GENERAL INFORMATION

Administration

FAULT-TRACING

CAMSHAFT DIAGNOSTICS (CVVT)

In addition to electrical checks of the camshaft reset valve, the engine control module (ECM) checks that the position of the camshaft is correct and that the control (deployment and return of the camshaft) is working satisfactorily. The control module uses the signals from the camshaft position sensor and engine speed (RPM) sensor (crankshaft position) for the diagnostics.

Checking the camshaft position

The control module checks that the 0 position of the camshaft (mechanical rest position) is correct. During certain driving conditions, camshaft control is not active. If this is the case, the control module checks the deviation between the camshaft position (angle position) and the crankshaft position (angle position).

The difference is stored in the engine control module (ECM) as an adaption value. A diagnostic trouble code (DTC) is stored in the engine control module (ECM) if the adaptation value becomes too high or low. The deviation of the camshafts from the reference position can be read off.

Checking the camshaft control

When camshaft control is active, the control module checks that the camshaft moves to the intended position. If the position is not reached, the time the system takes to deploy to the correct camshaft position (the transition time from the actual to the desired camshaft angle) is measured. A diagnostic trouble code (DTC) is stored in the engine control module (ECM) if the camshaft angle does not reach the desired value within a certain time frame.

CATALYTIC CONVERTER DIAGNOSTIC

- For 5 cylinder engines, see **CATALYTIC CONVERTER DIAGNOSTICS 5 CYLINDER**
- For 6 cylinder engines, see **CATALYTIC CONVERTER DIAGNOSTICS 6 CYLINDER**.

CATALYTIC CONVERTER DIAGNOSTICS 5 CYLINDER

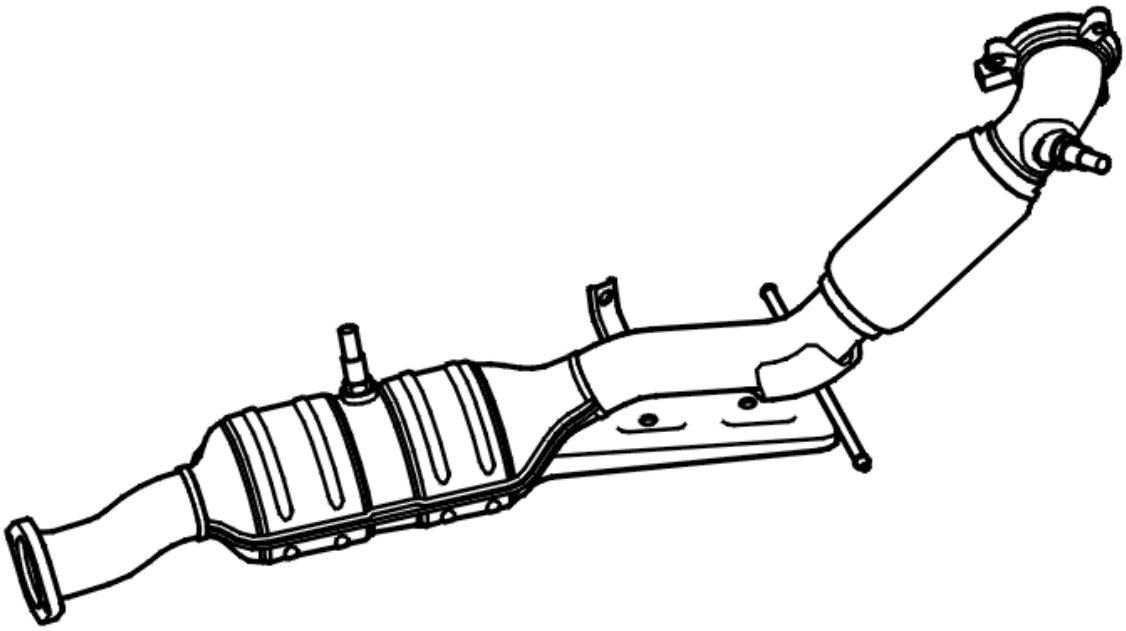

Fig. 1: Identifying Three-Way Catalytic Converter And Heated Oxygen Sensors
Courtesy of VOLVO CARS CORPORATION

The three-way catalytic converter (TWC) stores oxygen from the exhaust gases and uses it to make toxic gases more environmentally friendly. The catalytic converter is a 3 way catalytic converter in which HC (hydrocarbons) and CO (carbon monoxide) are oxidized and NO_x (nitrous oxide) is reduced. As the three-way catalytic converter (TWC) ages its ability to store oxygen drops. This reduces the conversion capacity of the three-way catalytic converter (TWC). To avoid dangerous emissions the engine control module (ECM) checks three-way catalytic converter (TWC) efficiency. In brief, this check is carried out as follows.

Two heated oxygen sensors (HO2S) are used to check the three-way catalytic converter (TWC), one upstream of the converter and one in the center of the converter (the rear heated oxygen sensor (HO2S)). The main function of the heated oxygen sensors (HO2S) is to measure the oxygen content in the exhaust gases so that the engine control module (ECM) can maintain the fuel / air mixture at around lambda=1. This mixture allows for optimum catalytic conversion. To determine catalytic converter efficiency the amplitude of the heated oxygen sensor (HO2S) signals is compared (amplitude is a measure of signal oscillation).

When efficiency of the catalytic converter is good and the fuel / air mixture is normal, the front probe signal switches between rich and lean while the rear probe signal is steady. If the three-way catalytic converter (TWC) efficiency is poor but the fuel / air mixture is normal, the rear probe signal will also switch between rich and lean. This is because the exhaust gases flow straight through the three-way catalytic converter (TWC) without being acted on. If the amplitude of the rear sensor becomes too great in relation to the amplitude of the front sensor for a number of checks, a diagnostic trouble code (DTC) will be stored for catalytic converter efficiency.

CATALYTIC CONVERTER DIAGNOSTICS 6 CYLINDER

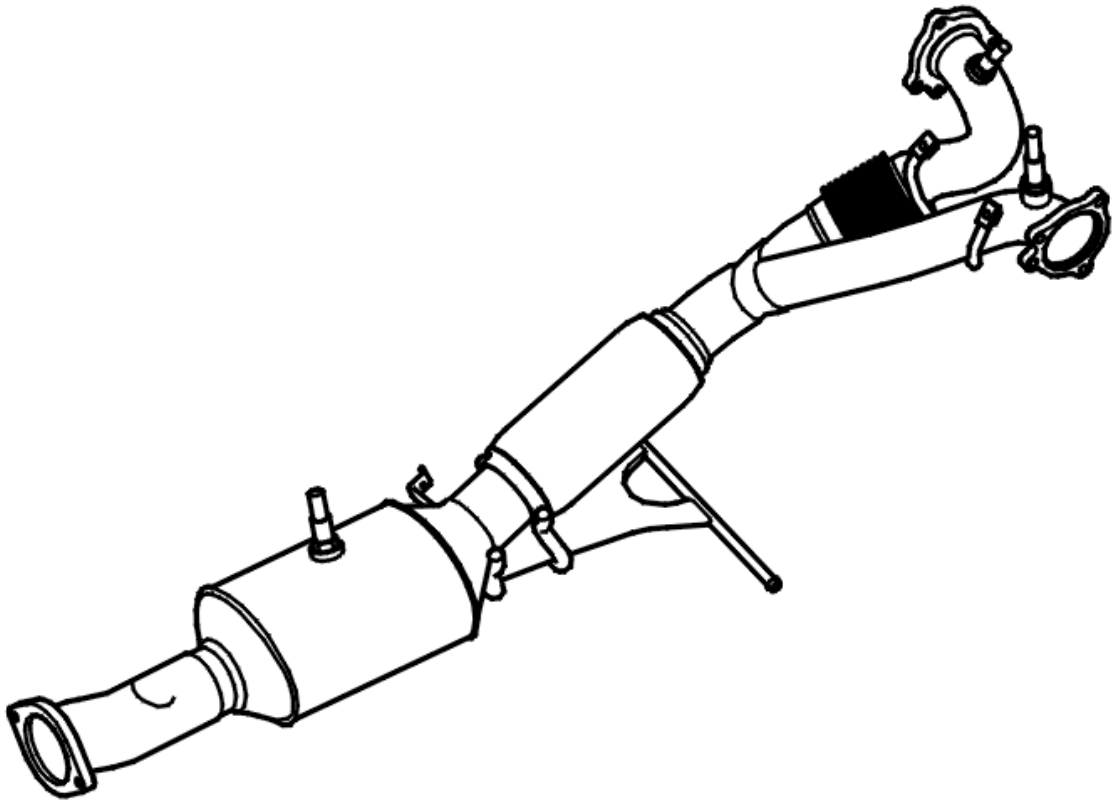

Fig. 2: Identifying Three-Way Catalytic Converter
Courtesy of VOLVO CARS CORPORATION

The three-way catalytic converter (TWC) stores oxygen from the exhaust gases and uses it to make toxic gases more environmentally friendly. The catalytic converter is a 3 way catalytic converter in which HC (hydrocarbons) and CO (carbon monoxide) are oxidized and NO_x (nitrous oxide) is reduced. As the three-way catalytic converter (TWC) ages its ability to store oxygen drops. This reduces the conversion capacity of the three-way catalytic converter (TWC). To avoid dangerous emissions the engine control module (ECM) checks three-way catalytic converter (TWC) efficiency. In brief, this check is carried out as follows.

Three heated oxygen sensors (HO2S) check the common catalytic converter. One heated oxygen sensor (HO2S) is in front of the three-way catalytic converter (TWC) for each bank of cylinders and a common rear heated oxygen sensor (HO2S) in the center of the three-way catalytic converter (TWC). The main function of the heated oxygen sensors (HO2S) is to measure the oxygen content in the exhaust gases so that the engine control module (ECM) can maintain the fuel / air mixture at around lambda=1. This mixture allows for optimum catalytic conversion. To determine catalytic converter efficiency the amplitude of the heated oxygen sensor (HO2S) signals is compared (amplitude is a measure of signal oscillation).

When efficiency of the catalytic converter is good and the fuel / air mixture is normal, the front probe signals for banks 1 and 2 switch between rich and lean while the rear probe signal is steady. If the three-way catalytic converter (TWC) efficiency is poor but the fuel / air mixture is normal, the rear probe signal will also switch between rich and lean. This is because the exhaust gases flow straight through the three-way catalytic converter

(TWC) without being acted on. If the amplitude of the rear sensor becomes too great in relation to the amplitude of the front sensor for a number of checks, a diagnostic trouble code (DTC) will be stored for catalytic converter efficiency.

DESCRIPTION OF ACTIVATIONS

BUTTONS ON THE LEFT-HAND KEYPAD

Activate the buttons on the left-hand keypad.

- CD button
- Back button
- AM/FM button
- Forward button
- 1 button
- 4 button
- 7 button
- * button
- 2 button
- 5 button
- 8 button
- 0 button
- 3 button
- 6 button
- 9 button
- # button
- * button

BUTTONS ON THE RIGHT-HAND KEYPAD

Activate the buttons on the right-hand keypad.

- buttons for sound control
- button for carphone on/off
- button for selecting the function
- buttons for the carphone and menu control
- button to open the CD tray
- CD eject button
- Up button
- Down button
- knob to select the source

- SIM card holder (only for cars with carphones)

DISPLAY TEST

Activate the display test positions.

- Normal
- All pixels on
- All pixels off
- Predetermined pattern 1
- Predetermined pattern 2
- Predetermined pattern 3
- Predetermined pattern 4.

STANDARD DISPLAY SYMBOLS

Activate the symbols in the standard display.

- TP symbol
- Symbol)))
- DDPLII symbol
- PHONE symbol
- REG symbol
- 3CH symbol
- PHONE ONLINE symbol
- MESSAGE symbol
- VOICE MESSAGE symbol.

DESCRIPTION OF EXTENDED DIAGNOSTIC TROUBLE CODE (DTC) INFORMATION

CONTENTS

Select type of description.

- see **DESCRIPTION OF FROZEN VALUES**
- see **COUNTERS, DESCRIPTION**
- see **STATUS IDENTIFIER, DESCRIPTION**

DESCRIPTION OF FROZEN VALUES

EXPLANATION

Not all the parameters described need to be implemented in the control module. This varies from system to

system.

Frozen values are parameter values that are stored when a diagnostic trouble code (DTC) is stored.

HINT: Frozen values are stored the first time a diagnostic trouble code (DTC) is generated. Because of this, intermittent open-circuits on the MOST network may be hard to diagnose.

BATTERY VOLTAGE, VALUE

Measurement range: 0-30 V.

Normal value when the generator (GEN) is charging: 13.0-14.5 V.

The value indicates the voltage at the central electronic module (CEM).

DISTANCE, VALUE

Measurement range: 0-1048575 km.

The value indicates the total mileage of the car at the time the diagnostic trouble code (DTC) was stored.

PASSENGER COMPARTMENT TEMPERATURE, VALUE

Measurement range: -60-195 °C.

The combined instrument panel obtains the value via the control area network (CAN).

OUTSIDE TEMPERATURE, VALUE

Measurement range: -128-127.75 °C.

The combined instrument panel obtains the value via the control area network (CAN).

ENGINE RUNNING, STATUS

The status displays whether the engine was running when the diagnostic trouble code (DTC) was stored.

No = the engine was not running

Yes = the engine was running

TIME, VALUE

The value displays the time that has passed since the diagnostic trouble code (DTC) was stored.

CAN COMMUNICATION, STATUS

The status indicates the control modules in the Control area network (CAN) which were communicating when

the diagnostic trouble code (DTC) was stored.

30 SUPPLY, VALUE

Measurement range: 0-50 V

The value indicates the power supply to the infotainment control module (ICM) when the diagnostic trouble code (DTC) was stored.

5 V SUPPLY, VALUE

Measurement range: 0-10 V

Normal range: 4.5-5.5 V

The value indicates the internal power supply in the infotainment control module (ICM) when the diagnostic trouble code (DTC) was stored.

3.3 V SUPPLY, VALUE

Measurement range: 0-5 V

Normal range: 2.9-3.5 V

The value indicates the internal power supply in the infotainment control module (ICM) when the diagnostic trouble code (DTC) was stored.

DISPLAY VOLTAGE, VALUE

Measurement range: 0-600 V

Normal range: 40-80 V

The value indicates the power supply to the display in the infotainment control module (ICM) when the diagnostic trouble code (DTC) was stored.

RING BREAK DIAGNOSTIC, STATUS

The status indicates the status of the MOST network when the diagnostic trouble code (DTC) was stored.

Status is stored the first time a diagnostic trouble code (DTC) is generated. If the fault is intermittent, the diagnostic trouble code may be generated several times, but the frozen value is only stored the first time. Because of this, intermittent open-circuits on the MOST network may be hard to diagnose.

OK = MOST network OK.

Open-circuit location = Indicates the location of the open-circuit in the MOST network.

MOST LOCKED, STATUS

The status indicates whether the MOST network was closed when the diagnostic trouble code (DTC) was stored.

No = The MOST network was not closed and communication was not possible.

Yes = The MOST network was closed and communication was possible.

BUTTONS LEFT KEYPAD, STATUS

The status indicates which button on the left-hand keypad was activated when the diagnostic trouble code (DTC) was stored.

Activated = The button was activated

Not activated = The button was not activated.

BUTTONS RIGHT KEYPAD, STATUS

The status indicates which button on the right-hand keypad was activated when the diagnostic trouble code (DTC) was stored.

Activated = The button was activated

Not activated = The button was not activated.

INPUT SIGNAL FROM THE BUTTON CIRCUIT, VALUE

Measurement range: 0-1023 V

The value indicates the voltage in the button circuit when the diagnostic trouble code (DTC) was stored.

- Left button circuit 1 (AM/FM, CD, |<<, >>|)
- Left button circuit 2 (*, 7, 4, 1)
- Left button circuit 3 (0, 8; 5, 2)
- Left button circuit 4 (#, 9, 6, 3)
- Right button circuit 1 (>>, AM/FM, |<<, CD)
- Right button circuit 2 (Up, Down, CD eject)
- Right button circuit 5 (sound)
- Button circuit for power button

VOLUME AND SELECTOR SWITCHES, STATUS

The status indicates the position of the switches in the Volume and Selector controls

Open

Closed

VOLUME AND SELECTOR KNOB MOVEMENT, VALUE

Measurement range: 0-FF (step)

The value indicates whether the Volume or Selector controls have been activated and how many steps they had been moved when the diagnostic trouble code (DTC) was stored.

DESCRIPTION OF FROZEN VALUES, CENTRAL ELECTRONIC MODULE (CEM)

EXPLANATION

Not all the parameters described need to be implemented in the control module. This varies from system to system.

Frozen values are parameter values that are stored when a diagnostic trouble code (DTC) is stored.

BATTERY VOLTAGE, VALUE

Measurement range: 0-12 V.

Normal value when the generator (GEN) is charging: 13.0-14.5 V.

DISTANCE, VALUE

Measurement range: 0-1048575 km.

The value indicates the total mileage of the car at the time the diagnostic trouble code (DTC) was stored.

PASSENGER COMPARTMENT TEMPERATURE, VALUE

Measurement range: -60-195 °C.

The combined instrument panel obtains the value via the control area network (CAN).

OUTSIDE TEMPERATURE, VALUE

Measurement range: -128-127.75 °C.

The combined instrument panel obtains the value via the control area network (CAN).

ENGINE RUNNING, STATUS

The status displays whether the engine was running when the diagnostic trouble code (DTC) was stored.

No = the engine was not running

Yes = the engine was running

TIME, VALUE

The value displays the time that has passed since the diagnostic trouble code (DTC) was stored.

DESCRIPTION OF FROZEN VALUES, PHONE MODULE (PHM)

EXPLANATION

Not all the parameters described need to be implemented in the control module. This varies from system to system.

Frozen values are parameter values that are stored when a diagnostic trouble code (DTC) is stored.

BATTERY VOLTAGE, VALUE

Measurement range: 0-28.4 V.

Normal value when the generator (GEN) is charging: 13.0-14.5 V.

The value indicates the voltage at the steering wheel module.

DISTANCE, VALUE

Measurement range: 0-1048575 km.

The value indicates the total mileage of the car at the time the diagnostic trouble code (DTC) was stored.

PASSENGER COMPARTMENT TEMPERATURE, VALUE

Measurement range: -60-195 °C.

The phone module (PHM) obtains the value via the control area network (CAN).

OUTSIDE TEMPERATURE, VALUE

Measurement range: -128-127.75 °C.

The phone module (PHM) obtains the value via the control area network (CAN).

ENGINE RUNNING, STATUS

The status displays whether the engine was running when the diagnostic trouble code (DTC) was stored.

No = the engine was not running

Yes = the engine was running

TIME, VALUE

The value displays the time that has passed since the diagnostic trouble code (DTC) was stored.

FUNCTIONS, STATUS

The status indicates which type of function was available when the diagnostic trouble code (DTC) was stored.

Carphone = normal carphone services available.

SOS = calls can only be made to the emergency services.

Infocom = data communication.

Unit switched off = the phone module (PHM) is switched off.

CALL STATUS

The status indicates the type of call when the diagnostic trouble code (DTC) was stored.

No activity = the phone module (PHM) is in standby mode. No ongoing calls or calls be made to/from the car.

Call from car = a number has been dialed from the car, but no answer.

Call to car = an incoming call to the car, but no answer.

Call = an ongoing call.

Call + outgoing = a call is on hold while a number is being dialed from the car. No answer.

Call + incoming = a call is on hold and there is an incoming call to the car.

Call on hold = approximately call is on hold.

Call + hold = a call is on hold and another call is ongoing.

Conference = a call with multiple participants connected

KEY POSITION, STATUS

The status indicates the position of the ignition key when the diagnostic trouble code (DTC) was stored.

No key = no key in the ignition switch.

Position 0 = ignition key in position 0.

Position 1 = ignition key in position 1.

Position 2 = ignition key in position 2.

Position 3 = ignition key in position 3.

CONTROL MODULE COMMUNICATION, CAN/MOST, STATUS

The status indicates which control modules on the MOST and LS-CAN networks the central electronic module (CEM) was able to communicate with when the diagnostic trouble code (DTC) was stored.

CEM OK = communication with the central electronic module (CEM), LS-CAN.

CEM nok = no communication with the central electronic module (CEM), LS-CAN.

AUD OK = communication with the audio module (AUD), MOST.

AUD nok = no communication with the audio module (AUD), MOST.

DIM OK = communication with the Driver Information Module (DIM), LS-CAN.

DIM nok = no communication with the Driver Information Module (DIM), LS-CAN.

DDM OK = communication with the Driver Door Module (DDM), LS-CAN.

DDM nok = no communication with the Driver Door Module (DDM), LS-CAN.

MMM OK = communication with the multimedia module (MMM), MOST.

MMM nok = no communication with the multimedia module (MMM), MOST.

PDM OK = communication with the Passenger Door Module (PDM), LS-CAN.

PDM nok = no communication with the Passenger Door Module (PDM), LS-CAN.

PSM OK = communication with the Power Seat Module (PSM), LS-CAN.

PSM nok = no communication with the Power Seat Module (PSM), LS-CAN.

SRS OK = communication with the Supplemental Restraint System Module (SRS), LS-CAN.

SRS nok = no communication with the Supplemental Restraint System Module (SRS), LS-CAN.

REM OK = communication with the rear electronic module (REM), LS-CAN.

REM nok = no communication with the rear electronic module (REM), LS-CAN.

SWM OK = communication with the steering wheel module (SWM), LS-CAN.

SWM nok = no communication with the steering wheel module (SWM), LS-CAN.

CCM OK = communication with the Climate Control Module (CCM), LS-CAN.

CCM nok = no communication with the Climate Control Module (CCM), LS-CAN.

UEM OK = communication with the upper electronic module (UEM), LS-CAN.

UEM nok = no communication with the upper electronic module (UEM), LS-CAN.

DESCRIPTION OF PARAMETERS, CD MODULE

CD PLAYER STATUS

The CD player can have the following status:

- Play
- Stop
- Pause
- Load
- Unload
- Search forwards
- Search backwards
- Fast forward
- Fast backward
- Retract
- Empty

TRACK

The value indicates which disc track is playing at the moment.

PLAYED TIME

The value indicates the time the current track has been playing.

ACTIVE DISC, ONLY FOR CARS WITH A CD CHANGER

Measurement range: 1-6.

The value indicates which of the discs in the CD changer is active.

DESCRIPTION OF PARAMETERS, MD MODULE

MD PLAYER STATUS

The MD player can have the following status:

- Play
- Stop
- Pause
- Load
- Unload
- Search forwards
- Search backwards
- Fast forward
- Fast backward
- Retract
- Empty

TRACK

The value indicates which disc track is playing at the moment.

PLAYED TIME

The value indicates the time the current track has been playing.

DESCRIPTION OF PARAMETERS, PHONE MODULE (PHM)

POWER SUPPLY, VALUE

Measurement range 0-65.535 V.

Normal value is approximately 12 V. The phone module (PHM) is supplied with +30.

The value indicates the power supply to the phone module (PHM).

PHONE MODULE (PHM) TEMPERATURE, VALUE

Measurement range -127- 127°C.

The normal temperature is approximately 70 °C but may vary depending on whether the air conditioning (A/C) or heater is in use.

The value indicates the internal temperature in the phone module (PHM).

SIGNAL STRENGTH GSM, VALUE

Measurement range 0-100%.

The value indicates the signal strength for GSM reception and may vary depending on the position of the operator and of the car.

DESCRIPTION OF PARAMETERS, ANTENNA MODULE (ATM)

FREQUENCY BAND AM/FM

Indicates the current wave band or whether the control module is switched off.

MAIN ANTENNA

The value indicates whether the main aerial is on or off.

SUB-ANTENNA

The value indicates whether the sub aerial is on or off.

REGION

Indicates which region the antenna module (ATM) is configured for, EU / US / AUS / JP.

EQUIPPED WITH TMC

Indicates whether the antenna module (ATM) is equipped with TMC.

EQUIPPED WITH GPS

Indicates whether the antenna module (ATM) is equipped with GPS.

FREQUENCY

Indicates the frequency which is set.

TMC FREQUENCY

Indicates the frequency the TMC receiver is set to.

SIGNAL STRENGTH TMC

Indicates the strength of the TMC signal.

GPS RECEIVED POSITION, LONGITUDE

Indicates the received longitudinal position.

GPS RECEIVED POSITION, LATITUDE

Indicates the received latitudinal position.

GPS SATELLITES ACCESSIBLE

Indicates how many satellites the system is in contact with.

- **Not available** - no contact with the satellite
- **No fix** - contact with a satellite but unable to fix a position
- **2D fix** - contact with a satellite, two-dimensional position fixing
- **3D fix** - contact with a satellite, three-dimensional position fixing.

DESCRIPTION OF PARAMETERS, INFOTAINMENT CONTROL MODULE (ICM)

30 SUPPLY, VALUE

Measurement range: 0 - 50 V

Normal range: 12 - 14 V

The value indicates the power supply to the infotainment control module (ICM).

5 V SUPPLY, VALUE

Measurement range: 0 - 10 V

Normal range: 4.5 - 5.5 V

The value indicates the internal power supply in the infotainment control module (ICM).

3.3 V SUPPLY, VALUE

Measurement range: 0 - 5 V

Normal range: 2.9 - 3.5 V

The value indicates the internal power supply in the infotainment control module (ICM).

DISPLAY VOLTAGE, VALUE

Measurement range: 0 - 600 V

Normal range: 40 - 80 V

The value indicates the voltage to the display in the infotainment control module (ICM).

POWER CONSUMPTION INFOTAINMENT, VALUE

Measurement range: 0 - 50 A

The value gives the power consumption of the infotainment system.

POWER CONSUMPTION INFOTAINMENT CONTROL MODULE (ICM), VALUE

Measurement range: 0 - 50 A

The value gives the power consumption of the Infotainment Control Module (ICM).

INPUT SIGNAL FROM THE BUTTON CIRCUIT, VALUE

Measurement range: 0 - 1023 V

Normal range: ~4.1 V (when no buttons in the relevant circuit are affected.)

The value indicates the voltage in the button circuit.

- Normal range: ~(3.6V, 3.1V, 2.4V, 1.4V)
- Left button circuit 1 (>>|, AM/FM, |<<, CD)
- Left button circuit 2 (*, 7, 4, 1)
- Left button circuit 3 (0, 8; 5, 2)
- Left button circuit 4 (#, 9, 6, 3)
- Right button circuit 1 (>>, AM/FM, |<<, CD)
- Normal range: ~(3.1V, 2.4V, 1.4V)
- Right button circuit 2 (Up, Down, CD eject)
- Normal range: ~(1.4V)
- Right button circuit 5 (sound)
- Button circuit for power button

NUMBER OF CONTROL MODULES IN THE MOST NETWORK, VALUE

The value indicates the number of control modules in the present MOST network. The number can be between 4-8.

BUTTONS IN THE KEYPAD, STATUS

The status displays if the selected button is activated or not

DISPLAY TEST, STATUS

Status displays the position for display test.

- Normal
- All pixels on

- All pixels off
- Predetermined pattern 1
- Predetermined pattern 2
- Predetermined pattern 3
- Predetermined pattern 4
- Undefined.

DISPLAY TYPE, STATUS

Status indicates what display type for the present unit.

- Standard
- Graphic
- Undefined.

MOST-LOCKED, STATUS

The status indicates whether the MOST network is closed and communication possible.

No

Yes

RING BREAK DIAGNOSTIC, STATUS

NOTE: This parameter is only changed after a ring break diagnostic has been run.

After the ring break diagnosis has been carried out the status indicates if there is an open-circuit and if so the location of the open-circuit.

OK

Pos1 - Pos8

HINT: The number of possible positions varies depending on the number of control modules in the car.

NETWORK ACTIVITY, STATUS

Status indicates if there is communication in the MOST network.

No

Yes

3 DB SWITCH, STATUS

Status displays if the 3 dB switch is on or off.

FUEL PRESSURE REGULATION, DIAGNOSTICS

FUEL PRESSURE REGULATION, DIAGNOSTICS

General

The fuel pump control module has no functions for diagnostics. Fuel pressure control components and functions are diagnosed by the engine control module (ECM).

The following components and functions are diagnosed by the engine control module (ECM). Diagnostic trouble codes (DTCs) can be stored for each component and function:

- **Fuel pump control module** , a diagnostic checks the power supply. A diagnostic trouble code (DTC) will be stored and the fuel pump will not work if there is no power supply to the fuel pump control module
- **Fuel pressure sensor** with temperature sensor, a diagnostic checks the pressure and temperature signals to, see if they are outside the normal operating range of the sensor. If a fault in the fuel pressure sensor is detected, the fuel pump (FP) will run at a predefined power and the pressure is governed by the by-pass valve in the fuel tank
- **Fuel pressure** , the engine control module (ECM) compares the requested pressure with the measured pressure(signal from the fuel pressure sensor). If the measured pressure deviates excessively from the requested pressure, or if the pressure pulses, a diagnostic trouble code (DTC) will be stored for incorrect fuel pressure. The diagnostic is not active if a diagnostic trouble code (DTC) for the fuel pressure sensor is stored. A diagnostic trouble code (DTC) for fuel pressure will be stored if there is a fault in the *fuel pump* .
- **Communication cable.** The engine cannot be started if there is a fault in the communication cable between the engine control module (ECM) and the fuel pump control module. A diagnostic trouble code (DTC) will be stored for the fault.

Components and functions which cannot be diagnosed:

If there is a fault in the *by-pass valve* in the tank unit, the starting process of the engine will take longer if the valve is leaking fuel when the fuel pump is off. If the valve does not open when there are pressure peaks in the fuel system, engine operation will be affected negatively, especially after engine braking. The fault can also cause rough idling.

HEATED OXYGEN SENSOR (HO2S) DIAGNOSTIC, 5-CYLINDER ENGINE

The front heated oxygen sensor (HO2S) is a lineal type and functions with current control. Therefore it is not possible to measure the signals from the heated oxygen sensor (HO2S) using a multimeter. The rear heated oxygen sensor (HO2S) is a binary type as with earlier heated oxygen sensors (HO2S).

The Engine Control Module (ECM) checks the heated oxygen sensors (HO2S) when the conditions for diagnostics have been fulfilled.

The following faults can be registered by the control module:

- **Electrical fault** in the circuits for the heated oxygen sensors (HO2S) and for the heated oxygen sensor (HO2S) preheating
- **Adaptation.** The control module checks that the long-term fuel trim is not higher or lower than the pre-defined values
- **Large difference between the front and rear heated oxygen sensor (HO2S) adaptation.** The control module checks that the difference between the rear and front heated oxygen sensor (HO2S) adaptation is not too great. The fault may be in the front or rear heated oxygen sensor (HO2S) or the wiring
- **Heated oxygen sensor (HO2S) dynamics.** The control module checks that the changeover period between rich and lean mixtures is not too long
- **Unlikely signals between the front and rear heated oxygen sensors (HO2S).** When the control module registers a rich mixture in the front probe at the same time that a lean mixture is registered in the rear probe or vice versa.

HEATED OXYGEN SENSOR (HO2S) DIAGNOSTIC, 6-CYLINDER ENGINE

HEATED OXYGEN SENSOR (HO2S) DIAGNOSTIC

The front heated oxygen sensor (HO2S) is a linear type and functions with current control. Therefore, it is not possible to measure the signals from the heated oxygen sensor (HO2S) using a multimeter. The rear heated oxygen sensor (HO2S) is a binary type as with earlier heated oxygen sensors (HO2S). The Engine Control Module (ECM) checks the heated oxygen sensors (HO2S) when the conditions for diagnostics have been fulfilled.

There are two sets of front and rear heated oxygen sensors, one for bank 1 and one for bank 2.

Bank 1; cylinder 1, 2, and 3.

Bank 2; cylinder 4, 5, and 6.

The following faults can be registered by the control module:

- **Electrical faults in the circuits** for the heated oxygen sensors (HO2S) and for oxygen sensor preheating.
- **Adaption** The control module checks that the long-term fuel trim is not higher or lower than the pre-defined values.
- **Heated oxygen sensor (HO2S) dynamics.** The control module checks that the changeover period between rich and lean mixtures is not too long.

HEATED OXYGEN SENSOR (HO2S) DIAGNOSTIC, 8-CYLINDER ENGINE

The front heated oxygen sensor (HO2S) is a linear type and functions with current control. Therefore, it is not possible to measure the signals from the heated oxygen sensor (HO2S) using a multimeter. The rear heated oxygen sensor (HO2S) is a binary type as with earlier heated oxygen sensors (HO2S). The Engine Control Module (ECM) checks the heated oxygen sensors (HO2S) when the conditions for diagnostics have been fulfilled.

There are two sets of front and rear heated oxygen sensors, one for bank 1 and one for bank 2.

Bank 1 (front cylinder row); cylinders 1, 3, 5 and 7.

Bank 2 (rear cylinder row, closest to the passenger compartment); cylinders 2, 4, 6 and 8.

The following faults can be registered by the control module:

- **Electrical faults in the circuits** for the heated oxygen sensors (HO2S) and for oxygen sensor preheating.
- **Adaption** The control module checks that the long-term fuel trim is not higher or lower than the pre-defined values.
- **Heated oxygen sensor (HO2S) dynamics.** The control module checks that the changeover period between rich and lean mixtures is not too long.

LEAK DIAGNOSTICS (CERTAIN MARKETS ONLY)

To minimize false detection of leakage, new software has been released for the Engine control module (ECM). The software has been released afterwards, in order of priority, started at the end of 2006.

To check the current software version, use VIDA (Volvo scan tool).

The improved software version makes diagnostics more robust and durable against aging and wear of the leak diagnostic unit. It affects strategies, behavior and to a degree also read off parameters.

- Original version for model year -2004, see: **LEAK DIAGNOSTICS, ORIGINAL VERSION (-2004)**
- Original version for model year 2005-, see: **LEAK DIAGNOSTICS, ORIGINAL VERSION (2005-)**
- Improved version for all model years, see: **LEAK DIAGNOSTICS, IMPROVED VERSION (2002-)**

LEAK DIAGNOSTICS, IMPROVED VERSION (2002-)

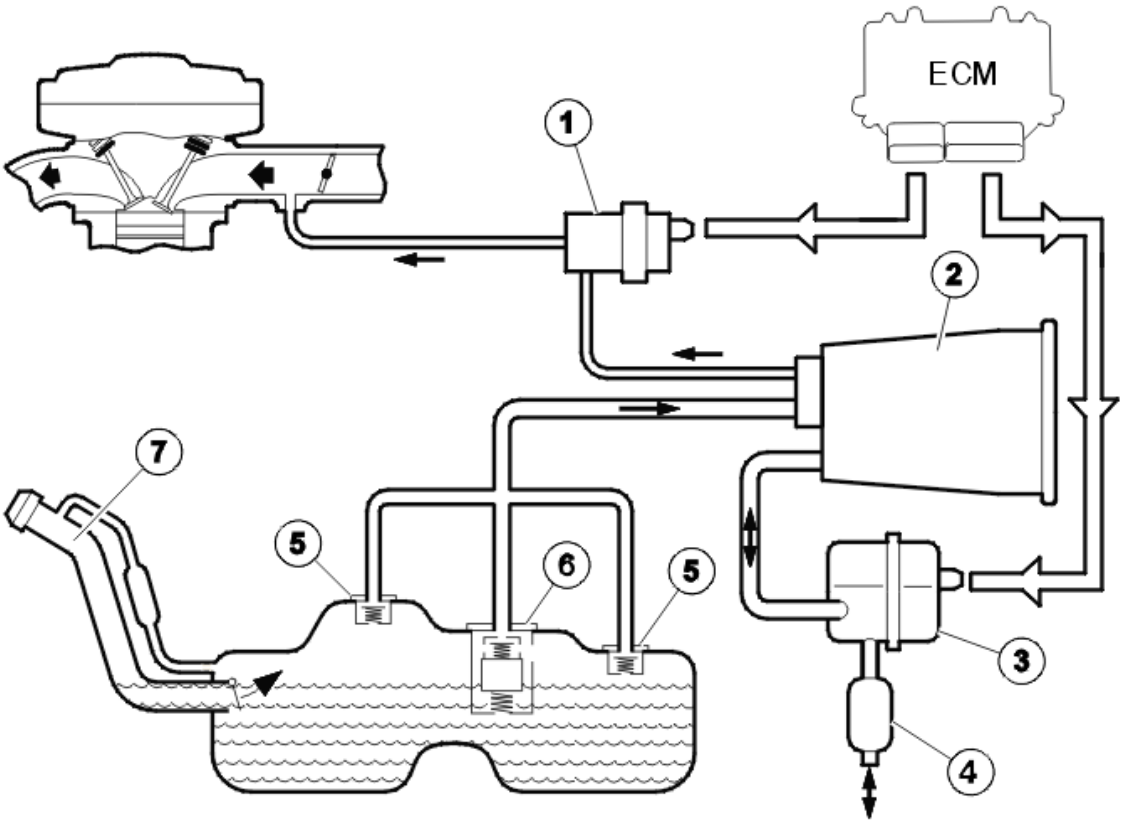

Fig. 3: Fuel Tank System Leak Overview
Courtesy of VOLVO CARS CORPORATION

All gases that evaporate from fuel in the fuel tank must be led to and stored in the evaporative emission system (EVAP) canister so that they can be directed into the engine for combustion. In order to detect leakages which cause evaporation of gases into the air, the fuel tank system is diagnosed for leakage. The fuel tank system consists of:

- fuel tank
- the EVAP canister purge valve (1)
- EVAP canister (2)
- leak diagnostic unit (3)
- air cleaner (ACL) (4)
- Roll-over valve (5)
- Float Limit Vent Valve (6)
- fuel filler pipe (7)
- all lines between the above components.

The fuel tank system has a leak diagnostic unit to diagnose any leakage. The leak diagnostic unit pressurizes the fuel tank system when the conditions for leak diagnostics are met.

The control module can detect faults in the function of the leak diagnostic unit and leakage that is 0.5 mm or

greater. Minor leak; leakage greater than 0.5 mm but less than 1.0 mm. Major leak; leakage greater than 1.0 mm.

The leak diagnostic unit consists of a pump and a valve that controls the air flow in the unit. The Engine control module (ECM) checks for leakage in the fuel tank system by measuring the relationship between reached pressure and flow from the leak diagnostic pump during pressurization.

If a certain pressure is not reached with a predetermined supplied flow (with known mass), the Engine control module (ECM) interprets this as a leak from the fuel tank system.

Leak diagnostics starts in normal operation when specific conditions are met, see below. The diagnostics can also be started on command using VIDA (Volvo scan tool) when some of these conditions are ignored.

Conditions for diagnosis

The diagnosis begins when all the following conditions are met.

Note: When diagnostics are started on command using VIDA (Volvo scan tool), certain different conditions apply.

- No diagnostic trouble codes (DTCs) for EVAP valve or atmospheric pressure sensor may be stored.
- The engine is switched off until the engine coolant temperature (ECT) has fallen to a few degrees above the outside temperature, then engine running for at least 10 minutes
- Ignition off
- Vehicle speed 0 km/h.
- Engine coolant temperature (ECT) 4-35°C.
- Maximum altitude of 2500 meters above sea level
- Outside temperature 4-35 °C.
- Fuel volume in the tank between 0-85 %. The engine control module (ECM) ignores these parameters if a diagnostic trouble code (DTC) is stored for the fuel level sensor and the fuel volume cannot be determined.
- Battery voltage between 11-15 V. The voltage must be stable.
- EVAP canister purge valve closed
- Low volume in the canister.
- Fuel tank filler cap locked. Tip. Locking occurs when the vehicle speed exceeds approximately 20 km/h.

Diagnostic phases

The diagnostic is divided into the following phases and is carried out in sequence when all conditions for the diagnostic have been met.

- reference phase
- function test
- checking the fuel tank system

Reference phase

Before the leak diagnostic begins, the control module runs a reference phase for leakage. During the reference phases for leakage that is 0.5 mm, the pump in the leak diagnostic unit pumps ambient air through a 0.5 mm hole and back out to the ambient air. At the same time, the pump in the leak diagnostic unit is monitored and the reference values stored for later use to determine whether the tank system is leaking or not.

If a reference value for the pump is outside its unexpectedly high or low, or deviates too much, diagnostics is cancelled and a DTC is stored.

Function test

After the reference phase, the valve in the leak diagnostic unit is activated and controls the air flow to the fuel tank to pressurize the fuel tank system. This change of air flow will cause the load the pump to fall briefly before the pressure builds up in the fuel tank system. If the load does not change within permitted parameters within a permitted time, diagnostics is cancelled and a DTC is stored.

Checking the tank system, major leak (leak greater than 1.0 mm)

Diagnostics are carried out every time conditions for diagnostics are met.

The leak diagnostic unit pressurizes the fuel tank system and checks for leaks by monitoring the pressure the fuel tank system. The pressure is a calculated pressure, calculated using the measured pump power consumption. If the pressure stabilizes and/or does not exceed 1500 Pa within 450 seconds, this is interpreted as a leak from the fuel tank system. Diagnostics are cancelled and a DTC for major leak is stored.

Checking the fuel tank system, minor leak (leakage greater than 0.5 mm but less than 1.0 mm)

The diagnostic for minor leaks is run every other time that the conditions for the diagnostic are met. Otherwise diagnostics stop after checking for major leaks.

The leak diagnostic unit continues to pressurize the fuel tank system. The Engine control module (ECM) checks for leakage in the fuel tank system by measuring the relationship between reached pressure and flow from the leak diagnostic pump during pressurization. In a sealed system the relationship between these must be linear. Any deviations from the linear relationship are calculated and used to determine how well sealed the tank system is.

A diagnostic trouble code (DTC) is stored if a minor leak is detected within 15 minutes.

LEAK DIAGNOSTICS, ORIGINAL VERSION (-2004)

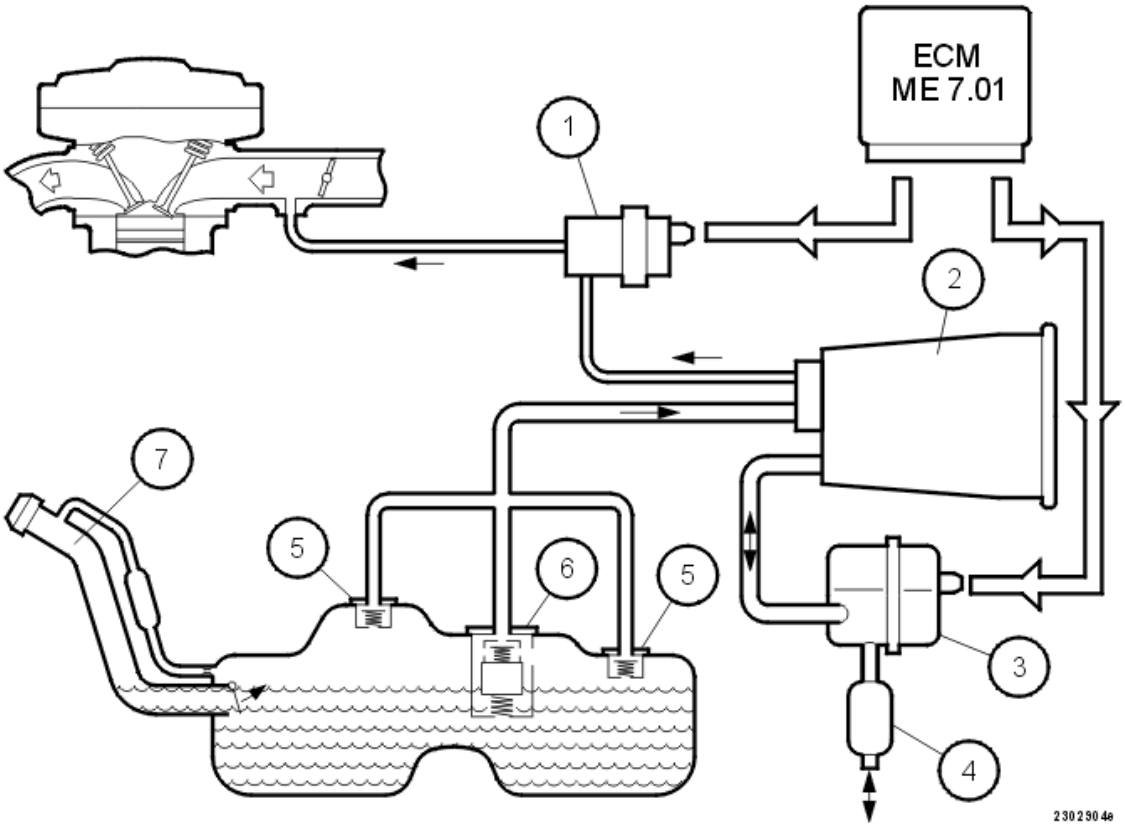

Fig. 4: Fuel Tank System Overview
Courtesy of VOLVO CARS CORPORATION

All gases that evaporate from fuel in the fuel tank must be led to and stored in the evaporative emission system (EVAP) canister so that they can be directed into the engine for combustion. In order to detect leakages that cause gas to evaporate into the air, the fuel tank system is diagnosed for leakage. The fuel tank system consists of fuel tank, fuel filler pipe (7), EVAP canister (2), EVAP valve (1), air cleaner (4), leak diagnostic unit (3) and all cables between these components. The fuel tank system has a leak diagnostic unit that makes it possible to diagnose any leaks. The unit pressurizes the fuel tank system when the ignition is switched off if the conditions for leak diagnostics are met. The control module can detect faults in the function of the diagnostic unit and leakage that is 0.5 mm (minor leak) or greater (major leak, fuel filler cap missing).

The leak diagnostic unit consists of a pump and a valve that controls the air flow in the unit. The fuel tank system tests for leaks by measuring the power consumption of the pump. The power consumption of the pump corresponds to a certain pressure in the fuel tank system. During diagnosis, the rate at which the pressure can build up is checked, taking into account the quantity of fuel in the tank. The quicker the pressurization the better the fuel tank system is sealed.

Conditions for diagnosis

The diagnosis begins when all the following conditions are met:

- There must be no diagnostic trouble code (DTC) stored for the following components or functions:
  - the power stage for the pump in the leak diagnostic unit

    - the power stage for the valve in the leak diagnostic unit
    - the power stage for the EVAP canister purge valve
    - the EVAP canister purge valve.
- Engine off for at least 5 hours (context), engine running for at least 20 minutes (context)
- Ignition off
- Vehicle speed 0 km/h
- Engine coolant temperature (ECT) +4 °C or higher
- Maximum altitude of 2500 meters above sea level
- Outside temperature between +4 and +35 °C
- Stable signal from the fuel level sensor
- Fuel volume in the tank between 15-85 %
- Battery voltage between 11.0-14.5 V. The voltage must be stable
- EVAP canister purge valve closed
- Low volume in the canister.

Diagnostic phases

The diagnostic is divided into the following phases and is carried out in sequence when all conditions for the diagnostic have been met.

- Reference phase 1
- Function test
- Leak diagnostic.

Reference phase and function test

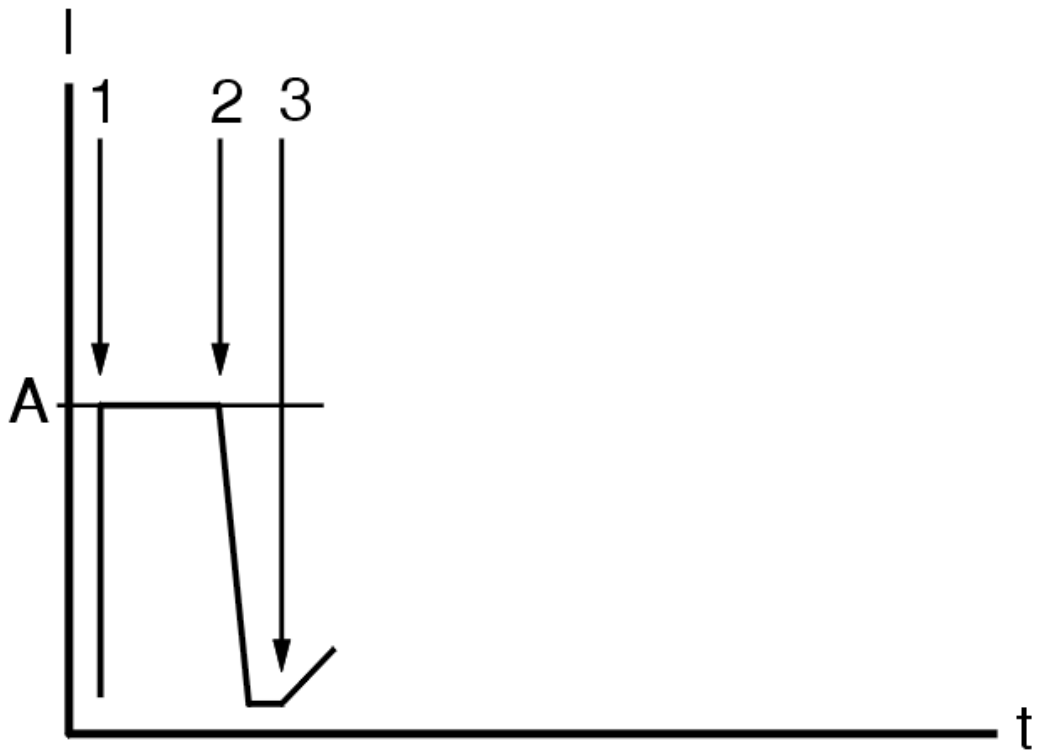

Fig. 5: Fault Free Fuel Tank System Diagram
Courtesy of VOLVO CARS CORPORATION

(the illustration is a diagram of a fault free fuel tank system) Before the actual leak diagnostic begins, the control module enters a reference phase for leakage and checks the components in the system.

Reference phase 1 and reference phase 2

During the reference phases (1-2) for leakage that is 0.5 mm, the pump in the leak diagnostic unit pumps ambient air through a 0.5 mm hole and back out to the ambient air. At the same time, the power consumption of the pump is measured and stored in the control module (A). The stored value for the power consumption of the pump corresponds to a leakage of 0.5 mm.

Function test

If the value for the power consumption of the pump is too high or low during reference phase1 (1-2), or if the value varies too much during reference phase 1 (1-2), the diagnostic is cancelled and starts again the next time the conditions for the diagnostic are met. Diagnostic trouble code (DTC) ECM-431D, faulty signal, is stored if the diagnostic is cancelled 10 times due to excessive variation in the power consumption of the pump.

After the reference phase, the valve (2) in the leak diagnostic unit is activated and controls the air flow to the fuel tank to pressurize the fuel tank system. This change of air flow will cause the power consumption of the pump to fall briefly before the pressure builds up in the fuel tank system (3). Diagnostic trouble code (DTC) ECM-431D, signal missing, is stored if the value for the power consumption of the pump drops too quickly, too

slowly or not at all.

Leak diagnostic

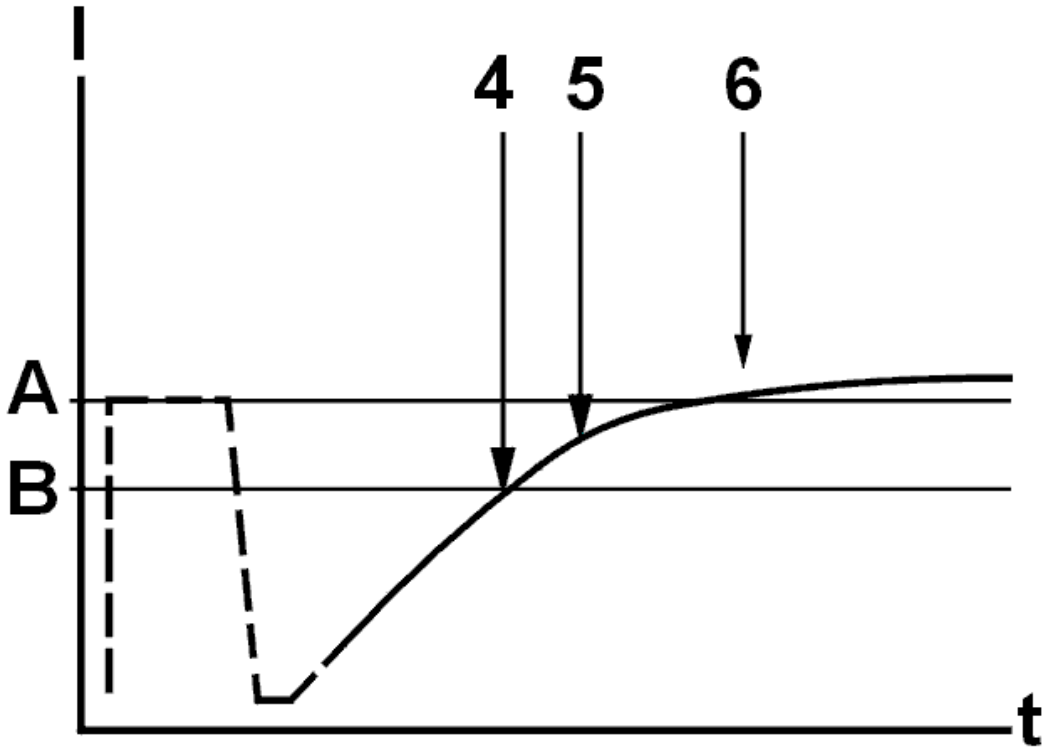

Fig. 6: Fault Free Fuel Tank System Diagram (Major Leak)
Courtesy of VOLVO CARS CORPORATION

(the illustration is a diagram of a fault free fuel tank system). As long as diagnostic trouble code (DTC) ECM-431D is not stored, the leak diagnostic will be carried out after the reference phase and the function test.

Major leak

(leaks >1.0 mm) The diagnostic for "major leaks" is carried out every other time when the diagnostic conditions are met. The leak diagnostic unit pressurizes the fuel tank system, measures the power consumption of the pump (4) and compares this with a calculated desired value (B). If the measured value does not reach the calculated desired value within a certain amount of time (this time is determined by the fuel level in the tank), the function of the leak diagnostic unit is rechecked by running reference phase 2 again to check that low power consumption has not led to changes in the components. Diagnostic trouble code ECM-400C, major leak, is generated if the power consumption of the pump is OK during reference phase 2.

Diagnostic trouble code (DTC) ECM-4338 (fuel tank filler cap missing) will also be stored and the driver will receive a text message in the Driver Information Module (DIM) when a major leak is detected by the Engine Control Module (ECM).

Minor leak

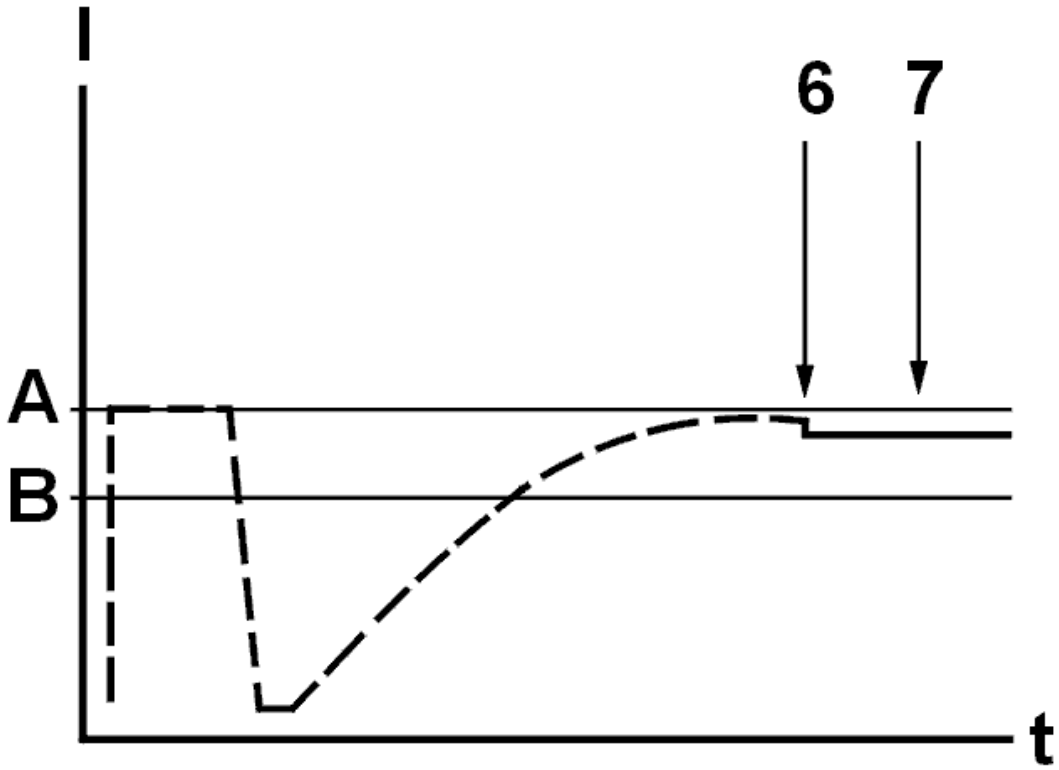

Fig. 7: Fault Free Fuel Tank System Diagram (Minor Leak)
Courtesy of VOLVO CARS CORPORATION

(leaks >0.5 mm <1.0 mm). The diagnostic for "minor leaks" is carried out every 14th time when the diagnostic conditions are met. The diagnostic for major leaks is always run before the diagnostic for minor leaks. The leak diagnostic unit continues to pressurize the fuel tank system (5). If the measured value (6) is the same or less than the value stored in the reference phase (A) after a certain amount of time (determined by the fuel level in the tank), reference phase 2 (7) is run to ensure that the lower power consumption (6) is not the result of changes in components. If the measured power consumption during the second reference phase (7) is lower than that measured during pressurization (6), the control module interprets this as meaning that the fuel tank system is sealed. Diagnostic trouble code ECM-400C, minor leak, is generated if the measured power consumption from the second reference phase (7) is the same or higher than that measured during pressurization (6).

LEAK DIAGNOSTICS, ORIGINAL VERSION (2005-)

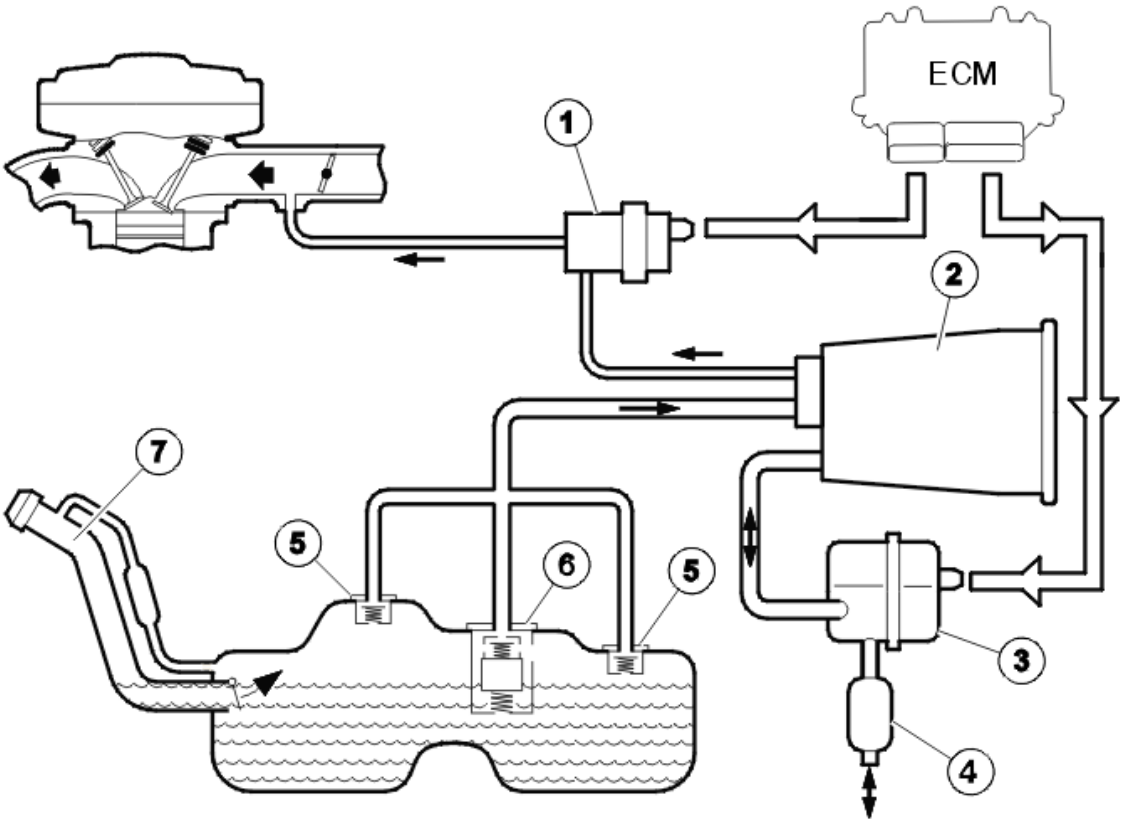

Fig. 8: Fuel Tank System Leak Overview
Courtesy of VOLVO CARS CORPORATION

All gases that evaporate from fuel in the fuel tank must be led to and stored in the evaporative emission system (EVAP) canister so that they can be directed into the engine for combustion. In order to detect leakages which cause evaporation of gases into the air, the fuel tank system is diagnosed for leakage. The fuel tank system consists of:

- fuel tank
- the EVAP canister purge valve (1)
- EVAP canister (2)
- leak diagnostic unit (3)
- air cleaner (ACL) (4)
- Roll-over valve (5)
- Float Limit Vent Valve (6)
- fuel filler pipe (7)
- all lines between the above components.

The fuel tank system has a leak diagnostic unit to diagnose any leakage. The leak diagnostic unit pressurizes the fuel tank system when the ignition is off, if the conditions for diagnosis have been met. The control module can detect faults in the function of the leak diagnostic unit and leakage that is 0.5 mm or greater. Minor leak; leakage greater than 0.5 mm but less than 1.0 mm. Major leak; leakage greater than 1.0 mm.

The leak diagnostic unit consists of a pump and a valve that controls the air flow in the unit. The fuel tank system tests for leaks by measuring the power consumption of the pump. The power consumption of the pump corresponds to a certain pressure in the fuel tank system. During diagnosis, the rate at which the pressure can build up is checked, taking into account the quantity of fuel in the tank. The quicker the pressurization the better the fuel tank system is sealed.

Conditions for diagnosis

The diagnosis begins when all the following conditions are met:

- There must be no diagnostic trouble code (DTC) stored for the following components or functions:
  - the power stage for the pump in the leak diagnostic unit
  - the power stage for the valve in the leak diagnostic unit
  - the power stage for the EVAP canister purge valve
  - the evaporative emission system (EVAP) valve
  - the engine coolant temperature (ECT) sensor
  - speed signal.
- The engine is switched off until the engine coolant temperature (ECT) has fallen to a few degrees above the outside temperature, then engine running for at least 10 minutes
- Ignition off
- Vehicle speed 0 km/h
- Engine coolant temperature (ECT) -5 °C or higher
- Maximum altitude of 2500 meters above sea level.
- Outside temperature between -5 and +35 °C
- Fuel volume in the tank less than 85 %. The engine control module (ECM) ignores these parameters if a diagnostic trouble code (DTC) is stored for the fuel level sensor and the fuel volume cannot be determined
- Battery voltage between 11.0-14.5 V. The voltage must be stable
- EVAP canister purge valve closed
- Low volume in the canister.

Fuel tank filler cap check

The exception from the above conditions is when the car has been refuelled. The engine control module (ECM) starts a check of the fuel tank filler cap after refuelling. This check is a simplified version of the leak diagnostic unit for major leaks. The fuel tank filler cap control is run whilst the vehicle is being driven. This allows the control module to check that the cap has been reinstalled. A diagnostic trouble code (DTC) is stored in the engine control module (ECM) and a text message is displayed in the driver information module (DIM) if the cap is missing.

Diagnostic phases

The diagnostic is divided into the following phases and is carried out in sequence when all conditions for the

diagnostic have been met.

- Reference phase
- Function test
- Leak diagnostics

Reference phase (1-2)

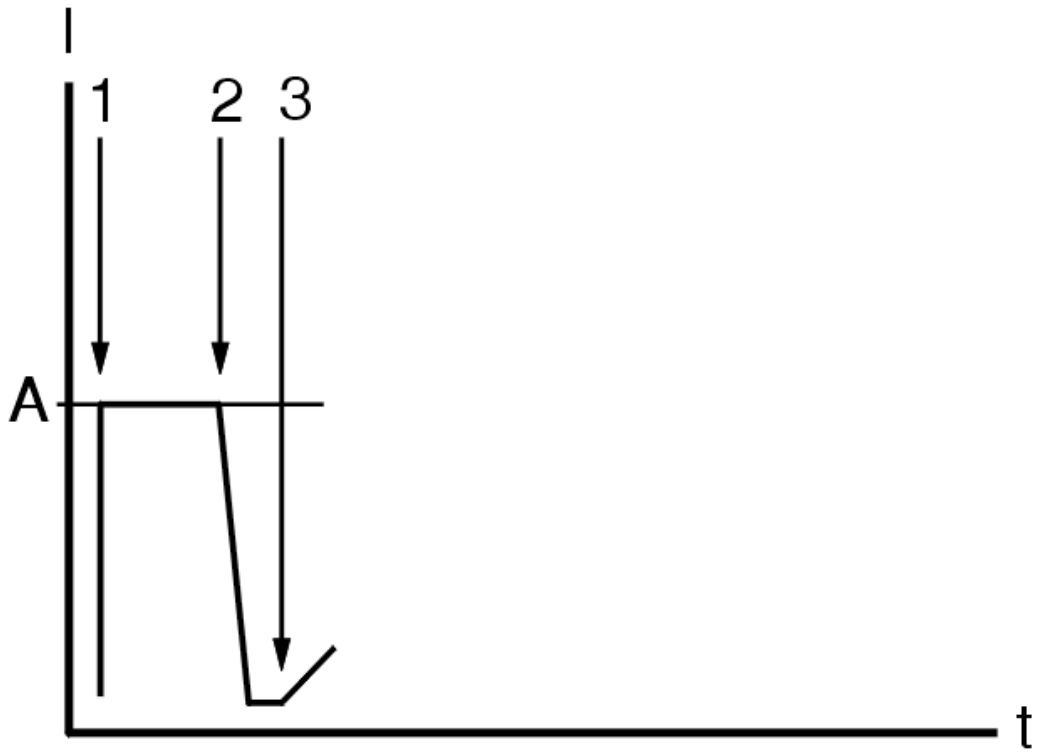

Fig. 9: Fault Free Fuel Tank System Diagram
Courtesy of VOLVO CARS CORPORATION

The illustration is a diagram of a fault free fuel tank system.

Before the leak diagnostic begins, the control module runs a reference phase for leakage. During the reference phase (1-2) for leakage that is 0.5 mm, the pump in the leak diagnostic unit pumps ambient air through a 0.5 mm hole and back out to the ambient air. At the same time, the power consumption (A) of the pump is measured and stored in the control module. The stored value (A) for the power consumption of the pump corresponds to a leakage of 0.5 mm. This value is then used by the engine control module (ECM) to determine the leak status of the fuel tank system.

Function test (1-3)

If the value for the power consumption of the pump is too high or low during the reference phase (1-2), or if the

value varies too much during the reference phase (1-2), the diagnostic is cancelled and starts again the next time the conditions for the diagnostic are met. A diagnostic trouble code (DTC) is stored if the diagnostic is cancelled several time in a row because the power consumption of the pump is varying excessively.

After the reference phase, the valve (2) in the leak diagnostic unit is activated and controls the air flow to the fuel tank to pressurize the fuel tank system. This change of air flow will cause the power consumption of the pump to fall briefly before the pressure builds up in the fuel tank system (3). A diagnostic trouble code is stored if the value for the power consumption of the pump drops too quickly, slowly or not at all.

Leak diagnostic, major leak (leakage greater than 1.0 mm)

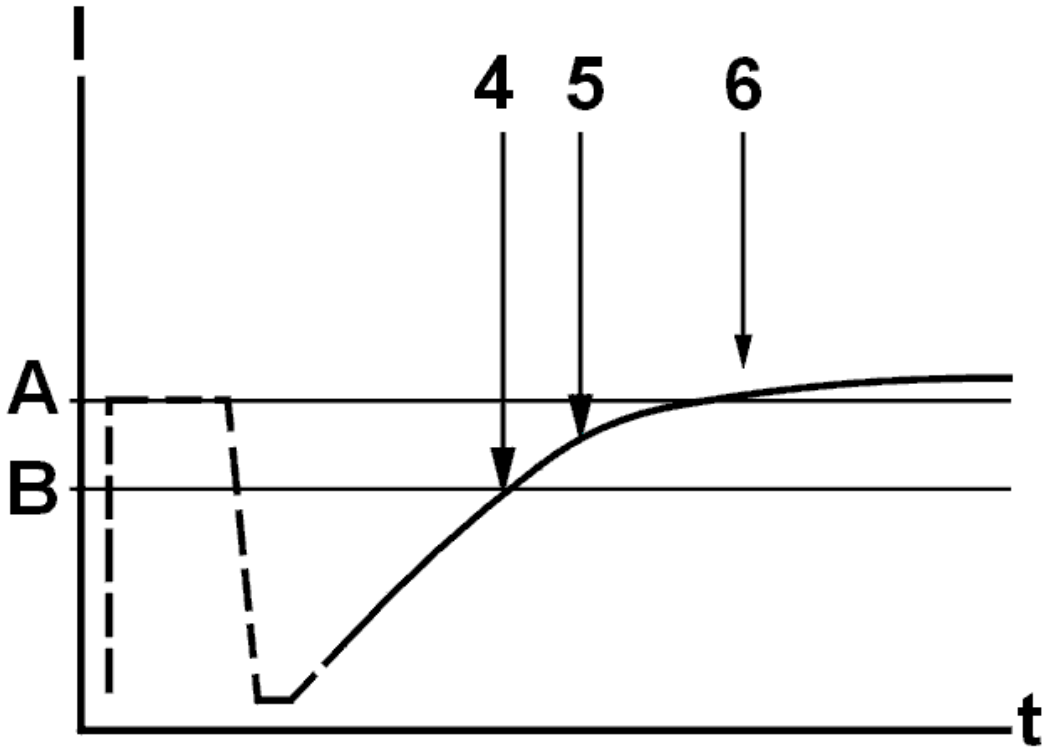

Fig. 10: Fault Free Fuel Tank System Diagram (Major Leak)
Courtesy of VOLVO CARS CORPORATION

The diagnostic for "major leaks" is carried out each time when the conditions for the diagnostic are met. The leak diagnostic unit pressurizes the fuel tank system, measures the power consumption of the pump (4) and compares this with a calculated desired value (B). A diagnostic trouble code (DTC) for a major leak is stored if the measured value does not reach the calculated desired value within a certain time (the time is determined by atmospheric pressure and the fuel level in the tank).

Leak diagnostic, minor leak (leakage greater than 0.5 mm but less than 1.0 mm)

The diagnostic for minor leaks is run every other time that the conditions for the diagnostic are met. The diagnostic for major leaks is always run before the diagnostic for minor leaks. The leak diagnostic unit

continues to pressurize the fuel tank system (5-6). After a certain amount of time (the time varies depending on the fuel level in the tank), the engine control module (ECM) checks that the fuel tank system for leaks. This is determined based on:

- time
- the measured reference current consumption of the pump (A)
- the measured power consumption of the pump when the assessment is made
- the shape and character of the current curve during pressurization.

A diagnostic trouble code (DTC) is stored if a minor leak is detected.

MISFIRE DIAGNOSTIC (B8444S)

MISFIRING

If the fuel / air mix does not completely ignite in the combustion chamber, the engine misfires. The engine control module (ECM) detects the misfire by registering deviations in the rotation of the flywheel.

Deviation in flywheel rotation is due to:

- driveline oscillations
  - incorrect fuel / air mixture
  - poor ignition sparking
  - insufficient compression.
- normal variations caused by uneven combustion
  - incorrect fuel / air mixture
  - poor ignition sparking
  - insufficient compression.
- flywheel mechanical tolerances
  - incorrect fuel / air mixture
  - poor ignition sparking
  - insufficient compression.
- misfiring, which is caused by:
  - incorrect fuel / air mixture
  - poor ignition sparking
  - insufficient compression.

DIAGNOSTICS

The mechanical tolerances and oscillations in the drive line disrupt the signal. This makes it difficult to determine if a misfire has occurred or if the detection is incorrect.

The signal from the flywheel is adapted to filter out the irregular rotation. This eliminates the mechanical

variations in the flywheel.

Misfires can be detected by registering the time difference between the intervals and comparing this with the filtered time difference in the flywheel. If the flywheel signal has not been adapted, the diagnostic is active. However this cannot identify misfires as accurately as an adapted flywheel signal. The adaptation is carried out at different loads and engine speed ranges. For the values to be set in the different ranges, the deviation in speed must be within certain fixed limits.

The misfire diagnostic is shut off when certain component faults have been detected by the engine control module (ECM).

"Rough Road" detection (drivetrain oscillations, caused by extremely uneven road surfaces, for example) is not activated on this engine.

DIAGNOSTIC TROUBLE CODE (DTC) MANAGEMENT

Diagnostic trouble codes (DTC) for misfiring will light the malfunction indicator lamp (MIL).

The engine control module (ECM) determines how much the engine is misfiring by counting the number of misfires during a certain number of engine revolutions.

MISFIRE AFFECTING EMISSION LEVELS

If the Engine control module (ECM) detects a number of misfires below 1, 000 engine RPM this is interpreted as misfires affecting emissions. Trouble code is stored and MIL-light is activated. Immediately in connection with engine start, that is, during the engine's first 1, 000 revs after start, the misfire diagnosis is four times as sensitive as later in the driving cycle.

CATALYTIC CONVERTER DAMAGING MISFIRE

If the engine control module (ECM) detects a certain number of misfires during 200 engine revolutions, this is interpreted as misfiring which damages the three-way catalytic converter (TWC). The number of misfires that the engine control module (ECM) allows before interpreting it as misfiring depends on the load and engine speed range. the malfunction indicator lamp (MIL) flashes when the misfire occurs, and shines constantly once the diagnostic trouble code (DTC) is stored.

The engine control module (ECM) does not store specific diagnostic trouble codes (DTCs) for emission or catalytic converter damaging related misfires.

The engine control module (ECM) registers and stores the engine speed and load range and whether the engine is warm or cold when misfiring is detected.

If the misfire stops, the requirements for the engine speed, load parameters and engine temperature must be met without misfiring before the engine control module (ECM) will begin counting down to extinguish the malfunction indicator lamp (MIL) and erase the stored diagnostic trouble codes (DTCs) for misfiring

The number of misfires can be read off.

MISFIRE DIAGNOSTIC (B6324S)

MISFIRE DIAGNOSTIC

Misfiring

If the fuel / air mix does not completely ignite in the combustion chamber, the engine misfires. The engine control module (ECM) detects the misfire by registering deviations in the rotation of the flywheel.

Deviation in flywheel rotation is due to:

- driveline oscillations
  - incorrect fuel / air mixture
  - poor ignition sparking
  - insufficient compression.
- normal variations caused by uneven combustion
  - incorrect fuel / air mixture
  - poor ignition sparking
  - insufficient compression.
- flywheel mechanical tolerances
  - incorrect fuel / air mixture
  - poor ignition sparking
  - insufficient compression.
- misfiring, which is caused by:
  - incorrect fuel / air mixture
  - poor ignition sparking
  - insufficient compression.

Diagnostics

The mechanical tolerances and oscillations in the drive line disrupt the signal. This makes it difficult to determine if a misfire has occurred or if the detection is incorrect.

The signal from the flywheel is adapted to filter out the irregular rotation. This eliminates the mechanical variations in the flywheel.

Misfires can be detected by registering the time difference between the intervals and comparing this with the filtered time difference in the flywheel. If the flywheel signal has not been adapted, the diagnostic is active. However this cannot identify misfires as accurately as an adapted flywheel signal. The adaptation is carried out at different loads and engine speed ranges. For the values to be set in the different ranges, the deviation in speed must be within certain fixed limits.

The misfire diagnostic is shut off when certain component faults have been detected by the engine control module (ECM).

"Rough Road" detection (drivetrain oscillations caused by, for example, extremely uneven roads) is not activated on this engine.

Diagnostic trouble code (DTC) management

Diagnostic trouble codes (DTC) for misfiring will light the malfunction indicator lamp (MIL).

The engine control module (ECM) determines how much the engine is misfiring by counting the number of misfires during a certain number of engine revolutions.

Misfire affecting emission levels

If Engine control module (ECM) detects a certain number of misfires during 1, 000 engine revolutions this is interpreted as misfiring that affects emissions. Fault code is stored and the MIL-light is turned on. Directly in connection with engine start, that is, during the engine's first 1, 000 revs after start, the misfiring diagnosis is four times as sensitive as later in the driving cycle.

Catalytic converter damaging misfire

If the engine control module (ECM) detects a certain number of misfires during 200 engine revolutions, this is interpreted as misfiring which damages the three-way catalytic converter (TWC). The number of misfires that the engine control module (ECM) allows before interpreting it as misfiring depends on the load and engine speed range. the malfunction indicator lamp (MIL) flashes when the misfire occurs, and shines constantly once the diagnostic trouble code (DTC) is stored.

The engine control module (ECM) does not store specific diagnostic trouble codes (DTCs) for emission or catalytic converter damaging related misfires.

The engine control module (ECM) registers and stores the engine speed and load range and whether the engine is warm or cold when misfiring is detected.

If the misfire stops, the requirements for the engine speed, load parameters and engine temperature must be met without misfiring before the engine control module (ECM) will begin counting down to extinguish the malfunction indicator lamp (MIL) and erase the stored diagnostic trouble codes (DTCs) for misfiring

The number of misfires can be read off.

MISFIRE DIAGNOSTIC (B5254T2; B6294T)

If the fuel / air mixture does not ignite completely in the ignition stroke the engine is misfiring. The engine control module (ECM) detects the misfire by registering deviations in the rotation of the flywheel.

Deviation in flywheel rotation is due to:

- Driveline oscillations
    - Incorrect fuel / air mixture
    - Poor ignition spark

    - Insufficient compression.
- Normal variations caused by uneven combustion
    - Incorrect fuel / air mixture
    - Poor ignition spark
    - Insufficient compression.
- Flywheel mechanical tolerances
    - Incorrect fuel / air mixture
    - Poor ignition spark
    - Insufficient compression.
- Misfire, caused by
    - Incorrect fuel / air mixture
    - Poor ignition spark
    - Insufficient compression.

Diagnostics

The mechanical tolerances and oscillations in the drive line disrupt the signal. This makes it difficult to determine if a misfire has occurred or if the detection is incorrect.

The signal from the flywheel is adapted to filter out the irregular rotation. This eliminates the mechanical variations in the flywheel.

Two camshaft revolutions are divided into five intervals for 5 cylinder engines and six intervals for 6 cylinder engines.

Misfires can be detected by registering the time difference between the intervals and comparing this with the filtered time difference in the flywheel. If the flywheel signal has not been adapted, the diagnostic is active. However this cannot identify misfires as accurately as an adapted flywheel signal. The adaptation is carried out at different loads and engine speed ranges. For the values to be set in the different ranges, the deviation in rotation must be within certain fixed limits.

Drive line oscillation, caused by uneven road surfaces for example, may lead to uneven engine operation. Drive line oscillations are registered by the accelerator in the brake control module (BCM) which sends this information to the engine control module (ECM).

The misfire diagnostic is shut off when:

- The brake control module (BCM) transmits information to the engine control module (ECM) about driveline oscillations
- A fault has been detected by the engine control module (ECM) in the engine speed (RPM) sensor, mass air flow (MAF) sensor or engine coolant temperature (ECT) sensor
- When one of the DSTC (Dynamic stability and traction control), traction control or Anti-lock Brake Systems (ABS) are active.

The following applies from model year 2005-

The injector for that cylinder will be disabled if the engine control module (ECM) detects misfiring in a cylinder. This will cut the fuel supply to the cylinder.

Diagnostic trouble code (DTC) management

The engine control module (ECM) determines how much the engine is misfiring by counting the number of misfires during a certain number of engine revolutions. If the engine control module (ECM) detects a particular number of misfires below 1000 RPM it is interpreted as emission related misfires. If the misfires exceed a certain value during 200 engine revolutions, this is interpreted as misfiring which damages the three-way catalytic converter (TWC).

Diagnostic trouble codes (DTC) for misfiring will light the malfunction indicator lamp (MIL). If there is risk of damage to the three way catalytic converter, the malfunction indicator lamp (MIL) will flash during misfiring and then switch to a constant light.

The engine control module (ECM) registers and stores the RPM and load ranges within which the misfire occurred. For the diagnostic trouble code (DTC) to be stored, the misfire must occur a further two times within the same RPM and load ranges.

In the event of emissions related misfiring, the malfunction indicator lamp (MIL) lights during the second operating cycle and a diagnostic trouble code (DTC) is stored.

If the misfire stops, the requirements for the RPM and load ranges must be met without misfiring before the engine control module (ECM) will begin counting down to extinguish the warning lamp and erase the stored diagnostic trouble codes (DTCs) for misfiring.

OIL LEVEL SENSOR, DIAGNOSTICS

General

The engine control module (ECM) can diagnose the oil level sensor. A diagnostic trouble code (DTC) will be stored if an internal fault is detected in the oil level sensor or if there is an open-circuit or a short-circuit to ground or voltage in its wiring connectors. A diagnostic trouble code (DTC) will also be stored if the oil level is too low or high or if the oil level drops rapidly over a certain time (leakage).

The pulse ratio of all the oil level sensor pulses in a pulse train must be within the normal operating range of 17-83 %. If this is exceeded, a diagnostic trouble code (DTC) will be stored in the engine control module (ECM).

HINT: Extremely diluted engine oil can result in a diagnostic trouble code (DTC) for the oil level being stored in the engine control module (ECM).

OVERVIEW

GENERAL INFORMATION

The engine control module (ECM) diagnoses both internal signals and functions as well as signals and functions

from connected components.

CONDITIONS FOR DIAGNOSIS

For the diagnosis of a component or function to start, certain specific conditions must be met. The conditions for diagnostics vary depending on the component or function being diagnosed.

Conditions must be met during the diagnostic in order for the diagnostic to be completed. The time and conditions for the diagnostic vary depending on the component or function being diagnosed. Certain diagnostics only require the ignition to be switched on and off for a diagnostic to be run. Other diagnostics require that several different conditions are met. For example:

- vehicle speed
- engine coolant temperature (ECT)
- time since start
- different load and engine speed relationships in the same trip
- a certain event (for example the evaporative emission system (EVAP) valve is operating).

When the engine control module (ECM) has run all the implemented diagnostics, the control module has completed a "trip". An extensive driving schedule in various conditions is required to complete a trip. The engine may also need to be shut off for a certain amount of time and then switched on again to complete a trip.

EMISSION-RELATED DIAGNOSTIC FUNCTIONS

The engine control module (ECM) checks that the emission-related systems are working. These systems are checked by running a diagnostic function. The diagnostic function checks the components and that the system is functioning.

DIAGNOSTIC TROUBLE CODE MEMORY

When the engine control module (ECM) detects a fault, the diagnostic trouble code (DTC) and status are stored in the diagnostic trouble code (DTC) memory and are now visible at normal diagnostic trouble code (DTC) read out. If the diagnostic trouble code (DTC) lights the malfunction indicator lamp (MIL) this occurs at the same time. If an existing fault disappears and does not recur, the engine control module, after a certain number of fault-free operating cycles and depending on the DTC, changes the status of the diagnostic trouble code (DTC). This means that it can no longer be read off at normal DTC read out. In this status, the diagnostic trouble code (DTC) remains until the engine control module (ECM) erases diagnostic trouble code (DTC) or is disconnected from power.

SUBSTITUTE VALUE

For certain types of diagnostic trouble codes (DTCs), the missing signal is replaced with a substitute value so that the system can continue functioning.

THREE-WAY CATALYTIC CONVERTER (TWC) DIAGNOSTICS (B8444S)

The three-way catalytic converter (TWC) stores oxygen from the exhaust gases and uses it to make toxic gases

more environmentally friendly. The catalytic converter is a 3 way catalytic converter in which HC (hydrocarbons) and CO (carbon monoxide) are oxidized and NO_x (nitrous oxide) is reduced. As the three-way catalytic converter (TWC) ages, its ability to store oxygen is reduced. The conversion capacity of the three-way catalytic converter (TWC) is reduced and unburned residue which is harmful to environment is released. To reduce the environmentally damaging emissions, the engine control module (ECM) checks the efficiency of the three-way catalytic converter (TWC). In brief, this check is carried out as follows.

To be able to check the catalytic converter, two heated oxygen sensors are used; one heated oxygen sensor in front of the catalytic converter in the engine compartment (front heated oxygen sensor) and a heated oxygen sensor after the catalytic converter in the engine compartment (rear heated oxygen sensor). After the rear heated oxygen sensor there is another catalytic converter, located at the front end of the propeller shaft tunnel under the vehicle's floor. However, this catalytic converter is not monitored.

The main function of the heated oxygen sensors is to measure the oxygen content in the exhaust gases so that the engine control module (ECM) can maintain the fuel/air mixture at around lambda=1. This mixture allows for optimum catalytic conversion.

NOTE: **On this version there are two banks on the engine's exhaust side, each one with catalytic converters and heated oxygen sensors according to the above description.**

To evaluate the efficiency of the three-way catalytic converter (TWC) one uses a deviation added to the lambda signal.

This means that 8 to 15 minutes after the engine is started (depending on the market) catalytic converter diagnostics start.

The process is as follows:

A deviation is added to the lambda signal and the engine control module (ECM) is allowed to correct this.

The deviation switches between positive and negative values so that the fuel/air mixture switches between rich and lean.

A counter registers the number of switches occurring while the diagnostic is taking place.

If the rear heated oxygen sensor registers a large number of switches exceeding a parameter, a diagnostic trouble code (DTC) for three-way catalytic converter (TWC) efficiency will be stored.

If the parameter is not exceeded the three-way catalytic converter (TWC) is deemed to be operating well.

NOTE: **In a poorly operating way catalytic converter the switches caused by the deviation will quickly exceed the parameter. This is because the exhaust gases in principle pass straight through the catalytic converter without being cleaned. If the catalytic converter is operating well the switches will be slower as it takes a longer time for the variations to make themselves felt.**

There are two catalytic converters, one for bank 1 and one for bank 2.

Bank 1 (front cylinder row); cylinders 1, 3, 5 and 7.

Bank 2 (rear cylinder row, closest to the passenger compartment); cylinders 2, 4, 6 and 8.

THREE-WAY CATALYTIC CONVERTER (TWC) DIAGNOSTICS (B6324S)

THREE-WAY CATALYTIC CONVERTER (TWC) DIAGNOSTICS

The three-way catalytic converter (TWC) stores oxygen from the exhaust gases and uses it to make toxic gases more environmentally friendly. The catalytic converter is a 3 way catalytic converter in which HC (hydrocarbons) and CO (carbon monoxide) are oxidized and NO_x (nitrous oxide) is reduced. As the three-way catalytic converter (TWC) ages, its ability to store oxygen is reduced. The conversion capacity of the three-way catalytic converter (TWC) is reduced and unburned residue which is harmful to environment is released. To reduce the environmentally damaging emissions, the engine control module (ECM) checks the efficiency of the three-way catalytic converter (TWC). In brief, this check is carried out as follows.

Two heated oxygen sensors are used to control the catalytic converter; one heated oxygen sensor in front of the catalytic converter in the engine compartment (front heated oxygen sensor) and one heated oxygen sensor after the catalytic converter in the engine compartment (rear heated oxygen sensor). After the rear heated oxygen sensor there is another catalytic converter, located at the front of the propeller shaft tunnel under the vehicle's floor. However, this catalytic converter is not monitored.

The main function of the heated oxygen sensors is to measure the oxygen content in the exhaust gases so that the engine control module (ECM) can maintain the fuel/air mixture at around lambda=1. This mixture allows for optimum catalytic conversion.

NOTE: On this version there are two banks on the engine's exhaust side, each with a set of catalytic converters and heated oxygen sensors as described above.

To evaluate the efficiency of the three-way catalytic converter (TWC) one uses a deviation added to the lambda signal.

This means that 8 to 15 minutes after the engine is started (depending on the market) catalytic converter diagnostics start.

The process is as follows:

A deviation is added to the lambda signal and the engine control module (ECM) is allowed to correct this.

The deviation switches between positive and negative values so that the fuel/air mixture switches between rich and lean.

A counter registers the number of switches occurring while the diagnostic is taking place.

If the rear heated oxygen sensor registers a large number of switches exceeding a parameter, a diagnostic

trouble code (DTC) for three-way catalytic converter (TWC) efficiency will be stored.

If the parameter is not exceeded the three-way catalytic converter (TWC) is deemed to be operating well.

NOTE: **In a poorly operating three-way catalytic converter (TWC) the switches caused by the deviation will quickly exceed the parameter. This is because the exhaust gases in principle pass straight through the three-way catalytic converter (TWC) without being cleaned. If the three-way catalytic converter (TWC) is operating well the switches will be slower as it takes a longer time for the variations to make themselves felt.**

There are four catalytic converters, two for bank 1 and two for 2.

Bank 1; cylinder 1, 2, and 3.

Bank 2; cylinder 4, 5, and 6.

ENGINE PERFORMANCE

General - Overhaul instructions

THREADS (2003-2012)

THREADS

NOTE: **As the illustrations in this service information are used for different model years and / or models, some variation may occur. However, the essential information in the illustrations is always correct.**

THREAD INSERTS, GENERAL

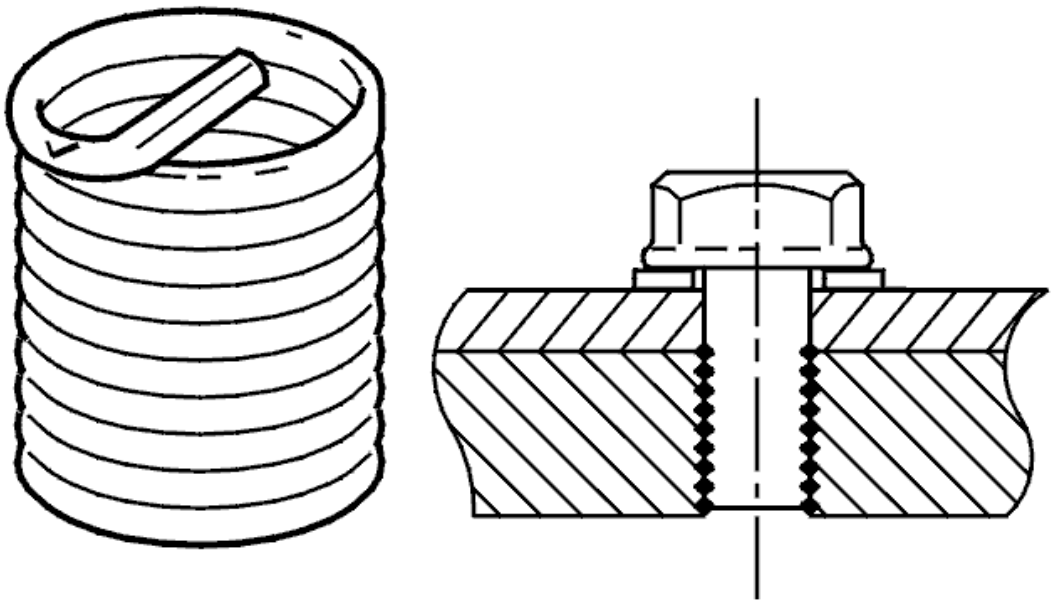

Fig. 1: Identifying Helicoil Thread Inserts
Courtesy of VOLVO CARS CORPORATION

Damaged threads can in most cases be reconditioned using HELICOIL thread inserts.

Thread inserts are available in a variety of sizes, pitches and lengths. A correctly reconditioned thread will generally increase the strength of a joint.

DESIGNATION OF THREAD INSERT

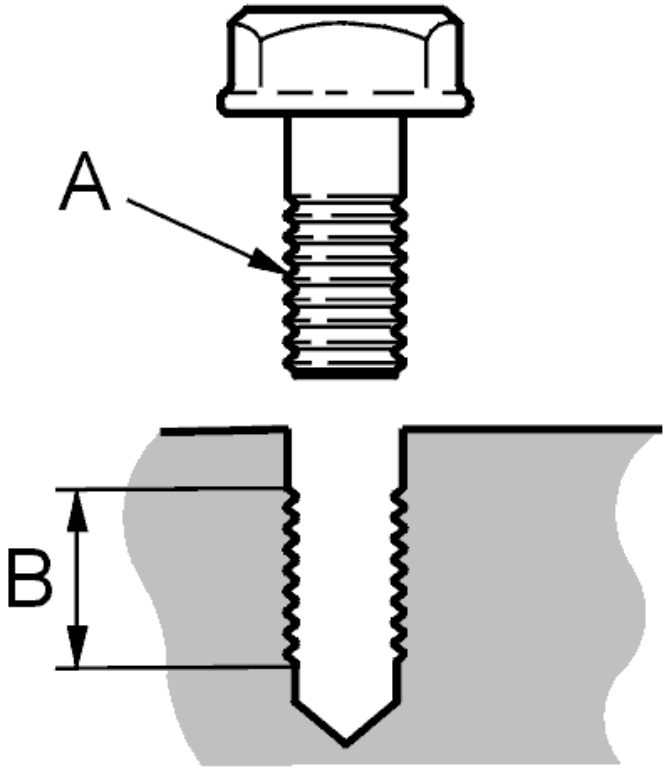

Fig. 2: Measuring Old Threads And Thread Length In Hole
Courtesy of VOLVO CARS CORPORATION

Measure the old threads and thread length in the hole.

A: Thread.

B: Thread length.

DRILLING AND TAPPING NEW THREAD IN THE HOLE

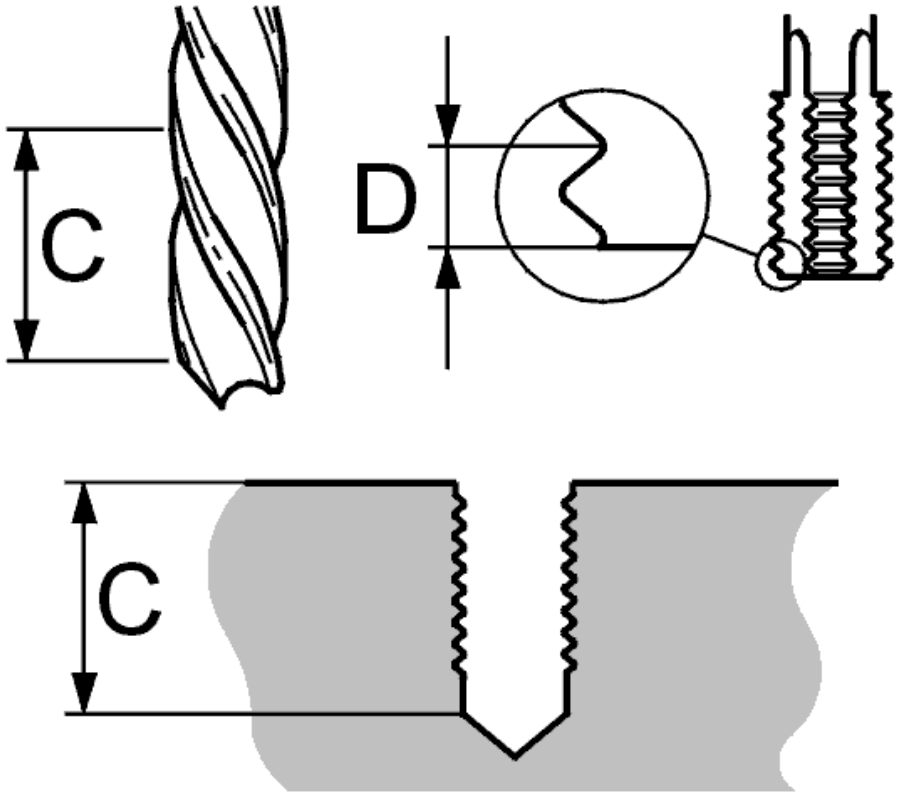

Fig. 3: Drilling And Tapping New Thread In Hole
Courtesy of VOLVO CARS CORPORATION

Drill out the old threads using the correct diameter drill bit. Blow the hole clean.

Tap the new thread using the correct tap.

NOTE: The thread taps referred to in the text are specially made for use with the HELI-COIL system.

Use methylated spirit or similar to lubricate the threading operation in aluminum. Thread longer threads in stages, backing out the tap and blowing the tap and the hole clean in between.

Thread the hole to the proper depth (or through if it is to be threaded throughout).

C: drill depth.

D: cutting phase.

TOOLS REQUIRED FOR INSTALLATION

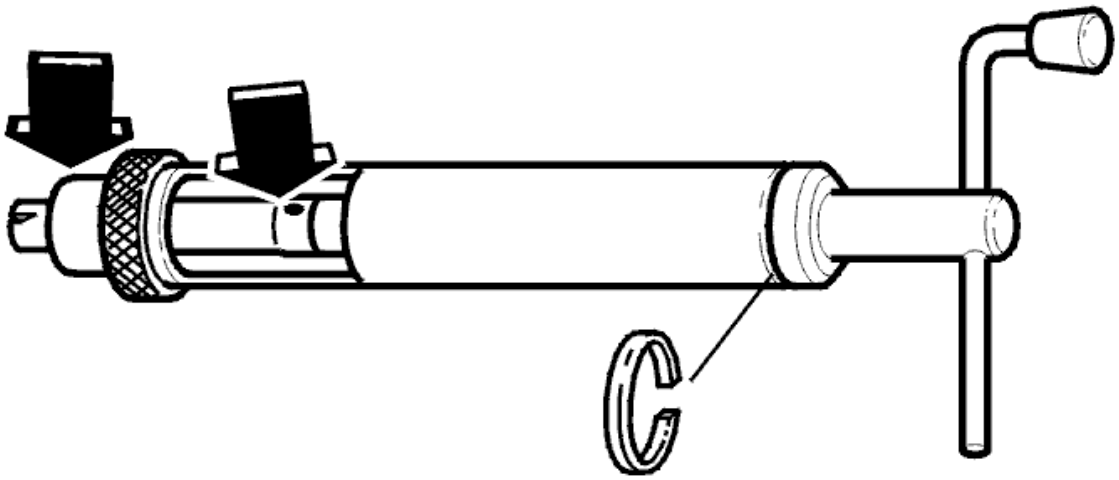

Fig. 4: Identifying Installation Tool
Courtesy of VOLVO CARS CORPORATION

The installation tool (illustrated) is used for threads **M6 - M14** . During some operations the tool must be disassembled by removing the locking ring, for example with countersunk threads.

For threads **M16** and larger the specific tool for each thread size must be used The guide and mandrel are included.

INSTALLING THE THREAD INSERT IN THE INSTALLATION TOOL

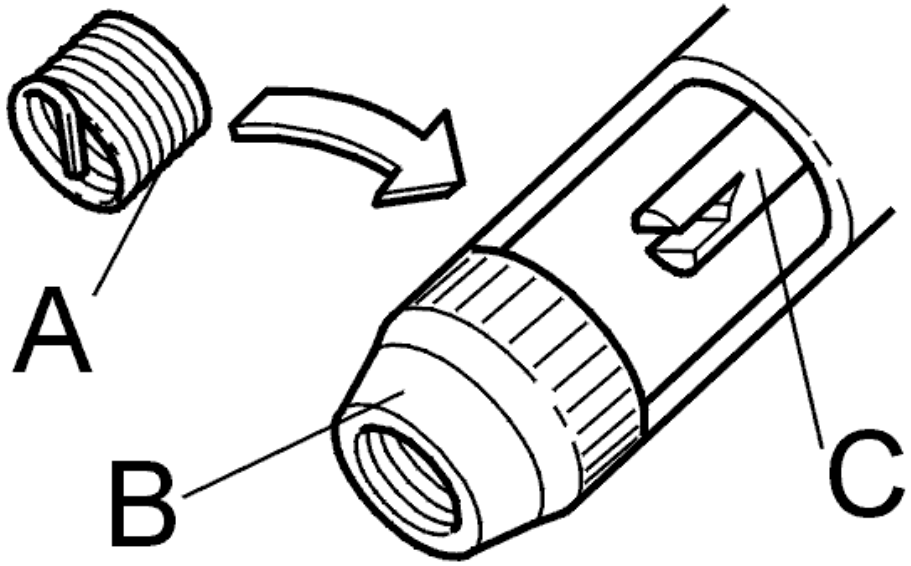

Fig. 5: Identifying Tang, Guide, And Mandrel
Courtesy of VOLVO CARS CORPORATION

Locate the thread insert with the tang facing down in the tool.

Turn the spindle until the tang engages in the recess.

Screw the thread insert into the guide, do not apply pressure, until the first turn of the thread insert is flush with the guide opening.

A: Tang.

B: Guide.

C: Mandrel.

INSTALLATION OF THREAD INSERT

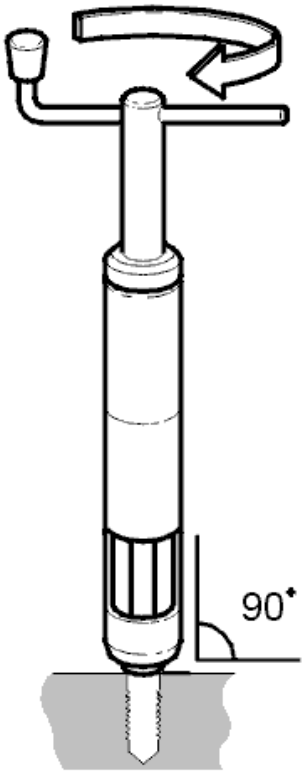

Fig. 6: Installation Of Thread Insert
Courtesy of VOLVO CARS CORPORATION

Hold the installation tool straight above and centered over the hole. Screw in the insert without applying pressure on the spindle handle. Screw in until the end of the insert reaches at least half a thread revolution into the thread.

The insert must not touch the bottom of the hole or stick out of the other side if it is a through hole.

Break off the tang with the proper tang breaker. For **M14** threads and coarser, use a pair of flat-nosed pliers or similar and break downwards.

EXTRACTION OF DAMAGED THREAD INSERT

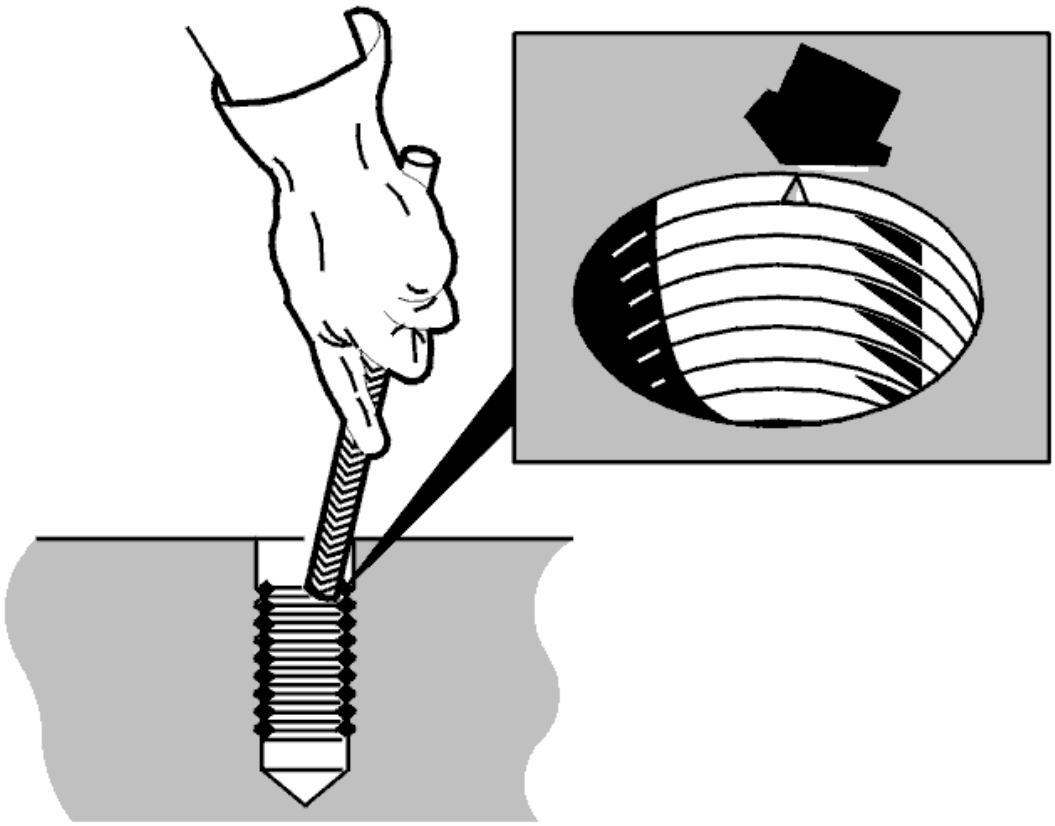

Fig. 7: Filing Notch In Thread Insert
Courtesy of VOLVO CARS CORPORATION

Alternative 1

File a notch in the thread insert, about a quarter turn in from the end. Do not file through the insert.

NOTE: Do not damage the thread in the material.

Use a triangular scraper or similar to extract the insert by rotating it.

Alternative 2

Carefully expose the end of the thread insert. Use flat-nose pliers to pull the thread insert out.

Clean out the threads in the hole using the thread tap and blow clean.

Install a new thread insert.

RECONDITIONING SPARKPLUG THREADS

NOTE: Reconditioning of spark plug threads must be carried out with removed cylinder head.

TAPPING THREAD IN SPARKPLUG HOLE

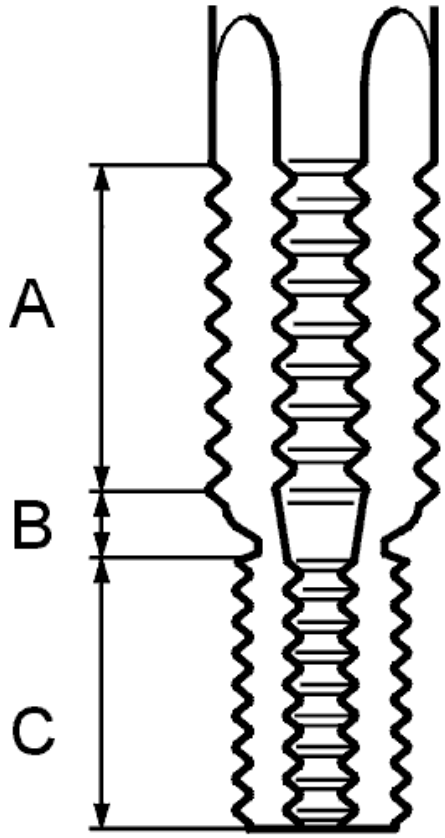

Fig. 8: Identifying Tap, Reamer, And Steering
Courtesy of VOLVO CARS CORPORATION

Use combination tap 998 5823-5 and thread repair inserts for spark plug thread **M14x1, 25** .

NOTE: Do not drill out spark plug threads.

Combined tap

A: Tap.

B: Reamer.

C: Steering.

INSTALLATION OF THREAD INSERT

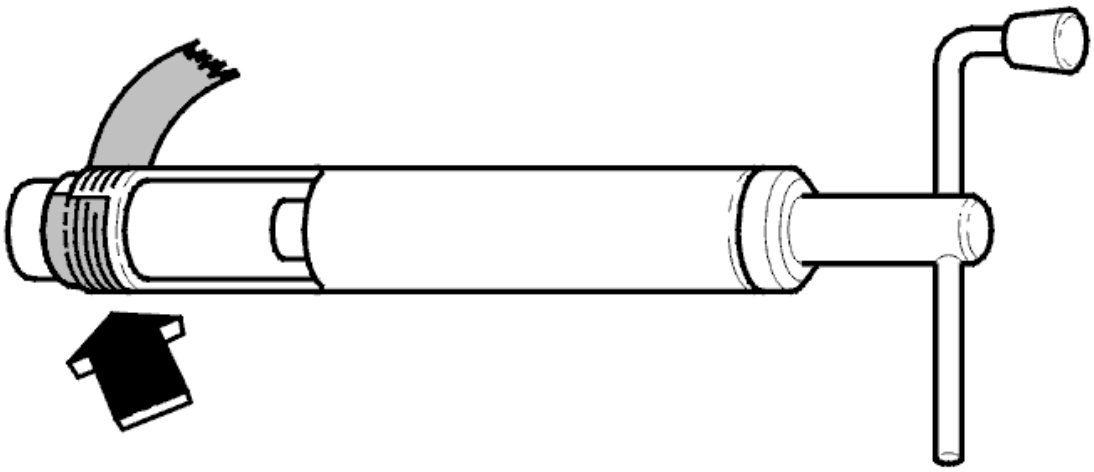

Fig. 9: Installing Thread Insert
Courtesy of VOLVO CARS CORPORATION

There are times when the cap nut cannot be used because of space restrictions. On these occasions the guide should be taped into place.

NOTE: **As the thread insert for the spark plug thread is thinner (finer) than usual it is extra important to not pressure on the pin when inserting the thread insert (both in the nozzle and the material).**

Twist the thread insert down and check that the upper thread is at least a half thread down into the thread and that none of the insert protrudes into the combustion chamber.

If the insert has been screwed in too far it must be turned until it is all the way through. If it is not deformed it can be inserted again.

Break off the tang with a pair of flat nose pliers. Check the thread. Install a sparkplug.

THREAD TABLE

Values in mm		
Thread dimension	**Drill - diameter**	**Examples of areas of**

		use
M6x1	6.3	Oil pump
M7x1	7.3	Sump to cylinder block, Intermediate section to cylinder block, Water pump to cylinder block
M8x1.25	8.4	Studs at the exhaust ports
M10x1.5	10.5	Intermediate section to cylinder block, Gearbox to engine
M12x1.5	12.5	
M14x1.25		Spark plugs
M14x1.5	14.2	Oil pressure switch. Oil pressure outlet engine / turbocharger unit.
M18x1.5	18.5	Oil drain plug in the sump.

THREADS WHICH MUST NOT BE RECONDITIONED

Coolant outlet for the drain nipple, heat exchanger / oil cooler.

Plug hole for crankshaft setting.

Screw holes for cylinder head screws.

FLANGED JOINT

Power transmission

FLANGED JOINT

FLANGED JOINT, ASSEMBLING

CHECK

CONDITIONS

All mating surfaces must be thoroughly cleaned.

Always replace gaskets, nuts and screws with **new** ones.

Always use those components shown in the replacement parts range for the relevant area.

CHECK

Always ensure:

- that there are not cracks or other damage at the mating surfaces which could result in leakage
- that all threads are working correctly
- that the gasket faces are flat.

Always remedy if necessary

PROCEDURE

Always use the listed tightening torques.

Always use copper paste **1161 408** where indicated in the method.

Always follow the listed procedure for tightening torques and, where applicable, angle-tightening.

GENINFO

Power transmission

GENINFO

SCREWED JOINT, TORQUE/ANGLE TIGHTENING

Special tools:

see **9512050**

SCREWED JOINT

There are a great number of torque spanner systems available on the market where the spanner grip can be replaced with other types. These wench grips are normally ideally suited to torque tightening screwed joints in poorly accessible places.

There may be occasions when torque tightening of a screwed joint must be followed by angle tightening and space does not allow the use of protractor (part number see **9512050**). In these cases, use either a nut, a screw head or a tool. These are usually hexagonal and each corner is **60°** . If there are twelve edges, each corner is **30°** .

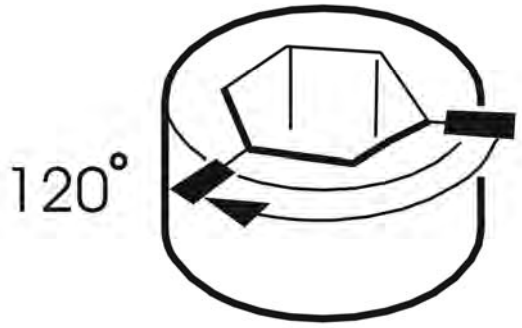

Fig. 1: Identifying Marked Nut

Courtesy of VOLVO CARS CORPORATION

To angle tighten, mark the material and nut for example as shown in the illustration and then tighten so that the markings are opposite each other.

GENERAL INFORMATION

Power transmission

TRANSMISSION

TRANSAXLE OIL (TF-80SC AND TF-80SC AWD)

NOTE: **The illustrations in this service information are used for different model years and/or models. Some variation may occur. However, the essential information in the illustrations is always correct.**

WARNING: **Avoid skin contact with the transmission oil.**

CAUTION: **Use only transmission oil, Volvo part no. 116 1540-8 (1litre container), 116 1640-6 (4 liter container).**

CONDITIONS

CHANGING THE OIL

The capacity of the transmission is **7.65± 0.15** liters. (MAX, MIN).

NOTE: **This volume applies to a completely new transmission that has never been filled before.**

The oil should be replaced only in the two following instances:

Where diagnostic trouble codes (DTCs) TCM 0042 and TCM 0046 are stored, in which case the diagnostic function activates the warning lamp in the following circumstances.

The transmission control module (TCM) receives data about the operating temperature of the transmission fluid while the vehicle is being driven. TCM 0042 is stored after an accumulated amount of time.

Diagnostic trouble code (DTC) TCM 0046 is stored if the transmission fluid temperature has exceeded 150 °C for more than 2 minutes.

On vehicles used in continuous taxi service and / or used to tow a trailer or caravan for most of its mileage, the oil should be changed according to the service program.

WARNING: **The oil may be very hot if the vehicle has just been driven. Avoid skin contact.**

DRAINING OIL

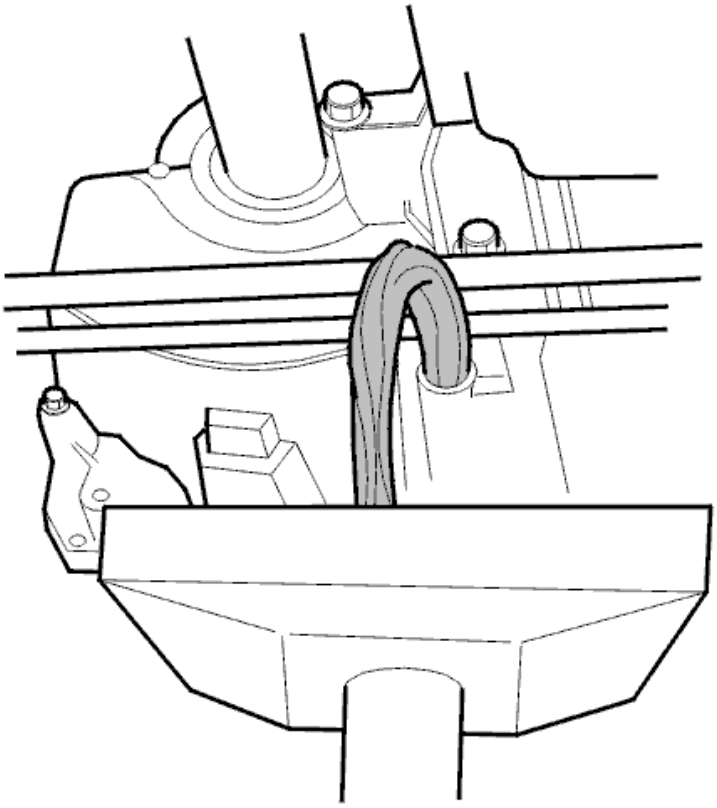

Fig. 1: Draining Off Oil
Courtesy of VOLVO CARS CORPORATION

Remove:

- the splash guard under the engine
- the oil plug. Drain the oil into a container.

Tighten the plug. See: **TIGHTENING TORQUE** .

The splashguard under the engine is installed later when the work is complete.

CONNECTING HOSES

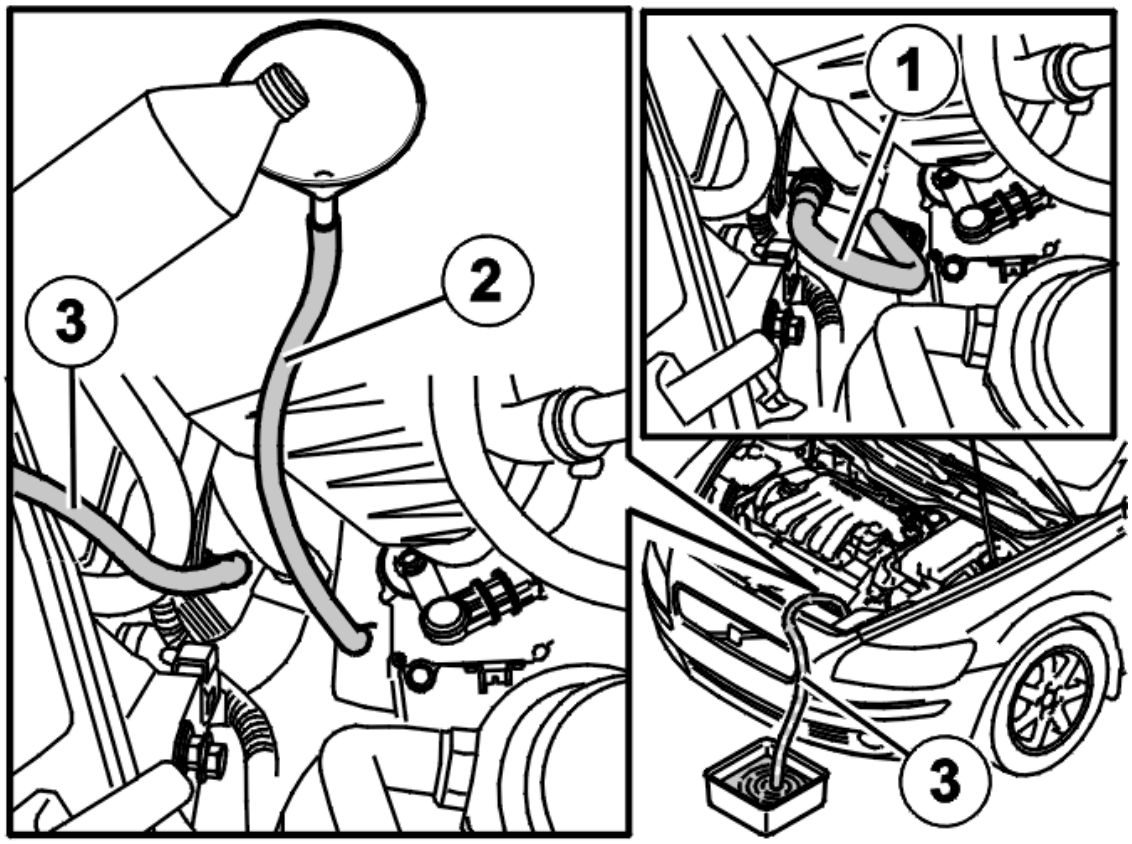

Fig. 2: Identifying Oil Line, Hose And Transparent Plastic Hose
Courtesy of VOLVO CARS CORPORATION

Remove the oil line (1) between the transmission cover and the oil cooler.

HINT: The quick-release connectors for the oil line are detached by pressing the clutch housing towards the cover/oil cooler. Hold the connection housing in this position. Pull back the lugs on the connection housing. Pull the connector off the cover/oil cooler.

Connect a hose (2) to the return pipe sleeve connector on the cover. This hose is used to fill with oil.

Install a transparent plastic hose (3) on the oil cooler connecting sleeve, which runs down into a container.

FILLING WITH TRANSMISSION FLUID

Apply the parking brake. Move the gear selector lever to position P.

Fill approximately 2 liters of oil through the hose connected to the transmission cover.

Start the engine. Allow the engine to idle so that the oil pump for the transmission pumps out the oil. Turn the engine off when air bubbles start to become visible in the hose.

Fill approximately 2 liters of oil again as described above. Start the engine again. Allow the engine to idle so that the oil pump for the transmission pumps out the oil. Turn the engine off when air bubbles start to become

visible in the hose.

FURTHER FILLING OF TRANSMISSION OIL

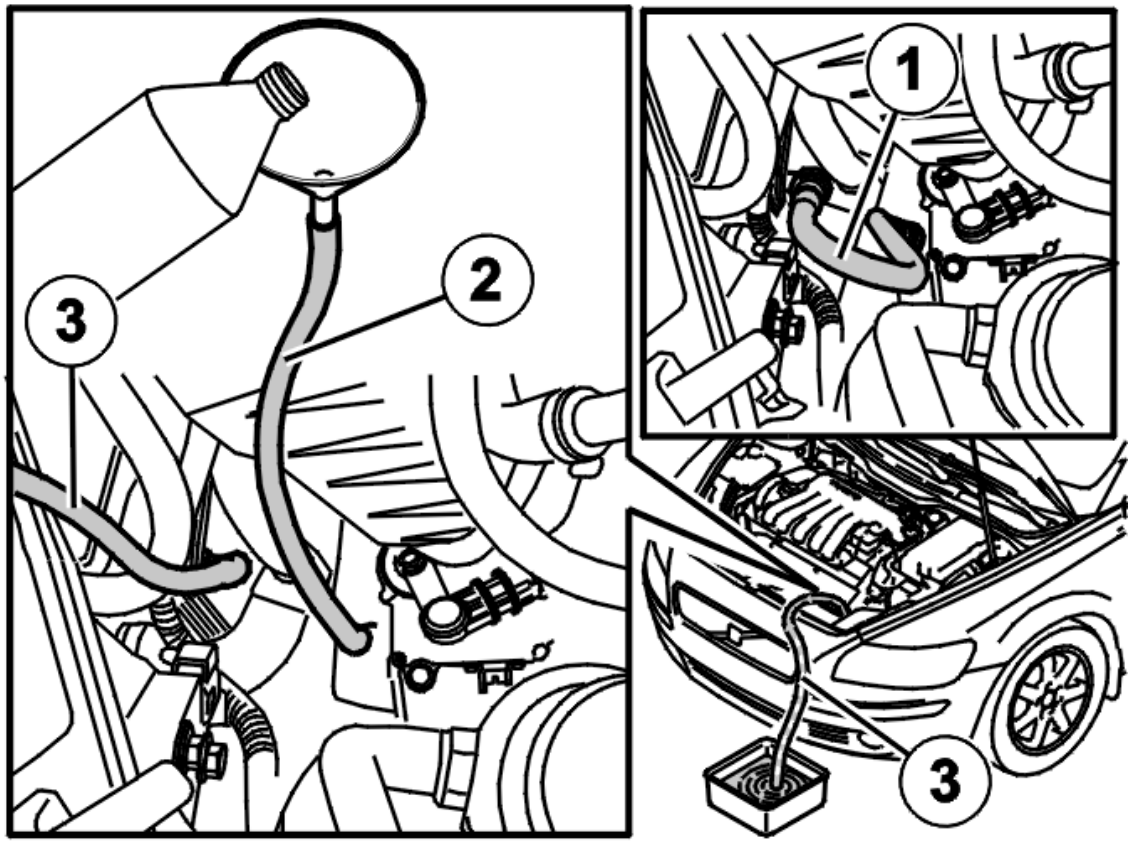

Fig. 3: Identifying Oil Line, Hose And Transparent Plastic Hose
Courtesy of VOLVO CARS CORPORATION

Fill approximately 2 liters of oil through the hose connected to the transmission cover.

Remove the hoses from the oil cooler and the transmission cover.

Connect the oil line between the oil cooler and the transmission cover.

CHECKING THE OIL LEVEL

Check the oil level. See: **TRANSMISSION OIL LEVEL - CHECKING** .

NOTE: After changing the transmission oil, the transmission oil change counter must be reset. See RESETTING TRANSMISSION FLUID CHANGE COUNTER .

GENERAL INFORMATION

Transport, Vehicle Storage And Driving Regulation - Service Programs

STOCK MAINTENANCE CHECKLIST (2003-10)

STOCK MAINTENANCE CHECKLIST - ALL MODELS. INTERVAL 210 - 360 DAYS

Model/Chassis #	-	-	-	-	-	-	-	-	-	-	Location:

Production Date	-	-	/	-	-	Release Date:	-	-	/	-	-	/	-	-

Perform inspection in the order detailed below. Check in non-empty boxes upon completion of inspection (**Ok/Not Ok**)						
Legend: "Ok/Not Ok:" = to be executed at interval / "-" = Not to be executed at interval						
Maintenance date from "Factory Complete":						
Interval days:	210	240	270	300	330	360
Check Rapgard™/wax condition. Check brake protection condition and repair if necessary [1]	Ok Not Ok	Ok Not Ok	Ok Not Ok	Ok Not Ok	Ok Not Ok	Ok Not Ok
Check exterior cleanliness, wash if necessary. Check for damages, repair if necessary.	Ok Not Ok	Ok Not Ok	Ok Not Ok	Ok Not Ok	Ok Not Ok	Ok Not Ok
Check tire pressure (set to 330 ± 20 kPa, 48 ± 3 PSI).	Ok Not Ok	Ok Not Ok	Ok Not Ok	Ok Not Ok	Ok Not Ok	Ok Not Ok
Check Battery voltage with Volvo Battery Analyzer 3100/3200/3300. Fill out battery card. Indicate Voltage	Ok Not Ok	Ok Not Ok	Ok Not Ok	Ok Not Ok	Ok Not Ok	Ok Not Ok
Check interior components for heat related failures and cleanliness	Ok Not Ok	-	Ok Not Ok	-	Ok Not Ok	-
Check interior protections are in place. Correct if required	Ok Not Ok	-	Ok Not Ok	-	Ok Not Ok	-
Remove and replace Rapgard™. If Rapgard™ is not replaced, protect the vehicle by applying wax approved by Volvo, p/n 9510269. Ensure that the vehicle is washed when needed	-	-	Ok Not Ok	-	-	-
Change engine oil and replace oil filter Oil quality: A3, B3, B4, A5, B5 (**Note: reset the service reminder indicator**)	-	-	-	-	-	Ok Not Ok
Change engine oil and replace oil filter Oil quality: A1, B1, WSS-M2C913-B (**Note: reset the service reminder indicator**)	-	-	-	-	-	Ok Not Ok
Brake rotor rust cleaning. Drive vehicle at low speed, 0.3 km/0.2 miles with brake application 5 X. (5 sec. per application)	Ok Not Ok	-	Ok Not Ok	-	Ok Not Ok	-
Undercarriage, engine inspection **(Check for rust and**	-	-	-	-	-	Ok

corrosion)						Not Ok
Inspector initials/number:	-	-	-	-	-	-
1) Use the following codes if repair is required for RAPGARD: H=hood, T=trunk, R=roof, M=mirror, D=door, B=bumper **Comments:**						

STOCK MAINTENANCE CHECKLIST - ALL MODELS. INTERVAL 30 - 180 DAYS

Model/ Chassis #	-	-	-	-	-	-	-	-	-	-	Location:

Production Date	-	-	/	-	-	Release Date:	-	-	/	-	-	/	-	-

Perform inspection in the order detailed below. Check in non-empty boxes upon completion of inspection (**Ok/Not Ok**)						
Legend: "Ok/Not Ok" = to be executed at interval / "-" = Not to be executed at interval						
Maintenance date from "Factory Complete":						
Interval days:	30	60	90	120	150	180
Check Rapgard™/Brake protection condition and repair if necessary [1]	-	-	Ok Not Ok	Ok Not Ok	Ok Not Ok	Ok Not Ok
Check exterior cleanliness, wash if necessary. Check for damages, repair if necessary.	-	-	Ok Not Ok	Ok Not Ok	Ok Not Ok	Ok Not Ok
Check tire pressure (set to 330±20 kPa, 48±3 PSI).	-	Ok Not Ok	Ok Not Ok	Ok Not Ok	Ok Not Ok	Ok Not Ok
Check Battery voltage with Volvo Battery Analyzer 3100/3200/3300. Fill out battery card. Indicate Voltage	-	Ok Not Ok	Ok Not Ok	Ok Not Ok	Ok Not Ok	Ok Not Ok
Check interior components for heat related failures and cleanliness	-	-	Ok Not Ok	-	Ok Not Ok	-
Check interior protections are in place. Correct if required	-	-	Ok Not Ok	-	Ok Not Ok	-
Remove and replace Rapgard™. If Rapgard™ is not replaced, protect the vehicle by applying wax approved by Volvo, p/n 9510269. Ensure that the vehicle is washed when needed	-	-	-	-	-	-
Change engine oil and replace oil filter. Oil quality: A3, B3, B4, A5, B5 (**Note: reset the service reminder indicator**)	-	-	-	-	-	-
Change engine oil and replace oil filter. Oil quality: A1, B1, WSS-M2C913-B **(Note: reset the service reminder indicator**)	-	-	-	-	-	Ok Not Ok
Brake rotor rust cleaning. Drive vehicle at low speed, 0.3 km/0.2 miles with brake application 5X. (5 sec. per application)	-	-	Ok Not Ok	-	Ok Not Ok	-

Undercarriage, engine inspection **(Check for rust and corrosion)**	-	-	-	-	-	Ok Not Ok
After 180 days, remove tape from inner front sill molding - driver side.	-	-	-	-	-	Ok Not Ok
Inspector initials/number:	-	-	-	-	-	-
1) Use the following codes if repair is required for RAPGARD: H=hood, T=trunk, R=roof, M=mirror, D=door, B=bumper **Comments:**						

STOCK MAINTENANCE CHECKLIST (2011-12)

STOCK MAINTENANCE CHECKLIST - ALL MODELS. INTERVAL 210 - 360 DAYS

Model/ Chassis #	-	-	-	-	-	-	-	-	-	-	Location:

Production Date	-	-	/	-	-	Release Date:	-	-	/	-	-	/	-	-

Perform inspection in the order detailed below. Check in non-empty boxes upon completion of inspection (**Ok/Not Ok**)						
Legend: "Ok/Not Ok:" = to be executed at interval / "-" = Not to be executed at interval						
Maintenance date from "Factory Complete":						
Interval days:	210	240	270	300	330	360
Check Rapgard™/wax condition. Check brake protection condition and repair if necessary [1]	Ok Not Ok	Ok Not Ok	Ok Not Ok	Ok Not Ok	Ok Not Ok	Ok Not Ok
Check exterior cleanliness, wash if necessary. Check for damages, repair if necessary.	Ok Not Ok	Ok Not Ok	Ok Not Ok	Ok Not Ok	Ok Not Ok	Ok Not Ok
Check tire pressure (set to 330 ± 20 kPa, 48 ± 3 PSI).	Ok Not Ok	Ok Not Ok	Ok Not Ok	Ok Not Ok	Ok Not Ok	Ok Not Ok
Check Battery voltage with Volvo Battery Analyzer 3100/3200/3300. Fill out battery card. Indicate Voltage	Ok Not Ok	Ok Not Ok	Ok Not Ok	Ok Not Ok	Ok Not Ok	Ok Not Ok
Check interior components for heat related failures and cleanliness	Ok Not Ok	-	Ok Not Ok	-	Ok Not Ok	-
Check interior protections are in place. Correct if required	Ok Not Ok	-	Ok Not Ok	-	Ok Not Ok	-
Remove and replace Rapgard™. If Rapgard™ is not replaced, protect the vehicle by applying wax approved by Volvo, p/n 9510269. Ensure that the vehicle is washed when needed	-	-	Ok Not Ok	-	-	-
Change engine oil and replace oil filter. (**Note: reset the service reminder indicator**)	-	-	-	-	-	Ok Not Ok
Brake rotor rust cleaning. Drive vehicle at low speed, 0.3 km/0.2 miles with brake application 5 X. (5 sec.	Ok	-	Ok	-	Ok	-

per application)	Not Ok		Not Ok		Not Ok	
Undercarriage, engine inspection **(Check for rust and corrosion)**	-	-	-	-	-	Ok Not Ok
Inspector initials/number:	-	-	-	-	-	-
1)Use the following codes if repair is required for RAPGARD: H=hood, T=trunk, R=roof, M=mirror, D=door, B=bumper **Comments:**						

STOCK MAINTENANCE CHECKLIST - ALL MODELS. INTERVAL 30 - 180 DAYS

Model/ Chassis #	-	-	-	-	-	-	-	-	-	-	Location:

Production Date	-	-	/	-	-	Release Date:	-	-	/	-	-	/	-	-

Perform inspection in the order detailed below. Check in non-empty boxes upon completion of inspection (**Ok/Not Ok**)						
Legend: "Ok/Not Ok" = to be executed at interval / "-" = Not to be executed at interval						
Maintenance date from "Factory Complete":						
Interval days:	30	60	90	120	150	180
Check Rapgard™/Brake protection condition and repair if necessary [1]	-	-	Ok Not Ok	Ok Not Ok	Ok Not Ok	Ok Not Ok
Check exterior cleanliness, wash if necessary. check for damages, repair if necessary.	-	-	Ok Not Ok	Ok Not Ok	Ok Not Ok	Ok Not Ok
Check tire pressure (set to 330 ± 20 kPa, 48 ± 3 PSI).	-	Ok Not Ok	Ok Not Ok	Ok Not Ok	Ok Not Ok	Ok Not Ok
Check Battery voltage with Volvo Battery Analyzer 3100/3200/3300. Fill out battery card. Indicate Voltage	-	Ok Not Ok	Ok Not Ok	Ok Not Ok	Ok Not Ok	Ok Not Ok
Check interior components for heat related failures and cleanliness	-	-	Ok Not Ok	-	Ok Not Ok	-
Check interior protections are in place. Correct if required	-	-	Ok Not Ok	-	Ok Not Ok	-
Remove and replace Rapgard™. If Rapgard™ is not replaced, protect the vehicle by applying wax approved by Volvo, p/n 9510269. Ensure that the vehicle is washed when needed	-	-	-	-	-	-
Change engine oil and replace oil filter. (**Note: reset the service reminder indicator**)	-	-	-	-	-	-
Brake rotor rust cleaning. Drive vehicle at low speed, 0.3 km/0.2 miles with brake application 5 X. (5 sec. per application)	-	-	Ok Not Ok	-	Ok Not Ok	-
Undercarriage, engine inspection **(Check for rust and corrosion)**	-	-	-	-	-	Ok Not Ok

Open and close the roof. Cut away strip clamps from trunk divider arms (left and right side).	-	-	Ok Not Ok	-	-	Ok Not Ok
After 180 days, remove tape from inner front sill molding - driver side.	-	-	-	-	-	Ok Not Ok
Remove the plastic cover on sun visor if the vehicle will be stored more than 90 days from Factory Complete. Only valid for XC90 and markets USA (31), Canada (39) and Japan (50).	-	-	Ok Not Ok	-	-	-
Inspector initials/number:	-	-	-	-	-	-
1)Use the following codes if repair is required for RAPGARD: H=hood, T=trunk, R=roof, M=mirror, D=door, B=bumper **Comments:**						

TRANSPORTATION EQUIPMENT (2003-06)

REMOVING THE BATTERY ISOLATOR

NOTE: **The graphics in this service information are used for different model years and/or models. Some variation may occur. However, the essential information in the graphics is always correct.**

GENERAL INFORMATION ABOUT HANDLING BATTERY ISOLATORS

NOTE: **The following applies only to cars with alarms: if the car needs to be locked when the battery isolator is installed, wait for 30 seconds before mechanically locking the car. The remote control cannot be used. If the car is locked too quickly, the siren is activated when the battery isolator disconnects the battery.**

The battery isolator must be returned and reused several times.

CAUTION: The battery isolator is fragile. Handle carefully

REMOVING THE BATTERY ISOLATOR

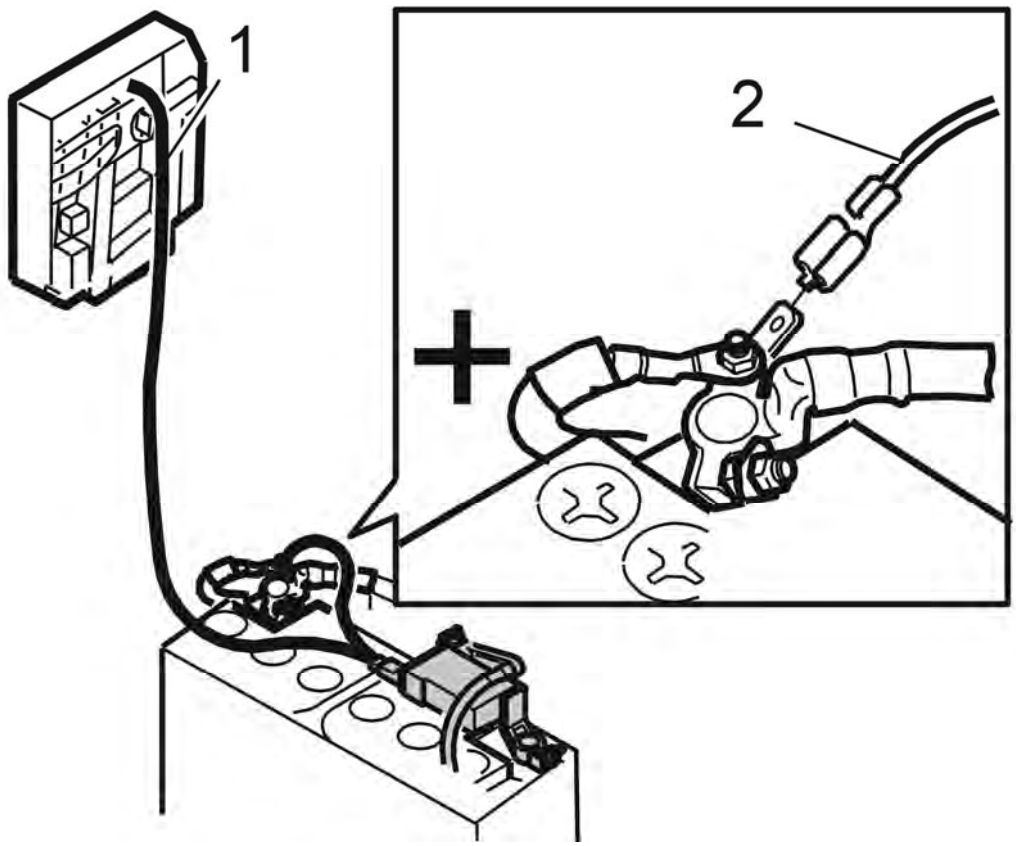

Fig. 1: Battery Isolator Cables
Courtesy of VOLVO CARS CORPORATION

Remove:

- the panel in front of the rear electronic module (REM)
- the yellow cable (1) for the battery isolator from the rear electronic module (REM)
- the red cable (2) for the battery isolator from the battery positive terminal.

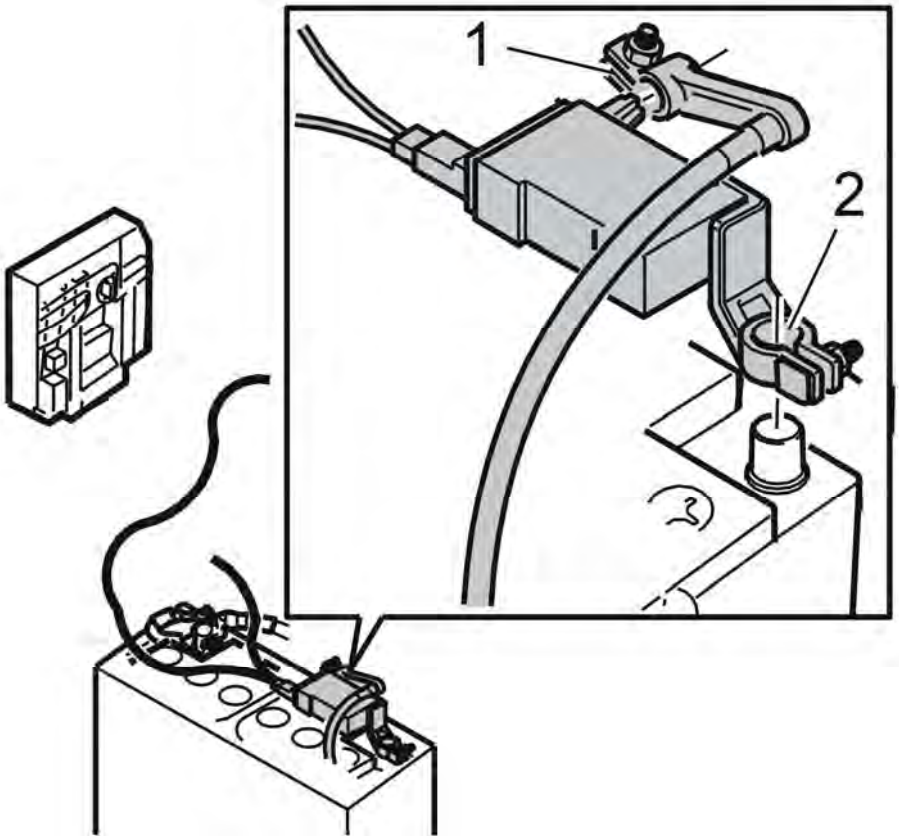

Fig. 2: Battery Isolator And Negative Lead
Courtesy of VOLVO CARS CORPORATION

Remove:

- the battery negative lead (1) from the battery isolator
- the battery isolator (2) from the battery negative terminal
- the cables from the battery isolator and discard them.

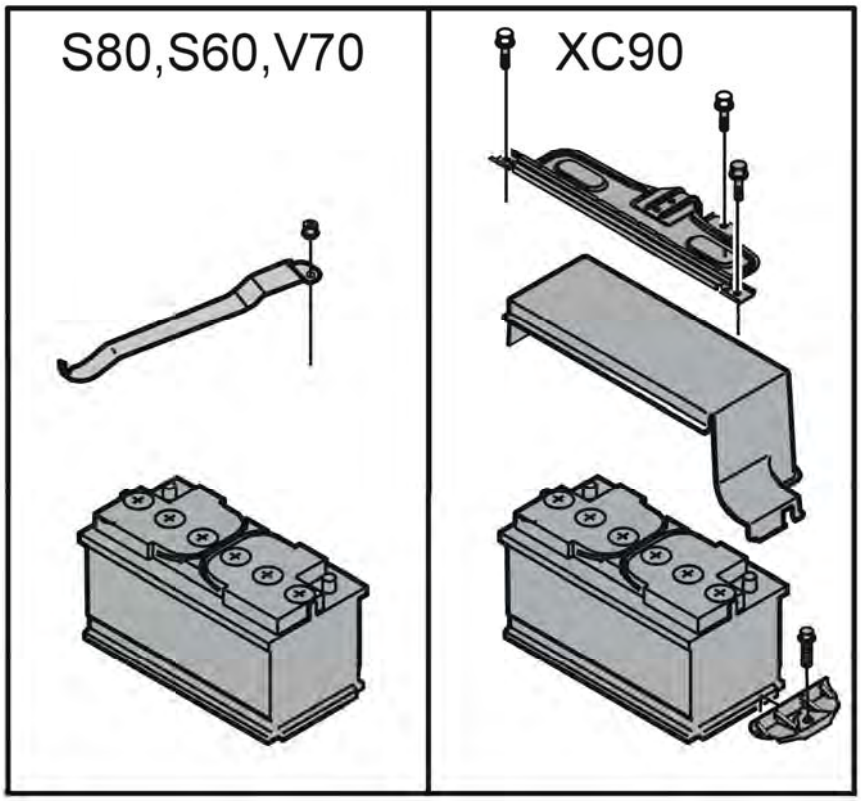

Fig. 3: Battery Brackets
Courtesy of VOLVO CARS CORPORATION

Applies to the XC90:

Connect the battery negative lead to the battery negative terminal. Tighten to **6 ± 1.5 Nm** .

Place the protective cover over the battery. Position the bracket over the cover. Secure the bracket using the two screws and the nut. Tighten to **25 Nm** .

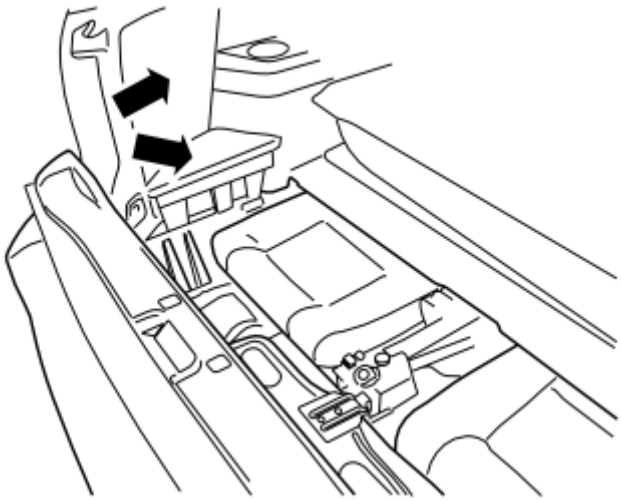

Fig. 4: Rear Storage Compartment
Courtesy of VOLVO CARS CORPORATION

Applies to the XC90:

Reinstall the panel in front of the rear electronic module (REM) and the block at the foot of the panel.

Position the winder handle for the jack.

Install the storage compartment and floor hatch.

RETURNING THE BATTERY ISOLATOR

Return the battery isolator to the following address:

USA

Volvo Cars of North America, Inc.

Technical Material Analysis Dept.

6 Volvo Drive Bldg. C

Rockleigh, NJ 07647

Canada:

Volvo Cars of Canada Ltd.

Technical Material Analysis Dept.

175 Gordon Baker Rd.

North York, Ontario, M2H 2N7

Other:

Att: Mr Thor Maugesten

RO-RO-International AB

Arods Industriv?g 74

S - 422 43 Gothenburg

Sweden

REMOVING THE FRONT MARINE TRANSPORTATION HOOK

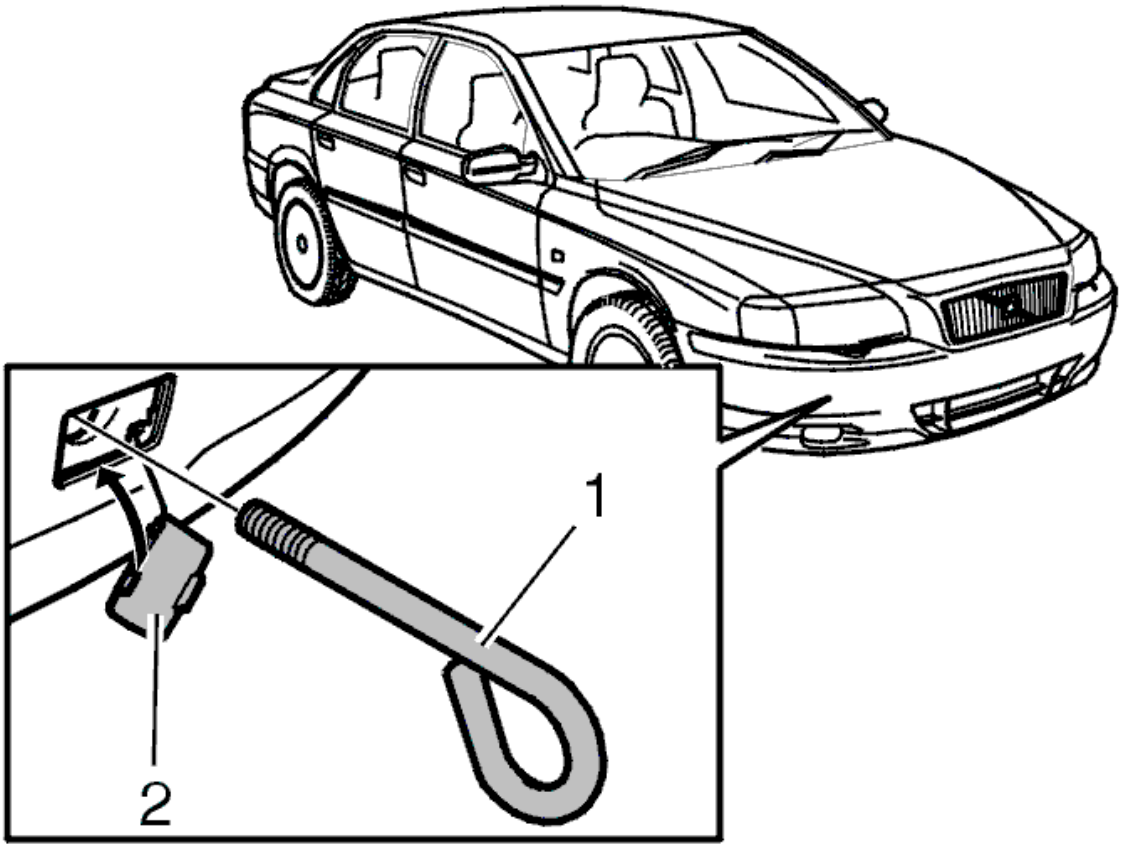

Fig. 5: Bumper And Transportation Hook
Courtesy of VOLVO CARS CORPORATION

Unscrew the hook and remove it (1).

Retrieve the blind cover plug from the glove compartment and install it in front of the hole in the bumper (2).

RETURNING THE FRONT MARINE TRANSPORTATION HOOK

Applies to USA, Canada, Japan and Taiwan:

Contact RO-RO International at the address below to return the transportation hook:

Att: Mr Thor Maugesten

RO-RO-International AB

Arods Industriv?g 74

S - 422 43 Gothenburg

Sweden

General Information

DTC Index

ACCESSORY ELECTRONIC MODULE (AEM) DTCS

ACCESSORY ELECTRONIC MODULE (AEM) - DTC INDEX

DTC	Description
AEM-1A01	Power supply. Signal too low. Intermittent fault
AEM-1D01	Control module. Internal fault. Intermittent fault
AEM-1D02	Control module, software. Internal fault. Intermittent fault
AEM-1D03	Control module not fully programmed. Internal fault. Intermittent fault
AEM-1D07	Control module. Internal fault. Intermittent fault
AEM-1D08	Control module. Internal fault. Intermittent fault
AEM-1D0A	Control module. Internal fault. Intermittent fault
AEM-5F10	Relay, engine block heater. Signal too low. Intermittent fault
AEM-5F11	Relay, engine block heater. Signal too high or Signal missing. Intermittent fault
AEM-6C50	Alarm output P0. Signal too low or signal missing. Intermittent fault
AEM-6C51	Alarm output P0. Signal too high. Intermittent fault
AEM-6C52	Alarm output P1. Signal too low or signal missing. Intermittent fault
AEM-6C53	Alarm output P1. Signal too high. Intermittent fault
AEM-6C54	Alarm output S0. Signal too low or signal missing. Intermittent fault
AEM-6C55	Alarm output S0. Signal too high. Intermittent fault
AEM-6C56	Alarm output S1. Signal too low. Intermittent fault
AEM-6C57	Alarm output S1. Signal too high or Signal missing. Intermittent fault
AEM-7A10	Carphone mute signal. Signal too low. Intermittent fault
AEM-7A11	Carphone mute signal. Signal too high or Signal missing. Intermittent fault
AEM-E001	Control module communication. Faulty communication
AEM-E003	Configuration fault. Faulty configuration
AEM-XXXX	Unknown diagnostic trouble code (DTC) for the current control module version

AUDIO MODULE (AUD) DTCS

AUDIO MODULE (AUD) - DTC INDEX

DTC	Description
AUD-0001	Control module. Internal fault
AUD-0002	Loudspeaker left front. Signal missing
AUD-0003	Loudspeaker right front. Signal missing
AUD-0004	Loudspeaker left rear. Signal missing

AUD-0005	Loudspeaker right rear. Signal missing
AUD-0006	Loudspeaker left front. Short-circuit to ground
AUD-0007	Center loudspeaker. Short-circuit to ground
AUD-0008	Loudspeaker right front. Short-circuit to ground
AUD-0009	Loudspeaker left rear. Short-circuit to ground
AUD-000A	Loudspeaker right rear. Short-circuit to ground
AUD-000E	Microphone input. Signal missing
AUD-000F	Microphone input. Signal too high
AUD-0010	Microphone input. Signal too low
AUD-0011	Buttons headset 1. Signal missing
AUD-0012	Buttons headset 1. Signal too low
AUD-0013	Buttons headset 2. Signal too low
AUD-0014	Buttons headset 2. Signal missing
AUD-0015	Buttons headset 3. Signal missing
AUD-0016	Buttons headset 3. Signal too low
AUD-0017	Buttons headset 4. Signal missing
AUD-0018	Buttons headset 4. Signal too low
AUD-0019	Headset panel left. Activated too long
AUD-001A	Headset panel right. Activated too long
AUD-001B	Control module. Software fault
AUD-001C	Center loudspeaker. Signal missing
AUD-001D	Control module. Internal fault
AUD-001E	Control module. Internal fault
AUD-001F	Control module. Internal fault
AUD-0020	Control module. Internal fault
AUD-0021	Control module. Internal fault
AUD-0022	Control module. Internal fault
AUD-0023	Loudspeaker front. Signal too high/signal too low
AUD-0024	Loudspeaker rear. Signal too high/signal too low
AUD-0025	Control module. Internal fault
AUD-0025	Loudspeaker left front. Faulty signal
AUD-0026	Loudspeaker right front. Faulty signal
AUD-0027	Loudspeaker left rear. Faulty signal
AUD-0028	Loudspeaker right rear. Faulty signal
AUD-0029	Loudspeaker left front. Signal too low
AUD-002A	Loudspeaker right front. Signal too low
AUD-002B	Loudspeaker left rear. Signal too low
AUD-002C	Loudspeaker right rear. Signal too low
AUD-002D	Loudspeaker left front. Signal too high
AUD-002E	Loudspeaker right front. Signal too high
AUD-002F	Loudspeaker left rear. Signal too high
AUD-0030	

	Loudspeaker right rear. Signal too high

ACCESSORY USB UNIT (AUU) DTCS

ACCESSORY USB UNIT (AUU) - DTC INDEX

DTC	Description
AUU-0001	Battery Voltage. Algorithm Based Failures
AUU-0002	Control Module. System Programming Failures

BRAKE CONTROL MODULE (BCM) DTCS

BRAKE CONTROL MODULE (BCM) - DTC INDEX

DTC	Description
BCM-C002001	ABS pump motor control. General malfunction information. General electrical malfunction (B6324S)
BCM-C002001	ABS pump motor control. General malfunction information. General electrical malfunction (B8444S)
BCM-C00201C	ABS pump motor control. General electrical malfunction. Incorrect voltage (B6324S)
BCM-C00201C	ABS pump motor control. General electrical malfunction. Incorrect voltage (B8444S)
BCM-C002071	ABS pump motor control. Mechanical malfunction. Jammed (B6324S)
BCM-C002071	ABS pump motor control. Mechanical malfunction. Jammed (B8444S)
BCM-C002201	Brake servo solenoid. General malfunction information. General electrical malfunction (B6324S)
BCM-C002201	Brake servo solenoid. General malfunction information. General electrical malfunction (B8444S)
BCM-C003007	Toothed wheel left front. General malfunction information. Mechanical malfunction (B6324S)
BCM-C003007	Toothed wheel left front. General malfunction information. Mechanical malfunction (B8444S)
BCM-C003101	Wheel speed sensor left front. General malfunction information. General electrical malfunction (B6324S)
BCM-C003101	Wheel speed sensor left front. General malfunction information. General electrical malfunction (B8444S)
BCM-C003107	Wheel speed sensor left front. General malfunction information. Mechanical malfunction (B6324S)
BCM-C003107	Wheel speed sensor left front. General malfunction information. Mechanical malfunction (B8444S)
BCM-C003701	Wheel speed sensor left rear. General malfunction information. General electrical malfunction (B6324S)

BCM-C003701	Wheel speed sensor left rear. General malfunction information. General electrical malfunction (B8444S)
BCM-C004064	Brake pedal switch "A". Algorithm error. Signal outside permitted range (B6324S)
BCM-C004064	Brake pedal switch "A". Algorithm error. Signal outside permitted range (B8444S)
BCM-C004401	Brake pressure sensor "A". General malfunction information. General electrical malfunction (B6324S)
BCM-C004401	Brake pressure sensor "A". General malfunction information. General electrical malfunction (B8444S)
BCM-C004664	Brake pressure sensor "A"/"B". Algorithm error. Signal outside permitted range (B6324S)
BCM-C004664	Brake pressure sensor "A"/"B". Algorithm error. Signal outside permitted range (B8444S)
BCM-C004801	Pedal position sensor. General malfunction information. General electrical malfunction (B6324S)
BCM-C004801	Pedal position sensor. General malfunction information. General electrical malfunction (B8444S)
BCM-C004864	Pedal position sensor. Algorithm error. Signal outside permitted range (B6324S)
BCM-C004864	Pedal position sensor. Algorithm error. Signal outside permitted range (B8444S)
BCM-C006101	Acceleration sensor lateral. General malfunction information. General electrical malfunction (B6324S)
BCM-C006101	Acceleration sensor lateral. General malfunction information. General electrical malfunction (B8444S)
BCM-C006128	Acceleration sensor lateral. General signal error. Signal displacement error/zero adjustment error (B6324S)
BCM-C006128	Acceleration sensor lateral. General signal error. Signal displacement error/zero adjustment error (B8444S)
BCM-C006164	Acceleration sensor lateral. Algorithm error. Signal outside permitted range (B6324S)
BCM-C006164	Acceleration sensor lateral. Algorithm error. Signal outside permitted range (B8444S)
BCM-C006A01	Multi-axial acceleration sensor. General malfunction information. General electrical malfunction (B6324S)
BCM-C006A01	Multi-axial acceleration sensor. General malfunction information. General electrical malfunction (B8444S)
BCM-C006A04	Multi-axial acceleration sensor. General malfunction information. Internal error (B6324S)
BCM-C006A04	Multi-axial acceleration sensor. General malfunction information. Internal error (B8444S)
BCM-C006A16	Multi-axial acceleration sensor. General electrical malfunction. Voltage too low (B6324S)

BCM-C006A16	Multi-axial acceleration sensor. General electrical malfunction. Voltage too low (B8444S)
BCM-C006A17	Multi-axial acceleration sensor. General electrical malfunction. Voltage too high (B6324S)
BCM-C006A17	Multi-axial acceleration sensor. General electrical malfunction. Voltage too high (B8444S)
BCM-C006B00	Stability system active too long. General malfunction information. No information on malfunction type (B6324S)
BCM-C006B00	Stability system active too long. General malfunction information. No information on malfunction type (B8444S)
BCM-C007200	Brake temperature too high. General malfunction information. No information on malfunction type (B6324S)
BCM-C007200	Brake temperature too high. General malfunction information. No information on malfunction type (B8444S)
BCM-C008204	Brake system malfunction indicator. General malfunction information. Internal error (B6324S)
BCM-C008204	Brake system malfunction indicator. General malfunction information. Internal error (B8444S)
BCM-C008216	Brake system malfunction indicator. General electrical malfunction. Voltage too low (B6324S)
BCM-C008216	Brake system malfunction indicator. General electrical malfunction. Voltage too low (B8444S)
BCM-C008217	Brake system malfunction indicator. General electrical malfunction. Voltage too high (B6324S)
BCM-C008217	Brake system malfunction indicator. General electrical malfunction. Voltage too high (B8444S)
BCM-C008249	Brake system malfunction indicator. Internal error. Electrical malfunction (B6324S)
BCM-C008249	Brake system malfunction indicator. Internal error. Electrical malfunction (B8444S)
BCM-C110668	Communication between control modules. Algorithm error. Event-controlled information (B6324S)
BCM-C110668	Communication between control modules. Algorithm error. Event-controlled information (B8444S)
BCM-C110687	Communication between control modules. Bus/message error. Message missing (B6324S)
BCM-C110687	Communication between control modules. Bus/message error. Message missing (B8444S)
BCM-C110768	Communication between control modules. Algorithm error. Event-controlled information (B6324S)
BCM-C110768	Communication between control modules. Algorithm error. Event-controlled information (B8444S)
BCM-C110787	Communication between control modules. Bus/message error. Message missing (B6324S)

BCM-C110787	Communication between control modules. Bus/message error. Message missing (B8444S)
BCM-C110801	Voltage feed sensor. General malfunction information. General electrical malfunction (B6324S)
BCM-C110801	Voltage feed sensor. General malfunction information. General electrical malfunction (B8444S)
BCM-C111154	AYC sensor. Programming error. Calibration missing (B6324S)
BCM-C111154	AYC sensor. Programming error. Calibration missing (B8444S)
BCM-C111301	Hydraulic valves. General malfunction information. General electrical malfunction (B6324S)
BCM-C111301	Hydraulic valves. General malfunction information. General electrical malfunction (B8444S)
BCM-C111495	Inclination sensor. Component malfunction. Incorrect assembly (B6324S)
BCM-C111495	Inclination sensor. Component malfunction. Incorrect assembly (B8444S)
BCM-C111542	Control module. Internal malfunction. General memory error (B6324S)
BCM-C111542	Control module. Internal malfunction. General memory error (B8444S)
BCM-C11164A	Factory test DSTC. Internal malfunction. Incorrect component (B6324S)
BCM-C11164A	Factory test DSTC. Internal malfunction. Incorrect component (B8444S)
BCM-C111768	Stability function. Algorithm error. Event-controlled information (B6324S)
BCM-C111768	Stability function. Algorithm error. Event-controlled information (B8444S)
BCM-C111802	Brake servo disengage switch. General malfunction information. General signal error (B6324S)
BCM-C111802	Brake servo disengage switch. General malfunction information. General signal error (B8444S)
BCM-U000100	HS-CAN communication bus. General malfunction information. No information on malfunction type (B6324S)
BCM-U000100	HS-CAN communication bus. General malfunction information. No information on malfunction type (B8444S)
BCM-U010000	Failed communication with the Engine Control Module (ECM). General malfunction information. No information on malfunction type (B6324S)
BCM-U010000	Failed communication with the Engine Control Module (ECM). General malfunction information. No information on malfunction type (B8444S)
BCM-U011400	Failed communication with differential electronic module (DEM). General malfunction information. No information on malfunction

	type
BCM-U011400	Failed communication with differential electronic module (DEM). General malfunction information. No information on malfunction type (B6324S)
BCM-U011400	Failed communication with differential electronic module (DEM). General malfunction information. No information on malfunction type (B8444S)
BCM-U012587	Failed communication with multi-axial acceleration sensor module. Bus/message error. Message missing (B6324S)
BCM-U012587	Failed communication with multi-axial acceleration sensor module. Bus/message error. Message missing (B8444S)
BCM-U012588	Failed communication with multi-axial acceleration sensor module. Bus/message error. Open circuit (B6324S)
BCM-U012588	Failed communication with multi-axial acceleration sensor module. Bus/message error. Open circuit (B8444S)
BCM-U012600	Failed communication with steering angle sensor module (SAS). General malfunction information. No information on malfunction type (B6324S)
BCM-U012600	Failed communication with steering angle sensor module (SAS). General malfunction information. No information on malfunction type (B8444S)
BCM-U030000	Internal software incompatible with the control module. General malfunction information. No information on malfunction type (B6324S)
BCM-U030000	Internal software incompatible with the control module. General malfunction information. No information on malfunction type (B8444S)
BCM-U030046	Control module incompatible internal software. Internal error. Defective calibration / parameter memory (B6324S)
BCM-U030046	Control module incompatible internal software. Internal error. Defective calibration / parameter memory (B8444S)
BCM-U030087	Control module incompatible internal software. Bus/message error. Message missing (B6324S)
BCM-U030087	Control module incompatible internal software. Bus/message error. Message missing (B8444S)
BCM-U040164	Invalid data received from engine control module (ECM). Algorithm error. Signal outside permitted range (B6324S)
BCM-U040164	Invalid data received from engine control module (ECM). Algorithm error. Signal outside permitted range (B8444S)
BCM-U040482	Invalid data received from transmission control module (TCM). Bus/message error. Sequence counter not correct or not updated (B6324S)
BCM-U040482	Invalid data received from transmission control module (TCM). Bus/message error. Sequence counter not correct or not updated (B8444S)

BCM-U041464	Invalid data received from connection differential electronic module (DEM). Algorithm error. Signal outside permitted range (B6324S)
BCM-U041464	Invalid data received from connection differential electronic module (DEM). Algorithm error. Signal outside permitted range (B8444S)
BCM-U042829	Invalid data received from steering angle sensor module (SAS). General signal error. Signal invalid (B6324S)
BCM-U042829	Invalid data received from steering angle sensor module (SAS). General signal error. Signal invalid (B8444S)
BCM-U042862	Invalid data received from steering angle sensor module (SAS). Algorithm error. Comparison error (B6324S)
BCM-U042862	Invalid data received from steering angle sensor module (SAS). Algorithm error. Comparison error (B8444S)
BCM-U042864	Invalid data received from steering angle sensor module (SAS). Algorithm error. Signal outside permitted range (B6324S)
BCM-U042864	Invalid data received from steering angle sensor module (SAS). Algorithm error. Signal outside permitted range (B8444S)
BCM-XXXXXX	Unknown diagnostic trouble code for this control module version (B6324S)
BCM-XXXXXX	Unknown diagnostic trouble code for this control module version (B8444S)

CLIMATE CONTROL MODULE (CCM) DTCS

CLIMATE CONTROL MODULE (CCM) - DTC INDEX

DTC	Description
CCM-0001	Configuration fault. Non-approved value
CCM-0002	Evaporator temperature sensor. Signal too high/Signal missing
CCM-0003	Evaporator temperature sensor. Signal too low
CCM-0004	Passenger compartment temperature sensor. Signal too high/Signal missing
CCM-0005	Passenger compartment temperature sensor. Signal too high/Signal missing
CCM-0006	Blower fan motor passenger compartment temperature sensor. Signal too high/Signal missing
CCM-0011	Control module. Internal fault
CCM-0020	Function button. Activated too long
CCM-0030	Left heater pad. Faulty signal
CCM-0031	Sensor left-hand seat heater. Faulty signal
CCM-0032	Left-hand seat heater. Internal fault
CCM-0033	Left-hand seat heater. Internal fault
CCM-0034	Right heater pad. Faulty signal
CCM-0035	Sensor right-hand seat heater. Faulty signal
CCM-0036	Right-hand seat heater. Internal fault

CCM-0037	Right-hand seat heater. Internal fault
CCM-0040	Air quality sensor. Internal fault
CCM-0050	Blower fan knob. Faulty signal
CCM-0051	Temperature control left. Faulty signal
CCM-0052	Temperature control right. Faulty signal
CCM-0053	Air distribution control. Faulty signal
CCM-0060	Damper motor defroster. Internal fault
CCM-0061	Recirculation damper motor. Internal fault
CCM-0062	Left temperature damper motor. Internal fault
CCM-0063	Right temperature damper motor. Internal fault
CCM-0064	Air distribution damper motor. Internal fault
CCM-0070	Configuration fault. Faulty identification
CCM-0071	Damper motor. Faulty position
CCM-0072	Damper motor. Initiation fault
CCM-0073	Configuration fault. Calibration not done
CCM-0074	Damper motor, defroster Internal fault
CCM-0074	Damper motor, defroster Internal fault (L.H.D)
CCM-0075	Damper motor Internal fault
CCM-0076	Damper motor, temperature left Internal fault
CCM-0077	Damper motor, temperature right Internal fault
CCM-0078	Damper motor distribution Internal fault
CCM-0090	Lower switch. Faulty ID
CCM-0091	Lower switch. ID missing
CCM-00A0	Blower fan motor. Signal too low
CCM-00A1	Blower fan motor. Signal too high
CCM-DD00	LIN bus1. Incorrect data
CCM-DD01	LIN bus1. Signal too high/Signal too low
CCM-DD02	LIN bus1. Faulty check sum
CCM-DD10	Air quality sensor (AQS). No communication
CCM-DD12	Left-hand seat heater. No communication
CCM-DD14	Recirculation damper motor. No communication
CCM-DD15	Left temperature damper motor. No communication
CCM-DD16	Damper motor air distribution. No communication
CCM-DD20	LIN bus 2. Incorrect data
CCM-DD21	LIN bus 2. Signal too high/Signal too low
CCM-DD22	LIN bus 2. Incorrect check sum
CCM-DD30	Right-hand seat heater. No communication
CCM-DD31	Recirculation damper motor. No communication
CCM-DD32	Right temperature damper motor. No communication
CCM-DD33	Damper motor defroster. No communication
CCM-DD34	Air quality sensor (AQS). No communication
CCM-E001	

	Control module communication
CCM-E003	Configuration fault
CCM-E010	Power supply
CCM-XXXX	Unknown diagnostic trouble code (DTC) for the current control module version

CENTRAL ELECTRONIC MODULE (CEM) DTCS

CENTRAL ELECTRONIC MODULE (CEM) - DTC INDEX

DTC	Description
CEM-1A03	S-Power supply. Signal too low
CEM-1A04	X-Power supply. Signal too low
CEM-1A05	X-Power supply. Signal too high
CEM-1A06	15-Power supply. Signal too low
CEM-1A07	15-Power supply. Signal too high
CEM-1A08	50-Power supply. Signal missing
CEM-1A09	50-Power supply. Signal too high
CEM-1A51	Communication with the supplemental restraint system module (SRS). Signal missing
CEM-1A52	Communication with the driver door module (DDM). Signal missing
CEM-1A53	Communication with the passenger door module (PDM). Signal missing
CEM-1A54	Communication with the power seat module (PSM). Signal missing
CEM-1A55	Communication with the climate control module (CCM). Signal missing
CEM-1A56	Communication with the driver information module (DIM). Signal missing
CEM-1A58	Communication with the phone module (PHM). Signal missing
CEM-1A59	Communication with the audio module (AUM). Signal missing
CEM-1A5A	Communication with the rear electronic module (REM). Signal missing
CEM-1A5C	Communication with the upper electronic module (UEM). Signal missing
CEM-1A5E	Communication with the steering wheel angle sensor module (SAS). Signal missing
CEM-1A5E	Communication with the steering wheel angle sensor module (SAS). Signal missing (B6324S)
CEM-1A5E	Communication with the steering wheel angle sensor module (SAS). Signal missing (B8444S)
CEM-1A5F	Communication with the brake control module (BCM). Signal missing
CEM-1A5F	Communication with the brake control module (BCM). Signal missing (B8444S)
CEM-1A61	Communication with the transmission control module (TCM). Signal missing (TF-80SC AWD)
CEM-1A62	Communication with the engine control module (ECM). Signal missing
CEM-1A62	Communication with the engine control module (ECM). Signal missing

	(B8444S)
CEM-1A63	Communication with the accessory electronic module (AEM). Signal missing
CEM-1A64	Communication with the differential electronic module (DEM). Signal missing
CEM-1A64	Communication with the differential electronic module (DEM). Signal missing (B6324S)
CEM-1A64	Communication with the differential electronic module (DEM). Signal missing (B8444S)
CEM-1A66	Communication with the infotainment control module (ICM). Signal missing
CEM-1A67	Communication with HCM control module Signal missing
CEM-1A67	Communication with HCM control module Signal missing (B6324S)
CEM-1A67	Communication with HCM control module Signal missing (B8444S)
CEM-1C05	30-Power supply. Signal too low
CEM-1D01	Control module. Internal fault
CEM-1D02	Control module. Internal fault
CEM-1D03	Control module not fully programmed. Internal fault
CEM-1D06	Control module. Configuration fault
CEM-1D07	Control module. Internal fault
CEM-1D08	Control module. Internal fault
CEM-1D09	Control module. Internal fault
CEM-1D0A	Control module. Internal fault
CEM-1D0B	Control module. Internal fault
CEM-1F00	ECM, software. Faulty signal
CEM-1F01	TCM, software. Faulty signal
CEM-2F01	Seat position sensor, driver. Signal too high
CEM-2F02	Seat position sensor, driver. Signal too low
CEM-2F03	Seat position sensor, driver. Faulty signal
CEM-2F04	Seat position sensor, passenger. Signal too high
CEM-2F05	Seat position sensor, passenger. Signal too low
CEM-2F06	Seat position sensor, passenger. Faulty signal
CEM-3F02	Shift lock signal. Signal too high
CEM-3F03	Shift lock signal. Signal too low
CEM-3F81	Immobilizer signal. Signal too high
CEM-3F82	Immobilizer signal. Signal too low
CEM-3F83	Immobilizer signal. Signal too low
CEM-3F84	Immobilizer signal. Faulty signal
CEM-3F90	Fuel pump relay. Open-circuit or short-circuit to ground
CEM-3F91	Fuel pump relay. Short-circuit to supply voltage
CEM-4A31	Ejector sensor. Faulty signal
CEM-4A33	Fuel level sensor. Short-circuit to supply voltage or open-circuit

CEM-4A34	Fuel level sensor. Short-circuit to ground
CEM-4A35	Fuel level sensor. Faulty signal
CEM-4A37	Fuel level sensor. Short-circuit to supply voltage or open-circuit
CEM-4A38	Fuel level sensor. Short-circuit to ground
CEM-4F00	Reset button. Activated too long
CEM-4F01	Read button. Activated too long
CEM-4F41	Light emitting diode, left camera module. Signal too low
CEM-4F42	Light emitting diode, right camera module. Signal too low
CEM-4F43	Light emitting diode, left camera module. Signal too high
CEM-4F44	Light emitting diode, right camera module. Signal too high
CEM-4F45	Light emitting diode, left camera module. No signal
CEM-4F46	Light emitting diode, right camera module. No signal
CEM-4F47	Left camera module. Internal fault
CEM-4F48	Right camera module (RCM). Internal fault
CEM-4F90	Seat belt reminder. Signal too high
CEM-4F91	Seat belt reminder. Signal too low
CEM-4F92	Seat belt reminder. Signal missing
CEM-4F93	Seat belt reminder. Faulty signal
CEM-5A00	Sun sensor. Signal too high
CEM-5A01	Sun sensor. Signal too low
CEM-5F31	Coolant temperature sensor Open circuit or short circuit to supply
CEM-5F32	Coolant temperature sensor Short circuit to ground
CEM-5F36	Flame sensor Short circuit to ground
CEM-5F37	Factory set diagnostic trouble code (DTC). Faulty code
CEM-5F39	Flame sensor Flame interuption
CEM-5F3A	Water pump. Signal too high
CEM-5F3B	Water pump. Signal too low
CEM-5F3C	Combustion fan. Signal too high
CEM-5F3D	Combustion fan. Signal too low
CEM-5F3E	Combustion fan. Faulty signal
CEM-5F3F	Fuel pump (FP). Signal too high
CEM-5F40	Fuel pump (FP). Signal too low
CEM-5F41	Overheat protection thermostat. Signal too low
CEM-5F42	Power supply. Faulty
CEM-5F43	Power supply. Missing
CEM-5F46	Glow plugs. Faulty signal
CEM-5F47	Control module power supply. Signal too high
CEM-5F4C	Power supply. Signal too low
CEM-5F4D	On-board diagnostic (OBD) system. Too long time
CEM-5F4F	Start attempt. Too many unsuccessful attempts
CEM-5F50	Overheat protection thermostat. Signal too high
CEM-6C41	

	Antenna/light ring-clock signal cable. Signal too high
CEM-6C42	Antenna/light ring - clock signal cable. Signal too low
CEM-6C43	Antenna/light ring - data communication cable. Signal too high
CEM-6C44	Antenna/light ring - data communication cable. Signal too low
CEM-6C45	Antenna/light ring. Communication problems
CEM-6C46	Antenna/light ring. Internal fault
CEM-6C48	Transponder type. Faulty signal
CEM-6C49	Transponder communication. Faulty signal
CEM-6E01	Switch, fuel tank filler cover. Faulty signal
CEM-6F01	Cruise control ON/OFF button. Activated too long
CEM-6F02	Cruise control Set+ button. Activated too long
CEM-6F03	Cruise control Set- button. Activated too long
CEM-6F04	Cruise control, Resume button. Activated too long
CEM-6F05	Cruise control, Cancel button. Activated too long
CEM-6F06	Cruise control. Faulty signal
CEM-6F07	Cruise control. Faulty signal
CEM-7A01	Scan- button. Activated too long
CEM-7A02	Scan+ button. Activated too long
CEM-7A03	Scan- button. Activated too long
CEM-7A04	Volume+ button. Activated too long
CEM-7A05	Phone YES button. Activated too long
CEM-7A06	Phone NO button. Activated too long
CEM-7A07	RTI Right button. Activated too long
CEM-7A08	RTI Left button. Activated too long
CEM-7A09	RTI Down button. Activated too long
CEM-7A0A	RTI Up button. Activated too long
CEM-7A0B	RTI Back button. Activated too long
CEM-7A0C	RTI Enter button. Activated too long
CEM-8A01	Invalid switch position for the light switch. Faulty position
CEM-8A20	Low beam left. Signal too low
CEM-8A21	Low beam right. Signal too low
CEM-8A30	Daytime running lamps, left. Faulty signal
CEM-8A31	Daytime running lamps, right. Faulty signal
CEM-8A32	High beam flash. Activated too long
CEM-8B01	Parking lamps. Signal too low
CEM-8C11	Switch, front fog lamps. Activated too long
CEM-8C12	Rear fog switch Activated too long
CEM-8D01	Stop lamps. Signal too low
CEM-8D03	Brake light switch internal fault
CEM-8D04	Internal fault in control module
CEM-8E01	Back-up (reversing) lamp switch. Faulty signal
CEM-8E02	

	Left-hand turn signal lamp. Signal too low
CEM-8F03	Right-hand turn signal lamp. Signal too low
CEM-8F04	Turn signal lamp. Faulty signal
CEM-8F05	Switch, hazard warning signal flashers. Activated too long
CEM-8F06	Switch, hazard warning signal flashers. Signal missing
CEM-8F07	Switch, hazard warning signal flashers. Signal too low
CEM-8F08	Engine control module (ECM). Signal too low
CEM-8F09	Engine control module (ECM). Signal too high
CEM-8F11	CEM Headlamp beam height control. Signal too high
CEM-8F12	CEM Headlamp beam height control. Signal too low
CEM-8F13	LSM Headlamp beam height control. Signal too high
CEM-8F14	LSM Headlamp beam height control. Signal too low
CEM-8F15	Xenon lamp left. Faulty signal
CEM-8F16	Xenon lamp left. Signal too low
CEM-8F17	Xenon lamp left. Faulty signal
CEM-8F18	Xenon lamp left. Signal too high/Signal missing
CEM-8F19	Xenon lamp right. Faulty signal
CEM-8F1A	Xenon lamp right. Signal too low
CEM-8F1B	Xenon lamp right Faulty signal
CEM-8F1C	Xenon lamp right. Signal too high / Signal missing
CEM-8F1D	X-supply relay circuit. Short-circuit to supply voltage
CEM-8F21	Windshield wiper. Faulty signal
CEM-8F22	Windshield wiper. Signal too low
CEM-8F23	Relay, windshield wiper. Signal too high
CEM-8F25	Relay, windshield wiper. Signal too low
CEM-8F26	Windshield wipers. Signal too high
CEM-8F2C	Windshield wiper. Signal too high
CEM-8F2D	Windshield wiper. Signal too low
CEM-8F2E	Windshield wiper. Signal too low
CEM-8F30	Windshield wiper lever. Signal missing
CEM-8F31	Windshield wiper lever. Faulty signal
CEM-8F32	Windshield wiper lever. Faulty signal
CEM-8F41	Tailgate washer motor relay. Signal too high
CEM-8F43	Tailgate washer motor relay. Signal too low
CEM-8F44	Windshield wiper lever. Faulty signal
CEM-8F45	Windshield wiper lever. Faulty signal
CEM-8F51	Relay, headlamp wash/wipe. Signal too low
CEM-8F52	Relay, headlamp wash/wipe. Signal too low or signal missing
CEM-8FD0	Relay, auxiliary lamp. Signal too high
CEM-8FF0	Rain sensor button. Activated too long
CEM-8FF1	Light emitting diode, Rain sensor button. Signal too low
CEM-9C01	

	Glove compartment lighting. Signal too low
CEM-9C02	Antenna/light ring. Short-circuit to ground
CEM-9C03	Antenna/light ring. Signal missing
CEM-9E01	Interior lighting. Signal too low
CEM-9F20	Twilight sensor. Short-circuit to supply voltage
CEM-9F21	Twilight sensor. Short-circuit to ground
CEM-9F24	Rheostat. Signal too high
CEM-9F25	Rheostat. Signal too low
CEM-9F26	Interior lighting. Signal too low
CEM-DD00	Communication with LSM control module and CPM control modoule. Communication fault
CEM-DD01	Communication with LSM control module and CPM control module. Short-circuit to supply or ground
CEM-DD02	Communication with LSM control module and CPM control module. Communication fault
CEM-DD10	Communication with the light switch module (LSM). Signal missing
CEM-DD11	Communication with the combustion preheater module (CPM). Signal missing
CEM-DD20	LIN-bus 2. Communication fault
CEM-DD21	LIN-bus 2. No signal
CEM-DD30	Communication with the alternator control module (ACM). Signal missing
CEM-DD31	Communication with left camera module (LCM). No signal
CEM-DD32	Communication with right camera module (LCM). No signal
CEM-DD40	Communication with the steering wheel module (SWM). Communication fault
CEM-DD41	Communication with the steering wheel module (SWM). Signal missing
CEM-DD50	Communication with the steering wheel module (SWM). Signal missing
CEM-DD51	Communication with the steering wheel module (SWM). Signal missing
CEM-DD52	Communication with the steering wheel module (SWM). Signal missing
CEM-DF01	CAN-H, low speed network. Signal missing
CEM-DF03	CAN-H, low speed network. Signal too high
CEM-DF04	CAN-L, low speed network. Signal too low
CEM-DF05	CAN-H, low speed network. Signal too low
CEM-DF06	CAN-L, low speed network. Signal too high
CEM-DF07	CAN-H, low speed network. Faulty signal
CEM-DF11	CAN-H, high speed network. Signal missing
CEM-DF13	CAN-H, high speed network. Signal too high
CEM-DF14	CAN-L, high speed network. Signal too low
CEM-DF15	CAN-H, high speed network. Signal too low
CEM-DF16	CAN-L, high speed network. Signal too high
CEM-DF17	CAN-H, high speed network. Faulty signal

CEM-E000	Control module communication
CEM-E000	Control module communication (B8444S)
CEM-E001	Control module communication
CEM-XXXX	Unknown diagnostic trouble code (DTC) for the current control module version

DRIVER DOOR MODULE (DDM) DTCS

DRIVER DOOR MODULE (DDM) - DTC INDEX

DTC	Description
DDM-0019	Lock, driver's door. Signal too low
DDM-001A	Driver's door lock. Signal too low
DDM-001D	Central locking button. Internal fault
DDM-0034	Control, driver's window. Faulty signal
DDM-0035	Control, passenger window. Faulty signal
DDM-0036	Control, left rear side window. Faulty signal
DDM-0037	Control, right rear side window. Faulty signal
DDM-0038	Control, door mirror. Faulty signal
DDM-0039	Child-proof lock. Stuck in the active position
DDM-003B	Control, driver's window. Faulty signal
DDM-003C	Control, passenger window. Faulty signal
DDM-003D	Control, left rear side window. Faulty signal
DDM-003E	Control, right rear side window. Faulty signal
DDM-003F	Control, door mirror. Signal too high
DDM-0040	Control, door mirror selector. Signal too high
DDM-0045	Door mirror lamp. Signal too low
DDM-0049	Control module. Internal fault
DDM-004A	Outside temperature sensor. Signal too high
DDM-004B	Outside temperature sensor. Signal missing
DDM-004C	Control module. Internal fault
DDM-004D	Control module. Internal fault
DDM-E001	Control module communication. Faulty communication
DDM-E003	Configuration fault. Faulty configuration
DDM-XXXX	Unknown diagnostic trouble code (DTC) for the current control module version

DIFFERENTIAL ELECTRONIC MODULE (DEM) DTCS

DIFFERENTIAL ELECTRONIC MODULE (DEM) - DTC INDEX

DTC	Description
DEM-P056017	System voltage. General electrical fault. Too high voltage (B6324S, TF-80SC AWD)

DEM-P056017	System voltage. General electrical fault. Too high voltage (B8444S, TF-80SC AWD)
DEM-P060749	Control module performance. Internal fault. Electrical fault (B8444S, TF-80SC AWD)
DEM-P060749	Control module performance. Internal fault. Electrical fault (B6324S, TF-80SC AWD)
DEM-P093211	Hydraulic pressure sensor circuit. General electrical fault. Short circuit to ground. (B6324S, TF-80SC AWD; B8444S, TF-80SC AWD)
DEM-P093215	Hydraulic pressure sensor circuit. General electrical fault. Short circuit to a voltage source or open circuit. (B6324S, TF-80SC AWD; B8444S, TF-80SC AWD)
DEM-P093711	Oil temperature sensor circuit. General electrical fault. Short circuit to ground (B6324S, TF-80SC AWD; B8444S, TF-80SC AWD)
DEM-P093715	Oil temperature sensor circuit. General electrical fault. Short circuit to a voltage source or open circuit. (B6324S, TF-80SC AWD; B8444S, TF-80SC AWD)
DEM-P093827	Oil temperature sensor circuit within/outside the limits. General signal fault. Rate of signal change exceeds the limit. (B6324S, TF-80SC AWD; B8444S, TF-80SC AWD)
DEM-P096162	Pressure regulation solenoid A control circuit within/outside the limits. Algorithm fault. Comparison fault (B6324S, TF-80SC AWD; B8444S, TF-80SC AWD)
DEM-P118854	Calibration memory. Programming fault. No calibration stored. (B6324S, TF-80SC AWD)
DEM-P118854	Calibration memory. Programming fault. No calibration stored. (B8444S, TF-80SC AWD)
DEM-P163568	Tire/Axle Out of Acceptable Range. Algorithm Based Failures. Event information (B6324S, TF-80SC AWD)
DEM-P163568	Tire/Axle Out of Acceptable Range. Algorithm Based Failures. Event information (B8444S, TF-80SC AWD)
DEM-P168912	Solenoid circuit oil pressure regulation. General electrical fault. Short circuit to a voltage source (B6324S, TF-80SC AWD)
DEM-P168912	Solenoid circuit oil pressure regulation. General electrical fault. Short circuit to a voltage source (B8444S, TF-80SC AWD)
DEM-P168914	Solenoid circuit oil pressure regulation. General electrical fault. Short circuit to ground or open circuit (B6324S, TF-80SC AWD)
DEM-P168914	Solenoid circuit oil pressure regulation. General electrical fault. Short circuit to ground or open circuit (B8444S, TF-80SC AWD)
DEM-P188912	Oil pressure pump performance. General electrical fault. Short circuit to a voltage source (B6324S, TF-80SC AWD)
DEM-P188912	Oil pressure pump performance. General electrical fault. Short circuit to a voltage source (B8444S, TF-80SC AWD)
DEM-P188914	Oil pressure pump performance. General electrical fault. Short circuit to ground or open circuit (B6324S, TF-80SC AWD)

DEM-P188914	Oil pressure pump performance. General electrical fault. Short circuit to ground or open circuit (B8444S, TF-80SC AWD)
DEM-P188974	Oil Pressure Pump Performance. Mechanical Failures. Actuator slipping (B6324S, TF-80SC AWD; B8444S, TF-80SC AWD)
DEM-P188A68	Differential Oil Temperature Too High/Too Low. Algorithm Based Failures. Event information (B6324S, TF-80SC AWD; B8444S, TF-80SC AWD)
DEM-U000100	HS-CAN communication bus. General fault information. No information about the type of fault (B6324S, TF-80SC AWD)
DEM-U000100	HS-CAN communication bus. General fault information. No information about the type of fault (B8444S, TF-80SC AWD)
DEM-U010000	Failed communication with the Engine Control Module (ECM). General fault information. Type of fault not specified. (B6324S, TF-80SC AWD)
DEM-U010000	Failed communication with the Engine Control Module (ECM). General fault information. Type of fault not specified. (B8444S, TF-80SC AWD)
DEM-U012900	Failed communication with the Brake Control Module (BCM). General fault information. Type of fault not specified. (B6324S, TF-80SC AWD)
DEM-U012900	Failed communication with the Brake Control Module (BCM). General fault information. Type of fault not specified. (B8444S, TF-80SC AWD)
DEM-U014000	Failed communication with the Central Electronic Module (CEM). General fault information. No information about the type of fault (B6324S, TF-80SC AWD)
DEM-U014000	Failed communication with the Central Electronic Module (CEM). General fault information. No information about the type of fault (B8444S, TF-80SC AWD)
DEM-U030000	Internal software incompatible with the control module. General information. No information about the type of fault. (B6324S, TF-80SC AWD)
DEM-U030000	Internal software incompatible with the control module. General information. No information about the type of fault. (B8444S, TF-80SC AWD)
DEM-U03004A	Internal software is incompatible with the control module. Internal fault. Wrong component (B6324S, TF-80SC AWD)
DEM-U03004A	Internal software is incompatible with the control module. Internal fault. Wrong component (B8444S, TF-80SC AWD)
DEM-U300362	Battery voltage. Algorithm fault. Comparison fault (B6324S, TF-80SC AWD)
DEM-U300362	Battery voltage. Algorithm fault. Comparison fault (B8444S, TF-80SC AWD)
DEM-XXXXXX	Unspecified diagnostic trouble code (DTC) for current control module version (B6324S, TF-80SC AWD)

DEM-XXXXXX	Unspecified diagnostic trouble code (DTC) for current control module version (B8444S, TF-80SC AWD)

DRIVER INFORMATION MODULE (DIM) DTCS

DRIVER INFORMATION MODULE (DIM) - DTC INDEX

DTC	Description
DIM-0001	Driving distance. Incorrect value
DIM-0002	ABS-lamp. Faulty circuit
DIM-0003	SRS-lamp. Faulty circuit
DIM-0005	Red warning lamp Faulty circuit
DIM-0006	Orange warning lamp Faulty circuit
DIM-0007	Global parameter. Internal fault
DIM-000C	Control module. Internal fault
DIM-E001	Control module communication. Faulty communication
DIM-E003	Configuration fault. Faulty configuration
DIM-XXXX	Unknown diagnostic trouble code (DTC) for the current control module version

ENGINE CONTROL MODULE (ECM) DTCS - B6324S

ENGINE CONTROL MODULE (ECM) - DTC INDEX

OBD-II Code	DTC	Description
B1024	ECM-B102400	Start control unit. General Failure Information. No sub type information
B1024	ECM-B102482	Start control unit. Bus Signal / Message Failures. Alive / sequence counter incorrect / not updated
B1024	ECM-B102486	Start control unit. Bus Signal / Message Failures. Signal invalid
B10A2	ECM-B10A268	Crash Input. Algorithm Based Failures. Event information
B10FF	ECM-B10FF68	Ignition control. Algorithm Based Failures. Event information
C0040	ECM-C004082	Brake Pedal Switch "A". Bus Signal / Message Failures. Alive / sequence counter incorrect / not updated
P0011	ECM-P001100	Intake Camshaft Position Timing - Over-Advanced (Bank 1). General Failure Information. No sub type information
P0012	ECM-P001200	Intake Camshaft Position Timing - Over-Retarded (Bank 1). General Failure Information. No sub type information

P0012	**ECM-P001268**	Intake Camshaft Position Timing - Over-Retarded (Bank 1). Algorithm Based Failures. Event information
P0016	**ECM-P001600**	Crankshaft Position - Camshaft Position Correlation - Bank 1 Sensor A. General Failure Information. No sub type information
P0018	**ECM-P001800**	Crankshaft Position - Camshaft Position Correlation - Bank 2 Sensor A. General Failure Information. No sub type information
P001A	**ECM-P001A00**	Intake (A) Cam Profile Control Circuit / Open (Bank 1). General Failure Information. No sub type information
P001B	**ECM-P001B00**	Intake (A) Cam Profile Control Circuit Low (Bank 1). General Failure Information. No sub type information
P001C	**ECM-P001C00**	Intake (A) Cam Profile Control Circuit High (Bank 1). General Failure Information. No sub type information
P0031	**ECM-P003100**	HO2S Heater Control Circuit Low (Bank 1, Sensor 1). General Failure Information. No sub type information
P0032	**ECM-P003200**	HO2S Heater Control Circuit High (Bank 1, Sensor 1). General Failure Information. No sub type information
P0037	**ECM-P003700**	HO2S Heater Control Circuit Low (Bank 1, Sensor 2). General Failure Information. No sub type information
P0038	**ECM-P003800**	HO2S Heater Control Circuit High (Bank 1, Sensor 2). General Failure Information. No sub type information
P003C	**ECM-P003C00**	Intake (A) Camshaft Profile Control Performance or Stuck Off (Bank 1). General Failure Information. No sub type information
P003D	**ECM-P003D00**	Intake (A) Camshaft Profile Control Stuck On (Bank 1). General Failure Information. No sub type information
P0051	**ECM-P005100**	HO2S Heater Control Circuit Low (Bank 2, Sensor 1). General Failure Information. No sub type information
P0052	**ECM-P005200**	HO2S Heater Control Circuit High (Bank 2, Sensor 1). General Failure Information. No sub type information
P0057	**ECM-P005700**	HO2S Heater Control Circuit Low (Bank 2, Sensor 2). General Failure Information. No sub type information

P0058	**ECM-P005800**	HO2S Heater Control Circuit High (Bank 2, Sensor 2). General Failure Information. No sub type information
P0070	**ECM-P007000**	Ambient Air Temperature Sensor Circuit. General Failure Information. No sub type information
P0071	**ECM-P007100**	Ambient Air Temperature Sensor Range/Performance. General Failure Information. No sub type information
P0072	**ECM-P007200**	Ambient Air Temperature Sensor Circuit Low Input. General Failure Information. No sub type information
P0073	**ECM-P007300**	Ambient Air Temperature Sensor Circuit High Input. General Failure Information. No sub type information
P0075	**ECM-P007500**	Intake Valve Control Circuit (Bank 1). General Failure Information. No sub type information
P0076	**ECM-P007600**	Intake Valve Control Circuit Low (Bank 1). General Failure Information. No sub type information
P0077	**ECM-P007700**	Intake Valve Control Circuit High (Bank 1). General Failure Information. No sub type information
P0087	**ECM-P008700**	Fuel Rail/System Pressure - Too Low. General Failure Information. No sub type information
P0088	**ECM-P008800**	Fuel Rail/System Pressure - Too High. General Failure Information. No sub type information
P0089	**ECM-P008968**	Fuel Pressure Regulator Performance. Algorithm Based Failures. Event information
P0100	**ECM-P010000**	Mass or Volume Air Flow Circuit. General Failure Information. No sub type information
P0101	**ECM-P010100**	Mass or Volume Air Flow Circuit Range/Performance. General Failure Information. No sub type information
P0102	**ECM-P010200**	Mass or Volume Air Flow Circuit Low Input. General Failure Information. No sub type information
P0103	**ECM-P010300**	Mass or Volume Air Flow Circuit High Input. General Failure Information. No sub type information
P0105	**ECM-P010500**	Manifold Absolute Pressure/BARO Circuit. General Failure Information. No sub type information
P0106	**ECM-P010600**	Manifold Absolute Pressure/BARO Sensor Range/Performance. General Failure

		Information. No sub type information
P0107	**ECM-P010700**	Manifold Absolute Pressure/BARO Sensor Low Input. General Failure Information. No sub type information
P0108	**ECM-P010800**	Manifold Absolute Pressure/BARO Sensor High Input. General Failure Information. No sub type information
P0111	**ECM-P011000**	Intake Air Temperature Sensor 1 Circuit. General Failure Information. No sub type information
P0111	**ECM-P011100**	Intake Air Temperature Sensor 1 Circuit Range/Performance. General Failure Information. No sub type information
P0112	**ECM-P011200**	Intake Air Temperature Sensor 1 Circuit Low Input. General Failure Information. No sub type information
P0113	**ECM-P011300**	Intake Air Temperature Sensor 1 Circuit High Input. General Failure Information. No sub type information
P0114	**ECM-P011400**	Intake Air Temperature Sensor 1 Intermittent/Erratic. General Failure Information. No sub type information
P0115	**ECM-P011500**	Engine Coolant Temperature Circuit. General Failure Information. No sub type information
P0116	**ECM-P011600**	Engine Coolant Temperature Circuit Range/Performance. General Failure Information. No sub type information
P0117	**ECM-P011700**	Engine Coolant Temperature Circuit Low Input. General Failure Information. No sub type information
P0118	**ECM-P011800**	Engine Coolant Temperature Circuit High Input. General Failure Information. No sub type information
P0120	**ECM-P012023**	Throttle/Pedal Position Sensor A Circuit. General Signal Failures. Signal stuck low
P0120	**ECM-P012024**	Throttle/Pedal Position Sensor A Circuit. General Signal Failures. Signal stuck high
P0120	**ECM-P012038**	Throttle/Pedal Position Sensor A Circuit. FM (Frequency Modulated) / PWM (Pulse Width Modulated) Failures. Signal frequency incorrect
P0128	**ECM-P012800**	Coolant Thermostat (Coolant Temp Below Thermostat Regulating Temperature). General Failure Information. No sub type information
P0131	**ECM-P013100**	O2 Circuit Low Voltage (Bank 1, Sensor 1). General Failure Information. No sub type

		information
P0132	**ECM-P013200**	O2 Circuit High Voltage (Bank 1, Sensor 1). General Failure Information. No sub type information
P0133	**ECM-P013300**	O2 Circuit Slow Response (Bank 1, Sensor 1). General Failure Information. No sub type information
P0134	**ECM-P013400**	O2 Circuit No Activity Detected (Bank 1, Sensor 1). General Failure Information. No sub type information
P0137	**ECM-P013700**	O2 Circuit Low Voltage (Bank 1, Sensor 2). General Failure Information. No sub type information
P0138	**ECM-P013800**	O2 Circuit High Voltage (Bank 1, Sensor 2). General Failure Information. No sub type information
P0151	**ECM-P015100**	O2 Circuit Low Voltage (Bank 2, Sensor 1). General Failure Information. No sub type information
P0152	**ECM-P015200**	O2 Circuit High Voltage (Bank 2, Sensor 1). General Failure Information. No sub type information
P0153	**ECM-P015300**	O2 Circuit Slow Response (Bank 2, Sensor 1). General Failure Information. No sub type information
P0154	**ECM-P015400**	O2 Circuit No Activity Detected (Bank 2, Sensor 1). General Failure Information. No sub type information
P0157	**ECM-P015700**	O2 Circuit Low Voltage (Bank 2, Sensor 2). General Failure Information. No sub type information
P0158	**ECM-P015800**	O2 Circuit High Voltage (Bank 2, Sensor 2). General Failure Information. No sub type information
P0170	**ECM-P017068**	Fuel Trim (Bank 1). Algorithm Based Failures. Event information
P0171	**ECM-P017100**	System Too Lean (Bank 1). General Failure Information. No sub type information
P0172	**ECM-P017200**	System Too Rich (Bank 1). General Failure Information. No sub type information
P0174	**ECM-P017400**	System Too Lean (Bank 2). General Failure Information. No sub type information
P0175	**ECM-P017500**	System Too Rich (Bank 2). General Failure Information. No sub type information
P0180	**ECM-P018000**	Fuel Temperature Sensor A Circuit. General

		Failure Information. No sub type information
P0181	**ECM-P018100**	Fuel Temperature Sensor A Circuit Range/Performance. General Failure Information. No sub type information
P0182	**ECM-P018200**	Fuel Temperature Sensor A Circuit Low Input. General Failure Information. No sub type information
P0183	**ECM-P018300**	Fuel Temperature Sensor A Circuit High Input. General Failure Information. No sub type information
P0190	**ECM-P019000**	Fuel Rail Pressure Sensor. General Failure Information. No sub type information
P0191	**ECM-P019100**	Fuel Rail Pressure Sensor Range/Performance. General Failure Information. No sub type information
P0192	**ECM-P019200**	Fuel Rail Pressure Sensor Low Input. General Failure Information. No sub type information
P0193	**ECM-P019300**	Fuel Rail Pressure Sensor High Input. General Failure Information. No sub type information
P0201	**ECM-P020100**	Cylinder 1 Injector Circuit / Open. General Failure Information. No sub type information
P0202	**ECM-P020200**	Cylinder 2 Injector Circuit / Open. General Failure Information. No sub type information
P0203	**ECM-P020300**	Cylinder 3 Injector Circuit / Open. General Failure Information. No sub type information
P0204	**ECM-P020400**	Cylinder 4 Injector Circuit / Open. General Failure Information. No sub type information
P0205	**ECM-P020500**	Cylinder 5 Injector Circuit / Open. General Failure Information. No sub type information
P0206	**ECM-P020600**	Cylinder 6 Injector Circuit / Open. General Failure Information. No sub type information
P0220	**ECM-P022023**	Throttle/Pedal Position Switch B Circuit. General Signal Failures. Signal stuck low
P0220	**ECM-P022024**	Throttle/Pedal Position Switch B Circuit. General Signal Failures. Signal stuck high
P0220	**ECM-P022082**	Throttle/Pedal Position Switch B Circuit. Bus Signal / Message Failures. Alive / sequence counter incorrect / not updated
P029C	**ECM-P029C68**	Cylinder 1 Balance - Injector Restricted. Algorithm Based Failures. Event information
P02A0	**ECM-P02A068**	Cylinder 2 Balance - Injector Restricted. Algorithm Based Failures. Event information
P02A4	**ECM-P02A468**	Cylinder 3 Balance - Injector Restricted. Algorithm Based Failures. Event information
P02A8	**ECM-P02A868**	Cylinder 4 Balance - Injector Restricted.

		Algorithm Based Failures. Event information
P0300	**ECM-P030000**	Random Misfire Detected. General Failure Information. No sub type information
P0301	**ECM-P030100**	Cylinder 1 Misfire Detected. General Failure Information. No sub type information
P0326	**ECM-P032600**	Knock Sensor 1 Circuit Range/Performance (Bank 1). General Failure Information. No sub type information
P0327	**ECM-P032700**	Knock Sensor 1 Circuit Low Input (Bank1). General Failure Information. No sub type information
P0328	**ECM-P032800**	Knock Sensor 1 Circuit High Input (Bank 1). General Failure Information. No sub type information
P0331	**ECM-P033100**	Knock Sensor 2 Circuit Range/Performance (Bank 2). General Failure Information. No sub type information
P0332	**ECM-P033200**	Knock Sensor 2 Circuit Low Input (Bank 2). General Failure Information. No sub type information
P0333	**ECM-P033300**	Knock Sensor 2 Circuit High Input (Bank 2). General Failure Information. No sub type information
P0335	**ECM-P033500**	Crankshaft Position Sensor A Circuit. General Failure Information. No sub type information
P0336	**ECM-P033600**	Crankshaft Position Sensor A Circuit Range/Performance. General Failure Information. No sub type information
P0339	**ECM-P033900**	Crankshaft Position Sensor A Circuit Intermittent. General Failure Information. No sub type information
P0340	**ECM-P034000**	Camshaft Position Sensor A Circuit (Bank 1 or single sensor). General Failure Information. No sub type information
P0341	**ECM-P034100**	Camshaft Position Sensor A Circuit Range/Performance (Bank 1 or single sensor). General Failure Information. No sub type information
P0344	**ECM-P034400**	Camshaft Position Sensor A Circuit Intermittent (Bank 1 or single sensor). General Failure Information. No sub type information
P0345	**ECM-P034500**	Camshaft Position Sensor A Circuit (Bank 2). General Failure Information. No sub type information
P0346	**ECM-P034600**	Camshaft Position Sensor A Circuit

		Range/Performance (Bank 2). General Failure Information. No sub type information
P0349	**ECM-P034900**	Camshaft Position Sensor A Circuit Intermittent (Bank 2). General Failure Information. No sub type information
P0351	**ECM-P035100**	Ignition Coil A Primary/Secondary Circuit. General Failure Information. No sub type information
P0352	**ECM-P035200**	Ignition Coil B Primary/Secondary Circuit. General Failure Information. No sub type information
P0353	**ECM-P035300**	Ignition Coil C Primary/Secondary Circuit. General Failure Information. No sub type information
P0354	**ECM-P035400**	Ignition Coil D Primary/Secondary Circuit. General Failure Information. No sub type information
P0355	**ECM-P035500**	Ignition Coil E Primary/Secondary Circuit. General Failure Information. No sub type information
P0356	**ECM-P035600**	Ignition Coil F Primary/Secondary Circuit. General Failure Information. No sub type information
P0365	**ECM-P036500**	Camshaft Position Sensor B Circuit (Bank 1). General Failure Information. No sub type information
P0366	**ECM-P036600**	Camshaft Position Sensor B Circuit Range/Performance (Bank 1). General Failure Information. No sub type information
P0369	**ECM-P036900**	Camshaft Position Sensor B Circuit Intermittent (Bank 1). General Failure Information. No sub type information
P0420	**ECM-P042000**	Catalyst System Efficiency Below Threshold (Bank 1). General Failure Information. No sub type information
P0430	**ECM-P043000**	Catalyst System Efficiency Below Threshold (Bank 2). General Failure Information. No sub type information
P043E	**ECM-P043E00**	Evaporative Emission System Leak Detection Reference Orifice Low Flow. General Failure Information. No sub type information
P0441	**ECM-P044100**	Evaporative Emission System Incorrect Purge Flow. General Failure Information. No sub type information
P0442	**ECM-P044200**	Evaporative Emission System Leak Detected

		(small leak). General Failure Information. No sub type information
P0444	**ECM-P044400**	Evaporative Emission System Purge Control Valve Circuit Open. General Failure Information. No sub type information
P0455	**ECM-P045500**	Evaporative Emission System Leak Detected (gross leak/no flow). General Failure Information. No sub type information
P0458	**ECM-P045800**	Evaporative Emission System Purge Control Valve Circuit Low. General Failure Information. No sub type information
P0459	**ECM-P045900**	Evaporative Emission System Purge Control Valve Circuit High. General Failure Information. No sub type information
P0460	**ECM-P046000**	Fuel Level Sensor A Circuit. General Failure Information. No sub type information
P0461	**ECM-P046100**	Fuel Level Sensor A Circuit Range/Performance. General Failure Information. No sub type information
P0464	**ECM-P046400**	Fuel Level Sensor A Circuit Intermittent. General Failure Information. No sub type information
P0480	**ECM-P048000**	Fan 1 Control Circuit. General Failure Information. No sub type information
P0481	**ECM-P048100**	Fan 2 Control Circuit. General Failure Information. No sub type information
P0483	**ECM-P048368**	Fan Performance. Algorithm Based Failures. Event information
P0500	**ECM-P050082**	Vehicle Speed Sensor A. Bus Signal / Message Failures. Alive / sequence counter incorrect / not updated
P0500	**ECM-P050087**	Vehicle Speed Sensor A. Bus Signal / Message Failures. Missing message
P0504	**ECM-P050429**	Brake Switch A / B Correlation. General Signal Failures. Signal signal invalid
P0504	**ECM-P050462**	Brake Switch A / B Correlation. Algorithm Based Failures. Signal compare failure
P0504	**ECM-P050465**	Brake Switch A / B Correlation. Algorithm Based Failures. Signal has too few transitions / events
P0505	**ECM-P050568**	Idle Air Control System. Algorithm Based Failures. Event information
P0506	**ECM-P050600**	Idle control rpm lower than expected. General malfunction information. No information on malfunction type

P0507	**ECM-P050700**	Idle control rpm higher than expected. General malfunction information. No information on malfunction type
P050B	**ECM-P050B00**	Cold Start Ignition Timing Performance. General Failure Information. No sub type information
P0525	**ECM-P052548**	Cruise Control Servo Control Circuit Range/Performance. System Internal Failures. Supervision software failure
P052A	**ECM-P052A00**	Cold Start Camshaft Position Timing Over-Advanced (Bank 1). General Failure Information. No sub type information
P052B	**ECM-P052B00**	Cold Start Intake (A) Camshaft Position Timing Over-Retarded (Bank 1). General Failure Information. No sub type information
P052D	**ECM-P052D00**	Cold Start Camshaft Position Timing Over-Retarded (Bank 2). General Failure Information. No sub type information
P0531	**ECM-P053100**	A/C Refrigerant Pressure Sensor A Circuit Range/Performance. General Failure Information. No sub type information
P0532	**ECM-P053200**	A/C Refrigerant Pressure Sensor A Circuit Low Input. General Failure Information. No sub type information
P0533	**ECM-P053300**	A/C Refrigerant Pressure Sensor A Circuit High Input. General Failure Information. No sub type information
P0534	**ECM-P053400**	A/C Refrigerant Charge Loss. General Failure Information. No sub type information
P0562	**ECM-P056200**	System Voltage Low. General Failure Information. No sub type information
P0563	**ECM-P056300**	System Voltage High. General Failure Information. No sub type information
P0575	**ECM-P057500**	Cruise Control Input Circuit. General Failure Information. No sub type information
P0603	**ECM-P060300**	Internal Control Module Keep Alive Memory (KAM) Error. General Failure Information. No sub type information
P0607	**ECM-P060704**	Control Module Performance. General Failure Information. System Internal Failures
P0615	**ECM-P061511**	Starter Relay Circuit. General Electrical Failures. Circuit short to ground
P0615	**ECM-P061512**	Starter Relay Circuit. General Electrical Failures. Circuit short to battery
P0615	**ECM-P061513**	Starter Relay Circuit. General Electrical

		Failures. Circuit open
P061A	ECM-P061A00	Internal Control Module Torque Performance. General Failure Information. No sub type information
P061A	ECM-P061A68	Internal Control Module Torque Performance. Algorithm Based Failures. Event information
P061B	ECM-P061B64	Internal Control Module Torque Calculation Performance. Algorithm Based Failures. Signal plausibility failure
P061B	ECM-P061B68	Internal Control Module Torque Calculation Performance. Algorithm Based Failures. Event information
P0620	ECM-P062001	Generator Control Circuit. General Failure Information. General electrical failure
P0620	ECM-P06204B	Generator Control Circuit. System Internal Failures. Over temperature
P0620	ECM-P062074	Generator Control Circuit. Mechanical Failures. Actuator slipping
P0628	ECM-P062800	Fuel Pump A Control Circuit Low. General Failure Information. No sub type information
P0629	ECM-P062900	Fuel Pump A Control Circuit High. General Failure Information. No sub type information
P0634	ECM-P063400	PCM / ECM / TCM Internal Temperature Too High. General Failure Information. No sub type information
P0634	ECM-P06344B	PCM / ECM / TCM Internal Temperature Too High. System Internal Failures. Over temperature
P0634	ECM-P063498	PCM / ECM / TCM Internal Temperature Too High. Component Failures. Component or system over temperature
P0642	ECM-P064200	Sensor Reference Voltage A Circuit Low. General Failure Information. No sub type information
P0645	ECM-P064500	A/C Clutch Relay Control Circuit. General Failure Information. No sub type information
P0646	ECM-P064600	A/C Clutch Relay Control Circuit Low. General Failure Information. No sub type information
P0647	ECM-P064700	A/C connection relay control circuit high. General malfunction information. No information on malfunction type
P064D	ECM-P064D68	Internal Control Module O2 Sensor Processor Performance - Bank 1. Algorithm Based Failures. Event information
P064E	ECM-P064E68	Internal Control Module O2 Sensor Processor

		Performance - Bank 2. Algorithm Based Failures. Event information
P0661	**ECM-P066100**	Intake Manifold Tuning Valve Control Circuit Low - Bank 1. General Failure Information. No sub type information
P0662	**ECM-P066200**	Intake Manifold Tuning Valve Control Circuit High - Bank 1. General Failure Information. No sub type information
P0668	**ECM-P066800**	PCM / ECM / TCM Internal Temperature Sensor Circuit Low. General Failure Information. No sub type information
P0669	**ECM-P066900**	PCM / ECM / TCM Internal Temperature Sensor Circuit High. General Failure Information. No sub type information
P068B	**ECM-P068B00**	Control module internal power +5V. General Failure Information. No sub type information
P0691	**ECM-P069100**	Fan 1 Control Circuit Low. General Failure Information. No sub type information
P0692	**ECM-P069200**	Fan 1 Control Circuit High. General Failure Information. No sub type information
P06A0	**ECM-P06A000**	Variable A/C Compressor Control Circuit. General Failure Information. No sub type information
P06A1	**ECM-P06A100**	Variable A/C Compressor Control Circuit Low. General Failure Information. No sub type information
P06A2	**ECM-P06A200**	Variable A/C Compressor Control Circuit High. General Failure Information. No sub type information
P0700	**ECM-P070000**	Transmission Control System (MIL Request). General Failure Information. No sub type information
P0737	**ECM-P073768**	TCM Engine Speed Output Circuit. Algorithm Based Failures. Event information
P0850	**ECM-P085023**	Park / Neutral Switch Input Circuit. General Signal Failures. Signal stuck low
P0850	**ECM-P085024**	Park / Neutral Switch Input Circuit. General Signal Failures. Signal stuck high
P0850	**ECM-P085086**	Park / Neutral Switch Input Circuit. Bus Signal / Message Failures. Signal invalid
P0A0F	**ECM-P0A0F68**	Engine Failed to Start. Algorithm Based Failures. Event information
P1126	**ECM-P112662**	Throttle Position (Narrow Range) Sensor Circuit. Algorithm Based Failures. Signal compare failure

P1137	ECM-P113700	Lack Of HO2S12 Switches - Sensor Indicates Lean. General Failure Information. No sub type information
P1138	ECM-P113800	Lack Of HO2S12 Switches - Sensor Indicates Rich. General Failure Information. No sub type information
P1157	ECM-P115700	Lack Of HO2S22 Switches - Sensor Indicates Lean. General Failure Information. No sub type information
P1158	ECM-P115800	Lack Of HO2S22 Switches - Sensor Indicates Rich. General Failure Information. No sub type information
P1170	ECM-P117068	Engine Shut Off Solenoid. Algorithm Based Failures. Event information
P1173	ECM-P117368	Rotor Calibration. Algorithm Based Failures. Event information
P1224	ECM-P122477	Throttle Position Sensor B Out Of Self Test Range. Mechanical Failures. Commanded position not reachable
P1250	ECM-P125000	Throttle Valve Spring. General Failure Information. No sub type information
P1260	ECM-P126000	Theft Detected, Vehicle Immobilized. General Failure Information. No sub type information
P1346	ECM-P134600	Fuel Level Sensor B Circuit. General Failure Information. No sub type information
P145C	ECM-P145C68	Fan System Component Error A. Algorithm Based Failures. Event information
P145D	ECM-P145D68	Fan System Component Error B. Algorithm Based Failures. Event information
P151B	ECM-P151B68	Idle Speed Control - RPM Lower Than Expected. Algorithm Based Failures. Event information
P151C	ECM-P151C68	Idle Speed Control - RPM Higher Than Expected. Algorithm Based Failures. Event information
P1572	ECM-P157281	Brake Pedal Switch Circuit. Bus Signal / Message Failures. Invalid serial data received
P1572	ECM-P157282	Brake Pedal Switch Circuit. Bus Signal / Message Failures. Alive / sequence counter incorrect / not updated
P1572	ECM-P157287	Brake Pedal Switch Circuit. Bus Signal / Message Failures. Missing message
P1573	ECM-P157300	Throttle Position Not Available. General Failure Information. No sub type information
P1574	ECM-P157462	Throttle Position Sensor Outputs Disagree.

		Algorithm Based Failures. Signal compare failure
P1589	**ECM-P158900**	Throttle Control Unable To Control To Desired Throttle Angle. General Failure Information. No sub type information
P1771	**ECM-P177100**	Throttle Position Sensor Circuit High Input. General Failure Information. No sub type information
P1772	**ECM-P177200**	Throttle Position Sensor Circuit Low Input. General Failure Information. No sub type information
P1934	**ECM-P193400**	Vehicle Speed Signal. General Failure Information. No sub type information
P2004	**ECM-P200400**	Intake Manifold Runner Control Stuck Open (Bank 1). General Failure Information. No sub type information
P2005	**ECM-P200500**	Intake Manifold Runner Control Stuck Open (Bank 2). General Failure Information. No sub type information
P2006	**ECM-P200600**	Intake Manifold Runner Control Stuck Closed (Bank 1). General Failure Information. No sub type information
P2007	**ECM-P200700**	Intake Manifold Runner Control Stuck Closed (Bank 2). General Failure Information. No sub type information
P2106	**ECM-P210600**	Throttle Actuator Control System - Forced Limited Power. General Failure Information. No sub type information
P2111	**ECM-P211100**	Throttle Actuator Control System - Stuck Open. General Failure Information. No sub type information
P2118	**ECM-P211800**	Throttle Actuator Control Motor Current Range/Performance. General Failure Information. No sub type information
P2135	**ECM-P213562**	Throttle/Pedal Position Sensor/Switch A / B Voltage Correlation. Algorithm Based Failures. Signal compare failure
P2162	**ECM-P216262**	Vehicle Speed Sensor A / B Correlation. Algorithm Based Failures. Signal compare failure
P2226	**ECM-P222600**	Barometric Pressure Circuit. General Failure Information. No sub type information
P2227	**ECM-P222700**	Barometric Pressure Circuit Range/Performance. General Failure Information. No sub type information

P2228	**ECM-P222800**	Barometric Pressure Circuit Low Input. General Failure Information. No sub type information
P2229	**ECM-P222900**	Barometric Pressure Circuit High Input. General Failure Information. No sub type information
P2270	**ECM-P227000**	O2 Sensor Signal Stuck Lean - Bank 1, Sensor 2. General Failure Information. No sub type information
P2271	**ECM-P227100**	O2 Sensor Signal Stuck Rich - Bank 1, Sensor 2. General Failure Information. No sub type information
P2272	**ECM-P227200**	O2 Sensor Signal Stuck Lean - Bank 2, Sensor 2. General Failure Information. No sub type information
P2273	**ECM-P227300**	O2 Sensor Signal Stuck Rich - Bank 2, Sensor 2. General Failure Information. No sub type information
P2401	**ECM-P240100**	Evaporative Emission System Leak Detection Pump Control Circuit Low. General Failure Information. No sub type information
P2402	**ECM-P240200**	Evaporative Emission System Leak Detection Pump Control Circuit High. General Failure Information. No sub type information
P2407	**ECM-P240700**	Evaporative Emission System Leak Detection Pump Sense Circuit Intermittent/Erratic. General Failure Information. No sub type information
P2408	**ECM-P240800**	Fuel Cap Sensor/Switch Circuit. General Failure Information. No sub type information
P240B	**ECM-P240B00**	Evaporative Emission System Leak Detection Pump Heater Circuit Low. General Failure Information. No sub type information
P240C	**ECM-P240C00**	Evaporative Emission System Leak Detection Pump Heater Circuit High. General Failure Information. No sub type information
P2419	**ECM-P241900**	Evaporative Emission Control System Switching Valve Control Circuit Low. General Failure Information. No sub type information
P2420	**ECM-P242000**	Evaporative Emission Control System Switching Valve Control Circuit High. General Failure Information. No sub type information
P2421	**ECM-P242100**	Evaporative Emission Control System Vent Valve Stuck Open. General Failure Information. No sub type information

P2422	**ECM-P242200**	Evaporative Emission Control System Vent Valve Stuck Closed. General Failure Information. No sub type information
P252C	**ECM-P252C00**	Engine Oil Quality Sensor Circuit Low. General Failure Information. No sub type information
P252D	**ECM-P252D00**	Engine Oil Quality Sensor Circuit High. General Failure Information. No sub type information
P2583	**ECM-P258382**	Cruise Control Front Distance Range Sensor. Bus Signal / Message Failures. Alive / sequence counter incorrect / not updated
P2610	**ECM-P261085**	ECM/PCM Internal Engine Off Timer Performance. Bus Signal / Message Failures. Signal above allowable range
U0001	**ECM-U000100**	High Speed CAN Communication Bus. General Failure Information. No sub type information
U0101	**ECM-U010100**	Lost Communication with Transmission control module. General Failure Information. No sub type information
U0104	**ECM-U010482**	Lost Communication With Cruise Control Module. Bus Signal / Message Failures. Signal compare failure
U0120	**ECM-U012086**	Lost Communication with Starter/ Generator Control Module. Bus Signal / Message Failures. Signal invalid
U0120	**ECM-U012087**	Lost Communication with Starter/ Generator Control Module. Bus Signal / Message Failures. Missing message
U0121	**ECM-U012100**	Lost Communication With Brake Control Module. General Failure Information. No sub type information
U0129	**ECM-U012900**	Lost Communication With Brake System Control Module. General Failure Information. No sub type information
U0141	**ECM-U014100**	Lost Communication With Central electronic module "A". General Failure Information. No sub type information
U0167	**ECM-U016700**	Lost Communication With Vehicle Immobilizer Control Module. General Failure Information. No sub type information
U0300	**ECM-U030000**	Internal Control Module Software Incompatibility. General Failure Information. No sub type information
U0322	**ECM-U032200**	Software Incompatibility with Body Control

		Module. General Failure Information. No sub type information
U0405	ECM-U040583	Invalid Data Received From Cruise Control Module. Bus Signal / Message Failures. Value of signal protection calculation incorrect
U0405	ECM-U04058F	Invalid Data Received From Cruise Control Module. Bus Signal / Message Failures. Erratic
U0418	ECM-U041800	Invalid Data Received From Brake Control Module. General Failure Information. No sub type information
U0418	ECM-U041886	Invalid Data Received From Brake Control Module. Bus Signal / Message Failures. Signal invalid
U0422	ECM-U042200	Invalid Data Received From Central electronic module. General Failure Information. No sub type information
U0426	ECM-U042600	Invalid data received from vehicle immobilizer control module. General malfunction information. No information on malfunction type
U2107	ECM-U210765	Collision Mitigation By Braking. Algorithm Based Failures. Signal has too few transitions / events
U2107	ECM-U210782	Collision Mitigation By Braking. Bus Signal / Message Failures. Alive / sequence counter incorrect / not updated
U2108	ECM-U210800	Adaptive Cruise Control. General Failure Information. No sub type information
U2108	ECM-U210882	Adaptive Cruise Control. Bus Signal / Message Failures. Alive / sequence counter incorrect / not updated

ENGINE CONTROL MODULE (ECM) DTCS - B8444S

ENGINE CONTROL MODULE (ECM) - DTC INDEX

OBD-II Code	DTC	Description
P0011	ECM-P001100	Intake camshaft position control - extended too far - (bank 1). General fault information. Type of fault not specified.
P0012	ECM-P001200	Intake camshaft position control - returned too far - (bank 1). General fault information. Type of fault not specified.
P0014	ECM-P001400	Controlling camshaft position exhaust- too much control - (bank 1). General fault information. No information about fault type

P0015	**ECM-P001500**	Exhaust camshaft position control - returned too far - (bank 1). General fault information. Type of fault not specified.
P0016	**ECM-P001600**	Crankshaft Position - Camshaft Position Correlation - Bank 1 Sensor A. General Failure Information. No sub type information
P0017	**ECM-P001700**	Crankshaft Position - Camshaft Position Correlation - Bank 1 Sensor B. General Failure Information. No sub type information
P0018	**ECM-P001800**	Crankshaft Position - Camshaft Position Correlation - Bank 2 Sensor A. General Failure Information. No sub type information
P0019	**ECM-P001900**	Crankshaft Position - Camshaft Position Correlation - Bank 2 Sensor B. General Failure Information. No sub type information
P0021	**ECM-P002100**	Intake camshaft position control - extended too far - (bank 2). General fault information. Type of fault not specified.
P0022	**ECM-P002200**	Intake camshaft position control - returned too far - (bank 2). General fault information. Type of fault not specified.
P0024	**ECM-P002400**	Controlling camshaft position exhaust - too much control- (bank 2). General fault information. No information about fault type
P0025	**ECM-P002500**	Exhaust camshaft position control - returned too far - (bank 2). General fault information. Type of fault not specified.
P0031	**ECM-P003100**	Heated oxygen sensor (HO2S) control circuit low (bank 1, sensor 1). General fault information. No information about fault type
P0032	**ECM-P003200**	Heated oxygen sensor (HO2S) control circuit high (bank 1, sensor 1). General fault information. No information about fault type
P0037	**ECM-P003700**	Heated oxygen sensor (HO2S) control circuit low (bank 1, sensor 2). General fault information. No information about fault type
P0038	**ECM-P003800**	Heated oxygen sensor (HO2S) control circuit high (bank 1, sensor 2). General fault information. No information about fault type
P0051	**ECM-P005100**	Heated oxygen sensor (HO2S) control circuit low (bank 2, sensor 1). General fault information. No information about fault type
P0052	**ECM-P005200**	Heated oxygen sensor (HO2S) control circuit high (bank 2, sensor 1). General fault information. No information about fault type

P0057	**ECM-P005700**	Heated oxygen sensor (HO2S) control circuit low (bank 2, sensor 2). General fault information. No information about fault type
P0058	**ECM-P005800**	Heated oxygen sensor (HO2S) control circuit high (bank 2, sensor 2). General fault information. No information about fault type
P0071	**ECM-P007100**	Ambient Air Temperature Sensor Range/Performance. General Failure Information. No sub type information
P0072	**ECM-P007200**	Ambient air temperature sensor circuit low input signal. General fault information. Type of fault not specified.
P0073	**ECM-P007300**	Ambient air temperature sensor circuit high input signal. General fault information. Type of fault not specified.
P0075	**ECM-P007500**	Intake valve control circuit (bank 1). General fault information. Type of fault not specified.
P0076	**ECM-P007600**	Intake valve control circuit low (bank 1). General fault information. Type of fault not specified.
P0077	**ECM-P007700**	Intake valve control circuit high (bank 1). General fault information. Type of fault not specified.
P0078	**ECM-P007800**	Exhaust valve control circuit (bank 1). General fault information. Type of fault not specified.
P0079	**ECM-P007900**	Exhaust valve control circuit low (bank 1). General fault information. Type of fault not specified.
P0080	**ECM-P008000**	Exhaust valve control circuit high (bank 1). General fault information. Type of fault not specified.
P0089	**ECM-P008900**	Fuel pressure regulator performance. General fault information. No information about fault type
P0091	**ECM-P009100**	Fuel pressure regulator control circuit low. General fault information. Type of fault not specified.
P0092	**ECM-P009200**	Fuel pressure regulator control circuit high. General fault information. Type of fault not specified.
P0101	**ECM-P010100**	Air mass or volume air flow circuit within/exceeding limit values. General fault information. Type of fault not specified.
P0102	**ECM-P010200**	Air mass or volume, airflow circuit low input signal. General fault information. Type of fault

		not specified.
P0103	**ECM-P010300**	Air mass or volume, airflow circuit high input signal. General fault information. Type of fault not specified.
P0106	**ECM-P010600**	Manifold Absolute Pressure/BARO Sensor Range/Performance. General Failure Information. No sub type information
P0107	**ECM-P010700**	Manifold absolute pressure/BARO sensor low input. General fault information. Type of fault not specified.
P0108	**ECM-P010800**	Manifold absolute pressure/BARO sensor high input. General fault information. Type of fault not specified.
P0111	**ECM-P011100**	Intake air temperature sensor 1 circuit within/exceeding limit values. General fault information. Type of fault not specified.
P0112	**ECM-P011200**	Intake air temperature sensor 1 circuit low input signal. General fault information. Type of fault not specified.
P0113	**ECM-P011300**	Intake air temperature sensor 1 circuit high input signal. General fault information. Type of fault not specified.
P0114	**ECM-P011400**	Intake air temperature sensor 1 intermittent/irregular. General fault information. Type of fault not specified.
P0116	**ECM-P011600**	Coolant temperature circuit within/outside the range. General fault information. No information about fault type
P0117	**ECM-P011700**	Coolant temperature circuit low input signal. General fault information. No information about fault type
P0118	**ECM-P011800**	Coolant temperature circuit high input signal. General fault information. No information about fault type
P0122	**ECM-P012200**	Throttle/pedal position sensor A circuit low input signal. General fault information. No information about fault type.
P0123	**ECM-P012300**	Throttle/pedal position sensor A circuit high input signal. General fault information. No information about fault type.
P0128	**ECM-P012800**	Coolant thermostat (coolant temperature lower than thermostat-control temperature. General malfunction information. No information on malfunction type
P0131	**ECM-P013100**	O2 Circuit Low Voltage (Bank 1, Sensor 1).

		General Failure Information. No sub type information
P0132	**ECM-P013200**	O2 Circuit High Voltage (Bank 1, Sensor 1). General Failure Information. No sub type information
P0133	**ECM-P013300**	Heated oxygen sensor (HO2S) slow response (bank 1, sensor 1). General fault information. No information about fault type
P0134	**ECM-P013400**	Heated oxygen sensor (HO2S) circuit no activity registered (bank 1, sensor 1). General fault information. No information about fault type
P0136	**ECM-P013600**	Heated oxygen sensor (HO2S) circuit (bank 1, sensor 2). General fault information. No information about fault type
P0137	**ECM-P013700**	Heated oxygen sensor (HO2S) circuit low voltage (bank 1, sensor 2). General fault information. No information about fault type
P0138	**ECM-P013800**	Heated oxygen sensor (HO2S) circuit high voltage (bank 1, sensor 2). General fault information. No information about fault type
P0151	**ECM-P015100**	O2 Circuit Low Voltage (Bank 2, Sensor 1). General Failure Information. No sub type information
P0152	**ECM-P015200**	O2 Circuit High Voltage (Bank 2, Sensor 1). General Failure Information. No sub type information
P0153	**ECM-P015300**	Heated oxygen sensor (HO2S) slow response (bank 2, sensor 1). General fault information. No information about fault type
P0154	**ECM-P015400**	Heated oxygen sensor (HO2S) circuit no activity registered (bank 2, sensor 1). General fault information. No information about fault type
P0156	**ECM-P015600**	Heated oxygen sensor (HO2S) circuit (bank 2, sensor 2). General fault information. No information about fault type
P0157	**ECM-P015700**	Heated oxygen sensor (HO2S) circuit low voltage (bank 2, sensor 2). General fault information. No information about fault type
P0158	**ECM-P015800**	Heated oxygen sensor circuit high voltage (bank 2, sensor 2). General malfunction information. No information on malfunction type
P0171	**ECM-P017100**	System too lean (bank 1). General malfunction information. No information on malfunction

		type
P0172	**ECM-P017200**	System too rich (bank 1). General malfunction information. No information on malfunction type
P0174	**ECM-P017400**	System too lean (bank 2). General malfunction information. No information on malfunction type
P0175	**ECM-P017500**	System too rich (bank 2). General malfunction information. No information on malfunction type
P0181	**ECM-P018100**	Fuel pressure temperature sensor A circuit within/outside range. General fault information. No information about fault type
P0182	**ECM-P018200**	Fuel temperature sensor A circuit low input signal. General fault information. No information about fault type
P0183	**ECM-P018300**	Fuel temperature sensor A circuit high input signal. General fault information. No information about fault type
P0191	**ECM-P019100**	Fuel rail pressure sensor within/outside limit values. General fault information. No information about fault type
P0192	**ECM-P019200**	Fuel rail pressure sensor low input. General fault information. No information about fault type
P0193	**ECM-P019300**	Fuel rail pressure sensor high input. General fault information. No information about fault type
P0201	**ECM-P020100**	Injector cylinder 1 open-circuit. General fault information. Type of fault not specified.
P0221	**ECM-P022100**	Throttle/pedal position switch B circuit within/outside range. General fault information. No information about fault type.
P0222	**ECM-P022200**	Throttle/pedal position sensor B circuit low input signal. General fault information. No information about fault type.
P0223	**ECM-P022300**	Throttle/pedal position sensor B circuit high input signal. General fault information. No information about fault type
P0300	**ECM-P030000**	Random misfire registered. General fault information. Type of fault not specified.
P0301	**ECM-P030100**	Cylinder 1 misfire registered. General fault information. Type of fault not specified.
P0326	**ECM-P032600**	Knock sensor 1 circuit within/exceeding limit values (bank 1). General fault information.

		Type of fault not specified.
P0327	**ECM-P032700**	Knock sensor 1 circuit low input signal (bank 1). General fault information. Type of fault not specified.
P0328	**ECM-P032800**	Knock sensor 1 circuit high input signal (bank 1). General fault information. Type of fault not specified.
P0331	**ECM-P033100**	Knock sensor 2 circuit within/exceeding limit values (bank 2). General fault information. Type of fault not specified.
P0332	**ECM-P033200**	Knock sensor 2 circuit low input signal (bank 2). General fault information. Type of fault not specified.
P0333	**ECM-P033300**	Knock sensor 2 circuit high input signal (bank 2). General fault information. Type of fault not specified.
P0335	**ECM-P033500**	Crankshaft position sensor A circuit low input signal. General fault information. Type of fault not specified.
P0336	**ECM-P033600**	Crankshaft position sensor A circuit within/exceeding limit values. General fault information. Type of fault not specified.
P0339	**ECM-P033900**	Crankshaft position sensor A circuit intermittent. General fault information. Type of fault not specified.
P0340	**ECM-P034000**	Camshaft Position Sensor A Circuit (Bank 1 or single sensor). General Failure Information. No sub type information
P0341	**ECM-P034100**	Camshaft position sensor A circuit within/exceeding limit values (bank 1 or single sensor). General fault information. Type of fault not specified.
P0345	**ECM-P034500**	Camshaft Position Sensor A Circuit (Bank 2). General Failure Information. No sub type information
P0346	**ECM-P034600**	Camshaft position sensor A circuit within/exceeding limit values (bank 2). General fault information. Type of fault not specified.
P0351	**ECM-P035100**	Ignition coil A, primary/secondary circuit. General fault information. Type of fault not specified.
P0365	**ECM-P036500**	Camshaft Position Sensor B Circuit (Bank 1). General Failure Information. No sub type information
P0366	**ECM-P036600**	Camshaft Position Sensor B Circuit

		Range/Performance (Bank 1). General Failure Information. No sub type information
P0369	**ECM-P039000**	Camshaft Position Sensor B Circuit (Bank 2). General Failure Information. No sub type information
P0391	**ECM-P039100**	Camshaft Position Sensor B Circuit Range/Performance (Bank 2). General Failure Information. No sub type information
P0420	**ECM-P042000**	Catalyst System Efficiency Below Threshold (Bank 1). General Failure Information. No sub type information
P0430	**ECM-P043000**	Catalyst System Efficiency Below Threshold (Bank 2). General Failure Information. No sub type information
P043E	**ECM-P043E00**	Evaporative Emission System Leak Detection Reference Orifice Low Flow. General Failure Information. No sub type information
P0441	**ECM-P044100**	EVAP emission system, faulty purge flow. General fault information. Type of fault not specified.
P0442	**ECM-P044200**	Evaporative Emission System Leak Detected (small leak). General Failure Information. No sub type information
P0455	**ECM-P045500**	EVAP emission system leakage registered (large leak/no flow). General fault information. Type of fault not specified.
P0458	**ECM-P045800**	EVAP emission system purge control valve circuit low. General fault information. Type of fault not specified.
P0459	**ECM-P045900**	EVAP emission system purge control valve circuit high. General fault information. Type of fault not specified.
P0461	**ECM-P046100**	Fuel level sensor A circuit within/outside limit values. General malfunction information. No information on malfunction type
P0462	**ECM-P046200**	Fuel level sensor A circuit low input signal. General malfunction information. No information on malfunction type
P0464	**ECM-P046400**	Fuel level sensor A circuit intermittent. General malfunction information. No information on malfunction type
P0480	**ECM-P048000**	Fan 1 control circuit. General fault information. Type of fault not specified.
P0500	**ECM-P050000**	Speed sensor A. General malfunction information. No information on malfunction

		type
P0501	**ECM-P050100**	Speed sensor A within/outside limit values. General malfunction information. No information on malfunction type
P0506	**ECM-P050600**	Idle control rpm lower than expected. General malfunction information. No information on malfunction type
P0507	**ECM-P050700**	Idle control rpm higher than expected. General malfunction information. No information on malfunction type
P050B	**ECM-P050B00**	Cold Start Ignition Timing Performance. General Failure Information. No sub type information
P0512	**ECM-P051200**	Start request circuit. General fault information. Type of fault not specified.
P052A	**ECM-P052A00**	Cold Start Camshaft Position Timing Over-Advanced (Bank 1). General Failure Information. No sub type information
P052B	**ECM-P052B00**	Cold Start Camshaft Position Timing Over-Retarded (Bank 1). General Failure Information. No sub type information
P052C	**ECM-P052C00**	Cold Start Camshaft Position Timing Over-Advanced (Bank 2). General Failure Information. No sub type information
P052D	**ECM-P052D00**	Cold Start Camshaft Position Timing Over-Retarded (Bank 2). General Failure Information. No sub type information
P0531	**ECM-P053100**	A/C refrigerant pressure sensor A circuit within/outside limit values. General malfunction information. No information on malfunction type
P0532	**ECM-P053200**	A/C refrigerant pressure sensor A circuit low input signal. General malfunction information. No information on malfunction type
P0533	**ECM-P053300**	A/C refrigerant pressure sensor A circuit high input signal. General malfunction information. No information on malfunction type
P0534	**ECM-P053400**	A/C refrigerant charging loss. General malfunction information. No information on malfunction type
P054A	**ECM-P054A00**	Cold Start Exhaust (B) Camshaft Position Timing Over-Advanced (Bank 1). General Failure Information. No sub type information
P054B	**ECM-P054B00**	Cold Start Exhaust (B) Camshaft Position Timing Over-Retarded (Bank 1). General

		Failure Information. No sub type information
P054C	**ECM-P054C00**	Cold Start Exhaust (B) Camshaft Position Timing Over-Advanced (Bank 2). General Failure Information. No sub type information
P054D	**ECM-P054D00**	Cold Start Exhaust (B) Camshaft Position Timing Over-Retarded (Bank 2). General Failure Information. No sub type information
P0562	**ECM-P056200**	System voltage low. General malfunction information. No information on malfunction type
P0563	**ECM-P056300**	System voltage high. General malfunction information. No information on malfunction type
P0574	**ECM-P057400**	Cruise Control System - Vehicle Speed Too High. General Failure Information. No sub type information
P0603	**ECM-P060300**	Internal malfunction in control module (KAM). General malfunction information. No information on malfunction type
P0607	**ECM-P060700**	Control module performance. General fault information. No information about fault type
P0615	**ECM-P061500**	Starter relay circuit. General fault information. Type of fault not specified.
P0616	**ECM-P061600**	Starter relay circuit low. General fault information. Type of fault not specified.
P0617	**ECM-P061700**	Starter relay circuit high. General fault information. Type of fault not specified.
P061A	**ECM-P061A62**	Internal Control Module Torque Performance. Algorithm Based Failures. Signal compare failure
P0620	**ECM-P062001**	Generator Control Circuit. General Failure Information. General electrical failure
P0620	**ECM-P06204B**	Generator Control Circuit. System Internal Failures. Over temperature
P0620	**ECM-P062074**	Generator Control Circuit. Mechanical Failures. Actuator slipping
P0628	**ECM-P062800**	Fuel pump A control circuit low. General fault information. No information about fault type
P0629	**ECM-P062900**	Fuel pump A control circuit high. General fault information. No information about fault type
P0634	**ECM-P063400**	PCM/ECM/TCM Internal temperature too high. General malfunction information. No information on malfunction type
P0641	**ECM-P064100**	Sensor reference voltage A open circuit. General malfunction information. No

		information on malfunction type
P0645	**ECM-P064500**	A/C connection relay control circuit. General malfunction information. No information on malfunction type
P0646	**ECM-P064600**	A/C connection relay control circuit low. General malfunction information. No information on malfunction type
P0647	**ECM-P064700**	A/C connection relay control circuit high. General malfunction information. No information on malfunction type
P0661	**ECM-P066100**	Intake manifold control valve control circuit low - bank 1. General fault information. No information about fault type
P0662	**ECM-P066200**	Intake manifold control valve control circuit high - bank 1. General fault information. No information about fault type
P0668	**ECM-P066800**	PCM/ECM/TCM internal temperature sensor circuit low. General malfunction information. No information on malfunction type
P0685	**ECM-P068500**	ECM/PCM power relay control circuit/open circuit. General malfunction information. No information on malfunction type
P0691	**ECM-P069100**	Fan 1 control circuit low. General fault information. Type of fault not specified.
P0692	**ECM-P069200**	Fan 1 control circuit high. General fault information. Type of fault not specified.
P0737	**ECM-P073700**	TCM engine rpm output circuit. General malfunction information. No information on malfunction type
P1126	**ECM-P112600**	Throttle Position (Narrow Range) Sensor Circuit. General Failure Information. No sub type information
P1224	**ECM-P122400**	Throttle Position Sensor B Out Of Self Test Range. General Failure Information. No sub type information
P1250	**ECM-P125000**	Throttle Valve Spring. General Failure Information. No sub type information
P1260	**ECM-P126000**	Theft registered, vehicle immobilized. General malfunction information. No information on malfunction type
P1270	**ECM-P127000**	Engine rpm or speed limitation reached. General malfunction information. No information on malfunction type
P1572	**ECM-P157200**	Bake pedal switch circuit. General fault information. Type of fault not specified.

P1574	ECM-P157400	Throttle position sensor output signals are not correct. General malfunction information. No information on malfunction type
P1589	ECM-P158900	Throttle Control Unable To Control To Desired Throttle Angle. General Failure Information. No sub type information
P1602	ECM-P160200	Immobilizer/ECM communication error. General malfunction information. No information on malfunction type
P1638	ECM-P163800	CAN-link ECM/INSTM circuit/network. General malfunction information. No information on malfunction type
P1709	ECM-P170900	Parking/neutral position switch outside self-test range. General malfunction information. No information on malfunction type
P1771	ECM-P177100	Throttle Position Sensor Circuit High Input. General Failure Information. No sub type information
P1772	ECM-P177200	Electronic throttle unit low input signal. General malfunction information. No information on malfunction type
P1934	ECM-P193400	Speed signal vehicle. General malfunction information. No information on malfunction type
P2004	ECM-P200400	Intake Manifold Runner Control Stuck Open (Bank 1). General Failure Information. No sub type information
P2006	ECM-P200600	Variable intake stuck in closed position (bank 1). General fault information. No information about fault type
P2067	ECM-P206700	Fuel level sensor B circuit low. General malfunction information. No information on malfunction type
P2096	ECM-P209600	Post Catalyst Fuel Trim System Too Lean Bank 1. General Failure Information. No sub type information
P2106	ECM-P210600	Throttle Actuator Control System - Forced Limited Power. General Failure Information. No sub type information
P2111	ECM-P211100	Electronic throttle unit control system - jammed in open position. General malfunction information. No information on malfunction type
P2118	ECM-P211800	Throttle Actuator Control Motor Current Range/Performance. General Failure Information. No sub type information

P2135	**ECM-P213500**	Throttle/pedal position sensor/contact A/B voltage correlation. General fault information. Type of fault not specified.
P2158	**ECM-P215886**	Vehicle Speed Sensor B. Bus Signal / Message Failures. Signal invalid
P2162	**ECM-P216200**	Speed sensor A/B correlation. General malfunction information. No information on malfunction type
P2175	**ECM-P217500**	Electronic throttle unit control system - low air flow registered. General malfunction information. No information on malfunction type
P2227	**ECM-P222700**	Barometric Pressure Circuit High Input. General Failure Information. No sub type information
P2228	**ECM-P222800**	Atmospheric pressure circuit low input signal. General fault information. Type of fault not specified.
P2270	**ECM-P227000**	O2 Sensor Signal Stuck Lean - Bank 1, Sensor 2. General Failure Information. No sub type information
P2271	**ECM-P227100**	O2 Sensor Signal Stuck Rich - Bank 1, Sensor 2. General Failure Information. No sub type information
P2272	**ECM-P227200**	O2 Sensor Signal Stuck Lean - Bank 2, Sensor 2. General Failure Information. No sub type information
P2273	**ECM-P227300**	O2 Sensor Signal Stuck Rich - Bank 2, Sensor 2. General Failure Information. No sub type information
p2401	**ECM-P240100**	EVAP emission system, leakage diagnosis pump control circuit low. General fault information. Type of fault not specified.
P2402	**ECM-P240200**	EVAP emission system, leakage diagnosis pump control circuit high. General fault information. Type of fault not specified.
P2408	**ECM-P240800**	Tank cap sensor/contact circuit. General fault information. Type of fault not specified.
P240B	**ECM-P240B00**	EVAP emission system, leakage diagnosis pump heating circuit low. General fault information. Type of fault not specified.
P240C	**ECM-P240C00**	EVAP emission system, leakage diagnosis pump heating circuit high. General fault information. Type of fault not specified.
P2419	**ECM-P241900**	Tank ventilation system changeover valve

		control circuit low. General fault information. Type of fault not specified.
P2420	**ECM-P242000**	Tank ventilation system changeover valve control circuit low. General fault information. Type of fault not specified.
P2421	**ECM-P242100**	Evaporative Emission Control System Vent Valve Stuck Open. General Failure Information. No sub type information
P2422	**ECM-P242200**	Evaporative Emission Control System Vent Valve Stuck Closed. General Failure Information. No sub type information
P250C	**ECM-P250C00**	Oil level sensor circuit low. General fault information. Type of fault not specified.
P250D	**ECM-P250D00**	Oil level sensor circuit high. General fault information. Type of fault not specified.
P250E	**ECM-P250E00**	Oil level sensor circuit intermittent/irregular. General fault information. Type of fault not specified.
P252B	**ECM-P252B00**	Oil quality sensor circuit within/exceeding limit values. General fault information. Type of fault not specified.
P252C	**ECM-P252C00**	Oil quality sensor circuit low. General fault information. Type of fault not specified.
P252D	**ECM-P252D00**	Oil quality sensor circuit high. General fault information. Type of fault not specified.
P2610	**ECM-P261000**	ECM/PCM internal engine shut-down timer performance. General malfunction information. No information on malfunction type
U0001	**ECM-U000100**	HS-CAN communication bus. General malfunction information. No information on malfunction type
U0101	**ECM-U010100**	Failed communication with transmission control module. General malfunction information. No information on malfunction type
U0104	**ECM-U010400**	Failed communication with cruise control module. General fault information. Type of fault not specified.
U0107	**ECM-U010700**	Lost Communication With Throttle Actuator Control Module. General Failure Information. No sub type information
U0120	**ECM-U012086**	Lost Communication with Starter/ Generator Control Module. Bus Signal / Message Failures. Signal invalid
U0120	**ECM-U012087**	Lost Communication with Starter/ Generator

		Control Module. Bus Signal / Message Failures. Missing message
U0121	ECM-U012100	Failed communication with brake control module. General malfunction information. No information on malfunction type
U0129	ECM-U012900	Failed communication with brake control module (BCM). General fault information. Type of fault not specified.
U0141	ECM-U014100	Failed communication with central electronic module "A". General malfunction information. No information on malfunction type
U0322	ECM-U032200	Software incompatible with body control module. General malfunction information. No information on malfunction type
U0400	ECM-U040000	Invalid data received. General malfunction information. No information on malfunction type
U0405	ECM-U040500	Invalid data from cruise control module. General fault information. Type of fault not specified.
U0418	ECM-U041823	Invalid Data Received From Brake control module. General Signal Failures. Signal stuck low
U0422	ECM-U042200	Invalid data received from central electronic module. General malfunction information. No information on malfunction type
U0426	ECM-U042600	Invalid data received from vehicle immobilizer control module. General malfunction information. No information on malfunction type
NA	ECM-XXXXXX	Unknown diagnostic trouble code (DTC) for current control module version

GLOBAL POSITIONING SYSTEM (GPS) DTCS

GLOBAL POSITIONING SYSTEM (GPS) - DTC INDEX

DTC	Description
GPS-0001	Antenna GPS. Signal missing
GPS-0002	Antenna GPS. Signal too high
GPS-0003	Control module. Internal fault

HEADLAMP CONTROL MODULE (HCM) DTCS

HEADLAMP CONTROL MODULE (HCM) - DTC INDEX

DTC	Description
HCM-B104076	Lamp Unit. Mechanical Failures. Wrong mounting position (B8444S)
HCM-B104076	Lamp Unit. Mechanical Failures. Wrong mounting position (B6324S)
HCM-B1D6401	Left Headlamp Swivelling Motor Circuit. General Failure Information. General electrical failure (B6324S)
HCM-B1D6401	Left Headlamp Swivelling Motor Circuit. General Failure Information. General electrical failure (B8444S)
HCM-B1D6477	Left Headlamp Swivelling Motor Circuit. Mechanical Failures. Commanded position not reachable (B6324S)
HCM-B1D6477	Left Headlamp Swivelling Motor Circuit. Mechanical Failures. Commanded position not reachable (B8444S)
HCM-B1D6501	Right Headlamp Swivelling Motor Circuit. General Failure Information. General electrical failure (B6324S)
HCM-B1D6501	Right Headlamp Swivelling Motor Circuit. General Failure Information. General electrical failure (B8444S)
HCM-B1D6577	Right Headlamp Swivelling Motor Circuit. Mechanical Failures. Commanded position not reachable (B6324S)
HCM-B1D6577	Right Headlamp Swivelling Motor Circuit. Mechanical Failures. Commanded position not reachable (B8444S)
HCM-B1D6616	Left Headlamp Power Module. General Electrical Failures. Circuit voltage below threshold (B6324S)
HCM-B1D6616	Left Headlamp Power Module. General Electrical Failures. Circuit voltage below threshold (B8444S)
HCM-B1D6716	Right Headlamp Power Module. General Electrical Failures. Circuit voltage below threshold (B6324S)
HCM-B1D6716	Right Headlamp Power Module. General Electrical Failures. Circuit voltage below threshold (B8444S)
HCM-P060141	Internal Control Module Memory Check Sum Error. System Internal Failures. General checksum failure (B6324S)
HCM-P060141	Internal Control Module Memory Check Sum Error. System Internal Failures. General checksum failure (B8444S)
HCM-U000100	High Speed CAN Communication Bus. General Failure Information. No sub type information (B6324S)
HCM-U000100	High Speed CAN Communication Bus. General Failure Information. No sub type information (B8444S)
HCM-U012687	Lost Communication With Steering Angle Sensor Module. Bus Signal/Message Failures. Missing message (B6324S)
HCM-U012687	Lost Communication With Steering Angle Sensor Module. Bus Signal/Message Failures. Missing message (B8444S)
HCM-U012987	Lost Communication With Brake Control Module. Bus Signal/Message Failures. Missing message (B6324S)
HCM-U012987	Lost Communication With Brake Control Module. Bus

	Signal/Message Failures. Missing message (B8444S)
HCM-U030000	Internal Control Module Software Incompatibility. General Failure Information. No sub type information (B6324S)
HCM-U030000	Internal Control Module Software Incompatibility. General Failure Information. No sub type information (B8444S)
HCM-U042281	Invalid Data Received From Central electronic module. Bus Signal/Message Failures. Invalid serial data received (B6324S)
HCM-U042281	Invalid Data Received From Central electronic module. Bus Signal/Message Failures. Invalid serial data received (B8444S)
HCM-U054283	Invalid Data Received From Headlamp Control Module "A". Bus Signal/Message Failures. Value of signal protection calculation incorrect (B6324S)
HCM-U054283	Invalid Data Received From Headlamp Control Module "A". Bus Signal/Message Failures. Value of signal protection calculation incorrect (B8444S)
HCM-U054286	Invalid Data Received From Headlamp Control Module "A". Bus Signal/Message Failures. Signal invalid (B6324S)
HCM-U054286	Invalid Data Received From Headlamp Control Module "A". Bus Signal/Message Failures. Signal invalid (B8444S)
HCM-U054288	Invalid Data Received From Headlamp Control Module "A". Bus Signal/Message Failures. Bus off (B6324S)
HCM-U054288	Invalid Data Received From Headlamp Control Module "A". Bus Signal/Message Failures. Bus off (B8444S)
HCM-U054383	Invalid Data Received From Headlamp Control Module "B". Bus Signal/Message Failures. Value of signal protection calculation incorrect (B6324S)
HCM-U054383	Invalid Data Received From Headlamp Control Module "B". Bus Signal/Message Failures. Value of signal protection calculation incorrect (B8444S)
HCM-U054386	Invalid Data Received From Headlamp Control Module "B". Bus Signal/Message Failures. Signal invalid (B6324S)
HCM-U054386	Invalid Data Received From Headlamp Control Module "B". Bus Signal/Message Failures. Signal invalid (B8444S)
HCM-U054388	Invalid Data Received From Headlamp Control Module "B". Bus Signal/Message Failures. Bus off (B6324S)
HCM-U054388	Invalid Data Received From Headlamp Control Module "B". Bus Signal/Message Failures. Bus off (B8444S)
HCM-U1A3887	Lost Communication With Left Headlamp Module. Bus Signal/Message Failures. Missing message (B6324S)
HCM-U1A3887	Lost Communication With Left Headlamp Module. Bus Signal/Message Failures. Missing message (B8444S)
HCM-U1A3987	Lost Communication With Right Headlamp Module. Bus Signal/Message Failures. Missing message (B6324S)
HCM-U1A3987	Lost Communication With Right Headlamp Module. Bus Signal/Message Failures. Missing message (B8444S)

HCM-U300316	Battery Voltage. General Electrical Failures. Circuit voltage below threshold (B6324S)
HCM-U300316	Battery Voltage. General Electrical Failures. Circuit voltage below threshold (B8444S)
HCM-U300317	Battery Voltage. General Electrical Failures. Circuit voltage above threshold (B6324S)
HCM-U300317	Battery Voltage. General Electrical Failures. Circuit voltage above threshold (B8444S)

INTEGRATED AUDIO MODULE (IAM) DTCS

INTEGRATED AUDIO MODULE (IAM) - DTC INDEX

DTC	Description
IAM-1001	AM/FM antenna. No signal
IAM-1002	AM/FM antenna. Faulty signal
IAM-2001	Control module. Internal fault
IAM-2002	Control module. Internal fault
IAM-2003	Control module. Internal fault
IAM-2004	Control module. Internal fault
IAM-2005	Control module. Internal fault
IAM-3001	Front left speaker. Signal too low
IAM-3002	Front left speaker. Signal too high
IAM-3003	Front left speaker. Faulty signal
IAM-3004	Front left speaker. No signal
IAM-3005	Front left speaker. Faulty signal
IAM-3011	Front right speaker. Signal too low
IAM-3012	Front right speaker. Signal too high
IAM-3013	Front right speaker. Faulty signal
IAM-3014	Front right speaker. No signal
IAM-3015	Front right speaker. Faulty signal
IAM-3021	Rear left speaker. Signal too low
IAM-3022	Rear left speaker. Signal too high
IAM-3023	Rear left speaker. Faulty signal
IAM-3024	Rear left speaker. No signal
IAM-3025	Rear left speaker. Faulty signal
IAM-3031	Rear right speaker. Signal too low
IAM-3032	Rear right speaker. Signal too high
IAM-3033	Rear right speaker. Faulty signal
IAM-3034	Rear right speaker. No signal
IAM-3035	Rear right speaker. Faulty signal
IAM-9001	Control module. Configuration fault
IAM-9002	Control module. Overheated

IAM-XXXX	Unspecified Diagnostic Trouble Code (DTC) for current control module version

INFOTAINMENT CONTROL MODULE (ICM) DTCS

INFOTAINMENT CONTROL MODULE (ICM) - DTC INDEX

DTC	Description
ICM-1A02	Control module. Faulty voltage
ICM-1A51	Communication with the audio module (AUD). Signal missing
ICM-1A53	Communication with the multimedia module (MMM). Signal missing
ICM-1A54	Communication with the Subwoofer module (SUB). Signal missing
ICM-1A57	Communication with the phone module (PHM). Signal missing
ICM-1A58	Communication with the Global positioning system module (GPS). Signal missing
ICM-1A5A	Communication with integrated audio module (IAM). Signal missing
ICM-1A5B	Communication with Remote Digital Audio Receiver (RDAR) Signal missing
ICM-1A5D	Communication With Accessory USB Unit (AUU) Signal missing
ICM-1D01	Control module. Internal fault
ICM-1D03	Control module, not fully programmed. Internal fault
ICM-1D07	Control module. Internal fault
ICM-1D08	Control module. Internal fault
ICM-1F20	Left keypad. Activated too long
ICM-1F21	Left-hand keypad circuit 1. Signal too high/too low
ICM-1F22	Left-hand keypad circuit 2. Signal too high/too low
ICM-1F23	Left-hand keypad circuit 3. Signal too high/too low
ICM-1F24	Left-hand keypad circuit 4. Signal too high/too low
ICM-1F25	Right-hand keypad circuit 5. Signal too high/too low
ICM-1F26	Right keypad. Activated too long
ICM-1F27	Right-hand keypad circuit 1. Signal too high/too low
ICM-1F28	Right-hand keypad circuit 2. Signal too high/too low
ICM-1F29	POWER button. Signal too high/low
ICM-1F30	POWER button. Activated too long
ICM-1F31	SOUND button. Activated too long
ICM-1F32	VOLUME knob. Signal missing
ICM-1F33	SELECTOR knob. Signal missing
ICM-1F34	VOLUME knob. Faulty signal
ICM-1F35	SELECTOR knob. Faulty signal
ICM-1F36	Display heater. Faulty voltage
ICM-1F38	Display Temperature Sensor Faulty Voltage
ICM-6C71	Audio module (AUD) not approved. Faulty signal
ICM-6C72	Multimedia module (MMM) not approved. Faulty signal

ICM-6C73	Subwoofer module (SUB) not approved. Faulty signal
ICM-6C76	Phone module (PHM) not approved. Faulty signal
ICM-6C77	Global Positioning Module (GPS) not valid. Faulty signal
ICM-6C79	Infotainment control module (ICM) not valid. Faulty signal
ICM-6C7A	Integrated audio module (IAM) not valid. Faulty signal
ICM-6C7B	Remote Digital Audio Receiver (RDAR) not valid Faulty signal
ICM-6C7D	Accessory USB Unit (AUU) not valid Faulty signal
ICM-DC00	Control module communication. Internal fault
ICM-DC01	Control module communication. Faulty signal
ICM-DC02	Control module communication. Signal missing
ICM-E001	Control module communication. Internal fault
ICM-E003	Configuration fault. Software fault
ICM-E010	Power supply. Signal too low
ICM-XXXX	Unknown diagnostic trouble code (DTC) for the current control module version

MULTIMEDIA MODULE (MMM) DTCS

MULTIMEDIA MODULE (MMM) - DTC INDEX

DTC	Description
MMM-1000	Control module. Internal fault
MMM-1010	Control module. Internal fault
MMM-1020	Control module. Internal fault
MMM-2000	Control module. Internal fault
MMM-2010	Control module. Internal fault
MMM-2100	Control module. Internal fault
MMM-2110	Control module. Internal fault
MMM-3100	GPS-antenna. Open circuit
MMM-3110	GPS-antenna. Ground (GND) short
MMM-4000	Control module. Internal fault
MMM-5000	Control module. Internal fault
MMM-5010	Control module. Internal fault
MMM-5020	Control module. Internal fault
MMM-6000	Control module Faulty configuration
MMM-XXXX	Unknown diagnostic trouble code (DTC) for the current control module version

PASSENGER DOOR MODULE (PDM) DTCS

PASSENGER DOOR MODULE (PDM) - DTC INDEX

DTC	Description
PDM-001D	Central locking button. Faulty signal

PDM-0034	Control, passenger window. Faulty signal
PDM-0035	Control, passenger window. Faulty signal
PDM-003A	Door mirror lamp. Signal too low
PDM-003E	Control module. Signal too high
PDM-0040	Outside temperature sensor. Signal too high
PDM-0041	Outside temperature sensor. Signal missing
PDM-0042	Control module. Internal fault
PDM-0043	Control module. Internal fault
PDM-E001	Control module communication. Faulty communication
PDM-E003	Configuration fault. Faulty configuration
PDM-XXXX	Unknown diagnostic trouble code (DTC) for the current control module version

PHONE MODULE (PHM) DTCS

PHONE MODULE (PHM) - DTC INDEX

DTC	Description
PHM-0008	Reserve microphone. Signal too high/Signal missing
PHM-000A	Reserve microphone. Signal too low
PHM-000B	Handset cradle. Signal too high/Signal missing
PHM-000D	Handset microphone. Signal too low
PHM-000F	Handset loudspeaker. Signal too high/Signal missing
PHM-0010	Handset loudspeaker. Signal too low
PHM-0012	Handset supply. Signal too low
PHM-0013	Control module. Internal fault
PHM-0014	Carphone antenna. Signal too high/Signal missing
PHM-0015	Control module. Internal fault
PHM-0020	Handset microphone. Signal too high/Signal missing
PHM-0022	Handset supply. Signal too high
PHM-0030	Reserve battery. Voltage too low
PHM-003A	Internal antenna. Signal missing
PHM-0040	SIM card. Internal fault
PHM-0063	Lighting switch. Signal too high/Signal missing
PHM-0064	Lighting switch. Signal too low
PHM-0065	Volvo On Call switch. Signal too low or signal missing
PHM-0066	Volvo On Call switch. Signal too high
PHM-0067	Reserv battery. Not connected
PHM-0068	SIM card holder. Signal missing
PHM-006B	Control module memory fault. Internal fault
PHM-006C	Handset cradle. Signal too low
PHM-0070	Control module. Incorrect software

PHM-0080	Volvo On Call switch. Incorrect keypad installed
PHM-0082	Volvo On Call switch. Activated too long
PHM-0090	Control module. Incorrect software
PHM-E001	Control module communication. Faulty communication
PHM-E003	Configuration fault. Faulty configuration
PHM-E010	Power supply. Faulty signal
PHM-XXXX	Unknown diagnostic trouble code (DTC) for the current control module version

POWER SEAT MODULE (PSM) DTCS

POWER SEAT MODULE (PSM) - DTC INDEX

DTC	Description
PSM-0001	Hall sensor 1. Faulty signal. Intermittent fault
PSM-0001	Hall sensor 1. Faulty signal. Permanent fault
PSM-0002	Hall sensor 2. Faulty signal. Intermittent fault
PSM-0002	Hall sensor 2. Faulty signal. Permanent fault
PSM-0003	Hall sensor 3. Faulty signal. Intermittent fault
PSM-0003	Hall sensor 3. Faulty signal. Permanent fault
PSM-0004	Hall sensor 4. Faulty signal. Intermittent fault
PSM-0004	Hall sensor 4. Faulty signal. Permanent fault
PSM-0019	Memory function 1. Internal fault. Intermittent fault
PSM-0019	Memory function 1. Internal fault. Permanent fault
PSM-001A	Memory function 2. Internal fault. Intermittent fault
PSM-001A	Memory function 2. Internal fault. Permanent fault
PSM-001B	Memory function 3. Internal fault. Intermittent fault
PSM-001B	Memory function 3. Internal fault. Permanent fault
PSM-001C	Control panel. Signal missing. Intermittent fault
PSM-001C	Control panel. Signal missing. Permanent fault
PSM-001D	Control module, relay. Internal fault. Intermittent fault
PSM-001D	Control module, relay. Internal fault. Permanent fault
PSM-001E	Battery voltage. Signal too low. Intermittent fault
PSM-001E	Battery voltage. Signal too low. Permanent fault
PSM-0020	Front-rear adjustment control, M1+. Too slow. Intermittent fault
PSM-0020	Front-rear adjustment control, M1+. Too slow. Permanent fault
PSM-0021	Front-rear adjustment control, M1- Too slow. Intermittent fault
PSM-0021	Front-rear adjustment control, M1-. Too slow. Permanent fault
PSM-0022	Backrest adjustment control, M2+. Too slow. Intermittent fault
PSM-0022	Backrest adjustment control, M2+. Too slow. Permanent fault
PSM-0023	Backrest adjustment control, M2-. Too slow. Intermittent fault
PSM-0023	Backrest adjustment control, M2-. Too slow. Permanent fault

PSM-0024	Rear edge adjustment control, M3+. Too slow. Intermittent fault
PSM-0024	Rear edge adjustment control, M3+. Too slow. Permanent fault
PSM-0025	Rear edge adjustment control, M3-. Too slow. Intermittent fault
PSM-0025	Rear edge adjustment control, M3-. Too slow. Permanent fault
PSM-0026	Front edge adjustment control, M4+. Too slow. Intermittent fault
PSM-0026	Front edge adjustment control, M4+. Too slow. Permanent fault
PSM-0027	Front edge adjustment control, M4-. Too slow. Intermittent fault
PSM-0027	Front edge adjustment control, M4-. Too slow. Permanent fault
PSM-0028	Operating button, memory 1. Too slow. Intermittent fault
PSM-0028	Operating button, memory 1. Too slow. Permanent fault
PSM-0029	Operating button, memory 2. Too slow. Intermittent fault
PSM-0029	Operating button, memory 2. Too slow. Permanent fault
PSM-002A	Operating button, memory 3. Too slow. Intermittent fault
PSM-002A	Operating button, memory 3. Too slow. Permanent fault
PSM-002B	Memory button. Too slow. Permanent fault
PSM-002B	Memory button. Too slow. Intermittent fault
PSM-002C	Button combination not permissible, M1+ and M1-. Faulty signal. Intermittent fault
PSM-002C	Button combination not permissible, M1+ and M1-. Faulty signal. Permanent fault
PSM-002D	Button combination not permissible, M2+ and M2-. Faulty signal. Intermittent fault
PSM-002D	Button combination not permissible, M2+ and M2-. Faulty signal. Permanent fault
PSM-002E	Button combination not permissible, M3+ and M3-. Faulty signal. Intermittent fault
PSM-002E	Button combination not permissible, M3+ and M3-. Faulty signal. Permanent fault
PSM-002F	Button combination not permissible, M4+ and M4-. Faulty signal. Intermittent fault
PSM-002F	Button combination not permissible, M4+ and M4-. Faulty signal. Permanent fault
PSM-0030	Front-rear adjustment, Motor 1 (M1+). Signal missing. Intermittent fault
PSM-0030	Front-rear adjustment, Motor 1 (M1+). Signal missing. Permanent fault
PSM-0031	Front-rear adjustment, Motor 1 (M1-). Signal missing. Intermittent fault
PSM-0031	Front-rear adjustment, Motor 1 (M1-). Signal missing. Permanent fault
PSM-0032	Backrest, Motor 2 (M2+). Signal missing. Intermittent fault
PSM-0032	Backrest, Motor 2 (M2+). Signal missing. Permanent fault
PSM-0033	Backrest, Motor 2 (M2-). Signal missing. Intermittent fault
PSM-0033	Backrest, Motor 2 (M2-). Signal missing. Permanent fault
PSM-0034	Seat rear edge, Motor 3 (M3+). Signal missing. Intermittent fault
PSM-0034	Seat rear edge, Motor 3 (M3+). Signal missing. Permanent fault

PSM-0035	Seat rear edge, Motor 3 (M3-). Signal missing. Intermittent fault
PSM-0035	Seat rear edge, Motor 3 (M3-). Signal missing. Permanent fault
PSM-0036	Seat front edge, Motor 4 (M4+). Signal missing. Permanent fault
PSM-0036	Seat front edge, Motor 4 (M4+). Signal missing. Intermittent fault
PSM-0037	Seat front edge, Motor 4 (M4-). Signal missing. Intermittent fault
PSM-0037	Seat front edge, Motor 4 (M4-). Signal missing. Permanent fault
PSM-0038	Wrong software
PSM-003A	Hall sensor 1. Faulty signal. Intermittent fault
PSM-003A	Hall sensor 1. Faulty signal. Permanent fault
PSM-003B	Hall sensor 2. Faulty signal. Intermittent fault
PSM-003B	Hall sensor 2. Faulty signal. Permanent fault
PSM-003C	Hall sensor 3. Faulty signal. Intermittent fault
PSM-003C	Hall sensor 3. Faulty signal. Permanent fault
PSM-003D	Hall sensor 4. Faulty signal. Intermittent fault
PSM-003D	Hall sensor 4. Faulty signal. Permanent fault
PSM-E001	Control module communication. Faulty communication
PSM-E003	Configuration fault. Faulty configuration
PSM-XXXX	Unknown diagnostic trouble code (DTC) for the current control module version

REAR ELECTRONIC MODULE (REM) DTCS

REAR ELECTRONIC MODULE (REM) - DTC INDEX

DTC	Description
REM-1D01	Control module. Internal fault
REM-1D02	Control module. Internal fault
REM-1D03	Control module, not fully programmed Internal fault
REM-1D07	Control module. Internal fault
REM-1D08	Control module. Internal fault
REM-1D0A	Control module. Internal fault
REM-1F8C	Trailer foglight driver, signal or temperature too high
REM-4A40	Gas temperature sensor. Signal too high
REM-4A41	Gas temperature sensor. Signal too low
REM-4A42	Gas pressure sensor. Signal too high
REM-4A43	Gas pressure sensor. Signal too low
REM-4A44	Fuel level, gas. Faulty signal
REM-4A45	Fuel level, gas. Signal too high
REM-4A46	Fuel level, gas. Signal too low
REM-4A47	Fuel level, gas. Signal too low
REM-4A48	Fuel level, gas. Signal too high
REM-4F42	Parking sensor 1. Faulty signal

REM-4F43	Parking sensor 2. Faulty signal
REM-4F44	Parking sensor 3. Faulty signal
REM-4F45	Parking sensor 4. Faulty signal
REM-4F46	Parking sensor 5. Faulty signal
REM-4F47	Parking sensor 6. Faulty signal
REM-4F48	Parking sensor 7. Faulty signal
REM-4F49	Parking sensor 8. Faulty signal
REM-4F4A	Parking assistance module (PAM). Faulty signal
REM-6A01	Switch, central locking motor. Signal too high
REM-6A02	Switch central locking motor. Signal too high
REM-6A03	Switch central locking motor. Signal too low
REM-6A04	Switch central locking motor. Signal too low
REM-6A05	Switch locking motor child-proof lock. Faulty signal
REM-6A06	Switch locking motor child-proof lock. Faulty signal
REM-6A07	Power child lock motor switch. Faulty signal
REM-6A08	Power child lock motor switch. Faulty signal
REM-6A09	Power child lock motor switch. Faulty signal
REM-6A0A	Power child lock motor switch. Faulty signal
REM-6A10	Door switch. Signal too high
REM-6A11	Door switch. Signal too high
REM-6A12	Door switch. Signal too high
REM-6A13	Door switch. Signal too high
REM-6A14	Hood switch. Signal too high
REM-6A15	Switch, tailgate. Signal too high
REM-6C11	Tilt sensor. Signal too high
REM-6C12	Tilt sensor. Signal too low
REM-6C15	Tilt sensor. Communication fault
REM-6C16	Tilt sensor. Internal fault
REM-6C17	Glass break wire. Signal missing
REM-6C18	Glass break wire. Signal too high
REM-6F51	Tailgate handle. Signal too low
REM-7A20	Subwoofer X-feed, signal or temperature too high
REM-8B01	Parking lamps right. Signal too low
REM-8B11	Parking lamps left. Signal too low
REM-8B21	License plate lighting. Signal too low
REM-8C21	Rear fog lamp. Signal too low
REM-8D11	High level stop lamp. Signal too low
REM-8D12	High level stop lamp. Signal too high
REM-8F10	Position sensor xenon lamp. Signal too high
REM-8F11	Xenon lamp position sensor. Signal too low
REM-8F12	Xenon lamp position sensor. Not calibrated
REM-8F13	

	Position sensor xenon lamp. Calibration fault
REM-9F21	Cargo compartment lighting. Signal too low
REM-DD00	LIN communication. Communication fault
REM-DD01	LIN communication. Communication fault
REM-DD02	LIN communication. Communication fault
REM-DD10	LIN communication. Communication fault
REM-DD20	Level sensor alarm. Communication fault
REM-DD21	Level sensor alarm. Faulty signal
REM-E001	Control module communication. Defective communication
REM-E003	Configuration fault. Faulty configuration
REM-E010	Power supply control module. Signal too low
REM-XXXX	Unknown diagnostic trouble code (DTC) for the current control module version

STEERING ANGLE SENSOR (SAS) DTCS

STEERING ANGLE SENSOR (SAS) - DTC INDEX

DTC	Description
SAS-C008B64	Excessive steering angle. Algorithm fault. Inappropriate signal (B6324S)
SAS-C008B64	Excessive steering angle. Algorithm fault. Inappropriate signal (B8444S)
SAS-C008C64	Excessive rate of change of steering angle. Algorithm fault. Inappropriate signal (B6324S)
SAS-C008C64	Excessive rate of change of steering angle. Algorithm fault. Inappropriate signal (B8444S)
SAS-C008D05	Steering Angle Sensor (SAS) - ECU internal fault. General information. Programming fault (B6324S)
SAS-C008D05	Steering Angle Sensor (SAS) - ECU internal fault. General information. Programming fault (B8444S)
SAS-C008E44	Steering Angle Sensor (SAS) - ECU stack overrun. Internal fault. Data memory fault (B6324S)
SAS-C008E44	Steering Angle Sensor (SAS) - ECU stack overrun. Internal fault. Data memory fault (B8444S)
SAS-C008F44	Steering Angle Sensor (SAS) - double check fault. Internal fault. Data memory fault (B6324S)
SAS-C008F44	Steering Angle Sensor (SAS) - double check fault. Internal fault. Data memory fault (B8444S)
SAS-C009005	Steering Angle Sensor (SAS) - RAM check-sum fault. General information. Programming fault (B6324S)
SAS-C009005	Steering Angle Sensor (SAS) - RAM check-sum fault. General information. Programming fault (B8444S)
SAS-C009102	Steering Angle Sensor (SAS) - analogue-digital converter LED fault.

	General fault information. General signal fault (B6324S)
SAS-C009102	Steering Angle Sensor (SAS) - analogue-digital converter LED fault. General fault information. General signal fault (B8444S)
SAS-C009205	Steering Angle Sensor (SAS) - task overstepping CAN MCU (main ECU). General information. Programming fault (B6324S)
SAS-C009205	Steering Angle Sensor (SAS) - task overstepping CAN MCU (main ECU). General information. Programming fault (B8444S)
SAS-C009305	Steering Angle Sensor (SAS) - task overstepping double control CAN MCU (main ECU). General information. Programming fault (B6324S)
SAS-C009305	Steering Angle Sensor (SAS) - task overstepping double control CAN MCU (main ECU). General information. Programming fault (B8444S)
SAS-C009404	Steering Angle Sensor (SAS) analogue-digital converter. General fault information. Internal fault (B6324S)
SAS-C009404	Steering Angle Sensor (SAS) analogue-digital converter. General fault information. Internal fault (B8444S)
SAS-C009513	Steering Angle Sensor (SAS) - no internal ground or 12 V connection. General electrical fault. Open circuit (B6324S)
SAS-C009513	Steering Angle Sensor (SAS) - no internal ground or 12 V connection. General electrical fault. Open circuit (B8444S)
SAS-C009687	The Steering Angle Sensor (SAS) lacks vehicle configuration data. Bus or message fault. Missing message (B6324S)
SAS-C009687	The Steering Angle Sensor (SAS) lacks vehicle configuration data. Bus or message fault. Missing message (B8444S)
SAS-C009781	Steering Angle Sensor (SAS) invalid total parameter value. Bus or message fault. Faulty data received (B6324S)
SAS-C009781	Steering Angle Sensor (SAS) invalid total parameter value. Bus or message fault. Faulty data received (B8444S)
SAS-C009887	The Steering Angle Sensor (SAS) lacks an ignition switch signal. Bus or message fault. Missing message (B6324S)
SAS-C009887	The Steering Angle Sensor (SAS) lacks an ignition switch signal. Bus or message fault. Missing message (B8444S)
SAS-C009904	Steering Angle Sensor (SAS). General fault information. Internal fault (B6324S)
SAS-C009904	Steering Angle Sensor (SAS). General fault information. Internal fault (B8444S)
SAS-C009D01	Steering Angle Sensor (SAS) analogue-digital converter fault. General fault information. General electrical fault (B6324S)
SAS-C009D01	Steering Angle Sensor (SAS) analogue-digital converter fault. General fault information. General electrical fault (B8444S)
SAS-C009E64	CPU to CPU communication fault. Algorithm fault. Inappropriate signal (B6324S)
SAS-C009E64	CPU to CPU communication fault. Algorithm fault. Inappropriate

	signal (B8444S)
SAS-C009F64	Invalid Grey code. Algorithm fault. Inappropriate signal (B6324S)
SAS-C009F64	Invalid Grey code. Algorithm fault. Inappropriate signal (B8444S)
SAS-C010029	Analogue sensor 1 outside limit. General signal fault. Signal invalid (B6324S)
SAS-C010029	Analogue sensor 1 outside limit. General signal fault. Signal invalid (B8444S)
SAS-C010129	Analogue sensor 2 outside limit. General signal fault. Signal invalid (B6324S)
SAS-C010129	Analogue sensor 2 outside limit. General signal fault. Signal invalid (B8444S)
SAS-C010229	Analogue sensor sum outside limit. General signal fault. Signal invalid (B6324S)
SAS-C010229	Analogue sensor sum outside limit. General signal fault. Signal invalid (B8444S)
SAS-C010349	The Steering Angle Sensor (SAS) lacks internal voltage (5 V). Internal fault. Electrical fault (B6324S)
SAS-C010349	The Steering Angle Sensor (SAS) lacks internal voltage (5 V). Internal fault. Electrical fault (B8444S)
SAS-U001000	Medium speed CAN communication bus. General fault information. No information about the type of fault. (B6324S)
SAS-U001000	Medium speed CAN communication bus. General fault information. No information about the type of fault. (B8444S)
SAS-U030000	The internal software of the control module is incompatible. General fault information. No information about the type of fault. (B6324S)
SAS-U030000	The internal software of the control module is incompatible. General fault information. No information about the type of fault. (B8444S)
SAS-U300362	Battery voltage. Algorithm fault. Comparison fault (B6324S)
SAS-U300362	Battery voltage. Algorithm fault. Comparison fault (B8444S)
SAS-XXXXXX	Unspecified diagnostic trouble code (DTC) for current control module version. General electrical fault. Short circuit to ground (B6324S)
SAS-XXXXXX	Unspecified diagnostic trouble code (DTC) for current control module version. General electrical fault. Short circuit to ground (B8444S)

SUPPLEMENTAL RESTRAINT SYSTEM (SRS) DTCS

SUPPLEMENTAL RESTRAINT SYSTEM (SRS) - DTC INDEX

DTC	Description
SRS-0010	Driver's airbag stage 1. Signal too high. Intermittent fault
SRS-0010	Driver's airbag stage 1. Signal too high. Permanent fault
SRS-0011	Driver's airbag stage 1. Signal too low. Intermittent fault
SRS-0011	Driver's airbag stage 1. Signal too low. Permanent fault
SRS-0012	Driver airbag, stage 1. Capacitance too high. Intermittent fault

SRS-0012	Driver airbag, stage 1. Capacitance too high. Permanent fault
SRS-0013	Driver airbag, stage 1. Capacitance too low. Intermittent fault
SRS-0013	Driver airbag, stage 1. Capacitance too low. Permanent fault
SRS-0014	Driver airbag, stage 1. Resistance too high. Intermittent fault
SRS-0014	Driver airbag, stage 1. Resistance too high. Permanent fault
SRS-0015	Driver airbag, stage 1. Resistance too low. Intermittent fault
SRS-0015	Driver airbag, stage 1. Resistance too low. Permanent fault
SRS-0016	Driver's airbag, stage 1. Configuration fault. Intermittent fault
SRS-0018	Driver airbag, stage 2. Signal too high. Intermittent fault
SRS-0018	Driver airbag, stage 2. Signal too high. Permanent fault
SRS-0019	Driver airbag, stage 2. Signal too low. Intermittent fault
SRS-0019	Driver airbag, stage 2. Signal too low. Permanent fault
SRS-001A	Driver's airbag, stage 2. Capacitance too high. Intermittent fault
SRS-001A	Driver's airbag, stage 2. Capacitance too high. Permanent fault
SRS-001B	Driver's airbag, stage 2. Capacitance too low. Intermittent fault
SRS-001B	Driver's airbag, stage 2. Capacitance too low. Permanent fault
SRS-001C	Driver's airbag, stage 2. Resistance too high. Intermittent fault
SRS-001C	Driver's airbag, stage 2. Resistance too high. Permanent fault
SRS-001D	Driver's airbag, stage 2. Resistance too low. Intermittent fault
SRS-001D	Driver's airbag, stage 2. Resistance too low. Permanent fault
SRS-001E	Driver.s airbag stage 2. Configuration fault. Permanent fault
SRS-0020	Passenger airbag, stage 1. Signal too high. Intermittent fault
SRS-0020	Passenger airbag, stage 1. Signal too high. Permanent fault
SRS-0021	Passenger airbag, stage 1. Signal too low. Intermittent fault
SRS-0021	Passenger airbag, stage 1. Signal too low. Permanent fault
SRS-0022	Passenger airbag, stage 1. Capacitance too high. Intermittent fault
SRS-0022	Passenger airbag, stage 1. Capacitance too high. Permanent fault
SRS-0023	Passenger airbag, stage 1. Capacitance too low. Intermittent fault
SRS-0023	Passenger airbag, stage 1. Capacitance too low. Permanent fault
SRS-0024	Passenger airbag, stage 1. Resistance too high. Intermittent fault
SRS-0024	Passenger airbag, stage 1. Resistance too high. Permanent fault
SRS-0025	Passenger airbag, stage 1. Resistance too low. Intermittent fault
SRS-0025	Passenger airbag, stage 1. Resistance too low. Permanent fault
SRS-0026	Passenger airbag, stage 1. Configuration fault. Intermittent fault
SRS-0028	Passenger airbag stage 2. Signal too high. Intermittent fault
SRS-0028	Passenger airbag stage 2. Signal too high. Permanent fault
SRS-0029	Passenger airbag stage 2. Signal too low. Intermittent fault
SRS-0029	Passenger airbag stage 2. Signal too low. Permanent fault
SRS-002A	Passenger airbag, stage 2. Capacitance too high. Intermittent fault
SRS-002A	Passenger airbag, stage 2. Capacitance too high. Permanent fault
SRS-002B	Passenger airbag, stage 2. Capacitance too low. Intermittent fault
SRS-002B	

	Passenger airbag, stage 2. Capacitance too low. Permanent fault
SRS-002C	Passenger airbag, stage 2. Resistance too high. Intermittent fault
SRS-002C	Passenger airbag, stage 2. Resistance too high. Permanent fault
SRS-002D	Passenger airbag, stage 2. Resistance too low. Intermittent fault
SRS-002D	Passenger airbag, stage 2. Resistance too low. Permanent fault
SRS-0030	Front left side impact protection (SIPS) bag. Signal too high. Intermittent fault
SRS-0030	Front left side impact protection (SIPS) bag. Signal too high. Permanent fault
SRS-0031	Front left side impact protection (SIPS) bag. Signal too low. Intermittent fault
SRS-0031	Front left side impact protection (SIPS) bag. Signal too low. Permanent fault
SRS-0032	Front left side impact protection (SIPS) bag. Capacitance too high. Intermittent fault
SRS-0032	Front left side impact protection (SIPS) bag. Capacitance too high. Permanent fault
SRS-0033	Front left side impact protection (SIPS) bag. Capacitance too low. Intermittent fault
SRS-0033	Front left side impact protection (SIPS) bag. Capacitance too low. Permanent fault
SRS-0034	Front left side impact protection (SIPS) bag. Resistance too high. Intermittent fault
SRS-0034	Front left side impact protection (SIPS) bag. Resistance too high. Permanent fault
SRS-0035	Front left side impact protection (SIPS) bag. Resistance too low. Intermittent fault
SRS-0035	Front left side impact protection (SIPS) bag. Resistance too low. Permanent fault
SRS-0036	Left front side impact protection (SIPS) bag. Configuration fault. Permanent fault
SRS-0038	Left inflatable curtain. Signal too high. Intermittent fault
SRS-0038	Left inflatable curtain. Signal too high. Permanent fault
SRS-0039	Left inflatable curtain. Signal too low. Intermittent fault
SRS-0039	Left inflatable curtain. Signal too low. Permanent fault
SRS-003A	Left inflatable curtain. Capacitance too high. Intermittent fault
SRS-003A	Left inflatable curtain. Capacitance too high. Permanent fault
SRS-003B	Left inflatable curtain. Capacitance too low. Intermittent fault
SRS-003B	Left inflatable curtain. Capacitance too low. Permanent fault
SRS-003C	Left inflatable curtain. Resistance too high. Intermittent fault
SRS-003C	Left inflatable curtain. Resistance too high. Permanent fault
SRS-003D	Left inflatable curtain. Resistance too low. Intermittent fault
SRS-003D	Left inflatable curtain. Resistance too low. Permanent fault

SRS-0040	Right front side impact protection (SIPS) bag. Signal too high. Intermittent fault
SRS-0040	Right front side impact protection (SIPS) bag. Signal too high. Permanent fault
SRS-0041	Right front side impact protection (SIPS) bag. Signal too low. Intermittent fault
SRS-0041	Right front side impact protection (SIPS) bag. Signal too low. Permanent fault
SRS-0042	Right front side impact protection (SIPS) bag. Capacitance too high. Intermittent fault
SRS-0042	Right front side impact protection (SIPS) bag. Capacitance too high. Permanent fault
SRS-0043	Right front side impact protection (SIPS) bag. Capacitance too low. Intermittent fault
SRS-0043	Right front side impact protection (SIPS) bag. Capacitance too low. Permanent fault
SRS-0044	Right front side impact protection (SIPS) bag. Resistance too high. Intermittent fault
SRS-0044	Right front side impact protection (SIPS) bag. Resistance too high. Permanent fault
SRS-0045	Right front side impact protection (SIPS) bag. Resistance too low. Intermittent fault
SRS-0045	Right front side impact protection (SIPS) bag. Resistance too low. Permanent fault
SRS-0048	Right inflatable curtain. Signal too high. Intermittent fault
SRS-0048	Right inflatable curtain. Signal too high. Permanent fault
SRS-0049	Right inflatable curtain. Signal too low. Intermittent fault
SRS-0049	Right inflatable curtain. Signal too low. Permanent fault
SRS-004A	Right inflatable curtain. Capacitance too high. Intermittent fault
SRS-004A	Right inflatable curtain. Capacitance too high. Permanent fault
SRS-004B	Right inflatable curtain. Capacitance too low. Intermittent fault
SRS-004B	Right inflatable curtain. Capacitance too low. Permanent fault
SRS-004C	Right inflatable curtain. Resistance too high. Intermittent fault
SRS-004C	Right inflatable curtain. Resistance too high. Permanent fault
SRS-004D	Right inflatable curtain. Resistance too low. Intermittent fault
SRS-004D	Right inflatable curtain. Resistance too low. Permanent fault
SRS-0050	Passenger airbag stage 3. Signal too high
SRS-0051	Passenger airbag, stage 3. Signal too low
SRS-0052	Passenger airbag, stage 3. Capacitance too high
SRS-0053	Passenger airbag, stage 3. Capacitance too low
SRS-0054	Passenger airbag, stage 3. Resistance too high
SRS-0055	Passenger airbag, stage 3. Resistance too low
SRS-0056	Passenger airbag, stage 3. Configuration fault

SRS-0058	Driver airbag, stage 3. Signal too high
SRS-0059	Driver airbag, stage 3. Signal too low
SRS-005A	Driver's airbag, stage 3. Capacitance too high
SRS-005B	Driver's airbag, stage 3. Capacitance too low
SRS-005C	Driver's airbag, stage 3. Resistance too high
SRS-005D	Driver's airbag, stage 3. Resistance too low
SRS-005E	Driver's airbag stage 3. Configuration fault
SRS-0060	Front left seat belt tensioner. Signal too high. Intermittent fault
SRS-0060	Front left seat belt tensioner. Signal too high. Permanent fault
SRS-0061	Front left seat belt tensioner. Signal too low. Intermittent fault
SRS-0061	Front left seat belt tensioner. Signal too low. Permanent fault
SRS-0062	Front left seat belt tensioner. Capacitance too high. Intermittent fault
SRS-0062	Front left seat belt tensioner. Capacitance too high. Permanent fault
SRS-0063	Front left seat belt tensioner. Capacitance too low. Intermittent fault
SRS-0063	Front left seat belt tensioner. Capacitance too low. Permanent fault
SRS-0064	Front left seat belt tensioner. Resistance too high. Intermittent fault
SRS-0064	Front left seat belt tensioner. Resistance too high. Permanent fault
SRS-0065	Front left seat belt tensioner. Resistance too low. Intermittent fault
SRS-0065	Front left seat belt tensioner. Resistance too low. Permanent fault
SRS-0066	Front left seat belt tensioner. Configuration fault. Intermittent fault
SRS-0068	Front right seat belt tensioner. Signal too high. Intermittent fault
SRS-0068	Front right seat belt tensioner. Signal too high. Permanent fault
SRS-0069	Front right seat belt tensioner. Signal too low. Intermittent fault
SRS-0069	Front right seat belt tensioner. Signal too low. Permanent fault
SRS-006A	Front right seat belt tensioner. Capacitance too high. Intermittent fault
SRS-006A	Front right seat belt tensioner. Capacitance too high. Permanent fault
SRS-006B	Front right seat belt tensioner. Capacitance too low. Intermittent fault
SRS-006B	Front right seat belt tensioner. Capacitance too low. Permanent fault
SRS-006C	Front right seat belt tensioner. Resistance too high. Intermittent fault
SRS-006C	Front right seat belt tensioner. Resistance too high. Permanent fault
SRS-006D	Front right seat belt tensioner. Resistance too low. Intermittent fault
SRS-006D	Front right seat belt tensioner. Resistance too low. Permanent fault
SRS-0070	Rear left seat belt tensioner. Signal too high. Intermittent fault
SRS-0070	Rear left seat belt tensioner. Signal too high. Permanent fault
SRS-0071	Rear left seat belt tensioner. Signal too low. Intermittent fault
SRS-0071	Rear left seat belt tensioner. Signal too low. Permanent fault
SRS-0072	Rear left seat belt tensioner. Capacitance too high. Intermittent fault
SRS-0072	Rear left seat belt tensioner. Capacitance too high. Permanent fault
SRS-0073	Rear left seat belt tensioner. Capacitance too low. Intermittent fault
SRS-0073	Rear left seat belt tensioner. Capacitance too low. Permanent fault
SRS-0074	Rear left seat belt tensioner. Resistance too high. Intermittent fault
SRS-0074	

	Rear left seat belt tensioner. Resistance too high. Permanent fault
SRS-0075	Rear left seat belt tensioner. Resistance too low. Intermittent fault
SRS-0075	Rear left seat belt tensioner. Resistance too low. Permanent fault
SRS-0076	Rear left seat belt tensioner. Configuration fault. Intermittent fault
SRS-0078	Rear center seat belt tensioner. Signal too high. Intermittent fault
SRS-0078	Rear center seat belt tensioner. Signal too high. Permanent fault
SRS-0079	Rear center seat belt tensioner. Signal too low. Intermittent fault
SRS-0079	Rear center seat belt tensioner. Signal too low. Permanent fault
SRS-007A	Rear center seat belt tensioner. Capacitance too high. Intermittent fault
SRS-007A	Rear center seat belt tensioner. Capacitance too high. Permanent fault
SRS-007B	Rear center seat belt tensioner. Capacitance too low. Intermittent fault
SRS-007B	Rear center seat belt tensioner. Capacitance too low. Permanent fault
SRS-007C	Rear center seat belt tensioner. Resistance too high. Intermittent fault
SRS-007C	Rear center seat belt tensioner. Resistance too high. Permanent fault
SRS-007D	Rear center seat belt tensioner. Resistance too low. Intermittent fault
SRS-007D	Rear center seat belt tensioner. Resistance too low. Permanent fault
SRS-007E	Rear center seat belt tensioner. Configuration fault. Intermittent fault
SRS-0080	Rear right seat belt tensioner. Signal too high. Intermittent fault
SRS-0080	Rear right seat belt tensioner. Signal too high. Permanent fault
SRS-0081	Rear right seat belt tensioner. Signal too low. Intermittent fault
SRS-0081	Rear right seat belt tensioner. Signal too low. Permanent fault
SRS-0082	Rear right seat belt tensioner. Capacitance too high. Intermittent fault
SRS-0082	Rear right seat belt tensioner. Capacitance too high. Permanent fault
SRS-0083	Rear right seat belt tensioner. Capacitance too low. Intermittent fault
SRS-0083	Rear right seat belt tensioner. Capacitance too low. Permanent fault
SRS-0084	Rear right seat belt tensioner. Resistance too high. Intermittent fault
SRS-0084	Rear right seat belt tensioner. Resistance too high. Permanent fault
SRS-0085	Rear right seat belt tensioner. Resistance too low. Intermittent fault
SRS-0085	Rear right seat belt tensioner. Resistance too low. Permanent fault
SRS-0090	Seat belt tensioner 3rd row left. Signal too high
SRS-0091	Seat belt tensioner 3rd row left. Signal too low
SRS-0092	Seat belt tensioner 3rd row left. Capacitance too high
SRS-0093	Seat belt tensioner 3rd row left. Capacitance too low
SRS-0094	Seat belt tensioner 3rd row left. Resistance too high
SRS-0095	Seat belt tensioner 3rd row left. Resistance too low
SRS-0096	Seat belt tensioner 3rd row left. Configuration fault
SRS-0098	Seat belt tensioner 3rd row right. Signal too high
SRS-0099	Seat belt tensioner 3rd row right. Signal too low
SRS-009A	Seat belt tensioner 3rd row right. Capacitance too high
SRS-009B	Seat belt tensioner 3rd row right. Capacitance too low
SRS-009C	Seat belt tensioner 3rd row right. Resistance too high
SRS-009D	

	Seat belt tensioner 3rd row right. Resistance too low
SRS-009E	Seat belt tensioner 3rd row right. Configuration fault
SRS-00A0	Inflatable curtain rear left. Signal too high
SRS-00A1	Inflatable curtain rear left. Signal too low
SRS-00A2	Inflatable curtain rear left. Capacitance too high
SRS-00A3	Inflatable curtain rear left. Capacitance too low
SRS-00A4	Inflatable curtain rear left. Resistance too high
SRS-00A5	Inflatable curtain rear left. Resistance too low
SRS-00A6	Inflatable curtain rear left. Configuration fault
SRS-00A8	Inflatable curtain rear right. Signal too high
SRS-00A9	Inflatable curtain rear right. Signal too low
SRS-00AA	Inflatable curtain rear right. Capacitance too high
SRS-00AB	Inflatable curtain rear right. Capacitance too low
SRS-00AC	Inflatable curtain rear right. Resistance too high
SRS-00AD	Inflatable curtain rear right. Resistance too low
SRS-00AE	Inflatable curtain rear right. Configuration fault
SRS-00B0	Front left side impact sensor. Faulty signal. Intermittent fault
SRS-00B0	Front left side impact sensor. Faulty signal. Permanent fault
SRS-00B1	Front left side impact sensor. Communication fault. Intermittent fault
SRS-00B1	Front left side impact sensor. Communication fault. Permanent fault
SRS-00B2	Front left side impact sensor. Faulty identity. Intermittent fault
SRS-00B2	Front left side impact sensor. Faulty identity. Permanent fault
SRS-00B3	Front left side impact sensor. Internal fault. Intermittent fault
SRS-00B4	Front left side impact sensor. Configuration fault. Intermittent fault
SRS-00B5	Front right side impact sensor. Faulty signal. Intermittent fault
SRS-00B5	Front right side impact sensor. Faulty signal. Permanent fault
SRS-00B6	Front right side impact sensor. Communication fault. Intermittent fault
SRS-00B6	Front right side impact sensor. Communication fault. Permanent fault
SRS-00B7	Front right side impact sensor. Faulty identity. Intermittent fault
SRS-00B7	Front right side impact sensor. Faulty identity. Permanent fault
SRS-00B8	Front right side impact sensor. Internal fault. Intermittent fault
SRS-00B9	Front right side impact sensor. Configuration fault. Intermittent fault
SRS-00BA	Rear left side impact sensor. Faulty signal. Intermittent fault
SRS-00BA	Rear left side impact sensor. Faulty signal. Permanent fault
SRS-00BB	Rear left side impact sensor. Communication fault. Intermittent fault
SRS-00BB	Rear left side impact sensor. Communication fault. Permanent fault
SRS-00BC	Rear left side impact sensor. Faulty identity. Intermittent fault
SRS-00BC	Rear left side impact sensor. Faulty identity. Permanent fault
SRS-00BD	Rear left side impact sensor. Internal fault. Intermittent fault
SRS-00BE	Rear left side impact sensor. Configuration fault. Intermittent fault
SRS-00BF	Rear right side impact sensor. Faulty signal. Intermittent fault
SRS-00BF	

	Rear right side impact sensor. Faulty signal. Permanent fault
SRS-00C0	Rear right side impact sensor. Communication fault. Intermittent fault
SRS-00C0	Rear right side impact sensor. Communication fault. Permanent fault
SRS-00C1	Rear right side impact sensor. Faulty identity. Intermittent fault
SRS-00C1	Rear right side impact sensor. Faulty identity. Permanent fault
SRS-00C2	Rear right side impact sensor. Internal fault. Intermittent fault
SRS-00C3	Rear right side impact sensor. Configuration fault. Intermittent fault
SRS-00C4	Front left side impact sensor. Cross-connected
SRS-00C5	Front right side impact sensor. Cross-connected
SRS-00C6	Rear left side impact sensor. Cross-connected
SRS-00C7	Rear right side impact sensor. Cross-connected
SRS-00D3	Collision signal. Signal too high. Intermittent fault
SRS-00D3	Collision signal. Signal too high. Permanent fault
SRS-00D4	SRS indicator lamp. Faulty function. Intermittent fault
SRS-00D4	SRS indicator lamp. Faulty function. Permanent fault
SRS-00D5	SRS indicator lamp. Signal missing. Intermittent fault
SRS-00D5	SRS indicator lamp. Signal missing. Permanent fault
SRS-00D7	Collision signal. Collision signal received. Intermittent fault
SRS-00D7	Collision signal. Collision signal received. Permanent fault
SRS-00D8	Control. Faulty signal. Intermittent fault
SRS-00D8	Control. Faulty signal. Permanent fault
SRS-00D9	Occupant weight sensor. Configuration fault
SRS-00DA	Model. Faulty signal. Intermittent fault
SRS-00DA	Model. Faulty signal. Permanent fault
SRS-00DB	Passenger airbag. Faulty signal. Intermittent fault
SRS-00DB	Passenger airbag. Faulty signal. Permanent fault
SRS-00DC	Number of seats. Faulty signal
SRS-00DD	CAN signal. Signal missing
SRS-00E2	CAN signal. Signal missing. Intermittent fault
SRS-00E2	CAN signal. Signal missing. Permanent fault
SRS-00E3	CAN signal. Signal missing. Intermittent fault
SRS-00E3	CAN signal. Signal missing. Permanent fault
SRS-00E4	CAN signal. Signal missing. Intermittent fault
SRS-00E4	CAN signal. Signal missing. Permanent fault
SRS-00E5	CAN signal. Faulty function
SRS-00E6	CAN signal. Signal missing
SRS-00E7	CAN signal. Signal missing
SRS-00E8	Adaptive steering column. Signal too high
SRS-00E9	Adaptive steering column. Signal too low
SRS-00EA	Adaptive steering column. Capacitance too high
SRS-00EB	Adaptive steering column. Capacitance too low
SRS-00EC	

	Adaptive steering column. Resistance too high
SRS-00ED	Adaptive steering column. Resistance too low
SRS-00EE	Adaptive steering column. Configuration fault
SRS-00F0	Front left seat belt buckle. Signal too high
SRS-00F1	Front left seat belt buckle. Signal too low or signal missing
SRS-00F2	Front left seat belt buckle. Faulty signal
SRS-00F3	Front right seat belt buckle. Signal too high
SRS-00F4	Front right seat belt buckle. Signal too low or signal missing
SRS-00F5	Front right seat belt buckle. Faulty signal
SRS-00F6	Front seat belt buckle. Signal too high
SRS-00F7	Front seat belt buckle. Signal too low
SRS-0101	Driver airbag stage 1. Circuit fault
SRS-0102	Driver airbag stage 2. Circuit fault
SRS-0103	Passenger airbag stage 1. Circuit fault
SRS-0104	Passenger airbag stage 2. Circuit fault
SRS-0105	Side impact protection (SIPS) bag left front. Circuit fault
SRS-0106	Inflatable curtain (IC) left. Circuit fault
SRS-0107	Side impact protection (SIPS) bag right front. Circuit fault
SRS-0108	Inflatable curtain (IC) right. Circuit fault
SRS-0109	Passenger airbag stage 3. Circuit fault
SRS-010A	Driver airbag stage 3. Circuit fault
SRS-010B	Seat belt tensioner left front. Circuit fault
SRS-010C	Seat belt tensioner right front. Circuit fault
SRS-010D	Seat belt tensioner left rear. Circuit fault
SRS-010E	Seat belt tensioner middle rear. Circuit fault
SRS-010F	Seat belt tensioner right rear. Circuit fault
SRS-0110	Control module. Internal fault. Intermittent fault
SRS-0111	Control module. Internal fault. Intermittent fault
SRS-0112	Control module. Internal fault. Intermittent fault
SRS-0113	Control module. Internal fault. Intermittent fault
SRS-0114	Control module. Internal fault. Intermittent fault
SRS-0115	Control module. Internal fault. Intermittent fault
SRS-011A	Control module. Internal fault. Intermittent fault
SRS-011B	Control module. Internal fault. Intermittent fault
SRS-011C	Control module. Internal fault
SRS-011D	Control module. Internal fault. Intermittent fault
SRS-011E	Control module. Internal fault. Intermittent fault
SRS-011F	Control module. Internal fault. Intermittent fault
SRS-0120	Control module. Internal fault. Intermittent fault
SRS-0121	Control module. Internal fault. Intermittent fault
SRS-0122	Control module. Internal fault. Intermittent fault
SRS-0123	

	Control module. Internal fault. Intermittent fault
SRS-0124	Control module. Internal fault. Intermittent fault
SRS-0125	Control module. Internal fault. Intermittent fault
SRS-0126	Control module. Internal fault. Intermittent fault
SRS-0127	Control module. Internal fault. Intermittent fault
SRS-0128	Control module. Internal fault. Intermittent fault
SRS-0129	Control module. Internal fault. Intermittent fault
SRS-012B	Control module. Internal fault. Intermittent fault
SRS-012C	Control module. Internal fault. Intermittent fault
SRS-0130	Control module. Internal fault. Intermittent Fault
SRS-0135	Belt tensioner 3rd row left. Circuit fault
SRS-0136	Belt tensioner 3rd row right. Circuit fault
SRS-0137	Inflatable curtain rear left. Circuit fault
SRS-0138	Inflatable curtain rear right. Circuit fault
SRS-0139	Adaptive steering column. Circuit fault
SRS-013A	Control module. Internal fault
SRS-013B	Control module. Internal fault
SRS-0210	Front right front impact sensor. Faulty signal
SRS-0211	Front right front impact sensor. Communication fault
SRS-0212	Front right front impact sensor. Faulty identification
SRS-0213	Front right front impact sensor. Internal fault
SRS-0214	Front right front impact sensor. Configuration fault
SRS-0215	Front right front impact sensor. Cross-connected
SRS-0218	Front left front impact sensor. Faulty signal
SRS-0219	Front left front impact sensor Communication fault
SRS-021A	Front left front impact sensor. Faulty identification
SRS-021B	Front left front impact sensor. Internal fault
SRS-021C	Front left front impact sensor. Configuration fault
SRS-021D	Front left front impact sensor. Cross-connected
SRS-0220	CAN signal. Signal missing
SRS-0221	CAN signal. Diagnostic trouble code (DTC) in the central electronic module (CEM)
SRS-0222	CAN signal. Diagnostic trouble code (DTC) in the central electronic module (CEM)
SRS-0223	CAN signal. Signal missing
SRS-0224	CAN signal. Configuration fault
SRS-0225	CAN signal. Configuration fault
SRS-0228	Control module. Programming error
SRS-0230	Switch for the passenger airbag. Signal too low or signal missing
SRS-0231	Switch for the passenger airbag. Signal too low or signal missing
SRS-0232	Switch for the passenger airbag. Incorrect measurement range

SRS-0233	Switch for the passenger airbag. Incorrect measurement range
SRS-0234	Switch for the passenger airbag. Signal too high
SRS-0235	Switch for the passenger airbag. Signal too high
SRS-0236	Switch for the passenger airbag. Faulty function
SRS-0237	Switch for the passenger airbag. Faulty signal
SRS-0238	Switch for the passenger airbag. Faulty signal
SRS-0239	Switch for the passenger airbag. Configuration fault
SRS-023A	Switch for the passenger airbag. Configuration fault
SRS-0240	Passenger airbag. Activation
SRS-0241	Passenger airbag. Deactivation
SRS-0250	Occupant weight sensor (OWS). Calibration fault
SRS-0251	Occupant weight sensor (OWS). Configuration fault
SRS-0252	Occupant weight sensor (OWS). Internal fault
SRS-0253	Occupant weight sensor (OWS). Communication fault
SRS-0254	Occupant weight sensor (OWS). Communication fault
SRS-0256	Occupant weight sensor (OWS). Internal fault
SRS-0258	Occupant weight sensor (OWS). Calibration fault
SRS-0259	Occupant weight sensor. Signal missing
SRS-025A	Occupant weight sensor (OWS). Internal fault
SRS-025B	Occupant weight sensor (OWS). Signal too low
SRS-025C	Occupant weight sensor (OWS). Signal too high
SRS-025D	Occupant weight sensor (OWS). Signal missing
SRS-025E	Occupant weight sensor (OWS). Internal fault
SRS-025F	Occupant weight sensor (OWS). Signal too low
SRS-0260	Occupant weight sensor (OWS). Signal too high
SRS-0261	Occupant weight sensor. Signal missing
SRS-0262	Occupant weight sensor (OWS). Incorrect data
SRS-DD00	Control module communication. Faulty communication
SRS-DD01	Communication control module. Signal too high / signal too low
SRS-DD02	Communication control module. Faulty communication
SRS-DD10	Communication control module. Faulty communication
SRS-E001	Control module communication. Faulty communication
SRS-E003	Configuration fault. Faulty configuration
SRS-XXXX	Unknown diagnostic trouble code (DTC) for the current control module version

TRANSMISSION CONTROL MODULE (TCM) DTCS

TRANSMISSION CONTROL MODULE (TCM) - DTC INDEX

DTC	Description
TCM-P021868	Transmission Fluid Overtemperature Condition. Algorithm Based

	Failures. Event information (B6324S, TF-80SC; B6324S, TF-80SC AWD)
TCM-P050000	Vehicle Speed Sensor A. General Failure Information. No sub type information (B6324S, TF-80SC; B6324S, TF-80SC AWD)
TCM-P050000	Speed sensor A. General fault information. No information on fault type (B8444S, TF-80SC AWD)
TCM-P056008	System voltage. General fault information. Bus/message fault (B8444S, TF-80SC AWD)
TCM-P056100	System Voltage Unstable. General Failure Information. No sub type information (B6324S, TF-80SC; B6324S, TF-80SC AWD)
TCM-P056100	System voltage unstable. General fault information. No information on fault type (B8444S, TF-80SC AWD)
TCM-P056200	System Voltage Low. General Failure Information. No sub type information (B6324S, TF-80SC; B6324S, TF-80SC AWD)
TCM-P056200	System voltage low. General information. No information on fault type (B8444S, TF-80SC AWD)
TCM-P056300	System voltage high. General fault information. No information on fault type (B8444S, TF-80SC AWD)
TCM-P060000	Serial communication link. General fault information. No information on fault type (B8444S, TF-80SC AWD)
TCM-P060100	Internal Control Module Memory Check Sum Error. General Failure Information. No sub type information (B6324S, TF-80SC; B6324S, TF-80SC AWD)
TCM-P060100	Internal fault in control module memory checksum. General fault information. No information on fault type (B8444S, TF-80SC AWD)
TCM-P060300	Internal Control Module Keep Alive Memory (KAM) Error. General Failure Information. No sub type information (B6324S, TF-80SC; B6324S, TF-80SC AWD)
TCM-P060300	Internal memory fault in control module (KAM). General for information. No information on fault type (B8444S, TF-80SC AWD)
TCM-P060400	Internal Control Module Random Access Memory (RAM) Error. General Failure Information. No sub type information (B6324S, TF-80SC; B6324S, TF-80SC AWD)
TCM-P060400	Internal memory fault in control module (RAM). General for information. No information on fault type (B8444S, TF-80SC AWD)
TCM-P060500	Internal Control Module Read Only Memory (ROM) Error. General Failure Information. No sub type information (B6324S, TF-80SC; B6324S, TF-80SC AWD)
TCM-P060500	Internal memory fault in control module (ROM). General for information. No information on fault type (B8444S, TF-80SC AWD)
TCM-P061000	Configuration fault in the control module. General fault information.

	No information about the fault type (B8444S, TF-80SC AWD)
TCM-P061400	ECM/TCM Incompatible. General Failure Information. No sub type information (B6324S, TF-80SC; B6324S, TF-80SC AWD)
TCM-P061400	ECM/TCM not compatible. General fault information. No information on fault type (B8444S, TF-80SC AWD)
TCM-P062F00	Internal Control Module EEPROM Error. General Failure Information. No sub type information (B6324S, TF-80SC; B6324S, TF-80SC AWD)
TCM-P062F00	Internal EEPROM memory fault in control module. General fault information. No information on fault type (B8444S, TF-80SC AWD)
TCM-P070500	Transmission Range Sensor A Circuit (PRNDL Input). General Failure Information. No sub type information (B6324S, TF-80SC; B6324S, TF-80SC AWD)
TCM-P070500	Gearbox position sensor A circuit (PRNDL input). General fault information. No information on fault type (B8444S, TF-80SC AWD)
TCM-P070600	Transmission Range Sensor A Circuit Range/Performance. General Failure Information. No sub type information (B6324S, TF-80SC; B6324S, TF-80SC AWD)
TCM-P070600	Gearbox position sensor A circuit inside/outside tolerance. General fault information. No information on fault type (B8444S, TF-80SC AWD)
TCM-P070900	Gearbox position sensor A circuit intermittent. General fault information. No information on fault type (B8444S, TF-80SC AWD)
TCM-P070900	Transmission Range Sensor A Circuit Intermittent. General Failure Information. No sub type information (B6324S, TF-80SC; B6324S, TF-80SC AWD)
TCM-P071100	Transmission Fluid Temperature Sensor A Circuit Range/Performance. General Failure Information. No sub type information (B6324S, TF-80SC; B6324S, TF-80SC AWD)
TCM-P071100	Gearbox oil temperature sensor A circuit inside/outside tolerance. General fault information. No information on fault type (B8444S, TF-80SC AWD)
TCM-P071200	Transmission Fluid Temperature Sensor A Circuit Low Input. General Failure Information. No sub type information (B6324S, TF-80SC; B6324S, TF-80SC AWD)
TCM-P071200	Gearbox oil temperature sensor A circuit inside/outside tolerance. General fault information. No information on fault type (B8444S, TF-80SC AWD)
TCM-P071300	Transmission Fluid Temperature Sensor A Circuit High Input. General Failure Information. No sub type information (B6324S, TF-80SC; B6324S, TF-80SC AWD)
TCM-P071300	Gearbox oil temperature sensor A circuit inside/outside tolerance.

	General fault information. No information on fault type (B8444S, TF-80SC AWD)
TCM-P071500	Turbine/Input Shaft Speed Sensor A Circuit. General Failure Information. No sub type information (B6324S, TF-80SC; B6324S, TF-80SC AWD)
TCM-P071500	Turbine/input shaft speed sensor A circuit. General fault information. No information on fault type (B8444S, TF-80SC AWD)
TCM-P071600	Turbine/Input Shaft Speed Sensor A Circuit Range/Performance. General Failure Information. No sub type information (B6324S, TF-80SC; B6324S, TF-80SC AWD)
TCM-P071600	Turbine/input shaft speed sensor A circuit inside/outside tolerance. General fault information. No information on fault type (B8444S, TF-80SC AWD)
TCM-P071700	Turbine/input shaft speed sensor A circuit no signal. General fault information. No information on fault type (B8444S, TF-80SC AWD)
TCM-P071800	Turbine/Input Shaft Speed Sensor A Circuit Intermittent. General Failure Information. No sub type information (B6324S, TF-80SC; B6324S, TF-80SC AWD)
TCM-P071800	Turbine/input shaft speed sensor A circuit intermittent. General fault information. No information on fault type (B8444S, TF-80SC AWD)
TCM-P072000	Output Shaft Speed Sensor Circuit. General Failure Information. No sub type information (B6324S, TF-80SC; B6324S, TF-80SC AWD)
TCM-P072000	Output shaft speed sensor circuit. General fault information. No information on fault type (B8444S, TF-80SC AWD)
TCM-P072100	Output Shaft Speed Sensor Circuit Range/Performance. General Failure Information. No sub type information (B6324S, TF-80SC; B6324S, TF-80SC AWD)
TCM-P072100	Output shaft speed sensor circuit inside/outside tolerance. General fault information. No information on fault type (B8444S, TF-80SC AWD)
TCM-P072200	Output Shaft Speed Sensor Circuit No Signal. General Failure Information. No sub type information (B6324S, TF-80SC; B6324S, TF-80SC AWD)
TCM-P072200	Output shaft speed sensor circuit no signal. General fault information. No information on fault type (B8444S, TF-80SC AWD)
TCM-P072300	Output Shaft Speed Sensor Circuit Intermittent. General Failure Information. No sub type information (B6324S, TF-80SC; B6324S, TF-80SC AWD)
TCM-P072300	Output shaft speed sensor circuit intermittent. General fault information. No information on fault type (B8444S, TF-80SC AWD)

TCM-P072500	Engine Speed Input Circuit. General Failure Information. No sub type information (B6324S, TF-80SC; B6324S, TF-80SC AWD)
TCM-P072500	Engine speed input circuit. General fault information. No information on fault type (B8444S, TF-80SC AWD)
TCM-P072900	Gear 6 Incorrect Ratio. General Failure Information. No sub type information (B6324S, TF-80SC; B6324S, TF-80SC AWD)
TCM-P072900	Gear 6 incorrect ratio. General fault information. No information on fault type (B8444S, TF-80SC AWD)
TCM-P073000	Incorrect Gear Ratio. General Failure Information. No sub type information (B6324S, TF-80SC; B6324S, TF-80SC AWD)
TCM-P073000	Incorrect gear ratio. General malfunction information. No information on malfunction type (B8444S, TF-80SC AWD)
TCM-P073095	Incorrect Gear Ratio. Component Failures. Incorrect assembly (B6324S, TF-80SC AWD)
TCM-P073100	Gear 1 Incorrect Ratio. General Failure Information. No sub type information (B6324S, TF-80SC; B6324S, TF-80SC AWD)
TCM-P073200	Gear 2 Incorrect Ratio. General Failure Information. No sub type information (B6324S, TF-80SC; B6324S, TF-80SC AWD)
TCM-P073300	Gear 3 Incorrect Ratio. General Failure Information. No sub type information (B6324S, TF-80SC; B6324S, TF-80SC AWD)
TCM-P073400	Gear 4 Incorrect Ratio. General Failure Information. No sub type information (B6324S, TF-80SC; B6324S, TF-80SC AWD)
TCM-P073500	Gear 5 Incorrect Ratio. General Failure Information. No sub type information (B6324S, TF-80SC; B6324S, TF-80SC AWD)
TCM-P073600	Reverse Incorrect Ratio. General Failure Information. No sub type information (B6324S, TF-80SC; B6324S, TF-80SC AWD)
TCM-P073600	Reverse incorrect ratio. General fault information. No information on fault type (B8444S, TF-80SC AWD)
TCM-P073F00	Unable to Engage Gear 1. General Failure Information. No sub type information (B6324S, TF-80SC; B6324S, TF-80SC AWD)
TCM-P073F00	Unable to select gear 1. General malfunction information. No information on malfunction type (B8444S, TF-80SC AWD)
TCM-P074100	Torque Converter Clutch Solenoid Circuit Performance Or Stuck Off. General Failure Information. No sub type information (B6324S, TF-80SC; B6324S, TF-80SC AWD)
TCM-P074100	Torque converter clutch solenoid circuit performance or stuck in off position. General fault information. No information on fault type (B8444S, TF-80SC AWD)
TCM-P074200	Torque Converter Clutch Solenoid Circuit Stuck On. General Failure Information. No sub type information (B6324S, TF-80SC; B6324S, TF-80SC AWD)
TCM-P074200	Torque converter clutch solenoid circuit stuck in on position. General fault information. No information on fault type (B8444S, TF-80SC AWD)
TCM-P074400	Torque Converter Clutch Solenoid Circuit Intermittent. General

	Failure Information. No sub type information (B6324S, TF-80SC; B6324S, TF-80SC AWD)
TCM-P074400	Torque converter clutch solenoid circuit intermittent. General fault information. No information on fault type (B8444S, TF-80SC AWD)
TCM-P074468	Torque Converter Clutch Solenoid Circuit Intermittent. Algorithm Based Failures. Event information (B6324S, TF-80SC; B6324S, TF-80SC AWD)
TCM-P074A00	Unable to Engage Gear 2. General Failure Information. No sub type information (B6324S, TF-80SC; B6324S, TF-80SC AWD)
TCM-P074B00	Unable to Engage Gear 3. General Failure Information. No sub type information (B6324S, TF-80SC; B6324S, TF-80SC AWD)
TCM-P074C00	Unable to Engage Gear 4. General Failure Information. No sub type information (B6324S, TF-80SC; B6324S, TF-80SC AWD)
TCM-P074D00	Unable to Engage Gear 5. General Failure Information. No sub type information (B6324S, TF-80SC; B6324S, TF-80SC AWD)
TCM-P074E00	Unable to Engage Gear 6. General Failure Information. No sub type information (B6324S, TF-80SC; B6324S, TF-80SC AWD)
TCM-P077700	Pressure Control Solenoid B Stuck On. General Failure Information. No sub type information (B6324S, TF-80SC; B6324S, TF-80SC AWD)
TCM-P081711	Starter Disable Circuit. General Electrical Failures. Circuit short to ground (B6324S, TF-80SC; B6324S, TF-80SC AWD)
TCM-P081711	Starter inhibitor circuit. General electric fault. Short-circuit to ground (B8444S, TF-80SC AWD)
TCM-P081712	Starter Disable Circuit. General Electrical Failures. Circuit short to battery (B6324S, TF-80SC; B6324S, TF-80SC AWD)
TCM-P081712	Starter inhibitor circuit. General electrical fault. Short-circuit to voltage (B8444S, TF-80SC AWD)
TCM-P082601	Up and Down Switch Input Circuit. General Failure Information. General electrical failure (B6324S, TF-80SC; B6324S, TF-80SC AWD)
TCM-P082601	Up and down switch input circuit. General fault information. General electrical fault (B8444S, TF-80SC AWD)
TCM-P086011	Transmission control module A communication circuit. General electrical fault. Short-circuit to ground (B8444S, TF-80SC AWD)
TCM-P086011	Gear Shift Module A Communication Circuit. General Electrical Failures. Circuit short to ground (B6324S, TF-80SC; B6324S, TF-80SC AWD)
TCM-P086012	Gear Shift Module A Communication Circuit. General Electrical Failures. Circuit short to battery (B6324S, TF-80SC; B6324S, TF-80SC AWD)
TCM-P086012	Transmission control module A communication circuit. General electrical fault. Short circuit to voltage (B8444S, TF-80SC AWD)
TCM-P086013	Gear Shift Module A Communication Circuit. General Electrical

	Failures. Circuit open (B6324S, TF-80SC; B6324S, TF-80SC AWD)
TCM-P086013	Shifting control module A communication circuit. General electrical malfunction. Open circuit (B8444S, TF-80SC AWD)
TCM-P086087	Gear Shift Module A Communication Circuit. Bus Signal/Message Failures. Missing message (B6324S, TF-80SC; B6324S, TF-80SC AWD)
TCM-P086087	Transmission control module A communication circuit. Bus/message error. Message missing (B8444S, TF-80SC AWD)
TCM-P089500	Shift Time Too Short. General Failure Information. No sub type information (B6324S, TF-80SC; B6324S, TF-80SC AWD)
TCM-P089500	Gear change time too short. General fault information. No information on fault type (B8444S, TF-80SC AWD)
TCM-P089600	Shift Time Too Long. General Failure Information. No sub type information (B6324S, TF-80SC; B6324S, TF-80SC AWD)
TCM-P089600	Gear change times too long. General fault information. No information on fault type (B8444S, TF-80SC AWD)
TCM-P089709	Transmission Fluid Deteriorated. General Failure Information. Component Failures (B6324S, TF-80SC; B6324S, TF-80SC AWD)
TCM-P089709	Transmission fluid expended. General fault information. Component defect (B8444S, TF-80SC AWD)
TCM-P092813	Gear Shift Lock Solenoid Circuit/Open. General Electrical Failures. Circuit open (B6324S, TF-80SC; B6324S, TF-80SC AWD)
TCM-P092813	Gear Shift Lock Solenoid Circuit/Open. General Electrical Failures. Circuit open (B8444S, TF-80SC AWD)
TCM-P093011	Gear Shift Lock Solenoid Circuit Low. General Electrical Failures. Circuit short to ground (B6324S, TF-80SC; B6324S, TF-80SC AWD)
TCM-P093011	Gear Shift Lock Solenoid Circuit Low. General Electrical Failures. Circuit short to ground (B8444S, TF-80SC AWD)
TCM-P093112	Gear Shift Lock Solenoid Circuit High. General Electrical Failures. Circuit short to battery (B6324S, TF-80SC; B6324S, TF-80SC AWD)
TCM-P093112	Gear Shift Lock Solenoid Circuit High. General Electrical Failures. Circuit short to battery (B8444S, TF-80SC AWD)
TCM-P096000	Pressure Control Solenoid A Control Circuit/Open. General Failure Information. No sub type information (B6324S, TF-80SC; B6324S, TF-80SC AWD)
TCM-P096000	Pressure regulator solenoid A control circuit/broken circuit. General fault information. No information on fault type (B8444S, TF-80SC AWD)
TCM-P096100	Pressure Control Solenoid A Control Circuit Range/Performance. General Failure Information. No sub type information (B6324S, TF-80SC; B6324S, TF-80SC AWD)
TCM-P096100	Pressure regulator solenoid A control circuit inside/outside

	tolerance. General fault information. No information on fault type (B8444S, TF-80SC AWD)
TCM-P096300	Pressure Control Solenoid A Control Circuit High. General Failure Information. No sub type information (B6324S, TF-80SC; B6324S, TF-80SC AWD)
TCM-P096300	Pressure regulator solenoid A control circuit high. General fault information. No information on fault type (B8444S, TF-80SC AWD)
TCM-P096400	Pressure Control Solenoid B Control Circuit/Open. General Failure Information. No sub type information (B6324S, TF-80SC; B6324S, TF-80SC AWD)
TCM-P096400	Pressure regulator solenoid B control circuit/broken circuit. General fault information. No information on fault type (B8444S, TF-80SC AWD)
TCM-P096500	Pressure Control Solenoid B Control Circuit Range/Performance. General Failure Information. No sub type information (B6324S, TF-80SC; B6324S, TF-80SC AWD)
TCM-P096500	Pressure regulator solenoid B control circuit inside/outside tolerance. General fault information. No information on fault type (B8444S, TF-80SC AWD)
TCM-P096700	Pressure Control Solenoid B Control Circuit High. General Failure Information. No sub type information (B6324S, TF-80SC; B6324S, TF-80SC AWD)
TCM-P096700	Pressure regulator solenoid B control circuit high. General fault information. No information on fault type (B8444S, TF-80SC AWD)
TCM-P096900	Pressure Control Solenoid C Control Circuit Range/Performance. General Failure Information. No sub type information (B6324S, TF-80SC; B6324S, TF-80SC AWD)
TCM-P096900	Pressure regulator solenoid B control circuit inside/outside tolerance. General fault information. No information on fault type (B8444S, TF-80SC AWD)
TCM-P097000	Pressure Control Solenoid C Control Circuit Low. General Failure Information. No sub type information (B6324S, TF-80SC; B6324S, TF-80SC AWD)
TCM-P097000	Pressure regulator solenoid C control circuit low. General fault information. No information on fault type (B8444S, TF-80SC AWD)
TCM-P097100	Pressure Control Solenoid C Control Circuit High. General Failure Information. No sub type information (B6324S, TF-80SC; B6324S, TF-80SC AWD)
TCM-P097100	Pressure regulator solenoid C control circuit high. General fault information. No information on fault type (B8444S, TF-80SC AWD)
TCM-P097300	Shift Solenoid A Control Circuit Low. General Failure Information.

	No sub type information (B6324S, TF-80SC; B6324S, TF-80SC AWD)
TCM-P097300	Shift solenoid A control circuit low. General fault information. No information on fault type (B8444S, TF-80SC AWD)
TCM-P097400	Shift Solenoid A Control Circuit High. General Failure Information. No sub type information (B6324S, TF-80SC; B6324S, TF-80SC AWD)
TCM-P097400	Shift solenoid A control circuit high. General fault information. No information on fault type (B8444S, TF-80SC AWD)
TCM-P097600	Shift Solenoid B Control Circuit Low. General Failure Information. No sub type information (B6324S, TF-80SC; B6324S, TF-80SC AWD)
TCM-P097600	Shift solenoid B control circuit low. General fault information. No information on fault type (B8444S, TF-80SC AWD)
TCM-P097700	Shift Solenoid B Control Circuit High. General Failure Information. No sub type information (B6324S, TF-80SC; B6324S, TF-80SC AWD)
TCM-P097700	Shift solenoid B control circuit high. General fault information. No information on fault type (B8444S, TF-80SC AWD)
TCM-P170100	Reverse Engagement Error. General Failure Information. No sub type information (B8444S, TF-80SC AWD)
TCM-P170164	Reverse Engagement Error. Algorithm Based Failures. Signal plausibility failure (B6324S, TF-80SC; B6324S, TF-80SC AWD)
TCM-P171900	Engine Torque Signal. General Failure Information. No sub type information (B6324S, TF-80SC; B6324S, TF-80SC AWD)
TCM-P171900	Engine torque signal. General fault information. No information on fault type (B8444S, TF-80SC AWD)
TCM-P178368	Transmission Overtemperature Condition. Algorithm Based Failures. Event information (B6324S, TF-80SC; B6324S, TF-80SC AWD)
TCM-P179900	CAN TCM/ABS Circuit Malfunction. Bus Signal/Message Failures. Missing message (B6324S, TF-80SC; B6324S, TF-80SC AWD)
TCM-P179900	CAN TCM/ABS circuit malfunction. Bus/message error. Message missing (B8444S, TF-80SC AWD)
TCM-P215800	Vehicle Speed Sensor B. General Failure Information. No sub type information (B6324S, TF-80SC; B6324S, TF-80SC AWD)
TCM-P215800	Speed sensor B. General fault information. No information on fault type (B8444S, TF-80SC AWD)
TCM-P271900	Pressure Control Solenoid D Control Circuit Range/Performance. General Failure Information. No sub type information (B6324S, TF-80SC; B6324S, TF-80SC AWD)
TCM-P271900	Pressure regulator solenoid D control circuit inside/outside tolerance. General fault information. No information on fault type (B8444S, TF-80SC AWD)
TCM-P272000	Pressure Control Solenoid D Control Circuit Low. General Failure

	Information. No sub type information (B6324S, TF-80SC; B6324S, TF-80SC AWD)
TCM-P272000	Pressure regulating solenoid D control circuit low. General fault information. No information about fault type (B8444S, TF-80SC AWD)
TCM-P272100	Pressure Control Solenoid D Control Circuit High. General Failure Information. No sub type information (B6324S, TF-80SC; B6324S, TF-80SC AWD)
TCM-P272100	Pressure regulating solenoid D control circuit high. General fault information. No information about fault type (B8444S, TF-80SC AWD)
TCM-P272800	Pressure Control Solenoid E Control Circuit Range/Performance. General Failure Information. No sub type information (B6324S, TF-80SC; B6324S, TF-80SC AWD)
TCM-P272800	Pressure regulating solenoid E control circuit inside/outside parameter values. General fault information. No information about fault type (B8444S, TF-80SC AWD)
TCM-P272900	Pressure Control Solenoid E Control Circuit Low. General Failure Information. No sub type information (B6324S, TF-80SC; B6324S, TF-80SC AWD)
TCM-P272900	Pressure regulating solenoid E control circuit low. General fault information. No information about fault type (B8444S, TF-80SC AWD)
TCM-P273000	Pressure Control Solenoid E Control Circuit High. General Failure Information. No sub type information (B6324S, TF-80SC; B6324S, TF-80SC AWD)
TCM-P273000	Pressure regulating solenoid E control circuit high. General fault information. No information about fault type (B8444S, TF-80SC AWD)
TCM-P273300	Pressure Control Solenoid F Stuck On. General Failure Information. No sub type information (B6324S, TF-80SC; B6324S, TF-80SC AWD)
TCM-P273700	Pressure Control Solenoid F Control Circuit Range/Performance. General Failure Information. No sub type information (B6324S, TF-80SC; B6324S, TF-80SC AWD)
TCM-P273700	Pressure regulating solenoid F control circuit inside/outside parameter values. General fault information. No information about fault type (B8444S, TF-80SC AWD)
TCM-P273800	Pressure Control Solenoid F Control Circuit Low. General Failure Information. No sub type information (B6324S, TF-80SC; B6324S, TF-80SC AWD)
TCM-P273800	Pressure regulating solenoid F control circuit low. General fault information. No information about fault type (B8444S, TF-80SC AWD)
TCM-P273900	Pressure Control Solenoid F Control Circuit High. General Failure

	Information. No sub type information (B6324S, TF-80SC; B6324S, TF-80SC AWD)
TCM-P273900	Pressure regulating solenoid F control circuit high. General fault information. No information about fault type (B8444S, TF-80SC AWD)
TCM-P278368	Torque Converter Temperature Too High. Algorithm Based Failures. Event information (B6324S, TF-80SC; B6324S, TF-80SC AWD)
TCM-P278768	Clutch Temperature Too High. Algorithm Based Failures. Event information (B6324S, TF-80SC; B6324S, TF-80SC AWD)
TCM-P280000	Transmission Range Sensor B Circuit (PRNDL Input). General Failure Information. No sub type information (B6324S, TF-80SC; B6324S, TF-80SC AWD)
TCM-P280000	Transmission area sensor B circuit (PRNDL input). General fault information. No information about fault type (B8444S, TF-80SC AWD)
TCM-P280500	Transmission Range Sensor A/B Correlation. General Failure Information. No sub type information (B6324S, TF-80SC; B6324S, TF-80SC AWD)
TCM-P280500	Transmission area sensor A/B co-operation. General fault information. No information about fault type (B8444S, TF-80SC AWD)
TCM-U000100	High Speed CAN Communication Bus. General Failure Information. No sub type information (B6324S, TF-80SC; B6324S, TF-80SC AWD)
TCM-U210000	Control Module Not Configured. General Failure Information. No sub type information (B6324S, TF-80SC; B6324S, TF-80SC AWD)
TCM-U210100	Control Module Configuration Incompatible. General Failure Information. No sub type information (B6324S, TF-80SC; B6324S, TF-80SC AWD)
TCM-U300362	Battery Voltage. Algorithm Based Failures. Signal compare failure (B6324S, TF-80SC; B6324S, TF-80SC AWD)
TCM-XXXXXX	Unknown diagnostic trouble code (DTC) for the current control module version (B8444S, TF-80SC AWD)

UPPER ELECTRONICS MODULE (UEM) DTCS

UPPER ELECTRONICS MODULE (UEM) - DTC INDEX

DTC	Description
UEM-0004	Siren. Communication fault
UEM-0005	Sun roof. Communication fault
UEM-0007	Reading lamp. Signal too low
UEM-0008	Reading lamp. Signal too low
UEM-0009	Reading lamp. Signal too low

UEM-000A	Movement sensor. Communication fault
UEM-000B	Movement sensor. Signal too low
UEM-000C	Mass movement sensor. Signal too high
UEM-0011	Mass movement sensor. Signal too low
UEM-0013	Movement sensor. Internal fault
UEM-0014	Movement sensor. Internal fault
UEM-001C	General courtesy lighting. Signal faulty
UEM-001D	Reading lamp. Signal too high
UEM-001E	Reading lamp. Signal too high
UEM-0020	Rear view mirror. Signal missing
UEM-0030	Rear left reading lamp. Signal too low
UEM-0031	Rear left reading lamp. Signal missing
UEM-0032	Rear right reading lamp. Signal too low
UEM-0033	Rear right reading lamp. Signal missing
UEM-0034	Front left reading lamp. Signal too low
UEM-0035	Front left reading lamp. Signal missing
UEM-0036	Front right reading lamp. Signal too low
UEM-0037	Front right reading lamp. Signal missing
UEM-0038	General lighting. Signal too low
UEM-0039	General lighting. Signal missing
UEM-003A	Extended X supply (EXT_X). Signal too low
UEM-003C	Cargo compartment lighting/3rd row reading lamps. Signal too low
UEM-003D	Cargo compartment lighting/3rd row reading lamps. Faulty signal
UEM-0041	Control unit. Internal fault
UEM-0051	Sunroof. Signal faulty
UEM-0052	Sunroof motor. Signal too high
UEM-0053	Sunroof motor. Signal too low
UEM-0054	Sunroof motor. Signal too low
UEM-0056	Sunroof motor. Signal too high
UEM-0057	Sunroof motor. Signal too high
UEM-0058	Sunroof motor. Signal too high
UEM-0059	Sunroof motor. Signal too high
UEM-0060	Sunroof motor. Signal too high
UEM-0061	Sunroof motor. Signal too high
UEM-0062	Sunroof motor. Signal too high
UEM-0063	Sunroof motor. Signal too high
UEM-0064	Sunroof. Signal too high
UEM-0065	Sunroof. Signal faulty
UEM-0066	Sunroof. Signal faulty
UEM-0067	Sunroof. Signal faulty
UEM-0068	Sunroof. Signal faulty
UEM-0070	

	Sunroof. Signal faulty
UEM-0071	Control unit. Internal fault
UEM-0072	Control unit. Internal fault
UEM-0078	Siren. Configuration fault
UEM-0080	Rain sensor. Signal missing
UEM-0081	Rain sensor. Signal too low
UEM-0082	Rain sensor. Signal too high
UEM-0083	Rain sensor. Internal fault
UEM-0084	Rain sensor. Faulty signal
UEM-0090	PAD lamp. Signal too low
UEM-0091	PAD lamp. Signal too high
UEM-0093	Seat belt reminder. Faulty signal
UEM-0094	Seat belt reminder. Signal too high
UEM-00A0	Tire pressure sensor. Signal missing
UEM-00A1	Tire pressure sensor. Signal missing
UEM-00A2	Tire pressure sensor. Signal missing
UEM-00A3	Tire pressure sensor. Signal missing
UEM-00A4	Tire pressure sensor. Low battery voltage
UEM-00A5	Tire pressure sensor. Low battery voltage
UEM-00A6	Tire pressure sensor. Low battery voltage
UEM-00A7	Tire pressure sensor. Low battery voltage
UEM-00A8	Tire pressure warning. Sensor missing
UEM-00A9	Control module. Configuration fault
UEM-E001	Control module communication. Faulty communication
UEM-E003	Configuration fault. Faulty configuration
UEM-XXXX	Unknown diagnostic trouble code (DTC) for the current control module version

2008 VOLVO

V70, XC70 & XC90

BUZZERS, RELAYS & TIMERS

BUZZERS, RELAYS & TIMERS LOCATION

Component	Location
Audio Disconnection Relay (2/238)	Behind center of dash. See **Fig. 17**.
Auxiliary Light Relay (2/64)	Behind left headlight. See **Fig. 16**.
Climate Control System Relay (2/22)	In engine compartment relay/fuse box. See **Fig. 16**.
Deadlock Relay (Left Rear Door) (V70) (2/138)	In left rear door. See **Fig. 16**.
Deadlock Relay (Left Rear Door) (XC90) (2/138)	In left rear door. See **Fig. 17**.
Deadlock Relay (Right Rear Door) (2/139)	In right rear door. See **Fig. 17**.
Electric Engine Heater Relay (2/192)	Left front of engine compartment. See **Fig. 17**.
Engine Management System Main Relay (3/32)	In engine compartment relay/fuse box. See **Fig. 16**.
High Pressure Headlight Washer Motor Relay (2/182)	In engine compartment relay/fuse box. See **Fig. 17**.
Intermittent Wiping Relay (2/91)	In engine compartment relay/fuse box. See **Fig. 16**.
Radio Signal Remote Parking Heater Start Relay (2/191)	In right rear of cargo area. See **Fig. 17**.
Starter Motor Relay (2/35)	In engine compartment relay/fuse box. See **Fig. 16**.
Windshield Wiper Low/High Speed Relay (2/90)	In engine compartment relay/fuse box. See **Fig. 16**.

CIRCUIT PROTECTION DEVICES

CIRCUIT PROTECTION DEVICES LOCATION

Component	Location
Cargo Compartment Auxiliary Fuse Holder (11L)	At rear of cargo compartment. See **Fig. 84**.
Engine Compartment Distribution Box (15/31)	Left side of engine compartment. See **Fig. 85**.
Engine Compartment Fuse Box (11A)	At left side of engine compartment, forward of strut tower. See **Fig. 84**.
Main Fuses (11E)	Next to battery, in cargo compartment. See **Fig. 84**.
Passenger Compartment Fuse Box (11C)	At left end of dash. See **Fig. 84**.

CONTROL UNITS

CONTROL UNITS LOCATION

Component	Location
Accessory Electronic Module (AEM) (4/78)	At right rear corner of cargo compartment. See **Fig. 29**.
Accessory USB Unit (AUU) (4/124)	In center console.
Activation Unit DSTC (8/46)	On brake master cylinder. See **Fig. 54**.

Alternator Control Module (6/26)	On alternator. See **Fig. 32**.
Audio Module (AUD) (16/105)	Under right front seat. See **Fig. 66**.
Brake Control Module (BCM) (4/16)	At left rear corner of engine compartment. See **Fig. 26**.
Call Start Parking Heater Control Module (4/107)	Right rear of cargo compartment. See **Fig. 30**.
Cellular Phone Hands Free Control Module (V70) (16/93)	Under driver's seat. See **Fig. 65**.
Cellular Phone Hands Free Control Module (XC90) (16/93)	Behind right side of dash. See **Fig. 65**.
Central Electronic Module (CEM) (4/56)	Behind left side of dash. See **Fig. 28**.
Cooling Fan Module (4/71)	At front center of engine compartment. See **Fig. 28**.
Differential Electronic Module (DEM) (4/82)	At rear differential. See **Fig. 29**.
Driver/Passenger Door Module (DDM)/(PDM) (V70) (3/126)	In driver's door. See **Fig. 23**.
Driver/Passenger Door Module (DDM)/(PDM) (XC90) (3/126)	In driver's door. See **Fig. 24**.
Electronic Power Steering Control Module (4/99)	Left center of dash. See **Fig. 30**.
Electronic Throttle Module (4/50)	Front of engine compartment. See **Fig. 27**.
Engine Control Module (ECM) (4/46)	In engine compartment. See **Fig. 27**.
Fan Control Module (4/31)	Behind right side of dash, near blower fan. See **Fig. 27**.
Fuel Pump Control Module (4/83)	On fuel tank. See **Fig. 29**.
Global Positioning System Module (GPS) (16/139)	Under driver's seat. See **Fig. 67**.
Headlight Control Module (HCM) (4/118)	Under driver's seat. See **Fig. 30**.
Multimedia Module (MMM) (16/108)	Under driver seat. See **Fig. 66**.
Parking Assistance Camera Module (PAC) (4/120)	Left side of luggage compartment. See **Fig. 30**.
Parking Assistance Module (PAM) (V70) (4/86)	At left rear corner of cargo compartment. See **Fig. 29**.
Parking Assistance Module (PAM) (XC90) (4/86)	At left side of cargo area. See **Fig. 30**.
Passenger/Driver Door Module (PDM)/(DDM) (3/127)	In front passenger's door. See **Fig. 24**.
Phone Module (PHM) (16/60)	Behind center of dash. See **Fig. 63**.
Power Seat Module (PSM) (4/52)	Under driver's seat. See **Fig. 28**.
Rear Audio Separation Module (RAS) (16/122)	In center console. See **Fig. 66**.
Rear Electronic Module (REM) (4/58)	At left rear corner of cargo compartment. See **Fig. 28**.
Remote Parking Heater Start Control Module (4/106)	Right rear of cargo compartment. See **Fig. 30**.
Road Traffic Information Module (RTI) (16/45)	Left rear side of luggage compartment. See **Fig. 62**.
Seat Heating Module (SHM) (Left/Right) (9/12, 9/13)	Under respective front seats. See **Fig. 60**.
Steering Wheel Module (SWM) (3/254)	In steering wheel. See **Fig. 25**.
Sun Roof Module (SRM) (4/33)	Forward of sun roof opening. See **Fig. 27**.

Suspension Module (SUM) (4/84)	Under center console. See **Fig. 29**.
Traffic Information Module (Turn By Turn) (16/45)	Left rear of luggage compartment. See **Fig. 62**.
Trailer Module (4/110)	Left rear of cargo compartment. See **Fig. 30**.
Transmission Control Module (TCM) (TF-80SC) (4/28)	On transmission. See **Fig. 26**.
Transmission Control Module (TCM) (V70) (4/28)	Right front of engine compartment. See **Fig. 26**.
Transmission Control Module (TCM) (XC90) (4/28)	Right front of engine compartment. See **Fig. 27**.
Upper Electronic Module (UEM) (V70) (4/70)	Integral to rearview mirror. See **Fig. 28**.
Upper Electronic Module (UEM) (XC90) (4/70)	Rearward of roof console. See **Fig. 28**.

MOTORS

MOTORS LOCATION

Component	Location
Backrest Angle Motor (Driver's Seat) (6/16)	Under driver's seat. See **Fig. 31**.
Backrest Angle Motor (Passenger's Seat) (6/64)	Under front passenger's seat. See **Fig. 35**.
Climate Control System (Rear) (6/76)	Left rear of cargo compartment. See **Fig. 35**.
Coolant Pump (8-Cyl.) (6/113)	Left front of engine compartment. See **Fig. 37**.
Defroster Damper Motor Module (DMM) (6/102)	Near center of HVAC housing. See **Fig. 36**.
Door Lock Unit (Left Front) (3/74)	Rear left front door. See **Fig. 20**.
Door Lock Unit (Right Front) (3/75)	Rear of right front door. See **Fig. 20**.
Door Lock Unit (Right Rear) (3/77)	Rear of right rear door. See **Fig. 21**.
Door Lock Unit (V70) (Left Rear) (3/76)	Rear of left rear door. See **Fig. 20**.
Door Lock Unit (XC90) (Left Rear) (3/76)	Rear of left rear door. See **Fig. 21**.
Electric Cooling Fan Motor (6/29)	Front of engine compartment. See **Fig. 32**.
Engine Compartment Electrics Box Cooling Fan (V70) (6/44)	Right side of engine compartment. See **Fig. 33**.
Engine Compartment Electrics Box Cooling Fan (XC90) (6/44)	Right side of engine compartment. See **Fig. 34**.
Floor/Ventilation Damper Motor Module (DMM) (6/103)	Near center of HVAC housing. See **Fig. 36**.
Fore/Aft Motor (Driver's Seat) (6/19)	Under driver's seat. See **Fig. 32**.
Fore/Aft Motor (Passenger's Seat) (6/20)	Under front passenger's seat. See **Fig. 32**.
Front Power Window Motor (Left/Right) (6/58, 6/60)	In respective front door. See **Fig. 34**.
Fuel Filler Flap Lock Motor (6/37)	Right side of cargo compartment, behind carpet. See **Fig. 33**.
Fuel Leakage Control Pump (6/67)	Under rear of vehicle, near fuel tank. See **Fig. 35**.
Fuel Pump (6/33)	In fuel tank. See **Fig. 33**.
Headlight Adjustment Motor (Left/Right) (6/38, 6/39)	Behind respective headlight assembly. See **Fig. 33**.

Headlight High Pressure Washer Motor (6/104)	At right front corner of engine compartment. See **Fig. 36**.
Headlight Wiper Motor (Left/Right) (6/3, 6/4)	Below respective headlight assembly. See **Fig. 31**.
Intake Manifold Actuating Motor (Upper/Lower) (6/139, 6/140)	On intake manifold. See **Fig. 38**.
Lock Unit (Tailgate) (3/78)	Center of tailgate. See **Fig. 21**.
Passenger Compartment Fan Motor (6/28)	On lower right side of HVAC housing. See **Fig. 32**.
Power Exterior Rearview Mirror (Left/Right) (6/62, 6/63)	In respective rearview mirror. See **Fig. 34**.
Rear Power Window Motor (Left/Right) (6/92, 6/93)	In respective rear door. See **Fig. 36**.
Rear Window Wiper Motor (V70) (6/32)	At center of tailgate. See **Fig. 32**.
Rear Window Wiper Motor (XC90) (6/32)	At center of tailgate. See **Fig. 33**.
Recirculation Damper Motor Module (DMM) (6/48)	On lower right side of HVAC housing. See **Fig. 34**.
Starter Motor (6/25)	Left side of engine. See **Fig. 32**.
Sunroof Motor (6/15)	Forward of sun roof opening. See **Fig. 31**.
Swirl Throttle Regulator Motor (6/118)	Top left side of engine. See **Fig. 37**.
Temperature Damper Motor Module (DMM) (Left) (6/95)	On left end of HVAC housing. See **Fig. 36**.
Temperature Damper Motor Module (DMM) (Right) (6/96)	Near center of HVAC housing. See **Fig. 36**.
Throttle Body Motor (6/120)	On throttle body. See **Fig. 37**.
Turbo Regulator Motor (6/143)	Rear of engine, on turbo. See **Fig. 38**.
Up/Down Front Edge Motor (Driver's Seat) (6/17)	Under driver's seat. See **Fig. 31**.
Up/Down Front Edge Motor (Passenger's Seat) (6/65)	Under front passenger's seat. See **Fig. 35**.
Up/Down Rear Edge Motor (Driver's Seat) (6/18)	Under driver's seat. See **Fig. 31**.
Up/Down Rear Edge Motor (Passenger's Seat) (6/66)	Under front passenger's seat. See **Fig. 35**.
Vacuum Pump (6/114)	At left front of engine compartment. See **Fig. 37**.
Ventilation/Floor/Defroster Damper Motor Module (DMM) (6/69)	Near center of HVAC housing. See **Fig. 35**.
Washer Motor (V70) (6/127)	Bottom of reservoir tank. See **Fig. 37**.
Washer Motor (XC90) (6/127)	Bottom of reservoir tank. See **Fig. 38**.
Windshield Wiper Motor (6/1)	On left side of plenum. See **Fig. 31**.

SENDING UNITS & SENSORS

SENDING UNITS & SENSORS LOCATION

Component	Location
ABS Sensor (Front Left/Right) (7/31, 7/32)	Behind respective wheel, on spindle/hub assembly. See **Fig. 41**.
	Behind respective wheel, on spindle/hub assembly.

ABS Sensor (Rear Left/Right) (7/56, 7/57)	See **Fig. 42**.
Acceleration Sensor (Four-C Front Left/Right) (7/87, 7/88)	Behind respective side of front bumper. See **Fig. 43**.
Acceleration Sensor (Four-C Rear Left) (7/89)	Left rear of vehicle. See **Fig. 44**.
Accelerator Pedal Sensor (7/51)	Near accelerator pedal. See **Fig. 42**.
Air Quality Sensor (AQS) (7/159)	At right side of plenum. See **Fig. 49**.
Angle Sensor (Four-C/Bi-Xenon Rear Left) (7/120)	In left rear wheelwell. See **Fig. 46**.
Angle Sensor (Four-C Rear Right) (7/121)	In right rear wheelwell. See **Fig. 46**.
Automatic Transmission Fluid Temperature Sensor (AW51) (7/74)	On transmission. See **Fig. 43**.
Automatic Transmission Fluid Temperature Sensor (TF-80SC) (7/74)	On transaxle, under cover. See **Fig. 43**.
Body Sensor Cluster Stability Sensor (BSC) (7/164)	Under front passenger's seat. See **Fig. 49**.
Brake Fluid Level Sensor (7/4)	On brake master cylinder reservoir. See **Fig. 38**.
Brake Pedal Sensor (7/124)	Left rear corner of engine compartment. See **Fig. 47**.
Brake Pressure Sensor 1 (7/139)	On brake master cylinder. See **Fig. 48**.
Brake Pressure Sensor 2 (7/129)	On brake master cylinder. See **Fig. 47**.
Camshaft Position Sensor (Exhaust Side) (7/173)	On top left rear of engine. See **Fig. 49**.
Camshaft Position Sensor (Intake Side) (7/172)	On top rear of engine. See **Fig. 49**.
Camshaft Position Sensor (8-Cyl., Bank 1) (Exhaust) (7/189)	Right front of engine. See **Fig. 50**.
Camshaft Position Sensor (8-Cyl., Bank 1) (Intake) (7/188)	Left rear of engine. See **Fig. 50**.
Camshaft Position Sensor (8-Cyl., Bank 2) (Exhaust) (7/173)	Top right rear of engine. See **Fig. 50**.
Camshaft Position Sensor (8-Cyl., Bank 2) (Intake) (7/172)	On right rear of engine. See **Fig. 49**.
Climate Control System Pressure Sensor (V70) (7/8)	At right front of engine compartment. See **Fig. 38**.
Climate Control System Pressure Sensor (XC90) (7/8)	At right front of engine compartment. See **Fig. 39**.
Clutch Pedal Sensor (V70) (7/123)	Behind left side of dash. See **Fig. 46**.
Clutch Pedal Sensor (XC90) (7/123)	Behind left side of dash. See **Fig. 47**.
Coolant Level Sensor (7/73)	On engine coolant reservoir. See **Fig. 42**.
Coolant Temperature Sensor (Except 8-Cyl.) (7/16)	Left front of engine. See **Fig. 40**.
Coolant Temperature Sensor (8-Cyl.) (7/16)	Rear of engine. See **Fig. 40**.
Evaporator Temperature Sensor (7/41)	Near center of HVAC housing. See **Fig. 41**.
Front Impact Sensor (Left/Right) (7/178, 7/179)	Behind respective side of front bumper. See **Fig. 50**.
Fuel Level Sensor (Ejector Side) (7/130)	In fuel tank. See **Fig. 47**.
Fuel Level Sensor (Pump Side) (7/143)	In fuel tank. See **Fig. 48**.
Glass Breakage Sensor (Left/Right) (7/135, 7/136)	In respective rear window. See **Fig. 47**.
Glass Breakage Sensor (Tailgate) (7/137)	In tailgate window. See **Fig. 48**.

Heated Oxygen Sensor (Bank 1) (8-Cyl.) (7/82)	Upstream of left catalytic converter. See **Fig. 43**.
Heated Oxygen Sensor (Bank 2) (8-Cyl.) (7/15)	Upstream of right catalytic converter. See **Fig. 39**.
Heated Oxygen Sensor (Diagnostic 1) (7/82)	Downstream of right catalytic converter. See **Fig. 43**.
Heated Oxygen Sensor (Rear- Bank 2) (8-Cyl.) (7/103)	Downstream of right catalytic converter. See **Fig. 44**.
Heated Oxygen Sensor (Rear) (7/104)	Downstream of catalytic converter. See **Fig. 44**.
Heated Oxygen Sensor 3 (7/103)	Upstream of left catalytic converter. See **Fig. 44**.
Heated Oxygen Sensor (5-Cyl.) (7/15)	Upstream of catalytic converter. See **Fig. 39**.
Heated Oxygen Sensor (6-Cyl.) (2) (7/15)	Upstream of catalytic converters. See **Fig. 39**.
Impulse Sensor (7/25)	At rear of engine. See **Fig. 41**.
Inclination Sensor Module (ISM) (7/100)	Left rear of vehicle. See **Fig. 44**.
Input Speed Sensor (AW51) (7/61)	On transaxle. See **Fig. 42**.
Input Speed Sensor (TF-80SC) (7/61)	On transaxle, under cover. See **Fig. 42**.
Intake Manifold Pressure Sensor (Except 8-Cyl.) (7/81)	Left side of engine. See **Fig. 43**.
Intake Manifold Pressure Sensor (8-Cyl.) (7/81)	On intake manifold. See **Fig. 43**.
Intake Manifold Pressure & Temperature Sensor (7/165)	Left front of engine compartment. See **Fig. 49**.
Interior Temperature Sensor (7/10)	Integral to climate control module. See **Fig. 39**.
Knock Sensor (Front) (Except 8-Cyl.) (7/24)	On left front side of engine. See **Fig. 40**.
Knock Sensor (Front) (8-Cyl.) (7/24)	On left front of engine. See **Fig. 41**.
Knock Sensor (Rear) (7/23)	On left rear side of engine. See **Fig. 40**.
Mass Airflow Sensor (7/17)	In intake air duct. See **Fig. 40**.
Mass Movement Sensor (MMS) (Front) (7/122)	Center front of roof. See **Fig. 46**.
Mass Movement Sensor (MMS) (Rear) (7/158)	Center rear of roof. See **Fig. 49**.
Occupant Weight Sensor (OWS) (7/93)	Under front passenger's seat. See **Fig. 44**.
Oil Level Sensor (7/35)	Lower left front of engine. See **Fig. 41**.
Oil Pressure Monitor (7/6)	On left side of engine. See **Fig. 38**.
Output Speed Sensor (AW51) (7/62)	On top of transaxle. See **Fig. 42**.
Output Speed Sensor (TF080SC) (7/62)	On transaxle, under cover. See **Fig. 42**.
Outside Temperature Sensor (Engine Control Module) (7/105)	In left outside rearview mirror. See **Fig. 45**.
Outside Temperature Sensor (7/11)	In right hand outside mirror. See **Fig. 39**.
Parking Assistance Sensor (Front 5, 6, 7 & 8) (7/204-7/207)	In front bumper. See **Fig. 51**.
Parking Assistance Sensor (Rear 1, 2, 3 & 4) (7/131-7/134)	In rear bumper. See **Fig. 47**.
Pressure And Temperature Sensor (Bi-Fuel) (7/156)	Left rear of vehicle, on tank. See **Fig. 48**.
Pressure And Temperature Sensor (Fuel) (7/156)	Rear of engine. See **Fig. 48**.
Rain Sensor Module (RSM) (7/149)	Top center of windshield. See **Fig. 48**.
Seat Position Sensor (Driver/Passenger) (3/255,	Under respective front seat. See **Fig. 26**.

3/256)	
Seat Temperature Sensor (Left/Right) (7/110, 7/111)	In respective front seat cushion. See **Fig. 45**.
Shock Absorber Acceleration Sensor (Four-C Front Left/Right) (7/118, 7/119)	In respective front shock tower. See **Fig. 46**.
Side Impact Sensor (Left Front) (7/115)	In left "B" pillar. See **Fig. 45**.
Side Impact Sensor (Left/Right Rear) (7/108, 7/109)	Near respective rear door. See **Fig. 45**.
Side Impact Sensor (Right Front) (7/116)	In right "B" pillar. See **Fig. 46**.
Solar Sensor, Twilight Sensor & Indication Alarm (7/12)	At top center of dash. See **Fig. 39**.
Steering Angle Sensor (7/91)	At top of steering column. See **Fig. 44**.
Steering Wheel Angle Sensor (4/68)	Top of steering column. See **Fig. 28**.
Washer Fluid Level Sensor (7/5)	In windshield washer reservoir. See **Fig. 38**.
Weight Sensor (Passenger Seat Belt Reminder) (7/175)	Under passenger seat. See **Fig. 50**.

SOLENOIDS & SOLENOID VALVES

SOLENOIDS & SOLENOID VALVES LOCATION

Component	Location
Bi-Fuel, Fuel Tank Solenoid (Left Front) (8/89)	Under left center of vehicle. See **Fig. 57**.
Bi-Fuel, Fuel Tank Solenoid (Rear) (8/88)	At fuel tank. See **Fig. 57**.
Bi-Fuel, Fuel Tank Solenoid (Right Front) (8/90)	Under right center of vehicle. See **Fig. 57**.
Electromagnetic Clutch (Climate Control System) (8/3)	Left front of engine. See **Fig. 51**.
EVAP Valve (8/18)	Left side of engine compartment. See **Fig. 51**.
Fuel Cut-Off DFCO Valve (8/75)	Left side of engine compartment. See **Fig. 56**.
Fuel Pressure Bypass Valve (8/113)	Near rear of engine. See **Fig. 58**.
Injection Valves (8-Cyl.) (8/146 - 8/153)	On top of engine. See **Fig. 60**.
Injectors (8/6 - 8/11)	Top of engine. See **Fig. 51**.
Linear Pressure Solenoid (SLB1 & SLC 1 - 3) (8/142 - 8/145)	In transmission. See **Fig. 59**.
Lock-Up Solenoid (8/40)	Under transmission cover. See **Fig. 54**.
Pressure Solenoid (8/41)	Under transmission cover. See **Fig. 54**.
Rear Shock Absorber (Four-C) (Left/Right) (8/22, 8/23)	In respective rear wheelwell. See **Fig. 52**.
Reverse Interlock Solenoid (Manual) (8/134)	At base of shifter assembly. See **Fig. 59**.
Shift Lock Solenoid (8/36)	In floor console, at base of gear selector lever. See **Fig. 53**.
Shift Solenoid 1 (8/38)	In transmission. See **Fig. 54**.
Shift Solenoid 2 (8/39)	In transmission. See **Fig. 54**.
Shift Solenoid 3, 4 & 5 (8/72, 8/73 & 8/74)	Under transmission cover. See **Fig. 56**.

Shock Absorber (Four-C) (Left/Right Front) (8/20, 8/21)	In respective front wheelwell. See **Fig. 52**.
Speed-Dependent Power Steering Valve (6/71)	Left rear of engine compartment.
Throttle Solenoid (8/71)	Under transmission cover. See **Fig. 56**.
Turbocharger Control Valve (8/28)	On top rear of engine. See **Fig. 52**.
Variable Intake Valve (8-Cyl.) (8/107)	On intake manifold. See **Fig. 58**.
Variable Valve Timing Solenoid (Bank 1, Exhaust) (8/118)	Front left side of engine. See **Fig. 58**.
Variable Valve Timing Solenoid (Bank 1, Intake) (8/117)	Left front of engine. See **Fig. 58**.
Variable Valve Timing Solenoid (Intake) (5-Cyl.) (8/19)	On top rear of engine. See **Fig. 51**.
Variable Valve Timing Solenoid (Intake) (6-Cyl.) (8/19)	Top front of engine. See **Fig. 52**.
Variable Valve Timing Solenoid (Outlet) (8/81)	On top of engine. See **Fig. 57**.
Variable Valve Timing Solenoid (8-Cyl., Bank 2) (Exhaust) (8/81)	Top right front of engine. See **Fig. 57**.
Variable Valve Timing Solenoid (8-Cyl., Bank 2) (Intake) (8/19)	Top left front of engine. See **Fig. 52**.

SWITCHES

SWITCHES LOCATION

Component	Location
Fuel Filter Heating & Thermostatic Switch (8/85)	At front of right rear wheelwell. See **Fig. 57**.
Gear Selector Contacts (3/71)	On transaxle. See **Fig. 20**.
Hood Alarm Contact (V70) (3/62)	At left front of engine compartment. See **Fig. 20**.
Hood Alarm Contact (2) (XC90) (3/62)	At front of engine compartment. See **Fig. 20**.
Horn Contact (3/37)	In steering wheel, under horn pad. See **Fig. 19**.
Parking Brake Contact (V70) (3/47)	At base of parking brake lever. See **Fig. 19**.
Parking Brake Contact (XC90) (3/47)	At top of parking brake pedal assembly. See **Fig. 19**.
Reversing Light Contact (3/10)	On transaxle, near gear position contacts. See **Fig. 18**.
Seat Belt Buckle Contact (Left) (3/93)	On left seat belt buckle. See **Fig. 22**.
Seat Belt Buckle Contact (Right) (V70) (3/94)	On right seat belt buckle. See **Fig. 22**.
Seat Belt Buckle Contact (Right) (XC90) (3/94)	On right seat belt buckle. See **Fig. 23**.
Vacuum Pump Switch (8/84)	At front of engine compartment. See **Fig. 57**.

MISCELLANEOUS

MISCELLANEOUS LOCATION

Component	Location

Airbag Igniter (Driver Side) (8/30)	In steering wheel. See **Fig. 52**.
Airbag Igniter (Passenger Side) (V70) (8/31)	Behind right side of dash. See **Fig. 52**.
Airbag Igniter (Passenger Side) (XC90) (8/31)	Behind right side of dash. See **Fig. 53**.
Airbag Igniter Stage 2 (Driver Side) (8/61)	In steering wheel. See **Fig. 55**.
Airbag Igniter Stage 2 (Passenger Side) (8/32)	Behind right side of dash. See **Fig. 53**.
Airbag Igniter Stage 3 (Driver Side) (8/123)	In steering wheel. See **Fig. 59**.
Airbag Igniter Stage 3 (Passenger Side) (8/124)	Behind right side of dash. See **Fig. 59**.
Antenna Amplifier (Bumper) (16/67)	Right rear of vehicle. See **Fig. 64**.
Antenna (Bumper) (16/68)	Right side of rear bumper. See **Fig. 64**.
Antenna, Ring/Ignition Switch Lighting (16/65)	On steering column. See **Fig. 64**.
Antenna (Satellite Receiver) (16/153)	Rear of roof. See **Fig. 67**.
Battery (1/1)	In rear of cargo compartment, under carpet. See **Fig. 16**.
Belt Tensioner Igniter (Center Rear) (8/62)	In center rear seat belt tensioner assembly. See **Fig. 55**.
Belt Tensioner Igniter (Left/Right Front) (8/33, 8/34)	At respective "B" pillar. See **Fig. 53**.
Belt Tensioner Igniter (Left/Right Rear) (8/55, 8/56)	At respective "C" pillar. See **Fig. 55**.
Belt Tensioner Igniter (Left 3rd Row Seats) (8/94)	At left "D" pillar. See **Fig. 57**.
Belt Tensioner Igniter (Right 3rd Row Seats) (8/95)	At right "D" pillar. See **Fig. 58**.
Camera Module (LCM/RCM) (Left/Right) (27/3, 27/4)	In left or right mirror. See **Fig. 69**.
Capacitor (20/16)	In engine compartment relay/fuse box. See **Fig. 69**.
Cellular Phone Antenna (16/64)	Center front of roof. See **Fig. 63**.
Contact Reel (18/4)	Top of steering column. See **Fig. 69**.
Data Link Connector (17/13)	Under left side of dash. See **Fig. 67**.
Fuel Distributor (Gas) (6/105)	On engine. See **Fig. 37**.
Gear Selector Module (GSM) (3/156)	Integral to transmission shift lever. See **Fig. 24**.
GPS Antenna (Cellular Phone) (16/63)	Center front of roof. See **Fig. 63**.
GPS Antenna RTI (16/47)	At top left side of dash. See **Fig. 62**.
Horn 1 (16/10)	Front of engine compartment. See **Fig. 61**.
Horn 2 (16/11)	Front of engine compartment. See **Fig. 61**.
Inflatable Curtain Igniter (Left/Right 3rd Row Seats) (8/96, 8/97)	At respective "D" pillar. See **Fig. 58**.
Inflatable Curtain Igniter (Left/Right) (8/66, 8/67)	In roof, above respective rear window. See **Fig. 56**.
Jump Start Connection (17/17)	Left rear of engine compartment. See **Fig. 67**.
Microphone (Cellular Phone Hands Free) (V70) (16/127)	In left side of dash. See **Fig. 66**.
Microphone (Cellular Phone Hands Free) (XC90) (16/127)	In left side of dash. See **Fig. 67**.
MP3 Player (16/149)	Left rear of vehicle. See **Fig. 67**.
Program Selector (A/T) (3/155)	Part of selector lever assembly. See **Fig. 24**.

Satellite Radio Receiver (V70) (16/145)	Left rear of vehicle. See **Fig. 67**.
Satellite Radio Receiver (XC90) (16/145)	Right rear of vehicle. See **Fig. 67**.
Side Airbag Igniter (Front Left) (V70) (8/51)	On left side of driver's seat back. See **Fig. 54**.
Side Airbag Igniter (Front Left) (XC90) (8/51)	On left side of driver's seat back. See **Fig. 55**.
Side Airbag Igniter (Front Right) (8/52)	On right front seat back. See **Fig. 55**.
Siren (16/35)	Right front wheelwell. See **Fig. 62**.
Spark Plug & Ignition Coil (6-Cyl.) (20/3 - 20/8)	Top of engine. See **Fig. 69**.
Spark Plug W/Ignition Coil (8-Cyl.) (20/46 - 20/53)	Top of engine. See **Fig. 69**.
Steering Column Igniter (8/99)	In steering column. See **Fig. 58**.
Tow Hitch Cable Converter Harness (26/4)	Left rear corner of cargo compartment. See **Fig. 69**.
Tow Hitch Cable Harness Outlet (4-Pin) (17/37)	Under rear bumper. See **Fig. 68**.
Tow Hitch Cable Harness Outlet (7-Pin) (17/38)	Under rear bumper. See **Fig. 68**.
Tow Hitch Cable Harness Outlet (13-Pin) (17/39)	Under rear bumper. See **Fig. 68**.
T/V Receiver (16/36)	Left rear corner of cargo compartment. See **Fig. 62**.
Variable Valve Lifter (Front Plane) (8/125)	Top right rear of engine. See **Fig. 59**.
Variable Valve Lifter (Rear Plane) (8/126)	Top right front of engine. See **Fig. 59**.
Window Antenna Amplifier 1 (Left) (16/16)	Above left rear window. See **Fig. 61**.
Window Antenna Amplifier 1 (Right) (16/71)	Above right rear window. See **Fig. 64**.
Window Antenna Amplifier 2 (Left) (16/73)	Above left rear window. See **Fig. 64**.
Window Antenna Amplifier 2 (Right) (16/74)	Above right rear window. See **Fig. 64**.

CONNECTORS

CONNECTORS LOCATION

Component	Location
C54/1B (Gray, 14 Pin)	At left side of engine compartment. See **Fig. 75**.
C54/1C (Gray, 2 Pin)	Left front of engine compartment. See **Fig. 76**.
C54/3.1 (Gray, 36 Pin)	At left rear corner of engine compartment. See **Fig. 76**.
C54/3.2 (Gray, 6 Pin)	Behind left kick panel. See **Fig. 76**.
C54/4 (Gray, 8 Pin)	At left front of engine compartment. See **Fig. 76**.
C54/7 (Gray, 3 Pin)	At front of engine compartment. See **Fig. 76**.
C54/8 (Gray, 2 Pin)	Behind left headlight. See **Fig. 76**.
C54/9 (V70) (Gray, 6 Pin)	Behind left headlight. See **Fig. 76**.
C54/9 (XC90) (Gray, 6 Pin)	Behind left headlight. See **Fig. 77**.
C54/10 (Black, 12 Pin)	Behind left kick panel. See **Fig. 77**.
C54/11 (Black, 12 Pin)	Behind right kick panel. See **Fig. 77**.
C54/12 (Orange, 4 Pin)	Behind right side of dash. See **Fig. 77**.
C54/13 (Black, 22 Pin)	At left "A" pillar. See **Fig. 77**.
C54/14 (Gray, 12 Pin)	Behind left side of dash. See **Fig. 77**.
C54/16 (Green, 5 Pin)	At right front of roof. See **Fig. 78**.

C54/20 (Black, 12 Pin)	At left "B" pillar. See **Fig. 78**.
C54/21 (Black, 12 Pin)	At right "B" pillar. See **Fig. 78**.
C54/22 (V70) (Black, 12 Pin)	Behind left headlight. See **Fig. 78**.
C54/22 (XC90) (Black, 10 Pin)	Behind left headlight. See **Fig. 78**.
C54/23 (V70) (Black, 12 Pin)	Behind right headlight. See **Fig. 78**.
C54/23 (XC90) (Black, 10 Pin)	Behind right headlight. See **Fig. 78**.
C54/24 (Black, 20 Pin)	Under left front seat. See **Fig. 78**.
C54/25 (Black, 20 Pin)	Under right front seat. See **Fig. 78**.
C54/32 (Gray, 3 Pin)	Near bottom of left "C" pillar. See **Fig. 78**.
C54/34 (Gray, 4 Pin)	Near bottom of right "C" pillar. See **Fig. 79**.
C54/35 (Gray, 4 Pin)	Near bottom of right "C" pillar. See **Fig. 79**.
C54/36 (Gray, 6 Pin)	Near bottom of right "C" pillar. See **Fig. 79**.
C54/39 (Orange, 4 Pin)	Near bottom of right "C" pillar. See **Fig. 79**.
C54/40B (Gray, 8 Pin)	Near bottom of left "C" pillar. See **Fig. 79**.
C54/40C (Black, 2 Pin)	Near bottom of left "C" pillar. See **Fig. 79**.
C54/40D (Black, 2 Pin)	Near bottom of left "C" pillar. See **Fig. 79**.
C54/43B (Gray, 8 Pin)	Near bottom of right "C" pillar. See **Fig. 79**.
C54/43 (Gray, 14 Pin)	Near bottom of right "C" pillar. See **Fig. 79**.
C54/50 (Gray, 2 Pin)	Left rear corner of cargo compartment. See **Fig. 80**.
C54/53 (Gray, 4 Pin)	At front of engine compartment. See **Fig. 80**.
C54/54 (Gray, 8 Pin)	At right rear of cargo compartment. See **Fig. 80**.
C54/66.1 (Gray, 2 Pin)	At left rear of cargo compartment. See **Fig. 81**.
C54/66.2 (Black, 2 Pin)	At left rear of cargo compartment. See **Fig. 81**.
C54/74B (Orange, 2 Pin)	At bottom of left "C" pillar. See **Fig. 81**.
C54/74 (Yellow, 4 Pin)	At bottom of left "C" pillar. See **Fig. 81**.
C54/98 (Gray, 5 Pin)	At right rear corner of cargo compartment. See **Fig. 81**.
C54/100 (Black, 2 Pin)	Left side of engine. See **Fig. 81**.
C54/106 (Gray, 4 Pin)	At bottom of right "C" pillar. See **Fig. 81**.
C54/107 (Gray, 10 Pin)	At bottom of left "C" pillar. See **Fig. 81**.
C54/112 (Gray, 4 Pin)	Behind center of dash. See **Fig. 81**.
C54/113 (Black, 2 Pin)	At left front corner of engine compartment. See **Fig. 81**.
C54/117 (Orange, 2 Pin)	Near bottom of right "C" pillar. See **Fig. 81**.
C54/122 (Black, 2 Pin)	At right front corner of engine compartment.
C54/132 (Gray, 6 Pin)	Behind left side of dash. See **Fig. 82**.
C54/134 (XC90) (Gray, 12 Pin)	Under center console. See **Fig. 82**.
C54/134.2 (Except XC90) (Gray, 4 Pin)	Under center console. See **Fig. 82**.
C54/137A (Gray, 3 Pin)	Center of roof. See **Fig. 82**.
C54/139 (Gray, 12 Pin)	Under driver's seat. See **Fig. 82**.
C54/140 (Gray, 12 Pin)	Under center console. See **Fig. 82**.

C54/274 (Gray, 12 Pin)	Left center of roof. See **Fig. 82**.
C54/275 (Gray, 12 Pin)	Right center of roof. See **Fig. 82**.
C54/276 (Gray, 12 Pin)	In driver's seat back. See **Fig. 82**.
C54/277 (Gray, 12 Pin)	In front passenger's seat back. See **Fig. 83**.
C54/1300 (Gray, 6 Pin)	Behind right headlight. See **Fig. 83**.
C54/1400 (Gray, 6 Pin)	Under right side of dash. See **Fig. 83**.
C54/1401 (V70) (Gray, 10 Pin)	Center of roof. See **Fig. 83**.
C54/1401 (XC90) (Gray, 12 Pin)	Center of roof. See **Fig. 83**.
C54/1402 (Green, 22 Pin)	Center of roof. See **Fig. 83**.

GROUNDS

GROUNDS LOCATION

Component	Location
G31/1	Right side of engine compartment, on strut tower. See **Fig. 70**.
G31/2	In engine compartment, on left strut tower. See **Fig. 70**.
G31/4	At rear left side of engine. See **Fig. 70**.
G31/6	At left kick panel. See **Fig. 70**.
G31/10	At right kick panel. See **Fig. 70**.
G31/44	At lower left front of engine compartment. See **Fig. 71**.
G31/46	On left rear seat riser. See **Fig. 71**.
G31/47	On left rear seat riser. See **Fig. 71**.
G31/48	On right rear seat riser. See **Fig. 71**.
G31/53	Left side of engine compartment. See **Fig. 71**.
G31/66	On left front seat riser. See **Fig. 72**.
G31/67	On right front seat riser. See **Fig. 72**.
G31/70	Lower left front corner of engine compartment. See **Fig. 72**.
G31/72	At left rear of cargo compartment. See **Fig. 72**.
G31/73	At right rear of passenger's compartment, near floor. See **Fig. 72**.
G31/83	At left kick panel. See **Fig. 73**.
G31/84	At right kick panel. See **Fig. 73**.
G31/88	At top of engine. See **Fig. 73**.
G31/89	At top rear of engine. See **Fig. 73**.
G31/90	Left side of engine. See **Fig. 74**.
G31/91	At left side of engine. See **Fig. 74**.
G31/93	Left side of engine compartment, on strut tower. See **Fig. 74**.

G31/94	Right side of engine compartment, on strut tower. See **Fig. 74**.
G31/95	Left side of engine compartment, on strut tower. See **Fig. 74**.
G31/96	Right side of engine compartment, on strut tower. See **Fig. 74**.
G31/98	At front center of headliner. See **Fig. 75**.
G31/99	Above left rear window. See **Fig. 75**.
G31/100	Top left side of engine. See **Fig. 74**.
G31/102	Behind left corner of front bumper. See **Fig. 75**.
G31/120 (V70)	Left rear of cargo compartment. See **Fig. 75**.
G31/120 (XC90)	Right rear of cargo compartment. See **Fig. 75**.
G31/121 (8-Cyl.)	Top right side of engine.

SPLICES

SPLICES LOCATION

Component	Location
S53/301 (V70)	In engine compartment harness, at left front of engine compartment. See **Fig. 3**.
S53/301 (XC90)	In engine compartment harness, at left front of engine compartment. See **Fig. 4**.
S53/302 (V70)	In engine compartment harness, at right side of engine compartment. See **Fig. 3**.
S53/302 (XC90)	In engine compartment harness, at right front corner of engine compartment. See **Fig. 4**.
S53/303 (V70)	In engine compartment harness, at right side of engine compartment. See **Fig. 3**.
S53/303 (XC90)	In engine compartment harness, at right side of engine compartment. See **Fig. 4**.
S53/304 (6-Cyl.)	In engine harness, at rear of engine. See **Fig. 1**.
S53/304 (8-Cyl.)	In engine harness, at rear of engine. See **Fig. 2**.
S53/305	In engine compartment harness, at left side of engine compartment. See **Fig. 3**.
S53/309 (6-Cyl.)	In engine harness, at rear of engine. See **Fig. 1**.
S53/309 (8-Cyl.)	In engine harness, at top rear of engine. See **Fig. 2**.
S53/314	In engine harness, at left front of engine. See **Fig. 1**.
S53/315 (6-Cyl.)	In engine harness, at rear of engine. See **Fig. 1**.
S53/315 (8-Cyl.)	In engine harness, at top rear of engine. See **Fig. 2**.
S53/319	In engine harness, at left front of engine. See **Fig. 1**.
S53/324 (V70)	In engine compartment harness, at right side of engine compartment. See **Fig. 3**.
	In engine compartment harness, at right side of

S53/324 (XC90)	engine compartment. See **Fig. 4**.
S53/326	In engine harness, at left front of engine. See **Fig. 1**.
S53/328 (6-Cyl.)	In engine harness, at rear of engine. See **Fig. 1**.
S53/328 (8-Cyl.)	In engine harness, at right front of engine. See **Fig. 2**.
S53/329 (V70)	In engine compartment harness, at left side of engine compartment. See **Fig. 3**.
S53/329 (XC90)	In engine compartment harness, at left side of engine compartment. See **Fig. 4**.
S53/331 (V70)	In engine compartment harness, at left front of engine compartment. See **Fig. 3**.
S53/331 (XC90)	In engine compartment harness, at left side of engine compartment. See **Fig. 4**.
S53/332 (6-Cyl.)	In engine harness, at left front of engine. See **Fig. 1**.
S53/332 (8-Cyl.)	In engine harness, at left rear of engine. See **Fig. 2**.
S53/352 (V70)	In engine compartment harness, at left front of engine compartment. See **Fig. 3**.
S53/352 (XC90)	In engine compartment harness, at left front corner of engine compartment. See **Fig. 4**.
S53/353 (V70)	In engine compartment harness, at left side of engine compartment. See **Fig. 3**.
S53/353 (XC90)	In engine compartment harness, at left front corner of engine compartment. See **Fig. 4**.
S53/354 (V70)	In engine compartment harness, rear of engine compartment. See **Fig. 3**.
S53/355 (V70)	In engine compartment harness, rear of engine compartment. See **Fig. 3**.
S53/360 (6-Cyl.)	In engine harness, at rear of engine. See **Fig. 1**.
S53/360 (8-Cyl.)	In engine harness, at right side of engine. See **Fig. 2**.
S53/375	In engine harness, at left front of engine. See **Fig. 1**.
S53/376	In engine harness, at left front of engine. See **Fig. 1**.
S53/384 (V70)	In engine compartment harness, at left side of engine compartment. See **Fig. 3**.
S53/384 (XC90)	In engine compartment harness, at left side of engine compartment. See **Fig. 4**.
S53/394 (V70)	In engine compartment harness, at left side of engine compartment. See **Fig. 3**.
S53/394 (XC90)	In engine compartment harness, at left side of engine compartment. See **Fig. 4**.
S53/395 (V70)	In engine compartment harness, at left front of engine compartment. See **Fig. 3**.
S53/395 (XC90)	In engine compartment harness, at left front corner of engine compartment. See **Fig. 4**.
	In engine compartment harness, at side of engine

S53/396 (XC90)	compartment. See **Fig. 4**.
S53/397 (V70)	In engine compartment harness, at left side of engine compartment. See **Fig. 3**.
S53/397 (XC90)	In engine compartment harness, at left side of engine compartment. See **Fig. 4**.
S53/398 (V70)	In engine compartment harness, at rear of engine compartment. See **Fig. 3**.
S53/398 (XC90)	In engine compartment harness, at rear of engine compartment. See **Fig. 4**.
S53/400 (V70)	In front passenger compartment harness, behind left side of dash. See **Fig. 5**.
S53/400 (XC90)	In front passenger compartment harness, behind left side of dash. See **Fig. 6**.
S53/403 (V70)	In front passenger compartment harness, behind left side of dash. See **Fig. 5**.
S53/403 (XC90)	In front passenger compartment harness, behind left side of dash. See **Fig. 6**.
S53/405 (V70)	In front passenger compartment harness, behind left side of dash. See **Fig. 5**.
S53/405 (XC90)	In front passenger compartment harness, behind left side of dash. See **Fig. 6**.
S53/406 (V70)	In front passenger compartment harness, behind center of dash. See **Fig. 5**.
S53/408 (V70)	In front passenger compartment harness, behind left side of dash. See **Fig. 5**.
S53/408 (XC90)	In front passenger compartment harness, behind center of dash. See **Fig. 6**.
S53/415 (V70)	In front passenger compartment harness, behind left side of dash. See **Fig. 5**.
S53/415 (XC90)	In front passenger compartment harness, behind left side of dash. See **Fig. 6**.
S53/425 (V70)	In front passenger compartment harness, behind left side of dash. See **Fig. 5**.
S53/425 (XC90)	In front passenger compartment harness, behind left side of dash. See **Fig. 6**.
S53/433 (V70)	In front passenger compartment harness, behind center of dash. See **Fig. 5**.
S53/433 (XC90)	In front passenger compartment harness, behind left side of dash. See **Fig. 6**.
S53/434 (V70)	In front passenger compartment harness, behind center of dash. See **Fig. 5**.
S53/434 (XC90)	In front passenger compartment harness, behind left side of dash. See **Fig. 6**.
S53/437 (V70)	In front passenger compartment harness, behind left

	side of dash. See **Fig. 5**.
S53/437 (XC90)	In front passenger compartment harness, behind left side of dash. See **Fig. 6**.
S53/438 (V70)	In front passenger compartment harness, behind left side of dash. See **Fig. 5**.
S53/438 (XC90)	In front passenger compartment harness, behind left side of dash. See **Fig. 6**.
S53/443 (V70)	In front passenger compartment harness, behind left side of dash. See **Fig. 5**.
S53/443 (XC90)	In front passenger compartment harness, behind left side of dash. See **Fig. 6**.
S53/448 (V70)	In front passenger compartment harness, behind right side of dash. See **Fig. 5**.
S53/448 (XC90)	In front passenger compartment harness, behind center of dash. See **Fig. 6**.
S53/449	In front passenger compartment harness, at left rear wheelwell. See **Fig. 5**.
S53/450	In front passenger compartment harness, at left rear wheelwell. See **Fig. 5**.
S53/452	In front passenger compartment harness, behind center side of dash. See **Fig. 6**.
S53/454	In front passenger compartment harness, behind left side of dash. See **Fig. 6**.
S53/462	In engine harness, at rear of engine. See **Fig. 2**.
S53/500 (V70)	In front passenger compartment harness, under driver's door sill. See **Fig. 5**.
S53/500 (XC90)	In front passenger compartment harness, under left rear door sill. See **Fig. 6**.
S53/501 (V70)	In front passenger compartment harness, under front passenger's door sill. See **Fig. 5**.
S53/501 (XC90)	In front passenger compartment harness, under front passenger's door sill. See **Fig. 6**.
S53/503 (XC90)	In roof harness, at left front of roof. See **Fig. 10**.
S53/505 (V70)	In roof & inflatable curtain harness, at top of left "A" pillar. See **Fig. 9**.
S53/505 (XC90)	In roof harness, at left front of roof. See **Fig. 10**.
S53/508	In roof harness, forward of sun roof. See **Fig. 10**.
S53/509	In roof harness, forward of sun roof. See **Fig. 10**.
S53/514 (V70)	In left front door harness. See **Fig. 12**.
S53/514 (XC90)	In left front door harness. See **Fig. 14**.
S53/515 (V70)	In right front door harness. See **Fig. 13**.
S53/515 (XC90)	In right front door harness. See **Fig. 14**.
S53/523 (V70)	In front passenger compartment harness, at left kick panel. See **Fig. 5**.

S53/523 (XC90)	In front passenger compartment harness, at left kick panel. See **Fig. 6**.
S53/524 (V70)	In front passenger compartment harness, at left kick panel. See **Fig. 5**.
S53/524 (XC90)	In front passenger compartment harness, at left kick panel. See **Fig. 6**.
S53/525 (V70)	In front passenger compartment harness, behind right side of dash. See **Fig. 5**.
S53/525 (XC90)	In front passenger compartment harness, behind right side of dash. See **Fig. 6**.
S53/526 (V70)	In front passenger compartment harness, behind right side of dash. See **Fig. 5**.
S53/526 (XC90)	In front passenger compartment harness, behind right side of dash. See **Fig. 6**.
S53/567 (V70)	In front passenger compartment harness, under center floor console. See **Fig. 5**.
S53/568 (V70)	In front passenger compartment harness, under center floor console. See **Fig. 5**.
S53/569 (V70)	In front passenger compartment harness, at left kick panel. See **Fig. 5**.
S53/570 (V70)	In front passenger compartment harness, at left kick panel. See **Fig. 5**.
S53/575	In roof harness, at top of left "C" pillar. See **Fig. 10**.
S53/576	In roof harness, at top of left "C" pillar. See **Fig. 10**.
S53/577	In roof harness, at top of left "C" pillar. See **Fig. 10**.
S53/579 (V70)	In cargo compartment harness, at right front side of vehicle. See **Fig. 7**.
S53/579 (XC90)	In cargo compartment harness, at right front side of vehicle. See **Fig. 8**.
S53/583 (V70)	In roof & inflatable curtain harness, at left front of roof. See **Fig. 9**.
S53/583 (XC90)	In roof harness, forward of sun roof. See **Fig. 10**.
S53/584 (V70)	In front passenger compartment harness, under driver's door sill. See **Fig. 5**.
S53/584 (XC90)	In front passenger compartment harness, under driver's door sill. See **Fig. 6**.
S53/585 (V70)	In front passenger compartment harness, under driver's door sill. See **Fig. 5**.
S53/585 (XC90)	In front passenger compartment harness, under driver's door sill. See **Fig. 6**.
S53/601 (V70)	In cargo compartment harness, at left rear corner of cargo compartment. See **Fig. 7**.
S53/601 (XC90)	In cargo compartment harness, at left rear corner of cargo compartment. See **Fig. 8**.

S53/602 (V70)	In cargo compartment harness, at left rear corner of cargo compartment. See **Fig. 7**.
S53/602 (XC90)	In cargo compartment harness, at left rear corner of cargo compartment. See **Fig. 8**.
S53/604 (V70)	In cargo compartment harness, at right rear corner of cargo compartment. See **Fig. 7**.
S53/604 (XC90)	In cargo compartment harness, at right rear corner of cargo compartment. See **Fig. 8**.
S53/605 (V70)	In cargo compartment harness, at right rear of cargo area. See **Fig. 7**.
S53/606	In tailgate harness, at top left of tailgate. See **Fig. 11**.
S53/652	In cargo compartment harness, at right side of cargo compartment. See **Fig. 7**.
S53/653	In cargo compartment harness, at right side of cargo compartment. See **Fig. 7**.
S53/654	In cargo compartment harness, at right rear corner of cargo compartment. See **Fig. 7**.
S53/655	In cargo compartment harness, at right rear corner of cargo compartment. See **Fig. 7**.
S53/1400	In rear seat entertainment harness, at center of roof. See **Fig. 15**.
S53/1403	In rear seat entertainment harness, at center of roof. See **Fig. 15**.
S53/1404	In rear seat entertainment harness, at center of roof. See **Fig. 15**.
S53/1405	In rear seat entertainment harness, at left rear of cargo area. See **Fig. 15**.
S53/3002	In engine harness, at left front of engine. See **Fig. 2**.
S53/3006	In engine harness, at rear of engine. See **Fig. 2**.
S53/3006	In engine harness, at right side of engine. See **Fig. 2**.
S53/3009	In engine harness, at rear of engine. See **Fig. 2**.

COMPONENT LOCATION GRAPHICS

NOTE: **Figures may show multiple component locations. Refer to appropriate table for proper figure references.**

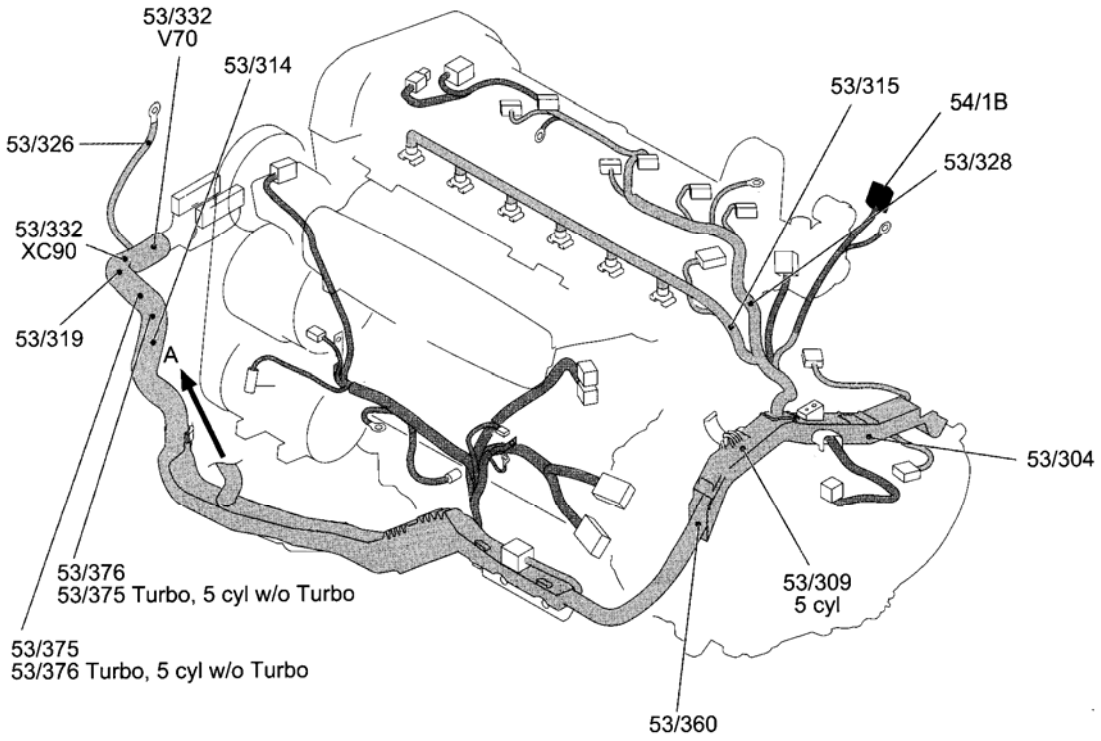

Fig. 1: Engine (6-Cyl.)
Courtesy of VOLVO CARS OF NORTH AMERICA.

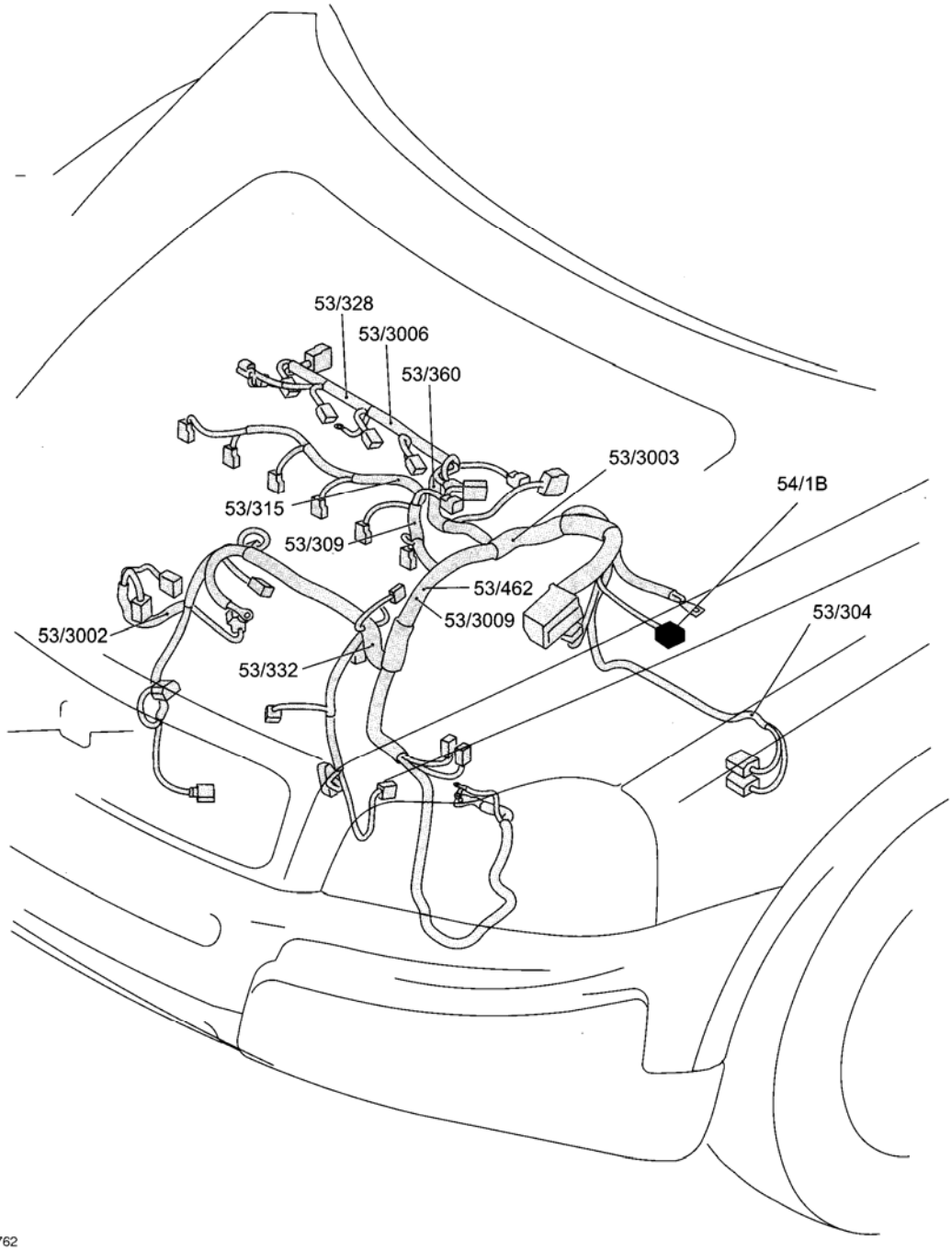

Fig. 2: Engine (8-Cyl.)
Courtesy of VOLVO CARS OF NORTH AMERICA.

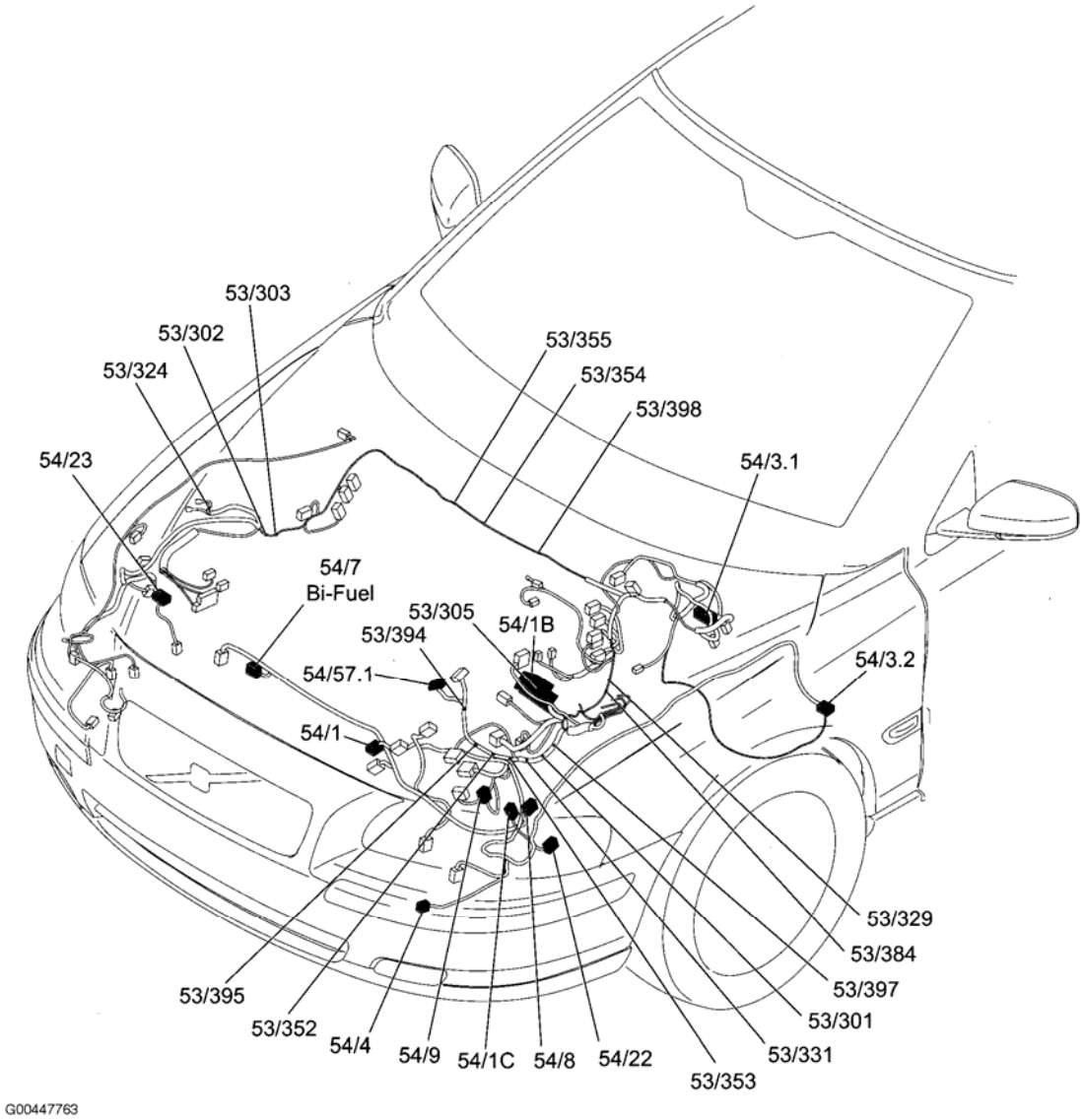

Fig. 3: Engine Compartment (V70)
Courtesy of VOLVO CARS OF NORTH AMERICA.

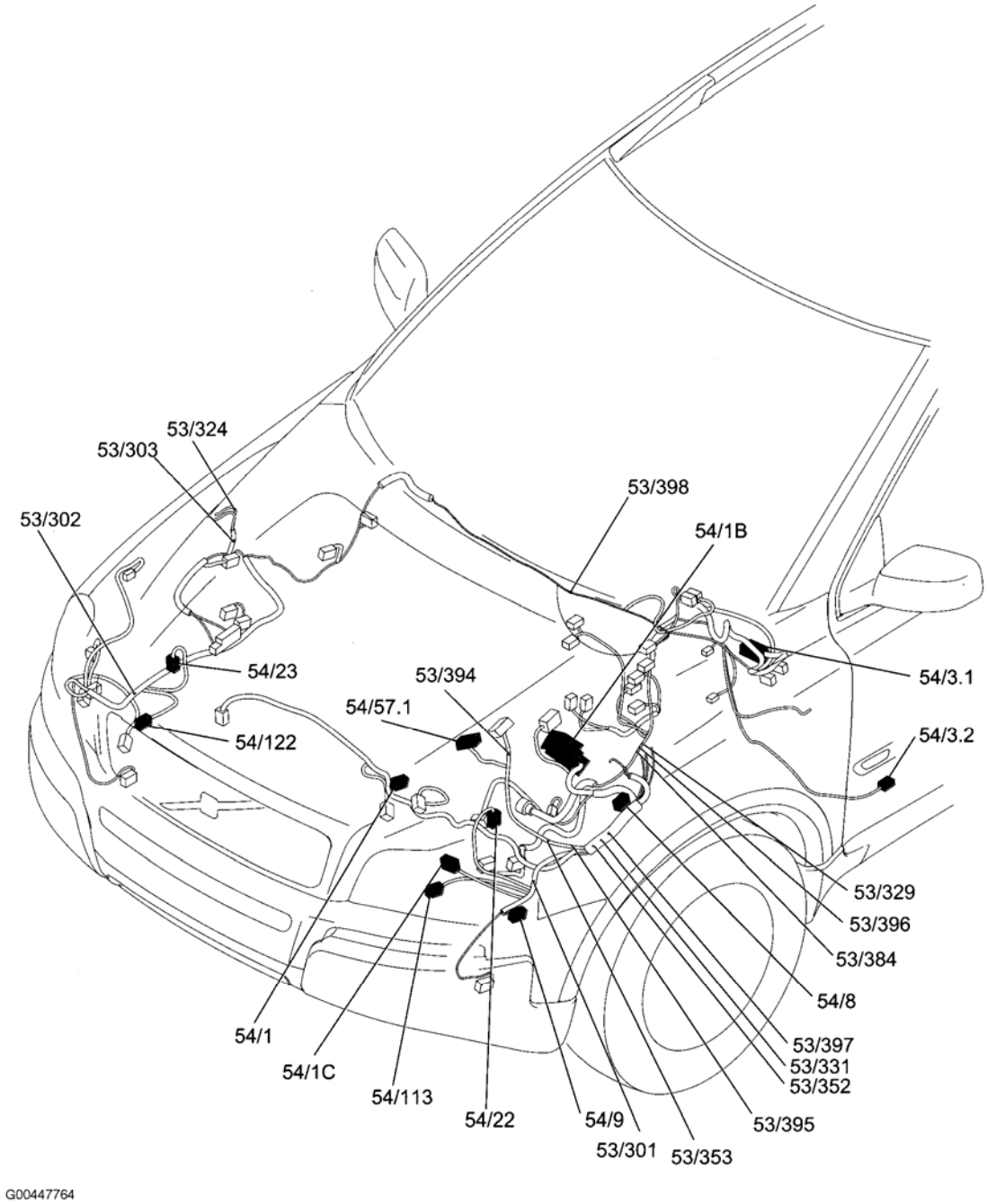

Fig. 4: Engine Compartment (XC90)
Courtesy of VOLVO CARS OF NORTH AMERICA.

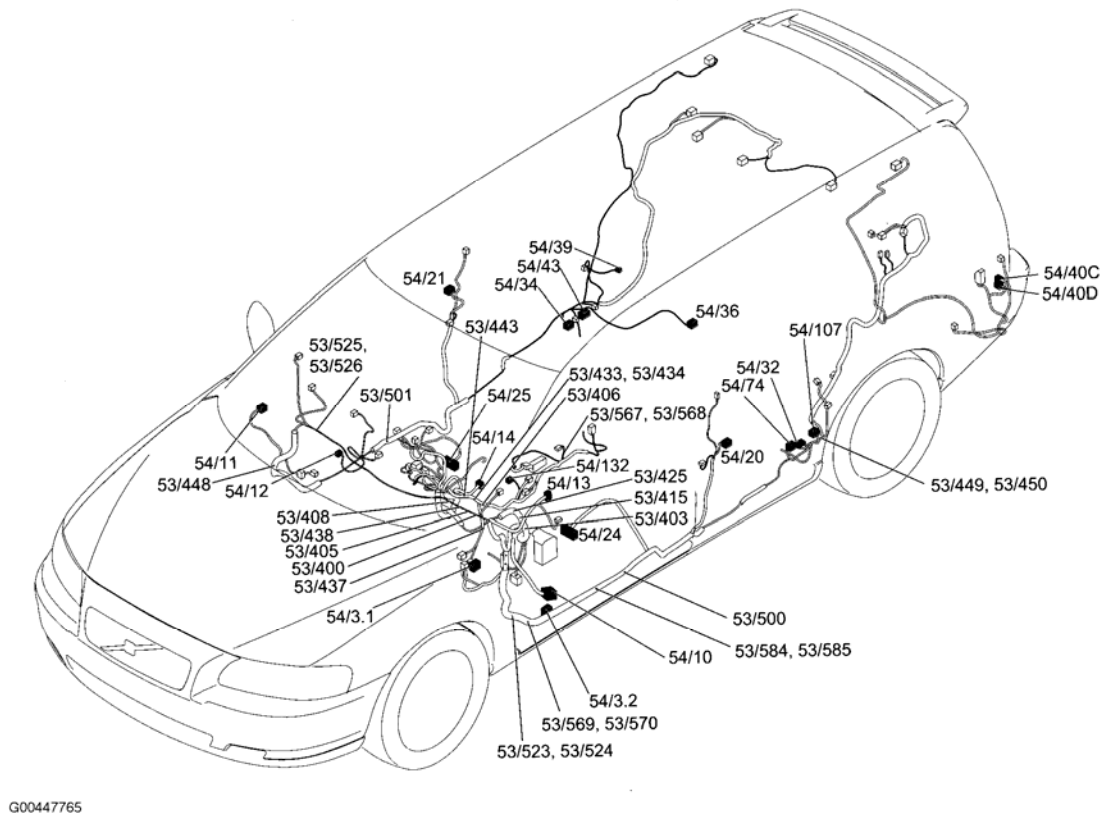

Fig. 5: Vehicle Overview (V70)
Courtesy of VOLVO CARS OF NORTH AMERICA.

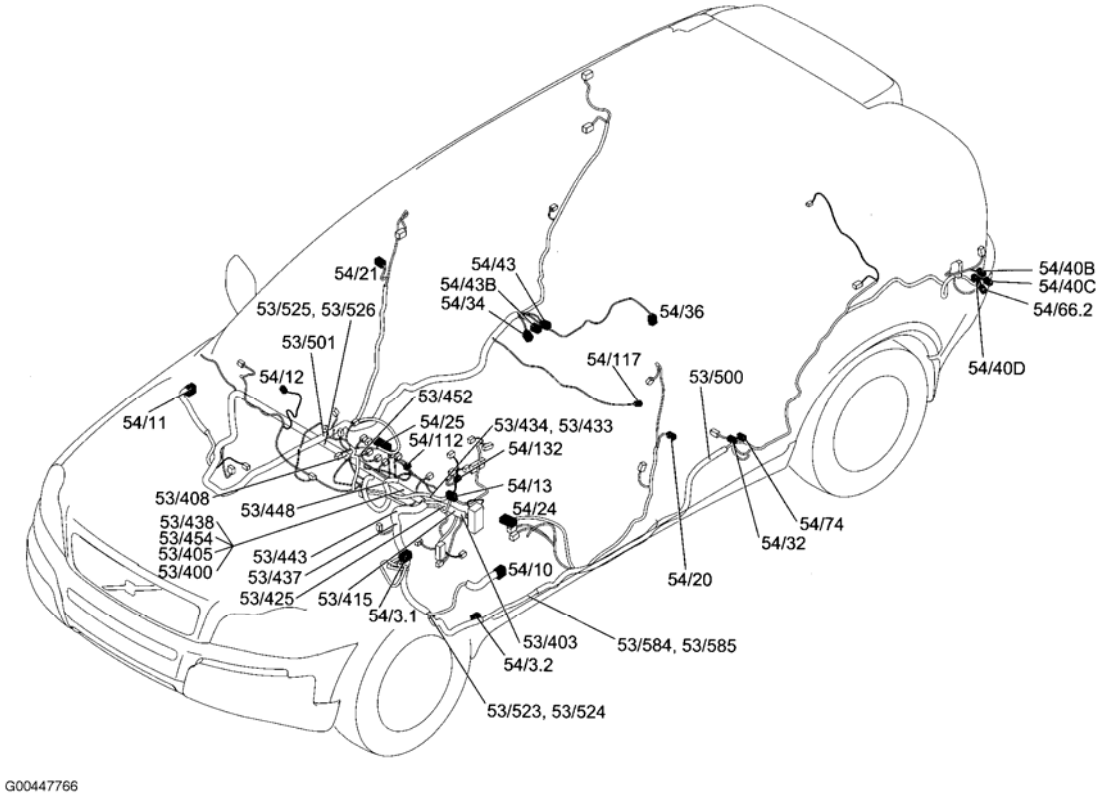

Fig. 6: Vehicle Overview (XC90)
Courtesy of VOLVO CARS OF NORTH AMERICA.

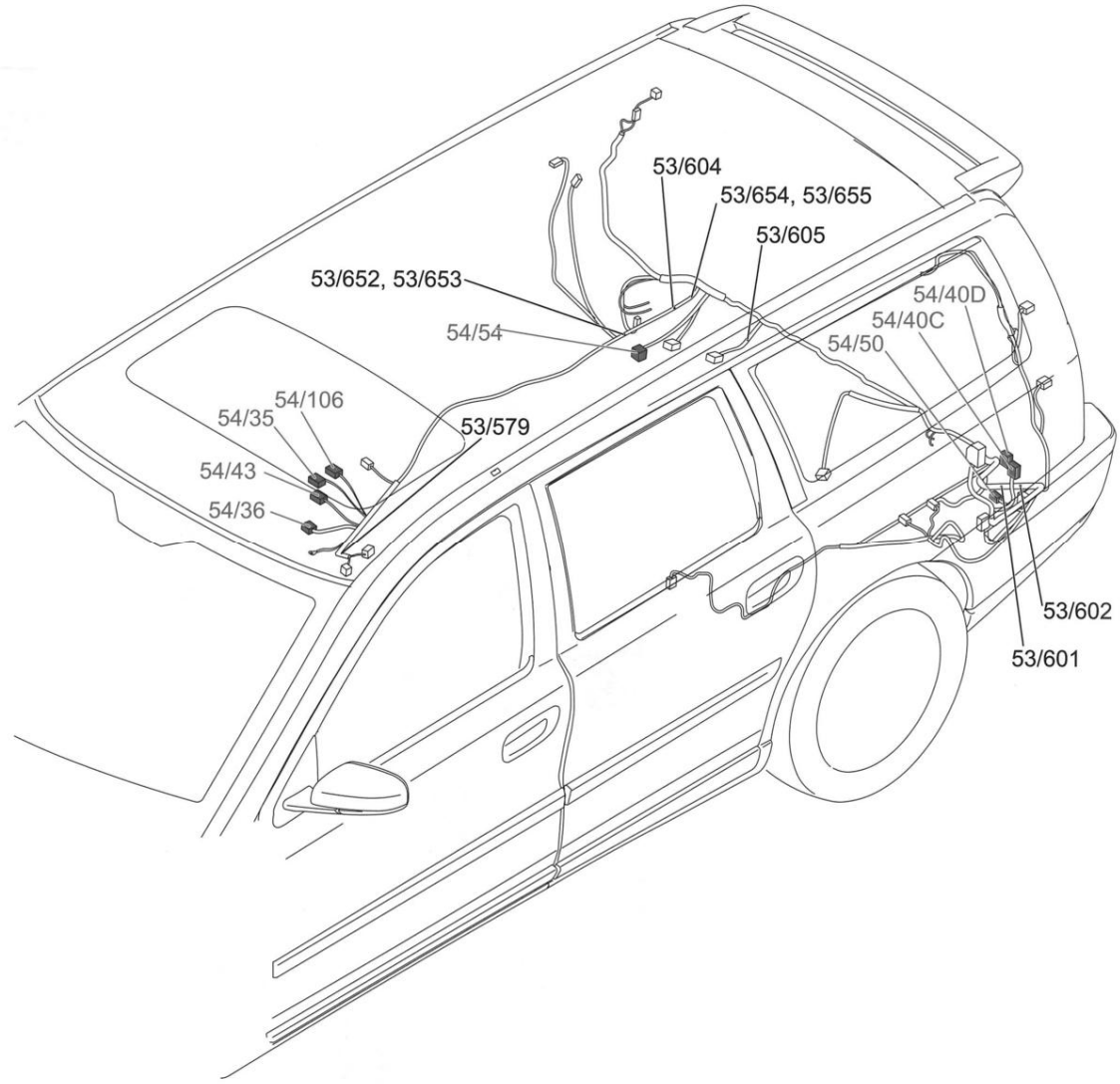

Fig. 7: Rear Of Vehicle (V70)
Courtesy of VOLVO CARS OF NORTH AMERICA.

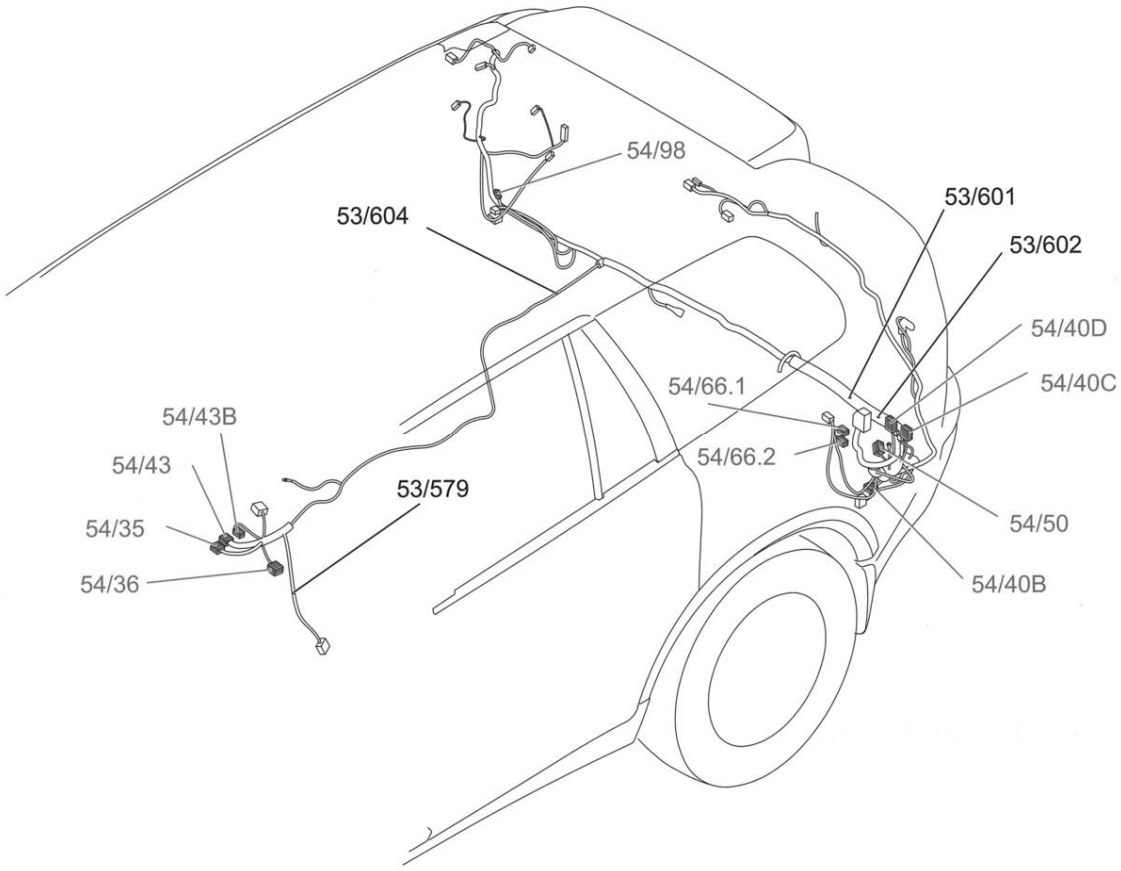

Fig. 8: Rear Of Vehicle (XC90)
Courtesy of VOLVO CARS OF NORTH AMERICA.

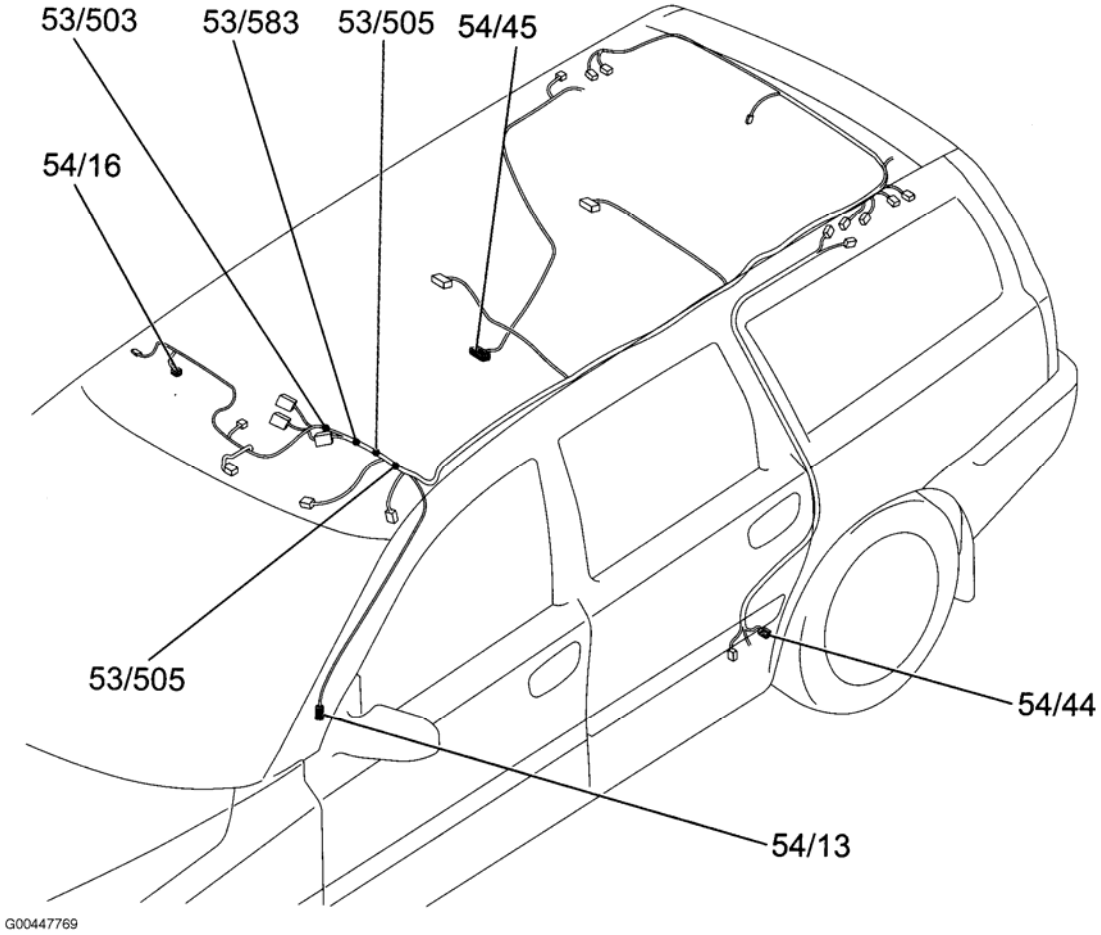

Fig. 9: Roof (V70)
Courtesy of VOLVO CARS OF NORTH AMERICA.

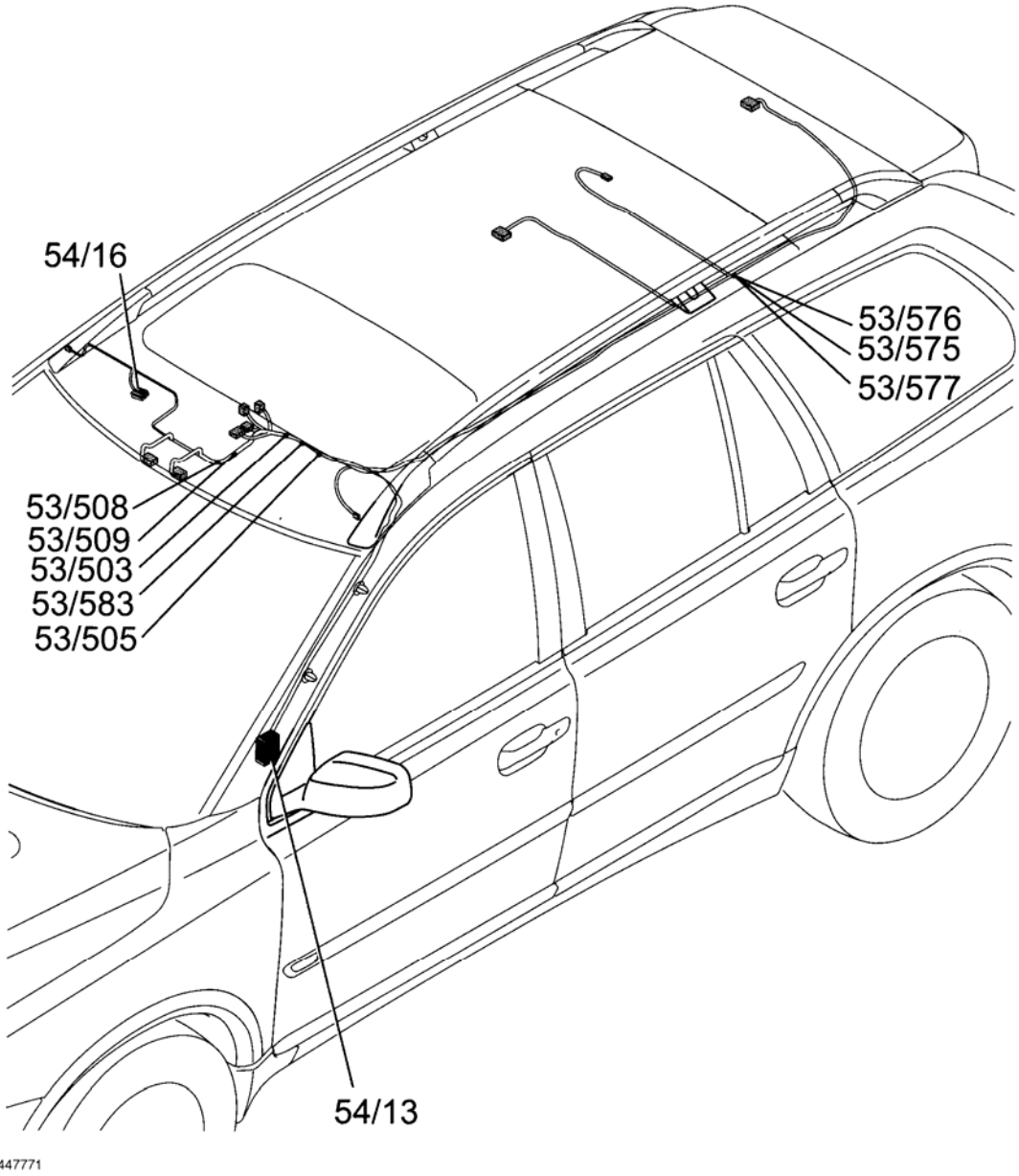

Fig. 10: Roof (XC90)
Courtesy of VOLVO CARS OF NORTH AMERICA.

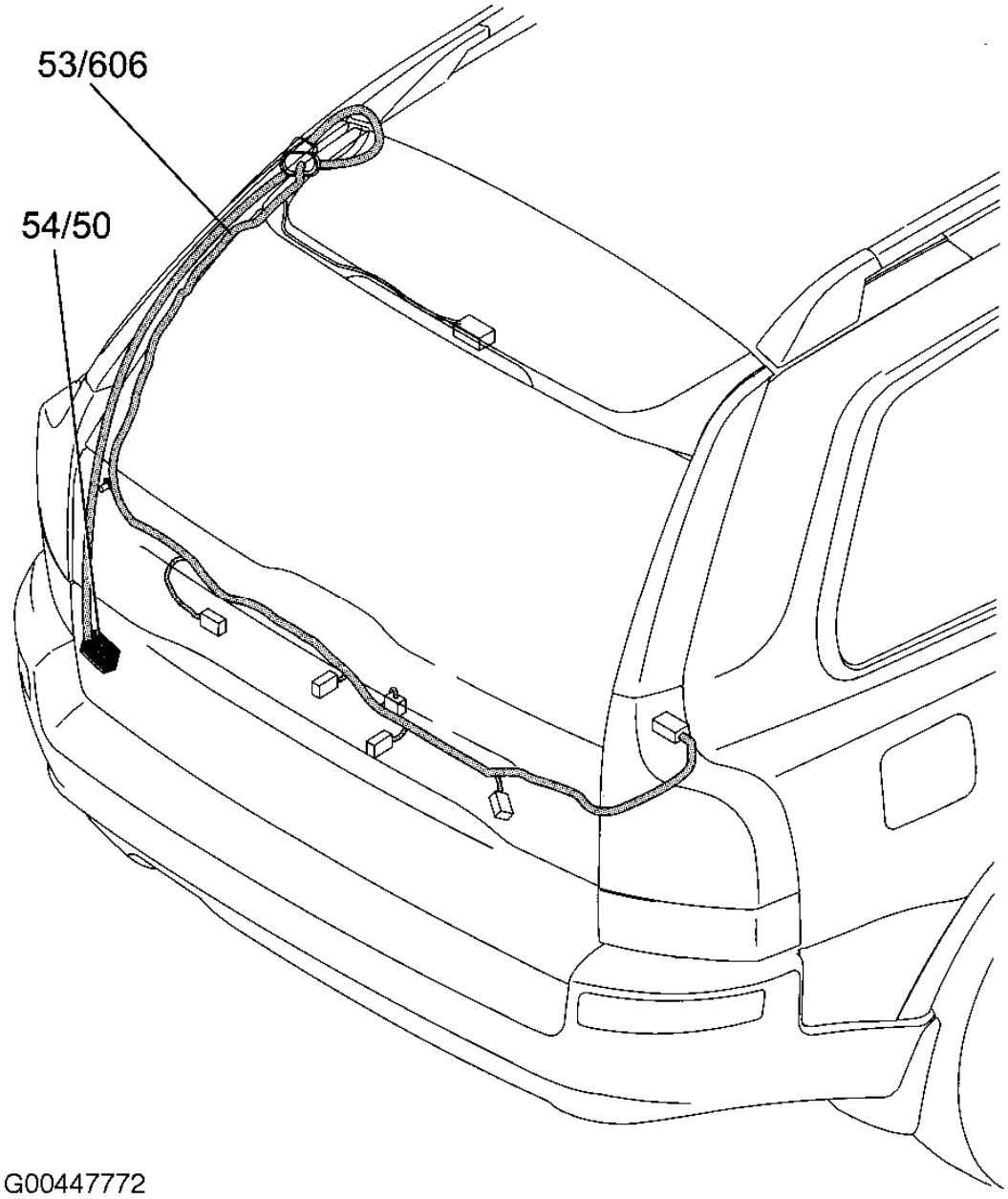

Fig. 11: Tailgate (XC90)
Courtesy of VOLVO CARS OF NORTH AMERICA.

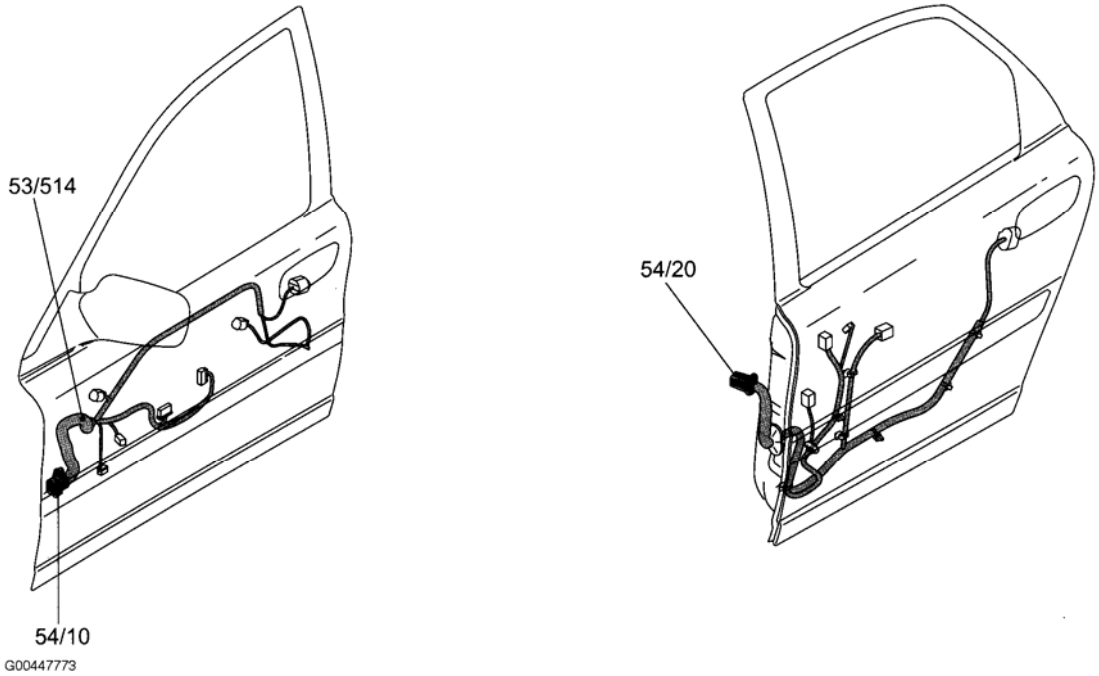

Fig. 12: Left Front Door (V70)
Courtesy of VOLVO CARS OF NORTH AMERICA.

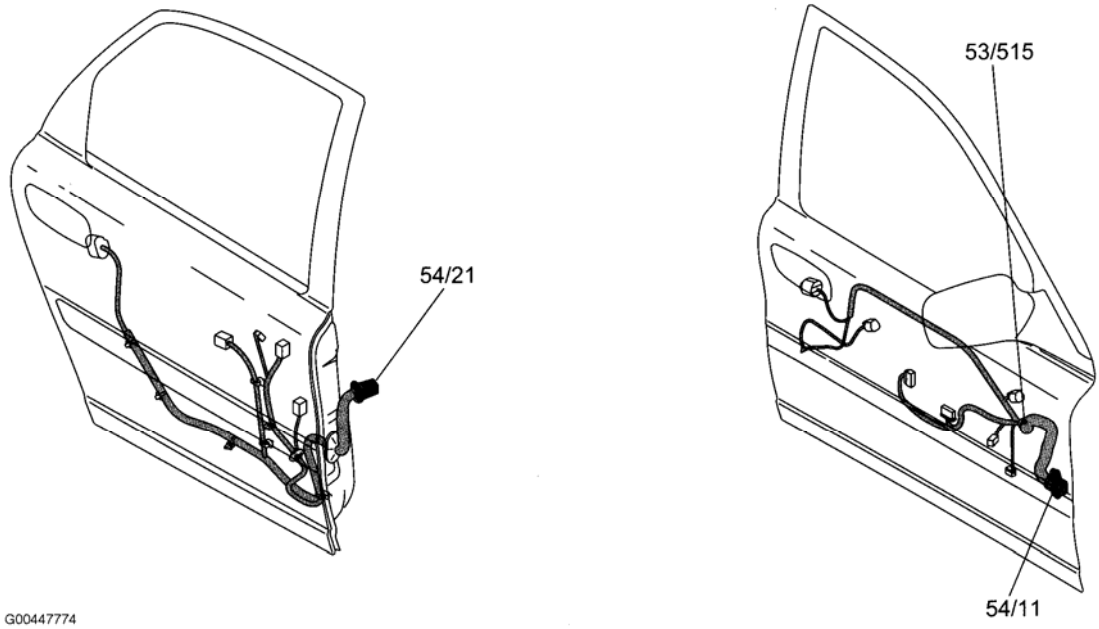

Fig. 13: Right Front Door (V70)
Courtesy of VOLVO CARS OF NORTH AMERICA.

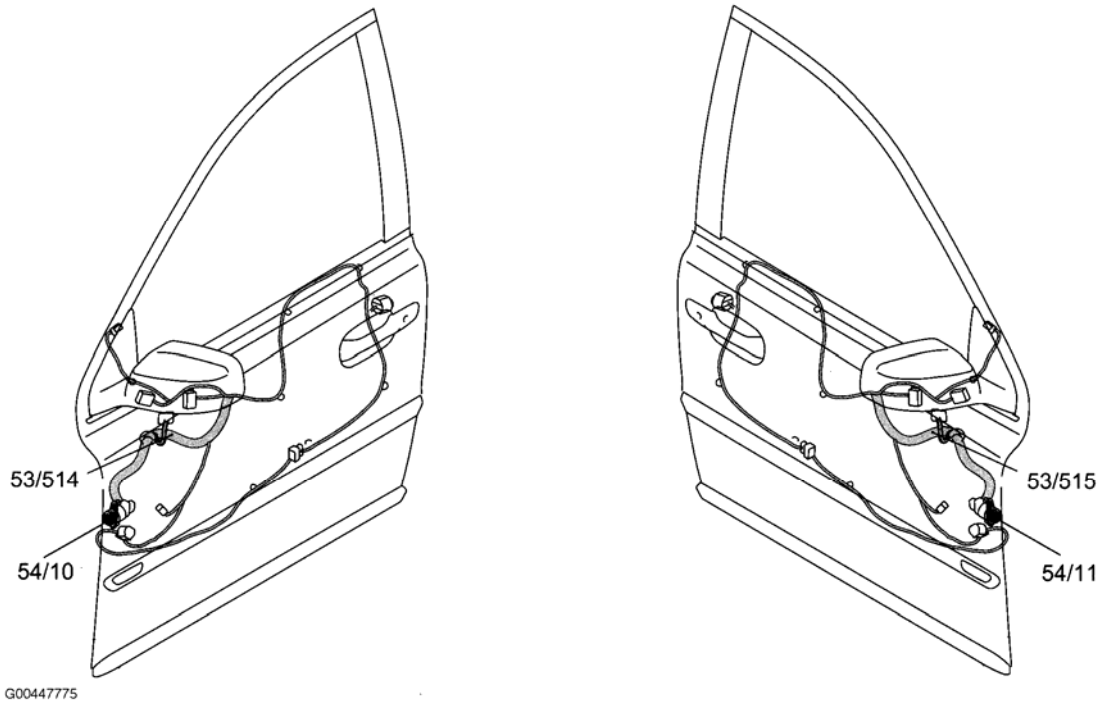

Fig. 14: Front Doors (XC90)
Courtesy of VOLVO CARS OF NORTH AMERICA.

Volvo XC90

2008 VOLVO V70, XC70 & XC90

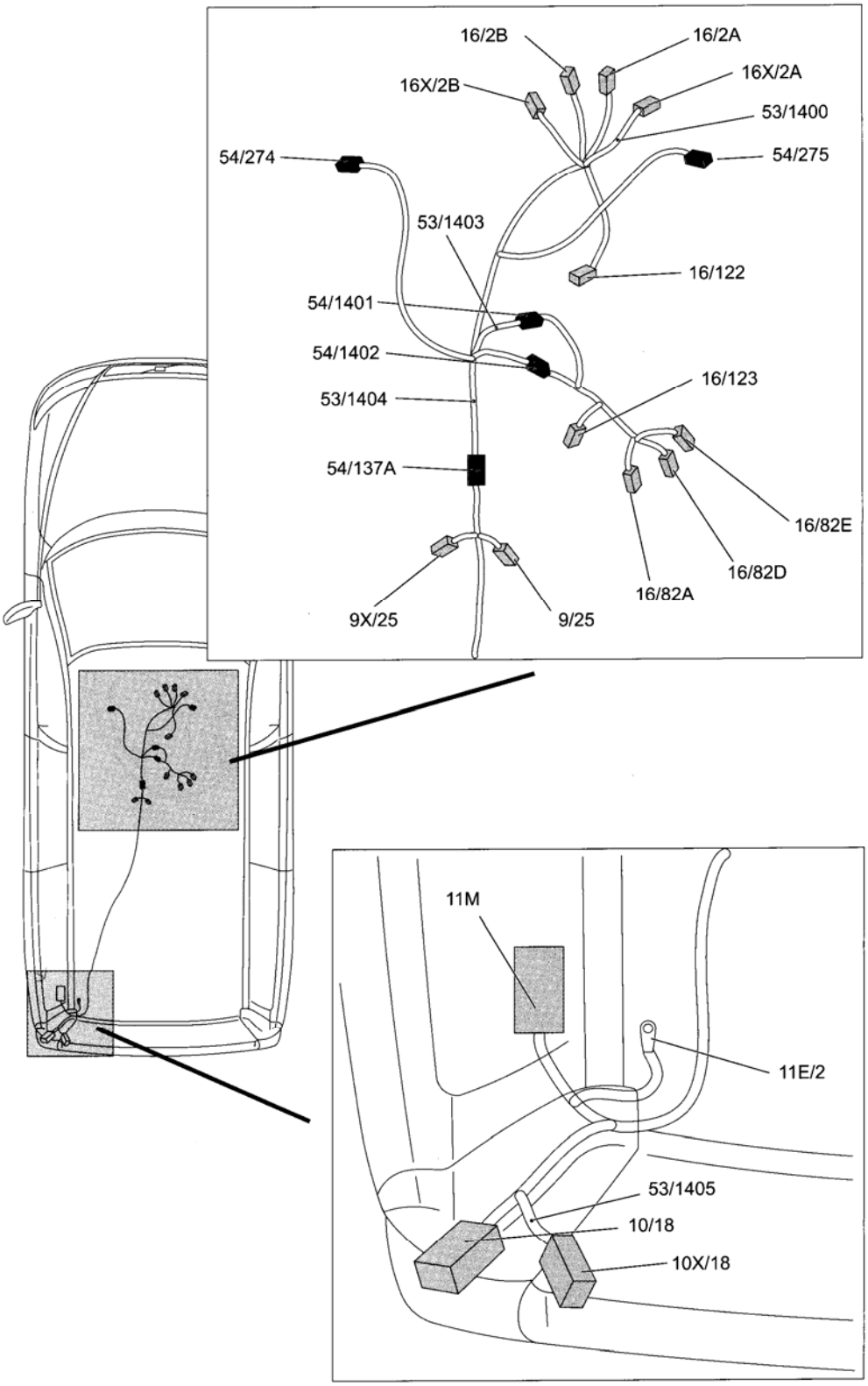

G00447776

Fig. 15: Vehicle Overview (V70)
Courtesy of VOLVO CARS OF NORTH AMERICA.

1/1 Battery V70

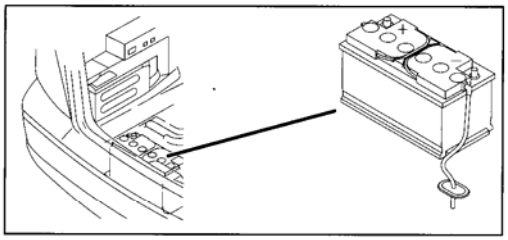

1/1 Battery XC90

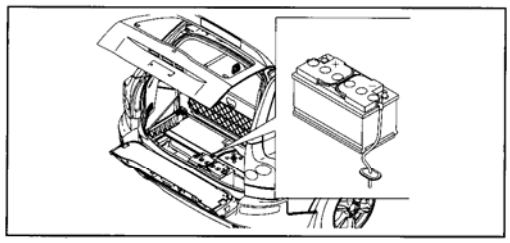

2/22 Relay, climate control system

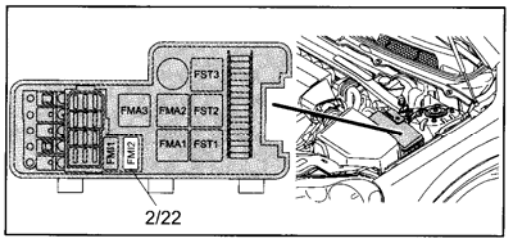

2/32 Main relay, engine management system

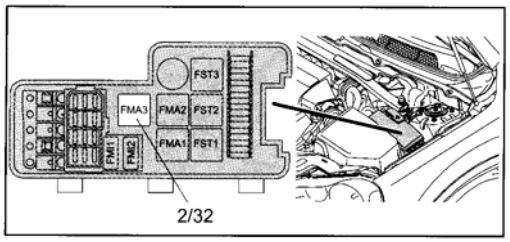

2/35 Relay, starter motor

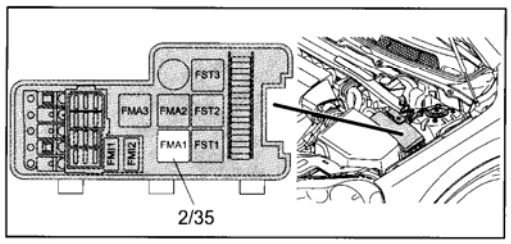

2/64 Auxiliary light relay V70

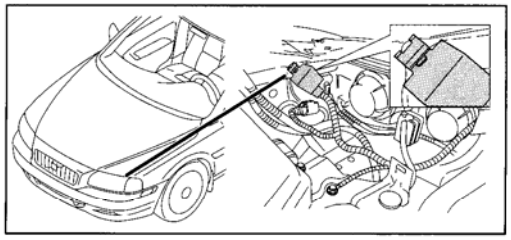

2/64 Auxiliary light relay XC90

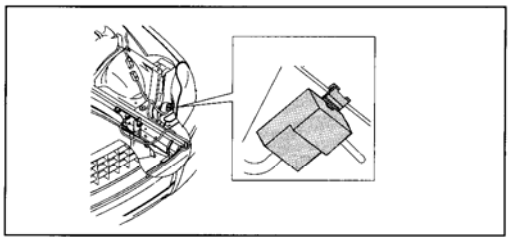

2/90 Relay, windshield wiper, low/high speed

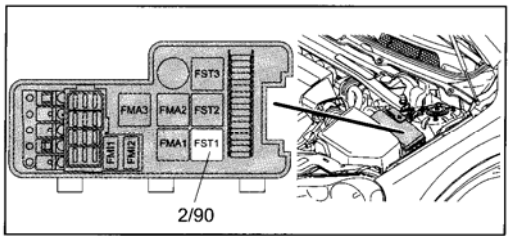

2/91 Relay, intermittent wiping

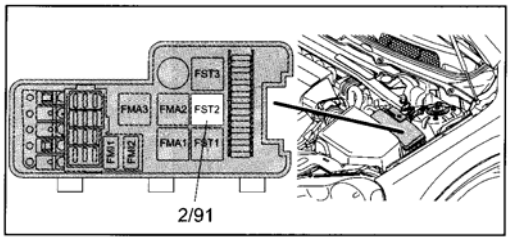

2/138 Deadlock relay, left rear door, V70

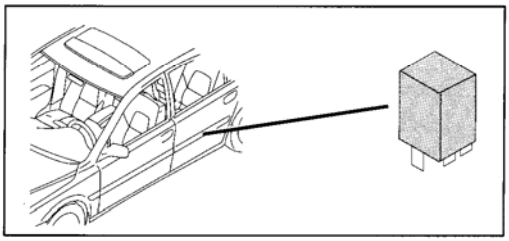

Fig. 16: Components (1/1 To 2/138)
Courtesy of VOLVO CARS OF NORTH AMERICA.

2/138 Deadlock relay, left rear door, XC90

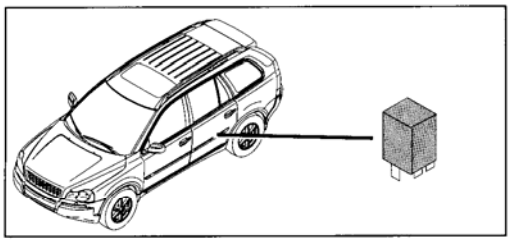

2/139 Deadlock relay, right rear door V70

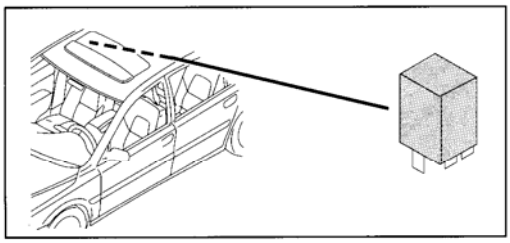

2/139 Deadlock relay, right rear door XC90

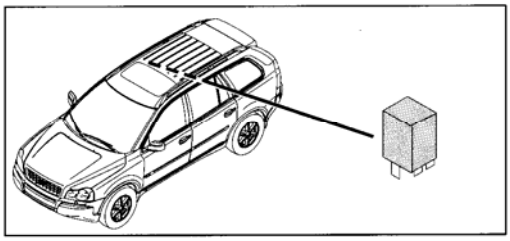

2/182 Relay, high pressure headlight washer motor

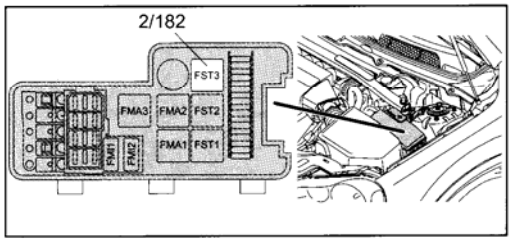

2/191 Relay, remote parking heater start, radio signal

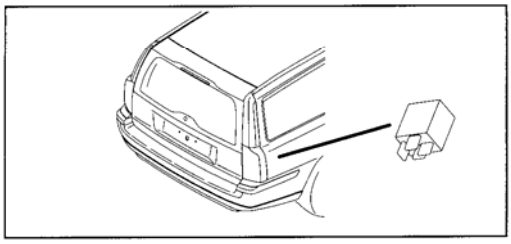

2/192 Relay, electric engine heater V70

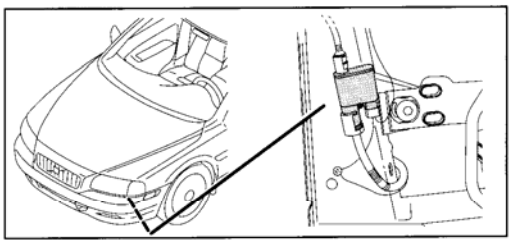

2/192 Relay, electric engine heater XC90

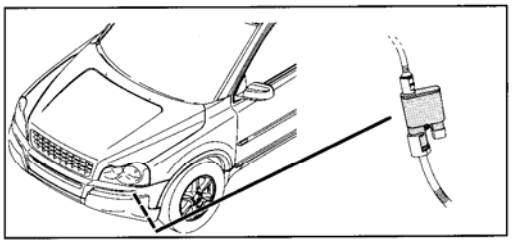

2/238 Relay, audio disconnection

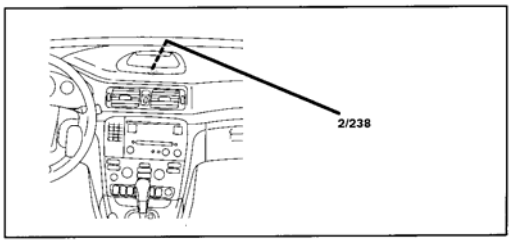

3/1 Ignition switch V70

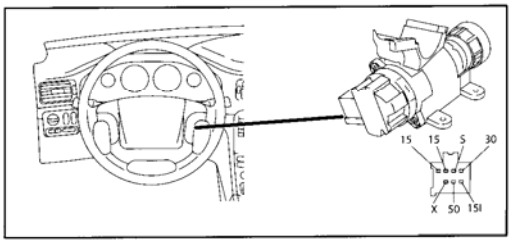

3/1 Ignition switch XC90

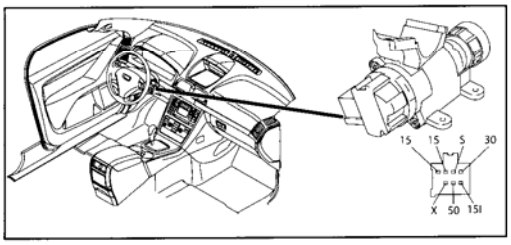

G00447779

Fig. 17: Components (2/138 To 3/1)

Volvo XC90
2008 VOLVO V70, XC70 & XC90

Courtesy of VOLVO CARS OF NORTH AMERICA.

3/4 Steering Wheel Switch Left (SWSL) V70

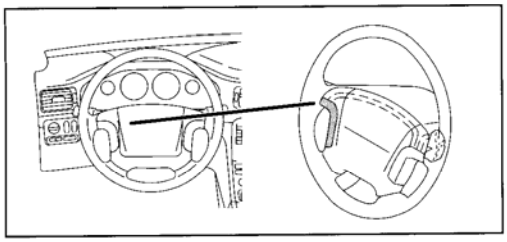

3/4 Steering Wheel Switch Left (SWSL) XC90

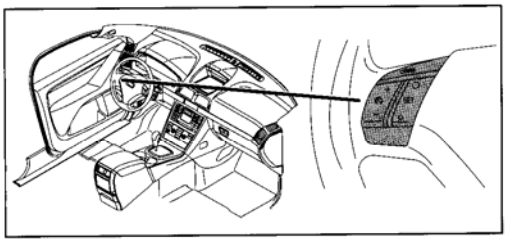

3/6 Switch, hazard warning flashers

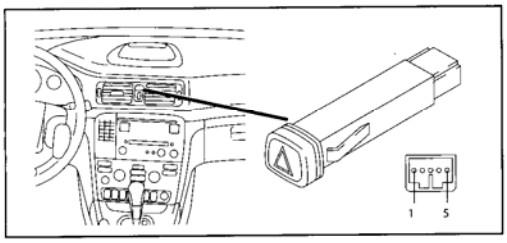

3/8 Switch, heated rear window/exterior rearview mirrors V70

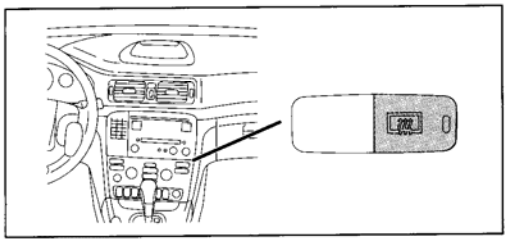

3/8 Switch, heated rear window/exterior rearview mirrors XC90

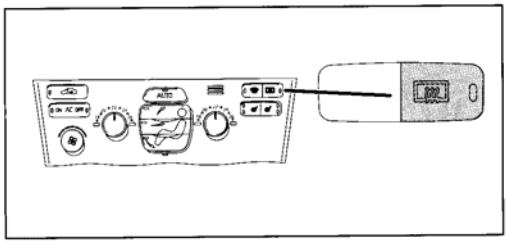

3/9 Brake light contact V70

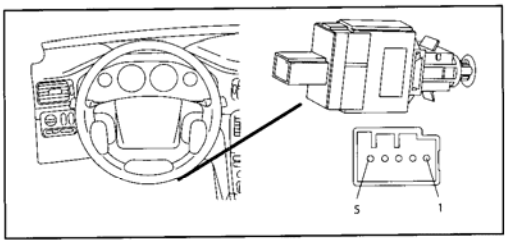

3/9 Brake light contact XC90

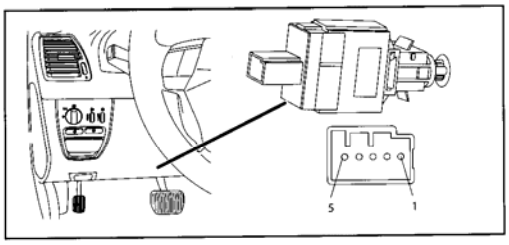

3/10 Reversing light contact

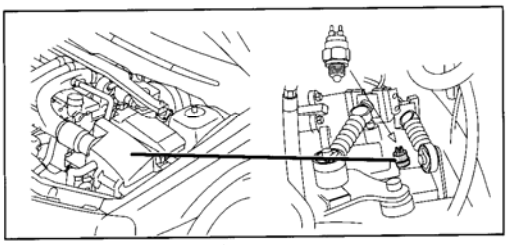

3/25 Power sunroof switch V70

3/25 Power sunroof switch XC90

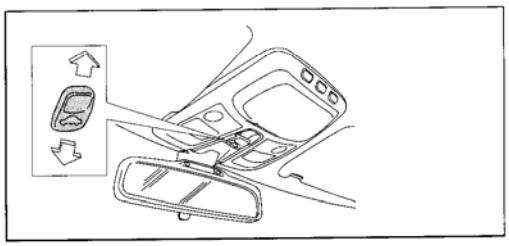

G00447780

Fig. 18: Components (3/4 To 3/25)
Courtesy of VOLVO CARS OF NORTH AMERICA.

3/26 Switch unit, power driver's seat

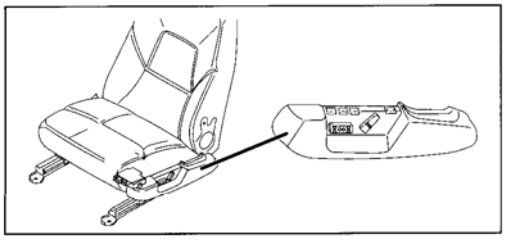

3/47 Parking brake contact XC90

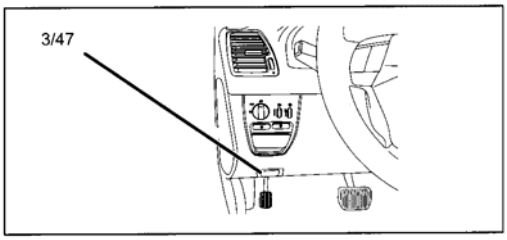

3/27 Switch unit, power passenger seat

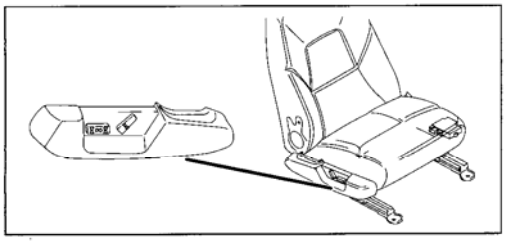

3/59 Headlight adjustment control V70

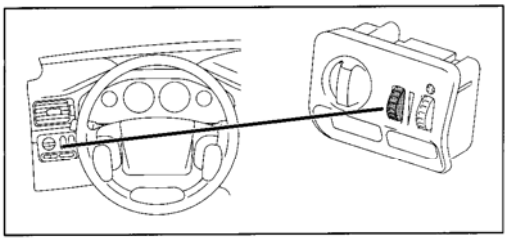

3/37 Horn contact V70

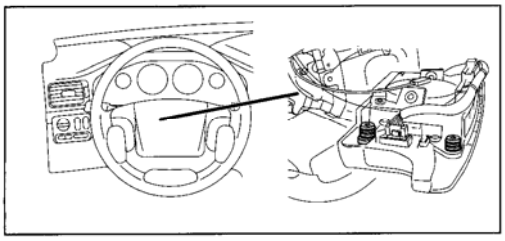

3/59 Headlight adjustment control XC90

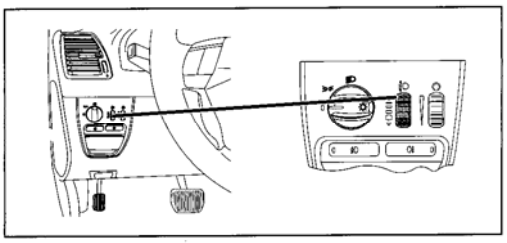

3/37 Horn contact XC90

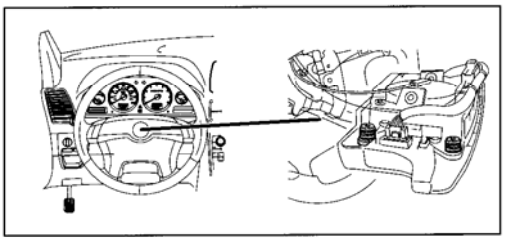

3/60 Auxiliary light switch V70

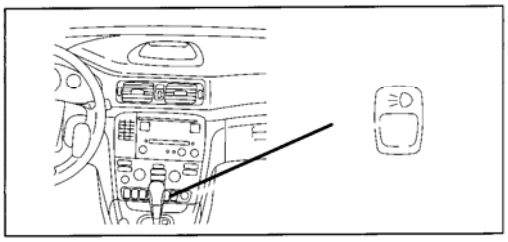

3/47 Parking brake contact V70

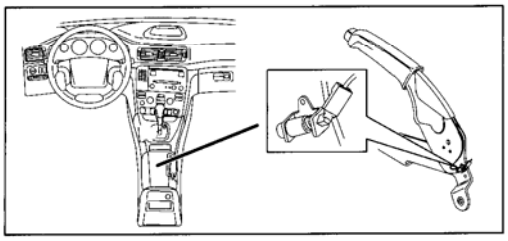

3/60 Auxiliary light switch XC90

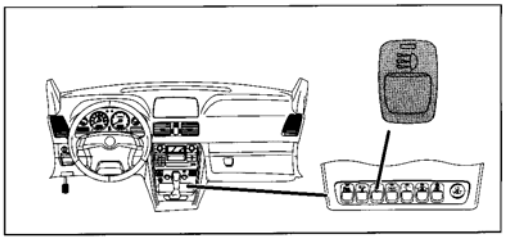

G00447781

Fig. 19: Components (3/26 To 3/60)

Volvo XC90
2008 VOLVO V70, XC70 & XC90

Courtesy of VOLVO CARS OF NORTH AMERICA.

3/62 Hood alarm contact V70

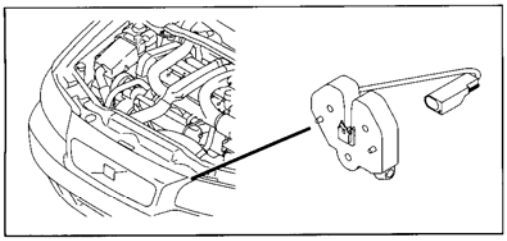

3/62 Hood alarm contact XC90

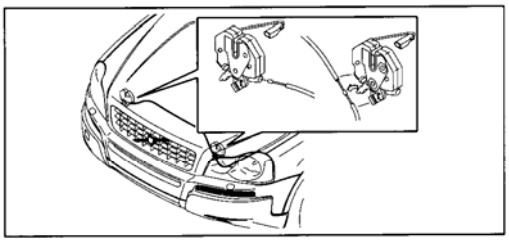

3/71 Gear selector contacts AW51

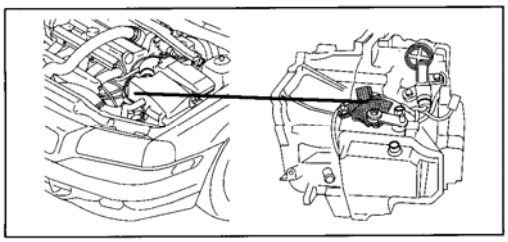

3/73 Switch, child safety lock PCL V70

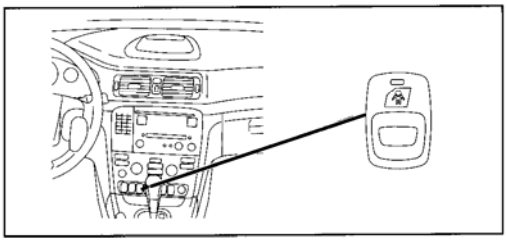

3/73 Switch, child safety lock PCL XC90

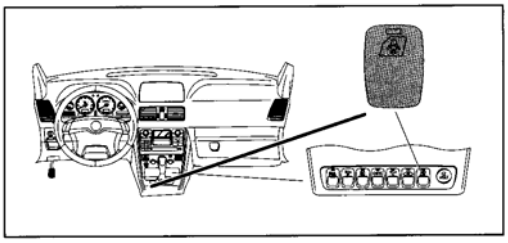

3/74 Lock unit, left front door, V70

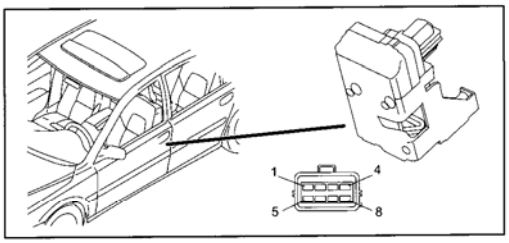

3/74 Lock unit, left front door, XC90

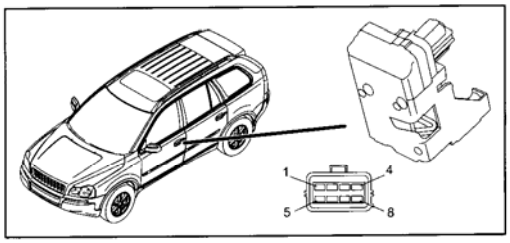

3/75 Lock unit, right front door, V70

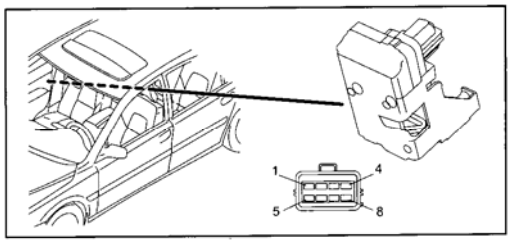

3/75 Lock unit, front right door, XC90

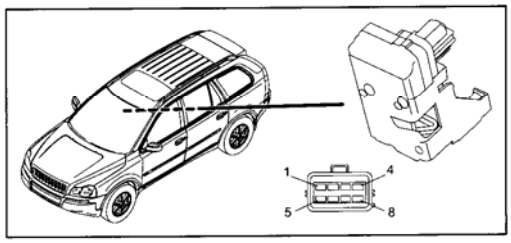

3/76 Lock unit, left rear door V70

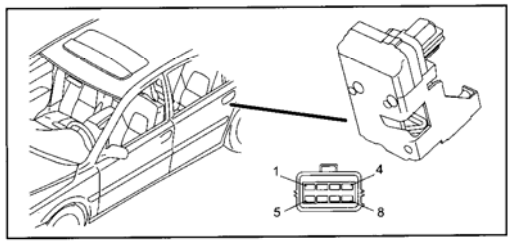

G00447782

Fig. 20: Components (3/62 To 3/76)

Volvo XC90
2008 VOLVO V70, XC70 & XC90

Courtesy of VOLVO CARS OF NORTH AMERICA.

3/76 Lock unit, left rear door, XC90

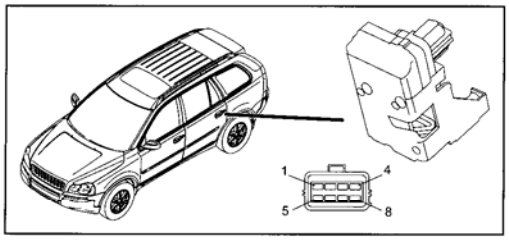

3/77 Lock unit, right rear door, V70

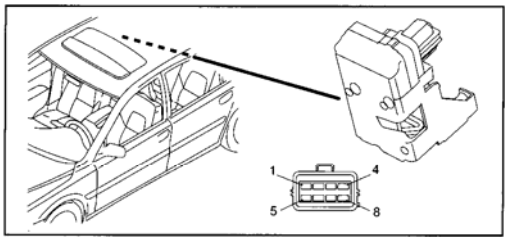

3/77 Lock unit, right rear door XC90

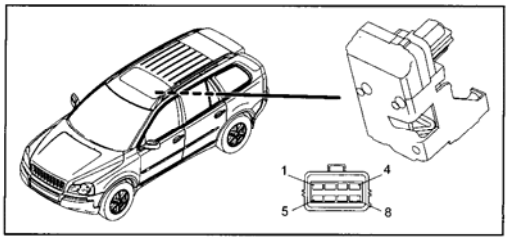

3/78 Lock unit, tailgate V70

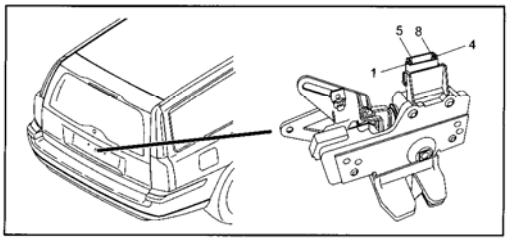

3/78 Lock unit, tailgate XC90

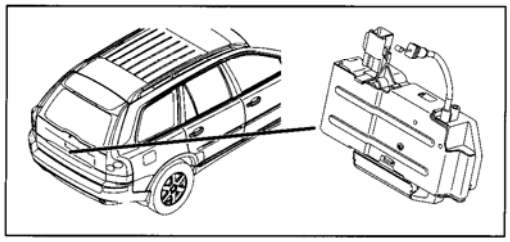

3/80 Switch, central locking, left V70

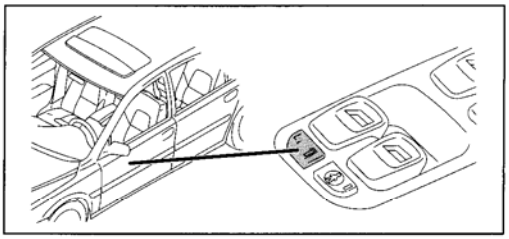

3/80 Switch, central locking, left XC90

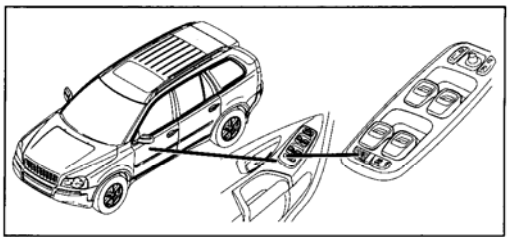

3/82 Switch, central locking, right V70

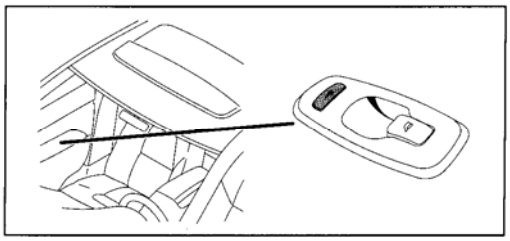

3/82 Switch, central locking, right XC90

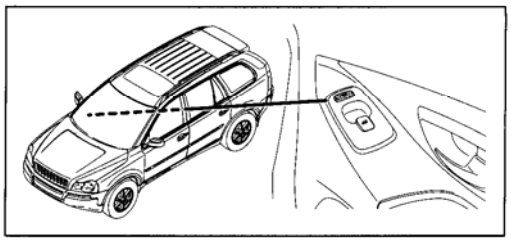

3/85 Power window switch, left rear door V70

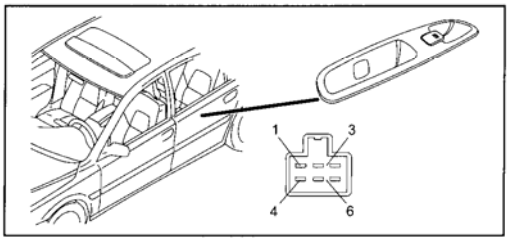

G00447783

Fig. 21: Components (3/76 To 3/85)

Volvo XC90
2008 VOLVO V70, XC70 & XC90

Courtesy of VOLVO CARS OF NORTH AMERICA.

3/85 Power window switch, left rear door XC90

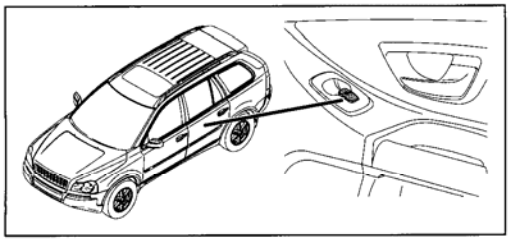

3/86 Power window switch, right rear door V70

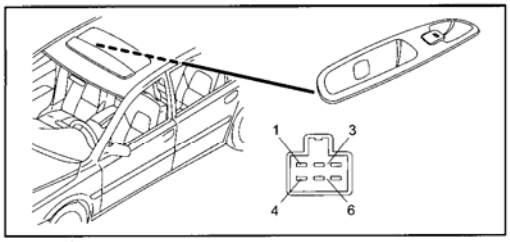

3/86 Power window switch, right rear door XC90

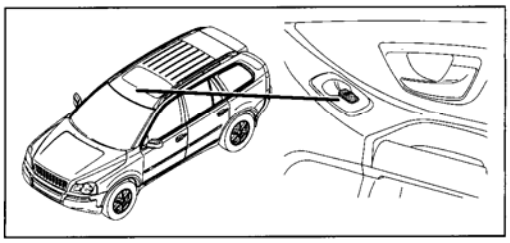

3/91 Switch, left heated seat V70

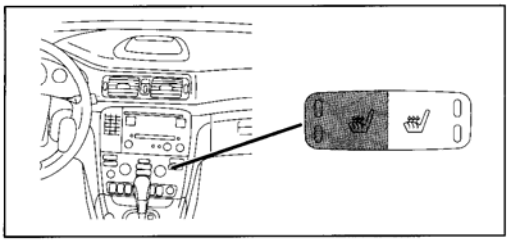

3/91 Switch, left heated seat XC90

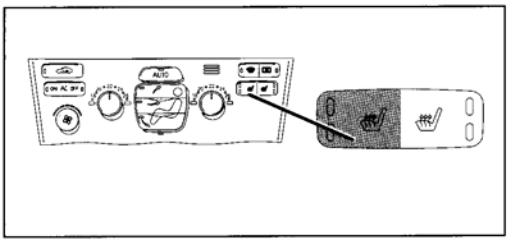

3/92 Switch, right heated seat V70

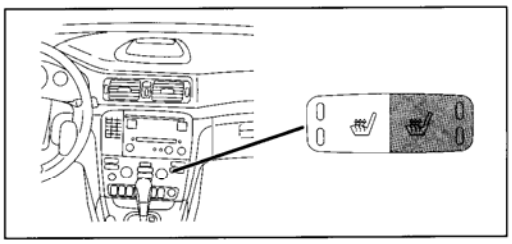

3/92 Switch, right heated seat XC90

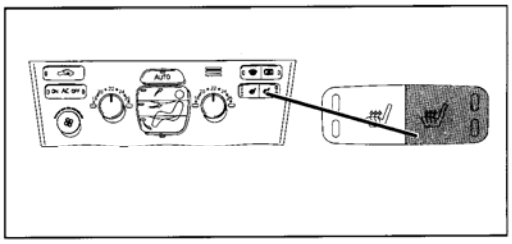

3/93 Belt buckle contact, left seat V70

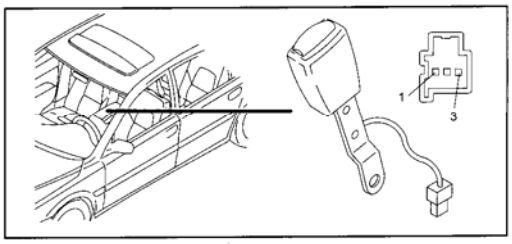

3/93 Belt buckle contact, left seat XC90

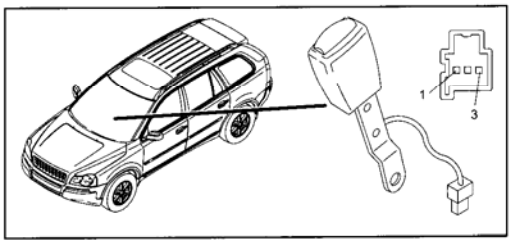

3/94 Belt buckle contact, right seat V70

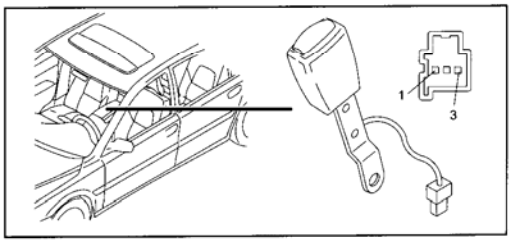

Fig. 22: Components (3/85 To 3/94)
Courtesy of VOLVO CARS OF NORTH AMERICA.

3/94 Belt buckle contact, right seat XC90

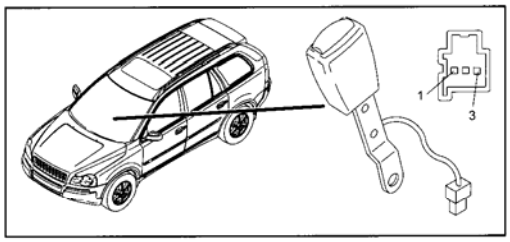

3/95 Spin control switch V70

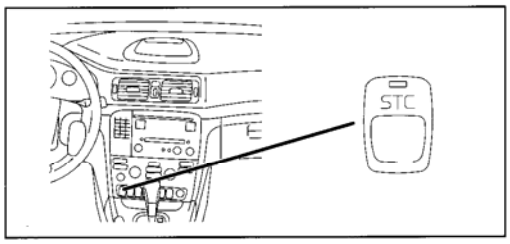

3/95 Spin control switch XC90

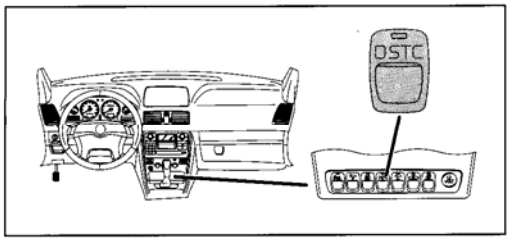

3/111 Light Switch Module (LSM), V70

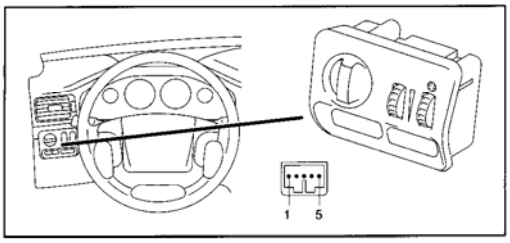

3/111 Light Switch Module (LSM), XC90

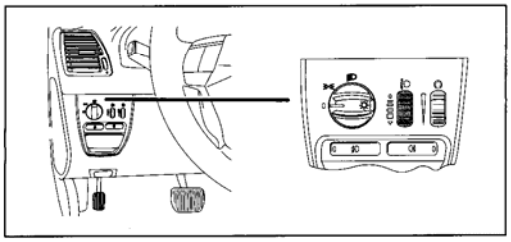

3/112 Climate Control Module (CCM) V70

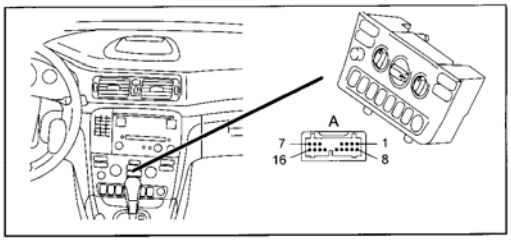

3/112 Climate Control Module (CCM) XC90

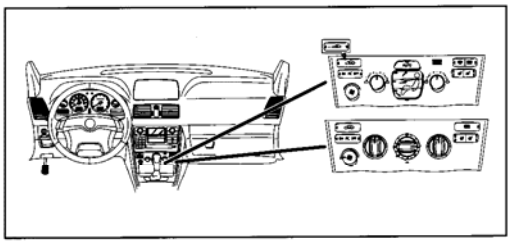

3/117 Ceiling light switch unit, V70

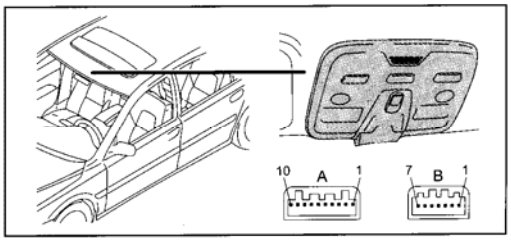

3/117 Ceiling light switch unit, XC90

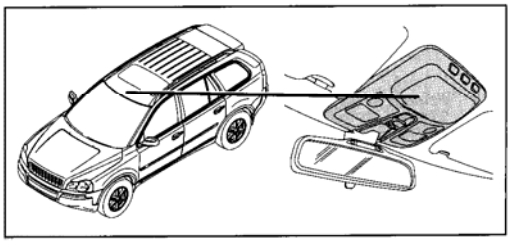

3/126 Driver/Passenger Door Module (DDM)/(PDM), V70

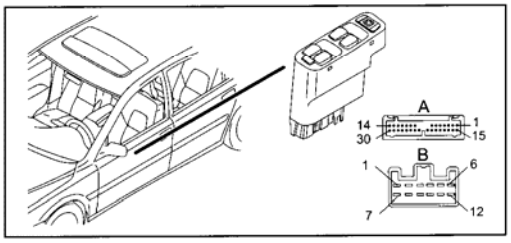

G00447785

Fig. 23: Components (3/94 To 3/126)

Volvo XC90
2008 VOLVO V70, XC70 & XC90

Courtesy of VOLVO CARS OF NORTH AMERICA.

3/126 Driver/Passenger Door Module (DDM)/(PDM), XC90

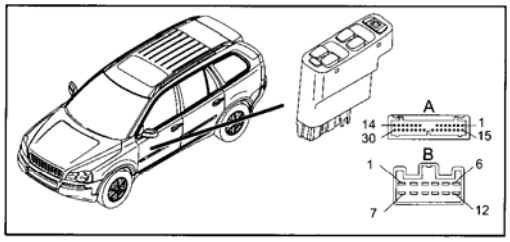

3/127 Passenger/Driver Door Module (PDM)/(DDM), V70

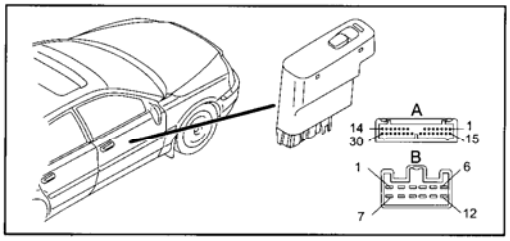

3/127 Passenger/Driver Door Module (PDM)/(DDM), XC90

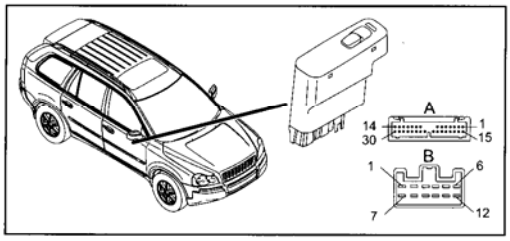

3/131 Steering Wheel Switch Right (SWSR) V70

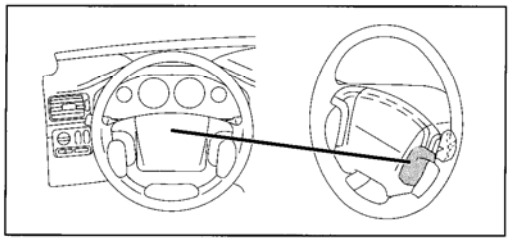

3/131 Steering Wheel Switch Right (SWSR) XC90

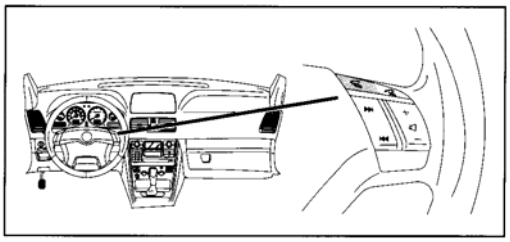

3/135 RTI switch

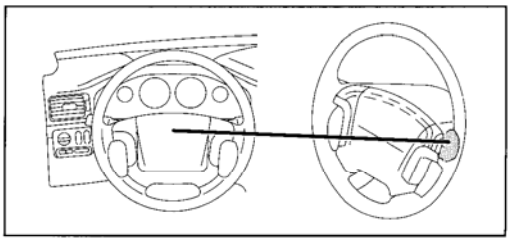

3/155 Program selector, automatic transmission V70

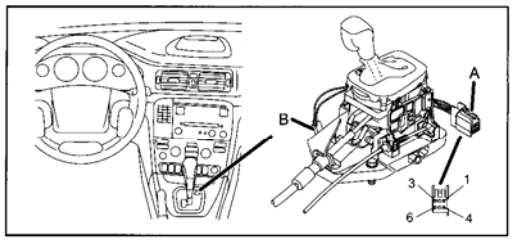

3/155 Program selector, automatic transmission XC90

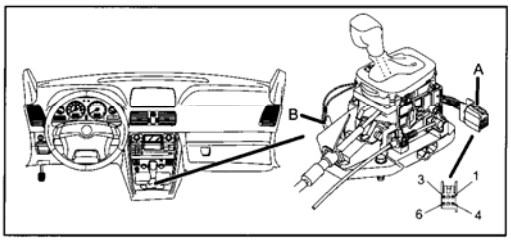

3/156 Gear Selector Module (GSM) V70

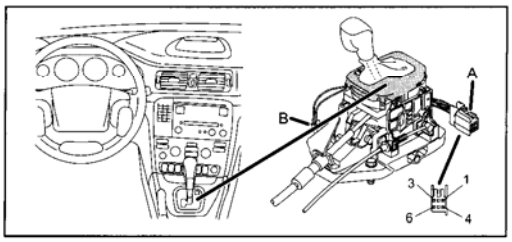

3/156 Gear Selector Module (GSM) XC90

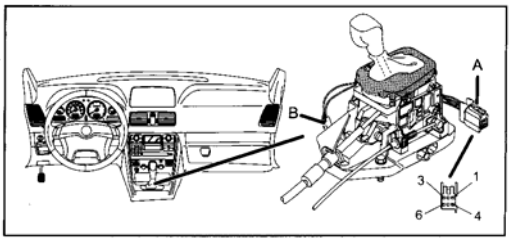

G00447786

Fig. 24: Components (3/126 To 3/156)
Courtesy of VOLVO CARS OF NORTH AMERICA.

3/157 Switch, passenger side airbag V70

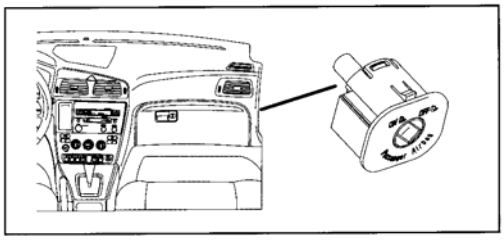

3/157 Switch, passenger side airbag XC90

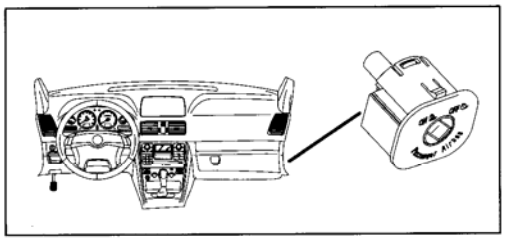

3/171 Switch, retractable exterior rearview mirrors V70

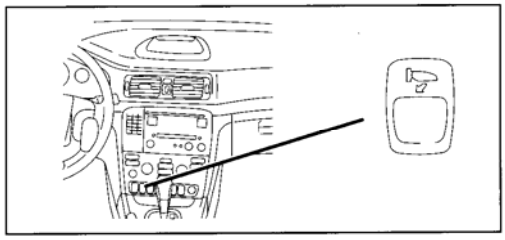

3/171 Switch, retractable exterior rearview mirrors XC90

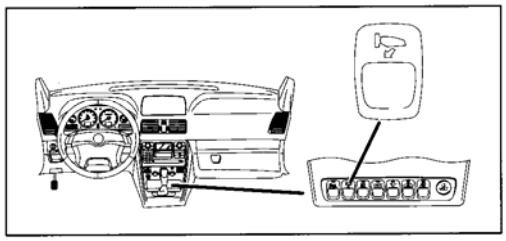

3/173 Switch, tailgate private lock V70

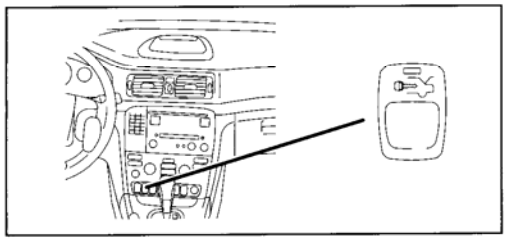

3/173 Switch, tailgate private lock XC90

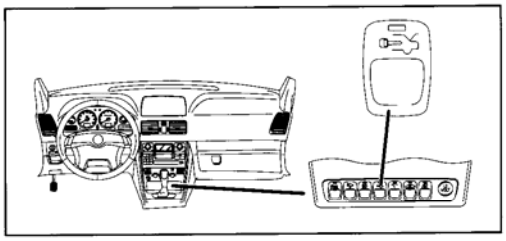

3/174 Switch, reduced alarm V70

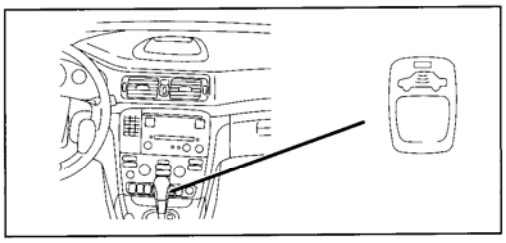

3/174 Switch, reduced alarm XC90

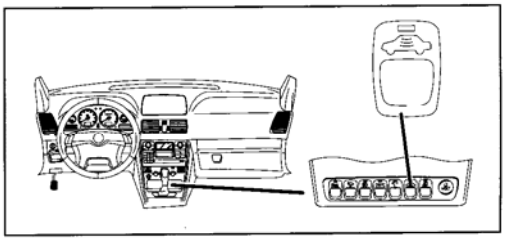

3/225 Switch unit continuous damping control (CCD)

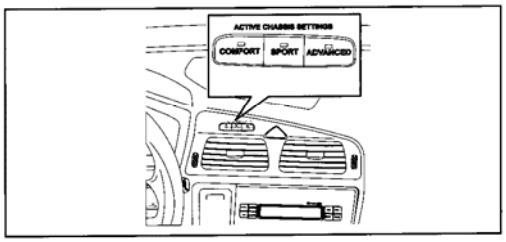

3/254 Steering Wheel Module (SWM)

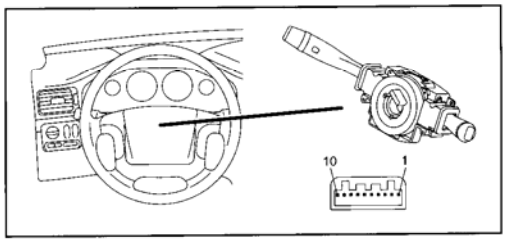

G00447787

Fig. 25: Components (3/157 To 3/254)

Volvo XC90
2008 VOLVO V70, XC70 & XC90

Courtesy of VOLVO CARS OF NORTH AMERICA.

3/255 Position sensor, driver's seat

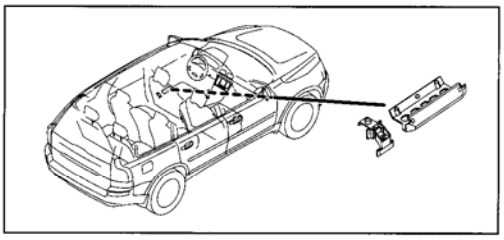

3/256 Position sensor, passenger seat

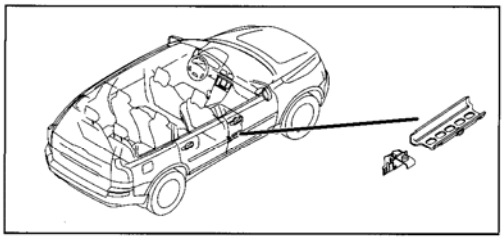

3/267 Switch unit, telematics

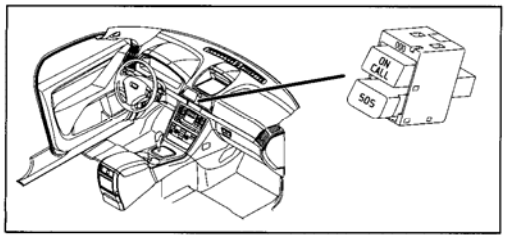

4/7 Combustion Preheater Module (CPM) V70

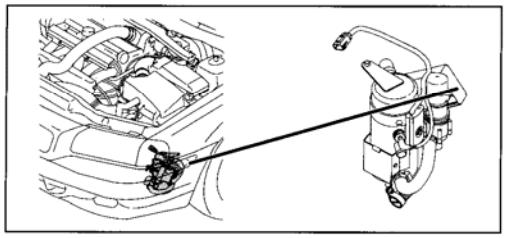

4/7 Combustion Preheater Module (CPM) XC90

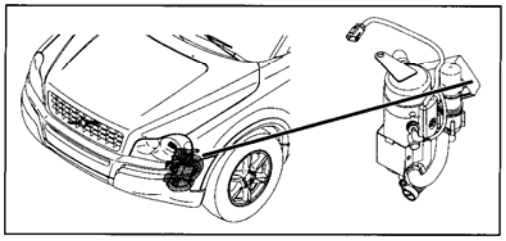

4/9 Supplemental Restraint System module (SRS)

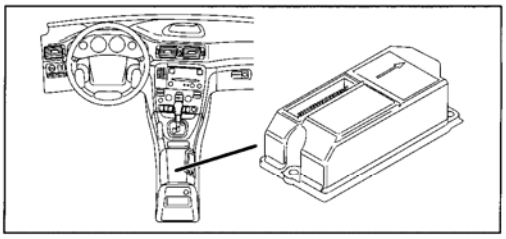

4/16 Brake Control Module (BCM) V70

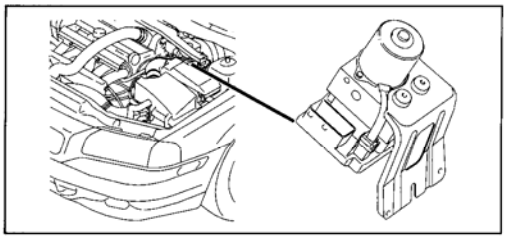

4/16 Brake Control Module (BCM) XC90

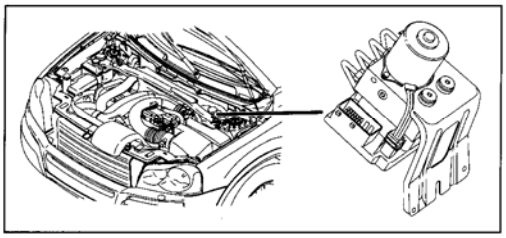

4/28 Transmission Control Module (TCM) TF-80SC

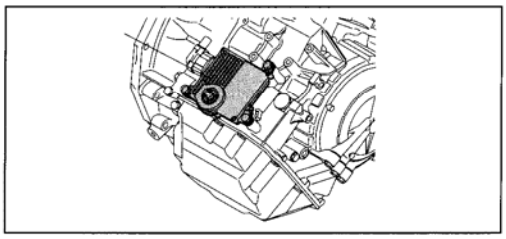

4/28 Transmission Control Module (TCM) V70

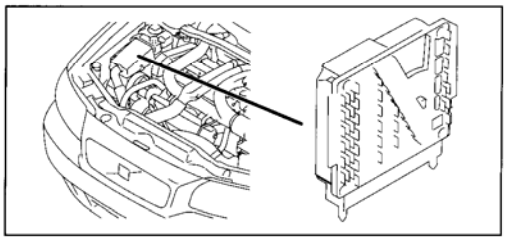

G00447788

Fig. 26: Components (3/255 To 4/28)
Courtesy of VOLVO CARS OF NORTH AMERICA.

4/28 Transmission Control Module (TCM) XC90

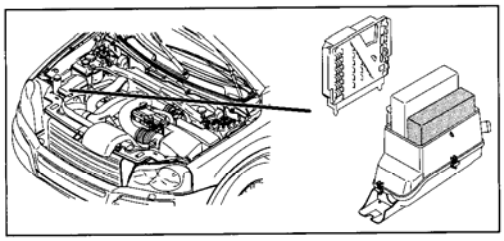

4/31 Fan control module

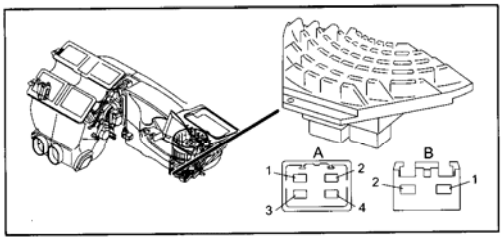

4/33 Sun Roof Module (SRM) V70

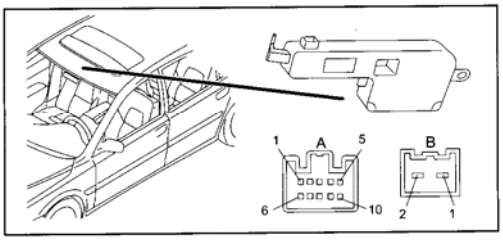

4/33 Sun Roof Module (SRM) XC90

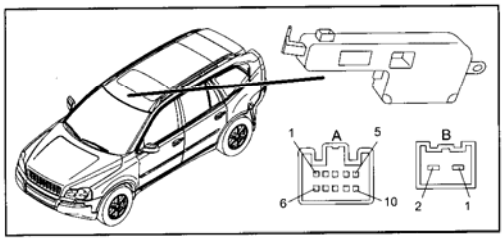

4/46 Engine Control Module (ECM) V70

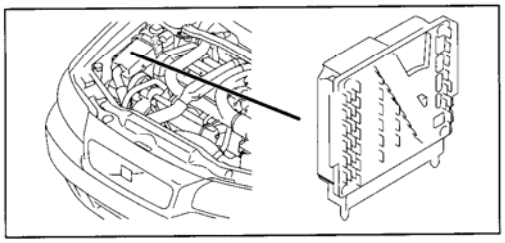

4/46 Engine Control Module (ECM) XC90

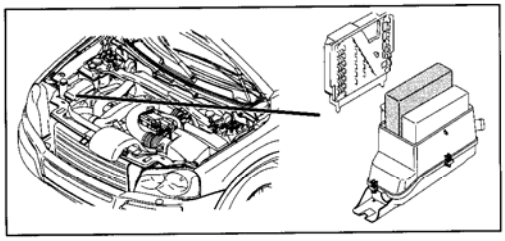

4/46 Engine Control Module (ECM) 6-cyl.

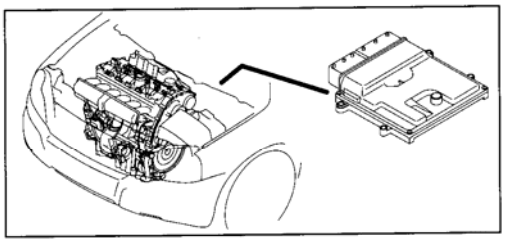

4/46 Engine Control Module (ECM) 8-cyl.

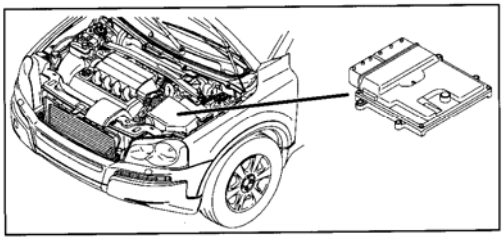

4/46 Engine Control Module (ECM), Diesel

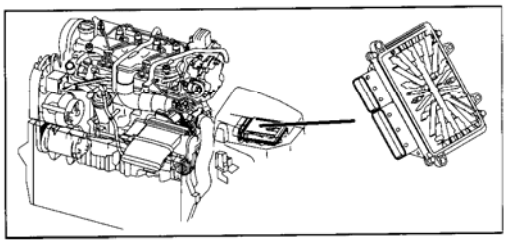

4/50 Electronic Throttle Module (ETM)

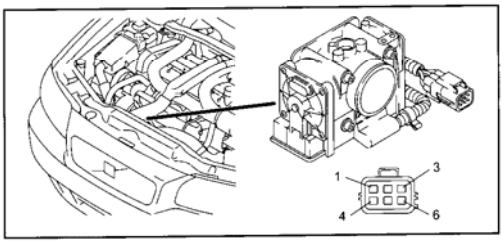

G00447789

Fig. 27: Components (4/28 To 4/50)
Courtesy of VOLVO CARS OF NORTH AMERICA.

4/52 Power Seat Module (PSM)

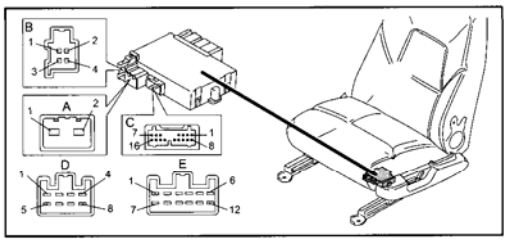

4/56 Central Electronic Module (CEM)

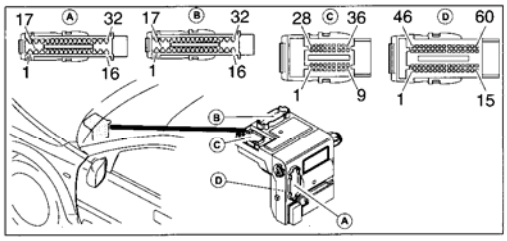

4/58 Rear Electronic Module (REM), V70

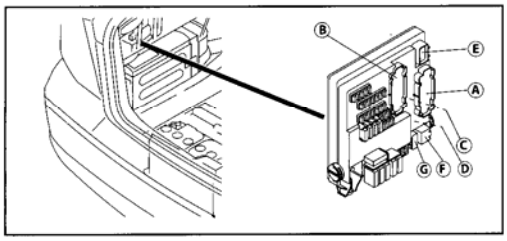

4/58 Rear Electronic Module (REM), XC90

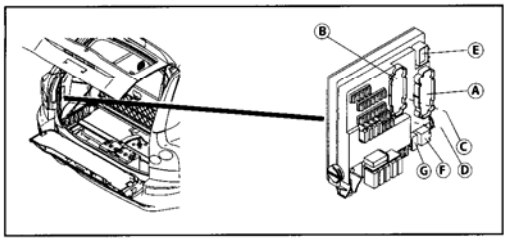

4/58 Rear Electronic Module (REM) A-G

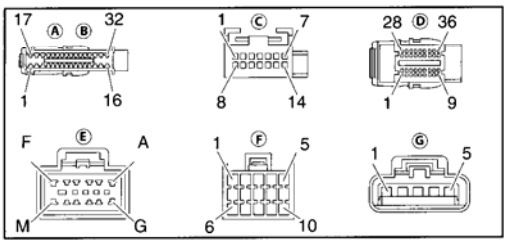

4/68 Steering Wheel Angle Sensor Module (SAS)

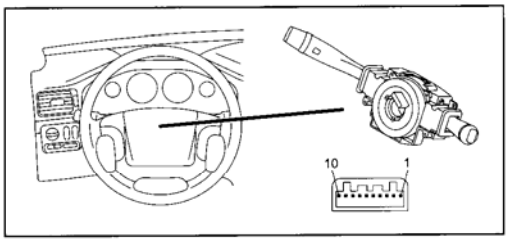

4/70 Upper Electronic Module (UEM) V70

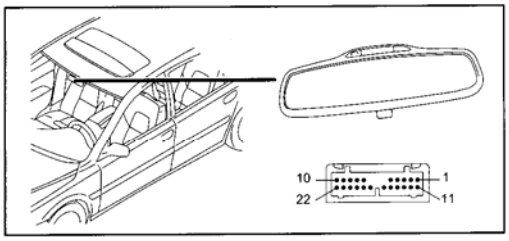

4/70 Upper Electronic Module (UEM) XC90

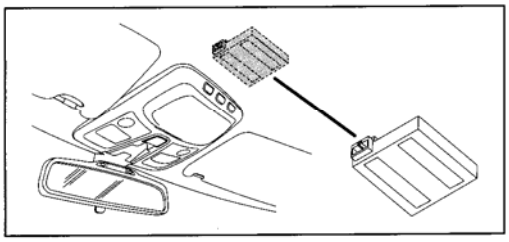

4/71 Cooling fan control module V70

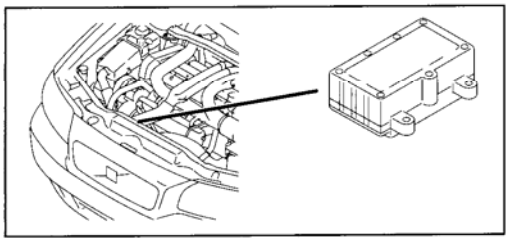

4/71 Cooling fan control module XC90

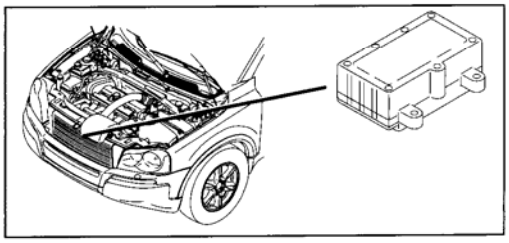

G00447790

Fig. 28: Components (4/52 To 4/71)
Courtesy of VOLVO CARS OF NORTH AMERICA.

4/71 Cooling fan control module, Diesel

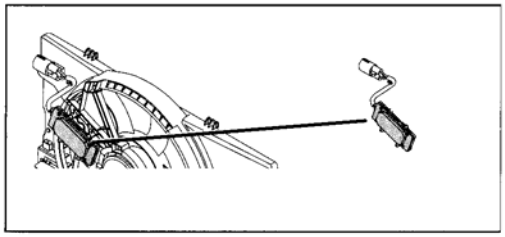

4/76 Remote control unit for garage door opener

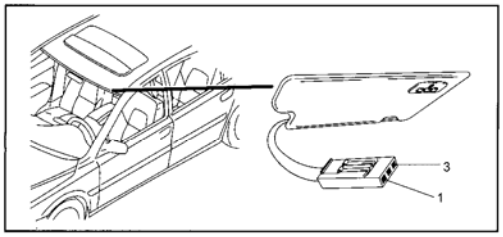

4/78 Accessory Electronic Module (AEM) V70

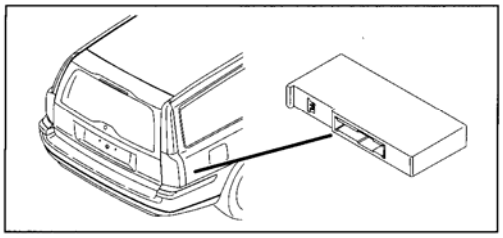

4/78 Accessory Electronic Module (AEM) XC90

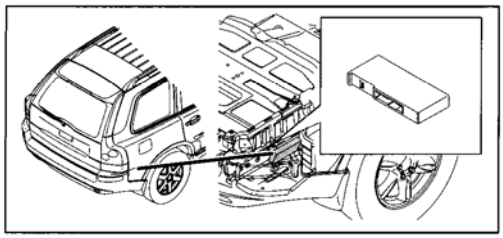

4/82 Differential Electronic Module (DEM) V70

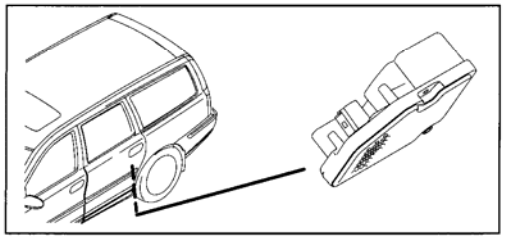

4/82 Differential Electronic Module (DEM) XC90

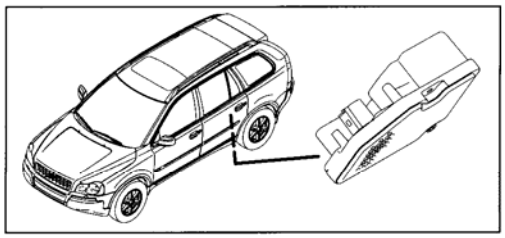

4/83 Fuel pump control module V70

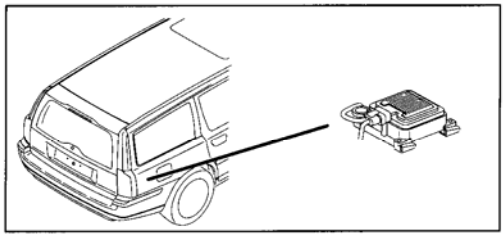

4/83 Fuel pump control module XC90

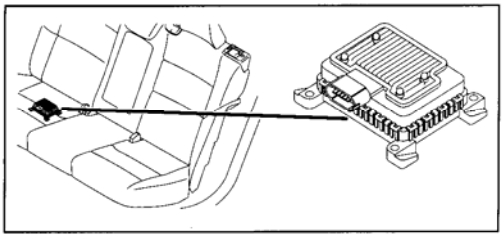

4/84 Suspension Module (SUM)

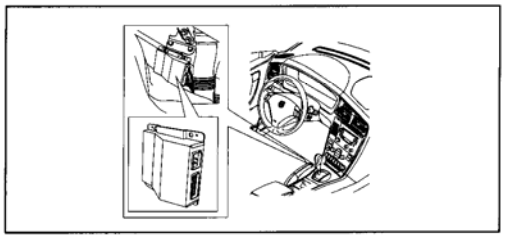

4/86 Parking Assistance Module (PAM) V70

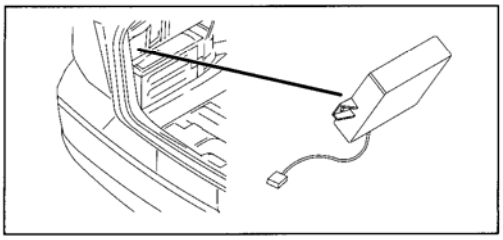

G00447791

Fig. 29: Components (4/71 To 4/86)
Courtesy of VOLVO CARS OF NORTH AMERICA.

4/86 Parking Assistance Module (PAM) XC90

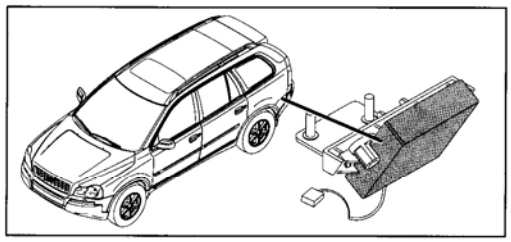

4/99 Electronic power steering control module

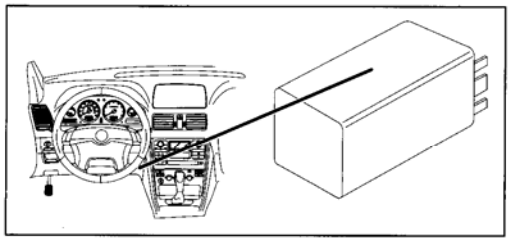

4/106 Control module, remote parking heater start

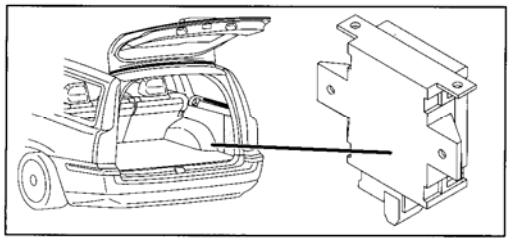

4/107 Control module, parking heater, Call start

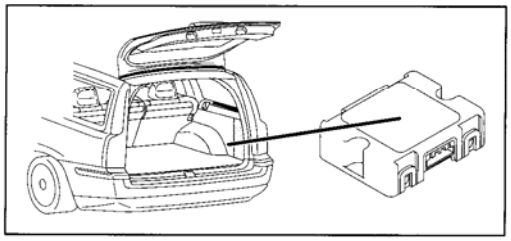

4/109 Glow plug control module

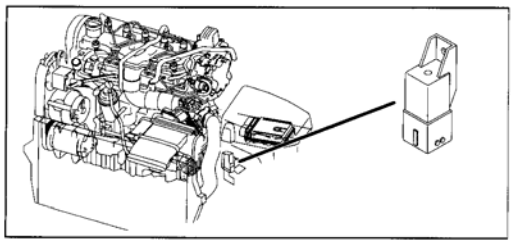

4/110 Trailer module V70

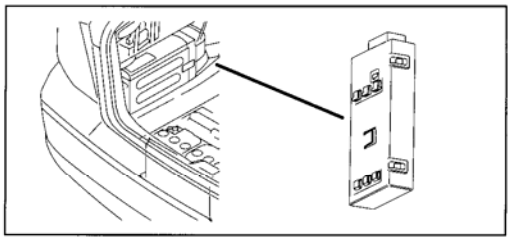

4/110 Trailer module XC90

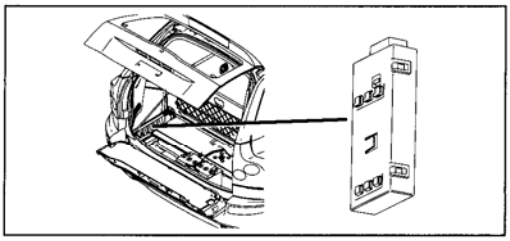

4/118 Headlight Control Module (HCM)

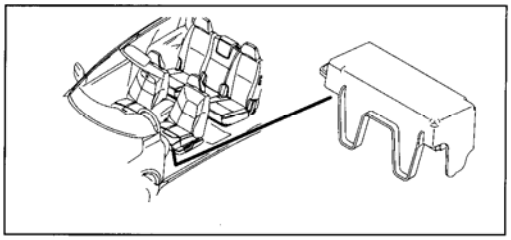

4/120 Parking Assistance Camera module (PAC)

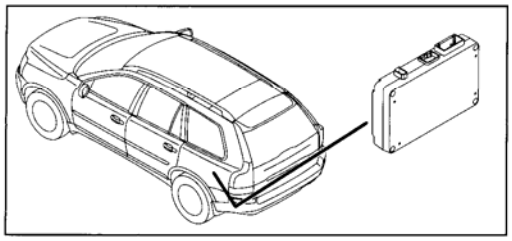

5/1 Driver Information Module (DIM) V70

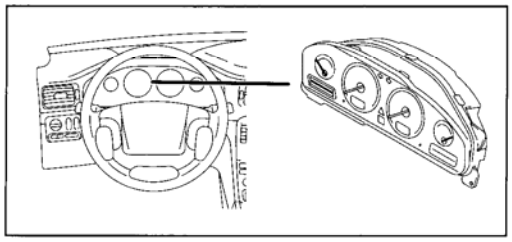

G00447792

Fig. 30: Components (4/86 To 5/1)
Courtesy of VOLVO CARS OF NORTH AMERICA.

5/1 Driver Information Module (DIM) XC90

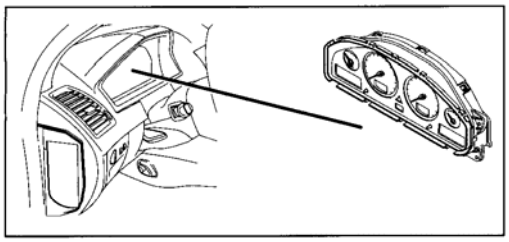

6/1 Windshield wiper motor V70

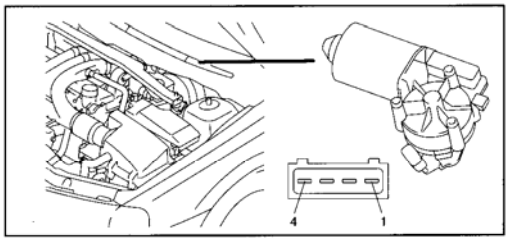

6/1 Windshield wiper motor XC90

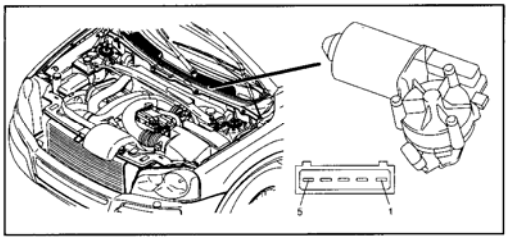

6/3 Right-hand headlight wiper motor

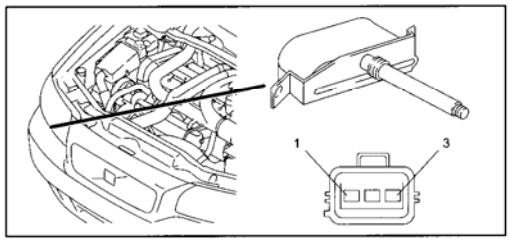

6/4 Left-hand headlight wiper motor

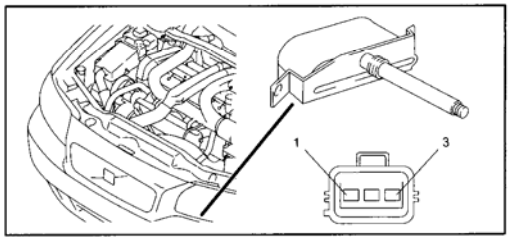

6/15 Sunroof motor V70

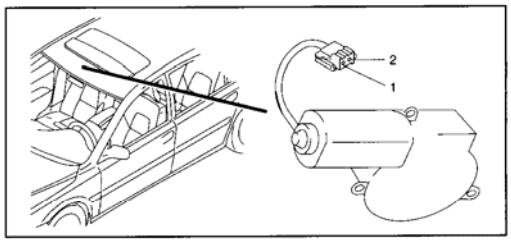

6/15 Sunroof motor XC90

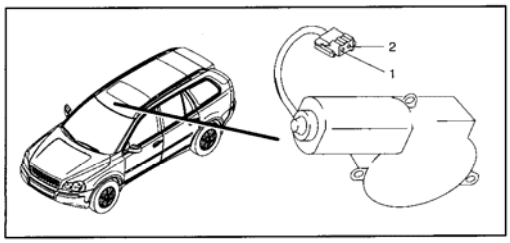

6/16 Motor driver's seat, backrest angle

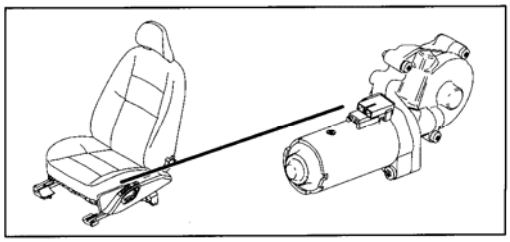

6/17 Motor driver's seat, up/down front edge

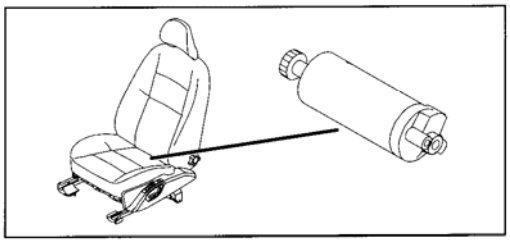

6/18 Motor driver's seat, up/down rear edge

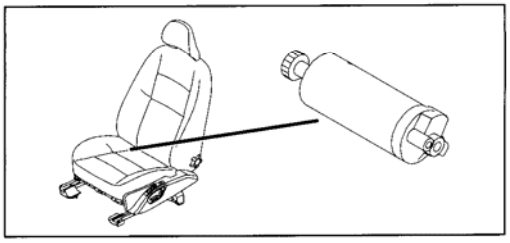

G00447793

Fig. 31: Components (5/1 To 6/18)

Volvo XC90
2008 VOLVO V70, XC70 & XC90

Courtesy of VOLVO CARS OF NORTH AMERICA.

6/19 Motor driver's seat, fore/aft

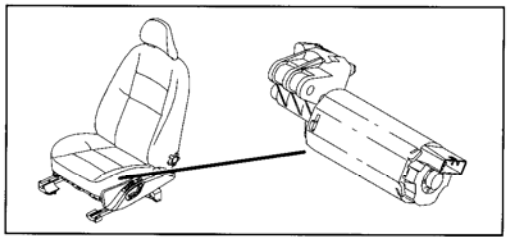

6/20 Motor passenger seat, fore/aft

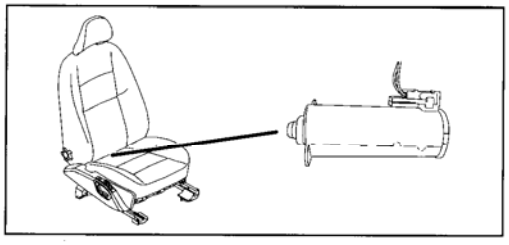

6/25 Starter motor V70

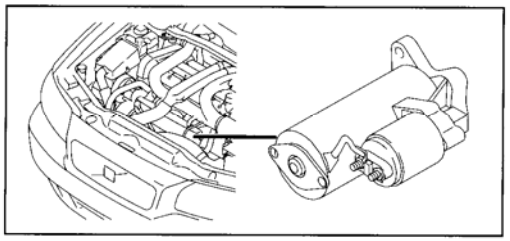

6/25 Starter motor XC90

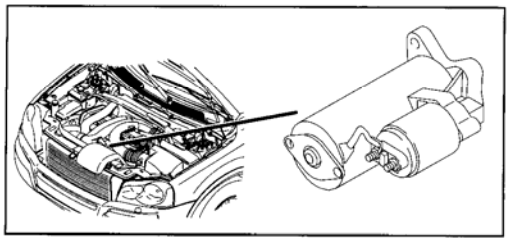

6/26 Alternator Control Module (ACM) V70

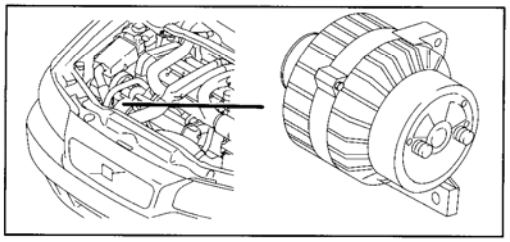

6/26 Alternator Control Module (ACM) XC90

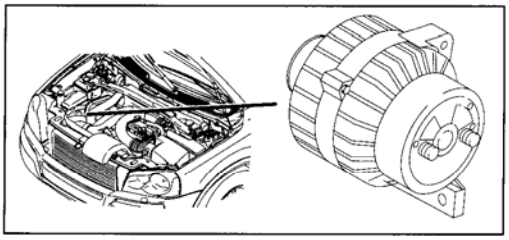

6/28 Motor, passenger compartment fan

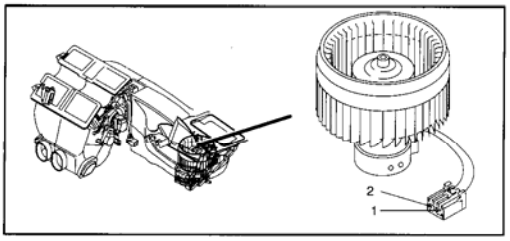

6/29 Motor, electric cooling fan

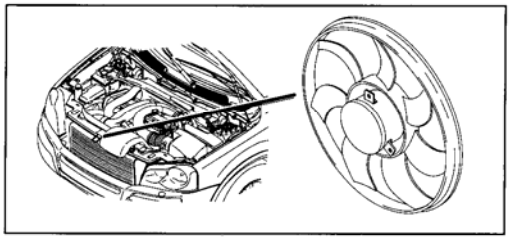

6/29 Cooling fan motor, Diesel

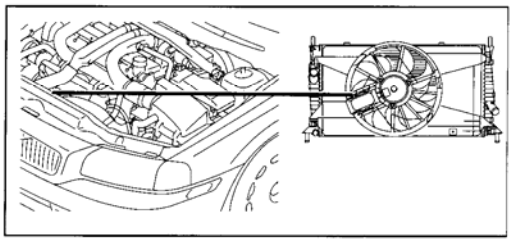

6/32 Rear window wiper motor V70

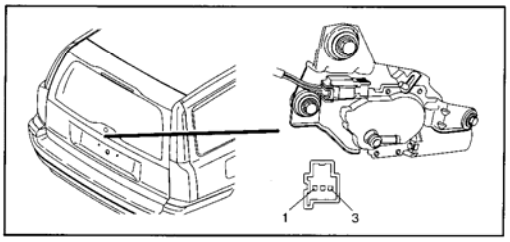

G00447794

Fig. 32: Components (6/19 To 6/32)
Courtesy of VOLVO CARS OF NORTH AMERICA.

6/32 Rear window wiper motor XC90

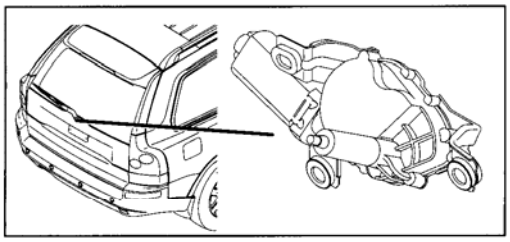

6/33 Fuel pump V70

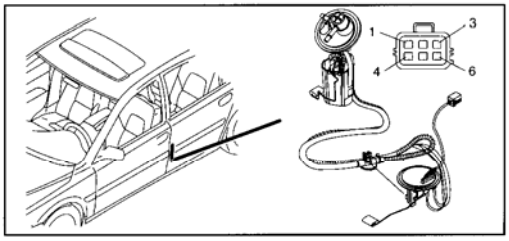

6/33 Fuel pump XC90

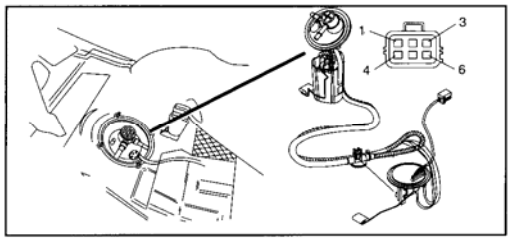

6/35 Fuel pump, auxiliary heater V70

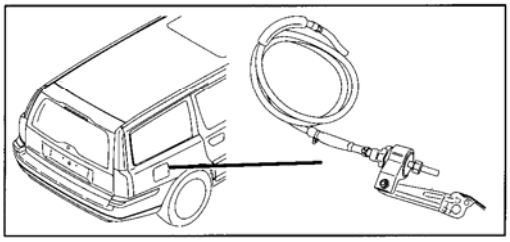

6/35 Fuel pump, auxiliary heater XC90

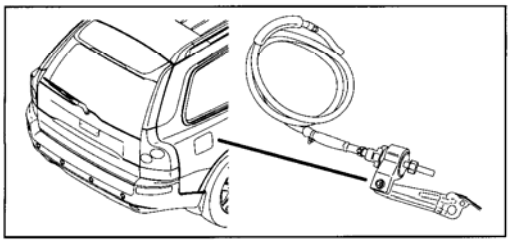

6/37 Lock motor, fuel filler flap V70

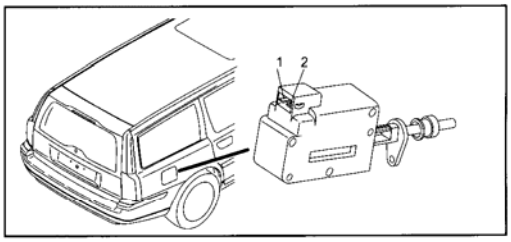

6/37 Lock motor, fuel filler flap XC90

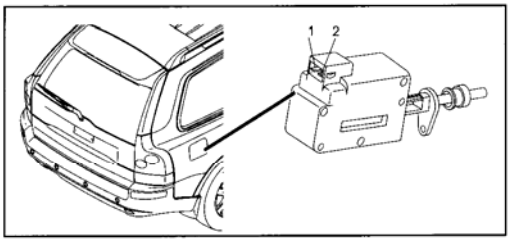

6/38 Motor, left headlight adjustment

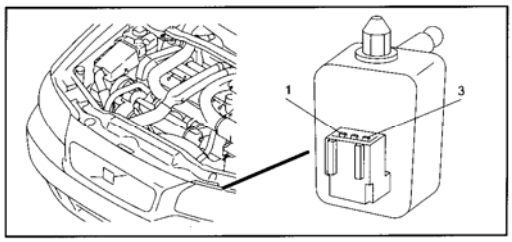

6/39 Motor, right headlight adjustment

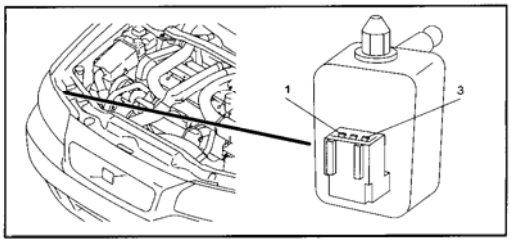

6/44 Cooling fan, electrics box, engine compartment V70

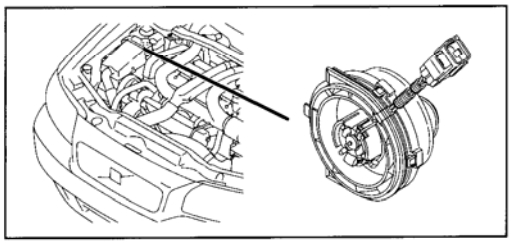

G00447795

Fig. 33: Components (6/32 To 6/44)

Volvo XC90
2008 VOLVO V70, XC70 & XC90

Courtesy of VOLVO CARS OF NORTH AMERICA.

6/44 Cooling fan, electrics box, engine compartment XC90

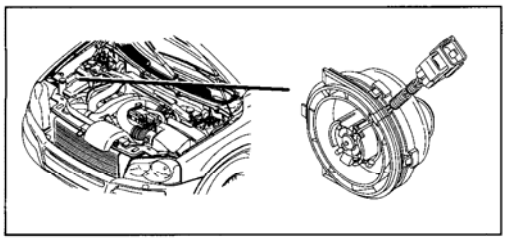

6/48 Damper Motor Module (DMM), recirculation

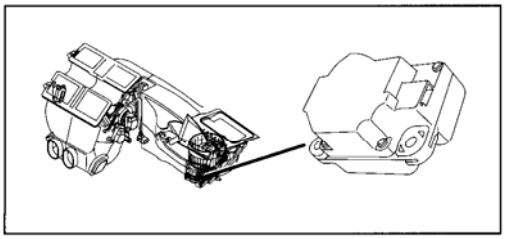

6/58 Front left power window motor, V70

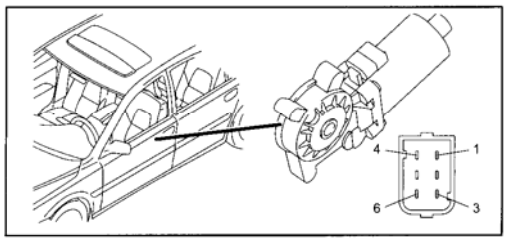

6/58 Front left power window motor, XC90

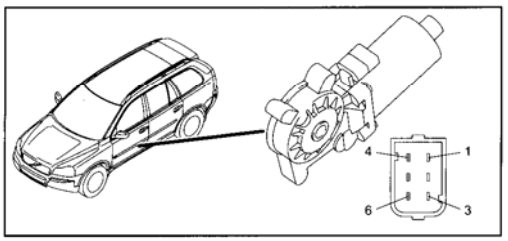

6/60 Front right power window motor, V70

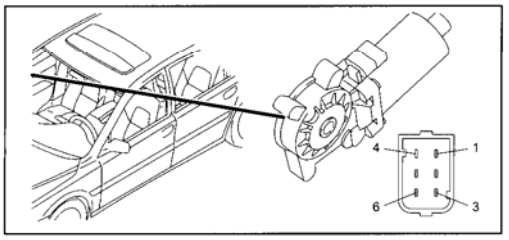

6/60 Front right power window motor, XC90

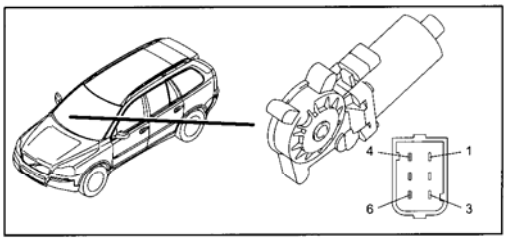

6/62 Left power exterior rearview mirror, V70

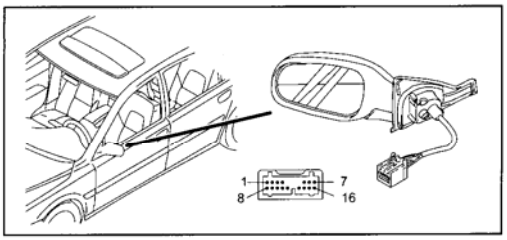

6/62 Left power exterior rearview mirror, XC90

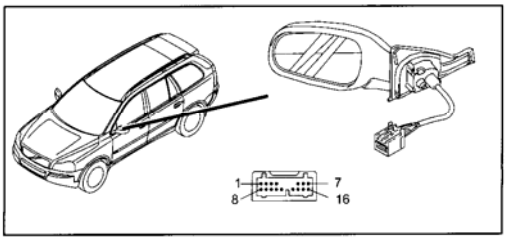

6/63 Right power exterior rearview mirror, V70

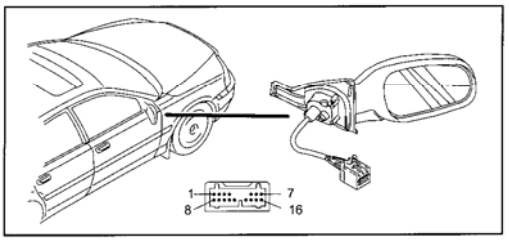

6/63 Right power exterior rearview mirror, XC90

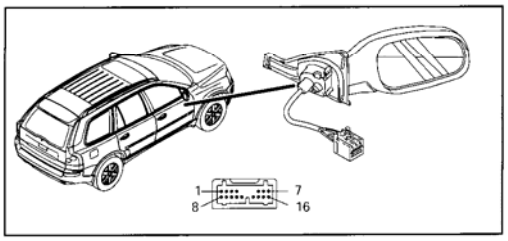

G00447796

Fig. 34: Components (6/44 To 6/63)
Courtesy of VOLVO CARS OF NORTH AMERICA.

6/64 Motor passenger seat, backrest angle

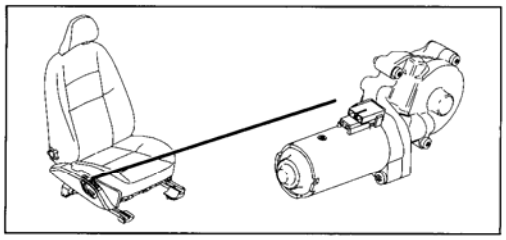

6/65 Motor passenger seat, up/down front edge

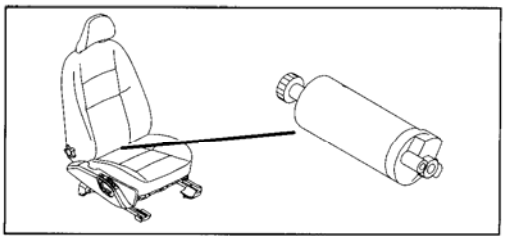

6/66 Motor passenger seat, up/down rear edge

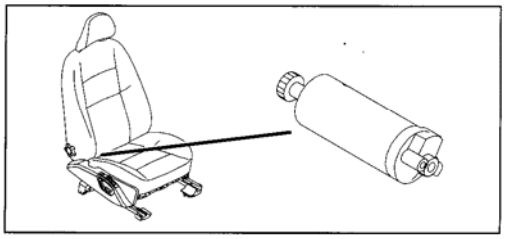

6/67 Pump, fuel leakage control, V70

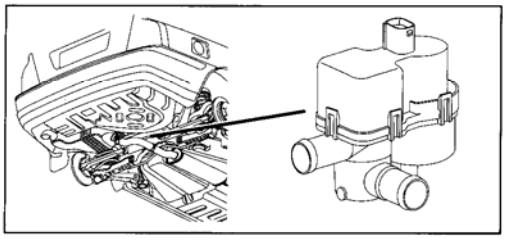

6/67 Pump, fuel leakage control, XC90

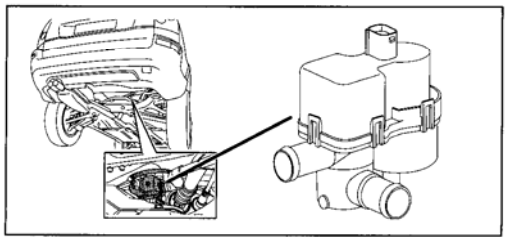

6/69 Damper Motor Module (DMM), ventilation/floor/defroster

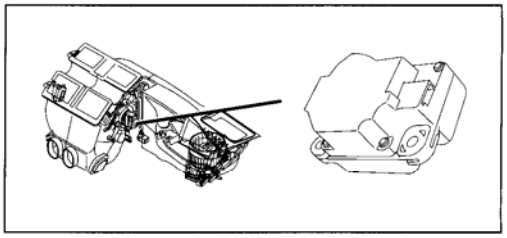

6/71 Valve, speed-dependent power steering

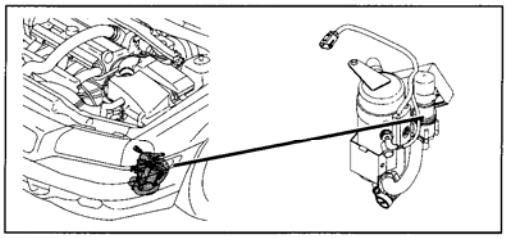

6/73 Coolant pump, auxiliary heater V70

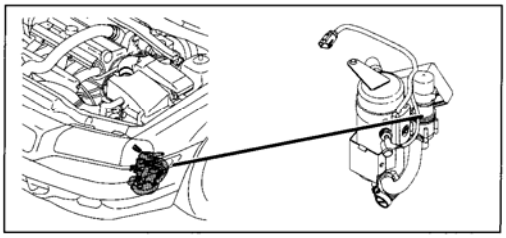

6/73 Coolant pump, auxiliary heater XC90

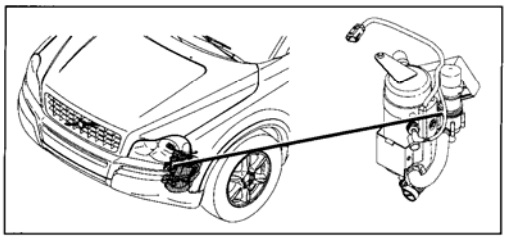

6/76 Climate control system, rear

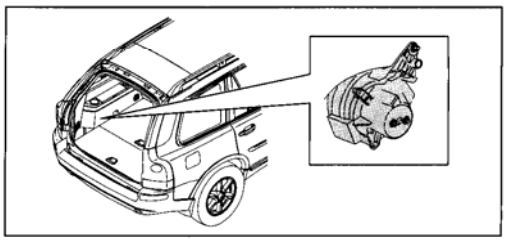

G00447797

Fig. 35: Components (6/64 To 6/76)
Courtesy of VOLVO CARS OF NORTH AMERICA.

6/92 Rear left power window motor, V70

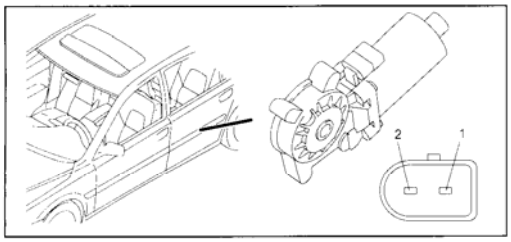

6/92 Rear left power window motor, XC90

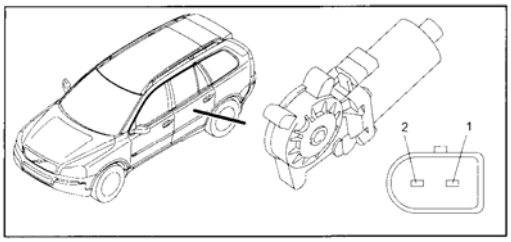

6/93 Rear right power window motor, V70

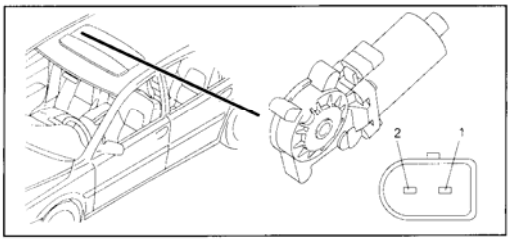

6/93 Motor, rear right power window XC90

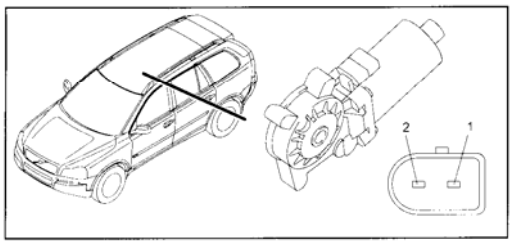

6/95 Damper Motor Module (DMM), temperature, left-hand side

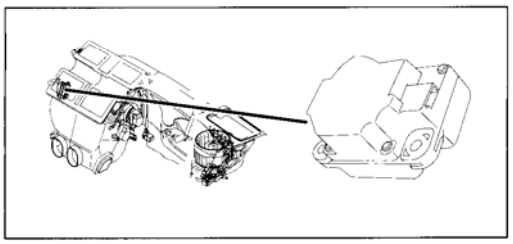

6/96 Damper Motor Module (DMM), temperature, right-hand side

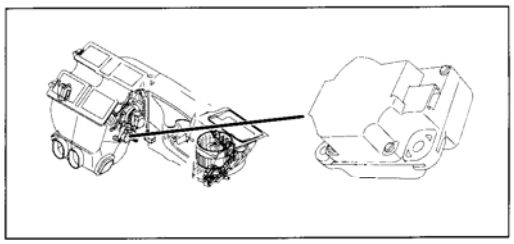

6/102 Damper Motor Module (DMM), defroster

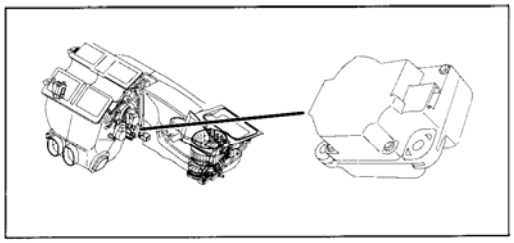

6/103 Damper Motor Module (DMM), floor/ventilation

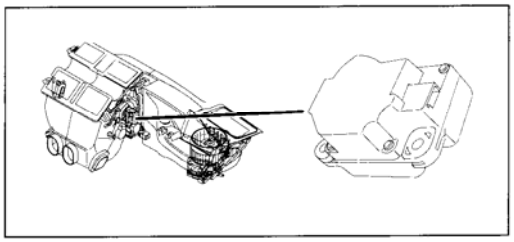

6/104 High pressure headlight washer V70

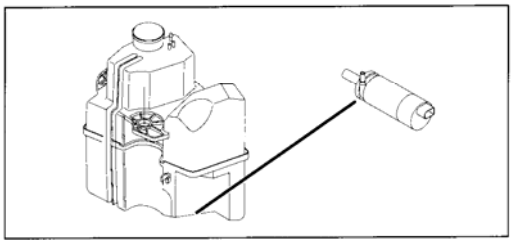

6/104 High pressure headlight washer motor XC90

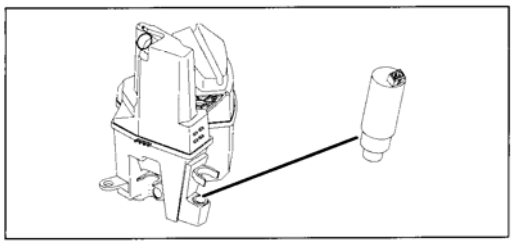

G00447798

Fig. 36: Components (6/92 To 6/104)
Courtesy of VOLVO CARS OF NORTH AMERICA.

6/105 Fuel distributor, gas

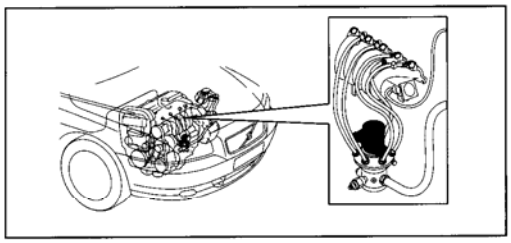

6/120 Throttle body motor XC90

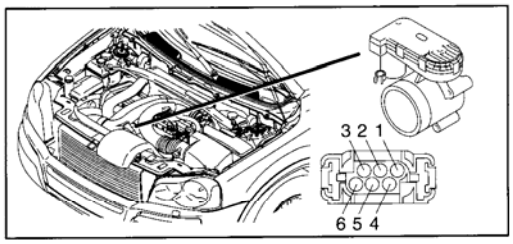

6/113 Coolant pump, 8-cyl.

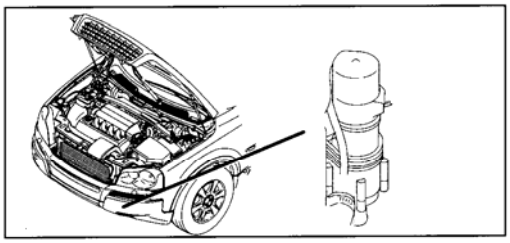

6/120 Throttle body motor, 6-cyl.

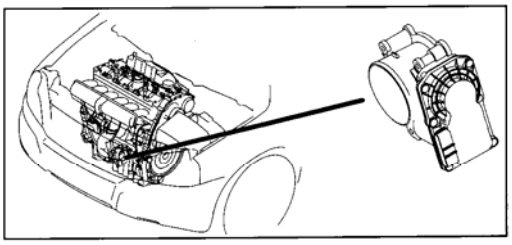

6/114 Vacuum pump

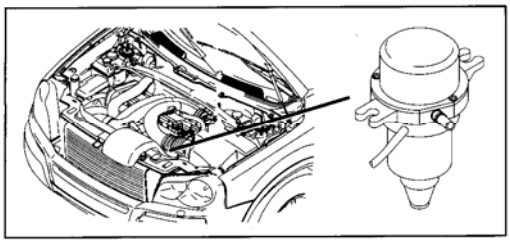

6/120 Throttle body motor, 8-cyl.

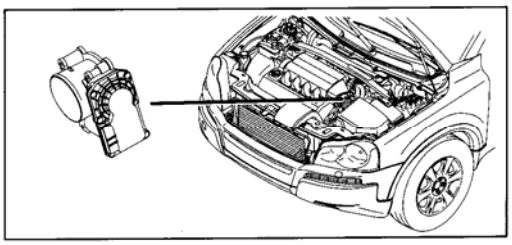

6/118 Regulator motor, swirl throttle

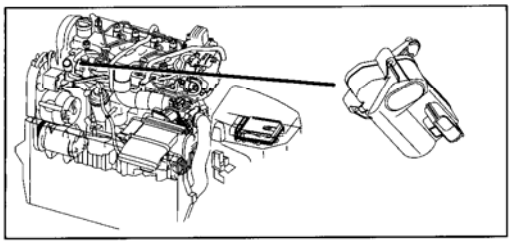

6/120 Throttle body motor, Diesel

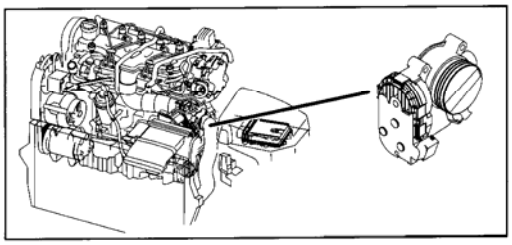

6/120 Throttle body motor V70

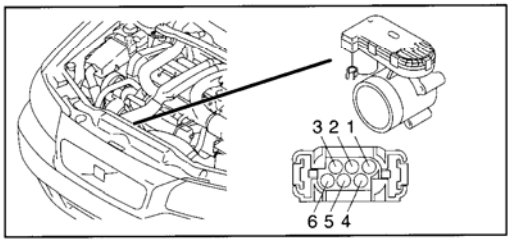

6/127 Washer motor V70

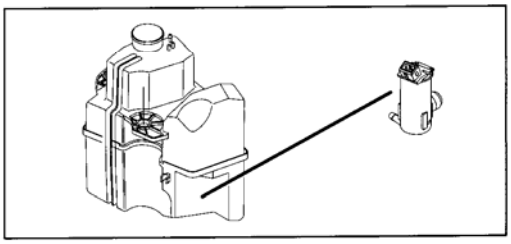

G00447799

Fig. 37: Components (6/105 To 6/127)

Volvo XC90
2008 VOLVO V70, XC70 & XC90

Courtesy of VOLVO CARS OF NORTH AMERICA.

6/127 Washer motor XC90

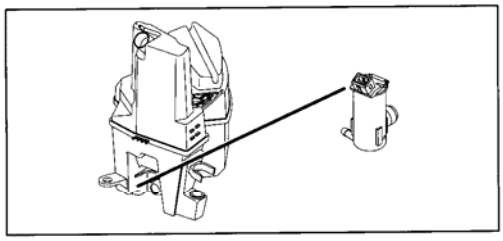

6/139 Upper actuating motor, intake manifold

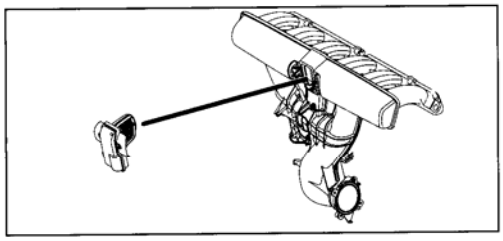

6/140 Lower actuating motor, intake manifold

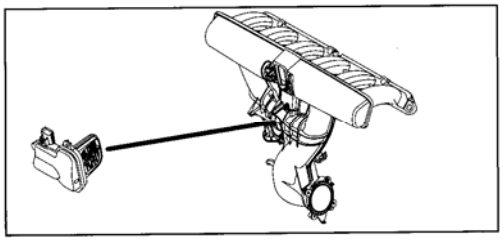

6/143 Regulator motor, Turbo

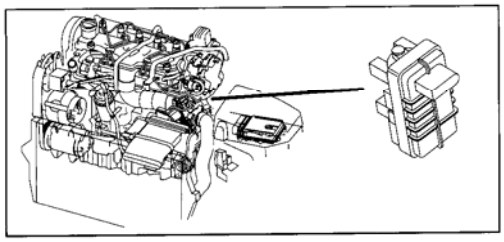

7/4 Brake fluid level sensor

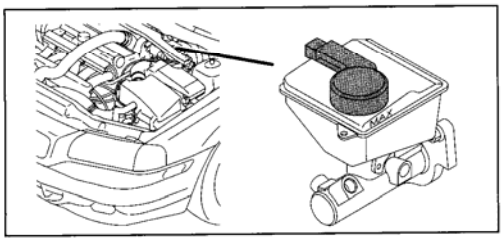

7/5 Washer fluid level sensor V70

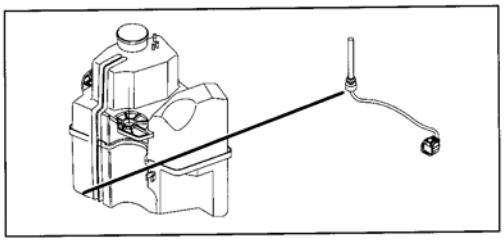

7/5 Washer fluid level sensor XC90

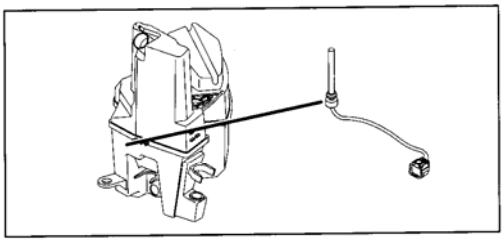

7/6 Oil pressure monitor V70

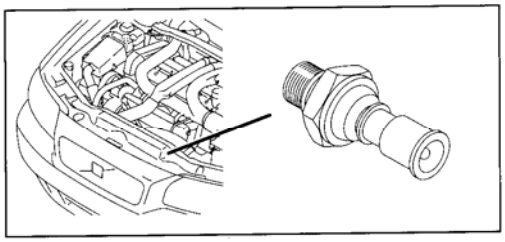

7/6 Oil pressure monitor XC90

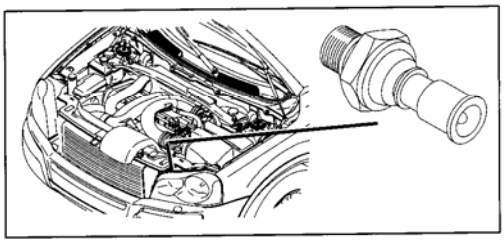

7/8 Pressure sensor, climate control system V70

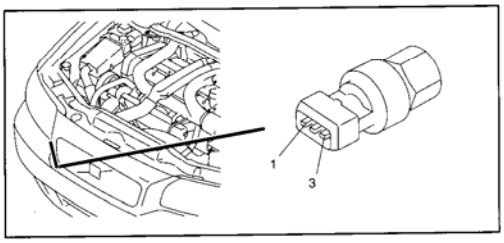

G00447800

Fig. 38: Components (6/127 To 7/8)

Volvo XC90
2008 VOLVO V70, XC70 & XC90

Courtesy of VOLVO CARS OF NORTH AMERICA.

7/8 Pressure sensor, climate control system XC90

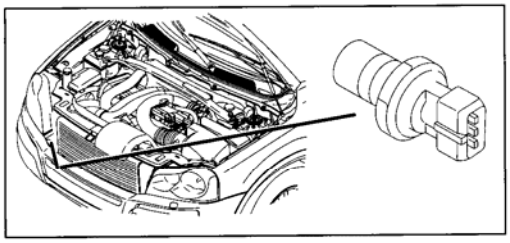

7/8 Pressure sensor, climate control system, 8-cyl.

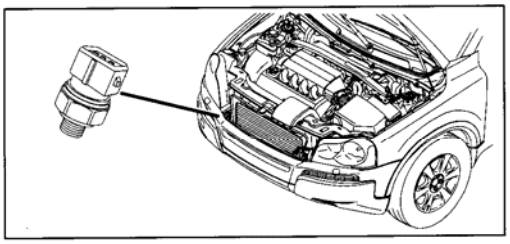

7/10 Interior temperature sensor

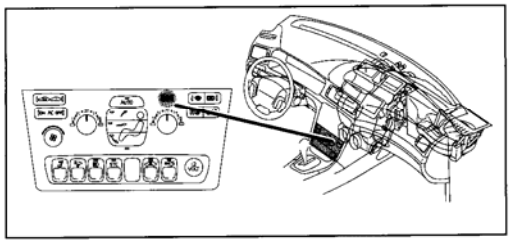

7/11 Outside temperature sensor V70

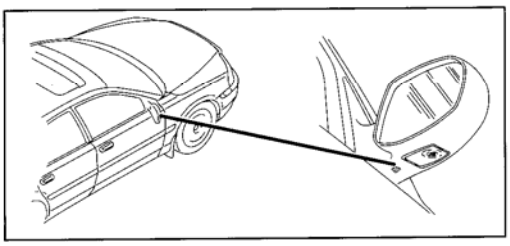

7/11 Outside temperature sensor XC90

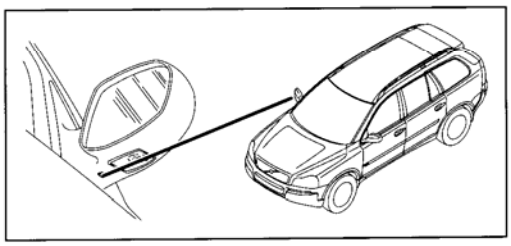

7/12 Solar sensor, twilight sensor and indicator alarm V70

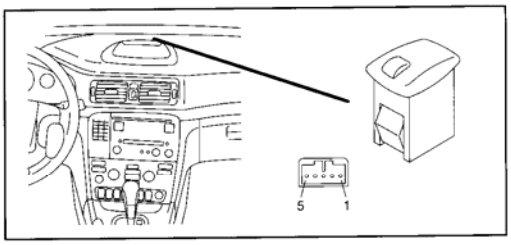

7/12 Solar sensor, twilight sensor and indicator alarm XC90

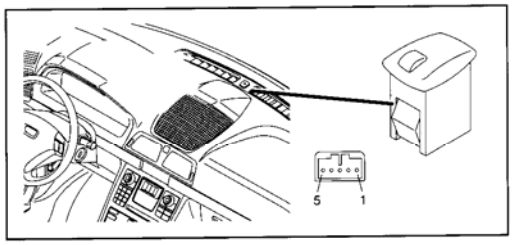

7/15 Heated oxygen sensor, 5-cyl.

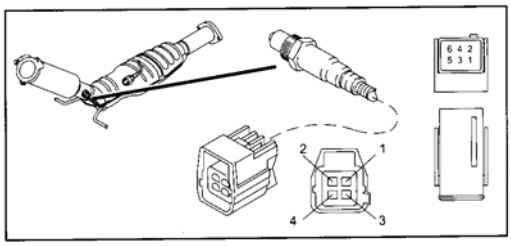

7/15 Heated oxygen sensor, 6-cyl.

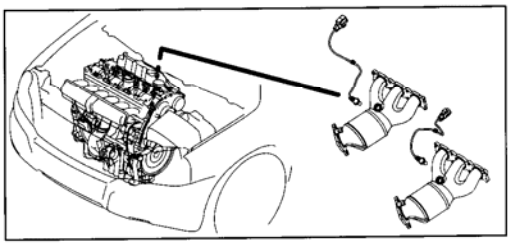

7/15 Front heated oxygen sensor, bank 2, 8-cyl.

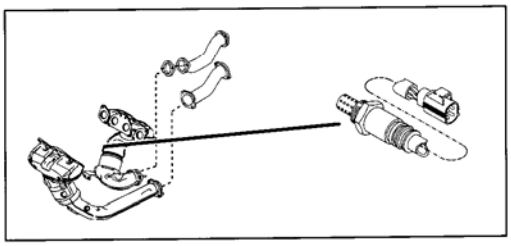

G00447801

Fig. 39: Components (7/8 To 7/15)
Courtesy of VOLVO CARS OF NORTH AMERICA.

7/15 Heated oxygen sensor, Diesel

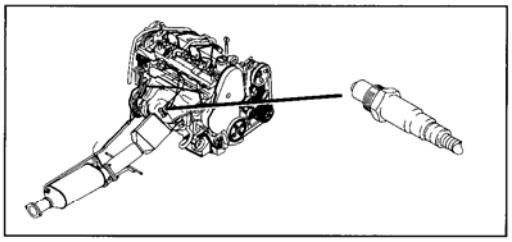

7/17 Mass air flow sensor (MAF) XC90

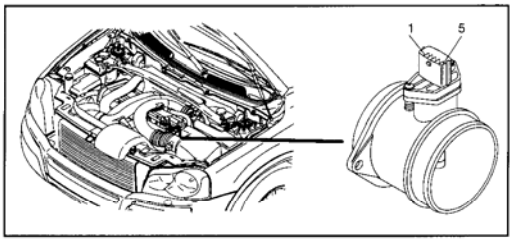

7/16 Coolant temperature sensor V70

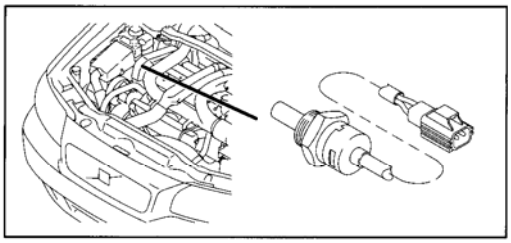

7/17 Mass air flow sensor (MAF), 8-cyl.

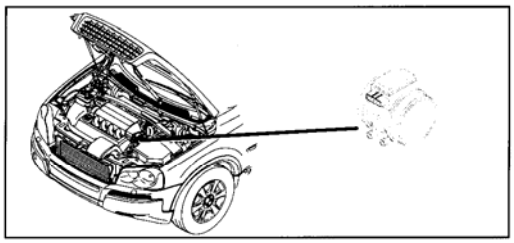

7/16 Coolant temperature sensor XC90

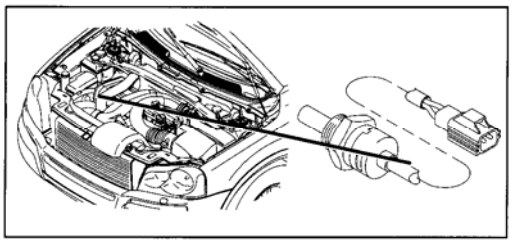

7/23 Rear knock sensor

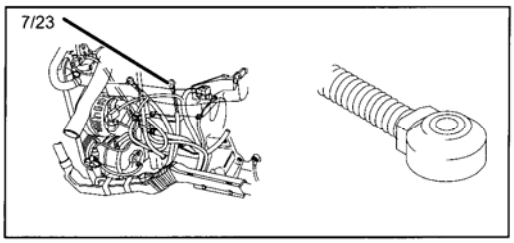

7/16 Coolant temperature sensor, 8-cyl.

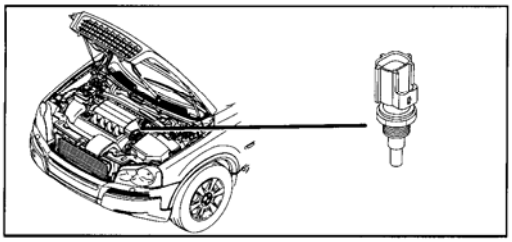

7/23 Rear knock sensor, 8-cyl.

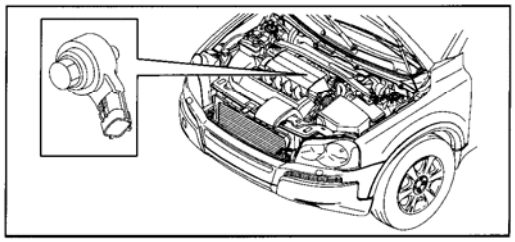

7/17 Mass air flow sensor (MAF) V70

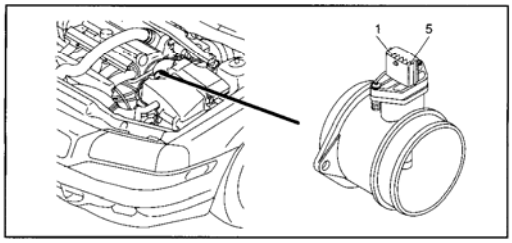

7/24 Front knock sensor

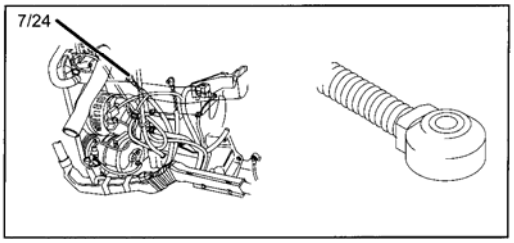

G00447802

Fig. 40: Components (7/15 To 7/24)

Volvo XC90
2008 VOLVO V70, XC70 & XC90

Courtesy of VOLVO CARS OF NORTH AMERICA.

7/24 Front knock sensor, 8-cyl.

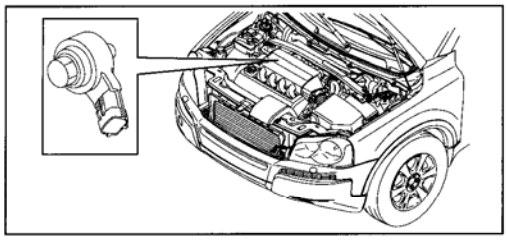

7/25 Impulse sensor, 8-cyl.

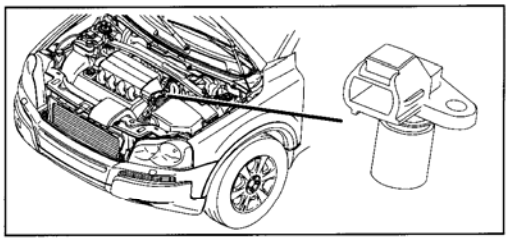

7/25 Impulse sensor, V70

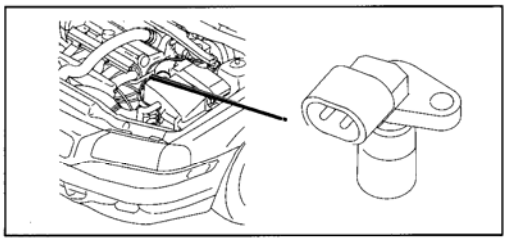

7/31 Sensor ABS, front left

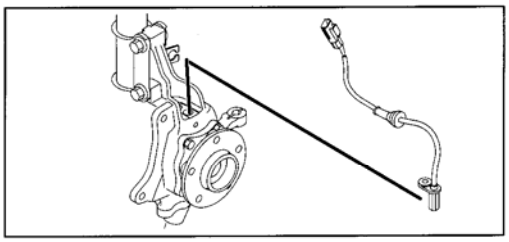

7/25 Impulse sensor, Diesel V70

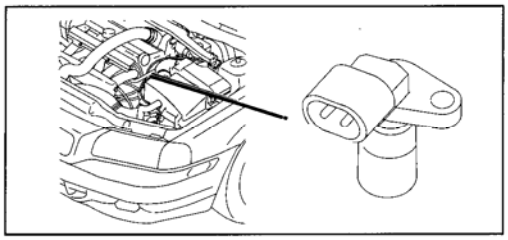

7/32 Sensor ABS, front right

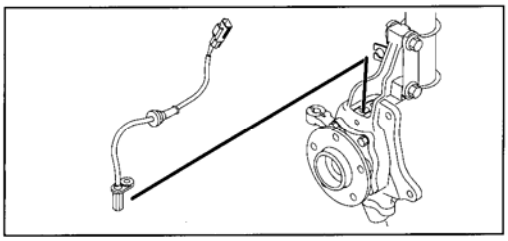

7/25 Impulse sensor, XC90

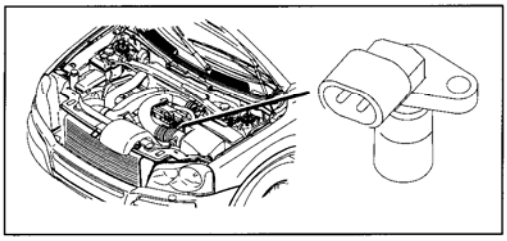

7/35 Oil level sensor

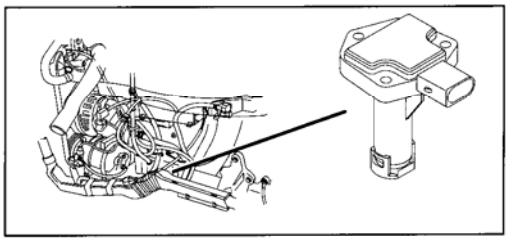

7/25 Impulse sensor, 6-cyl.

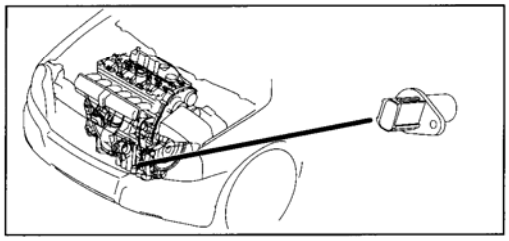

7/41 Temperature sensor evaporator

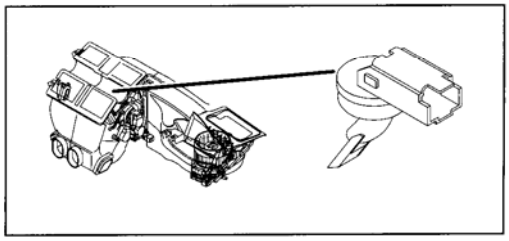

G00447803

Fig. 41: Components (7/24 To 7/41)

Volvo XC90
2008 VOLVO V70, XC70 & XC90

Courtesy of VOLVO CARS OF NORTH AMERICA.

7/51 Accelerator pedal sensor V70

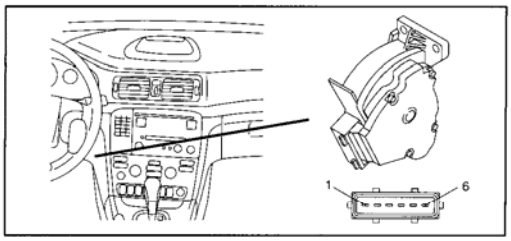

7/61 Input speed sensor TF-80SC

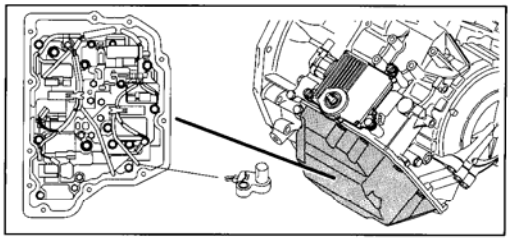

7/51 Accelerator pedal sensor XC90

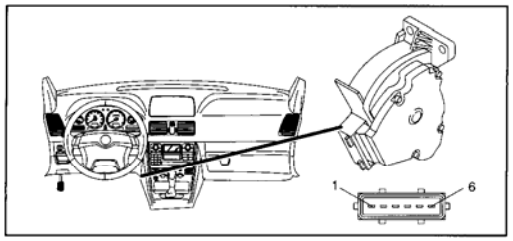

7/62 Output speed sensor AW51

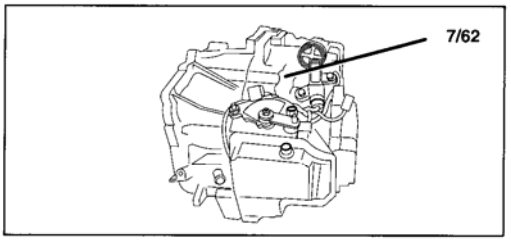

7/56 Sensor ABS, rear left

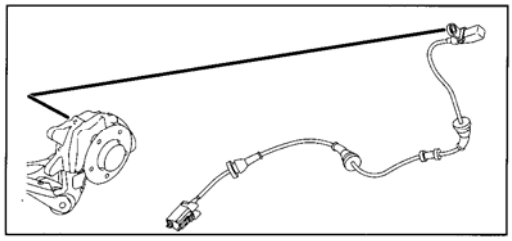

7/62 Output speed sensor TF-80SC

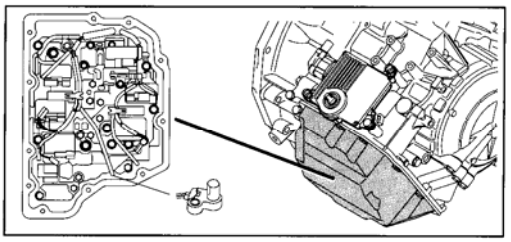

7/57 Sensor ABS, rear right

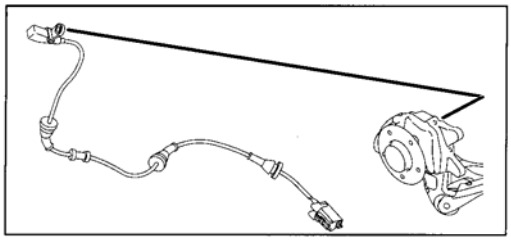

7/73 Coolant level sensor V70

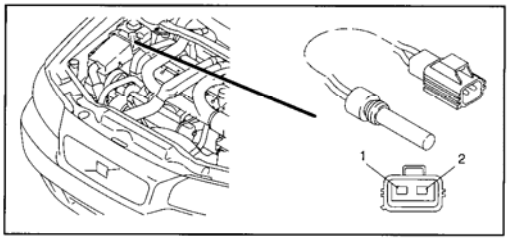

7/61 Input speed sensor AW51

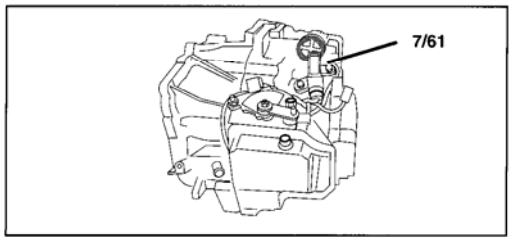

7/73 Coolant level sensor XC90

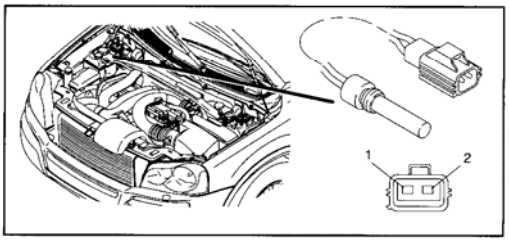

G00447804

Fig. 42: Components (7/51 To 7/73)

Volvo XC90
2008 VOLVO V70, XC70 & XC90

Courtesy of VOLVO CARS OF NORTH AMERICA.

7/74 Fluid temperature sensor, automatic transmission AW51

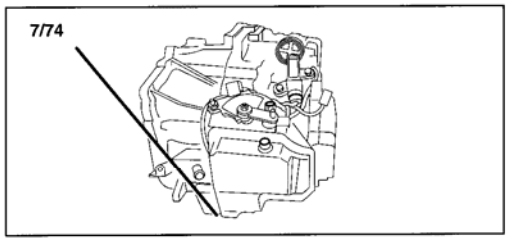

7/74 Fluid temperature sensor, automatic transmission TF-80SC

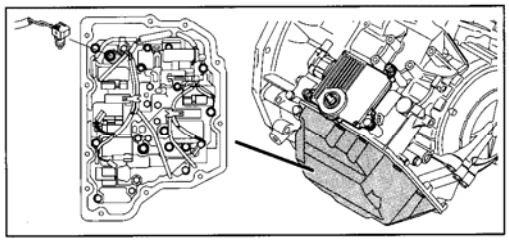

7/81 Pressure sensor, intake manifold

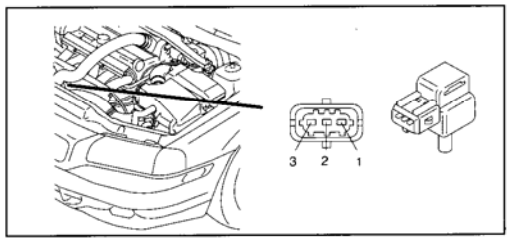

7/81 Intake manifold pressure sensor, 6-cyl.

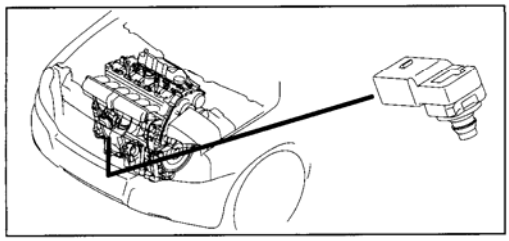

7/81 Intake manifold pressure sensor, 8-cyl.

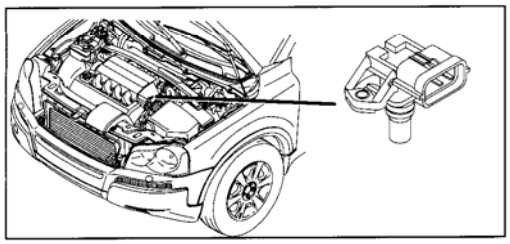

7/82 Heated oxygen sensor, diagnostics 1, 5-cyl.

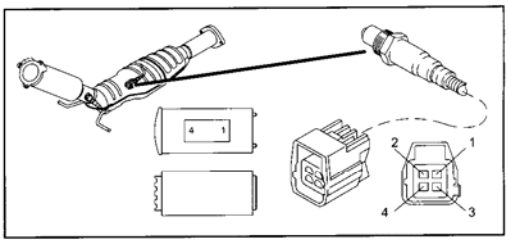

7/82 Heated oxygen sensor, diagnostics 1, 6-cyl.

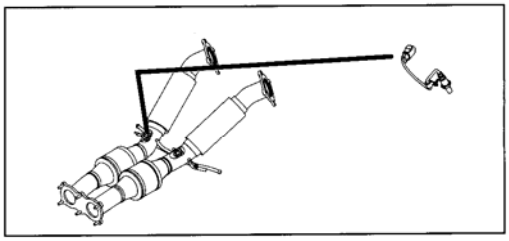

7/82 Front heated oxygen sensor, bank 1, 8-cyl.

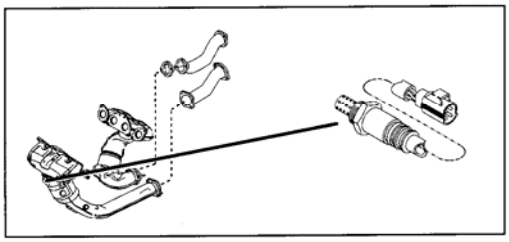

7/87 Acceleration sensor, Four-C, front left

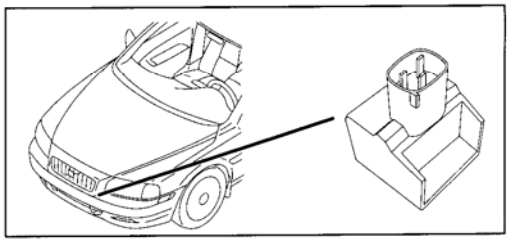

7/88 Acceleration sensor, Four-C, front right

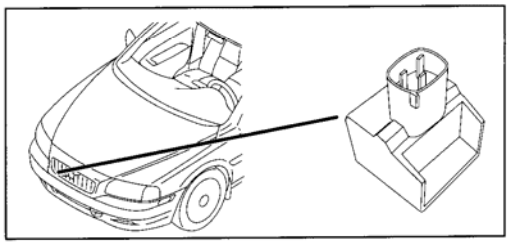

G00447805

Fig. 43: Components (7/74 To 7/88)
Courtesy of VOLVO CARS OF NORTH AMERICA.

7/89 Acceleration sensor, Four-C, rear left

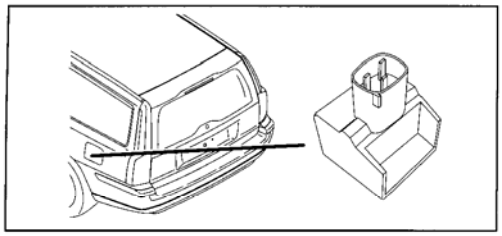

7/91 Steering angle sensor V70

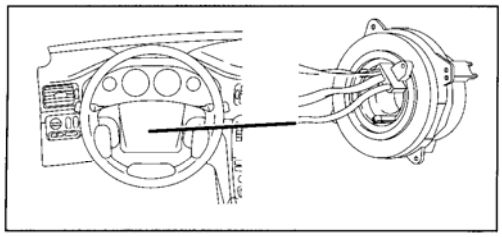

7/91 Steering angle sensor XC90

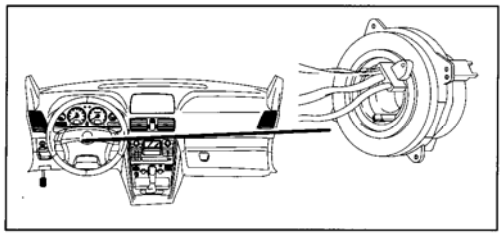

7/93 Occupant Weight Sensor (OWS)

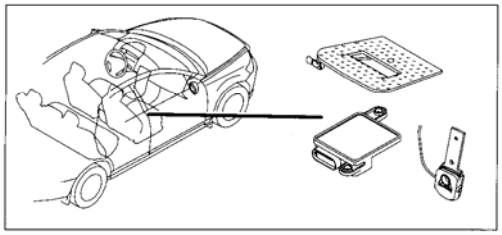

7/100 Inclination Sensor Module (ISM) V70

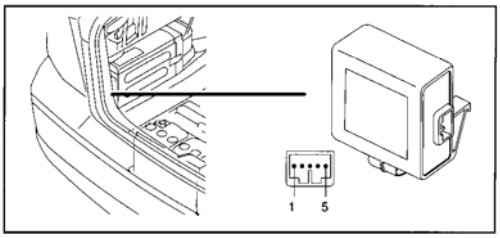

7/100 Inclination Sensor Module (ISM) XC90

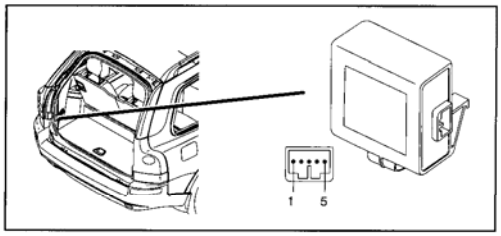

7/103 Heated oxygen sensor 3, 6-cyl.

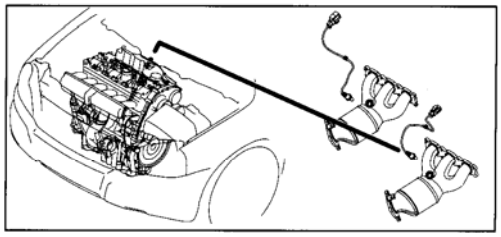

7/103 Rear heated oxygen sensor, bank 2, 8-cyl.

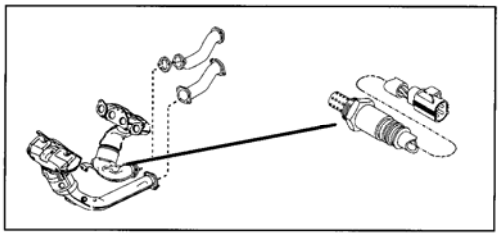

7/104 Rear heated oxygen sensor, bank 1, 6-cyl.

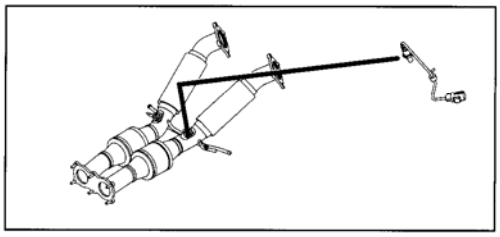

7/104 Rear heated oxygen sensor, bank 1, 8-cyl.

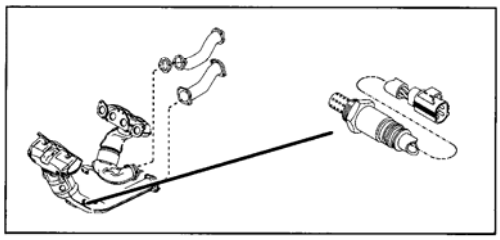

G00447806

Fig. 44: Components (7/89 To 7/104)

Volvo XC90
2008 VOLVO V70, XC70 & XC90

Courtesy of VOLVO CARS OF NORTH AMERICA.

7/105 Outside temperature sensor, engine control module V70

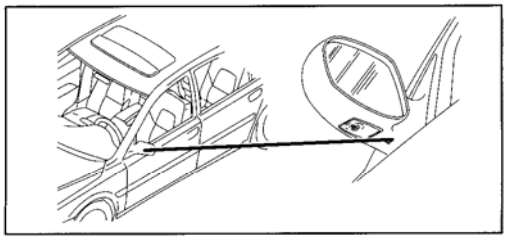

7/105 Outside temperature sensor, engine control module XC90

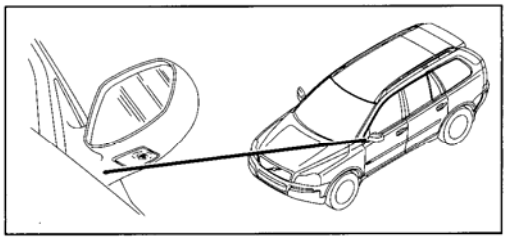

7/108 Side impact sensor, rear left V70

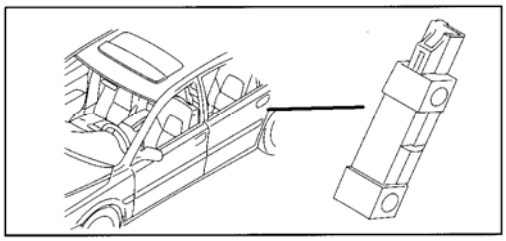

7/108 Side impact sensor, rear left XC90

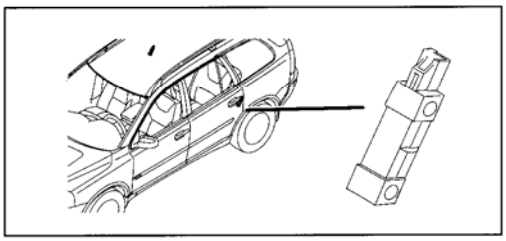

7/109 Side impact sensor, rear right V70

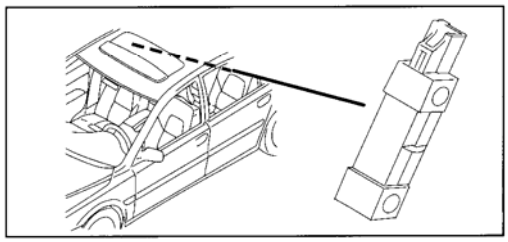

7/109 Side impact sensor, rear right XC90

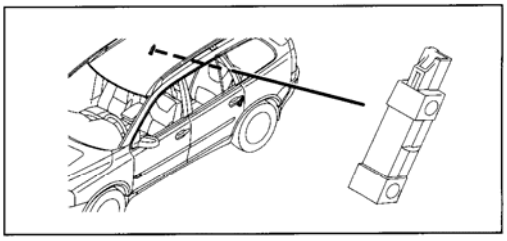

7/110 Left-hand seat temperature sensor

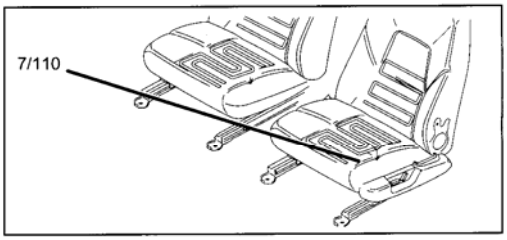

7/111 Right-hand seat temperature sensor

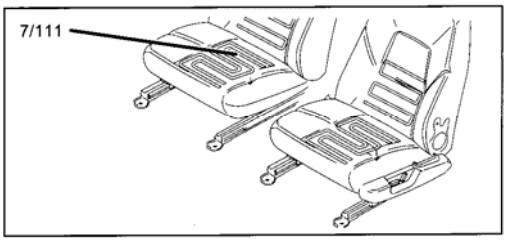

7/115 Side impact sensor, front left V70

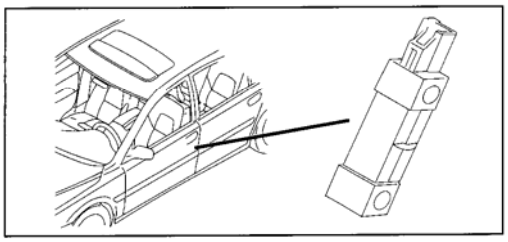

7/115 Side impact sensor, front left XC90

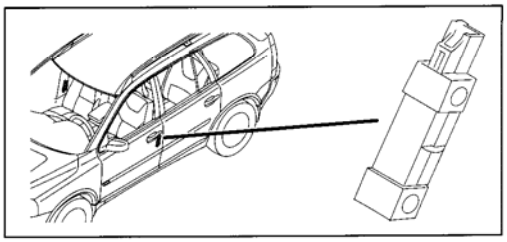

G00447807

Fig. 45: Components (7/105 To 7/115)
Courtesy of VOLVO CARS OF NORTH AMERICA.

7/116 Side impact sensor, front right V70

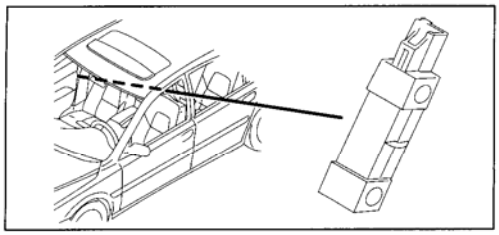

7/116 Side impact sensor, front right XC90

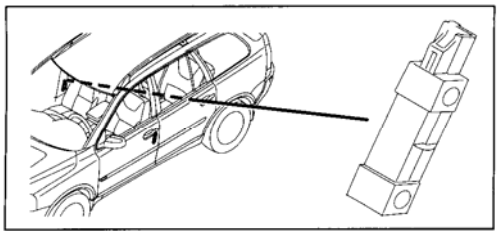

7/118 Acceleration sensor, shock absorber, Four-C, front left

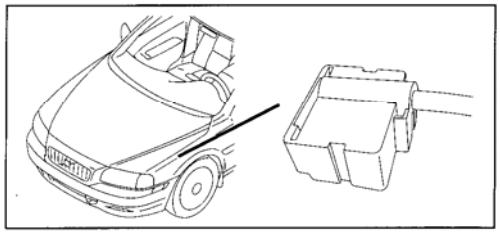

7/119 Acceleration sensor, shock absorber, Four-C, front right

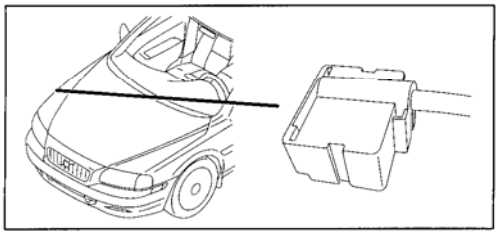

7/120 Rear left angle sensor, Four-C/ Bi-Xenon V70

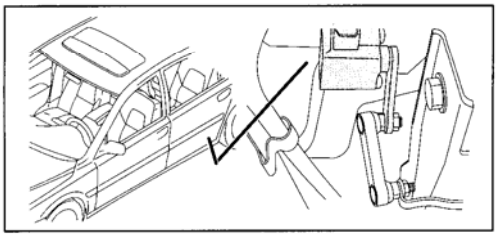

7/120 Rear left angle sensor, Four-C/ Bi-Xenon XC90

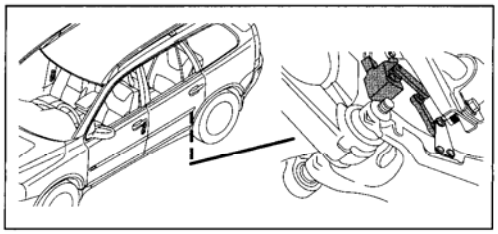

7/121 Rear right angle sensor, Four-C

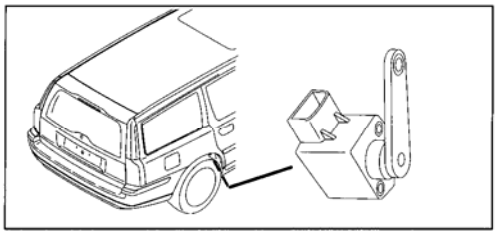

7/122 Mass Movement Sensor (MMS), front V70

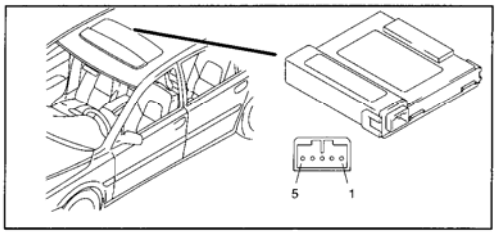

7/122 Mass Movement Sensor (MMS), front XC90

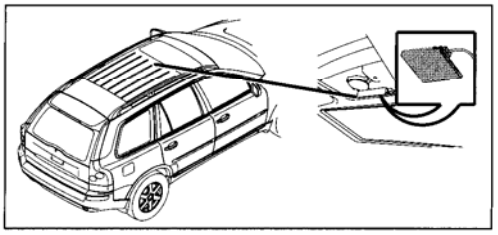

7/123 Clutch pedal sensor V70

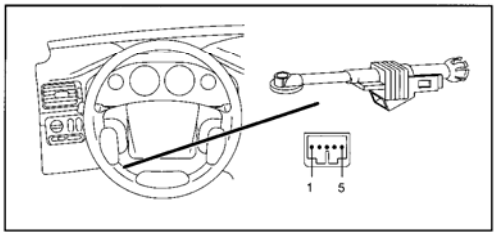

G00447808

Fig. 46: Components (7/116 To 7/123)
Courtesy of VOLVO CARS OF NORTH AMERICA.

7/123 Clutch pedal sensor XC90

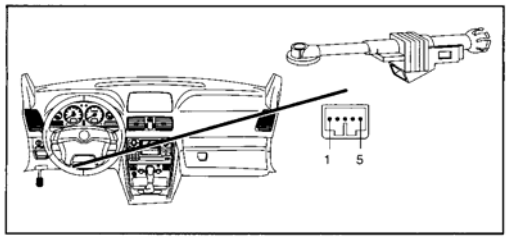

7/124 Brake pedal sensor V70

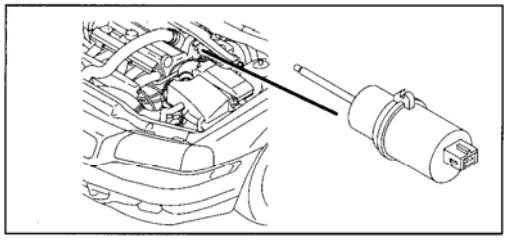

7/124 Brake pedal sensor XC90

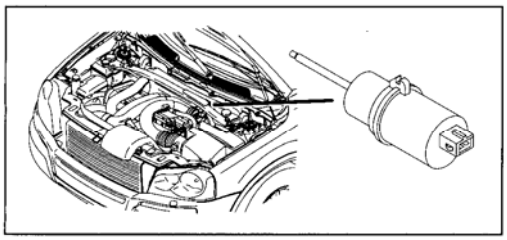

7/129 Brake pressure sensor 2 V70

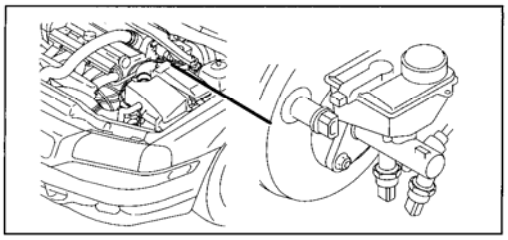

7/129 Brake pressure sensor 2 XC90

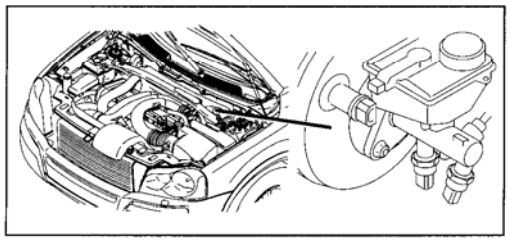

7/130 Fuel level sensor, ejector side V70

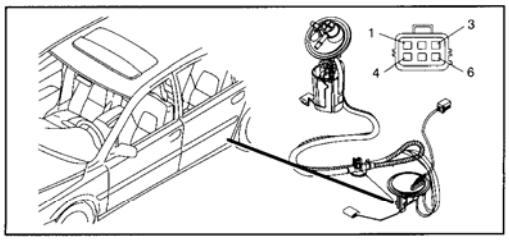

7/130 Fuel level sensor, ejector side XC90

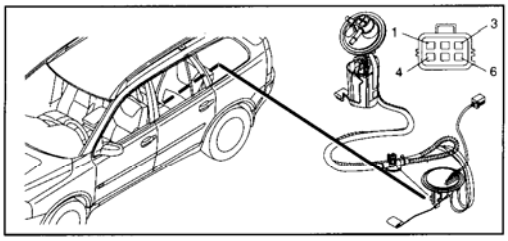

7/131-
7/134 Rear parking assistance sensor

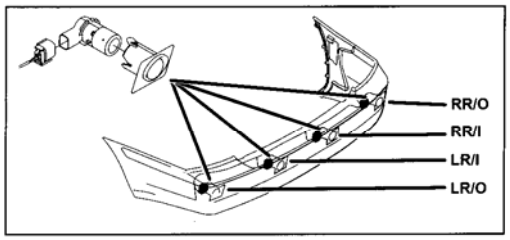

7/135 Glass breakage sensor, left-hand

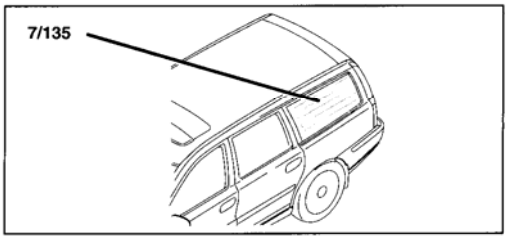

7/136 Glass breakage sensor, right-hand

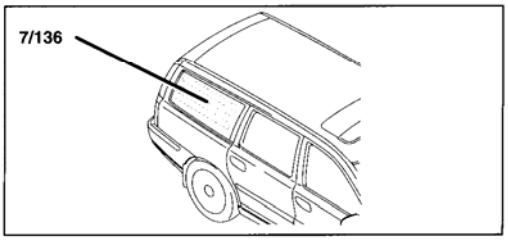

G00447809

Fig. 47: Components (7/123 To 7/136)

Courtesy of VOLVO CARS OF NORTH AMERICA.

7/137 Glass breakage sensor, tailgate

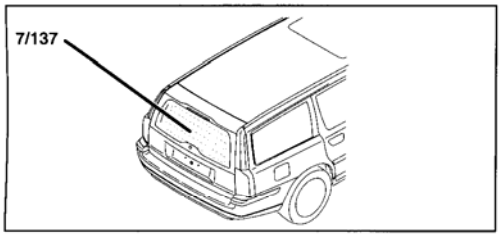

7/139 Brake pressure sensor 1 V70

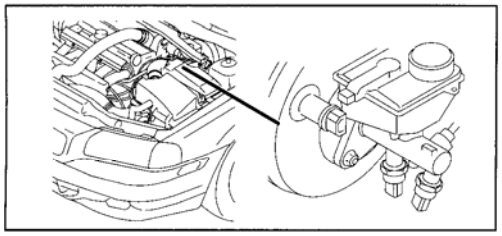

7/139 Brake pressure sensor 1 XC90

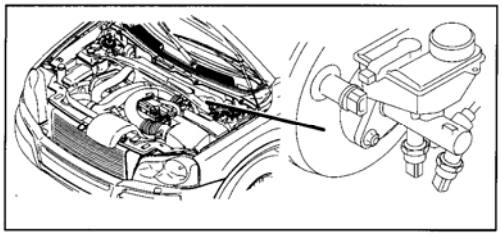

7/143 Fuel level sensor, pump side V70

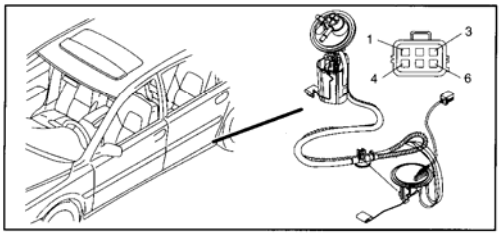

7/143 Sensor fuel level, pump side XC90

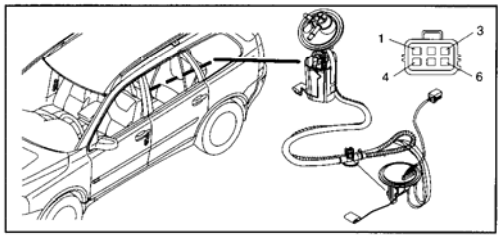

7/149 Rain Sensor Module (RSM), V70

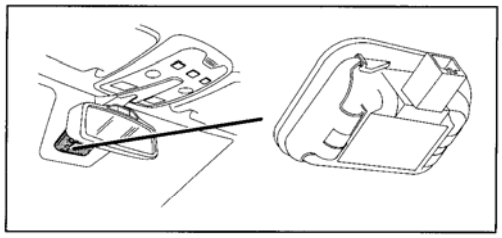

7/149 Rain Sensor Module (RSM), XC90

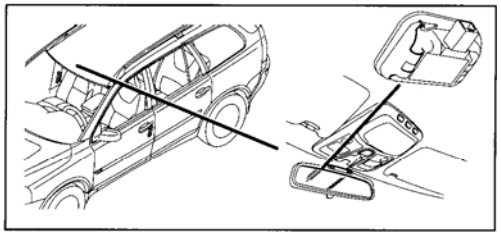

7/154 Fuel temperature sensor, Diesel

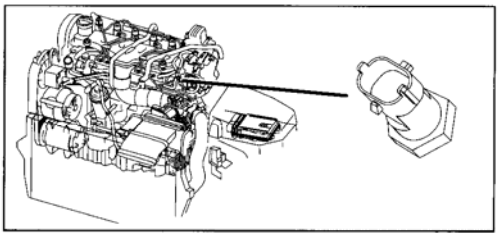

7/156 Pressure and temperature sensor, Bi-Fuel

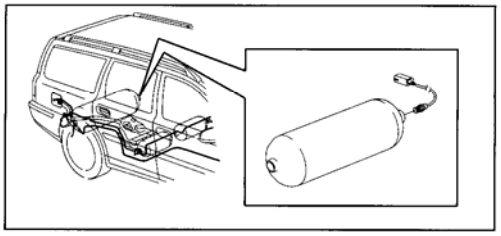

7/156 Pressure and temperature sensor fuel

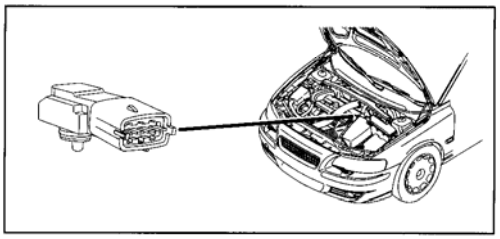

G00447810

Fig. 48: Components (7/137 To 7/156)
Courtesy of VOLVO CARS OF NORTH AMERICA.

7/158 Mass Movement Sensor (MMS), rear

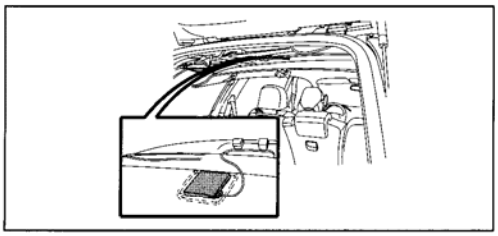

7/159 Air Quality Sensor (AQS)

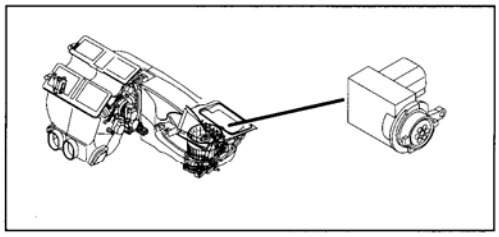

7/162 Fuel rail pressure sensor, Diesel

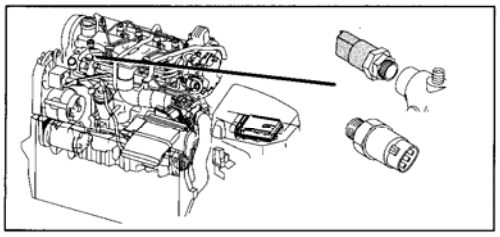

7/164 Body Sensor Cluster Stability Sensor (BSC)

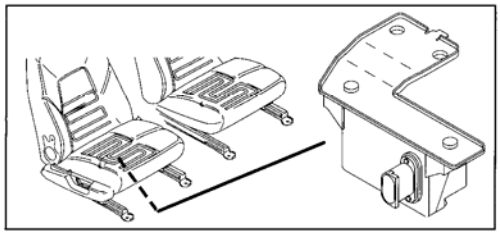

7/165 Pressure and temperature sensor, intake manifold

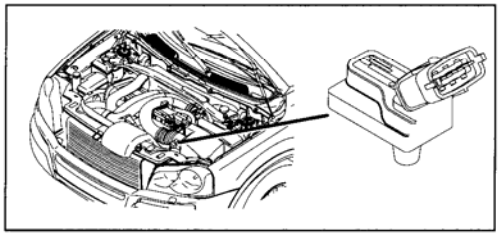

7/166 Oil level sensor, Diesel

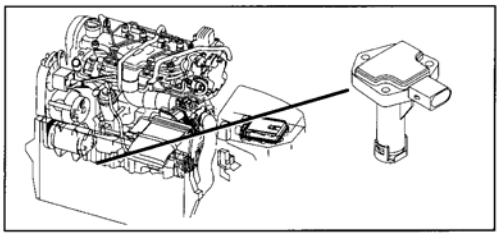

7/172 Position sensor camshaft, intake side

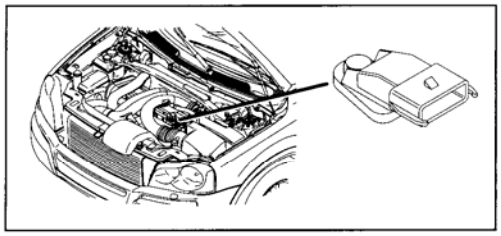

7/172 Intake camshaft position sensor, bank 2, 8-cyl.

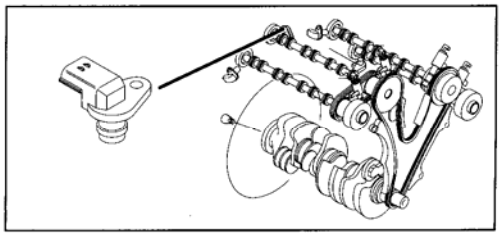

7/173 Camshaft position sensor, exhaust side, Diesel

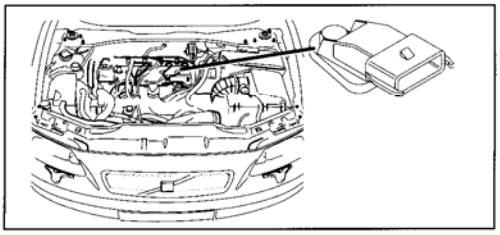

7/173 Camshaft position sensor, exhaust side, Gasoline

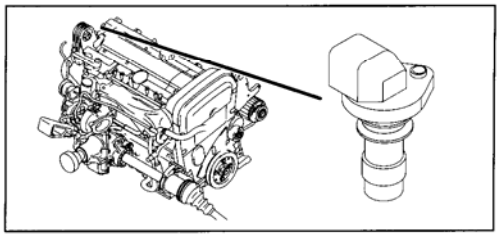

G00447811

Fig. 49: Components (7/158 To 7/173)

Volvo XC90
2008 VOLVO V70, XC70 & XC90

Courtesy of VOLVO CARS OF NORTH AMERICA.

7/173 Exhaust camshaft position sensor, bank 2, 8-cyl.

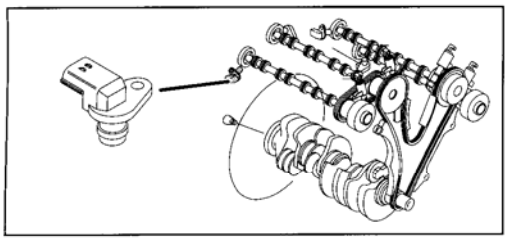

7/174 Differential pressure sensor, particle filter

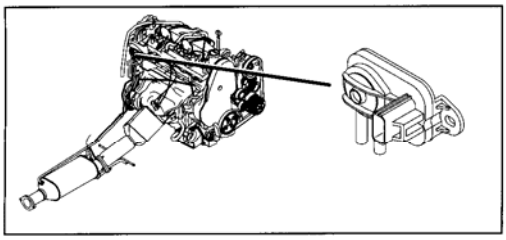

7/175 Weight sensor passenger seat, seat belt reminder

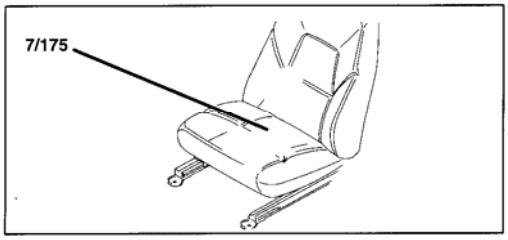

7/178 Front impact sensor, right

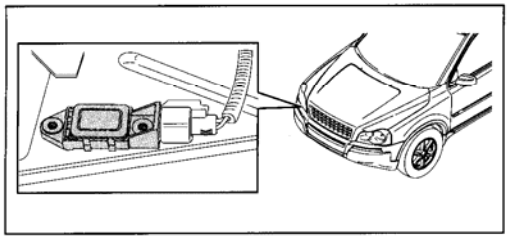

7/179 Front impact sensor, left

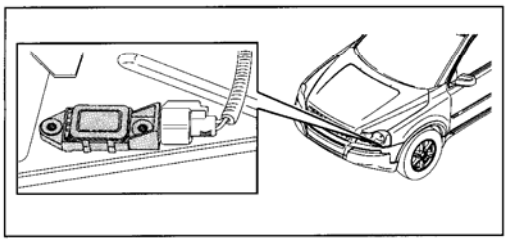

7/188 Intake camshaft position sensor, bank 1, 8-cyl.

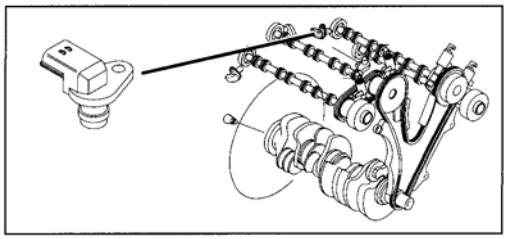

7/189 Exhaust camshaft position sensor, bank 1, 8-cyl.

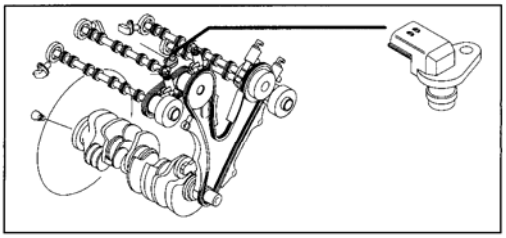

7/190 Temperature sensor, exhaust gases upstream of particle filter

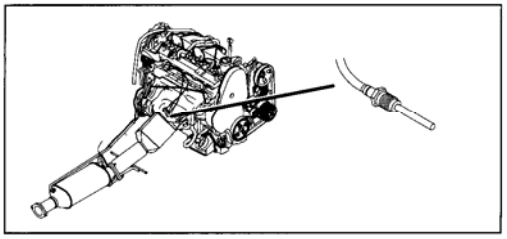

7/191 Temperature sensor, exhaust gases downstream of particle filter

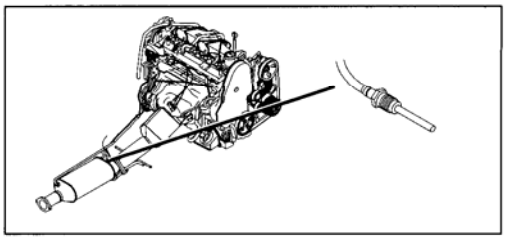

7/201 Pressure and temperature sensor, gas

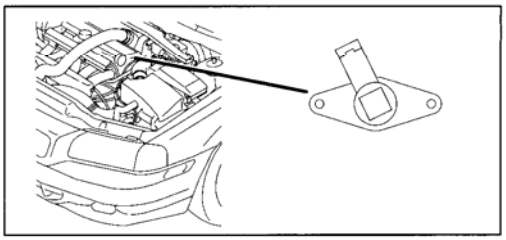

G00447812

Fig. 50: Components (7/173 To 7/201)
Courtesy of VOLVO CARS OF NORTH AMERICA.

7/204-
7/207 Front parking assistance sensor

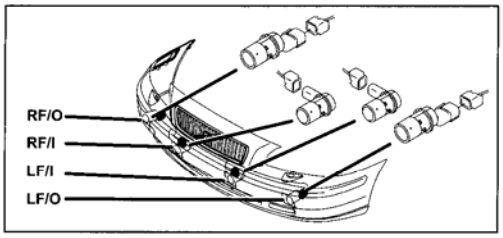

8/3 Electromagnetic clutch, climate control system V70

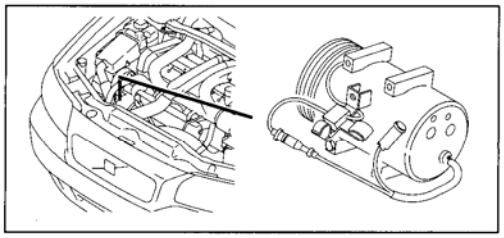

8/3 Electromagnetic clutch, climate control system XC90

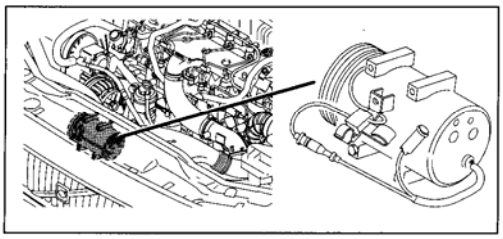

8/3 Electromagnetic clutch, climate control system, 8-cyl.

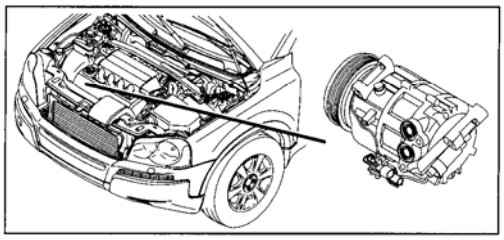

8/6-10 Injectors, Diesel

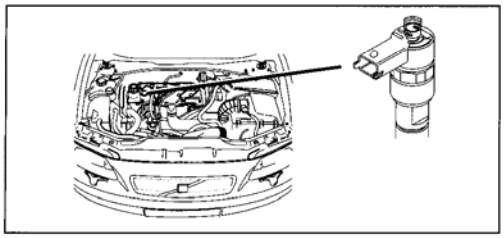

8/6-11 Injectors, Gasoline

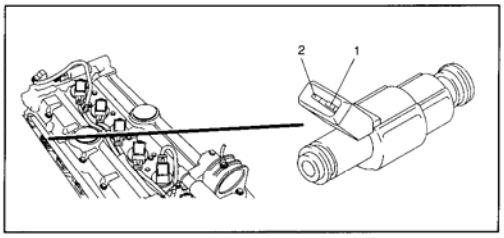

8/18 EVAP valve V70

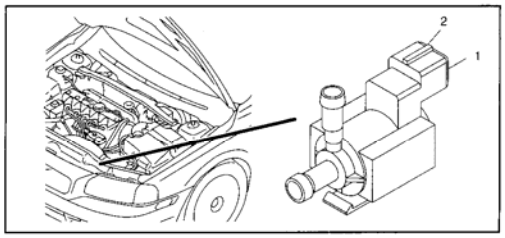

8/18 EVAP valve XC90

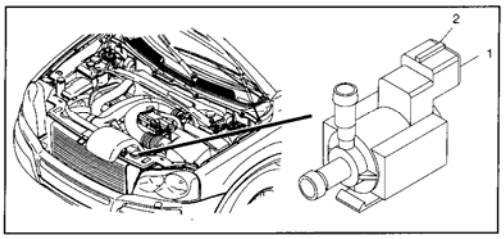

8/18 EVAP valve, 8-cyl.

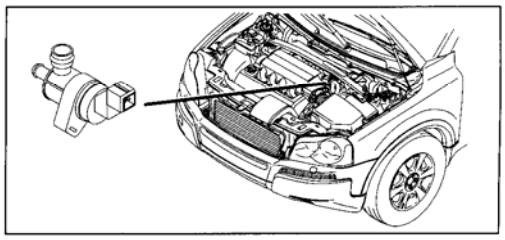

8/19 Solenoid, variable valve timing, intake

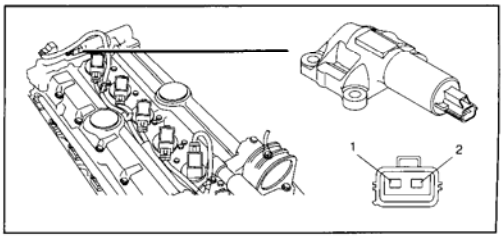

G00447813

Fig. 51: Components (7/204 To 8/19)
Courtesy of VOLVO CARS OF NORTH AMERICA.

8/19 Solenoid, variable valve timing, intake, 6-cyl.

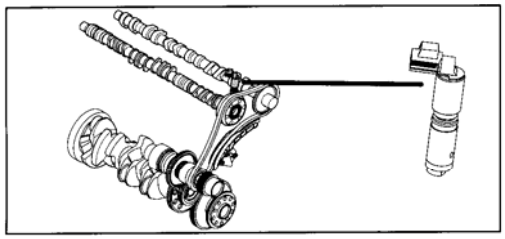

8/19 Solenoid, variable valve timing, intake, bank 2, 8-cyl.

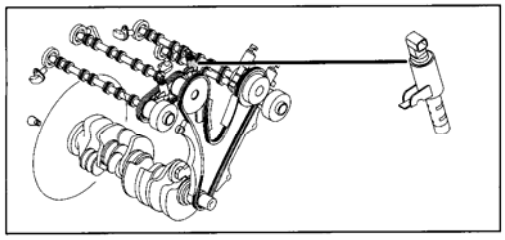

8/20 Shock absorber, Four-C, front left

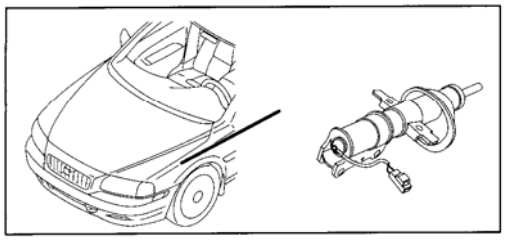

8/21 Shock absorber, Four-C, front right

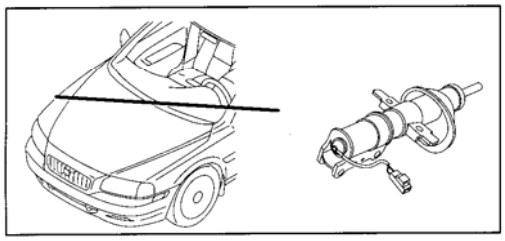

8/22 Shock absorber, Four-C, rear left

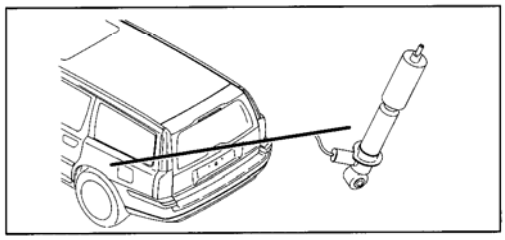

8/23 Shock absorber, Four-C, rear right

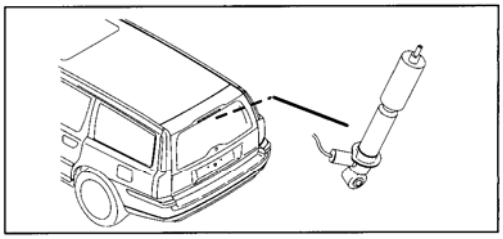

8/28 Turbocharger control valve V70

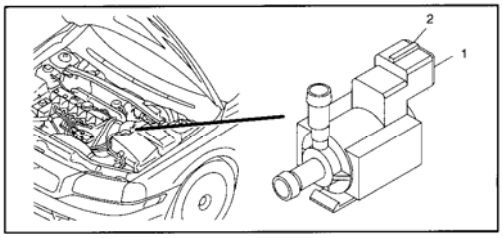

8/28 Turbocharger control valve XC90

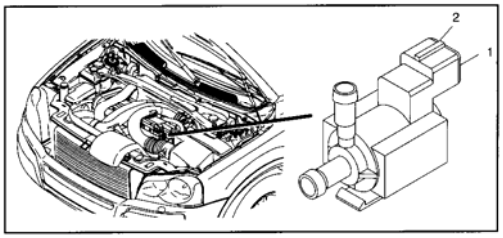

8/30 Airbag igniter, driver's side

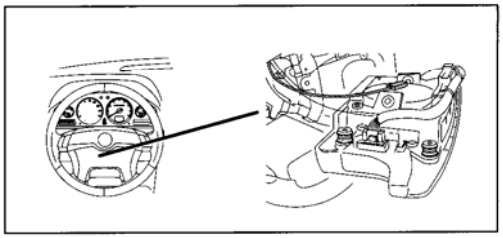

8/31 Igniter, passenger side airbag V70

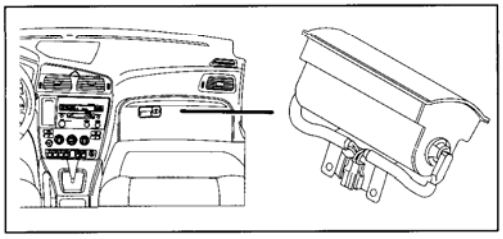

G00447814

Fig. 52: Components (8/19 To 8/31)

Volvo XC90
2008 VOLVO V70, XC70 & XC90

Courtesy of VOLVO CARS OF NORTH AMERICA.

8/31 Igniter, passenger side airbag XC90

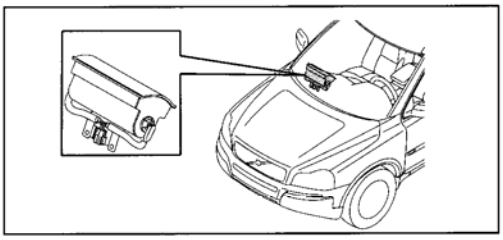

8/32 Igniter, airbag stage 2, passenger side V70

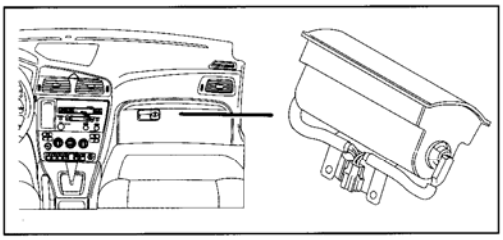

8/32 Igniter passenger side airbag stage 2, XC90

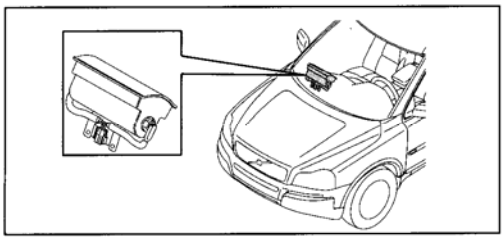

8/33 Front left belt tensioner igniter V70

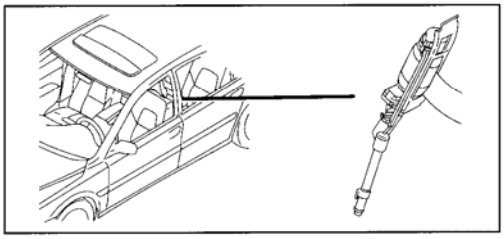

8/33 Front left belt tensioner igniter XC90

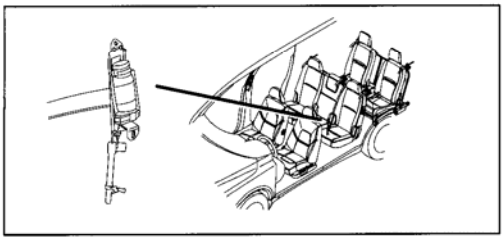

8/34 Front right belt tensioner igniter V70

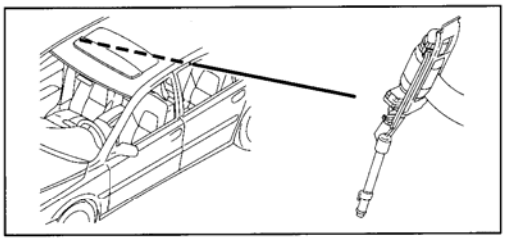

8/34 Front right seat belt tensioner igniter XC90

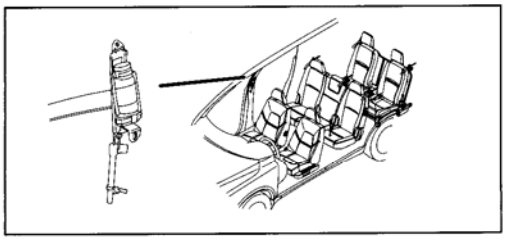

8/36 Solenoid shift lock

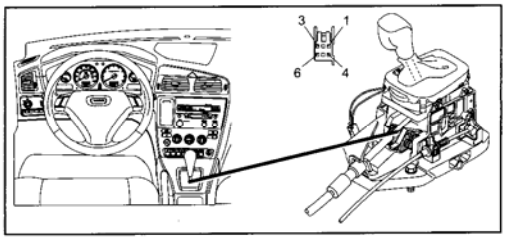

8/37 Automatic transmission AW51

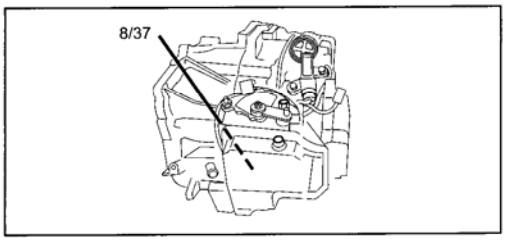

8/37 Automatic transmission TF-80SC

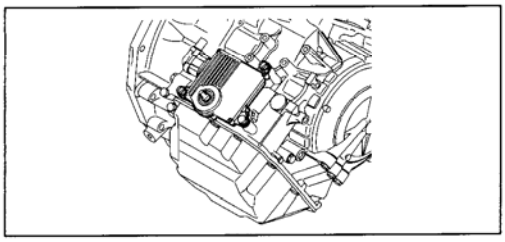

G00447815

Fig. 53: Components (8/31 To 8/37)

Courtesy of VOLVO CARS OF NORTH AMERICA.

8/38 Shift solenoid 1 AW51

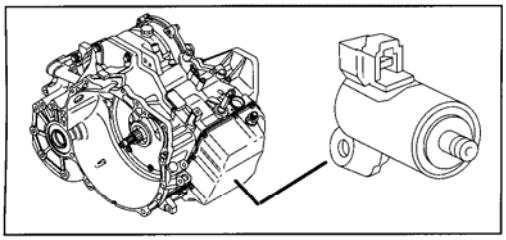

8/38 Shift solenoid 1 TF-80SC

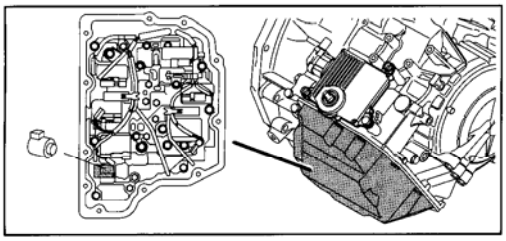

8/39 Shift solenoid 2 AW51

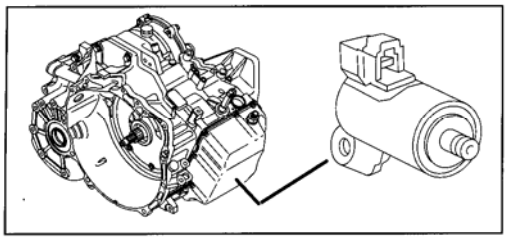

8/39 Shift solenoid 2 TF-80SC

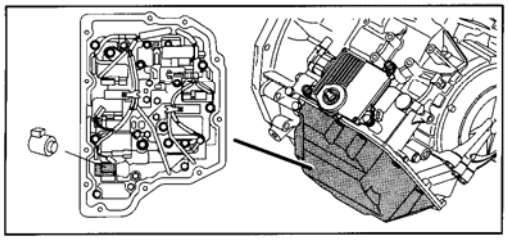

8/40 Lock-up solenoid AW51

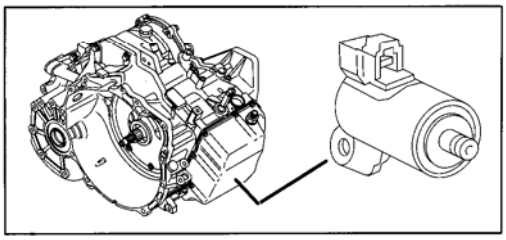

8/40 Lock-up solenoid TF-80SC

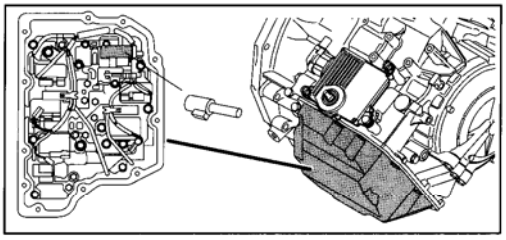

8/41 Pressure solenoid AW51

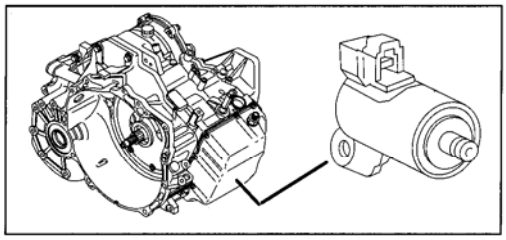

8/46 Activation unit DSTC V70

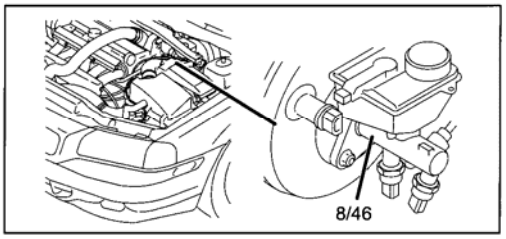

8/46 Activation unit DSTC XC90

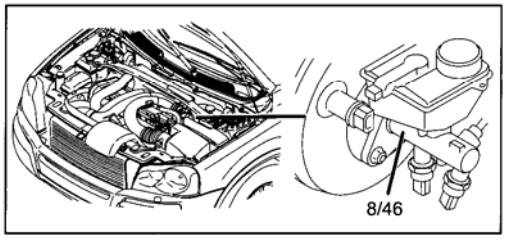

8/51 Front left side airbag igniter V70

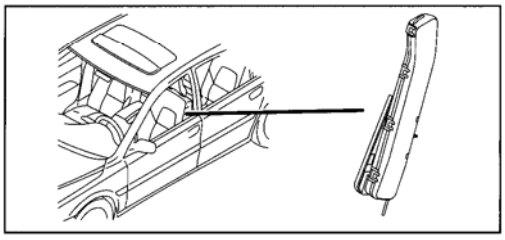

G00447816

Fig. 54: Components (8/38 To 8/51)
Courtesy of VOLVO CARS OF NORTH AMERICA.

8/51 Front left side airbag igniter XC90

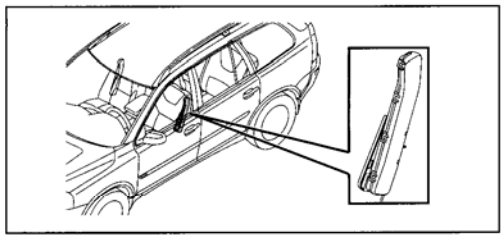

8/52 Front right side airbag igniter V70

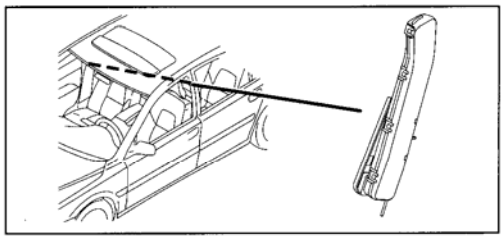

8/52 Front right side airbag igniter XC90

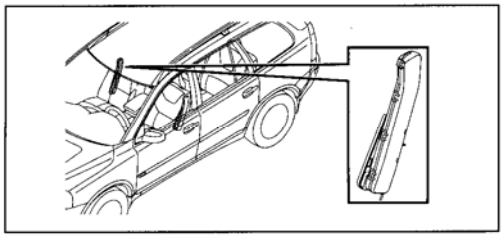

8/55 Igniter, left rear belt tensioner

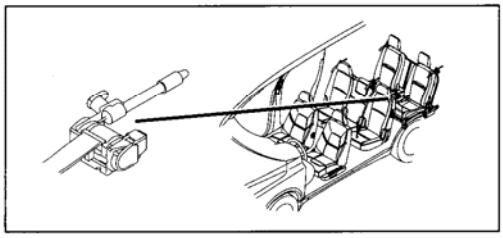

8/56 Igniter, right rear belt tensioner

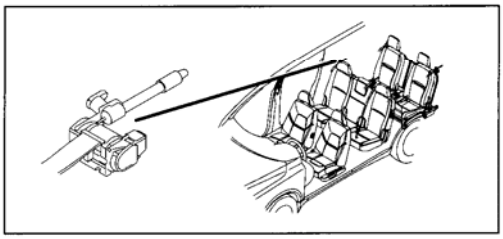

8/61 Igniter, airbag stage 2, driver's side

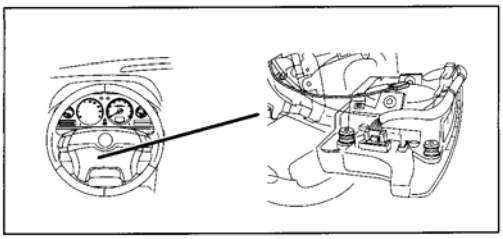

8/62 Belt tensioner igniter, center rear seat V70

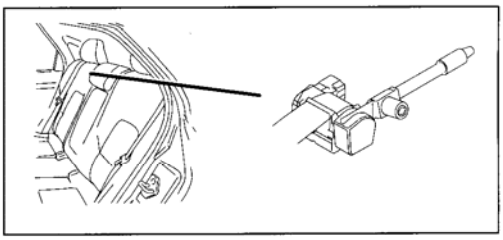

8/62 Belt tensioner igniter, center rear XC90

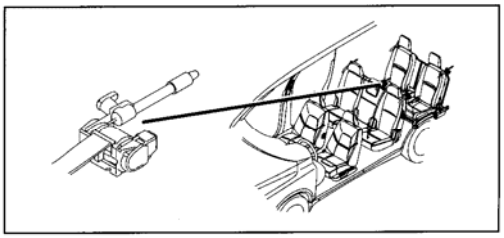

8/64 Solenoid valve, engine pad, Diesel V70

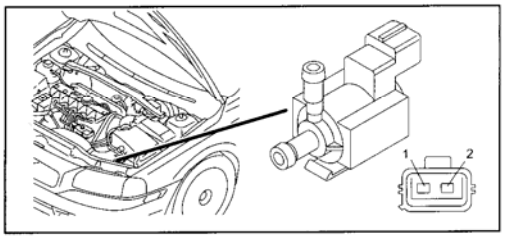

8/64 Solenoid valve, engine pad, Diesel XC90

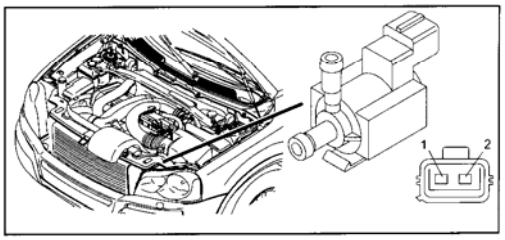

G00447817

Fig. 55: Components (8/51 To 8/64)

Courtesy of VOLVO CARS OF NORTH AMERICA.

8/66 Left inflatable curtain igniter, V70

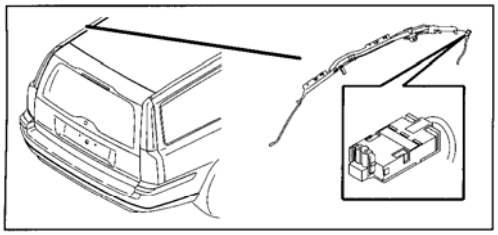

8/66 Left inflatable curtain igniter, XC90

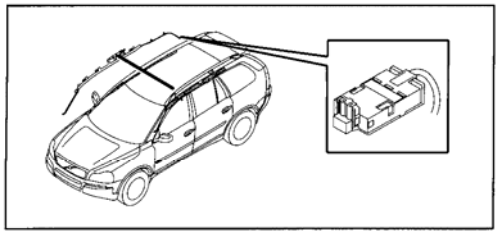

8/67 Right inflatable curtain igniter, V70

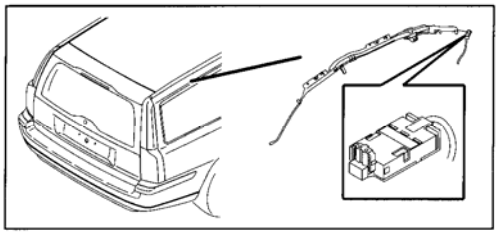

8/67 Right inflatable curtain igniter, XC90

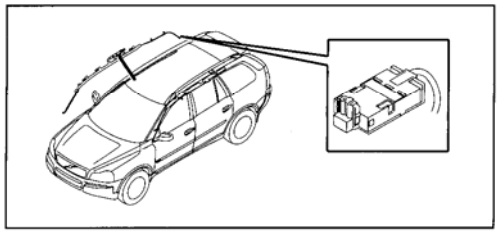

8/71 Throttle solenoid AW51

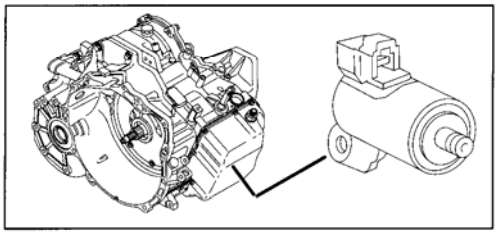

8/71 Throttle solenoid TF-80SC

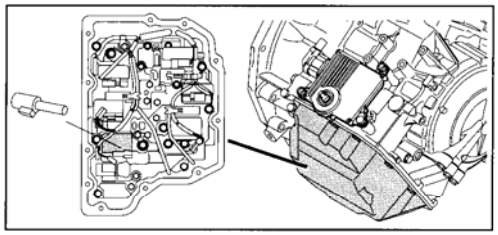

8/72 Shift solenoid 3 AW51

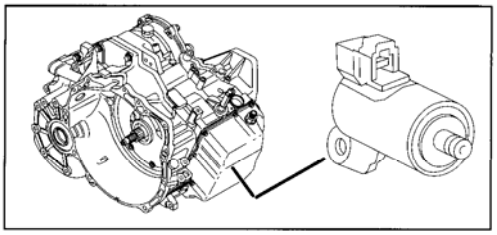

8/73 Shift solenoid 4 AW51

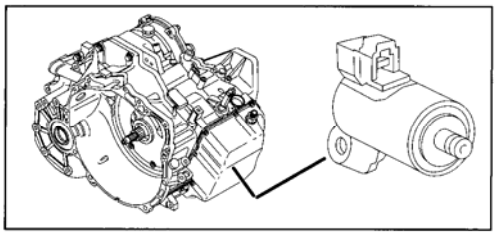

8/74 Shift solenoid 5 AW51

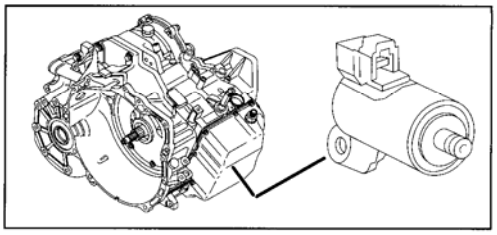

8/75 Valve, fuel cut-off DFCO

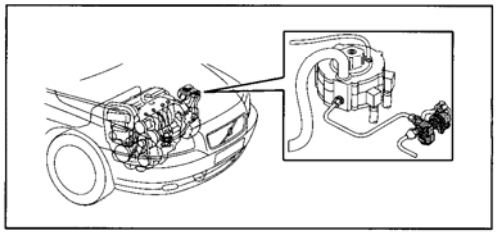

G00447818

Fig. 56: Components (8/66 To 8/75)
Courtesy of VOLVO CARS OF NORTH AMERICA.

8/81 Solenoid, variable valve timing outlet V70

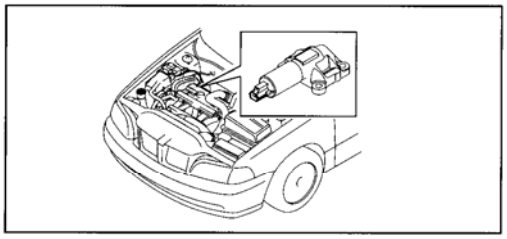

8/81 Solenoid, variable valve timing outlet XC90

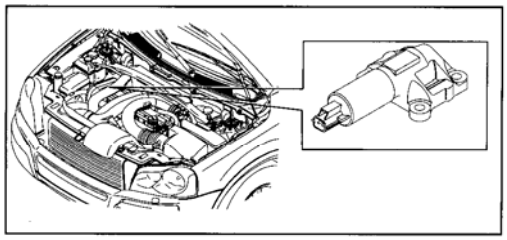

8/81 Solenoid, variable valve timing, exhaust, bank 2, 8-cyl.

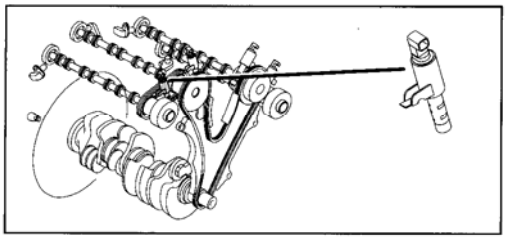

8/84 Switch, vacuum pump

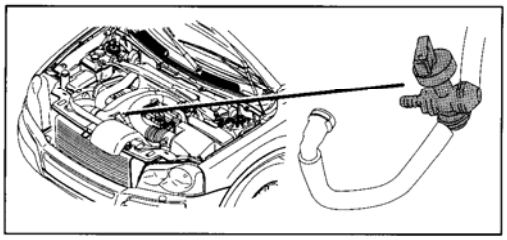

8/85 Thermostatic switch and fuel filter heating V70

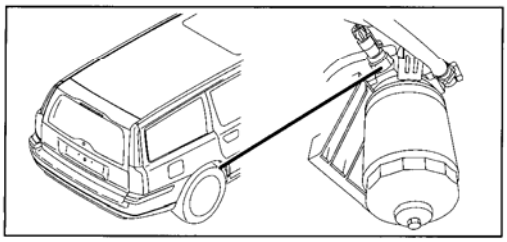

8/85 Thermostatic switch and fuel filter heating XC90

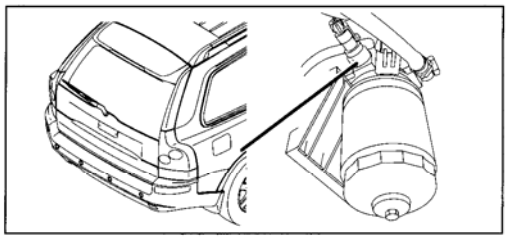

8/88 Solenoid, fuel tank, Bi-Fuel, rear

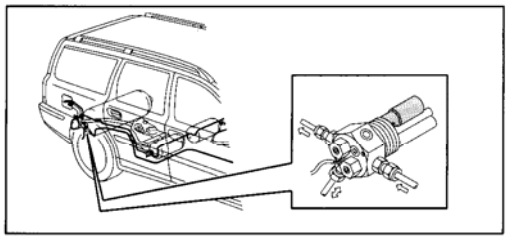

8/89 Solenoid, fuel tank, Bi-Fuel, front left

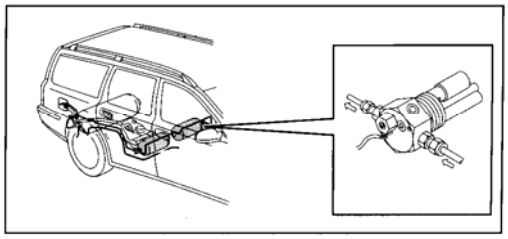

8/90 Solenoid, fuel tank, Bi-Fuel, front right

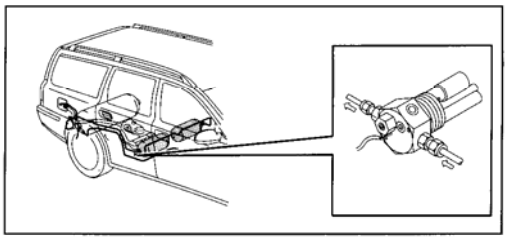

8/94 Left belt tensioner igniter, third row of seats

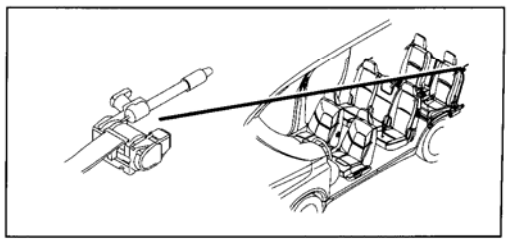

G00447819

Fig. 57: Components (8/81 To 8/94)
Courtesy of VOLVO CARS OF NORTH AMERICA.

8/95 Right belt tensioner igniter, third row of seats

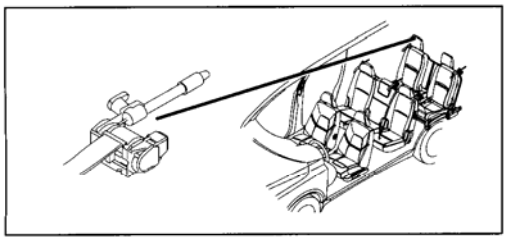

8/96 Left inflatable curtain igniter, third row of seats

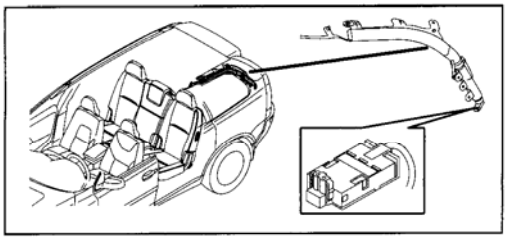

8/97 Right inflatable curtain igniter, third row of seats

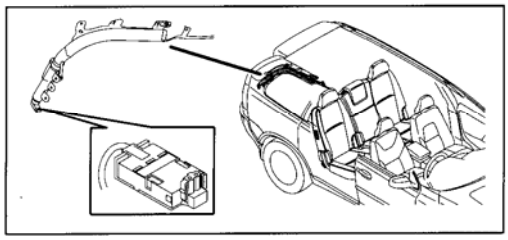

8/98 Fuel pressure control valve, Diesel

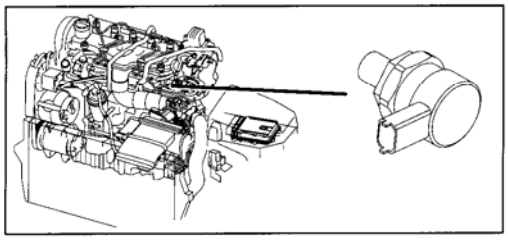

8/99 Igniter, steering column

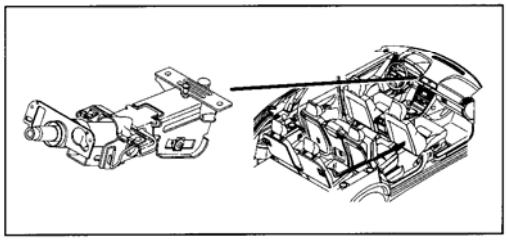

8/107 Valve, variable intake, 8-cyl.

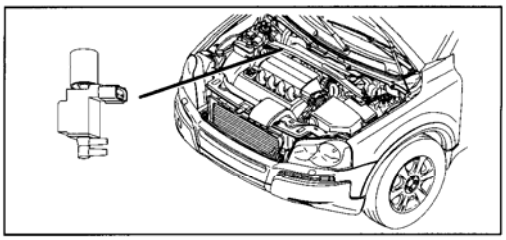

8/111 High-pressure solenoid valve, Diesel

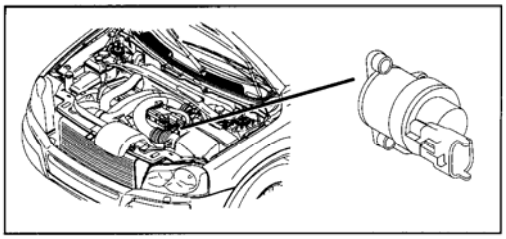

8/113 Bypass valve, fuel pressure

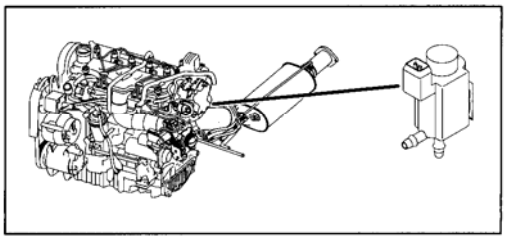

8/117 Solenoid, variable valve timing, intake, bank 1, 8-cyl.

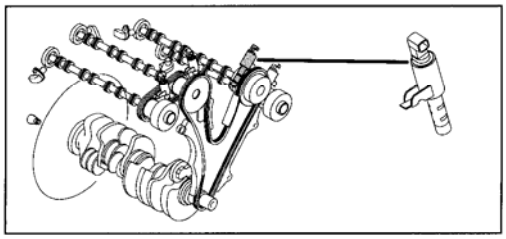

8/118 Solenoid, variable valve timing, exhaust, bank 1, 8-cyl.

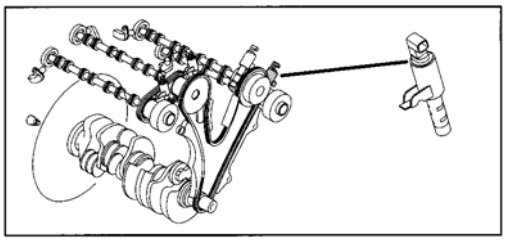

G00447820

Fig. 58: Components (8/95 To 8/118)
Courtesy of VOLVO CARS OF NORTH AMERICA.

8/120 EGR valve

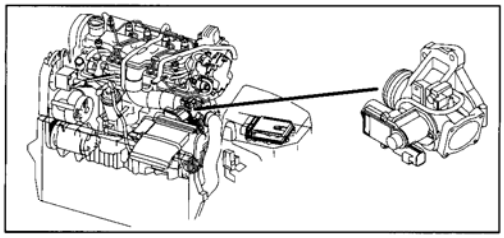

8/123 Igniter airbag driver side stage 3, XC90

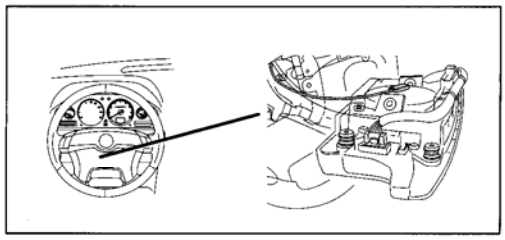

8/124 Igniter passenger side airbag stage 3, XC90

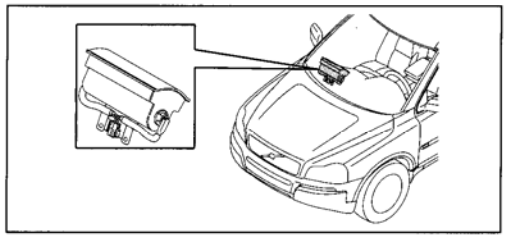

8/125 Variable valve lifter, front plane, 6-cyl.

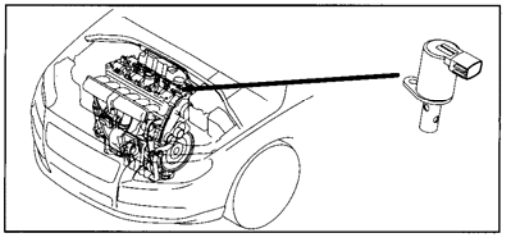

8/126 Variable valve lifter, rear plane, 6-cyl.

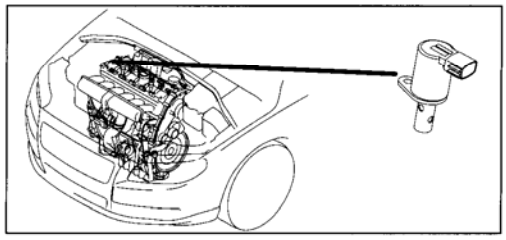

8/134 Solenoid, reverse interlock, manual

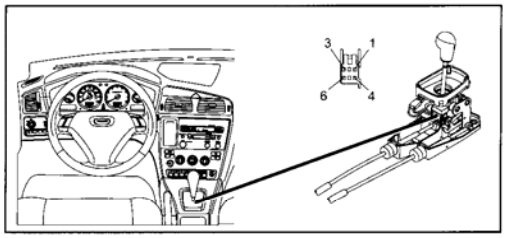

8/142 Linear pressure solenoid SLB1 TF-80SC AWD

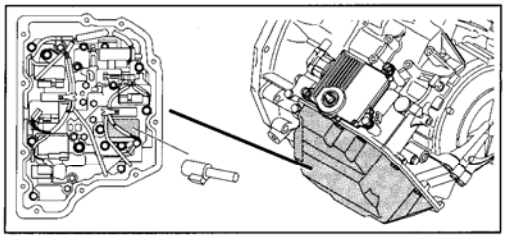

8/143 Linear pressure solenoid SLC1 TF-80SC AWD

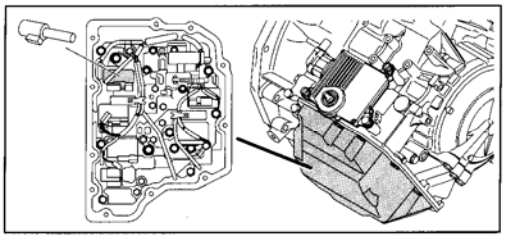

8/144 Linear pressure solenoid SLC2 TF-80SC AWD

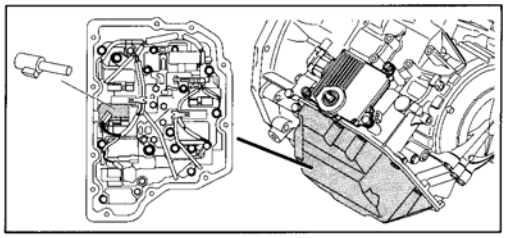

8/145 Linear pressure solenoid SLC3 TF-80SC AWD

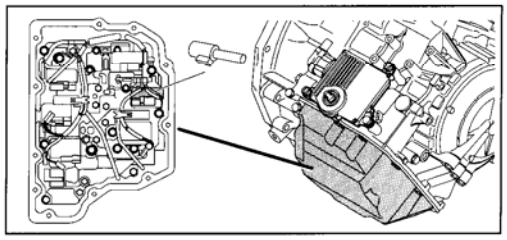

G00447821

Fig. 59: Components (8/120 To 8/145)

Volvo XC90
2008 VOLVO V70, XC70 & XC90

Courtesy of VOLVO CARS OF NORTH AMERICA.

8/146-
8/153 Injection valves, 8-cyl.

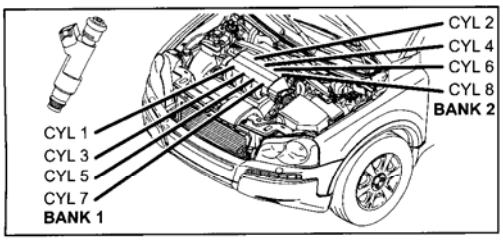

9/1 Outlet 12V front V70

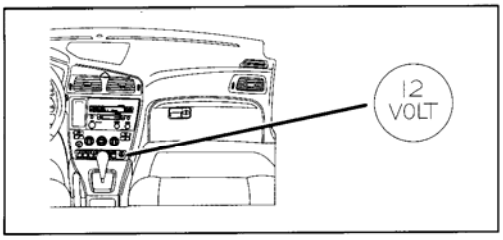

9/1 Outlet 12V front XC90

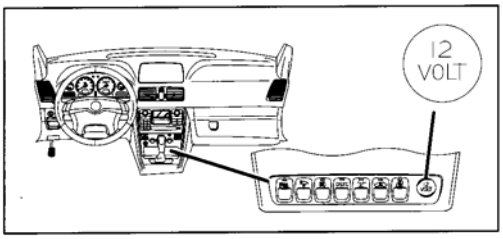

9/2 Heated rear window, V70

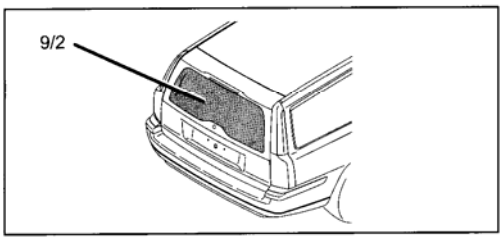

9/2 Heated rear window, XC90

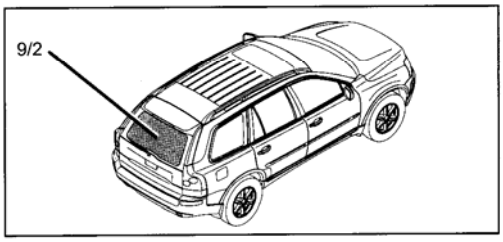

9/12 Seat Heating Module (SHM), left-hand

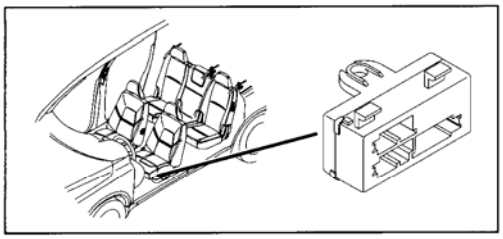

9/13 Seat Heating Module (SHM), right-hand

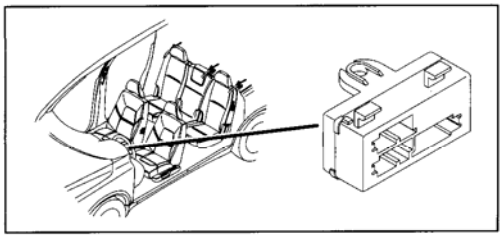

9/16 Left-hand backrest heating element

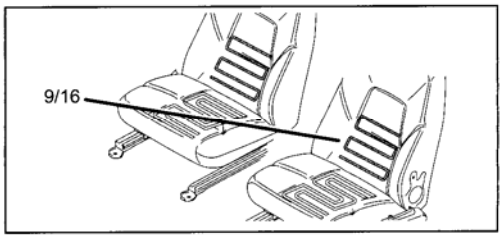

9/17 Right-hand backrest heating element

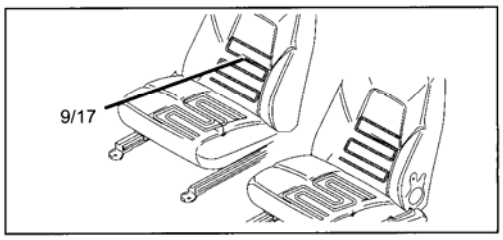

9/18 Left-hand seat heating element

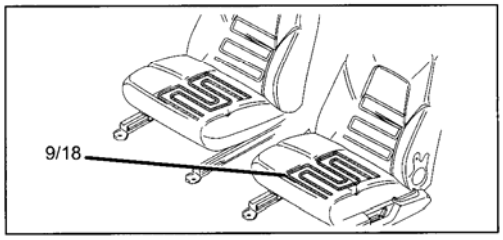

Fig. 60: Components (8/146 To 9/18)
Courtesy of VOLVO CARS OF NORTH AMERICA.

16/6 Speaker, left rear door V70

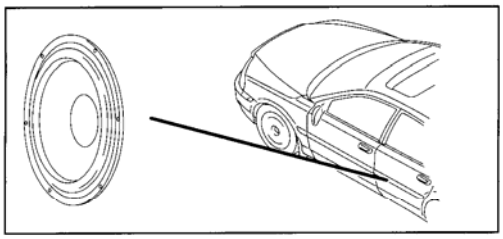

16/6 Speaker, left rear door XC90

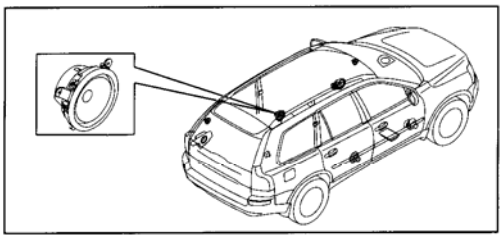

16/10 Horn 1, V70

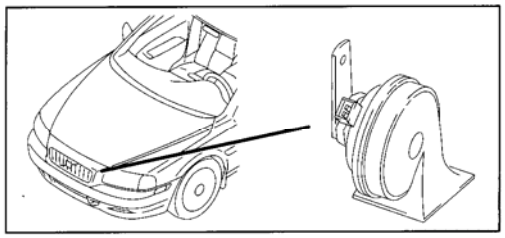

16/10 Horn 1, XC90

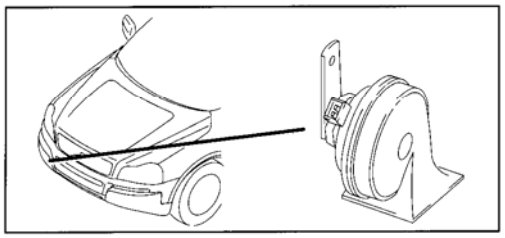

16/11 Horn 2

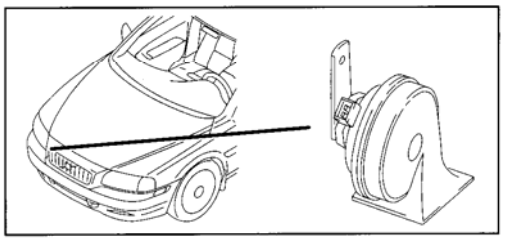

16/15 CD changer

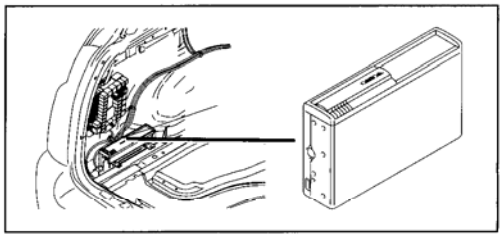

16/16 LH window antenna amplifier 1, V70

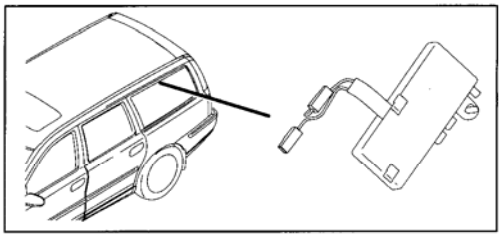

16/16 LH window antenna amplifier 1, XC90

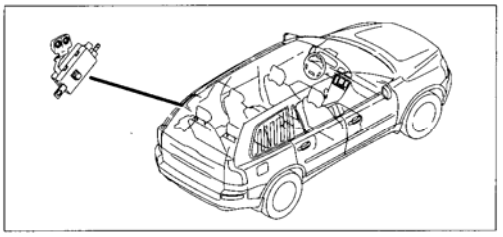

16/26 Speaker, dashboard middle V70

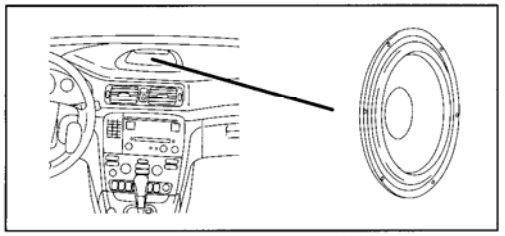

16/26 Speaker, dashboard middle XC90

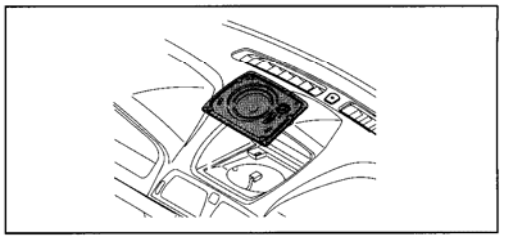

G00447823

Fig. 61: Components (16/6 To 16/26)

Volvo XC90
2008 VOLVO V70, XC70 & XC90

Courtesy of VOLVO CARS OF NORTH AMERICA.

16/35 Siren (SCM) V70

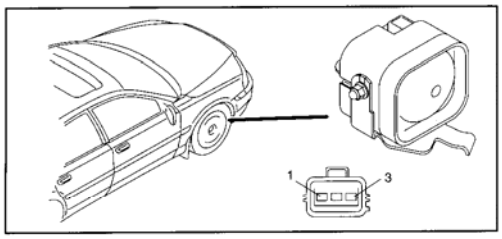

16/35 Siren (SCM) XC90

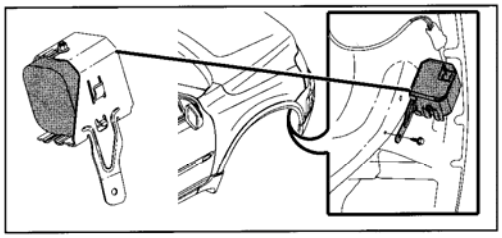

16/36 TV receiver, V70

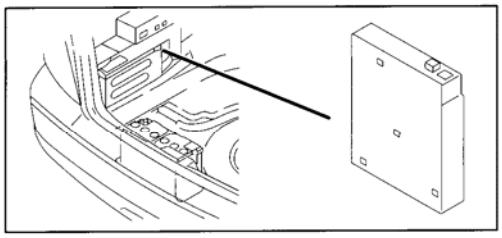

16/45 Road Traffic Information module (RTI)

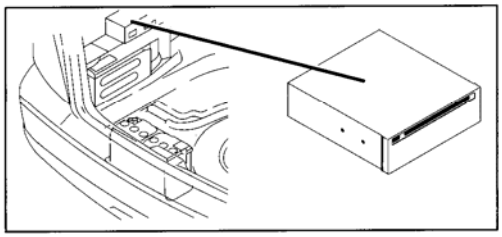

16/45 Traffic information module, Turn-by-Turn

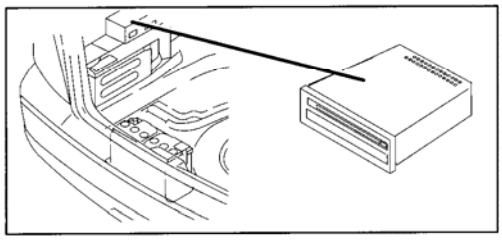

16/46 RTI display, V70

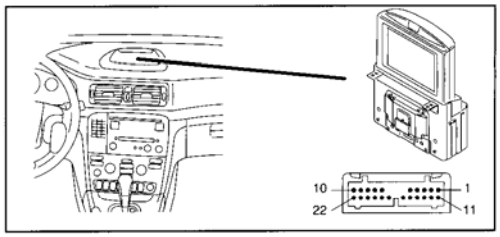

16/46 Multimedia display, XC90

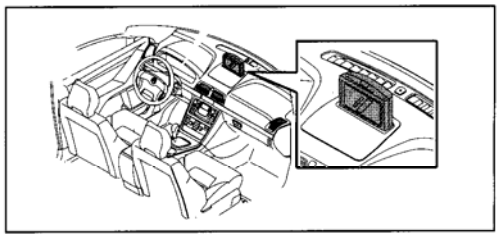

16/46 RTI display, Turn-by-Turn

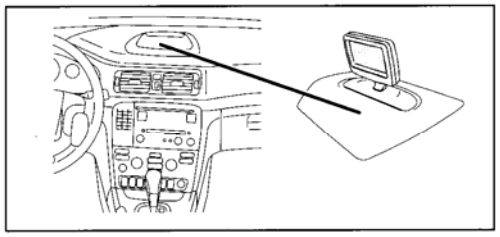

16/47 GPS antenna, RTI

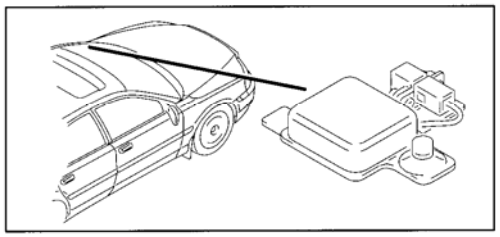

16/49 Traffic Message Channel module

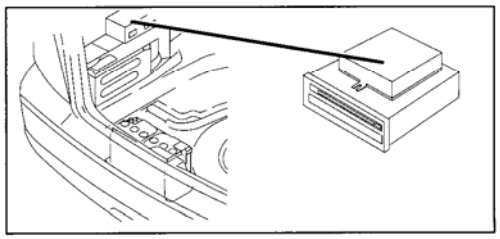

G00447824

Fig. 62: Components (16/35 To 16/49)

Volvo XC90
2008 VOLVO V70, XC70 & XC90

Courtesy of VOLVO CARS OF NORTH AMERICA.

16/58 Speaker, right D-post V70

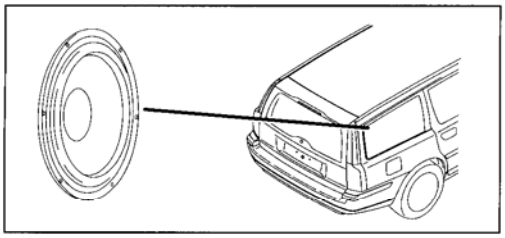

16/62 Handset, cellular phone XC90

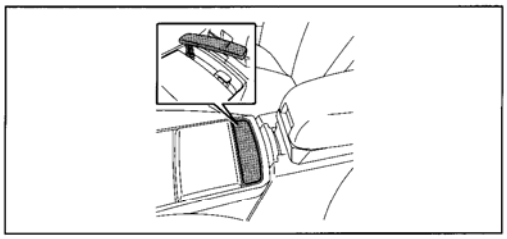

16/58 Speaker, right D-post XC90

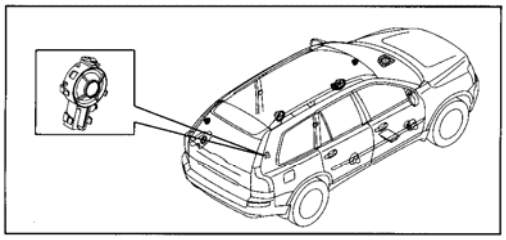

16/63 GPS antenna, cellular phone V70

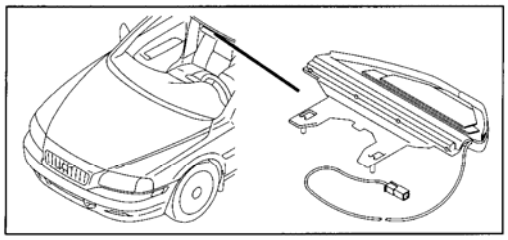

16/60 Phone Module (PHM), V70

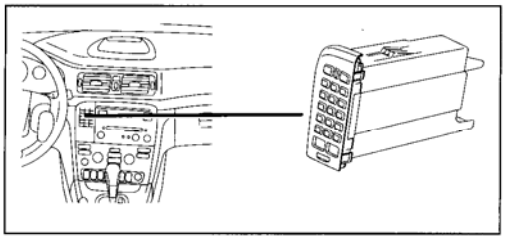

16/63 GPS antenna, cellular phone XC90

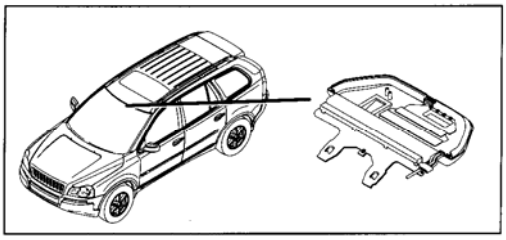

16/60 Phone Module (PHM), XC90

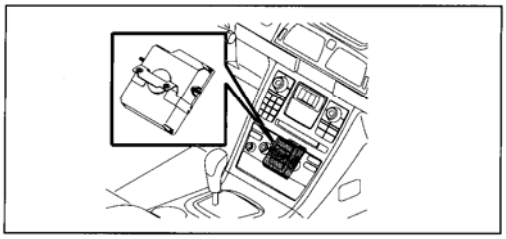

16/64 Cellular phone antenna V70

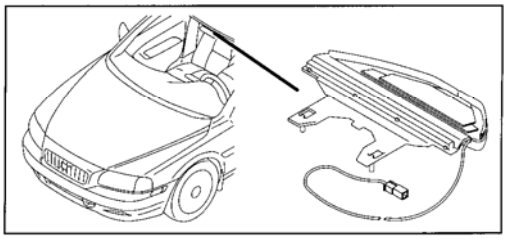

16/62 Handset, cellular phone V70

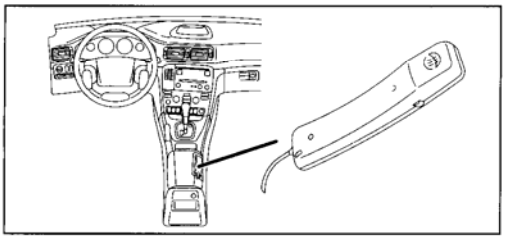

16/64 Cellular phone antenna XC90

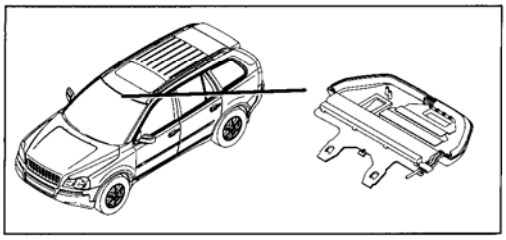

G00447825

Fig. 63: Components (16/58 To 16/64)

Volvo XC90
2008 VOLVO V70, XC70 & XC90

Courtesy of VOLVO CARS OF NORTH AMERICA.

16/65 Antenna ring/ignition switch lighting, V70

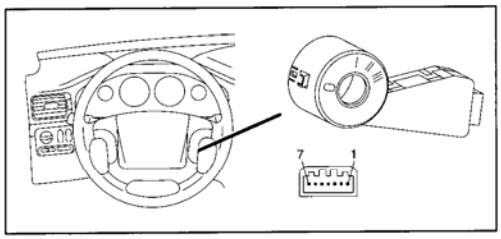

16/65 Antenna ring/ignition switch lighting, XC90

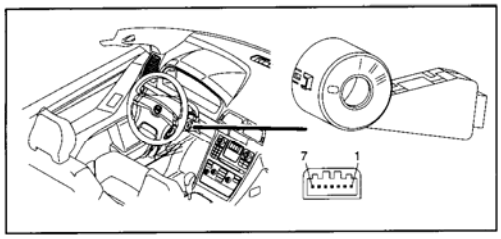

16/67 Amplifier antenna, bumper

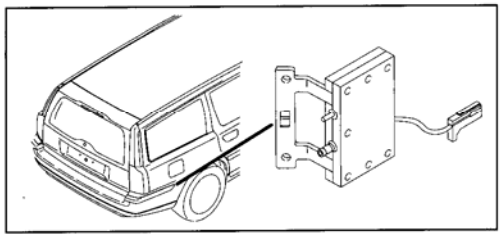

16/68 Antenna, bumper

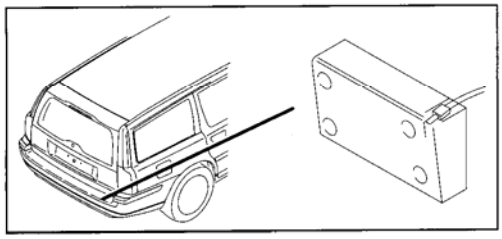

16/71 RH window antenna amplifier 1, V70

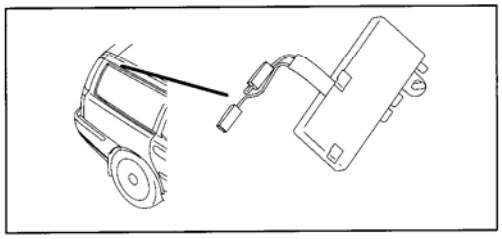

16/71 Window antenna amplifier 1, right XC90

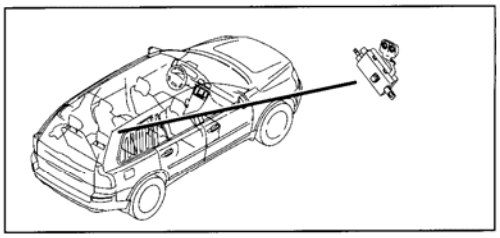

16/73 Window antenna amplifier 2, left

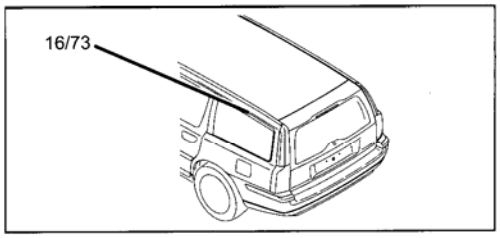

16/74 Window antenna amplifier 2, right

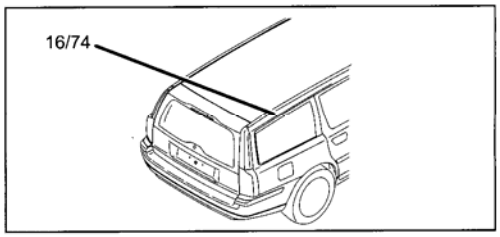

16/77 Microphone, cellular phone V70

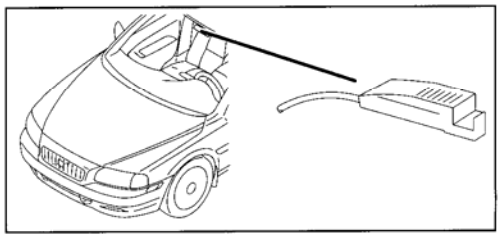

16/77 Microphone, cellular phone XC90

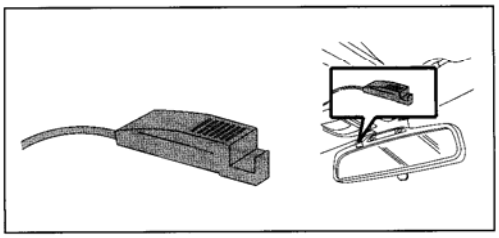

G00447826

Fig. 64: Components (16/65 To 16/77)
Courtesy of VOLVO CARS OF NORTH AMERICA.

16/78 Speaker, cellular phone

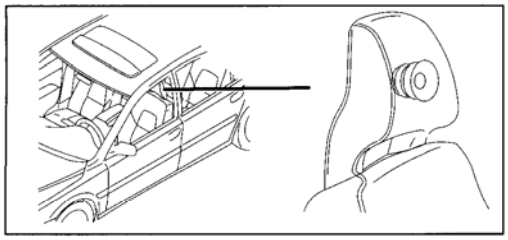

16/79 Subwoofer, V70

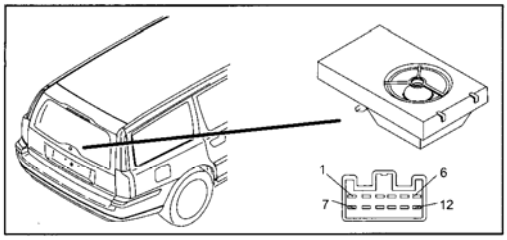

16/79 Subwoofer Module (SUB), XC90

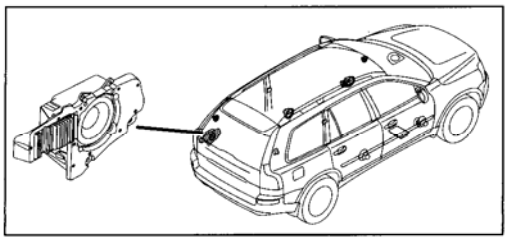

16/81 Screen, accessory

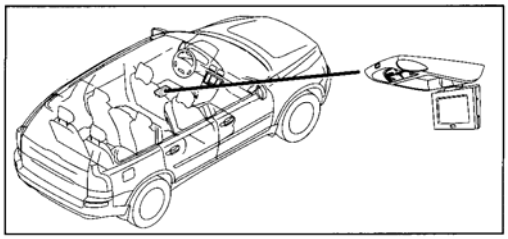

16/81A Screen, LH head restraint

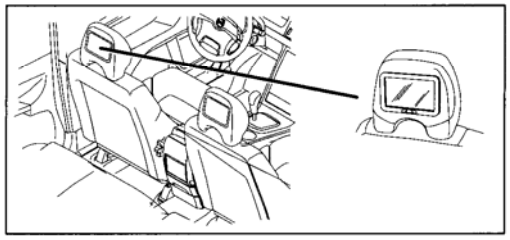

16/81B Screen, RH head restraint

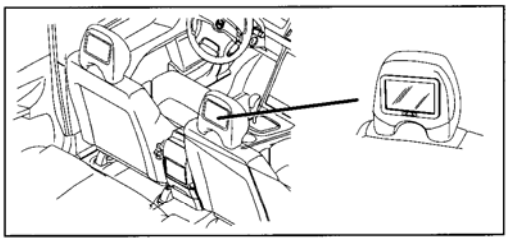

16/82 DVD-player

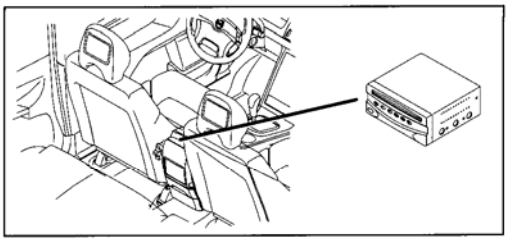

16/82 DVD-player accessory

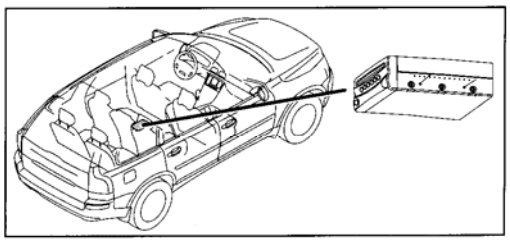

16/93 Control module, cellular phone handsfree, V70

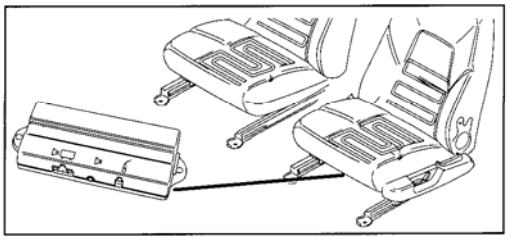

16/93 Control module, cellular phone handsfree, XC90

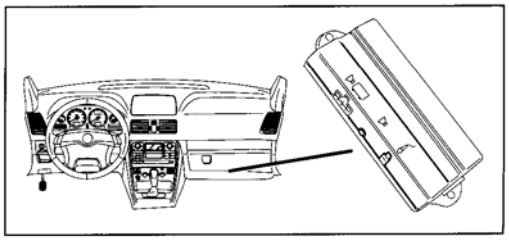

G00447827

Fig. 65: Components (16/78 To 16/93)
Courtesy of VOLVO CARS OF NORTH AMERICA.

16/94 Infotainment Control Module (ICM)

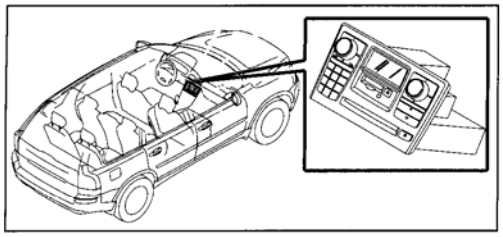

16/105 Audio Module (AUD)

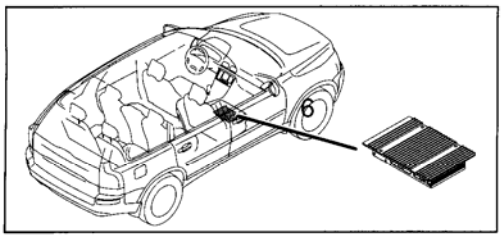

16/108 Multimedia Module (MMM)

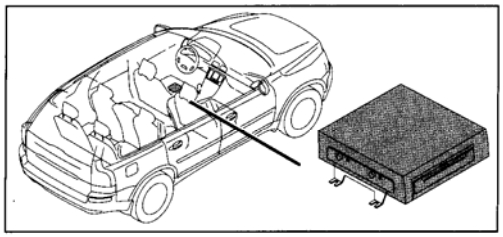

16/111 Outlet, rear left headphones

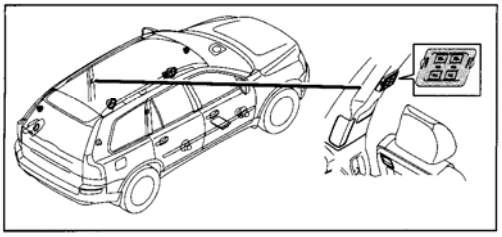

16/112 Outlet, rear right headphones

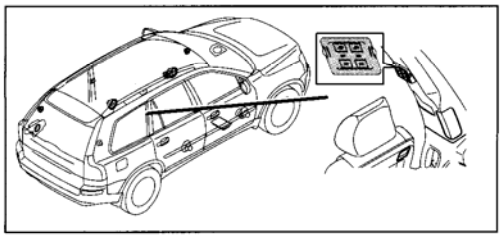

16/122 Rear Audio Separation module (RAS)

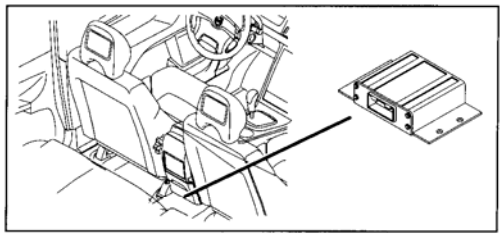

16/123 External equipment input (AUX)

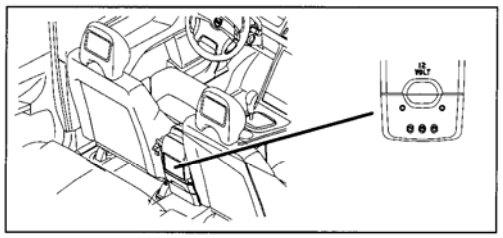

16/126 Holder, cellular phone handsfree, V70

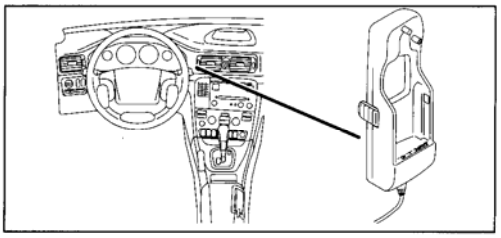

16/126 Holder, handsfree cellular phone XC90

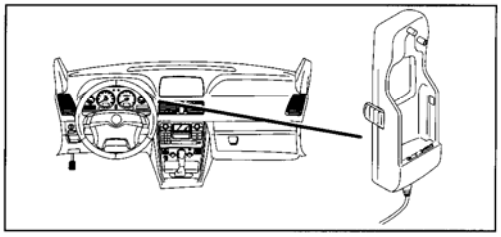

16/127 Microphone, cellular phone hands-free, V70

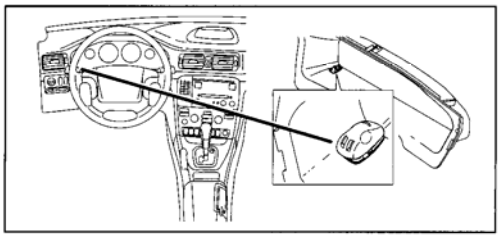

G00447828

Fig. 66: Components (16/94 To 16/127)

Volvo XC90
2008 VOLVO V70, XC70 & XC90

Courtesy of VOLVO CARS OF NORTH AMERICA.

16/127 Microphone, cellular phone handsfree XC90

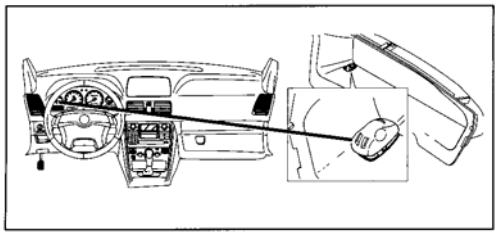

16/139 Global Positioning System Module (GPS)

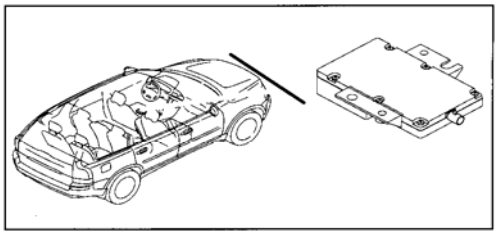

16/145 Satellite radio receiver, V70

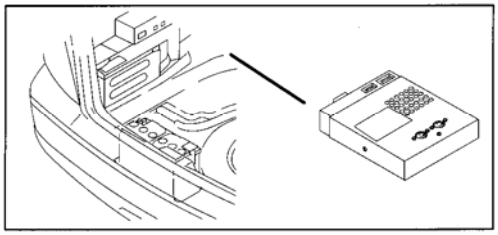

16/145 Satellite radio receiver, XC90

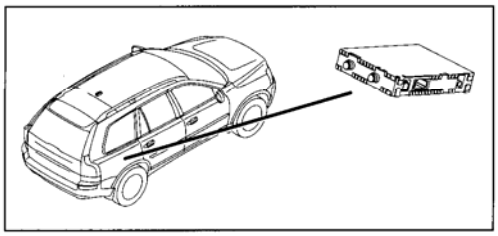

16/149 MP3 player

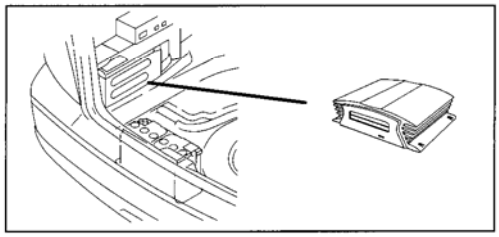

16/153 Satellite receiver antenna V70

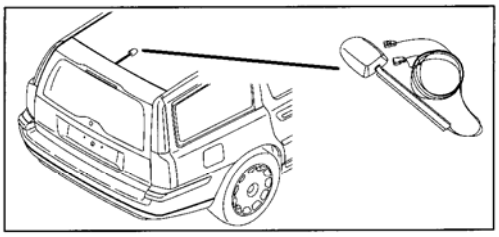

16/153 Satellite receiver antenna XC90

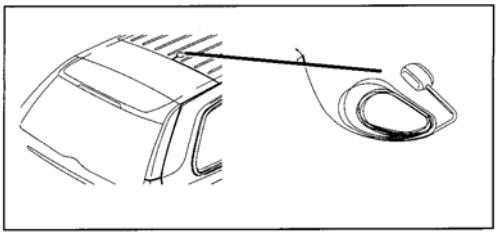

17/13 Data link connector, V70

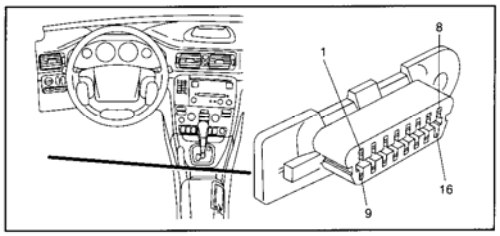

17/13 Data link connector, XC90

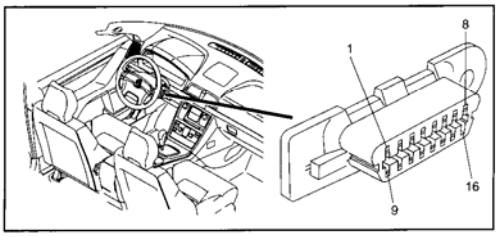

17/17 Jump start connection

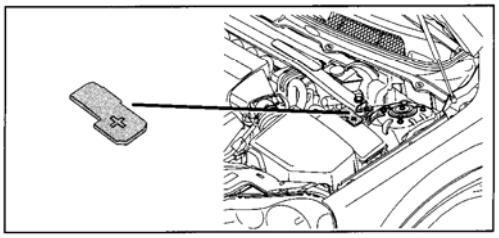

G00447829

Fig. 67: Components (16/127 To 17/17)

Volvo XC90
2008 VOLVO V70, XC70 & XC90

Courtesy of VOLVO CARS OF NORTH AMERICA.

17/19 12V outlet, cargo compartment V70

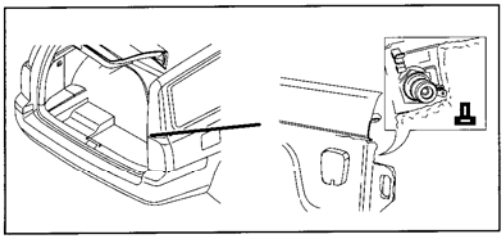

17/19 12V outlet, cargo compartment XC90

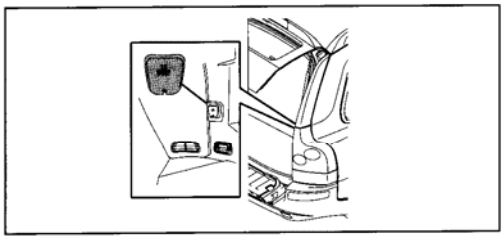

17/37 4-pin outlet, tow hitch cable harness V70

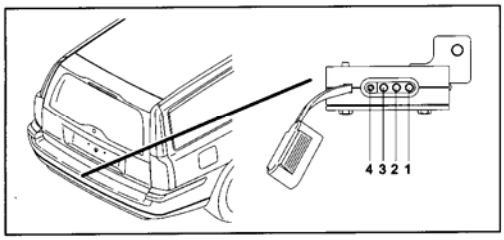

17/37 4-pin outlet, tow hitch cable harness XC90

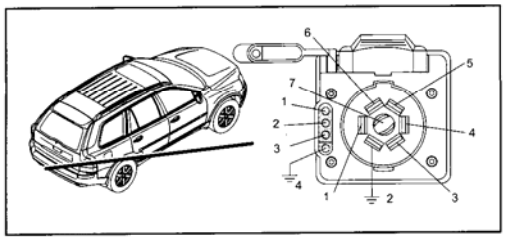

17/38 7-pin outlet, tow hitch cable harness V70

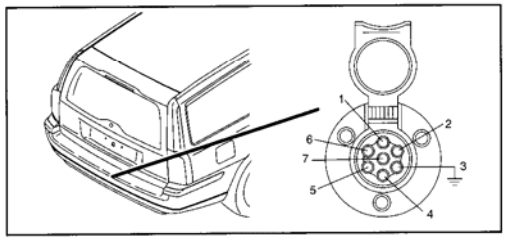

17/38 7-pin outlet, tow hitch cable harness XC90 EU/OS

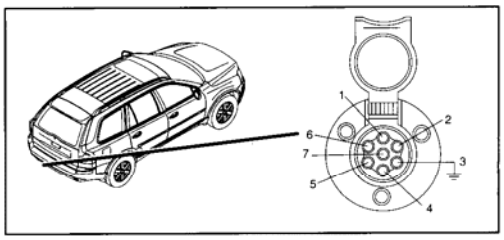

17/38 7-pin outlet, tow hitch cable harness XC90 USA

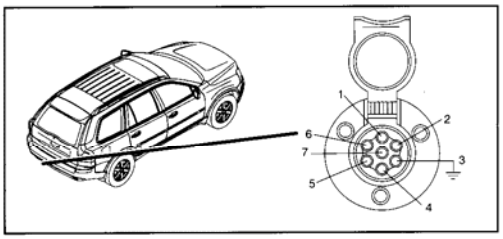

17/39 13-pin outlet, tow hitch cable harness V70

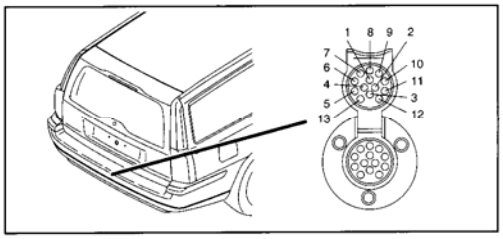

17/39 13-pin outlet, tow hitch cable harness XC90

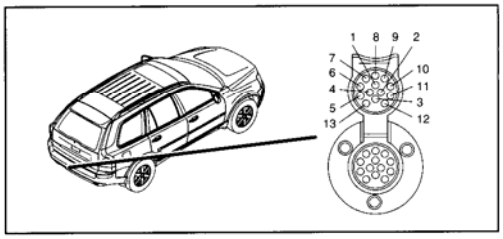

17/40 External equipment input (AUX)

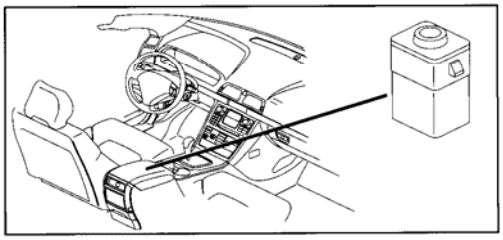

G00447830

Fig. 68: Components (17/19 To 17/40)
Courtesy of VOLVO CARS OF NORTH AMERICA.

18/4 Contact reel V70

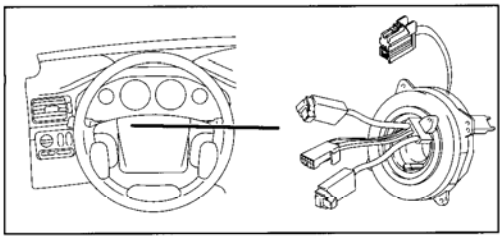

18/4 Contact reel XC90

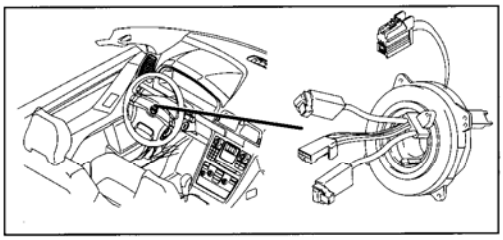

20/3-8 Spark plug and ignition coil

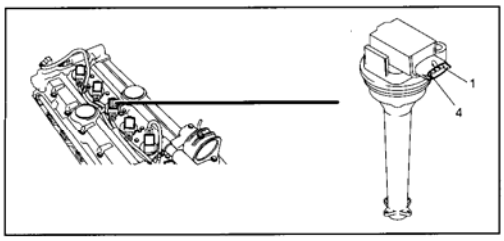

20/16 Capacitor

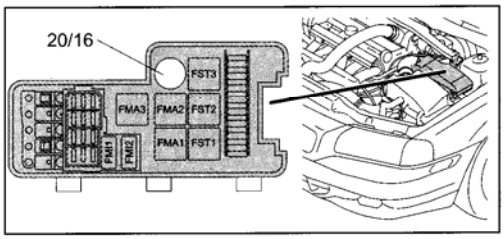

20/22-26Glow plug

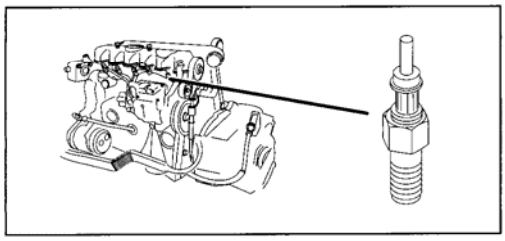

20/46-53Spark plug with ignition coil, 8-cyl.

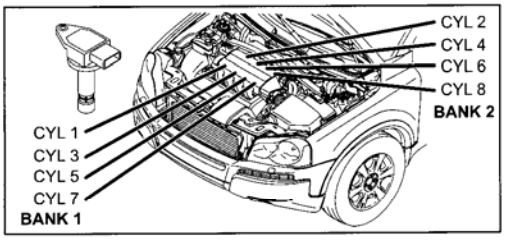

26/4 Converter, tow hitch cable harness V70

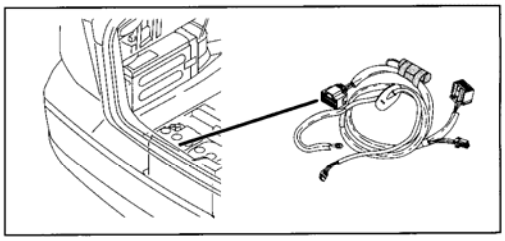

26/4 Converter, tow hitch cable harness XC90

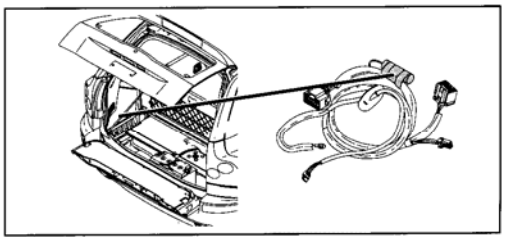

27/3 Left Camera Module (LCM)

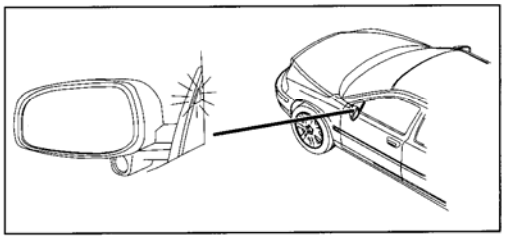

27/4 Right Camera Module (RCM)

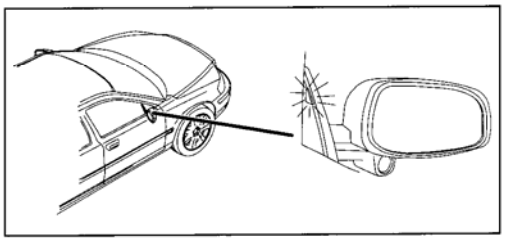

G00447831

Fig. 69: Components (18/4 To 27/4)

Volvo XC90
2008 VOLVO V70, XC70 & XC90

Courtesy of VOLVO CARS OF NORTH AMERICA.

27/6 Camera

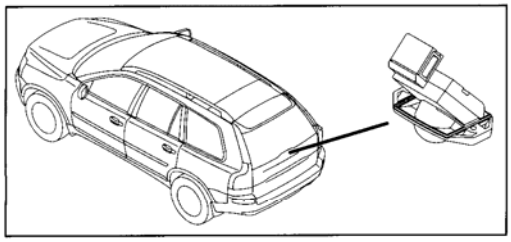

31/1 Ground connection, right MacPherson strut tower V70

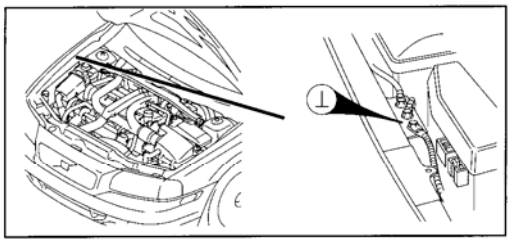

31/1 Ground connection, right MacPherson strut tower XC90

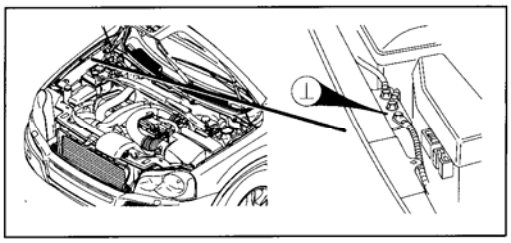

31/2 Ground connection, left MacPherson strut tower V70

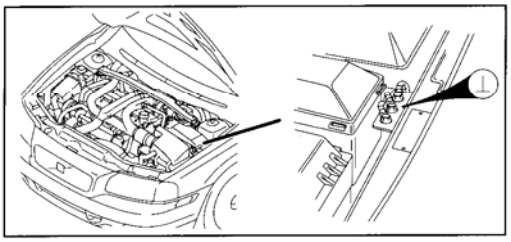

31/2 Ground connection, left MacPherson strut tower XC90

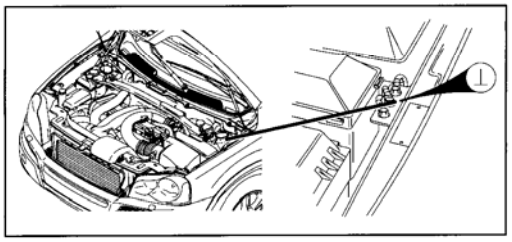

31/4 Ground connection, engine

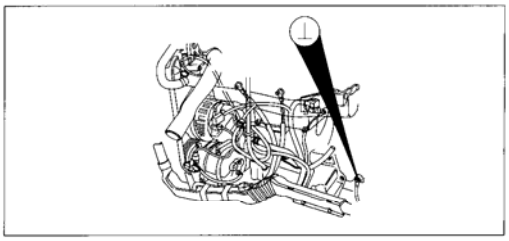

31/6 Ground connection, left-hand side A-post V70

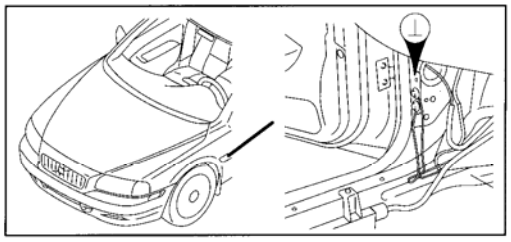

31/6 Ground connection, left-hand side A-post XC90

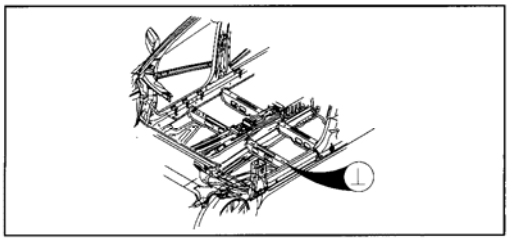

31/10 Ground connection, A-post, right side V70

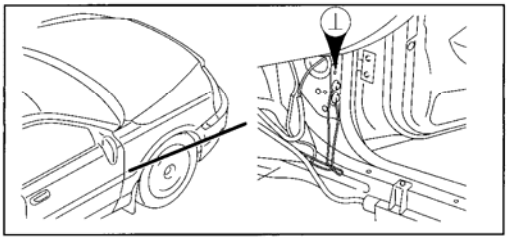

31/10 Ground connection, A-post, right side XC90

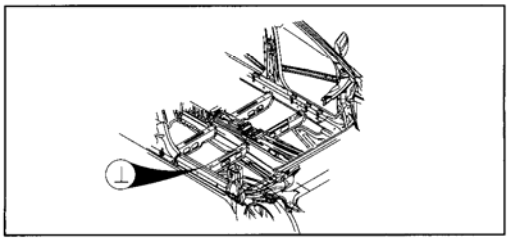

G00447832

Fig. 70: Components (27/6 To 31/10)

Volvo XC90
2008 VOLVO V70, XC70 & XC90

Courtesy of VOLVO CARS OF NORTH AMERICA.

31/44 Ground connection, left-hand side member, lower engine compartment V70

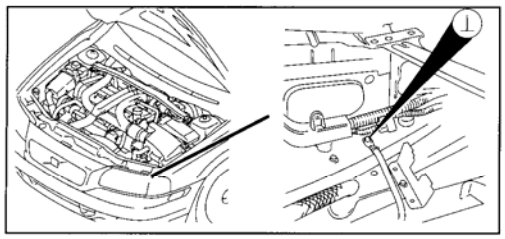

31/44 Ground connection, left-hand side member, lower engine compartment XC90

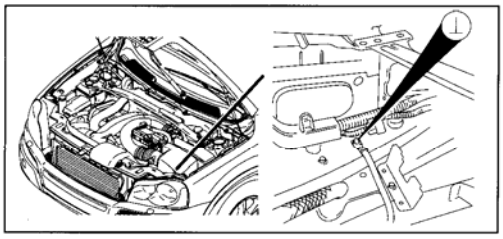

31/46 Ground connection, rear left seat riser V70

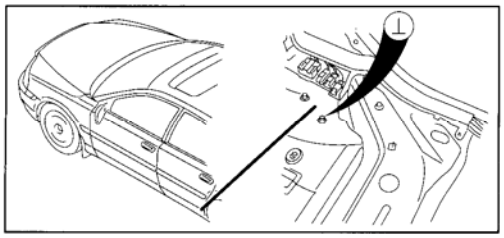

31/46 Ground connection, rear left seat riser XC90

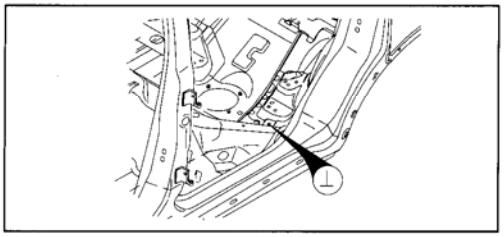

31/47 Ground connection, rear left seat riser V70

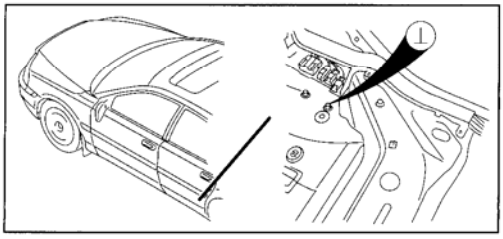

31/47 Ground connection, rear left seat riser XC90

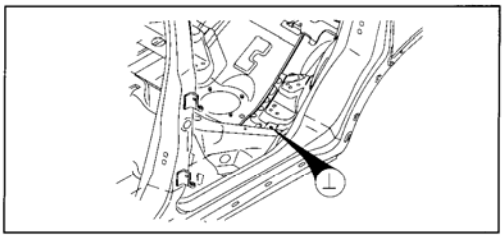

31/48 Ground connection, rear right seat riser V70

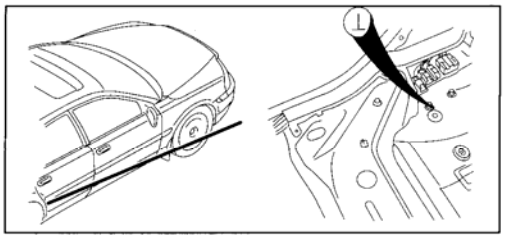

31/48 Ground connection, rear right seat riser XC90

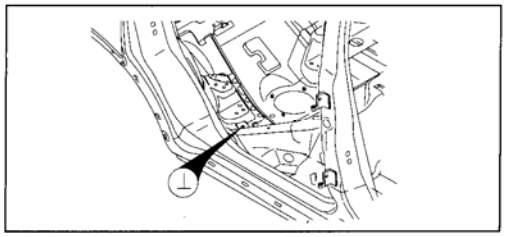

31/53 Ground connection, firewall, V70

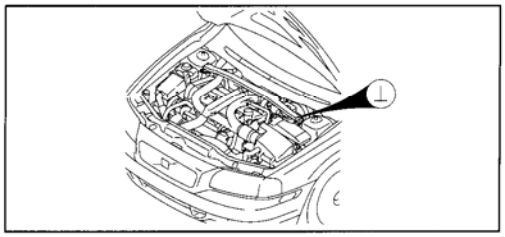

31/53 Ground connection, firewall, XC90

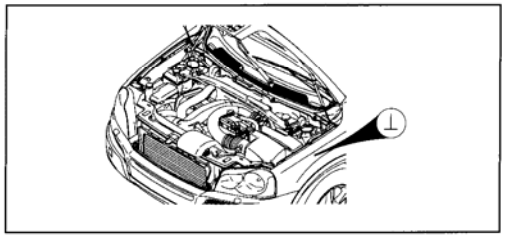

G00447833

Fig. 71: Components (31/44 To 31/53)
Courtesy of VOLVO CARS OF NORTH AMERICA.

31/66 Ground connection, front left seat riser V70

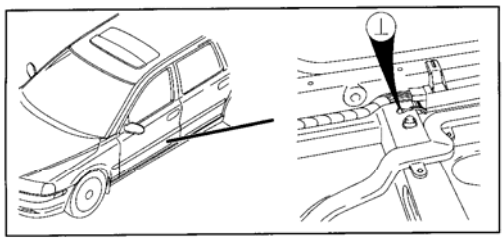

31/66 Ground connection, front left seat riser, XC90

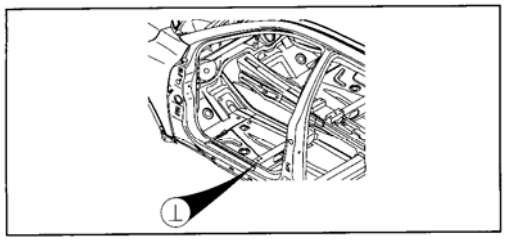

31/67 Ground connection, front right seat riser V70

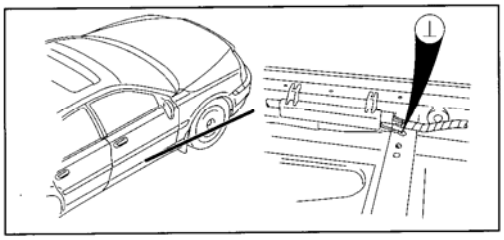

31/67 Ground connection, front right seat riser XC90

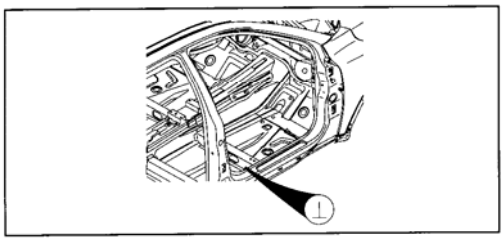

31/70 Ground connection, left-hand side member, lower engine compartment V70

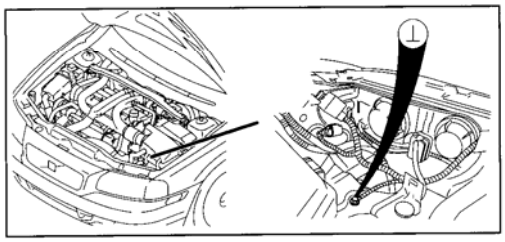

31/70 Ground connection, left-hand side member, lower engine compartment XC90

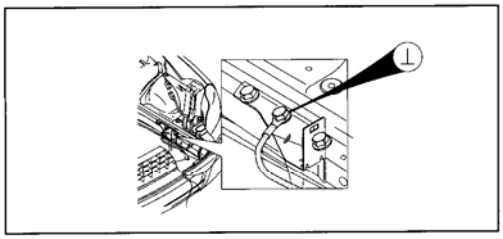

31/72 Ground connection, cargo compartment V70

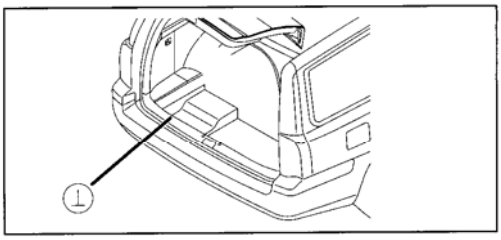

31/72 Ground connection, cargo compartment XC90

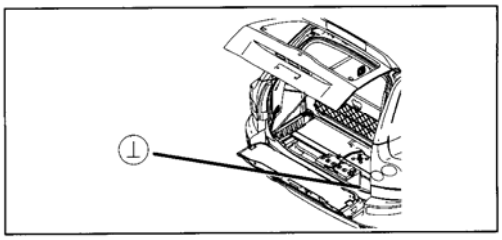

31/73 Ground connection, rear right seat riser V70

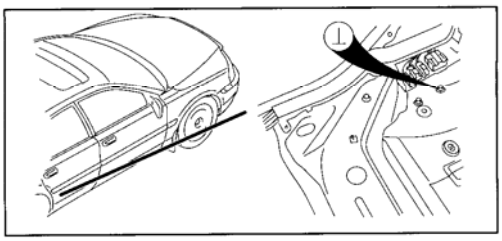

31/73 Ground connection, rear right seat riser XC90

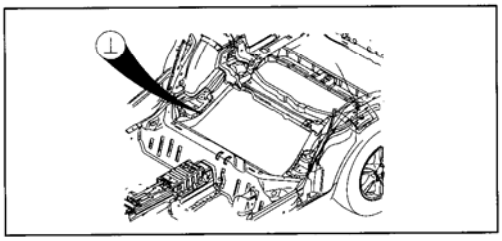

G00447834

Fig. 72: Components (31/66 To 31/73)
Courtesy of VOLVO CARS OF NORTH AMERICA.

31/83 Ground connection, left-hand side A-post V70

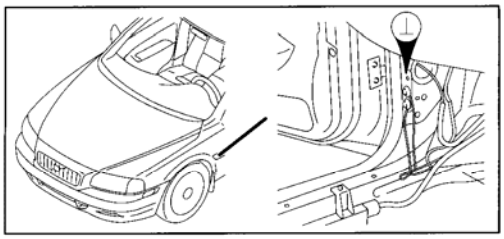

31/83 Ground connection, left-hand side A-post XC90

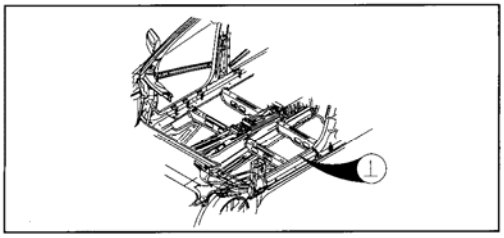

31/84 Ground connection, A-post, right side V70

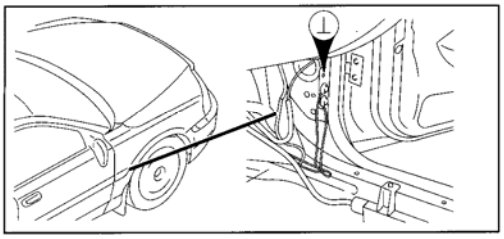

31/84 Ground connection, A-post, right side XC90

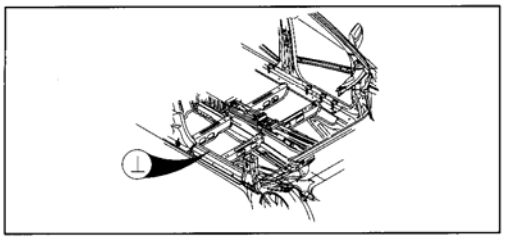

31/88 Ground connection, engine ignition coils, group 1

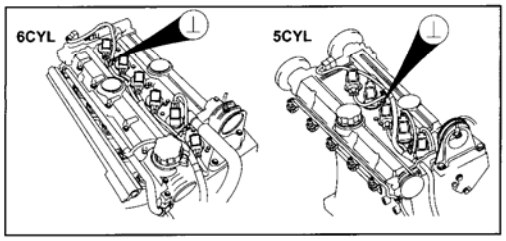

31/88 Ground connection, engine ignition coils, 6-cyl.

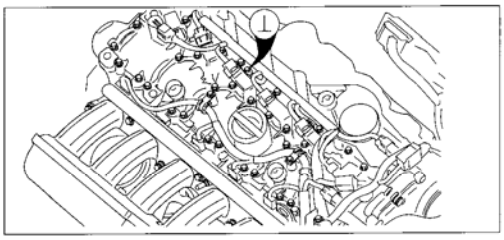

31/88 Ground connection, engine ignition coils, 8-cyl.

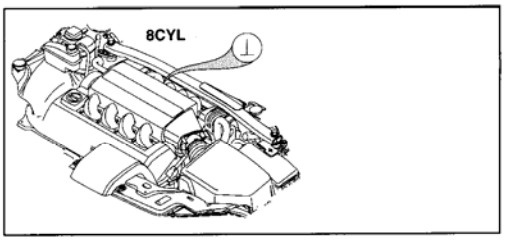

31/89 Ground connection, engine ignition coils, group 2

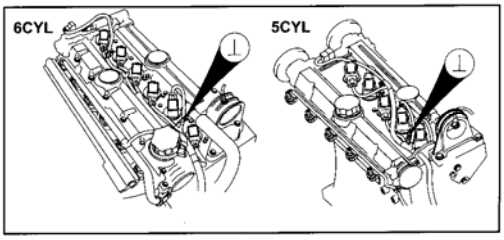

31/89 Ground connection, engine ignition coils, 6-cyl.

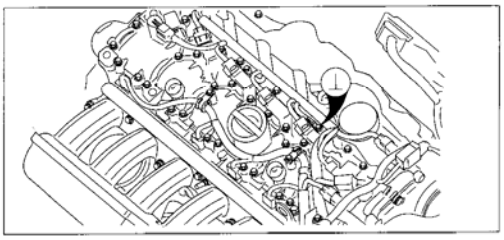

31/89 Ground connection, engine ignition coils, 8-cyl.

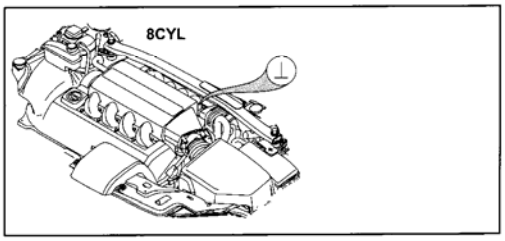

G00447835

Fig. 73: Components (31/83 To 31/89)
Courtesy of VOLVO CARS OF NORTH AMERICA.

31/90 Ground connection, engine ignition coils, 8-cyl.

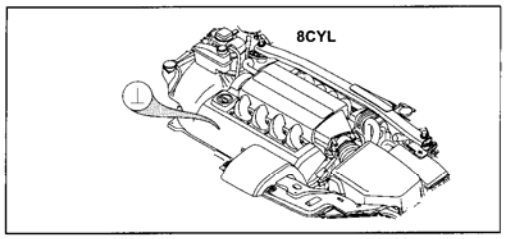

31/91 Ground connection, engine

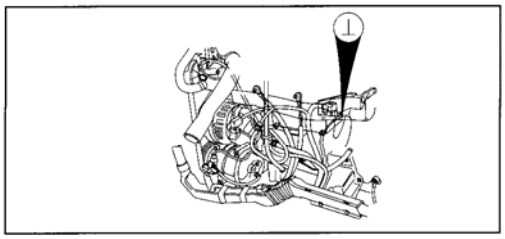

31/93 Ground connection, left MacPherson strut tower V70

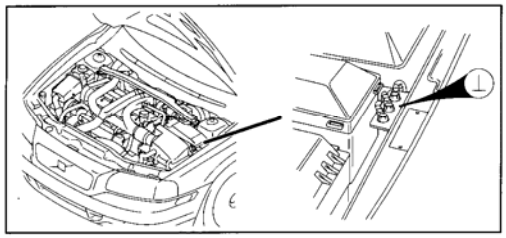

31/93 Ground connection, left MacPherson strut tower XC90

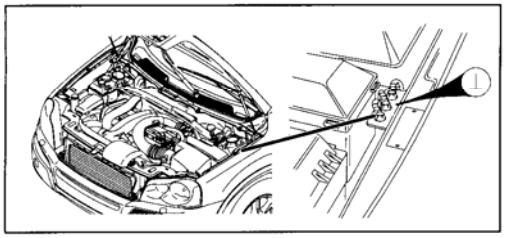

31/94 Ground connection, right MacPherson strut tower V70

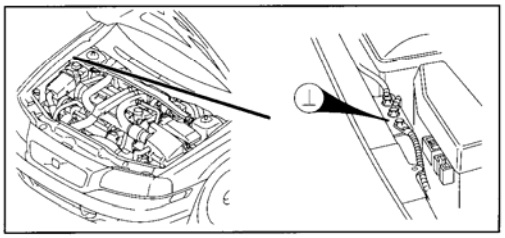

31/94 Ground connection, right MacPherson strut tower XC90

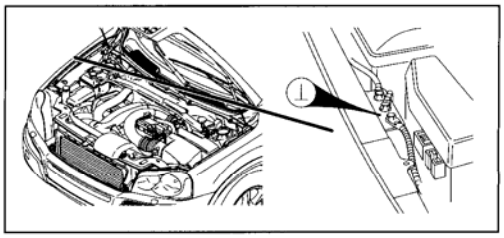

31/95 Ground connection, left MacPherson strut tower V70

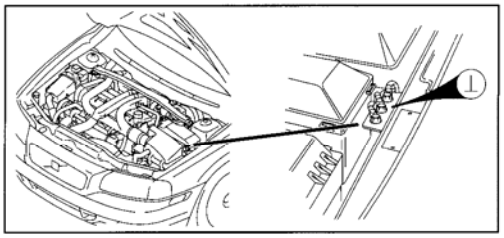

31/95 Ground connection, left MacPherson strut tower XC90

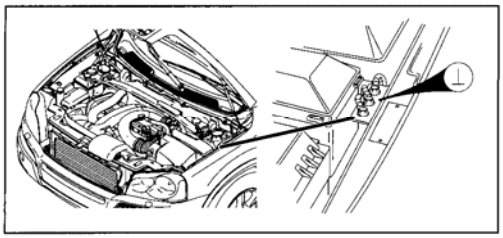

31/96 Ground connection, right MacPherson strut tower V70

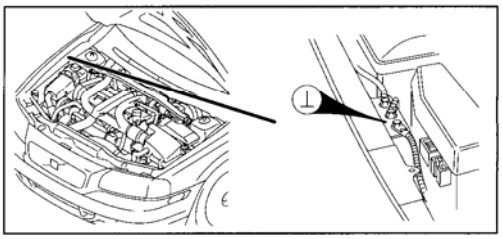

31/96 Ground connection, right MacPherson strut tower XC90

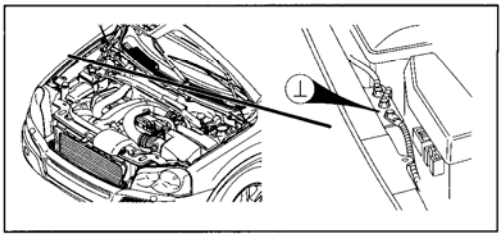

G00447836

Fig. 74: Components (31/90 To 31/96)
Courtesy of VOLVO CARS OF NORTH AMERICA.

31/98 Ground connection, upper windshield member, V70

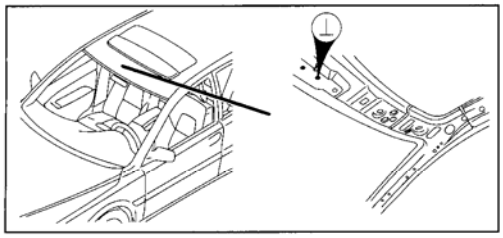

31/98 Ground connection, upper windshield member, XC90

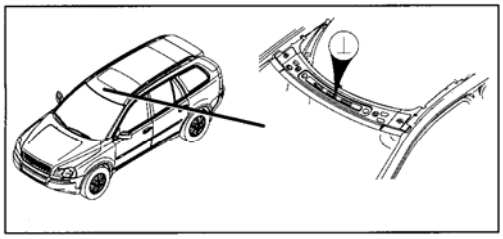

31/99 Ground connection, Side window left

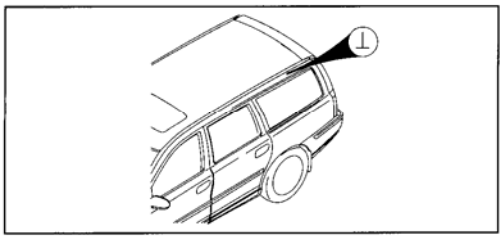

31/100 Engine ignition coils, 8-cyl.

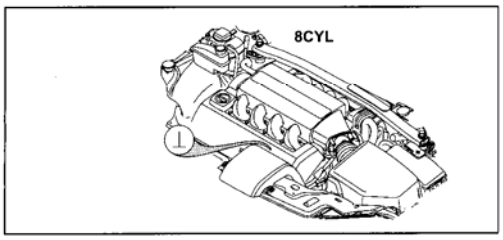

31/102 Ground connection, front member, V70

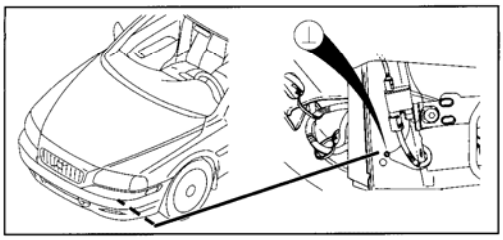

31/102 Ground connection, front member, XC90

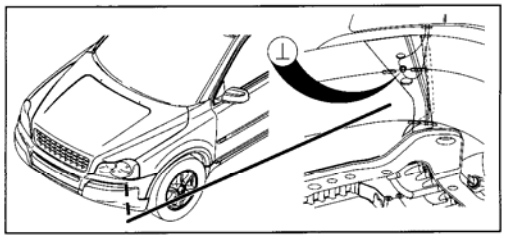

31/120 Ground connection, cargo compartment V70

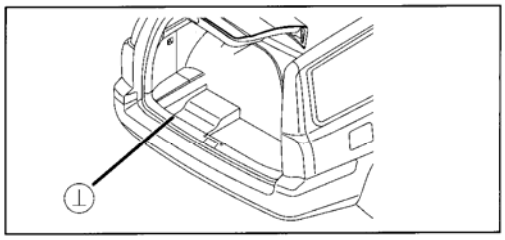

31/120 Ground connection, cargo compartment XC90

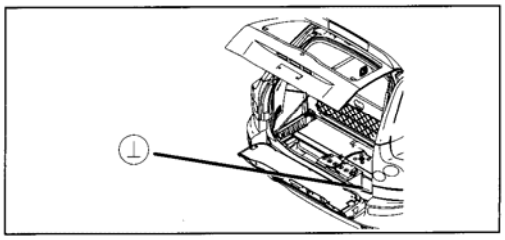

54/1B Connector V70

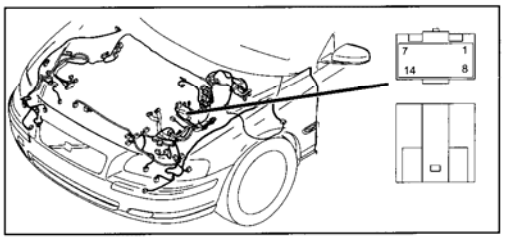

54/1B Connector XC90

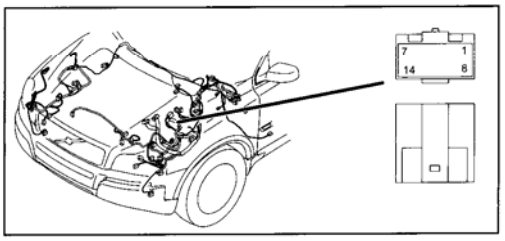

G00447837

Fig. 75: Components (31/98 To C54/1B)
Courtesy of VOLVO CARS OF NORTH AMERICA.

54/1C Connector

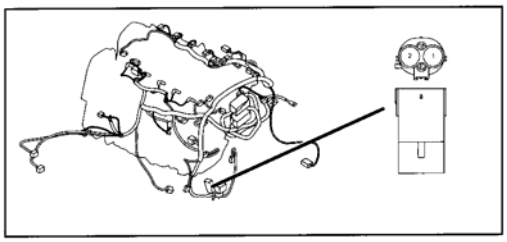

54/4 Connector

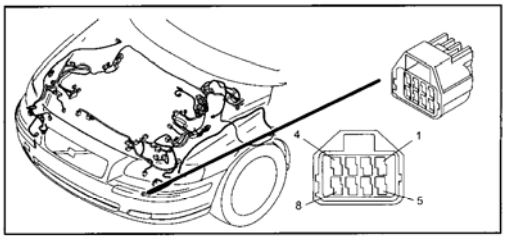

54/3.1 Connector V70

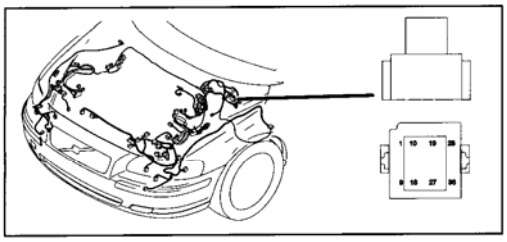

54/7 Connector

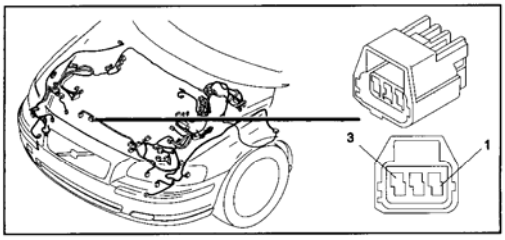

54/3.1 Connector XC90

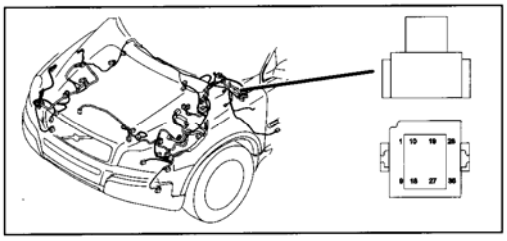

54/8 Connector V70

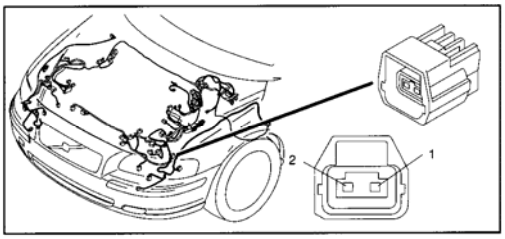

54/3.2 Connector V70

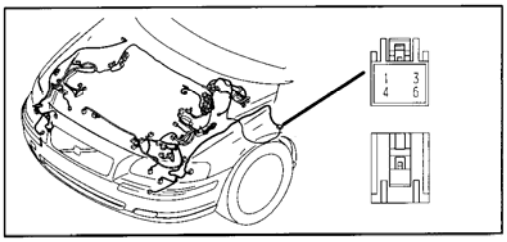

54/8 Connector XC90

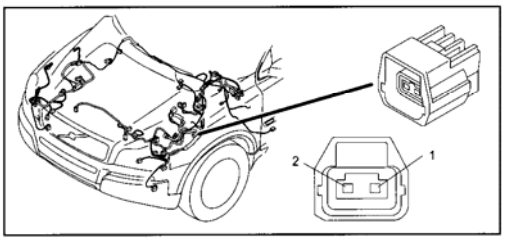

54/3.2 Connector XC90

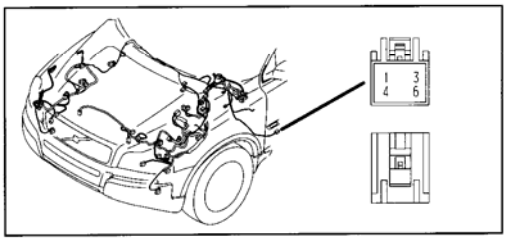

54/9 Connector V70

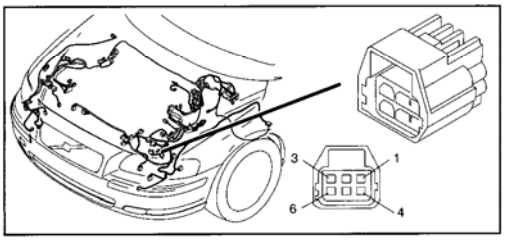

G00447838

Fig. 76: Components (54/1C To 54/9)

Volvo XC90
2008 VOLVO V70, XC70 & XC90

Courtesy of VOLVO CARS OF NORTH AMERICA.

54/9 Connector XC90

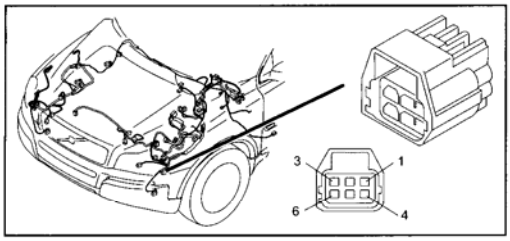

54/10 Connector V70

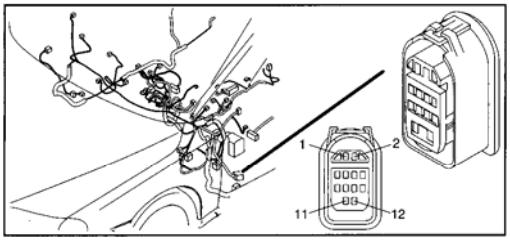

54/10 Connector XC90

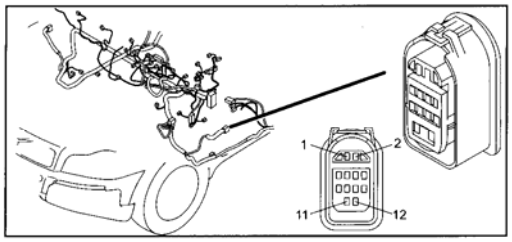

54/11 Connector V70

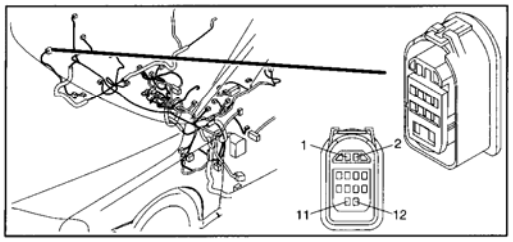

54/11 Connector XC90

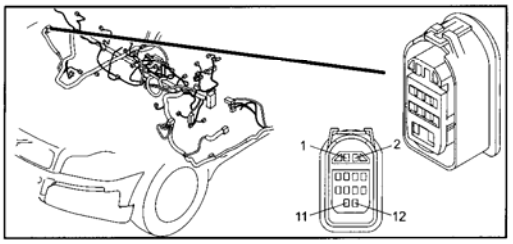

54/12 Connector V70

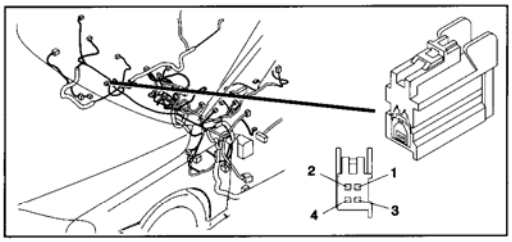

54/12 Connector XC90

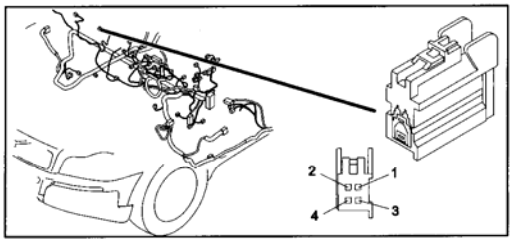

54/13 Connector V70

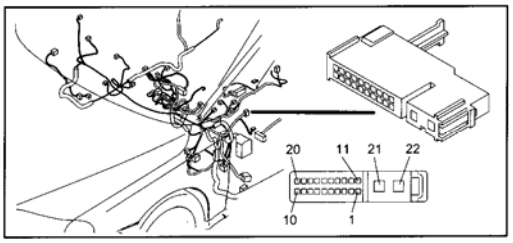

54/13 Connector XC90

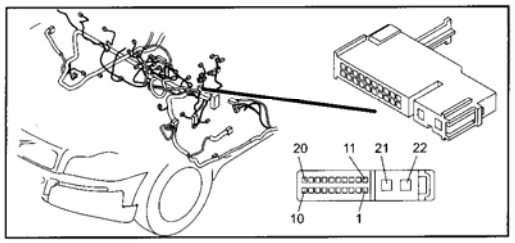

54/14 Connector

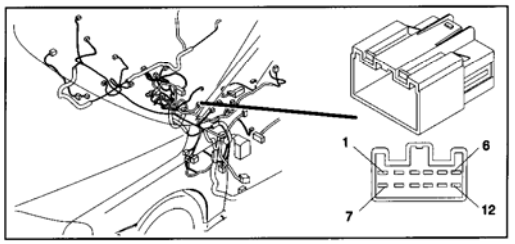

G00447839

Fig. 77: Components (54/9 To 54/14)
Courtesy of VOLVO CARS OF NORTH AMERICA.

54/16 Connector

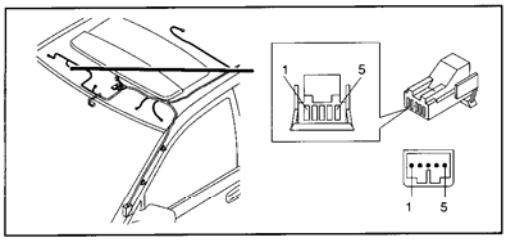

54/23 Connector V70

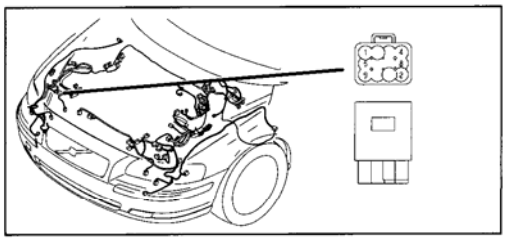

54/20 Connector

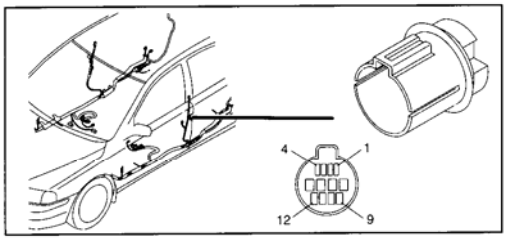

54/23 Connector XC90

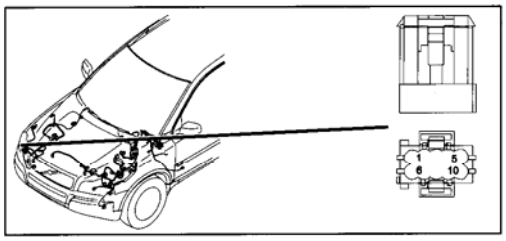

54/21 Connector

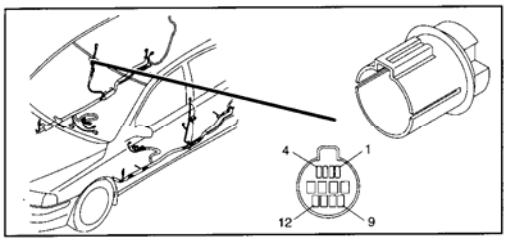

54/24 Connector

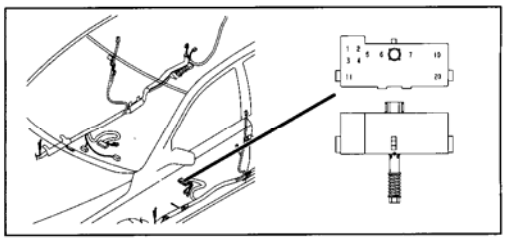

54/22 Connector V70

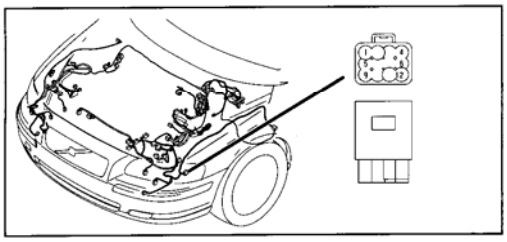

54/25 Connector

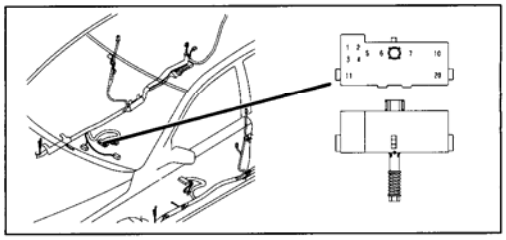

54/22 Connector XC90

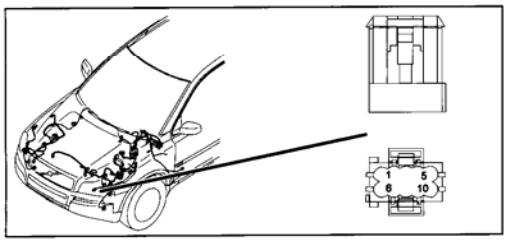

54/32 Connector

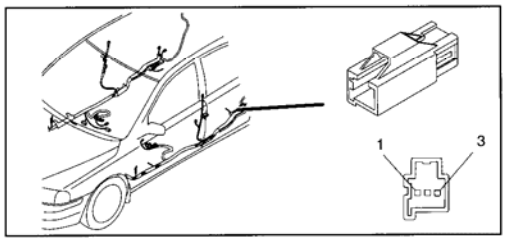

G00447840

Fig. 78: Components (54/16 To 54/32)

Volvo XC90
2008 VOLVO V70, XC70 & XC90

Courtesy of VOLVO CARS OF NORTH AMERICA.

54/34 Connector

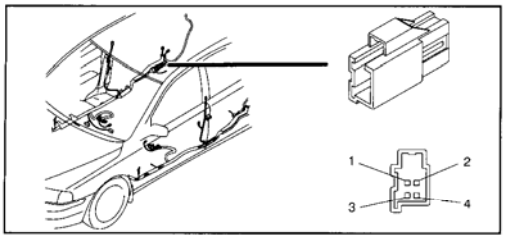

54/35 Connector

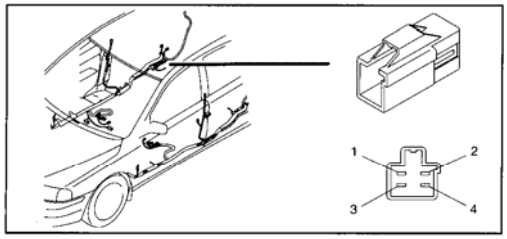

54/36 Connector V70

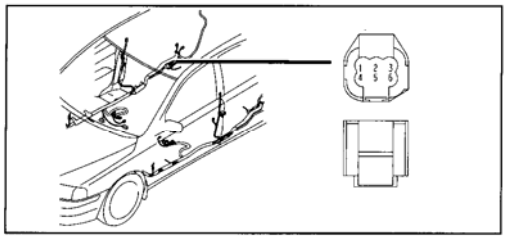

54/36 Connector XC90

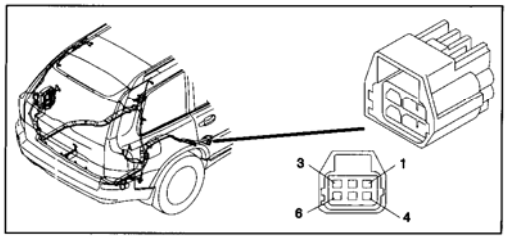

54/39 Connector

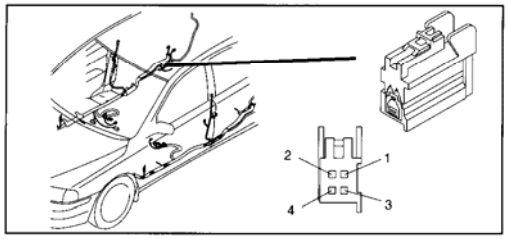

54/40B Connector

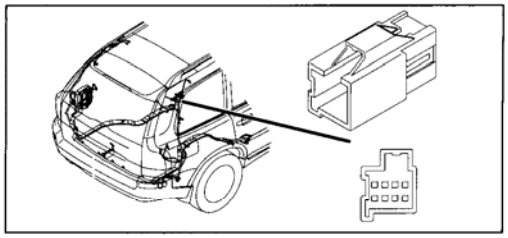

54/40C Connector

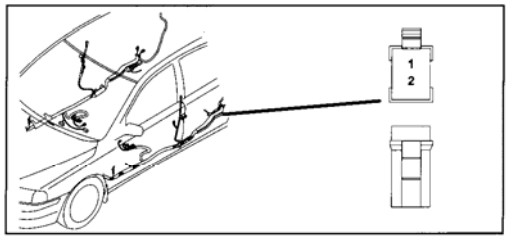

54/40D Connector

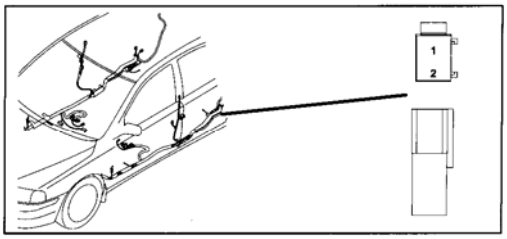

54/43 Connector V70

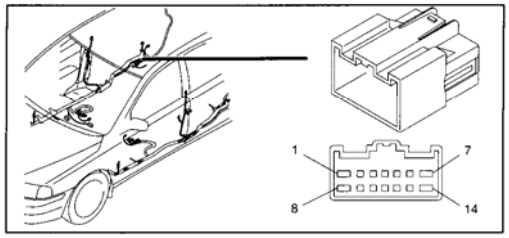

54/43B Connector XC90

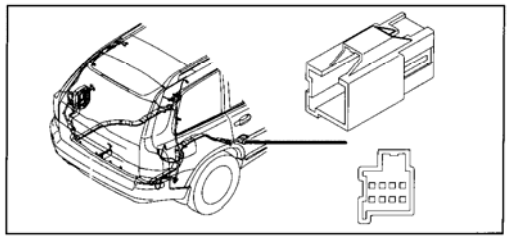

G00447841

Fig. 79: Components (54/34 To 54/43B)

Volvo XC90
2008 VOLVO V70, XC70 & XC90

Courtesy of VOLVO CARS OF NORTH AMERICA.

54/50 Connector V70

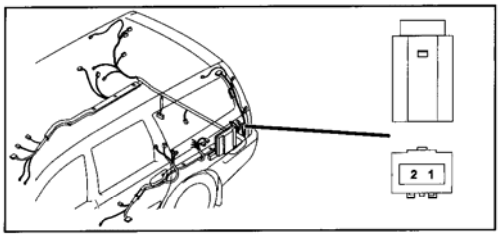

54/55 Connector XC90

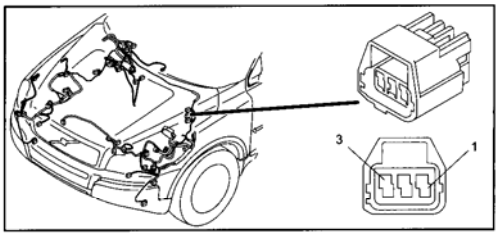

54/50 Connector XC90

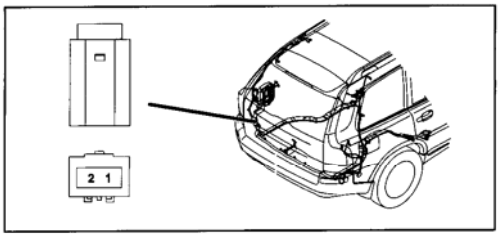

54/56 Connector V70

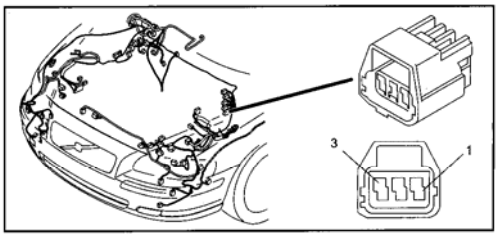

54/53 Connector

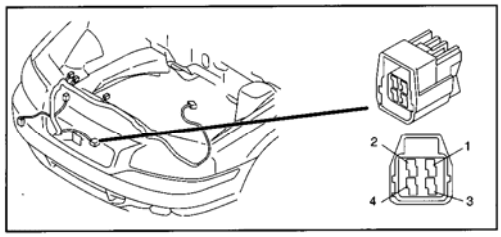

54/56 Connector XC90

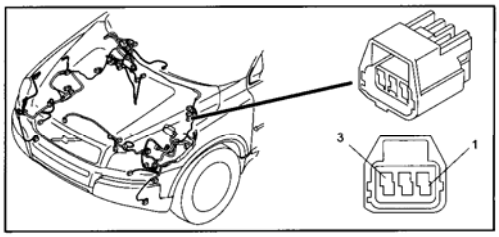

54/54 Connector

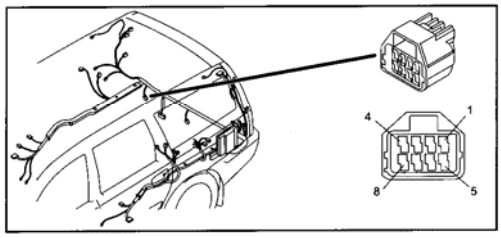

54/57.1Connector V70

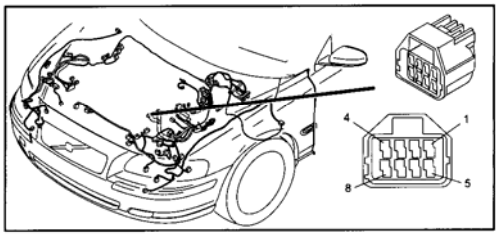

54/55 Connector V70

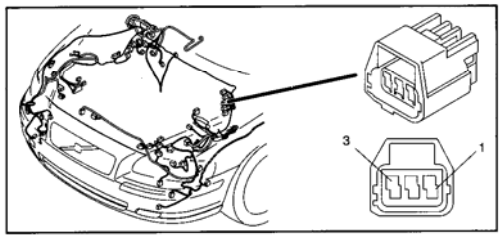

54/57.1Connector XC90

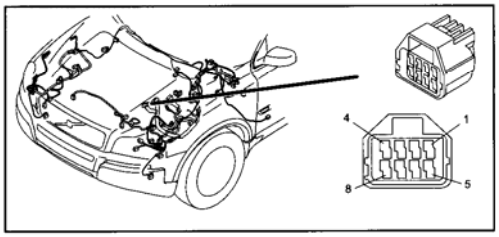

G00447842

Fig. 80: Components (54/50 To 54/57.1)

Volvo XC90
2008 VOLVO V70, XC70 & XC90

Courtesy of VOLVO CARS OF NORTH AMERICA.

54/66.1Connector

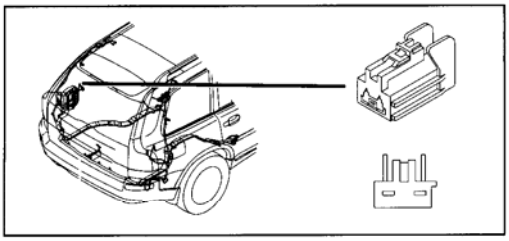

54/106 Connector

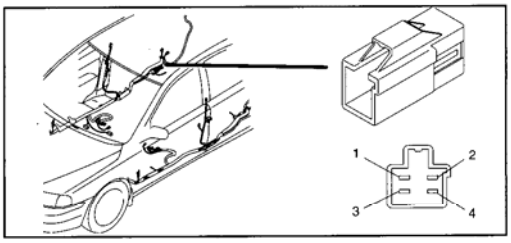

54/66.2Connector

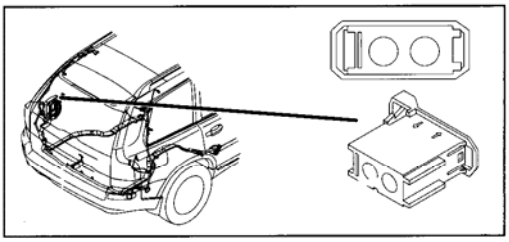

54/107 Connector

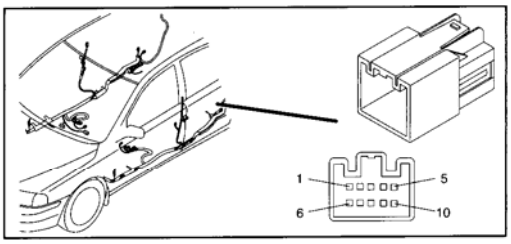

54/74 Connector

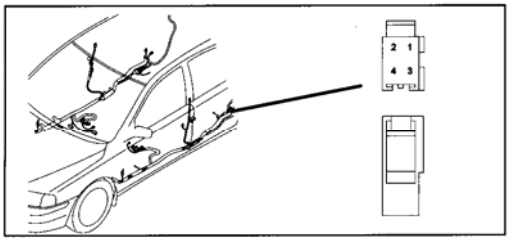

54/112 Connector

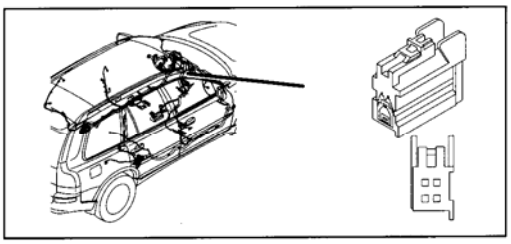

54/98 Connector

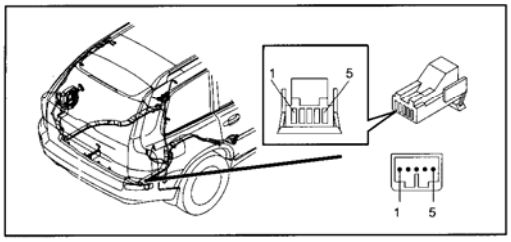

54/113 Connector

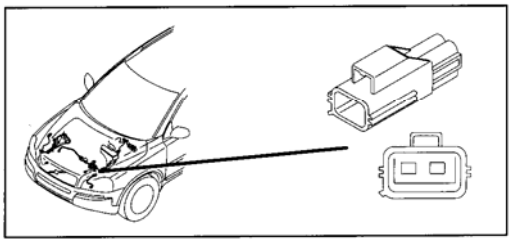

54/100 Connector

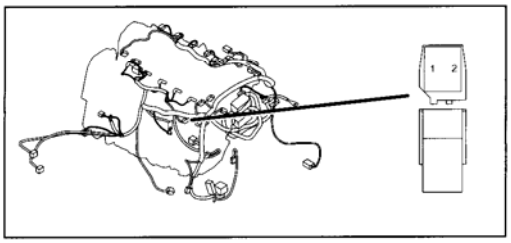

54/117 Connector

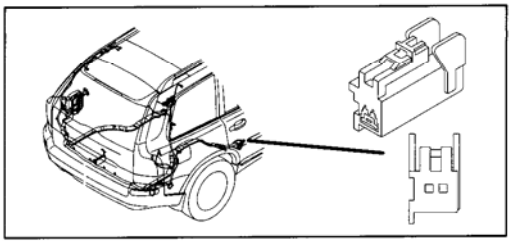

G00447843

Fig. 81: Components (54/66.1 To 54/117)
Courtesy of VOLVO CARS OF NORTH AMERICA.

54/132 Connector V70

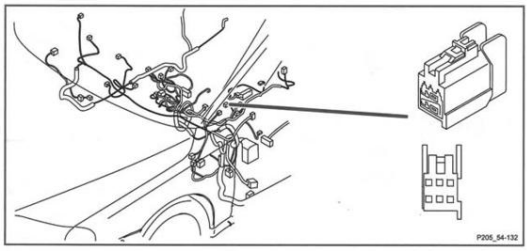

54/139 Connector

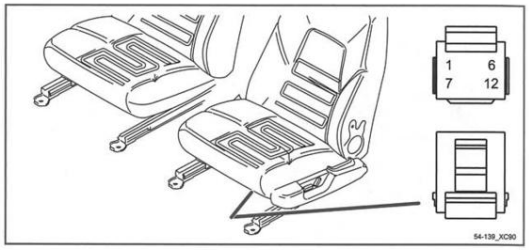

54/132 Connector XC90

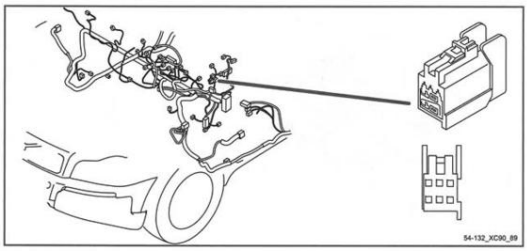

54/140 Connector

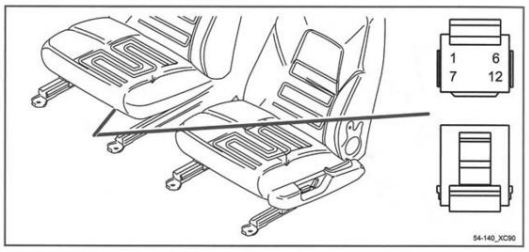

54/134 Connector

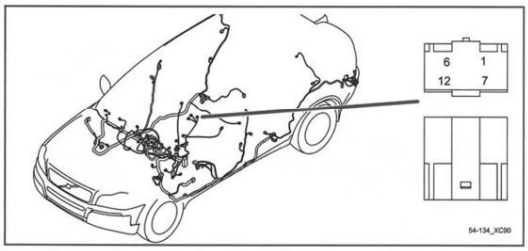

54/274 Connector

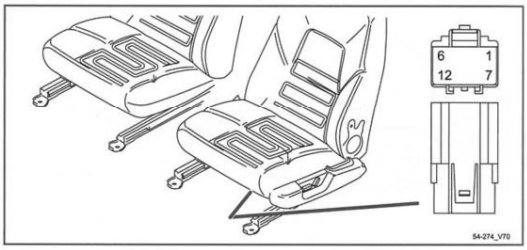

54/134.2 Connector

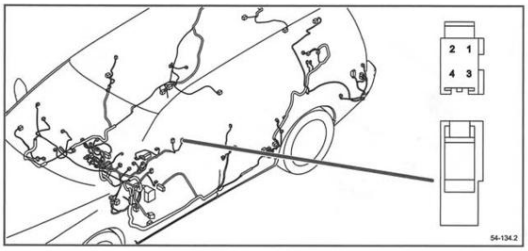

54/275 Connector

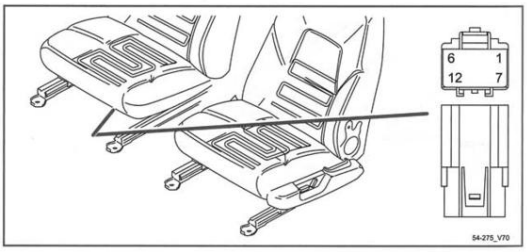

54/137A Connector

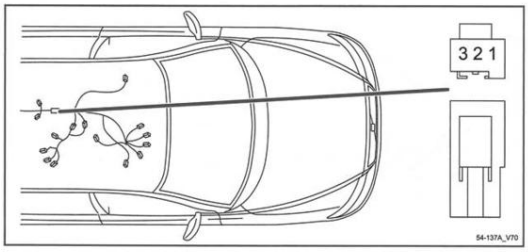

54/276 Connector

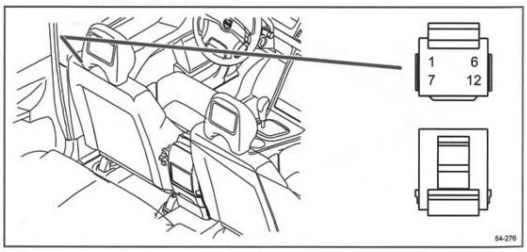

<u>Fig. 82: Components (54/132 To 54/276)</u>
Courtesy of VOLVO CARS OF NORTH AMERICA.

54/277 Connector

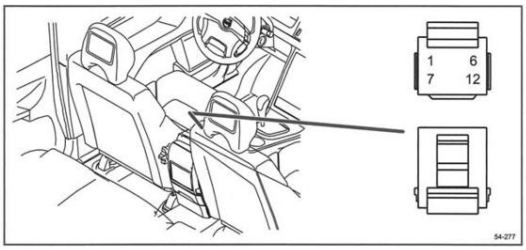

54/1401 Connector V70

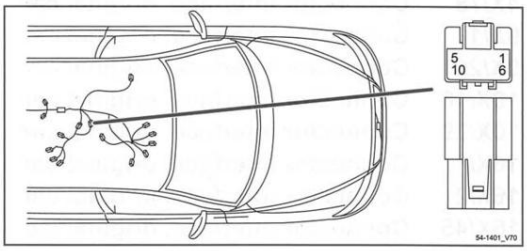

54/1300 Connector V70

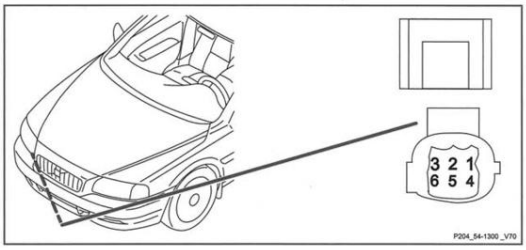

54/1401 Connector XC90

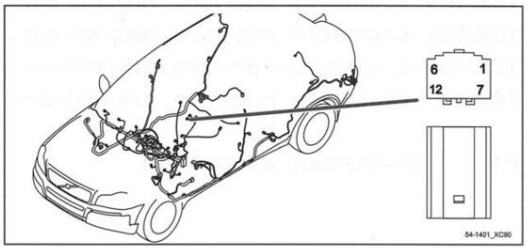

54/1300 Connector XC90

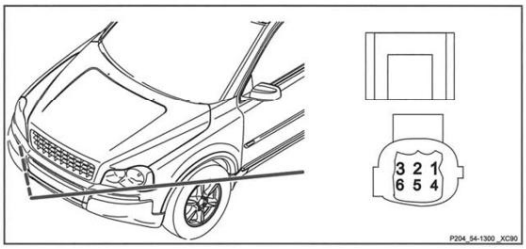

54/1402 Connector V70

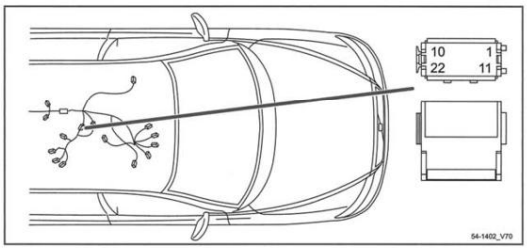

54/1400 Connector V70

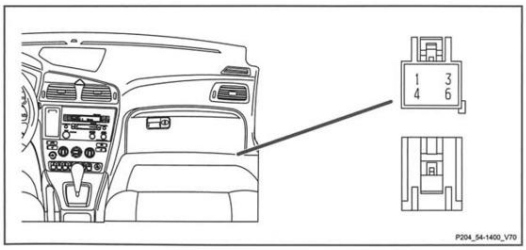

54/1402 Connector XC90

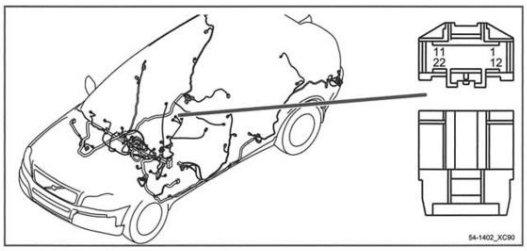

54/1400 Connector XC90

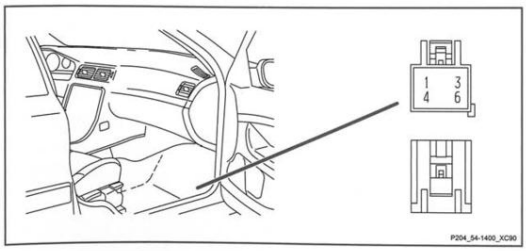

Fig. 83: Components (54/277 To 54/1402)
Courtesy of VOLVO CARS OF NORTH AMERICA.

11A/no. Main fuses in engine compartment fuse box

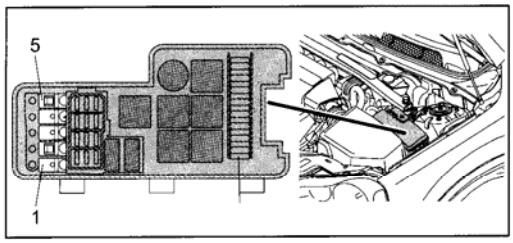

11B/no. Fuses in engine compartment fuse box

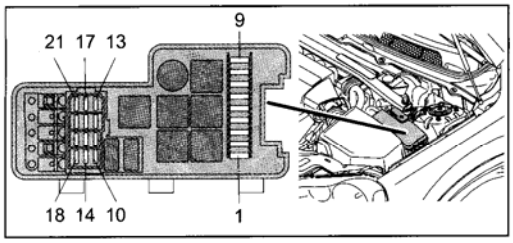

11C/no. Fuses in the passenger compartment fuse box, V70

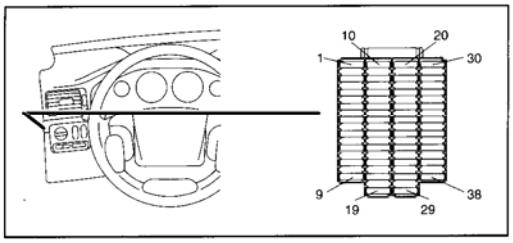

11C/no.Fuses in the passenger compartment fuse box, XC90

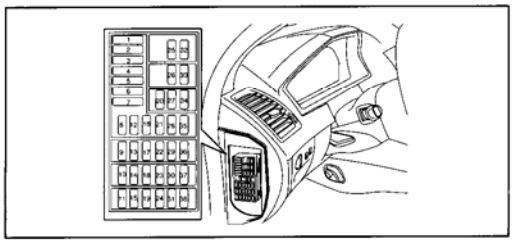

11E/no. Main fuses at the battery V70

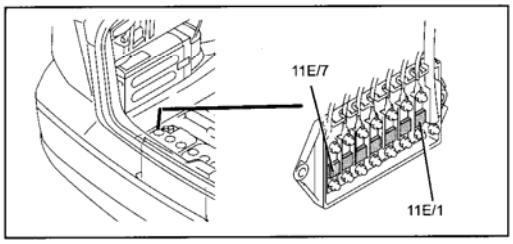

11E/no.Main fuses at the battery XC90

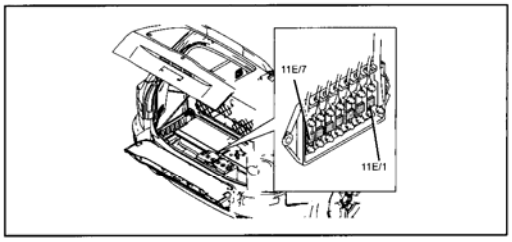

11L/no. Fuse in fuse holder, cargo compartment V70

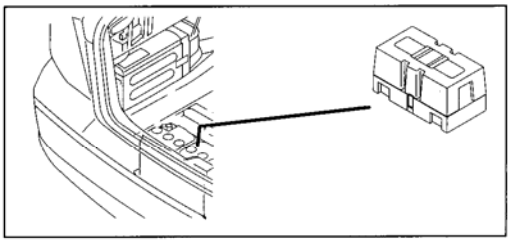

11L/no.Fuse in fuse holder, cargo compartment XC90

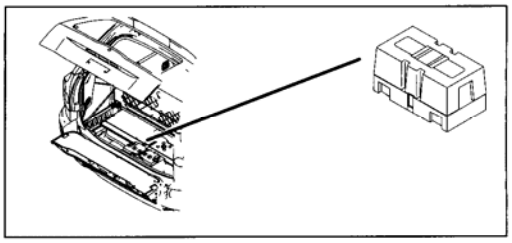

11M/no.Fuse in spare fuse holder, cargo compartment V70

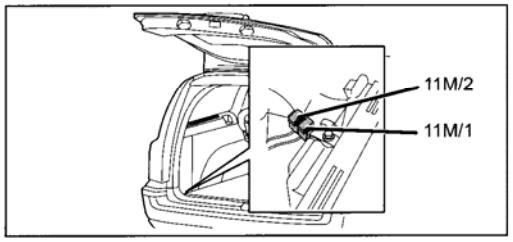

11M/no.Fuse in spare fuse holder, cargo compartment XC90

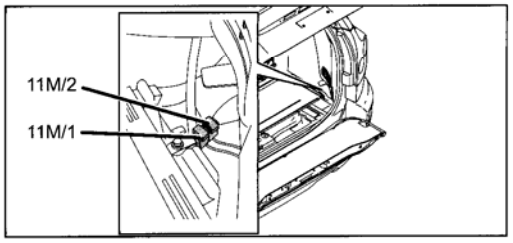

G00447846

Fig. 84: Components (11A To 11M)
Courtesy of VOLVO CARS OF NORTH AMERICA.

15/31 Distribution box in engine compartment

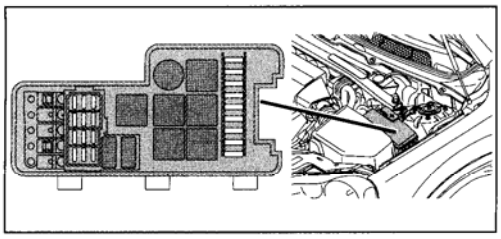

16/1 Audio Module (AUM), V70

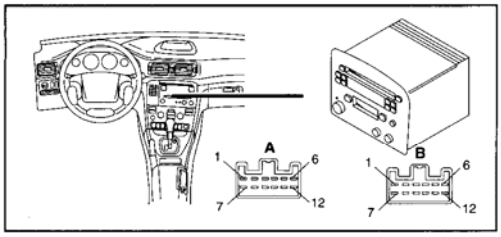

16/1 Integrated Audio Module (IAM), XC90

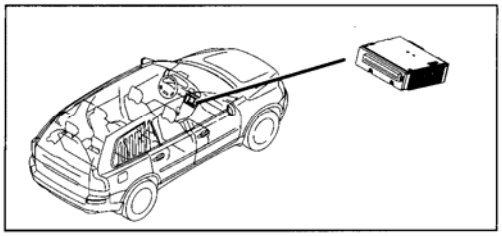

16/2 Amplifier

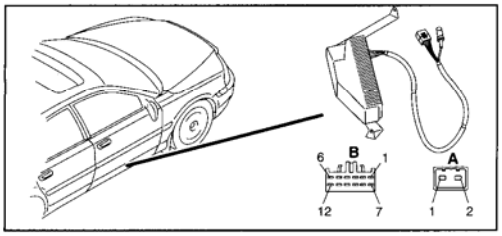

16/3 Speaker, right front door, V70

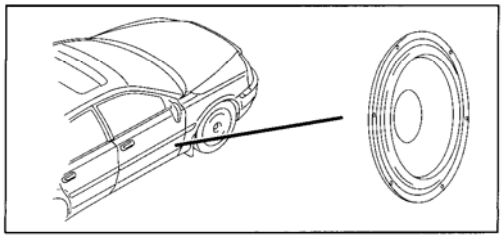

16/3 Speaker, front right door, XC90

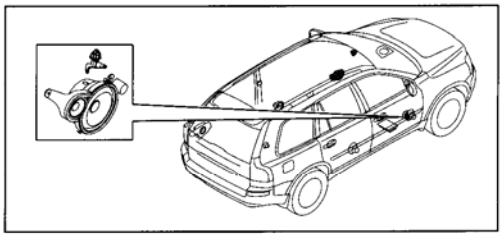

16/4 Speaker, front left door V70

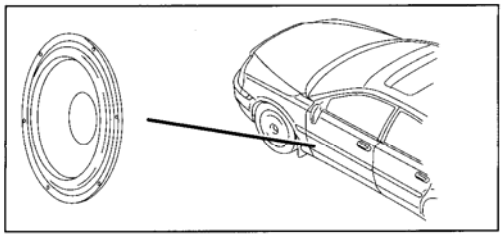

16/4 Speaker, front left door XC90

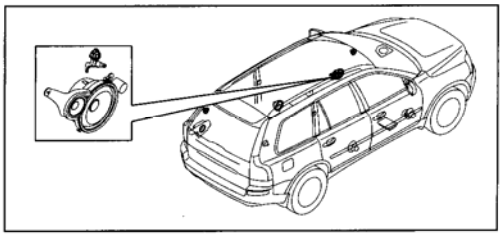

16/5 Speaker, right rear door V70

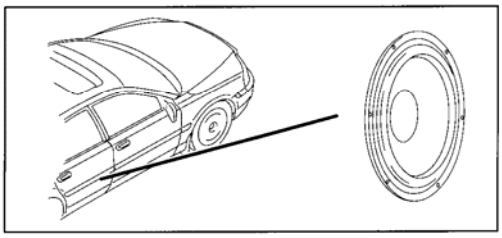

16/5 Speaker, right rear door XC90

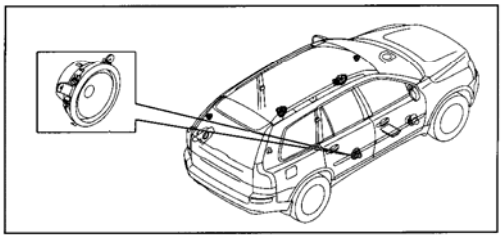

G00447847

Fig. 85: Components (15/31 To 16/5)
Courtesy of VOLVO CARS OF NORTH AMERICA.

ACCESSORIES AND BODY, CAB

Doors And Lids - Design and Function

CENTRAL LOCKING (2003-2004)

SIGNALS

see **SIGNALS**

SYSTEM DESCRIPTION

see **SYSTEM DESCRIPTION**

SYSTEM OVERVIEW

see **SYSTEM OVERVIEW**

CENTRAL LOCKING (2005-2011)

DIAGNOSTIC FUNCTIONS

see **DIAGNOSTIC FUNCTIONS**

FUNCTION

see **FUNCTION**

SIGNALS

see **SIGNALS**

SYSTEM DESCRIPTION/DESIGN

see **SYSTEM DESCRIPTION/DESIGN**

SYSTEM OVERVIEW

see **SYSTEM OVERVIEW**

SUN ROOF (2003-2011)

DESIGN

see **DESIGN**

FUNCTION

see **FUNCTION**

OVERVIEW

see **OVERVIEW**

DRIVER DOOR MODULE (DDM) AND PASSENGER DOOR MODULE (PDM) (2003-2011)

DESIGN

see **DESIGN**

DIAGNOSTIC FUNCTIONS

see **DIAGNOSTIC FUNCTIONS**

DOWNLOADING SOFTWARE AND REPLACING THE CONTROL MODULE

see **DOWNLOADING SOFTWARE AND REPLACING THE CONTROL MODULE**

FUNCTION

see **FUNCTION**

SYSTEM OVERVIEW

see **SYSTEM OVERVIEW**

ACCESSORIES AND BODY, CAB

Doors And Lids - Diagnostic Trouble Codes and Associated Procedures

DDM/PDM-0031 DOOR MIRROR POTENTIOMETER. SIGNAL TOO LOW (2005-2012)

DIAGNOSTIC TROUBLE CODE (DTC) INFORMATION

Condition

Diagnostic trouble code (DTC) DDM/PDM-0031 is stored if the control module registers that the signal across the potentiometer for door mirror X axis control (left and right) is too low.

Substitute Value

- None.

Possible Source

- Short-circuit to ground in the signal cable.
- Open-circuit in the power cable.
- Short-circuit to ground in the power cable.

Fault symptom[s]

- The door mirror memory function is not working.

SIGNAL TOO LOW

CHECKING CONNECTORS AND COMPONENTS

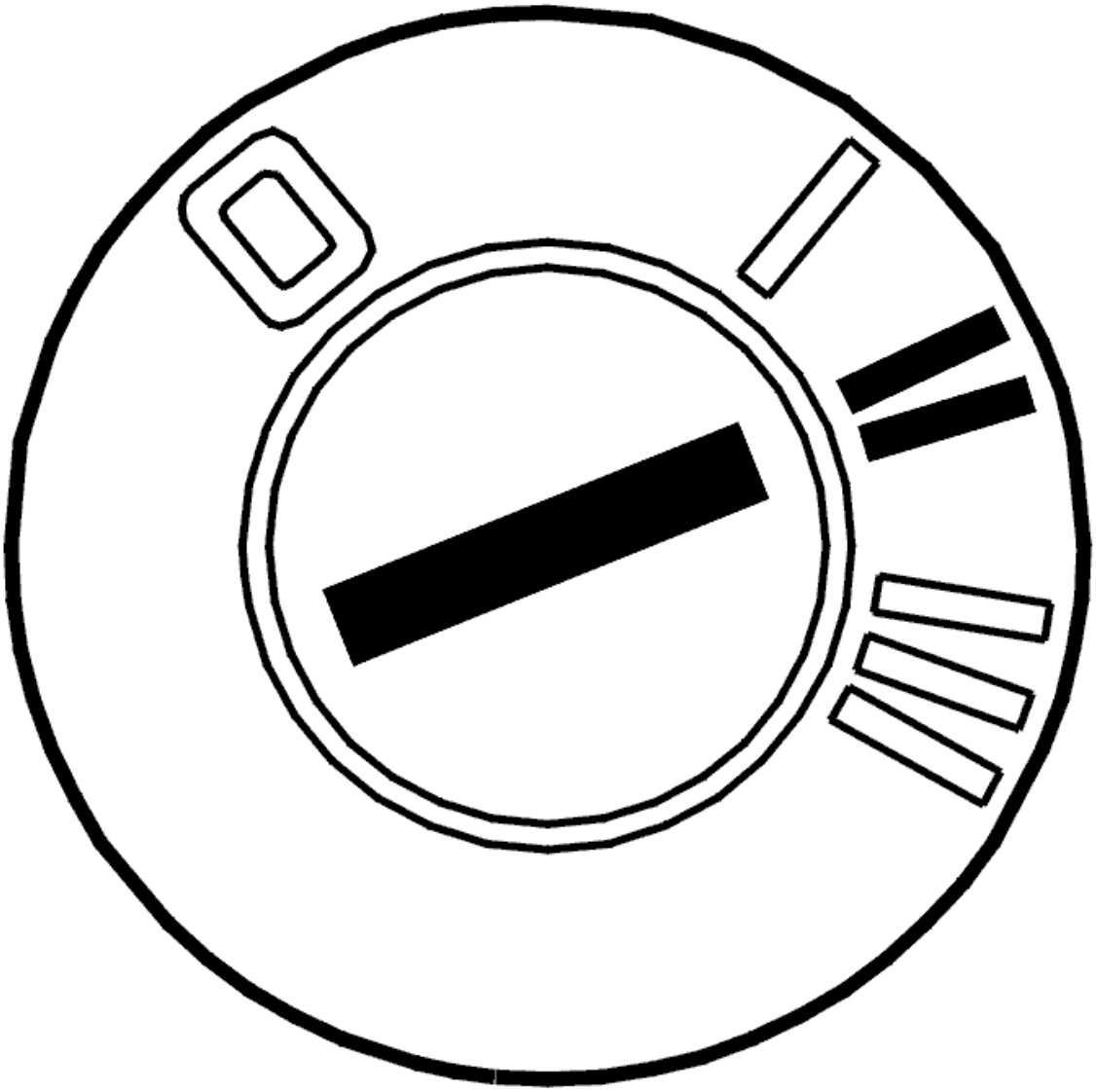

Fig. 1: Identifying Ignition ON
Courtesy of VOLVO CARS CORPORATION

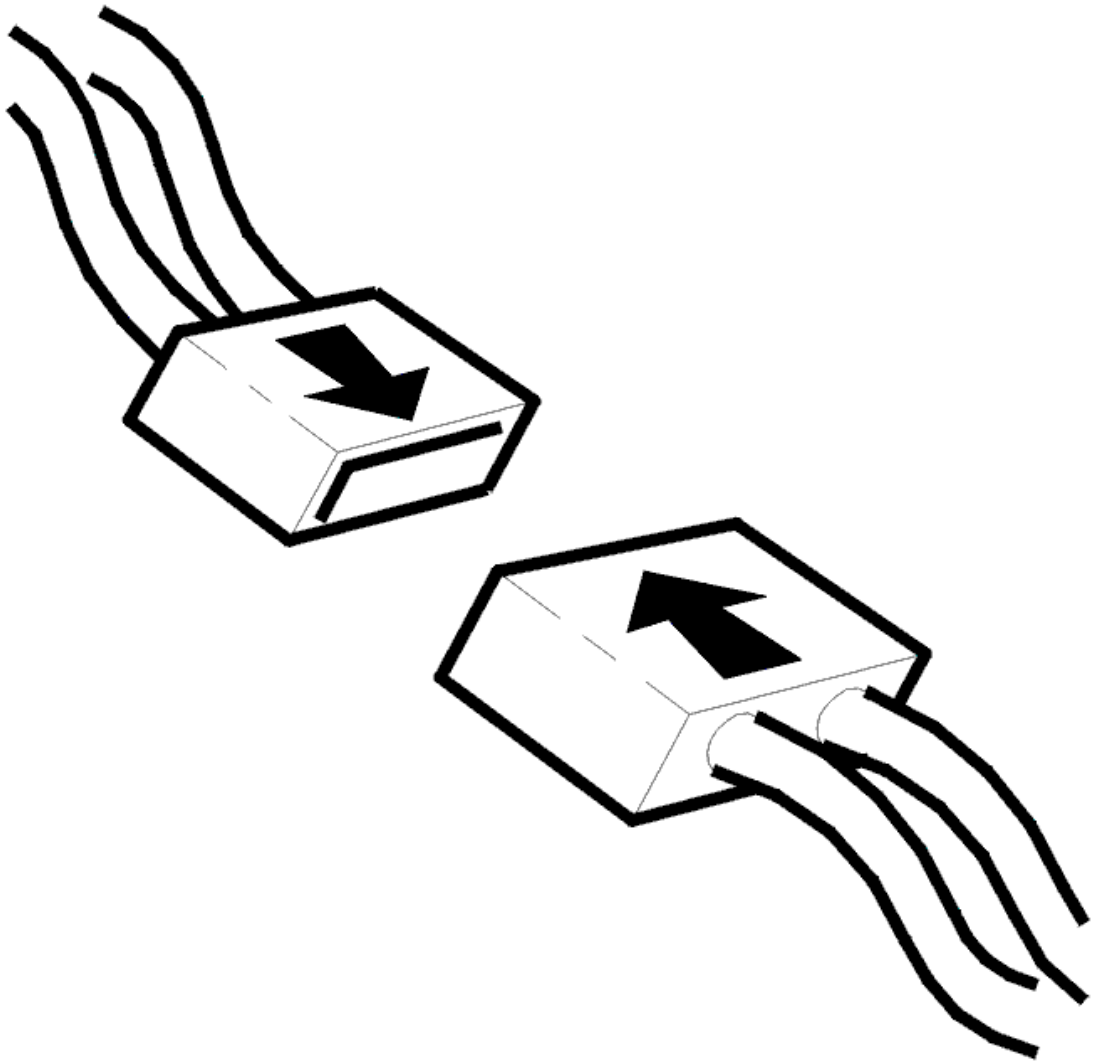

Fig. 2: Checking Connector
Courtesy of VOLVO CARS CORPORATION

- Check the connector for the control module and door mirror. Check for contact resistance and oxidation.

  Remedy as necessary

- Reinstall the connectors, components etc.
- Ignition on.

  Test the door mirror function by changing its position and reading off the end values registered by the door mirror potentiometer.

  HINT: The end values for the door mirror potentiometer should be between approximately 1 V and 4 V.

Other information:

- see **REAR VIEW MIRROR, REPLACING**
- see **CHECKING WIRING AND TERMINALS**

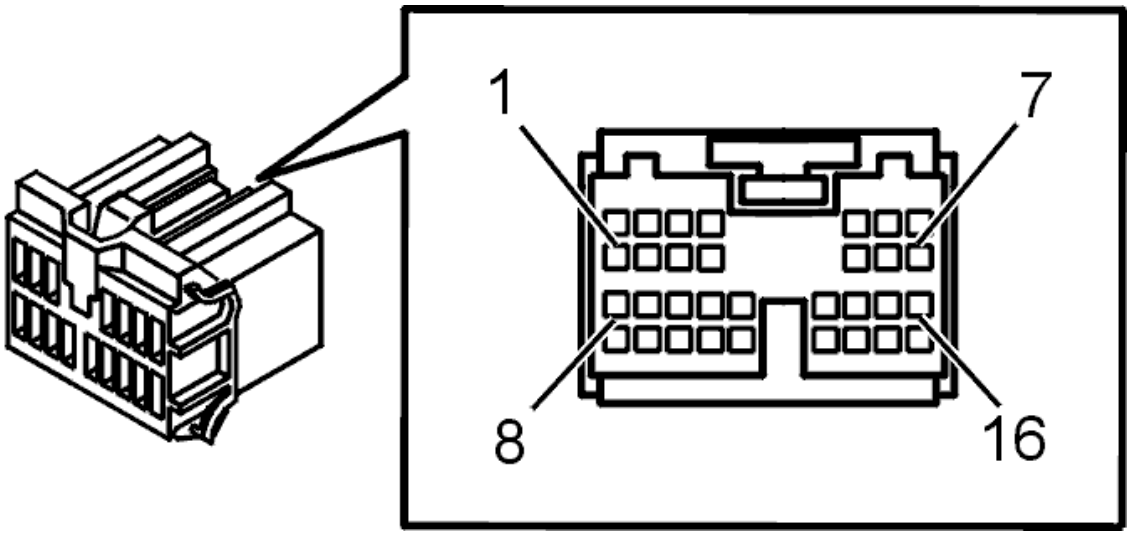

Fig. 3: Connector, Green (16- Pin)
Courtesy of VOLVO CARS CORPORATION

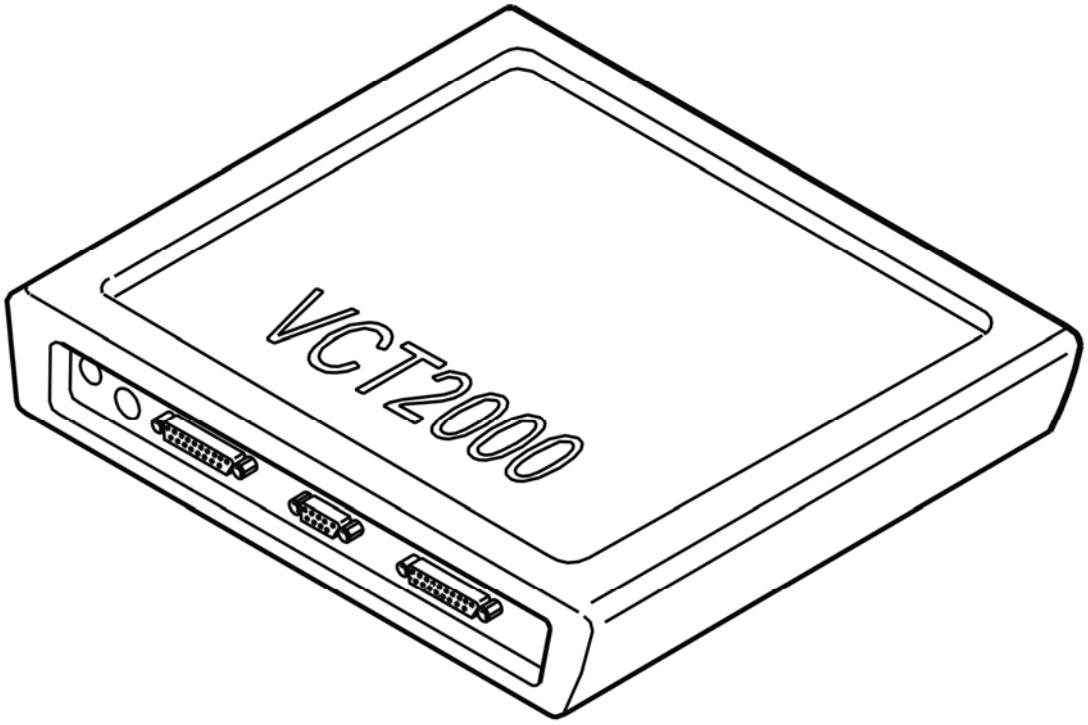

Fig. 4: Identifying VCT2000 Diagnostic Tool Symbol In VIDA

Courtesy of VOLVO CARS CORPORATION

Does the door mirror potentiometer operate correctly?

- **YES**

  see: **VERIFICATION**

- **NO**

  see: **CHECKING FAULTY SIGNALS**

CHECKING FAULTY SIGNALS

Check the cable between the control module #25A and the door mirror potentiometer terminal #1. Check for an open-circuit. Check for a short-circuit to ground.

DDM/PDM-0031 Door mirror potentiometer, signal too low

Check the cable between control module #9A and door mirror potentiometer #9. Check for a short-circuit to ground.

DDM/PDM-0033 Door mirror potentiometer, signal too low

Check the cable between control module #10A and door mirror potentiometer #10. Check for a short-circuit to ground.

Other information:

- see **SIGNAL SPECIFICATION**
- see **CONNECTING THE BREAKOUT BOX**
- see **CHECKING WIRING AND TERMINALS**

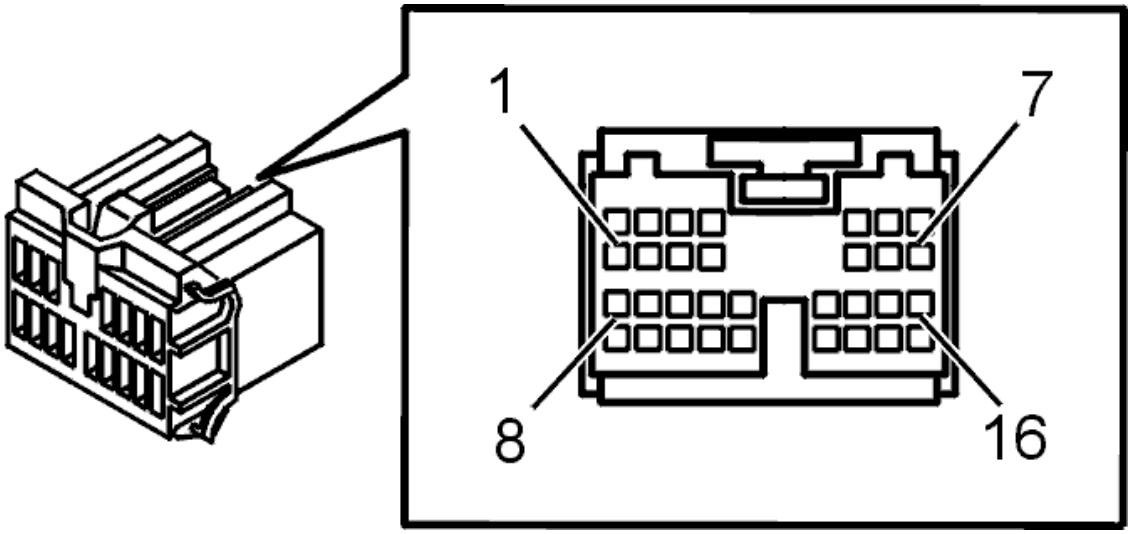

Fig. 5: Connector, Green (16- Pin)
Courtesy of VOLVO CARS CORPORATION

- **Continue**

  see: **VERIFICATION**

VERIFICATION

VERIFICATION

HINT: After carrying out the repair, check that the fault has been remedied.

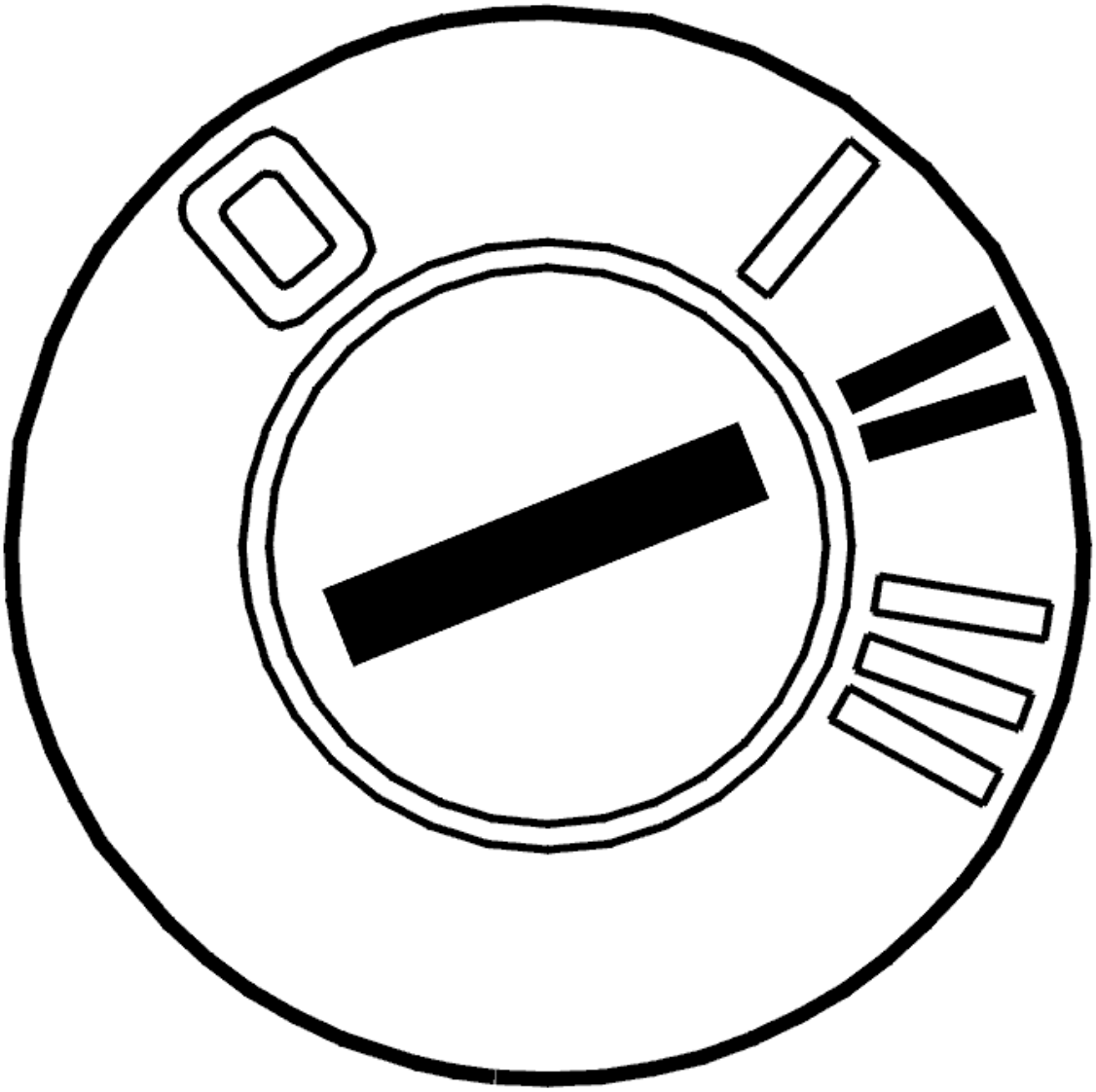

Fig. 6: Identifying Ignition ON
Courtesy of VOLVO CARS CORPORATION

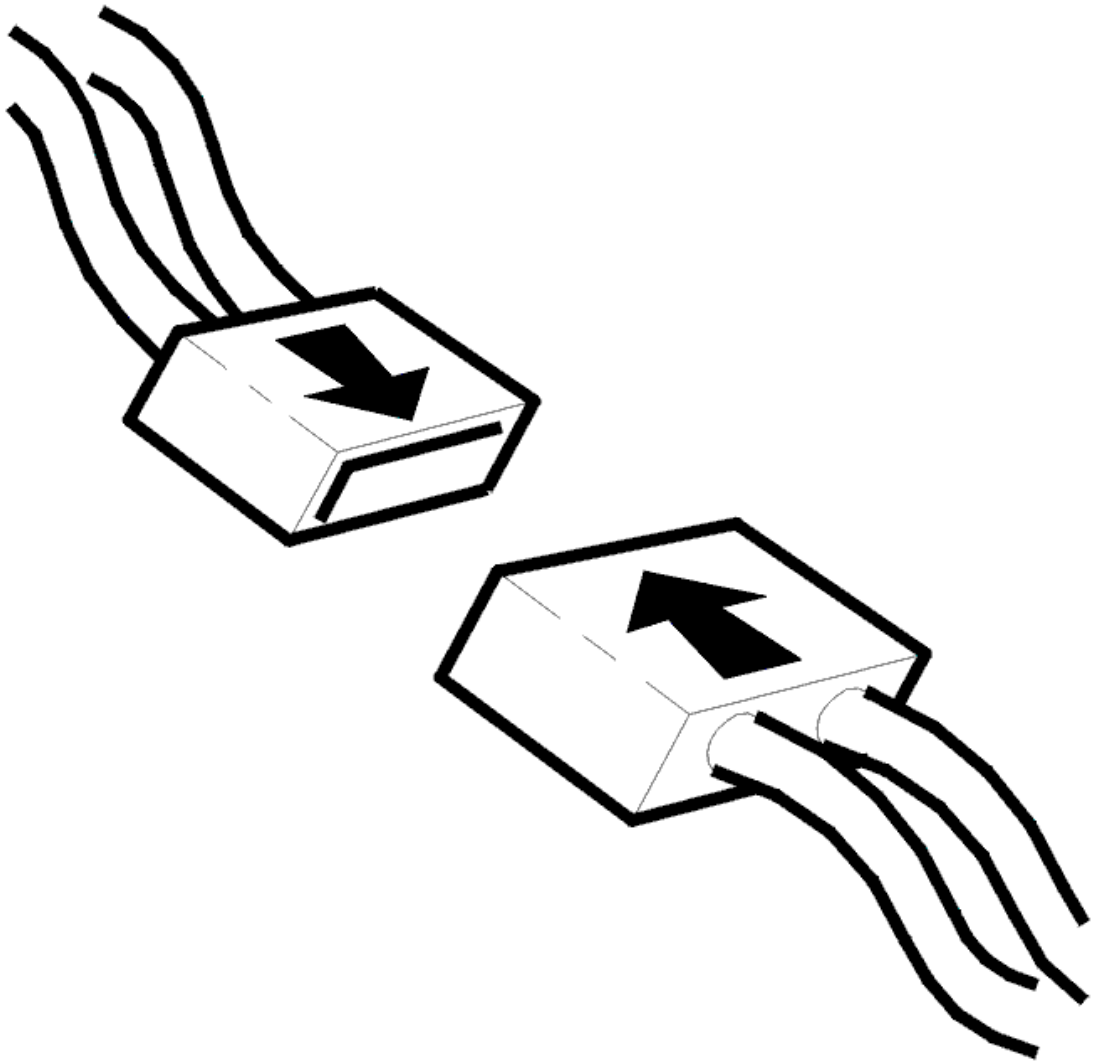

Fig. 7: Checking Connector
Courtesy of VOLVO CARS CORPORATION

- Ignition off
- Reconnect the components, connectors etc.
- Ignition on.

Check that the limit values for the door mirrors are between 1 and 4 V.

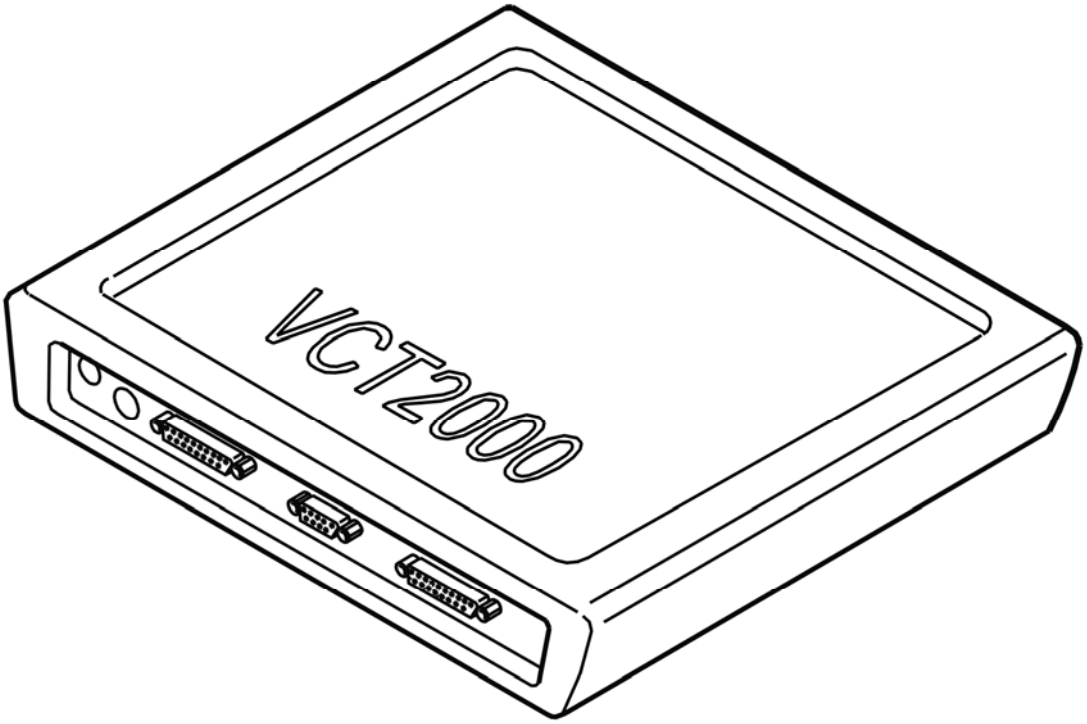

Fig. 8: Identifying VCT2000 Diagnostic Tool Symbol In VIDA
Courtesy of VOLVO CARS CORPORATION

Is the response within its permitted range?

- **YES**

  VERIFIED: Troubleshooting has been completed.

- **NO**

  see: **INFORMATION**

INFORMATION

FAULT-TRACING INFORMATION

The fault should have been detected and remedied. As this is not the case fault-tracing has failed.

Exit fault-tracing for this diagnostic trouble code (DTC) or make another attempt.

DDM/PDM-0031 DOOR MIRROR POTENTIOMETER. SIGNAL TOO LOW. INTERMITTENT FAULT (2003-2004)

DIAGNOSTIC TROUBLE CODE (DTC) INFORMATION

see **DIAGNOSTIC TROUBLE CODE (DTC) INFORMATION**

SIGNAL TOO LOW. INTERMITTENT FAULT

CHECKING THE CONNECTORS AND COMPONENTS

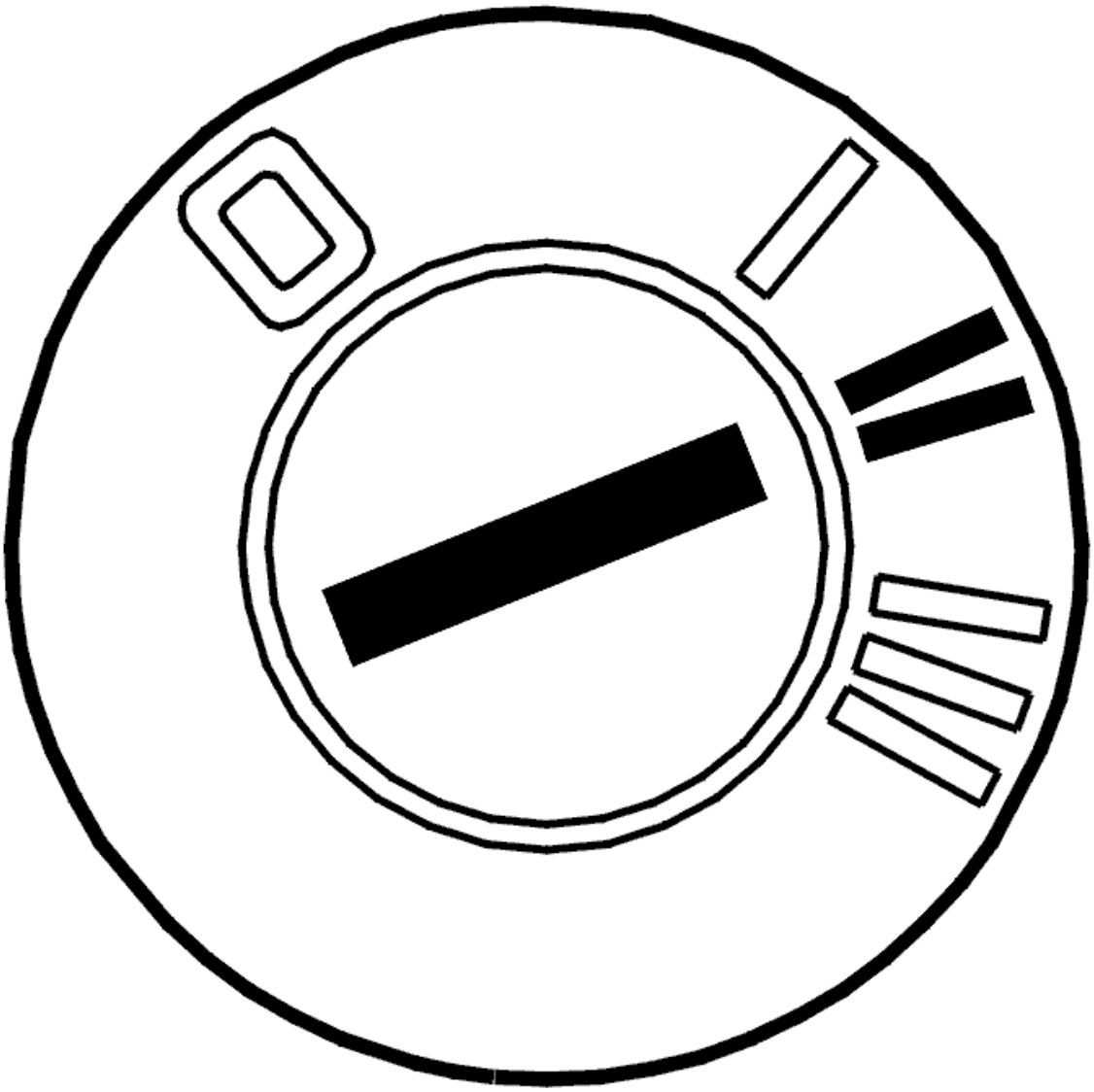

Fig. 9: Identifying Ignition ON
Courtesy of VOLVO CARS CORPORATION

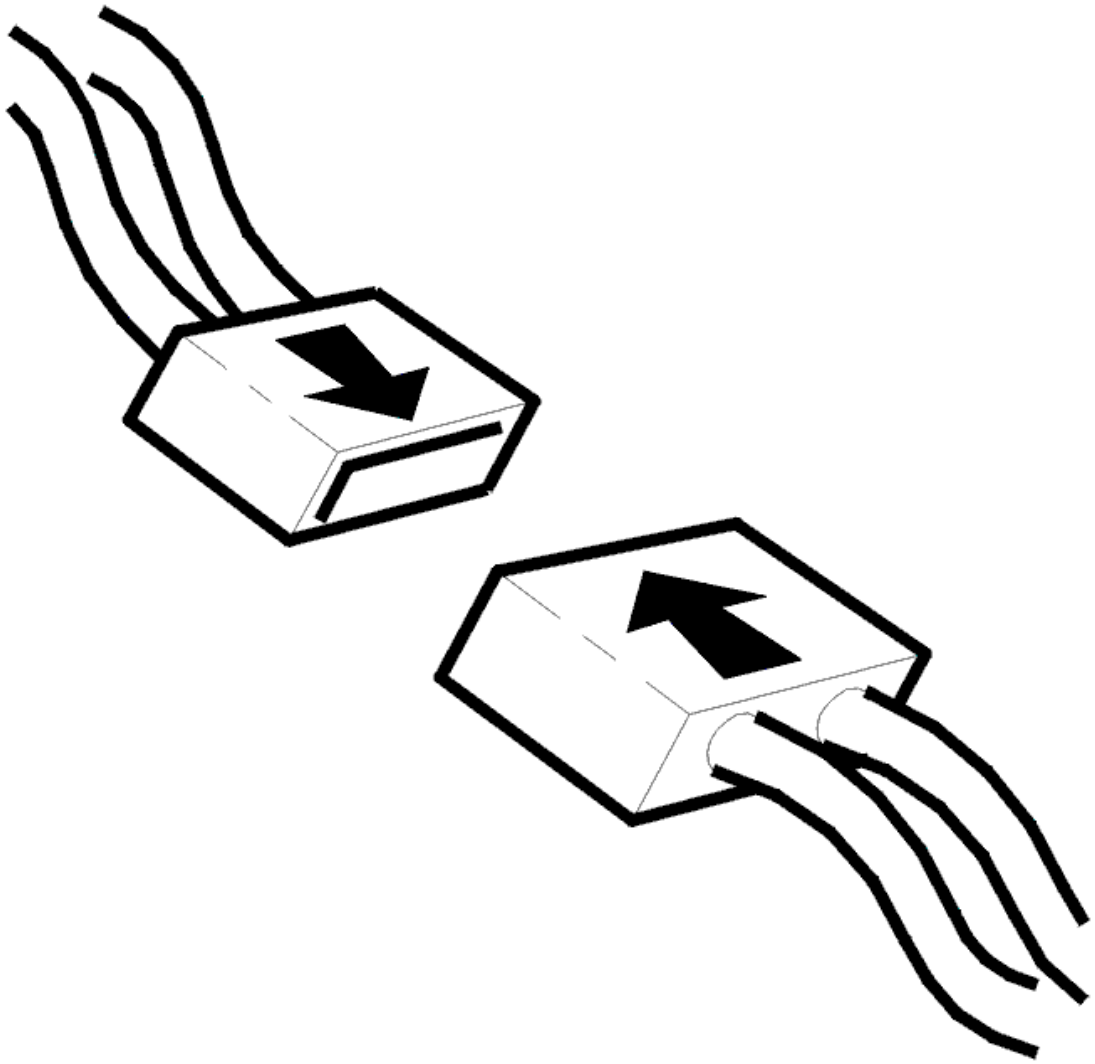

Fig. 10: Checking Connector
Courtesy of VOLVO CARS CORPORATION

- Check the connector for the door node and door mirror. Check for contact resistance and oxidation.

  Remedy as necessary

- Reinstall the connectors, components etc.
- Ignition on.

  Test the door mirror function by changing its position and reading off the end values registered by the door mirror potentiometer.

  HINT: The end values for the door mirror potentiometer should be between approximately 1 V and 4 V.

Other information:

- To access the door mirror, see **REAR VIEW MIRROR, REPLACING**
- see **CHECKING WIRING AND TERMINALS** .

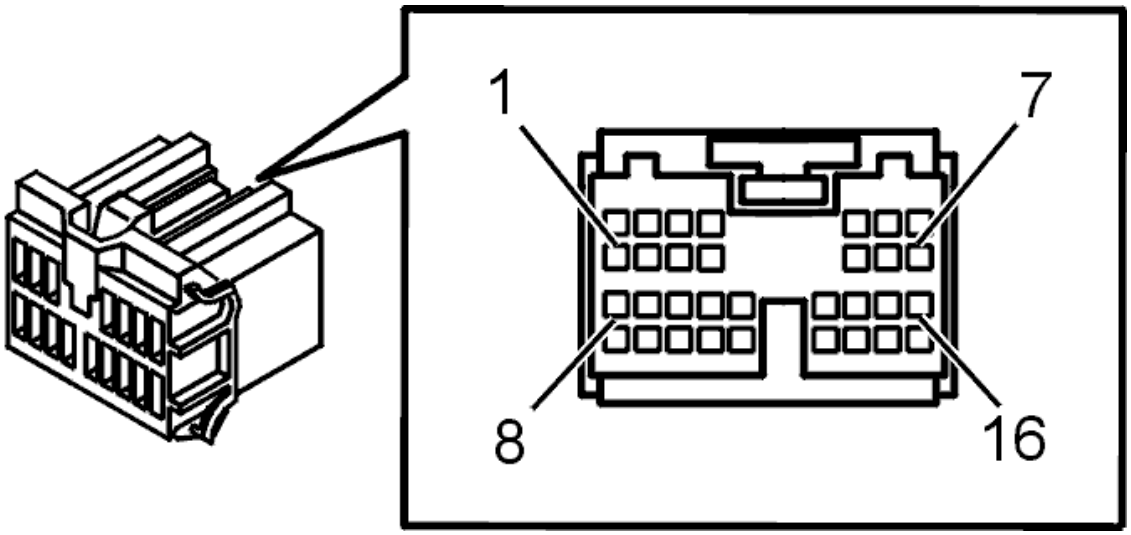

Fig. 11: Connector, Green (16- Pin)
Courtesy of VOLVO CARS CORPORATION

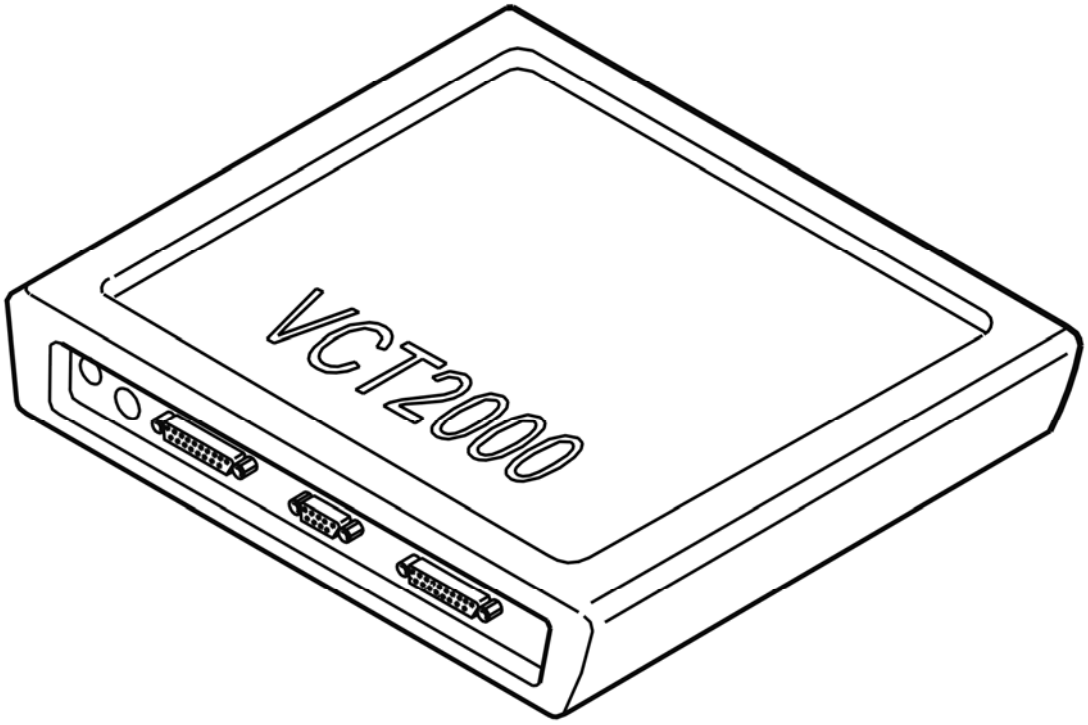

Fig. 12: Identifying VCT2000 Diagnostic Tool Symbol In VIDA

Courtesy of VOLVO CARS CORPORATION

Does the door mirror potentiometer operate correctly?

- **YES**

  OKAY: Troubleshooting has been completed.

- **NO**

  see: **CHECKING A FAULTY SIGNAL**

CHECKING A FAULTY SIGNAL

Check the cable between the control module #25A and the door mirror potentiometer terminal #1. Check for an open-circuit. Check for a short-circuit to ground.

DDM/PDM-0031 Door mirror potentiometer, signal too low

Check the cable between control module #9A and door mirror potentiometer #9. Check for a short-circuit to ground.

DDM/PDM-0033 Door mirror potentiometer, signal too low

Check the cable between control module #10A and door mirror potentiometer #10. Check for a short-circuit to ground.

Other information:

- For further information about signals and other values, see **SIGNAL SPECIFICATION**
- To connect the breakout box, see **CONNECTING THE BREAKOUT BOX**
- see **CHECKING WIRING AND TERMINALS** .

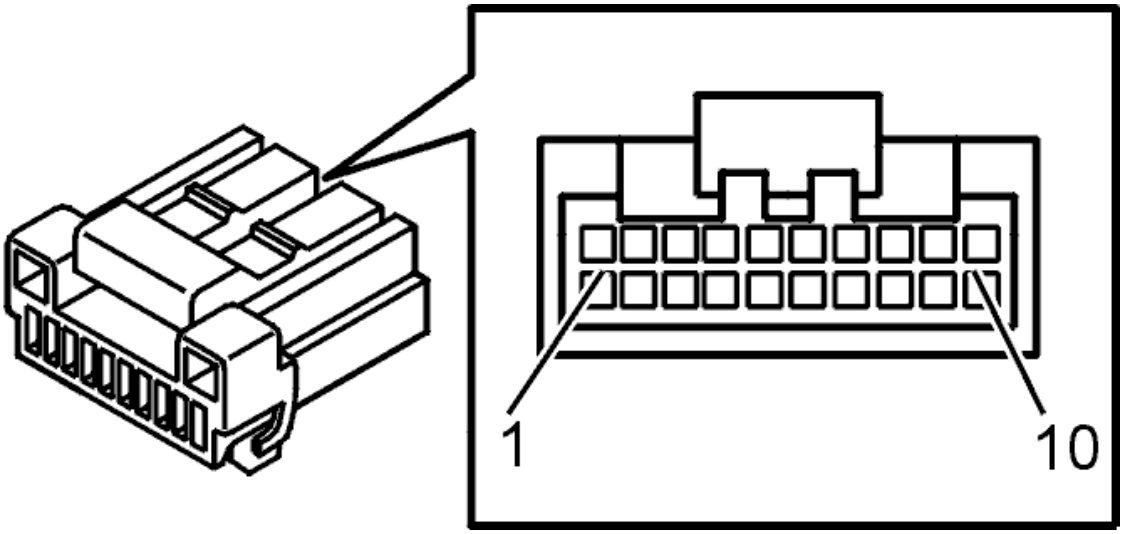

Fig. 13: Identifying Connector (D) Terminals
Courtesy of VOLVO CARS CORPORATION

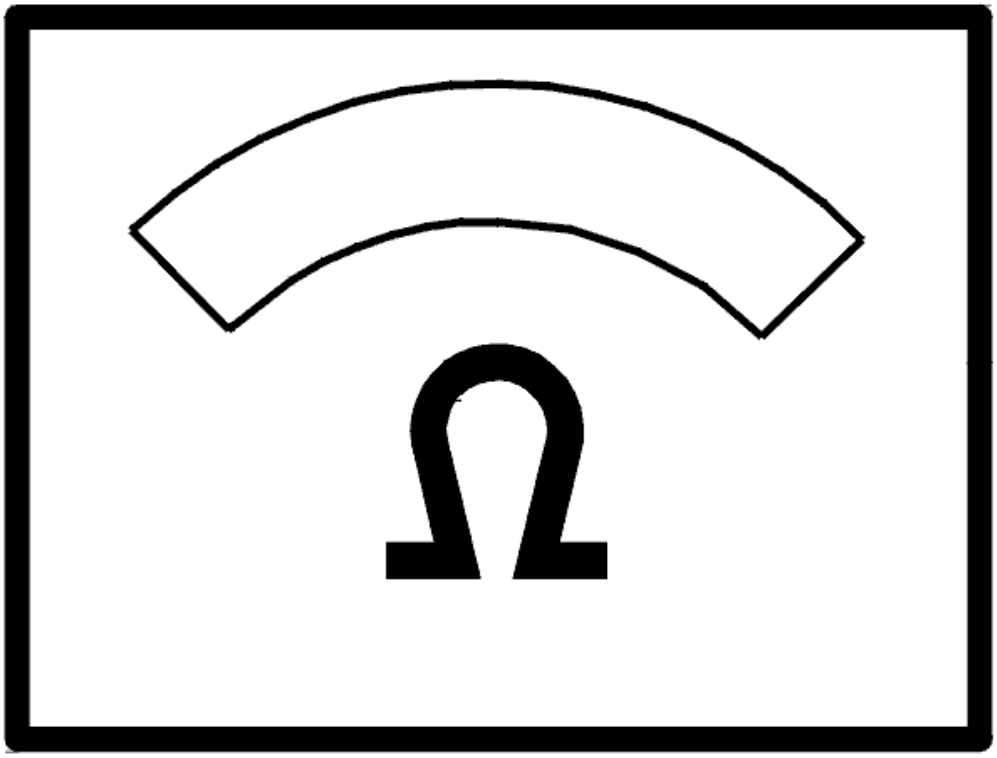

Fig. 14: Identifying Ohm Meter
Courtesy of VOLVO CARS CORPORATION

- **Continue**

  see: **FAULT-TRACING INFORMATION**

INFORMATION

FAULT-TRACING INFORMATION

If the fault is intermittent, do not verify fault-tracing if the fault does not recur.

It is possible to view the information again, or leave fault-tracing for this diagnostic trouble code (DTC).

DDM/PDM-0031 DOOR MIRROR POTENTIOMETER. SIGNAL TOO LOW.

PERMANENT FAULT (2003-2004)

DIAGNOSTIC TROUBLE CODE (DTC) INFORMATION

see **DIAGNOSTIC TROUBLE CODE (DTC) INFORMATION**

SIGNAL TOO LOW. PERMANENT FAULT

CHECKING THE CONNECTORS AND COMPONENTS

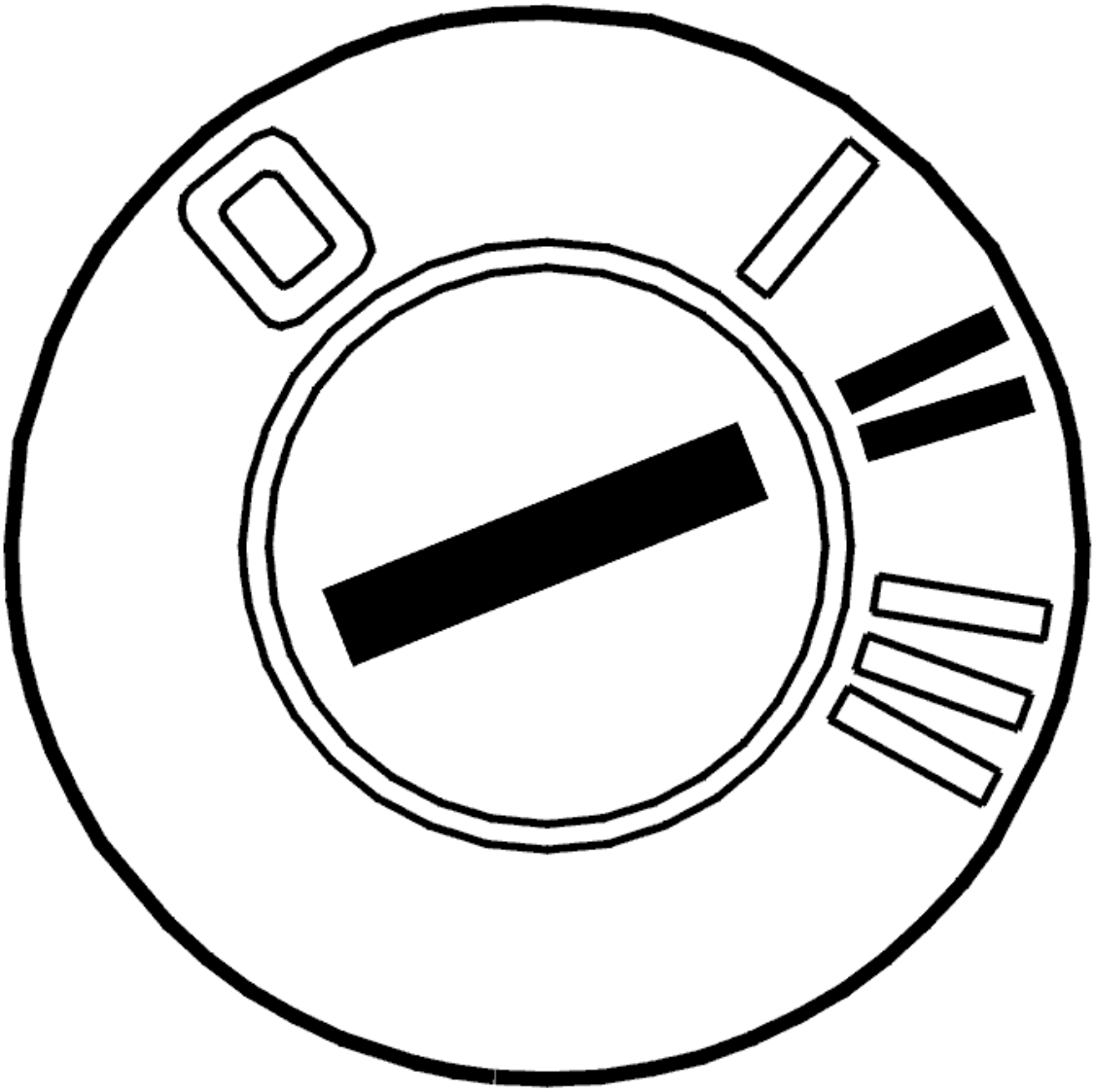

Fig. 15: Identifying Ignition ON
Courtesy of VOLVO CARS CORPORATION

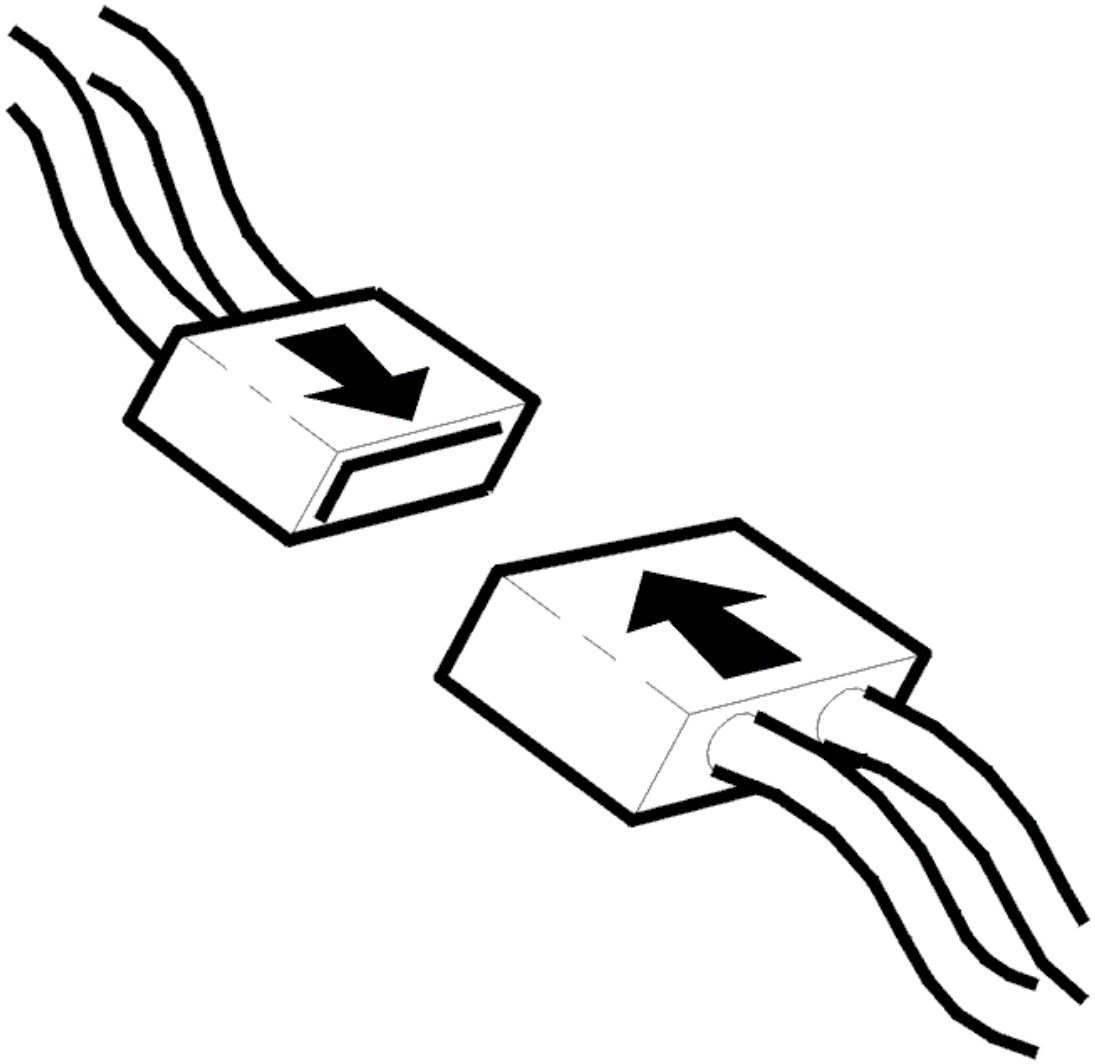

Fig. 16: Checking Connector
Courtesy of VOLVO CARS CORPORATION

- Check the connector for the door node and door mirror. Check for contact resistance and oxidation.

  Remedy as necessary

- Reinstall the connectors, components etc.
- Ignition on.

  Test the door mirror function by changing its position and reading off the end values registered by the door mirror potentiometer.

  HINT: The end values for the door mirror potentiometer should be between approximately 1 V and 4 V.

Other information:

- To access the door mirror, see **REAR VIEW MIRROR, REPLACING**
- see **CHECKING WIRING AND TERMINALS** .

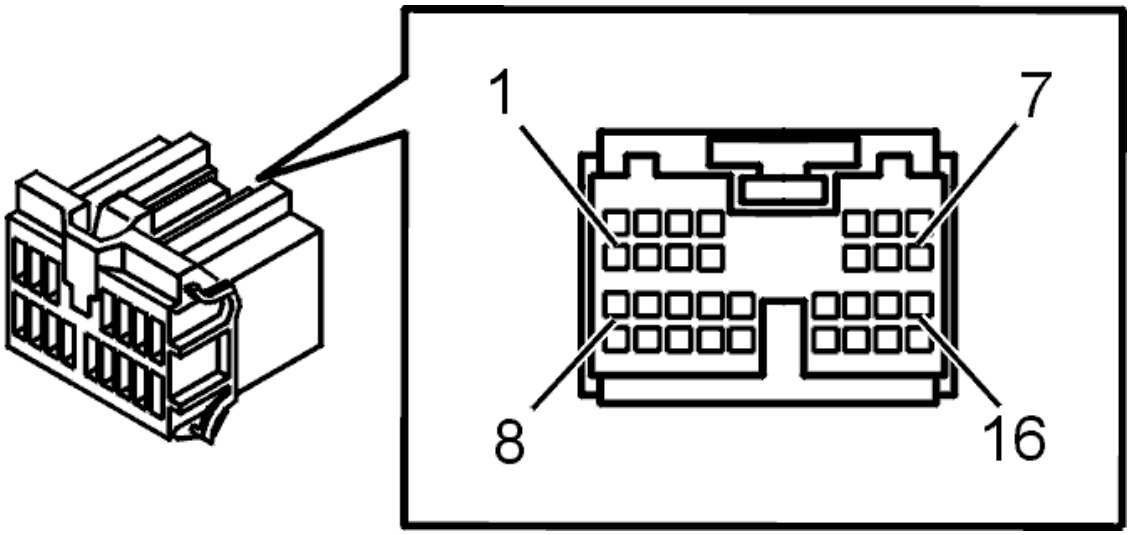

Fig. 17: Connector, Green (16- Pin)
Courtesy of VOLVO CARS CORPORATION

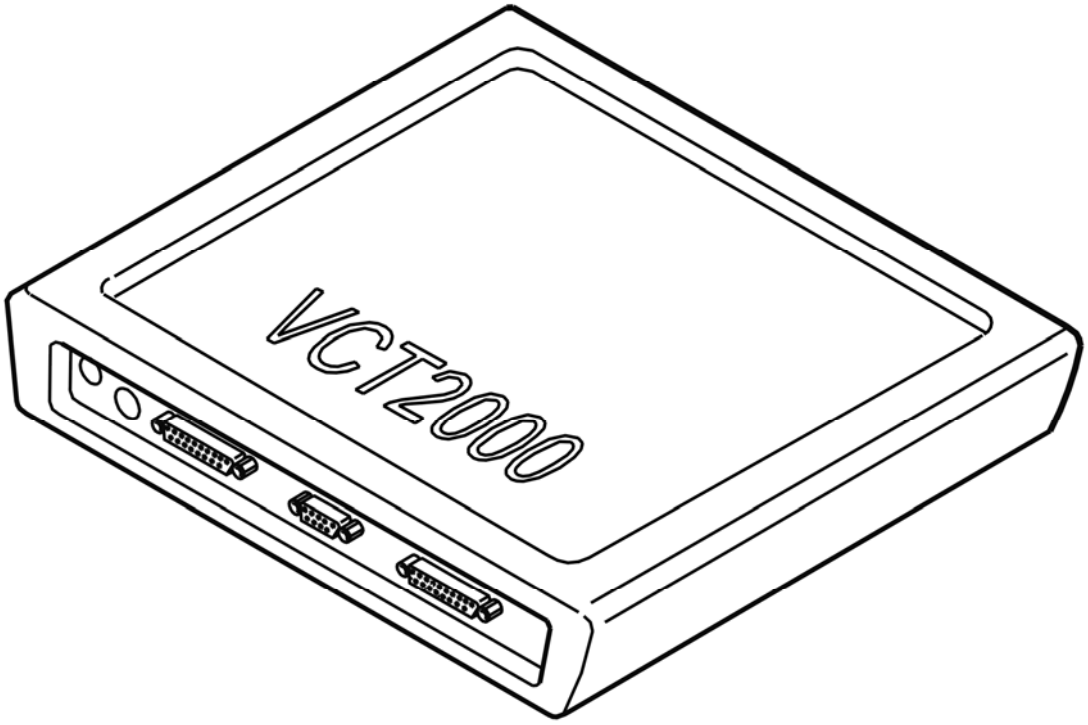

Fig. 18: Identifying VCT2000 Diagnostic Tool Symbol In VIDA

Courtesy of VOLVO CARS CORPORATION

Does the door mirror potentiometer operate correctly?

- **YES**

  see: **VERIFICATION**

- **NO**

  see: **CHECKING A FAULTY SIGNAL**

CHECKING A FAULTY SIGNAL

Check the cable between the control module #25A and the door mirror potentiometer terminal #1. Check for an open-circuit. Check for a short-circuit to ground.

DDM/PDM-0031 Door mirror potentiometer, signal too low

Check the cable between control module #9A and door mirror potentiometer #9. Check for a short-circuit to ground.

DDM/PDM-0033 Door mirror potentiometer, signal too low

Check the cable between control module #10A and door mirror potentiometer #10. Check for a short-circuit to ground.

Other information:

- For further information about signals and other values, see **SIGNAL SPECIFICATION**
- To connect the breakout box, see **CONNECTING THE BREAKOUT BOX**
- see **CHECKING WIRING AND TERMINALS** .

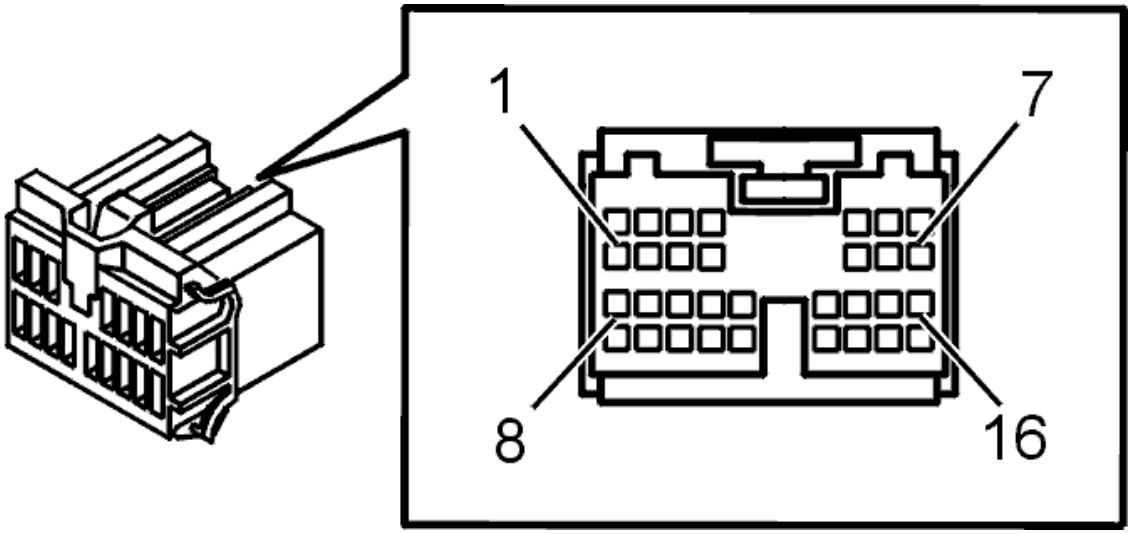

Fig. 19: Connector, Green (16- Pin)
Courtesy of VOLVO CARS CORPORATION

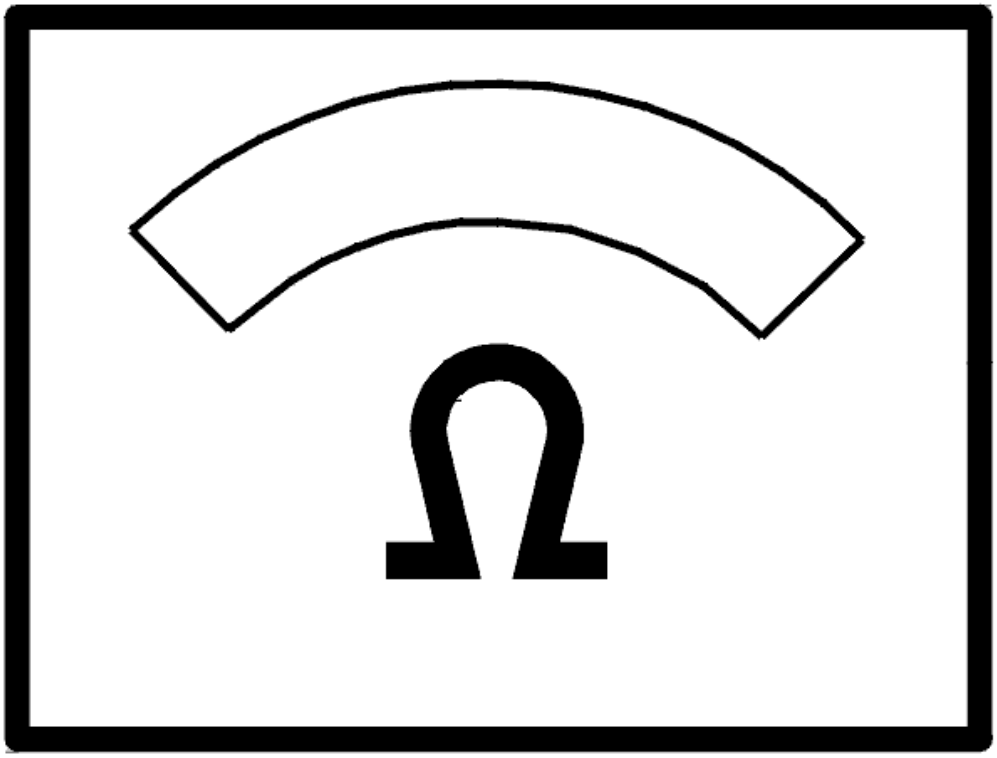

Fig. 20: Identifying Ohm Meter
Courtesy of VOLVO CARS CORPORATION

- **Continue**

  see: **VERIFICATION**

VERIFICATION

VERIFICATION

HINT: After carrying out the repair, check that the fault has been remedied.

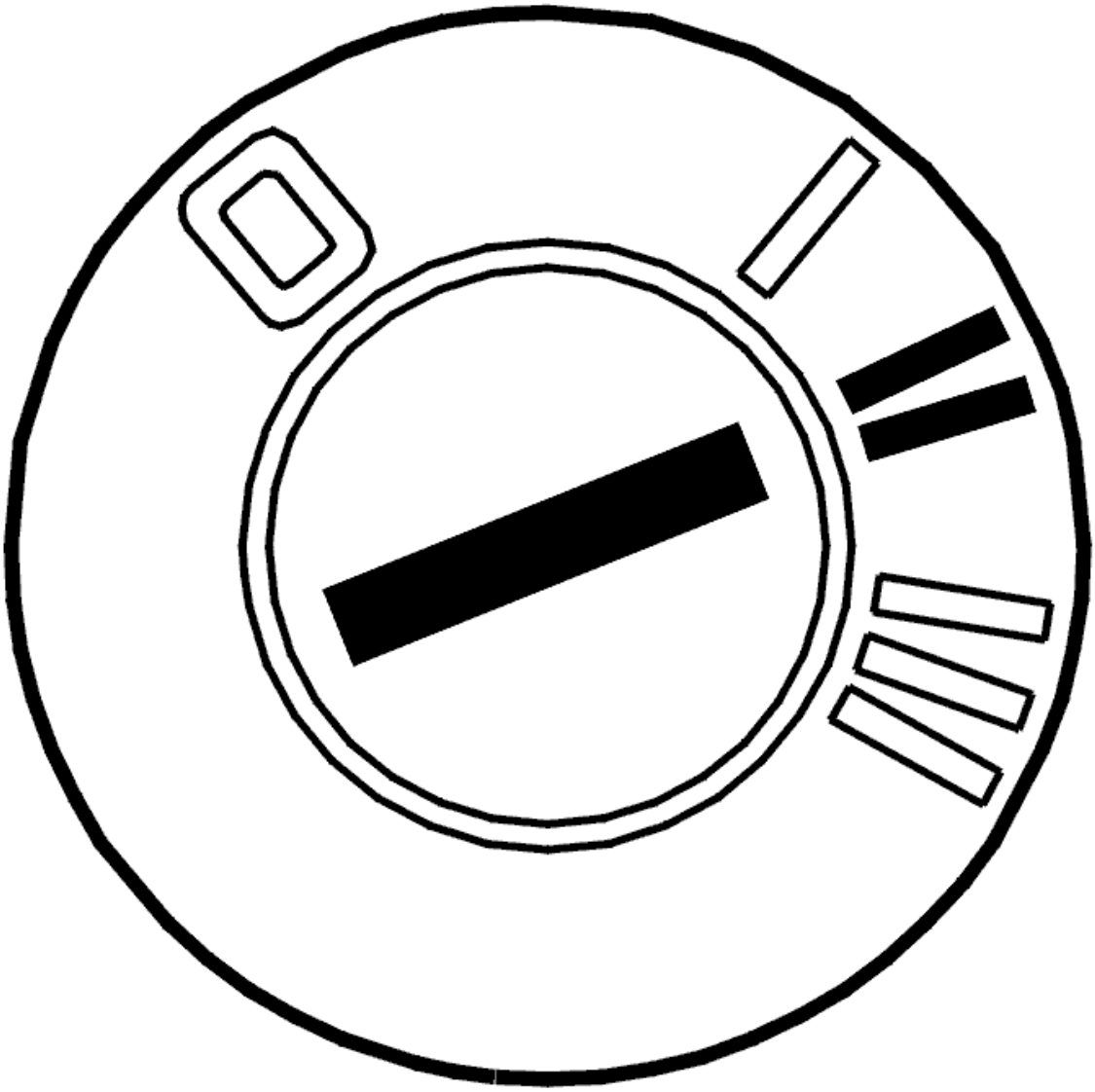

Fig. 21: Identifying Ignition ON
Courtesy of VOLVO CARS CORPORATION

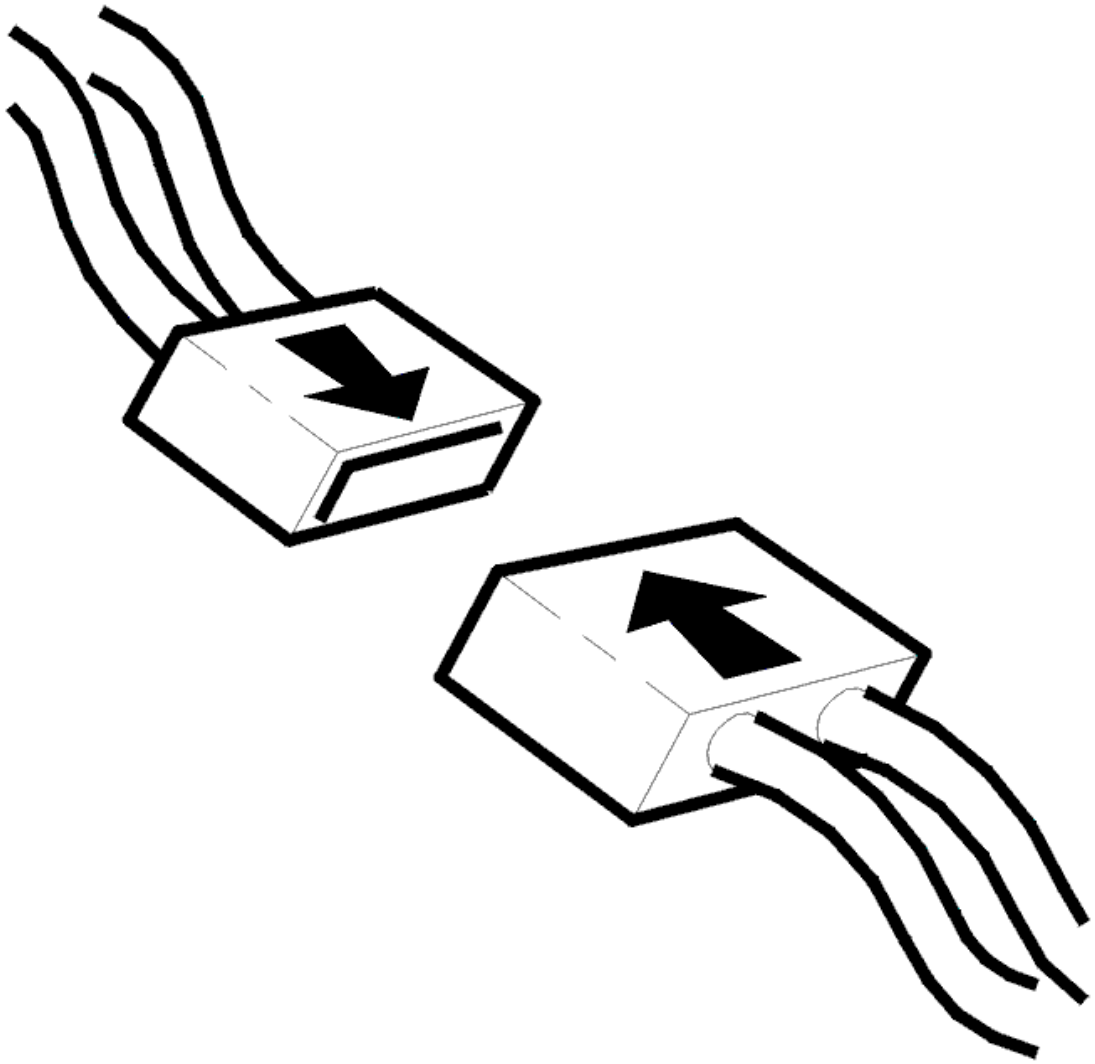

Fig. 22: Checking Connector
Courtesy of VOLVO CARS CORPORATION

- Ignition off
- Reconnect the components, connectors etc.
- Ignition on.

Check that the limit values for the door mirrors are between 1 and 4 V.

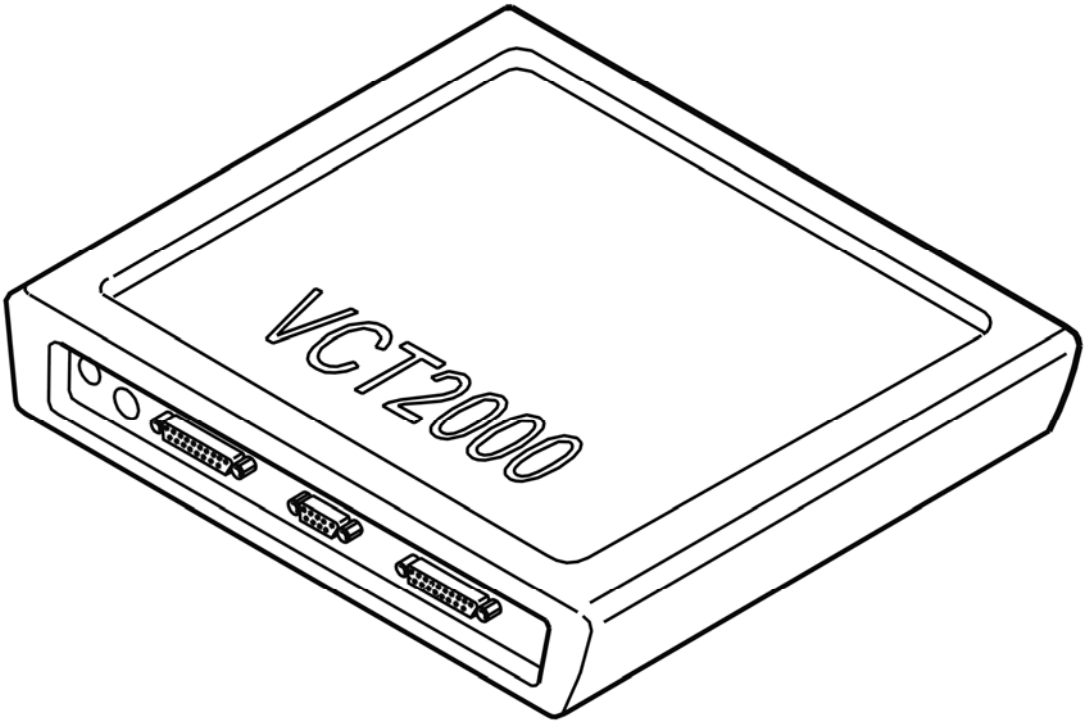

Fig. 23: Identifying VCT2000 Diagnostic Tool Symbol In VIDA
Courtesy of VOLVO CARS CORPORATION

Is the response within its permitted range?

- **YES**

  VERIFIED: Troubleshooting has been completed.

- **NO**

  see: **INFORMATION**

INFORMATION

FAULT-TRACING INFORMATION

The fault should have been detected and remedied. As this is not the case fault-tracing has failed.

Exit fault-tracing for this diagnostic trouble code (DTC) or make another attempt.

DDM/PDM-0032 DOOR MIRROR POTENTIOMETER. FAULTY SIGNAL (2005-2012)

DIAGNOSTIC TROUBLE CODE (DTC) INFORMATION

Condition

Diagnostic trouble code (DTC) DDM/PDM-0032 is stored if the control module registers that the signal across the potentiometer for door mirror Y axis control (up and down) is too high.

Substitute Value

- None.

Possible Source

- Short-circuit to supply voltage in the signal cable.
- Open-circuit in the signal cable.
- Short-circuit to ground in the power cable.
- Open-circuit in the ground lead.
- Short-circuit to supply voltage in the ground lead.

Fault symptom[s]

- The door mirror memory function is not working.

FAULTY SIGNAL

see **FAULTY SIGNAL**

DDM/PDM-0032 DOOR MIRROR POTENTIOMETER. FAULTY SIGNAL. INTERMITTENT FAULT (2003-2004)

DIAGNOSTIC TROUBLE CODE (DTC) INFORMATION

see **DIAGNOSTIC TROUBLE CODE (DTC) INFORMATION**

FAULTY SIGNAL. INTERMITTENT FAULT

see **FAULTY SIGNAL. INTERMITTENT FAULT**

DDM/PDM-0032 DOOR MIRROR POTENTIOMETER. FAULTY SIGNAL. PERMANENT FAULT (2003-2004)

DIAGNOSTIC TROUBLE CODE (DTC) INFORMATION

see **DIAGNOSTIC TROUBLE CODE (DTC) INFORMATION**

FAULTY SIGNAL. PERMANENT FAULT

see **FAULTY SIGNAL. PERMANENT FAULT**

DDM/PDM-0033 DOOR MIRROR POTENTIOMETER. SIGNAL TOO LOW (2005-2012)

DIAGNOSTIC TROUBLE CODE (DTC) INFORMATION

Condition

Diagnostic trouble code (DTC) DDM/PDM-0033 is stored if the control module registers that the signal across the potentiometer for door mirror Y axis control (up and down) is too low.

Substitute Value

- None.

Possible Source

- Short-circuit to ground in the signal cable.
- Open-circuit in the power cable.
- Short-circuit to ground in the power cable.

Fault symptom[s]

- The door mirror memory function is not working.

SIGNAL TOO LOW

see **SIGNAL TOO LOW**

DDM/PDM-0033 DOOR MIRROR POTENTIOMETER. SIGNAL TOO LOW. INTERMITTENT FAULT (2003-2004)

DIAGNOSTIC TROUBLE CODE (DTC) INFORMATION

see **DIAGNOSTIC TROUBLE CODE (DTC) INFORMATION**

SIGNAL TOO LOW. INTERMITTENT FAULT

see **SIGNAL TOO LOW. INTERMITTENT FAULT**

DDM/PDM-0033 DOOR MIRROR POTENTIOMETER. SIGNAL TOO LOW. PERMANENT FAULT (2003-2004)

DIAGNOSTIC TROUBLE CODE (DTC) INFORMATION

see **DIAGNOSTIC TROUBLE CODE (DTC) INFORMATION**

SIGNAL TOO LOW. PERMANENT FAULT

see **SIGNAL TOO LOW. PERMANENT FAULT**

DDM/PDM-E010 CONTROL MODULE. INTERNAL FAULT (2005-2012)

DIAGNOSTIC TROUBLE CODE (DTC) INFORMATION DDM/PDM-E010

Condition

The diagnostic trouble code (DTC) is generated if the voltage to the driver door/passenger door module (DDM/PDM) differs from the voltage to the central electronic module (CEM) by more than 2 V.

The driver door/passenger door module (DDM/PDM) receives information on voltage to the central electronic module (CEM) via the CAN network.

The diagnostic trouble code (DTC) can be diagnosed when the ignition is on.

Substitute Value

- None.

Possible Source

- Cable short-circuited to ground.
- Open-circuit on cable.
- Contact resistance.
- Half-blown fuse to driver door/passenger door module (DDM/PDM).

Fault symptom[s]

- Driver door/passenger door switch panel not working.

INTERNAL FAULT

CHECKING THE POWER SUPPLY

- Ignition off
- Unplug connector B to the driver door/passenger door module (DDM/PDM).
- Ignition on.

  Check the power supply to the driver door/passenger door module (DDM/PDM) by:

- Measuring the voltage between #B12 (#26) and #B5 (#19) on control module connector B.
- Measuring battery voltage.

If the difference between the control module supply voltage and battery voltage is greater than 2 V, the fault is in the supply cable or is due to contact resistance.

Also check the fuse of the driver door/passenger door module (DDM/PDM). A half-blown fuse can cause intermittent faults.

If the difference is less than 2 V, there could be an internal fault in the door control module.

Remedy as necessary.

Other information:

- see **CONNECTING THE BREAKOUT BOX**
- see **SIGNAL SPECIFICATION**
- Replacing the driver's side door module. See **DRIVER DOOR MODULE (DDM), REPLACING**
- Replacing the passenger side door module. See **PASSENGER DOOR MODULE (PDM), REPLACING** .
- see **CHECKING WIRING AND TERMINALS**

- **Continue**

  see: **VERIFICATION MIXED**

VERIFICATION MIXED

VERIFICATION

HINT: After carrying out the repair, check that the fault has been remedied.

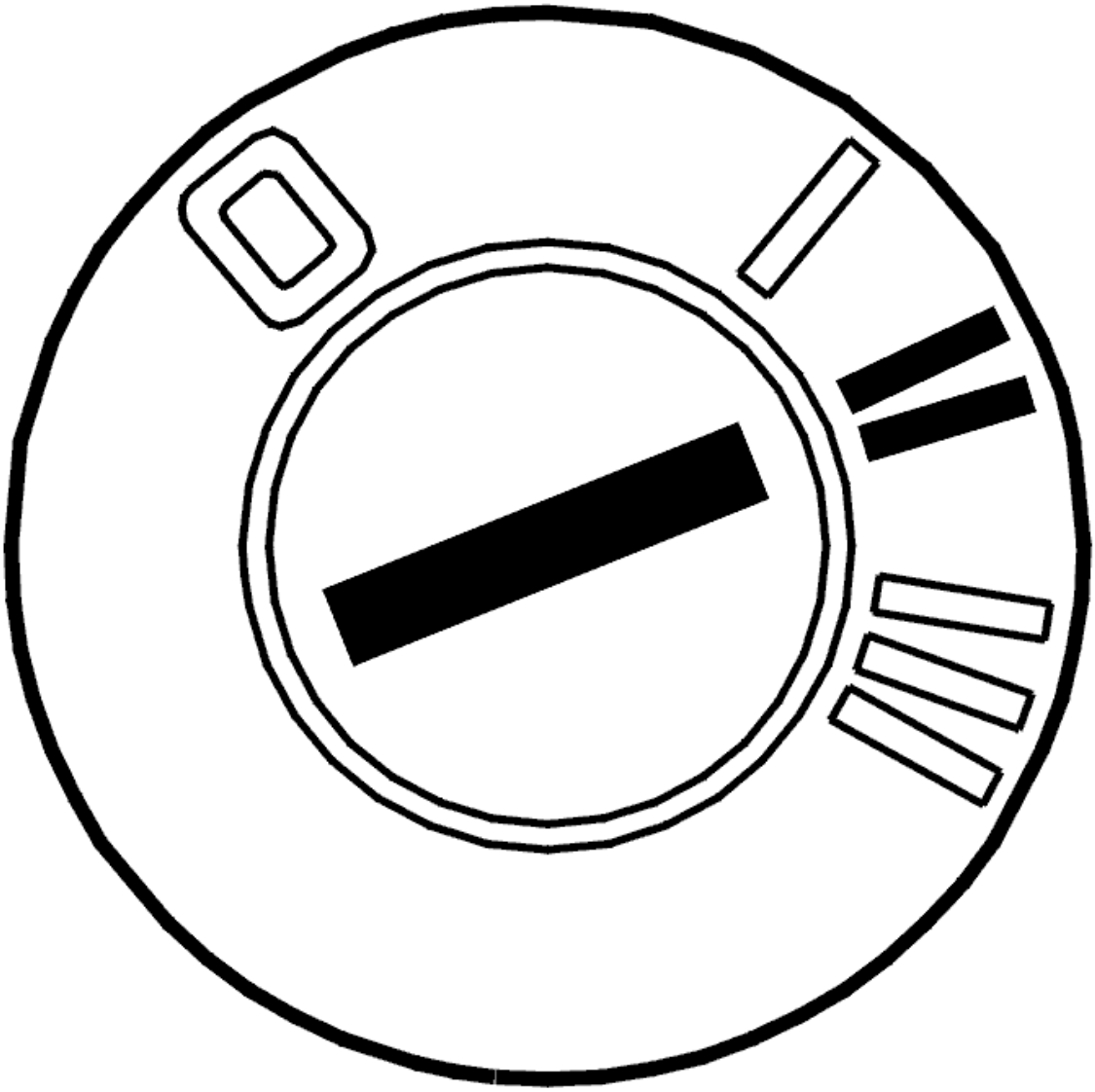

Fig. 24: Identifying Ignition ON
Courtesy of VOLVO CARS CORPORATION

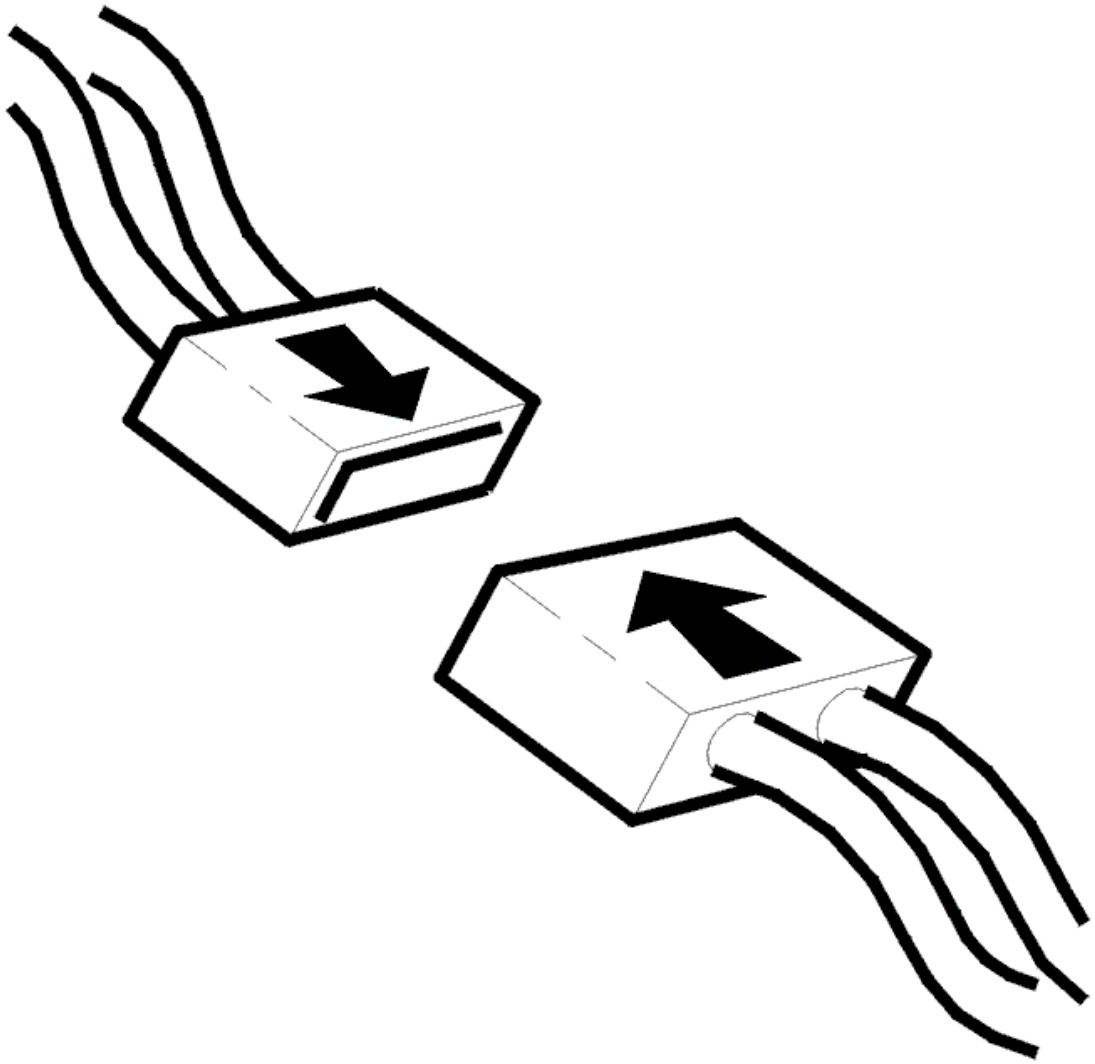

Fig. 25: Checking Connector
Courtesy of VOLVO CARS CORPORATION

- Ignition off
- Reinstall the connectors, components etc.
- Ignition on.

  Check that the power window mechanism, door mirrors and central locking operate.

Do all the functions operate normally?

- **YES**

  VERIFIED: Troubleshooting has been completed.

- **NO**

  see: **INFORMATION**

INFORMATION

FAULT-TRACING INFORMATION

The fault should have been detected and remedied. As this is not the case fault-tracing has failed.

Exit fault-tracing for this diagnostic trouble code (DTC) or make another attempt.

CONNECTING THE BREAKOUT BOX

Special tools:

see **9511428**

see **9511499**

see **9511507**

see **9813194**

CONNECTING THE BREAKOUT BOX

- Ignition off.
- Remove the door panel
- Disconnect the module connectors.

NOTE: Unplug the 12-pin connector before the 30-pin connector.

Connect the adapter to the control module's connector. Connect breakout box see **9511428** and cable harness see **9511499** to the adapter.

Adapter cable harness see **9511507** is for the 12-pin connector, and adapter cable harness see **9813194** is for the 30-pin connector.

Disconnection of breakout box in reverse order.

Other information

- To remove the door panel, see **PANEL FRONT SIDE DOOR, REPLACING**
- For further information about signals and other values, see **SIGNAL SPECIFICATION** .

DDM-0019: LOCK, DRIVER'S DOOR. SIGNAL TOO LOW (2003-2012)

DIAGNOSTIC TROUBLE CODE (DTC) INFORMATION

Condition

Diagnostic trouble code (DTC) DDM-0019 is stored if the driver's door module registers a low signal in the lock signal cable for unlocking for more than 10 seconds.

Substitute Value

- None.

Possible Source

- The lock has jammed in the unlocked position.
- Defective locking switch. (Short-circuit in the locking switch.)
- Short-circuit to ground in the lock signal cable for unlocking.

Fault symptom[s]

- Cannot be operated with a key from the driver's door.

SIGNAL TOO LOW

CHECKING FOR PERMANENT OR INTERMITTENT FAULTS

Check that the driver's door lock can be operated with the key.

Is the function OK?

- **YES**

  see: **CHECKING THE CABLE**

- **NO**

  see: **CHECKING THE CABLE**

CHECKING THE CABLE

Check the cable between the door control module and the lock unit on the driver's door. Check for a short-circuit to ground.

DDM-0019 Central locking input (Unlocking)

Door control module terminal #A12 and driver's door terminal #1.

DDM-001A Central locking input (Locking)

Door control module terminal #A13 and driver's door terminal #5.

DDM-001B Central locking, lock cylinder

Door control module terminal #A13 and driver's door terminal #5, and door control module terminal #A12 and driver's door terminal #1.

Remedy as necessary.

Other information:

- With the ignition off, the voltage between terminal #12B and ground must be battery voltage
- To connect the breakout box, see **CONNECTING THE BREAKOUT BOX**
- For further information about signals and other values, see **SIGNAL SPECIFICATION**
- Replacing the driver's side door module. See **DRIVER DOOR MODULE (DDM), REPLACING**
- Replacing the passenger side door module. See **PASSENGER DOOR MODULE (PDM), REPLACING** .
- See **LOCK MECHANISM FRONT SIDE DOOR, REPLACING** .
- see **CHECKING WIRING AND TERMINALS** .

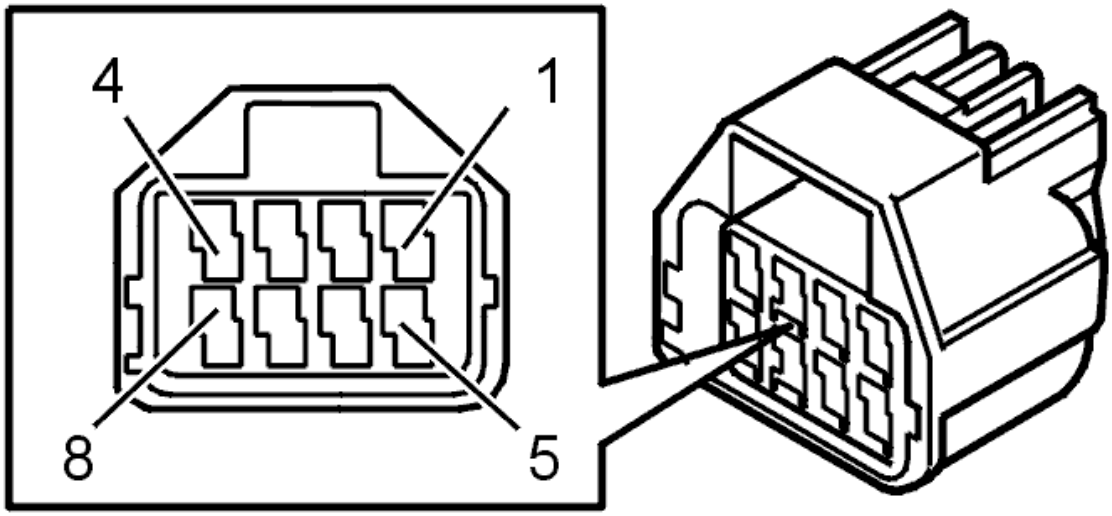

Fig. 26: Identifying Connector Terminals
Courtesy of VOLVO CARS CORPORATION

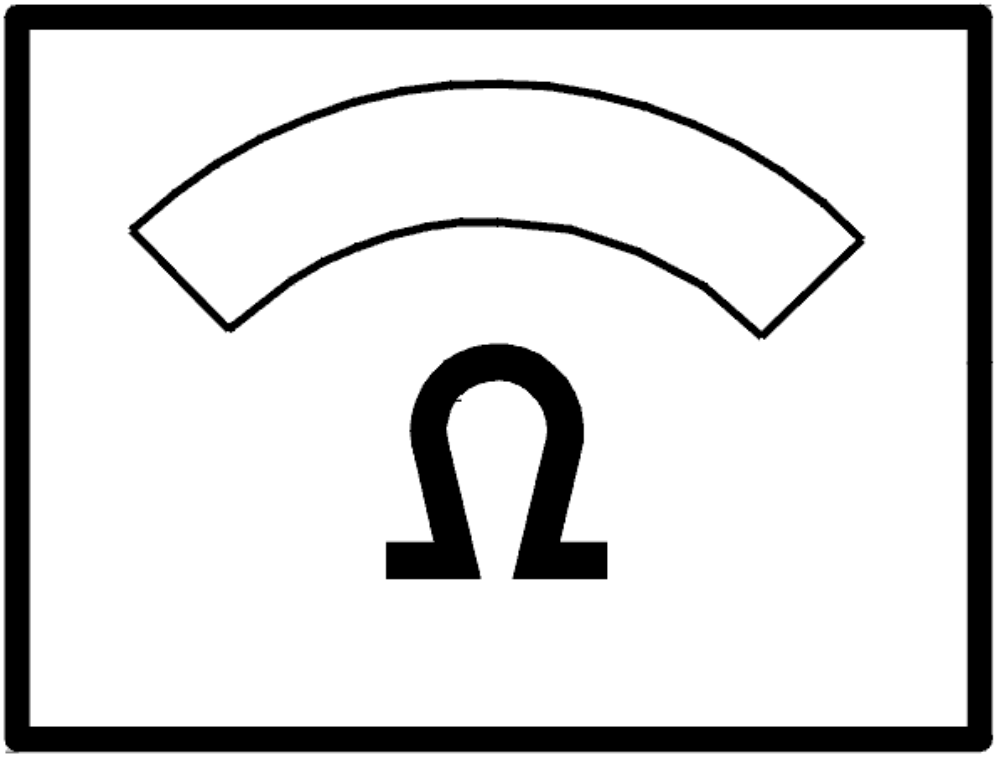

Fig. 27: Identifying Ohm Meter
Courtesy of VOLVO CARS CORPORATION

Was a fault detected?

- **YES**

  see: **VERIFICATION**

- **NO**

  see: **INFORMATION**

CHECKING THE CABLE

Check the cable between the door control module and the lock unit on the driver's door. Check for an

intermittent short-circuit to ground.

DDM-0019 Central locking input (Unlocking)

Door control module terminal #A12 and driver's door terminal #1.

DDM-001A Central locking input (Locking)

Door control module terminal #A13 and driver's door terminal #5.

DDM-001B Central locking, lock cylinder

Door control module terminal #A13 and driver's door terminal #5, and door control module terminal #A12 and driver's door terminal #1.

Remedy as necessary.

Other information:

- With the ignition off, the voltage between terminal #12B and ground must be battery voltage
- To connect the breakout box, see **CONNECTING THE BREAKOUT BOX**
- For further information about signals and other values, see **SIGNAL SPECIFICATION**
- Replacing the driver's side door module. See **DRIVER DOOR MODULE (DDM), REPLACING**
- Replacing the passenger side door module. See **PASSENGER DOOR MODULE (PDM), REPLACING** .
- See **LOCK MECHANISM FRONT SIDE DOOR, REPLACING** .
- see **CHECKING WIRING AND TERMINALS** .

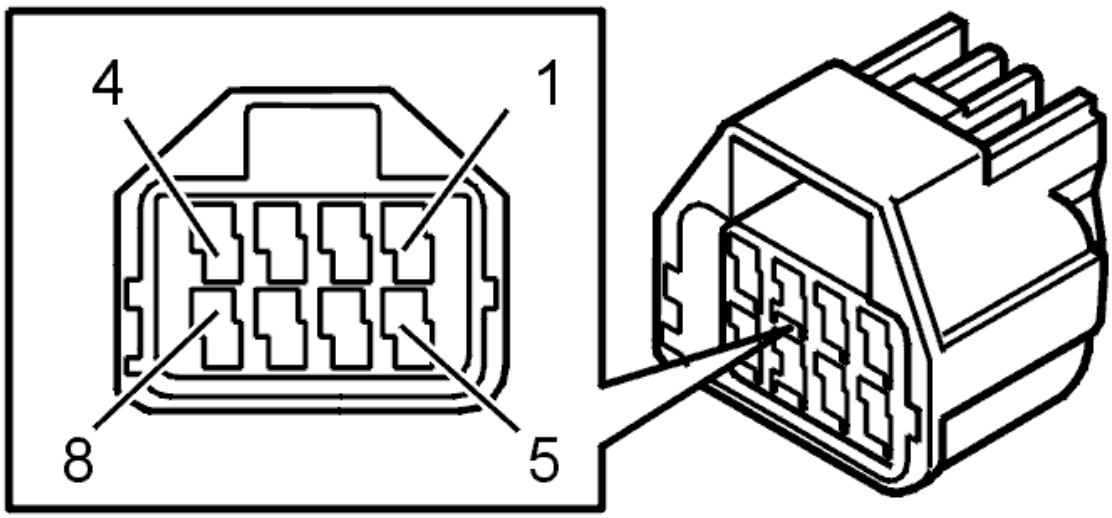

Fig. 28: Identifying Connector Terminals
Courtesy of VOLVO CARS CORPORATION

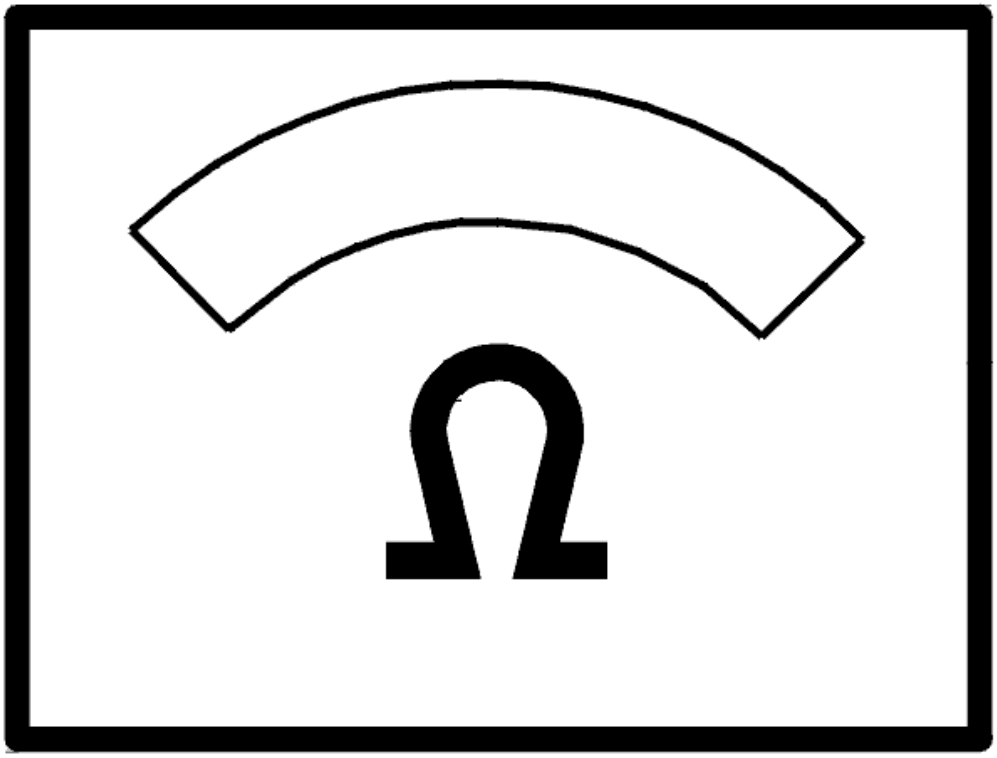

Fig. 29: Identifying Ohm Meter
Courtesy of VOLVO CARS CORPORATION

- **Continue**

  see: **INFORMATION**

VERIFICATION

VERIFICATION

HINT: After carrying out the repair, check that the fault has been remedied.

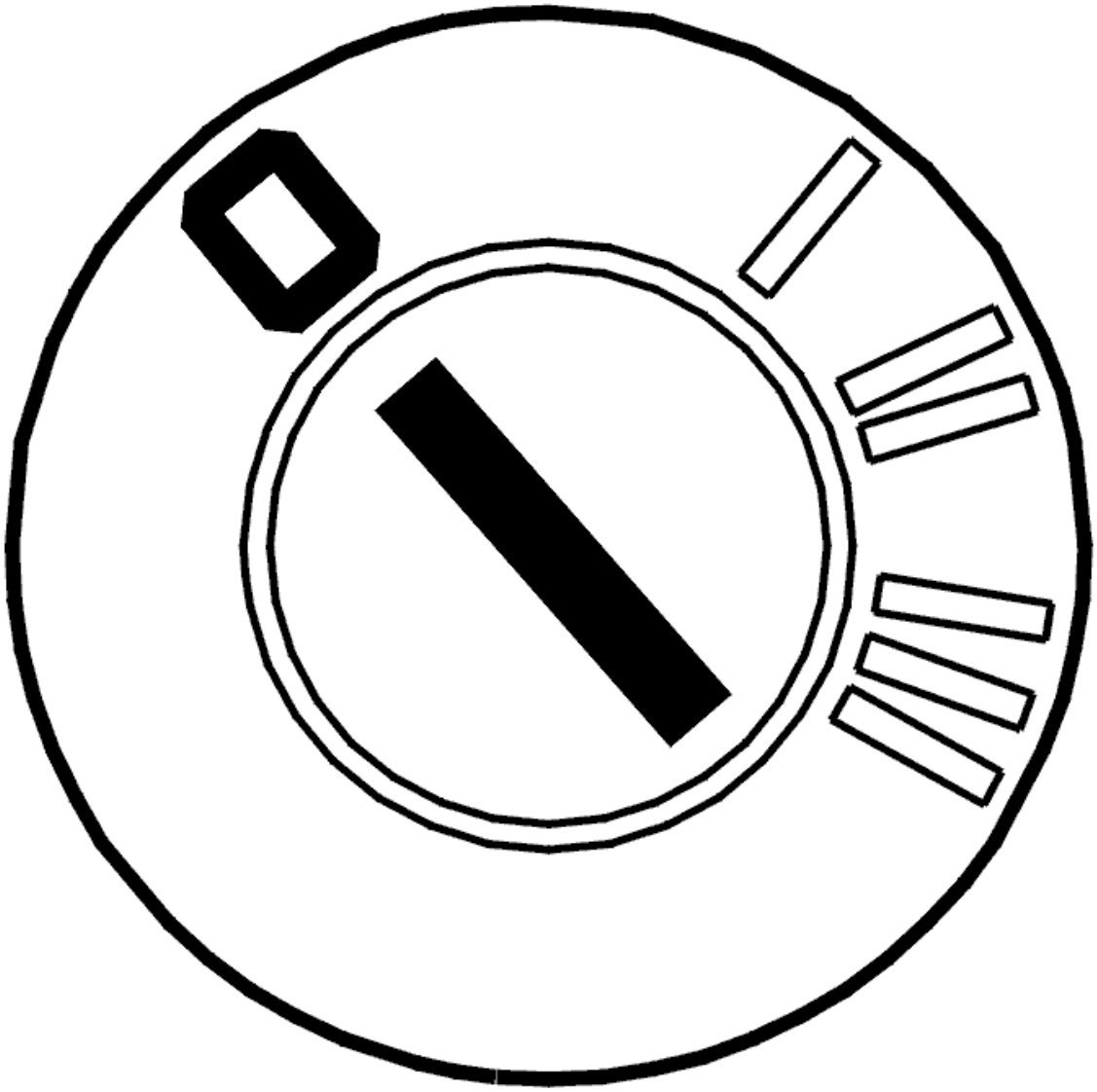

Fig. 30: Identifying Ignition OFF
Courtesy of VOLVO CARS CORPORATION

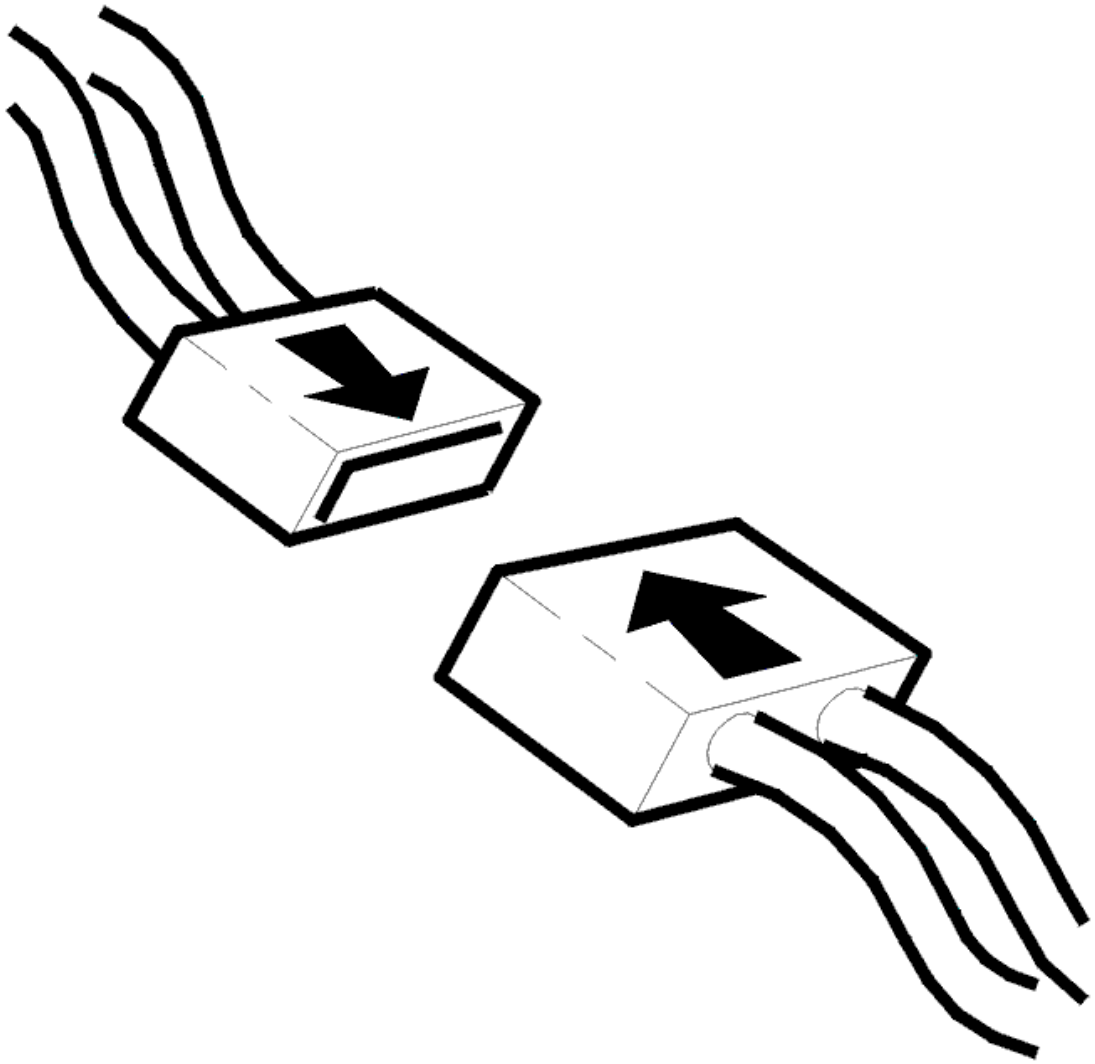

Fig. 31: Checking Connector
Courtesy of VOLVO CARS CORPORATION

- Ignition off.
- Reinstall the connectors, components etc.

  Check that the driver's door lock can be operated with the key.

Is the function OK?

- **YES**

  VERIFIED: Troubleshooting has been completed.

- **NO**

see: **INFORMATION**

INFORMATION

FAULT-TRACING INFORMATION

The fault should have been detected and remedied. As this is not the case fault-tracing has failed.

Exit fault-tracing for this diagnostic trouble code (DTC) or make another attempt.

INFORMATION

FAULT-TRACING INFORMATION

If the fault is intermittent, do not verify fault-tracing if the fault does not recur.

It is possible to view the information again, or leave fault-tracing for this diagnostic trouble code (DTC).

DDM-001A: DRIVER'S DOOR LOCK. SIGNAL TOO LOW (2003-2012)

DIAGNOSTIC TROUBLE CODE (DTC) INFORMATION

Condition

Diagnostic trouble code (DTC) DDM-001A is stored if the driver's door module registers a low signal in the lock signal cable (locking) for more than 10 seconds.

Substitute Value

- None.

Possible Source

- The lock has jammed in the locked position.
- Defective locking switch. (Short-circuit in the locking switch.)
- Short-circuit to ground in the lock signal cable (LK).

Fault symptom[s]

- Cannot be operated with a key from the driver's door.

SIGNAL TOO LOW

see **SIGNAL TOO LOW**

DDM-001B: DRIVER'S DOOR LOCK. SIGNAL TOO LOW (2003-2004)

DIAGNOSTIC TROUBLE CODE (DTC) INFORMATION

Condition

Diagnostic trouble code (DTC) DDM-001B is stored if the driver's door module registers a low signal in the two lock signal cables (locking and unlocking) for more than 2 seconds.

Substitute Value

- None.

Possible Source

- Defective locking switch. (Short-circuit in the locking switch.)
- Short-circuit to ground in the two lock signal cables (ULK+LK).

Fault symptom[s]

- Cannot be operated with a key from the driver's door.

SIGNAL TOO LOW

see **SIGNAL TOO LOW**

DDM-001D: CENTRAL LOCKING BUTTON. INTERNAL FAULT (2003-2012)

DIAGNOSTIC TROUBLE CODE INFORMATION

Condition

If driver door module (DDM) registers that the central locking button is depressed for more than 60 seconds, error code DDM-001D is set.

Substitute Value

- Nothing.

Possible Source

- Button depressed for more than 60 seconds.
- Defective central locking button.

Fault symptom[s]

- Cannot be operated from central-locking switch.

SIGNAL FAULTY

FAULT-TRACING INFORMATION

INFORMATION

There is no fault-tracing for this diagnostic fault code (DTC).

DDM-0034: CONTROL, DRIVER'S WINDOW. FAULTY SIGNAL (2005-2012)

DIAGNOSTIC TROUBLE CODE INFORMATION

Condition

If control unit registers that UP and DOWN signals to electric window lift on driver door are activated at the same time, diagnostic trouble code DDM-0034 is displayed.

Substitute Value

- Nothing.

Possible Source

- Electric window lift button on driver door is locked in two positions.

Fault symptom[s]

- Electric window lift on driver side does not work.

FAULTY SIGNAL

CHECKING FOR PERMANENT OR INTERMITTENT FAULTS

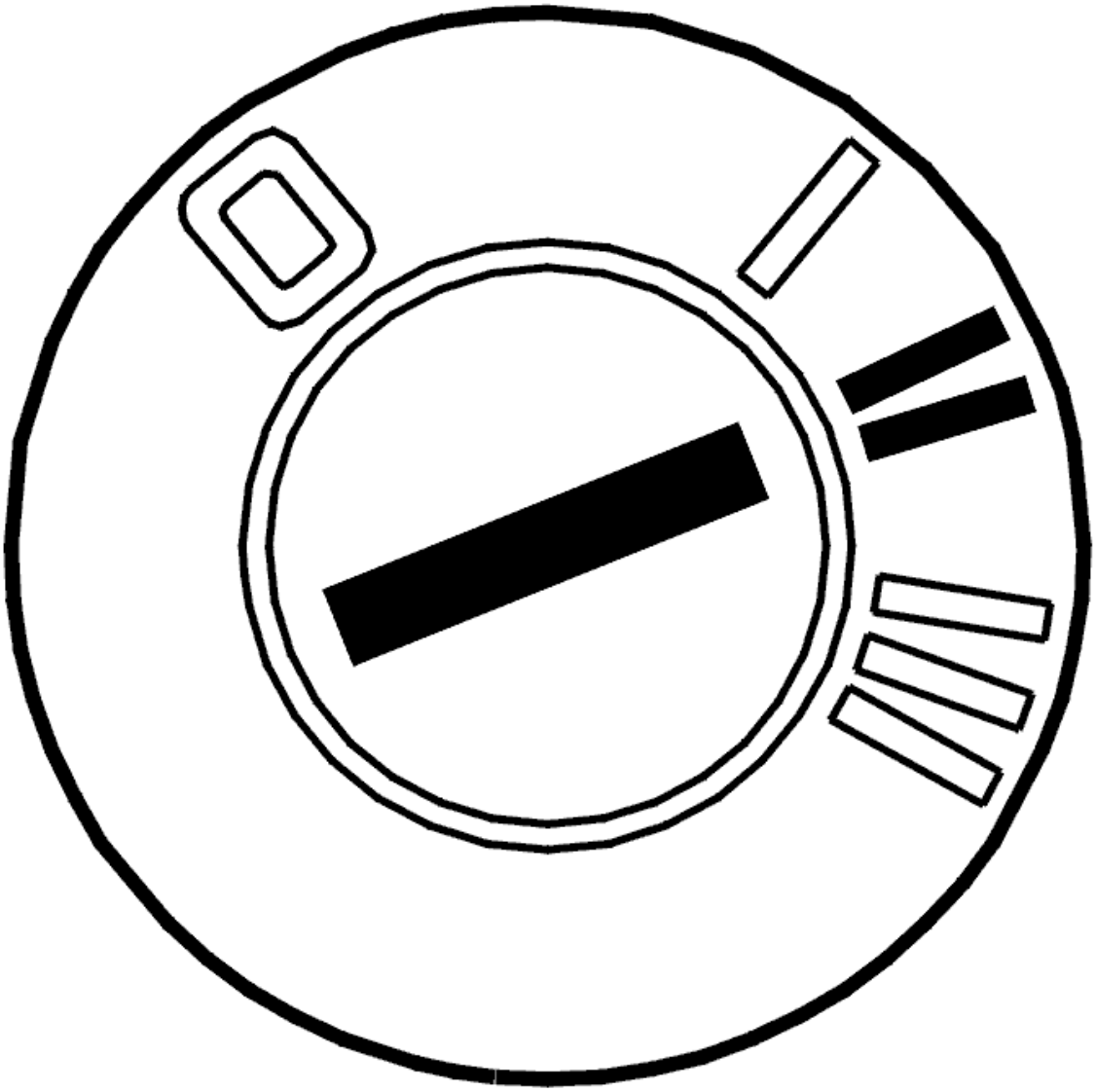

Fig. 32: Identifying Ignition ON
Courtesy of VOLVO CARS CORPORATION

- Ignition on.

  Operate each function and check the function.

Are the controls working?

- **YES**

  see: **FAULT-TRACING INFORMATION**

- **NO**

  see: **REPLACING THE COMPONENT**

REPLACING THE COMPONENT

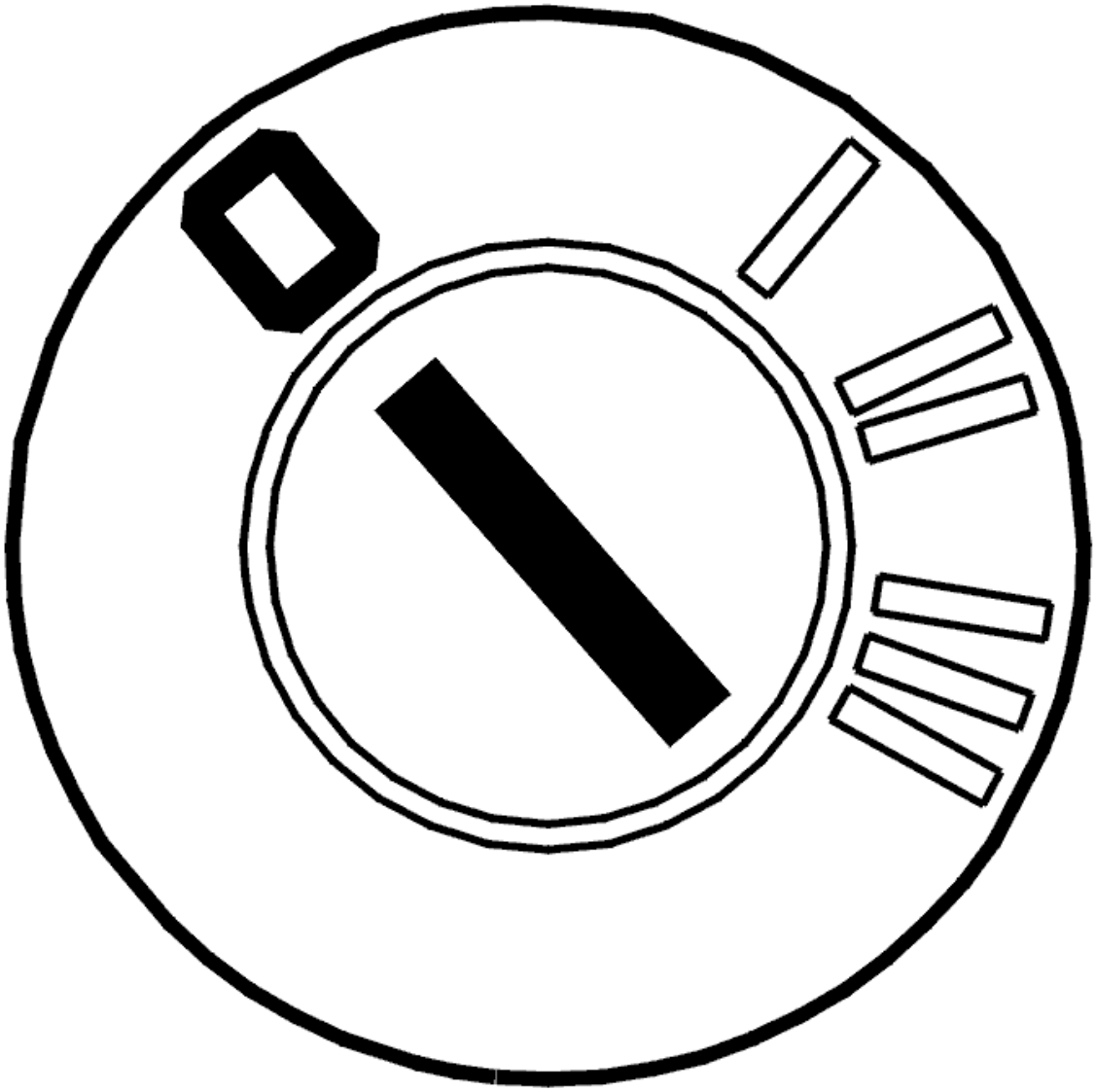

Fig. 33: Identifying Ignition OFF
Courtesy of VOLVO CARS CORPORATION

- Ignition off.

  The control module has registered an internal fault.

  NOTE: A new control module is delivered without software. The control module must be programmed when it has been replaced.

  Other information:

  - Replacing the driver's side door module. See **DRIVER DOOR MODULE (DDM), REPLACING**

- Replacing the passenger side door module. See **PASSENGER DOOR MODULE (PDM), REPLACING** .

After replacing the control module the window position must be initialized.

Ignition on.

Move the window to its upper limit position using manual control.

Initialize the window.

During initialization, the window will automatically go down to its lowest position and then go back up again.

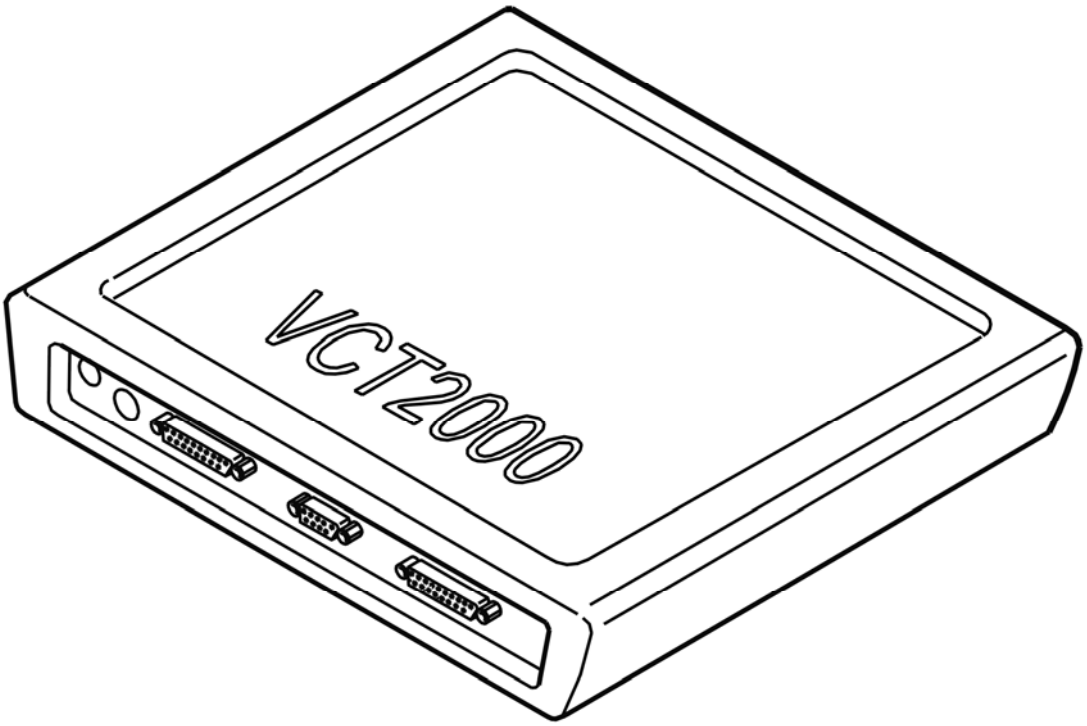

Fig. 34: Identifying VCT2000 Diagnostic Tool Symbol In VIDA
Courtesy of VOLVO CARS CORPORATION

FAULT-TRACING INFORMATION

FAULT-TRACING INFORMATION

Fault-tracing indicates that the control module had previously identified an intermittent fault, but that the fault is no longer present.

- **Continue**

  see: **INFORMATION**

INFORMATION

FAULT-TRACING INFORMATION

If the fault is intermittent, do not verify fault-tracing if the fault does not recur.

It is possible to view the information again, or leave fault-tracing for this diagnostic trouble code (DTC).

DDM-0034: DRIVER-SIDE WINDOW CONTROL. SIGNAL FAULTY (2003-2004)

DIAGNOSTIC TROUBLE CODE INFORMATION

see **DIAGNOSTIC TROUBLE CODE INFORMATION**

FAULTY SIGNAL

CHECKING FOR PERMANENT OR INTERMITTENT FAULTS

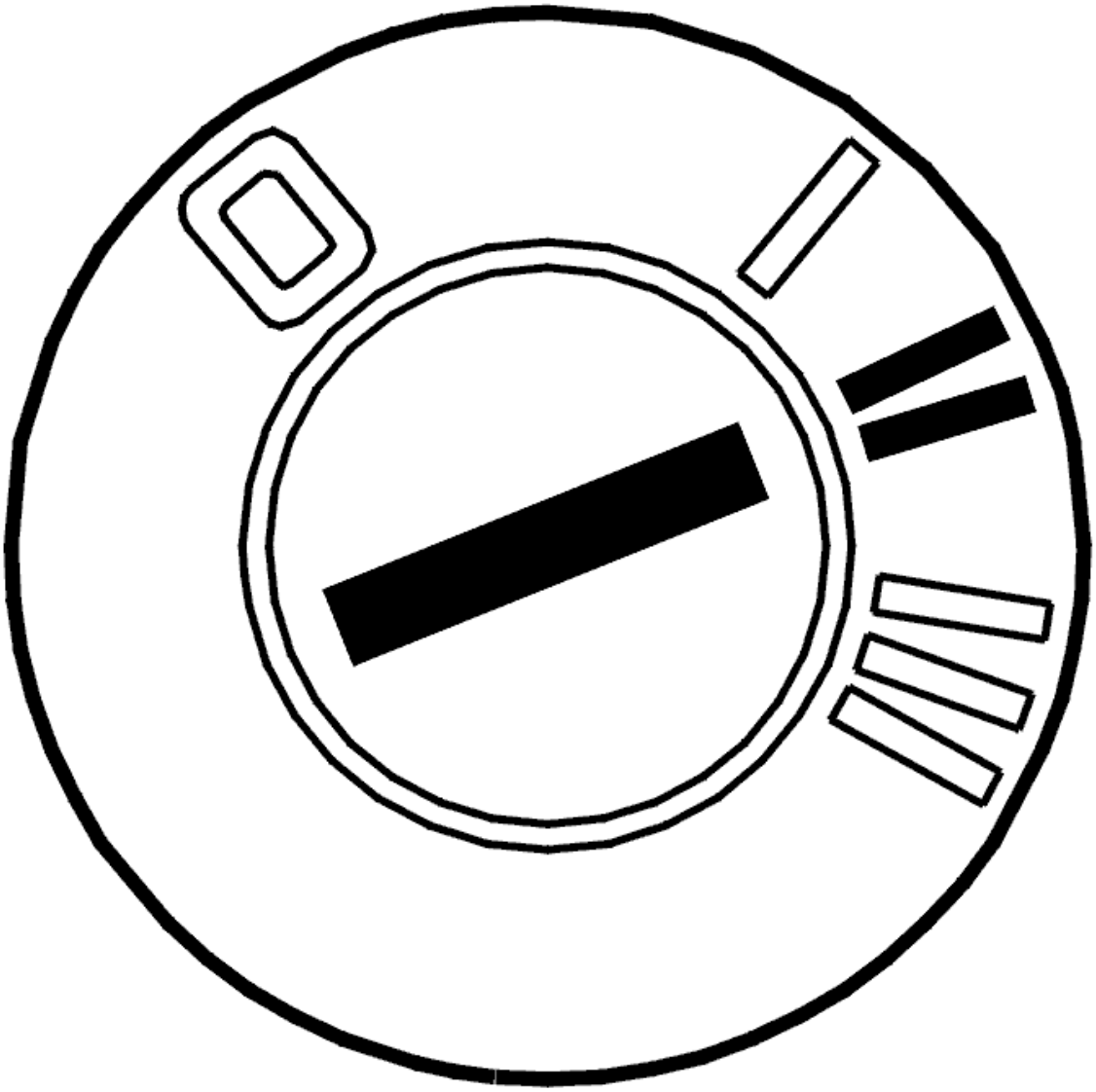

Fig. 35: Identifying Ignition ON
Courtesy of VOLVO CARS CORPORATION

- Ignition on.

  Operate each function and check the function.

Are the controls working?

- **YES**

  see: **FAULT-TRACING INFORMATION**

- **NO**

  see: **REPLACING THE COMPONENT**

REPLACING THE COMPONENT

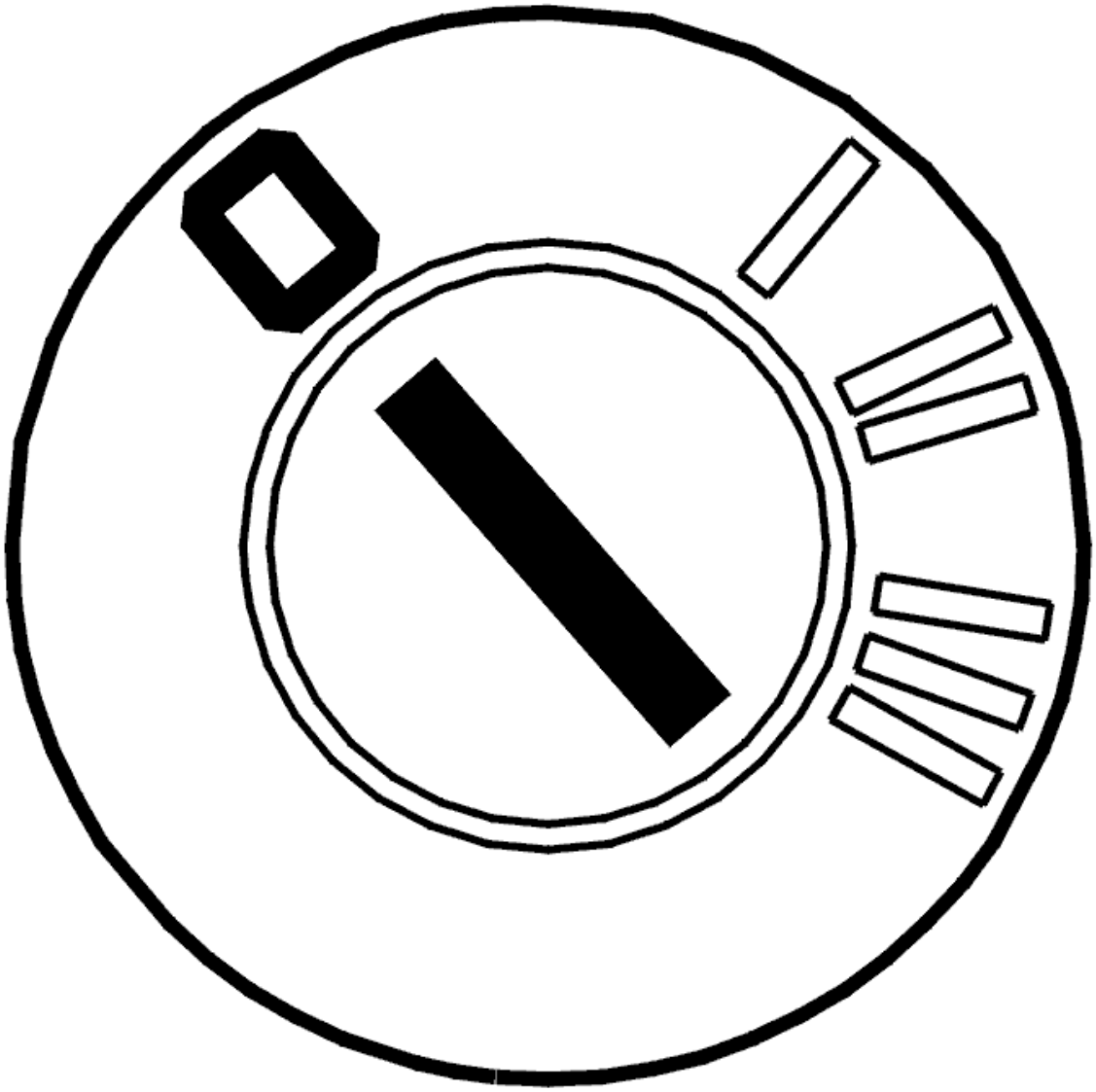

Fig. 36: Identifying Ignition OFF
Courtesy of VOLVO CARS CORPORATION

- Ignition off.

  The control module has registered an internal fault.

  NOTE: A new control module is delivered without software. The control module must be programmed when it has been replaced.

  Other information:

  - Replacing the driver's side door module. See **DRIVER DOOR MODULE (DDM), REPLACING**

- Replacing the passenger side door module. See **PASSENGER DOOR MODULE (PDM), REPLACING** .

After replacing the control module the window position must be initialized.

Ignition on.

Move the window to its upper limit position using manual control.

Initialize the window.

From model year 2003 inclusive, the window will lower approximately 10 centimeters and then close again during initialization.

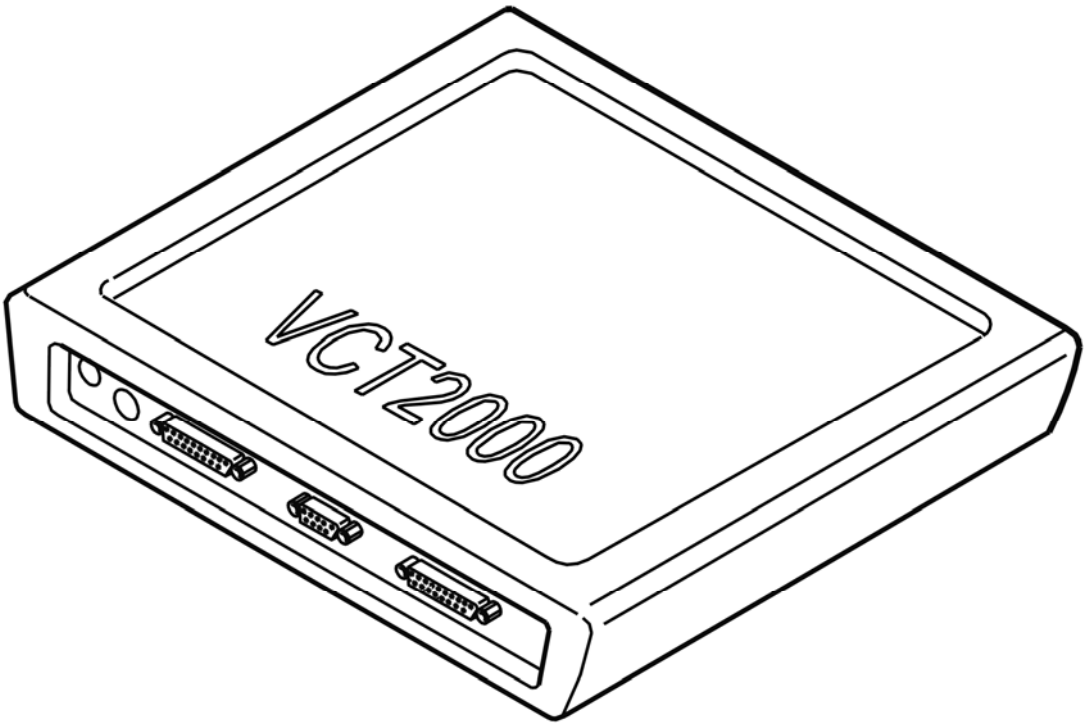

Fig. 37: Identifying VCT2000 Diagnostic Tool Symbol In VIDA
Courtesy of VOLVO CARS CORPORATION

FAULT-TRACING INFORMATION

FAULT-TRACING INFORMATION

Fault-tracing indicates that the control module had previously identified an intermittent fault, but that the fault is no longer present.

- **Continue**

  see: **INFORMATION**

INFORMATION

FAULT-TRACING INFORMATION

If the fault is intermittent, do not verify fault-tracing if the fault does not recur.

It is possible to view the information again, or leave fault-tracing for this diagnostic trouble code (DTC).

DDM-0035: CONTROL, PASSENGER WINDOW. FAULTY SIGNAL (2005-2012)

DIAGNOSTIC TROUBLE CODE INFORMATION

Condition

If control unit registers that UP and DOWN signals to electric window lift on passenger door from driver door are active at the same time, diagnostic trouble code DDM-0035 is displayed.

Substitute Value

- Nothing.

Possible Source

- Driver-door switch has stuck in two positions.

Fault symptom[s]

- Electric window lift on passenger side does not work.

FAULTY SIGNAL

see **FAULTY SIGNAL**

DDM-0035: PASSENGER-SIDE WINDOW CONTROL. SIGNAL FAULTY (2003-2004)

DIAGNOSTIC TROUBLE CODE INFORMATION

see **DIAGNOSTIC TROUBLE CODE INFORMATION**

FAULTY SIGNAL

see **FAULTY SIGNAL**

DDM-0036: CONTROL, LEFT REAR SIDE WINDOW. FAULTY SIGNAL (2003-2004)

DIAGNOSTIC TROUBLE CODE INFORMATION

Condition

If control unit registers that UP and DOWN signals to electric window lift on rear left door from driver door are active at the same time, diagnostic trouble code DDM-0036 is displayed.

Substitute Value

- Nothing.

Possible Source

- Driver-door switch has stuck in two positions.

Fault symptom[s]

- Electric window lift does not work.

FAULTY SIGNAL

see **FAULTY SIGNAL**

DDM-0036: CONTROL, LEFT REAR SIDE WINDOW. FAULTY SIGNAL (2005-2012)

DIAGNOSTIC TROUBLE CODE INFORMATION

see **DIAGNOSTIC TROUBLE CODE INFORMATION**

FAULTY SIGNAL

see **FAULTY SIGNAL**

DDM-0037: CONTROL, RIGHT REAR SIDE WINDOW. FAULTY SIGNAL (2003-2004)

DIAGNOSTIC TROUBLE CODE INFORMATION

Condition

If control unit registers that UP and DOWN signals to electric window lift on rear right door from driver door are active at the same time, diagnostic trouble code DDM-0037 is displayed.

Substitute Value

- Nothing.

Possible Source

- Driver-door switch has stuck in two positions.

Fault symptom[s]

- Electric window lift does not work.

FAULTY SIGNAL

see **FAULTY SIGNAL**

DDM-0037: CONTROL, RIGHT REAR SIDE WINDOW. FAULTY SIGNAL (2005-2012)

DIAGNOSTIC TROUBLE CODE INFORMATION

see **DIAGNOSTIC TROUBLE CODE INFORMATION**

FAULTY SIGNAL

see **FAULTY SIGNAL**

DDM-0038: CONTROL, DOOR MIRROR. FAULTY SIGNAL (2005-2012)

DIAGNOSTIC TROUBLE CODE INFORMATION

Condition

If control unit registers that operation button for external rear-view mirror electric motors is activated in more than one position at the same time, diagnostic trouble code DDM-0038 is displayed.

Substitute Value

- Nothing.

Possible Source

- Operation button for external rear-view mirror electric motors does not work.

Fault symptom[s]

- External rear-view mirror operation does not work.

FAULTY SIGNAL

see **FAULTY SIGNAL**

DDM-0038: CONTROL, DOOR MIRROR. FAULTY SIGNAL (2003-2004)

DIAGNOSTIC TROUBLE CODE INFORMATION

see **DIAGNOSTIC TROUBLE CODE INFORMATION**

FAULTY SIGNAL

see **FAULTY SIGNAL**

DDM-0039: CHILD-PROOF LOCK. STUCK IN THE ACTIVE POSITION (2005-2012)

DIAGNOSTIC TROUBLE CODE INFORMATION

Condition

If control unit registers that CS signal wire is grounded for more than 10 seconds, diagnostic trouble code DDM-0039 is displayed.

Substitute Value

- Nothing.

Possible Source

- Switch for child safety lock has stuck in one position.

Fault symptom[s]

- Child safety lock not working.

STUCK IN THE ACTIVE POSITION

CHECKING FOR PERMANENT OR INTERMITTENT FAULTS

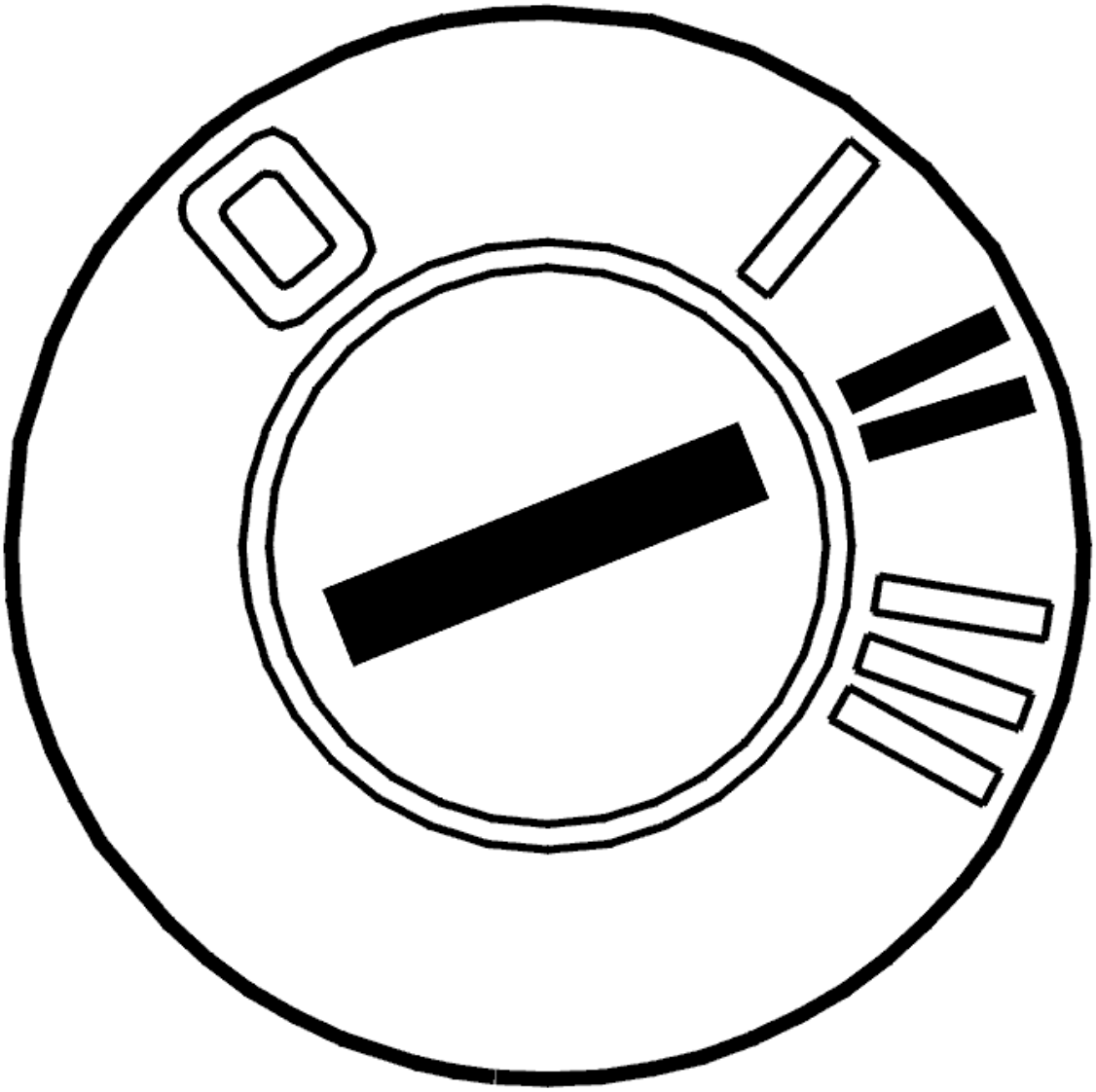

Fig. 38: Identifying Ignition ON
Courtesy of VOLVO CARS CORPORATION

- Ignition on.

  Check if the child-proof lock button is working.

Is the child-proof button working?

- **YES**

  see: **INTERMITTENT FAULT**

- **NO**

  see: **REPLACING THE COMPONENT**

REPLACING THE COMPONENT

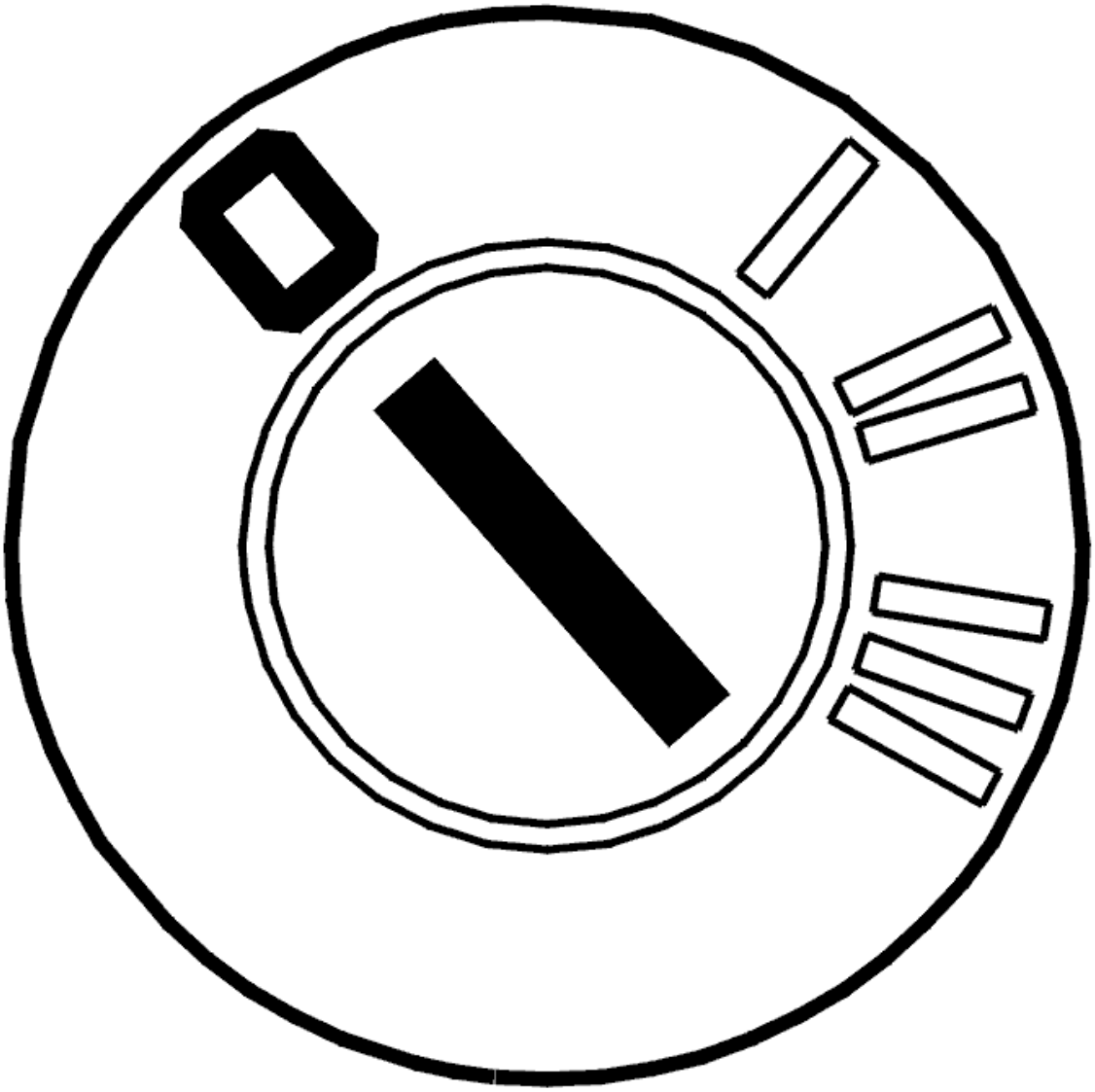

Fig. 39: Identifying Ignition OFF
Courtesy of VOLVO CARS CORPORATION

- Ignition off.

  The driver door module (DDM) has registered an internal fault.

  NOTE: A new control module is delivered without software. The control module must be programmed in order to function after replacement.

  - Ignition on.

  After replacing the control module the window position must be initialized.

Move the window to its upper limit position using manual control.

Initialize the window.

During initialization, the window will automatically go down to its lowest position and then go back up again.

Other information:

- Replacing the driver's side door module. See **DRIVER DOOR MODULE (DDM), REPLACING**
- Replacing the passenger side door module. See **PASSENGER DOOR MODULE (PDM), REPLACING** .

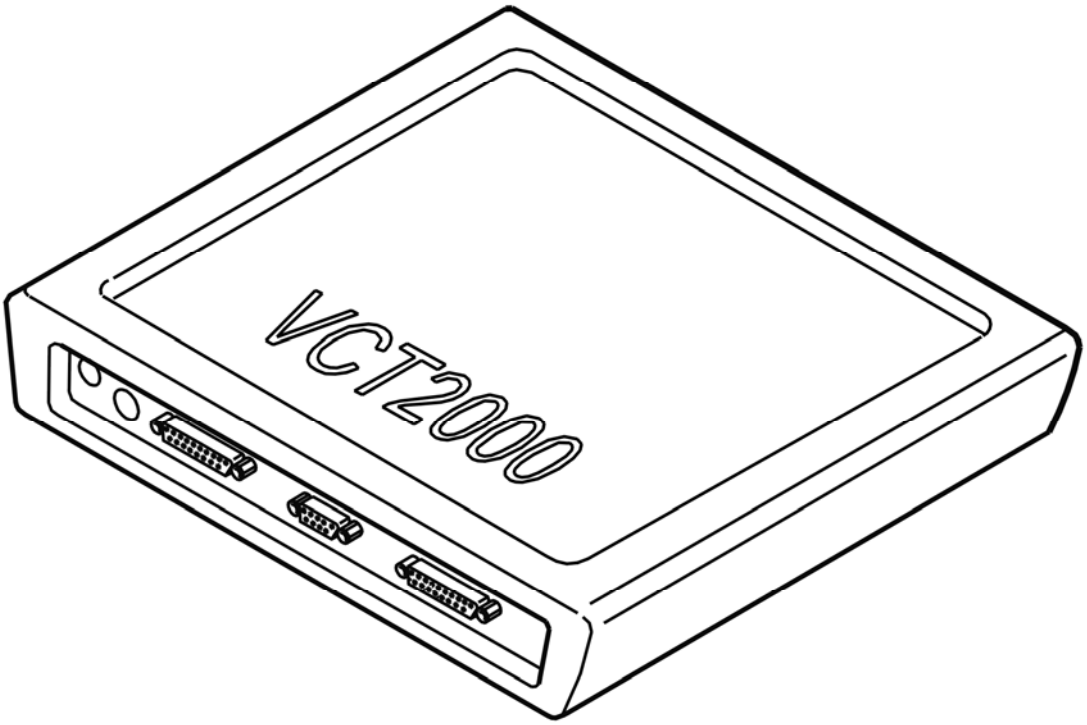

Fig. 40: Identifying VCT2000 Diagnostic Tool Symbol In VIDA
Courtesy of VOLVO CARS CORPORATION

INTERMITTENT FAULT

The control module has previously registered an internal fault.

This may be because the child-proof button has been depressed for more than 10 seconds.

Fault-trace and erase the diagnostic trouble codes (DTCs). Switch the ignition on and off and read off diagnostic trouble codes (DTCs) again.

If the diagnostic trouble code (DTC) is not still stored, the fault is due to the above.

- **Continue**

  see: **INFORMATION**

INFORMATION

FAULT-TRACING INFORMATION

If the fault is intermittent, do not verify fault-tracing if the fault does not recur.

It is possible to view the information again, or leave fault-tracing for this diagnostic trouble code (DTC).

DDM-0039: CHILD-PROOF LOCK. STUCK IN THE ACTIVE POSITION (2003-2004)

DIAGNOSTIC TROUBLE CODE INFORMATION

see **DIAGNOSTIC TROUBLE CODE INFORMATION**

STUCK IN THE ACTIVE POSITION

CHECKING FOR PERMANENT OR INTERMITTENT FAULTS

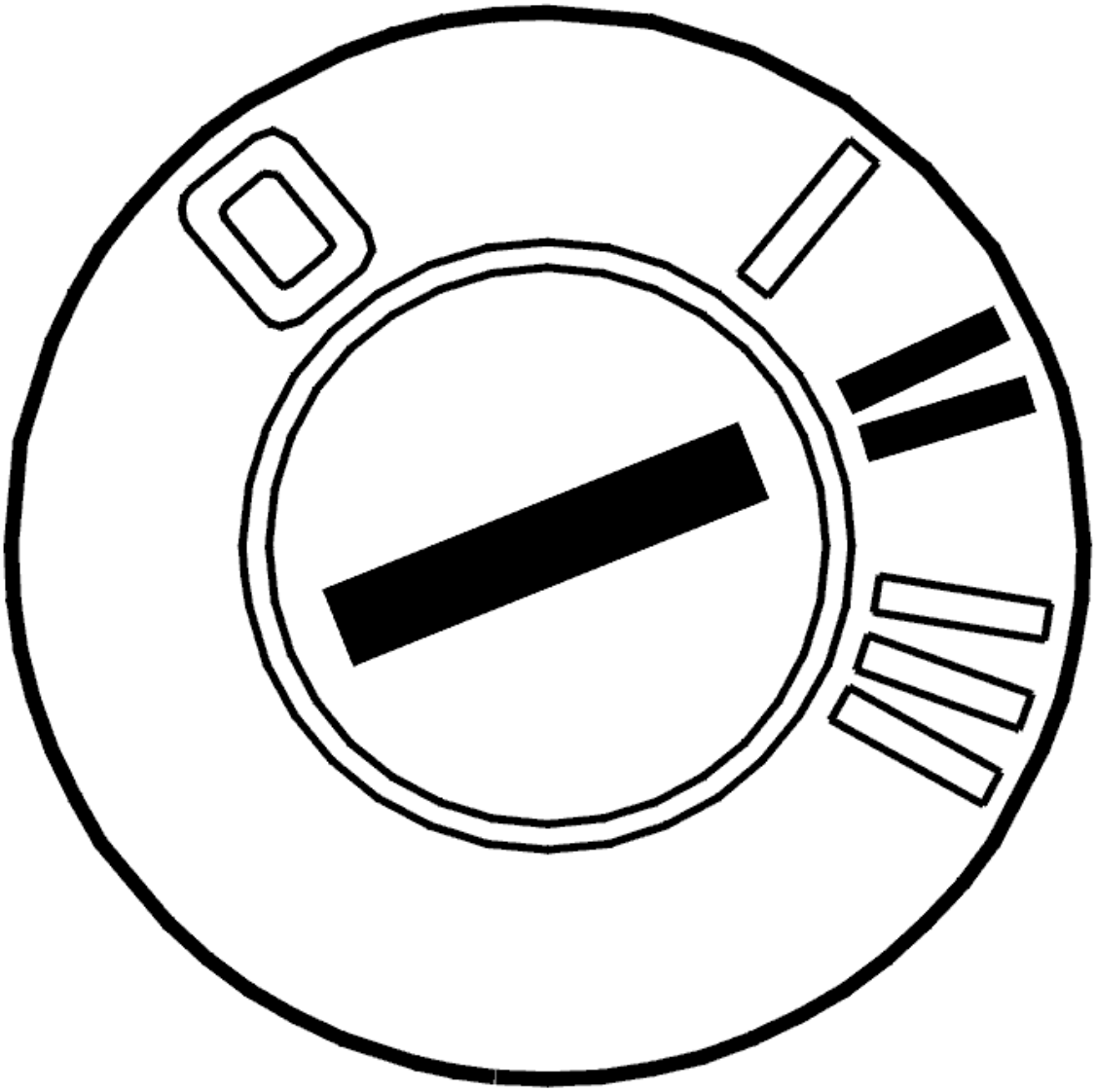

Fig. 41: Identifying Ignition ON
Courtesy of VOLVO CARS CORPORATION

- Ignition on.

  Check if the child-proof button is working.

Is the child-proof button working?

- **YES**

  see: **INTERMITTENT FAULT**

- **NO**

  see: **REPLACING THE COMPONENT**

REPLACING THE COMPONENT

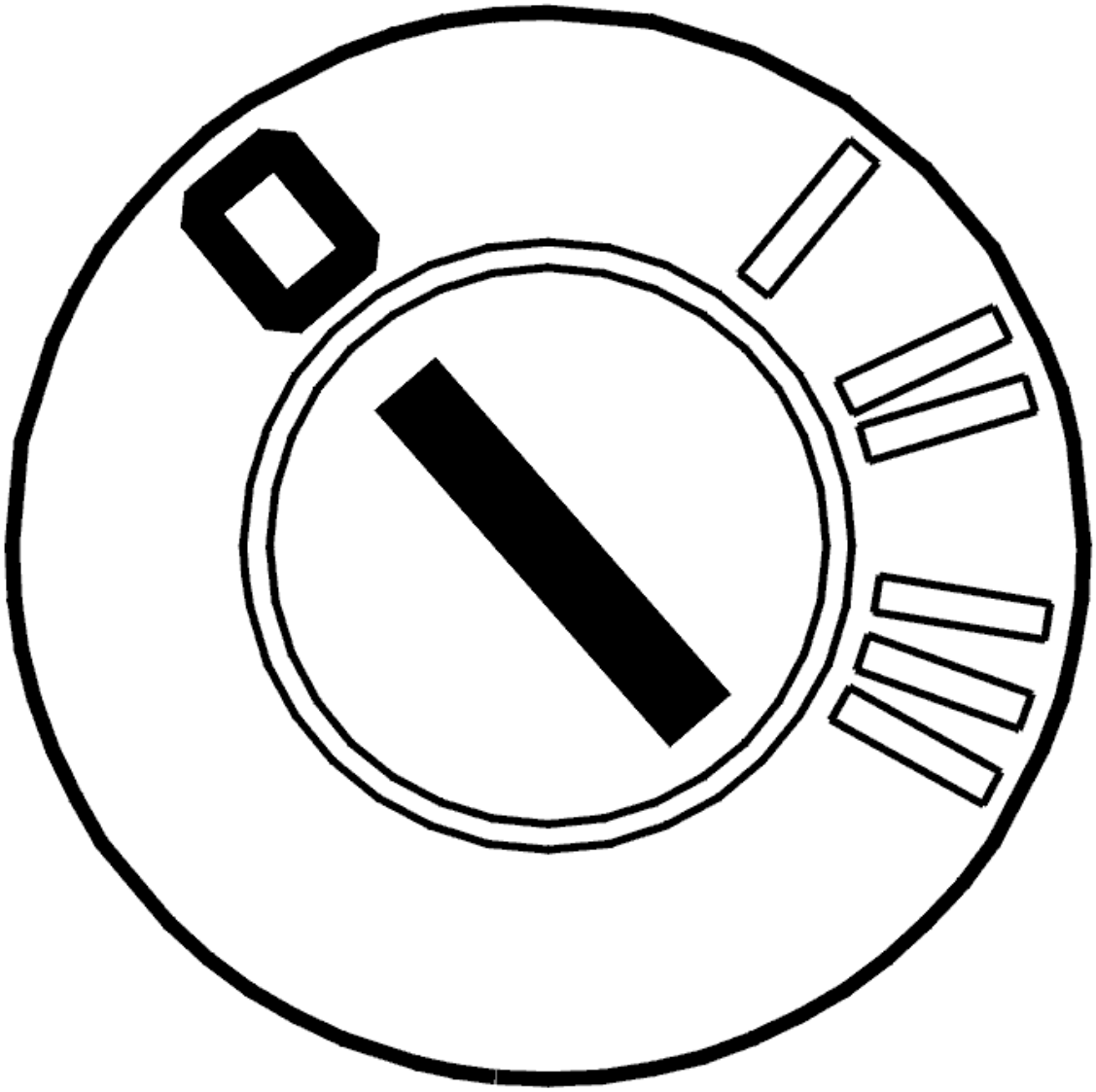

Fig. 42: Identifying Ignition OFF
Courtesy of VOLVO CARS CORPORATION

- Ignition off.

  The driver door module (DDM) has registered an internal fault.

  NOTE: A new control module is delivered without software. The control module must be programmed when it has been replaced.

  Other information:

  - Replacing the driver's side door module. See **DRIVER DOOR MODULE (DDM), REPLACING**

- Replacing the passenger side door module. See **PASSENGER DOOR MODULE (PDM), REPLACING** .

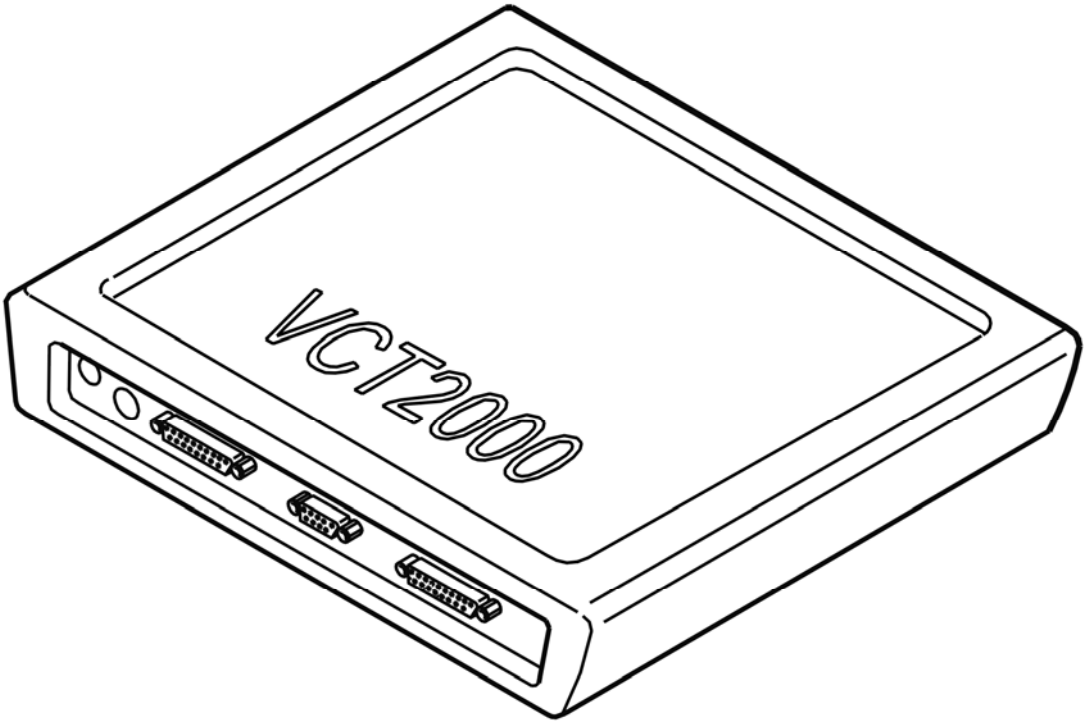

Fig. 43: Identifying VCT2000 Diagnostic Tool Symbol In VIDA
Courtesy of VOLVO CARS CORPORATION

- Ignition on.

  After replacing the control module the window position must be initialized.

  Move the window to its upper limit position using manual control.

  Initialize the window.

  From model year 2003 inclusive, the window will lower approximately 10 centimeters and then close again during initialization

INTERMITTENT FAULT

- The control module has previously registered an internal fault.

  This may be because the child-proof button has been depressed for more than 10 seconds.

Fault-trace and erase the diagnostic trouble codes (DTCs). Switch the ignition on and off and read off diagnostic trouble codes (DTCs) again.

If the diagnostic trouble code (DTC) is not still stored, the fault is due to the above.

- **Continue**

  see: **INFORMATION**

INFORMATION

FAULT-TRACING INFORMATION

If the fault is intermittent, do not verify fault-tracing if the fault does not recur.

It is possible to view the information again, or leave fault-tracing for this diagnostic trouble code (DTC).

DDM-003B: CONTROL, DRIVER'S WINDOW. FAULTY SIGNAL (2003-2004)

DIAGNOSTIC TROUBLE CODE INFORMATION

Condition

If control unit registers that electric window-lift switch on driver door is activated for more than 60 seconds, diagnostic trouble code DDM-003B is displayed.

Substitute Value

- Nothing.

Possible Source

- Electric window lift switch on driver door has stuck in an activated position.

Fault symptom[s]

- Electric window lift on driver side does not work.

FAULTY SIGNAL

CHECKING FOR PERMANENT OR INTERMITTENT FAULTS

Operate the window to its limit positions.

DDM-003B: Driver's window

DDM-003C: Passenger window

DDM-003D: Left rear side window

DDM-003E: Right rear side window

Is the power window control operating correctly?

- **YES**

  see: **FAULT-TRACING INFORMATION**

- **NO**

  see: **CHECKING THE OPERATION OF THE WINDOW**

CHECKING THE OPERATION OF THE WINDOW

Check that the button for operating the window is in the correct position. Check that the button has not jammed in an incorrect position. Press the button a few times and try to run the window up and down.

Is the power window control operating correctly?

- **YES**

  see: **FAULT-TRACING INFORMATION**

- **NO**

  see: **REPLACING THE COMPONENT**

REPLACING THE COMPONENT

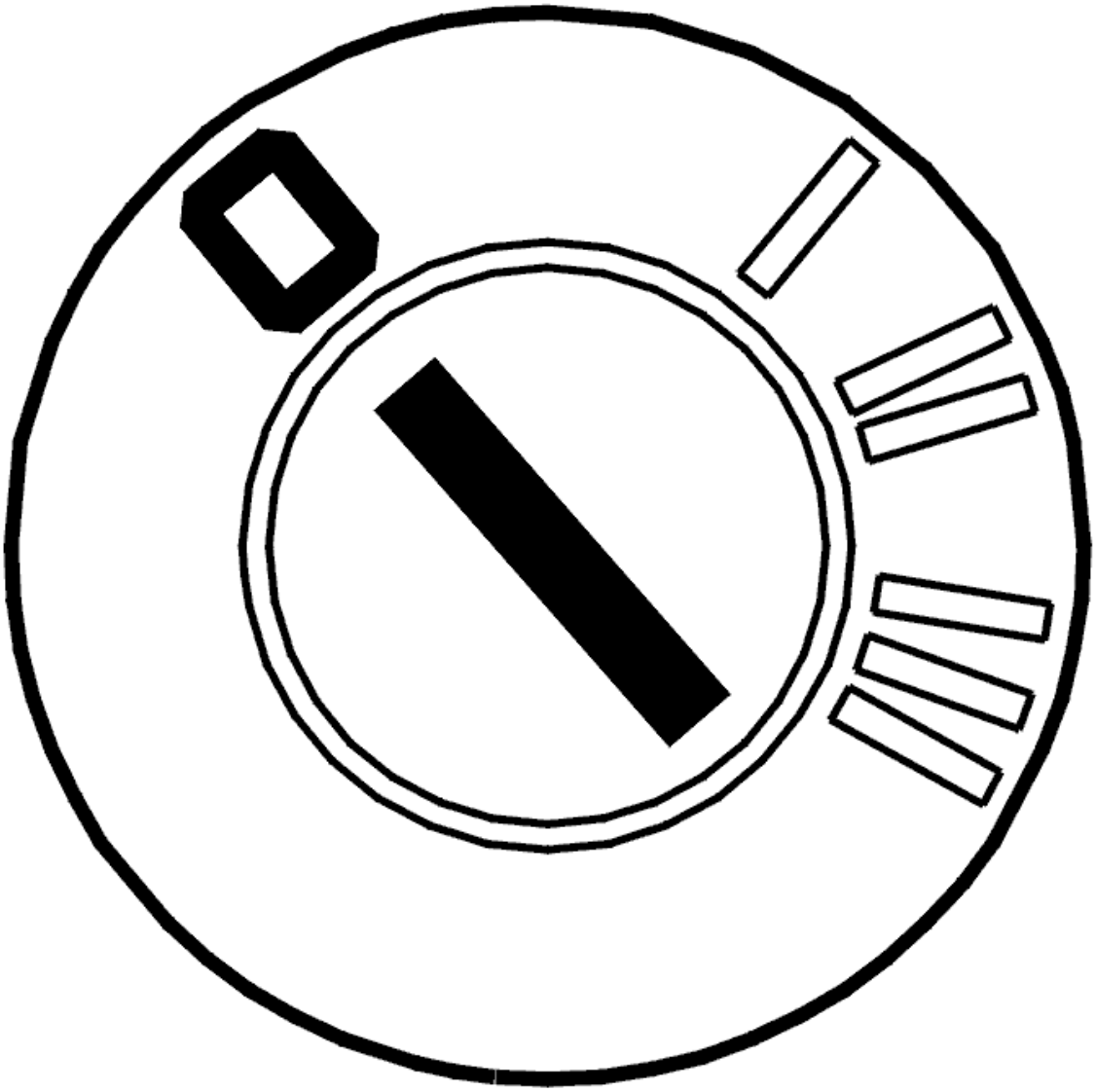

Fig. 44: Identifying Ignition OFF
Courtesy of VOLVO CARS CORPORATION

- Ignition off.

The driver door module (DDM) has registered an internal fault.

NOTE: **A new control module is delivered without software. The control module must be programmed when it has been replaced.**

Other information:

- Replacing the driver's side door module. See **DRIVER DOOR MODULE (DDM), REPLACING**
- Replacing the passenger side door module. See **PASSENGER DOOR MODULE (PDM), REPLACING** .

After replacing the control module the window position must be initialized.

Ignition on.

Move the window to its upper limit position using manual control.

Initialize the window.

From model year 2003 inclusive, the window will lower approximately 10 centimeters and then close again during initialization.

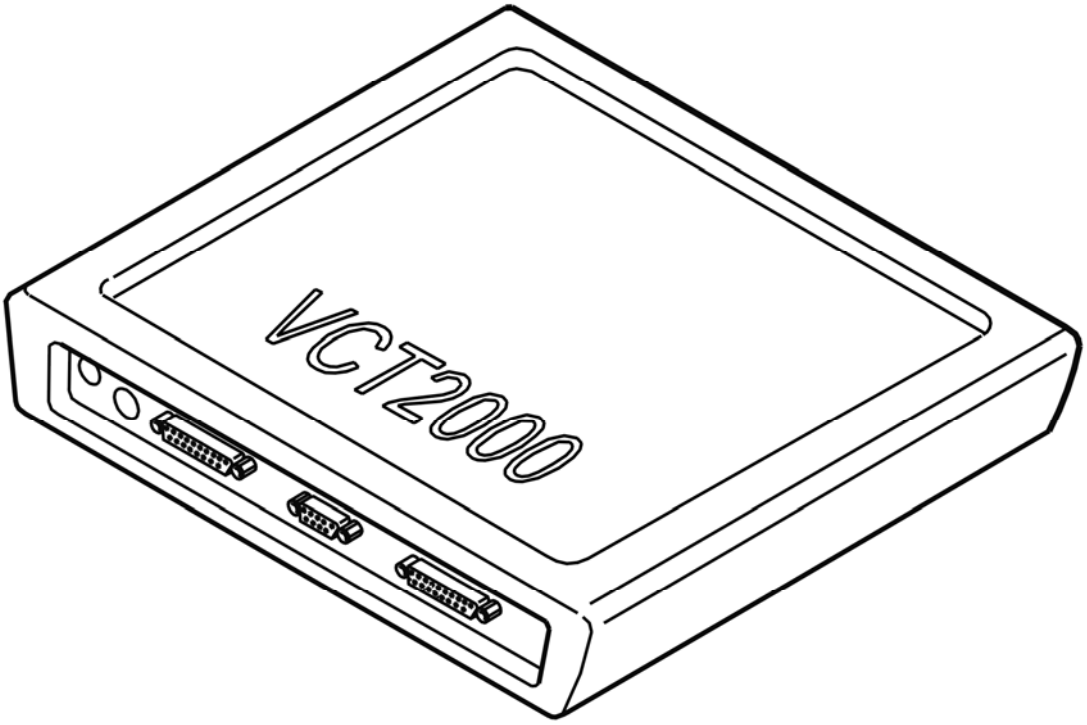

Fig. 45: Identifying VCT2000 Diagnostic Tool Symbol In VIDA
Courtesy of VOLVO CARS CORPORATION

FAULT-TRACING INFORMATION

FAULT-TRACING INFORMATION

Fault-tracing indicates that the control module had previously identified an intermittent fault, but that the fault is no longer present.

- **Continue**

  see: **INFORMATION**

INFORMATION

FAULT-TRACING INFORMATION

If the fault is intermittent, do not verify fault-tracing if the fault does not recur.

It is possible to view the information again, or leave fault-tracing for this diagnostic trouble code (DTC).

DDM-003B: CONTROL, DRIVER'S WINDOW. FAULTY SIGNAL (2005-2012)

DIAGNOSTIC TROUBLE CODE INFORMATION

see **DIAGNOSTIC TROUBLE CODE INFORMATION**

FAULTY SIGNAL

CHECKING FOR PERMANENT OR INTERMITTENT FAULTS

Operate the window to its limit positions.

DDM-003B: Driver's window

DDM-003C: Passenger window

DDM-003D: Left rear side window

DDM-003E: Right rear side window

Is the power window control operating correctly?

- **YES**

  see: **FAULT-TRACING INFORMATION**

- **NO**

  see: **CHECKING THE OPERATION OF THE WINDOW**

CHECKING THE OPERATION OF THE WINDOW

Check that the button for operating the window is in the correct position. Check that the button has not jammed in an incorrect position. Press the button a few times and try to run the window up and down.

Is the power window control operating correctly?

- **YES**

see: **FAULT-TRACING INFORMATION**

- **NO**

  see: **REPLACING THE COMPONENT**

REPLACING THE COMPONENT

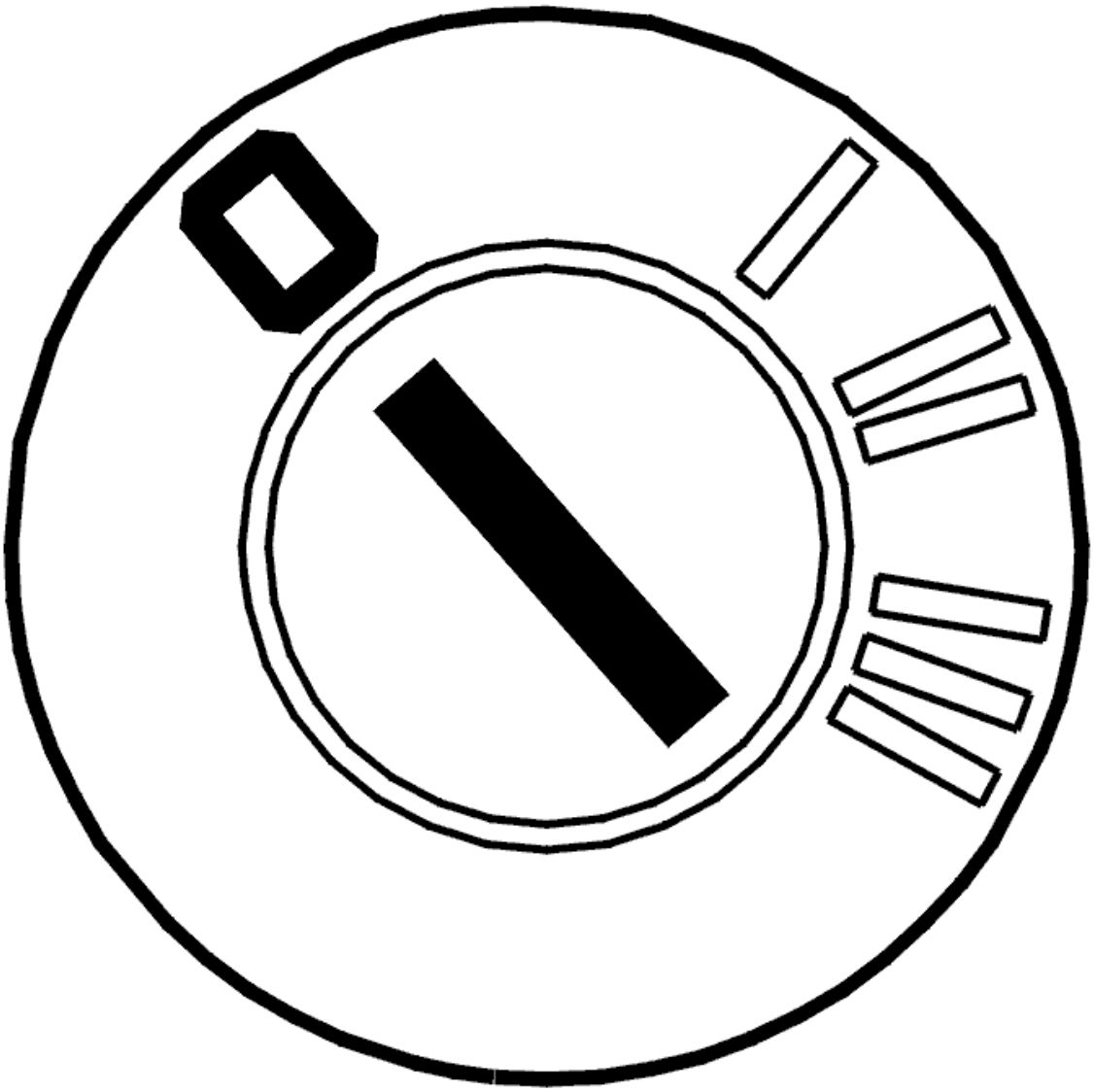

Fig. 46: Identifying Ignition OFF
Courtesy of VOLVO CARS CORPORATION

- Ignition off.

  The driver door module (DDM) has registered an internal fault.

  NOTE: A new control module is delivered without software. The control module

must be programmed in order to function after replacement.

After replacing the control module the window position must be initialized.

- Ignition on.

Move the window to its upper limit position using manual control.

Initialize the window.

During initialization, the window will automatically go down to its lowest position and then go back up again.

Other information:

- Replacing the driver's side door module. See **DRIVER DOOR MODULE (DDM), REPLACING**
- Replacing the passenger side door module. See **PASSENGER DOOR MODULE (PDM), REPLACING** .

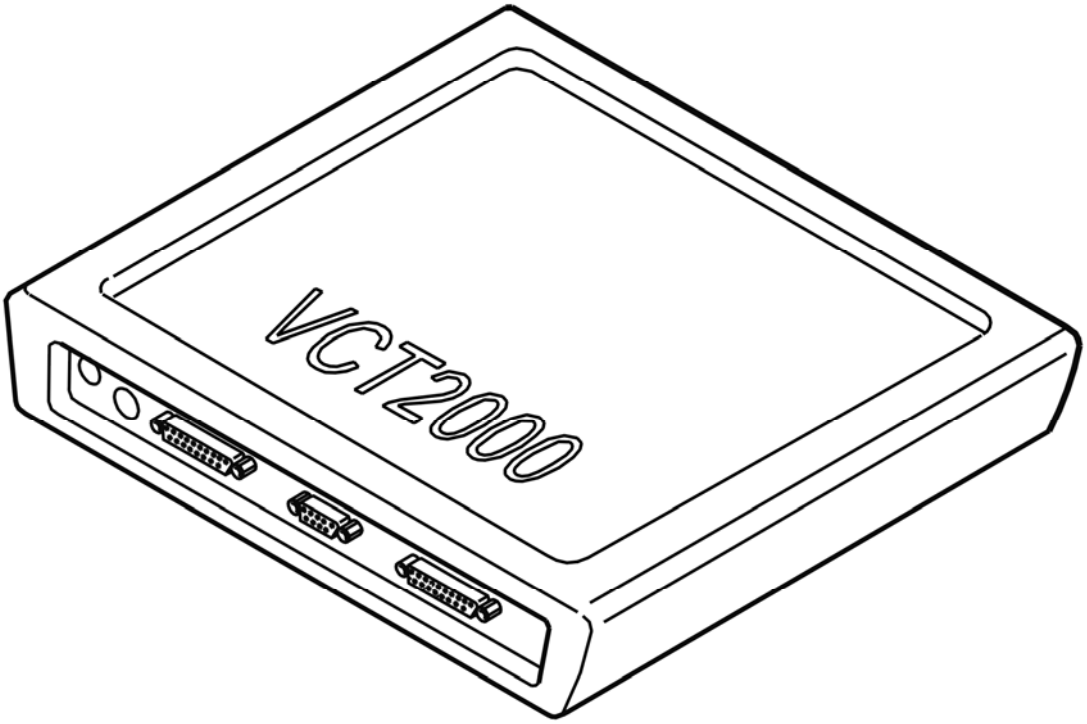

Fig. 47: Identifying VCT2000 Diagnostic Tool Symbol In VIDA
Courtesy of VOLVO CARS CORPORATION

FAULT-TRACING INFORMATION

FAULT-TRACING INFORMATION

Fault-tracing indicates that the control module had previously identified an intermittent fault, but that the fault is no longer present.

- **Continue**

  see: **INFORMATION**

INFORMATION

FAULT-TRACING INFORMATION

If the fault is intermittent, do not verify fault-tracing if the fault does not recur.

It is possible to view the information again, or leave fault-tracing for this diagnostic trouble code (DTC).

DDM-003C: CONTROL, PASSENGER WINDOW. FAULTY SIGNAL (2005-2012)

DIAGNOSTIC TROUBLE CODE INFORMATION

Condition

If control unit registers that driver-door switch to passenger-door electric window lift is activated for more than 60 seconds, diagnostic trouble code DDM-003C is displayed.

Substitute Value

- Nothing.

Possible Source

- Driver-door switch for passenger-door electric window lift has stuck in an activated position.

Fault symptom[s]

- Electric window lift on passenger side does not work.

FAULTY SIGNAL

see **FAULTY SIGNAL**

DDM-003C: PASSENGER-SIDE WINDOW CONTROL. SIGNAL TOO HIGH (2003-2004)

DIAGNOSTIC TROUBLE CODE INFORMATION

see **DIAGNOSTIC TROUBLE CODE INFORMATION**

FAULTY SIGNAL

see **FAULTY SIGNAL**

DDM-003D: CONTROL, LEFT REAR SIDE WINDOW. FAULTY SIGNAL (2005-2012)

DIAGNOSTIC TROUBLE CODE (DTC) INFORMATION

Condition

Diagnostic trouble code (DTC) DDM-003D is stored if the control module registers that the switch for the power window for the left hand rear door is activated for more than 60 seconds.

Substitute Value

- None.

Possible Source

- The switch in the driver's door for the power window in the left hand rear door has jammed in the active position.

Fault symptom[s]

- The power window mechanism does not operate.

FAULTY SIGNAL

see **FAULTY SIGNAL**

DDM-003D: REAR LEFT SIDE-WINDOW CONTROL. SIGNAL TOO HIGH (2003-2004)

DIAGNOSTIC TROUBLE CODE (DTC) INFORMATION

see **DIAGNOSTIC TROUBLE CODE (DTC) INFORMATION**

FAULTY SIGNAL

see **FAULTY SIGNAL**

DDM-003E: CONTROL, RIGHT REAR SIDE WINDOW. FAULTY SIGNAL (2005-2012)

DIAGNOSTIC TROUBLE CODE INFORMATION

Condition

If control unit registers that electric window-lift switch on rear right door is activated for more than 60 seconds, diagnostic trouble code DDM-003E is displayed.

Substitute Value

- Nothing.

Possible Source

- Driver-door switch for rear right door electric window lift has stuck in an activated position.

Fault symptom[s]

- Electric window lift does not work.

FAULTY SIGNAL

see **FAULTY SIGNAL**

DDM-003E: REAR RIGHT SIDE-WINDOW CONTROL. SIGNAL TOO HIGH (2003-2004)

DIAGNOSTIC TROUBLE CODE INFORMATION

see **DIAGNOSTIC TROUBLE CODE INFORMATION**

FAULTY SIGNAL

see **FAULTY SIGNAL**

DDM-003F: CONTROL, DOOR MIRROR. SIGNAL TOO HIGH (2005-2012)

DIAGNOSTIC TROUBLE CODE INFORMATION

Condition

If control unit registers that operation button for external rear-view mirror electric motors has been activated in one position for more than 60 seconds, diagnostic trouble code DDM-003F is displayed.

Substitute Value

- Nothing.

Possible Source

- Operation button for external rear-view mirror electric motors has stuck in one position.

Fault symptom[s]

- External rear-view mirror operation does not work.

SIGNAL TOO HIGH

CHECKING FOR PERMANENT OR INTERMITTENT FAULTS

Try to operate the door mirrors to their limit positions in all directions.

Can the door mirrors be operated in all directions?

- **YES**

  see: **FAULT-TRACING INFORMATION**

- **NO**

  see: **REPLACING THE COMPONENT**

REPLACING THE COMPONENT

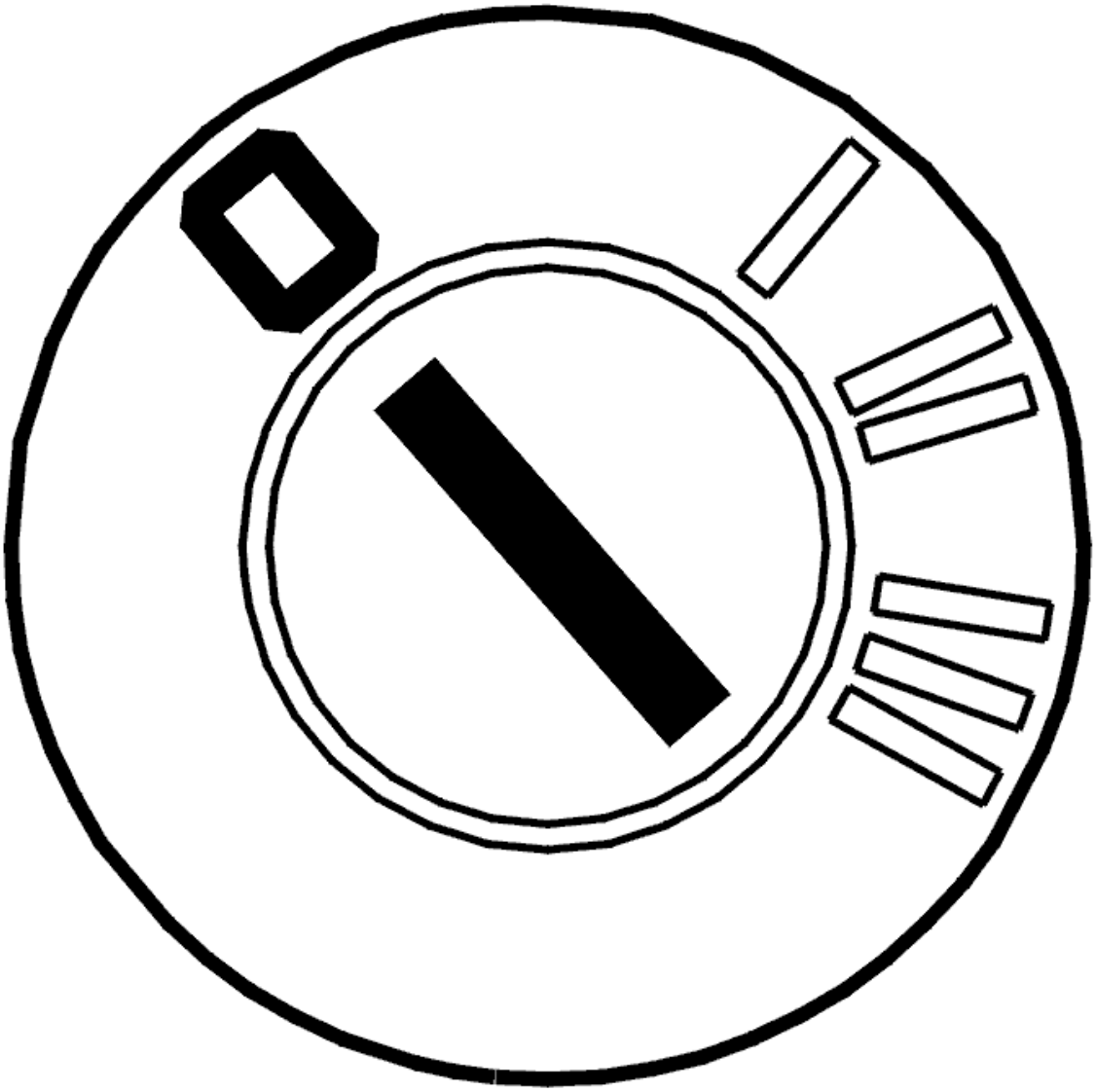

Fig. 48: Identifying Ignition OFF
Courtesy of VOLVO CARS CORPORATION

- Ignition off.

The driver door module (DDM) has registered an internal fault.

NOTE: **A new control module is delivered without software. The control module must be programmed in order to function after replacement.**

After replacing the control module the window position must be initialized.

- Ignition on.

Move the window to its upper limit position using manual control.

Initialize the window.

During initialization, the window will automatically go down to its lowest position and then go back up again.

Other information:

- Replacing the driver's side door module. See **DRIVER DOOR MODULE (DDM), REPLACING**
- Replacing the passenger side door module. See **PASSENGER DOOR MODULE (PDM), REPLACING** .

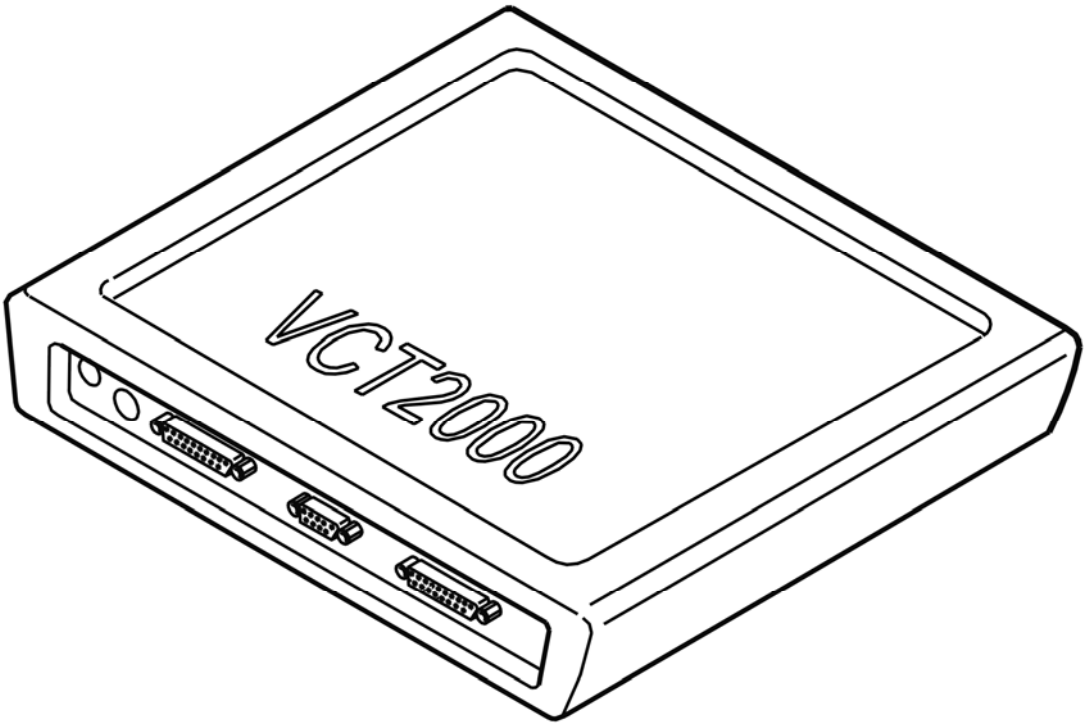

Fig. 49: Identifying VCT2000 Diagnostic Tool Symbol In VIDA
Courtesy of VOLVO CARS CORPORATION

FAULT-TRACING INFORMATION

FAULT-TRACING INFORMATION

Fault-tracing indicates that the control module had previously identified an intermittent fault, but that the fault is no longer present.

- **Continue**

  see: **INFORMATION**

INFORMATION

FAULT-TRACING INFORMATION

If the fault is intermittent, do not verify fault-tracing if the fault does not recur.

It is possible to view the information again, or leave fault-tracing for this diagnostic trouble code (DTC).

DDM-003F: REAR-VIEW MIRROR CONTROL. SIGNAL TOO HIGH (2003-2004)

DIAGNOSTIC TROUBLE CODE INFORMATION

see **DIAGNOSTIC TROUBLE CODE INFORMATION**

SIGNAL TOO HIGH

CHECKING FOR PERMANENT OR INTERMITTENT FAULTS

Try to operate the door mirrors to their limit positions in all directions.

Can the door mirrors be operated in all directions?

- **YES**

  see: **FAULT-TRACING INFORMATION**

- **NO**

  see: **REPLACING THE COMPONENT**

REPLACING THE COMPONENT

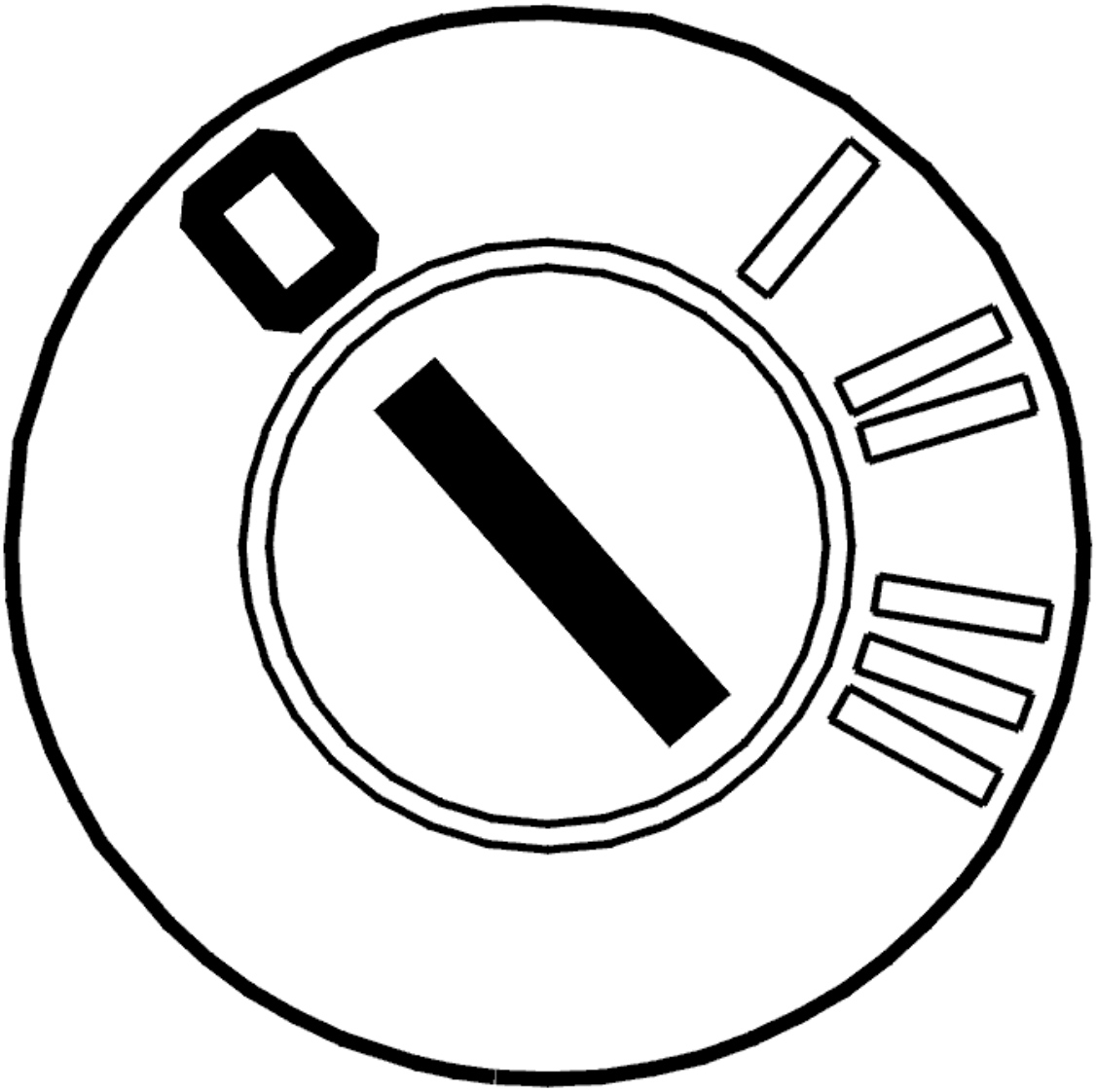

Fig. 50: Identifying Ignition OFF
Courtesy of VOLVO CARS CORPORATION

- Ignition off.

  The driver door module (DDM) has registered an internal fault.

  NOTE: A new control module is delivered without software. The control module must be programmed when it has been replaced.

  Other information:

  - Replacing the driver's side door module. See **DRIVER DOOR MODULE (DDM), REPLACING**
  - Replacing the passenger side door module. See **PASSENGER DOOR MODULE (PDM), REPLACING** .

After replacing the control module the window position must be initialized.

Ignition on.

Move the window to its upper limit position using manual control.

Initialize the window.

From model year 2003 inclusive, the window will lower approximately 10 centimeters and then close again during initialization.

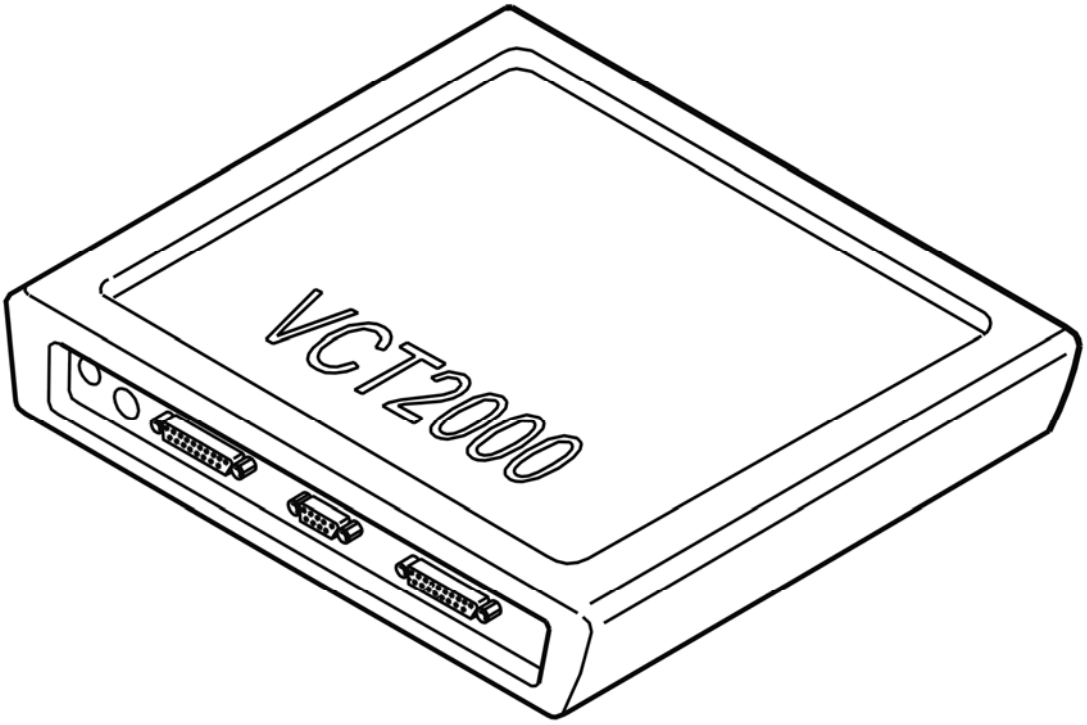

Fig. 51: Identifying VCT2000 Diagnostic Tool Symbol In VIDA
Courtesy of VOLVO CARS CORPORATION

FAULT-TRACING INFORMATION

FAULT-TRACING INFORMATION

Fault-tracing indicates that the control module had previously identified an intermittent fault, but that the fault is no longer present.

- **Continue**

  see: **INFORMATION**

INFORMATION

FAULT-TRACING INFORMATION

If the fault is intermittent, do not verify fault-tracing if the fault does not recur.

It is possible to view the information again, or leave fault-tracing for this diagnostic trouble code (DTC).

DDM-0040: CONTROL, DOOR MIRROR SELECTOR. SIGNAL TOO HIGH (2005-2012)

DIAGNOSTIC TROUBLE CODE INFORMATION

Condition

If control unit registers that operation button for external rear-view mirror selector has been activated for more than 60 seconds, diagnostic trouble code DDM-0040 is displayed.

Substitute Value

- Nothing.

Possible Source

- Operation button for external rear-view mirror selector has stuck.

Fault symptom[s]

- External rear-view mirror operation does not work.

SIGNAL TOO HIGH

CHECKING FOR PERMANENT OR INTERMITTENT FAULTS

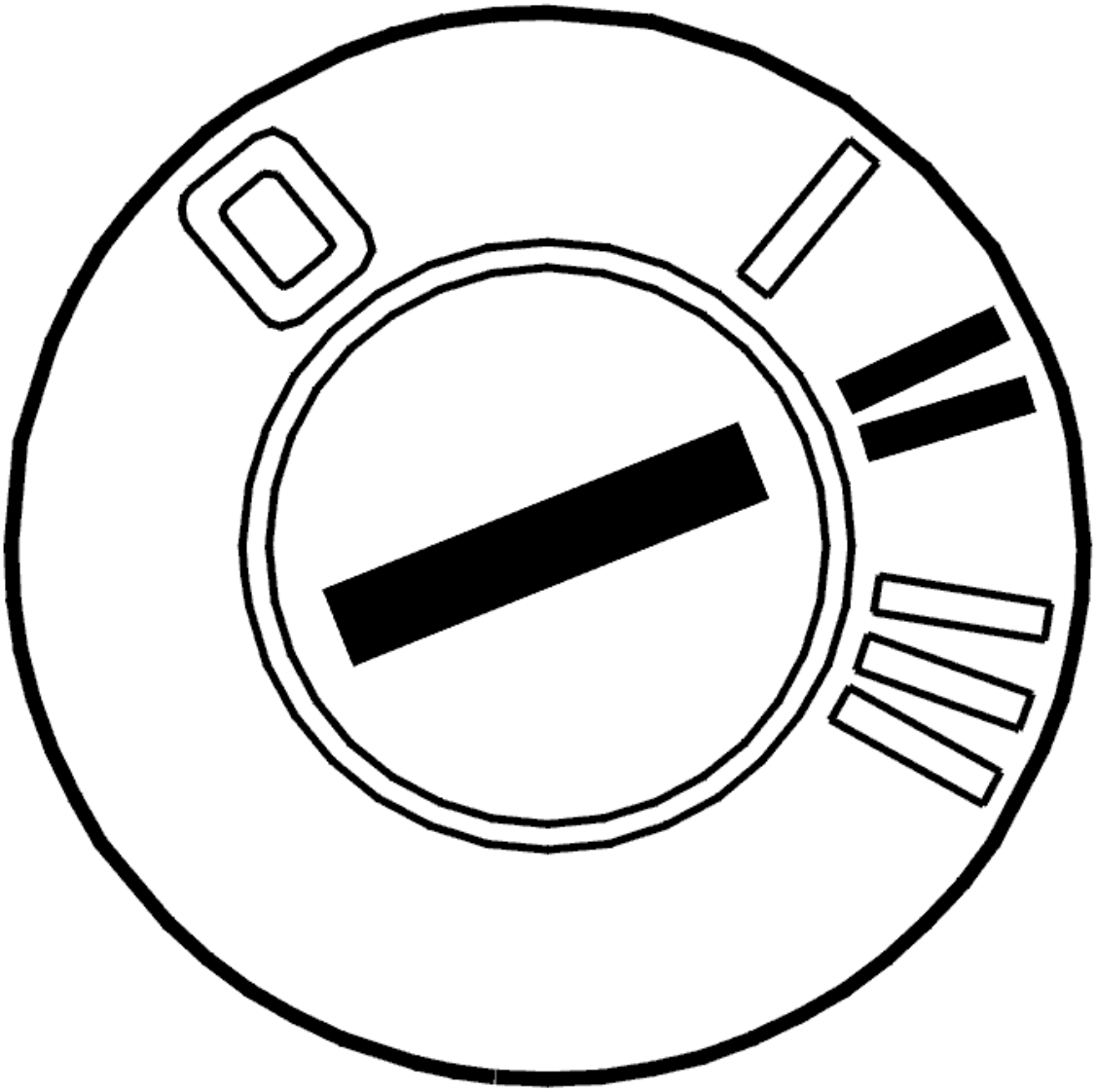

Fig. 52: Identifying Ignition ON
Courtesy of VOLVO CARS CORPORATION

- Ignition on.

  Select one door mirror and maneuver it.

  Now select the other door mirror and try to maneuver it.

Can both the door mirrors be operated?

- **YES**

  see: **FAULT-TRACING INFORMATION**

- **NO**

see: **REPLACING THE COMPONENT**

REPLACING THE COMPONENT

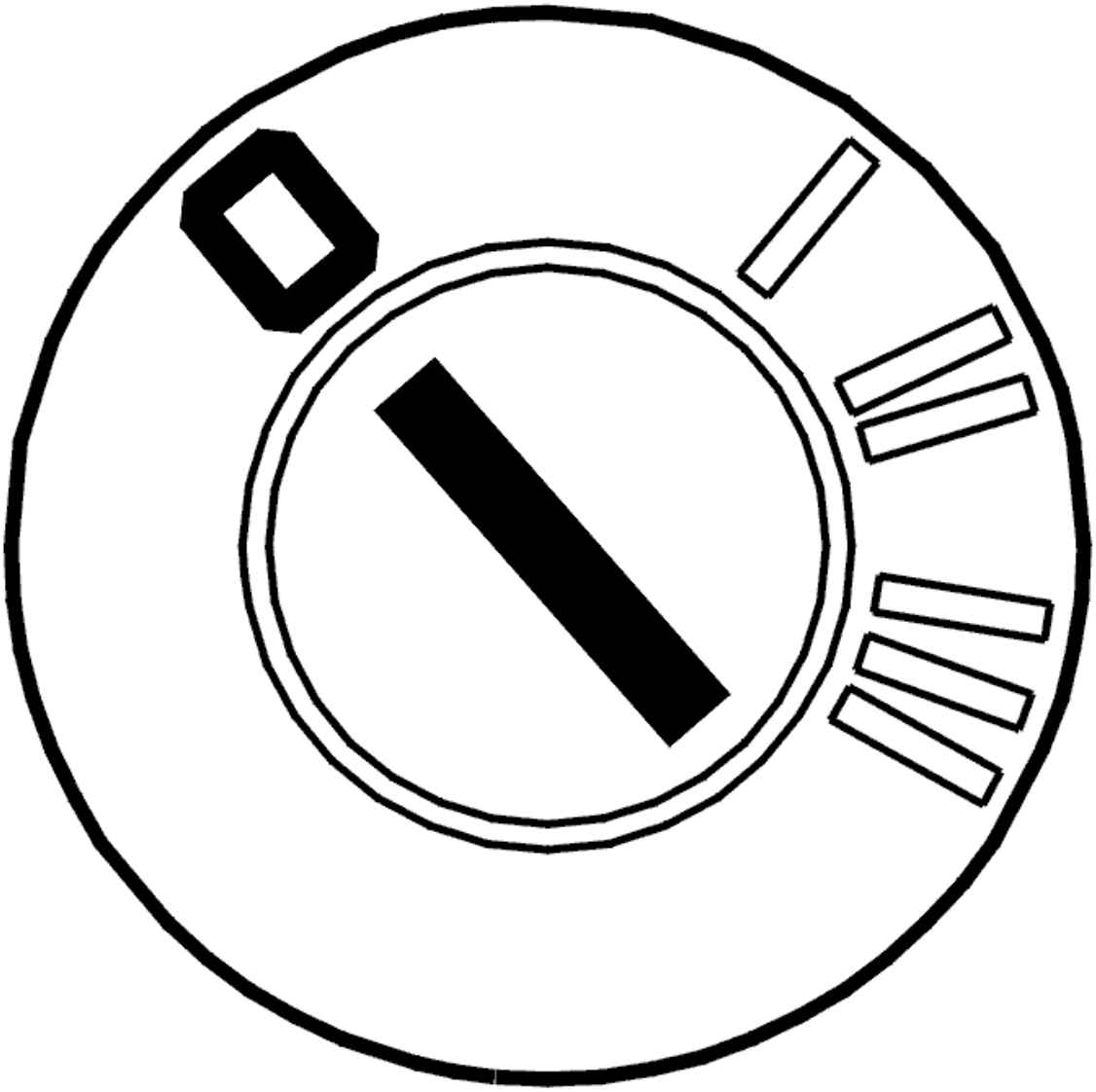

Fig. 53: Identifying Ignition OFF
Courtesy of VOLVO CARS CORPORATION

- Ignition off.

The driver door module (DDM) has registered an internal fault.

NOTE: **A new control module is delivered without software. The control module must be programmed in order to function after replacement.**

After replacing the control module the window position must be initialized.

- Ignition on.

Move the window to its upper limit position using manual control.

Initialize the window.

During initialization, the window will automatically go down to its lowest position and then go back up again.

Other information:

- Replacing the driver's side door module. See **DRIVER DOOR MODULE (DDM), REPLACING**
- Replacing the passenger side door module. See **PASSENGER DOOR MODULE (PDM), REPLACING** .

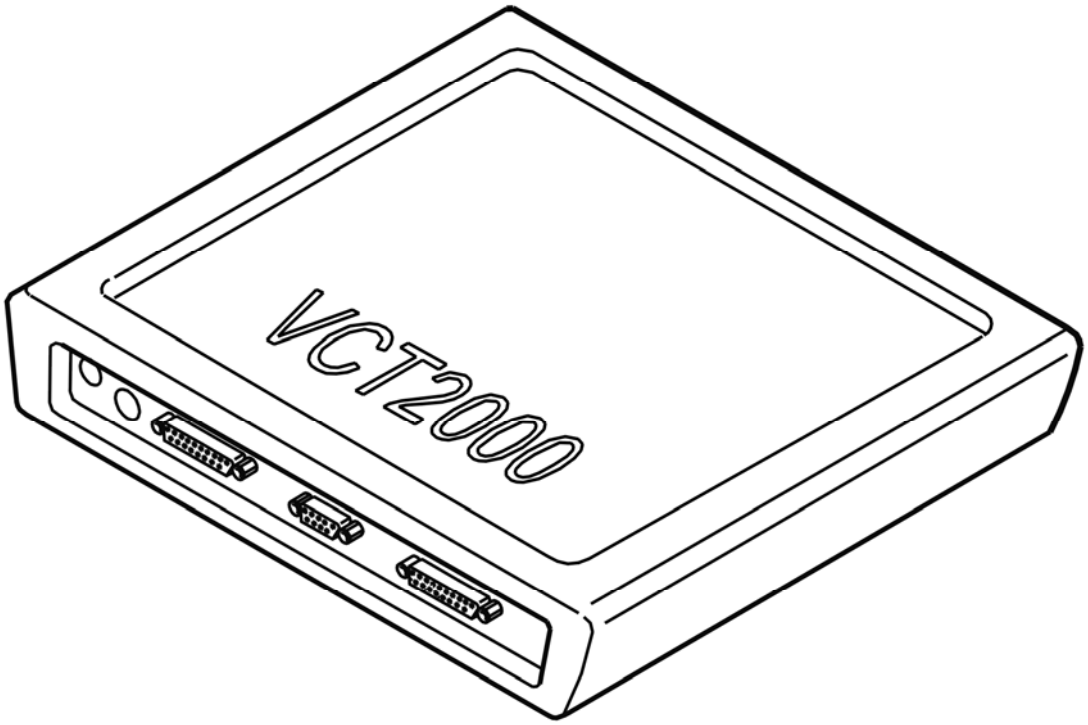

Fig. 54: Identifying VCT2000 Diagnostic Tool Symbol In VIDA
Courtesy of VOLVO CARS CORPORATION

FAULT-TRACING INFORMATION

FAULT-TRACING INFORMATION

Fault-tracing indicates that the control module had previously identified an intermittent fault, but that the fault is

no longer present.

- **Continue**

  see: **INFORMATION**

INFORMATION

FAULT-TRACING INFORMATION

If the fault is intermittent, do not verify fault-tracing if the fault does not recur.

It is possible to view the information again, or leave fault-tracing for this diagnostic trouble code (DTC).

DDM-0040: REAR-VIEW MIRROR SELECTOR CONTROL. SIGNAL TOO HIGH (2003-2004)

DIAGNOSTIC TROUBLE CODE INFORMATION

see **DIAGNOSTIC TROUBLE CODE INFORMATION**

SIGNAL TOO HIGH

CHECKING FOR PERMANENT OR INTERMITTENT FAULTS

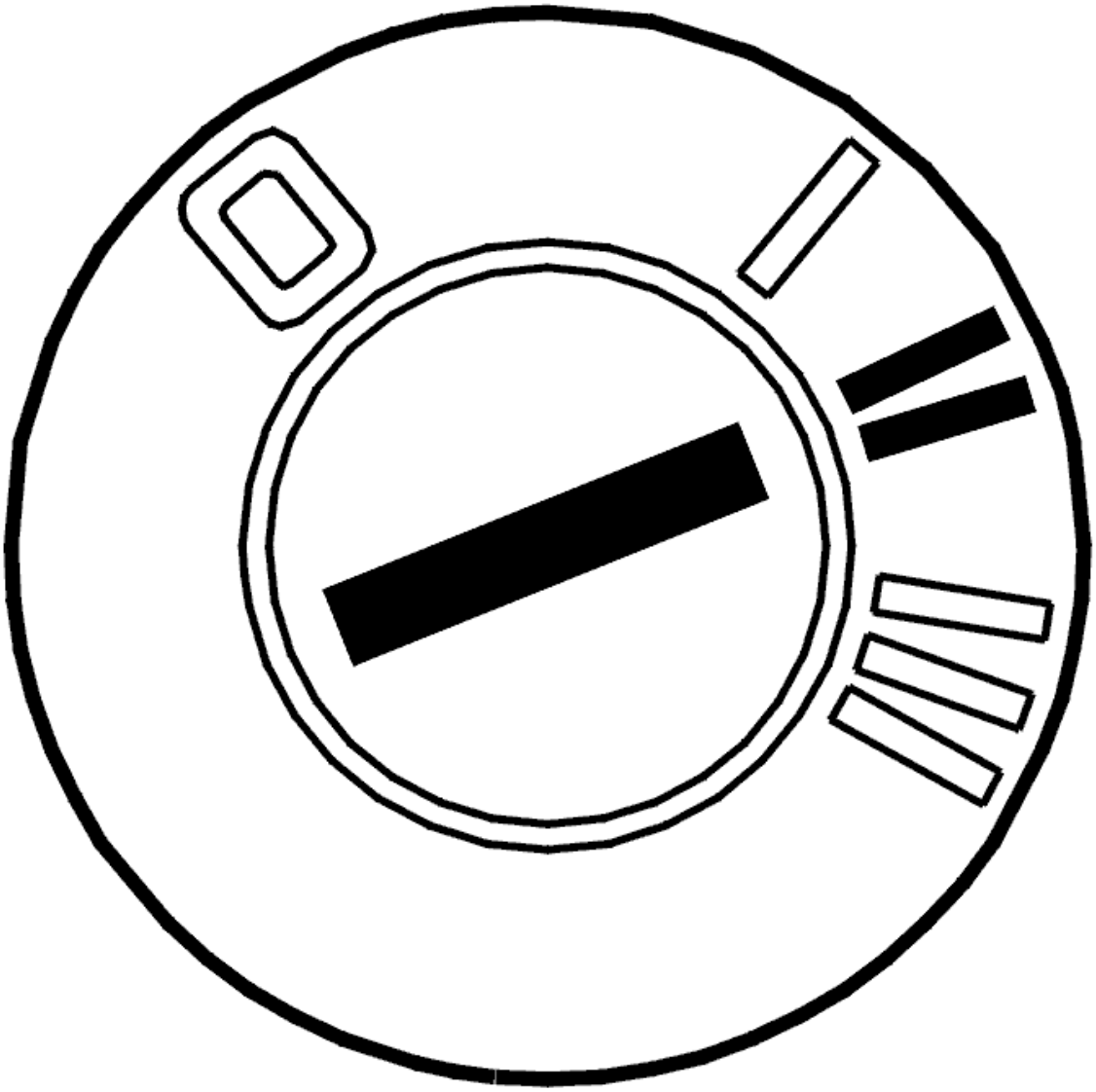

Fig. 55: Identifying Ignition ON
Courtesy of VOLVO CARS CORPORATION

- Ignition on.

  Select one door mirror and maneuver it.

  Now select the other door mirror and try to maneuver it.

Can both the door mirrors be operated?

- **YES**

  see: **FAULT-TRACING INFORMATION**

- **NO**

see: **REPLACING THE COMPONENT**

REPLACING THE COMPONENT

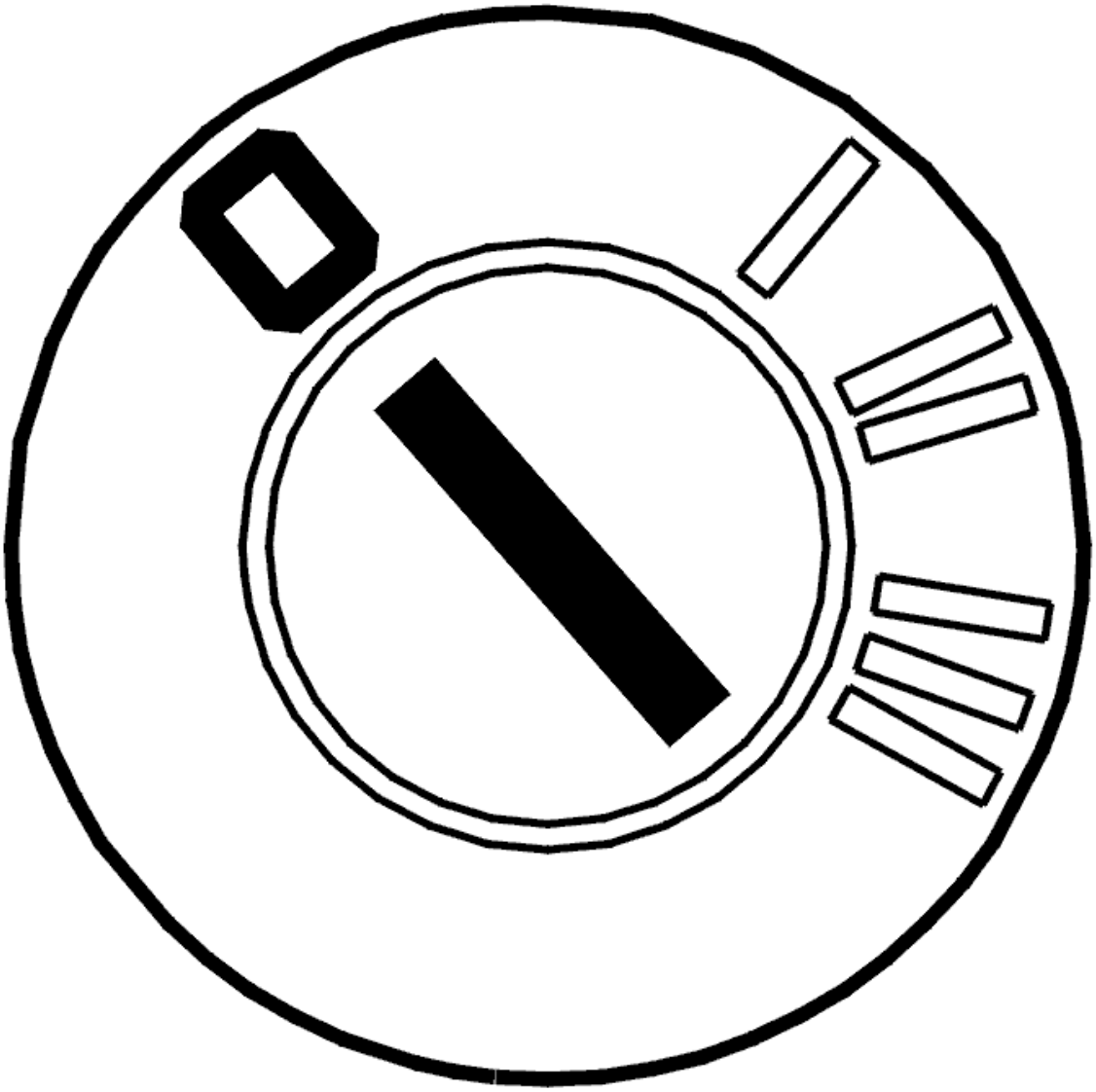

Fig. 56: Identifying Ignition OFF
Courtesy of VOLVO CARS CORPORATION

- Ignition off.

  The driver door module (DDM) has registered an internal fault.

  NOTE: A new control module is delivered without software. The control module must be programmed when it has been replaced.

  Other information:

- Replacing the driver's side door module. See **DRIVER DOOR MODULE (DDM), REPLACING**
- Replacing the passenger side door module. See **PASSENGER DOOR MODULE (PDM), REPLACING** .

After replacing the control module the window position must be initialized.

Ignition on.

Move the window to its upper limit position using manual control.

Initialize the window.

From model year 2003 inclusive, the window will lower approximately 10 centimeters and then close again during initialization.

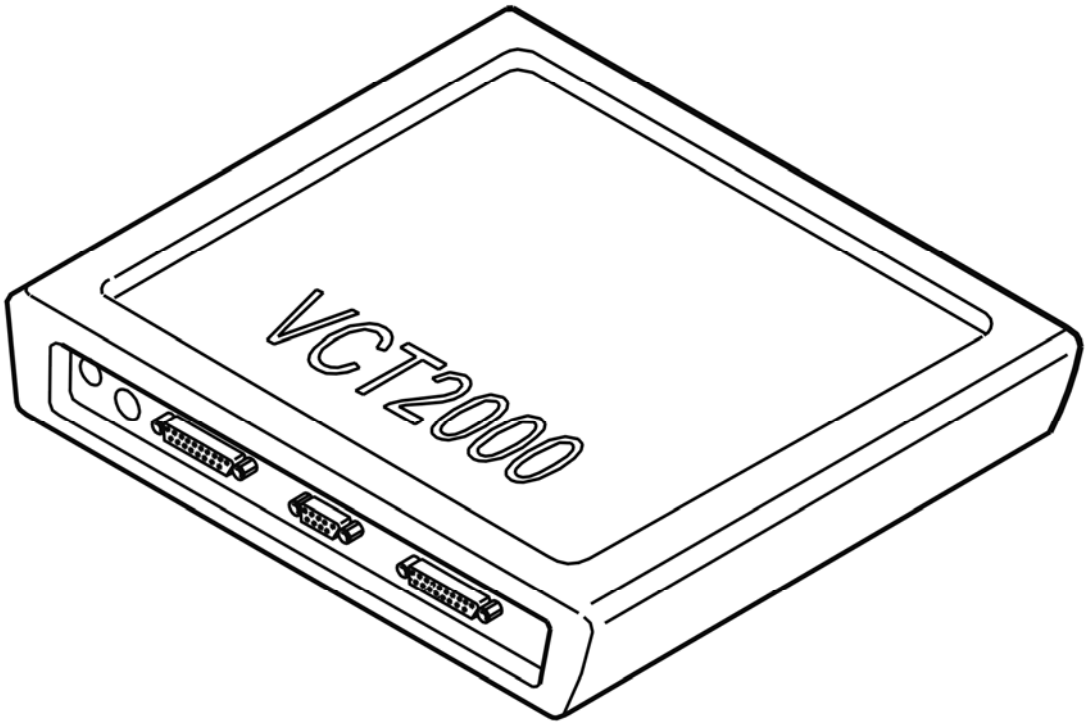

Fig. 57: Identifying VCT2000 Diagnostic Tool Symbol In VIDA
Courtesy of VOLVO CARS CORPORATION

FAULT-TRACING INFORMATION

FAULT-TRACING INFORMATION

Fault-tracing indicates that the control module had previously identified an intermittent fault, but that the fault is

no longer present.

- **Continue**

  see: **INFORMATION**

INFORMATION

FAULT-TRACING INFORMATION

If the fault is intermittent, do not verify fault-tracing if the fault does not recur.

It is possible to view the information again, or leave fault-tracing for this diagnostic trouble code (DTC).

DDM-0045: DOOR MIRROR LAMP. SIGNAL TOO LOW (2005-2012)

DIAGNOSTIC TROUBLE CODE (DTC) INFORMATION

Condition

Diagnostic trouble code (DTC) DDM-0045 is stored if the control module registers that there is a short-circuit to ground in the signal supply to the mirror lamps, connected to the driver's door module, at the same time as the control module has requested the door mirror lamp to light.

Substitute Value

- None.

Possible Source

- Signal cable to the door mirror lamp, connected to driver's door module, short circuited to ground.

Fault symptom[s]

- Local lighting is not operating.

SIGNAL TOO LOW (2005, 2006)

CHECKING FOR PERMANENT OR INTERMITTENT FAULTS

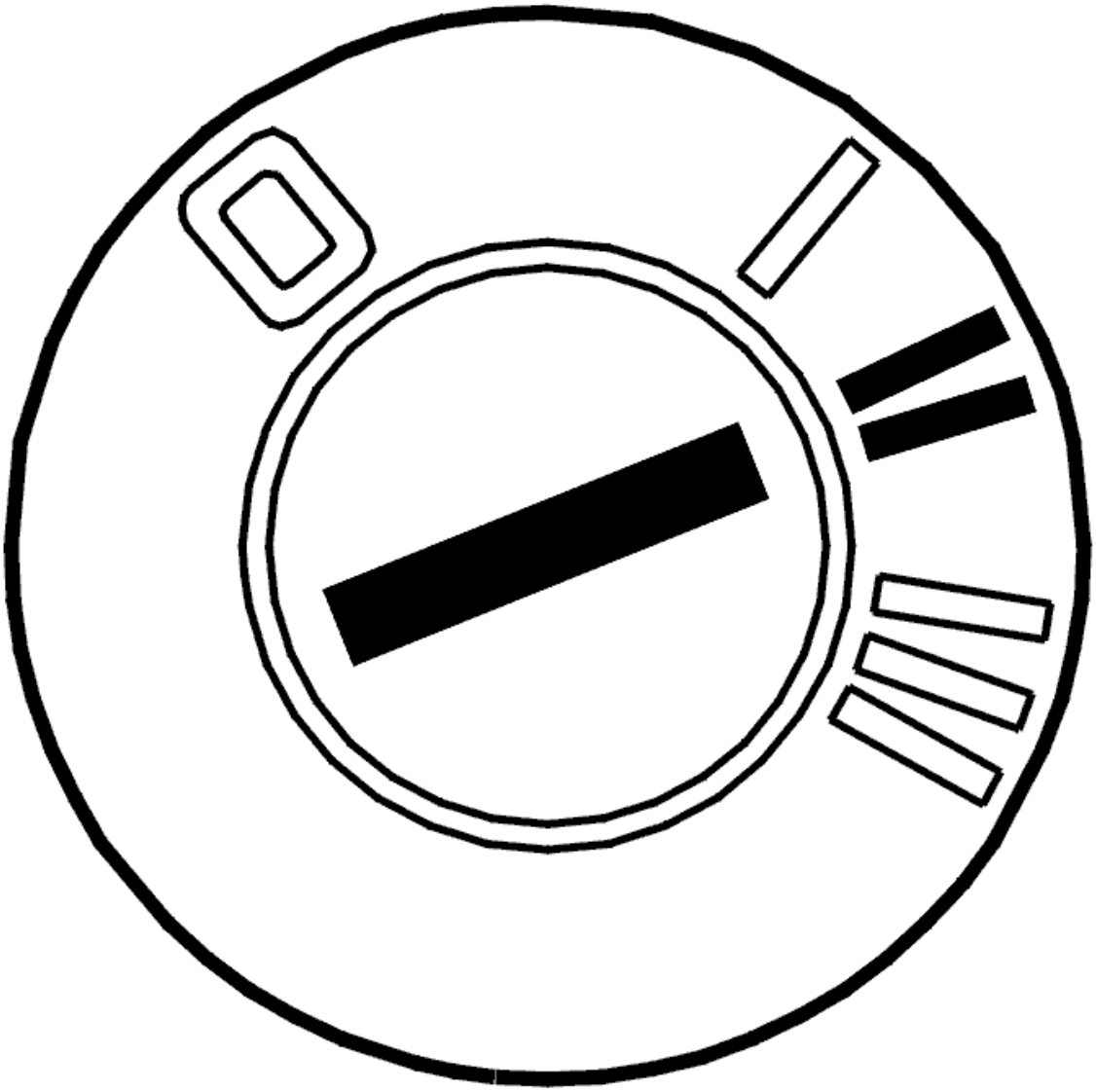

Fig. 58: Identifying Ignition ON
Courtesy of VOLVO CARS CORPORATION

- Ignition on.

  Check if the lamp in the power door mirror lights up and goes out.

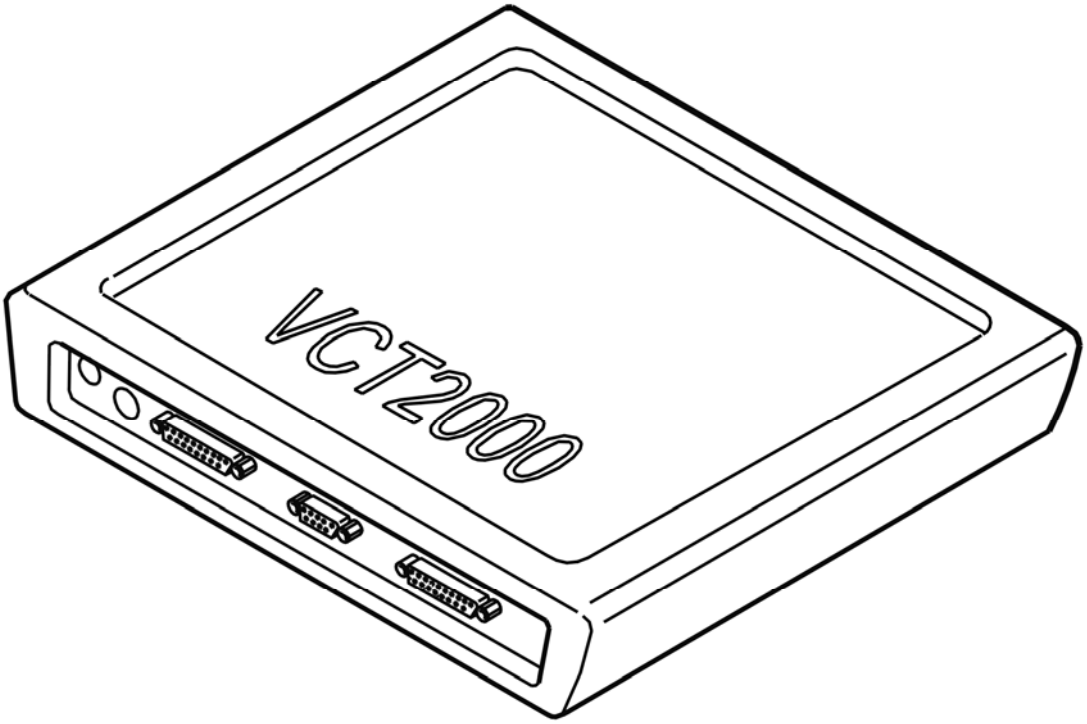

Fig. 59: Identifying VCT2000 Diagnostic Tool Symbol In VIDA
Courtesy of VOLVO CARS CORPORATION

Is the lamp in the power door mirror working?

- **YES**

  see: **INTERMITTENT FAULT**

- **NO**

  see: **CHECKING FOR SHORT-CIRCUITS TO GROUND**

CHECKING FOR SHORT-CIRCUITS TO GROUND

Check the cable between control module terminal #8B and power door mirror terminal #13. Check for a short-circuit to ground.

Check the ground lead between the control module terminal #10B and the power door mirror terminal #6.

Replace the cable if a fault is found.

Other information:

- see **CONNECTING THE BREAKOUT BOX**
- Replacing the driver's side door module. See **DRIVER DOOR MODULE (DDM), REPLACING**
- Replacing the passenger side door module. See **PASSENGER DOOR MODULE (PDM), REPLACING** .
- see **SIGNAL SPECIFICATION**
- see **CHECKING WIRING AND TERMINALS** .

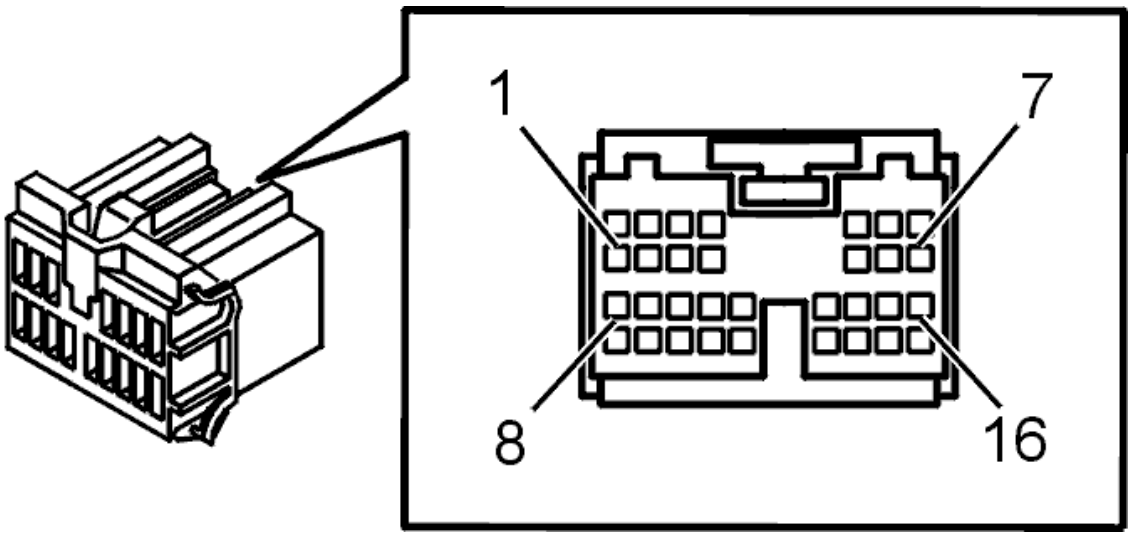

Fig. 60: Connector, Green (16- Pin)
Courtesy of VOLVO CARS CORPORATION

Were any faults found in the cable?

- **YES**

  see: **VERIFICATION**

- **NO**

  see: **REPLACING THE COMPONENT**

REPLACING THE COMPONENT

Check the bulb holder. Check for a short-circuit.

Remedy as necessary.

If no malfunction is found:Replace the bulb.

Other information

- see **BULB, GROUND LIGHTING, DOOR MIRROR, REPLACING**

- **Continue**

  see: **VERIFICATION**

INTERMITTENT FAULT

Check the control module and power door mirror connectors. Check for contact resistance and oxidation. Check for loose connections.

Check the cable between control module terminal #8B and power door mirror terminal #13. Check for an intermittent short-circuit to ground. Check for an intermittent open-circuit.

Check the ground lead between the control module terminal #10B and the power door mirror terminal #6.

Check the bulb holder and bulb if no fault was found.

Other information:

- see **CONNECTING THE BREAKOUT BOX**
- see **SIGNAL SPECIFICATION**
- see **BULB, GROUND LIGHTING, DOOR MIRROR, REPLACING**
- see **CHECKING WIRING AND TERMINALS** .

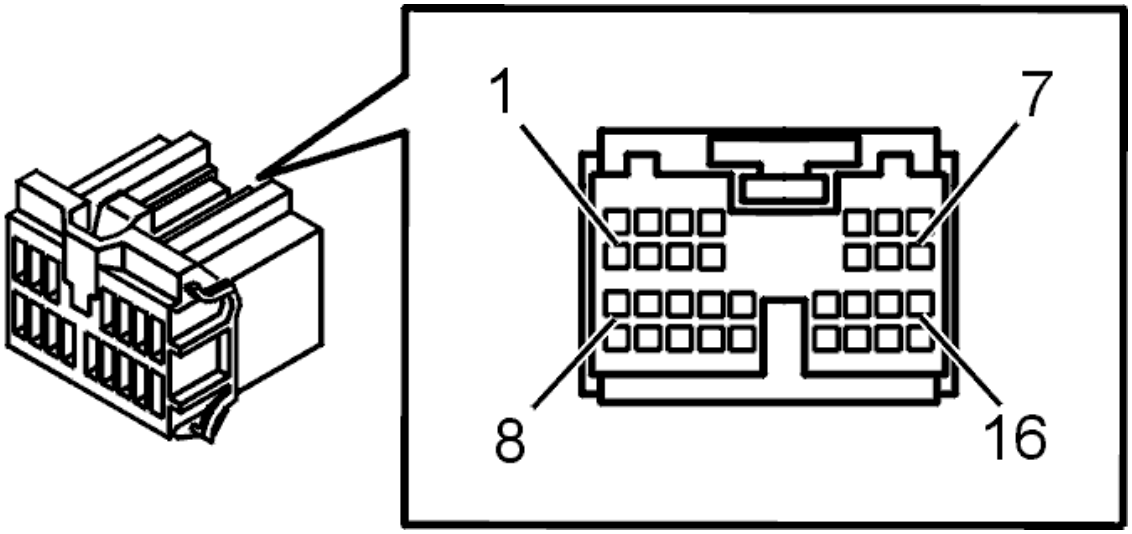

Fig. 61: Connector, Green (16- Pin)
Courtesy of VOLVO CARS CORPORATION

- **Continue**

  see: **INFORMATION**

VERIFICATION

VERIFICATION

HINT: After carrying out the repair, check that the fault has been remedied.

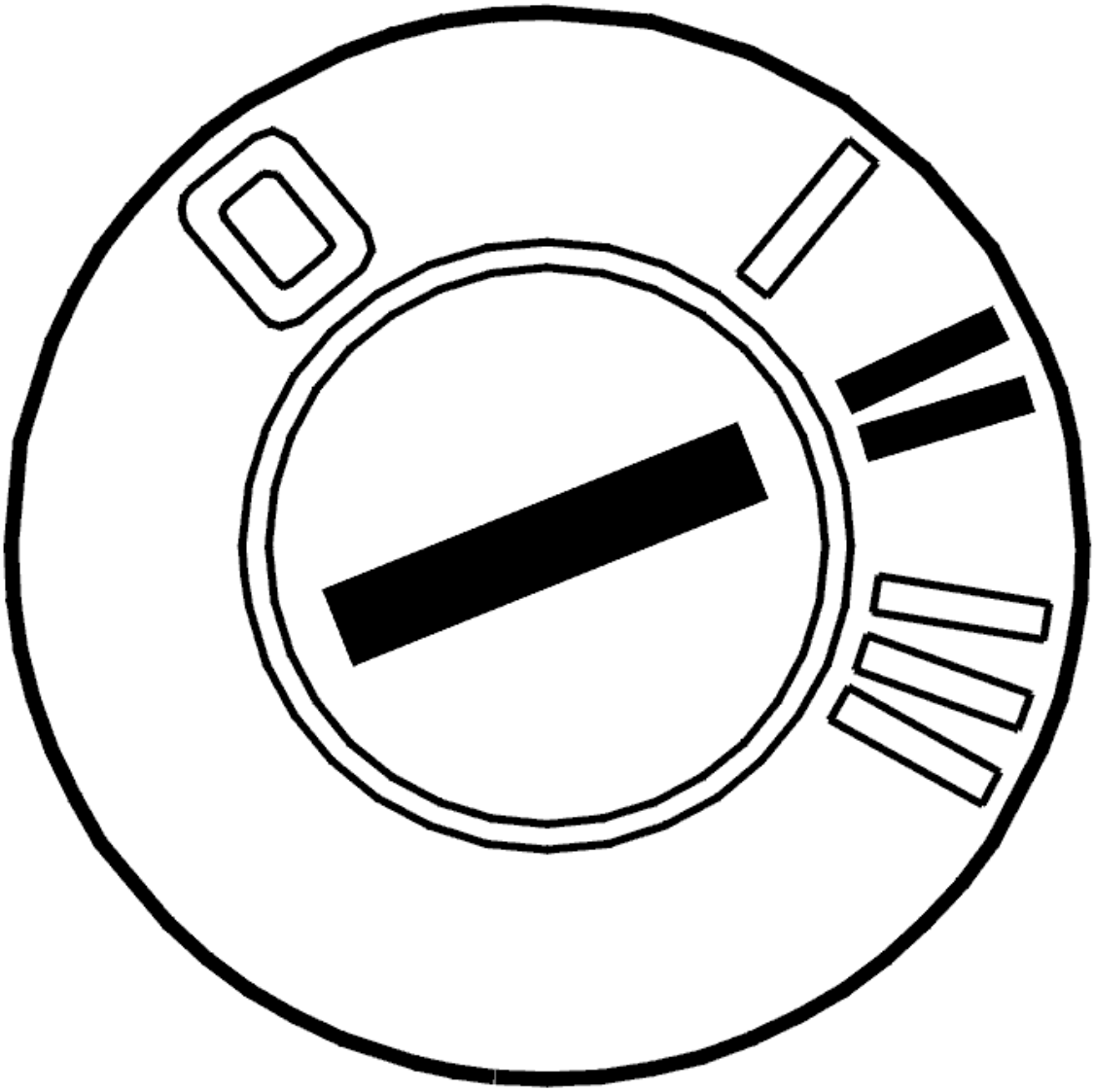

Fig. 62: Identifying Ignition ON
Courtesy of VOLVO CARS CORPORATION

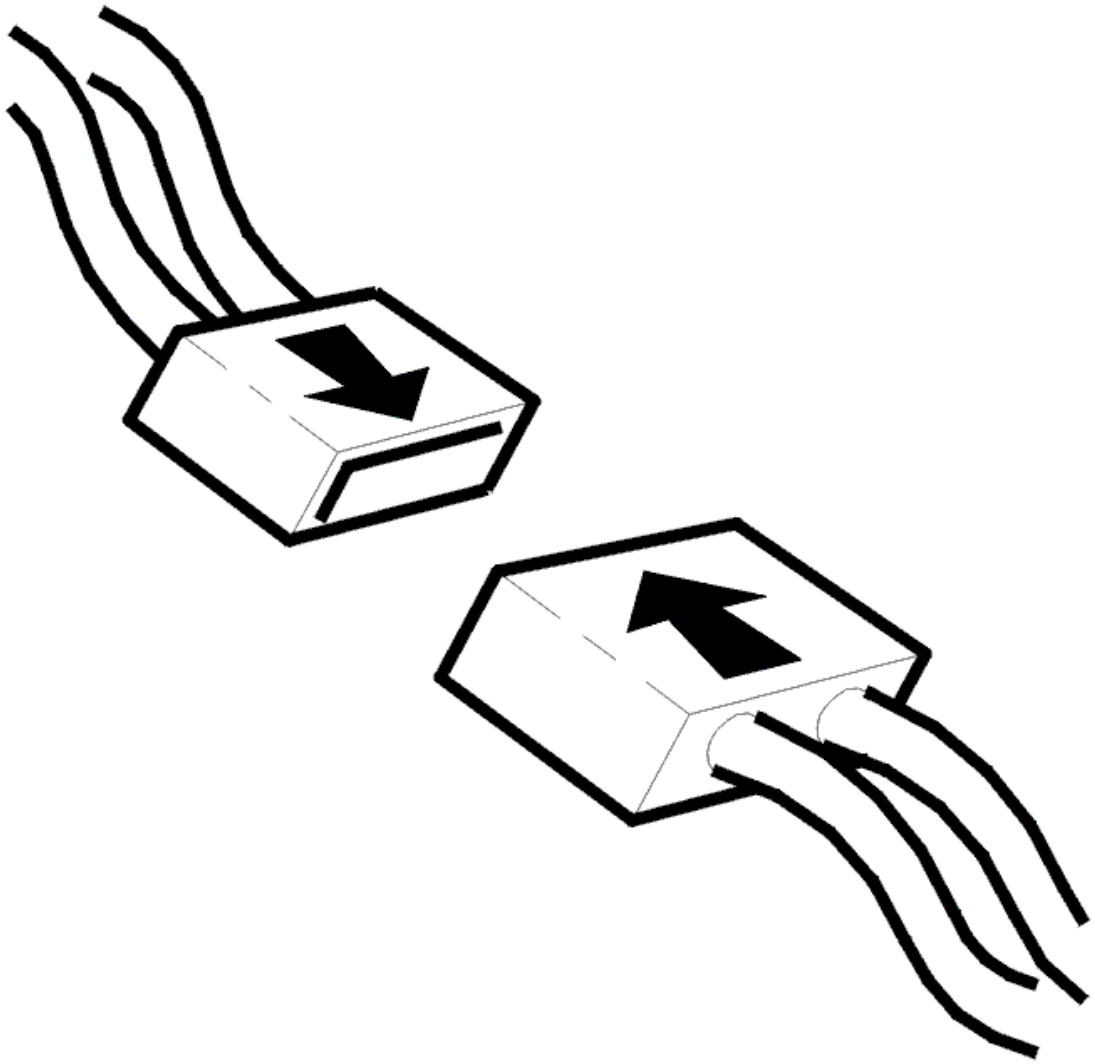

Fig. 63: Checking Connector
Courtesy of VOLVO CARS CORPORATION

- Ignition off
- Reconnect the components, connectors etc.
- Ignition on.

Check if the lamp in the power door mirror lights.

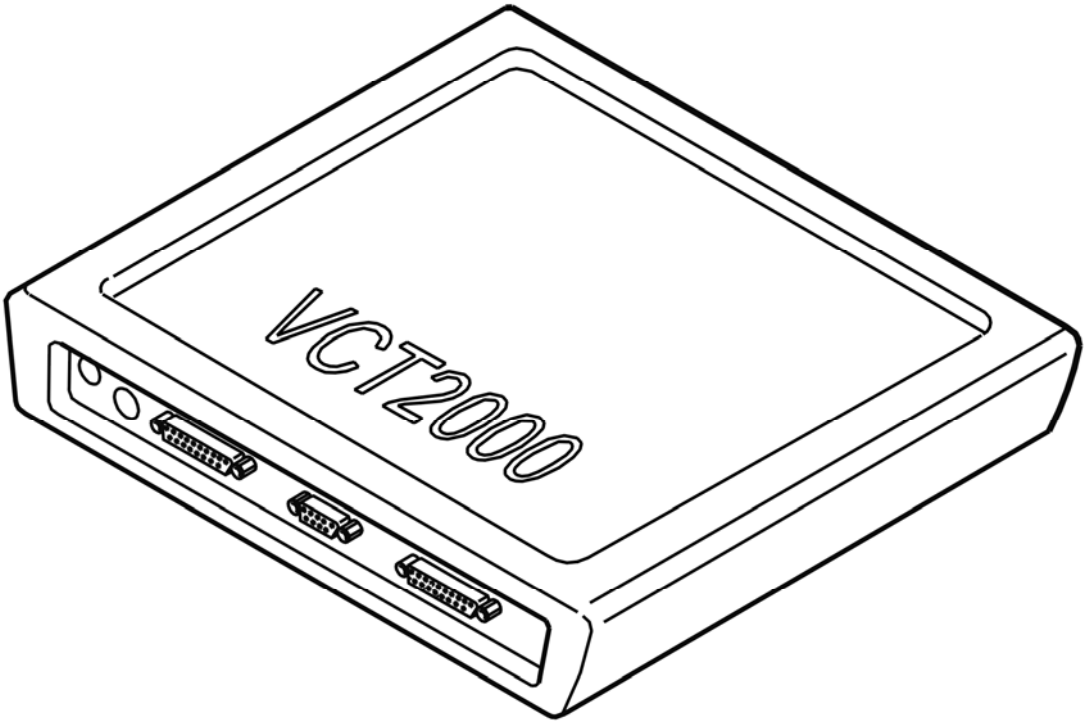

Fig. 64: Identifying VCT2000 Diagnostic Tool Symbol In VIDA
Courtesy of VOLVO CARS CORPORATION

Does the lamp in the power door mirror light?

- **YES**

  VERIFIED: Troubleshooting has been completed.

- **NO**

  see: **INFORMATION**

INFORMATION

FAULT-TRACING INFORMATION

The fault should have been detected and remedied. As this is not the case fault-tracing has failed.

Exit fault-tracing for this diagnostic trouble code (DTC) or make another attempt.

INFORMATION

FAULT-TRACING INFORMATION

If the fault is intermittent, do not verify fault-tracing if the fault does not recur.

It is possible to view the information again, or leave fault-tracing for this diagnostic trouble code (DTC).

SIGNAL TOO LOW (2007-2012)

CHECKING FOR PERMANENT OR INTERMITTENT FAULTS

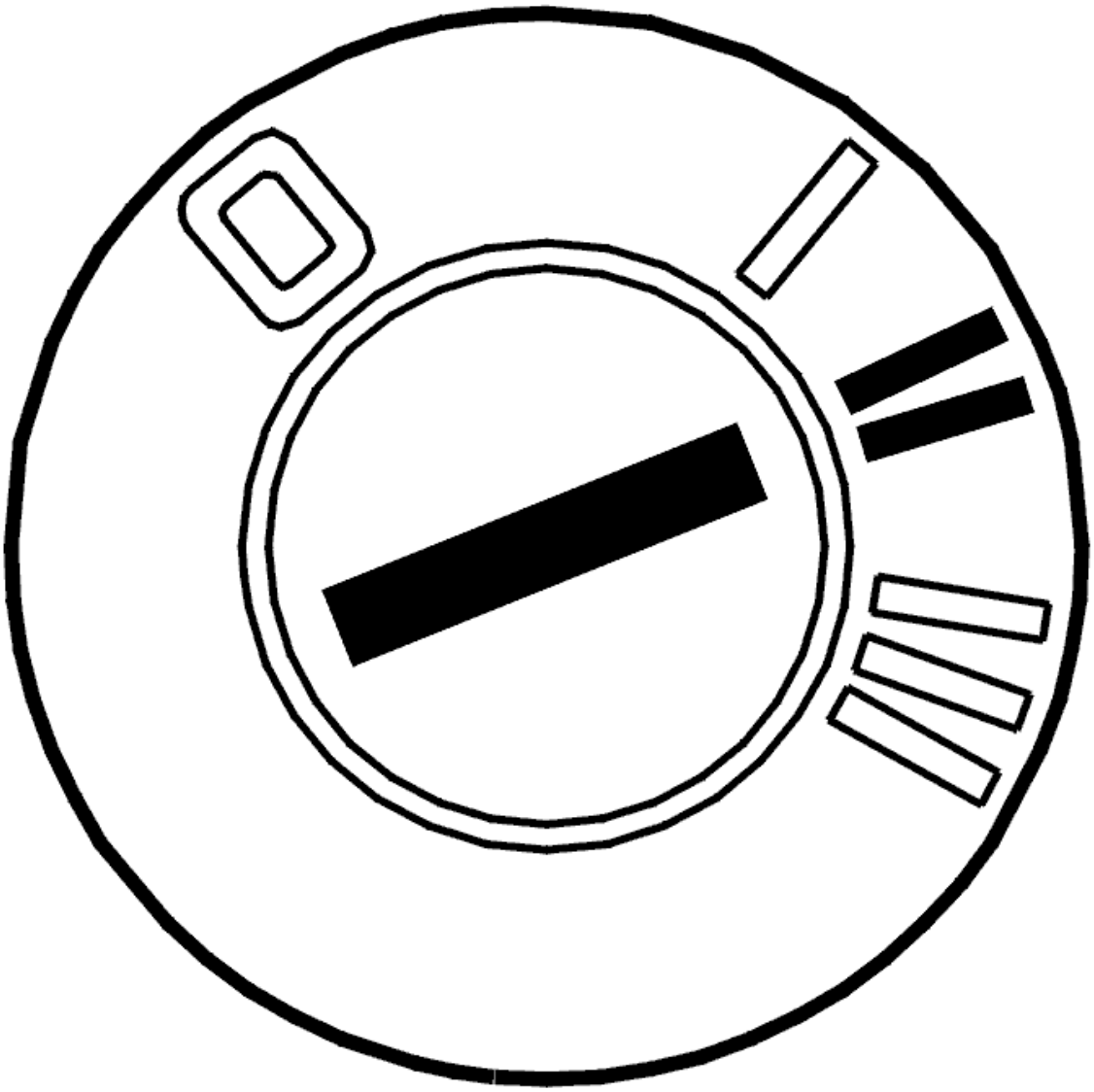

Fig. 65: Identifying Ignition ON
Courtesy of VOLVO CARS CORPORATION

- Ignition on.

  Check if the lamp in the power door mirror lights up and goes out.

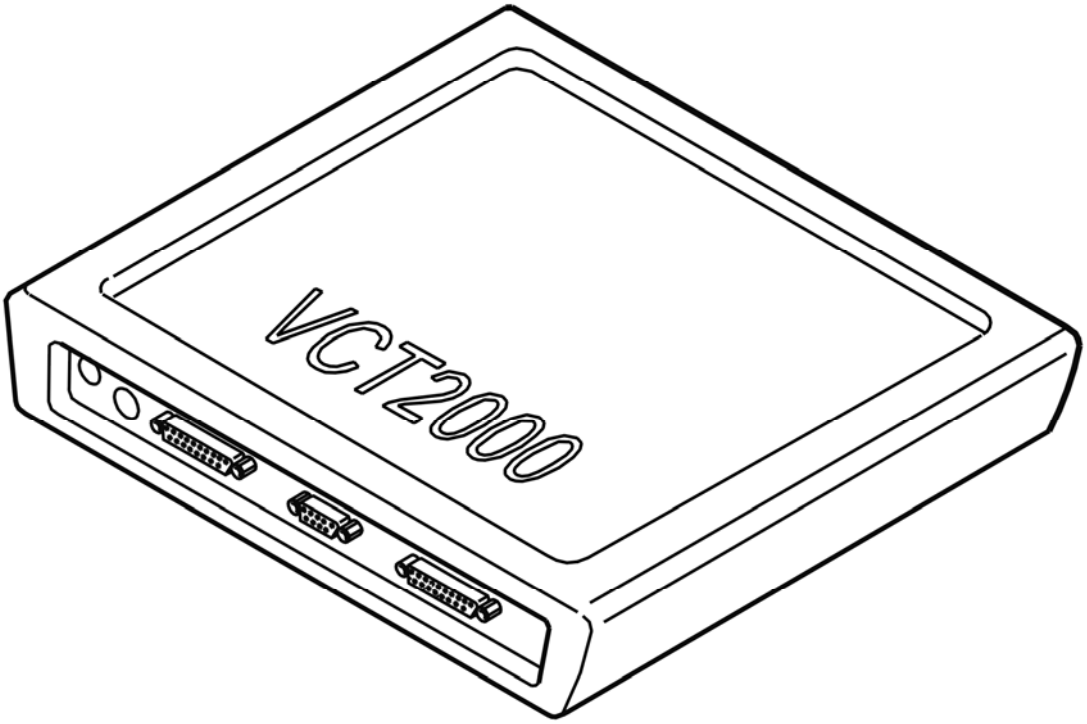

Fig. 66: Identifying VCT2000 Diagnostic Tool Symbol In VIDA
Courtesy of VOLVO CARS CORPORATION

Is the lamp in the power door mirror working?

- **YES**

  see: **INTERMITTENT FAULT**

- **NO**

  see: **CHECKING FOR SHORT-CIRCUITS TO GROUND**

CHECKING FOR SHORT-CIRCUITS TO GROUND

Check the cable between control module terminal #8B and power door mirror terminal #13. Check for a short-circuit to ground.

Check the ground lead between the control module terminal #10B and the power door mirror terminal #6.

Replace the cable if a fault is found.

Other information:

- see **CONNECTING THE BREAKOUT BOX**
- Replacing the driver's side door module. See **DRIVER DOOR MODULE (DDM), REPLACING**
- Replacing the passenger side door module. See **PASSENGER DOOR MODULE (PDM), REPLACING** .
- see **SIGNAL SPECIFICATION**
- see **CHECKING WIRING AND TERMINALS** .

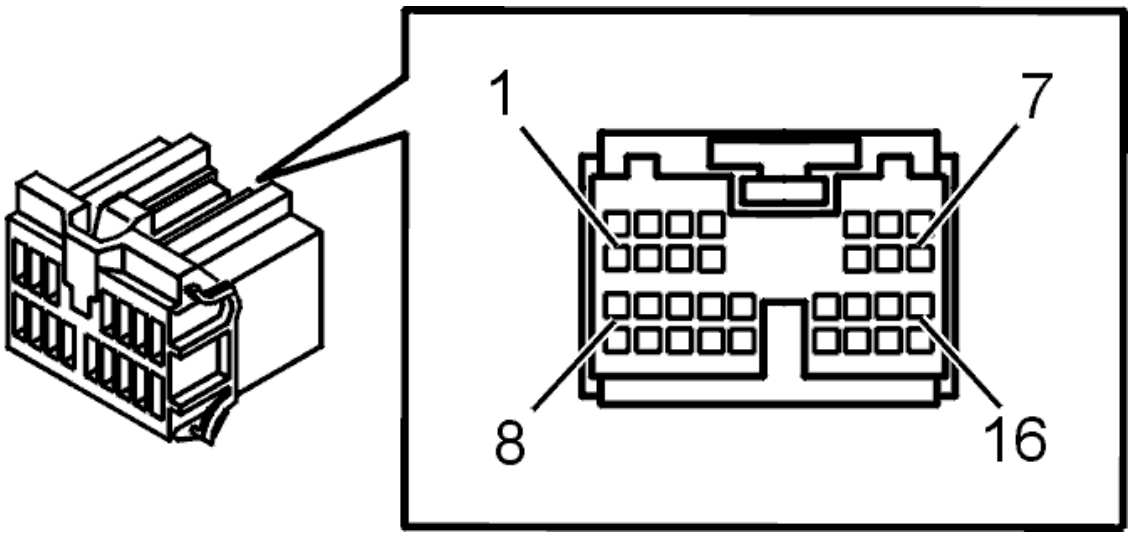

Fig. 67: Connector, Green (16- Pin)
Courtesy of VOLVO CARS CORPORATION

Were any faults found in the cable?

- **YES**

  see: **VERIFICATION**

- **NO**

  see: **REPLACING THE COMPONENT**

REPLACING THE COMPONENT

Check the bulb holder. Check for a short-circuit.

Remedy as necessary.

If no malfunction is found:Replace the bulb.

Other information

- see **BULB, DOOR MIRROR, GROUND LIGHTING**

- **Continue**

  see: **VERIFICATION**

INTERMITTENT FAULT

Check the control module and power door mirror connectors. Check for contact resistance and oxidation. Check for loose connections.

Check the cable between control module terminal #8B and power door mirror terminal #13. Check for an intermittent short-circuit to ground. Check for an intermittent open-circuit.

Check the ground lead between the control module terminal #10B and the power door mirror terminal #6.

Check the bulb holder and bulb if no fault was found.

Other information:

- see **CONNECTING THE BREAKOUT BOX**
- see **SIGNAL SPECIFICATION**
- see **BULB, DOOR MIRROR, GROUND LIGHTING**
- see **CHECKING WIRING AND TERMINALS** .

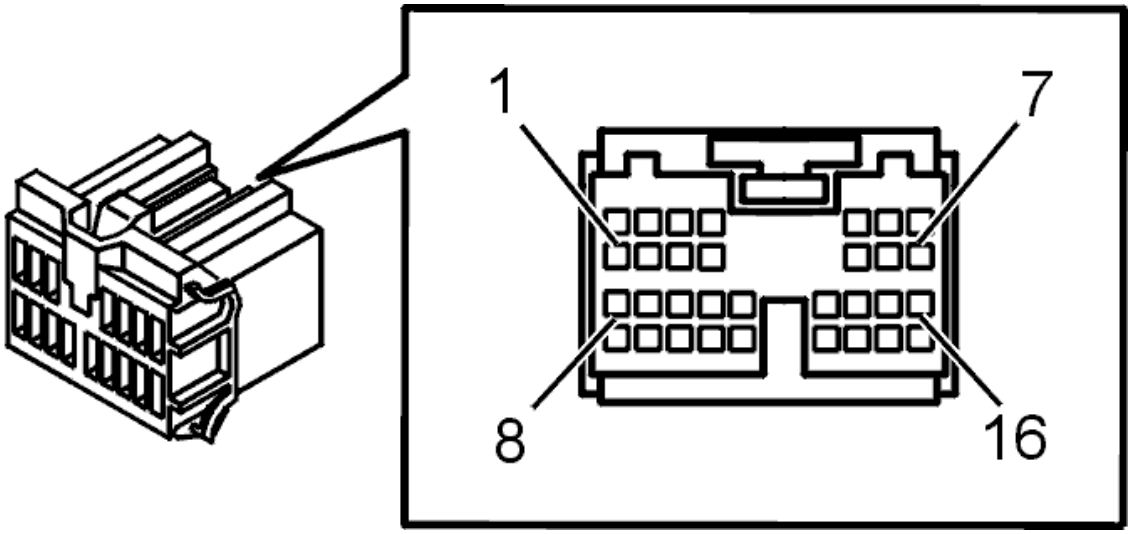

Fig. 68: Connector, Green (16- Pin)
Courtesy of VOLVO CARS CORPORATION

- **Continue**

  see: **INFORMATION**

VERIFICATION

VERIFICATION

HINT: After carrying out the repair, check that the fault has been remedied.

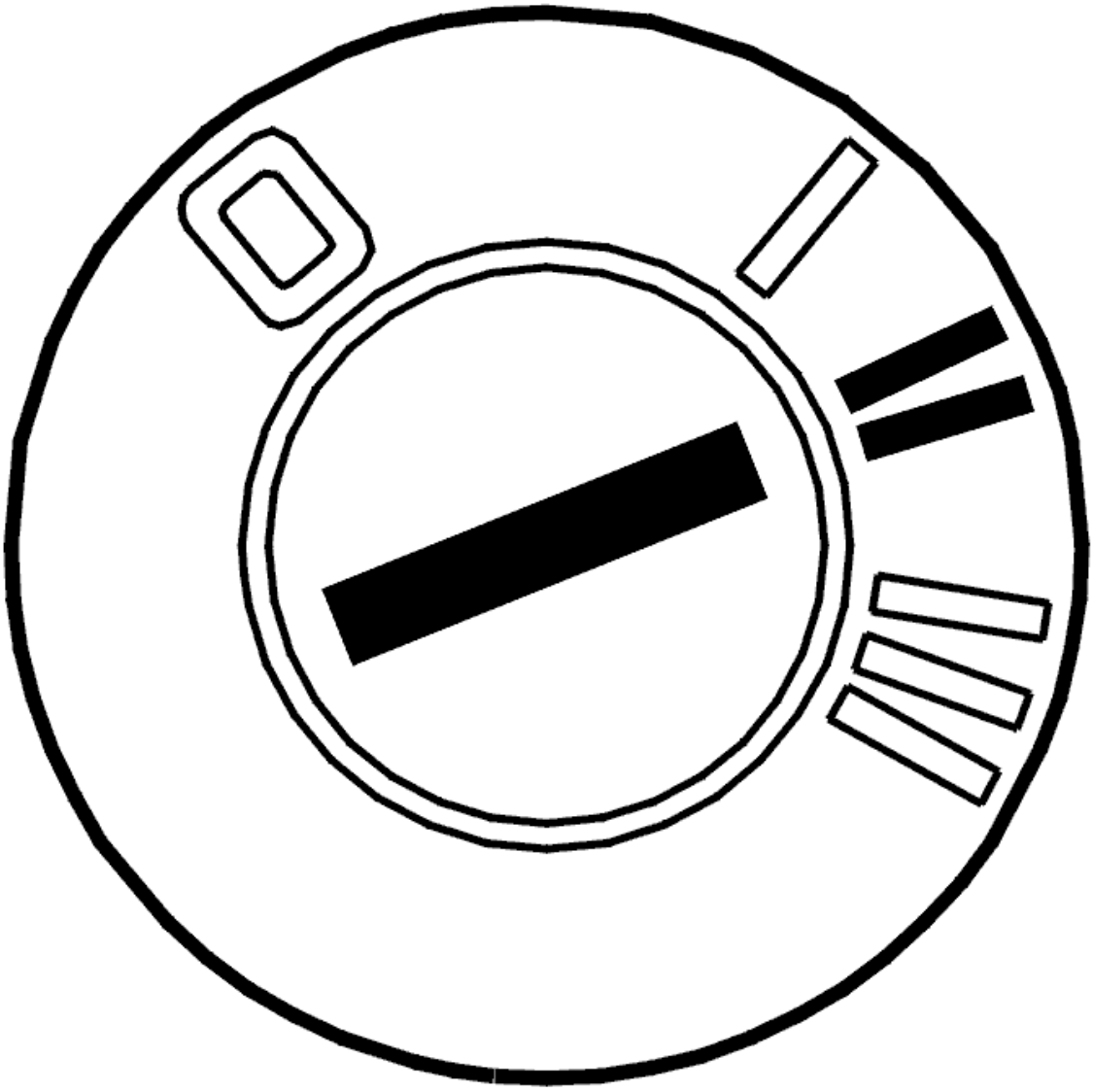

Fig. 69: Identifying Ignition ON
Courtesy of VOLVO CARS CORPORATION

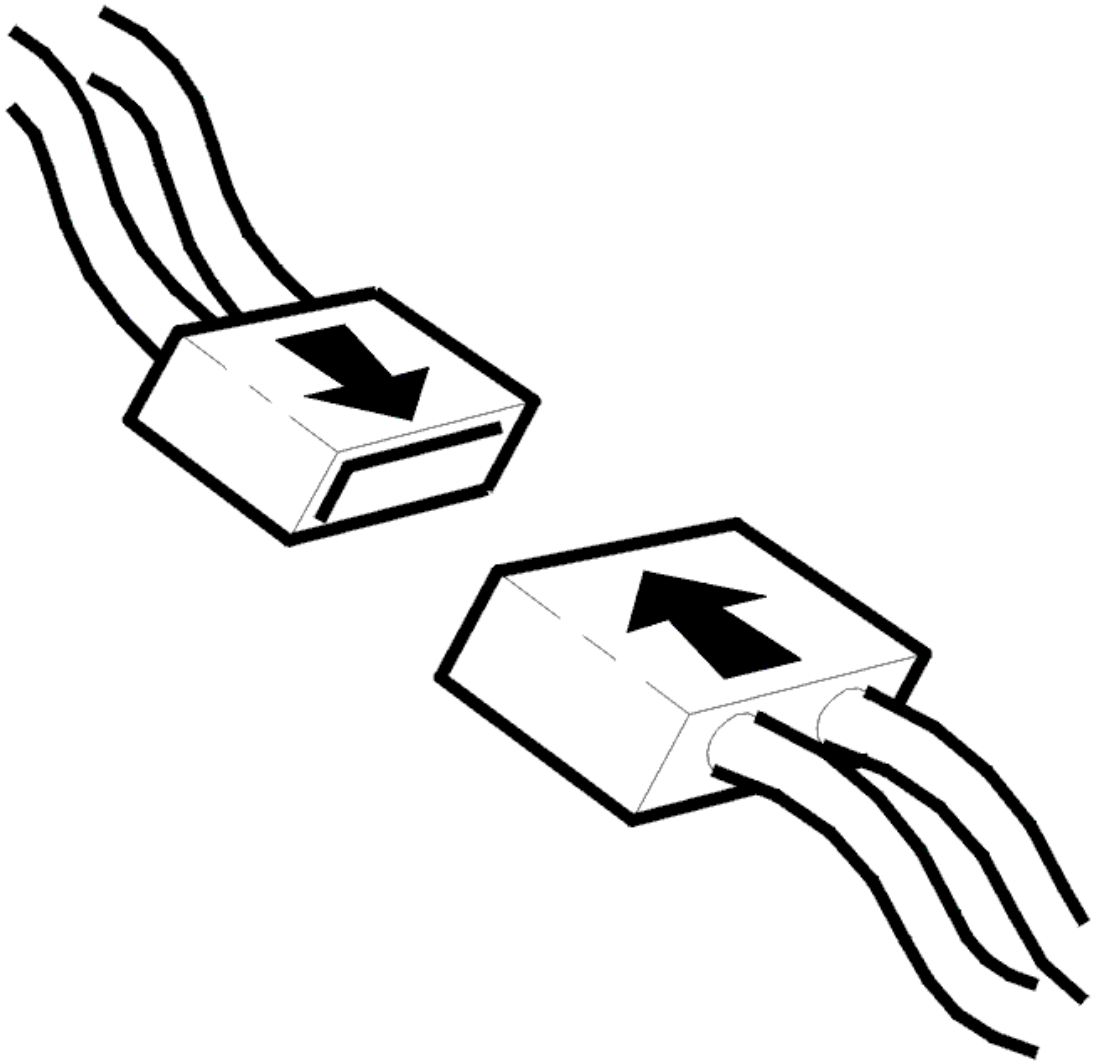

Fig. 70: Checking Connector
Courtesy of VOLVO CARS CORPORATION

- Ignition off
- Reconnect the components, connectors etc.
- Ignition on.

Check if the lamp in the power door mirror lights.

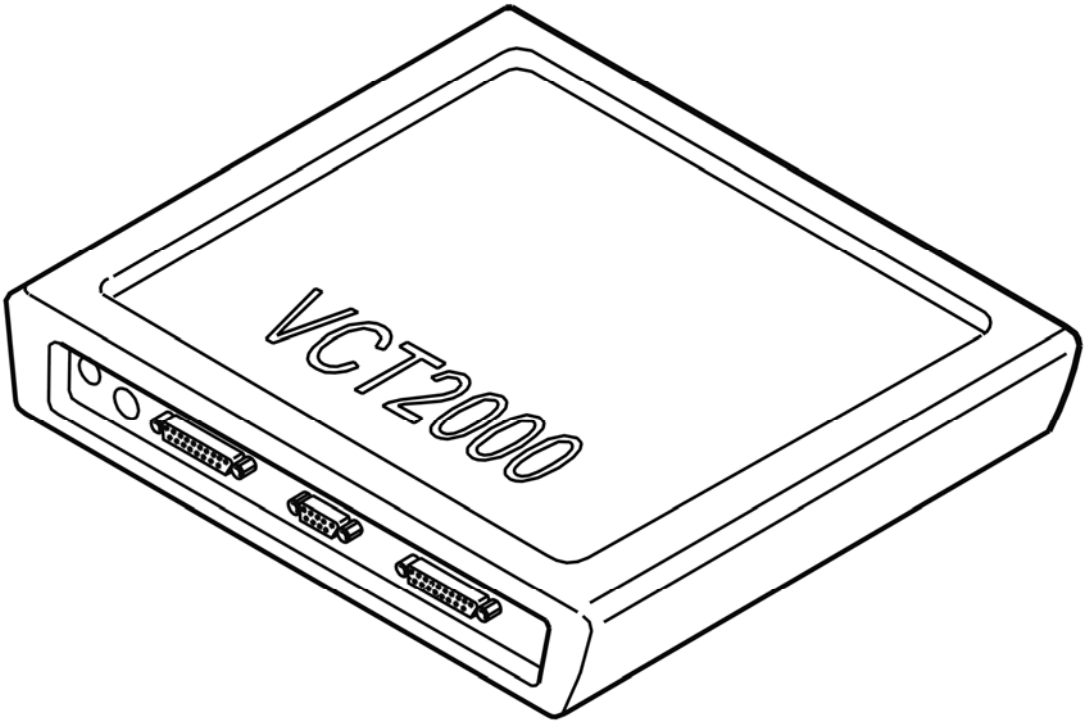

Fig. 71: Identifying VCT2000 Diagnostic Tool Symbol In VIDA
Courtesy of VOLVO CARS CORPORATION

Does the lamp in the power door mirror light?

- **YES**

  VERIFIED: Troubleshooting has been completed.

- **NO**

  see: **INFORMATION**

INFORMATION

FAULT-TRACING INFORMATION

The fault should have been detected and remedied. As this is not the case fault-tracing has failed.

Exit fault-tracing for this diagnostic trouble code (DTC) or make another attempt.

INFORMATION

FAULT-TRACING INFORMATION

If the fault is intermittent, do not verify fault-tracing if the fault does not recur.

It is possible to view the information again, or leave fault-tracing for this diagnostic trouble code (DTC).

DDM-0045: DOOR MIRROR LAMP. SIGNAL TOO LOW (2003-2004)

DIAGNOSTIC TROUBLE CODE (DTC) INFORMATION

see **DIAGNOSTIC TROUBLE CODE (DTC) INFORMATION**

SIGNAL TOO LOW

CHECKING FOR PERMANENT OR INTERMITTENT FAULTS

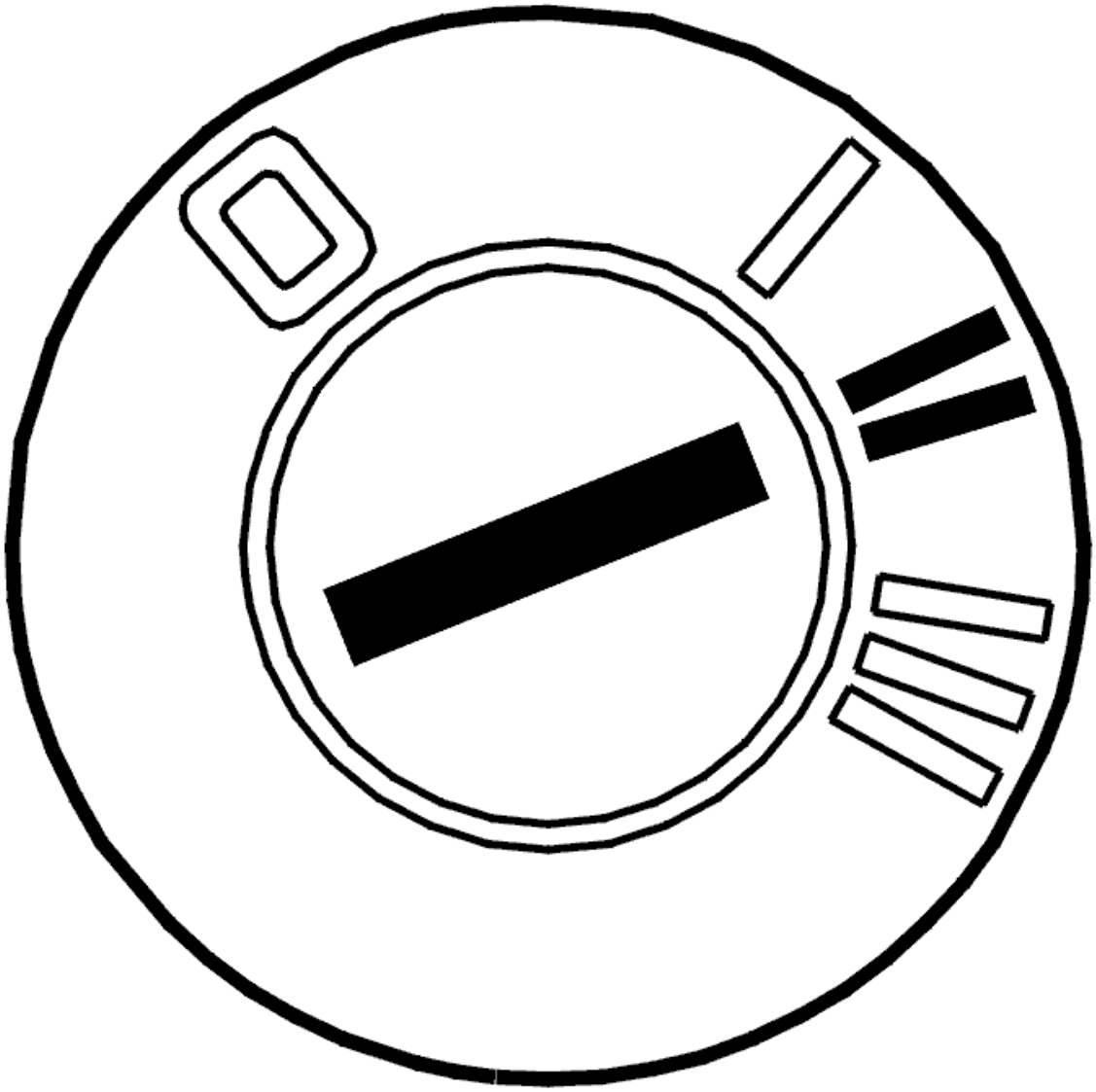

Fig. 72: Identifying Ignition ON
Courtesy of VOLVO CARS CORPORATION

- Ignition on.

  Check if the lamp in the power door mirror lights up and goes out.

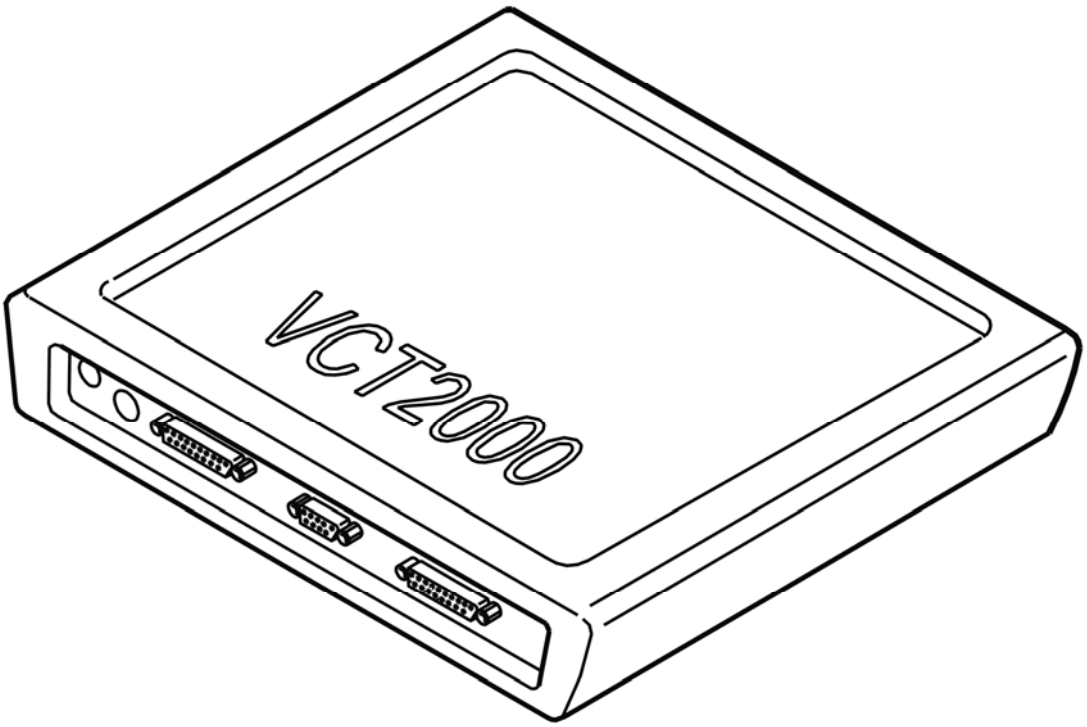

Fig. 73: Identifying VCT2000 Diagnostic Tool Symbol In VIDA
Courtesy of VOLVO CARS CORPORATION

Is the lamp in the power door mirror working?

- **YES**

  see: **INTERMITTENT FAULT**

- **NO**

  see: **CHECKING FOR SHORT-CIRCUITS TO GROUND**

CHECKING FOR SHORT-CIRCUITS TO GROUND

Check the cable between control module terminal #8B and power door mirror terminal #13. Check for a short-circuit to ground.

Check the ground lead between the control module terminal #10B and the power door mirror terminal #6.

Replace the cable if a fault is found.

Other information:

- To connect the breakout box, see **CONNECTING THE BREAKOUT BOX**
- Replacing the driver's side door module. See **DRIVER DOOR MODULE (DDM), REPLACING**
- Replacing the passenger side door module. See **PASSENGER DOOR MODULE (PDM), REPLACING** .
- For information about signals, see **SIGNAL SPECIFICATION**
- see **CHECKING WIRING AND TERMINALS** .

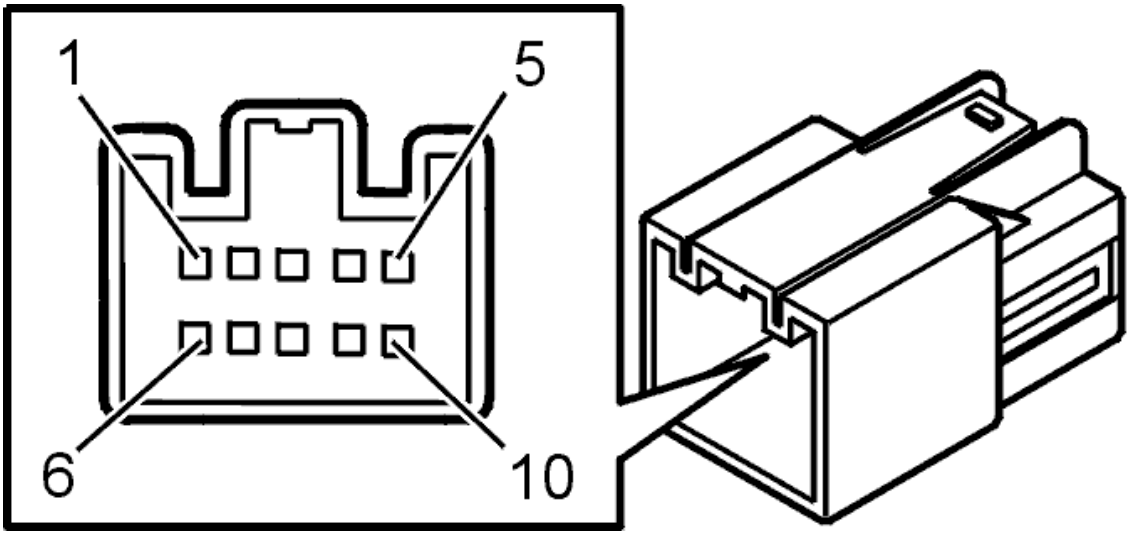

Fig. 74: Identifying 10--Pin Power Door Mirror Connector Terminal
Courtesy of VOLVO CARS CORPORATION

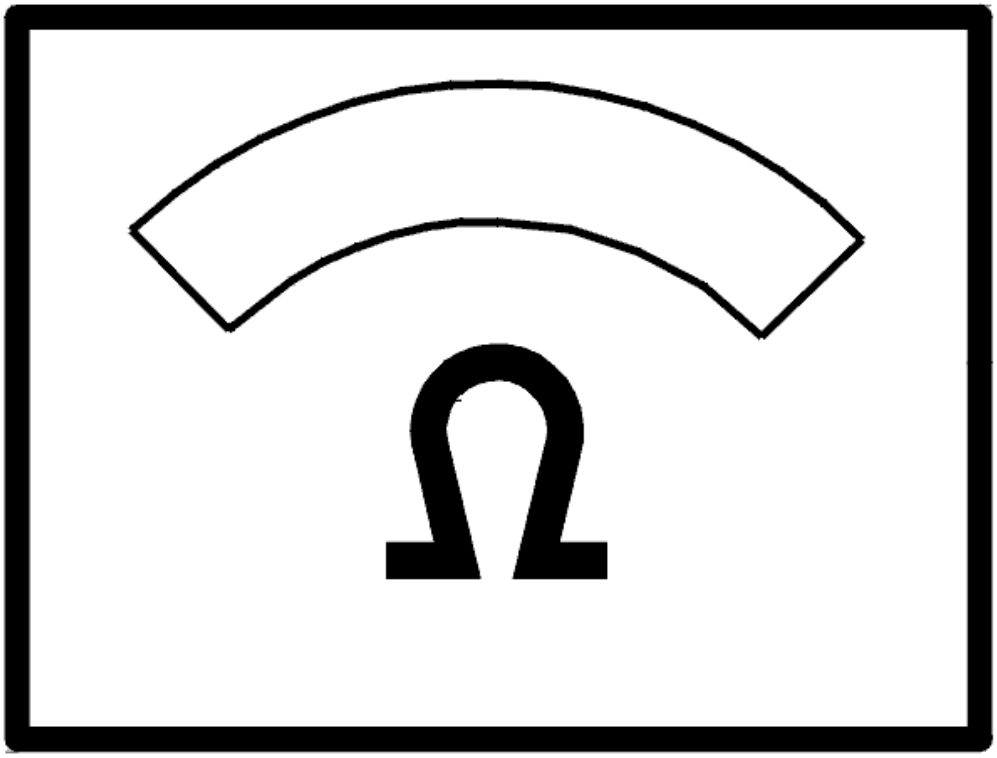

Fig. 75: Identifying Ohm Meter
Courtesy of VOLVO CARS CORPORATION

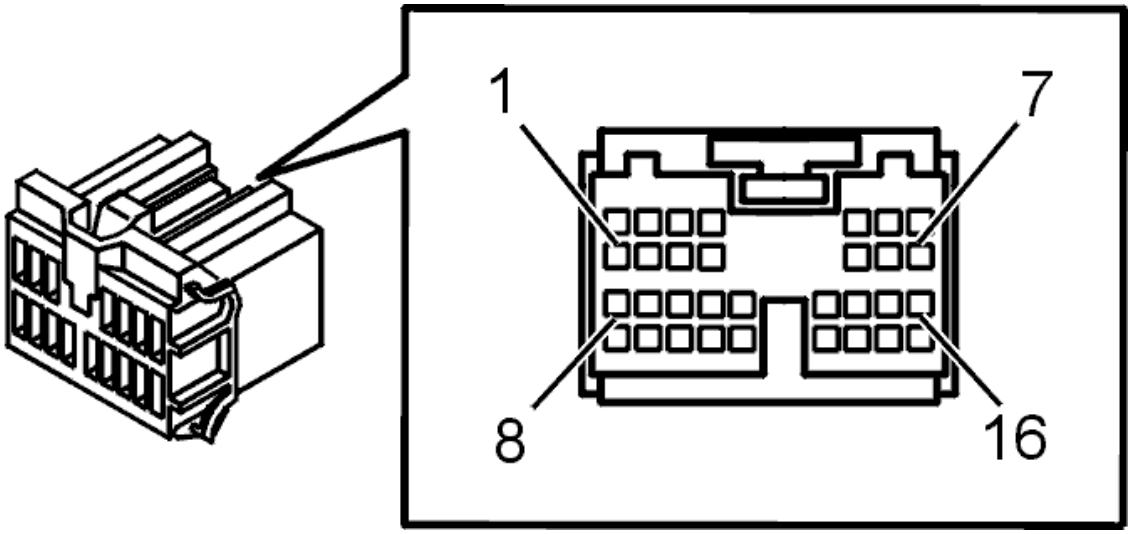

Fig. 76: Connector, Green (16- Pin)
Courtesy of VOLVO CARS CORPORATION

Were any faults found in the cable?

- **YES**

  see: **VERIFICATION**

- **NO**

  see: **REPLACING THE COMPONENT**

REPLACING THE COMPONENT

Check that there are no short circuits in the bulb holder.

Remedy as necessary.

If no fault is found, replace the lamp in the power door mirror according to **BULB, GROUND LIGHTING, DOOR MIRROR, REPLACING** .

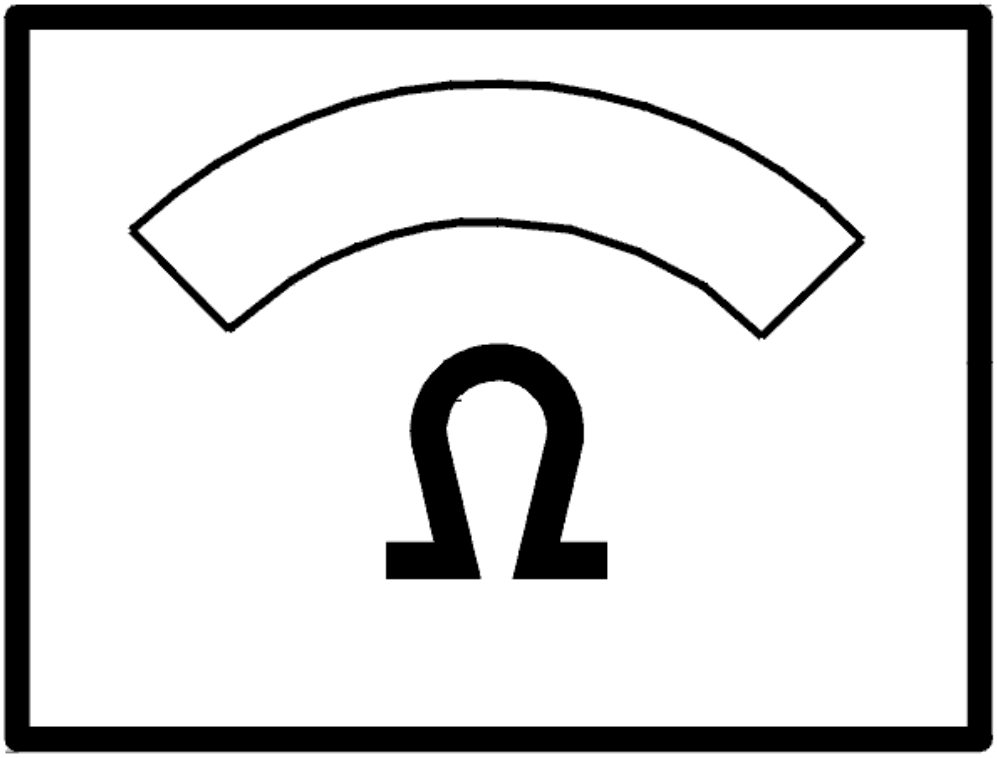

Fig. 77: Identifying Ohm Meter
Courtesy of VOLVO CARS CORPORATION

- **Continue**

  see: **VERIFICATION**

INTERMITTENT FAULT

Check the control module and power door mirror connectors. Check for contact resistance, oxidation and loose connections.

Check the cable between control module terminal #8B and power door mirror terminal #13. Check for an intermittent short-circuit to ground. Check for an intermittent open-circuit.

Check the ground lead between the control module terminal #10B and the power door mirror terminal #6.

Check the bulb holder and bulb if no fault was found.

Other information:

- To connect the breakout box, see **CONNECTING THE BREAKOUT BOX**
- For further information about signals and other values, see **SIGNAL SPECIFICATION**
- To access and replace the lamp and bulb holder, see **BULB, GROUND LIGHTING, DOOR MIRROR, REPLACING**
- see **CHECKING WIRING AND TERMINALS** .

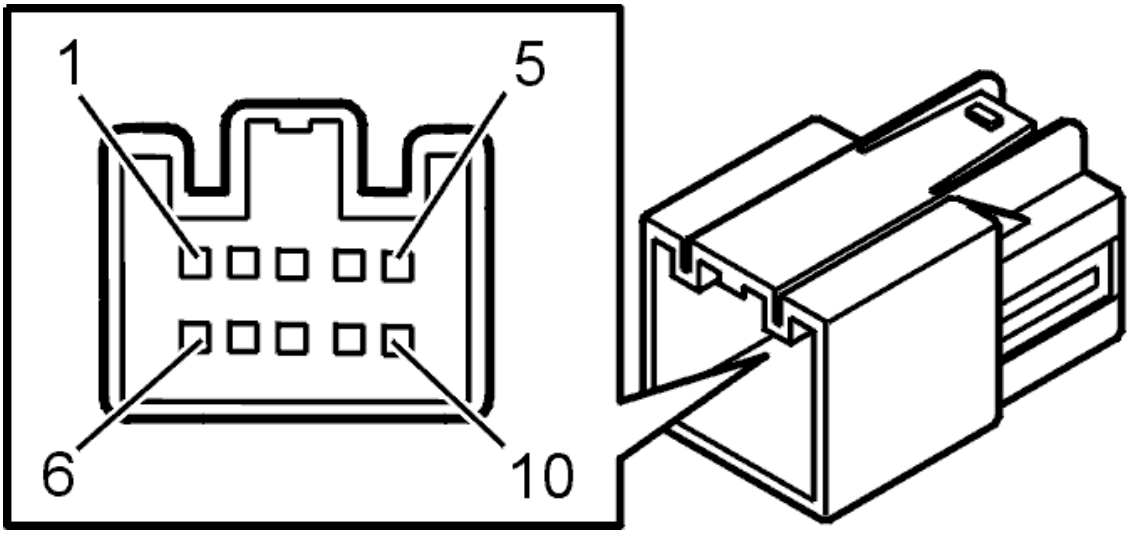

Fig. 78: Identifying 10--Pin Power Door Mirror Connector Terminal
Courtesy of VOLVO CARS CORPORATION

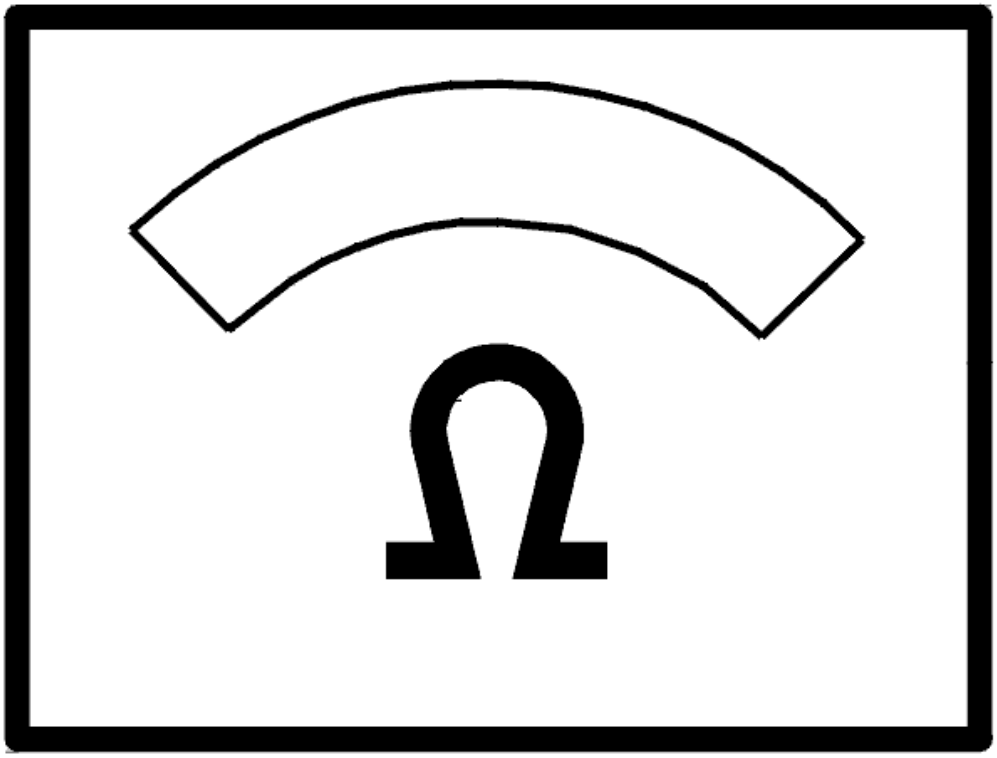

Fig. 79: Identifying Ohm Meter
Courtesy of VOLVO CARS CORPORATION

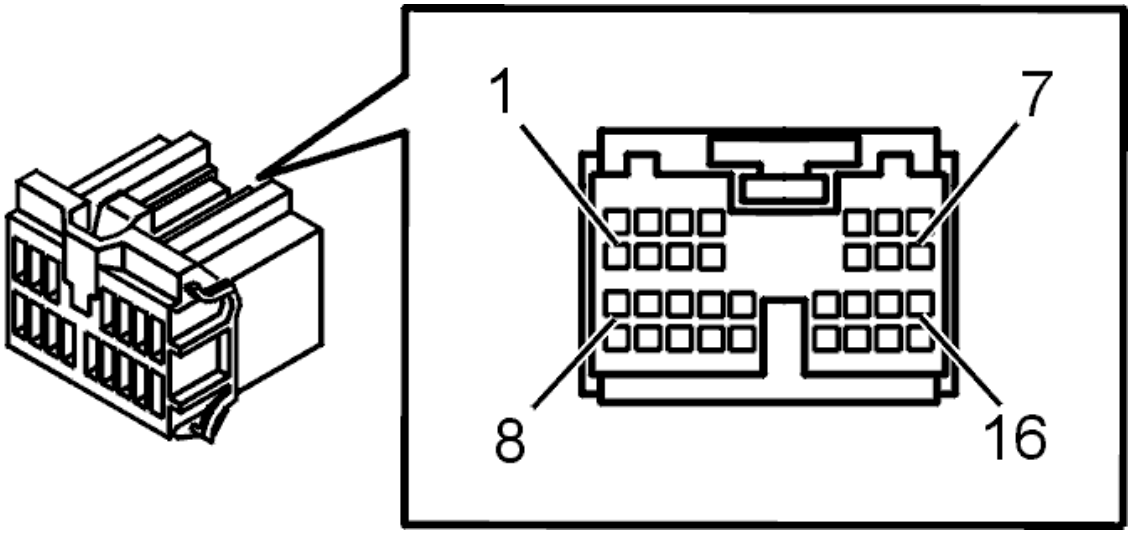

Fig. 80: Connector, Green (16- Pin)
Courtesy of VOLVO CARS CORPORATION

- **Continue**

  see: **INFORMATION**

VERIFICATION

VERIFICATION

HINT: After the repair it is necessary to check that the fault has been rectified.

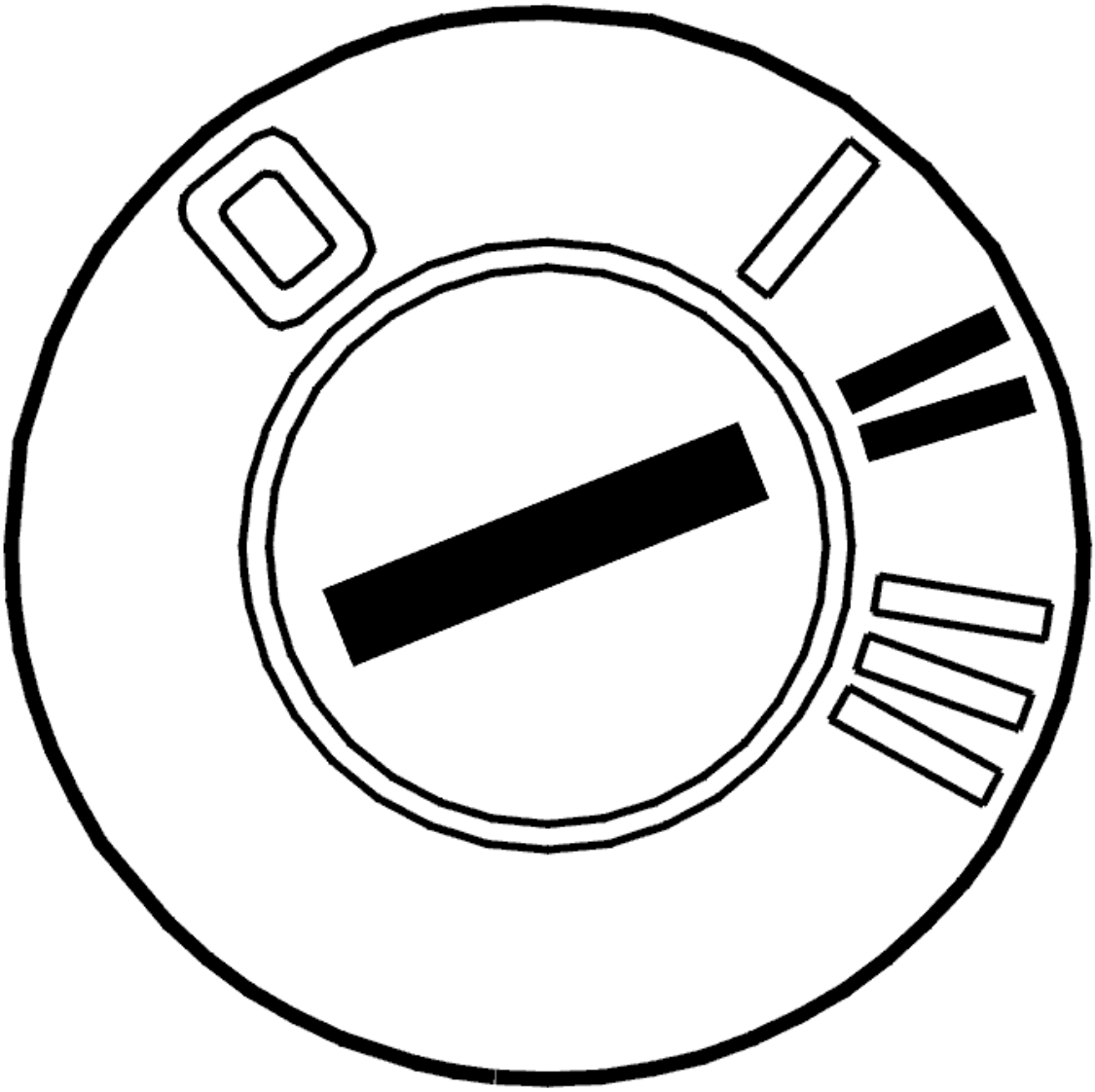

Fig. 81: Identifying Ignition ON
Courtesy of VOLVO CARS CORPORATION

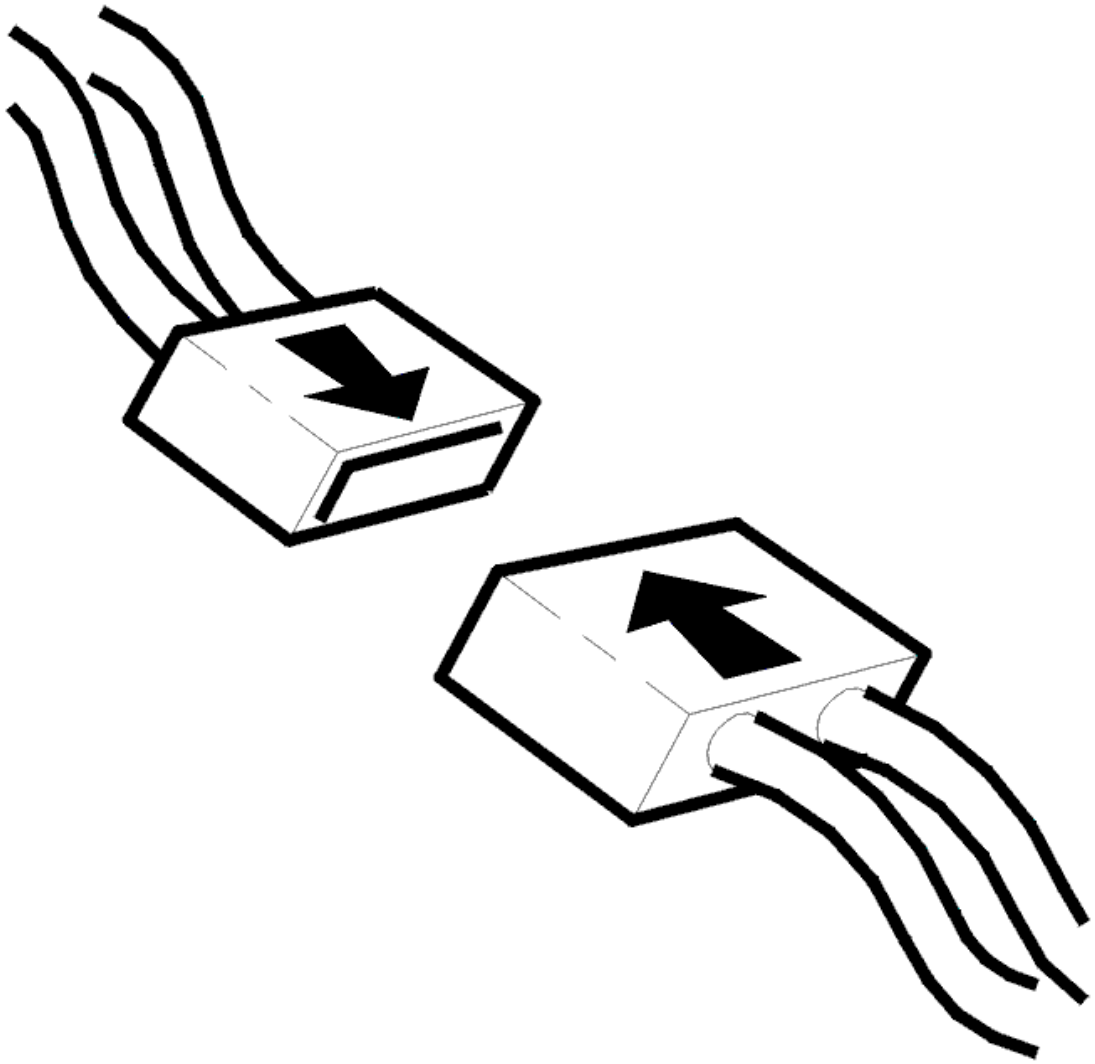

Fig. 82: Checking Connector
Courtesy of VOLVO CARS CORPORATION

- Ignition off.
- Connect the connectors, install the components, etc.
- Ignition on.

  Check that electric rear-view mirror lamp comes on.

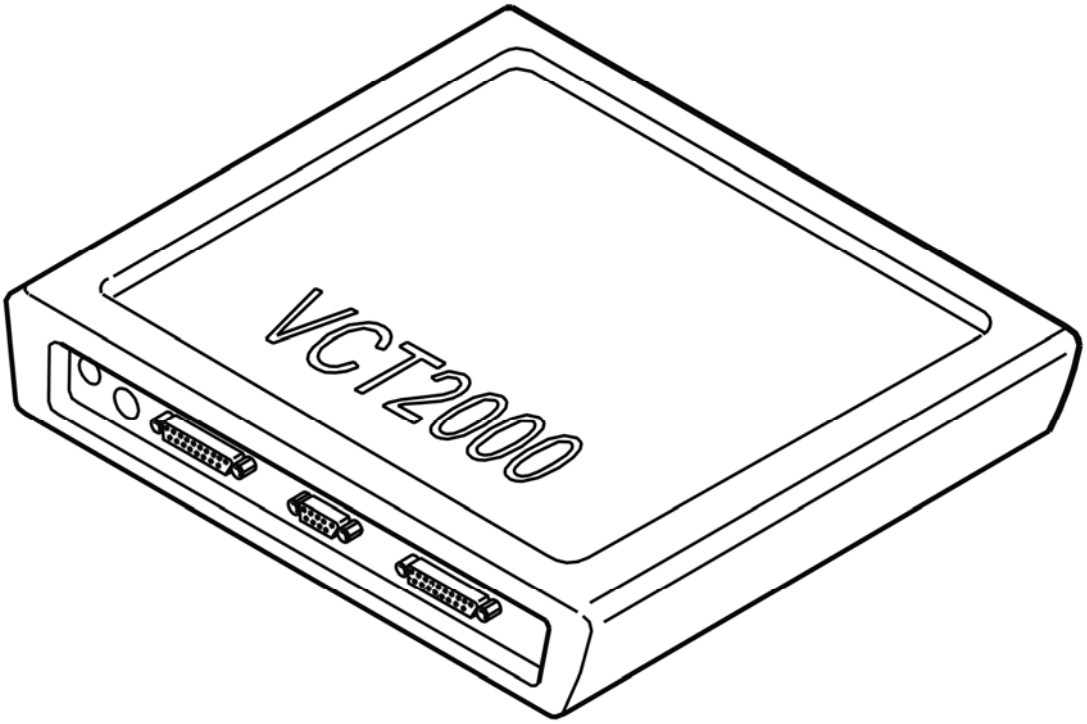

Fig. 83: Identifying VCT2000 Diagnostic Tool Symbol In VIDA
Courtesy of VOLVO CARS CORPORATION

Does lamp for electric rear-view mirror come on?

- **YES**

  VERIFIED: Troubleshooting has been completed.

- **NO**

  see: **INFORMATION**

INFORMATION

FAULT-TRACING INFORMATION

The fault should have been detected and remedied. As this is not the case fault-tracing has failed.

Exit fault-tracing for this diagnostic trouble code (DTC) or make another attempt.

INFORMATION

FAULT-TRACING INFORMATION

If the fault is intermittent, do not verify fault-tracing if the fault does not recur.

It is possible to view the information again, or leave fault-tracing for this diagnostic trouble code (DTC).

DDM-0047: POWER SUPPLY. SIGNAL TOO LOW (2003-2004)

DIAGNOSTIC TROUBLE CODE INFORMATION

Condition

If control unit registers that power supply is too low compared with supply to CEM, diagnostic trouble code DDM-0047 is displayed.

Substitute Value

- Nothing.

Possible Source

- Supply voltage too low.

Fault symptom[s]

- Automatic window closer does not work
- Electric window lift does not work
- Central locking does not work.

SIGNAL TOO LOW

CHECKING FOR PERMANENT OR INTERMITTENT FAULTS

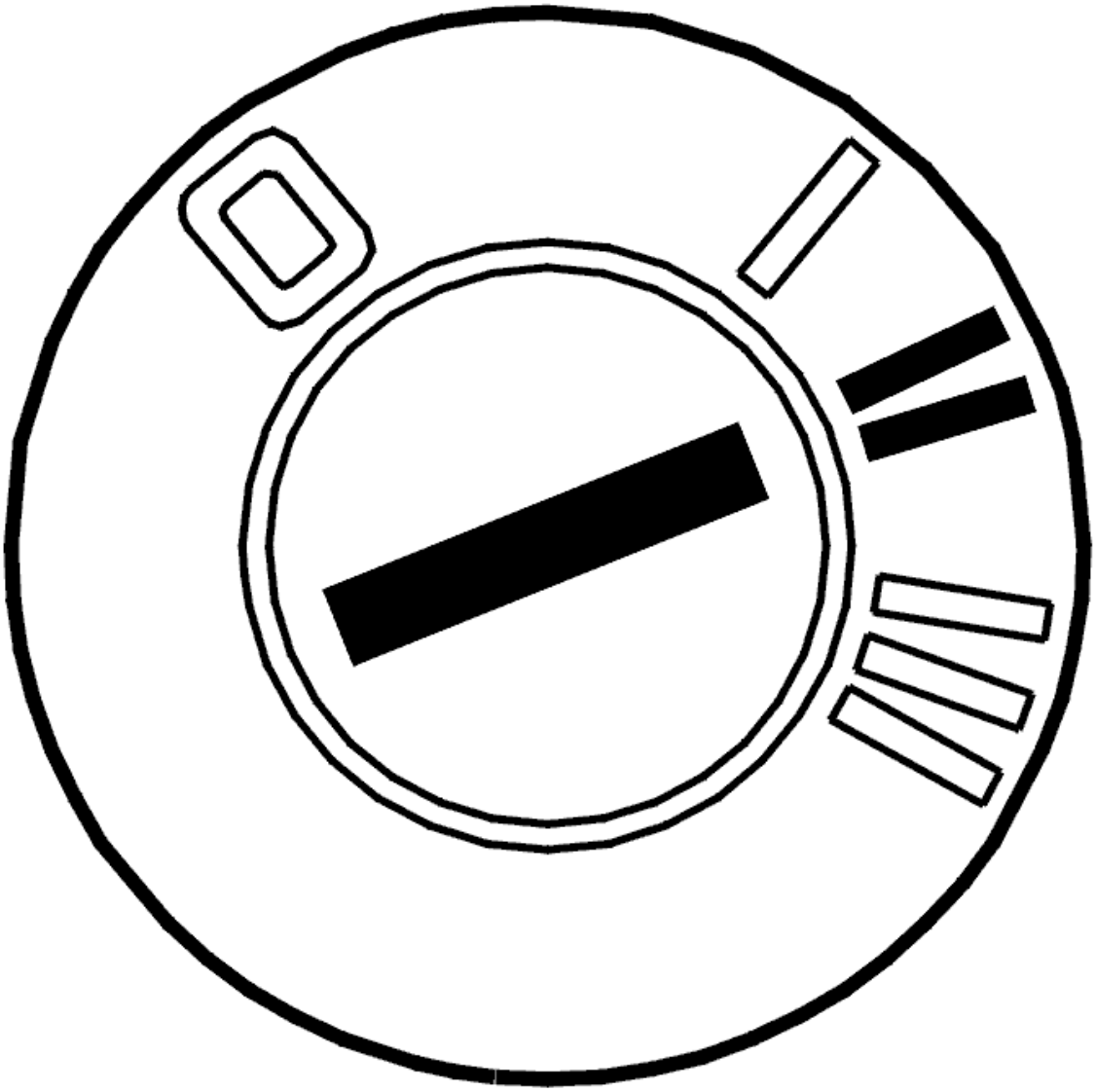

Fig. 84: Identifying Ignition ON
Courtesy of VOLVO CARS CORPORATION

- Ignition on.

  Check that window operates by raising/lowering window to its end stops.

Does window operate?

- **YES**

  see: **INTERMITTENT FAULT**

- **NO**

  see: **CHECKING THE CONNECTORS**

CHECKING THE CONNECTORS

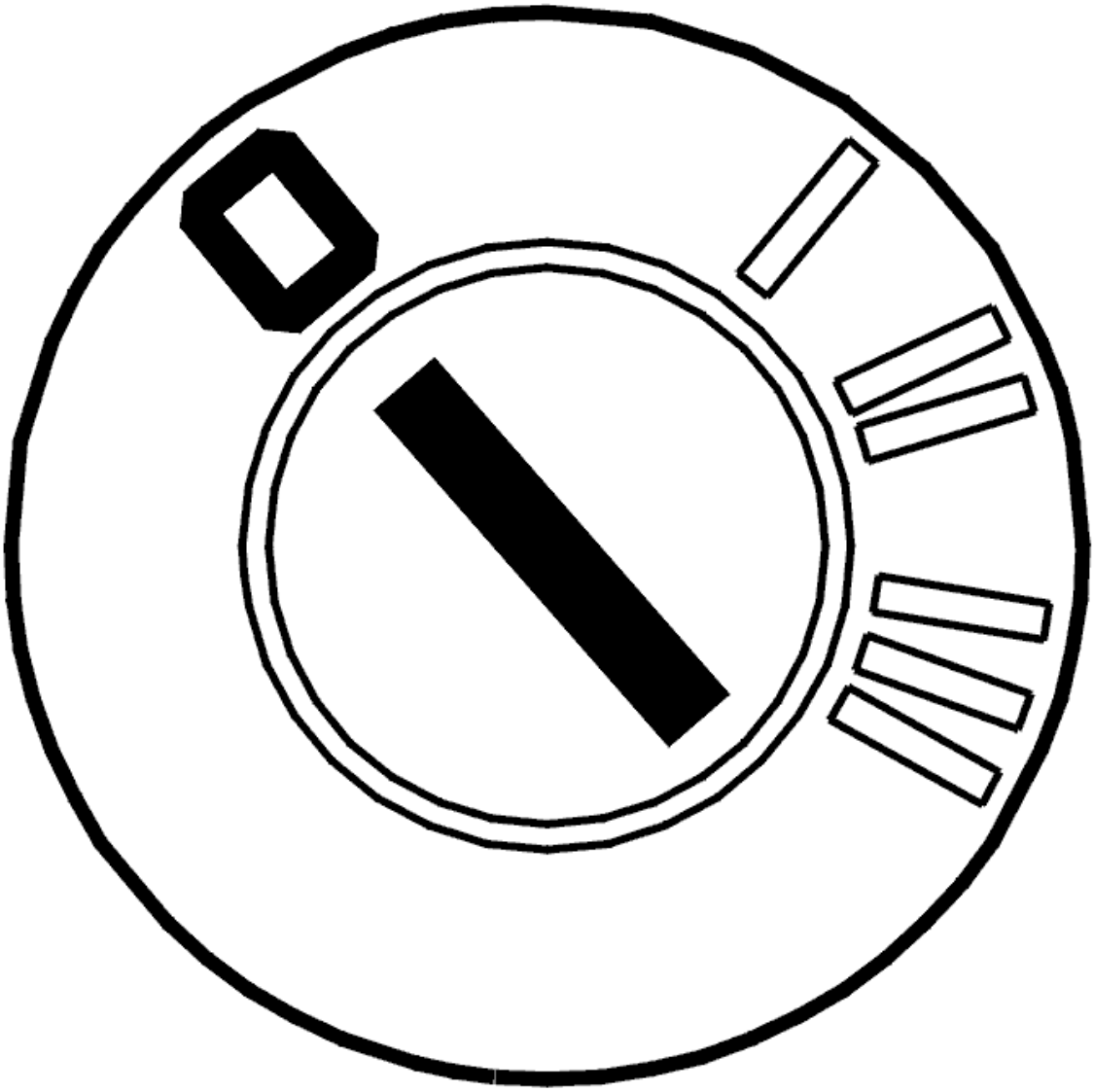

Fig. 85: Identifying Ignition OFF
Courtesy of VOLVO CARS CORPORATION

- Ignition off.

  Check control unit and wire connector (54/3R, 54/10 or 54/11 and 3/126 or 3/127) for contact resistance and oxidation. See **CONTACT RESISTANCE AND OXIDATION** , and for a loose contact. See **LOOSE CONNECTIONS (TERMINALS)** .

  Check especially for damage.

  Additional information:

  - Replacing the driver's side door module. See **DRIVER DOOR MODULE (DDM), REPLACING**

- Replacing the passenger side door module. See **PASSENGER DOOR MODULE (PDM), REPLACING** .

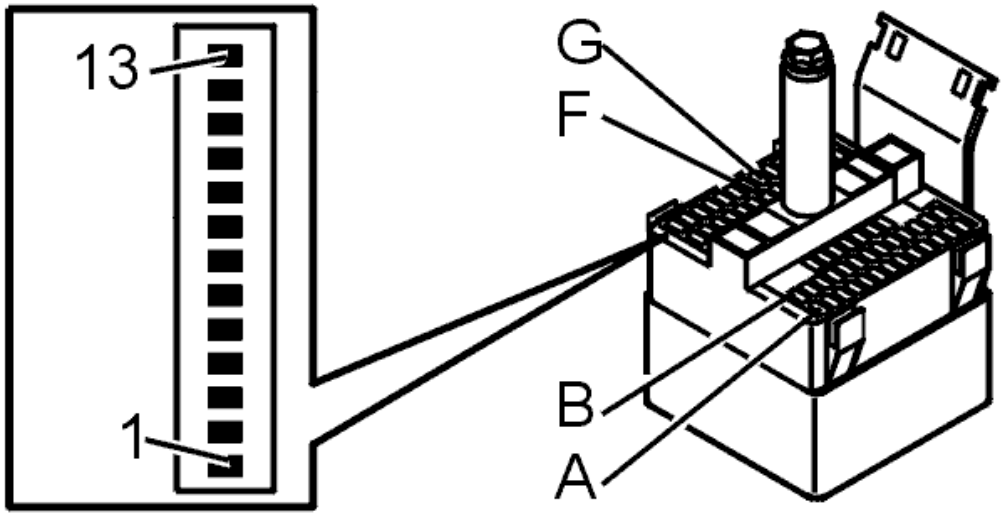

Fig. 86: Identifying Connector Terminals
Courtesy of VOLVO CARS CORPORATION

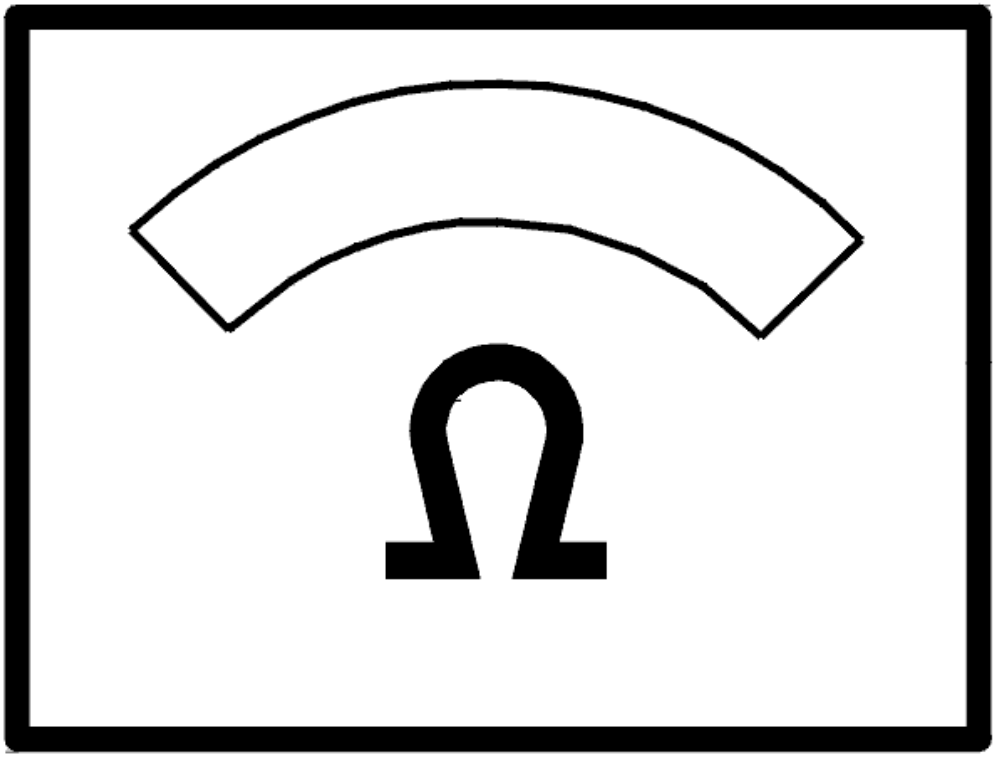

Fig. 87: Identifying Ohm Meter
Courtesy of VOLVO CARS CORPORATION

- **Continue**

  see: **CHECKING THE WIRES AND COMPONENTS**

CHECKING THE WIRES AND COMPONENTS

Check that main fuse (11A/2) in engine compartment relay/fuse box is intact.

If control unit is on the left side, check that interior fuse (11C/35) in interior fuse box is intact.

If control unit is on the right side, check that interior fuse (11C/36) in interior fuse box is intact.

Check the wire between control unit 12B and the battery for a short circuit to ground. See **SHORT-CIRCUIT**

TO GROUND, PERMANENT FAULTS and for an open circuit. See **OPEN-CIRCUIT, PERMANENT FAULTS** .

Check the wire between control unit 9B and ground: Check front left or right seat support for a short circuit to ground. See **SHORT-CIRCUIT TO GROUND, PERMANENT FAULTS** , and for an open circuit. See **OPEN-CIRCUIT, PERMANENT FAULTS** .

Additional information:

- With ignition off, voltage between control unit 12B and ground should be battery voltage.
- To connect the test box, see **CONNECTING THE BREAKOUT BOX** .
- For information on signals and additional values, see **SIGNAL SPECIFICATION** .

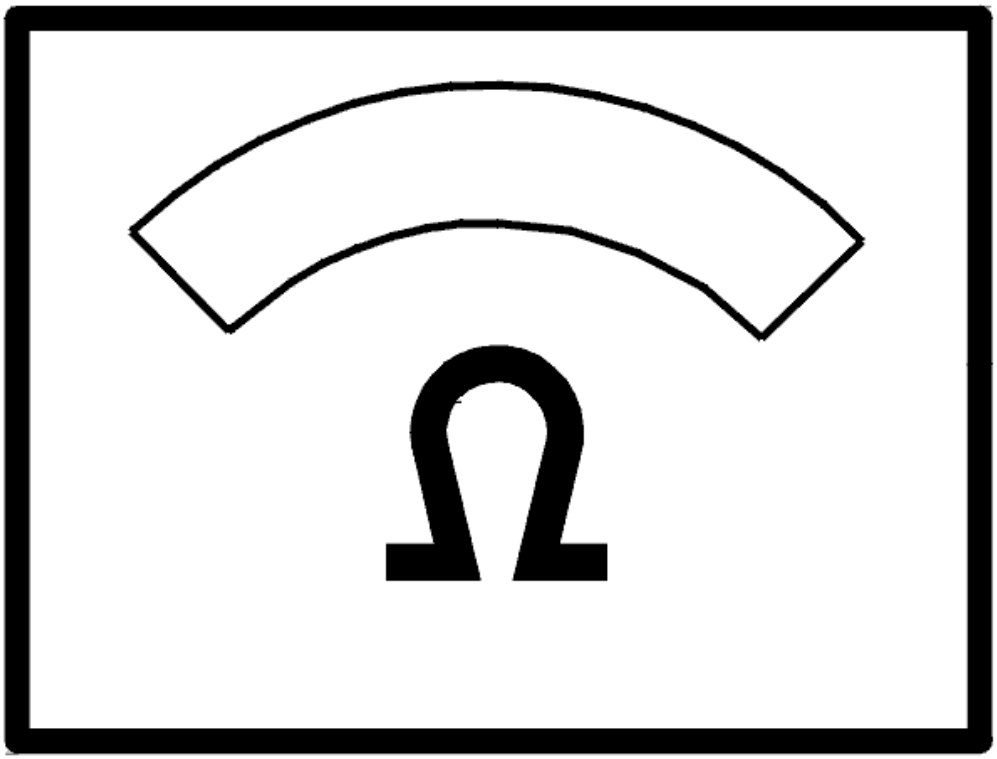

Fig. 88: Identifying Ohm Meter
Courtesy of VOLVO CARS CORPORATION

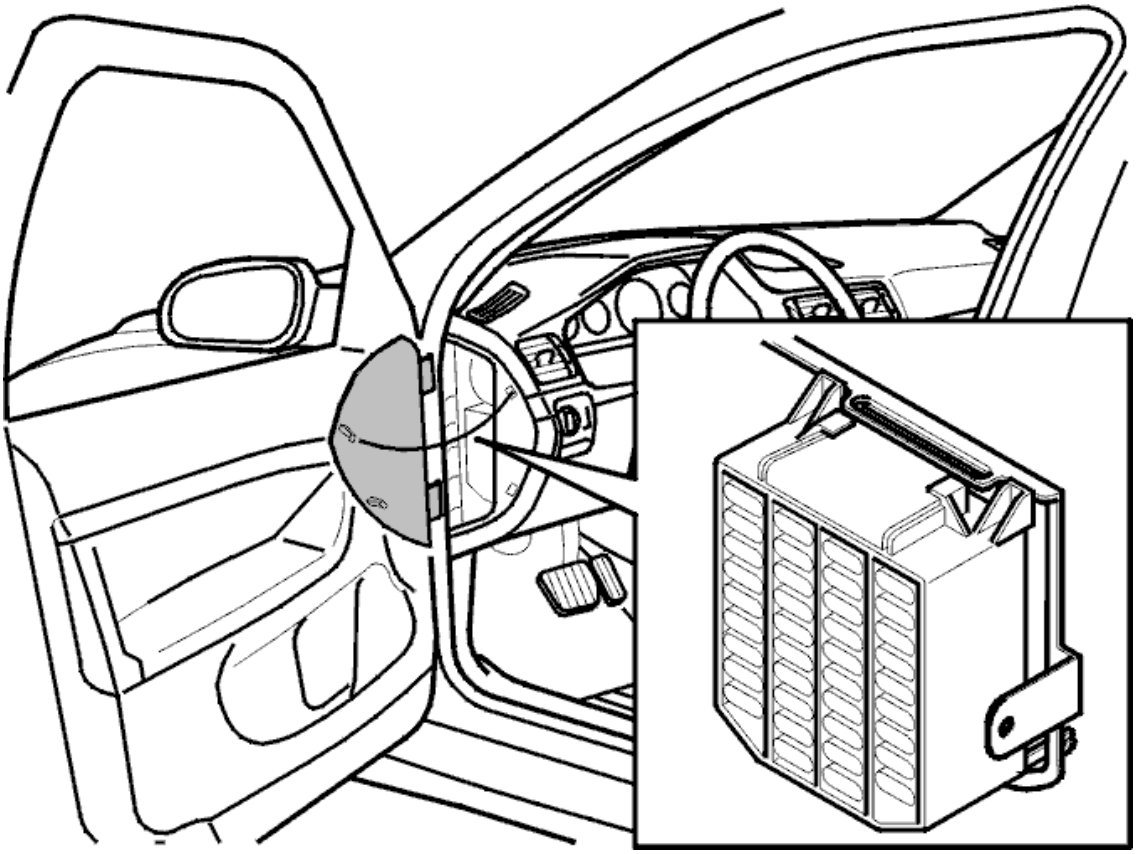

Fig. 89: Identifying Passenger Compartment Fusebox
Courtesy of VOLVO CARS CORPORATION

- **Continue**

  see: **VERIFICATION**

INTERMITTENT FAULT

Check control unit and wire connector (54/3R, 54/10 or 54/11 and 3/126 or 3/127) for contact resistance and oxidation. See **CONTACT RESISTANCE AND OXIDATION** , and for a loose contact. See **LOOSE CONNECTIONS (TERMINALS)** .

Check that main fuse (11A/2) in engine compartment relay/fuse box is correctly installed.

If control unit is on the left side, check that interior fuse (11C/35) in interior fuse box is correctly installed.

If control unit is on the right side, check that interior fuse (11C/36) in interior fuse box is correctly installed.

Check the wire between control unit 12B and the ignition lock for an intermittent short circuit to ground. See **SHORT-CIRCUIT TO GROUND, INTERMITTENT FAULTS** , and for an intermittent open circuit. See **OPEN-CIRCUIT, INTERMITTENT FAULTS** .

Check the wire between control unit 9B and ground: Check front left or right seat support for an intermittent

short circuit to ground. See **SHORT-CIRCUIT TO GROUND, INTERMITTENT FAULTS** , and for an intermittent open circuit. See **OPEN-CIRCUIT, INTERMITTENT FAULTS** .

Additional information:

- With ignition off, voltage between control unit 12B and ground should be battery voltage.
- To connect the test box, see **CONNECTING THE BREAKOUT BOX** .
- For information on signals and additional values, see **SIGNAL SPECIFICATION** .
- Replacing the driver's side door module. See **DRIVER DOOR MODULE (DDM), REPLACING**
- Replacing the passenger side door module. See **PASSENGER DOOR MODULE (PDM), REPLACING** .

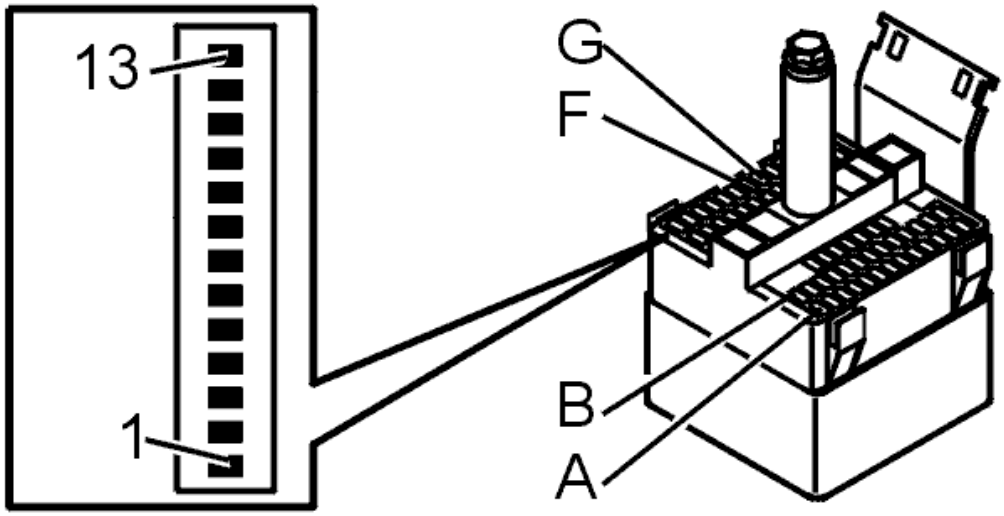

Fig. 90: Identifying Connector Terminals
Courtesy of VOLVO CARS CORPORATION

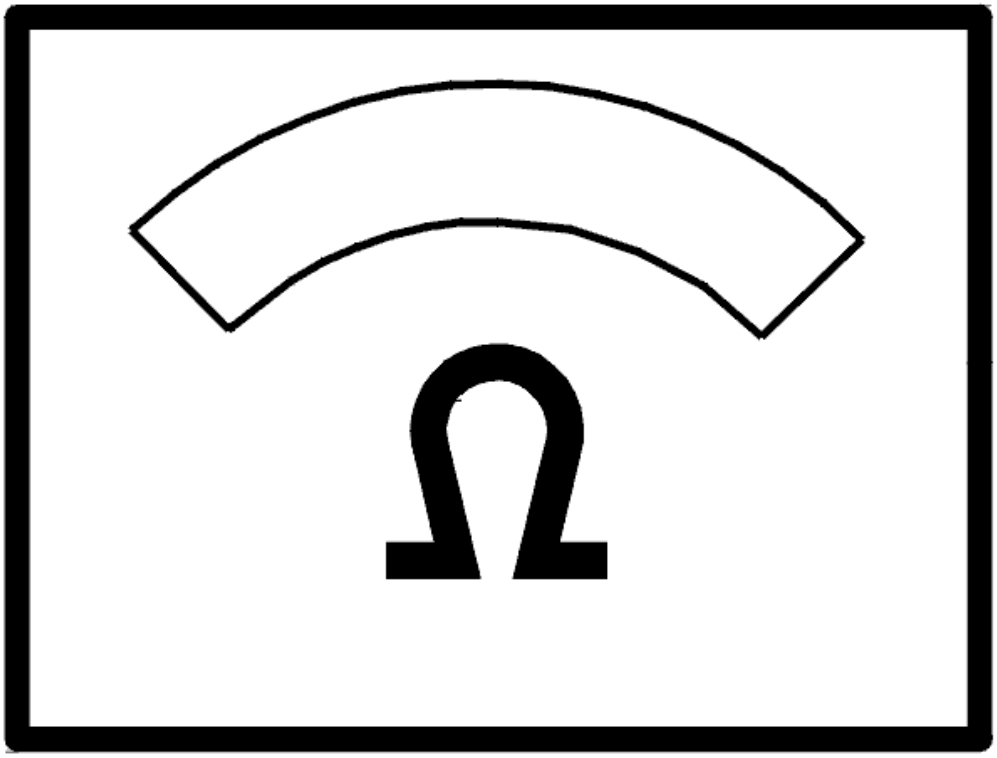

Fig. 91: Identifying Ohm Meter
Courtesy of VOLVO CARS CORPORATION

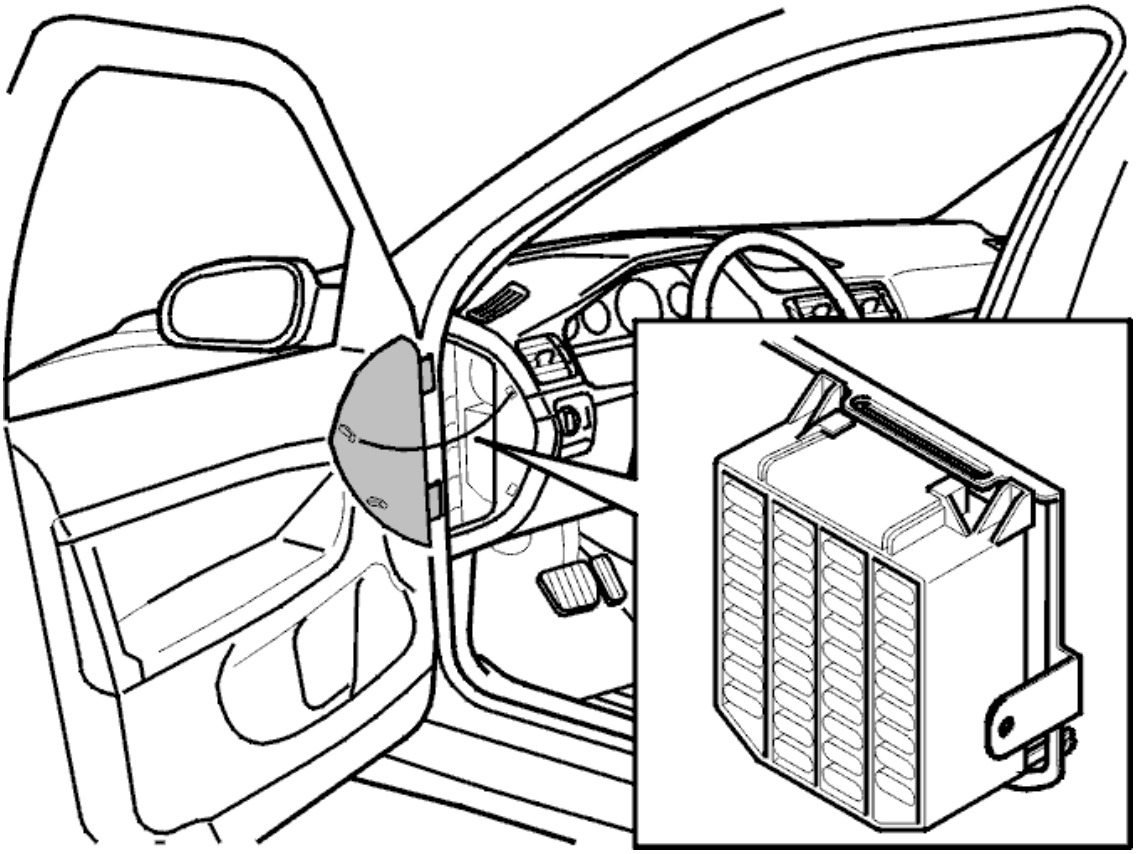

Fig. 92: Identifying Passenger Compartment Fusebox
Courtesy of VOLVO CARS CORPORATION

- **Continue**

  see: **INFORMATION**

INFORMATION

FAULT-TRACING INFORMATION

If the fault is intermittent, do not verify fault-tracing if the fault does not recur.

It is possible to view the information again, or leave fault-tracing for this diagnostic trouble code (DTC).

VERIFICATION

VERIFICATION

HINT: After the repair it is necessary to check that the fault has been rectified.

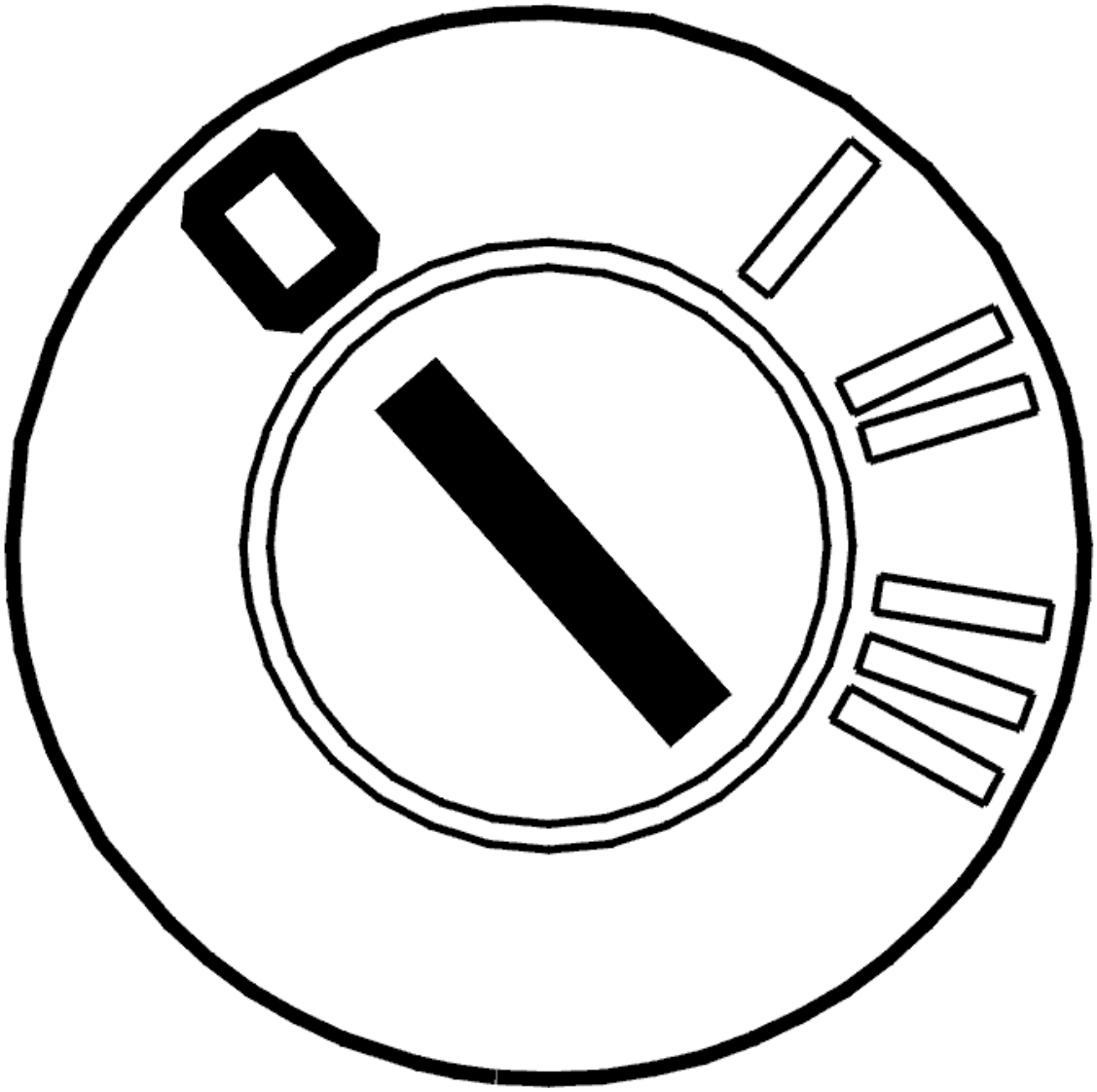

Fig. 93: Identifying Ignition OFF
Courtesy of VOLVO CARS CORPORATION

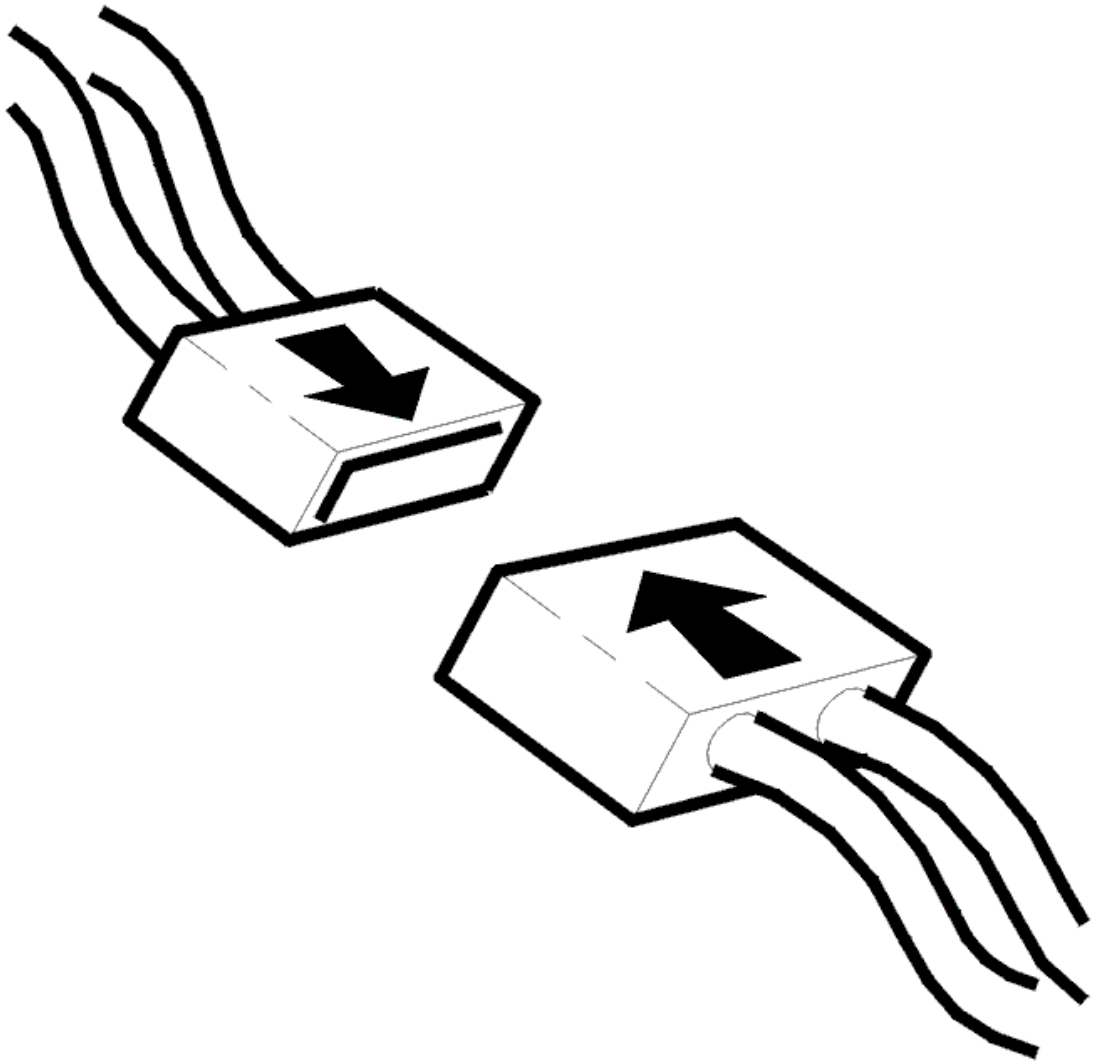

Fig. 94: Checking Connector
Courtesy of VOLVO CARS CORPORATION

- Ignition off.
- Connect the connectors, install the components, etc.

  Check that the voltage between control unit 12B and ground is the same as battery voltage.

Is the voltage correct?

- **YES**

  VERIFIED: Troubleshooting has been completed.

- **NO**

see: **INFORMATION**

INFORMATION

FAULT-TRACING INFORMATION

The fault should have been detected and remedied. As this is not the case fault-tracing has failed.

Exit fault-tracing for this diagnostic trouble code (DTC) or make another attempt.

DDM-0049: CONTROL MODULE. INTERNAL FAULT (2005-2012)

DIAGNOSTIC TROUBLE CODE (DTC) INFORMATION DDM-0049

Condition

Diagnostic trouble code (DTC) DDM-0049 is stored if the control module registers that a signal has not been updated within the set period.

Substitute Value

- The control module "Limp Home" program has been initiated.

Possible Source

- Internal fault.

Fault symptom[s]

- The power window mechanism does not operate
- Door mirror control does not function.

INTERNAL FAULT

REPLACING THE COMPONENT

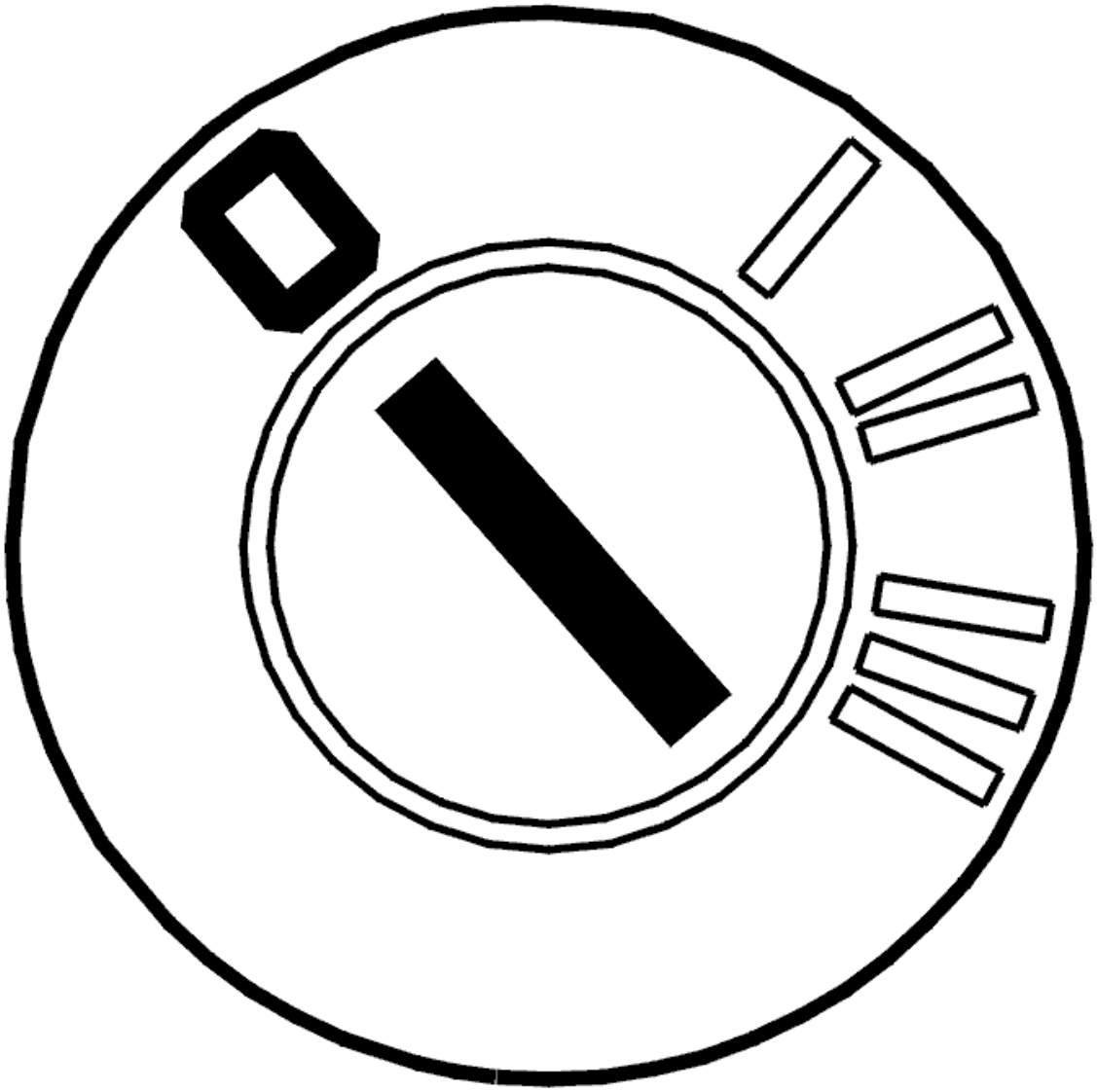

Fig. 95: Identifying Ignition OFF
Courtesy of VOLVO CARS CORPORATION

- Ignition off.

The driver door module (DDM) has registered an internal fault.

NOTE: **A new control module is delivered without software. The control module must be programmed in order to function after replacement.**

After replacing the control module the window position must be initialized.

- Ignition on.

Move the window to its upper limit position using manual control.

Initialize the window.

During initialization, the window will automatically go down to its lowest position and then go back up again.

Other information:

- Replacing the driver's side door module. See **DRIVER DOOR MODULE (DDM), REPLACING**
- Replacing the passenger side door module. See **PASSENGER DOOR MODULE (PDM), REPLACING** .

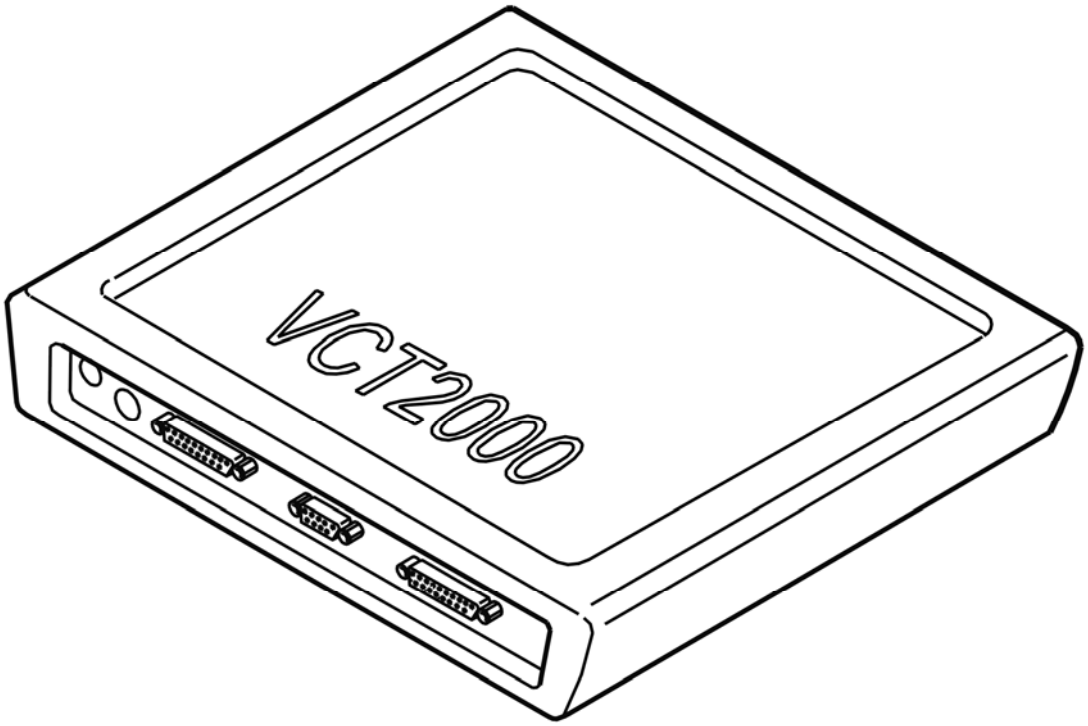

Fig. 96: Identifying VCT2000 Diagnostic Tool Symbol In VIDA
Courtesy of VOLVO CARS CORPORATION

DDM-0049: CONTROL UNIT. INTERNAL FAULT (2003-2004)

DIAGNOSTIC TROUBLE CODE (DTC) INFORMATION DDM-0049

see **DIAGNOSTIC TROUBLE CODE (DTC) INFORMATION DDM-0049**

INTERNAL FAULT

REPLACING THE COMPONENT

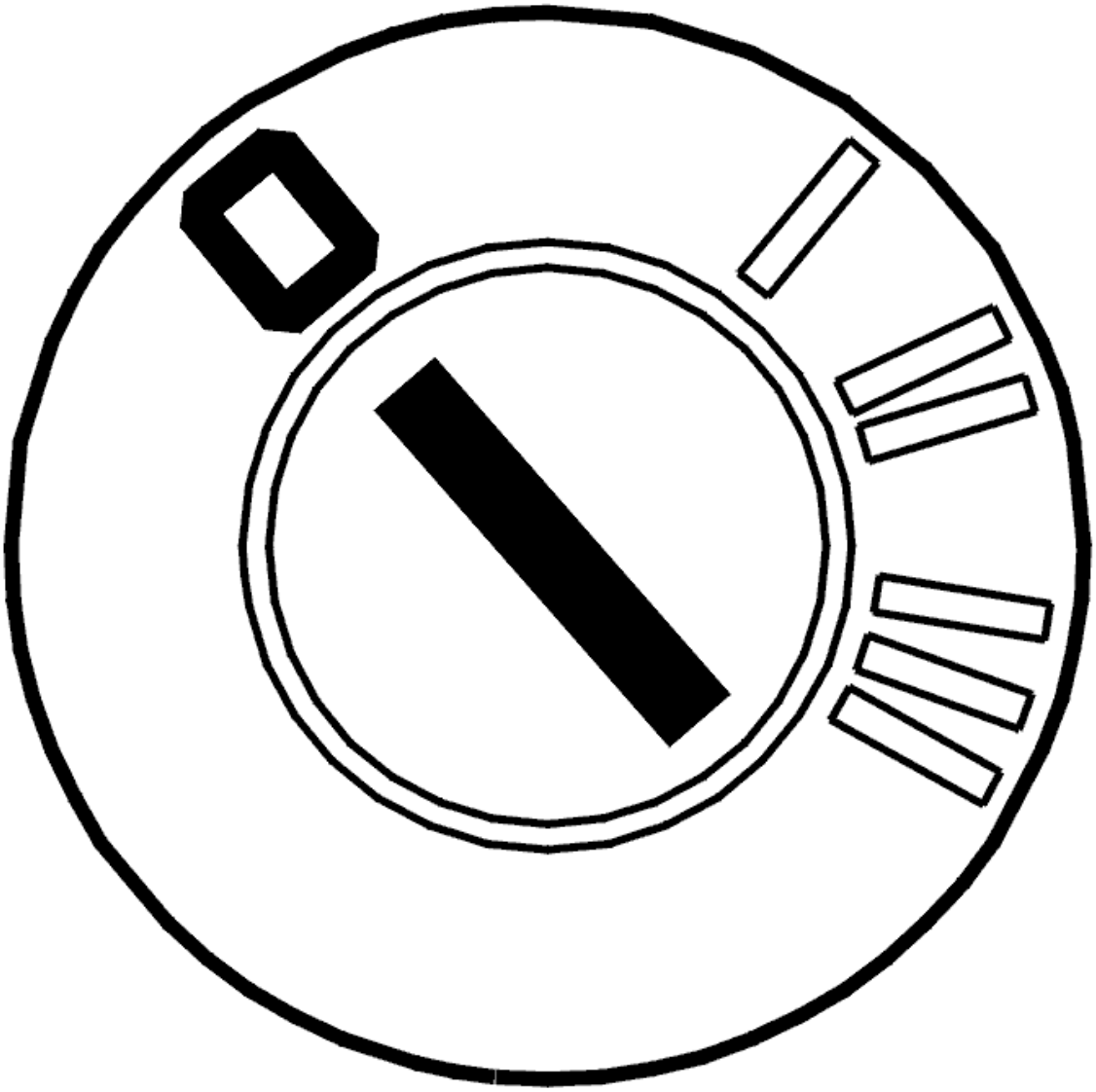

Fig. 97: Identifying Ignition OFF
Courtesy of VOLVO CARS CORPORATION

- Ignition off.

  The driver door module (DDM) has registered an internal fault.

  NOTE: A new control module is delivered without software. The control module must be programmed when it has been replaced.

  Other information:

  - Replacing the driver's side door module. See **DRIVER DOOR MODULE (DDM), REPLACING**
  - Replacing the passenger side door module. See **PASSENGER DOOR MODULE (PDM), REPLACING** .

After replacing the control module the window position must be initialized.

Ignition on.

Move the window to its upper limit position using manual control.

Initialize the window.

From model year 2003 inclusive, the window will lower approximately 10 centimeters and then close again during initialization.

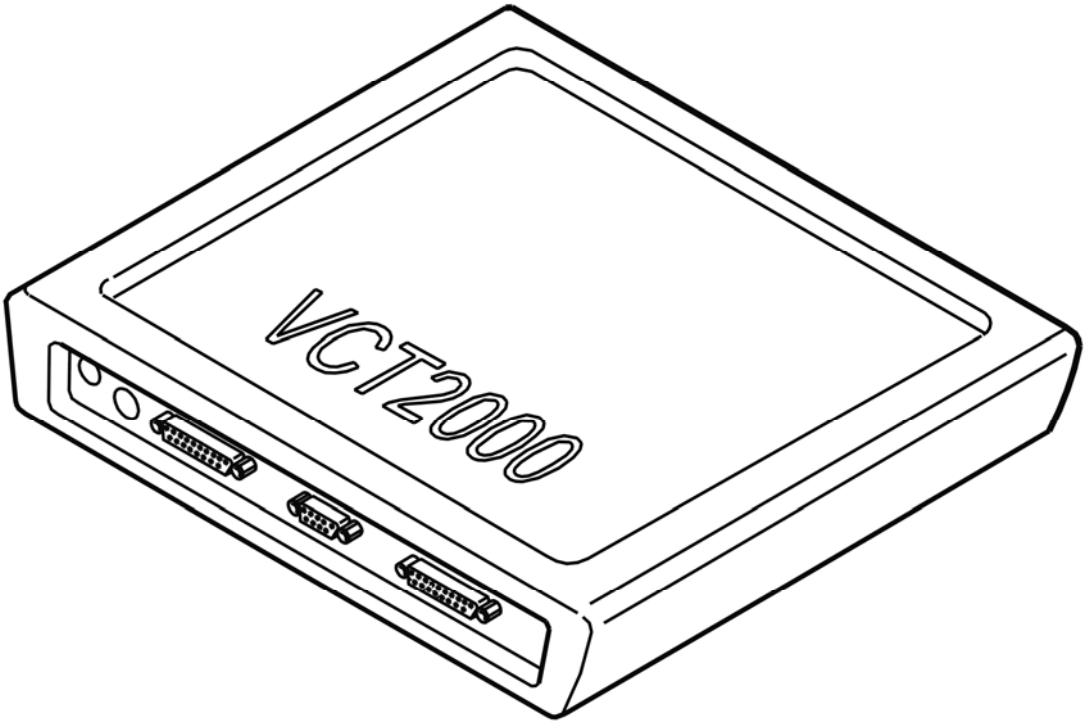

Fig. 98: Identifying VCT2000 Diagnostic Tool Symbol In VIDA
Courtesy of VOLVO CARS CORPORATION

DDM-004A: OUTSIDE TEMPERATURE SENSOR. SIGNAL TOO HIGH (2005-2012)

DIAGNOSTIC TROUBLE CODE INFORMATION

Condition

If control unit registers that signal from temperature sensor is too high, diagnostic trouble code DDM-004A is displayed.

Substitute Value

- Nothing.

Possible Source

- Signal wire short circuited to voltage supply
- Open circuit in signal wire.

Fault symptom[s]

- Outside temperature sensor does not work.

SIGNAL TOO HIGH

CHECKING FOR PERMANENT OR INTERMITTENT FAULTS

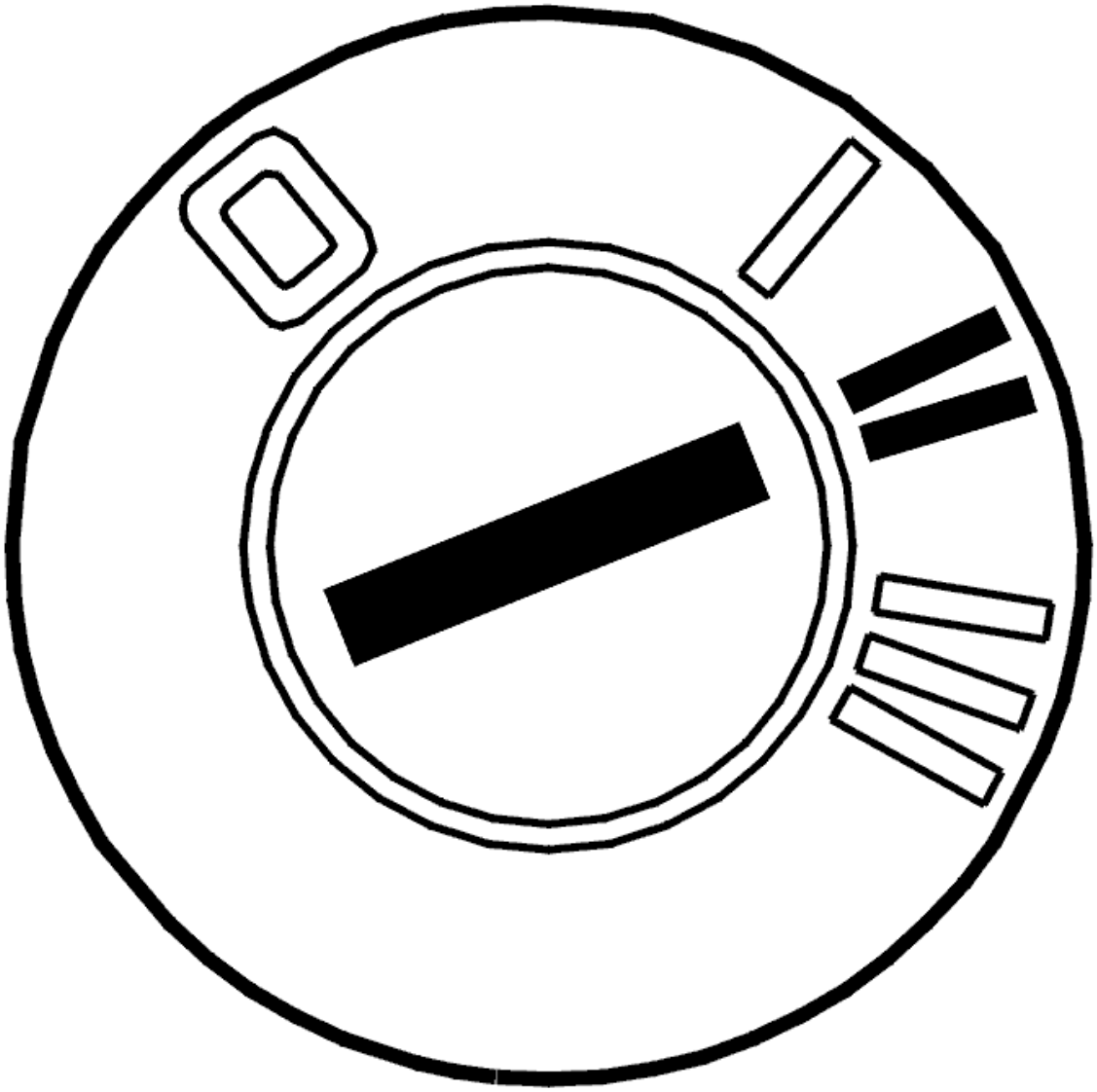

Fig. 99: Identifying Ignition ON
Courtesy of VOLVO CARS CORPORATION

- Ignition on.

  Check the outside temperature.

  NOTE: The outside temperature sensor is always located in the right door mirror.

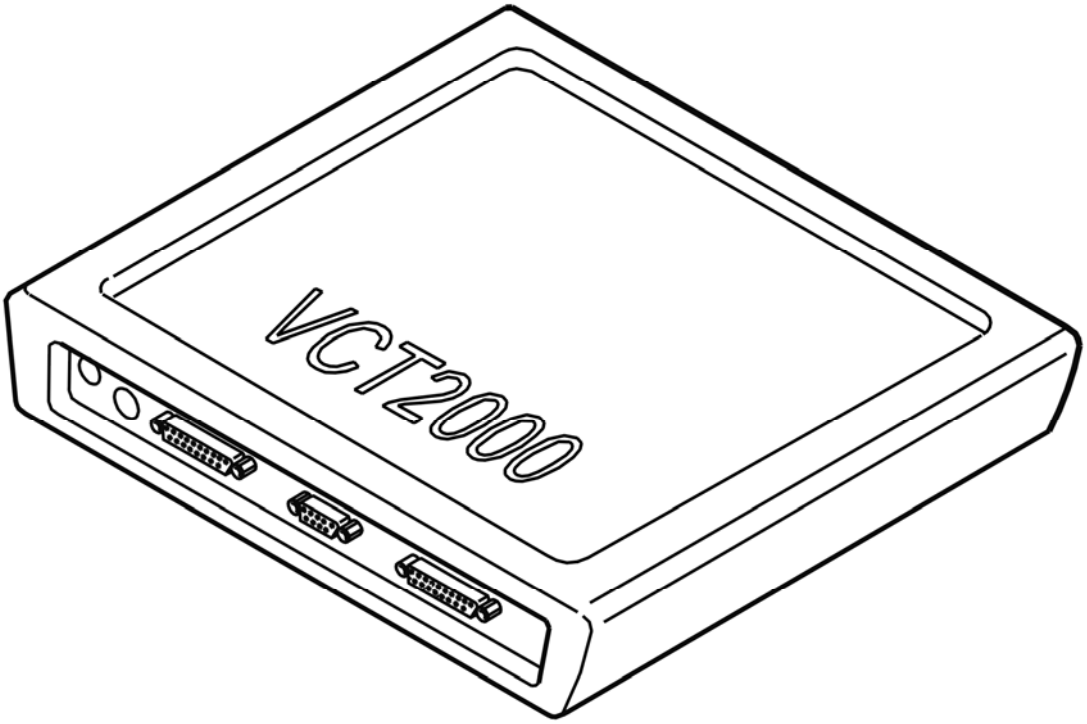

Fig. 100: Identifying VCT2000 Diagnostic Tool Symbol In VIDA
Courtesy of VOLVO CARS CORPORATION

Is the temperature within its permitted range?

- **YES**

  see: **INTERMITTENT FAULT**

- **NO**

  see: **CHECKING FOR A SHORT-CIRCUIT**

CHECKING FOR A SHORT-CIRCUIT

If the car is equipped with a 16-pin connector

Check the cable between driver door module (DDM) terminal #18A and power door mirror connector terminal #3. Check for an open-circuit.

Check the cable between driver door module (DDM) terminal #14A and power door mirror connector terminal #2. Check for a short-circuit to supply voltage. Check for an open-circuit.

Replace the cable if a fault is found.

Try a new outside temperature sensor if no fault was found.

Other information:

- see **CONNECTING THE BREAKOUT BOX**
- see **SIGNAL SPECIFICATION**
- see **REAR VIEW MIRROR, REPLACING**
- Outside temperature sensor -2006, see **OUTSIDE TEMPERATURE SENSOR DOOR MIRROR, REPLACING**
- Outside temperature sensor 2007-, see **OUTSIDE TEMPERATURE SENSOR**
- see **CHECKING WIRING AND TERMINALS** .

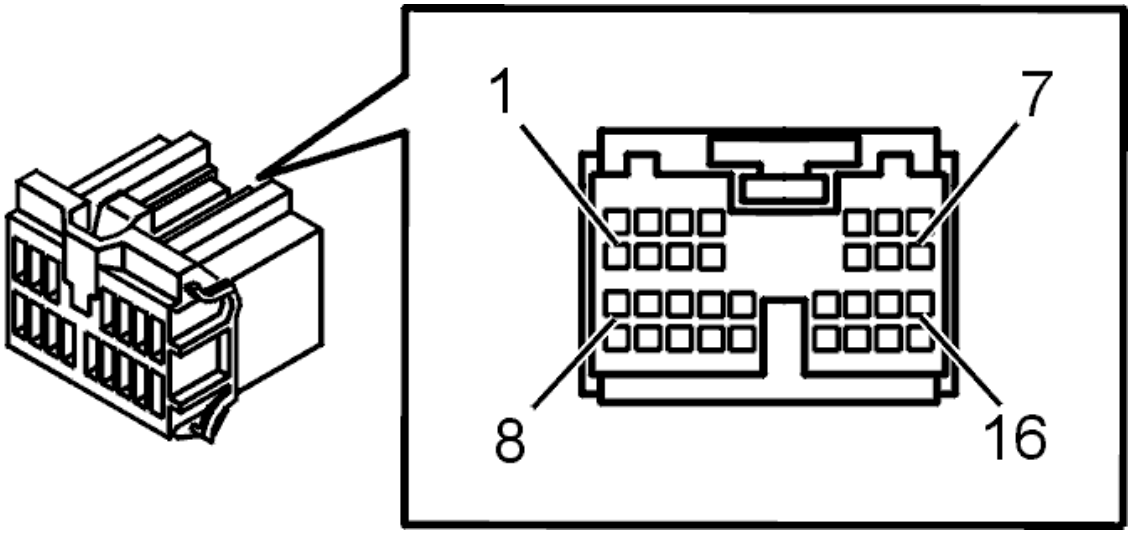

Fig. 101: Connector, Green (16- Pin)
Courtesy of VOLVO CARS CORPORATION

- **Continue**

  see: **VERIFICATION**

INTERMITTENT FAULT

Check the control module and power door mirror connectors. Check for contact resistance, oxidation and loose connections.

If the car is equipped with a 16-pin connector

Check the cable between driver door module (DDM) terminal #14A and power door mirror terminal #2. Check the cable between control module terminal #18A and power door mirror terminal #3. Check these cables for an intermittent short-circuit to supply voltage. Check for an intermittent open-circuit.

Try a new outside temperature sensor if no fault was found.

Other information:

- see **CONNECTING THE BREAKOUT BOX**
- see **SIGNAL SPECIFICATION**
- see **REAR VIEW MIRROR, REPLACING**
- Outside temperature sensor -2006, see **OUTSIDE TEMPERATURE SENSOR DOOR MIRROR, REPLACING**
- Outside temperature sensor 2007-, see **OUTSIDE TEMPERATURE SENSOR**
- see **CHECKING WIRING AND TERMINALS** .

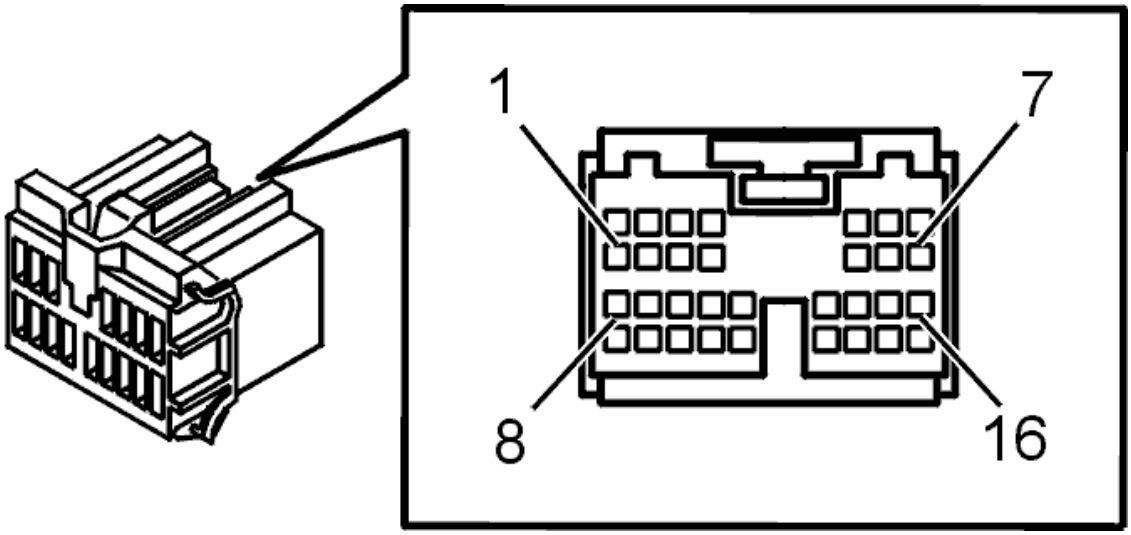

Fig. 102: Connector, Green (16- Pin)
Courtesy of VOLVO CARS CORPORATION

- **Continue**

  see: **INFORMATION**

VERIFICATION

VERIFICATION

HINT: After carrying out the repair, check that the fault has been remedied.

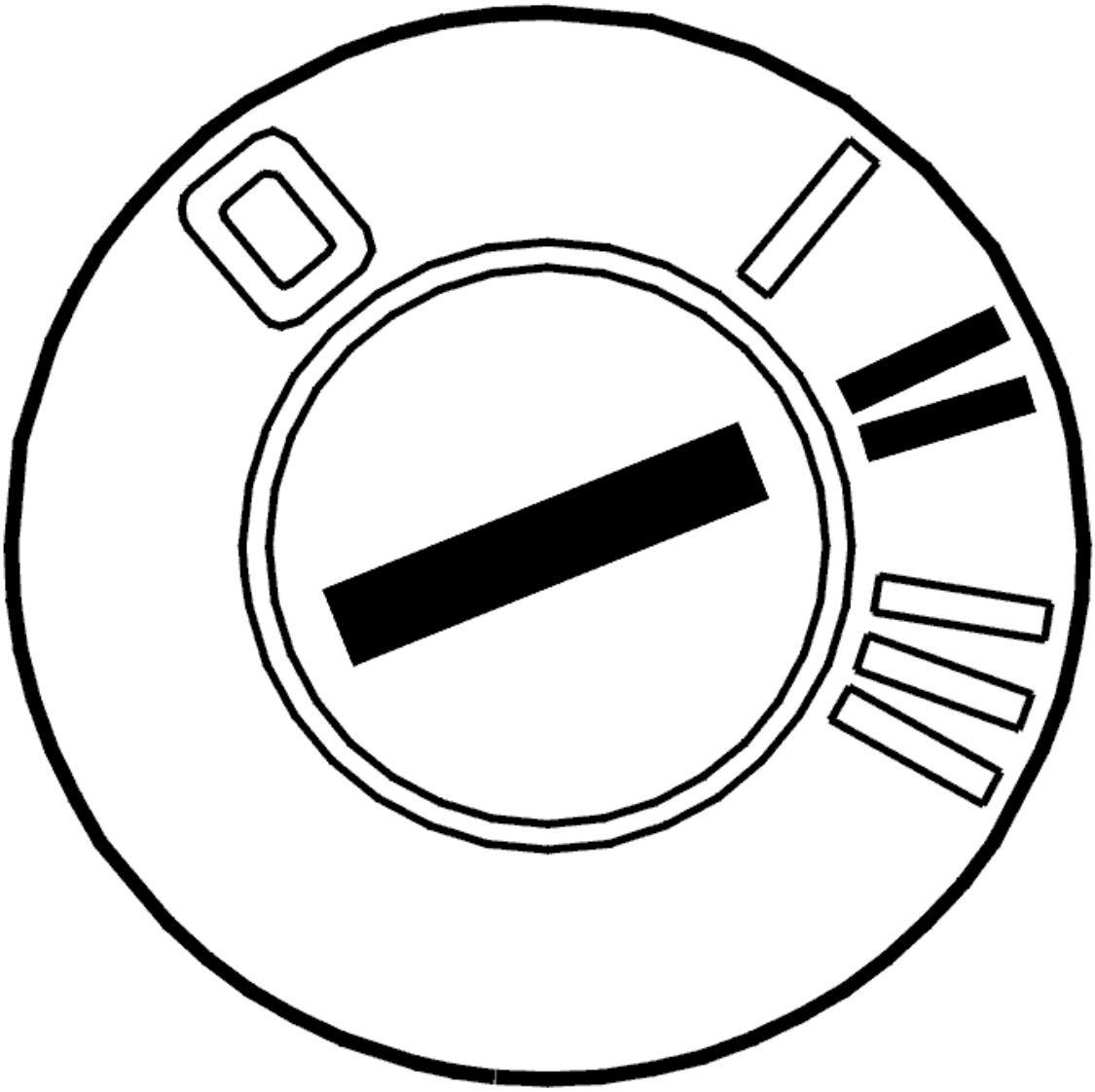

Fig. 103: Identifying Ignition ON
Courtesy of VOLVO CARS CORPORATION

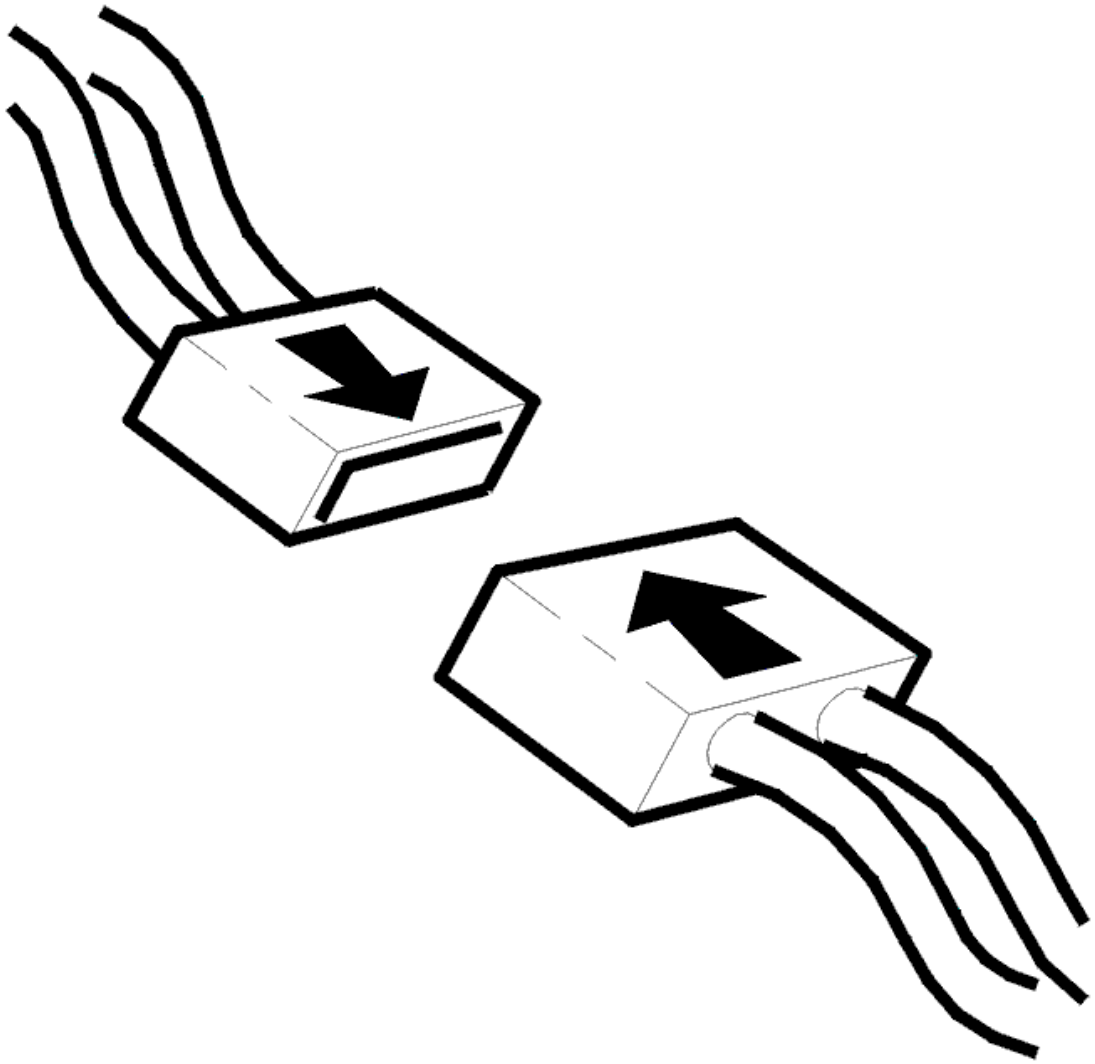

Fig. 104: Checking Connector
Courtesy of VOLVO CARS CORPORATION

- Ignition off
- Reconnect the components, connectors etc.
- Ignition on.

Check the outside temperature.

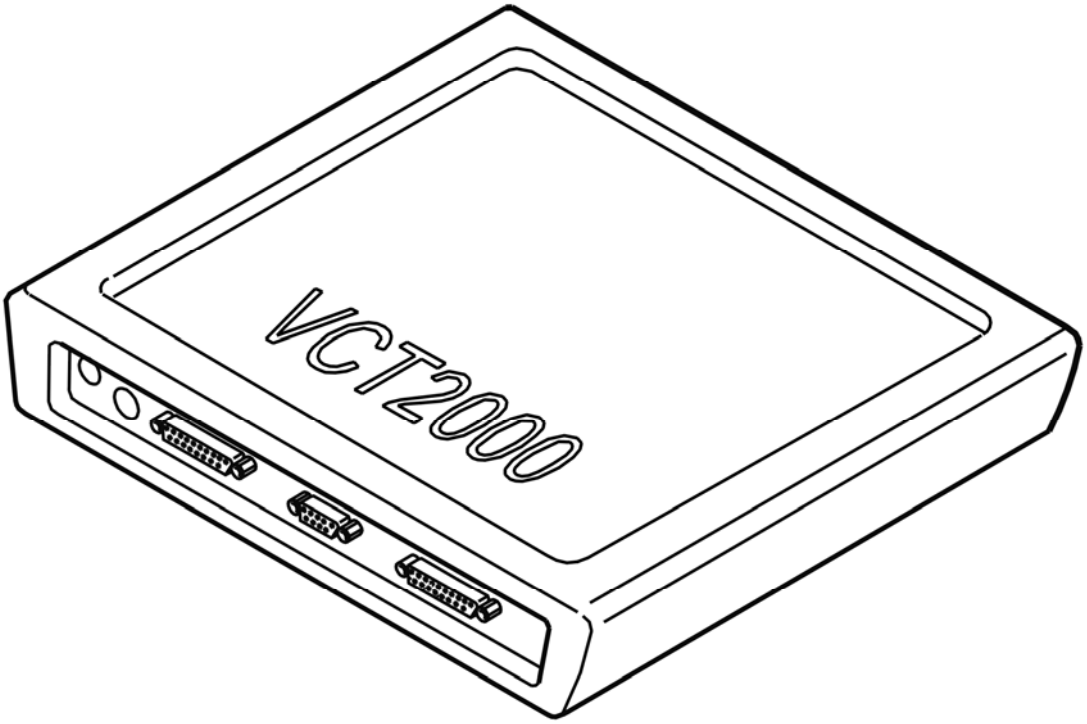

Fig. 105: Identifying VCT2000 Diagnostic Tool Symbol In VIDA
Courtesy of VOLVO CARS CORPORATION

Is the temperature within its permitted range?

- **YES**

  VERIFIED: Troubleshooting has been completed.

- **NO**

  see: **INFORMATION**

INFORMATION

FAULT-TRACING INFORMATION

The fault should have been detected and remedied. As this is not the case fault-tracing has failed.

Exit fault-tracing for this diagnostic trouble code (DTC) or make another attempt.

INFORMATION

FAULT-TRACING INFORMATION

If the fault is intermittent, do not verify fault-tracing if the fault does not recur.

It is possible to view the information again, or leave fault-tracing for this diagnostic trouble code (DTC).

DDM-004A: OUTSIDE TEMPERATURE SENSOR. SIGNAL TOO HIGH (2003-2004)

DIAGNOSTIC TROUBLE CODE INFORMATION

see **DIAGNOSTIC TROUBLE CODE INFORMATION**

SIGNAL TOO HIGH

CHECKING FOR PERMANENT OR INTERMITTENT FAULTS

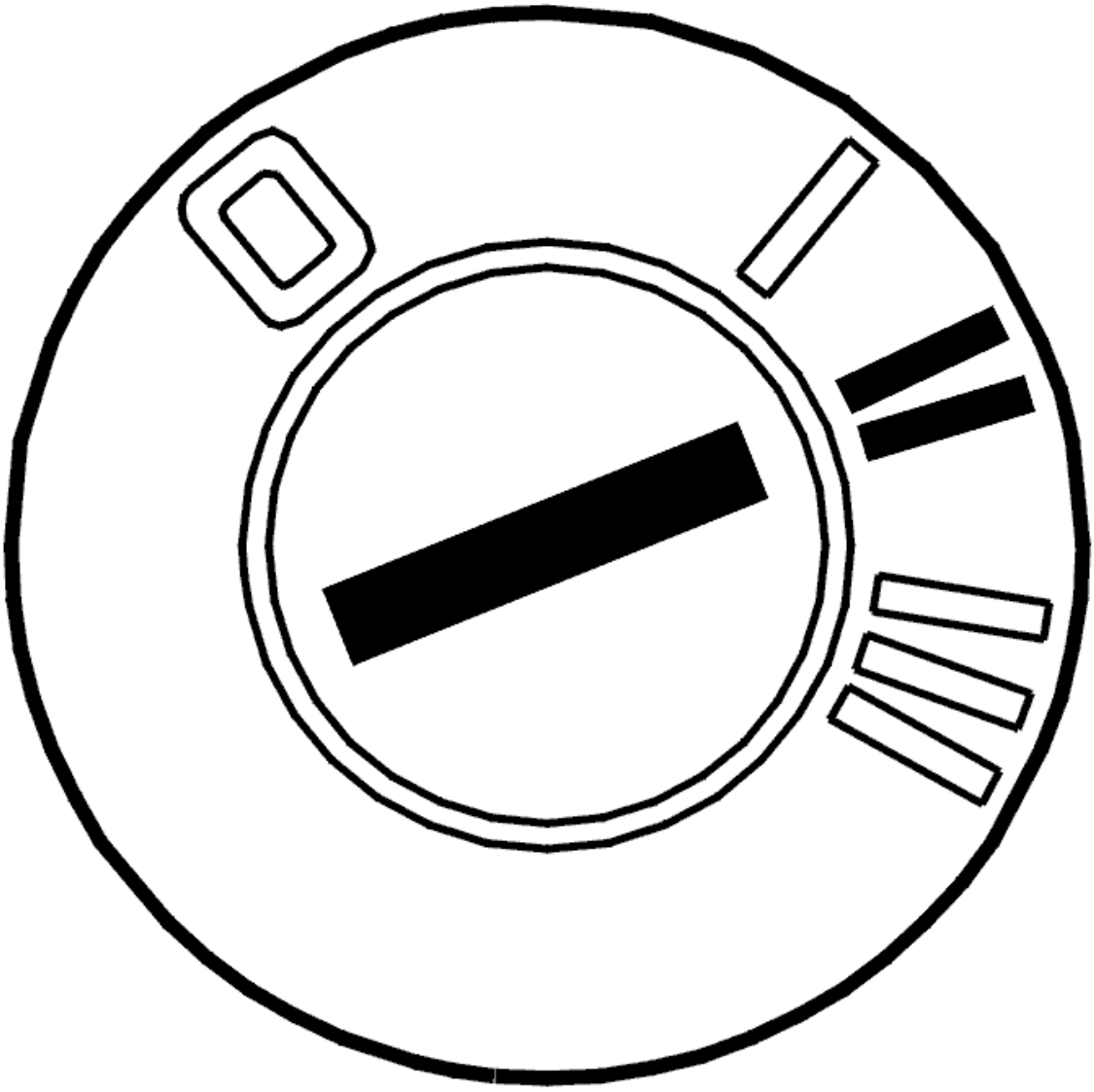

Fig. 106: Identifying Ignition ON
Courtesy of VOLVO CARS CORPORATION

- Ignition on.

  Check the outside temperature.

  NOTE: The outside temperature sensor is always located in the right door mirror.

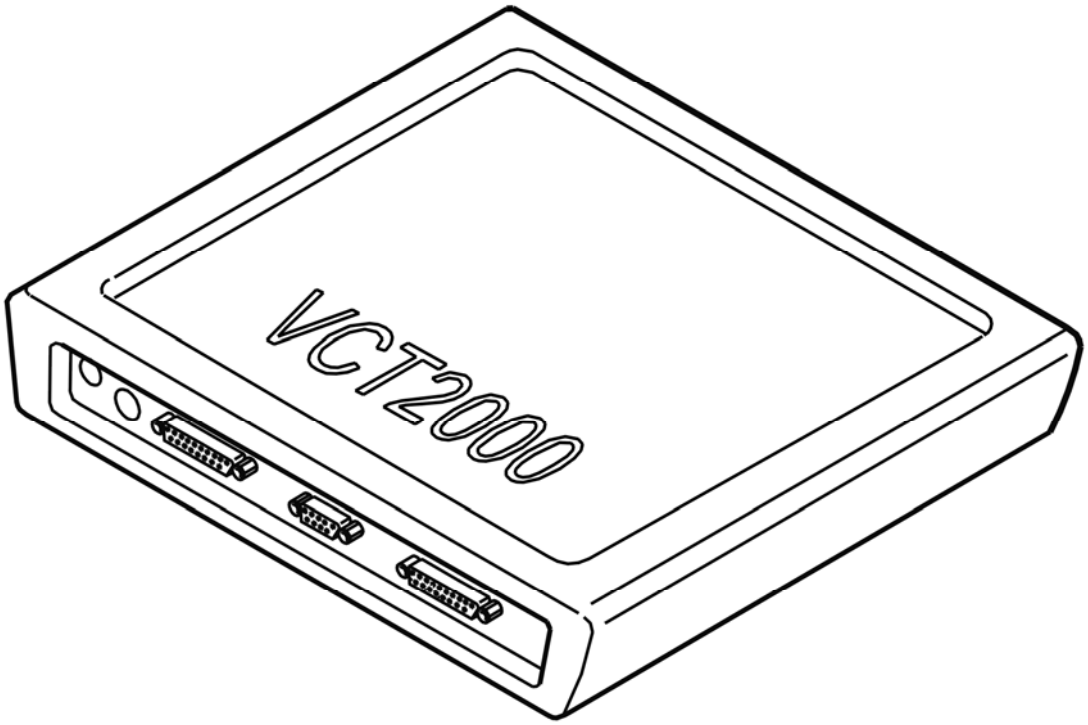

Fig. 107: Identifying VCT2000 Diagnostic Tool Symbol In VIDA
Courtesy of VOLVO CARS CORPORATION

Is the temperature within its permitted range?

- **YES**

  see: **INTERMITTENT FAULT**

- **NO**

  see: **CHECKING FOR A SHORT-CIRCUIT**

CHECKING FOR A SHORT-CIRCUIT

If the car is equipped with a 10-pin connector

Check the cable between door control module terminal #18A and power door mirror connector terminal #3. Check for an open-circuit.

Check the cable between door control module terminal #14A and power door mirror connector terminal #1. Check for a short-circuit to supply voltage. Check for an open-circuit.

If the car is equipped with a 16-pin connector

Check the cable between door control module terminal #18A and power door mirror connector terminal #3. Check for an open-circuit.

Check the cable between door control module terminal #14A and power door mirror connector terminal #2. Check for a short-circuit to supply voltage. Check for an open-circuit.

Replace the cable if a fault is found.

Try a new outside temperature sensor if no fault was found.

Other information:

- To connect the breakout box, see **CONNECTING THE BREAKOUT BOX**
- For further information about signals and other values, see **SIGNAL SPECIFICATION**
- To access the connector for the power door mirror, see **REAR VIEW MIRROR, REPLACING**
- To access and replace the outside temperature sensor, see **OUTSIDE TEMPERATURE SENSOR DOOR MIRROR, REPLACING**
- Outside temperature sensor -2006, see **OUTSIDE TEMPERATURE SENSOR DOOR MIRROR, REPLACING**
- Outside temperature sensor 2007-, see **OUTSIDE TEMPERATURE SENSOR**
- see **CHECKING WIRING AND TERMINALS** .

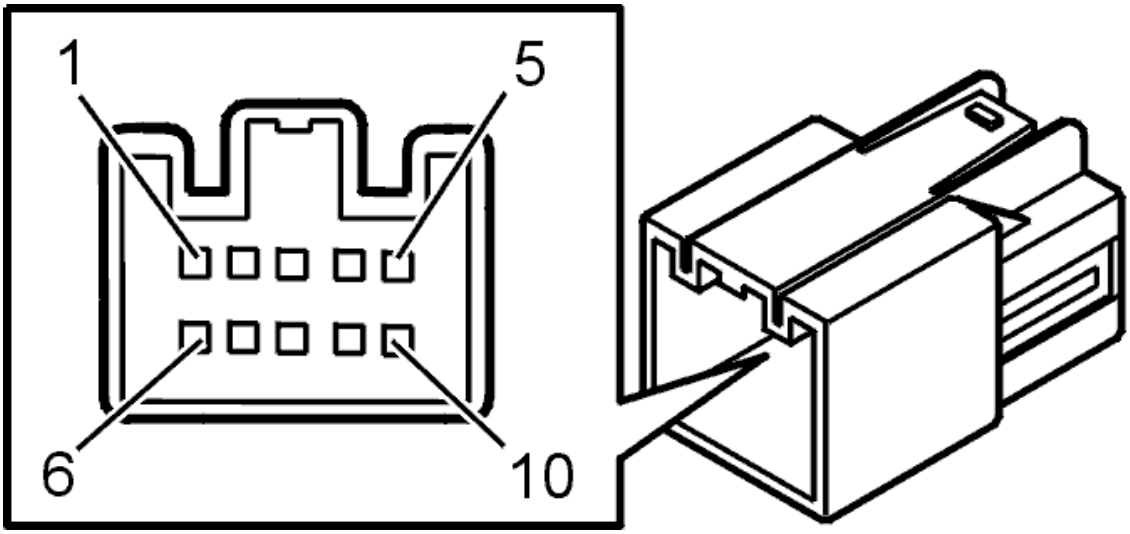

Fig. 108: Identifying 10--Pin Power Door Mirror Connector Terminal
Courtesy of VOLVO CARS CORPORATION

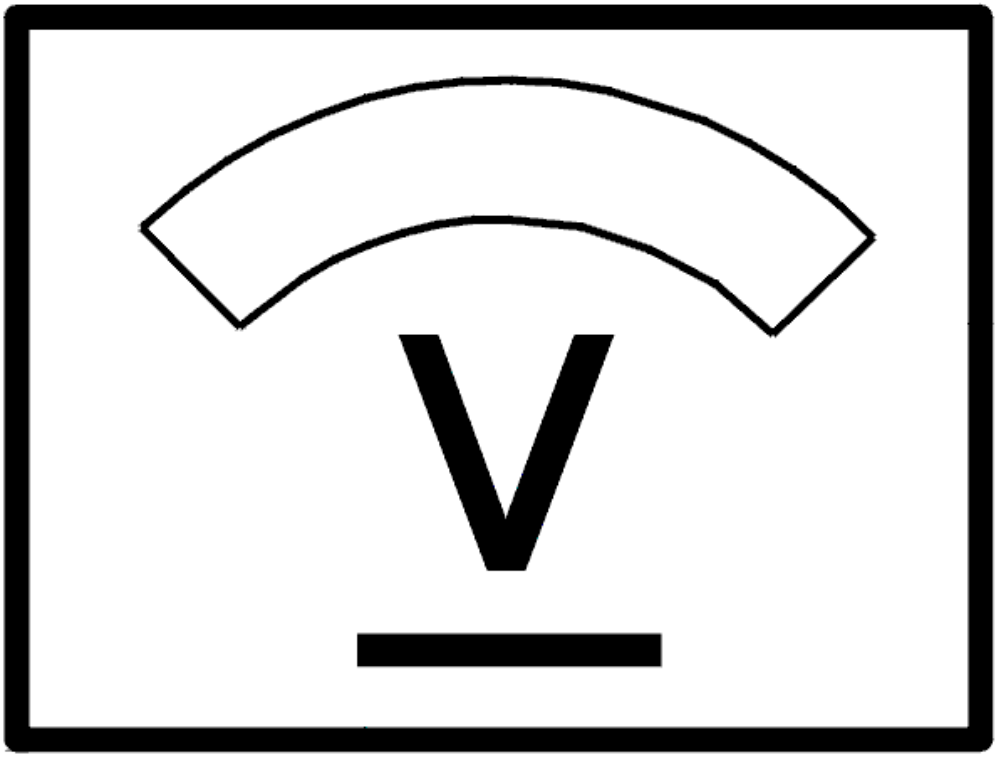

Fig. 109: Identifying Voltage Display
Courtesy of VOLVO CARS CORPORATION

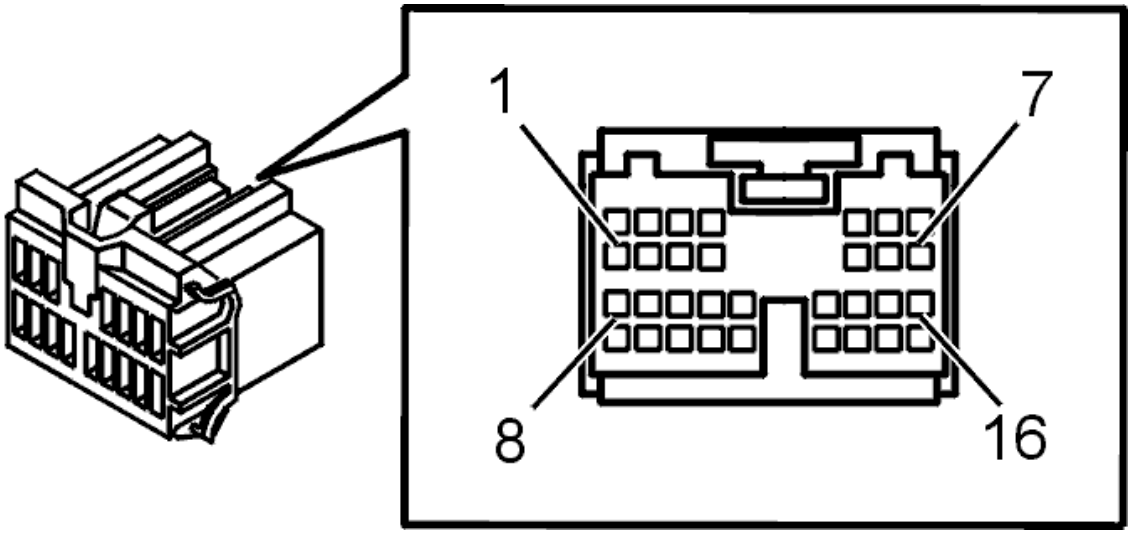

Fig. 110: Connector, Green (16- Pin)
Courtesy of VOLVO CARS CORPORATION

- **Continue**

  see: **VERIFICATION**

INTERMITTENT FAULT

Check the control module and power door mirror connectors. Check for contact resistance, oxidation and loose connections.

If the car is equipped with a 10-pin connector

Check the cable between control module terminal #14A and power door mirror terminal #1. Check the cable between control module terminal #18A and power door mirror terminal #3. Check these cables for an intermittent short-circuit to supply voltage. Also check for an intermittent open-circuit.

If the car is equipped with a 16-pin connector

Check the cable between control module terminal #14A and power door mirror terminal #2. Check the cable between control module terminal #18A and power door mirror terminal #3. Check these cables for an intermittent short-circuit to supply voltage. Also check for an intermittent open-circuit.

Try a new outside temperature sensor if no fault was found.

Other information:

- To connect the breakout box, see **CONNECTING THE BREAKOUT BOX**
- For further information about signals and other values, see **SIGNAL SPECIFICATION**
- To access the connector for the power door mirror, see **REAR VIEW MIRROR, REPLACING**
- Outside temperature sensor -2006, see **OUTSIDE TEMPERATURE SENSOR DOOR MIRROR,**

REPLACING

- Outside temperature sensor 2007-, see **OUTSIDE TEMPERATURE SENSOR**
- see **CHECKING WIRING AND TERMINALS** .

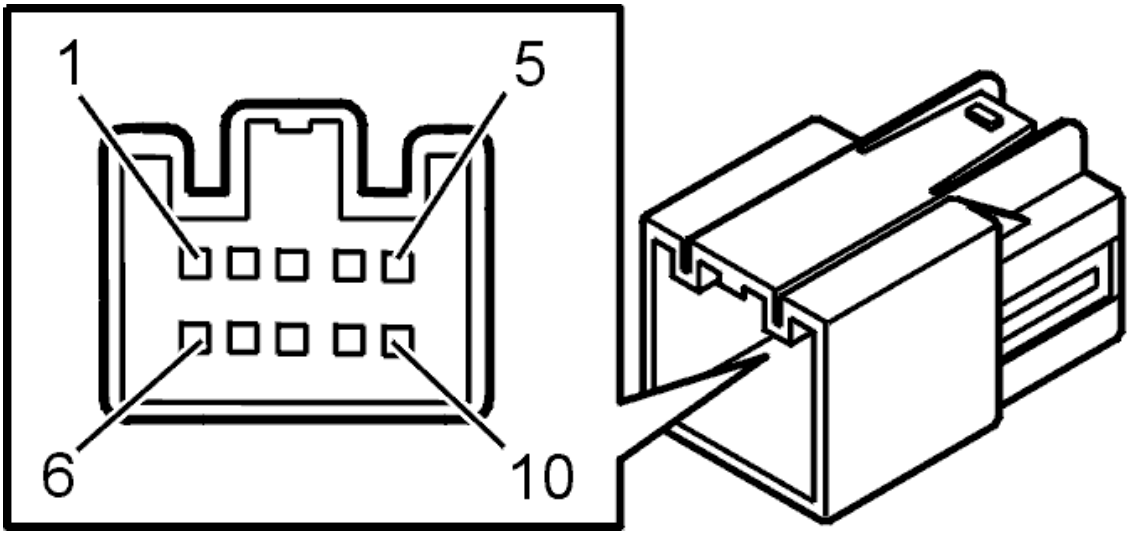

Fig. 111: Identifying 10--Pin Power Door Mirror Connector Terminal
Courtesy of VOLVO CARS CORPORATION

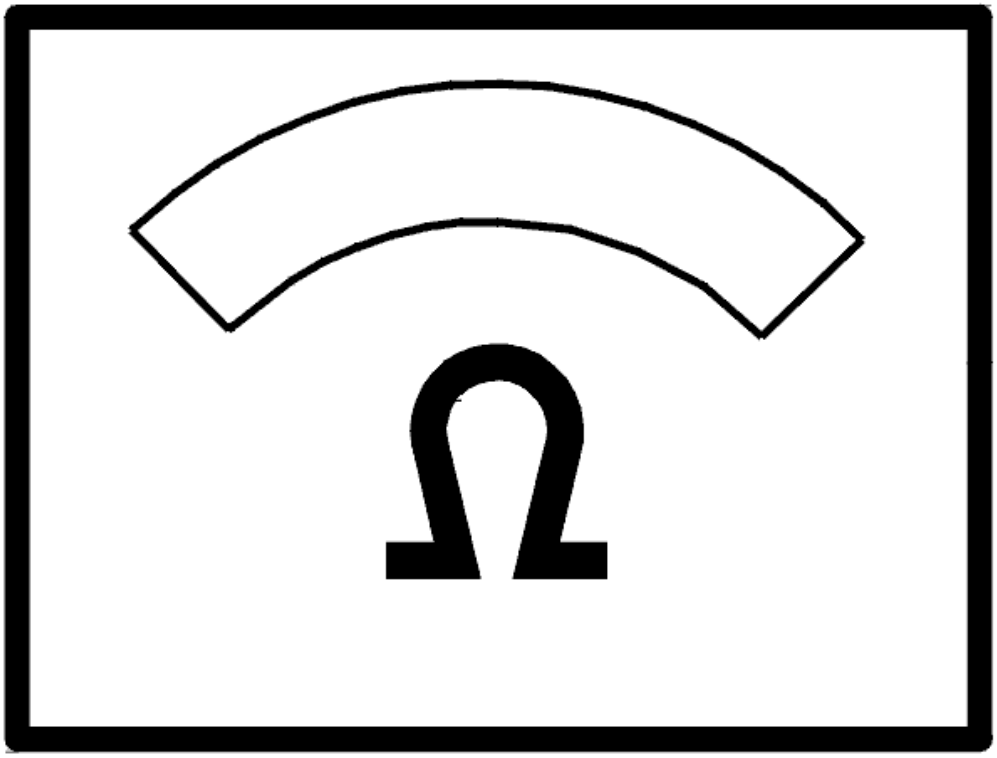

Fig. 112: Identifying Ohm Meter
Courtesy of VOLVO CARS CORPORATION

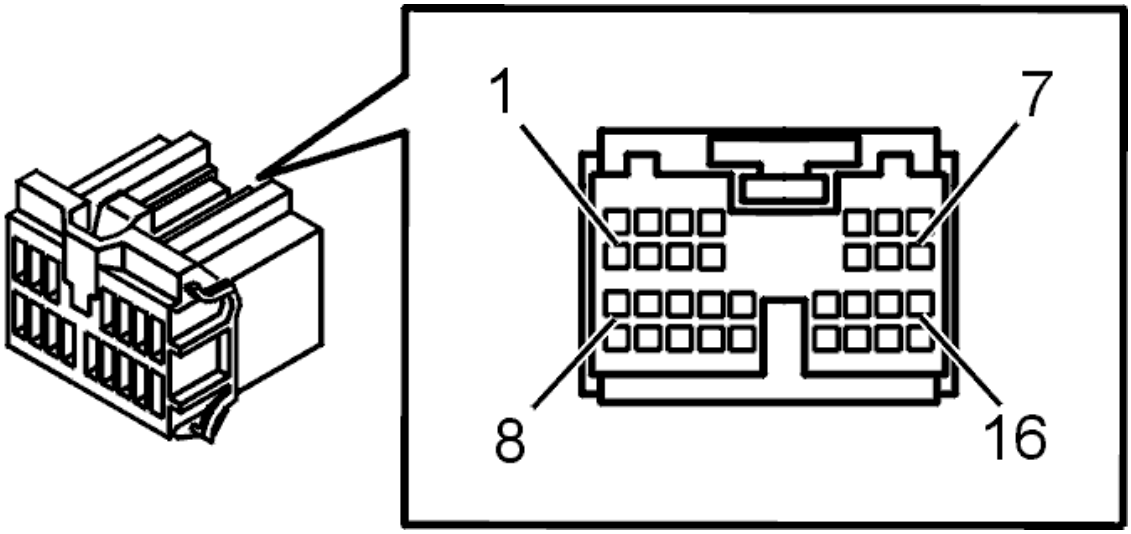

Fig. 113: Connector, Green (16- Pin)
Courtesy of VOLVO CARS CORPORATION

- **Continue**

  see: **INFORMATION**

VERIFICATION

VERIFICATION

HINT: After the repair it is necessary to check that the fault has been rectified.

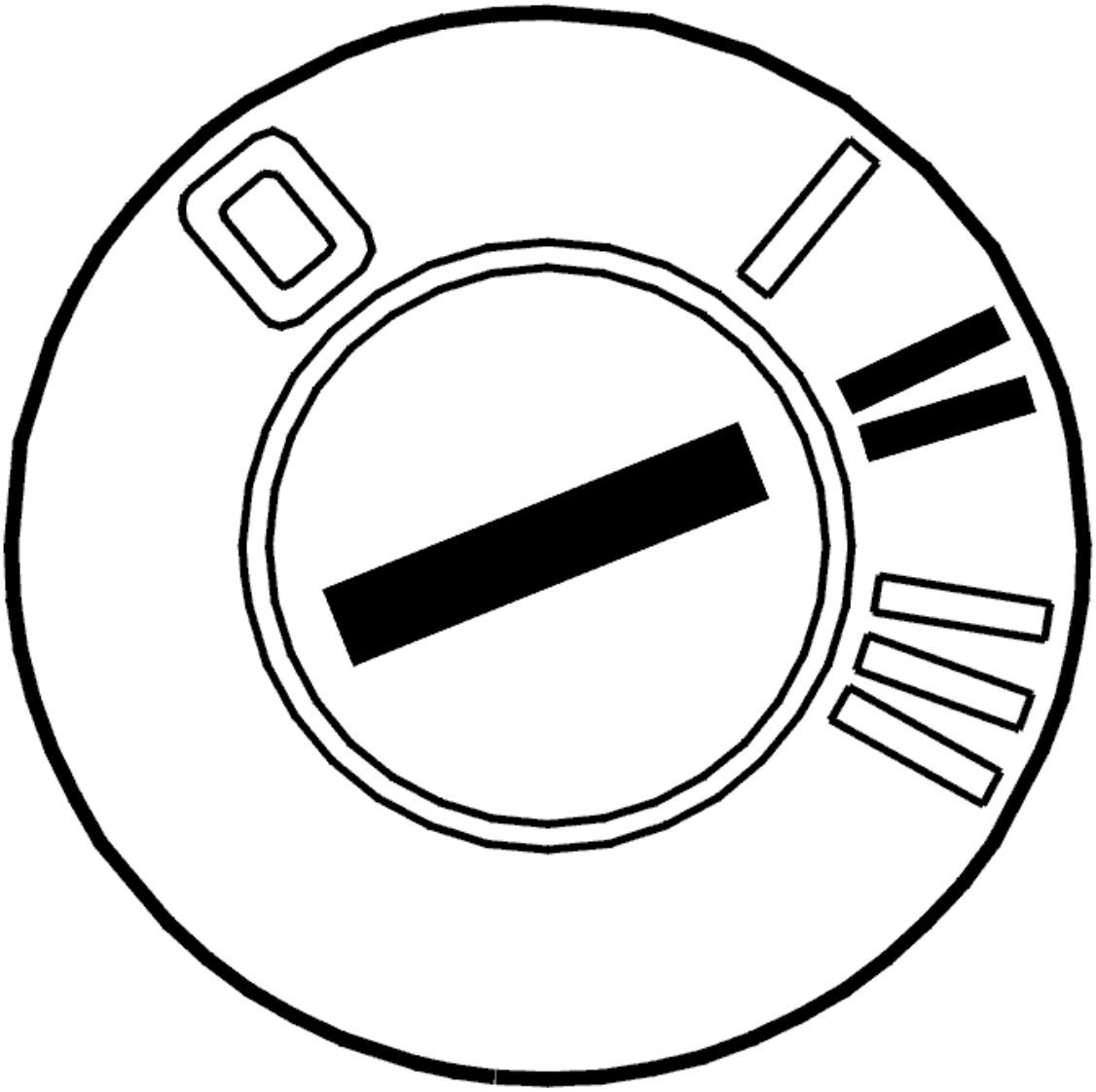

Fig. 114: Identifying Ignition ON
Courtesy of VOLVO CARS CORPORATION

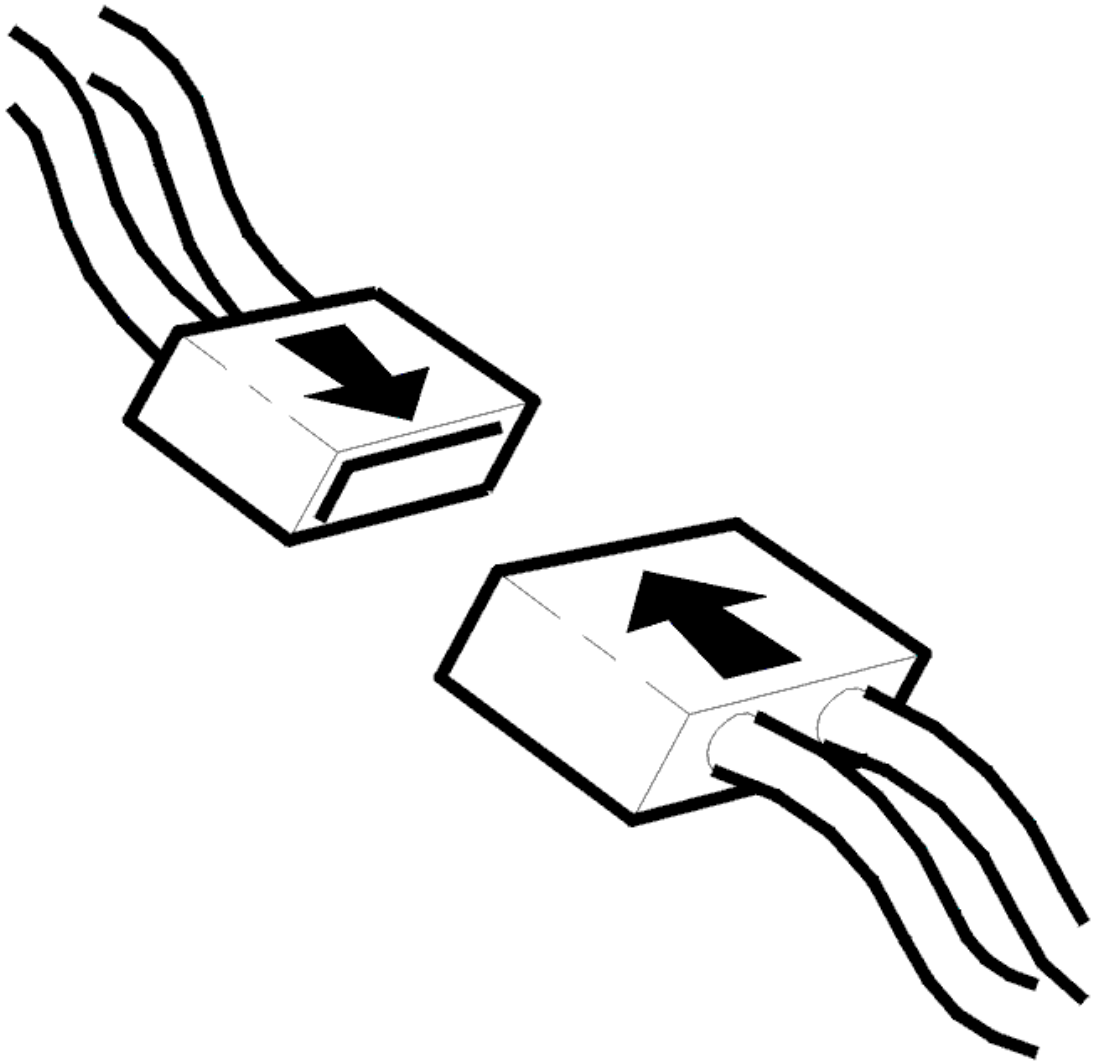

Fig. 115: Checking Connector
Courtesy of VOLVO CARS CORPORATION

- Ignition off.
- Connect the connectors, install the components, etc.
- Ignition on.

Check outside temperature.

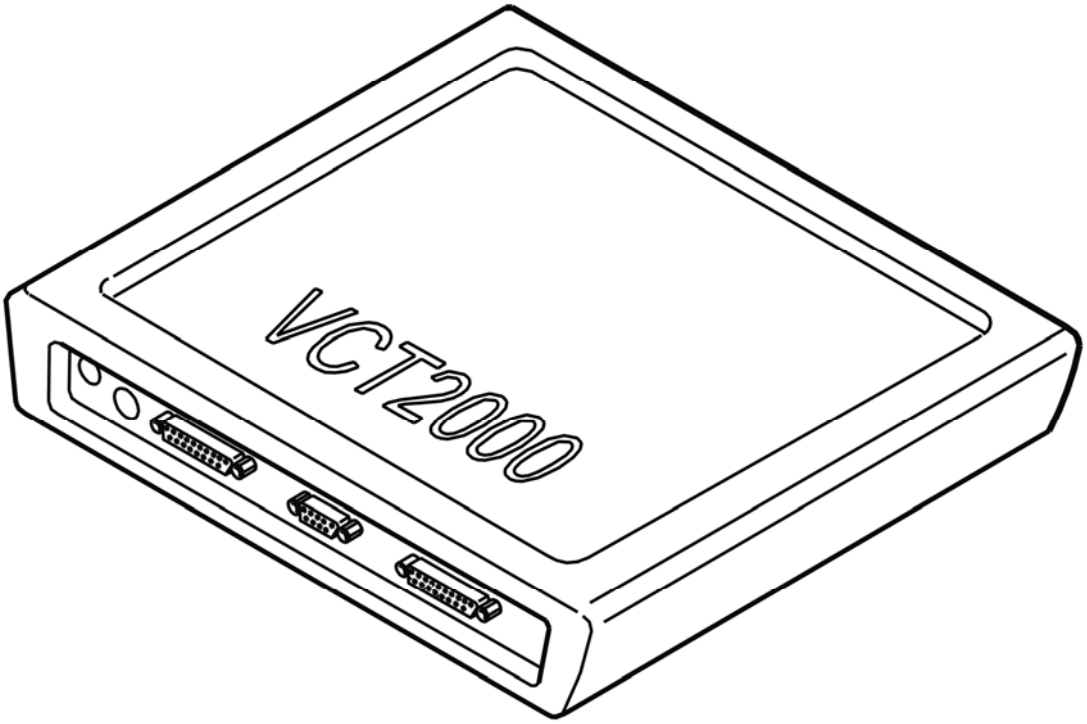

Fig. 116: Identifying VCT2000 Diagnostic Tool Symbol In VIDA
Courtesy of VOLVO CARS CORPORATION

Does the temperature shown appear correct?

- **YES**

  VERIFIED: Troubleshooting has been completed.

- **NO**

  see: **INFORMATION**

INFORMATION

FAULT-TRACING INFORMATION

The fault should have been detected and remedied. As this is not the case fault-tracing has failed.

Exit fault-tracing for this diagnostic trouble code (DTC) or make another attempt.

INFORMATION

FAULT-TRACING INFORMATION

If the fault is intermittent, do not verify fault-tracing if the fault does not recur.

It is possible to view the information again, or leave fault-tracing for this diagnostic trouble code (DTC).

DDM-004B: OUTSIDE TEMPERATURE SENSOR. SIGNAL MISSING (2003-2004)

DIAGNOSTIC TROUBLE CODE INFORMATION

Condition

If control unit registers that signal from temperature sensor is too low, diagnostic trouble code DDM-004B is displayed.

Substitute Value

- Nothing.

Possible Source

- Signal wire short circuited to ground.

Fault symptom[s]

- Outside temperature sensor does not work.

SIGNAL MISSING

CHECKING FOR PERMANENT OR INTERMITTENT FAULTS

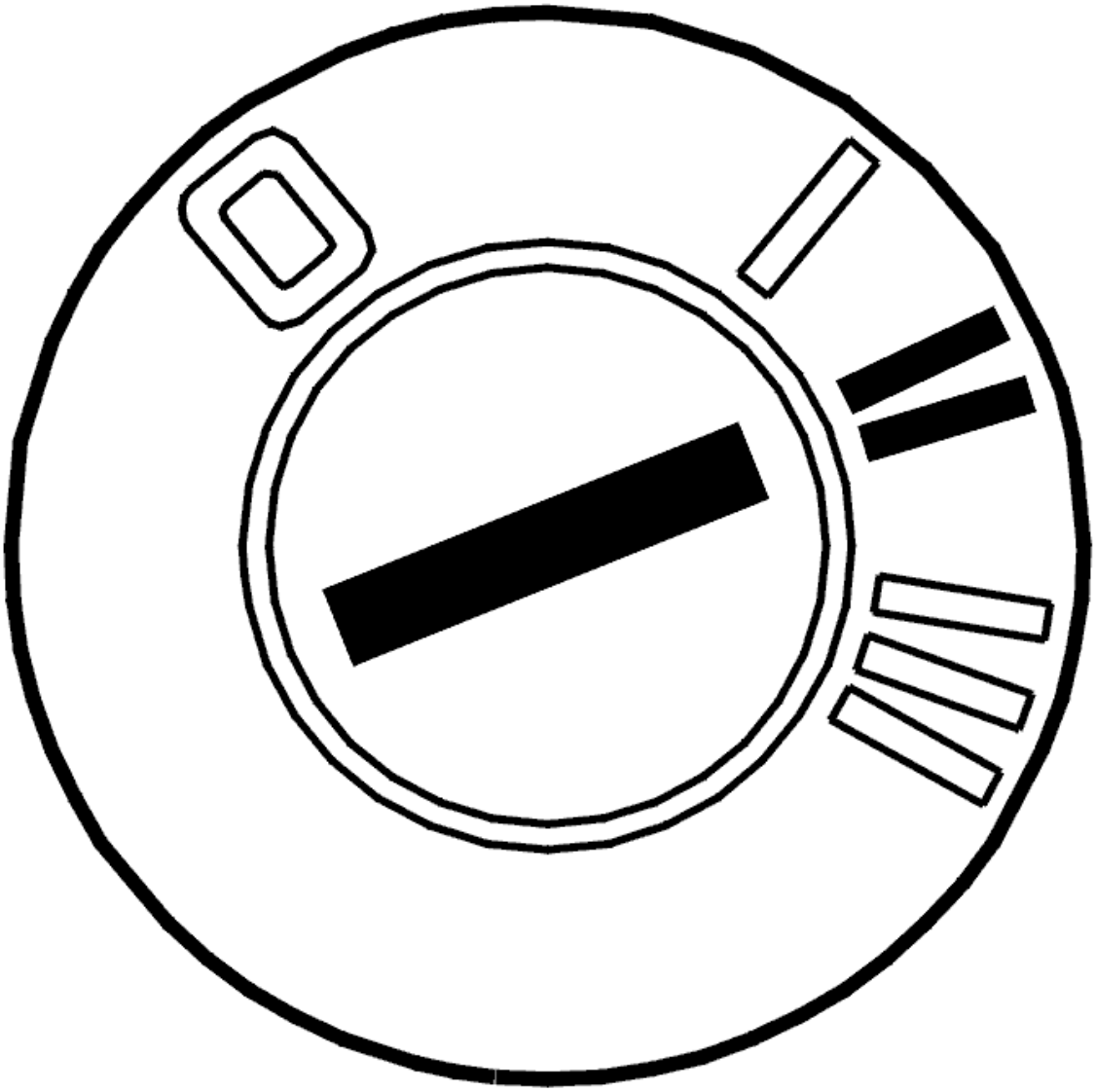

Fig. 117: Identifying Ignition ON
Courtesy of VOLVO CARS CORPORATION

- Ignition on.

  Check the outside temperature.

  NOTE: The outside temperature sensor is always located in the right door mirror.

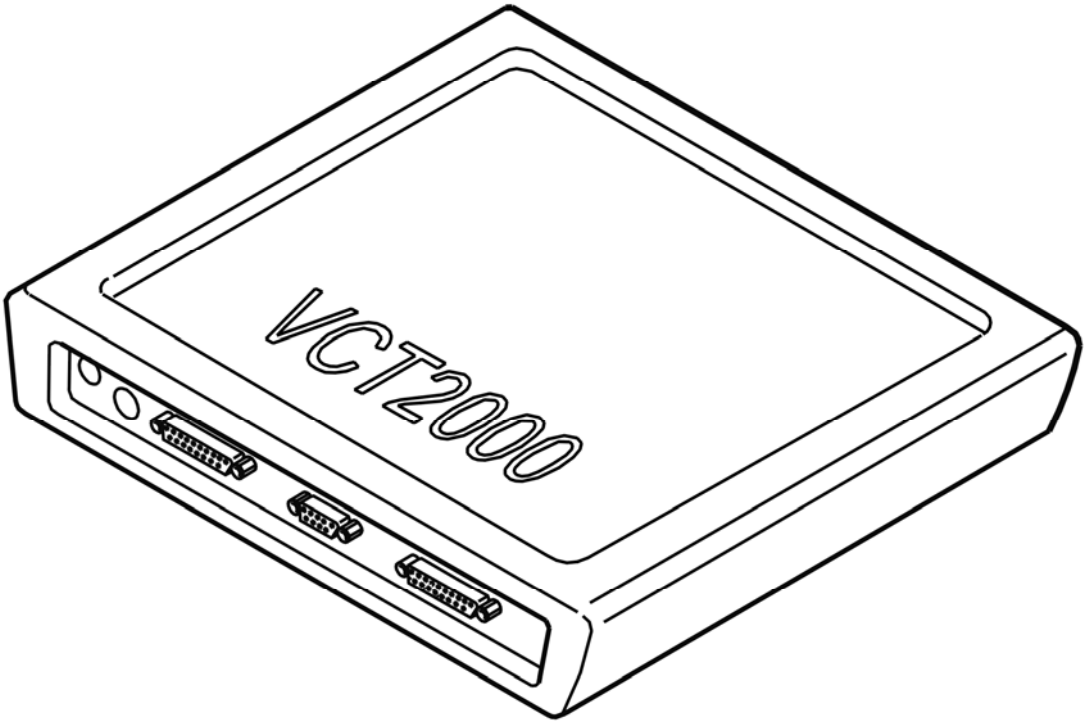

Fig. 118: Identifying VCT2000 Diagnostic Tool Symbol In VIDA
Courtesy of VOLVO CARS CORPORATION

Is the temperature within its permitted range?

- **YES**

  see: **INTERMITTENT FAULT**

- **NO**

  see: **CHECKING THE CONNECTORS**

CHECKING THE CONNECTORS

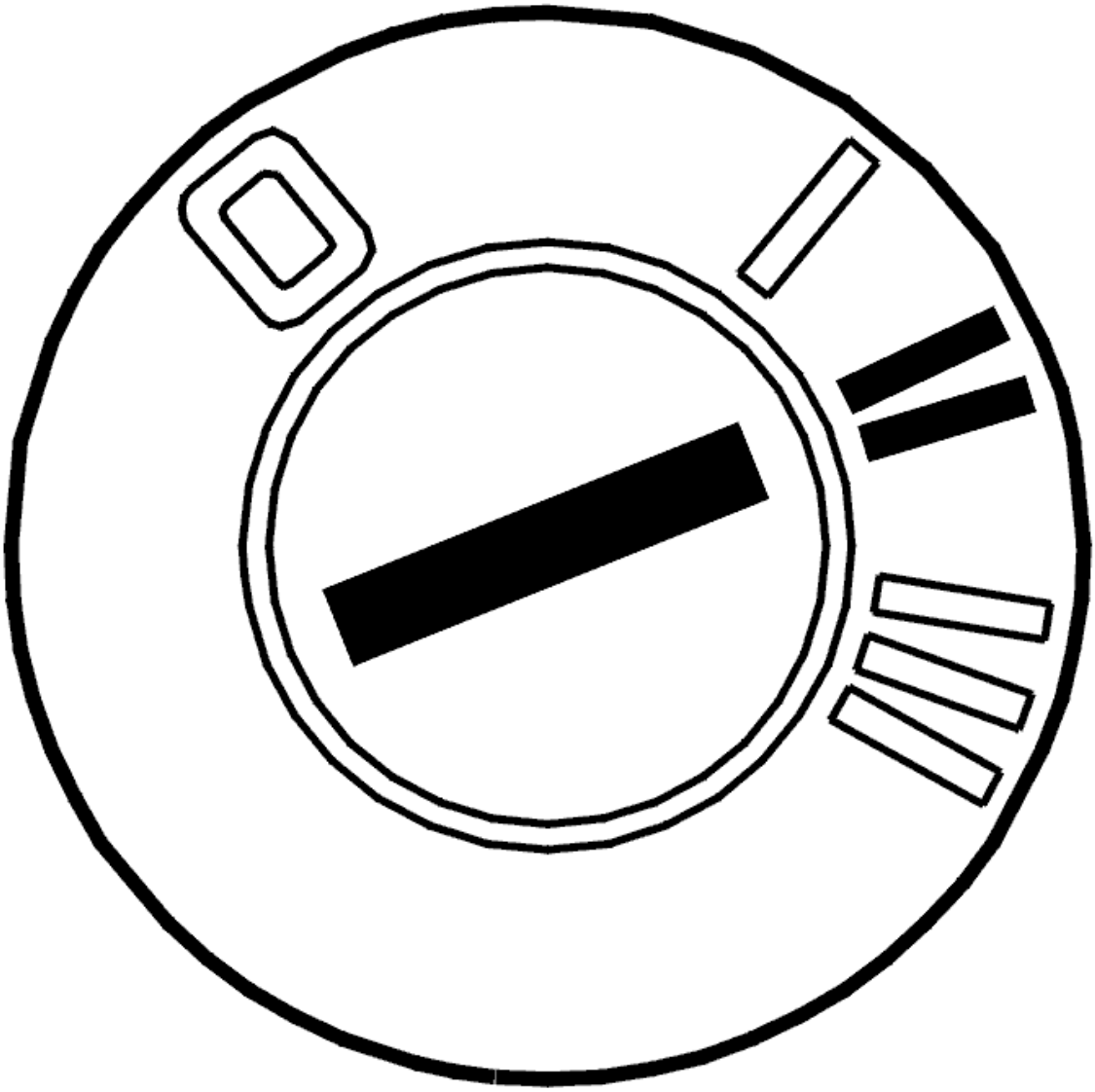

Fig. 119: Identifying Ignition ON
Courtesy of VOLVO CARS CORPORATION

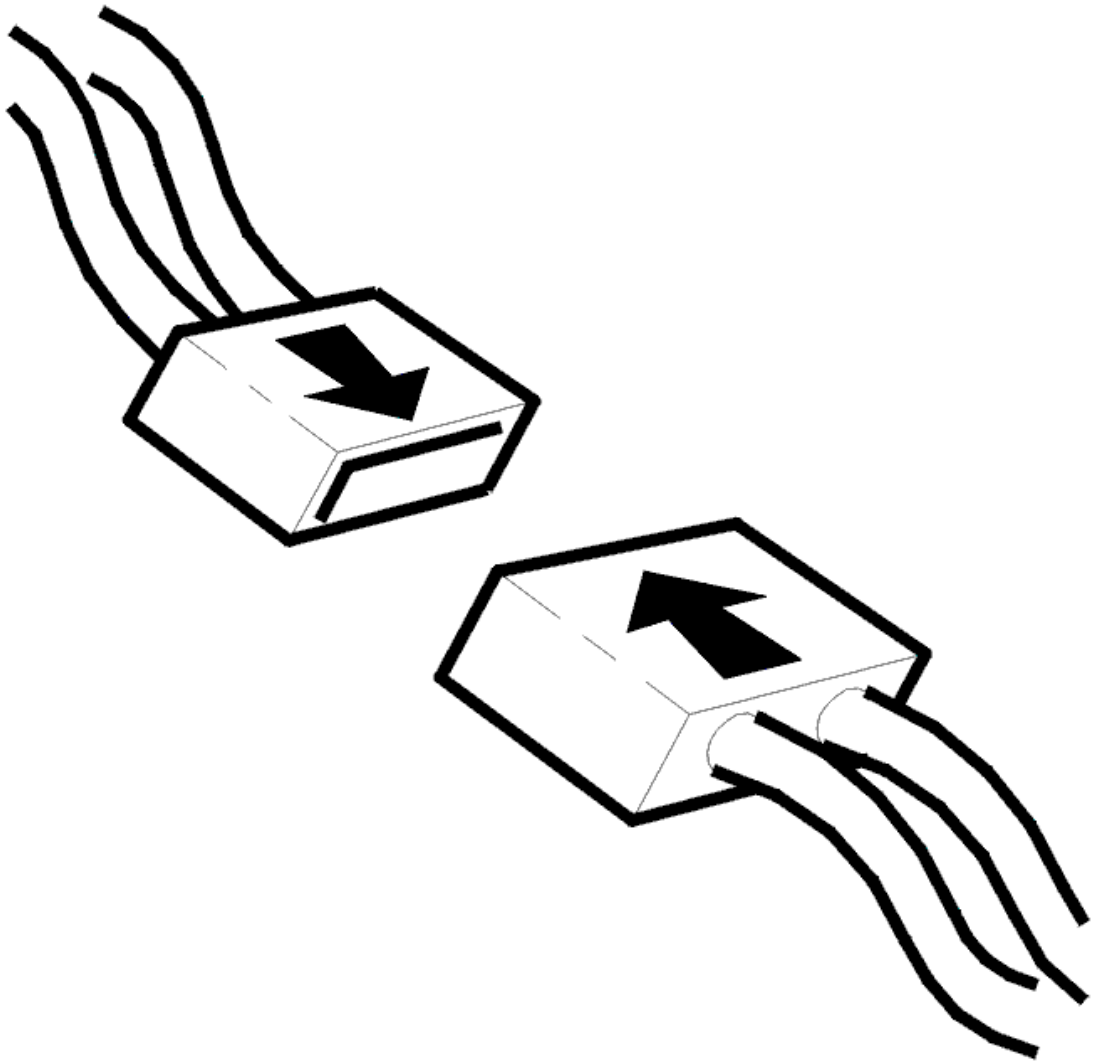

Fig. 120: Checking Connector
Courtesy of VOLVO CARS CORPORATION

- Ignition off
- Check the power door mirror connector for contact resistance and oxidation. Remedy. Check for damage carefully
- Reinstall the components, reconnect the connectors etc.
- Ignition on.

Check the outside temperature.

NOTE: The outside temperature sensor is always located in the right door mirror.

Other information:

- To connect the breakout box, see **CONNECTING THE BREAKOUT BOX**
- For further information about signals and other values, see **SIGNAL SPECIFICATION**
- To access the connector for the power door mirror, see **REAR VIEW MIRROR, REPLACING**
- see **CHECKING WIRING AND TERMINALS** .

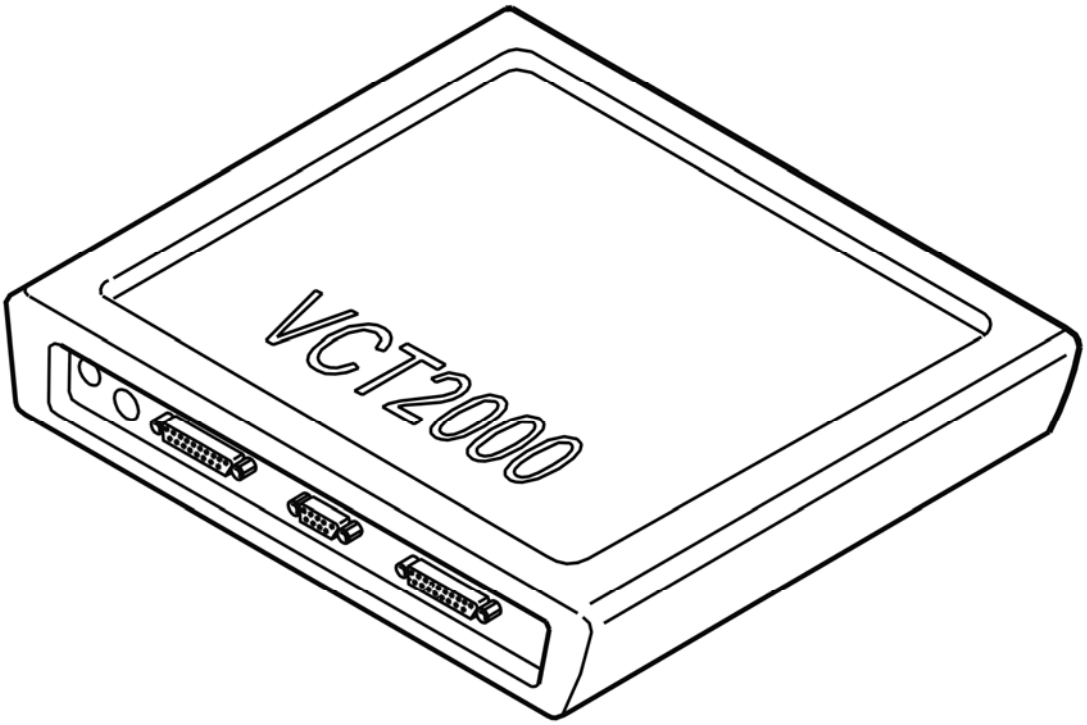

Fig. 121: Identifying VCT2000 Diagnostic Tool Symbol In VIDA
Courtesy of VOLVO CARS CORPORATION

Is the temperature within its permitted range?

- **YES**

  see: **VERIFICATION**

- **NO**

  see: **CHECKING FOR A SHORT-CIRCUIT**

CHECKING FOR A SHORT-CIRCUIT

If the car is equipped with a 10-pin connector

Check the cable between door control module terminal #14A and power door mirror connector terminal #1.

Check for a short-circuit to ground.

If the car is equipped with a 16-pin connector

Check the cable between door control module terminal #14A and power door mirror connector terminal #2. Check for a short-circuit to ground.

Replace the cable if a fault is found.

Try a new outside temperature sensor if no fault was found.

Other information:

- To connect the breakout box, see **CONNECTING THE BREAKOUT BOX**
- For further information about signals and other values, see **SIGNAL SPECIFICATION**
- To access the connector for the power door mirror, see **REAR VIEW MIRROR, REPLACING**
- Outside temperature sensor -2006, see **OUTSIDE TEMPERATURE SENSOR DOOR MIRROR, REPLACING**
- Outside temperature sensor 2007-, see **OUTSIDE TEMPERATURE SENSOR**
- see **CHECKING WIRING AND TERMINALS** .

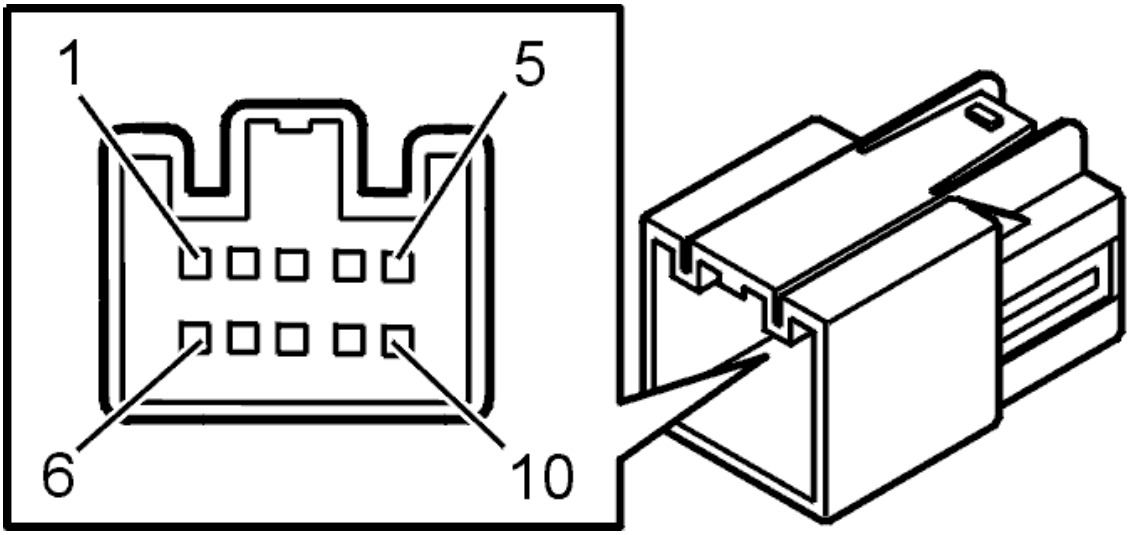

Fig. 122: Identifying 10--Pin Power Door Mirror Connector Terminal
Courtesy of VOLVO CARS CORPORATION

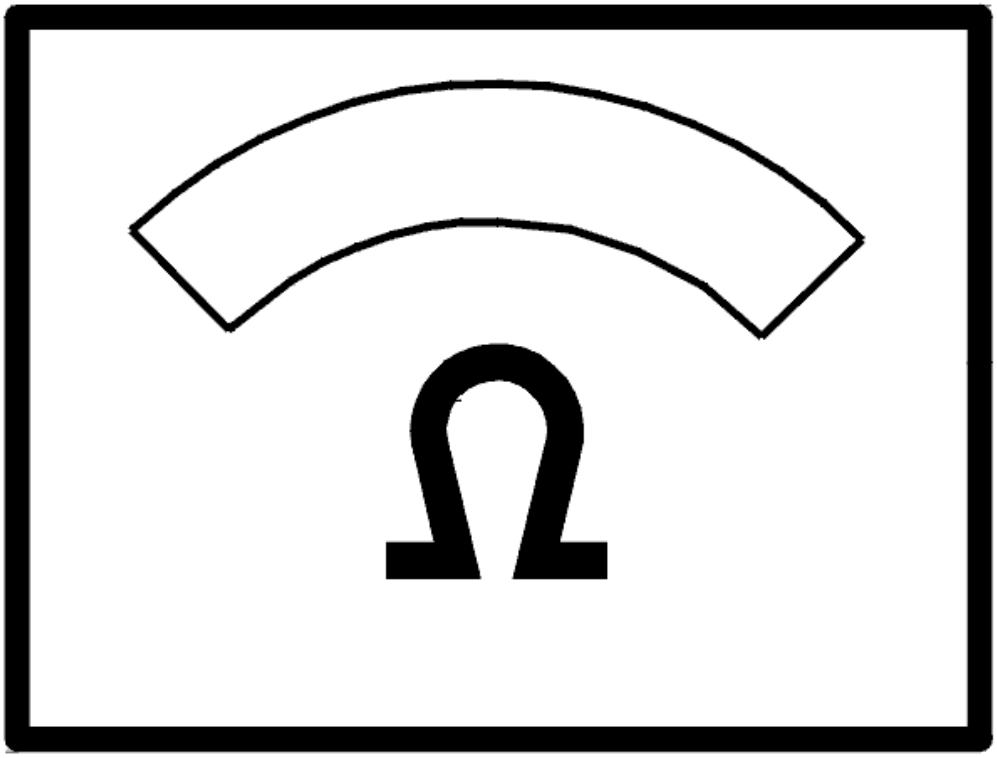

Fig. 123: Identifying Ohm Meter
Courtesy of VOLVO CARS CORPORATION

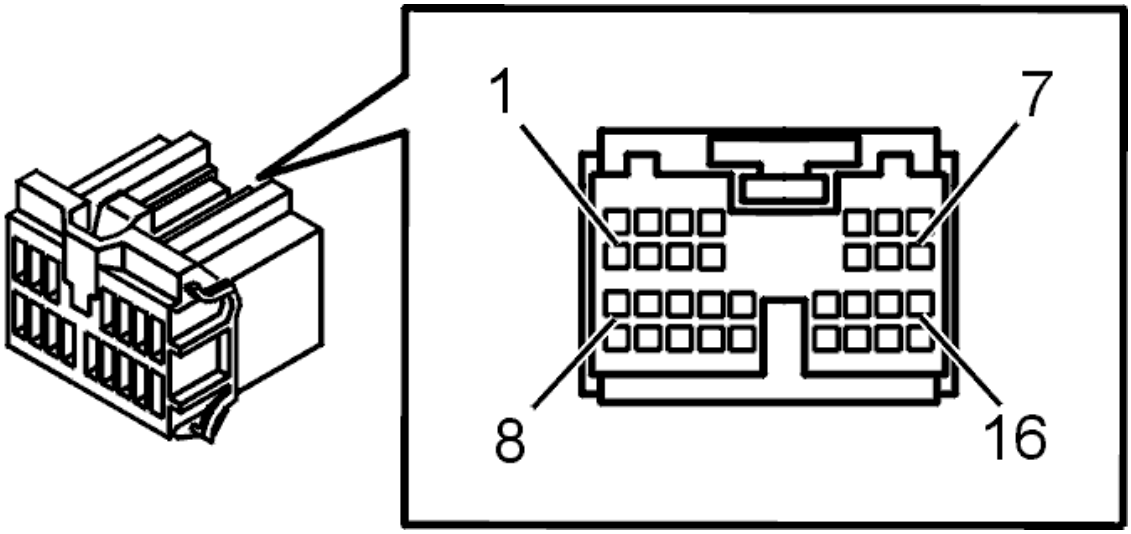

Fig. 124: Connector, Green (16- Pin)
Courtesy of VOLVO CARS CORPORATION

- **Continue**

  see: **VERIFICATION**

INTERMITTENT FAULT

If the car is equipped with a 10-pin connector

Check the cable between control module terminal #14A and power door mirror terminal #1. Check for an intermittent short-circuit to ground.

If the car is equipped with a 16-pin connector

Check the cable between control module terminal #14A and power door mirror terminal #2. Check for an intermittent short-circuit to ground.

Replace the outside temperature sensor if no fault is found.

Other information:

- To connect the breakout box, see **CONNECTING THE BREAKOUT BOX**
- For further information about signals and other values, see **SIGNAL SPECIFICATION**
- To access the connector for the power door mirror, see **REAR VIEW MIRROR, REPLACING**
- Outside temperature sensor -2006, see **OUTSIDE TEMPERATURE SENSOR DOOR MIRROR, REPLACING**
- Outside temperature sensor 2007-, see **OUTSIDE TEMPERATURE SENSOR**
- see **CHECKING WIRING AND TERMINALS** .

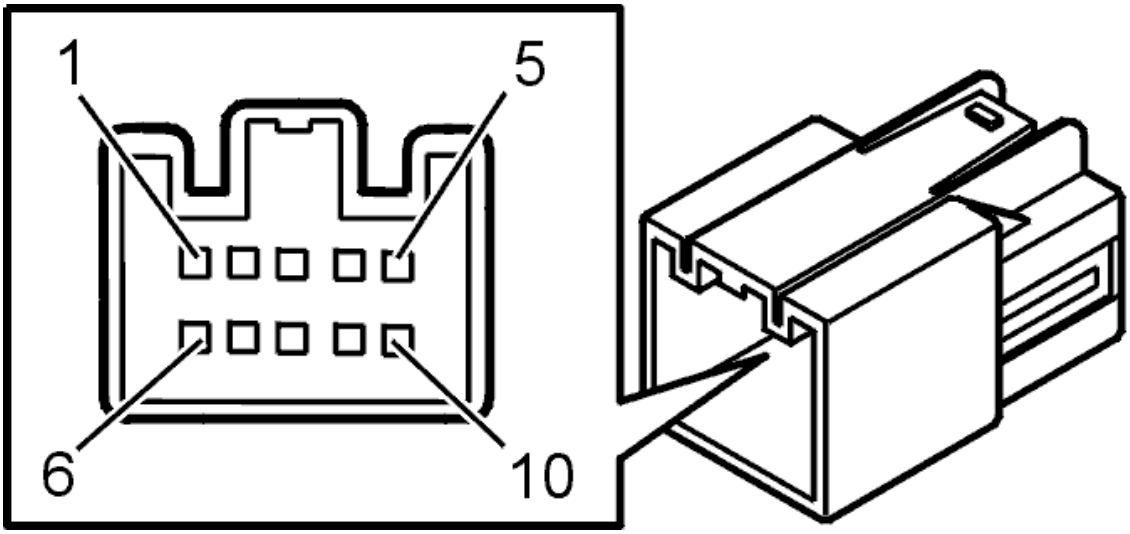

Fig. 125: Identifying 10--Pin Power Door Mirror Connector Terminal
Courtesy of VOLVO CARS CORPORATION

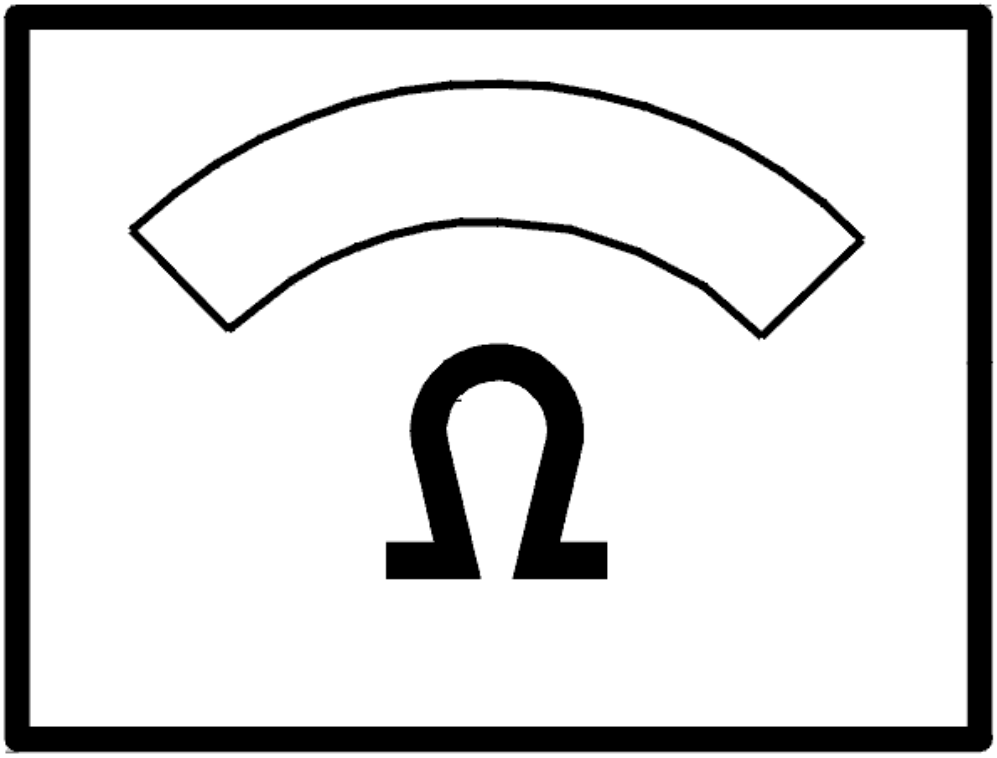

Fig. 126: Identifying Ohm Meter
Courtesy of VOLVO CARS CORPORATION

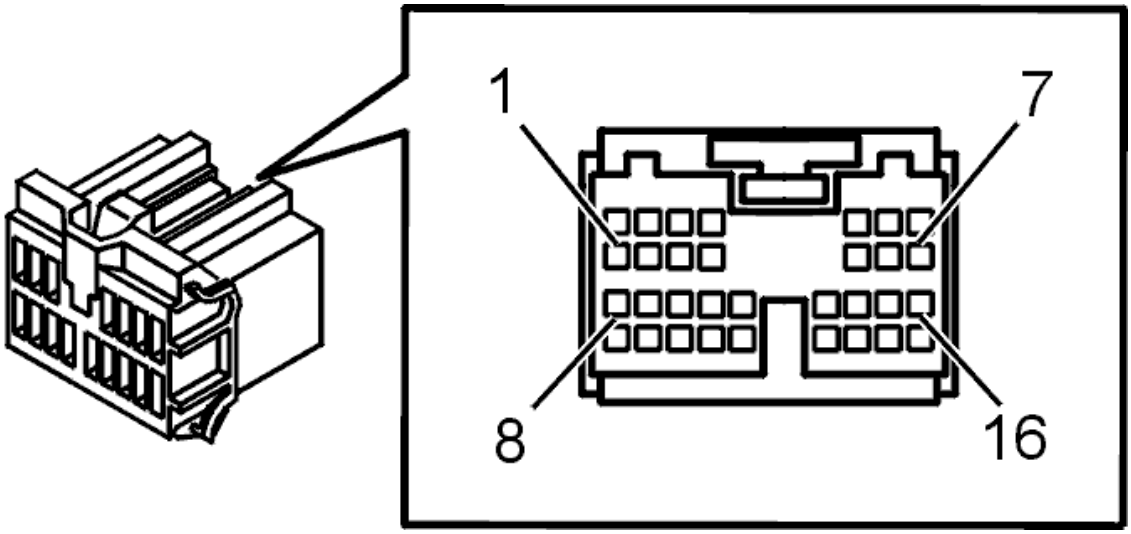

Fig. 127: Connector, Green (16- Pin)
Courtesy of VOLVO CARS CORPORATION

- **Continue**

  see: **INFORMATION**

VERIFICATION

VERIFICATION

HINT: After the repair it is necessary to check that the fault has been rectified.

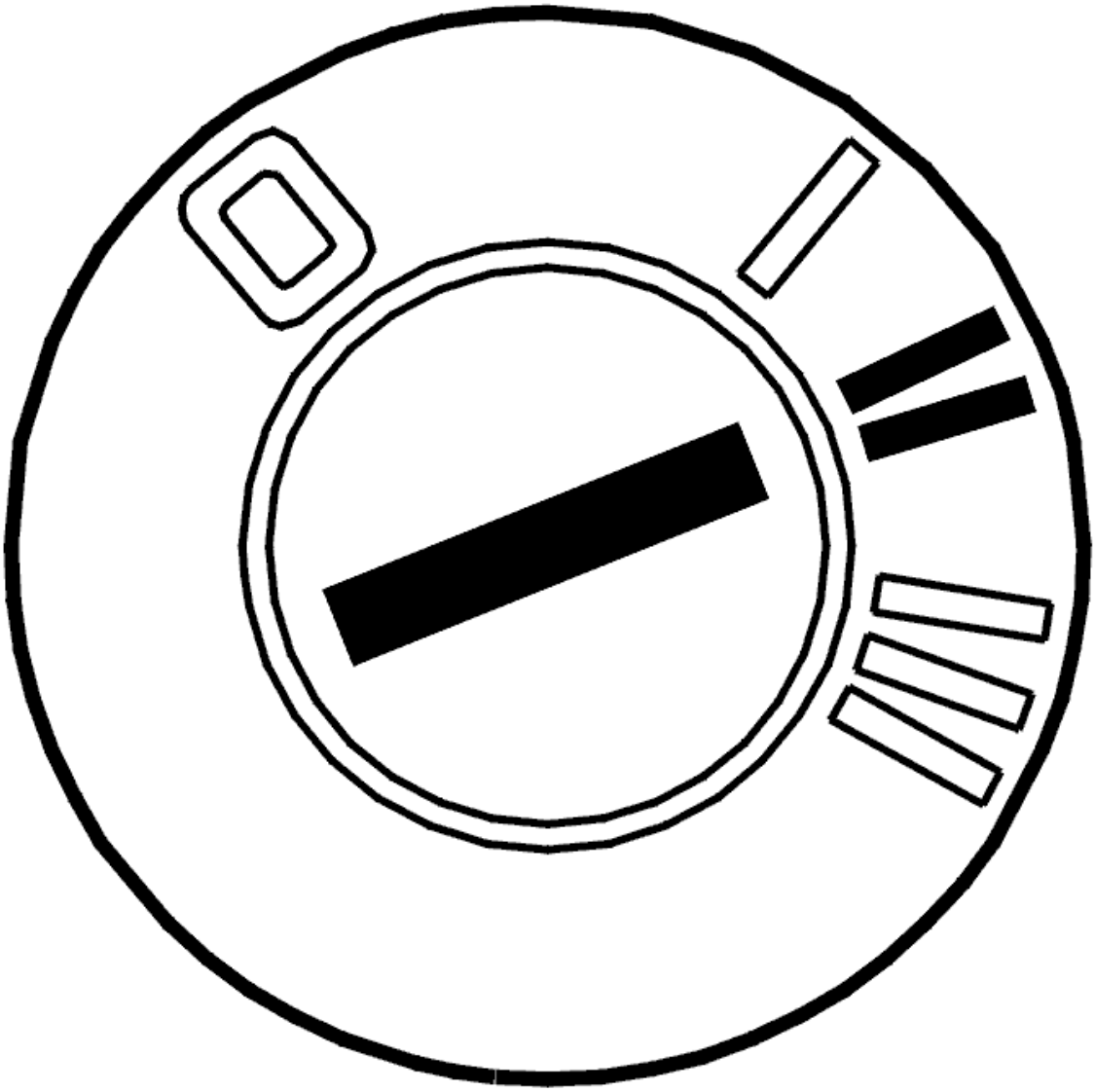

Fig. 128: Identifying Ignition ON
Courtesy of VOLVO CARS CORPORATION

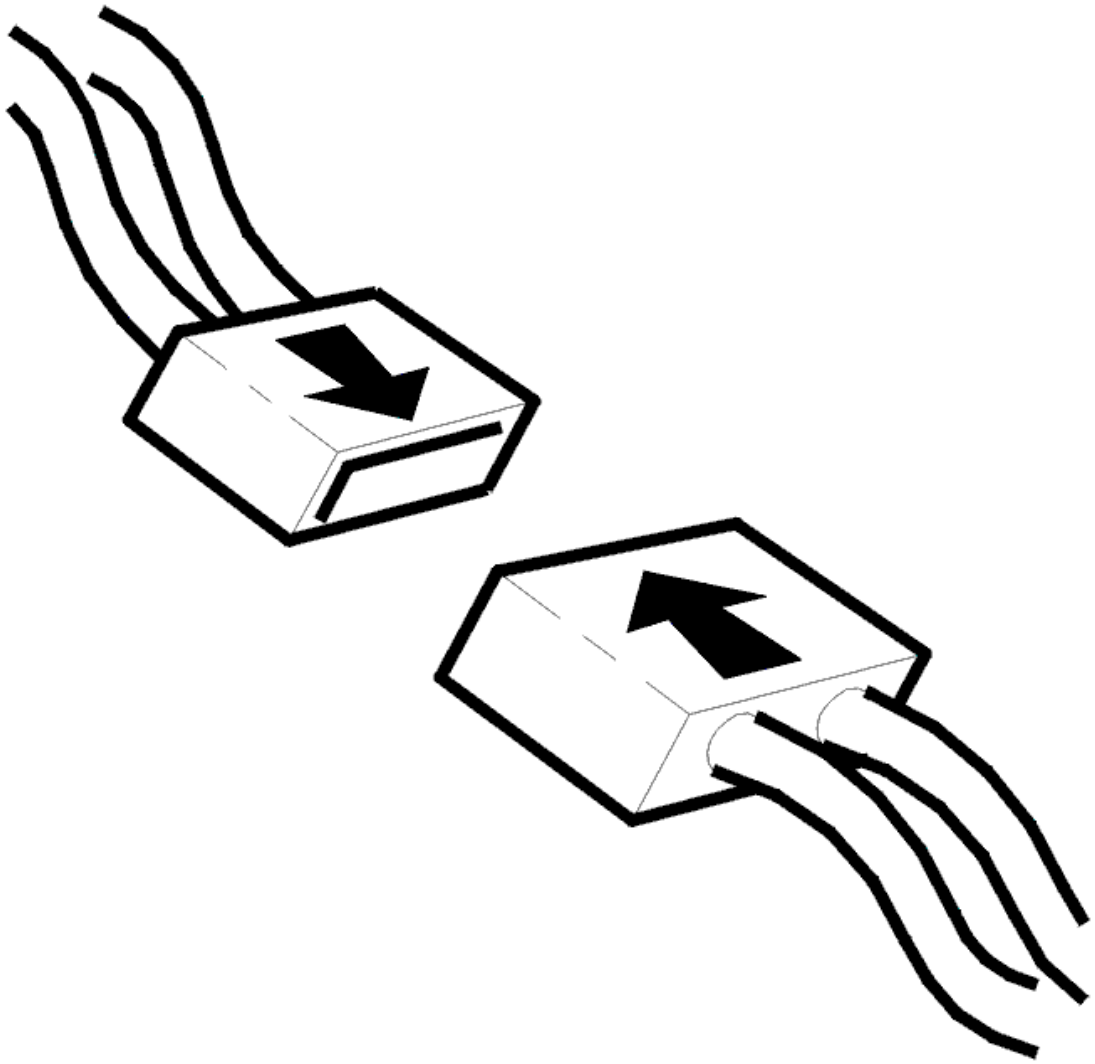

Fig. 129: Checking Connector
Courtesy of VOLVO CARS CORPORATION

- Ignition off.
- Connect the connectors, install the components, etc.
- Ignition on.

Check outside temperature.

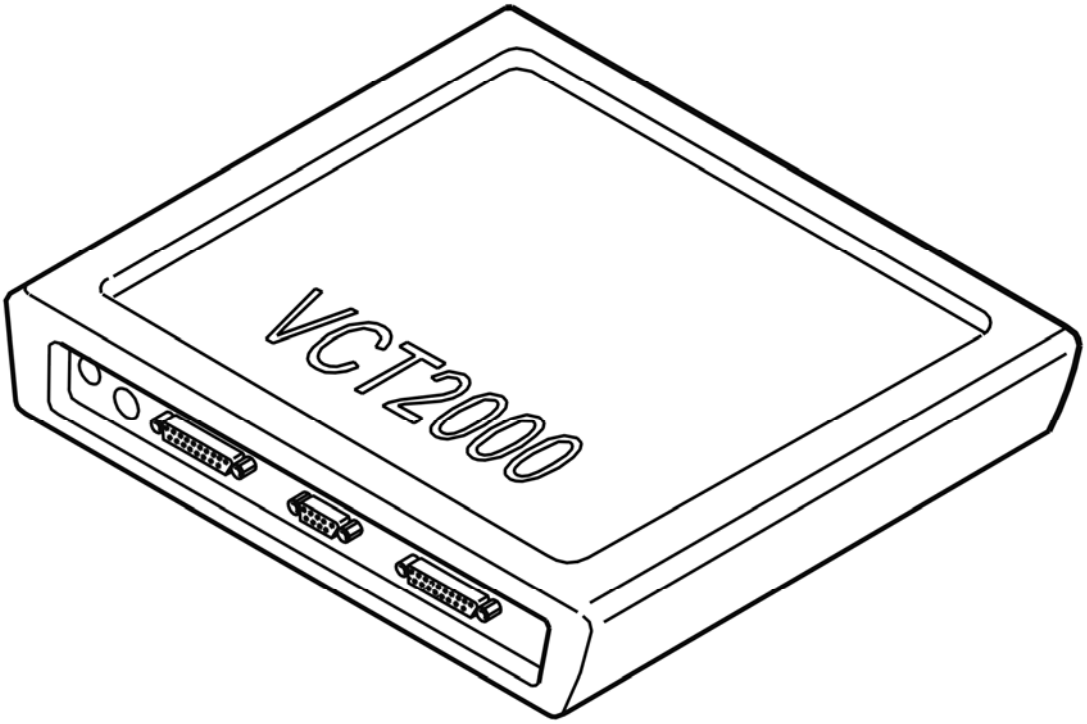

Fig. 130: Identifying VCT2000 Diagnostic Tool Symbol In VIDA
Courtesy of VOLVO CARS CORPORATION

Does the temperature shown appear correct?

- **YES**

  VERIFIED: Troubleshooting has been completed.

- **NO**

  see: **INFORMATION**

INFORMATION

FAULT-TRACING INFORMATION

The fault should have been detected and remedied. As this is not the case fault-tracing has failed.

Exit fault-tracing for this diagnostic trouble code (DTC) or make another attempt.

INFORMATION

FAULT-TRACING INFORMATION

If the fault is intermittent, do not verify fault-tracing if the fault does not recur.

It is possible to view the information again, or leave fault-tracing for this diagnostic trouble code (DTC).

DDM-004B: OUTSIDE TEMPERATURE SENSOR. SIGNAL MISSING (2005-2012)

DIAGNOSTIC TROUBLE CODE INFORMATION

see **DIAGNOSTIC TROUBLE CODE INFORMATION**

SIGNAL MISSING

CHECKING FAULTS

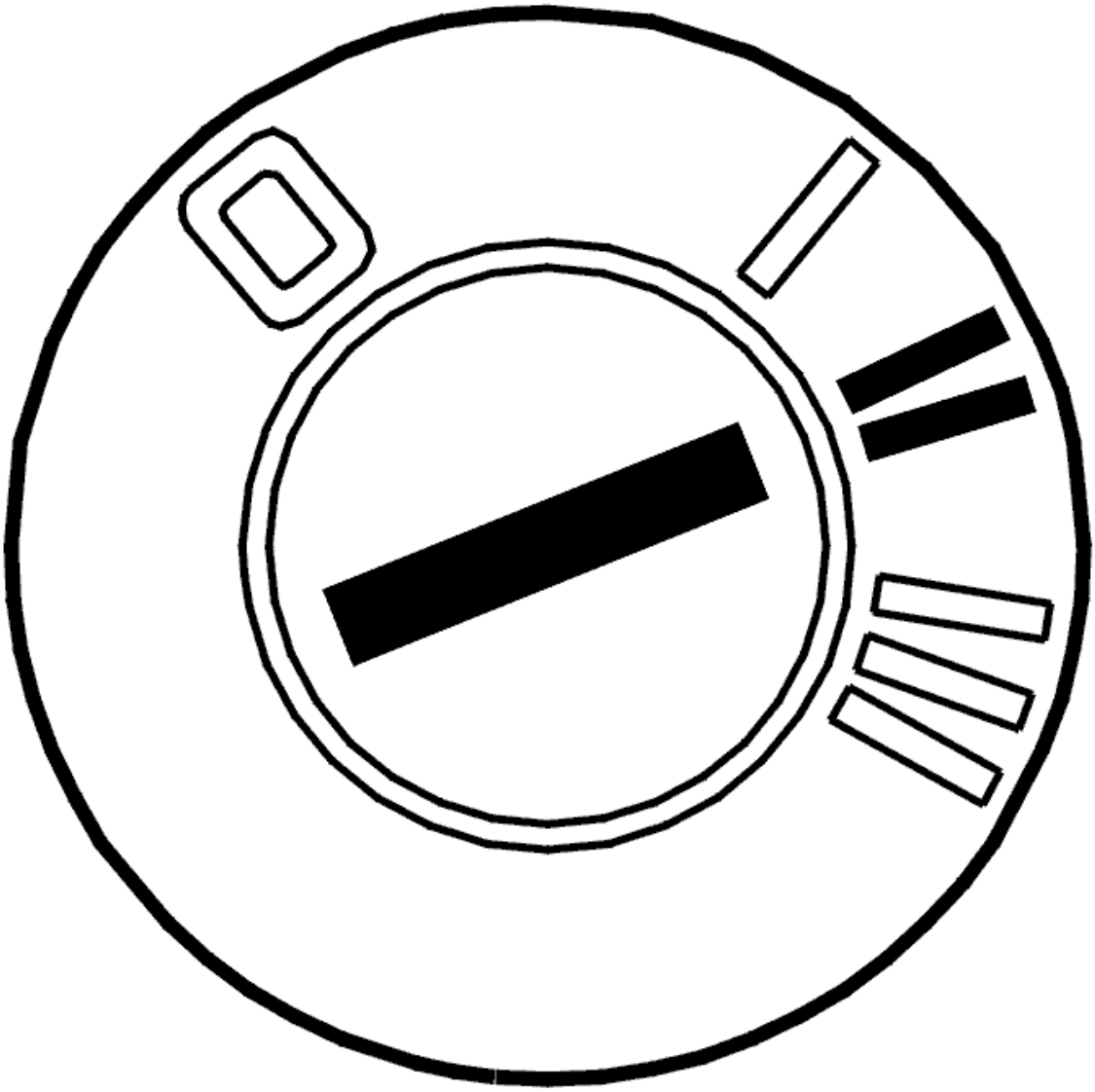

Fig. 131: Identifying Ignition ON
Courtesy of VOLVO CARS CORPORATION

- Ignition on.

  Check the outside temperature.

  NOTE: The outside temperature sensor is always located in the right door mirror.

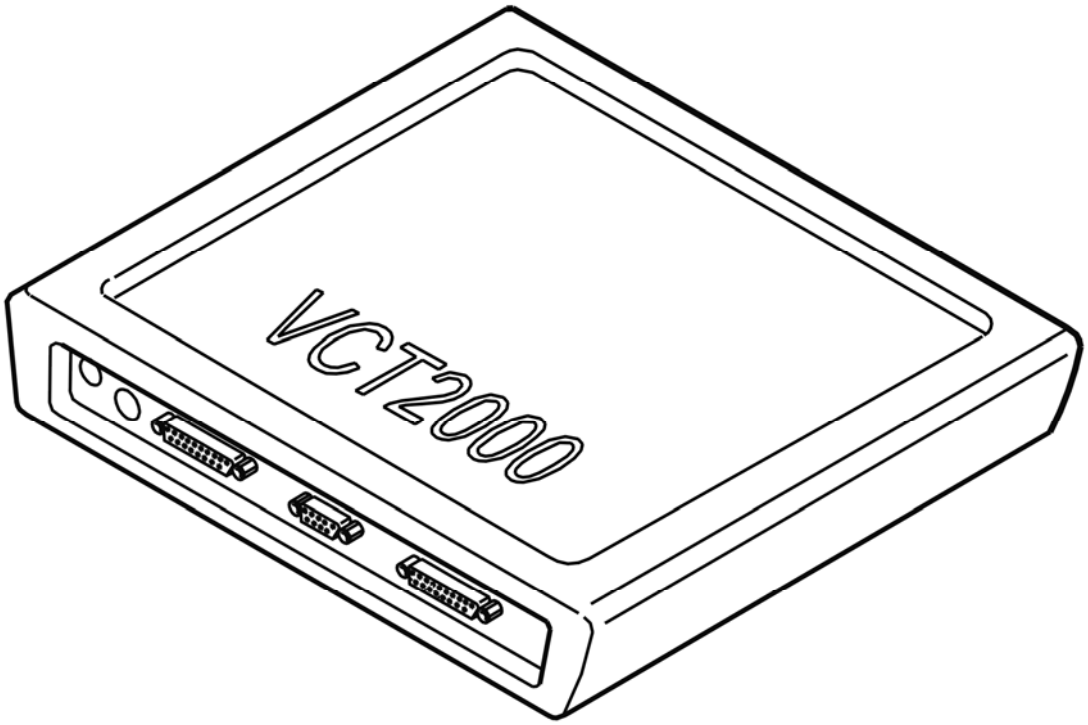

Fig. 132: Identifying VCT2000 Diagnostic Tool Symbol In VIDA
Courtesy of VOLVO CARS CORPORATION

Is the temperature within its permitted range?

- **YES**

  see: **INTERMITTENT FAULT**

- **NO**

  see: **CHECKING THE CONNECTORS**

CHECKING THE CONNECTORS

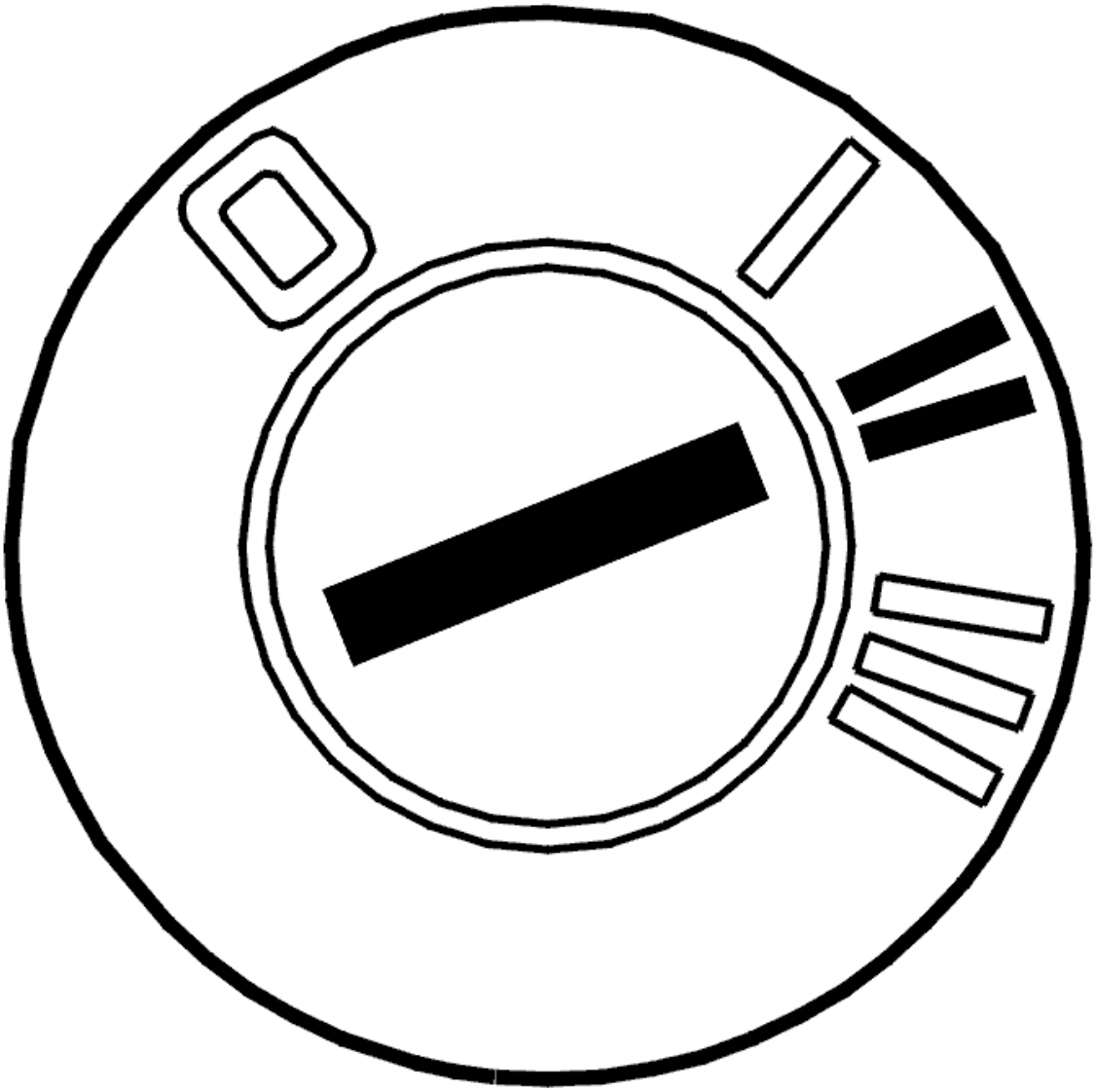

Fig. 133: Identifying Ignition ON
Courtesy of VOLVO CARS CORPORATION

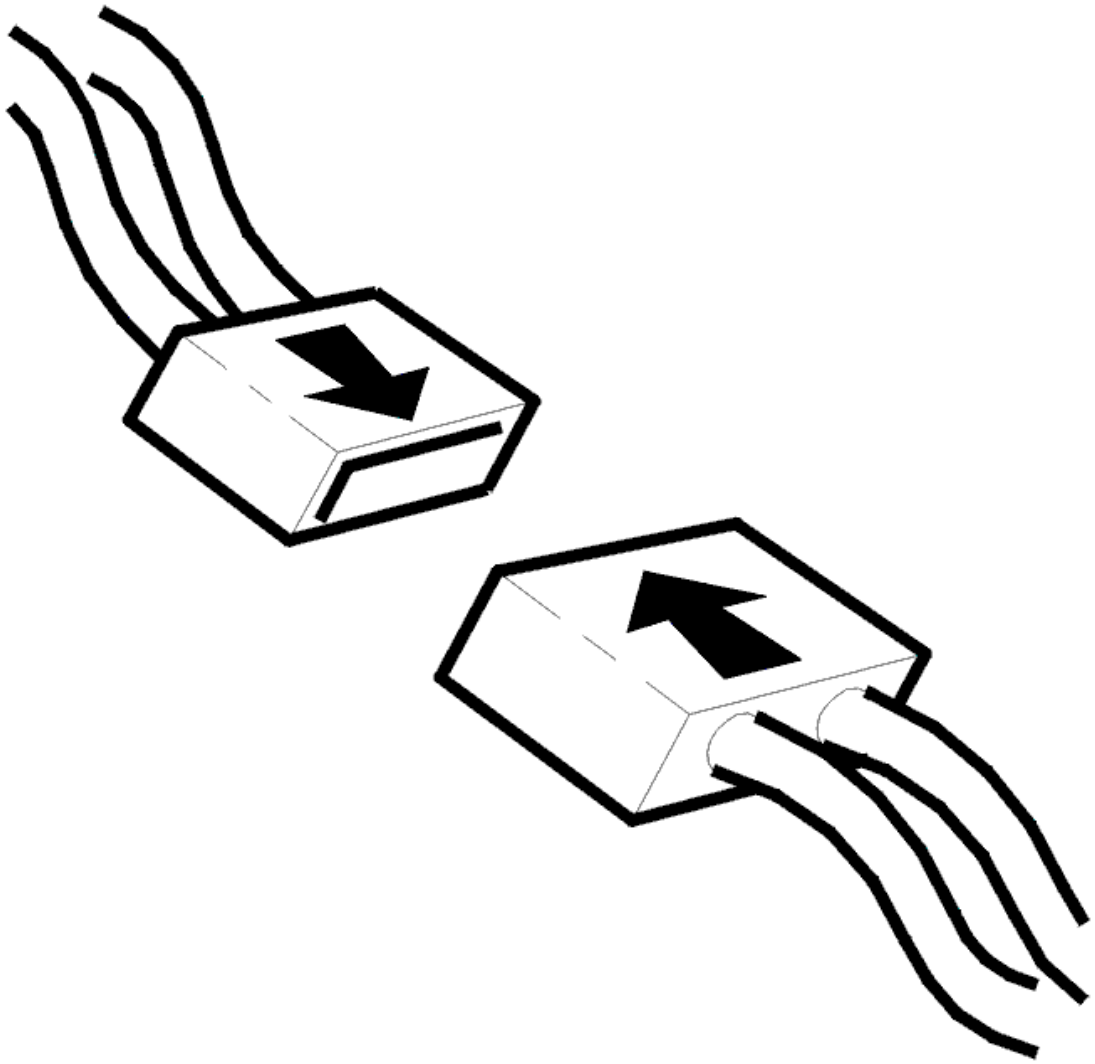

Fig. 134: Checking Connector
Courtesy of VOLVO CARS CORPORATION

- Ignition off
- Check the power door mirror connector. Check for contact resistance and oxidation. Remedy if necessary. Check for damage carefully
- Reinstall the components, reconnect the connectors etc.
- Ignition on.

Check the outside temperature.

NOTE: The outside temperature sensor is always located in the right door mirror.

Other information:

- see **CONNECTING THE BREAKOUT BOX**
- see **SIGNAL SPECIFICATION**
- see **REAR VIEW MIRROR, REPLACING**
- see **CHECKING WIRING AND TERMINALS** .

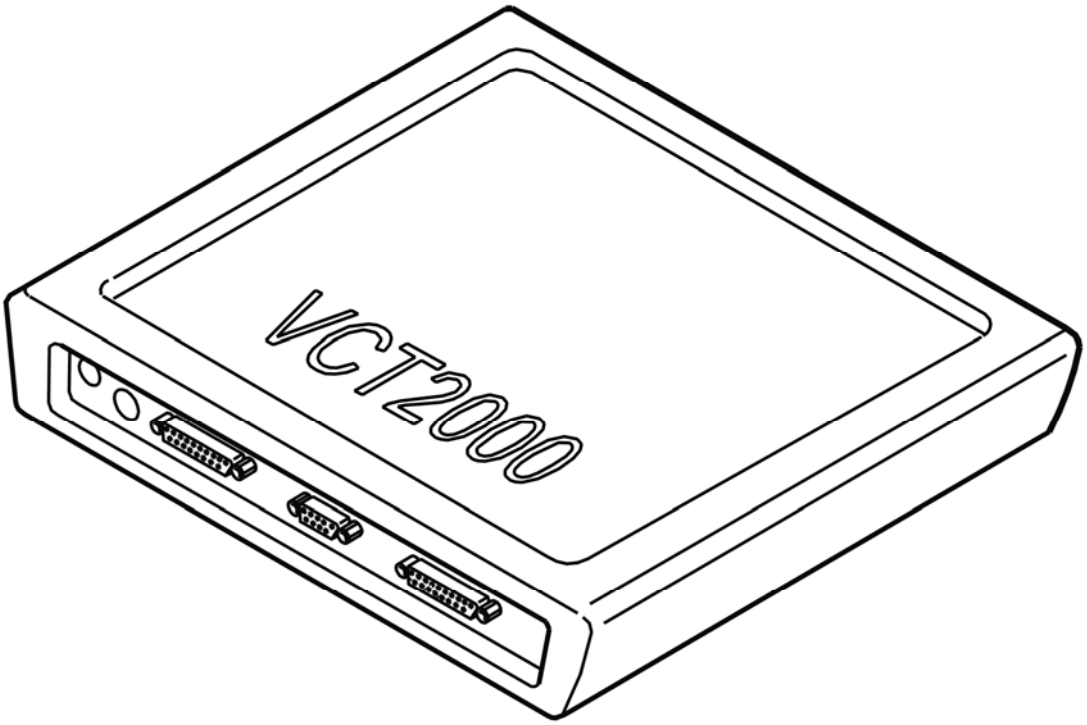

Fig. 135: Identifying VCT2000 Diagnostic Tool Symbol In VIDA
Courtesy of VOLVO CARS CORPORATION

Is the temperature within its permitted range?

- **YES**

  see: **VERIFICATION**

- **NO**

  see: **CHECKING FOR A SHORT-CIRCUIT**

CHECKING FOR A SHORT-CIRCUIT

Check the cable between door control module terminal #14A and power door mirror connector terminal #2. Check for a short-circuit to ground.

Replace the cable if a fault is found.

Try a new outside temperature sensor if no fault was found.

Other information:

- see **CONNECTING THE BREAKOUT BOX**
- see **SIGNAL SPECIFICATION**
- see **REAR VIEW MIRROR, REPLACING**
- Outside temperature sensor -2006, see **OUTSIDE TEMPERATURE SENSOR DOOR MIRROR, REPLACING**
- Outside temperature sensor 2007-, see **OUTSIDE TEMPERATURE SENSOR**
- see **CHECKING WIRING AND TERMINALS** .

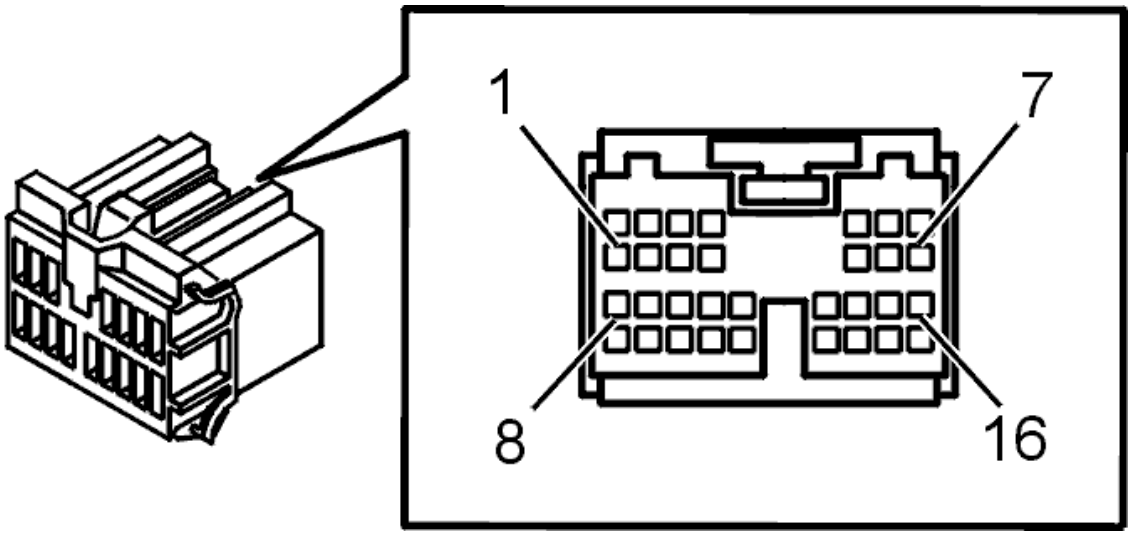

Fig. 136: Connector, Green (16- Pin)
Courtesy of VOLVO CARS CORPORATION

- **Continue**

  see: **VERIFICATION**

INTERMITTENT FAULT

Check the cable between control module terminal #14A and power door mirror terminal #2. Check for an intermittent short-circuit to ground.

Replace the outside temperature sensor if no fault is found.

Other information:

- see **CONNECTING THE BREAKOUT BOX**

- see **SIGNAL SPECIFICATION**
- see **REAR VIEW MIRROR, REPLACING**
- Outside temperature sensor -2006, see **OUTSIDE TEMPERATURE SENSOR DOOR MIRROR, REPLACING**
- Outside temperature sensor 2007-, see **OUTSIDE TEMPERATURE SENSOR**
- see **CHECKING WIRING AND TERMINALS** .

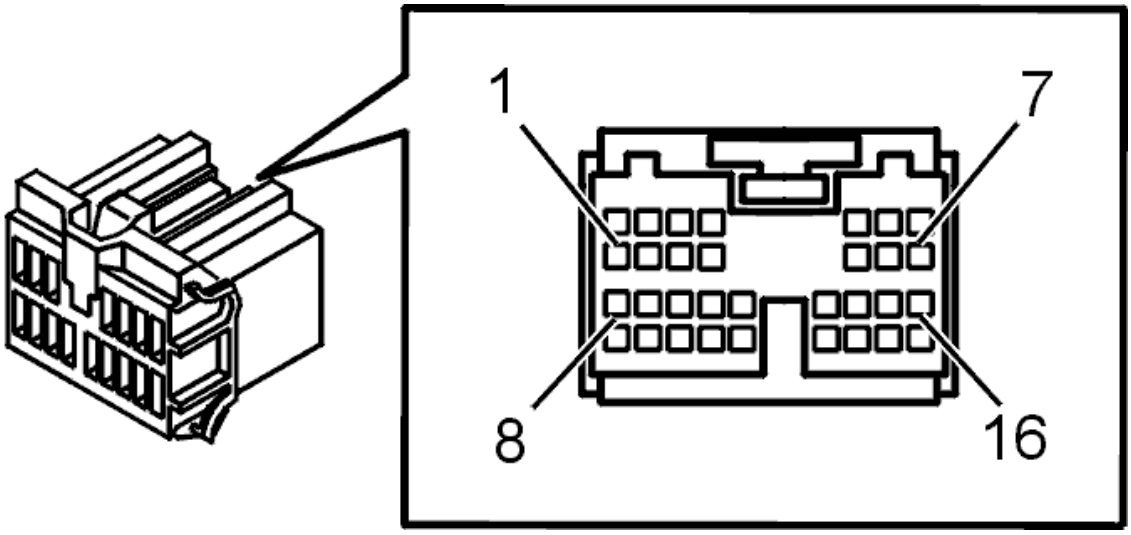

Fig. 137: Connector, Green (16- Pin)
Courtesy of VOLVO CARS CORPORATION

- **Continue**

  see: **INFORMATION**

VERIFICATION

VERIFICATION

HINT: After carrying out the repair, check that the fault has been remedied.

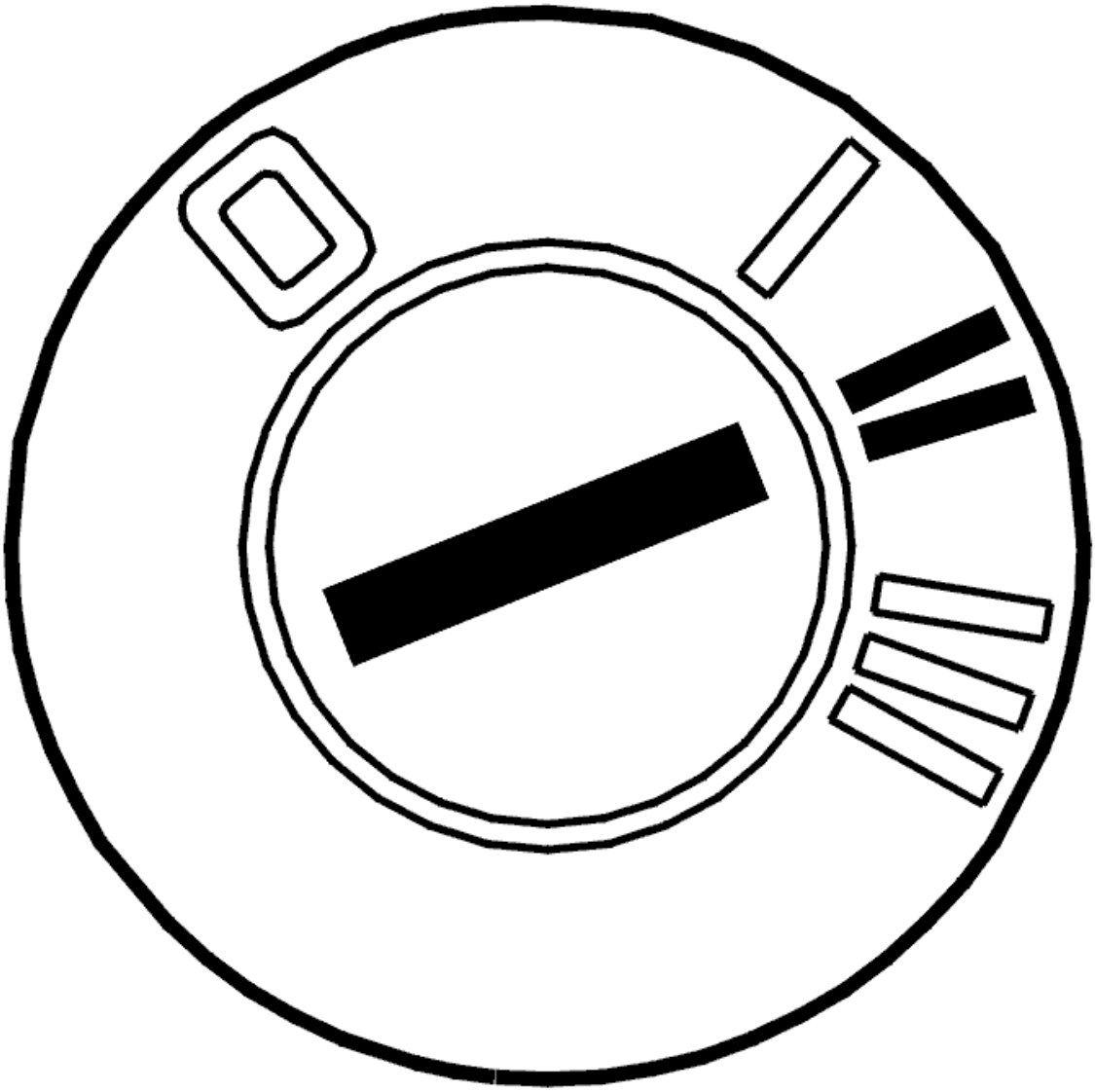

Fig. 138: Identifying Ignition ON
Courtesy of VOLVO CARS CORPORATION

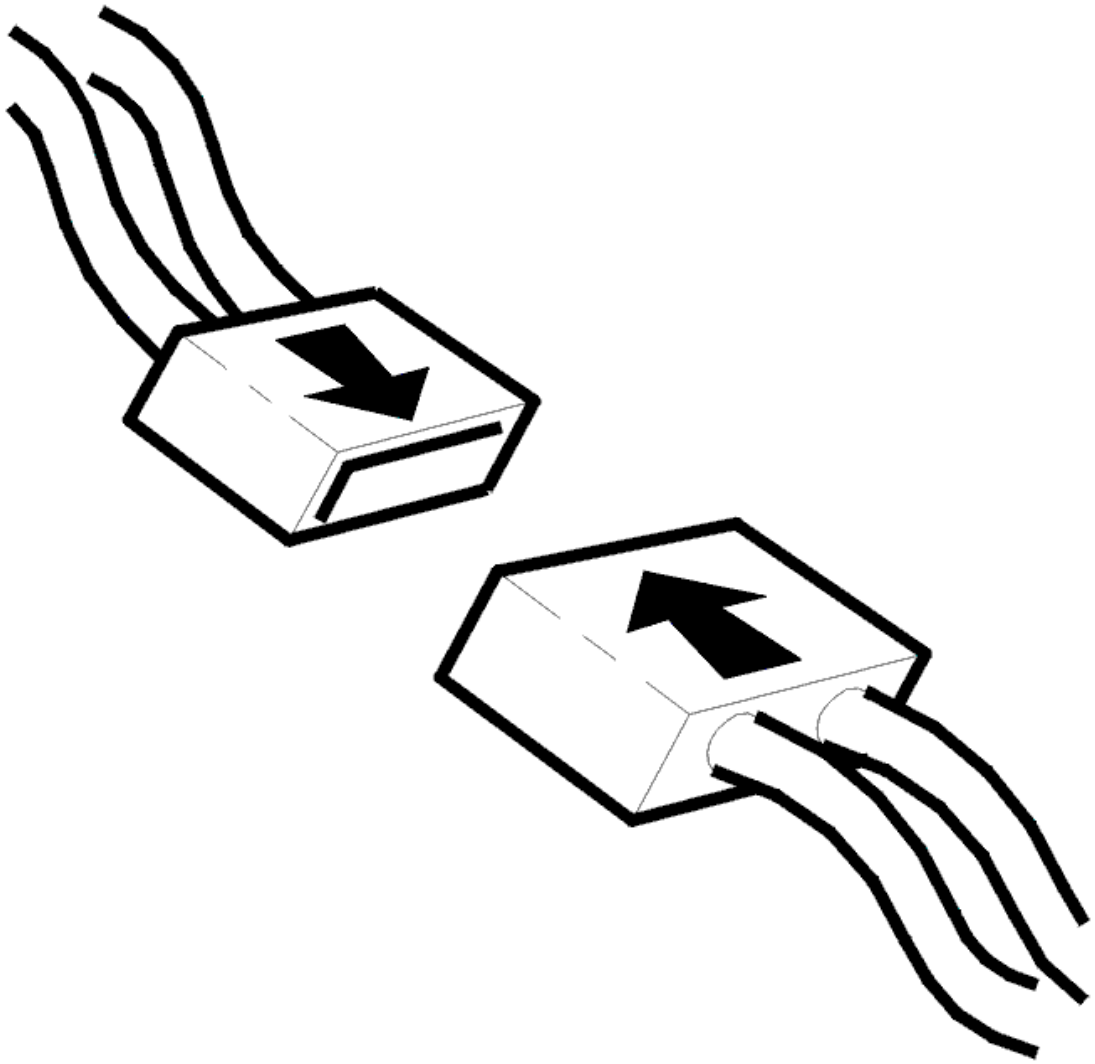

Fig. 139: Checking Connector
Courtesy of VOLVO CARS CORPORATION

- Ignition off
- Reconnect the components, connectors etc.
- Ignition on.

Check the outside temperature.

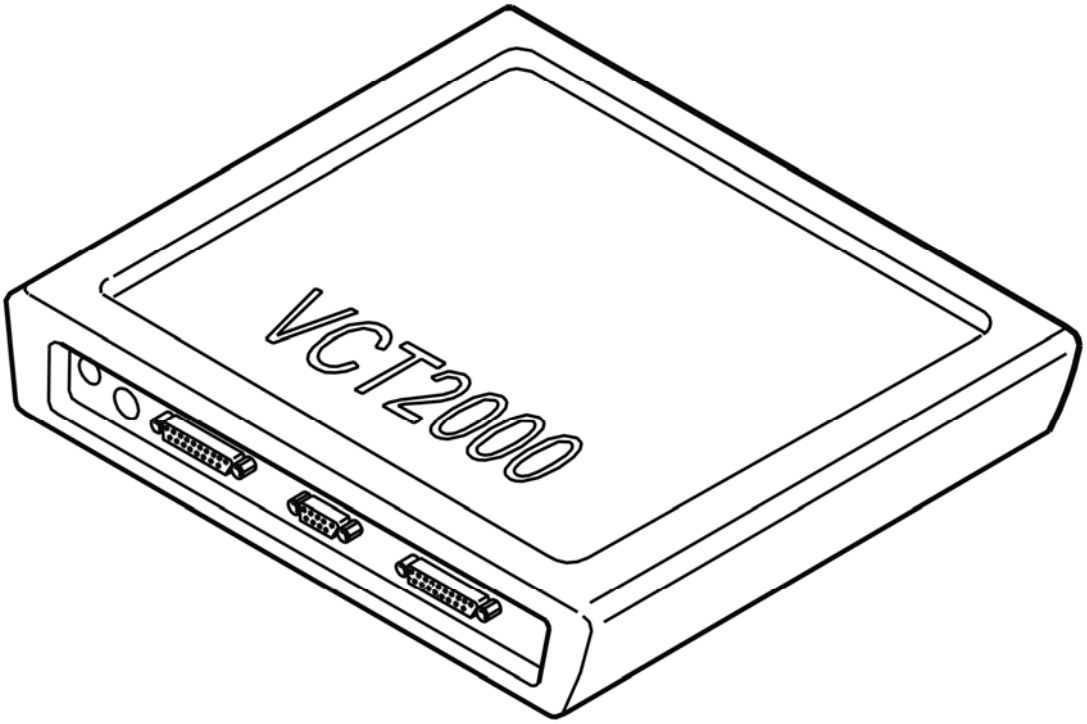

Fig. 140: Identifying VCT2000 Diagnostic Tool Symbol In VIDA
Courtesy of VOLVO CARS CORPORATION

Is the temperature within its permitted range?

- **YES**

  VERIFIED: Troubleshooting has been completed.

- **NO**

  see: **INFORMATION**

INFORMATION

FAULT-TRACING INFORMATION

The fault should have been detected and remedied. As this is not the case fault-tracing has failed.

Exit fault-tracing for this diagnostic trouble code (DTC) or make another attempt.

INFORMATION

FAULT-TRACING INFORMATION

If the fault is intermittent, do not verify fault-tracing if the fault does not recur.

It is possible to view the information again, or leave fault-tracing for this diagnostic trouble code (DTC).

DDM-004C: CONTROL MODULE. INTERNAL FAULT (2005-2012)

DIAGNOSTIC TROUBLE CODE INFORMATION

Condition

The initial set up of the window position is not done at the workshop.

Substitute Value

- Nothing.

Possible Source

- Set up is not done.

Fault symptom[s]

- The automatic window operation does not work.

INTERNAL FAULT

CHECKING FAULTS

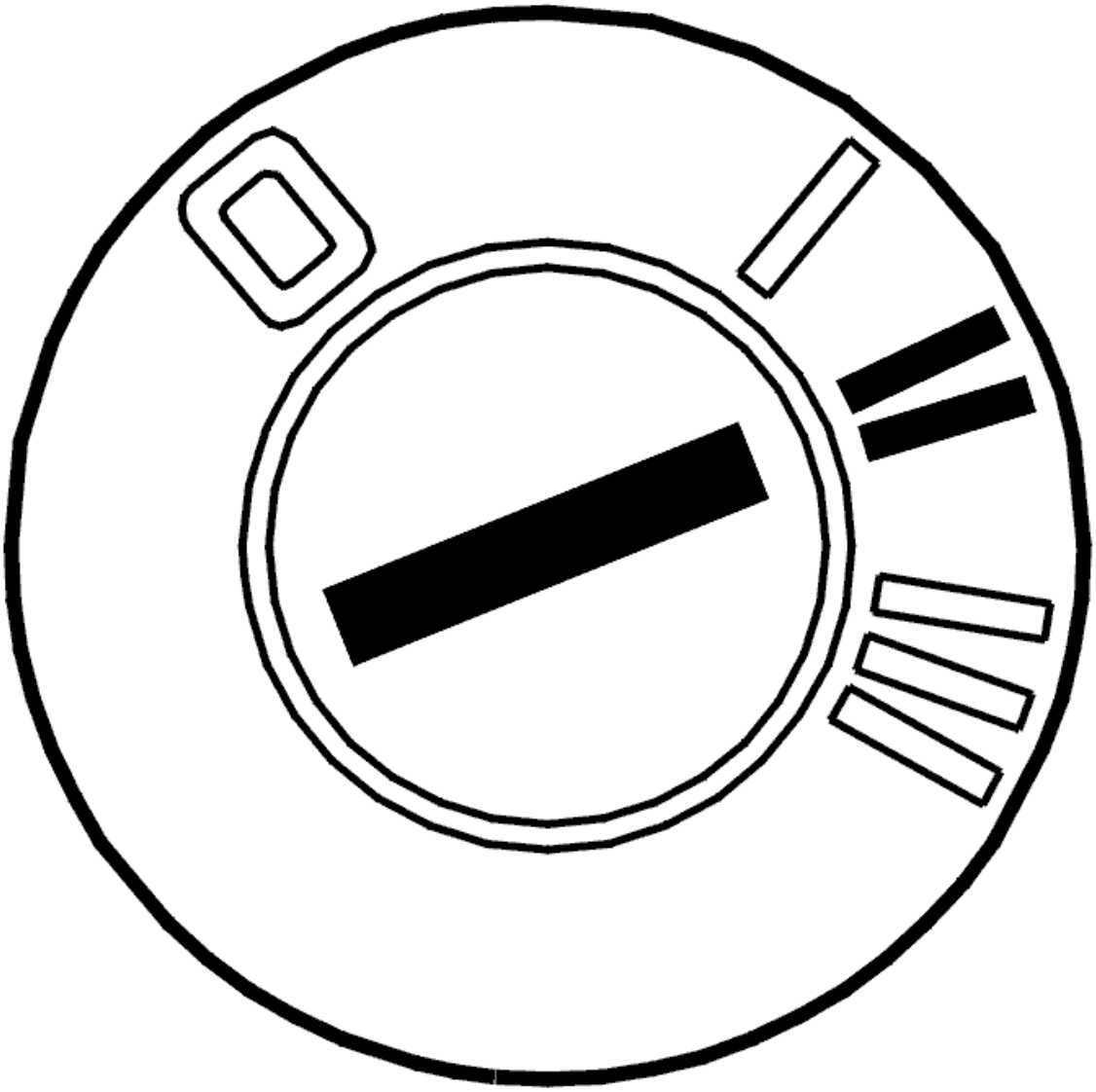

Fig. 141: Identifying Ignition ON
Courtesy of VOLVO CARS CORPORATION

- Ignition on.

  Press the power window switch 2 steps up to check the function of the automatic power window mechanism.

Is the automatic power window mechanism functioning?

- **YES**

  see: **INTERMITTENT FAULT**

- **NO**

see: **INITIATION**

INITIATION

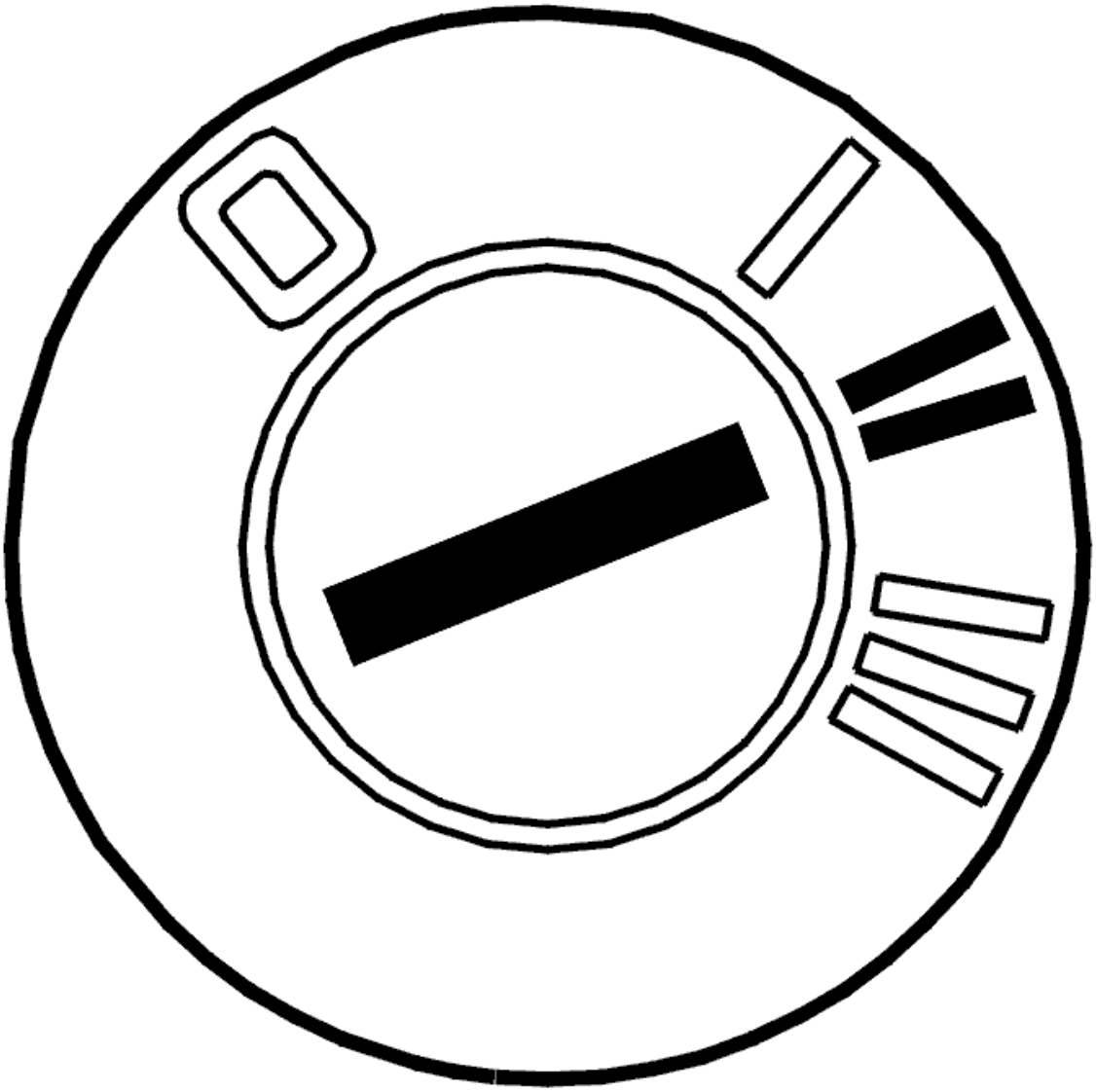

Fig. 142: Identifying Ignition ON
Courtesy of VOLVO CARS CORPORATION

- Ignition on.

  The window position has never been initiated in the control module.

  Move the window to its upper limit position using manual control.

  Initialize the window.

  During initialization, the window will automatically go down to its lowest position and then go back up

again.

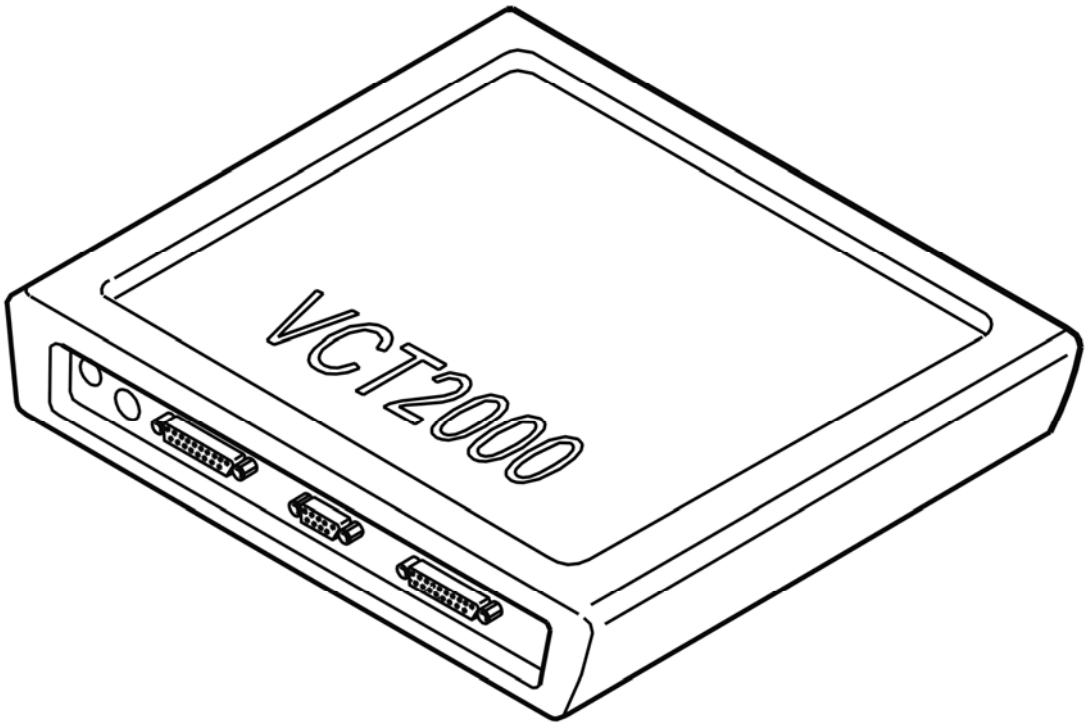

Fig. 143: Identifying VCT2000 Diagnostic Tool Symbol In VIDA
Courtesy of VOLVO CARS CORPORATION

INTERMITTENT FAULT

Fault-tracing indicates that the control module had previously identified an intermittent fault, but that the fault is no longer present.

- **Continue**

  see: **INFORMATION**

INFORMATION

FAULT-TRACING INFORMATION

If the fault is intermittent, do not verify fault-tracing if the fault does not recur.

It is possible to view the information again, or leave fault-tracing for this diagnostic trouble code (DTC).

DDM-004C: CONTROL MODULE. INTERNAL FAULT (2003-2004)

DIAGNOSTIC TROUBLE CODE INFORMATION

see **DIAGNOSTIC TROUBLE CODE INFORMATION**

INTERNAL FAULT

CHECKING FOR PERMANENT OR INTERMITTENT FAULTS

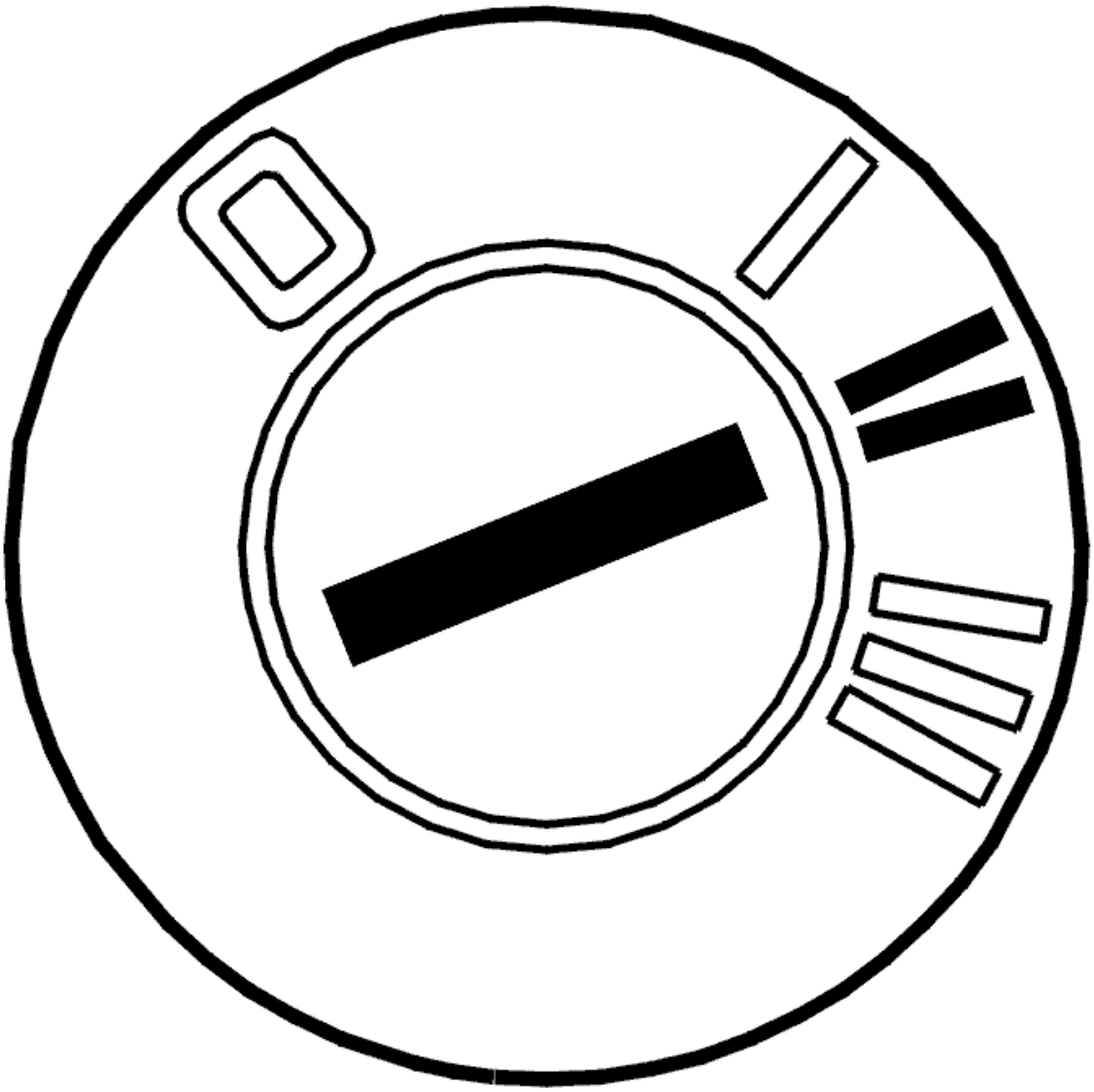

Fig. 144: Identifying Ignition ON
Courtesy of VOLVO CARS CORPORATION

- Ignition on.

  Press the power window switch 2 steps up to check the function of the automatic power window mechanism.

Is the automatic power window mechanism functioning?

- **YES**

  see: **INTERMITTENT FAULT**

- **NO**

  see: **INITIATION**

INITIATION

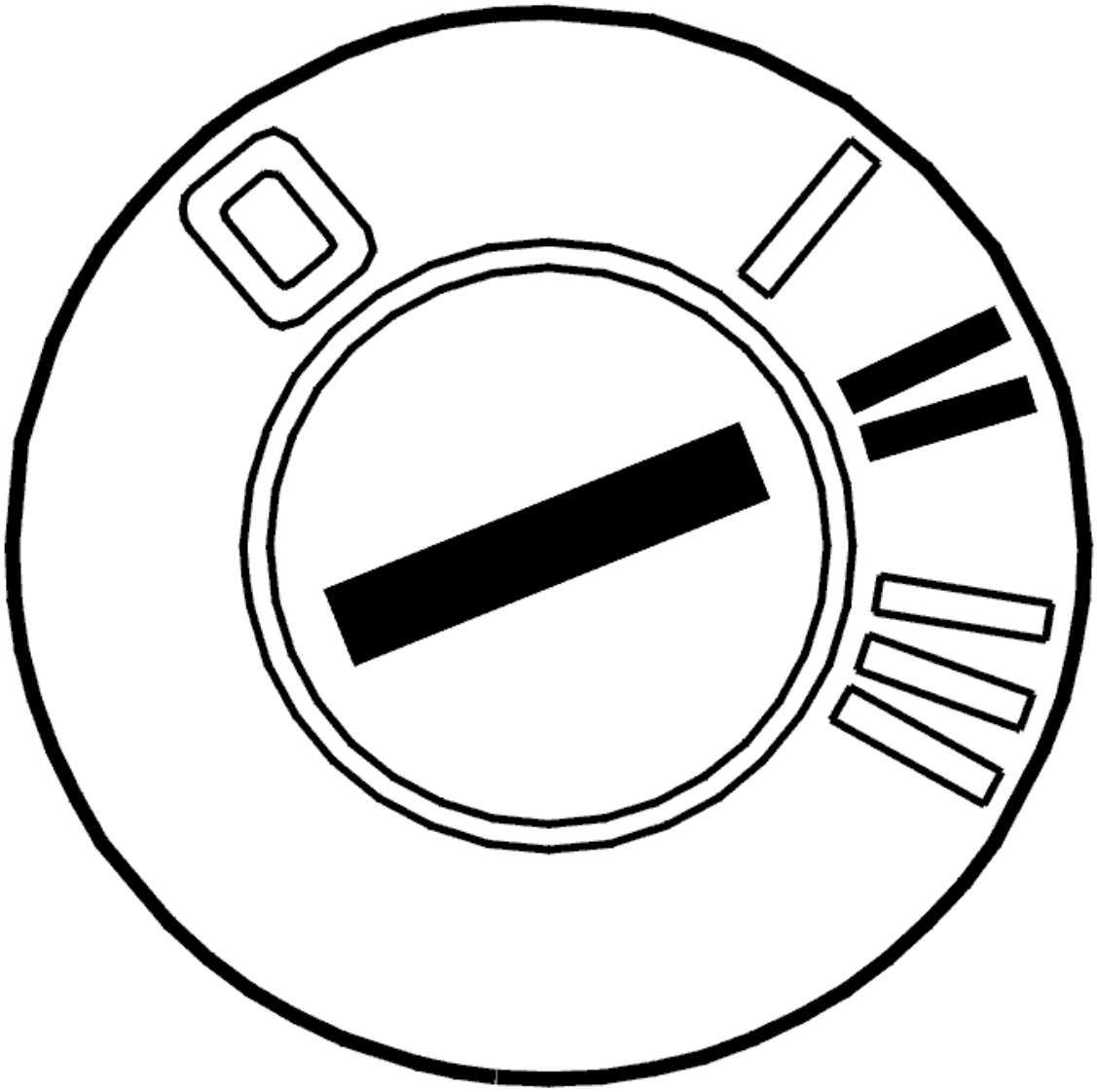

Fig. 145: Identifying Ignition ON
Courtesy of VOLVO CARS CORPORATION

- Ignition on.

The window position has never been initiated in the control module.

Move the window to its upper limit position using manual control.

Initialize the window.

From model year 2003 inclusive, the window will lower approximately 10 centimeters and then close again during initialization.

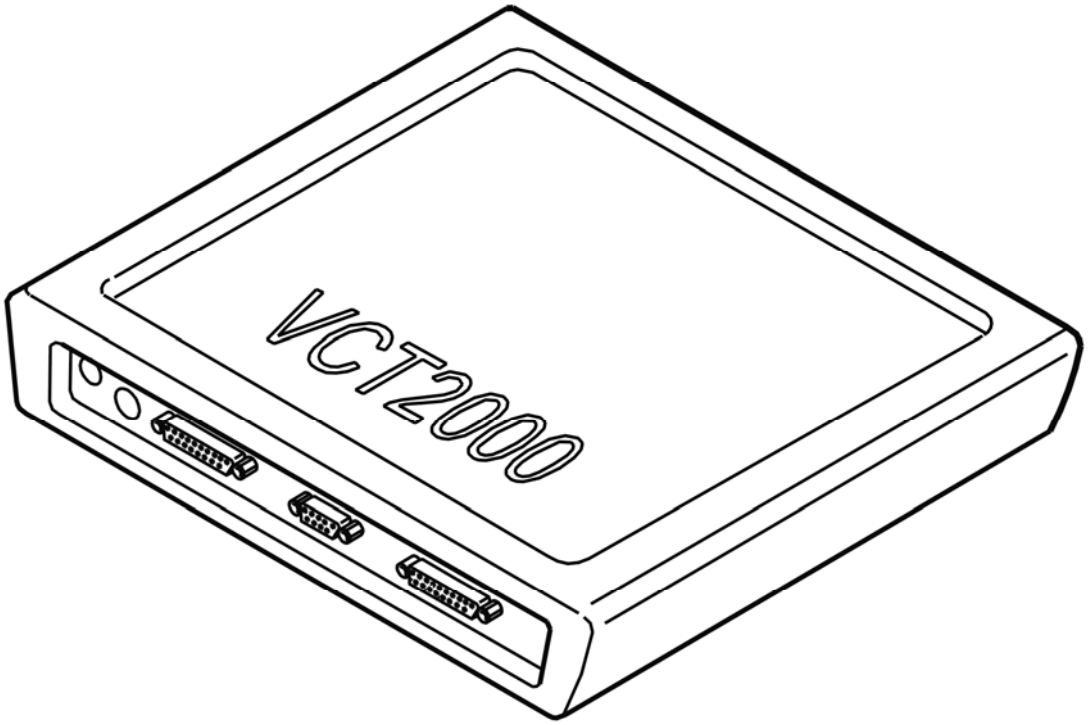

Fig. 146: Identifying VCT2000 Diagnostic Tool Symbol In VIDA
Courtesy of VOLVO CARS CORPORATION

INTERMITTENT FAULT

Fault-tracing indicates that the control module had previously identified an intermittent fault, but that the fault is no longer present.

- **Continue**

  see: **INFORMATION**

INFORMATION

FAULT-TRACING INFORMATION

If the fault is intermittent, do not verify fault-tracing if the fault does not recur.

It is possible to view the information again, or leave fault-tracing for this diagnostic trouble code (DTC).

DDM-004D: CONTROL MODULE. INTERNAL FAULT (2003-2004)

DIAGNOSTIC TROUBLE CODE (DTC) INFORMATION

Condition

The window position settings have been lost by the control module. This is due to a voltage drop when the window lift mechanism was activated.

Substitute Value

- None.

Possible Source

- The initialization of the window position is lost.

Fault symptom[s]

- Automatic window operation does not function.

INTERNAL FAULT

CHECKING FOR PERMANENT OR INTERMITTENT FAULTS

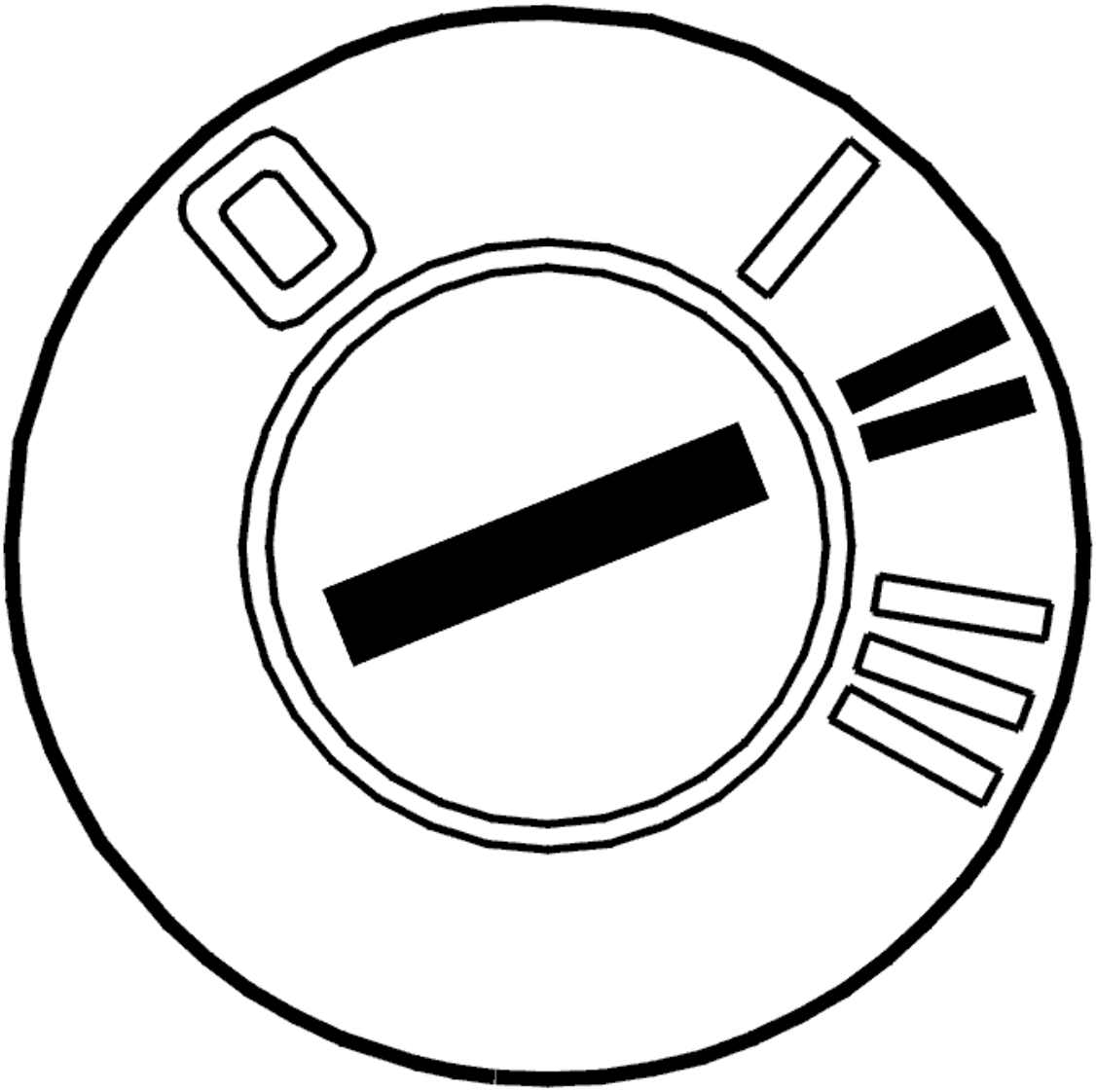

Fig. 147: Identifying Ignition ON
Courtesy of VOLVO CARS CORPORATION

- Ignition on.

  Press the power window switch 2 steps up to check the function of the automatic power window mechanism.

Is the automatic power window mechanism functioning?

- **YES**

  see: **INTERMITTENT FAULT**

- **NO**

see: **INITIATION**

INITIATION

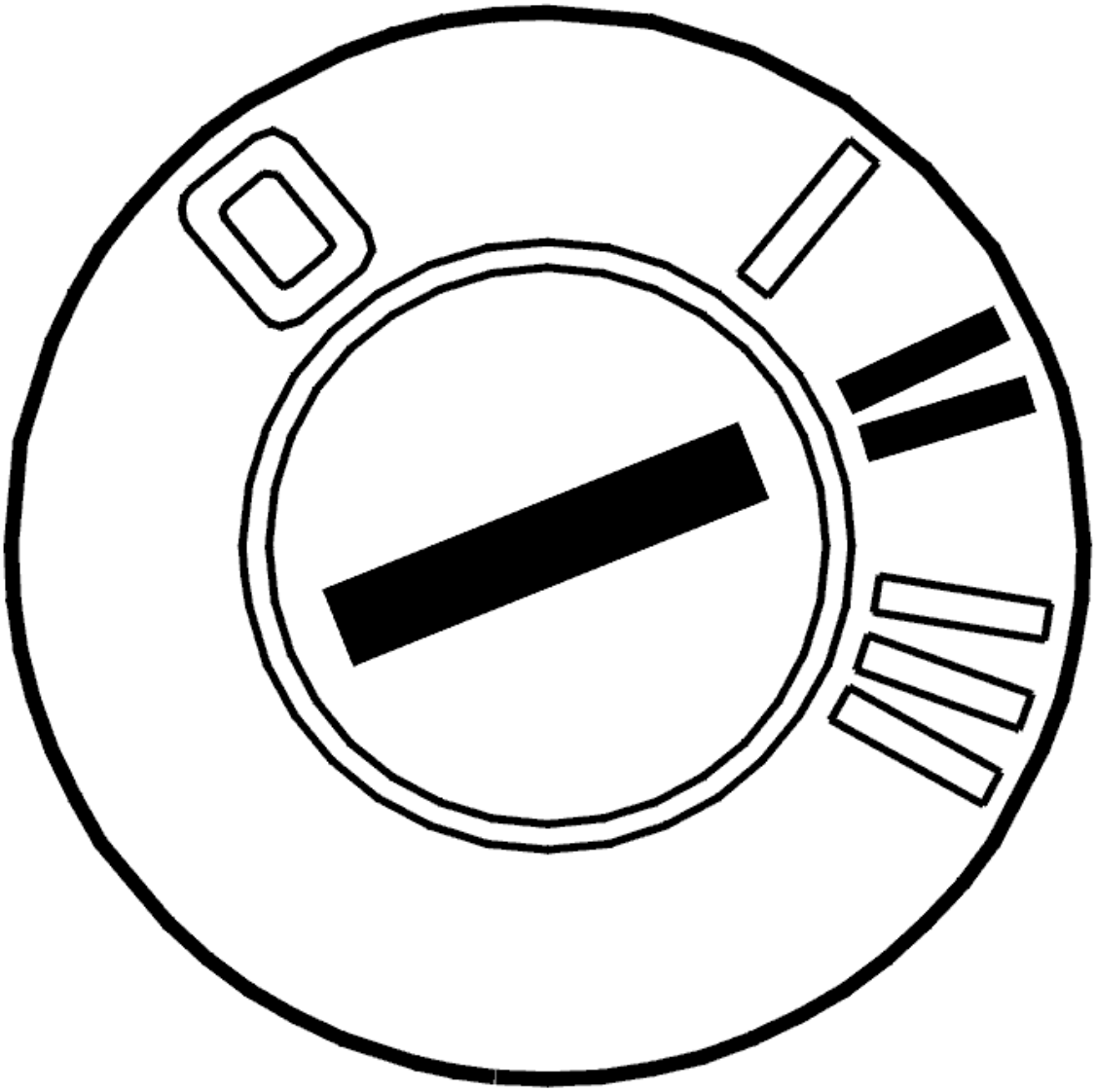

Fig. 148: Identifying Ignition ON
Courtesy of VOLVO CARS CORPORATION

- Ignition on.

  The control module has registered an internal fault.

  The window position must be initialized.

  Move the window to its upper limit position using manual control.

  Initialize the window.

From model year 2003 inclusive, the window will lower approximately 10 centimeters and then close again during initialization.

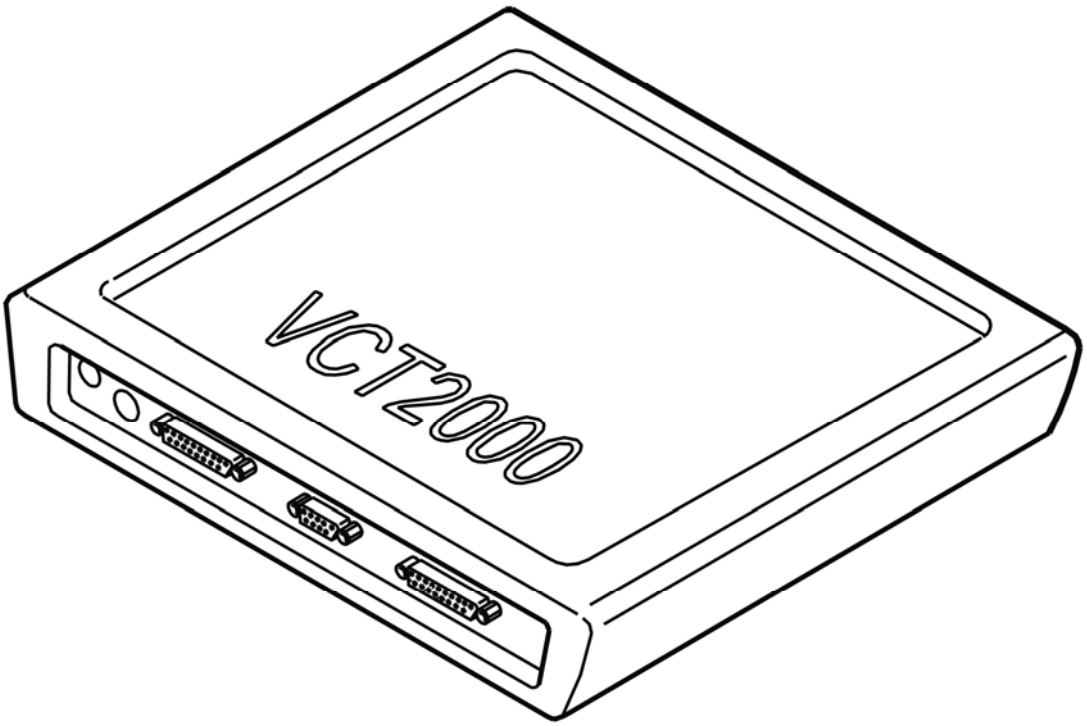

Fig. 149: Identifying VCT2000 Diagnostic Tool Symbol In VIDA
Courtesy of VOLVO CARS CORPORATION

INTERMITTENT FAULT

Fault-tracing indicates that the control module had previously identified an intermittent fault, but that the fault is no longer present.

- **Continue**

  see: **INFORMATION**

INFORMATION

FAULT-TRACING INFORMATION

If the fault is intermittent, do not verify fault-tracing if the fault does not recur.

It is possible to view the information again, or leave fault-tracing for this diagnostic trouble code (DTC).

DDM-004D: CONTROL MODULE. INTERNAL FAULT (2005-2012)

DIAGNOSTIC TROUBLE CODE (DTC) INFORMATION

see **DIAGNOSTIC TROUBLE CODE (DTC) INFORMATION**

INTERNAL FAULT

CHECKING FAULTS

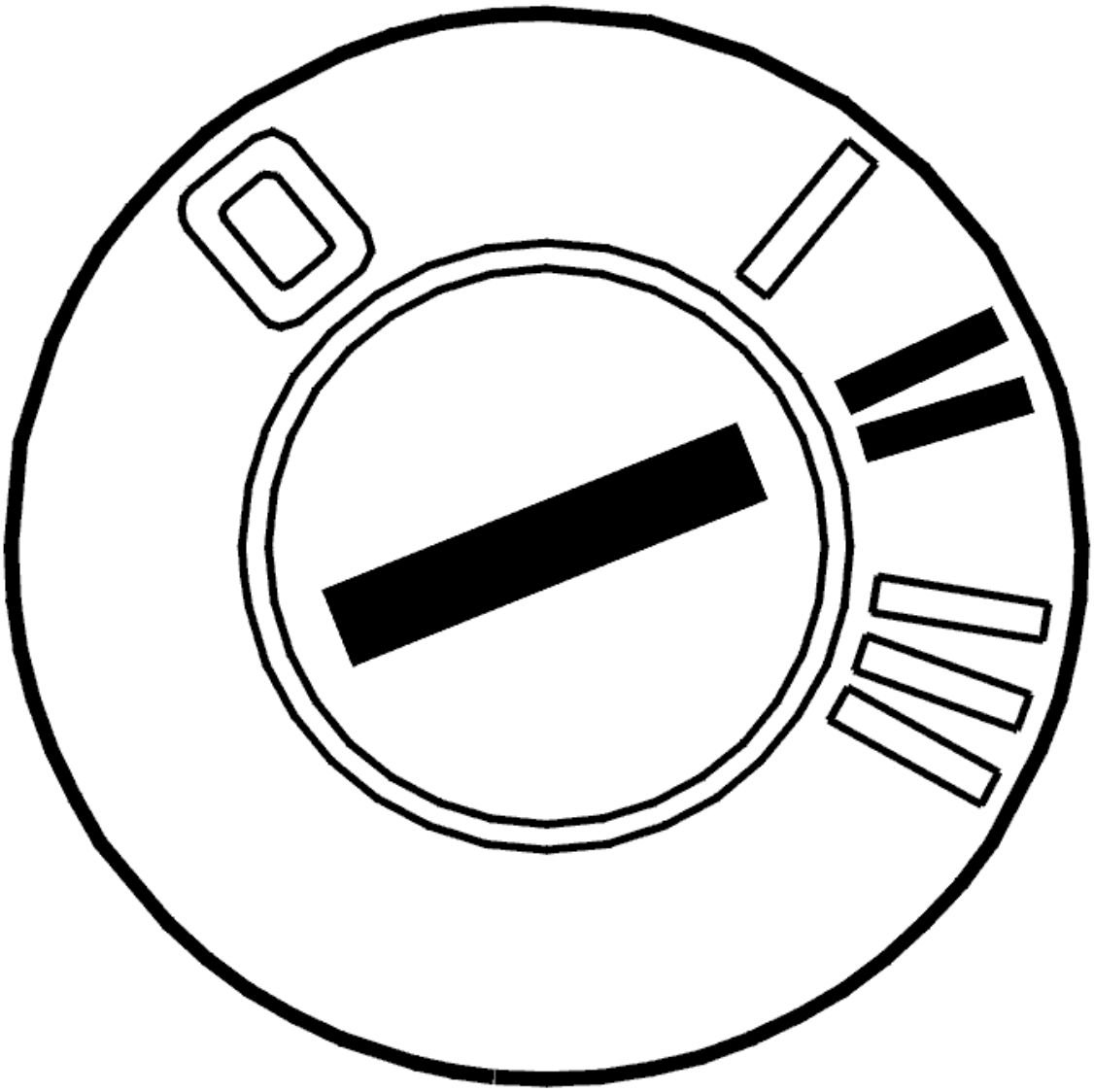

Fig. 150: Identifying Ignition ON
Courtesy of VOLVO CARS CORPORATION

- Ignition on.

  Press the power window switch 2 steps up to check the function of the automatic power window mechanism.

Is the automatic power window mechanism functioning?

- **YES**

  see: **INTERMITTENT FAULT**

- **NO**

  see: **INITIATION**

INITIATION

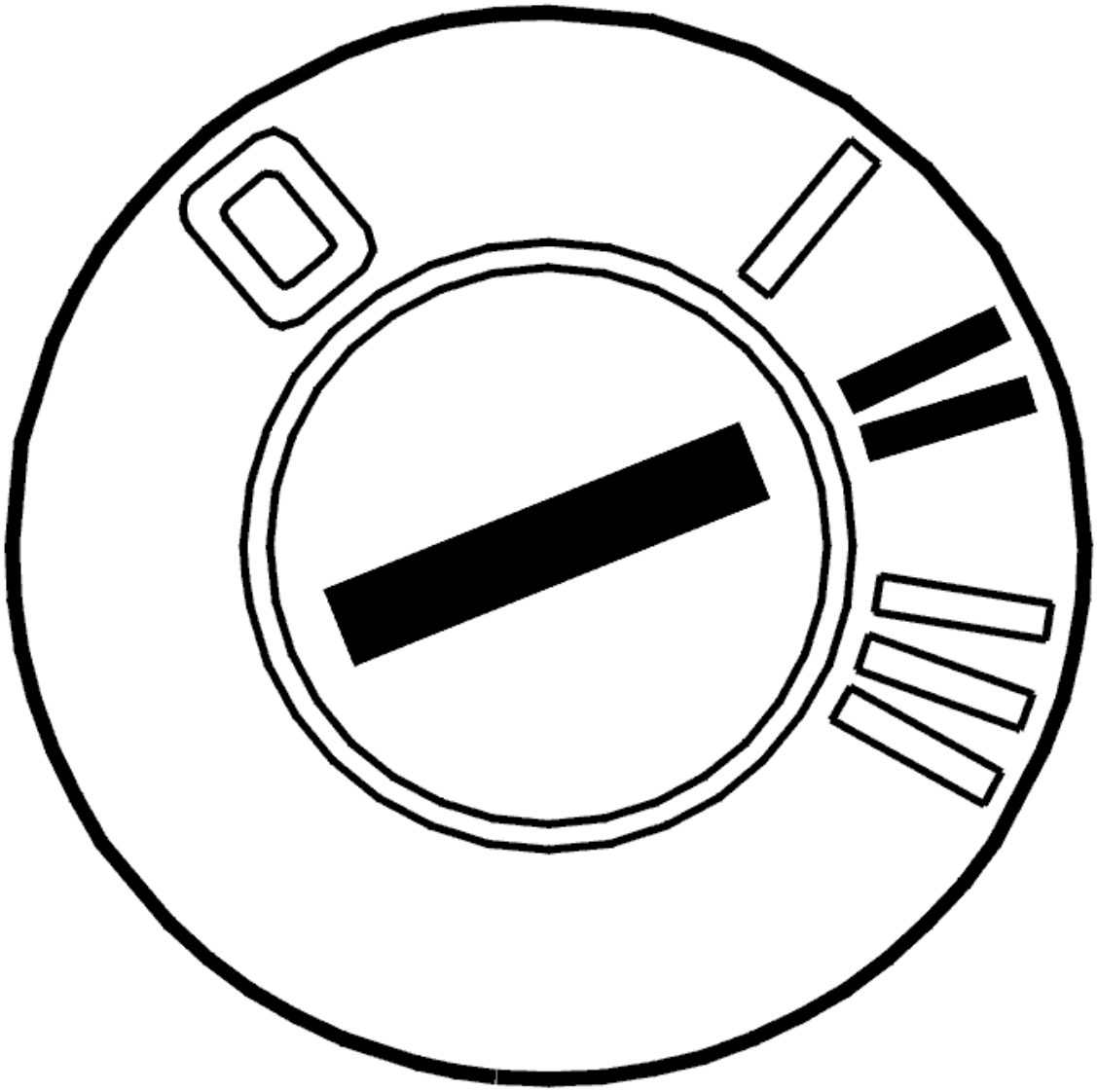

Fig. 151: Identifying Ignition ON
Courtesy of VOLVO CARS CORPORATION

- Ignition on.

The control module has registered an internal fault.

The window position must be initialized.

Move the window to its upper limit position using manual control.

Initialize the window.

During initialization, the window will automatically go down to its lowest position and then go back up again.

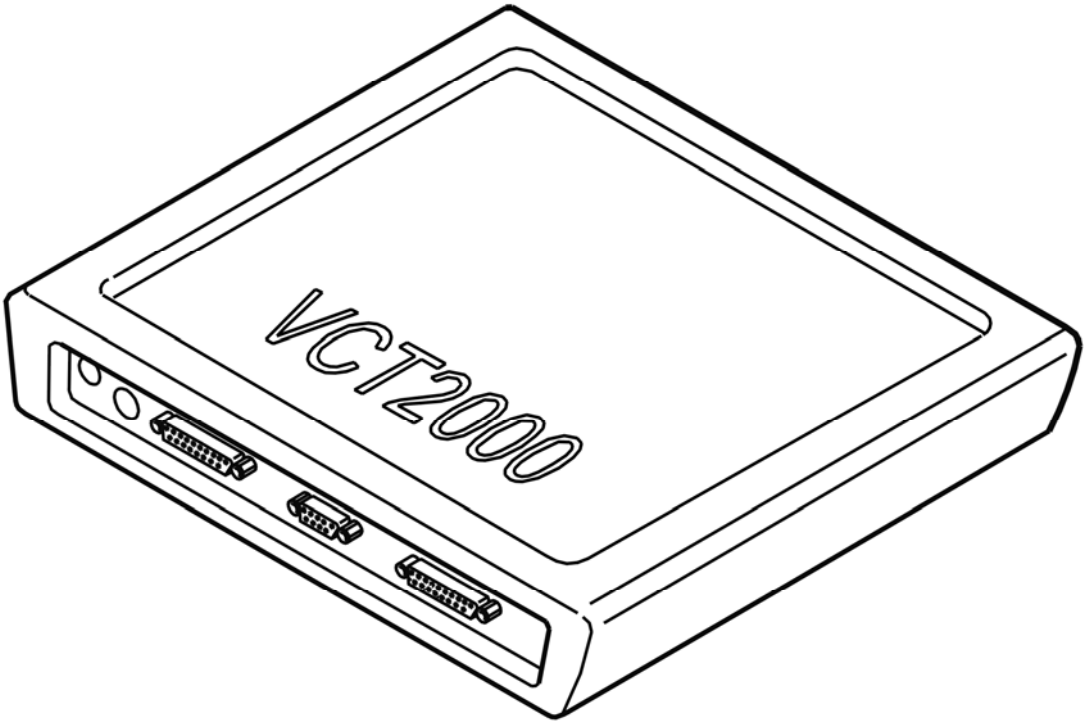

Fig. 152: Identifying VCT2000 Diagnostic Tool Symbol In VIDA
Courtesy of VOLVO CARS CORPORATION

INTERMITTENT FAULT

Fault-tracing indicates that the control module had previously identified an intermittent fault, but that the fault is no longer present.

- **Continue**

  see: **INFORMATION**

INFORMATION

FAULT-TRACING INFORMATION

If the fault is intermittent, do not verify fault-tracing if the fault does not recur.

It is possible to view the information again, or leave fault-tracing for this diagnostic trouble code (DTC).

DDM-E001: CONTROL MODULE COMMUNICATION. FAULTY COMMUNICATION (2005-2012)

DIAGNOSTIC TROUBLE CODE (DTC) INFORMATION DDM-E001

Condition

The control modules transmit and receive information via a standardized serial communication method - CAN (Controller Area Network). The diagnostic trouble code (DTC) is stored if the control module registers serious interference (CAN communication blocked).

NOTE: In the event of system communication problems, it is not possible to communicate with the control module. Therefore it will only be possible to read off the fault if it is intermittent.

Substitute Value

- The control module shuts itself off ("bus-off").

  HINT: The control module will remain shut off until the power supply is broken (15, 30, X). When the power supply is connected the control module will make a new attempt to communicate.

Possible Source

- Short-circuit between the control area network (CAN) wiring
- Open-circuit in the control area network (CAN) wiring
- Internal fault in the control module
- Internal fault in another control module in the same part of the control area network (CAN).

Fault symptom[s]

- The switch panel for the driver's door does not work
- Automatic window closure does not function
- Cannot be controlled with the remote control.

SIGNAL MISSING

see **SIGNAL MISSING**

DDM-E001: CONTROL MODULE COMMUNICATION. FAULTY COMMUNICATION (2003-2004)

DIAGNOSTIC TROUBLE CODE (DTC) INFORMATION DDM-E001

see **DIAGNOSTIC TROUBLE CODE (DTC) INFORMATION DDM-E001**

FAULTY COMMUNICATION

see **FAULTY COMMUNICATION**

DDM-E003: CONFIGURATION FAULT. FAULTY CONFIGURATION (2003-2004)

DIAGNOSTIC TROUBLE CODE (DTC) INFORMATION DDM-E003

Condition

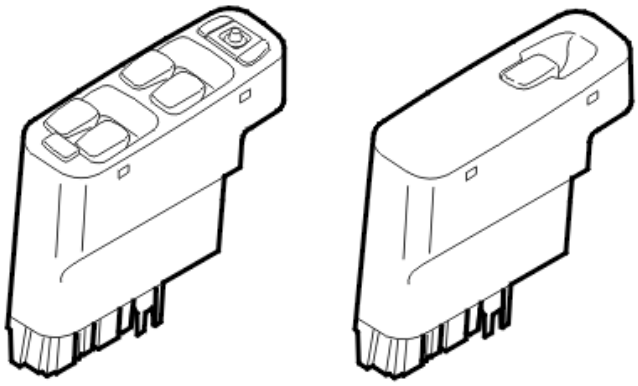

Fig. 153: Driver Door Module And Passenger Door Module Control Modules
Courtesy of VOLVO CARS CORPORATION

The control module compares its configuration ID with the signal configuration transmitted on the control area network (CAN) by the central electronic module (CEM). If the configuration IDs do not correspond the fault code is stored. The diagnostic trouble code (DTC) is also stored if the communication between the control module and the central electronic module (CEM) is interrupted.

NOTE: **In the event of open-circuit in both the control area network (CAN) cables, it is not possible to communicate with the control module. Therefore it will only be possible to read off the diagnostic trouble code (DTC) if this type of fault is intermittent. When the diagnostic trouble code (DTC) is stored, the control module responds to the diagnostic command, however normal control area network (CAN) communication does not work. ("Expulsion mode")**

Substitute Value

- None.

Possible Source

- Faulty control area network (CAN) configuration ID. (The node is not intended for this car, for example a used control module with different software/hardware.)
- Open-circuit in the control area network (CAN) wiring between the control module and the central electrical module (CEM).

Fault symptom[s]

- The switch panel for the driver's door does not work
- Automatic window closure does not function
- Cannot be controlled with the remote control.

FAULTY CONFIGURATION (2003)

see **FAULTY CONFIGURATION (2003)**

FAULTY CONFIGURATION (2004)

see **FAULTY CONFIGURATION (2004)**

DDM-E003: CONFIGURATION FAULT. FAULTY CONFIGURATION (2005-2012)

DIAGNOSTIC TROUBLE CODE (DTC) INFORMATION DDM-E003

see **DIAGNOSTIC TROUBLE CODE (DTC) INFORMATION DDM-E003**

SIGNAL MISSING

see **SIGNAL MISSING**

DDM-XXXX: UNKNOWN DIAGNOSTIC TROUBLE CODE (DTC) FOR THE CURRENT CONTROL MODULE VERSION (2003-2012)

UNKNOWN DIAGNOSTIC TROUBLE CODE (DTC) FOR THE CURRENT CONTROL MODULE VERSION

READING OFF DIAGNOSTIC TROUBLE CODES (DTCS)

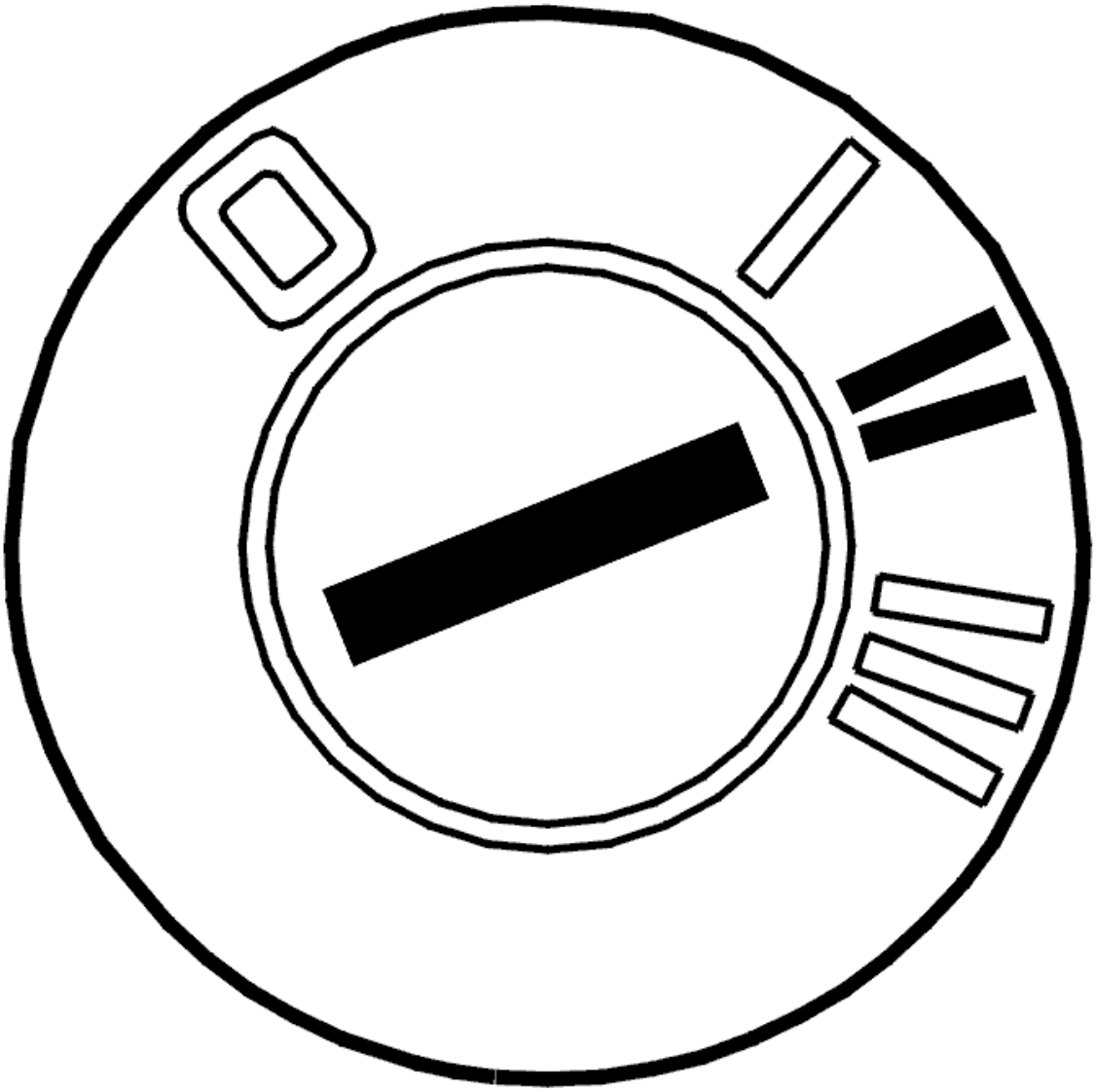

Fig. 154: Identifying Ignition ON
Courtesy of VOLVO CARS CORPORATION

- Ignition on.

  Read off the diagnostic trouble code (DTC) that is stored in the car.

  Make a note of the code for reporting purposes.

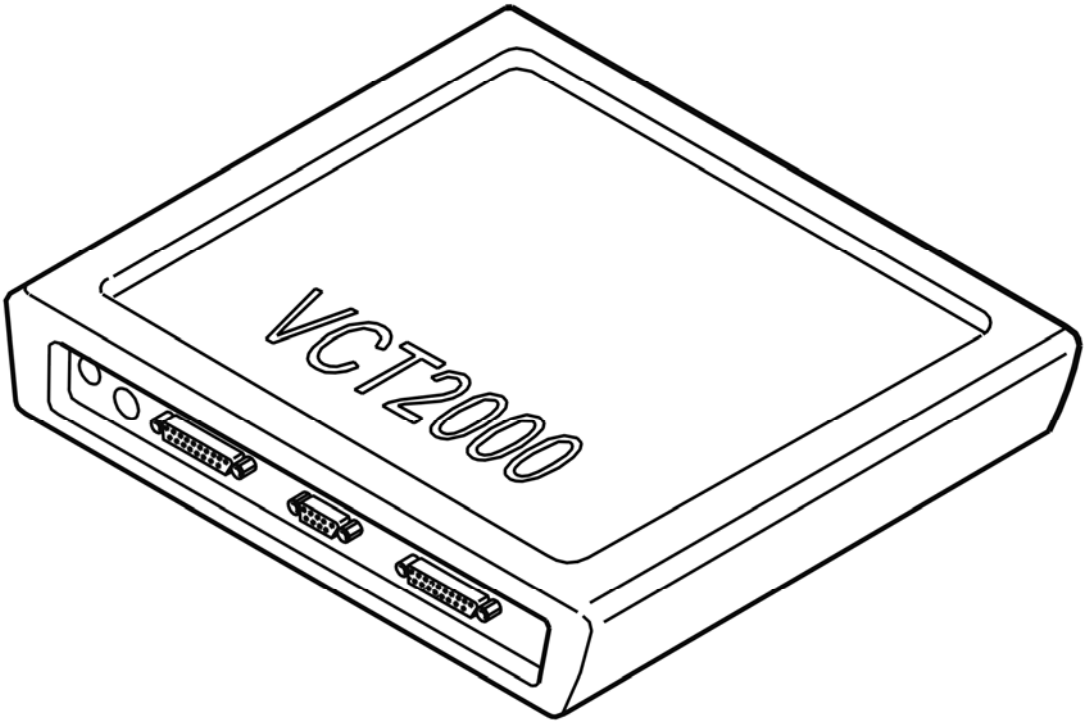

Fig. 155: Identifying VCT2000 Diagnostic Tool Symbol In VIDA
Courtesy of VOLVO CARS CORPORATION

PDM-001D: CENTRAL LOCKING BUTTON. FAULTY SIGNAL (2003-2012)

DIAGNOSTIC TROUBLE CODE INFORMATION

Condition

If the passenger door module (PDM) registers that the central locking button is depressed for more than 60 seconds, error code PDM-001D is set.

Substitute Value

- Nothing.

Possible Source

- Button depressed for more than 60 seconds.
- Defective central locking button.

Fault symptom[s]

- Cannot be operated from central-locking switch.

SIGNAL FAULTY

see **SIGNAL FAULTY**

PDM-0034: CONTROL, PASSENGER WINDOW. FAULTY SIGNAL (2005-2012)

DIAGNOSTIC TROUBLE CODE INFORMATION

Condition

If control unit registers that UP and DOWN signals to electric window lift on passenger door are active at the same time, diagnostic trouble code PDM-0034 is displayed.

Substitute Value

- Nothing.

Possible Source

- Electric window lift switch on passenger door is stuck in two positions.

Fault symptom[s]

- Electric window lift on passenger side does not work.

FAULTY SIGNAL

see **FAULTY SIGNAL**

PDM-0034: PASSENGER WINDOW CONTROL. SIGNAL FAULTY (2003-2004)

DIAGNOSTIC TROUBLE CODE INFORMATION

see **DIAGNOSTIC TROUBLE CODE INFORMATION**

FAULTY SIGNAL

see **FAULTY SIGNAL**

PDM-0035: CONTROL, PASSENGER WINDOW. FAULTY SIGNAL (2005-2012)

DIAGNOSTIC TROUBLE CODE INFORMATION

Condition

If control unit registers that electric window-lift switch on passenger door is activated for more than 60 seconds diagnostic trouble code PDM-0035 is displayed.

Substitute Value

- Nothing.

Possible Source

- Electric window lift switch on driver door has stuck in an activated position.

Fault symptom[s]

- Electric window lift on passenger side does not work.

FAULTY SIGNAL

see **FAULTY SIGNAL**

PDM-0035: PASSENGER WINDOW CONTROL. SIGNAL FAULTY (2003-2004)

DIAGNOSTIC TROUBLE CODE INFORMATION

see **DIAGNOSTIC TROUBLE CODE INFORMATION**

FAULTY SIGNAL

see **FAULTY SIGNAL**

PDM-003A: DOOR MIRROR LAMP. SIGNAL TOO LOW (2005-2012)

DIAGNOSTIC TROUBLE CODE (DTC) INFORMATION

Condition

Diagnostic trouble code (DTC) PDM-003A is stored if the control module registers that there is a short-circuit to ground in the signal supply to the mirror lamp, connected to the passenger door module, at the same time as the control module has requested the door mirror lamp to light.

Substitute Value

- None.

Possible Source

- Signal cable to the door mirror lamp, connected to passenger door module, short circuited to ground.

Fault symptom[s]

- Local lighting is not operating.

SIGNAL TOO LOW (2005, 2006)

CHECKING FAULTS

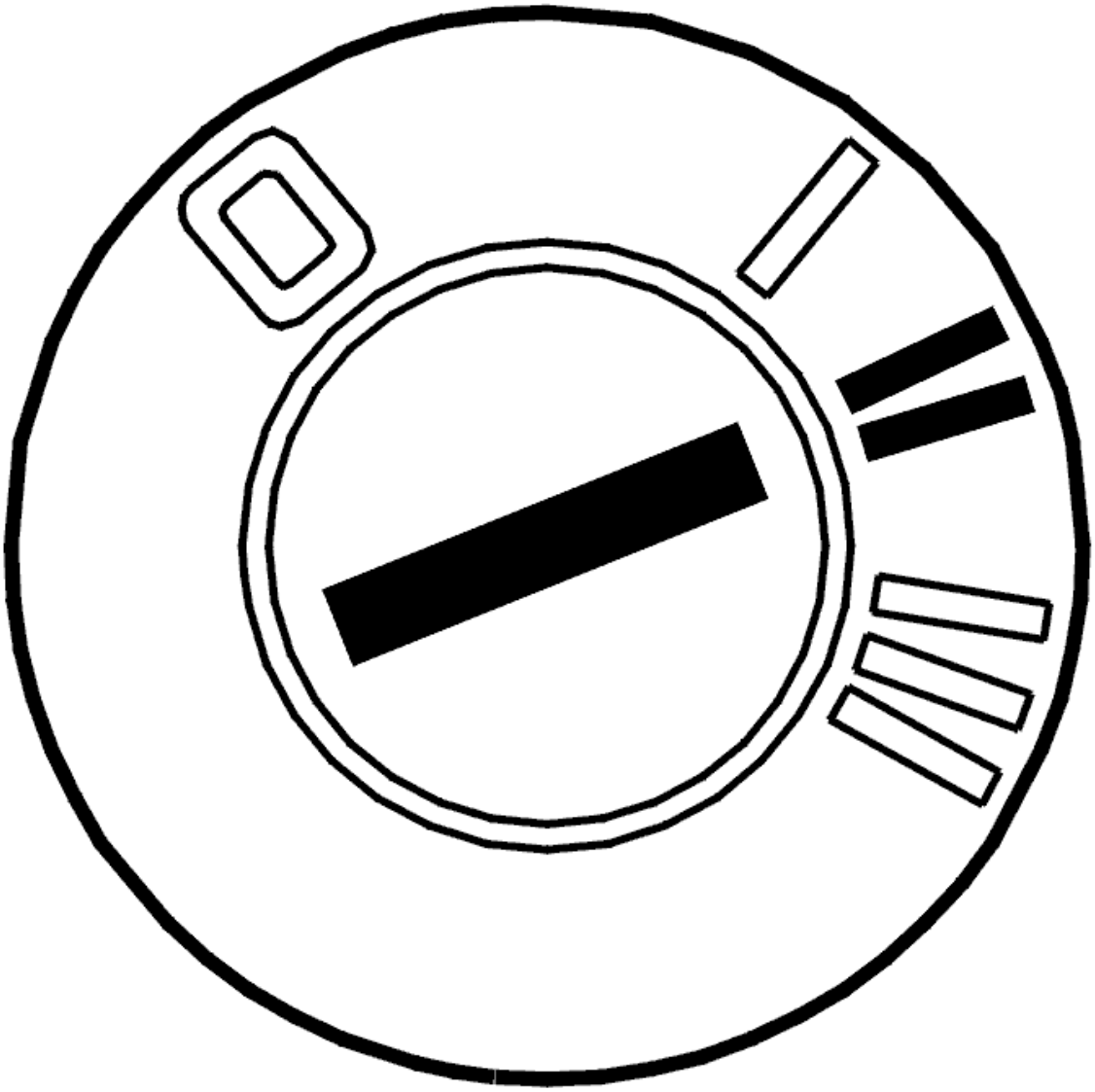

Fig. 156: Identifying Ignition ON
Courtesy of VOLVO CARS CORPORATION

- Ignition on.

  Check if the lamp in the power door mirror lights up and goes out.

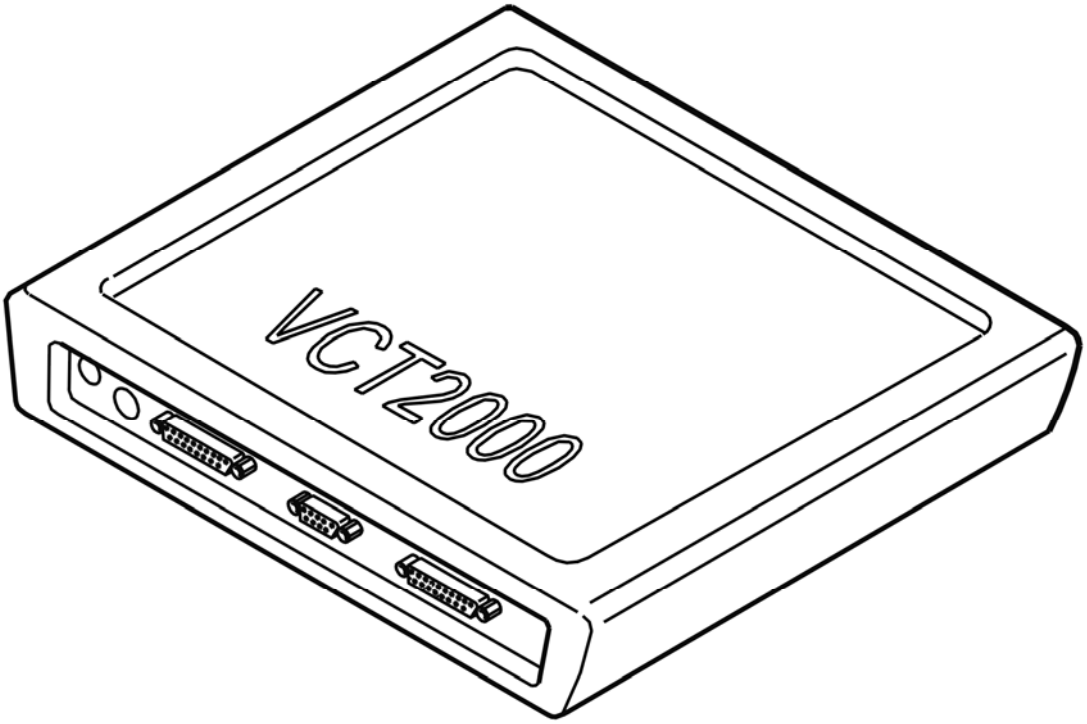

Fig. 157: Identifying VCT2000 Diagnostic Tool Symbol In VIDA
Courtesy of VOLVO CARS CORPORATION

Is the lamp in the power door mirror working?

- **YES**

  see: **INTERMITTENT FAULT**

- **NO**

  see: **CHECKING FOR A SHORT-CIRCUIT**

CHECKING FOR A SHORT-CIRCUIT

Check the cable between control module terminal #8B and power door mirror terminal #13. Check for a short-circuit to ground.

Check the ground lead between the control module terminal #10B and the power door mirror terminal #6.

Replace the cable if a fault is found.

Other information:

- see **CONNECTING THE BREAKOUT BOX**
- Replacing the driver's side door module. See **DRIVER DOOR MODULE (DDM), REPLACING**
- Replacing the passenger side door module. See **PASSENGER DOOR MODULE (PDM), REPLACING** .
- see **SIGNAL SPECIFICATION**
- see **CHECKING WIRING AND TERMINALS**

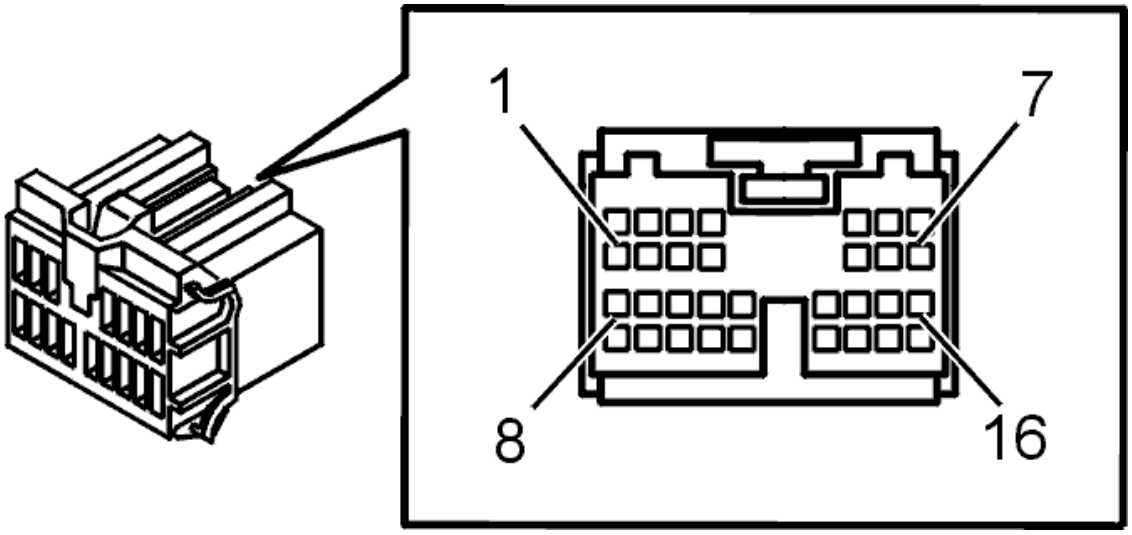

Fig. 158: Connector, Green (16- Pin)
Courtesy of VOLVO CARS CORPORATION

Were any faults found in the cable?

- **YES**

  see: **VERIFICATION**

- **NO**

  see: **REPLACING THE COMPONENT**

REPLACING THE COMPONENT

Check the bulb holder. Check for a short-circuit.

Remedy as necessary.

If no malfunction is found:Replace the bulb.

Other information

- see **BULB, GROUND LIGHTING, DOOR MIRROR, REPLACING**

- **Continue**

  see: **VERIFICATION**

INTERMITTENT FAULT

Check the control module and power door mirror connectors. Check for contact resistance and oxidation. Check for loose connections.

Check the cable between control module terminal #8B and power door mirror terminal #13. Check for an intermittent short-circuit to ground.

Check the ground lead between the control module terminal #10B and the power door mirror terminal #6.

Check the bulb holder and bulb if no fault was found.

Other information:

- see **CONNECTING THE BREAKOUT BOX**
- see **SIGNAL SPECIFICATION**
- see **BULB, GROUND LIGHTING, DOOR MIRROR, REPLACING**
- see **CHECKING WIRING AND TERMINALS**

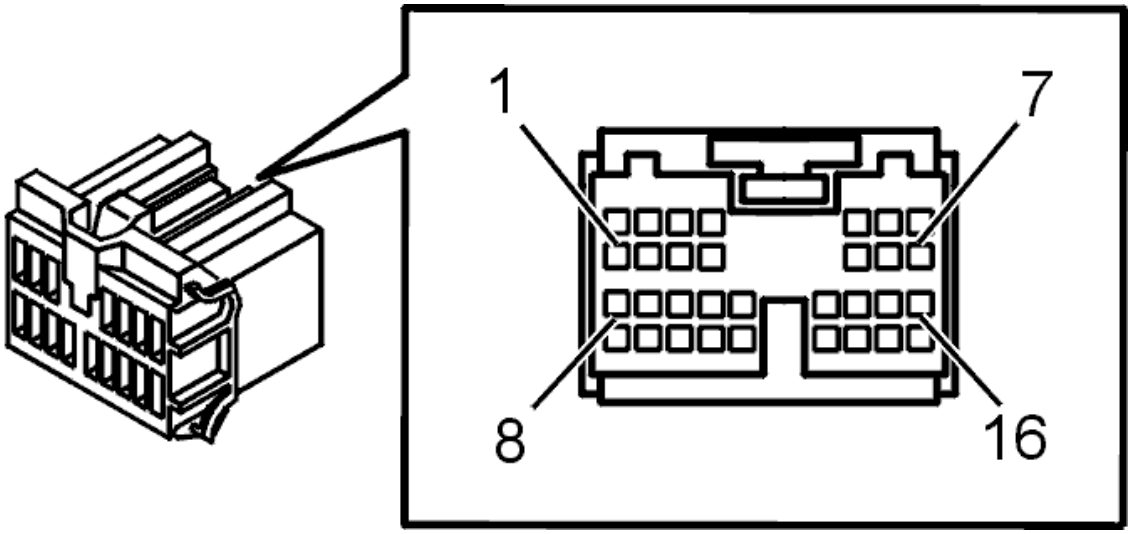

Fig. 159: Connector, Green (16- Pin)
Courtesy of VOLVO CARS CORPORATION

- **Continue**

  see: **INFORMATION**

VERIFICATION

VERIFICATION

HINT: After carrying out the repair, check that the fault has been remedied.

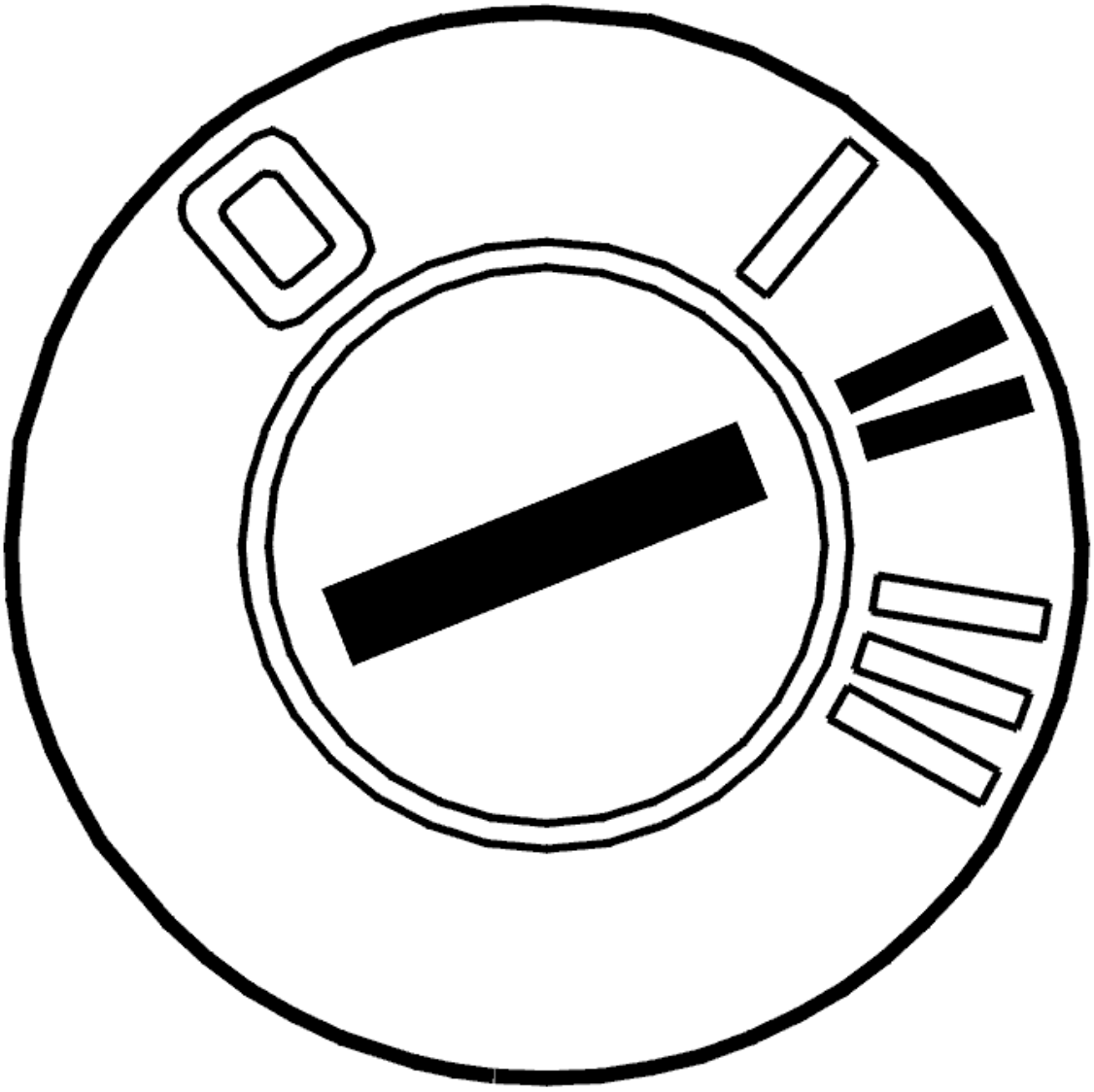

Fig. 160: Identifying Ignition ON
Courtesy of VOLVO CARS CORPORATION

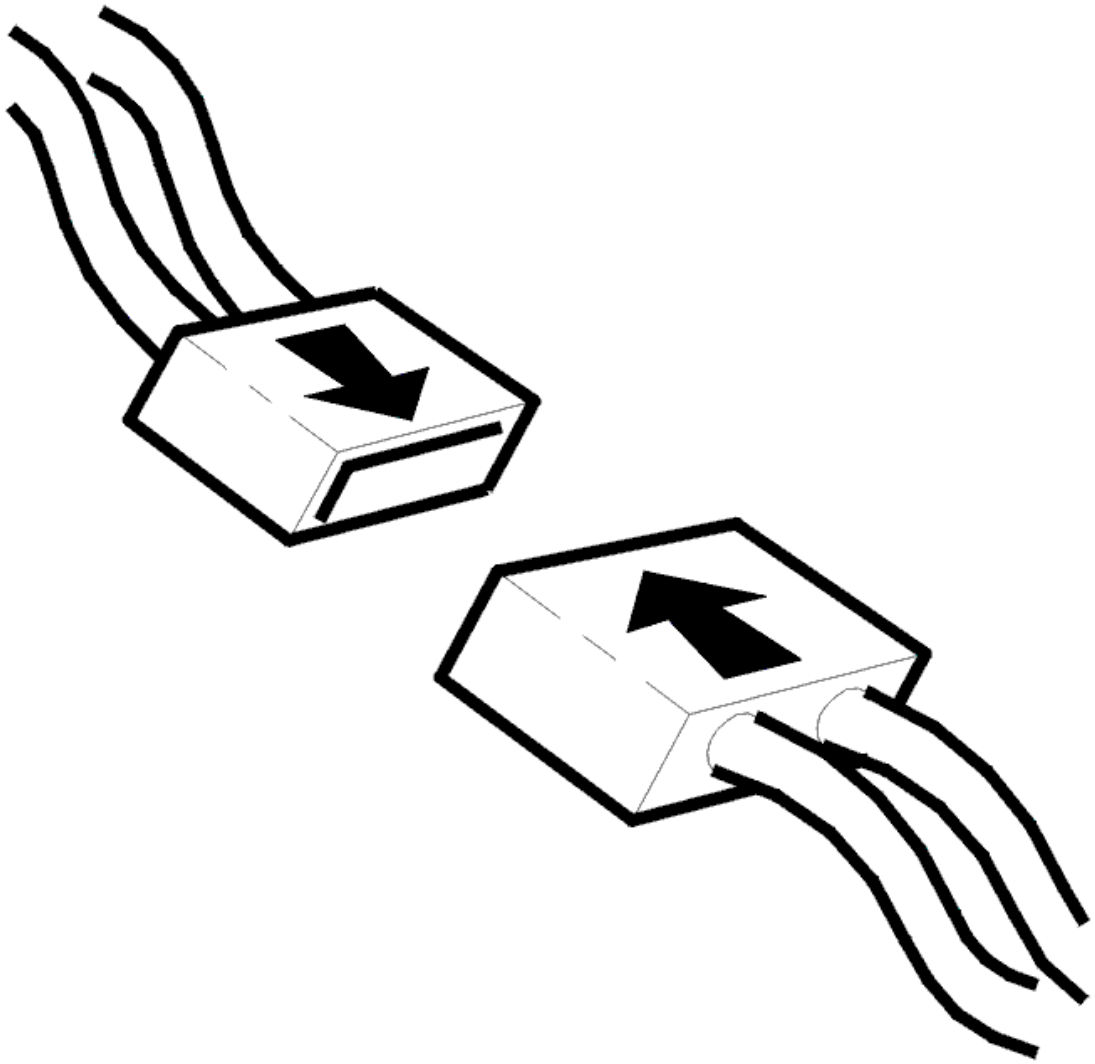

Fig. 161: Checking Connector
Courtesy of VOLVO CARS CORPORATION

- Ignition off
- Reconnect the components, connectors etc.
- Ignition on.

Check if the lamp in the power door mirror lights.

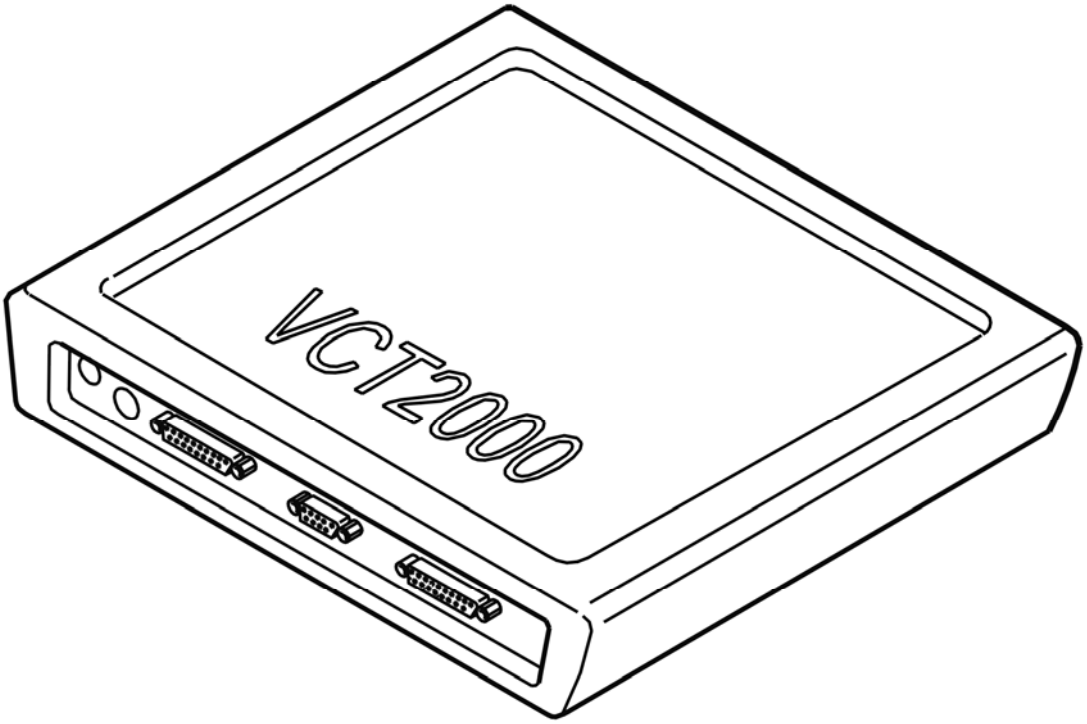

Fig. 162: Identifying VCT2000 Diagnostic Tool Symbol In VIDA
Courtesy of VOLVO CARS CORPORATION

Does the lamp in the power door mirror light?

- **YES**

  VERIFIED: Troubleshooting has been completed.

- **NO**

  see: **INFORMATION**

INFORMATION

FAULT-TRACING INFORMATION

The fault should have been detected and remedied. As this is not the case fault-tracing has failed.

Exit fault-tracing for this diagnostic trouble code (DTC) or make another attempt.

INFORMATION

FAULT-TRACING INFORMATION

If the fault is intermittent, do not verify fault-tracing if the fault does not recur.

It is possible to view the information again, or leave fault-tracing for this diagnostic trouble code (DTC).

SIGNAL TOO LOW (2007-2012)

CHECKING FAULTS

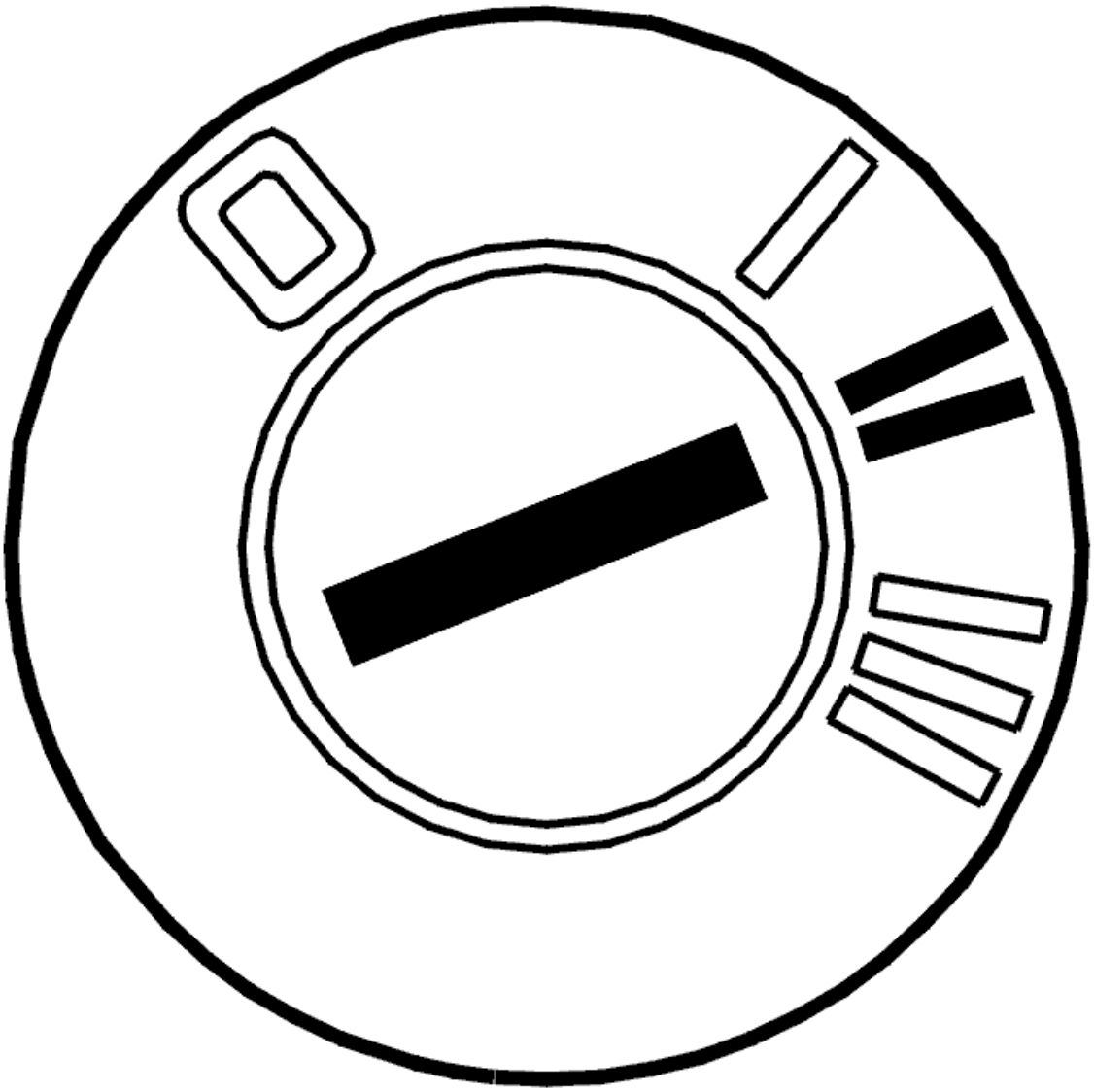

Fig. 163: Identifying Ignition ON
Courtesy of VOLVO CARS CORPORATION

- Ignition on.

  Check if the lamp in the power door mirror lights up and goes out.

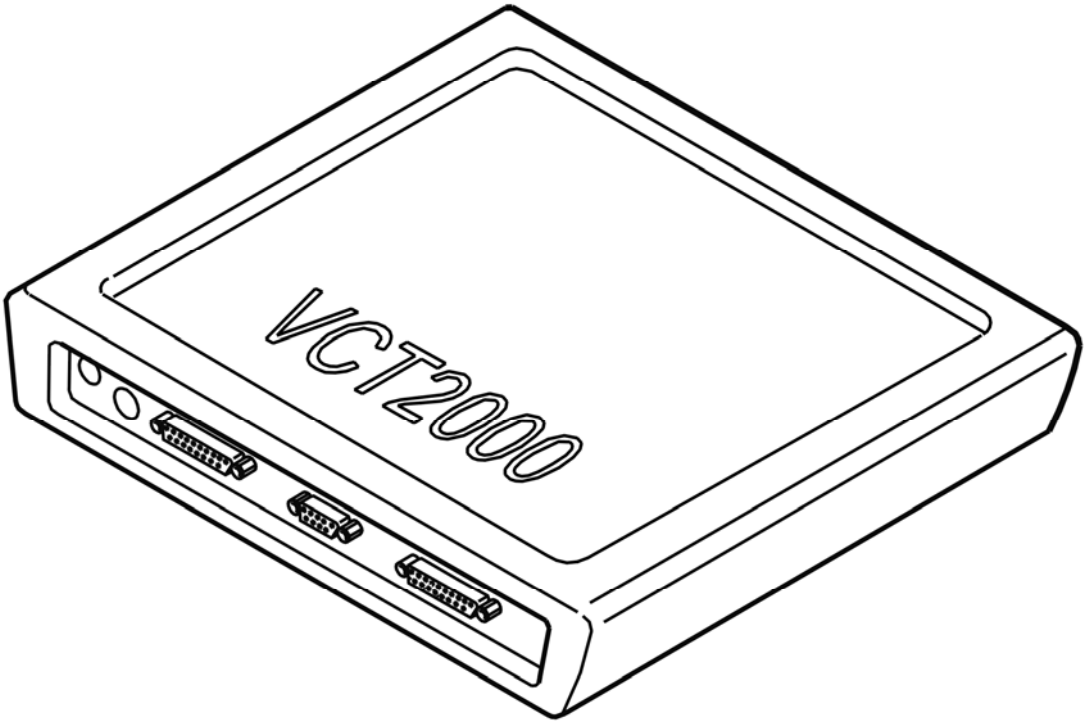

Fig. 164: Identifying VCT2000 Diagnostic Tool Symbol In VIDA
Courtesy of VOLVO CARS CORPORATION

Is the lamp in the power door mirror working?

- **YES**

  see: **INTERMITTENT FAULT**

- **NO**

  see: **CHECKING FOR A SHORT-CIRCUIT**

CHECKING FOR A SHORT-CIRCUIT

Check the cable between control module terminal #8B and power door mirror terminal #13. Check for a short-circuit to ground.

Check the ground lead between the control module terminal #10B and the power door mirror terminal #6.

Replace the cable if a fault is found.

Other information:

- see **CONNECTING THE BREAKOUT BOX**
- Replacing the driver's side door module. See **DRIVER DOOR MODULE (DDM), REPLACING**
- Replacing the passenger side door module. See **PASSENGER DOOR MODULE (PDM), REPLACING** .
- see **SIGNAL SPECIFICATION**
- see **CHECKING WIRING AND TERMINALS**

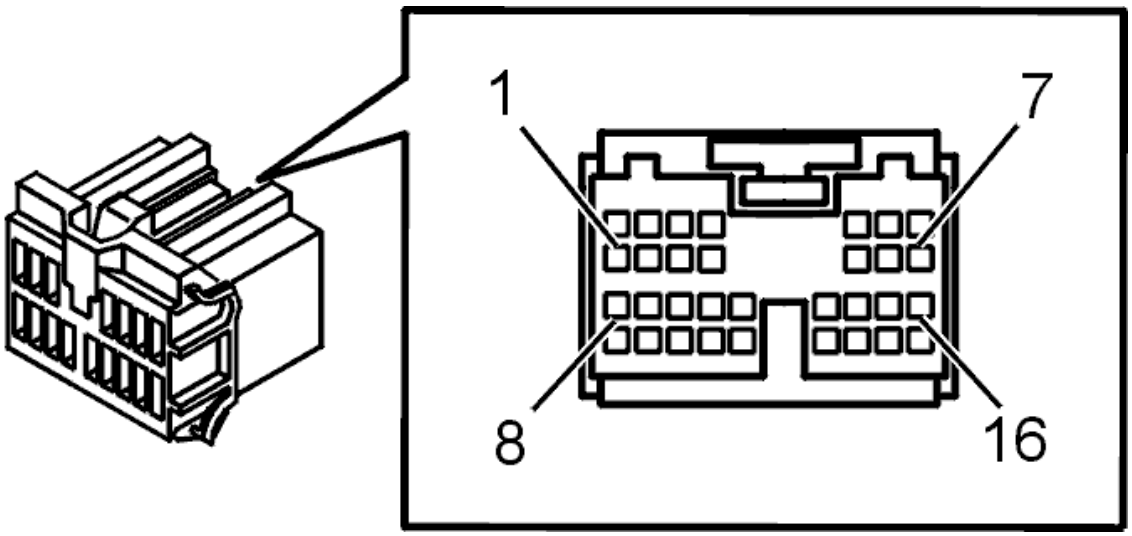

Fig. 165: Connector, Green (16- Pin)
Courtesy of VOLVO CARS CORPORATION

Were any faults found in the cable?

- **YES**

  see: **VERIFICATION**

- **NO**

  see: **REPLACING THE COMPONENT**

REPLACING THE COMPONENT

Check the bulb holder. Check for a short-circuit.

Remedy as necessary.

If no malfunction is found:Replace the bulb.

Other information

- see **BULB, DOOR MIRROR, GROUND LIGHTING**

- **Continue**

  see: **VERIFICATION**

INTERMITTENT FAULT

Check the control module and power door mirror connectors. Check for contact resistance and oxidation. Check for loose connections.

Check the cable between control module terminal #8B and power door mirror terminal #13. Check for an intermittent short-circuit to ground.

Check the ground lead between the control module terminal #10B and the power door mirror terminal #6.

Check the bulb holder and bulb if no fault was found.

Other information:

- see **CONNECTING THE BREAKOUT BOX**
- see **SIGNAL SPECIFICATION**
- see **BULB, DOOR MIRROR, GROUND LIGHTING**
- see **CHECKING WIRING AND TERMINALS**

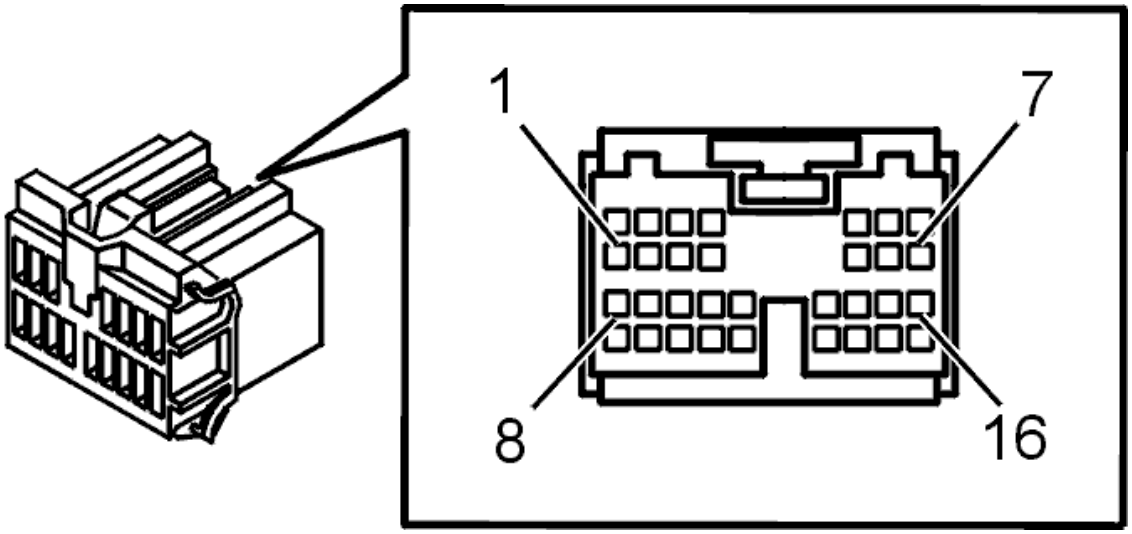

Fig. 166: Connector, Green (16- Pin)
Courtesy of VOLVO CARS CORPORATION

- **Continue**

  see: **INFORMATION**

VERIFICATION

VERIFICATION

HINT: After carrying out the repair, check that the fault has been remedied.

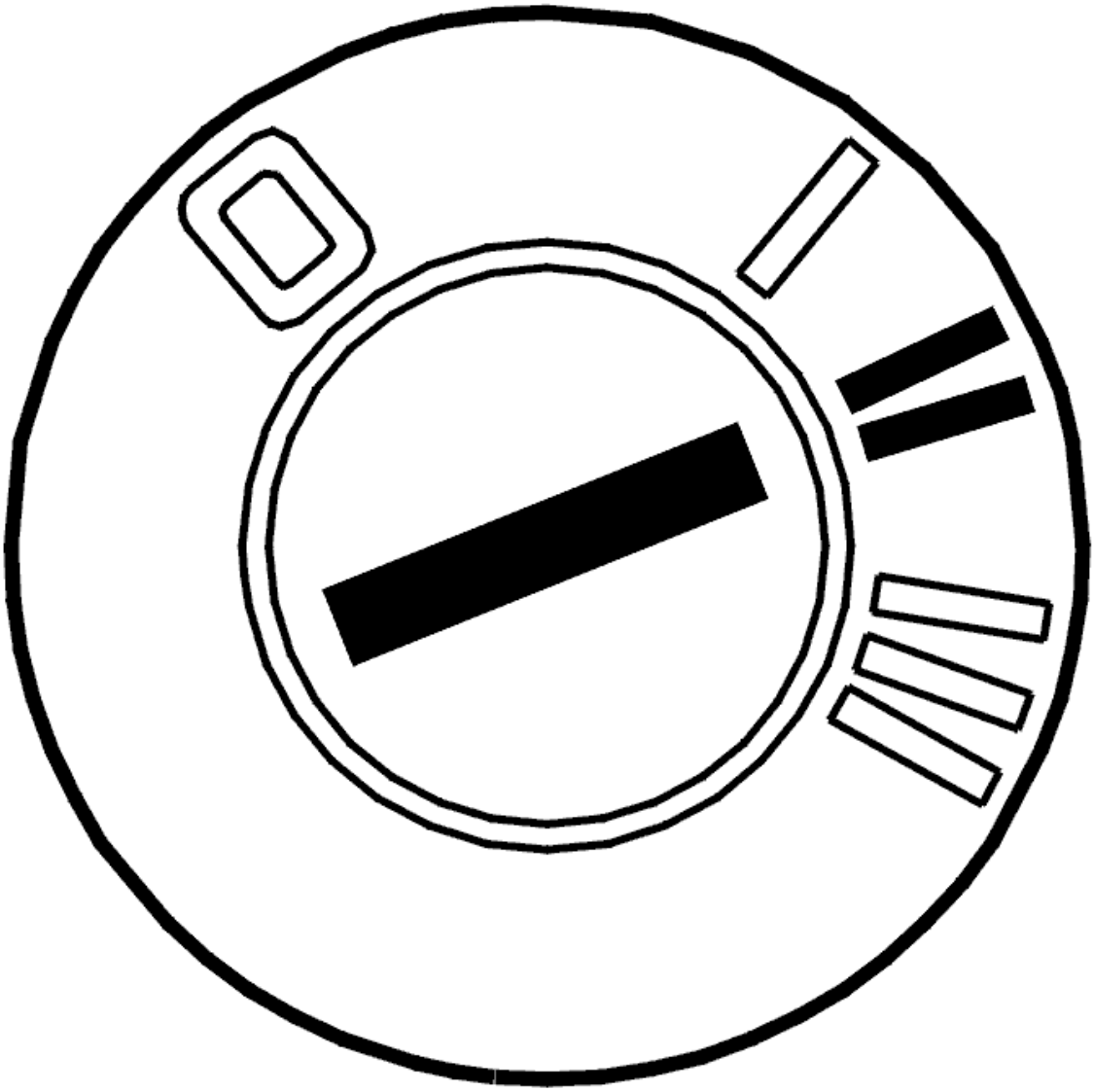

Fig. 167: Identifying Ignition ON
Courtesy of VOLVO CARS CORPORATION

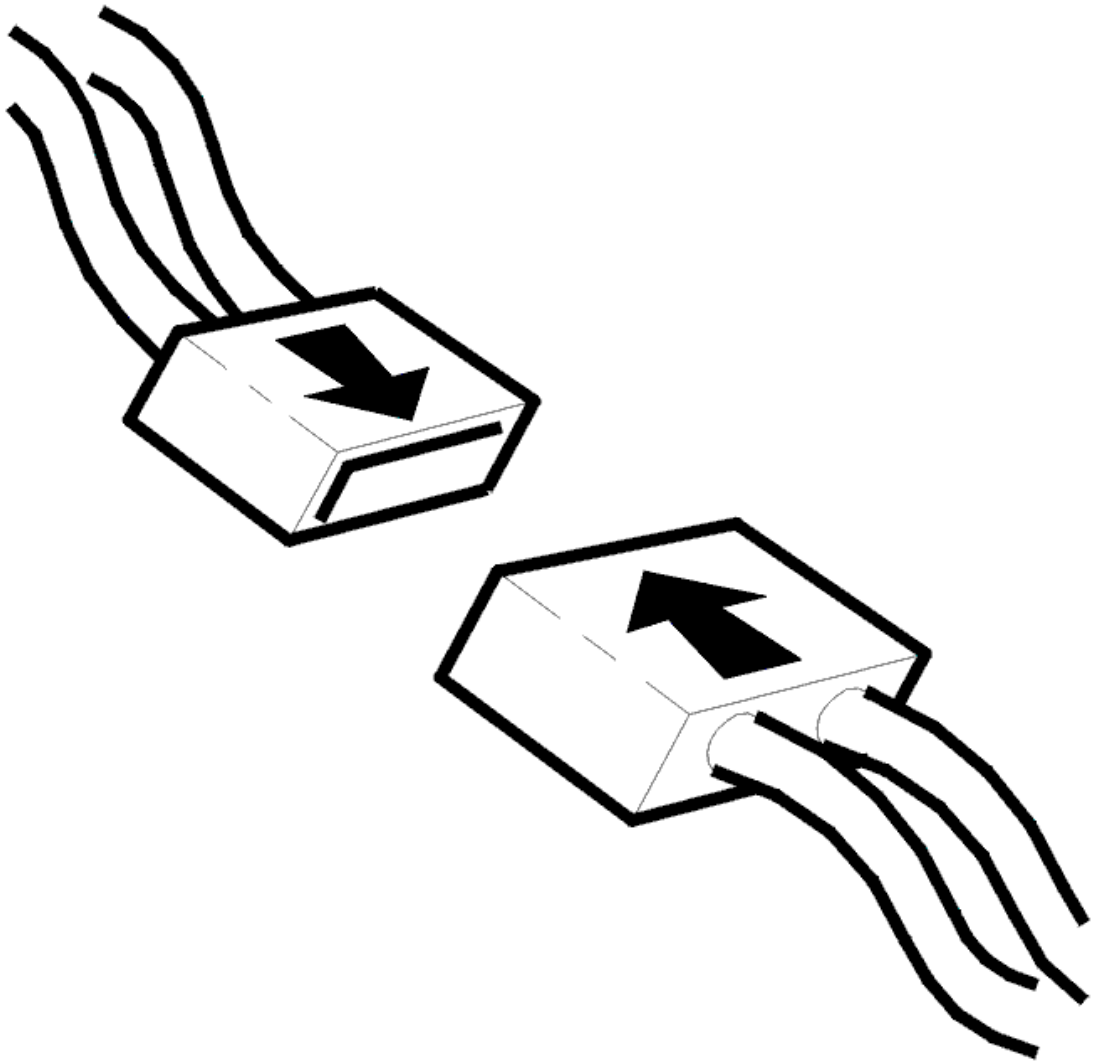

Fig. 168: Checking Connector
Courtesy of VOLVO CARS CORPORATION

- Ignition off
- Reconnect the components, connectors etc.
- Ignition on.

Check if the lamp in the power door mirror lights.

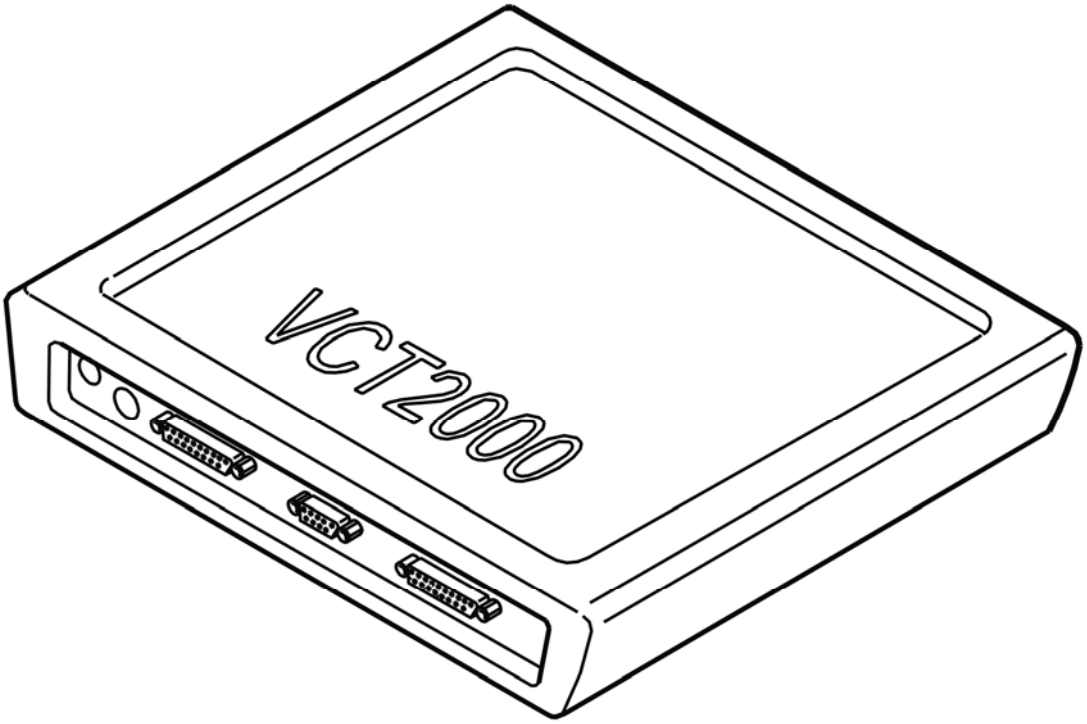

Fig. 169: Identifying VCT2000 Diagnostic Tool Symbol In VIDA
Courtesy of VOLVO CARS CORPORATION

Does the lamp in the power door mirror light?

- **YES**

  VERIFIED: Troubleshooting has been completed.

- **NO**

  see: **INFORMATION**

INFORMATION

FAULT-TRACING INFORMATION

The fault should have been detected and remedied. As this is not the case fault-tracing has failed.

Exit fault-tracing for this diagnostic trouble code (DTC) or make another attempt.

INFORMATION

FAULT-TRACING INFORMATION

If the fault is intermittent, do not verify fault-tracing if the fault does not recur.

It is possible to view the information again, or leave fault-tracing for this diagnostic trouble code (DTC).

PDM-003A: DOOR MIRROR LAMP. SIGNAL TOO LOW (2003-2004)

DIAGNOSTIC TROUBLE CODE (DTC) INFORMATION

see **DIAGNOSTIC TROUBLE CODE (DTC) INFORMATION**

SIGNAL TOO LOW

CHECKING FOR PERMANENT OR INTERMITTENT FAULTS

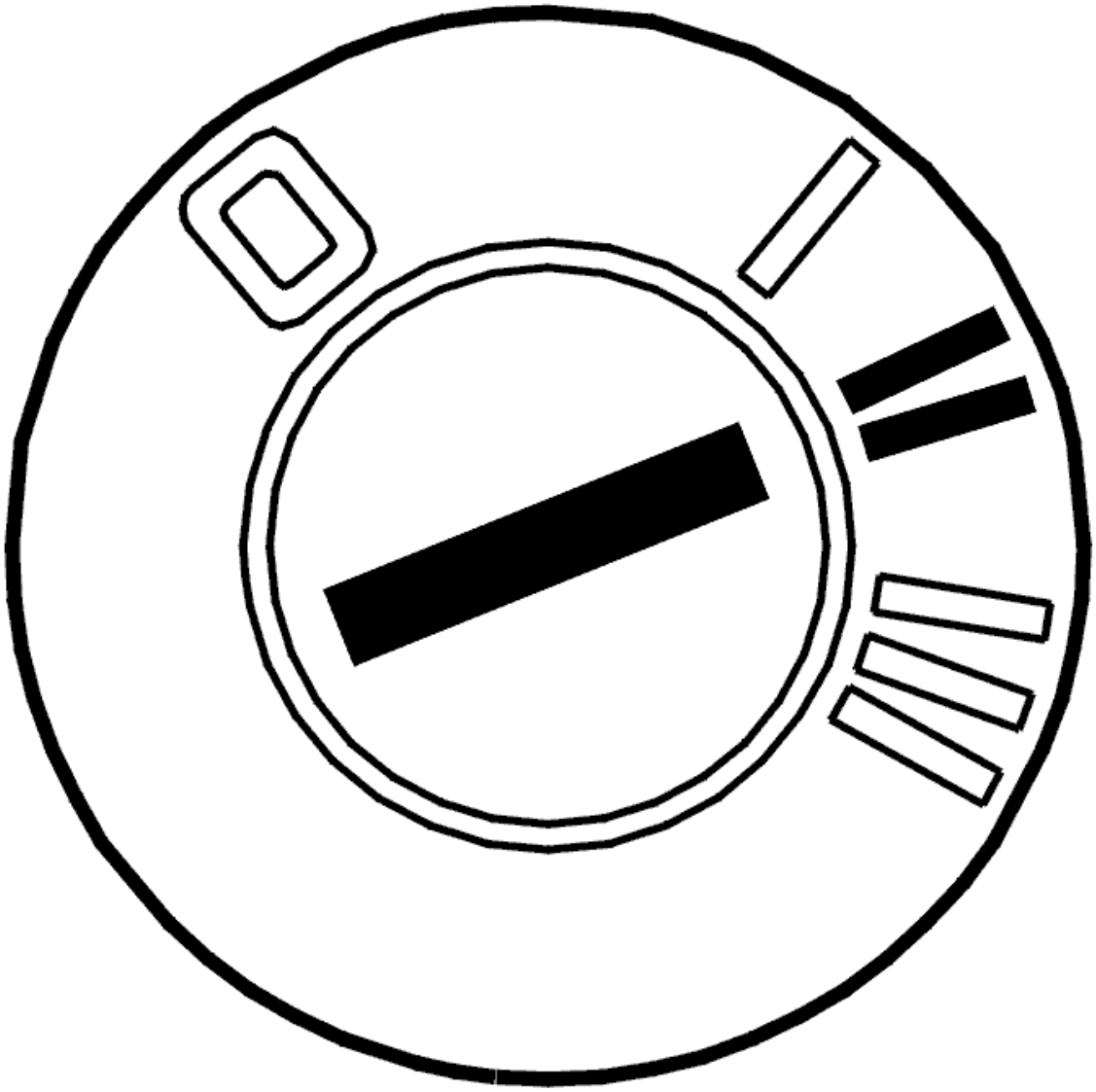

Fig. 170: Identifying Ignition ON
Courtesy of VOLVO CARS CORPORATION

- Ignition on.

  Check if the lamp in the power door mirror lights up and goes out.

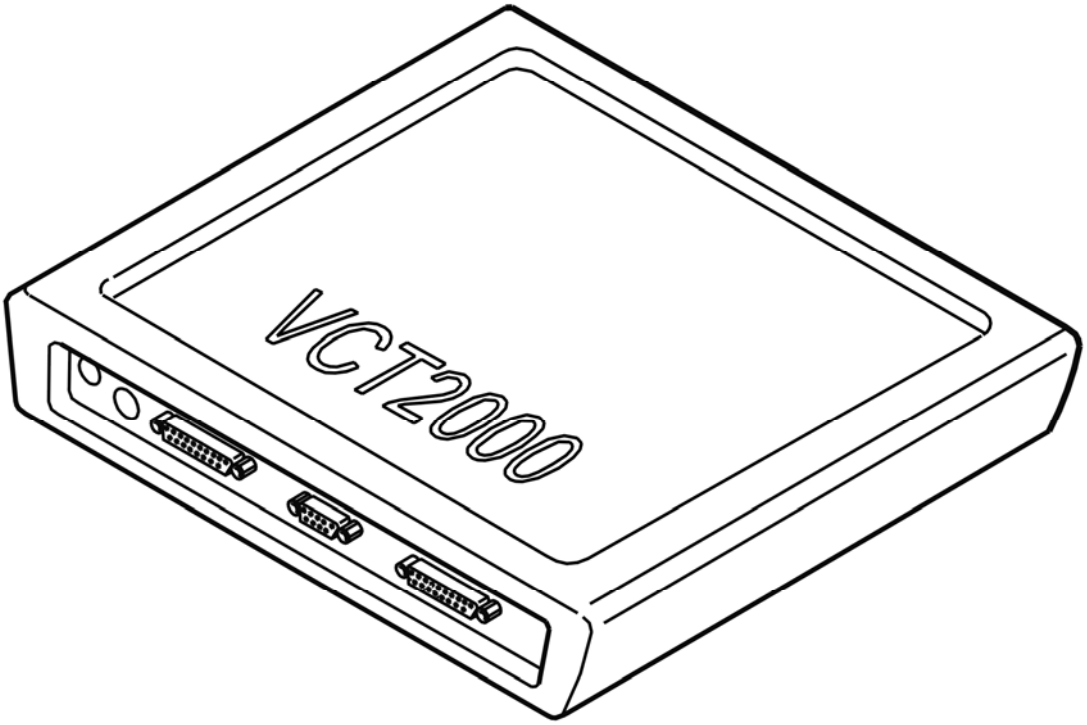

Fig. 171: Identifying VCT2000 Diagnostic Tool Symbol In VIDA
Courtesy of VOLVO CARS CORPORATION

Is the lamp in the power door mirror working?

- **YES**

  see: **INTERMITTENT FAULT**

- **NO**

  see: **CHECKING FOR A SHORT-CIRCUIT**

CHECKING FOR A SHORT-CIRCUIT

Check the cable between control module terminal #8B and power door mirror terminal #13. Check for a short-circuit to ground.

Check the ground lead between the control module terminal #10B and the power door mirror terminal #6.

Replace the cable if a fault is found.

Other information:

- To connect the breakout box, see **CONNECTING THE BREAKOUT BOX**
- Replacing the driver's side door module. See **DRIVER DOOR MODULE (DDM), REPLACING**
- Replacing the passenger side door module. See **PASSENGER DOOR MODULE (PDM), REPLACING** .
- For information about signals, see **SIGNAL SPECIFICATION**
- see **CHECKING WIRING AND TERMINALS** .

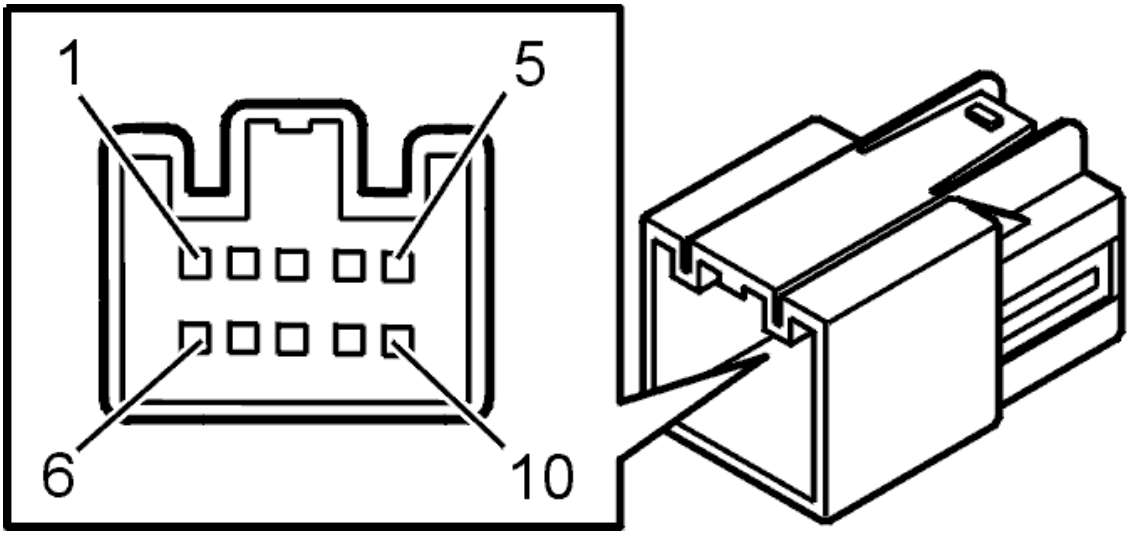

Fig. 172: Identifying 10--Pin Power Door Mirror Connector Terminal
Courtesy of VOLVO CARS CORPORATION

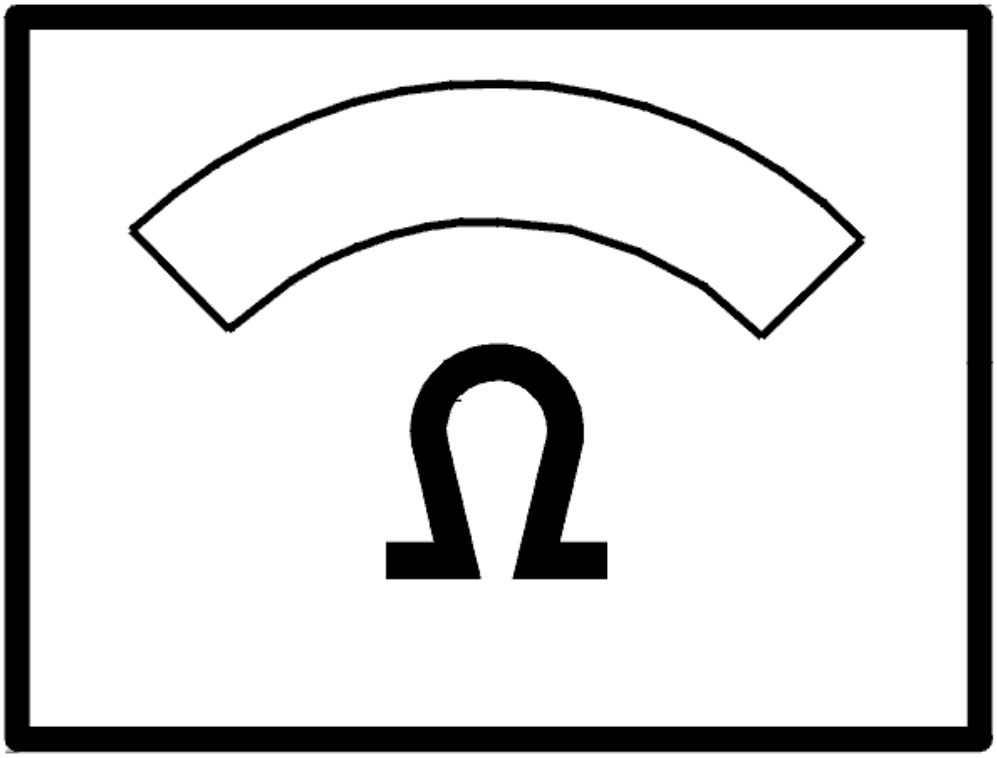

Fig. 173: Identifying Ohm Meter
Courtesy of VOLVO CARS CORPORATION

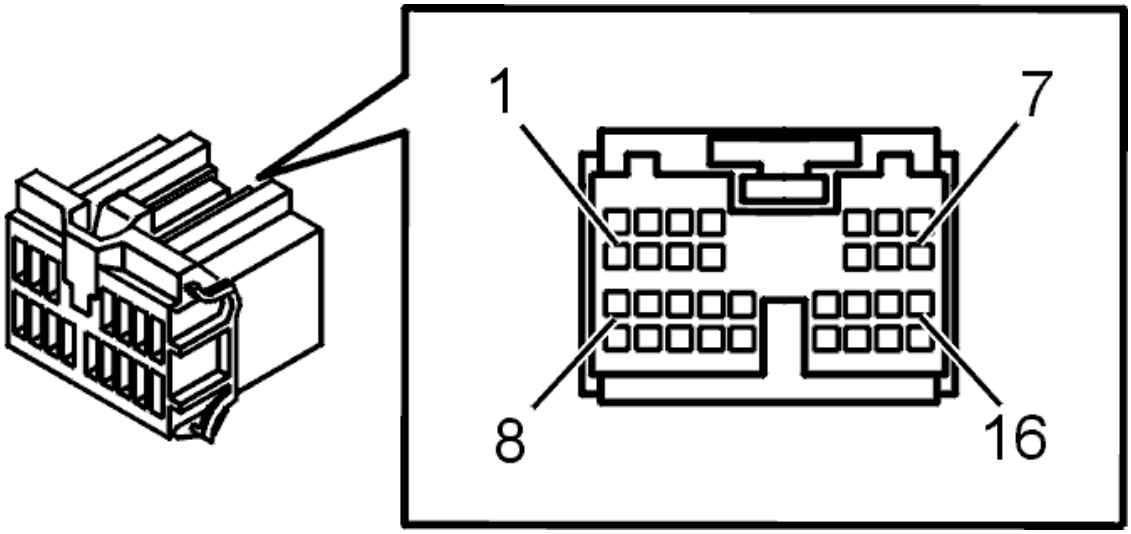

Fig. 174: Connector, Green (16- Pin)
Courtesy of VOLVO CARS CORPORATION

Were any faults found in the cable?

- **YES**

  see: **VERIFICATION**

- **NO**

  see: **REPLACING THE COMPONENT**

REPLACING THE COMPONENT

Check that there are no short circuits in the bulb holder.

Remedy as necessary.

If no fault is found, replace the lamp in the power door mirror according to **BULB, GROUND LIGHTING, DOOR MIRROR, REPLACING** .

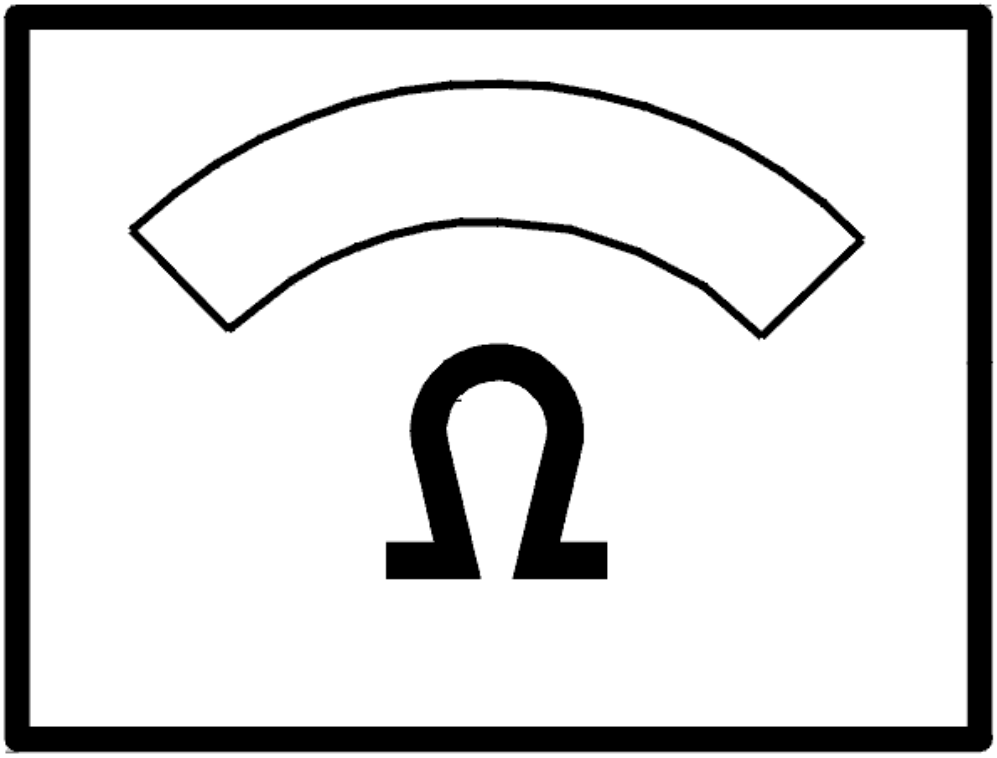

Fig. 175: Identifying Ohm Meter
Courtesy of VOLVO CARS CORPORATION

- **Continue**

  see: **VERIFICATION**

INTERMITTENT FAULT

Check the control module and power door mirror connectors. Check for contact resistance, oxidation and loose connections.

Check the cable between control module terminal #8B and power door mirror terminal #13. Check for an intermittent short-circuit to ground.

Check the ground lead between the control module terminal #10B and the power door mirror terminal #6.

Check the bulb holder and bulb if no fault was found.

Other information:

- To connect the breakout box, see **CONNECTING THE BREAKOUT BOX**
- For further information about signals and other values, see **SIGNAL SPECIFICATION**
- To access and replace the lamp and bulb holder, see **BULB, GROUND LIGHTING, DOOR MIRROR, REPLACING**
- see **CHECKING WIRING AND TERMINALS** .

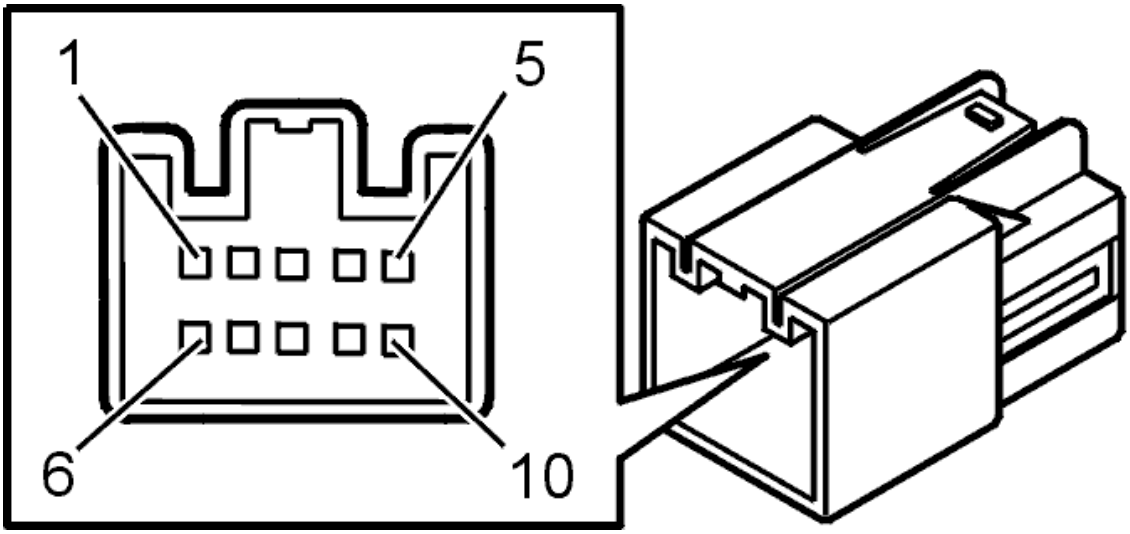

Fig. 176: Identifying 10--Pin Power Door Mirror Connector Terminal
Courtesy of VOLVO CARS CORPORATION

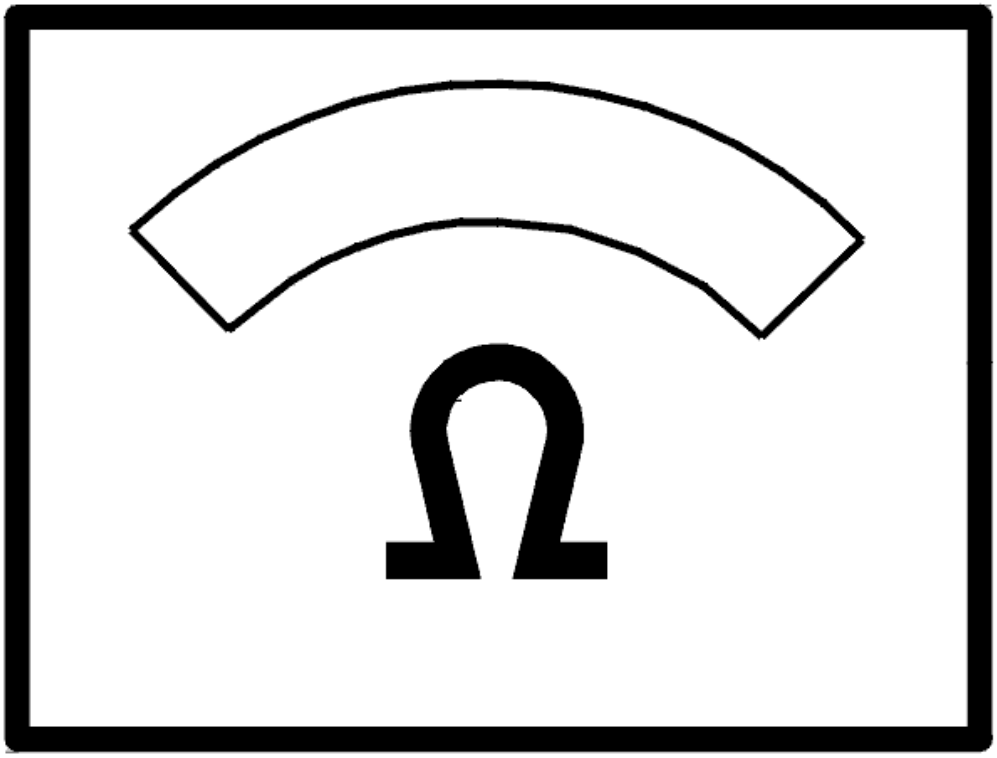

Fig. 177: Identifying Ohm Meter
Courtesy of VOLVO CARS CORPORATION

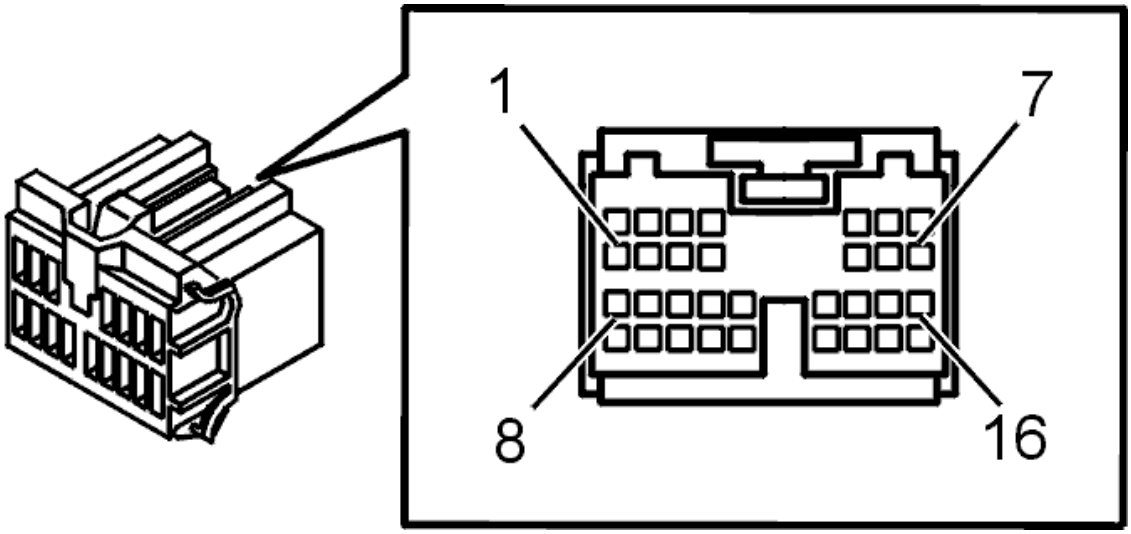

Fig. 178: Connector, Green (16- Pin)
Courtesy of VOLVO CARS CORPORATION

- **Continue**

  see: **INFORMATION**

VERIFICATION

VERIFICATION

HINT: After carrying out the repair, check that the fault has been remedied.

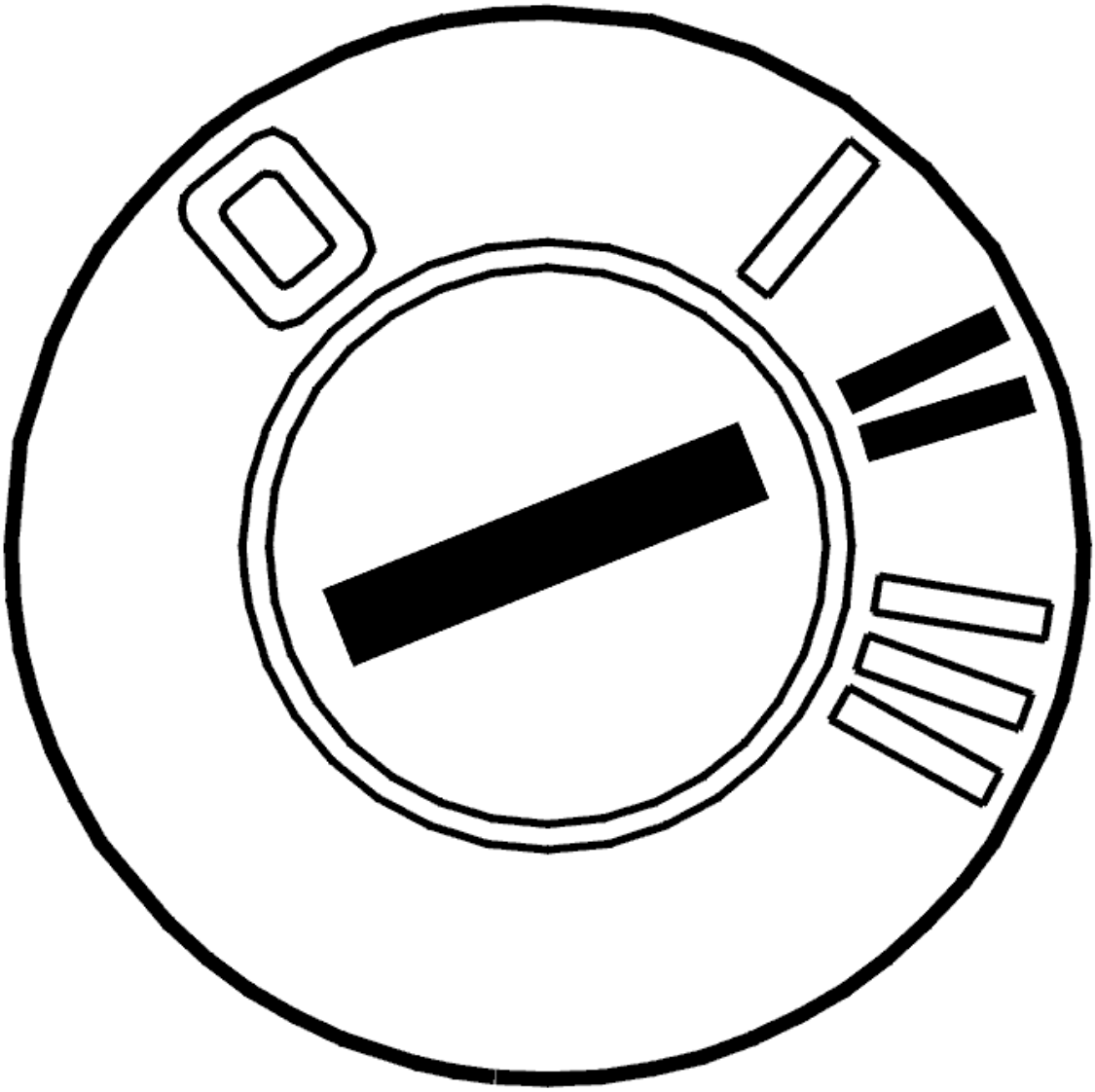

Fig. 179: Identifying Ignition ON
Courtesy of VOLVO CARS CORPORATION

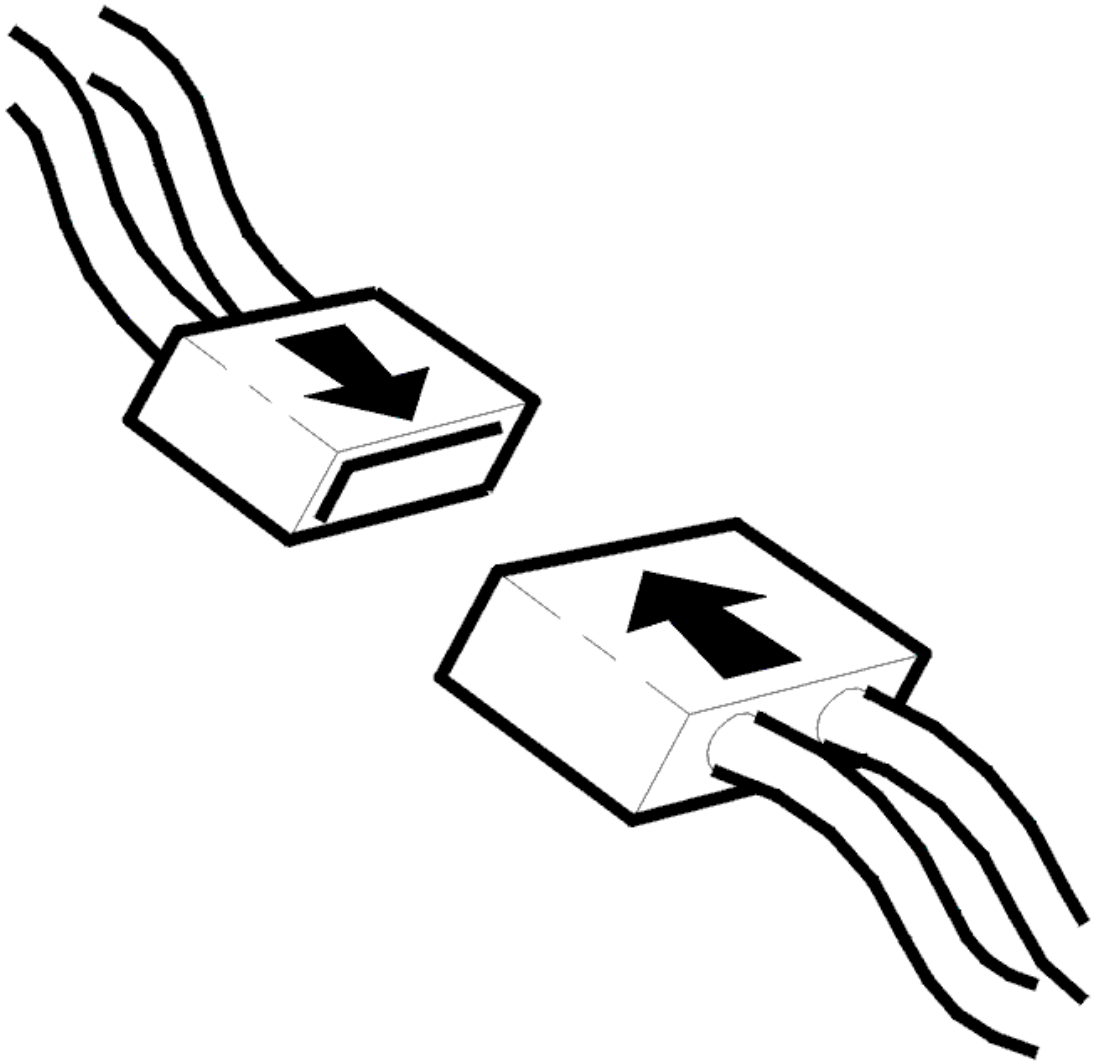

Fig. 180: Checking Connector
Courtesy of VOLVO CARS CORPORATION

- Ignition off
- Reconnect the components, connectors etc.
- Ignition on.

Check if the lamp in the power door mirror lights.

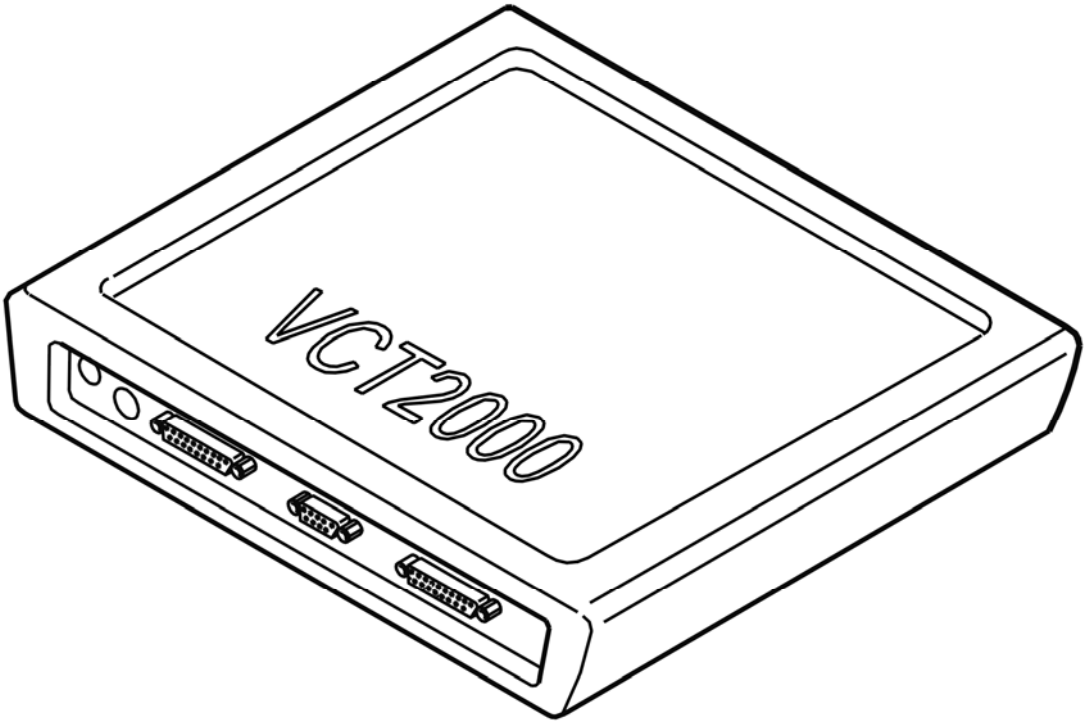

Fig. 181: Identifying VCT2000 Diagnostic Tool Symbol In VIDA
Courtesy of VOLVO CARS CORPORATION

Does the lamp in the power door mirror light?

- **YES**

  VERIFIED: Troubleshooting has been completed.

- **NO**

  see: **INFORMATION**

INFORMATION

FAULT-TRACING INFORMATION

The fault should have been detected and remedied. As this is not the case fault-tracing has failed.

Exit fault-tracing for this diagnostic trouble code (DTC) or make another attempt.

INFORMATION

FAULT-TRACING INFORMATION

If the fault is intermittent, do not verify fault-tracing if the fault does not recur.

It is possible to view the information again, or leave fault-tracing for this diagnostic trouble code (DTC).

PDM-003C: POWER SUPPLY. SIGNAL TOO LOW (2003-2004)

DIAGNOSTIC TROUBLE CODE INFORMATION

Condition

If control unit registers that power supply is too low compared with supply to CEM, diagnostic trouble code PDM-003C is displayed.

Substitute Value

- Nothing.

Possible Source

- Supply voltage too low.

Fault symptom[s]

- Electric window lift on passenger side does not work
- Automatic window closer does not work
- Central locking does not work.

SIGNAL TOO LOW

see **SIGNAL TOO LOW**

PDM-003E: CONTROL MODULE. SIGNAL TOO HIGH (2003-2004)

DIAGNOSTIC TROUBLE CODE INFORMATION

Condition

If control unit registers that a signal has not been updated within the specified time, diagnostic trouble code PDM-003E is displayed.

Substitute Value

- Nothing.

Possible Source

- Internal fault in software.

Fault symptom[s]

- Electric window lift does not work
- External rear-view mirror operation does not work
- Mist on windows and/or external rear-view mirrors.

SIGNAL TOO HIGH

REPLACING THE COMPONENT

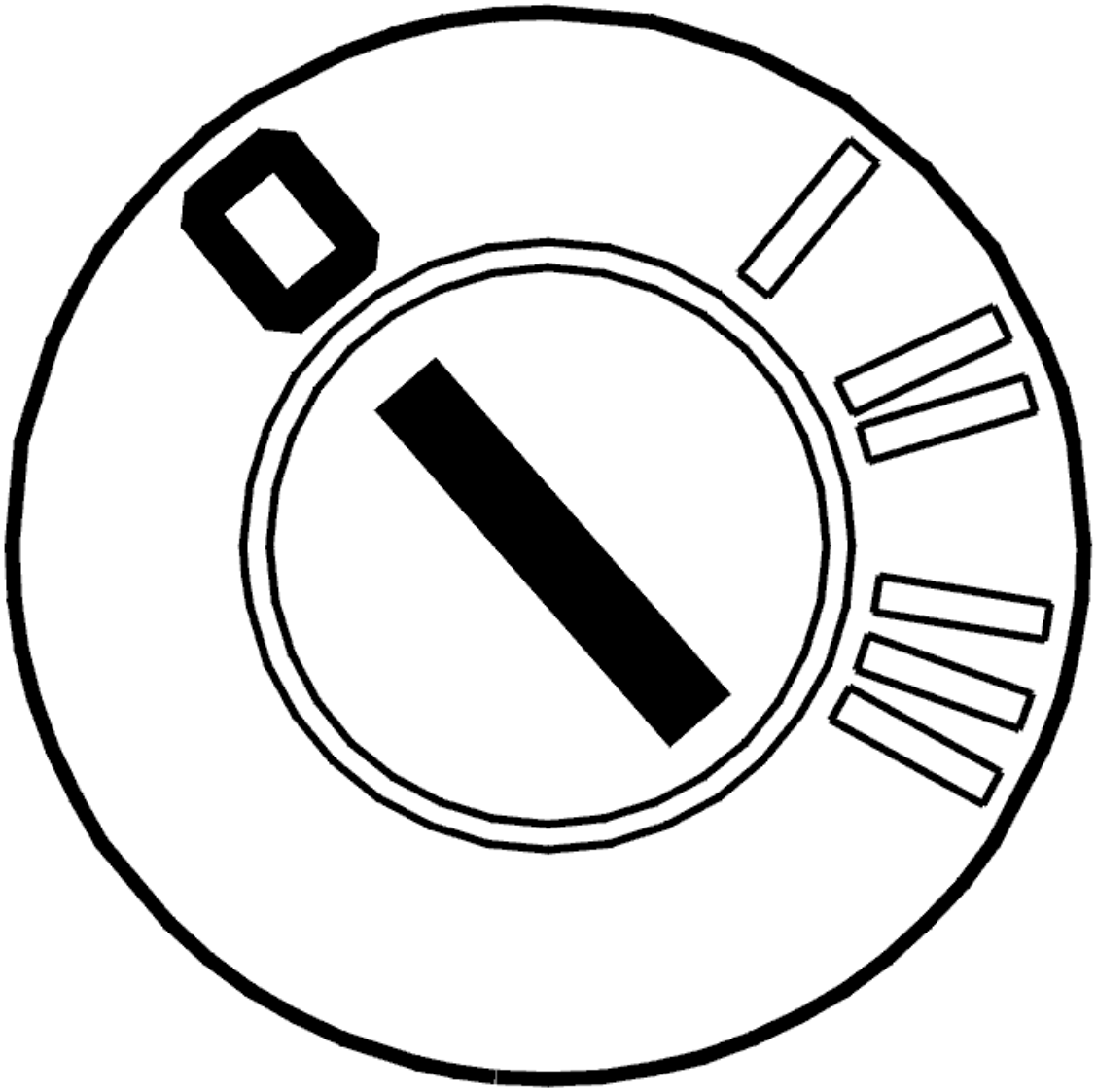

Fig. 182: Identifying Ignition OFF
Courtesy of VOLVO CARS CORPORATION

- Ignition off.

The passenger door module (PDM) has registered an internal fault.

NOTE: A new control module is delivered without software. The control module must be programmed when it has been replaced.

Other information:

- Replacing the driver's side door module. See **DRIVER DOOR MODULE (DDM), REPLACING**
- Replacing the passenger side door module. See **PASSENGER DOOR MODULE (PDM), REPLACING** .

After replacing the control module the window position must be initialized.

Ignition on.

Move the window to its upper limit position using manual control.

Initialize the window.

From model year 2003 inclusive, the window will lower approximately 10 centimeters and then close again during initialization.

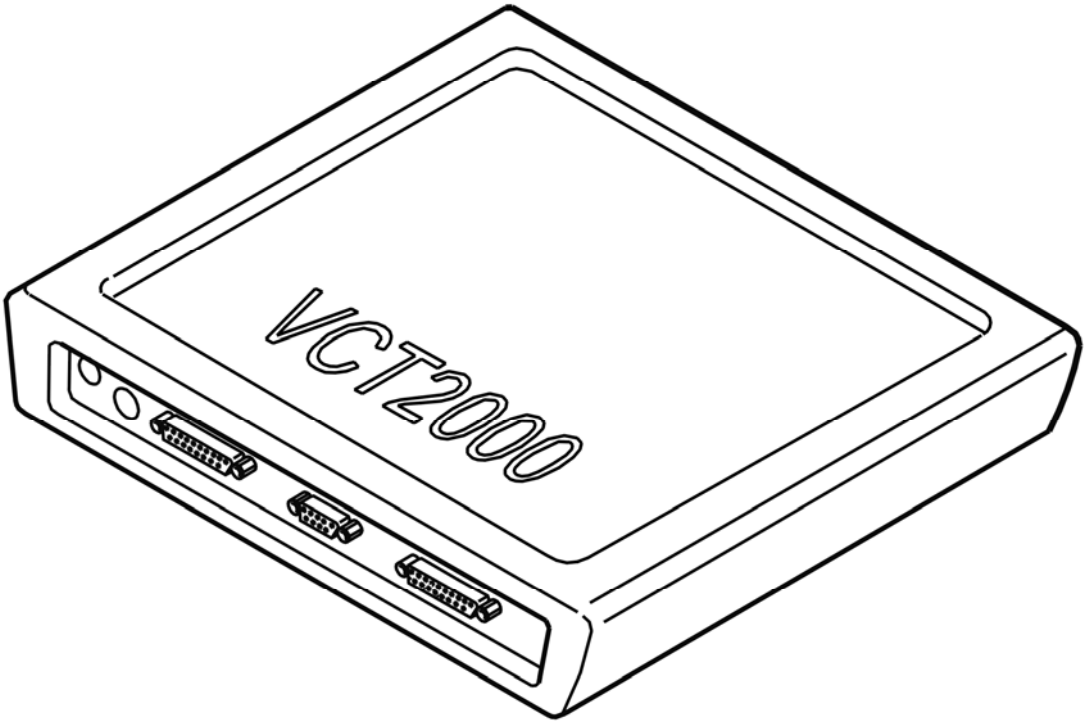

Fig. 183: Identifying VCT2000 Diagnostic Tool Symbol In VIDA
Courtesy of VOLVO CARS CORPORATION

PDM-003E: CONTROL MODULE. SIGNAL TOO HIGH (2005-2012)

DIAGNOSTIC TROUBLE CODE INFORMATION

see **DIAGNOSTIC TROUBLE CODE INFORMATION**

SIGNAL TOO HIGH

REPLACING THE COMPONENT

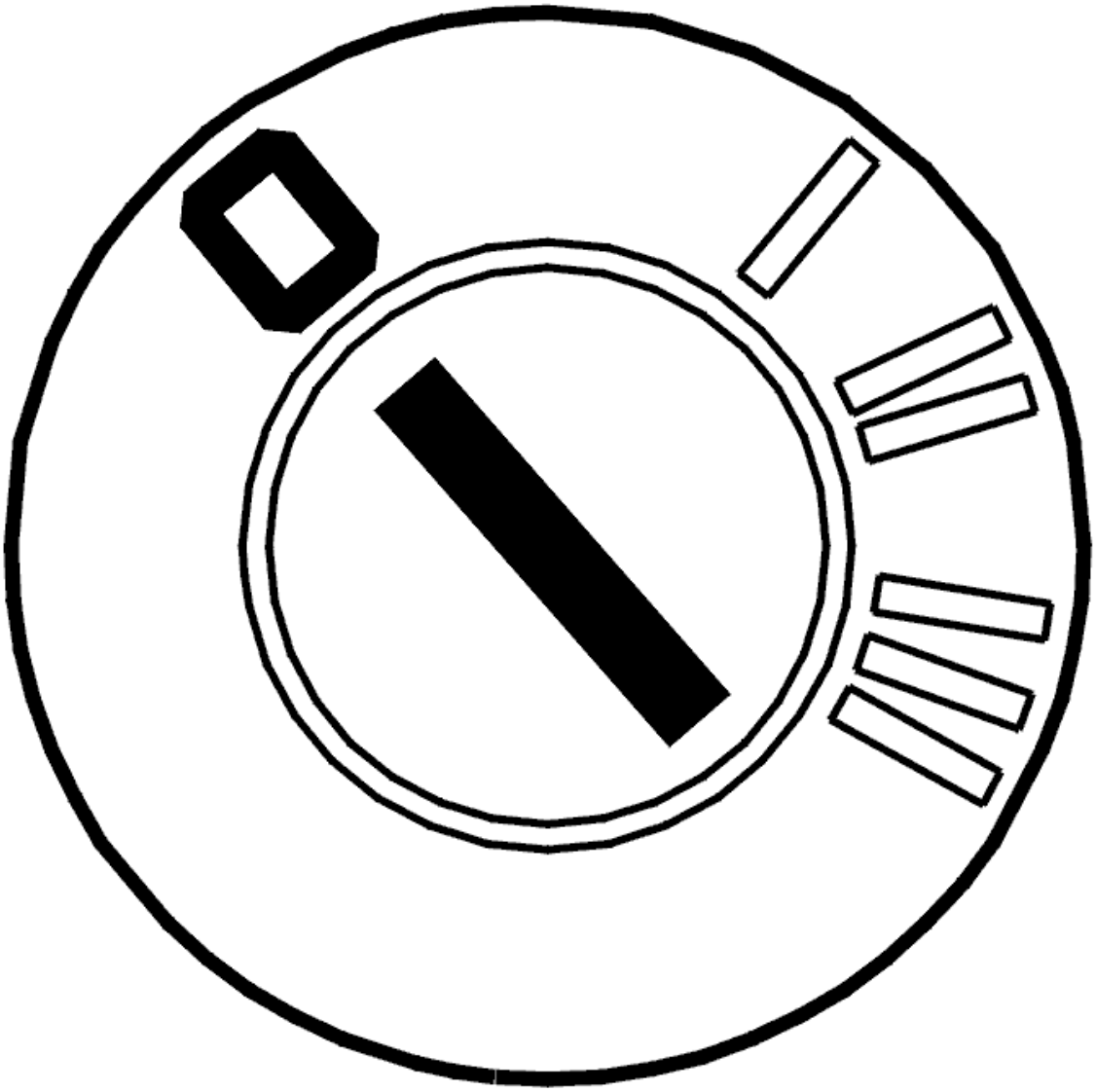

Fig. 184: Identifying Ignition OFF
Courtesy of VOLVO CARS CORPORATION

- Ignition off.

The passenger door module (PDM) has registered an internal fault.

NOTE: **A new control module is delivered without software. The control module must be programmed in order to function after replacement.**

After replacing the control module the window position must be initialized.

- Ignition on.

Move the window to its upper limit position using manual control.

Initialize the window.

During initialization, the window will automatically go down to its lowest position and then go back up again.

Other information:

- Replacing the driver's side door module. See **DRIVER DOOR MODULE (DDM), REPLACING**
- Replacing the passenger side door module. See **PASSENGER DOOR MODULE (PDM), REPLACING** .

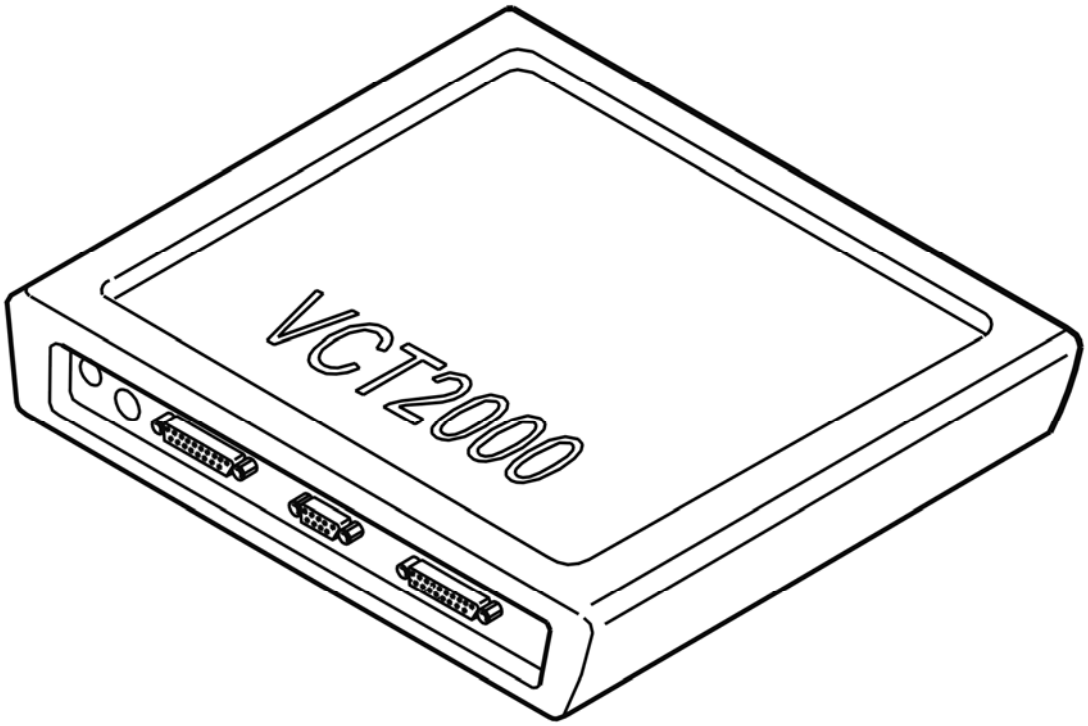

Fig. 185: Identifying VCT2000 Diagnostic Tool Symbol In VIDA
Courtesy of VOLVO CARS CORPORATION

PDM-0040: OUTSIDE TEMPERATURE SENSOR. SIGNAL TOO HIGH (2003-2004)

DIAGNOSTIC TROUBLE CODE INFORMATION

Condition

If control unit registers that signal from temperature sensor is too high, diagnostic trouble code PDM-0040 is displayed.

Substitute Value

- Nothing.

Possible Source

- Signal wire short circuited to voltage supply.

Fault symptom[s]

- Outside temperature sensor does not work.

SIGNAL TOO HIGH

see **SIGNAL TOO HIGH**

PDM-0040: OUTSIDE TEMPERATURE SENSOR. SIGNAL TOO HIGH (2005-2012)

DIAGNOSTIC TROUBLE CODE INFORMATION

see **DIAGNOSTIC TROUBLE CODE INFORMATION**

SIGNAL TOO HIGH

see **SIGNAL TOO HIGH**

PDM-0041: OUTSIDE TEMPERATURE SENSOR. SIGNAL MISSING (2005-2012)

DIAGNOSTIC TROUBLE CODE INFORMATION

Condition

If control unit registers that signal from temperature sensor is too low, diagnostic trouble code PDM-0041 is displayed.

Substitute Value

- Nothing.

Possible Source

- Signal wire open circuit or short circuited to ground.

Fault symptom[s]

- Outside temperature sensor does not work.

SIGNAL MISSING

see **SIGNAL MISSING**

PDM-0041: OUTSIDE TEMPERATURE SENSOR. SIGNAL MISSING (2003-2004)

DIAGNOSTIC TROUBLE CODE INFORMATION

see **DIAGNOSTIC TROUBLE CODE INFORMATION**

SIGNAL MISSING

see **SIGNAL MISSING**

PDM-0042: CONTROL MODULE. INTERNAL FAULT (2005-2012)

DIAGNOSTIC TROUBLE CODE INFORMATION

Condition

The initial set up of the window position is not done at the workshop.

Substitute Value

- Nothing.

Possible Source

- Set up is not done.

Fault symptom[s]

- The automatic window operation does not work.

INTERNAL FAULT

CHECKING FAULTS

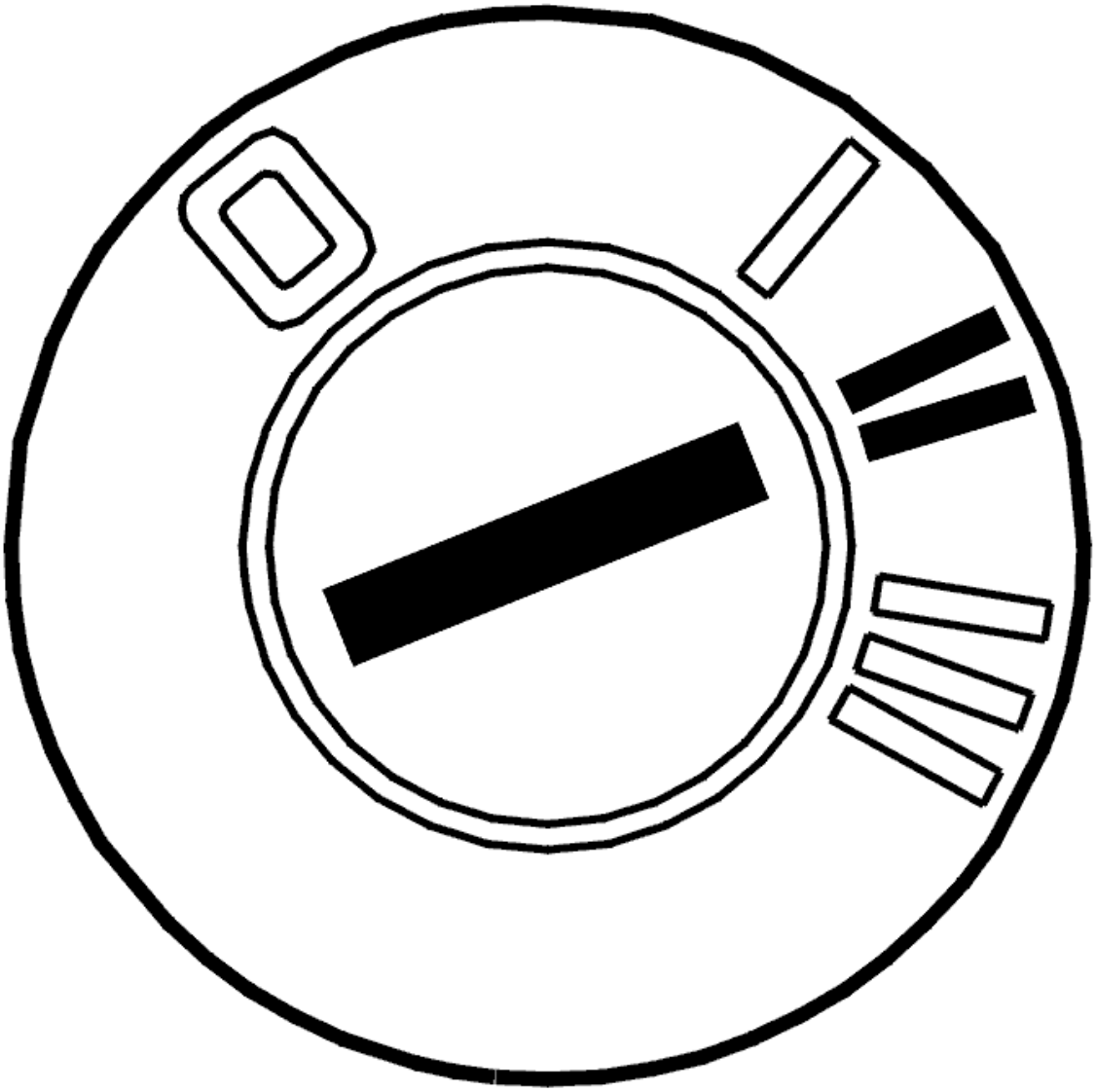

Fig. 186: Identifying Ignition ON
Courtesy of VOLVO CARS CORPORATION

- Ignition on.

  Press the power window switch 2 steps up to check the function of the automatic power window mechanism.

Is the automatic power window mechanism functioning?

- **YES**

  see: **INTERMITTENT FAULT**

- **NO**

see: **INITIATION**

INITIATION

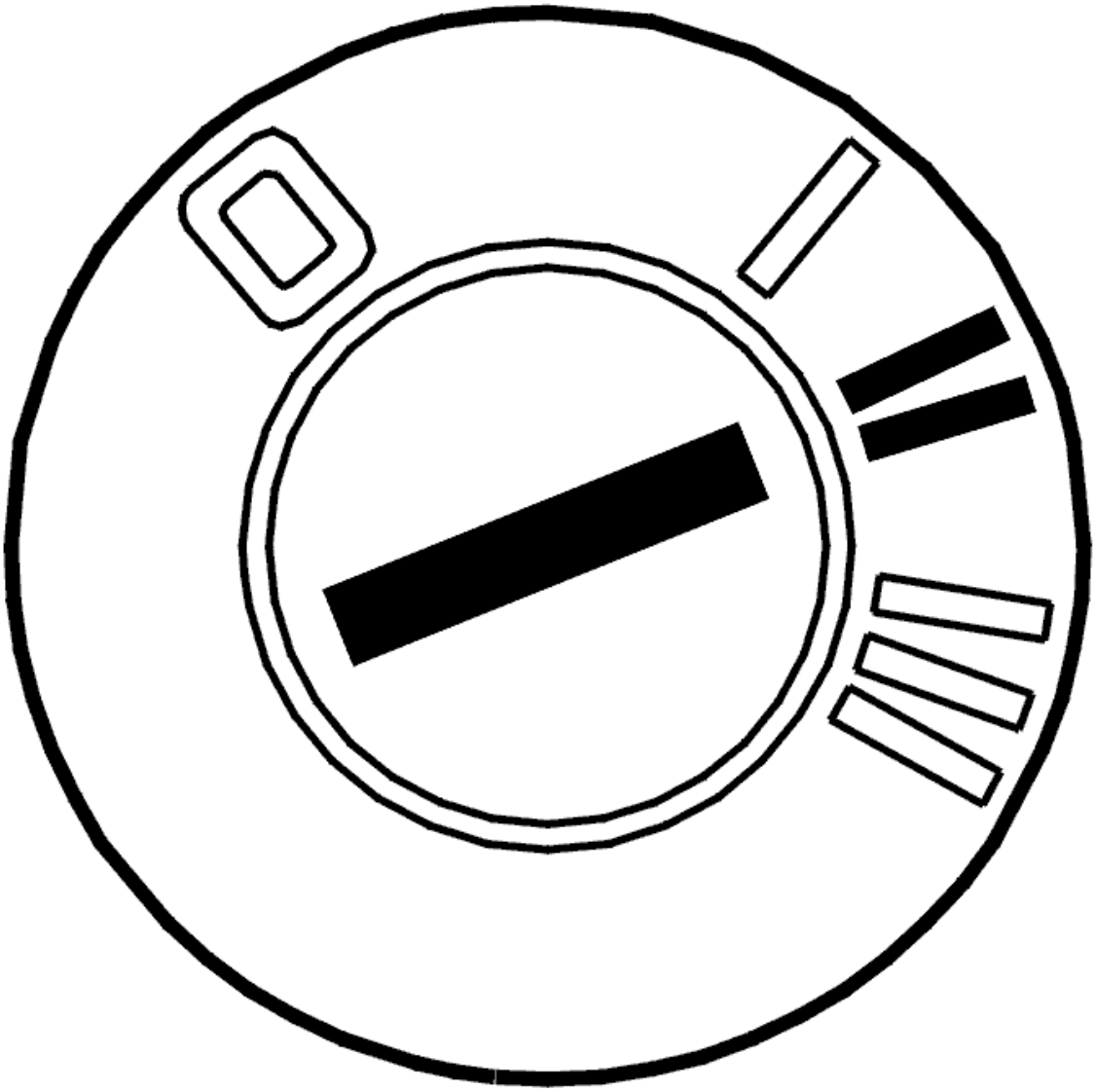

Fig. 187: Identifying Ignition ON
Courtesy of VOLVO CARS CORPORATION

The control module has registered an internal fault.

The window position must be initialized.

- Ignition on.

Move the window to its upper limit position using manual control.

Initialize the window.

During initialization, the window will automatically go down to its lowest position and then go back up again.

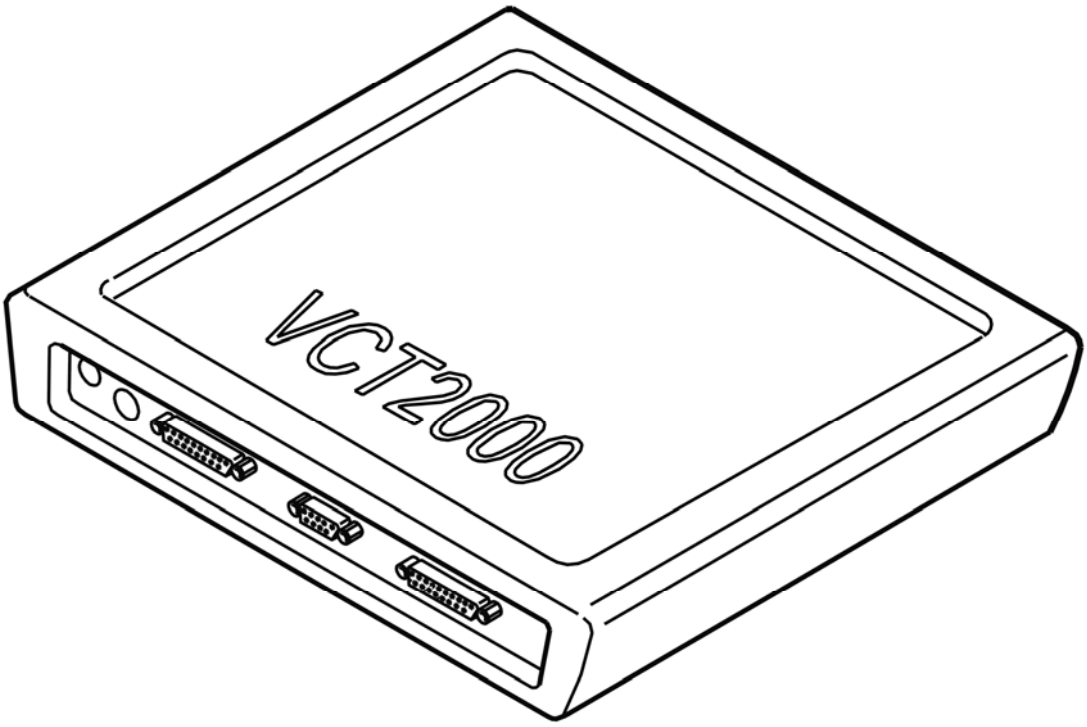

Fig. 188: Identifying VCT2000 Diagnostic Tool Symbol In VIDA
Courtesy of VOLVO CARS CORPORATION

INTERMITTENT FAULT

Fault-tracing indicates that the control module had previously identified an intermittent fault, but that the fault is no longer present.

- **Continue**

  see: **INFORMATION**

INFORMATION

FAULT-TRACING INFORMATION

If the fault is intermittent, do not verify fault-tracing if the fault does not recur.

It is possible to view the information again, or leave fault-tracing for this diagnostic trouble code (DTC).

PDM-0042: CONTROL MODULE. INTERNAL FAULT (2003-2004)

DIAGNOSTIC TROUBLE CODE INFORMATION

see **DIAGNOSTIC TROUBLE CODE INFORMATION**

INTERNAL FAULT

CHECKING FOR PERMANENT OR INTERMITTENT FAULTS

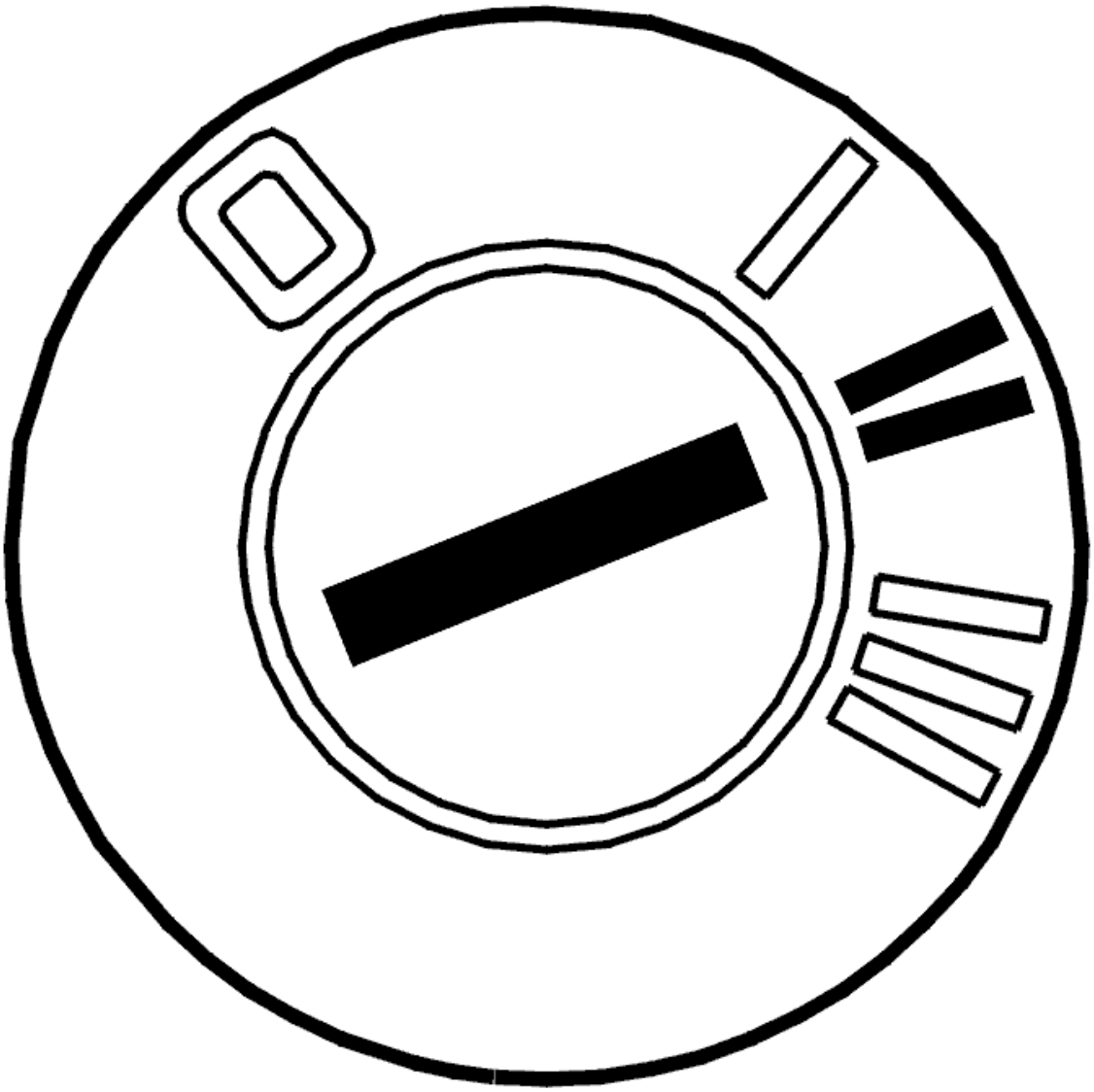

Fig. 189: Identifying Ignition ON
Courtesy of VOLVO CARS CORPORATION

- Ignition on.

  Press the power window switch 2 steps up to check the function of the automatic power window mechanism.

Is the automatic power window mechanism functioning?

- **YES**

  see: **INTERMITTENT FAULT**

- **NO**

  see: **INITIATION**

INITIATION

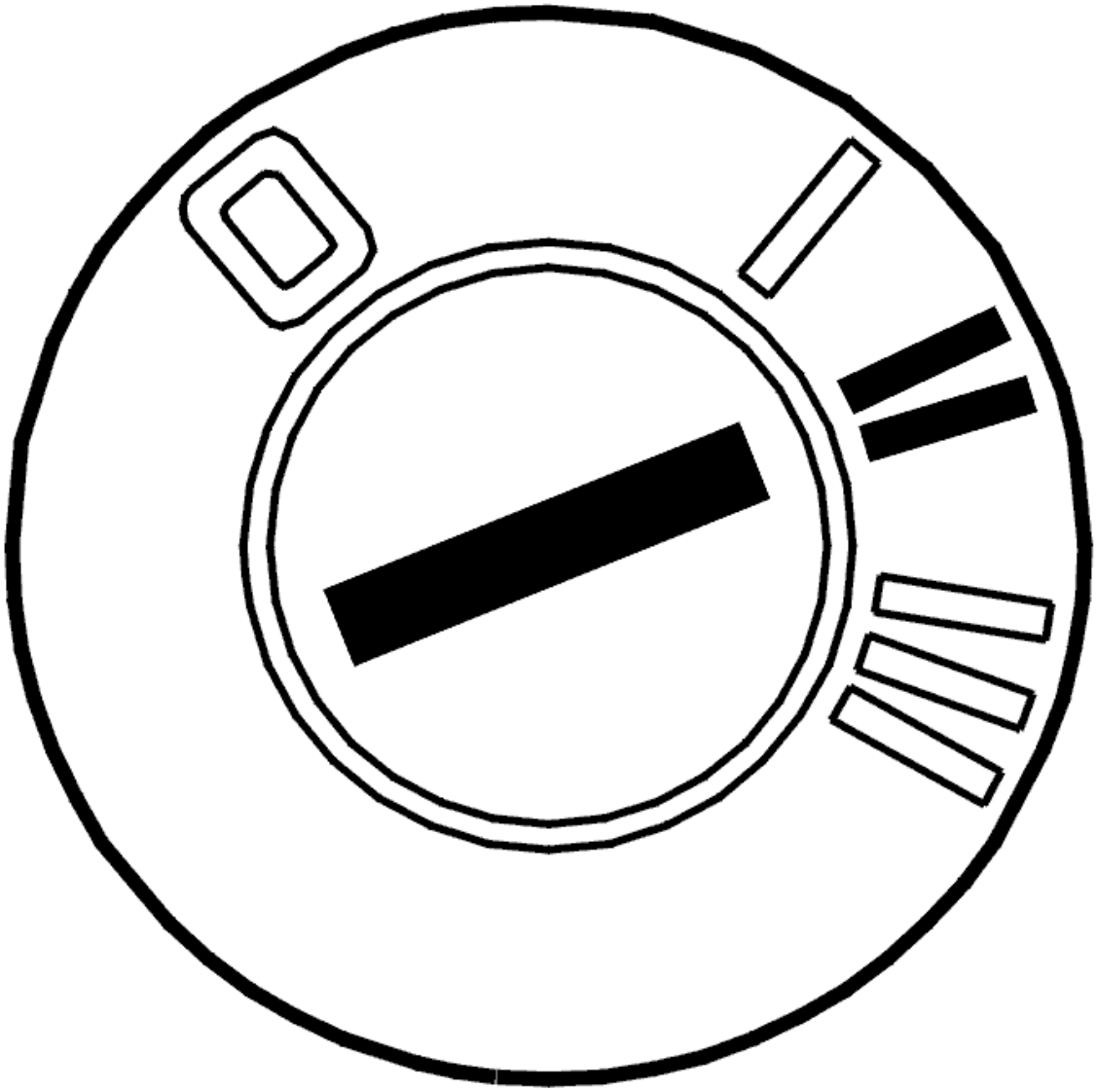

Fig. 190: Identifying Ignition ON
Courtesy of VOLVO CARS CORPORATION

The control module has registered an internal fault.

The window position must be initialized.

Ignition on.

Move the window to its upper limit position using manual control.

Initialize the window.

From model year 2003 inclusive, the window will lower approximately 10 centimeters and then close again during initialization.

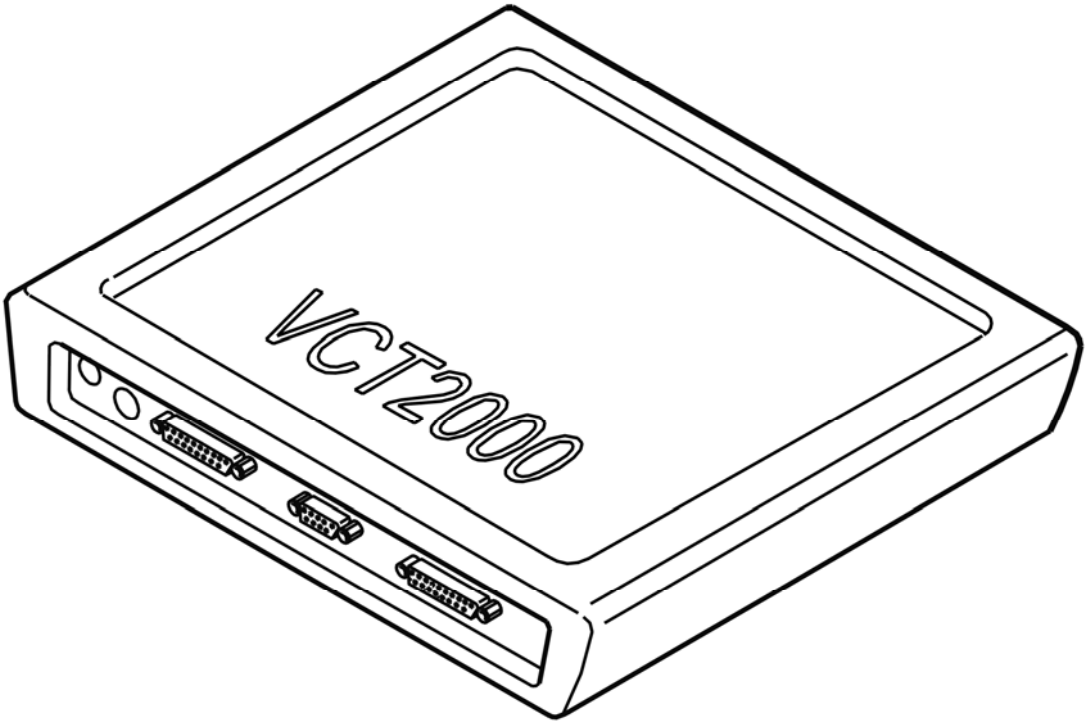

Fig. 191: Identifying VCT2000 Diagnostic Tool Symbol In VIDA
Courtesy of VOLVO CARS CORPORATION

INTERMITTENT FAULT

Fault-tracing indicates that the control module had previously identified an intermittent fault, but that the fault is no longer present.

- **Continue**

  see: **INFORMATION**

INFORMATION

FAULT-TRACING INFORMATION

If the fault is intermittent, do not verify fault-tracing if the fault does not recur.

It is possible to view the information again, or leave fault-tracing for this diagnostic trouble code (DTC).

PDM-0043: CONTROL MODULE. INTERNAL FAULT (2003-2012)

DIAGNOSTIC TROUBLE CODE (DTC) INFORMATION

Condition

The window position settings have been lost by the control module. This is due to a voltage drop when the window lift mechanism was activated.

Substitute Value

- None.

Possible Source

- The initialization of the window position is lost.

Fault symptom[s]

- Automatic window operation does not function.

INTERNAL FAULT

CHECKING FOR PERMANENT OR INTERMITTENT FAULTS

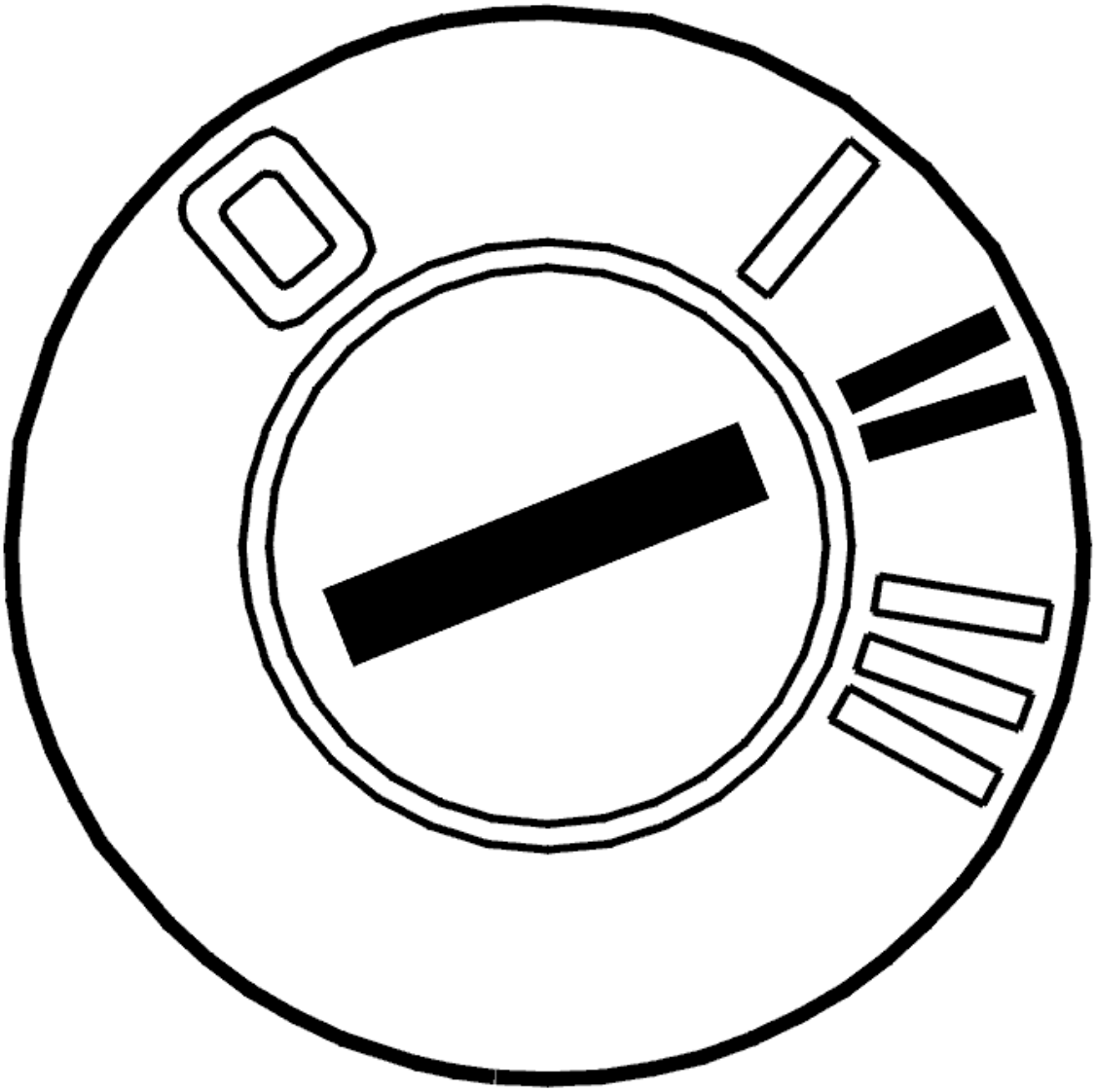

Fig. 192: Identifying Ignition ON
Courtesy of VOLVO CARS CORPORATION

- Ignition on.

  Press the power window switch 2 steps up to check the function of the automatic power window mechanism.

Is the automatic power window mechanism functioning?

- **YES**

  see: **INTERMITTENT FAULT**

- **NO**

see: **INITIATION**

INITIATION

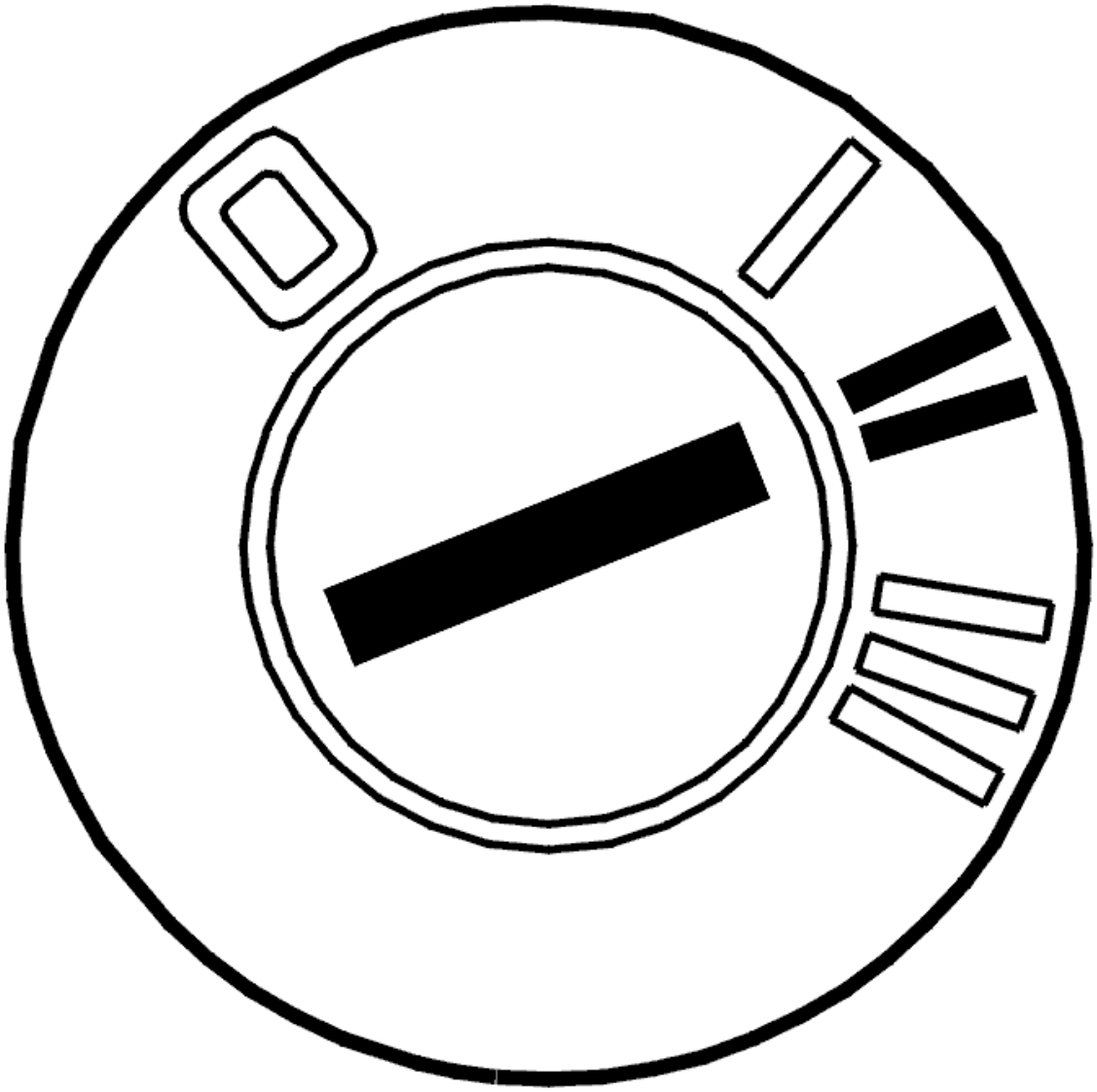

Fig. 193: Identifying Ignition ON
Courtesy of VOLVO CARS CORPORATION

The control module has registered an internal fault.

The window position must be initialized.

Ignition on.

Move the window to its upper limit position using manual control.

Initialize the window.

From model year 2003 inclusive, the window will lower approximately 10 centimeters and then close again during initialization.

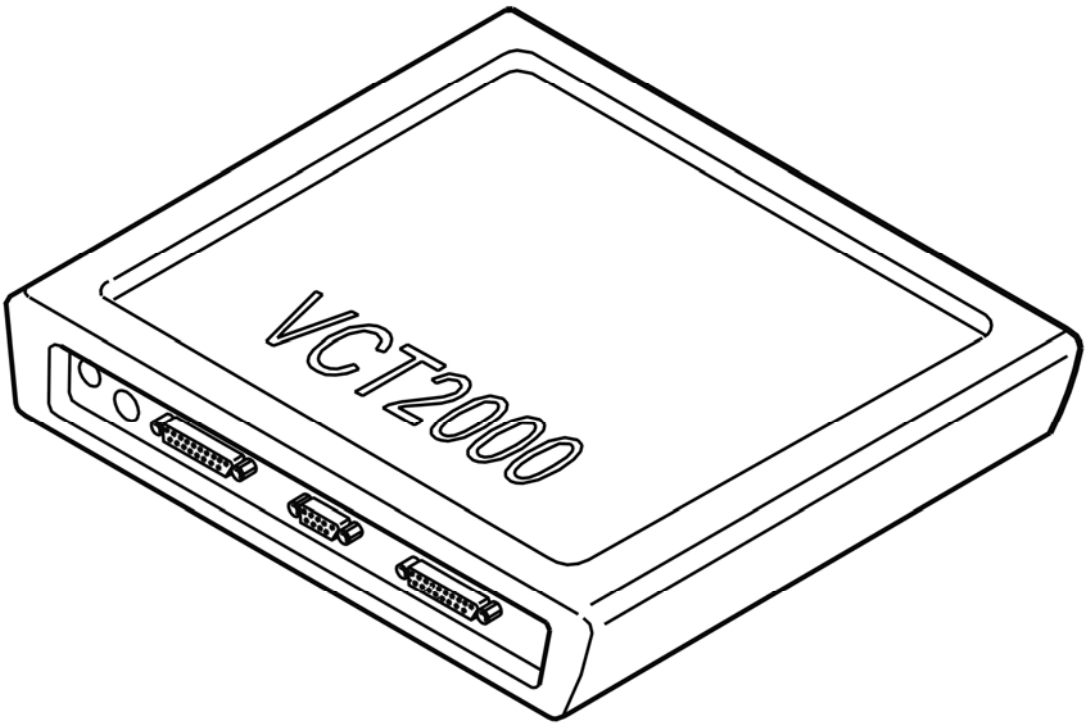

Fig. 194: Identifying VCT2000 Diagnostic Tool Symbol In VIDA
Courtesy of VOLVO CARS CORPORATION

INTERMITTENT FAULT

Fault-tracing indicates that the control module had previously identified an intermittent fault, but that the fault is no longer present.

- **Continue**

  see: **INFORMATION**

INFORMATION

FAULT-TRACING INFORMATION

If the fault is intermittent, do not verify fault-tracing if the fault does not recur.

It is possible to view the information again, or leave fault-tracing for this diagnostic trouble code (DTC).

PDM-E001: CONTROL MODULE COMMUNICATION. FAULTY

COMMUNICATION (2003-2004)

DIAGNOSTIC TROUBLE CODE (DTC) INFORMATION PDM-E001

Condition

The control modules transmit and receive information via a standardized serial communication method - CAN (Controller Area Network). The diagnostic trouble code (DTC) is stored if the control module registers serious interference (CAN communication blocked).

NOTE: In the event of system communication problems, it is not possible to communicate with the control module. Therefore it will only be possible to read off the fault if it is intermittent.

Substitute Value

- The control module shuts itself off ("bus-off").

  HINT: The control module will remain shut off until the power supply is broken (15, 30, X). When the power supply is connected the control module will make a new attempt to communicate.

Possible Source

- Short-circuit between the control area network (CAN) wiring
- Open-circuit in the control area network (CAN) wiring
- Internal fault in the control module
- Internal fault in another control module in the same part of the control area network (CAN).

Fault symptom[s]

- The switch panel for the driver's door does not work
- Automatic window closure does not function
- Cannot be controlled with the remote control.

FAULTY COMMUNICATION

see **FAULTY COMMUNICATION**

PDM-E001: CONTROL MODULE COMMUNICATION. FAULTY COMMUNICATION (2005-2012)

DIAGNOSTIC TROUBLE CODE (DTC) INFORMATION PDM-E001

see **DIAGNOSTIC TROUBLE CODE (DTC) INFORMATION PDM-E001**

SIGNAL MISSING

see **SIGNAL MISSING**

PDM-E003: CONFIGURATION FAULT. FAULTY CONFIGURATION (2003-2004)

DIAGNOSTIC TROUBLE CODE (DTC) INFORMATION PDM-E003

Condition

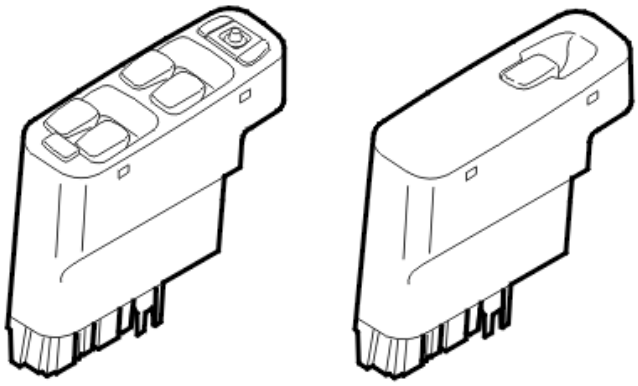

Fig. 195: Driver Door Module And Passenger Door Module Control Modules
Courtesy of VOLVO CARS CORPORATION

The control module compares its configuration ID with the signal configuration transmitted on the control area network (CAN) by the central electronic module (CEM). If the configuration IDs do not correspond the fault code is stored. The diagnostic trouble code (DTC) is also stored if the communication between the control module and the central electronic module (CEM) is interrupted.

NOTE: **In the event of open-circuit in both the control area network (CAN) cables, it is not possible to communicate with the control module. Therefore it will only be possible to read off the diagnostic trouble code (DTC) if this type of fault is intermittent. When the diagnostic trouble code (DTC) is stored, the control module responds to the diagnostic command, however normal control area network (CAN) communication does not work. ("Expulsion mode")**

Substitute Value

- None.

Possible Source

- Faulty control area network (CAN) configuration ID. (The node is not intended for this car, for example a used control module with different software/hardware.)

- Open-circuit in the control area network (CAN) wiring between the control module and the central electrical module (CEM).

Fault symptom[s]

- The switch panel for the passenger door does not work
- Automatic window closure does not function
- Cannot be controlled with the remote control.

FAULTY CONFIGURATION (2003)

see **FAULTY CONFIGURATION (2003)**

FAULTY CONFIGURATION (2004)

see **FAULTY CONFIGURATION (2004)**

PDM-E003: CONFIGURATION FAULT. FAULTY CONFIGURATION (2005-2012)

DIAGNOSTIC TROUBLE CODE (DTC) INFORMATION PDM-E003

see **DIAGNOSTIC TROUBLE CODE (DTC) INFORMATION PDM-E003**

SIGNAL MISSING

see **SIGNAL MISSING**

PDM-XXXX: UNKNOWN DIAGNOSTIC TROUBLE CODE (DTC) FOR THE CURRENT CONTROL MODULE VERSION (2003-2012)

UNKNOWN DIAGNOSTIC TROUBLE CODE (DTC) FOR THE CURRENT CONTROL MODULE VERSION

READING OFF DIAGNOSTIC TROUBLE CODES (DTCS)

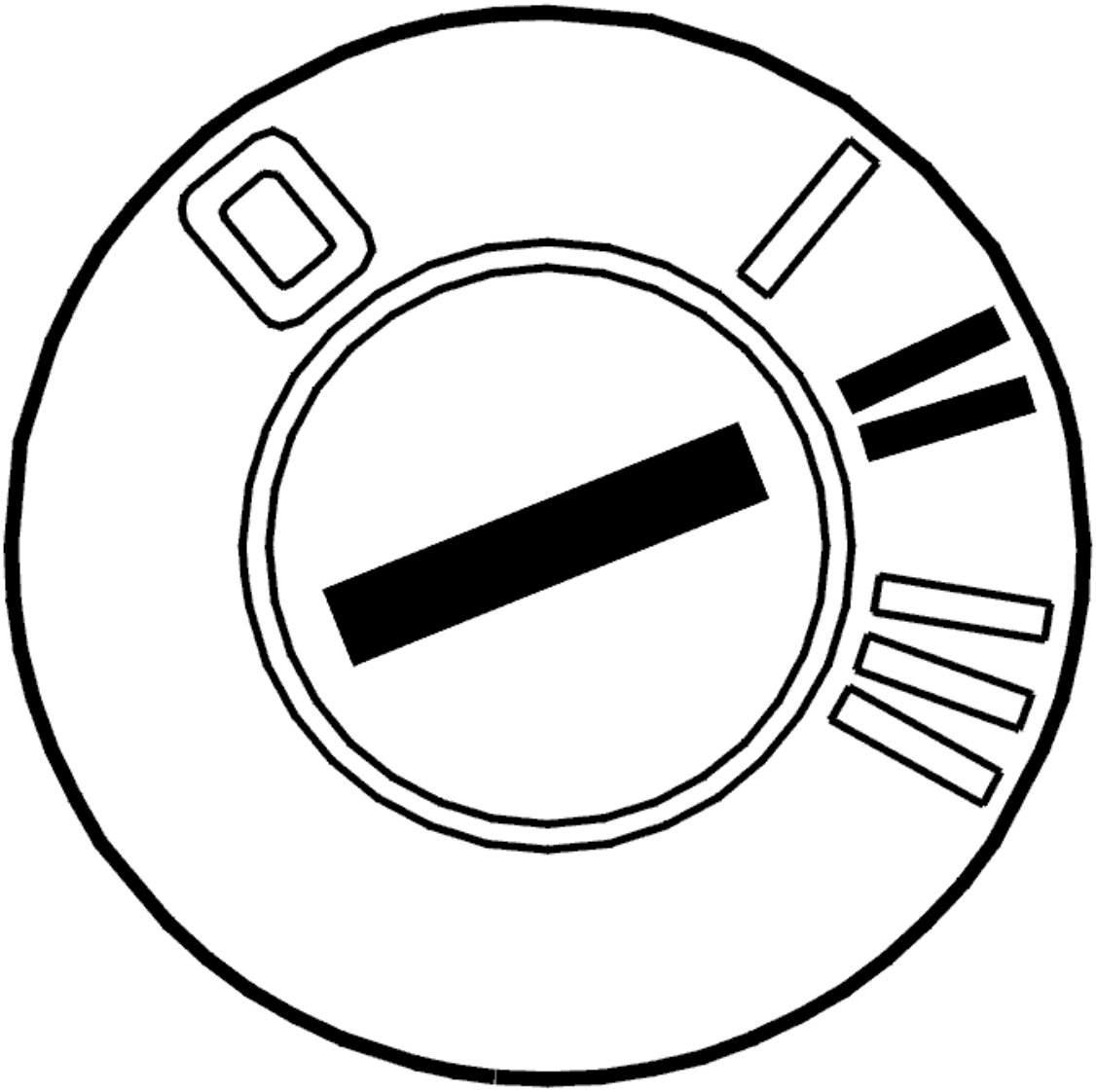

Fig. 196: Identifying Ignition ON
Courtesy of VOLVO CARS CORPORATION

- Ignition on.

  Read off the diagnostic trouble code (DTC) that is stored in the car.

  Make a note of the code for reporting purposes.

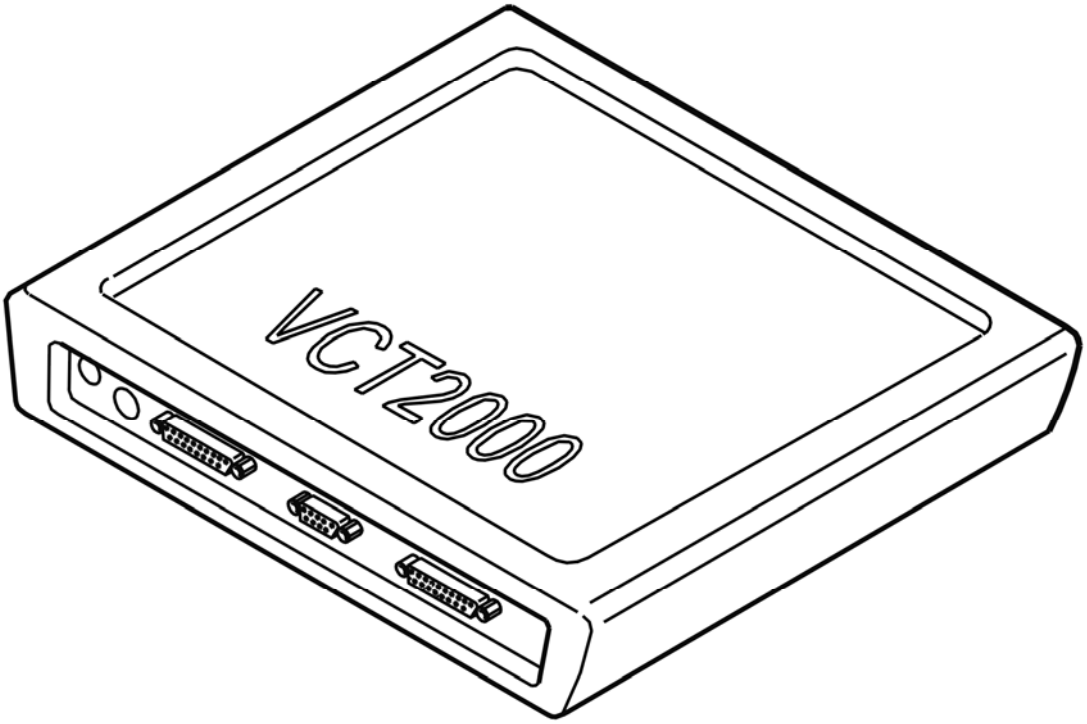

Fig. 197: Identifying VCT2000 Diagnostic Tool Symbol In VIDA
Courtesy of VOLVO CARS CORPORATION

ACCESSORIES AND EQUIPMENT

Doors And Lids - Diagnostic Trouble Codes And Associated Procedures

DDM/PDM-0001 POWER WINDOW LIFT MOTOR M+ OR M-. SIGNAL TOO HIGH (2003-12)

DIAGNOSTIC TROUBLE CODE (DTC) INFORMATION

Condition

If the control module registers that the signal cable M+ or signal cable M- is too high, DTC DDM/PDM-0001 is stored.

Diagnostic Trouble Code (DTC) DDM/PDM-0001 can be diagnosed at terminal 15.

Substitute Value

- None.

Possible Source

- Short-circuit to supply voltage in the M+ or M- signal cables.

Fault symptom[s]

- The power window mechanism does not operate.

SIGNAL TOO HIGH

CHECKING COMPONENTS AND WIRING

Check signal cable M+ between door control module connector terminal #B4 and central locking motor connector terminal #3. Check for a short-circuit to supply voltage.

Check signal cable M- between door control module connector terminal #B3 and central locking motor connector terminal #6. Check for a short-circuit to supply voltage.

Remedy as necessary.

Other information:

- To fault-trace wiring and terminals, see **CONTENTS**
- To connect the breakout box, see **CONNECTING THE BREAKOUT BOX**
- To access and replace the door control module, see **PASSENGER DOOR MODULE (PDM), REPLACING**

- For information about signals, see **SIGNAL SPECIFICATION**
- For information about power window mechanisms, see **WINDOW LIFT MECHANISM FRONT SIDE DOOR, REPLACING** .

- **Continue**

  Refer to **VERIFICATION**

VERIFICATION

HINT: After the repair it is necessary to check that the fault has been rectified.

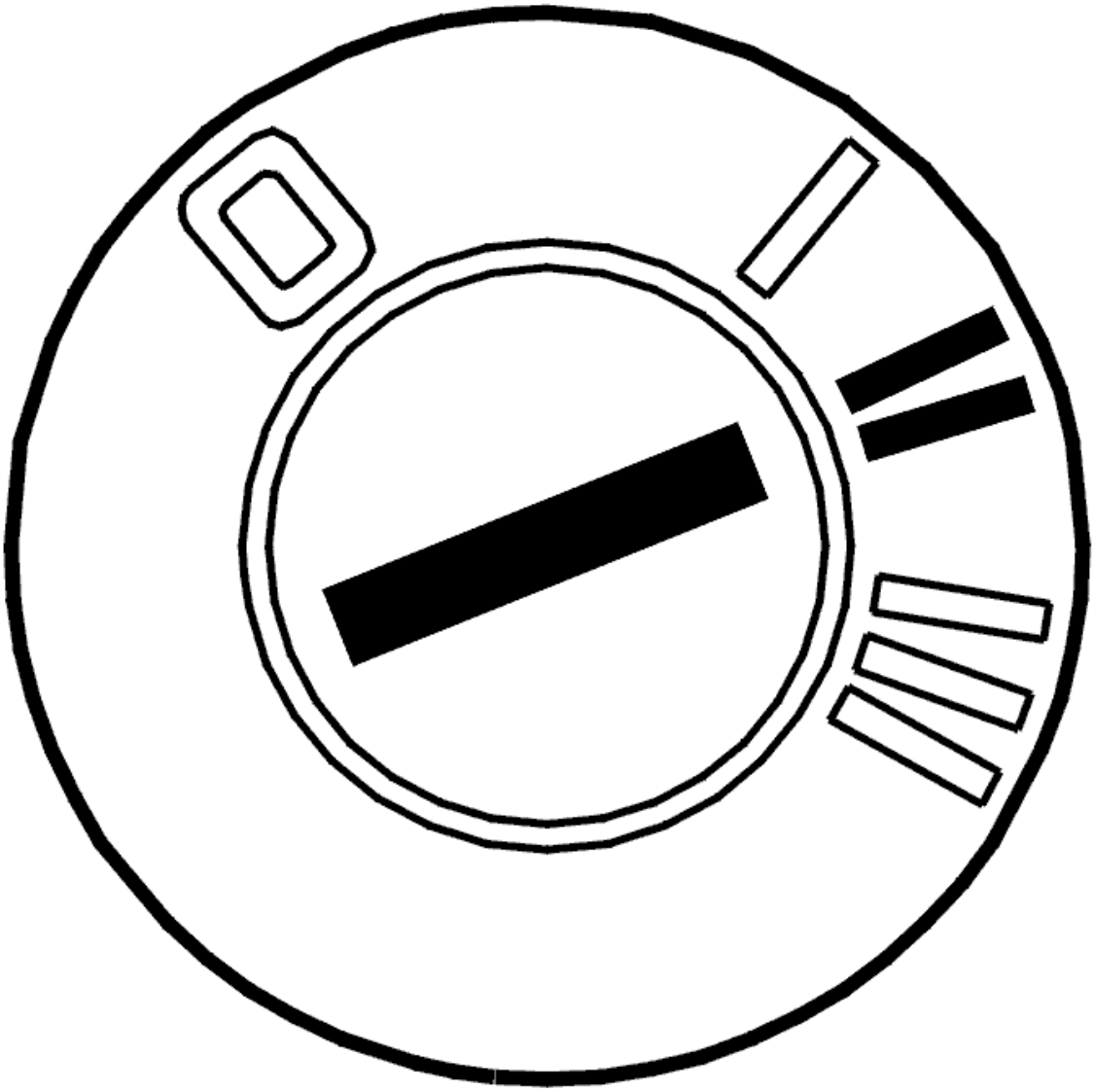

Fig. 1: Identifying Ignition ON
Courtesy of VOLVO CARS CORPORATION

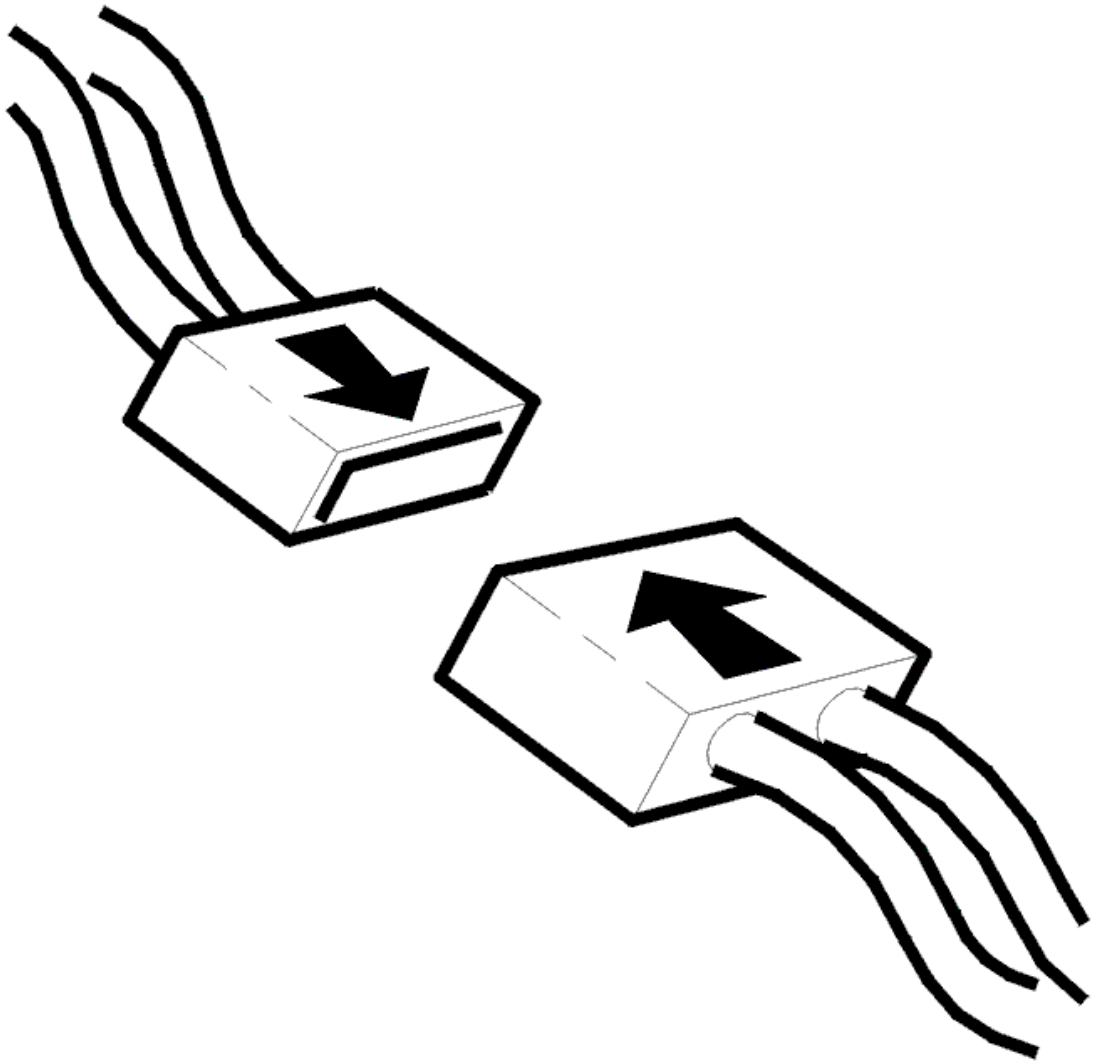

Fig. 2: Connecting Connector
Courtesy of VOLVO CARS CORPORATION

- Ignition off.
- Connect the connectors, install the components, etc.
- Ignition on.

  Check that window operates by raising/lowering window to its end stops.

Does window operate?

- **YES**

  VERIFIED: Troubleshooting has been completed.

- **NO**

  Refer to **INFORMATION**

INFORMATION

FAULT-TRACING INFORMATION

The fault should have been detected and remedied. As this is not the case fault-tracing has failed.

Exit fault-tracing for this diagnostic trouble code (DTC) or make another attempt.

DDM/PDM-0005 POWER WINDOW LIFT MOTOR M+ OR M-. SIGNAL TOO LOW OR SIGNAL MISSING (2003-04)

DIAGNOSTIC TROUBLE CODE (DTC) INFORMATION

Condition

Diagnostic trouble code DDM/PDM-0005 is stored if the control module registers a low signal or open-circuit in the M+ signal cable or M- signal cable (the power supply wiring to the power window motor) when the window is operated upwards or downwards.

Diagnostic Trouble Code (DTC) DDM/PDM-0005 can be diagnosed when the power window motor is activated.

Substitute Value

- None.

Possible Source

- Short-circuit to ground in the M+ or M- signal cables
- Open-circuit in the M+ signal cable or M- signal cable
- Blown fuse.

Fault symptom[s]

- The power window mechanism does not operate.

SIGNAL TOO LOW OR SIGNAL MISSING

CHECKING FOR PERMANENT OR INTERMITTENT FAULTS

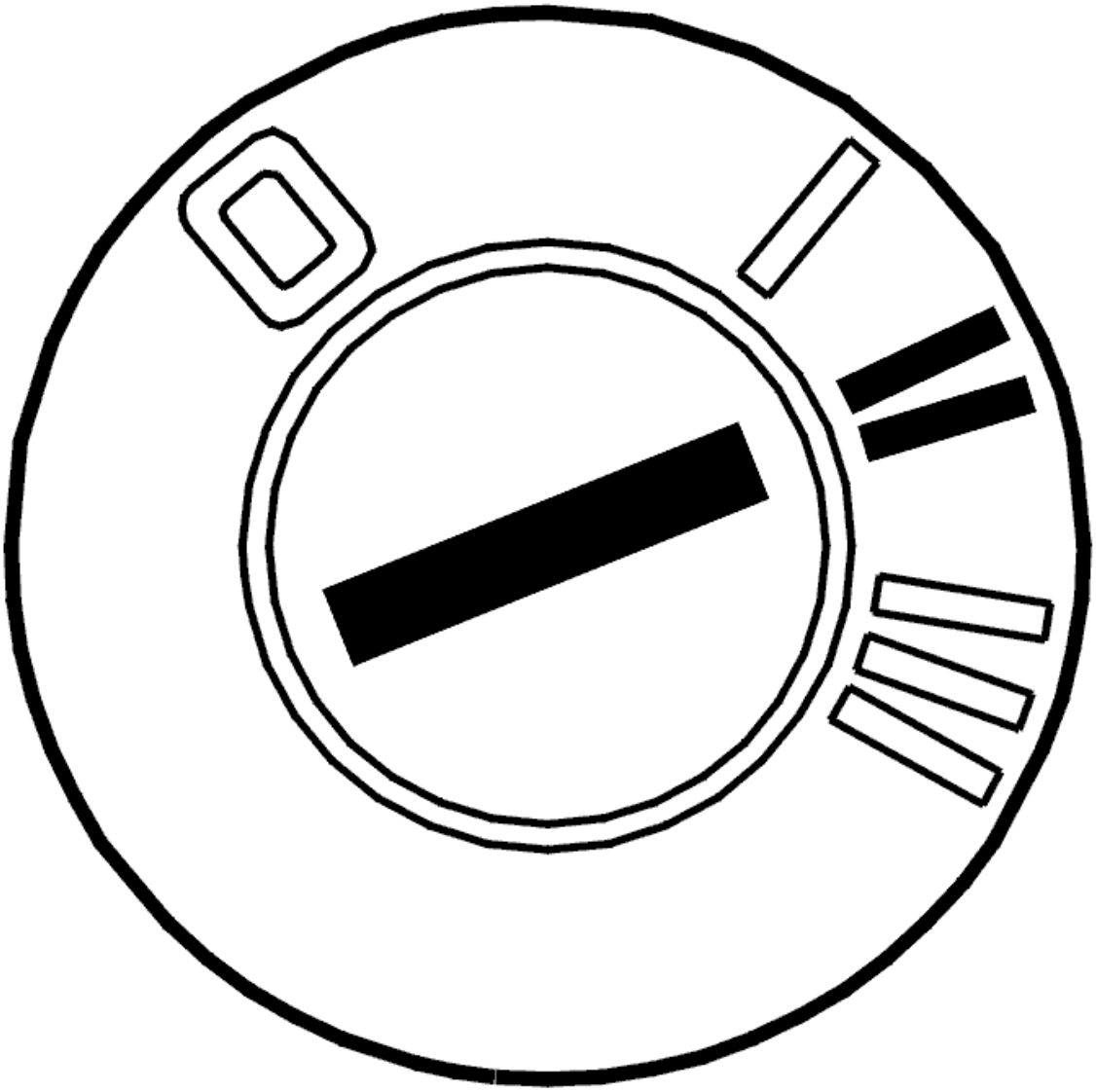

Fig. 3: Identifying Ignition ON
Courtesy of VOLVO CARS CORPORATION

- Ignition on.

  Press the switch for the power window to check the function of the power window mechanism.

Is the power window control operating correctly?

- **YES**

  Refer to **INTERMITTENT FAULT**

- **NO**

  Refer to **CHECKING THE CONNECTORS**

CHECKING THE CONNECTORS

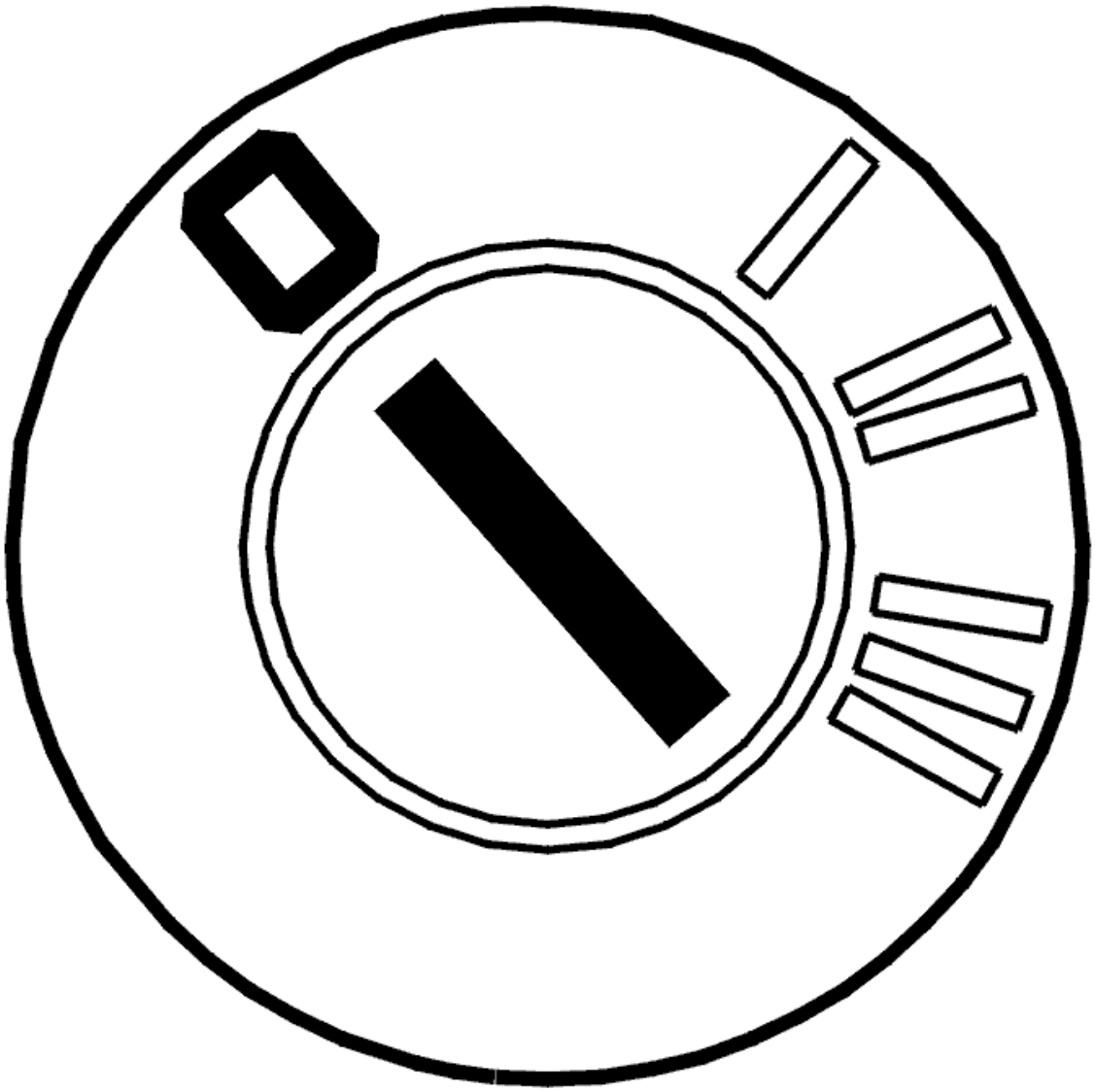

Fig. 4: Identifying Ignition OFF
Courtesy of VOLVO CARS CORPORATION

- Ignition off.

  Check that the fuses are intact.

  Check the control module and power window lift motor connectors. Check for contact resistance and oxidation.

  Other information:

  - To access the driver/passenger door module (DDM/PDM), see **PASSENGER DOOR MODULE (PDM), REPLACING**

- To access and replace the power window mechanism, see **WINDOW LIFT MECHANISM FRONT SIDE DOOR, REPLACING**
- see **CHECKING THE POWER SUPPLY AND GROUND TERMINALS**
- see **CHECKING WIRING AND TERMINALS** .

- **Continue**

  Refer to **CHECKING THE CABLE**

CHECKING THE CABLE

Check the cable between door control module connector terminal #B4 and power window lift motor connector terminal #3. Check for an open-circuit. Check for a short-circuit to ground.

Check the cable between door control module connector terminal #B3 and power window lift motor connector terminal #6. Check for an open-circuit. Check for a short-circuit to ground.

Remedy as necessary.

Other information:

- To connect the breakout box, see **CONNECTING THE BREAKOUT BOX**
- For further information about signals and other values, see **SIGNAL SPECIFICATION**
- To access the control module, see **PASSENGER DOOR MODULE (PDM), REPLACING**
- see **CHECKING THE POWER SUPPLY AND GROUND TERMINALS**
- see **CHECKING WIRING AND TERMINALS** .

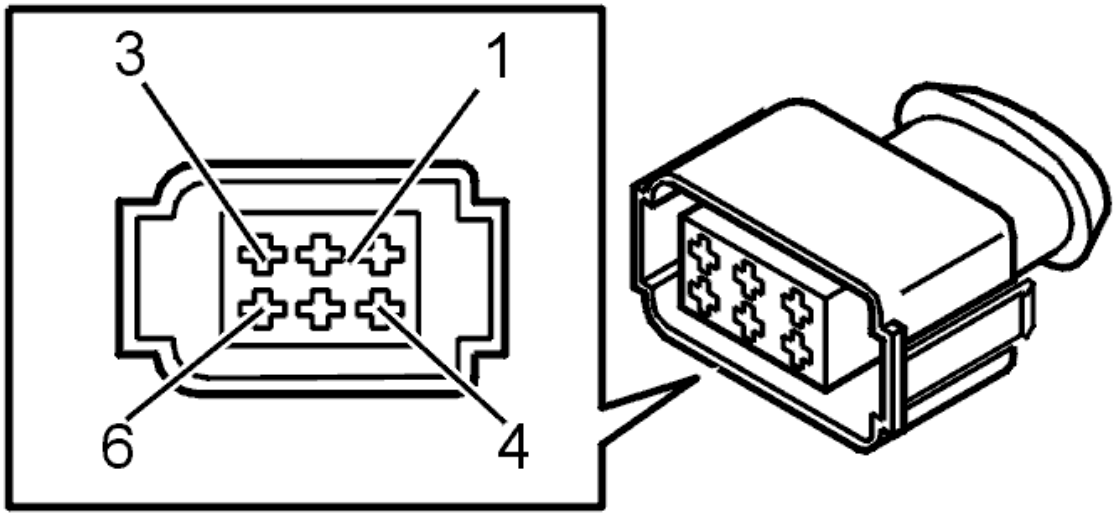

Fig. 5: Identifying Connector
Courtesy of VOLVO CARS CORPORATION

Was the cable OK?

- **YES**

  Refer to **REPLACING THE COMPONENT**

- **NO**

  Refer to **VERIFICATION**

REPLACING THE COMPONENT

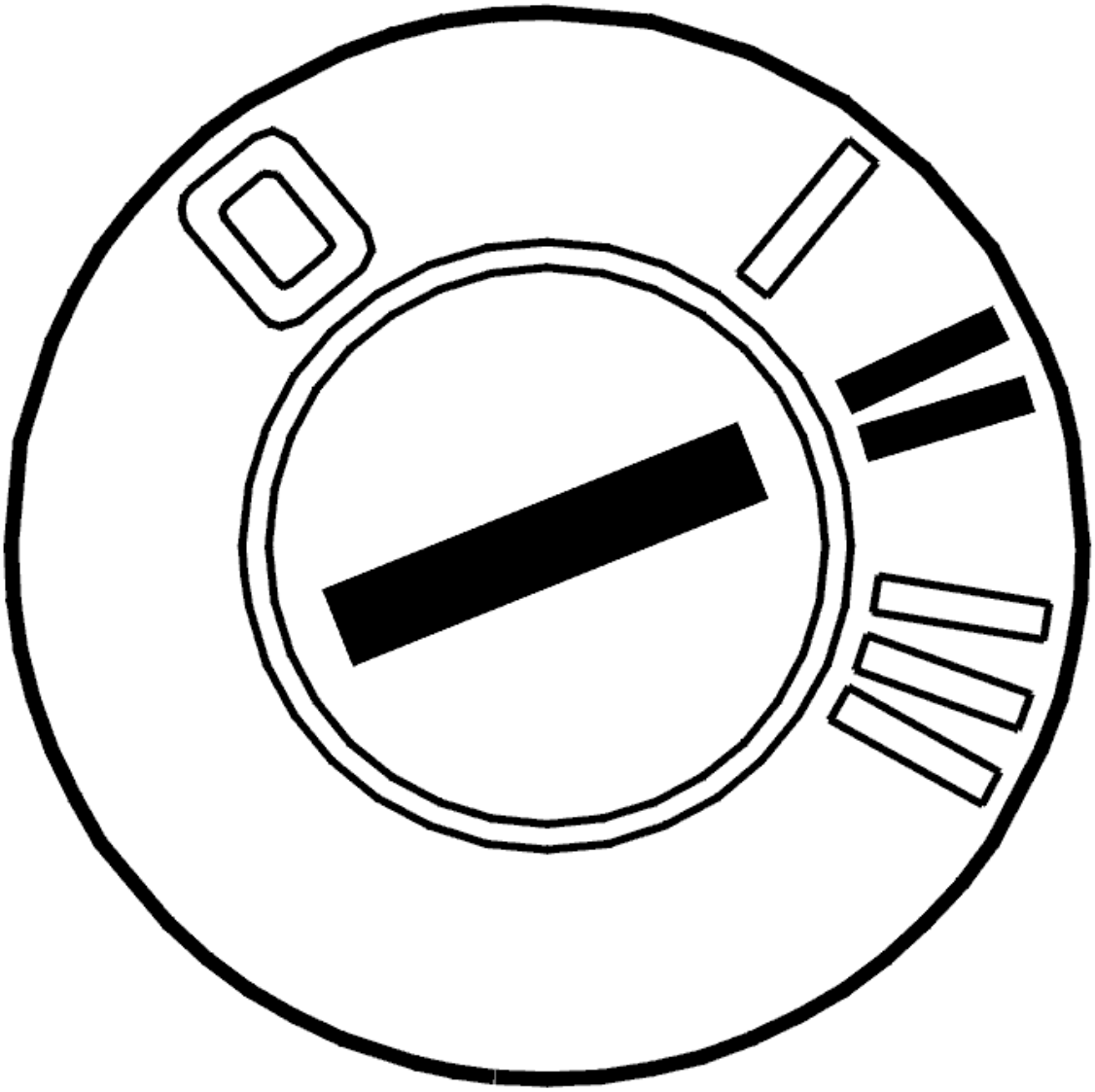

Fig. 6: Identifying Ignition ON
Courtesy of VOLVO CARS CORPORATION

Replace the window lift mechanism. See **WINDOW LIFT MECHANISM FRONT SIDE DOOR, REPLACING** .

Ignition on.

Move the window to its upper limit position using manual control.

Initialize the window.

From model year 2003 inclusive, the window will lower approximately 10 centimeters and then close again during initialization.

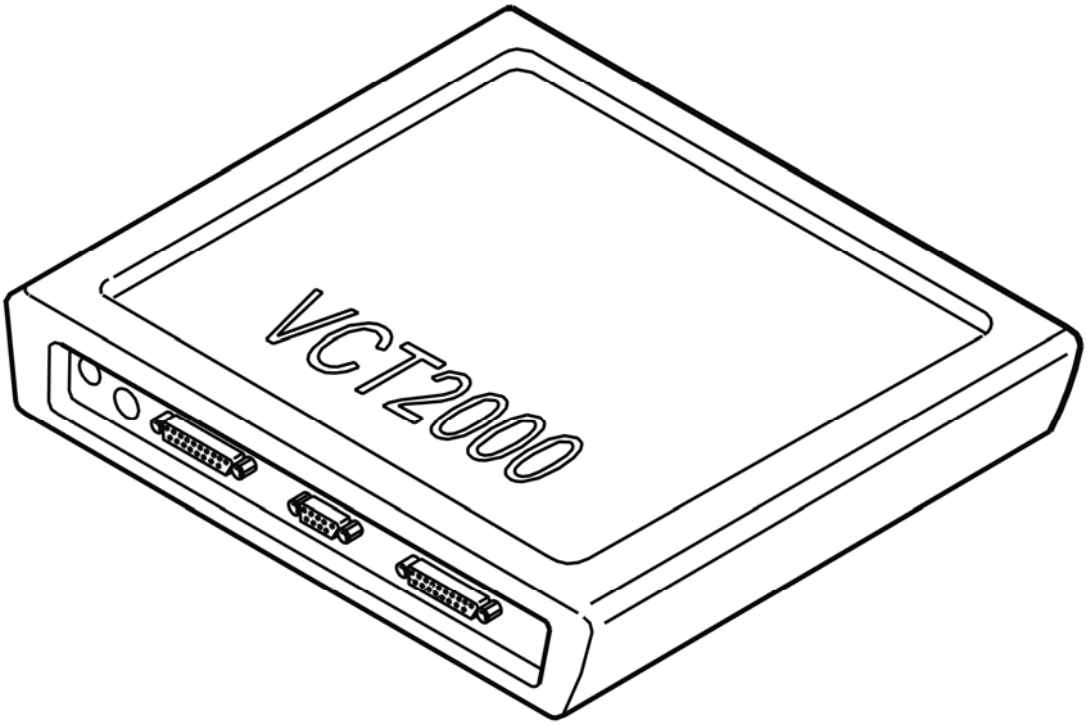

Fig. 7: Identifying VCT2000 Diagnostic Tool Symbol In VIDA
Courtesy of VOLVO CARS CORPORATION

- **Continue**

  Refer to **VERIFICATION**

INTERMITTENT FAULT

Check the connectors for the control module and power window lift motor. Check for contact resistance and oxidation. Check for loose connections.

Check the cable between control module connector terminal #B4 and power window lift motor connector terminal #3. Check for an intermittent open-circuit.

Check the cable between the control module connector terminal #3B and the power window lift motor connector terminal #6. Check for an intermittent open-circuit.

Other information:

- To connect the breakout box, see **CONNECTING THE BREAKOUT BOX**
- For further information about signals and other values, see **SIGNAL SPECIFICATION**
- To access the control module, see **PASSENGER DOOR MODULE (PDM), REPLACING**
- To access and replace the power window mechanism, see **WINDOW LIFT MECHANISM FRONT SIDE DOOR, REPLACING**
- see **CHECKING THE POWER SUPPLY AND GROUND TERMINALS**
- see **CHECKING WIRING AND TERMINALS** .

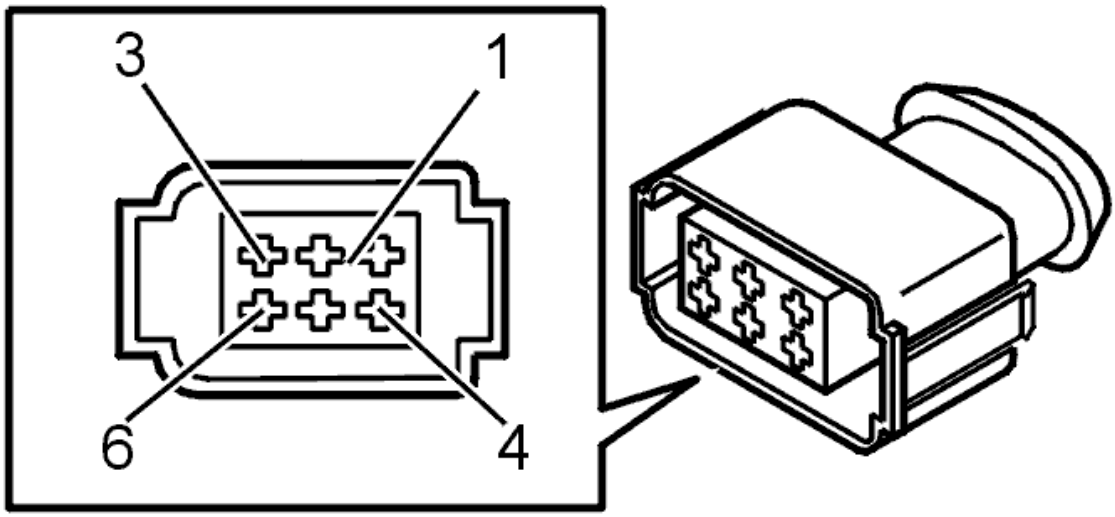

Fig. 8: Identifying Connector
Courtesy of VOLVO CARS CORPORATION

- **Continue**

  Refer to **INFORMATION**

VERIFICATION

HINT: After the repair it is necessary to check that the fault has been rectified.

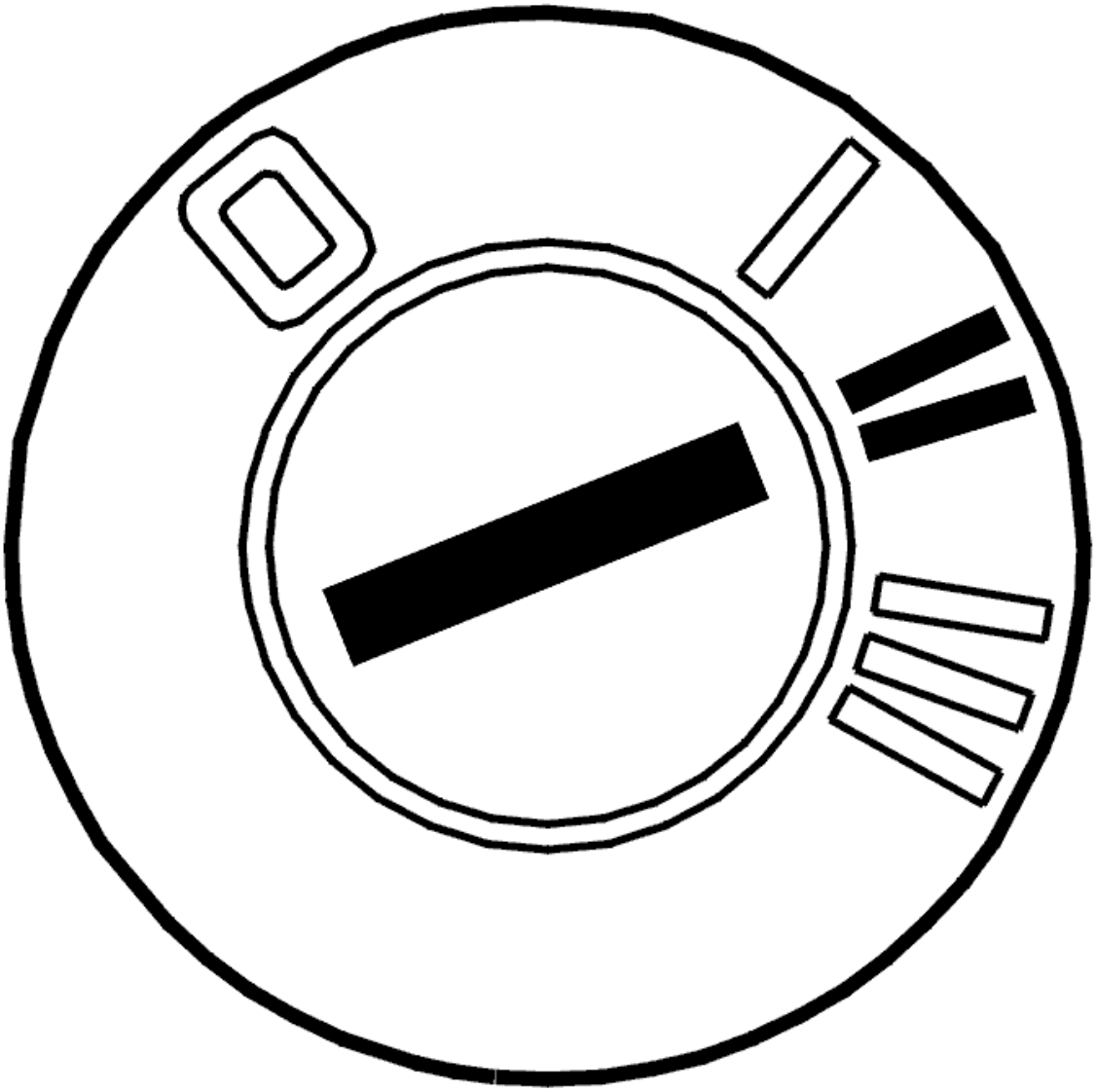

Fig. 9: Identifying Ignition ON
Courtesy of VOLVO CARS CORPORATION

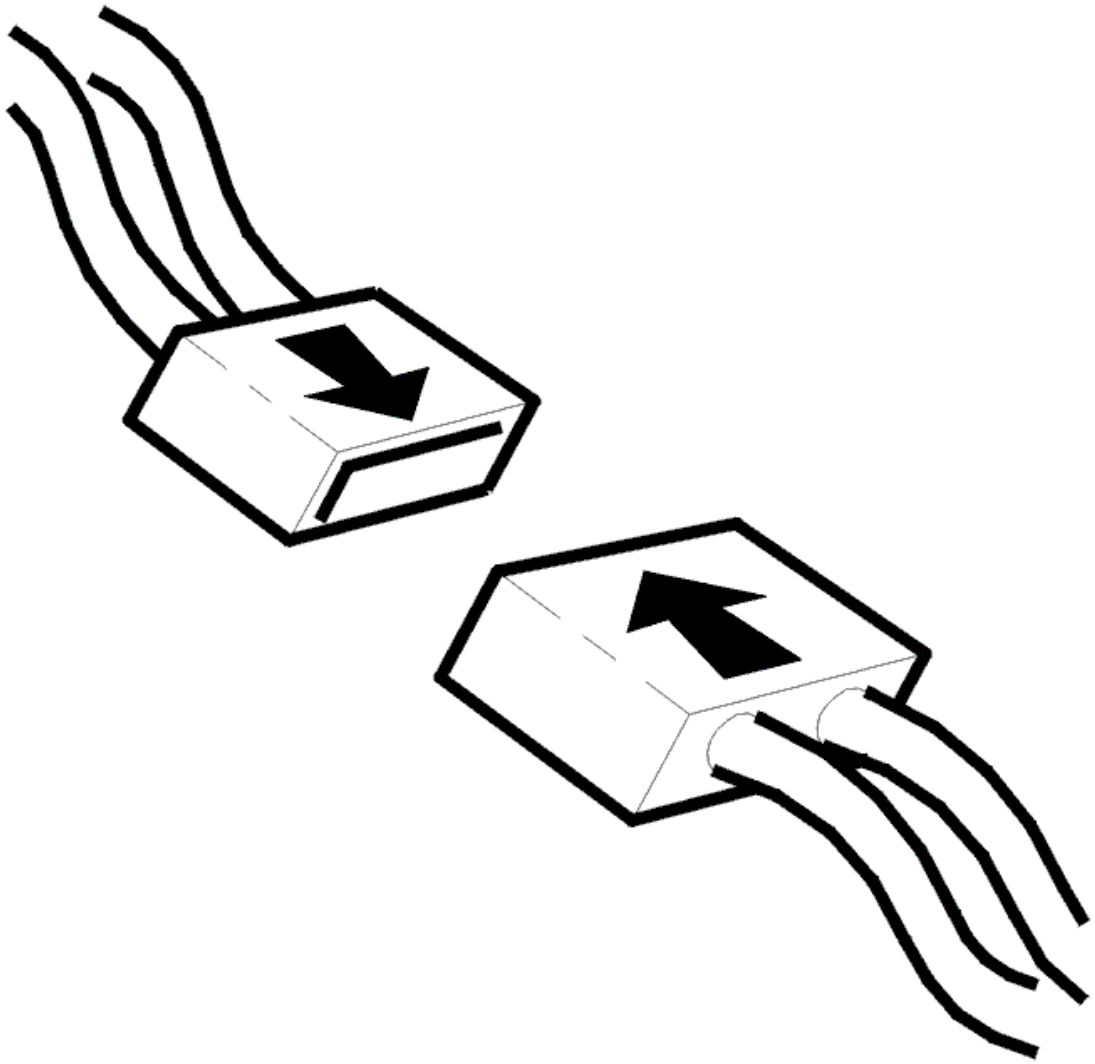

Fig. 10: Connecting Connector
Courtesy of VOLVO CARS CORPORATION

- Ignition off.
- Connect the connectors, install the components, etc.
- Ignition on.

  Check that window operates by raising/lowering window to its end stops.

Does window operate?

- **YES**

  VERIFIED: Troubleshooting has been completed.

- **NO**

  Refer to **INFORMATION**

INFORMATION

FAULT-TRACING INFORMATION

The fault should have been detected and remedied. As this is not the case fault-tracing has failed.

Exit fault-tracing for this diagnostic trouble code (DTC) or make another attempt.

DDM/PDM-0005 POWER WINDOW LIFT MOTOR M+ OR M-. SIGNAL TOO LOW OR SIGNAL MISSING (2005-12)

DIAGNOSTIC TROUBLE CODE (DTC) INFORMATION

see **DIAGNOSTIC TROUBLE CODE (DTC) INFORMATION**

SIGNAL TOO LOW OR SIGNAL MISSING

CHECKING FOR PERMANENT OR INTERMITTENT FAULTS

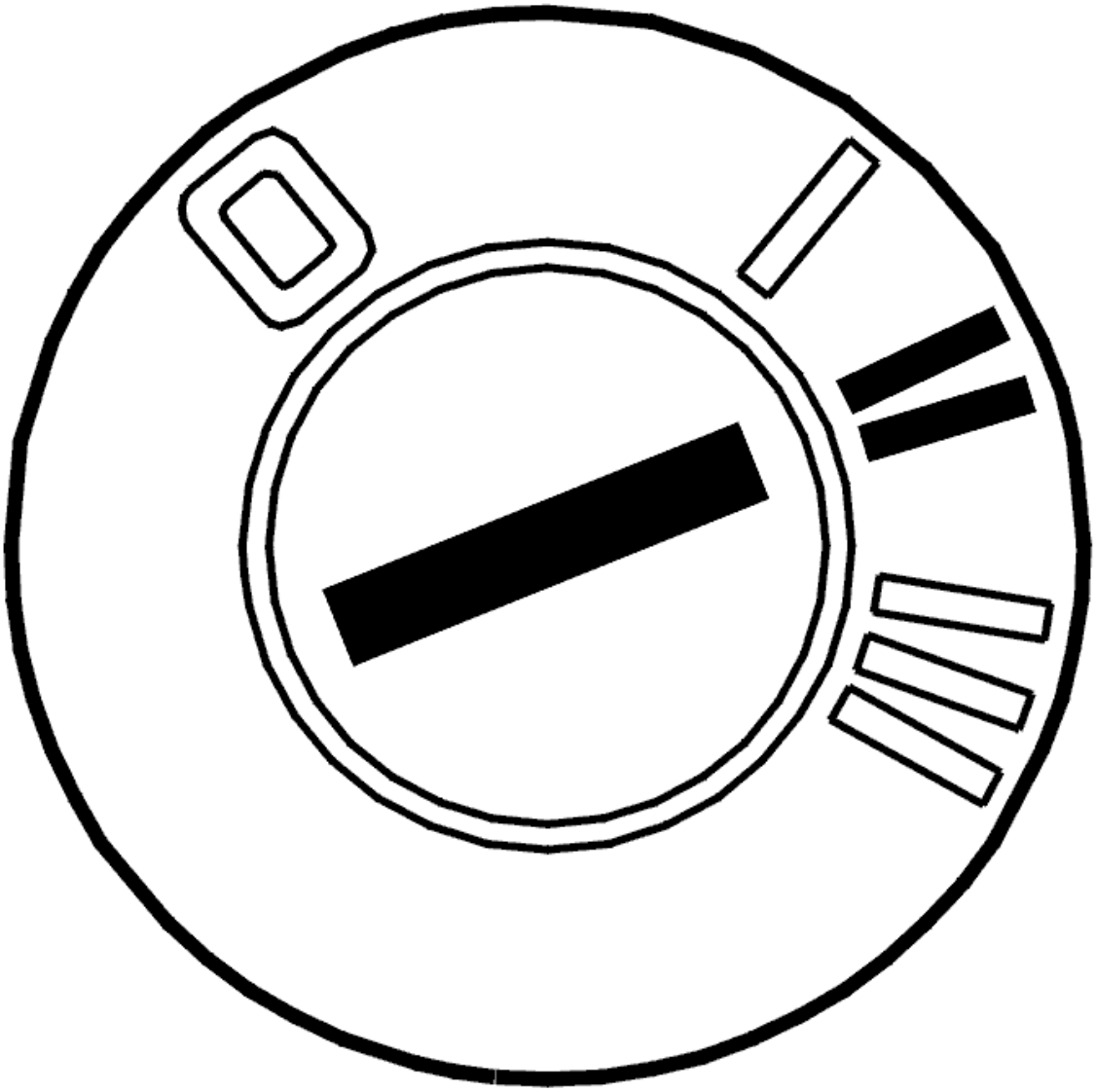

Fig. 11: Identifying Ignition ON
Courtesy of VOLVO CARS CORPORATION

- Ignition on.

  Press the switch for the power window to check the function of the power window mechanism.

Is the power window control operating correctly?

- **YES**

  Refer to **INTERMITTENT FAULT**

- **NO**

  Refer to **CHECKING THE CONNECTORS**

CHECKING THE CONNECTORS

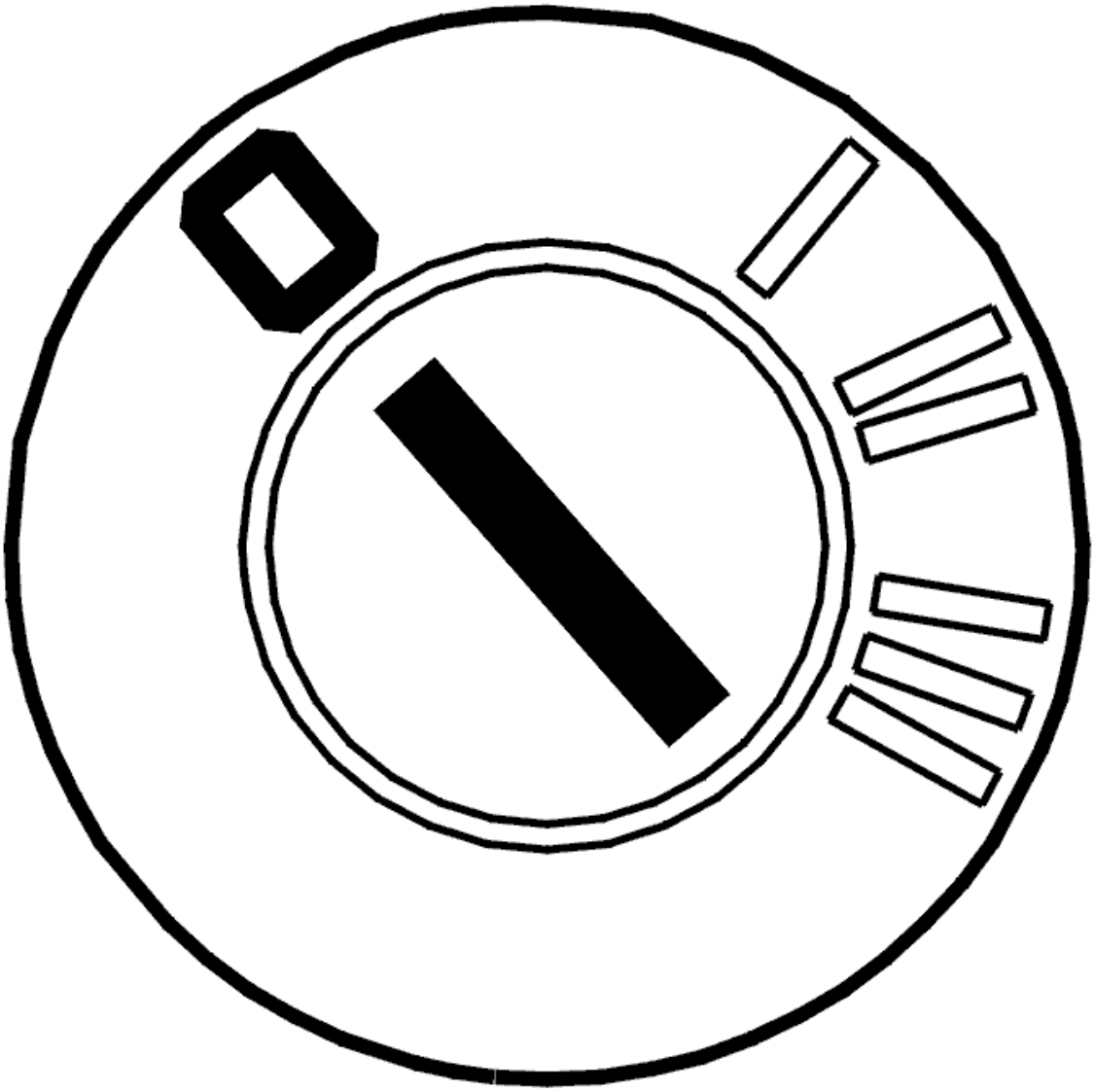

Fig. 12: Identifying Ignition OFF
Courtesy of VOLVO CARS CORPORATION

- Ignition off.

  Check that the fuses are intact.

  Check the control module and power window lift motor connectors. Check for contact resistance and oxidation.

  Other information:

  - see **PASSENGER DOOR MODULE (PDM), REPLACING**
  - see **WINDOW LIFT MECHANISM FRONT SIDE DOOR, REPLACING**

- see **CHECKING THE POWER SUPPLY AND GROUND TERMINALS**
- see **CHECKING WIRING AND TERMINALS**

- **Continue**

  Refer to **CHECKING THE CABLE**

CHECKING THE CABLE

Check the cable between control module connector terminal #B4 and power window lift motor connector terminal #3. Check for an open-circuit. Check for a short-circuit to ground.

Check the cable between control module connector terminal #B3 and power window lift motor connector terminal #6. Check for an open-circuit. Check for a short-circuit to ground.

Remedy as necessary.

Other information:

- see **CONNECTING THE BREAKOUT BOX**
- see **SIGNAL SPECIFICATION**
- see **PASSENGER DOOR MODULE (PDM), REPLACING**
- see **CHECKING THE POWER SUPPLY AND GROUND TERMINALS**
- see **CHECKING WIRING AND TERMINALS**

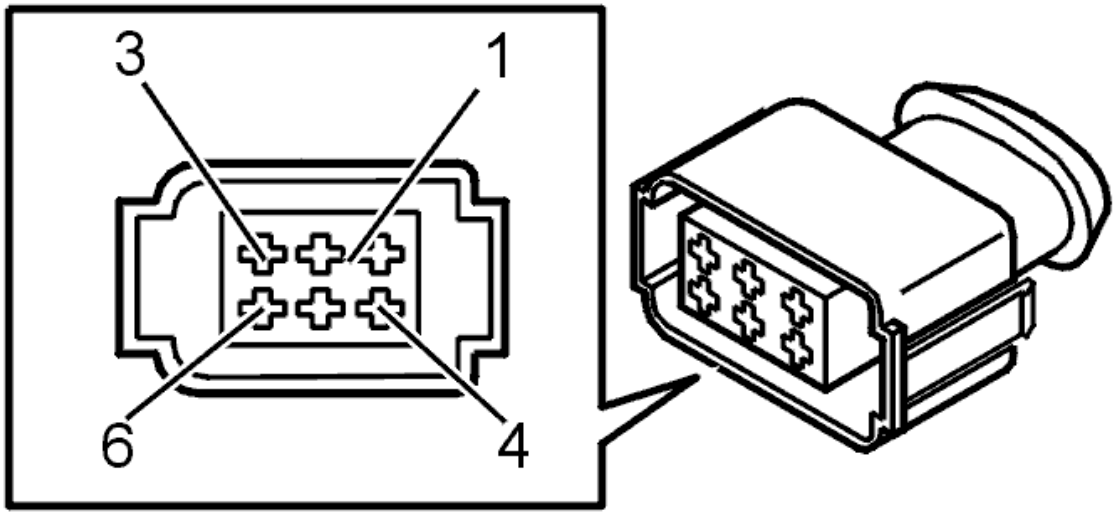

Fig. 13: Identifying Connector
Courtesy of VOLVO CARS CORPORATION

Was the cable OK?

- **YES**

Refer to **REPLACING THE COMPONENT**

- **NO**

  Refer to **VERIFICATION**

REPLACING THE COMPONENT

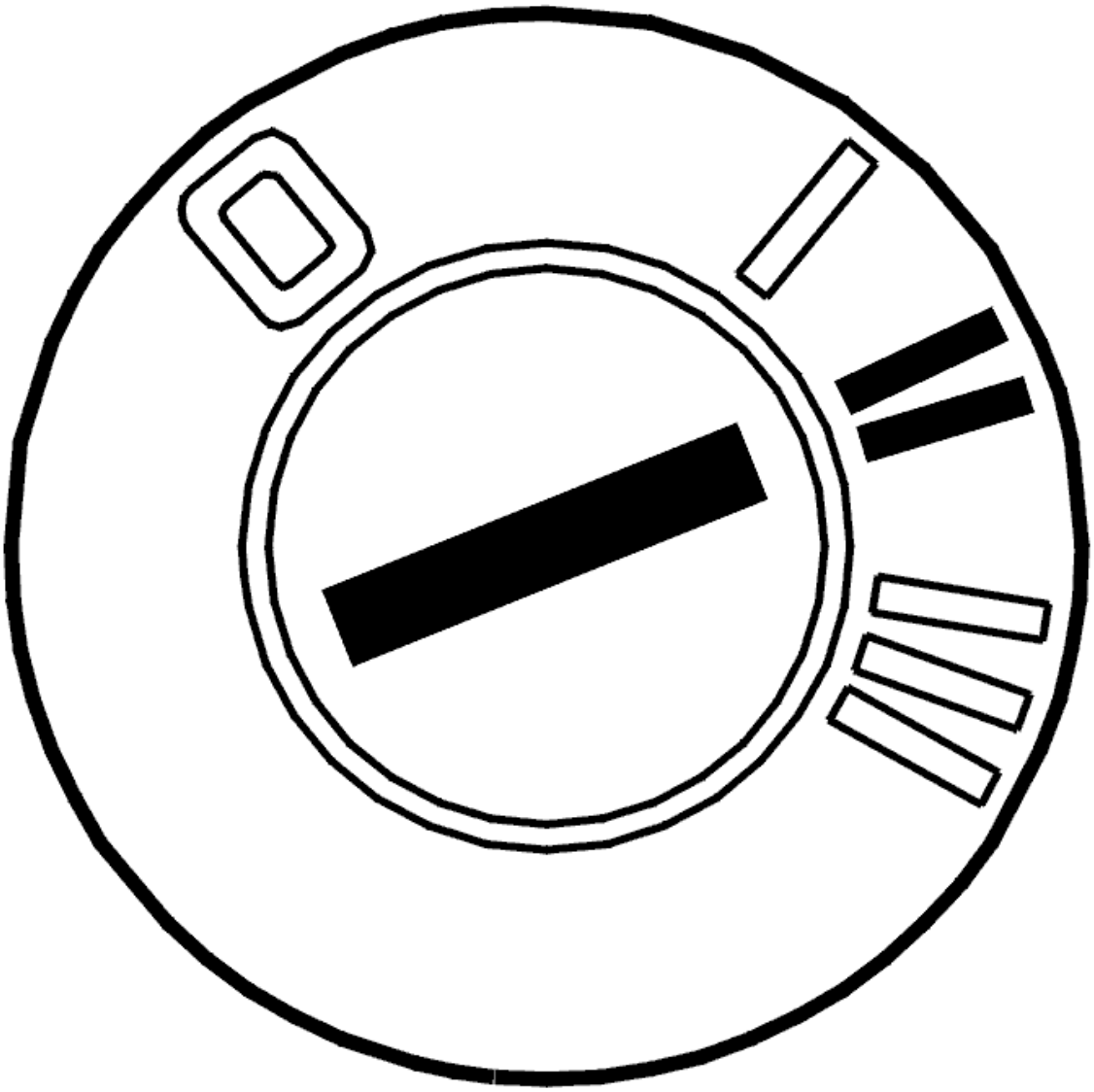

Fig. 14: Identifying Ignition ON
Courtesy of VOLVO CARS CORPORATION

Replace the window lift mechanism.

- Ignition on.

Move the window to its upper limit position using manual control.

Initialize the window.

During initialization, the window will automatically go down to its lowest position and then go back up again.

Other information

- see **WINDOW LIFT MECHANISM FRONT SIDE DOOR, REPLACING**

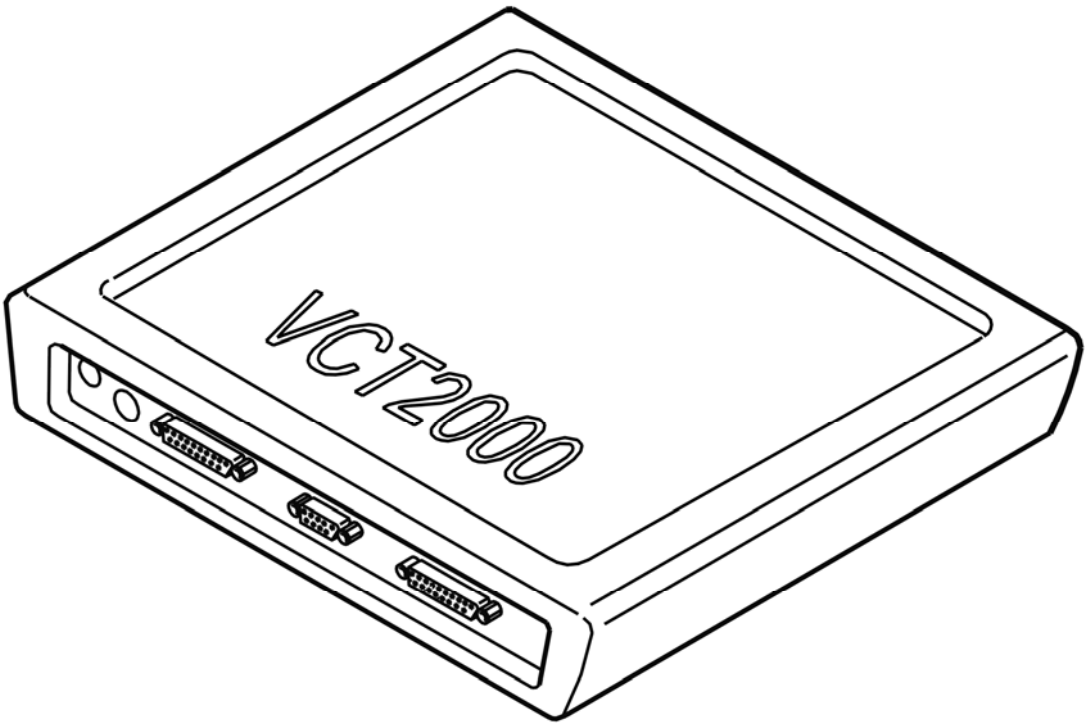

Fig. 15: Identifying VCT2000 Diagnostic Tool Symbol In VIDA
Courtesy of VOLVO CARS CORPORATION

- **Continue**

  Refer to **VERIFICATION**

INTERMITTENT FAULT

Check the connectors for the control module and power window lift motor. Check for contact resistance and oxidation. Check for loose connections.

Check the cable between control module connector terminal #B4 and power window lift motor connector terminal #3. Check for an intermittent open-circuit.

Check the cable between the control module connector terminal #3B and the power window lift motor

connector terminal #6. Check for an intermittent open-circuit.

Other information:

- see **CONNECTING THE BREAKOUT BOX**
- see **SIGNAL SPECIFICATION**
- see **PASSENGER DOOR MODULE (PDM), REPLACING**
- see **WINDOW LIFT MECHANISM FRONT SIDE DOOR, REPLACING**
- see **CHECKING THE POWER SUPPLY AND GROUND TERMINALS**
- see **CHECKING WIRING AND TERMINALS**

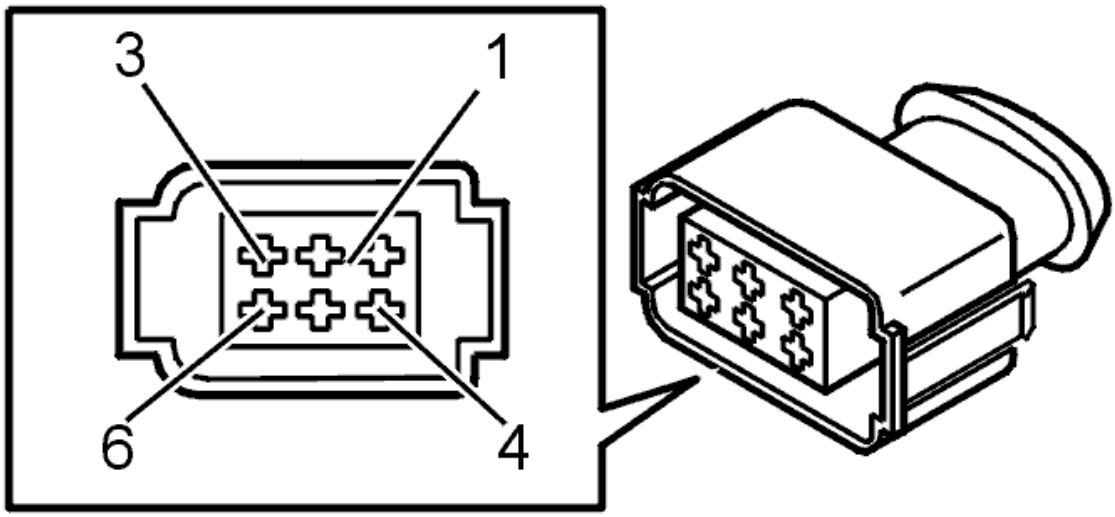

Fig. 16: Identifying Connector
Courtesy of VOLVO CARS CORPORATION

- **Continue**

  Refer to **INFORMATION**

VERIFICATION

HINT: After the repair it is necessary to check that the fault has been rectified.

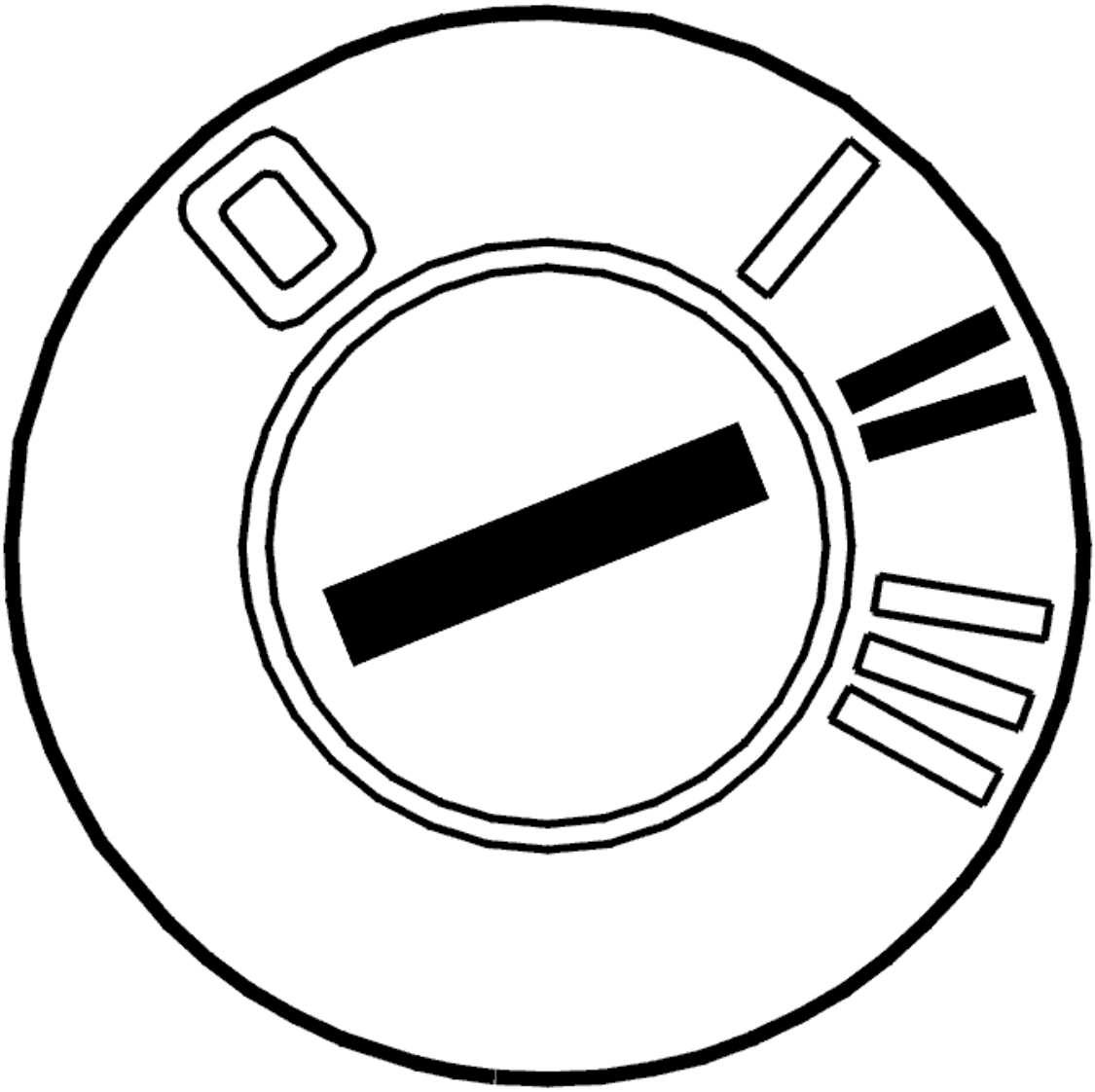

Fig. 17: Identifying Ignition ON
Courtesy of VOLVO CARS CORPORATION

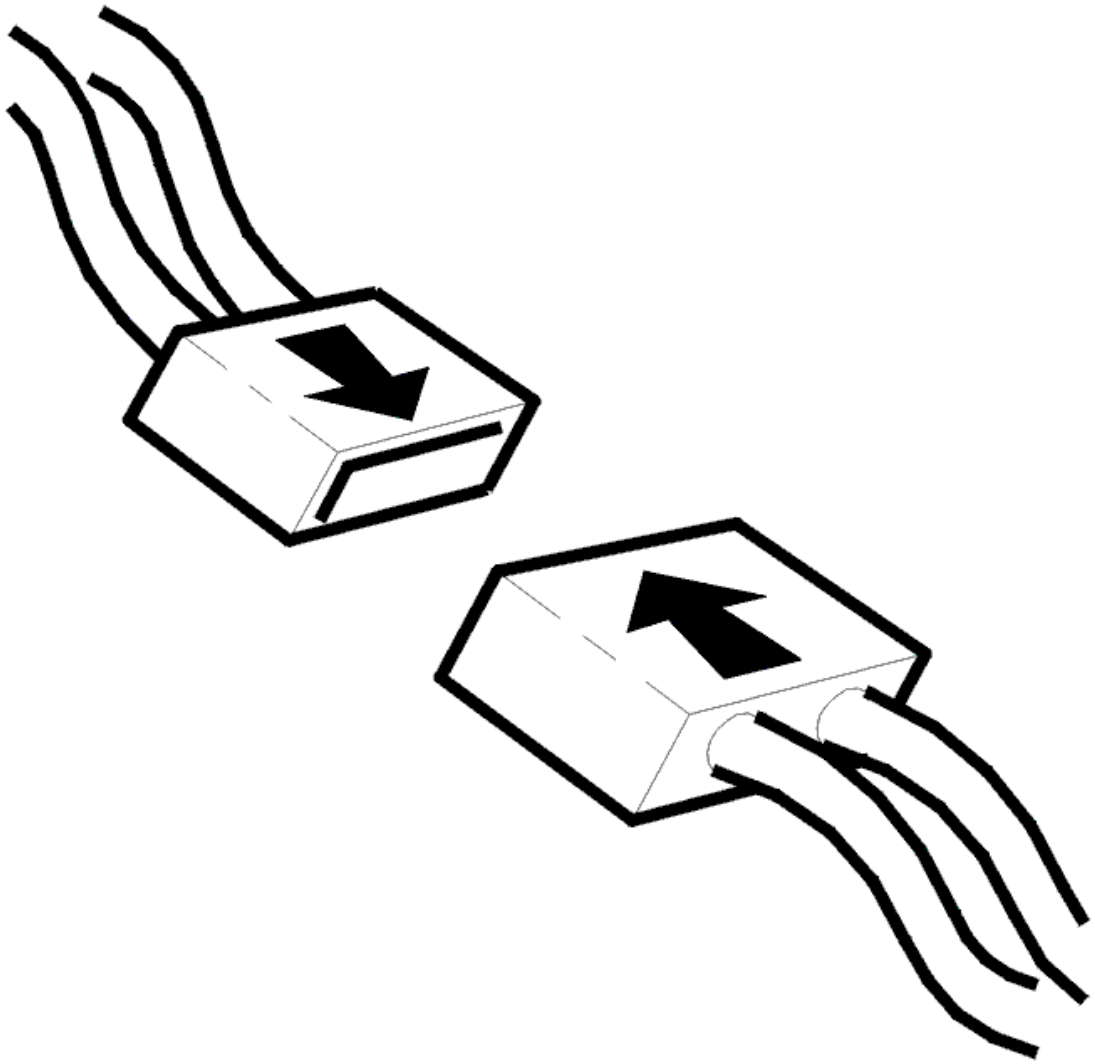

Fig. 18: Connecting Connector
Courtesy of VOLVO CARS CORPORATION

- Ignition off.
- Connect the connectors, install the components, etc.
- Ignition on.

  Check that window operates by raising/lowering window to its end stops.

Does window operate?

- **YES**

  VERIFIED: Troubleshooting has been completed.

- **NO**

  Refer to **INFORMATION**

INFORMATION

FAULT-TRACING INFORMATION

The fault should have been detected and remedied. As this is not the case fault-tracing has failed.

Exit fault-tracing for this diagnostic trouble code (DTC) or make another attempt.

DDM/PDM-0010 CENTRAL LOCKING MOTOR M1. SIGNAL TOO LOW (2003-12)

DIAGNOSTIC TROUBLE CODE (DTC) INFORMATION

Condition

Diagnostic trouble code (DTC) DDM/PDM-0010 is stored if the control module registers a short-circuit to ground in signal cable M1.

Diagnostic trouble code (DTC) DDM/PDM-0010 can be diagnosed when the central locking locks or unlocks.

Substitute Value

- None.

Possible Source

- Signal cable M1 is short-circuited to ground.

Fault symptom[s]

- The central locking system does not function at all.

SIGNAL TOO LOW

CHECKING COMPONENTS AND WIRING

Check signal cable M1 between door control module connector terminal #B2 and central locking motor connector terminal #8. Check for a short-circuit to ground.

Remedy as necessary.

Other information:

- To connect the breakout box, see **CONNECTING THE BREAKOUT BOX**
- To access and replace the door control module, see **PASSENGER DOOR MODULE (PDM), REPLACING**
- For information about signals, see **SIGNAL SPECIFICATION**
- see **CONTENTS** .

- **Continue**

  Refer to **VERIFICATION**

VERIFICATION

HINT: After carrying out the repair, check that the fault has been remedied.

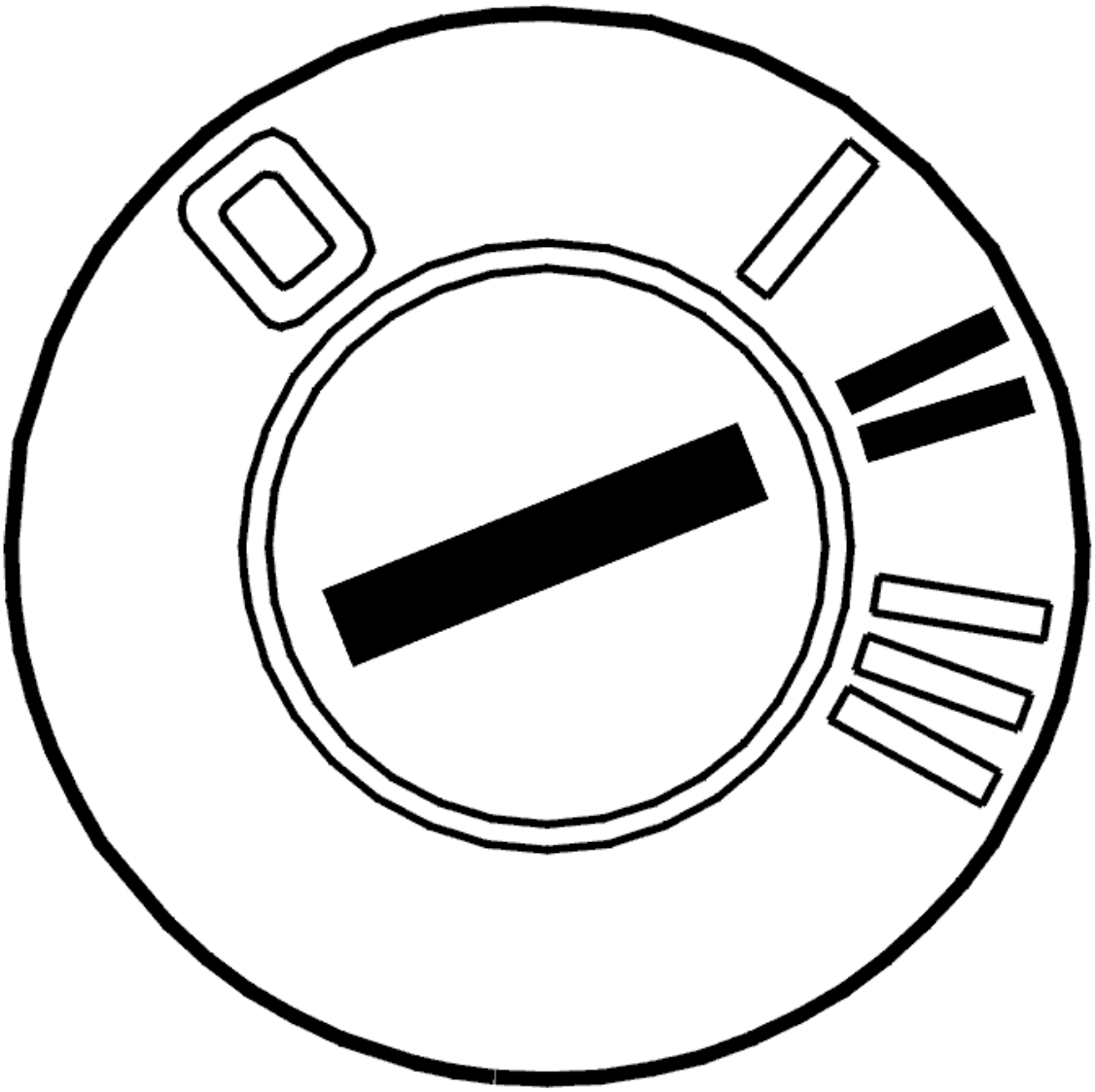

Fig. 19: Identifying Ignition ON

Courtesy of VOLVO CARS CORPORATION

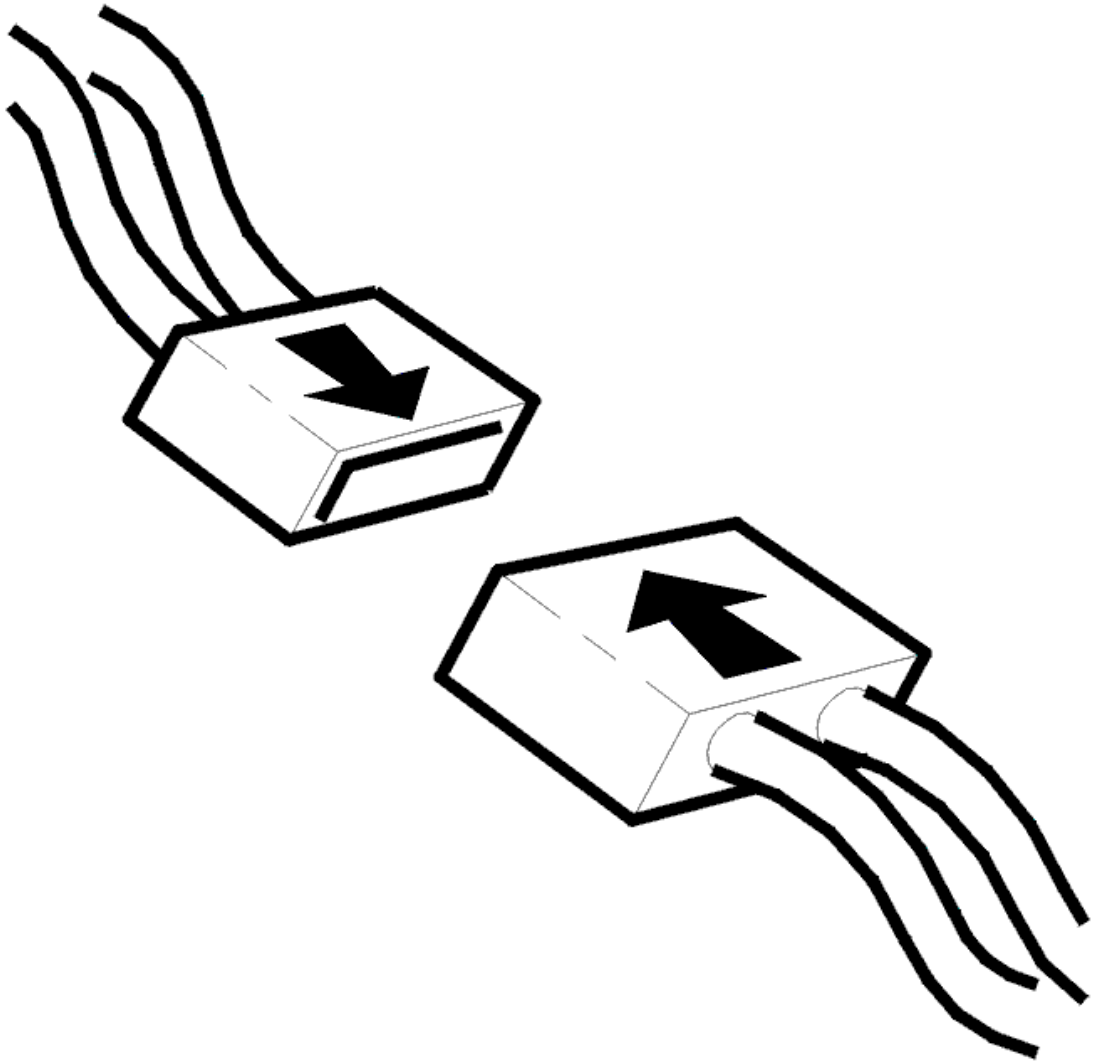

Fig. 20: Connecting Connector
Courtesy of VOLVO CARS CORPORATION

- Ignition off
- Reinstall the connectors, components etc.
- Ignition on.

  Check that the central locking system functions.

Does the central locking system function?

- **YES**

VERIFIED: Troubleshooting has been completed.

- **NO**

  Refer to **INFORMATION**

INFORMATION

FAULT-TRACING INFORMATION

The fault should have been detected and remedied. As this is not the case fault-tracing has failed.

Exit fault-tracing for this diagnostic trouble code (DTC) or make another attempt.

DDM/PDM-0013 CENTRAL LOCKING MOTOR M3. SIGNAL TOO LOW (2003-12)

DIAGNOSTIC TROUBLE CODE (DTC) INFORMATION

Condition

Diagnostic trouble code (DTC) DDM/PDM-0013 is stored if the control module registers a too low signal in signal cable M3.

Diagnostic trouble code (DTC) DDM/PDM-0013 can be diagnosed when the central locking is activated.

Substitute Value

- None.

Possible Source

- Signal cable M3 short-circuited to ground.

Fault symptom[s]

- The central locking system does not function at all.

SIGNAL TOO LOW

CHECKING COMPONENTS AND WIRING

Check signal cable M3 between door control module connector terminal #B1 and central locking motor connector terminal #6. Check for a short-circuit to ground.

Remedy as necessary.

Other information:

- To connect the breakout box, see **CONNECTING THE BREAKOUT BOX**
- To access and replace the door control module, see **PASSENGER DOOR MODULE (PDM), REPLACING**
- For information about signals, see **SIGNAL SPECIFICATION**
- see **CONTENTS** .

- **Continue**

  Refer to **VERIFICATION**

VERIFICATION

HINT: After carrying out the repair, check that the fault has been remedied.

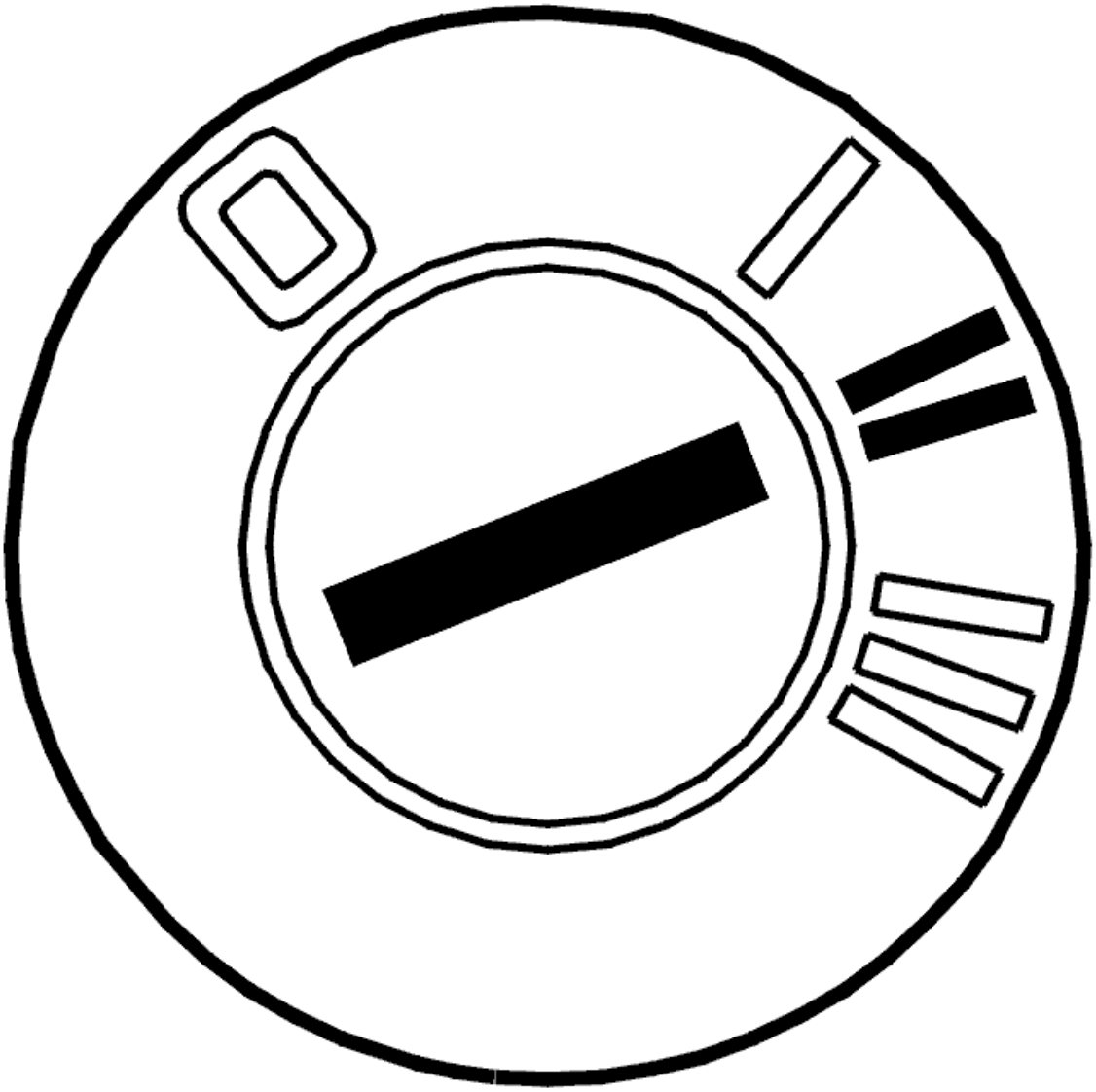

Fig. 21: Identifying Ignition ON
Courtesy of VOLVO CARS CORPORATION

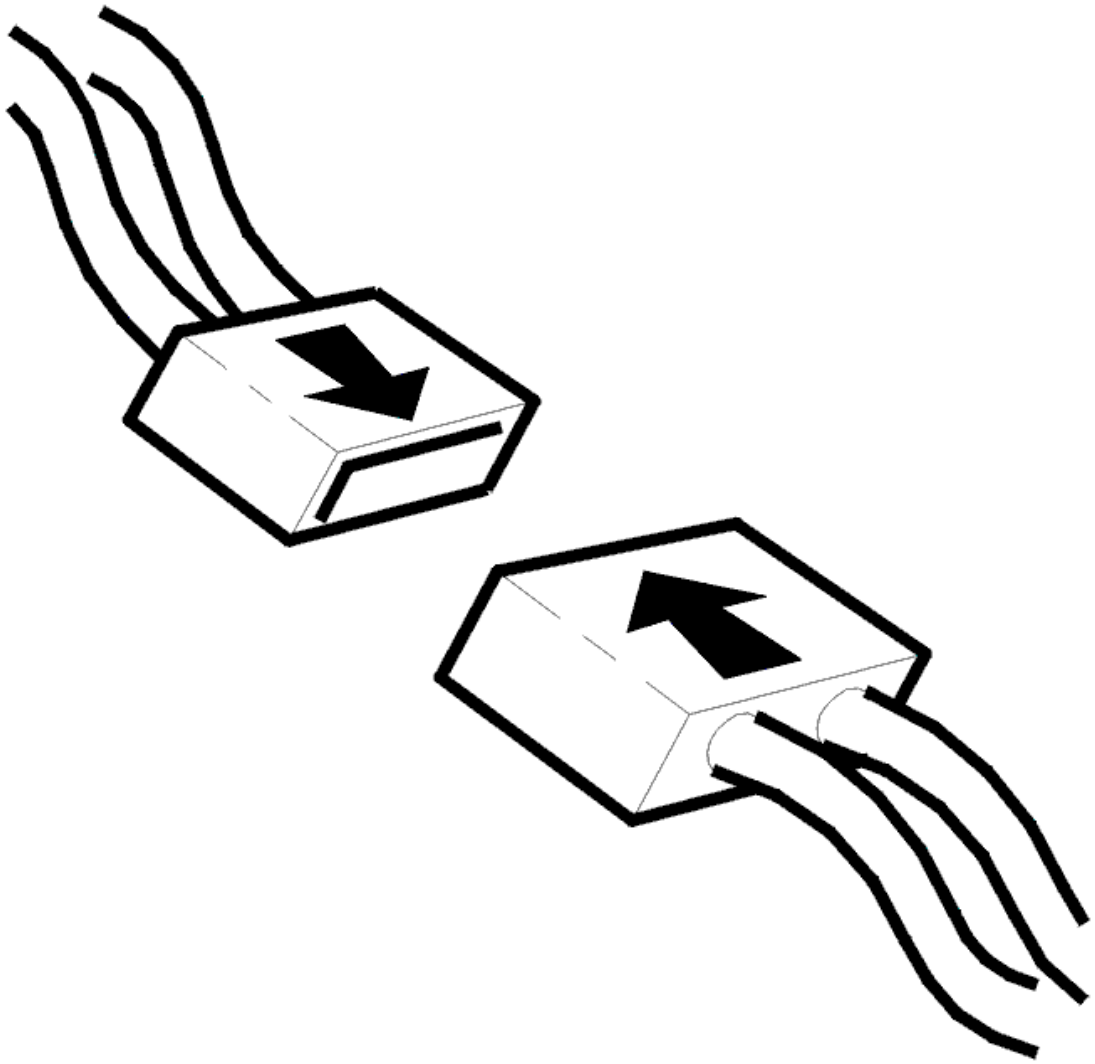

Fig. 22: Connecting Connector
Courtesy of VOLVO CARS CORPORATION

- Ignition off
- Reinstall the connectors, components etc.
- Ignition on.

  Check that the central locking system functions.

Does the central locking system function?

- **YES**

  VERIFIED: Troubleshooting has been completed.

- **NO**

  Refer to **INFORMATION**

INFORMATION

FAULT-TRACING INFORMATION

The fault should have been detected and remedied. As this is not the case fault-tracing has failed.

Exit fault-tracing for this diagnostic trouble code (DTC) or make another attempt.

DDM/PDM-0016 CENTRAL LOCKING MOTOR M2. SIGNAL TOO LOW (2003-12)

DIAGNOSTIC TROUBLE CODE (DTC) INFORMATION

Condition

Diagnostic trouble code (DTC) DDM/PDM-0016 is stored if the control module registers a too low signal in signal cable M2.

Diagnostic trouble code (DTC) DDM/PDM-0016 can be diagnosed when the deadlock activates or deactivates.

Substitute Value

- None.

Possible Source

- Signal cable M2 short-circuited to ground.

Fault symptom[s]

- Does not deadlock.

SIGNAL TOO LOW

CHECKING COMPONENTS AND WIRING

Check signal cable M2 between door control module connector terminal #B6 and central locking motor connector terminal #7. Check for a short-circuit to ground.

Remedy as necessary.

Other information:

- To connect the breakout box, see **CONNECTING THE BREAKOUT BOX**
- To access and replace the door control module, see **PASSENGER DOOR MODULE (PDM), REPLACING**
- For information about signals, see **SIGNAL SPECIFICATION**
- see **CONTENTS** .

- **Continue**

  Refer to **VERIFICATION**

VERIFICATION

HINT: After carrying out the repair, check that the fault has been remedied.

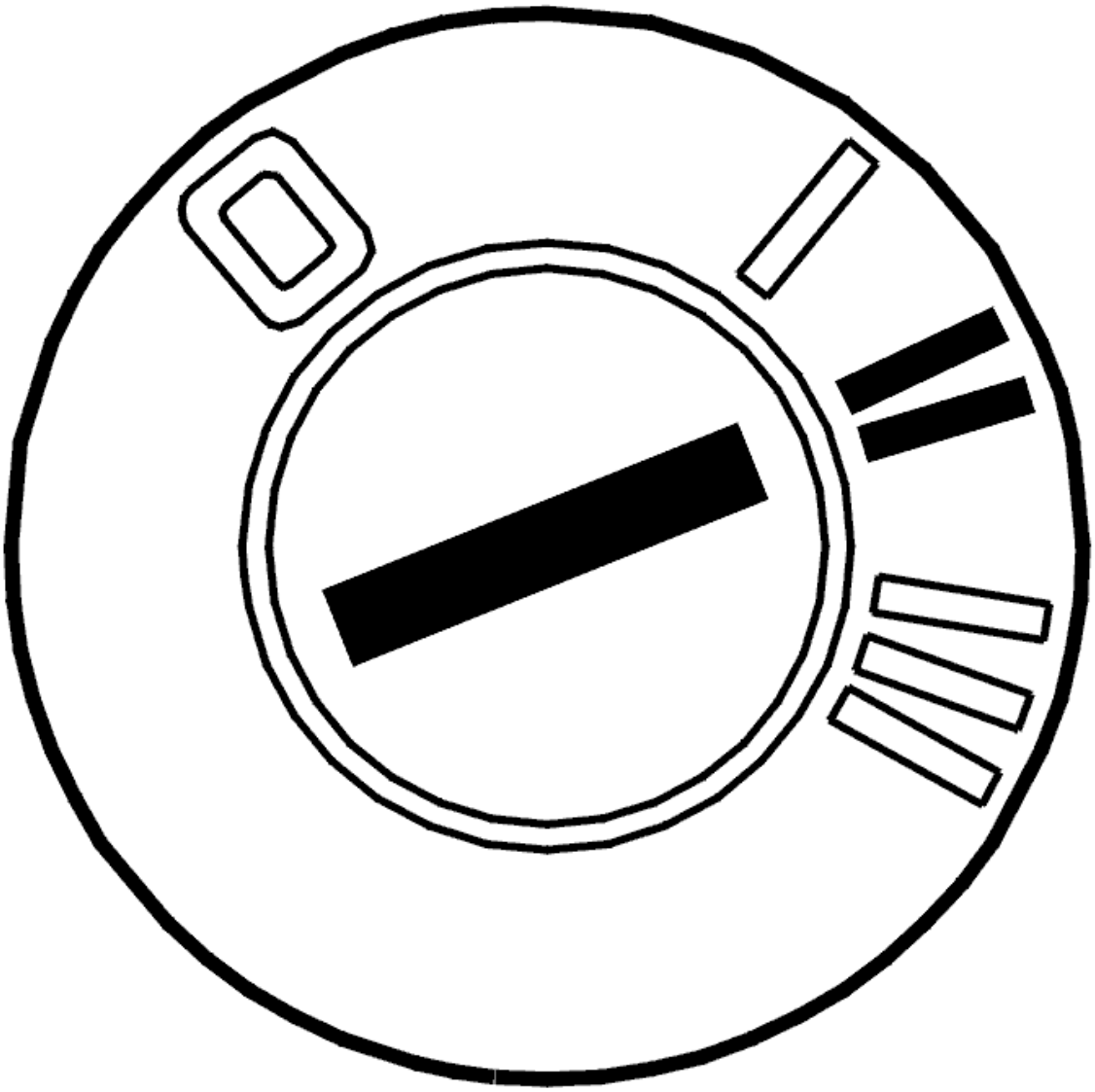

Fig. 23: Identifying Ignition ON

Courtesy of VOLVO CARS CORPORATION

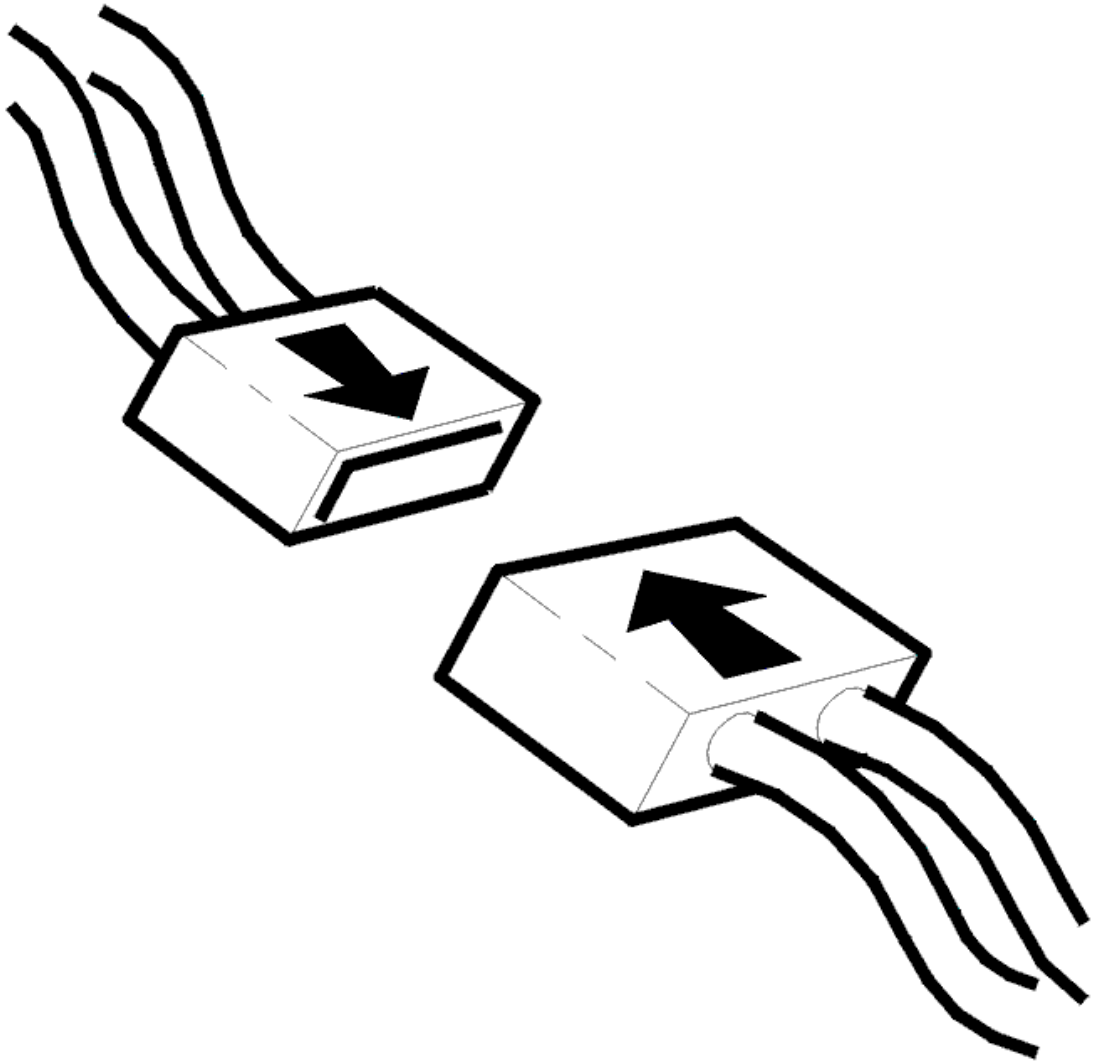

Fig. 24: Connecting Connector
Courtesy of VOLVO CARS CORPORATION

- Ignition off
- Reinstall the connectors, components etc.
- Ignition on.

  Check that the central locking system functions.

Does the central locking system function?

- **YES**

VERIFIED: Troubleshooting has been completed.

- **NO**

  Refer to **INFORMATION**

INFORMATION

FAULT-TRACING INFORMATION

The fault should have been detected and remedied. As this is not the case fault-tracing has failed.

Exit fault-tracing for this diagnostic trouble code (DTC) or make another attempt.

DDM/PDM-0020 POWER WINDOW MECHANISM HALL SENSOR 1. FAULTY SIGNAL (2005-12)

DIAGNOSTIC TROUBLE CODE INFORMATION

Condition

If control unit does not register a signal from Hall sensor H1 but registers a signal from Hall sensor H2 when window-lifting motor is activated, diagnostic trouble code DDM/PDM-0020 is displayed.

Substitute Value

- Nothing.

Possible Source

- Hall sensor H1 does not work
- Signal wire for Hall sensor H1 short circuited
- Open circuit on Hall sensor H1 signal wire.

Fault symptom[s]

- Automatic window closer does not work.

FAULTY SIGNAL

CHECKING FAULTS

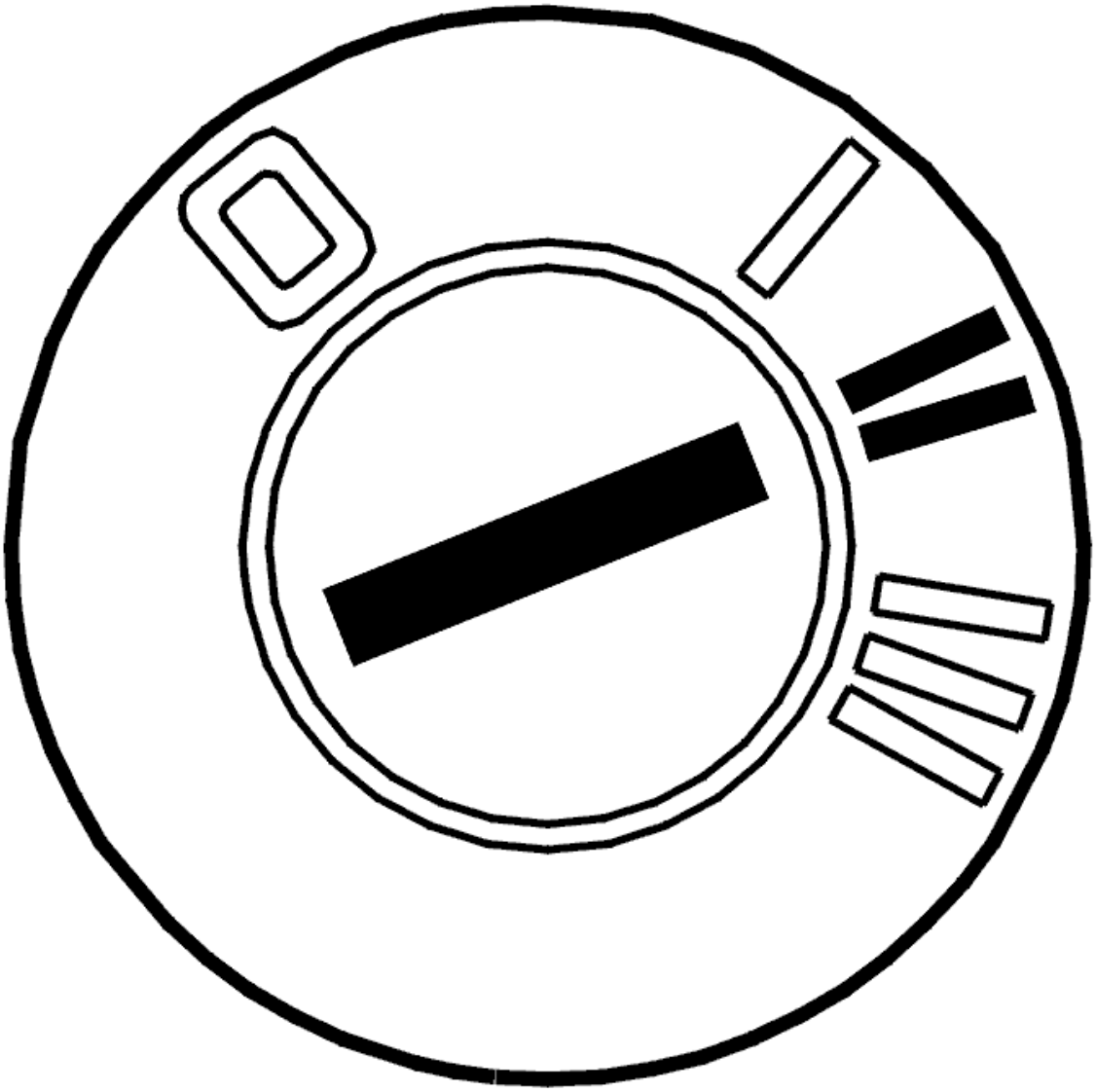

Fig. 25: Identifying Ignition ON
Courtesy of VOLVO CARS CORPORATION

- Ignition on.

  Press the power window switch 2 steps up to check the function of the automatic power window mechanism.

Is the automatic power window mechanism functioning?

- **YES**

  Refer to **INTERMITTENT FAULT**

- **NO**

Refer to **CHECKING THE CONNECTORS**

CHECKING THE CONNECTORS

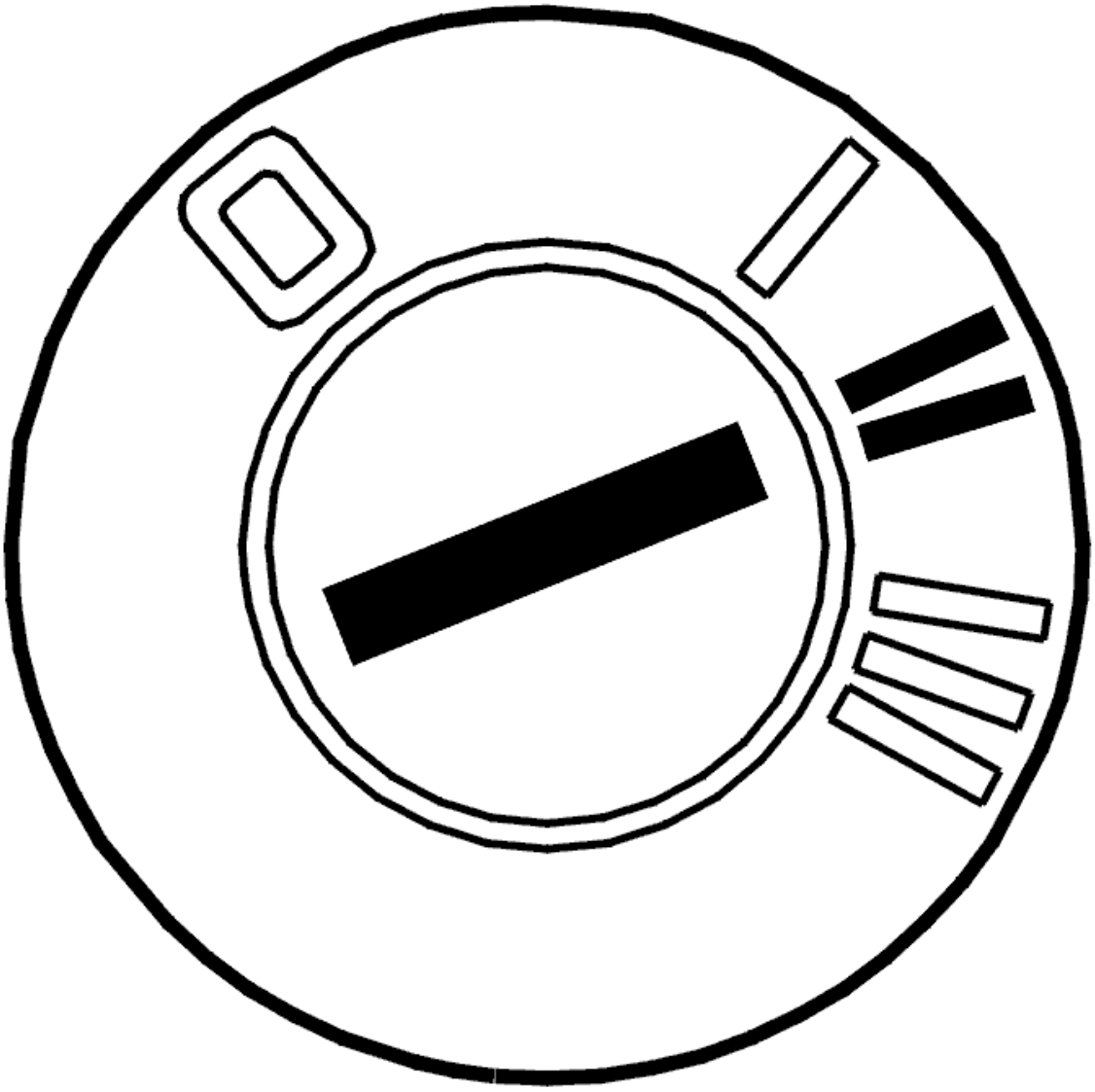

Fig. 26: Identifying Ignition ON
Courtesy of VOLVO CARS CORPORATION

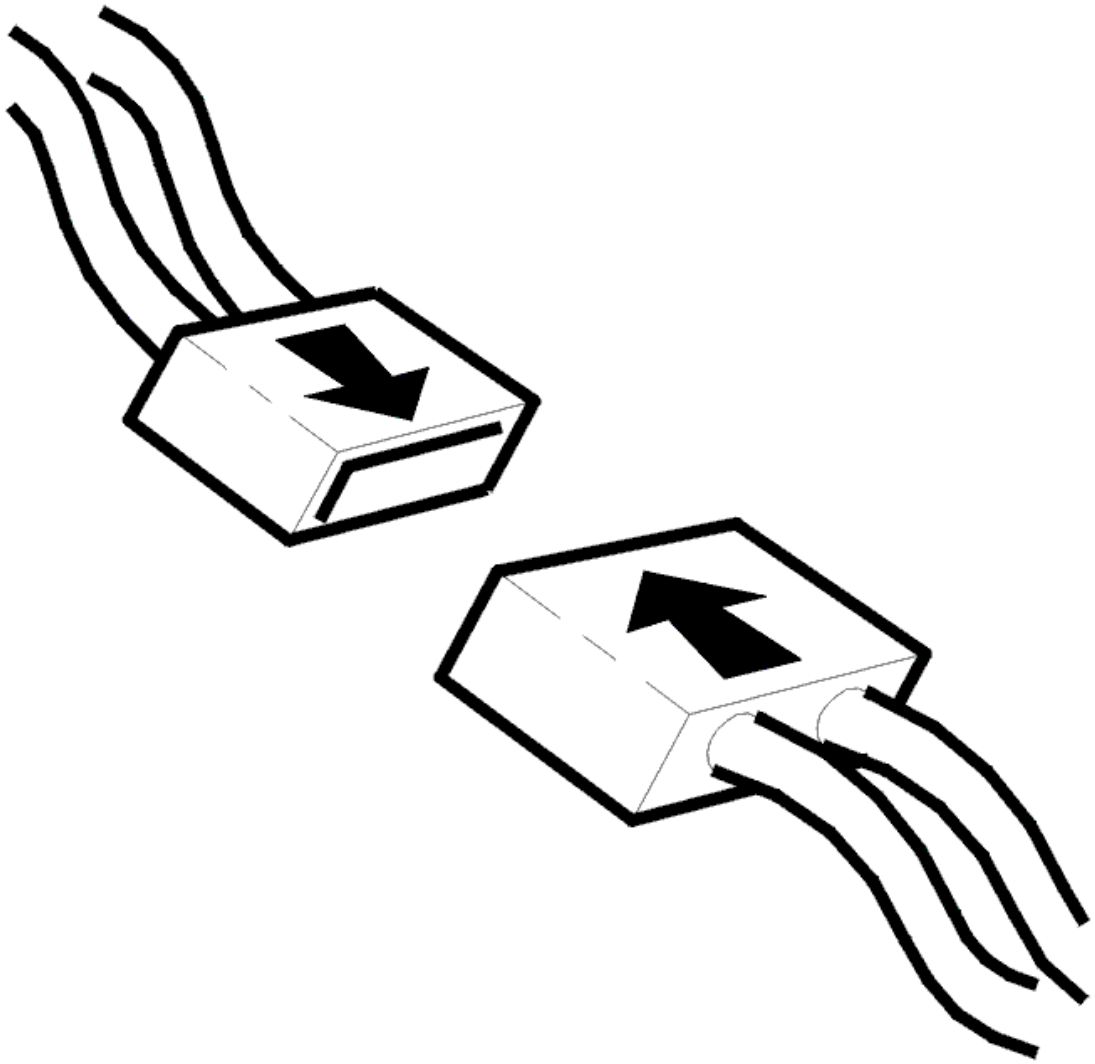

Fig. 27: Connecting Connector
Courtesy of VOLVO CARS CORPORATION

- Ignition off
- Check the power window lift motor connector. Check for contact resistance and oxidation. Remedy if necessary. In particular, check for any damage
- Reinstall the components, reconnect the connectors etc.
- Ignition on.

  Press the power window switch 2 steps up and down.

  Other information:

  - see **WINDOW LIFT MECHANISM FRONT SIDE DOOR, REPLACING**
  - see **CHECKING WIRING AND TERMINALS**

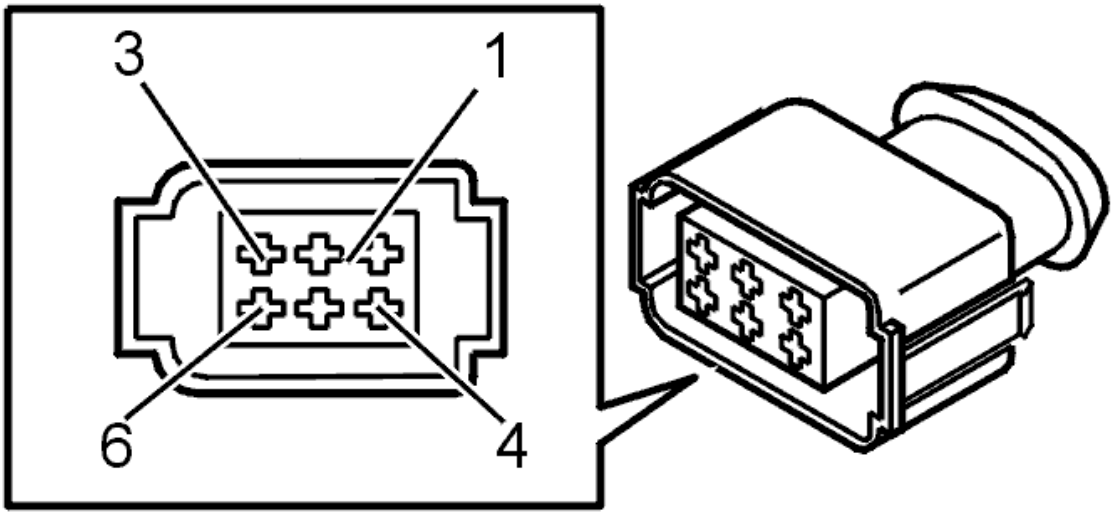

Fig. 28: Identifying Connector
Courtesy of VOLVO CARS CORPORATION

Is the automatic power window mechanism functioning?

- **YES**

  OKAY: Troubleshooting has been completed.

- **NO**

  Refer to **CHECKING FOR OPEN-CIRCUITS AND SHORT-CIRCUITS**

CHECKING FOR OPEN-CIRCUITS AND SHORT-CIRCUITS

XC90

Check the cable between control module terminal #23A and power window lift motor terminal #2. Check for a short-circuit to ground. Check for a short-circuit to supply voltage. Check for an open circuit.

When raising or lowering the window, the voltage between power window lift motor terminal #2 and ground must be 12 V.

Remedy as necessary.

Other information:

- see **CONNECTING THE BREAKOUT BOX**
- see **SIGNAL SPECIFICATION**
- see **CHECKING WIRING AND TERMINALS**

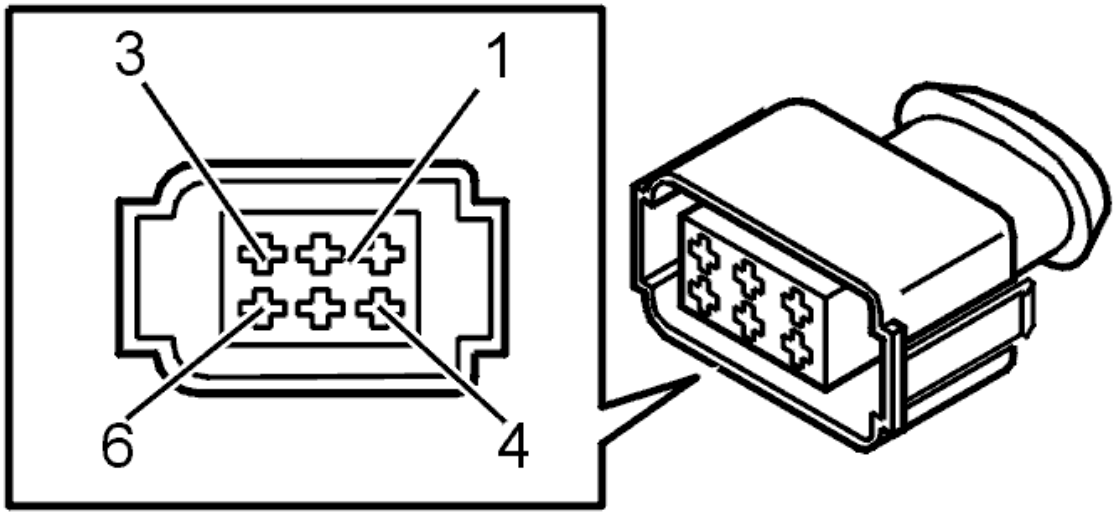

Fig. 29: Identifying Connector
Courtesy of VOLVO CARS CORPORATION

Was a fault detected?

- **YES**

  Refer to **VERIFICATION**

- **NO**

  Refer to **REPLACING THE COMPONENT**

REPLACING THE COMPONENT

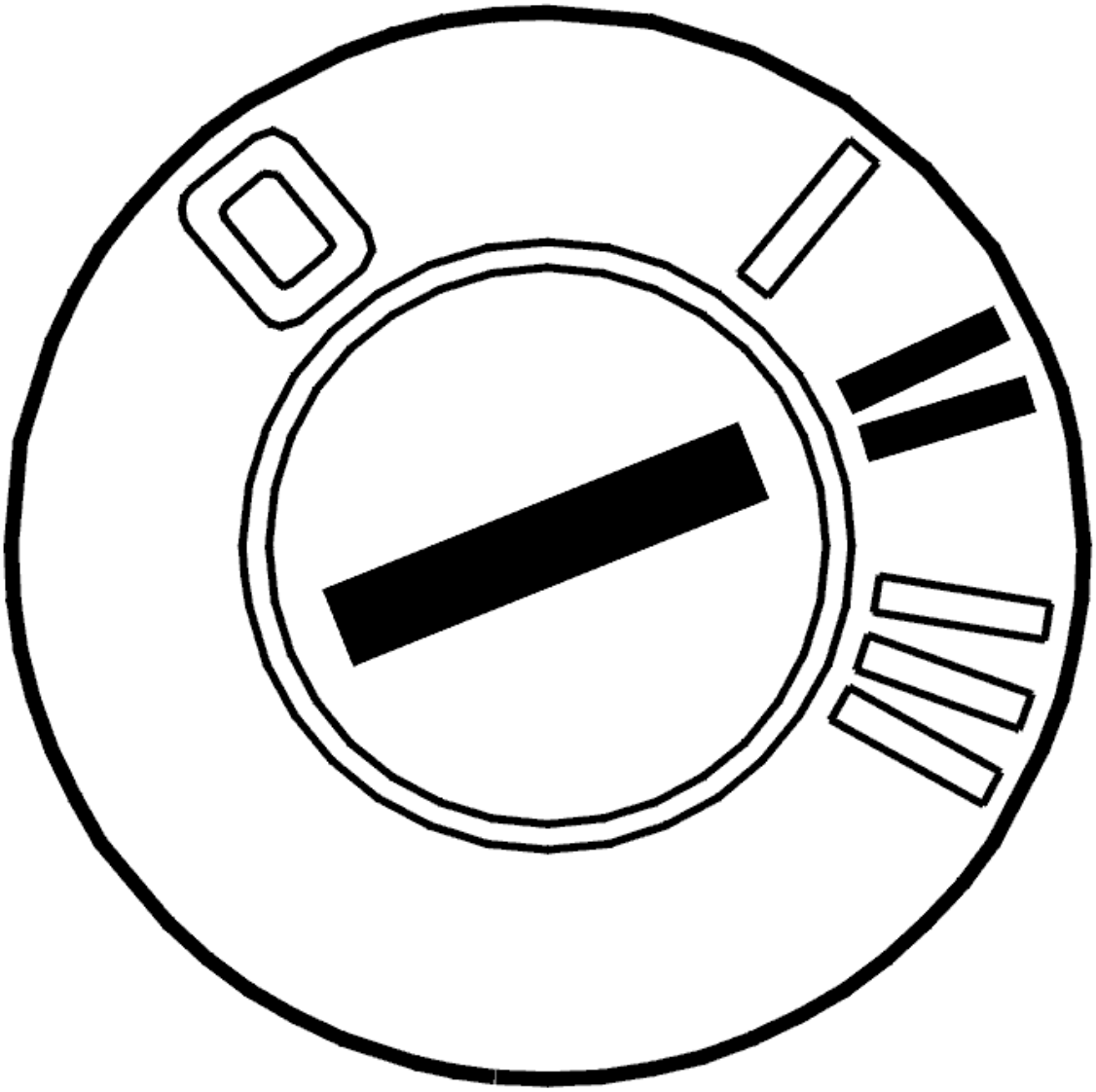

Fig. 30: Identifying Ignition ON
Courtesy of VOLVO CARS CORPORATION

Replace the window lift mechanism.

- Ignition on.

Move the window to its upper limit position using manual control.

Initialize the window.

During initialization, the window will automatically go down to its lowest position and then go back up again.

Other information

- see **WINDOW LIFT MECHANISM FRONT SIDE DOOR, REPLACING**

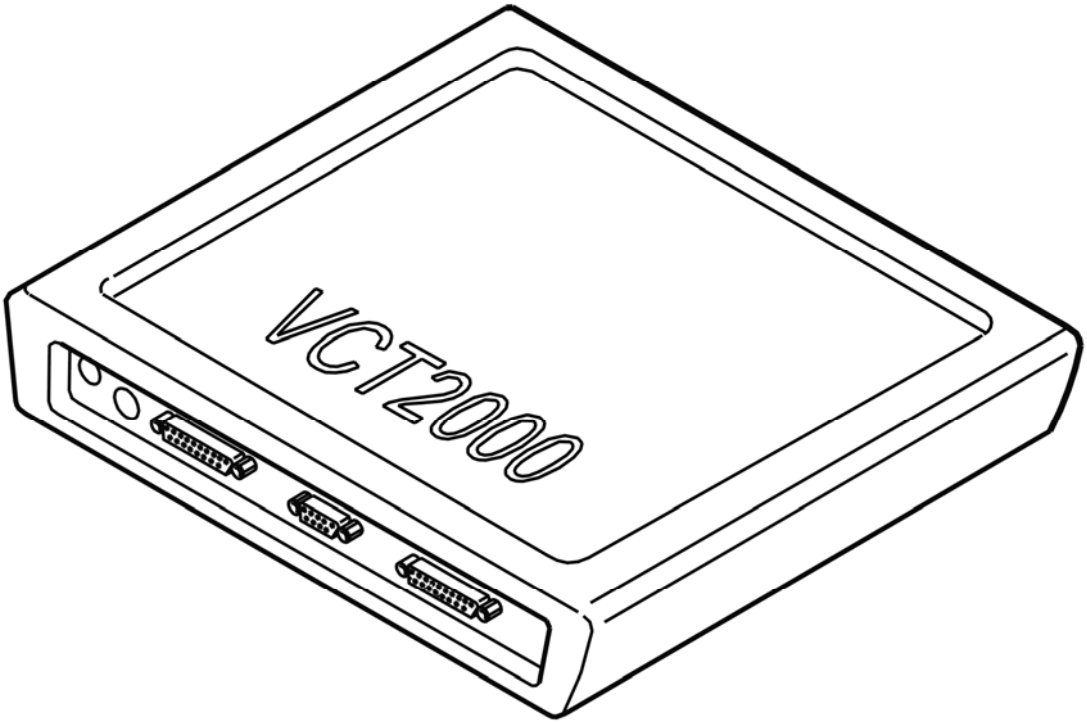

Fig. 31: Identifying VCT2000 Diagnostic Tool Symbol In VIDA
Courtesy of VOLVO CARS CORPORATION

- **Continue**

  Refer to **VERIFICATION**

INTERMITTENT FAULT

Check the connectors for the control module and power window lift motor. Check for contact resistance and oxidation. Check for loose connections.

XC90

Check the cable between control module terminal #23A and power window lift motor terminal #2. Check for a short-circuit to ground. Check for a short-circuit to supply voltage. Check for an open circuit.

When raising or lowering the window, the voltage between power window lift motor terminal #2 and ground must be 12 V.

Other information:

- see **CONNECTING THE BREAKOUT BOX**
- see **SIGNAL SPECIFICATION**

- see **WINDOW LIFT MECHANISM FRONT SIDE DOOR, REPLACING**
- see **CHECKING WIRING AND TERMINALS**

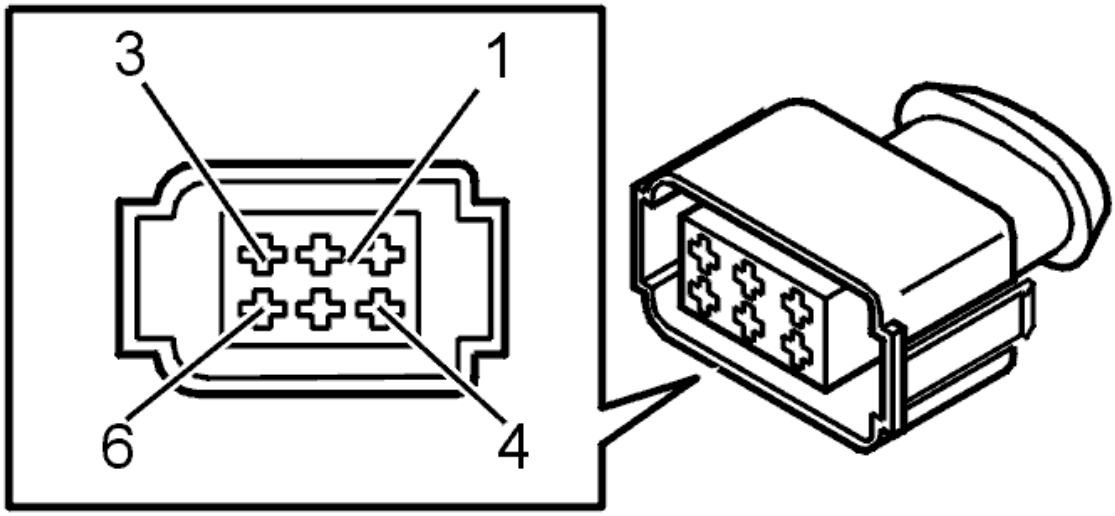

Fig. 32: Identifying Connector
Courtesy of VOLVO CARS CORPORATION

- **Continue**

  Refer to **INFORMATION**

VERIFICATION

HINT: After the repair it is necessary to check that the fault has been rectified.

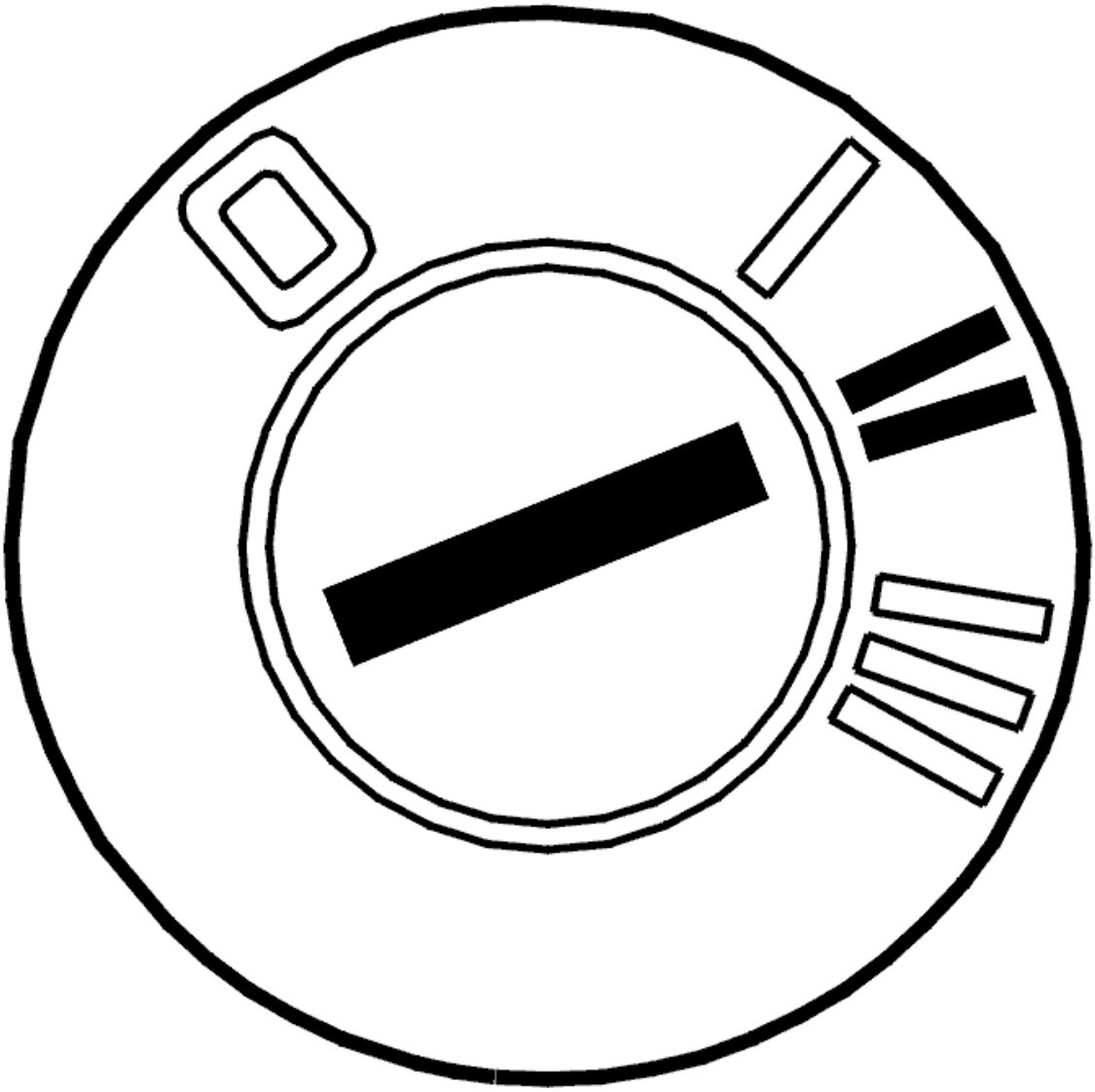

Fig. 33: Identifying Ignition ON
Courtesy of VOLVO CARS CORPORATION

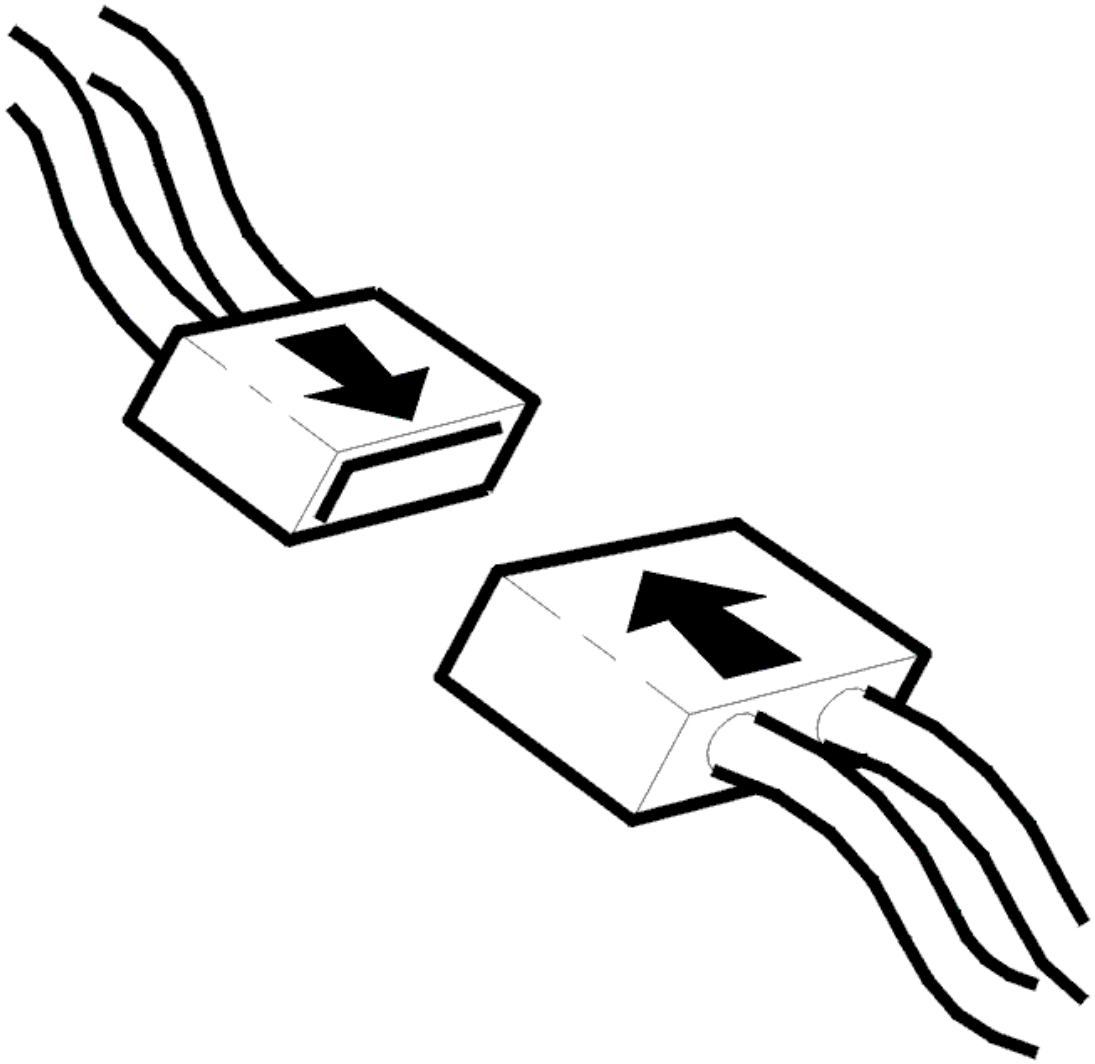

Fig. 34: Connecting Connector
Courtesy of VOLVO CARS CORPORATION

- Ignition off.
- Connect connectors, install components, etc.
- Ignition on.

  Check that the automatic window operation works by pressing in the button 2 stages one way or the other.

Does the automatic window operation work?

- **YES**

  VERIFIED: Troubleshooting has been completed.

- **NO**

  Refer to **INFORMATION**

INFORMATION

FAULT-TRACING INFORMATION

The fault should have been detected and remedied. As this is not the case fault-tracing has failed.

Exit fault-tracing for this diagnostic trouble code (DTC) or make another attempt.

DDM/PDM-0020 WINDOW LIFT HALL SENSOR 1. SIGNAL FAULTY (2003-04)

DIAGNOSTIC TROUBLE CODE INFORMATION

see **DIAGNOSTIC TROUBLE CODE INFORMATION**

FAULTY SIGNAL

CHECKING FOR PERMANENT OR INTERMITTENT FAULTS

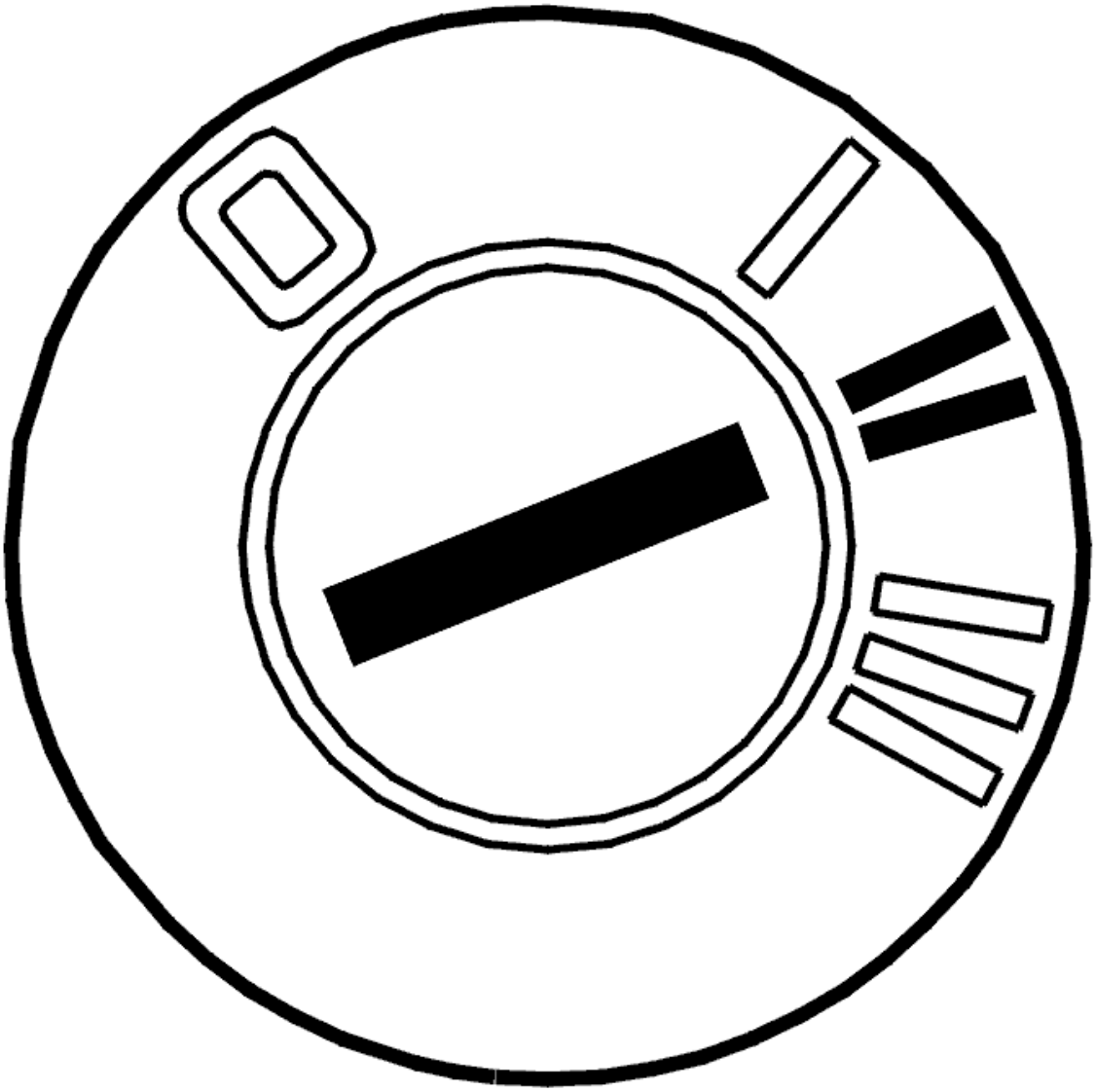

Fig. 35: Identifying Ignition ON
Courtesy of VOLVO CARS CORPORATION

- Ignition on.

  Press the power window switch 2 steps up to check the function of the automatic power window mechanism.

Is the automatic power window mechanism functioning?

- **YES**

  Refer to **INTERMITTENT FAULT**

- **NO**

Refer to **CHECKING THE CONNECTORS**

CHECKING THE CONNECTORS

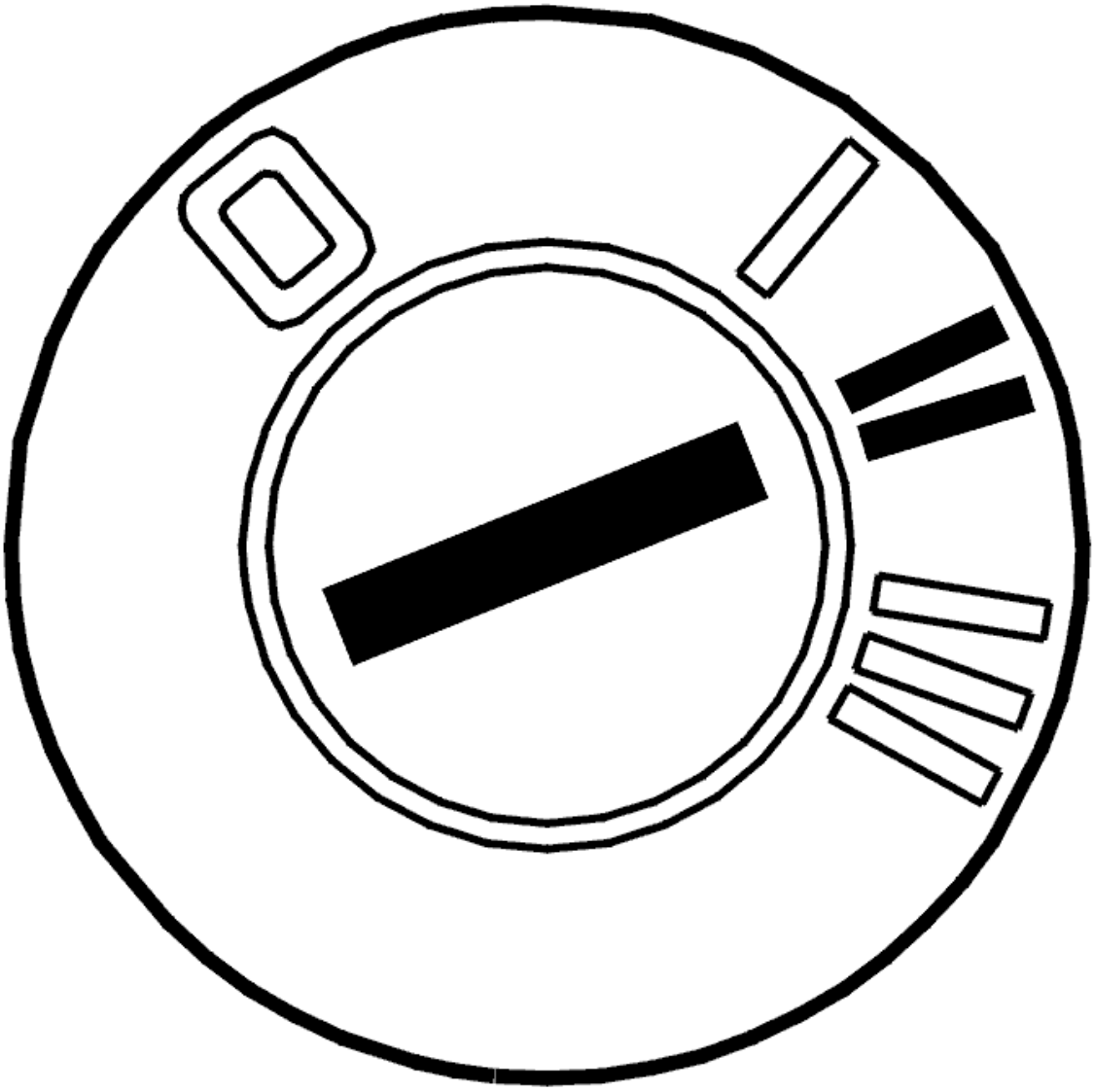

Fig. 36: Identifying Ignition ON
Courtesy of VOLVO CARS CORPORATION

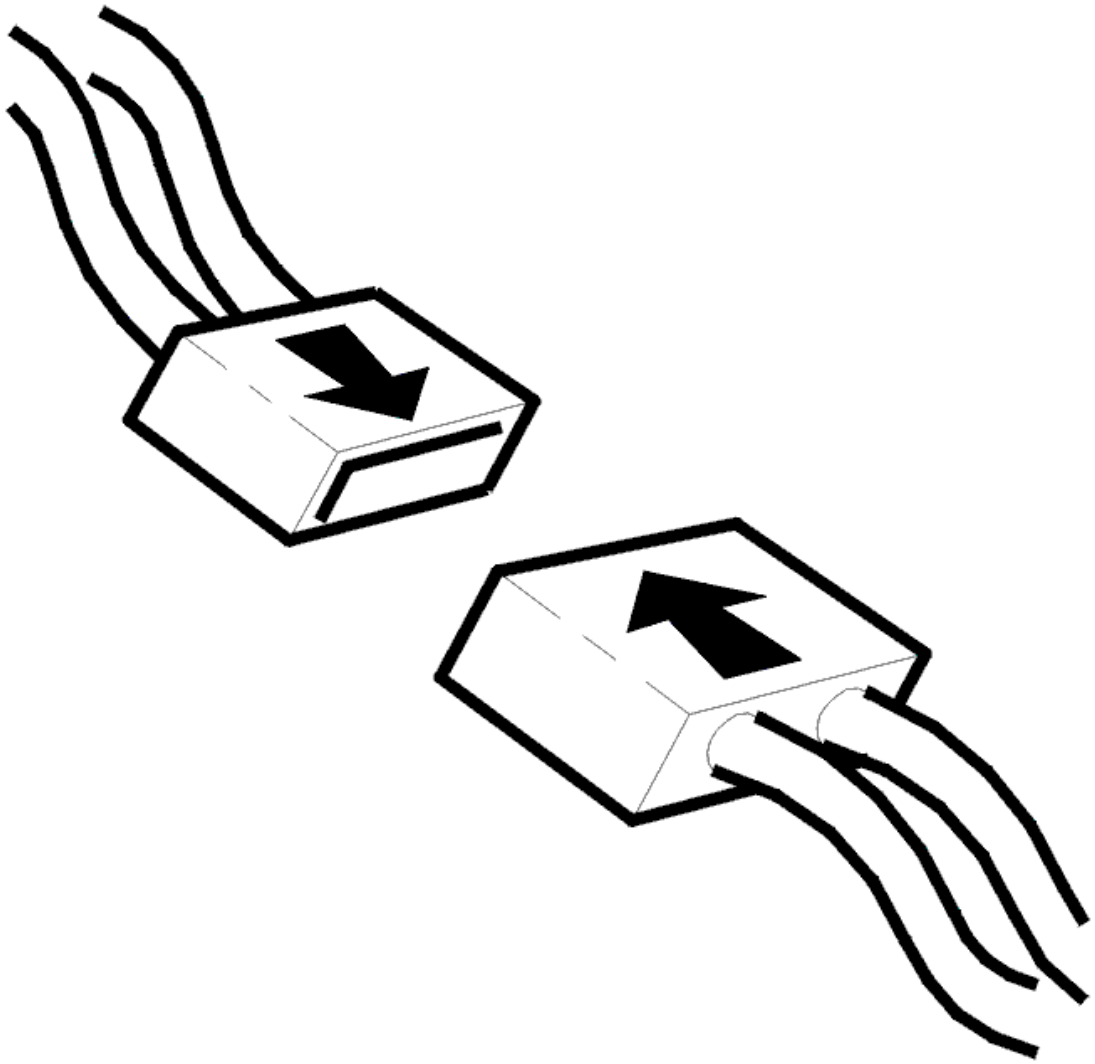

Fig. 37: Connecting Connector
Courtesy of VOLVO CARS CORPORATION

- Ignition off
- Check the power window lift motor connector. Check for contact resistance and oxidation and remedy. In particular, check for any damage
- Reinstall the components, reconnect the connectors etc.
- Ignition on.

  Press the power window switch 2 steps up and down.

  Other information:

  - To access the window lift mechanism, see **WINDOW LIFT MECHANISM FRONT SIDE DOOR, REPLACING**

- see **CHECKING WIRING AND TERMINALS** .

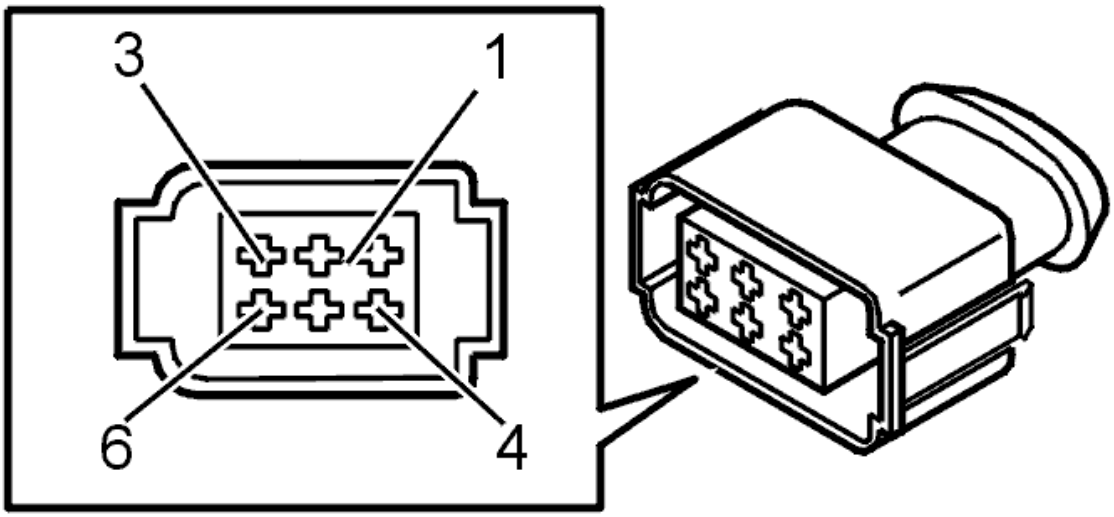

Fig. 38: Identifying Connector
Courtesy of VOLVO CARS CORPORATION

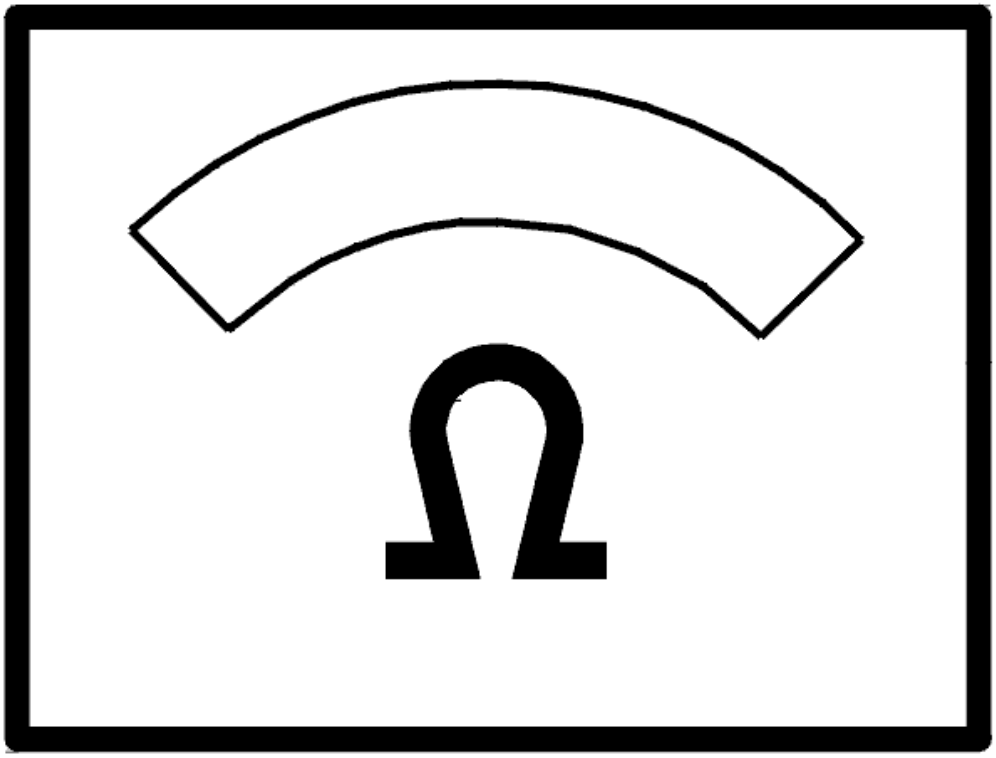

Fig. 39: Identifying Ohmmeter
Courtesy of VOLVO CARS CORPORATION

Is the automatic power window mechanism functioning?

- **YES**

  OKAY: Troubleshooting has been completed.

- **NO**

  Refer to **CHECKING FOR OPEN-CIRCUITS AND SHORT-CIRCUITS**

CHECKING FOR OPEN-CIRCUITS AND SHORT-CIRCUITS

Check the cable between door control module terminal #23A and power window motor terminal #5. Check for a

short-circuit to ground. Check for a short-circuit to supply voltage. Check for an open-circuit.

Remedy as necessary.

Other information:

- When raising or lowering the window, the voltage between power window lift motor terminal #5 and ground must be 12 V
- To connect the breakout box, see **CONNECTING THE BREAKOUT BOX**
- For further information about signals and other values, see **SIGNAL SPECIFICATION**
- see **CHECKING WIRING AND TERMINALS** .

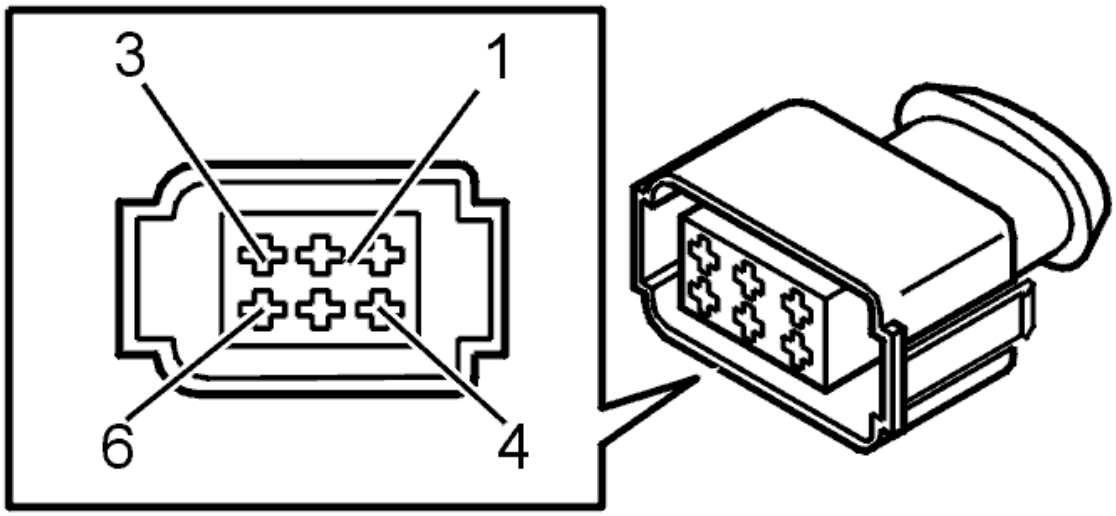

Fig. 40: Identifying Connector
Courtesy of VOLVO CARS CORPORATION

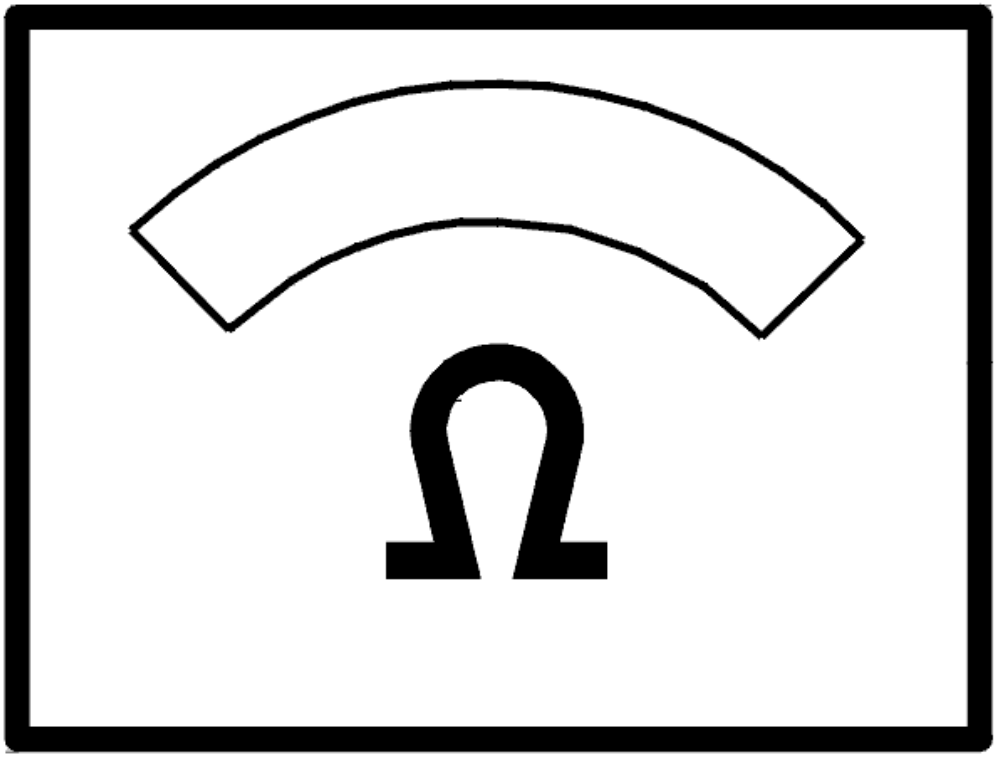

Fig. 41: Identifying Ohmmeter
Courtesy of VOLVO CARS CORPORATION

Was a fault detected?

- **YES**

  Refer to **VERIFICATION**

- **NO**

  Refer to **REPLACING THE COMPONENT**

REPLACING THE COMPONENT

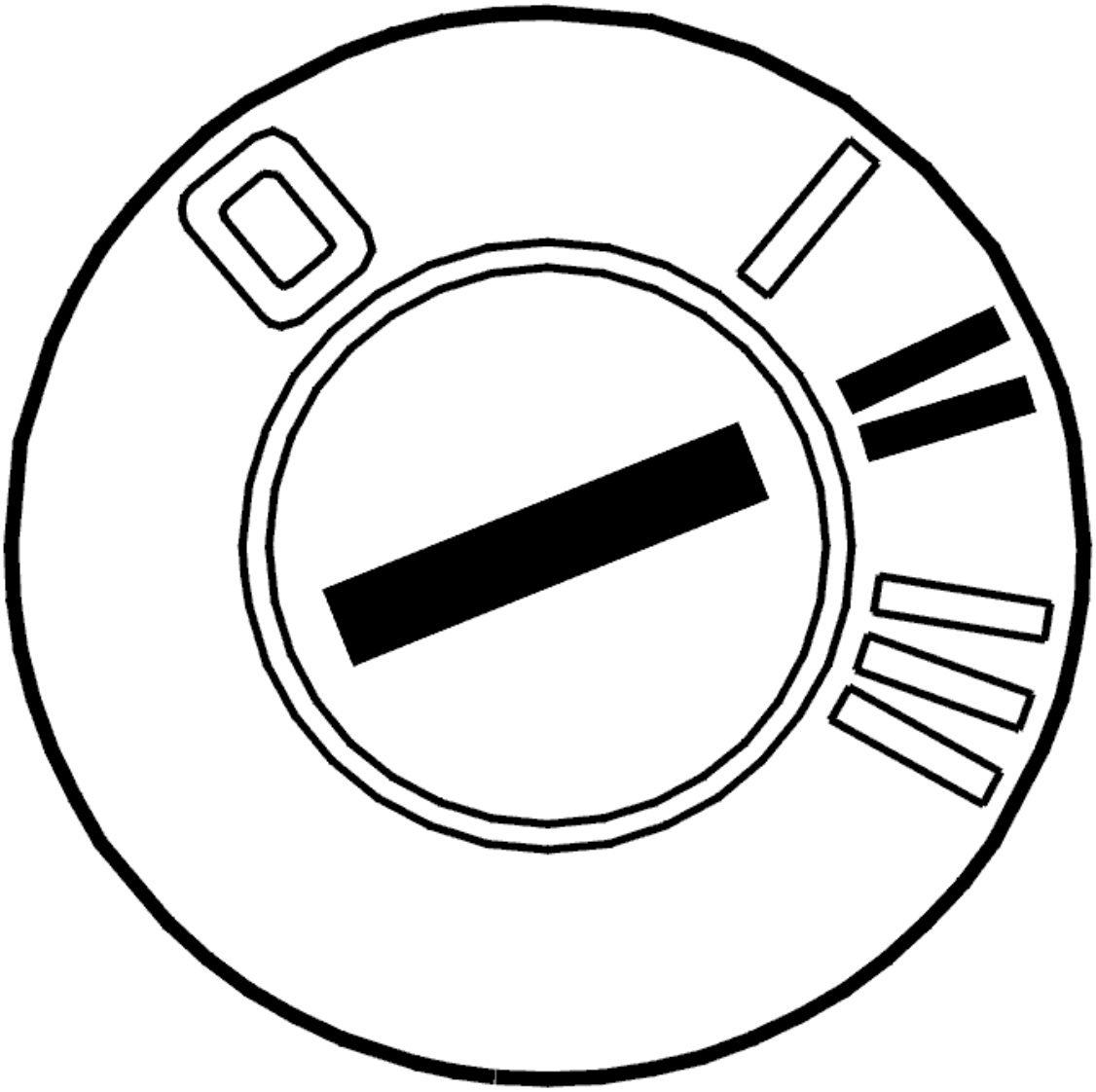

Fig. 42: Identifying Ignition ON
Courtesy of VOLVO CARS CORPORATION

Replace the power window mechanism according to **WINDOW LIFT MECHANISM FRONT SIDE DOOR, REPLACING** .

Ignition on.

Move the window to its upper limit position using manual control.

Initialize the window.

From model year 2003 inclusive, the window will lower approximately 10 centimeters and then close again during initialization.

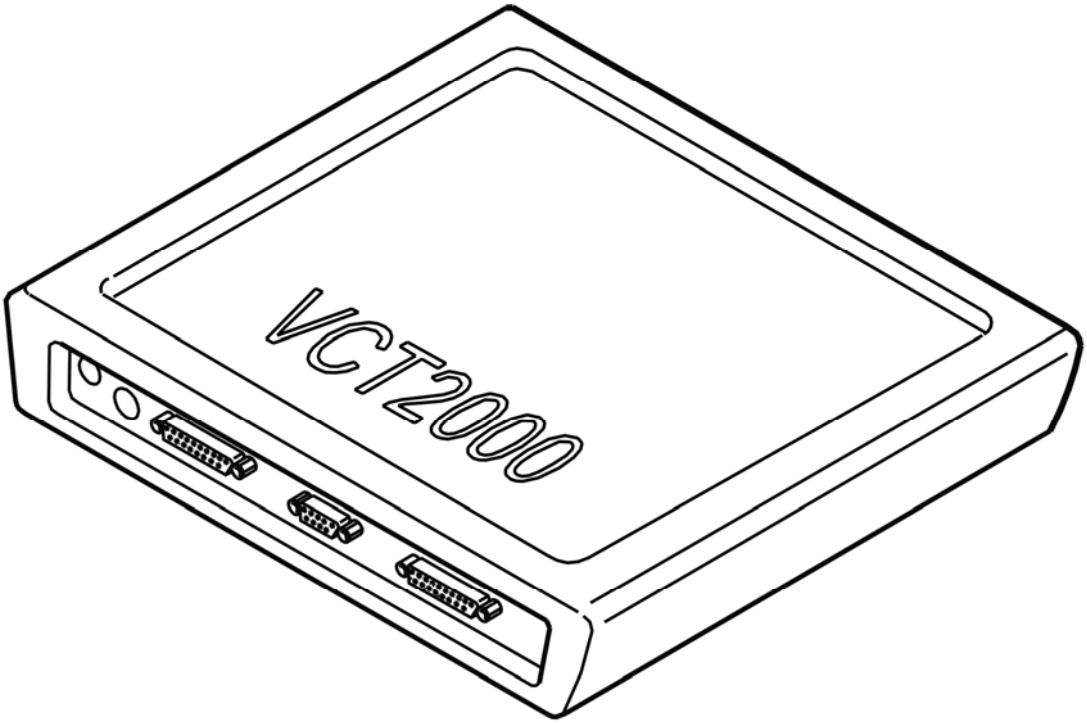

Fig. 43: Identifying VCT2000 Diagnostic Tool Symbol In VIDA
Courtesy of VOLVO CARS CORPORATION

- **Continue**

  Refer to **VERIFICATION**

INTERMITTENT FAULT

Check the connectors for the control module and power window lift motor. Check for contact resistance and oxidation. Check for loose connections.

Check the cable between control module terminal #23A and power window motor terminal #5. Check for an intermittent short-circuit to ground. Check for an intermittent short-circuit to supply voltage. Check for an intermittent open-circuit.

Other information:

- When raising or lowering the window, the voltage between power window lift motor terminal #5 and ground must be 12 V
- To connect the breakout box, see **CONNECTING THE BREAKOUT BOX**
- For further information about signals and other values, see **SIGNAL SPECIFICATION**
- To access the window lift mechanism, see **WINDOW LIFT MECHANISM FRONT SIDE DOOR,**

REPLACING

- see **CHECKING WIRING AND TERMINALS** .

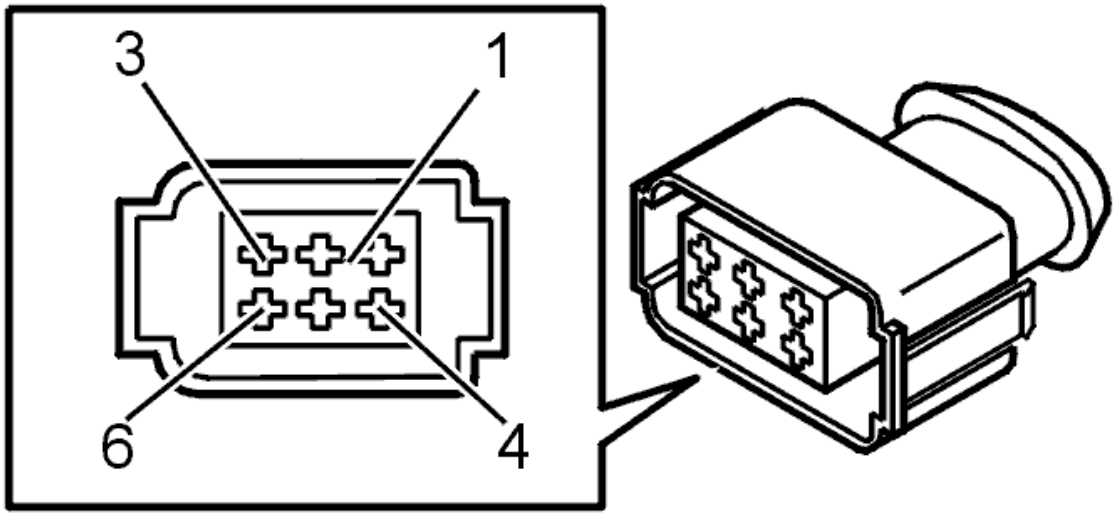

Fig. 44: Identifying Connector
Courtesy of VOLVO CARS CORPORATION

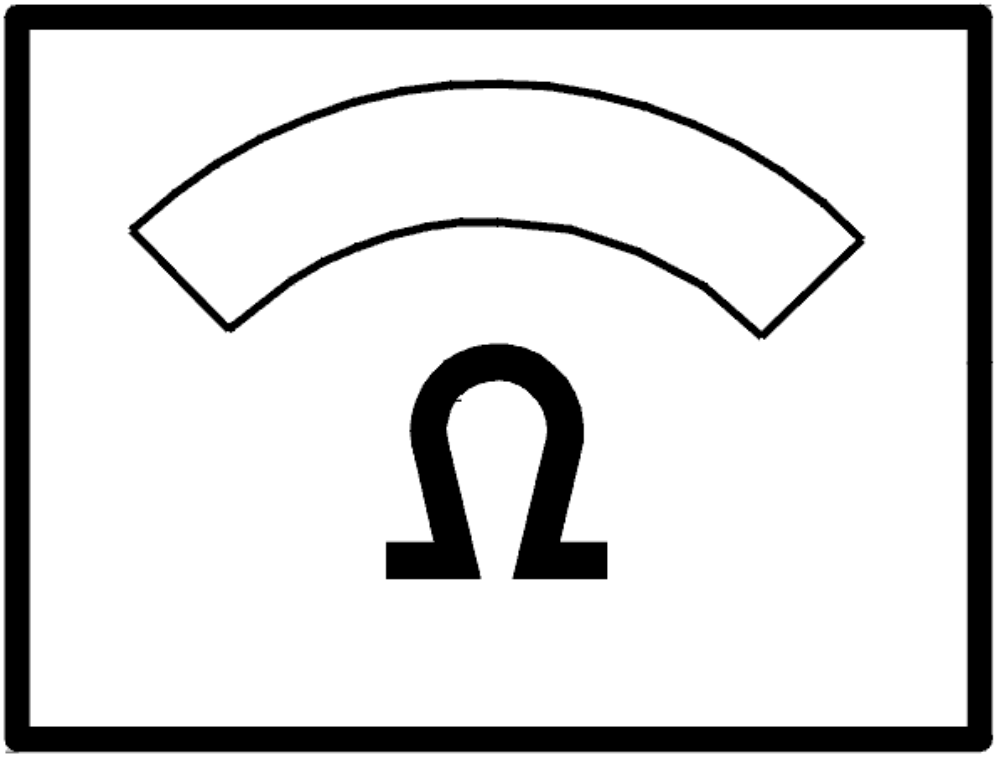

Fig. 45: Identifying Ohmmeter
Courtesy of VOLVO CARS CORPORATION

- **Continue**

  Refer to **INFORMATION**

VERIFICATION

HINT: After the repair it is necessary to check that the fault has been rectified.

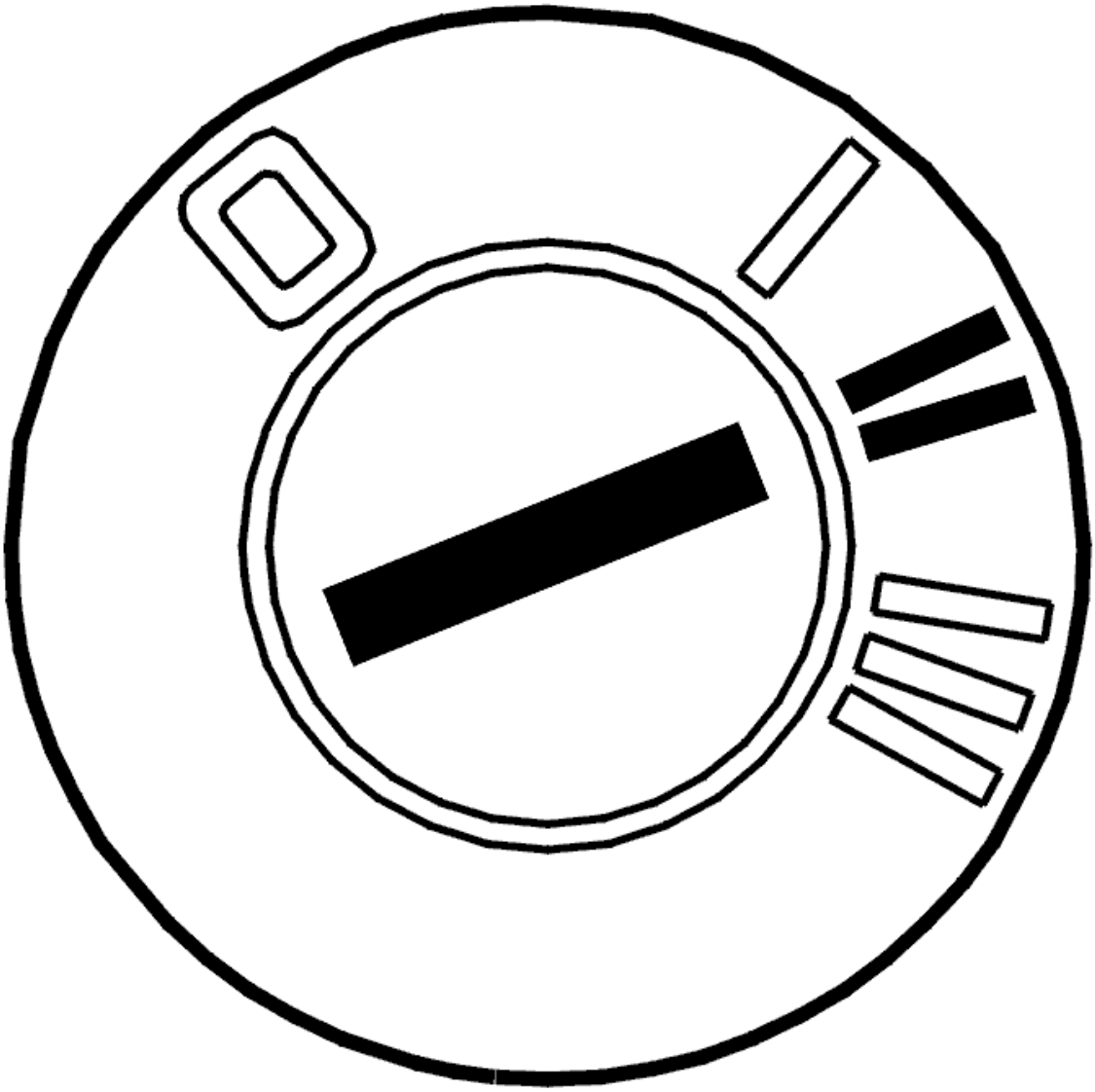

Fig. 46: Identifying Ignition ON
Courtesy of VOLVO CARS CORPORATION

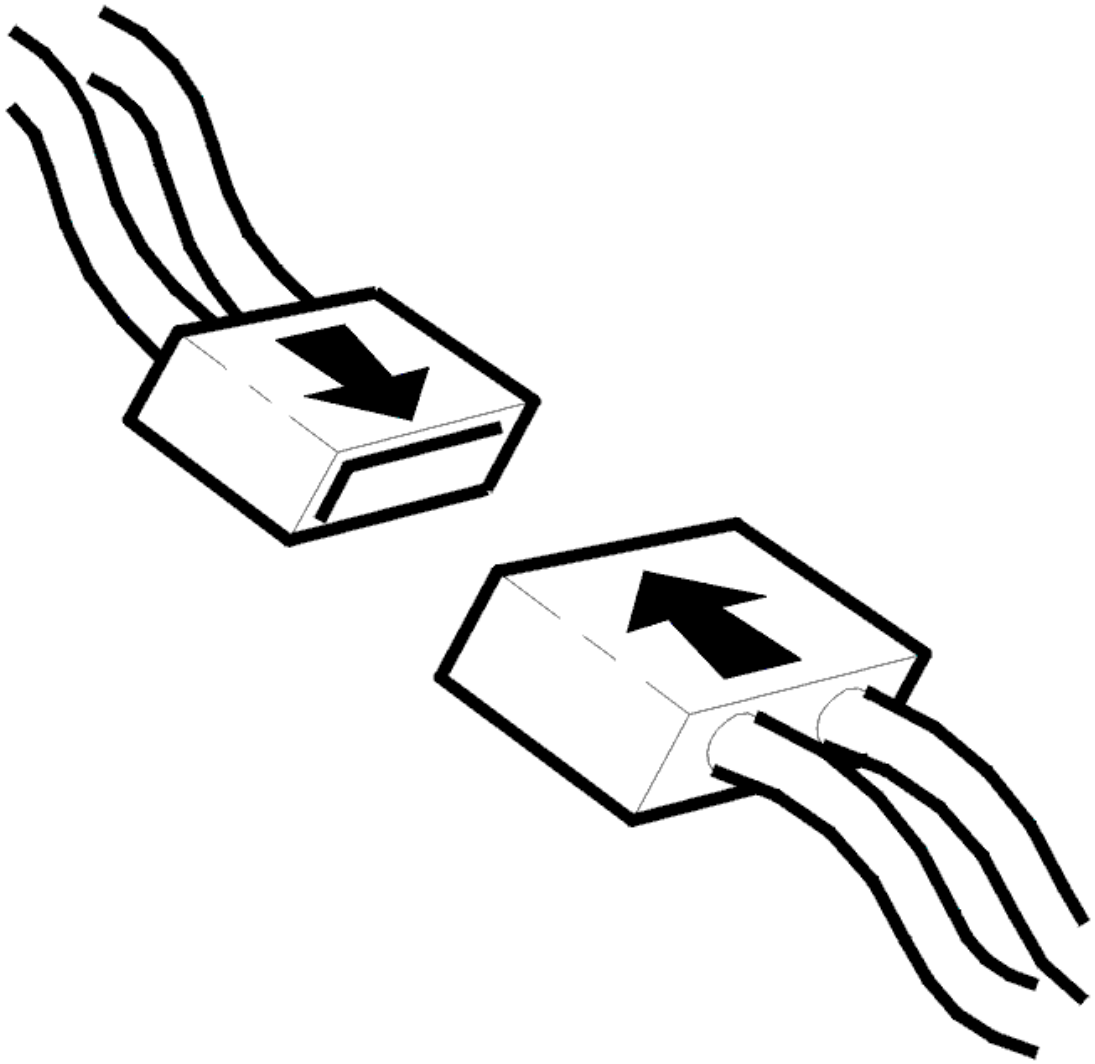

Fig. 47: Connecting Connector
Courtesy of VOLVO CARS CORPORATION

- Ignition off.
- Connect connectors, install components, etc.
- Ignition on.

  Check that the automatic window operation works by pressing in the button 2 stages one way or the other.

Does the automatic window operation work?

- **YES**

  VERIFIED: Troubleshooting has been completed.

- **NO**

  Refer to **INFORMATION**

INFORMATION

FAULT-TRACING INFORMATION

The fault should have been detected and remedied. As this is not the case fault-tracing has failed.

Exit fault-tracing for this diagnostic trouble code (DTC) or make another attempt.

DDM/PDM-0021 POWER WINDOW MECHANISM HALL SENSOR 2. FAULTY SIGNAL (2005-12)

DIAGNOSTIC TROUBLE CODE INFORMATION

Condition

If control unit does not register a signal from Hall sensor H2 but registers a signal from Hall sensor H1 when window-lifting motor is activated, diagnostic trouble code DDM/PDM-0021 is displayed.

Substitute Value

- Nothing.

Possible Source

- Hall sensor H2 does not work
- Signal wire for Hall sensor H2 short circuited
- Open circuit on Hall sensor H2 signal wire.

Fault symptom[s]

- Automatic window closer does not work.

FAULTY SIGNAL

CHECKING FAULTS

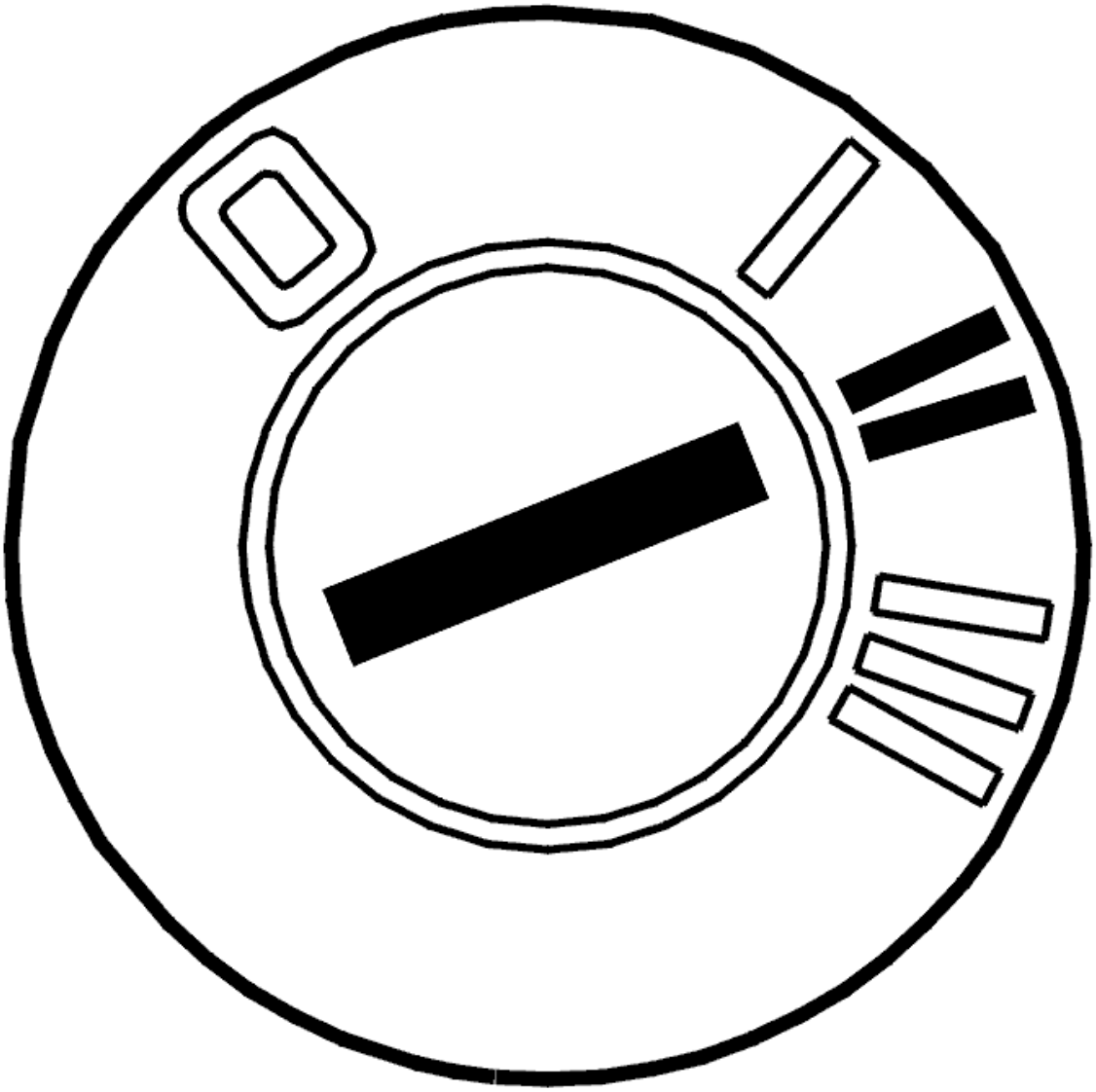

Fig. 48: Identifying Ignition ON
Courtesy of VOLVO CARS CORPORATION

- Ignition on.

  Press the power window switch 2 steps up to check the function of the automatic power window mechanism.

Is the automatic power window mechanism functioning?

- **YES**

  Refer to **INTERMITTENT FAULT**

- **NO**

Refer to **CHECKING THE CONNECTORS**

CHECKING THE CONNECTORS

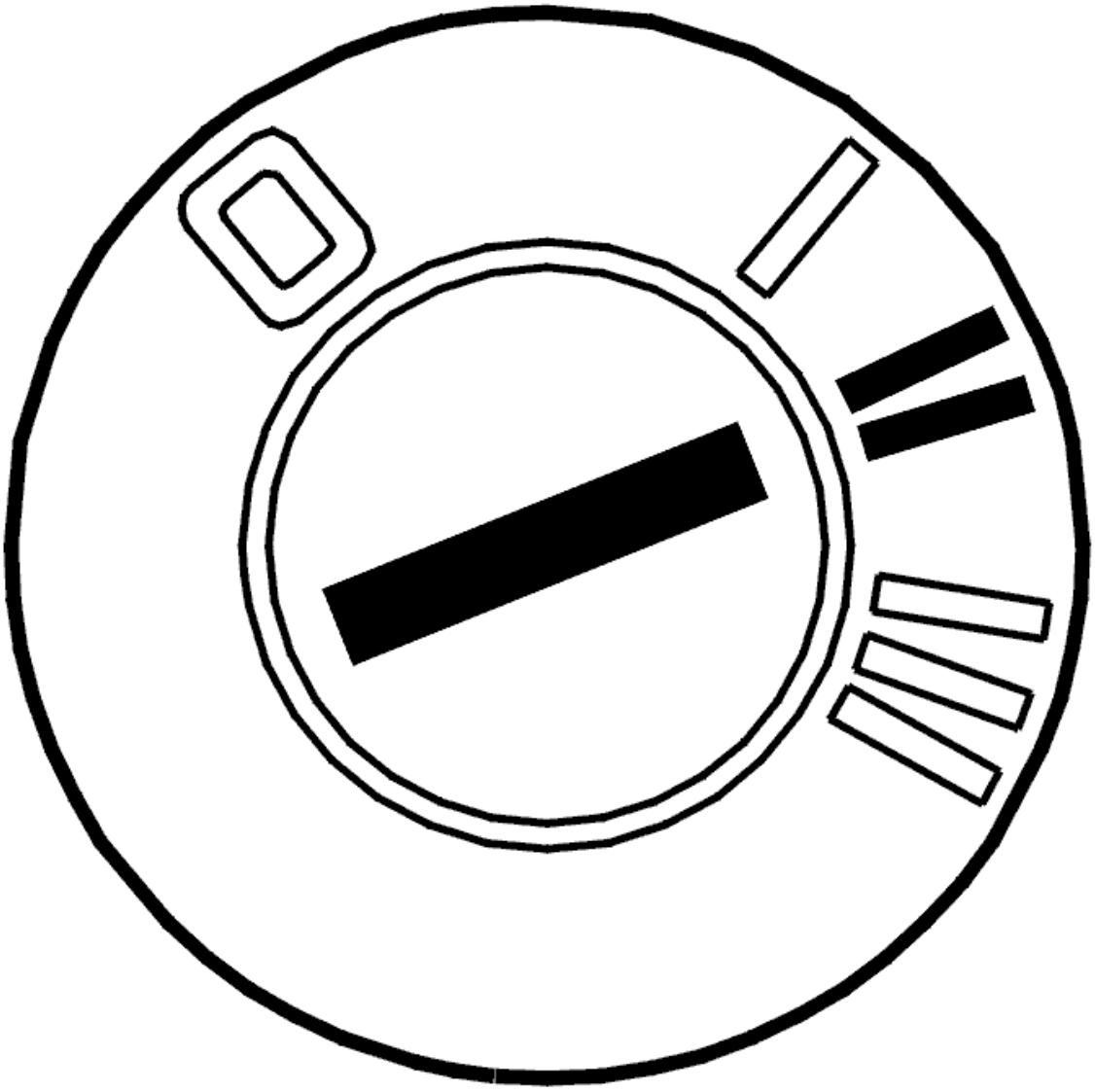

Fig. 49: Identifying Ignition ON
Courtesy of VOLVO CARS CORPORATION

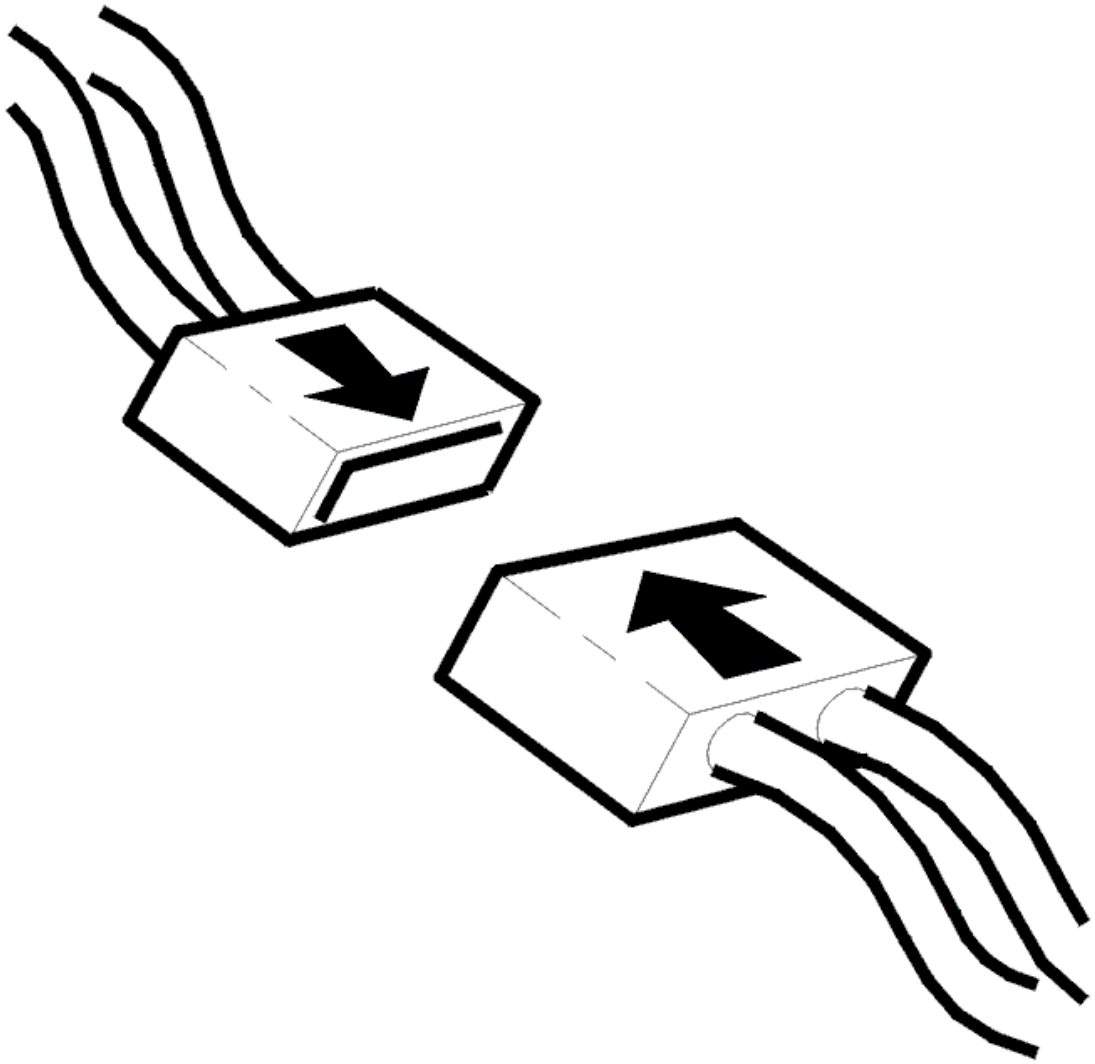

Fig. 50: Connecting Connector
Courtesy of VOLVO CARS CORPORATION

- Ignition off
- Check the power window lift motor connector. Check for contact resistance and oxidation. Check for damage carefully
- Reinstall the components, reconnect the connectors etc.
- Ignition on.

  Press the power window switch 2 steps up and down.

  Other information:

  - see **WINDOW LIFT MECHANISM FRONT SIDE DOOR, REPLACING**
  - see **CHECKING WIRING AND TERMINALS**

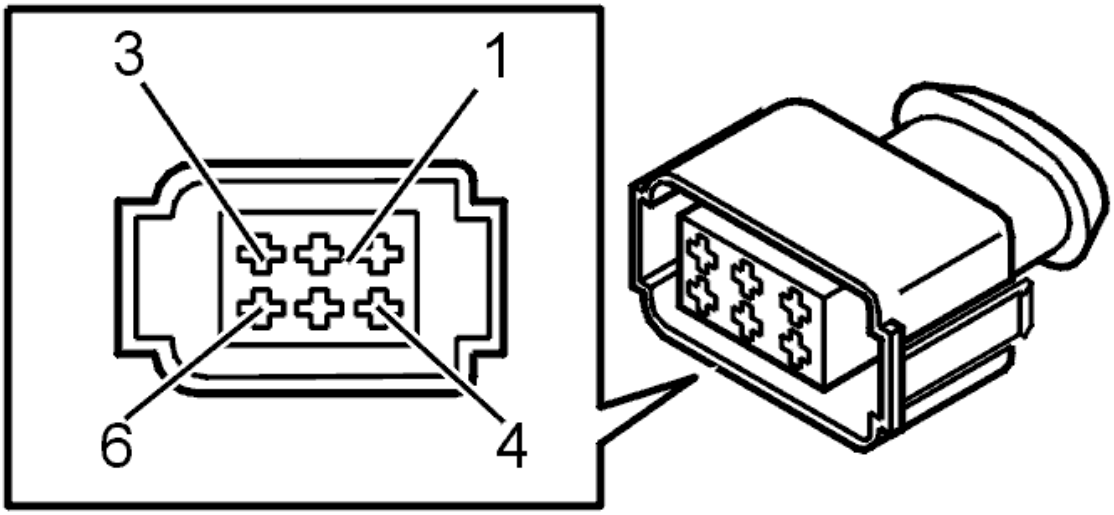

Fig. 51: Identifying Connector
Courtesy of VOLVO CARS CORPORATION

Is the automatic power window mechanism functioning?

- **YES**

  OKAY: Troubleshooting has been completed.

- **NO**

  Refer to **CHECKING FOR OPEN-CIRCUITS AND SHORT-CIRCUITS**

CHECKING FOR OPEN-CIRCUITS AND SHORT-CIRCUITS

XC90

Check the cable between control module terminal #24A and power window lift motor terminal #5. Check for a short-circuit to ground. Check for a short-circuit to supply voltage. Check for an open circuit.

When raising or lowering the window, the voltage between power window lift motor terminal #5 and ground must be 2.4 V.

Remedy as necessary.

Other information:

- see **CONNECTING THE BREAKOUT BOX**
- see **SIGNAL SPECIFICATION**
- see **CHECKING WIRING AND TERMINALS**

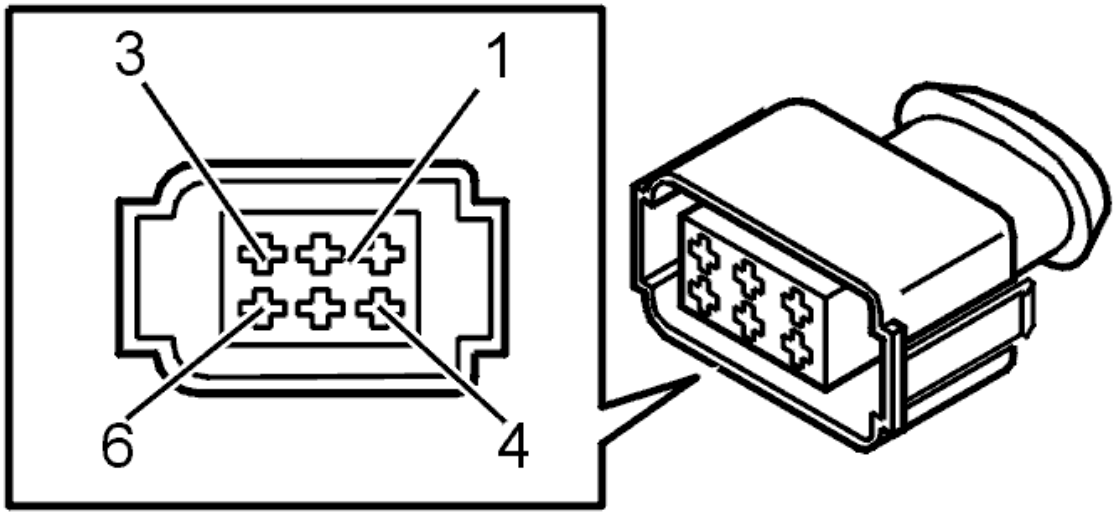

Fig. 52: Identifying Connector
Courtesy of VOLVO CARS CORPORATION

Was a fault detected?

- **YES**

  Refer to **VERIFICATION**

- **NO**

  Refer to **REPLACING THE COMPONENT**

REPLACING THE COMPONENT

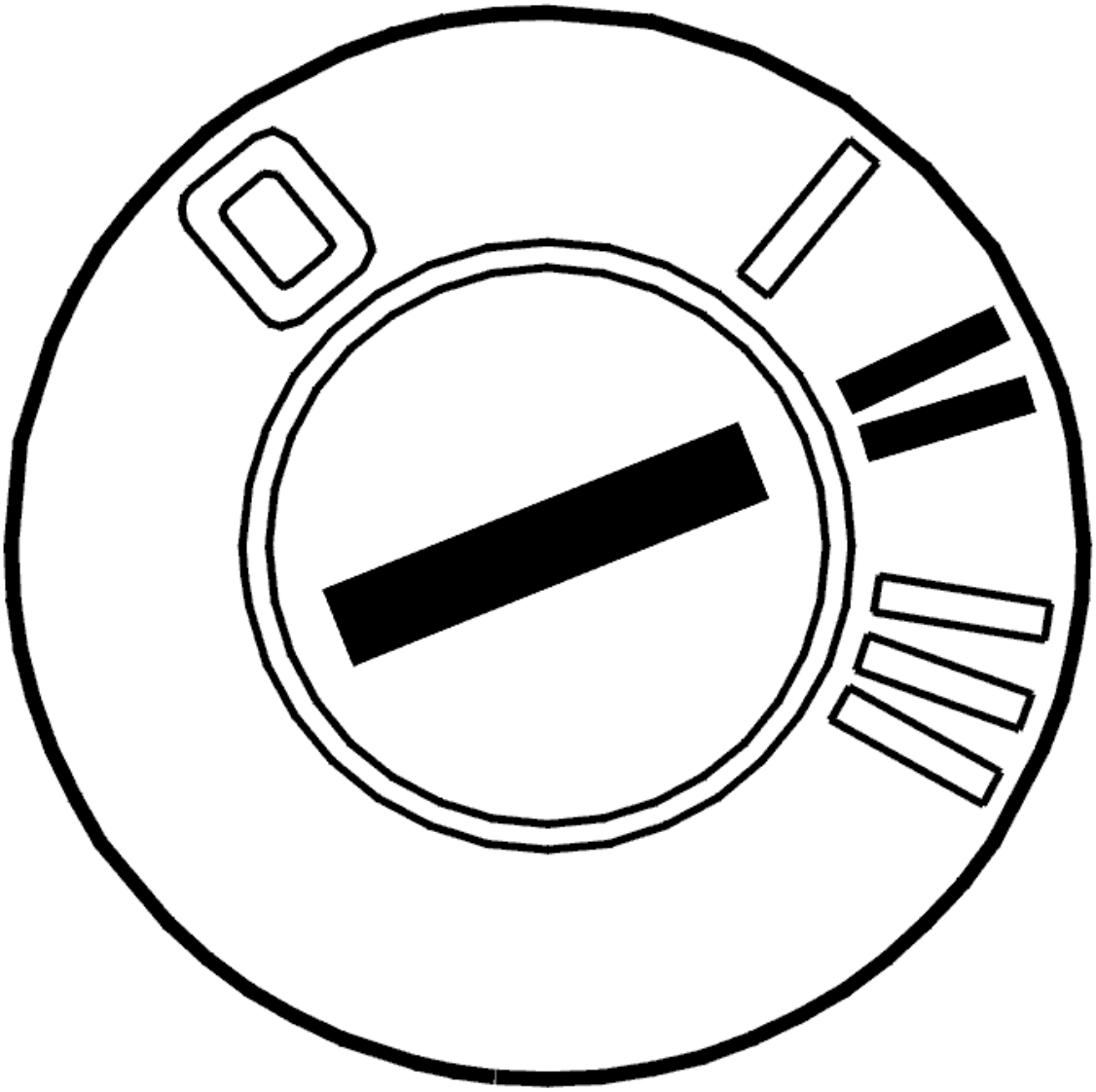

Fig. 53: Identifying Ignition ON
Courtesy of VOLVO CARS CORPORATION

Replace the window lift mechanism.

- Ignition on.

Move the window to its upper limit position using manual control.

Initialize the window.

During initialization, the window will automatically go down to its lowest position and then go back up again.

Other information

- see **WINDOW LIFT MECHANISM FRONT SIDE DOOR, REPLACING**

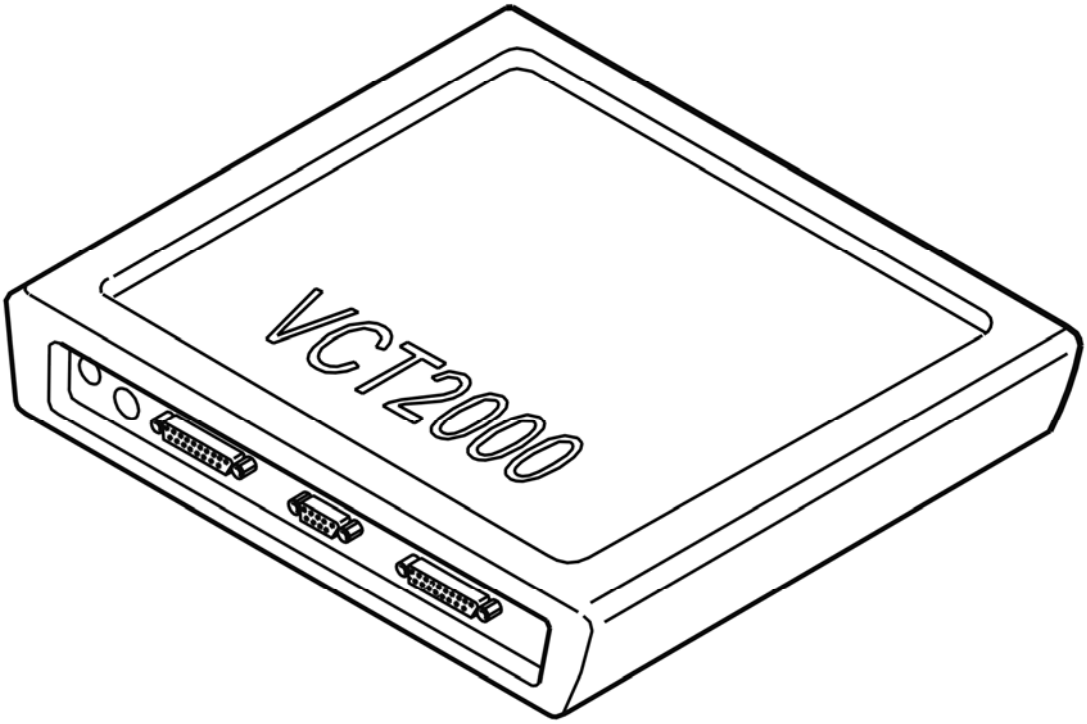

Fig. 54: Identifying VCT2000 Diagnostic Tool Symbol In VIDA
Courtesy of VOLVO CARS CORPORATION

- **Continue**

  Refer to **VERIFICATION**

INTERMITTENT FAULT

Check the connectors for the control module and power window lift motor. Check for contact resistance and oxidation. Check for loose connections.

When raising or lowering the window, the voltage between power window lift motor terminal #2 and ground must be 2.4 V

XC90

Check the cable between control module terminal #24A and power window lift motor terminal #5. Check for a short-circuit to ground. Check for a short-circuit to supply voltage. Check for an open circuit.

When raising or lowering the window, the voltage between power window lift motor terminal #5 and ground must be 2.4 V.

Other information:

- see **CONNECTING THE BREAKOUT BOX**
- see **SIGNAL SPECIFICATION**
- see **WINDOW LIFT MECHANISM FRONT SIDE DOOR, REPLACING**
- see **CHECKING WIRING AND TERMINALS**

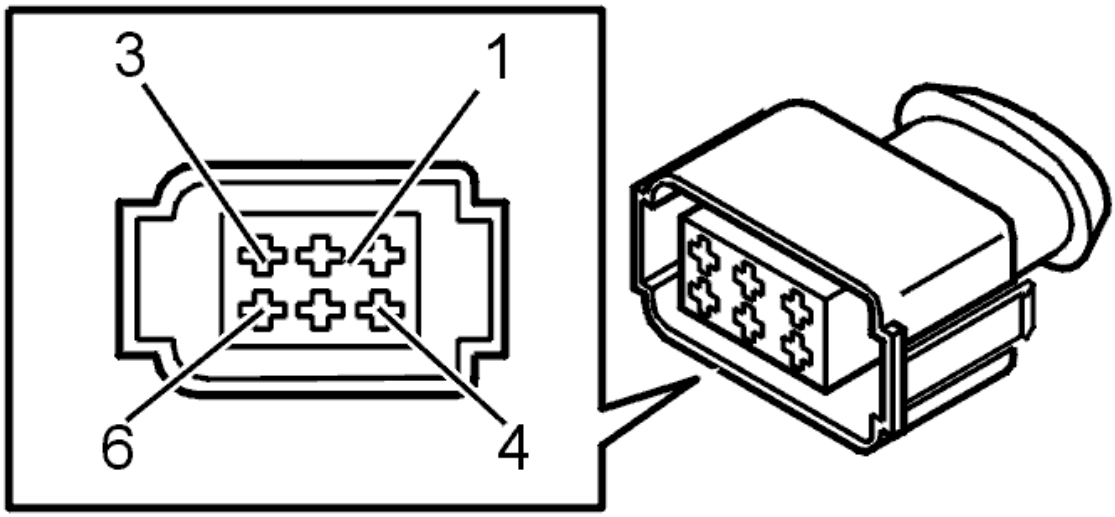

Fig. 55: Identifying Connector
Courtesy of VOLVO CARS CORPORATION

- **Continue**

  Refer to **INFORMATION**

VERIFICATION

HINT: After the repair it is necessary to check that the fault has been rectified.

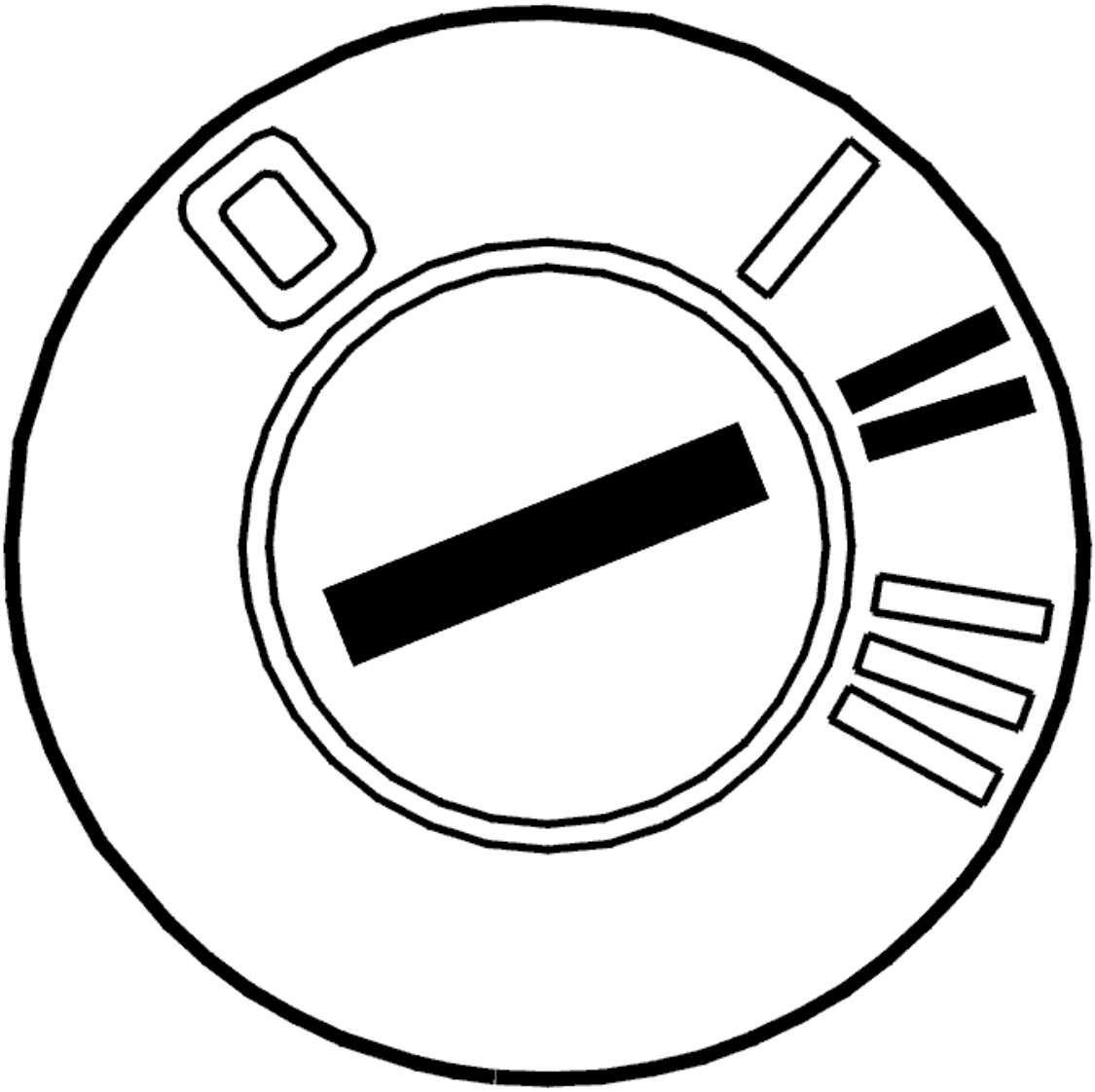

Fig. 56: Identifying Ignition ON
Courtesy of VOLVO CARS CORPORATION

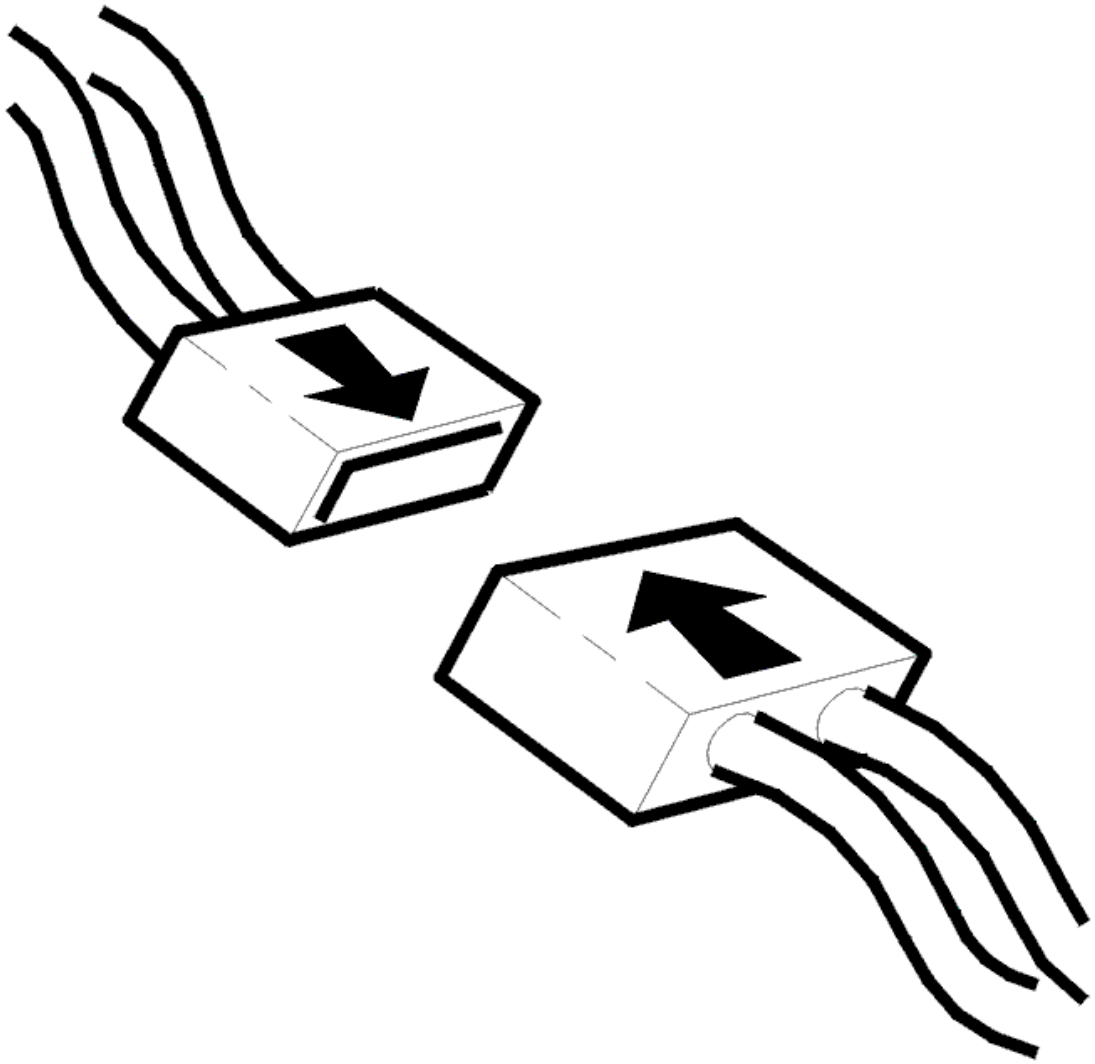

Fig. 57: Connecting Connector
Courtesy of VOLVO CARS CORPORATION

- Ignition off.
- Connect connectors, install components, etc.
- Ignition on.

  Check that the automatic window operation works by pressing in the button 2 stages one way or the other.

Does the automatic window operation work?

- **YES**

  VERIFIED: Troubleshooting has been completed.

- **NO**

  Refer to **INFORMATION**

INFORMATION

FAULT-TRACING INFORMATION

The fault should have been detected and remedied. As this is not the case fault-tracing has failed.

Exit fault-tracing for this diagnostic trouble code (DTC) or make another attempt.

INFORMATION

FAULT-TRACING INFORMATION

If the fault is intermittent, do not verify fault-tracing if the fault does not recur.

It is possible to view the information again, or leave fault-tracing for this diagnostic trouble code (DTC).

DDM/PDM-0021 WINDOW LIFT HALL SENSOR 2. SIGNAL FAULTY (2003-04)

DIAGNOSTIC TROUBLE CODE INFORMATION

see **DIAGNOSTIC TROUBLE CODE INFORMATION**

FAULTY SIGNAL

CHECKING FOR PERMANENT OR INTERMITTENT FAULTS

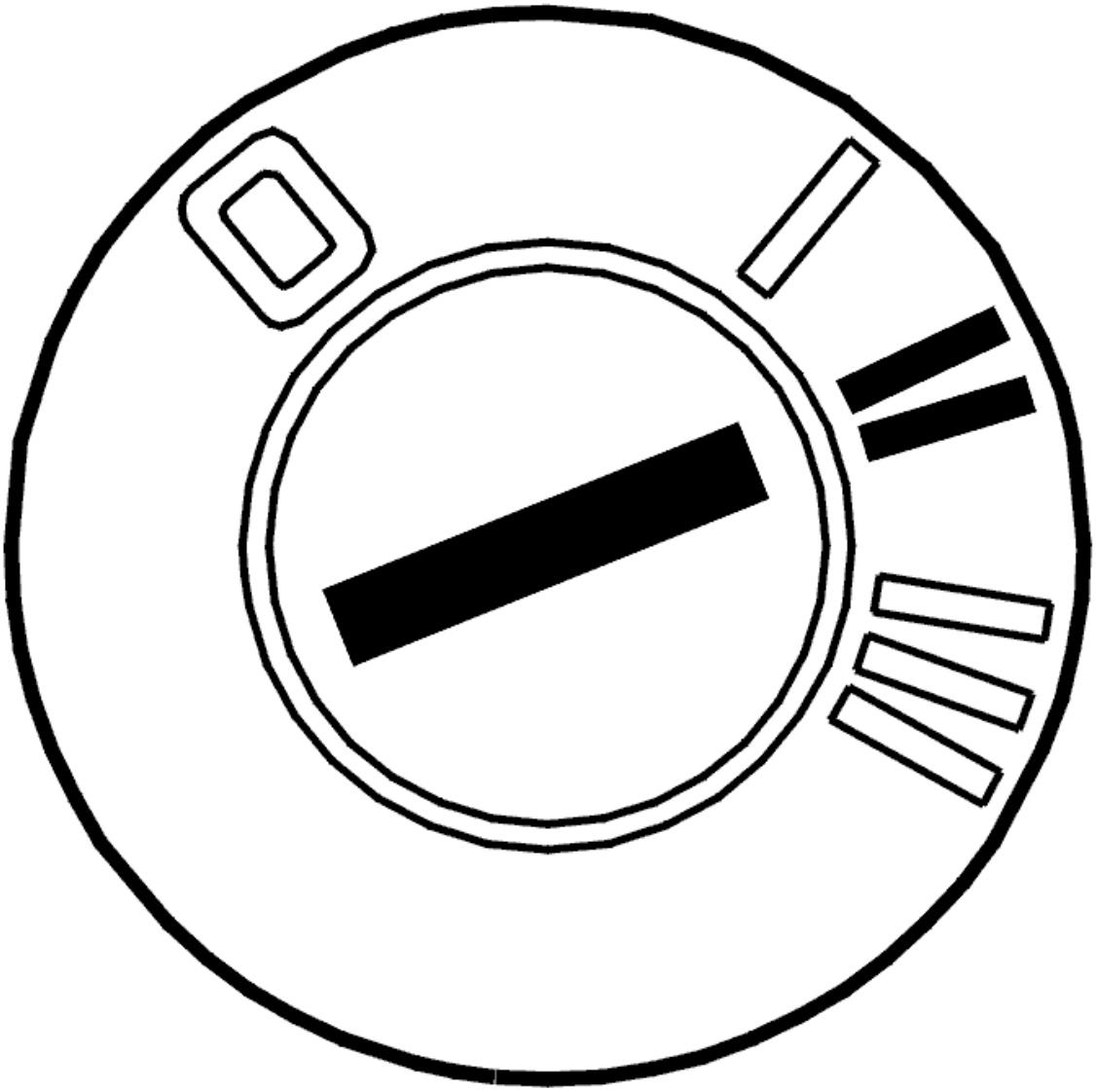

Fig. 58: Identifying Ignition ON
Courtesy of VOLVO CARS CORPORATION

- Ignition on.

  Press the power window switch 2 steps up to check the function of the automatic power window mechanism.

Is the automatic power window mechanism functioning?

- **YES**

  Refer to **INTERMITTENT FAULT**

- **NO**

Refer to **CHECKING THE CONNECTORS**

CHECKING THE CONNECTORS

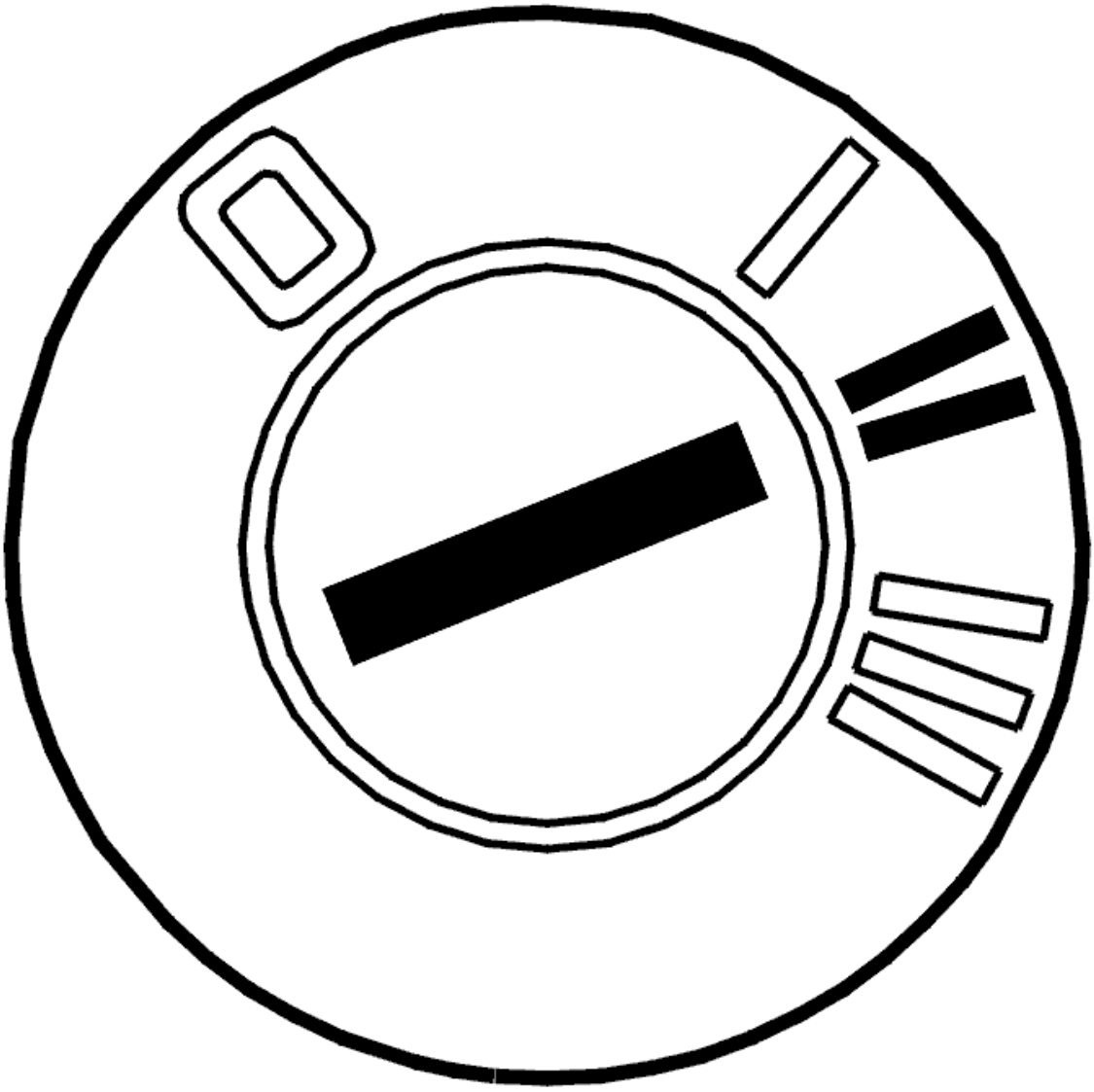

Fig. 59: Identifying Ignition ON
Courtesy of VOLVO CARS CORPORATION

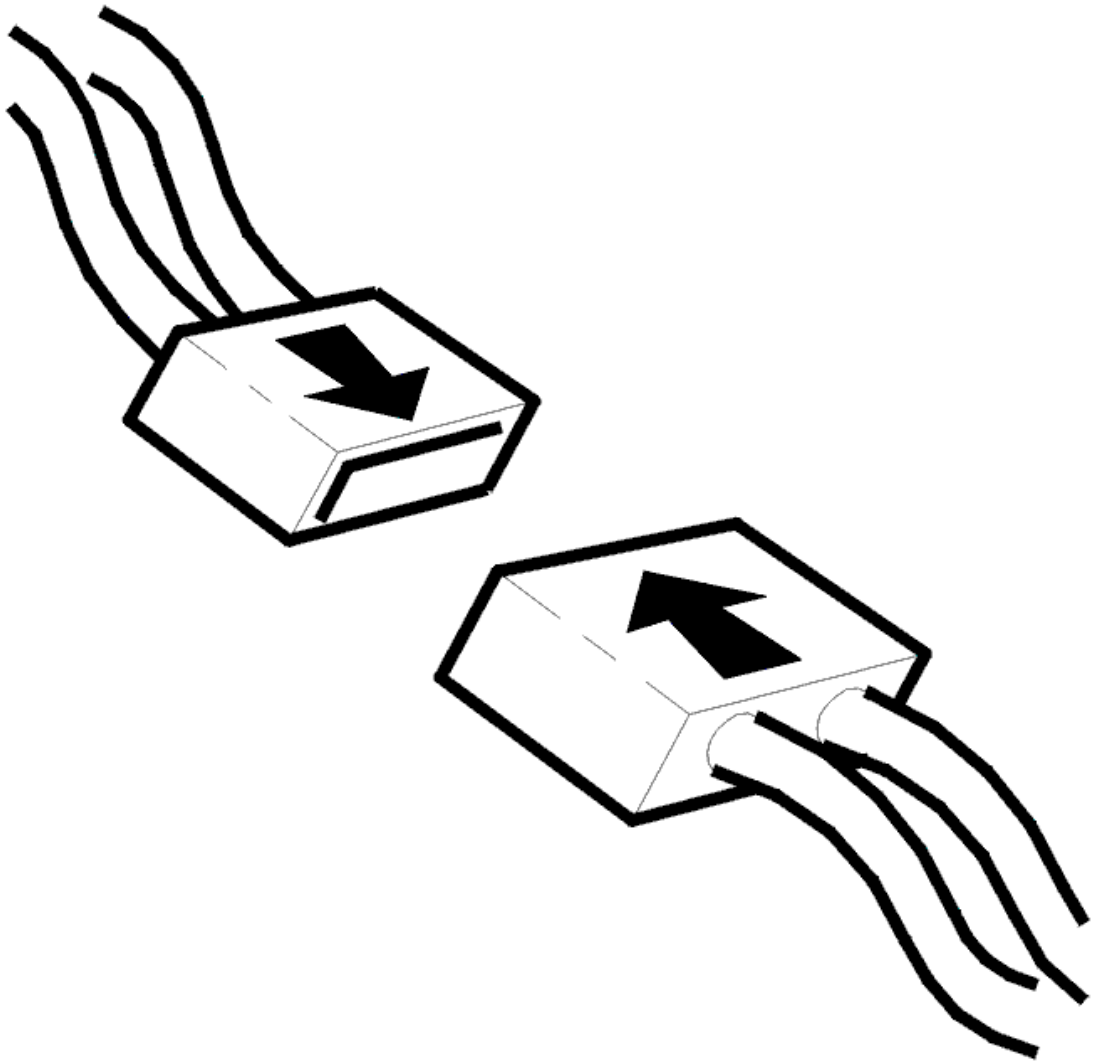

Fig. 60: Connecting Connector
Courtesy of VOLVO CARS CORPORATION

- Ignition off
- Check the power window lift motor connector. Check for contact resistance and oxidation and remedy. In particular, check for any damage
- Reinstall the components, reconnect the connectors etc.
- Ignition on.

  Press the power window switch 2 steps up and down.

  Other information:

  - To access the window lift mechanism, see **WINDOW LIFT MECHANISM FRONT SIDE DOOR, REPLACING**

- see **CHECKING WIRING AND TERMINALS** .

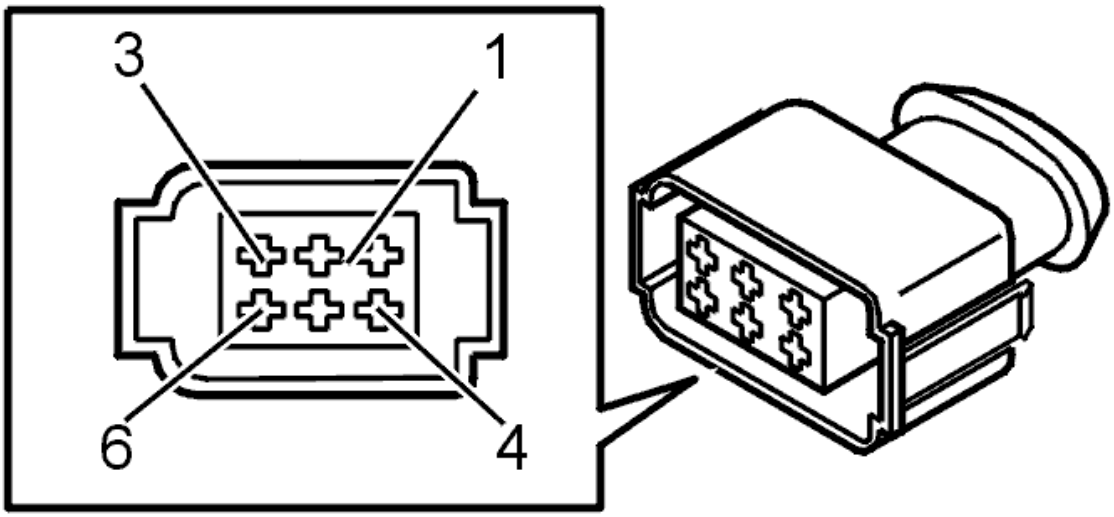

Fig. 61: Identifying Connector
Courtesy of VOLVO CARS CORPORATION

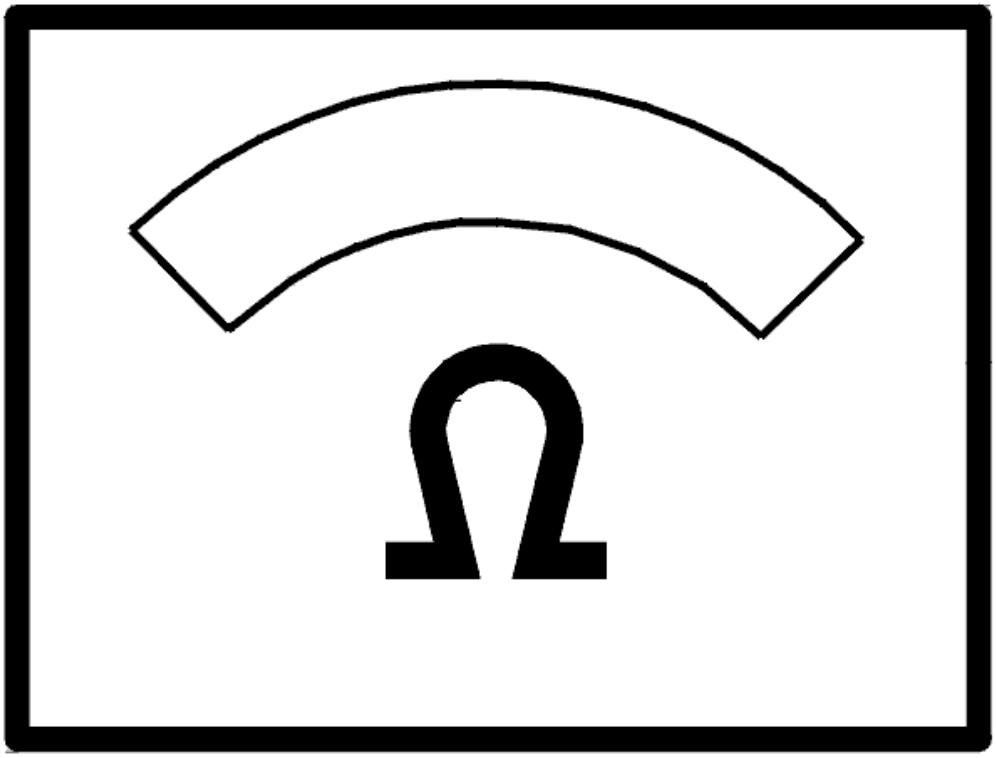

Fig. 62: Identifying Ohmmeter
Courtesy of VOLVO CARS CORPORATION

Is the automatic power window mechanism functioning?

- **YES**

  OKAY: Troubleshooting has been completed.

- **NO**

  Refer to **CHECKING FOR OPEN-CIRCUITS AND SHORT-CIRCUITS**

CHECKING FOR OPEN-CIRCUITS AND SHORT-CIRCUITS

Check the cable between door control module terminal #24A and power window motor terminal connector #2.

Check for a short-circuit to ground. Check for a short-circuit to supply voltage. Check for an open-circuit.

Remedy as necessary.

Other information:

- When raising or lowering the window, the voltage between power window lift motor terminal #2 and ground must be 2.4 V
- To connect the breakout box, see **CONNECTING THE BREAKOUT BOX**
- For further information about signals and other values, see **SIGNAL SPECIFICATION**
- see **CHECKING WIRING AND TERMINALS** .

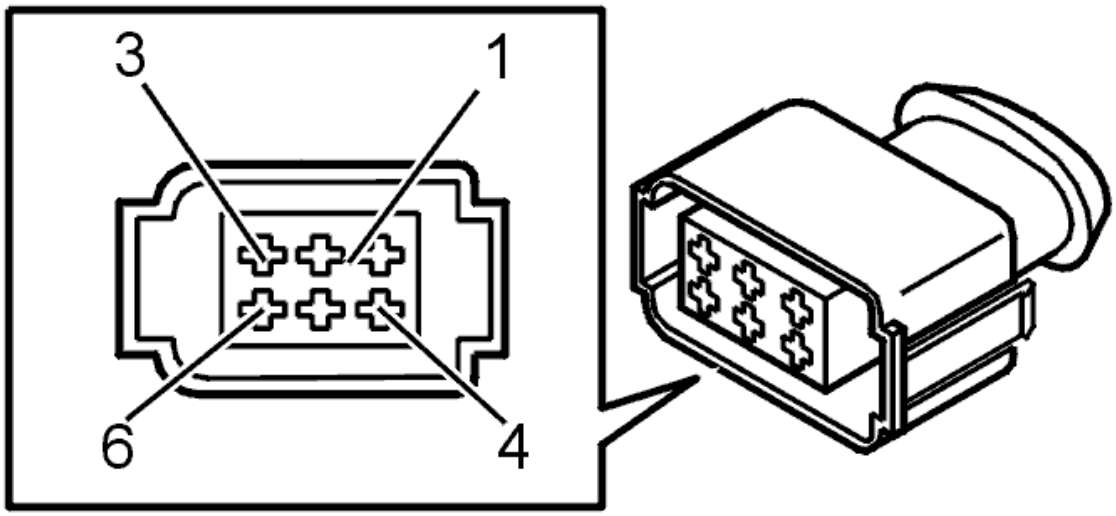

Fig. 63: Identifying Connector
Courtesy of VOLVO CARS CORPORATION

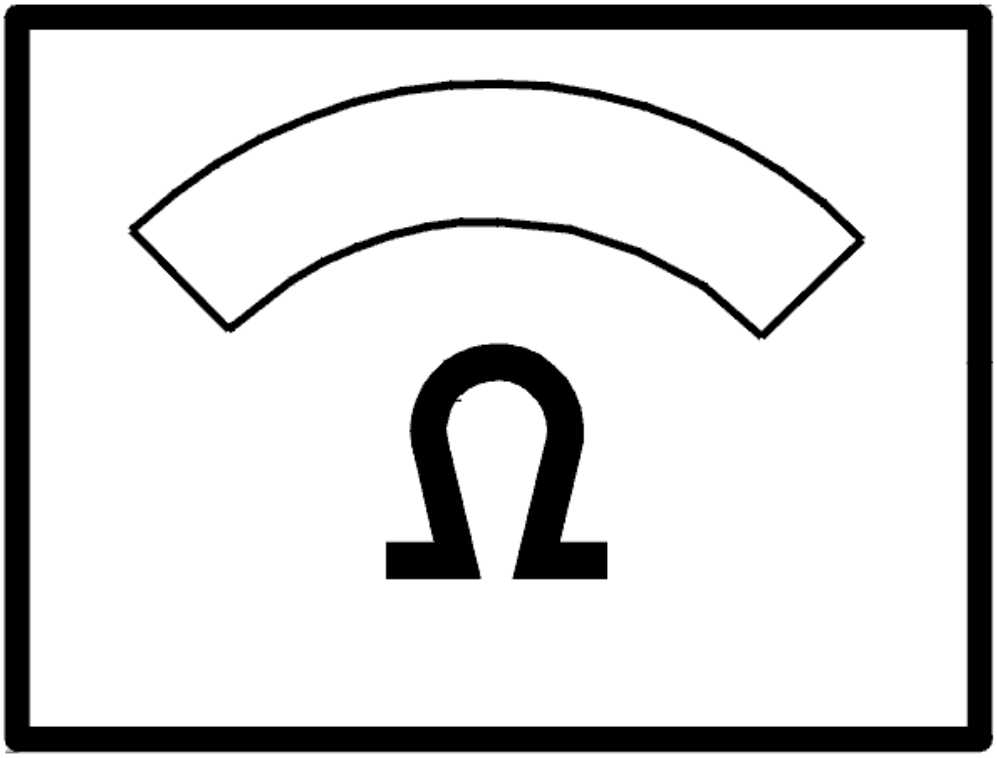

Fig. 64: Identifying Ohmmeter
Courtesy of VOLVO CARS CORPORATION

Was a fault detected?

- **YES**

  Refer to **VERIFICATION**

- **NO**

  Refer to **REPLACING THE COMPONENT**

REPLACING THE COMPONENT

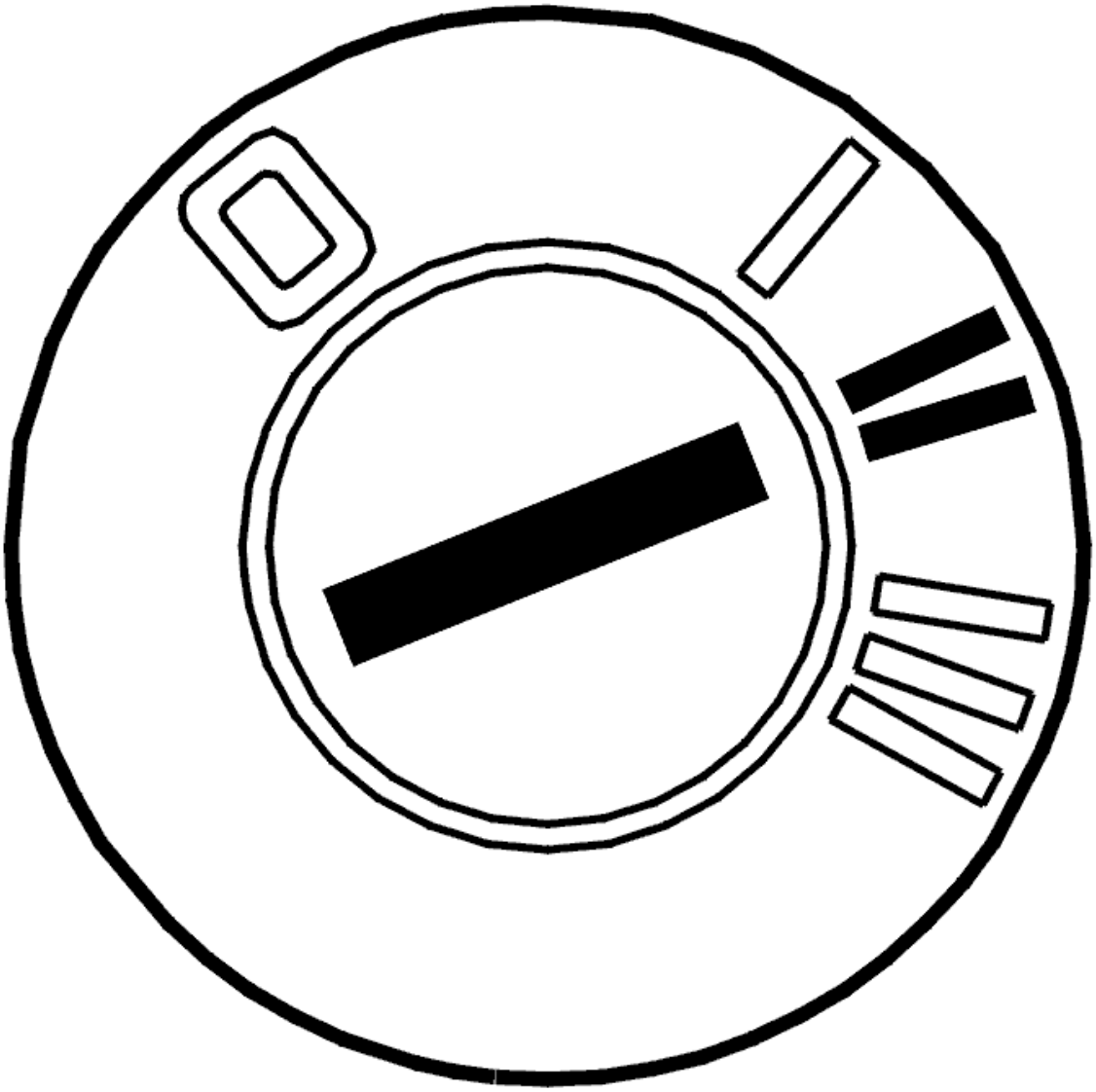

Fig. 65: Identifying Ignition ON
Courtesy of VOLVO CARS CORPORATION

Replace the power window mechanism according to **WINDOW LIFT MECHANISM FRONT SIDE DOOR, REPLACING** .

Ignition on.

Move the window to its upper limit position using manual control.

Initialize the window.

From model year 2003 inclusive, the window will lower approximately 10 centimeters and then close again during initialization.

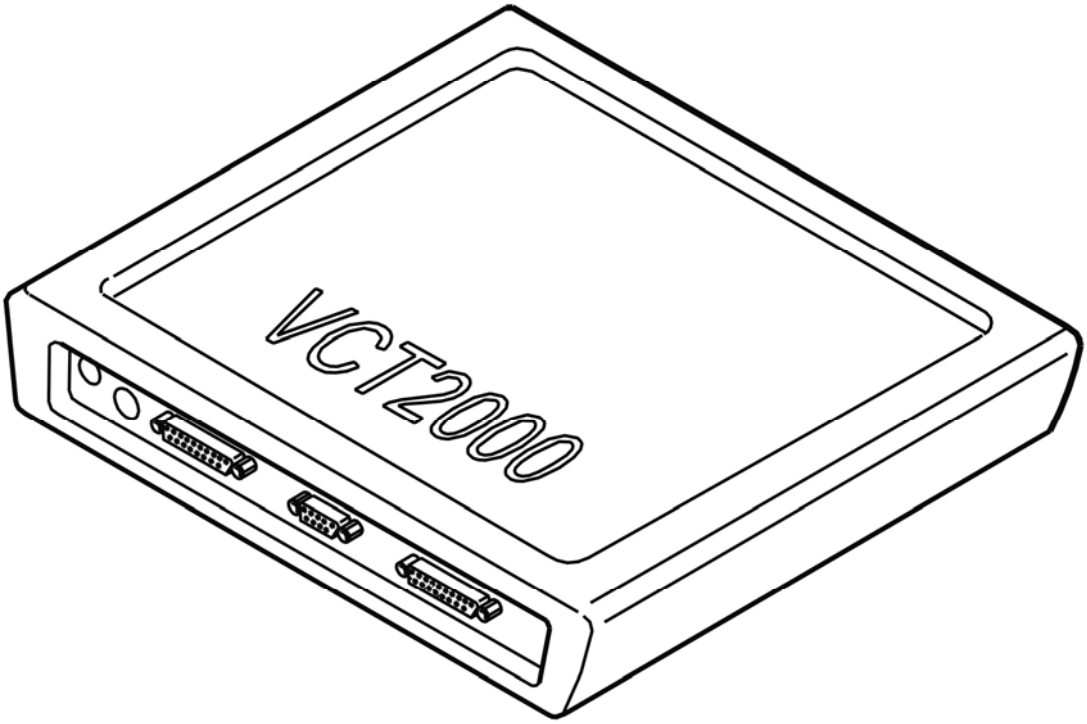

Fig. 66: Identifying VCT2000 Diagnostic Tool Symbol In VIDA
Courtesy of VOLVO CARS CORPORATION

- **Continue**

  Refer to **VERIFICATION**

INTERMITTENT FAULT

Check the connectors for the control module and power window lift motor. Check for contact resistance and oxidation. Check for loose connections.

Check the cable between control module terminal #24A and power window motor terminal #2. Check for an intermittent short-circuit to ground. Check for an intermittent short-circuit to supply voltage. Check for an intermittent open-circuit.

Other information:

- When raising or lowering the window, the voltage between power window lift motor terminal #2 and ground must be 2.4 V
- To connect the breakout box, see **CONNECTING THE BREAKOUT BOX**
- For further information about signals and other values, see **SIGNAL SPECIFICATION**
- To access the window lift mechanism, see **WINDOW LIFT MECHANISM FRONT SIDE DOOR,**

REPLACING

- see **CHECKING WIRING AND TERMINALS** .

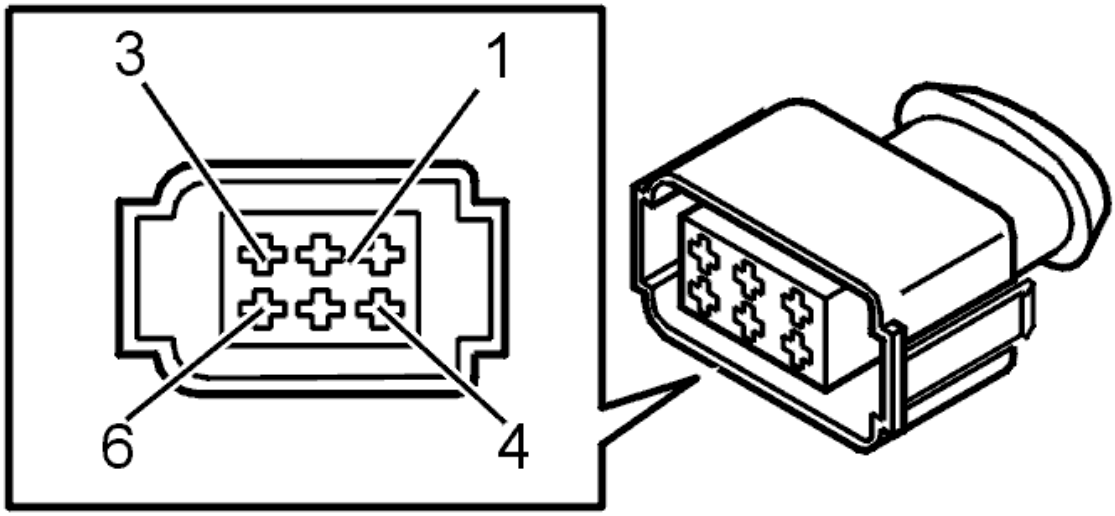

Fig. 67: Identifying Connector
Courtesy of VOLVO CARS CORPORATION

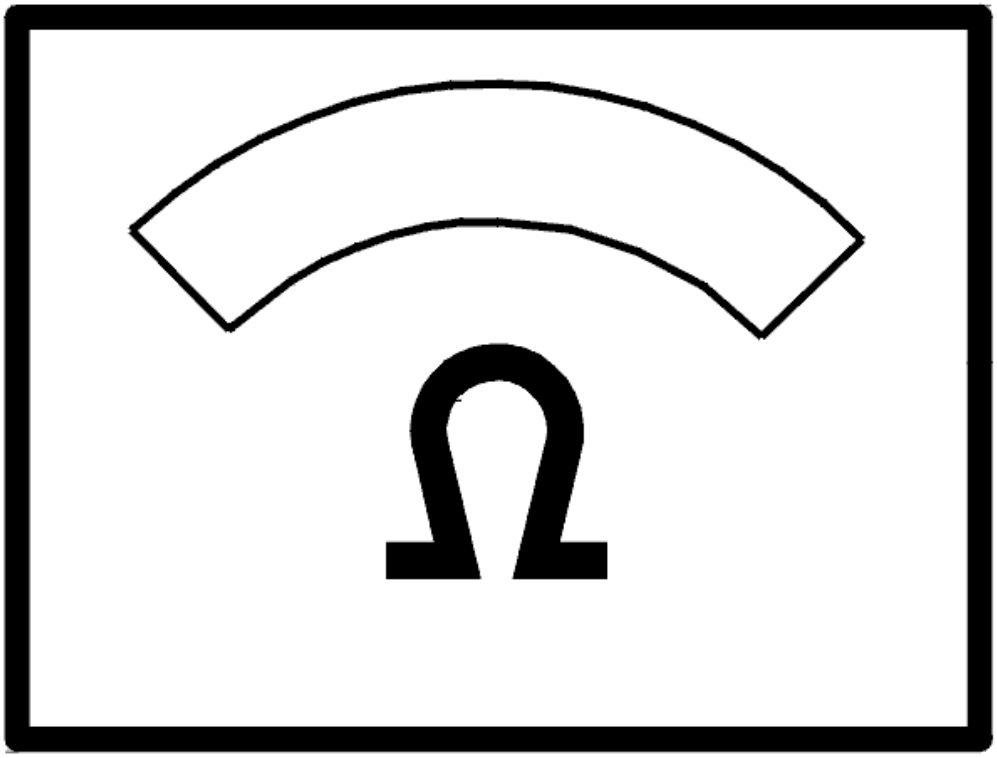

Fig. 68: Identifying Ohmmeter
Courtesy of VOLVO CARS CORPORATION

- **Continue**

  Refer to **INFORMATION**

VERIFICATION

HINT: After the repair it is necessary to check that the fault has been rectified.

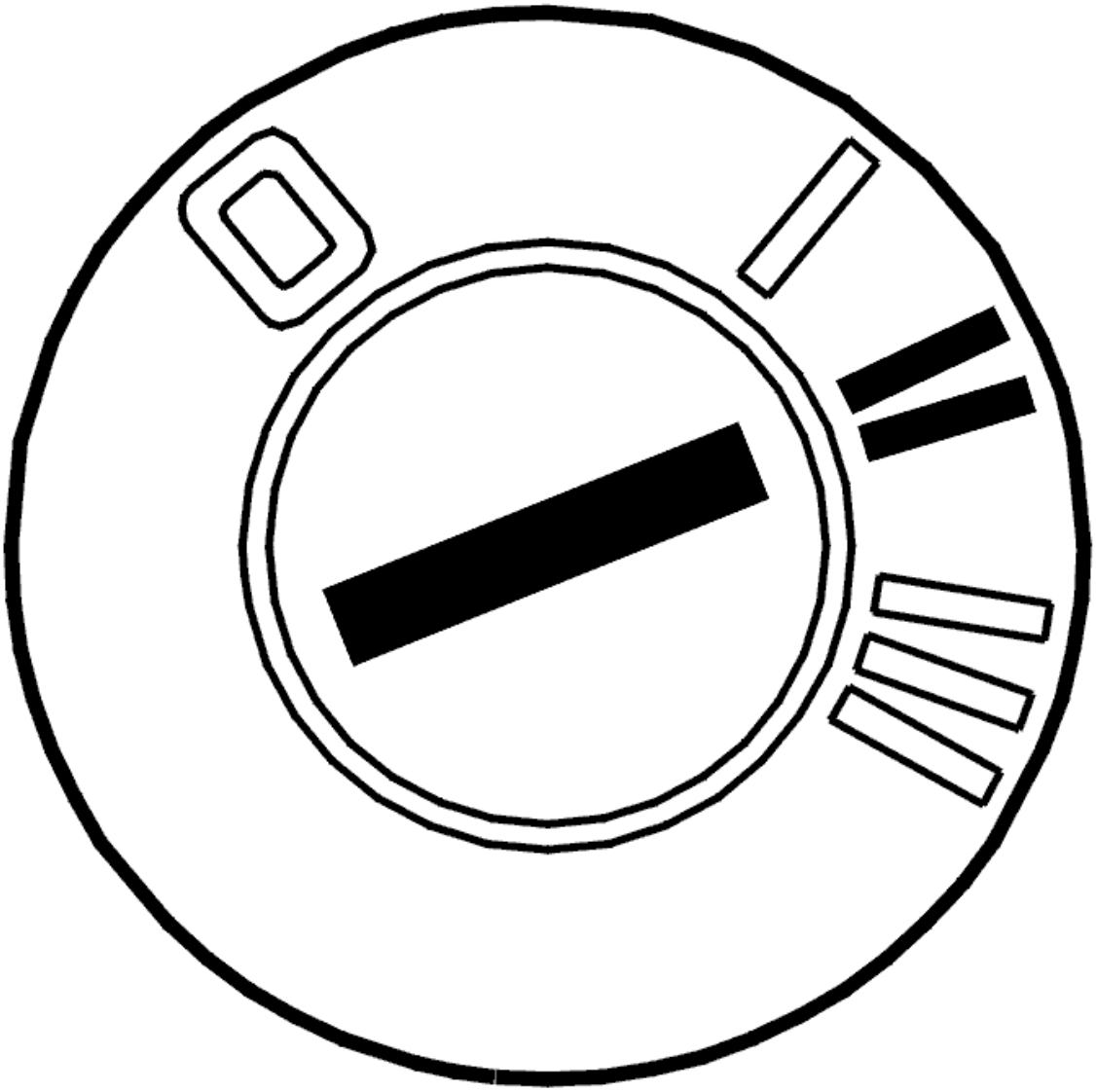

Fig. 69: Identifying Ignition ON
Courtesy of VOLVO CARS CORPORATION

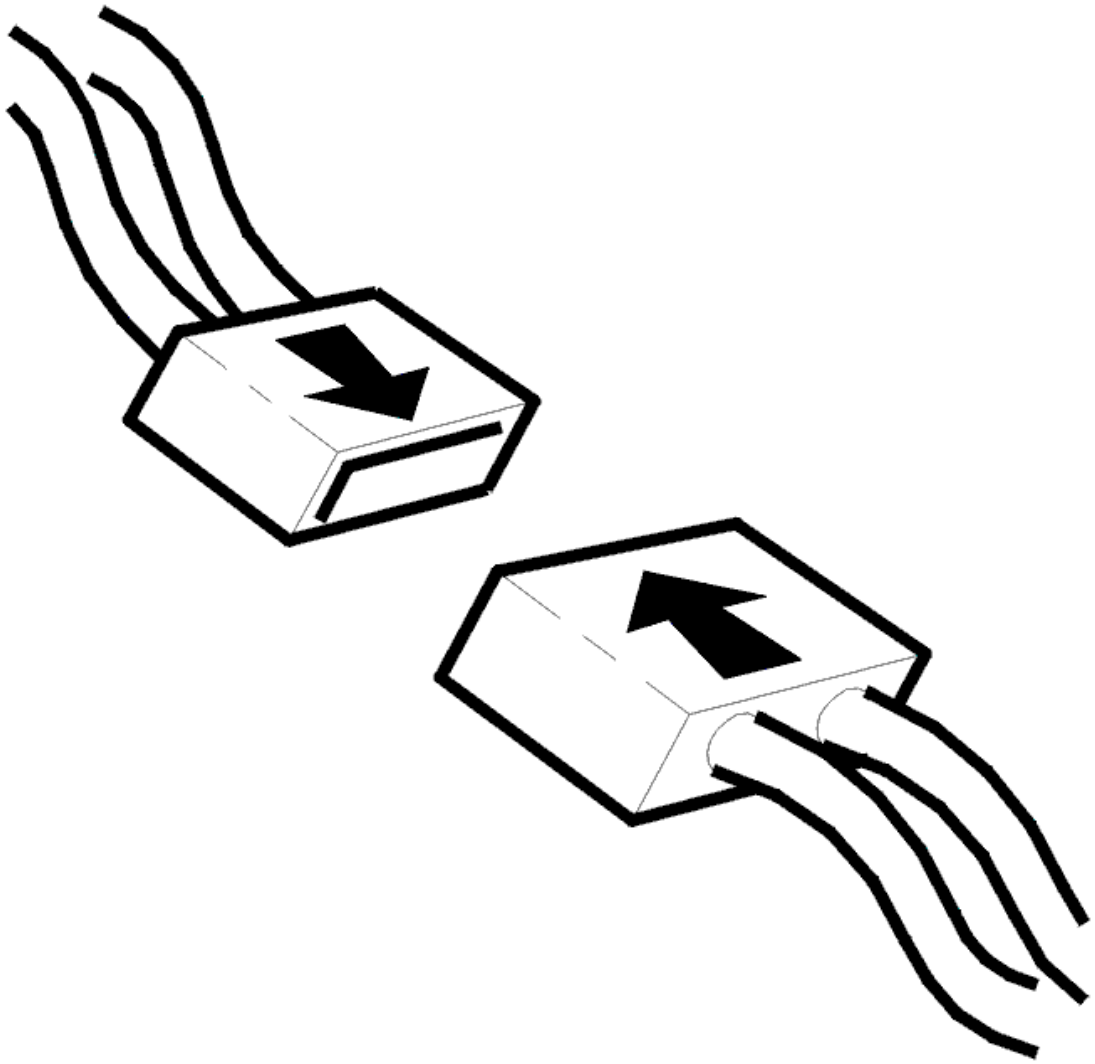

Fig. 70: Connecting Connector
Courtesy of VOLVO CARS CORPORATION

- Ignition off.
- Connect connectors, install components, etc.
- Ignition on.

  Check that the automatic window operation works by pressing in the button 2 stages one way or the other.

Does the automatic window operation work?

- **YES**

  VERIFIED: Troubleshooting has been completed.

- **NO**

  Refer to **INFORMATION**

INFORMATION

FAULT-TRACING INFORMATION

The fault should have been detected and remedied. As this is not the case fault-tracing has failed.

Exit fault-tracing for this diagnostic trouble code (DTC) or make another attempt.

DDM/PDM-0022 POWER WINDOW MECHANISM HALL SENSOR 1 AND 2. FAULTY SIGNAL (2005-12)

DIAGNOSTIC TROUBLE CODE INFORMATION

Condition

If control unit does not register a signal from Hall sensors H1 and H2 when window-lifting motor is activated, diagnostic trouble code DDM/PDM-0022 is displayed.

Substitute Value

- Nothing.

Possible Source

- Hall sensors H1 and H2 do not work
- Signal wire for Hall sensors H1 and H2 short circuited
- Open circuit on signal wire for Hall sensors H1 and H2
- Open circuit or short circuit to ground on Hall sensor supply wire or ground.

Fault symptom[s]

- Automatic window closer does not work.

FAULTY SIGNAL

CHECKING FAULTS

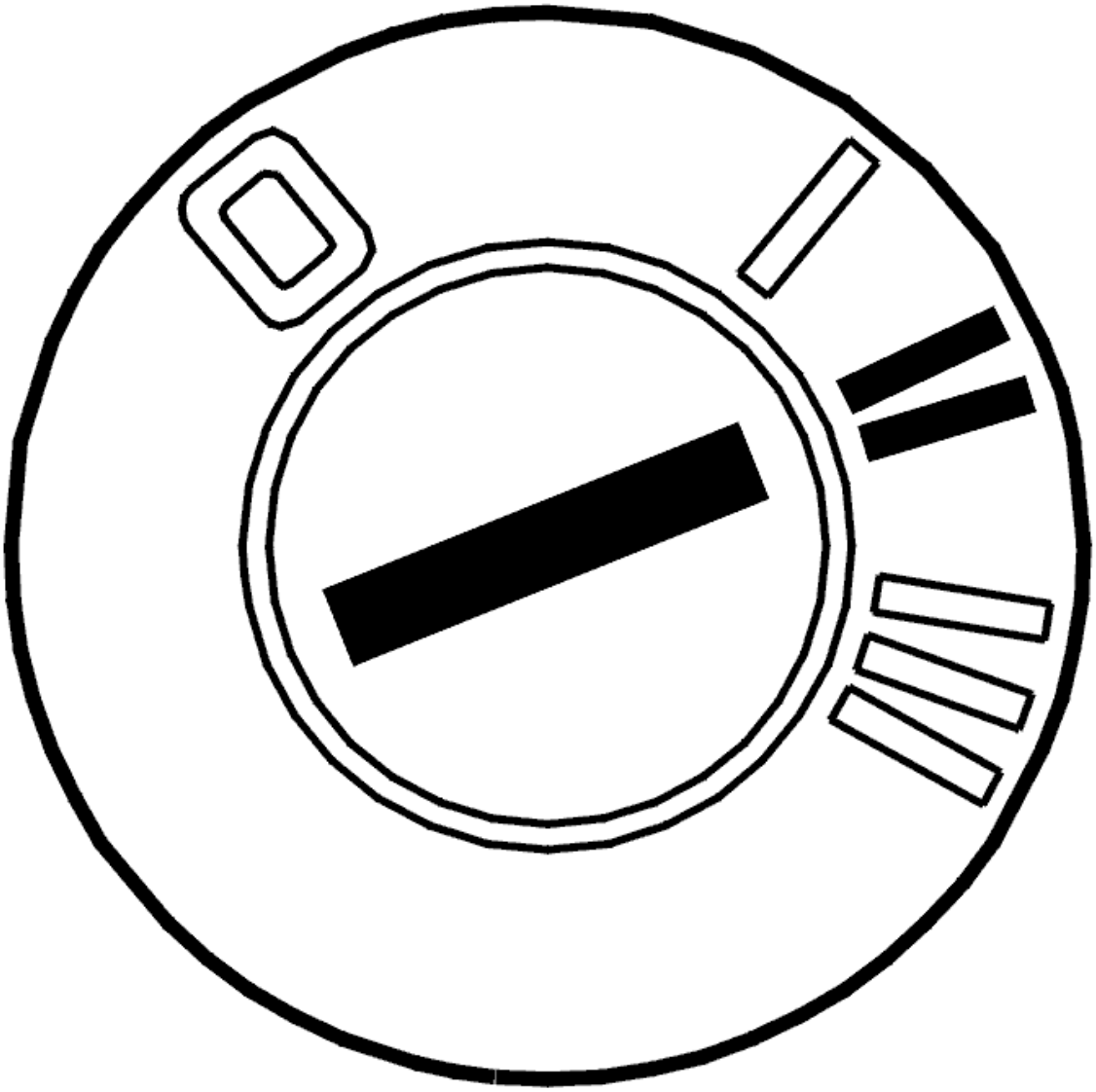

Fig. 71: Identifying Ignition ON
Courtesy of VOLVO CARS CORPORATION

- Ignition on.

  Press the power window switch 2 steps up to check the function of the automatic power window mechanism.

Is the automatic power window mechanism functioning?

- **YES**

  Refer to **INTERMITTENT FAULT**

- **NO**

Refer to **CHECKING THE CONNECTORS**

CHECKING THE CONNECTORS

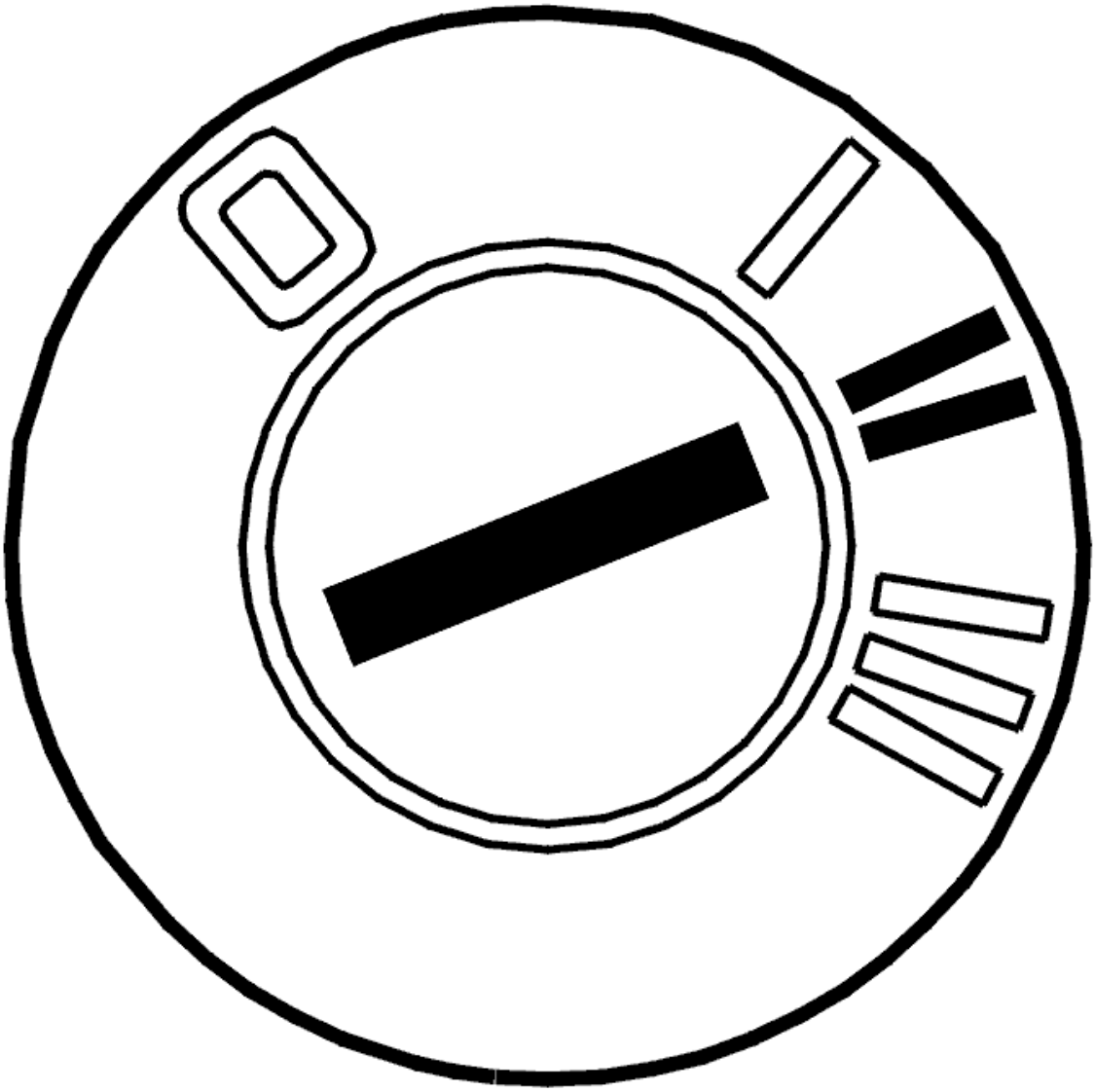

Fig. 72: Identifying Ignition ON
Courtesy of VOLVO CARS CORPORATION

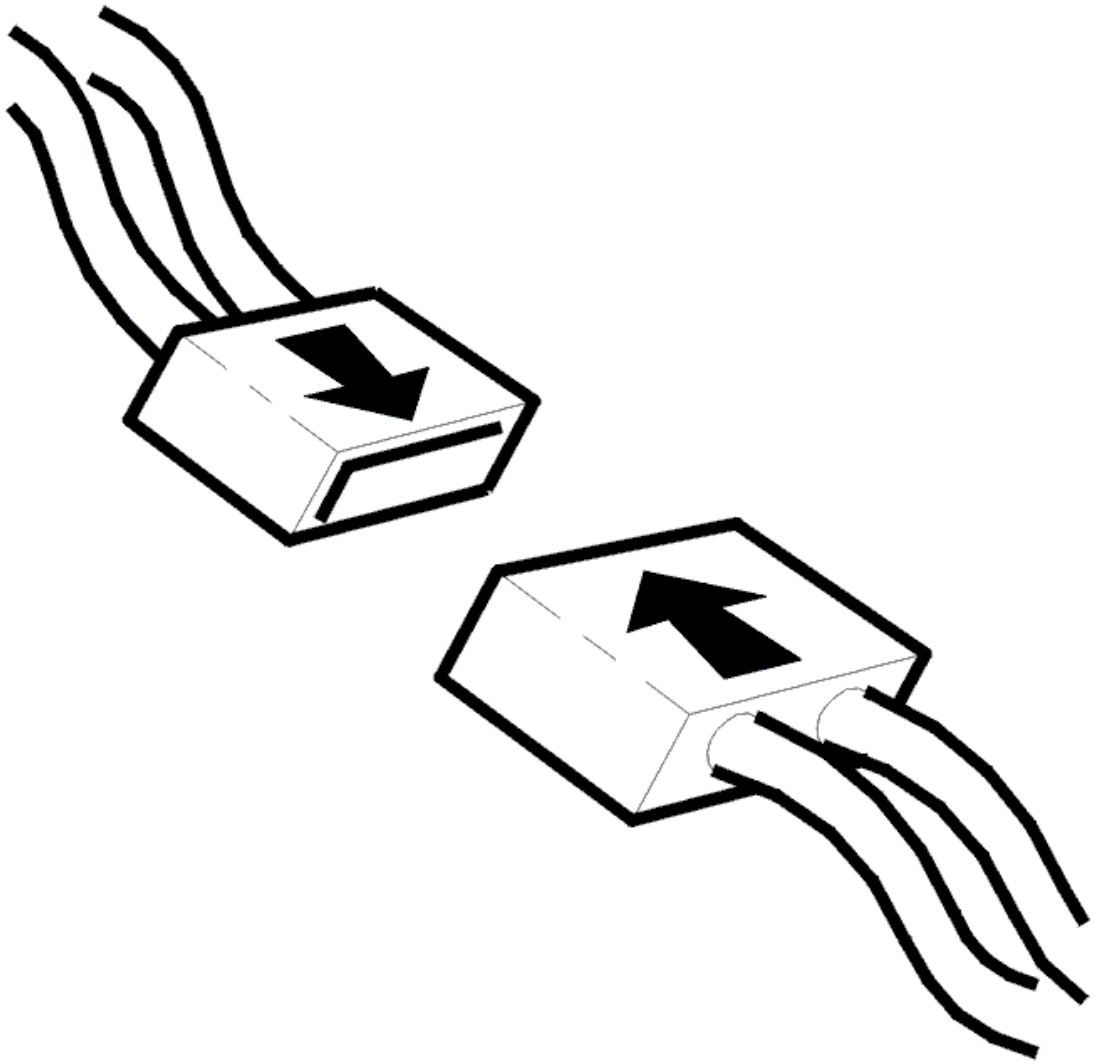

Fig. 73: Connecting Connector
Courtesy of VOLVO CARS CORPORATION

- Ignition off
- Check the power window lift motor connector. Check for contact resistance and oxidation. Check for damage carefully
- Reinstall the components, reconnect the connectors etc.
- Ignition on.

  Press the power window switch 2 steps up and down.

  Other information:

  - see **WINDOW LIFT MECHANISM FRONT SIDE DOOR, REPLACING**
  - see **CHECKING WIRING AND TERMINALS**

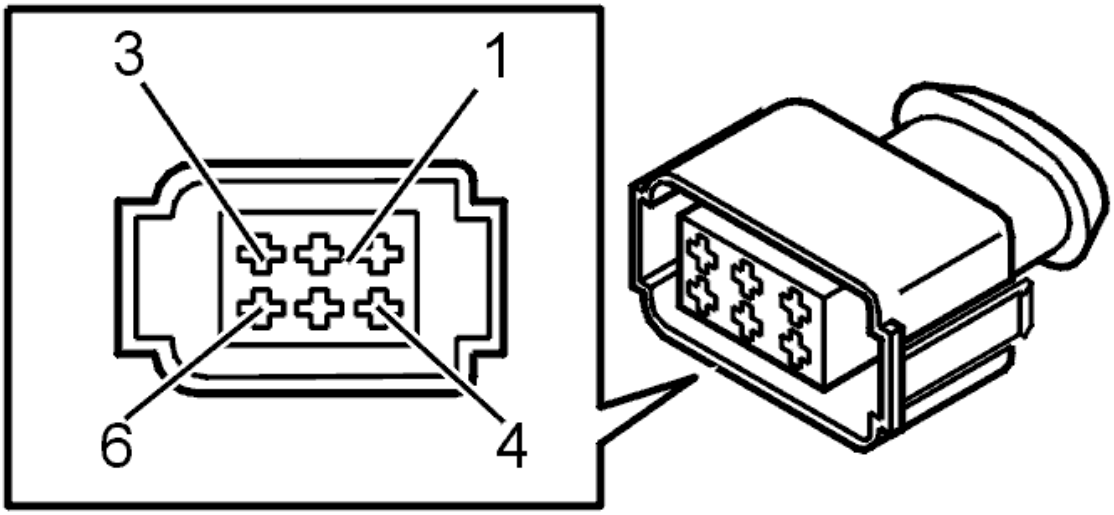

Fig. 74: Identifying Connector
Courtesy of VOLVO CARS CORPORATION

Is the automatic power window mechanism functioning?

- **YES**

  Refer to **VERIFICATION**

- **NO**

  Refer to **CHECKING FOR OPEN-CIRCUITS AND SHORT-CIRCUITS**

CHECKING FOR OPEN-CIRCUITS AND SHORT-CIRCUITS

XC90

Check the cable between control module terminal #23A and power window lift motor terminal #2. Check for a short-circuit to ground. Check for a short-circuit to supply voltage. Check for an open circuit.

Check the cable between control module terminal #16A and power window lift motor connector terminal #4. Check for a short-circuit to ground. Check for an open-circuit.

Check the cable between control module terminal #19A and power window lift motor connector terminal #1. Check for an open-circuit.

Check the cable between control module terminal #24A and power window lift motor terminal #5. Check for a short-circuit to ground. Check for a short-circuit to supply voltage. Check for an open circuit.

Remedy as necessary.

Other information:

- The voltage must be approximately 2.4 V between terminal #24A or terminal #23A and ground when the window is being operated up or down
- see **CONNECTING THE BREAKOUT BOX**
- see **SIGNAL SPECIFICATION**
- see **CHECKING WIRING AND TERMINALS**

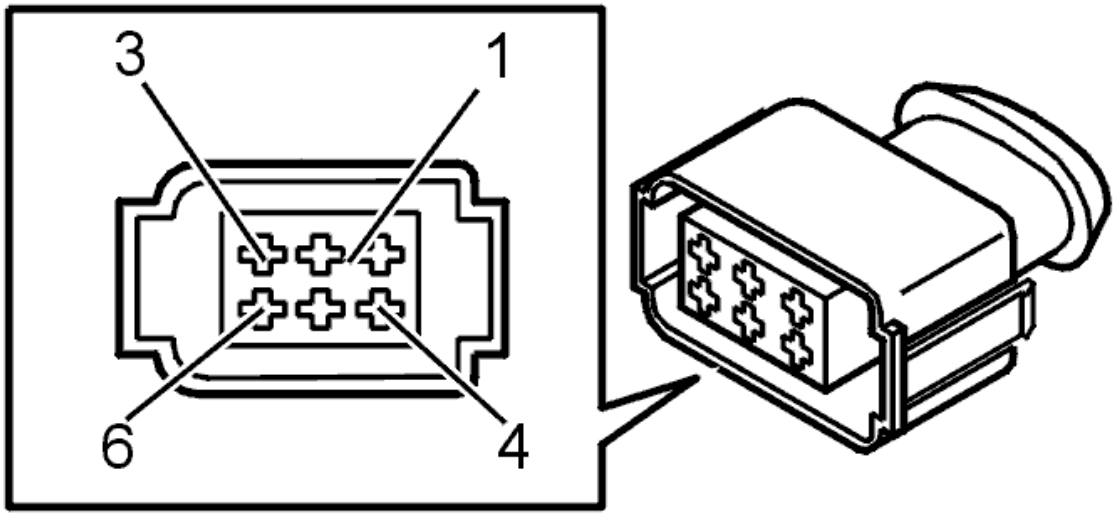

Fig. 75: Identifying Connector
Courtesy of VOLVO CARS CORPORATION

Was a fault detected?

- **YES**

  Refer to **VERIFICATION**

- **NO**

  Refer to **REPLACING THE COMPONENT**

REPLACING THE COMPONENT

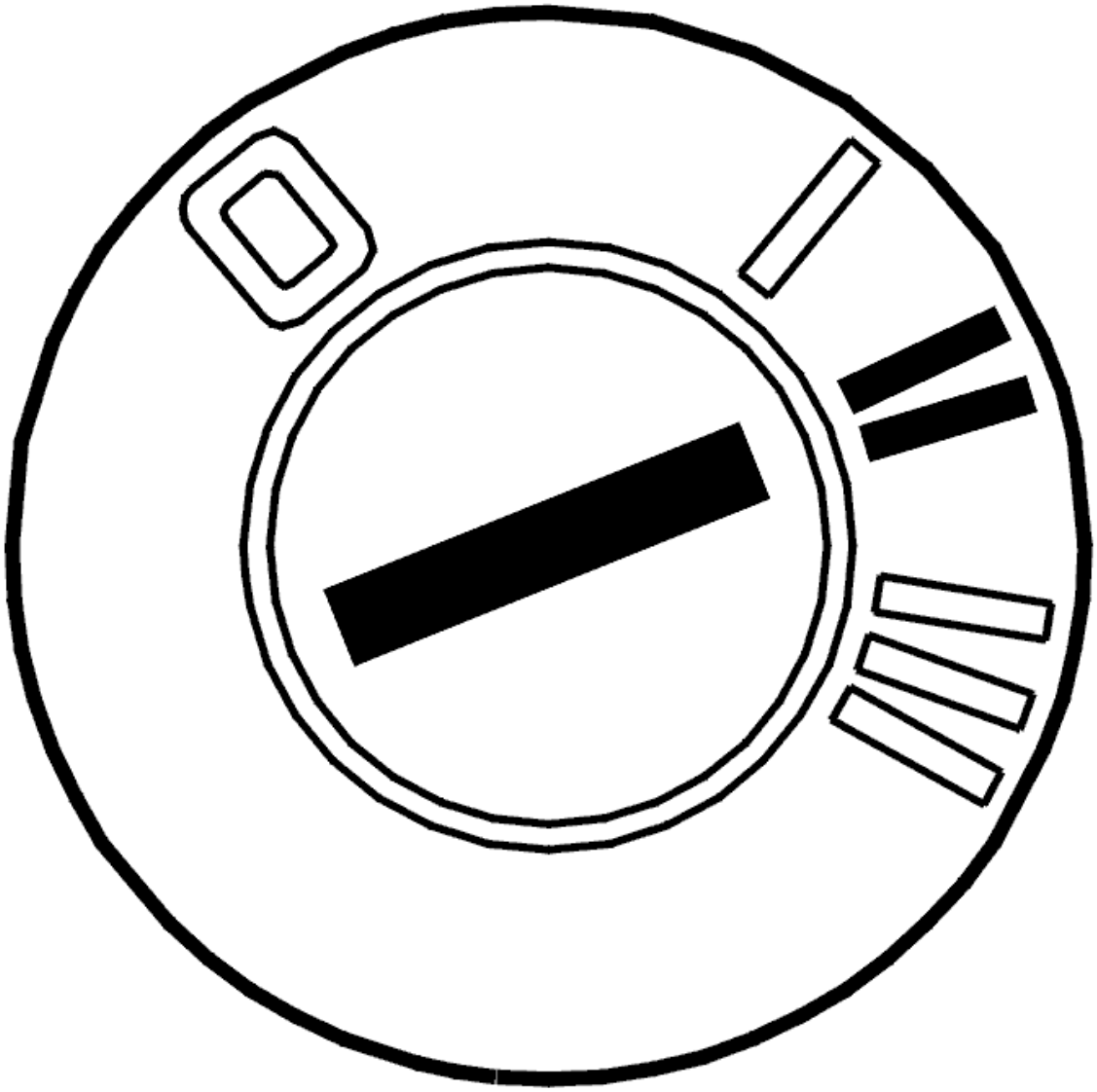

Fig. 76: Identifying Ignition ON
Courtesy of VOLVO CARS CORPORATION

Replace the window lift mechanism.

- Ignition on.

Move the window to its upper limit position using manual control.

Initialize the window.

During initialization, the window will automatically go down to its lowest position and then go back up again.

Other information

- see **WINDOW LIFT MECHANISM FRONT SIDE DOOR, REPLACING**

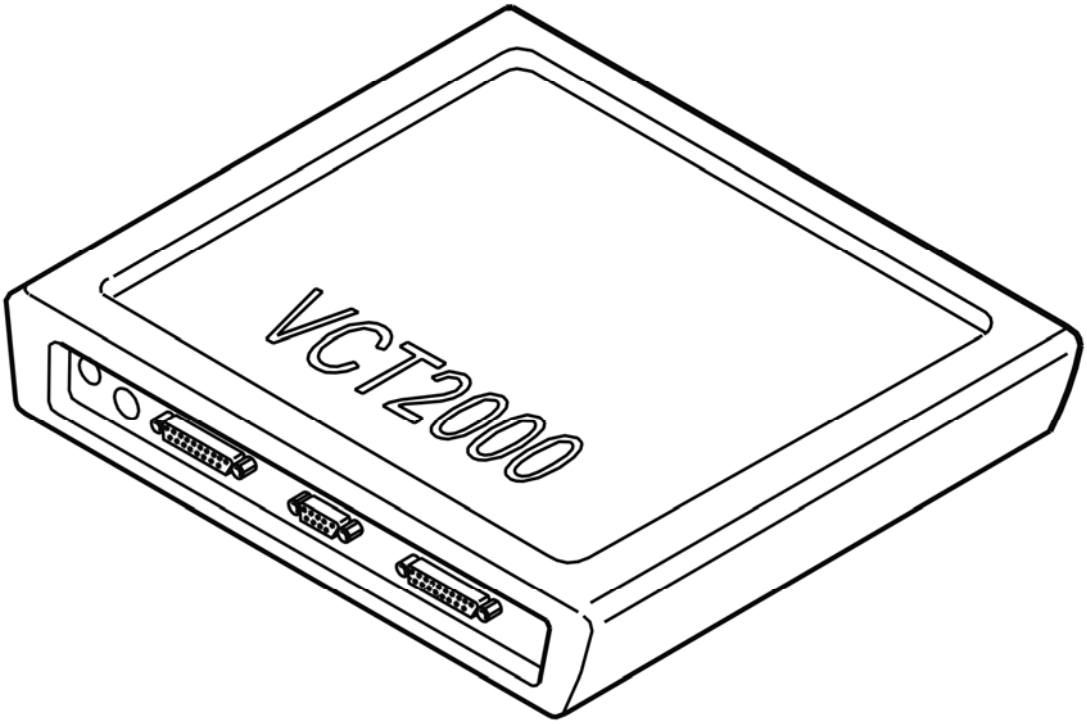

Fig. 77: Identifying VCT2000 Diagnostic Tool Symbol In VIDA
Courtesy of VOLVO CARS CORPORATION

- **Continue**

  Refer to **VERIFICATION**

INTERMITTENT FAULT

Check the connectors for the control module and power window lift motor. Check for contact resistance and oxidation. Check for loose connections.

XC90

Check the cable between control module terminal #23A and power window lift motor terminal #2. Check for a short-circuit to ground. Check for a short-circuit to supply voltage. Check for an open circuit. Check the cable between control module terminal #24A and power window lift motor terminal #5. Check for a short-circuit to ground. Check for a short-circuit to supply voltage. Check for an open circuit.

Check the cable between control module terminal #16A and power window lift motor connector terminal #4. Check for an intermittent short-circuit to ground. Check for an intermittent open-circuit.

Check the cable between control module terminal #19A and power window lift motor connector terminal #1. Check for an intermittent open-circuit.

Other information:

- The voltage must be approximately 2.4 V between terminal #24A or terminal #23A and ground when the window is being operated up or down
- see **CONNECTING THE BREAKOUT BOX**
- see **SIGNAL SPECIFICATION**
- see **CHECKING WIRING AND TERMINALS**

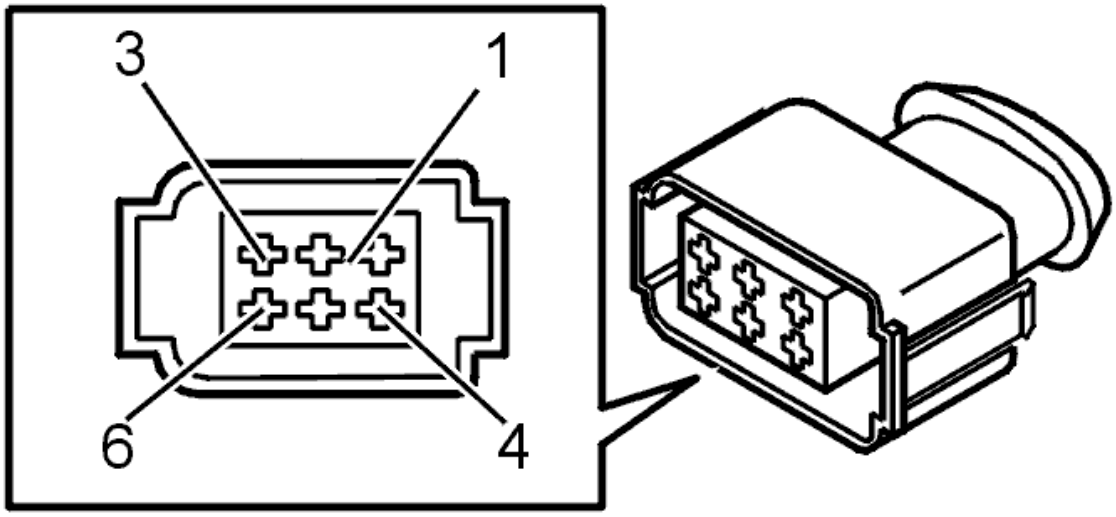

Fig. 78: Identifying Connector
Courtesy of VOLVO CARS CORPORATION

- **Continue**

  Refer to **INFORMATION**

VERIFICATION

HINT: After the repair it is necessary to check that the fault has been rectified.

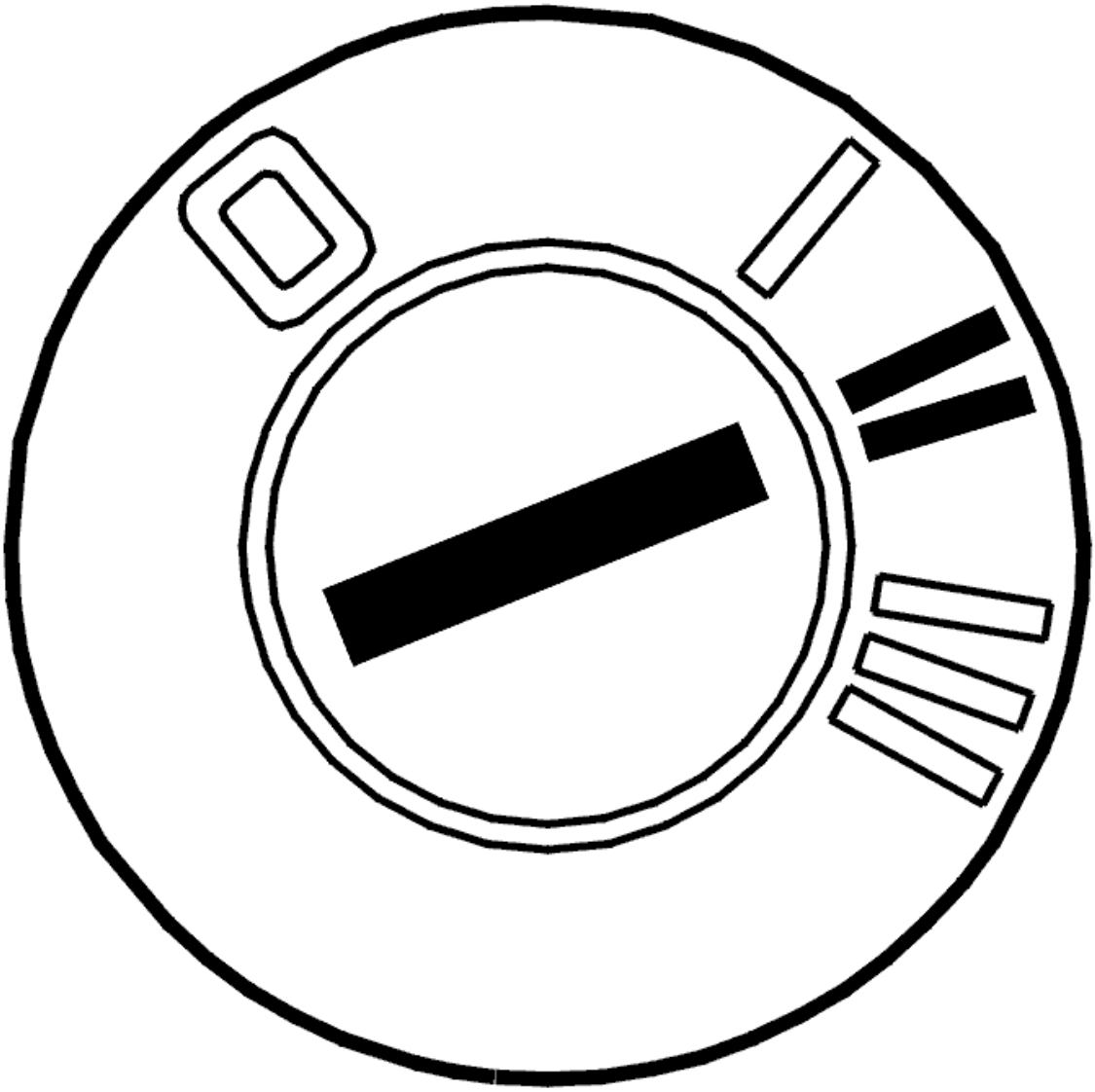

Fig. 79: Identifying Ignition ON
Courtesy of VOLVO CARS CORPORATION

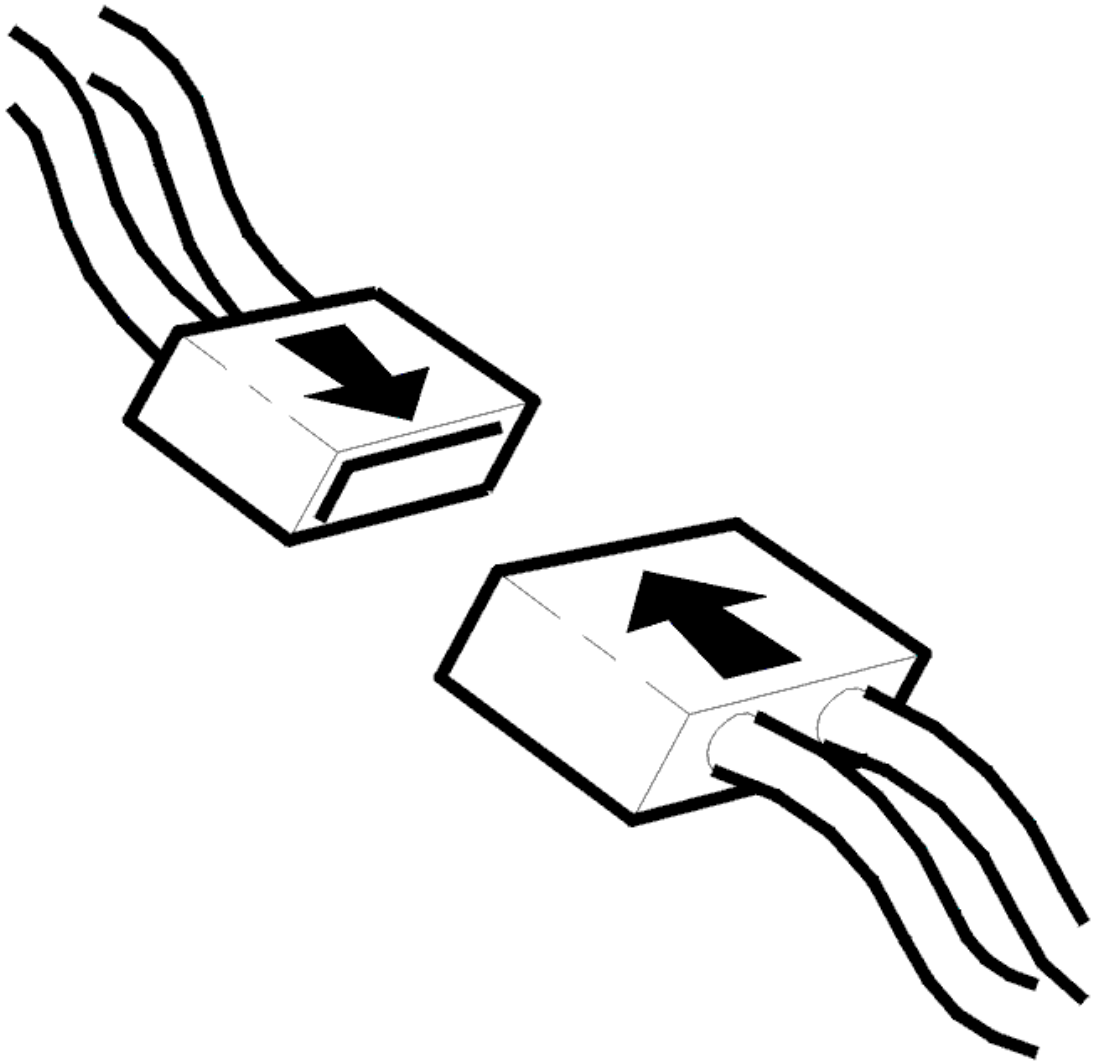

Fig. 80: Connecting Connector
Courtesy of VOLVO CARS CORPORATION

- Ignition off.
- Connect connectors, install components, etc.
- Ignition on.

  Check that the automatic window operation works by pressing in the button 2 stages one way or the other.

Does the automatic window operation work?

- **YES**

  VERIFIED: Troubleshooting has been completed.

- **NO**

  Refer to **INFORMATION**

INFORMATION

FAULT-TRACING INFORMATION

The fault should have been detected and remedied. As this is not the case fault-tracing has failed.

Exit fault-tracing for this diagnostic trouble code (DTC) or make another attempt.

DDM/PDM-0022 WINDOW LIFT HALL SENSORS 1 AND 2. SIGNAL FAULTY (2003-04)

DIAGNOSTIC TROUBLE CODE INFORMATION

see **DIAGNOSTIC TROUBLE CODE INFORMATION**

FAULTY SIGNAL

CHECKING FOR PERMANENT OR INTERMITTENT FAULTS

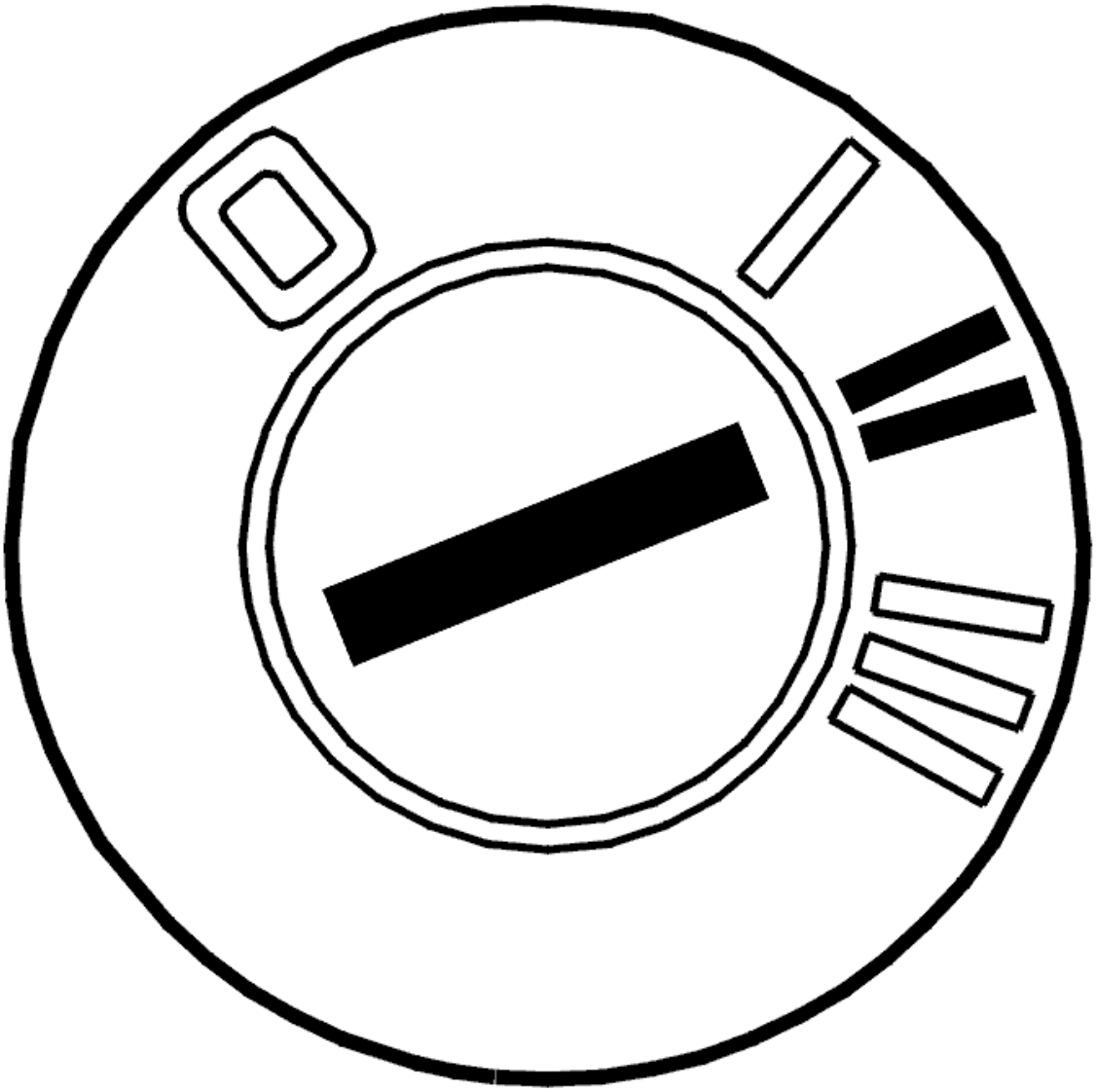

Fig. 81: Identifying Ignition ON
Courtesy of VOLVO CARS CORPORATION

- Ignition on.

  Press the power window switch 2 steps up to check the function of the automatic power window mechanism.

Is the automatic power window mechanism functioning?

- **YES**

  Refer to **INTERMITTENT FAULT**

- **NO**

Refer to **CHECKING THE CONNECTORS**

CHECKING THE CONNECTORS

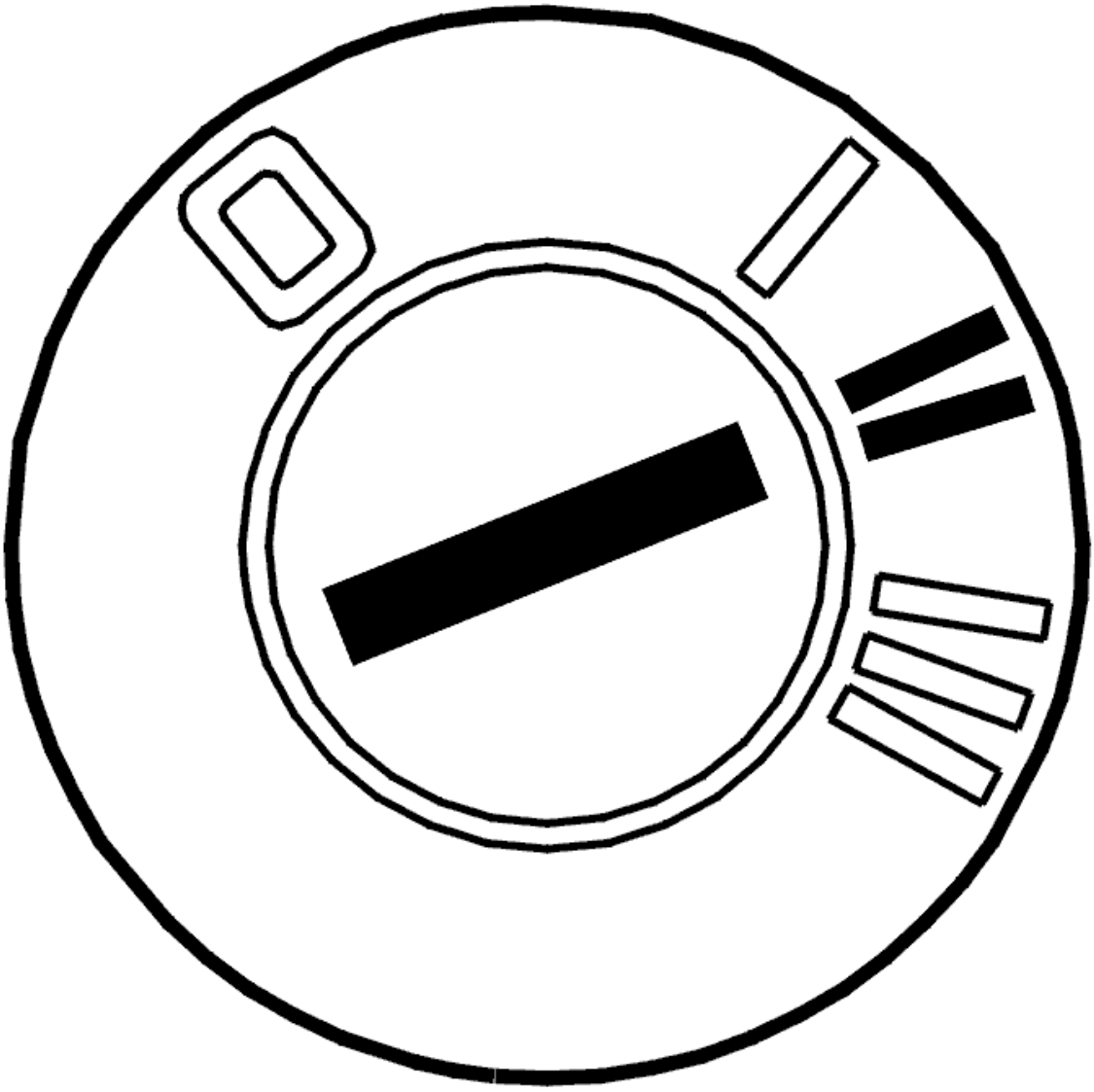

Fig. 82: Identifying Ignition ON
Courtesy of VOLVO CARS CORPORATION

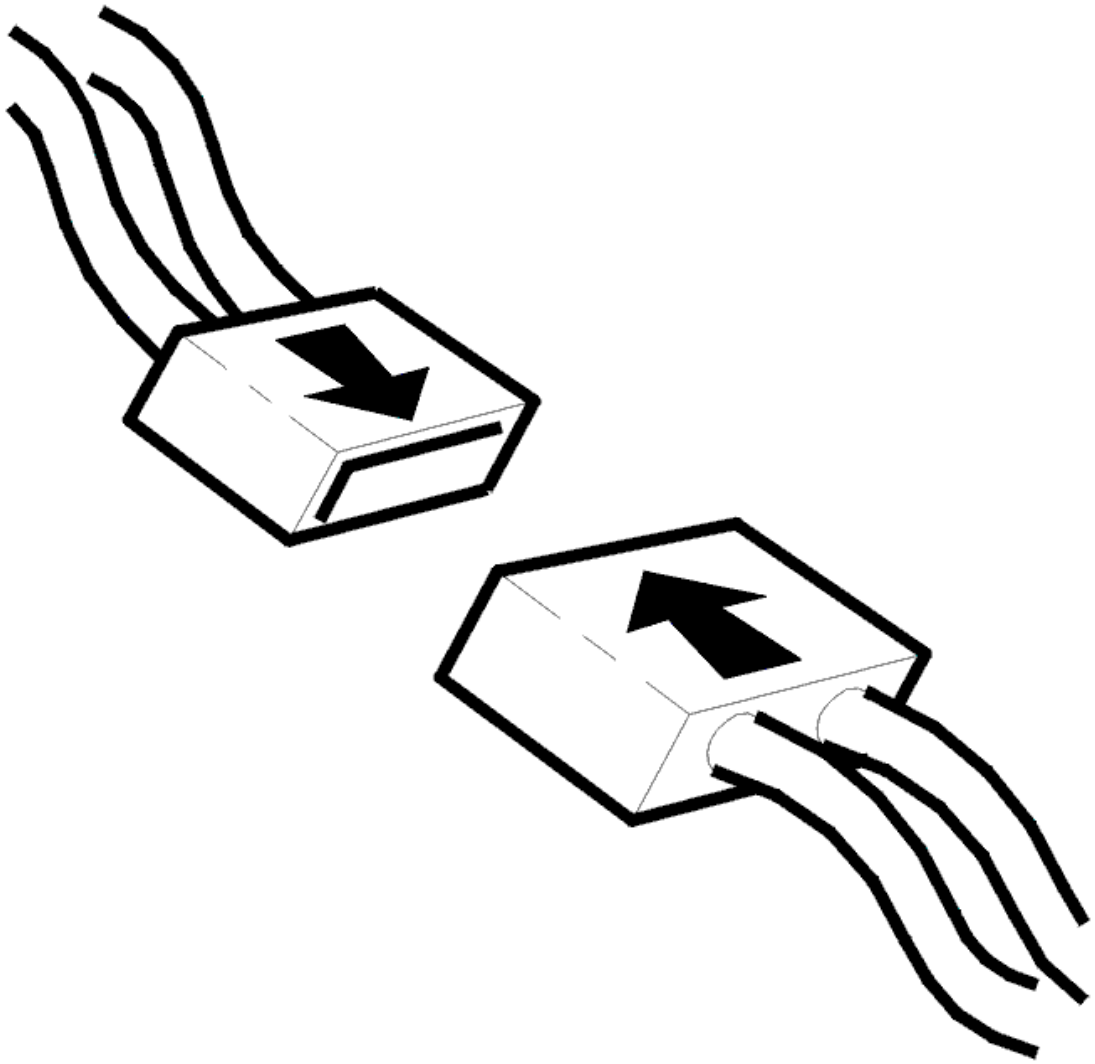

Fig. 83: Connecting Connector
Courtesy of VOLVO CARS CORPORATION

- Ignition off
- Check the power window lift motor connector. Check for contact resistance and oxidation and remedy. In particular, check for any damage
- Reinstall the components, reconnect the connectors etc.
- Ignition on.

  Press the power window switch 2 steps up and down.

  Other information:

  - To access the window lift mechanism, see **WINDOW LIFT MECHANISM FRONT SIDE DOOR, REPLACING**

- see **CHECKING WIRING AND TERMINALS** .

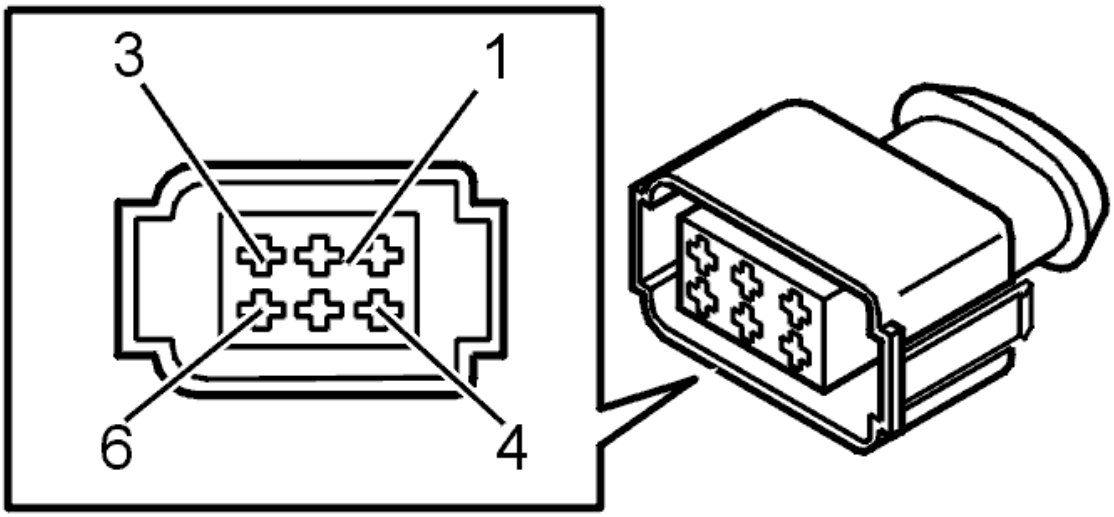

Fig. 84: Identifying Connector
Courtesy of VOLVO CARS CORPORATION

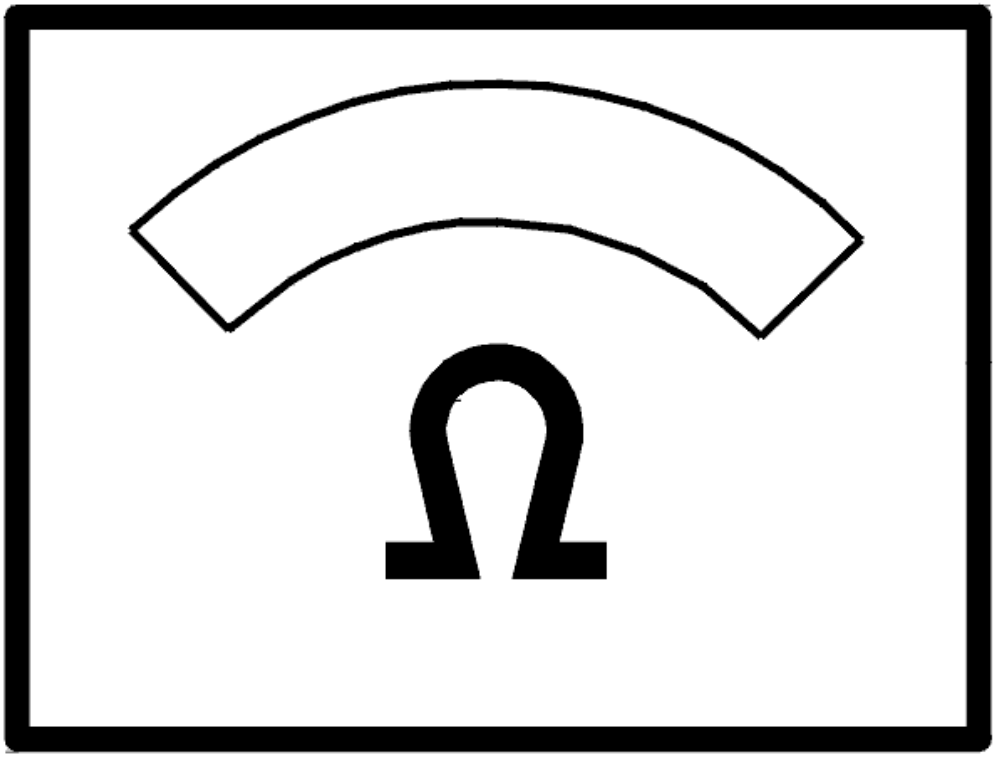

Fig. 85: Identifying Ohmmeter
Courtesy of VOLVO CARS CORPORATION

Is the automatic power window mechanism functioning?

- **YES**

  Refer to **VERIFICATION**

- **NO**

  Refer to **CHECKING FOR OPEN-CIRCUITS AND SHORT-CIRCUITS**

CHECKING FOR OPEN-CIRCUITS AND SHORT-CIRCUITS

Check the cable between door control module terminal #23A and power window motor terminal connector #5.

Check for a short-circuit to ground. Check for a short-circuit to supply voltage. Check for an open-circuit.

Check the cable between door control module terminal #16A and power window lift motor connector terminal #4. Check for a short-circuit to ground. Check for an open-circuit.

Check the cable between door control module terminal #19A and power window lift motor connector terminal #1. Check for an open-circuit.

Check the cable between door control module terminal #24A and power window motor terminal connector #2. Check for a short-circuit to ground. Check for a short-circuit to supply voltage. Check for an open-circuit.

Remedy as necessary.

Other information:

- The voltage must be approximately 2.4 V between terminal #24A or terminal #23A and ground when the window is being operated up or down
- To connect the breakout box, see **CONNECTING THE BREAKOUT BOX**
- For further information about signals and other values, see **SIGNAL SPECIFICATION**
- see **CHECKING WIRING AND TERMINALS** .

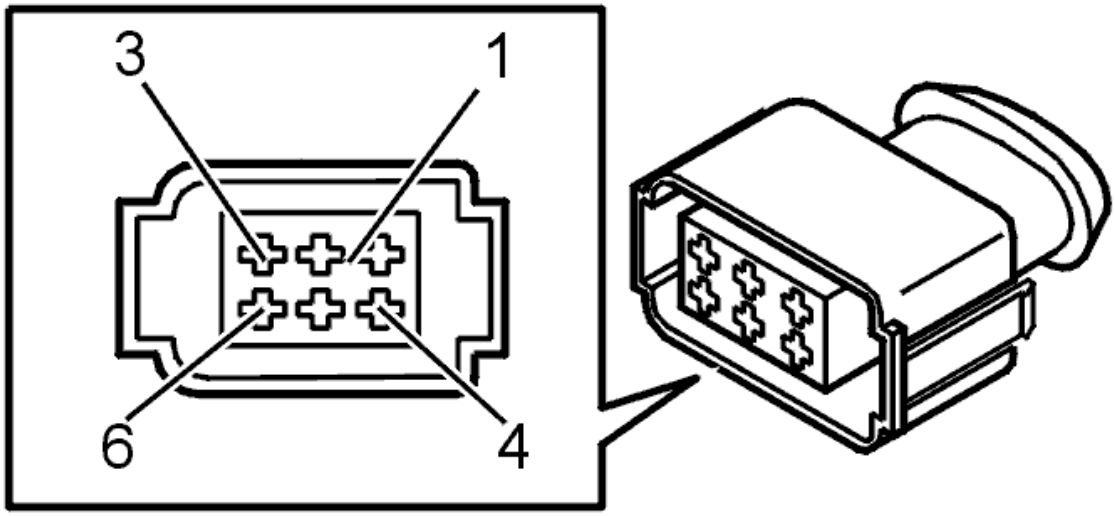

Fig. 86: Identifying Connector
Courtesy of VOLVO CARS CORPORATION

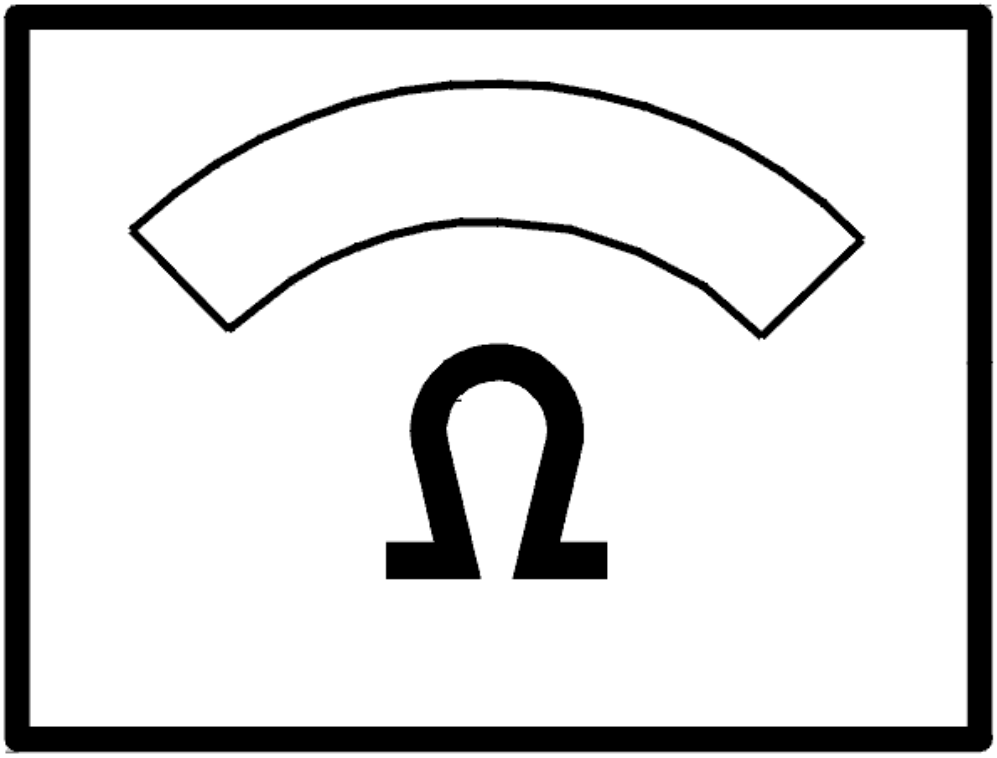

Fig. 87: Identifying Ohmmeter
Courtesy of VOLVO CARS CORPORATION

Was a fault detected?

- **YES**

  Refer to **VERIFICATION**

- **NO**

  Refer to **REPLACING THE COMPONENT**

REPLACING THE COMPONENT

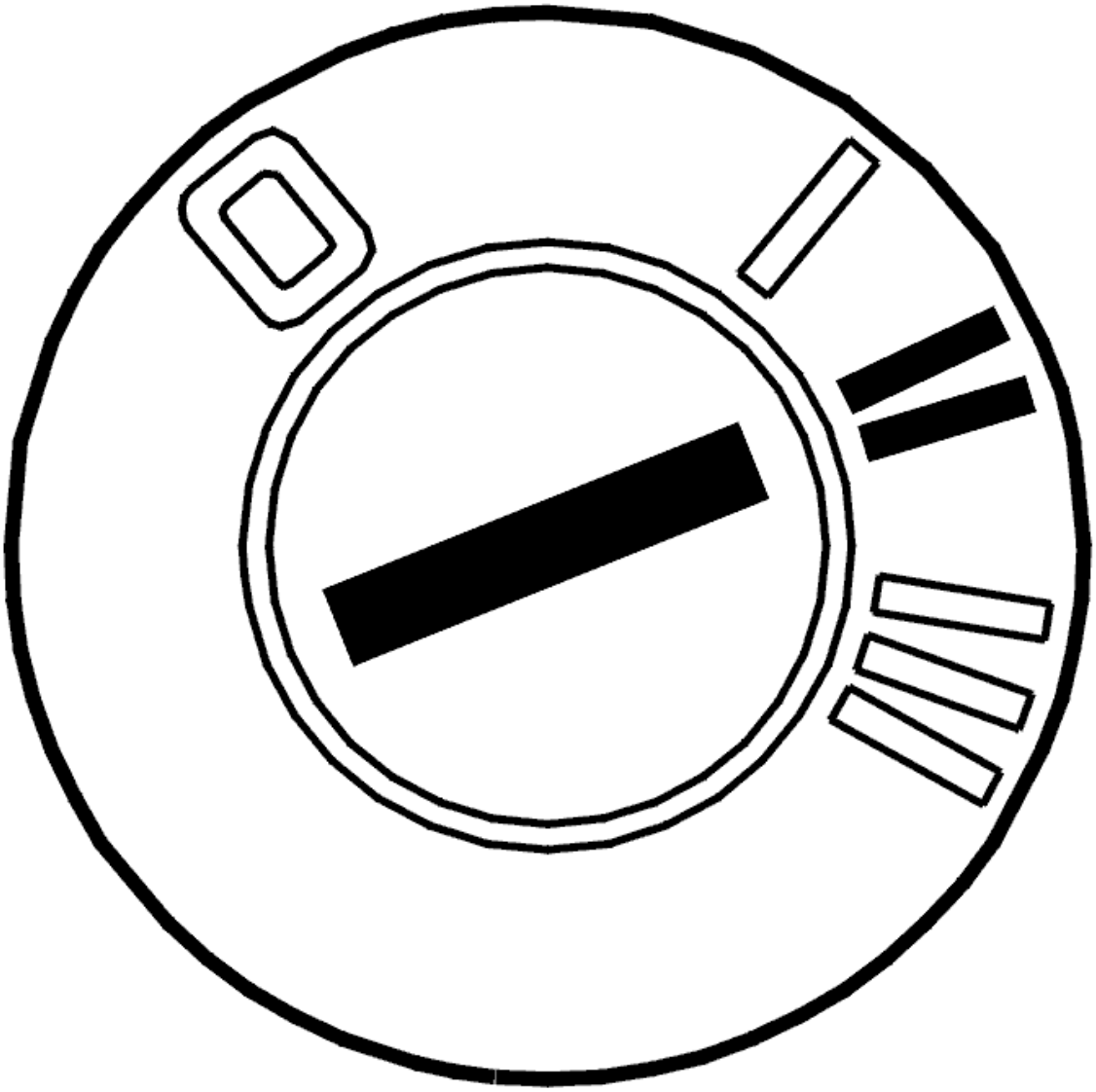

Fig. 88: Identifying Ignition ON
Courtesy of VOLVO CARS CORPORATION

Replace the power window mechanism according to **WINDOW LIFT MECHANISM FRONT SIDE DOOR, REPLACING** .

Ignition on.

Move the window to its upper limit position using manual control.

Initialize the window.

From model year 2003 inclusive, the window will lower approximately 10 centimeters and then close again during initialization.

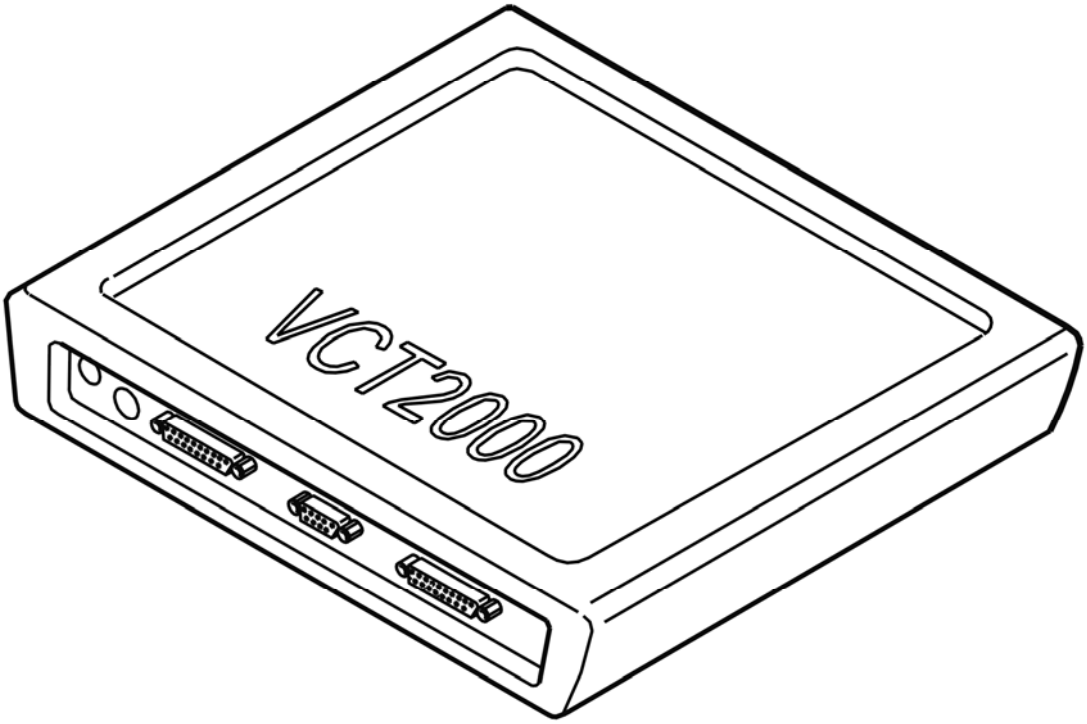

Fig. 89: Identifying VCT2000 Diagnostic Tool Symbol In VIDA
Courtesy of VOLVO CARS CORPORATION

- **Continue**

  Refer to **VERIFICATION**

INTERMITTENT FAULT

Check the connectors for the control module and power window lift motor. Check for contact resistance and oxidation. Check for loose connections.

Check the cable between control module terminal #23A and power window lift motor terminal #5. Check the cable between control module terminal #24A and power window lift motor terminal #2. Check for an intermittent short-circuit to ground. Check for an intermittent short-circuit to supply voltage. Check for an intermittent open-circuit.

Check the cable between door control module terminal #16A and power window lift motor connector terminal #4. Check for an intermittent short-circuit to ground. Check for an intermittent open-circuit.

Check the cable between door control module terminal #19A and power window lift motor connector terminal #1. Check for an intermittent open-circuit.

Other information:

- The voltage must be approximately 2.4 V between terminal #24A or terminal #23A and ground when the window is being operated up or down
- To connect the breakout box, see **CONNECTING THE BREAKOUT BOX**
- For further information about signals and other values, see **SIGNAL SPECIFICATION**
- see **CHECKING WIRING AND TERMINALS** .

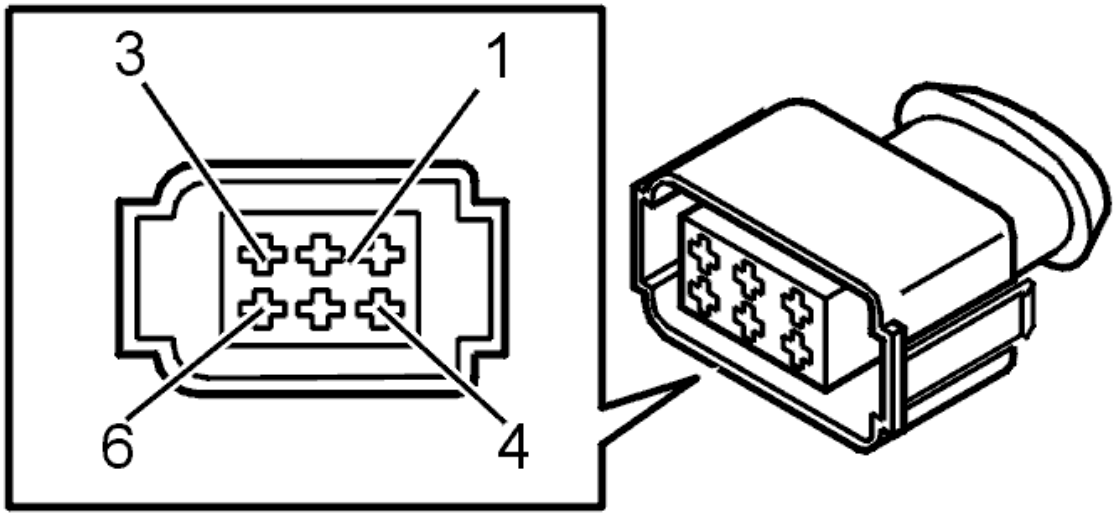

Fig. 90: Identifying Connector
Courtesy of VOLVO CARS CORPORATION

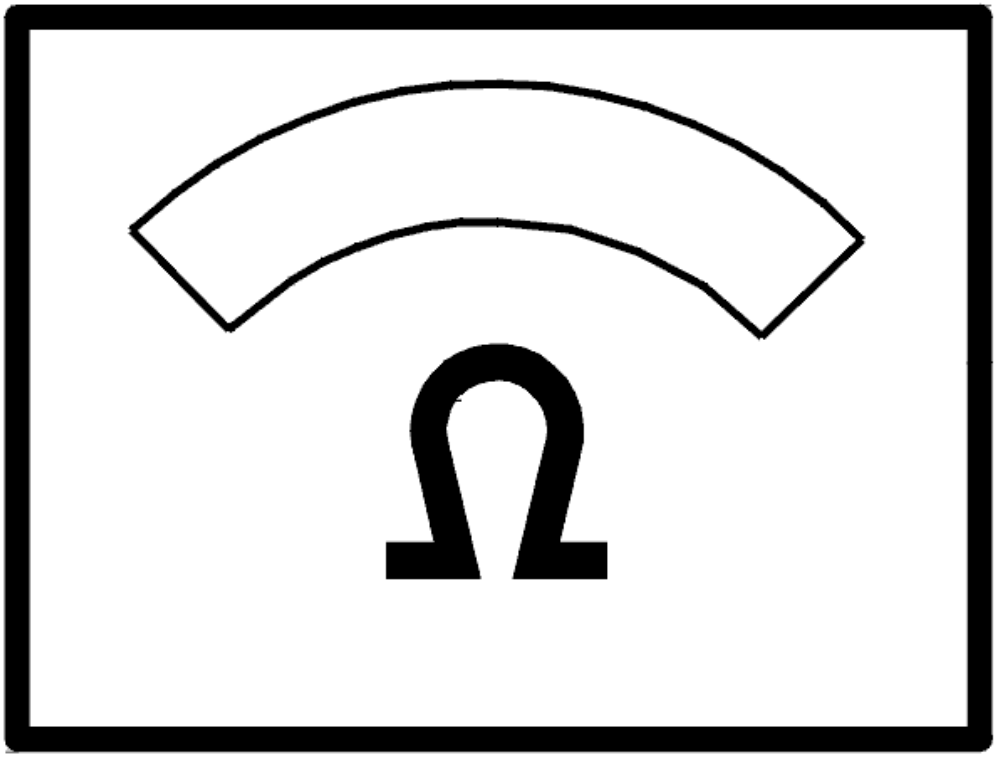

Fig. 91: Identifying Ohmmeter
Courtesy of VOLVO CARS CORPORATION

- **Continue**

  Refer to **INFORMATION**

VERIFICATION

HINT: After the repair it is necessary to check that the fault has been rectified.

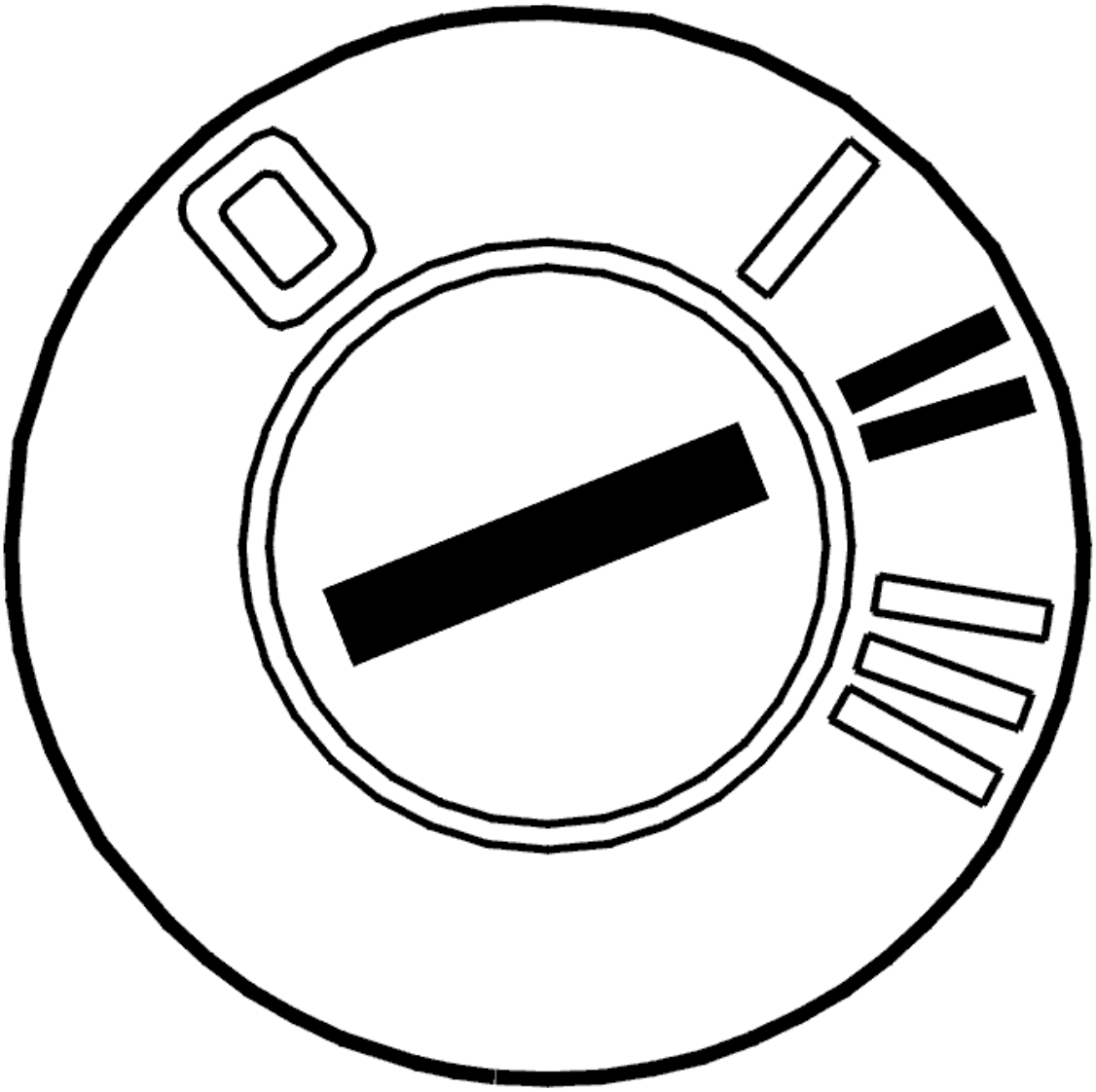

Fig. 92: Identifying Ignition ON
Courtesy of VOLVO CARS CORPORATION

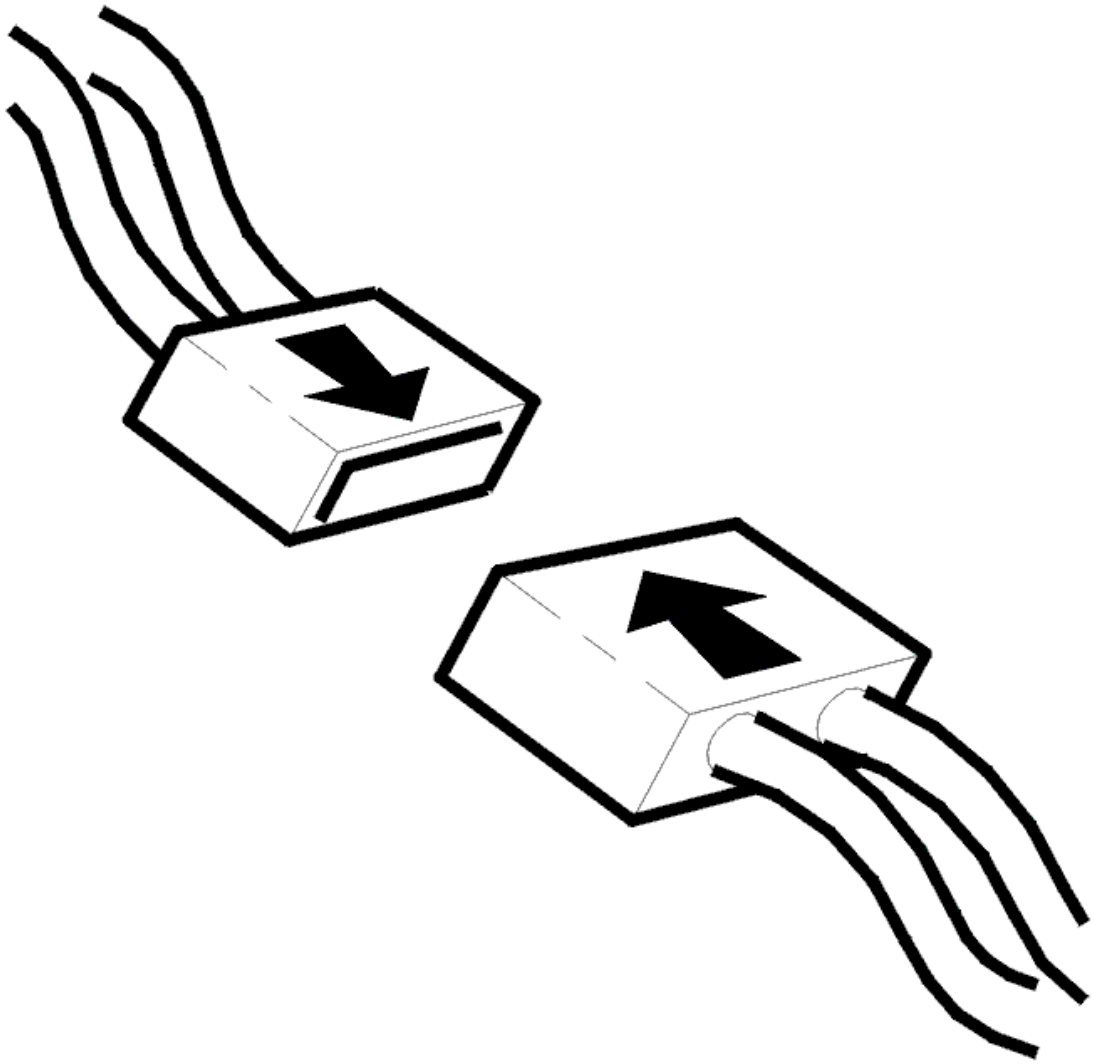

Fig. 93: Connecting Connector
Courtesy of VOLVO CARS CORPORATION

- Ignition off.
- Connect connectors, install components, etc.
- Ignition on.

  Check that the automatic window operation works by pressing in the button 2 stages one way or the other.

Does the automatic window operation work?

- **YES**

  VERIFIED: Troubleshooting has been completed.

- **NO**

  Refer to **INFORMATION**

INFORMATION

FAULT-TRACING INFORMATION

The fault should have been detected and remedied. As this is not the case fault-tracing has failed.

Exit fault-tracing for this diagnostic trouble code (DTC) or make another attempt.

DDM/PDM-0023 MIRROR MOTOR MX+. SIGNAL TOO HIGH (2003-12)

DIAGNOSTIC TROUBLE CODE (DTC) INFORMATION

Condition

Diagnostic trouble code (DTC) DDM/PDM-0023 is stored if door mirror down is activated at the same time as the control module registers that there is voltage in the cable.

Substitute Value

- None.

Possible Source

- Short-circuit to supply voltage in signal cable MX+.

Fault symptom[s]

- Power door mirror control does not function.

SIGNAL TOO HIGH

CHECKING FOR PERMANENT OR INTERMITTENT FAULTS

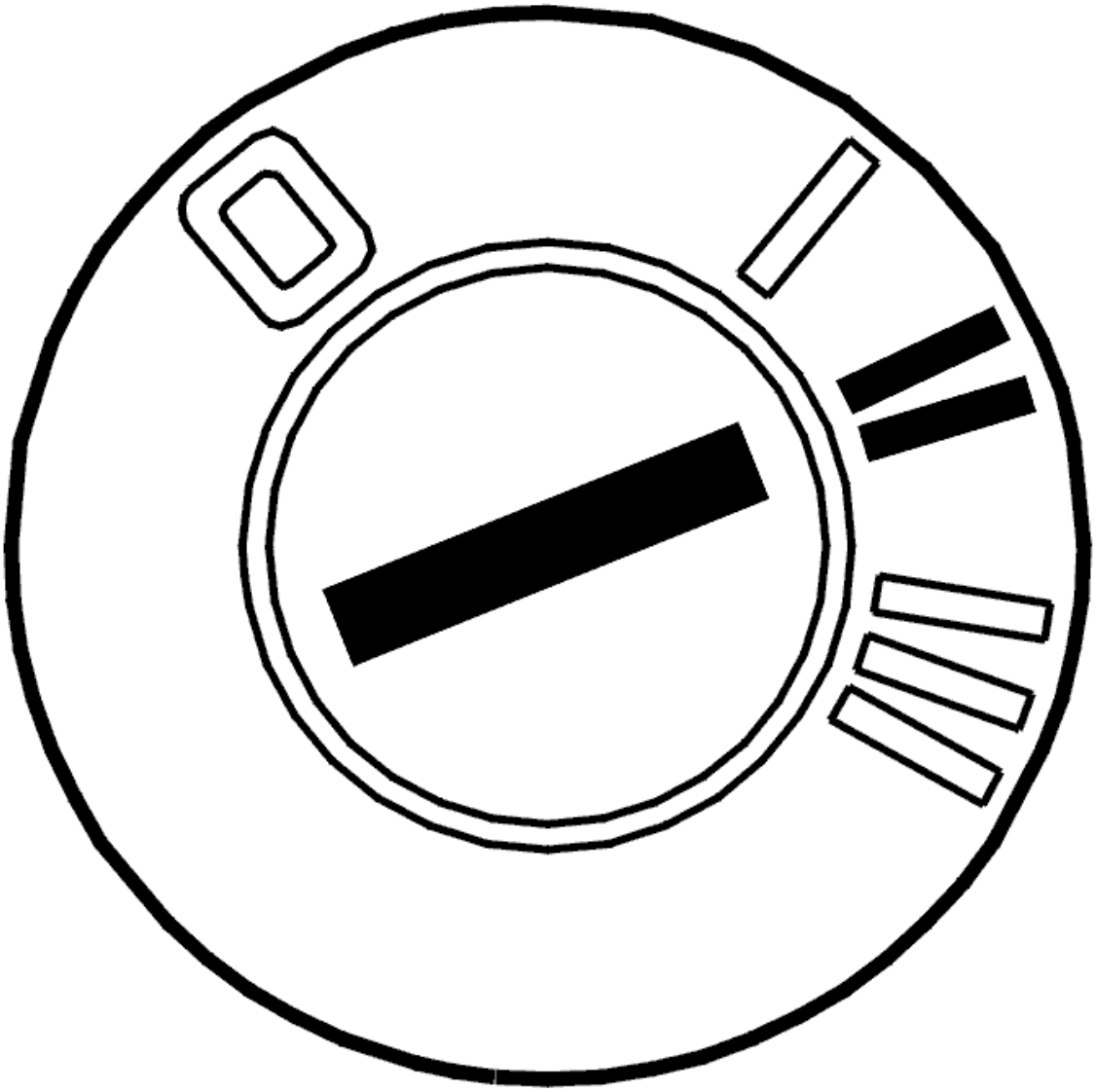

Fig. 94: Identifying Ignition ON
Courtesy of VOLVO CARS CORPORATION

- Ignition on.

  Press the switch for the power door mirrors to check the function of the power door mirrors.

Can the power door mirrors be maneuvered?

- **YES**

  Refer to **INTERMITTENT FAULT**

- **NO**

  Refer to **CHECKING FOR A SHORT-CIRCUIT**

CHECKING FOR A SHORT-CIRCUIT

Check the cable between the driver/passenger door control module (DDM/PDM) and the power door mirror (as follows). Check for a short-circuit to supply voltage.

Remedy as necessary.

Try a new power door mirror if the cable is OK.

If the car is equipped with a 10-pin connector

DDM-0023 Door mirror motor MX+

Control module terminal #26A and power door mirror terminal #9.

DDM-0026 Door mirror motor MY+

Control module terminal #28A and power door mirror terminal #10.

DDM-0028 Door mirror motor MF+

Control module terminal #29A and power door mirror terminal #8.

If the car is equipped with a 16-pin connector

DDM-0023 Door mirror motor MX+

Control module terminal #26A and power door mirror terminal #15.

DDM-0026 Door mirror motor MY+

Control module terminal #28A and power door mirror terminal #16.

DDM-0028 Door mirror motor MF+

Control module terminal #29A and power door mirror terminal #14.

Other information:

- To connect the breakout box, see **CONNECTING THE BREAKOUT BOX**
- For further information about signals and other values, see **SIGNAL SPECIFICATION**
- To access the driver/passenger door module (DDM/PDM), see **PASSENGER DOOR MODULE (PDM), REPLACING**
- To access the power door mirror, see **REAR VIEW MIRROR, REPLACING**
- see **CHECKING WIRING AND TERMINALS** .

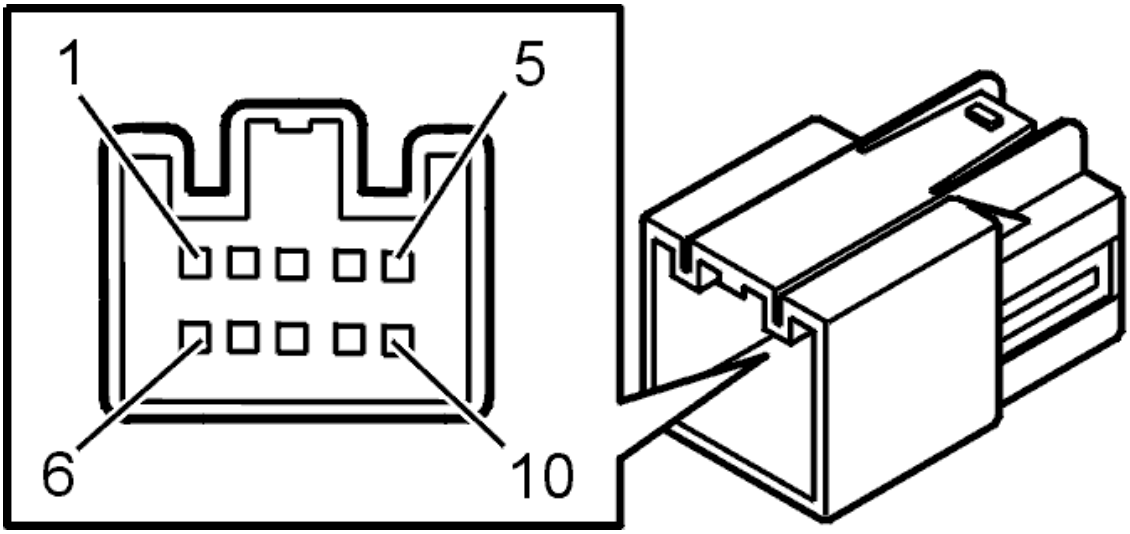

Fig. 95: Identifying 10-Pin Power Door Mirror Connector Terminal
Courtesy of VOLVO CARS CORPORATION

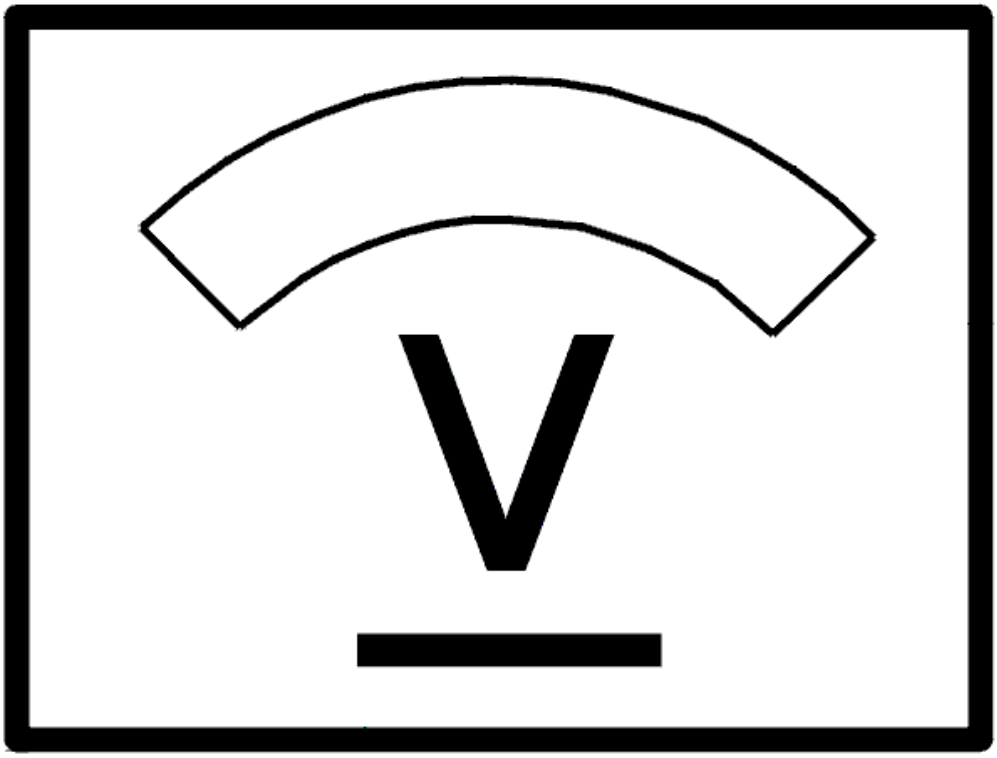

Fig. 96: Identifying Voltage Display
Courtesy of VOLVO CARS CORPORATION

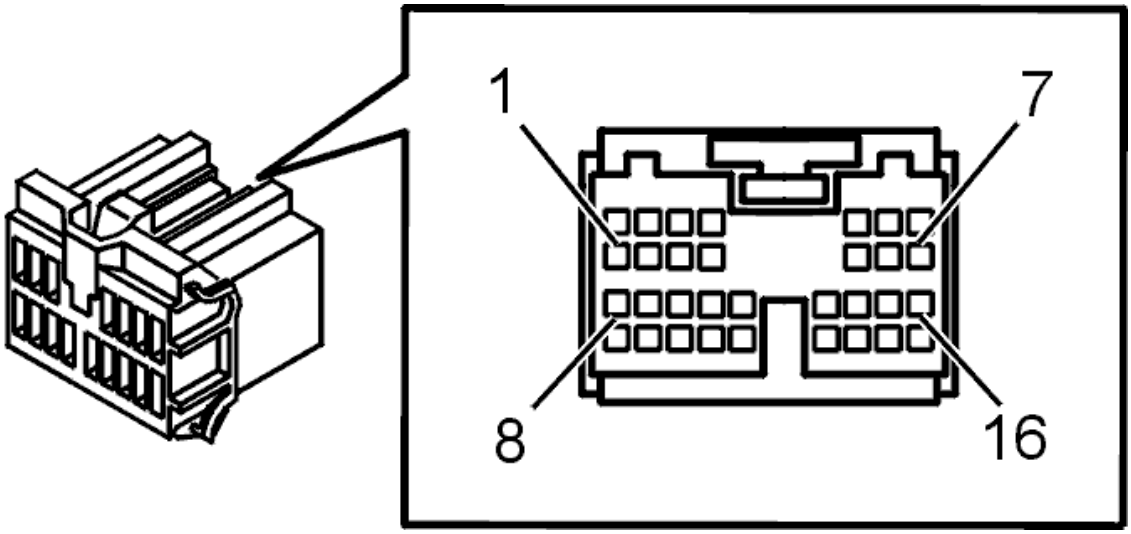

Fig. 97: Connector, Green (16-Pin)
Courtesy of VOLVO CARS CORPORATION

- **Continue**

  Refer to **VERIFICATION**

INTERMITTENT FAULT

Check the driver/passenger door control module (DDM/PDM) and power door mirror connectors. Check for contact resistance, oxidation and loose connections.

Check the cable between the door control module and the power door mirror (as follows). Check for an intermittent short-circuit to supply voltage. Check for an intermittent open-circuit.

If the car is equipped with a 10-pin connector

DDM-0023 Door mirror motor MX+

Control module terminal #26A and power door mirror terminal #9.

DDM-0026 Door mirror motor MY+

Control module terminal #28A and power door mirror terminal #10.

DDM-0028 Door mirror motor MF+

Control module terminal #29A and power door mirror terminal #8.

If the car is equipped with a 16-pin connector

DDM-0023 Door mirror motor MX+

Control module terminal #26A and power door mirror terminal #15.

DDM-0026 Door mirror motor MY+

Control module terminal #28A and power door mirror terminal #16.

DDM-0028 Door mirror motor MF+

Control module terminal #29A and power door mirror terminal #14.

Other information:

- When the function is not activated the voltage between the control module and ground must be **0 V**
- To connect the breakout box, see **CONNECTING THE BREAKOUT BOX**
- For further information about signals and other values, see **SIGNAL SPECIFICATION**
- To access the driver/passenger door module (DDM/PDM), see **PASSENGER DOOR MODULE (PDM), REPLACING**
- To access the power door mirror, see **REAR VIEW MIRROR, REPLACING**
- see **CHECKING WIRING AND TERMINALS** .

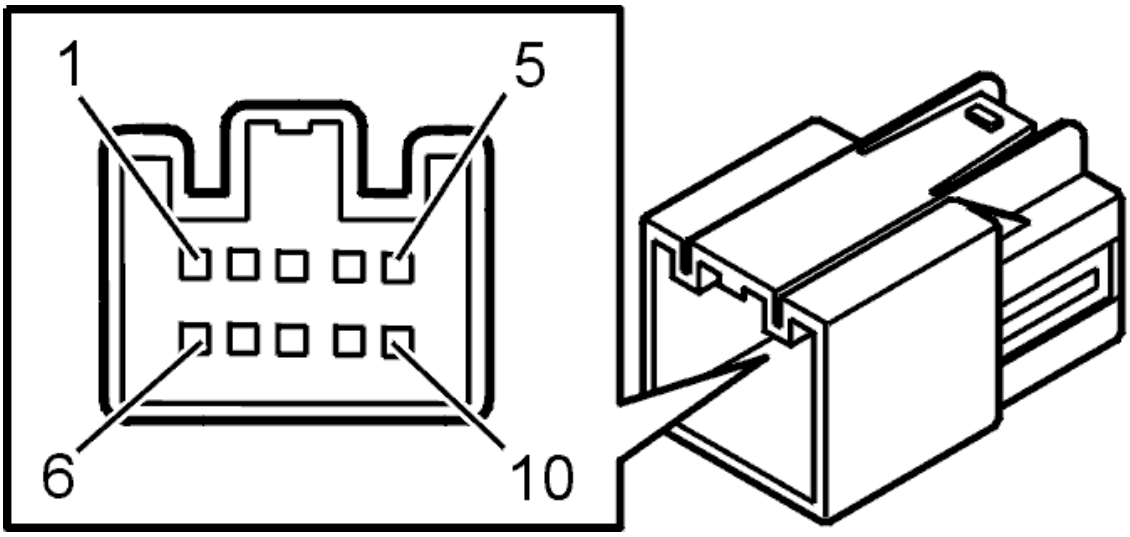

Fig. 98: Identifying 10-Pin Power Door Mirror Connector Terminal
Courtesy of VOLVO CARS CORPORATION

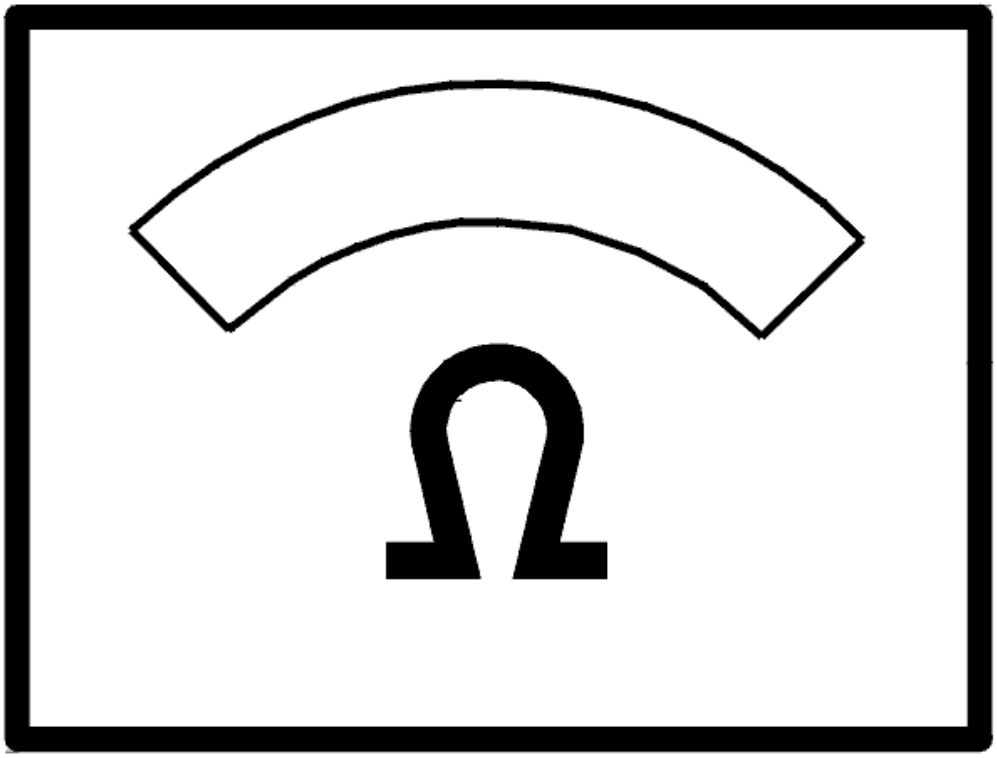

Fig. 99: Identifying Ohmmeter
Courtesy of VOLVO CARS CORPORATION

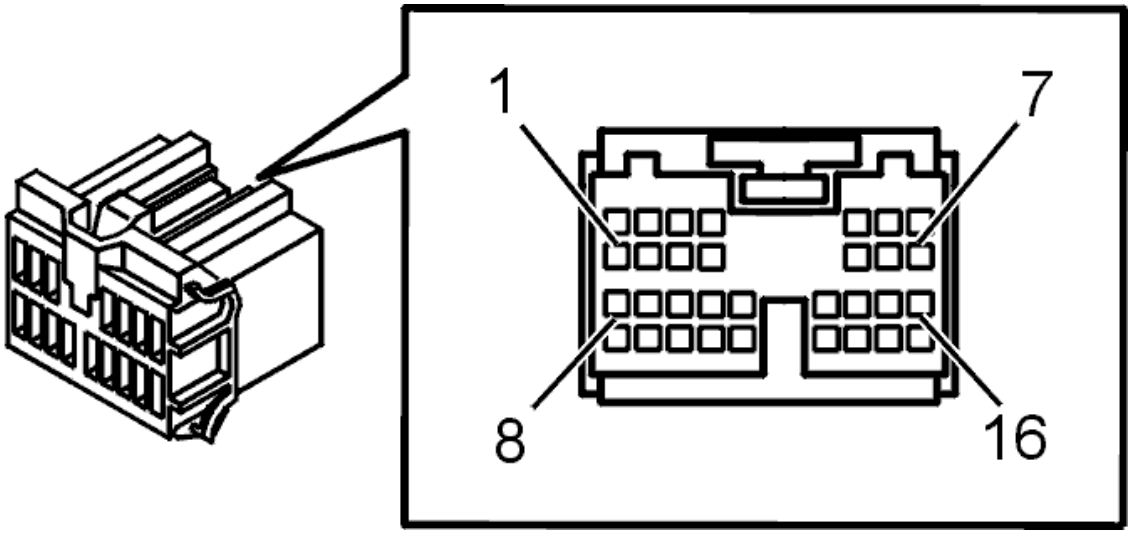

Fig. 100: Connector, Green (16-Pin)
Courtesy of VOLVO CARS CORPORATION

- **Continue**

  Refer to **INFORMATION**

VERIFICATION

HINT: After carrying out the repair, check that the fault has been remedied.

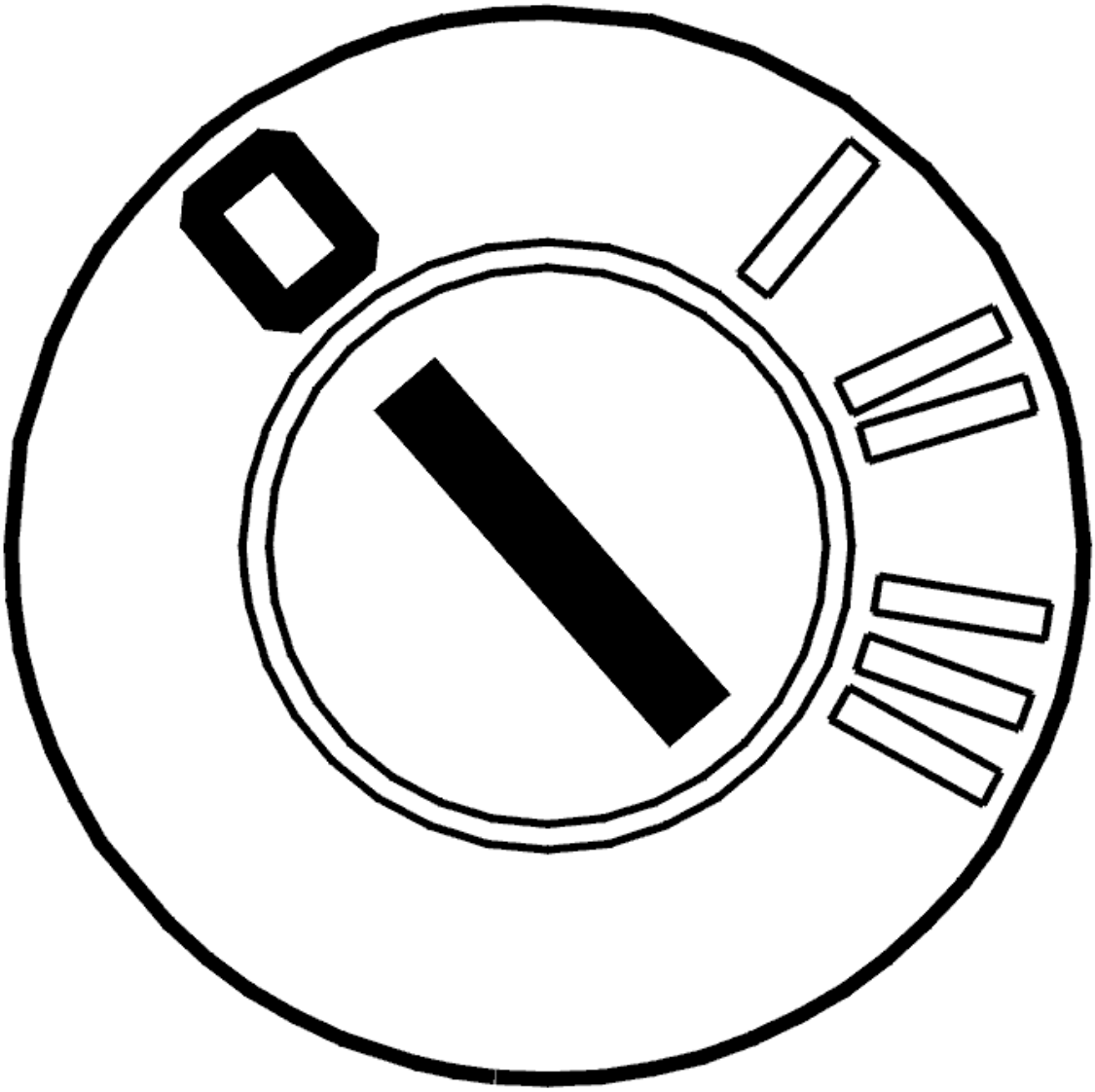

Fig. 101: Identifying Ignition OFF
Courtesy of VOLVO CARS CORPORATION

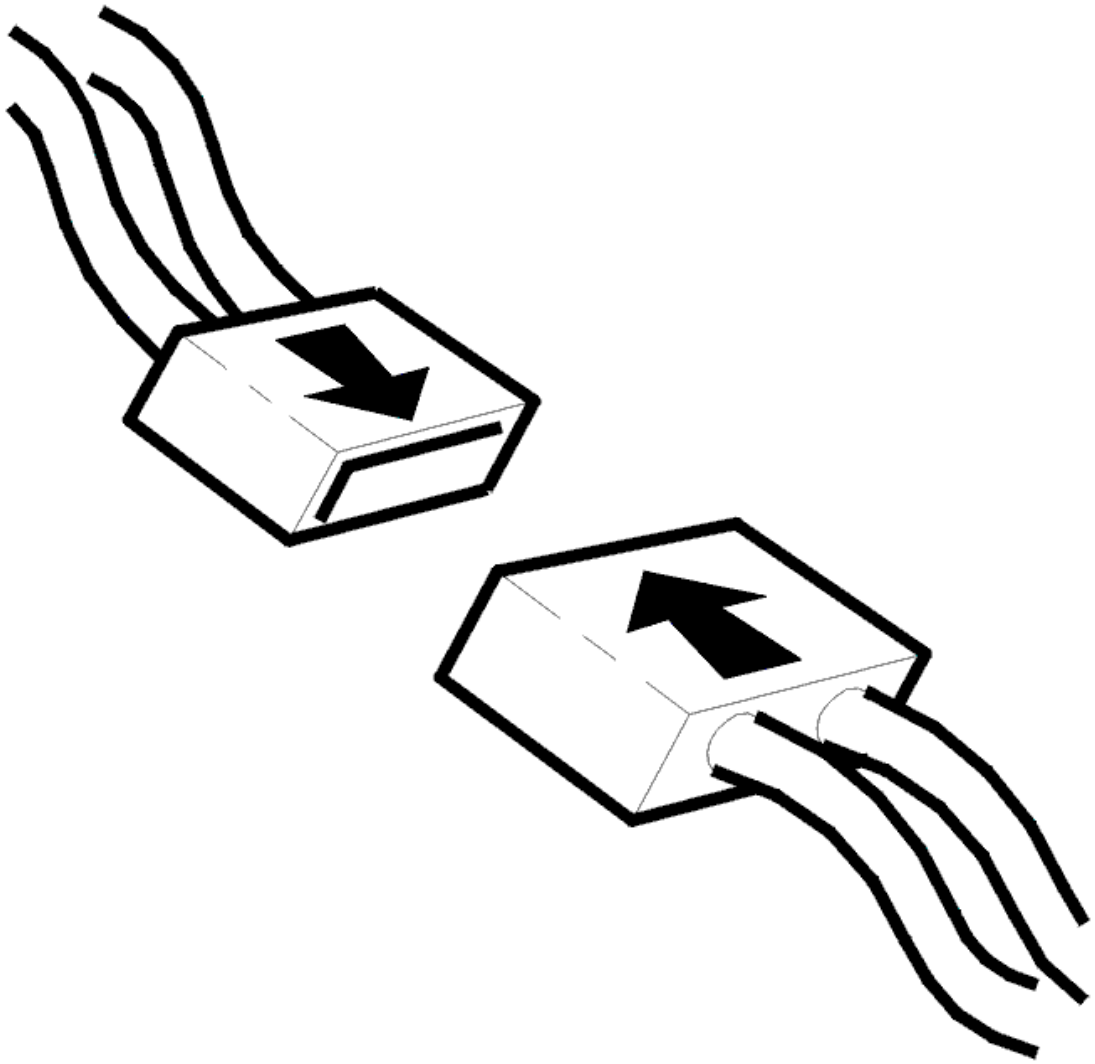

Fig. 102: Connecting Connector
Courtesy of VOLVO CARS CORPORATION

- Ignition off
- Reconnect the components, connectors etc.

  Operate the door mirror to each limit position using the control. The mirror must move in the corresponding directions.

Is the mirror working?

- **YES**

  VERIFIED: Troubleshooting has been completed.

- **NO**

Refer to **INFORMATION**

INFORMATION

FAULT-TRACING INFORMATION

The fault should have been detected and remedied. As this is not the case fault-tracing has failed.

Exit fault-tracing for this diagnostic trouble code (DTC) or make another attempt.

DDM/PDM-0024 MIRROR MOTOR MX+. SIGNAL TOO LOW (2003-12)

DIAGNOSTIC TROUBLE CODE (DTC) INFORMATION

Condition

Diagnostic trouble code (DTC) DDM/PDM-0024 is stored if power door window up is activated at the same time as the control module registers that there is a short-circuit to ground in the cable.

Substitute Value

- None.

Possible Source

- Short-circuit to ground in signal cable MX+.

Fault symptom[s]

- Power door window control does not function.

SIGNAL TOO LOW

CHECKING FOR PERMANENT OR INTERMITTENT FAULTS

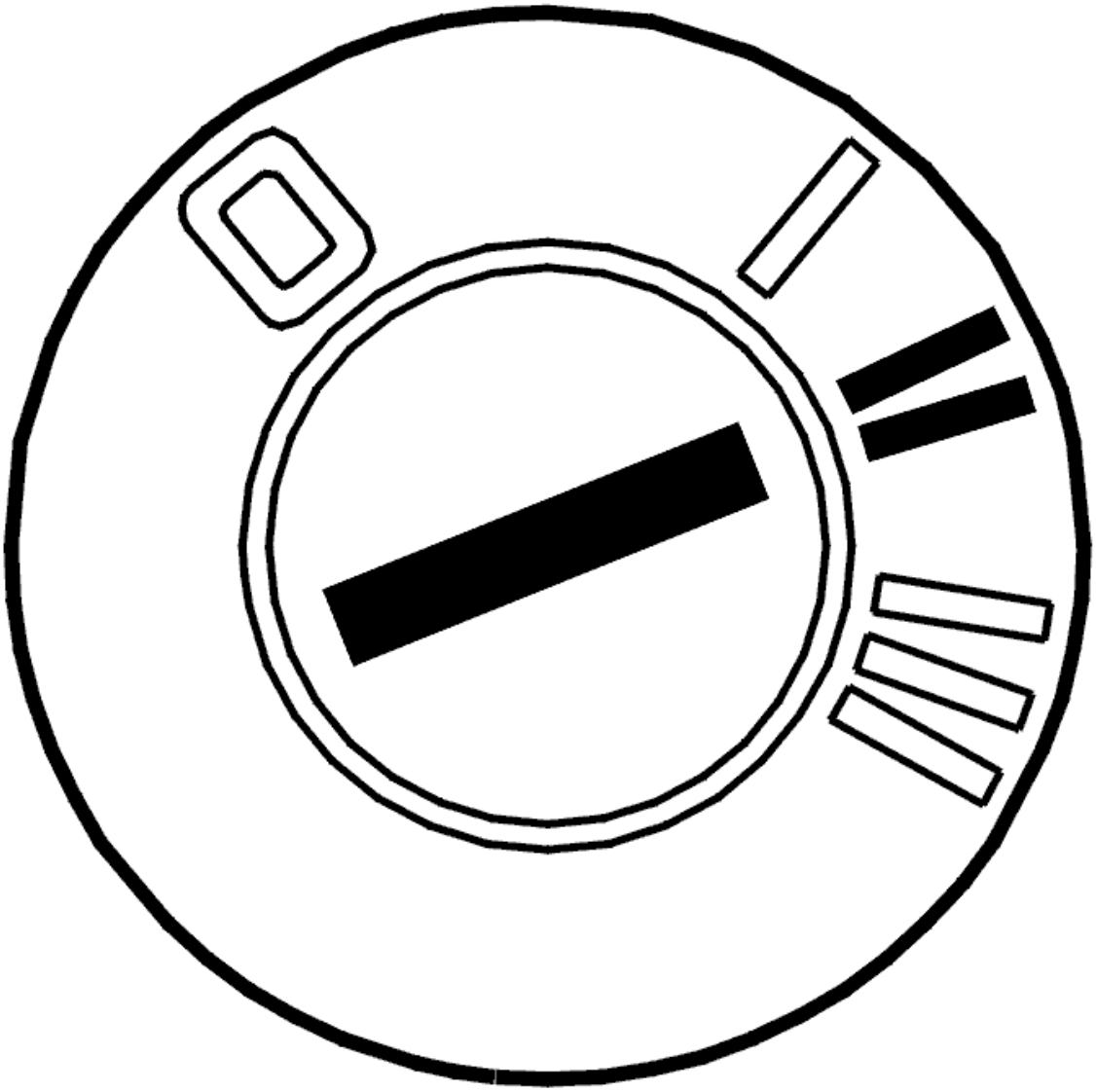

Fig. 103: Identifying Ignition ON
Courtesy of VOLVO CARS CORPORATION

- Ignition on.

  Press the switch for the power door mirrors to check the function of the power door mirrors.

Can the power door mirrors be maneuvered?

- **YES**

  Refer to **INTERMITTENT FAULT**

- **NO**

  Refer to **CHECKING FOR A SHORT-CIRCUIT**

CHECKING FOR A SHORT-CIRCUIT

Check the cable between the door control module and the power door mirror (as follows). Check for a short-circuit to ground.

Remedy as necessary.

Try a new power door mirror if the cable is OK.

If the car is equipped with a 10-pin connector

DDM-0024 Door mirror motor MX+

Control module terminal #26A and power door mirror terminal #9.

DDM-0027 Door mirror motor MY+

Control module terminal #28A and power door mirror terminal #10.

DDM-0029 Door mirror motor MF+

Control module terminal #29A and power door mirror terminal #8.

If the car is equipped with a 16-pin connector

DDM-0024 Door mirror motor MX+

Control module terminal #26A and power door mirror terminal #15.

DDM-0027 Door mirror motor MY+

Control module terminal #28A and power door mirror terminal #16.

DDM-0029 Door mirror motor MF+

Control module terminal #29A and power door mirror terminal #14.

Other information:

- To connect the breakout box, see **CONNECTING THE BREAKOUT BOX**
- For further information about signals and other values, see **SIGNAL SPECIFICATION**
- To access the driver/passenger door module (DDM/PDM), see **PASSENGER DOOR MODULE (PDM), REPLACING**
- To access the power door mirror, see **REAR VIEW MIRROR, REPLACING**
- see **CHECKING WIRING AND TERMINALS** .

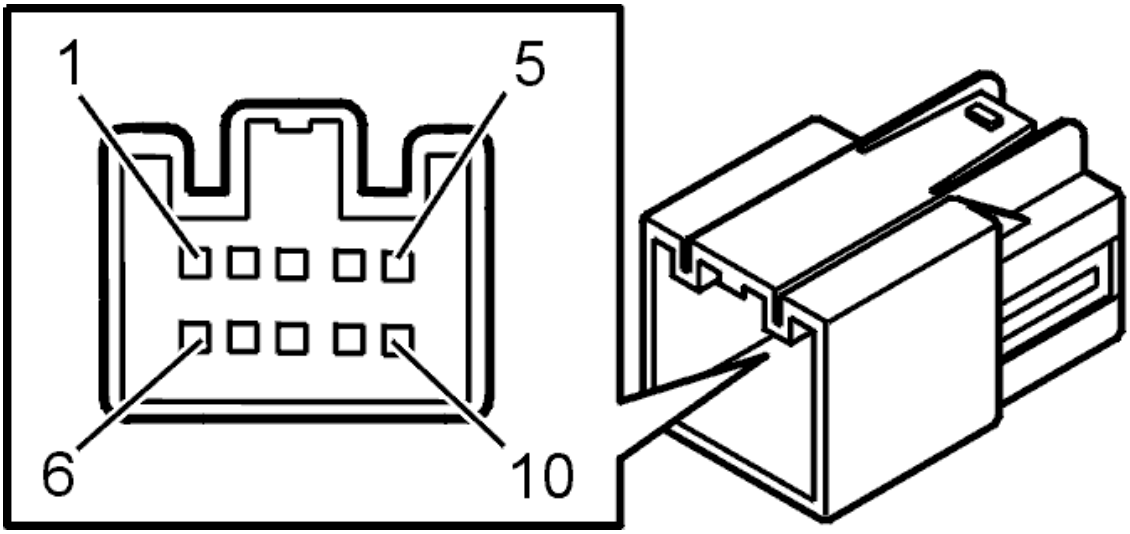

Fig. 104: Identifying 10-Pin Power Door Mirror Connector Terminal
Courtesy of VOLVO CARS CORPORATION

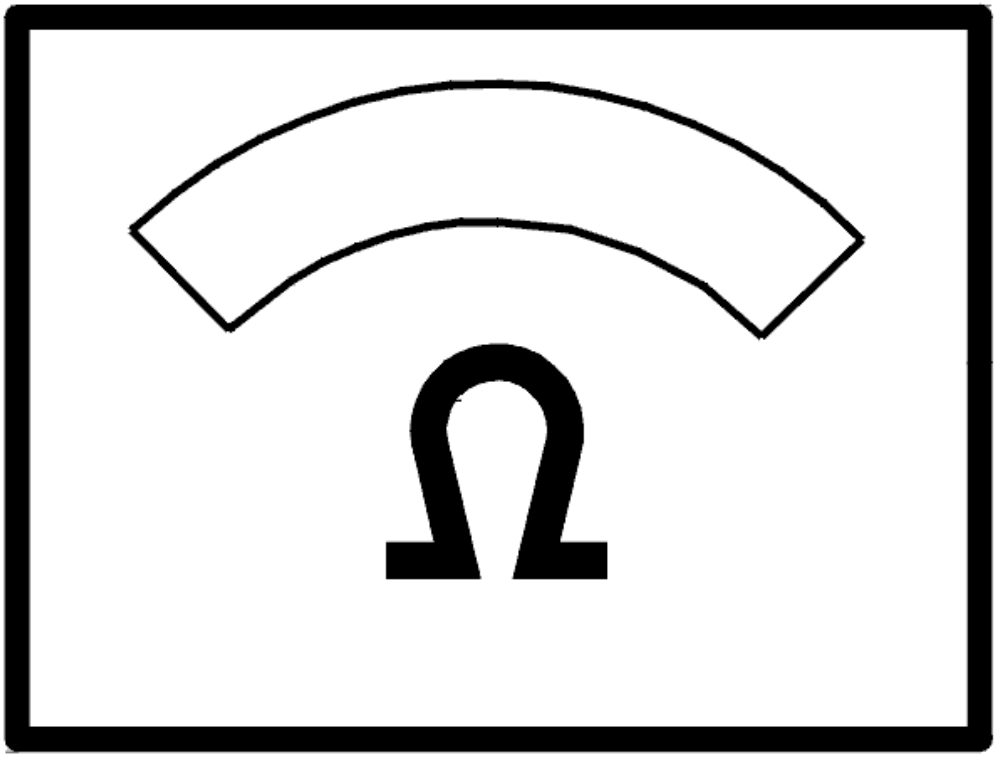

Fig. 105: Identifying Ohmmeter
Courtesy of VOLVO CARS CORPORATION

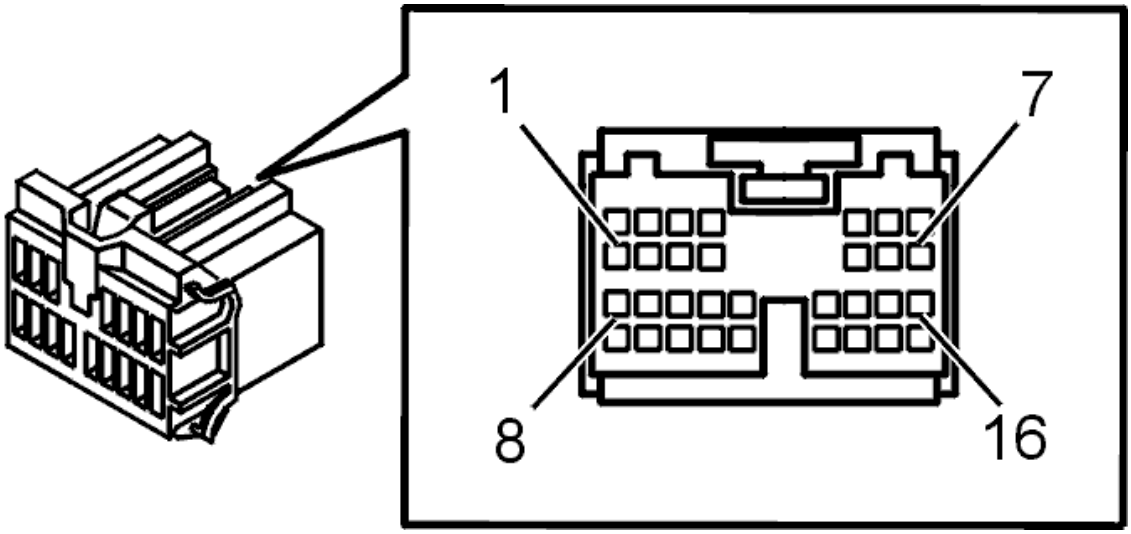

Fig. 106: Connector, Green (16-Pin)
Courtesy of VOLVO CARS CORPORATION

- **Continue**

  Refer to **VERIFICATION**

INTERMITTENT FAULT

Check the control module and power door mirror connectors. Check for contact resistance, oxidation and loose connections.

Check the cable between the control module and the power door mirror. Check for an intermittent short-circuit to ground.

If the car is equipped with a 10-pin connector

DDM-0024 Door mirror motor MX+

Control module terminal #26A and power door mirror terminal #9.

DDM-0027 Door mirror motor MY+

Control module terminal #28A and power door mirror terminal #10.

DDM-0029 Door mirror motor MF+

Control module terminal #29A and power door mirror terminal #8.

If the car is equipped with a 16-pin connector

DDM-0023 Door mirror motor MX+

Control module terminal #26A and power door mirror terminal #15.

DDM-0026 Door mirror motor MY+

Control module terminal #28A and power door mirror terminal #16.

DDM-0028 Door mirror motor MF+

Control module terminal #29A and power door mirror terminal #14.

Other information:

- To connect the breakout box, see **CONNECTING THE BREAKOUT BOX**
- For further information about signals and other values, see **SIGNAL SPECIFICATION**
- To access the driver/passenger door module (DDM/PDM), see **PASSENGER DOOR MODULE (PDM), REPLACING**
- To access the power door mirror, see **REAR VIEW MIRROR, REPLACING**
- see **CHECKING WIRING AND TERMINALS** .

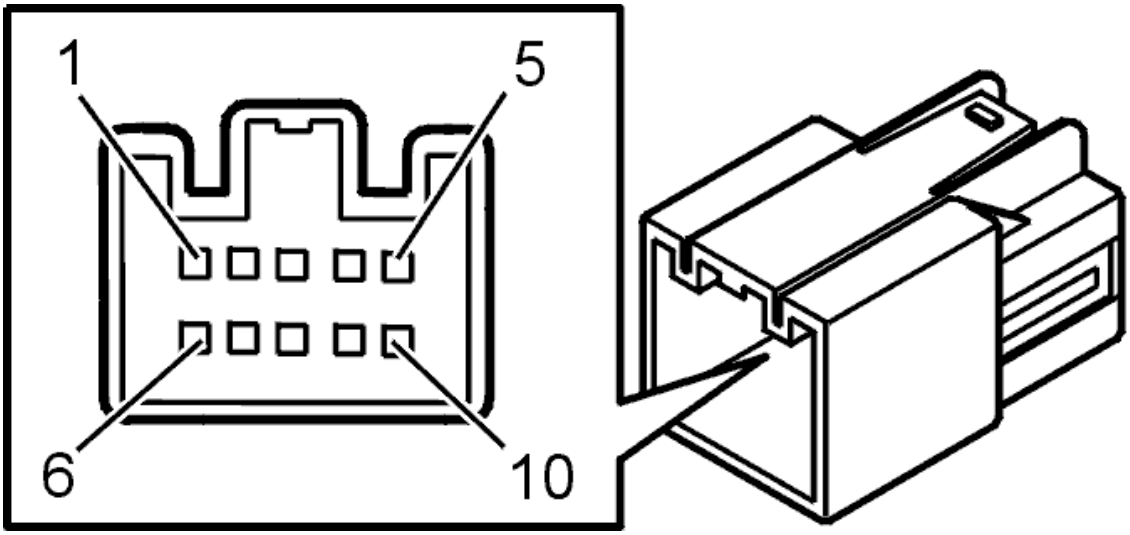

Fig. 107: Identifying 10-Pin Power Door Mirror Connector Terminal
Courtesy of VOLVO CARS CORPORATION

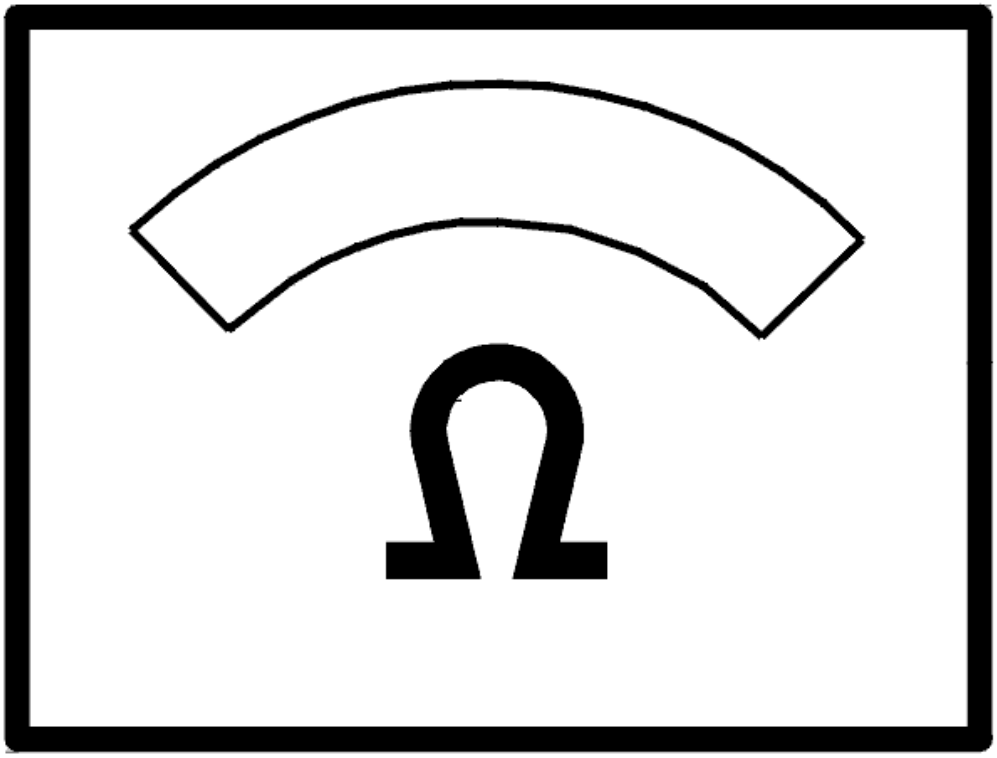

Fig. 108: Identifying Ohmmeter
Courtesy of VOLVO CARS CORPORATION

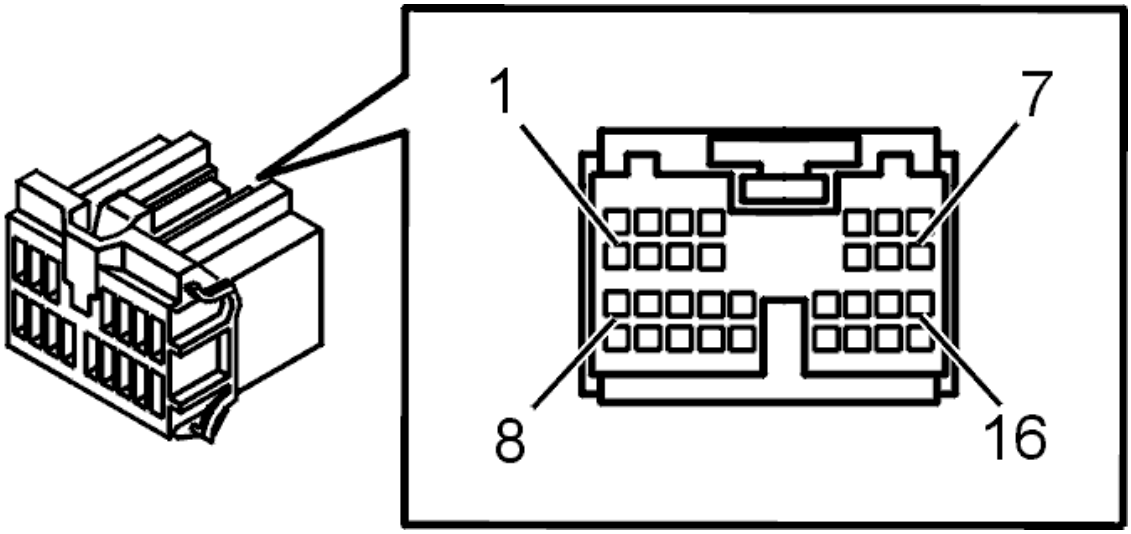

Fig. 109: Connector, Green (16-Pin)
Courtesy of VOLVO CARS CORPORATION

- **Continue**

  Refer to **INFORMATION**

VERIFICATION

HINT: After carrying out the repair, check that the fault has been remedied.

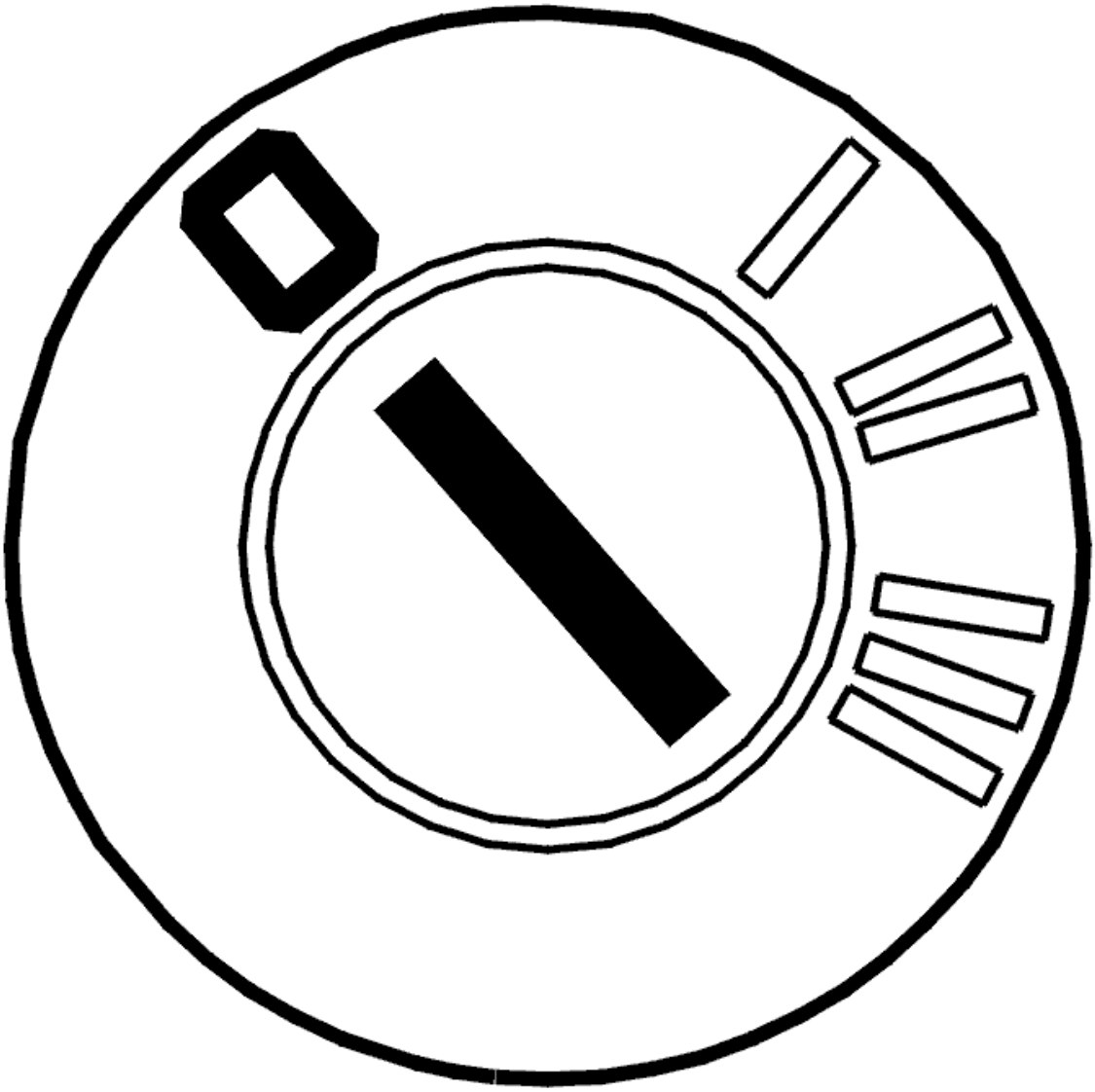

Fig. 110: Identifying Ignition OFF
Courtesy of VOLVO CARS CORPORATION

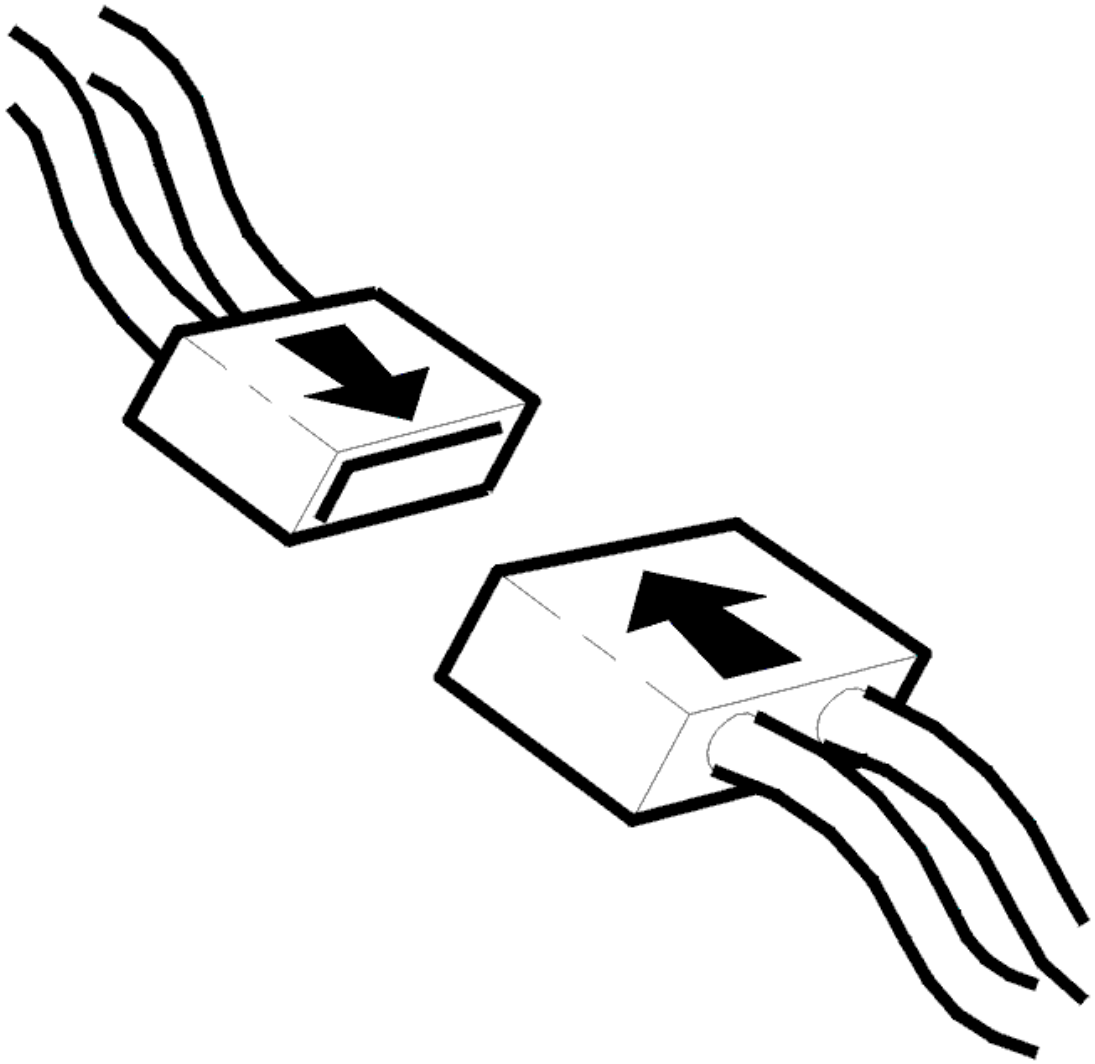

Fig. 111: Connecting Connector
Courtesy of VOLVO CARS CORPORATION

- Ignition off
- Reconnect the components, connectors etc.

  Operate the door mirror to each limit position using the control. The mirror must move in the corresponding directions.

Is the mirror working?

- **YES**

  VERIFIED: Troubleshooting has been completed.

- **NO**

Refer to **INFORMATION**

INFORMATION

FAULT-TRACING INFORMATION

The fault should have been detected and remedied. As this is not the case fault-tracing has failed.

Exit fault-tracing for this diagnostic trouble code (DTC) or make another attempt.

DDM/PDM-0025 DOOR MIRROR MOTOR. DISCONNECTED (2003-12)

DIAGNOSTIC TROUBLE CODE (DTC) INFORMATION

Condition

Diagnostic trouble code (DTC) DDM/PDM-0025 is stored if the control module registers that the signal cable for one of the power door mirror motors or defroster is interrupted at the same time that the relevant function is activated.

Substitute Value

- None.

Possible Source

- Open-circuit in the signal cable to the door mirror heating or motors (including the motor for electric folding door mirrors)
- Blown fuse 11C/35 or 11C/36.
- Damaged defroster in external mirror.

Fault symptom[s]

- Power door mirror control does not function
- Misting on the windows and/or door mirrors.

SIGNAL MISSING

CHECKING FOR PERMANENT OR INTERMITTENT FAULTS

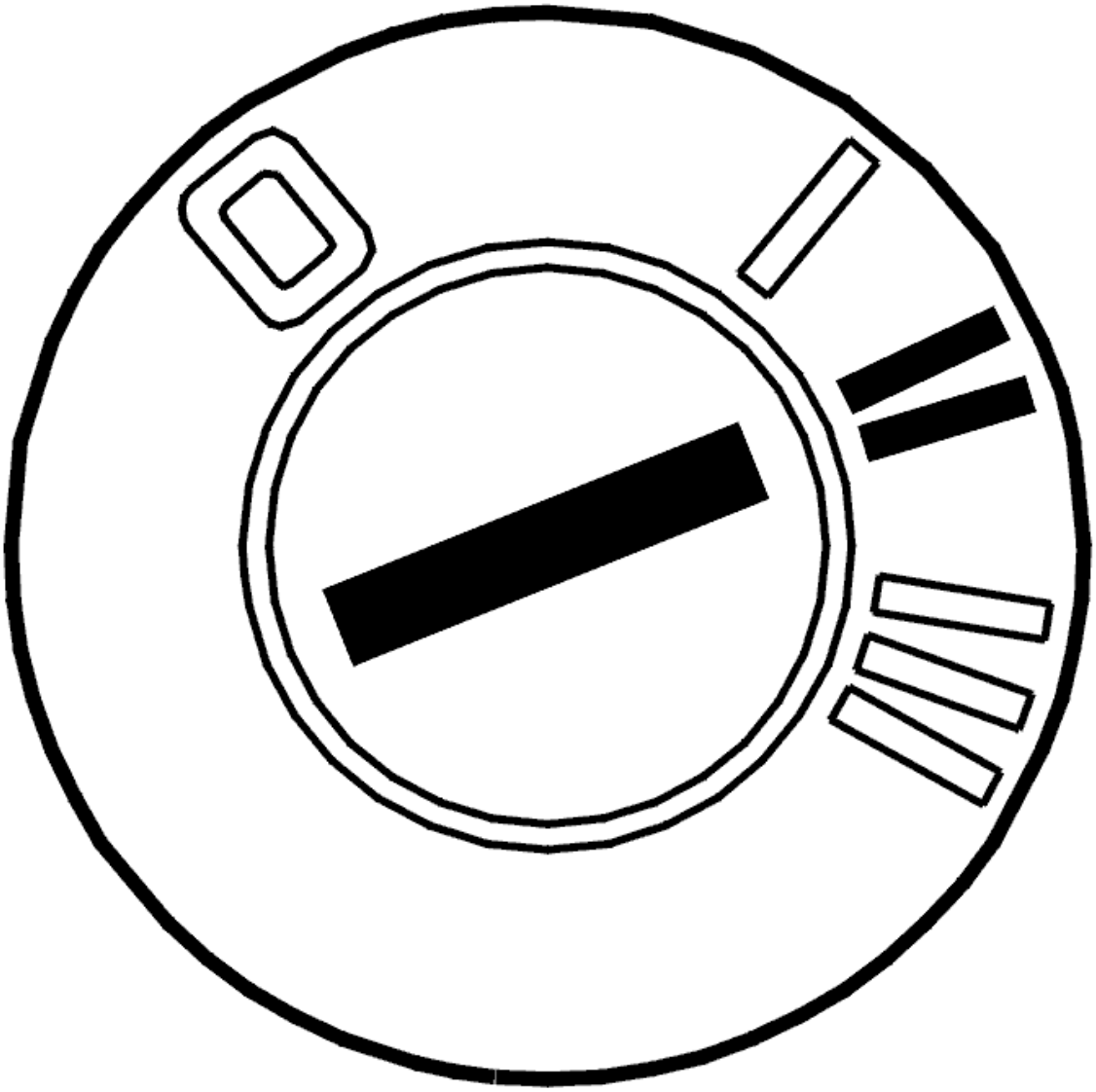

Fig. 112: Identifying Ignition ON
Courtesy of VOLVO CARS CORPORATION

- Ignition on.

  Press the switch for the power door mirrors to check the function of the power door mirrors in all directions.

  Also check that folding in of the rearview mirrors works on vehicles equipped with this function.

Can the power door mirrors be maneuvered?

- **YES**

  Refer to **INTERMITTENT FAULT**

- **NO**

  Refer to **CHECKING THE CONNECTORS**

CHECKING THE CONNECTORS

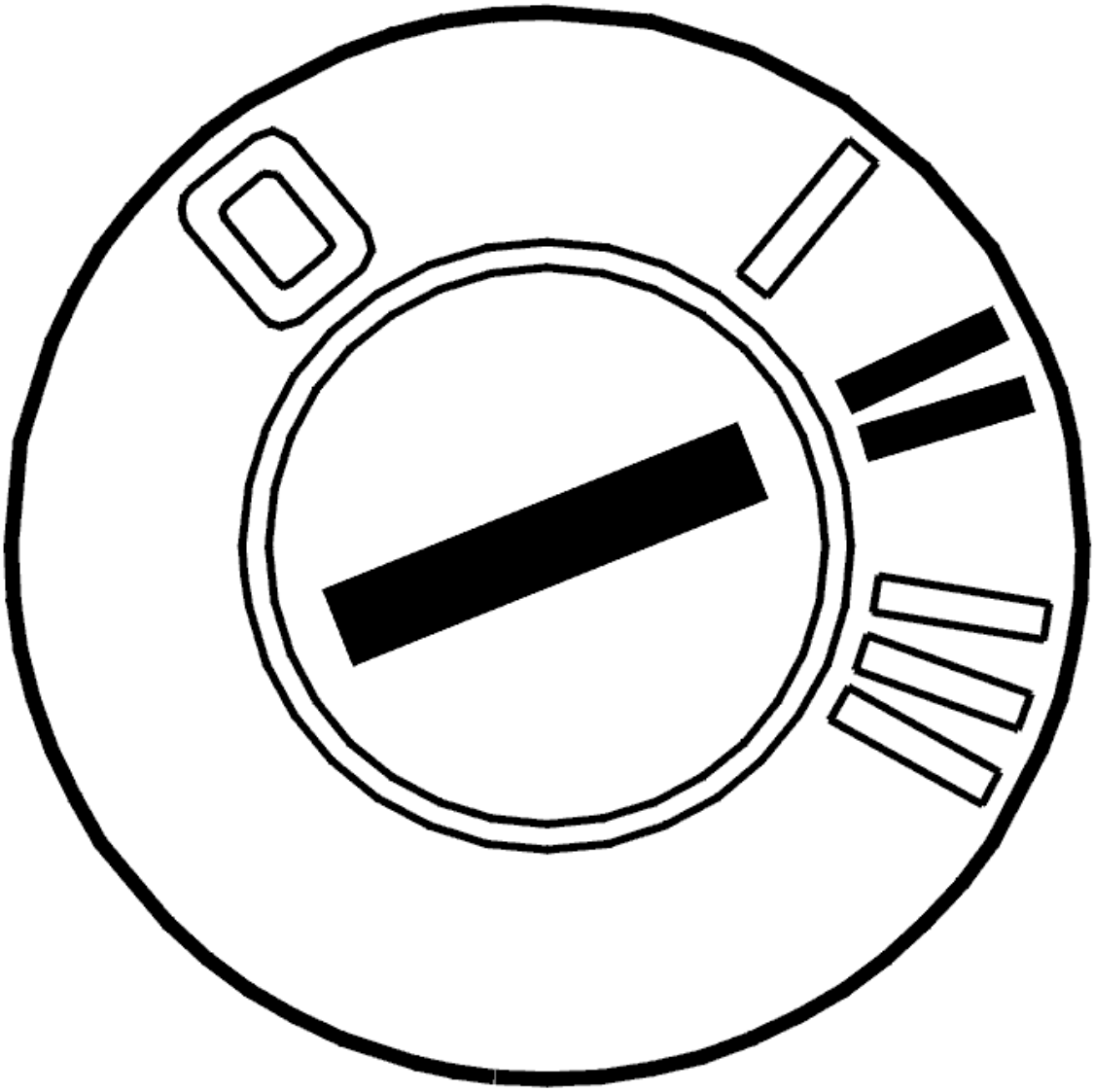

Fig. 113: Identifying Ignition ON
Courtesy of VOLVO CARS CORPORATION

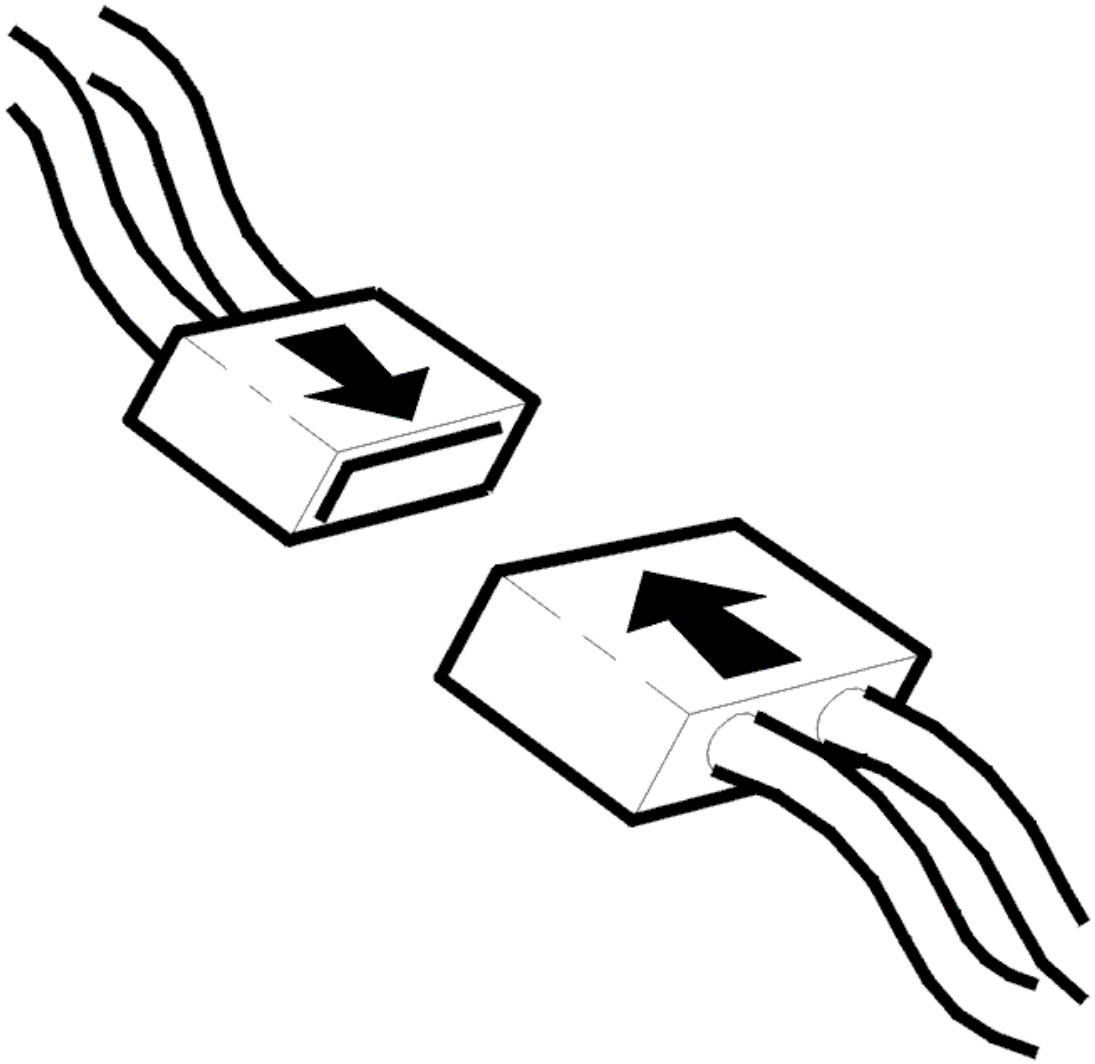

Fig. 114: Connecting Connector
Courtesy of VOLVO CARS CORPORATION

- Ignition off
- Check that fuse 11C/35 or 11C/36 in the integrated relay/fusebox in the passenger compartment is intact
- Check the power door mirror connector for contact resistance and oxidation. Remedy.

  In particular, check for any damage

- Reinstall the components, reconnect the connectors etc.
- Ignition on.

  Press the switch for the power door mirrors to check the function of the power door mirrors in all directions.

Remedy as necessary.

Other information:

- To access the connector for the power door mirror, see **REAR VIEW MIRROR, REPLACING**
- see **CHECKING WIRING AND TERMINALS** .

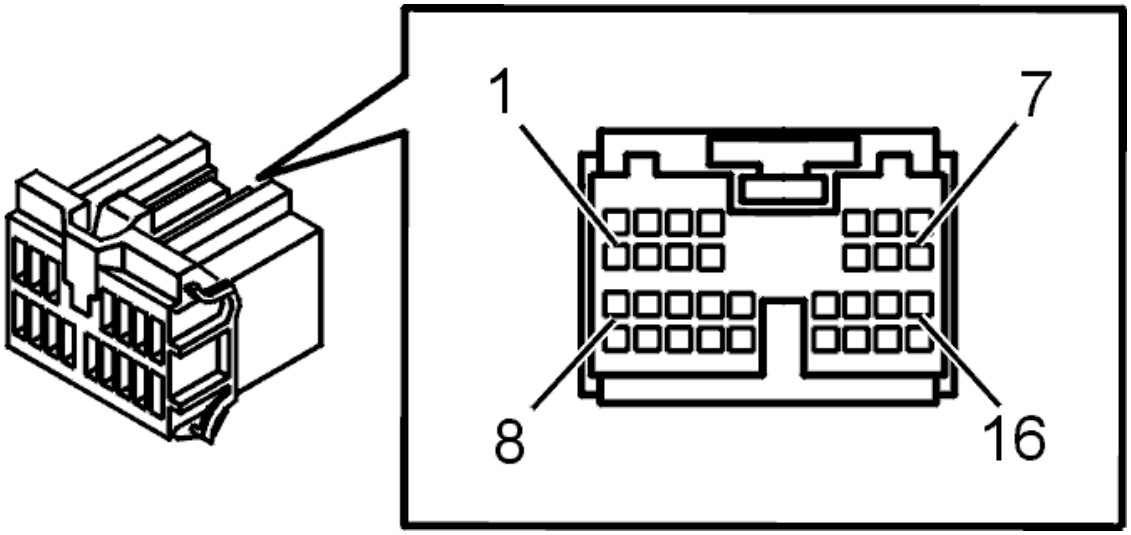

Fig. 115: Connector, Green (16-Pin)
Courtesy of VOLVO CARS CORPORATION

Can the power door mirrors be maneuvered?

- **YES**

  Refer to **VERIFICATION**

- **NO**

  Refer to **CHECKING FOR A SHORT-CIRCUIT**

CHECKING FOR A SHORT-CIRCUIT

Check the cable between the door control module and the power door mirror (as follows). Check for an open-circuit.

Control module terminal #26A and power door mirror terminal #15.

Control module terminal #27A and power door mirror terminal #7.

Control module terminal #28A and power door mirror terminal #16.

Control module terminal #29A and power door mirror terminal #14.

Control module terminal #11B and power door mirror terminal #8.

Remedy as necessary.

Try replacing the door mirror if no fault is found.

Other information:

- To connect the breakout box, see **CONNECTING THE BREAKOUT BOX**
- For further information about signals and other values, see **SIGNAL SPECIFICATION**
- To access the driver/passenger door module (DDM/PDM), see **PASSENGER DOOR MODULE (PDM), REPLACING**
- To access the power door mirror, see **REAR VIEW MIRROR, REPLACING**
- see **CHECKING WIRING AND TERMINALS** .

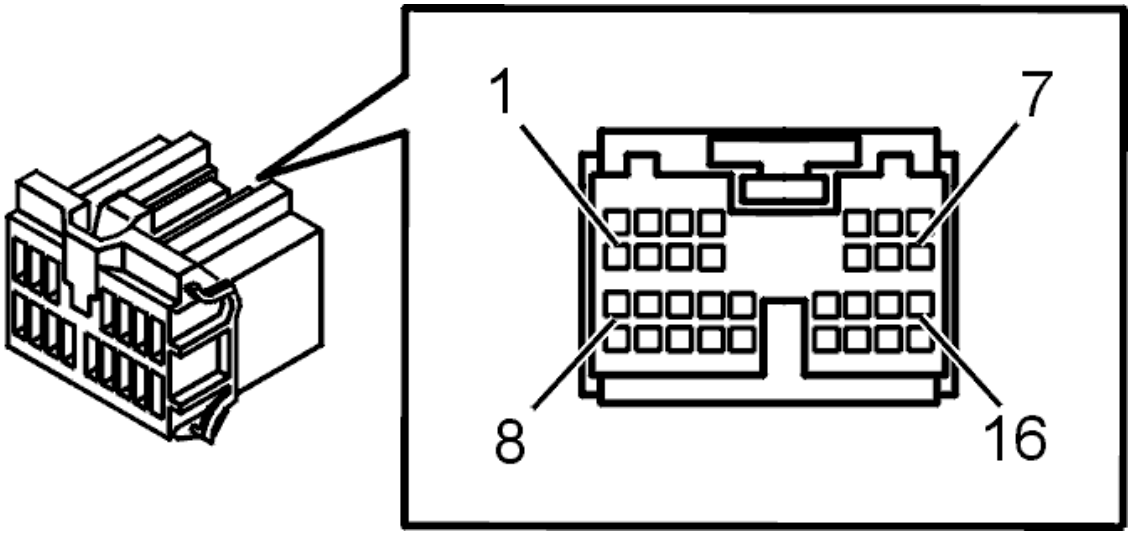

Fig. 116: Connector, Green (16-Pin)
Courtesy of VOLVO CARS CORPORATION

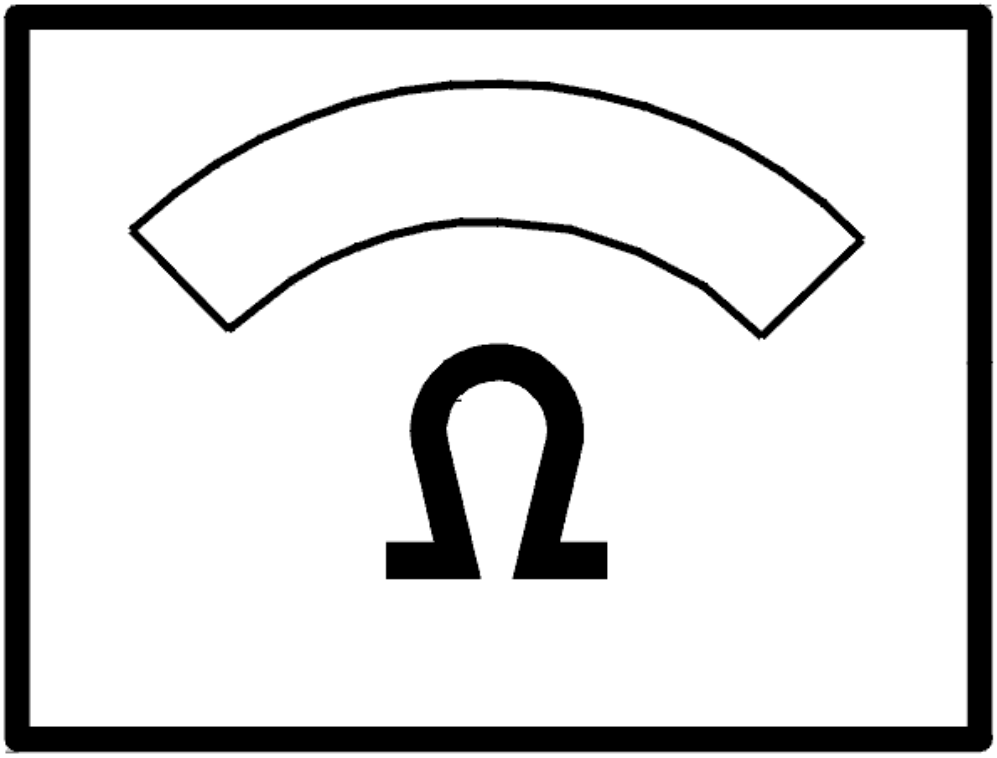

Fig. 117: Identifying Ohmmeter
Courtesy of VOLVO CARS CORPORATION

- **Continue**

  Refer to **VERIFICATION**

INTERMITTENT FAULT

Check the control module and power door mirror connectors. Check for contact resistance, oxidation and loose connections.

Check the cable between the door control module and the power door mirror (as follows). Check for an intermittent open-circuit.

Control module terminal #26A and power door mirror terminal #15.

Control module terminal #27A and power door mirror terminal #7.

Control module terminal #28A and power door mirror terminal #16.

Control module terminal #29A and power door mirror terminal #14.

Control module terminal #11B and power door mirror terminal #8.

Remedy as necessary.

Other information:

- To connect the breakout box, see **CONNECTING THE BREAKOUT BOX**
- For further information about signals and other values, see **SIGNAL SPECIFICATION**
- To access the driver/passenger door module (DDM/PDM), see **PASSENGER DOOR MODULE (PDM), REPLACING**
- To access the power door mirror, see **REAR VIEW MIRROR, REPLACING**

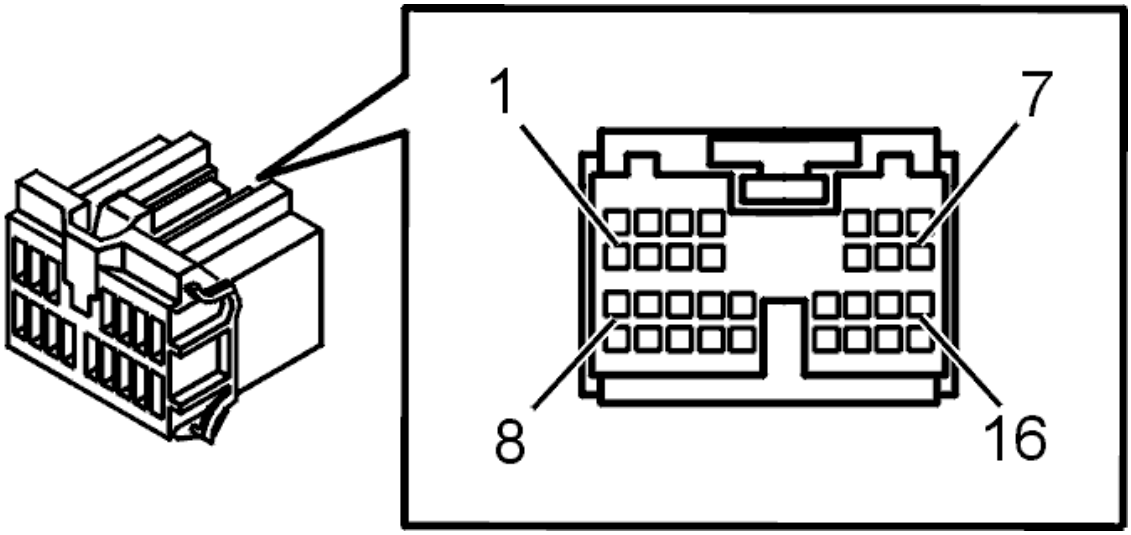

Fig. 118: Connector, Green (16-Pin)
Courtesy of VOLVO CARS CORPORATION

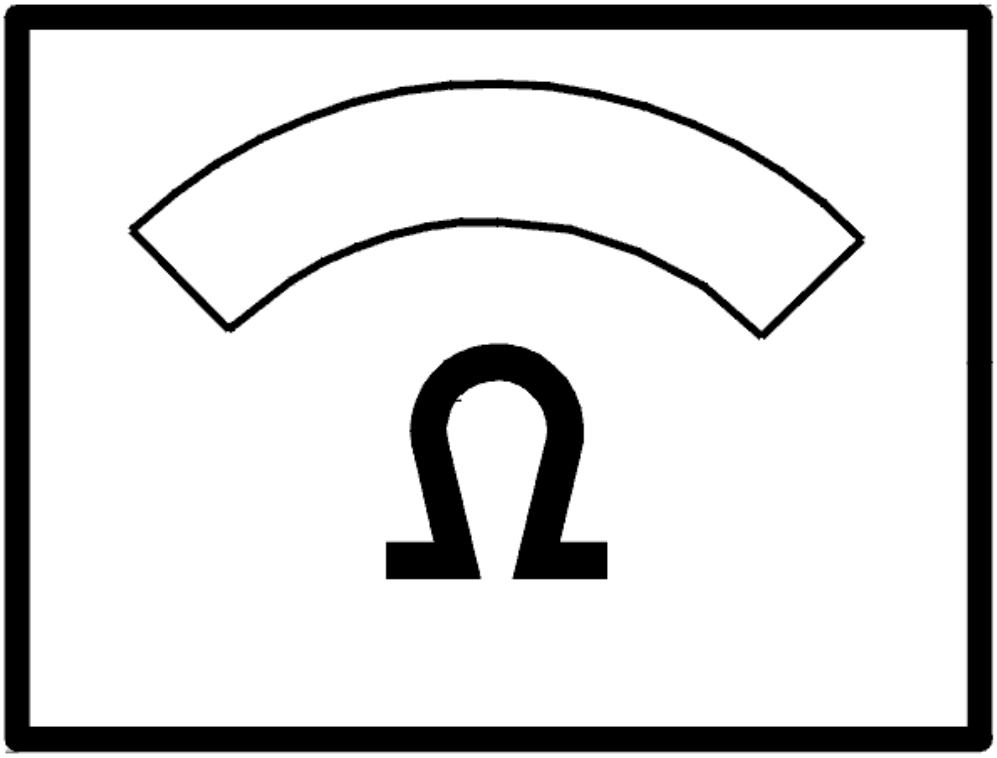

Fig. 119: Identifying Ohmmeter
Courtesy of VOLVO CARS CORPORATION

- **Continue**

  Refer to **INFORMATION**

VERIFICATION

HINT: After carrying out the repair, check that the fault has been remedied.

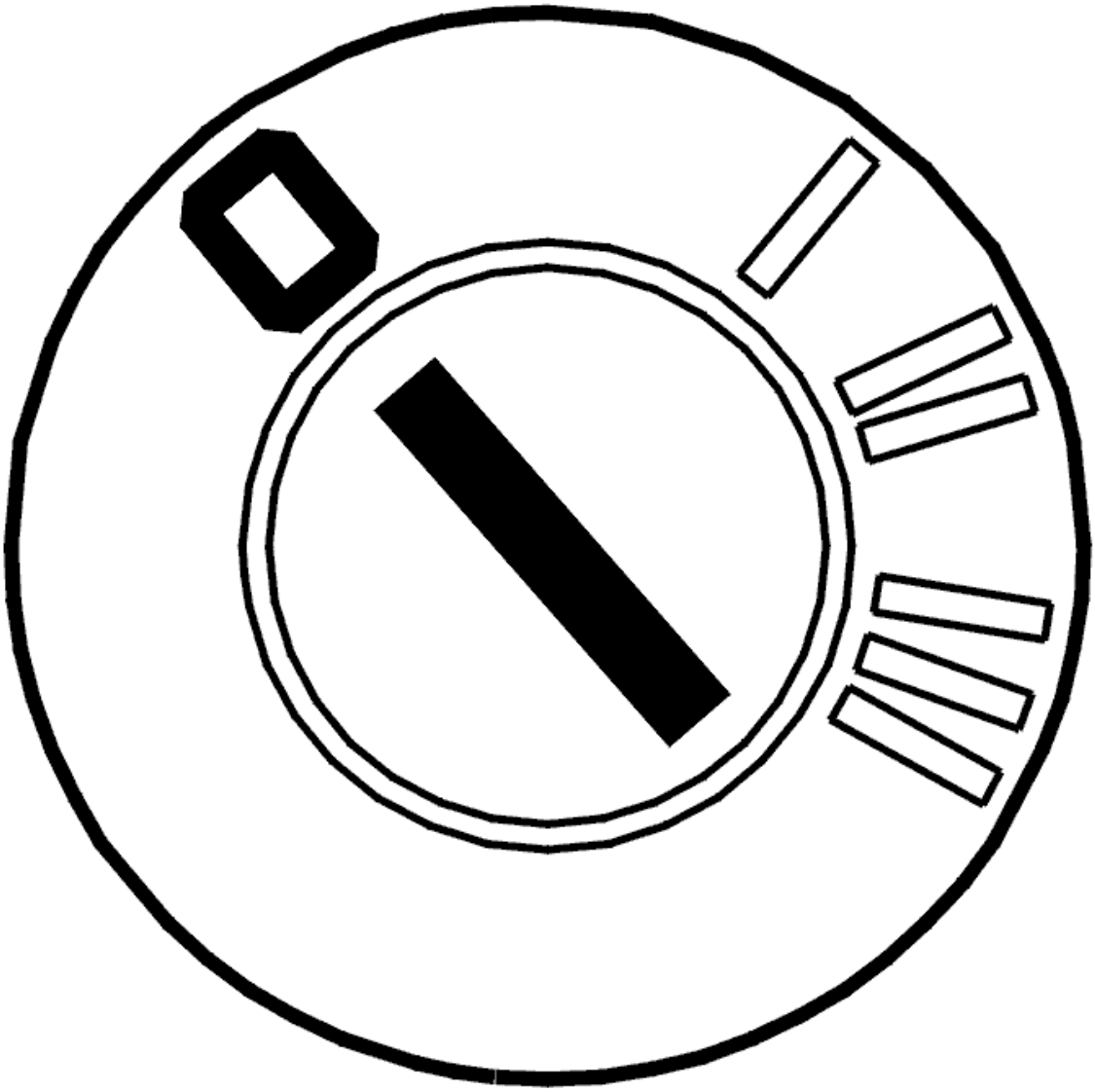

Fig. 120: Identifying Ignition OFF
Courtesy of VOLVO CARS CORPORATION

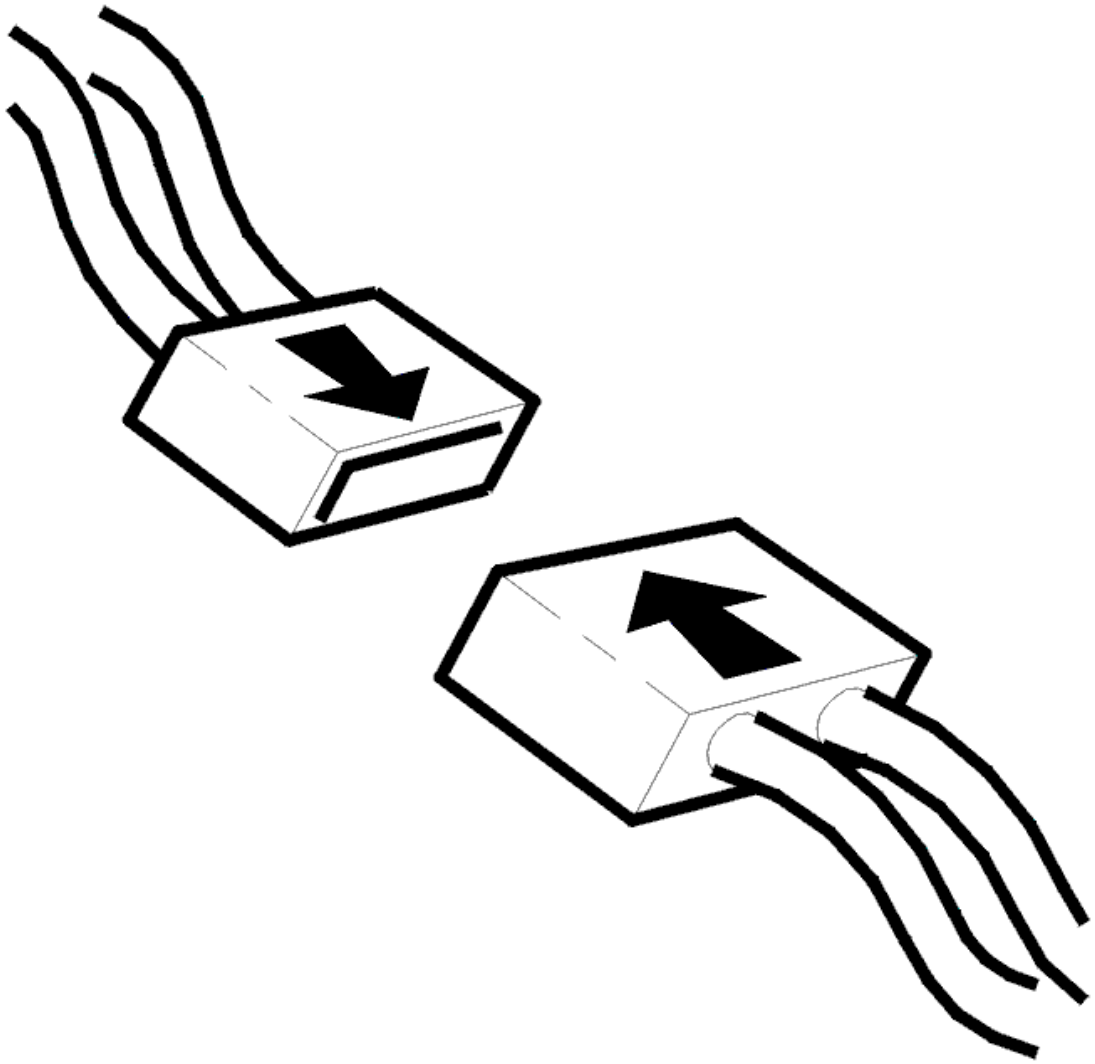

Fig. 121: Connecting Connector
Courtesy of VOLVO CARS CORPORATION

- Ignition off
- Reconnect the components, connectors etc.

  Operate the door mirror to each limit position using the control. The mirror must move in the corresponding directions.

Is the mirror working?

- **YES**

  VERIFIED: Troubleshooting has been completed.

- **NO**

Refer to **INFORMATION**

INFORMATION

FAULT-TRACING INFORMATION

The fault should have been detected and remedied. As this is not the case fault-tracing has failed.

Exit fault-tracing for this diagnostic trouble code (DTC) or make another attempt.

DDM/PDM-0026 MIRROR MOTOR MY+. SIGNAL TOO HIGH (2003-12)

DIAGNOSTIC TROUBLE CODE INFORMATION

Condition

If control unit registers that signal wire for lateral adjustment is short circuited to voltage supply when none of the external rear-view mirror motors are activated, diagnostic trouble code DDM/PDM-0026 is displayed.

Substitute Value

- Nothing.

Possible Source

- Signal wire MY+ short circuited to voltage supply.

Fault symptom[s]

- External rear-view mirror operation does not work.

SIGNAL TOO HIGH

see **SIGNAL TOO HIGH**

DDM/PDM-0027 MIRROR MOTOR MY+. SIGNAL TOO LOW (2003-12)

DIAGNOSTIC TROUBLE CODE INFORMATION

Condition

If control unit registers that signal wire for lateral adjustment is short circuited to ground when only one of the external rear-view mirror motors is activated, diagnostic trouble code DDM/PDM-0027 is displayed.

Substitute Value

- Nothing.

Possible Source

- Signal wire MY+ short circuited to ground.

Fault symptom[s]

- External rear-view mirror operation does not work.

SIGNAL TOO LOW

see **SIGNAL TOO LOW**

DDM/PDM-0028 MIRROR MOTOR MF+. SIGNAL TOO HIGH (2003-12)

DIAGNOSTIC TROUBLE CODE INFORMATION

Condition

If control unit registers that signal wire for lowering of external rear-view mirror is short circuited to voltage supply when none of the external rear-view mirror motors are active, diagnostic trouble code DDM/PDM-0028 is displayed.

Substitute Value

- Nothing.

Possible Source

- Signal wire MF+ short circuited to voltage supply.

Fault symptom[s]

- External rear-view mirror operation does not work.

SIGNAL TOO HIGH

see **SIGNAL TOO HIGH**

DDM/PDM-0029 MIRROR MOTOR MF+. SIGNAL TOO LOW (2003-12)

DIAGNOSTIC TROUBLE CODE INFORMATION

Condition

If control unit registers that signal wire for lowering of external rear-view mirror is short circuited to ground when only one of the external rear-view mirror motors is activated, diagnostic trouble code DDM/PDM-0029 is displayed.

Substitute Value

- Nothing.

Possible Source

- Signal wire MF+ short circuited to ground.

Fault symptom[s]

- External rear-view mirror operation does not work.

SIGNAL TOO LOW

see **SIGNAL TOO LOW**

DDM/PDM-002A MIRROR MOTOR MC. SIGNAL TOO HIGH (2003-12)

DIAGNOSTIC TROUBLE CODE INFORMATION

Condition

If control unit registers that a signal wire for a movement is short circuited to voltage supply when none of the external rear-view mirror motors are active, diagnostic trouble code DDM/PDM-002A is displayed.

Substitute Value

- Nothing.

Possible Source

- Signal wire MC+ short circuited to voltage supply.

Fault symptom[s]

- External rear-view mirror operation does not work.

SIGNAL TOO HIGH

CHECKING FOR PERMANENT OR INTERMITTENT FAULTS

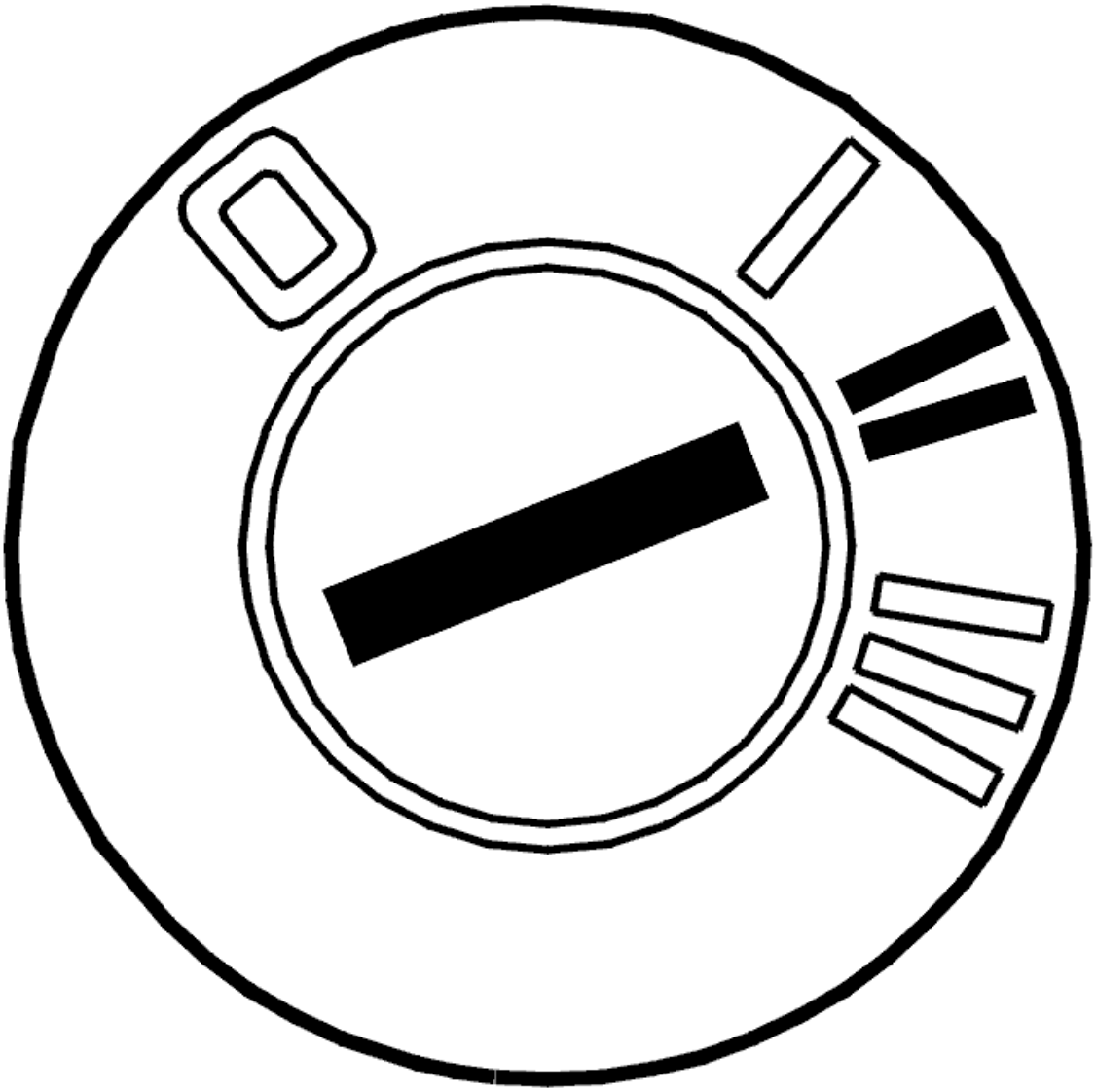

Fig. 122: Identifying Ignition ON
Courtesy of VOLVO CARS CORPORATION

- Ignition on.

  Press the switch for the power door mirrors. Move the door mirrors to their limit position.

Can the power door mirrors be maneuvered?

- **YES**

  Refer to **INTERMITTENT FAULT**

- **NO**

  Refer to **CHECKING FOR A SHORT-CIRCUIT**

CHECKING FOR A SHORT-CIRCUIT

Check the cable between door control module terminal #27A and power door mirror terminal #7 (both 10 and 16-pin connectors). Check for a short-circuit to supply voltage.

Remedy as necessary.

Try a new power door mirror if the cable is OK.

Other information:

- To connect the breakout box, see **CONNECTING THE BREAKOUT BOX**
- For further information about signals and other values, see **SIGNAL SPECIFICATION**
- To access the connector for the power door mirror/replace the power door mirror, see **REAR VIEW MIRROR, REPLACING**
- see **CHECKING WIRING AND TERMINALS** .

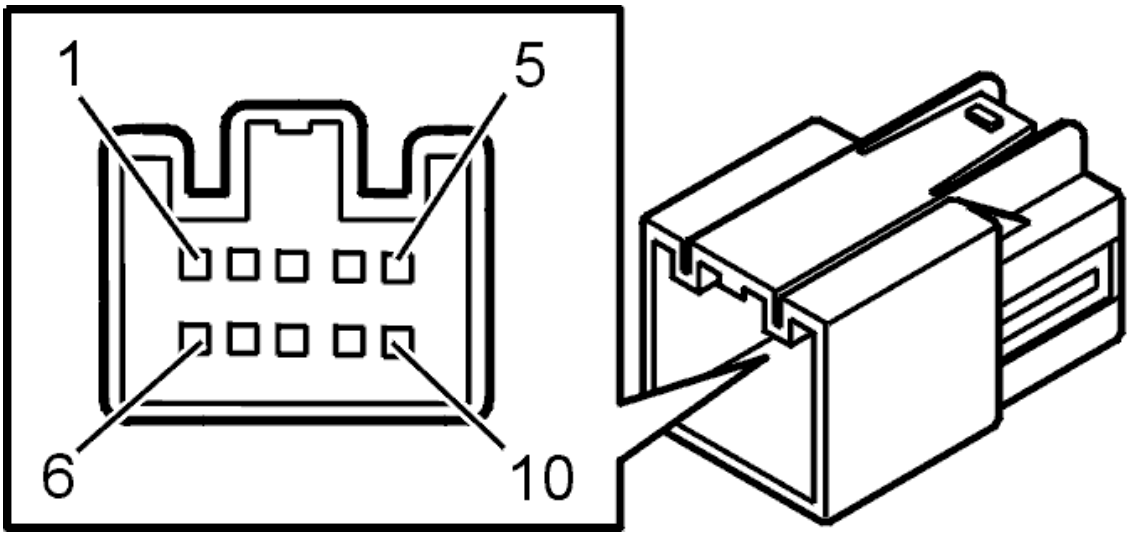

Fig. 123: Identifying 10-Pin Power Door Mirror Connector Terminal
Courtesy of VOLVO CARS CORPORATION

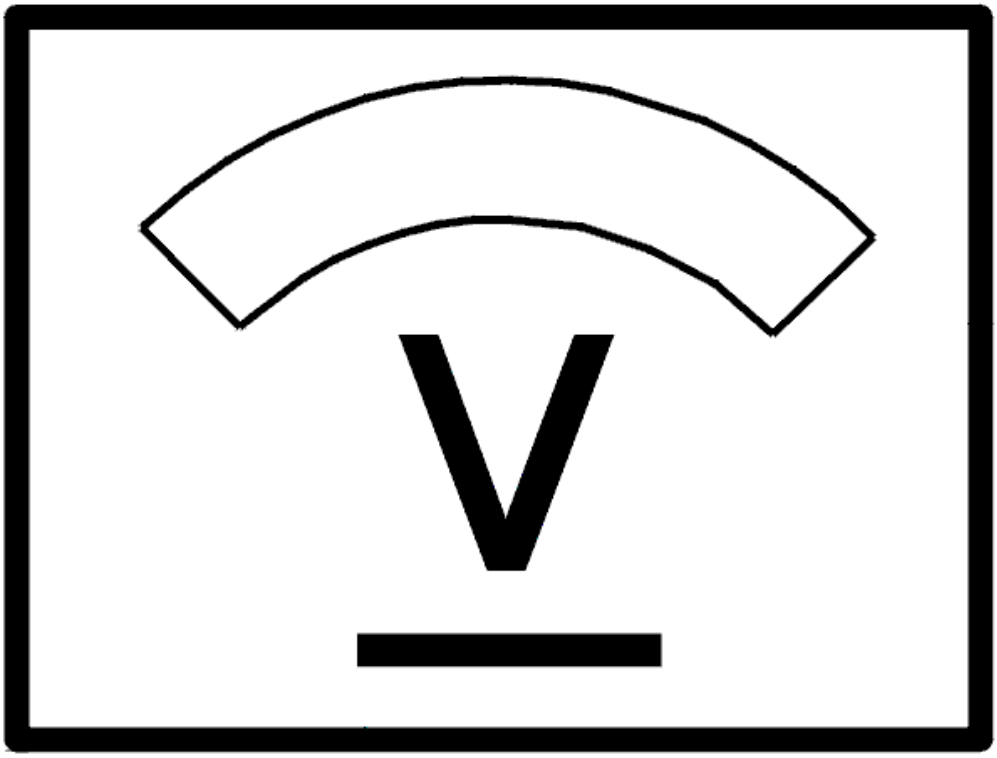

Fig. 124: Identifying Voltage Display
Courtesy of VOLVO CARS CORPORATION

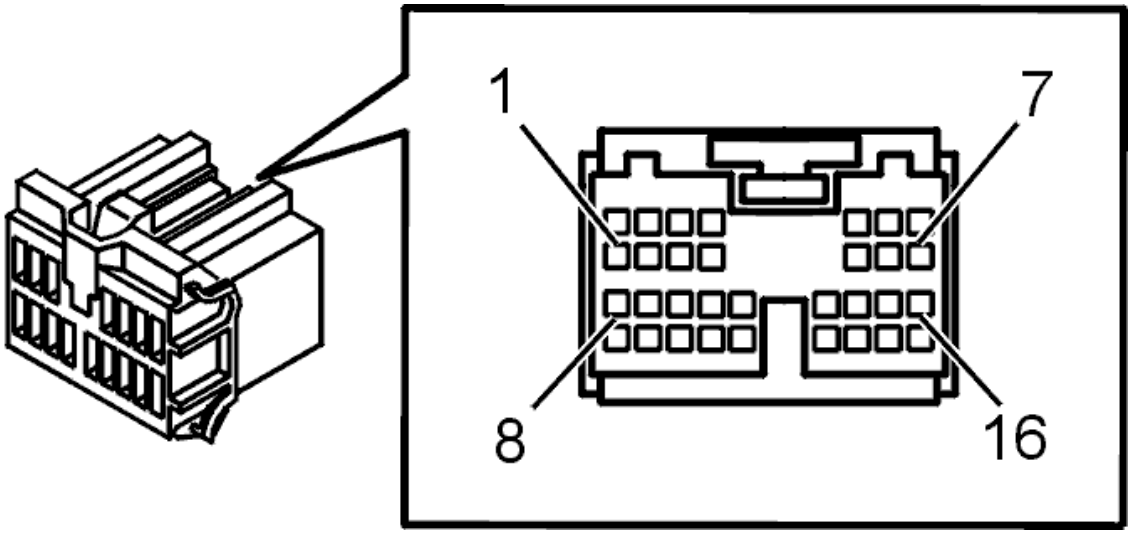

Fig. 125: Connector, Green (16-Pin)
Courtesy of VOLVO CARS CORPORATION

- **Continue**

  Refer to **VERIFICATION**

INTERMITTENT FAULT

Check the control module and power door mirror connectors. Check for contact resistance. Check for oxidation.

Check the cable between door control module terminal #27A and power door mirror terminal #7 (both 10 and 16-pin connectors). Check for an intermittent short-circuit to supply voltage. Check for an intermittent open-circuit.

Other information:

- To connect the breakout box, see **CONNECTING THE BREAKOUT BOX**
- For further information about signals and other values, see **SIGNAL SPECIFICATION**
- To access the connector for the power door mirror/replace the power door mirror, see **REAR VIEW MIRROR, REPLACING**

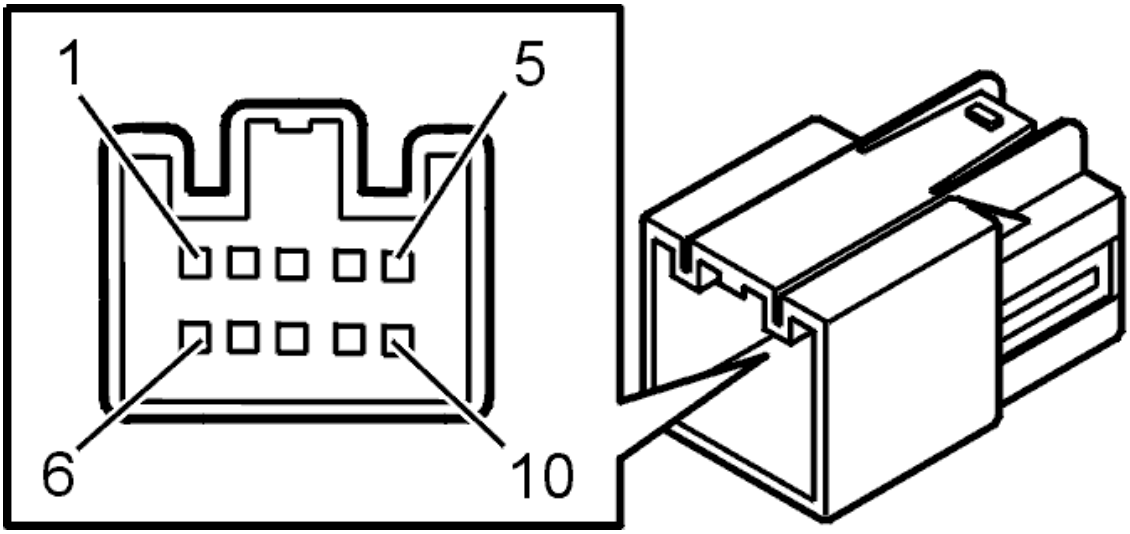

Fig. 126: Identifying 10-Pin Power Door Mirror Connector Terminal
Courtesy of VOLVO CARS CORPORATION

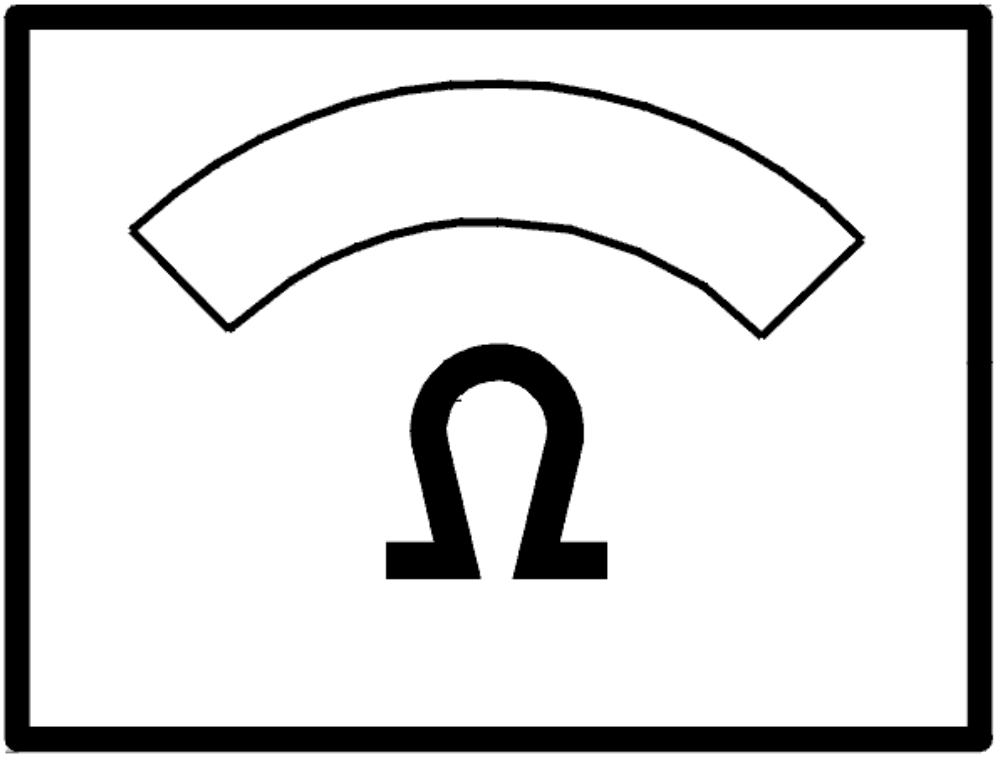

Fig. 127: Identifying Ohmmeter
Courtesy of VOLVO CARS CORPORATION

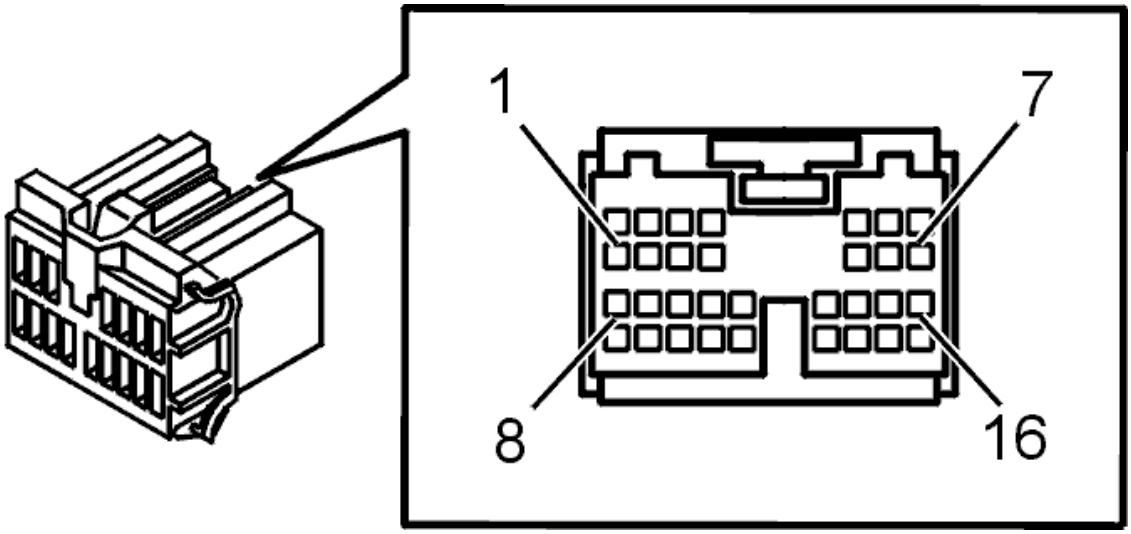

Fig. 128: Connector, Green (16-Pin)
Courtesy of VOLVO CARS CORPORATION

- **Continue**

  Refer to **INFORMATION**

VERIFICATION

HINT: After the repair it is necessary to check that the fault has been rectified.

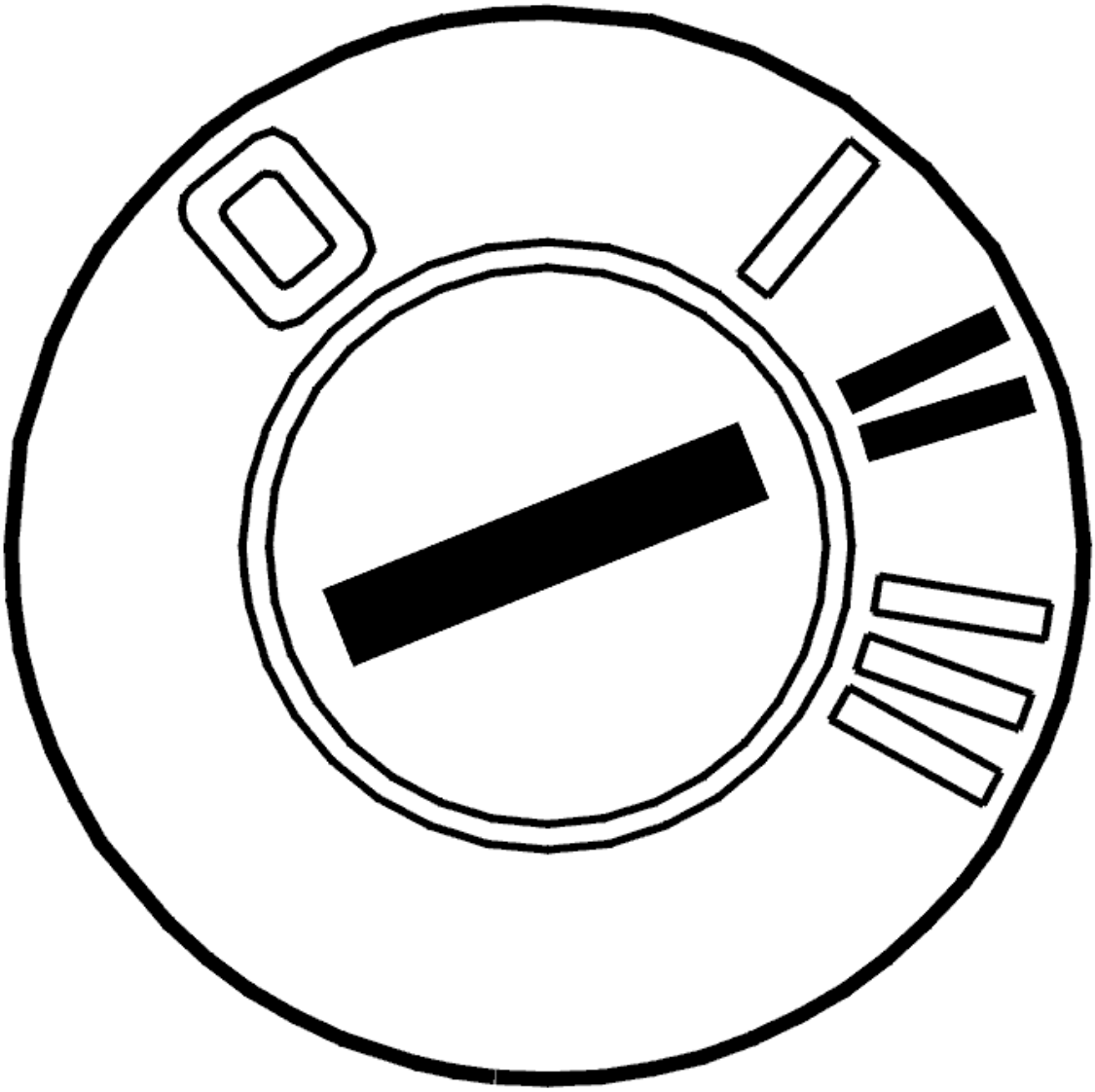

Fig. 129: Identifying Ignition ON
Courtesy of VOLVO CARS CORPORATION

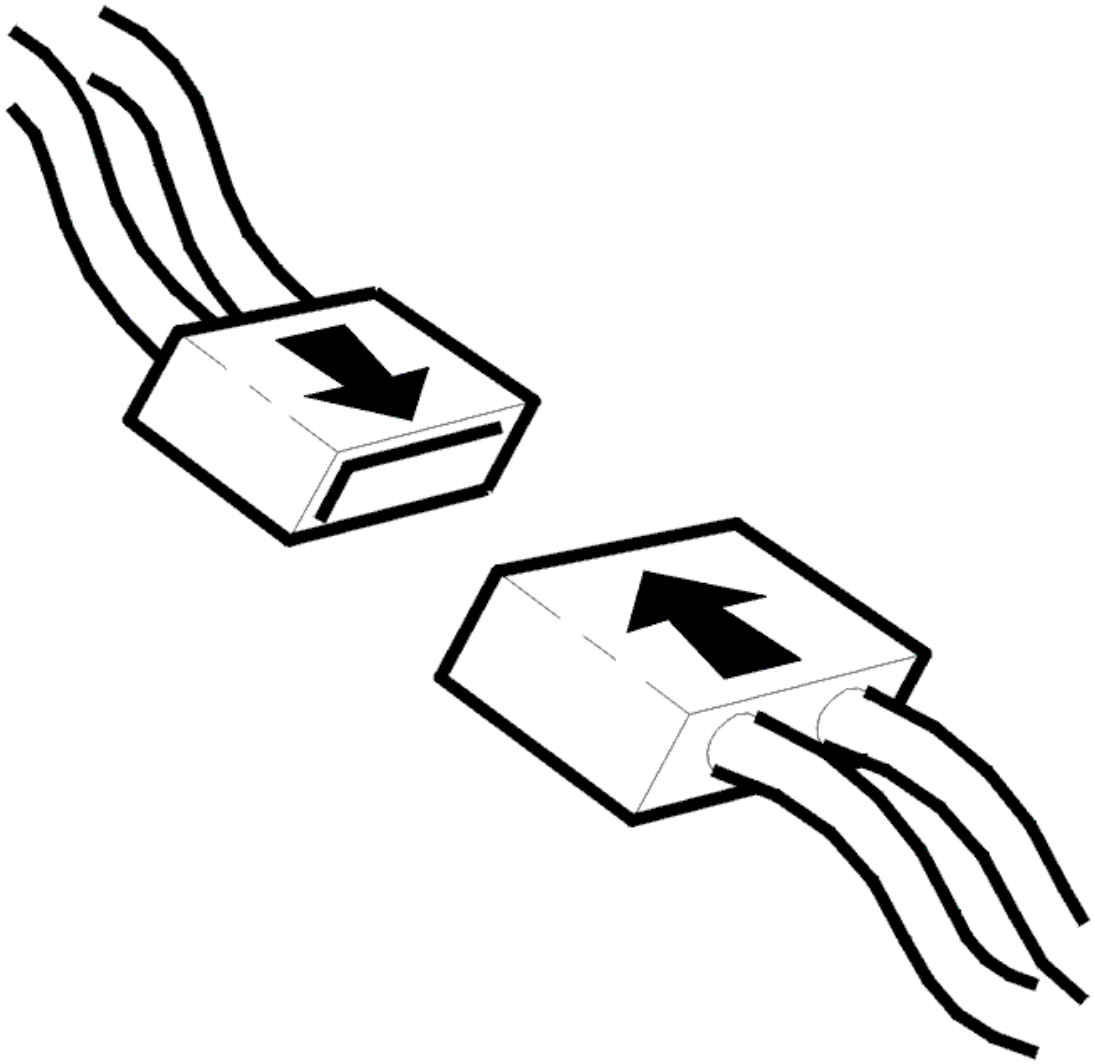

Fig. 130: Connecting Connector
Courtesy of VOLVO CARS CORPORATION

- Ignition off.
- Connect connectors, install components, etc.
- Ignition on.

  Test the rear-view mirror for a few seconds; the mirror should move in opposite directions.

Does the mirror work?

- **YES**

  VERIFIED: Troubleshooting has been completed.

- **NO**

  Refer to **INFORMATION**

INFORMATION

FAULT-TRACING INFORMATION

The fault should have been detected and remedied. As this is not the case fault-tracing has failed.

Exit fault-tracing for this diagnostic trouble code (DTC) or make another attempt.

DDM/PDM-002B MIRROR MOTOR MC. SIGNAL TOO LOW (2003-12)

DIAGNOSTIC TROUBLE CODE INFORMATION

Condition

If control unit registers that a signal wire for a movement is short circuited to ground when only one of the external rear-view mirror motors is activated, diagnostic trouble code DDM/PDM-002B is displayed.

Substitute Value

- Nothing.

Possible Source

- Signal wire MC+ short circuited to ground.

Fault symptom[s]

- External rear-view mirror operation does not work.

SIGNAL TOO LOW

CHECKING FOR PERMANENT OR INTERMITTENT FAULTS

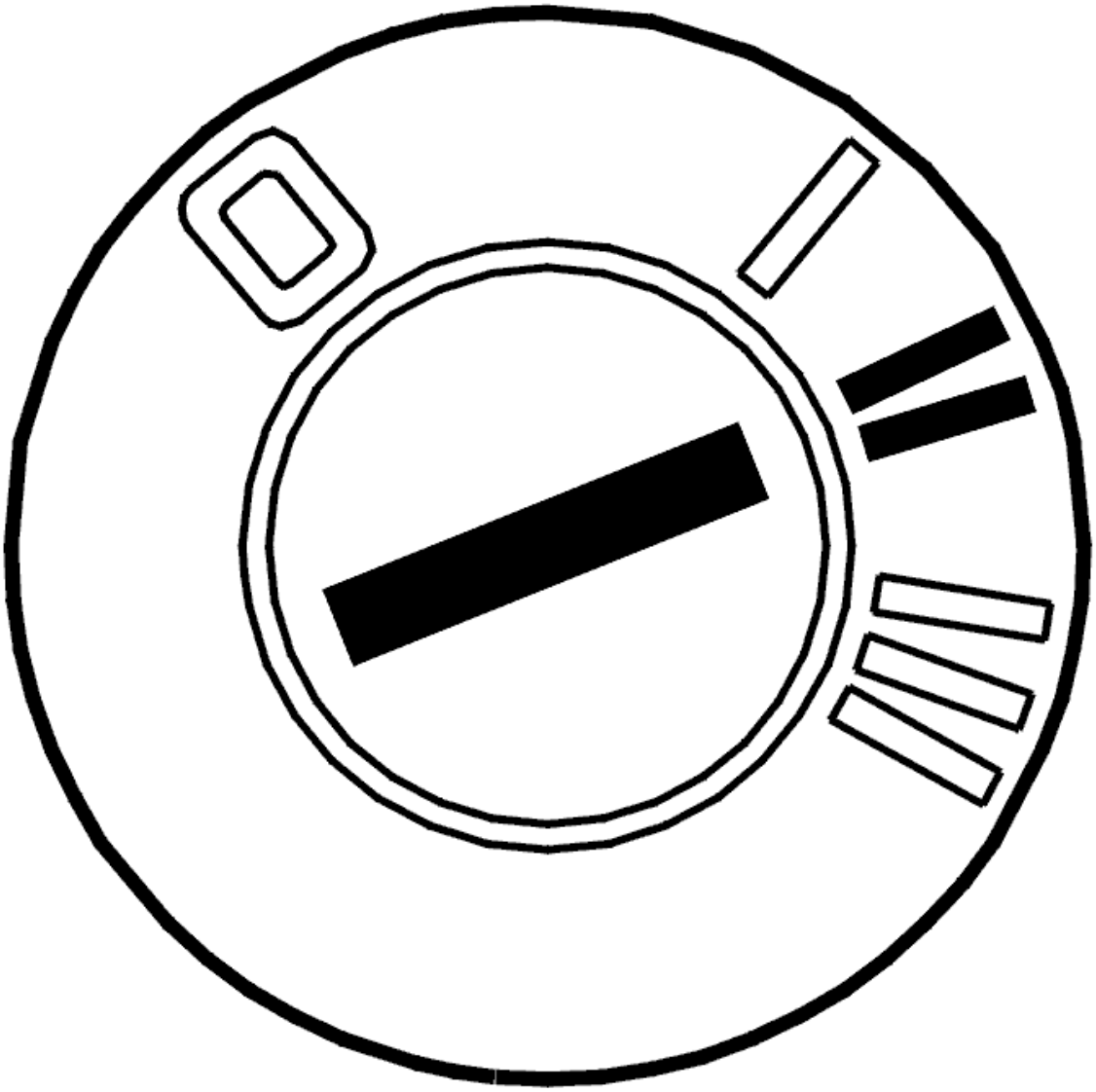

Fig. 131: Identifying Ignition ON
Courtesy of VOLVO CARS CORPORATION

- Ignition on.

  Press the switch for the power door mirrors. Move the door mirrors to their limit position.

Can the power door mirrors be maneuvered?

- **YES**

  Refer to **INTERMITTENT FAULT**

- **NO**

  Refer to **CHECKING FOR A SHORT-CIRCUIT**

CHECKING FOR A SHORT-CIRCUIT

Check the cable between door control module terminal #27A and power door mirror terminal #7 (both 10 and 16-pin connectors). Check for a short-circuit to ground.

Remedy as necessary.

Replace the cable if a fault is found.

Try a new power door mirror if the cable is OK.

Other information:

- To connect the breakout box, see **CONNECTING THE BREAKOUT BOX**
- For further information about signals and other values, see **SIGNAL SPECIFICATION**
- To access the connector for the power door mirror/replace the power door mirror, see **REAR VIEW MIRROR, REPLACING**
- see **CHECKING WIRING AND TERMINALS** .

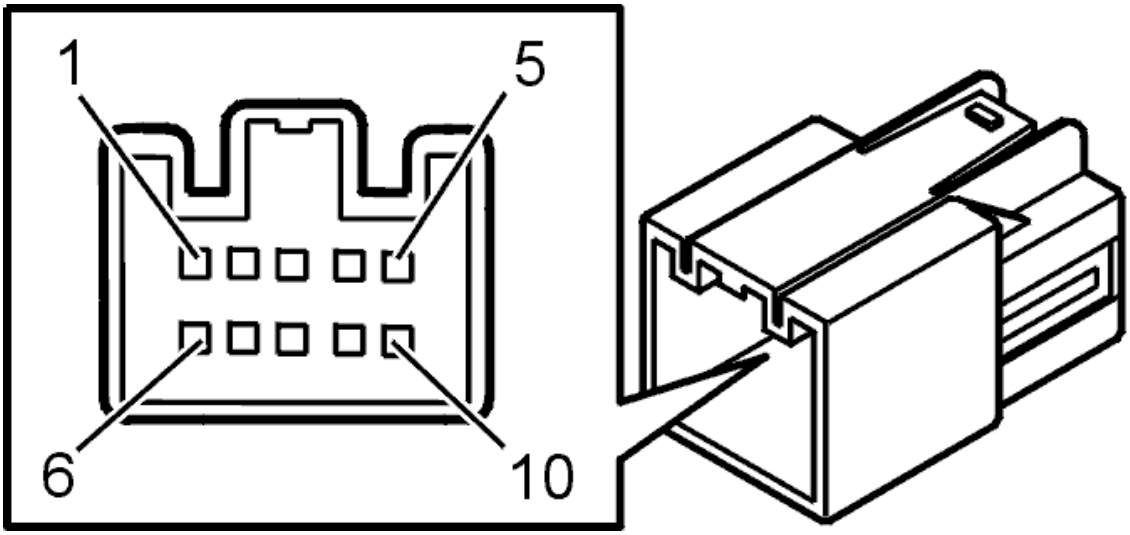

Fig. 132: Identifying 10-Pin Power Door Mirror Connector Terminal
Courtesy of VOLVO CARS CORPORATION

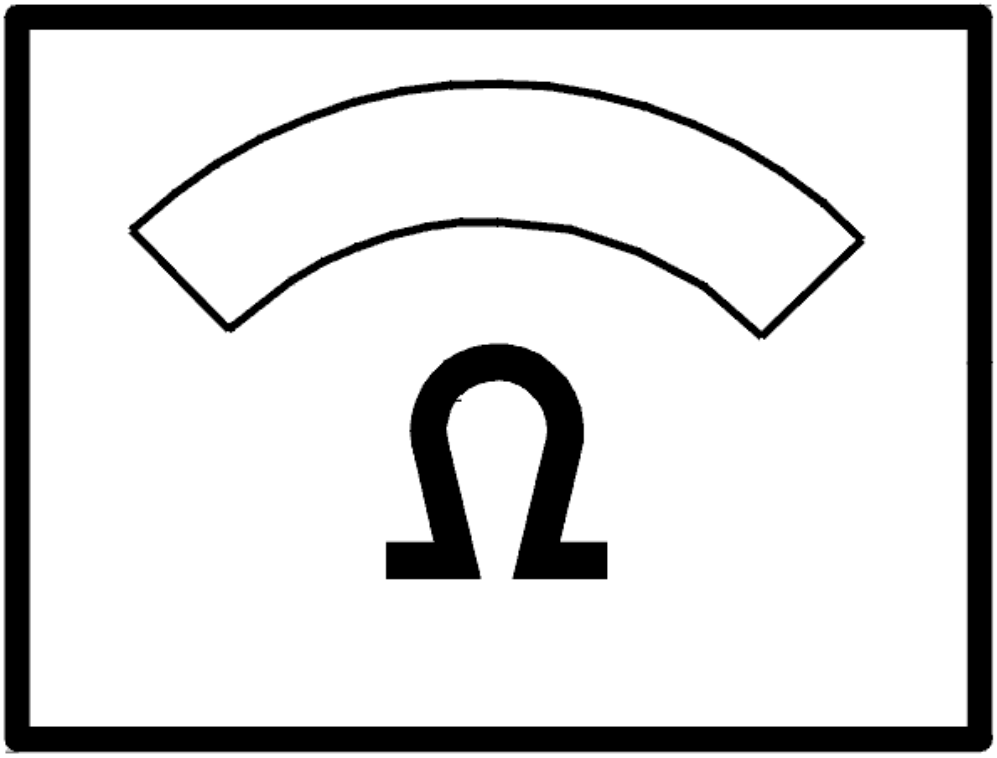

Fig. 133: Identifying Ohmmeter
Courtesy of VOLVO CARS CORPORATION

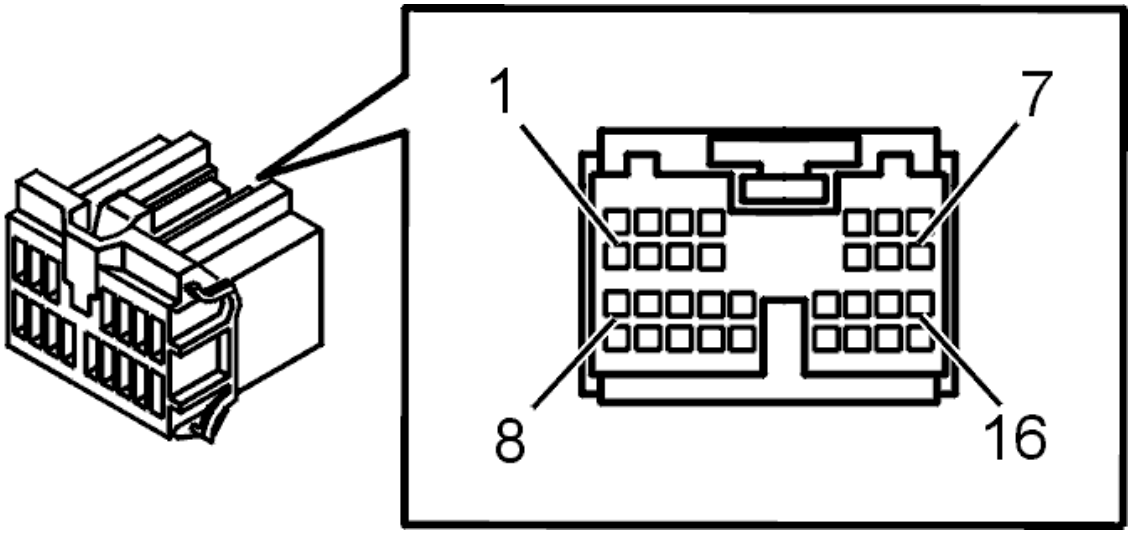

Fig. 134: Connector, Green (16-Pin)
Courtesy of VOLVO CARS CORPORATION

- **Continue**

  Refer to **VERIFICATION**

INTERMITTENT FAULT

Check the control module and power door mirror connectors. Check for contact resistance, oxidation and loose connections.

Check the cable between door control module terminal #27A and power door mirror terminal #7 (both 10 and 16-pin connectors). Check for an intermittent short-circuit to ground.

Other information:

- To connect the breakout box, see **CONNECTING THE BREAKOUT BOX**
- For further information about signals and other values, see **CONNECTING THE BREAKOUT BOX**
- To access the connector for the power door mirror/replace the power door mirror, see **REAR VIEW MIRROR, REPLACING**

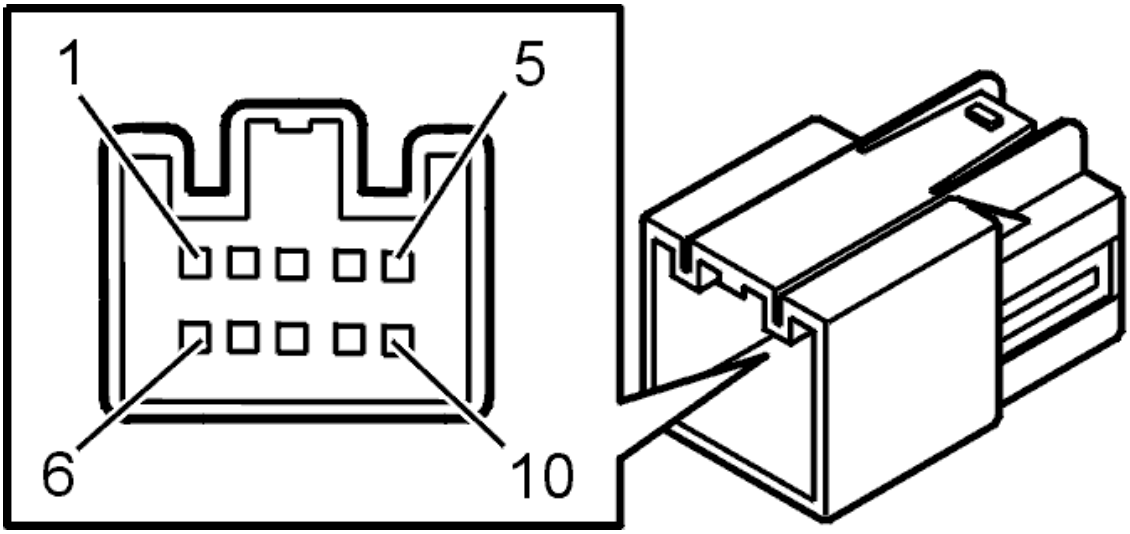

Fig. 135: Identifying 10-Pin Power Door Mirror Connector Terminal
Courtesy of VOLVO CARS CORPORATION

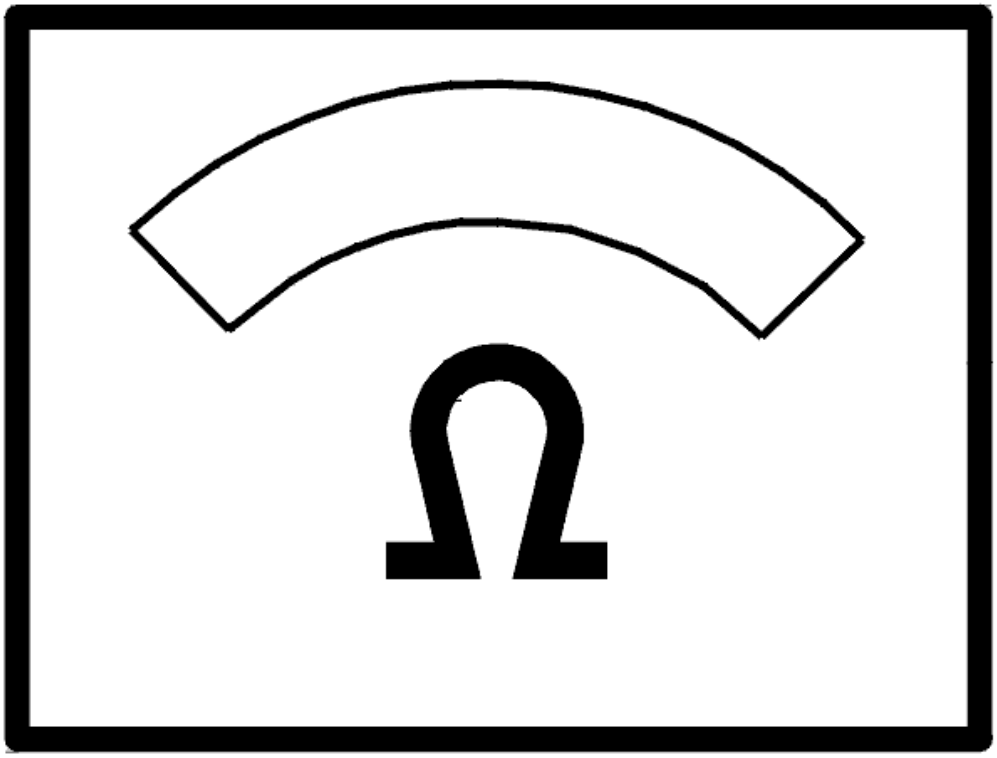

Fig. 136: Identifying Ohmmeter
Courtesy of VOLVO CARS CORPORATION

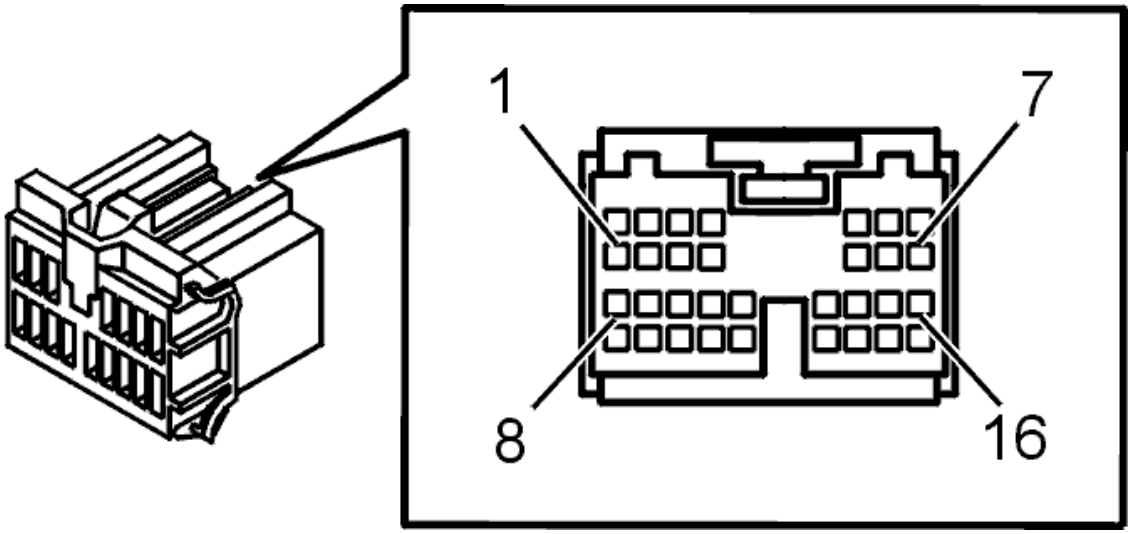

Fig. 137: Connector, Green (16-Pin)
Courtesy of VOLVO CARS CORPORATION

- **Continue**

  Refer to **INFORMATION**

VERIFICATION

HINT: After the repair it is necessary to check that the fault has been rectified.

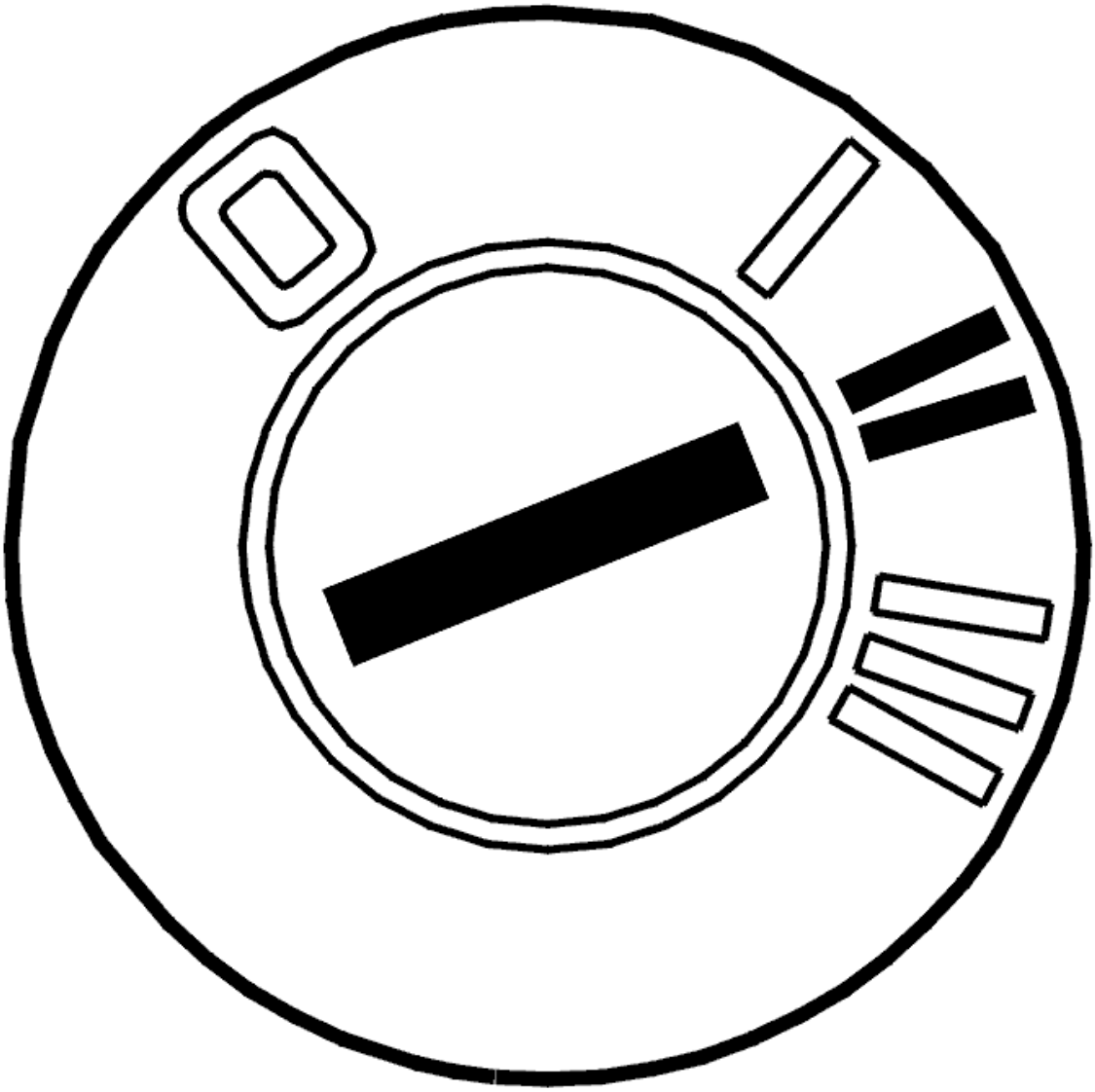

Fig. 138: Identifying Ignition ON
Courtesy of VOLVO CARS CORPORATION

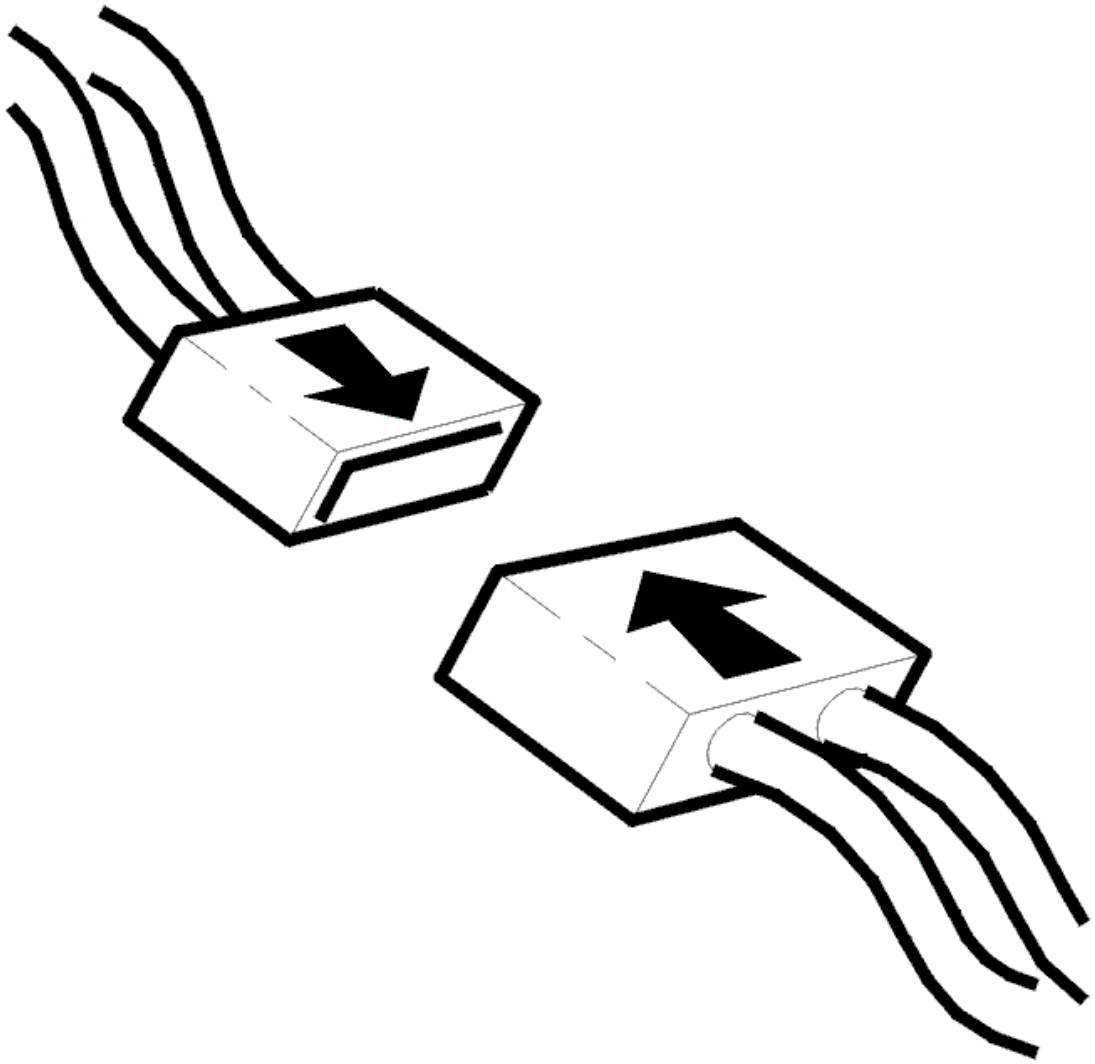

Fig. 139: Connecting Connector
Courtesy of VOLVO CARS CORPORATION

- Ignition off.
- Connect connectors, install components, etc.
- Ignition on.

  Test the rear-view mirror for a few seconds; the mirror should move in opposite directions.

Does the mirror work?

- **YES**

  VERIFIED: Troubleshooting has been completed.

- **NO**

  Refer to **INFORMATION**

INFORMATION

FAULT-TRACING INFORMATION

The fault should have been detected and remedied. As this is not the case fault-tracing has failed.

Exit fault-tracing for this diagnostic trouble code (DTC) or make another attempt.

DDM/PDM-002C DOOR MIRROR HEATER. SIGNAL TOO HIGH (2005-12)

DIAGNOSTIC TROUBLE CODE INFORMATION

Condition

If control unit registers that signal wire for external rear-view mirror defroster is short circuited to voltage supply when the function is inactive, diagnostic trouble code DDM/PDM-002C is displayed.

Substitute Value

- Nothing.

Possible Source

- Signal wire to external rear-view mirror defroster short circuited to voltage supply.

Fault symptom[s]

- Engine does not start
- Starter motor does not work
- Mist on windows and/or external rear-view mirrors.

SIGNAL TOO HIGH

CHECKING FAULTS

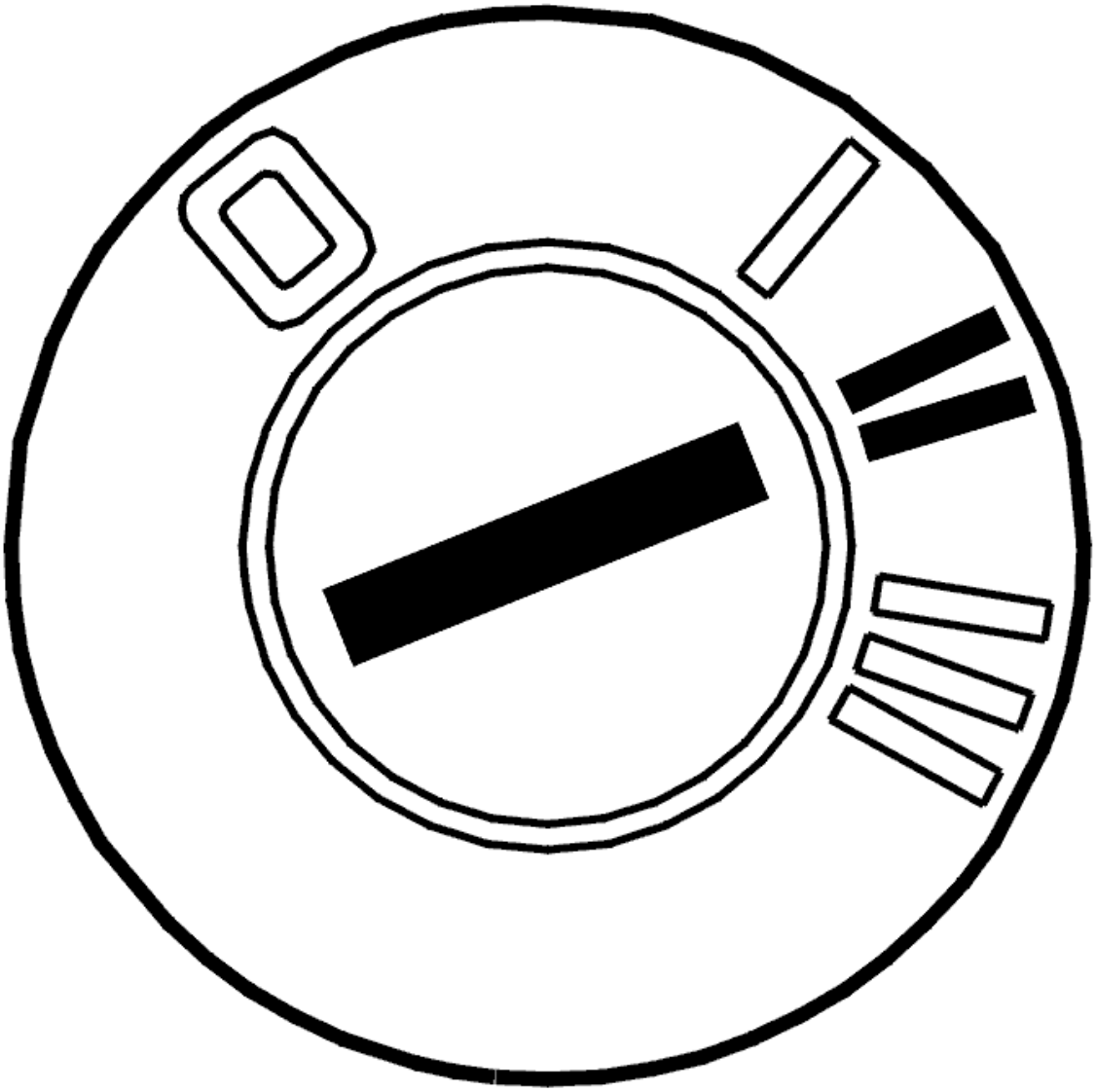

Fig. 140: Identifying Ignition ON
Courtesy of VOLVO CARS CORPORATION

- Ignition on.

  Ensure that the button for the rear defroster is depressed.

  Check that the defroster for the door mirrors is activated.

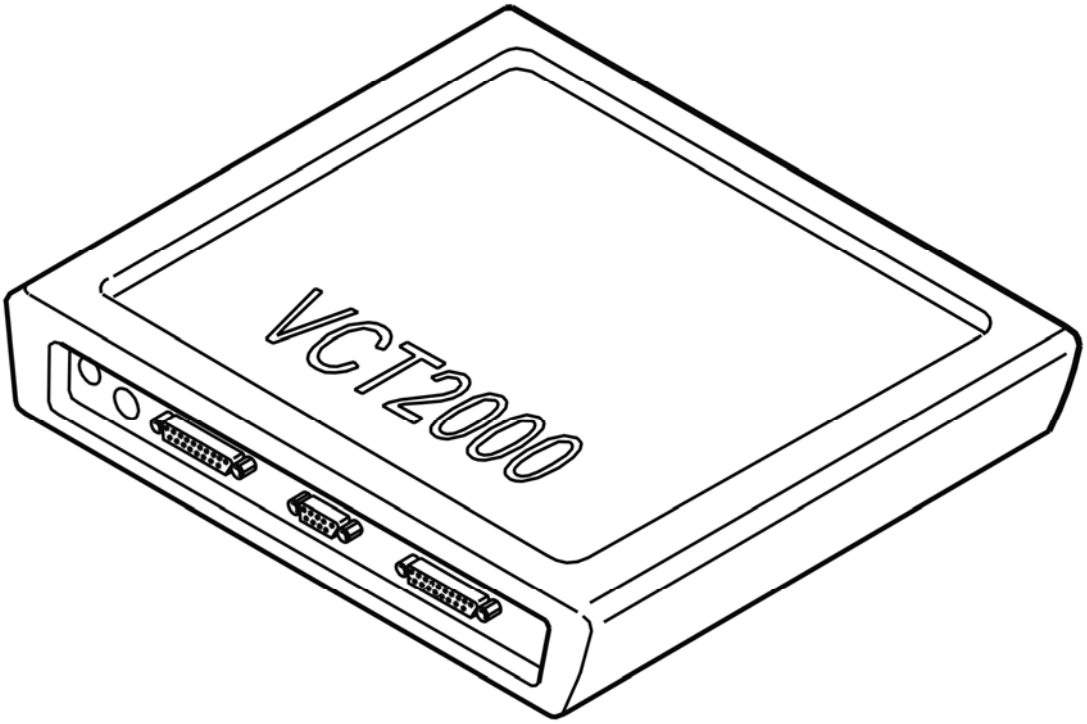

Fig. 141: Identifying VCT2000 Diagnostic Tool Symbol In VIDA
Courtesy of VOLVO CARS CORPORATION

Is the defroster for the door mirror activated?

- **YES**

  Refer to **CHECKING FOR A SHORT-CIRCUIT**

- **NO**

  Refer to **INTERMITTENT FAULT**

CHECKING FOR A SHORT-CIRCUIT

Check the cable between door control module terminal #11B and power door mirror terminal #8. Check for a short-circuit to supply voltage.

Replace the cable if it is faulty.

Replace the power door mirror if the cable is OK.

Other information:

- see **CONNECTING THE BREAKOUT BOX**
- see **SIGNAL SPECIFICATION**
- see **PASSENGER DOOR MODULE (PDM), REPLACING**
- see **REAR VIEW MIRROR, REPLACING**
- see **CHECKING WIRING AND TERMINALS**

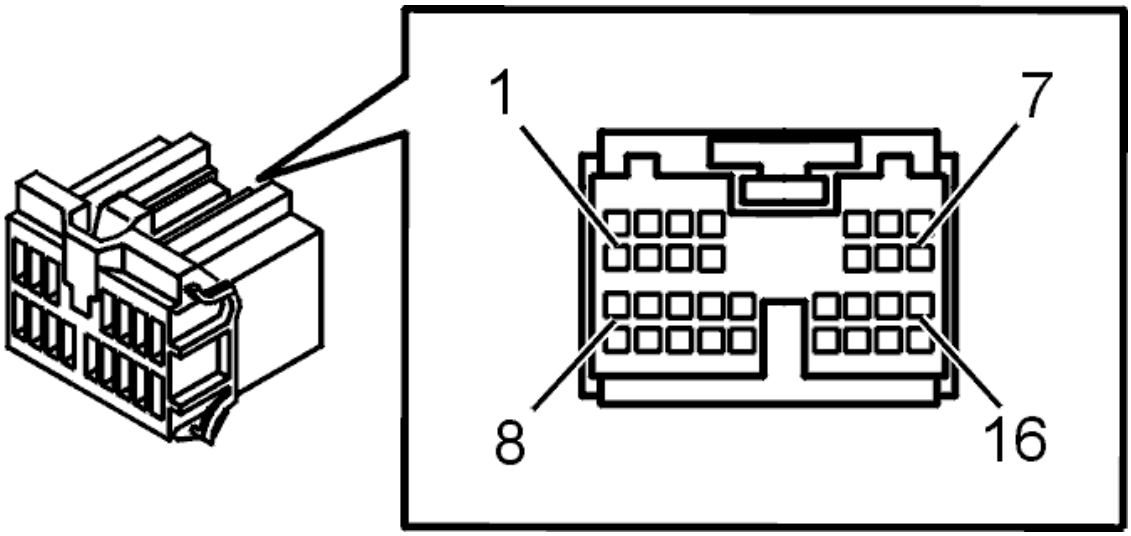

Fig. 142: Connector, Green (16-Pin)
Courtesy of VOLVO CARS CORPORATION

- **Continue**

  Refer to **VERIFICATION**

INTERMITTENT FAULT

Check the control module and power door mirror connectors. Check for contact resistance and oxidation.

Check the cable between door control module terminal #11B and power door mirror terminal #8. Check for an intermittent short-circuit to supply voltage. Check for an intermittent open-circuit.

Other information:

- see **CONNECTING THE BREAKOUT BOX**
- see **SIGNAL SPECIFICATION**
- see **PASSENGER DOOR MODULE (PDM), REPLACING**
- see **REAR VIEW MIRROR, REPLACING**
- see **CHECKING WIRING AND TERMINALS**

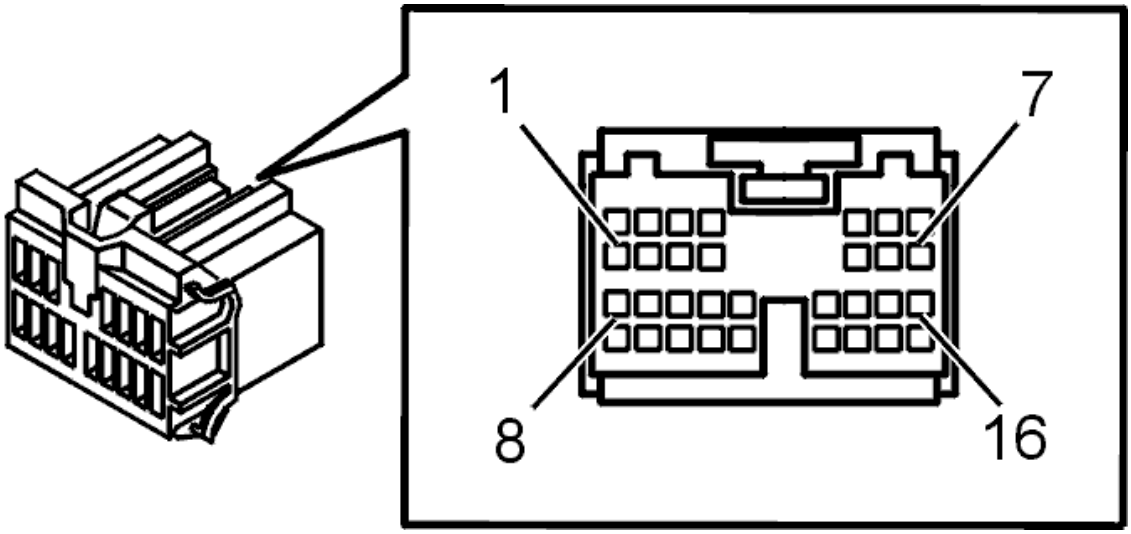

Fig. 143: Connector, Green (16-Pin)
Courtesy of VOLVO CARS CORPORATION

- **Continue**

  Refer to **INFORMATION**

VERIFICATION

HINT: After carrying out the repair, check that the fault has been remedied.

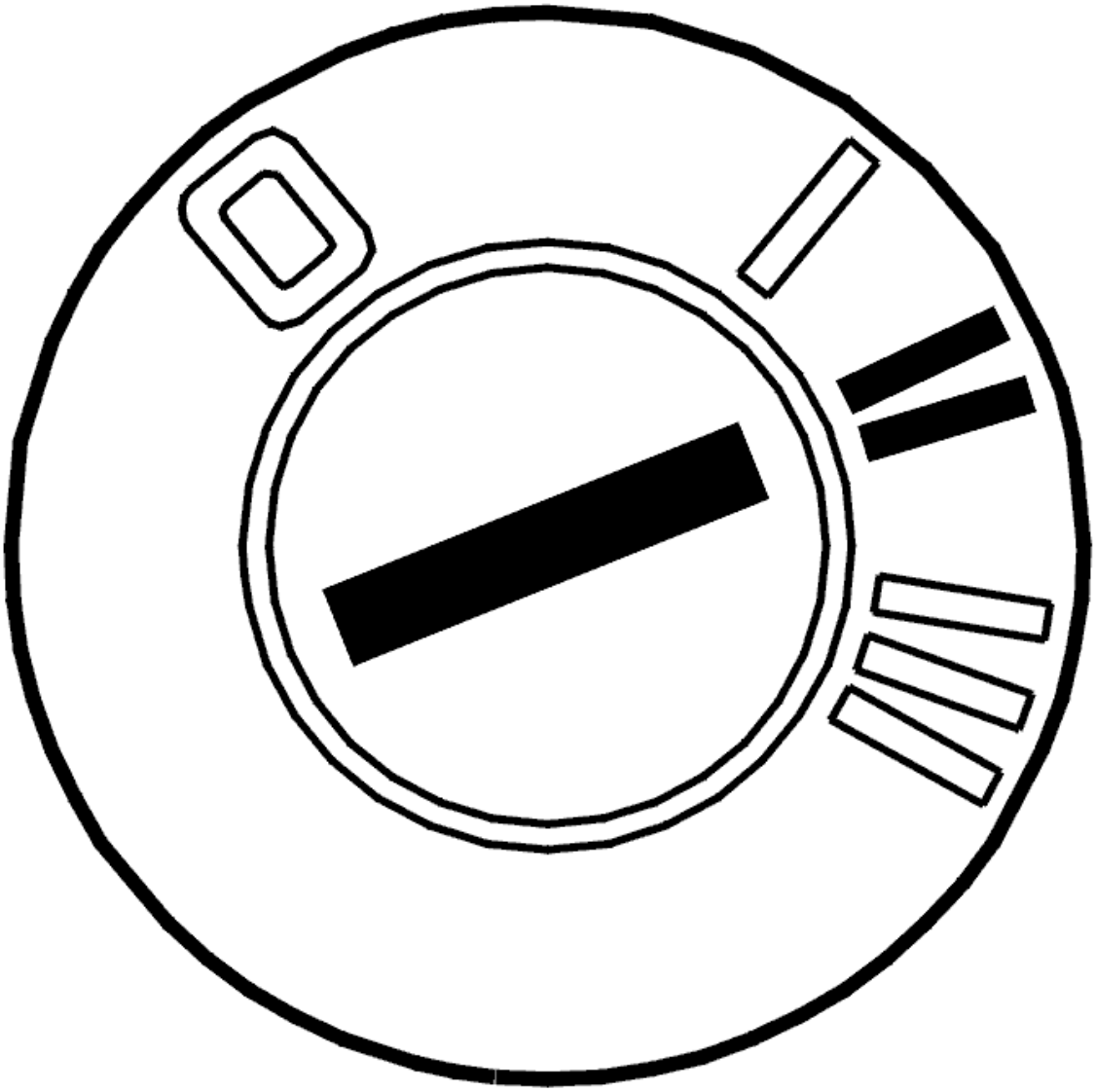

Fig. 144: Identifying Ignition ON
Courtesy of VOLVO CARS CORPORATION

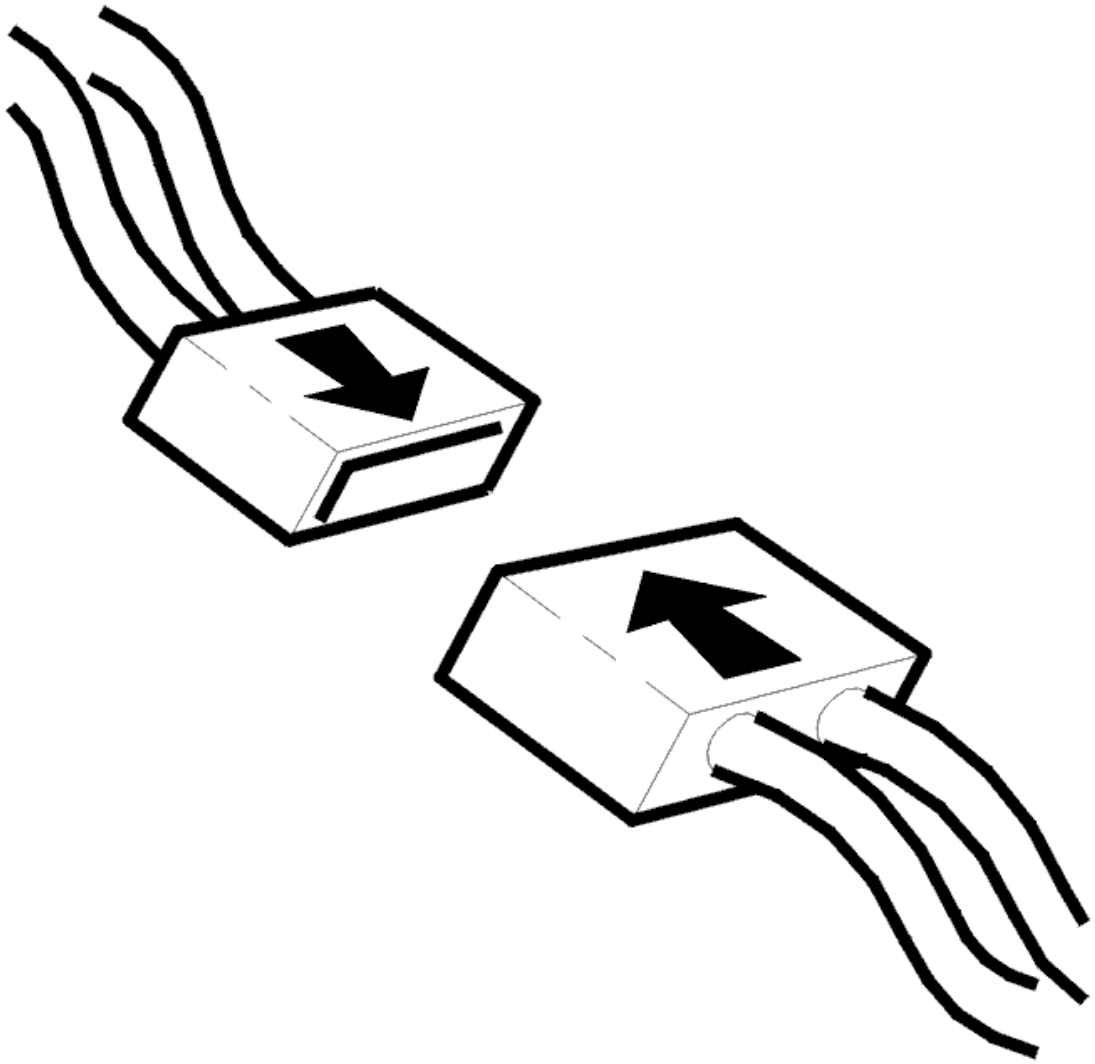

Fig. 145: Connecting Connector
Courtesy of VOLVO CARS CORPORATION

- Ignition off
- Reinstall the components, reconnect the connectors etc.
- Ignition on.

  Ensure that the button for the rear defroster is depressed.

  Check that the defroster for the door mirrors is activated.

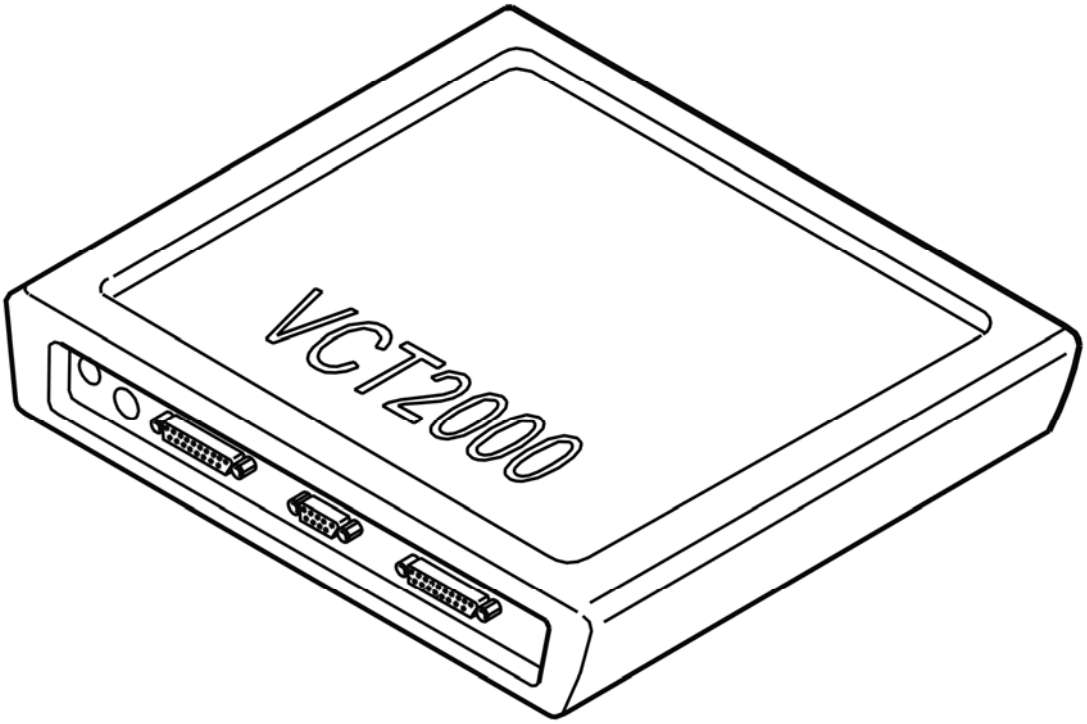

Fig. 146: Identifying VCT2000 Diagnostic Tool Symbol In VIDA
Courtesy of VOLVO CARS CORPORATION

Is the defroster for the door mirror activated?

- **YES**

  VERIFIED: Troubleshooting has been completed.

- **NO**

  Refer to **INFORMATION**

INFORMATION

FAULT-TRACING INFORMATION

The fault should have been detected and remedied. As this is not the case fault-tracing has failed.

Exit fault-tracing for this diagnostic trouble code (DTC) or make another attempt.

DDM/PDM-002C MIRROR HEATER. SIGNAL TOO HIGH (2003-04)

DIAGNOSTIC TROUBLE CODE INFORMATION

see **DIAGNOSTIC TROUBLE CODE INFORMATION**

SIGNAL TOO HIGH

CHECKING FOR PERMANENT OR INTERMITTENT FAULTS

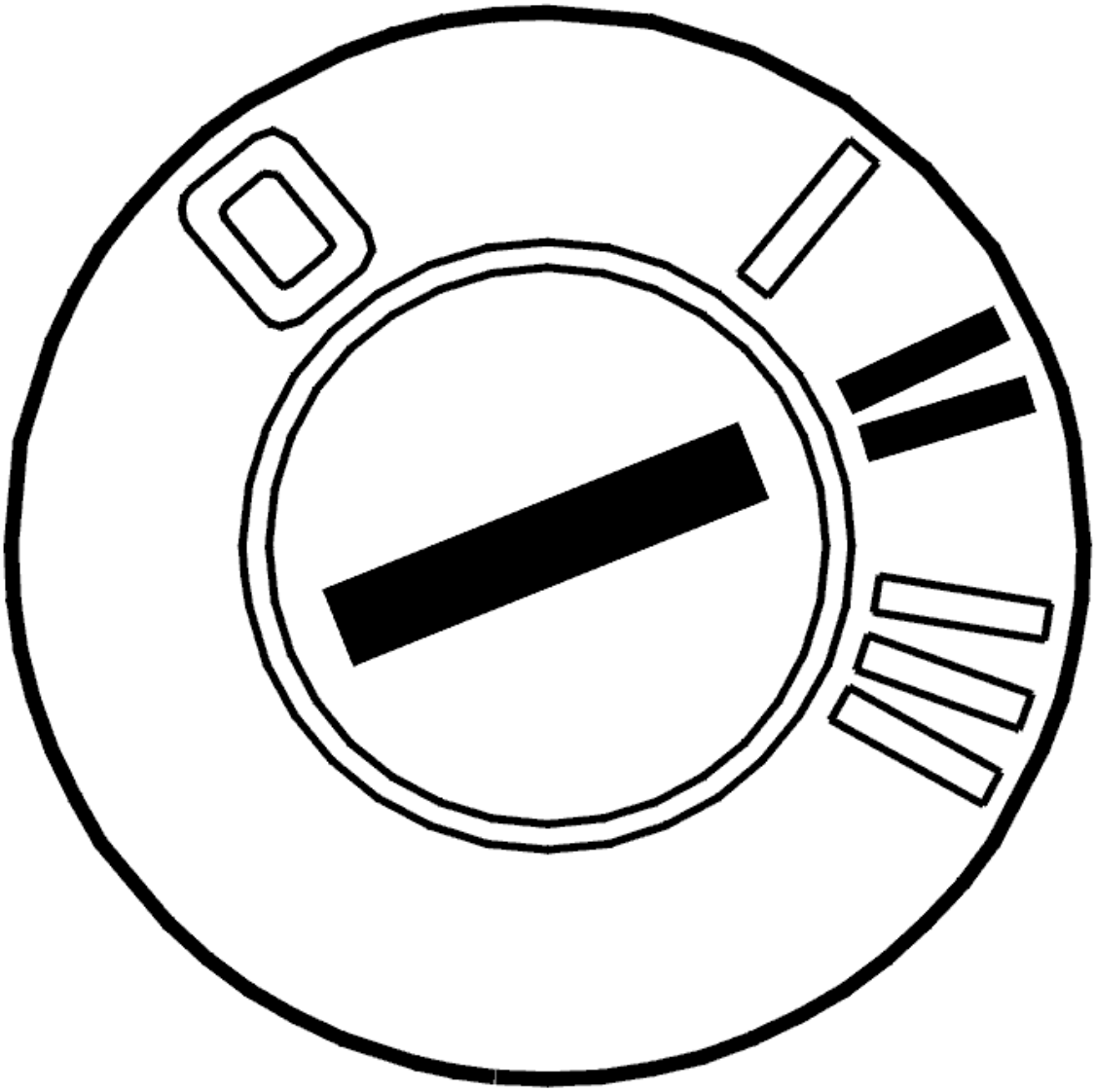

Fig. 147: Identifying Ignition ON
Courtesy of VOLVO CARS CORPORATION

- Ignition on.

  Ensure that the button for the rear defroster is depressed.

  Check that the defroster for the door mirrors is activated.

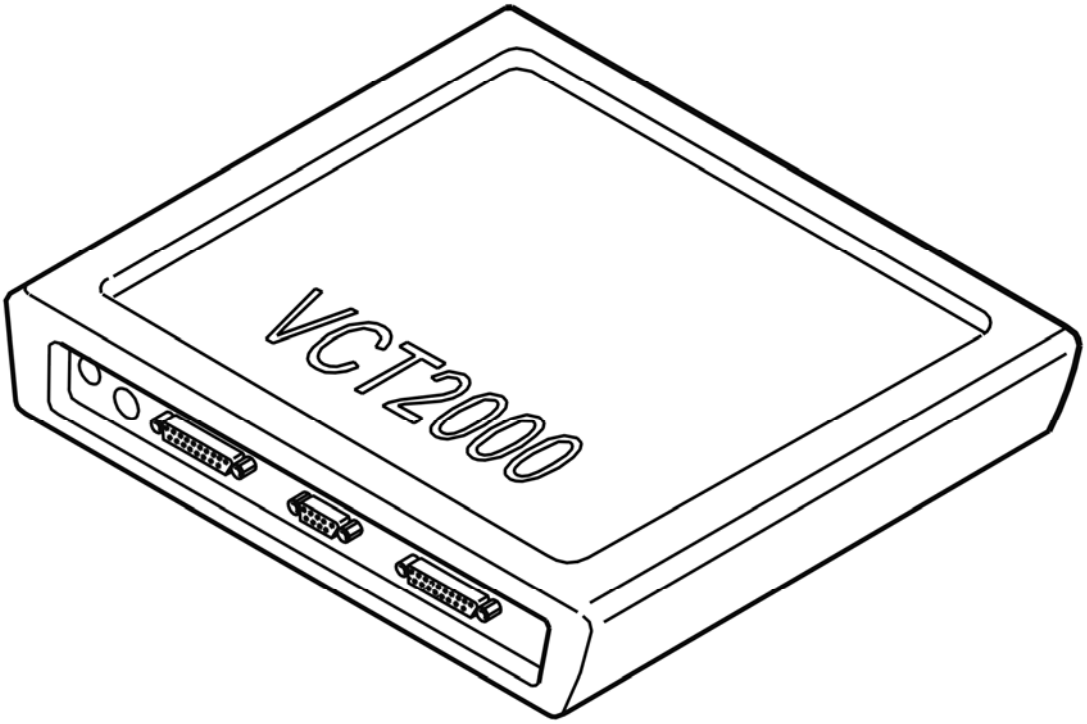

Fig. 148: Identifying VCT2000 Diagnostic Tool Symbol In VIDA
Courtesy of VOLVO CARS CORPORATION

Is the defroster for the door mirrors activated?

- **YES**

  Refer to **CHECKING FOR A SHORT-CIRCUIT**

- **NO**

  Refer to **INTERMITTENT FAULT**

CHECKING FOR A SHORT-CIRCUIT

If the connector is 10-pin

Check the cable between door control module terminal #11B and power door mirror terminal #5. Check for a short-circuit to supply voltage.

If the connector is 16-pin

Check the cable between door control module terminal #11B and power door mirror terminal #8. Check for a short-circuit to supply voltage.

Replace the cable if it is faulty.

Replace the power door mirror if the cable is OK.

Other information:

- To connect the breakout box, see **CONNECTING THE BREAKOUT BOX**
- For further information about signals and other values, see **SIGNAL SPECIFICATION**
- To access the door control module, see **PASSENGER DOOR MODULE (PDM), REPLACING**
- To access and replace the power door mirror, see **REAR VIEW MIRROR, REPLACING**
- see **CHECKING WIRING AND TERMINALS** .

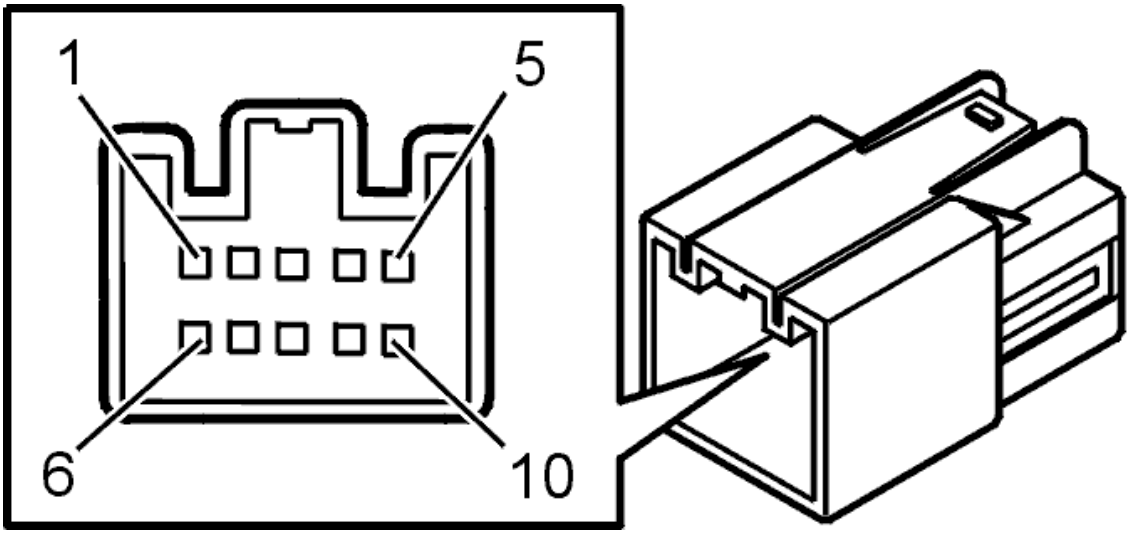

Fig. 149: Identifying 10-Pin Power Door Mirror Connector Terminal
Courtesy of VOLVO CARS CORPORATION

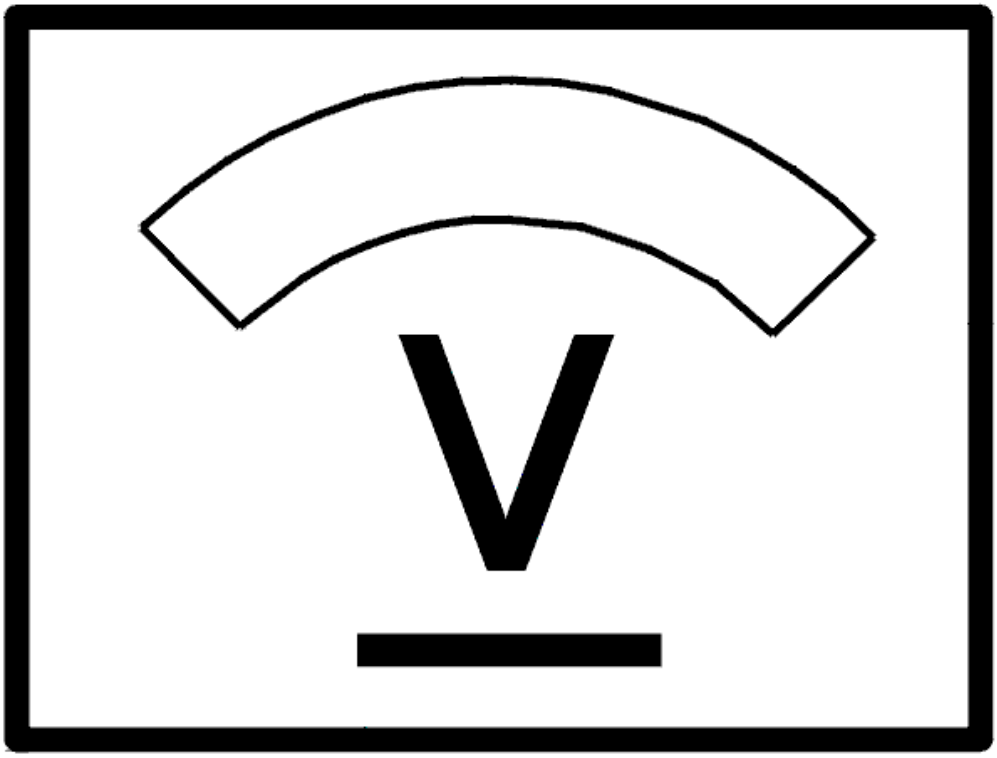

Fig. 150: Identifying Voltage Display
Courtesy of VOLVO CARS CORPORATION

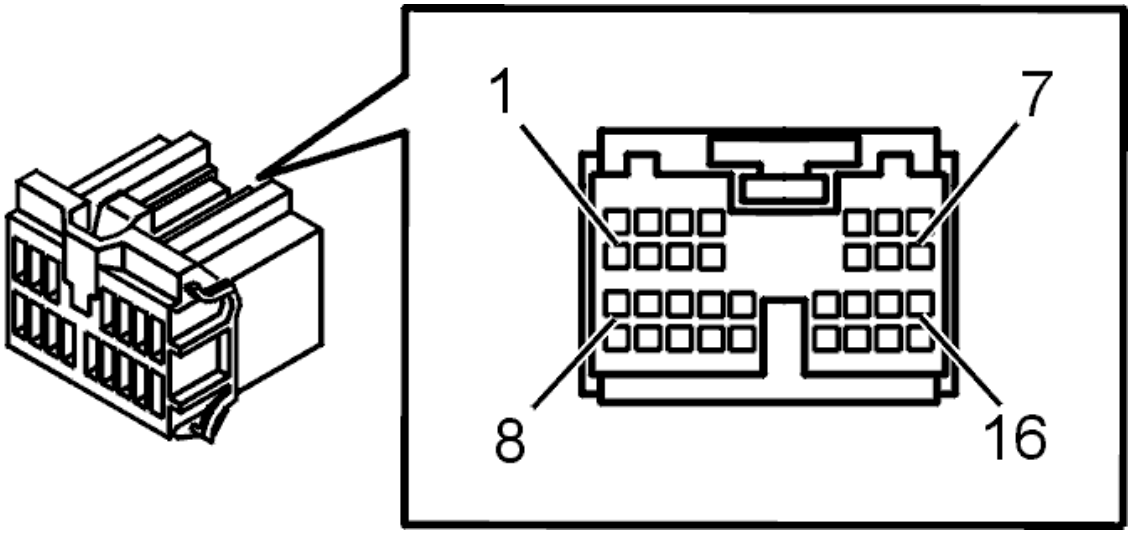

Fig. 151: Connector, Green (16-Pin)
Courtesy of VOLVO CARS CORPORATION

- **Continue**

  Refer to **VERIFICATION**

INTERMITTENT FAULT

Check the control module and power door mirror connectors. Check for contact resistance. Check for oxidation.

If the connector is 10-pin

Check the cable between door control module terminal #11B and power door mirror terminal #5. Check for an intermittent short-circuit to supply voltage. Check for an intermittent open-circuit.

If the connector is 16-pin

Check the cable between door control module terminal #11B and power door mirror terminal #8. Check for an intermittent short-circuit to supply voltage. Check for an intermittent open-circuit.

Other information:

- To connect the breakout box, see **CONNECTING THE BREAKOUT BOX**
- For further information about signals and other values, see **SIGNAL SPECIFICATION**
- To access the door control module, see **PASSENGER DOOR MODULE (PDM), REPLACING**
- To access the power door mirror, see **REAR VIEW MIRROR, REPLACING**
- see **CHECKING WIRING AND TERMINALS** .

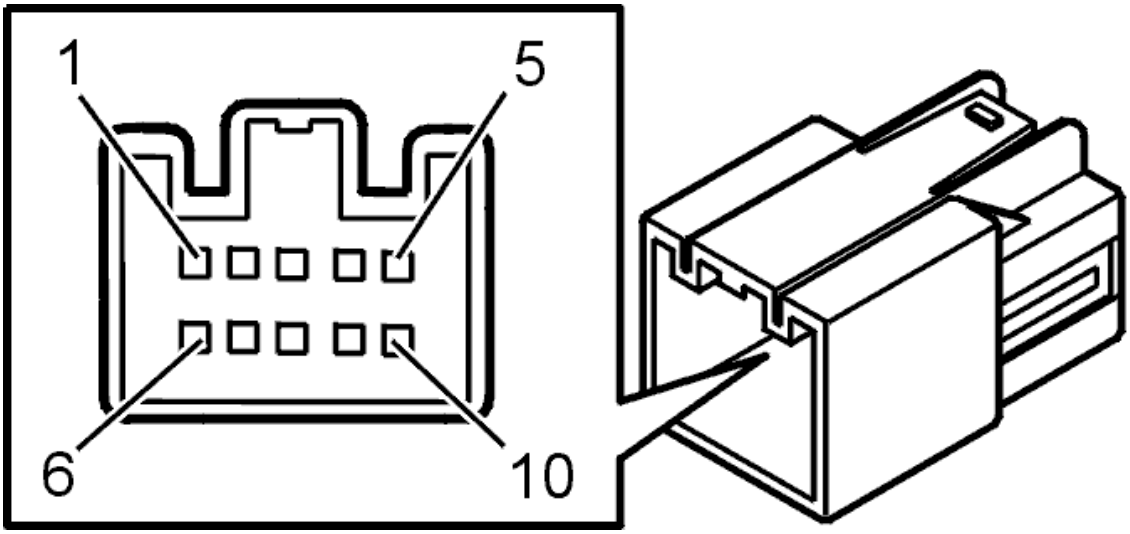

Fig. 152: Identifying 10-Pin Power Door Mirror Connector Terminal
Courtesy of VOLVO CARS CORPORATION

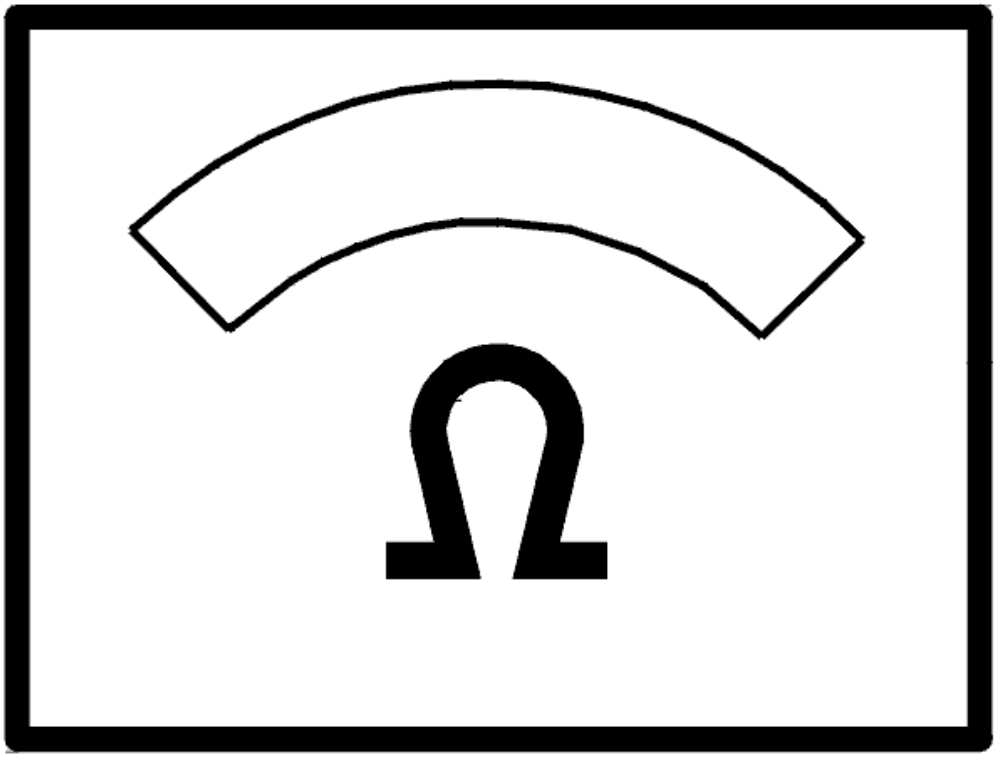

Fig. 153: Identifying Ohmmeter
Courtesy of VOLVO CARS CORPORATION

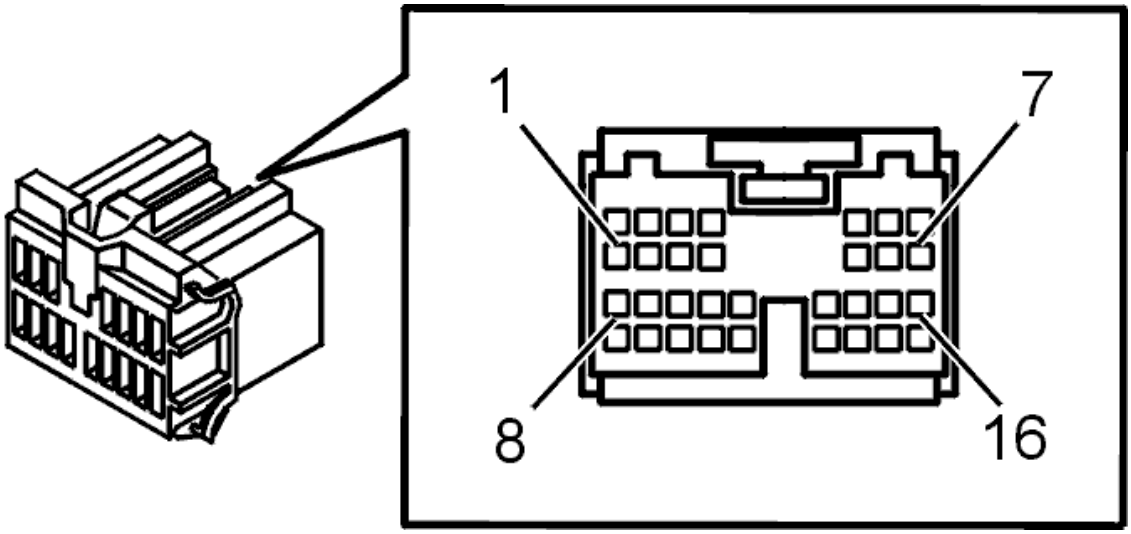

Fig. 154: Connector, Green (16-Pin)
Courtesy of VOLVO CARS CORPORATION

- **Continue**

  Refer to **INFORMATION**

VERIFICATION

HINT: After the repair it is necessary to check that the fault has been rectified.

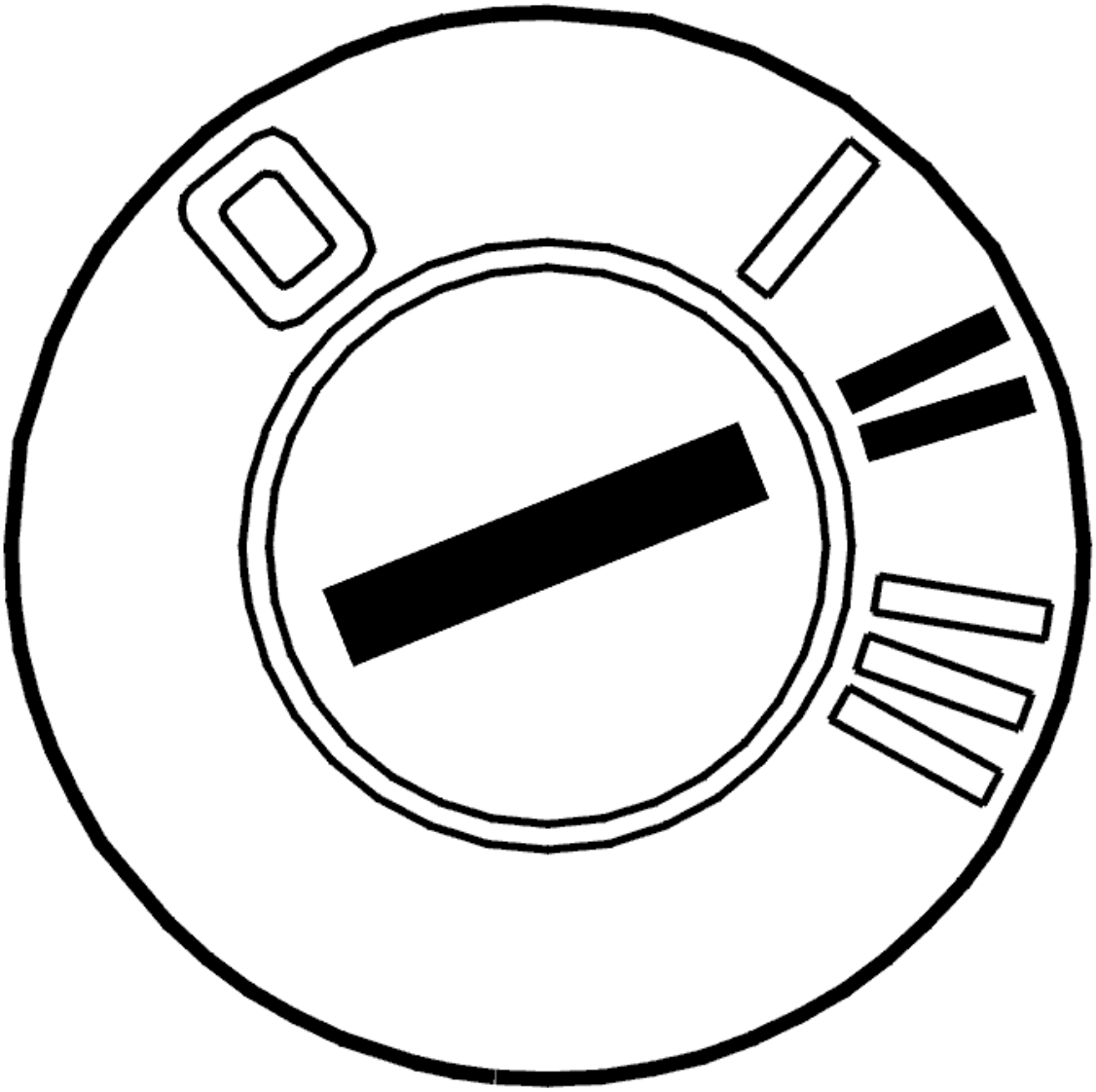

Fig. 155: Identifying Ignition ON
Courtesy of VOLVO CARS CORPORATION

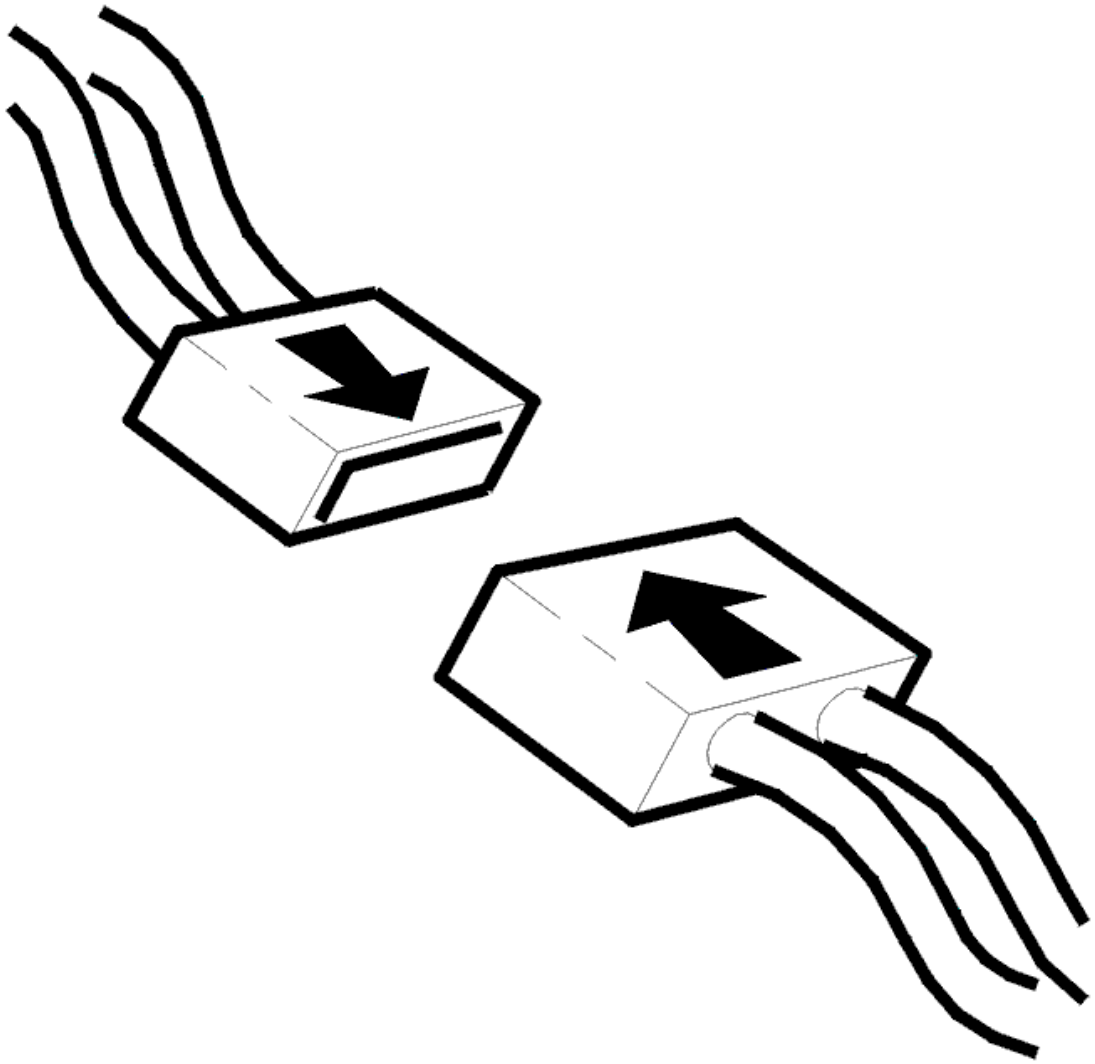

Fig. 156: Connecting Connector
Courtesy of VOLVO CARS CORPORATION

- Ignition off.
- Connect the connectors, install the components, etc.
- Ignition on.

  Make sure that rear window defroster button is depressed.

  Check to, see if external rear-view mirror defroster is activated.

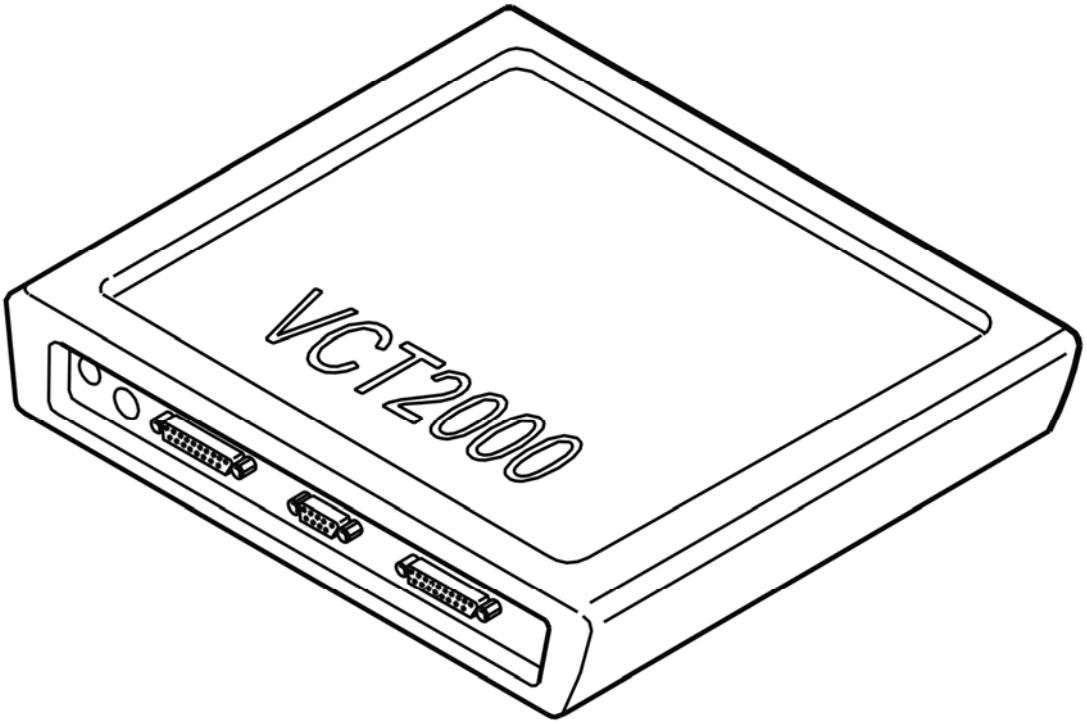

Fig. 157: Identifying VCT2000 Diagnostic Tool Symbol In VIDA
Courtesy of VOLVO CARS CORPORATION

Is external rear-view mirror defroster activated?

- **YES**

  VERIFIED: Troubleshooting has been completed.

- **NO**

  Refer to **INFORMATION**

INFORMATION

FAULT-TRACING INFORMATION

The fault should have been detected and remedied. As this is not the case fault-tracing has failed.

Exit fault-tracing for this diagnostic trouble code (DTC) or make another attempt.

DDM/PDM-002D DOOR MIRROR HEATER. SIGNAL TOO LOW (2005-12)

DIAGNOSTIC TROUBLE CODE INFORMATION

Condition

If control unit registers that signal wire for external rear-view mirror defroster is short circuited to ground when the function is activated, diagnostic trouble code DDM/PDM-002D is displayed.

Substitute Value

- Nothing.

Possible Source

- Signal wire to external rear-view mirror defroster short circuited to ground.

Fault symptom[s]

- Mist on windows and/or external rear-view mirrors.

SIGNAL TOO LOW

CHECKING FAULTS

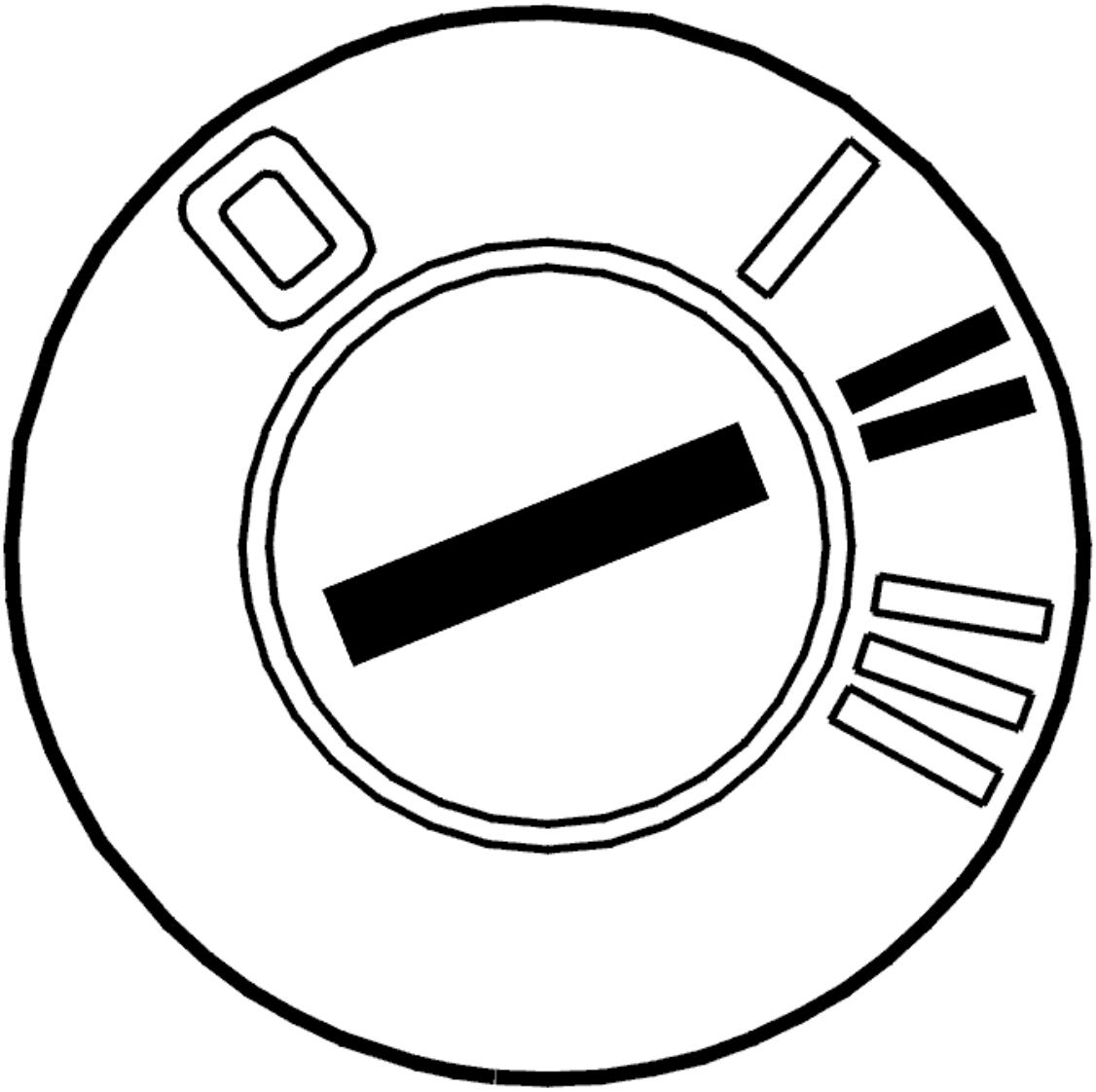

Fig. 158: Identifying Ignition ON
Courtesy of VOLVO CARS CORPORATION

- Ignition on.

  Ensure that the button for the rear defroster is depressed.

  Check that the defroster for the door mirrors is activated.

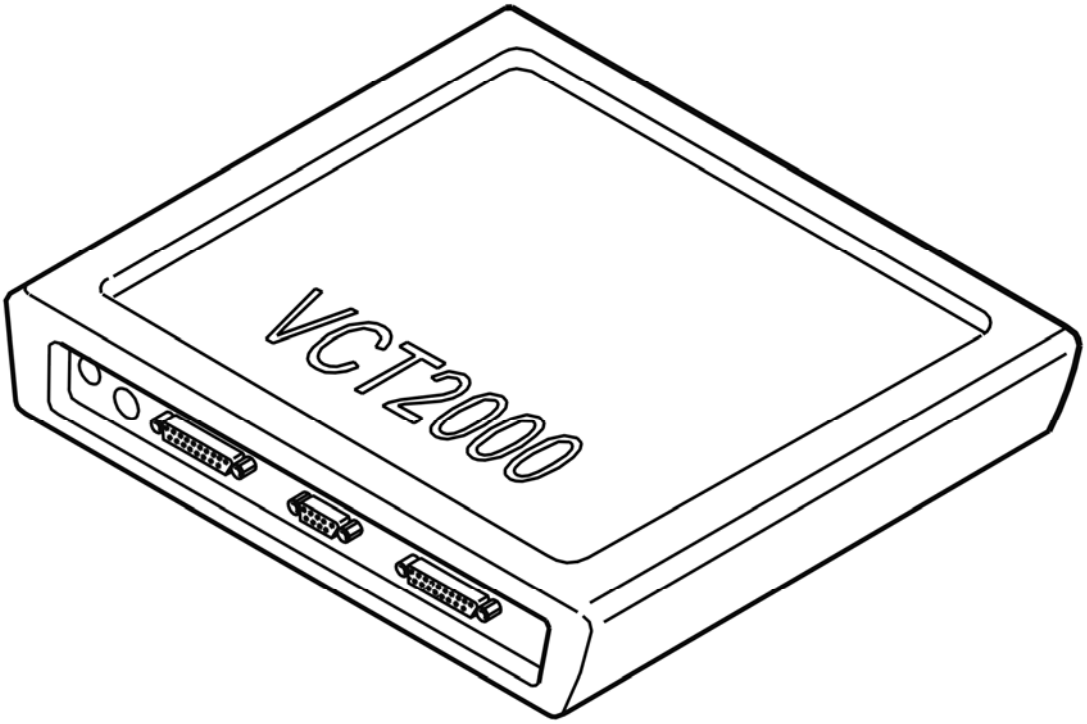

Fig. 159: Identifying VCT2000 Diagnostic Tool Symbol In VIDA
Courtesy of VOLVO CARS CORPORATION

Is the defroster for the door mirror activated?

- **YES**

  Refer to **INTERMITTENT FAULT**

- **NO**

  Refer to **CHECKING FOR A SHORT-CIRCUIT**

CHECKING FOR A SHORT-CIRCUIT

Check the cable between door control module terminal #11B and power door mirror terminal #8. Check for a short-circuit to ground.

Replace the cable if it is faulty.

Replace the power door mirror if the cable is OK.

Other information:

- see **CONNECTING THE BREAKOUT BOX**
- see **SIGNAL SPECIFICATION**
- see **PASSENGER DOOR MODULE (PDM), REPLACING**
- see **REAR VIEW MIRROR, REPLACING**
- see **CHECKING WIRING AND TERMINALS**

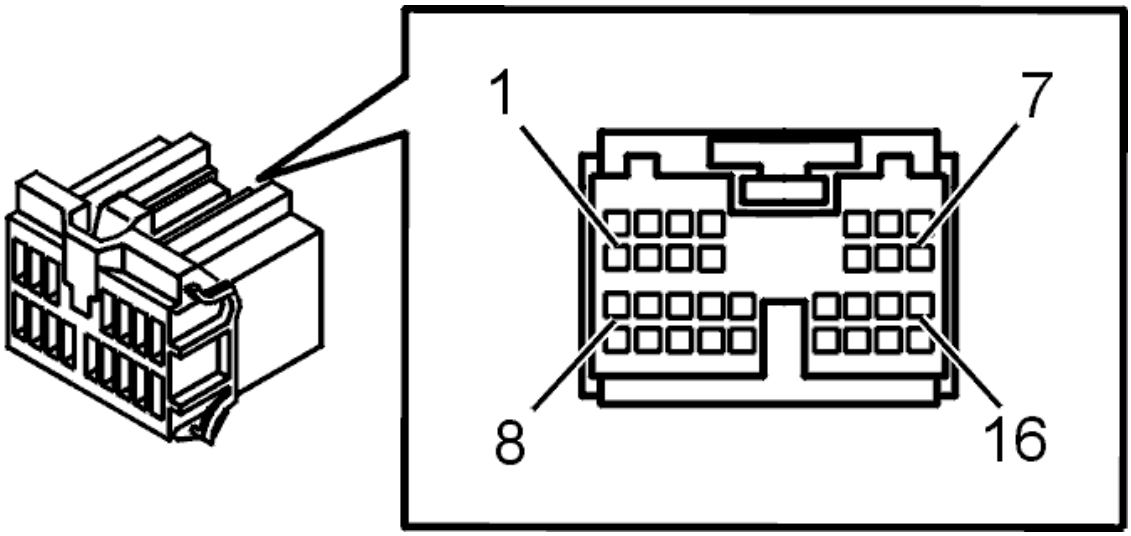

Fig. 160: Connector, Green (16-Pin)
Courtesy of VOLVO CARS CORPORATION

- **Continue**

  Refer to **VERIFICATION**

INTERMITTENT FAULT

Check the control module and power door mirror connectors. Check for contact resistance, oxidation and loose connections.

Check the cable between control module terminal #11B and power door mirror terminal #8. Check for an intermittent short-circuit to ground.

Other information:

- see **CONNECTING THE BREAKOUT BOX**
- see **SIGNAL SPECIFICATION**
- see **PASSENGER DOOR MODULE (PDM), REPLACING**
- see **REAR VIEW MIRROR, REPLACING**
- see **CHECKING WIRING AND TERMINALS**

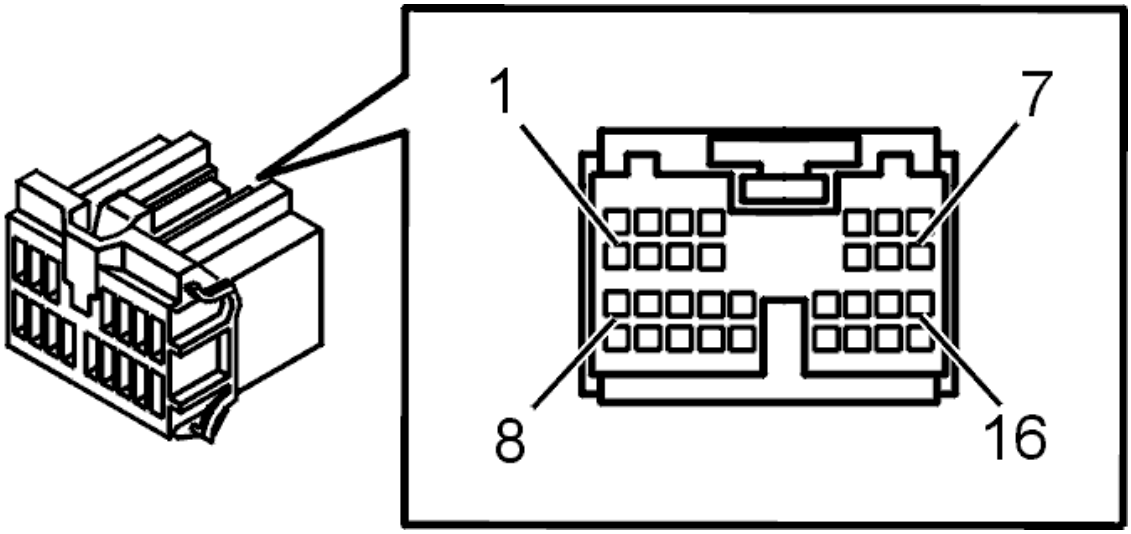

Fig. 161: Connector, Green (16-Pin)
Courtesy of VOLVO CARS CORPORATION

- **Continue**

  Refer to **INFORMATION**

VERIFICATION

HINT: After carrying out the repair, check that the fault has been remedied.

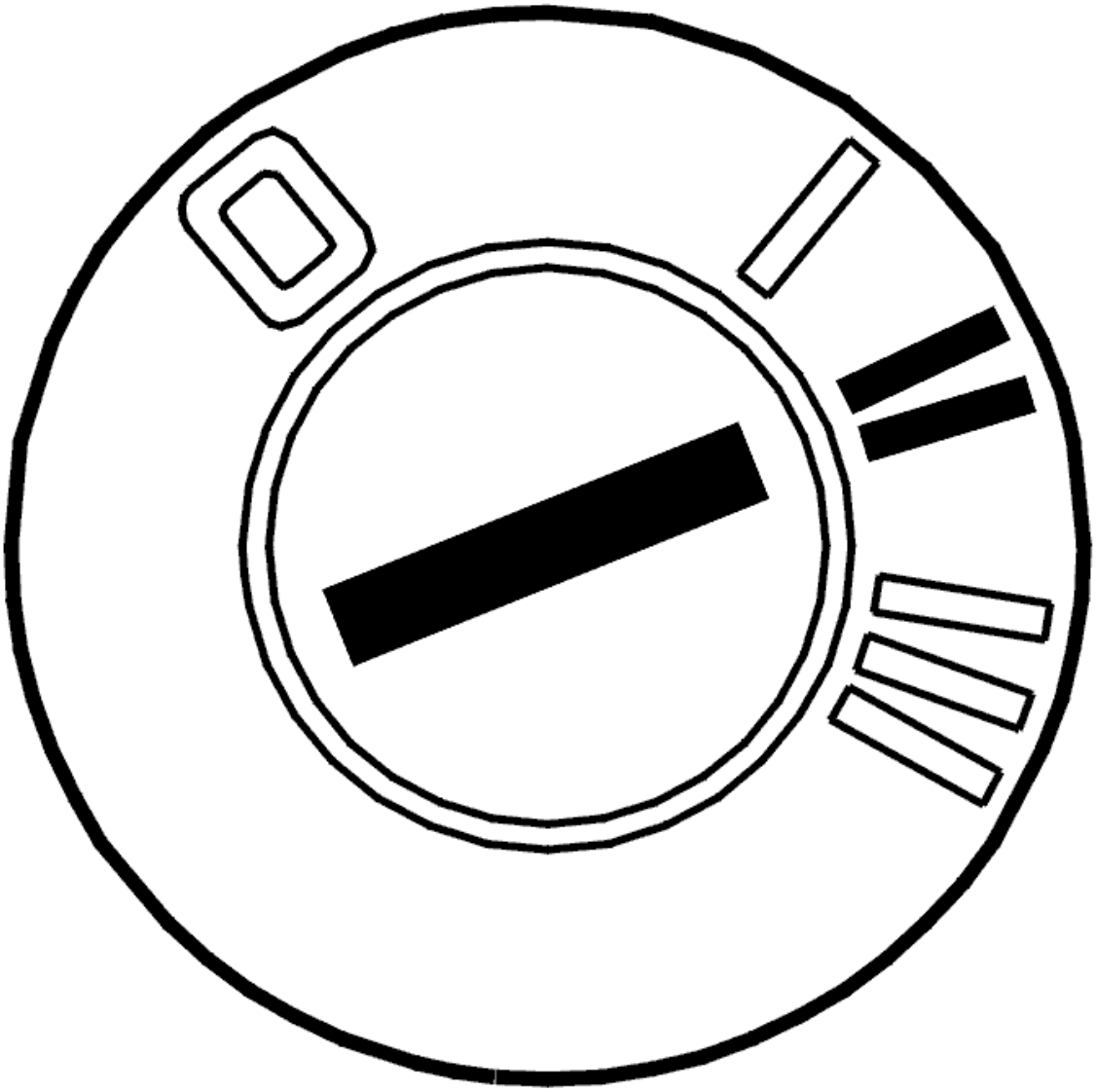

Fig. 162: Identifying Ignition ON
Courtesy of VOLVO CARS CORPORATION

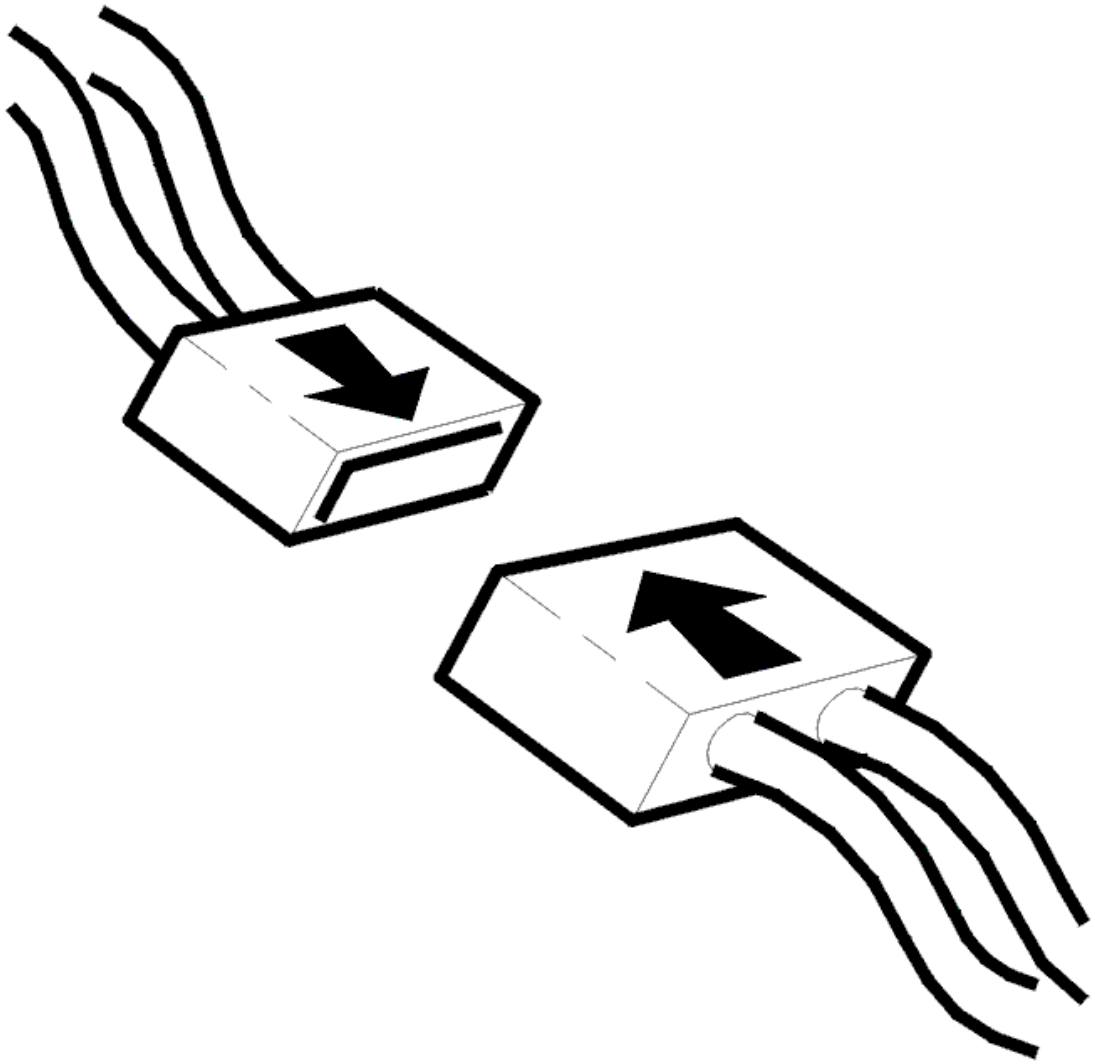

Fig. 163: Connecting Connector
Courtesy of VOLVO CARS CORPORATION

- Ignition off
- Reinstall the components, reconnect the connectors etc.
- Ignition on.

  Ensure that the button for the rear defroster is depressed.

  Check that the defroster for the door mirrors is activated.

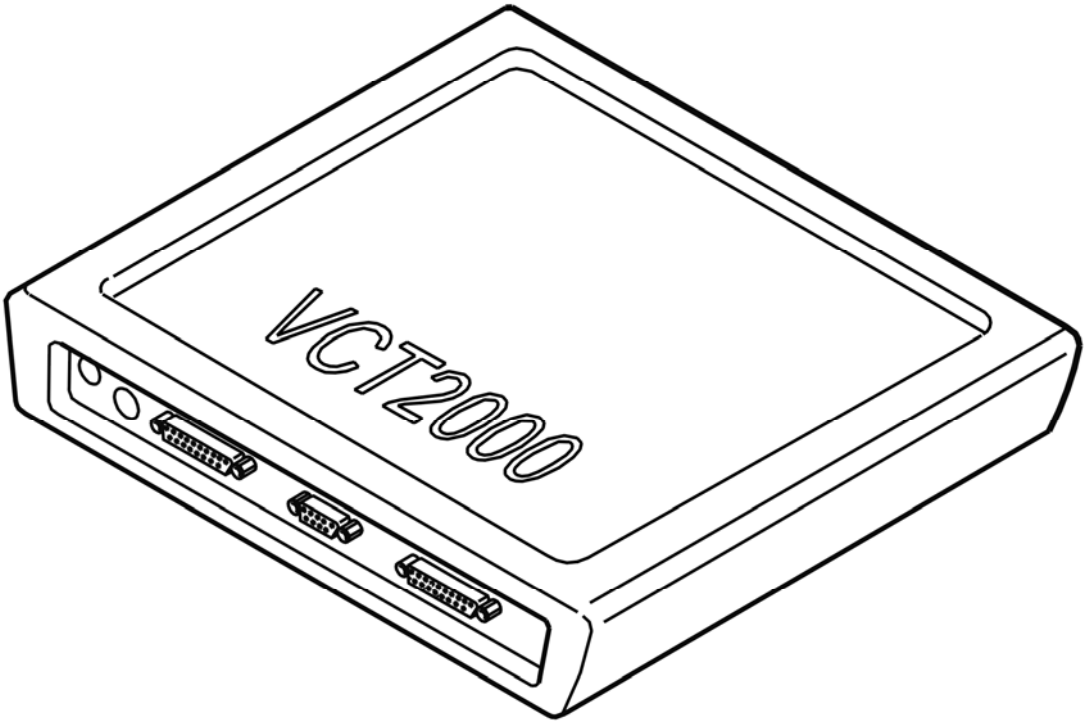

Fig. 164: Identifying VCT2000 Diagnostic Tool Symbol In VIDA
Courtesy of VOLVO CARS CORPORATION

Is the defroster for the door mirror activated?

- **YES**

  VERIFIED: Troubleshooting has been completed.

- **NO**

  Refer to **INFORMATION**

INFORMATION

FAULT-TRACING INFORMATION

The fault should have been detected and remedied. As this is not the case fault-tracing has failed.

Exit fault-tracing for this diagnostic trouble code (DTC) or make another attempt.

DDM/PDM-002D MIRROR HEATER. SIGNAL TOO LOW (2003-04)

DIAGNOSTIC TROUBLE CODE INFORMATION

see **DIAGNOSTIC TROUBLE CODE INFORMATION**

SIGNAL TOO LOW

CHECKING FOR PERMANENT OR INTERMITTENT FAULTS

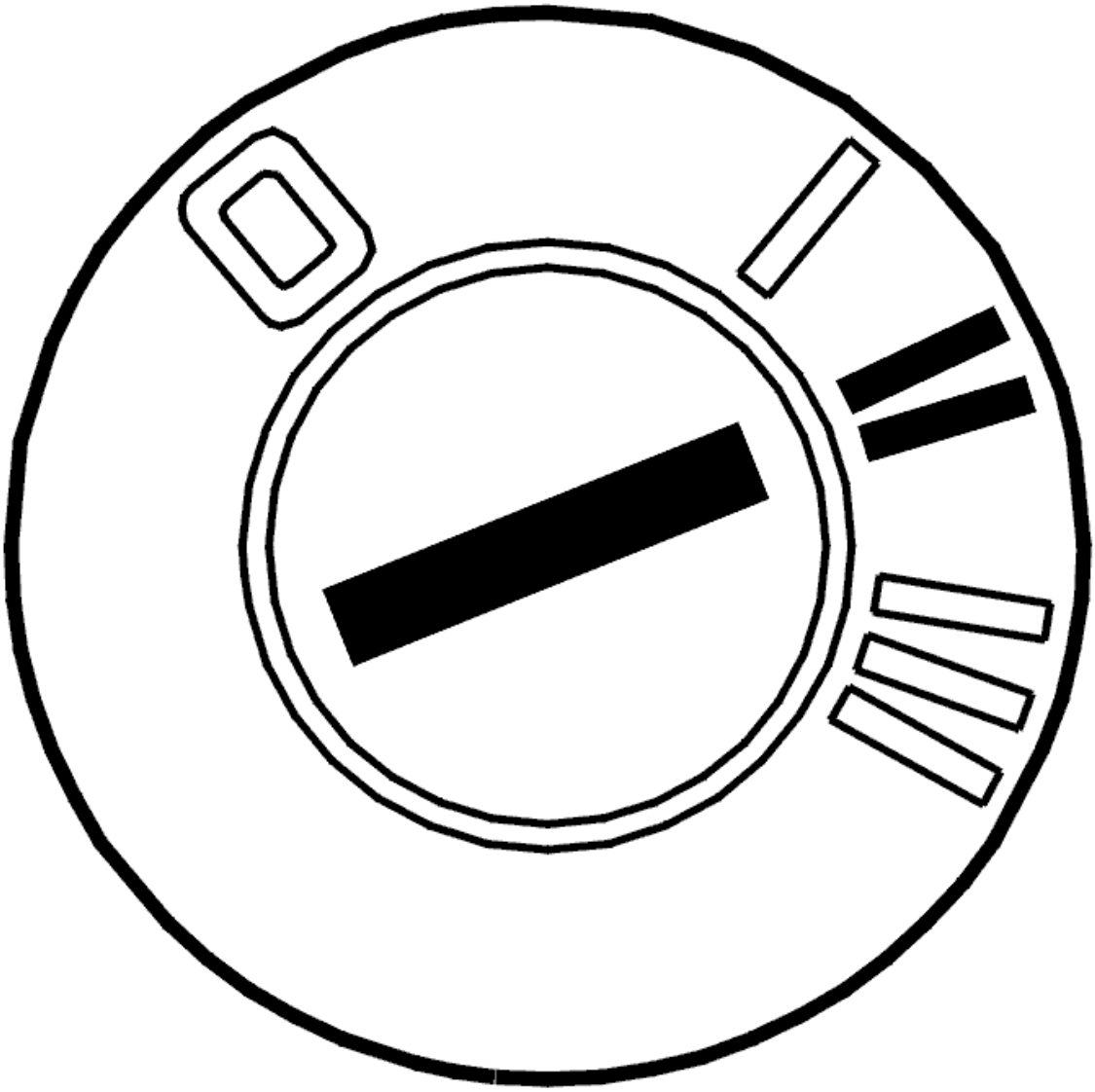

Fig. 165: Identifying Ignition ON
Courtesy of VOLVO CARS CORPORATION

- Ignition on.

  Ensure that the button for the rear defroster is depressed.

  Check that the defroster for the door mirrors is activated.

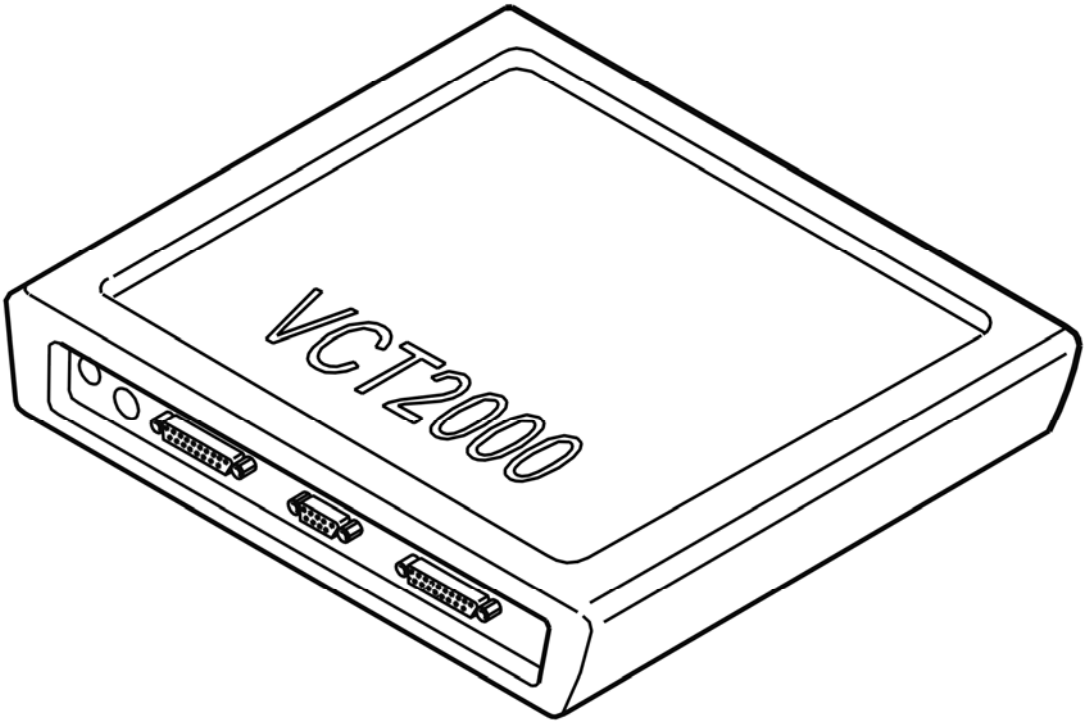

Fig. 166: Identifying VCT2000 Diagnostic Tool Symbol In VIDA
Courtesy of VOLVO CARS CORPORATION

Is the defroster for the door mirrors activated?

- **YES**

  Refer to **INTERMITTENT FAULT**

- **NO**

  Refer to **CHECKING FOR A SHORT-CIRCUIT**

CHECKING FOR A SHORT-CIRCUIT

If the connector is 10-pin

Check the cable between door control module terminal #11B and power door mirror terminal #5. Check for a short-circuit to ground.

If the connector is 16-pin

Check the cable between door control module terminal #11B and power door mirror terminal #8. Check for a short-circuit to ground.

Replace the cable if it is faulty.

Replace the power door mirror if the cable is OK.

Other information:

- To connect the breakout box, see **CONNECTING THE BREAKOUT BOX**
- For further information about signals and other values, see **SIGNAL SPECIFICATION**
- To access the door control module, see **PASSENGER DOOR MODULE (PDM), REPLACING**
- To access and replace the power door mirror, see **REAR VIEW MIRROR, REPLACING**
- see **CHECKING WIRING AND TERMINALS** .

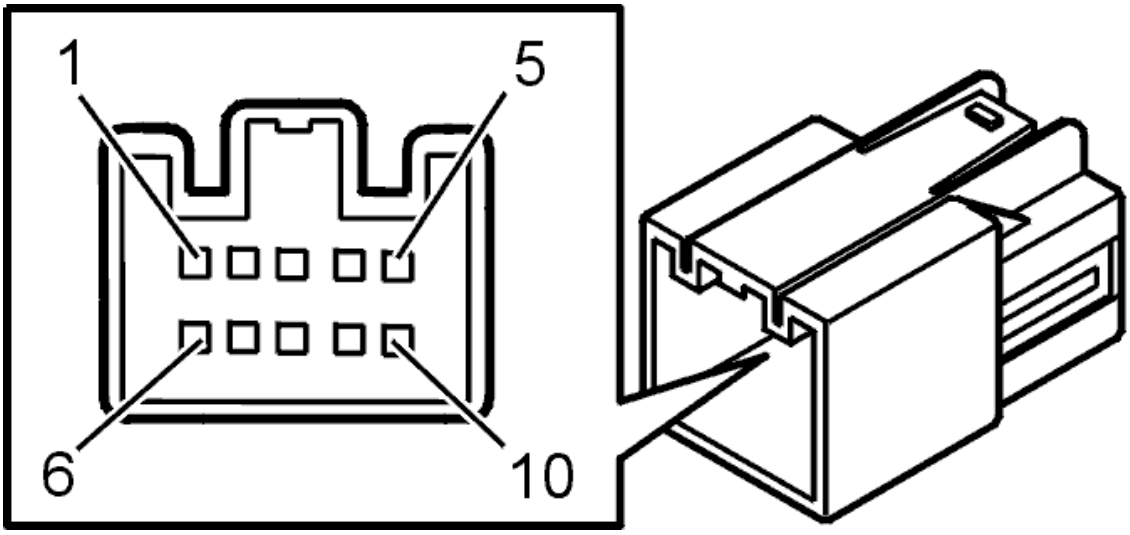

Fig. 167: Identifying 10-Pin Power Door Mirror Connector Terminal
Courtesy of VOLVO CARS CORPORATION

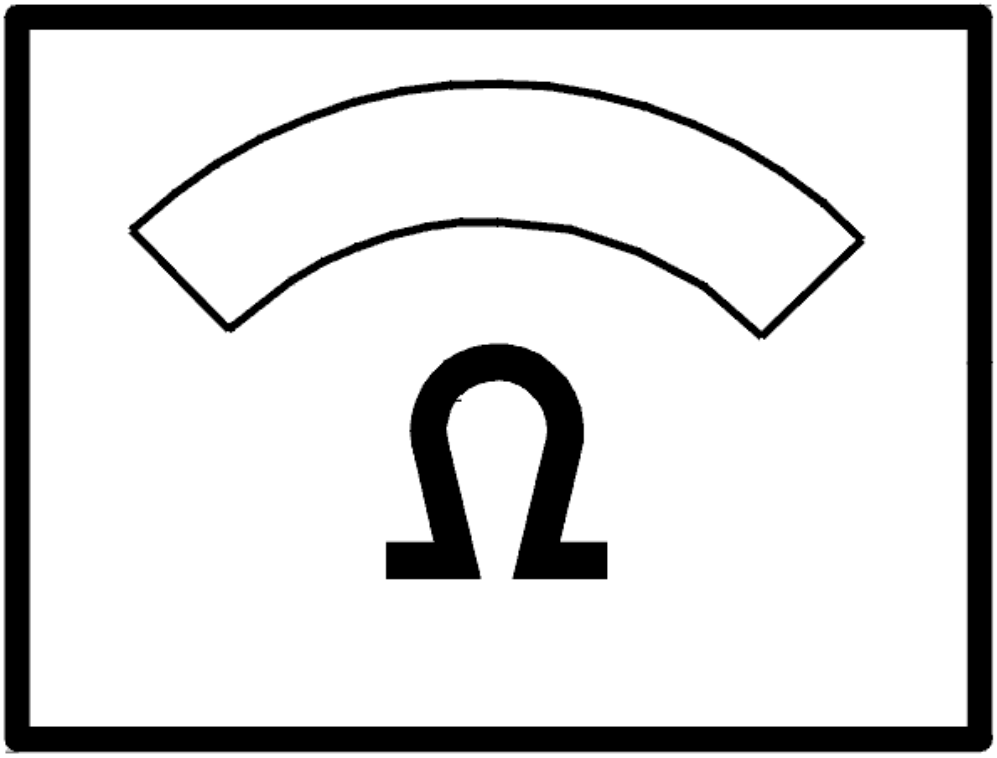

Fig. 168: Identifying Ohmmeter
Courtesy of VOLVO CARS CORPORATION

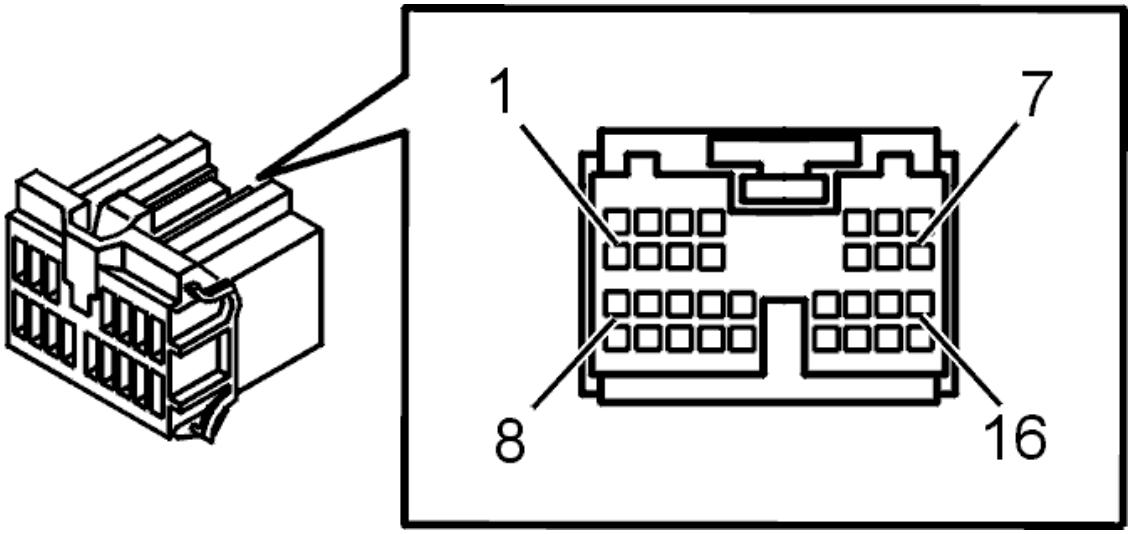

Fig. 169: Connector, Green (16-Pin)
Courtesy of VOLVO CARS CORPORATION

- **Continue**

  Refer to **VERIFICATION**

INTERMITTENT FAULT

Check the control module and power door mirror connectors. Check for contact resistance, oxidation and loose connections.

If the connector is 10-pin

Check the cable between control module terminal #11B and power door mirror terminal #5. Check for an intermittent short-circuit to ground.

If the connector is 16-pin

Check the cable between control module terminal #11B and power door mirror terminal #8. Check for an intermittent short-circuit to ground.

Other information:

- To connect the breakout box, see **CONNECTING THE BREAKOUT BOX**
- For further information about signals and other values, see **SIGNAL SPECIFICATION**
- To access the door control module, see **PASSENGER DOOR MODULE (PDM), REPLACING**
- To access the power door mirror, see **REAR VIEW MIRROR, REPLACING**
- see **CHECKING WIRING AND TERMINALS** .

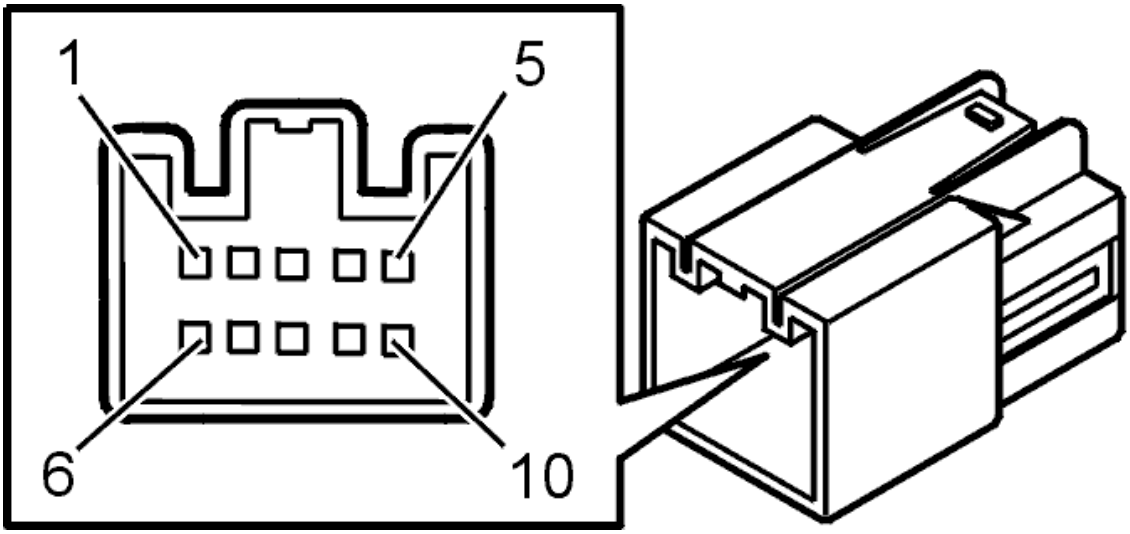

Fig. 170: Identifying 10-Pin Power Door Mirror Connector Terminal
Courtesy of VOLVO CARS CORPORATION

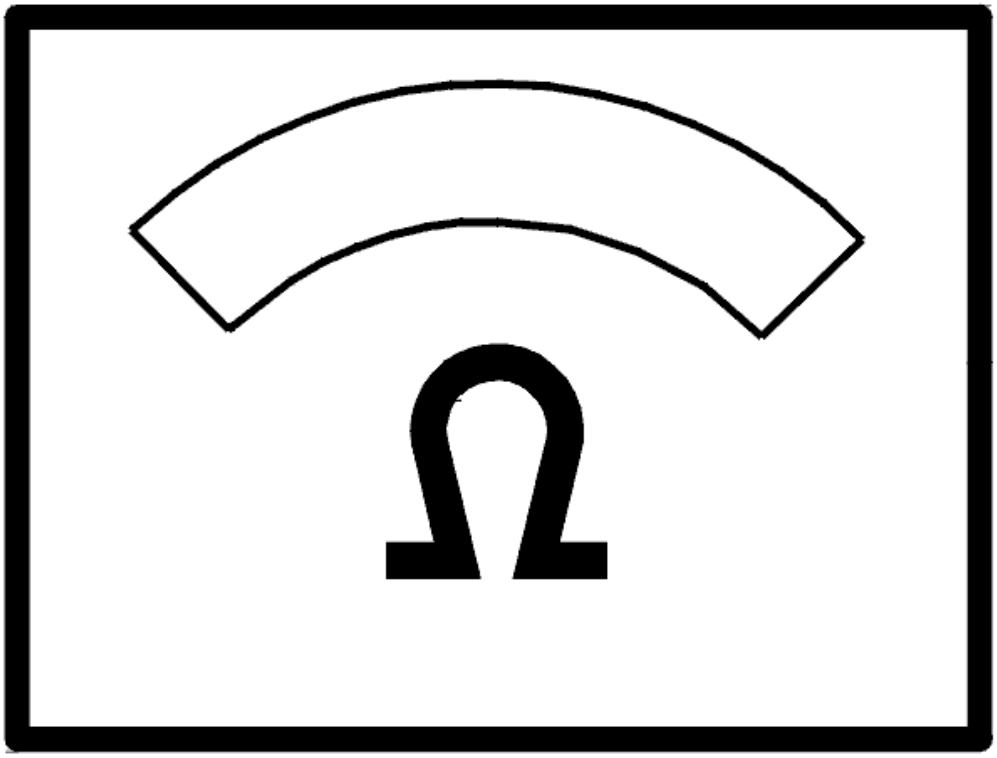

Fig. 171: Identifying Ohmmeter
Courtesy of VOLVO CARS CORPORATION

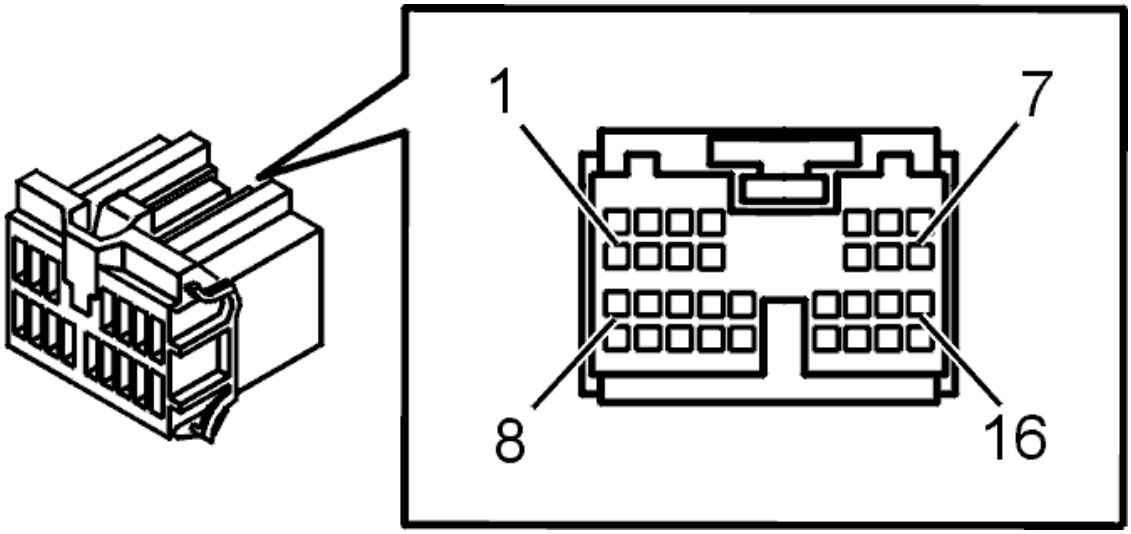

Fig. 172: Connector, Green (16-Pin)
Courtesy of VOLVO CARS CORPORATION

- **Continue**

  Refer to **INFORMATION**

VERIFICATION

HINT: After the repair it is necessary to check that the fault has been rectified.

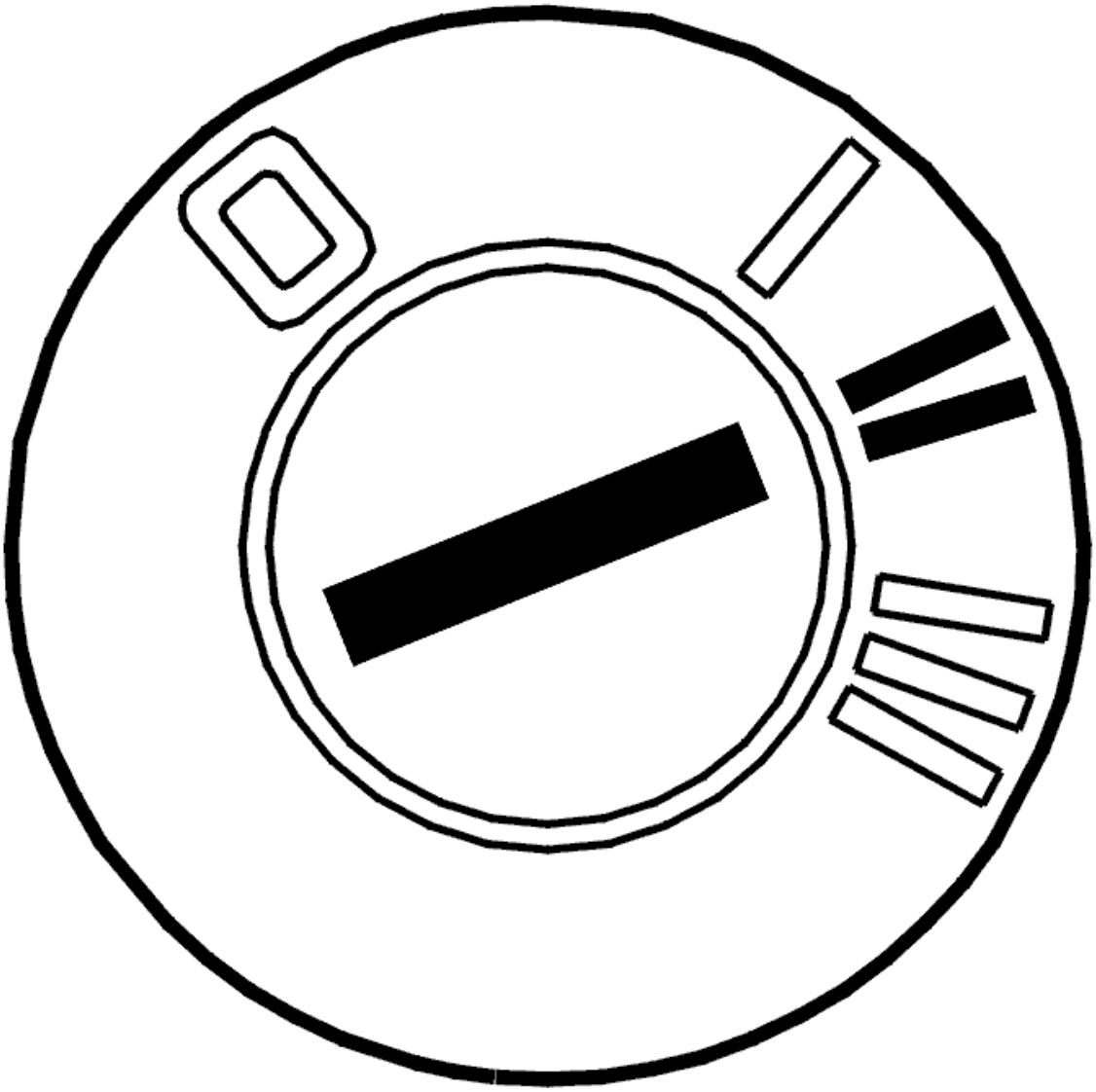

Fig. 173: Identifying Ignition ON
Courtesy of VOLVO CARS CORPORATION

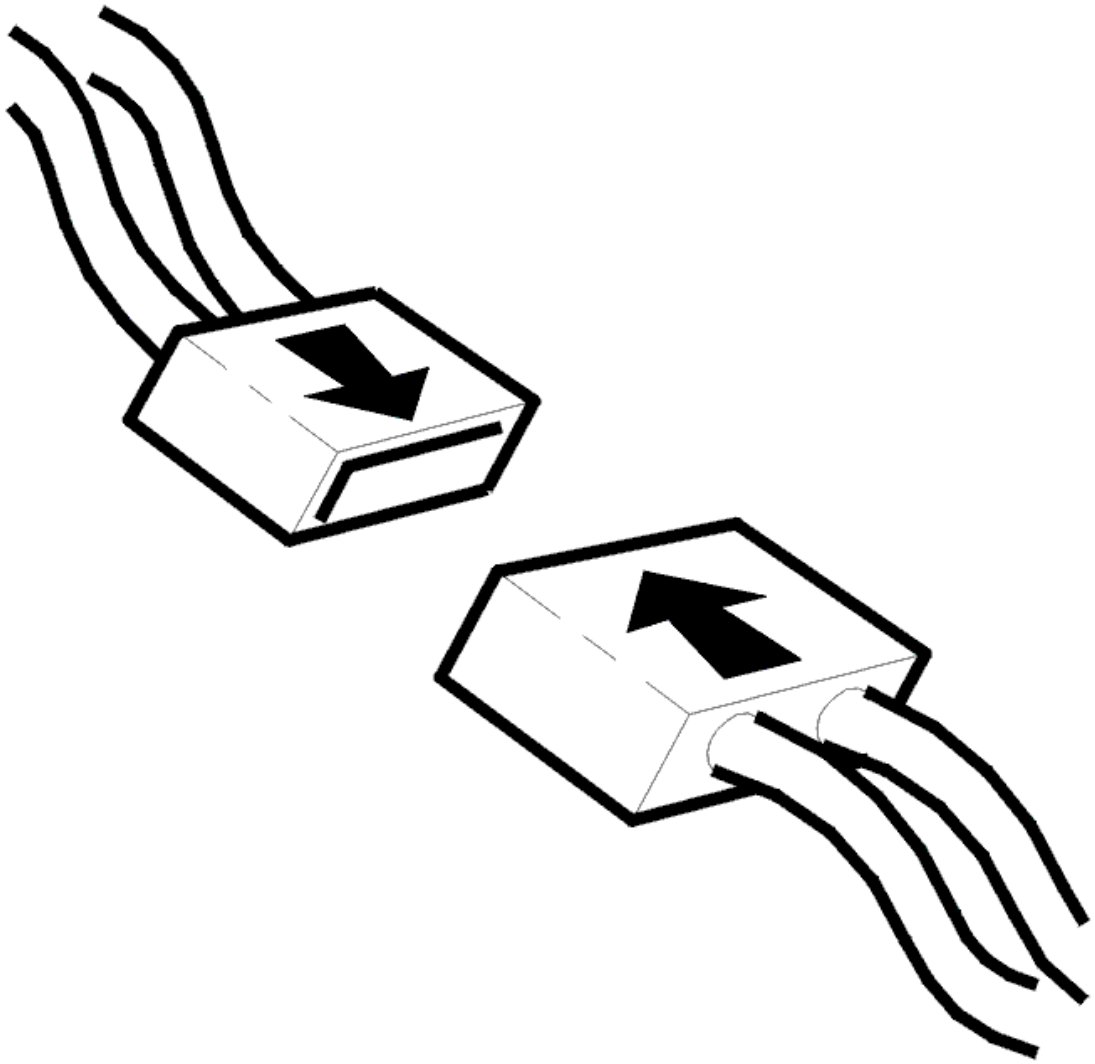

Fig. 174: Connecting Connector
Courtesy of VOLVO CARS CORPORATION

- Ignition off.
- Connect the connectors, install the components, etc.
- Ignition on.

  Make sure that rear window defroster button is depressed.

  Check to, see if external rear-view mirror defroster is activated.

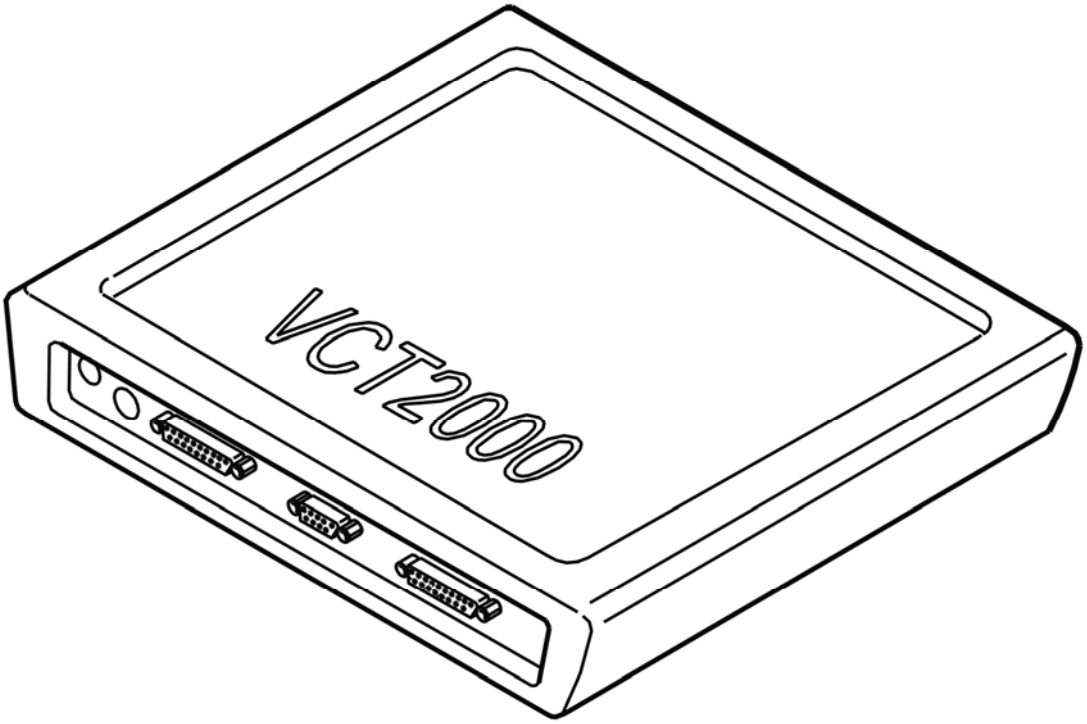

Fig. 175: Identifying VCT2000 Diagnostic Tool Symbol In VIDA
Courtesy of VOLVO CARS CORPORATION

Is external rear-view mirror defroster activated?

- **YES**

  VERIFIED: Troubleshooting has been completed.

- **NO**

  Refer to **INFORMATION**

INFORMATION

FAULT-TRACING INFORMATION

The fault should have been detected and remedied. As this is not the case fault-tracing has failed.

Exit fault-tracing for this diagnostic trouble code (DTC) or make another attempt.

DDM/PDM-002E DOOR MIRROR HEATER. SIGNAL TOO HIGH (2005-12)

DIAGNOSTIC TROUBLE CODE INFORMATION

Condition

If control unit registers that external rear-view mirror defroster overheats when function is activated, diagnostic trouble code DDM/PDM-002E is displayed.

Substitute Value

- Nothing.

Possible Source

- External rear-view mirror heater overheats.

Fault symptom[s]

- Nothing.

SIGNAL TOO HIGH

CHECKING FAULTS

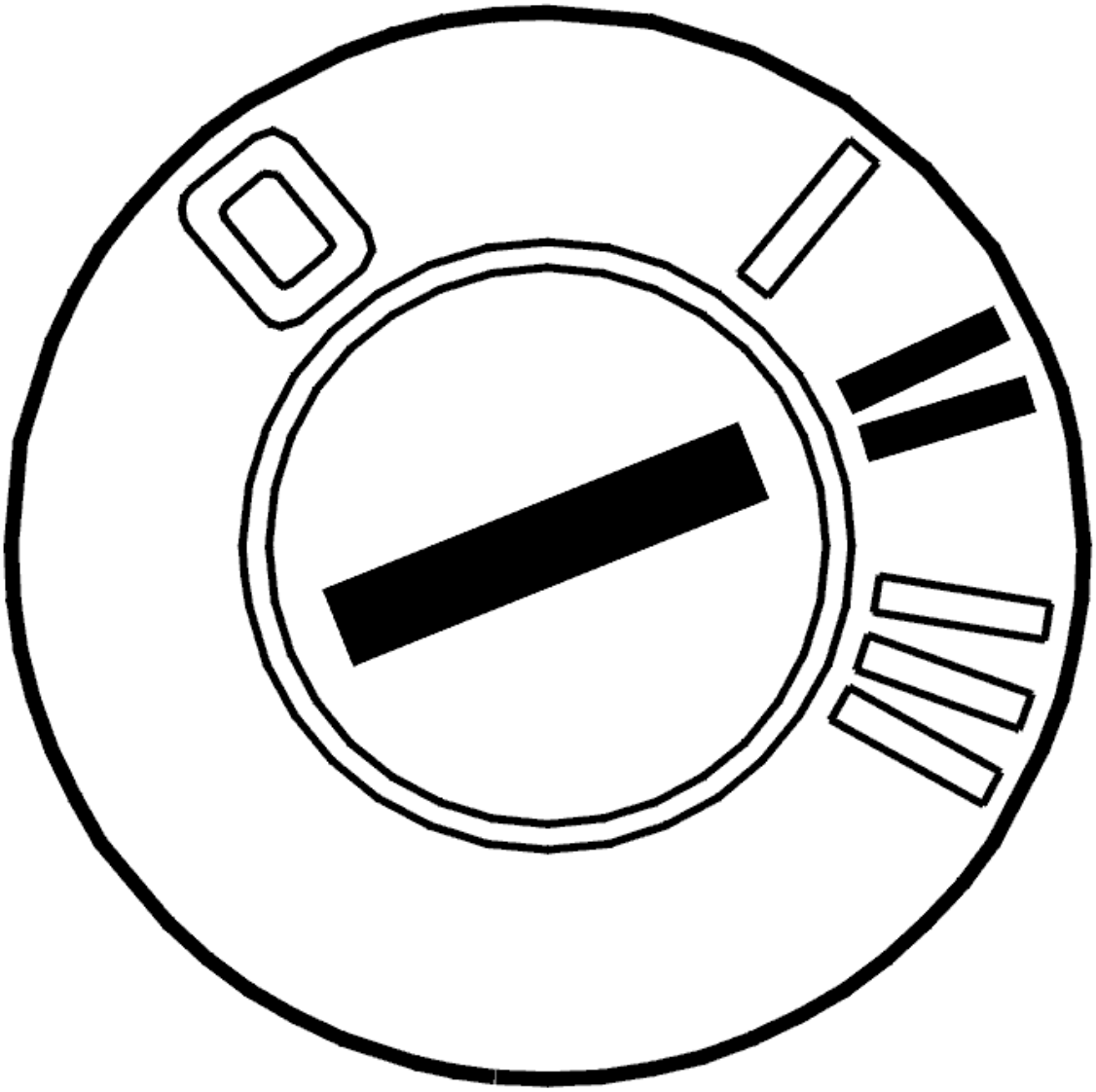

Fig. 176: Identifying Ignition ON
Courtesy of VOLVO CARS CORPORATION

- Ignition on.

  Ensure that the button for the rear defroster is not depressed.

  Check that the defroster for the door mirrors is not activated.

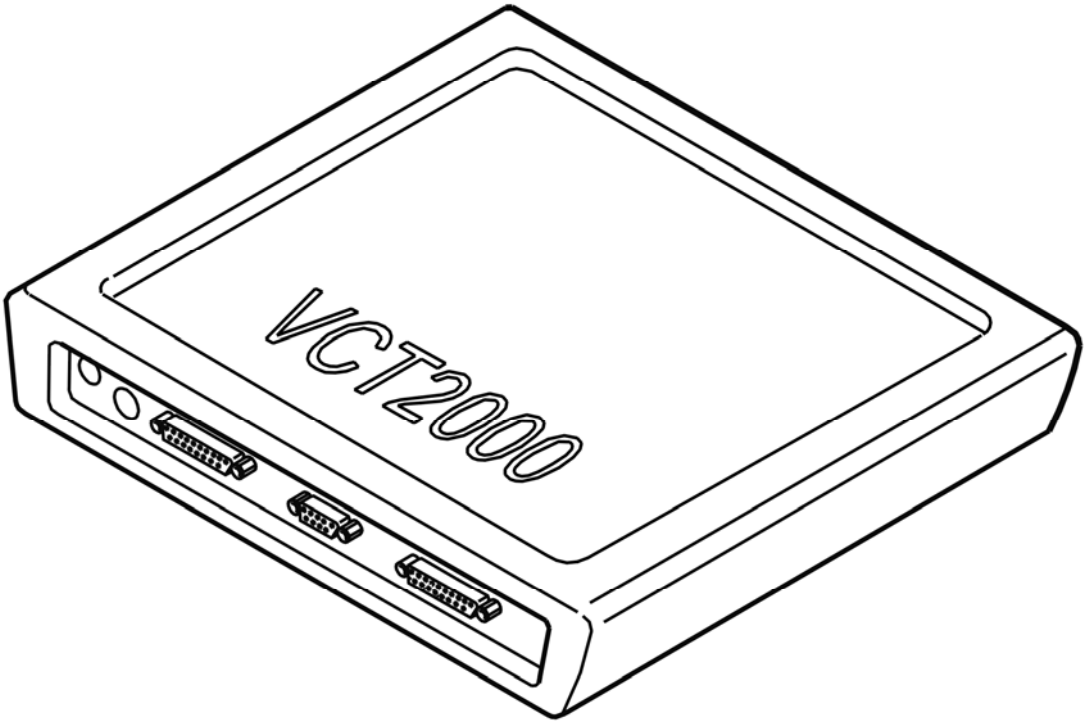

Fig. 177: Identifying VCT2000 Diagnostic Tool Symbol In VIDA
Courtesy of VOLVO CARS CORPORATION

Is the defroster for the door mirror activated?

- **YES**

  Refer to **CHECKING FOR A SHORT-CIRCUIT**

- **NO**

  Refer to **INTERMITTENT FAULT**

CHECKING FOR A SHORT-CIRCUIT

Check the cable between door control module terminal #11B and power door mirror terminal #8. Check for a short-circuit to supply voltage.

Replace the cable if it is faulty.

Replace the power door mirror if the cable is OK.

Other information:

- see **CONNECTING THE BREAKOUT BOX**
- see **SIGNAL SPECIFICATION**
- see **PASSENGER DOOR MODULE (PDM), REPLACING**
- see **REAR VIEW MIRROR, REPLACING**
- see **CHECKING WIRING AND TERMINALS**

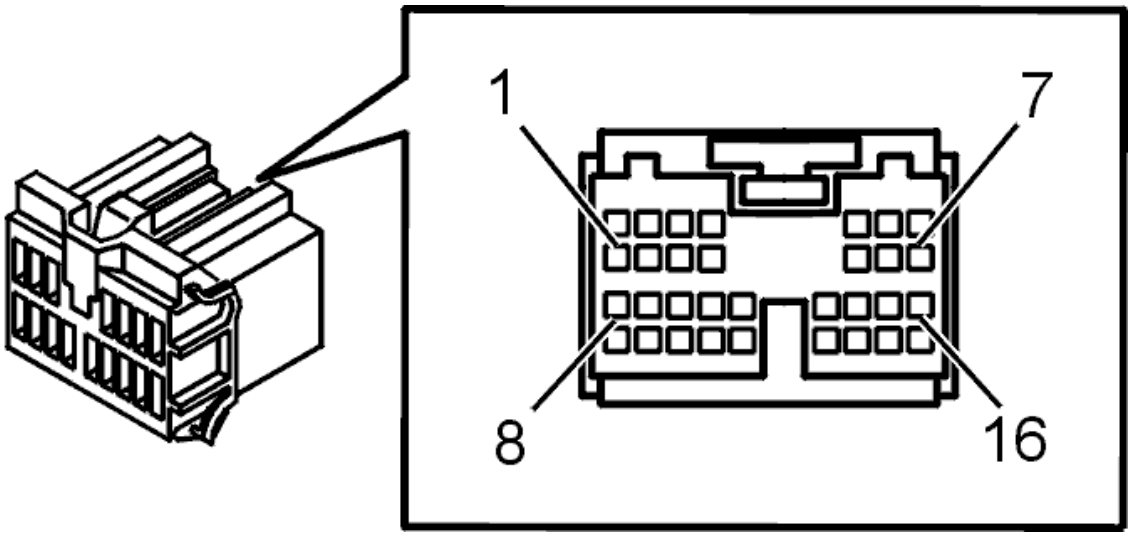

Fig. 178: Connector, Green (16-Pin)
Courtesy of VOLVO CARS CORPORATION

- **Continue**

  Refer to **VERIFICATION**

INTERMITTENT FAULT

Check the control module and power door mirror connectors. Check for contact resistance and oxidation.

Check the cable between door control module terminal #11B and power door mirror terminal #8. Check for an intermittent short-circuit to supply voltage. Check for an intermittent open-circuit.

Other information:

- see **CONNECTING THE BREAKOUT BOX**
- see **SIGNAL SPECIFICATION**
- see **PASSENGER DOOR MODULE (PDM), REPLACING**
- see **REAR VIEW MIRROR, REPLACING**
- see **CHECKING WIRING AND TERMINALS**

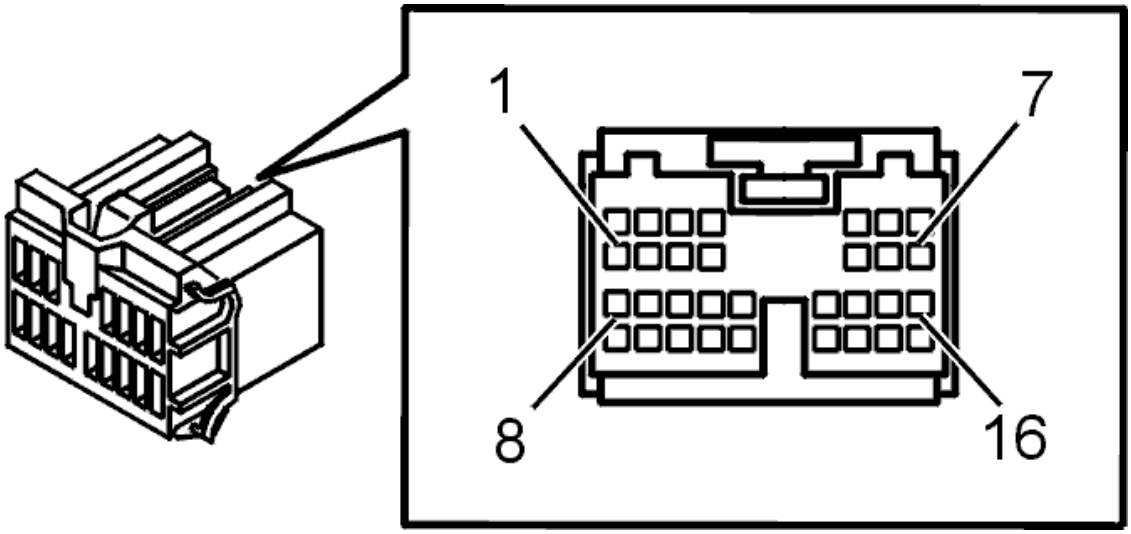

Fig. 179: Connector, Green (16-Pin)
Courtesy of VOLVO CARS CORPORATION

- **Continue**

  Refer to **INFORMATION**

VERIFICATION

HINT: After carrying out the repair, check that the fault has been remedied.

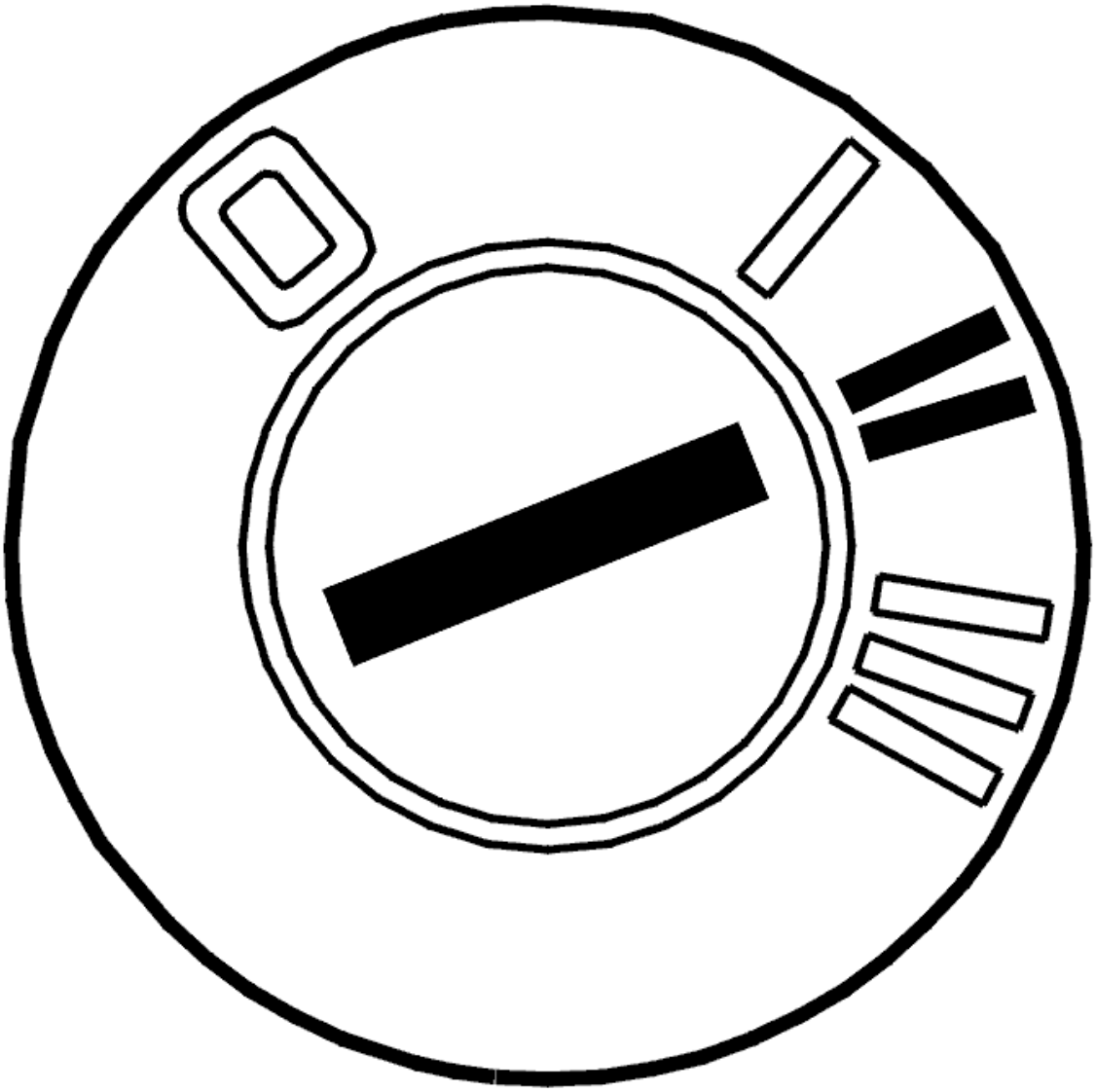

Fig. 180: Identifying Ignition ON
Courtesy of VOLVO CARS CORPORATION

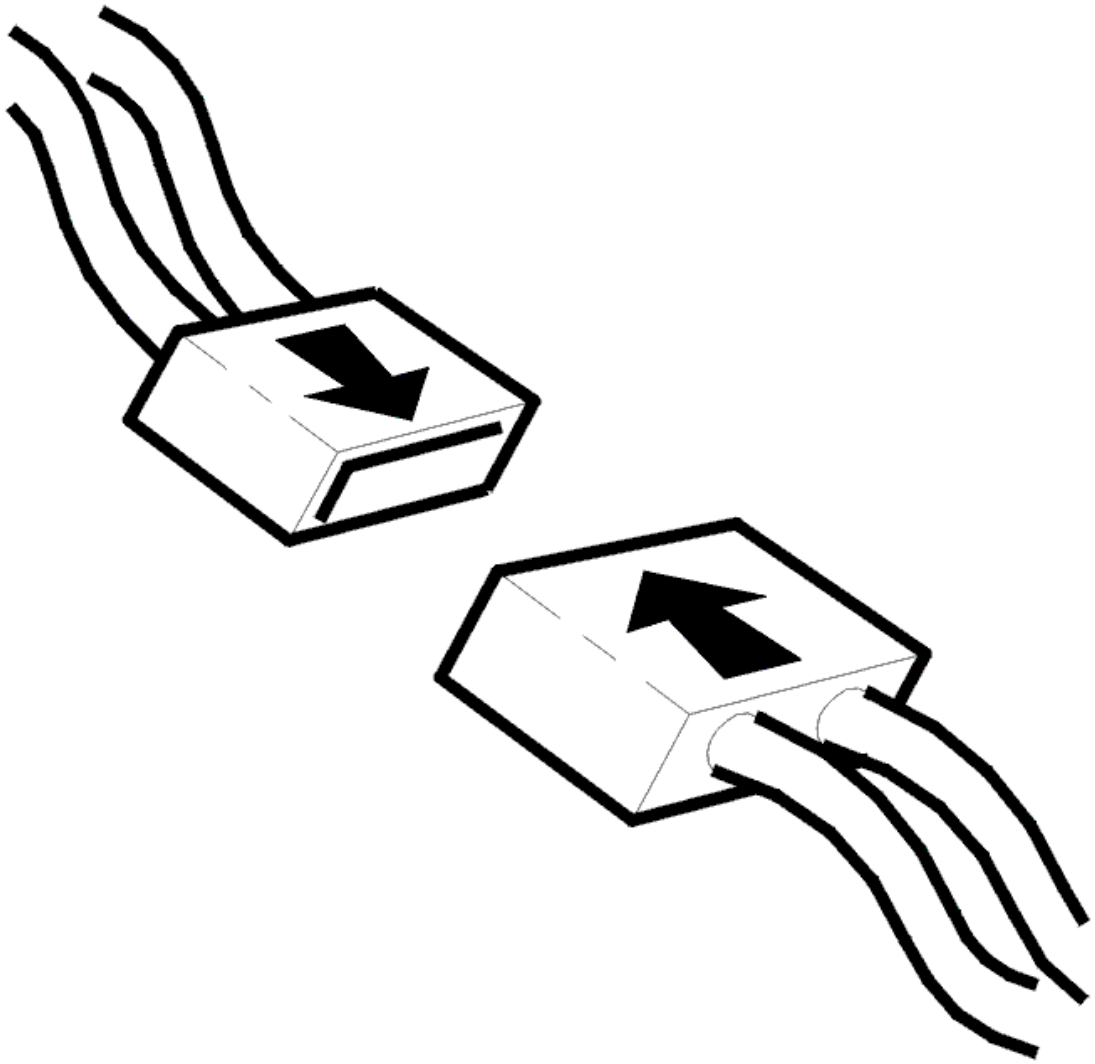

Fig. 181: Connecting Connector
Courtesy of VOLVO CARS CORPORATION

- Ignition off
- Reinstall the components, reconnect the connectors etc.
- Ignition on.

  Ensure that the button for the rear defroster is depressed.

  Check that the defroster for the door mirrors is activated.

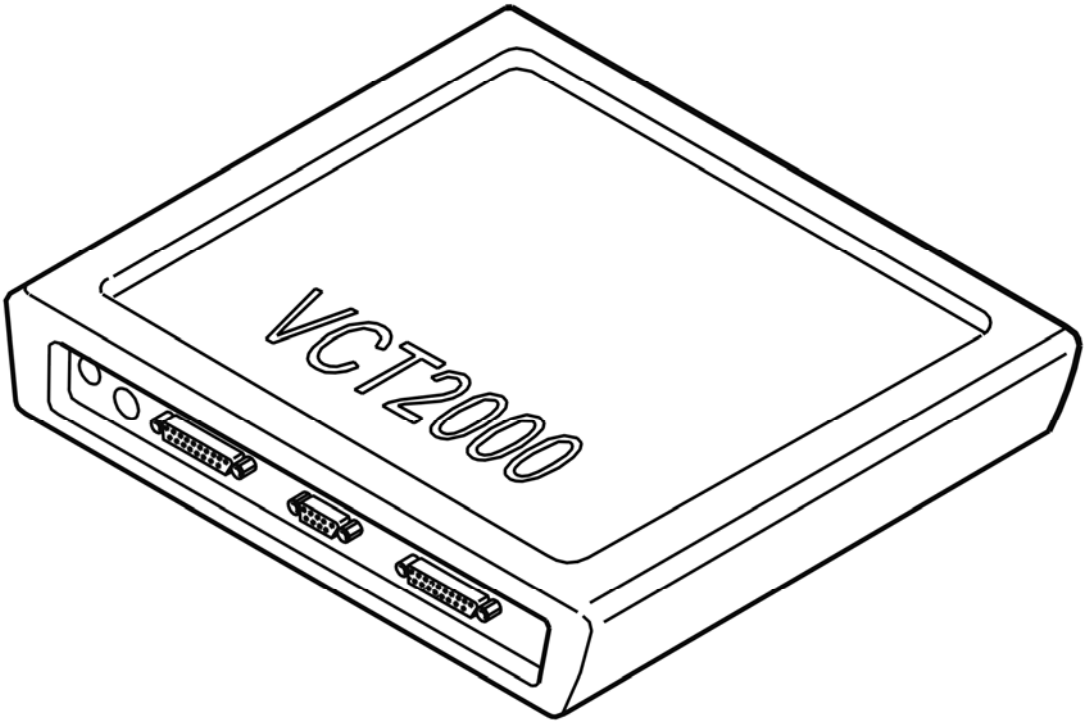

Fig. 182: Identifying VCT2000 Diagnostic Tool Symbol In VIDA
Courtesy of VOLVO CARS CORPORATION

Is the defroster for the door mirror activated?

- **YES**

  VERIFIED: Troubleshooting has been completed.

- **NO**

  Refer to **INFORMATION**

INFORMATION

FAULT-TRACING INFORMATION

The fault should have been detected and remedied. As this is not the case fault-tracing has failed.

Exit fault-tracing for this diagnostic trouble code (DTC) or make another attempt.

DDM/PDM-002E MIRROR HEATER. SIGNAL TOO HIGH (2003-04)

DIAGNOSTIC TROUBLE CODE INFORMATION

see **DIAGNOSTIC TROUBLE CODE INFORMATION**

SIGNAL TOO HIGH

CHECKING FOR PERMANENT OR INTERMITTENT FAULTS

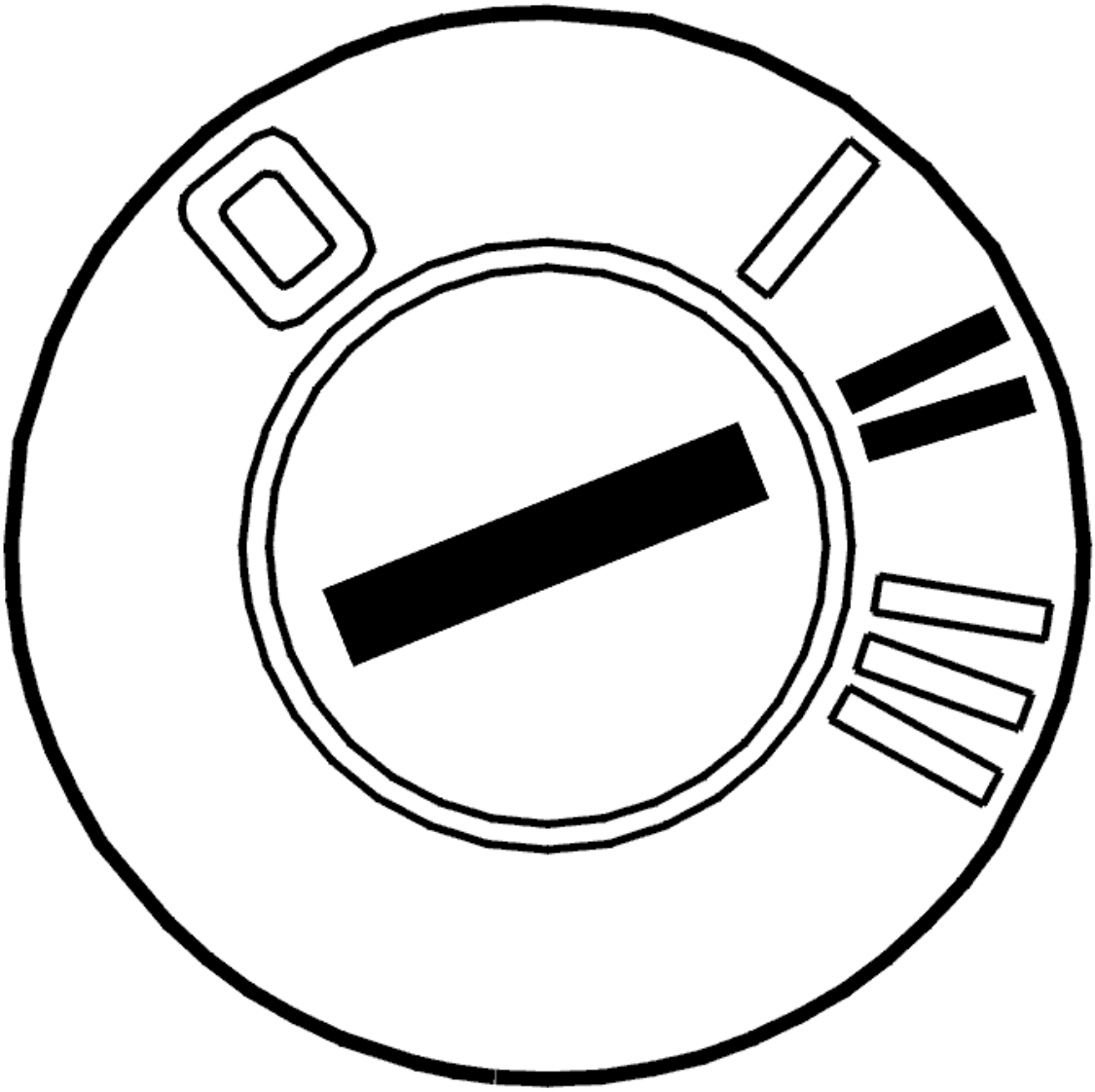

Fig. 183: Identifying Ignition ON
Courtesy of VOLVO CARS CORPORATION

- Ignition on.

  Ensure that the button for the rear defroster is not depressed.

  Check that the defroster for the door mirrors is not activated.

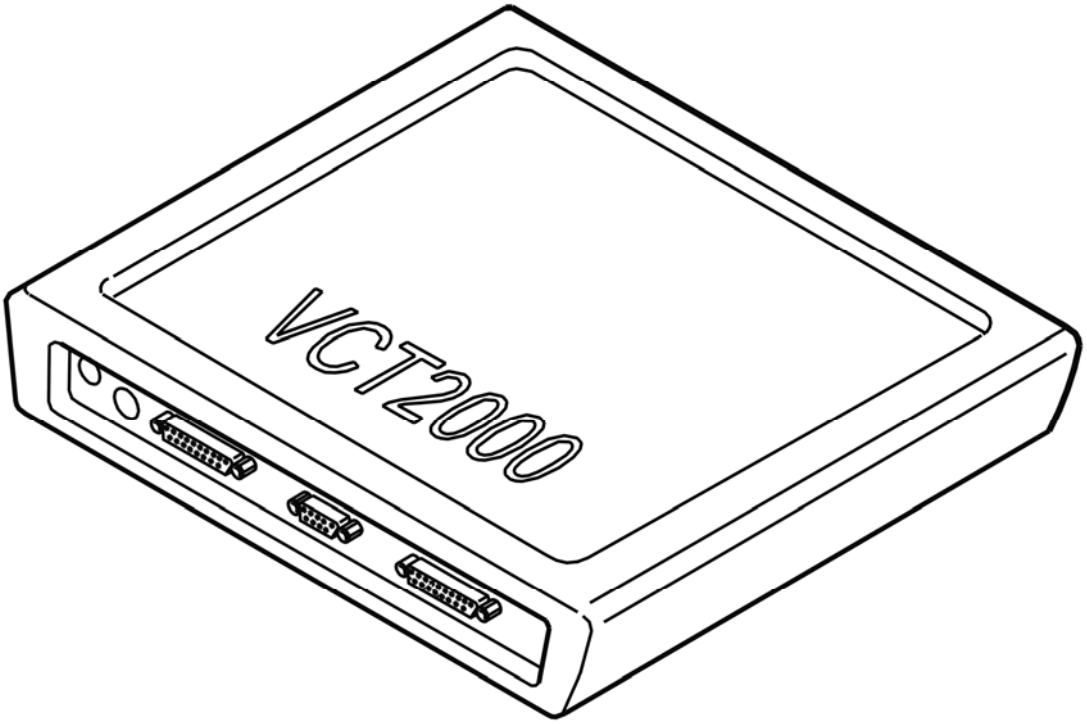

Fig. 184: Identifying VCT2000 Diagnostic Tool Symbol In VIDA
Courtesy of VOLVO CARS CORPORATION

Is the defroster for the door mirrors activated?

- **YES**

  Refer to **CHECKING FOR A SHORT-CIRCUIT**

- **NO**

  Refer to **INTERMITTENT FAULT**

CHECKING FOR A SHORT-CIRCUIT

If the car is equipped with a 10-pin connector

Check the cable between door control module terminal #11B and power door mirror terminal #5. Check for a short-circuit to supply voltage.

If the car is equipped with a 16-pin connector

Check the cable between door control module terminal #11B and power door mirror terminal #8. Check for a short-circuit to supply voltage.

Replace the cable if it is faulty.

Replace the power door mirror if the cable is OK.

Other information:

- To connect the breakout box, see **CONNECTING THE BREAKOUT BOX**
- For further information about signals and other values, see **SIGNAL SPECIFICATION**
- To access the door control module, see **PASSENGER DOOR MODULE (PDM), REPLACING**
- To access and replace the power door mirror, see **REAR VIEW MIRROR, REPLACING**
- see **CHECKING WIRING AND TERMINALS** .

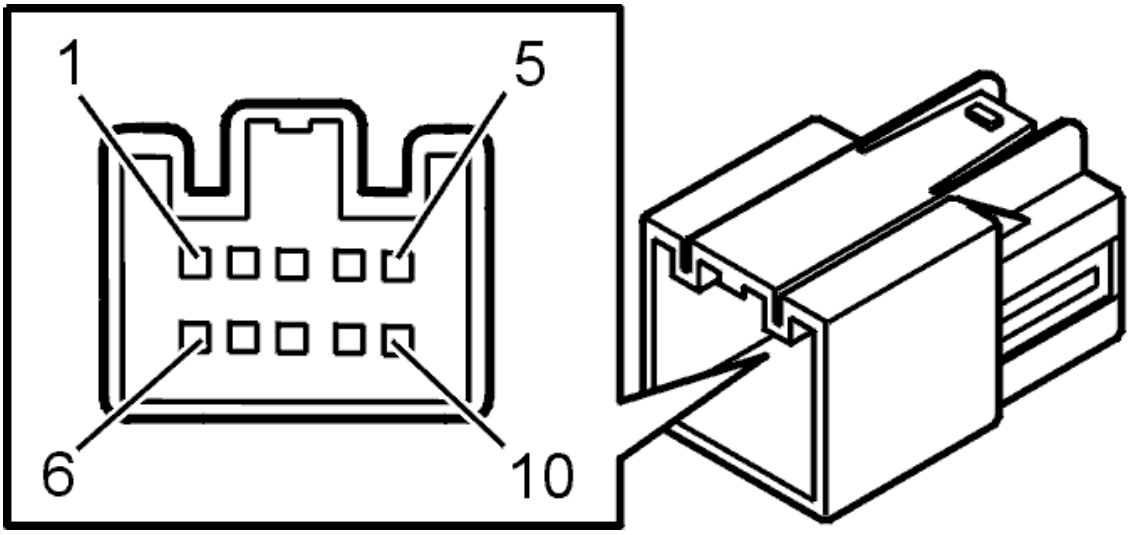

Fig. 185: Identifying 10--Pin Power Door Mirror Connector Terminal
Courtesy of VOLVO CARS CORPORATION

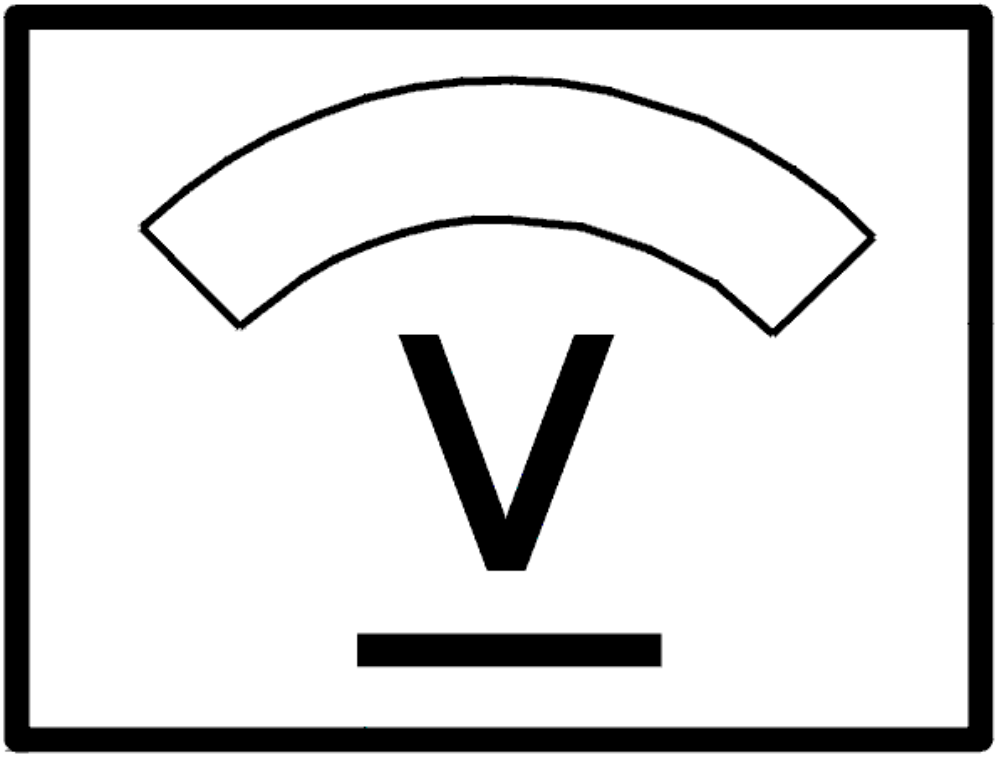

Fig. 186: Identifying Voltage Display
Courtesy of VOLVO CARS CORPORATION

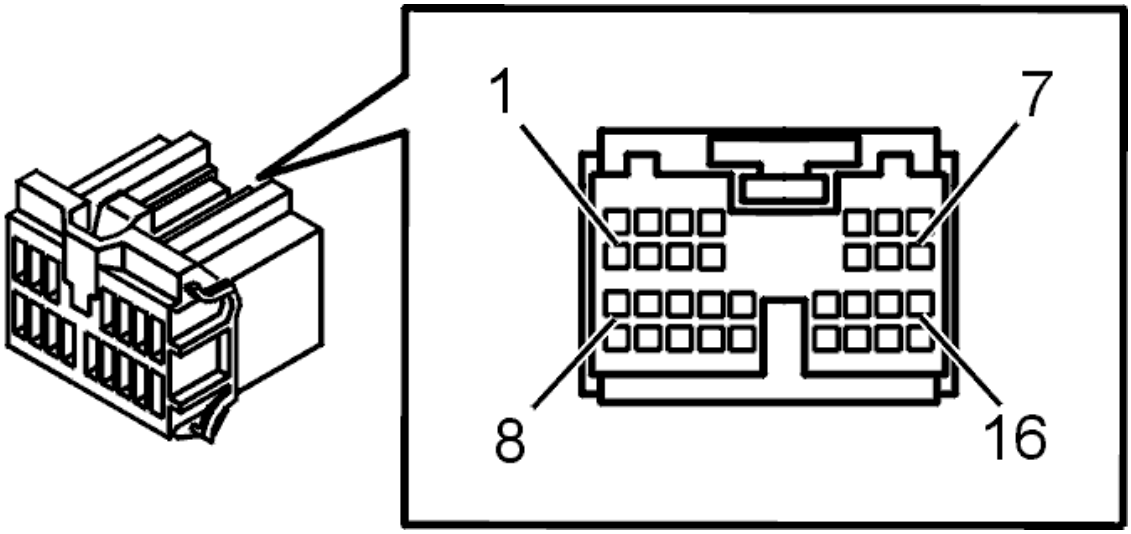

Fig. 187: Connector, Green (16-Pin)
Courtesy of VOLVO CARS CORPORATION

- **Continue**

  Refer to **VERIFICATION**

INTERMITTENT FAULT

Check the control module and power door mirror connectors. Check for contact resistance. Check for oxidation.

If the car is equipped with a 10-pin connector

Check the cable between door control module terminal #11B and power door mirror terminal #5. Check for an intermittent short-circuit to supply voltage. Check for an intermittent open-circuit.

If the car is equipped with a 16-pin connector

Check the cable between door control module terminal #11B and power door mirror terminal #8. Check for an intermittent short-circuit to supply voltage. Check for an intermittent open-circuit.

Other information:

- To connect the breakout box, see **CONNECTING THE BREAKOUT BOX**
- For further information about signals and other values, see **SIGNAL SPECIFICATION**
- To access the door control module, see **PASSENGER DOOR MODULE (PDM), REPLACING**
- To access the power door mirror, see **REAR VIEW MIRROR, REPLACING**
- see **CHECKING WIRING AND TERMINALS** .

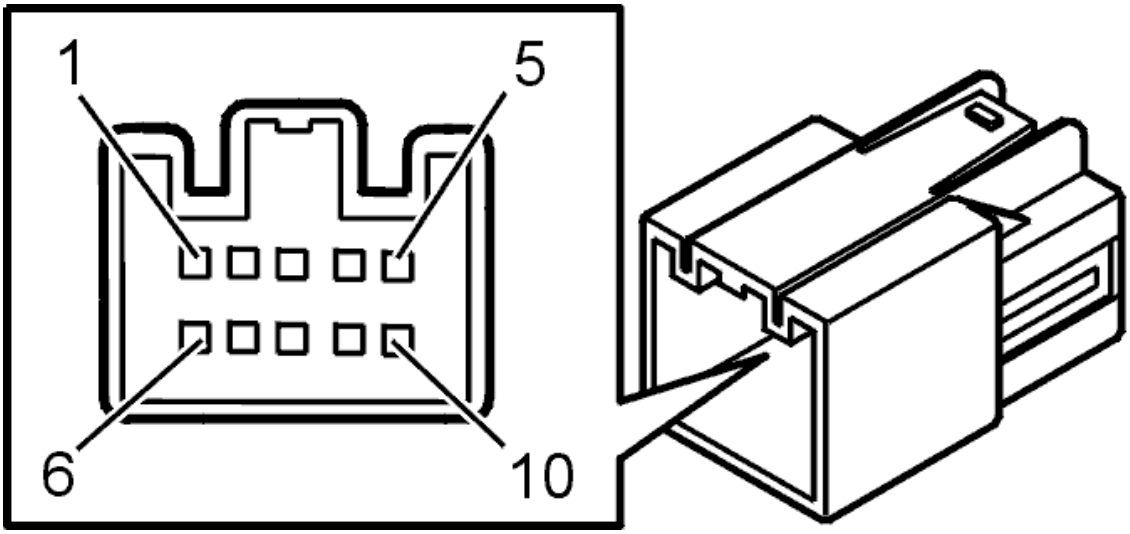

Fig. 188: Identifying 10-Pin Power Door Mirror Connector Terminal
Courtesy of VOLVO CARS CORPORATION

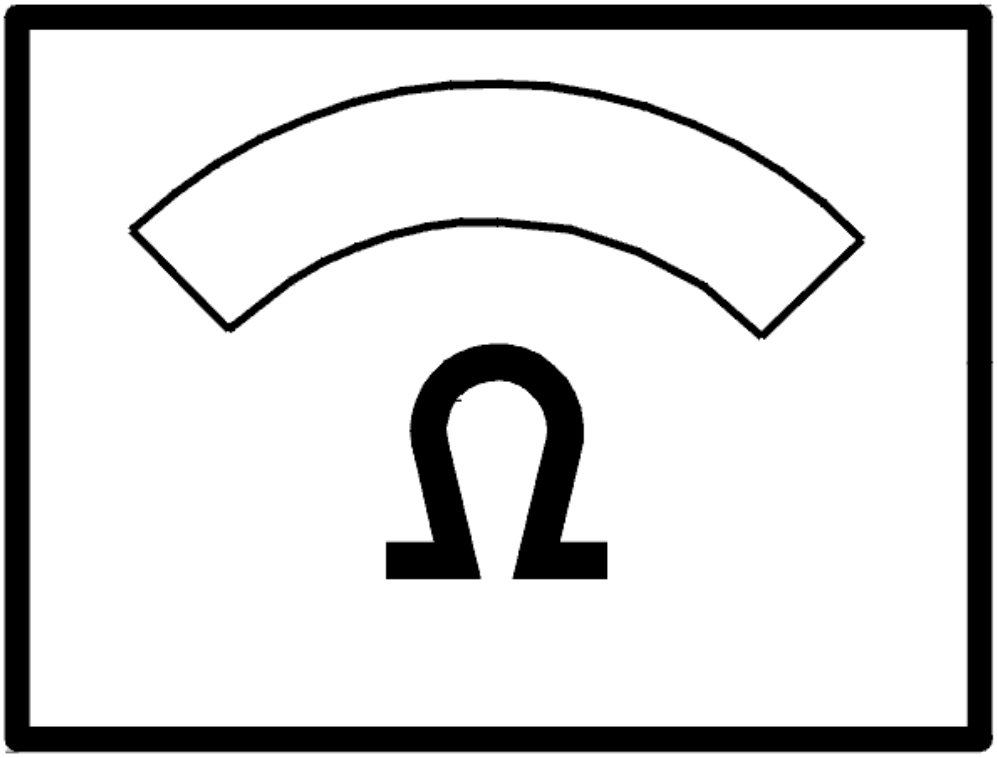

Fig. 189: Identifying Ohmmeter
Courtesy of VOLVO CARS CORPORATION

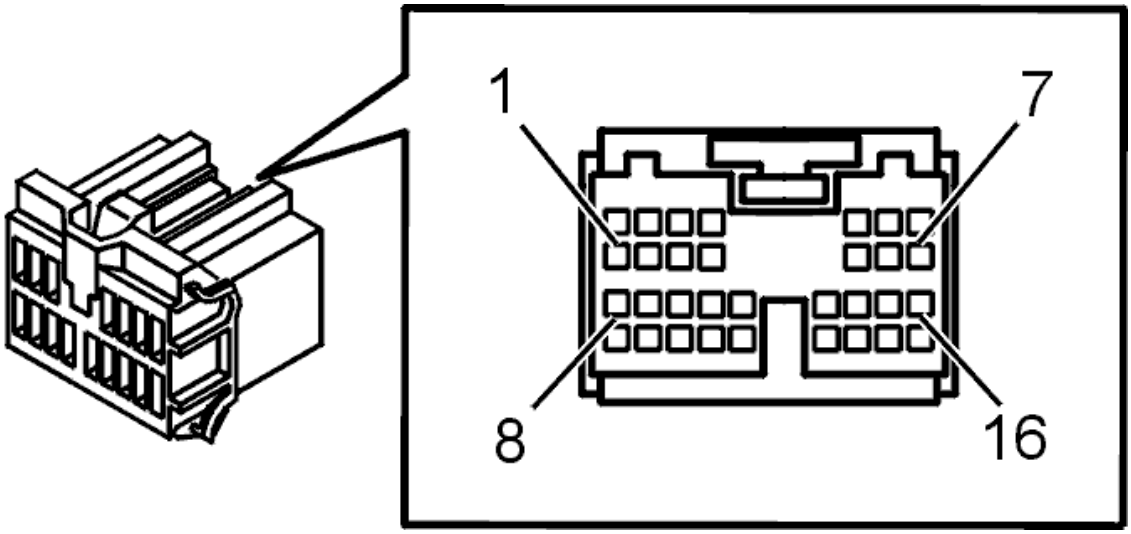

Fig. 190: Connector, Green (16-Pin)
Courtesy of VOLVO CARS CORPORATION

- **Continue**

  Refer to **INFORMATION**

VERIFICATION

HINT: After the repair it is necessary to check that the fault has been rectified.

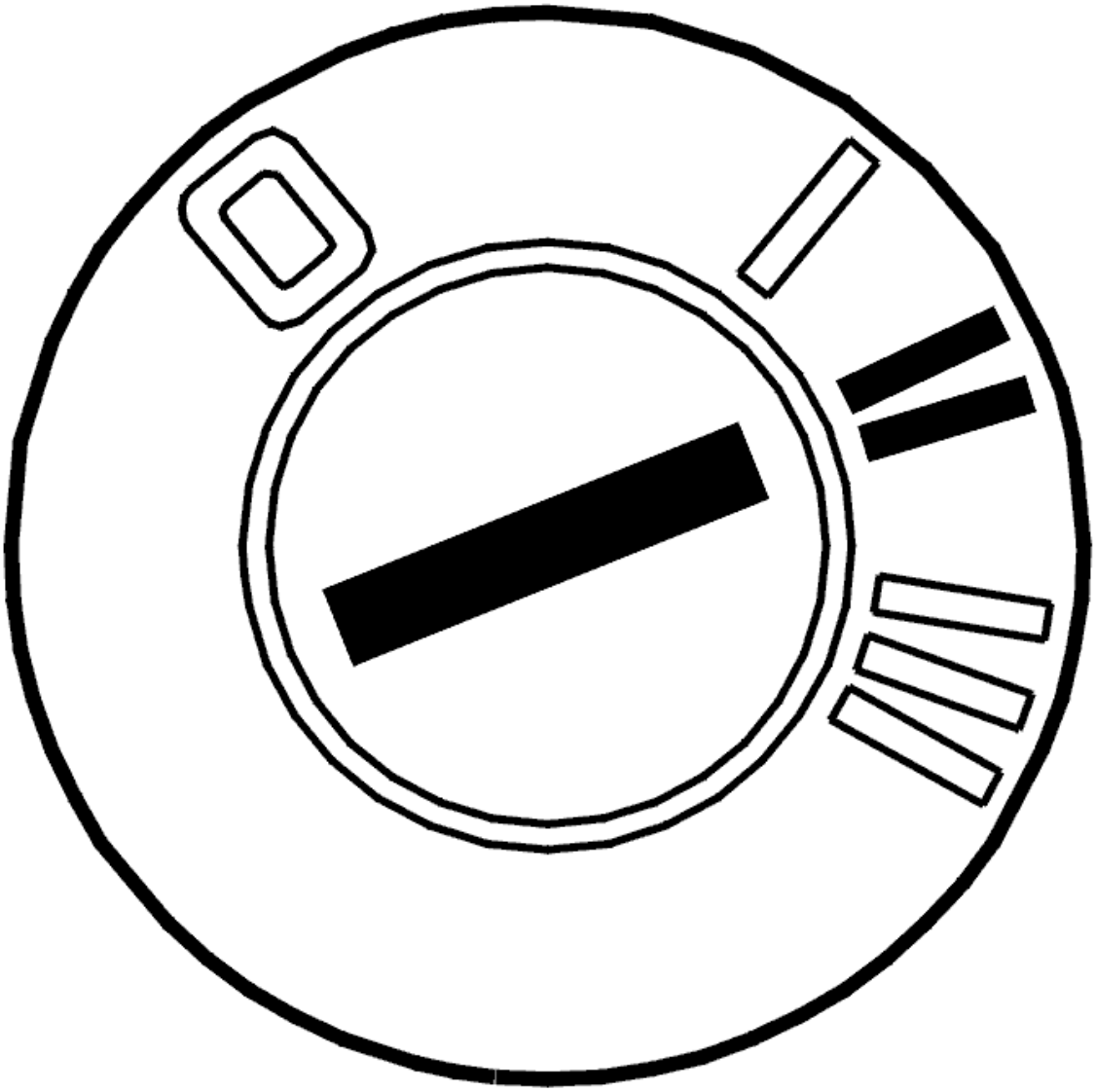

Fig. 191: Identifying Ignition ON
Courtesy of VOLVO CARS CORPORATION

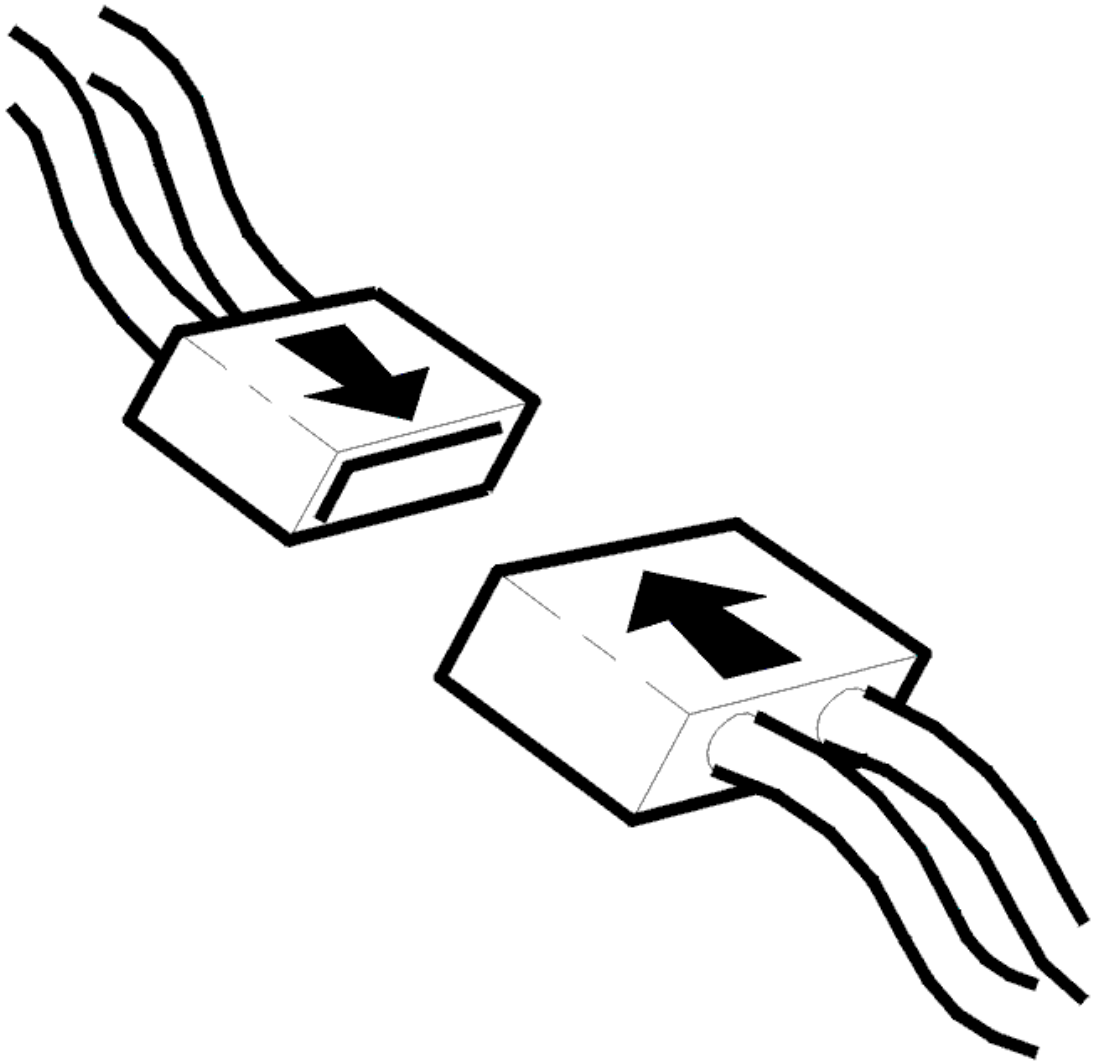

Fig. 192: Connecting Connector
Courtesy of VOLVO CARS CORPORATION

- Ignition off.
- Connect the connectors, install the components, etc.
- Ignition on.

  Make sure that rear window defroster button is depressed.

  Check to, see if external rear-view mirror defroster is activated.

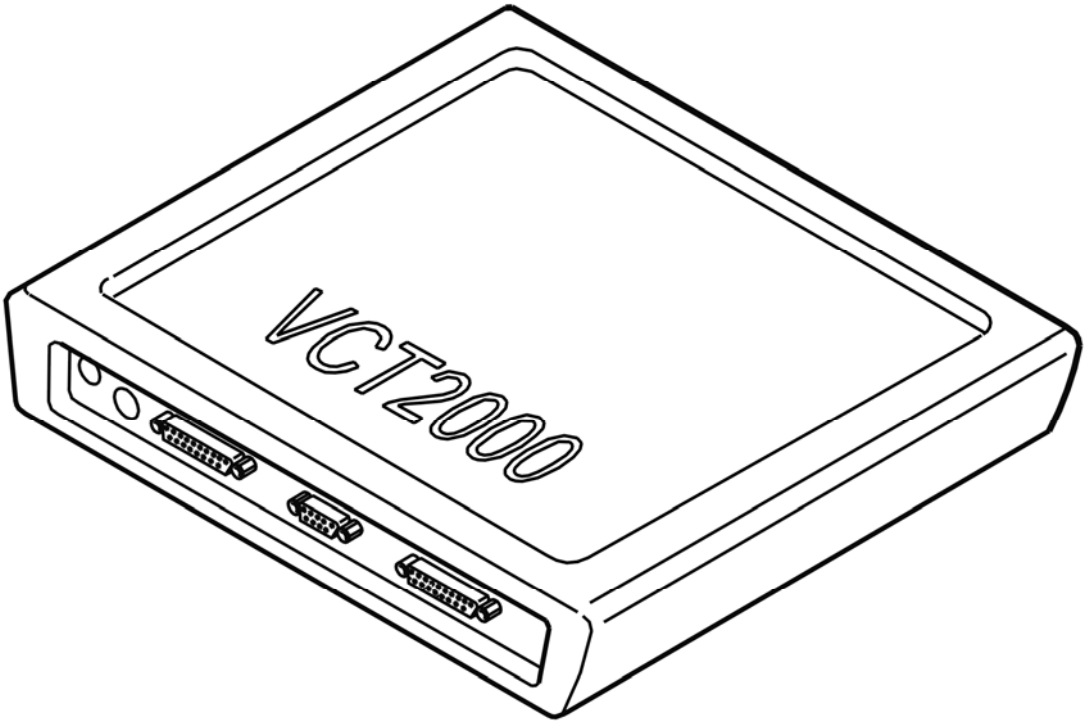

Fig. 193: Identifying VCT2000 Diagnostic Tool Symbol In VIDA
Courtesy of VOLVO CARS CORPORATION

Is external rear-view mirror defroster activated?

- **YES**

  VERIFIED: Troubleshooting has been completed.

- **NO**

  Refer to **INFORMATION**

INFORMATION

FAULT-TRACING INFORMATION

The fault should have been detected and remedied. As this is not the case fault-tracing has failed.

Exit fault-tracing for this diagnostic trouble code (DTC) or make another attempt.

DDM/PDM-002F WINDOW MOTOR. SIGNAL TOO HIGH (2003-12)

DIAGNOSTIC TROUBLE CODE INFORMATION

Condition

If control unit registers that voltage is too high in one or more of the signal wires OUT1-OUT5, or that mirror heater overheats when a mirror motor or defroster is activated, diagnostic trouble code DDM/PDM-002F is displayed.

Substitute Value

- Nothing.

Possible Source

- Voltage too high in one or more of signal wires OUT1-OUT5
- External rear-view mirror heater overheats.

Fault symptom[s]

- External rear-view mirror operation does not work.

SIGNAL TOO HIGH

CHECKING FOR PERMANENT OR INTERMITTENT FAULTS

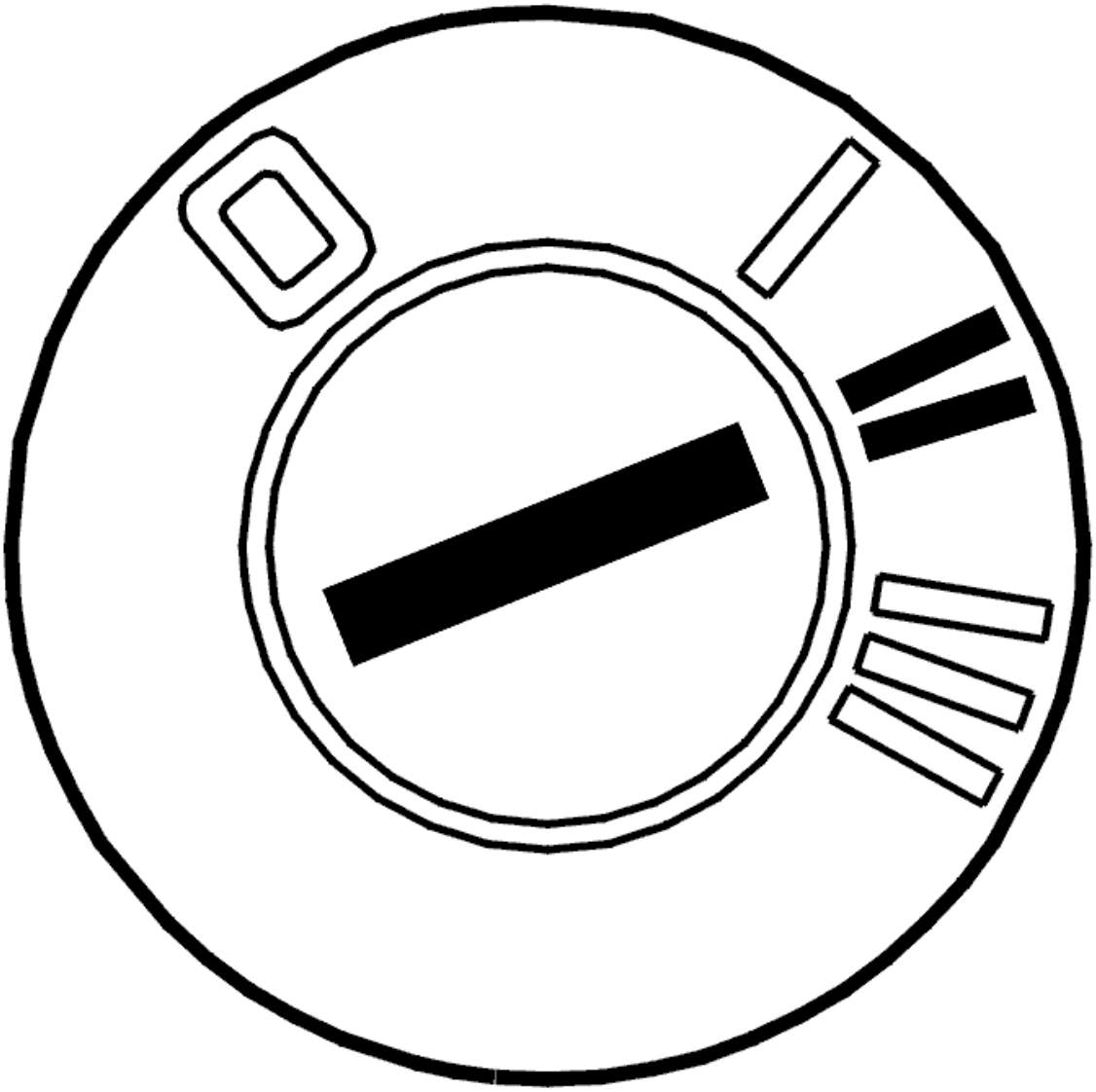

Fig. 194: Identifying Ignition ON
Courtesy of VOLVO CARS CORPORATION

- Ignition on.

  Press the switch for the power door mirrors to check the function of the power door mirrors.

Can the power door mirrors be maneuvered?

- **YES**

  Refer to **INTERMITTENT FAULT**

- **NO**

  Refer to **CHECKING FOR A SHORT-CIRCUIT**

CHECKING FOR A SHORT-CIRCUIT

Check the cable between the door control module and the power door mirror (as follows). Check for a short-circuit to supply voltage.

Remedy as necessary.

Try a new power door mirror if the cable is OK.

If the car is equipped with a 10-pin connector

Control module terminal #26A and power door mirror terminal #9.

Control module terminal #28A and power door mirror terminal #10.

Control module terminal #29A and power door mirror terminal #8.

Control module terminal #27A and power door mirror terminal #7.

Control module terminal #11B and power door mirror terminal #5.

If the car is equipped with a 16-pin connector

Control module terminal #26A and power door mirror terminal #15.

Control module terminal #28A and power door mirror terminal #16.

Control module terminal #29A and power door mirror terminal #14.

Control module terminal #27A and power door mirror terminal #7.

Control module terminal #11B and power door mirror terminal #8.

Other information:

- To connect the breakout box, see **CONNECTING THE BREAKOUT BOX**
- For further information about signals and other values, see **SIGNAL SPECIFICATION**
- To access the door control module, see **PASSENGER DOOR MODULE (PDM), REPLACING**
- To access and replace the power door mirror, see **REAR VIEW MIRROR, REPLACING**
- see **CHECKING WIRING AND TERMINALS** .

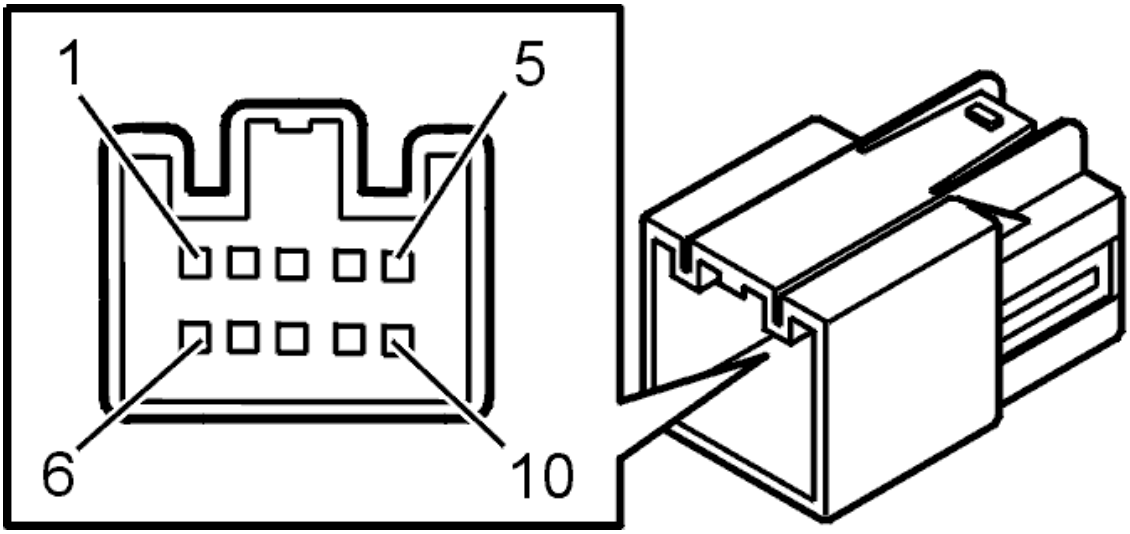

Fig. 195: Identifying 10-Pin Power Door Mirror Connector Terminal
Courtesy of VOLVO CARS CORPORATION

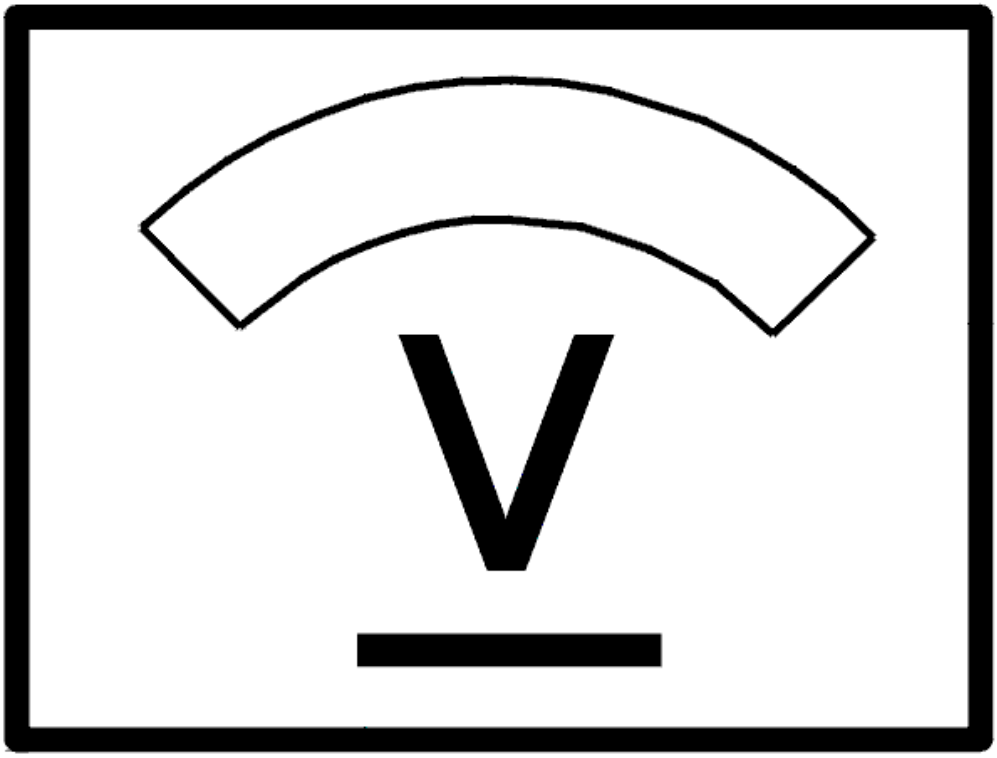

Fig. 196: Identifying Voltage Display
Courtesy of VOLVO CARS CORPORATION

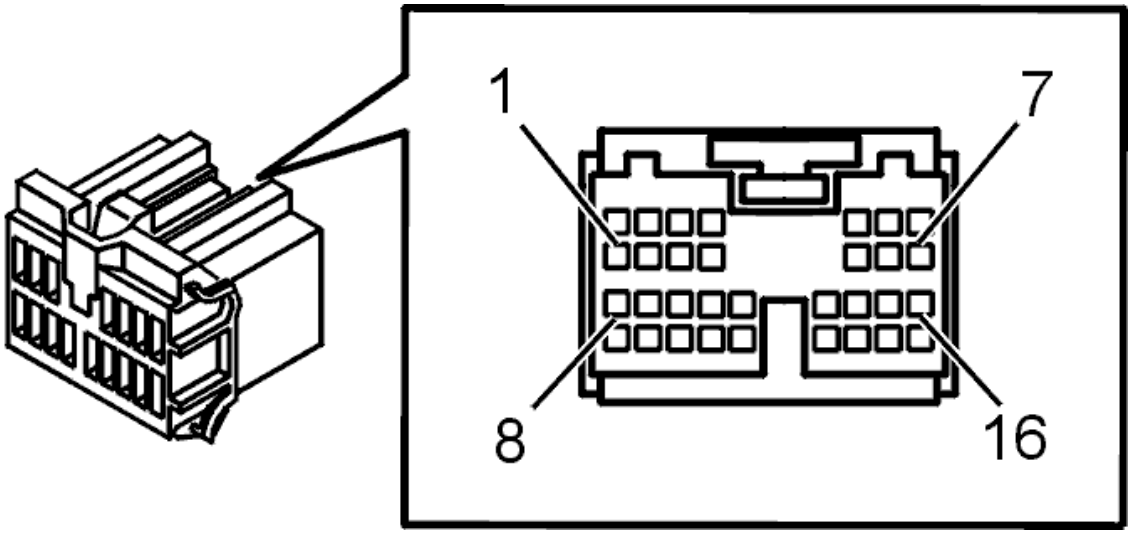

Fig. 197: Connector, Green (16-Pin)
Courtesy of VOLVO CARS CORPORATION

- **Continue**

  Refer to **VERIFICATION**

INTERMITTENT FAULT

Check the door control module and power door mirror connectors. Check for contact resistance. Check for oxidation.

Check the cable between the door control module and the power door mirror (as follows). Check for an intermittent short-circuit to supply voltage. Check for an intermittent open-circuit.

If the car is equipped with a 10-pin connector

Control module terminal #26A and power door mirror terminal #9.

Control module terminal #28A and power door mirror terminal #10.

Control module terminal #29A and power door mirror terminal #8.

Control module terminal #27A and power door mirror terminal #7.

Control module terminal #11B and power door mirror terminal #5.

If the car is equipped with a 16-pin connector

Control module terminal #26A and power door mirror terminal #15.

Control module terminal #28A and power door mirror terminal #16.

Control module terminal #29A and power door mirror terminal #14.

Control module terminal #27A and power door mirror terminal #7.

Control module terminal #11B and power door mirror terminal #8.

Other information:

- To connect the breakout box, see **CONNECTING THE BREAKOUT BOX**
- For further information about signals and other values, see **SIGNAL SPECIFICATION**
- To access the door control module, see **PASSENGER DOOR MODULE (PDM), REPLACING**
- To access the power door mirror, see **REAR VIEW MIRROR, REPLACING**
- see **CHECKING WIRING AND TERMINALS** .

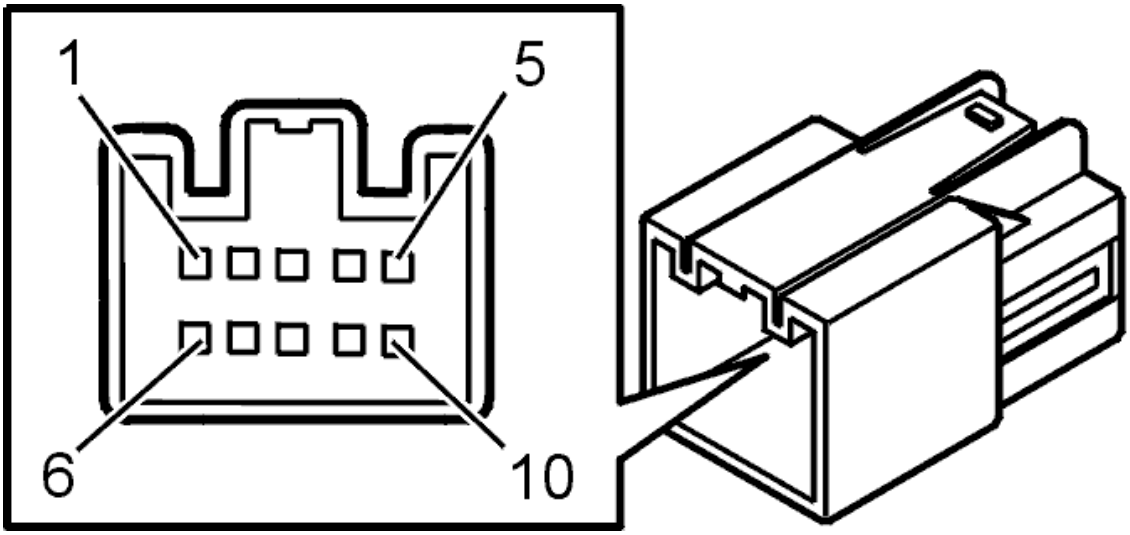

Fig. 198: Identifying 10--Pin Power Door Mirror Connector Terminal
Courtesy of VOLVO CARS CORPORATION

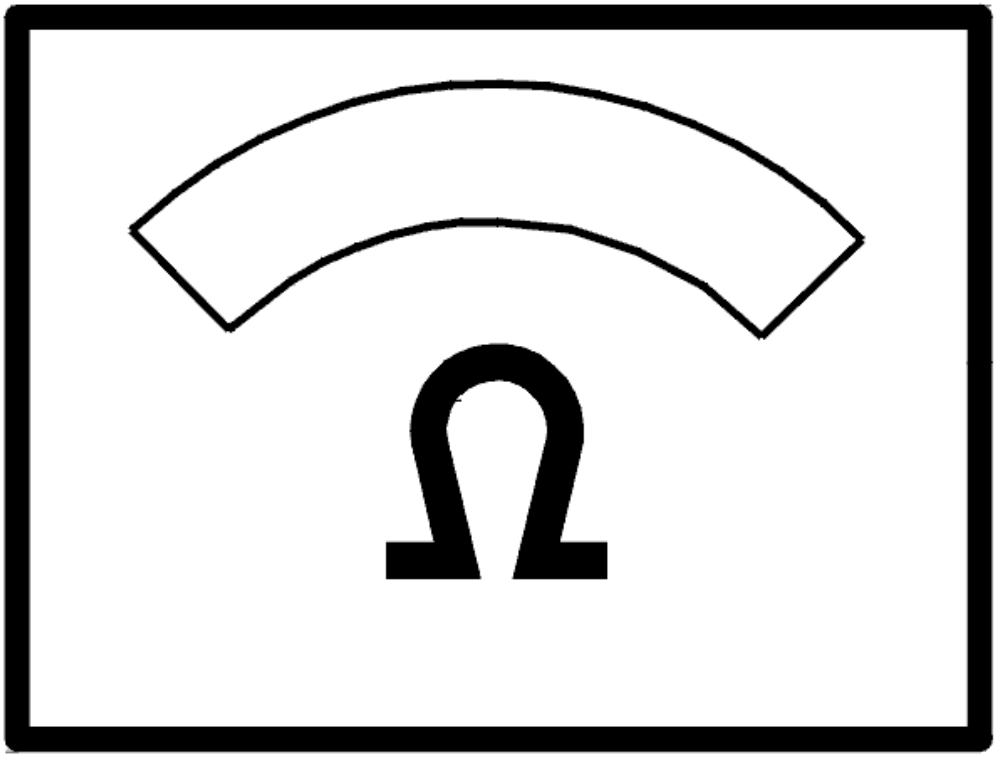

Fig. 199: Identifying Ohmmeter
Courtesy of VOLVO CARS CORPORATION

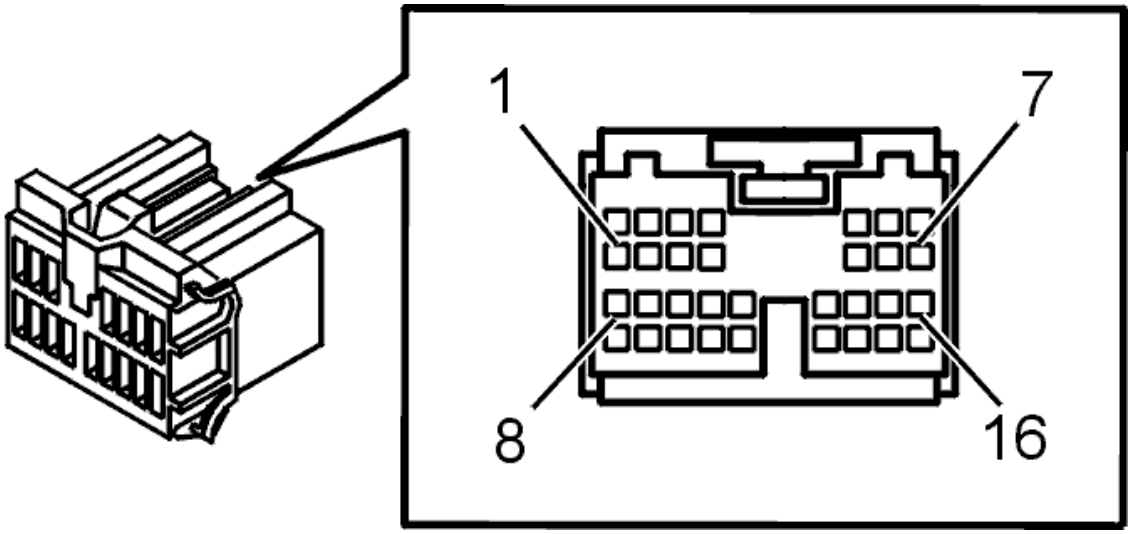

Fig. 200: Connector, Green (16-Pin)
Courtesy of VOLVO CARS CORPORATION

- **Continue**

  Refer to **INFORMATION**

VERIFICATION

HINT: After carrying out the repair, check that the fault has been remedied.

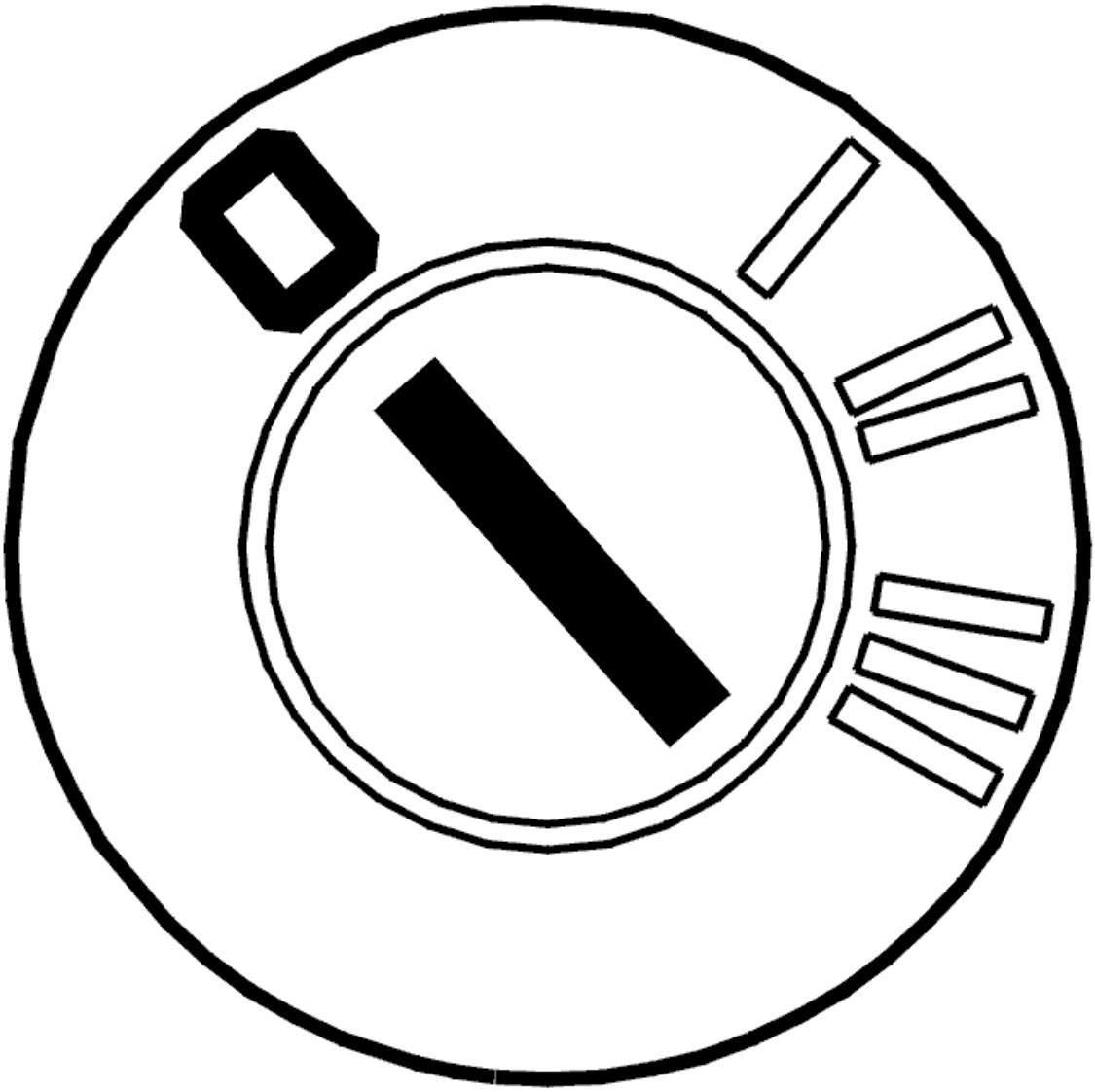

Fig. 201: Identifying Ignition OFF
Courtesy of VOLVO CARS CORPORATION

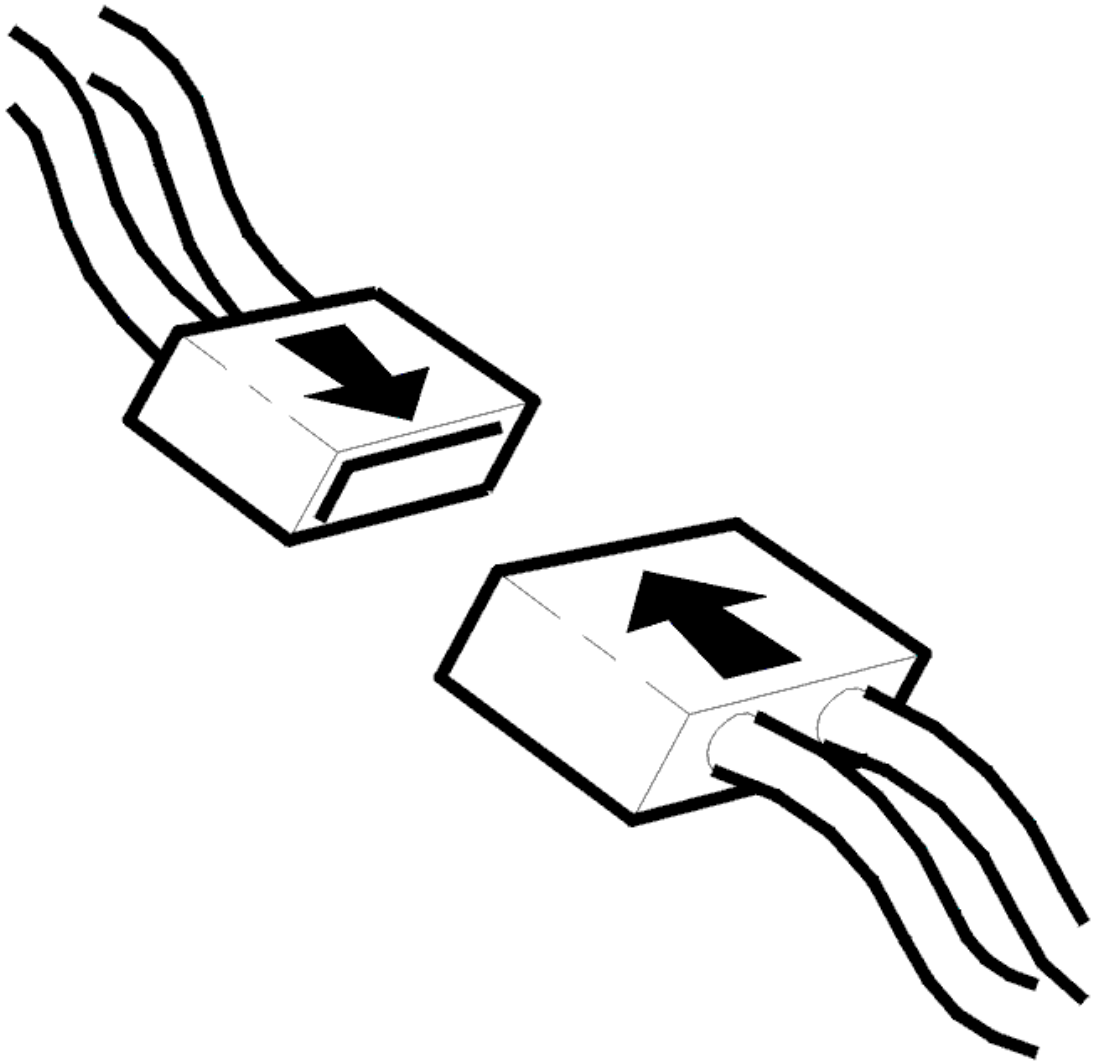

Fig. 202: Connecting Connector
Courtesy of VOLVO CARS CORPORATION

- Ignition off
- Reconnect the components, connectors etc.

  Operate the door mirror to each limit position using the control. The mirror must move in the corresponding directions.

Is the mirror working?

- **YES**

  VERIFIED: Troubleshooting has been completed.

- **NO**

Refer to **INFORMATION**

INFORMATION

FAULT-TRACING INFORMATION

The fault should have been detected and remedied. As this is not the case fault-tracing has failed.

Exit fault-tracing for this diagnostic trouble code (DTC) or make another attempt.

DDM/PDM-0030 DOOR MIRROR POTENTIOMETER. FAULTY SIGNAL (2005-12)

DIAGNOSTIC TROUBLE CODE (DTC) INFORMATION

Condition

Diagnostic trouble code (DTC) PDM/DDM-0030 is stored if the control module registers that the signal across the potentiometer for door mirror X axis control (left and right) is too high.

Substitute Value

- None.

Possible Source

- Short-circuit to supply voltage in the signal cable.
- Open-circuit in the signal cable.
- Short-circuit to ground in the power cable.
- Open-circuit in the ground lead.
- Short-circuit to supply voltage in the ground lead.

Fault symptom[s]

- The door mirror memory function is not working.

FAULTY SIGNAL

CHECKING CONNECTORS AND COMPONENTS

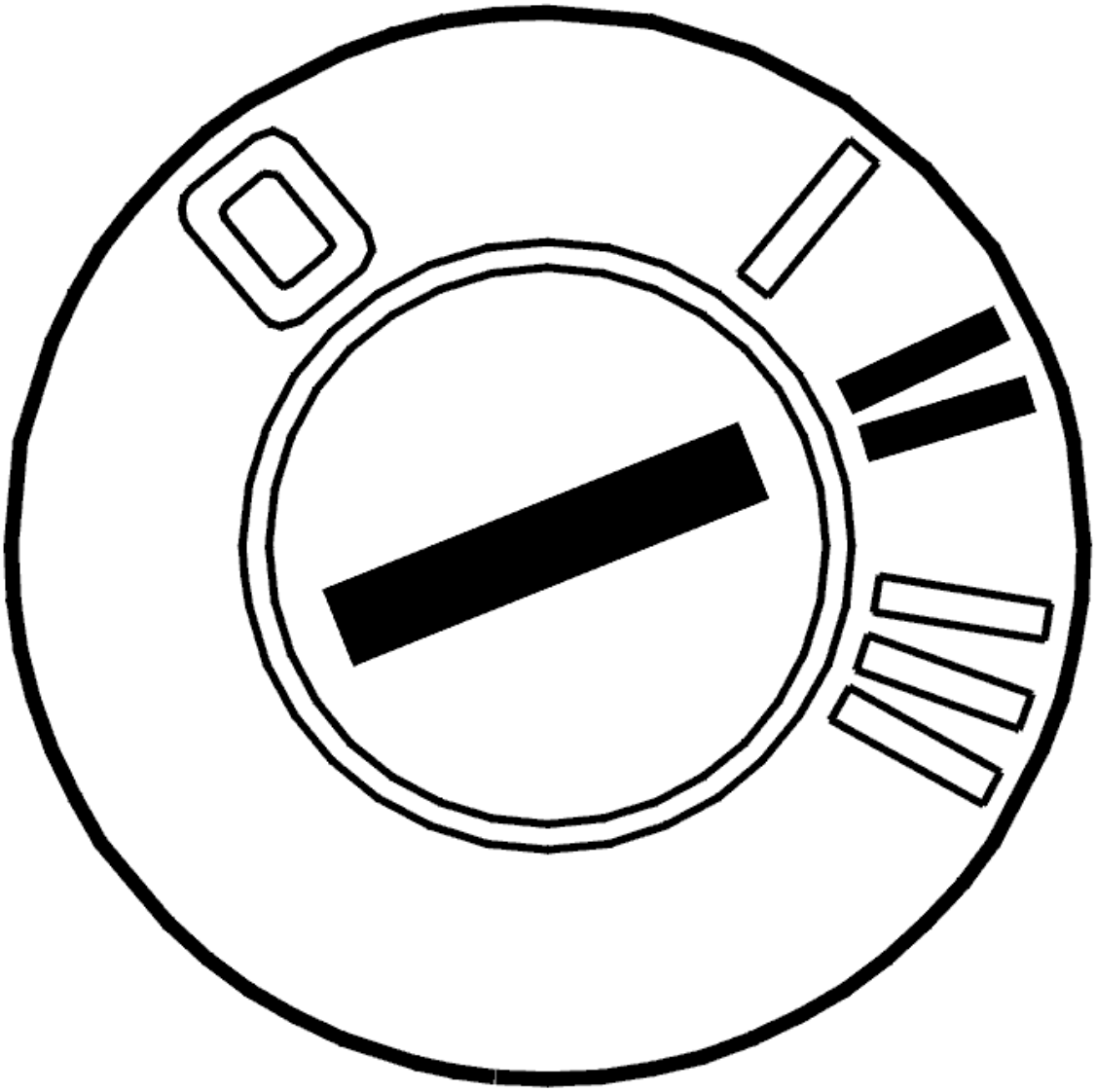

Fig. 203: Identifying Ignition ON
Courtesy of VOLVO CARS CORPORATION

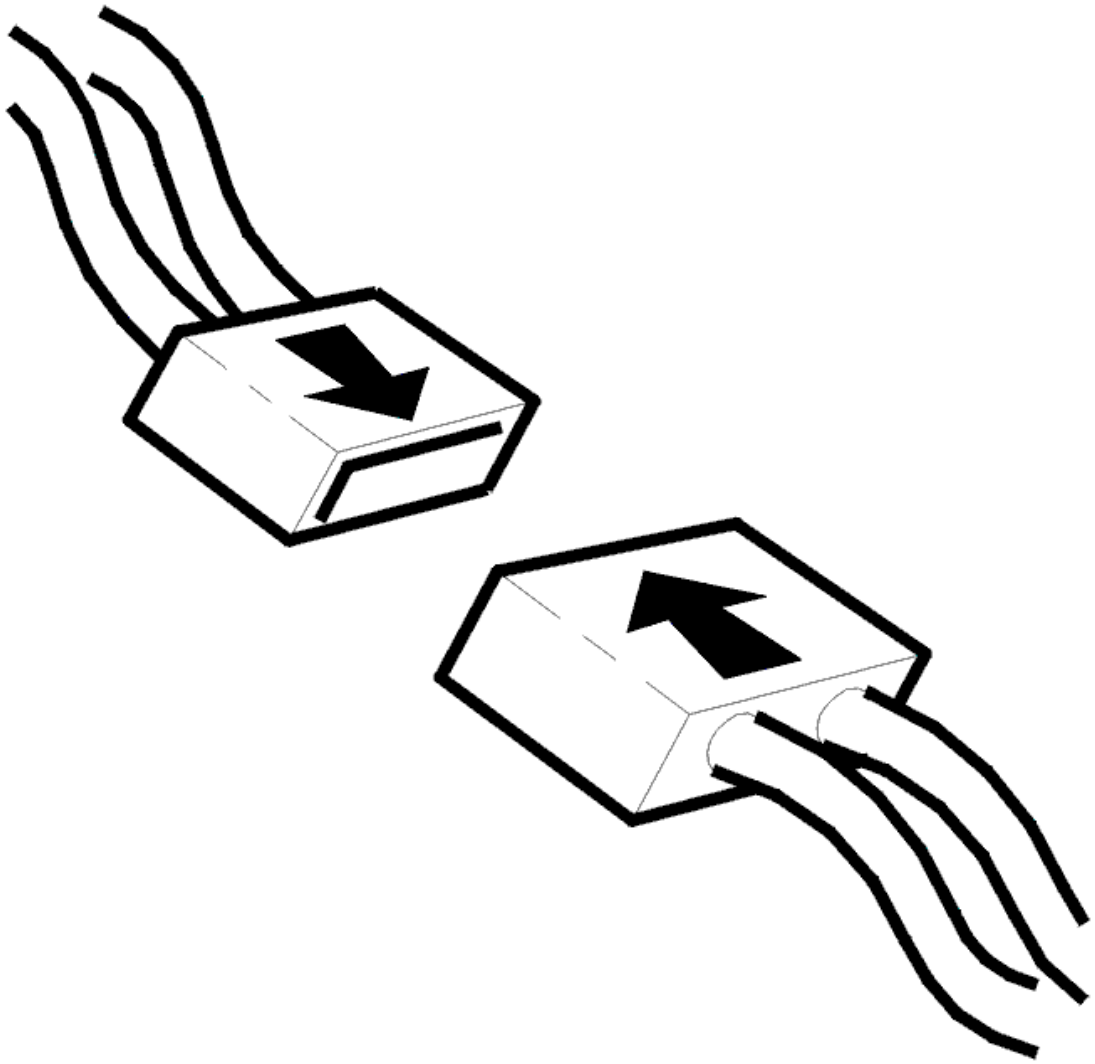

Fig. 204: Connecting Connector
Courtesy of VOLVO CARS CORPORATION

- Check the connector for the control module and door mirror. Check for contact resistance and oxidation.

  Remedy as necessary

- Reinstall the connectors, components etc.
- Ignition on.

  Test the door mirror function by changing its position and reading off the end values registered by the door mirror potentiometer.

  HINT: The end values for the door mirror potentiometer should be between 1 and 4 V.

  Other information:

- see **REAR VIEW MIRROR, REPLACING**
- see **CHECKING WIRING AND TERMINALS**

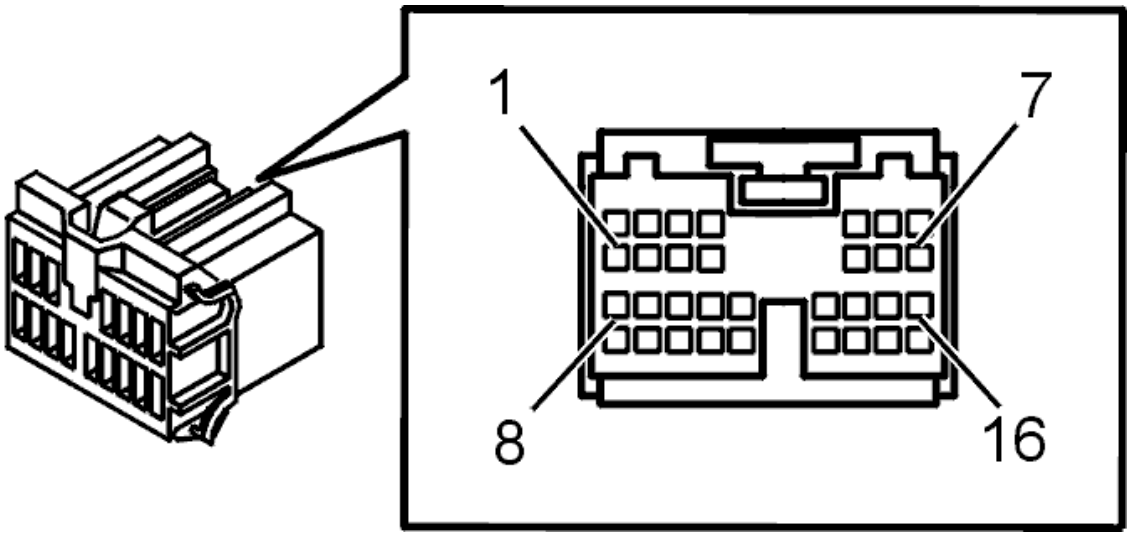

Fig. 205: Connector, Green (16-Pin)
Courtesy of VOLVO CARS CORPORATION

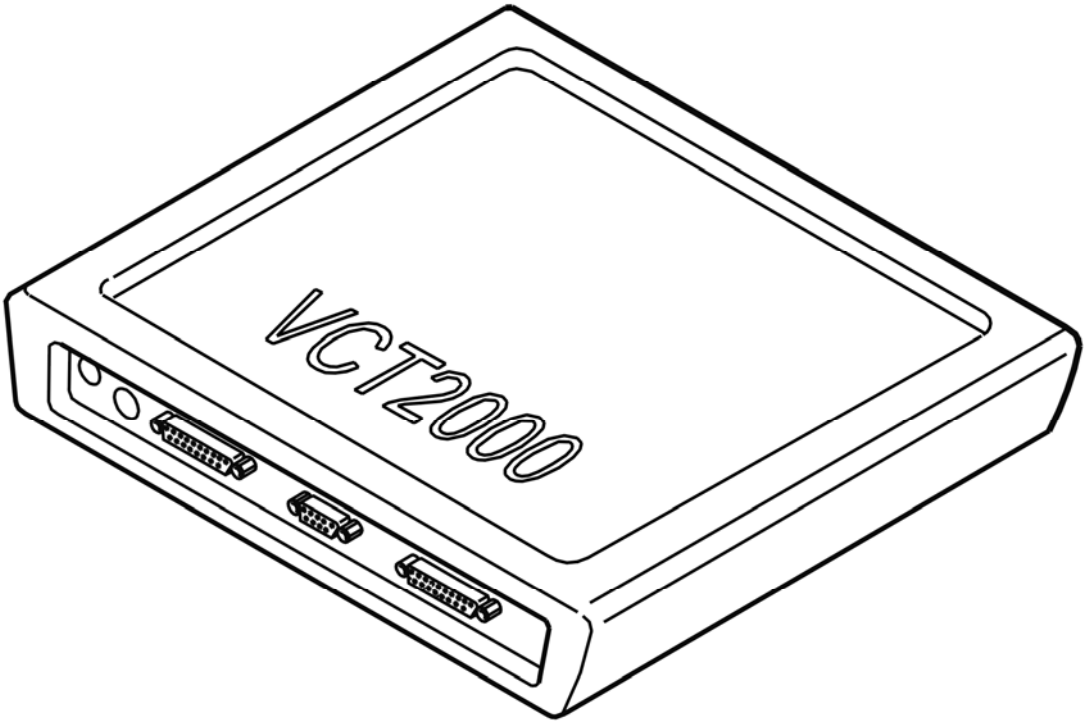

Fig. 206: Identifying VCT2000 Diagnostic Tool Symbol In VIDA
Courtesy of VOLVO CARS CORPORATION

Does the door mirror potentiometer operate correctly?

- **YES**

  Refer to **VERIFICATION**

- **NO**

  Refer to **CHECKING FAULTY SIGNALS**

CHECKING FAULTY SIGNALS

Check the cable between control module terminal #25A and door mirror terminal #1. Check for a short-circuit to ground.

Check the cable between control module terminal #8A and door mirror terminal #11. Check for a short-circuit to supply voltage. Check for an open-circuit.

DDM/PDM-0030 Door mirror potentiometer, faulty signal

Check the cable between control module terminal #9A and door mirror terminal #9. Check for a short-circuit to supply voltage. Check for an open-circuit.

DDM/PDM-0032 Door mirror potentiometer, faulty signal

Check the cable between control module terminal #10A and door mirror terminal #10. Check for a short-circuit to supply voltage. Check for an open-circuit.

Other information:

- see **SIGNAL SPECIFICATION**
- see **CONNECTING THE BREAKOUT BOX**
- see **CHECKING WIRING AND TERMINALS**

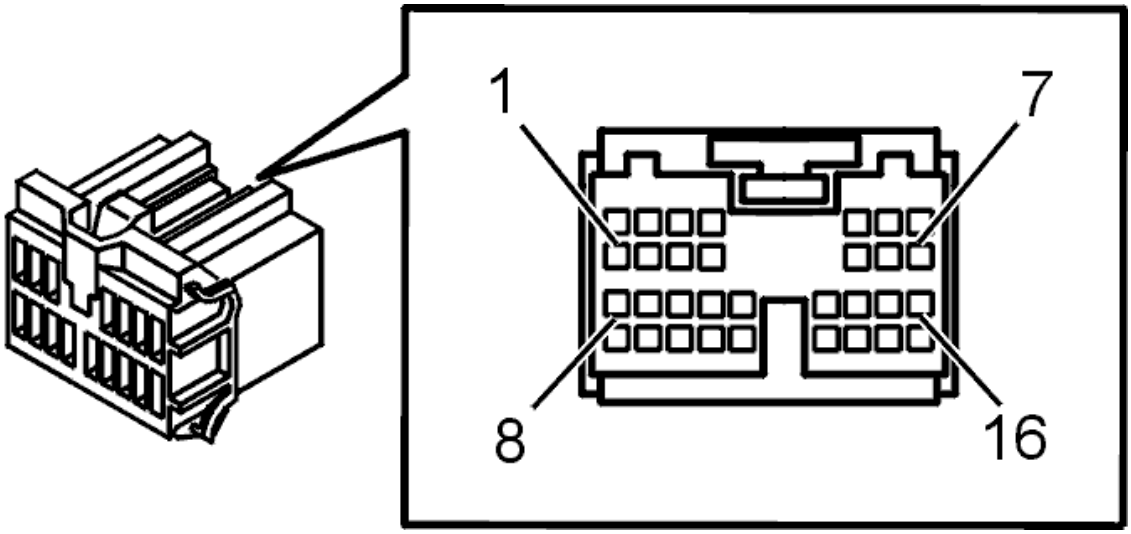

Fig. 207: Connector, Green (16-Pin)
Courtesy of VOLVO CARS CORPORATION

- **Continue**

  Refer to **VERIFICATION**

VERIFICATION

HINT: After carrying out the repair, check that the fault has been remedied.

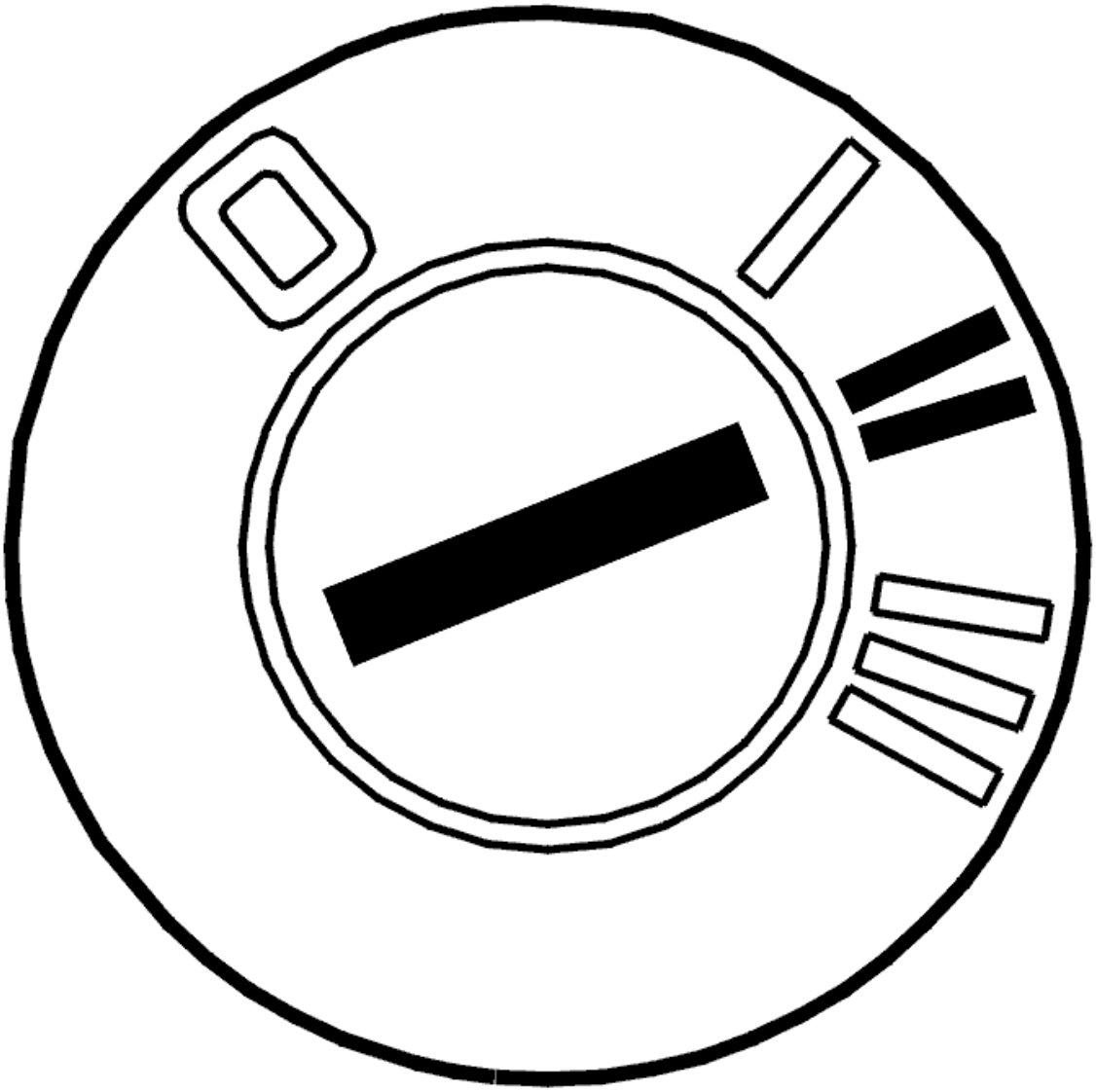

Fig. 208: Identifying Ignition ON
Courtesy of VOLVO CARS CORPORATION

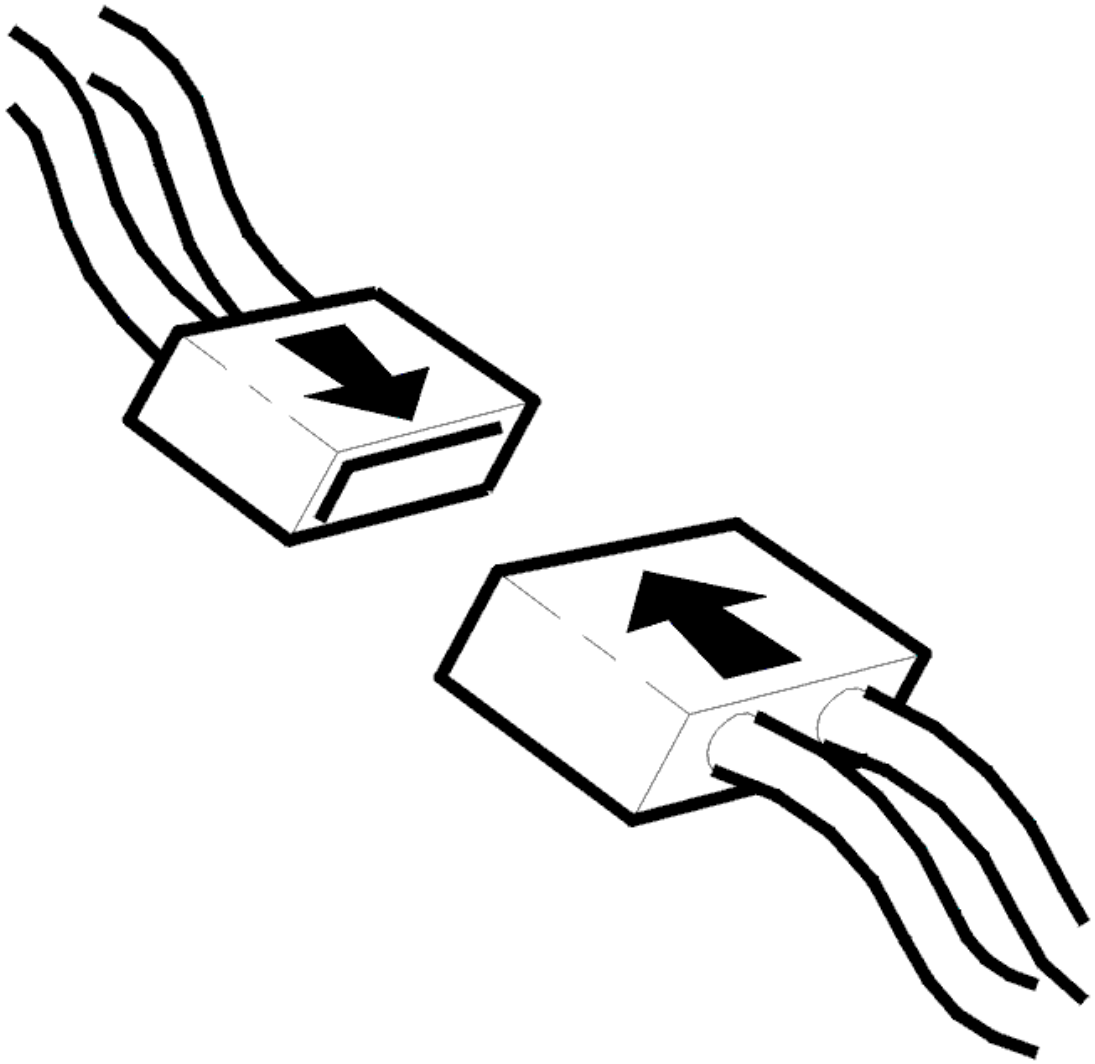

Fig. 209: Connecting Connector
Courtesy of VOLVO CARS CORPORATION

- Ignition off
- Reconnect the components, connectors etc.
- Ignition on.

Check that the limit values for the door mirrors are between 1 and 4 V.

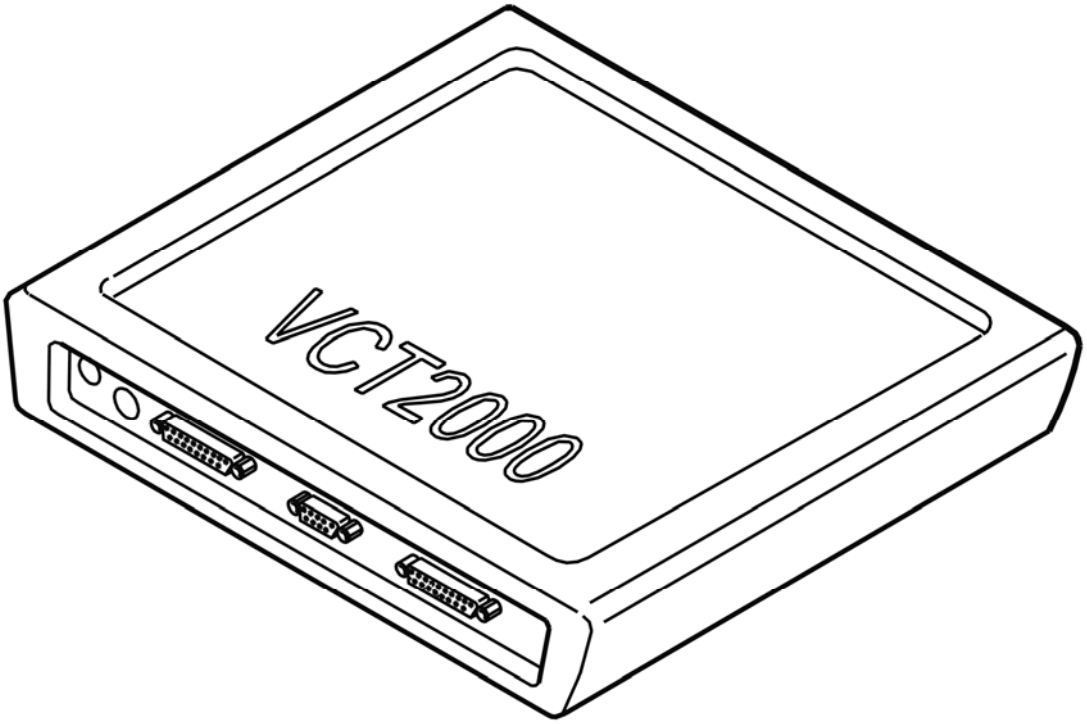

Fig. 210: Identifying VCT2000 Diagnostic Tool Symbol In VIDA
Courtesy of VOLVO CARS CORPORATION

Is the response within its permitted range?

- **YES**

  VERIFIED: Troubleshooting has been completed.

- **NO**

  Refer to **INFORMATION**

INFORMATION

FAULT-TRACING INFORMATION

The fault should have been detected and remedied. As this is not the case fault-tracing has failed.

Exit fault-tracing for this diagnostic trouble code (DTC) or make another attempt.

DDM/PDM-0030 DOOR MIRROR POTENTIOMETER. FAULTY SIGNAL. INTERMITTENT FAULT (2003-04)

DIAGNOSTIC TROUBLE CODE (DTC) INFORMATION

see **DIAGNOSTIC TROUBLE CODE (DTC) INFORMATION**

FAULTY SIGNAL. INTERMITTENT FAULT

CHECKING THE CONNECTORS AND COMPONENTS

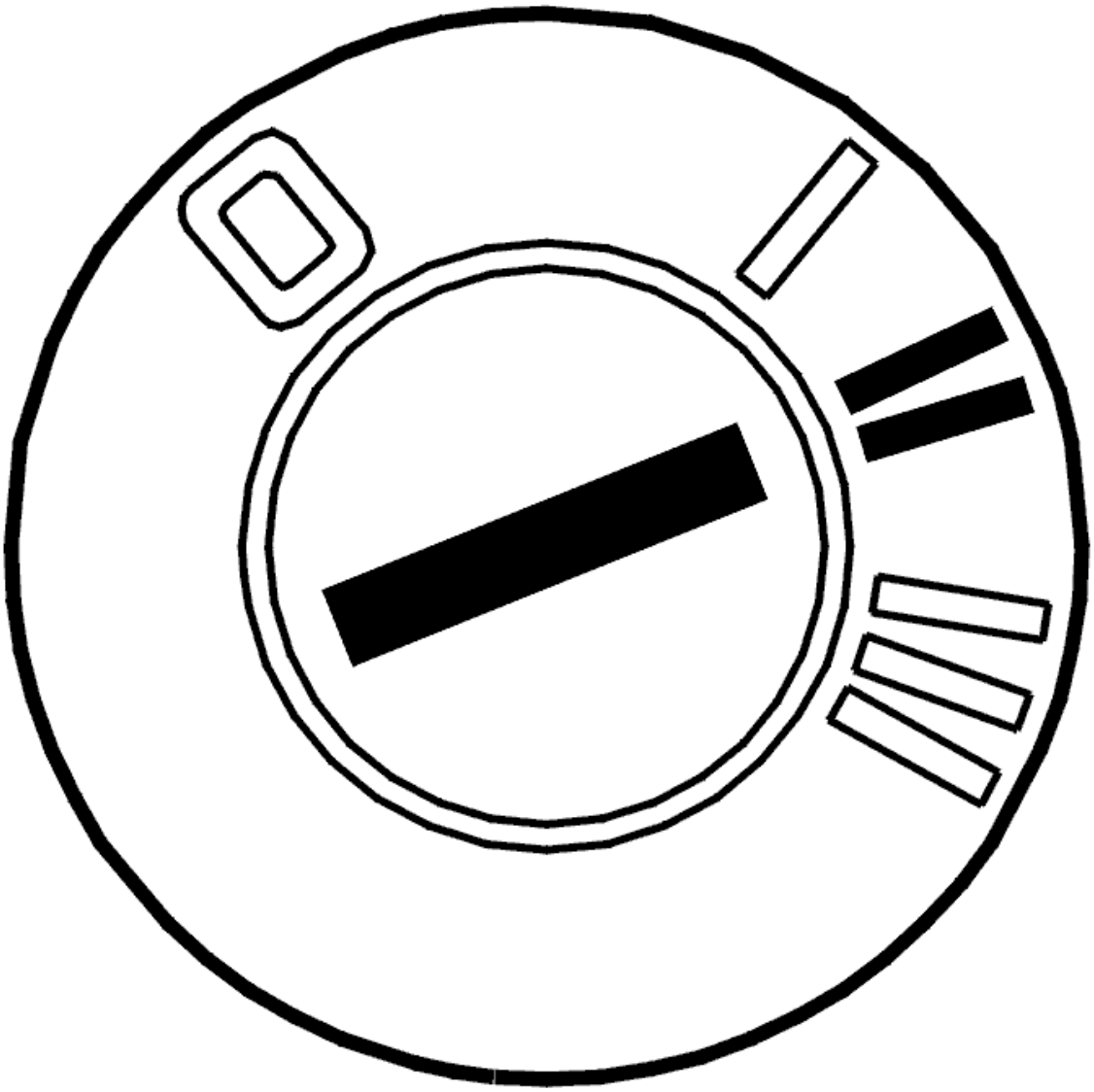

Fig. 211: Identifying Ignition ON
Courtesy of VOLVO CARS CORPORATION

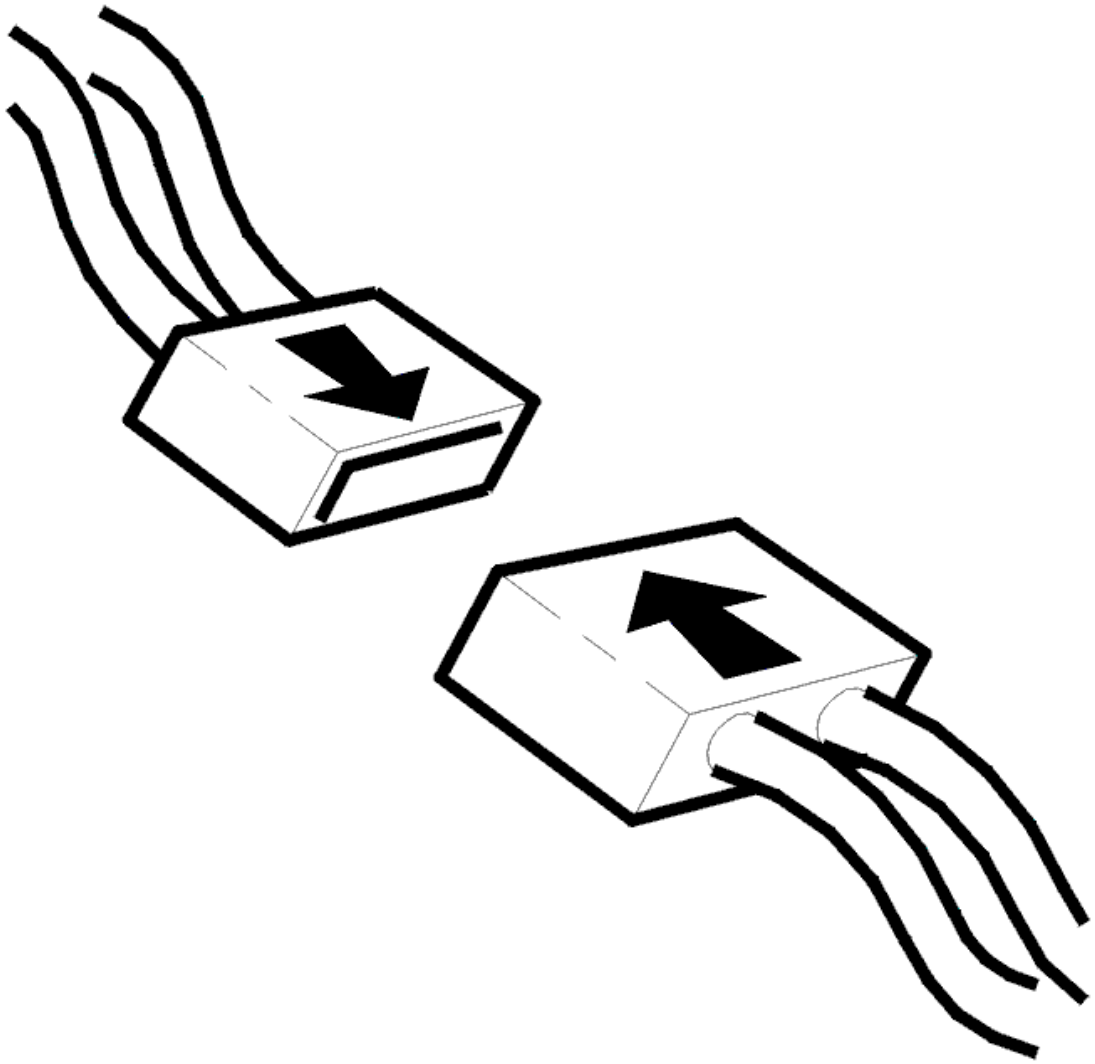

Fig. 212: Connecting Connector
Courtesy of VOLVO CARS CORPORATION

- Check the connector for the door node and door mirror. Check for contact resistance and oxidation.

  Remedy as necessary

- Reinstall the connectors, components etc.
- Ignition on.

  Test the door mirror function by changing its position and reading off the end values registered by the door mirror potentiometer.

  HINT: The end values for the door mirror potentiometer should be between approximately 1 V and 4 V.

Other information:

- To access the door mirror, see **REAR VIEW MIRROR, REPLACING**
- see **CHECKING WIRING AND TERMINALS** .

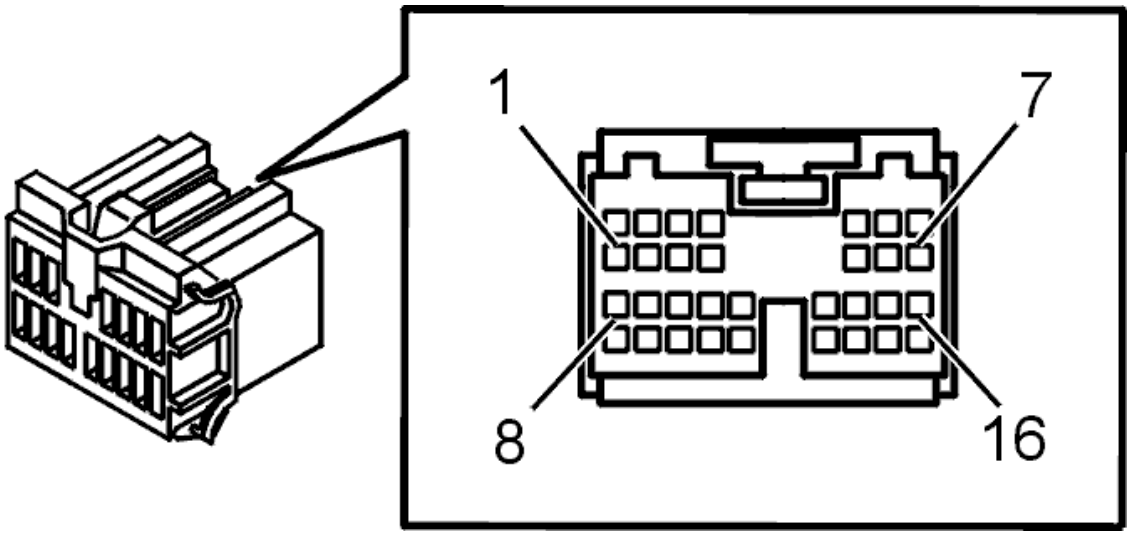

Fig. 213: Connector, Green (16-Pin)
Courtesy of VOLVO CARS CORPORATION

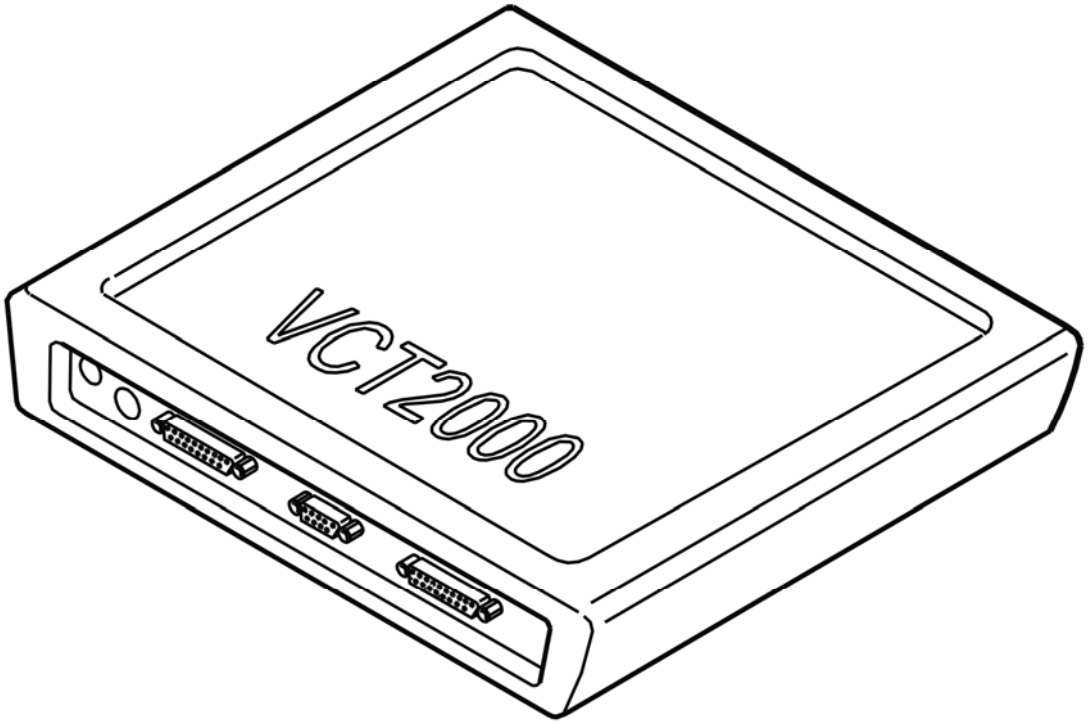

Fig. 214: Identifying VCT2000 Diagnostic Tool Symbol In VIDA

Courtesy of VOLVO CARS CORPORATION

Was a fault detected?

- **YES**

  OKAY: Troubleshooting has been completed.

- **NO**

  Refer to **CHECKING A FAULTY SIGNAL**

CHECKING A FAULTY SIGNAL

Check the cable between control module terminal #25A and door mirror terminal #1. Check for a short-circuit to ground.

Check the cable between control module terminal #8A and door mirror terminal #11. Check for a short-circuit to supply voltage. Check for an open-circuit.

DDM/PDM-0030 Door mirror potentiometer, faulty signal

Check the cable between control module terminal #9A and door mirror terminal #9. Check for a short-circuit to supply voltage. Check for an open-circuit.

DDM/PDM-0032 Door mirror potentiometer, faulty signal

Check the cable between control module terminal #10A and door mirror terminal #10. Check for a short-circuit to supply voltage. Check for an open-circuit.

Other information:

- For further information about signals and other values, see **SIGNAL SPECIFICATION**
- To connect the breakout box, see **CONNECTING THE BREAKOUT BOX**
- see **CHECKING WIRING AND TERMINALS** .

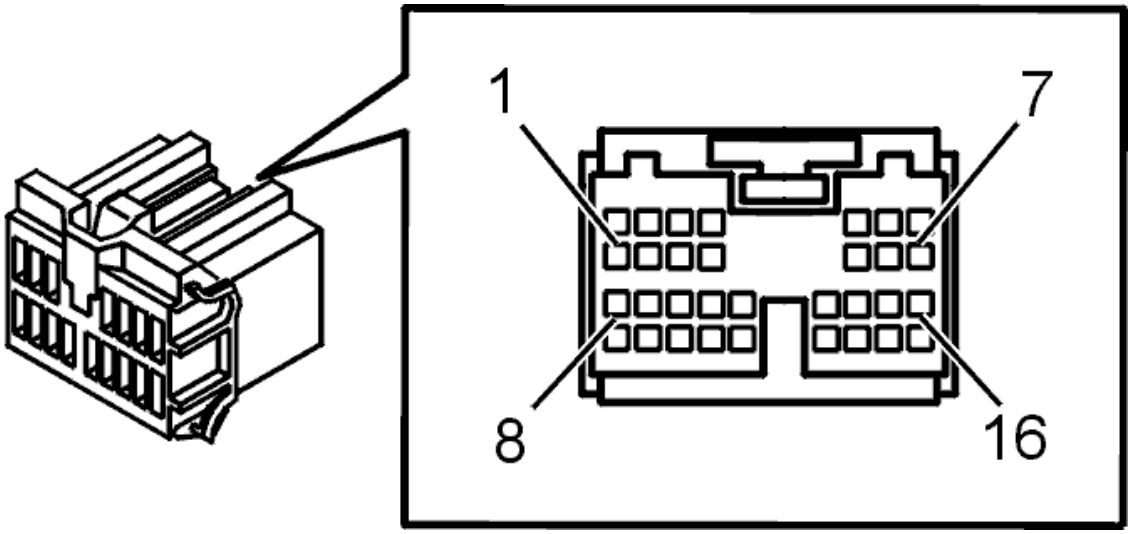

Fig. 215: Connector, Green (16-Pin)
Courtesy of VOLVO CARS CORPORATION

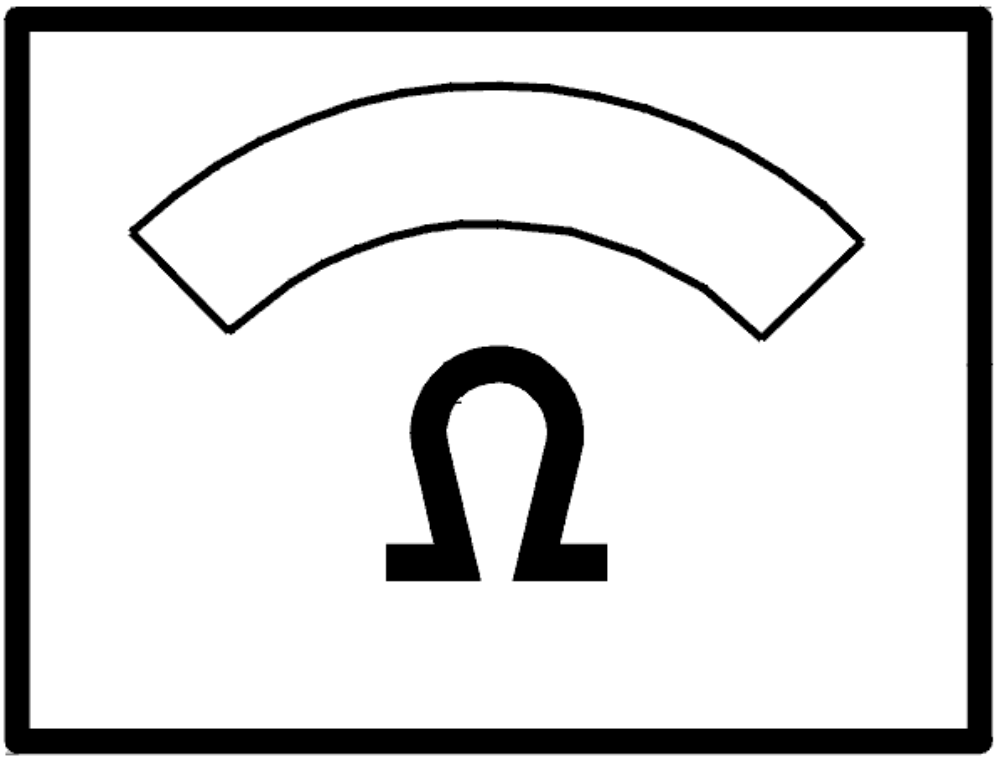

Fig. 216: Identifying Ohmmeter
Courtesy of VOLVO CARS CORPORATION

- **Continue**

  Refer to **INFORMATION**

INFORMATION

FAULT-TRACING INFORMATION

If the fault is intermittent, do not verify fault-tracing if the fault does not recur.

It is possible to view the information again, or leave fault-tracing for this diagnostic trouble code (DTC).

DDM/PDM-0030 DOOR MIRROR POTENTIOMETER. FAULTY SIGNAL.

PERMANENT FAULT (2003-04)

DIAGNOSTIC TROUBLE CODE (DTC) INFORMATION

see **DIAGNOSTIC TROUBLE CODE (DTC) INFORMATION**

FAULTY SIGNAL. PERMANENT FAULT

CHECKING THE CONNECTORS AND COMPONENTS

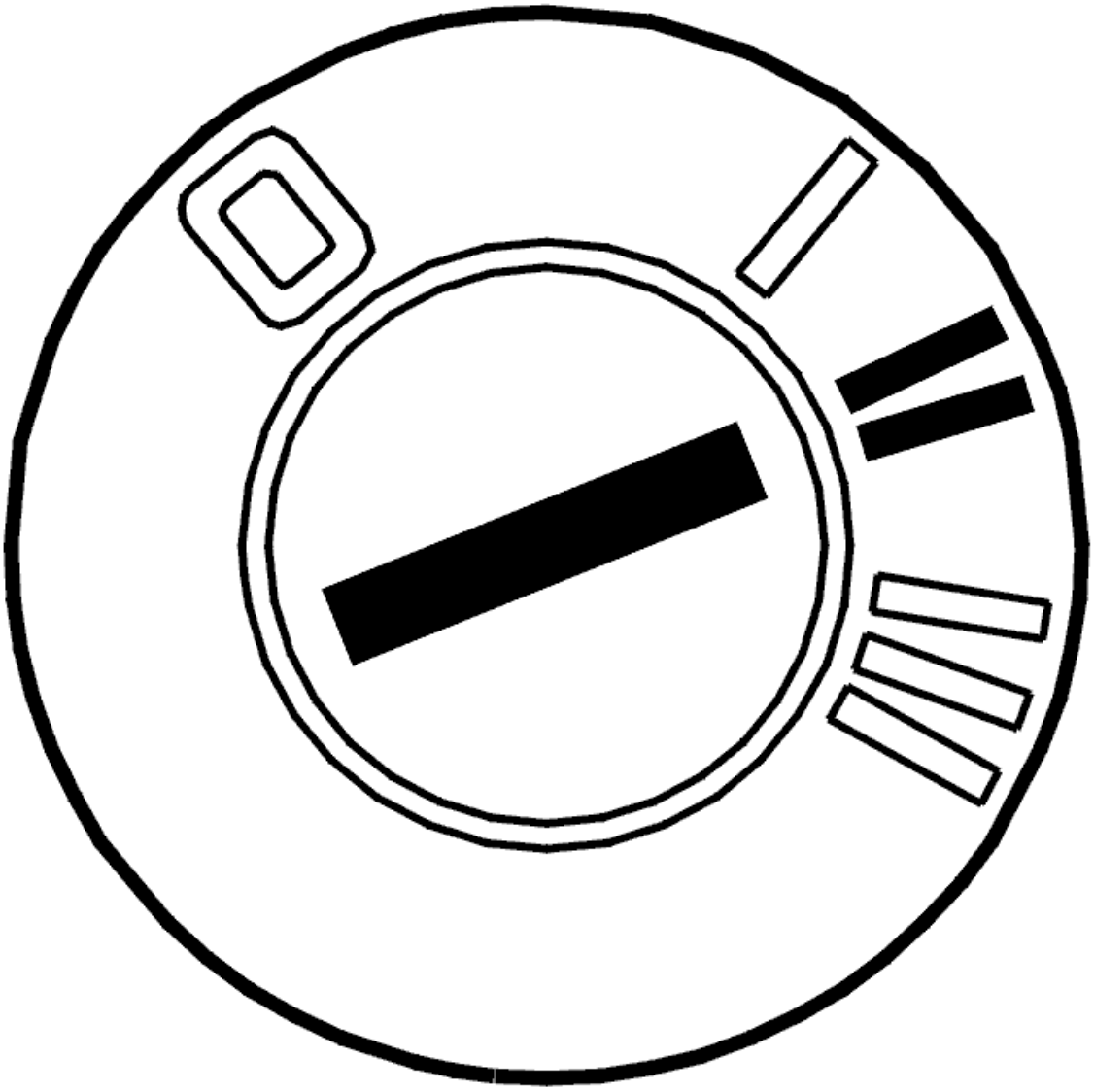

Fig. 217: Identifying Ignition ON
Courtesy of VOLVO CARS CORPORATION

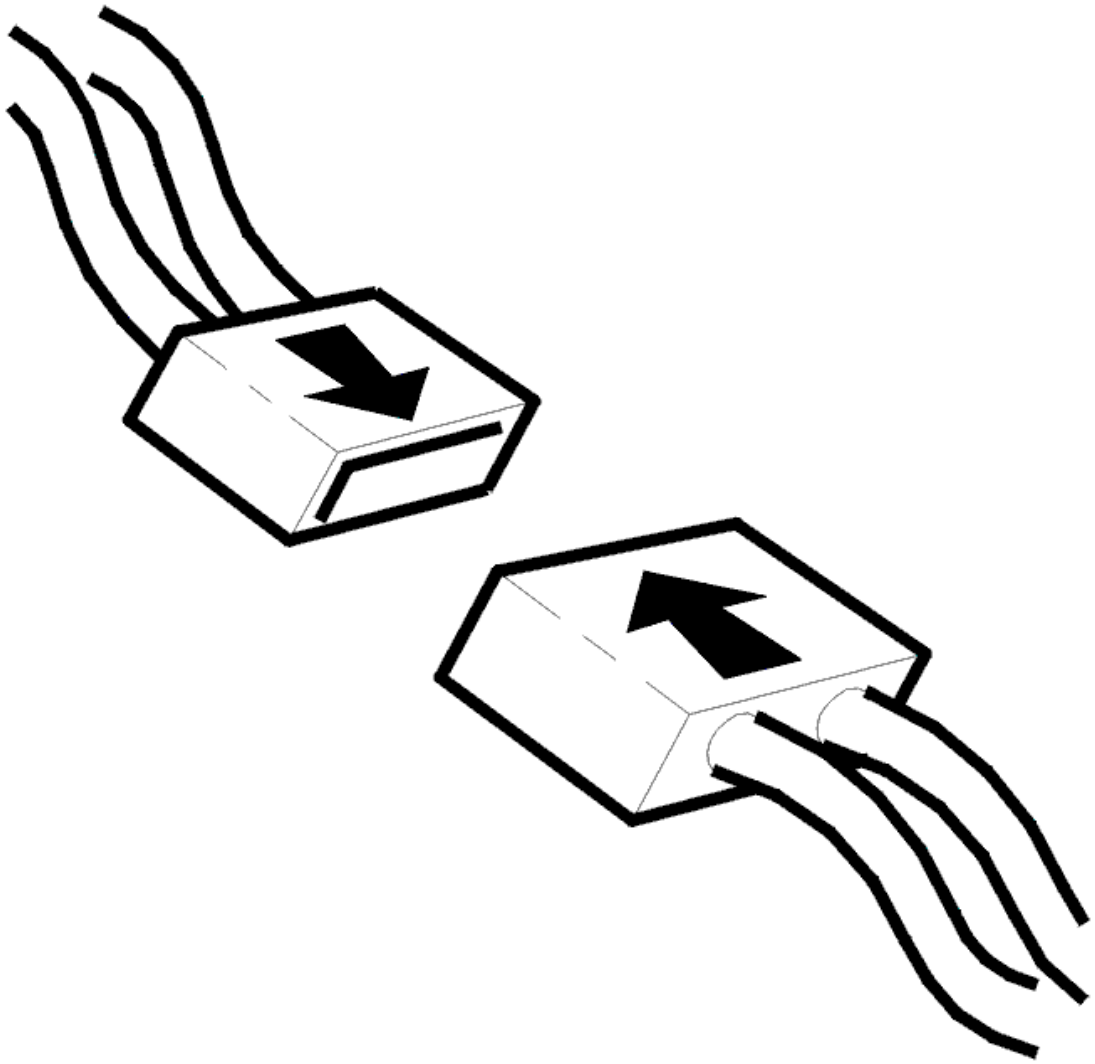

Fig. 218: Connecting Connector
Courtesy of VOLVO CARS CORPORATION

- Check the connector for the door node and door mirror. Check for contact resistance and oxidation.

  Remedy as necessary

- Reinstall the connectors, components etc.
- Ignition on.

  Test the door mirror function by changing its position and reading off the end values registered by the door mirror potentiometer.

  HINT: The end values for the door mirror potentiometer should be between 1 and 4 V.

  Other information:

- To access the door mirror, see **REAR VIEW MIRROR, REPLACING**
- see **CHECKING WIRING AND TERMINALS** .

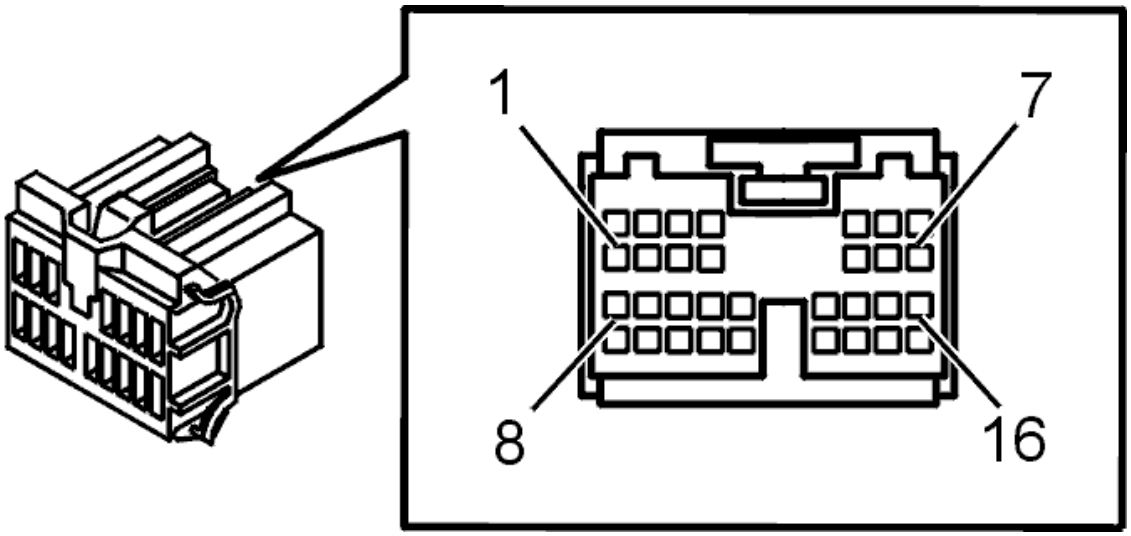

Fig. 219: Connector, Green (16-Pin)
Courtesy of VOLVO CARS CORPORATION

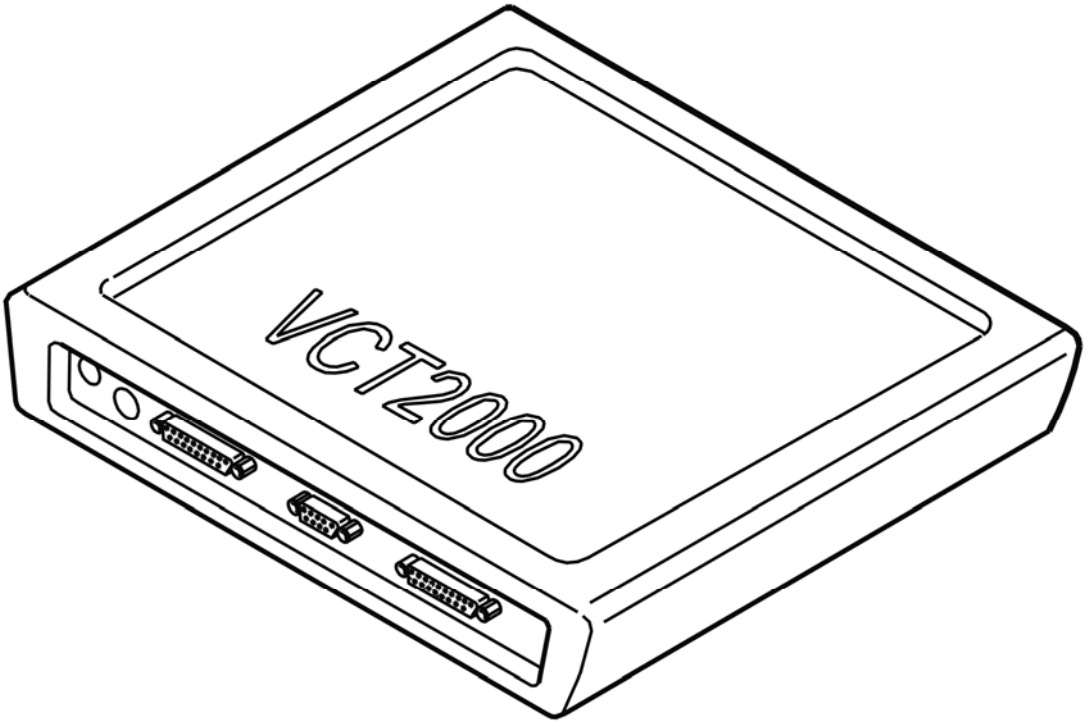

Fig. 220: Identifying VCT2000 Diagnostic Tool Symbol In VIDA
Courtesy of VOLVO CARS CORPORATION

Does the door mirror potentiometer operate correctly?

- **YES**

  Refer to **VERIFICATION**

- **NO**

  Refer to **CHECKING A FAULTY SIGNAL**

CHECKING A FAULTY SIGNAL

Check the cable between control module terminal #25A and door mirror terminal #1. Check for a short-circuit to ground.

Check the cable between control module terminal #8A and door mirror terminal #11. Check for a short-circuit to supply voltage. Check for an open-circuit.

DDM/PDM-0030 Door mirror potentiometer, faulty signal

Check the cable between control module terminal #9A and door mirror terminal #9. Check for a short-circuit to supply voltage. Check for an open-circuit.

DDM/PDM-0032 Door mirror potentiometer, faulty signal

Check the cable between control module terminal #10A and door mirror terminal #10. Check for a short-circuit to supply voltage. Check for an open-circuit.

Other information:

- For further information about signals and other values, see **SIGNAL SPECIFICATION**
- To connect the breakout box, see **CONNECTING THE BREAKOUT BOX**
- see **CHECKING WIRING AND TERMINALS** .

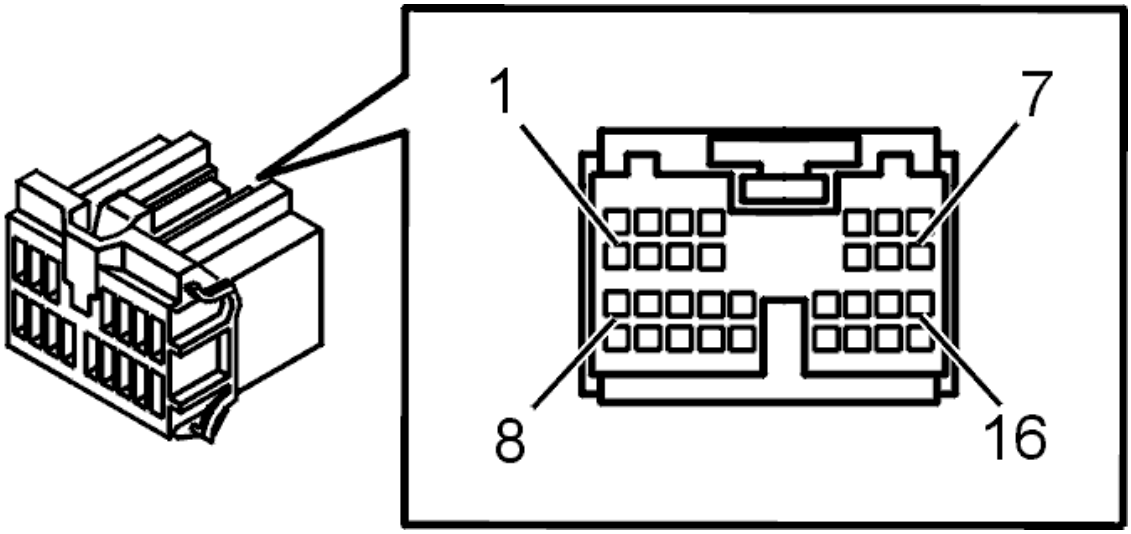

Fig. 221: Connector, Green (16-Pin)
Courtesy of VOLVO CARS CORPORATION

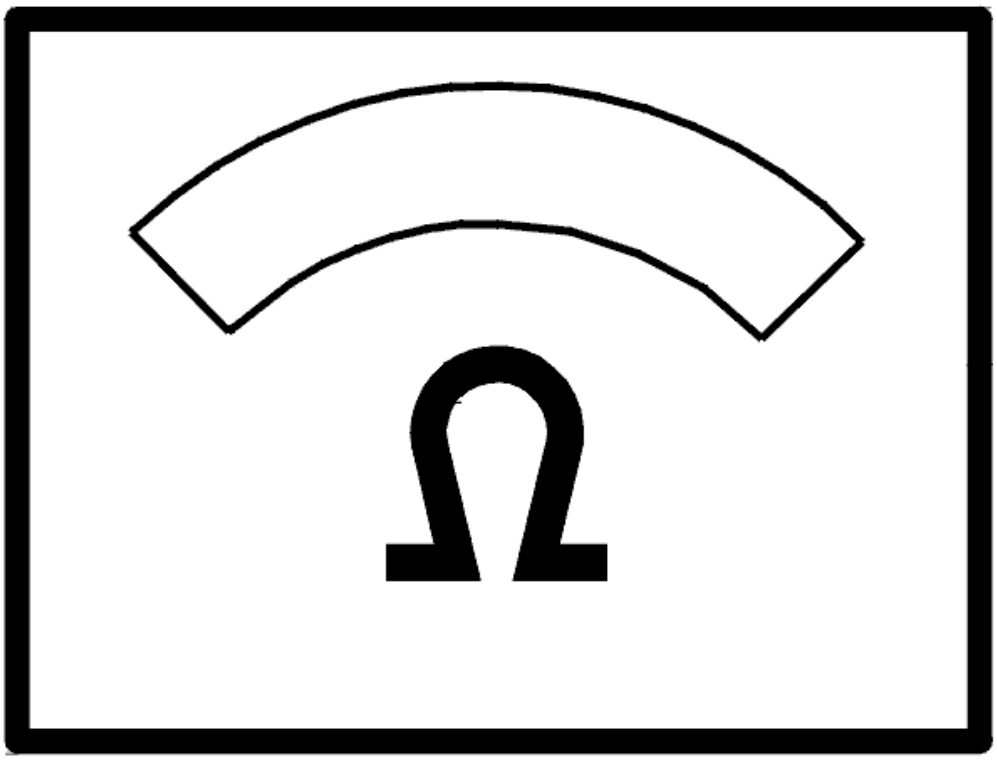

Fig. 222: Identifying Ohmmeter
Courtesy of VOLVO CARS CORPORATION

- **Continue**

  Refer to **VERIFICATION**

VERIFICATION

HINT: After carrying out the repair, check that the fault has been remedied.

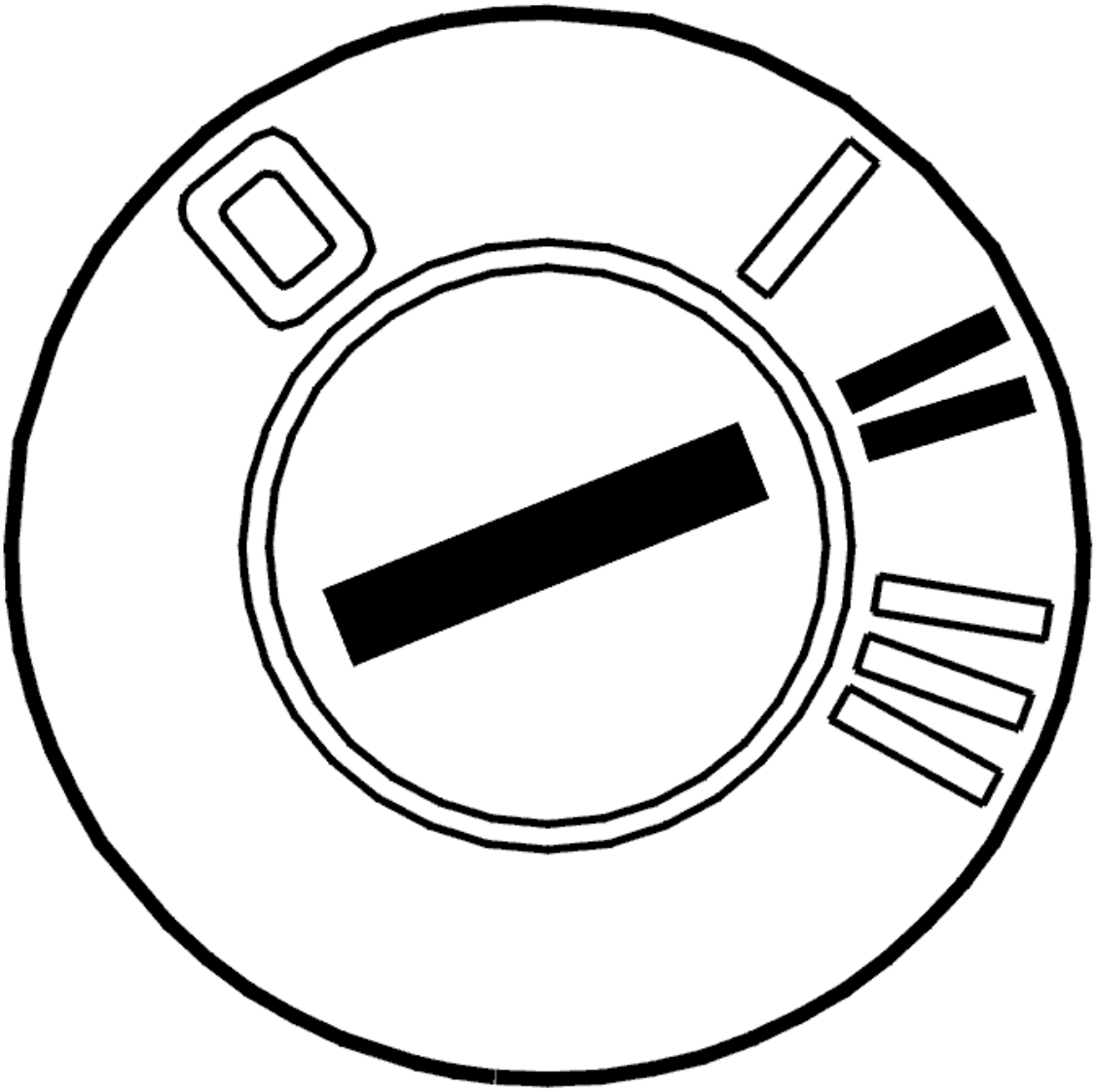

Fig. 223: Identifying Ignition ON
Courtesy of VOLVO CARS CORPORATION

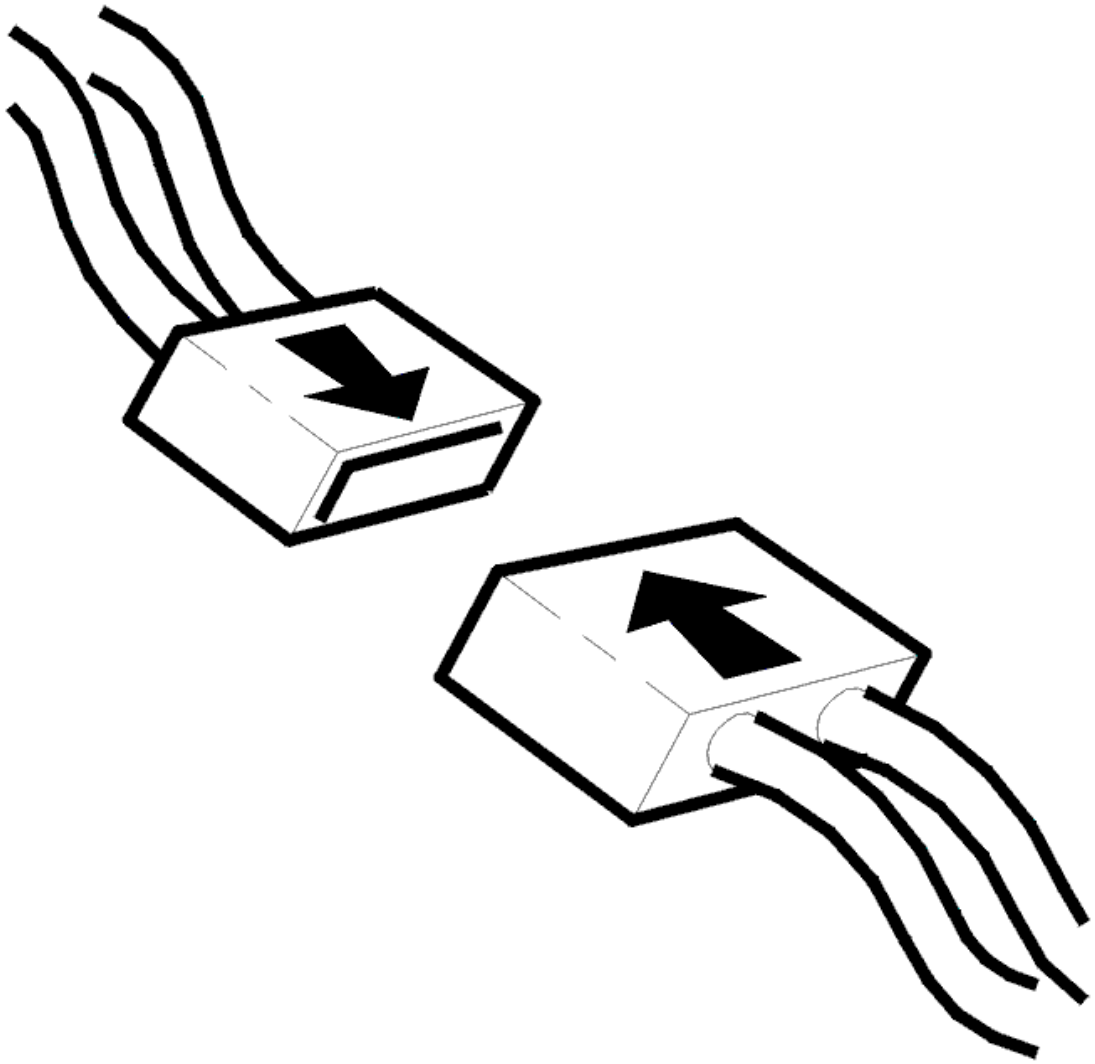

Fig. 224: Connecting Connector
Courtesy of VOLVO CARS CORPORATION

- Ignition off
- Reconnect the components, connectors etc.
- Ignition on.

Check that the limit values for the door mirrors are between 1 and 4 V.

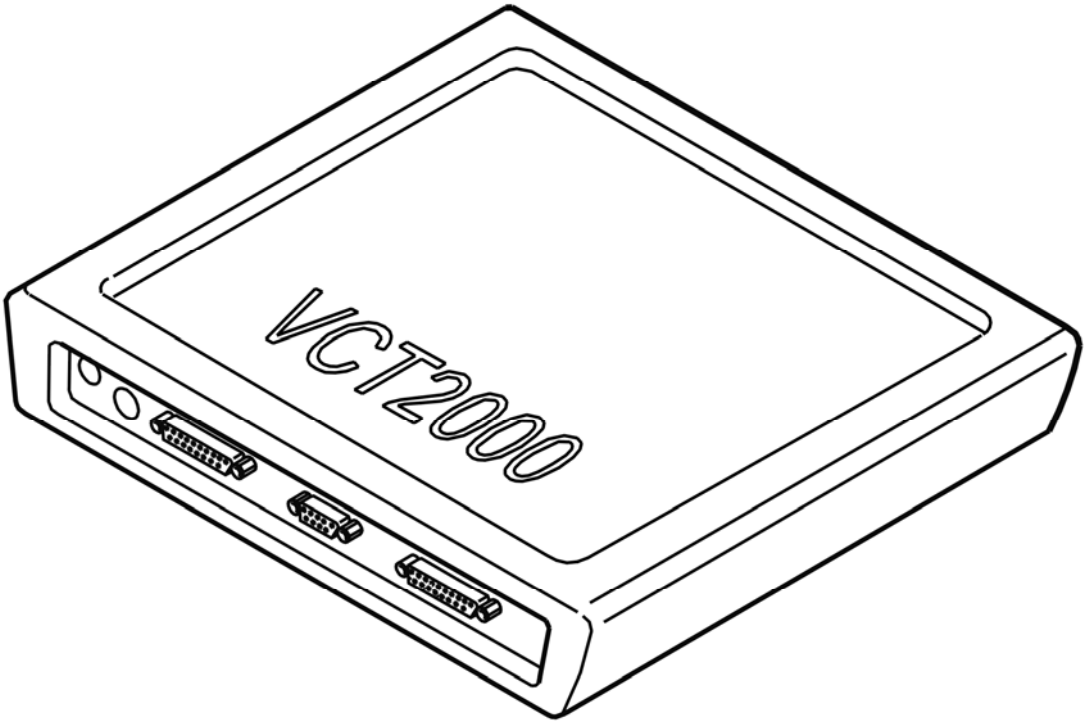

Fig. 225: Identifying VCT2000 Diagnostic Tool Symbol In VIDA
Courtesy of VOLVO CARS CORPORATION

Is the response within its permitted range?

- **YES**

  VERIFIED: Troubleshooting has been completed.

- **NO**

  Refer to **INFORMATION**

INFORMATION

FAULT-TRACING INFORMATION

The fault should have been detected and remedied. As this is not the case fault-tracing has failed.

Exit fault-tracing for this diagnostic trouble code (DTC) or make another attempt.

ACCESSORIES AND EQUIPMENT

Doors And Lids - General Diagnostics And Tests

CHECKING THE VOLTAGE/GROUND TERMINAL, DRIVER DOOR MODULE (DDM)/PASSENGER DOOR MODULE (PDM)

CHECKING THE POWER SUPPLY AND GROUND TERMINALS

Power supply

Voltage input terminal #B12 (#26) is powered from the battery (30-supply) via a fuse and is separate for the Driver door module (DDM) and Passenger door module (PDM). It will not be possible to activate the control module if there is an open-circuit.

Checking the power supply

Check the power supply cable from the battery to the driver door module (DDM)/passenger door module (PDM) terminal #B12 (B26). Check for an open-circuit. Check for loose connections. Check for contact resistance and oxidation. Check the fuse. The voltage should be approximately battery voltage.

Ground terminal

The Passenger Door Module (PDM)/Driver Door Module (DDM) has two power inputs. The ground inputs from the control module are connected via separate ground leads to a common ground terminal in the car body. See the relevant wiring diagram for further information about the ground terminal.

1. Ground input terminal #B5 (#19) is connected via a ground cable to the ground terminal in the car body. If there is an open-circuit, the control module will function, but it will not be possible to operate the window on that side
2. Ground input terminal #B9 (#23) is connected via a ground cable to the ground terminal in the car body. The control module will not work if there is an open-circuit.

Checking ground terminal

Check the ground lead between driver door module (DDM)/passenger door module (PDM) terminal #B5 (#19) and the ground terminal in the car body. Check for an open-circuit. Check for loose connections. Check for contact resistance and oxidation. With the ignition on, the drop in voltage between the ground connection for the driver door module (DDM)/passenger door module (PDM) ground connection terminal #B5 (#19) and the ground terminal must not be greater than 0.5 V.

Check the ground lead between driver door module (DDM)/passenger door module (PDM) terminal #B9 (#23) and the ground terminal in the car body. Check for an open-circuit. Check for loose connections. Check for contact resistance and oxidation. With the ignition on, the drop in voltage between the ground connection for the driver door module (DDM)/passenger door module (PDM) ground connection terminal #B9 (#23) and the ground terminal must not be greater than 0.5 V.

Remedy as necessary.

Other information:

- To connect the breakout box, see **CONNECTING THE BREAKOUT BOX**
- For information about signals, see **SIGNAL SPECIFICATION**
- see **CONTENTS** .

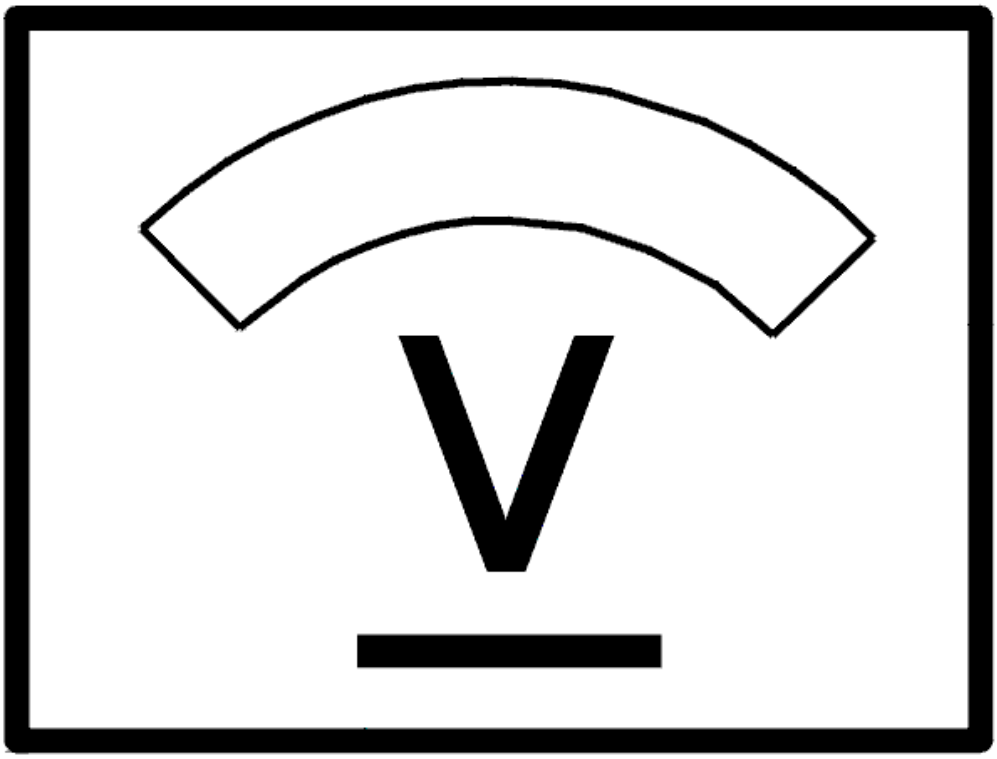

Fig. 1: Identifying Voltage Display
Courtesy of VOLVO CARS CORPORATION

CONNECTING THE BREAKOUT BOX, DRIVER DOOR MODULE (DDM)/PASSENGER DOOR MODULE (PDM)

CONNECTING THE BREAKOUT BOX

Special tools:

see **9511428**

see **9511499**

see **9511507**

see **9813194**

- Ignition off.
- Remove the door panel
- Disconnect the module connectors.

NOTE: Unplug the 12-pin connector before the 30-pin connector.

Connect the adapter to the control module's connector. Connect breakout box see **9511428** and cable harness see **9511499** to the adapter.

Adapter cable harness see **9511507** is for the 12-pin connector, and adapter cable harness see **9813194** is for the 30-pin connector.

Disconnection of breakout box in reverse order.

Other information

- To remove the door panel, see **PANEL FRONT SIDE DOOR, REPLACING**
- For further information about signals and other values, see **SIGNAL SPECIFICATION** .

ACCESSORIES AND BODY, CAB

Doors And Lids - Removal, Replacement And Installation

FUEL TANK FILLER COVER (2003-2011)

LOCK UNIT FUEL TANK FILLER COVER, REPLACING

NOTE: **As the illustrations in this service information are used for different model years and / or models, some variation may occur. However, the essential information in the illustrations is always correct.**

REMOVING THE LOCK UNIT FOR THE FUEL TANK FILLER COVER

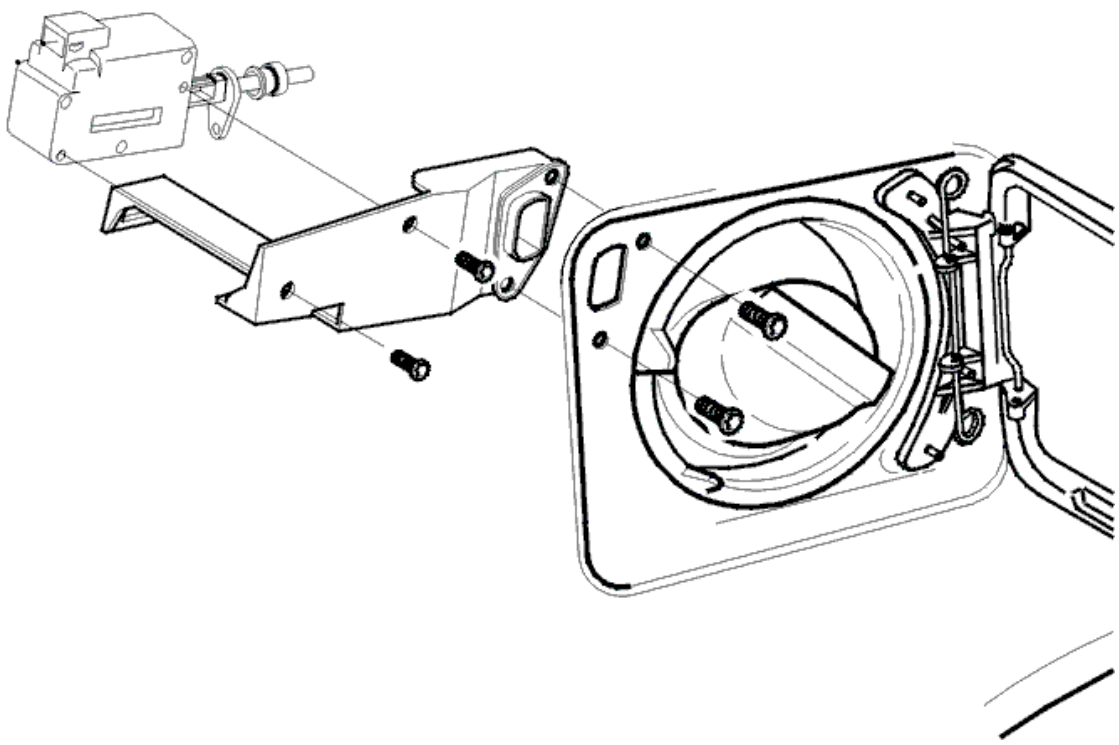

Fig. 1: Fuel Tank Filler Cover And Screws
Courtesy of VOLVO CARS CORPORATION

Fold up the cargo floor hatch.

Remove:

- the outer load floor
- the hatch (the rear section of the side panel in the cargo compartment).

Fold the insulation out of the way.

- the two screws holding the bracket in the body
- the connector
- two screws holding the lock unit on the bracket.

INSTALLING THE LOCK UNIT FOR THE FUEL TANK FILLER COVER

Install:

- the two screws holding the lock unit on the bracket
- the two screws holding the bracket in the body
- the connector.

Reinstall the insulation.

Install:

- the hatch (the rear section of the side panel in the cargo compartment)
- the outer load floor.

Fold down the cargo floor hatch.

HATCH, COVER (2003-2011)

COVER ANTENNA MODULE, REPLACING

REMOVE

Special tools:

see **9512337**

NOTE: **As the illustrations in this service information are used for different model years and / or models, some variation may occur. However, the essential information in the illustrations is always correct.**

PREPARATIONS

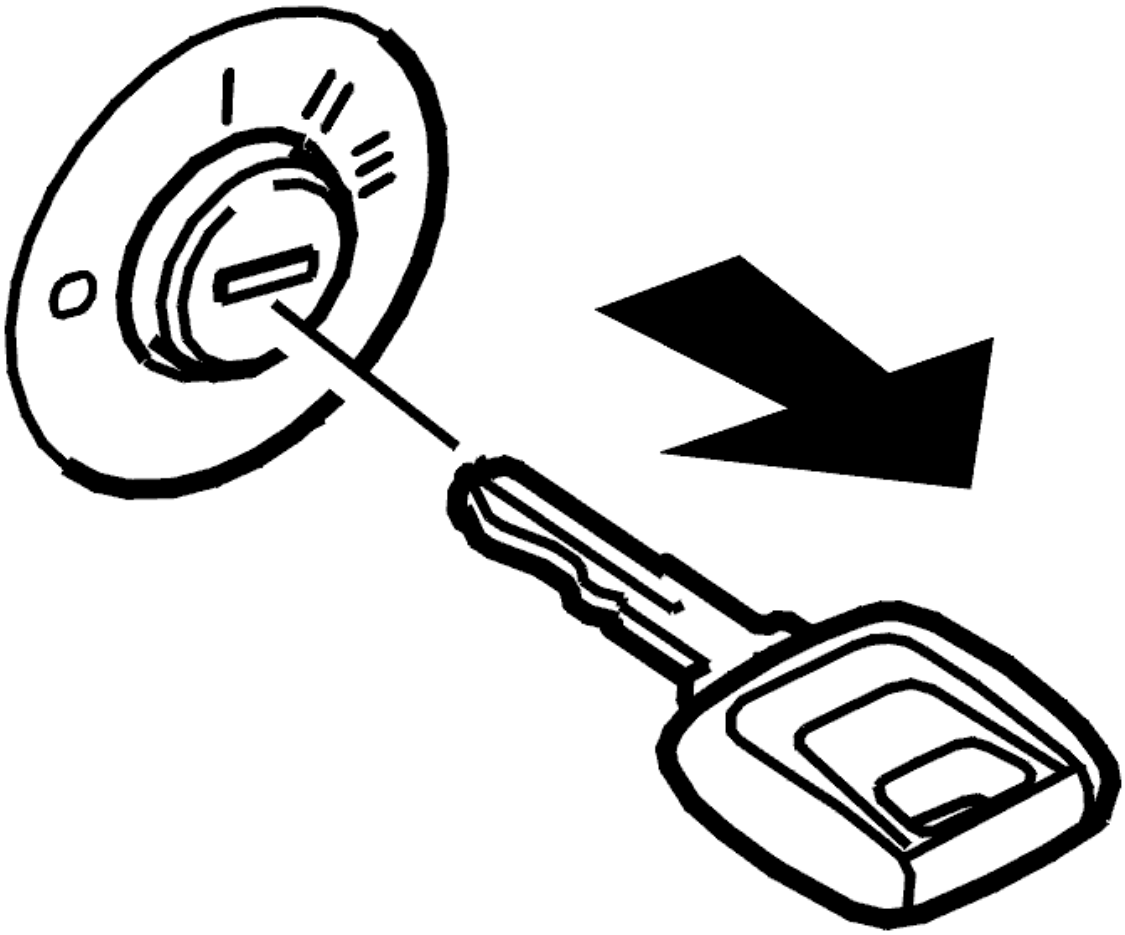

Fig. 2: Identifying Ignition Key Off
Courtesy of VOLVO CARS CORPORATION

Ignition off.

Remove the key from the ignition switch.

NOTE: After the key has been removed: Wait one minute before starting work.

REMOVING THE COVER FROM THE ANTENNA MODULE

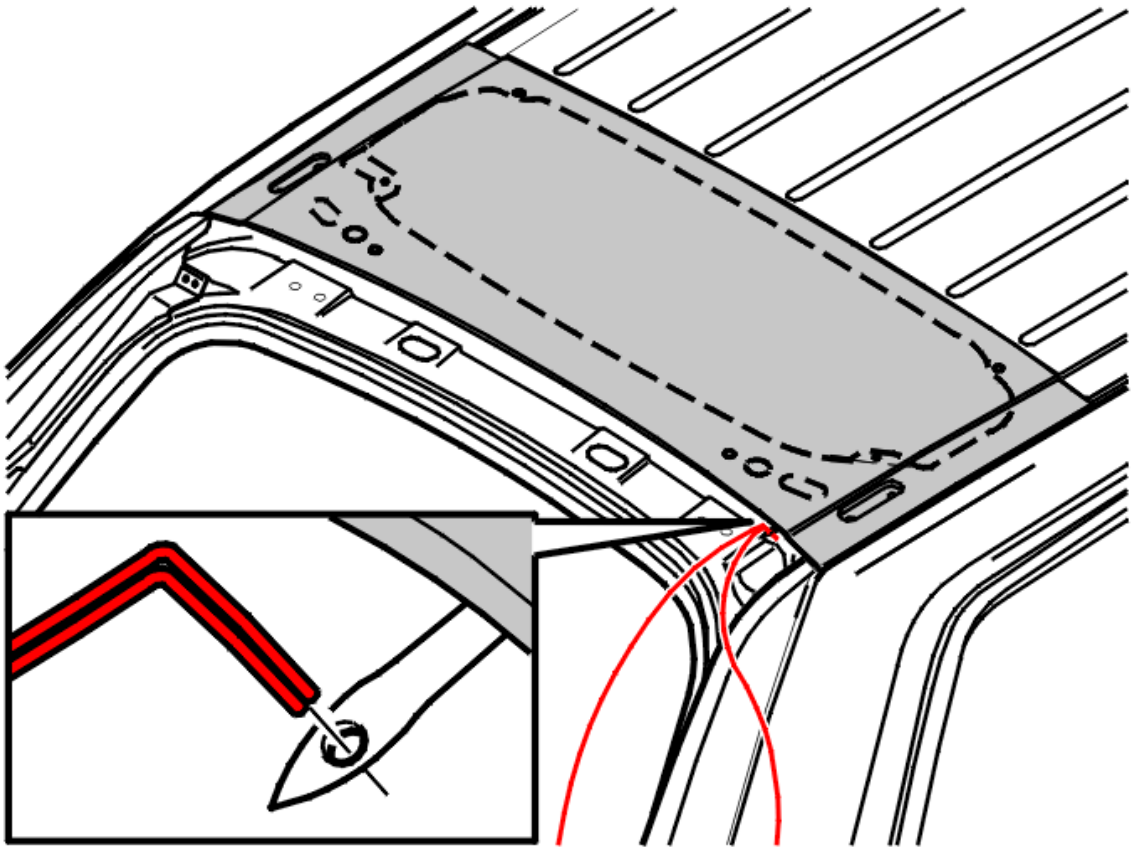

Fig. 3: Identifying Wire Puller Into Right Hand Corner
Courtesy of VOLVO CARS CORPORATION

Remove:

- the headlining. See **HEADLINING, REPLACING**
- the antenna module.

NOTE: **The antenna module is PUR bonded in the roof and must be cut out. This is extremely difficult using a knife, there is a risk of damage to the paintwork around the sun roof. Use a wire instead for removal.**

WARNING: **Use protective goggles and protective gloves.**

Cut off four meters of piano wire.

Press the wire puller, special tool see **9512337** , into the rear right-hand corner.

Pull in both ends of the wire approximately 45 cm.

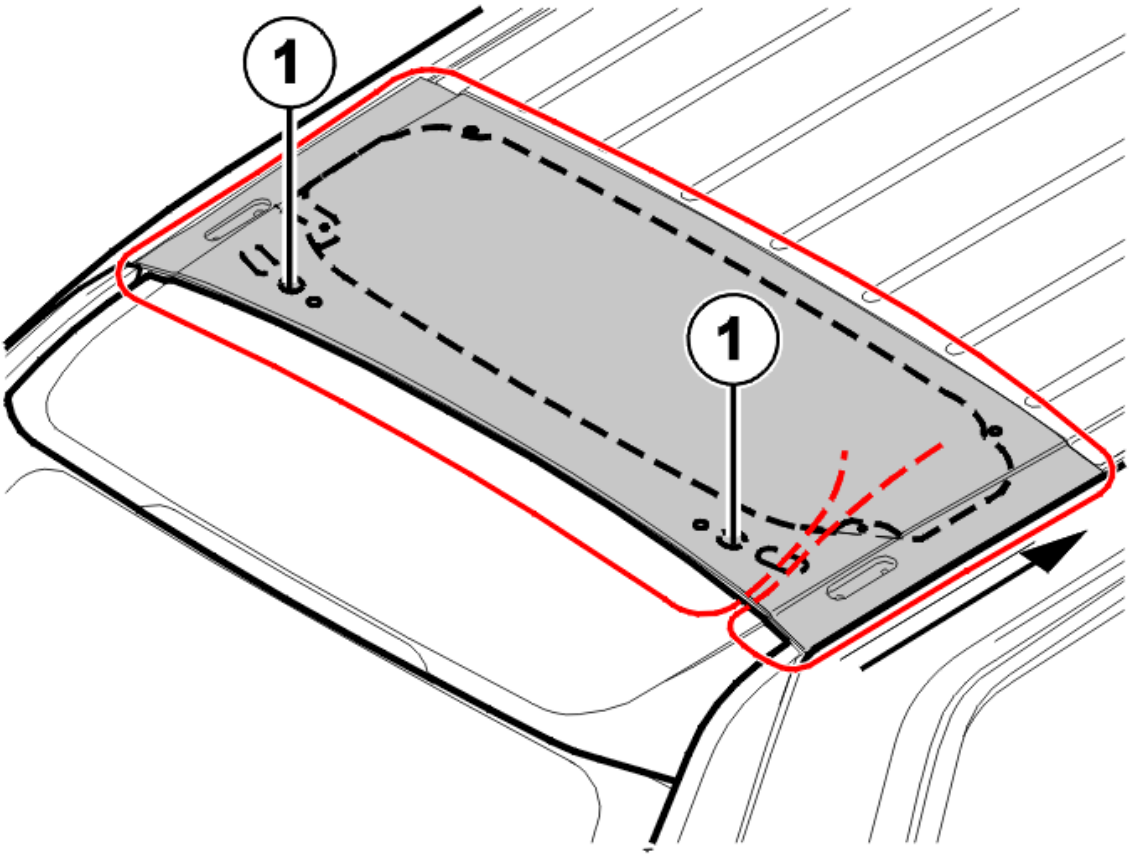

Fig. 4: Identifying Locating Pin
Courtesy of VOLVO CARS CORPORATION

Form the wire into a loop around the window and pull in the excess wire from one end.

Check which wire end moves so that they can be told apart.

Because there are locating pins at (1), the wire must be pulled in the direction arrowed.

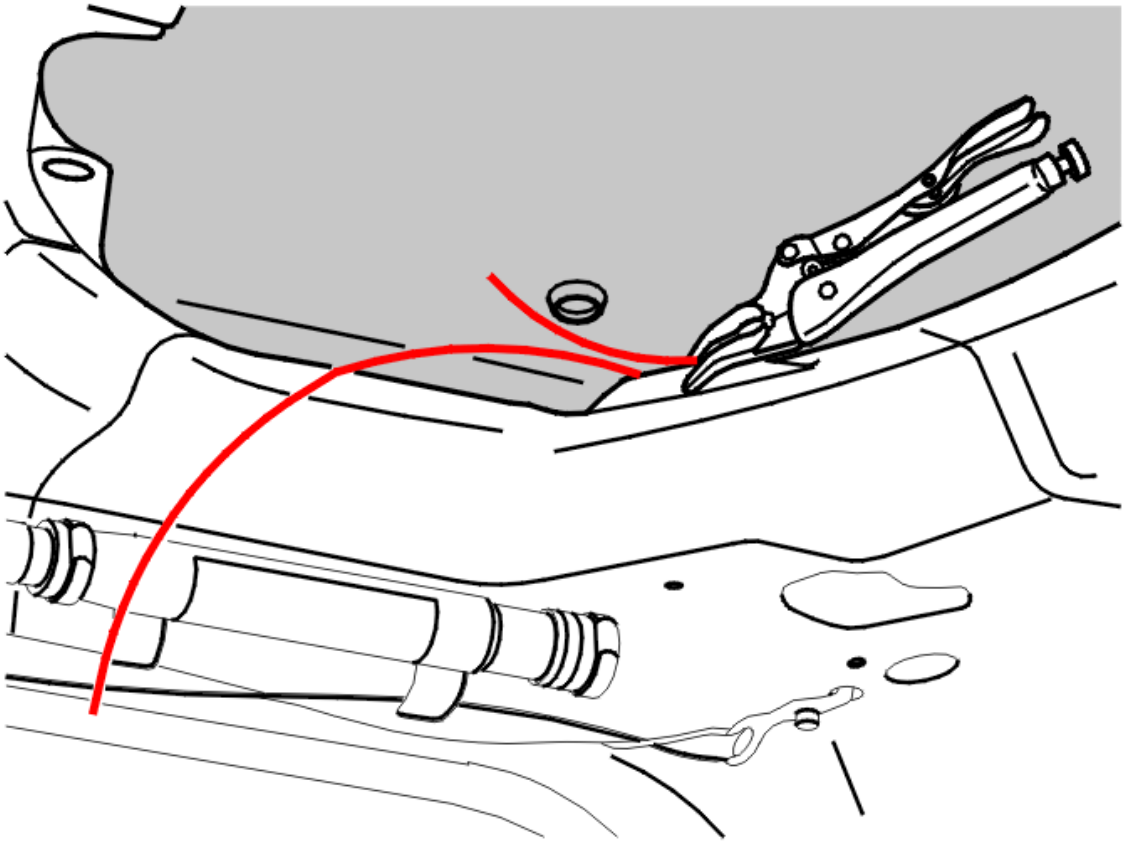

Fig. 5: Secure Wire Using Welding Pliers
Courtesy of VOLVO CARS CORPORATION

Secure the wire going to the left using welding pliers.

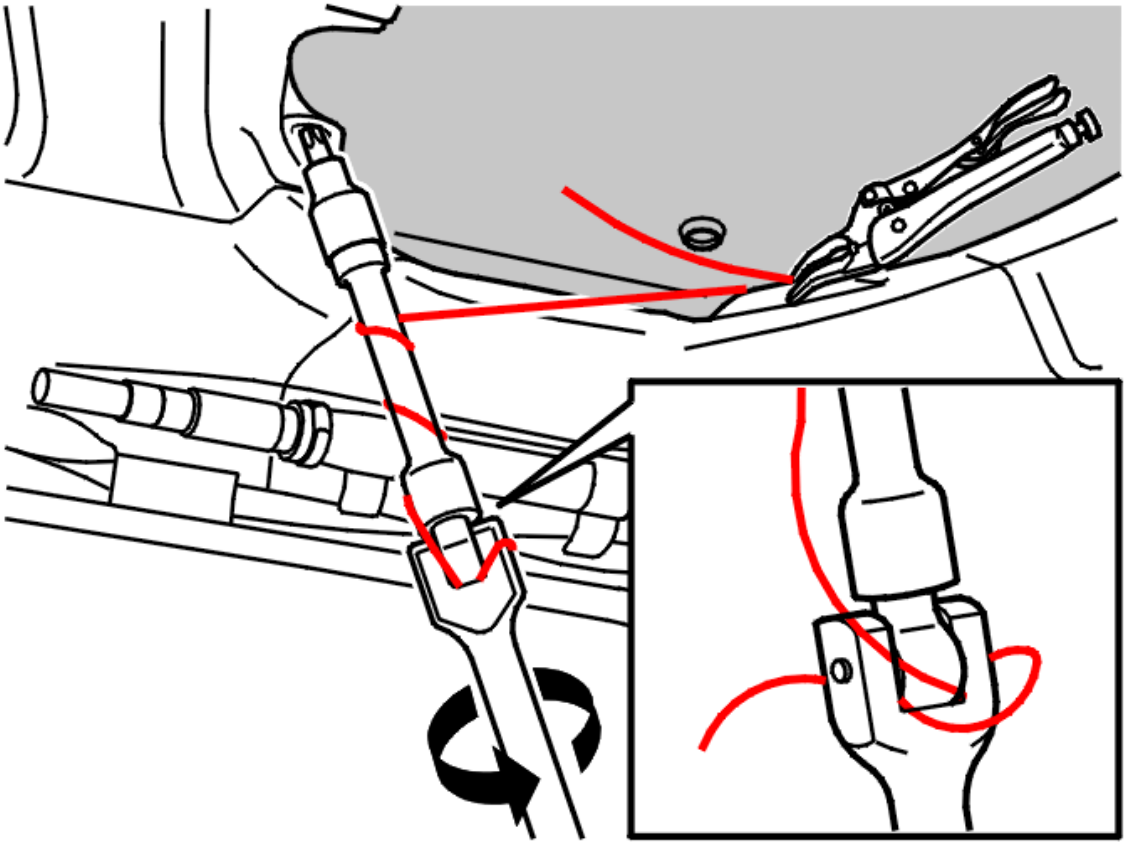

Fig. 6: View Of Wire End To Be Winched To A Puller Bar
Courtesy of VOLVO CARS CORPORATION

Secure the wire end to be winched to a puller bar (see the illustration). Attach a short extension and a torx wrench or similar to the puller bar.

Tension the wire by winding it onto the puller handle.

Break the puller handle so that the wire is pulled into the car. Use the holes around the panel as holding points.

Wind in the wire up to the right-hand locating pin. There will be an obvious obstacle when the correct point has been reached.

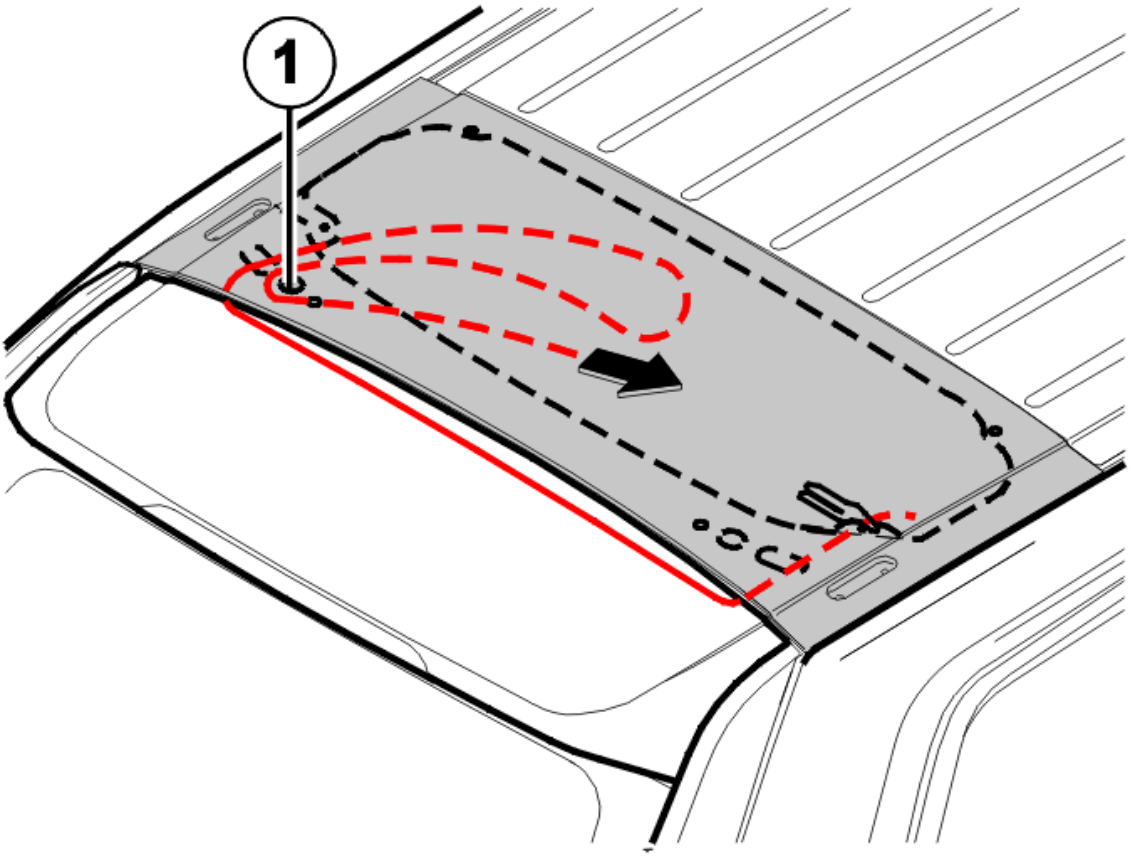

Fig. 7: View Of Feeding The Wire
Courtesy of VOLVO CARS CORPORATION

Release the wire from the ratchet handle. Feed the wire in on the inside of the locating pin.

Secure the wire again and continue winding in until the hatch releases.

INSTALLING THE COVER PANEL FOR THE ANTENNA MODULE

The method for installing the cover panel is the same as for replacing windows. See **INSTALLING THE REAR WINDSHIELD**.

Clean the area on the panel to which PUR adhesive is to be applied using cleaner-H (black cap).

Apply PUR rim activator (blue cork) to the section of the panel where the adhesive will be applied.

NOTE: **PUR rim activator does not need to be applied if the old panel is reused within eight hours and there is still adhesive on it.**

Apply PUR adhesive to the cover panel or to the body flange.

Press the panel into place by hand.

Secure the panel using tape.

INSTALLING THE REAR WINDSHIELD

When working with PUR on the body flange, see **PUR ON BODY FLANGE** .

Clean the area on the window to which PUR adhesive is to be applied with cleaner-H (black cap).

Apply glass activator (yellow cap) to the area on the window to which PUR adhesive will be applied.

Apply glass primer (green cap) to the area on the window to which PUR adhesive will be applied.

Apply generously (although not so much that it runs).

Let the primer dry until the surface is matt.

Apply the PUR/RIM activator (blue cap) on the remaining PUR bead on the body flange.

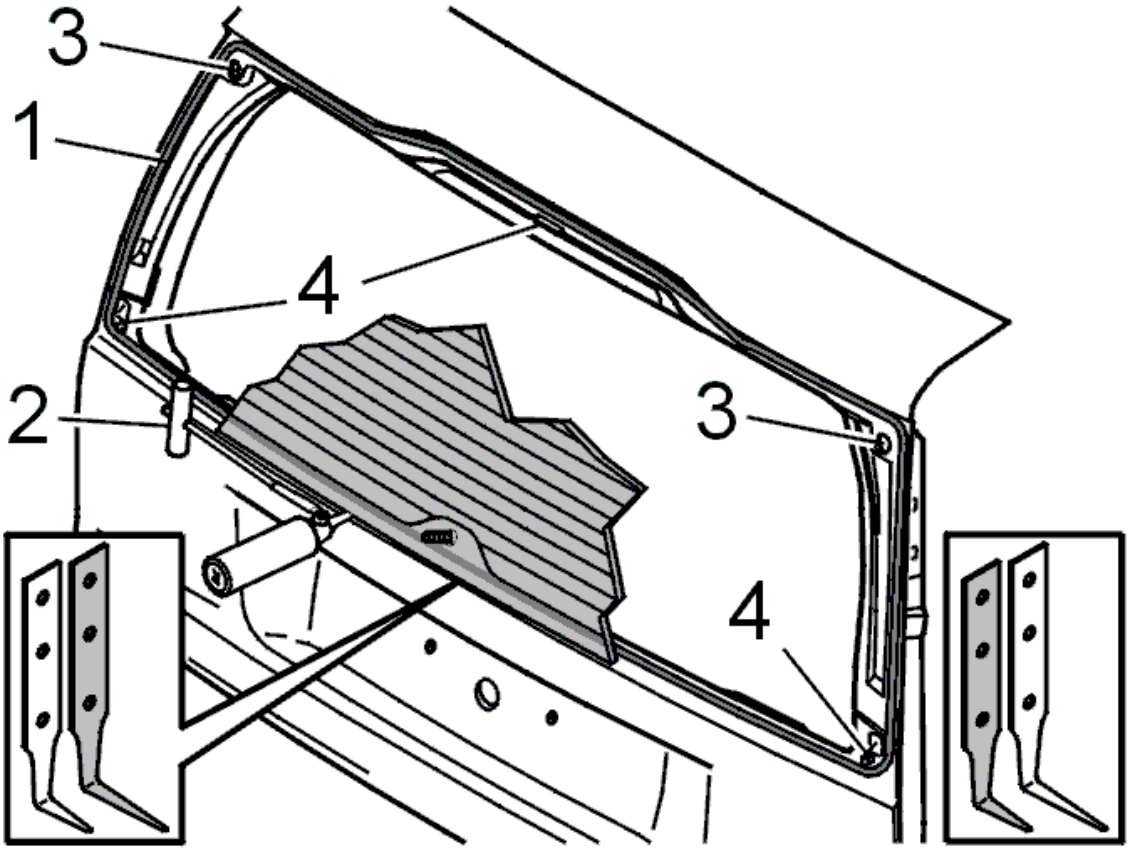

Fig. 8: Identifying PUR Bead, Window Knife, Guide Hole, And Spacers
Courtesy of VOLVO CARS CORPORATION

Load the gun with both cartridges and the mixing pipe.

Apply adhesive to either the window or to the body flange.

Press the window into place by hand.

Reinstall the connector for the heated rear windshield.

Secure with tape.

Load the gun with both cartridges and the mixing pipe.

Apply adhesive to either the window or to the body flange.

Press the window into place by hand.

Secure with tape.

LOCK, HANDLE (2003)

CABLE, INTERNAL HANDLE, FRONT SIDE DOOR, REPLACING

NOTE: **As the illustrations in this service information are used for different model years and / or models, some variation may occur. However, the essential information in the illustrations is always correct.**

REMOVING THE CABLE FOR THE INNER HANDLE IN THE FRONT SIDE DOORS

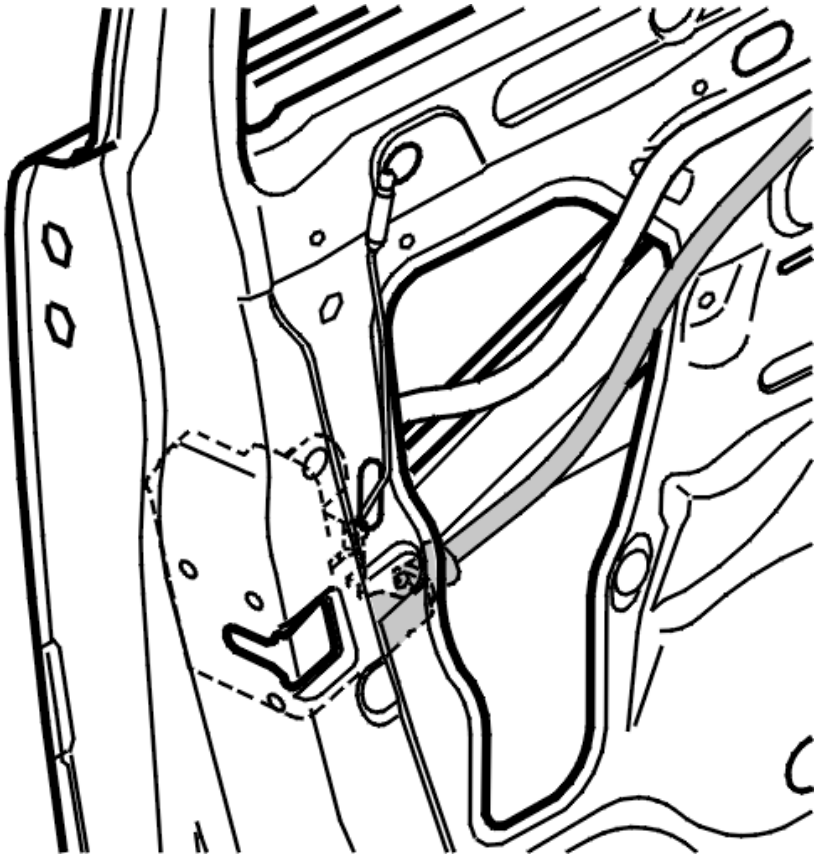

Fig. 9: Identifying Lock Mechanism & Cable
Courtesy of VOLVO CARS CORPORATION

Remove:

- the door panel. See **PANEL FRONT SIDE DOOR, REPLACING**
- the run-off profile.

Unhook the cable from the lock mechanism.

INSTALLING THE CABLE FOR THE INNER HANDLE IN THE FRONT SIDE DOORS

Hook the cable into the lock mechanism.

Install

- the run-off profile
- the door panel. See **PANEL FRONT SIDE DOOR, REPLACING** .

CABLE, INTERNAL HANDLE, REAR SIDE DOOR, REPLACING

NOTE: **As the illustrations in this service information are used for different model years and / or models, some variation may occur. However, the essential information**

is always correct.

REMOVING THE CABLE FOR THE INNER HANDLE IN THE REAR SIDE DOORS

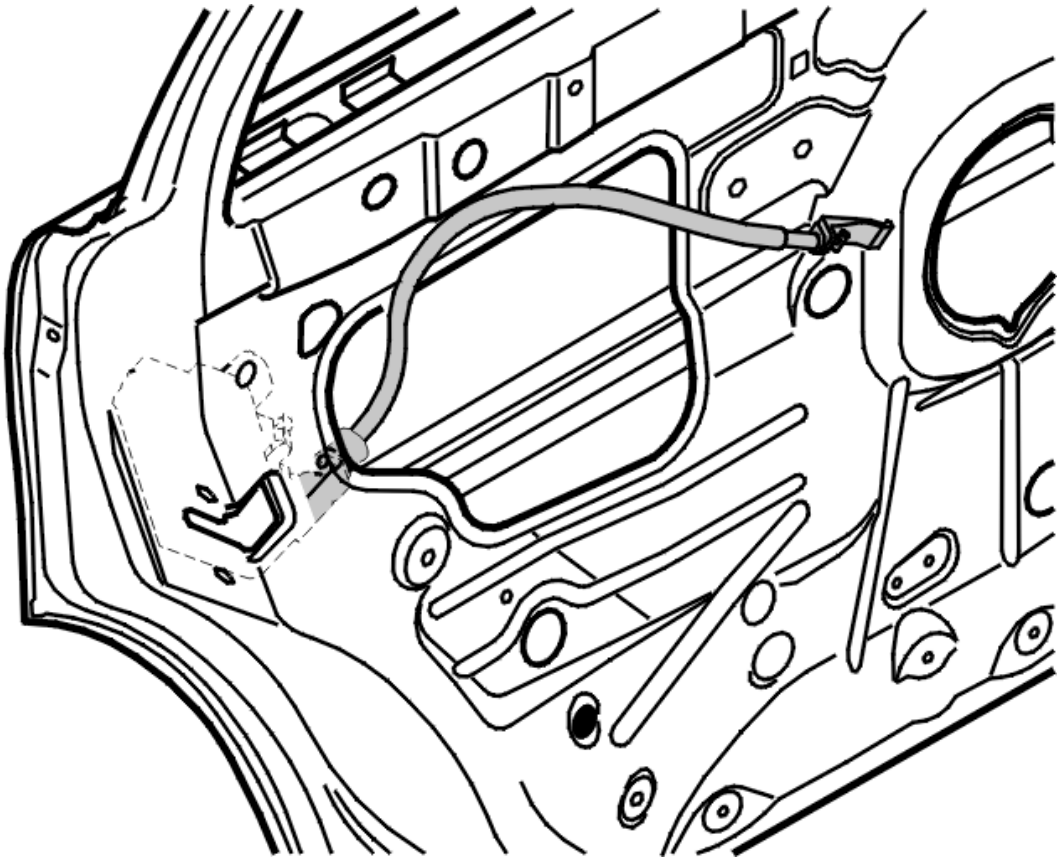

Fig. 10: Identifying Lock Mechanism Cable
Courtesy of VOLVO CARS CORPORATION

Remove:

- the door panel. See **PANEL REAR SIDE DOOR, REPLACING**
- the run-off profile.

Unhook the cable from the lock mechanism.

INSTALLING THE CABLE FOR THE INNER HANDLE IN THE REAR SIDE DOORS

Hook the cable into the lock mechanism.

Install:

- the run-off profile
- the door panel. See **PANEL REAR SIDE DOOR, REPLACING** .

HANDLE INNER FRONT SIDE DOOR, REPLACING

NOTE: **As the illustrations in this service information are used for different model years and / or models, some variation may occur. However, the essential information in the illustrations is always correct.**

REMOVING THE INNER HANDLE FROM THE FRONT SIDE DOORS

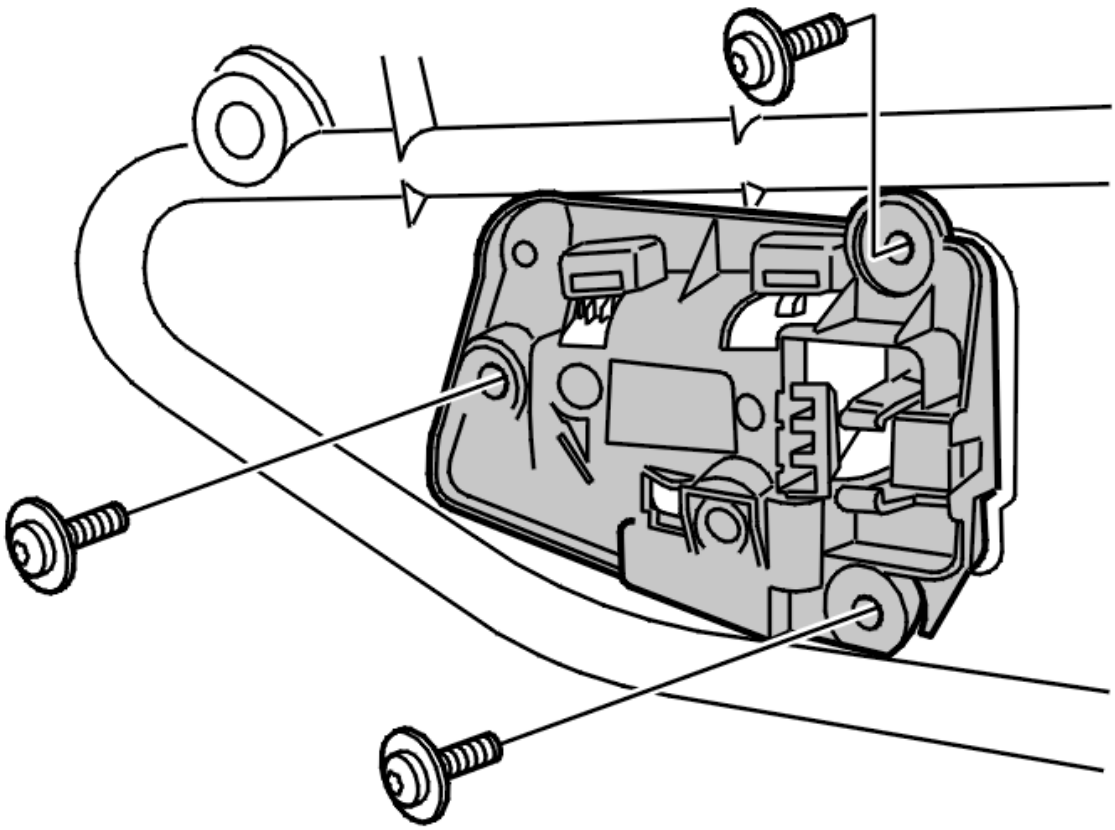

Fig. 11: Identifying Inner Handle Screws
Courtesy of VOLVO CARS CORPORATION

Remove:

- the door panel. See **PANEL FRONT SIDE DOOR, REPLACING**
- the 3 screws.

Press the surround out of the bracket.

INSTALLING THE INNER HANDLE IN THE FRONT SIDE DOORS

Install the 3 screws. Tighten.

Press the surround into the bracket.

Install the door panel. See **PANEL FRONT SIDE DOOR, REPLACING** .

HANDLE INNER REAR SIDE DOOR, REPLACING

NOTE: **As the illustrations in this service information are used for different model years and / or models, some variation may occur. However, the essential information in the illustrations is always correct.**

REMOVING THE INNER HANDLE FROM THE REAR SIDE DOORS

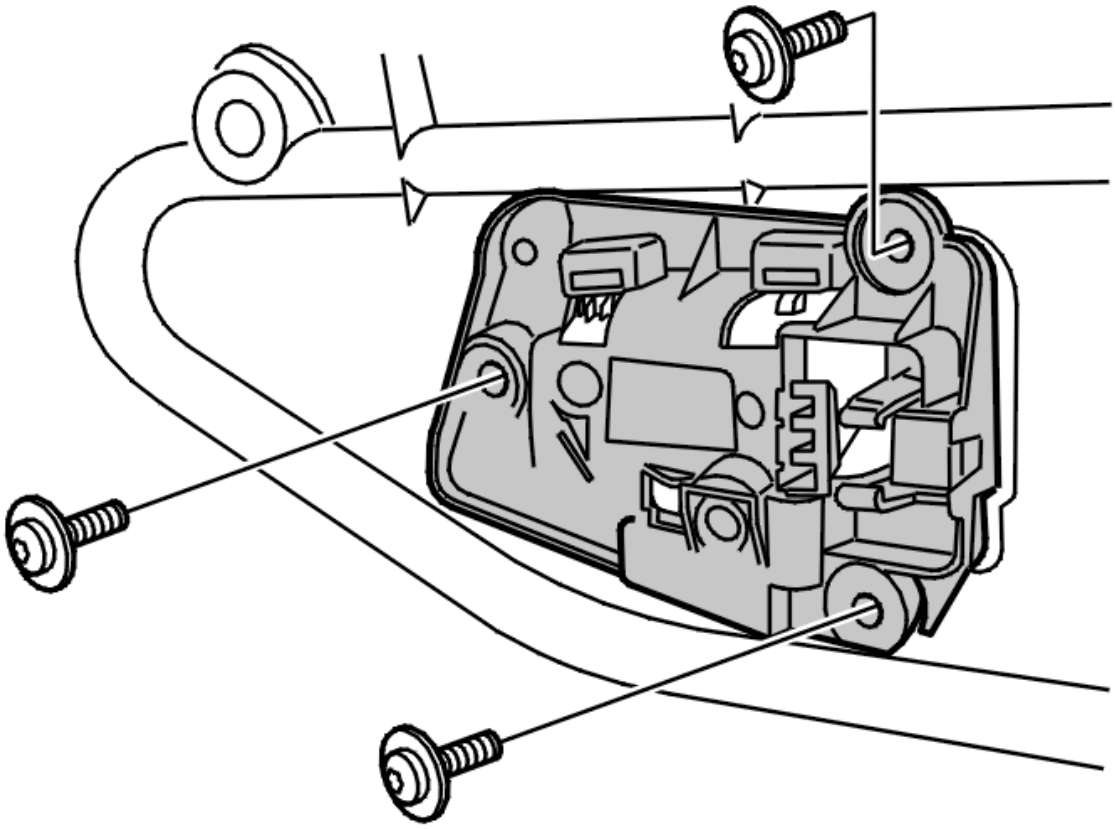

Fig. 12: Identifying Inner Handle Screws
Courtesy of VOLVO CARS CORPORATION

Remove:

- the door panel. See **PANEL REAR SIDE DOOR, REPLACING**
- 3 screw.

Press the surround out of the bracket.

INSTALLING THE INNER HANDLE IN THE REAR SIDE DOORS

Press the surround into the bracket.

Install:

- 3 screw. Tighten
- the door panel. See **PANEL REAR SIDE DOOR, REPLACING** .

HANDLE INNER TAILGATE LOWER, REPLACING

NOTE: As the illustrations in this service information are used for different model years and / or models, some variation may occur. However, the essential information in the illustrations is always correct.

REMOVING THE INNER HANDLE FROM THE LOWER TAILGATE

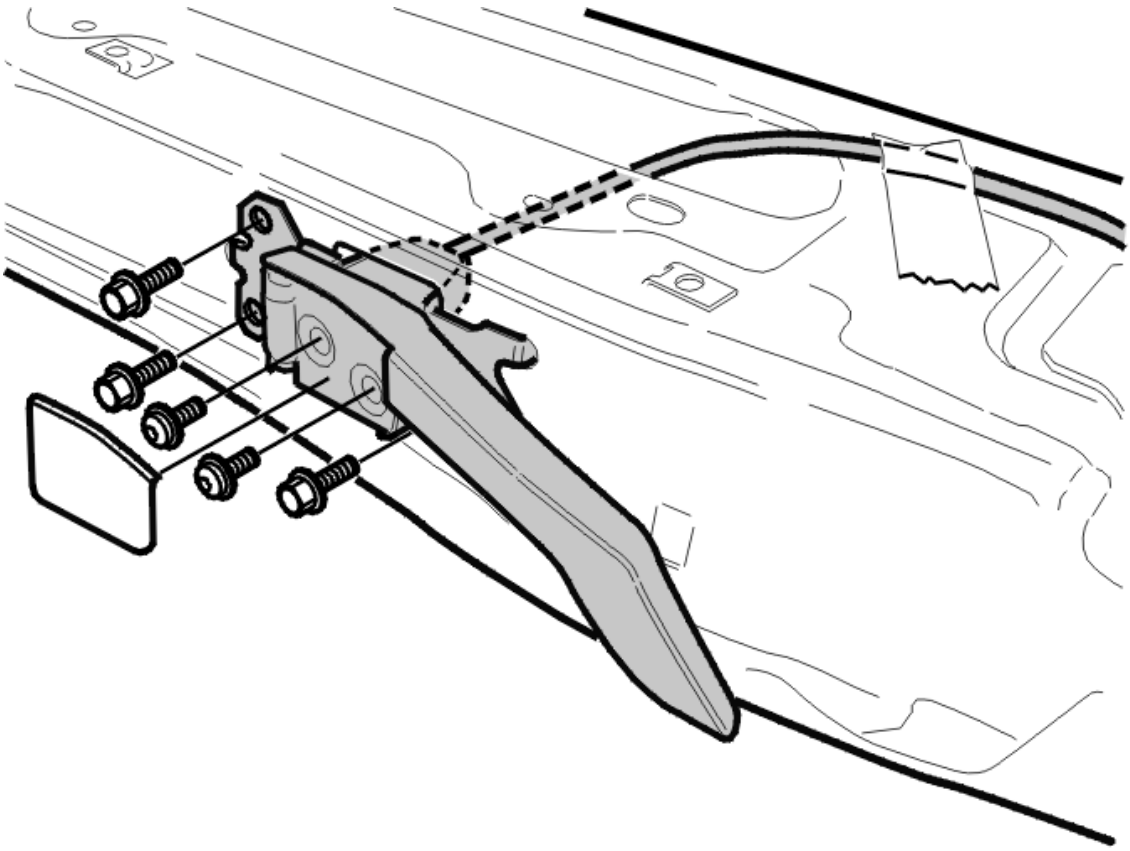

Fig. 13: Identifying Tailgate Handle Screws
Courtesy of VOLVO CARS CORPORATION

Remove the lock mechanism. See **LOCK MECHANISM TAILGATE LOWER, REPLACING**.

Unhook the cable from the lock.

Remove the cable from the clip in the tailgate.

Remove the 3 screws.

Pull the opening handle and cables from the tailgate.

Remove:

- the cover on the opening handle
- the 2 screws.

Unhook the cables from the opening handle.

Release the catches.

Remove the cable from the bracket.

INSTALLING THE INNER HANDLE IN THE LOWER TAILGATE

NOTE: For tightening torques, see TIGHTENING TORQUE .

Install:

- the cable from the bracket
- the opening handle
- the 2 M5 screws. Tighten
- the cover
- the opening handle and the cables in the tailgate
- the 3 M8 screws. Tighten.

Press the cable into place in the clip.

Hook the cables in the lock.

Install the lock mechanism. See **LOCK MECHANISM TAILGATE LOWER, REPLACING**.

HANDLE OUTER FRONT SIDE DOOR, REPLACING

NOTE: As the illustrations in this service information are used for different model years and / or models, some variation may occur. However, the essential information in the illustrations is always correct.

Included in this method are methods for:

- outer front door handle **without** deadlocking. See **HANDLE OUTER FRONT SIDE DOOR (WITHOUT DEADLOCKING), REPLACING**
- outer front door handle **with** deadlocking. See **HANDLE, OUTER, FRONT, SIDE DOOR (WITH DEADLOCKING), REPLACING**.

HANDLE OUTER FRONT SIDE DOOR (WITHOUT DEADLOCKING), REPLACING

REMOVING THE HANDLE FROM THE OUTER FRONT SIDE DOOR (WITHOUT DEADLOCKING)

Close the side window.

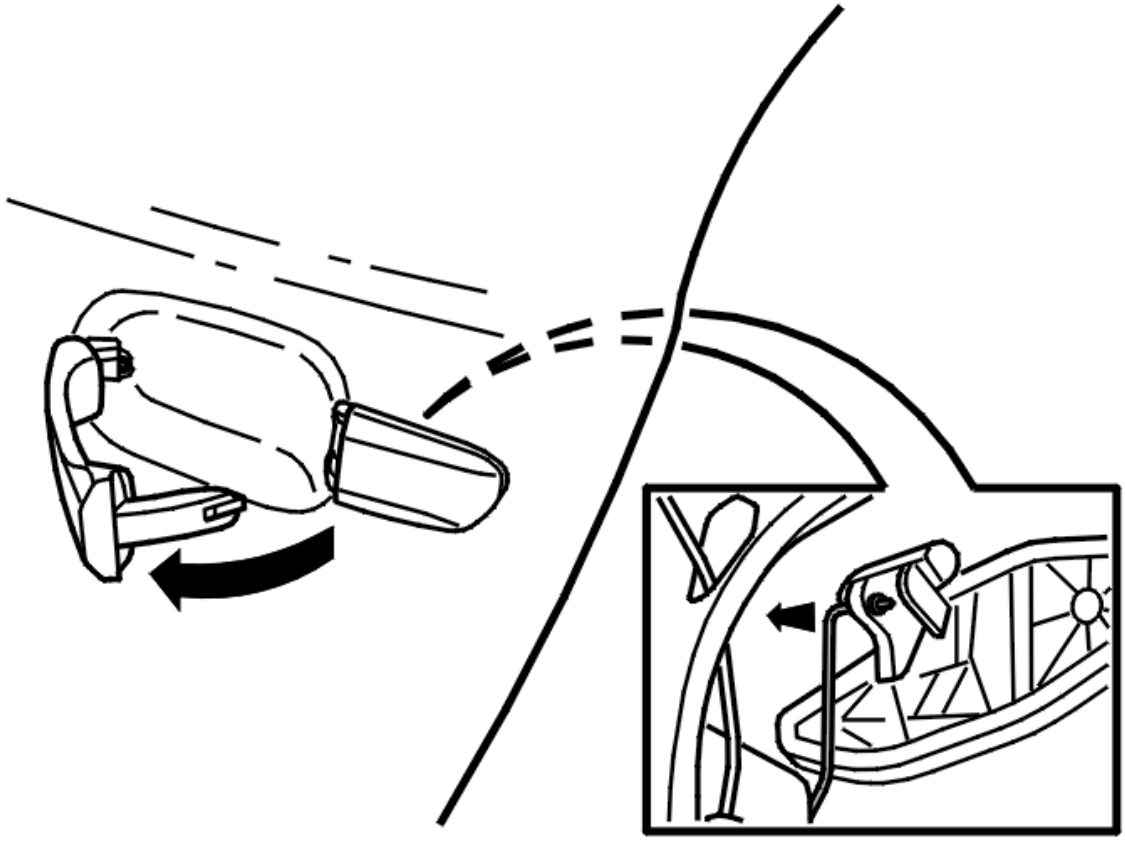

Fig. 14: Identifying Outer Front Side Door Handle
Courtesy of VOLVO CARS CORPORATION

Remove:

- the door panel. See **PANEL FRONT SIDE DOOR, REPLACING**
- the run-off profile
- the two links between the handle and the lock.

Pull out the handle. Work out the front end of the handle from the side of the door.

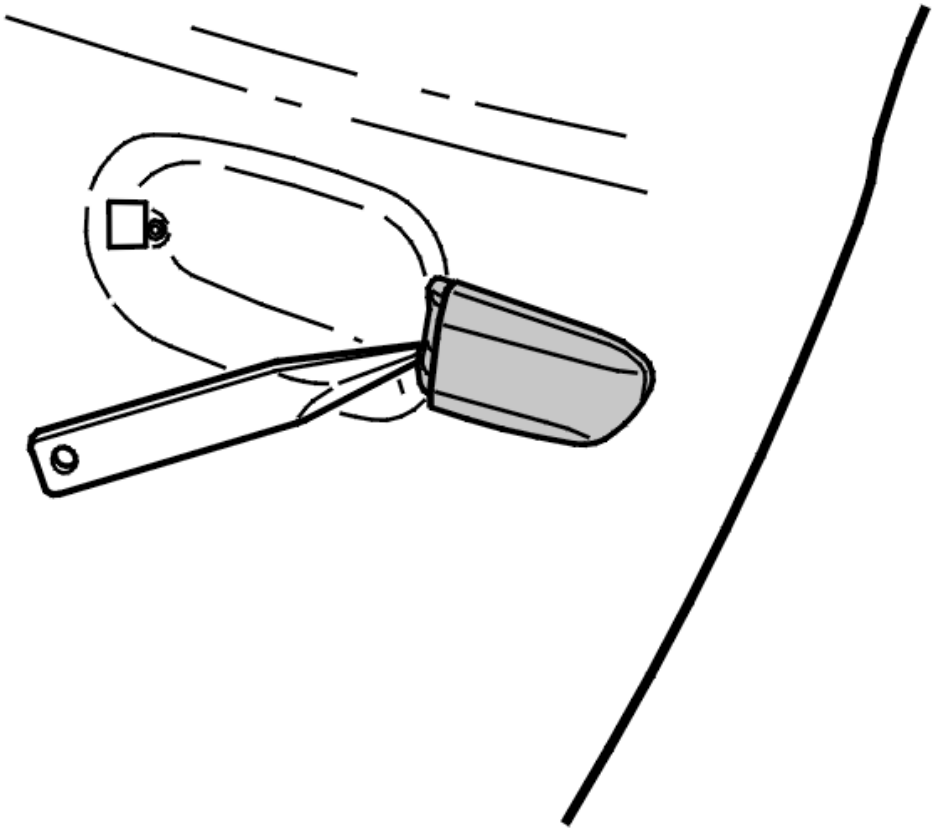

Fig. 15: View Of Outside Door Bracket
Courtesy of VOLVO CARS CORPORATION

Remove the bracket on the outside of the door.

NOTE: **This bracket must be replaced with a new one.**

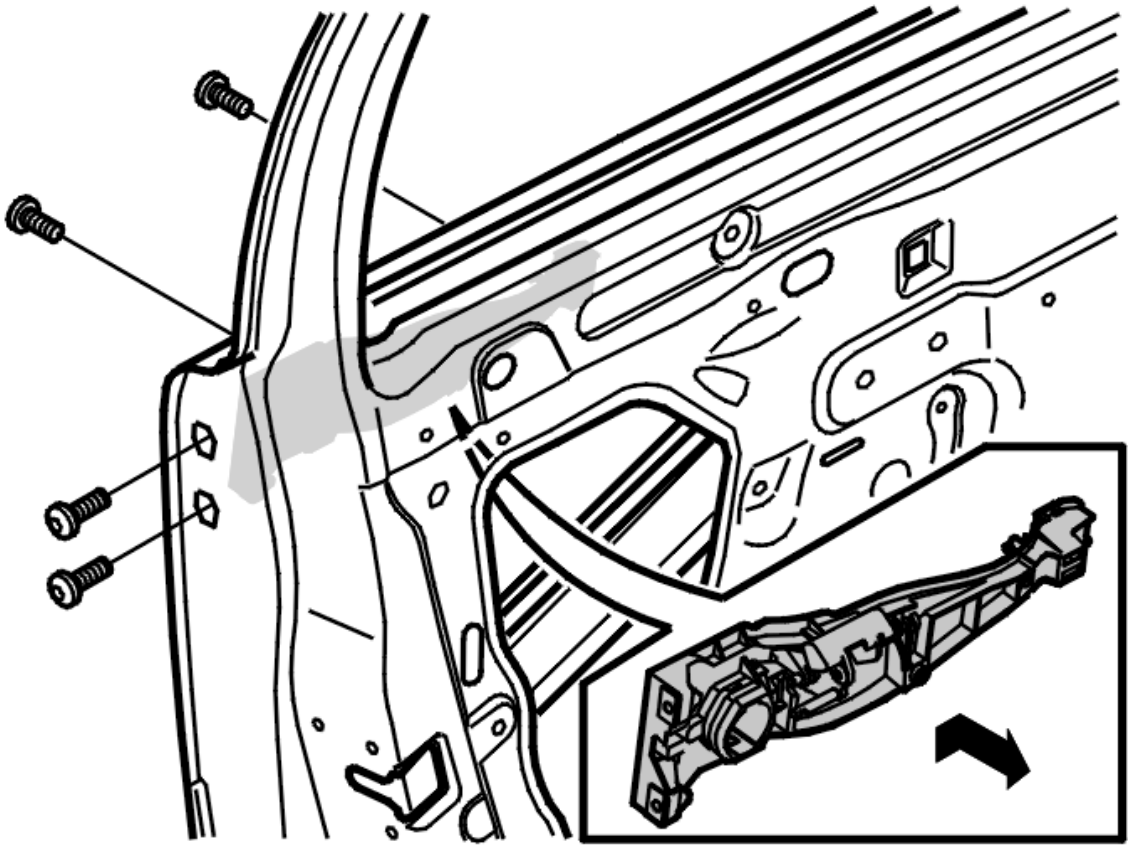

Fig. 16: Identifying Bracket Screws
Courtesy of VOLVO CARS CORPORATION

Remove:

- the 4 screws
- the bracket for the handle by pressing it forwards from the inside.

INSTALLING THE HANDLE ON THE OUTER FRONT SIDE DOOR (WITHOUT DEADLOCKING)

NOTE: For tightening torques, see TIGHTENING TORQUE .

Install:

- the bracket for the handle
- the 4 M5 screws. Tighten
- the bracket on the outside of the door
- the handle Press back the upper front link mounting so that the handle is secured
- the links between the outer handle and the lock
- the run-off profile
- the door panel. See **PANEL FRONT SIDE DOOR, REPLACING** .

HANDLE, OUTER, FRONT, SIDE DOOR (WITH DEADLOCKING), REPLACING

REMOVING THE EXTERIOR HANDLE FROM THE FRONT SIDE DOORS

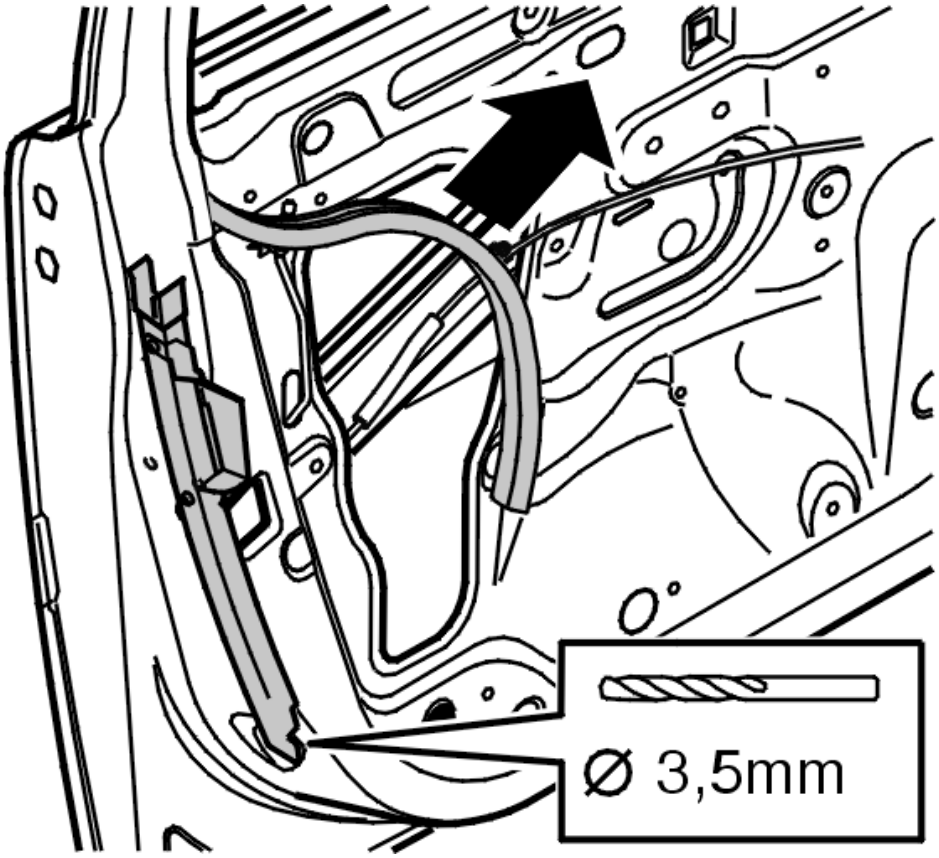

Fig. 17: View Of Door Strip Weatherstrip
Courtesy of VOLVO CARS CORPORATION

Remove:

- the door panel. See **PANEL FRONT SIDE DOOR, REPLACING**
- the run-off profile
- the window. See **WINDOW FRONT SIDE DOOR, REPLACE** .

Detach the weatherstrip up to the door arch.

Drill out the rivets. See **REMOVING RIVET** .

Remove the glass guide.

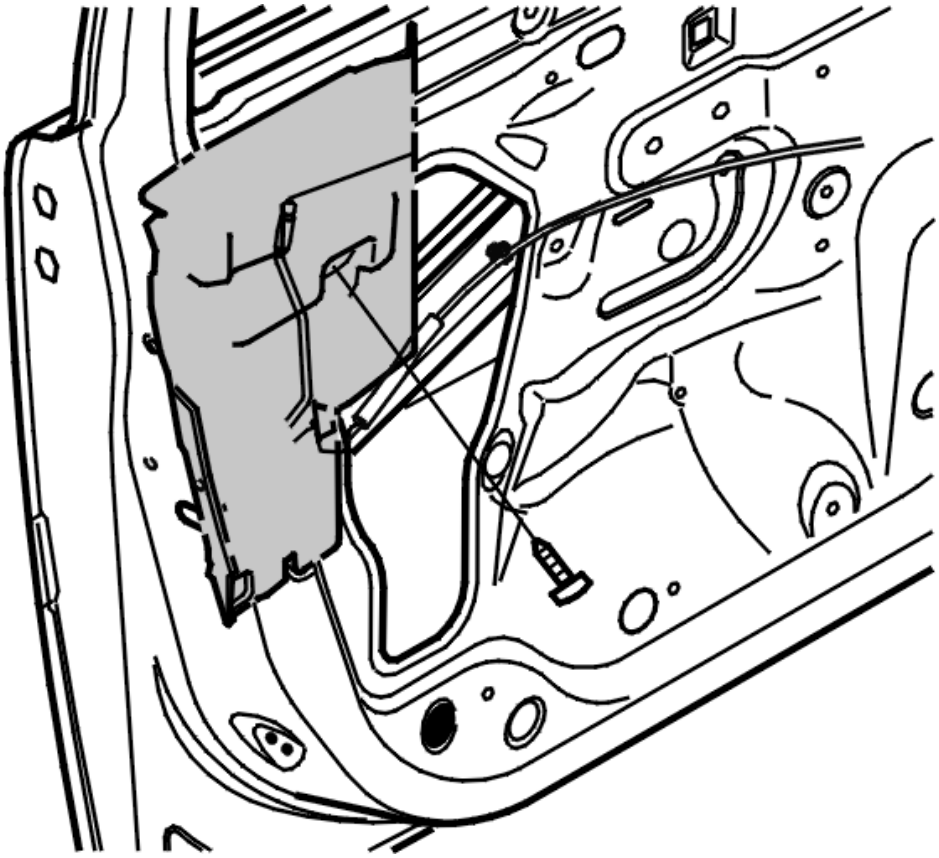

Fig. 18: Identifying Glass Guide Screw
Courtesy of VOLVO CARS CORPORATION

Remove 1 screw.

NOTE: Note how the cover is positioned at the member.

Work the cover out.

NOTE: There is no cover on the passenger side.

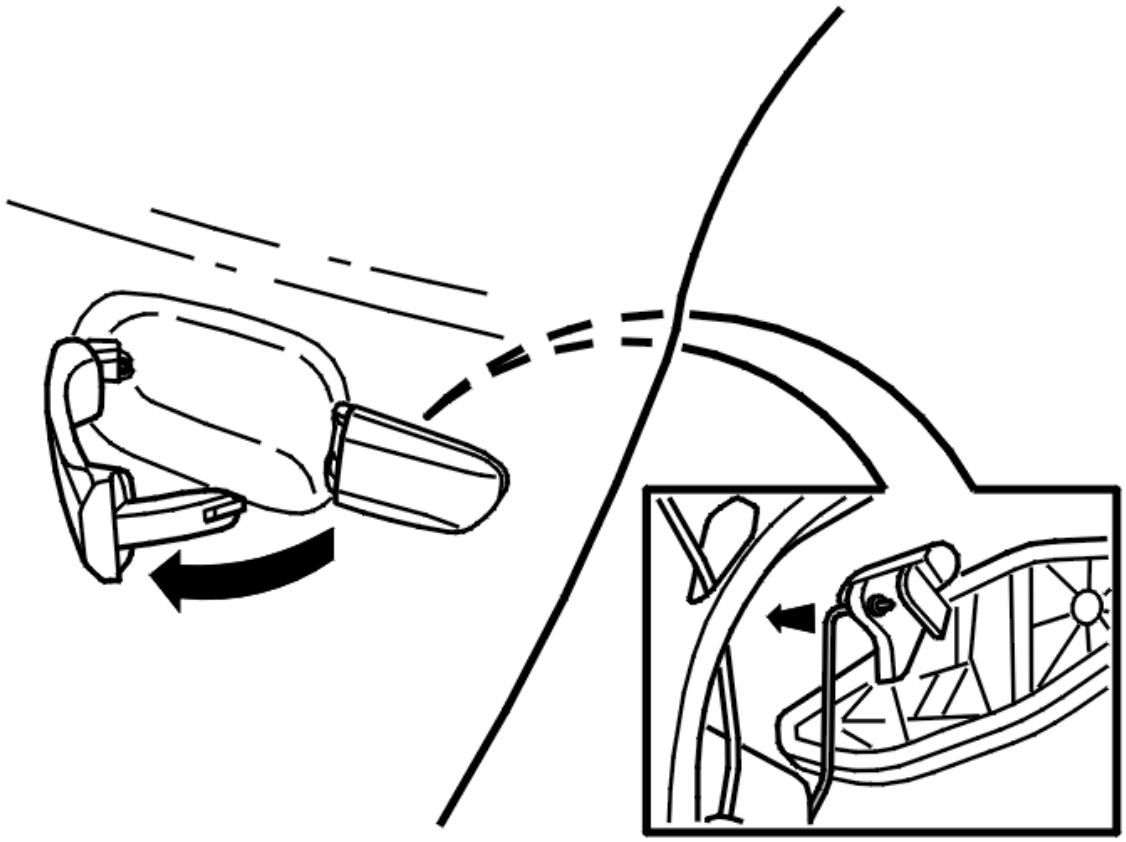

Fig. 19: Identifying Outer Front Side Door Handle
Courtesy of VOLVO CARS CORPORATION

Remove the links between the outer handle and the lock.

Press the upper front mounting for the link forward.

Pull out the handle. Work out the front end of the handle from the side of the door.

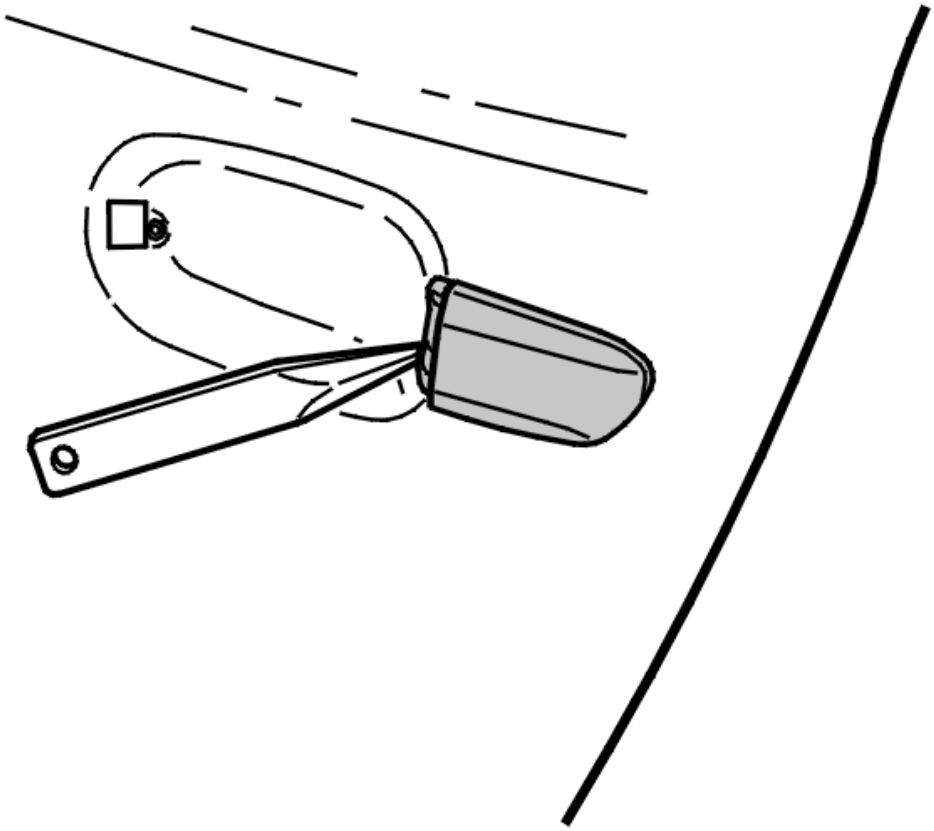

Fig. 20: View Of Outside Door Bracket
Courtesy of VOLVO CARS CORPORATION

Remove the bracket on the outside of the door.

NOTE: **This bracket must be replaced with a new one.**

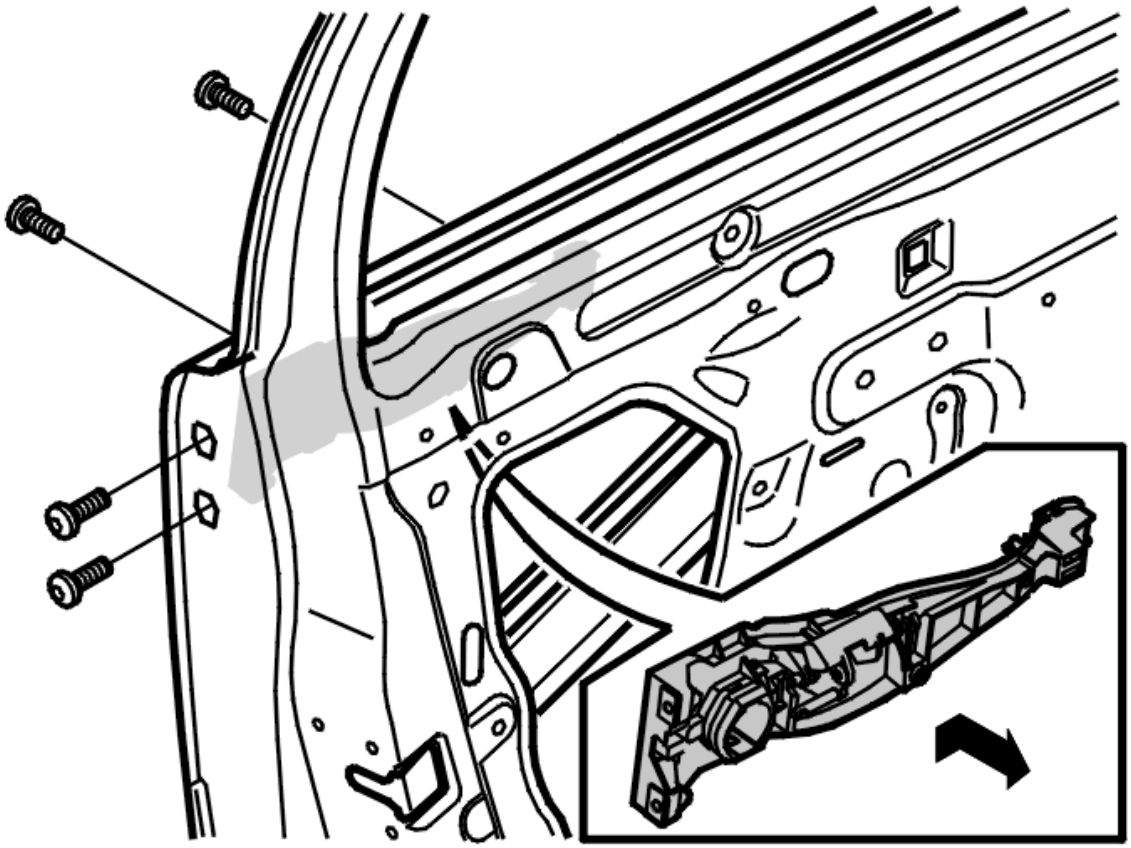

Fig. 21: Identifying Bracket Screws
Courtesy of VOLVO CARS CORPORATION

Remove:

- the 4 screws
- the bracket for the handle by pressing it forwards from the inside.

INSTALLING THE HANDLE ON THE OUTER FRONT SIDE DOOR (WITH DEADLOCKING)

NOTE: For tightening torques, see TIGHTENING TORQUE .

Install:

- the bracket for the handle
- the 4 M5 screws. Tighten
- the bracket on the outside of the door
- the handle.

Press back the upper link mounting so that the handle is secured.

Install:

- the links between the outer handle and the lock
- the cover
- 1 M5 screw. Tighten
- the glass guide
- the 2 blind rivets
- weatherstrip.

HINT: Work in the weatherstrip using a little soap.

Install:

- the side window. See **WINDOW FRONT SIDE DOOR, REPLACE**
- the run-off profile
- the door panel. See **PANEL FRONT SIDE DOOR, REPLACING** .

HANDLE OUTER REAR SIDE DOOR, REPLACING

NOTE: **As the illustrations in this service information are used for different model years and / or models, some variation may occur. However, the essential information in the illustrations is always correct.**

REMOVING THE EXTERIOR HANDLE FROM THE REAR SIDE DOORS

The side window must be closed.

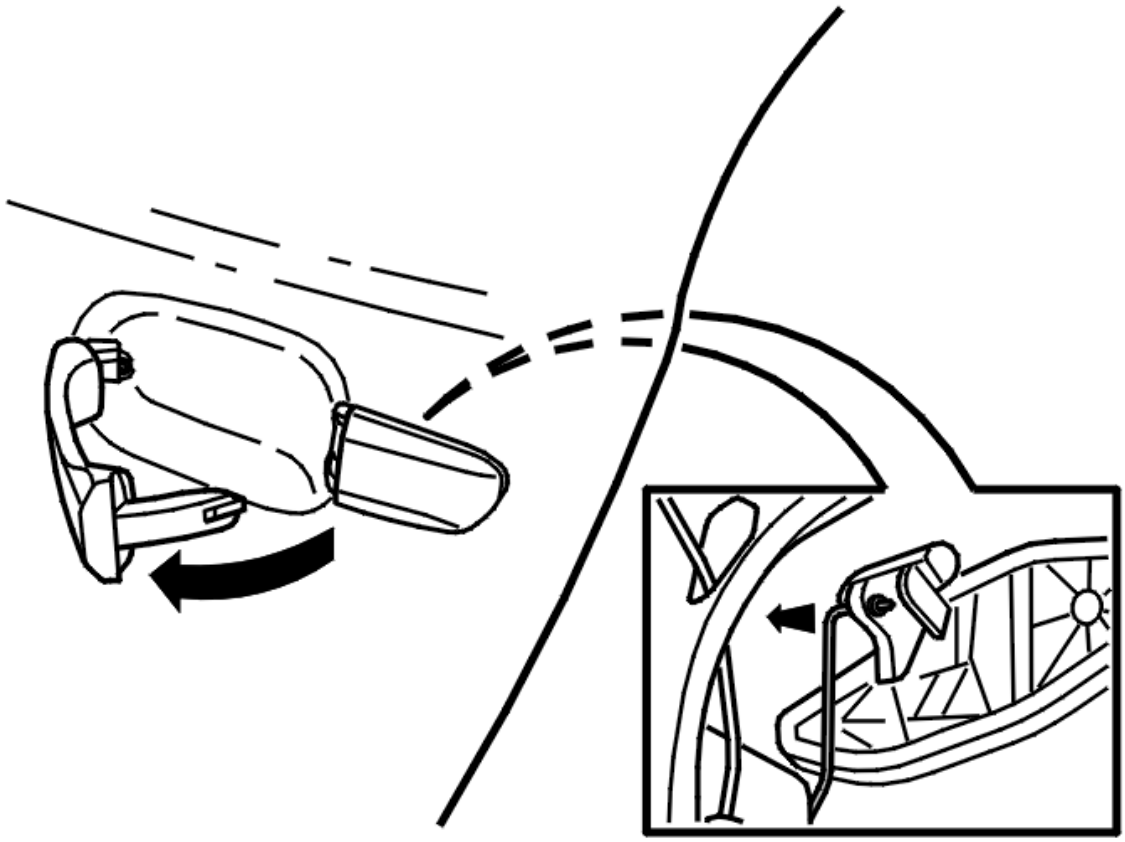

Fig. 22: Identifying Outer Front Side Door Handle
Courtesy of VOLVO CARS CORPORATION

Remove:

- the door panel. See **PANEL REAR SIDE DOOR, REPLACING**
- the run-off profile.

Detach the link for the exterior handle at the lock.

Press the upper mounting for the link forward.

Pull out the handle and work out the front edge of the handle from the side of the door.

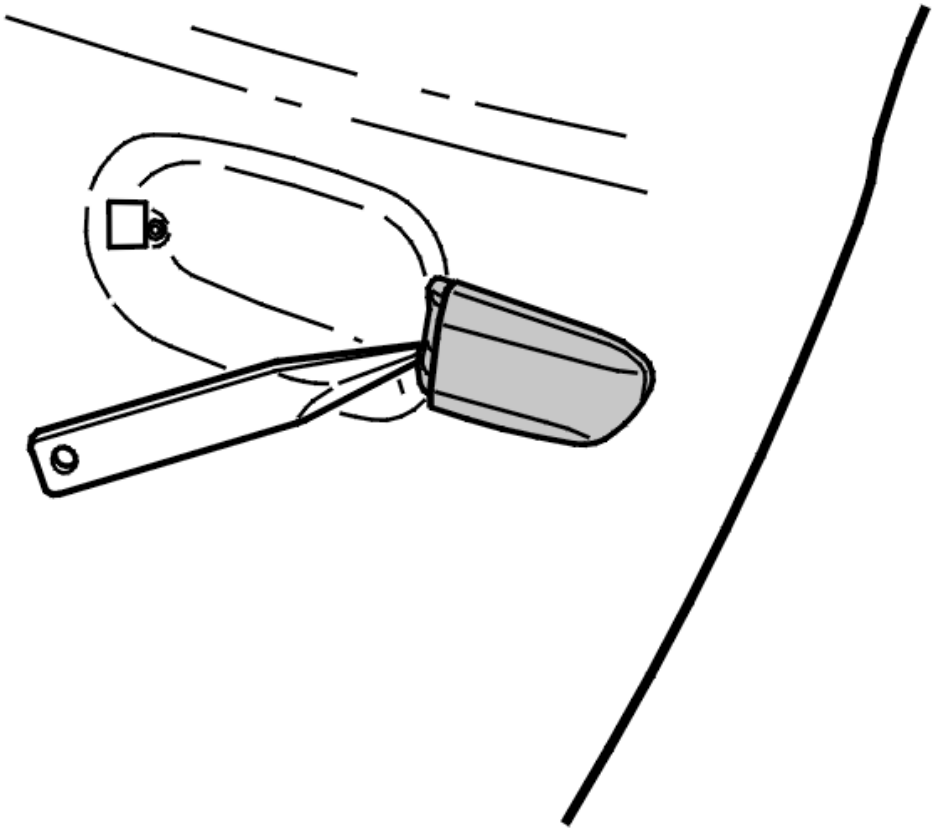

Fig. 23: View Of Outside Door Bracket
Courtesy of VOLVO CARS CORPORATION

Remove the bracket on the outside of the door.

NOTE: Replace the bracket with a new one.

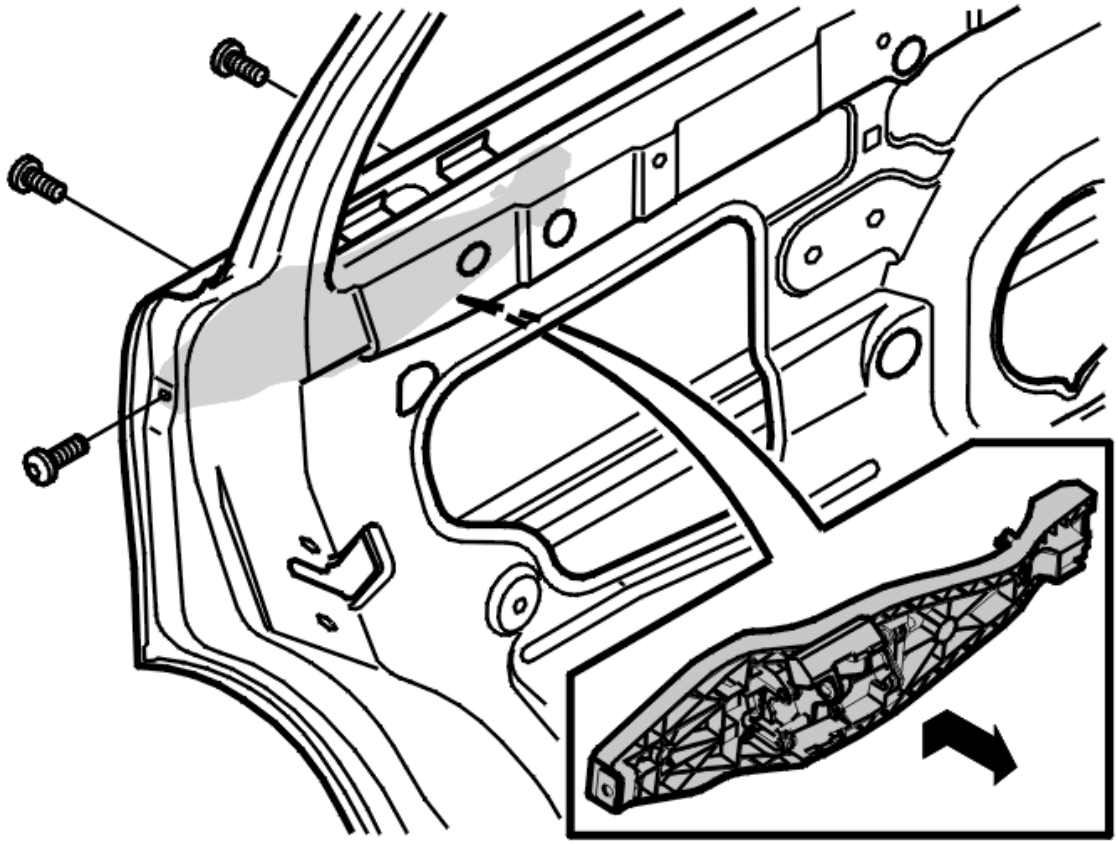

Fig. 24: Identifying Outer Rear Side Door Handle Screws
Courtesy of VOLVO CARS CORPORATION

Remove:

- the 3 screws
- the bracket for the handle. Press the bracket forwards from the inside.

INSTALLING THE EXTERIOR HANDLE IN THE REAR SIDE DOORS

NOTE: For tightening torques, see TIGHTENING TORQUE .

Install:

- the bracket for the handle
- the 3 M5 screws. Tighten
- the bracket on the outside of the door
- the handle.

Press back the upper link mounting so that the handle is secured.

Install:

- the link between the exterior handle and the lock
- the soundproofing
- the door panel. See **PANEL REAR SIDE DOOR, REPLACING** .

HANDLE OUTER TAILGATE UPPER, REPLACING

NOTE: The illustrations in this service information are used for different model years and / or models. Some variation may occur. However, the essential information in the illustrations is always correct.

REMOVING THE EXTERIOR HANDLE FROM THE UPPER TAILGATE

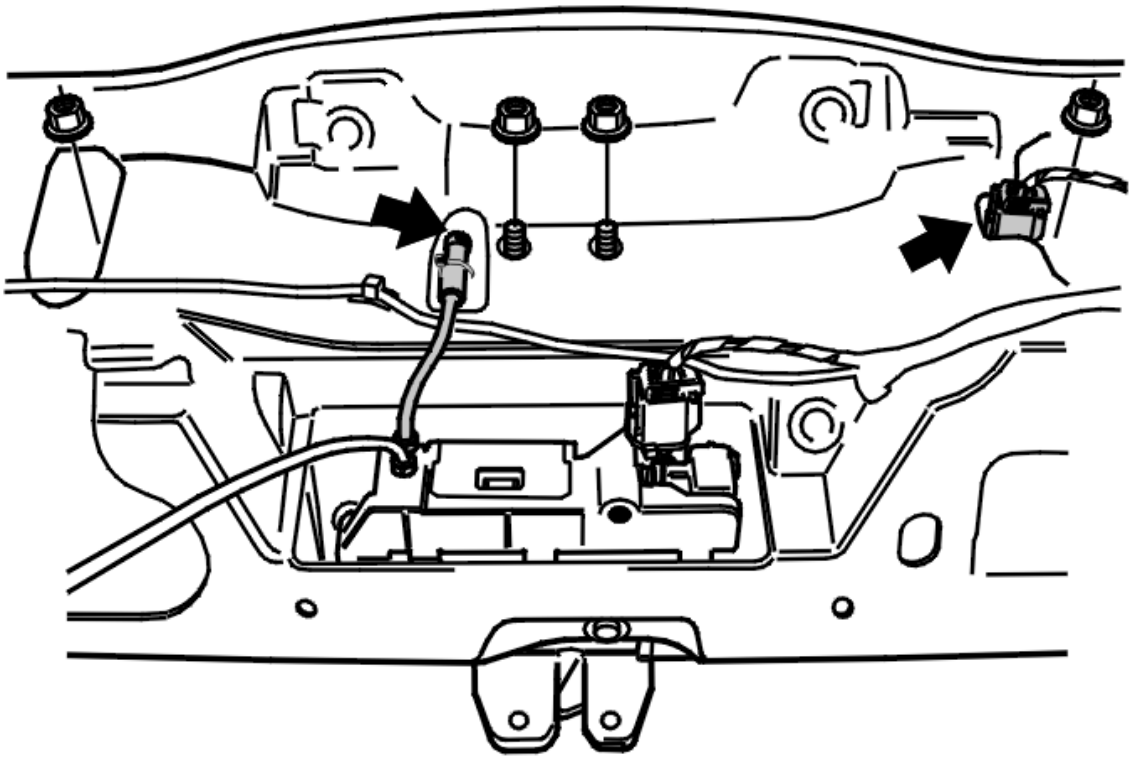

Fig. 25: Identifying Upper Tailgate Handle Mechanical Cable
Courtesy of VOLVO CARS CORPORATION

Remove:

- the wiper arm. See **TAILGATE WIPER ARM / BLADE, REPLACING**
- the panel. See **PANEL TAILGATE UPPER, REPLACING**
- the 3 screws for the wiper motor
- the wiper motor
- the mechanical cable for the outer opening handle

- the 4 nuts
- the connector.

Remove the outer handle.

INSTALLING THE EXTERIOR HANDLE ON THE UPPER TAILGATE

NOTE: **For tightening torques, see TIGHTENING TORQUE .**

Install:

- the opening handle
- 4 M6 nuts. Tighten
- the mechanical cable for the outer opening handle
- the wiper motor
- the connector for the wiper motor
- the 3 M6 screws. Tighten
- the panel. See **PANEL TAILGATE UPPER, REPLACING**
- the wiper arm. See **TAILGATE WIPER ARM / BLADE, REPLACING**

LOCK CYLINDER GLOVE COMPARTMENT, REPLACING

NOTE: **As the illustrations in this service information are used for different model years and / or models, some variation may occur. However, the essential information in the illustrations is always correct.**

REMOVING THE LOCK CYLINDER

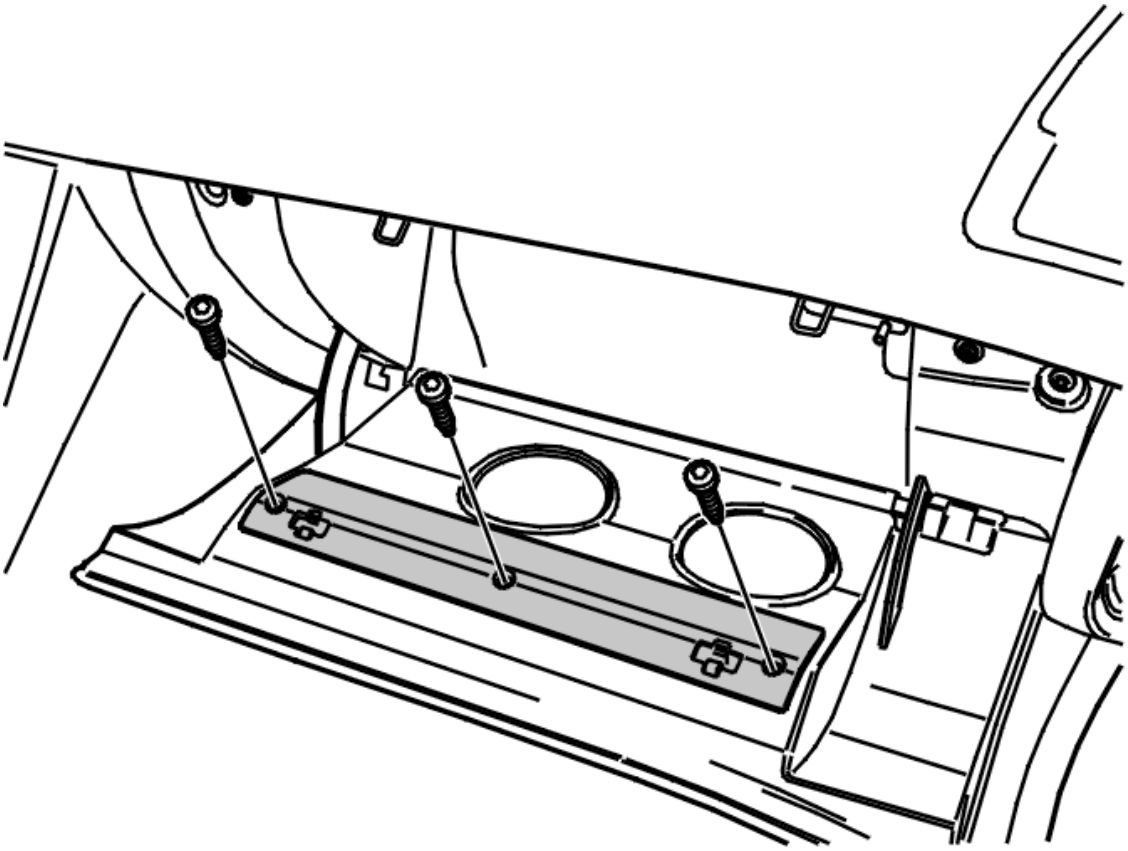

Fig. 26: Identifying Glove Compartment Screws
Courtesy of VOLVO CARS CORPORATION

Remove:

- the 3 screws.

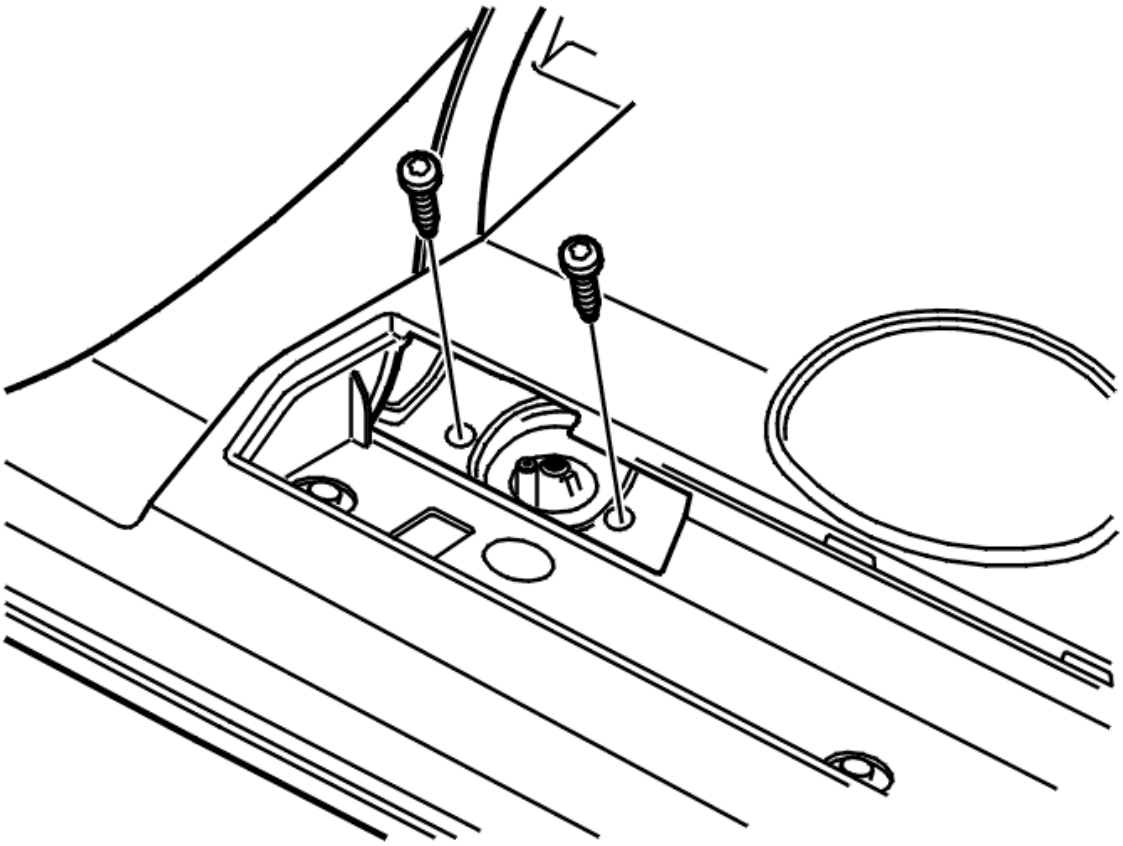

Fig. 27: View Of Lock Cylinder Screws
Courtesy of VOLVO CARS CORPORATION

- the panel
- the 2 screws
- the lock cylinder.

INSTALLING THE LOCK CYLINDER

Install:

- the lock cylinder
- the 2 screws. Tighten
- the panel
- the 3 screws. Tighten.

LOCK CYLINDER SIDE DOOR, REPLACING

NOTE: **As the illustrations in this service information are used for different model years and / or models, some variation may occur. However, the essential information in the illustrations is always correct.**

REMOVING THE LOCK CYLINDER FROM THE SIDE DOOR

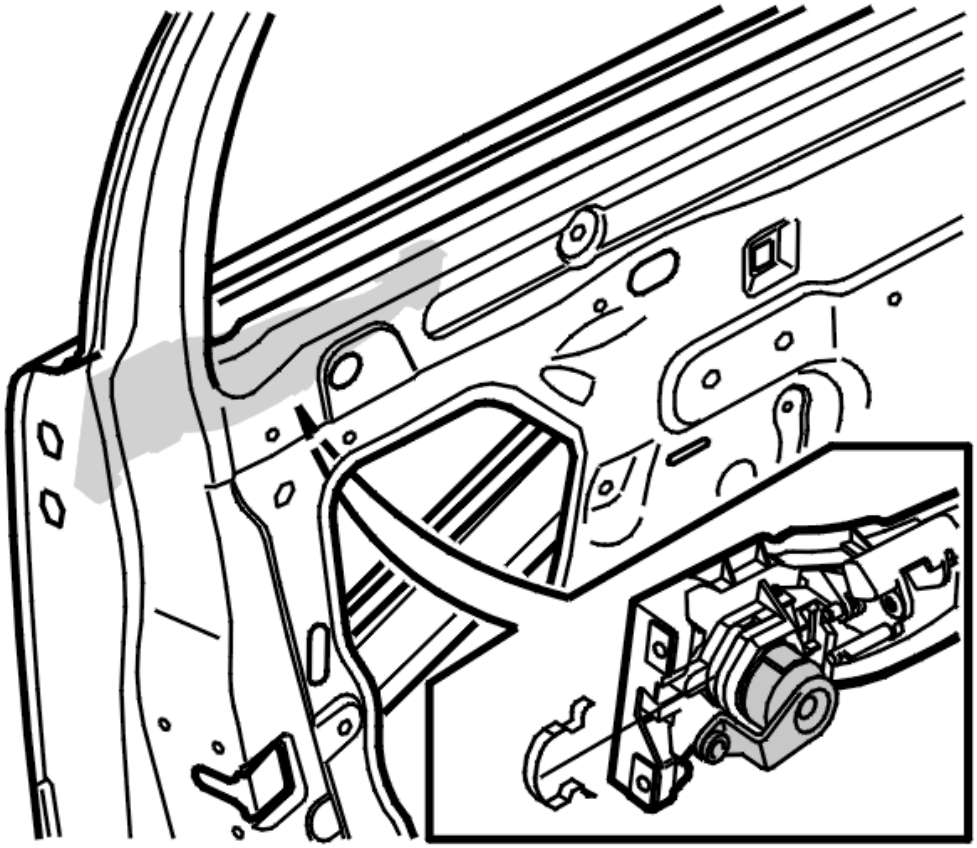

Fig. 28: Identifying Door Handle Clip
Courtesy of VOLVO CARS CORPORATION

Remove:

- the door panel. See **PANEL FRONT SIDE DOOR, REPLACING**
- the run-off profile
- the handle **with** deadlock. See **HANDLE, OUTER, FRONT, SIDE DOOR (WITH DEADLOCKING), REPLACING**
- the handle **without** deadlock. See **HANDLE OUTER FRONT SIDE DOOR (WITHOUT DEADLOCKING), REPLACING**
- the 1 clip
- the lock cylinder.

INSTALLING THE LOCK CYLINDER IN THE SIDE DOOR

Install:

- the lock cylinder
- the 1 clip

- the handle **with** deadlock. See **HANDLE, OUTER, FRONT, SIDE DOOR (WITH DEADLOCKING), REPLACING**
- the handle **without** deadlock. See **HANDLE OUTER FRONT SIDE DOOR (WITHOUT DEADLOCKING), REPLACING**
- the run-off profile
- the door panel. See **PANEL FRONT SIDE DOOR, REPLACING** .

LOCK MECHANISM FRONT SIDE DOOR, REPLACING

NOTE: **The illustrations in this service information are used for different model years and / or models. Some variation may occur. However, the essential information in the illustrations is always correct.**

Included in this method are methods for:

- lock mechanism front side door **without** deadlocking. See **LOCK MECHANISM FRONT SIDE DOOR (WITHOUT DEADLOCKING), REPLACING**
- lock mechanism front side door **with** deadlocking. See **LOCK MECHANISM FRONT SIDE DOOR (WITH DEADLOCKING), REPLACING**.

LOCK MECHANISM FRONT SIDE DOOR (WITHOUT DEADLOCKING), REPLACING

REMOVING THE LOCK MECHANISM FROM THE OUTER FRONT SIDE DOOR (WITHOUT DEADLOCKING)

The window must be in the uppermost position.

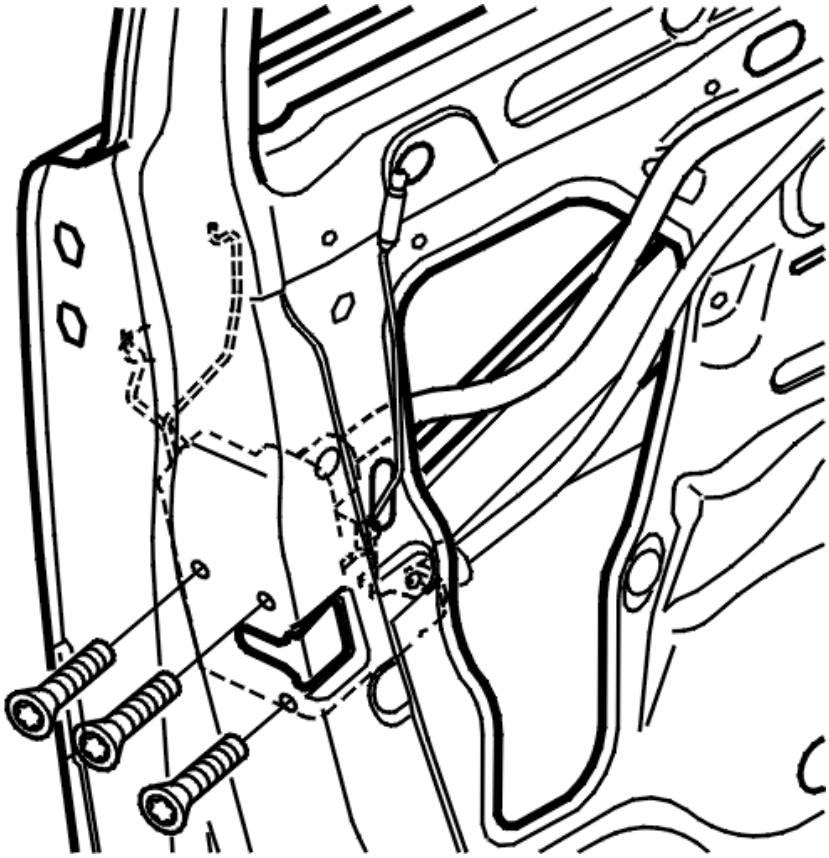

Fig. 29: Identifying Lock Screws
Courtesy of VOLVO CARS CORPORATION

Remove the door panel. See **PANEL FRONT SIDE DOOR, REPLACING** .

Move the run-off profile to one side.

Remove:

- the link for the lock button
- the guide molding
- the 2 rivets. See **REMOVING RIVET**
- the guide rail.

Detach the links for the external handle.

Remove the 3 screws.

Lift the lock out of the door.

Remove the connector.

Unhook the cable.

INSTALLING THE LOCK MECHANISM FOR THE OUTER FRONT SIDE DOOR (WITHOUT DEADLOCKING)

NOTE: For tightening torques, see TIGHTENING TORQUE .

When installing a new lock (replacement part), the clip which determines the position on the link for the lock cylinder must be removed after the lock mechanism and link for the lock cylinder have been installed.

Turn the clip 90 degrees and pull it out.

HINT: Keep the clip. The clip can be used the next time the lock is removed, in order to establish the position of the link for the lock cylinder.

Hook the cable into place.

Connect the connector.

Lift the lock into the door.

Install the 3 M6 screws. Tighten.

CAUTION: Ensure that the lower link mounting (for the lock cylinder link) on the lock mechanism has been placed in the center position, so that the holes (for the transit safety catch) in the casing for the lock mechanism and the hole in the link mounting arm correspond.

Install:

- the links for the external handle
- the guide rail
- the 2 rivets for the guide rail
- the guide molding
- the link for the inner lock button
- the run-off profile
- the door panel. See **PANEL REAR SIDE DOOR, REPLACING** .

LOCK MECHANISM FRONT SIDE DOOR (WITH DEADLOCKING), REPLACING

REMOVING THE LOCK MECHANISM FROM THE OUTER FRONT SIDE DOOR (WITH DEADLOCKING)

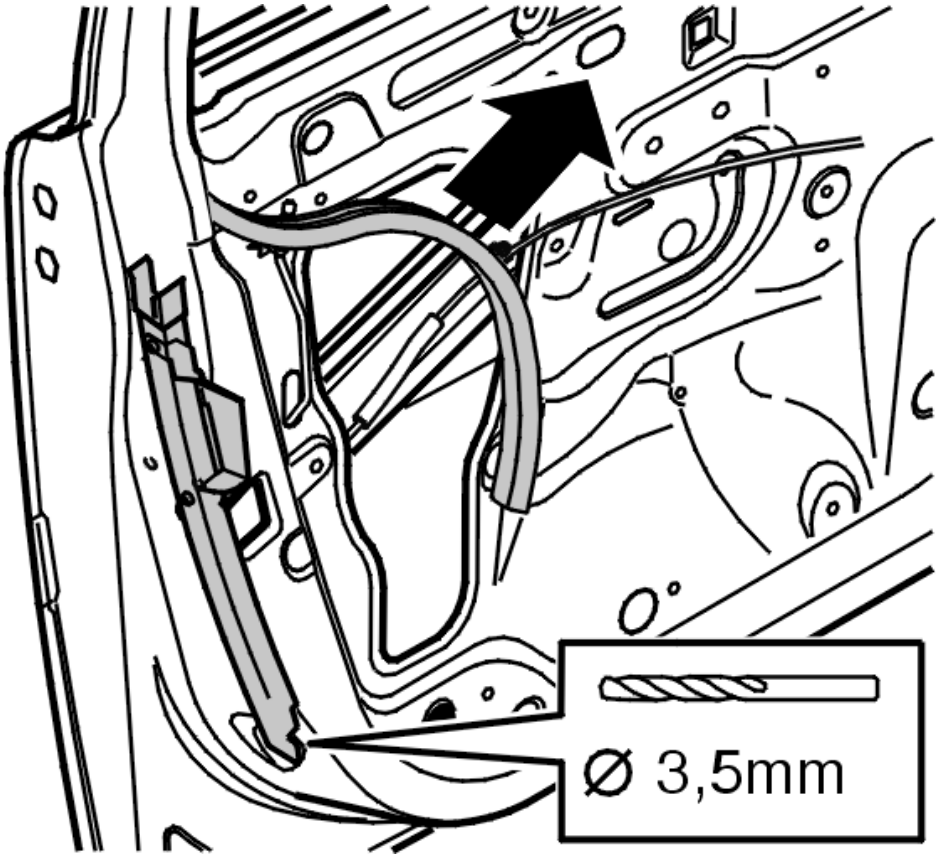

Fig. 30: View Of Door Strip Weatherstrip
Courtesy of VOLVO CARS CORPORATION

Remove:

- the door panel. See **PANEL FRONT SIDE DOOR, REPLACING**
- the run-off profile
- the window. See **WINDOW FRONT SIDE DOOR, REPLACE** .

Detach the weatherstrip up to the door arch.

Drill out the rivets. See **REMOVING RIVET**.

Remove:

- the glass guide.

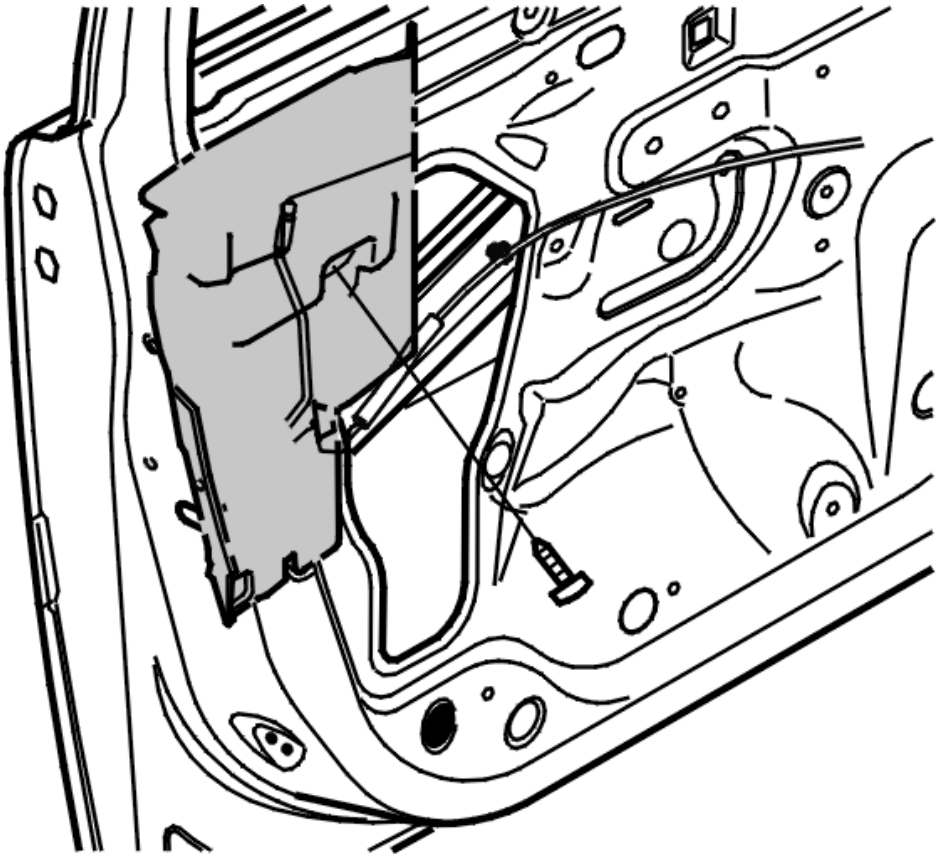

Fig. 31: Identifying Glass Guide Screw
Courtesy of VOLVO CARS CORPORATION

- 1 screw.

CAUTION: Note the position of the cover at the member.

Work the cover out.

NOTE: There is no cover on the passenger side.

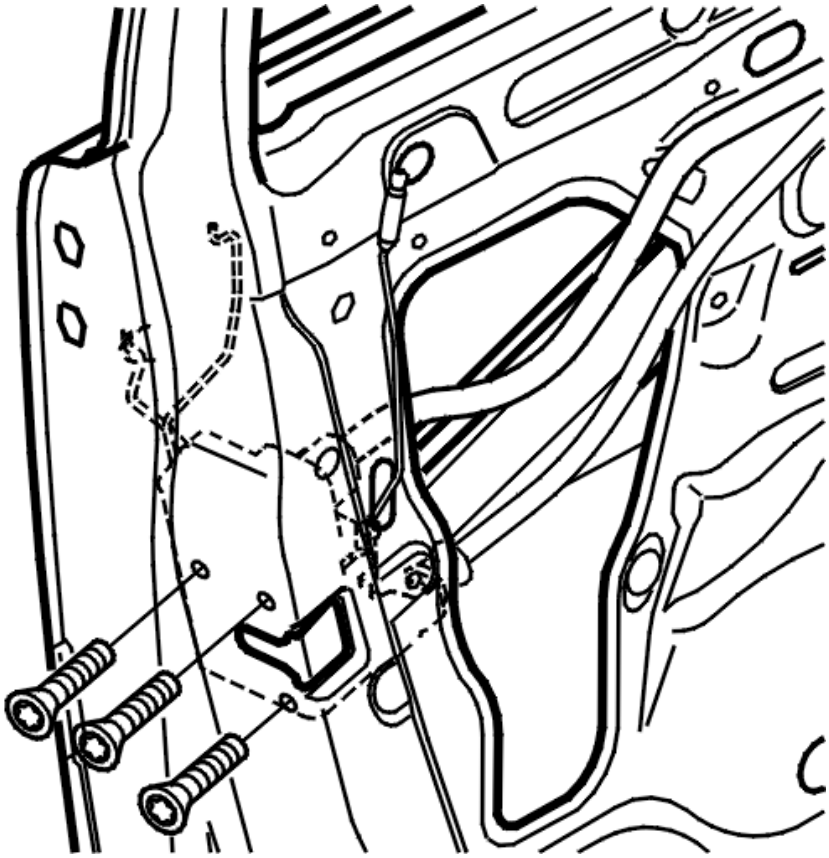

Fig. 32: Identifying Lock Screws
Courtesy of VOLVO CARS CORPORATION

Detach the links for the external handle.

Remove the 3 screws.

Lift the lock out of the door.

Remove the connector.

Unhook the cable.

INSTALLING THE LOCK MECHANISM FOR THE OUTER FRONT SIDE DOOR (WITH DEADLOCKING)

NOTE: For tightening torques, see TIGHTENING TORQUE .

When installing a new lock (replacement part), the clip which determines the position on the link for the lock cylinder must be removed after the lock mechanism and link for the lock cylinder have been installed.

Turn the clip 90 degrees and pull it out.

HINT: Keep the clip. The clip can be used the next time the lock is removed, in order to establish the

position of the link for the lock cylinder.

Hook the cable into place.

Connect the connector.

Lift the lock into the door.

Install the 3 M6 screws. Tighten.

CAUTION: Ensure that the lower link mounting (for the lock cylinder link) on the lock mechanism has been placed in the center position, so that the holes (for the transit safety catch) in the casing for the lock mechanism and the hole in the link mounting arm correspond.

Install:

- the links between the outer handle and the lock
- the cover
- 1 M5 screw. Tighten
- the glass guide
- the 2 blind rivets
- weatherstrip.

HINT: Work in the weatherstrip using a little soap.

Install:

- the side window. See **WINDOW FRONT SIDE DOOR, REPLACE**
- the run-off profile
- the door panel. See **PANEL FRONT SIDE DOOR, REPLACING** .

REMOVING RIVET

Special tools	
	T9814075 SPRAY GUN **Tool number:** T9814075 **Tool description:** SPRAY GUN **Tool boards:**

Materials:	
Designation	**Part number**
Thin rustproofing agent	1161682

NOTE: If the pop rivet spins, drill at a 45° angle against the pop rivet.

Pay attention to heat generation when drilling in pop rivet mounted in plastic part.

Remove drill burrs and any remains of the rivet.

If possible, put tape on the back to catch pop rivet.

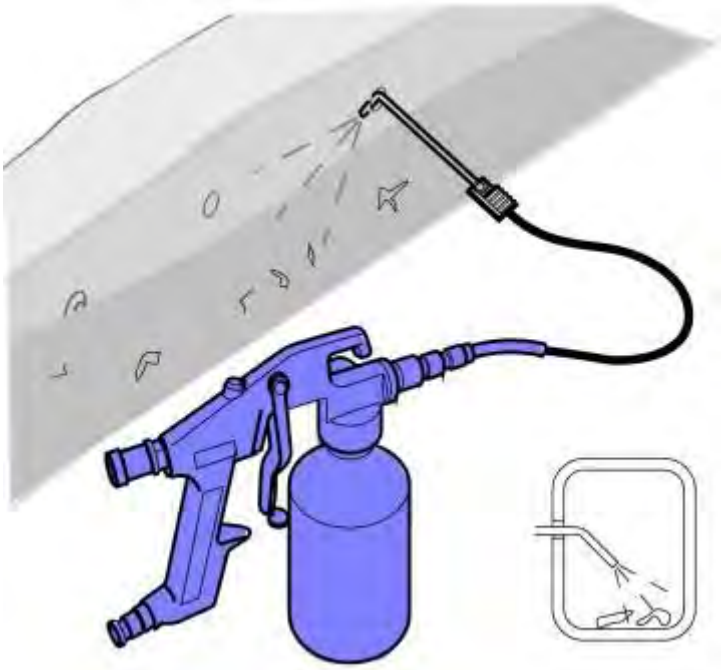

Fig. 33: Applying Thin Rustproofing Agent

To avoid rattling if it is not possible to remove remains of rivet.

Use: Thin rustproofing agent, 1161682

9814075

CAUTION: Make sure that rustproofing agent does not run out, discoloring the upholstery or other.

LOCK MECHANISM REAR SIDE DOOR, REPLACING

NOTE: The illustrations in this service information are used for different model years and/or models. Some variation may occur. However, the essential information in the illustrations is always correct.

REMOVING THE LOCK MECHANISM FOR THE REAR SIDE DOOR

The window must be closed before beginning removal.

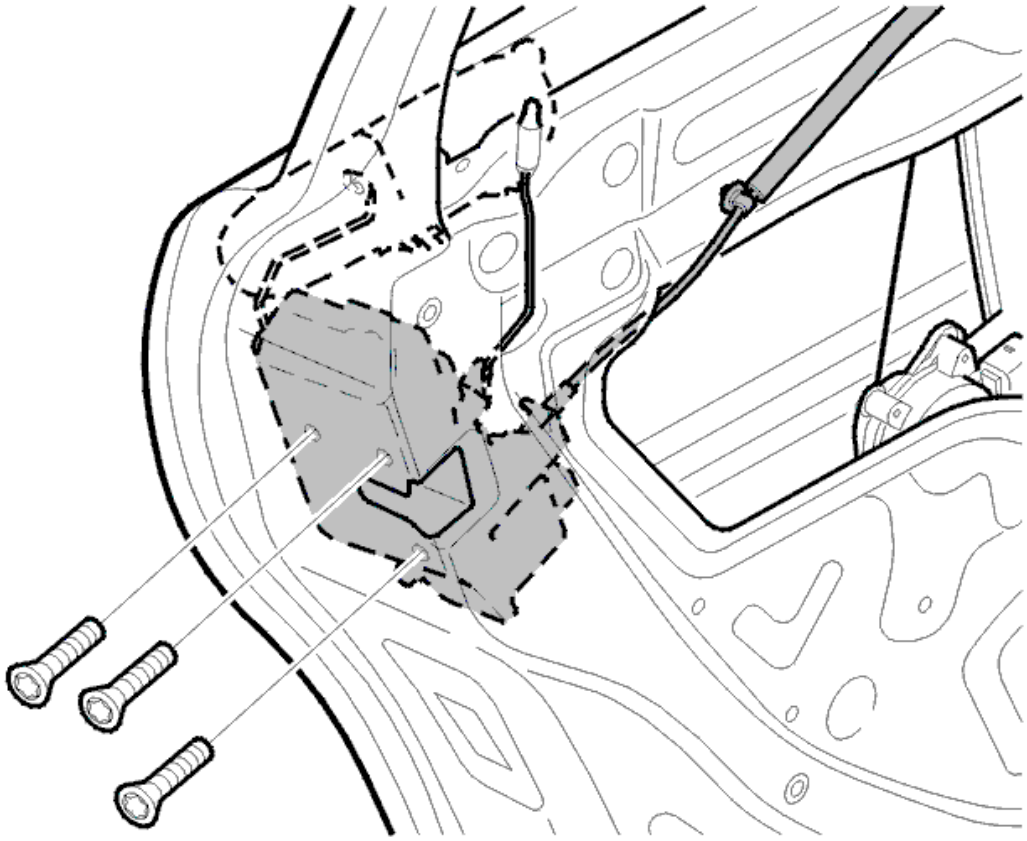

Fig. 34: Identifying Back Door Lock Mechanism And Screws
Courtesy of VOLVO CARS CORPORATION

Remove:

- the door panel. See **PANEL REAR SIDE DOOR, REPLACING**
- the run-off profile
- the link for the inner lock button
- the link for the external handle
- the 3 screws.

Lift the lock out of the door.

Remove the connector.

Unhook the cable.

Remove the cover from the top of the lock.

INSTALLING THE LOCK MECHANISM FOR THE REAR SIDE DOOR

NOTE: For tightening torques, see GENERAL TIGHTENING TORQUE .

Press down the cover (1) on the top of the lock.

Press in the locking plug (2).

Hook the cable into place.

Connect the connector.

Lift the lock into the door.

Install:

- the 3 M6 screws. Tighten
- the link for the external handle
- the link for the inner lock button
- the run-off profile
- the door panel. See **PANEL REAR SIDE DOOR, REPLACING** .

LOCK MECHANISM, TAILGATE, REPLACING

NOTE: As the illustrations in this service information are used for different model years and / or models, some variation may occur. However, the essential information in the illustrations is always correct.

Included in this method are methods for:

- the lock mechanism in the upper tailgate. See **LOCK MECHANISM TAILGATE UPPER, REPLACING**
- the lock mechanism in the lower tailgate. See **LOCK MECHANISM TAILGATE LOWER, REPLACING**.

LOCK MECHANISM TAILGATE UPPER, REPLACING

REMOVING THE LOCK MECHANISM FOR THE UPPER TAILGATE

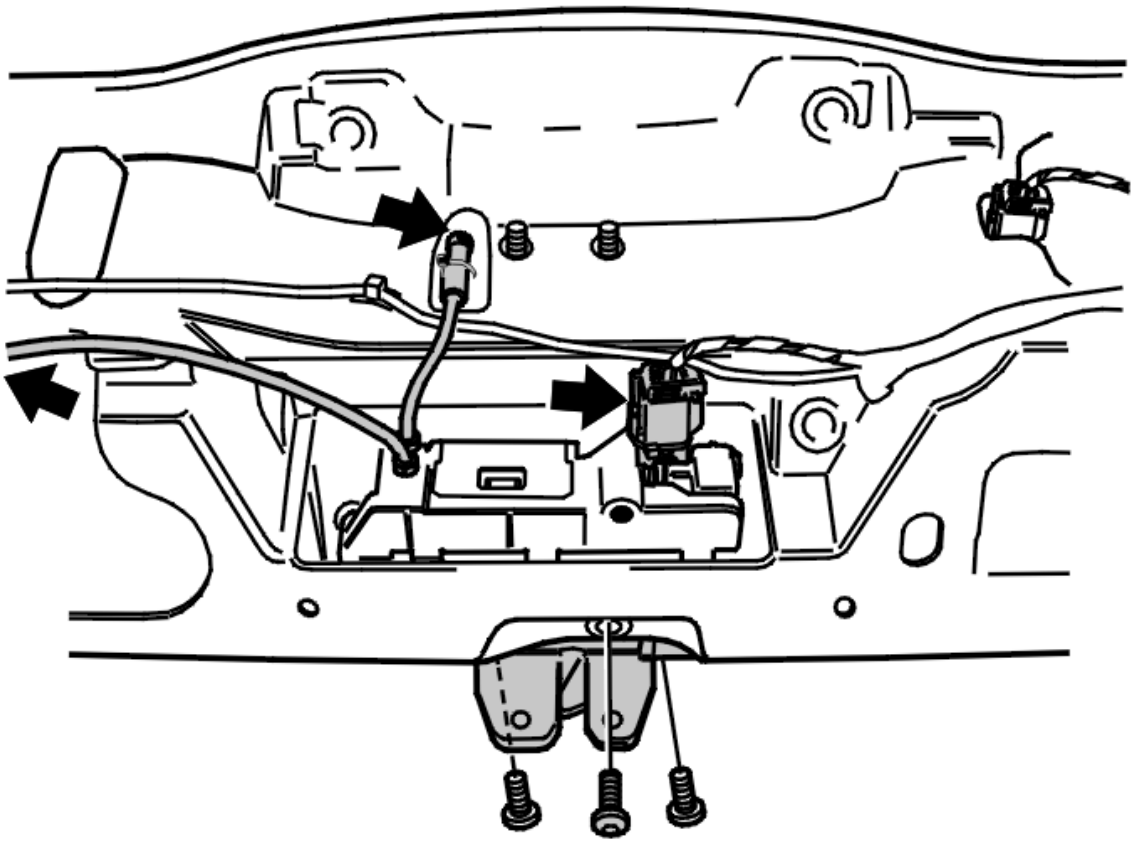

Fig. 35: View Of Upper Tailgate Mechanical Cable
Courtesy of VOLVO CARS CORPORATION

Remove the panel. See **PANEL TAILGATE UPPER, REPLACING** .

Remove:

- the connector
- the mechanical cable for the inner opening handle
- the mechanical cable for the external opening handle.

Remove the 3 screws.

Angle out the lock mechanism.

INSTALLING THE LOCK MECHANISM FOR THE UPPER TAILGATE

NOTE: For tightening torques, see TIGHTENING TORQUE .

Install:

- the lock mechanism
- the 3 M8 screws. Tighten

- the mechanical cable for the outer opening handle
- the mechanical cable for the inner opening handle
- the connector
- the panel. See **PANEL TAILGATE UPPER, REPLACING** .

LOCK MECHANISM TAILGATE LOWER, REPLACING

REMOVING THE LOCK MECHANISM FOR THE LOWER TAILGATE

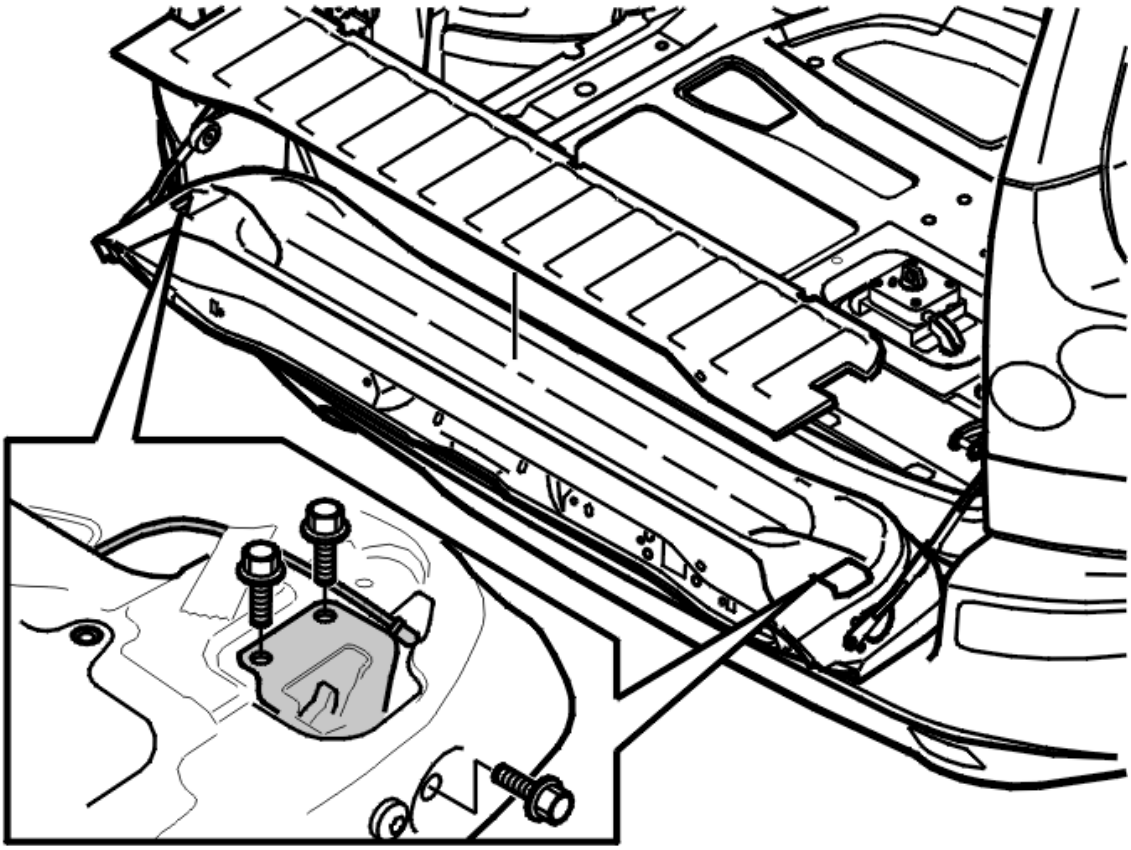

Fig. 36: View Of Lower Tailgate Lock Screws
Courtesy of VOLVO CARS CORPORATION

Remove:

- the panel. See **PANEL TAILGATE LOWER, REPLACING**
- the 6 screws (3 screws per lock)
- the lock
- the cable.

INSTALLING THE LOCK MECHANISM FOR THE LOWER TAILGATE

NOTE: For tightening torques, see TIGHTENING TORQUE .

Install:

- the cable
- the lock
- the 6 M8 screws. Tighten
- the panel. See **PANEL TAILGATE LOWER, REPLACING** .

LOCK, HANDLE (2004-2011)

CABLE, INTERNAL HANDLE, FRONT SIDE DOOR, REPLACING

see **CABLE, INTERNAL HANDLE, FRONT SIDE DOOR, REPLACING**

CABLE, INTERNAL HANDLE, REAR SIDE DOOR, REPLACING

see **CABLE, INTERNAL HANDLE, REAR SIDE DOOR, REPLACING**

HANDLE INNER FRONT SIDE DOOR, REPLACING

see **HANDLE INNER FRONT SIDE DOOR, REPLACING**

HANDLE INNER REAR SIDE DOOR, REPLACING

see **HANDLE INNER REAR SIDE DOOR, REPLACING**

HANDLE INNER TAILGATE LOWER, REPLACING

see **HANDLE INNER TAILGATE LOWER, REPLACING**

HANDLE OUTER FRONT SIDE DOOR, REPLACING

see **HANDLE OUTER FRONT SIDE DOOR, REPLACING**

HANDLE OUTER REAR SIDE DOOR, REPLACING

see **HANDLE OUTER REAR SIDE DOOR, REPLACING**

HANDLE OUTER TAILGATE UPPER, REPLACING

see **HANDLE OUTER TAILGATE UPPER, REPLACING**

KEY REMOTE CONTROL, REPLACING

XC90: See **IGNITION KEY/REMOTE CONTROL, ADDING/REPLACING/ERASING**.

IGNITION KEY/REMOTE CONTROL, ADDING/REPLACING/ERASING

NOTE: **The illustrations in this service information are used for different model years and/or models. Some variation may occur. However, the essential information in the illustrations is always correct.**

IGNITION KEY/REMOTE CONTROL, ADDING/REPLACING/ERASING

CAUTION: **When replacing an ignition key or remote control, the new unit must be programmed.**

Both software and the code on the packaging are required to add a new remote control.

Only the software is required to erase a remote control.

Only software is required to add an ignition key.

IGNITION KEY PROGRAMMING/ERASING

Order the software. See 9438428

REMOTE CONTROL PROGRAMMING/ERASING

Order the software. See 9438429

FINISHING

Check the function after programming an ignition key or remote control.

MODEL YEAR 2004

NOTE: **2004 sees the introduction of an ignition key integrated with the remote control.**

REMOVING KEYS FROM THE REMOTE CONTROL

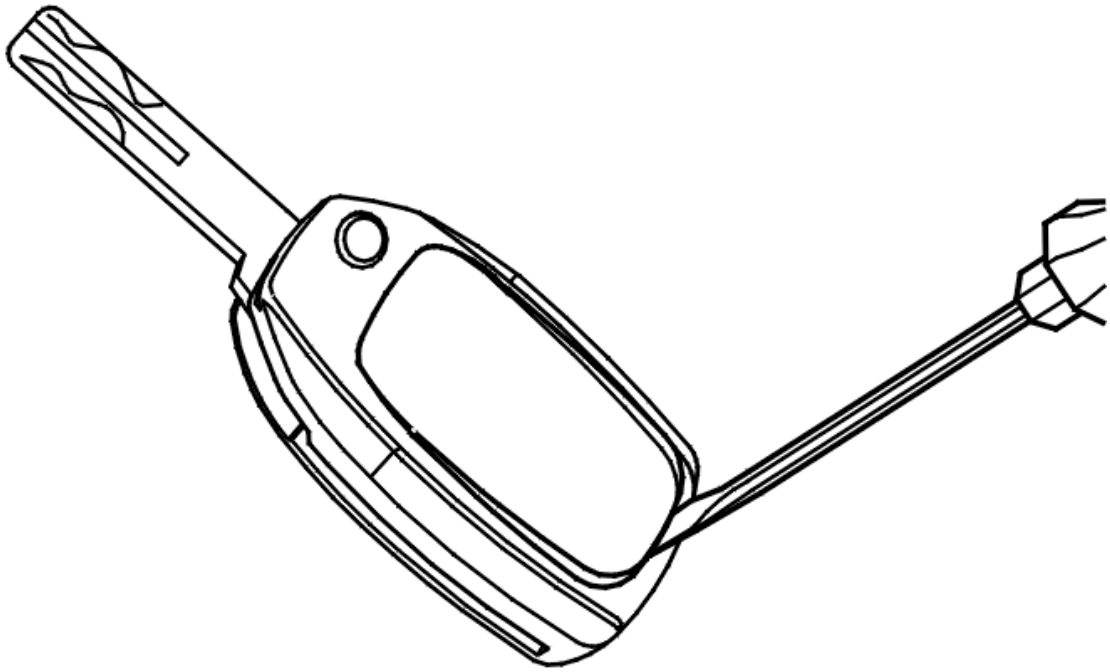

Fig. 37: Identifying Key Battery Cover Removal
Courtesy of VOLVO CARS CORPORATION

Fold out the key and remove the battery cover.

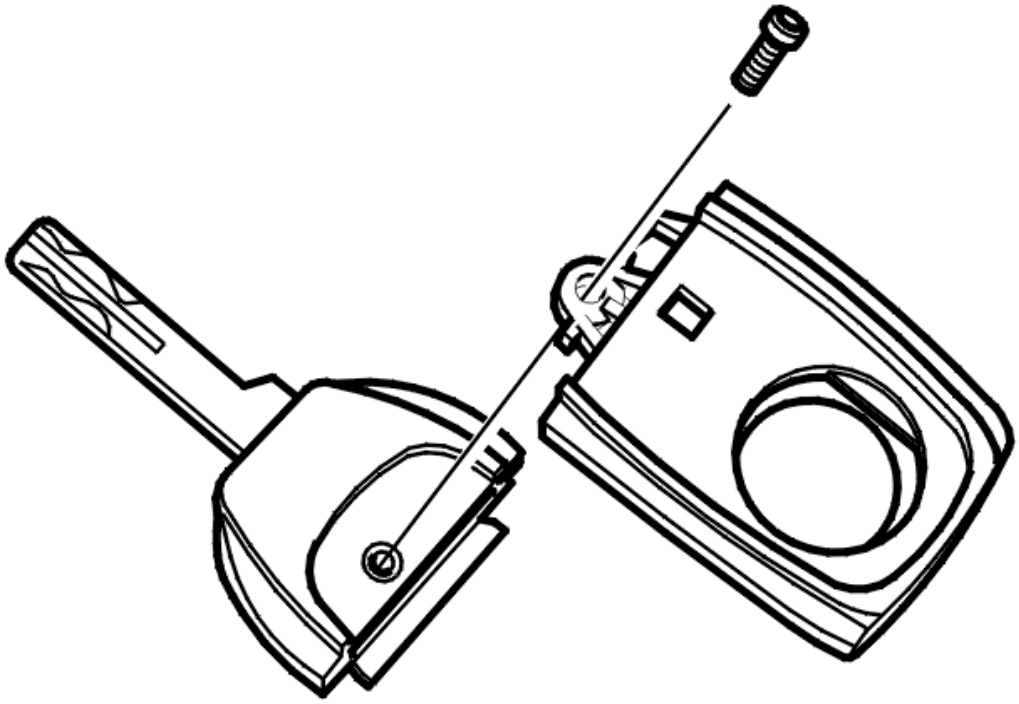

Fig. 38: Identifying Key, Remote Control Unit, And Screw
Courtesy of VOLVO CARS CORPORATION

Remove the screw and separate the unit.

INSTALLING KEYS IN THE REMOTE CONTROL

Install

- the key.

NOTE: Always use a new key when installing.

- the screw
- the cover.

IGNITION KEY/REMOTE CONTROL, ADDING/REPLACING/ERASING

NOTE: The illustrations in this service information are used for different model years and/or models. Some variation may occur. However, the essential information in the illustrations is always correct.

IGNITION KEY/REMOTE CONTROL, ADDING/REPLACING/ERASING

CAUTION: When replacing an ignition key or remote control, the new unit must be programmed.

Both software and the code on the packaging are required to add a new remote control.

Only the software is required to erase a remote control.

Only software is required to add an ignition key.

IGNITION KEY PROGRAMMING/ERASING

Order the software. See 9438428

REMOTE CONTROL PROGRAMMING/ERASING

Order the software. See 9438429

FINISHING

Check the function after programming an ignition key or remote control.

MODEL YEAR 2004

NOTE: 2004 sees the introduction of an ignition key integrated with the remote control.

REMOVING KEYS FROM THE REMOTE CONTROL

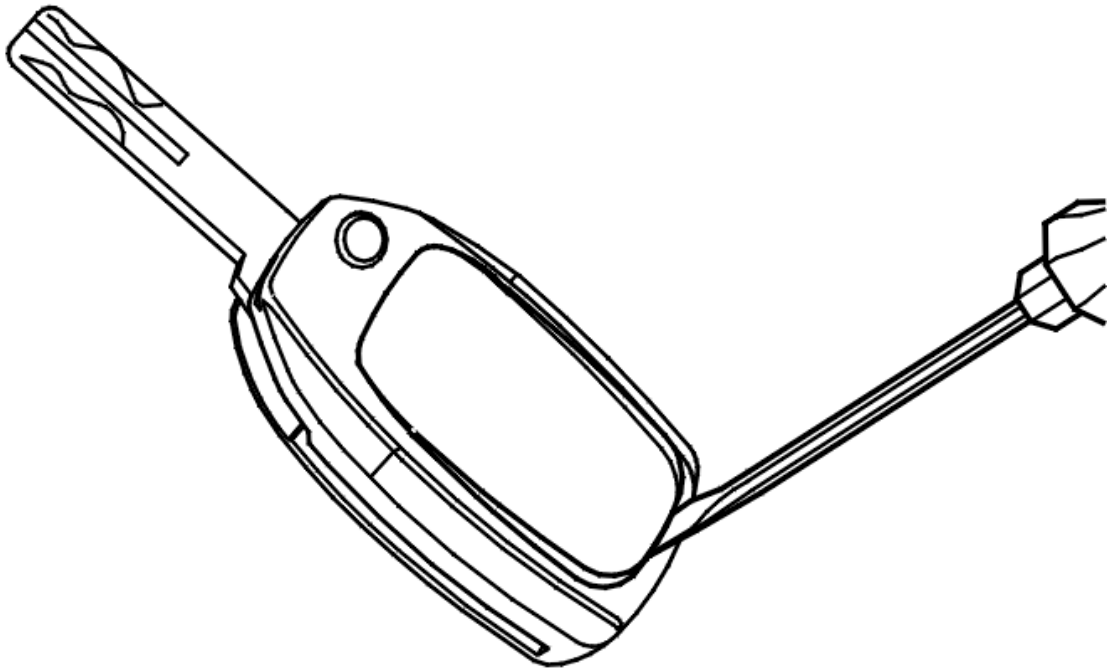

Fig. 39: Identifying Key Battery Cover Removal
Courtesy of VOLVO CARS CORPORATION

Fold out the key and remove the battery cover.

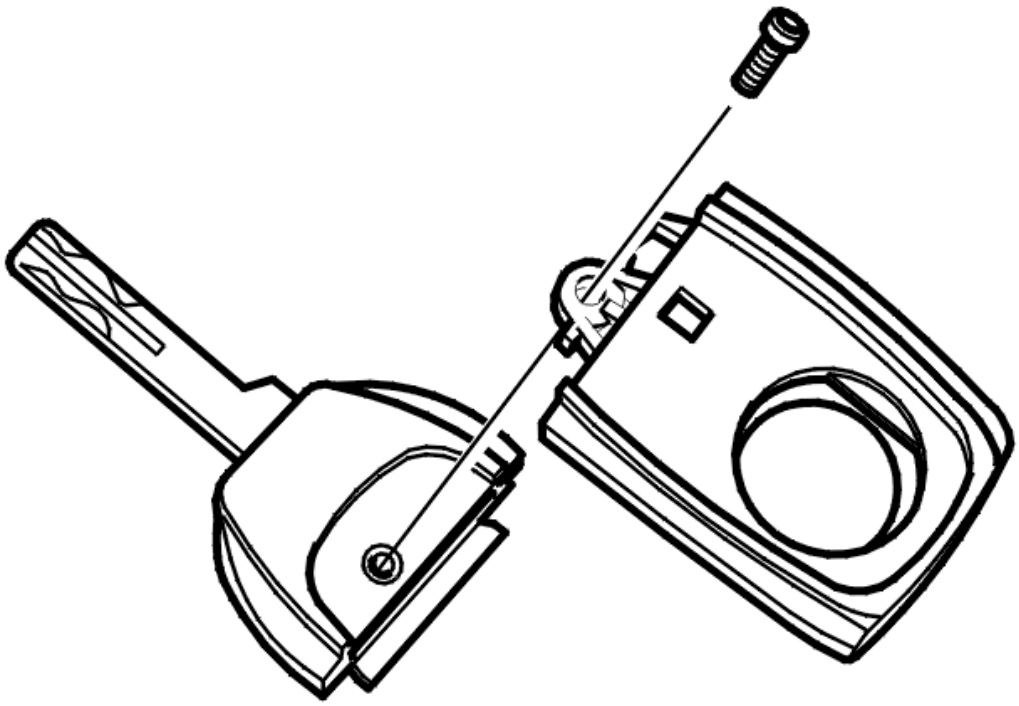

Fig. 40: Identifying Key, Remote Control Unit, And Screw
Courtesy of VOLVO CARS CORPORATION

Remove the screw and separate the unit.

INSTALLING KEYS IN THE REMOTE CONTROL

Install

- the key.

NOTE: Always use a new key when installing.

- the screw
- the cover.

LOCK CYLINDER GLOVE COMPARTMENT, REPLACING

see **LOCK CYLINDER GLOVE COMPARTMENT, REPLACING**

LOCK CYLINDER SIDE DOOR, REPLACING

see **LOCK CYLINDER SIDE DOOR, REPLACING**

LOCK MECHANISM FRONT SIDE DOOR, REPLACING

see **LOCK MECHANISM FRONT SIDE DOOR, REPLACING**

LOCK MECHANISM REAR SIDE DOOR, REPLACING

see **LOCK MECHANISM REAR SIDE DOOR, REPLACING**

LOCK MECHANISM, TAILGATE, REPLACING

see **LOCK MECHANISM, TAILGATE, REPLACING**

POWER WINDOW MECHANISM (2003-2011)

WINDOW LIFT MECHANISM FRONT SIDE DOOR, REPLACING

NOTE: The illustrations in this service information are used for different model years and / or models. Some variation may occur. However, the essential information in the illustrations is always correct.

REMOVING THE LIFT MECHANISM FROM THE FRONT SIDE DOOR

The window must be in the half open position.

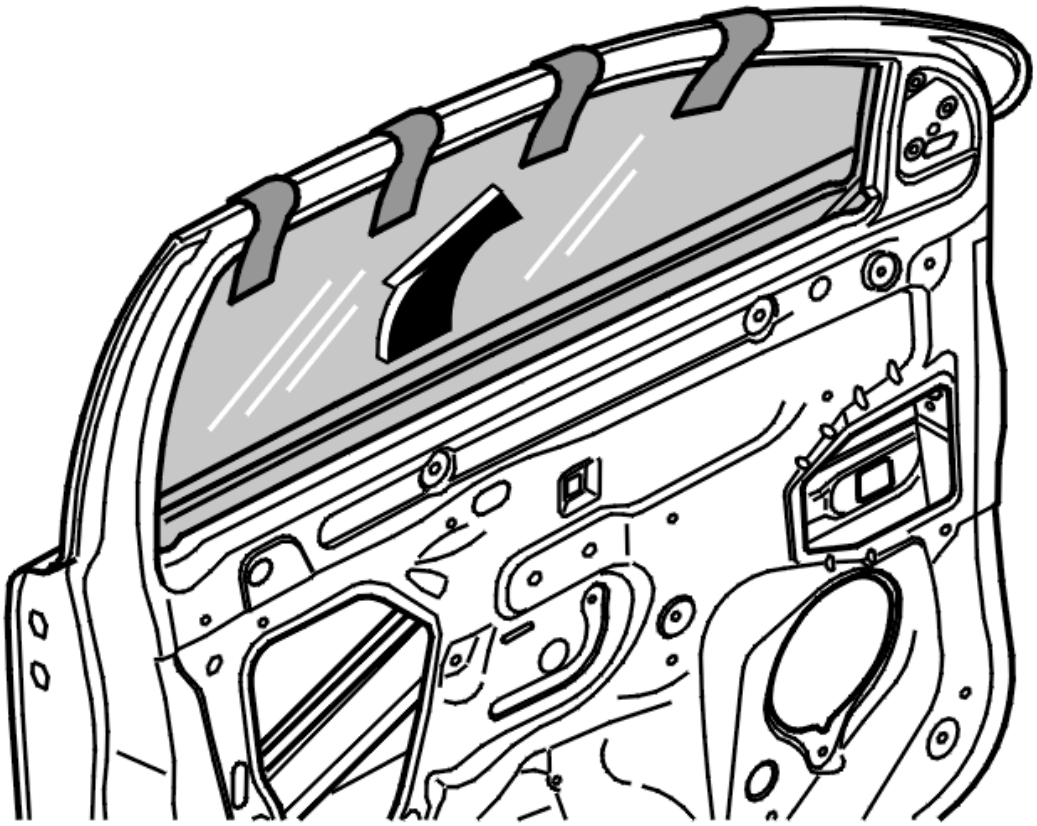

Fig. 41: View Of Secure The Window Using Tape
Courtesy of VOLVO CARS CORPORATION

Remove:

- the panel. See **PANEL FRONT SIDE DOOR, REPLACING**
- the soundproofing
- the window. See **WINDOW FRONT SIDE DOOR, REPLACE** .

HINT: Instead of removing the window, press it up into its highest position.

Secure the window using tape.

NOTE: The mechanism is correctly positioned for removal when the holes in the mechanism and in the arm are opposite each other.

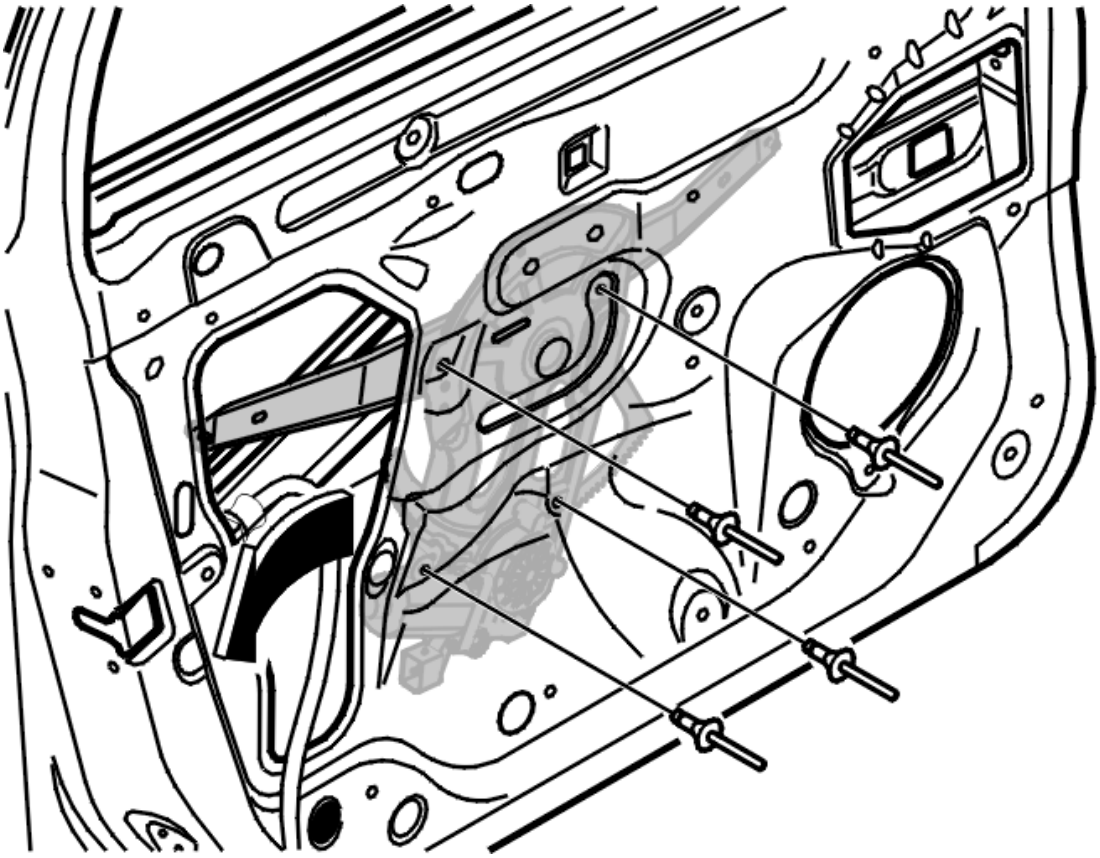

Fig. 42: View Of Life Mechanism Rivets
Courtesy of VOLVO CARS CORPORATION

Remove the 4 rivets. See **REMOVING RIVET** .

Work out the lift mechanism.

Remove the connectors for the lift mechanism motor.

INSTALLING THE LIFT MECHANISM FOR THE FRONT SIDE DOOR

Install:

- the connector for the lift mechanism motor
- the lift mechanism.

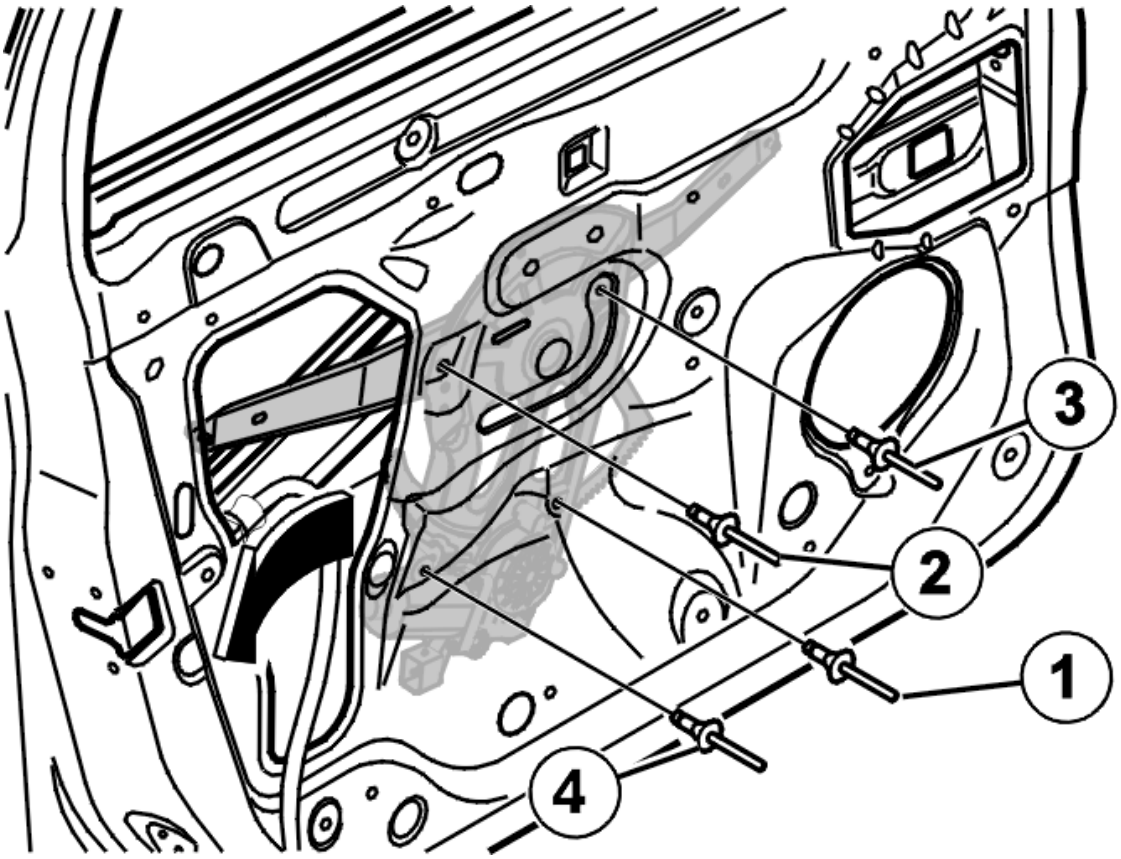

Fig. 43: Identifying Rivets Installation Order
Courtesy of VOLVO CARS CORPORATION

NOTE: Install 4 new rivets in the numerical order illustrated.

Install:

- the window. See **WINDOW FRONT SIDE DOOR, REPLACE**
- the soundproofing
- the panel. See **PANEL FRONT SIDE DOOR, REPLACING** .

INITIALIZING THE WINDOW POSITION

After replacing the lift mechanism, the window position must be initialized.

Ignition on.

Initialize the window position. See the information in VIDA vehicle communication function group 83.

WINDOW LIFT MECHANISM REAR SIDE DOOR, REPLACING

NOTE: As the illustrations in this service information are used for different model years and / or models, some variation may occur. However, the essential information in the illustrations is always correct.

REMOVING THE LIFT MECHANISM FOR THE REAR SIDE DOOR

The window must be in the half open position.

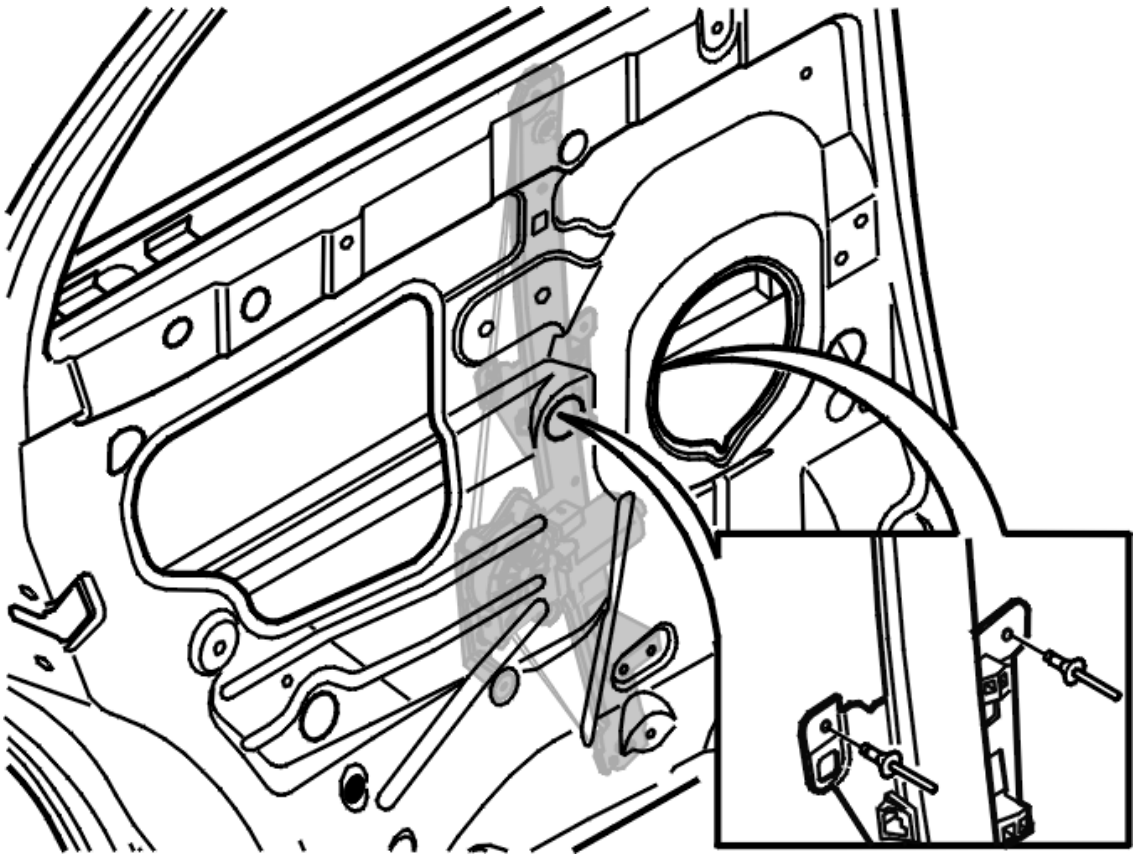

Fig. 44: View Of Window Rivets
Courtesy of VOLVO CARS CORPORATION

Remove:

- the panel. See **PANEL REAR SIDE DOOR, REPLACING**
- the run-off profile
- the loudspeaker. See **LOUDSPEAKER, REAR SIDE DOOR, REPLACING** .

Drill out the 2 rivets for the window. See **REMOVING RIVET** .

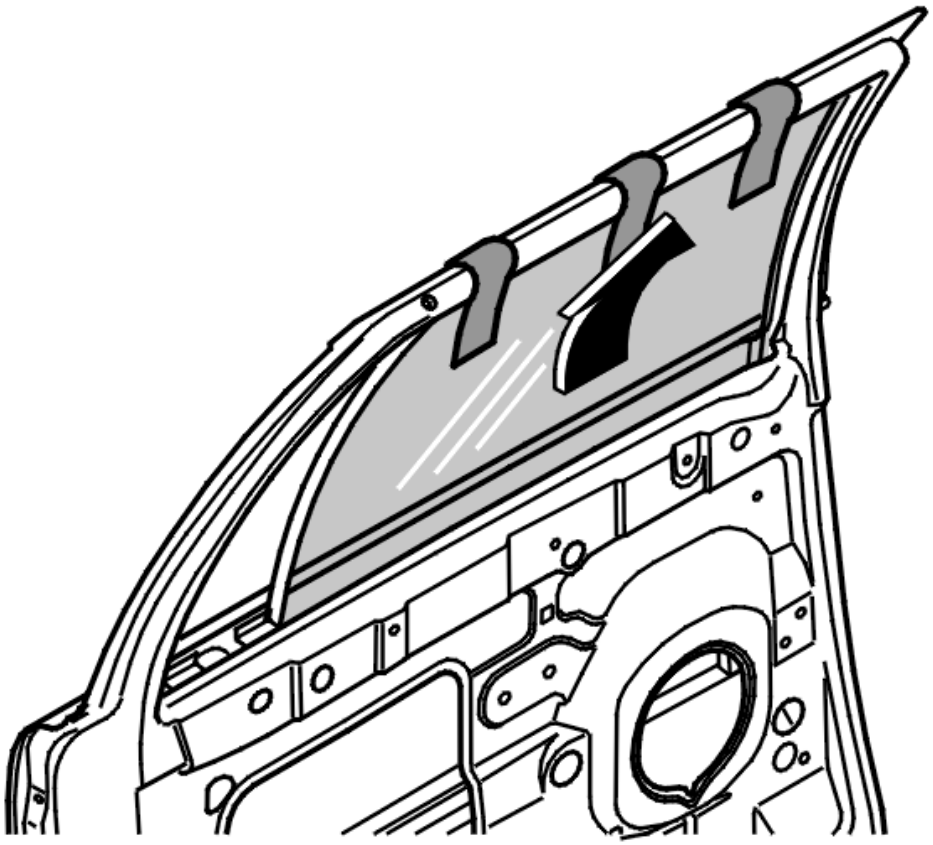

Fig. 45: Identifying Secured Window Using Tape
Courtesy of VOLVO CARS CORPORATION

Close the window.

Secure the window using tape.

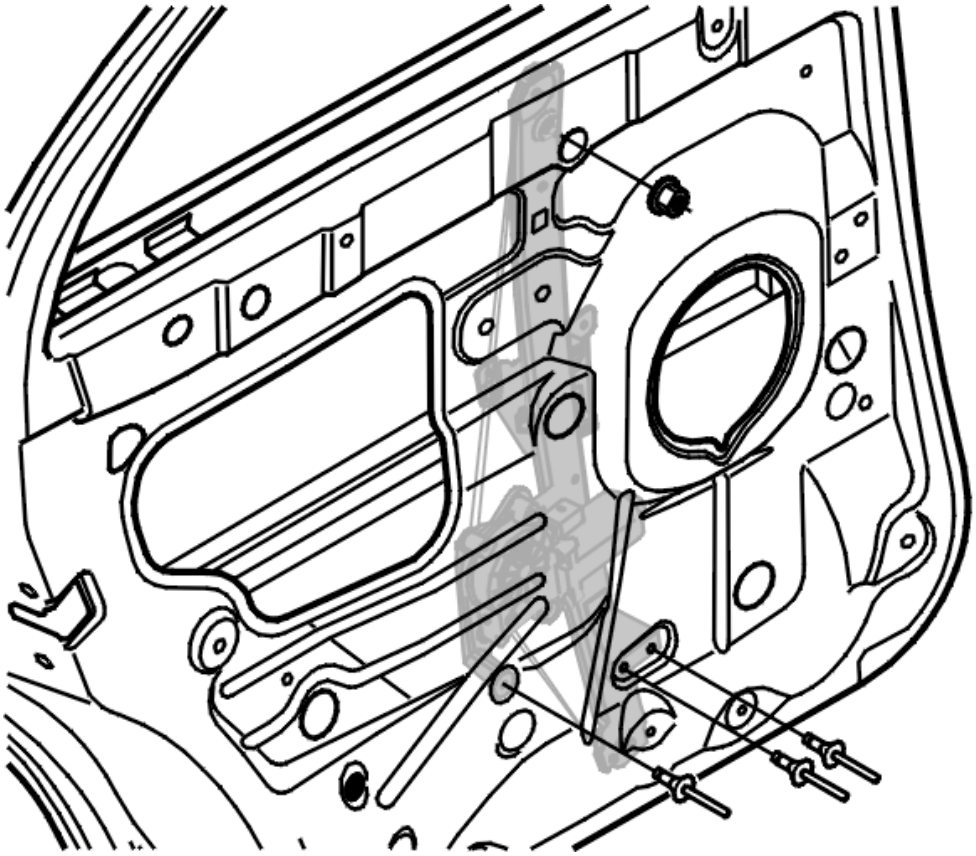

Fig. 46: Identifying Lift Mechanism Rivets
Courtesy of VOLVO CARS CORPORATION

Disconnect the connector for the lift mechanism motor.

Remove:

- the 3 rivets. See **REMOVING RIVET**
- the 1 nut at the top of the lift mechanism.

Work out the lift mechanism.

INSTALLING THE LIFT MECHANISM FOR THE REAR SIDE DOOR

NOTE: For tightening torques, see TIGHTENING TORQUE .

Install:

- the lift mechanism
- 1 M6 nut. Tighten
- the 3 rivets for the lift mechanism
- the connector for the lift mechanism motor.

Lower the window.

Install:

- the 2 rivets securing the window to the lift mechanism
- the loudspeakers. See **LOUDSPEAKER, REAR SIDE DOOR, REPLACING**
- the run-off profile
- the panel. See **PANEL REAR SIDE DOOR, REPLACING** .

INITIALIZING THE WINDOW POSITION

After replacing the lift mechanism, the window position must be initialized.

Ignition on.

Initialize the window position. VIDA (Volvo scan tool) is necessary.

SIDE DOOR WITH CONTROLS (2003-2011)

DOOR STOP FRONT SIDE DOOR, REPLACING

NOTE: As the illustrations in this service information are used for different model years and / or models, some variation may occur. However, the essential information in the illustrations is always correct.

REMOVING THE DOOR STOP FOR THE FRONT SIDE DOOR

The window must be closed.

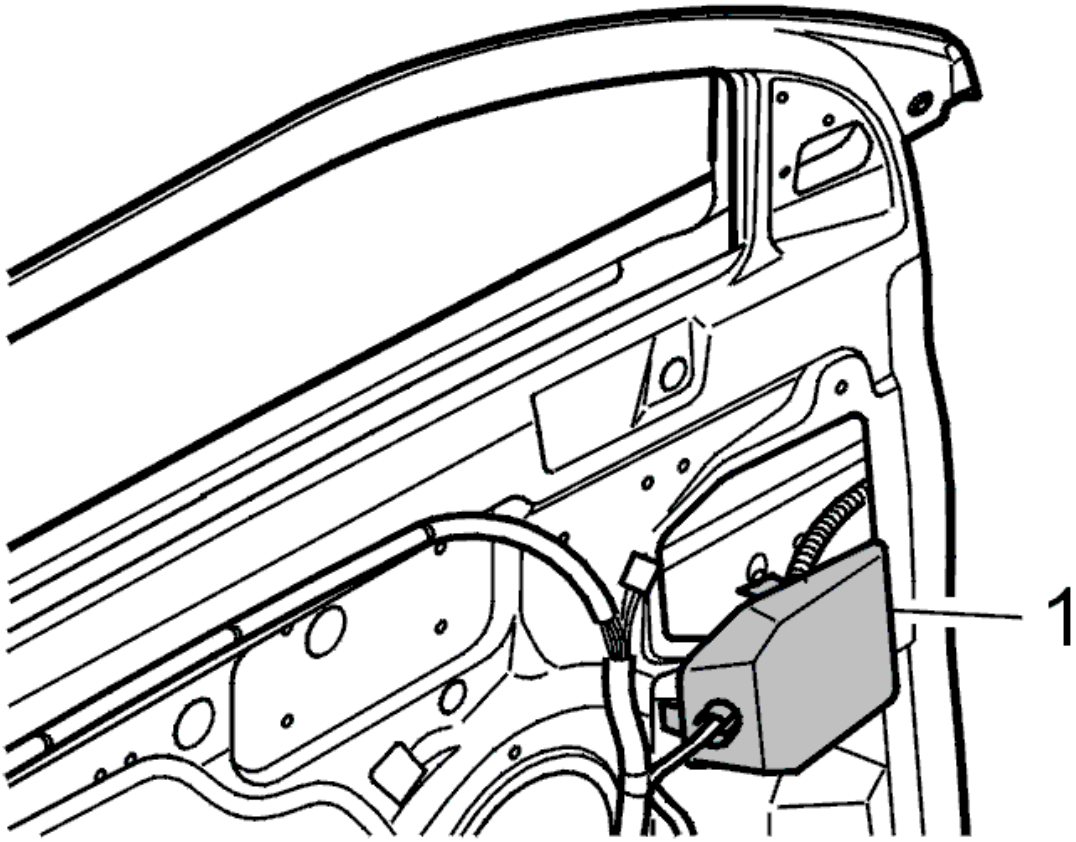

Fig. 47: Disconnecting And Moving Front Plastic Cover To Side
Courtesy of VOLVO CARS CORPORATION

Remove the door panel. See **PANEL FRONT SIDE DOOR, REPLACING** .

Disconnect and move the front plastic cover (1) to one side.

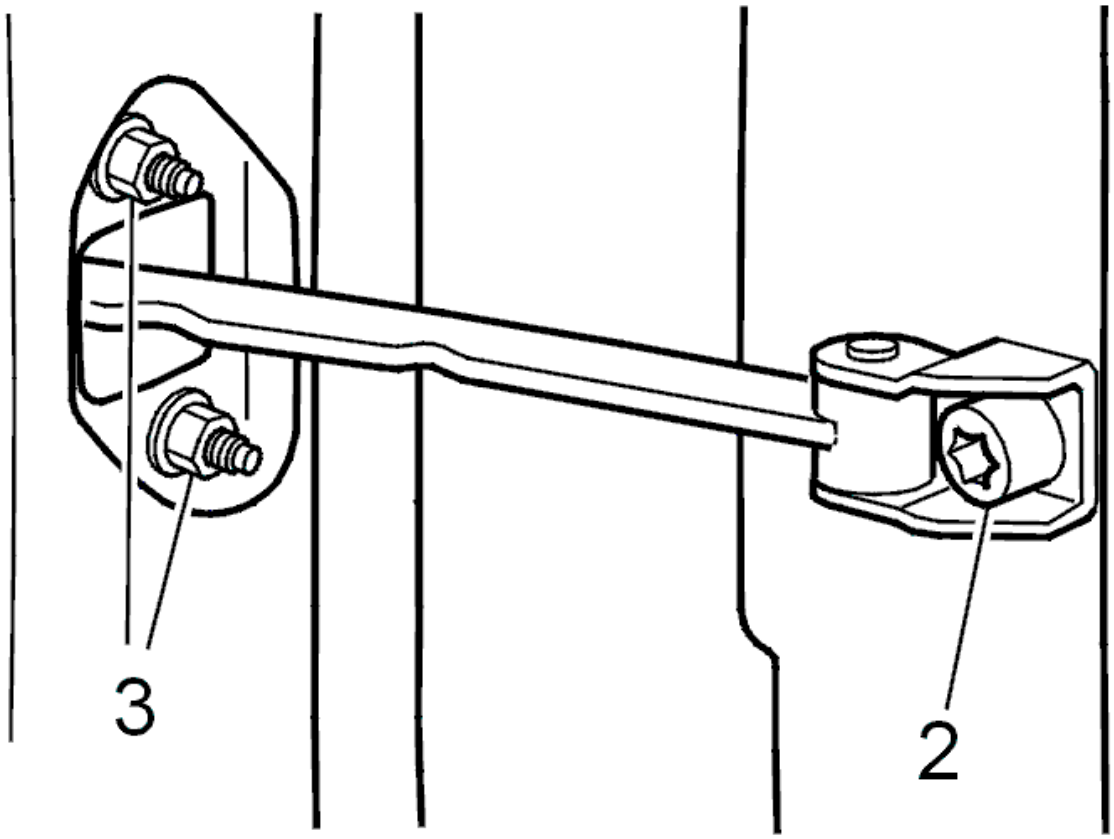

Fig. 48: Identifying Door Stop, Screw And Nuts
Courtesy of VOLVO CARS CORPORATION

Remove:

- one screw (2)
- the two nuts (3).

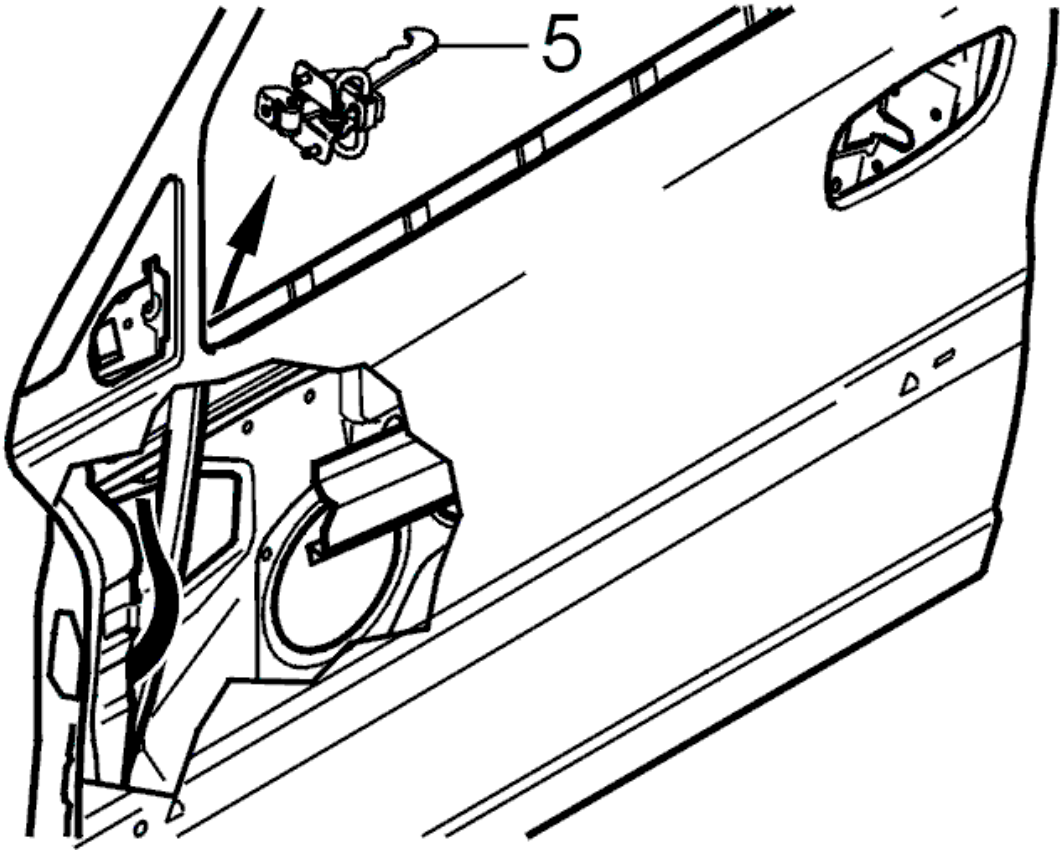

Fig. 49: Identifying Door Stop Removal Through Opening
Courtesy of VOLVO CARS CORPORATION

Twist the door stop carefully to remove it through the opening.

NOTE: **It is tight past at front guide for the front window. It is easy to dent the panels if great care is not taken.**

INSTALLING THE DOOR STOP FOR THE FRONT SIDE DOOR

NOTE: **For tightening torques, see GENERAL TIGHTENING TORQUE .**

Install:

- the door stop
- 2 M6 nuts. Tighten
- 1 M8 screw. Tighten
- the cover
- the door panel. See **PANEL FRONT SIDE DOOR, REPLACING** .

DOOR STOP REAR SIDE DOOR, REPLACING

NOTE: **As the illustrations in this service information are used for different model years and / or models, some variation may occur. However, the essential information is always correct.**

REMOVING THE DOOR STOP FOR THE REAR SIDE DOOR

The window must be closed.

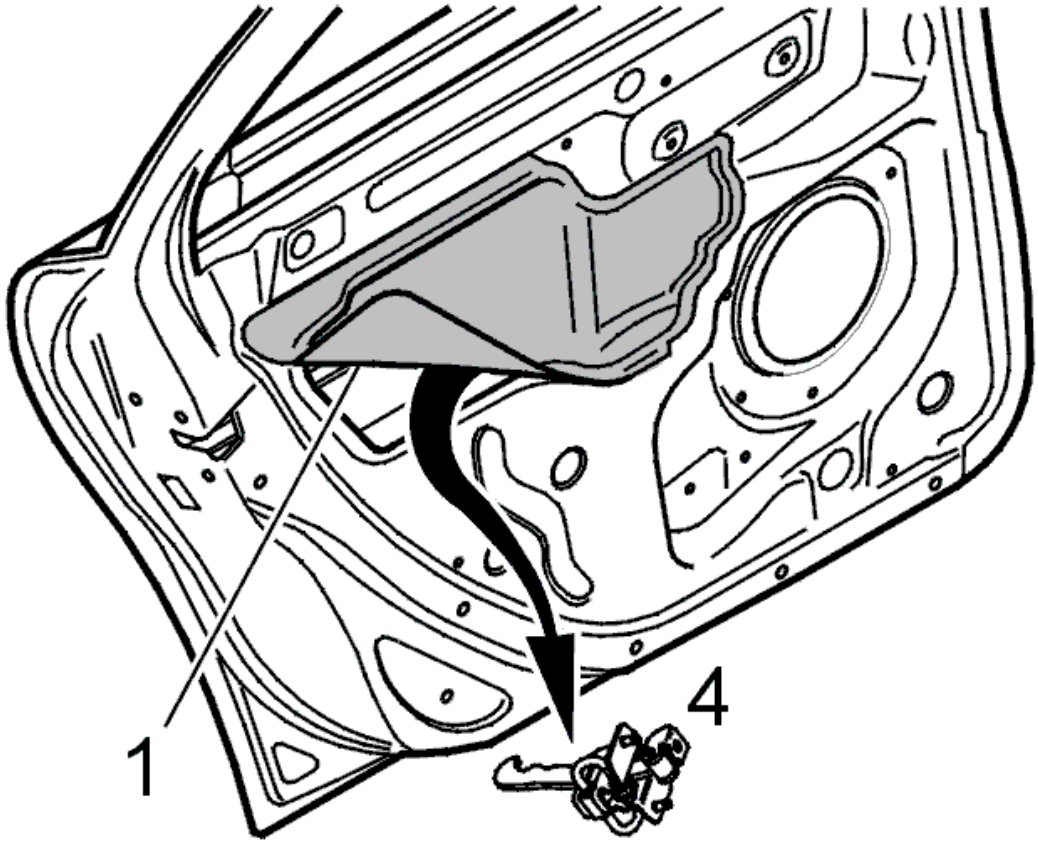

Fig. 50: Identifying Soundproofing And Door Stop
Courtesy of VOLVO CARS CORPORATION

Remove:

- the door panel. See **PANEL REAR SIDE DOOR, REPLACING**
- soundproofing.

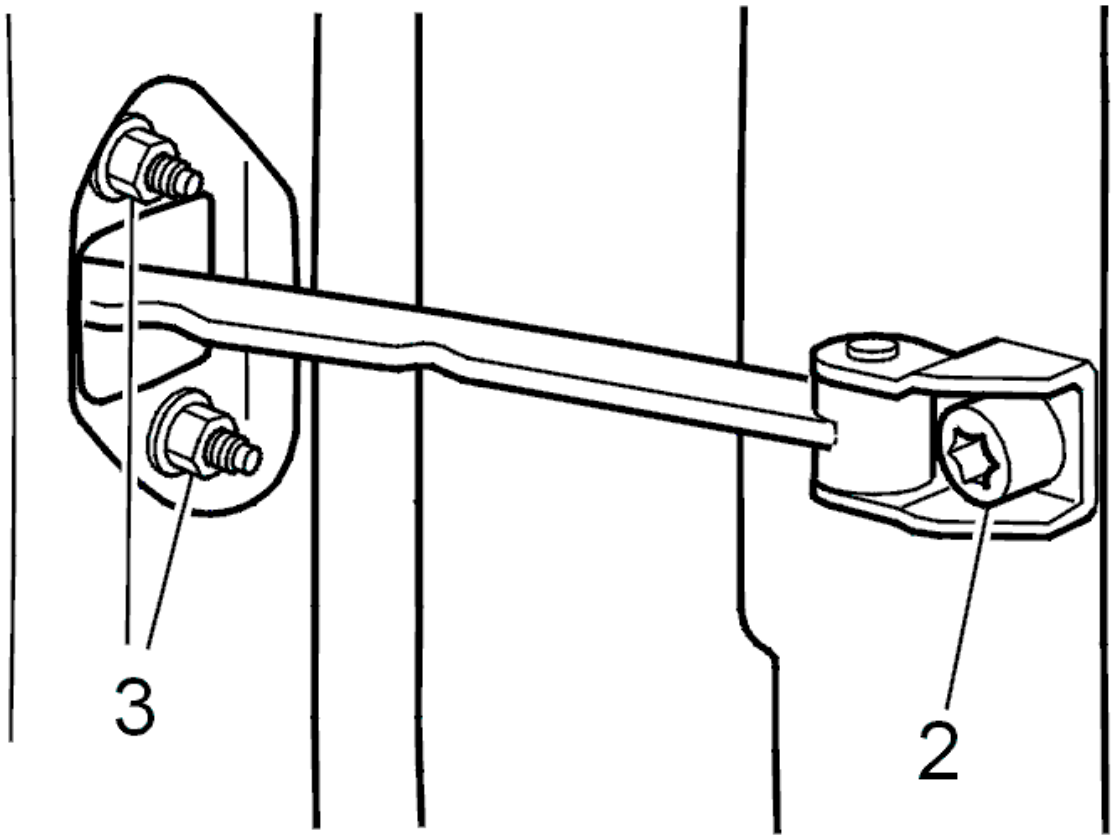

Fig. 51: Identifying Door Stop, Screw And Nuts
Courtesy of VOLVO CARS CORPORATION

- one screw (2)
- the two nuts (3).

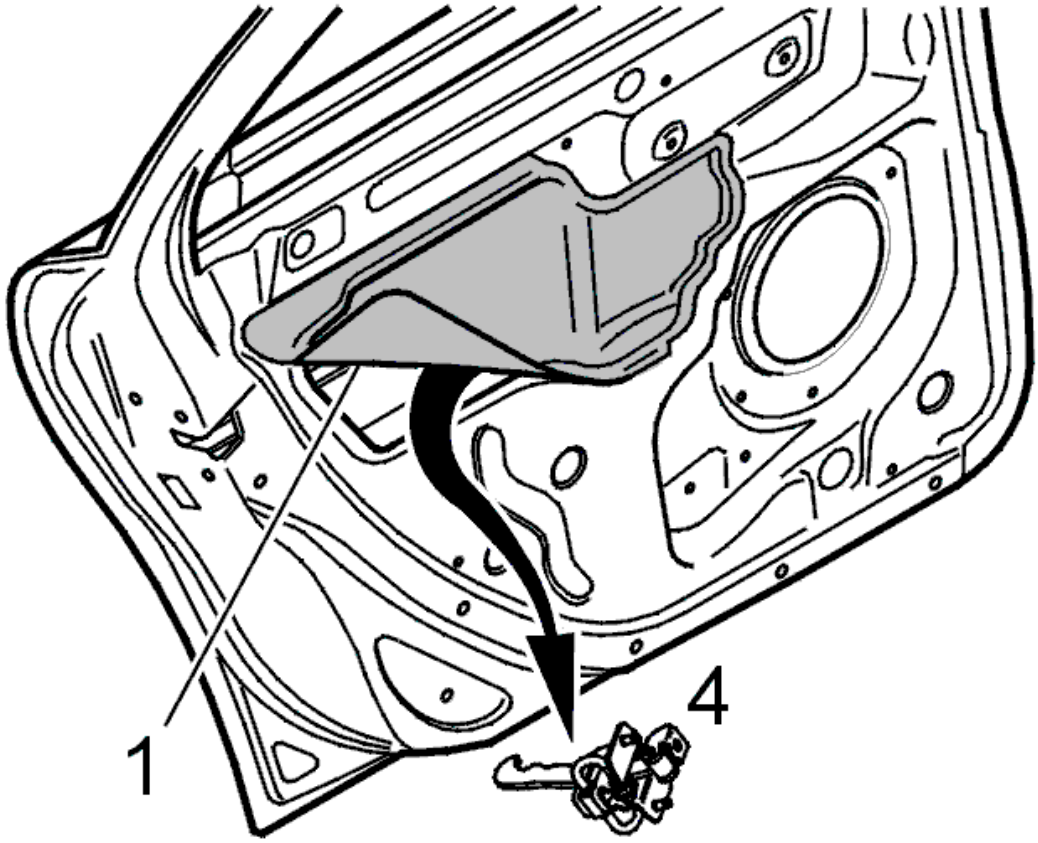

Fig. 52: Identifying Soundproofing And Door Stop
Courtesy of VOLVO CARS CORPORATION

Twist the door stop (4) carefully to remove it through the opening.

INSTALLING THE DOOR STOP FOR THE REAR SIDE DOOR

NOTE: For tightening torques, see GENERAL TIGHTENING TORQUE .

Install:

- the door stop
- 2 M6 nuts. Tighten
- 1 M8 screw. Tighten
- the soundproofing
- the door panel. See **PANEL REAR SIDE DOOR, REPLACING** .

HINGES SIDE DOOR, REPLACING

Special tools:

see **9501080**

NOTE: **As the illustrations in this service information are used for different model years and / or models, some variation may occur. However, the essential information in the illustrations is always correct.**

REMOVING HINGES FROM THE SIDE DOOR

Remove the necessary components. See **SIDE SECTION, EXPOSING** .

Grind off the bead weld around the hinge so that the hinge releases.

Grind clean.

Apply welding primer.

INSTALLING HINGES FOR THE SIDE DOOR

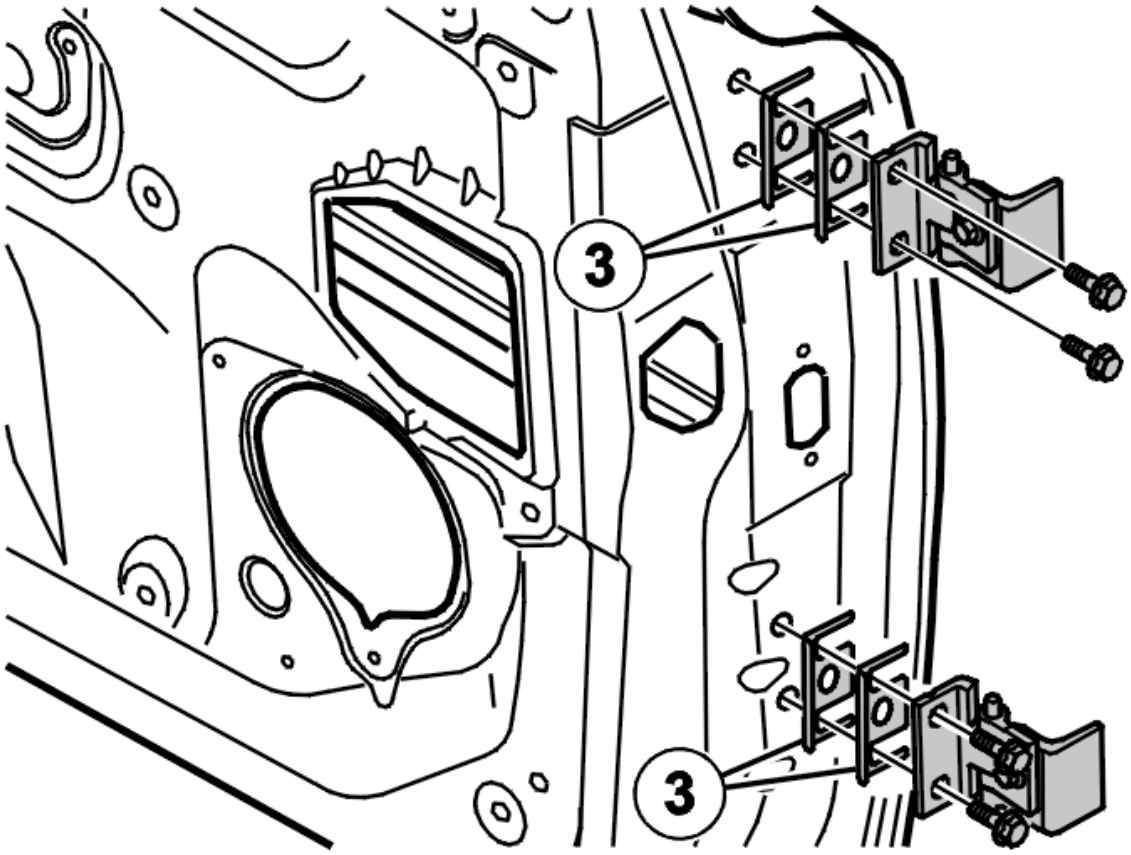

Fig. 53: Identifying Adjuster Shims
Courtesy of VOLVO CARS CORPORATION

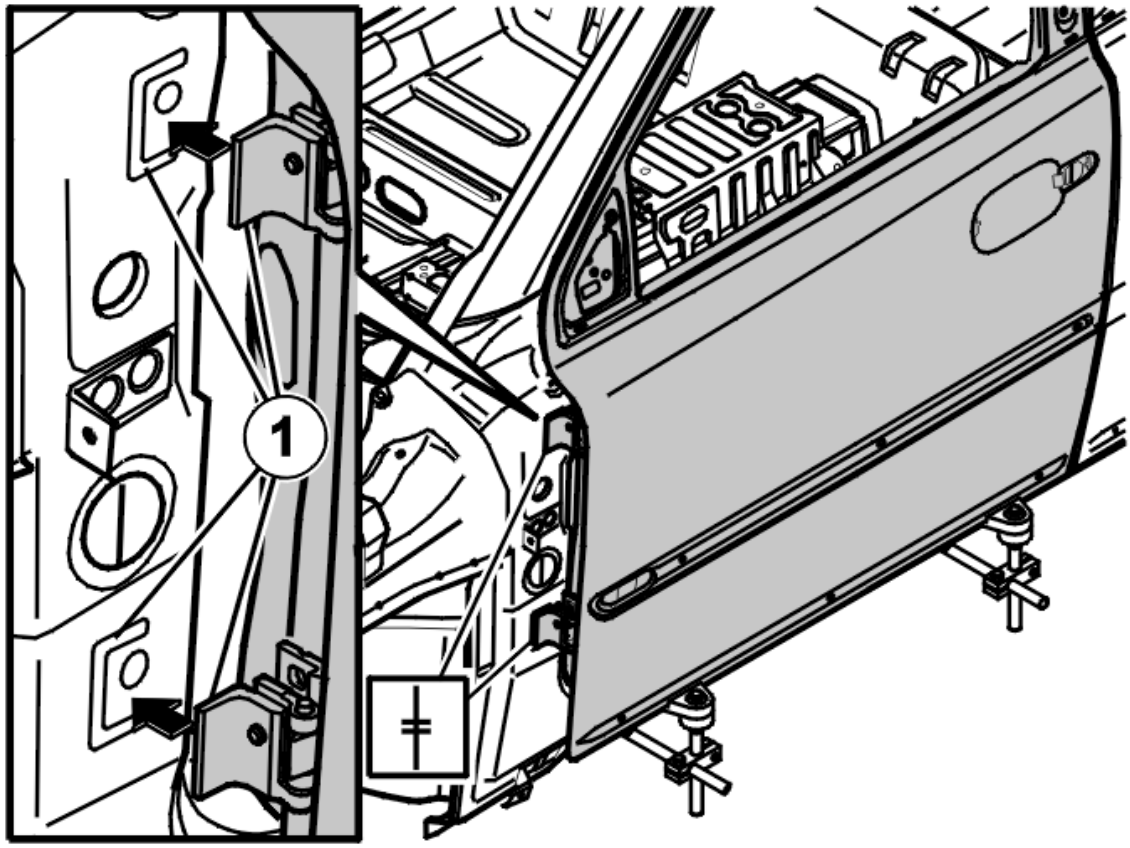

Fig. 54: Identifying Cowl Side Holes
Courtesy of VOLVO CARS CORPORATION

Use special tool see **9501080** .

Install the hinges on the door using two adjuster shims (3) between each hinge and the door. This will make any late adjustment easier.

Align the door and hinges so that the edge of the hinges are positioned in the punched out holes in the cowl side (1).

Tack weld the hinges into place.

Check the alignments and clearance.

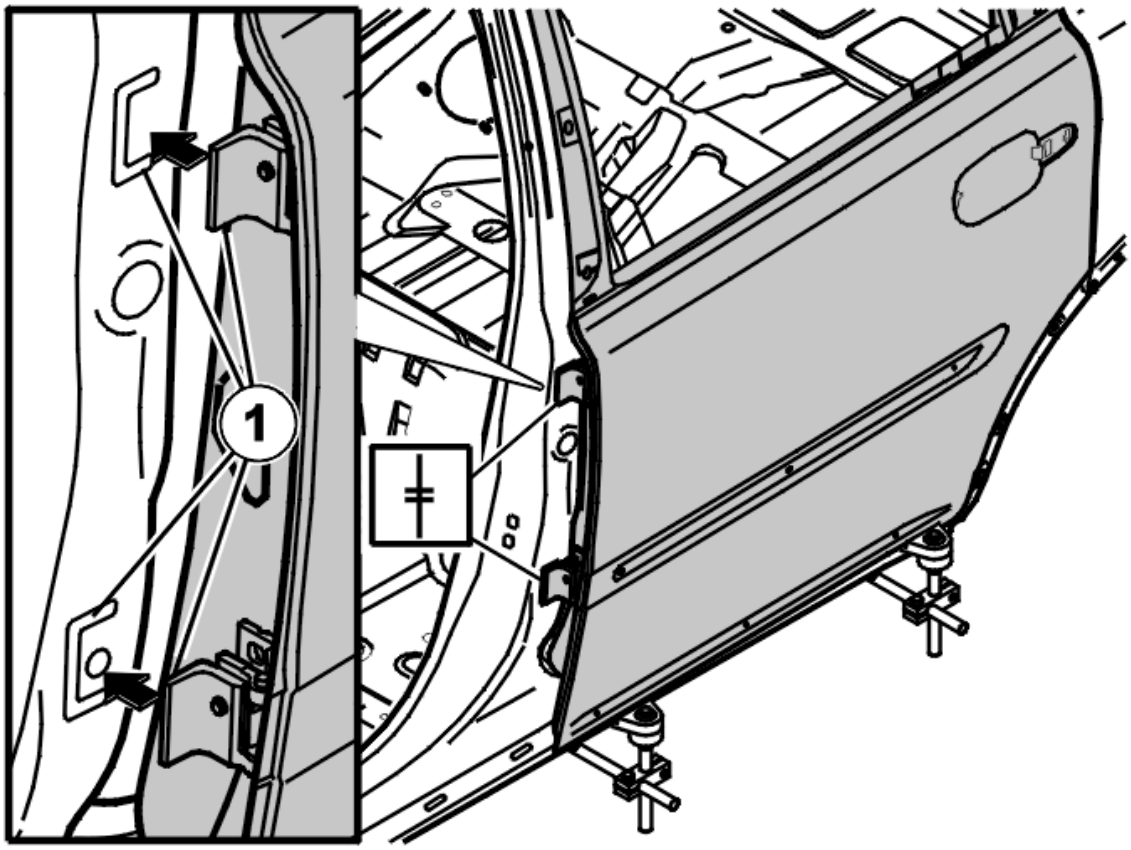

Fig. 55: Identifying Cowl Side Holes
Courtesy of VOLVO CARS CORPORATION

Remove:

- the door
- the door support.

Weld the hinges into place. Ensure that the weld is in the groove in the cowl side.

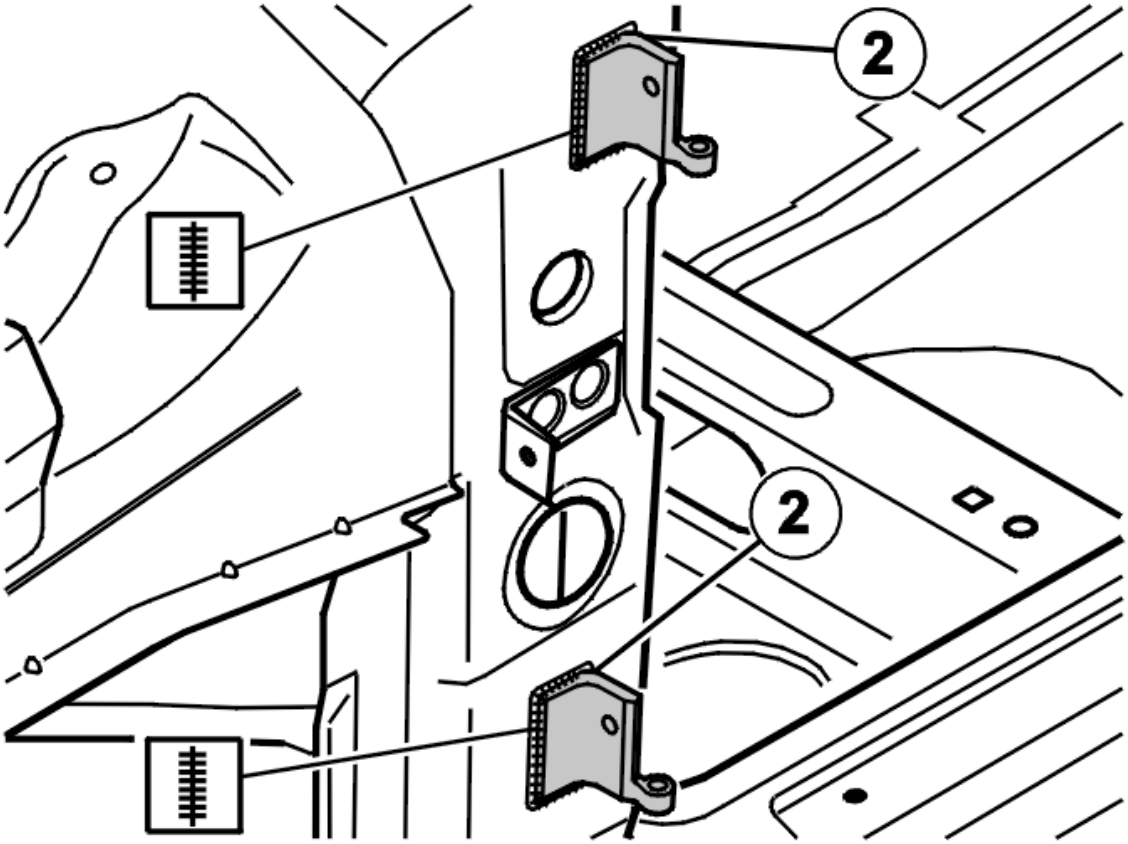

Fig. 56: Identifying Rear Edge Seal
Courtesy of VOLVO CARS CORPORATION

Seal at the rear edge (2). See **BODY SEAL** .

OUTER DOOR SKIN, REPLACING

NOTE: **Since the illustrations in this service information are used for different model years and/or models there may be some variation. However, the essential information in the illustrations is always correct.**

Included in this method are methods for:

- the front side outer door skin. See **FRONT SIDE OUTER DOOR SKIN, REPLACING**
- the rear side outer door skin. See **REPLACING THE REAR SIDE OUTER DOOR SKIN**.

FRONT SIDE OUTER DOOR SKIN, REPLACING

PREPARATIONS

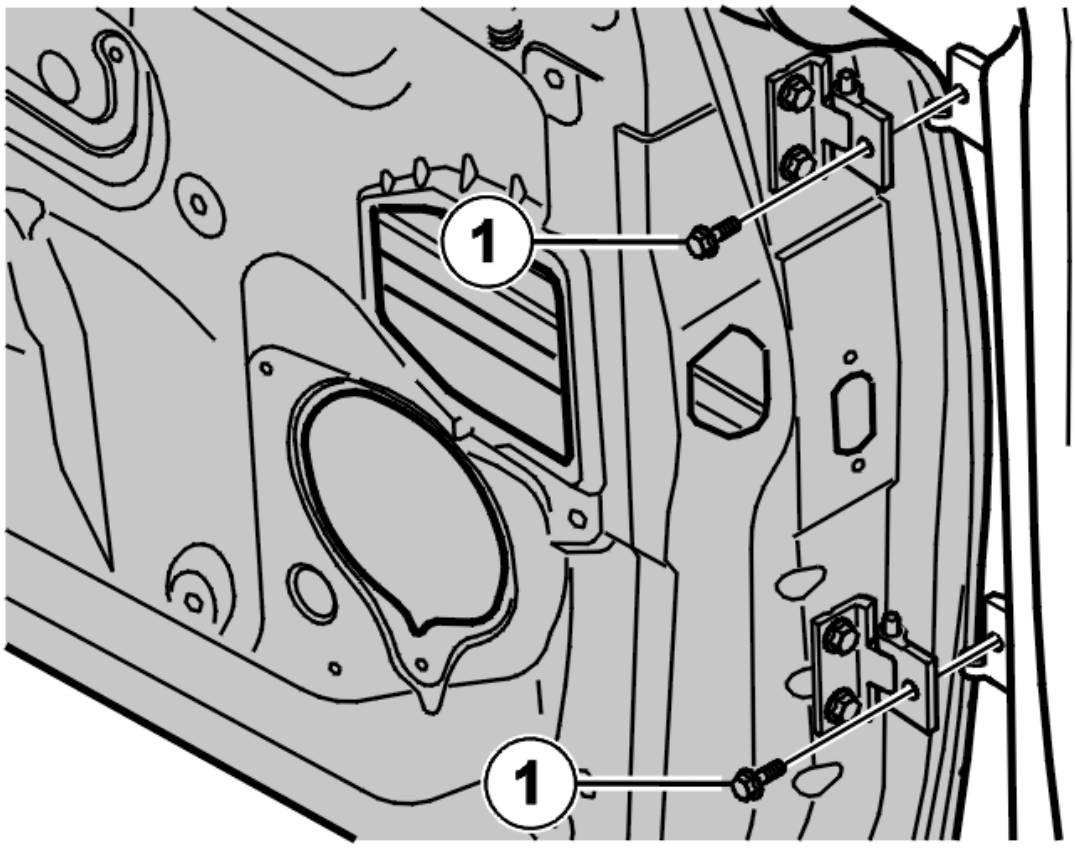

Fig. 57: View Of Door Hinge Screws
Courtesy of VOLVO CARS CORPORATION

Remove:

- the cover from the door mirror
- the interior handle. See **HANDLE INNER FRONT SIDE DOOR, REPLACING**
- the outer door skin. See **PANEL FRONT SIDE DOOR, REPLACING**
- the side window. See **WINDOW FRONT SIDE DOOR, REPLACE**
- the exterior handle. See **HANDLE OUTER FRONT SIDE DOOR, REPLACING**
- the door mirror. See **REAR VIEW MIRROR, REPLACING**
- the rubber and trim strips.

Disconnect the cable harness from its connector in the door.

Remove the screws (1) holding the 2 door hinges and lift down the door.

REMOVING THE DOOR PANEL FOR THE FRONT SIDE DOOR

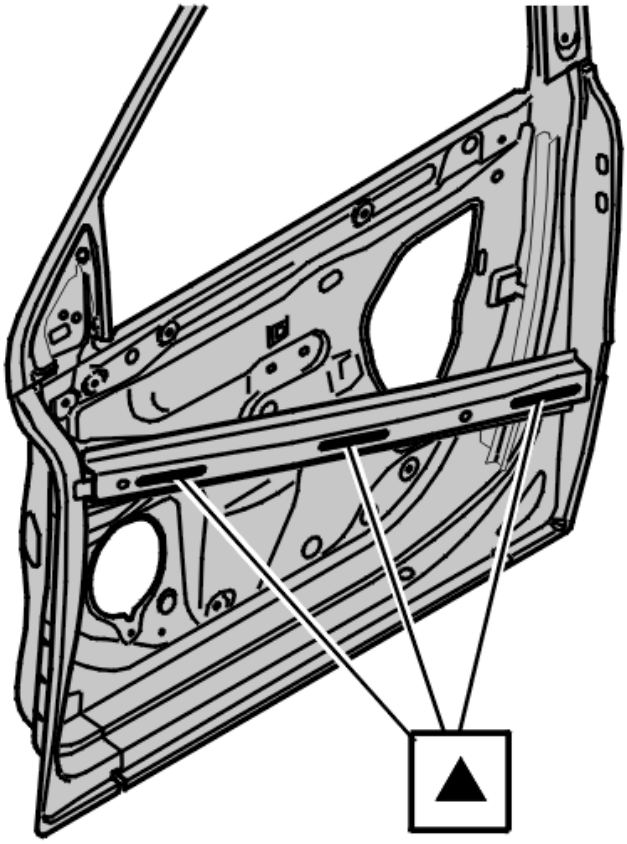

Fig. 58: Identifying Collision Member
Courtesy of VOLVO CARS CORPORATION

Grind the panel edges.

Cut the outer door skin as illustrated.

The outer door skin is bonded in the frame and in the collision member.

Pry off the outer door skin.

NOTE: Check that the door frame is undamaged.

Clean the door frame.

INSTALLING THE FRONT SIDE OUTER DOOR SKIN

NOTE: For tightening torques, see TIGHTENING TORQUE .

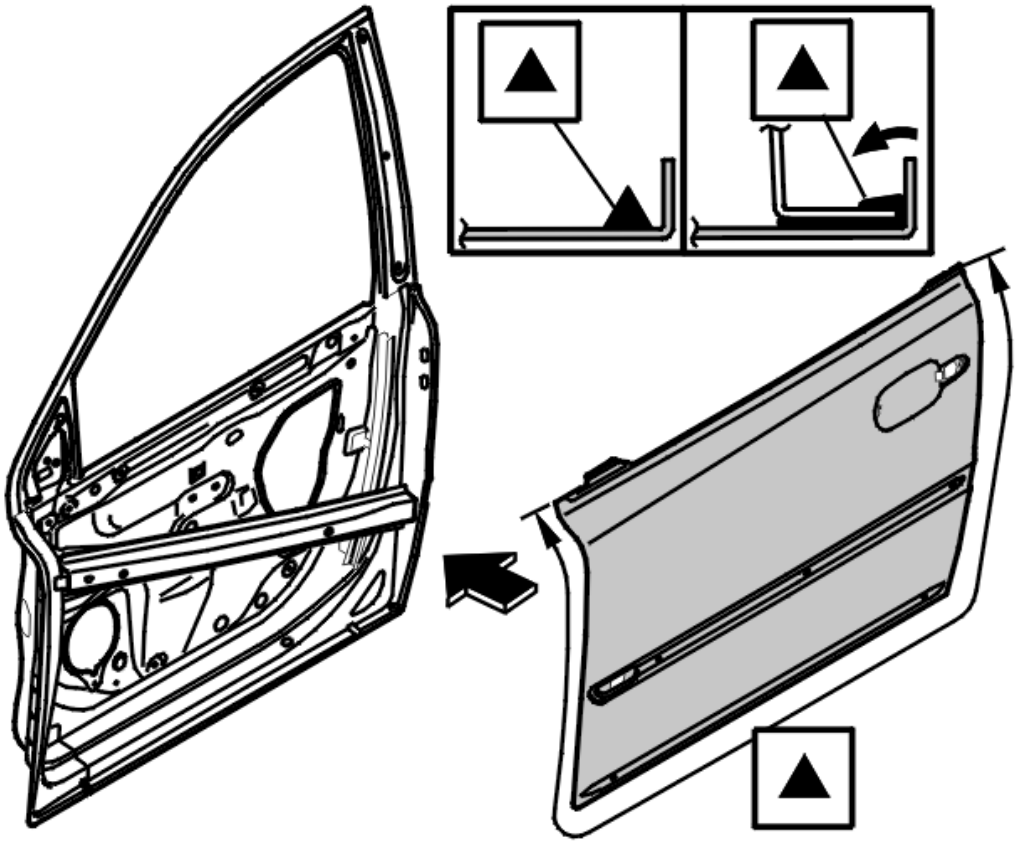

Fig. 59: Identifying Outer Door Skin
Courtesy of VOLVO CARS CORPORATION

Align the frame in the outer door skin.

Cut the panel at the door arches.

Remove the frame from the outer door skin.

Apply:

- enamel primer to the points that will be PUR bonded
- PUR adhesive to the collision member
- bodywork adhesive (P/N 116 1524) on the outer door skin.

Secure the replacement part using two tack welds in the door arches.

Beat the edge over using a counterhold pressed hard against the outer door skin.

Check the alignment by hanging the door on the car. This must be done before the adhesive has cured.

Complete the welding.

Seal the outer door skin to the frame. See **BODY SEAL** .

FINISHING

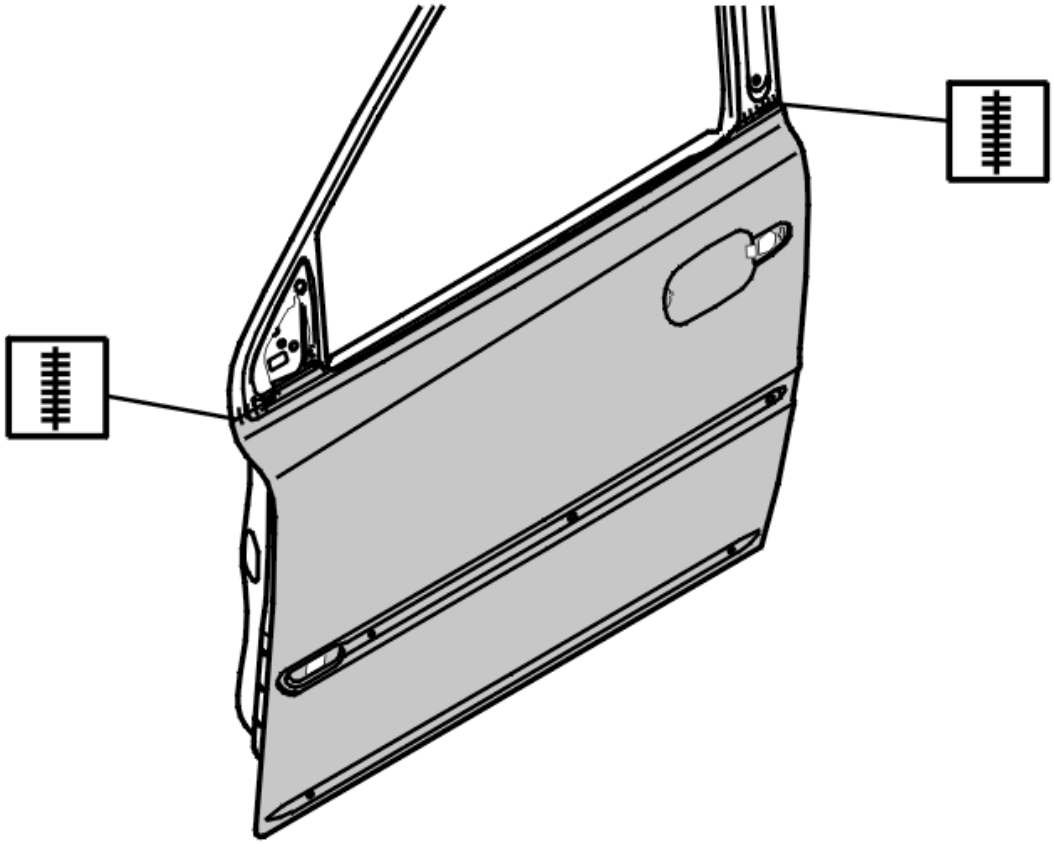

Fig. 60: Identifying Door Skin Welding
Courtesy of VOLVO CARS CORPORATION

Install:

- the door to the hinges using 2 M8 screws. Tighten
- the exterior handle. See **HANDLE OUTER FRONT SIDE DOOR, REPLACING**
- the side window. See **WINDOW FRONT SIDE DOOR, REPLACE**
- the rubber and trim strips
- the cable harness in its connector in the door post
- the door mirror. See **REAR VIEW MIRROR, REPLACING**
- the outer door skin. See **PANEL FRONT SIDE DOOR, REPLACING**
- the interior handle. See **HANDLE INNER FRONT SIDE DOOR, REPLACING**
- the cover from the door mirror

REPLACING THE REAR SIDE OUTER DOOR SKIN

PREPARATIONS

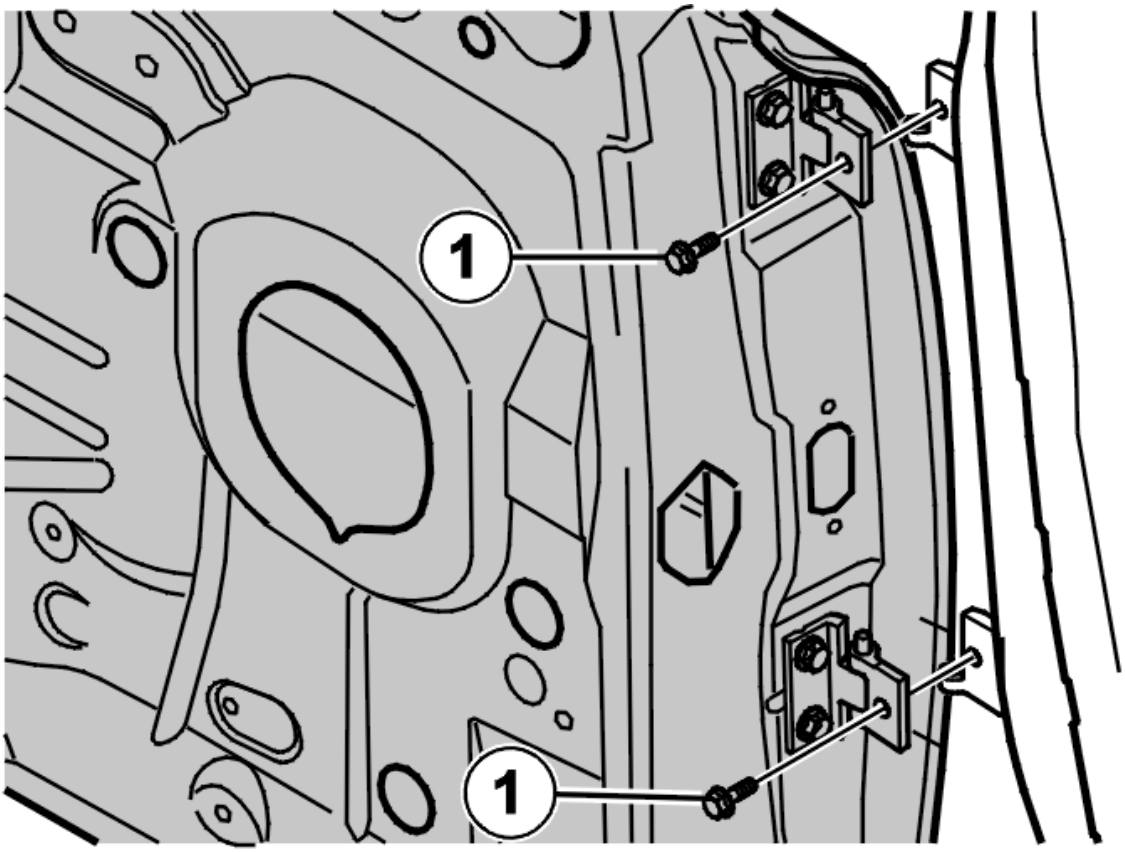

Fig. 61: Identifying Rear Side Outer Door Skin
Courtesy of VOLVO CARS CORPORATION

Remove:

- the interior handle. See **HANDLE INNER REAR SIDE DOOR, REPLACING**
- the outer door skin. See **PANEL REAR SIDE DOOR, REPLACING**
- the side window. See **WINDOW REAR SIDE DOOR, REPLACING**
- the exterior handle. See **HANDLE OUTER REAR SIDE DOOR, REPLACING**
- the rubber and trim strips.

Disconnect the cable harness from its connector in the door.

Remove the screws (1) holding the 2 door hinges and lift down the door.

REMOVING THE OUTER DOOR SKIN FOR THE REAR SIDE DOOR

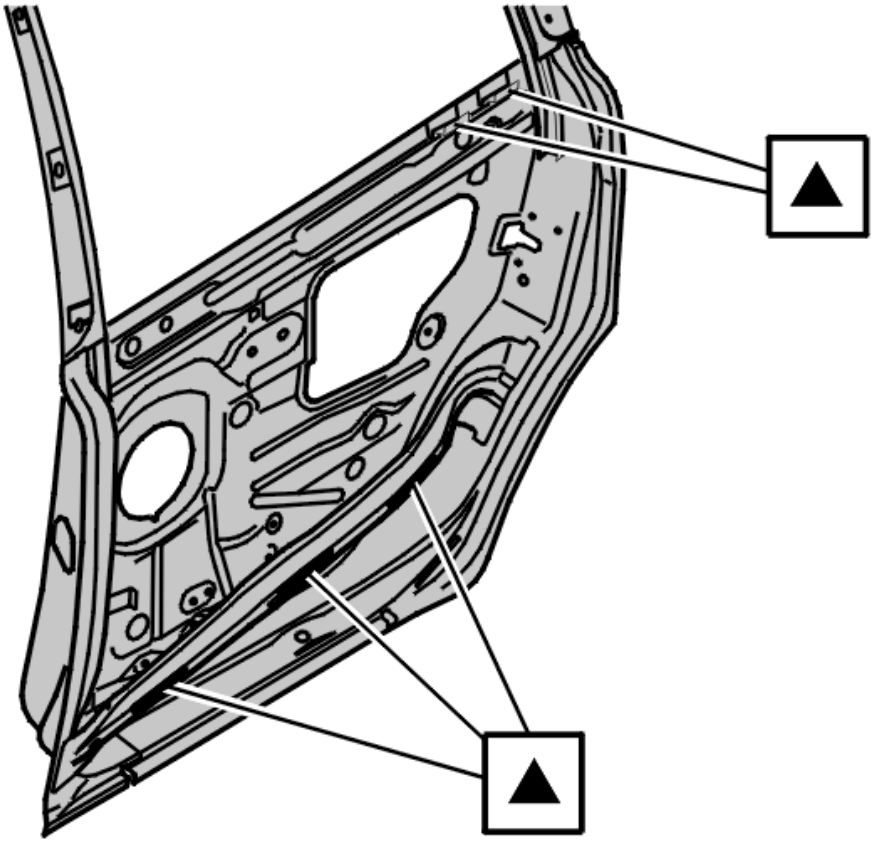

Fig. 62: Identifying Rear Side Door Frame
Courtesy of VOLVO CARS CORPORATION

Grind the panel edges.

Cut the outer door skin as illustrated.

The outer door skin is bonded in the frame and in the collision member.

Pry off the outer door skin.

NOTE: Check that the door frame is undamaged.

Clean the door frame.

INSTALLING THE OUTER DOOR SKIN FOR THE REAR SIDE DOOR

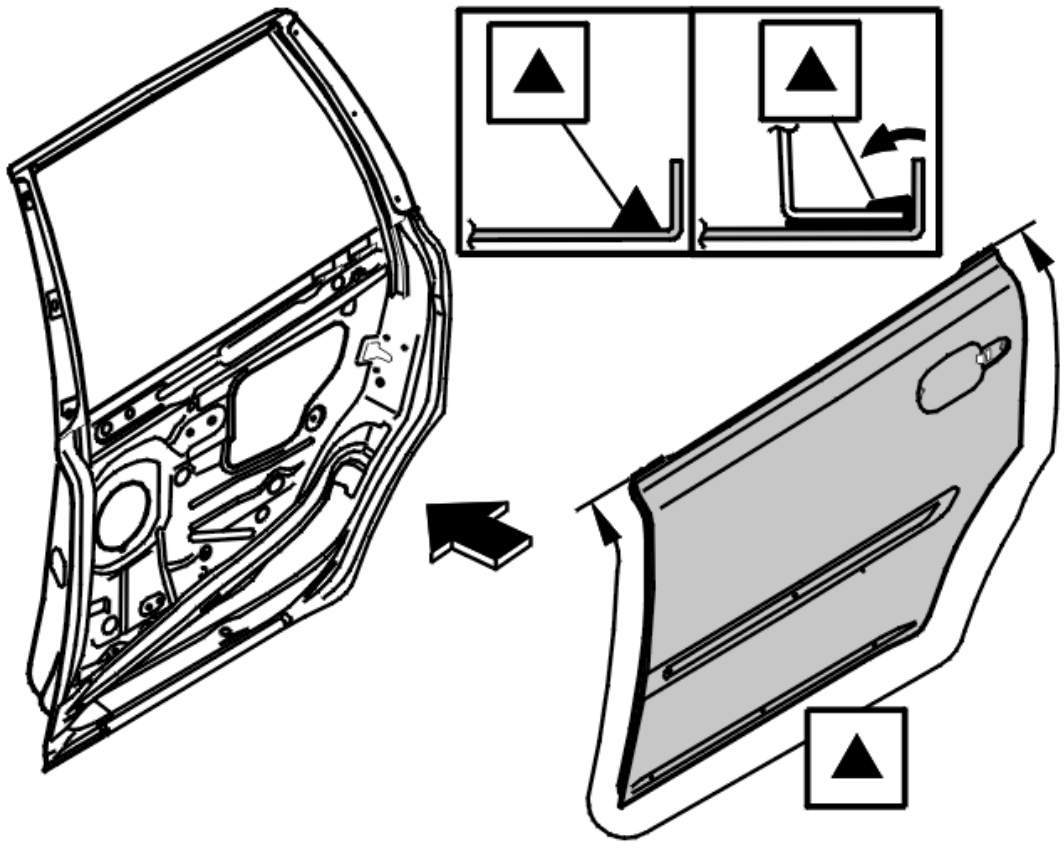

Fig. 63: Align The Frame In The Outer Door Skin
Courtesy of VOLVO CARS CORPORATION

Align the frame in the outer door skin.

Cut the door skin at the door arches.

Remove the frame from the outer door skin.

Apply:

- enamel primer to the points that will be PUR bonded
- PUR adhesive to the collision member
- bodywork adhesive (P/N 116 1524) on the outer door skin.

Secure the replacement part using two tack welds in the door arches.

Beat the edge over using a counterhold pressed hard against the outer door skin.

Check the alignment by hanging the door on the car. This must be done before the adhesive has cured.

Complete the welding.

Seal the outer door skin to the frame. See **BODY SEAL** .

FINISHING

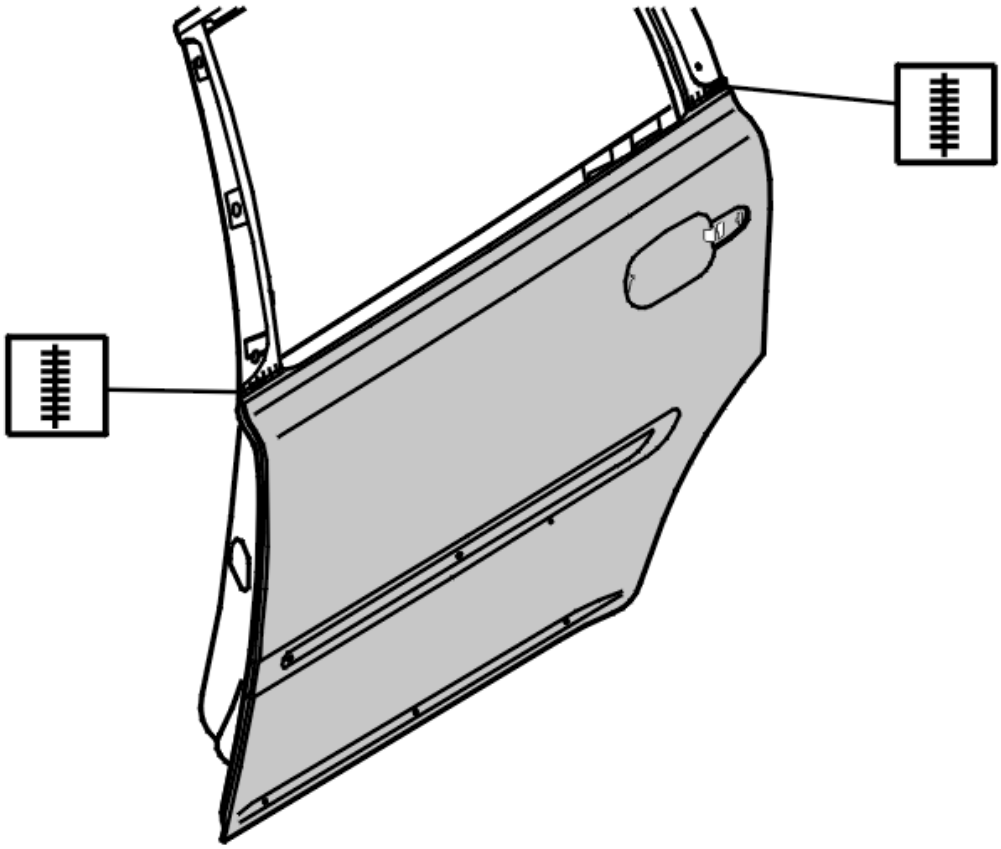

Fig. 64: Install Outer Door Skin Weld Points
Courtesy of VOLVO CARS CORPORATION

Install:

- the door to the hinges using 2 M8 screws. Tighten
- the exterior handle. See **HANDLE OUTER REAR SIDE DOOR, REPLACING**
- the side window. See **WINDOW REAR SIDE DOOR, REPLACING**
- the rubber and trim strips
- the cable harness in its connector in the door post
- the outer door skin. See **PANEL REAR SIDE DOOR, REPLACING**
- the interior handle. See **HANDLE INNER REAR SIDE DOOR, REPLACING**

SIDE DOOR FRONT, REPLACING

NOTE: **As the illustrations in this service information are used for different model years and / or models, some variation may occur. However, the essential information in the illustrations is always correct.**

REMOVING THE FRONT SIDE DOOR

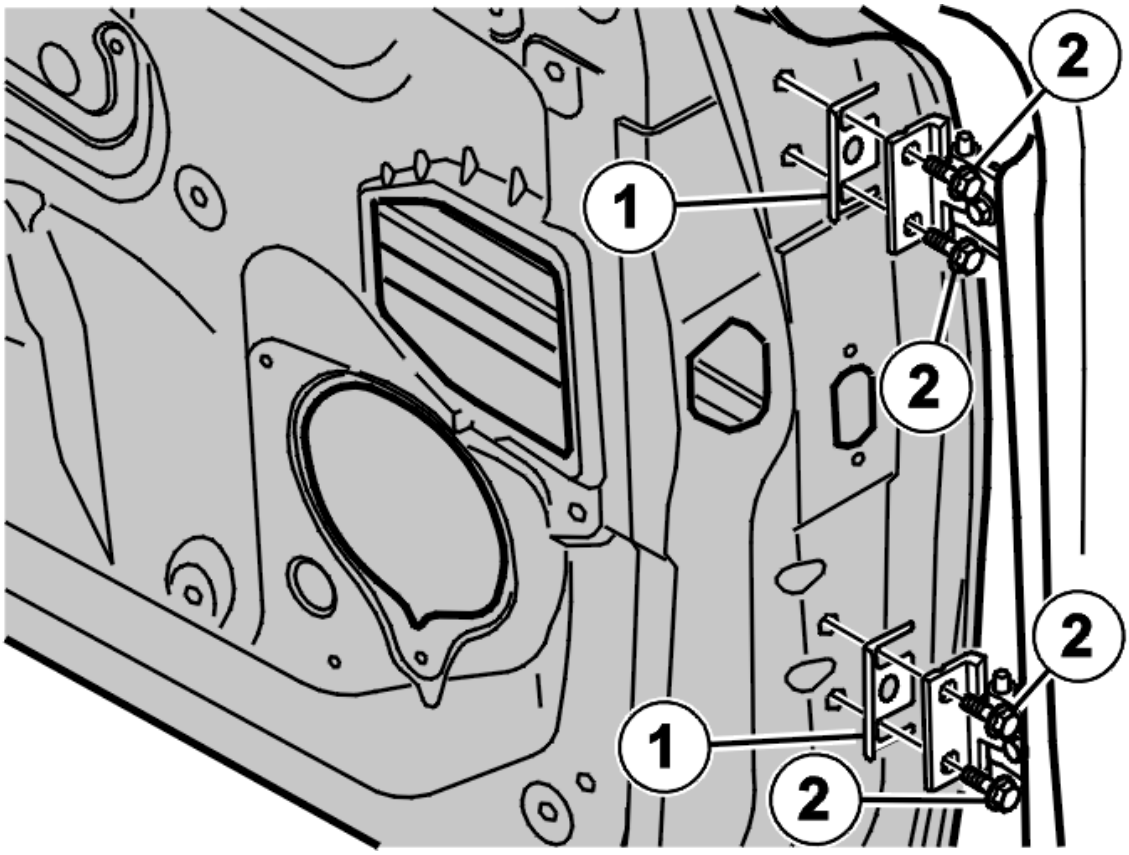

Fig. 65: View Of Front Side Door Hinge
Courtesy of VOLVO CARS CORPORATION

Remove:

- the cover from the door mirror
- the interior handle. See **HANDLE INNER FRONT SIDE DOOR, REPLACING**
- the door panel. See **PANEL FRONT SIDE DOOR, REPLACING**
- the side window. See **WINDOW FRONT SIDE DOOR, REPLACE**
- the window lift mechanism. See **WINDOW LIFT MECHANISM FRONT SIDE DOOR, REPLACING**
- the loudspeakers. See **LOUDSPEAKER, FRONT SIDE DOOR, REPLACING**
- the lock mechanism. See **LOCK MECHANISM FRONT SIDE DOOR, REPLACING**
- the exterior handle. See **HANDLE OUTER FRONT SIDE DOOR, REPLACING**
- the door mirror. See **REAR VIEW MIRROR, REPLACING**
- the cable harness in the door
- the rubber and trim strips
- the door stop. See **DOOR STOP FRONT SIDE DOOR, REPLACING**.

HINT: Check whether there are any spacers (1) between the door and the hinge. Make a note of how many there are.

Remove the 4 screws (2) holding the door at the front edge. Then remove the upper screw and lower the door.

INSTALLING THE FRONT SIDE DOOR

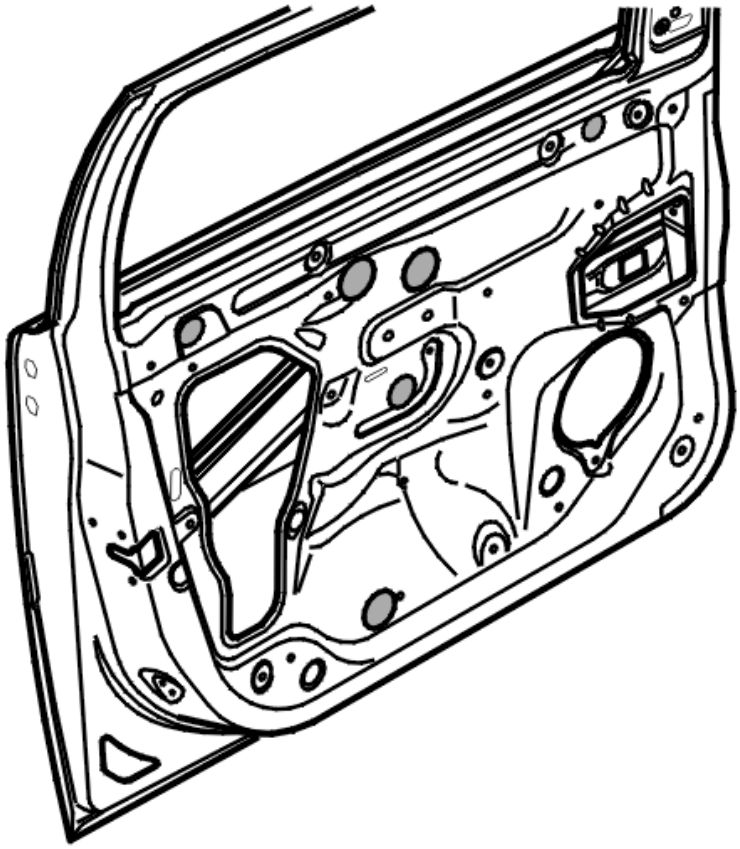

Fig. 66: Identifying Front Door Spacers
Courtesy of VOLVO CARS CORPORATION

Install the door using only the upper screw but without tightening it.

Then install the other screws.

If spacers were installed, install them in the same place they were removed from.

Install the screws following the old color marking so that the door is roughly aligned.

Install:

- the cable harness in the door
- the lock mechanism. See **LOCK MECHANISM FRONT SIDE DOOR, REPLACING**
- the loudspeakers. See **LOUDSPEAKER, FRONT SIDE DOOR, REPLACING**

- the window lift mechanism. See **WINDOW LIFT MECHANISM FRONT SIDE DOOR, REPLACING**
- the side window. See **WINDOW FRONT SIDE DOOR, REPLACE**
- the interior handle. See **HANDLE INNER FRONT SIDE DOOR, REPLACING**.

Place seal lips over the holes in the door.

Install:

- the door stop. See **DOOR STOP FRONT SIDE DOOR, REPLACING**
- the door mirror. See **REAR VIEW MIRROR, REPLACING**
- the exterior handle. See **HANDLE OUTER FRONT SIDE DOOR, REPLACING**
- the door panel. See **PANEL FRONT SIDE DOOR, REPLACING**
- the cover from the door mirror
- the rubber and trim strips.

Adjust the door.

Tighten the 4 M8 screws at the front edge of the door.

SIDE DOOR REAR, REPLACING

NOTE: **As the illustrations in this service information are used for different model years and / or models, some variation may occur. However, the essential information in the illustrations is always correct.**

REMOVING THE FRONT SIDE DOOR

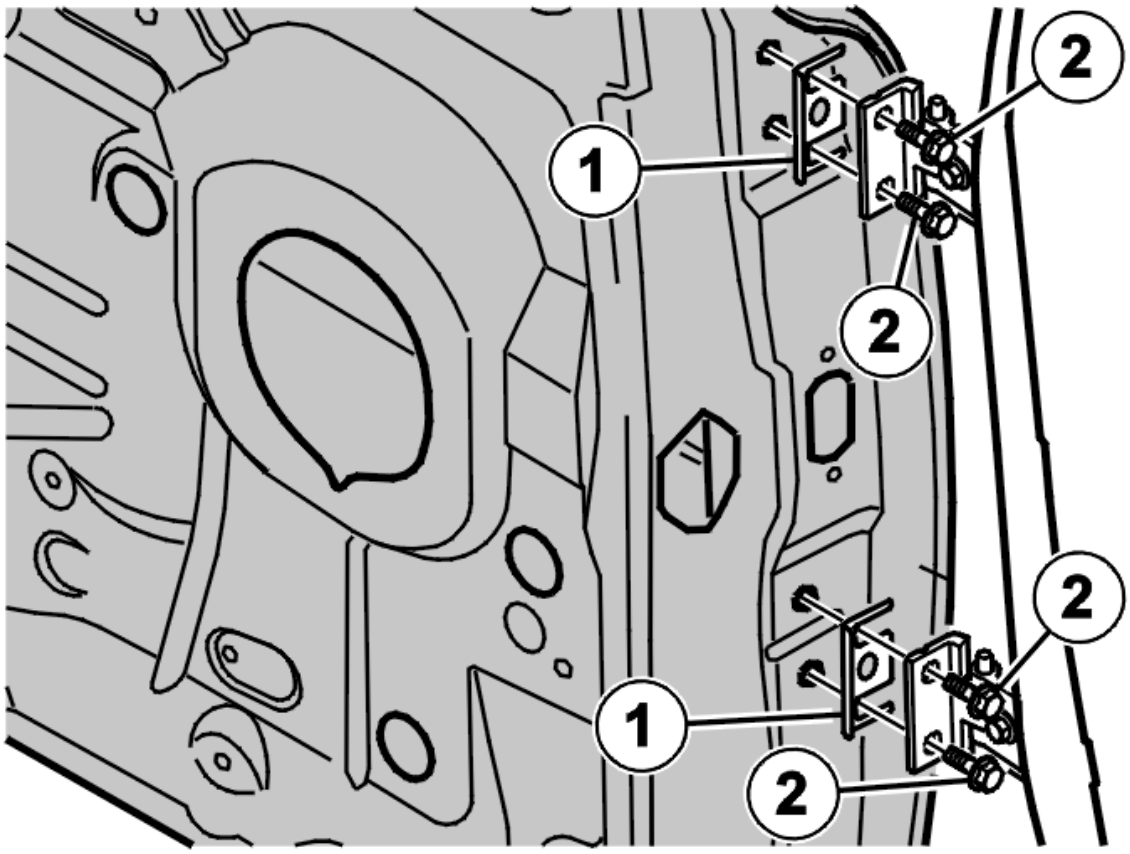

Fig. 67: Identifying Front Door Hinge Components
Courtesy of VOLVO CARS CORPORATION

Remove:

- the interior handle. See **HANDLE INNER REAR SIDE DOOR, REPLACING**
- the door panel. See **PANEL REAR SIDE DOOR, REPLACING**
- the side window. See **WINDOW REAR SIDE DOOR, REPLACING**
- the window lift mechanism. See **WINDOW LIFT MECHANISM REAR SIDE DOOR, REPLACING**
- the loudspeakers. See **LOUDSPEAKER, REAR SIDE DOOR, REPLACING**
- the lock mechanism. See **LOCK MECHANISM REAR SIDE DOOR, REPLACING**
- the exterior handle. See **HANDLE OUTER REAR SIDE DOOR, REPLACING**
- the cable harness in the door
- the rubber and trim strips
- the door stop. See **DOOR STOP REAR SIDE DOOR, REPLACING**
- the SIPS block.

HINT: Check whether there are any spacers (1) between the door and the hinge. Make a note of how many there are.

Remove the 4 screws (2) holding the door at the front edge. Then remove the upper screw and lower the door.

INSTALLING THE FRONT SIDE DOOR

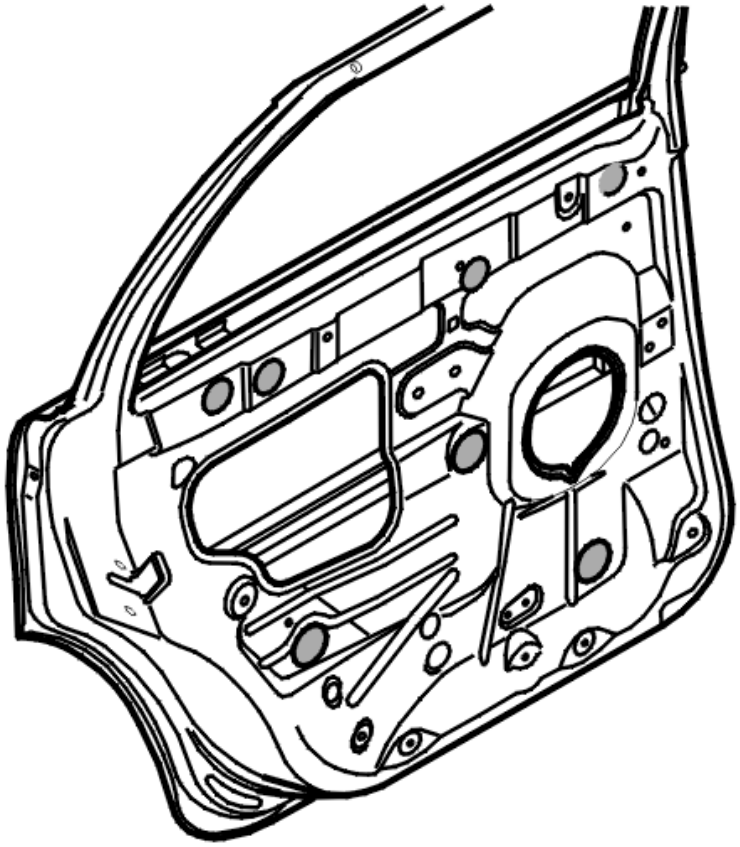

Fig. 68: Identifying Front Side Door Spacers
Courtesy of VOLVO CARS CORPORATION

Install the door using only the upper screw but without tightening it.

Then install the other screws.

If spacers were installed, install them in the same place they were removed from.

Install the screws following the old color marking so that the door is roughly aligned.

Install:

- SIPS block
- the cable harness in the door
- the lock mechanism. See **LOCK MECHANISM REAR SIDE DOOR, REPLACING**
- the loudspeakers. See **LOUDSPEAKER, REAR SIDE DOOR, REPLACING**
- the window lift mechanism. See **WINDOW LIFT MECHANISM REAR SIDE DOOR, REPLACING**
- the side window. See **WINDOW REAR SIDE DOOR, REPLACING**
- the interior handle. See **HANDLE INNER REAR SIDE DOOR, REPLACING**.

Place seal lips over the holes in the door.

Install:

- the door stop. See **DOOR STOP REAR SIDE DOOR, REPLACING**
- the exterior handle. See **HANDLE OUTER REAR SIDE DOOR, REPLACING**
- the door panel. See **PANEL REAR SIDE DOOR, REPLACING**
- the rubber and trim strips.

Adjust the door.

Tighten the 4 M8 screws at the front edge of the door

SUN ROOF (2003-2011)

APRON MOLDING SUN ROOF, REPLACEMENT

NOTE: **The illustrations in this service information are used for different model years and / or models. Some variation may occur. However, the essential information in the illustrations is always correct.**

REMOVING THE APRON MOLDING FOR THE SUN ROOF

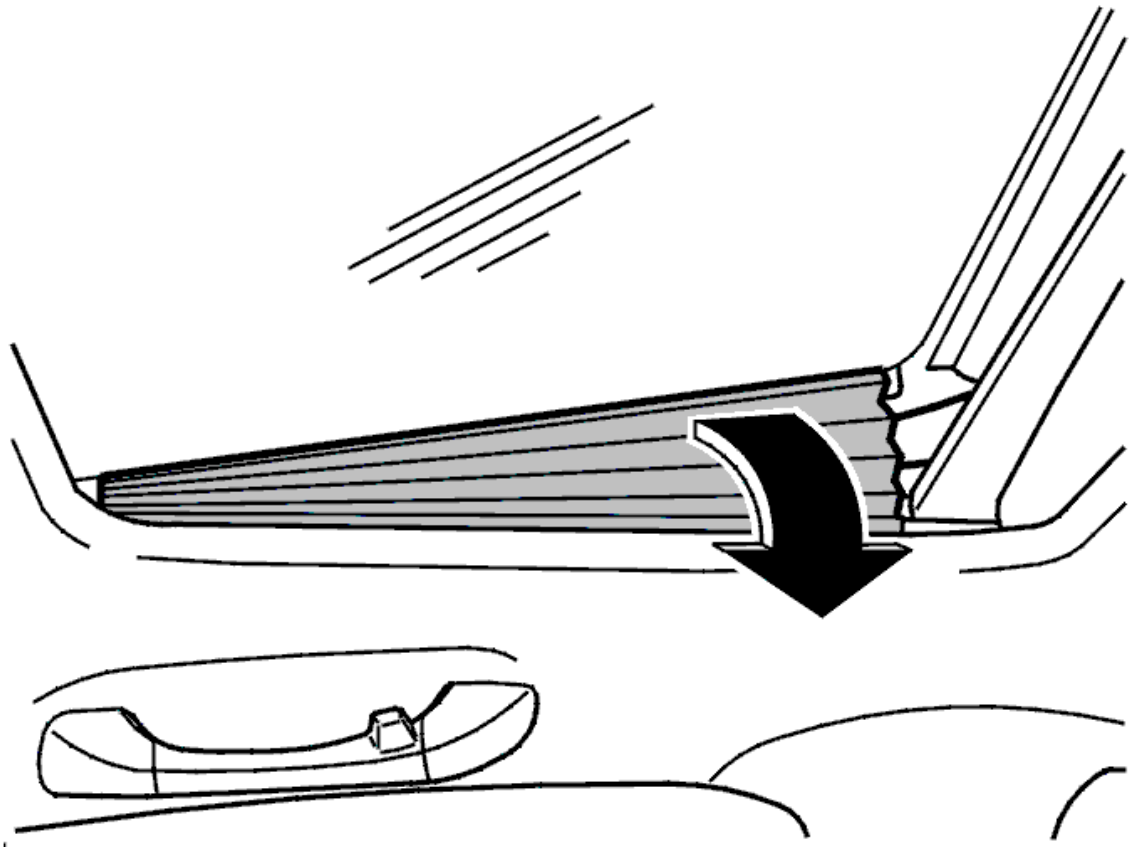

Fig. 69: Identifying Apron Molding Pulled Into Car
Courtesy of VOLVO CARS CORPORATION

The sun roof must be in the half open position.

Pull the apron molding inwards into the car.

Detach the upper edge of the apron molding.

Unhook the lower edge of the apron molding.

Remove the apron molding.

INSTALLING APRON MOLDING FOR THE SUN ROOF

Hook the apron molding into place at the top and bottom edges.

CONTROL MODULE, SUN ROOF, REPLACING

NOTE: **As the illustrations in this service information are used for different model years and / or models, some variation may occur. However, the essential information in the illustrations is always correct.**

PREPARATIONS

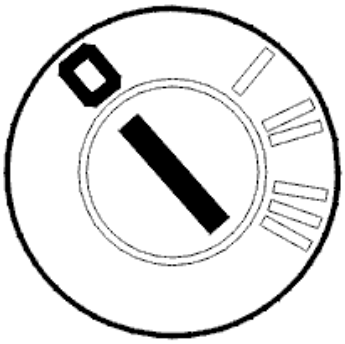

Fig. 70: Identifying Ignition In Off Position
Courtesy of VOLVO CARS CORPORATION

Close the sun roof.

Ignition off.

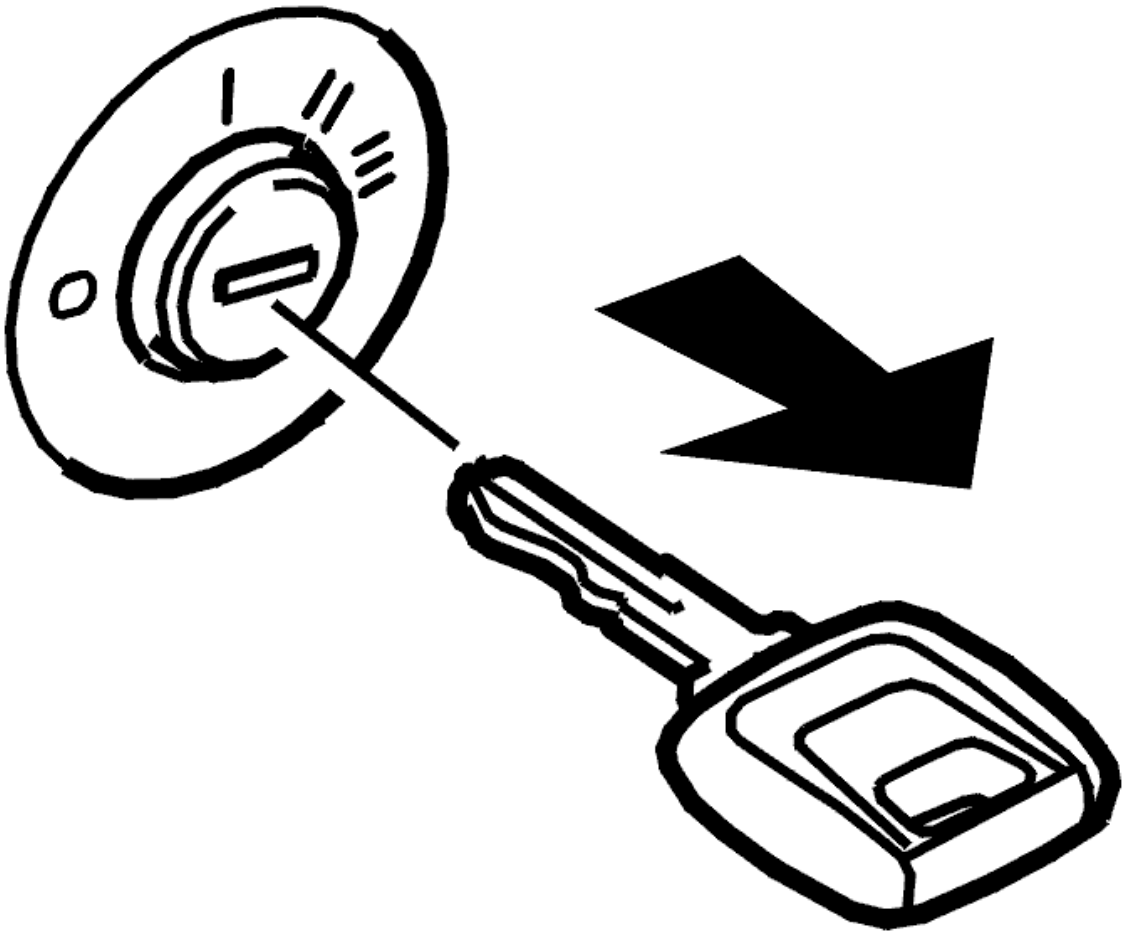

Fig. 71: Identifying Ignition Key Off
Courtesy of VOLVO CARS CORPORATION

Remove the key.

NOTE: After removing the key, wait one minute before starting work.

REMOVING THE SUN ROOF CONTROL MODULE

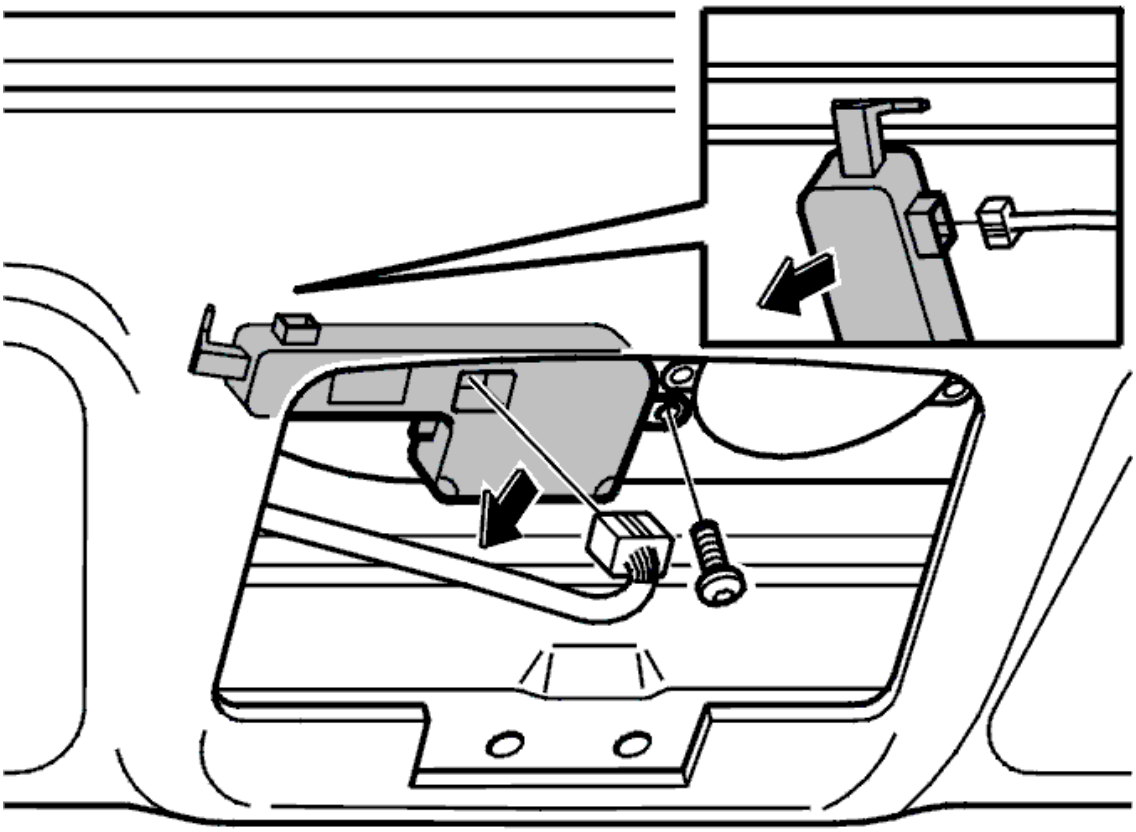

Fig. 72: Identifying Upper Electronic Module, Connector And Screw
Courtesy of VOLVO CARS CORPORATION

Remove:

- the upper electronic module (UEM). See **UPPER ELECTRONIC MODULE (UEM)/REARVIEW MIRROR, REPLACING**
- the first connector
- 1 screw.

Detach the control module and lift it down.

Remove:

- the second connector
- the control module for the sun roof.

INSTALLING THE SUN ROOF CONTROL MODULE

NOTE: For tightening torques, see TIGHTENING TORQUE .

Install:

- the small connector
- the control module
- 1 M6 screw. Tighten
- the large connector
- the upper electronic module (UEM). See **UPPER ELECTRONIC MODULE (UEM)/REARVIEW MIRROR, REPLACING** .

Calibrate the control module for the sun roof. See **SUN ROOF MODULE (SRM), CALIBRATING** .

ELECTRIC MOTOR, SUN ROOF, REPLACING

NOTE: **As the illustrations in this service information are used for different model years and / or models, some variation may occur. However, the essential information in the illustrations is always correct.**

PREPARATIONS

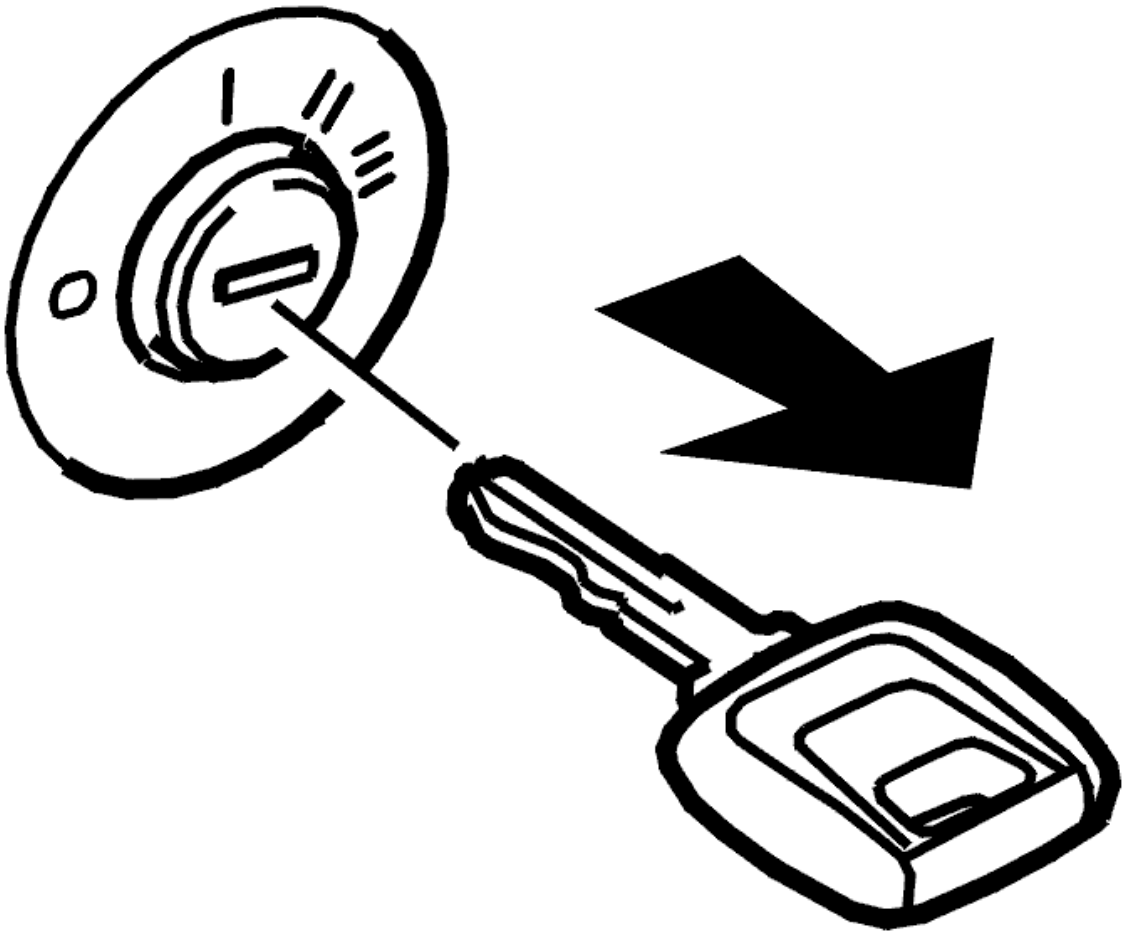

Fig. 73: Identifying Ignition Key Off
Courtesy of VOLVO CARS CORPORATION

Close the sun roof.

Ignition off.

Remove the key from the ignition switch.

NOTE: After removing the key, wait one minute before starting work.

REMOVING THE ELECTRIC MOTOR FOR THE SUN ROOF

Remove:

- the roof module. See **UPPER ELECTRONIC MODULE (UEM)/REARVIEW MIRROR,**

REPLACING

- the panel / plastic molding around the headlining / sun roof unit.

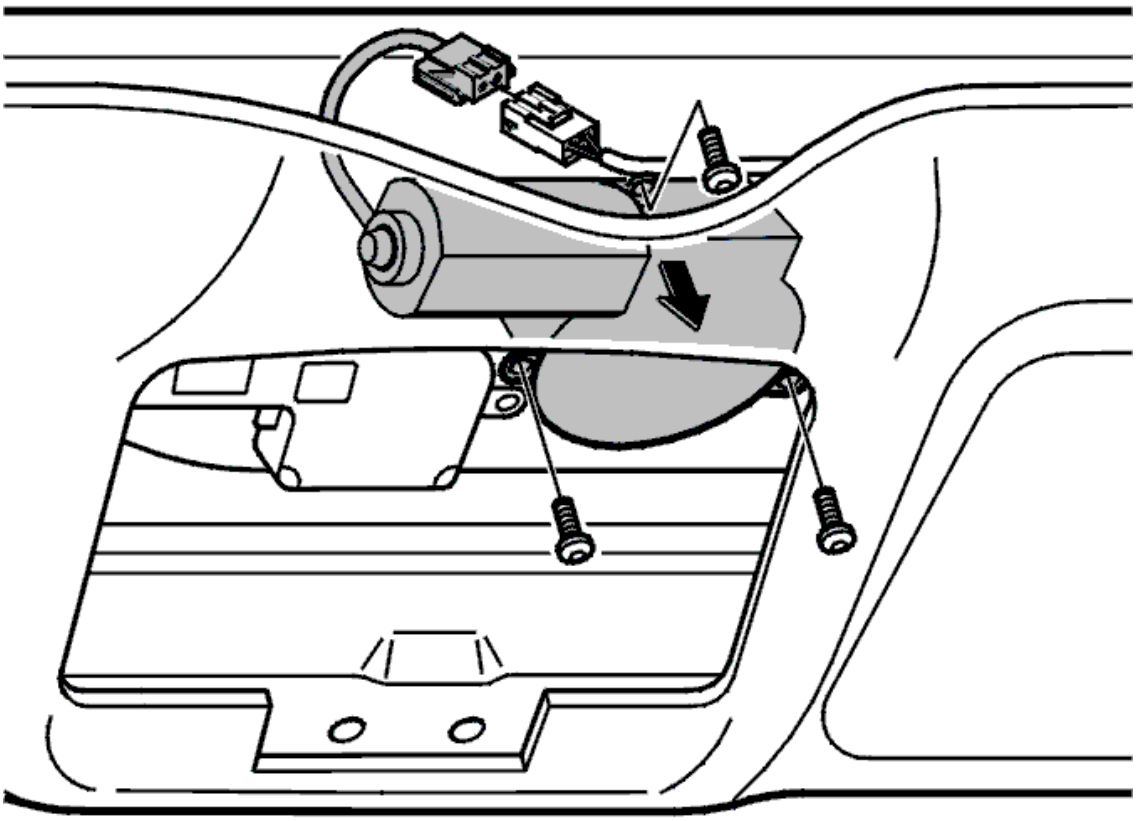

Fig. 74: Connector At Sun Roof
Courtesy of VOLVO CARS CORPORATION

- the 2 screws for the motor.

Carefully lower the headlining. Position several spacers between the sun roof unit and the headlining to avoid long term kinks.

Remove:

- 1 screw
- the connector
- the motor.

HINT: Use a 1/4 ratchet handle with a Torx 25 socket for the last screw.

INSTALLING THE ELECTRIC MOTOR FOR THE SUN ROOF

NOTE: For tightening torques, see TIGHTENING TORQUE .

Connect the connector.

Screw the electric motor into place using the 3 M5 screws. Tighten.

Install:

- the roof module. See **UPPER ELECTRONIC MODULE (UEM)/REARVIEW MIRROR, REPLACING**
- the panel / plastic molding around the headlining / sun roof. Start by pressing one corner into place, continue along a long side and then the shorter sides and the corners. Finish with a long side.

Check that the sun roof is operating correctly. If this is not the case, see **SUN ROOF MODULE (SRM), CALIBRATING** .

GLASS SUN ROOF, REPLACEMENT

NOTE: **The illustrations in this service information are used for different model years and / or models. Some variation may occur. However, the essential information in the illustrations is always correct.**

PREPARATIONS

Remove the apron molding. See **APRON MOLDING SUN ROOF, REPLACEMENT**.

REMOVING THE SUN ROOF GLASS

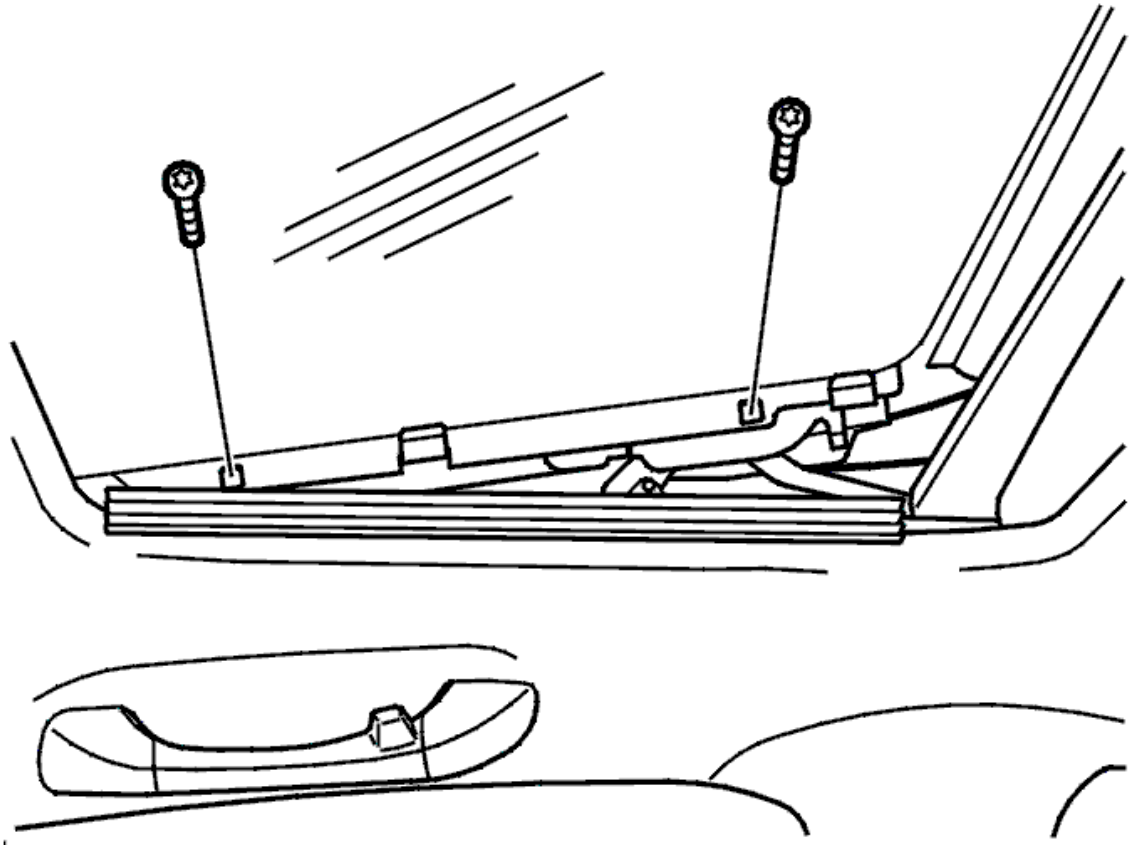

Fig. 75: Identifying Glass Sun Roof And Screws
Courtesy of VOLVO CARS CORPORATION

Remove:

- the screws, 2 on each side
- the glass sun roof.

INSTALL

INSTALLING THE GLASS SUN ROOF

CAUTION: Check that the mechanism has not moved during the replacement.

Install:

- the glass sun roof
- the screws, 2 on each side.

Adjust. See **SUN ROOF, ADJUSTING** .

GUTTER SUN ROOF, REPLACEMENT

NOTE: **The illustrations in this service information are used for different model years and / or models. Some variation may occur. However, the essential information in the illustrations is always correct.**

REMOVING THE GUTTER

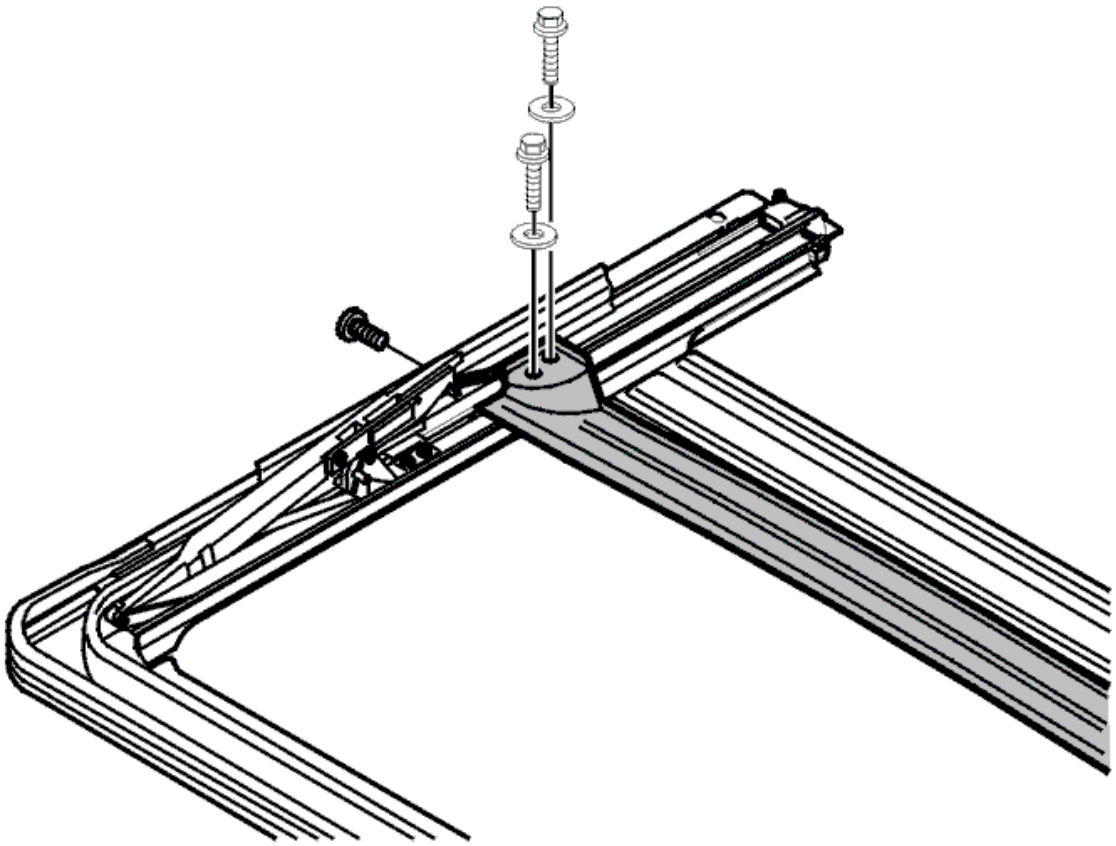

Fig. 76: Identifying Glass Cover And Screws
Courtesy of VOLVO CARS CORPORATION

The sun roof must be in the half open position.

Remove:

- the glass cover. See **GLASS SUN ROOF, REPLACEMENT**
- the 2 screws (mounting to the mechanism, screwed from outside).

Pull the gutter forwards slightly.

Remove:

- 4 screws with washers,
- the drainage channel.

INSTALLING THE GUTTER

Install:

- the gutter
- 4 screws with washers. Tighten.

Slide the gutter backwards so that the hole on xxx corresponds to the hole in the mechanism.

Install:

- the 2 screws, (screwed from the outside). Tighten
- the glass cover. See **GLASS SUN ROOF, REPLACEMENT**.

Check for leakage. See **SUN ROOF, LEAK TEST** .

MECHANISM / MECHANICAL CABLE SUN ROOF, REPLACEMENT

NOTE: The illustrations in this service information are used for different model years and / or models. Some variation may occur. However, the essential information in the illustrations is always correct.

CAUTION: When replacing the mechanism / mechanical cable, both sides must be replaced.

PREPARATION

PREPARATORY WORK

Remove:

- the sun roof. See **SUN ROOF, REPLACING**
- the motor. See **ELECTRIC MOTOR, SUN ROOF, REPLACING**
- the glass cover. See **GLASS SUN ROOF, REPLACEMENT**
- the drainage channel. See **GUTTER SUN ROOF, REPLACEMENT**.

REMOVING THE MECHANISM / MECHANICAL CABLE

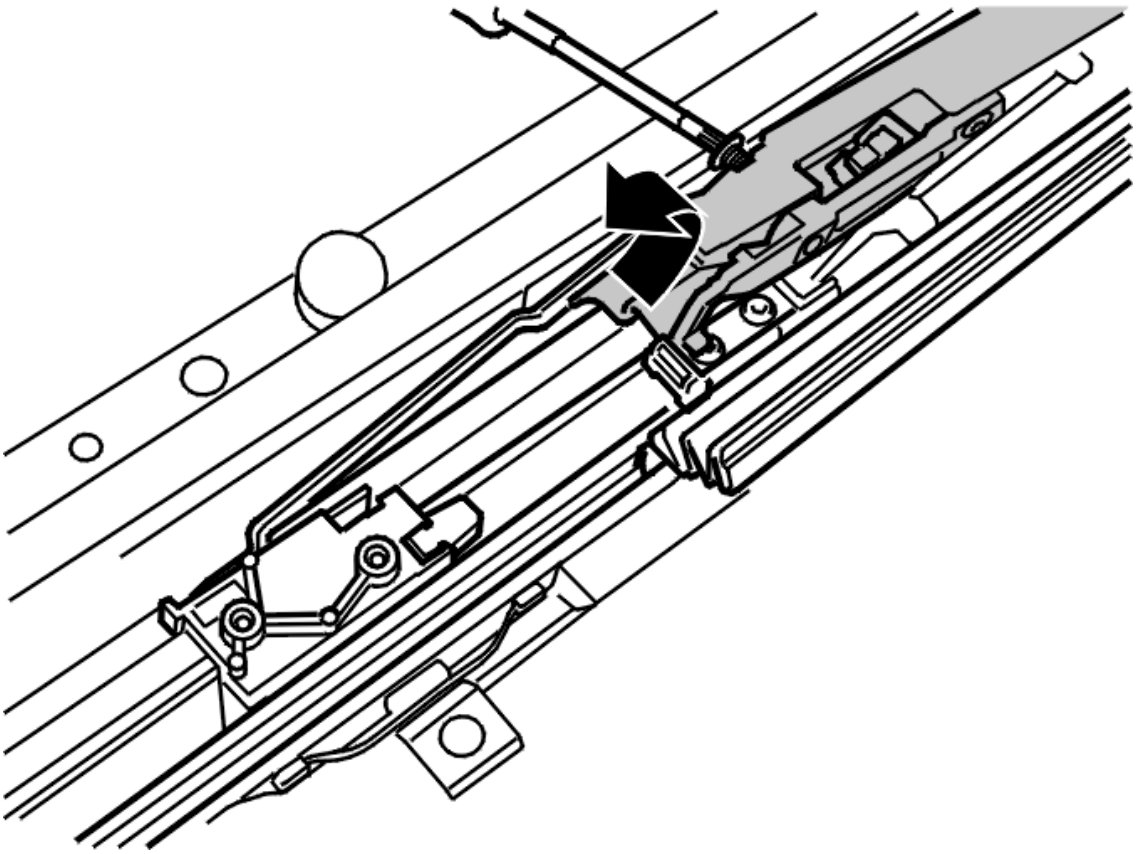

Fig. 77: Angling Mechanism Up
Courtesy of VOLVO CARS CORPORATION

Angle the mechanism up.

Remove the screw.

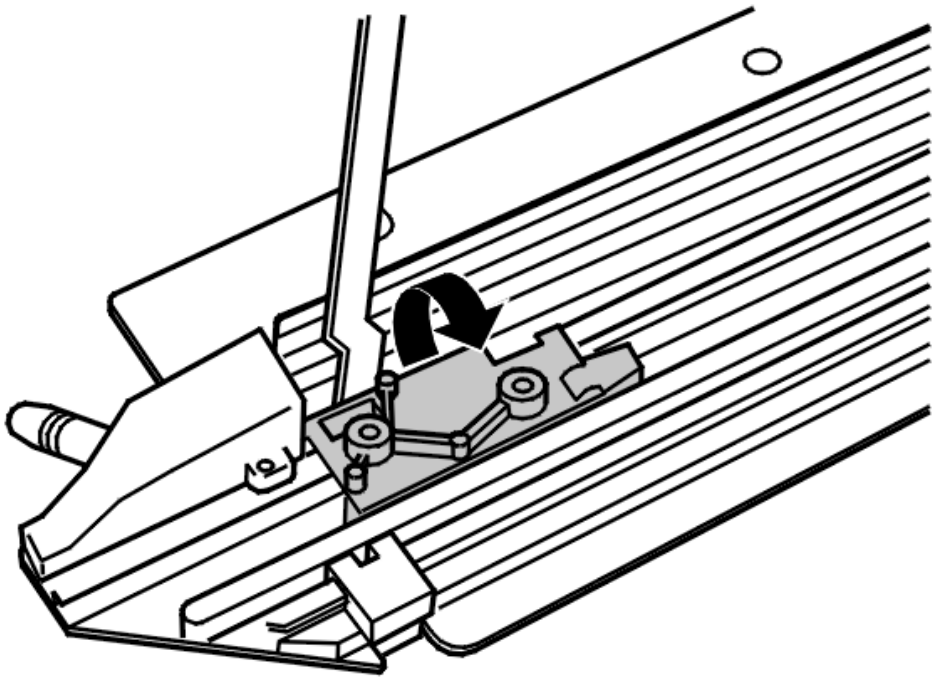

Fig. 78: Identifying Carriage And Slides
Courtesy of VOLVO CARS CORPORATION

Pull the carriage as far back as possible.

Remove the carriage from the slides.

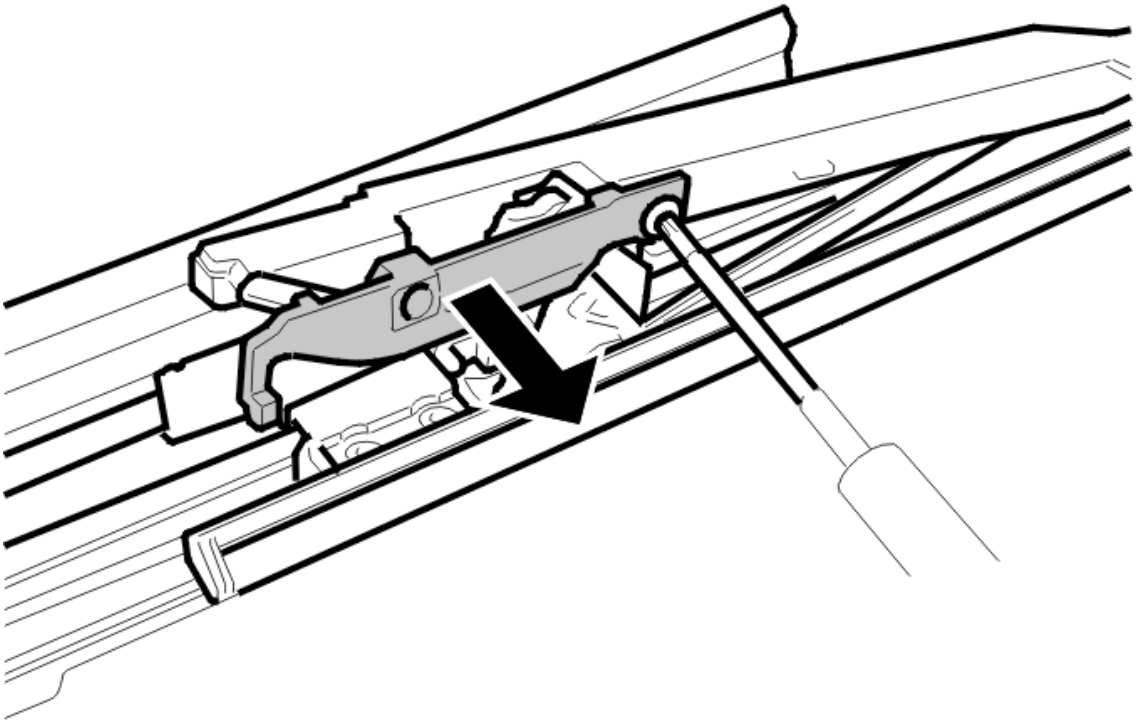

Fig. 79: Identifying Screw And Bracket
Courtesy of VOLVO CARS CORPORATION

Remove:

- the screw
- the bracket.

NOTE: **Note the position of the locating pin for the drive plate against the bracket.**

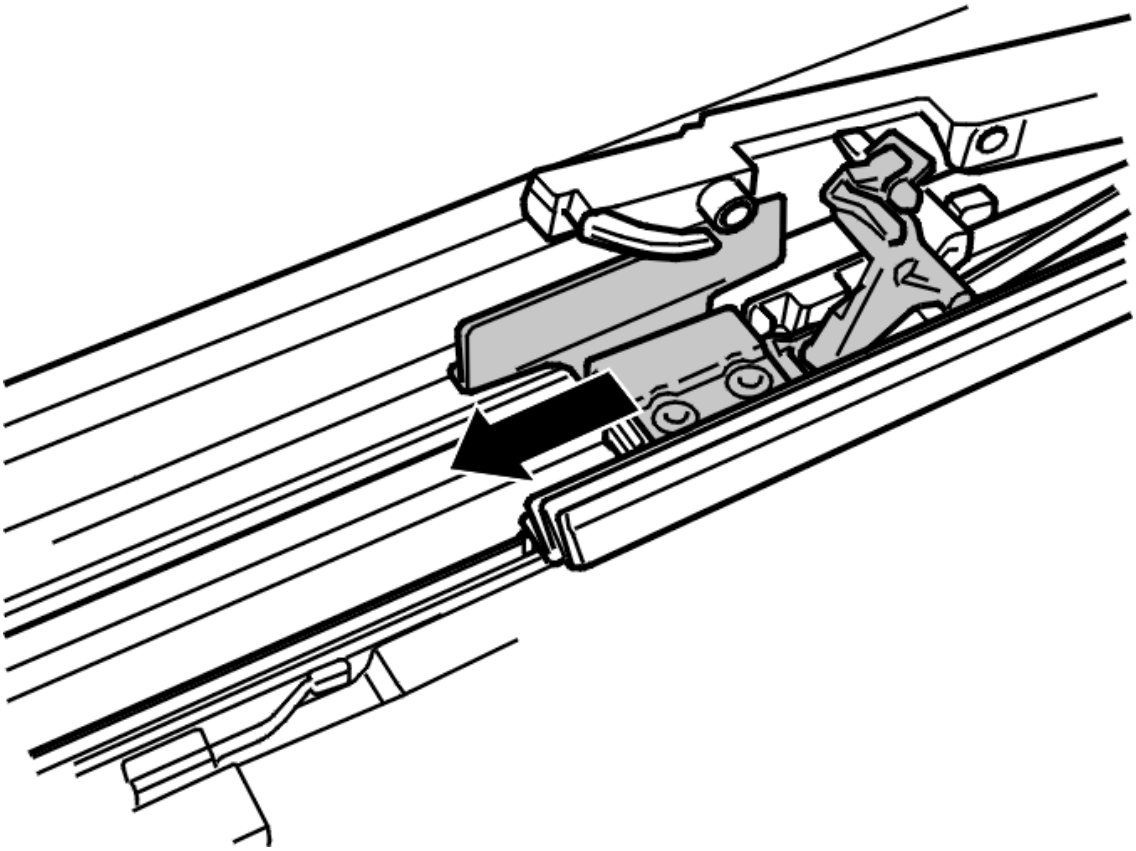

Fig. 80: Identifying Drive Plate
Courtesy of VOLVO CARS CORPORATION

NOTE: Note the position of the locating pin for the drive plate against the mechanism.

Pull the drive plate as far back as possible.

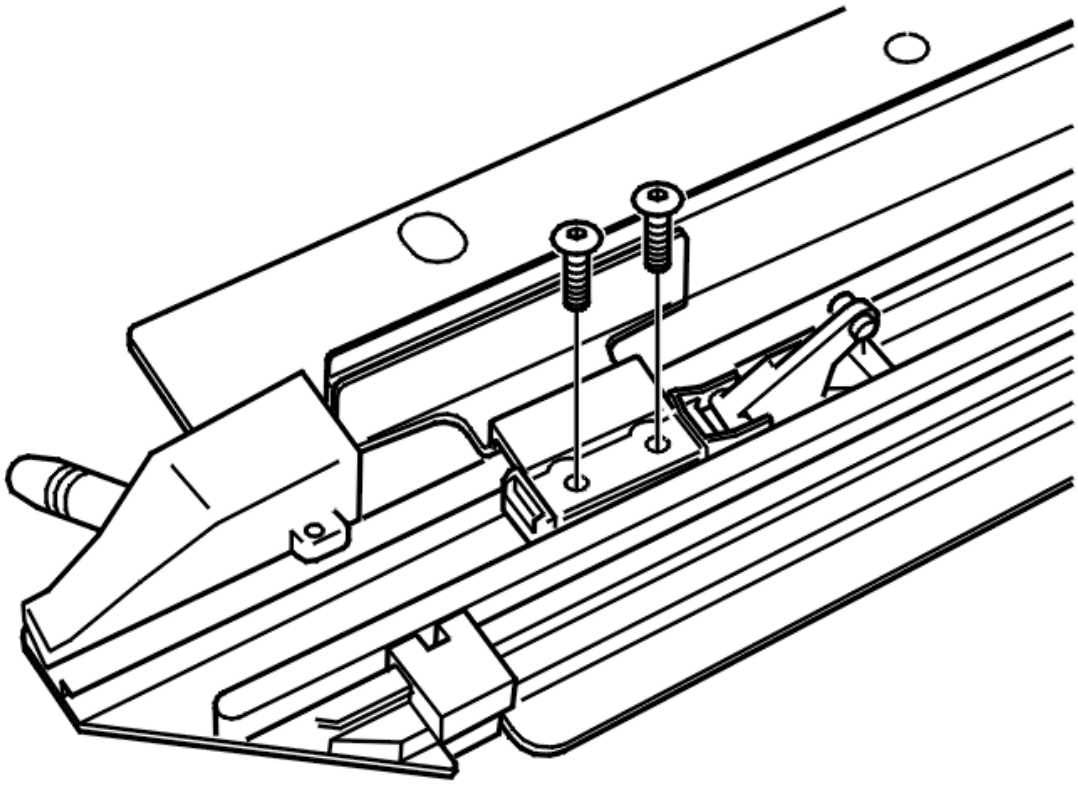

Fig. 81: Identifying Screws
Courtesy of VOLVO CARS CORPORATION

Remove the 2 screws.

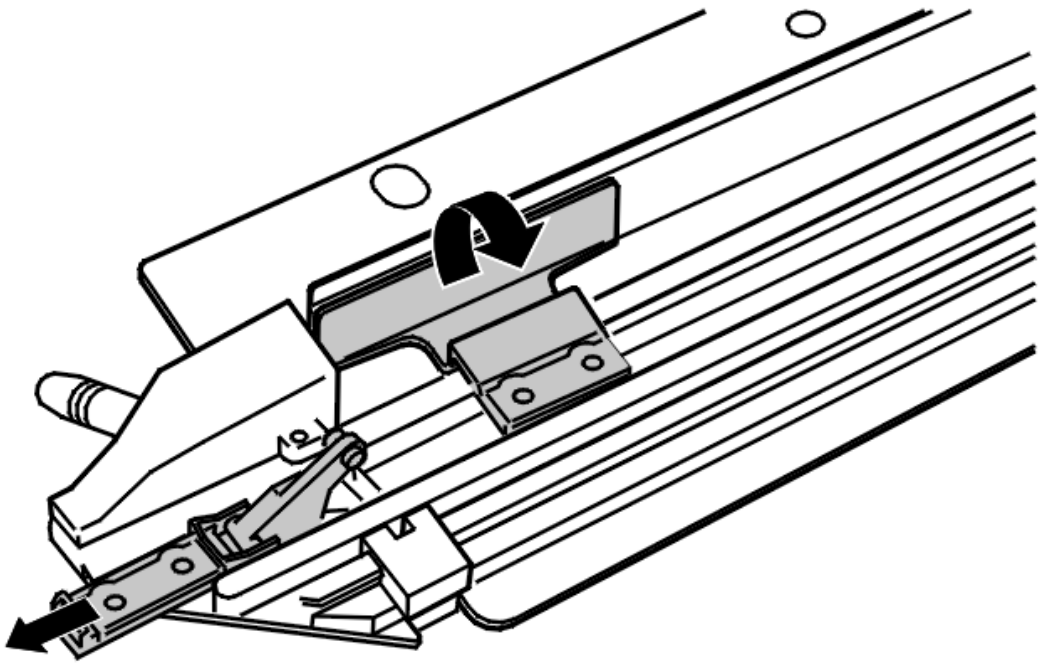

Fig. 82: Identifying Carriage And Mounting / Mechanical Cable
Courtesy of VOLVO CARS CORPORATION

Pull the carriage out.

Angle up and pull out the mounting / mechanical cable.

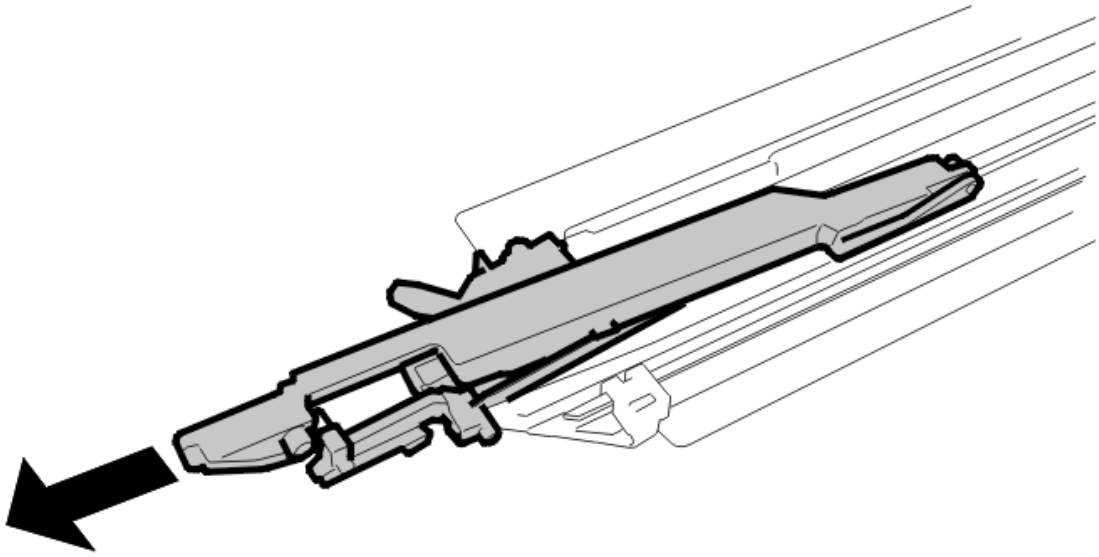

Fig. 83: Identifying Mechanism
Courtesy of VOLVO CARS CORPORATION

Withdraw the mechanism.

INSTALL

INSTALLING THE MECHANISM / MECHANICAL CABLE

NOTE: For tightening torques, see TIGHTENING TORQUE .

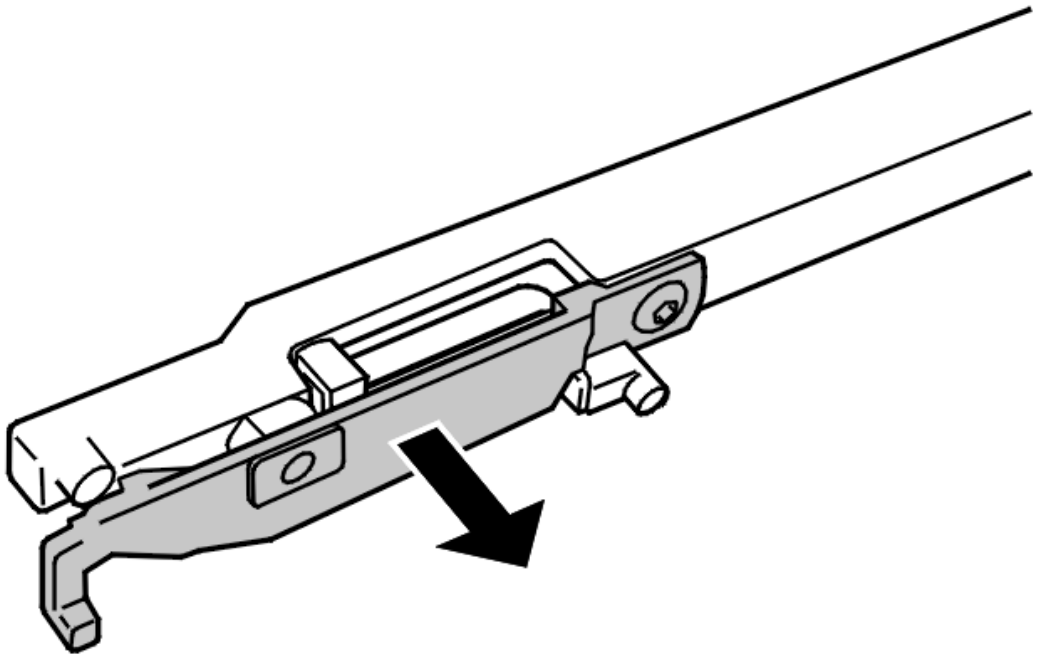

Fig. 84: Identifying Bracket And Mechanism
Courtesy of VOLVO CARS CORPORATION

Remove the bracket from the mechanism (applies to service kit).

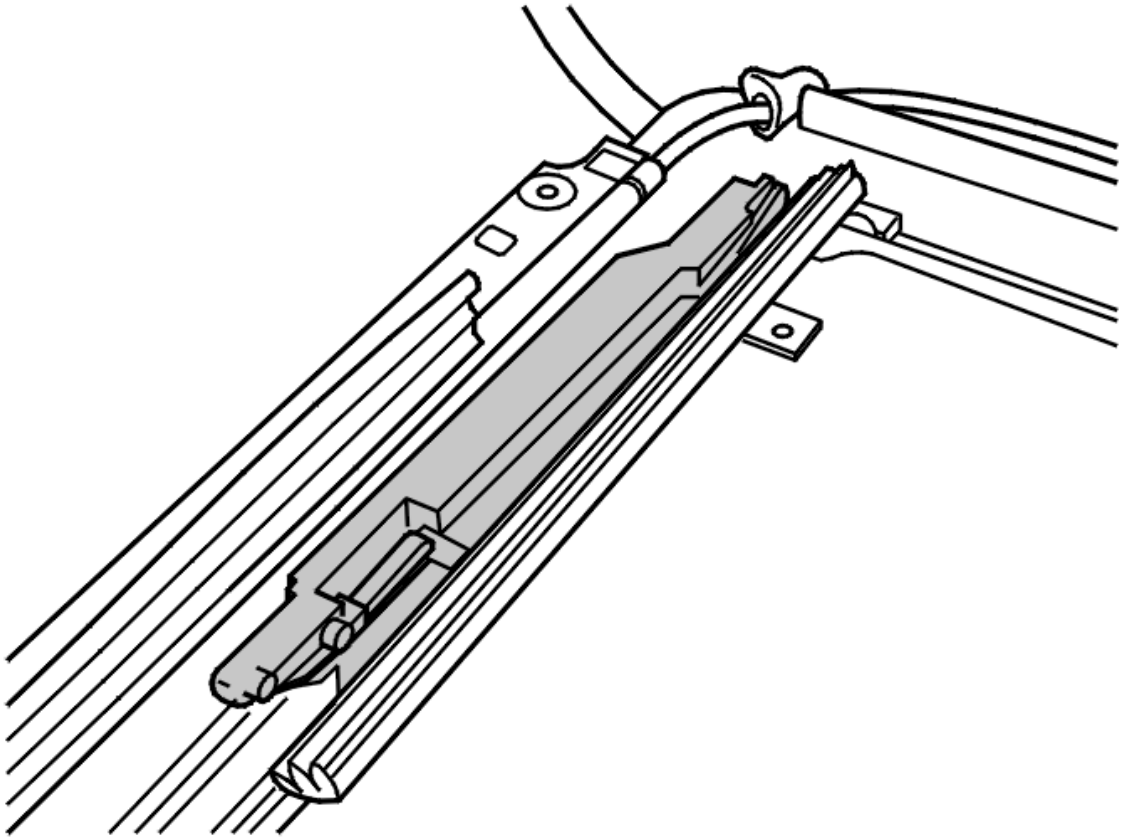

Fig. 85: Identifying Mechanism In Front Position
Courtesy of VOLVO CARS CORPORATION

Slide in the mechanism to the front position.

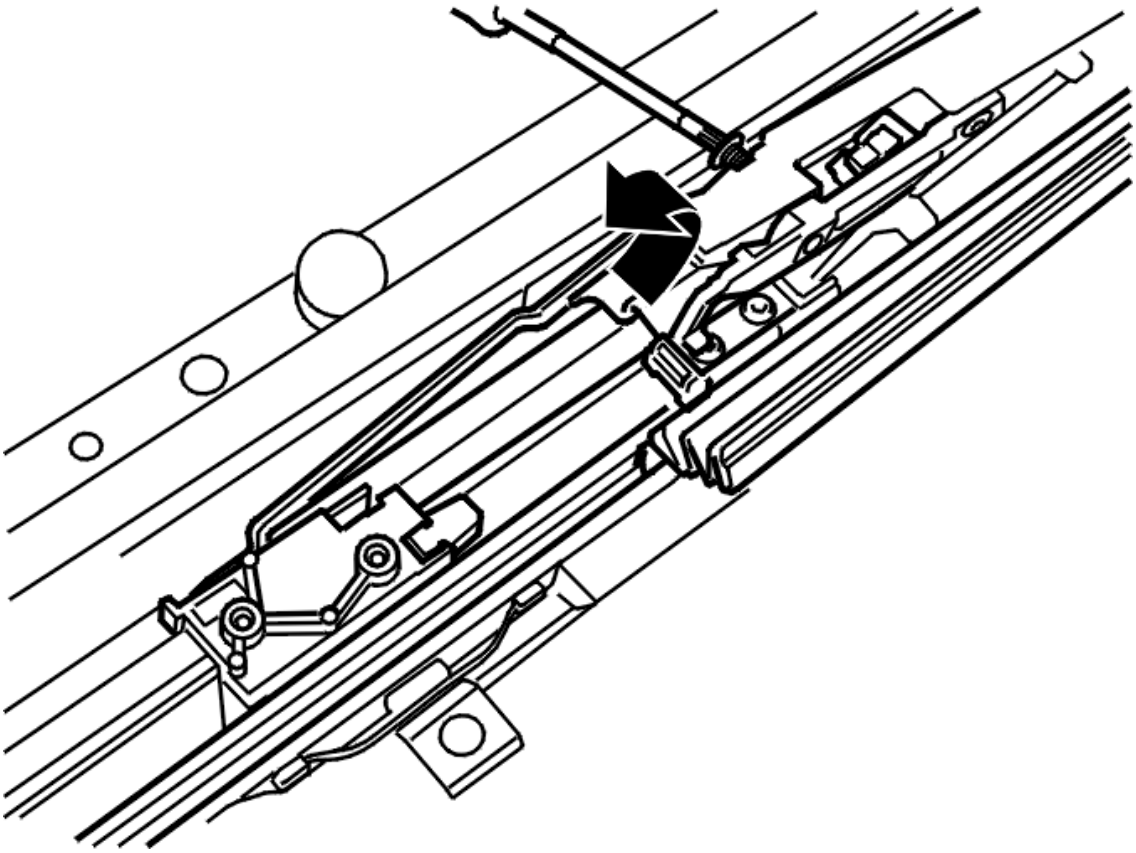

Fig. 86: Identifying Mounting / Mechanical Cable And Drive Plate
Courtesy of VOLVO CARS CORPORATION

Remove the mounting / mechanical cable from the new drive plate (applies to service kit).

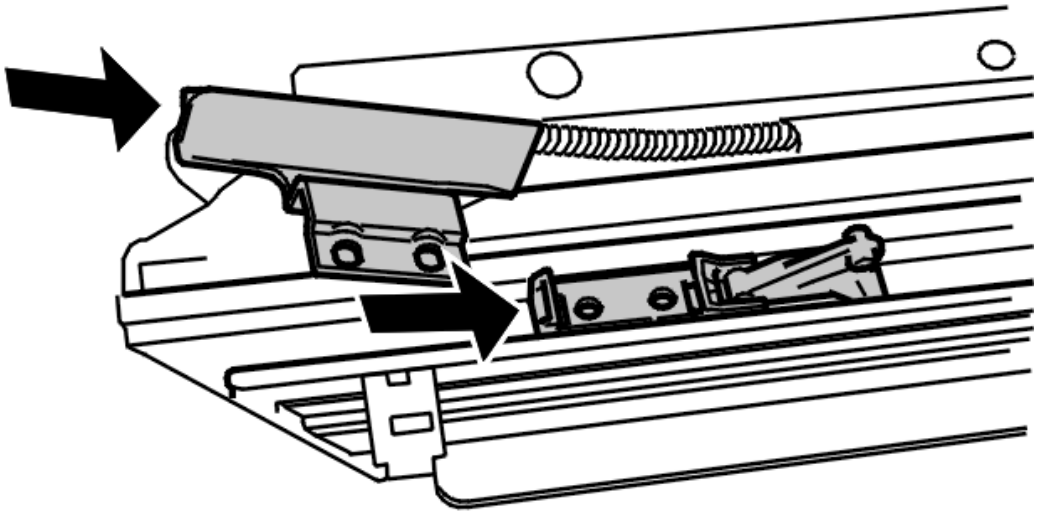

Fig. 87: Identifying Mounting / Mechanical Cable And Drive Plate
Courtesy of VOLVO CARS CORPORATION

Slide the drive plate into the groove.

Slide in the mounting / mechanical cable.

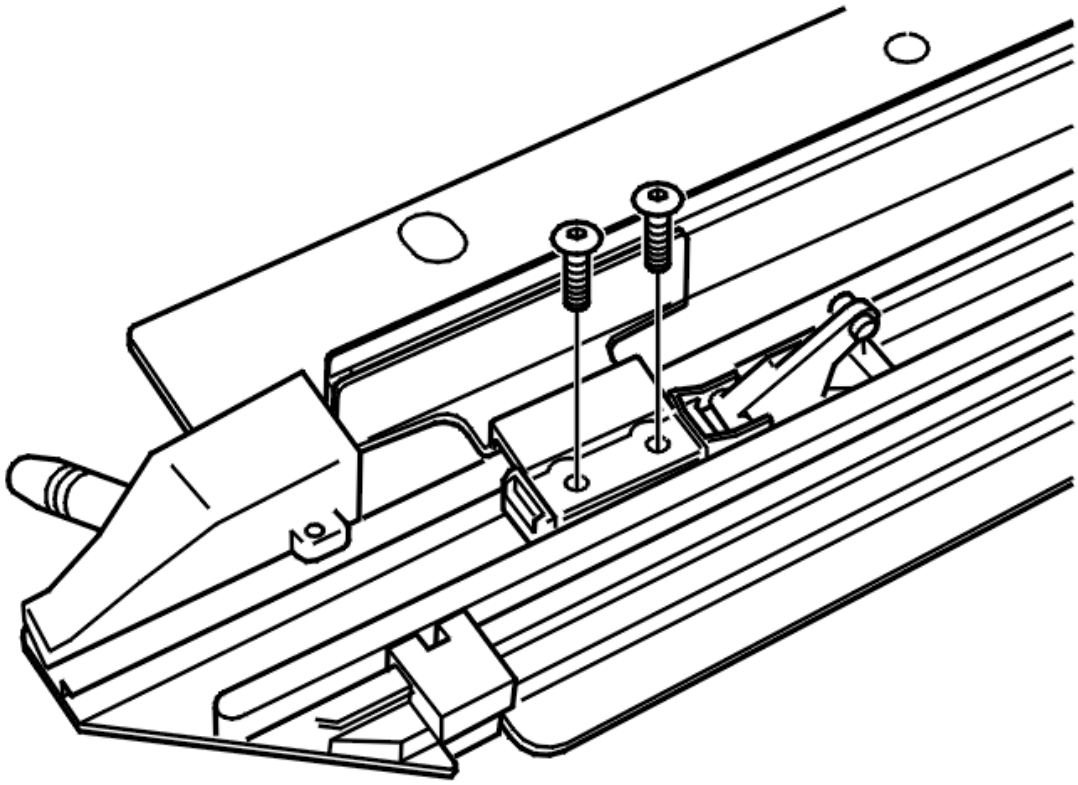

Fig. 88: Identifying Mounting / Mechanical Cable, Drive Plate And Screws
Courtesy of VOLVO CARS CORPORATION

Install the mounting / mechanical cable on the drive plate using the 2 M4 screws. Tighten.

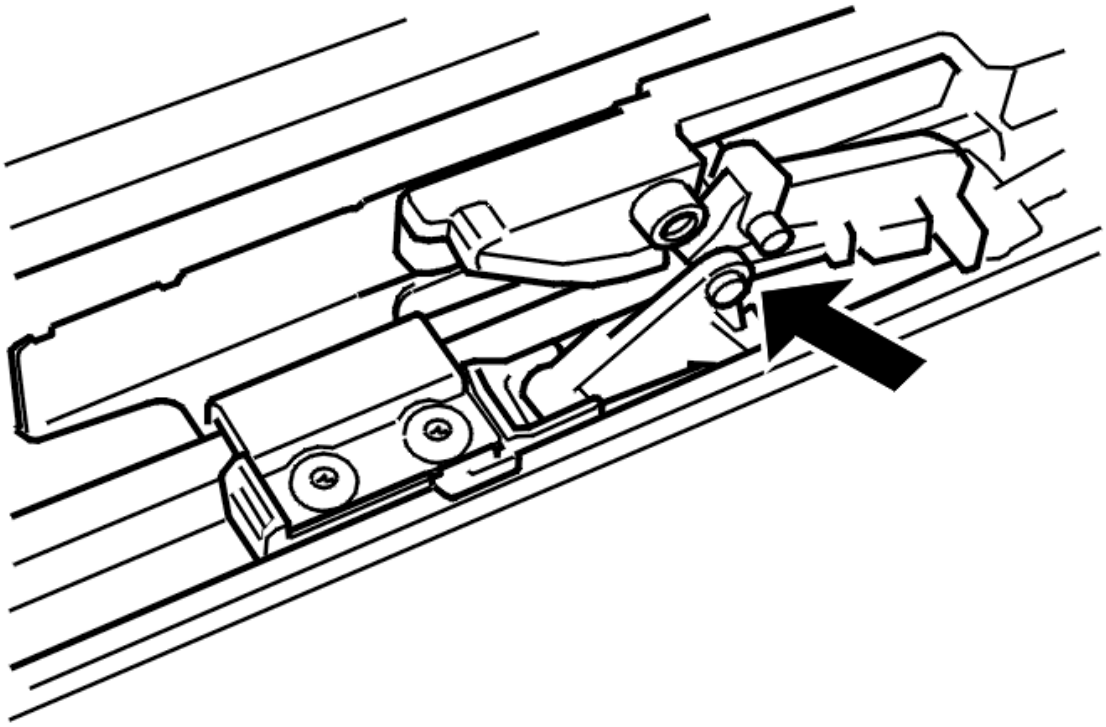

Fig. 89: Identifying Drive Plate And Mounting/Mechanical Cable
Courtesy of VOLVO CARS CORPORATION

Slide in the drive plate with the mounting / mechanical cable. Guide it in against the mechanism.

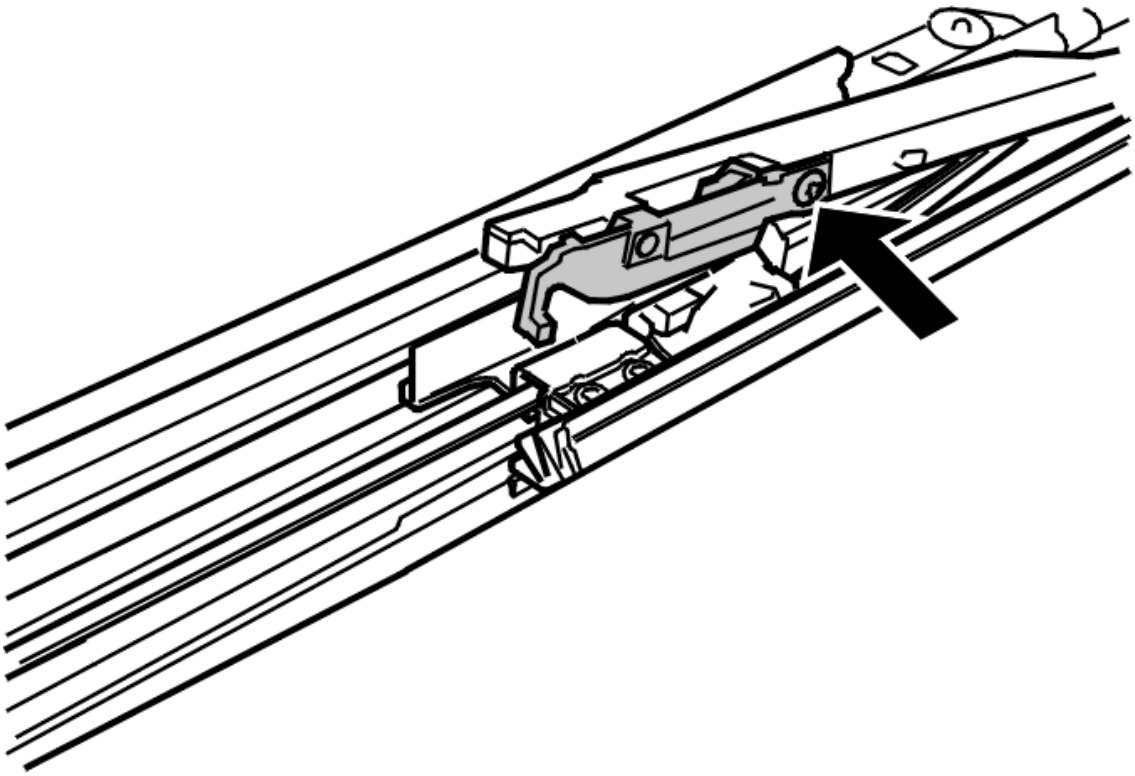

Fig. 90: Identifying Bracket And Mechanism
Courtesy of VOLVO CARS CORPORATION

Install the bracket for the mechanism.

NOTE: **Position the guide pin for the drive plate against the bracket. Use the 1 M4 screw. Tighten.**

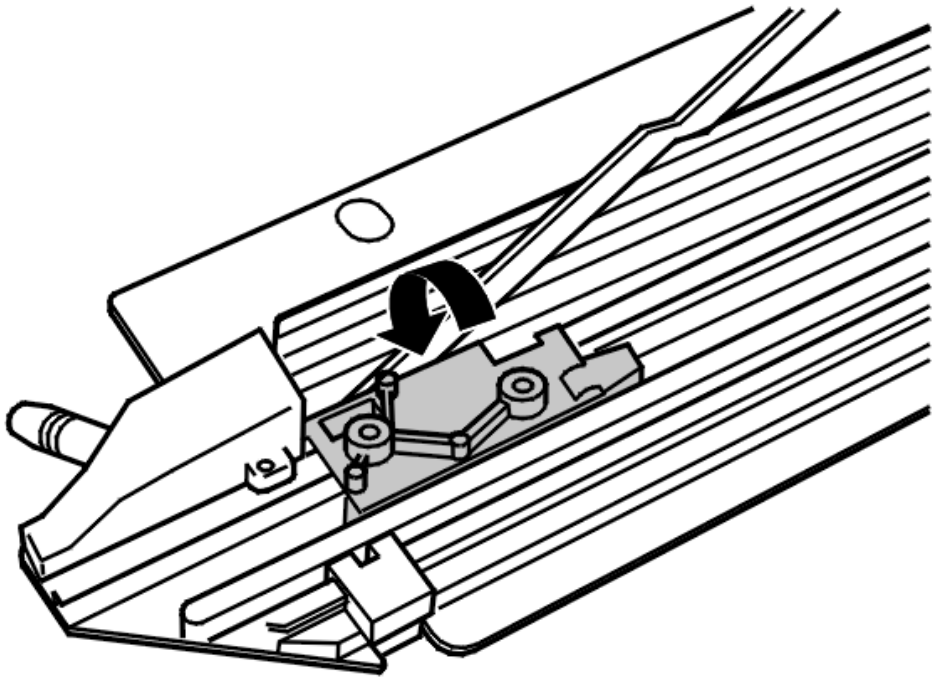

Fig. 91: Angling In And Pressing Mounting For Gutter Into Place
Courtesy of VOLVO CARS CORPORATION

Angle in and press the mounting for the gutter into place.

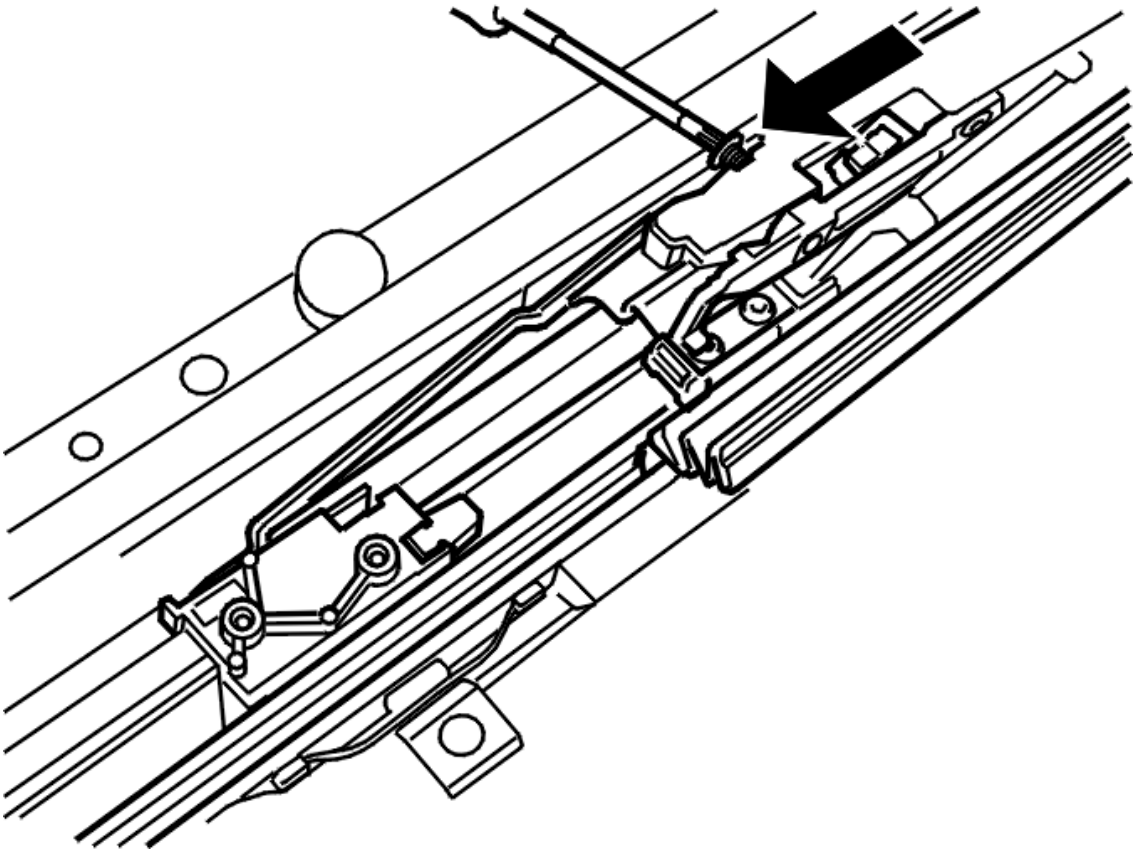

Fig. 92: Identifying Mounting For Gutter And Link Rod For Mechanism
Courtesy of VOLVO CARS CORPORATION

Slide in the mounting for the gutter.

Install the link rod for the mechanism. Tighten the screw.

FINISHING

Install:

- the motor. See **ELECTRIC MOTOR, SUN ROOF, REPLACING**
- the drainage channel. See **GUTTER SUN ROOF, REPLACEMENT**
- the sun roof. See **SUN ROOF, REPLACING**
- the glass cover. See **GLASS SUN ROOF, REPLACEMENT**.

Adjust. See **SUN ROOF, ADJUSTING** .

Check for leakage. See **SUN ROOF, LEAK TEST** .

SUN ROOF, REPLACING

NOTE: The illustrations in this service information are used for different model years

and / or models. Some variation may occur. However, the essential information in the illustrations is always correct.

PREPARATIONS

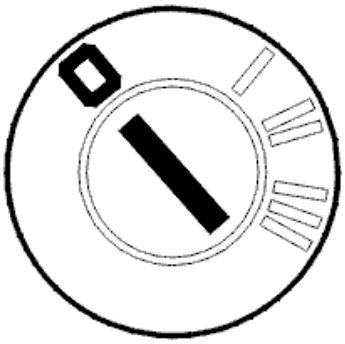

Fig. 93: Identifying Ignition In Off Position
Courtesy of VOLVO CARS CORPORATION

Ignition off.

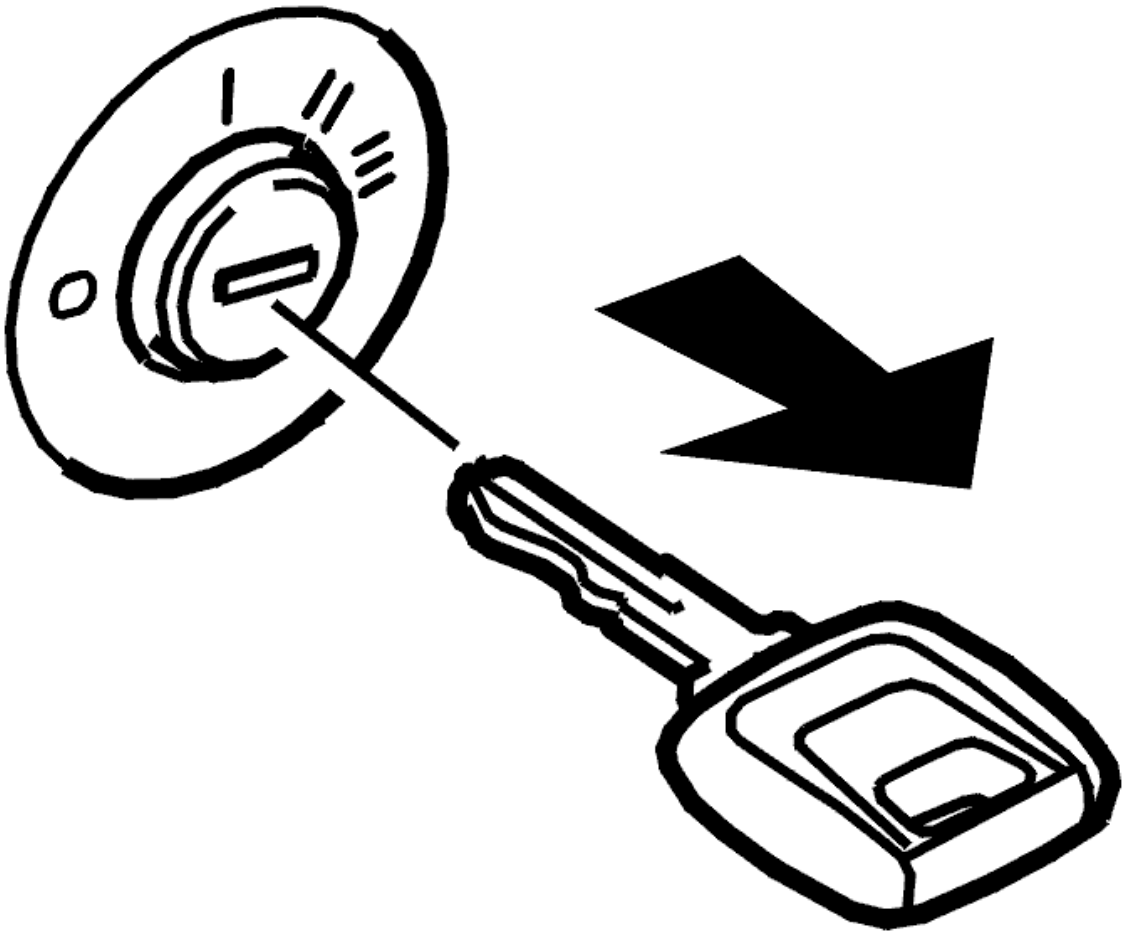

Fig. 94: Identifying Ignition Key Off
Courtesy of VOLVO CARS CORPORATION

Remove the key from the ignition switch.

NOTE: **The key must be removed to ensure that the ignition is not switched on by mistake.**

NOTE: **After removing the key, wait one minute before starting work.**

REMOVING THE SUN ROOF

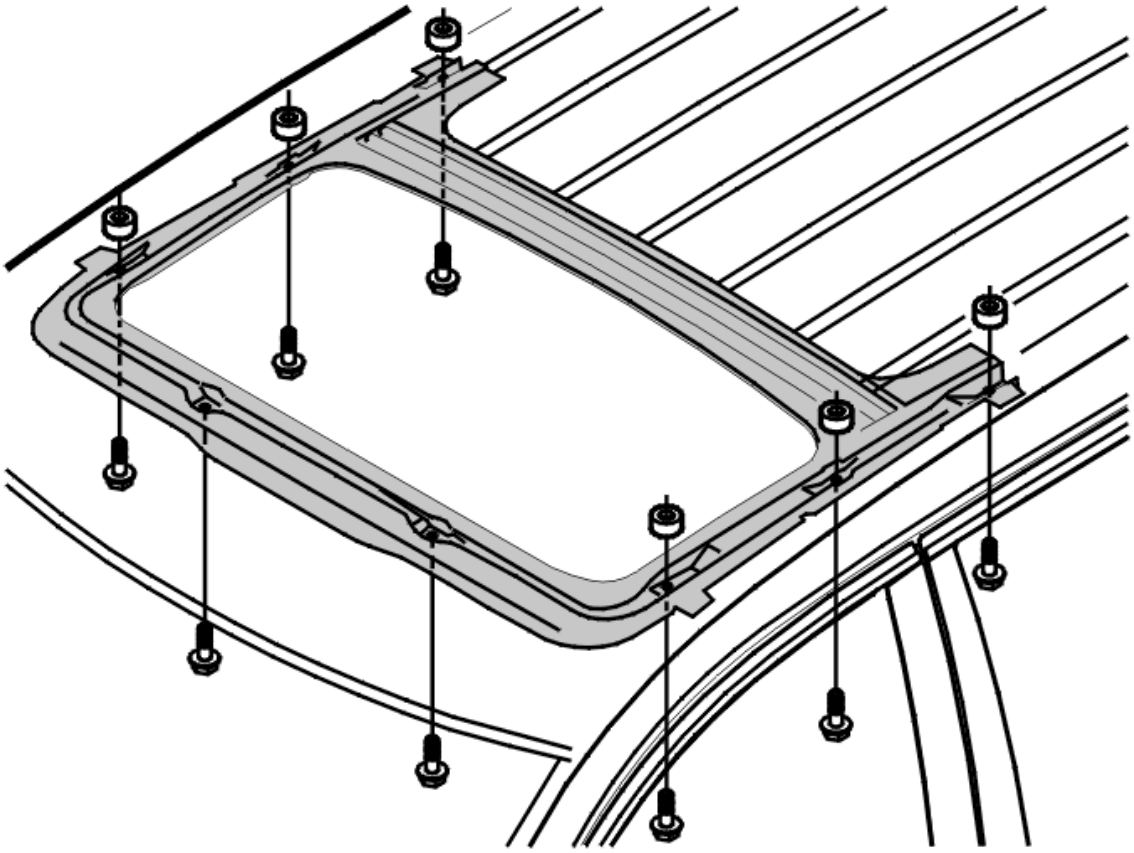

Fig. 95: Identifying Sun Roof Bolts & Nuts
Courtesy of VOLVO CARS CORPORATION

Remove:

- the headlining. See **HEADLINING, REPLACING**
- the connector for the sun roof unit
- the front and rear drain hoses.

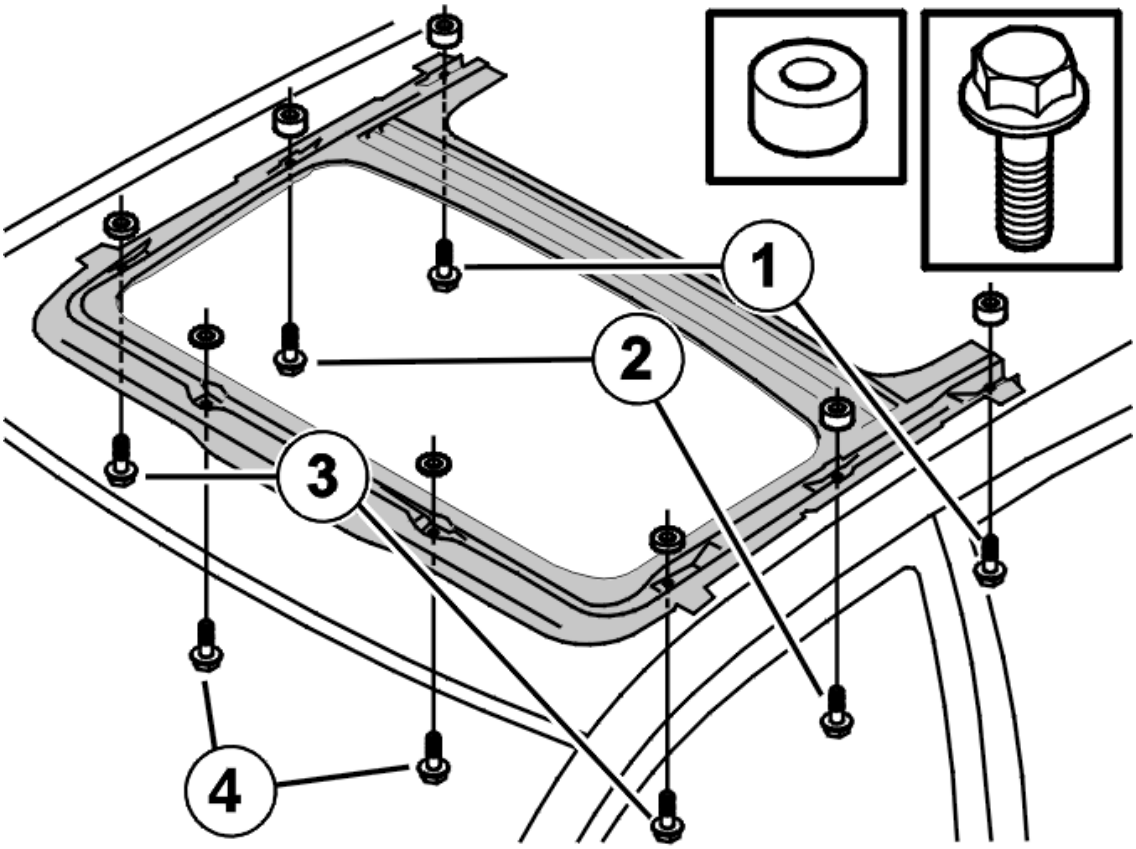

Fig. 96: Identifying 8 Screws, And 8 Spacers, For The Gutter Frame
Courtesy of VOLVO CARS CORPORATION

- the 8 screws, and 8 spacers, for the gutter frame.

NOTE: Note the position of spacers and screws and the various thicknesses and lengths.

Lift the sun roof down and out.

INSTALLING SUN ROOF

NOTE: For tightening torques, see TIGHTENING TORQUE .

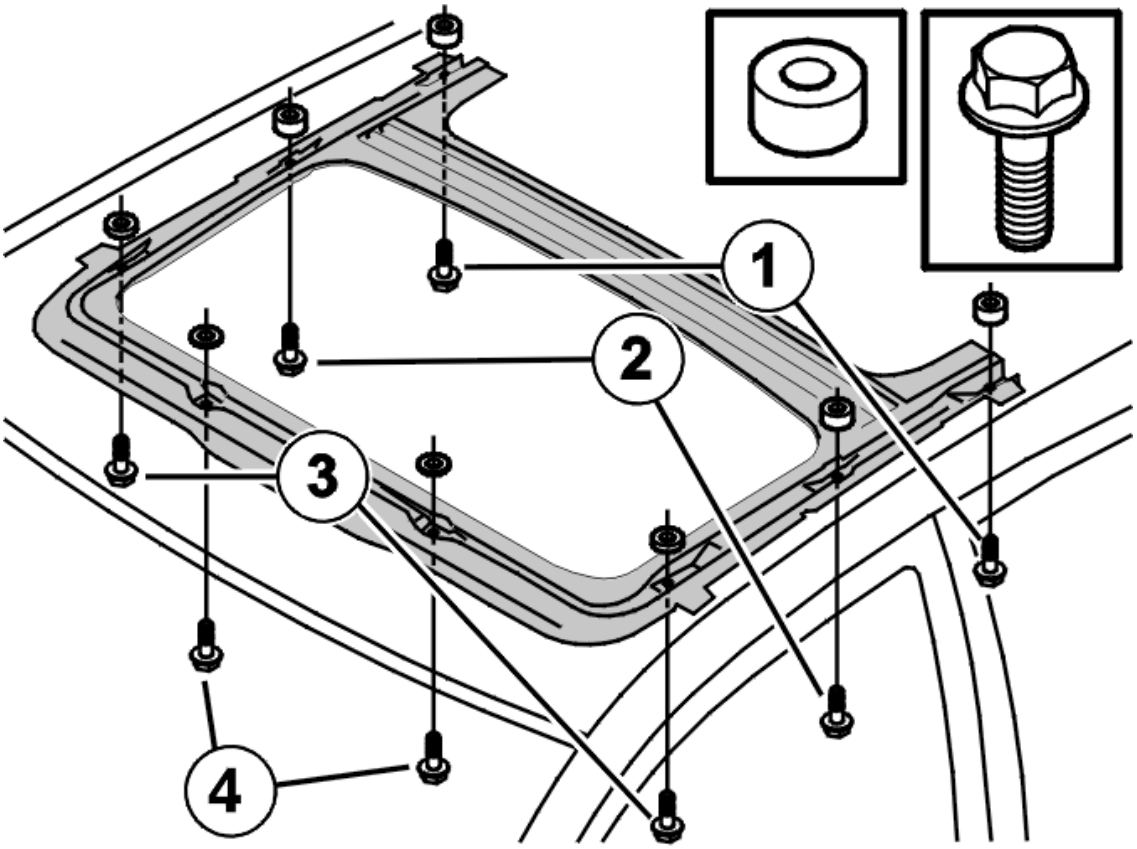

Fig. 97: Identifying 8 Screws, And 8 Spacers, For The Gutter Frame
Courtesy of VOLVO CARS CORPORATION

HINT: Install the screws, the spacers and the nylon washer for the gutter frame before installation.

Install:

- the 2 M6*35 screws (position 1)
- the 2 M6*25 screws (position 2)
- the 2 M6*20 screws (position 3)
- the 2 M6*16 screws (position 4)
- the 2 spacers, 20*6, 5*19.3 mm (positions 1 and 2)
- the 2 spacers, 20*6, 5*9.6 mm (positions 2 and 2)
- the 4 spacers, 20*6, 5*4.4 mm (positions 3 and 4).

Lift the sun roof. Place the sun roof in position.

Tighten.

Install:

- the drainage

- the connector.

Adjust. See **SUN ROOF, ADJUSTING** .

Install the headlining. See **HEADLINING, REPLACING** .

Check for leakage. See **SUN ROOF, LEAK TEST** .

SUN VISOR / INNER COVER SUN ROOF, REPLACEMENT

REMOVE

REMOVING THE SUN VISOR / INNER COVER

Remove:

- the glass cover. See **GLASS SUN ROOF, REPLACEMENT**
- the drainage channel. See **GUTTER SUN ROOF, REPLACEMENT**.

Pull inner cover forwards.

Compress the spring.

Angle the hatch out through the roof opening.

Replace the sunroof.

INSTALLING THE SUN VISOR / INNER COVER

Angle the inner cover in through the roof opening.

Compress the spring.

Slide in the inner cover.

Install:

- the drainage channel. See **GUTTER SUN ROOF, REPLACEMENT**
- the glass cover. See **GLASS SUN ROOF, REPLACEMENT**.

REMOVE

REMOVING THE SLIDE SPRING FOR THE SUN VISOR / INNER COVER

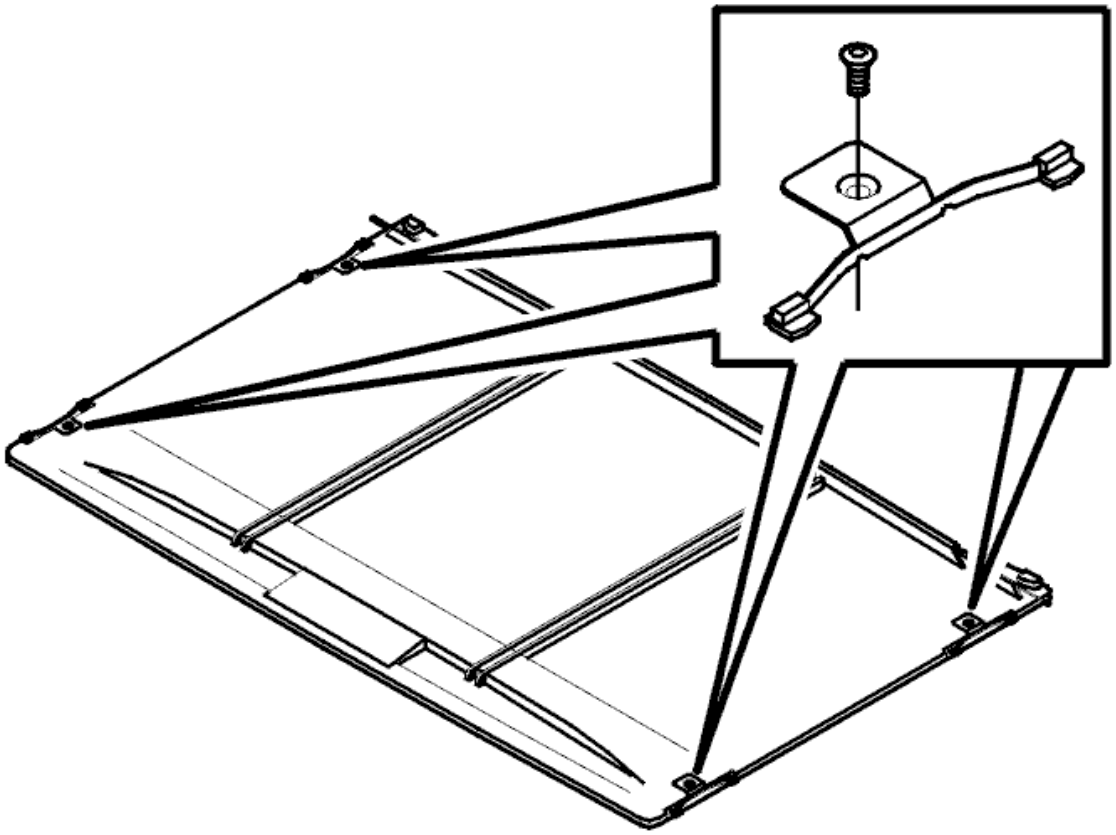

Fig. 98: Identifying Removal Of Inner Hatch And Screw/Spring
Courtesy of VOLVO CARS CORPORATION

Remove:

- the inner hatch. See **REMOVING THE SUN VISOR / INNER COVER**
- the screw / spring.

Replace the spring.

INSTALLING THE SPRING SLIDE SUN VISOR / INNER COVER

Install:

- the screw / spring
- the inner hatch. See **INSTALLING THE SUN VISOR / INNER COVER**.

SWITCH SUN ROOF, REPLACING

NOTE: **The illustrations in this service information are used for different model years and / or models. Some variation may occur. However, the essential information in the illustrations is always correct.**

PREPARATIONS

Ignition off.

REMOVING THE SWITCH FOR THE SUN ROOF

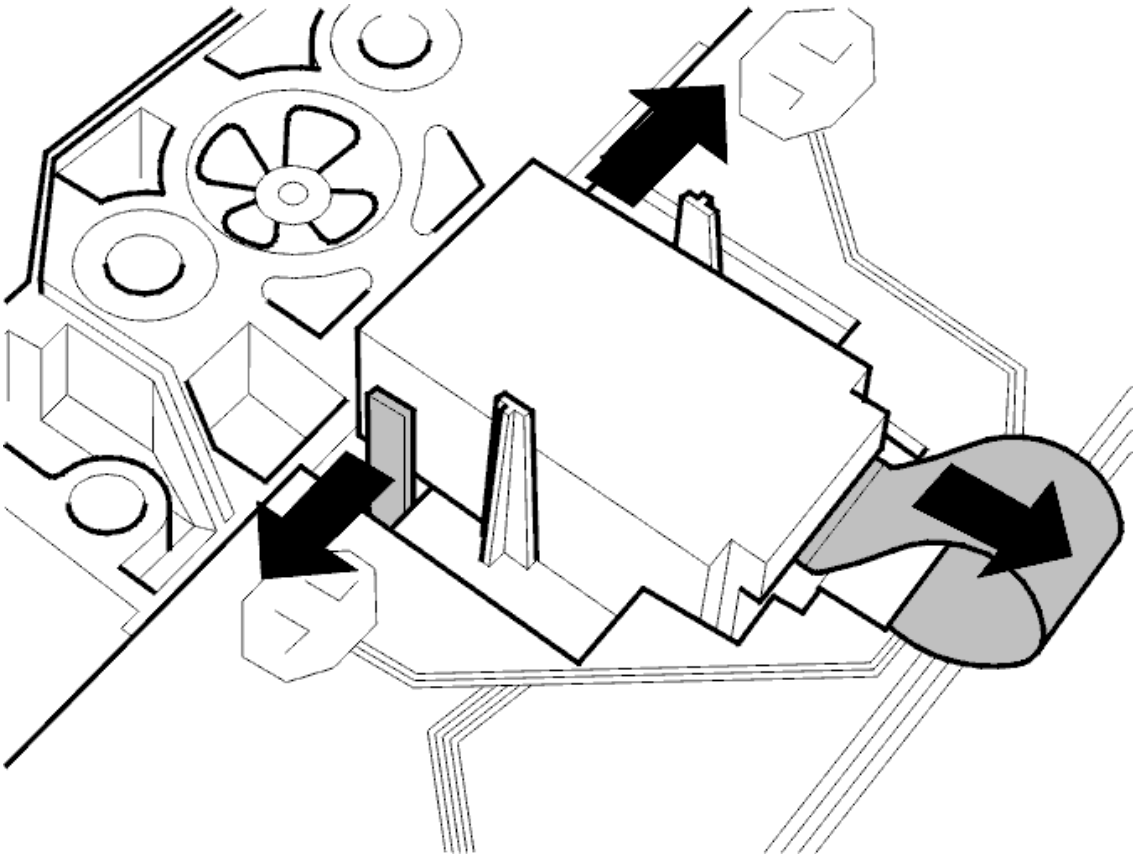

Fig. 99: Identifying Catches And Switch Removal
Courtesy of VOLVO CARS CORPORATION

Remove the interior lighting. See **INTERIOR LIGHTING, REPLACING** .

Press out the catches. Pull the switch outwards and upwards.

Remove the catch and the conductive strap.

INSTALL

INSTALLING THE SWITCH FOR THE SUN ROOF

Press in the conductive strap. Press in the catch.

Correctly position the rear of the switch and press the switch into place.

Install the interior lighting. See **INTERIOR LIGHTING, REPLACING** .

TAILGATE / TRUNK LID WITH HINGES AND SUPPORT (2003-2011)

TAILGATE, REPLACING

TAILGATE UPPER, REPLACING

NOTE: **As the illustrations in this service information are used for different model years and / or models, some variation may occur. However, the essential information in the illustrations is always correct.**

REMOVING THE UPPER TAILGATE

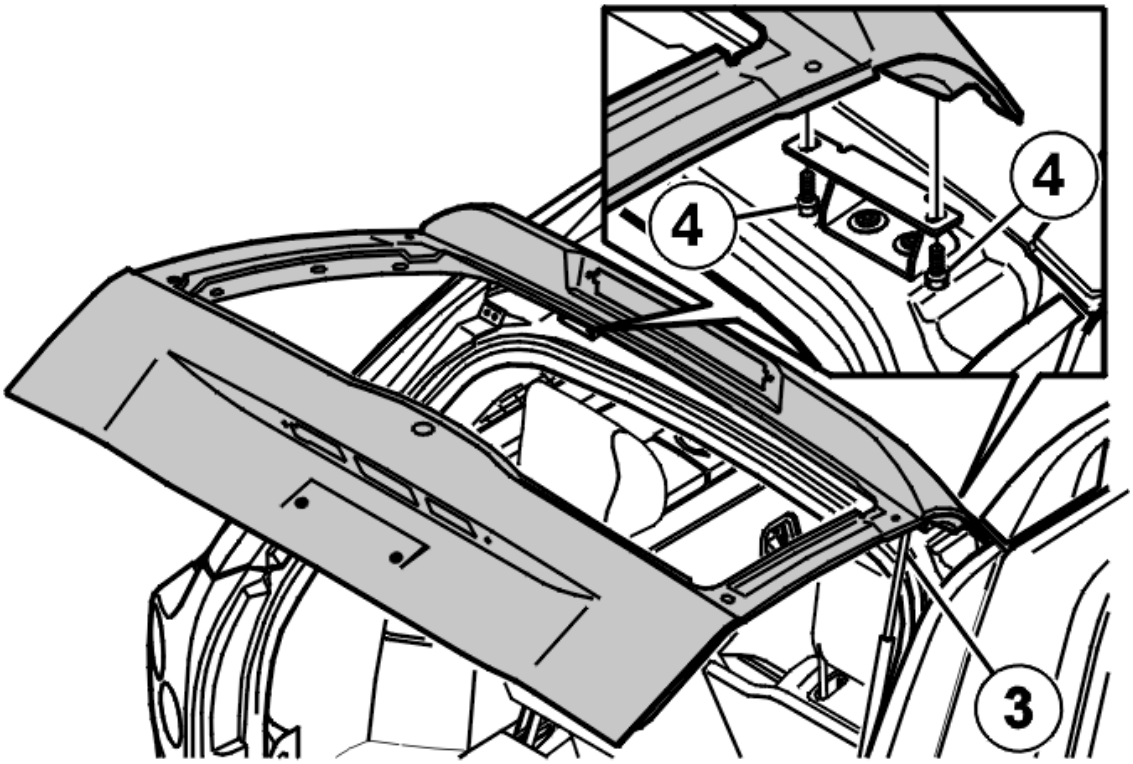

Fig. 100: View Of Tailgate Hinges
Courtesy of VOLVO CARS CORPORATION

Remove:

- the stop lamp
- the panel. See **PANEL TAILGATE UPPER, REPLACING**
- the wiper motor. See **MOTOR WINDSHIELD WIPER, REPLACING**
- the lock mechanism. See **LOCK MECHANISM TAILGATE UPPER, REPLACING**
- the cable harness
- the window. See **TAILGATE WINDSHIELD, REPLACING**
- the gas struts (3).

Remove the cover at the screws (4).

Transfer:

- the rubber strip
- the mounting clips
- the stops.

INSTALLING THE UPPER TAILGATE

NOTE: For tightening torques, see TIGHTENING TORQUE .

Install:

- the tailgate. Adjust approximately by screwing the tailgate into the hinges in the same places as prior to removal
- the cable harness
- the lock mechanism. See **LOCK MECHANISM TAILGATE UPPER, REPLACING**.

Check that the tailgate can be opened and closed.

Install the window. See **TAILGATE WINDSHIELD, REPLACING** .

Adjust the tailgate.

Tighten the 4 M6 screws (4).

Install:

- the gas struts
- the wiper motor. See **MOTOR WINDSHIELD WIPER, REPLACING**
- the panel. See **PANEL TAILGATE UPPER, REPLACING**
- the stop lamp.

TAILGATE LOWER, REPLACING

REMOVING THE LOWER TAILGATE

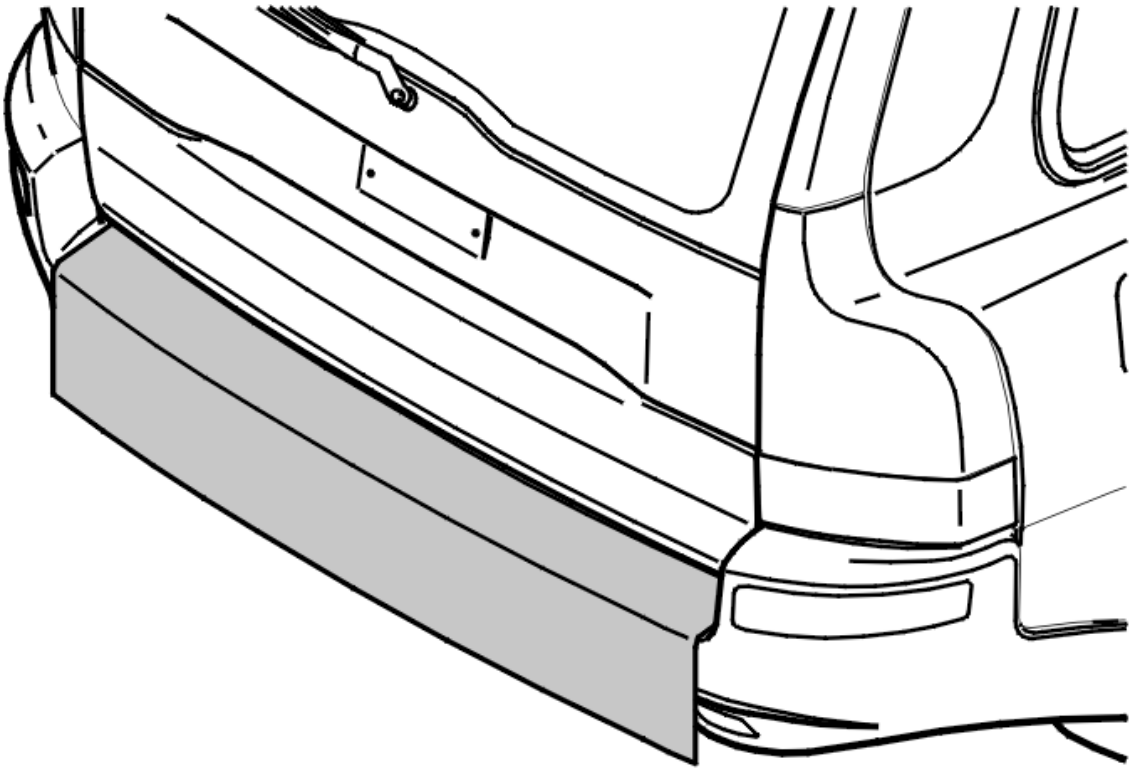

Fig. 101: View Of Soft Cover As Protection On The Bumper
Courtesy of VOLVO CARS CORPORATION

Place a soft cover as protection on the bumper.

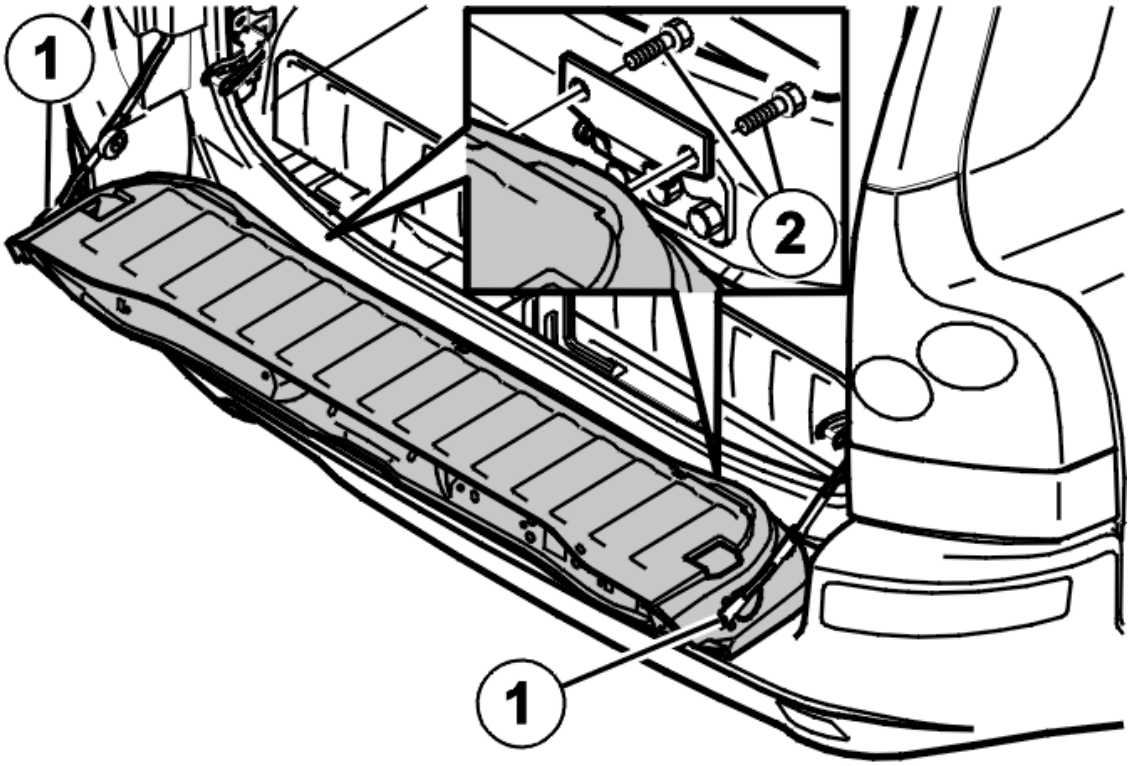

Fig. 102: View Of Soft Cover Over Lower Tailgate
Courtesy of VOLVO CARS CORPORATION

Remove:

- the panel. See **PANEL TAILGATE LOWER, REPLACING**
- the lock mechanism. See **LOCK MECHANISM TAILGATE LOWER, REPLACING**
- the control arms (1) from the tailgate
- the screws (2) in the front edge. Lower the tailgate.

INSTALLING THE LOWER TAILGATE

NOTE: For tightening torques, see TIGHTENING TORQUE .

Install:

- the tailgate. Adjust approximately by screwing the tailgate into the hinges in the same places as prior to removal
- the lock mechanism. See **LOCK MECHANISM TAILGATE LOWER, REPLACING**.

Adjust the tailgate.

Tighten the 4 M8 screws.

Install:

- the control arms
- the panel. See **PANEL TAILGATE LOWER, REPLACING** .

ACCESSORIES AND EQUIPMENT

Doors And Lids - Specifications, Electrical/Electronic

SIGNAL SPECIFICATION, DRIVER DOOR MODULE (DDM)/PASSENGER DOOR MODULE (PDM)

SIGNAL SPECIFICATION

DRIVER DOOR MODULE/PASSENGER DOOR MODULE CONNECTOR A

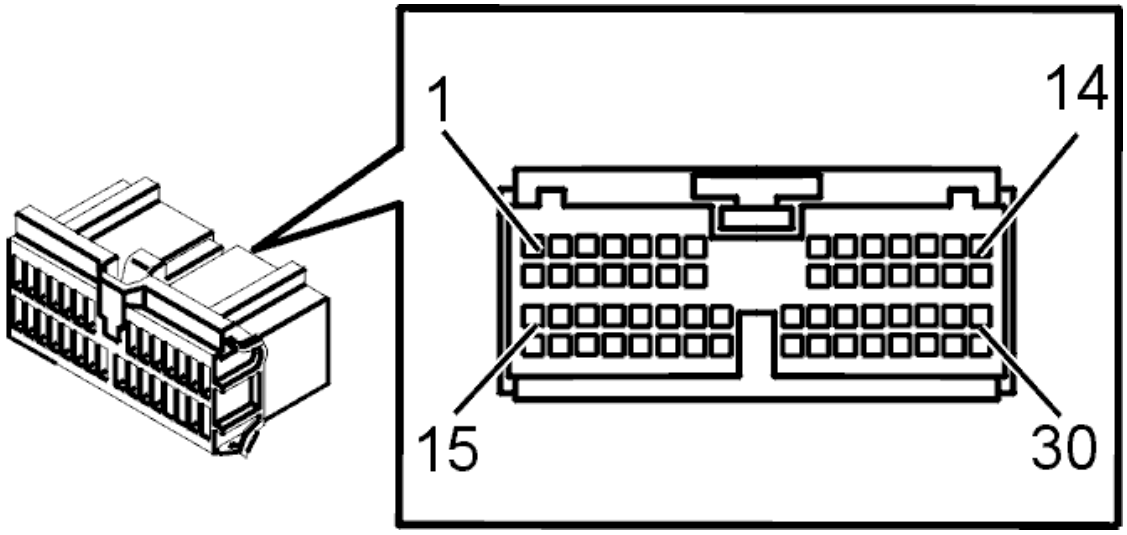

Fig. 1: Driver Door Module/Passenger Door Module Connector A
Courtesy of VOLVO CARS CORPORATION

Connector A, terminals #A1 #A30

The following values are measured between the relevant terminal in column 1 and terminal #A6 (ground) unless otherwise stated.

The values are measured with the control module in "Active mode".

NOTE: **Check the ground connections as above before starting to measure using the breakout box.**

U = DC in volts (V).

Ubat = battery voltage in volts (V).

Ulow=Voltage close to 0 V.

Terminal,	Terminal,	Signal type	Ignition off	Ignition on	Miscellaneous

breakout box	control module		Active/not active	Active/not active	
#1	#A1	-	-	-	-
#2	#A2	Control module communication cable (CANH)	2.5-3.5 V	2.5-3.5 V	-
#3	#A3	Control modules communication cable (CANL)	1.5-2.5 V	1.5-2.5 V	-
#4	#A4	-	-	-	-
#5	#A5	-	-	-	-
#6	#A6	Ground, door lock (31)	0 V	0 V	-
#7	#A7	Door open warning lamp (D lamp)	Ubat/0 V	Ubat/0 V	Not used on all cars
#8	#A8	Ground, door mirror potentiometer (31S)	0 V/0 V	0 V/0 V	Not used on all cars
#9	#A9	Door mirror potentiometer signal (right/left)	0 V/0 V	Between 1-4 V	Not used on all cars
#10	#A10	Door mirror potentiometer signal (up/down)	0 V/0 V	Between 1-4 V	Not used on all cars
#11	#A11	Door lock (DL)	0 V at locked position, 12 V at unlocked position	0 V at locked position, 12 V at unlocked position	-
#12	#A12	Unlocking (ULK)	0 V, during unlocking	0 V, during unlocking	Unlock by key
#13	#A13	Lock (LK)	0 V, during locking	0 V, during locking	Lock by key
#14	#A14	Temperature sensor (Temp+)	20°C ~ 2450 Ohm 30°C ~ 1550 Ohm	20°C ~ 2450 Ohm 30°C ~ 1550 Ohm	Measured disconnected to Temp- (terminal #A18)
#15	#A15	-	-	-	-
#16	#A16	Hall sensor (H+)	Ubat	Ubat	-
#17	#A17	-	-	-	-
#18	#A18	Temperature sensor (Temp-)	-	-	Measured to terminal #A14
#19	#A19	Hall sensor (H-)	0 V/0 V	0 V/0 V	-
#20	#A20	-	-	-	-
#21	#A21	-	-	-	-
#22	#A22	-	-	-	-
#23	#A23	Hall sensor 1 (H1)	2.4 V when	2.4 V when	Pulsed signal

			driving, 0 V or 5 V, at stop	driving, 0 V or 5 V, at stop	
#24	#A24	Hall sensor 2 (H2)	2.4 V when driving, 0 V or 5 V, at stop	2.4 V when driving, 0 V or 5 V, at stop	Pulsed signal
#25	#A25	Power supply to the potentiometer for the door mirror	0 V/0 V	5 V/5 V	Not used on all cars
#26	#A26	Door mirror motor 1 (MX+)	0 V	Ubat/0 V	When moving upwards and to the right this output is considered to be active
#27	#A27	Common door mirror motor (MC)	0 V	Ubat/0 V	When moving downwards and to the right this output is considered to be active
#28	#A28	Door mirror motor 2 (MY+)	0 V	Ubat/0 V	When moving downwards and to the left this output is considered to be active
#29	#A29	Door mirror motor 3 (MF+)	0 V	Ubat/0 V	Active when folding
#30	#A30	-	-	-	-

DRIVER DOOR MODULE/PASSENGER DOOR MODULE CONNECTOR B

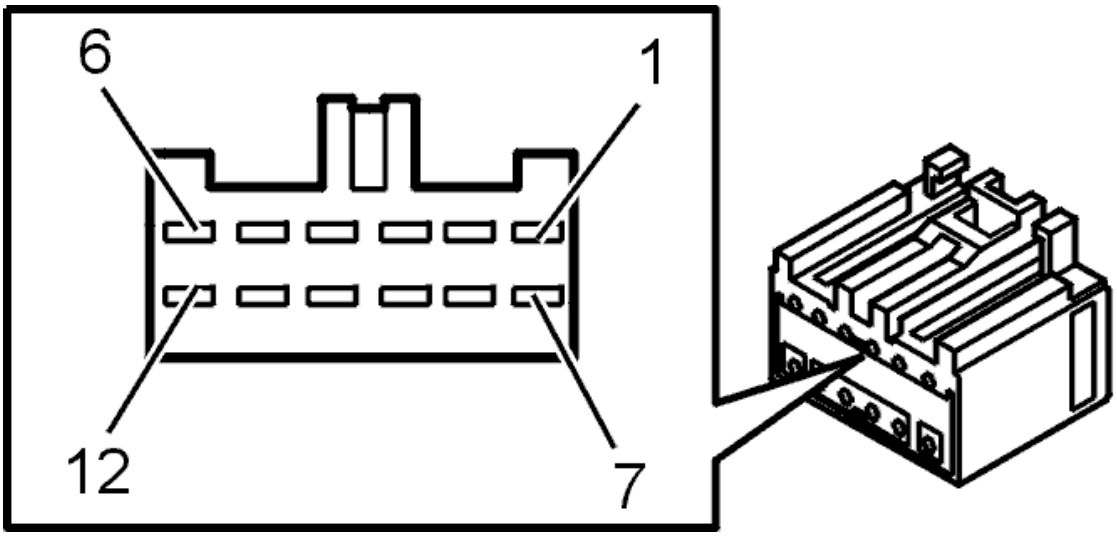

Fig. 2: Audio Control Module (AUM)/External Amplifier To Loudspeakers, Gray Connector
Courtesy of VOLVO CARS CORPORATION

Connector B, terminals #B1 - #B12

The following values are measured between the relevant connection in column 1 and ground (B9 or #B5) unless otherwise stated.

NOTE: Check the ground connections as above before starting to measure using the breakout box.

U = DC in volts (V).

Ubat = battery voltage in volts (V).

Ulow=Voltage close to 0 V.

Terminal, breakout box	Terminal, control module	Signal type	Ignition off Active/not active	Ignition on Active/not active	Miscellaneous
#15	#B1	Lock motor 2 (M3)	Ubat/0 V	Ubat/0 V	Active during dead locking
#16	#B2	Lock motor 1 (M1)	Ubat/0 V	Ubat/0 V	Active when locking
#17	#B3	Power window lift motor (M-)	0 V	Ubat/0 V	Active when lowering the window
#18	#B4	Power window lift motor (M+)	0 V	Ubat/0 V	Active when raising the window
#19	#B5	Ground, power (31P)	0 V	0 V	-
#20	#B6	Locking motor, common (M2)	Ubat/0 V	Ubat/0 V	Active when unlocking
#21	#B7	Power supply, signal (30S)	Ubat	Ubat	Not used for model years from and including 2003
#22	#B8	Lamp, door mirror	Ubat/0 V	Ubat/0 V	-
#23	#B9	Ground, signal (31S)	0 V	0 V	Not used for model years from and including 2003
#24	#B10	Door mirror heating (Mi-)	0 V	0 V	-
#25	#B11	Door mirror heating (Mi+)	Ubat/0 V	Ubat/0 V	Active when the button is pressed
#26	#B12	Power supply, power (30P)	Ubat	Ubat	-

ACCESSORIES AND EQUIPMENT

Doors And Lids - Specifications, Other

VEHICLE COMMUNICATION INFORMATION, DRIVER DOOR MODULE (DDM) (2005-12)

DESCRIPTION OF ACTIVATIONS

ACTIVATING COMPONENTS AND FUNCTIONS

Use this option to activate components/functions in the driver door module (DDM).

The following components/parameters can be activated in alternative ways:

- The up/down control for the front left window
- The up/down control for the front right window
- The up/down control for the rear windows
- The selection of the left or right door mirror control
- Upwards/downwards/left/right door mirror control
- Power window motor, up/down
- Lock cable M1
- Lock cable M2
- Door mirror motor
- Defroster
- Door mirror lamp
- Door open warning lamp (does not apply to all vehicle).

DESCRIPTION OF PARAMETERS

THE FOLLOWING PARAMETERS CAN BE READ OFF:

- The status of the front left window up-control
- The status of the front left window down-control
- The status of the front left window auto-control
- The status of the front right window up-control
- The status of the front right window down-control
- The status of the front right window auto-control
- The status of the rear left window up-control
- The status of the rear left window down-control
- The status of the rear right window up-control
- The status of the rear right window down-control

- The status of the child safety button

NOTE: A diagnostic trouble code (DTC) is stored if the child safety button is activated for 10 seconds.

- The status for the selection of the control for the left door mirror
- The status for the selection of the control for the right door mirror
- The status of the upward control for the door mirror
- The status of the downward control for the door mirror
- The status of the control for the left door mirror
- The status of the control for the right door mirror
- The status of the up-motor for the power window
- The status of the down-motor for the power window
- Lock cable M1, status
- Lock cable M2, status
- Lock cable M3, status
- Door open warning lamp, status (does not apply to all vehicles)
- Defroster, status
- Door mirror lamp, status
- Outside temperature, value

NOTE: The outside temperature can only be read off from the control module on the right-hand side of the car.

- Power supply, value
- Signal supply, value
- Door mirror position X axis, value (does not apply to all vehicles)
- Door mirror position Y axis, value (does not apply to all vehicles).

READING OFF EXTENDED DIAGNOSTIC TROUBLE CODE (DTC) INFORMATION, DRIVER'S DOOR MODULE

CONTENTS

Select type of description.

- see **DESCRIPTION OF FROZEN VALUES DRIVER'S DOOR MODULE**
- see **STATUS IDENTIFIER, DESCRIPTION**
- see **COUNTERS, DESCRIPTION**

DESCRIPTION OF FROZEN VALUES DRIVER'S DOOR MODULE

EXPLANATION

Not all the parameters described need to be implemented in the control module. This varies from system to system.

Frozen values are parameter values that are stored when a diagnostic trouble code (DTC) is stored.

BATTERY VOLTAGE, VALUE

Measurement range: 0-25.5 V.

Normal value when the generator (GEN) is charging: 13.0-14.5 V.

DISTANCE, VALUE

Measurement range: 0-1048575 km.

The value indicates the total mileage of the car at the time the diagnostic trouble code (DTC) was stored.

PASSENGER COMPARTMENT TEMPERATURE, VALUE

Measurement range: -60-195°C.

OUTSIDE TEMPERATURE, VALUE

Measurement range: -128-127.75°C.

ENGINE RUNNING, STATUS

The status displays whether the engine was running when the diagnostic trouble code (DTC) was stored.

No = the engine was not running

Yes = the engine was running

TIME, VALUE

The value displays the time that has passed since the diagnostic trouble code (DTC) was stored.

STATUS IDENTIFIER, DESCRIPTION

Status identifier
There are different status identifiers that can be read off for each diagnostic trouble code (DTC). The control module tests each terminal almost continuously. By reading off the diagnostic trouble code (DTC) and the associated status identifier (which detects the fault and stores the DTC), information about the test is obtained. Not all status identifiers need to be implemented in one control module. This varies from system to system. All status identifiers are reset and start counting again each time the control module is powered up and when erasing diagnostic trouble codes (DTCs). The possible status identifiers

are described below.

Status identifier	Explanation
Upper graph	When the signal value is above or below a maximum or minimum value that is considered to be a fault by the control module, an instantaneous fault is registered (i.e. a fault is active). The value may vary depending on the specific diagnostic trouble code (DTC). Examples of this are U > 11.5 V, U < 2 V or f < 10 Hz.
SI#01 (see the graph)	The test is active. The control module can only detect faults and store diagnostic trouble codes (DTC) when the test is running.
SI#02 (see the graph)	The test has been active. Indicates whether the control module was able to detect faults and store diagnostic trouble codes (DTC).
SI#03 (see the graph)	The control module detects an instantaneous fault. This information is used by the control module to determine if or when a diagnostic trouble code (DTC) should be stored. As soon as a signal exceeds the permitted value (compare with the upper graph), there is an instantaneous fault.
SI#04 (see the graph)	The control module has detected an instantaneous fault. An instantaneous fault has been detected at some stage.
SI#05	Lamp lighting / Text message. Information about whether the diagnostic trouble code (DTC) activates a warning lamp or text message in the combined instrument panel.
SI#06	The test is disabled because another fault has occurred. The diagnostic trouble code (DTC) is stored at the point of the base fault. If this leads to further faults, related diagnostic trouble codes (DTCs) are not stored.
SI#08 (see the graph)	Counter for instantaneous faults. When an instantaneous fault is detected by the control module, a counter counts up for as long as the fault exists. When the fault is no longer present, the counter counts down again. The diagnostic trouble code (DTC) is stored in the car if the counter reaches a certain maximum value. The maximum value varies between different diagnostic trouble codes (DTCs). The speed of the count depends on how long the fault can persist before it results in customer symptoms.
SI#09 (see the graph)	Maximum value of counter SI#08. There are a variety of ways that the counter value for instantaneous faults can be read off depending on how often the diagnostic has been run.
Lower graph	Validating diagnostic trouble codes (DTCs). The diagnostic trouble code (DTC) is stored when the counter for instantaneous faults has reached its maximum value.

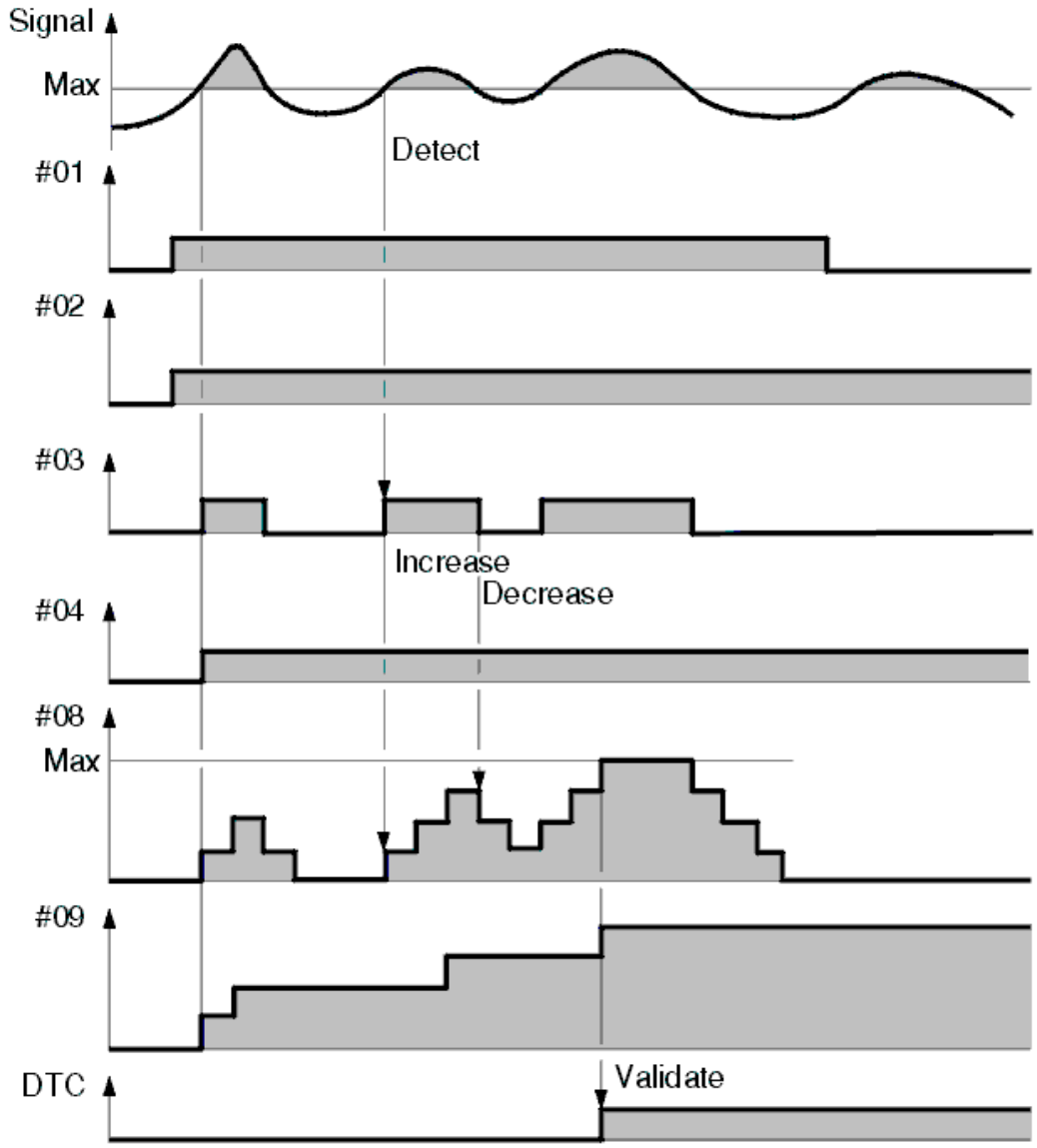

Fig. 1: Status Identifier Graph

COUNTERS, DESCRIPTION

Counter
A useful fault-tracing tool is the Diagnostic Trouble Code (DTC) counter. The control module stores 6 different counters for each Diagnostic Trouble Code (DTC), which describes the occurrence. The counters can be used to determine when and how often a fault has been detected. Using the counters for the Diagnostic Trouble Code (DTC) it is possible to see if the fault has only been registered during the current operating cycle or whether it has been detected previously. If a fault is intermittent it is possible to determine how intermittent the fault is by studying the values of the different counters.

Example:

- Counter 1 = 15 Counts the number of operating cycles since the fault was last validated.
- Counter 3 = 69 Counts the number of operating cycles since the fault was first validated.
- Counter 4 = 1 Counts how many times the fault has occurred since the first time the fault was first validated.
- Counter 5 = 91764 The counter adds the time in seconds for which the control module has been operating since the fault was first validated and the diagnostic trouble code (DTC) was stored.
- Counter 6 = 0 The counter adds the time in seconds for which the test, the diagnostic, has run since the fault was first validated and the diagnostic trouble code (DTC) was stored.
- Counter 7 = 0 The counter adds the time in seconds for which the fault has been validated since the fault was first validated and the diagnostic trouble code (DTC) was stored.

In the examples given above, counter 1 gives the number of operating cycles where the diagnostic was run without a fault being detected. Counting takes place from when the fault was last detected. Counter 3 is the total number of operating cycles regardless of whether the diagnostic was run or not. Counter 4 shows the number of operating cycles where the diagnostic detected a fault . Counters 3 and 4 start to count from the first operating cycle after the operating cycle when the fault was first detected.
In the example, counter 4 = 1, which means that the fault was detected twice. One can see that no fault was detected during the relevant operating cycle. Depending on the number of operating cycles and the customer's driving pattern, it can assist in ruling out this control module from the customer's current problems. The counters can help us understand how intermittent the fault can be. If the counters 1 = 0, 3 = 0 and 4 = 0 it indicates that there have not been any operating cycles since the fault was detected and that the fault was probably generated in the workshop.
For an operating cycle to be recognized certain requirements may be necessary, for example, increasing the engine coolant temperature. In certain cases ignition on, ignition off and ignition on again are counted as an operating cycle.
Counter 5 can be useful if the fault was detected in this operating cycle. The time can be used to determine more exactly when the fault occurred.

NOTE:

Not all counters need be implemented in a control module, this varies from system to system. The possible counters are described below.

Counter	Function
A (see the graph) Counter 1	The graph illustrates the time at which a fault occurs. In the illustration the control module has detected a fault in the second cycle. This fault has then occurred a total of 5 times. The counter can be read off for each diagnostic trouble code (DTC) in the control module in which this is implemented. Operating cycles are marked with vertical lines. An operating cycle usually begins at ignition on and finishes when the ignition is switched off.
C#1 (see the graph)	Counts the number of operating cycles since the fault was *last*

Counter 2	validated. This information can be used to determine whether the fault is active during the current operating cycle or not. The fault is present now if the value is zero. This counter is also used for most systems to give "Permanent fault" and " Intermittent fault" text messages in VIDA when reading off a diagnostic trouble code (DTC).
C#3 (see the graph) Counter 3	Counts the number of operating cycles since the fault was *first* validated. When a fault has been validated, the counter will count up by 1 for each subsequent operating cycle. The same as counter C#1 but monitors the number of cycles since the first fault occurred.
C#4 (see the graph) Counter 4	Counts the number of operating cycles in which the fault was validated since it was first validated. Counts the number of times the fault has occurred since the first time.
C#5 Counter 5	The counter assesses the number of seconds the control module has been operating since the fault was first validated and the diagnostic trouble code (DTC) was stored. The time the control module has been operating is only counted when it is active, not in "sleep mode".
C#6 Counter 6	The counter assesses the number of seconds the test (the diagnosis) has been operating since the fault was first validated and the diagnostic trouble code (DTC) was stored.
C#7 Counter 7	The counter assesses the number of seconds the fault has been valid since it was first validated and the diagnostic trouble code (DTC) was stored.

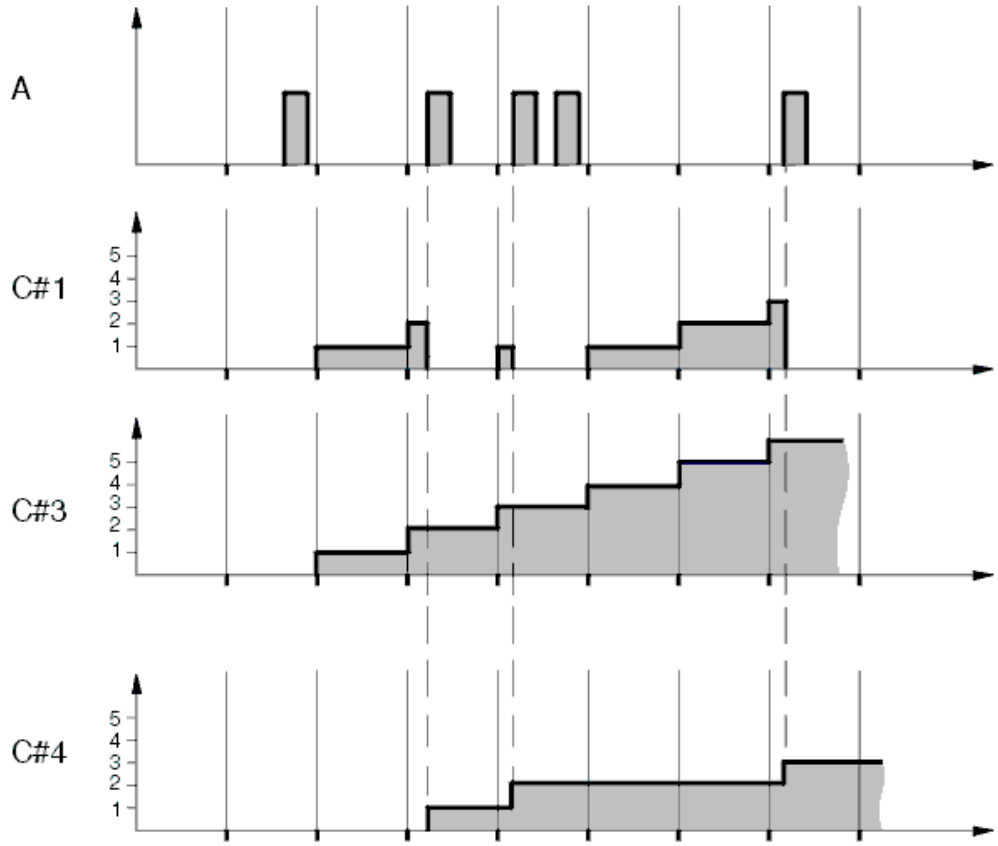

Fig. 2: Diagnostic Trouble Code (DTC) Counter Graph

VEHICLE COMMUNICATION INFORMATION, PASSENGER DOOR MODULE (PDM) (2005-12)

DESCRIPTION OF ACTIVATIONS

ACTIVATING COMPONENTS AND FUNCTIONS

The following components/parameters can be activated in alternative ways:

- The up/down control for the front passenger window
- Power window motor, up/down
- Lock cable M1
- Lock cable M2
- Door mirror motor
- Defroster
- Door mirror lamp
- Door open warning lamp (does not apply to all vehicle).

DESCRIPTION OF PARAMETERS

THE FOLLOWING PARAMETERS CAN BE READ OFF:

- The status of the front passenger window up-control
- The status of the front passenger window down-control
- The status of the front passenger window auto-control
- The status of the up-motor for the power window
- The status of the down-motor for the power window
- Lock cable M1, status
- Lock cable M2, status
- Lock cable M3, status
- Door open warning lamp, status (does not apply to all vehicles)
- The status of the control for the door mirror
- Defroster, status
- Door mirror lamp, status
- Outside temperature, value

NOTE: The outside temperature can only be read off from the control module on the right-hand side of the car.

- Power supply, value
- Signal supply, value
- Door mirror position X axis, value (does not apply to all vehicles)
- Door mirror position Y axis, value (does not apply to all vehicles).

READING OFF EXTENDED DIAGNOSTIC TROUBLE CODE (DTC) INFORMATION, PASSENGER DOOR MODULE

CONTENTS

Select type of description.

- see **DESCRIPTION OF FROZEN VALUES PASSENGER DOOR MODULE**
- see **STATUS IDENTIFIER, DESCRIPTION**
- see **COUNTERS, DESCRIPTION**

DESCRIPTION OF FROZEN VALUES PASSENGER DOOR MODULE

EXPLANATION

Not all the parameters described need to be implemented in the control module. This varies from system to system.

Frozen values are parameter values that are stored when a diagnostic trouble code (DTC) is stored.

BATTERY VOLTAGE, VALUE

Measurement range: 0-25.5 V.

Normal value when the generator (GEN) is charging: 13.0-14.5 V.

DISTANCE, VALUE

Measurement range: 0-1048575 km.

The value indicates the total mileage of the car at the time the diagnostic trouble code (DTC) was stored.

PASSENGER COMPARTMENT TEMPERATURE, VALUE

Measurement range: -60-195°C.

OUTSIDE TEMPERATURE, VALUE

Measurement range: -128-127.75°C.

ENGINE RUNNING, STATUS

The status displays whether the engine was running when the diagnostic trouble code (DTC) was stored.

No = the engine was not running

Yes = the engine was running

TIME, VALUE

The value displays the time that has passed since the diagnostic trouble code (DTC) was stored.

ACCESSORIES AND EQUIPMENT

Doors And Lids - Symptom Related Diagnostic Procedures

CHECKING CONTROL OF THE POWER DOOR MIRROR (2005-12)

CHECKING CONTROL OF THE POWER DOOR MIRROR

CHECKING THE CONNECTORS

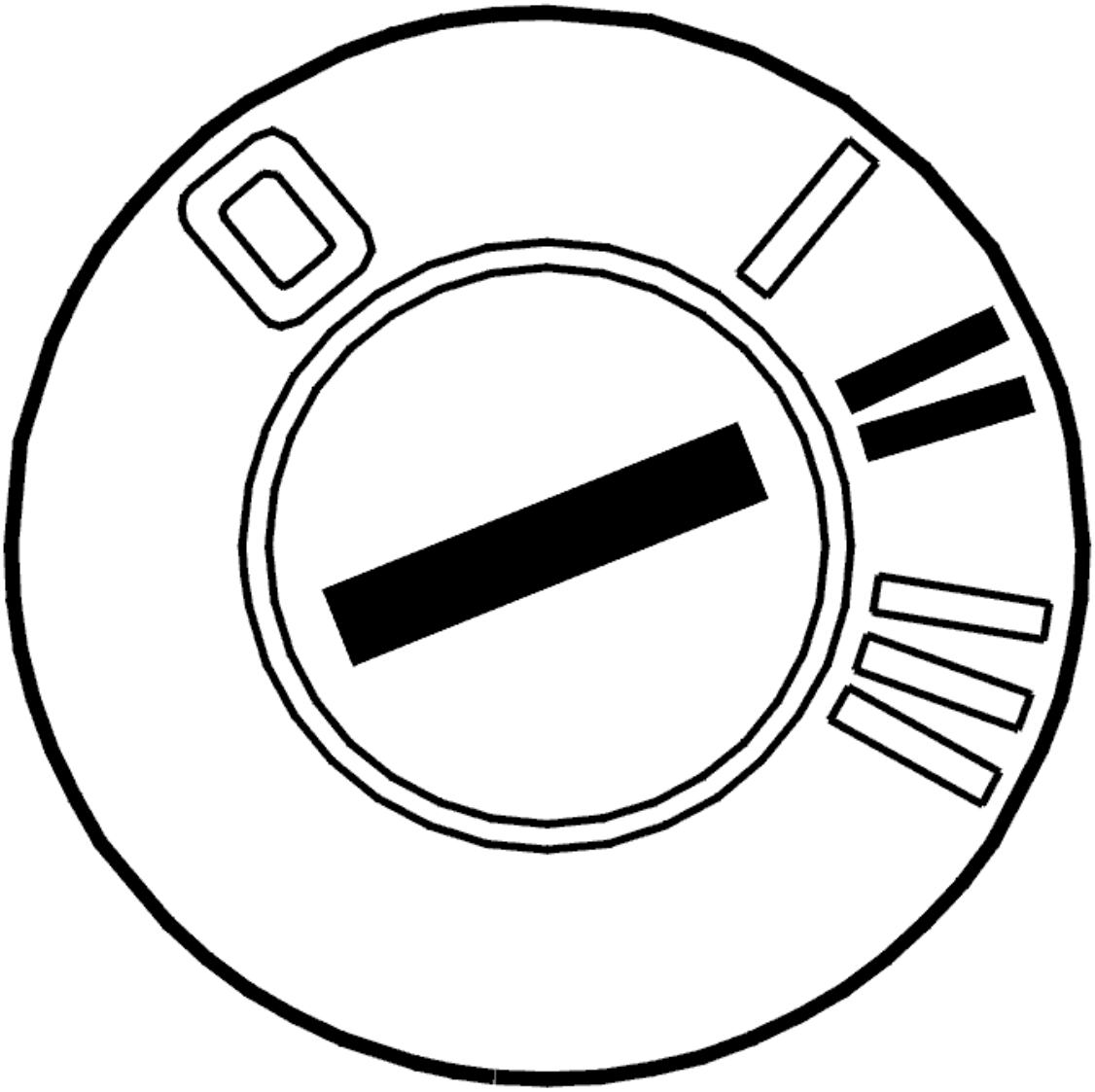

Fig. 1: Identifying Ignition ON
Courtesy of VOLVO CARS CORPORATION

- Ignition off
- Check the power door mirror connector and connectors 54/10 and 54/11. Check for contact resistance and

oxidation
- Ignition on.

  Check that the power door mirror can be operated.

  Other information:

  - To access the connector for the power door mirror, see **REAR VIEW MIRROR, REPLACING**
  - see **CHECKING WIRING AND TERMINALS**

Do the door mirror controls operate?

- **YES**

  OKAY: Troubleshooting has been completed.

- **NO**

  Refer to **CHECKING THE COMPONENTS AND WIRING**

CHECKING THE COMPONENTS AND WIRING

Check the cable between control module terminal #5B and ground: Left or right seat support. Check for an open-circuit.

If a fault is found replace the cable.

If no fault is found, replace the power door mirror.

Other information:

- see **SIGNAL SPECIFICATION**
- see **CONNECTING THE BREAKOUT BOX**
- To access and replace the power door mirror, see **REAR VIEW MIRROR, REPLACING**
- see **CHECKING WIRING AND TERMINALS**

- **Continue**

  Refer to **SYMPTOM VERIFICATION**

SYMPTOM VERIFICATION

HINT: After carrying out the repair, check that the fault has been remedied.

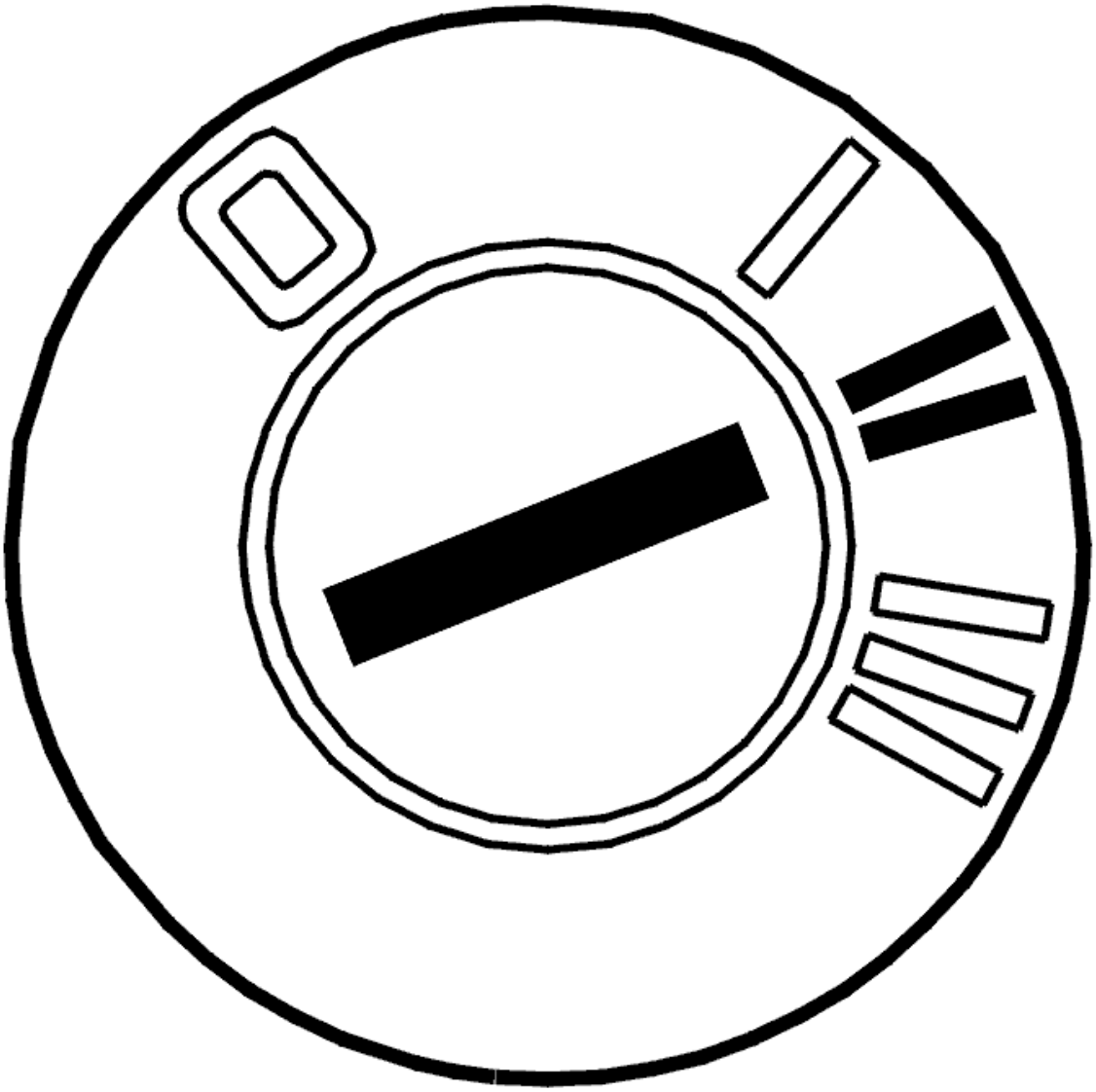

Fig. 2: Identifying Ignition ON
Courtesy of VOLVO CARS CORPORATION

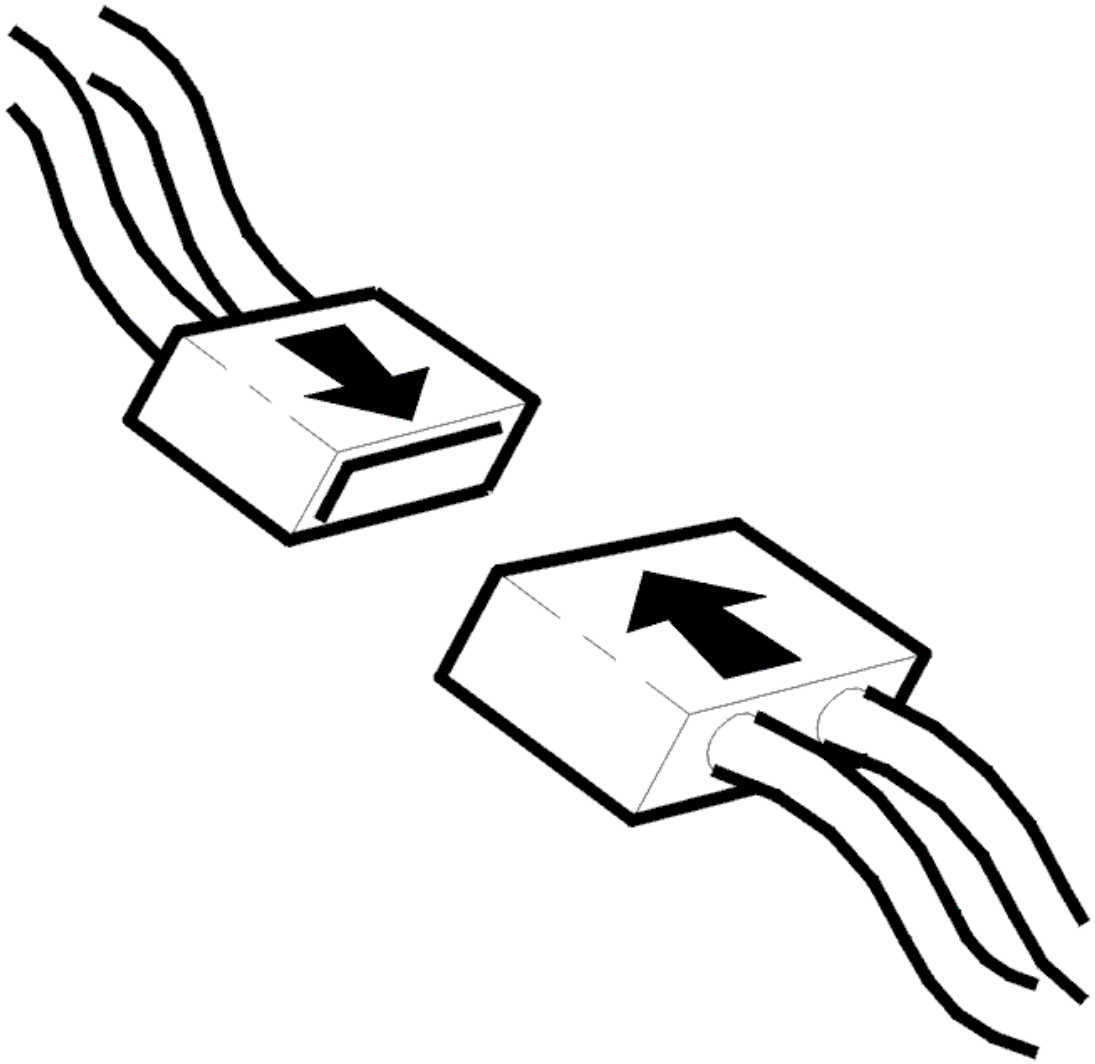

Fig. 3: Connecting Connector
Courtesy of VOLVO CARS CORPORATION

- Ignition off
- Reinstall the connectors, components etc.
- Ignition on.

Test both the door mirrors to their limit positions using the controls. The mirrors should move in the corresponding direction.

After repairing power folding door mirrors:

Check whether the power door mirrors are synchronized by pressing the button for retraction and deployment of the mirrors.

Are the controls working?

- **YES**

  VERIFIED: Troubleshooting has been completed.

- **NO**

  Refer to **INFORMATION**

INFORMATION

FAULT-TRACING INFORMATION

The fault should have been detected and remedied. As this is not the case fault-tracing has failed.

Exit fault-tracing for this diagnostic trouble code (DTC) or make another attempt.

CHECKING LOCAL LIGHTING (2005-12)

CHECKING LOCAL LIGHTING (2005-06)

CHECKING THE CONNECTORS

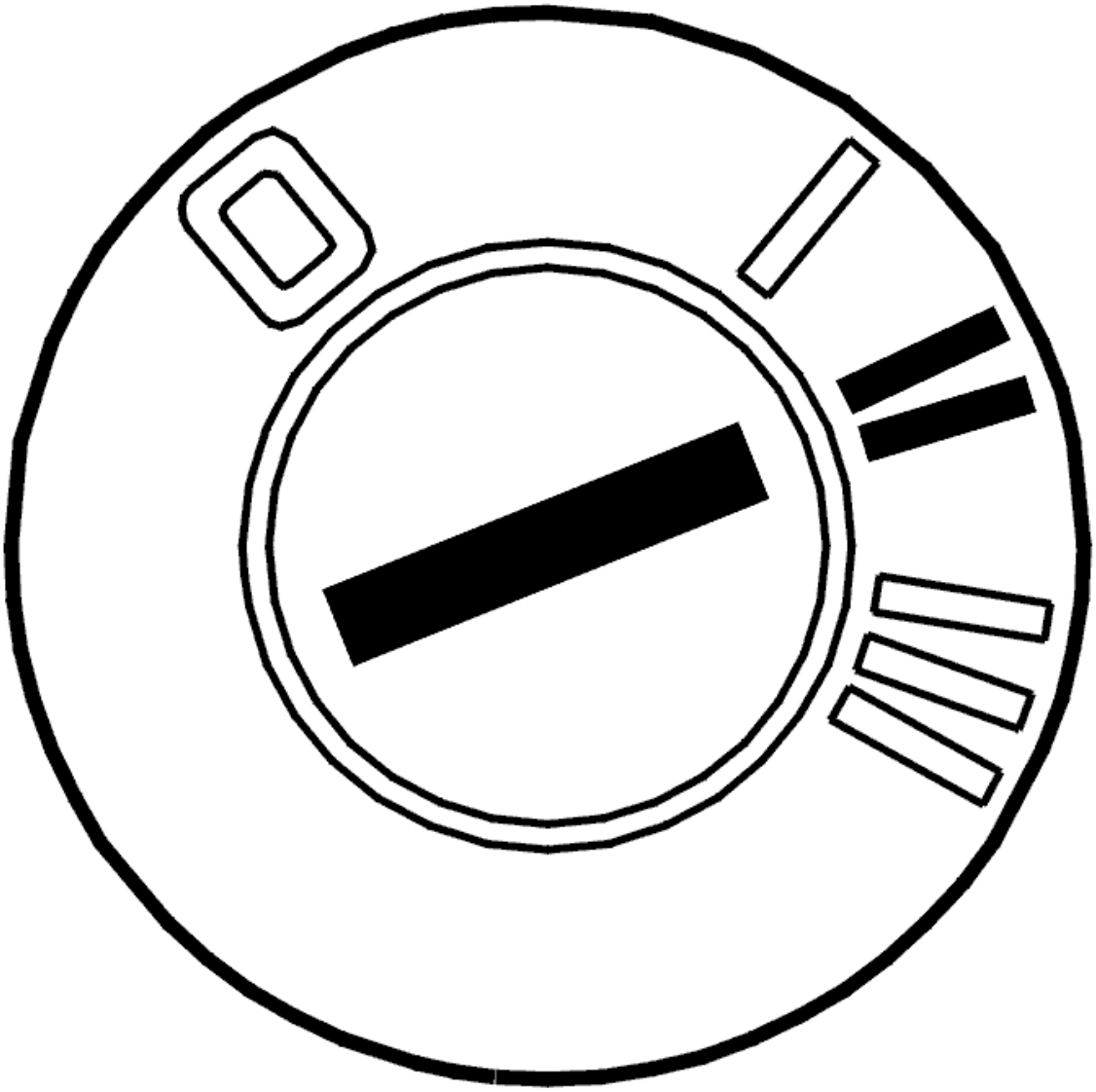

Fig. 4: Identifying Ignition ON
Courtesy of VOLVO CARS CORPORATION

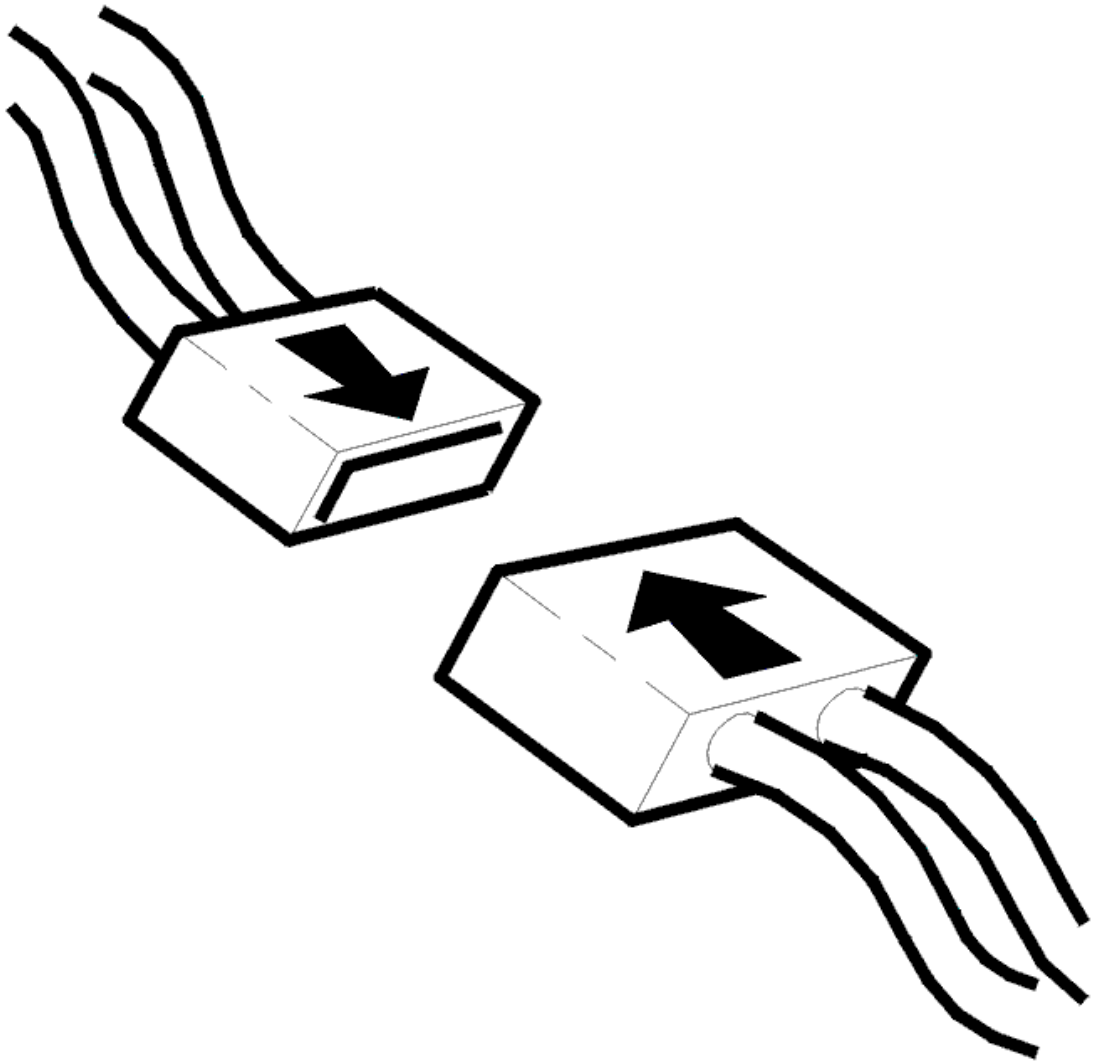

Fig. 5: Connecting Connector
Courtesy of VOLVO CARS CORPORATION

- Ignition off
- Check the power door mirror connector. Check for contact resistance and oxidation.

  In particular, check for any damage

- Ignition on.

  Other information:

  - To access the power door mirror connector, see **OUTSIDE TEMPERATURE SENSOR DOOR MIRROR, REPLACING**
  - see **CHECKING WIRING AND TERMINALS**

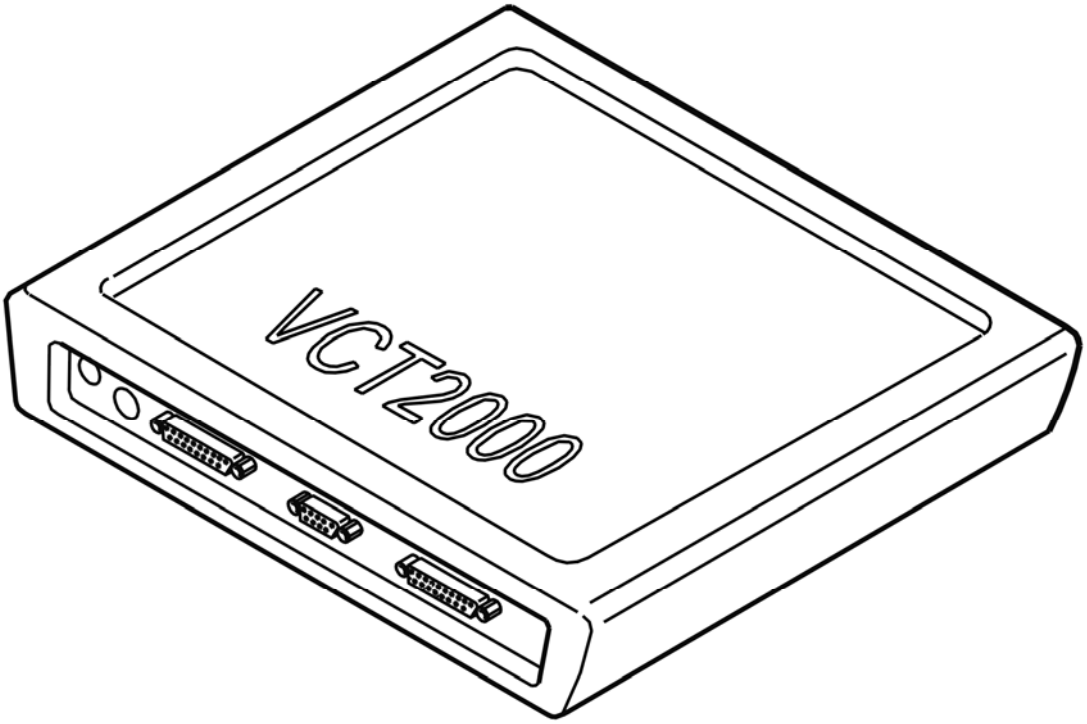

Fig. 6: Identifying VCT2000 Diagnostic Tool Symbol In VIDA
Courtesy of VOLVO CARS CORPORATION

Is the lamp in the power door mirror working?

- **YES**

  OKAY: Troubleshooting has been completed.

- **NO**

  Refer to **CHECKING THE COMPONENTS AND WIRING**

CHECKING THE COMPONENTS AND WIRING

Check the cable between door control module terminal #10B and power door mirror terminal #6. Check for an open-circuit. Check for a short-circuit to supply voltage.

Check the cable between door control module terminal #8B and power door mirror terminal #13 for an open-circuit.

Remedy as necessary.

Other information:

- see **SIGNAL SPECIFICATION**
- see **CONNECTING THE BREAKOUT BOX**
- To access the power door mirror connector, see **OUTSIDE TEMPERATURE SENSOR DOOR MIRROR, REPLACING**
- see **BULB, GROUND LIGHTING, DOOR MIRROR, REPLACING**
- see **CHECKING WIRING AND TERMINALS**

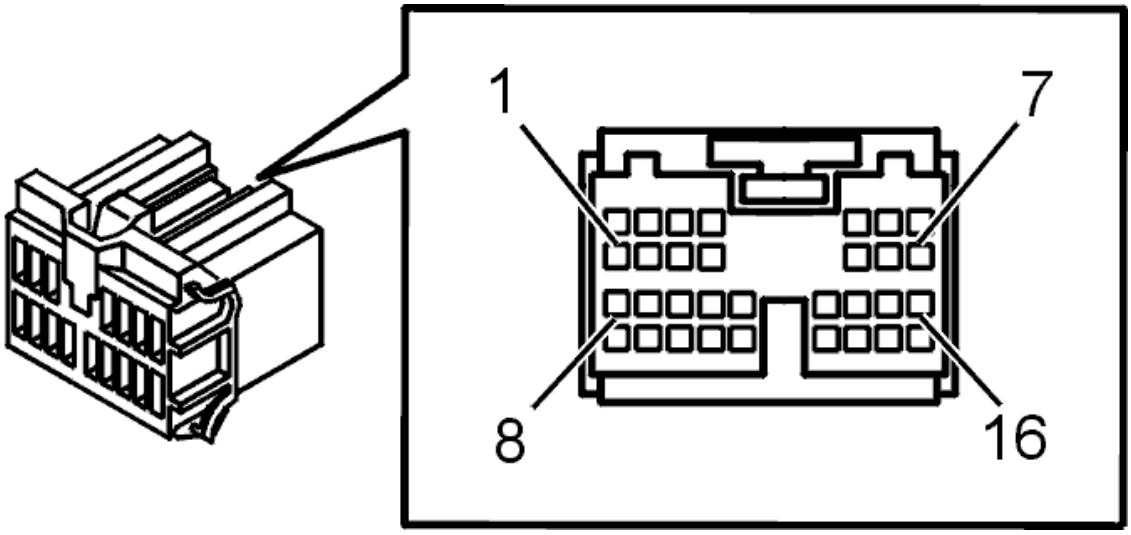

Fig. 7: Connector, Green (16-Pin)
Courtesy of VOLVO CARS CORPORATION

- **Continue**

  Refer to **VERIFICATION**

VERIFICATION

HINT: After carrying out the repair, check that the fault has been remedied.

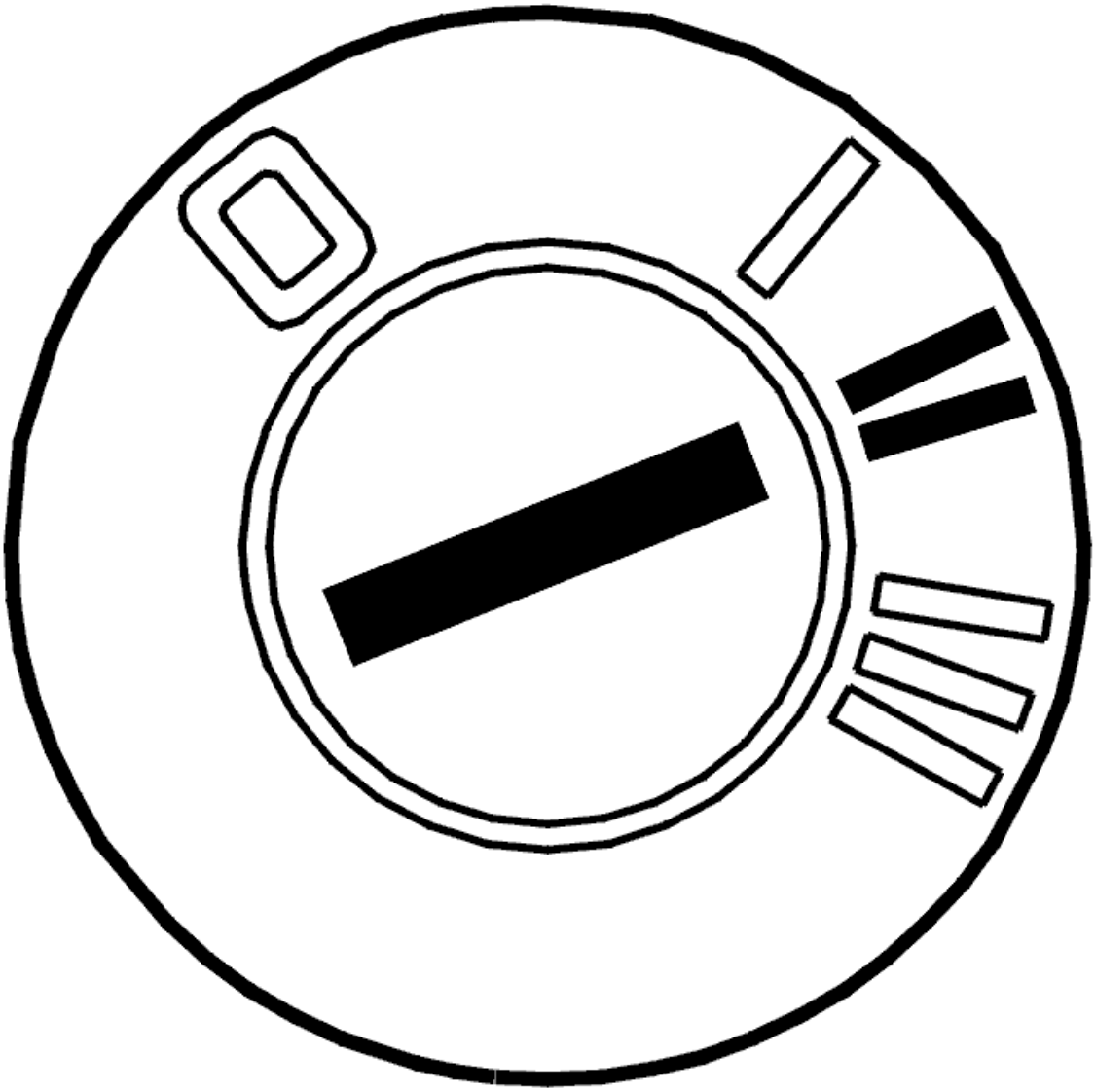

Fig. 8: Identifying Ignition ON
Courtesy of VOLVO CARS CORPORATION

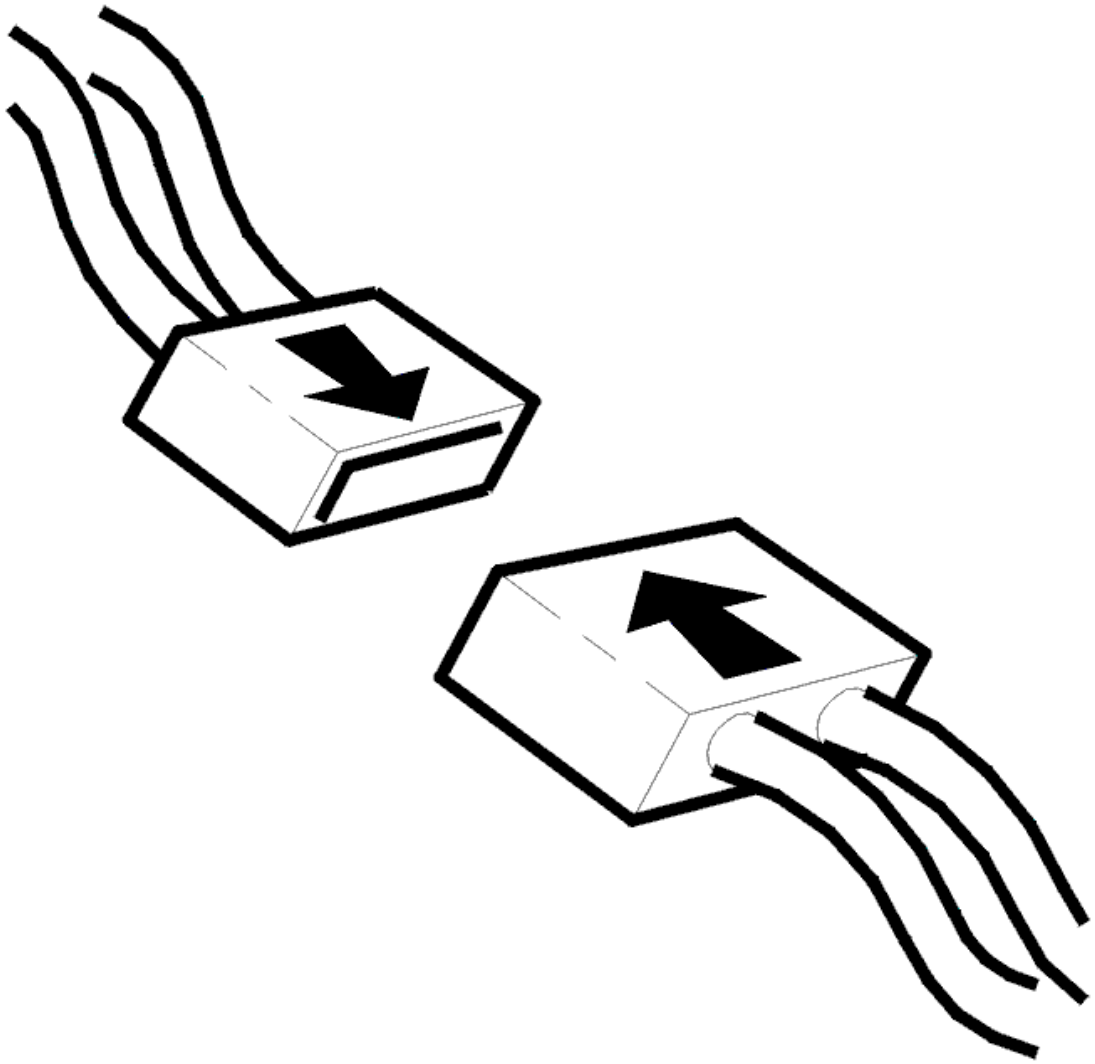

Fig. 9: Connecting Connector
Courtesy of VOLVO CARS CORPORATION

- Ignition off
- Reinstall the connectors, components etc.
- Ignition on.

  Check if the lamp in the power door mirror lights.

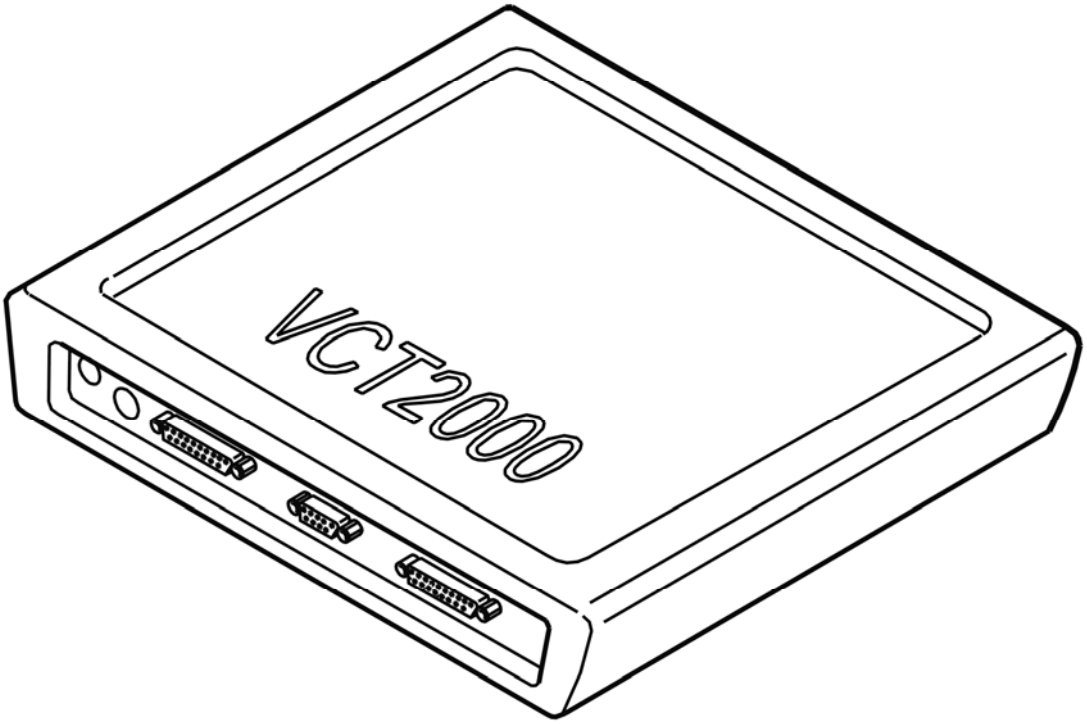

Fig. 10: Identifying VCT2000 Diagnostic Tool Symbol In VIDA
Courtesy of VOLVO CARS CORPORATION

Is the bulb in the power door mirror working?

- **YES**

  VERIFIED: Troubleshooting has been completed.

- **NO**

  Refer to **INFORMATION**

INFORMATION

FAULT-TRACING INFORMATION

The fault should have been detected and remedied. As this is not the case fault-tracing has failed.

Exit fault-tracing for this diagnostic trouble code (DTC) or make another attempt.

CHECKING LOCAL LIGHTING (2007-12)

CHECKING THE CONNECTORS

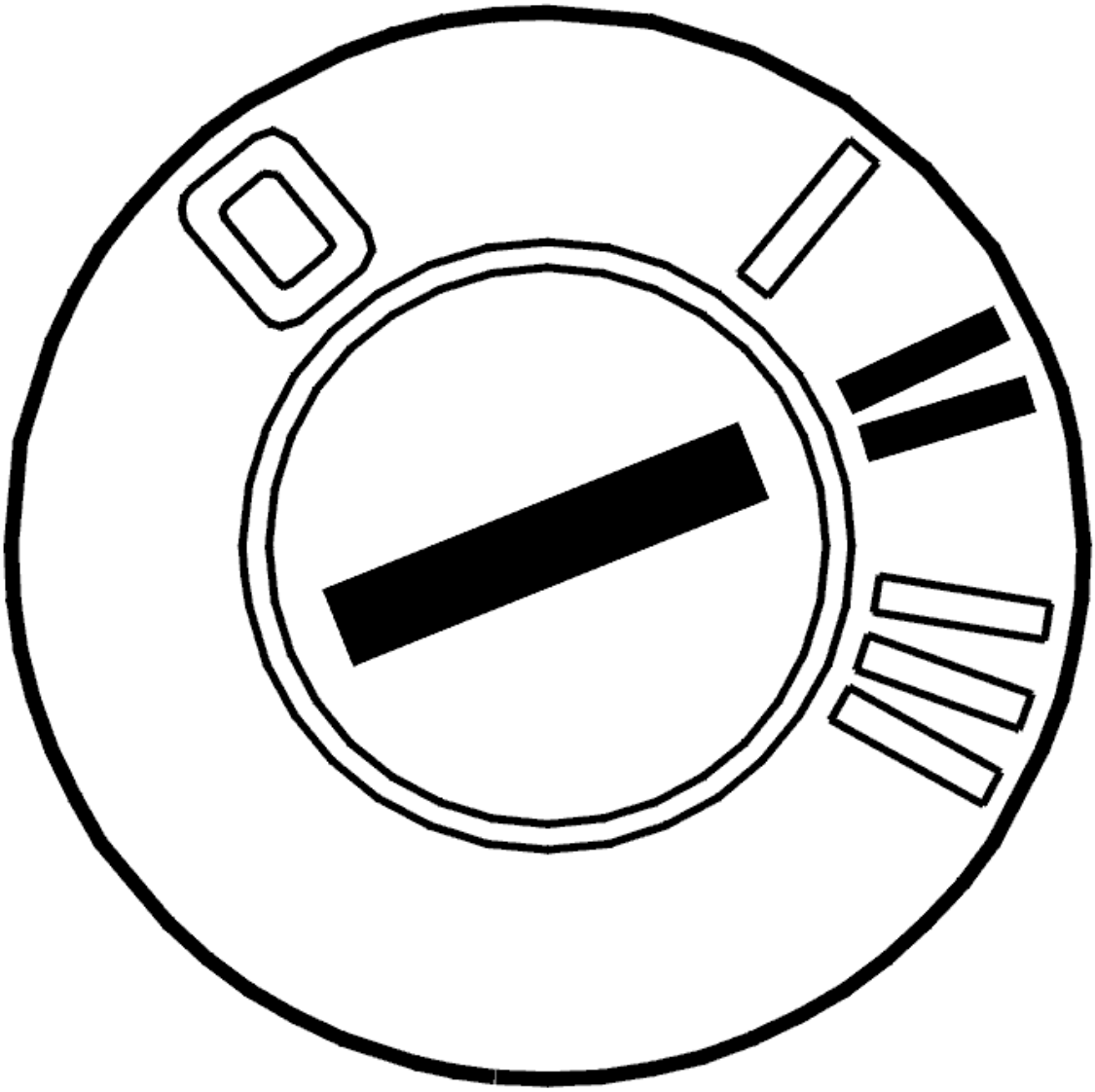

Fig. 11: Identifying Ignition ON
Courtesy of VOLVO CARS CORPORATION

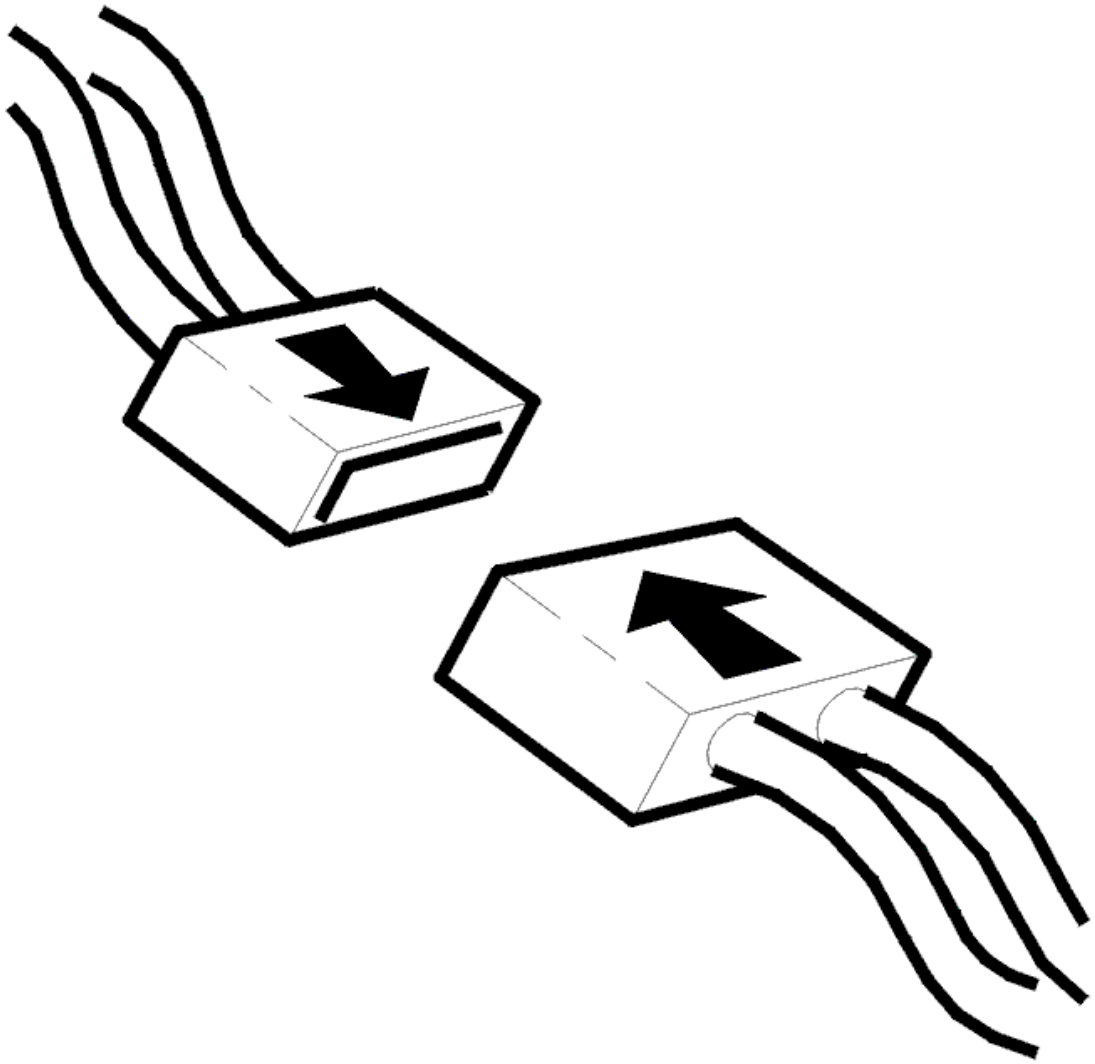

Fig. 12: Connecting Connector
Courtesy of VOLVO CARS CORPORATION

- Ignition off
- Check the power door mirror connector. Check for contact resistance and oxidation.

  In particular, check for any damage

- Ignition on.

  Other information:

  - To access the power door mirror connector, see **OUTSIDE TEMPERATURE SENSOR DOOR MIRROR, REPLACING**
  - see **CHECKING WIRING AND TERMINALS**

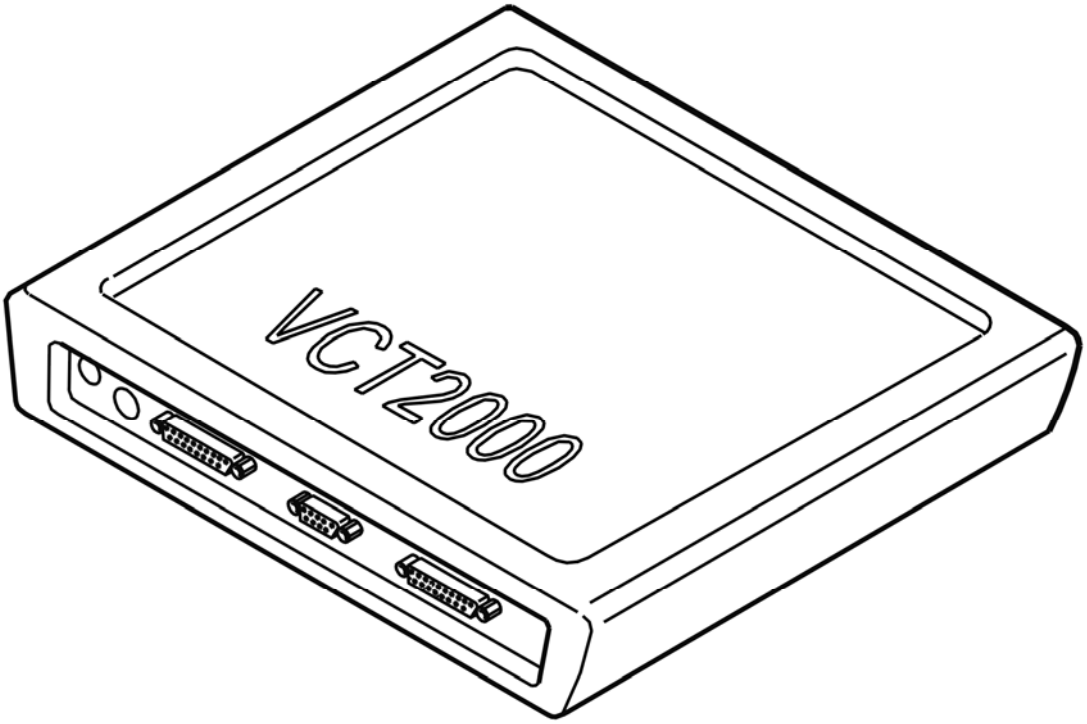

Fig. 13: Identifying VCT2000 Diagnostic Tool Symbol In VIDA
Courtesy of VOLVO CARS CORPORATION

Is the lamp in the power door mirror working?

- **YES**

  OKAY: Troubleshooting has been completed.

- **NO**

  Refer to **CHECKING THE COMPONENTS AND WIRING**

CHECKING THE COMPONENTS AND WIRING

Check the cable between door control module terminal #10B and power door mirror terminal #6. Check for an open-circuit. Check for a short-circuit to supply voltage.

Check the cable between door control module terminal #8B and power door mirror terminal #13 for an open-circuit.

Remedy as necessary.

Other information:

- see **SIGNAL SPECIFICATION**
- see **CONNECTING THE BREAKOUT BOX**
- To access the power door mirror connector, see **OUTSIDE TEMPERATURE SENSOR DOOR MIRROR, REPLACING**
- see **BULB, DOOR MIRROR, GROUND LIGHTING**
- see **CHECKING WIRING AND TERMINALS**

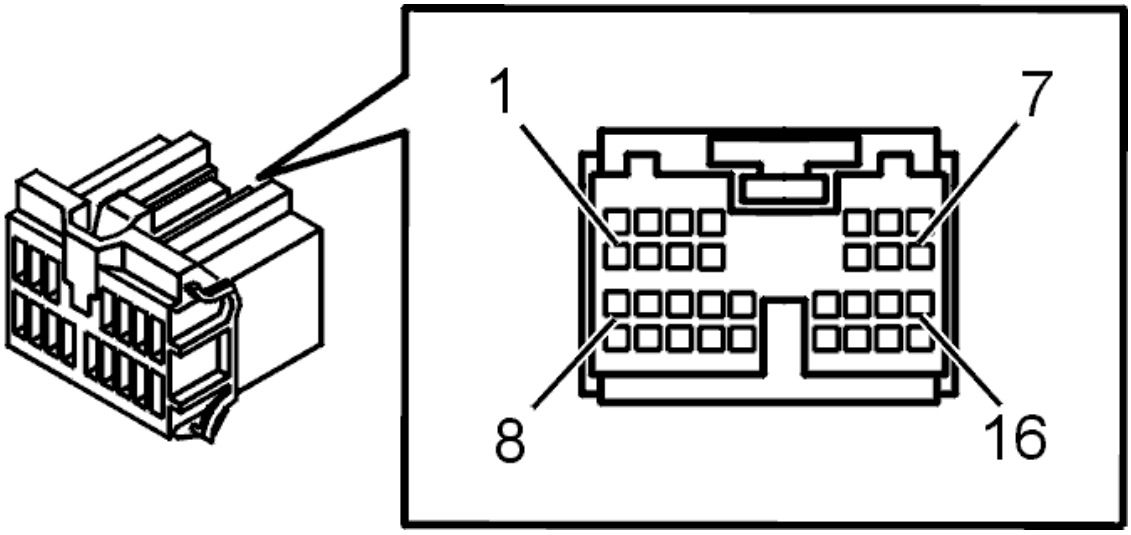

Fig. 14: Connector, Green (16-Pin)
Courtesy of VOLVO CARS CORPORATION

- **Continue**

  Refer to **VERIFICATION**

VERIFICATION

HINT: After carrying out the repair, check that the fault has been remedied.

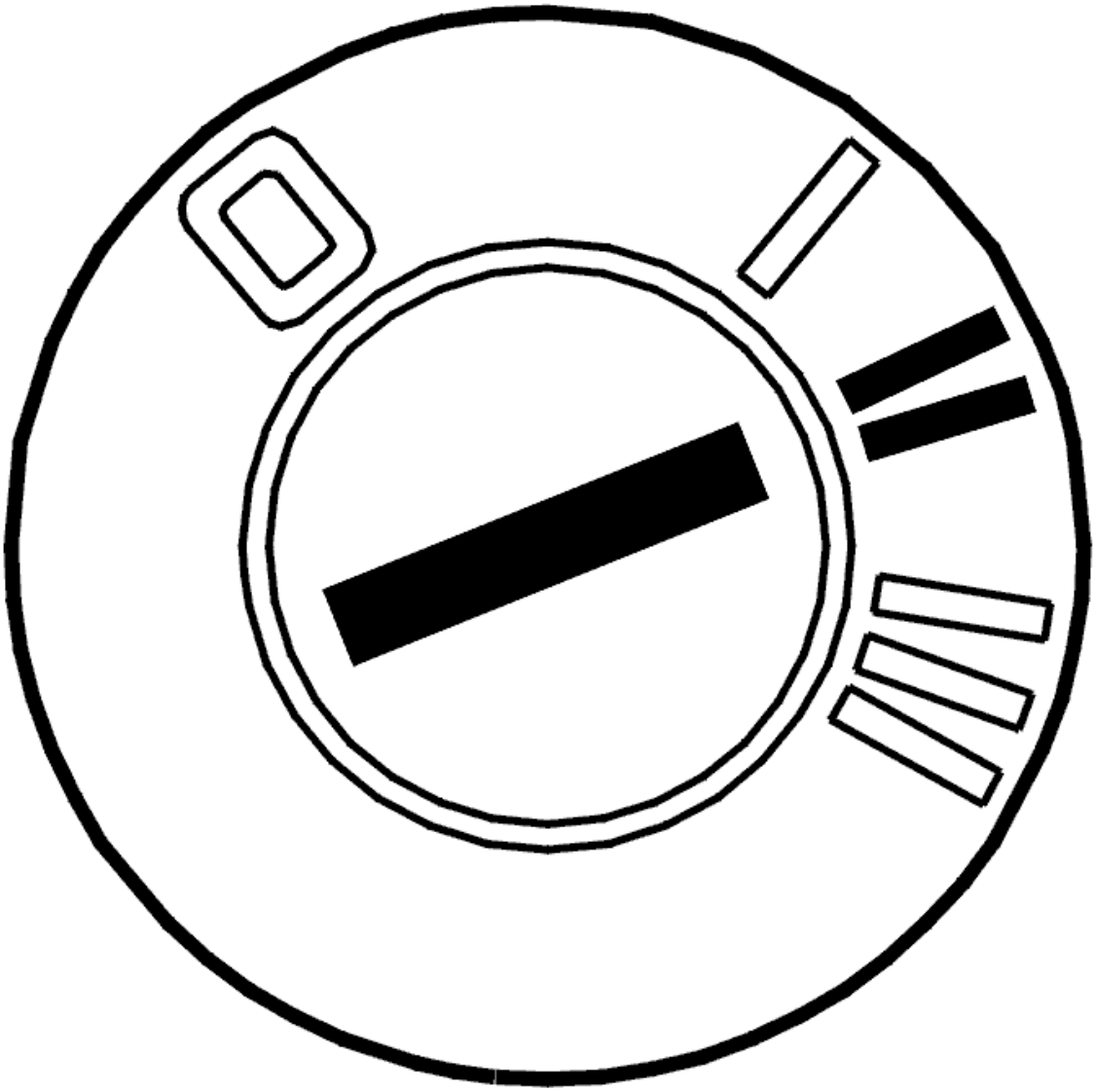

Fig. 15: Identifying Ignition ON
Courtesy of VOLVO CARS CORPORATION

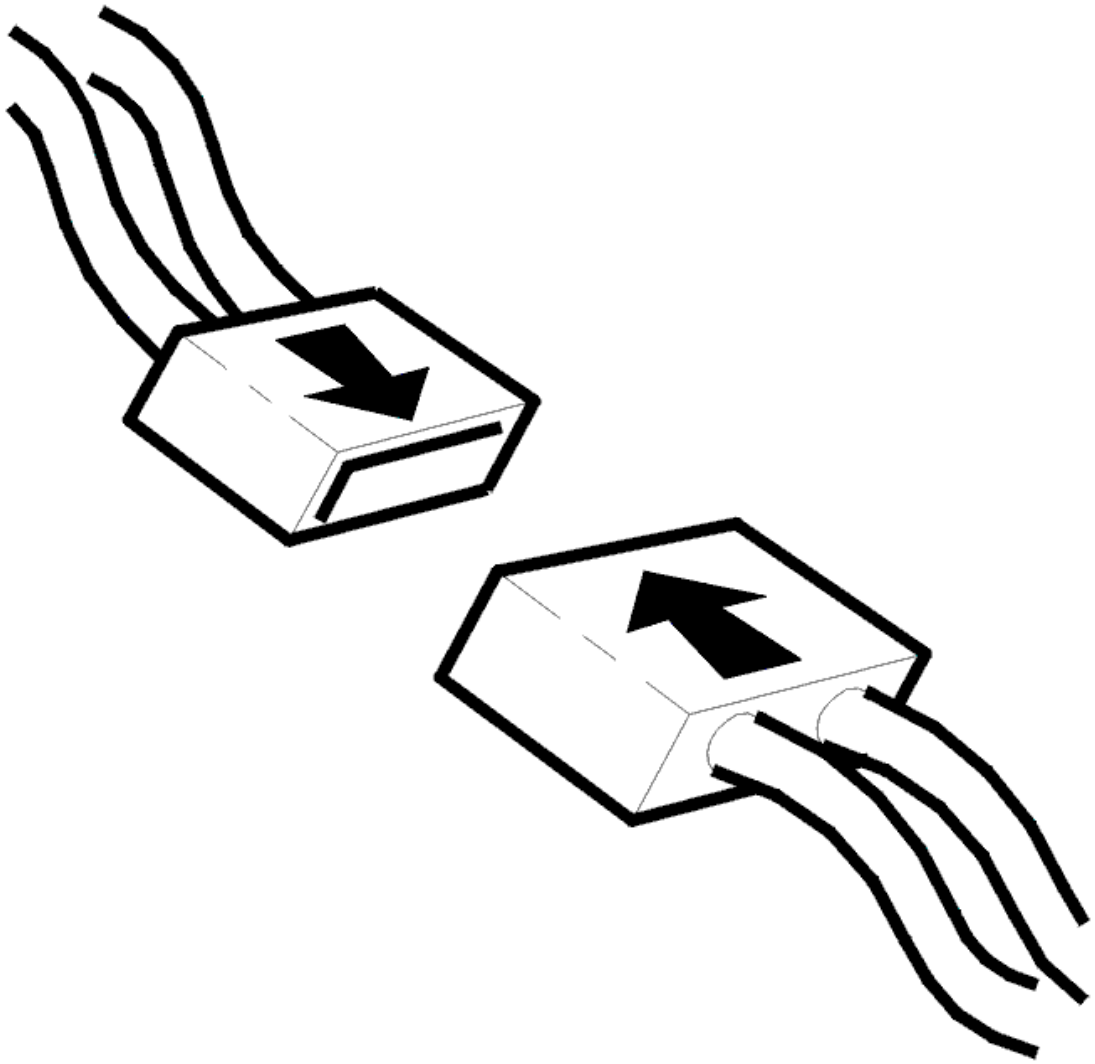

Fig. 16: Connecting Connector
Courtesy of VOLVO CARS CORPORATION

- Ignition off
- Reinstall the connectors, components etc.
- Ignition on.

Check if the lamp in the power door mirror lights.

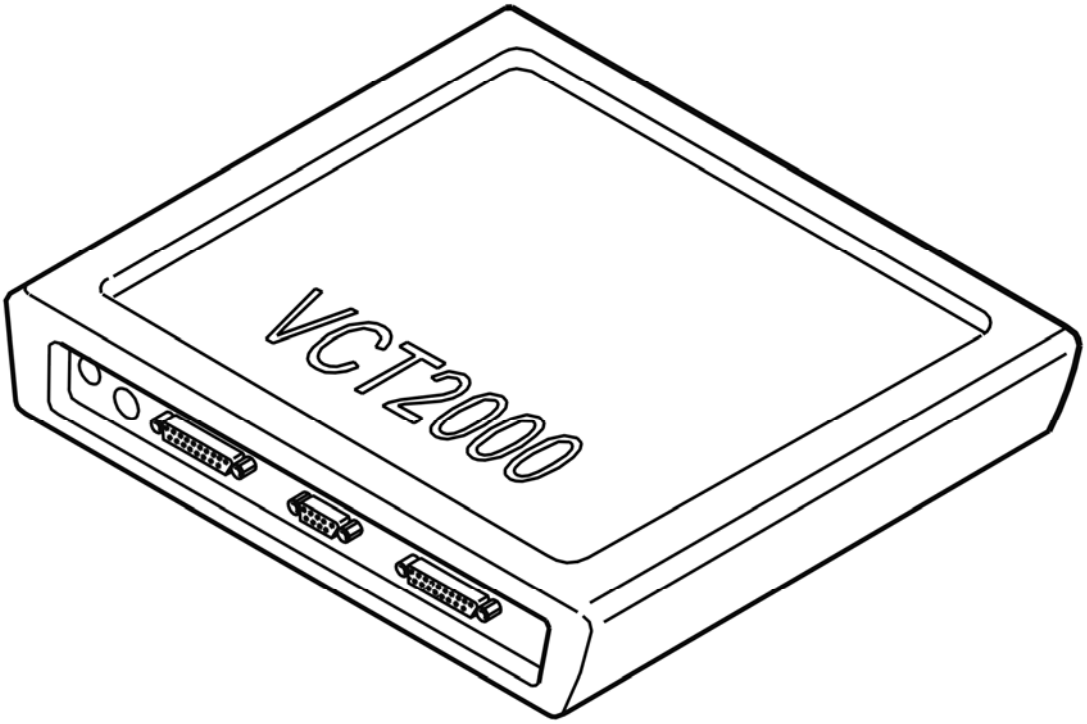

Fig. 17: Identifying VCT2000 Diagnostic Tool Symbol In VIDA
Courtesy of VOLVO CARS CORPORATION

Is the bulb in the power door mirror working?

- **YES**

  VERIFIED: Troubleshooting has been completed.

- **NO**

  Refer to **INFORMATION**

INFORMATION

FAULT-TRACING INFORMATION

The fault should have been detected and remedied. As this is not the case fault-tracing has failed.

Exit fault-tracing for this diagnostic trouble code (DTC) or make another attempt.

CHECKING OPENING USING THE KEY (2003-04)

CHECKING OPENING USING THE KEY

This fault-tracing assumes that the lock cylinder is not mechanically defective.

Check door control module connector A and the lock unit connector. Check for contact resistance and oxidation.

Check the cable between door control module connector terminal #A6 and lock unit connector terminal #4. Check for an open-circuit.

Check the cable between door control module connector terminal #A12 and lock unit connector terminal #1. Check for an open-circuit.

Check the cable between door control module connector terminal #A13 and lock unit connector terminal #5. Check for an open-circuit.

Replace the lock unit if no fault is found.

Other information:

- For further information about signals and other values, see **SIGNAL SPECIFICATION**
- To connect the breakout box, see **CONNECTING THE BREAKOUT BOX**
- To access the driver/passenger door module (DDM/PDM) connector, see **DRIVER'S DOOR MODULE/PASSENGER DOOR MODULE (DDM/PDM), REPLACING**
- To access and replace the lock unit, see **LOCK MECHANISM FRONT SIDE DOOR, REPLACING**
- see **CHECKING WIRING AND TERMINALS** .

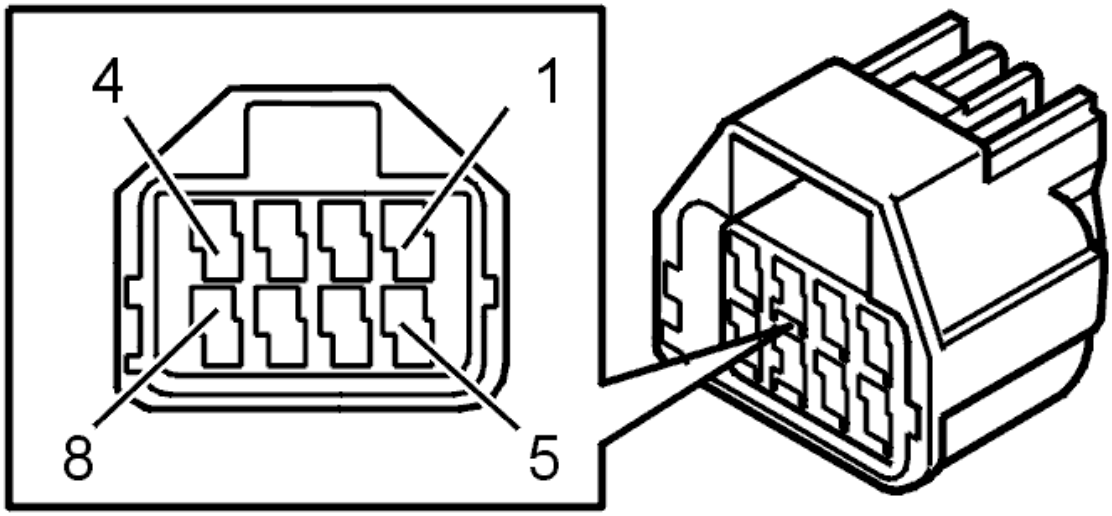

Fig. 18: Identifying Connector Terminals
Courtesy of VOLVO CARS CORPORATION

FAULT-TRACING INFORMATION

Condition

No DTCs stored.

Possible Source

- Open-circuit in the lock cables
- Oxidation in the connectors
- Defective lock unit.

Fault symptom[s]

- Cannot be operated with a key from the driver's door.

CHECKING OPENING USING THE KEY (2005-12)

CHECKING OPENING USING THE KEY

This fault-tracing assumes that the lock cylinder is not mechanically defective.

Check door control module connector A and the lock unit connector. Check for contact resistance and oxidation.

Check the cable between door control module connector terminal #A6 and lock unit connector terminal #4. Check for an open-circuit.

Check the cable between door control module connector terminal #A12 and lock unit connector terminal #1. Check for an open-circuit.

Check the cable between door control module connector terminal #A13 and lock unit connector terminal #5. Check for an open-circuit.

If no fault was found, replace the lock unit.

Other information:

- see **SIGNAL SPECIFICATION**
- see **CONNECTING THE BREAKOUT BOX**
- To access the driver/passenger door module (DDM/PDM) connector, see **PASSENGER DOOR MODULE (PDM), REPLACING**
- To access or replace the lock unit, see **LOCK MECHANISM FRONT SIDE DOOR, REPLACING**
- see **CHECKING WIRING AND TERMINALS**

- **Continue**

  Refer to **SYMPTOM VERIFICATION**

SYMPTOM VERIFICATION

HINT: After carrying out the repair, check that the fault has been remedied.

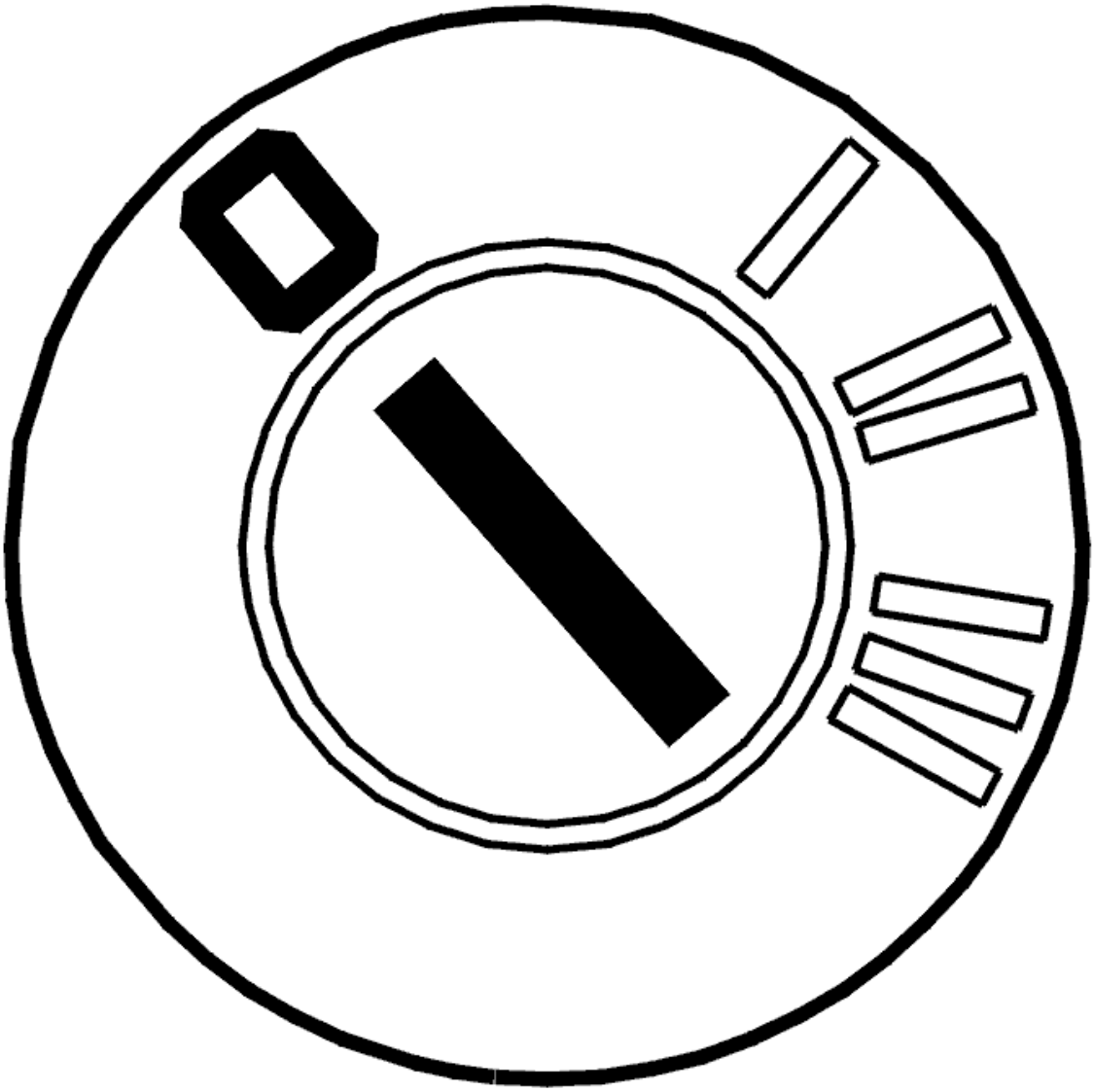

Fig. 19: Identifying Ignition OFF
Courtesy of VOLVO CARS CORPORATION

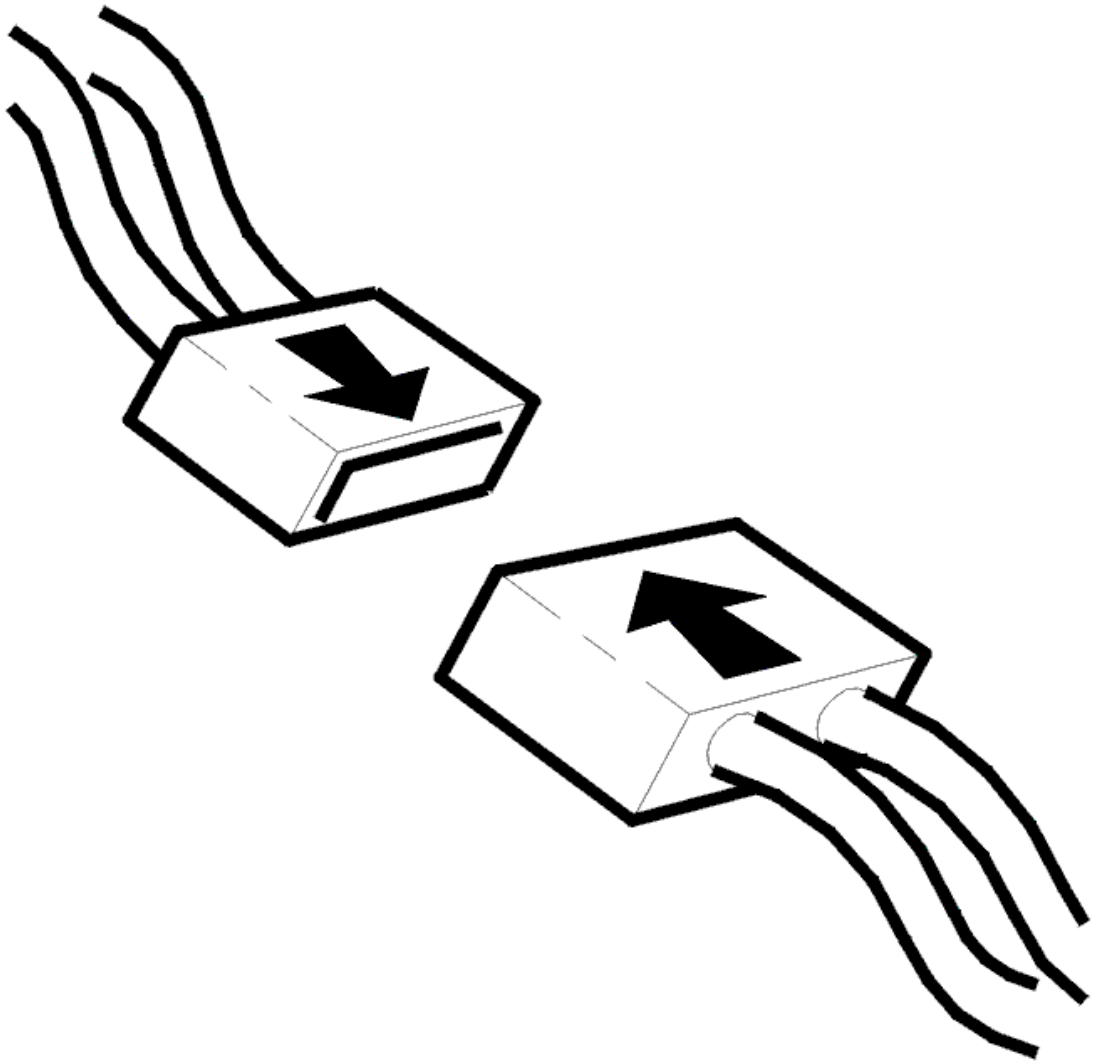

Fig. 20: Connecting Connector
Courtesy of VOLVO CARS CORPORATION

- Ignition off
- Reinstall the connectors, components etc.

  Try locking the central locking system using the key from the driver's door.

Does the unlocking function?

- **YES**

  VERIFIED: Troubleshooting has been completed.

- **NO**

Refer to **INFORMATION**

INFORMATION

FAULT-TRACING INFORMATION

The fault should have been detected and remedied. As this is not the case fault-tracing has failed.

Exit fault-tracing for this diagnostic trouble code (DTC) or make another attempt.

CHECKING POWER RETRACTABLE DOOR MIRRORS (2003-04)

CHECKING THE POWER RETRACTABLE DOOR MIRRORS

CHECKING UNSYNCHRONIZED DOOR MIRRORS

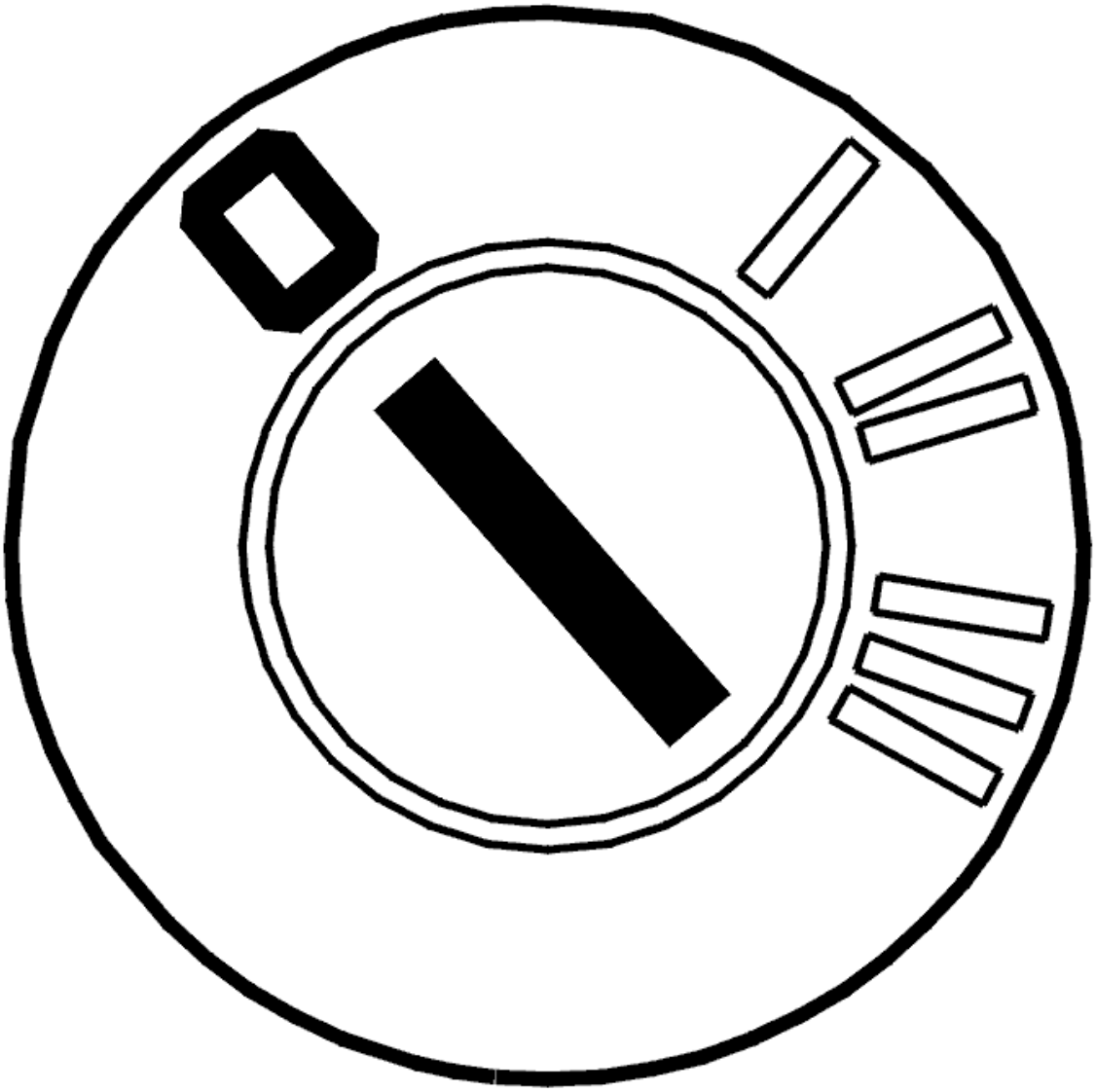

Fig. 21: Identifying Ignition OFF
Courtesy of VOLVO CARS CORPORATION

Unsynchronized door mirrors, where one door mirror retracts while the other opens when the button is activated, are remedied as follows.

- Ignition off
- Disconnect the fuse for the power door mirror and then reinstall the fuse
- Ignition on
- Press the button for deploying and retracting the power retractable door mirrors.

FAULT-TRACING INFORMATION

Condition

No DTCs stored.

Possible Source

- One of the two door modules was disconnected while the door mirrors were deployed or retracted.

Fault symptom[s]

- The electrically folding mirrors are not synchronized.

CHECKING THE "BLIND SPOT INFORMATION SYSTEM" (BLIS) (2007-12)

CHECKING THE "BLIND SPOT INFORMATION SYSTEM" (BLIS)

CHECKING TEXT MESSAGE IN DRIVER INFORMATION MODULE (DIM)

HINT: By holding in the trip odometer reset button for 10 seconds the text ID for the relevant text message is displayed in the Driver Information Module (DIM).

- Start the car.
- Depress the trip odometer reset button. Hold the button depressed until the relevant text ID is displayed in the Driver Information Module (DIM).
- Scroll between the messages in the Driver Information Module (DIM) by pressing the READ button.

1. Text-ID 160. Refer to **INFORMATION**.
2. Text-ID 148, 149, or 150. Refer to **CHECKING LENS**.
3. Text-ID 147 or no relevant message. Refer to **CHECKING THE FUNCTION**

INFORMATION

The text message means that the system for the moment has some difficulties in functioning satisfactorily. This depends completely on external factors and applies especially at dawn and dusk when the system does not know if it is to use day mode or night mode. This message does not indicate any malfunction and shall not generate any component replacement.

- Inform the customer of the system's limitations - see user manual for more information.

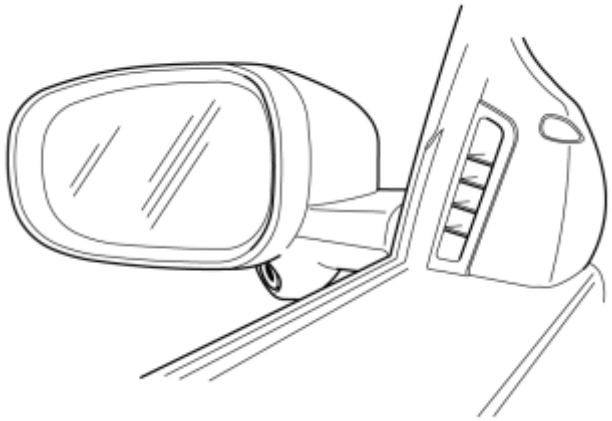

Fig. 22: Identifying Driver's Side (Rear-View) Door Mirror And Blind Spot Camera
Courtesy of VOLVO CARS CORPORATION

CHECKING LENS

- Remove the key from the ignition switch.
- Clean the camera lens according to instructions in the user manual.
- Check the heater in the lens by spraying on a thin layer of frost using freeze spray. Make sure that the mist disappears.
- If the heater works correctly, inform the customer that the system as a whole and about the system's technical limitations. See user manual for information.
- If the heater does not work, replace the rear-view mirror in question.

Other information:

- Replacing a component

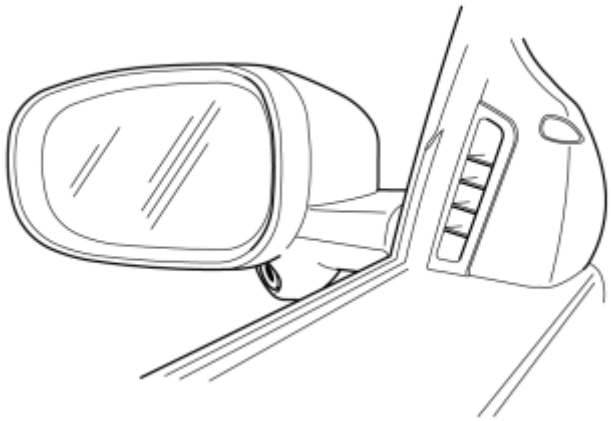

Fig. 23: Identifying Driver's Side (Rear-View) Door Mirror And Blind Spot Camera
Courtesy of VOLVO CARS CORPORATION

Has any rear-view mirror been replaced?

- **YES**

  Refer to **VERIFICATION**

- **NO**

  OKAY: Troubleshooting has been completed.

CHECKING THE FUNCTION

- Drive a short test-drive and check if text-id 147 is seen in the driver information module. Speed during the test-drive must mainly be above 10 km/h and the test-drive should include at least one stop where the start key is removed from the ignition.
- If the text message is not seen, the system is fully functional. Then the customer complaint is due to technical limitations in the system. Inform the customer of the system's limitations - see user manual for more information.

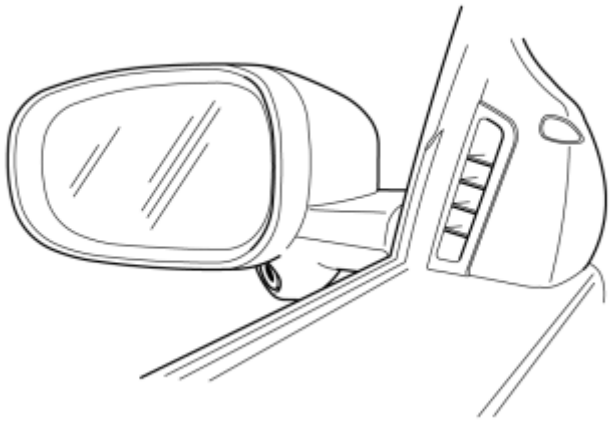

Fig. 24: Identifying Driver's Side (Rear-View) Door Mirror And Blind Spot Camera
Courtesy of VOLVO CARS CORPORATION

Is there a relevant text message?

- **YES**

  Refer to **CHECKING COMPONENTS AND SWITCHES**

- **NO**

  OKAY: Troubleshooting has been completed.

VERIFICATION

- Drive a test-drive. Speed during the test-drive must mainly be above 10 km/h and the test-drive should include at least one stop where the start key is removed from the ignition.
- Check that the message in Driver information module (DIM) has disappeared and that the function works satisfactorily.

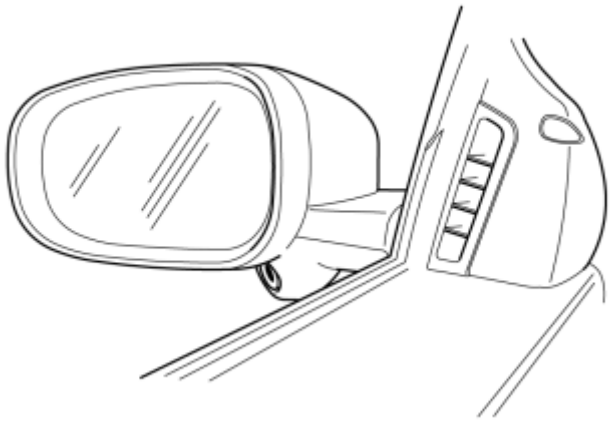

Fig. 25: Identifying Driver's Side (Rear-View) Door Mirror And Blind Spot Camera
Courtesy of VOLVO CARS CORPORATION

Is there a relevant text message?

- **YES**

  Refer to **INFORMATION**

- **NO**

  OKAY: Troubleshooting has been completed.

CHECKING COMPONENTS AND SWITCHES

- Switch off the engine.
- Start the engine and check if the diodes on left and right side flash three times each.
- If any diode does not flash three times, check it.

  Check the diode by measuring the resistance across it or connect it to voltage and check that it lights up.

- If the diode does not work, replace it.
- If the diode works, check all relevant connectors.
- If no fault is detected, replace rear-view mirror.

Other information:

- see **REAR VIEW MIRROR EXTERNAL**

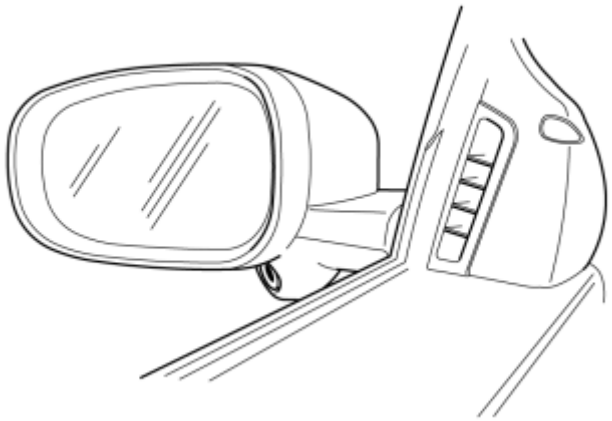

Fig. 26: Identifying Driver's Side (Rear-View) Door Mirror And Blind Spot Camera
Courtesy of VOLVO CARS CORPORATION

- **Continue**

  Refer to **VERIFICATION**

INFORMATION

FAULT-TRACING INFORMATION

The fault should have been detected and remedied. As this is not the case fault-tracing has failed.

Exit fault-tracing for this diagnostic trouble code (DTC) or make another attempt.

REAR VIEW MIRROR EXTERNAL

NOTE: Removal steps in this procedure may contain installation details.

Remove the door panel. See **REPLACING THE FRONT DOOR SIDE PANEL**.

Fig. 27: Identifying Rear View Mirror Trim Panel Removal
Courtesy of VOLVO CARS CORPORATION

Torque: Rear view mirror to front door

20 Nm

Fig. 28: Identifying Rear View Mirror Nut
Courtesy of VOLVO CARS CORPORATION

Install in the reverse order.

REMOVING THE PANEL FROM THE FRONT SIDE DOOR

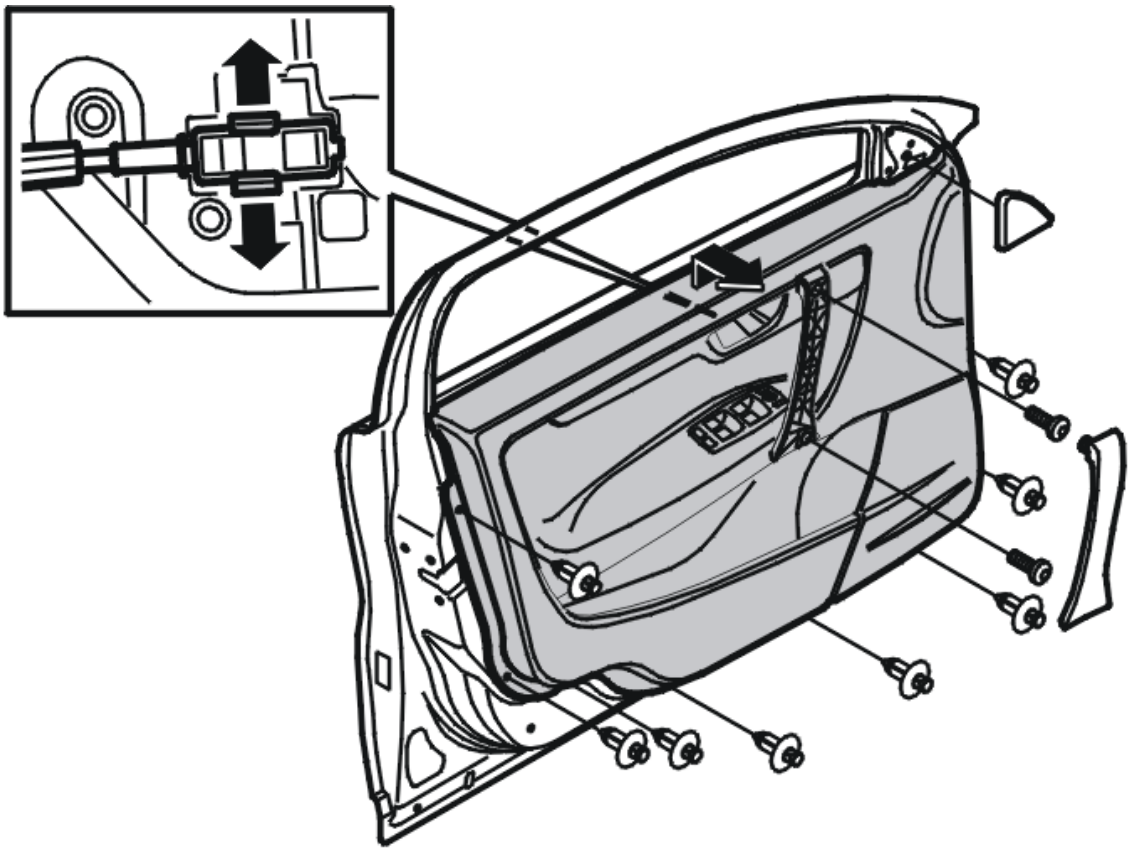

Fig. 29: Removing Screws, Clips, And Cover From Door Panel
Courtesy of VOLVO CARS CORPORATION

Remove the cover from the mirror by pulling it straight outwards.

Detach the side piece handle at the bottom edge. Use a weatherstrip tool.

Remove:

- the two screws
- the eight clips.

Twist the panel outwards and upwards.

Disconnect the mechanical cable for the inner door opener.

Disconnect the connectors.

CHECKING THE CENTRAL LOCKING SWITCH (2003-04)

CHECKING THE CENTRAL LOCKING SWITCH

CHECKING FUSES

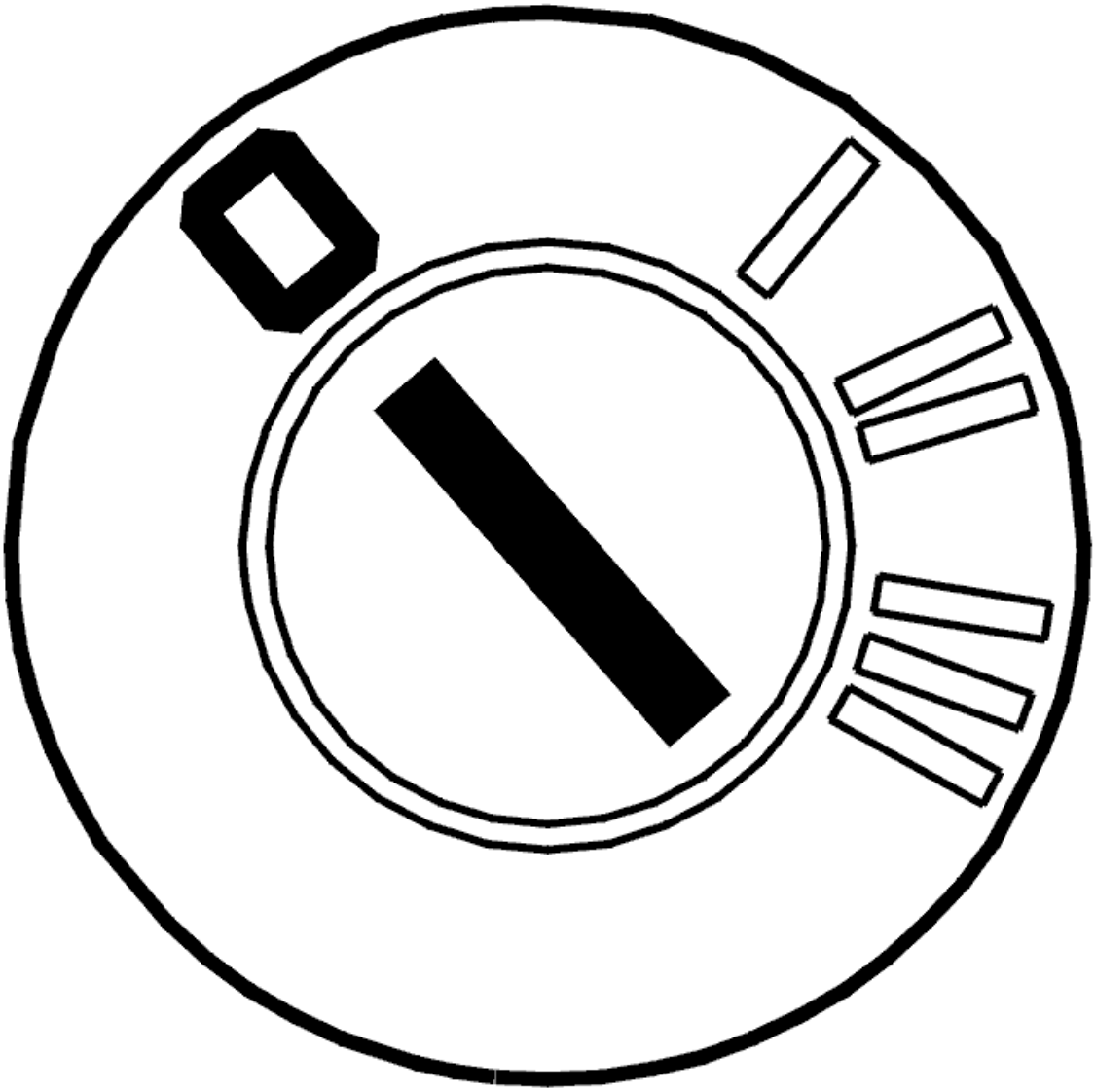

Fig. 30: Identifying Ignition OFF
Courtesy of VOLVO CARS CORPORATION

- Ignition off
- Check that fuse 11C/35 (if driver door module (DDM) is on the left) or 11C/36 (if driver door module (DDM) is on the right) in the passenger compartment fusebox is intact.

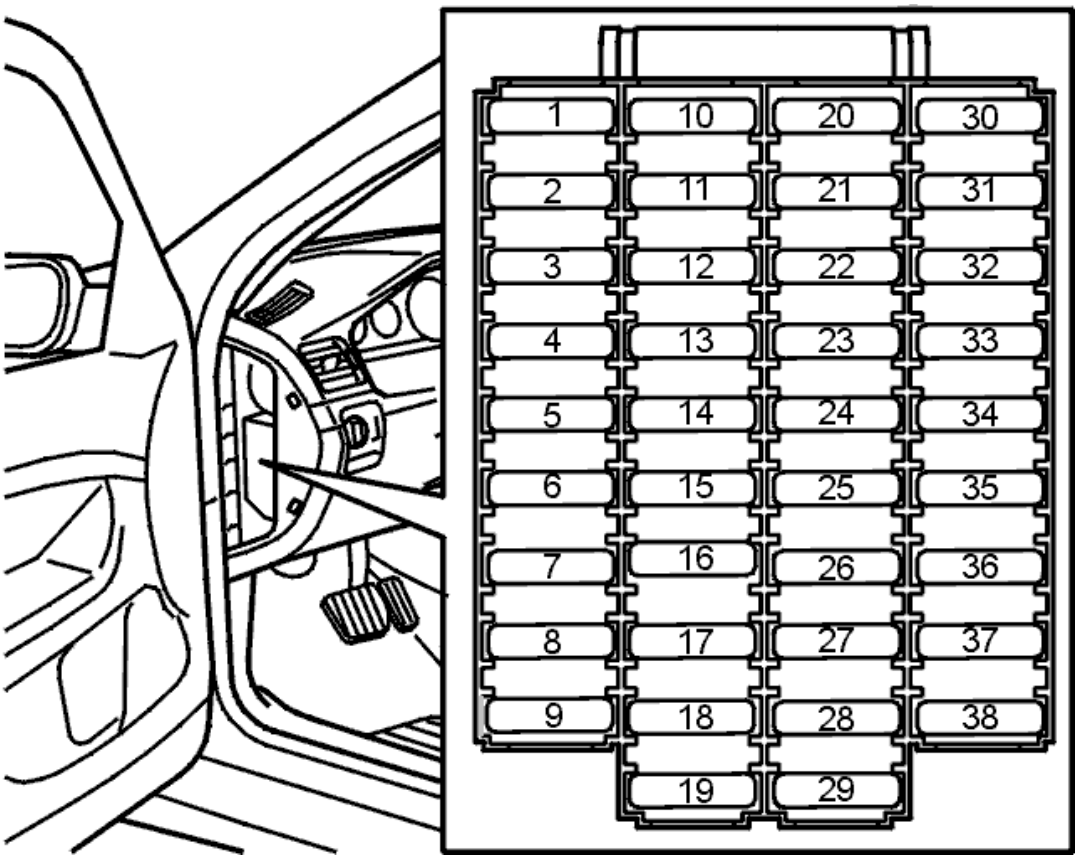

Fig. 31: Fuse Holder (Passenger Compartment)
Courtesy of VOLVO CARS CORPORATION

Was a fault detected?

- **YES**

  OKAY: Troubleshooting has been completed.

- **NO**

  Refer to **REPLACING THE COMPONENT**

REPLACING THE COMPONENT

The driver/passenger door module (DDM/PDM) has registered an internal fault.

CAUTION: A new control module is delivered without software. The control module must be programmed when it has been replaced.

After replacing the control module the window position must be initialized.

Move the window to its upper limit position using manual control.

Initialize the window.

From model year 2003 inclusive, the window will lower approximately 10 centimeters and then close again during initialization.

Other information:

- For information about programming and replacing the driver/passenger door module (DDM/PDM), see **DRIVER'S DOOR MODULE/PASSENGER DOOR MODULE (DDM/PDM), REPLACING** .

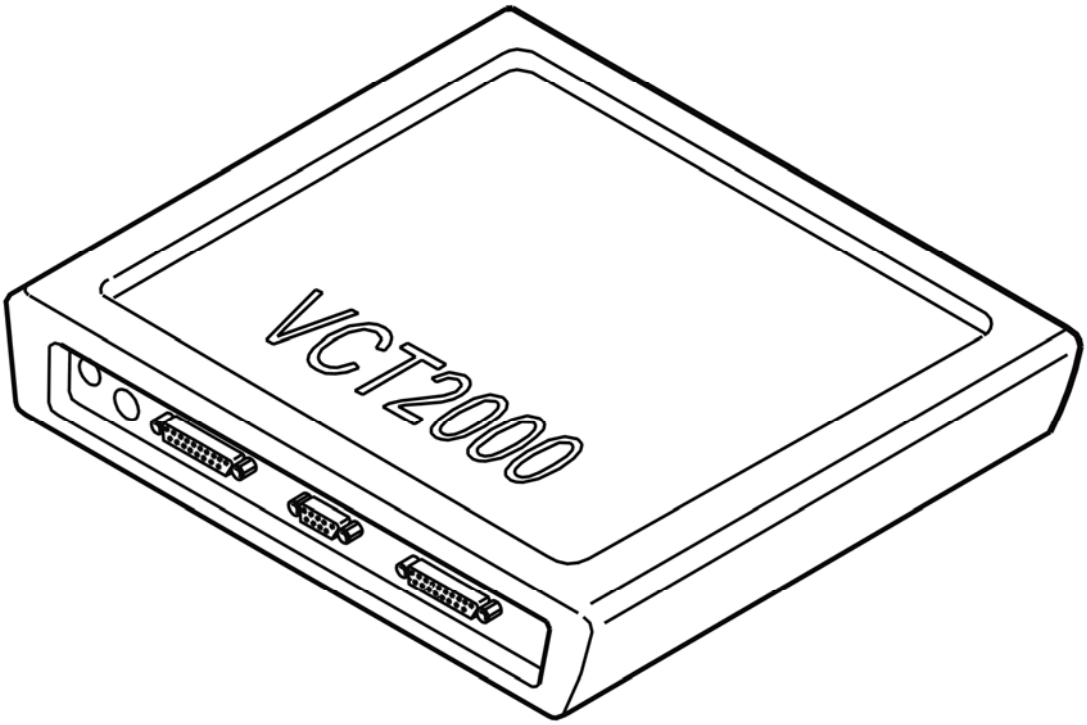

Fig. 32: Identifying VCT2000 Diagnostic Tool Symbol In VIDA
Courtesy of VOLVO CARS CORPORATION

TROUBLE-SHOOTING INFORMATION

Condition

No diagnostic trouble codes are displayed.

Possible Source

- Defective control unit
- Defective fuse.

Fault symptom[s]

- Cannot be operated from central-locking switch unit.

CHECKING THE CENTRAL LOCKING SWITCH (2005-12)

CHECKING THE CENTRAL LOCKING SWITCH

CHECKING FUSES

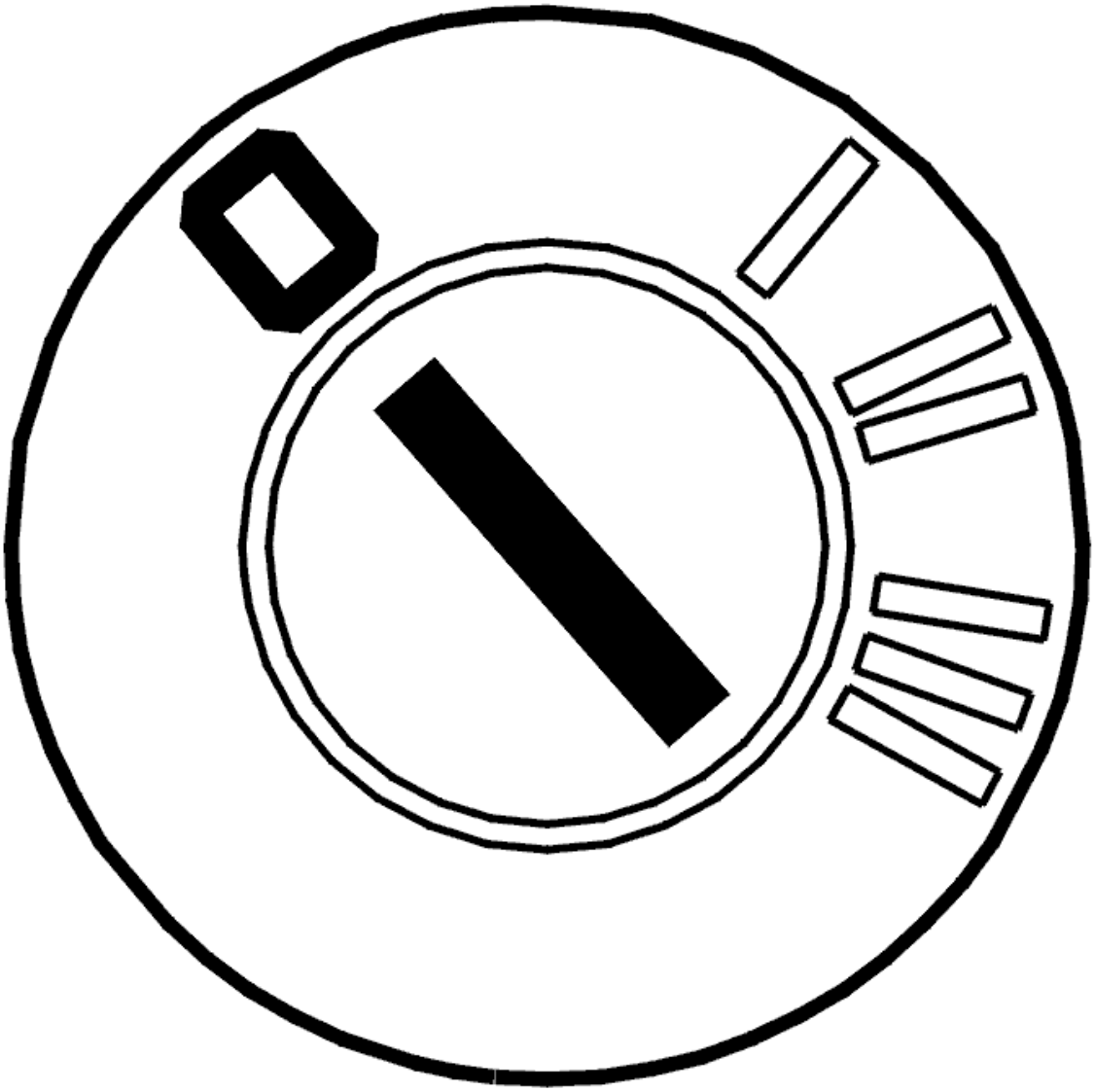

Fig. 33: Identifying Ignition OFF
Courtesy of VOLVO CARS CORPORATION

- Ignition off
- Check that the fuse in the passenger compartment fusebox is undamaged.

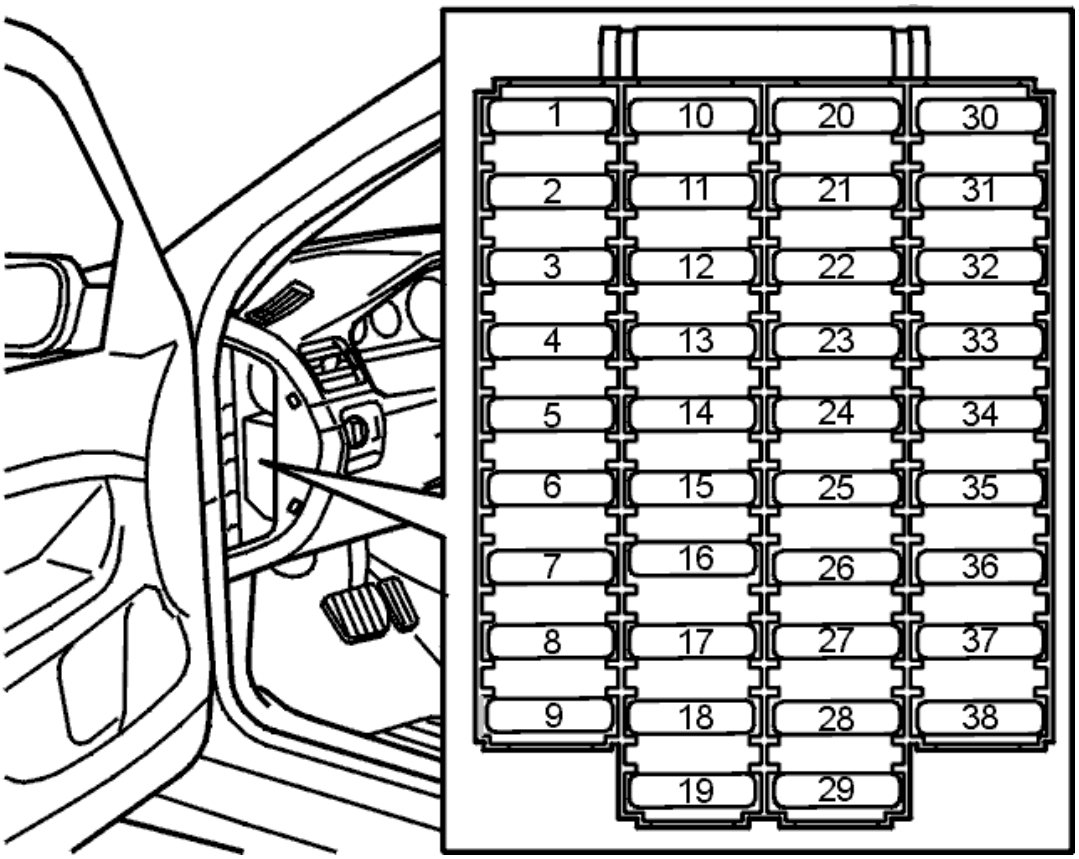

Fig. 34: Fuse Holder (Passenger Compartment)
Courtesy of VOLVO CARS CORPORATION

Was a fault detected?

- **YES**

  OKAY: Troubleshooting has been completed.

- **NO**

  Refer to **REPLACING THE COMPONENT**

REPLACING THE COMPONENT

The driver/passenger door module (DDM/PDM) has registered an internal fault.

CAUTION: A new control module is delivered without software. The control module must be programmed when it has been replaced.

After replacing the control module the window position must be initialized.

Move the window to its upper limit position using manual control.

Initialize the window.

Other information:

- see **PASSENGER DOOR MODULE (PDM), REPLACING** .

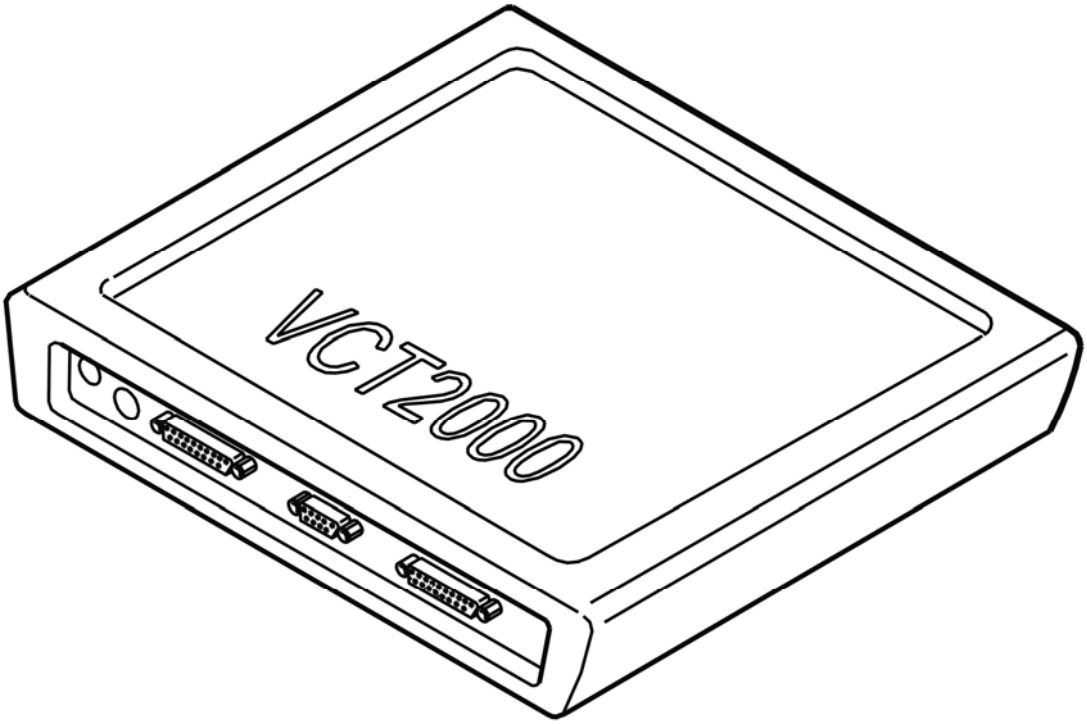

Fig. 35: Identifying VCT2000 Diagnostic Tool Symbol In VIDA
Courtesy of VOLVO CARS CORPORATION

- **Continue**

  Refer to **VERIFICATION**

VERIFICATION

HINT: After carrying out the repair, check that the fault has been remedied.

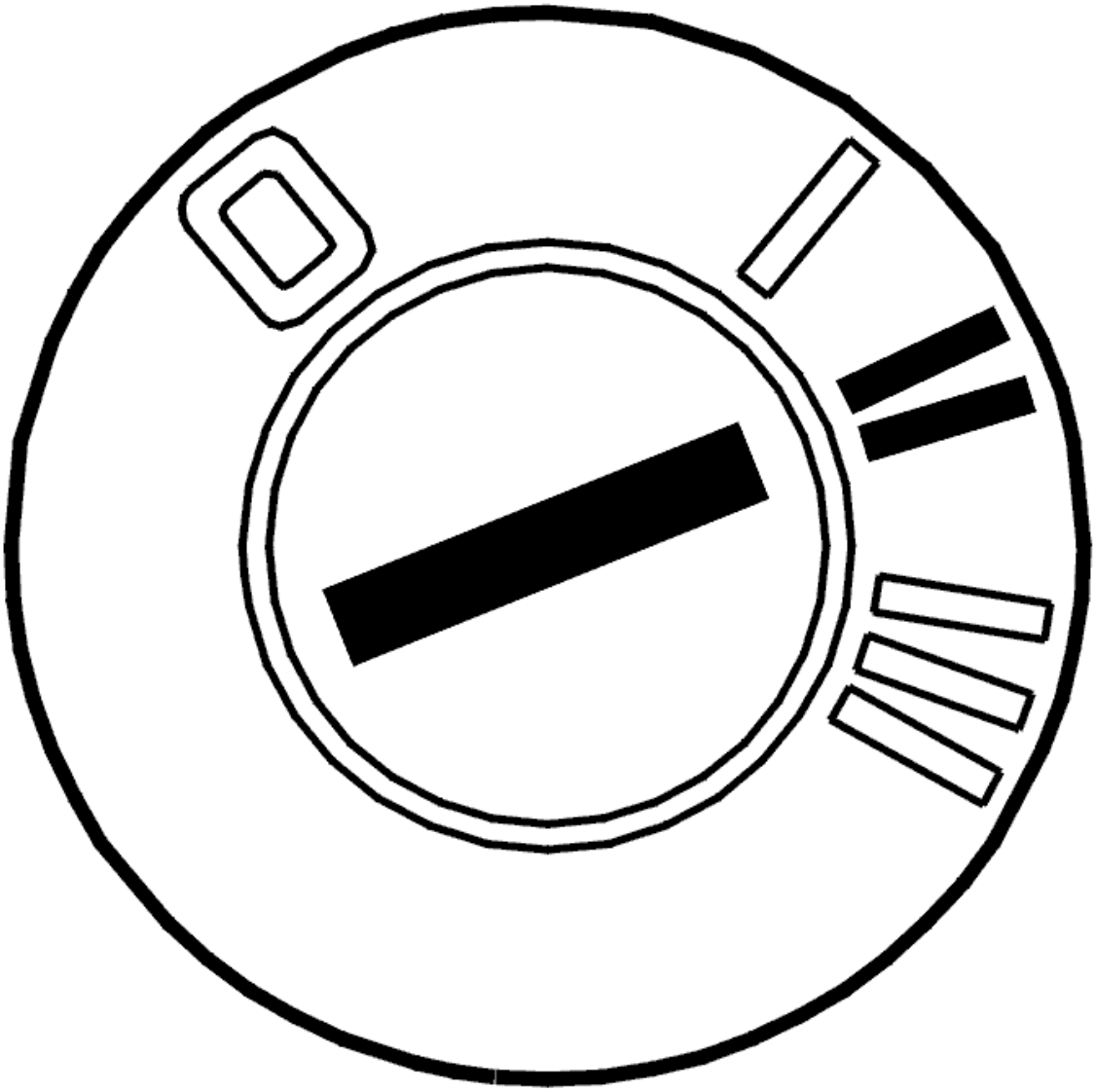

Fig. 36: Identifying Ignition ON
Courtesy of VOLVO CARS CORPORATION

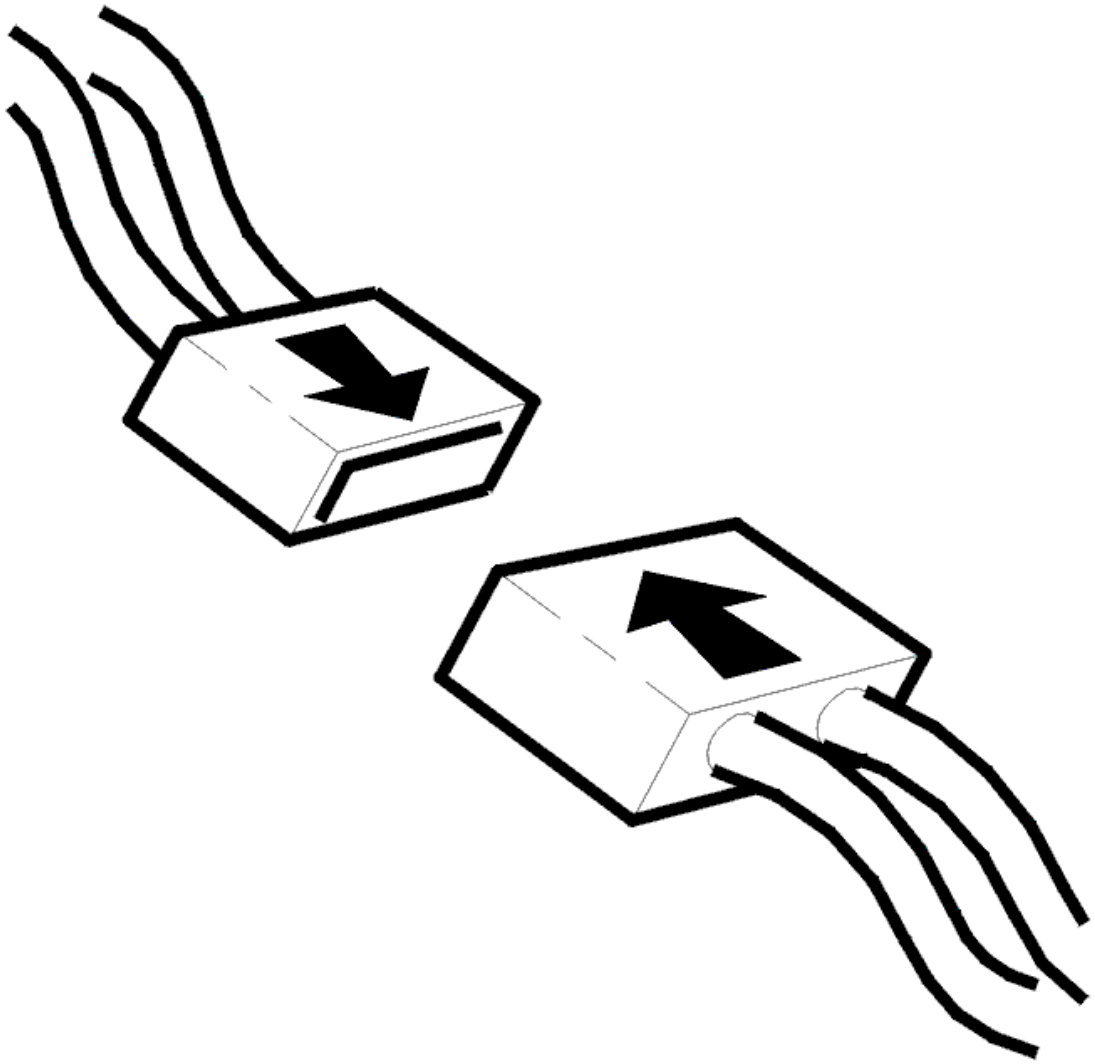

Fig. 37: Connecting Connector
Courtesy of VOLVO CARS CORPORATION

- Ignition off
- Reinstall the connectors, components etc.
- Ignition on.

  Lock/unlock using the central locking switch.

Does the central locking switch work?

- **YES**

  VERIFIED: Troubleshooting has been completed.

- **NO**

  Refer to **INFORMATION**

INFORMATION

FAULT-TRACING INFORMATION

The fault should have been detected and remedied. As this is not the case fault-tracing has failed.

Exit fault-tracing for this diagnostic trouble code (DTC) or make another attempt.

CHECKING THE CONTROL OF THE POWER DOOR MIRROR (2003-04)

CHECKING CONTROL OF THE POWER DOOR MIRROR

CHECKING THE CONNECTORS

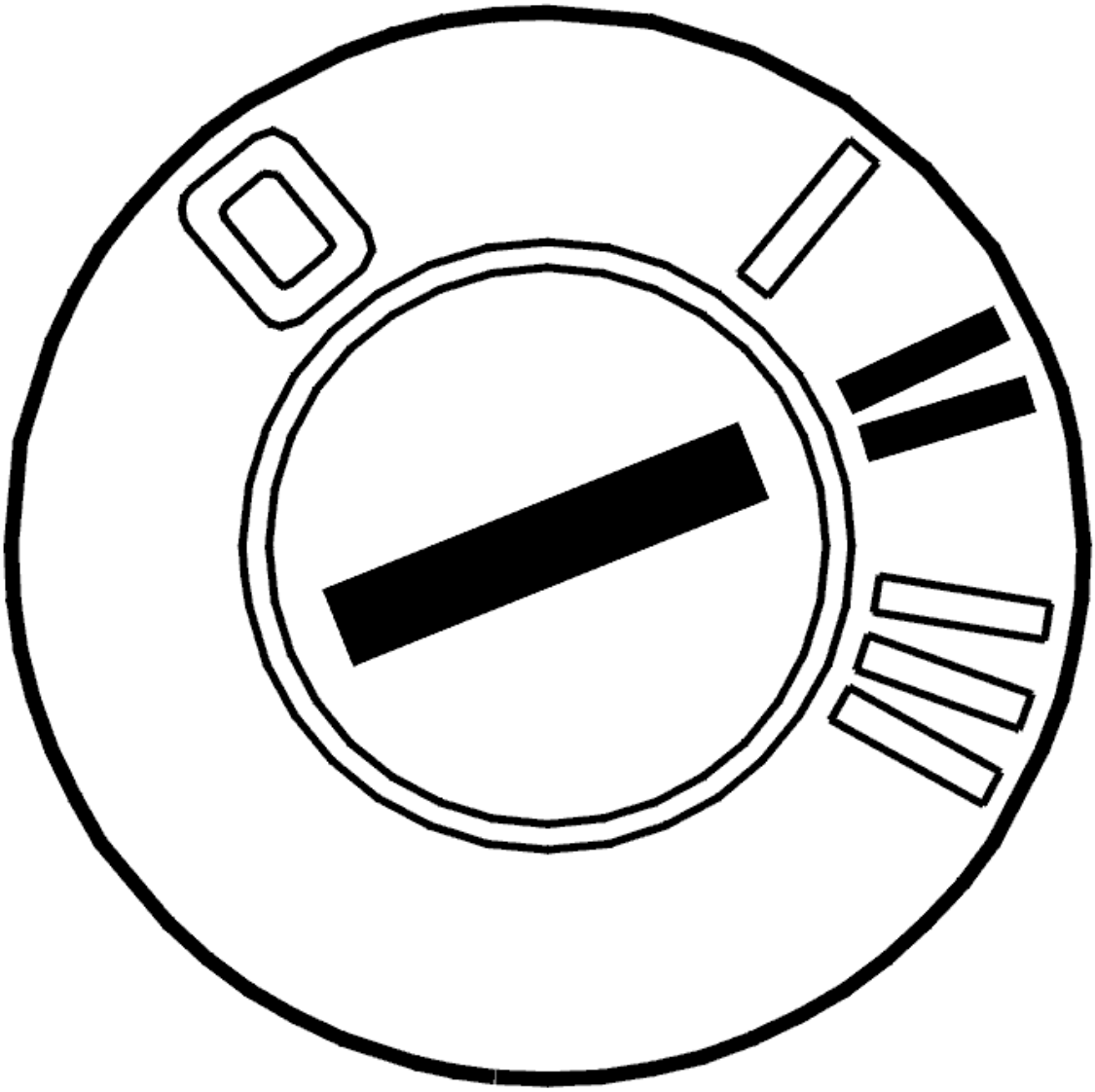

Fig. 38: Identifying Ignition ON
Courtesy of VOLVO CARS CORPORATION

- Ignition off
- Check the power door mirror connector and connectors 54/10 and 54/11. Check for contact resistance and oxidation
- Ignition on.

  Check that the power door mirror can be operated.

  Other information:

  - To access the connector for the power door mirror, see **REAR VIEW MIRROR, REPLACING**
  - see **CHECKING WIRING AND TERMINALS** .

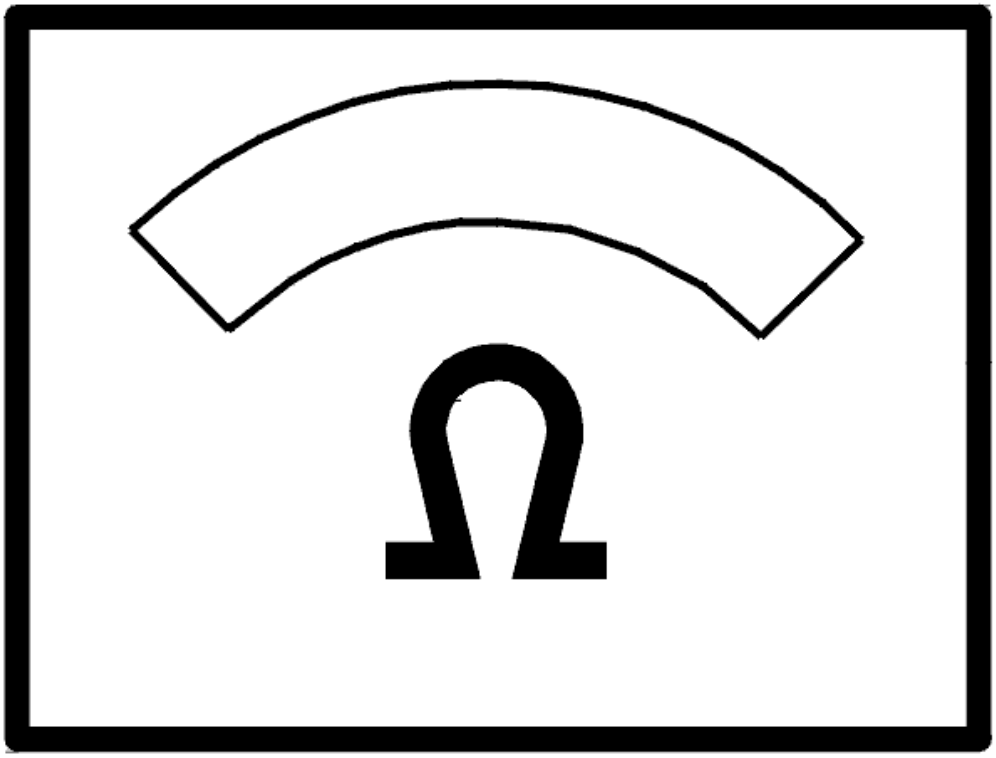

Fig. 39: Identifying Ohmmeter
Courtesy of VOLVO CARS CORPORATION

Do the door mirror controls operate?

- **YES**

  OKAY: Troubleshooting has been completed.

- **NO**

  Refer to **CHECKING COMPONENTS AND WIRING**

CHECKING COMPONENTS AND WIRING

Check the cable between control module terminal #5B and ground: Left or right seat support. Check for an

open-circuit.

If a fault is found replace the cable.

If no fault is found replace the power door mirror.

Other information:

- For further information about signals and other values, see **SIGNAL SPECIFICATION**
- To connect the breakout box, see **CONNECTING THE BREAKOUT BOX** .
- To access and replace the power door mirror, see **REAR VIEW MIRROR, REPLACING**
- see **CHECKING WIRING AND TERMINALS** .

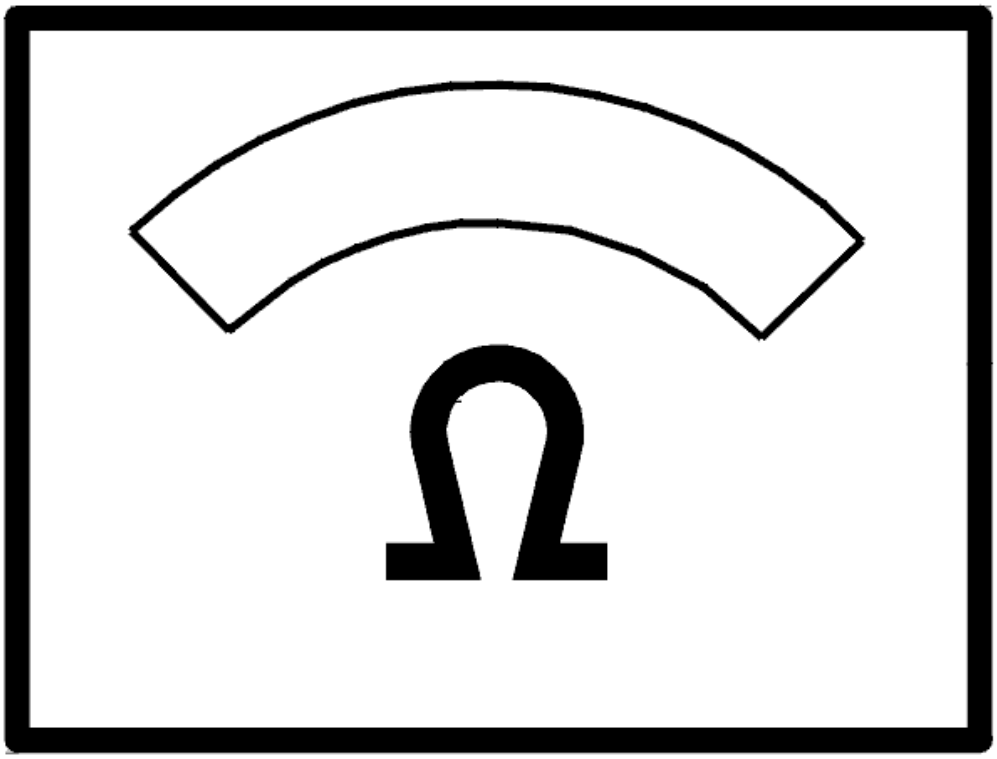

Fig. 40: Identifying Ohmmeter
Courtesy of VOLVO CARS CORPORATION

FAULT-TRACING INFORMATION

Condition

No DTCs stored.

Possible Source

- Open-circuit or shorting to power supply in the cable.
- Faulty power door mirror.

Fault symptom[s]

- Outer door mirror adjustment not working

CHECKING THE ELECTRIC REAR-VIEW MIRROR HEATING (2003-04)

CHECKING THE ELECTRICAL HEATING IN THE POWER DOOR MIRRORS

CHECKING COMPONENTS AND WIRING

If the car is equipped with a 10-pin connector

Check the cable between door control module terminal #10B and power door mirror terminal #4. Check for an open-circuit. Check for a short-circuit to supply voltage.

If the car is equipped with a 16-pin connector

Check the cable between door control module terminal #10B and power door mirror terminal #6. Check for an open-circuit. Check for a short-circuit to supply voltage.

Remedy as necessary.

Try replacing the power door mirror if no fault was found.

Other information:

- When the button is not depressed, the voltage between terminal #10B on the control module connector and ground must be 0 V
- For further information about signals and other values, see **SIGNAL SPECIFICATION**
- To connect the breakout box, see **CONNECTING THE BREAKOUT BOX**
- To access and replace the power door mirror, see **REAR VIEW MIRROR, REPLACING**
- see **CHECKING WIRING AND TERMINALS** .

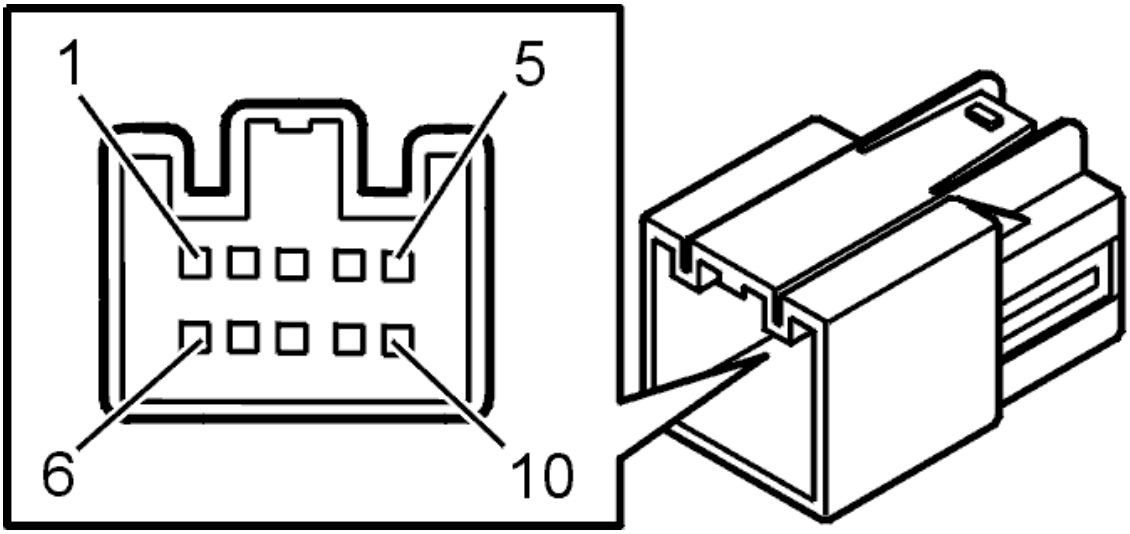

Fig. 41: Identifying 10-Pin Power Door Mirror Connector Terminal
Courtesy of VOLVO CARS CORPORATION

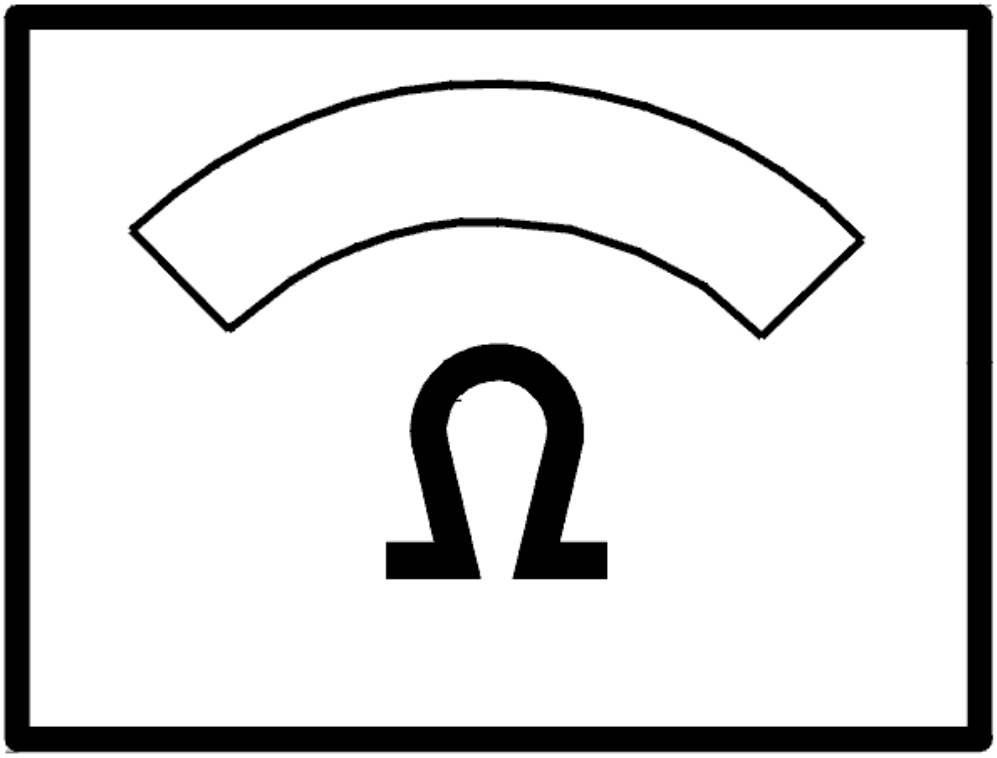

Fig. 42: Identifying Ohmmeter
Courtesy of VOLVO CARS CORPORATION

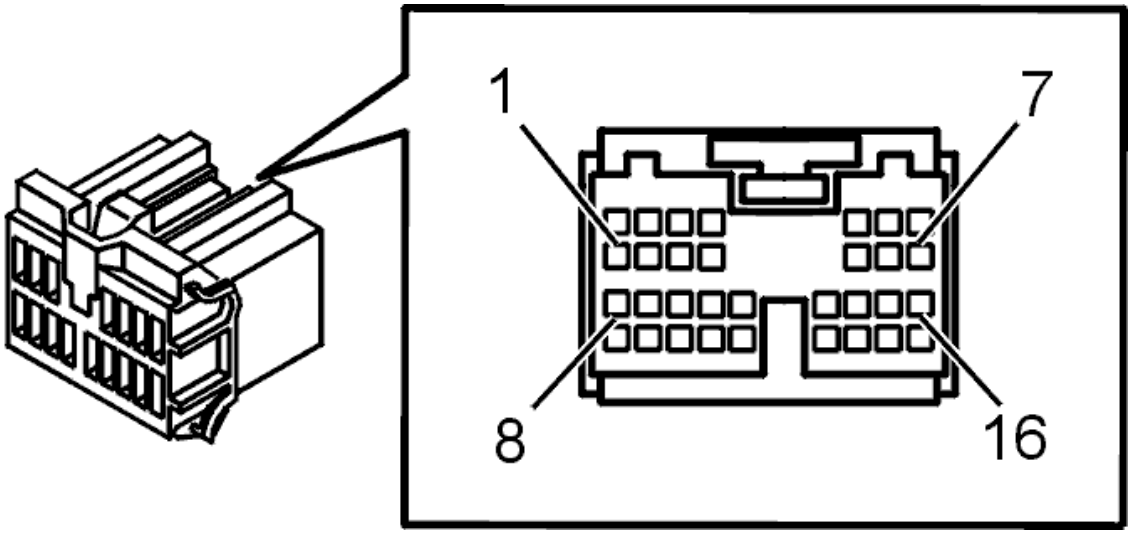

Fig. 43: Connector, Green (16-Pin)
Courtesy of VOLVO CARS CORPORATION

TROUBLE-SHOOTING INFORMATION

Condition

No diagnostic trouble codes are displayed.

Possible Source

- Open circuit or short circuit to voltage supply on wire
- Defective rear-view electric mirror.

Fault symptom[s]

- Mist on windows and/or external rear-view mirrors.

CHECKING THE ELECTRIC WINDOW LIFT (2003-04)

CHECKING THE POWER WINDOW MECHANISM

CHECKING THE LIMIT POSITION

Check that the window reaches its upper limit position.

Does the window reach its upper limit position?

- **YES**

  Refer to **CHECKING COMPONENTS AND WIRING**

- **NO**

  Refer to **CHECKING THE WINDOW CONTROLS**

CHECKING COMPONENTS AND WIRING

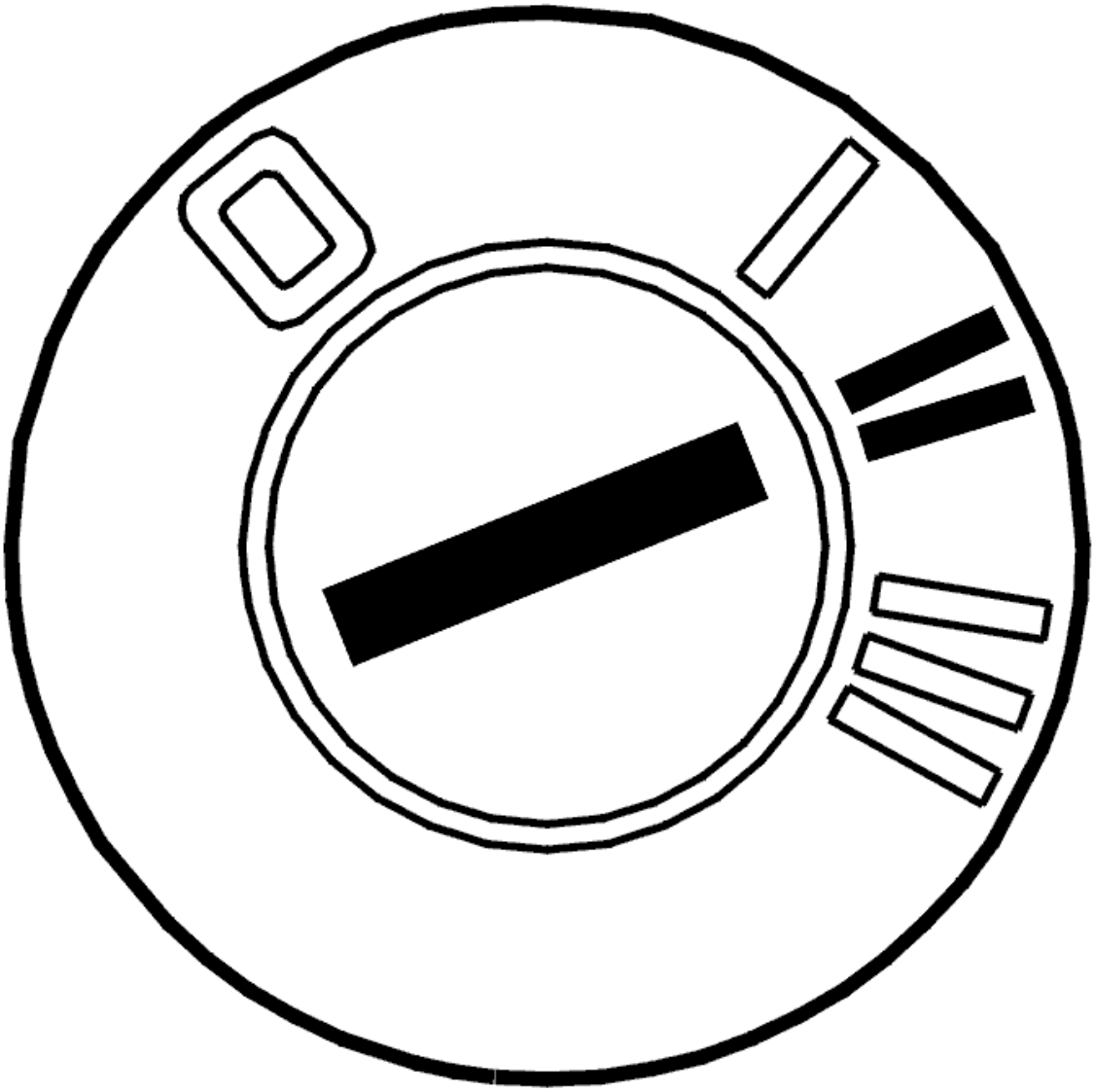

Fig. 44: Identifying Ignition ON
Courtesy of VOLVO CARS CORPORATION

Check that fuse 11C/35 or 11C/36 in the passenger compartment integrated relay / fusebox is intact.

Check the cable between control module terminal #4B and the power window motor #3. Check for a short-circuit to ground. Check for a short-circuit to supply voltage.

Check the cable between control module terminal #3B and the power window motor #6. Check for a short-circuit to ground. Check for a short-circuit to supply voltage.

Check the cable between control module terminal #16A and the power window motor #4. Check for a short-circuit to ground. Check for an open-circuit. Check for a short-circuit to supply voltage.

Check the cable between control module terminal #19A and the power window motor #1. Check for a short-circuit to ground. Check for an open-circuit. Check for a short-circuit to supply voltage.

Check the cable between control module terminal #7B and the battery. Check for a short-circuit to ground. Check for an open-circuit.

Check the cable between control module terminal #5B and ground: Left or right front seat support. Check for a short-circuit to ground. Check for an open-circuit.

Replace the cable if a fault is found.

- Ignition on
- Try to operate the window lift mechanism to its limit positions (manually and automatically).

Other information:

- To connect the breakout box, see **CONNECTING THE BREAKOUT BOX**
- To access the driver/passenger door module (DDM/PDM), see **PASSENGER DOOR MODULE (PDM), REPLACING**
- To access and replace the power window mechanism, see **WINDOW LIFT MECHANISM FRONT SIDE DOOR, REPLACING**
- After checking all wiring (and replacing faulty wiring), pass a current across the motor and check that it operates
- see **CHECKING WIRING AND TERMINALS** .

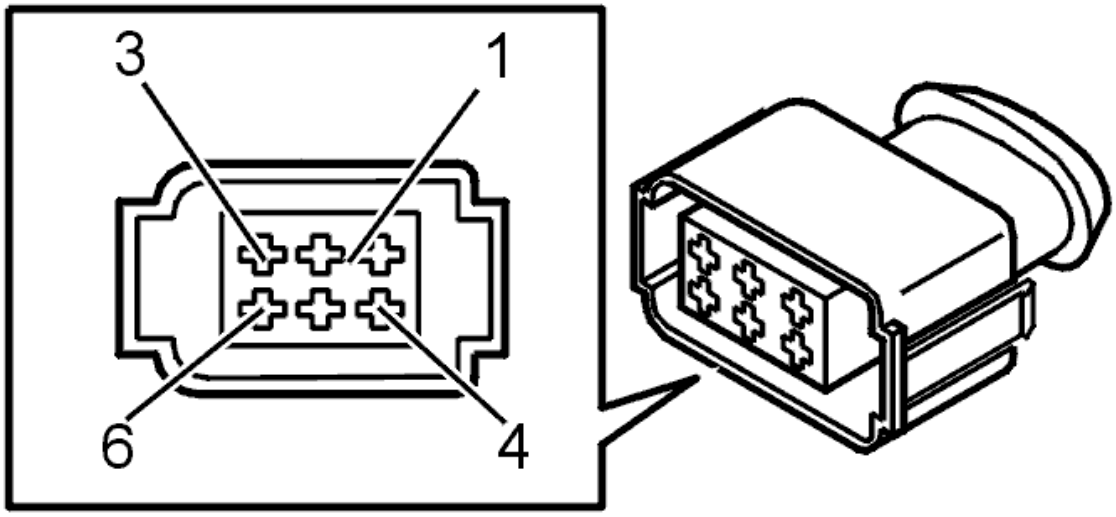

Fig. 45: Identifying Connector
Courtesy of VOLVO CARS CORPORATION

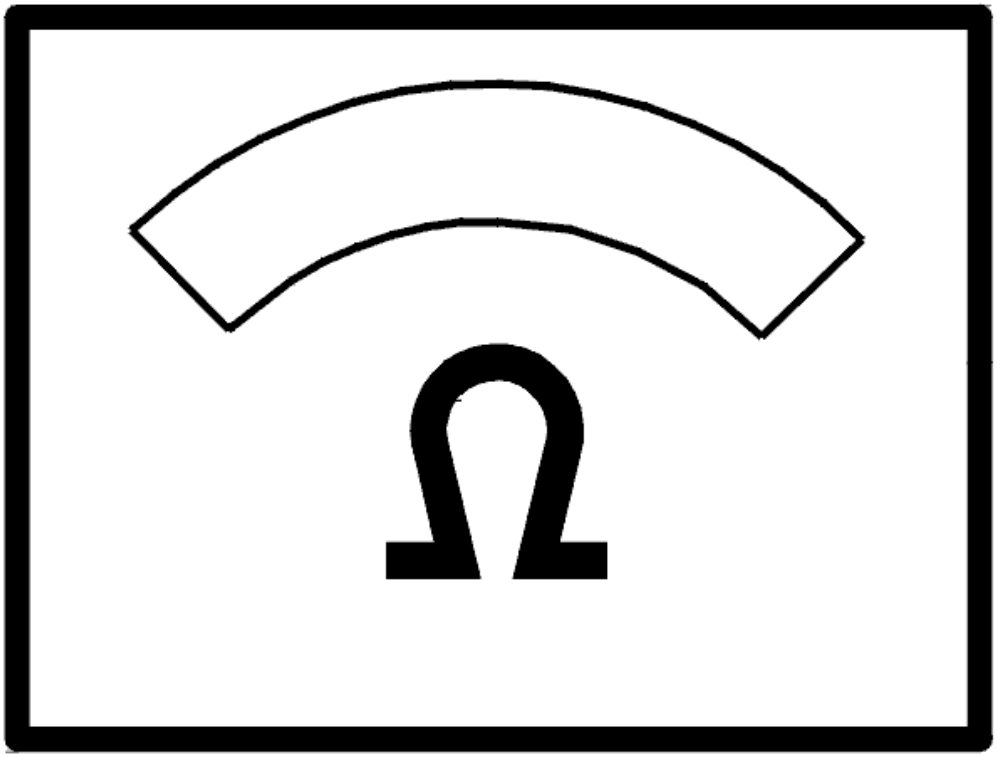

Fig. 46: Identifying Ohmmeter
Courtesy of VOLVO CARS CORPORATION

Was a fault detected?

- **YES**

  OKAY: Troubleshooting has been completed.

- **NO**

  Refer to **CHECKING THE VOLTAGE**

CHECKING THE WINDOW CONTROLS

Press the VCT2000 symbol. Read off to check that the automatic window controls for up and down are

functioning on the front door controls.

HINT: Automatic window control is achieved by moving the control two stages.

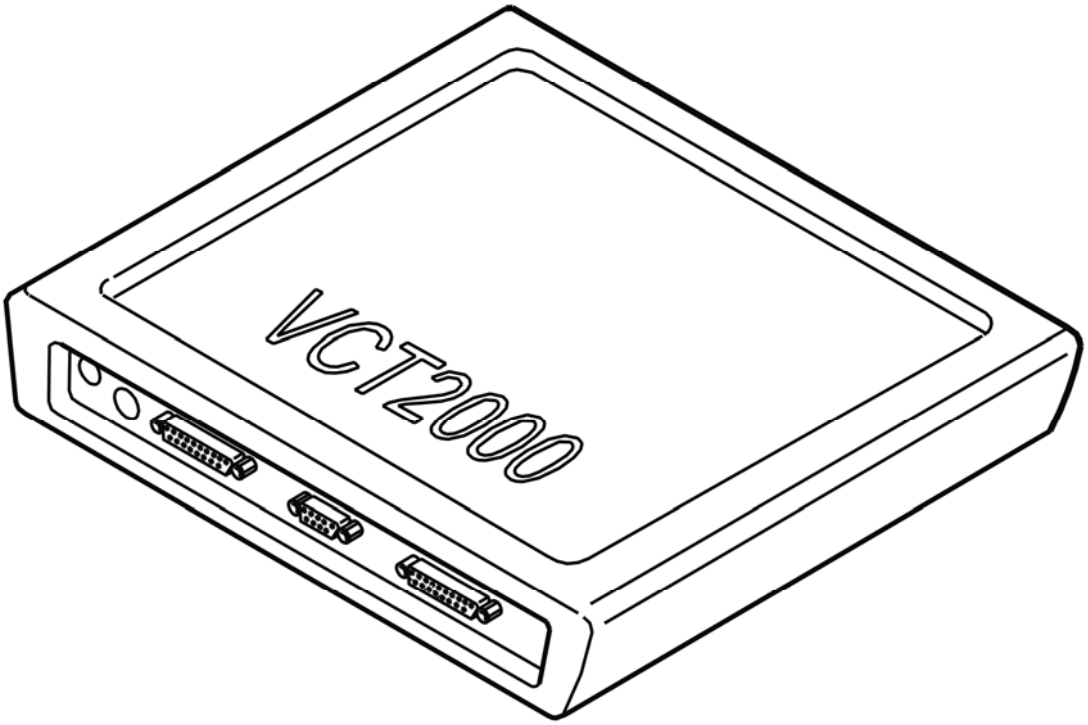

Fig. 47: Identifying VCT2000 Diagnostic Tool Symbol In VIDA
Courtesy of VOLVO CARS CORPORATION

Do the controls function?

- **YES**

  Refer to **REINITIATING THE WINDOW POSITIONS**

- **NO**

  Refer to **REPLACING THE COMPONENT**

REPLACING THE COMPONENT

CAUTION: A new driver/passenger door module (DDM/PDM) is supplied without software. The control module must be programmed when it has been replaced. For further information about programming and replacing the control module, see PASSENGER DOOR MODULE (PDM), REPLACING .

After replacing the control module the window position must be initialized.

Move the window to its upper limit position using manual control.

Initialize the window.

From model year 2003 inclusive, the window will lower approximately 10 centimeters and then close again during initialization.

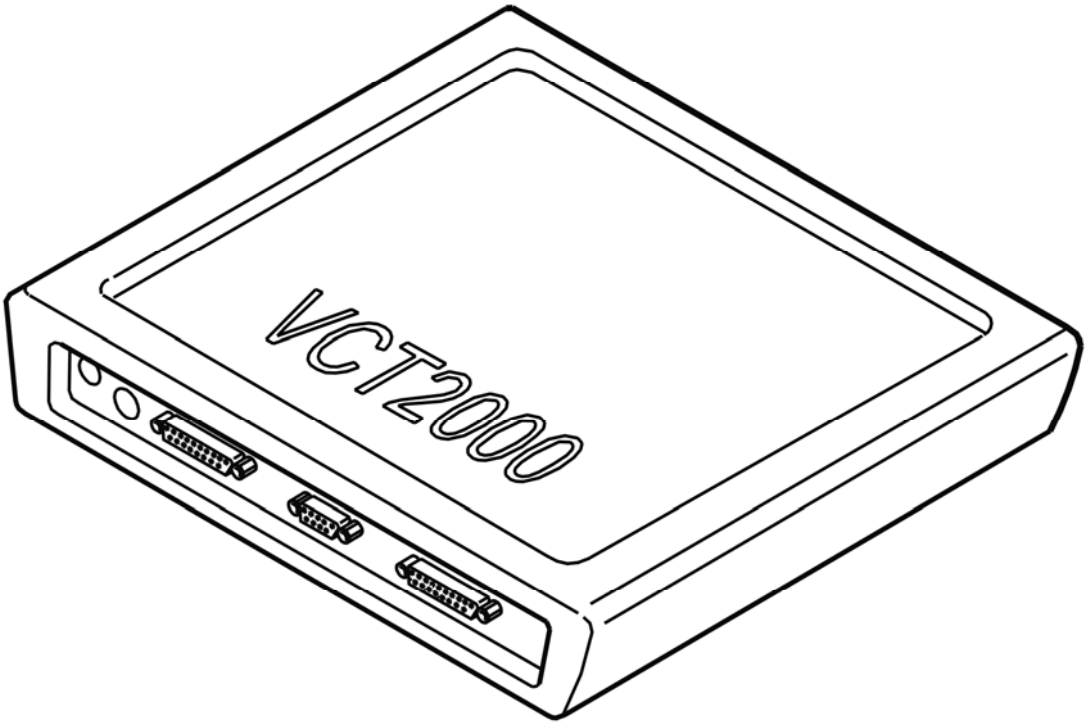

Fig. 48: Identifying VCT2000 Diagnostic Tool Symbol In VIDA
Courtesy of VOLVO CARS CORPORATION

CHECKING THE VOLTAGE

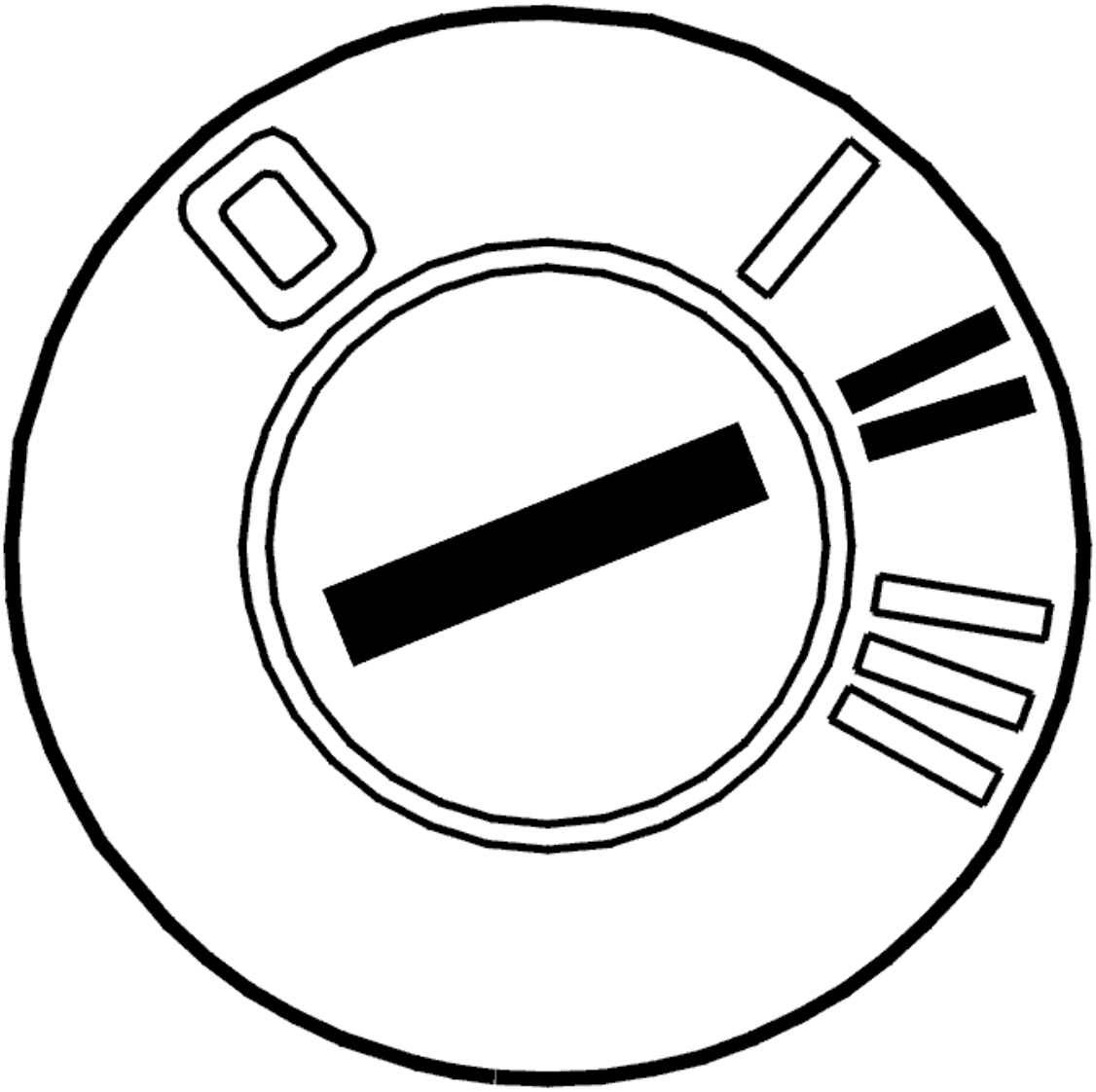

Fig. 49: Identifying Ignition ON
Courtesy of VOLVO CARS CORPORATION

- Ignition on.

  Activate the power window lift motor and take a reading across the motor. Voltage should be 12 V.

  Other information:

  - To access and replace the power window mechanism, see **WINDOW LIFT MECHANISM FRONT SIDE DOOR, REPLACING** .

Is the voltage 12 V?

- **YES**

Refer to **REPLACING THE COMPONENT**

- **NO**

  Refer to **REPLACING THE COMPONENT**

REPLACING THE COMPONENT

Replace the window lift mechanism. See **WINDOW LIFT MECHANISM FRONT SIDE DOOR, REPLACING** .

- Ignition on
- Move the window to its upper limit position using manual control
- Initialize the window
- From model year 2003 inclusive, the window will lower approximately 10 centimeters and then close again during initialization
- Try to operate the window lift mechanism to its limit positions (manually and automatically).

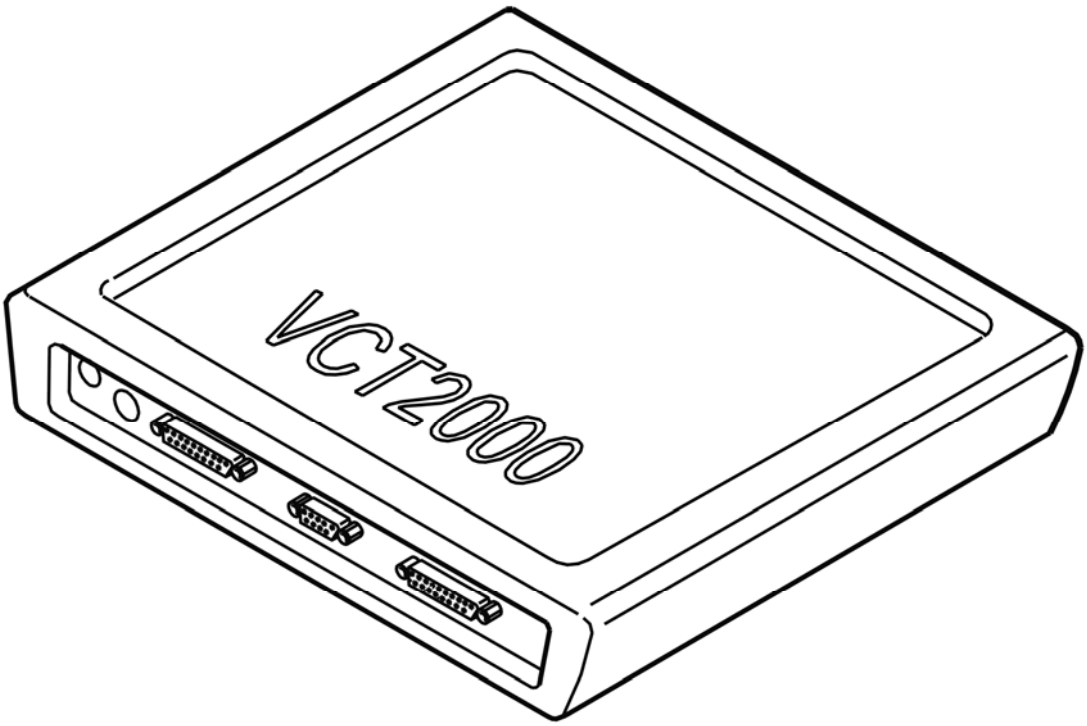

Fig. 50: Identifying VCT2000 Diagnostic Tool Symbol In VIDA
Courtesy of VOLVO CARS CORPORATION

REINITIATING THE WINDOW POSITIONS

Move the window to its upper limit position using manual control.

Initialize the window.

From model year 2003 inclusive, the window will lower approximately 10 centimeters and then close again during initialization.

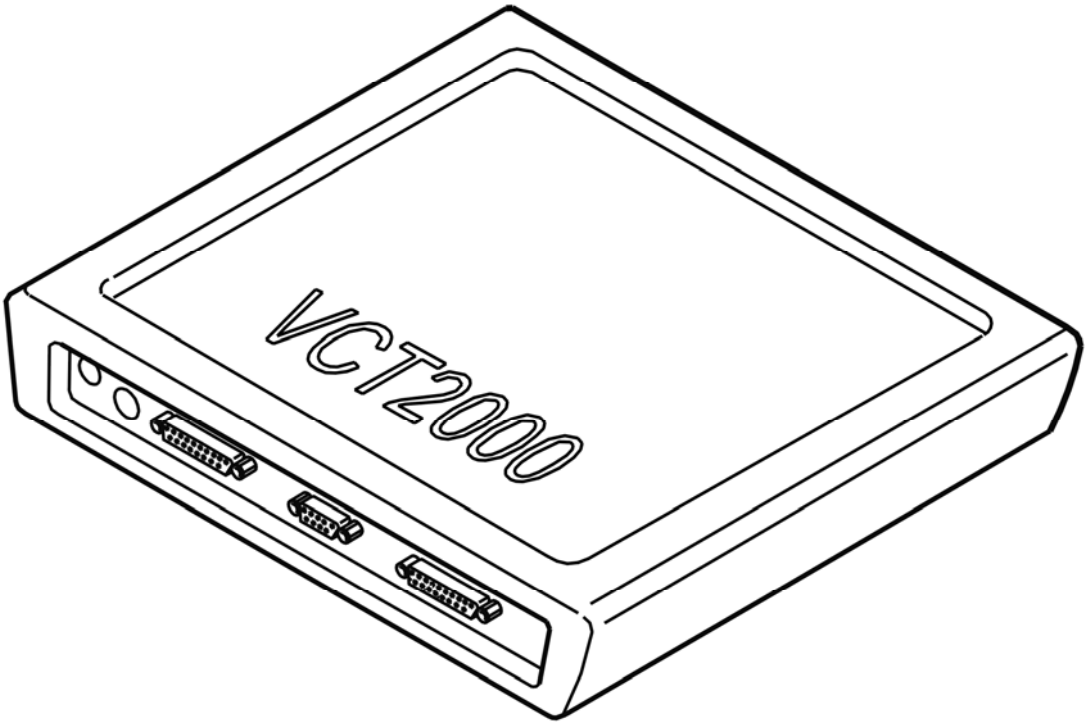

Fig. 51: Identifying VCT2000 Diagnostic Tool Symbol In VIDA
Courtesy of VOLVO CARS CORPORATION

FAULT-TRACING INFORMATION

Condition

No DTCs stored.

Possible Source

- Open-circuit, short-circuit to ground or short-circuit to supply voltage in the cable
- Defective power window lift motor.
- Defective power window lift control.

Fault symptom[s]

- Power window mechanism does not operate.
- Automatic window closure does not function.

CHECKING THE NEAR-SIDE LIGHTING (2003-04)

CHECKING THE LOCAL LIGHTING

CHECKING THE CONNECTORS

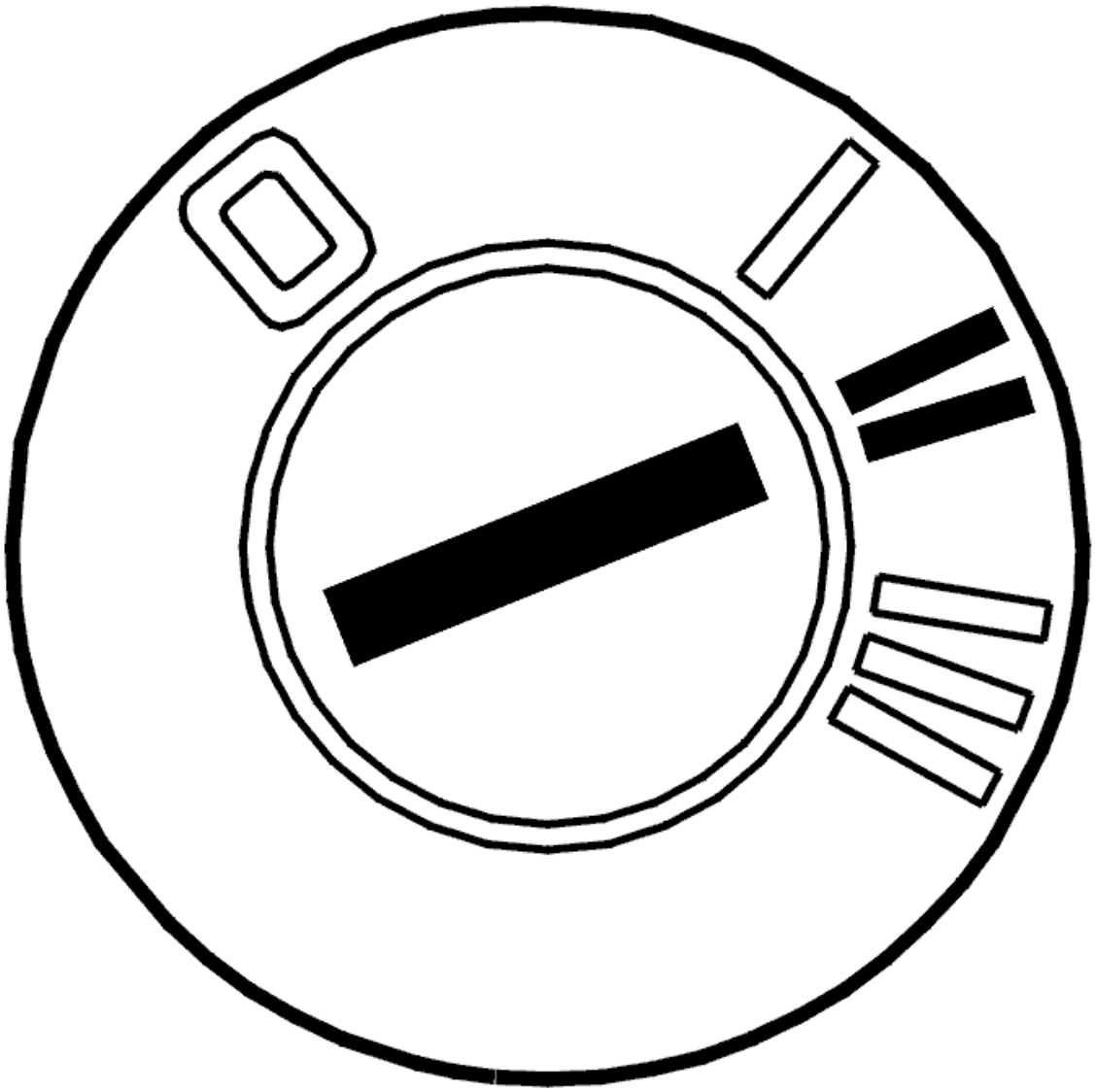

Fig. 52: Identifying Ignition ON
Courtesy of VOLVO CARS CORPORATION

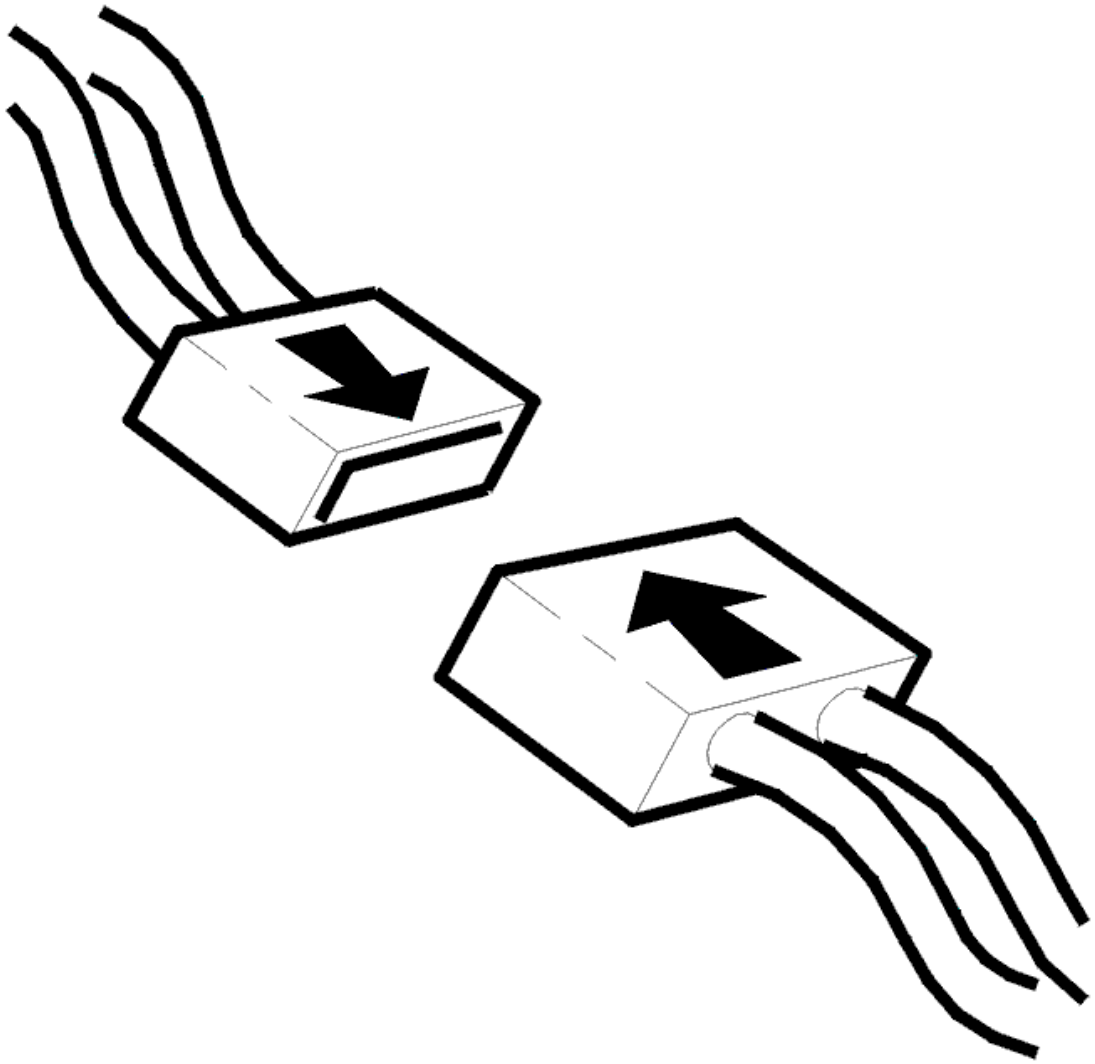

Fig. 53: Connecting Connector
Courtesy of VOLVO CARS CORPORATION

- Ignition off.
- Check the connectors for the power door mirrors for contact resistance and oxidation according to **CONTACT RESISTANCE AND OXIDATION** .

  Check for damage carefully.

- Ignition on.

  Other information:

  - To access the connector for the power door mirror, see **OUTSIDE TEMPERATURE SENSOR DOOR MIRROR, REPLACING** .

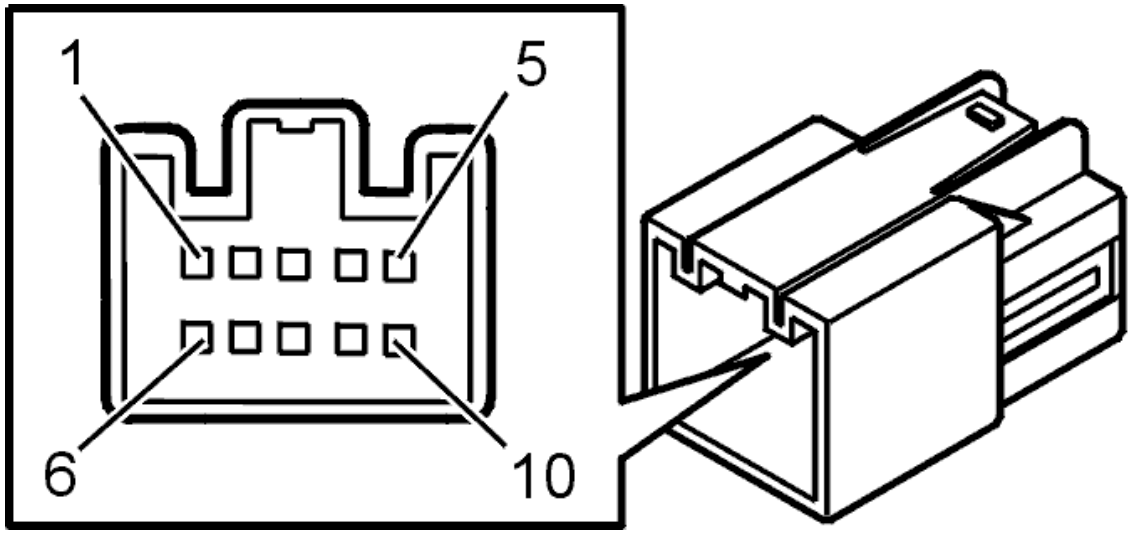

Fig. 54: Identifying 10-Pin Power Door Mirror Connector Terminal
Courtesy of VOLVO CARS CORPORATION

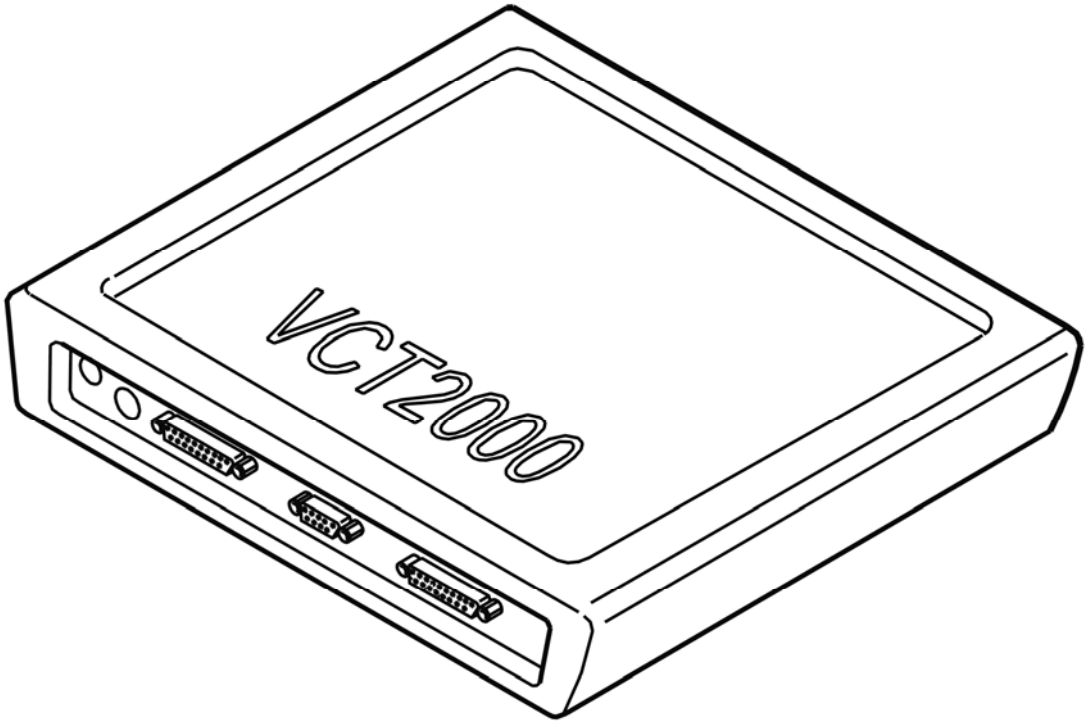

Fig. 55: Identifying VCT2000 Diagnostic Tool Symbol In VIDA
Courtesy of VOLVO CARS CORPORATION

Is the lamp in the power door mirror working?

- **YES**

OKAY: Troubleshooting has been completed.

- **NO**

  Refer to **CHECKING COMPONENTS AND WIRING**

CHECKING COMPONENTS AND WIRING

If the car is equipped with a 10-pin connector

Check the cable between door control module terminal #10B and power door mirror terminal #4 for an open-circuit according to **OPEN-CIRCUIT, PERMANENT FAULTS** , check for a short-circuit to supply voltage according to **SHORT-CIRCUIT TO SUPPLY VOLTAGE. PERMANENT FAULTS** .

Check the cable between door control module terminal #8B and power door mirror terminal #6 for an open-circuit according to **OPEN-CIRCUIT, PERMANENT FAULTS** .

If the car is equipped with a 16-pin connector

Check the cable between door control module terminal #10B and power door mirror terminal #6 for an open-circuit according to **OPEN-CIRCUIT, PERMANENT FAULTS** , check for a short-circuit to supply voltage according to **SHORT-CIRCUIT TO SUPPLY VOLTAGE. PERMANENT FAULTS** .

Check the cable between door control module terminal #8B and power door mirror terminal #13 for an open-circuit according to **OPEN-CIRCUIT, PERMANENT FAULTS** .

Remedy as necessary.

Other information:

- For further information about signals and other values, see **SIGNAL SPECIFICATION** .
- To connect the breakout box, see **CONNECTING THE BREAKOUT BOX** .
- To access the connector for the power door mirror, see **OUTSIDE TEMPERATURE SENSOR DOOR MIRROR, REPLACING** .
- To replace the bulb in the power door mirror, see **BULB, GROUND LIGHTING, DOOR MIRROR, REPLACING** .

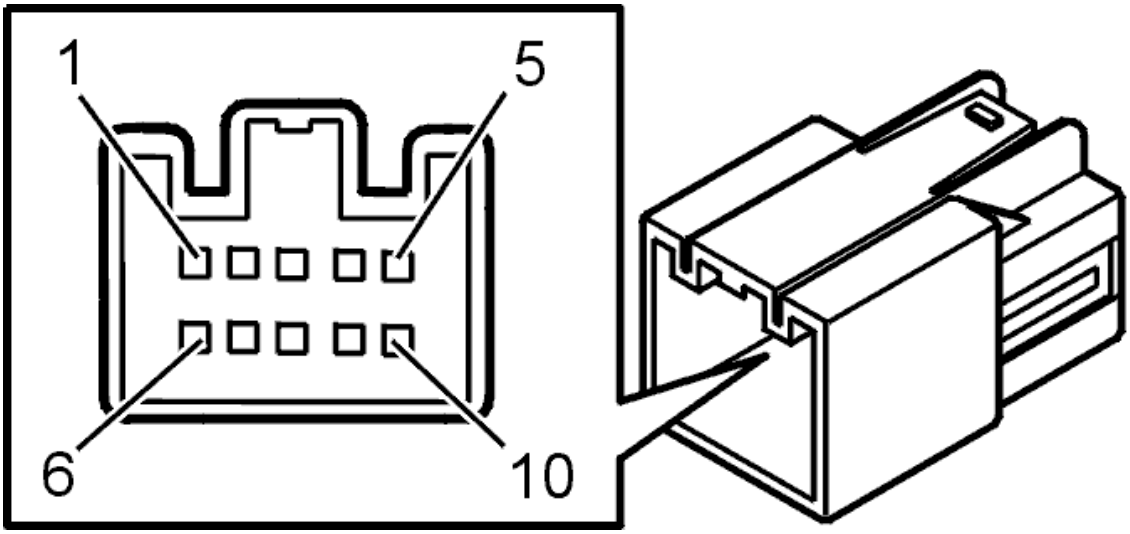

Fig. 56: Identifying 10-Pin Power Door Mirror Connector Terminal
Courtesy of VOLVO CARS CORPORATION

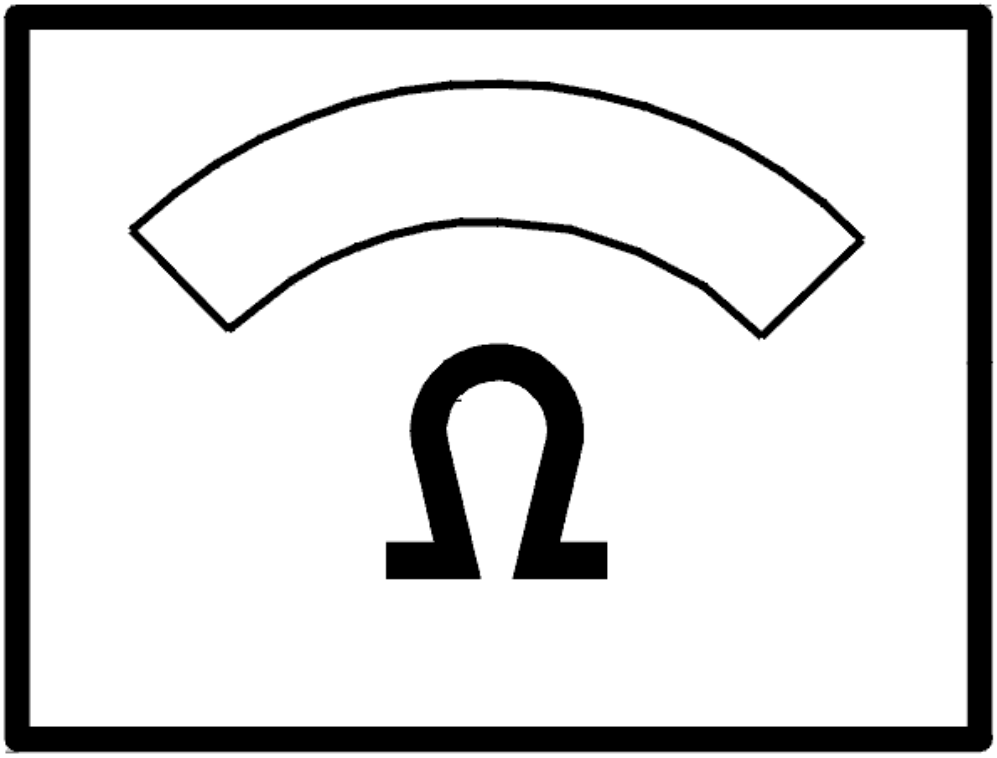

Fig. 57: Identifying Ohmmeter
Courtesy of VOLVO CARS CORPORATION

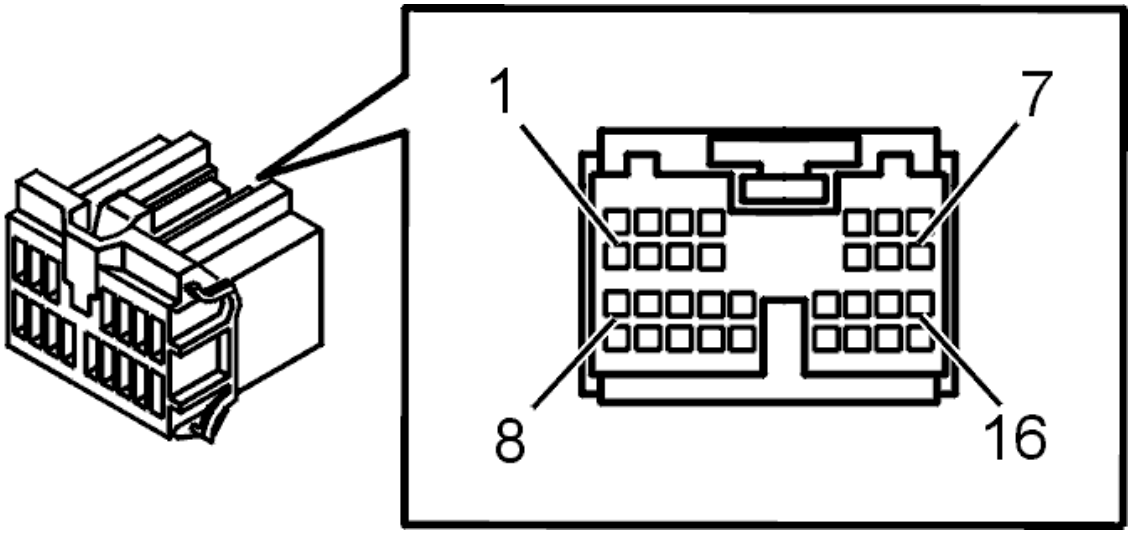

Fig. 58: Connector, Green (16-Pin)
Courtesy of VOLVO CARS CORPORATION

TROUBLE-SHOOTING INFORMATION

Condition

No diagnostic trouble codes are displayed.

Possible Source

- Open circuit or short circuit to voltage supply on wire
- Defective lamp.

Fault symptom[s]

- Near-side lighting does not work.

CHECKING THE OUTSIDE TEMPERATURE SENSOR (2005-12)

CHECKING THE OUTSIDE TEMPERATURE SENSOR

CHECKING THE CONNECTORS

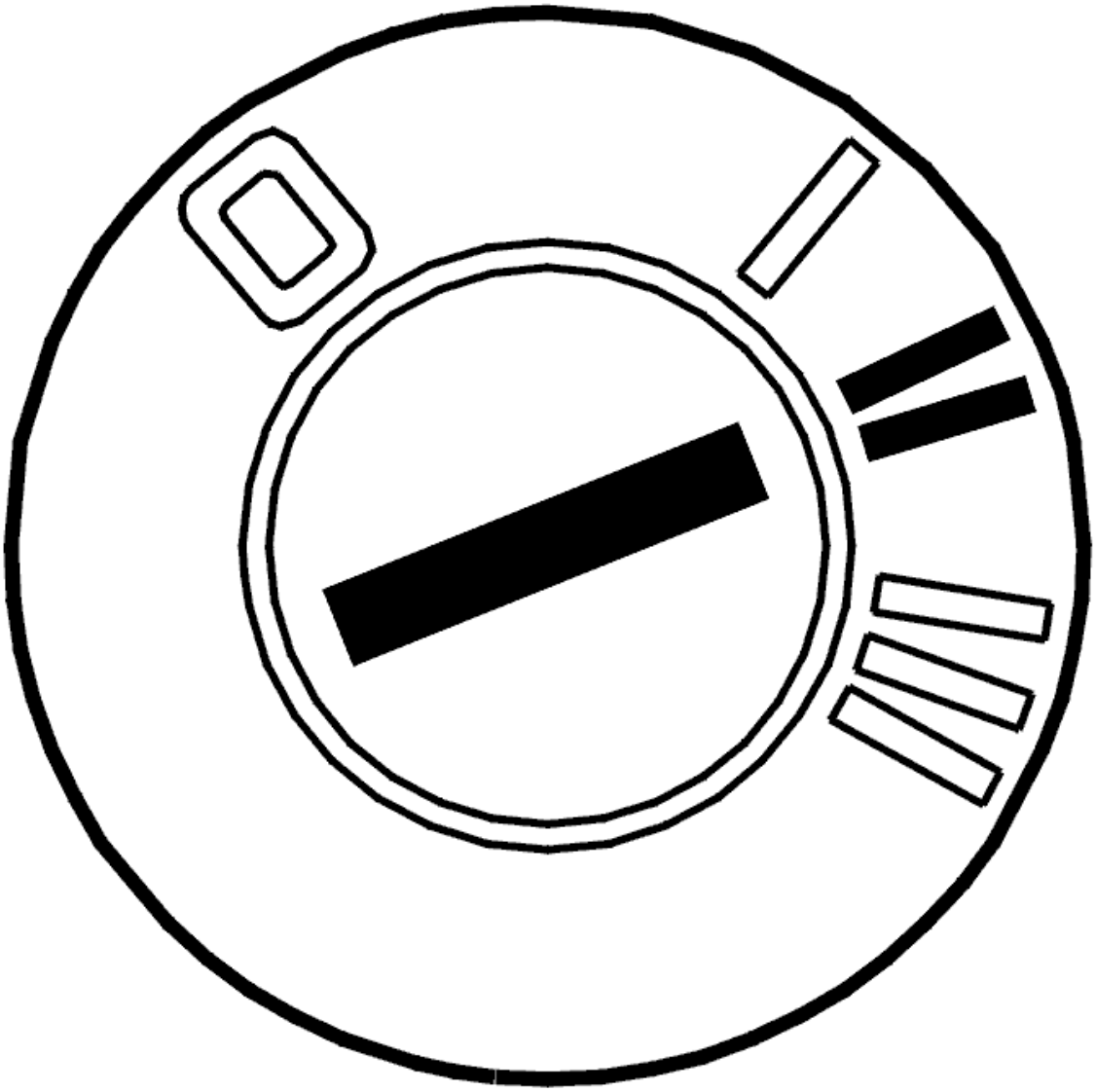

Fig. 59: Identifying Ignition ON
Courtesy of VOLVO CARS CORPORATION

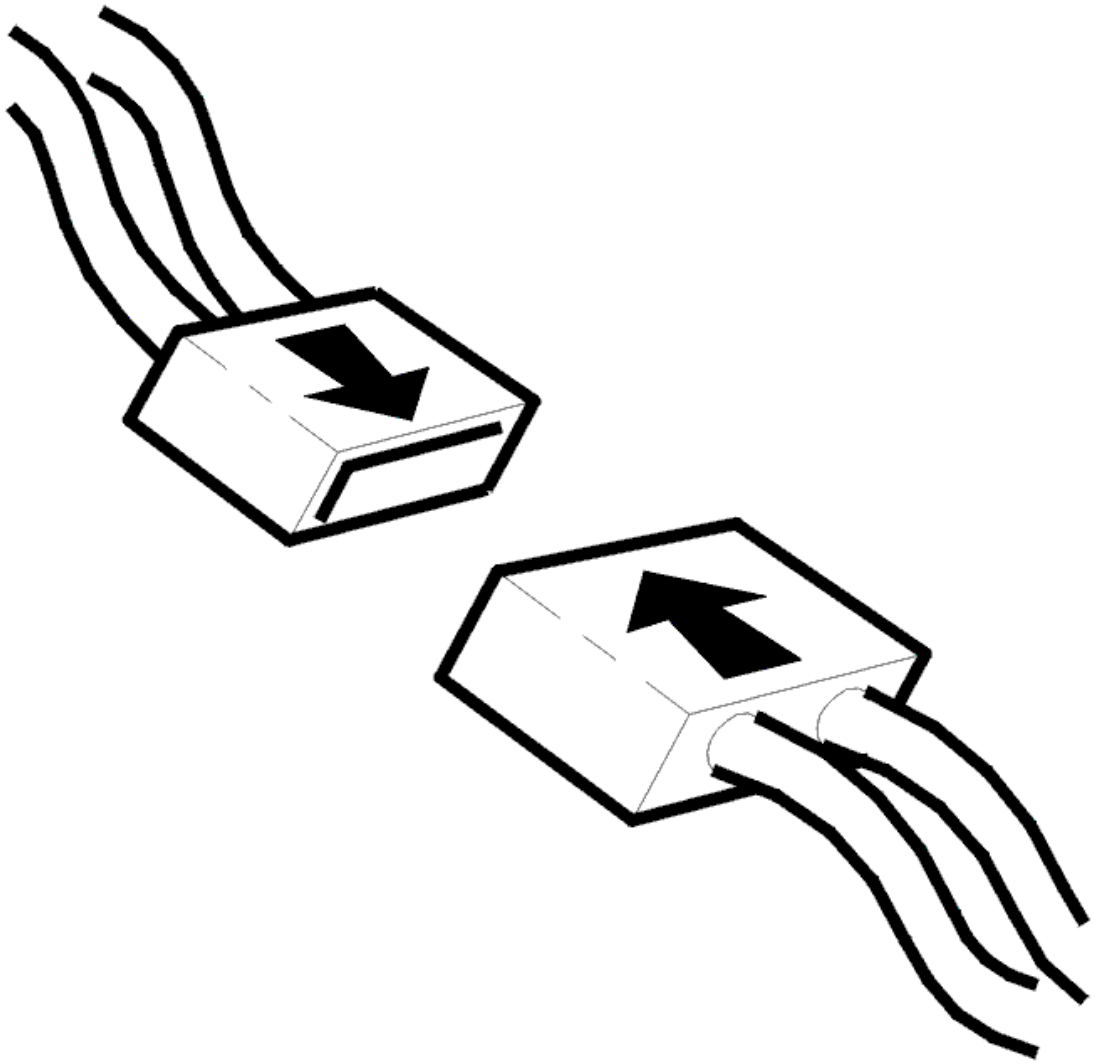

Fig. 60: Connecting Connector
Courtesy of VOLVO CARS CORPORATION

- Ignition off
- Check the connector on the right power door mirror. Check for contact resistance and oxidation. Remedy if necessary.

  In particular, check for any damage

- Reinstall the components, reconnect the connectors etc.
- Ignition on.

  Check the outside temperature.

  Other information:

- To access the connector for the power door mirror, see **REAR VIEW MIRROR, REPLACING**
- see **CHECKING WIRING AND TERMINALS**

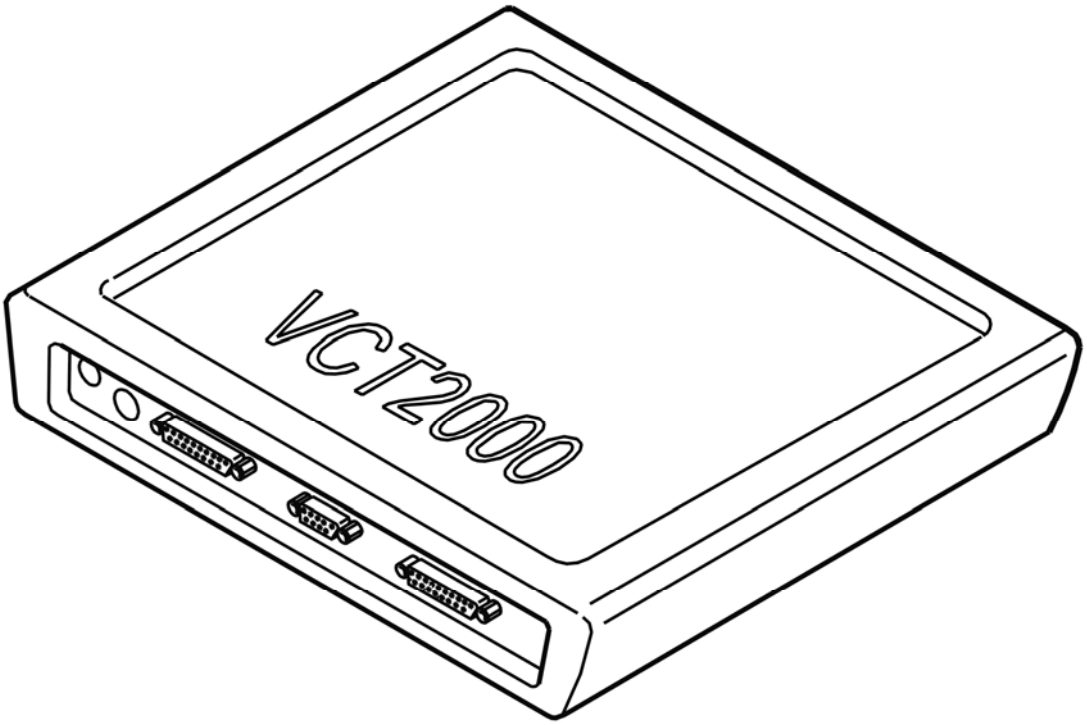

Fig. 61: Identifying VCT2000 Diagnostic Tool Symbol In VIDA
Courtesy of VOLVO CARS CORPORATION

Is the temperature within its permitted range?

- **YES**

  OKAY: Troubleshooting has been completed.

- **NO**

  Refer to **CHECKING FOR A SHORT-CIRCUIT**

CHECKING FOR A SHORT-CIRCUIT

Check the cable between right hand door control module #14A and power door mirror #2. Check for an open-circuit.

Check the cable between right hand door control module terminal #18A and power door mirror terminal #3. Check for a short-circuit to ground. Check for an open-circuit.

Replace the cable if a fault is found.

Replace the outside temperature sensor if no fault is found.

Other information:

- see **SIGNAL SPECIFICATION**
- see **CONNECTING THE BREAKOUT BOX**
- To access the connector for the power door mirror, see **REAR VIEW MIRROR, REPLACING**
- To replace the outside temperature sensor, see **OUTSIDE TEMPERATURE SENSOR DOOR MIRROR, REPLACING**
- see **CHECKING WIRING AND TERMINALS**

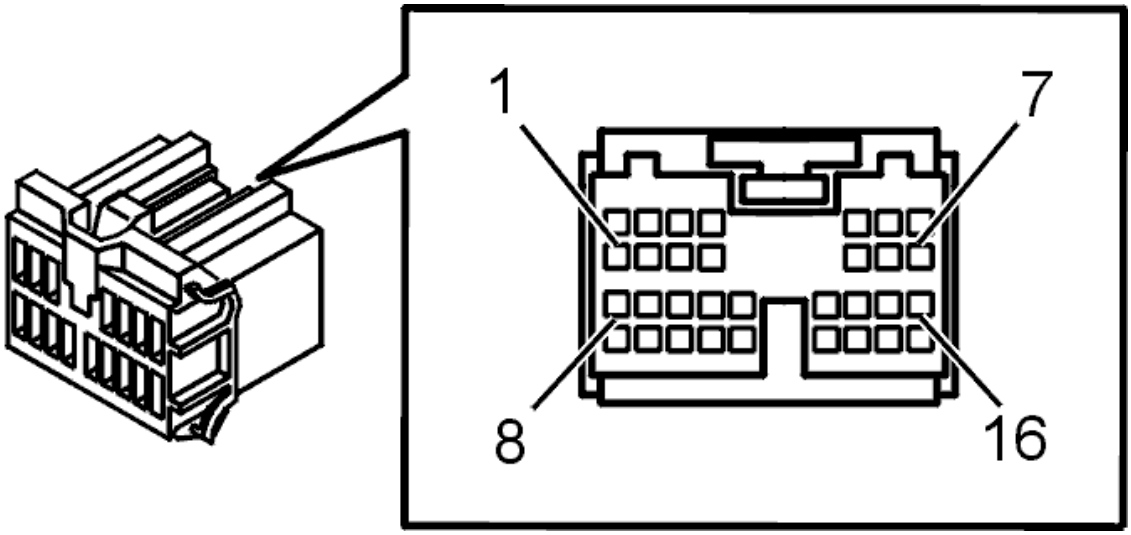

Fig. 62: Connector, Green (16-Pin)
Courtesy of VOLVO CARS CORPORATION

- **Continue**

  Refer to **VERIFICATION**

VERIFICATION

HINT: After carrying out the repair, check that the fault has been remedied.

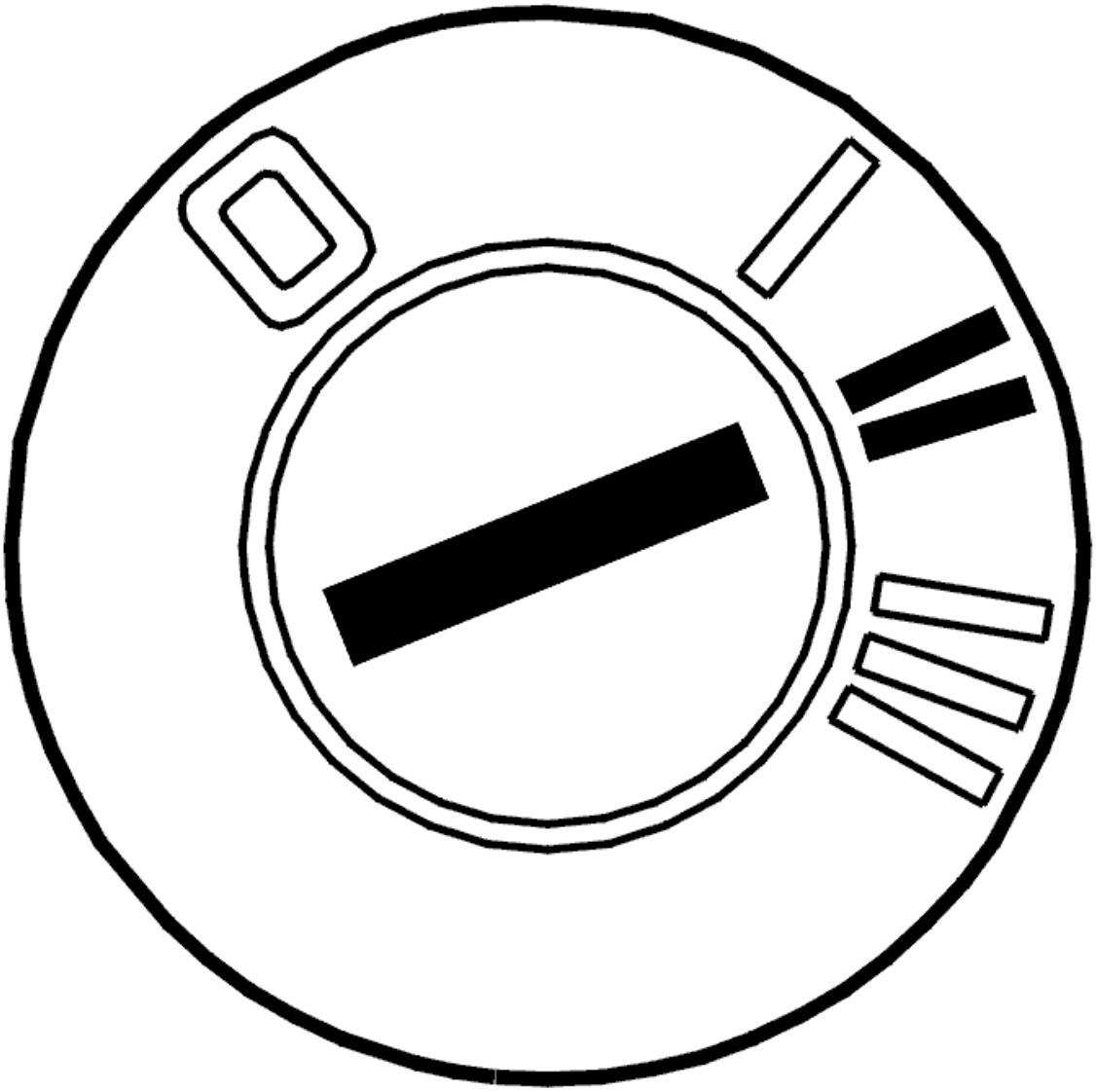

Fig. 63: Identifying Ignition ON
Courtesy of VOLVO CARS CORPORATION

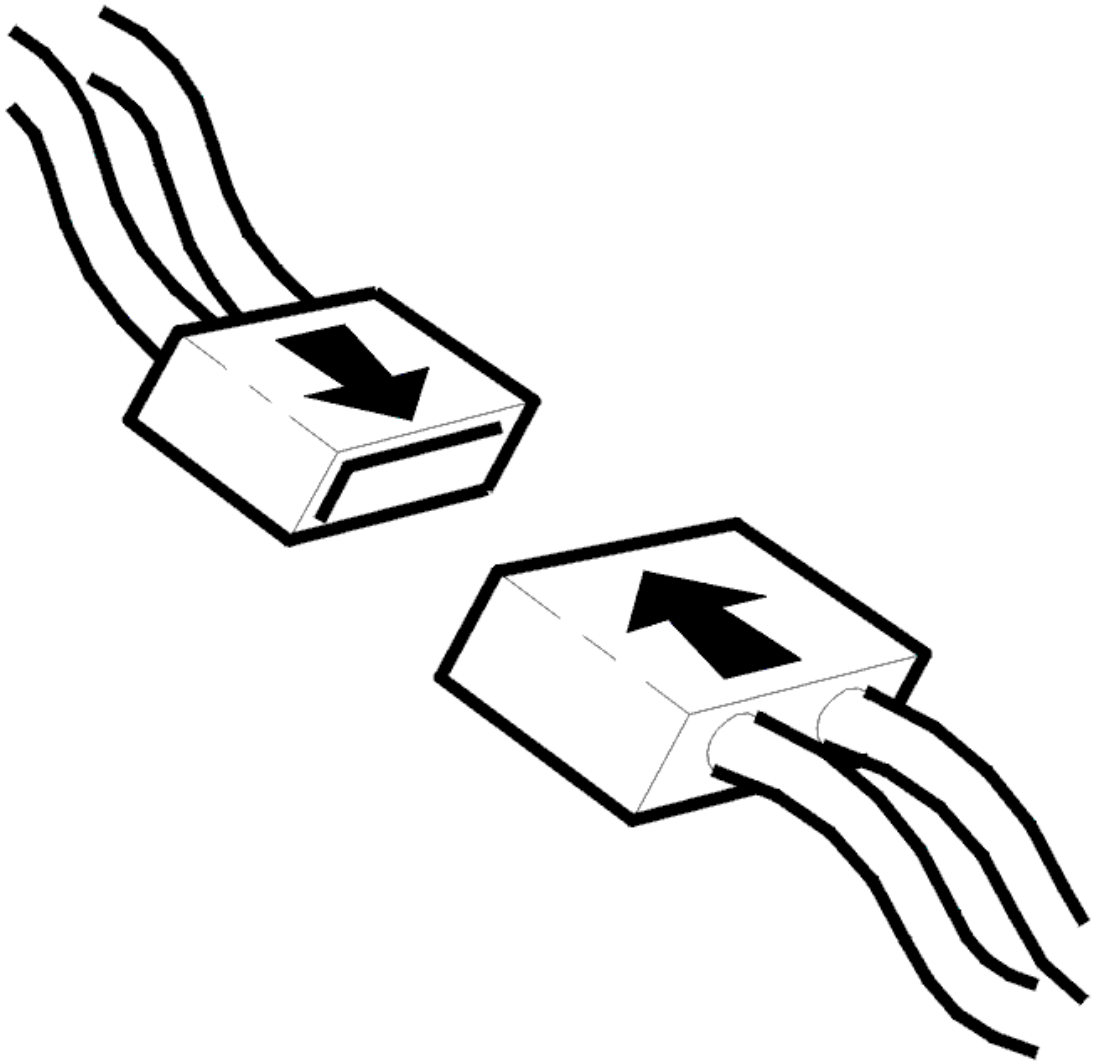

Fig. 64: Connecting Connector
Courtesy of VOLVO CARS CORPORATION

- Ignition off
- Reinstall the connectors, components etc.
- Ignition on.

Check the outside temperature.

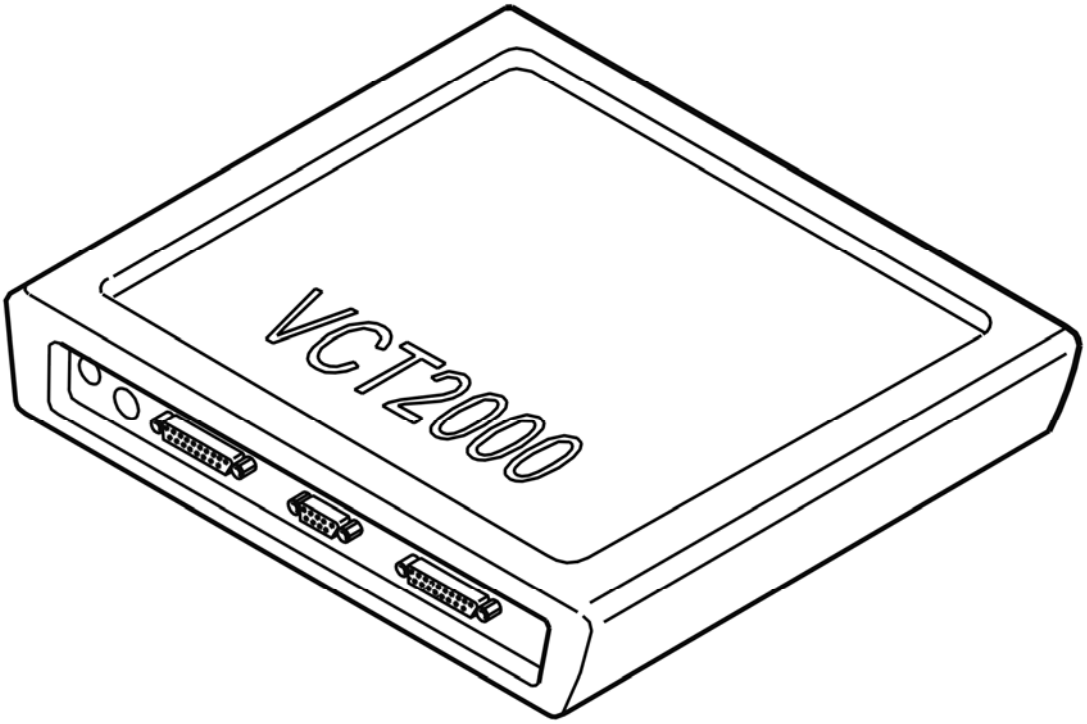

Fig. 65: Identifying VCT2000 Diagnostic Tool Symbol In VIDA
Courtesy of VOLVO CARS CORPORATION

Is the temperature within its permitted range?

- **YES**

  VERIFIED: Troubleshooting has been completed.

- **NO**

  VERIFICATION FAILED: The fault should have been detected and remedied. As this is not the case fault-tracing has failed. Exit fault-tracing for this diagnostic trouble code (DTC) or make another attempt.

CHECKING THE OUTSIDE TEMPERATURE SENSOR (2003-2004)

CHECKING THE OUTSIDE TEMPERATURE SENSOR

CHECKING THE CONNECTORS

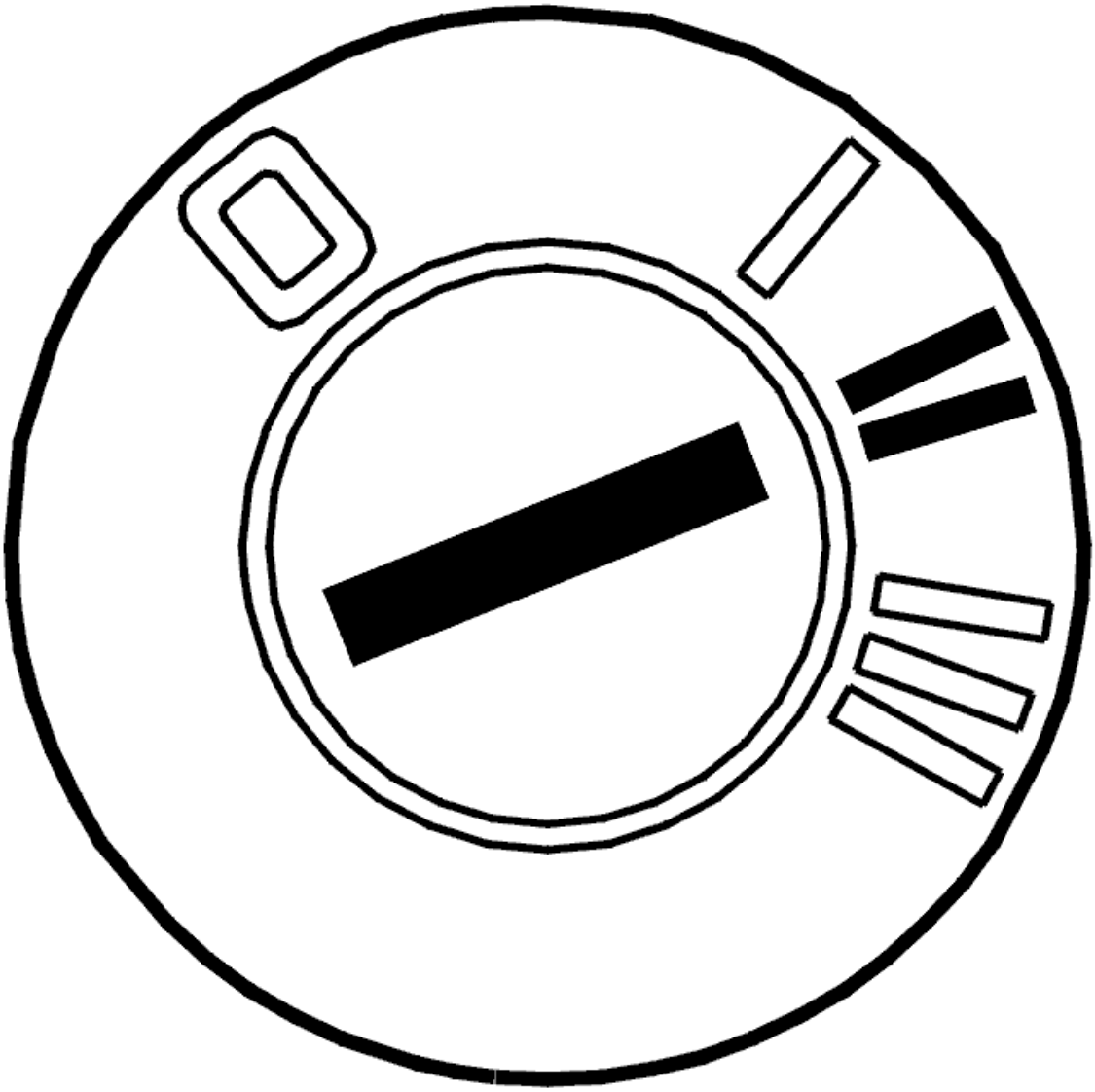

Fig. 66: Identifying Ignition ON
Courtesy of VOLVO CARS CORPORATION

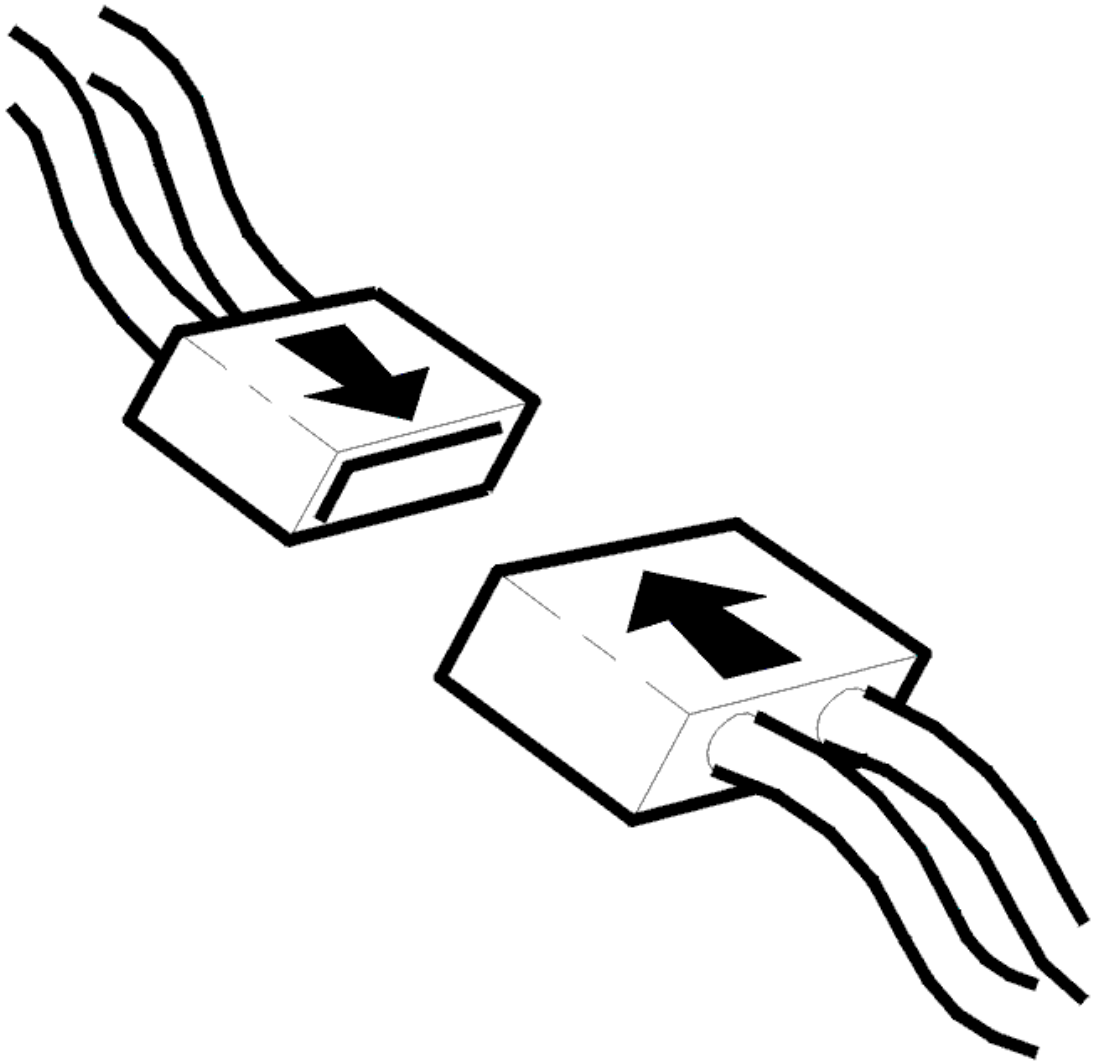

Fig. 67: Connecting Connector
Courtesy of VOLVO CARS CORPORATION

- Ignition off
- Remedy the connector on the right power door mirror. Check for contact resistance and oxidation.

  In particular, check for any damage

- Reinstall the components, reconnect the connectors etc.
- Ignition on.

  Check the outside temperature.

  Other information:

- To access the connector for the power door mirror, see **REAR VIEW MIRROR, REPLACING**
- see **CHECKING WIRING AND TERMINALS** .

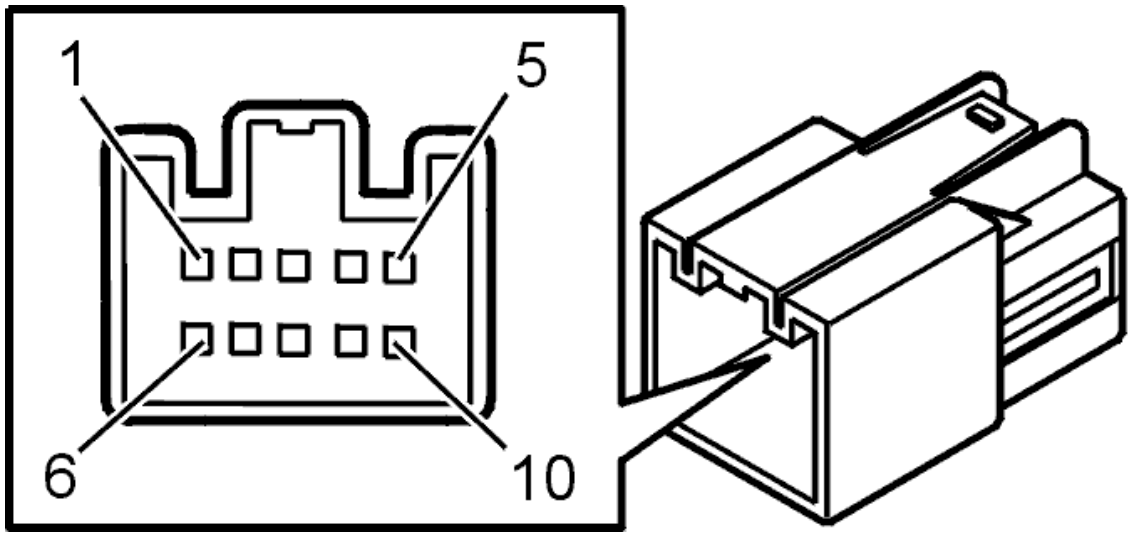

Fig. 68: Identifying 10-Pin Power Door Mirror Connector Terminal
Courtesy of VOLVO CARS CORPORATION

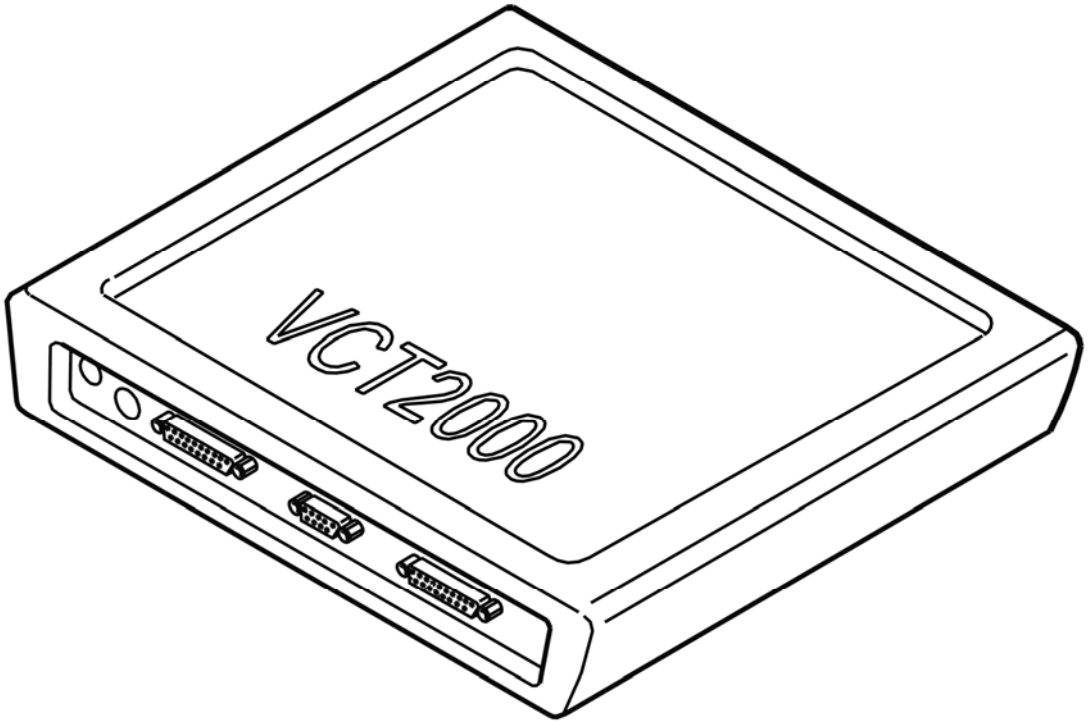

Fig. 69: Identifying VCT2000 Diagnostic Tool Symbol In VIDA
Courtesy of VOLVO CARS CORPORATION

Is the temperature within its permitted range?

- **YES**

  OKAY: Troubleshooting has been completed.

- **NO**

  Refer to **CHECKING FOR A SHORT-CIRCUIT**

CHECKING FOR A SHORT-CIRCUIT

If the control module is equipped with a 10-pin connector

Check the cable between right hand door control module #14A and power door mirror #1. Check for an open-circuit.

Check the cable between right hand door control module terminal #18A and power door mirror terminal #3. Check for a short-circuit to ground. Check for an open-circuit.

If the control module is equipped with a 16-pin connector

Check the cable between right hand door control module #14A and power door mirror #2. Check for an open-circuit.

Check the cable between right hand door control module terminal #18A and power door mirror terminal #3. Check for a short-circuit to ground. Check for an open-circuit.

Replace the cable if a fault is found.

Replace the outside temperature sensor if no fault is found.

Other information:

- For further information about signals and other values, see **SIGNAL SPECIFICATION**
- To connect the breakout box, see **CONNECTING THE BREAKOUT BOX**
- To access the connector for the power door mirror, see **REAR VIEW MIRROR, REPLACING**
- To replace the outside temperature sensor, see **OUTSIDE TEMPERATURE SENSOR DOOR MIRROR, REPLACING**
- see **CHECKING WIRING AND TERMINALS** .

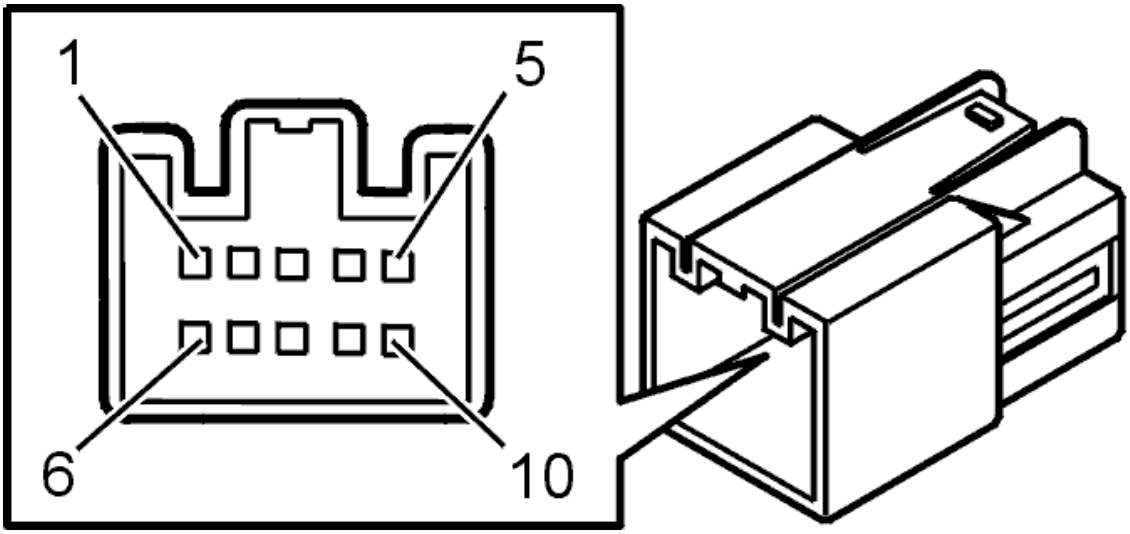

Fig. 70: Identifying 10-Pin Power Door Mirror Connector Terminal
Courtesy of VOLVO CARS CORPORATION

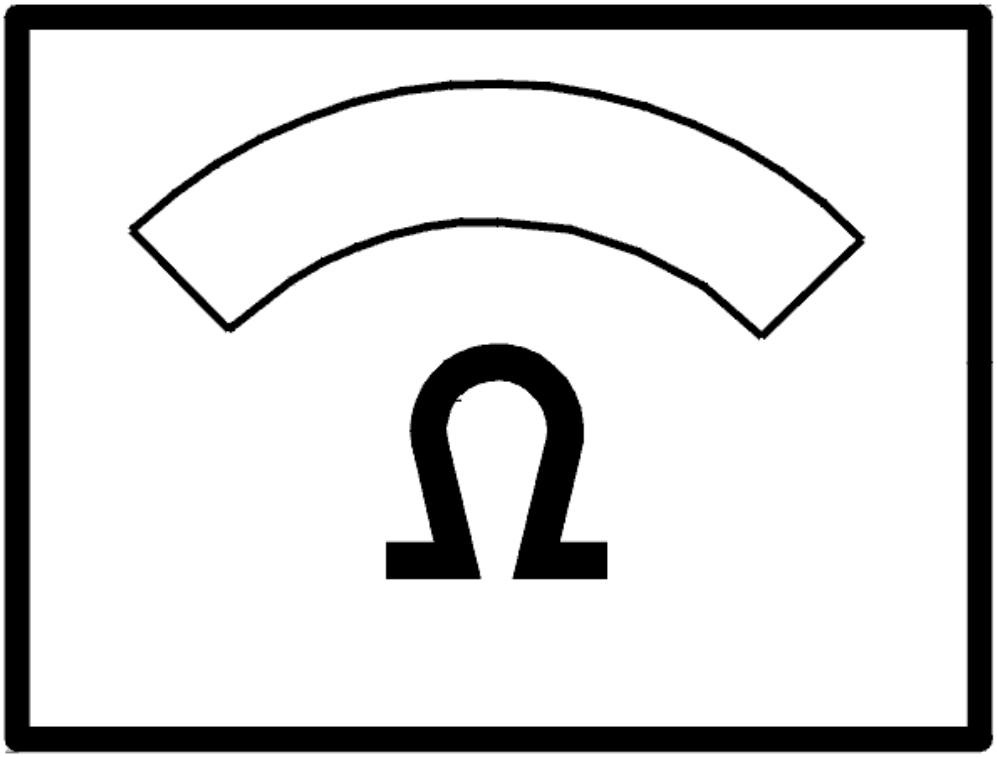

Fig. 71: Identifying Ohmmeter
Courtesy of VOLVO CARS CORPORATION

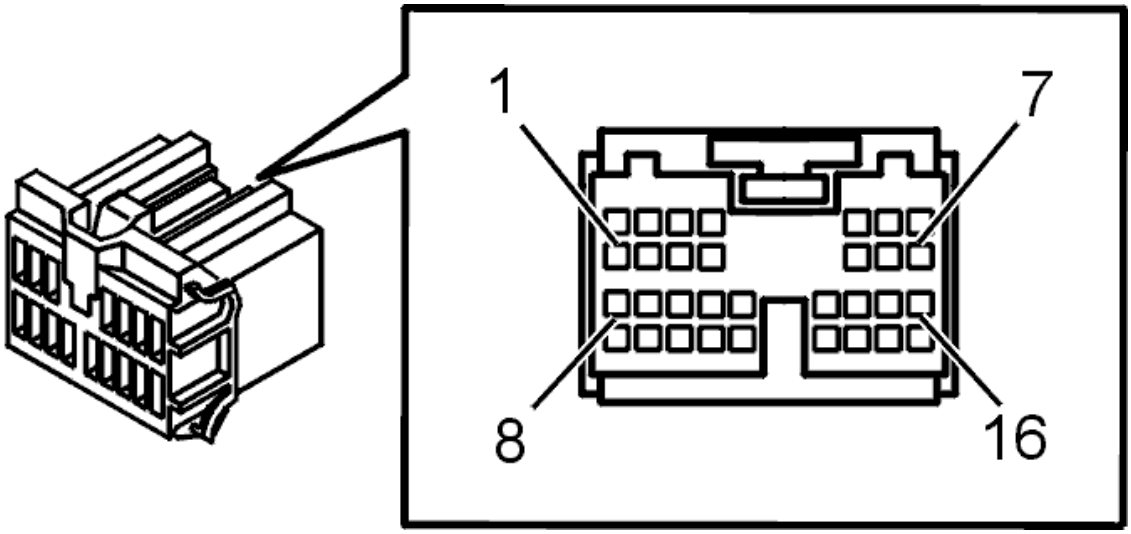

Fig. 72: Connector, Green (16-Pin)
Courtesy of VOLVO CARS CORPORATION

FAULT-TRACING INFORMATION

Condition

No DTCs stored.

Possible Source

- Open-circuit or short-circuit to ground in the cable.

Fault symptom[s]

- Cabin temperature does not correspond to value set
- Poor heating in compartment
- Outside temperature gauge not functioning
- Mist on rear window and door mirrors

CHECKING THE POWER RETRACTABLE DOOR MIRRORS (2005-12)

CHECKING THE POWER RETRACTABLE DOOR MIRRORS

CHECKING UNSYNCHRONIZED DOOR MIRRORS

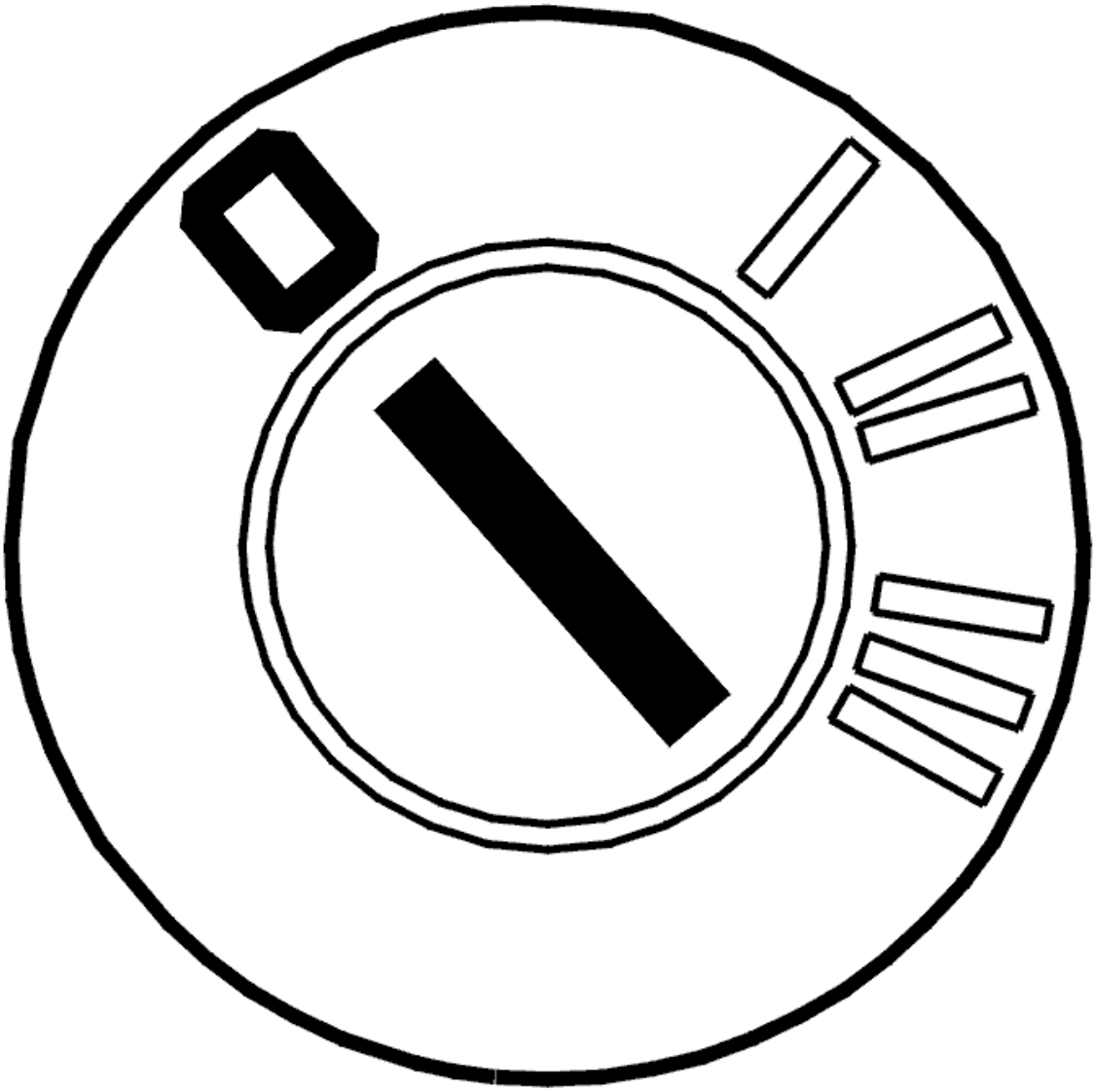

Fig. 73: Identifying Ignition OFF
Courtesy of VOLVO CARS CORPORATION

If a door mirror folds inwards at the same time as the other folds outwards when the button for folding the mirrors is activated, the mirrors are unsynchronized.

Remedy unsynchronized door mirrors according to the following instructions.

- Ignition off
- Disconnect the fuse for the power door mirror and then reinstall the fuse
- Ignition on
- Press the button for deploying and retracting the power retractable door mirrors.

- **Continue**

Refer to **SYMPTOM VERIFICATION**

SYMPTOM VERIFICATION

HINT: After carrying out the repair, check that the fault has been remedied.

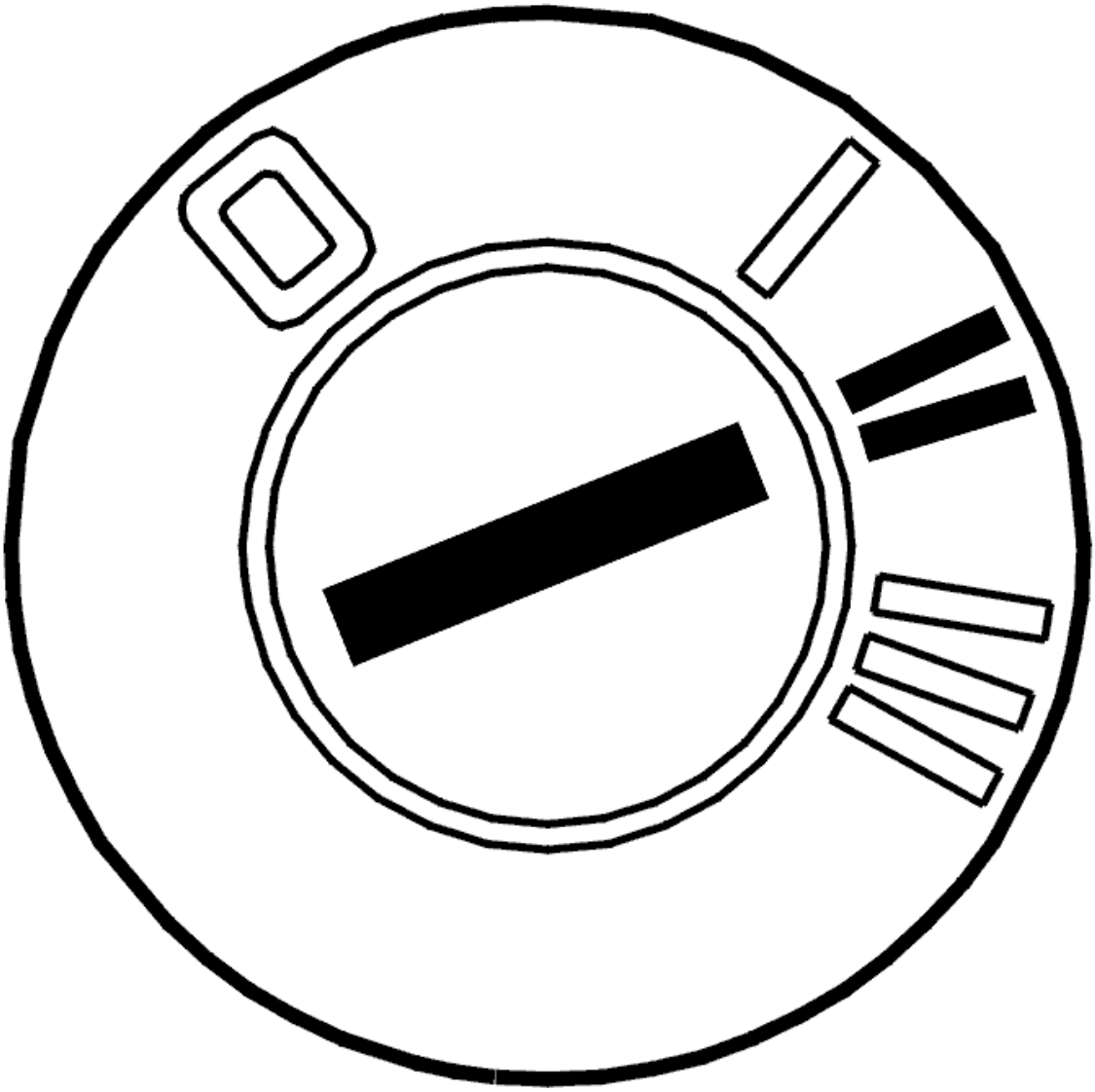

Fig. 74: Identifying Ignition ON
Courtesy of VOLVO CARS CORPORATION

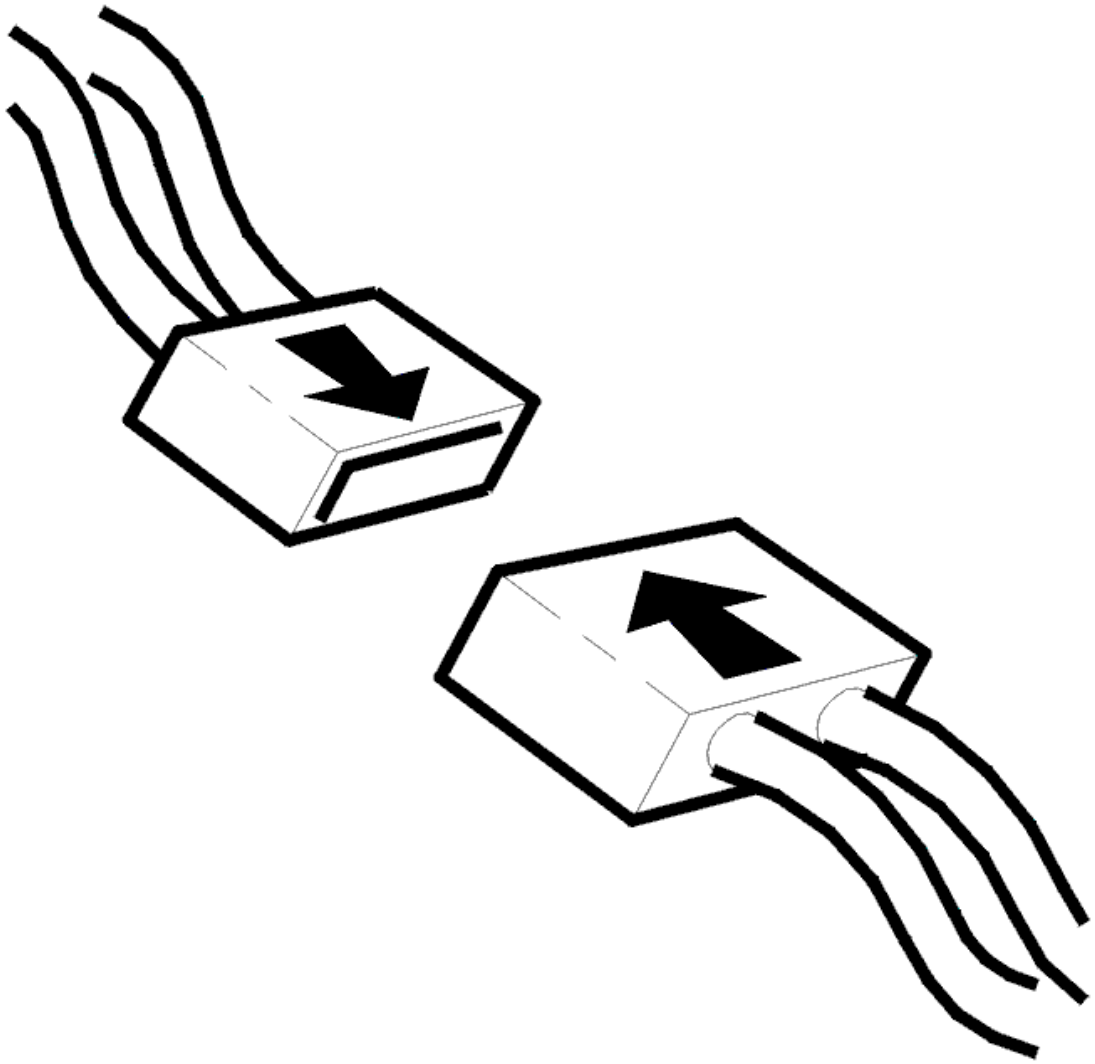

Fig. 75: Connecting Connector
Courtesy of VOLVO CARS CORPORATION

- Ignition off
- Reinstall the connectors, components etc.
- Ignition on.

Test both the door mirrors to their limit positions using the controls. The mirrors should move in the corresponding direction.

After repairing power folding door mirrors:

Check whether the power door mirrors are synchronized by pressing the button for retraction and deployment of the mirrors.

Are the controls working?

- **YES**

  VERIFIED: Troubleshooting has been completed.

- **NO**

  Refer to **INFORMATION**

INFORMATION

FAULT-TRACING INFORMATION

The fault should have been detected and remedied. As this is not the case fault-tracing has failed.

Exit fault-tracing for this diagnostic trouble code (DTC) or make another attempt.

CHECKING THE POWER WINDOW MECHANISM (2005-12)

CHECKING THE POWER WINDOW MECHANISM

CHECKING THE LIMIT POSITION

Check that the window reaches its upper limit position.

Does the window reach its upper limit position?

- **YES**

  Refer to **CHECKING THE COMPONENTS AND WIRING**

- **NO**

  Refer to **CHECKING THE WINDOW CONTROLS**

CHECKING THE COMPONENTS AND WIRING

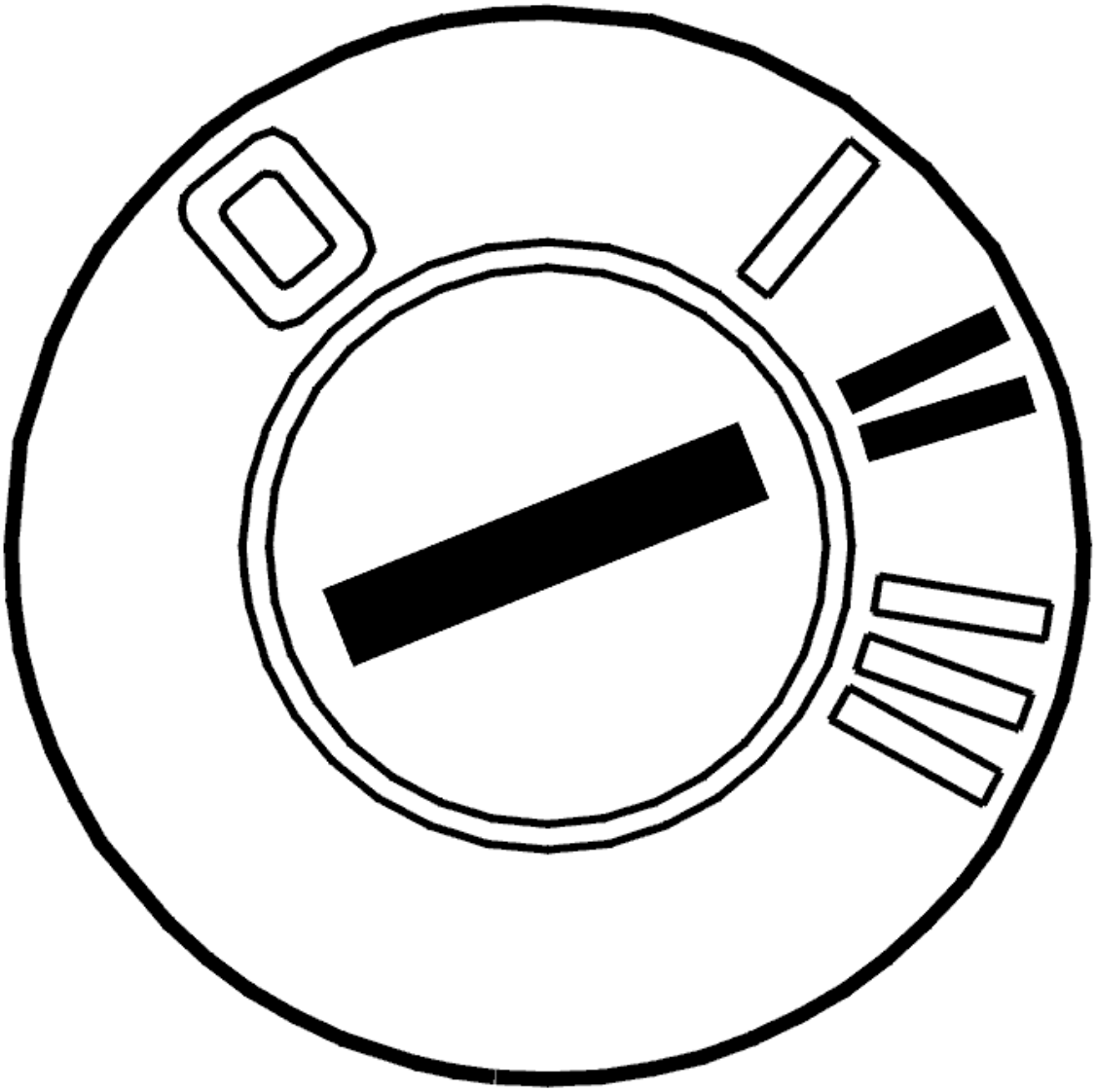

Fig. 76: Identifying Ignition ON
Courtesy of VOLVO CARS CORPORATION

Check that the fuses are intact.

Check the cable between control module terminal #4B and the power window motor #3. Check for a short-circuit to ground. Check for a short-circuit to supply voltage.

Check the cable between control module terminal #3B and the power window motor #6. Check for a short-circuit to ground. Check for a short-circuit to supply voltage.

Check the cable between control module terminal #16A and the power window motor #4. Check for a short-circuit to ground. Check for an open-circuit. Check for a short-circuit to supply voltage.

Check the cable between control module terminal #19A and the power window motor #1. Check for a short-circuit to ground. Check for an open-circuit. Check for a short-circuit to supply voltage.

Check the cable between control module terminal #7B and the battery. Check for a short-circuit to ground. Check for an open-circuit.

Check the cable between control module terminal #5B and ground. Check for a short-circuit to ground. Check for an open-circuit.

Replace the cable if a fault is found.

- Ignition on
- Try to operate the window lift mechanism to its limit positions (manually and automatically).

Other information:

- see **SIGNAL SPECIFICATION**
- see **CONNECTING THE BREAKOUT BOX**
- see **PASSENGER DOOR MODULE (PDM), REPLACING**
- see **WINDOW LIFT MECHANISM FRONT SIDE DOOR, REPLACING**
- see **CHECKING WIRING AND TERMINALS**

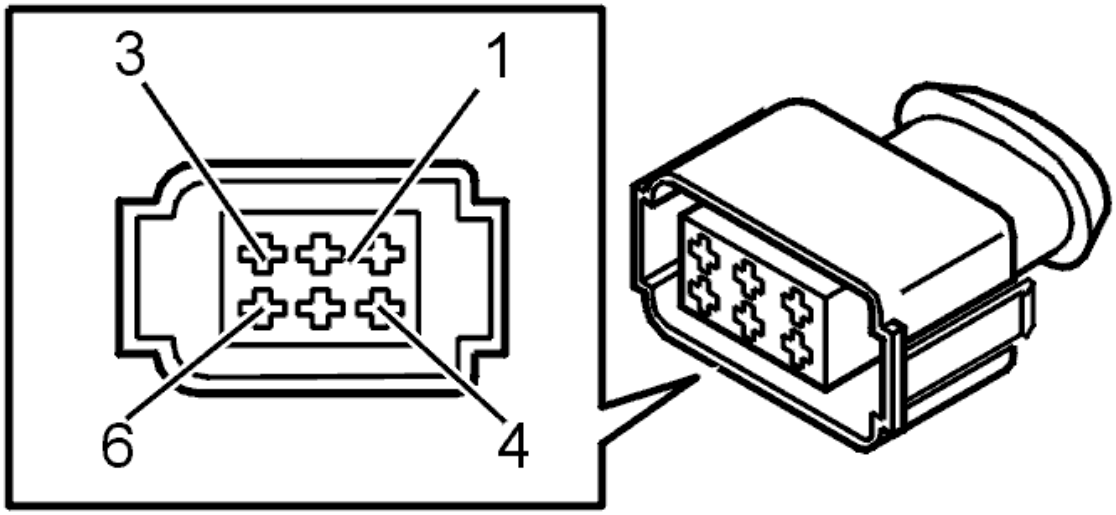

Fig. 77: Identifying Connector
Courtesy of VOLVO CARS CORPORATION

Was a fault detected?

- **YES**

  OKAY: Troubleshooting has been completed.

- **NO**

  Refer to **CHECKING THE VOLTAGE**

CHECKING THE VOLTAGE

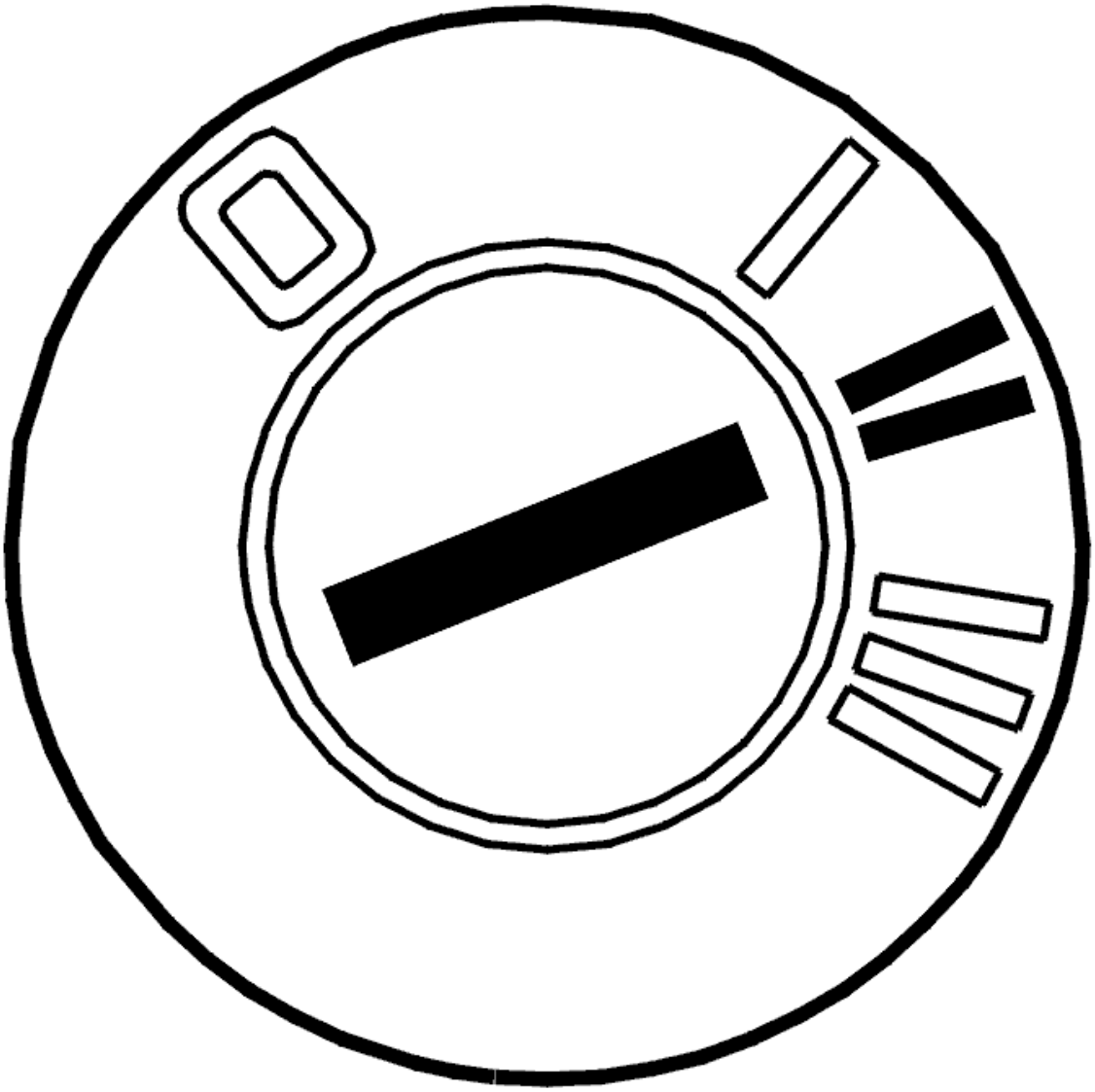

Fig. 78: Identifying Ignition ON
Courtesy of VOLVO CARS CORPORATION

- Ignition on.

  Activate the power window lift motor and take a reading across the motor. Voltage should be 12 V.

  Other information:

  - To access and replace the power window mechanism, see **WINDOW LIFT MECHANISM FRONT SIDE DOOR, REPLACING** .

Is the voltage 12 V?

- **YES**

  Refer to **REPLACING THE COMPONENT**

- **NO**

  Refer to **REPLACING THE COMPONENT**

REPLACING THE COMPONENT

Replace the window lift mechanism, see **WINDOW LIFT MECHANISM FRONT SIDE DOOR, REPLACING** .

- Ignition on
- Move the window to its upper limit position using manual control
- Initialize the window
- Try to operate the window lift mechanism to its limit positions (manually and automatically).

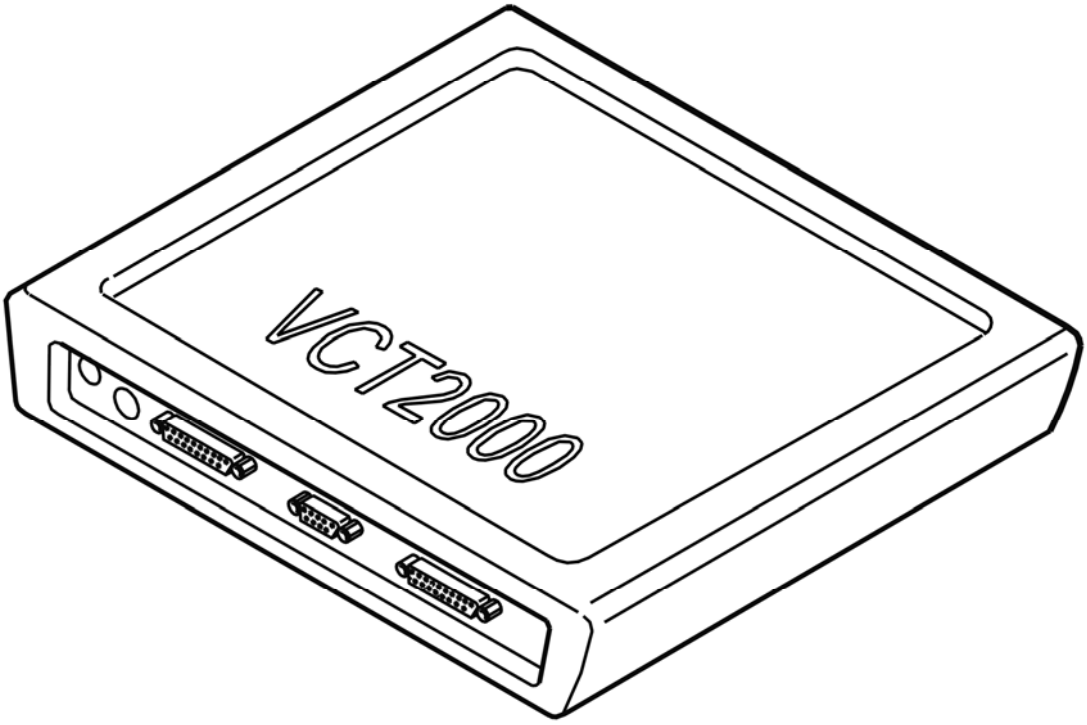

Fig. 79: Identifying VCT2000 Diagnostic Tool Symbol In VIDA
Courtesy of VOLVO CARS CORPORATION

REPLACING THE COMPONENT

CAUTION: A new driver/passenger door module (DDM/PDM) is supplied without software. The control module must be programmed when it has been replaced. For further information about programming and replacing the control module, see PASSENGER DOOR MODULE (PDM), REPLACING .

After replacing the control module the window position must be initialized.

Move the window to its upper limit position using manual control.

Initialize the window.

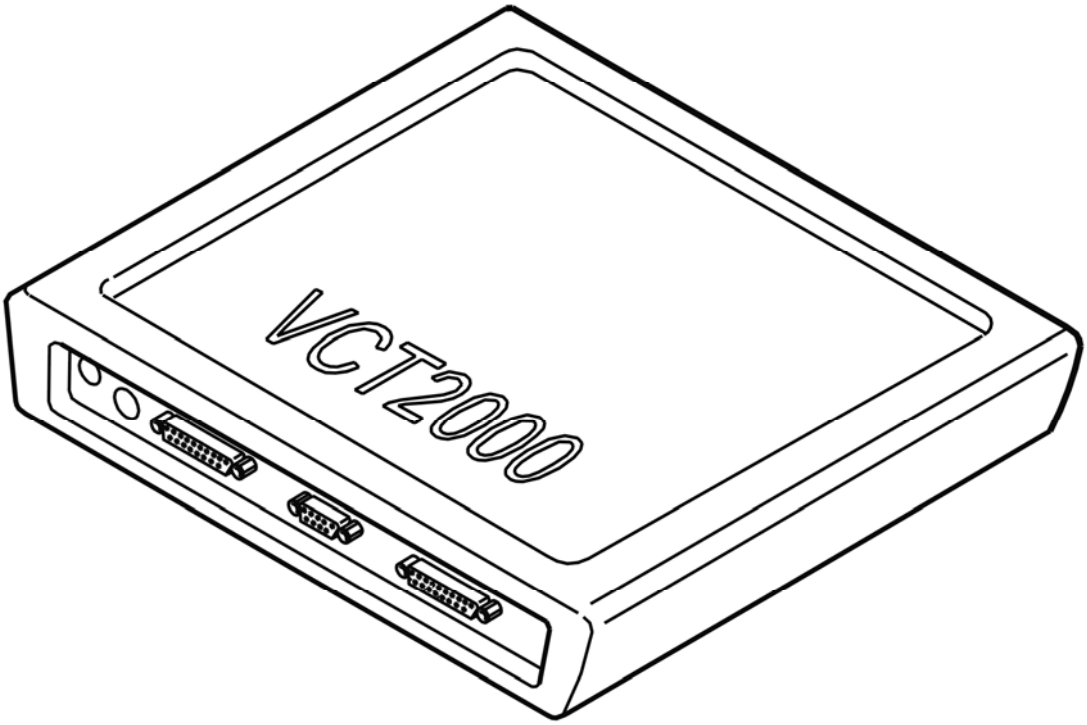

Fig. 80: Identifying VCT2000 Diagnostic Tool Symbol In VIDA
Courtesy of VOLVO CARS CORPORATION

CHECKING THE WINDOW CONTROLS

Read off to check that the automatic window controls for up and down are functioning on the front door controls.

HINT: Automatic window control is achieved by moving the control two stages.

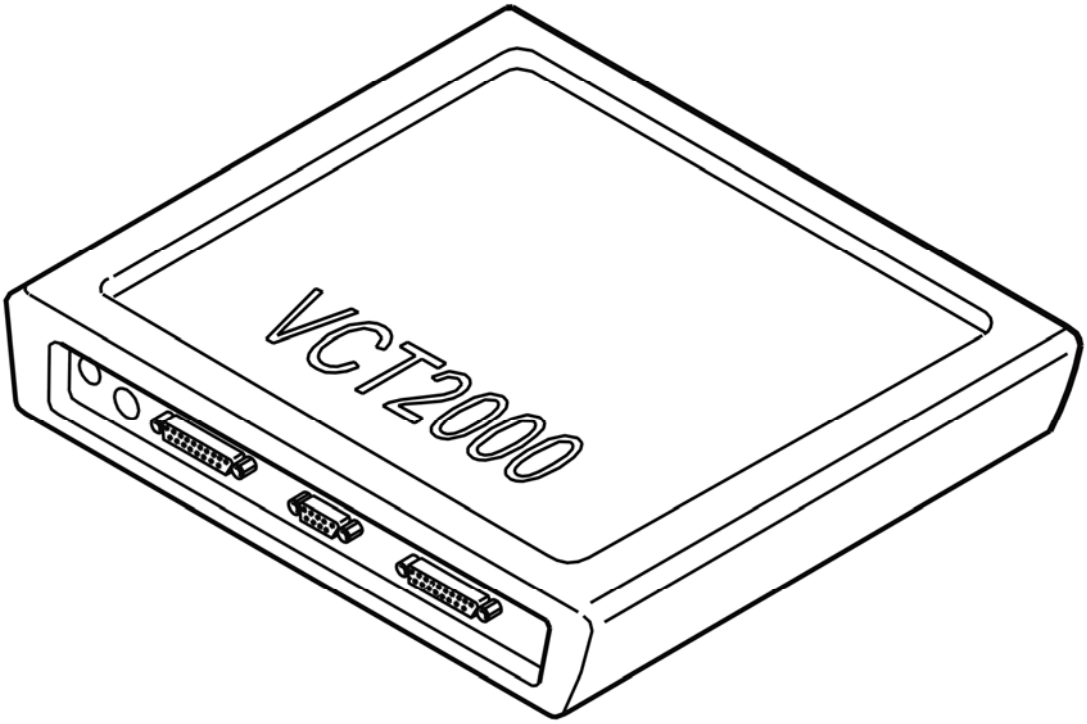

Fig. 81: Identifying VCT2000 Diagnostic Tool Symbol In VIDA
Courtesy of VOLVO CARS CORPORATION

Do the controls function?

- **YES**

  Refer to **REINITIATING THE WINDOW POSITIONS**

- **NO**

  Refer to **REPLACING THE COMPONENT**

REINITIATING THE WINDOW POSITIONS

Move the window to its upper limit position using manual control.

Initialize the window.

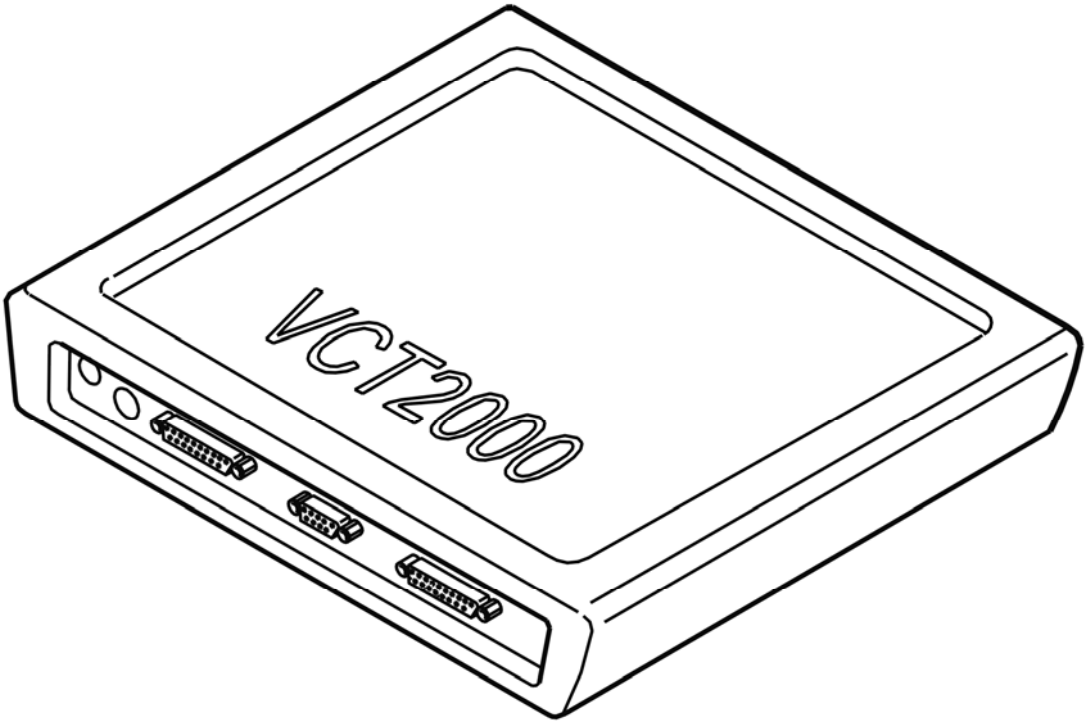

Fig. 82: Identifying VCT2000 Diagnostic Tool Symbol In VIDA
Courtesy of VOLVO CARS CORPORATION

- **Continue**

  Refer to **VERIFICATION**

VERIFICATION

HINT: After carrying out the repair, check that the fault has been remedied.

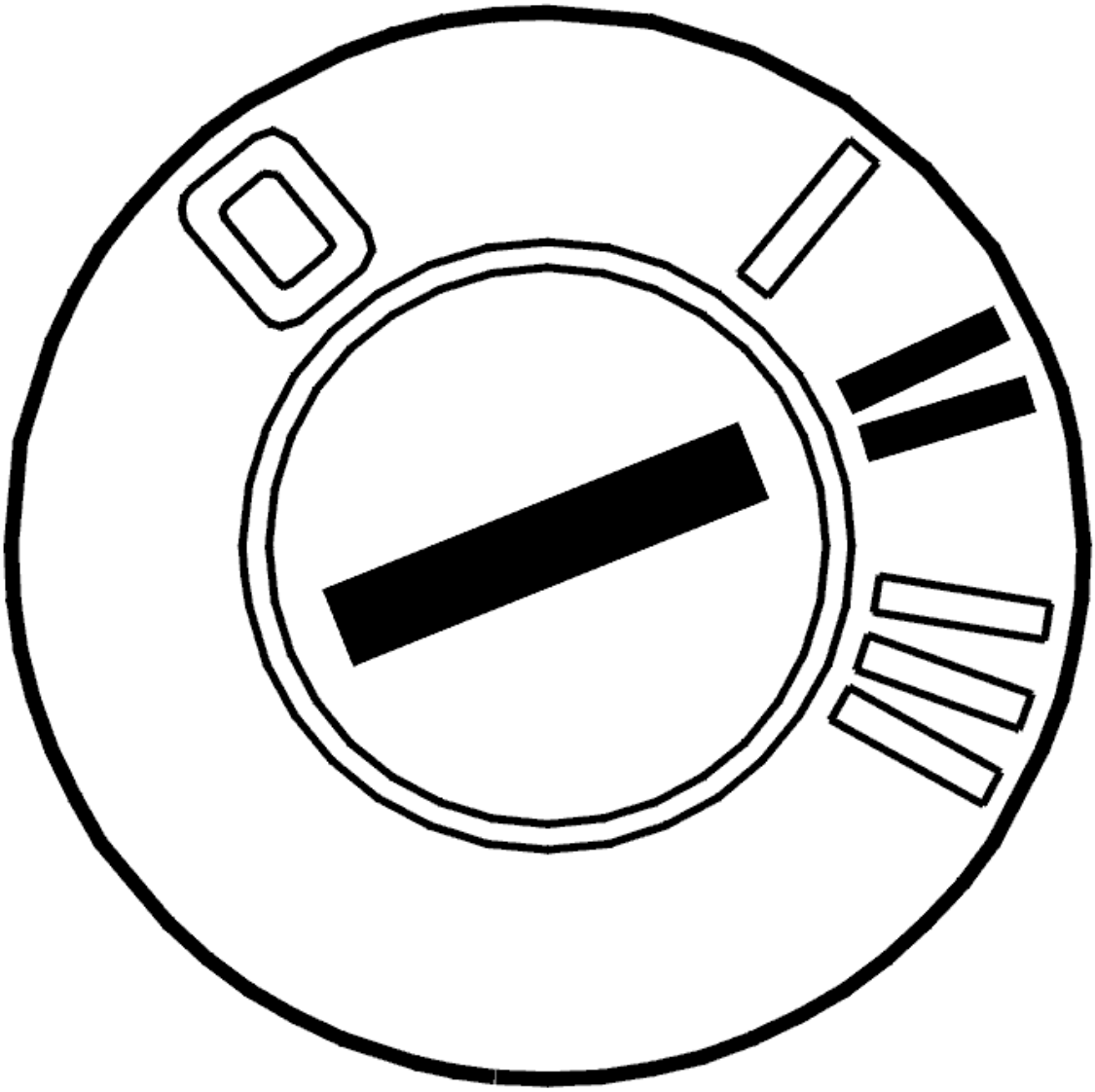

Fig. 83: Identifying Ignition ON
Courtesy of VOLVO CARS CORPORATION

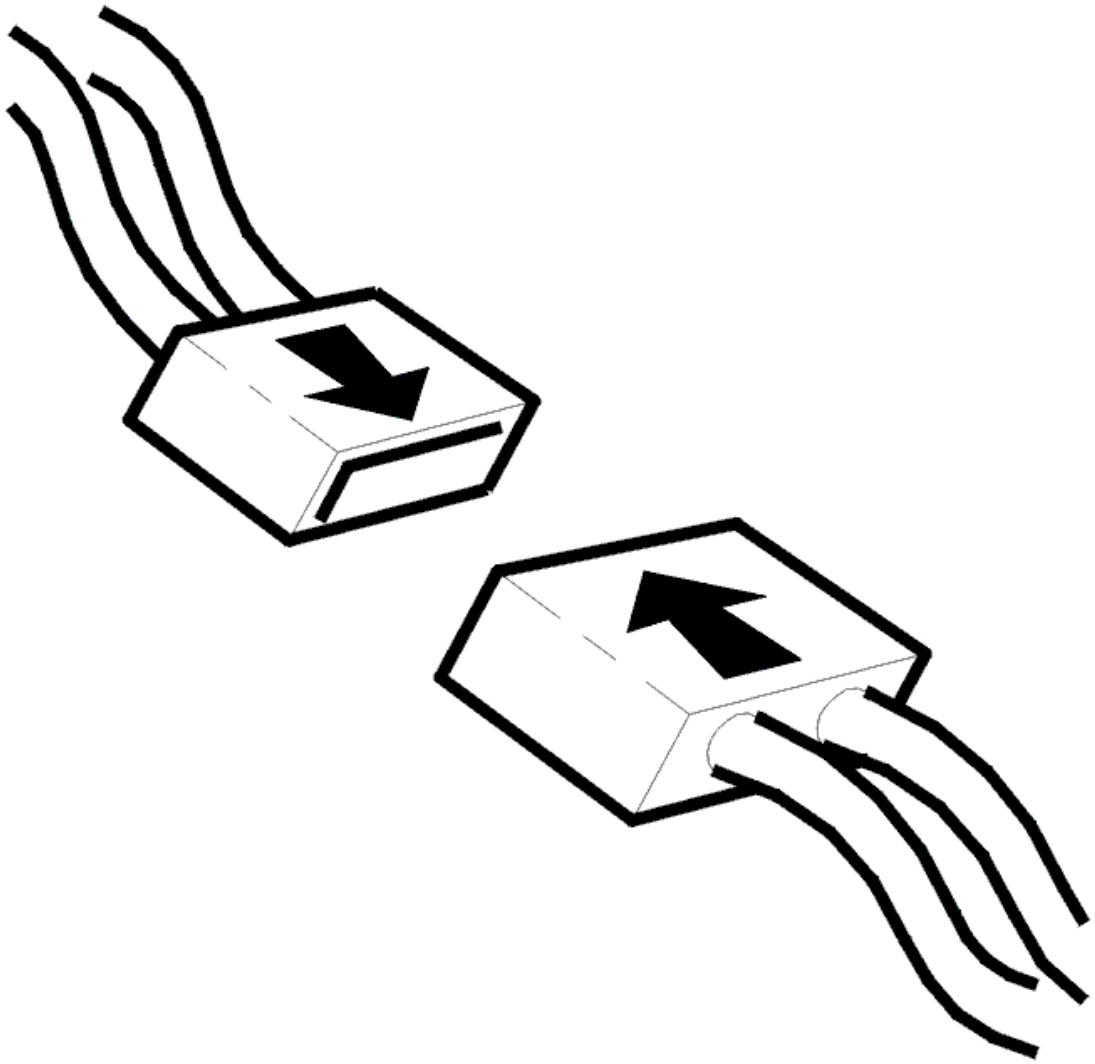

Fig. 84: Connecting Connector
Courtesy of VOLVO CARS CORPORATION

- Ignition off
- Reinstall the connectors, components etc.
- Ignition on.

  Move the window lift mechanism to its limit position, including automatic control.

Are the controls working?

- **YES**

  VERIFIED: Troubleshooting has been completed.

- **NO**

  Refer to **INFORMATION**

INFORMATION

FAULT-TRACING INFORMATION

The fault should have been detected and remedied. As this is not the case fault-tracing has failed.

Exit fault-tracing for this diagnostic trouble code (DTC) or make another attempt.

ACCESSORIES AND BODY, CAB

Doors And Lids - Symptom Verification

INFORMATION AND VERIFICATION, DOORS (2003-2011)

INFORMATION AND VERIFICATION, DOORS

Symptom and function description

The power windows are operated using the switches in the doors.

The control panel in the driver's door manages the functions for the electric power windows in all doors, child locks in the rear doors and the central locking.

The control panel in the passenger door manages the functions in the passenger doors and the central locking.

The control panels in the rear doors manage the power windows in the respective rear door.

Power windows work in ignition positions I and II. After driving and after the ignition key has been removed, the windows can still be opened or closed, as long as none of the front doors is open.

Manual operation

Press the control down slightly or pull it up slightly. The power windows go up or down for as long as the control is affected.

Automatic control

Press the control down fully or pull it up fully, and then release. The side windows then open or close automatically.

NOTE: The automatic up function on the passenger side is only available on certain markets.

Using the control panel for the central locking at the door opening handle, all doors and the boot lid can be locked or unlocked at the same time.

Child lock can be activated in ignition positions I and II by pressing the button in the control panel.

When the LED in the button illuminates, the rear power windows are locked.

When the child locks are activated, the power windows can only be operated from the control panel in the driver's door.

Verification

Access to the vehicle is necessary for the following checks.

- Ignition on.

Check the function of the relevant control panel buttons.

Check that the control responds as expected.

INFORMATION AND VERIFICATION, LOCKING/UNLOCKING (2003)

SYMPTOM AND FUNCTION DESCRIPTION

For locking and unlocking to be possible, the following conditions must be met:

- The battery in the remote key control must have sufficient voltage. If the battery starts to deteriorate, the transmission strength is reduced.
- The remote control must be within the normal distance from the vehicle's remote receiver.
- The key belonging to the vehicle must not be in the ignition when locking.

NOTE: **Communication between the remote control and the remote receiver can, in exceptional cases, be interrupted due to increased surrounding radiation, e. g. from TV and radio transmitters, mobile telephones or electrical metering devices that are remotely read.**

HINT: For more information, see Design and Function.

Verification

Check the central locking system by standing outside of the vehicle. Try to lock and unlock the vehicle with the remote control, all doors should lock and unlock.

Also check that the boot lid locks and unlocks.

Check using all the vehicle's remote controls.

Pre-check:

- That the text REMOTE CONTROL REPLACE BATTERY was not visible on the Driver information module (DIM) display.

If the function fails, when one of the remote keys is used, the fault probably lies with the individual remote key.

INFORMATION AND VERIFICATION, LOCKING/UNLOCKING (2004-2011)

SYMPTOM AND FUNCTION DESCRIPTION

For locking and unlocking to be possible, the following conditions must be met:

- The battery in the remote key control must have sufficient voltage. If the battery starts to deteriorate, the transmission strength is reduced.
- The remote control must be within the normal distance from the vehicle's remote receiver.
- The key belonging to the vehicle must not be in the ignition when locking.

Remote control functions

1. Unlock.
2. Open tailgate.
3. Panic function.
4. Home safe lighting.
5. Lock.
6. Folding/opening key.

NOTE: **Communication between the remote control and the remote receiver can, in exceptional cases, be interrupted due to increased surrounding radiation, e. g. from TV and radio transmitters, mobile telephones or electrical metering devices that are remotely read.**

Verification

Check the central locking system by standing outside of the vehicle. Try to lock and unlock the vehicle with the remote control, all doors should lock and unlock.

Also check that the boot lid locks and unlocks.

Check using all the vehicle's remote controls.

Pre-check:

- That the text REMOTE CONTROL REPLACE BATTERY was not visible on the Driver information module (DIM) display.

If the function fails, when one of the remote keys is used, the fault probably lies with the individual remote key.

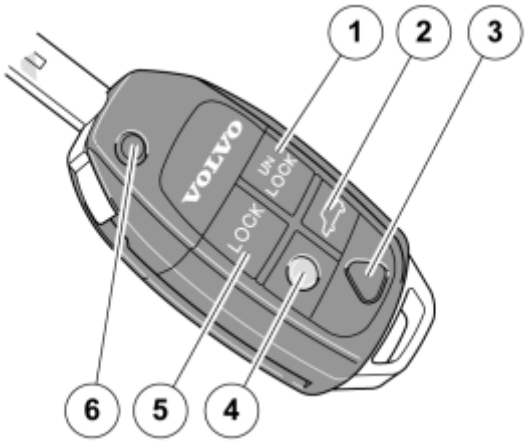

Fig. 1: Identifying Remote Control Key
Courtesy of VOLVO CARS CORPORATION

General Information

DTC Index

DRIVER DOOR MODULE (DDM) DTCS

DRIVER DOOR MODULE (DDM) - DTC INDEX

DTC	Description
DDM-0019	Lock, driver's door. Signal too low
DDM-001A	Driver's door lock. Signal too low
DDM-001D	Central locking button. Internal fault
DDM-0034	Control, driver's window. Faulty signal
DDM-0035	Control, passenger window. Faulty signal
DDM-0036	Control, left rear side window. Faulty signal
DDM-0037	Control, right rear side window. Faulty signal
DDM-0038	Control, door mirror. Faulty signal
DDM-0039	Child-proof lock. Stuck in the active position
DDM-003B	Control, driver's window. Faulty signal
DDM-003C	Control, passenger window. Faulty signal
DDM-003D	Control, left rear side window. Faulty signal
DDM-003E	Control, right rear side window. Faulty signal
DDM-003F	Control, door mirror. Signal too high
DDM-0040	Control, door mirror selector. Signal too high
DDM-0045	Door mirror lamp. Signal too low
DDM-0049	Control module. Internal fault
DDM-004A	Outside temperature sensor. Signal too high
DDM-004B	Outside temperature sensor. Signal missing
DDM-004C	Control module. Internal fault
DDM-004D	Control module. Internal fault
DDM-E001	Control module communication. Faulty communication
DDM-E003	Configuration fault. Faulty configuration
DDM-XXXX	Unknown diagnostic trouble code (DTC) for the current control module version

FAULT-TRACING

Electrical system

FAULT-TRACING

SIGNAL SPECIFICATION, REAR ELECTRONIC MODULE (REM)

REAR ELECTRONIC MODULE (REM) CONNECTORS A-E

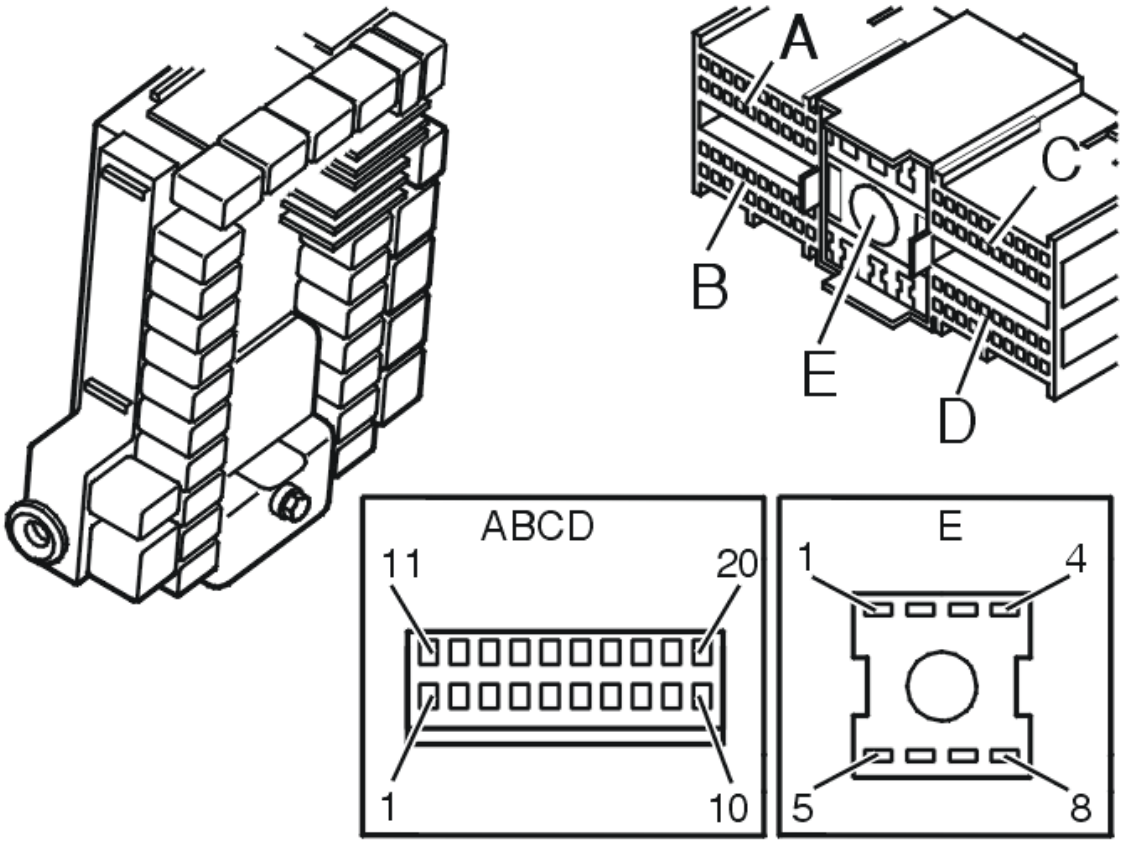

Fig. 1: Identifying Rear Electronic Module (REM) And Connector Terminals
Courtesy of VOLVO CARS CORPORATION

Connector A, terminals #A1-#A20

The following values are measured between the relevant terminal and terminal #E1 (power ground) unless otherwise stated.

The values are measured with the control module in "Active mode".

NOTE: **It is important to connect the breakout box and check the ground terminals before taking readings.**

U = DC in volts (V).

Ubat = battery voltage in volts (V).

Ulow = Voltage close to 0 V.

NC = Not connected

NC* = grounded via capacitor (C=22nF)

Terminal, breakout box	Terminal, control module	Signal type	Ignition off Active / not active	Ignition on Active / not active	Other
#A01	#A1	Spare input (30)	U~Ubat	U~Ubat	At no input
#A02	#A2	Fuel level sensor, left-hand side (+). Switched signal, 5/35 ms.	U~Ulow	U=0.54-3.96 V	Full: 0.54 V Empty: 3.96 V For Bi-fuel cars this applies to the LPG gas tank The terminal is not used if the tank is PZEVEVAP or EVAP 2.
#A03	#A3	Reserve output (switch to ground)	U~Ulow	U~Ulow	
#A04	#A4	Stop lamp, relay driver from the central electronic module (CEM)	U~Ulow / Ubat	U~Ulow / Ubat	
#A05	#A5	-	-	-	
#A06	#A6	Reserve, analog input signal	NC*	NC*	
#A07	#A7	Signal ground (-)	U~Ulow	U~Ulow	
#A08	#A8	Fuel level sensor, right-hand side (+). Switched signal, 5/35 ms.	U~Ulow	U=0.54-3.96 V	Full: 0.54 V Empty: 3.96 V
#A09	#A9	Spare input (30)	U~Ubat	U~Ubat	At no input
#A10	#A10	Fuel level sensor common ground	U~Ulow	U~Ulow	
#A11	#A11	Reserve, analog input signal	NC*	NC*	
#A12	#A12	Signal ground (-)	U~Ulow	U~Ulow	
#A13	#A13	Reserve output (switch to ground)	U~Ulow	U~Ulow	
#A14	#A14	CAN H	-	-	During

					communication U=2.0-3.5 V
#A15	#A15	Volcano Lite CAN H	-	-	During communication U=2.0-3.5 V
#A16	#A16	CAN L	-	-	During communication U=2.0-3.5 V
#A17	#A17	Volcano Lite CAN L	-	-	During communication U=2.0-3.5 V
#A18	#A18	Reserve	U~Ulow	U~Ulow	NC
#A19	#A19	Reserve output (switch to ground)	U~Ulow	U~Ulow	
#A20	#A20	-	-	-	
#A21	#B1	Spare input (GND)	U~Ulow	U~Ulow	At no input
#A22	#B2	Spare input (GND)	U~Ulow	U~Ulow	At no input
#A23	#B3	Reserve output (switch to ground)	U~Ulow	U~Ulow	
#A24	#B4	Reserve	U~Ulow	U~Ulow	NC
#A25	#B5	Power supply, fuel level sensor, CNG	U~Ulow	U~ 5V	Bi-fuel
#A26	#B6	Signal ground, position sensor for headlamp beam height control	U~Ulow	U~Ulow	
#A27	#B7	Reserve output (switch to ground)	U~Ulow	U~Ulow	
#A28	#B8	Analog input signal from the position sensor for headlamp beam height control.	U~Ulow	U=1.7-3.2V	NC
#A29	#B9	Reserve	U~Ulow	U~Ulow	NC
#A30	#B10	Power supply, position sensor for headlamp beam height control	U~Ulow	U=5 V	
#A31	#B11	Reserve	U~Ulow	U~Ulow	NC
#A32	#B12	Reserve	U~Ulow	U~Ulow	NC
#A33	#B13	Reserve	U~Ulow	U~Ulow	NC
#A34	#B14	Reserve	U~Ulow	U~Ulow	NC
#A35	#B15	Reserve	U~Ulow	U~Ulow	NC
#A36	#B16	Input signal fuel level sensor (pressure), CNG	U~Ulow	U=0.5V-4.5V	Full (200bar): 4.5V Empty (0 bar): 0.5V
#A37	#B17	Reserve	U~Ulow	U~Ulow	NC

#A38	#B18	Reserve	U~Ulow	U~Ulow	NC
#A39	#B19	Reserve	U~Ulow	U~Ulow	NC
#A40	#B20	Reserve	U~Ulow	U~Ulow	NC
#A41	#C1	Input signal, fuel level sensor (temperature), CNG	U~Ulow	U=0V-5V	0°C~4 V 25°C~2.5 V
#A42	#C2	Signal ground fuel level sensor, CNG	U~Ulow	U~Ulow	Bi-fuel
#A43	#C3	Reserve	U~Ulow	U~Ulow	NC
#A44	#C4	-	-	-	
#A45	#C5	-	-	-	
#A46	#C6	Reserve output (switch to ground)	U~Ulow	U~Ulow	
#A47	#C7	Reserve	U~Ulow	U~Ulow	NC
#A48	#C8	Reserve output (switch to ground)	U~Ulow	U~Ulow	
#A49	#C9	Reserve	U~Ulow	U~Ulow	NC
#A50	#C10	Reserve	U~Ulow	U~Ulow	NC
#A51	#C11	Reserve output (switch to ground)	U~Ulow	U~Ulow	
#A52	#C12	Reserve output (switch to ground)	U~Ulow	U~Ulow	
#A53	#C13	Reserve	U~Ulow	U~Ulow	NC
#A54	#C14	Reserve	U~Ulow	U~Ulow	NC
#A55	#C15	Reserve	U~Ulow	U~Ulow	NC
#A56	#C16	Reserve	U~Ulow	U~Ulow	NC
#A57	#C17	Spare input (30)	U~Ubat	U~Ubat	At no input
#A58	#C18	Spare input (30)	U~Ubat	U~Ubat	At no input
#A59	#C19	Reserve	U~Ulow	U~Ulow	NC
#A60	#C20	Reserve output (switch to ground)	U~Ulow	U~Ulow	
#B01	#D1	Relay driver, rear windshield heating	U~Ubat	U~Ulow / Ubat	Grounded when the relay is activated
#B02	#D2	Relay driver, rear 15l-supply	-	-	
#B03	#D3	Reserve	U~Ulow	U~Ulow	NC
#B04	#D4	Signal voltage, high mounted stop lamp	U~Ubat / Ulow	U~Ubat / Ulow	5 door
#B05	#D5	Reserve	5V / Ulow	5V / Ulow	NC
#B06	#D6	Serial communication, input signal from the level sensor control	During communication U=8-11 V	During communication U=8-11 V	Communicates when the car is alarmed.

		module			Conditional on the car being equipped with an inclination sensor module (ISM).
#B07	#D7	Input signal from the tailgate handle	U~Ulow / Ubat	U~Ulow / Ubat	Applies to 4-door models. Grounded when the tailgate handle is pressed in.
#B08	#D8	Spare input (30)	Ubat	Ubat	At no input
#B09	#D9	Spare input (30)	Ubat	Ubat	At no input
#B10	#D10	Spare input (30)	Ubat	Ubat	At no input
#B11	#D11	-	U~Ulow	U~Ulow	NC
#B12	#D12	Reserve, relay RMA 04	U~Ulow	U~Ulow	
#B13	#D13	Reserve, relay RMI 09	U~Ulow	U~Ulow	
#B14	#D14	Reserve, relay RMI 10	U~Ulow	U~Ulow	
#B15	#D15	Reserve, relay RMI 25	U~Ulow	U~Ulow	
#B16	#D16	Relay driver, warm-up cycle diesel filter	U~Ulow	U~Ulow / Ubat	
#B17	#D17	Reserve, relay RST 01	U~Ulow	U~Ulow	
#B18	#D18	Relay driver, rear X-supply	-	-	
#B19	#D19	Reserve output (switch to ground)	U~Ulow	U~Ulow	
#B20	#D20	Power supply to the tilt sensor. Output signal.	U~Ulow / Ubat	U~Ulow	Supplied with voltage when the car is alarmed. Conditional on the car being equipped with an inclination sensor module (ISM).

The power signals below are measured between the relevant terminal and terminal #E1 (power ground)

Terminal, breakout box	**Terminal, control module**	**Signal type**	**Ignition off Active / not active**	**Ignition on Active / not active**	**Other**
#B21	#E1	Power ground	U~Ulow	U~Ulow	
#B22	#E2	Power supply to the cargo compartment lighting. Output signal.	U~Ulow / Ubat	U~Ulow / Ubat	Applies to 4-door models. Activated when the trunk lid is

					open. Goes out after 30 minutes Goes out when driving forward with the trunk lid open. The ignition must be switched off before it lights again. Can be switched off via the upper electronic module (UEM).
#B23	#E3	Reserve	U~Ulow	U~Ulow	NC
#B24	#E4	Power supply to the rear fog lamp. Input signal.	U~Ubat	U~Ubat	
#B25	#E5	Reserve	U~Ulow	U~Ulow	NC
#B26	#E6	Power supply to the rear electronic module (REM)	U~Ubat	U~Ubat	
#B27	#E7	Reserve	U~Ulow	U~Ulow	NC
#B28	#E8	Reserve	U~Ulow	U~Ulow	NC

RESISTANCE VALUES, FUEL LEVEL SENSOR

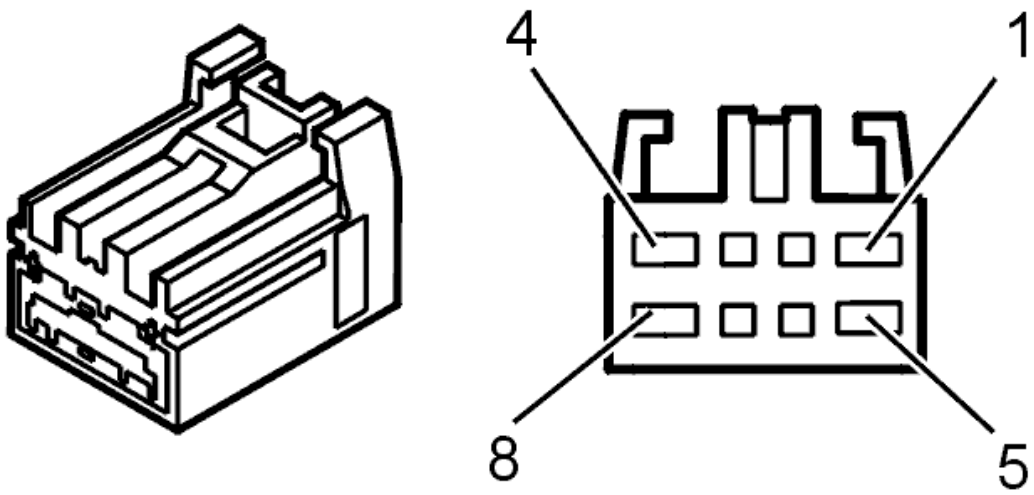

Fig. 2: Fuel Level Sensor Terminals
Courtesy of VOLVO CARS CORPORATION

Readings for the left fuel level sensor are taken between terminals #5 and #6.

Readings for the right fuel level sensor are taken between terminals #7 and #6.

The following table lists the fuel level sensor resistance and the corresponding fuel volume.

Resistance (ohm)	Fuel volume (liters)
12	40
38	35
66	30
96	25
130	20
171	15
223	10
297	5
383	1

SIGNAL SPECIFICATION, ABS CONTROL MODULE

All values given are between the relevant terminal in column 1 and terminal #A8 or #A24 (ground), unless otherwise indicated in brackets.

NOTE: **It is important that the breakout box is connected and that the ground terminals have been checked before readings are taken.**

U=	DC voltage in volts (V)	Ubat =	battery voltage (V)
I =	current in amperes (A)	Ulow =	voltage approximately 0 V

Breakout box terminal	Control module terminal	Signal type	Ignition on	Other
#A1	#1	Front left wheel sensor signal	Tooth against sensor: Iapprox.14 mA Uapprox.9 V Cover against sensor: Iapprox.7 mA Uapprox.10 V (at normal system voltage)	The wheel sensors generate a current for the control module. When the pulse wheel rotates, the sensor generates a pulsed current (quadratic wave) where the strength of the current depends on the position of the pulse wheel. The frequency increases with speed.
#A2	#2	Front left wheel sensor power supply	U = Ubat	-
#A3	#3	-	-	-
#A4	#4	15l-supply (power supply	U = Ubat	-

		from ignition switch)		
#A5	#5	Rear left wheel sensor signal	Tooth against sensor: Iapprox.14 mA Uapprox.9 V Cover against sensor: Iapprox.7 mA Uapprox.10 V (at normal system voltage)	The wheel sensors generate a current for the control module. When the pulse wheel rotates, the sensor generates a pulsed current (quadratic wave) where the strength of the current depends on the position of the pulse wheel. The frequency increases with speed.
#A6	#6	Rear left wheel sensor power supply	U = Ubat	-
#A7	#7	-	-	-
#A8	#8	Power and signal ground (measured to battery negative terminal)	Uapprox.Ulow	-
#A9	#9	30-supply inlet and outlet valves (power supply from the battery to the intake and exhaust valves)	Uapprox.Ubat	Power supply to the in and outlet valves and signal to the control module.
#A10	#10	Control modules communication cable (CAN L)	U=2-3V	-
#A11	#11	Control modules communication cable (CAN H)	U=2-3V	-
#A12	#12	-	-	-
#A13	#13	-	-	-
#A14	#14	Stop lamp switch signal (applies only to AWD TRACS)	Open: Uapprox.Ulow Closed: Uapprox.Ubat.	The stop lamp switch closes when braking.
#A15	#15	-	-	-
#A16	#16	-	-	-
#A17	#17	-	-	-
#A18	#18	Stop lamp switch signal	Open: Uapprox.Ulow Closed: Uapprox.Ubat	The stop lamp switch closes when braking.
#A19	#19	Front right wheel sensor signal	Tooth against sensor: Iapprox.14 mA Uapprox.9 V Cover against sensor: Iapprox.7 mA Uapprox.10 V (at normal system voltage)	The wheel sensors generate a current for the control module. When the pulse wheel rotates, the sensor generates a pulsed current (quadratic wave) where the strength of the

				current depends on the position of the pulse wheel. The frequency increases with speed.
#A20	#20	Power supply, rear right wheel sensor	U = Ubat	-
#A21	#21	-	-	-
#A22	#22	Power supply, rear right wheel sensor	U = Ubat	The wheel sensor receives 12 V from the control module.
#A23	#23	Rear right wheel sensor signal	Tooth against sensor: Iapprox.14 mA Uapprox.9 V Cover against sensor: Iapprox.7 mA Uapprox.10 V (at normal system voltage)	The wheel sensors generate a current for the control module. When the pulse wheel rotates, the sensor generates a pulsed current (quadratic wave) where the strength of the current depends on the position of the pulse wheel. The frequency increases with speed.
#A24	#24	Power and signal ground (measured to battery negative terminal)	Uapprox.Ulow	-
#A25	#25	30-supply pump motor (power supply from the battery)	Uapprox.Ubat	-

SIGNAL SPECIFICATION, AUDIO CONTROL MODULE

CONNECTING THE BREAKOUT BOX AND CHECKING THE GROUND TERMINAL

CAUTION: Before starting to measure, the breakout box must be connected and the ground connections must be checked. See CHECKING VOLTAGE / GROUND CONNECTION, MEDIA/INFOTAINMENT .

DEFINITIONS

DC voltage in volts (V)	U_{low} = Voltage near 0 V
	U_{bat} = Battery voltage

THE AUDIO CONTROL MODULE, GREEN CONNECTOR

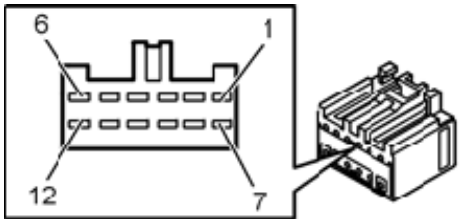

Fig. 3: Identifying Terminals Of Audio Control Module Gray Connector
Courtesy of VOLVO CARS CORPORATION

NOTE: The connectors on the adapter cable must have the correct color-coding for the signal table to match.

Before taking any readings, see **CHECKING VOLTAGE / GROUND CONNECTION, MEDIA/INFOTAINMENT** .

Control module terminal	Breakout box terminal	Signal type	Ignition on	Miscellaneous
A1	#15	30 supply	U_{bat}	-
A2	#16	15 supply	U_{bat}	-
A3	#17	Extra input (AUX input), left channel (+)	Analog input signal	-
A4	#18	Extra input (AUX-input), ground	$U=U_{low}$	-
A5	#19	Extra input (AUX input), right channel (+)	Analog input signal	-
A6	#20	-	-	-
A7	#21	CANH	Digital signal 2-3 V	-
A8	#22	CANL	Digital signal 2-3 V	-
A9	#23	Power supply, aerial amplifier	11 V	-
A10	#24	Audio channel (+), center loudspeaker	Alternating current at sound in center loudspeaker	-
A11	#25	Audio channel (-), center loudspeaker	Alternating current at sound in center loudspeaker	-
A12	#26	Ground	U_{low}	-

AUDIO CONTROL MODULE (AUM)/EXTERNAL AMPLIFIER TO LOUDSPEAKERS, GRAY CONNECTOR

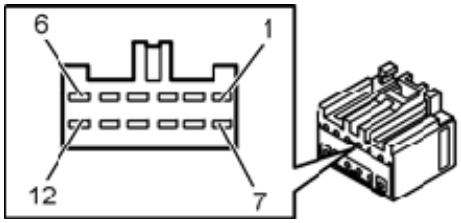

Fig. 4: Identifying Terminals Of Audio Control Module Gray Connector
Courtesy of VOLVO CARS CORPORATION

NOTE: The connectors on the adapter cable must have the correct color-coding for the signal table to match.

Before taking any readings, see **CHECKING VOLTAGE / GROUND CONNECTION, MEDIA/INFOTAINMENT** .

Control module terminal	Breakout box terminal	Signal type	Ignition on	Miscellaneous
B1	#1	Audio channel (+), loudspeaker left front	AC voltage (to pin 2) when sound in the left front loudspeakers	-
B2	#2	Audio channel (-), loudspeaker left front	AC voltage (to pin 1) when sound in the left front loudspeakers	-
B3	#3	-	-	-
B4	#4	-	-	-
B5	#5	Audio channel (+), loudspeaker right front	Alternating current (to pin 6) when sound in the right front loudspeakers	-
B6	#6	Audio channel (-), loudspeaker right front	Alternating current (to pin 5) when sound in the right front loudspeakers	-
B7	#7	Audio channel (+), loudspeaker left rear	Alternating current (to pin 8) when sound in the left rear loudspeakers	-
B8	#8	Audio channel (-), loudspeaker left rear	Alternating current (to pin 7) when sound in the left rear loudspeakers	-
B9	#9	-	-	-
B10	#10	-	-	-
B11	#11	Audio channel (+), loudspeaker right rear	Alternating current (to pin 12) when sound in the right rear loudspeakers	-
B12	#12	Audio channel (-), loudspeaker right rear	Alternating current (to pin 11) when sound in the	-

			right rear loudspeakers	

AUDIO CONTROL MODULE (TO AERIAL)

Before taking any readings, see **CHECKING VOLTAGE / GROUND CONNECTION, MEDIA/INFOTAINMENT** .

Control module terminal	Breakout box terminal	Signal type	Ignition on	Miscellaneous
C1	#45	Aerial signal, head aerial	Analogue signal	-
C2	#46	Power supply and aerial signal, sub aerial	Analogue signal	The aerial signal is retained over DC

AUDIO CONTROL MODULE (CABLE BETWEEN THE AUDIO MODULE AND THE AMPLIFIER)

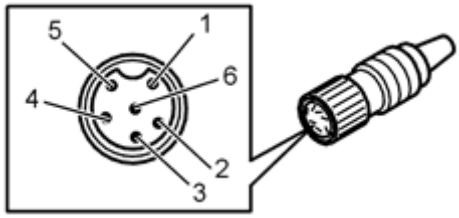

Fig. 5: Identifying Terminals Of Cable Between Audio Module And Amplifier
Courtesy of VOLVO CARS CORPORATION

Before taking any readings, see **CHECKING VOLTAGE / GROUND CONNECTION, MEDIA/INFOTAINMENT** .

Control module terminal	Breakout box terminal	Signal type	Ignition on	Miscellaneous
D1	#42	Audio channel, loudspeaker left front	Alternating current when sound at front left loudspeaker	-
D2	#43	Audio channel, loudspeaker right front	Alternating current when sound at front right loudspeaker	-
D3	#44	Audio channel, loudspeaker right rear	Alternating current when sound at right rear loudspeaker	-
D4	#45	Signal ground, audio channel	U_{low}	-
D5	#46	Audio channel, loudspeaker left rear	Alternating current when sound at left rear loudspeaker	-
D6	#47	Control signal (off / on)		-

		amplifier		

AUDIO CONTROL MODULE (CABLE BETWEEN THE AUDIO MODULE AND THE CD CHANGER/NAVIGATION UNIT)

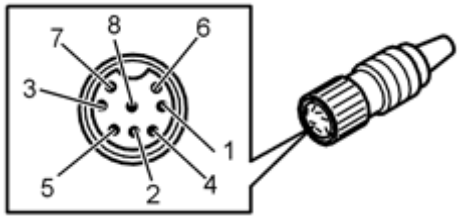

Fig. 6: Identifying Terminals Of Cable Between Audio Module And CD Changer/Navigation Unit
Courtesy of VOLVO CARS CORPORATION

Before taking any readings, see **CHECKING VOLTAGE / GROUND CONNECTION, MEDIA/INFOTAINMENT** .

Control module terminal	Breakout box terminal	Signal type	Ignition on	Miscellaneous
E1	#16	Clock signal to audio unit	Digital signal	-
E2	#17	Signal ground, sound	U_{low}	-
E3	#18	15 supply	U_{bat}	-
E4	#19	Data signal to audio unit	Digital signal	-
E5	#20	Busy signal to audio unit	Digital signal	-
E6	#21	Left audio channel	Alternating current when there is sound to the loudspeaker	-
E7	#22	Right audio channel	Alternating current when there is sound to the loudspeaker	-
E8	#23	Voice guide channel	Alternating current when there is sound to the loudspeaker	-
H		Screen ground, cable to audio unit	U_{low}	-

EXTERNAL AMPLIFIER

Before taking any readings, see **CHECKING VOLTAGE / GROUND CONNECTION, MEDIA/INFOTAINMENT** .

Control module terminal	Signal type	Ignition on	Miscellaneous
F1	30 supply		-

		U_{bat}	
F2	Ground	U_{low}	-

10CD CHANGER

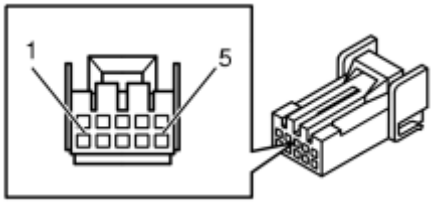

Fig. 7: Identifying 10-CD Changer Connector Terminals
Courtesy of VOLVO CARS CORPORATION

Before taking any readings, see **CHECKING VOLTAGE / GROUND CONNECTION, MEDIA/INFOTAINMENT** .

Control module terminal	Signal type	Ignition on	Miscellaneous
G1	30 supply	U_{bat}	-
G2	Ground	U_{low}	-
G3			
G4			
G5			

SIGNAL SPECIFICATION, KEYPAD UNIT / CARPHONE MODULE (PHM)

CONNECTING THE BREAKOUT BOX AND CHECKING THE GROUND TERMINAL

NOTE: **It is important to connect the breakout box and check ground terminals according to CHECKING THE GROUND TERMINAL, PHONE MODULE (PHM) before taking readings.**

DEFINITIONS

DC voltage in volts (V)	Ulow = Voltage near 0 V
	Ubat = Battery voltage

KEYPAD UNIT /CARPHONE CONTROL MODULE (PHM) (FOR HANDS-FREE LOUDSPEAKER AND HANDSET)

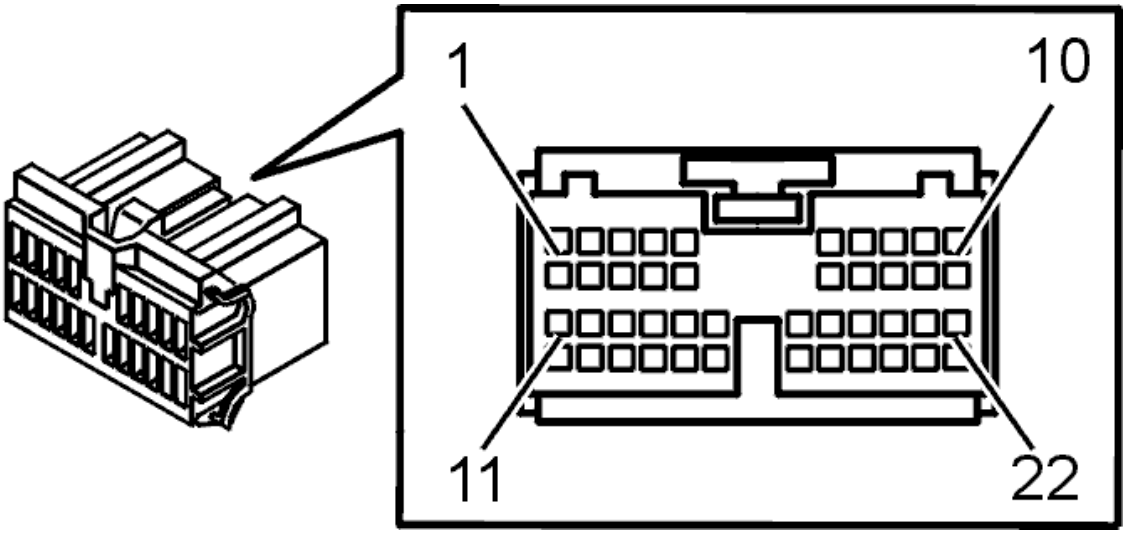

Fig. 8: Identifying Connector (F) Terminals
Courtesy of VOLVO CARS CORPORATION

Before measuring, read, see **CONNECTING THE BREAKOUT BOX AND CHECKING THE GROUND TERMINAL**.

Control module terminal	Breakout box terminal	Signal type	Ignition on	Other
A1	#1	Signal, handset microphone	Alternating current when there is sound to the handset microphone	-
A2	#2	Handset signal ground	Ulow	-
A3	#3	Power supply to the handset	Ubat	-
A4	#4	Signal, handset on cradle	8 V	-
A5	#5	-	-	-
A6	#6	30 supply	Ubat	-
A7	#7	-	-	-
A8	#8	Ground	Ulow	-
A9	#9	-	-	-
A10	#10	CANL	Digital signal	-
A11	#11	Signal, handset loudspeaker	Alternating current when there is sound from the handset loudspeaker	-
A12	#12	Signal (+), hands-free	Alternating current (to #13) when there is sound from the head restraint loudspeaker	-
A13	#13	Signal (-), hands-free	Alternating current (to #12) when there is sound from the head restraint loudspeaker	-

A14	#14	-	-	-
A15	#15	-	-	-
A16	#16	-	-	-
A17	#17	-	-	-
A18	#18	-	-	-
A19	#19	-	-	-
A20	#20	-	-	-
A21	#21	-	-	-
A22	#22	CANH	Digital signal	-

KEYPAD UNIT / CARPHONE MODULE (PHM) (TO CARPHONE BOX)

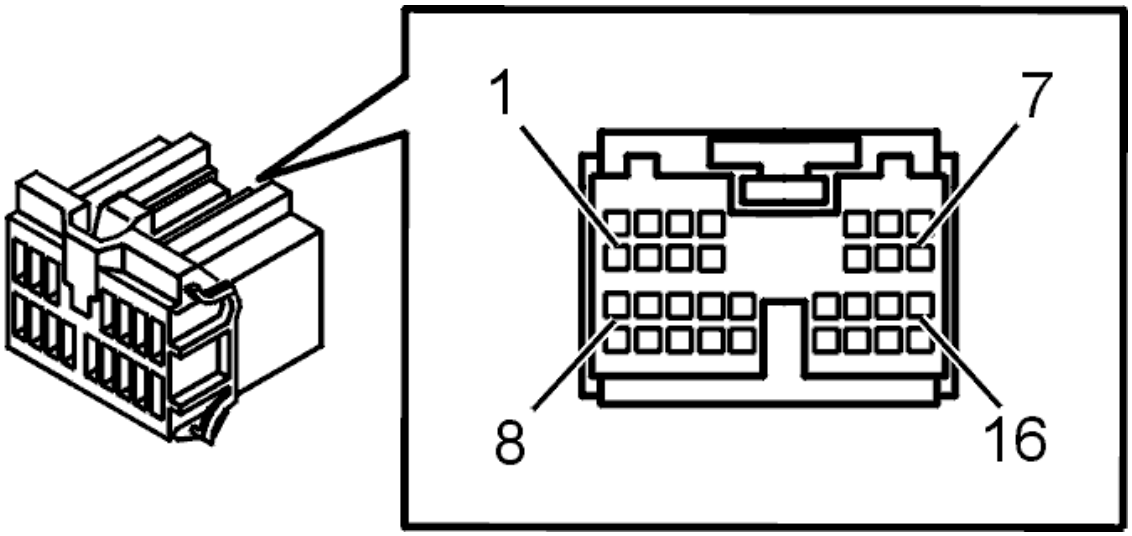

Fig. 9: Connector, Green (16- Pin)
Courtesy of VOLVO CARS CORPORATION

Before measuring, read, see **CONNECTING THE BREAKOUT BOX AND CHECKING THE GROUND TERMINAL**.

Control module terminal	Breakout box terminal	Signal type	Ignition on / carphone on	Other
B1	#25	Microphone signal	Alternating current when there is sound to the handset microphone	-
B2	#26	Analog ground reference	Ulow	-
B3	#27	-	-	-
B4	#28	-	-	-
B5	#29	Power supply to GSM unit	Ubat	-
B6	#30	Ground	Ulow	-
B7	#31	Mbus	Digital signal	-

B8	#32	Loudspeaker signal	Alternating current when there is sound in handset loudspeaker	-
B9	#33	Signal (-), hands-free	Alternating current when there is sound in the hands-free loudspeaker	-
B10	#34	Signal (+), hands-free	Alternating current when there is sound in the hands-free loudspeaker	-
B11	#35	-	-	-
B12	#36	-	-	-
B13	#37	-	-	-
B14	#38	Power supply to GSM unit	Ubat	-
B15	#39	Ground	Ulow	-
B16	#40	Signal ground (Mbus)	Ulow	-

CARPHONE BOX (TO KEYPAD UNIT / CARPHONE MODULE (PHM)

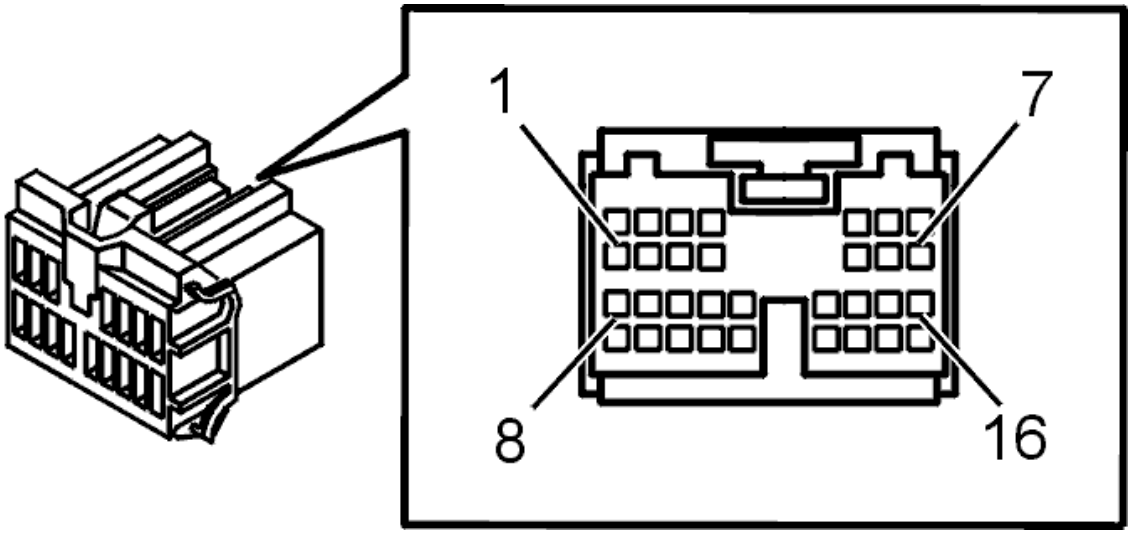

Fig. 10: Connector, Green (16- Pin)
Courtesy of VOLVO CARS CORPORATION

Before measuring, read, see **CONNECTING THE BREAKOUT BOX AND CHECKING THE GROUND TERMINAL**.

Stepper unit terminal	Breakout box terminal	Signal type	Ignition on	Other
C1	#25	Microphone signal	Alternating current when there is sound to the handset microphone	-
C2	#26	Analog ground reference	Ulow	-
C3	#27	-	-	-

C4	#28	-	-	-
C5	#29	Power supply to GSM unit	Ubat	-
C6	#30	Ground	Ulow	-
C7	#31	Mbus	Digital signal	-
C8	#32	Loudspeaker signal	Alternating current when there is sound in handset loudspeaker	-
C9	#33	Signal (-), hands-free	Alternating current when there is sound in the hands-free loudspeaker	-
C10	#34	Signal (+), hands-free	Alternating current when there is sound in the hands-free loudspeaker	-
C11	#35	-	-	-
C12	#36	-	-	-
C13	#37	-	-	-
C14	#38	Power supply to GSM unit	Ubat	-
C15	#39	Ground	Ulow	-
C16	#40	Signal ground (Mbus)	Ulow	-

CARPHONE (FOR HANDS-FREE MICROPHONE)

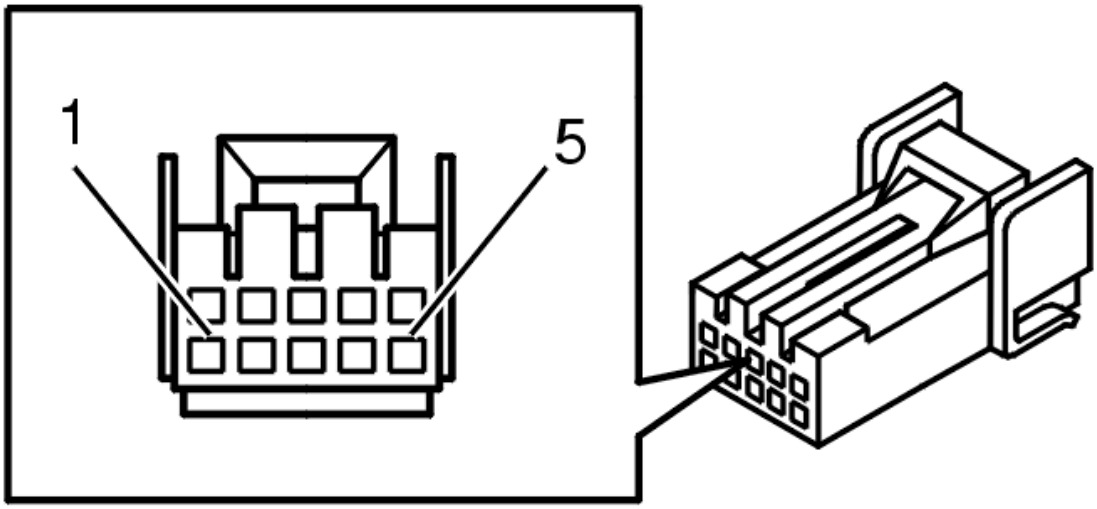

Fig. 11: 10 CD Changer Connector Terminals
Courtesy of VOLVO CARS CORPORATION

Before measuring, read, see **CONNECTING THE BREAKOUT BOX AND CHECKING THE GROUND TERMINAL**.

Pin no.	Signal type	Ignition on	Other
D1	Power supply and microphone	Analog signal	The microphone

	signal		signal is retained over DC
D2	-	-	-
D3	Signal ground, hands-free microphone	Ulow	-
D4	-	-	-
D5	-	-	-

HANDSET (FOR KEYPAD UNIT / CARPHONE MODULE (PHM))

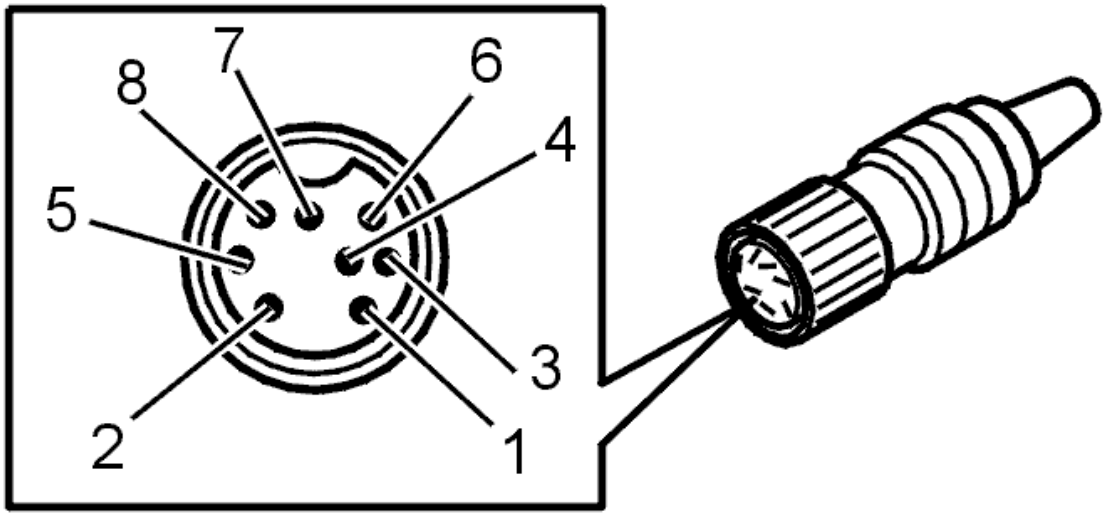

Fig. 12: Connector D, Handset Connector
Courtesy of VOLVO CARS CORPORATION

Before measuring, read, see **CONNECTING THE BREAKOUT BOX AND CHECKING THE GROUND TERMINAL**.

Stepper unit terminal	Breakout box terminal	Signal type	Ignition on	Other
E1	#32	-	-	-
E2	#33	-	-	-
E3	#34	Handset microphone signal	Alternating current when there is sound from the handset microphone	-
E4	#35	Handset speaker signal	Alternating current when there is sound in the handset loudspeaker	-
E5	#36	Ground	Ulow	-
E6	#37	Signal, handset on cradle	U = 8V	-
E7	#38	Handset power supply	Ubat	-
E8	#39	-	-	-

HANDS-FREE SPEAKERS (FOR KEYPAD UNIT / CARPHONE MODULE (PHM))

Graphic under process

Fig. 13: Identifying Engine Control Module
Courtesy of VOLVO CARS CORPORATION

Before measuring, read, see **CONNECTING THE BREAKOUT BOX AND CHECKING THE GROUND TERMINAL**.

Pin no.	Signal type	Ignition on	Other
F1	Signal (+) hands-free	Alternating current (to #2) when there is sound from the speakers	-
F2	Signal (-) hands-free	Alternating current (to #1) when there is sound from the speakers	-

SIGNAL SPECIFICATION, REAR SEAT ENTERTAINMENT MODULE (RSE), GENERATION 4.2

U=	DC voltage in volts (V)	U_{AC} =	AC voltage in volts (V)
U_{bat} =	Battery voltage (V)	f =	Frequency in Hertz (Hz)
U_{low} =	Voltage approximately 0 V	t =	Time in seconds
PWM =	Pulse width modulated signal as a %		

Damaged rear seat entertainment module (RSE).

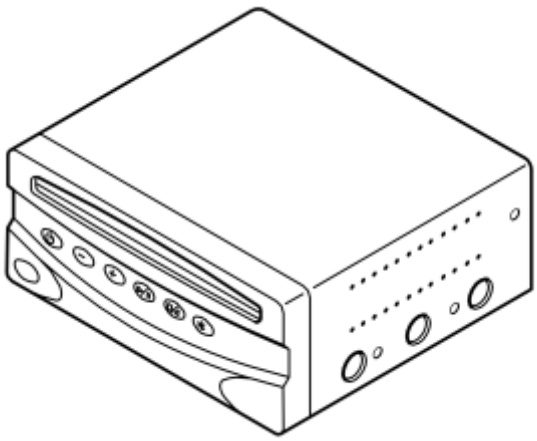

Fig. 14: Identifying Rear Seat Entertainment Module (RSE)
Courtesy of VOLVO CARS CORPORATION

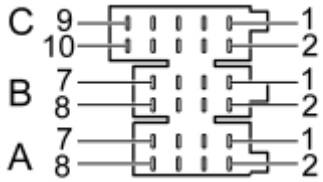

Fig. 15: Identifying Terminals
Courtesy of VOLVO CARS CORPORATION

SIGNAL TABLE

Terminal	Signal type	Ignition on	Miscellaneous
#A1	-	-	-
#A2	-	-	-
#A3	-	-	-
#A4	Power supply to control module	$U=U_{high}$	Direct from battery via fuse.
#A5	-	-	-
#A6	Power supply to control module	$U=U_{high}$	Via Central electronic module (CEM). For lighting in buttons.
#A7	Power supply to control module	$U=U_{high}$	Via Central electronic module (CEM). Indication of ignition on.
#A8	Ground terminal	$U=U_{low}$	-

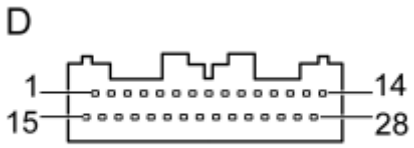

Fig. 16: Identifying 28-Bit Connector
Courtesy of VOLVO CARS CORPORATION

SIGNAL TABLE

Terminal	Signal type	Ignition on	Miscellaneous
#D1	-	-	-
#D2	-	-	-
#D3	Ground terminal	$U=U_{low}$	Ground for audio signal to AUX-input and Integrated Audio Module (IAM)
#D4	Audio signal (in)	-	Input signal from AV-panel. Left audio channel (+), RCA switch. Alternating current voltage during signal.
#D5	-	-	-
#D6	-	-	-
#D7	Video signal (in)	-	Input signal from video connection (+) on AV-panel. Analog signal.
#D8	-	-	-
#D9	Internal CAN (+)	U= 2.5-2.8 V	Connected to terminal #D10.
#D10	Internal CAN (+)	U= 2.5-2.8 V	Connected to terminal #D9.
#D11	-	-	-
#D12	Audio signal (out)	-	Signal to wire headsets via AV-panel. Left audio signal headset socket 1.
#D13	Audio signal (out)	-	Signal to wire headsets via AV- panel. Right audio signal headset socket 1.
#D14	Ground terminal	$U=U_{low}$	Ground connection wire headsets via AV-panel. Headset socket 1
#D15	-	-	-
#D16	Audio signal (out)	-	Output signal to AUX-input and Integrated Audio Module (IAM). Right audio signal.
#D17	Audio signal (out)	-	Output signal to AUX-input and Integrated Audio Module (IAM). Left audio signal.

#D18	Audio signal (in)	-	Input signal from AV-panel. Right audio channel (+), RCA switch. Alternating current voltage during signal.
#D19	Ground terminal	$U=U_{low}$	Ground connection for audio inputs on AV-panel.
#D20	-	-	-
#D21	Video signal (in)	-	Input signal from video connection (-) on AV-panel. Analog signal.
#D22	-	-	-
#D23	Internal CAN (-)	U= 2.5-2.8 V	Connected to terminal #D24.
#D24	Internal CAN (-)	U= 2.5-2.8 V	Connected to terminal #D23.
#D25	-	-	-
#D26	Ground terminal	$U=U_{low}$	Ground connection wire headsets via AV-panel. Headset socket 2.
#D27	Audio signal (out)	-	Signal to wire headsets via AV-panel. Left audio signal headset socket 2.
#D28	Audio signal (out)	-	Signal to wire headsets via AV-panel. Right audio signal headset socket 2.

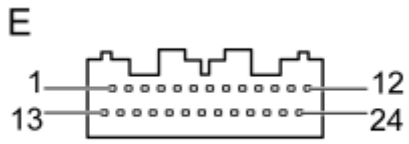

Fig. 17: Identifying 24-Bit Connector
Courtesy of VOLVO CARS CORPORATION

SIGNAL TABLE

Terminal	Signal type	Ignition on	Miscellaneous
#E1	Power supply	12 V	To left display screen terminal #2.
#E2	Wake-up signal	approximately 11-11.5 V	To left screen terminal #3. Upon start-up of the system and when there are communication faults with the screen, the voltages switches between 0 V and 11-11.5 V, 3 times.
#E3	CAN signal (+)	U= 2.5-2.8 V	Internal CAN network

			between control module and display screens. Left display screen terminal #4.
#E4	CAN signal (-)	U= 2.5-2.8 V	Internal CAN network between control module and display screens. Left display screen terminal #5.
#E5	IR control signal for system (in)	U=approx. 4 V when no IR signal received	From left screen terminal #12. Lowers upon signal receipt.
#E6	Ground terminal	$U=U_{low}$	For audio signal to left display screen #11.
#E7	Audio signal (out)	Analog signal	To left display screen terminal #9. Left audio channel.
#E8	Audio signal (out)	Analog signal	To left display screen terminal #10. Right audio channel.
#E9	-	-	-
#E10	Video signal (out)	Analog signal	To left display screen terminal #8. Video (+).
#E11	Video signal (out)	Analog signal	To left display screen terminal #7. Video (-).
#E12	Ground terminal	$U=U_{low}$	To left display screen terminal #1.
#E13	Power supply	12 V	To right display screen terminal #2.
#E14	Wake-up signal	approximately 11-11.5 V	To right screen terminal #3. Upon start-up of the system and when there are communication faults with the screen, the voltages switches between 0 V and 11-11.5 V, 3 times.
#E15	CAN signal (+)	U= 2.5-2.8 V	Internal CAN network between control module and display screens. Right display screen terminal #4.
#E16	CAN signal (-)	U= 2.5-2.8 V	Internal CAN network between control module and display screens. Right display screen terminal #5.
#E17	IR control signal for system (in)	U=approx. 4 V when no IR signal received	From right screen terminal #12. Lowers upon signal receipt.
#E18	Ground terminal	$U=U_{low}$	For audio signal to right display screen terminal #11.
			To right display screen

#E19	Audio signal (out)	Analog signal	terminal #10. Left audio channel.
#E20	Audio signal (out)	Analog signal	To right display screen terminal #9. Right audio channel.
#E21	-	-	-
#E22	Video signal (out)	Analog signal	To right display screen terminal #8. Video (+).
#E23	Video signal (out)	Analog signal	To right display screen terminal #7. Video (-).
#E24	Ground terminal	$U=U_{low}$	To right display screen terminal #1.

SIGNAL SPECIFICATION, RTI

CONNECTING THE BREAKOUT BOX AND CHECKING THE GROUND TERMINAL

NOTE: **Before taking readings, the breakout box must be connected and the ground terminal must be checked. See CONNECTING THE BREAKOUT BOX TO THE ROAD TRAFFIC INFORMATION (RTI) CONTROL MODULE .**

DEFINITIONS

DC voltage in volts (V)	Ulow = Voltage near V
	Ubat = Battery voltage

RTI CONTROL MODULE

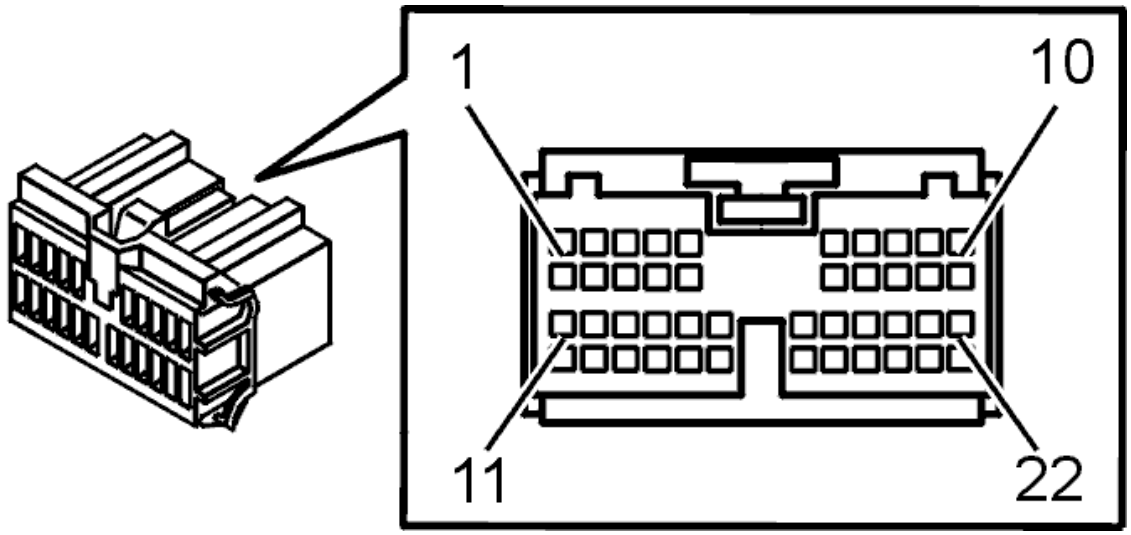

Fig. 18: Identifying Connector (F) Terminals
Courtesy of VOLVO CARS CORPORATION

Before taking any readings, see **CONNECTING THE BREAKOUT BOX AND CHECKING THE GROUND TERMINAL**.

The RTI control module terminals A1-A22 correspond to terminals #1-#22 on the breakout box.

Control module terminal	Breakout box terminal	Signal type	Ignition on	Other
A1	#1	30-supply (power supply from battery)	Ubat	-
A2	#2	-	-	-
A3	#3	-	-	-
A4	#4	-	-	-
A5	#5	-	-	-
A6	#6	-	-	-
A7	#7	Signal (+) with map information from the CD-ROM changer	Digital signal	V_H =0.68 +/- 0.2 V, V_L =0.5 +/- 0.1 V
A8	#8	-	-	-
A9	#9	-	-	-
A10	#10	CANH signal	U = 2-3 V	-
A11	#11	Ground (Measured to battery negative terminal)	Ulow	-
A12	#12	-	-	-
A13	#13	-	-	-
A14	#14	-	-	-
A15	#15	-	-	-
A16	#16	-	-	-
A17	#17	-	-	-
A18	#18	-	-	-
A19	#19	Signal (-) with map information from the CD-ROM changer	Digital signal	V_H =0.68 +/- 0.2 V, V_L =0.5 +/- 0.1 V
A20	#20	Screen ground, signal cables to CD-ROM changer	Ulow	-
A21	#21	-	-	-
A22	#22	CANL signal	U = 2-3 V	-

RTI CONTROL MODULE (TO TV RECEIVER)

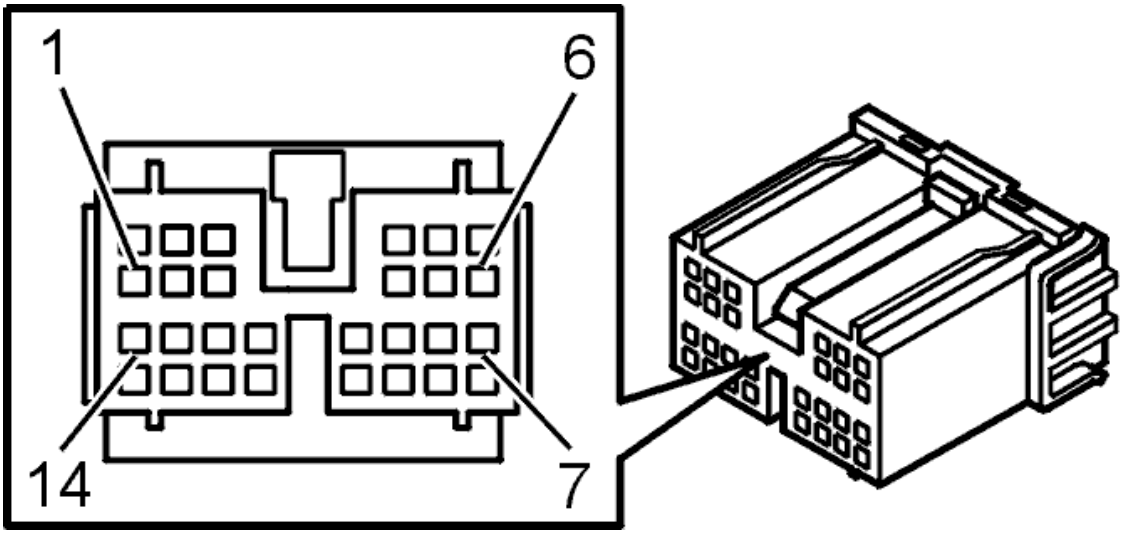

Fig. 19: Identifying M2D Control Module (FORTV Executive. Rear Seat Entertainment, Generation 3.1/3.2, Premier TV Receiver) Connector
Courtesy of VOLVO CARS CORPORATION

Before taking any readings, see **CONNECTING THE BREAKOUT BOX AND CHECKING THE GROUND TERMINAL**.

The RTI control module terminals B1-B14 correspond to terminals #43-#56 on the breakout box.

Control module terminal	Breakout box terminal	Signal type	Ignition on	Other
B1	#43	Video signal, TV	Analog signal	1 V p-p +/- 0.2 V
B2	#44	Synchronizing signal, TV	Digital signal	0-5 V
B3	#45	-	-	-
B4	#46	-	-	-
B5	#47	-	-	-
B6	#48	30 supply	Ubat	-
B7	#49	Signal ground, TV signals	Ulow	-
B8	#50	Screen ground, TV signals	Ulow	-
B9	#51	-	-	-
B10	#52	-	-	-
B11	#53	Signal, remote control TV	Digital signal	33.3 kHz carrier wave when the remote control is pressed
B12	#54	-	-	-
B13	#55	Ground (Measured to battery negative terminal)	Ulow	-
B14	#56	-	-	-

RTI CONTROL MODULE (TO DISPLAY)

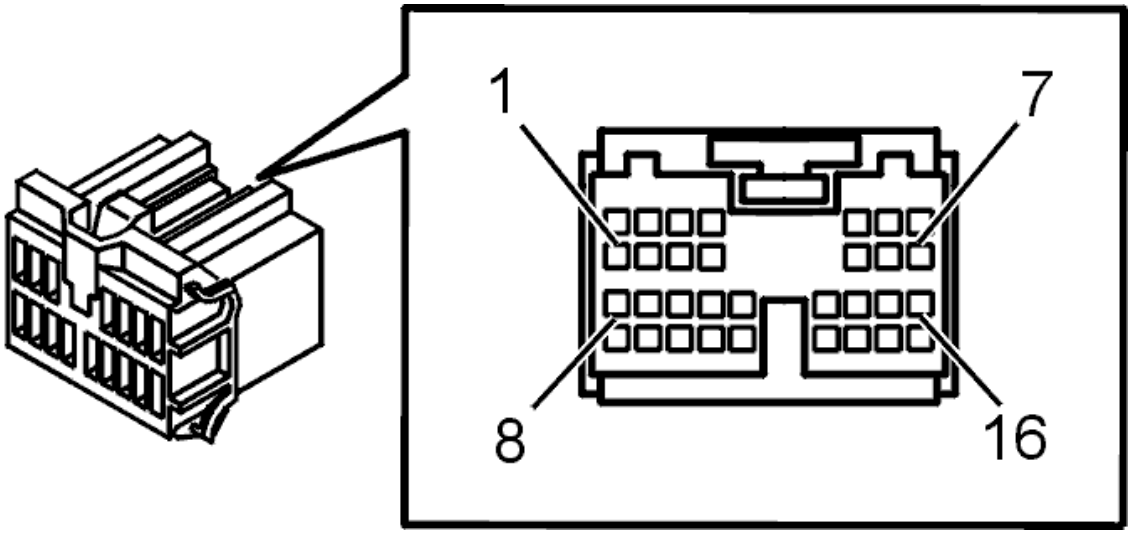

Fig. 20: Connector, Green (16- Pin)
Courtesy of VOLVO CARS CORPORATION

Before taking any readings, see **CONNECTING THE BREAKOUT BOX AND CHECKING THE GROUND TERMINAL**.

The RTI control module terminals C1-C16 correspond to terminals #25-#40 on the breakout box.

Control module terminal	Breakout box terminal	Signal type	Ignition on	Other
C1	#25	Color signal (red), screen	Analog signal when red color is displayed	0.714 V p-p
C2	#26	Color signal (blue), screen	Analog signal when blue color is displayed	0.714 V p-p
C3	#27	Screen ground, video signals	Ulow	-
C4	#28	-	-	-
C5	#29	-	-	-
C6	#30	-	-	-
C7	#31	-	-	-
C8	#32	Color signal (green), display	Analog signal when green color is displayed	0.714 V p-p
C9	#33	Composite synch, display	Analog signal	0-5 V
C10	#34	Screen ground, cable to the screen	Ulow	-
C11	#35	Signal, display remote control	Digital signal	38 kHz carrier wave when the remote control is

				pressed
C12	#36	Serial bus to the display	Digital signal	Half duplex, start-stop synchronizing, 2400 BPS
C13	#37	-	-	-
C14	#38	Video signal to display	Analog signal	1 V p-p +/- 0.2 V
C15	#39	-	-	-
C16	#40	-	-	-

RTI CONTROL MODULE (TO CD-ROM CHANGER)

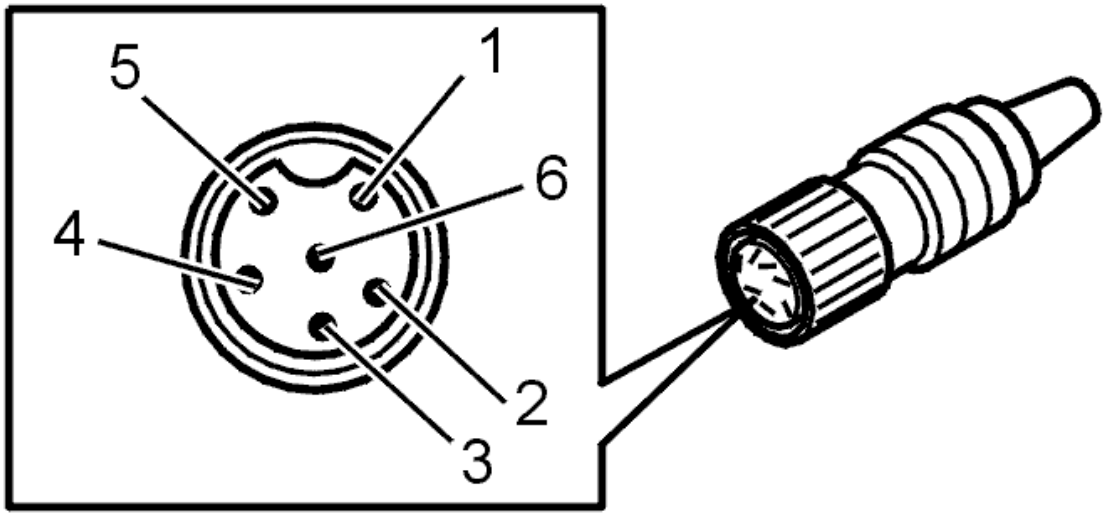

Fig. 21: Audio Control Module (Cable Between Audio Module & Amplifier)
Courtesy of VOLVO CARS CORPORATION

Before taking any readings, see **CONNECTING THE BREAKOUT BOX AND CHECKING THE GROUND TERMINAL**.

The RTI control module terminals D1-D6 correspond to terminals #42-#47 on the breakout box.

Control module terminal	Breakout box terminal	Signal type	Ignition on	Other
D1	#42	Clock signal from CD-ROM changer	Digital signal	Melbus protocol
D2	#43	Data signal from the CD ROM changer	Digital signal	Melbus protocol
D3	#44	-	-	-
D4	#45	Busy signal from CD-ROM changer	Digital signal	Melbus protocol
D5	#46	15 supply	Ubat	-

D6	#47	-	-	-
H		Screen ground, cable to the CD-ROM changer	Ulow	-

RTI CONTROL MODULE (TO AUDIO UNIT)

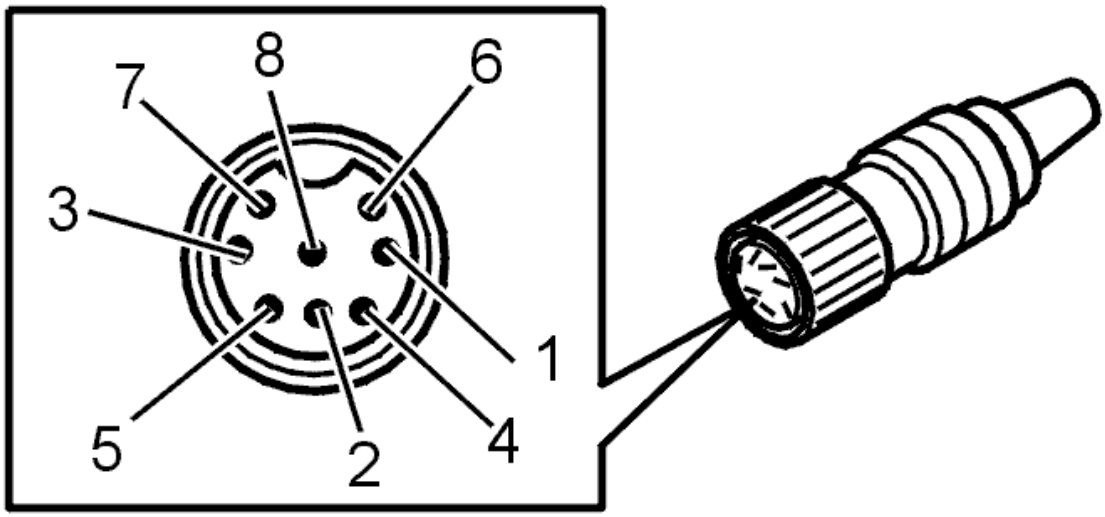

Fig. 22: Audio Control Module (Cable Between Audio Module & CD Changer/Navigation Unit)
Courtesy of VOLVO CARS CORPORATION

Before taking any readings, see **CONNECTING THE BREAKOUT BOX AND CHECKING THE GROUND TERMINAL**.

The RTI control module terminals E1-E8 correspond to terminal #16-#23 on the breakout box.

Control module terminal	Breakout box terminal	Signal type	Ignition on	Other
E1	#16	Clock signal to audio unit	Digital signal	Melbus protocol
E2	#17	Signal ground, sound	Ulow	-
E3	#18	15 supply	Ubat	-
E4	#19	Data signal to audio unit	Digital signal	Melbus protocol
E5	#20	Busy signal to audio unit	Digital signal	Melbus protocol
E6	#21	Left audio channel	Alternating current on sound to loudspeakers	150 mV rms +/- 38 mV (1 kHz 30% mod)
E7	#22	Right audio channel	Alternating current on sound to loudspeakers	150 mV rms +/- 38 mV (1 kHz 30% mod)
E8	#23	Voice guide channel	Alternating current on sound to loudspeakers (for voice guidance)	150 mV rms +/- 38 mV (1 kHz 30% mod)

H	Screen ground, cable to audio unit	Ulow	-	

RTI CONTROL MODULE (TO TV RECEIVER)

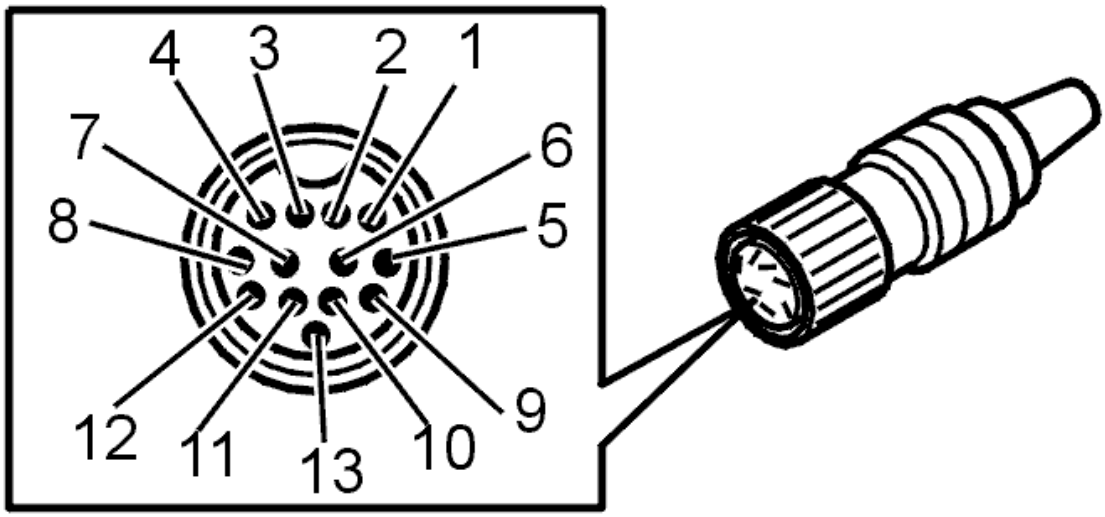

Fig. 23: Identifying RTI Control Module (To TV Receiver) Connector Terminals
Courtesy of VOLVO CARS CORPORATION

Before taking any readings, see **CONNECTING THE BREAKOUT BOX AND CHECKING THE GROUND TERMINAL**.

The RTI control module terminals F1-F13 correspond to terminals #1-#13 on the breakout box.

Control module terminal	Breakout box terminal	Signal type	Ignition on	Other
F1	#1	Signal ground	Ulow	-
F2	#2	Left audio channel	Alternating current when there is sound to the loudspeaker	150 mV rms +/- 38 mV (1 kHz 30% mod)
F3	#3	-	-	-
F4	#4	Right audio channel	Alternating current when there is sound to the loudspeaker	150 mV rms +/- 38 mV (1 kHz 30% mod)
F5	#5	-	-	-
F6	#6	Voice guide channel	Alternating current when there is sound to the loudspeaker (during voice guidance)	150 mV rms +/- 38 mV (1 kHz 30% mod)
F7	#7	-	-	-

F8	#8	-	-	-
F9	#9	-	-	-
F10	#10	15 supply	Ubat	-
F11	#11	Busy signal to TV receiver	Digital signal	Melbus protocol
F12	#12	Clock signal to TV receiver	Digital signal	Melbus protocol
F13	#13	Data signal to TV receiver	Digital signal	Melbus protocol
H	Screen ground, cable to TV receiver	Ulow	-	

RTI CONTROL MODULE (TO GPS ANTENNA, GRAY CONNECTOR)

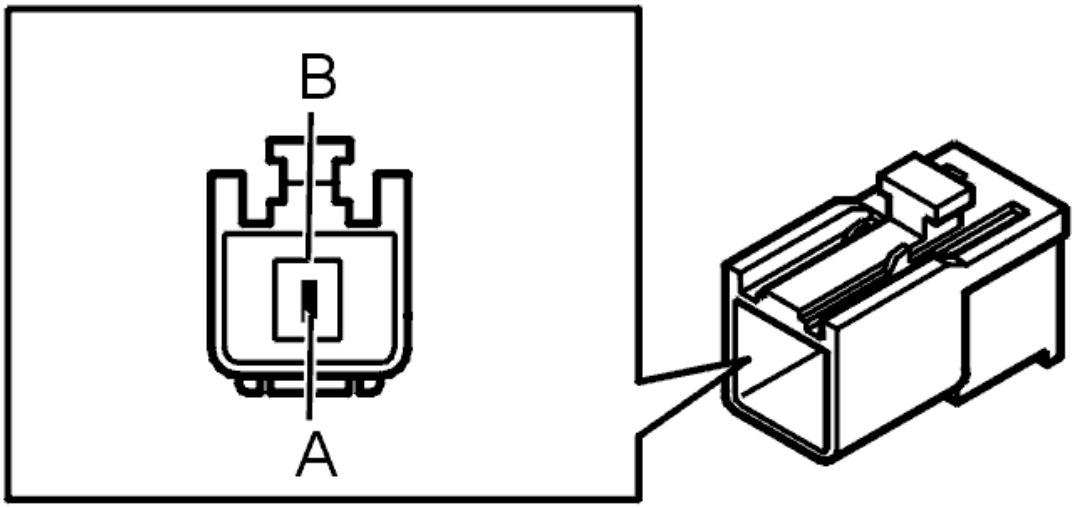

Fig. 24: Connector F, Carphone Antenna (Brown Connector), Single Hirose GT5
Courtesy of VOLVO CARS CORPORATION

Before taking any readings, see **CONNECTING THE BREAKOUT BOX AND CHECKING THE GROUND TERMINAL**.

Control module terminal	Signal type	Ignition on	Other
G1 (A)	Power supply and GPS signal	Analog signal	Supply 5 V (DC), signal 1.575 GHz
G2 (B)	Screen ground	Ulow	-

RTI CONTROL MODULE (TO TMC (FM-MPX) ANTENNA, BROWN CONNECTOR)

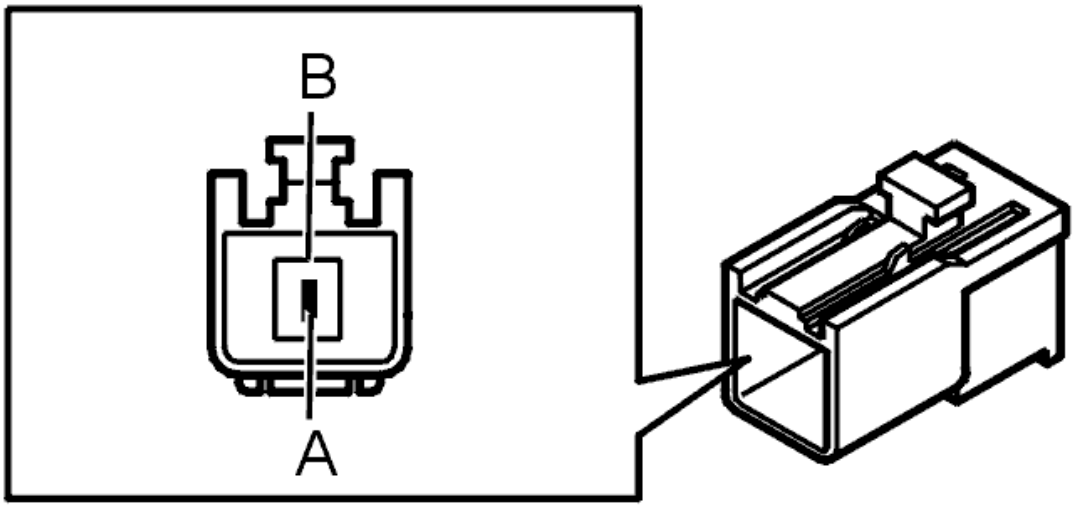

Fig. 25: Connector F, Carphone Antenna (Brown Connector), Single Hirose GT5
Courtesy of VOLVO CARS CORPORATION

Before taking any readings, see **CONNECTING THE BREAKOUT BOX AND CHECKING THE GROUND TERMINAL**.

Control module terminal	Signal type	Ignition on	Other
H1 (A)	Antenna signal	Analog signal	-
H2 (B)	Screen ground	Ulow	-

RTI CONTROL MODULE (TO FM-MPX ANTENNA, GREEN CONNECTOR)

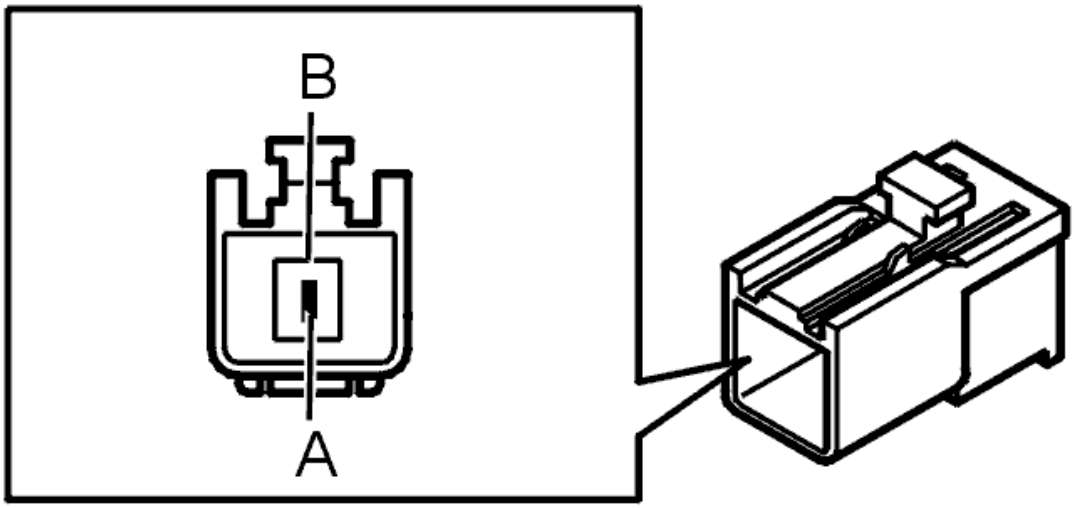

Fig. 26: Connector F, Carphone Antenna (Brown Connector), Single Hirose GT5
Courtesy of VOLVO CARS CORPORATION

Before taking any readings, see **CONNECTING THE BREAKOUT BOX AND CHECKING THE**

GROUND TERMINAL.

Control module terminal	Signal type	Ignition on	Other
I1 (A)	Antenna signal	Analog signal	-
I2 (A)	Screen ground	Ulow	-

DISPLAY (TO RTI CONTROL MODULE AND "CHASSIS")

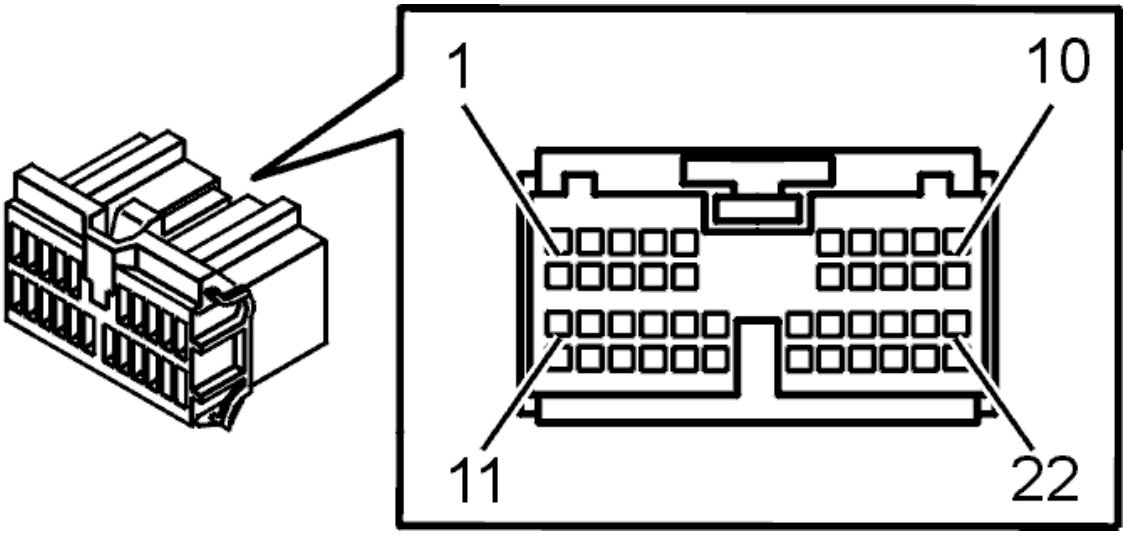

Fig. 27: Identifying Connector (F) Terminals
Courtesy of VOLVO CARS CORPORATION

Before taking any readings, see **CONNECTING THE BREAKOUT BOX AND CHECKING THE GROUND TERMINAL**.

Display terminals J1-J22 correspond to terminals #1-#22 on the breakout box.

Control module terminal	Breakout box terminal	Signal type	Ignition on	Other
J1	#1	Color signal (red), screen	Analog signal when red color is displayed	0.714 V p-p
J2	#2	Color signal (green), display	Analog signal when green color is displayed	0.714 V p-p
J3	#3	Color signal (blue), screen	Analog signal when blue color is displayed	0.714 V p-p
J4	#4	Synchronizing signal, TV	Digital signal	0-5 V
J5	#5	Screen ground, video signals	Ubat	-
J6	#6	Signal, display remote	Digital signal	38 kHz carrier wave

		control		when the remote control is pressed
J7	#7	-	-	-
J8	#8	Screen ground, cable to the screen	Ulow	-
J9	#9	Video signal to display	Analog signal	1 V p-p +/- 0.2 V
J10	#10	-	-	-
J11	#11	30-supply (power supply from battery)	Ubat	-
J12	#12	30-supply (power supply from battery)	Ubat	-
J13	#13	15 supply	Ubat	-
J14	#14	-	-	-
J15	#15	Ground (Measured to battery negative terminal)	Ulow	-
J16	#16	Ground (Measured to battery negative terminal)	Ulow	-
J17	#17	-	-	-
J18	#18	Serial bus from the control module	Digital signal	Half duplex, start-stop synchronizing, 2400 BPS
J19	#19	-	-	-
J20	#20	-	-	-
J21	#21	-	-	-
J22	#22	-	-	-

CD-ROM CHANGER (TO RTI CONTROL MODULE AND "CHASSIS")

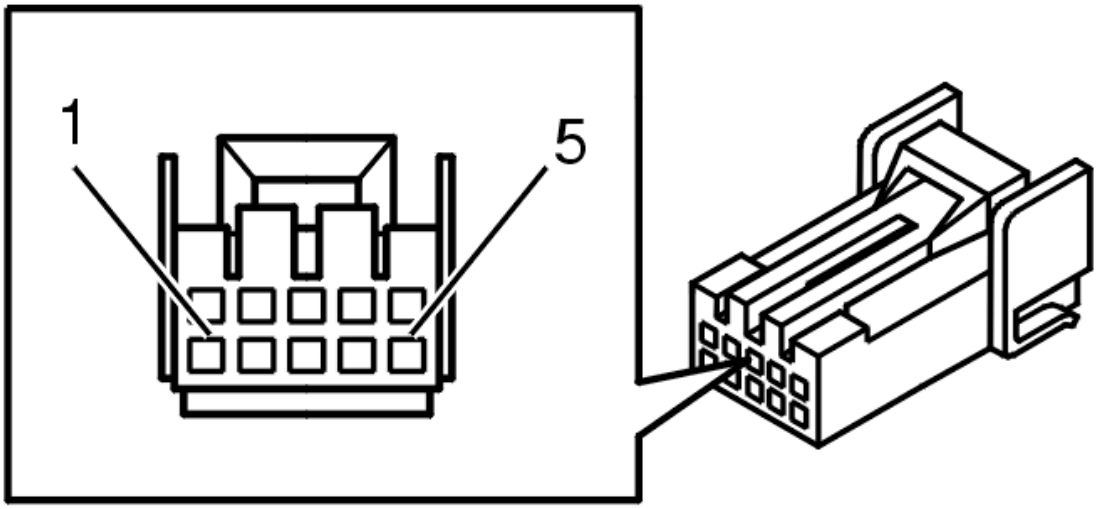

Fig. 28: 10 CD Changer Connector Terminals
Courtesy of VOLVO CARS CORPORATION

Before taking any readings, see **CONNECTING THE BREAKOUT BOX AND CHECKING THE GROUND TERMINAL**.

CD-ROM changer terminals K1-K5 correspond to #26-#30 on the breakout box.

Control module terminal	Breakout box terminal	Signal type	Ignition on	Other
K1	#26	Ground (Measured to battery negative terminal)	Ulow	-
K2	#27	30-supply (power supply from battery)	Ubat	-
K3	#28	Signal (+) with map information from the CD-ROM changer	Digital signal	V_H =0.68 +/- 0.2 V, V_L =0.5 +/- 0.1 V
K4	#29	Screen ground, signal cables to CD-ROM changer	Ulow	-
K5	#30	Signal (-) with map information from the CD-ROM changer	Digital signal	V_H =0.68 +/- 0.2 V, V_L =0.5 +/- 0.1 V

CD-ROM CHANGER (TO RTI CONTROL MODULE)

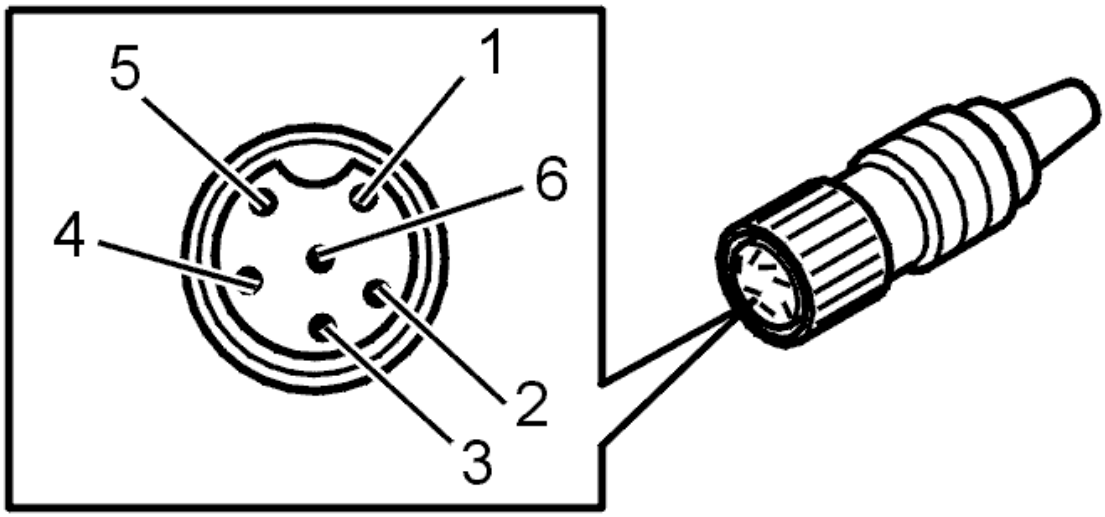

Fig. 29: Audio Control Module (Cable Between Audio Module & Amplifier)
Courtesy of VOLVO CARS CORPORATION

Before taking any readings, see **CONNECTING THE BREAKOUT BOX AND CHECKING THE GROUND TERMINAL**.

CD-ROM changer terminals L1-L6 correspond to #26-#31 on the breakout box.

Control module terminal	Breakout box terminal	Signal type	Ignition on	Other
L1	#26	Clock signal from the CD-ROM changer	Digital signal	Melbus protocol
L2	#27	Data signal from CD-ROM changer	Digital signal	Melbus protocol
L3	#28	-	-	-
L4	#29	Busy signal from the CD-ROM changer	Digital signal	Melbus protocol
L5	#30	15 supply	Ubat	-
L6	#31	-	-	-
H	Screen ground, cable to CD-ROM changer	Ulow	-	

TV RECEIVER (TO RTI CONTROL MODULE)

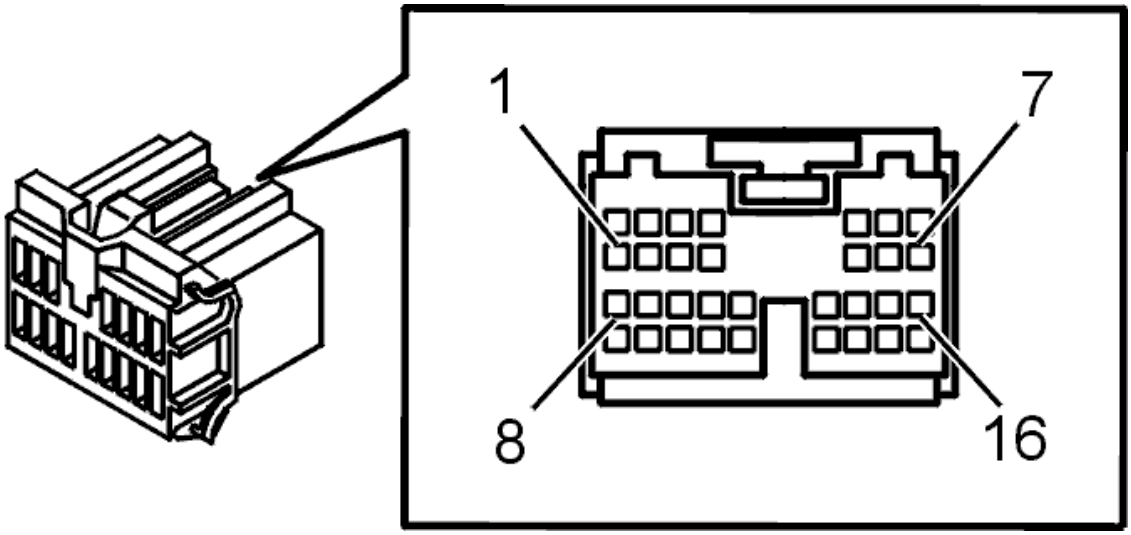

Fig. 30: Connector, Green (16- Pin)
Courtesy of VOLVO CARS CORPORATION

Before taking any readings, see **CONNECTING THE BREAKOUT BOX AND CHECKING THE GROUND TERMINAL**.

TV receiver terminals M1-M16 correspond to terminals #25-#40 on the breakout box.

Control module	Breakout box terminal	Signal type	Ignition on	Other

terminal				
M1	#25	Video signal, TV	Analog signal	1 V p-p +/- 0.2 V
M2	#26	Synchronizing signal, TV	Digital signal	0-5 V
M3	#27	-	-	-
M4	#28	-	-	-
M5	#29	-	-	-
M6	#30	-	-	-
M7	#31	30 supply	Ubat	-
M8	#32	Signal ground, TV signals	Ulow	-
M9	#33	Screen ground, TV signals	Ulow	-
M10	#34	-	-	-
M11	#35	-	-	-
M12	#36	-	-	-
M13	#37	Signal, remote control TV	Digital signal	33.3 kHz carrier wave when the remote control is pressed
M14	#38	-	-	-
M15	#39	Ground (Measured to battery negative terminal)	Ulow	-
M16	#40	-	-	-

TV RECEIVER (TO REVERSE CAMERA AND VIDEO)

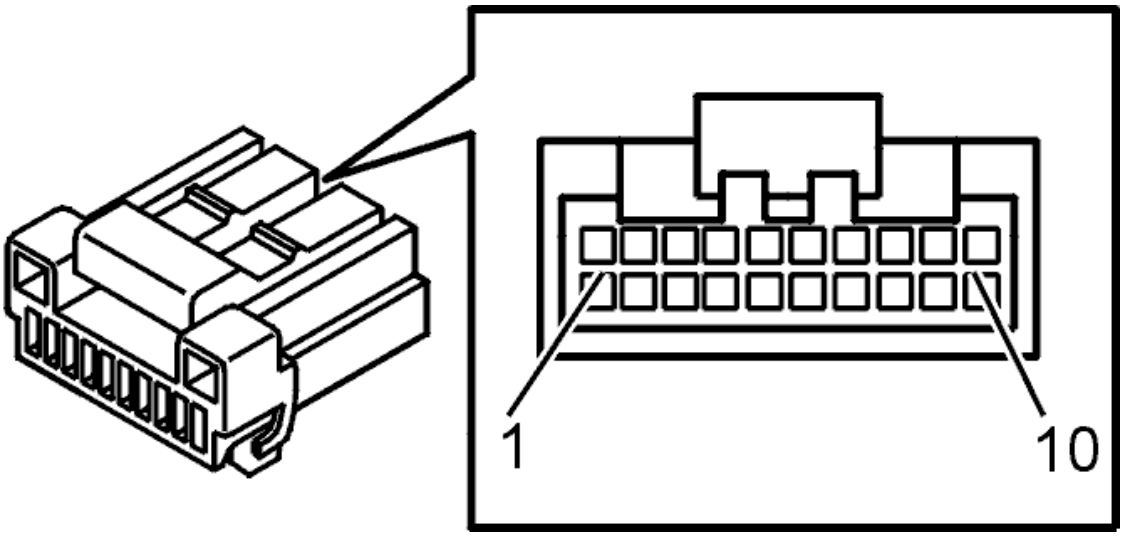

Fig. 31: Identifying Connector (D) Terminals
Courtesy of VOLVO CARS CORPORATION

Before taking any readings, see **CONNECTING THE BREAKOUT BOX AND CHECKING THE GROUND TERMINAL**.

TV receiver terminals N1-N10 correspond to #47-#56 on the breakout box.

Control module terminal	Breakout box terminal	Signal type	Ignition on	Other
N1	#47	-	-	-
N2	#48	Power supply, rear camera	Ubat	-
N3	#49	Video signal, rear camera	-	-
N4	#50	Video signal ground, rear camera	Ulow	-
N5	#51	Video signal	-	-
N6	#52	Signal ground, video signals	Ulow	-
N7	#53	Left audio channel	Alternating current when there is sound to the loudspeaker	150 mV rms +/- 38 mV (1 kHz 30% mod)
N8	#54	Right audio channel	Alternating current when there is sound to the loudspeaker	150 mV rms +/- 38 mV (1 kHz 30% mod)
N9	#55	signal ground, audio	Ulow	-
N10	#56	-	-	-

TV RECEIVER (TO RTI CONTROL MODULE)

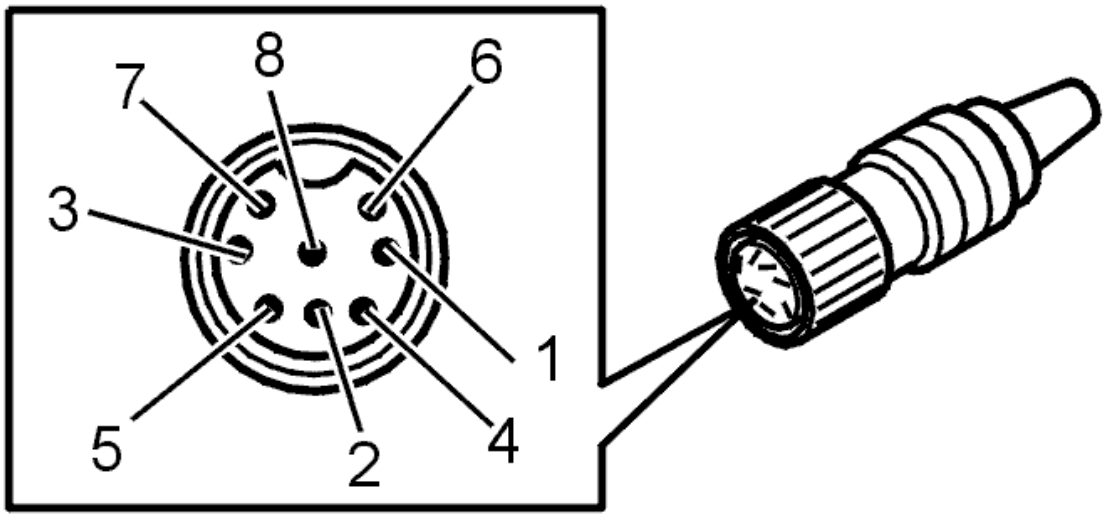

Fig. 32: Audio Control Module (Cable Between Audio Module & CD Changer/Navigation Unit)
Courtesy of VOLVO CARS CORPORATION

Before taking any readings, see **CONNECTING THE BREAKOUT BOX AND CHECKING THE GROUND TERMINAL**.

TV receiver terminals O1-O8 correspond to terminals #16-#23 on the breakout box.

Control module terminal	Breakout box terminal	Signal type	Ignition on	Other
O1	#16	Clock signal to TV receiver	Digital signal	Melbus protocol
O2	#17	Signal ground, sound	Ulow	-
O3	#18	15 supply	Ubat	-
O4	#19	Data signal to TV receiver	Digital signal	Melbus protocol
O5	#20	Busy signal to TV receiver	Digital signal	Melbus protocol
O6	#21	Left audio channel	Alternating current when there is sound to the loudspeaker	150 mV rms +/- 38 mV (1 kHz 30% mod)
O7	#22	Right audio channel	Alternating current when there is sound to the loudspeaker	150 mV rms +/- 38 mV (1 kHz 30% mod)
O8	#23	Voice guide channel	Alternating current when there is sound to the loudspeaker (during voice guidance)	-
H	Screen ground, cable to audio unit	Ulow	-	

TV RECEIVER (TO CD PLAYER)

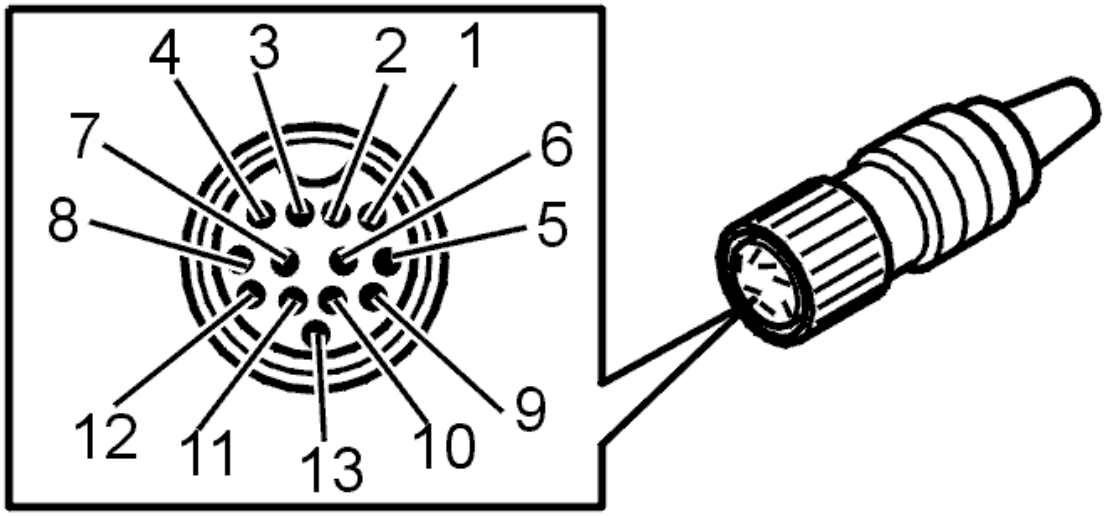

Fig. 33: Identifying RTI Control Module (To TV Receiver) Connector Terminals
Courtesy of VOLVO CARS CORPORATION

Before taking any readings, see **CONNECTING THE BREAKOUT BOX AND CHECKING THE GROUND TERMINAL**.

TV receiver terminals P1-P13 correspond to terminals #1-#13 on the breakout box.

Control module terminal	Breakout box terminal	Signal type	Ignition on	Other
P1	#1	signal ground	Ulow	-
P2	#2	Left audio channel	Alternating current when there is sound to the loudspeaker	150 mV rms +/- 38 mV (1 kHz 30% mod)
P3	#3	-	-	-
P4	#4	Right audio channel	Alternating current when there is sound to the loudspeaker	150 mV rms +/- 38 mV (1 kHz 30% mod)
P5	#5	-	-	-
P6	#6	Voice guide channel	Alternating current when there is sound to the loudspeaker (during voice guidance)	-
P7	#7	-	-	-
P8	#8	-	-	-
P9	#9	-	-	-
P10	#10	15 supply	Ubat	-
P11	#11	Busy signal to TV receiver	Digital signal	Melbus protocol
P12	#12	Clock signal to TV receiver	Digital signal	Melbus protocol
P13	#13	Data signal to TV receiver	Digital signal	Melbus protocol
H	Screen ground, cable to TV receiver	Ulow	-	

TV RECEIVER (TO TV TUNER A)

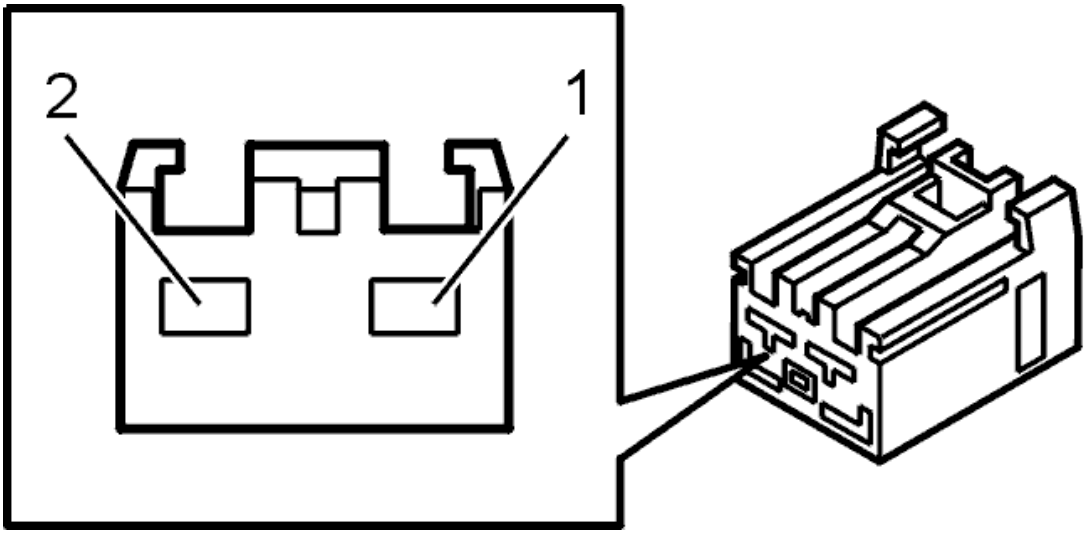

Fig. 34: Connector, Black (2-Pin)
Courtesy of VOLVO CARS CORPORATION

Before taking any readings, see **CONNECTING THE BREAKOUT BOX AND CHECKING THE GROUND TERMINAL**.

Control module terminal	Signal type	Ignition on	Other
Q1	Power supply and signal	Analog signal	The antenna signal is retained over DC EU: 48.5 -87.75 MHz 175.25 -229.75 MHz 471.25 -855.25 MHz JPN: 91.25 -103.75 MHz 175.25 -217.25 MHz 471.25 - 765.25 MHz
Q2	Power supply and signal	Analog signal	The antenna signal is retained over DC EU: 48.5 -87.75 MHz 175.25 -229.75 MHz 471.25 -855.25 MHz JPN: 91.25 -103.75 MHz 175.25 -217.25 MHz 471.25 - 765.25 MHz
H	Screen ground	Ulow	-

TV RECEIVER (TO TV TUNER B)

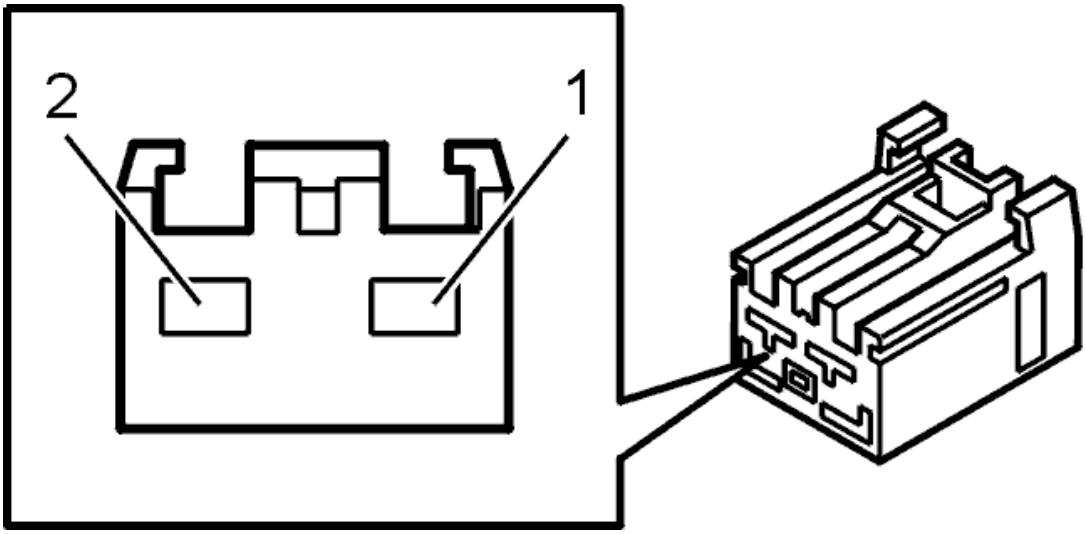

Fig. 35: Connector, Black (2-Pin)
Courtesy of VOLVO CARS CORPORATION

Before taking any readings, see **CONNECTING THE BREAKOUT BOX AND CHECKING THE GROUND TERMINAL**.

Control module terminal	Signal type	Ignition on	Other
R1	Power supply and signal	Analog signal	The antenna signal is retained over DC EU: 48.5 -87.75 MHz 175.25 -229.75 MHz 471.25 -855.25 MHz JPN: 91.25 -103.75 MHz 175.25 -217.25 MHz 471.25 - 765.25 MHz
R2	Power supply and signal	Analog signal	The antenna signal is retained over DC EU: 48.5 -87.75 MHz 175.25 -229.75 MHz 471.25 -855.25 MHz JPN: 91.25 -103.75 MHz 175.25 -217.25 MHz 471.25 - 765.25 MHz
H	Screen ground	Ulow	-

COMMUNICATION DEVICES

Electrical system

COMMUNICATION DEVICES

BATTERY, PHONE MODULE (PHM), REPLACING

NOTE: **The illustrations in this service information are used for different model years and/or models. Some variation may occur. However, the essential information in the illustrations is always correct.**

PREPARATORY WORK

Fig. 1: Identifying Ignition Off Position
Courtesy of VOLVO CARS CORPORATION

Ignition off.

REMOVAL

Remove the Phone module (PHM). See: **PHONE MODULE (PHM), REPLACING (2006-2010)** .

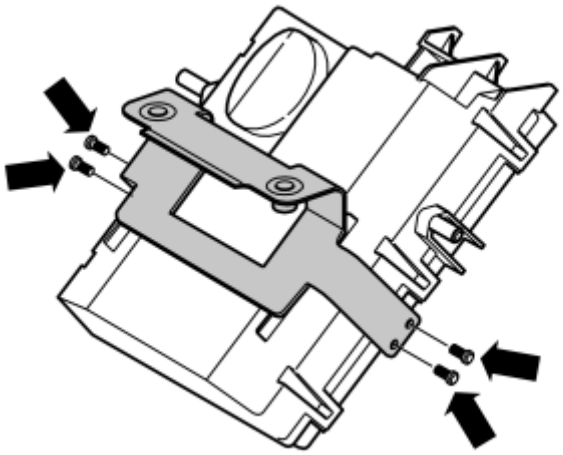

Fig. 2: Identifying Phone Module, Bracket, And Screws
Courtesy of VOLVO CARS CORPORATION

Remove:

- the screws, 4 pieces.
- the bracket.

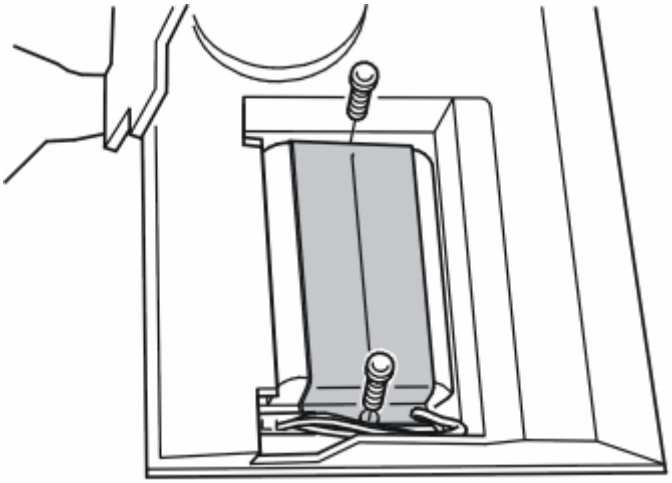

Fig. 3: Identifying Screws For Phone Module Battery
Courtesy of VOLVO CARS CORPORATION

Remove:

- the cover
- the connector, 1 piece.
- the 2 screws
- the metal bracket
- the battery.

INSTALLATION

Install

- the battery
- the metal bracket
- the 2 screws
- the connector, 1 piece.
- the cover.

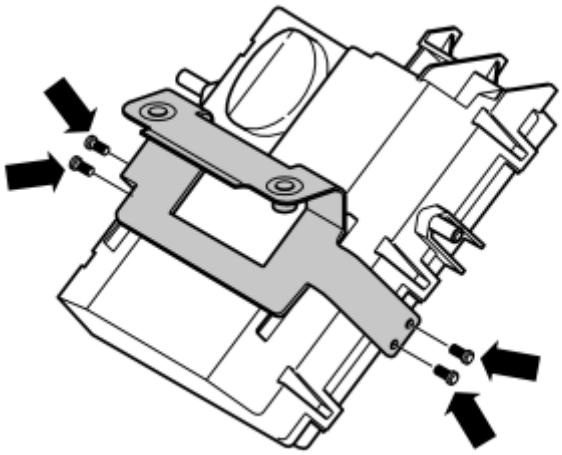

Fig. 4: Identifying Phone Module, Bracket, And Screws
Courtesy of VOLVO CARS CORPORATION

Install:

- the bracket
- the screws, 4 pieces.
- the Phone module (PHM). See: **PHONE MODULE (PHM), REPLACING (2006-2010)** .

FINISHING

Resetting counter

NOTE: The counter must be reset when a new reserve battery has been installed.

CHECKING THE GROUND TERMINAL, PHONE MODULE (PHM)

CONNECTING THE BREAKOUT BOX

Connect the breakout box according to **CONNECTING THE BREAKOUT BOX TO THE CARPHONE MODULE**.

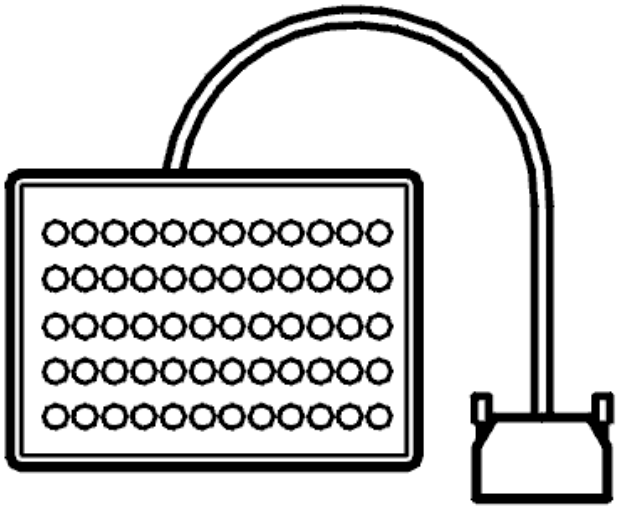

Fig. 5: Breakout Box
Courtesy of VOLVO CARS CORPORATION

- **Continue**

  Refer to **CHECKING THE GROUND TERMINAL**

CHECKING THE GROUND TERMINAL

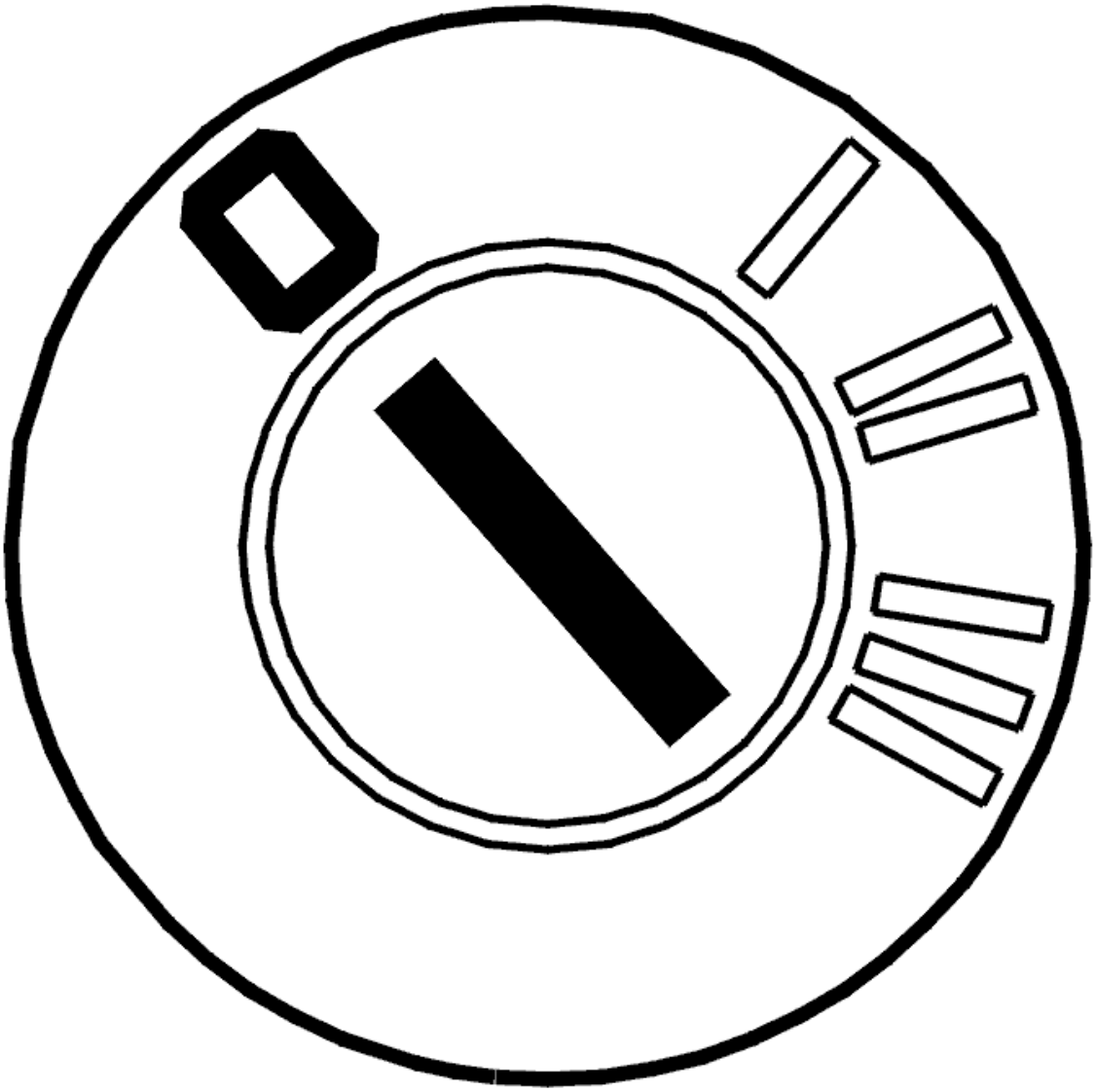

Fig. 6: Identifying Ignition OFF
Courtesy of VOLVO CARS CORPORATION

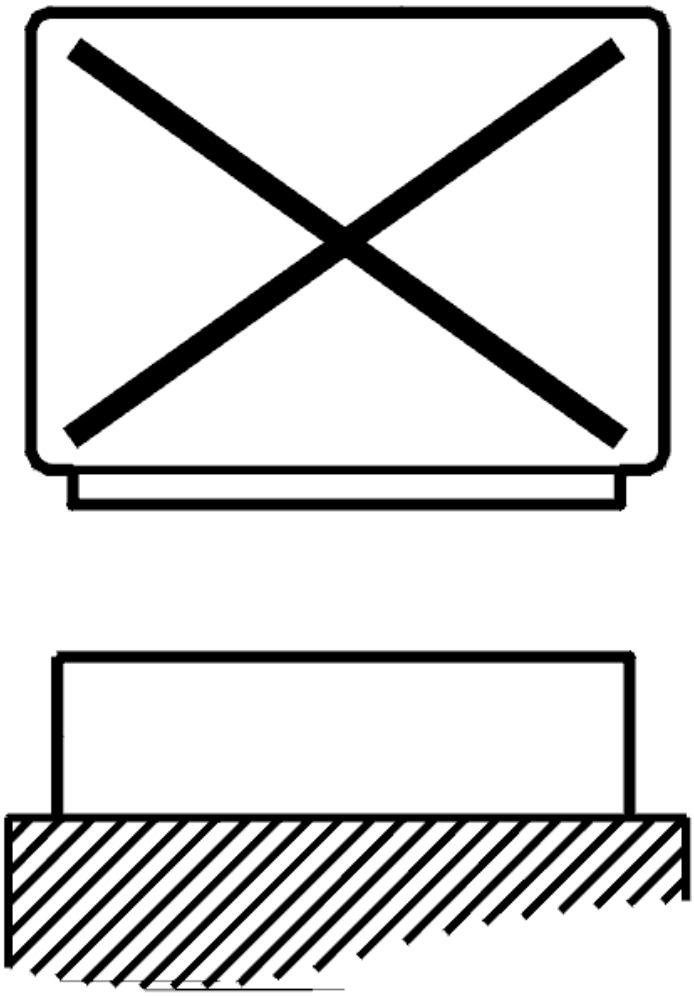

Fig. 7: Disconnecting Control Unit
Courtesy of VOLVO CARS CORPORATION

- Ignition off
- Main unit disconnected.
- Switch off all equipment that takes power from the battery (courtesy lighting, radio etc).

Connect an ohmmeter between terminal #18 on the breakout box and the battery negative terminal.

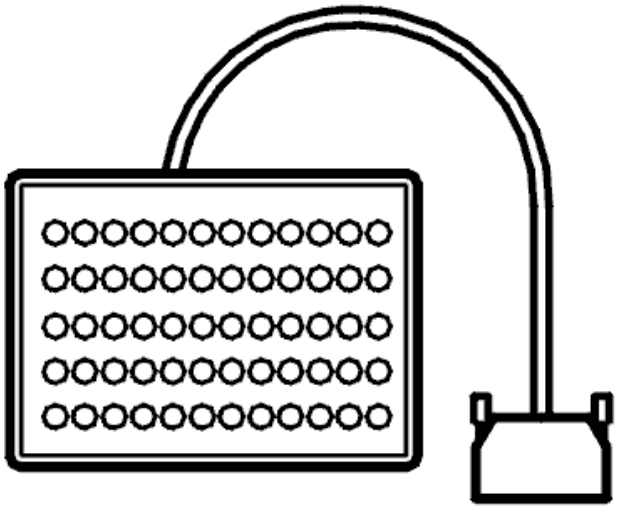

Fig. 8: Breakout Box
Courtesy of VOLVO CARS CORPORATION

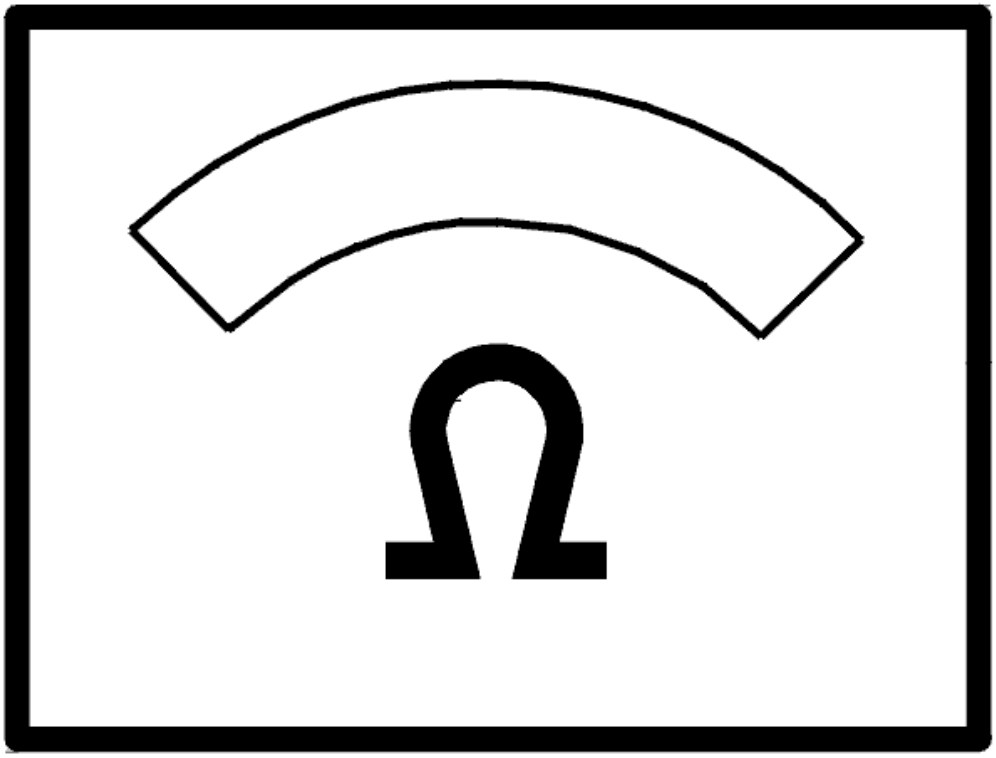

Fig. 9: Identifying Ohm Meter
Courtesy of VOLVO CARS CORPORATION

The ohmmeter should read approximately 0 ohms.

- **OK**

  OKAY: Troubleshooting has been completed.

- **NOT OK**

  Refer to **CHECKING FOR OPEN-CIRCUITS, CONTACT RESISTANCE AND OXIDATION**

CHECKING FOR OPEN-CIRCUITS, CONTACT RESISTANCE AND OXIDATION

Check ground terminal 31/84 and the wiring connected to it. Check for an open-circuit according to **OPEN-**

CIRCUIT, PERMANENT FAULTS . Check for contact resistance and oxidation according to **CONTACT RESISTANCE AND OXIDATION** .

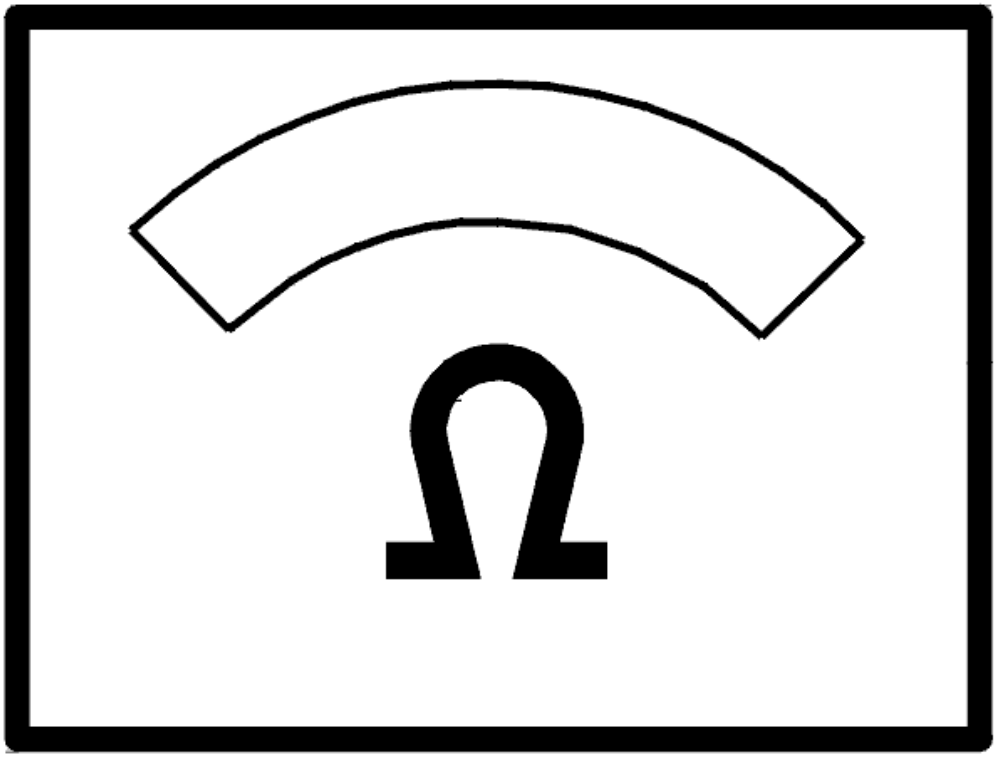

Fig. 10: Identifying Ohm Meter
Courtesy of VOLVO CARS CORPORATION

- **Continue**

  Refer to **VERIFICATION**

VERIFICATION

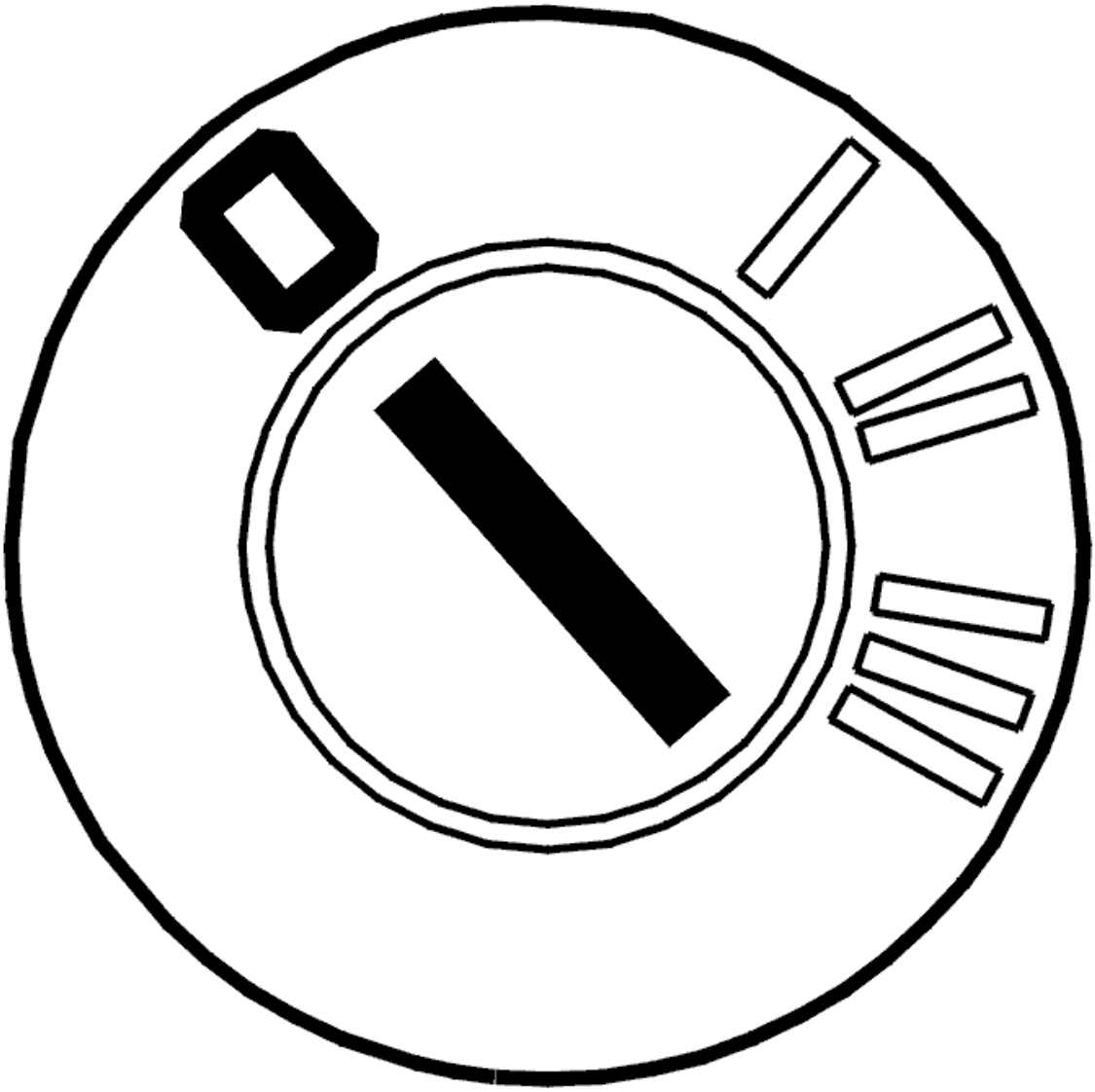

Fig. 11: Identifying Ignition OFF
Courtesy of VOLVO CARS CORPORATION

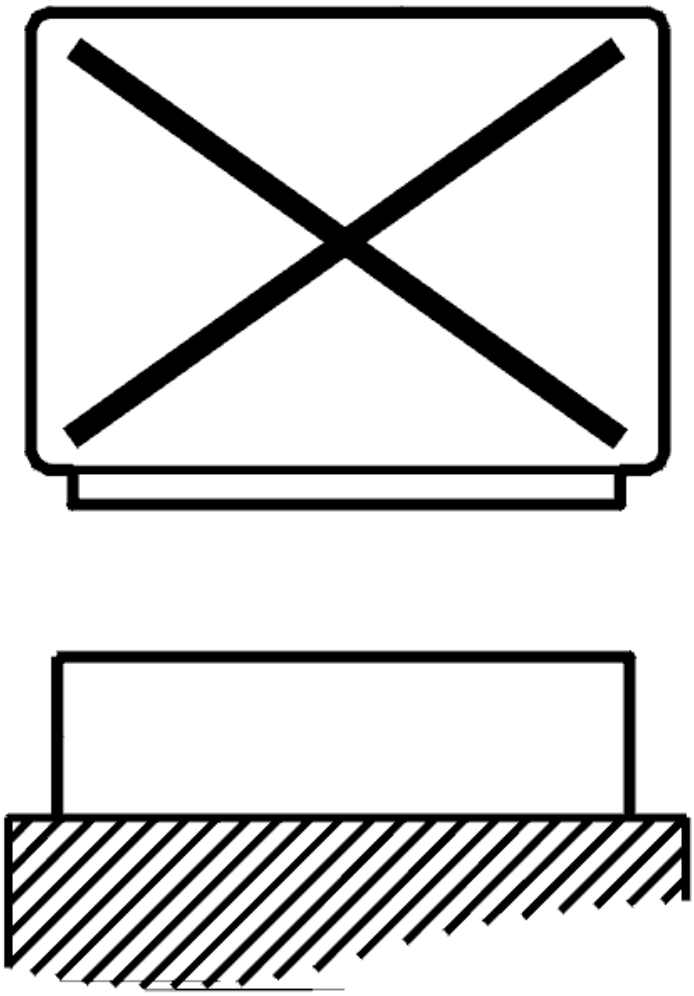

Fig. 12: Disconnecting Control Unit
Courtesy of VOLVO CARS CORPORATION

- Ignition off
- Module disconnected.
- Switch off all equipment that takes power from the battery (courtesy lighting, radio etc).

  Connect an ohmmeter between terminal #18 on the breakout box and the battery negative terminal.

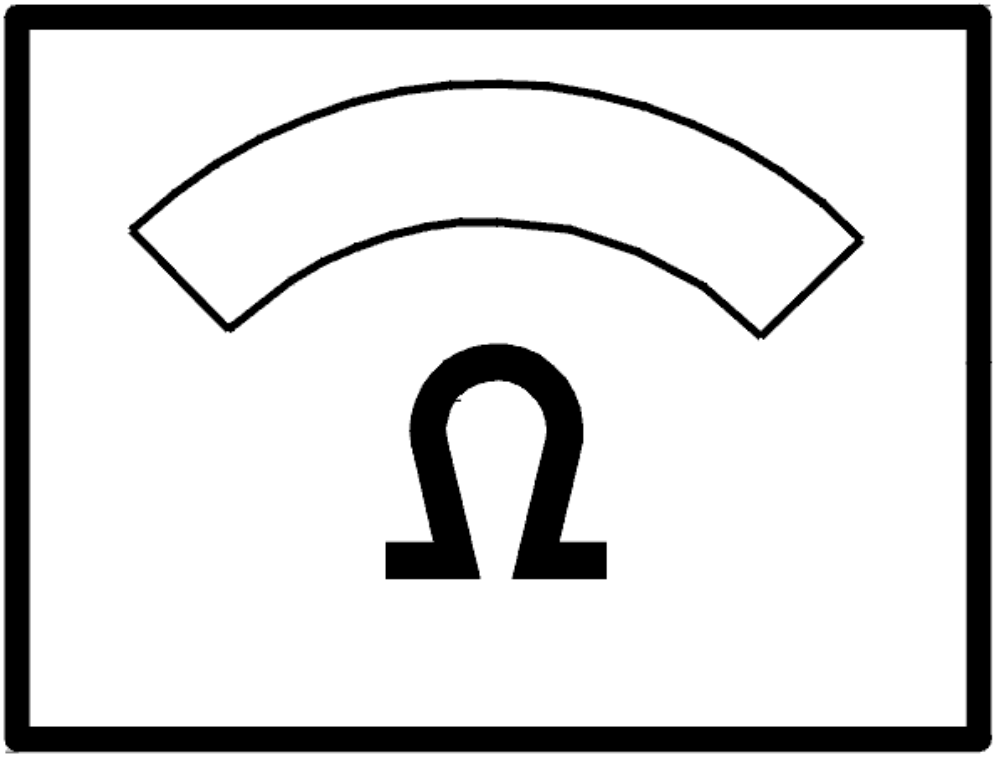

Fig. 13: Identifying Ohm Meter
Courtesy of VOLVO CARS CORPORATION

The ohmmeter should read 0 ohms.

- **YES**

  OKAY: Troubleshooting has been completed.

- **NO**

  Refer to **INFORMATION**

INFORMATION

FAULT-TRACING INFORMATION

The fault should be diagnosed and remedied. Since this is not the case the fault-tracing process has failed.

Complete the fault-tracing for those fault or try again.

CONNECTING THE BREAKOUT BOX TO THE PHONE MODULE (PHM)

Special tools:

see **9511463**

see **9511509**

see **9511428**

CONNECTING THE BREAKOUT BOX

- Ignition off.
- Expose the carphone module according to **MEDIA, COMMUNICATION AND NAVIGATION - REMOVAL, REPLACEMENT & INSTALLATION** .

Check that the male and female terminals on the unit connectors are undamaged and secure (cannot be pressed in). Check that the cables to the female terminals are secured to the terminal pins.

Connect adapter see **9511463** (terminal A, B, C) or see **9511509** (terminal E) to the unit connectors (to the wiring) and connect the breakout box see **9511428** to the adapter.

Keypad / carphone module terminals:

Terminals #A1-#A22 correspond to terminals #1-#22 on the breakout box.

Terminals #B1-#B16 correspond to terminals #25-#40 on the breakout box.

Carphone box terminals:

Terminals #C1-#C16 correspond to terminals #25-#40 on the breakout box.

Carphone handset terminals:

Terminals #E1-#E8 correspond to terminals #32-#39 on the breakout box.

The breakout box is designed to facilitate reading off the control module input and output signals when the control module is connected; and the cable and component resistance when the control module is disconnected. The use of a breakout box reduces the risk of accidental short-circuited cables and damage to the connector pins.

For information about signals and other values, see **SIGNAL SPECIFICATION, KEYPAD UNIT / CARPHONE MODULE (PHM)** .

DOOR LOCKS & ANTI-THEFT SYSTEMS

Electrical system

DOOR LOCKS & ANTI-THEFT SYSTEMS

ADD/REMOVE KEY

ORDERING SOFTWARE / KEYS

NOTE: **To add a key, a key and software must be ordered.**

Only software needs to be ordered to erase a key.

Order a key and/or software according to 9438428 .

NOTE: **Keys can only be programmed or erased when the key and/or software have been delivered.**

The function must be checked if a new key has been added.

Use VIDA (Volvo Scan tool) to check that no diagnostic trouble codes have been stored during the work.

DOOR LOCKS & ANTI-THEFT SYSTEMS

Electrical system

DOOR LOCKS & ANTI-THEFT SYSTEMS

REPLACING THE SWITCH FOR THE LOCK UNIT / CARGO COMPARTMENT LIGHTING

REMOVAL

LOCK UNIT

The switch for the cargo compartment lighting is positioned in the lock unit.

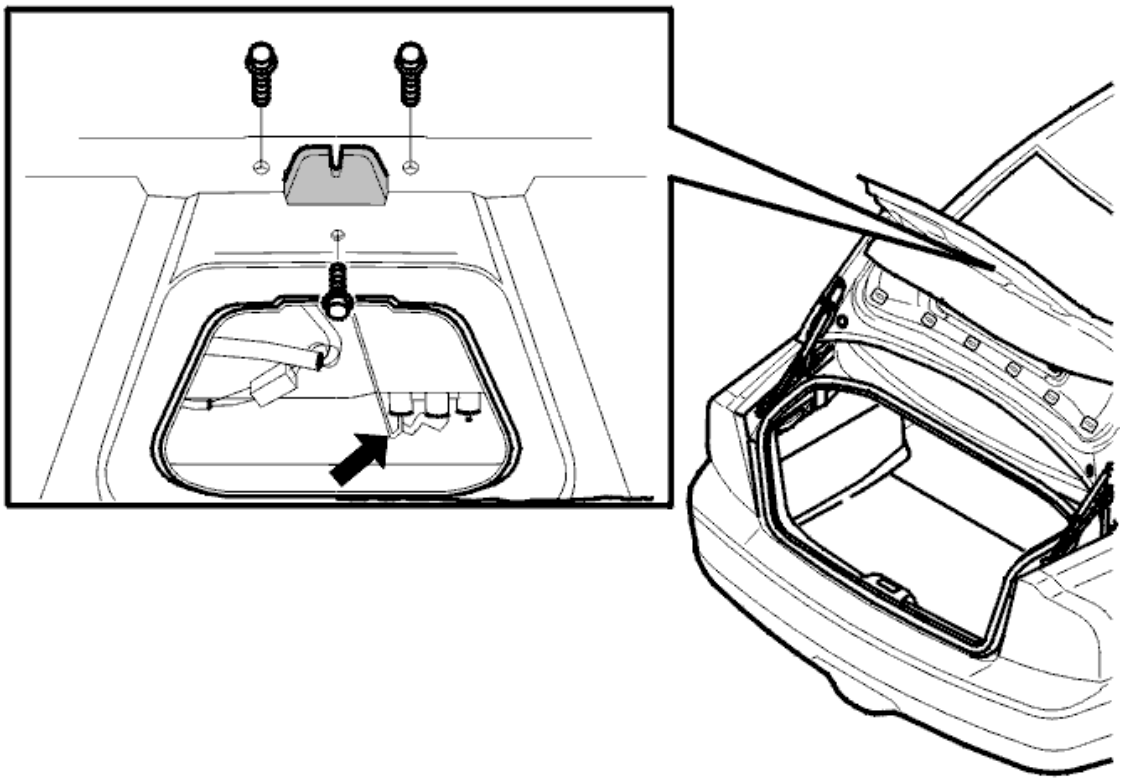

Fig. 1: Identifying Screws & Switch For Lock Unit/Cargo Compartment Lighting
Courtesy of VOLVO CARS CORPORATION

- Remove the upholstery on the tailgate. This is to gain access to the entire lock unit mechanism
- Unhook the lever from the lock cylinder mechanism
- Remove the screws (3 x) from the lock unit. Remove the lock unit
- Disconnect the connector.

INSTALLATION

LOCK UNIT

Install:

1. the connector,
2. the three screws for the lock unit. Tighten the screws to **10 Nm** ,
3. the lever for the lock mechanism,
4. the upholstery.

ENTERTAINMENT SYSTEMS

Electrical system

ENTERTAINMENT SYSTEMS

CONNECTING THE BREAKOUT BOX TO THE AUDIO CONTROL MODULE

Special tools:

see **9511507**

see **9511428**

see **9511509**

CONNECTING THE BREAKOUT BOX

- Ignition off
- Expose the head unit / audio module. See **MEDIA, COMMUNICATION AND NAVIGATION - REMOVAL, REPLACEMENT & INSTALLATION** .

Check that the male and female terminals on the unit connectors are undamaged and secure (cannot be pressed in). Check that the cables to the female terminals are secured to the terminal pins.

NOTE: In order for the below connections to be made take note of the color codes of the connectors.

Connect adapter see **9511507** to the audio control module (wiring side). Connect breakout box see **9511428** to the adapter.

Audio control module terminals:

#A1-#A12 correspond to terminals #15-#26 on the breakout box (green connector).

#B1-#B12 correspond to terminals #1-#12 on the breakout box (gray connector).

Terminals #E1-#E8 correspond to terminals #16-#23 on the breakout box.

When connecting connector D, adapter see **9511509** must be used.

Terminals #D1-#D6 correspond to terminals #42-#47 on the breakout box.

The breakout box is designed to facilitate reading off the control module input and output signals when the control module is connected; and the cable and component resistance when the control module is disconnected. The use of a breakout box reduces the risk of accidental short-circuited cables and damage to the connector

pins.

For further information about signals and other values, see **SIGNAL SPECIFICATION, AUDIO CONTROL MODULE** .

CHECKING VOLTAGE / GROUND CONNECTION, MEDIA/INFOTAINMENT

CHECKING THE VOLTAGE FEED / GROUND CONNECTION

Voltage feed phone module (PHM)

Phone module (PHM) is supplied with voltage via a voltage input on the control module.

Voltage input #A5 (#5) has +30-feed via a fuse from the battery. In case of open circuit, it will not be possible to activate the telephone.

Checking voltage feed

Check the voltage feed cable from the battery to the phone module (PHM) #A5 (#5) for open circuit, loose connection, contact resistance and oxidation. Also check the fuse. The voltage shall be approx. battery voltage.

Ground connection phone module (PHM)

Phone module (PHM) has a ground input. The ground input from the control module is power ground and is connected to a grounding point in the body.

Checking ground connection

Check the ground cable between the phone module (PHM) #A6 (#6) and ground connection for open circuit, loose connection, contact resistance and oxidation. When ignition is on, the voltage-drop between the control module's ground connection and body ground connection may not exceed 0.5 V.

Remedy as necessary.

Other information:

- see **CONTENTS** .
- To connect the breakout box, see **CONNECTING THE BREAKOUT BOX** .
- For information on signals, see **SIGNAL SPECIFICATION** .

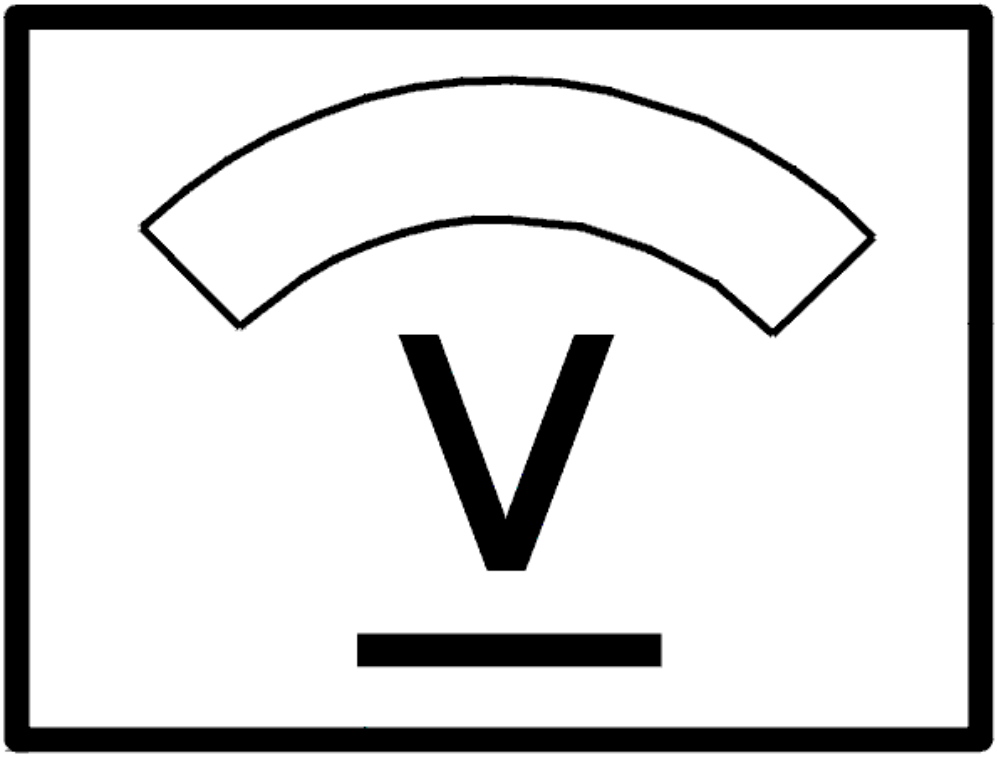

Fig. 1: Identifying Voltage Display
Courtesy of VOLVO CARS CORPORATION

ENTERTAINMENT SYSTEMS

Electrical system

ENTERTAINMENT SYSTEMS

CONTROL MODULE, REAR AUDIO SEPARATION, REPLACING

REMOVAL

Move the seat to its front-most position.

Fig. 1: Identifying Control Module Location
Courtesy of VOLVO CARS CORPORATION

Remove the following items:

- the control module, pull from the Velcro strip
- the connector

INSTALLATION

Install the following items:

- the connector
- the control module, by pressing the control module so that it is secure

DESCRIPTION OF ACTIVATIONS AND READOUTS, FM

FREQUENCY BAND AM/FM

Click on the button **AM/FM** to change frequency band between AM and FM.

Readout value indicates frequency band in question or if the control module is off.

AM = frequency band AM.

FM = frequency band FM.

Off = control module off.

FREQUENCY

Clicking on the button>>| starts an automatic search for radio stations in the frequency band.

Radio stations with a signal strength of approx. 110 or higher are found automatically.

Readout value indicates frequency in question in MHz.

MAIN ANTENNA

By clicking on the button **Start readout 1** , the main antenna is activated. When the antenna has been activated, a readout is performed of the activation as well as the values for signal strength and noise level.

Readout value indicates if the main antenna is activated or deactivated.

On = main antenna activated.

Off = main antenna deactivated.

SUB-ANTENNA

By clicking on the button **Start readout 2** , the sub-antenna is activated. When the antenna has been activated, a readout is performed of the activation as well as the values for signal strength and noise level.

Readout value indicates if the sub-antenna is activated or deactivated.

On = sub-antenna activated.

Off = sub-antenna deactivated.

SIGNAL STRENGTH

The readout value applies to the active antenna.

Signal strength is presented as a number between 0 and 255. 0 means that no signal has been registered, and 255 means that highest possible signal strength has been reached.

NOISE LEVEL

The readout value applies to the active antenna.

Noise level is presented as a number between 0 and 15. 0 means that no noise has been registered, and 15 means

that highest possible noise level has been registered.

DESCRIPTION OF READOUTS, FM

FREQUENCY BAND AM/FM

Click on the button **AM/FM** to change frequency band between AM and FM.

Readout value indicates frequency band in question or if the control module is off.

AM = frequency band AM.

FM = frequency band FM.

Off = control module off.

FREQUENCY

Clicking on the button>>| starts an automatic search for radio stations in the frequency band.

Radio stations with a signal strength of approx. 110 or higher are found automatically.

Readout value indicates frequency in question in MHz.

MAIN ANTENNA

Readout value indicates if the main antenna is activated or deactivated.

On = main antenna activated.

Off = main antenna deactivated.

SUB-ANTENNA

Readout value indicates if the sub-antenna is activated or deactivated.

On = sub-antenna activated.

Off = sub-antenna deactivated.

SIGNAL STRENGTH

The readout value applies to the active antenna.

Signal strength is presented as a number between 0 and 255. 0 means that no signal has been registered, and 255 means that highest possible signal strength has been registered.

NOISE LEVEL

The readout value applies to the active antenna.

Noise level is presented as a number between 0 and 15. 0 means that no noise has been registered, and 15 means that highest possible noise level has been registered.

DESCRIPTION OF READOUTS, AM

FREQUENCY BAND AM/FM

Click on the button **AM/FM** to change frequency band between AM and FM.

Readout value indicates frequency band in question or if the control module is off.

AM = frequency band AM.

FM = frequency band FM.

Off = control module off.

FREQUENCY

Clicking on the button>>| starts an automatic search for radio stations in the frequency band.

Radio stations with a signal strength of approx. 75 or higher are found automatically.

Readout value indicates frequency in question in kHz.

SIGNAL STRENGTH

Signal strength is presented as a number between 0 and 255. 0 means that no signal has been registered, and 255 means that highest possible signal strength has been registered.

FAULT-TRACING

Electrical system

FAULT-TRACING

DESCRIPTION OF FROZEN VALUES, BLUETOOTH PHONE MODULE (BPM)

EXPLANATION

Not all the parameters described need to be implemented in the control module. This varies from system to system.

Frozen values are parameter values that are stored when a diagnostic trouble code (DTC) is stored.

BATTERY VOLTAGE, VALUE

Measurement range: 5-24 V.

Normal value when the alternator is charging: 13.0-14.5 V.

DISTANCE, VALUE

Measurement range: 0-1000000 km.

The value indicates the total mileage of the car at the time the diagnostic trouble code (DTC) was stored.

PASSENGER COMPARTMENT TEMPERATURE, VALUE

Measurement range: -40 to +80 °C.

OUTSIDE TEMPERATURE, VALUE

Measurement range: -40 to +80 °C.

ENGINE RUNNING, STATUS

The status displays whether the engine was running when the diagnostic trouble code (DTC) was stored.

No = the engine was not running

Yes = the engine was running

DESCRIPTION OF PARAMETERS

HINT: Certain parameters have different values depending whether the car was manufactured before or after week 39, 2001. Using VIDA (Volvo scan tool), perform "Reading off data for vehicle configuration " to, see the week of manufacture of the car.

FAILED START ATTEMPTS, VALUE

Reading of the number of failed attempts to start the heater.

If the counter reaches 3 the heater cannot start. A diagnostic trouble code (DTC) is stored in the central electronic module if the counter reaches 1 but the heater can still be started. To set the counter to zero erase the diagnostic trouble codes (DTCs).

OVERHEATING INCIDENTS, VALUE

Reading of the number of failed attempts to start the heater. If this parameter counts to 3 the heater cannot be started. To set the counter to zero erase the diagnostic trouble codes (DTCs).

SUCCESSFUL START ATTEMPTS, VALUE

Reading of the number of successful attempts to start the heater. If the heater can be started 10 times in succession the overheat counter is set to zero. The counter is also set to zero when the diagnostic trouble codes (DTCs) are erased.

COOLANT TEMPERATURE, VALUE

The coolant temperature in the heater.

For cars manufactured up to week 38, 2001 inclusive:

The heater cycles between 76 -89 °C (status 5).

For cars manufactured from week 39, 2001 inclusive:

The heater cycles between 76 -93 °C (status 5).

BATTERY VOLTAGE, VALUE

The normal value when the alternator is charging is 13.0- 14.0 V. Voltage shall be at least 10.5 V to start the heater.

Measurement range 0 and up.

HEATER RUN TIME, VALUE

Reading off the number of hours the heater has been running.

Measurement range: 0-65, 535 hours.

The heater is designed to run for approximately 4, 500 hours.

ADDITIONAL HEATER STATUS, VALUE

Heater operating status:

0: The heater has not started.

1: The heater starts. Heater self test. The glow plug is activated and then the heater fan.

2: The heater starts and the fuel pump is active. The control module awaits combustion for a certain period of time.

3: The heater runs. Normal heater operation.

4: The heater stops. The flame goes out.

5: The heater waits. Waiting for the engine coolant temperature to be low enough for the heater to start again.

6: The heater has stopped. The heater only has this status if a fault has occurred.

7: The flame is extinguished.

8: Residual heat. If, when the outside temperature is low, the driver is in the car and turns on the heater, the water pump starts in order to heat the passenger compartment.

9: Fuel pump activated. Used in production.

10: Activating the fuel pump. Used to avoid problems with the fuel pump sticking.

ACTUAL COMBUSTION FAN SPEED, VALUE

Measurement range 0 - 8000 RPM.

For cars manufactured up to week 38, 2001 inclusive:

Normal RPM approx. 4000-4500 RPM as well as at high RPM, approx. 8000 RPM.

For cars manufactured from week 39, 2001 inclusive:

Normal RPM approx.5000 RPM as well as at high RPM, approx. 8000 RPM.

DERIVED COMBUSTION FAN SPEED, VALUE

Measurement range 0 - 8000 RPM.

Displays the theoretical speed that the fan should have.

DEGREE OF MODULATION OF COMBUSTION FAN, VALUE

Measurement range 0 - 100 %.

Reading of the degree of pulse width modulation that the combustion fan is controlled by.

FUEL PUMP FREQUENCY, VALUE

Measurement range 0-10 Hz.

Reading off the pump frequency of the fuel pump.

For cars manufactured up to week 38, 2001 inclusive: In status no. 2 the pump operates at 4.9 Hz for diesel and 5.5 Hz for gasoline.

Cars manufactured from week 39, 2001 inclusive: In status no. 2 the pump operates at 5.7 Hz for diesel and 6.8 Hz for gasoline.

In status no. 3 the pump is controlled by the water temperature. In status nos. 4 and 7 the fuel pump is switched off (0 Hz). The fuel pump is not active in status nos. 1, 7, 5, 6 or 8.

DEGREE OF MODULATION OF GLOW PLUG, VALUE

Measurement range 0-100%.

Reading of the degree to which the glow plug is activated.

For cars manufactured up to week 38, 2001 inclusive:

In status no. 1 the glow plug is supplied completely (100%) or pulsed with the frequency 1 Hz. The degree of modulation of the glow plug depends on the voltage.

For cars manufactured from week 39, 2001 inclusive:

In status no. 1 the glow plug is supplied completely (100%) or pulsed with the frequency 10 Hz. The degree of modulation of the glow plug depends on the voltage.

FLAME MONITOR, VALUE

Measurement range: 0-5 V.

Reading out flame monitor's voltage.

The flame monitor registers the light intensity in the heater and is used to detect if there is a flame or not. The lower the light intensity that the flame monitor detects, the higher the voltage to the control module. The higher the light intensity that is registered, the lower the voltage.

The following applies when the control module uses the signal from the flame monitor to decide if there is a flame or not:

- If voltage is **higher than** approx. 2.5 V for a certain time, the control module considers that there is no flame.

- If voltage is **lower than** approx. 2.5 V for a certain time, the control module considers that there is a flame.

EXTENDED X-SUPPLY, STATUS

Indicates whether the ignition is on or off according to the control module.

SUPPLY VOLTAGE TO COMPONENTS, STATUS

Indicates whether the control module is sending supply voltage to the combustion fan, fuel pump and water pump.

On: Voltage

Off: No voltage

GLOW PLUG, STATUS

On: Glow plug activated.

Off: Glow plug not activated.

In status 1 the glow plug is on. In status 2 the glow plug is switched off when a flame is detected. Other statuses the glow plug is off.

WATER PUMP, STATUS

On: Water pump activated.

Off: Water pump not activated (status 6, 9 and 10).

FUEL LEVEL, STATUS

Fuel level OK: The control module registers that there are more than 4 liters of fuel in the fuel tank and the heater can be started.

Fuel level too low: The control module registers that there is less than 4 liters of fuel in the fuel tank and the heater cannot be started.

GENERAL INFORMATION

Electrical system

FAULT TRACING

SIGNAL SPECIFICATION, ENGINE CONTROL MODULE

General

All values given below are between the terminals stated in column 1 and breakout box terminal #B2. Control module terminals #A1-#A60 correspond to terminals #A1-#A60 on the breakout box, terminals #A61-#A70 correspond to terminals #B1-#B10 on the breakout box and terminals #B1-#B50 correspond to terminals #B10-#B60 on the breakout box.

NOTE: **It is important to connect the breakout box and check the ground terminals before taking readings.**

HINT: If the numbering of the connector is different from the numbering on the breakout box, the connector number is given first, terminal #A61, followed by the breakout box number in brackets, (terminal #B1). Example: #A61 (#B1).

U=	DC voltage in volts (V)	U A/C =	AC voltage in volts (V)
U_{bat} =	Battery voltage in volts (V)	f =	Frequency in Hertz (Hz)
U_{low} =	Voltage approximately 0 V	%pulse =	Pulse ratio (%)
t =	Time in milliseconds (ms)		

CONNECTOR TERMINALS #A1-#A70

Terminal	Breakout box	Signal type	Ignition on	Idle	Other
#A1	(#A1)	-	-	-	-
#A2	(#A2)	Control signal Canister purge (CP) valve	U = Ubat	-	Pulse width modulation (PWM) signal during activation of the EVAP canister shut-off valve
#A3	(#A3)	-	-	-	-
#A4	(#A4)	Signal (+) intake temperature sensor, integrated in the mass air flow (MAF) sensor	-	(+10°C) U=2.01 V (+20°C) U=2.62 V (+30°C) U=3.21 V	-

#A5	(#A5)	-	-	-	-
#A6	(#A6)	-	-	-	-
#A7	(#A7)	Control signal to the engine cooling fan control module	Pulse width modulation (PWM) signal Ulow = 1.5 V pulse ratio = 10 %-90 %	- Uhigh = Ubat -1.5 V f=100Hz	-
#A8	(#A8)	-	-	-	-
#A9	(#A9)	-	-	-	-
#A10	(#A10)	-	-	-	-
#A11	(#A11)	Control signal preheating rear heated oxygen sensor (HO2S)	U = Ubat	Preheating OFF U = Ubat Preheating ON U = Ulow	-
#A12	(#A12)	Reset valve camshaft	Pulse width modulation (PWM) signal Utop = Ubat t = 0.6 ms pulse ratio = 14 %	Pulse width modulation (PWM) signal Utop = Ubat -1 V t=2 ms pulse ratio = 50 %	The pulse ratio changes with engine speed (RPM)
#A13	(#A13)	-	-	-	-
#A14	(#A14)	Control signal injector 5	U = Ubat	t = 2-3 ms	t increases with engine speed (RPM) and load
#A15	(#A15)	Control signal injector 3	U = Ubat	tlow = 2-3 ms	t increases with engine speed (RPM) and load
#A16	(#A16)	Control signal injector 1	U = Ubat	tlow = 2-3 ms	t increases with engine speed (RPM) and load
#A17	(#A17)	-	-	-	-
#A18	(#A18)	Control signal preheating front heated oxygen sensor (HO2S)	U = Ubat	Preheating OFF U = Ubat Preheating ON U = Ubat	-
#A19	(#A19)	-	-	-	-
#A20	(#A20)	-	-	-	-
#A21	(#A21)	Signal A/C pressure sensor	U=0.9 V (at approximately 20° C)	-	U increases with increased pressure in the system

#A22	(#A22)	Mass air flow (MAF) sensor signal	U = 0.58 V	U = 1.33 V Unloaded, engine at operating temperature	U increases with increasing air mass
#A23	(#A23)	Signal manifold absolute pressure (MAP) sensor	U = 1.64 V atmospheric pressure at sea level	-	U increases with increasing pressure in the intake manifold
#A24	(#A24)	Signal (+) front heated oxygen sensor (HO2S) signal (+)	-	lambda=0.95 V>700 mV lambda=1.10 V<200 mV	-
#A25	(#A25)	-	-	-	-
#A26	(#A26)	-	-	-	-
#A27	(#A27)	-	-	-	-
#A28	(#A28)	Signal ignition discharge module (IDM) check, ignition coils	-	-	-
#A29	(#A29)	Control signal ignition coil no. 3	U = Ulow	U = 2.5 volt thigh = 2 ms	The frequency varies according to engine speed (RPM)
#A30	(#A30)	Control signal ignition coil no. 2	U = Ulow	U = 2.5 volt thigh = 2 ms	The frequency varies according to engine speed (RPM)
#A31	(#A31)	Control signal ignition coil no. 1	U = Ulow	U = 2.5 volt thigh = 2.5 ms	The frequency varies according to engine speed (RPM)
#A32	(#A32)	-	-	-	-
#A33	(#A33)	Control signal injector 4	U = Ubat	tlow = 2-3 ms	t increases with engine speed (RPM) and load
#A34	(#A34)	Control signal injector 2	U = Ubat	tlow = 2-3 ms	t increases with engine speed (RPM) and load
#A35	(#A35)	-	-	-	-
#A36	(#A36)	Power ground	U = Ulow	-	-

		preheating, front heated oxygen sensor (HO2S)			
#A37	(#A37)	Communication cable control modules (CAN H)	-	-	Between the engine control module (ECM) and the throttle unit
#A38	(#A38)	Control signal stop lamp switch	U = Ulow (not activated) U = Uhigh (activated)	-	Between the engine control module (ECM) and the throttle unit
#A39	(#A39)	Oil pressure switch	U = Ulow (no oil pressure)	U = Ubat	-
#A40	(#A40)	Signal (+) engine coolant temperature (ECT) sensor	-	(+20°C) U = 3.1 V (+30°C) U = 2.6 V (+80°C) U = 0.9 V (+100°C) U = 0.5 V	-
#A41	(#A41)	Signal (-) front heated oxygen sensor (HO2S)	-	lambda=1 when the current is approximately +0.2 mA	Negative current when the fuel air mixture is rich. Range: [-12 mA, +12 mA]
#A42	(#A42)	Signal (+) front heated oxygen sensor (HO2S)	-	lambda= 1 when the current is approximately +0.2 mA	Positive current when the fuel air mixture is lean. Range: [-12 mA, +12 mA]
#A43	(#A43)	-	-	-	-
#A44	(#A44)	-	-	-	-
#A45	(#A45)	-	-	-	-
#A46	(#A46)	Signal (+) knock sensor (KS)	-	-	-
#A47	(#A47)	Signal (+) camshaft position (CMP) sensor	Uapprox.5 V or U=Ulow	fapprox.35 Hz Uapprox.2.5 V	The frequency increases with engine speed (RPM)
#A48	(#A48)	Signal (+) flywheel sensor	U=2.5 V	U = sine wave voltage Utop = 3.5 V Uoffset = 2.5 V	-

#A49	(#A49)	-	-	-	-
#A50	(#A50)	Control signal ignition coil no. 5	U = Ulow	U = 2.5 volt thigh = 2 ms	The frequency varies according to engine speed (RPM)
#A51	(#A51)	Control signal ignition coil no. 4	U = Ulow	U = 2.5 volt thigh = 2 ms	The frequency varies according to engine speed (RPM)
#A52	(#A52)	Control signal Air assisted control valve (AACV)	-	-	-
#A53	(#A53)	Power ground 3	Ulow	-	-
#A54	(#A54)	Power ground 2	Ulow	-	-
#A55	(#A55)	Communication cable control modules (CAN L)	-	-	Between the engine control module (ECM) and the throttle unit
#A56	(#A56)	Control signal accelerator pedal (AP) position sensor, pulse width modulation (PWM) signal	Utop = 12 V t = 4 ms pulse ratio = 8 %-88 %	-	Between the engine control module (ECM) and the throttle unit
#A57	(#A57)	Power supply, camshaft position (CMP) sensor	U =5 V	-	-
#A58	(#A58)	Power supply, manifold absolute pressure (MAP) sensor A/C pressure sensor	U =5 V	-	-
#A59	(#A59)	-	-	-	-
#A60	(#A60)	Signal ground mass air flow (MAF) sensor	U = Ulow	-	-
#A61	(#B1)	Signal ground intake temperature engine coolant temperature (ECT) sensor rear heated oxygen sensor (HO2S)	U = Ulow	-	-

#A62	(#B2)	Power ground 1	U = Ulow	-	-
#A63	(#B3)	-	-	-	-
#A64	(#B4)	Signal (-) knock sensor (KS)	-	-	-
#A65	(#B5)	Signal ground camshaft position (CMP) sensor	U = Ulow	-	-
#A66	(#B6)	Signal ground flywheel sensor	U = Ulow	-	-
#A67	(#B7)	-	-	-	-
#A68	(#B8)	-	-	-	-
#A69	(#B9)	Control signal preheating front heated oxygen sensor (HO2S)	U = Ubat	Preheating off U = Ubat Preheating U = Ubat	B+ from the system relay
#A70	(#B10)	Power supply	U = Ubat	-	B+ from the system relay

CONNECTOR TERMINALS #B1-#B50

Terminal	Breakout box	Signal type	Ignition on	Engine idling	Other
#B1	(#B11)	Communication cable control modules (CAN L)	-	-	Between the engine control module (ECM) and the transmission control module (TCM)
#B2	(#B12)	-	-		-
#B3	(#B13)	-	-	-	-
#B4	(#B14)	Signal ground intake manifold air temperature sensor fuel tank pressure sensor clutch pedal sensor brake pedal sensor	U = Ulow	-	-
#B5	(#B15)	Signal ground accelerator pedal (AP) position sensor	U = Ulow	-	-
#B6	(#B16)	-	-	-	-
#B7	(#B17)	-	-	-	-
#B8	(#B18)	Coolant level sensor	U = Ulow	-	-
#B9	(#B19)	Power supply accelerator pedal (AP)	U =5 V	-	-

		position sensor, analog sensor			
#B10	(#B20)	Power supply fuel tank pressure sensor	U =5 V	-	-
#B11	(#B21)	30-supply (Power supply from the battery)	U = Ubat	-	-
#B12	(#B22)	-	-	-	-
#B13	(#B23)	Control modules communication cable (CAN H)	-	-	Between the engine control module (ECM) and the transmission control module (TCM)
#B14	(#B24)	-	-	-	-
#B15	(#B25)	Signal clutch pedal sensor	U=3.3 V (unaffected) U = 2.2 V (fully depressed, 100 mm)	-	Varies depending on the position of the clutch pedal
#B16	(#B26)	Signal brake sensor	U = 4.4 V (unaffected) U = 3.9 V (25 mm depressed)	-	Varies depending on the position of the brake pedal
#B17	(#B27)	Signal accelerator pedal (AP) position sensor, analog signal	U=0.4 V (idle) U=4.4 V (wide open throttle (WOT))	-	Varies depending on the position of the accelerator pedal (AP)
#B18	(#B28)	-	-	-	-
#B19	(#B29)	-	-	-	-
#B20	(#B30)	-	-	-	-
#B21	(#B31)	-	-	-	-
#B22	(#B32)	Diagnostic lead C-link	U=90 % of Ubat	Other values apply if a generic fault-tracing instrument is connected to the data link connector (DLC)	-
#B23	(#B33)	Signal (+) crank, +50 supply	U = Ulow	U = Ulow	U = Ubat at crank

#B24	(#B34)	-	-	-	-
#B25	(#B35)	Signal (+) accelerator pedal (AP) position sensor, Pulse width modulated (PWM) signal	Utop = Ubat t = 4 ms pulse ratio = 8-88%	-	Between the accelerator pedal (AP) position sensor and the engine control module (ECM)
#B26	(#B36	Signal (+) stop lamp switch	U = Ubat when the brake pedal is depressed U = Ulow when the brake pedal is not depressed	-	-
#B27	(#B37)	-	-	-	-
#B28	(#B38)	-	-	-	-
#B29	(#B39)	Signal outside temperature sensor	(0°C) U = 3.99 V (+10°C) U = 3.53 V (+20°C) U = 3.01 V (+30°C) U = 2.47 V	-	Temperature range: -50°C to +120°C
#B30	(#B40)	-	-	-	-
#B31	(#B41)	Signal fuel tank pressure sensor	U = 2.5 V at 1 kPa negative pressure U=3.3 V at atmospheric pressure (0 kPa overpressure) U=4.1 V at 1 kPa overpressure	-	-
#B32	(#B42)	-	-	-	-
#B33	(#B43)	-	-	-	-
#B34	(#B44)	-	-	-	-
#B35	(#B45)	-	-	-	-
#B36	(#B46)	-	-	-	-
#B37	(#B47)	Signal ignition ON signal, +15 supply	U = Ubat	-	-
#B38	(#B48)	System relay control signal	U = Ulow	U = Ulow	Relay activated: U = Ulow Relay not activated: U = Ubat The system relay runs on (2-5

					minutes)
#B39	(#B49)	-	-	-	-
#B40	(#B50)	Control signal EVAP canister shut-off valve	U=3.82 V	-	-
#B41	(#B51)	-	-	-	-
#B42	(#B52)	-	-	-	-
#B43	(#B53)	-	-	-	-
#B44	(#B54)	Control signal A/C activation	U = Ubat (not activated) U = Ulow (activated)	-	-
#B45	(#B55)	Control signal fuel pump (FP) activation	Pulse width modulation (PWM) signal	-	Control signal to the central electronic module (CEM) to control the fuel pump (FP)
#B46	(#B56)	Control signal malfunction indicator lamp (MIL)	U = Ulow	U = Ubat (not activated) U = Ulow (activated)	-
#B47	(#B57)	-	-	-	-
#B48	(#B58)	Control signal engine start inhibiting	U = Ulow (activated) U = Uhigh (not activated)	-	Certain markets only. The engine can only be started with the clutch pedal depressed (U=Ulow)
#B49	(#B59)	-	-	-	-
#B50	(#B60)	-	-	-	-

SIGNAL SPECIFICATION, CARPHONE

General

All the values given below are between the respective connection in column 1 and connection #A6 in column 2 (power ground) unless otherwise stated in brackets.

NOTE: **It is important to connect the breakout box and check the ground terminals before taking readings.**

For information on:

- Connecting the breakout box, see **CONNECTING THE BREAKOUT BOX TO THE CARPHONE MODULE** .
- Checking ground connection, see **CHECKING VOLTAGE / GROUND CONNECTION, MEDIA/INFOTAINMENT** .

There may be several connections and connectors between control modules and components.

U=	DC voltage in volts (V)	U_{AC} =	AC voltage in volts (V)
U_{bat} =	Battery voltage (V)	f =	Frequency in Hertz (Hz)
U_{low} =	Voltage approx. 0 V	t =	Time in s (seconds)
PWM =	Pulse-width modulated signal in %		

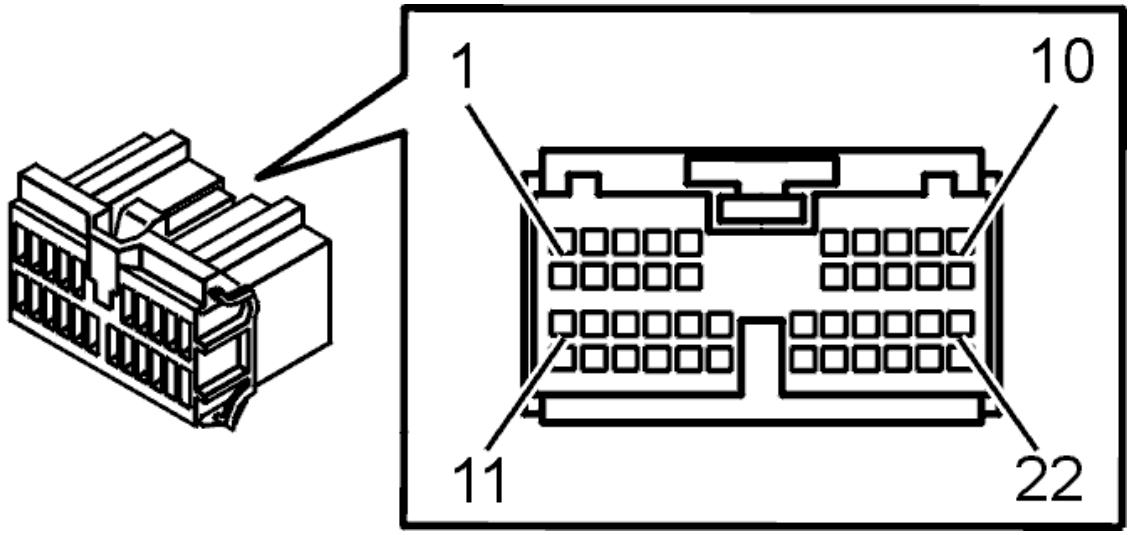

Fig. 1: Identifying Connector (F) Terminals
Courtesy of VOLVO CARS CORPORATION

SIGNAL TABLE CONNECTOR A, PHONE MODULE (PHM)

Connection breakout box	Connection control module	Signal type	Ignition on	Idle	Other
#1	#A1	-	-	-	-
#2	#A2	-	-	-	-
#3	#A3	-	-	-	-
#4	#A4	-	-	-	-
#5	#A5	+30-feed	U_{bat}	U_{bat}	-
#6	#A6	Power ground	U_{low}	U_{low}	-
#7	#A7	Handset, voltage feed	U_{bat}	U_{bat}	-
#8	#A8	Handset, cradle	U=5 V when handset is used,	U=5 V when handset is used,	-

		signal	otherwise U=0 V.	otherwise U=0 V.	
#9	#A9	-	-	-	-
#10	#A10	-	-	-	-
#11	#A11	CAN (L)	Digital signal	Digital signal	-
#12	#A12	CAN (H)	Digital signal	Digital signal	-
#13	#A13	-	-	-	-l
#14	#A14	-	-	-	-
#15	#A15	-	-	-	-
#16	#A16	-	-	-	-
#17	#A17	Impact cable from SRS	U=12 V at activated SRS-component, otherwise U=0 V	U=12 V at activated SRS-component, otherwise U=0 V	-
#18	#A18	Handset, ground	U_{low}	U_{low}	-
#19	#A19	Handset, microphone	Alternating voltage at sound in microphone	Alternating voltage at sound in microphone	Difficult to measure
#20	#A20	Handset, speaker	Alternating voltage at sound in speaker	Alternating voltage at sound in speaker	Difficult to measure
#21	#A21	-	-	-	-
#22	#A22	-	-	-	-

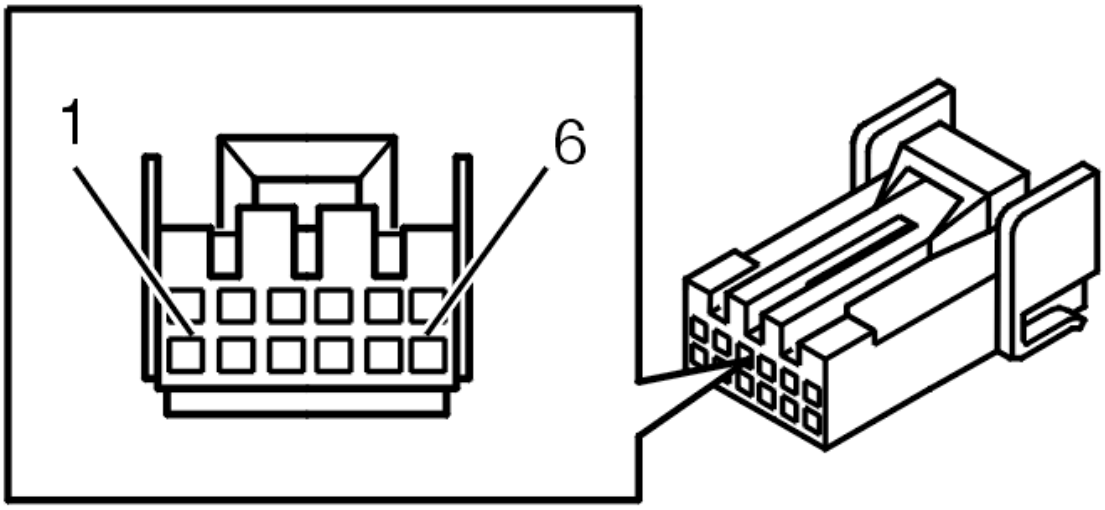

Fig. 2: Identifying Signal Table Connector B, Phone Module (PHM)
Courtesy of VOLVO CARS CORPORATION

SIGNAL TABLE CONNECTOR B, PHONE MODULE (PHM)

Connection breakout box	Connection control module	Signal type	Ignition on	Idle	Other
#21	#B1	Clock signal to SIM-card	Pound signal	Pound	-

				signal	
#22	#B2	Signal ground, SIM-card	U_{low}	U_{low}	-
#23	#B3	Voltage feed, SIM-card	U=2.8 V	U=2.8 V	-
#24	#B4	Communication cable, SIM-card	Pulsed signal	Pulsed signal	-
#25	#B5	Control signal, SIM-card	Pulsed signal	Pulsed signal	-
#26	#B6	Diagnostic cable, SIM-card	U_{low}	U_{low}	-

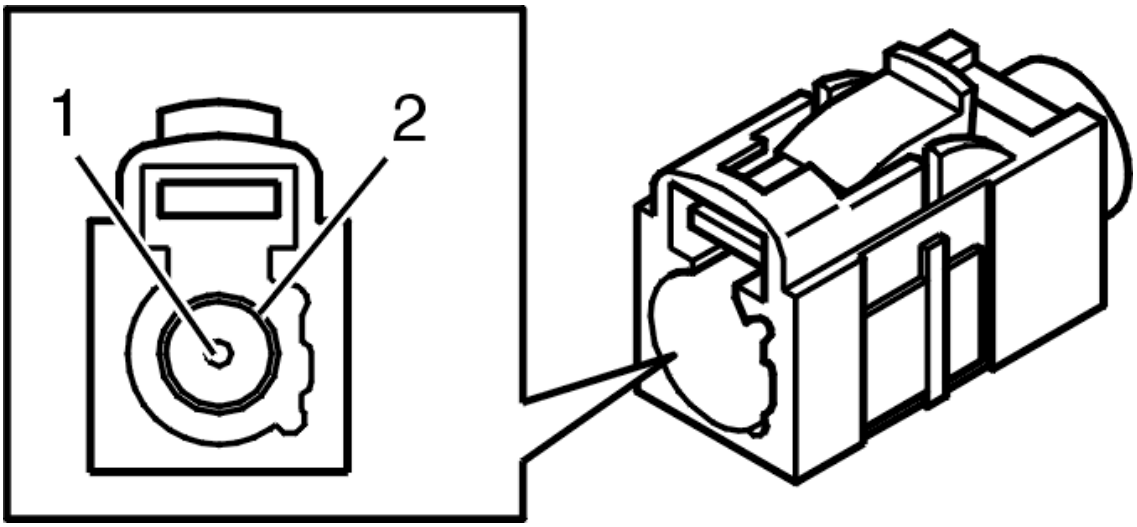

Fig. 3: Identifying 1-Bit Connector
Courtesy of VOLVO CARS CORPORATION

SIGNAL TABLE CONNECTOR C, PHONE MODULE (PHM)

Connection breakout box	Connection control module	Signal type	Ignition on	Idle	Other
-	#C1	Telephone antenna	Antenna signal telephone	Antenna signal telephone	-
-	#C2	Antenna ground	U_{low}	U_{low}	-

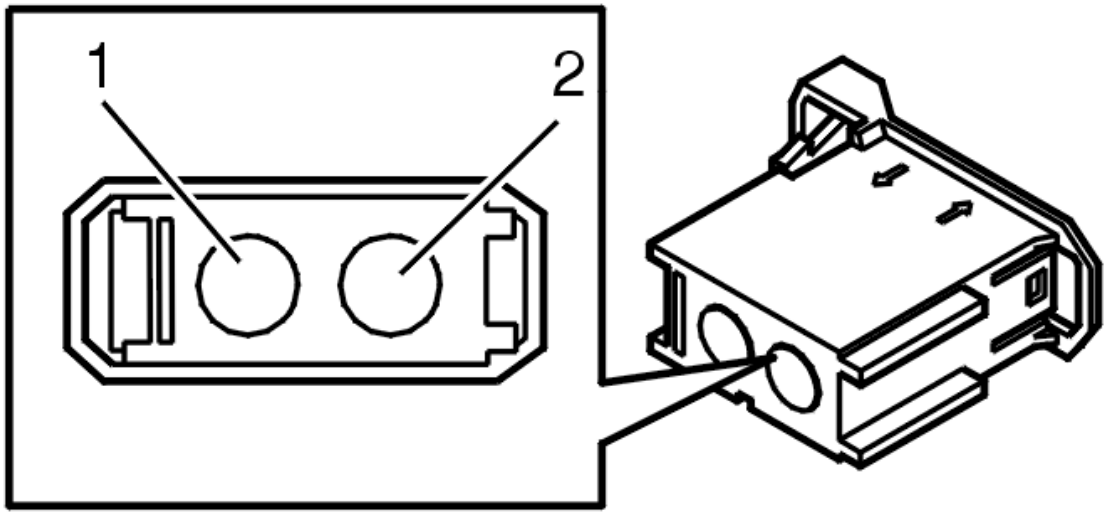

Fig. 4: Identifying Connector C
Courtesy of VOLVO CARS CORPORATION

SIGNAL TABLE CONNECTOR D, PHONE MODULE (PHM)

Connection breakout box	Connection control module	Signal type	Ignition on	Idle	Other
-	#D1	MOST input signal	Optical input signal when the MOST network is activated	Optical input signal when the MOST network is activated	-
-	#D2	MOST output signal	Optical output signal when the MOST network is activated	Optical output signal when the MOST network is activated	-

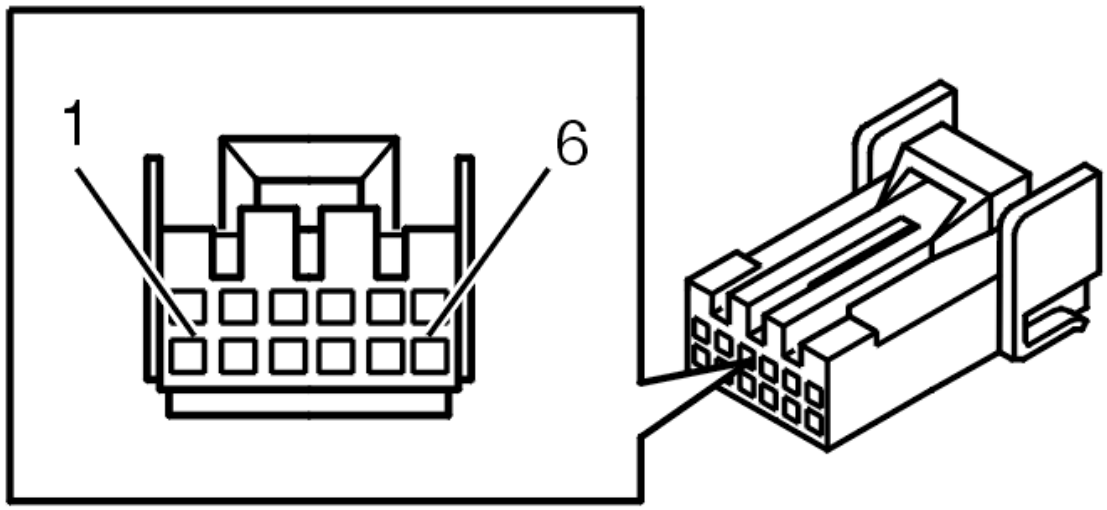

Fig. 5: Identifying Signal Table Connector B, Phone Module (PHM)
Courtesy of VOLVO CARS CORPORATION

SIGNAL TABLE CONNECTOR SIM-CARD HOLDER

Connection breakout box	Connection control module	Signal type	Ignition on	Idle	Other
#21	#1	Clock signal to SIM-card	Pound signal	Pound signal	-
#22	#2	Signal ground, SIM-card	U_{low}	U_{low}	-
#23	#3	Voltage feed, SIM-card	U=2.8 V	U=2.8 V	-
#24	#4	Communication cable, SIM-card	Pulsed signal	Pulsed signal	-
#25	#5	Control signal, SIM-card	Pulsed signal	Pulsed signal	-
#26	#6	Diagnostic cable, SIM-card	U_{low}	U_{low}	-

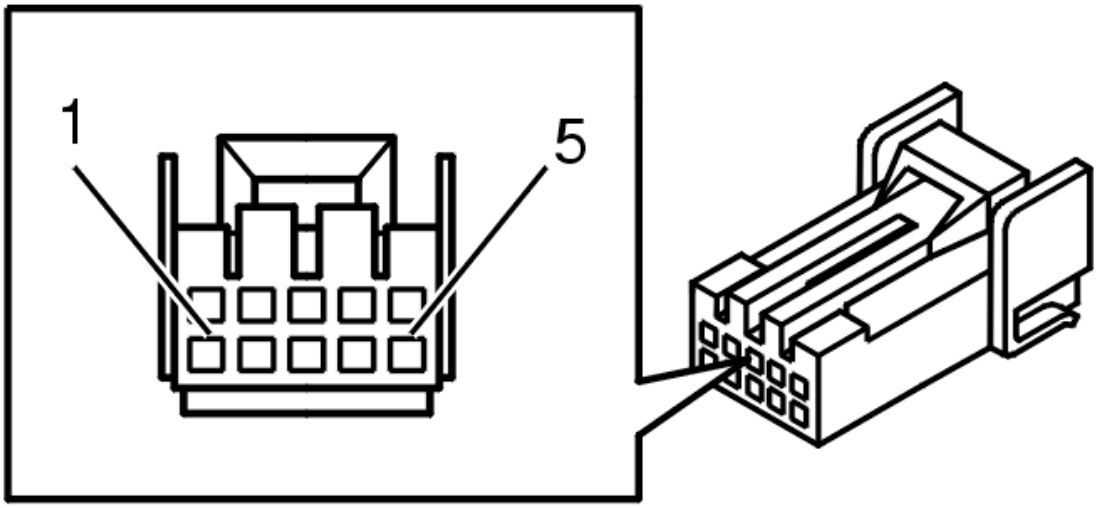

Fig. 6: 10 CD Changer Connector Terminals
Courtesy of VOLVO CARS CORPORATION

SIGNAL TABLE CONNECTOR HANDSET

Connection breakout box	Connection control module	Signal type	Ignition on	Idle	Other
#21	#1	Handset, microphone	Alternating voltage at sound in microphone	Alternating voltage at sound in microphone	Difficult to measure
#22	#2	Handset, speaker	Alternating voltage at sound in microphone	Alternating voltage at sound in microphone	Difficult to measure
#23	#3	Handset, ground	U_{low}	U_{low}	-
#24	#4	Handset, cradle signal	U=5 V when handset is used, otherwise U=0 V.	U=5 V when handset is used, otherwise U=0 V.	-

#25	#5	Handset, voltage feed	U_{bat}	U_{bat}	-

EXTERIOR/INTERIOR TRIM

Electrical system

EXTERIOR/INTERIOR TRIM

INSTRUMENT PANEL, LOWER

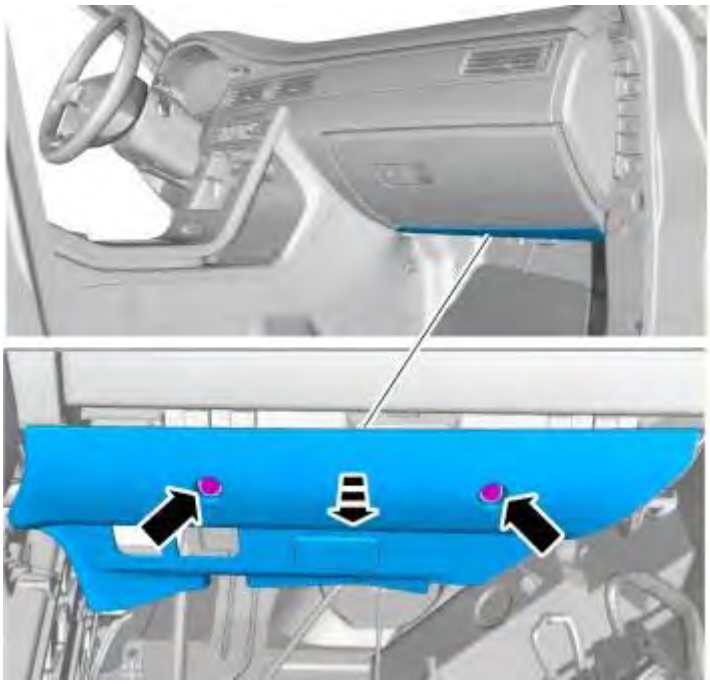

Fig. 1: Identifying Lower Instrument Panel Screws
Courtesy of VOLVO CARS CORPORATION

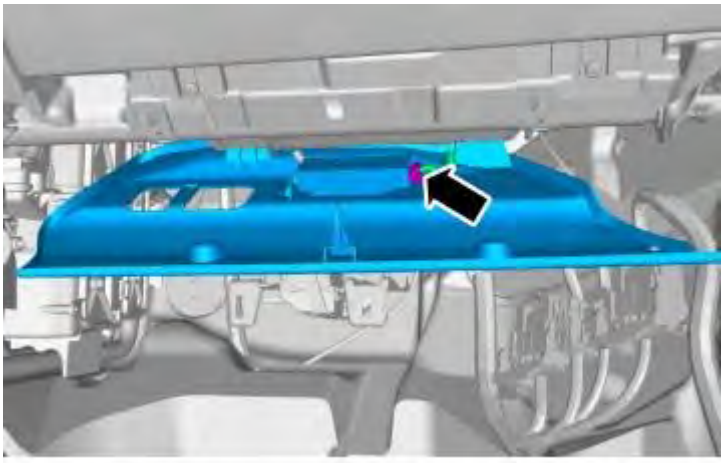

Fig. 2: Identifying Lower Instrument Panel Connector
Courtesy of VOLVO CARS CORPORATION

NAVIGATION SYSTEM

Electrical system

NAVIGATION SYSTEM

CONNECTING THE BREAKOUT BOX TO THE ROAD TRAFFIC INFORMATION (RTI) CONTROL MODULE

Special tools:

see **9511463**

see **9511509**

see **9511508**

see **9813194**

CONNECTING THE BREAKOUT BOX

- Ignition off
- Disconnect the required connections from the relevant unit.

Check that the male and female terminals on the unit connectors are undamaged and secure (cannot be pressed in). Check that the cables to the female terminals are secured to the terminal pins.

Other information:

- To access and replace the Road Traffic Information (RTI) control module, see **REMOVAL**
- To access and replace the CD-ROM player, see **CD READER, RTI (ROAD TRAFFIC INFORMATION), REPLACING**
- To access and replace the GPS receiver, see **ANTENNA, GPS, REPLACING**.

Different adapters are required depending on what terminal should be checked on the breakout box.

Terminals A, B, C, J and M should be connected to adapter see **9511463** .

Connect terminals D, E, F, L, O and P to adapter see **9511509** .

Terminal K should be connected to adapter see **9511508** .

Terminal N should be connected to adapter see **9813194** .

Road Traffic Information (RTI) Terminals:

Terminals #A1-#A22 correspond to terminals #1-#22 on the breakout box.

Terminals #B1-#B14 correspond to terminals #43-#56 on the breakout box.

Terminals #C1-#C16 correspond to terminals #25-#40 on the breakout box.

Terminals #D1-#D6 correspond to terminals #42-#47 on the breakout box.

Terminals #E1-#E8 correspond to terminals #16-#23 on the breakout box.

Terminals #F1-#F13 correspond to terminals #1-#13 on the breakout box.

CD-ROM changer terminals:

#J1-#J22 correspond to #1-#22 on the breakout box.

Display terminals:

#K1-#K5 correspond to #26-#30 on the breakout box.

Terminals #L1-#L6 correspond to terminals #26-#31 on the breakout box.

TV receiver terminals:

#M1-#M16 correspond to #25-#40 on the breakout box.

#N1-#N10 correspond to #47-#56 on the breakout box.

#O1-#O8 correspond to #16-#23 on the breakout box.

#P1-#P13 correspond to #1-#13 on the breakout box.

The breakout box is designed to facilitate reading off the control module input and output signals when the control module is connected; and the cable and component resistance when the control module is disconnected. The use of a breakout box reduces the risk of accidental short-circuited cables and damage to the connector pins.

For further information about signals and other values, see **SIGNAL SPECIFICATION, RTI** .

ANTENNA, GPS, REPLACING

REMOVAL

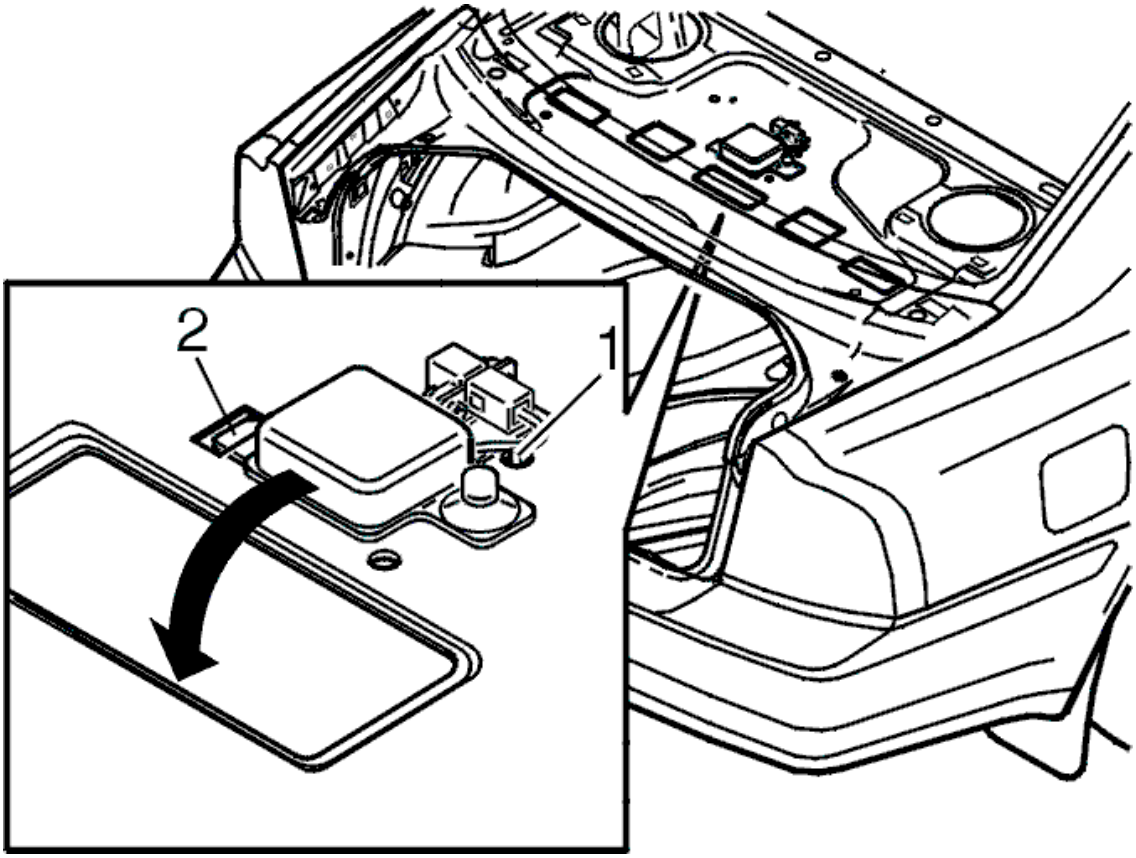

Fig. 1: Antenna Clip
Courtesy of VOLVO CARS CORPORATION

HINT: The GPS antenna is located underneath the parcel shelf. The GPS antenna can be removed through the cargo compartment.

- Press the clip (1) up
- Insert a hand through one of the holes in the panel. Unhook the lip (2) which is securing the antenna
- Remove the antenna through the hole
- Disconnect the connector.

INSTALLATION

- Connect the connector
- Install the lip on the antenna
- Install the clip fully using flat nose pliers. Pull the clip down through the hole.

NAVIGATION SYSTEM

Electrical system

NAVIGATION SYSTEM

ROAD TRAFFIC INFORMATION MODULE (RTI), REPLACING

REMOVAL

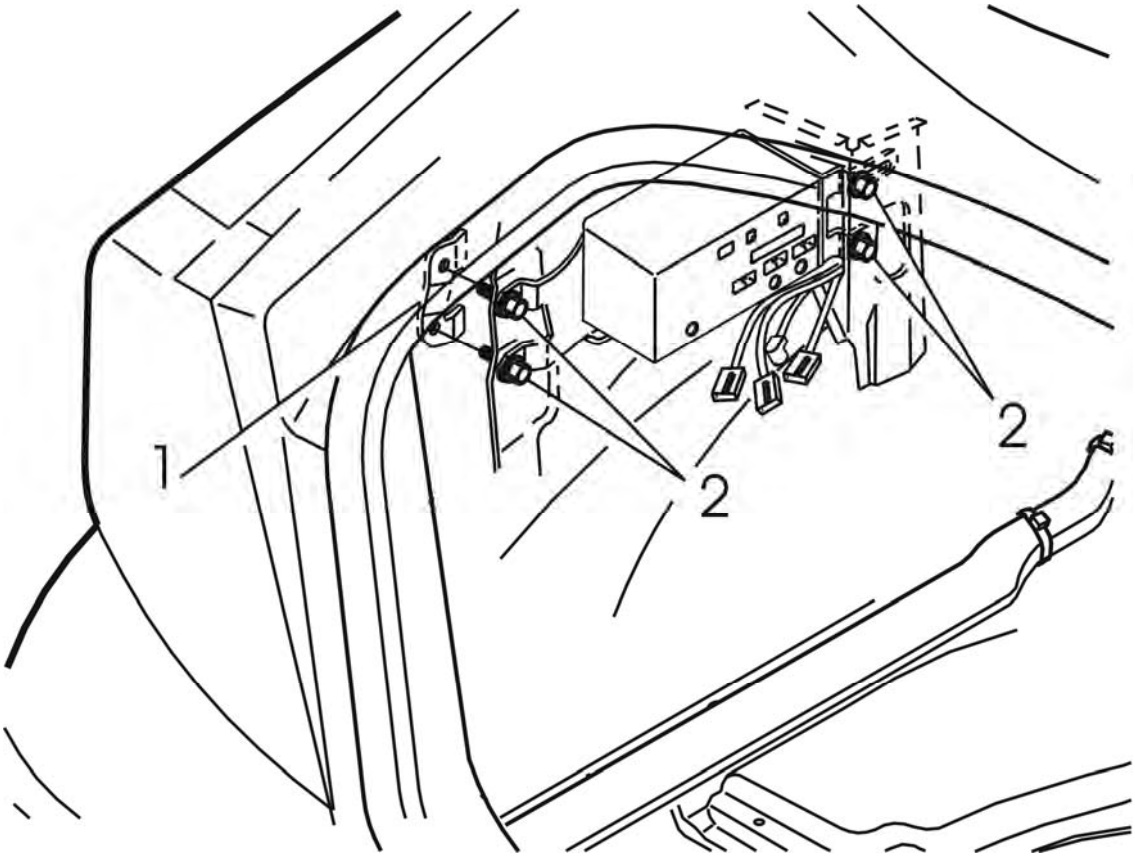

Fig. 1: Identifying Road Traffic Information Module
Courtesy of VOLVO CARS CORPORATION

- Fold down the side panel on the left-hand side of the cargo compartment.
- Release the clips for the front side panel in the cargo compartment. Fold down the panel.
- Disconnect the connectors.
- Remove the screw holding the control module.

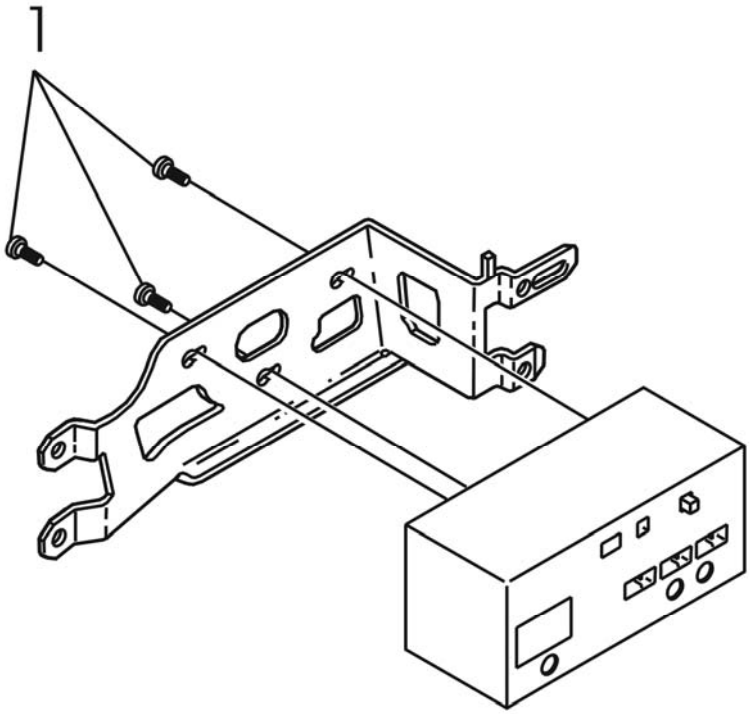

Fig. 2: Identifying Road Traffic Information Module And Bracket
Courtesy of VOLVO CARS CORPORATION

- Unscrew the bracket from the control module.

INSTALLATION

- Screw the control module into place on the bracket.
- Screw the bracket into place in the car.
- Install the connectors.
- Reinstall the panel.

FINISHING

Check that no diagnostic trouble codes have been stored during the repair.

ACCESSORIES AND EQUIPMENT

General - Specifications, Mechanical

TIGHTENING TORQUE

GENERAL TIGHTENING TORQUE

NOTE: Screws coated with a locking fluid or self locking nuts must be replaced with new when reinstalled.

See the table below to find the tightening torques for components not included in the summary.

Nuts and screws which are not self locking can be reused provided that they are in good condition.

Thread	Tightening torque (Nm)
M5	5
M6	10
M7	17
M8	24
M10	50
M12	80
M14	130

SUMMARY OF TIGHTENING TORQUES FOR SPECIFIC COMPONENTS

NOTE: Screws coated with locking fluid or sealant must be replaced with new ones when reinstalled.

Always use **new screws and nuts** when angle tightening. Any exceptions to this rule will be indicated in the method.

Angle-tightening in tight spaces. See **SCREWED JOINT, TORQUE/ANGLE TIGHTENING**.

Seat belts	
Seatbelt front: seatbelt reel Seatbelt front: bracket Seatbelt rear center: seatbelt reel Seatbelt rear center: upper seatbelt mounting Seatbelt (third row): seatbelt reel	40 Nm 48 Nm 24 Nm 48 Nm
Collision sensor	
Collision sensor Collision sensor front	6 Nm 6 Nm
Buckle seatbelt	

Buckle seatbelt front Buckle seatbelt rear (second row) Buckle seatbelt rear (third row)	48 Nm 48 Nm 48 Nm
End plate	
End plate front Endplate rear (second row) End plate center seat (second row) End plate rear (third row)	48 Nm 48 Nm 48 Nm 48 Nm
Whiplash unit	
Deformation element Whiplash element: self tapping Torx-screw, fixed seat Whiplash element: lock nut	17 Nm 9 Nm 18 Nm
Rails	
Rails front mounting Rails center mounting Rails rear mounting	8 Nm 8 Nm 8 Nm
Engine coolant heater	
Control module Water pump holder/clamp Cover (over engine coolant temperature sensor and overheat protection thermostat) Overheat protection thermostat Engine cooling fan (FC) mounting Engine cooling fan (FC) shaft Glow plug	2 Nm 3 Nm 2 Nm 2 Nm 2 Nm 3 Nm 15 Nm
AC compressor	
Magnetic clutch compressor - magnetic coil Magnetic clutch compressor - drive plate (5 and 6 cylinder engines) Magnetic clutch compressor - drive plate (8 cylinder engine)	5 Nm 13 Nm 24 Nm
Air conditioning (A/C) condenser with integrated drier	
Pressure sensor Drier, lower mounting	13 Nm 13 Nm
Drier, upper mounting	Step 1: 6 Nm. Step 2: Loosen 90°.
Rear air conditioning (A/C)	
Upper mounting points (climate control unit assembly) Lower mounting point (climate control unit assembly) Fan motor Pipe connection to expansion valve Covers around evaporator	6 Nm 6 Nm 1.7 ± 0.3 Nm 4.5 ± 0.5 Nm 1.5 ± 0.3 Nm
Seats	
Upper screw seat frame	50 Nm
Lower screw seat frame	24 Nm
Floor hatch	
Sems screw M6 x 20	6 Nm

Center arm rest rear seat	
Screw for the bracket	1 Nm
Screw for the shaft and cover	4 Nm

SCREWED JOINT, TORQUE/ANGLE TIGHTENING

Special tools:

9512050

SCREWED JOINT

There are a great number of torque spanner systems available on the market where the spanner grip can be replaced with other types. These wench grips are normally ideally suited to torque tightening screwed joints in poorly accessible places.

There may be occasions when torque tightening of a screwed joint must be followed by angle tightening and space does not allow the use of protractor (part number **9512050**). In these cases, use either a nut, a screw head or a tool. These are usually hexagonal and each corner is **60°** . If there are twelve edges, each corner is **30°** .

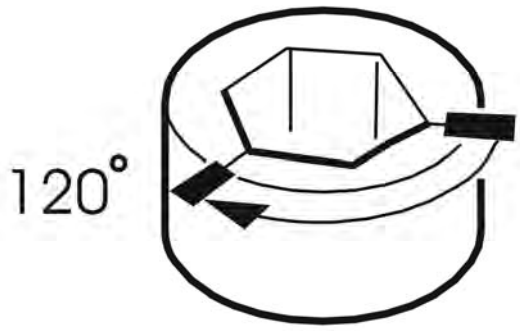

Fig. 1: Identifying Marked Nut

To angle tighten, mark the material and nut for example as illustrated and then tighten so that the markings are

opposite each other.

SURFACE TREATMENT MATERIAL

PAINT, SANDING AND POLISHING

MATERIAL STARTER KIT

Fig. 2: Identifying Material Starter Kit
Courtesy of VOLVO CARS CORPORATION

USA/Asia reference number: VC-NA-0108-3M

1. 3M 05927
2. 3M 06068
3. 3M 05703
4. 3M 05738
5. 3M 05733
6. 3M 00950
7. 3M 02085
8. 3M Blue 06020, Yellow 06016

EU reference number: VC-EMEA-0208-3M

1. 3M 80349

2. 3M 50383
3. 3M 50390
4. 3M 09550
5. 3M 50388
6. 3M 50238/62011
7. 3M 50414
8. 3M Blue 50486, Yellow 50400

Japan reference number: VP-JPN-0308-3M

1. 3M 05939
2. 3M 05969
3. 3M 05755
4. 3M 05766
5. 3M 05734
6. 3M O/D DF2 1500
7. 3M 02034
8. 3M 05351

ISOPROPANOL

Fig. 3: Identifying Spray Bottle
Courtesy of VOLVO CARS CORPORATION

Use: Isopropanol, 1161721

Mix 30% isopropanol and 70% water in a spray bottle.

UV-LIGHT

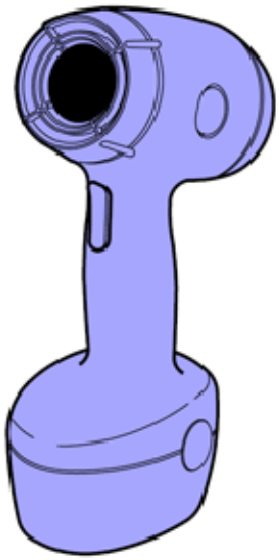

Fig. 4: Identifying UV-Light
Courtesy of VOLVO CARS CORPORATION

US/Asia: 3M 16400

EU: 3M 16407

Japan: 3M 16400

PAINT CODE (2007-12)

Exterior color, color codes

Fig. 5: Identifying Paint Code Locations
Courtesy of VOLVO CARS CORPORATION

Fig. 6: Identifying Exterior Color Code
Courtesy of VOLVO CARS CORPORATION

Exterior color, code/supplier/paint type. Written in two groups divided by a -.

The first group (3 digits) is the exterior colour, the last group (2 digits) is the supplier and paint type.

If the car has 2 colours, both codes are written, divided by a "/". Then the main color is to the left of "/".

Information about exterior colors

Fig. 7: Identifying Paint Manufacturer Code
Courtesy of VOLVO CARS CORPORATION

Manufacturer

1. BASF
2. Herberts
3. PPG
4. DuPont

Fig. 8: Identifying Lacquer Type Code
Courtesy of VOLVO CARS CORPORATION

Lacquer type

1. Solvent-based solid/metallic/pearl
2. Water-based metallic/pearl + 1K clear lacquer
3. Water-based solid + 1K clear lacquer
4. Solvent-based + 1K clear lacquer

5. Solvent-based pearl + 2K clear lacquer*
6. Water-based solid/metallic/pearl + 2K clear lacquer

*Depending on the transparent pearl paint, it contains a solid colour that is to be applied before the pearl paint.

Fig. 9: Identifying Two-Colored Exterior Code
Courtesy of VOLVO CARS CORPORATION

Two-colored exterior

If the car has two colours, both codes are written, divided by a "/". Then the main color is to the left of "/".

ACCESSORIES AND EQUIPMENT

Instrumentation - Diagnostic Trouble Codes And Associated Procedures

DIM-0001: DRIVING DISTANCE. INCORRECT VALUE (2003-12)

DIAGNOSTIC TROUBLE CODE (DTC) INFORMATION DIM-0001

Condition

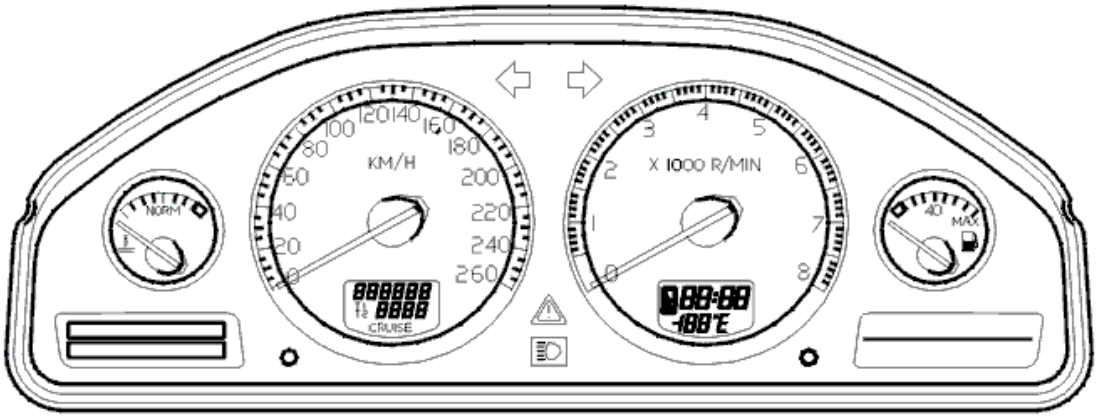

Fig. 1: Driver Information Module
Courtesy of VOLVO CARS CORPORATION

NOTE: The graphics in this service information are used for different model years and/or models. Some variation may occur. However, the essential information in the graphics is always correct.

The diagnostic trouble code (DTC) is stored if the driver information module (DIM) registers that the stored mileage value differs by more than 500 km from the most recently stored mileage. The diagnostic trouble code (DTC) is also stored if the voltage to the driver information module (DIM) is interrupted before the new mileage is stored in the central electronic module (CEM).

Substitute Value

- None.

Possible Source

- Software fault in the control module.

Fault symptom[s]

- No symptom.

DIM-0002: ABS-LAMP. FAULTY CIRCUIT (2003-12)

DIAGNOSTIC TROUBLE CODE (DTC) INFORMATION DIM-0002

Condition

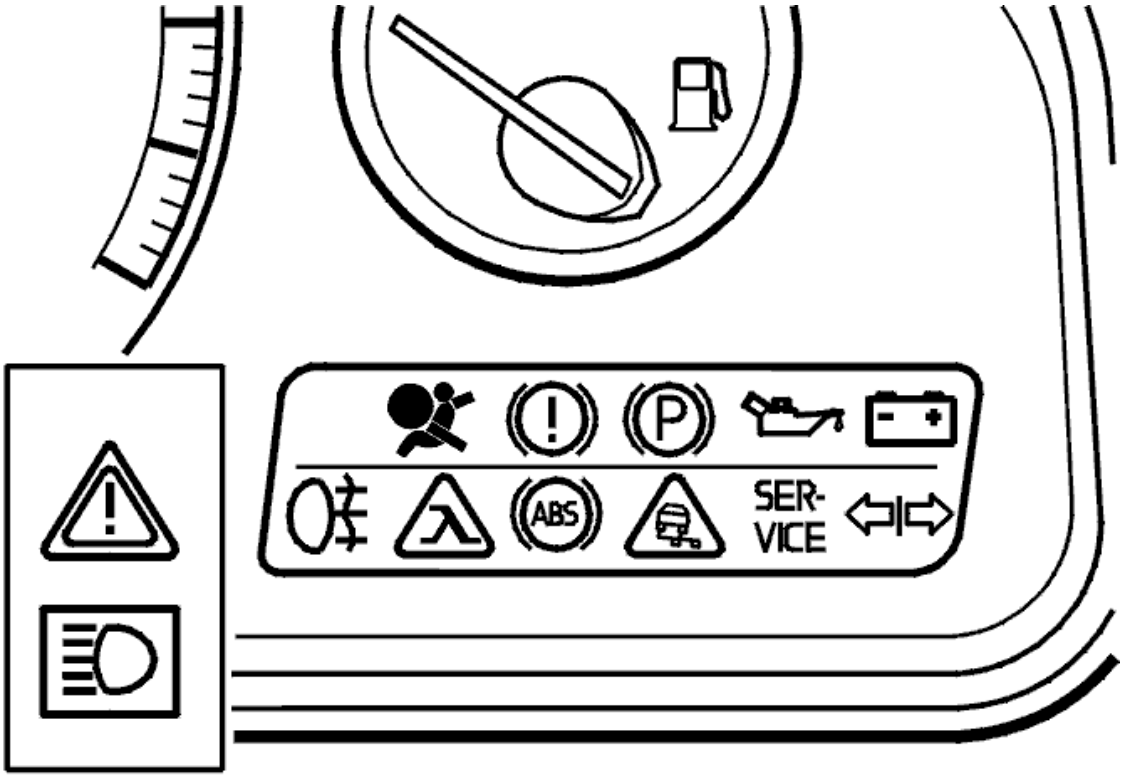

Fig. 2: Identifying ABS Warning Lamp
Courtesy of VOLVO CARS CORPORATION

NOTE: **The graphics in this service information are used for different model years and / or models. Some variation may occur. However, the essential information in the graphics is always correct.**

The diagnostic trouble code (DTC) is stored if the driver information module (DIM) detects an internal open-circuit in the circuit for the ABS warning lamp.

Substitute Value

- None.

Possible Source

- Software fault in the control module.

Fault symptom[s]

- The ABS warning lamp does not light
- General orange warning lamp lit.

FAULTY CIRCUIT

CHECKING THE FUNCTION OF THE LAMP

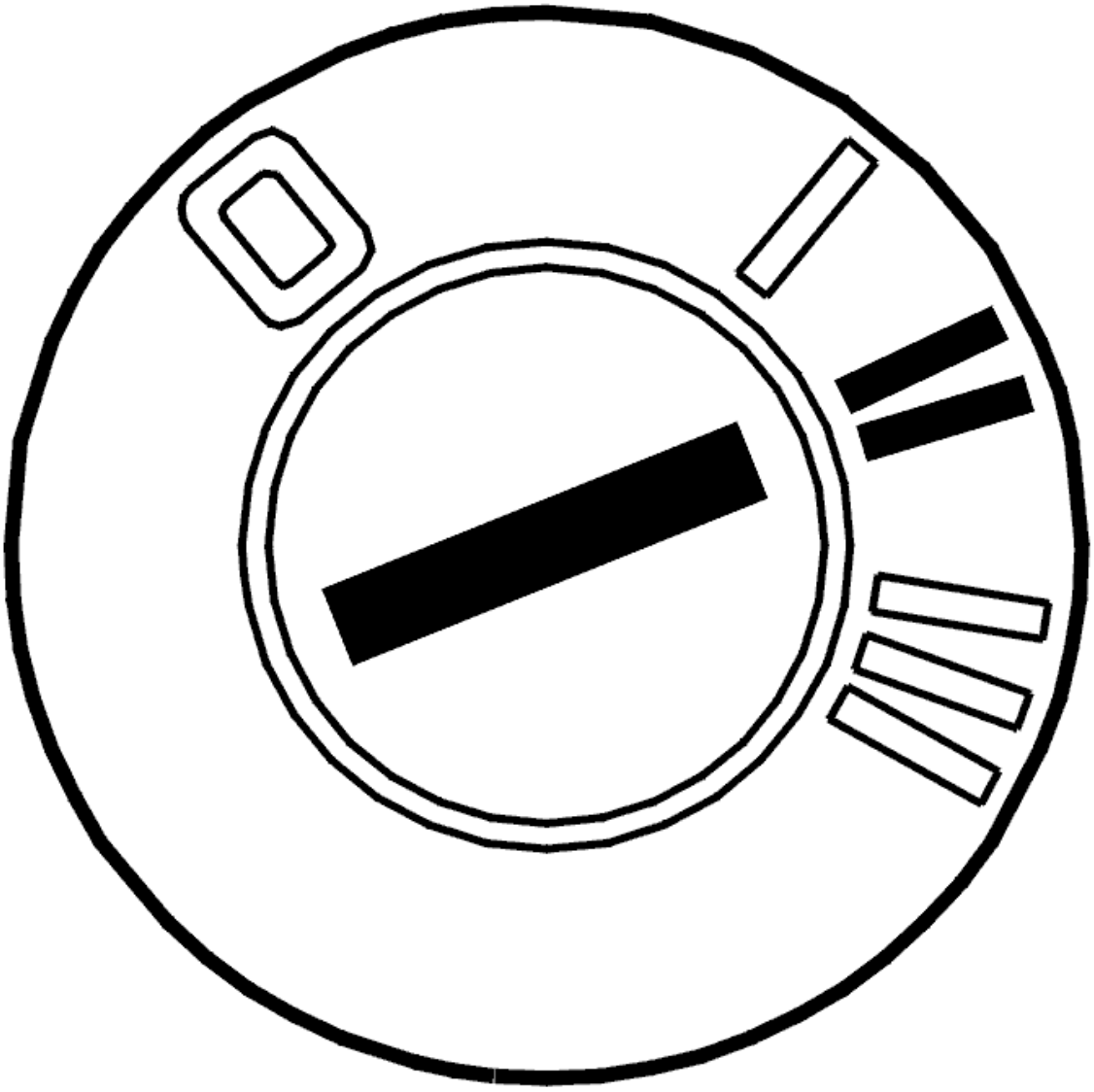

Fig. 3: Identifying Ignition ON
Courtesy of VOLVO CARS CORPORATION

- Ignition on.

  Check whether the lamp lights when the ignition is on.

Does the lamp function?

- **YES**

  OKAY: Troubleshooting has been completed.

- **NO**

  Refer to **REPLACING THE DRIVER INFORMATION MODULE (DIM)**

REPLACING THE DRIVER INFORMATION MODULE (DIM)

Replace the driver information module (DIM). See **DRIVER INFORMATION MODULE (DIM), REPLACING** .

DIM-0003: SRS-LAMP. FAULTY CIRCUIT (2003-12)

DIAGNOSTIC TROUBLE CODE (DTC) INFORMATION DIM-0003

Condition

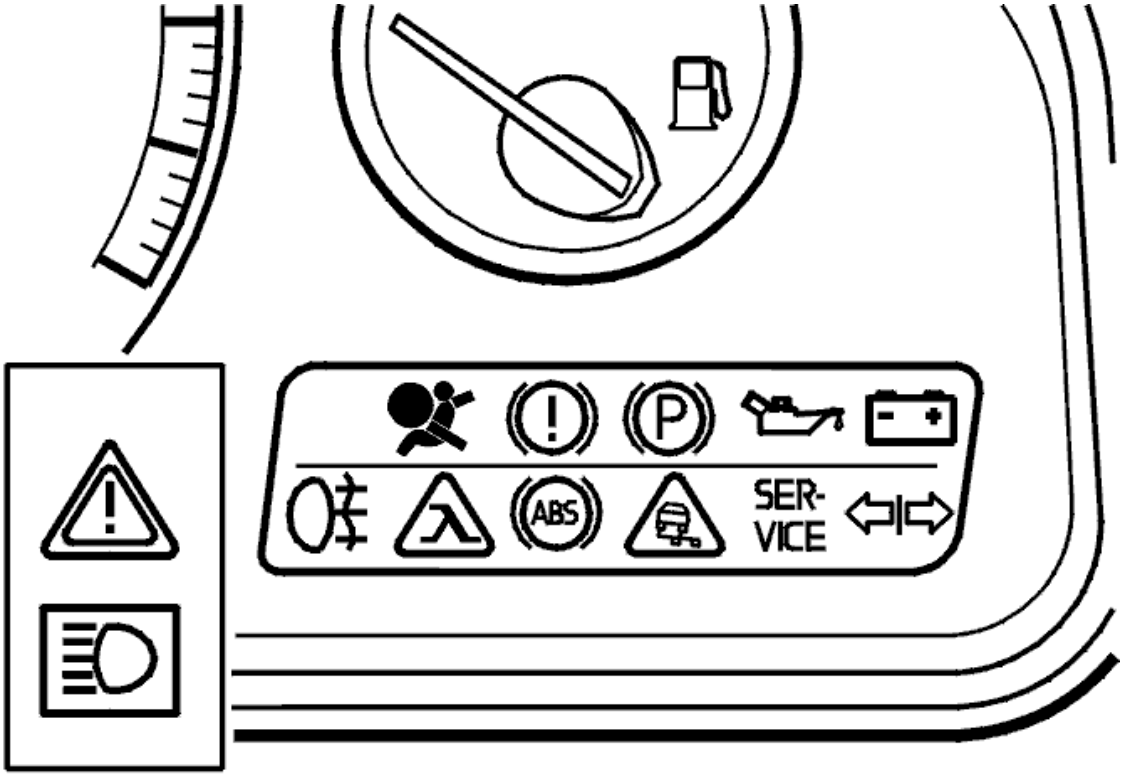

Fig. 4: Identifying ABS Warning Lamp
Courtesy of VOLVO CARS CORPORATION

NOTE: **The graphics in this service information are used for different model years and / or models. Some variation may occur. However, the essential information in the graphics is always correct.**

The diagnostic trouble code (DTC) is stored if the driver information module (DIM) detects an internal open-circuit in the circuit for the SRS warning lamp.

Substitute Value

- None.

Possible Source

- Hardware fault

Fault symptom[s]

- The SRS warning lamp does not light
- General red warning lamp lit.

FAULTY CIRCUIT

CHECKING THE DIAGNOSTIC TROUBLE CODES (DTCS)

Check and remedy any diagnostic trouble codes (DTCs) in the central electronic module (CEM) before fault-tracing this diagnostic trouble code (DTC).

Were diagnostic trouble codes (DTCs) stored in the central electronic module (CEM)?

- **YES**

  OKAY: Troubleshooting has been completed.

- **NO**

  Refer to **CHECKING THE FUNCTION OF THE LAMP**

CHECKING THE FUNCTION OF THE LAMP

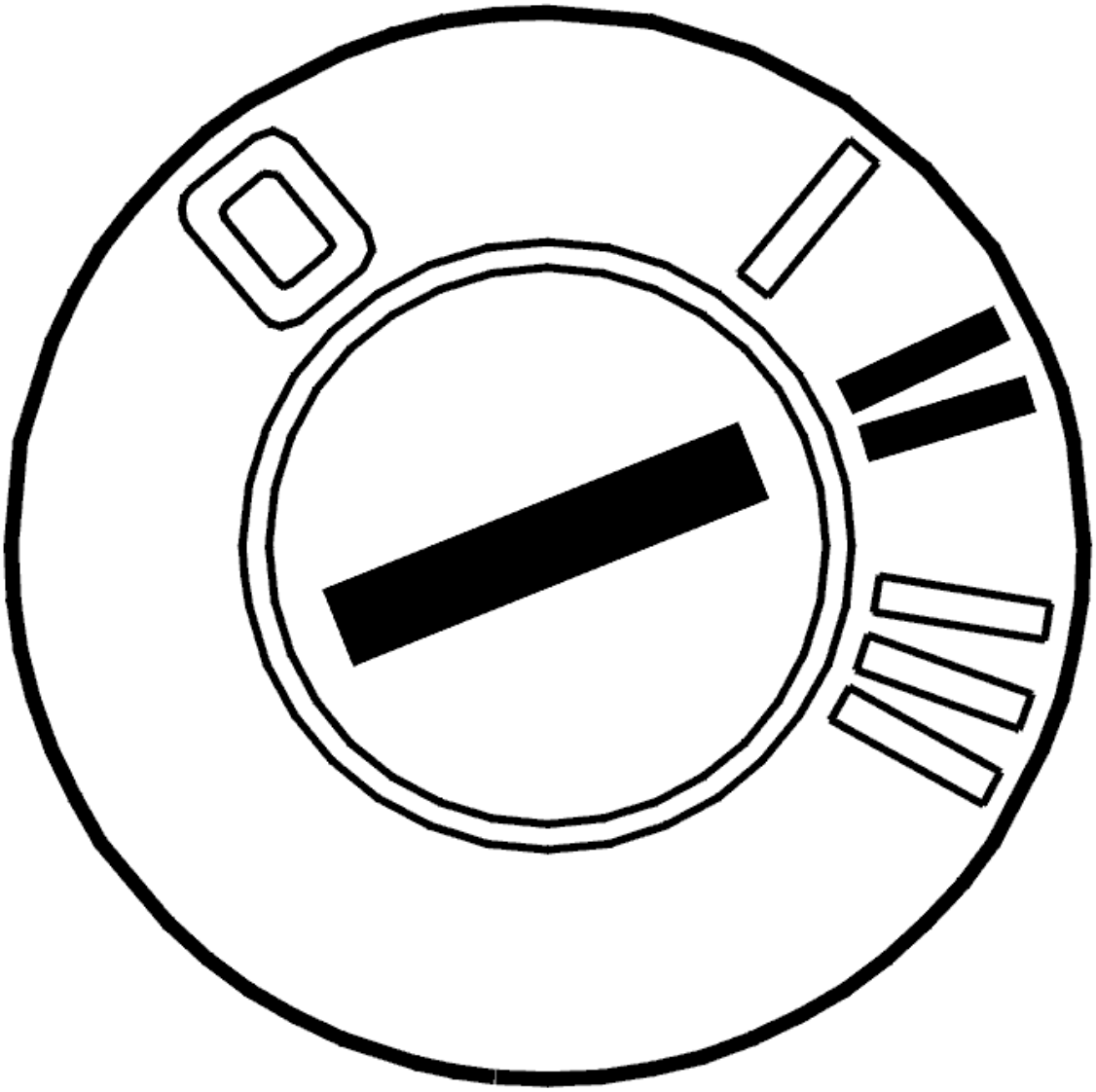

Fig. 5: Identifying Ignition ON
Courtesy of VOLVO CARS CORPORATION

- Ignition on.

  Check whether the lamp lights when the ignition is on.

Does the lamp function?

- **YES**

  OKAY: Troubleshooting has been completed.

- **NO**

  Refer to **REPLACING THE DRIVER INFORMATION MODULE (DIM)**

REPLACING THE DRIVER INFORMATION MODULE (DIM)

Replace the driver information module (DIM). See **DRIVER INFORMATION MODULE (DIM), REPLACING** .

DIM-0005: RED WARNING LAMP FAULTY CIRCUIT (2003-12)

DIAGNOSTIC TROUBLE CODE (DTC) INFORMATION DIM-0005

Condition

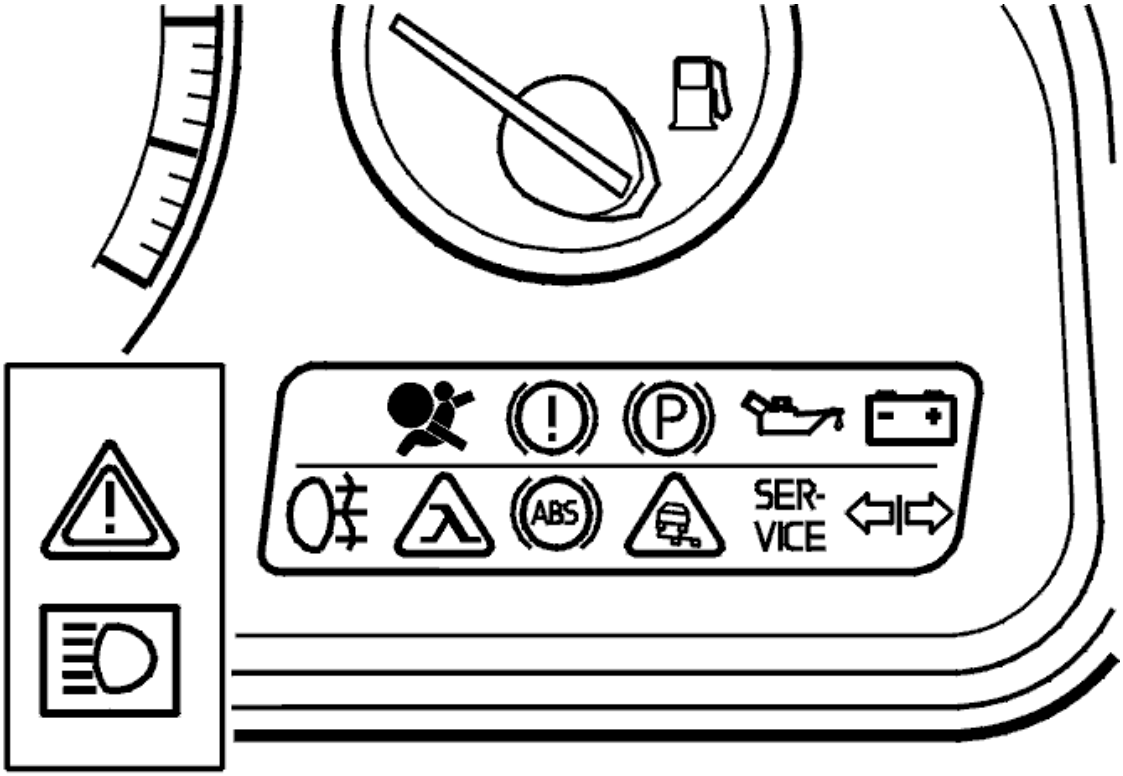

Fig. 6: Identifying ABS Warning Lamp
Courtesy of VOLVO CARS CORPORATION

NOTE: **The graphics in this service information are used for different model years and/or models. Some variation may occur. However, the essential information in the graphics is always correct.**

The diagnostic trouble code (DTC) is stored if the driver information module (DIM) detects an internal open-circuit in the circuit for the general red warning lamp.

Substitute Value

- None.

Possible Source

- Software fault in the control module.

Fault symptom[s]

- The general red warning lamp does not light.

FAULTY CIRCUIT

CHECKING THE FUNCTION OF THE LAMP

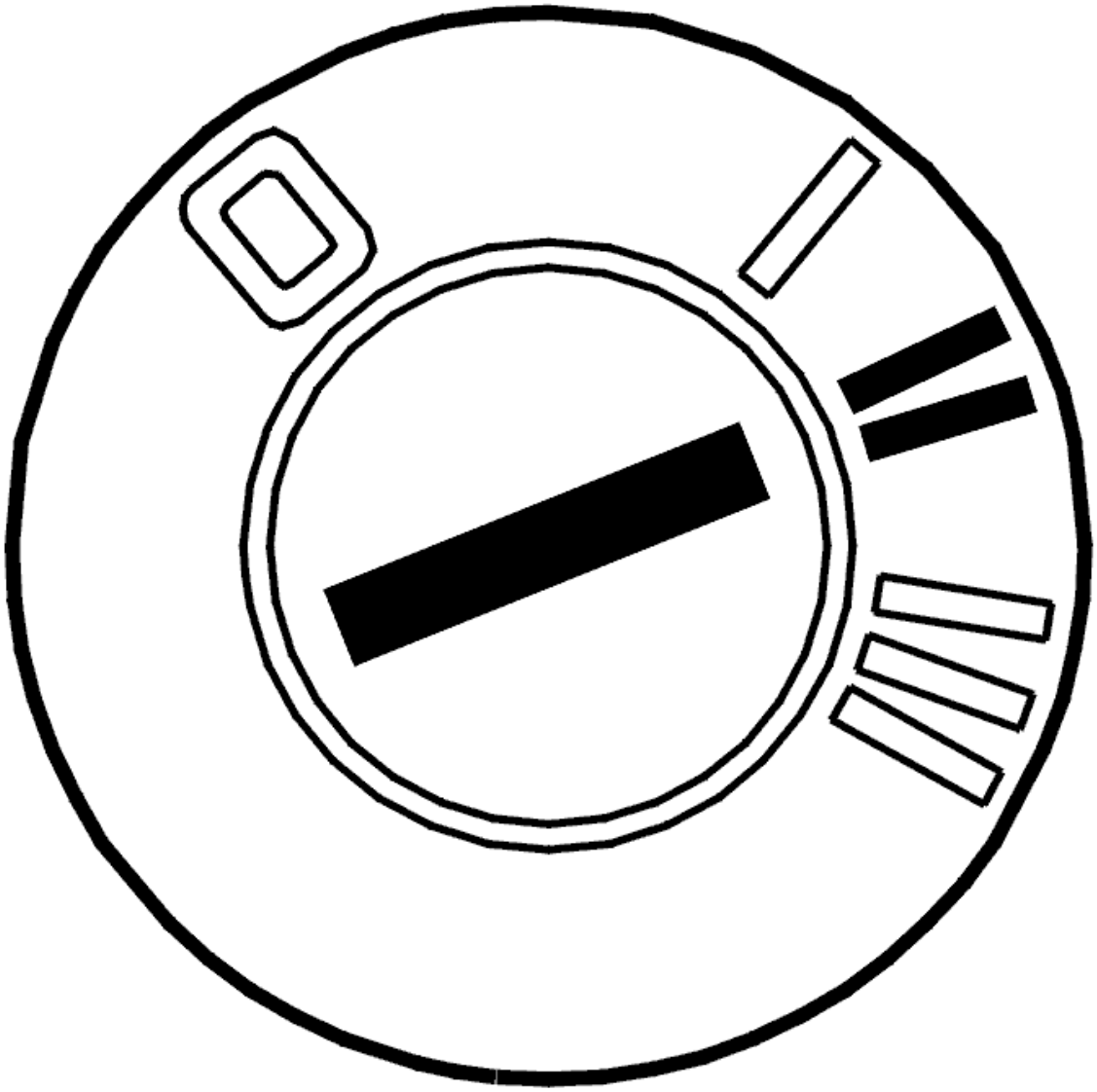

Fig. 7: Identifying Ignition ON
Courtesy of VOLVO CARS CORPORATION

- Ignition on.

  Activate the warning lamp.

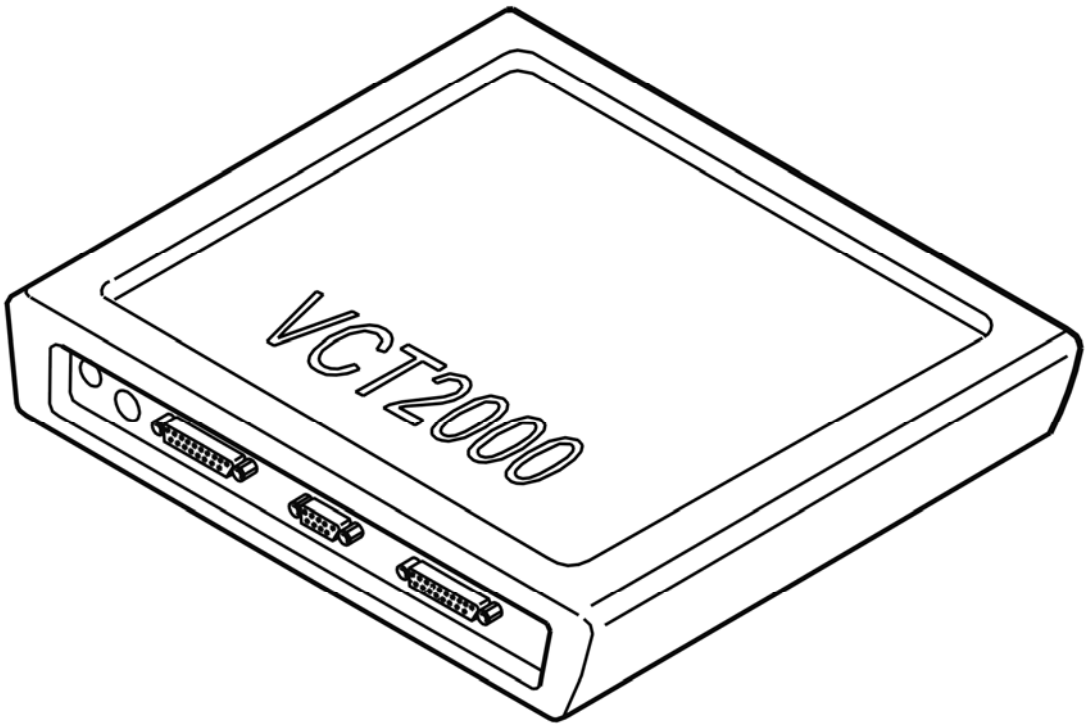

Fig. 8: Identifying VCT2000 Diagnostic Tool Symbol In VIDA
Courtesy of VOLVO CARS CORPORATION

Does the lamp function?

- **YES**

  OKAY: Troubleshooting has been completed.

- **NO**

  Refer to **REPLACING THE COMBINED INSTRUMENT PANEL**

REPLACING THE COMBINED INSTRUMENT PANEL

Replace the driver information module (DIM). See **DRIVER INFORMATION MODULE (DIM), REPLACING** .

DIM-0006: ORANGE WARNING LAMP FAULTY CIRCUIT (2003-12)

DIAGNOSTIC TROUBLE CODE (DTC) INFORMATION DIM-0006

Condition

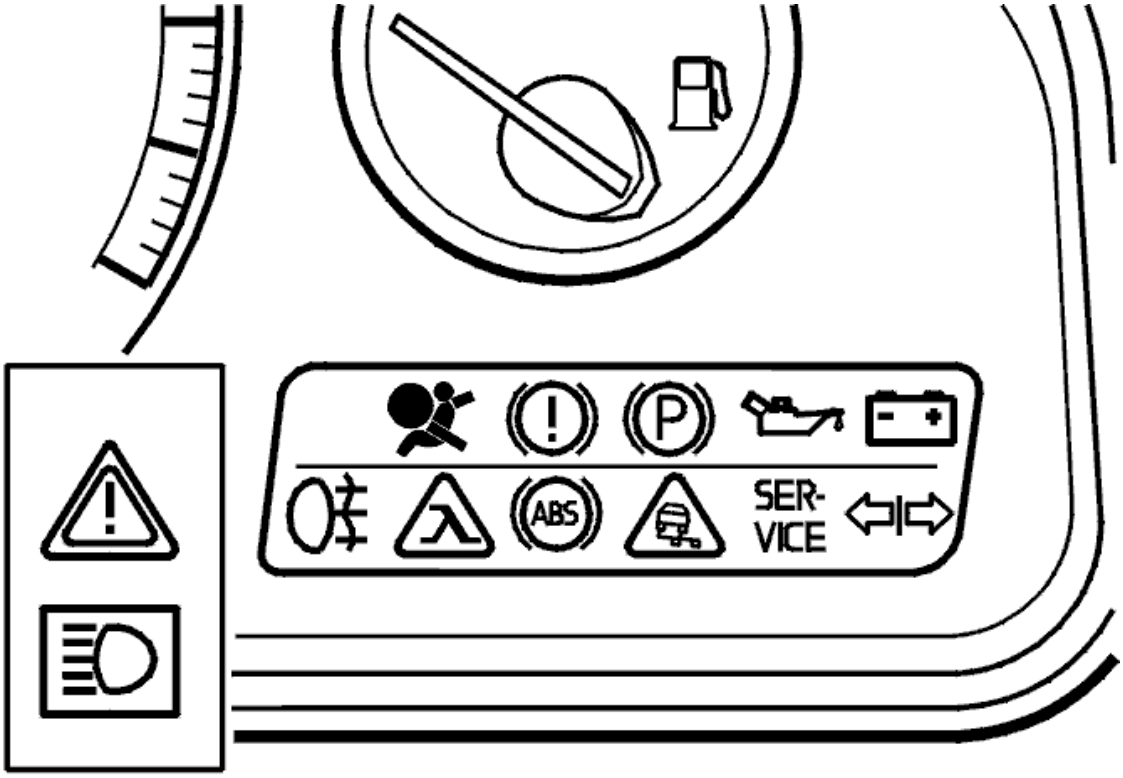

Fig. 9: Identifying ABS Warning Lamp
Courtesy of VOLVO CARS CORPORATION

NOTE: **The graphics in this service information are used for different model years and/or models. Some variation may occur. However, the essential information in the graphics is always correct.**

The diagnostic trouble code (DTC) is stored if the driver information module (DIM) detects an internal open-circuit in the circuit for the general orange warning lamp.

Substitute Value

- None.

Possible Source

- Software fault in the control module.

Fault symptom[s]

- The general orange warning lamp does not light.

FAULTY CIRCUIT

CHECKING THE FUNCTION OF THE LAMP

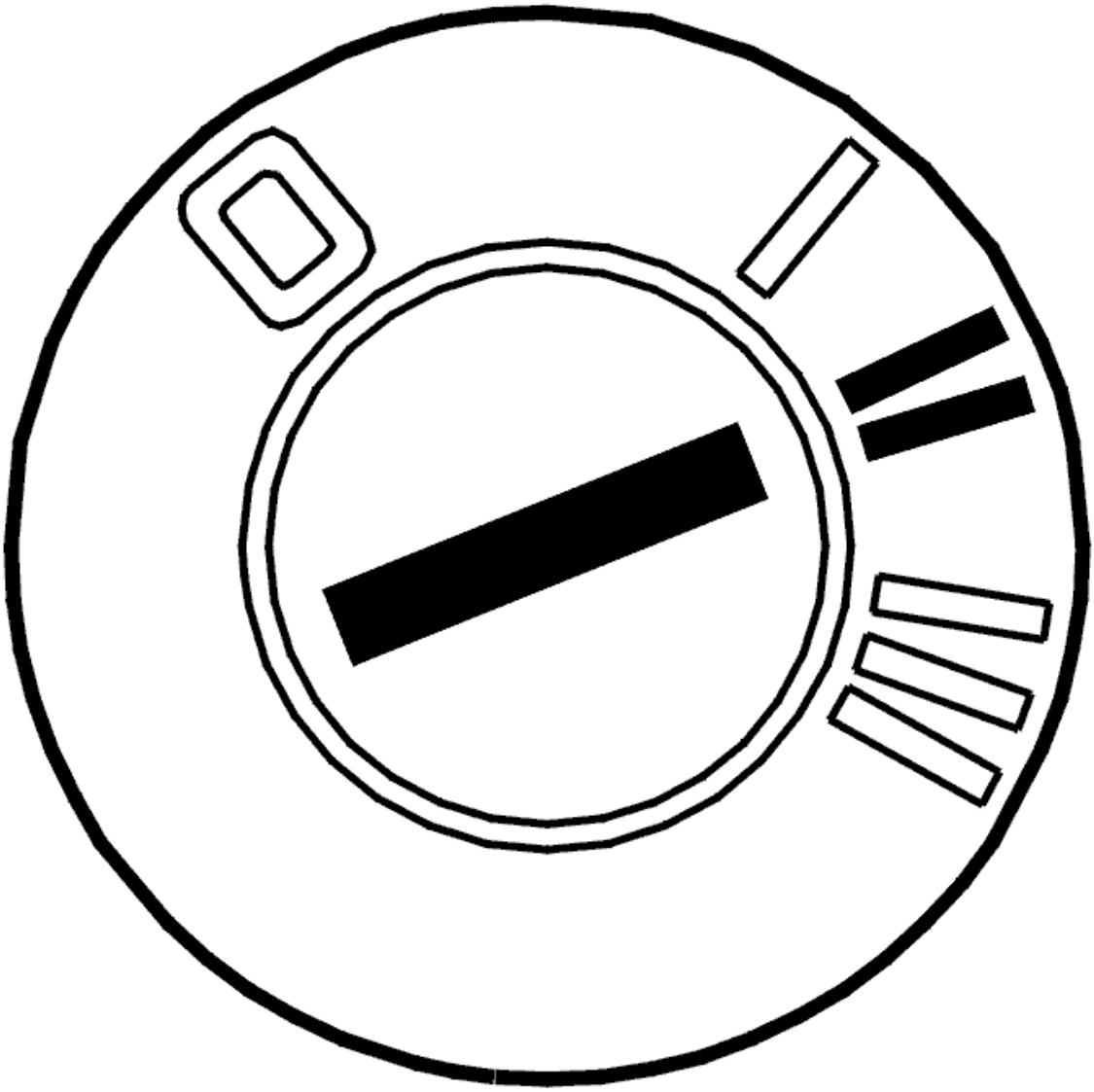

Fig. 10: Identifying Ignition ON
Courtesy of VOLVO CARS CORPORATION

- Ignition on.

  Activate the warning lamp.

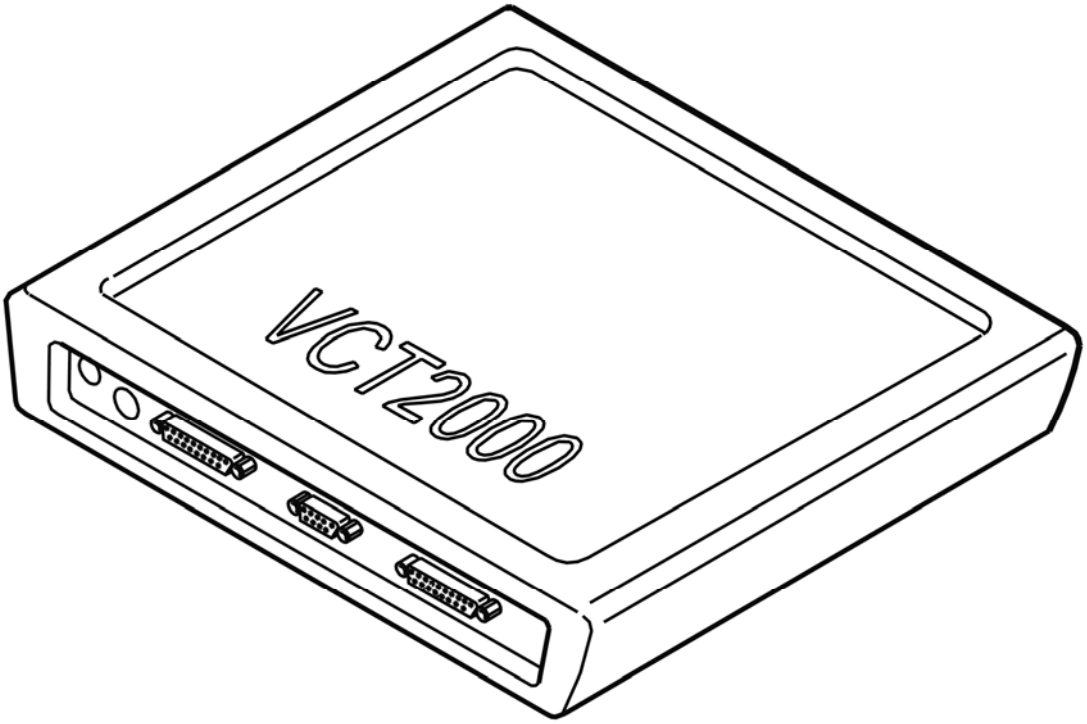

Fig. 11: Identifying VCT2000 Diagnostic Tool Symbol In VIDA
Courtesy of VOLVO CARS CORPORATION

Does the lamp function?

- **YES**

  OKAY: Troubleshooting has been completed.

- **NO**

  Refer to **REPLACING THE DRIVER INFORMATION MODULE (DIM)**

REPLACING THE DRIVER INFORMATION MODULE (DIM)

Replace the driver information module (DIM). See **DRIVER INFORMATION MODULE (DIM), REPLACING** .

DIM-0007: GLOBAL PARAMETER. INTERNAL FAULT (2005-12)

DIAGNOSTIC TROUBLE CODE (DTC) INFORMATION DIM-0007

Condition

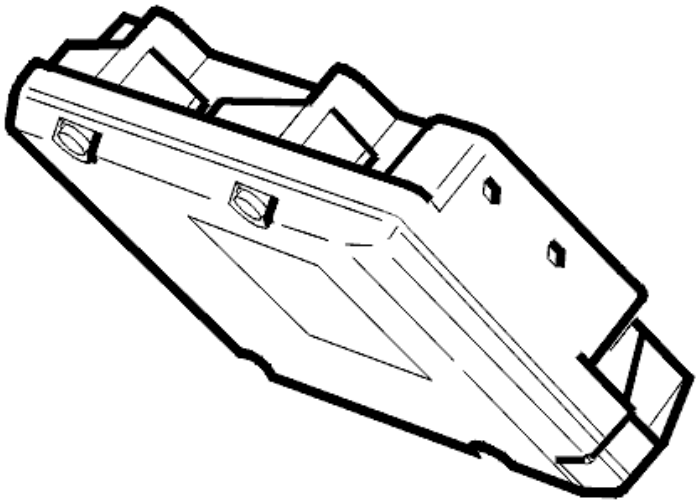

Fig. 12: Brake Control Module
Courtesy of VOLVO CARS CORPORATION

NOTE: The graphics in this service information are used for different model years and/or models. Some variation may occur. However, the essential information in the graphics is always correct.

The diagnostic trouble code (DTC) is stored if the control module detects that one of the global parameters used by the driver's information module (DIM) is not updated or defined.

Substitute Value

- None.

Possible Source

- Communication fault
- Incorrectly downloaded software in the central electronic module (CEM) (Carconfig).

Fault symptom[s]

- The driver information module (DIM) is not functioning.

INTERNAL FAULT

FAULT-TRACING INFORMATION

INFORMATION

There is no fault-tracing for this diagnostic fault code (DTC).

For further information on this diagnostic trouble code, see Diagnostic trouble code (DTC) information.

DIM-0007: GLOBAL PARAMETER. INTERNAL FAULT. (2003-04)

DIAGNOSTIC TROUBLE CODE (DTC) INFORMATION DIM-0007

see **DIAGNOSTIC TROUBLE CODE (DTC) INFORMATION DIM-0007**

INTERNAL FAULT

FAULT-TRACING INFORMATION

INFORMATION

There is no fault-tracing for this diagnostic fault code (DTC).

For further information on this diagnostic trouble code, see Diagnostic trouble code (DTC) information.

DIM-000C: CONTROL MODULE. INTERNAL FAULT (2005-12)

DIAGNOSTIC TROUBLE CODE (DTC) INFORMATION DIM-000C

Condition

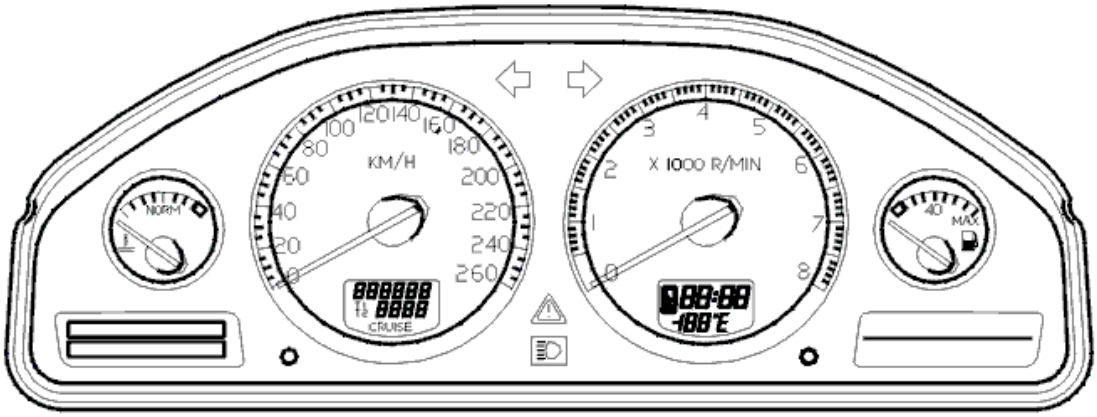

Fig. 13: Driver Information Module
Courtesy of VOLVO CARS CORPORATION

The diagnostic trouble code (DTC) is stored if the control module detects a damaged memory element.

Substitute Value

- None.

Possible Source

- Damaged memory in the instrument.

Fault symptom[s]

- The combined instrument panel is not functioning.

INTERNAL FAULT

DAMAGED MEMORY ELEMENT

The diagnostic trouble code (DTC) is stored if the control module has detected a damaged memory element in the driver information module (DIM). This can affect the control module, although not necessarily. Replace the driver information module (DIM) if the customer complains.

Do you want to replace the driver information module (DIM)?

- **YES**

Refer to **REPLACING THE COMBINED INSTRUMENT PANEL**

- **NO**

  FAULT NOT FOUND: Troubleshooting has been completed.

REPLACING THE COMBINED INSTRUMENT PANEL

Replace the combined instrument panel. See **DRIVER INFORMATION MODULE (DIM), REPLACING** .

DIM-000C: CONTROL UNIT. INTERNAL FAULT. INTERMITTENT FAULT (2003-04)

DIAGNOSTIC TROUBLE CODE (DTC) INFORMATION DIM-000C

see **DIAGNOSTIC TROUBLE CODE (DTC) INFORMATION DIM-000C**

INTERNAL FAULT. INTERMITTENT FAULT

DEFECTIVE MEMORY ELEMENT

The diagnostic trouble code is displayed when the control unit has previously found a faulty memory element in the instrument but the fault is no longer there. This can affect the instrument but does not necessarily do so.

DIM-000C: CONTROL UNIT. INTERNAL FAULT. PERMANENT FAULT (2003-04)

DIAGNOSTIC TROUBLE CODE (DTC) INFORMATION DIM-000C

see **DIAGNOSTIC TROUBLE CODE (DTC) INFORMATION DIM-000C**

INTERNAL FAULT. PERMANENT FAULT

DEFECTIVE MEMORY ELEMENT

The diagnostic trouble code is displayed when the control unit detects a defective memory element in the instrument. This can affect the instrument but does not necessarily do so. If the customer complains, replace the instrument.

Replace the instrument?

- **YES**

  Refer to **REPLACING THE COMBINED INSTRUMENT**

- **NO**

FAULT NOT FOUND: Troubleshooting has been completed.

REPLACING THE COMBINED INSTRUMENT

Replace the combined instrument as described in, see **DRIVER INFORMATION MODULE (DIM), REPLACING** .

DIM-E001: CONTROL MODULE COMMUNICATION. FAULTY COMMUNICATION (2005-12)

DIAGNOSTIC TROUBLE CODE (DTC) INFORMATION DIM-E001

Condition

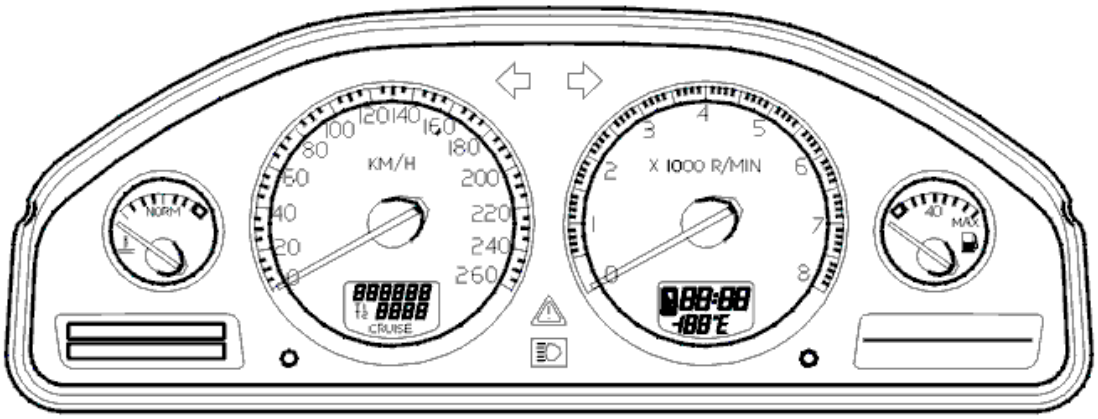

Fig. 14: Driver Information Module
Courtesy of VOLVO CARS CORPORATION

The control modules transmit and receive information via a standardized serial communication method - CAN (Control Area Network). The diagnostic trouble code (DTC) is stored if the control module registers serious interference on the low speed network (CAN communication blocked).

NOTE: **In the event of system communication problems, it is not possible to communicate with the control module. Therefore it will only be possible to read off the diagnostic trouble code (DTC) if the fault is intermittent.**

Substitute Value

- The control module shuts itself off ("bus-off").

HINT: The driver information module (DIM) will remain shut off until the power supply is broken (15, 30, X). When the power supply is connected the control module will make a new attempt to communicate.

Possible Source

- Short-circuit between the control area network (CAN) wiring
- Open-circuit in the control area network (CAN) wiring
- Internal fault in the control module
- Internal fault in another control module in the same part of the control area network (CAN).

Fault symptom[s]

- The ABS warning lamp is lit
- The SPIN warning lamp is lit
- The general red warning lamp is lit
- No vehicle speed display (because there is no signal to the combined instrument panel)
- No gauges working.

SIGNAL MISSING

see **SIGNAL MISSING**

DIM-E001: CONTROL MODULE COMMUNICATION. FAULTY COMMUNICATION (2003-04)

DIAGNOSTIC TROUBLE CODE (DTC) INFORMATION DIM-E001

Condition

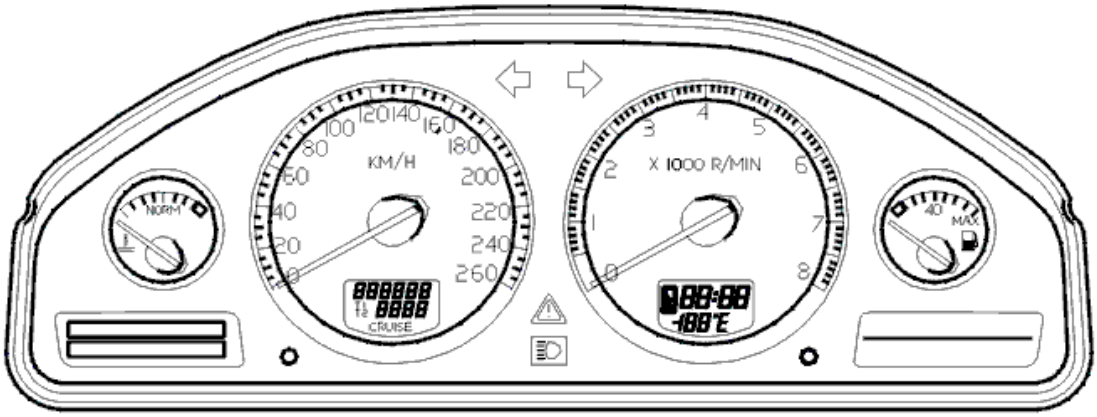

Fig. 15: Driver Information Module
Courtesy of VOLVO CARS CORPORATION

The control modules transmit and receive information via a standardized serial communication method - CAN (Controller Area Network). The diagnostic trouble code (DTC) is stored if the control module registers serious interference (CAN communication blocked).

NOTE: **In the event of system communication problems, it is not possible to communicate with the control module. Therefore it will only be possible to read off the fault if it is intermittent.**

Substitute Value

- The control module shuts itself off ("bus-off").

  HINT: The control module will remain shut off until the power supply is broken (15, 30, X). When the power supply is connected the control module will make a new attempt to communicate.

Possible Source

- Short-circuit between the control area network (CAN) wiring
- Open-circuit in the control area network (CAN) wiring
- Internal fault in the control module
- Internal fault in another control module in the same part of the control area network (CAN).

Fault symptom[s]

- No gauges are working
- The instrument lighting does not operate.

FAULTY COMMUNICATION

see **FAULTY COMMUNICATION**

DIM-E003: CONFIGURATION FAULT. FAULTY CONFIGURATION (2003-04)

DIAGNOSTIC TROUBLE CODE (DTC) INFORMATION DIM-E003

Condition

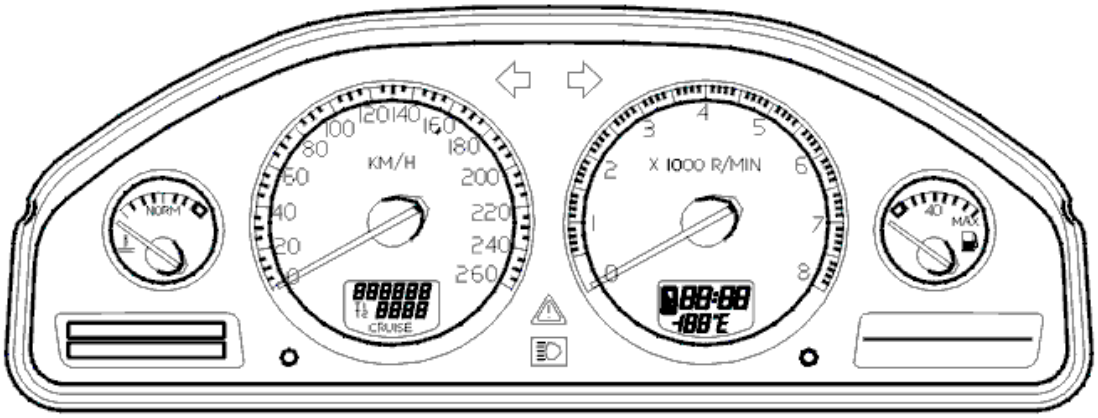

Fig. 16: Driver Information Module
Courtesy of VOLVO CARS CORPORATION

The control module compares its configuration ID with the signal configuration transmitted on the control area network (CAN) by the central electronic module (CEM). If the configuration IDs do not correspond the fault code is stored. The diagnostic trouble code (DTC) is also stored if the communication between the control module and the central electronic module (CEM) is interrupted.

NOTE: **In the event of open-circuit in both the control area network (CAN) cables, it is not possible to communicate with the control module. Therefore it will only be possible to read off the diagnostic trouble code (DTC) if this type of fault is intermittent. When the diagnostic trouble code (DTC) is stored, the control module responds to the diagnostic command, however normal control area network (CAN) communication does not work. ("Expulsion mode")**

Substitute Value

- None.

Possible Source

- Faulty control area network (CAN) configuration ID. (The node is not intended for this car (for example a used control module with different software/hardware))
- Open-circuit in the control area network (CAN) wiring between the control module and the central electrical module (CEM).

Fault symptom[s]

- No gauges are working
- The instrument lighting does not operate.

FAULTY CONFIGURATION (2003)

see **FAULTY CONFIGURATION (2003)**

FAULTY CONFIGURATION (2004)

see **FAULTY CONFIGURATION (2004)**

DIM-E003: CONFIGURATION FAULT. FAULTY CONFIGURATION (2005-12)

DIAGNOSTIC TROUBLE CODE (DTC) INFORMATION DIM-E003

Condition

The driver information module (DIM) compares its configuration ID with the signal configuration transmitted on the control area network (CAN) by the central electronic module (CEM). If the configuration IDs do not correspond the fault code is stored. The diagnostic trouble code (DTC) is also stored if the communication between the control module and the central electronic module (CEM) is interrupted.

NOTE: **In the event of an open-circuit in both the control area network (CAN) cables, it is not possible to communicate with the control module. Therefore it will only be possible to read off the diagnostic trouble code (DTC) if this type of fault is intermittent. When the diagnostic trouble code (DTC) is stored, the control module responds to the diagnostic commands. However, normal control area network (CAN) communication does not work ("Expulsion mode").**

Substitute Value

- None.

Possible Source

- Incorrect control area network (CAN) configuration ID (the control module is not intended for this car, for example it is a used control module with different software/hardware)
- Open-circuit in the control area network (CAN) wiring between the control module and the central electrical module (CEM).

Fault symptom[s]

- The driver information module (DIM) panel does not function if there is no CAN communication.

SIGNAL MISSING

see **SIGNAL MISSING**

DIM-XXXX: UNKNOWN DIAGNOSTIC TROUBLE CODE (DTC) FOR THE CURRENT CONTROL MODULE VERSION (2003-12)

UNKNOWN DIAGNOSTIC TROUBLE CODE (DTC) FOR THE CURRENT CONTROL MODULE VERSION

READING OFF DIAGNOSTIC TROUBLE CODES (DTCS)

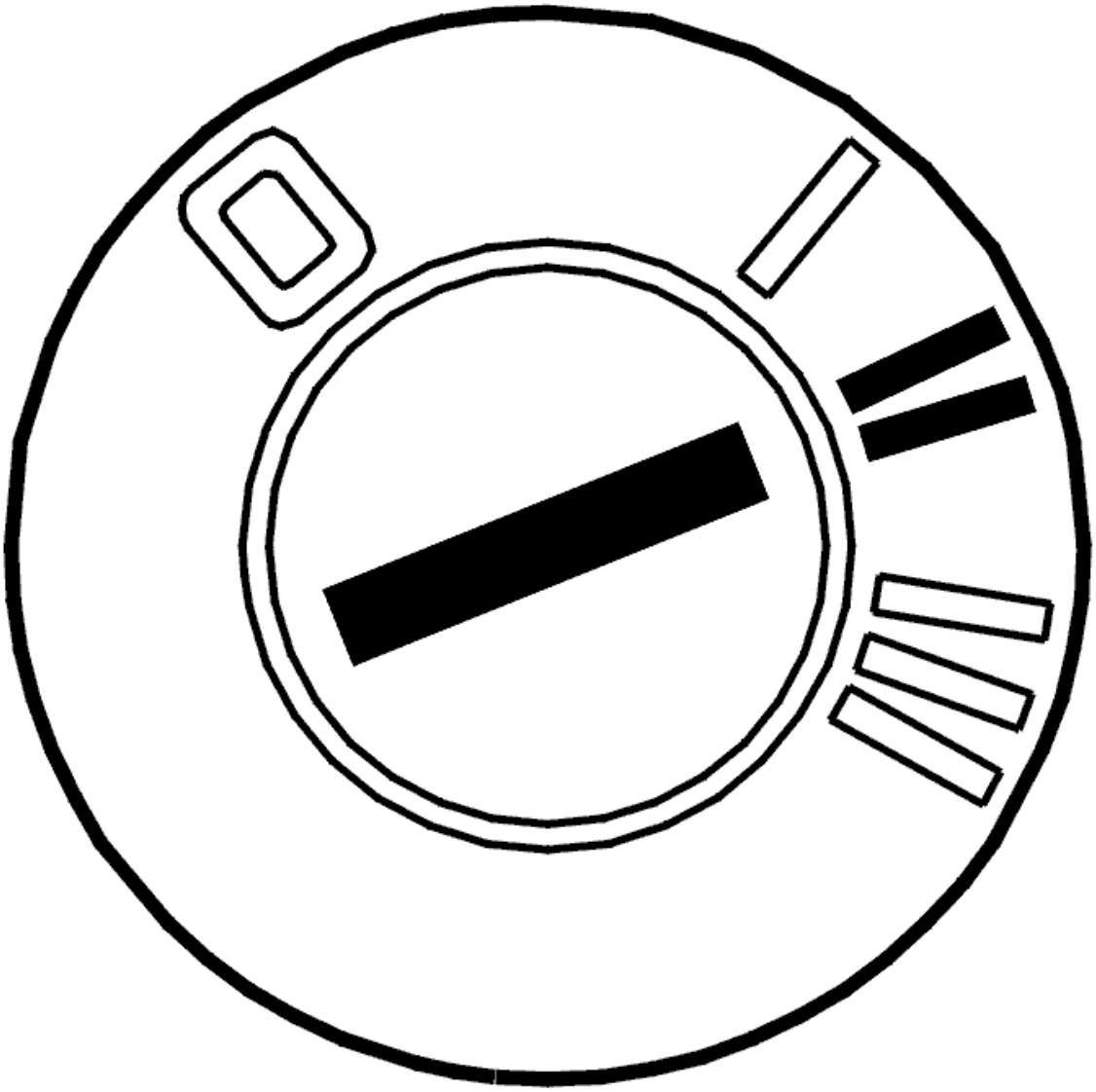

Fig. 17: Identifying Ignition ON
Courtesy of VOLVO CARS CORPORATION

- Ignition on.

  Read off the diagnostic trouble code (DTC) that is stored in the car.

  Make a note of the code. Report the code to VIDA customer support.

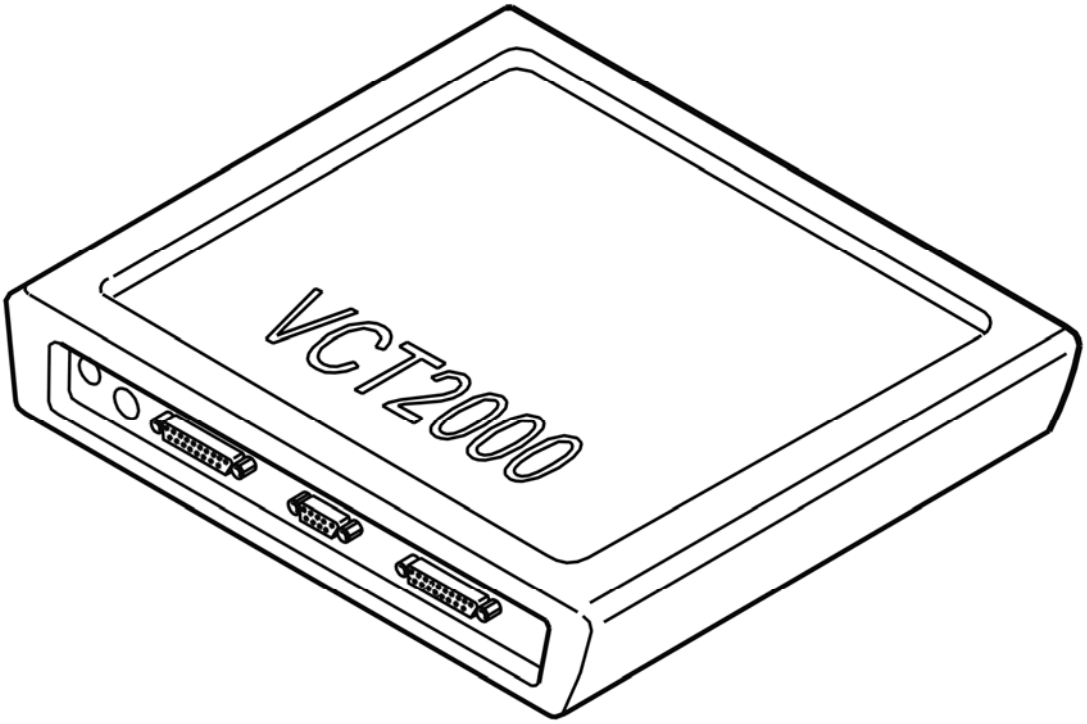

Fig. 18: Identifying VCT2000 Diagnostic Tool Symbol In VIDA
Courtesy of VOLVO CARS CORPORATION

ACCESSORIES AND EQUIPMENT

Instrumentation - General Diagnostics And Tests

CHECKING THE POWER SUPPLY AND GROUND (2003-04)

CHECKING POWER SUPPLY AND GROUND. PERMANENT FAULT

CHECKING SUPPLY

Check passenger compartment fuse 24 (11C/24:2).

Check the cable between combined instrument panel supply relay (2/29) terminal #3 and passenger compartment fuse 24 (11C/24:2). Check for an open-circuit according to **OPEN-CIRCUIT, PERMANENT FAULTS**. Check for a short-circuit to ground according to **SHORT-CIRCUIT TO GROUND, PERMANENT FAULTS**.

Check that the relay is not defective.

Check the cable between combined instrument panel terminal #6 and parking brake connector terminal #1 for a short-circuit to ground according to **SHORT-CIRCUIT TO GROUND, PERMANENT FAULTS**.

Check the cable between combined instrument panel terminal #1 and combined instrument panel supply relay (2/29) terminal #1. Check for an open-circuit according to **OPEN-CIRCUIT, PERMANENT FAULTS**. Check for a short-circuit to ground according to **SHORT-CIRCUIT TO GROUND, PERMANENT FAULTS**.

Check the cable between combined instrument panel terminal #14 and ground. Check for an open-circuit according to **OPEN-CIRCUIT, PERMANENT FAULTS**. Check for a short-circuit to supply voltage according to **SHORT-CIRCUIT TO SUPPLY VOLTAGE. PERMANENT FAULTS**.

Remedy as necessary

Other information:

- To connect the breakout box, see **CONNECTING THE DRIVER INFORMATION MODULE (DIM) TEST BOX**.

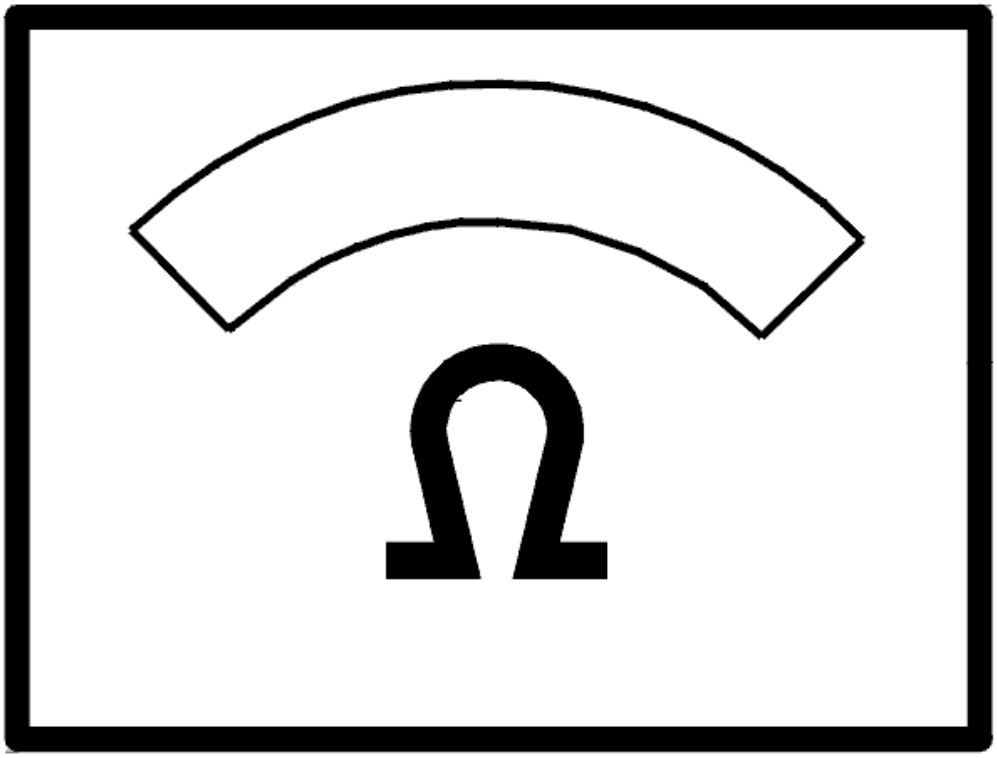

Fig. 1: Identifying Ohmmeter
Courtesy of VOLVO CARS CORPORATION

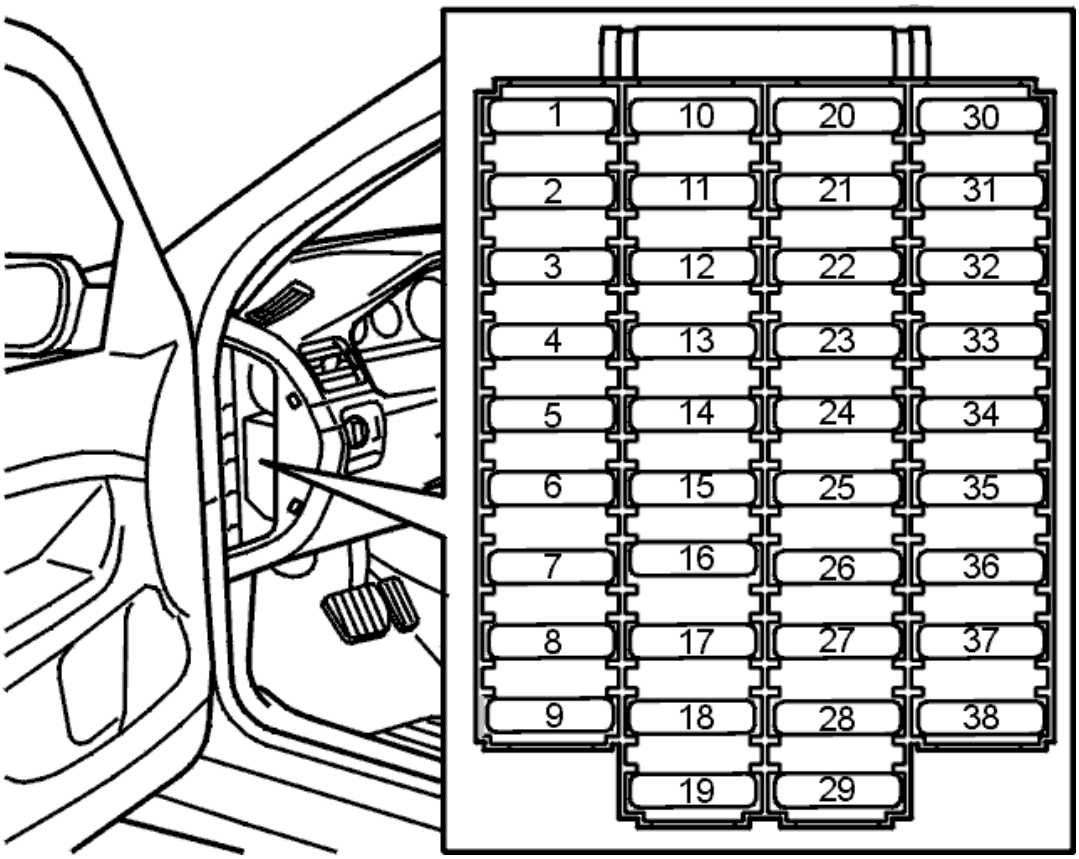

Fig. 2: Fuse Holder (Passenger Compartment)
Courtesy of VOLVO CARS CORPORATION

- **Continue**

  Refer to **CHECKING THE GROUND TERMINAL**

CHECKING THE GROUND TERMINAL

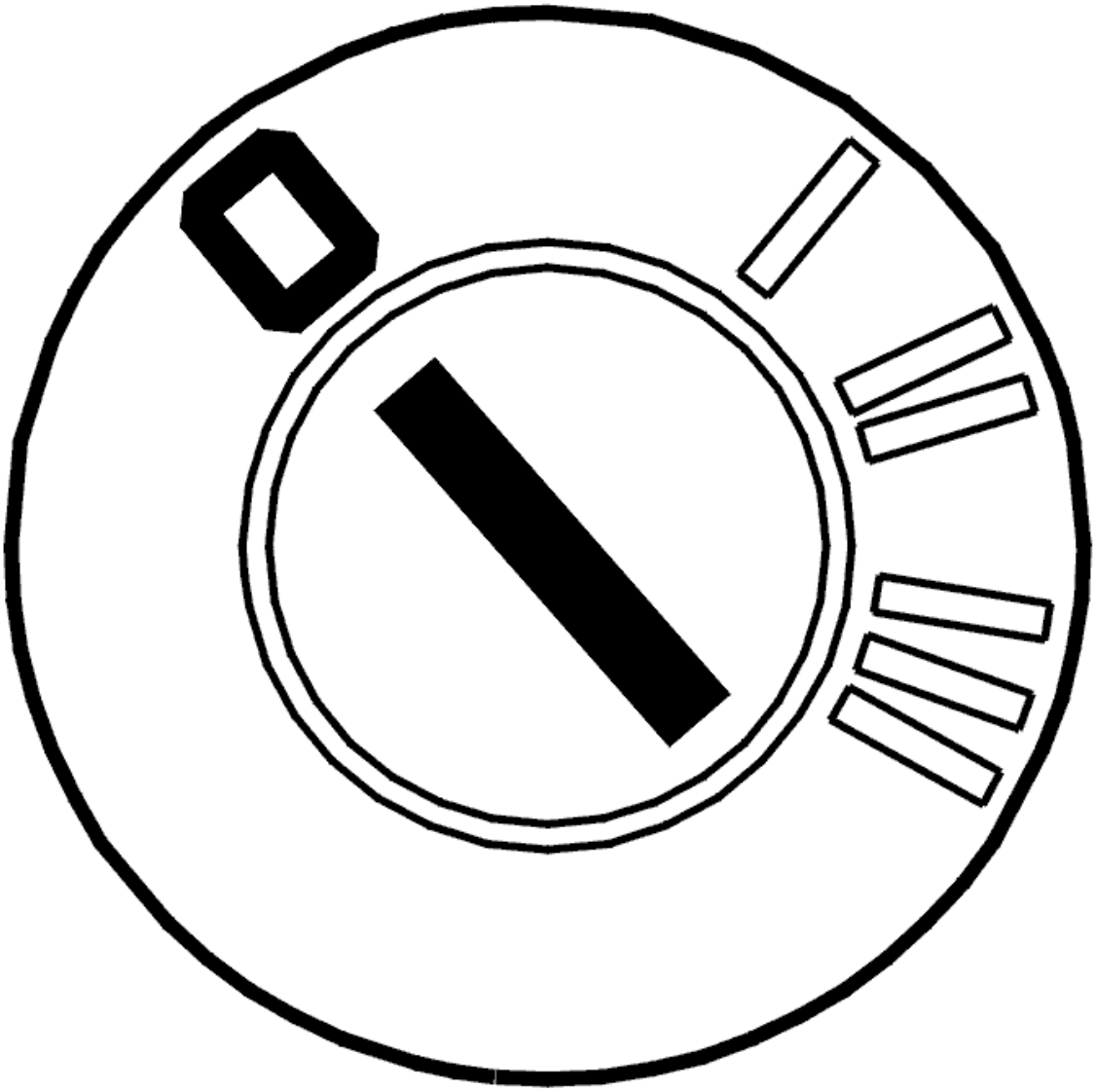

Fig. 3: Identifying Ignition OFF
Courtesy of VOLVO CARS CORPORATION

- Ignition off
- Control module disconnected
- Switch off all power consuming equipment (courtesy lighting, radio etc).

Connect an ohmmeter between terminal #14 on the breakout box and the battery negative terminal.

Additional information

- To connect the breakout box, see **CONNECTING THE DRIVER INFORMATION MODULE (DIM) TEST BOX**
- For information about signals, see **DRIVER INFORMATION MODULE (DIM) SIGNAL DESCRIPTION** .

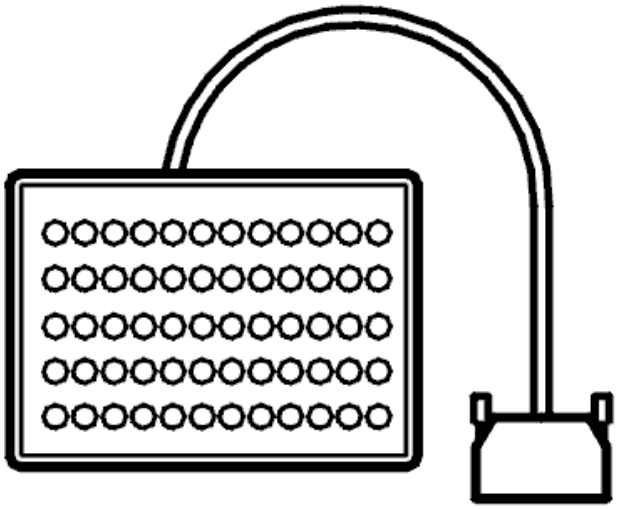

Fig. 4: Breakout Box
Courtesy of VOLVO CARS CORPORATION

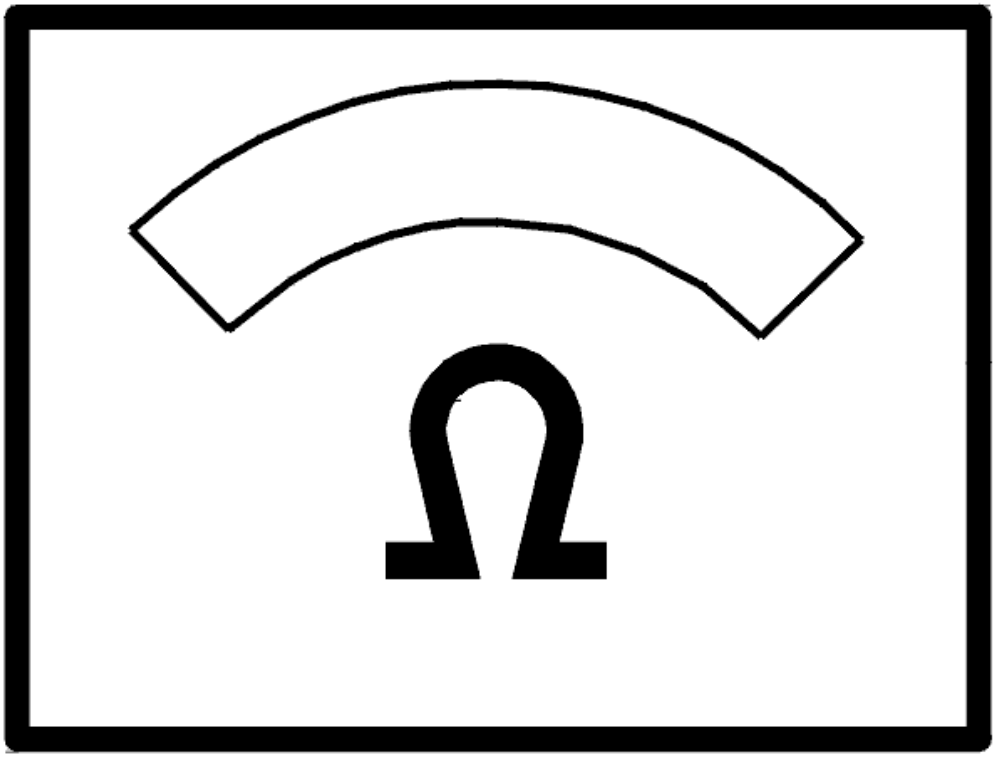

Fig. 5: Identifying Ohmmeter
Courtesy of VOLVO CARS CORPORATION

The ohmmeter should read approximately 0 ohms.

- **OK**

  OKAY: Troubleshooting has been completed.

- **NOT OK**

  Refer to **CHECKING FOR OPEN-CIRCUITS, CONTACT RESISTANCE AND OXIDATION**

CHECKING FOR OPEN-CIRCUITS, CONTACT RESISTANCE AND OXIDATION

Check ground terminal 31/83. Check for an open-circuit according to **OPEN-CIRCUIT, PERMANENT**

FAULTS. Check for contact resistance and oxidation according to **CONTACT RESISTANCE AND OXIDATION**.

Other information

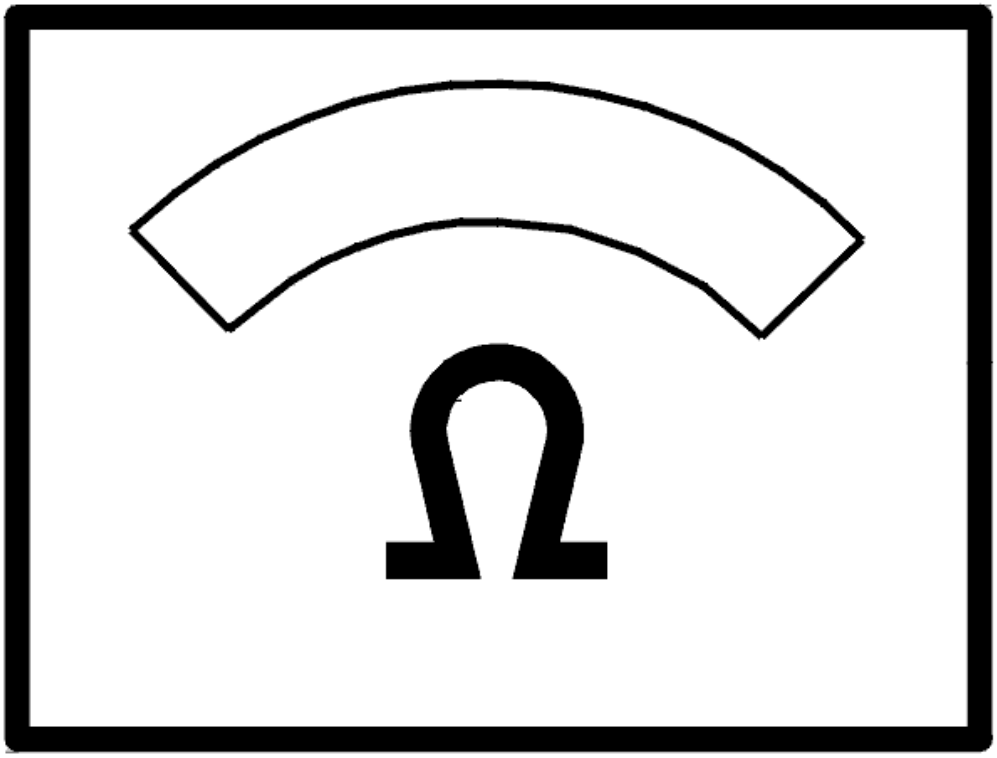

Fig. 6: Identifying Ohmmeter
Courtesy of VOLVO CARS CORPORATION

OPEN-CIRCUIT, PERMANENT FAULTS

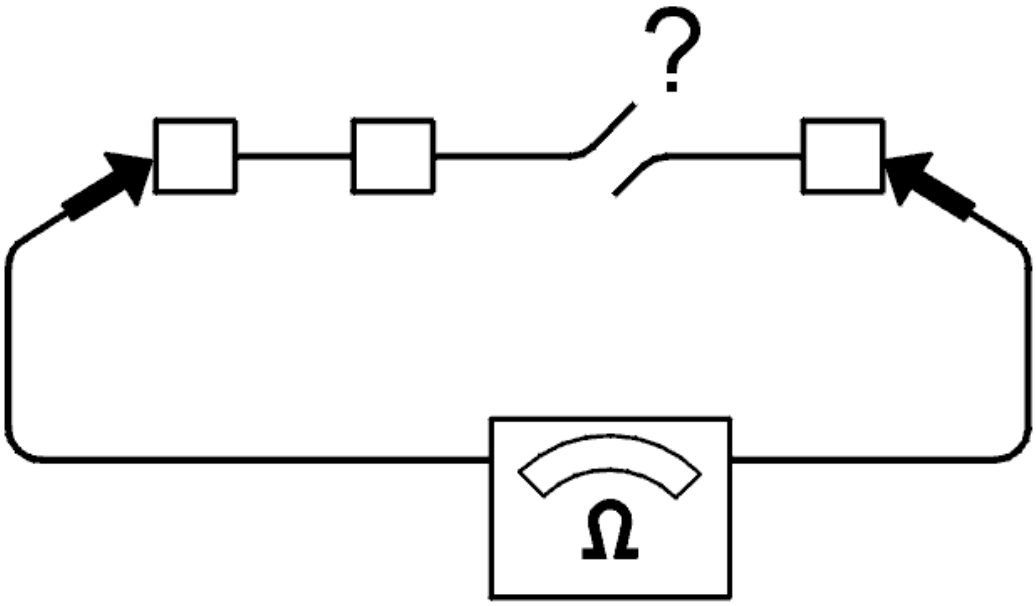

Fig. 7: Checking For Open Circuit
Courtesy of VOLVO CARS CORPORATION

An open-circuit in a cable is indicated by a loss of one or more functions.

Chafed and broken cables or terminals that have come loose are common causes of faults in electrical systems.

Checks:

- Disconnect the connectors at both ends of the cable.

Connect an ohmmeter between the ends of the cable.

The ohmmeter should read approximately 0 ohms if there is no open-circuit in the cable.

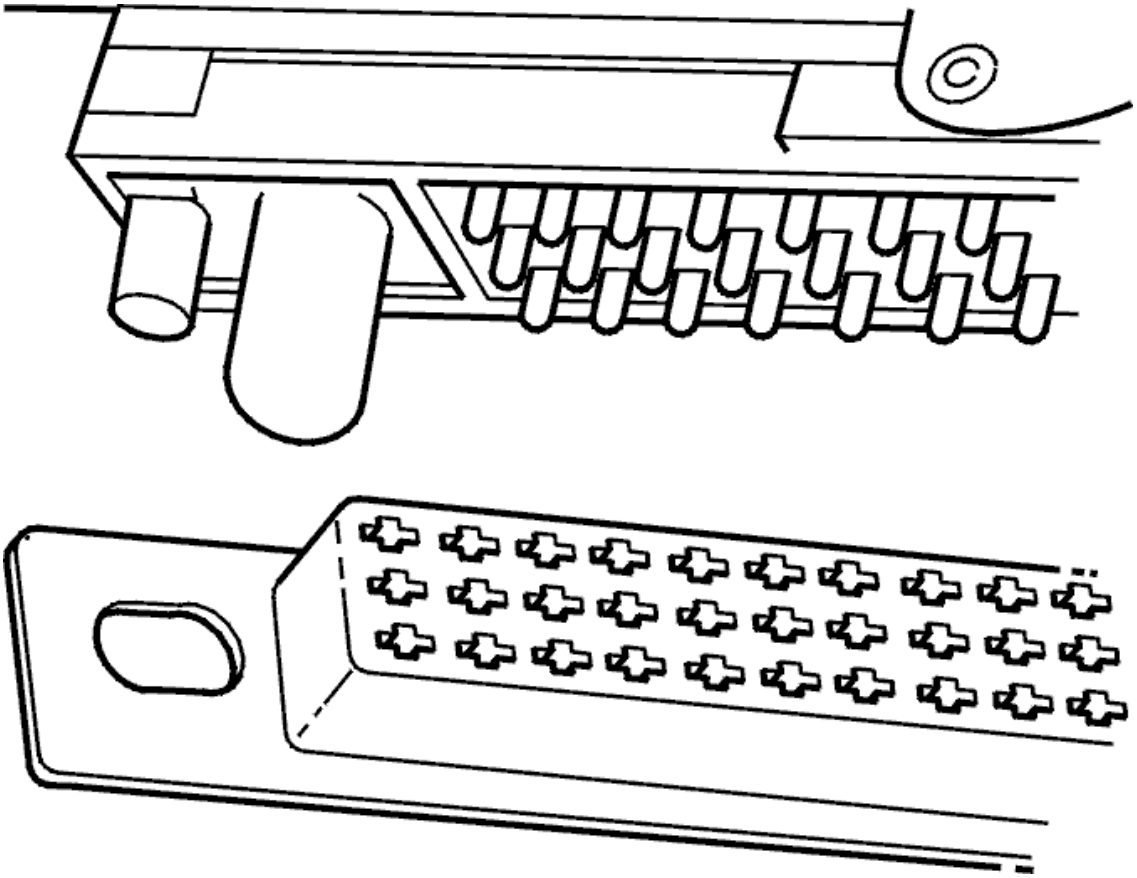

Fig. 8: Identifying Control Module Installation
Courtesy of VOLVO CARS CORPORATION

Always check the control module and control module box connectors to ensure that their pins and sockets are not bent or damaged, as this can cause faults.

Check pins and terminals particularly for this fault.

SHORT-CIRCUIT TO GROUND, PERMANENT FAULTS

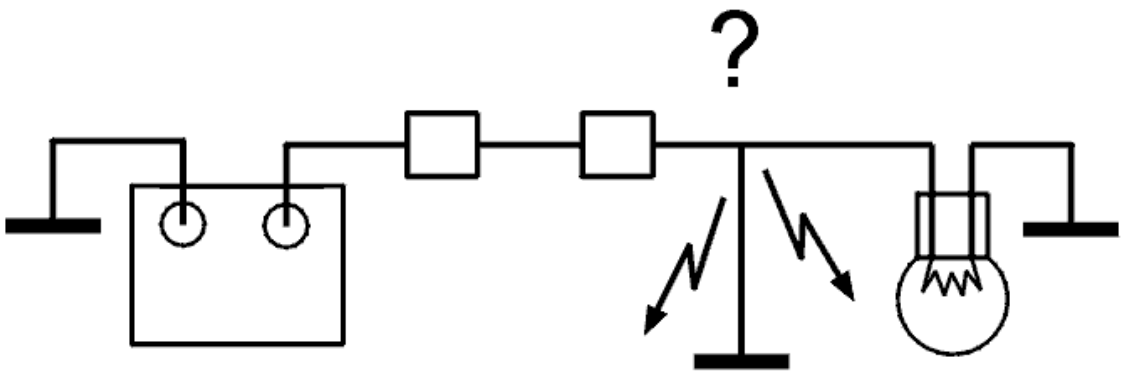

Fig. 9: Checking For Short Circuit To Ground
Courtesy of VOLVO CARS CORPORATION

A short-circuit between a live cable and ground is often indicated by the loss of a function or a fuse blowing when a current is passed through the cable.

Checks:

- Activate all switches and sensors in the circuit. Check whether the fuse blows
- Disconnect the connectors in the circuit to ensure that they do not affect readings.

Use an ohmmeter to take a resistance reading between the cable and ground.

The ohmmeter should read infinite resistance if no components are connected.

Check pins and terminals particularly for this fault.

SHORT-CIRCUIT TO SUPPLY VOLTAGE. PERMANENT FAULTS

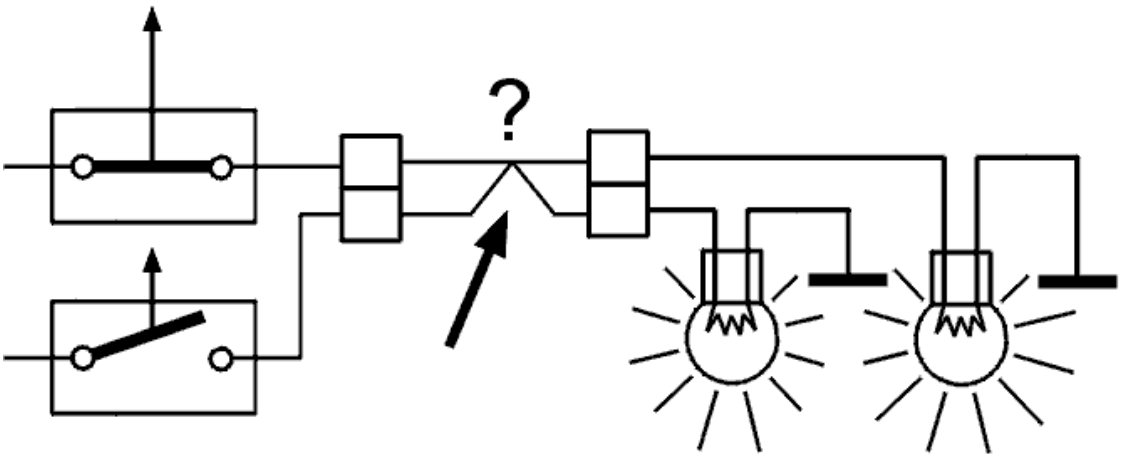

Fig. 10: Checking For Short Circuit
Courtesy of VOLVO CARS CORPORATION

A short-circuit between a cable and supply voltage is often indicated by the loss of a function or a fuse blowing when voltage is passed through the cable.

Checks:

- Use a voltmeter to take readings at various points in the circuit while operating switches and sensors.

Voltmeter readings will depend on which circuit is tested and the status of switches and sensors.

Use an ohmmeter between the suspect cables to detect short-circuits between them.

The ohmmeter should read infinite resistance between cables not connected to each other in the circuit.

Check pins and terminals particularly for this fault.

CONTACT RESISTANCE AND OXIDATION

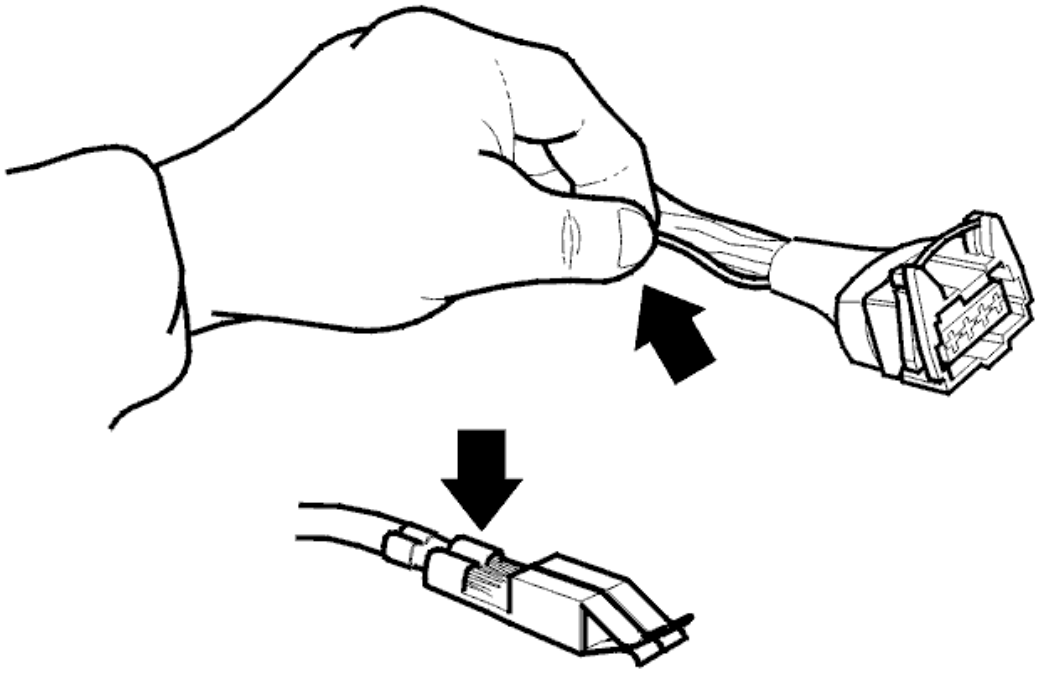

Fig. 11: Identifying Terminal Inspection
Courtesy of VOLVO CARS CORPORATION

In theory, the resistance across contacts, leads and terminals should be 0 ohms. However, there is always some resistance due to terminal oxidation.

If this resistance becomes too great the result will be a malfunction. The magnitude of the resistance before it causes a malfunction depends on the circuit load.

Cleaning female socket terminals and male pin terminals

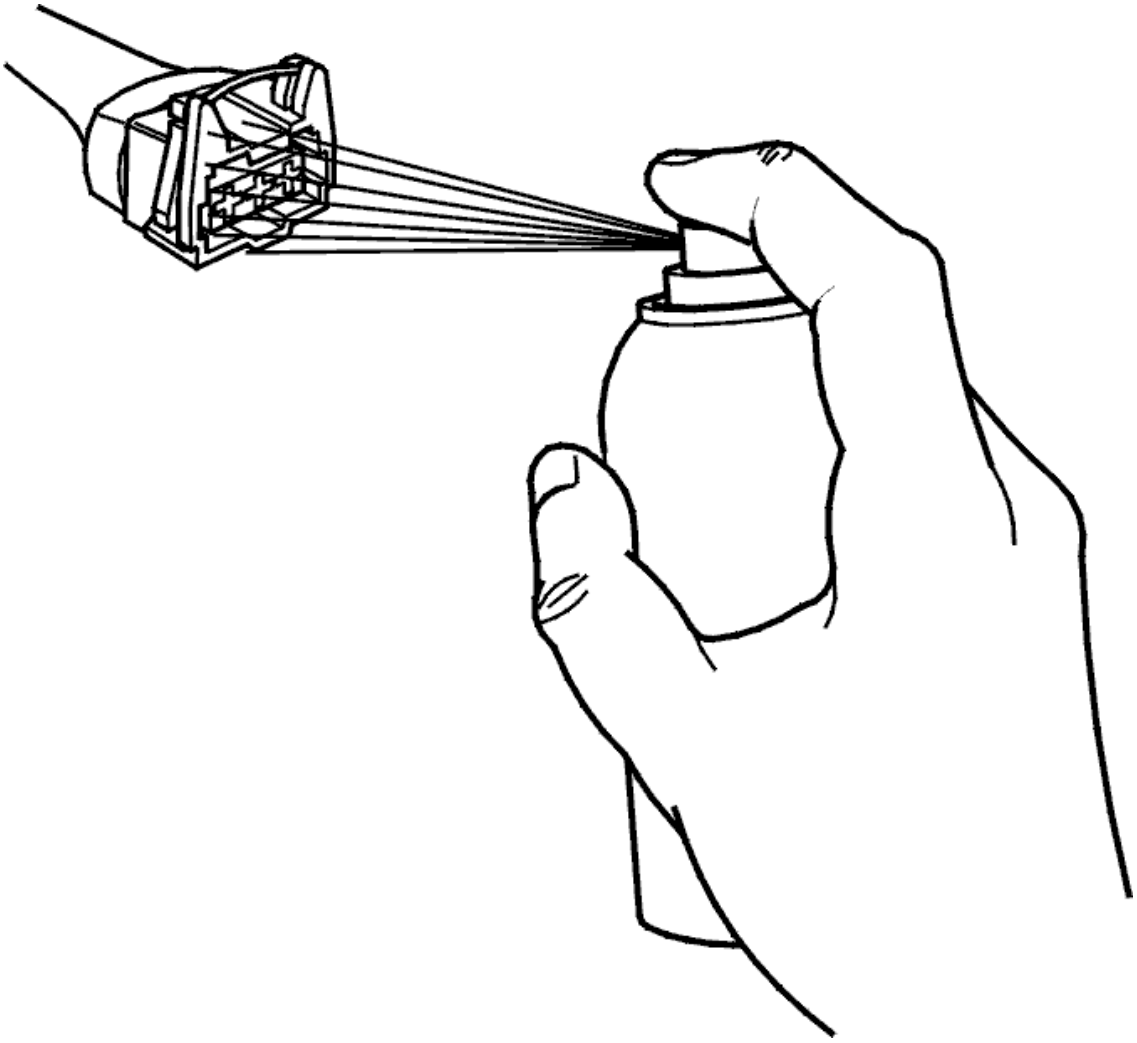

Fig. 12: Apply Rust Solvent Spray Or Grease To Connectors
Courtesy of VOLVO CARS CORPORATION

NOTE: **Do not apply rust solvent spray or grease to the catalyst monitor sensor or instrument cluster connectors.**

- Ignition off
- Disconnect the battery negative terminal
- Use compressed air to clean the disconnected connector
- Apply rust solvent spray 1161422 to the disconnected connectors
- Blow clean using compressed air.

Greasing female terminals

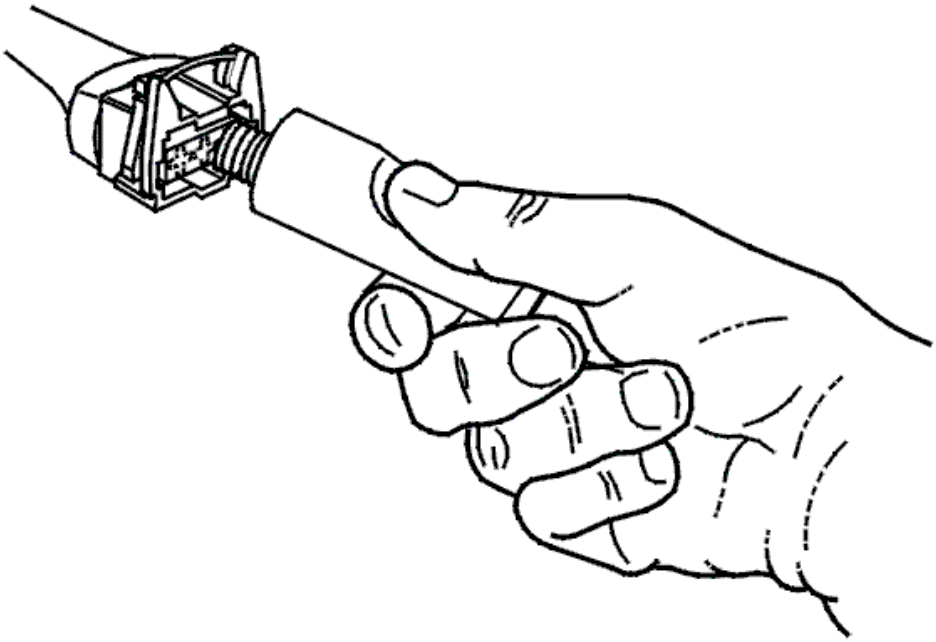

Fig. 13: Identifying Grease Pressed Into Terminals
Courtesy of VOLVO CARS CORPORATION

NOTE: Note Do not fill the protective cover with grease.

- Press grease, P/N 1161417-9, into the female sockets directly from tube
- Check that all the terminal cavities are filled
- Use a loose male pin to ensure that the connection in the sockets is good. The pin should remain in position when pulled gently.

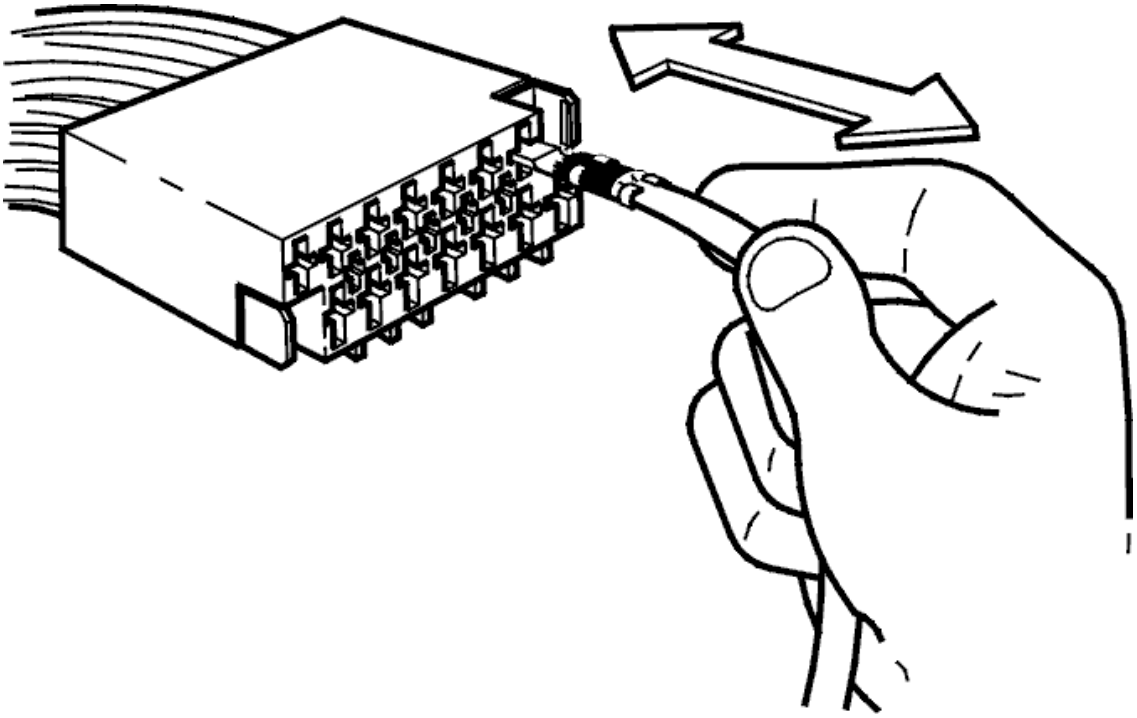

Fig. 14: Checking To Ensure Contact In Sockets Is Good
Courtesy of VOLVO CARS CORPORATION

CHECKING THE POWER SUPPLY AND GROUND INTERMITTENT FAULT

CHECKING THE POWER SUPPLY

Check interior fuse 24 (11C/24:2).

Check the wire between combined instrument power supply relay (2/29) 3 and interior fuse 24 (11C/24:2) for an open circuit as described in, see **OPEN-CIRCUIT, INTERMITTENT FAULTS**, and for a short circuit to ground as described in **SHORT-CIRCUIT TO GROUND, INTERMITTENT FAULTS**.

Check that the relay is not defective.

Check and measure wire between combined instrument 6 and handbrake contact 1 for a short circuit to ground as described in, see **SHORT-CIRCUIT TO GROUND, INTERMITTENT FAULTS**.

Check the wire between combined instrument 1 and combined instrument power supply relay (2/29) 1 for an open circuit as described in, see **OPEN-CIRCUIT, INTERMITTENT FAULTS**, and a short circuit to ground as described in **SHORT-CIRCUIT TO GROUND, INTERMITTENT FAULTS**.

Check the wire between combined instrument 14 and ground for an open circuit as described in, see **OPEN-CIRCUIT, INTERMITTENT FAULTS**, and for a short circuit to voltage supply as described in **SHORT-CIRCUIT TO SUPPLY VOLTAGE, INTERMITTENT FAULTS**.

Do the necessary corrective action.

Additional information:

- To connect the test box, see **CONNECTING THE DRIVER INFORMATION MODULE (DIM) TEST BOX**.

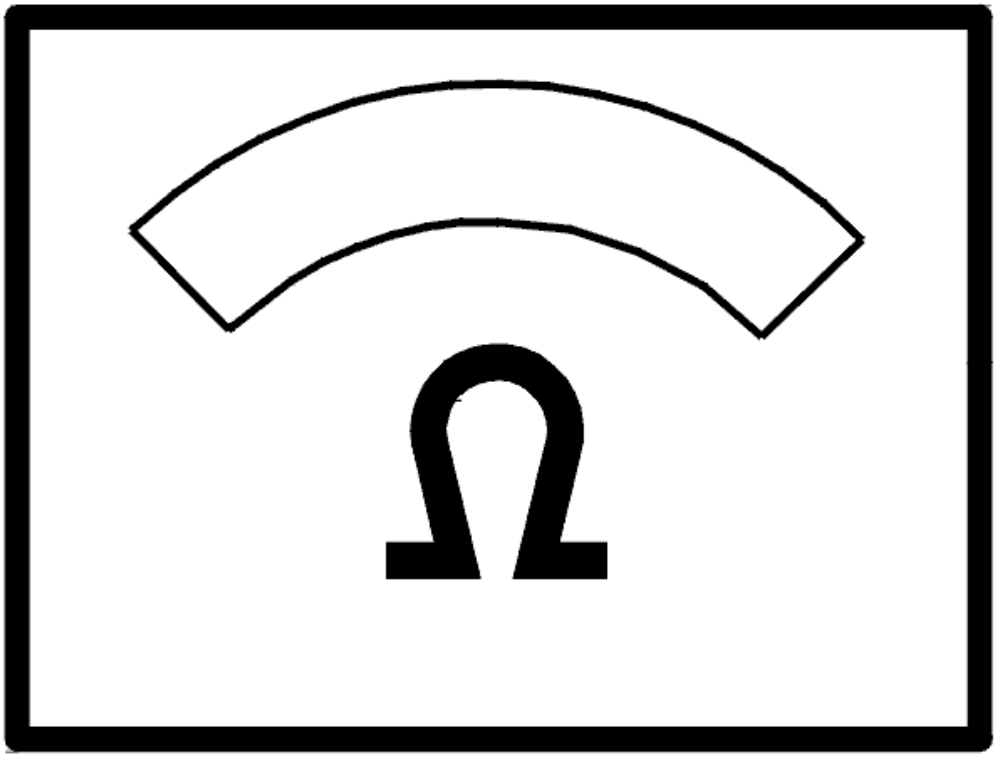

Fig. 15: Identifying Ohmmeter
Courtesy of VOLVO CARS CORPORATION

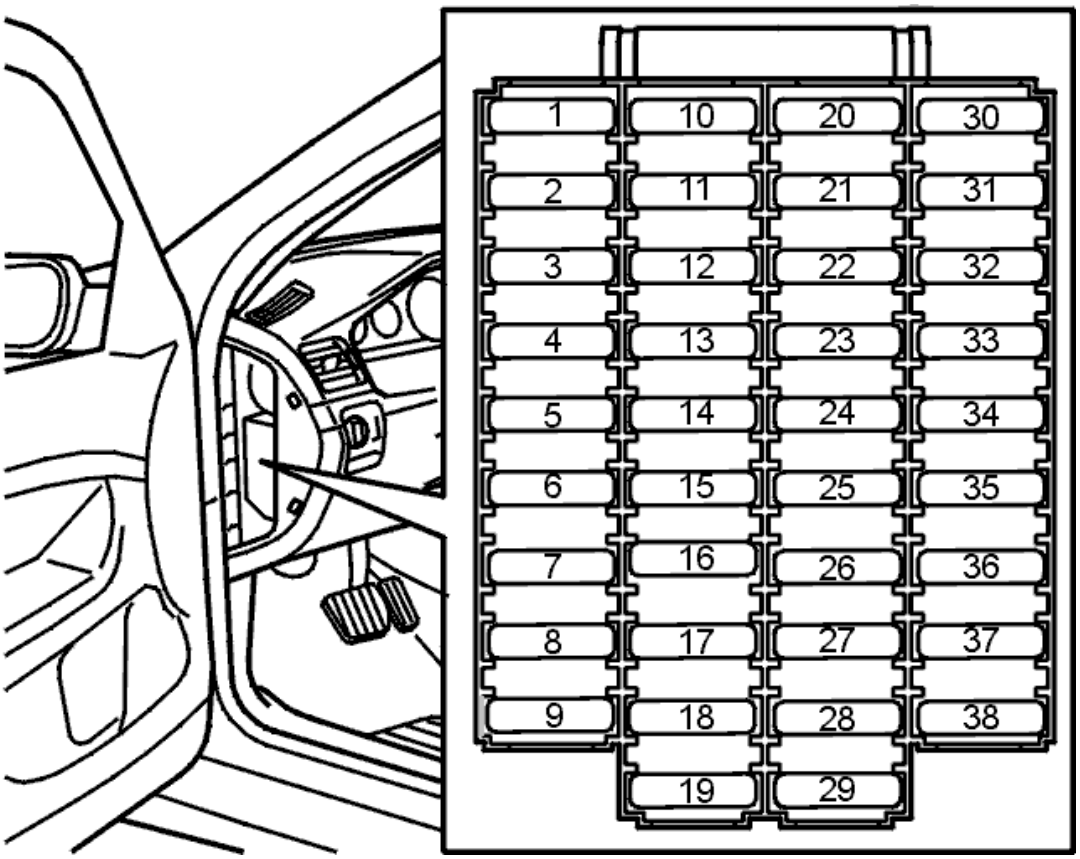

Fig. 16: Fuse Holder (Passenger Compartment)
Courtesy of VOLVO CARS CORPORATION

- **Continue**

  Refer to **CHECKING THE GROUND TERMINALS**

CHECKING THE GROUND TERMINALS

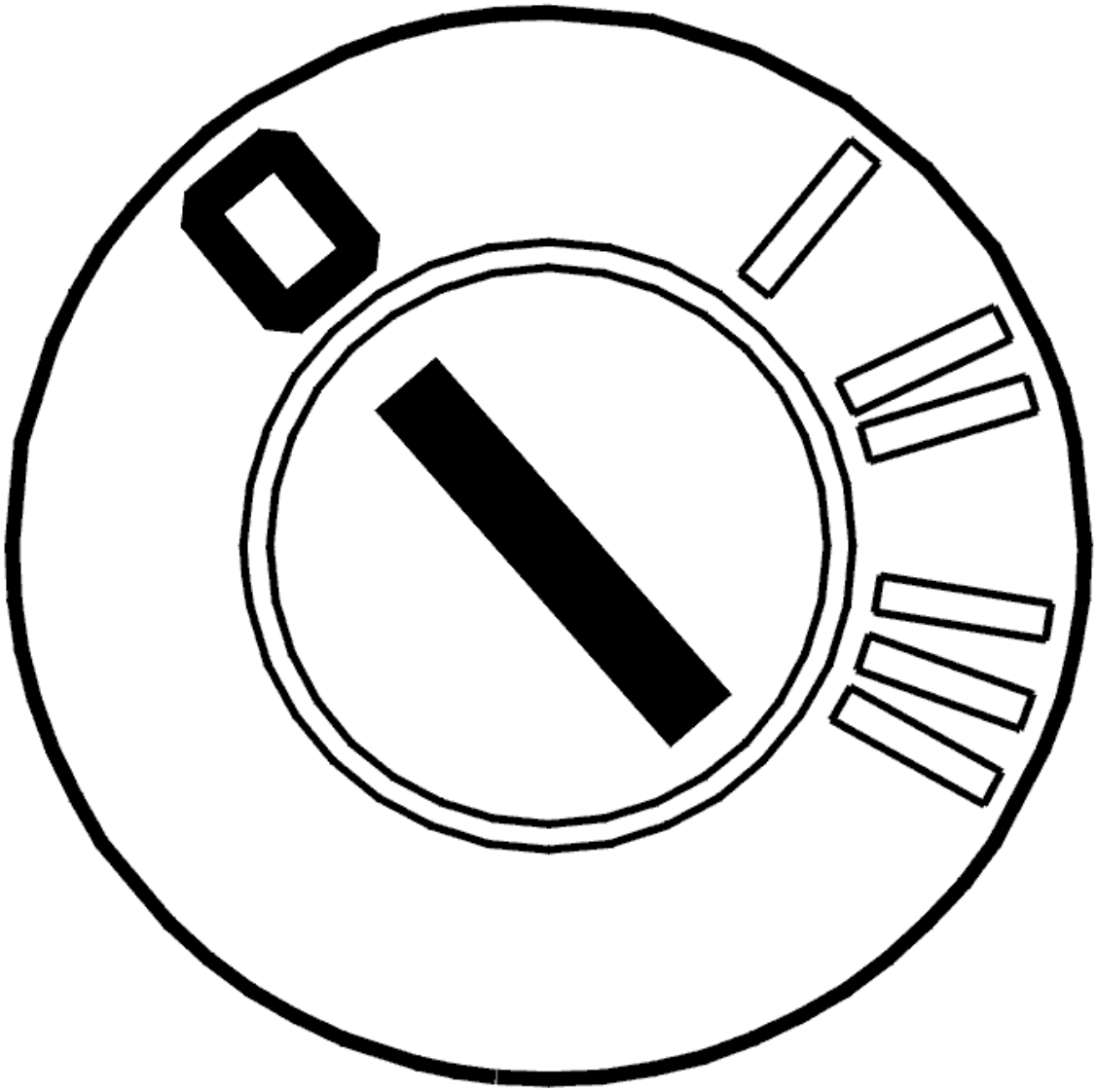

Fig. 17: Identifying Ignition OFF
Courtesy of VOLVO CARS CORPORATION

- Ignition off.
- Control unit disconnected.
- Switch off all battery loadings such as entrance lighting and radio.

Connect an ohmmeter between the battery negative lead and test box 14.

Additional information

- To connect the test box, see **CONNECTING THE DRIVER INFORMATION MODULE (DIM) TEST BOX**
- For information on signals and additional values, see **DRIVER INFORMATION MODULE (DIM) SIGNAL DESCRIPTION** .

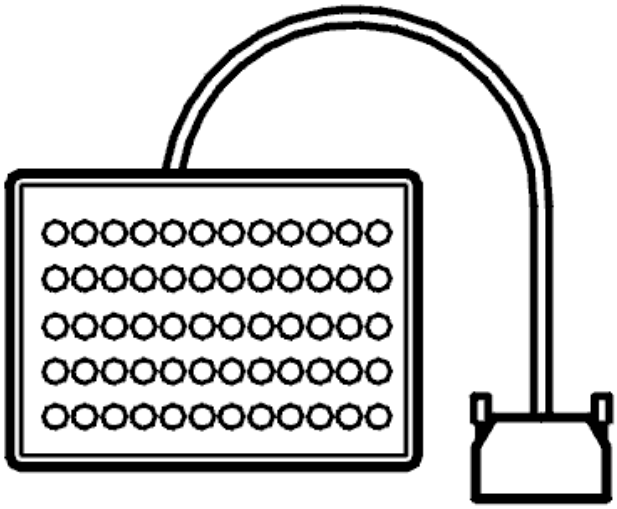

Fig. 18: Breakout Box
Courtesy of VOLVO CARS CORPORATION

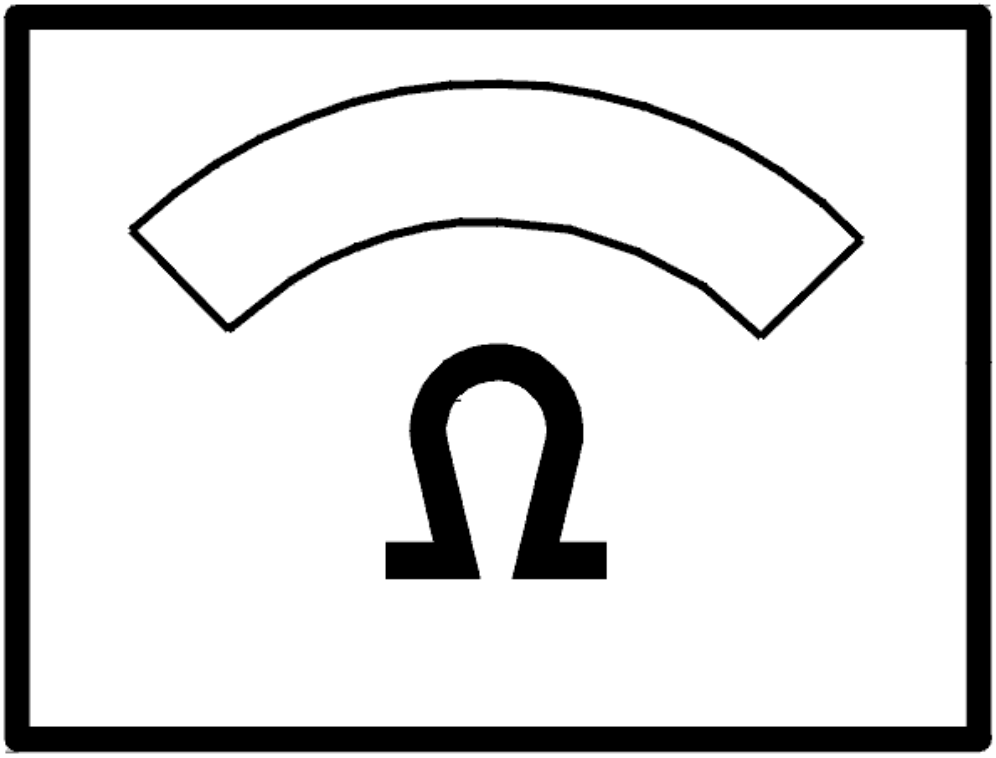

Fig. 19: Identifying Ohmmeter
Courtesy of VOLVO CARS CORPORATION

The ohmmeter should display approximately 0 ohms.

- **OK**

  OKAY: Troubleshooting has been completed.

- **NOT OK**

  Refer to **CHECKING FOR OPEN CIRCUITS, CONTACT RESISTANCE AND OXIDATION**

CHECKING FOR OPEN CIRCUITS, CONTACT RESISTANCE AND OXIDATION

Check ground points 53/400 and 31/83 for an open circuit as described in, see **OPEN-CIRCUIT,**

INTERMITTENT FAULTS, and for contact resistance and oxidation as described in **CONTACT RESISTANCE AND OXIDATION**.

Additional information

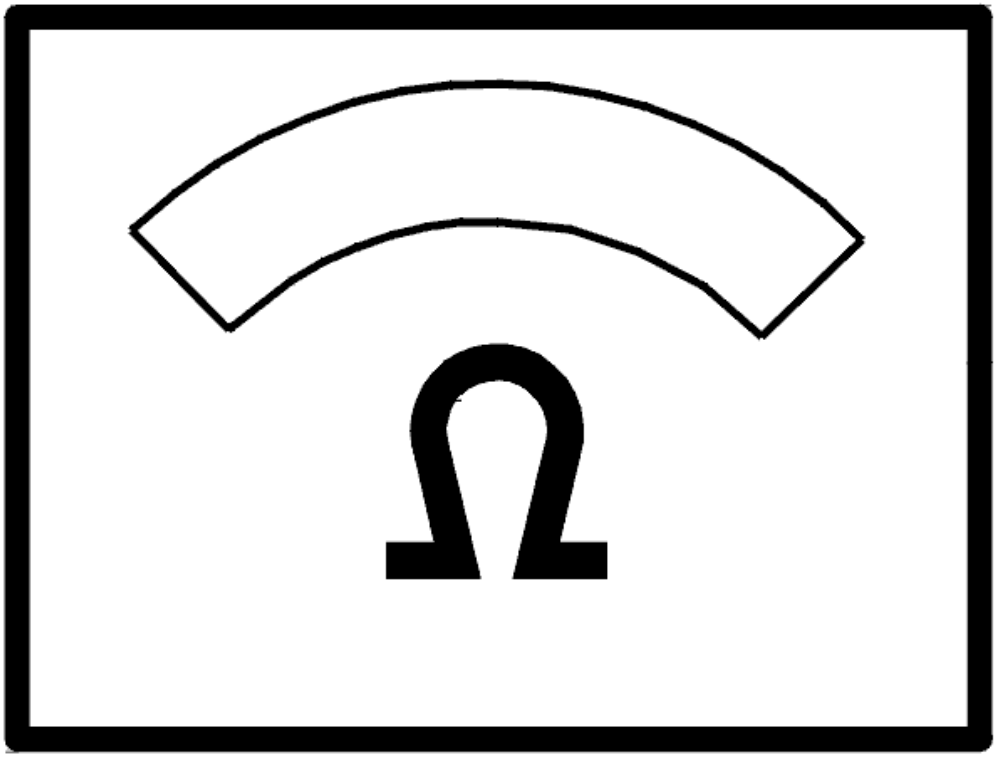

Fig. 20: Identifying Ohmmeter
Courtesy of VOLVO CARS CORPORATION

OPEN-CIRCUIT, INTERMITTENT FAULTS

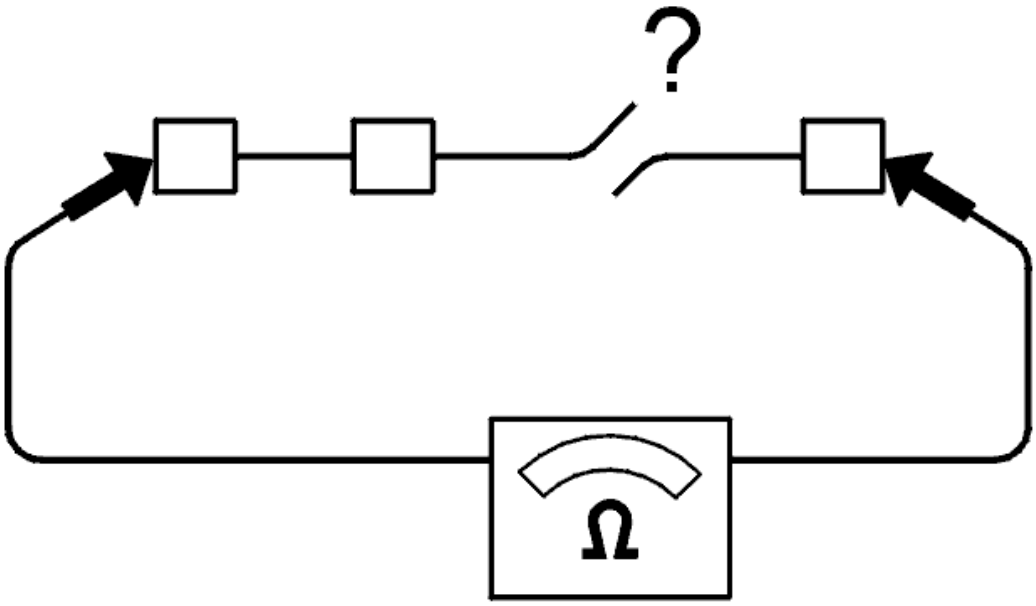

Fig. 21: Checking For Open Circuit
Courtesy of VOLVO CARS CORPORATION

An open-circuit in a cable will be indicated by the loss of a function (or functions).

Chafed and broken leads are common causes of faults.

Checks:

- Disconnect the connectors at both ends of the cable.

Check the cables visually.

Connect an ohmmeter between the ends of the cable.

The ohmmeter should read approximately 0 ohms if there is no open-circuit in the cable.

Shake the cable lightly and pull on connectors during measurement to locate the damage.

If the reading is not correct. Replace the cable.

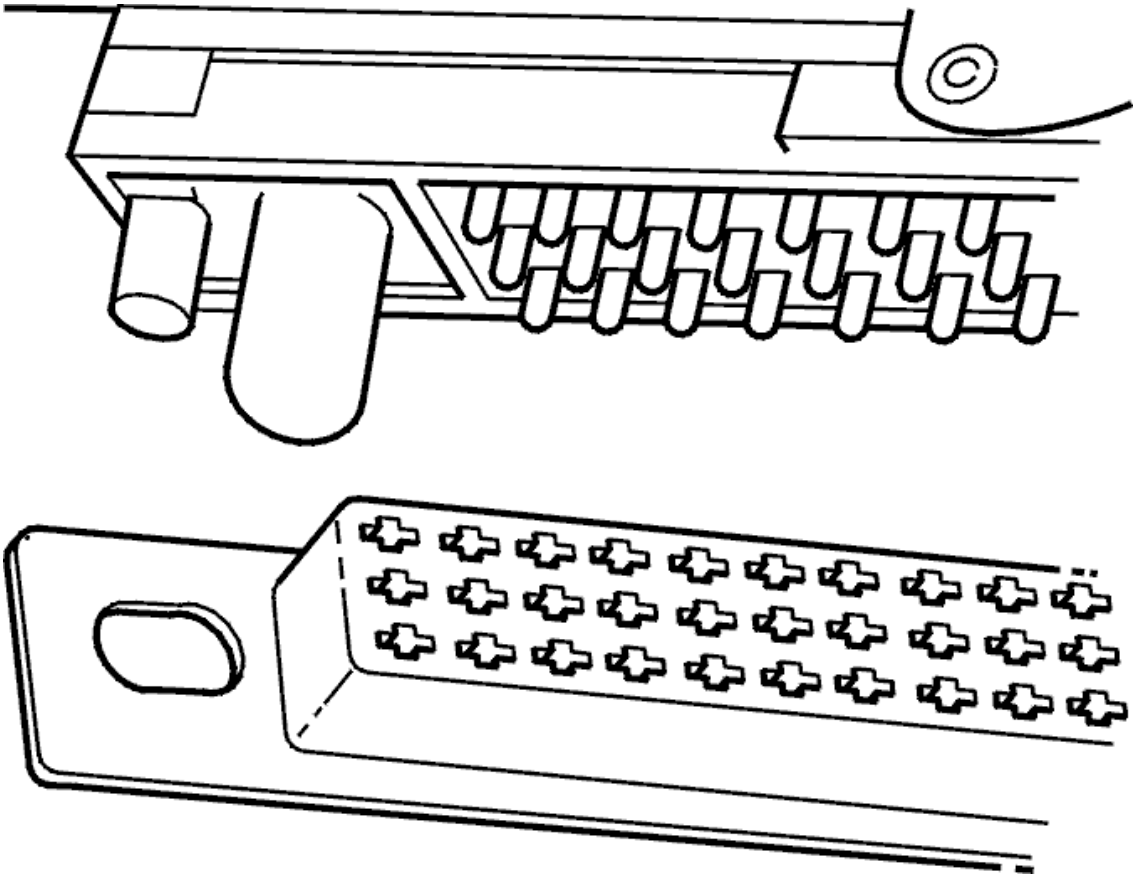

Fig. 22: Identifying Control Module Installation
Courtesy of VOLVO CARS CORPORATION

Always check the control module and control module box connectors to ensure that their pins and sockets are not bent or damaged, this may cause faults.

Check pins and terminals particularly carefully.

SHORT-CIRCUIT TO GROUND, INTERMITTENT FAULTS

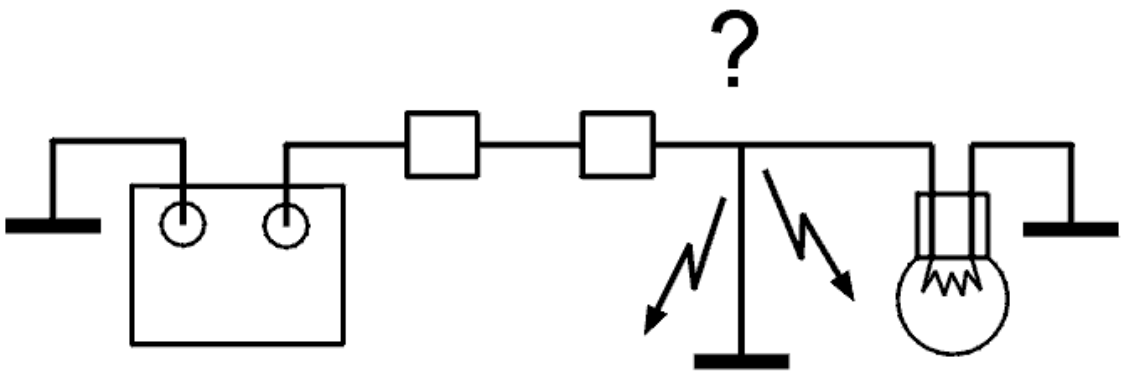

Fig. 23: Checking For Short Circuit To Ground
Courtesy of VOLVO CARS CORPORATION

A short-circuit between a live cable and ground is often indicated by the loss of a function or a fuse blowing when a current is passed through the cable.

Checks:

- Check the cables visually.

  Activate all switches and sensors in the circuit. Check whether the fuse blows

- Disconnect the connectors in the circuit to ensure that they do not affect readings.

Connect an ohmmeter between cable and ground.

The ohmmeter should read infinite resistance if no components are connected.

Shake the cable lightly and pull on connectors during measurement to locate the damage.

If the reading is not correct, replace the cable.

SHORT-CIRCUIT TO SUPPLY VOLTAGE, INTERMITTENT FAULTS

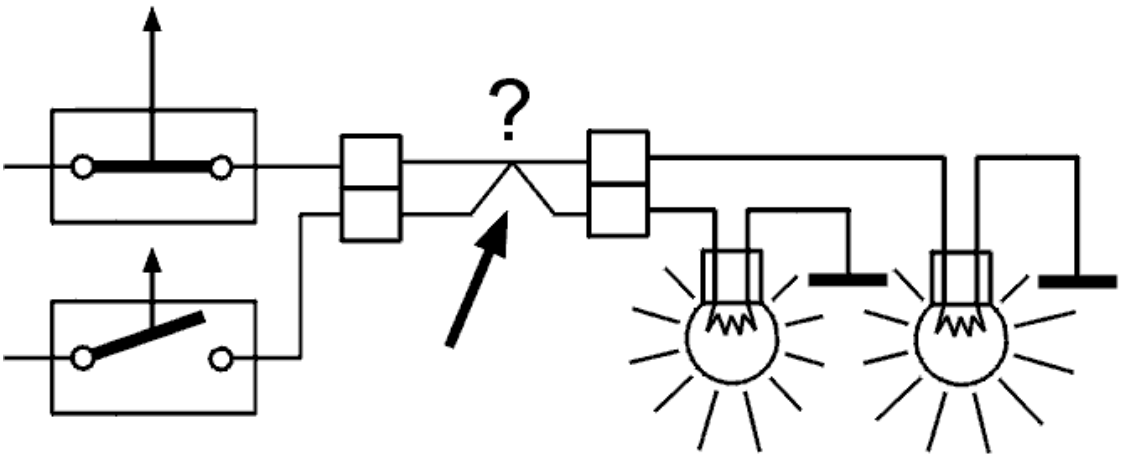

Fig. 24: Checking For Short Circuit
Courtesy of VOLVO CARS CORPORATION

A short-circuit between a cable and supply voltage is often indicated by the loss of a function or a fuse blowing when a current is passed through the cable.

Checks:

- Check the cables visually.

  Use a voltmeter to take readings at various points in the circuit while operating switches and sensors.

The voltmeter reading depends on the circuit being tested and the positions of switches and sensors.

Use an ohmmeter between the suspect cables to detect short-circuits between them.

The ohmmeter should read infinite resistance between cables not connected to each other in the circuit.

Shake the cable lightly and pull on connectors during measurement to locate the damage.

If the reading is not correct. Replace the cable and/or continue according to **CONTACT RESISTANCE AND OXIDATION**.

CHECKING THE SUPPLY VOLTAGE/GROUND TERMINAL, DRIVER INFORMATION MODULE (DIM) (2005-12)

CHECKING THE VOLTAGE/GROUND TERMINAL

CHECKING THE POWER SUPPLY AND GROUND TERMINALS

Voltage supply, driver information module (DIM)

The driver information module (DIM) is powered via a power input on the driver information module (DIM).

Power input terminal #A3 is powered via a fuse from the central electronic module (CEM). The driver information module (DIM) will not be activated if there is an open-circuit.

Checking the power supply

Check the power supply cable from the battery to the central electronic module (CEM) and from the central electronic module (CEM) to driver information module (DIM) terminal #A3. Check for an open-circuit. Check for loose connections. Check for contact resistance. Check for oxidation. Check the fuse. The voltage must be approximately battery voltage when the ignition is on.

Ground terminal, driver information module (DIM)

The driver information module (DIM) has a ground input. The ground input from the control module is connected via a ground lead to the ground terminal in the car body.

- Ground input terminal #A4 is signal ground and is connected to the ground terminal in the car body.

Checking the ground terminal

Check the ground lead between control module terminal #A4 and the ground terminal. Check for an open-circuit. Check for loose connections. Check for contact resistance. Check for oxidation. With the ignition on, the drop in voltage between the ground connection for the control module and the ground terminal must not be greater than 0.5 V.

Remedy as necessary.

Other information:

- see **CHECKING WIRING AND TERMINALS**
- see **CONNECTING THE BREAKOUT BOX**
- see **SIGNAL SPECIFICATION**

CONNECTING THE BREAKOUT BOX, DRIVER INFORMATION MODULE (DIM) (2005-12)

CONNECTING THE BREAKOUT BOX

Special tools:

see **9512901**

see **9511428**

see **9511499**

see **9813190**

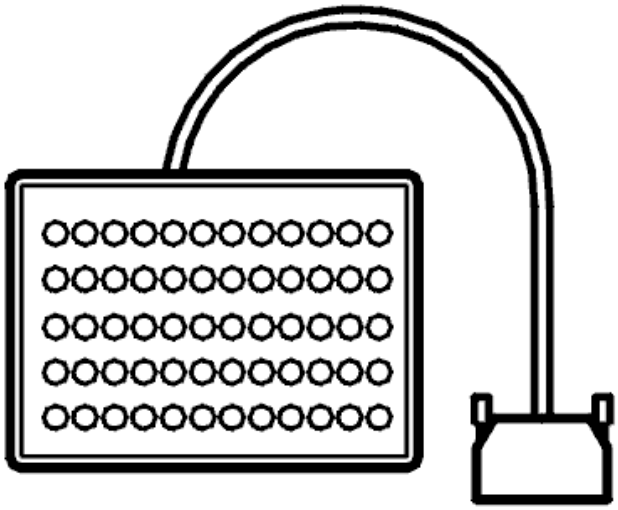

Fig. 25: Breakout Box
Courtesy of VOLVO CARS CORPORATION

- Ignition off
- Remove the fuse
- Remove the driver information module (DIM)
- Disconnect the control module connector.

Connect adapter see **9512901** to the control module connector. Connect breakout box see **9511428** and wiring see **9511499** to the adapter.

Alternatively, breakout box see **9813190** can be connected to the adapter.

Disconnect the breakout box in reverse order.

Other information:

- see **DRIVER INFORMATION MODULE (DIM), REPLACING**
- see **SIGNAL SPECIFICATION**

CONNECTING THE TEST BOX (2003-04)

CONNECTING THE DRIVER INFORMATION MODULE (DIM) TEST BOX

Special tools:

see **9511463**

see **9511428**

see **9511499**

see **9813190**

CONNECTING THE TEST BOX

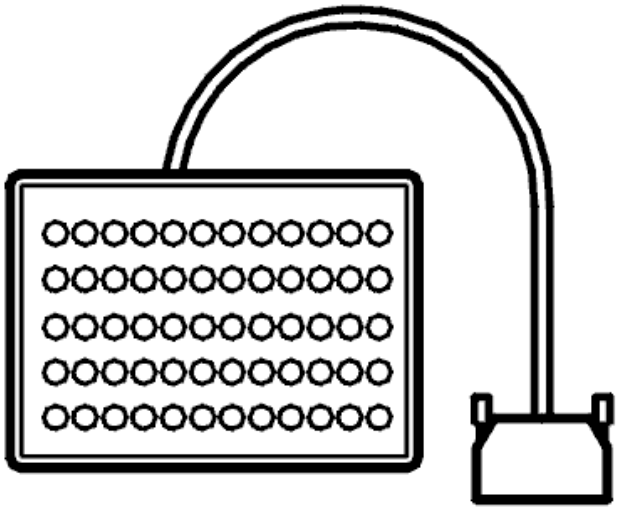

Fig. 26: Breakout Box
Courtesy of VOLVO CARS CORPORATION

- Ignition off
- Remove interior fuse 24 (11C/24)
- Loosen the combined instrument as described in, see **DRIVER INFORMATION MODULE (DIM), REPLACING**
- Release control unit connector.

Connect adapter see **9511463** (22-16-14-pin) to control unit connector and connect test box see **9511428** and wire see **9511499** to adapter.

Alternatively connect test box see **9813190** to adapter.

Disconnect the test box in the reverse order.

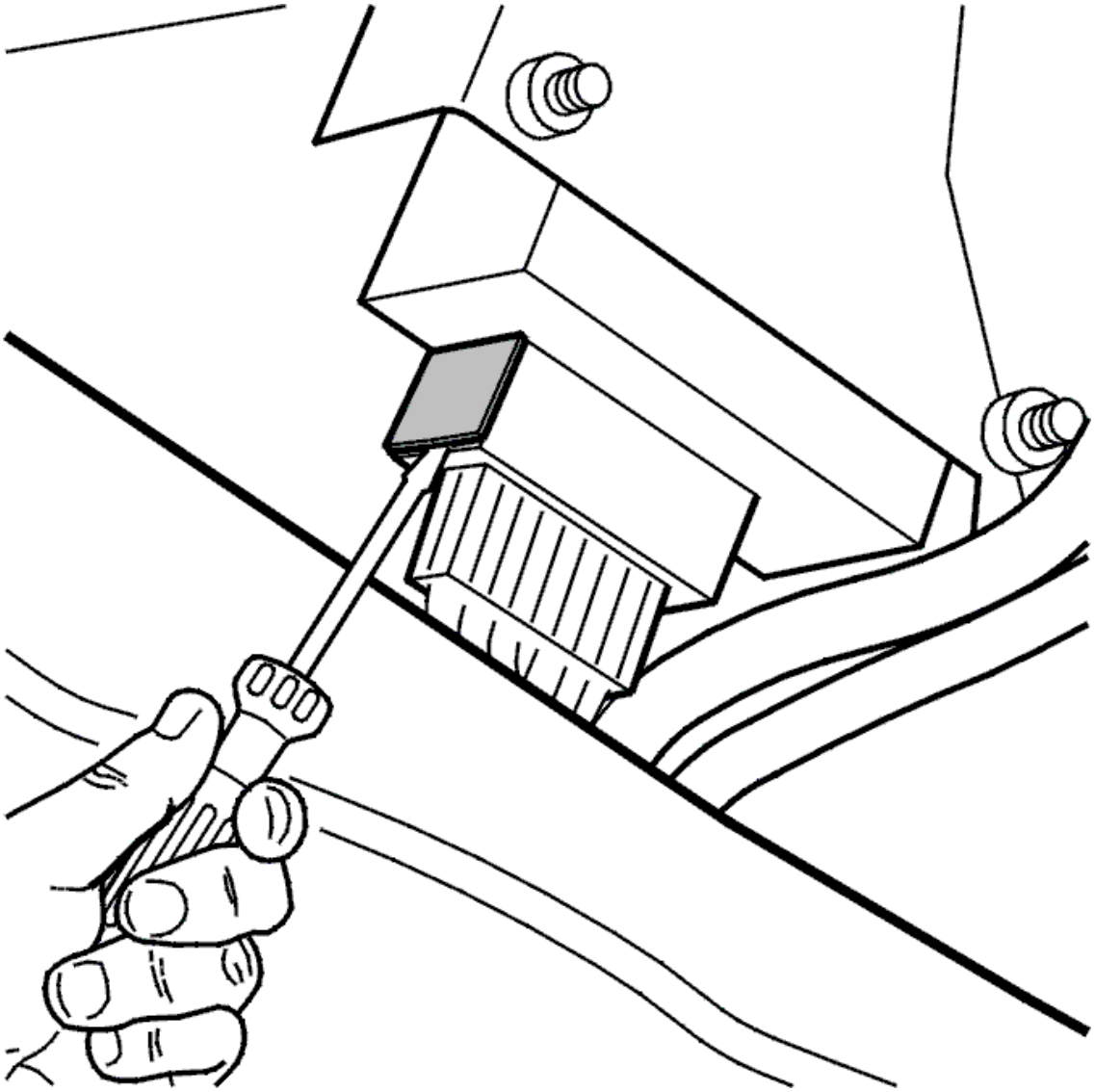

Fig. 27: Identifying Control Module Connector & Locking Handle
Courtesy of VOLVO CARS CORPORATION

Additional information:

- To remove the combined instrument, see **DRIVER INFORMATION MODULE (DIM), REPLACING**
- For information about signals and other values, see **DRIVER INFORMATION MODULE (DIM) SIGNAL DESCRIPTION** .

ACCESSORIES AND BODY, CAB

Instrumentation - Installation instructions, accessories

COMBI INSTRUMENTS, R-DESIGN (2007-2011)

COMBINED INSTRUMENT PANEL, R-DESIGN

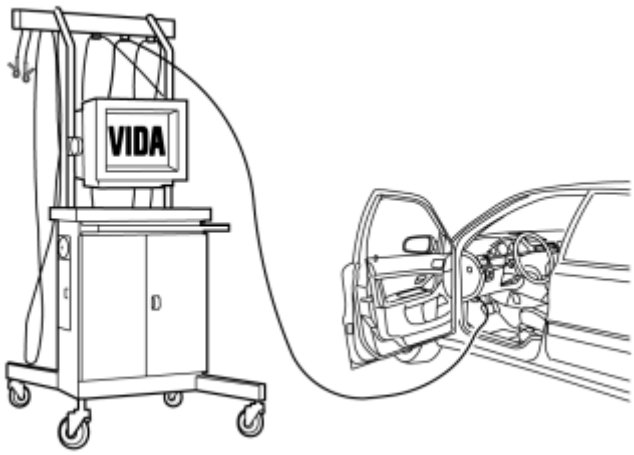

Fig. 1: Identifying VIDA (Service Information) To Program Software
Courtesy of VOLVO CARS CORPORATION

Before replacing Driver information module, programmed data shall be read out from the Driver information module. This is done in VIDA car communication. After replacing, the data in question shall be programmed in the new Driver information module.

Fig. 2: Identifying Ignition Switch Turned To Position 0
Courtesy of VOLVO CARS CORPORATION

NOTE: **Wait at least three minutes before unplugging the connectors or removing other electrical equipment.**

Fig. 3: Lowering Steering Wheel
Courtesy of VOLVO CARS CORPORATION

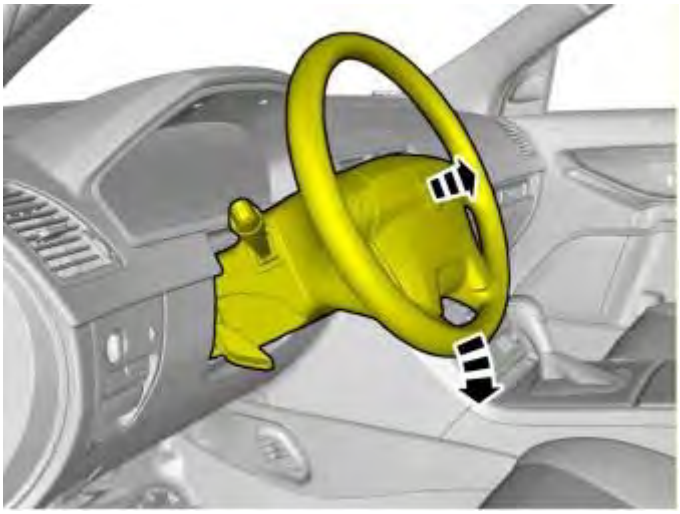

Fig. 4: Lowering Steering Wheel
Courtesy of VOLVO CARS CORPORATION

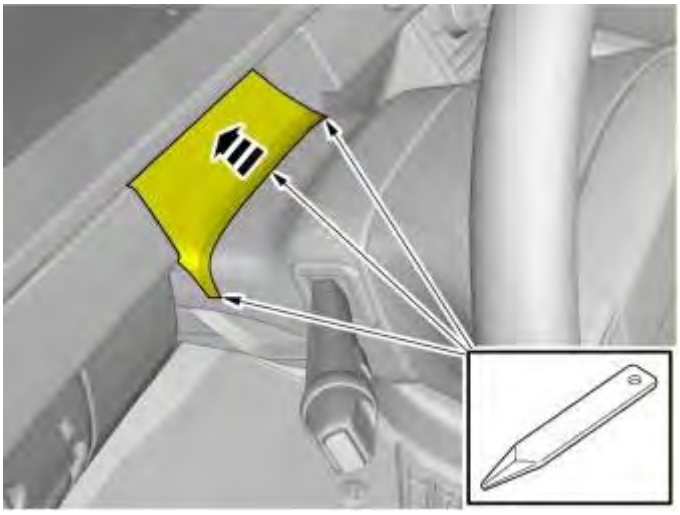

Fig. 5: Removing Panel
Courtesy of VOLVO CARS CORPORATION

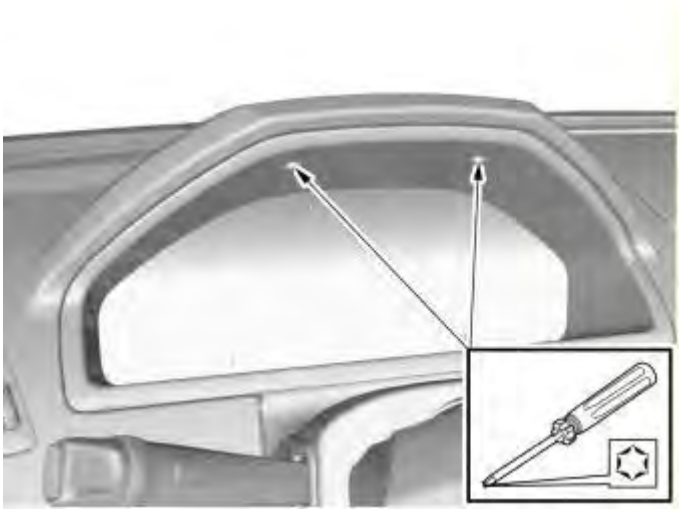

Fig. 6: Identifying Torx Screws
Courtesy of VOLVO CARS CORPORATION

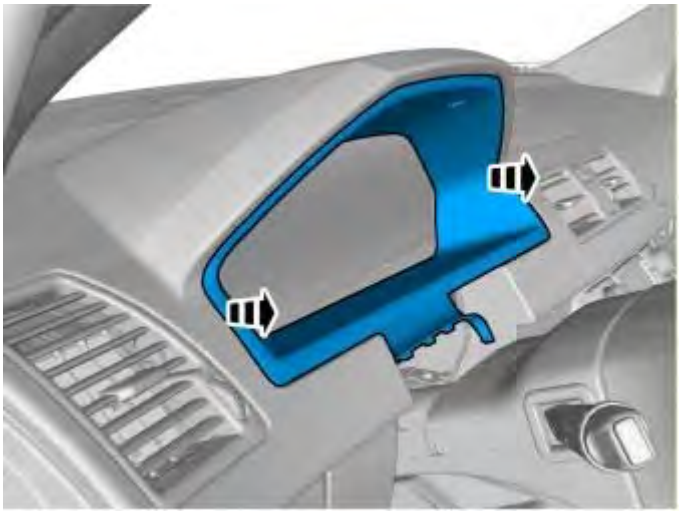

Fig. 7: Removing Bezel
Courtesy of VOLVO CARS CORPORATION

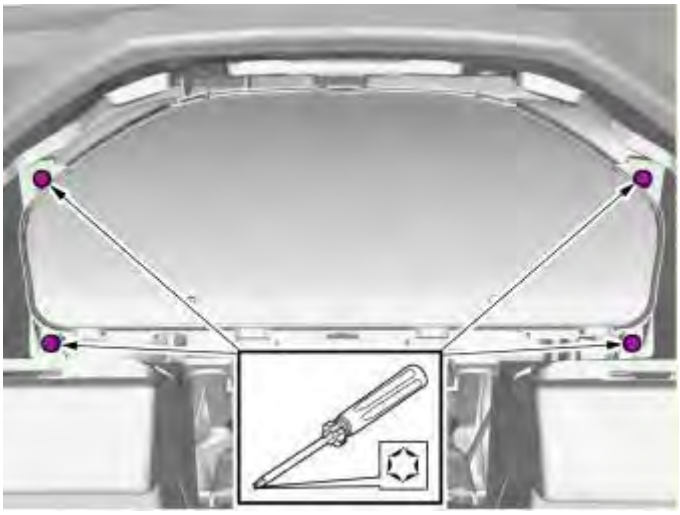

Fig. 8: Identifying Torx Screws
Courtesy of VOLVO CARS CORPORATION

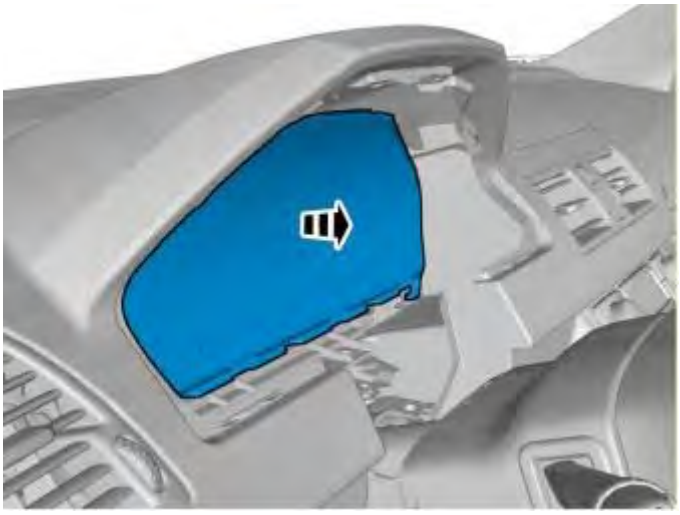

Fig. 9: Removing Instrument Cluster
Courtesy of VOLVO CARS CORPORATION

Fig. 10: Removing Connector
Courtesy of VOLVO CARS CORPORATION

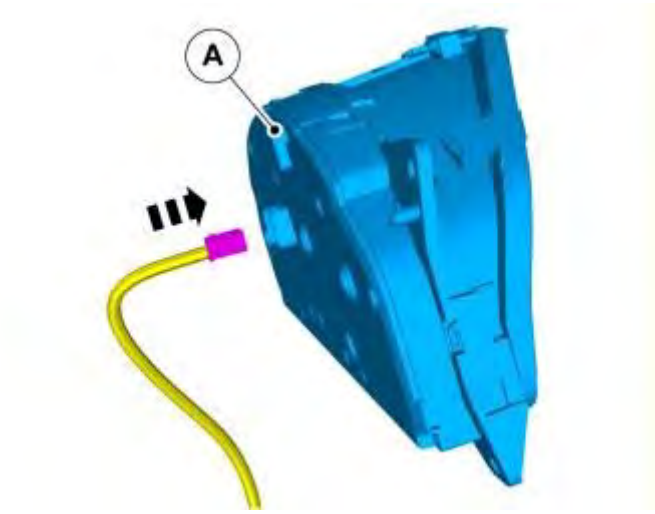

Fig. 11: Installing Connector
Courtesy of VOLVO CARS CORPORATION

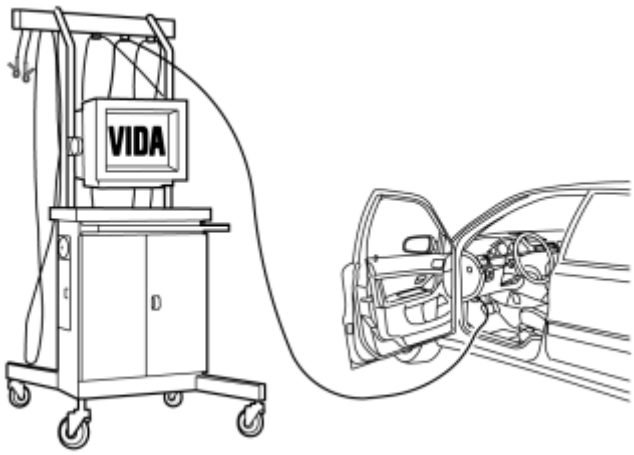

Fig. 12: Identifying VIDA (Service Information) To Program Software
Courtesy of VOLVO CARS CORPORATION

- Download new software for Driver information module acc. to the service information in VIDA (Volvo scan tool). After downloading, data read-out shall be programmed, the clock shall also be set.

PARKING ASSISTANCE, FRONT (2007-2012)

INTRODUCTION

see **INTRODUCTION**

PARKING ASSISTANCE, FRONT

NOTE: During installation the car and parts must maintain a temperature of at least

+20°C (68°F).

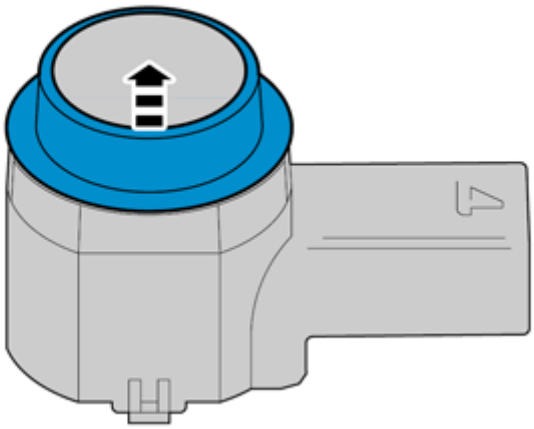

Fig. 13: Removing Ring
Courtesy of VOLVO CARS CORPORATION

Applies to cars with decor panel, standard version

- Performed on 2 sensors.

Applies to cars with decor panel, painted version

- Performed on 4 sensors.

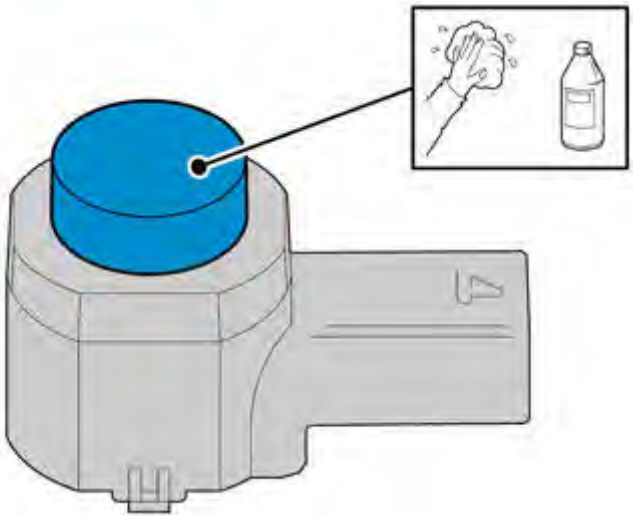

Fig. 14: Cleaning The Sensors Again
Courtesy of VOLVO CARS CORPORATION

Applies to cars with decor panel, standard version

- Clean 2 sensors. Use: Isopropanol
- Allow to dry.

Applies to cars with decor panel, painted version

- Clean 4 sensors. Use: Isopropanol
- Allow to dry.

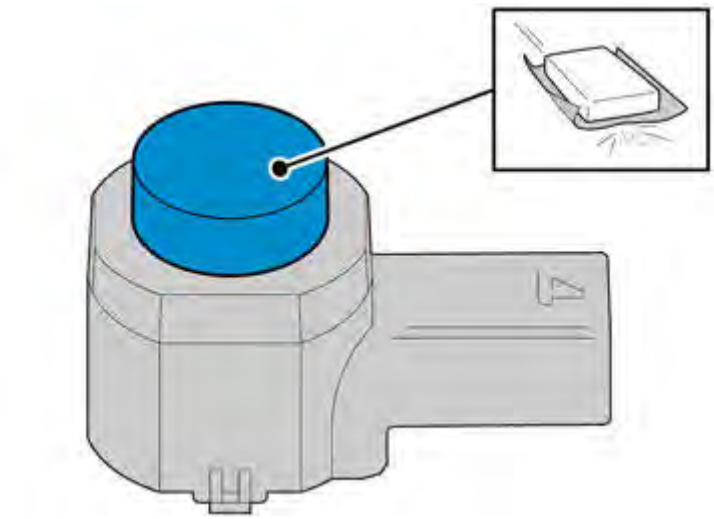

Fig. 15: Matting Down The Surface
Courtesy of VOLVO CARS CORPORATION

Applies to cars with decor panel, standard version

- Carefully mat down the surface on 2 sensors. Use Glasspaper, grade P1000

Applies to cars with decor panel, painted version

- Carefully mat down the surface on 4 sensors. Use Glasspaper, grade P1000

APPLIES TO ALL MODELS

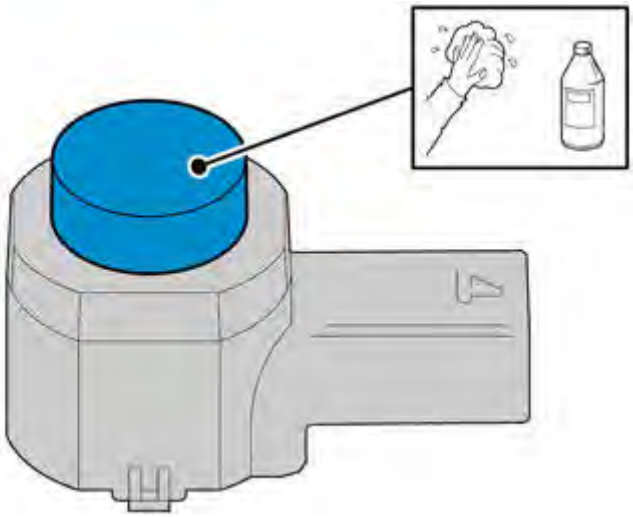

Fig. 16: Cleaning The Sensors Again
Courtesy of VOLVO CARS CORPORATION

- Clean the sensors again. Use: Isopropanol
- Allow to dry.
- Avoid contact with the cleaned surfaces.

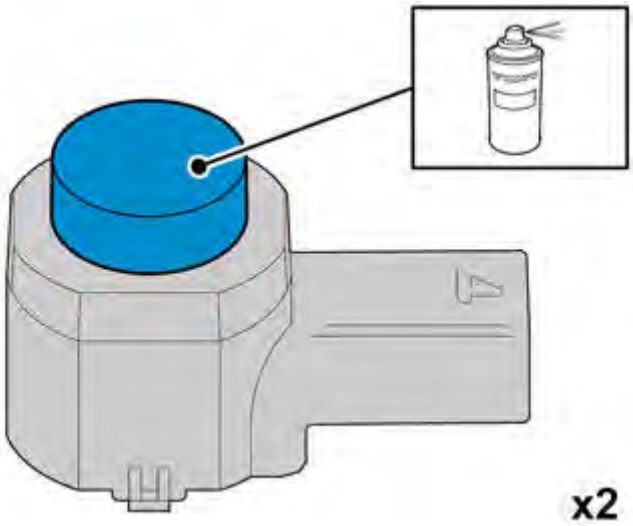

Fig. 17: Protect the Electrical Connectors
Courtesy of VOLVO CARS CORPORATION

CAUTION: Protect the connections' contact surfaces against paint.

- Paint the 2 sensors in the same color code as the vehicle.
- Use Volvo Touch-up paint. (Only use base coat.)
- Use: Volvo 2-K Varnish. P/N: **31335447**

NOTE: Also read the instructions on the spray can.

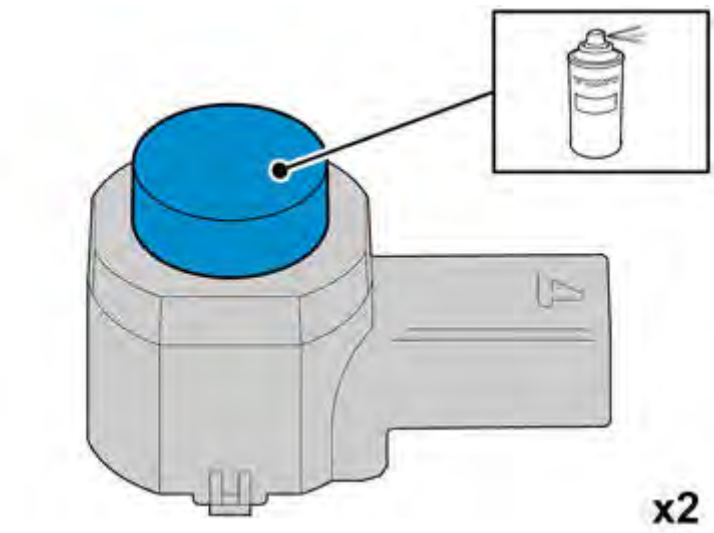

Fig. 18: Protect the Electrical Connectors
Courtesy of VOLVO CARS CORPORATION

CAUTION: Protect the connections' contact surfaces against paint.

Applies to cars with decor panel, painted version, gloss

- Use Volvo Touch-up paint. Color code: **938** . (Only use base coat.)
- Use: Volvo 2-K Varnish. P/N: **31335447**

NOTE: Also read the instructions on the spray can.

Applies to cars with decor panel, painted version, matt

- Use Volvo Touch-up paint. Color code: **426** . (Only use base coat.)
- Use Volvo Varnish. P/N: **9437467**

APPLIES TO ALL MODELS

Fig. 19: Installing Ring
Courtesy of VOLVO CARS CORPORATION

CAUTION: The paint must have dried after the first application.

Fig. 20: Identifying Ignition Switch Turned To Position 0
Courtesy of VOLVO CARS CORPORATION

- Turn the ignition switch to position 0.

NOTE: Wait at least one minute before unplugging the connectors or removing other electrical equipment.

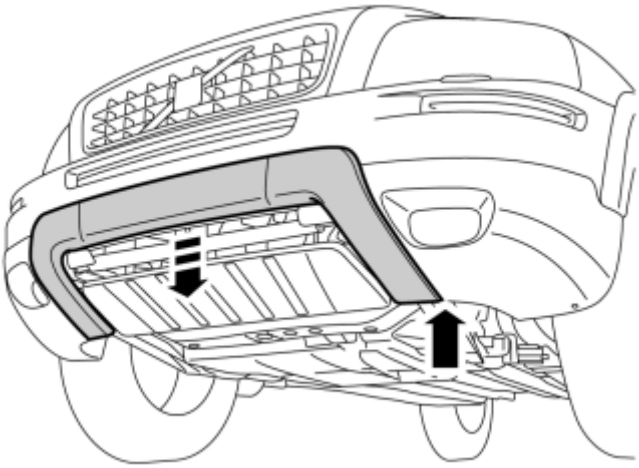

Fig. 21: Detaching The Panel
Courtesy of VOLVO CARS CORPORATION

- Detach the panel by carefully bending apart at the lower edge. Bend between the panel and bumper casing until the first catch releases. Then pull the panel straight out so that all catches release.

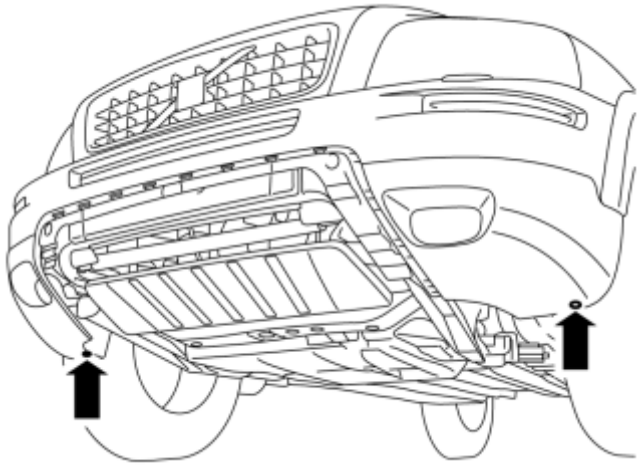

Fig. 22: Identifying Clips
Courtesy of VOLVO CARS CORPORATION

- Remove the 2 clips.

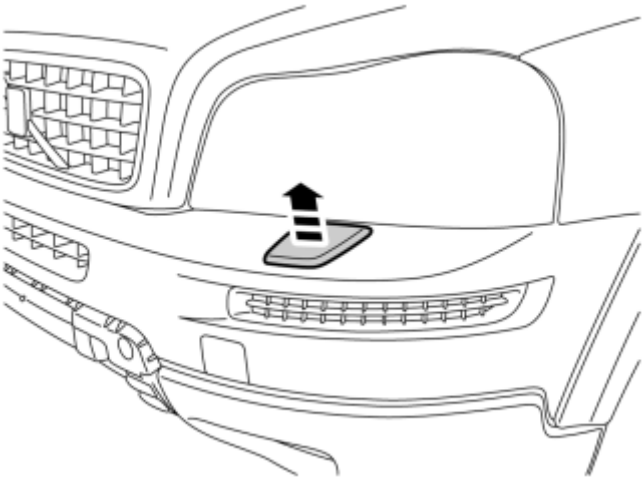

Fig. 23: Identifying Cover For The Headlight Washer
Courtesy of VOLVO CARS CORPORATION

- Pull the cover for the headlight washer straight up.

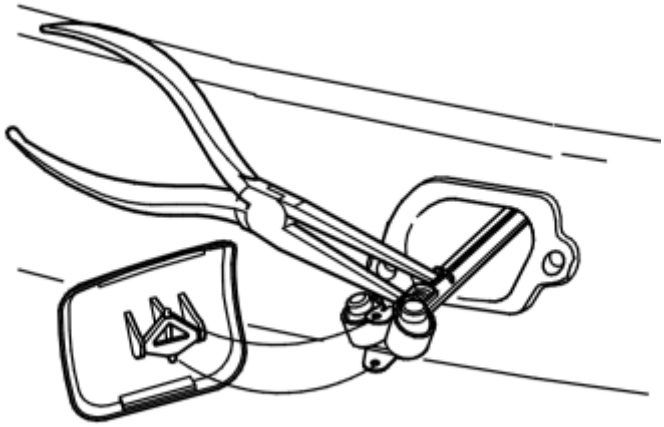

Fig. 24: Loosening The Cover From The Nozzle
Courtesy of VOLVO CARS CORPORATION

- Hold the washer with pliers.
- Loosen the cover from the nozzle acc. to figure.
- Let the washer carefully slide back and repeat the step on the car's other side.

NOTE: Take care not to scratch the bumper.

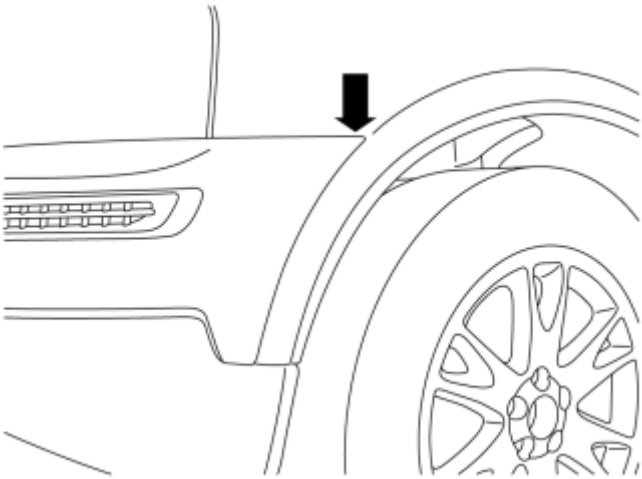

Fig. 25: Prying At The Corner And Pulling Straight Out
Courtesy of VOLVO CARS CORPORATION

- Use a pry tool and carefully bend between the fender and the corner of the bumper casing so that the top catch releases.
- Pull the casing straight out until all catches have released.

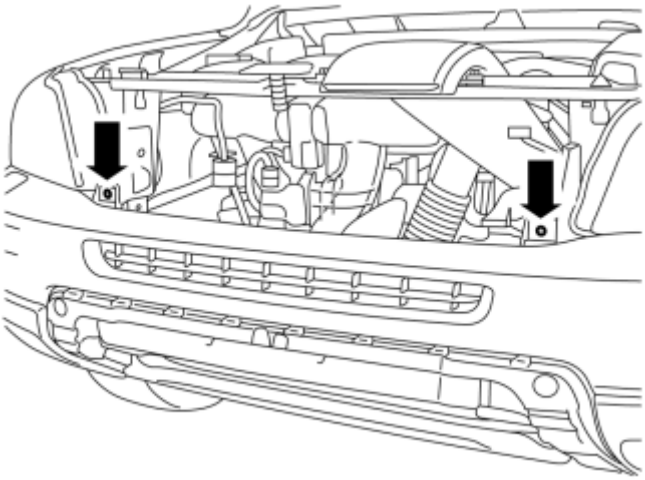

Fig. 26: Identifying 2 Screws
Courtesy of VOLVO CARS CORPORATION

- Open the engine hood.
- Remove the 2 screws.

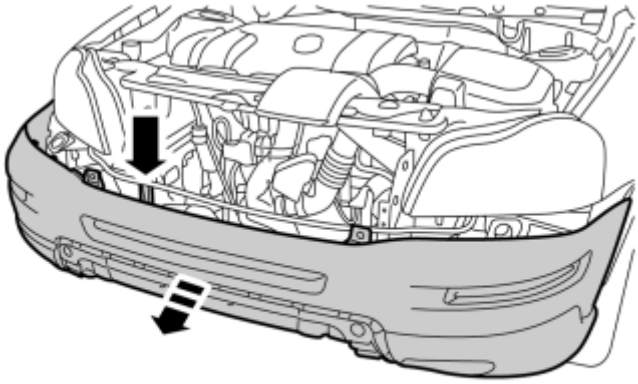

Fig. 27: Removing The Bumper Casing
Courtesy of VOLVO CARS CORPORATION

- Lift the bumper casing forward.
- Loosen the quick-coupling for the headlight washer.
- Loosen the connector for fog lights.
- Remove the bumper casing.

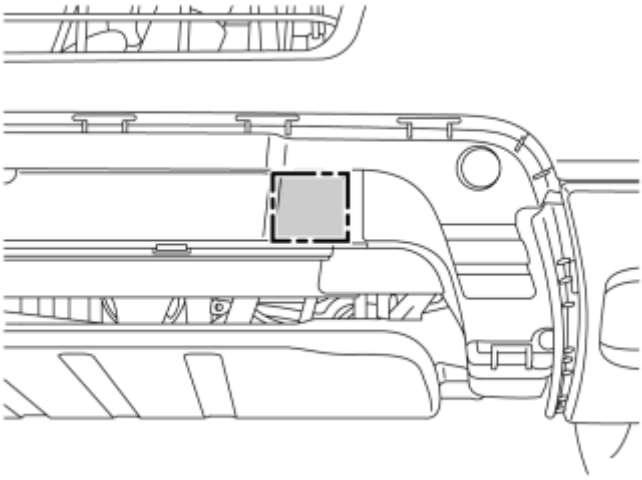

Fig. 28: Cutting Away The Corner On The Plastic Foam
Courtesy of VOLVO CARS CORPORATION

- Cut away the corner on the plastic foam acc. to figure.
- Done on both sides.

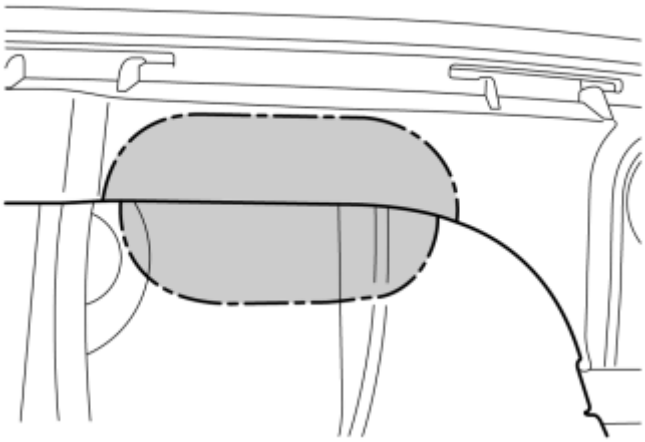

Fig. 29: Cut At The Markings With a Keyhole Saw
Courtesy of VOLVO CARS CORPORATION

- Localize the markings where the plastic foam was removed.
- Saw out acc. to the markings with a keyhole saw. At the top edge the slot shall be sawed through the outer casing, plastic foam and inner casing at the same time.
- Repeat the step on the car's other side.

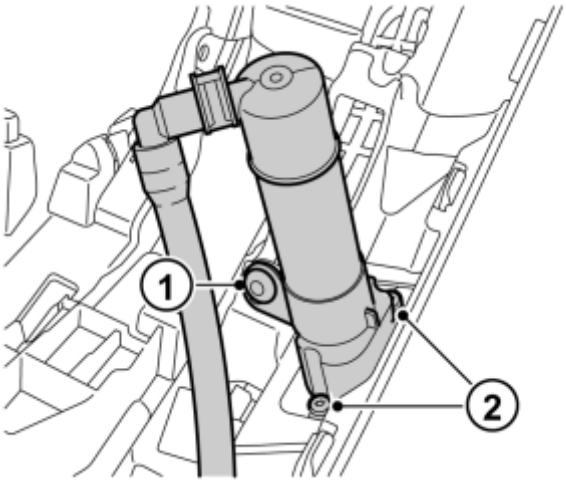

Fig. 30: Removing Headlight Washer On Both Sides
Courtesy of VOLVO CARS CORPORATION

- Remove the headlight washer on both sides by removing the clip (1) and screws (2).

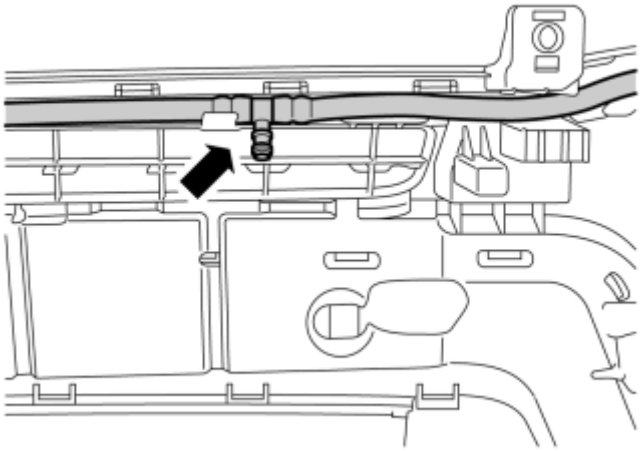

Fig. 31: Marking Relation of The Quick-Coupling To The Bumper Casing
Courtesy of VOLVO CARS CORPORATION

- Mark out where the quick-coupling is located in relation to the bumper casing.
- Remove the headlight washers with hoses.

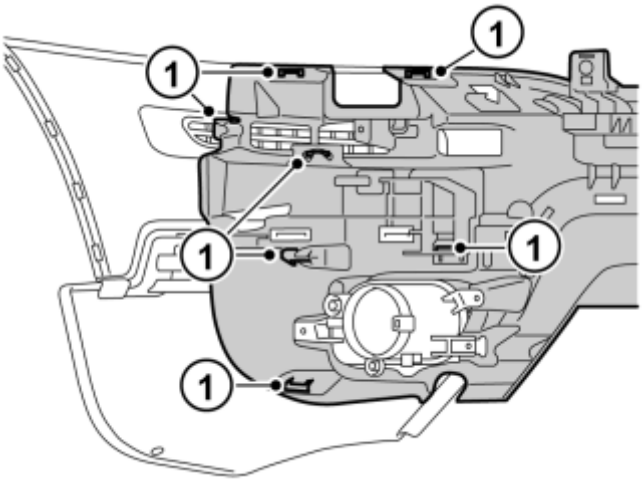

Fig. 32: Parting Outer And Inner Casing
Courtesy of VOLVO CARS CORPORATION

- Part outer and inner casing by loosening the 8 catches at the same time as the casings are pulled apart, and continue to pull apart the casings until all catches release.

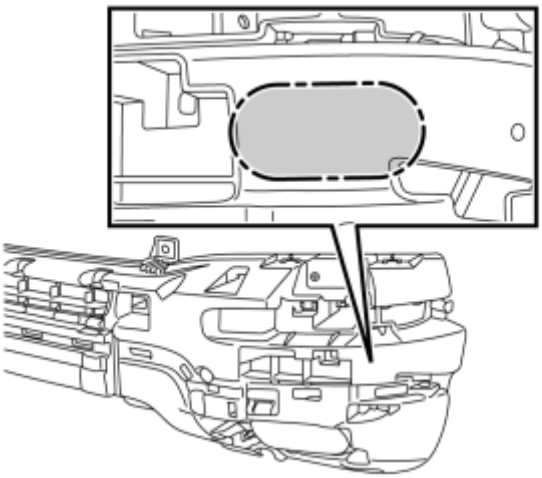

Fig. 33: Cutting Out The Slots
Courtesy of VOLVO CARS CORPORATION

- Localize the 2 markings on the outside of the inner casing's right and left side.
- Saw out the slots with a keyhole saw.

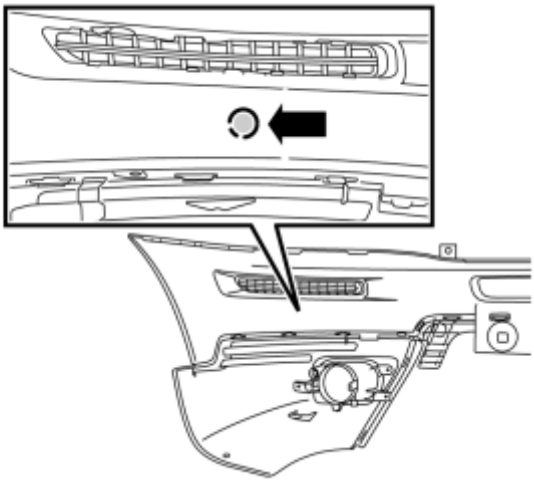

Fig. 34: Locating Markings On The Inside Of The Outer Casing
Courtesy of VOLVO CARS CORPORATION

- Localize the 2 markings on the inside of the outer casing's right and left side.
- Mark center with a scribe (marking scraper).

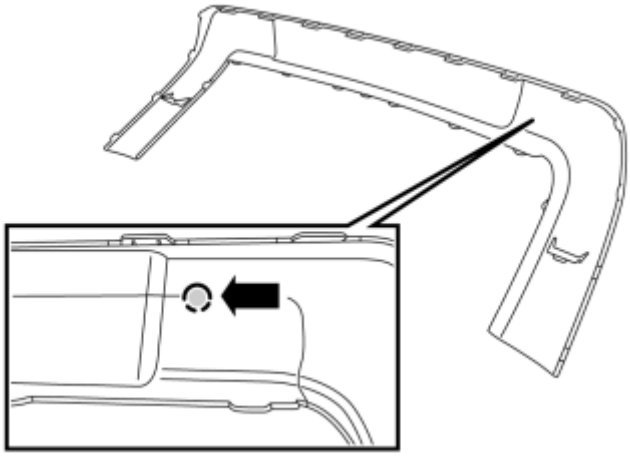

Fig. 35: Locating Markings On The Inside Of The Trim Panel
Courtesy of VOLVO CARS CORPORATION

- Localize the 2 markings on the inside of the trim panel.
- Mark center with a scribe (marking scraper).

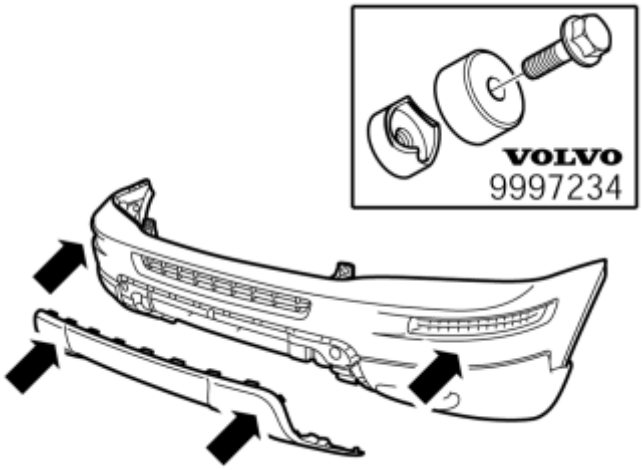

Fig. 36: Enlarge The Holes With Tool 9997234
Courtesy of VOLVO CARS CORPORATION

- Drill holes in the markings' center with a **O 3 mm (1/8")** drill bit. Drill from the trim panel and bumper casing inside.
- Drill out the holes. Use a **O10 mm (13/32")** diameter drill bit.
- Enlarge the holes in the trim panel and bumper casing with hole tool **part no. 9997234** . The hole tool's support sleeve shall be on the inside and the cutting part on the outside of the bumper casing.

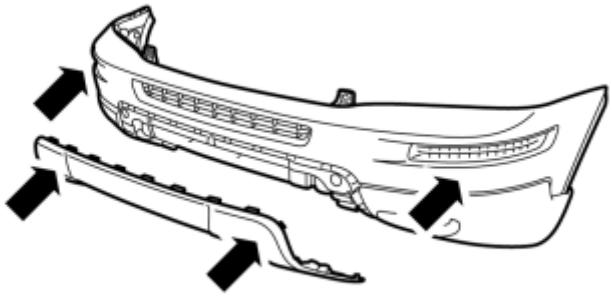

Fig. 37: Cleaning Around the Holes and Applying Activator
Courtesy of VOLVO CARS CORPORATION

- Clean the trim panel and bumper casing inside with a mild soap solution.
- Clean around the holes and the markings using an isopropyl cleaning cloth.
- Allow to dry.
- Apply a thin layer of activator, **part no. 8637076** , to the cleaned surfaces and let dry for approx. 10 min.

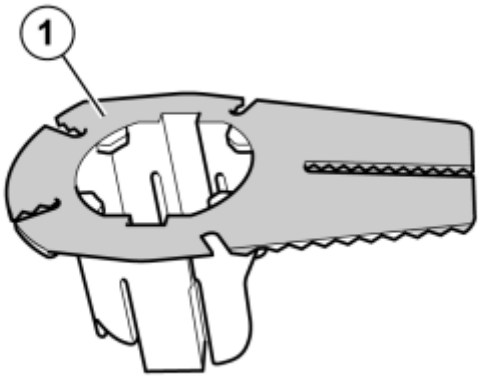

Fig. 38: Cleaning The Surface (1) and Applying Activator
Courtesy of VOLVO CARS CORPORATION

- Take 4 holders from the kit and clean the surface (1) illustrated using isopropyl.
- Allow to dry.
- Apply a thin and even coat of activator to the cleaned surfaces and allow to dry for at least 10 minutes.

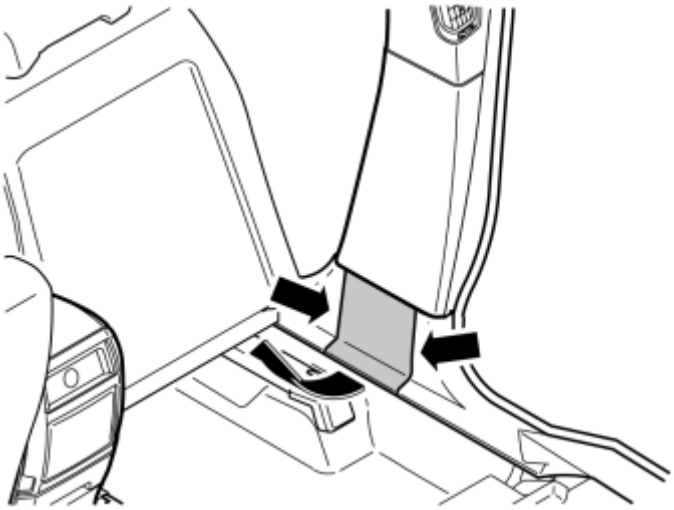

Fig. 39: Identifying Joint Between The Sill Panels
Courtesy of VOLVO CARS CORPORATION

- Use a pry tool, carefully bend loose and remove the cover panel over the joint between the sill panels.

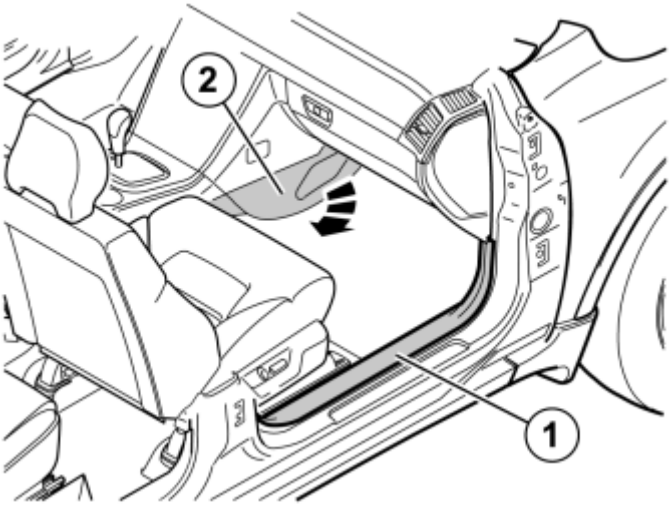

Fig. 40: Loosen The Sill Panel (1) And The Right Panel (2)
Courtesy of VOLVO CARS CORPORATION

- Loosen the sill panel (1) and the right panel (2) of the center console.

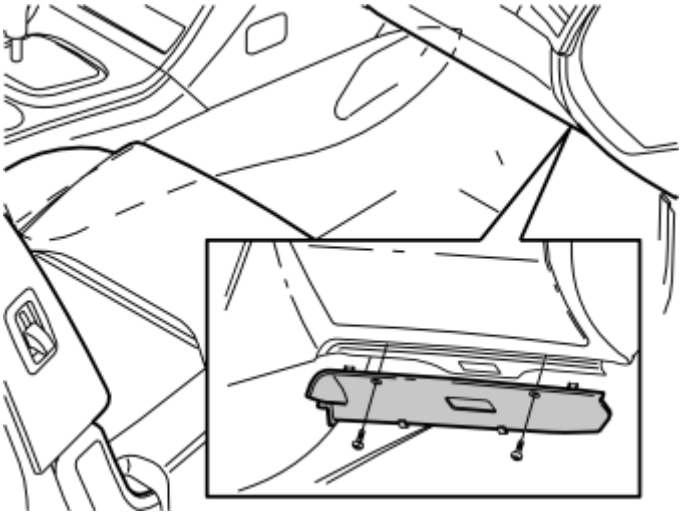

Fig. 41: Identifying Sound Proofing Bracket
Courtesy of VOLVO CARS CORPORATION

- Remove the screws and sound proofing bracket.
- Fold aside the floor mat so that the hole to the engine compartment becomes visible.

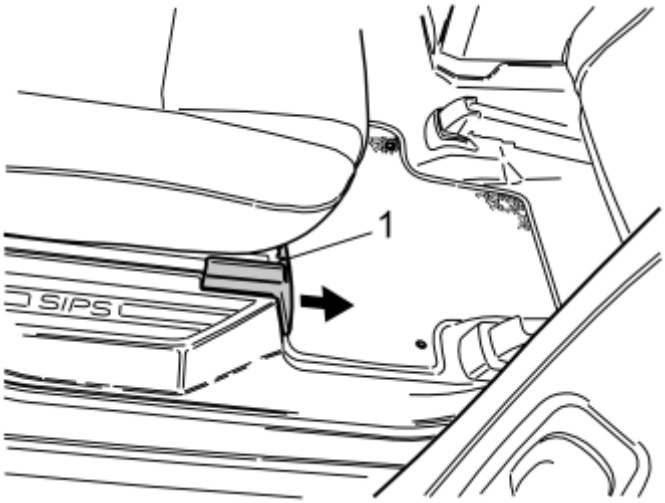

Fig. 42: Pushing Up Catch On Top Side
Courtesy of VOLVO CARS CORPORATION

- Remove the panel in the right front seat attachment on the second seat row by pressing in the lock catch (1) on the top side and pull the panel forward.
- Remove the screw.

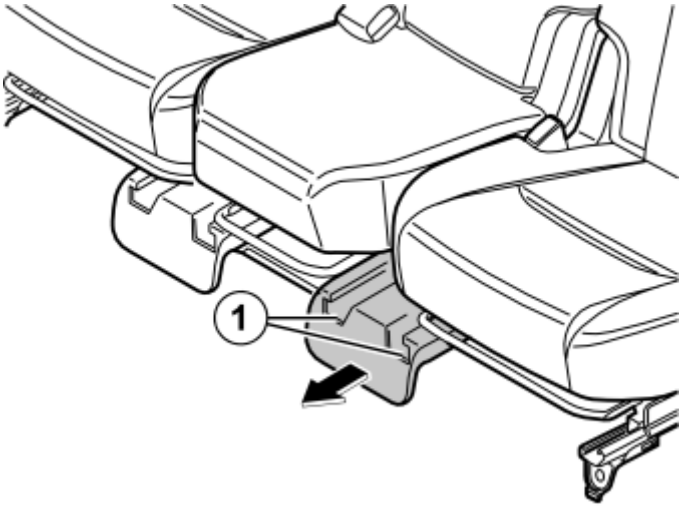

Fig. 43: Identifying The Seat Panel
Courtesy of VOLVO CARS CORPORATION

- press in the catches (1) and remove the seat panel.
- Remove the screw.

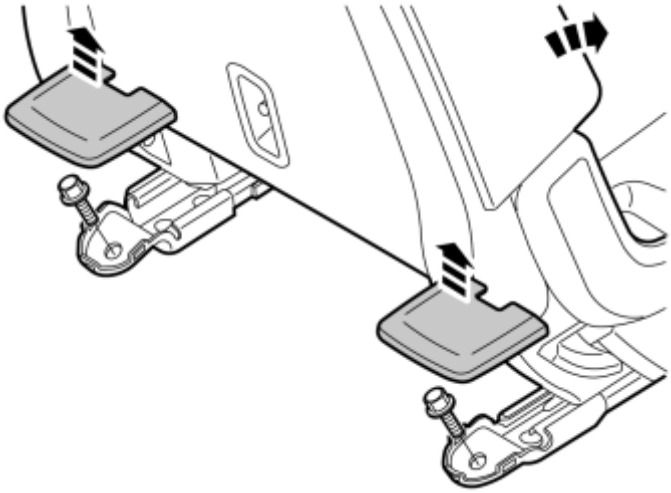

Fig. 44: Removing Screws Lifting Out The Seat.
Courtesy of VOLVO CARS CORPORATION

- Fold the backrest forward and push the seat as far forward as possible. On cars with two rows of seats the seat cannot be pushed forward.
- Remove both rear panels (1) by pulling them straight up.
- Remove the screws.
- Lift out the seat.

CAUTION: Exercise care when doing this so that the trim or door panels are not damaged.

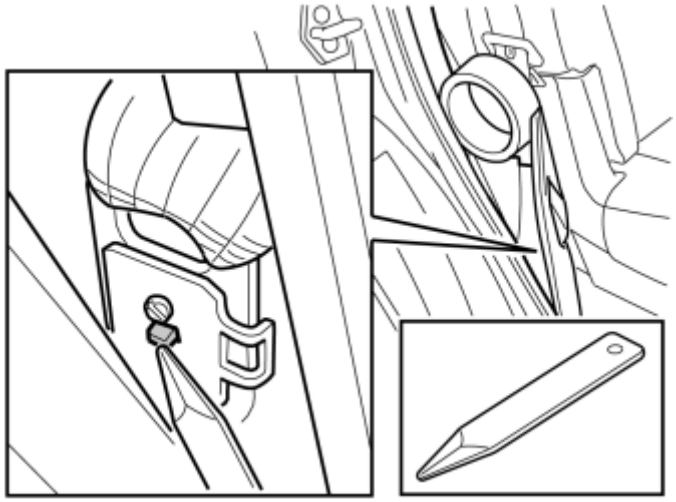

Fig. 45: Releasing The Seat Belt
Courtesy of VOLVO CARS CORPORATION

- Loosen the upper part of the sill moulding on the rear edge and loosen the seat belt from the end fitting. The belt is loosened by carefully pressing with a weatherstrip tool on the lock lug so that the seat belt releases from the end fitting.

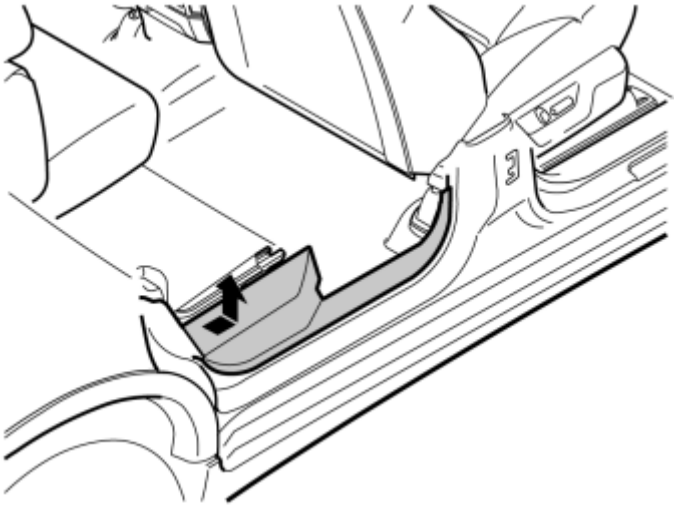

Fig. 46: Pulling The Sill Moulding Upwards
Courtesy of VOLVO CARS CORPORATION

- Pull the sill moulding upwards until the 3 clips release.
- Angle the sill moulding out from the B-post panel.

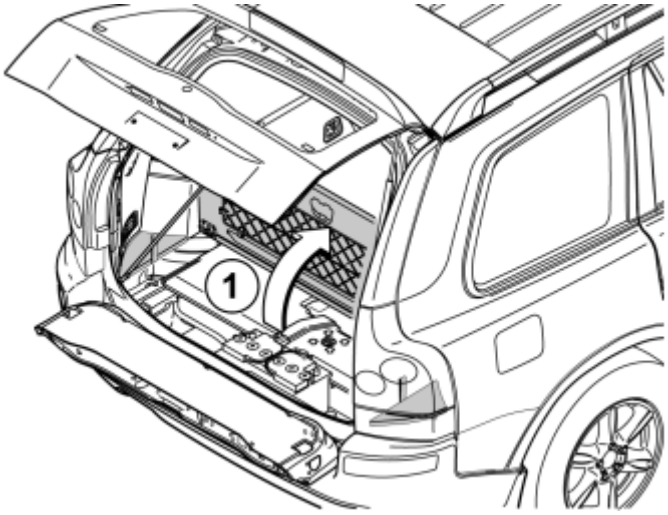

Fig. 47: Folding Up The Floor Hatch (1)
Courtesy of VOLVO CARS CORPORATION

Applies to cars with two rows of seats

- Fold up the floor hatch (1). If the floor hatch is equipped with a grocery bag holder, the holder is secured with a strap on both ends of the storage compartment. Detach the straps.
- Remove the storage compartment under the floor hatch.
- Remove the floor hatch by folding it almost completely closed and pulling it backwards from the mountings until it releases.

Applies to cars with three rows of seats and integrated carrier bag holder on the underside of the floor hatch

- Fold up the floor hatch (1).
- Detach the two straps on the panel under this. Lift up the rear edge of the panel, fold the floor hatch back towards the panel and lift out the floor hatch with the panel.

Applies to cars with three rows of seats without an integrated carrier bag holder

- Fold up the floor hatch (1) at the rear edge and lift it out.

APPLIES TO ALL MODELS

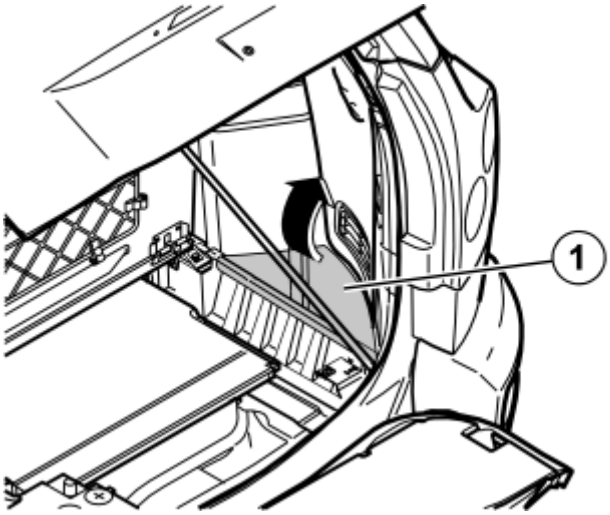

Fig. 48: Remove Right And Left Floor Hatches
Courtesy of VOLVO CARS CORPORATION

- Remove the floor hatches (1) on the right and left side.

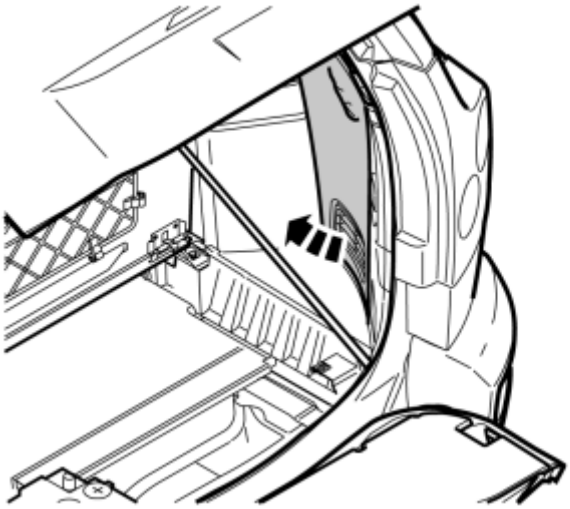

Fig. 49: Removing The Side Panels
Courtesy of VOLVO CARS CORPORATION

- Remove the side panels on the right and left side.

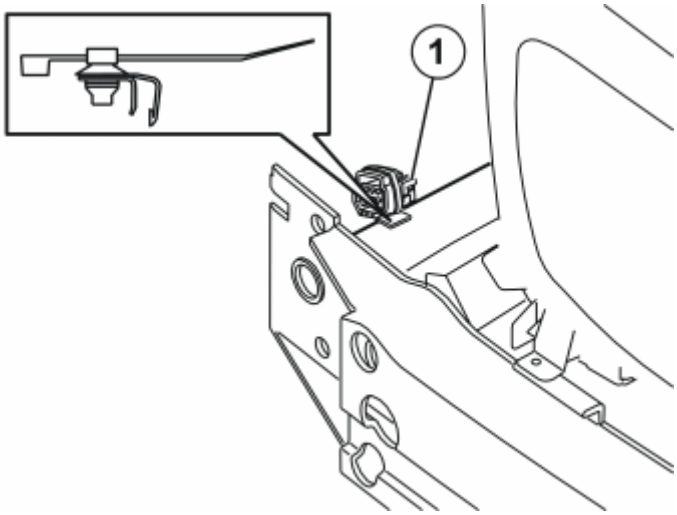

Fig. 50: Installing The Metal Clip Around The Panel Edge
Courtesy of VOLVO CARS CORPORATION

- Take the short cable harness from the kit.
- Remove the taped connector from the cable.
- Install the larger connector (1) with cable tie/metal clip from the kit.
- Secure the tie strap around the connector and install the metal clip around the panel edge on the right-hand side of the car.

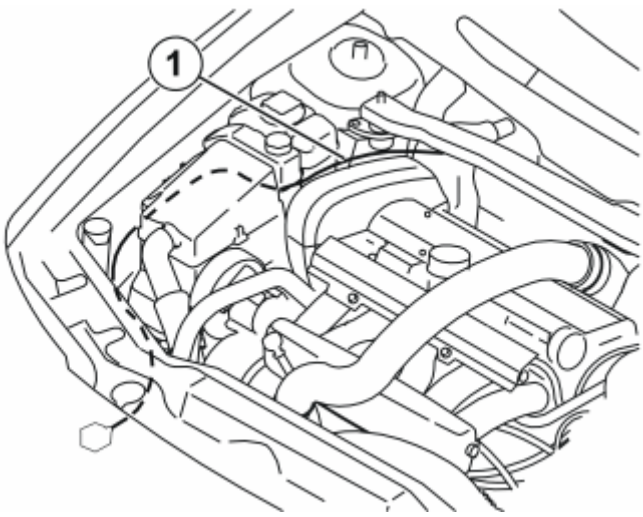

Fig. 51: Identifying Cable
Courtesy of VOLVO CARS CORPORATION

- Pull the end of the cable with the loose pins into the engine compartment.
- Route the cable (1) as illustrated. Place it under the cable duct and expansion tank so that it is concealed.

NOTE: Make sure that the cable is positioned so that it is not damaged by heat or wear.

- Clamp it in with tie straps from the kit.

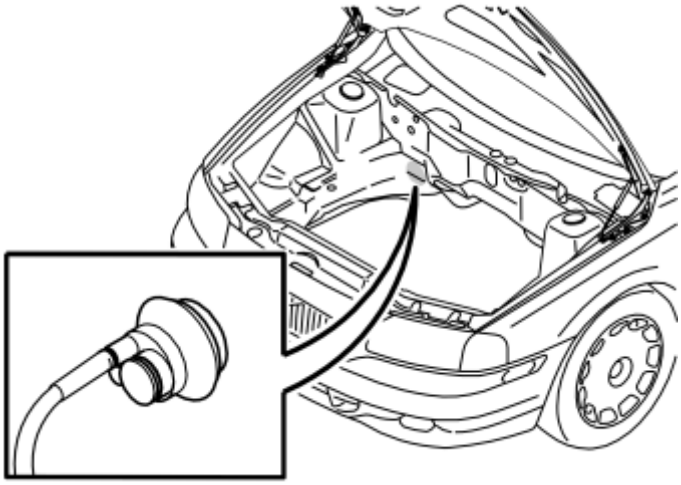

Fig. 52: Identifying Rubber Grommet
Courtesy of VOLVO CARS CORPORATION

- Raise the car.
- Remove the engine splash guard.
- Remove the plug from the hole in the passenger compartment. It is located under the cowl panel's insulation.

If the car has a rubber grommet without any space for more cables:

- Remove the existing rubber grommet and replace it with the rubber grommet from the kit. Cut off the tip of one of the rubber teats.

If the car has a rubber grommet with space for more cables:

- Cut off the tip of the unused rubber teat.

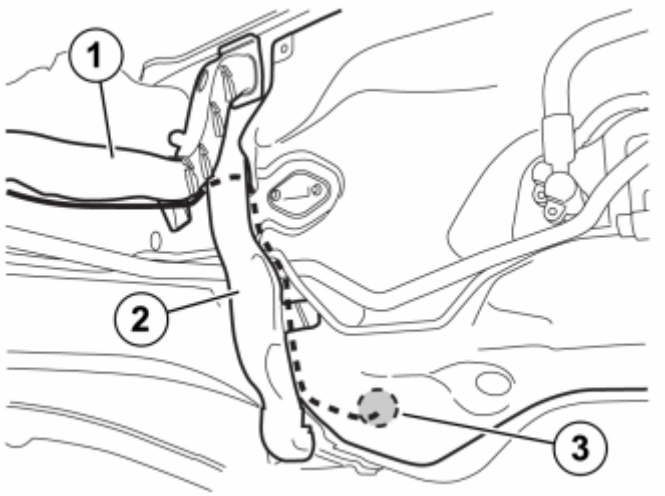

Fig. 53: Routing The Cable In Through The Hole
Courtesy of VOLVO CARS CORPORATION

- Route the cable by the cable duct (1) and along behind the drain pipe (2). Secure using a cable tie at the cable duct.
- Route the cable behind the cowl panel insulation (3) down along to the hole for the rubber grommet.
- Lubricate the cable with normal soap so that the cable slides easily in the rubber grommet.
- Thread the rubber grommet on the cable.
- Route the cable in through the hole and press in the rubber bushing in the hole so that it seals properly.
- Pull the cable again so that the correct length remains outside the passenger compartment.
- Make sure that the cable's heating hose is in contact against the rubber grommet and secure it with a tie strap.

APPLIES TO ALL MODELS

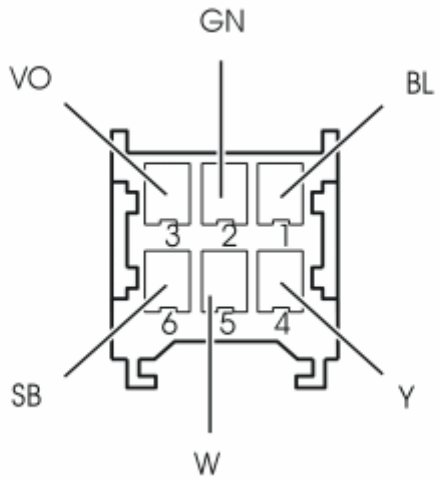

Fig. 54: Identifying Connector
Courtesy of VOLVO CARS CORPORATION

- Take the connector and loosen the lock.
  1. Blue (BL)
  2. Green (GN)
  3. Violet (VO)
  4. Yellow (Y)
  5. White (W)
  6. Black (SB)
- Install the cable ends' pins in the connector acc. to:
  1. Blue (BL)
  2. Green (GN)
  3. Violet (VO)
  4. Yellow (Y)
  5. White (W)
  6. Black (SB)
- Press back the connector's catch.

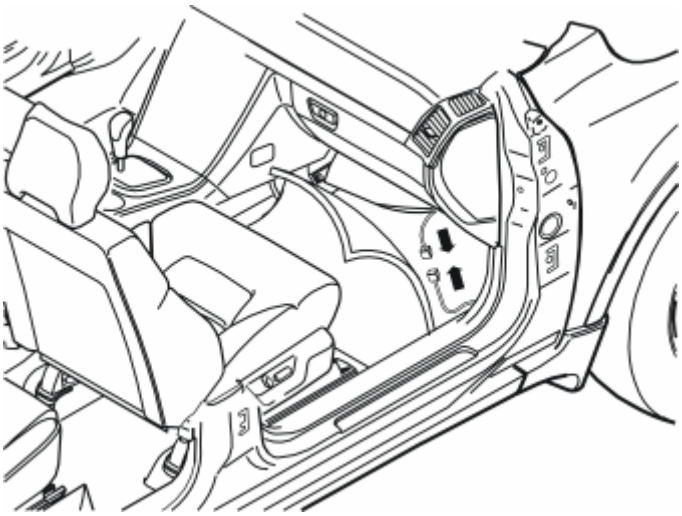

Fig. 55: Connecting Cable From The Kit
Courtesy of VOLVO CARS CORPORATION

- Take the long cable from the kit and connect it to the connector which has just been prepared.

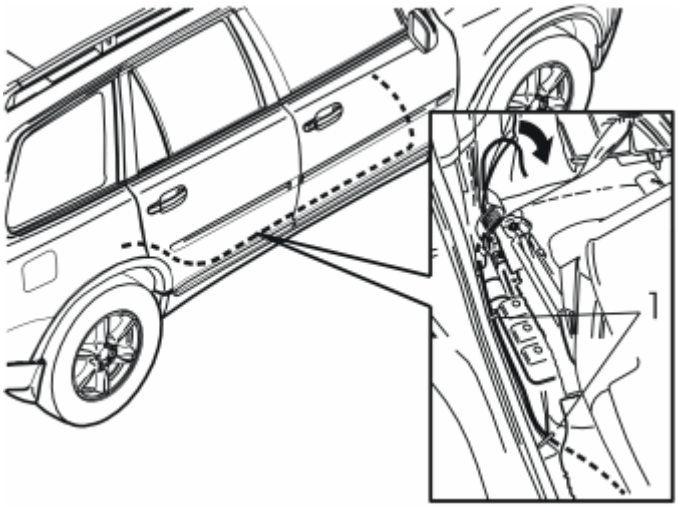

Fig. 56: Cable Clamped In At Air Duct
Courtesy of VOLVO CARS CORPORATION

- Guide the cable down between the carpet and the door sill as far as possible to the floor and route it along the right-hand side of the car on to the rear edge of the right-hand rear door's opening.
- Route the cable by the front right-hand seat mounting on the right-hand seat in the second row of seats.
- Pull away the mat from the front edge of the right-hand side panel in the cargo compartment.
- Route the cable harness along the right side of the right seat's placement in the second row of seats, towards the front edge of the rear wheel housing.
- Route it further on the left-hand side of the seat belt's lower mounting, between the support bracket for the right-hand seat and wheel housing, and out at the left-hand side of the wheel housing.
- Clamp the cable harness into the hole in the seat mounting front member, and in the rear hole in the horizontal panel at the right-hand side of the seat. Use tie straps (1) from the kit.

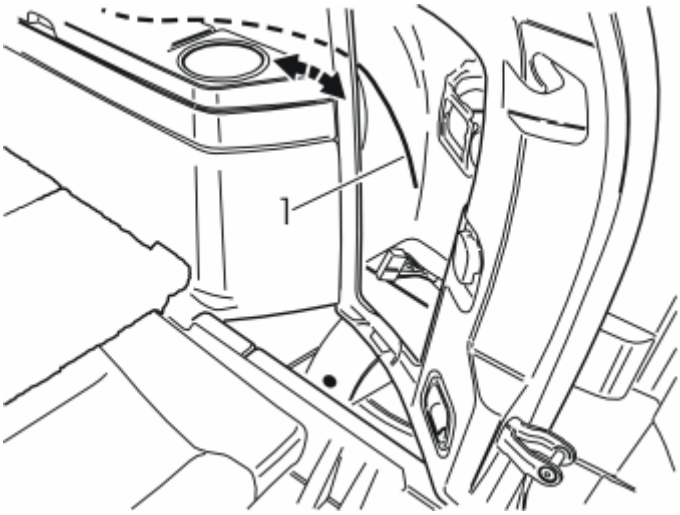

Fig. 57: Identifying Cable At Rear Edge Of Right-Hand Side Panel
Courtesy of VOLVO CARS CORPORATION

Applies to cars with three rows of seats

- Guide in a wire or cable (1) at the rear edge of the right-hand side panel and along its inside, above the load securing eyelet brackets.
- Route the wire/cable to the front edge of the side panel.

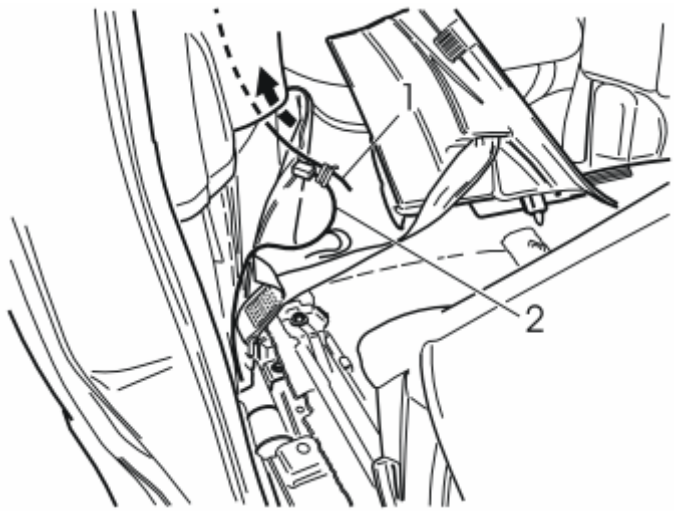

Fig. 58: Identifying Cable Harness
Courtesy of VOLVO CARS CORPORATION

Applies to cars with three rows of seats

- Tape the cable (2) to the wire and route it on at the rear edge of the side panel.

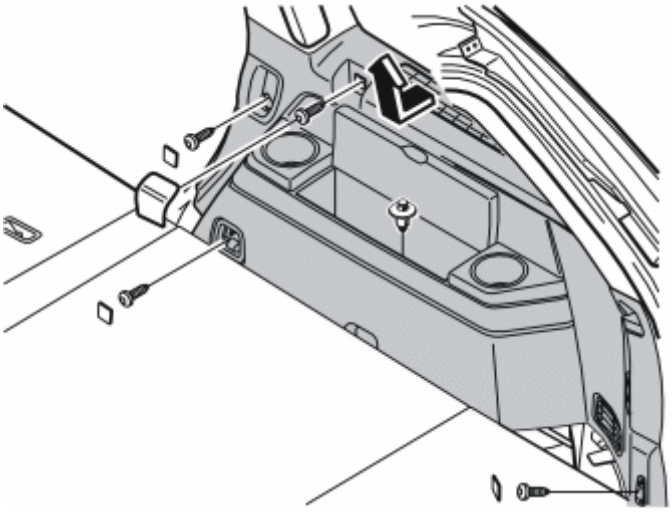

Fig. 59: Pulling The Side Panel Away
Courtesy of VOLVO CARS CORPORATION

Applies when the rear side panel must be removed to facilitate cable routing. Remove:

- four covers.
- four screws.

- one clip.
- Detach the C and D panels at the lower edge.
- Pull the side panel away and lift it off.

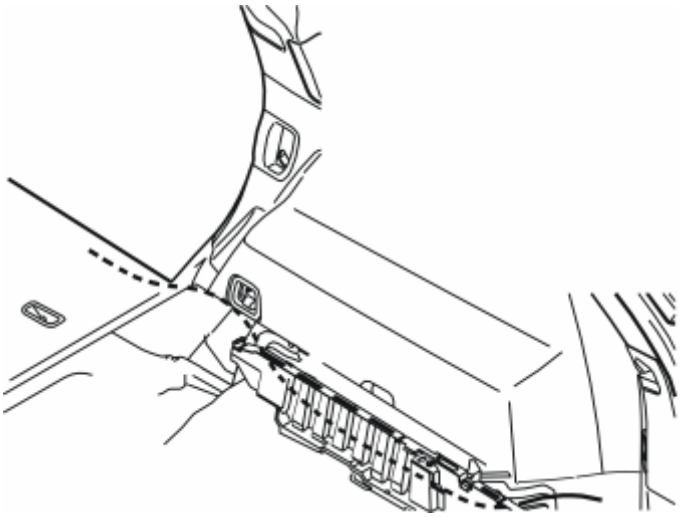

Fig. 60: Cable Routing
Courtesy of VOLVO CARS CORPORATION

Applies to cars with two rows of seats

- Route the cable on the left-hand side of the seat belt's mounting at the front edge of the wheel housing, inside the carpet at the front edge of the side panel, between the side panel and the rear cargo floor support, to the tailgate.

APPLIES TO ALL MODELS

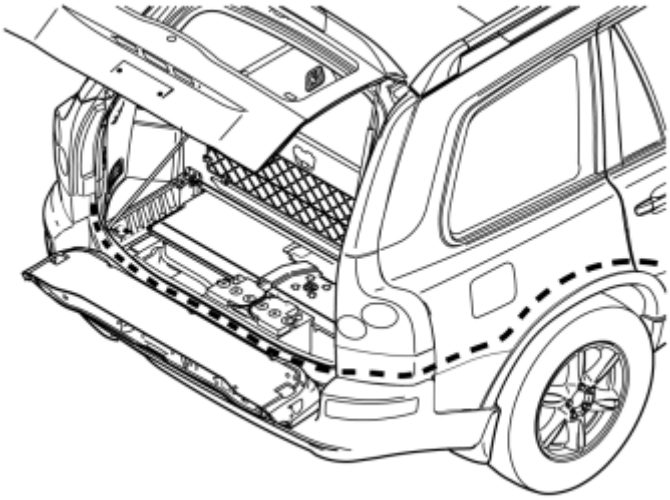

Fig. 61: Routing The Cable Along The Existing Cable Harness
Courtesy of VOLVO CARS CORPORATION

- Continue to route the cable along the existing cable harness below the tailgate.
- Secure the cable with tie straps from the kit.

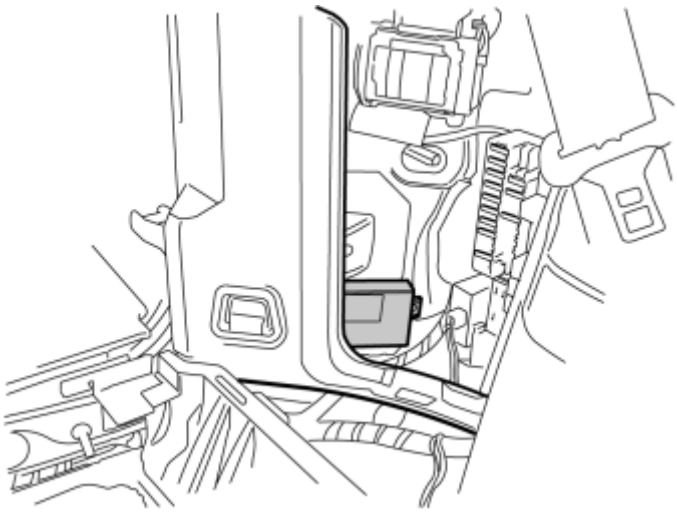

Fig. 62: Loosening The Control Module
Courtesy of VOLVO CARS CORPORATION

- Loosen the control module that is attached with Velcro tape.

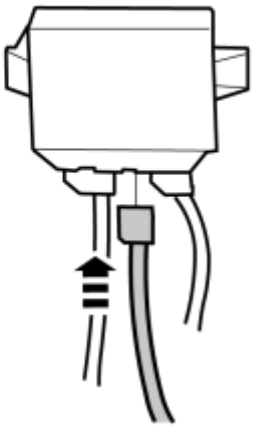

Fig. 63: Connect To The Middle Connection
Courtesy of VOLVO CARS CORPORATION

- Connect the routed cable's connector to the middle connection.
- Reinstall the control module.
- Return to the work with the bumper casing.

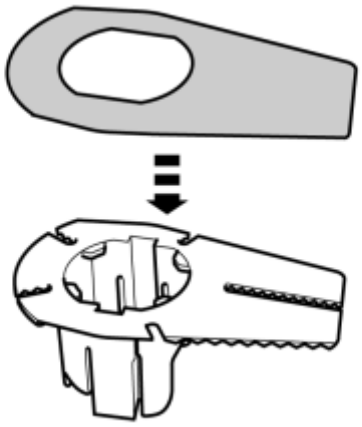

Fig. 64: Installing Tape On The Holders
Courtesy of VOLVO CARS CORPORATION

- Remove the protective film from one side of the double-backed tape.
- Install the tape on the four holders.

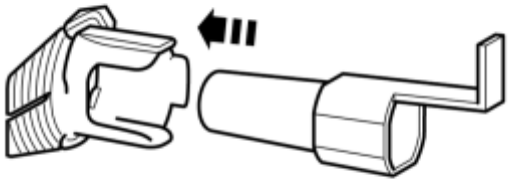

Fig. 65: Install The Centering Tool In The Holder
Courtesy of VOLVO CARS CORPORATION

- Remove the remaining protective film on one of the holders.
- Install the centering tool in the holder acc. to figure.

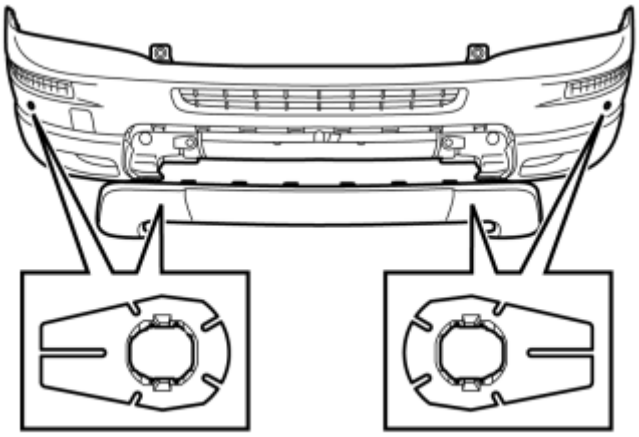

Fig. 66: Pressing The Holder In The Bumper Casing
Courtesy of VOLVO CARS CORPORATION

- Press in the holder in the bumper casing.

NOTE: **The holders shall be installed facing in the direction as shown in the figure.**

The holders must be installed horizontally and in line with the bumper casing.

- Repeat the steps for the other holders.

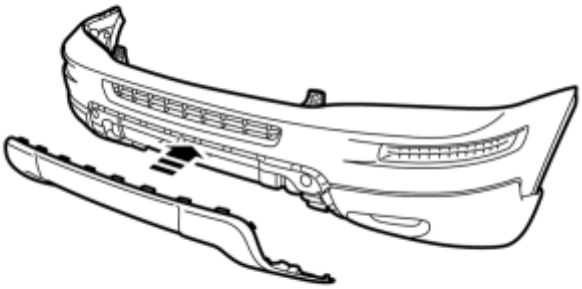

Fig. 67: Reinstalling The Trim Panel
Courtesy of VOLVO CARS CORPORATION

- Reinstall the trim panel.

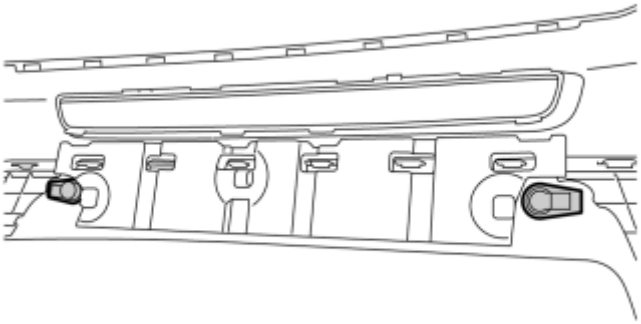

Fig. 68: Placing Plastic Foam Support In The Outer Casing
Courtesy of VOLVO CARS CORPORATION

- Loosen the plastic foam support from the bumper casing's inner casing and place it in the outer casing.

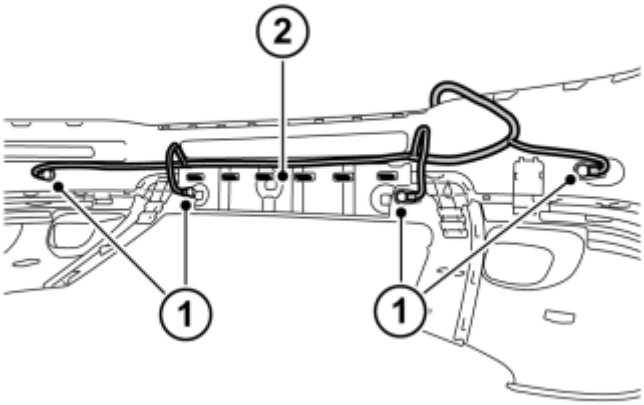

Fig. 69: Installing Sensors And Connectors (1), Routing Harness (2)
Courtesy of VOLVO CARS CORPORATION

- Install the sensors and plug in the connectors (1).
- Place the cable harness between the plastic foam support and outer casing (2).

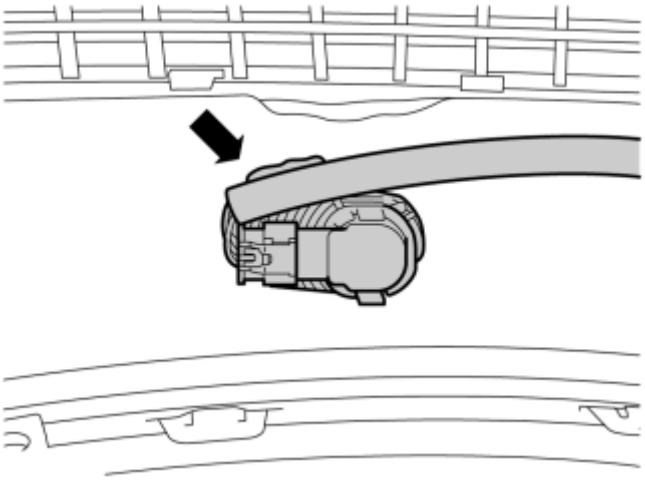

Fig. 70: Attaching The Cable Harness With Butyl Tape
Courtesy of VOLVO CARS CORPORATION

Left outer sensor

- Clean the surface by the arrow with isopropyl and then apply primer to get better adhesion.
- Attach the cable harness with butyl tape at the marked point.

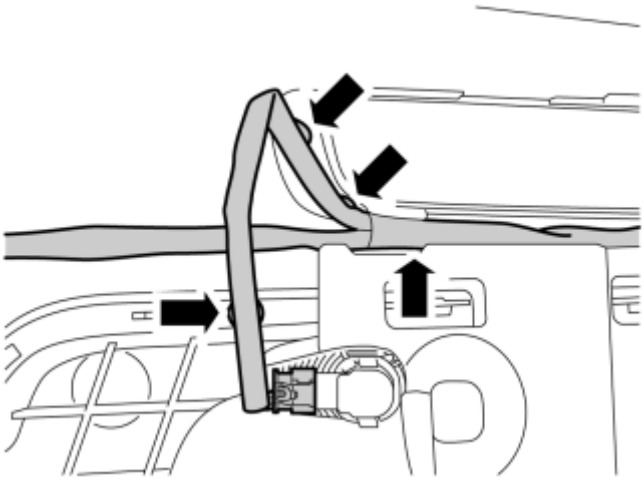

Fig. 71: Attaching The Cable Harness With Butyl Tape
Courtesy of VOLVO CARS CORPORATION

Left inner sensor

- Attach the cable harness with butyl tape at the marked points.

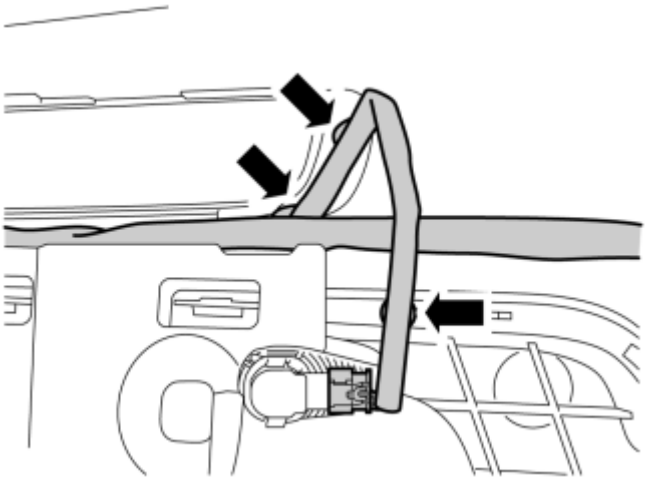

Fig. 72: Attaching The Cable Harness With Butyl Tape
Courtesy of VOLVO CARS CORPORATION

Right inner sensor

- Attach the cable harness with butyl tape at the marked points.

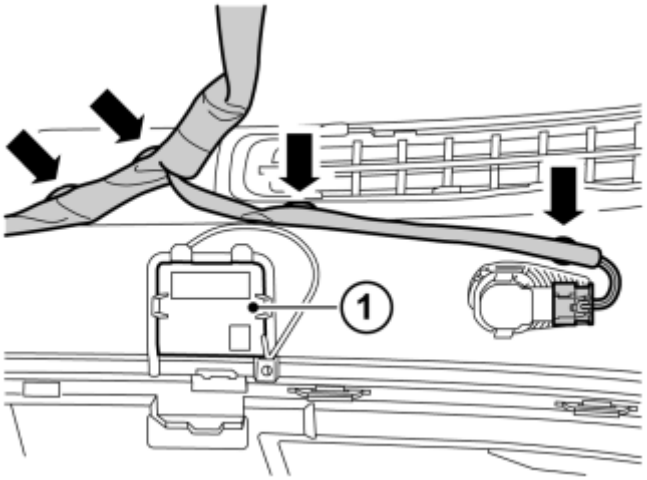

Fig. 73: Attaching The Cable Harness With Butyl Tape
Courtesy of VOLVO CARS CORPORATION

Right outer sensor

- Attach the cable harness with butyl tape at the marked points.

NOTE: The cable may not end up on the cover for the towing eye (1).

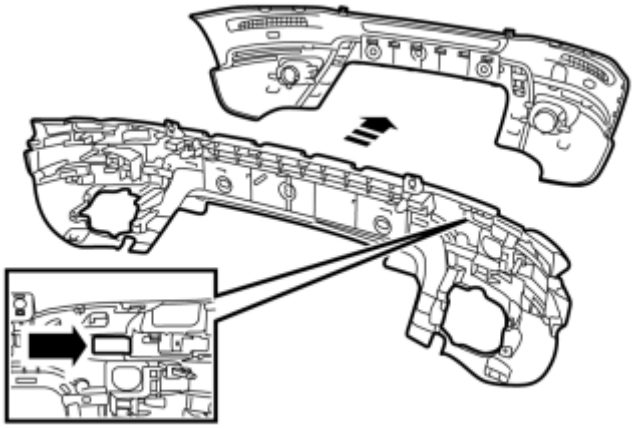

Fig. 74: Assemble Outer And Inner Casing
Courtesy of VOLVO CARS CORPORATION

- Assemble outer and inner casing and, at the same time, insert the cable harness through the inner casing.

NOTE: Make sure that all catches fully engage.

- Reinstall the headlight washers.

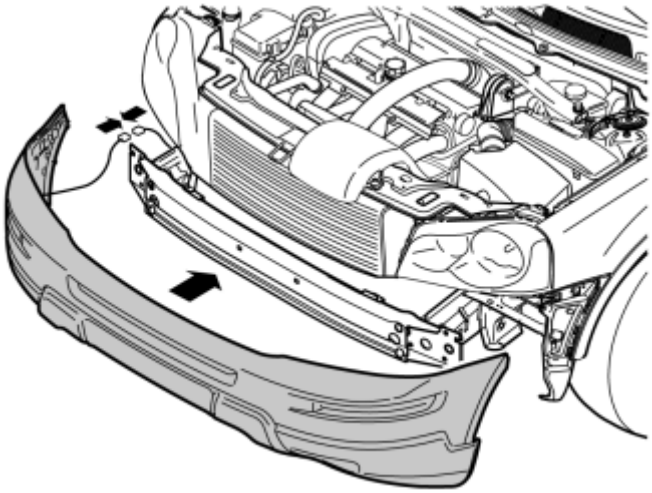

Fig. 75: Connecting The Connector For The Sensors
Courtesy of VOLVO CARS CORPORATION

- Hold the bumper up against the car and connect the connector for the sensors to the connector clamped to the car.
- Reinstall the bumpers by repeating the instructions in the steps for removal in reverse order.

Install:

- the sound barrier
- the sill trim panels
- side panel on the center console.
- panel over the joint between the door sills
- the seatbelt

NOTE: Check that the seat belt is secure by jerking it hard in an upwards direction.

- The seat, torque screws with **50 Nm (36.8 lbf. ft.)**
- the seat panels
- the side panels
- the floor hatches.

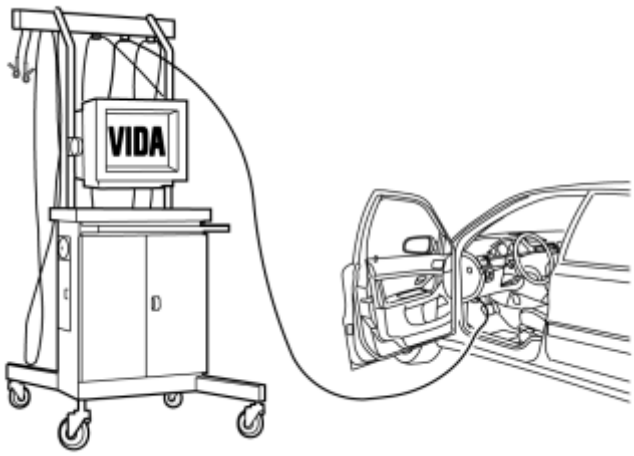

Fig. 76: Identifying VIDA (Service Information) To Program Software
Courtesy of VOLVO CARS CORPORATION

- Download software (application) for the accessory's function according to service information in VIDA (Volvo scan tool).

ACCESSORIES AND EQUIPMENT

Instrumentation - Specifications, Electrical/Electronic

SIGNAL DESCRIPTION, DRIVER INFORMATION MODULE (DIM) (2003-04)

SIGNAL DESCRIPTION

All the values given below are measured between the respective connection in column 1 and connection 14 (signal ground) if not otherwise specified.

NOTE: **It is important that the test box is connected and the ground points checked before testing begins.**

U =	DC voltage (V)	f =	frequency in Hertz (Hz)
Ubat =	battery voltage (V)	t =	period time in milliseconds (ms)
Ulow =	Voltage close to 0 V		-

Connect the test box	Connect.	Signal type	Ignition on	Idle
43	1	Power supply Ext X	U=Ubat	
44	2	Communication wire control units (CANH)	U=2.5-3.5 V	
45	3	Communication wire control units (CANL)	U=1.5-2.5 V	
46	4	Background lamp signal	Lamp off: U=Ubat Lamp on: U=Ulow	
47	5	Brake fluid level signal (+)	Lamp off: U=Ubat Lamp on: U=Ulow	
48	6	Parking brake signal (+)	Lamp off:U=Ubat Lamp on:U=Ulow	
49	7	-	-	-
50	8	Communication wire control units (CANH)	U= 2.5-3.5 V	
51	9	Communication wire control units (CANL)	U=1.5-2.5V	
52	10	-	-	-
53	11	-	-	-
54	12	-	-	-
55	13	-	-	-
56	14	Signal ground	U=Ulow	

SIGNAL DESCRIPTION, DRIVER INFORMATION MODULE (DIM) (2005-12)

SIGNAL DESCRIPTION

All values contained below are between the relevant terminal and signal ground, unless otherwise indicated in brackets.

NOTE: **It is important to connect the breakout box and check the ground terminals before taking readings.**

U=	DC voltage in volts (V)	U_{AC} =	AC voltage in volts (V)
U_{bat} =	Battery voltage (V)	f =	Frequency in Hertz (Hz)
U_{low} =	Voltage approximately 0 V	t =	Time in seconds (s)

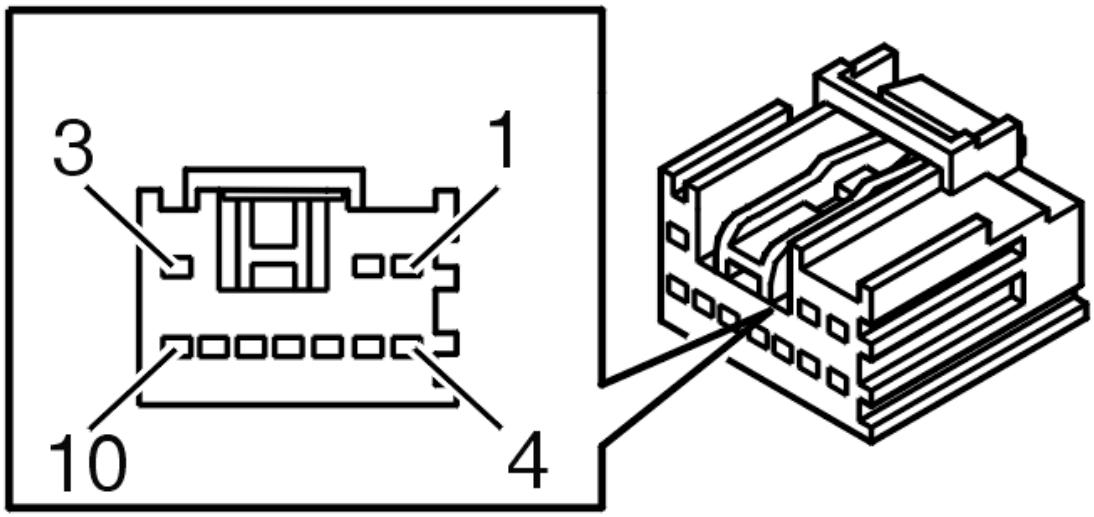

Fig. 1: Identifying 10-Bit Connector
Courtesy of VOLVO CARS CORPORATION

SIGNAL TABLE CONNECTOR A

Control module terminal	Breakout box terminal	Signal type	Ignition on
#A1	#1	-	-
#A2	#2	Signal malfunction indicator lamp (MIL)	Lamp off: U = U_{bat} Lamp on: U = U_{low}
#A3	#3	Power supply Extended X	U = U_{bat}
#A4	#10	Signal ground	U = U_{low}
#A5	#9	Signal (+) brake fluid level	Lamp off: U = U_{bat} Lamp on: U = U_{low}
#A6	#8	Signal (+) parking brake	Lamp off: U = U_{bat} Lamp on: U = U_{low}

#A7	#7	Control modules communication cable (CAN L)	U = 1.5-2.5 V
#A8	#6	Control modules communication cable (CAN H)	U = 2.5-3.5 V
#A9	#5	Control modules communication cable (CAN L)	U = 1.5-2.5 V
#A10	#4	Control modules communication cable (CAN H)	U = 2.5-3.5 V

ACCESSORIES AND EQUIPMENT

Instrumentation - Symptom Related Diagnostic Procedures

CHECKING LAMPS AND NEEDLES (2005-12)

CHECKING LAMPS AND NEEDLES

ACTIVATING LAMPS

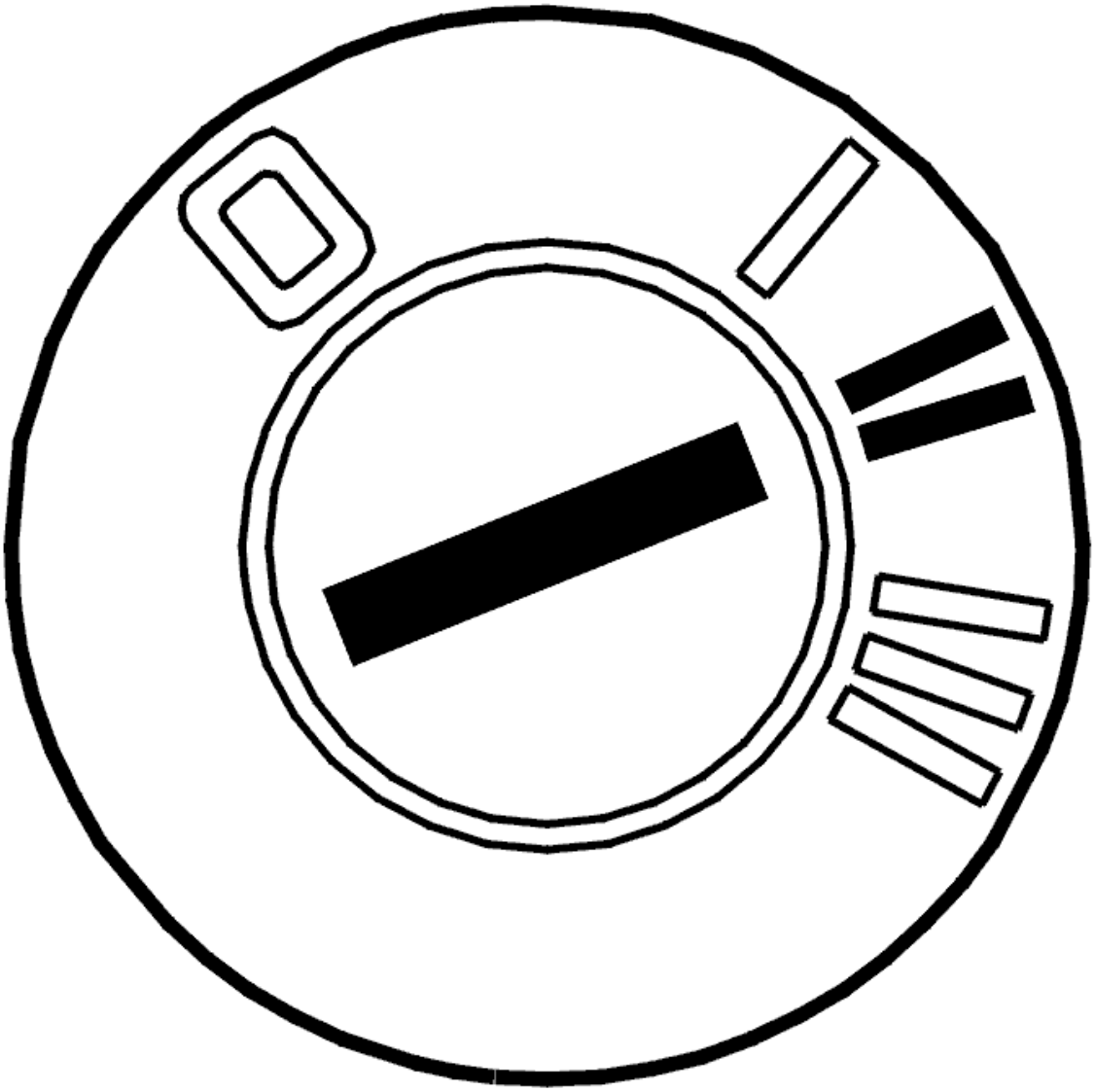

Fig. 1: Identifying Ignition ON
Courtesy of VOLVO CARS CORPORATION

- Ignition on
- Activate the system test procedures. Check whether the relevant needle or lamp operates correctly.

All needles must move from min to max and back again.

The lamps must flash (not the malfunction indicator lamp (MIL) or turn signal indicator lamps).

The light level in the instrumentation is also checked.

All parts of the instrumentation flash.

Remedy as necessary.

Other information:

- see **DRIVER INFORMATION MODULE (DIM), REPLACING**

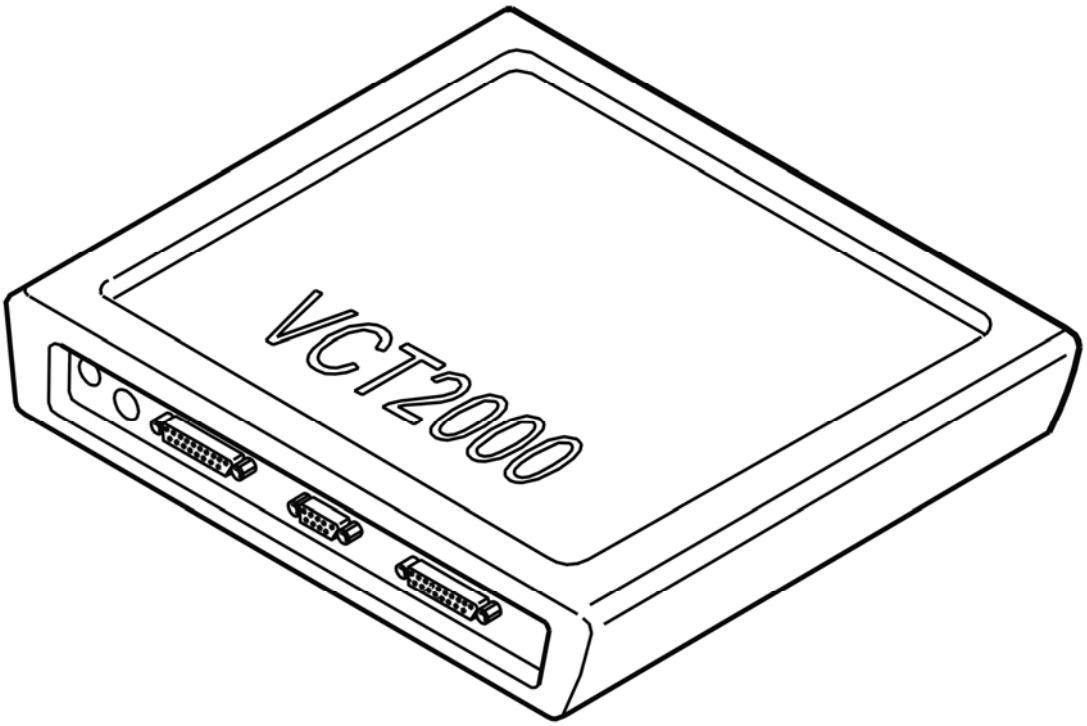

Fig. 2: Identifying VCT2000 Diagnostic Tool Symbol In VIDA
Courtesy of VOLVO CARS CORPORATION

CHECKING THE BACKGROUND LAMP (LAMP COMES ON) (2003-04)

CHECKING THE BACKGROUND LAMP (LAMP COMES ON)

CHECKING THE WIRES

Check and measure the wire between combined instrument 4 and engine control module connector B46 for a short circuit to ground as described in, see **SHORT-CIRCUIT TO GROUND, PERMANENT FAULTS**.

Additional information:

- To connect the test box, see **CONNECTING THE DRIVER INFORMATION MODULE (DIM) TEST BOX** .

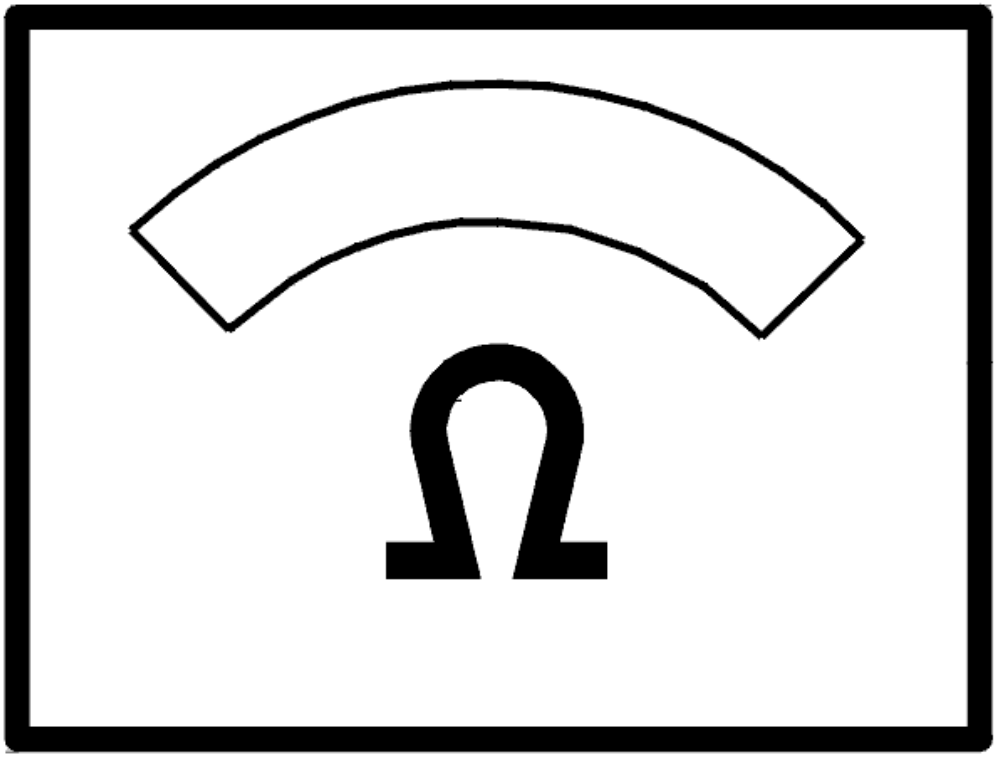

Fig. 3: Identifying Ohmmeter
Courtesy of VOLVO CARS CORPORATION

Is there a fault?

- **YES**

  Refer to **VERIFICATION**

- **NO**

  FAULT NOT FOUND: Troubleshooting has been completed.

VERIFICATION

HINT: After the repair it is necessary to check that the fault has been rectified.

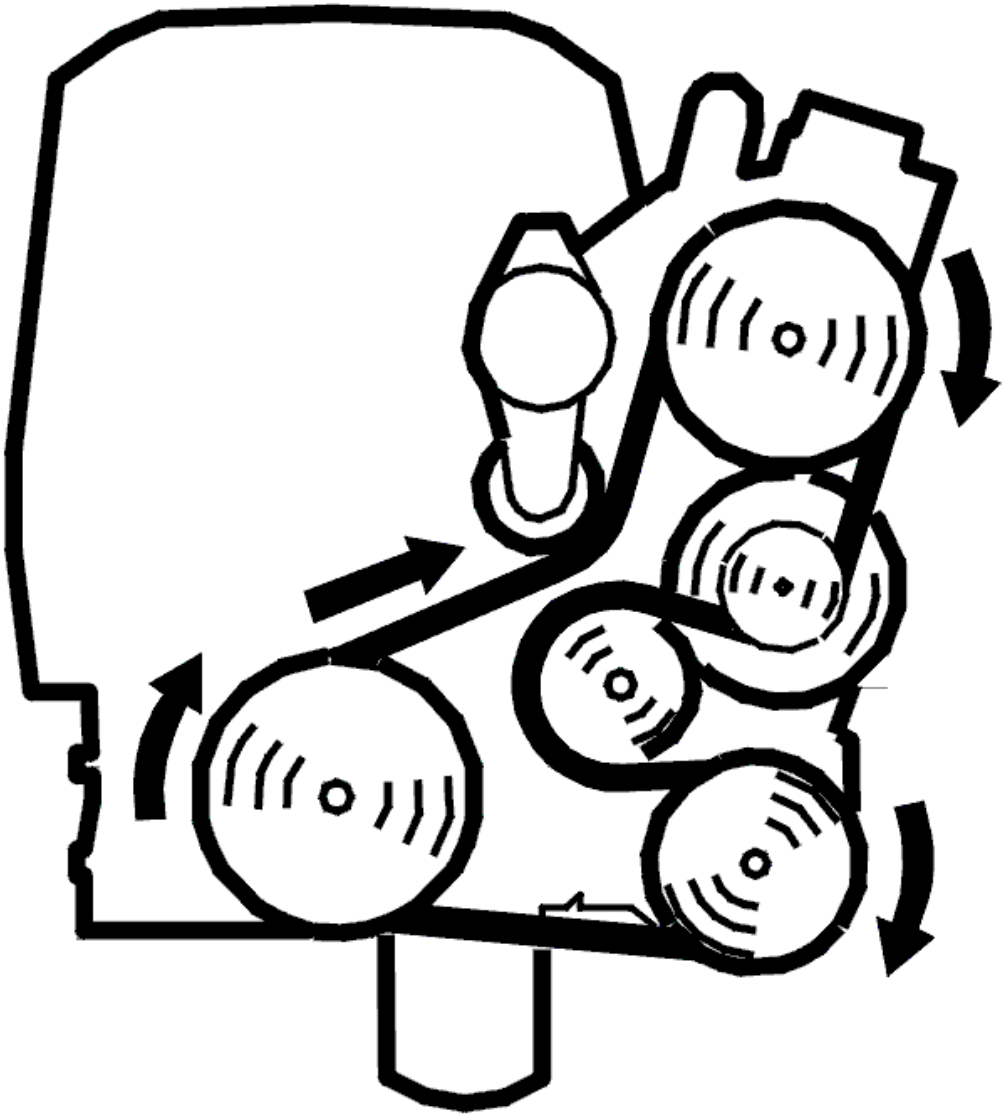

Fig. 4: Belt Routing/Engine Idling - Volvo
Courtesy of VOLVO CARS CORPORATION

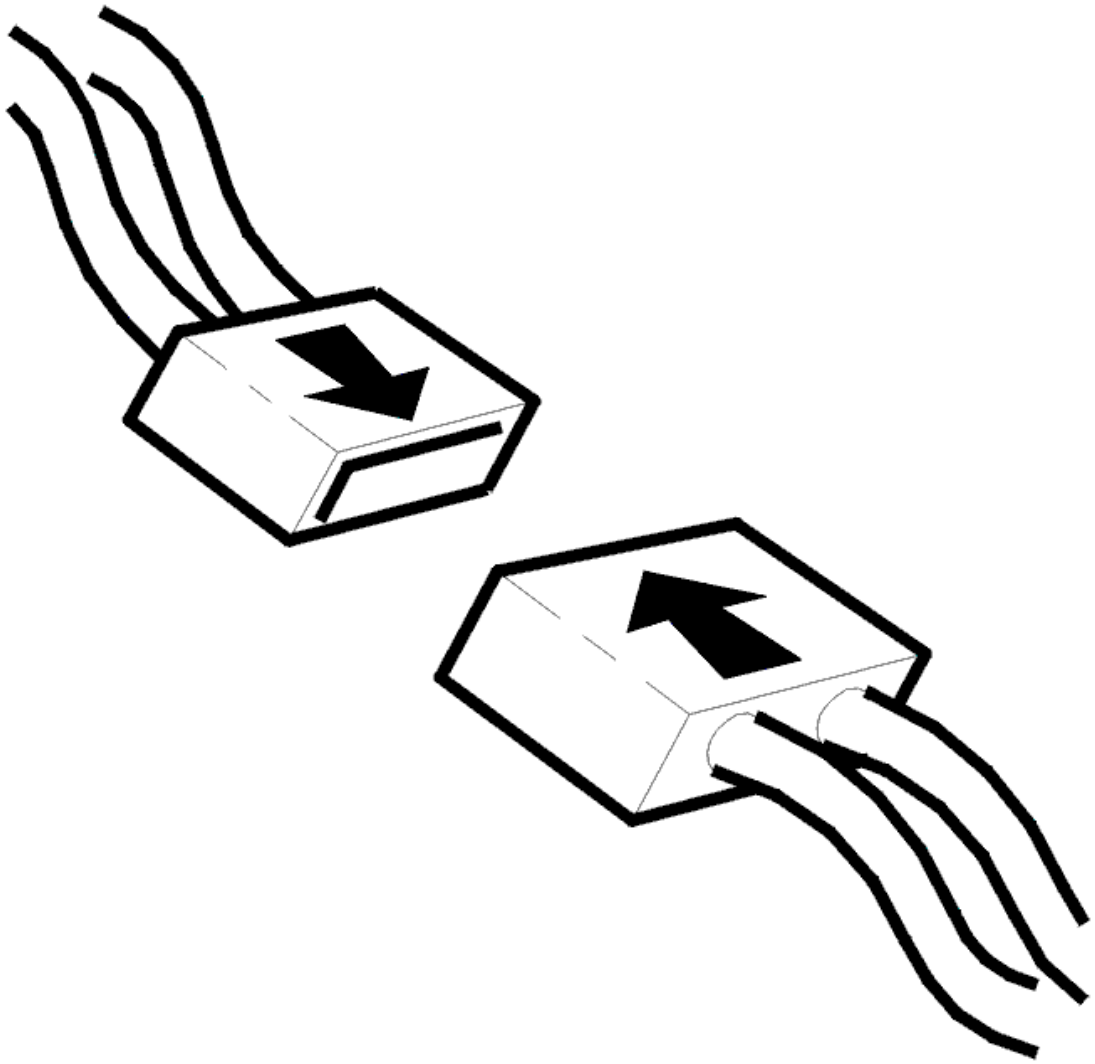

Fig. 5: Connecting Connector
Courtesy of VOLVO CARS CORPORATION

- Ignition off.
- Connect connectors, install components, etc.
- Engine running.
- Check that the malfunction indicator light (MIL) is off.

  Activate the malfunction indicator light (MIL).

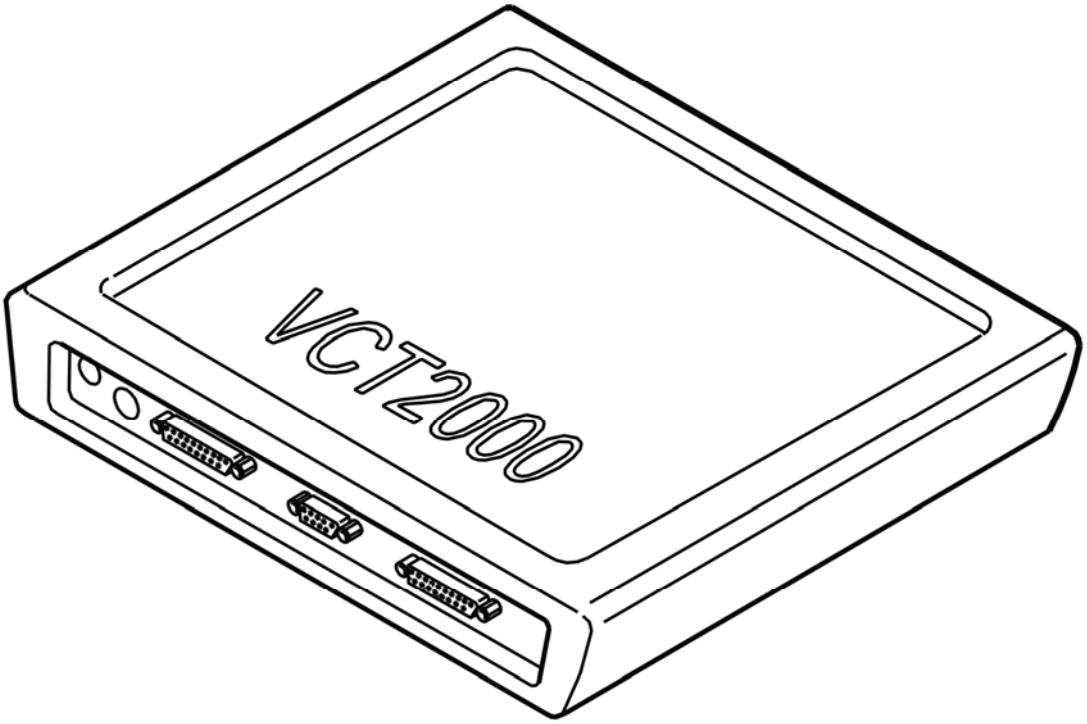

Fig. 6: Identifying VCT2000 Diagnostic Tool Symbol In VIDA
Courtesy of VOLVO CARS CORPORATION

Does the lamp work correctly?

- **YES**

  VERIFIED: Troubleshooting has been completed.

- **NO**

  Refer to **INFORMATION**

INFORMATION

FAULT-TRACING INFORMATION

The fault should have been detected and remedied. As this is not the case fault-tracing has failed.

Exit fault-tracing for this diagnostic trouble code (DTC) or make another attempt.

SHORT-CIRCUIT TO GROUND, PERMANENT FAULTS

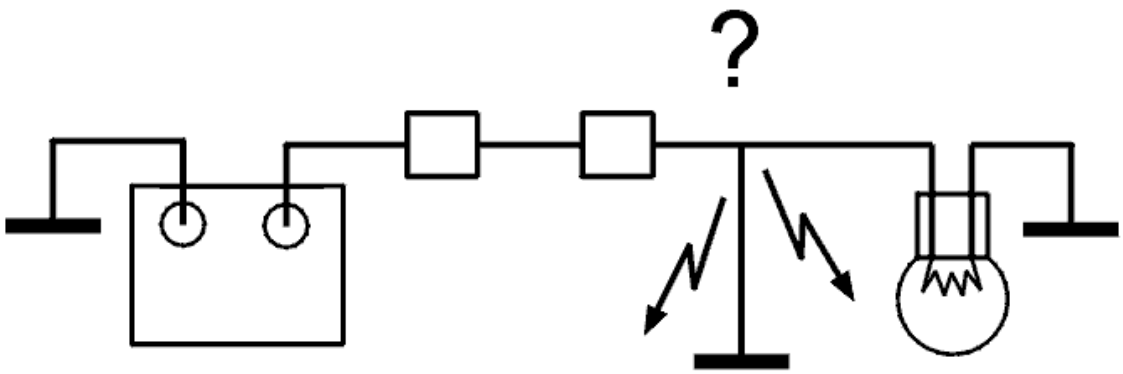

Fig. 7: Checking For Short Circuit To Ground
Courtesy of VOLVO CARS CORPORATION

A short-circuit between a live cable and ground is often indicated by the loss of a function or a fuse blowing when a current is passed through the cable.

Checks:

- Activate all switches and sensors in the circuit. Check whether the fuse blows
- Disconnect the connectors in the circuit to ensure that they do not affect readings.

Use an ohmmeter to take a resistance reading between the cable and ground.

The ohmmeter should read infinite resistance if no components are connected.

TROUBLE-SHOOTING INFORMATION

Condition

- No diagnostic trouble codes displayed
- No diagnostic trouble codes are stored in the engine control module
- Fault is permanent.

Possible Source

- Wire short circuited to ground.

Fault symptom[s]

- Background lamp is on.

CHECKING THE BACKGROUND LAMP (LAMP DOES NOT COME ON) (2003-04)

CHECKING THE BACKGROUND LAMP (LAMP DOES NOT COME ON)

CHECKING THE WIRES

Check and measure the wire between combined instrument 4 and engine control module connector B 46 for an open circuit as described in, see **SHORT-CIRCUIT TO GROUND, PERMANENT FAULTS**, and a short circuit to voltage supply as described in **SHORT-CIRCUIT TO SUPPLY VOLTAGE. PERMANENT FAULTS**.

Additional information:

- To connect the test box, see **CONNECTING THE DRIVER INFORMATION MODULE (DIM) TEST BOX** .

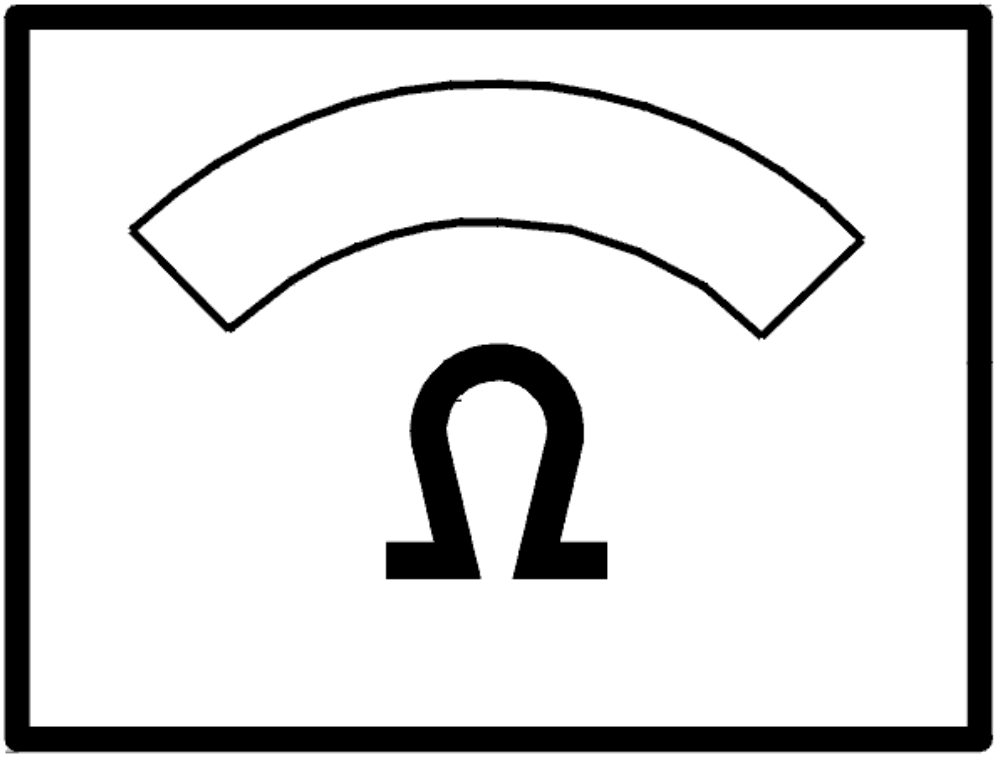

Fig. 8: Identifying Ohmmeter
Courtesy of VOLVO CARS CORPORATION

Is there a fault?

- **YES**

  Refer to **VERIFICATION**

- **NO**

  FAULT NOT FOUND: Troubleshooting has been completed.

VERIFICATION

HINT: After the repair it is necessary to check that the fault has been rectified.

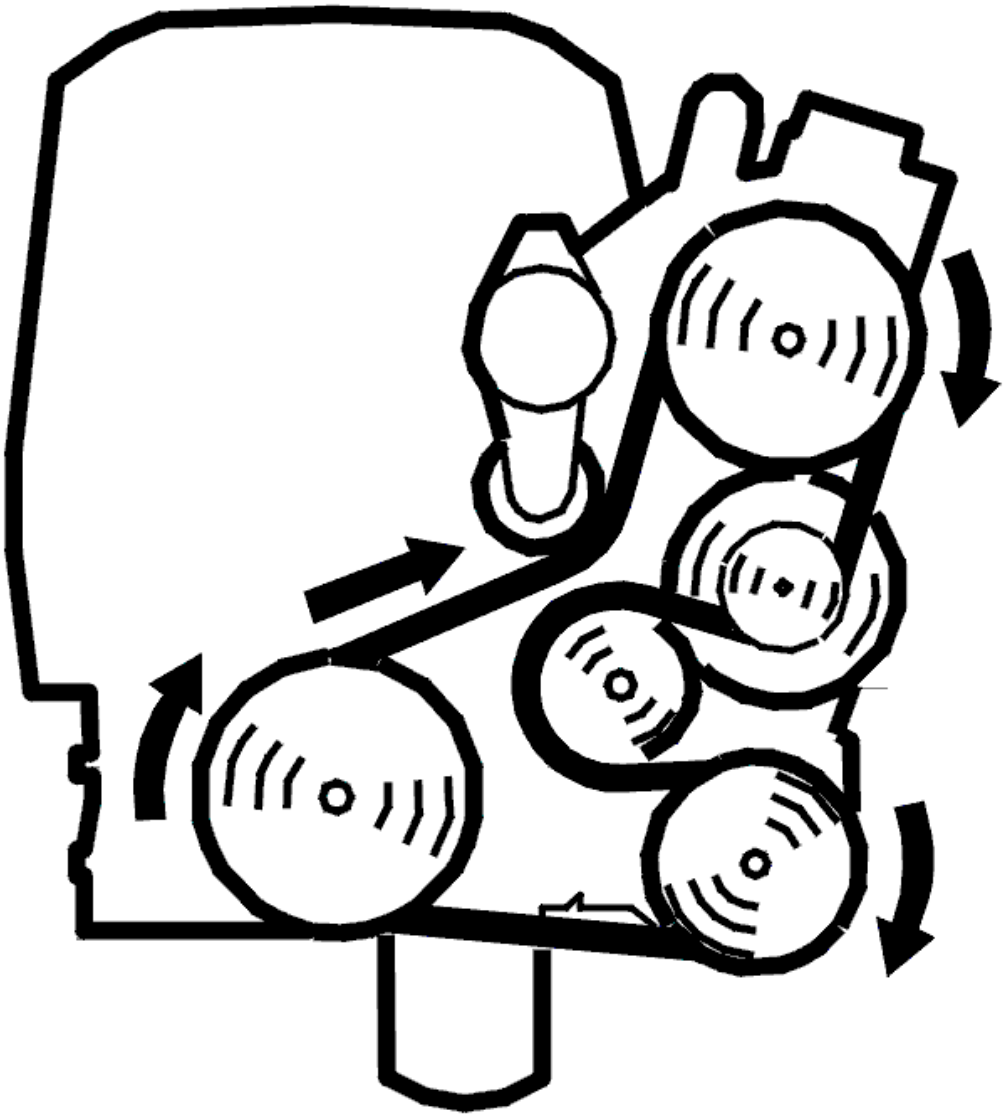

Fig. 9: Belt Routing/Engine Idling - Volvo
Courtesy of VOLVO CARS CORPORATION

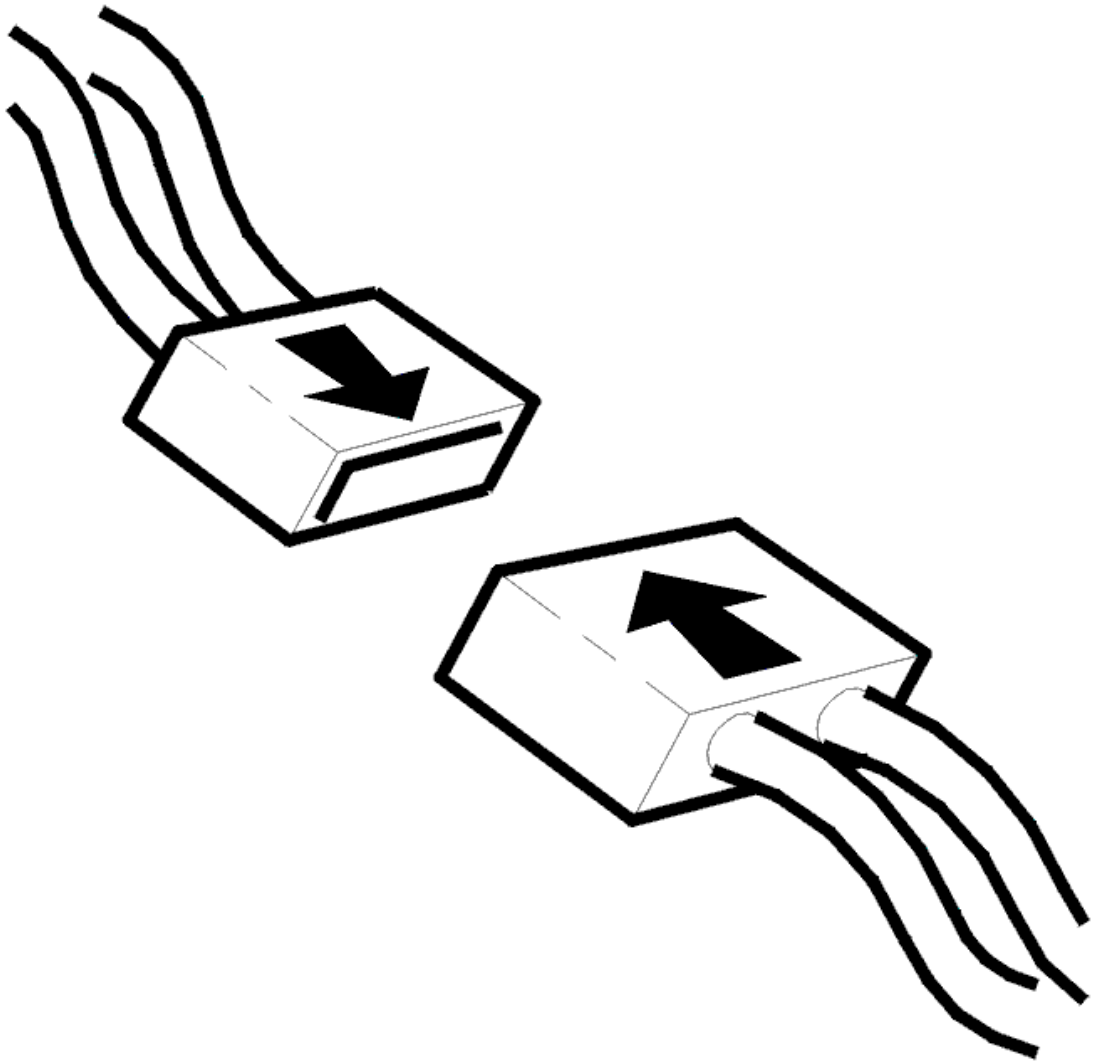

Fig. 10: Connecting Connector
Courtesy of VOLVO CARS CORPORATION

- Ignition off.
- Connect connectors, install components, etc.
- Engine running.
- Check that the malfunction indicator light (MIL) is off.

  Activate the malfunction indicator light (MIL).

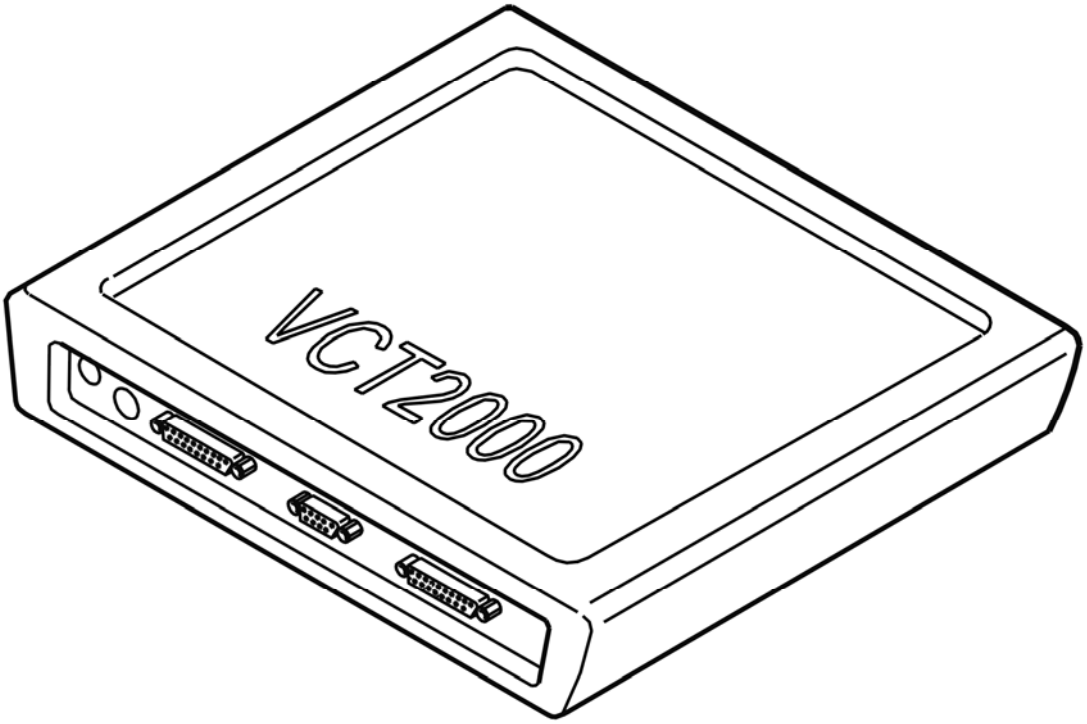

Fig. 11: Identifying VCT2000 Diagnostic Tool Symbol In VIDA
Courtesy of VOLVO CARS CORPORATION

Does the lamp work correctly?

- **YES**

  VERIFIED: Troubleshooting has been completed.

- **NO**

  Refer to **INFORMATION**

INFORMATION

FAULT-TRACING INFORMATION

The fault should have been detected and remedied. As this is not the case fault-tracing has failed.

Exit fault-tracing for this diagnostic trouble code (DTC) or make another attempt.

SHORT-CIRCUIT TO SUPPLY VOLTAGE. PERMANENT FAULTS

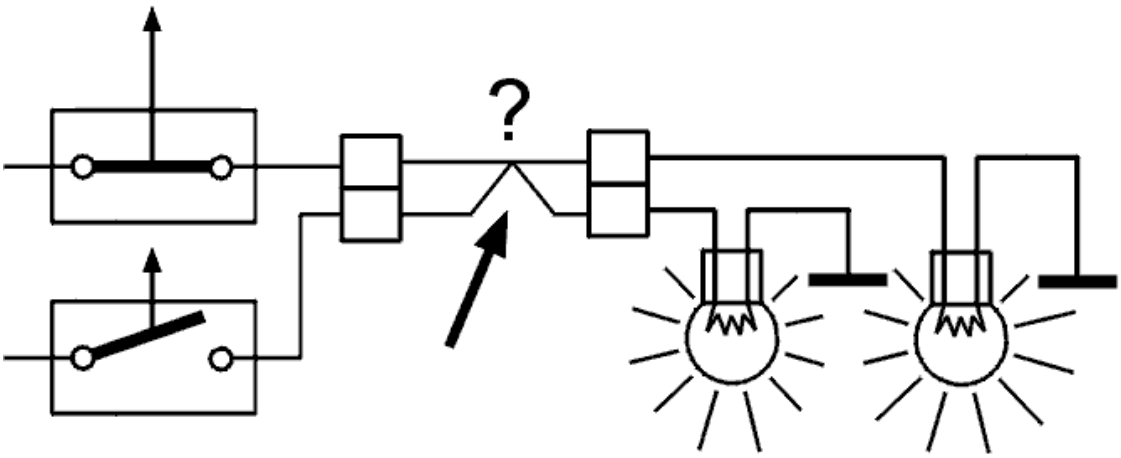

Fig. 12: Checking For Short Circuit
Courtesy of VOLVO CARS CORPORATION

A short-circuit between a cable and supply voltage is often indicated by the loss of a function or a fuse blowing when voltage is passed through the cable.

Checks:

- Use a voltmeter to take readings at various points in the circuit while operating switches and sensors.

Voltmeter readings will depend on which circuit is tested and the status of switches and sensors.

Use an ohmmeter between the suspect cables to detect short-circuits between them.

The ohmmeter should read infinite resistance between cables not connected to each other in the circuit.

TROUBLE-SHOOTING INFORMATION

Condition

- No diagnostic trouble codes displayed
- No diagnostic trouble codes are stored in the engine control module
- Fault is permanent.

Possible Source

- Wire short circuited to voltage supply
- Open circuit in wire.

Fault symptom[s]

- Background lamp does not come on.

CHECKING THE BRAKE FLUID LEVEL GUARD (2003-04)

CHECKING THE BRAKE FLUID LEVEL GUARD

CHECKING THE WIRE AND HANDBRAKE CONTACT

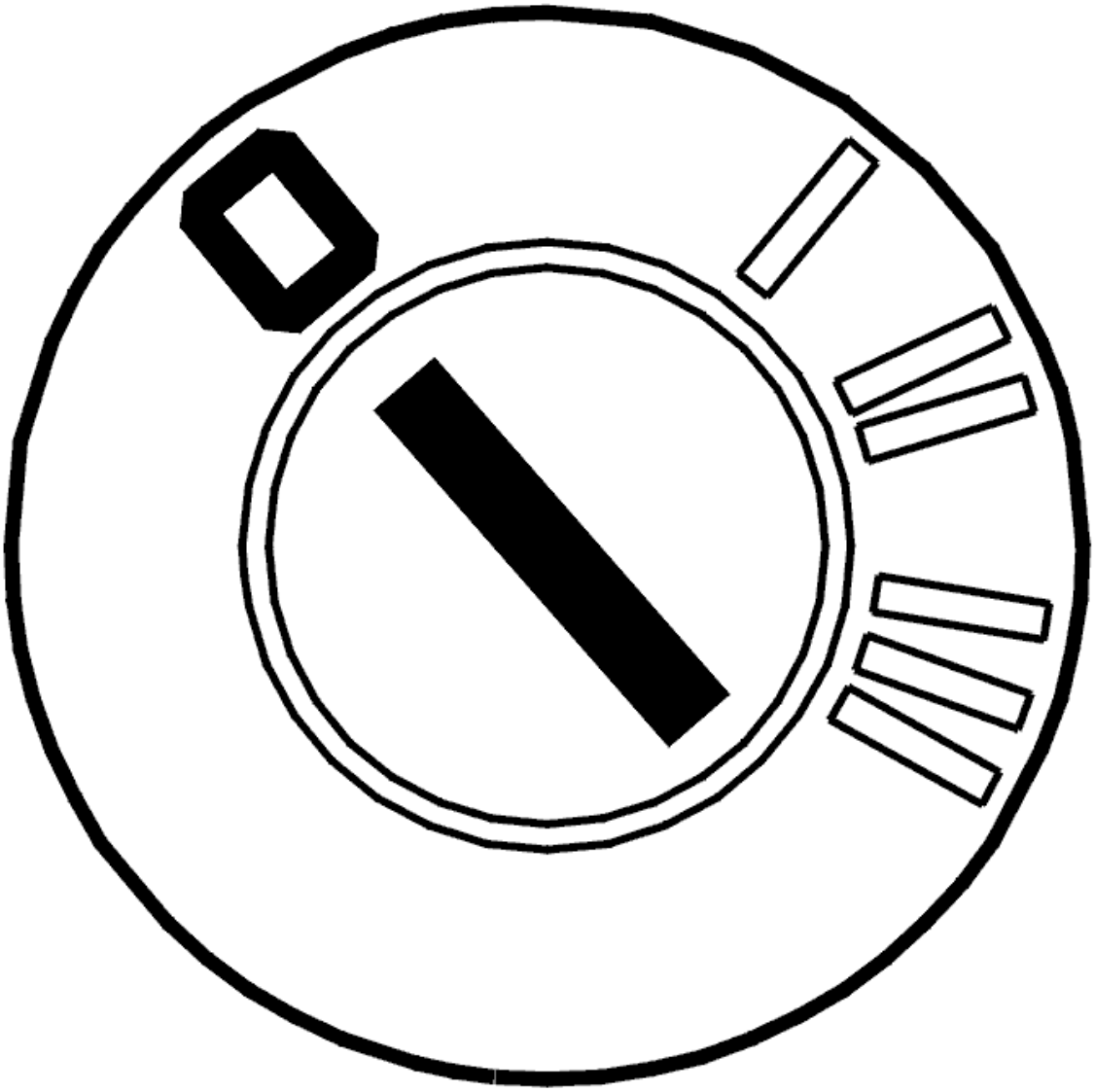

Fig. 13: Identifying Ignition OFF
Courtesy of VOLVO CARS CORPORATION

- Ignition off.
- Check function of brake fluid level guard. Measure the voltage between brake fluid level guard 1 and 2.

  When fluid level is low the voltage should be 0 V, and when level is full the voltage should be 12. See **DRIVER INFORMATION MODULE (DIM), REPLACING**.

  Check wires between combined instrument 5, and brake fluid level guard 1 for a short circuit to ground as described in, see **SHORT-CIRCUIT TO GROUND, PERMANENT FAULTS**.

  Additional information:

  - To connect the test box, see **CONNECTING THE DRIVER INFORMATION MODULE (DIM) TEST BOX** .

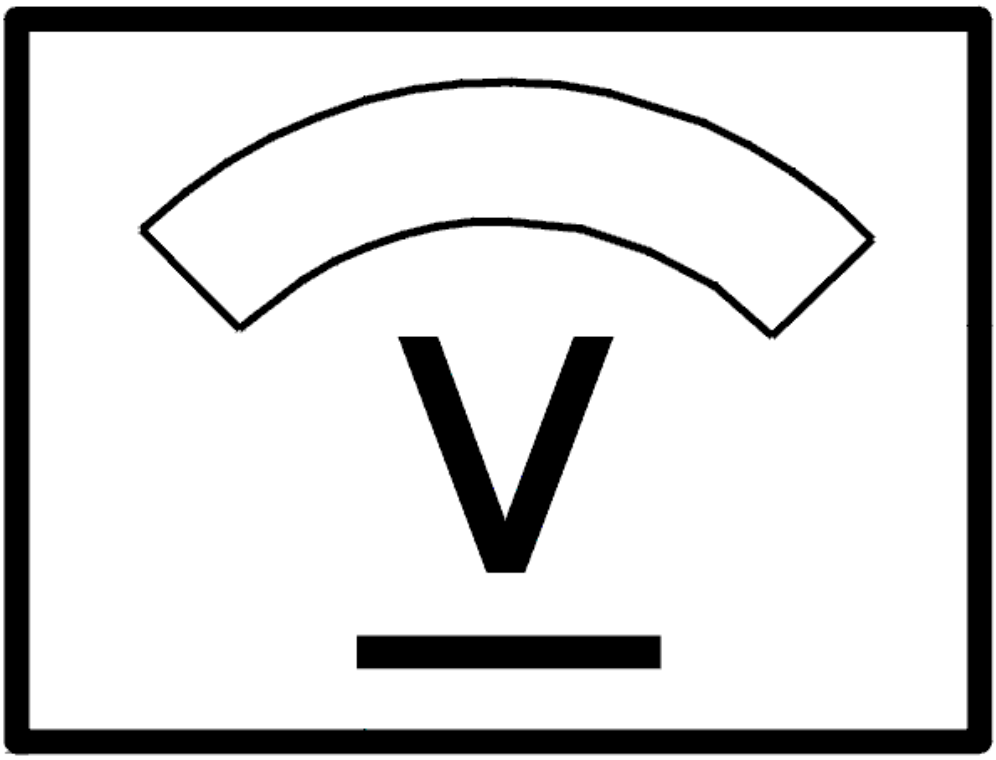

Fig. 14: Identifying Voltage Display
Courtesy of VOLVO CARS CORPORATION

Is there a fault?

- **YES**

  Refer to **VERIFICATION**

- **NO**

  FAULT NOT FOUND: Troubleshooting has been completed.

VERIFICATION

HINT: After the repair it is necessary to check that the fault has been rectified.

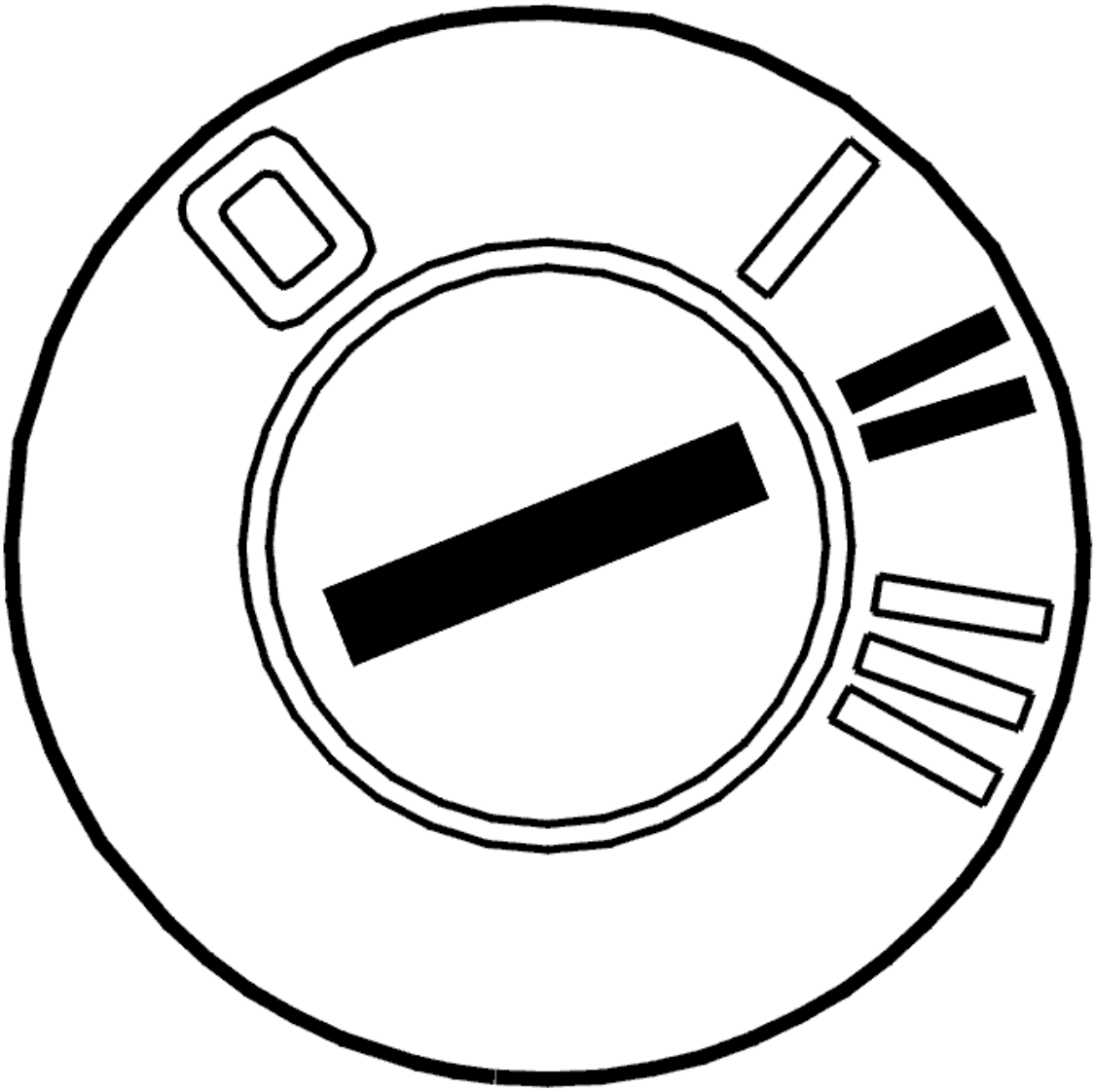

Fig. 15: Identifying Ignition ON
Courtesy of VOLVO CARS CORPORATION

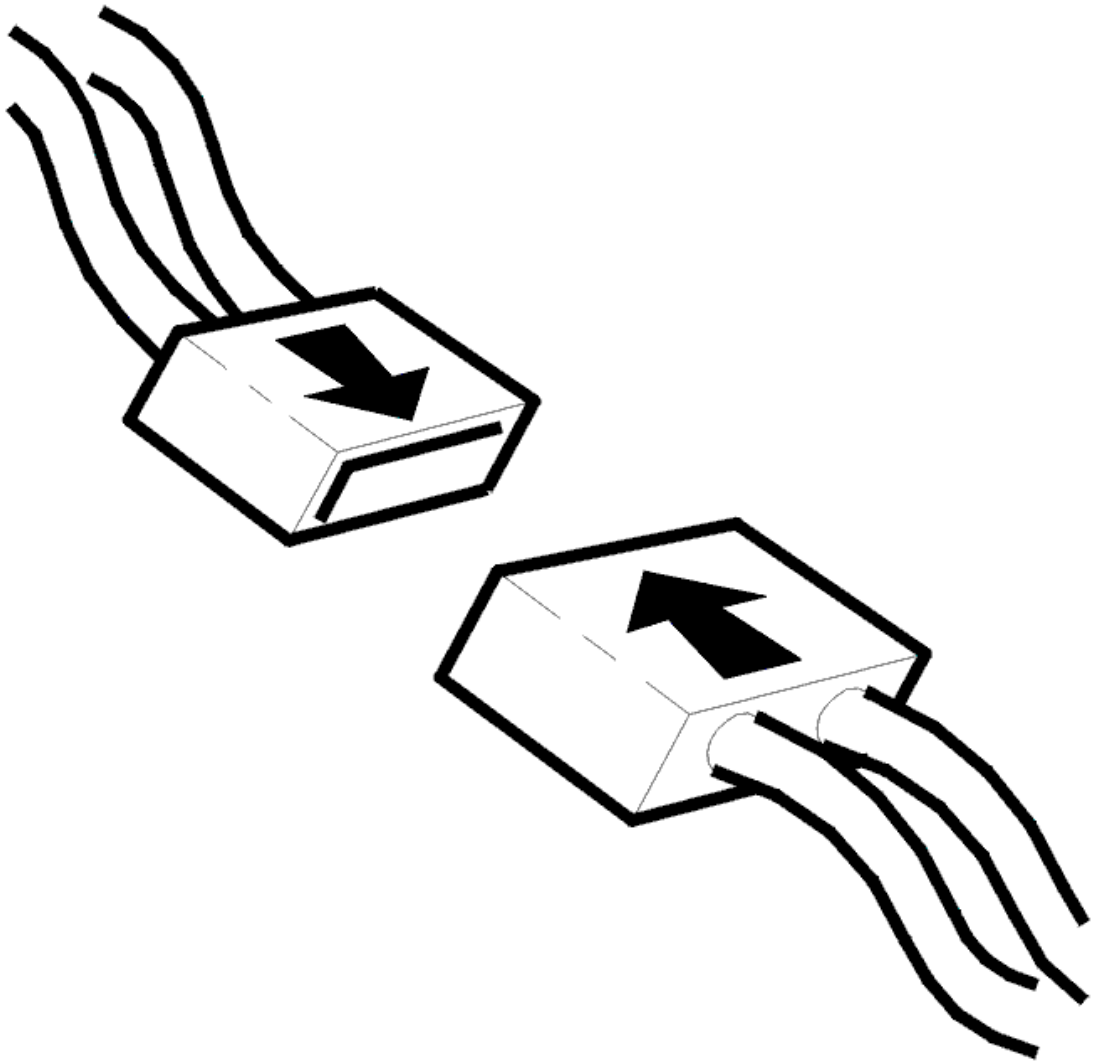

Fig. 16: Connecting Connector
Courtesy of VOLVO CARS CORPORATION

- Ignition off.
- Connect the connectors, install the components, etc.
- Fill brake fluid to maximum level.
- Ignition on.

  Brake fluid lamp should not be on.

Does fault still exist?

- **YES**

  Refer to **INFORMATION**

- **NO**

  VERIFIED: Troubleshooting has been completed.

INFORMATION

FAULT-TRACING INFORMATION

The fault should have been detected and remedied. As this is not the case fault-tracing has failed.

Exit fault-tracing for this diagnostic trouble code (DTC) or make another attempt.

DRIVER INFORMATION MODULE (DIM), REPLACING

PREPARATIONS

NOTE: **Read off data from the control module before replacing the control module. This is carried out via VIDA communication. The current data must be entered into the new control module after replacement.**

DRIVER INFORMATION MODULE (DIM), REPLACING

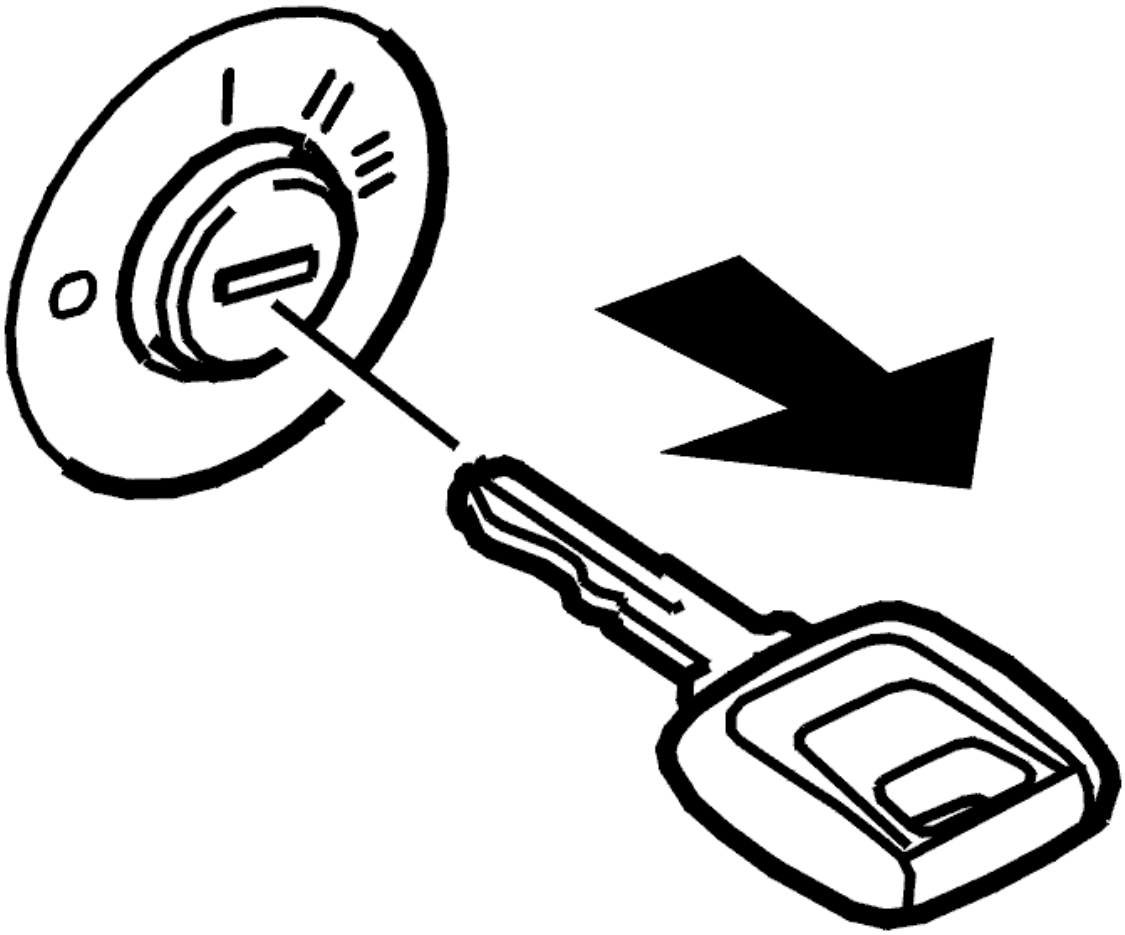

Fig. 17: Identifying Ignition Key Off
Courtesy of VOLVO CARS CORPORATION

Ignition off.

Remove the key.

NOTE: **The key must be removed to ensure that the ignition is not switched on by mistake.**

NOTE: **After the key has been removed: Wait 1 minute before starting work.**

Remove:

- the surround from the driver information module (DIM). See **COMBINED INSTRUMENT PANEL**

SURROUND .

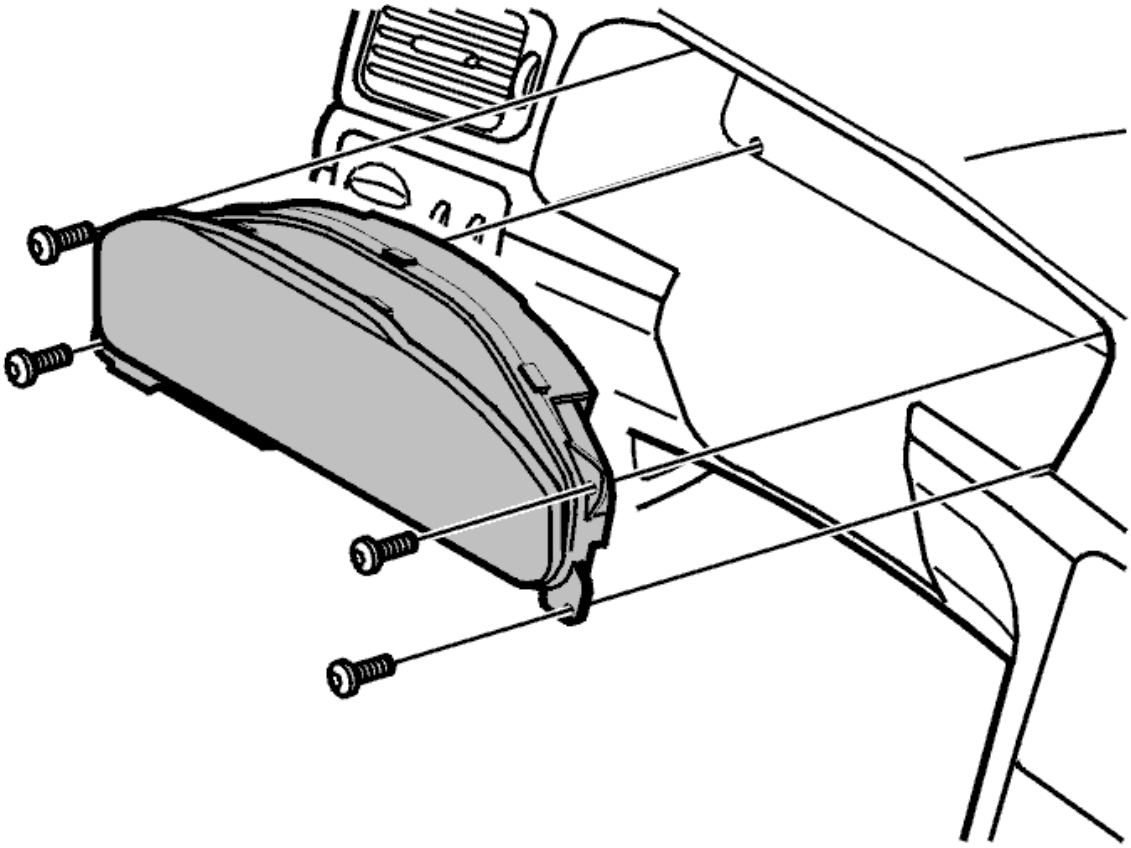

Fig. 18: Combined Instrument Panel And Screws
Courtesy of VOLVO CARS CORPORATION

- the 4 screws
- the connector
- driver information module (DIM).

INSTALLING THE DRIVER INFORMATION MODULE (DIM)

Install:

In reverse order.

ORDERING SOFTWARE AND PROGRAMMING CONTROL MODULES

Order the software. See 9438293 .

Program the new control module. See 9438293 .

FINISHING WORK

The customer parameters must be programmed after replacing the control module. The clock must also be reset. Finally, check that no diagnostic trouble codes (DTCs) were stored during replacement. Information about programming control modules and reading off diagnostic trouble codes (DTCs) can be found under VIDA communication.

TROUBLE-SHOOTING INFORMATION

Condition

- No diagnostic trouble codes displayed
- Normal amount of brake fluid present
- Fault is permanent.

Possible Source

- Level sensor faulty
- Wire short circuited to ground.

Fault symptom[s]

- Brake fluid level lamp is on.

CHECKING THE BRAKE FLUID LEVEL SENSOR (2005-12)

CHECKING THE BRAKE FLUID LEVEL SENSOR

CHECKING THE CABLE AND PARKING BRAKE SWITCH

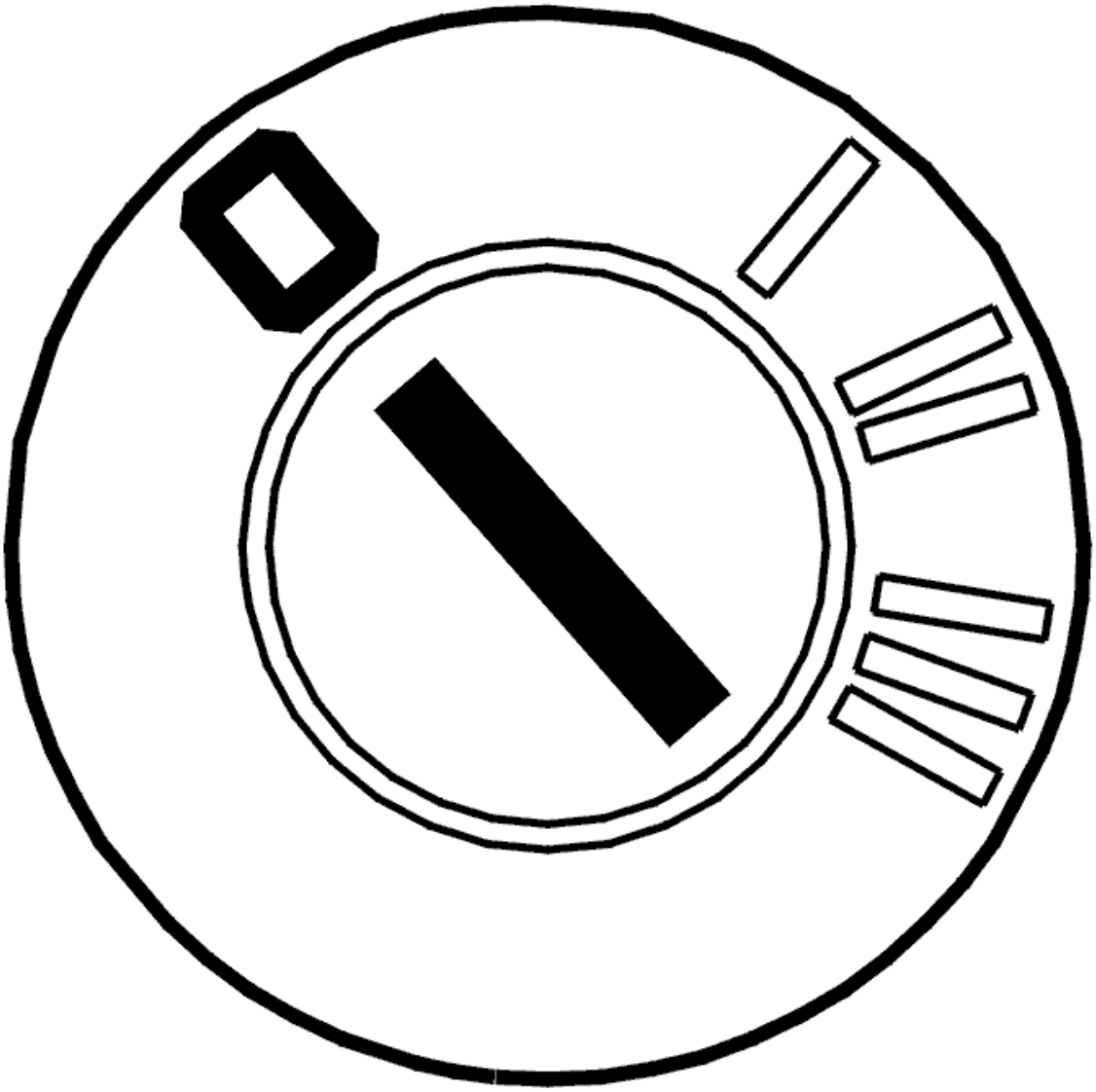

Fig. 19: Identifying Ignition OFF
Courtesy of VOLVO CARS CORPORATION

- Ignition off
- Check the function of the brake fluid level switch. Take readings between brake fluid level switch terminals #1 and #2.

  In the event of low fluid level the voltage must be 0 V. In the event of full fluid level the voltage should be 12 V.

  Check and remedy the wiring between driver information module (DIM) terminal #6 and brake fluid level switch terminal #1. Check for a short-circuit to ground. See **SHORT-CIRCUIT TO GROUND, PERMANENT FAULTS**.

  Other information:

- see **CONNECTING THE BREAKOUT BOX** .

Were any faults found?

- **YES**

  Refer to **VERIFICATION**

- **NO**

  FAULT NOT FOUND: Troubleshooting has been completed.

VERIFICATION

HINT: After the repair it is necessary to check that the fault has been rectified.

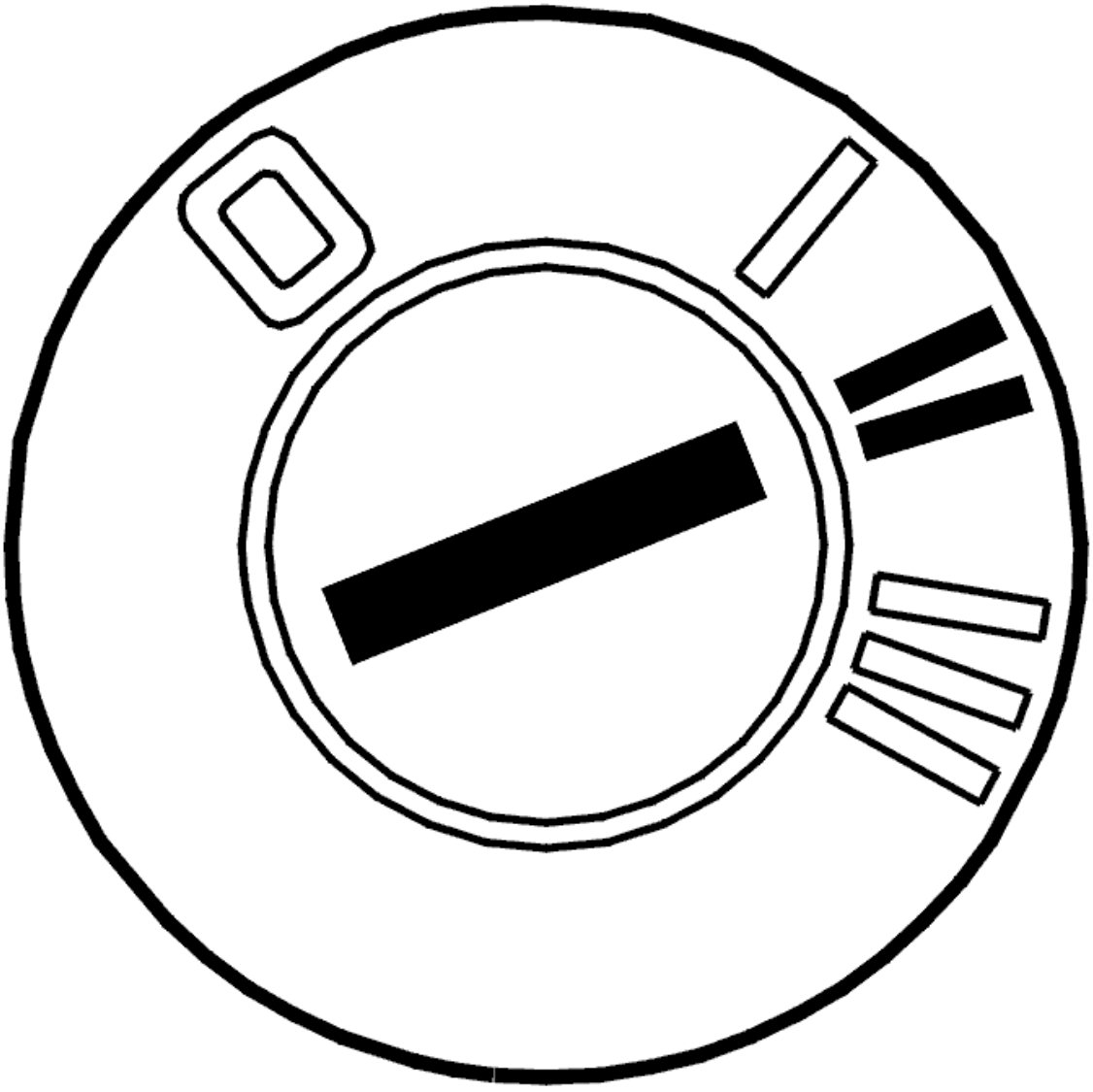

Fig. 20: Identifying Ignition ON
Courtesy of VOLVO CARS CORPORATION

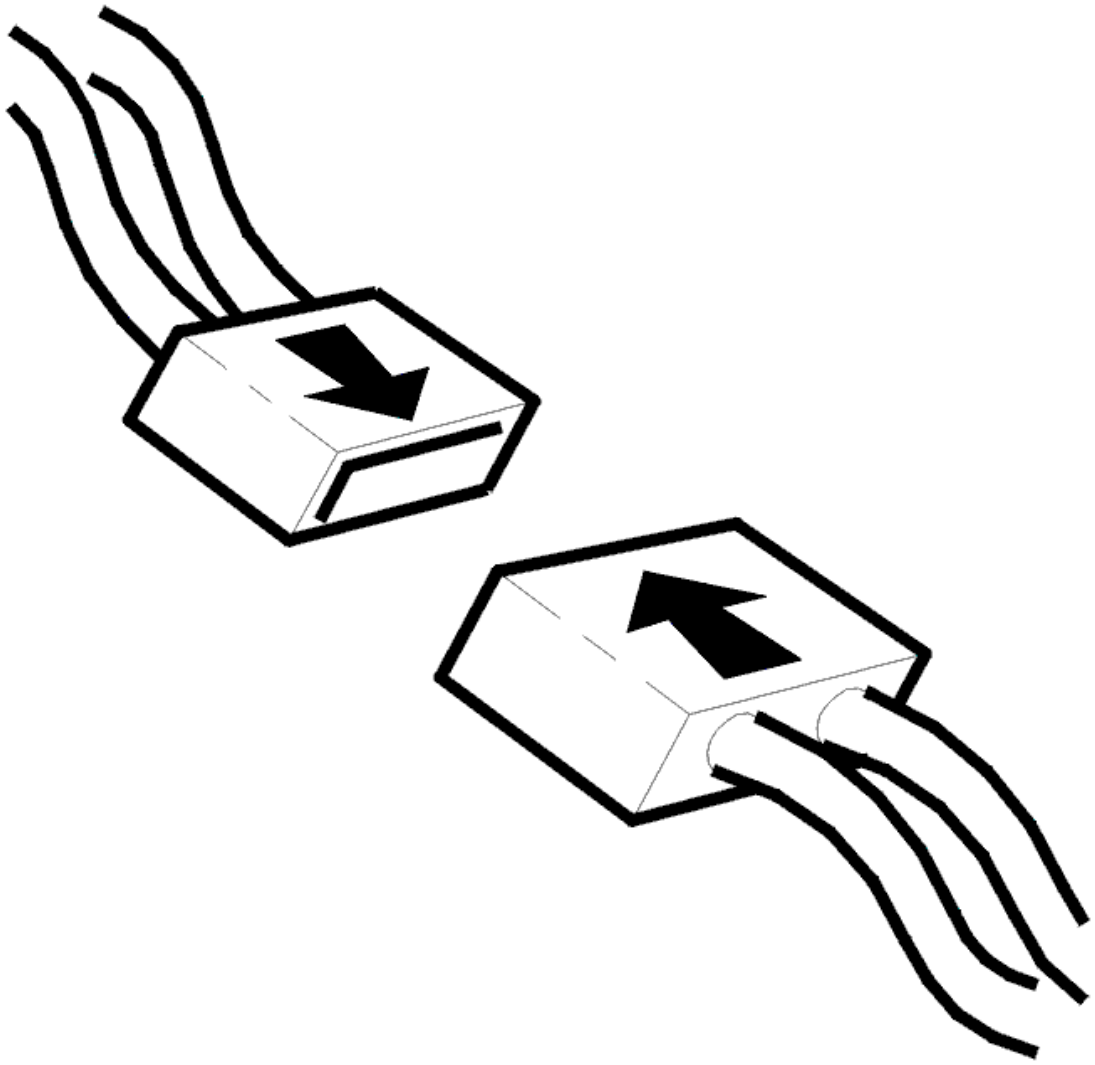

Fig. 21: Connecting Connector
Courtesy of VOLVO CARS CORPORATION

- Ignition off.
- Connect the connectors, install the components, etc.
- Fill brake fluid to maximum level.
- Ignition on.

  Brake fluid lamp should not be on.

Does fault still exist?

- **YES**

  Refer to **INFORMATION**

- **NO**

  VERIFIED: Troubleshooting has been completed.

INFORMATION

FAULT-TRACING INFORMATION

The fault should have been detected and remedied. As this is not the case fault-tracing has failed.

Exit fault-tracing for this diagnostic trouble code (DTC) or make another attempt.

CHECKING THE GROUND POINTS (DIM) (2003-04)

CHECKING THE GROUND TERMINALS

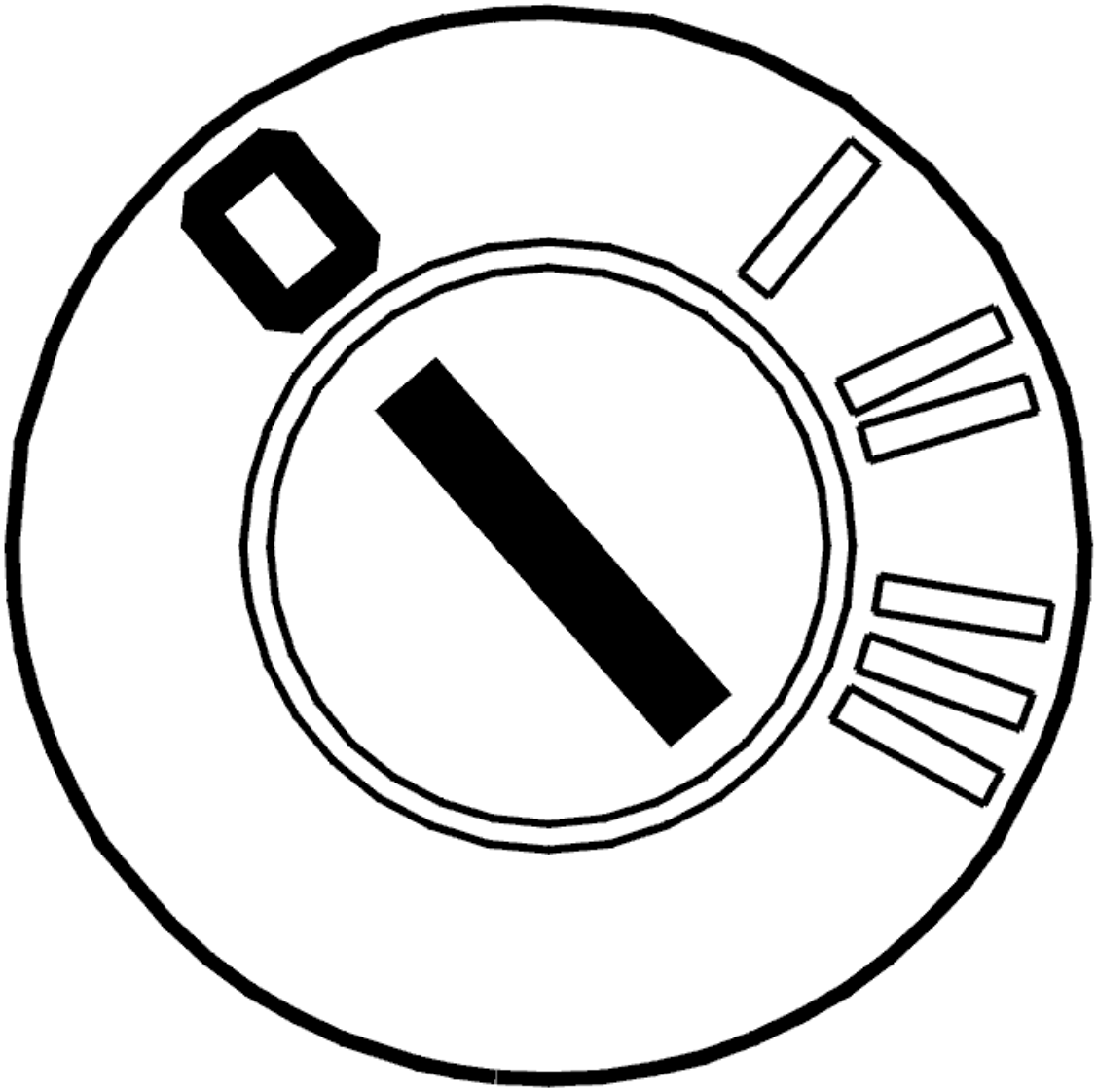

Fig. 22: Identifying Ignition OFF
Courtesy of VOLVO CARS CORPORATION

- Ignition off.
- Control unit disconnected.
- Switch off all battery loadings such as entrance lighting and radio.

Connect an ohmmeter between the battery negative lead and test box 14.

Additional information

- To connect the test box, see **CONNECTING THE DRIVER INFORMATION MODULE (DIM) TEST BOX**
- For information on signals and additional values, see **DRIVER INFORMATION MODULE (DIM) SIGNAL DESCRIPTION** .

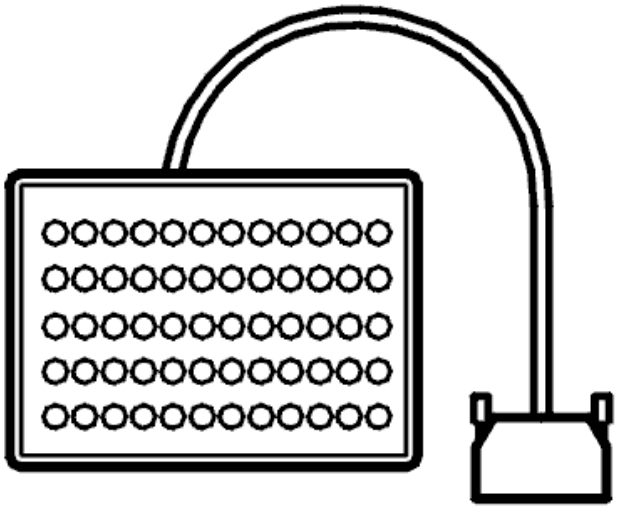

Fig. 23: Breakout Box
Courtesy of VOLVO CARS CORPORATION

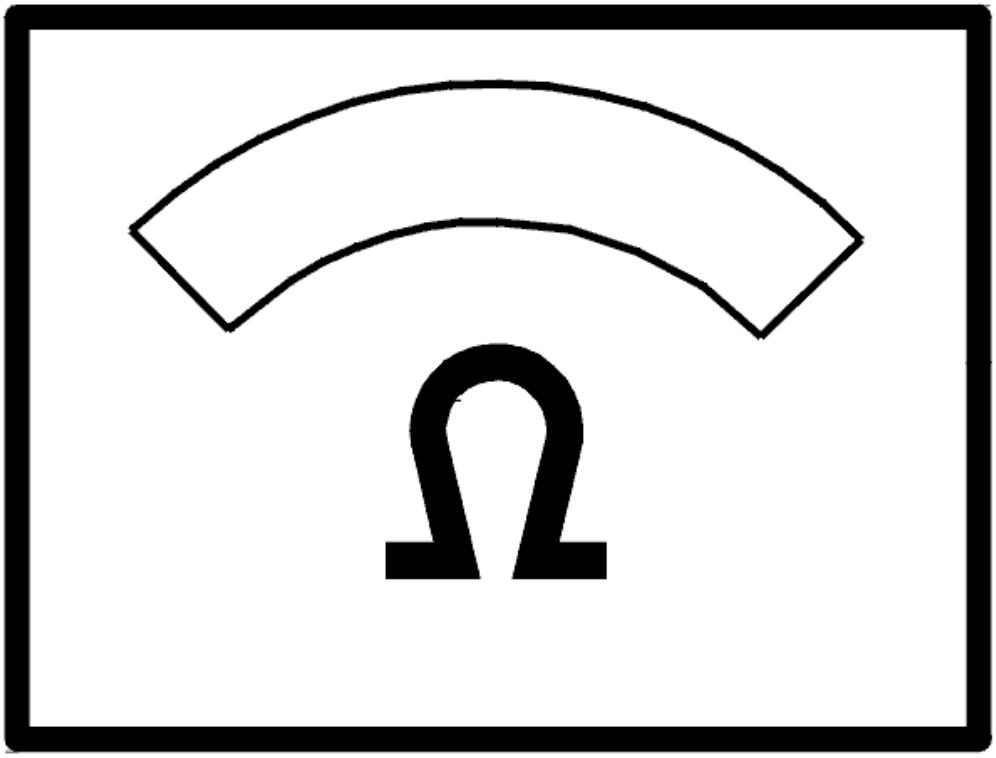

Fig. 24: Identifying Ohmmeter
Courtesy of VOLVO CARS CORPORATION

The ohmmeter should display approximately 0 ohms.

- **OK**

  OKAY: Troubleshooting has been completed.

- **NOT OK**

  Refer to **CHECKING FOR OPEN CIRCUITS, CONTACT RESISTANCE AND OXIDATION.**

CHECKING FOR OPEN CIRCUITS, CONTACT RESISTANCE AND OXIDATION

Check ground points 53/400 and 31/83 for an open circuit as described in, see **OPEN-CIRCUIT,**

PERMANENT FAULTS, and for contact resistance and oxidation as described in **CONTACT RESISTANCE AND OXIDATION**.

Additional information

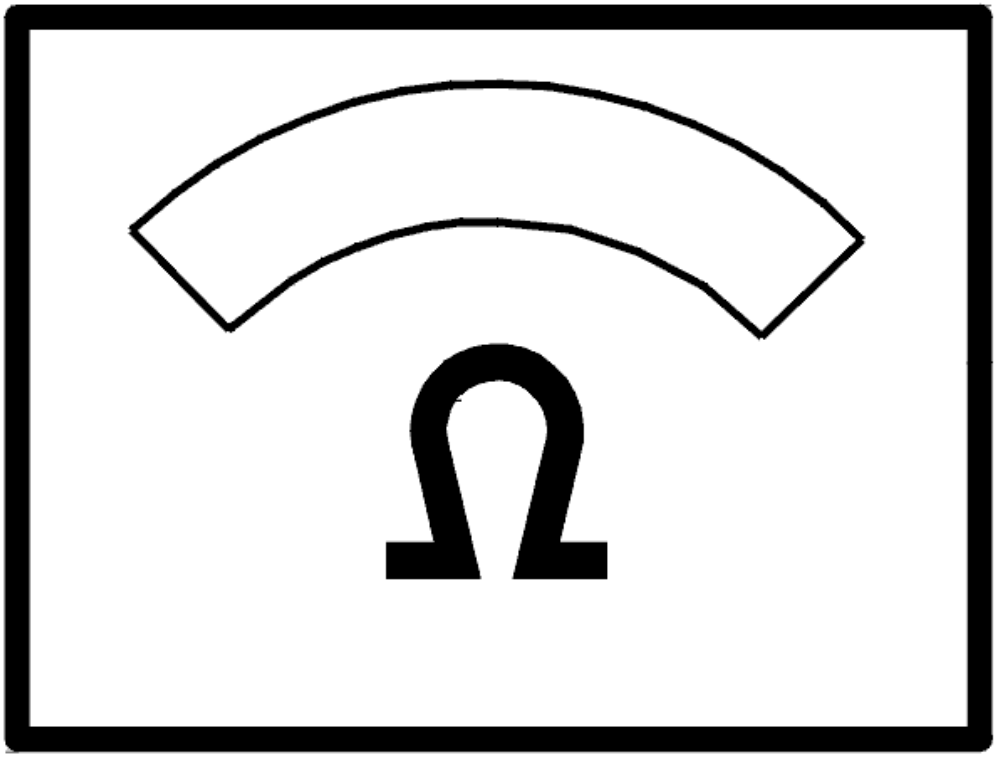

Fig. 25: Identifying Ohmmeter
Courtesy of VOLVO CARS CORPORATION

- **Continue**

  Refer to **VERIFICATION**

VERIFICATION

HINT: After the repair it is necessary to check that the fault has been rectified.

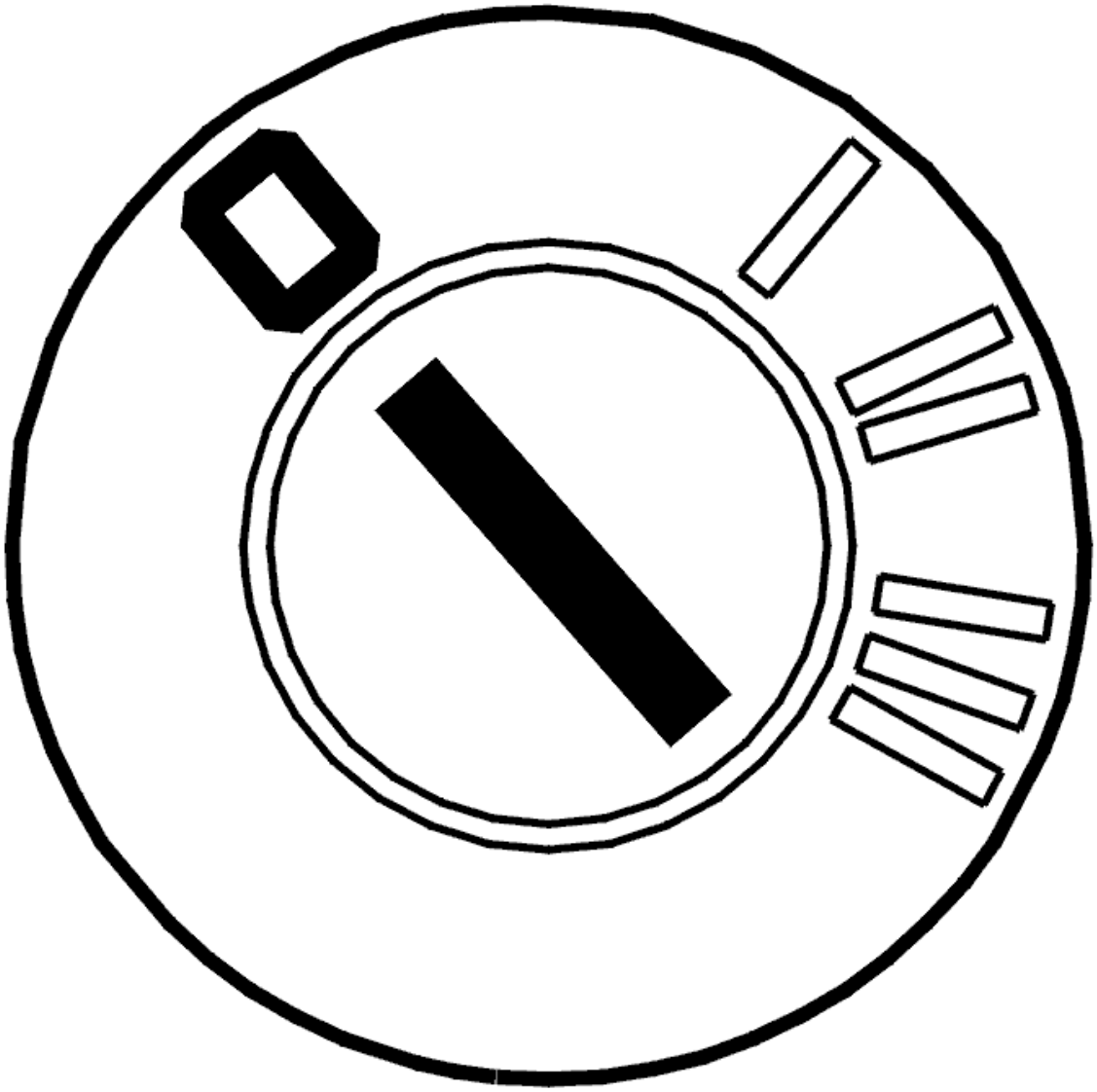

Fig. 26: Identifying Ignition OFF
Courtesy of VOLVO CARS CORPORATION

- Ignition off.
- Control unit disconnected.
- Switch off all battery loadings such as entrance lighting and radio.

Connect an ohmmeter between the battery negative lead and test box 14.

Additional information

- To connect the test box, see **CONNECTING THE DRIVER INFORMATION MODULE (DIM) TEST BOX**
- For information on signals and additional values, see **DRIVER INFORMATION MODULE (DIM) SIGNAL DESCRIPTION** .

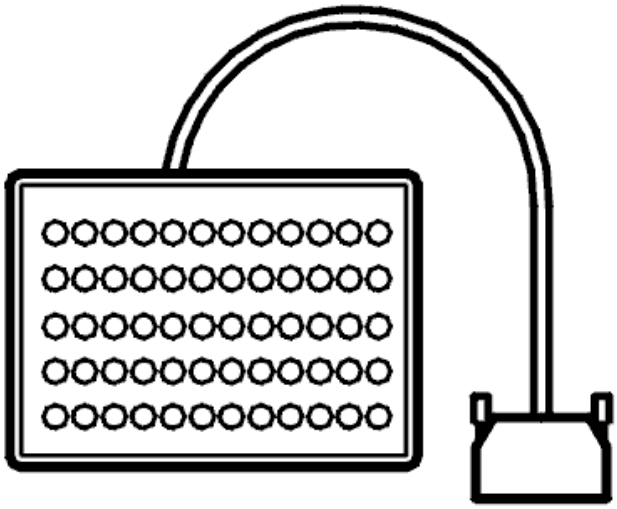

Fig. 27: Breakout Box
Courtesy of VOLVO CARS CORPORATION

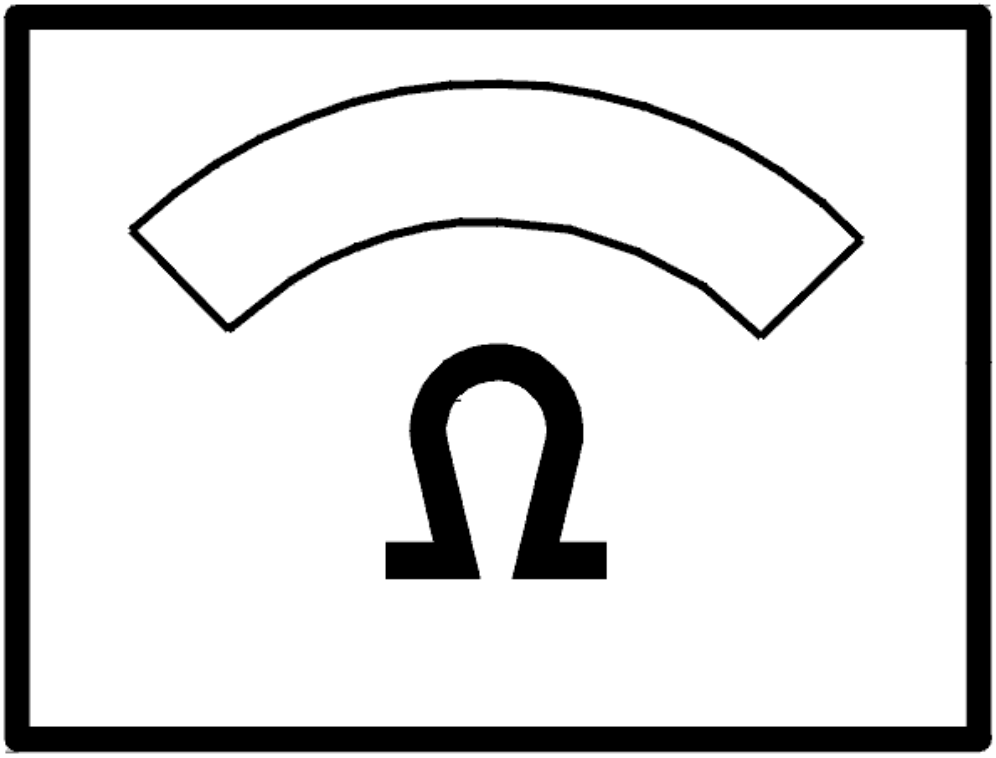

Fig. 28: Identifying Ohmmeter
Courtesy of VOLVO CARS CORPORATION

The ohmmeter should display approximately 0.

- **OK**

  VERIFIED: Troubleshooting has been completed.

- **NOT OK**

  Refer to **INFORMATION**

INFORMATION

FAULT-TRACING INFORMATION

The fault should have been detected and remedied. As this is not the case fault-tracing has failed.

Exit fault-tracing for this diagnostic trouble code (DTC) or make another attempt.

OPEN-CIRCUIT, PERMANENT FAULTS

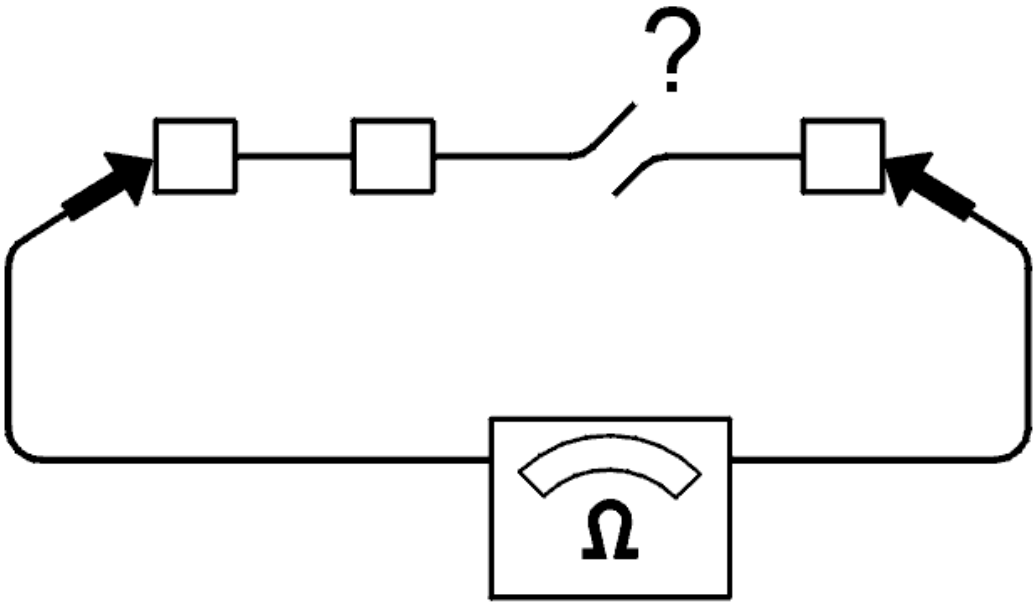

Fig. 29: Checking For Open Circuit
Courtesy of VOLVO CARS CORPORATION

An open-circuit in a cable is indicated by a loss of one or more functions.

Chafed and broken cables or terminals that have come loose are common causes of faults in electrical systems.

Checks:

- Disconnect the connectors at both ends of the cable.

Connect an ohmmeter between the ends of the cable.

The ohmmeter should read approximately 0 ohms if there is no open-circuit in the cable.

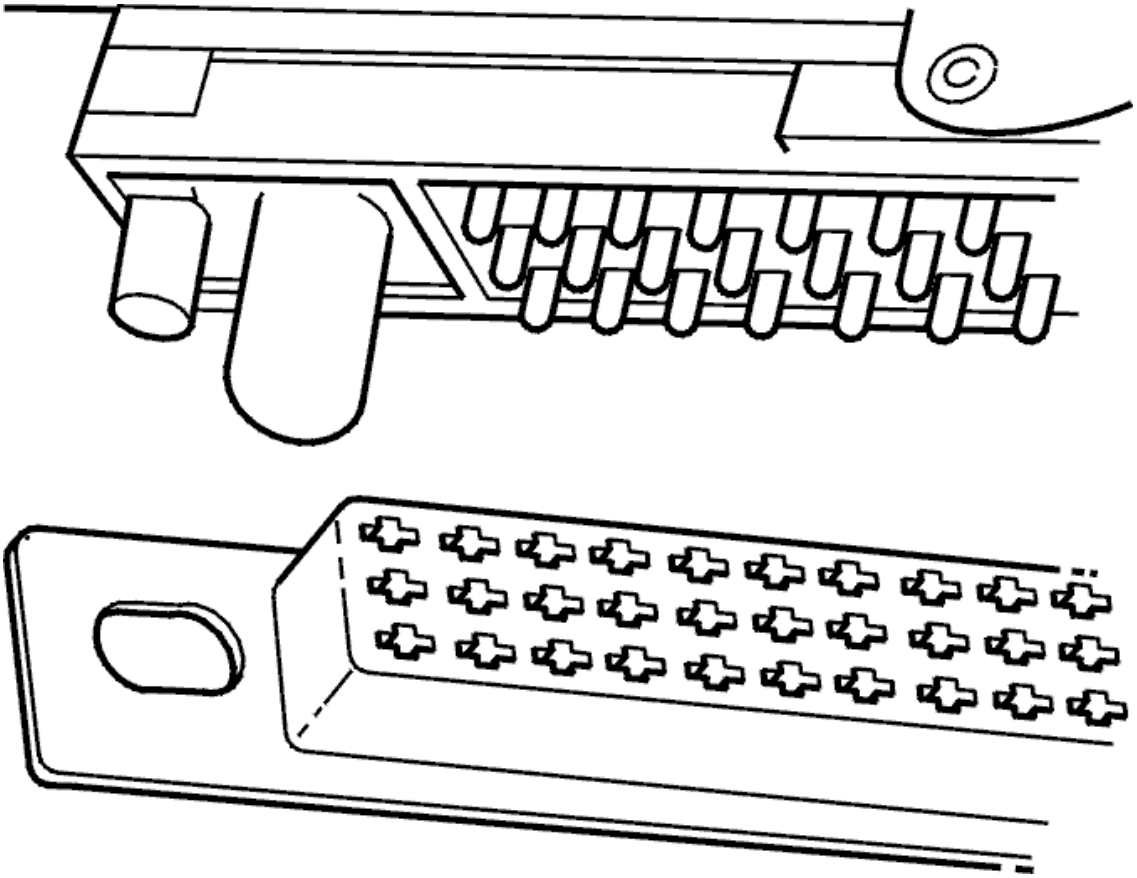

Fig. 30: Identifying Control Module Installation
Courtesy of VOLVO CARS CORPORATION

Always check the control module and control module box connectors to ensure that their pins and sockets are not bent or damaged, as this can cause faults.

CONTACT RESISTANCE AND OXIDATION

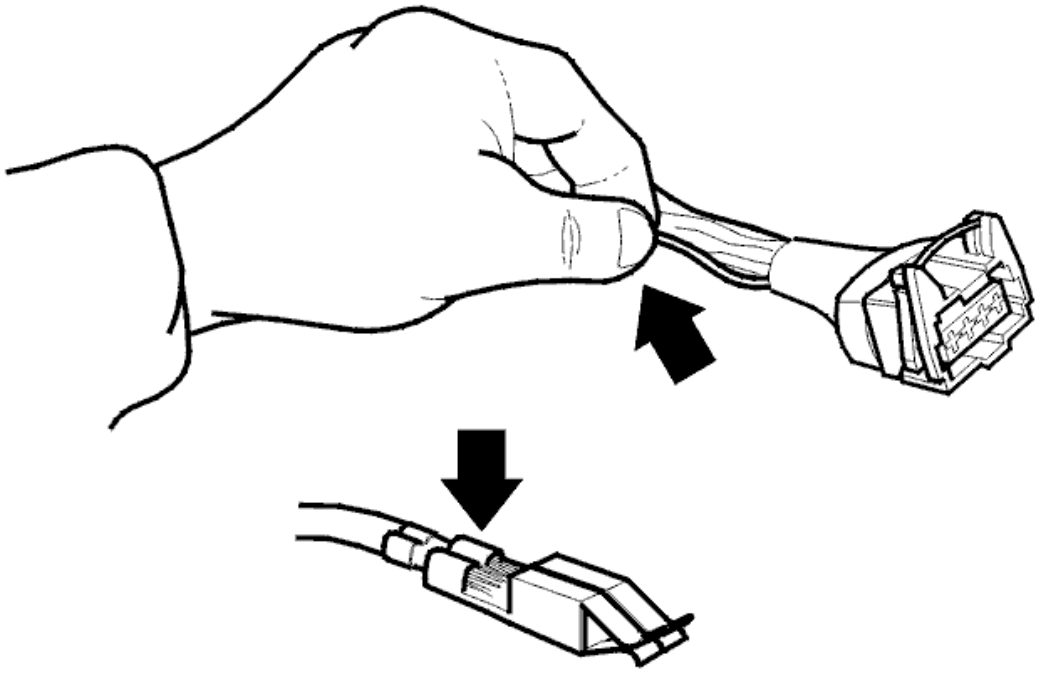

Fig. 31: Identifying Terminal Inspection
Courtesy of VOLVO CARS CORPORATION

In theory, the resistance across contacts, leads and terminals should be 0 ohms. However, there is always some resistance due to terminal oxidation.

If this resistance becomes too great the result will be a malfunction. The magnitude of the resistance before it causes a malfunction depends on the circuit load.

Checks:

- Check the cables visually.

Cleaning female socket terminals and male pin terminals

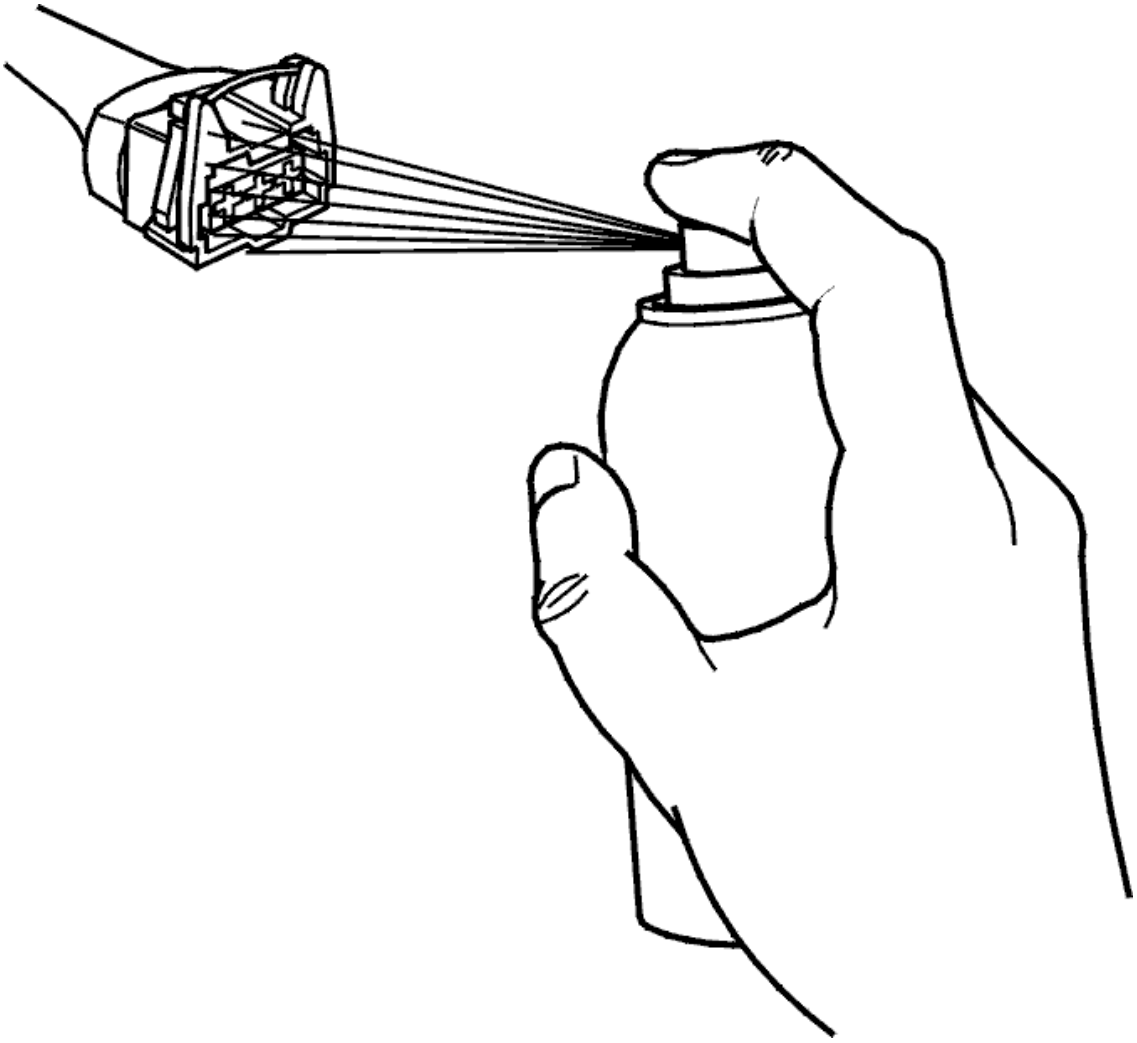

Fig. 32: Apply Rust Solvent Spray Or Grease To Connectors
Courtesy of VOLVO CARS CORPORATION

NOTE: **Do not apply rust solvent spray or grease to the catalyst monitor sensor or instrument cluster connectors.**

- Ignition off
- Disconnect the battery negative terminal
- Use compressed air to clean the disconnected connector
- Apply rust solvent spray 1161422 to the disconnected connectors
- Blow clean using compressed air.

Greasing female terminals

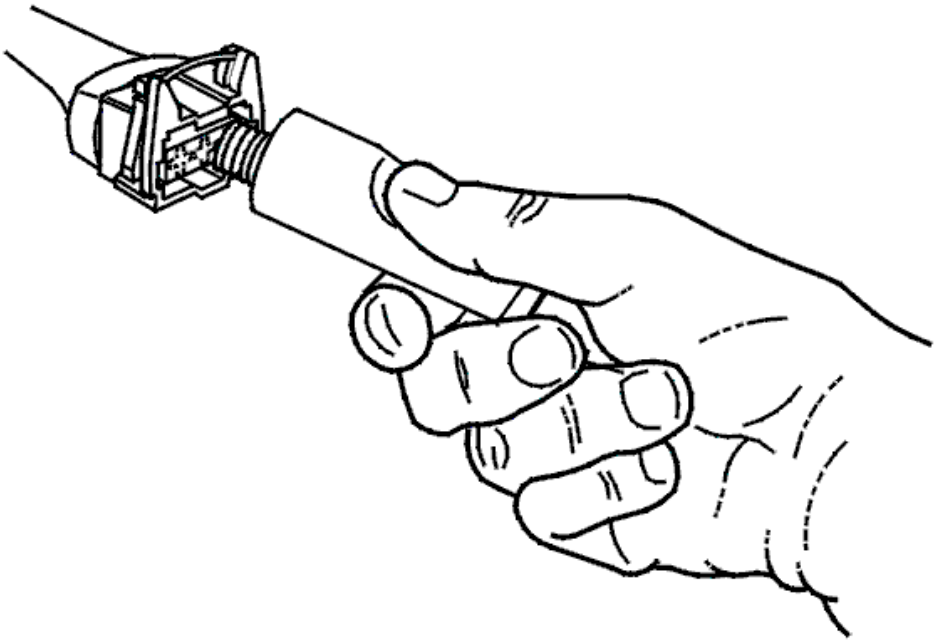

Fig. 33: Identifying Grease Pressed Into Terminals
Courtesy of VOLVO CARS CORPORATION

NOTE: Do not fill the protective cover with grease.

- Press grease, P/N 1161417-9, into the female sockets directly from tube
- Check that all the terminal cavities are filled
- Use a loose male pin to ensure that the connection in the sockets is good. The pin should remain in position when pulled gently.

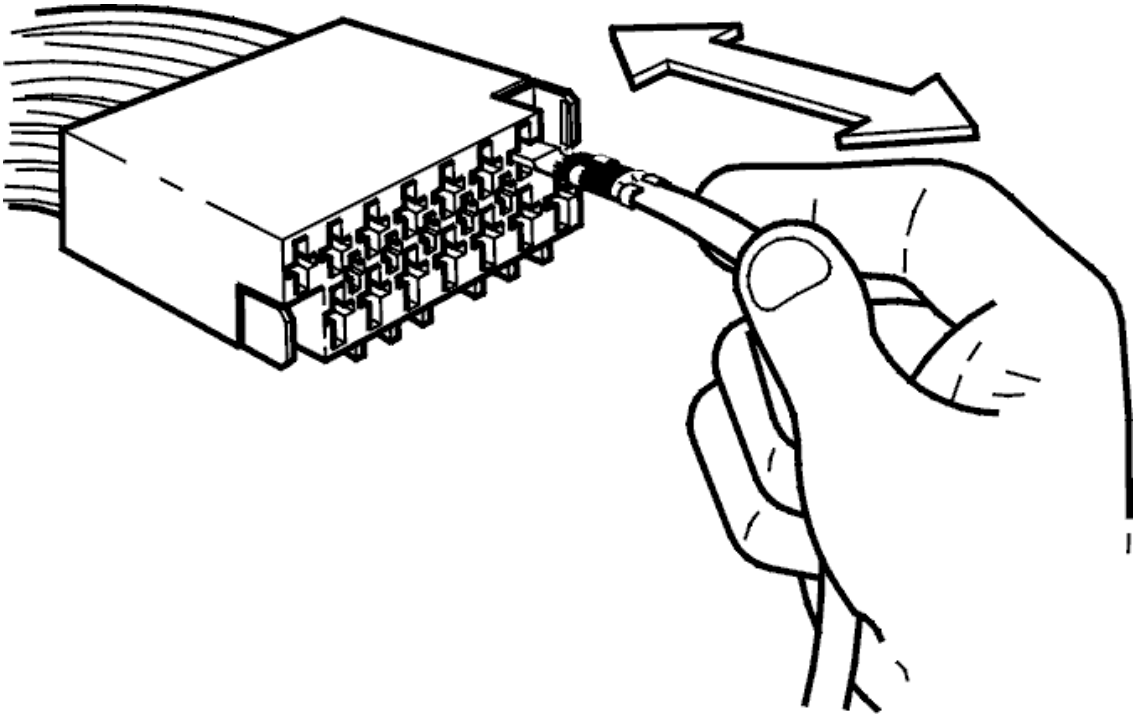

Fig. 34: Checking To Ensure Contact In Sockets Is Good
Courtesy of VOLVO CARS CORPORATION

CHECKING THE KEY WARNING FUNCTION (2003-04)

CHECKING THE KEY WARNING FUNCTION

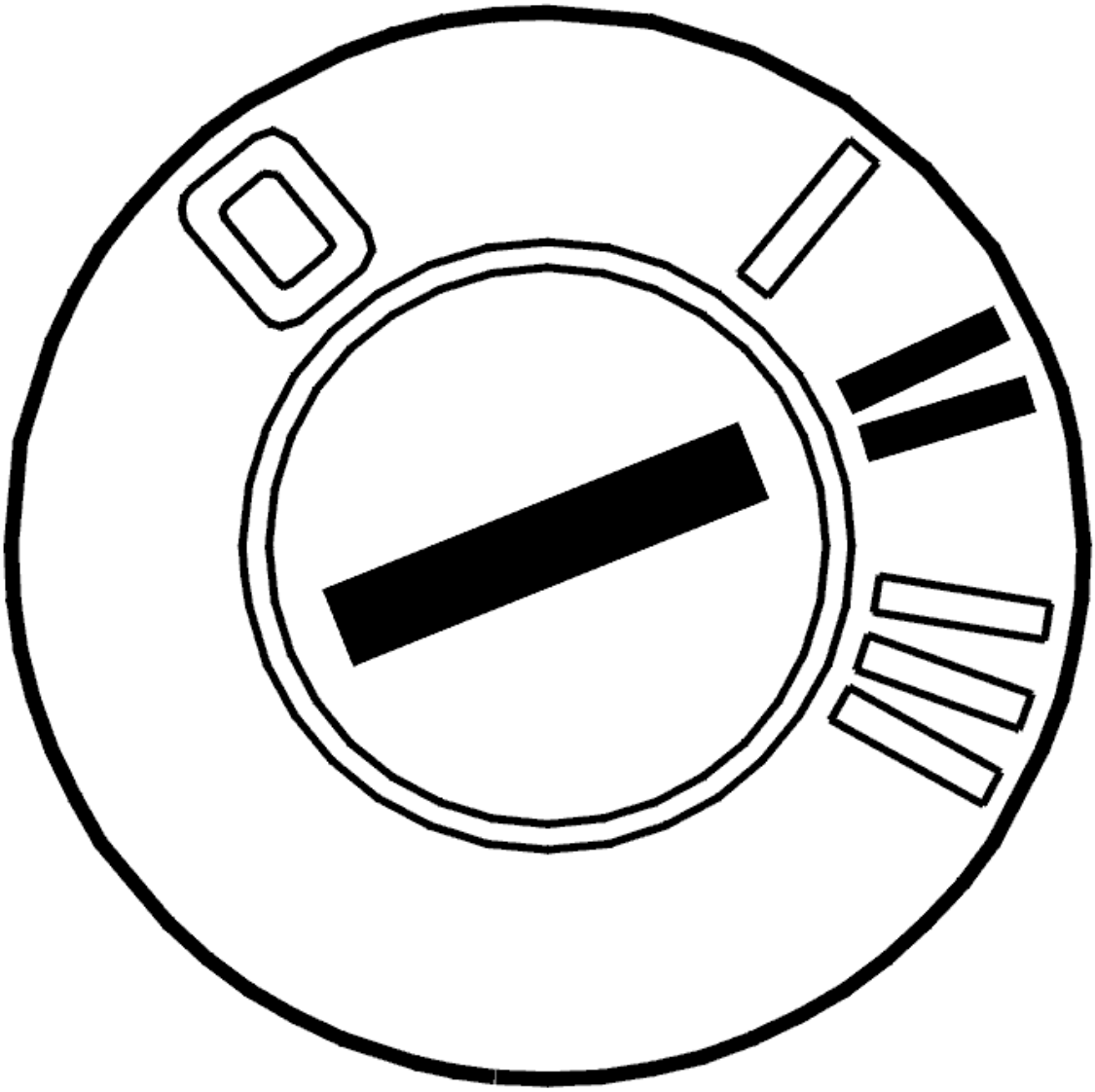

Fig. 35: Identifying Ignition ON
Courtesy of VOLVO CARS CORPORATION

- Ignition on.
- Read the value for the key warning signal by clicking on the symbol for VCT 2000.

  Value of key warning should change when the door opens and closes.

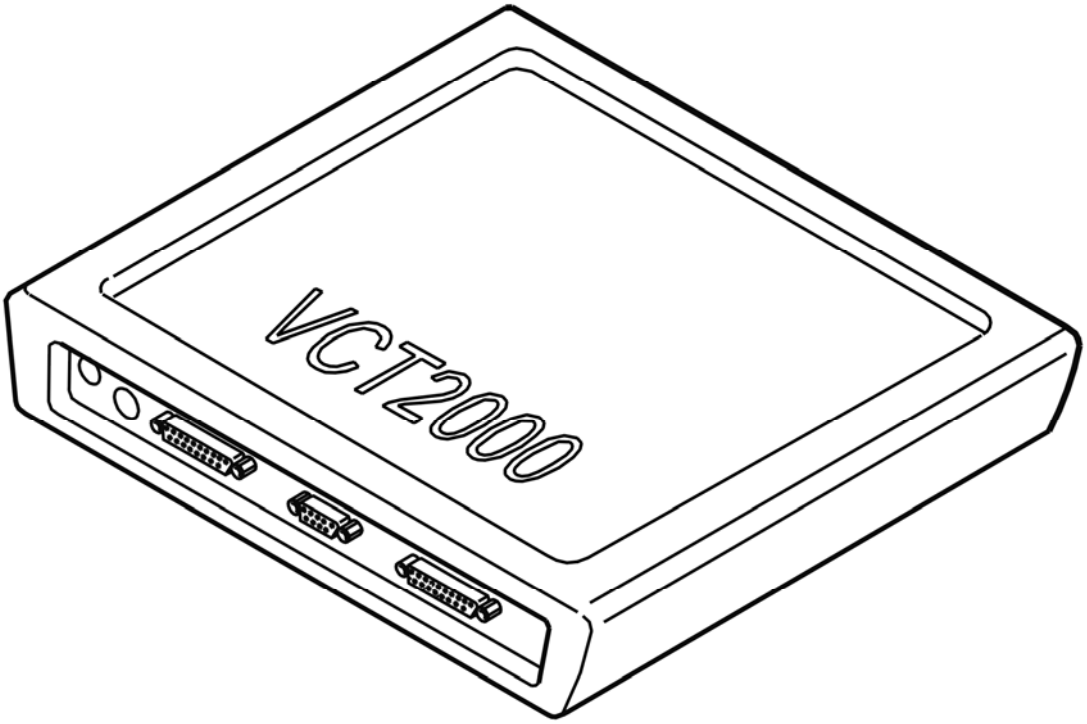

Fig. 36: Identifying VCT2000 Diagnostic Tool Symbol In VIDA
Courtesy of VOLVO CARS CORPORATION

Does the input signal value change?

- **YES**

  Refer to **CHECKING THE DRIVER INFORMATION MODULE**

- **NO**

  FAULT NOT FOUND: Troubleshooting has been completed.

CHECKING THE DRIVER INFORMATION MODULE

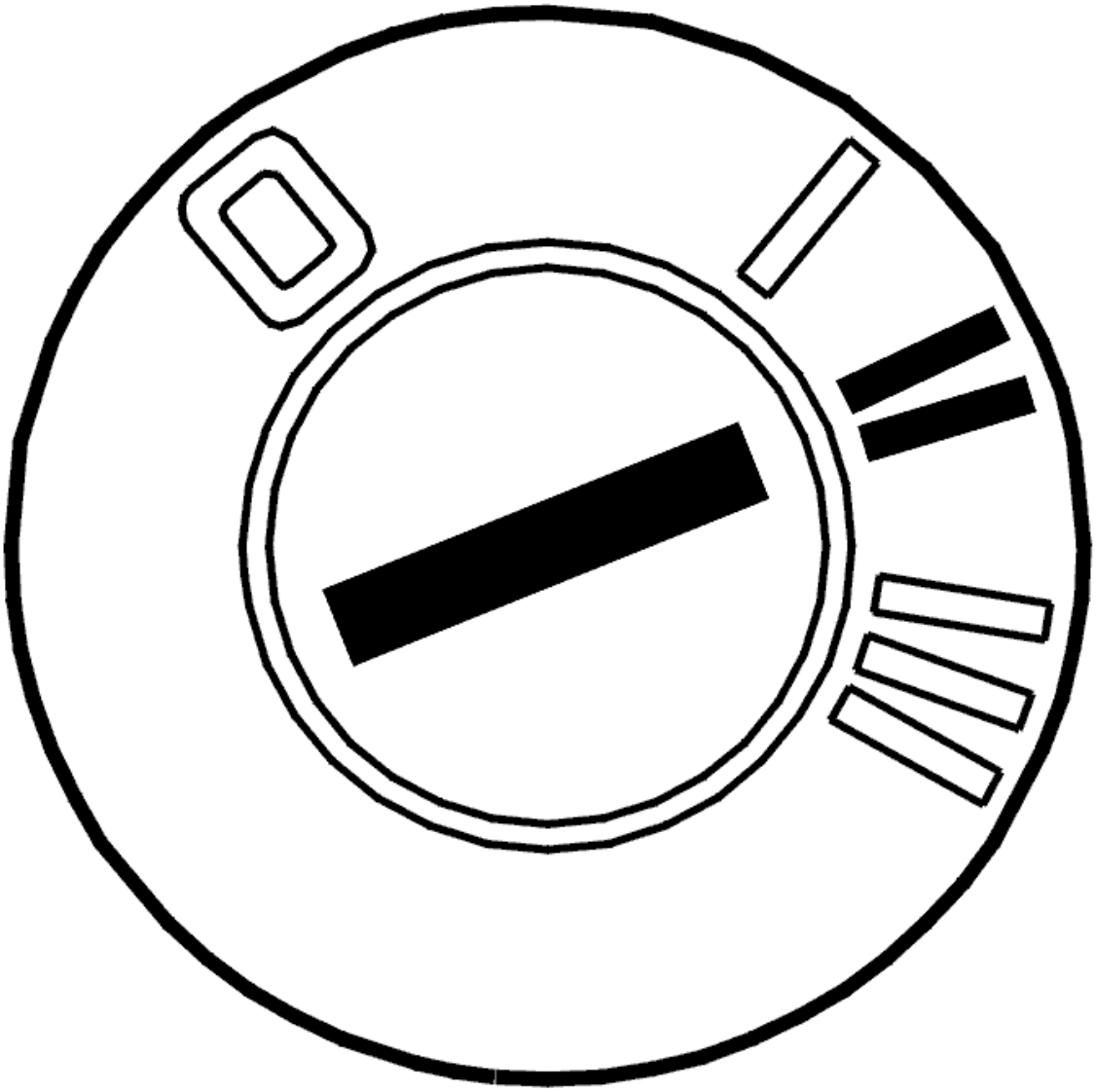

Fig. 37: Identifying Ignition ON
Courtesy of VOLVO CARS CORPORATION

- Ignition on.

  With door open and key in ignition lock a noise should sound from the driver information module.

Can the key warning function be heard when the door is open?

- **YES**

  Refer to **INFORMATION**

- **NO**

  Refer to **REPLACING THE DRIVER INFORMATION MODULE**

REPLACING THE DRIVER INFORMATION MODULE

CAUTION: A new control unit is supplied without software. The new control unit must be programmed before it will work.

For information on programming and replacing the control unit, see **DRIVER INFORMATION MODULE (DIM), REPLACING** .

INFORMATION

No faults found in the driver information module.

TROUBLE-SHOOTING INFORMATION

Condition

No diagnostic trouble codes are displayed.

For the key warning function to work, the key needs to be in the ignition lock and the vehicle door open.

Possible Source

- Fault in sound mechanism in driver information module.

Fault symptom[s]

- Sound function in driver information module does not work.

CHECKING THE LAMPS AND DIALS (2003-04)

CHECKING LAMPS AND NEEDLES

ACTIVATING LAMPS

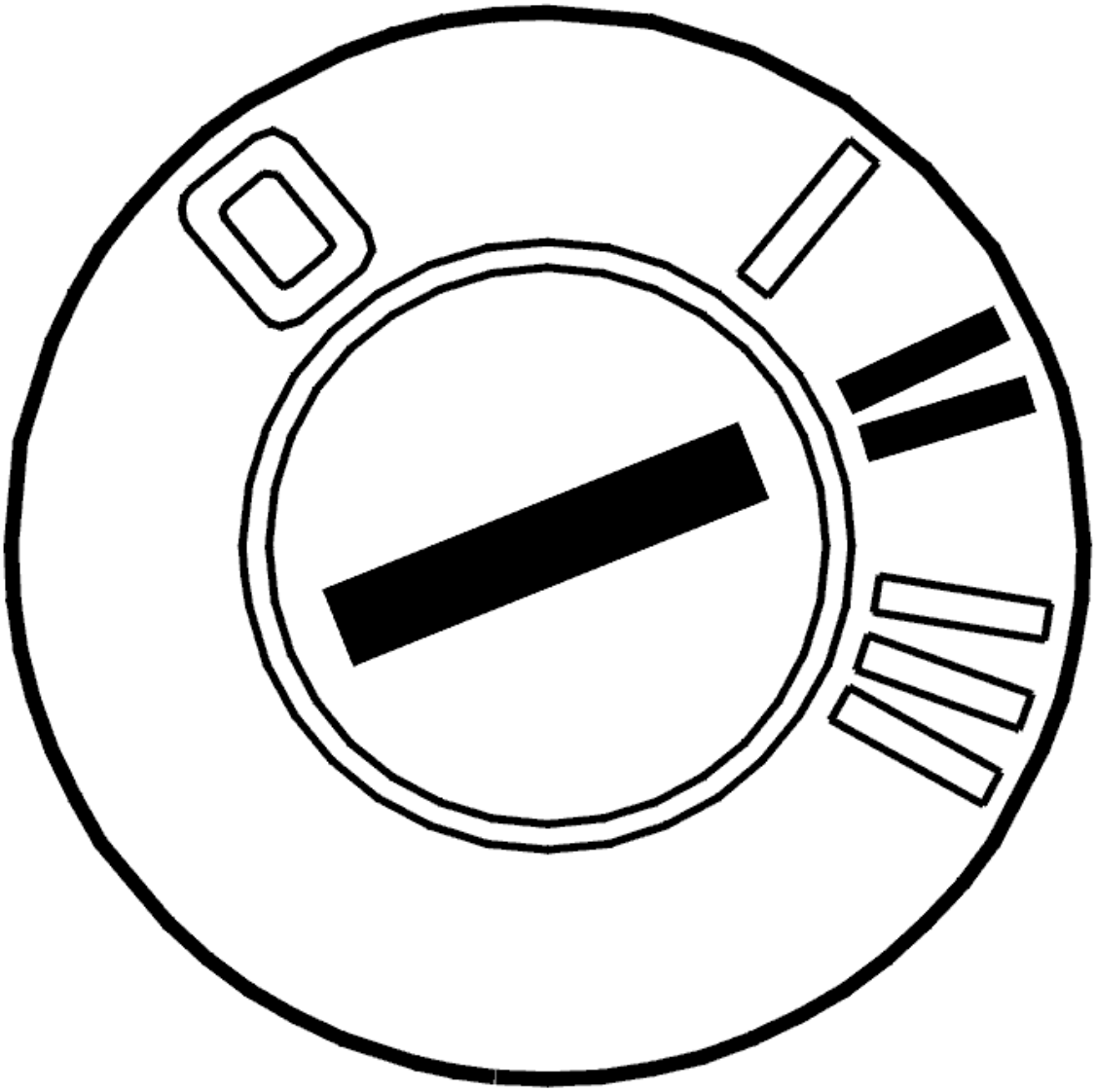

Fig. 38: Identifying Ignition ON
Courtesy of VOLVO CARS CORPORATION

- Ignition on
- Activate the system test procedures and check whether the relevant needle or lamp operates correctly. All needles must move from minimum to maximum and back again, and the lamps must flash (except for the MIL and the indicator light for the turn signal lamps).

  The light level in the instrumentation is also checked.

  All parts of the instrumentation flash.

  Remedy as necessary

  Other information:

- To replace the lamps, see **DRIVER INFORMATION MODULE (DIM), REPLACING**
- To replace the combined instrument panel, see **DRIVER INFORMATION MODULE (DIM), REPLACING** .

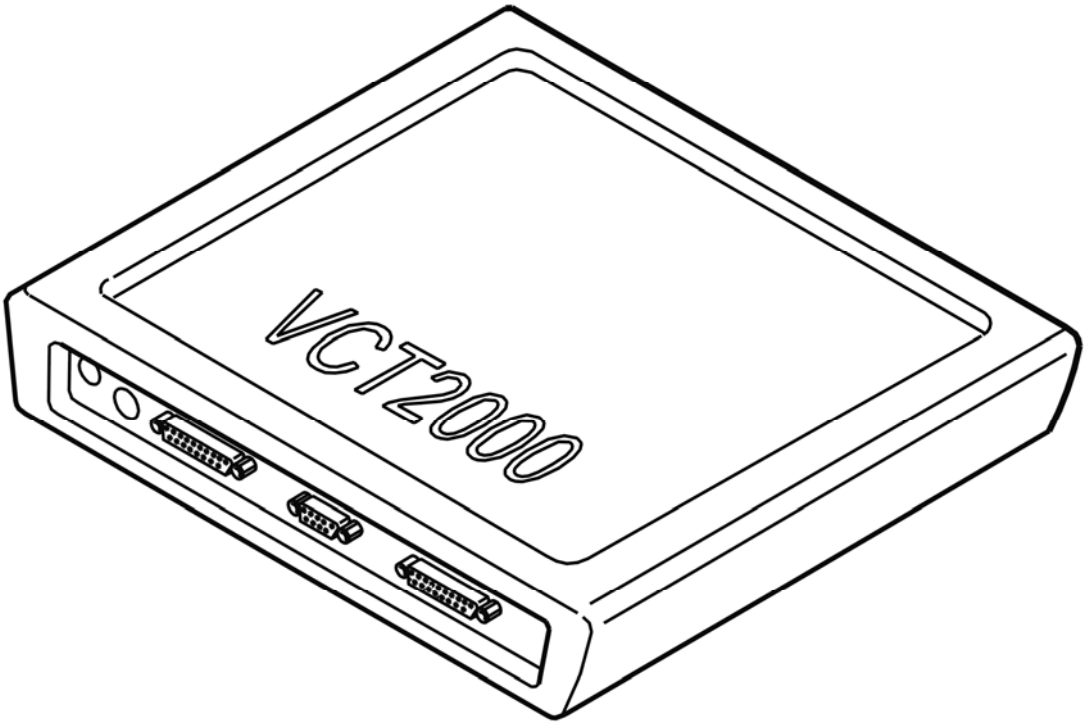

Fig. 39: Identifying VCT2000 Diagnostic Tool Symbol In VIDA
Courtesy of VOLVO CARS CORPORATION

TROUBLE-SHOOTING INFORMATION

Condition

- No diagnostic trouble codes displayed
- Fault is permanent.

Possible Source

- Lamp defective
- Internal fault
- Fault in another control unit which is sending signal to DIM control unit.

Fault symptom[s]

- A dial in the instrument displays a faulty value.

CHECKING THE OIL PRESSURE (2003-04)

CHECKING THE OIL PRESSURE

CHECKING THE WIRES

Check wire between oil pressure guard 1 and engine control unit 26A for a short circuit to voltage supply as described in, see **SHORT-CIRCUIT TO SUPPLY VOLTAGE. PERMANENT FAULTS**, a short circuit to ground as described in **SHORT-CIRCUIT TO GROUND, PERMANENT FAULTS** and an open circuit as described in **OPEN-CIRCUIT, PERMANENT FAULTS**.

HINT: The voltage should be 0 V in 1 with closed oil pressure contact (lamp on) and 12 V with an open circuit (lamp off).

Do the necessary corrective action.

Additional information:

- To connect the test box, see **CONNECTING THE DRIVER INFORMATION MODULE (DIM) TEST BOX** .

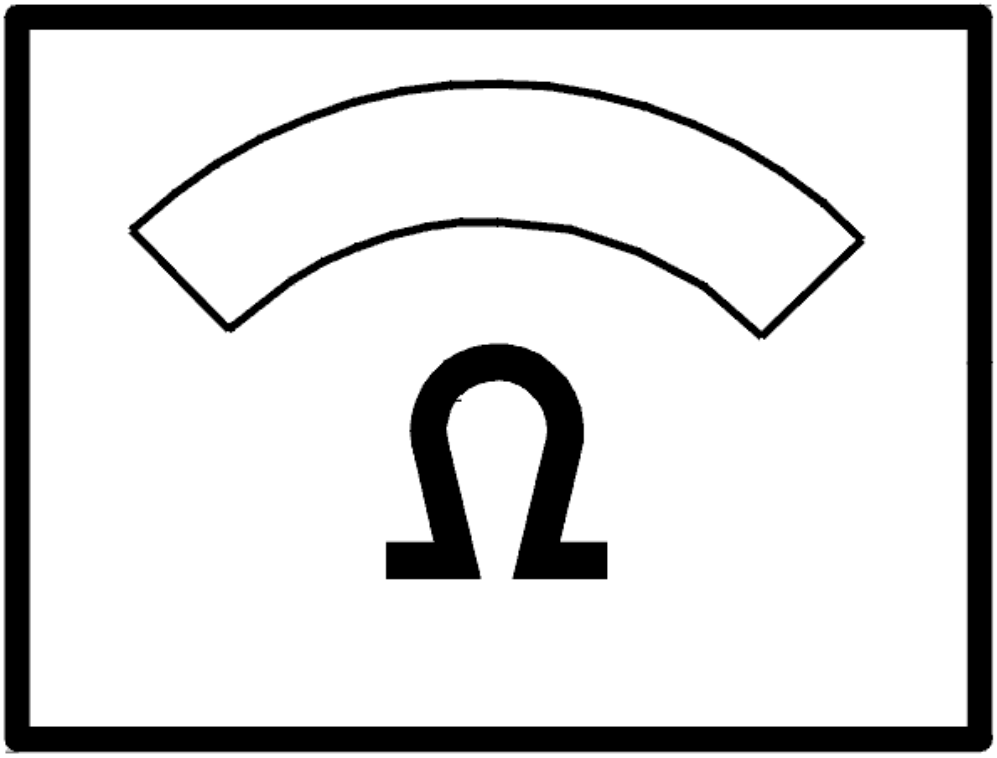

Fig. 40: Identifying Ohmmeter
Courtesy of VOLVO CARS CORPORATION

TROUBLE-SHOOTING INFORMATION

Condition

- No diagnostic trouble codes displayed.

Possible Source

- Defective oil pressure guard
- Open circuit, short circuit to voltage supply or short circuit to ground on the wire.

Fault symptom[s]

- One or more warning lamps do not work
- Low oil pressure warning lamp is on.

CHECKING THE PARKING BRAKE (INDICATOR LAMP LIT) (2005-12)

CHECKING THE PARKING BRAKE (INDICATOR LAMP LIT)

CHECK IN PROGRESS

Read off the status of the lamp.

The status must be "ON" when the parking brake is applied and "OFF" when the parking brake is released.

Other information:

- see **CONNECTING THE BREAKOUT BOX**

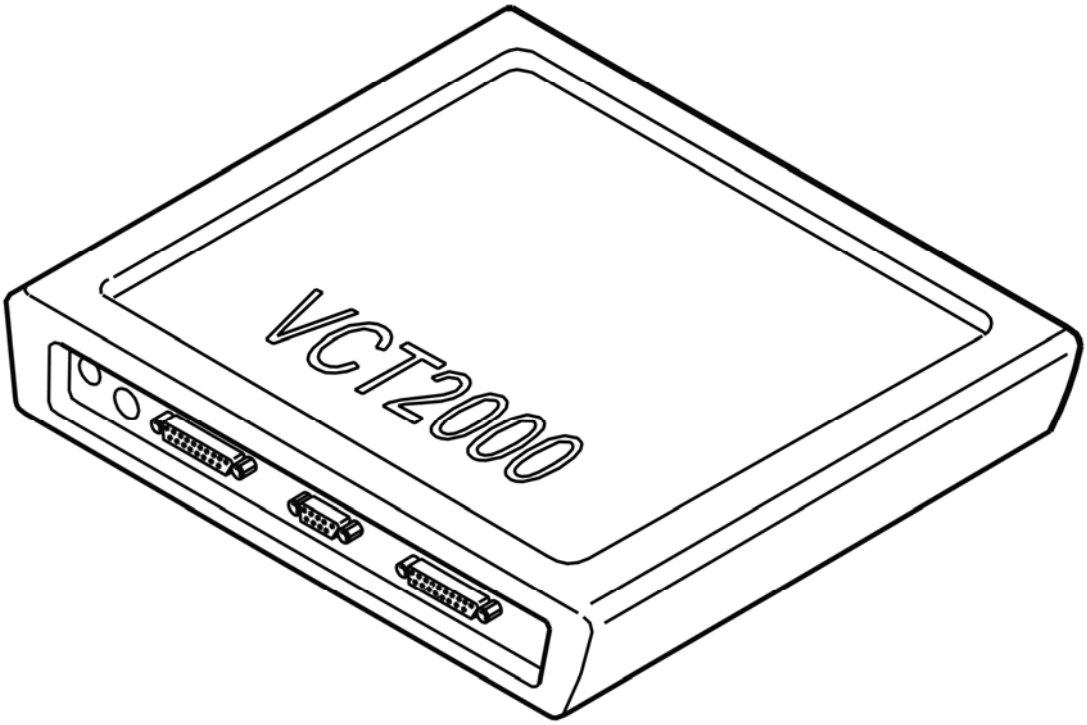

Fig. 41: Identifying VCT2000 Diagnostic Tool Symbol In VIDA
Courtesy of VOLVO CARS CORPORATION

Are these values correct?

- **YES**

FAULT NOT FOUND: Troubleshooting has been completed.

- **NO**

  Refer to **CHECKING THE CABLE AND PARKING BRAKE SWITCH**

CHECKING THE CABLE AND PARKING BRAKE SWITCH

Check the function of the parking brake switch. Remedy if necessary.

HINT: Parking brake terminal 1 must only be grounded when the parking brake is applied (lamp lit).

Check the cable between combined instrument panel terminal #5 and parking brake connector terminal #1. Check for a short-circuit to ground. Remedy if necessary.

Other information:

- see **CONNECTING THE BREAKOUT BOX**
- see **CHECKING WIRING AND TERMINALS**

CHECKING THE PARKING BRAKE (INDICATOR LAMP NOT LIT) (2005-12)

CHECKING THE PARKING BRAKE (INDICATOR LAMP NOT LIT)

CHECK IN PROGRESS

- Set parking brake.

  Read off the status of the lamp.

  The status must be "ON" when the parking brake is applied and "OFF" when the parking brake is released.

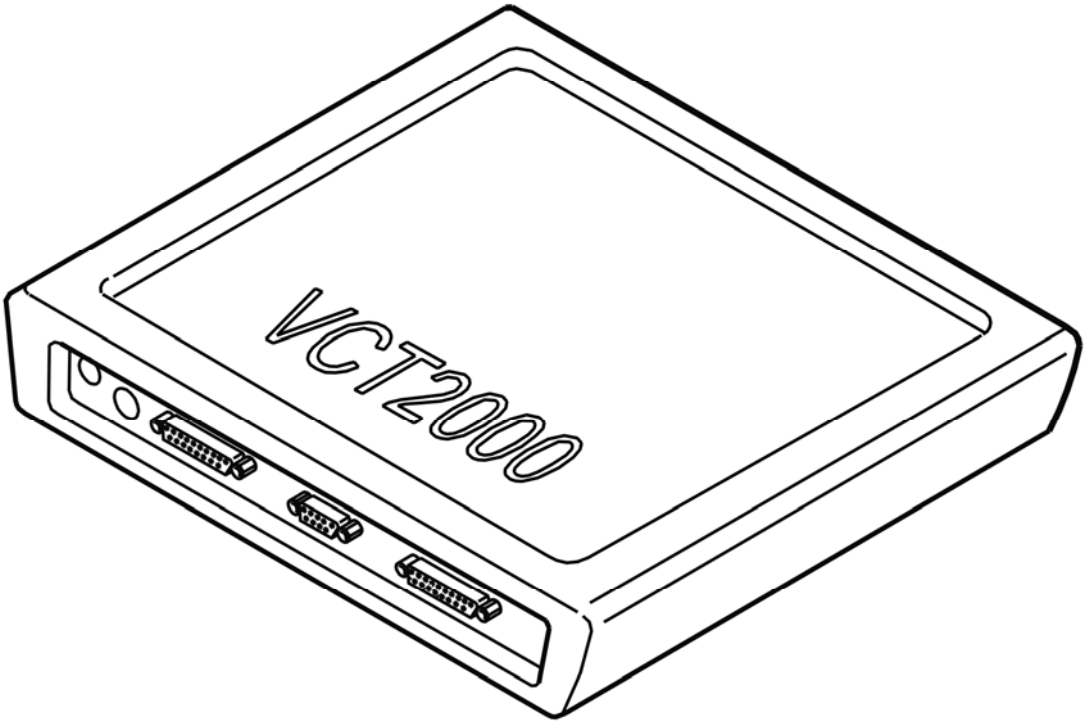

Fig. 42: Identifying VCT2000 Diagnostic Tool Symbol In VIDA
Courtesy of VOLVO CARS CORPORATION

Are these values correct?

- **YES**

  Refer to **VERIFICATION**

- **NO**

  Refer to **CHECKING THE CABLE AND PARKING BRAKE SWITCH**

CHECKING THE CABLE AND PARKING BRAKE SWITCH

Check the function of the parking brake switch. Measure the voltage between terminal #1 and ground.

HINT: Terminal pin 1 must be grounded when the parking brake is applied.

Check the cable between combined instrument panel terminal #5 and parking brake connector terminal #1. Check for an open-circuit. Check for a short-circuit to supply voltage. Remedy if necessary.

Other information:

- see **CONNECTING THE BREAKOUT BOX**
- see **CHECKING WIRING AND TERMINALS**

Were any faults found?

- **YES**

  Refer to **VERIFICATION**

- **NO**

  FAULT NOT FOUND: Troubleshooting has been completed.

VERIFICATION

HINT: After the repair it is necessary to check that the fault has been rectified.

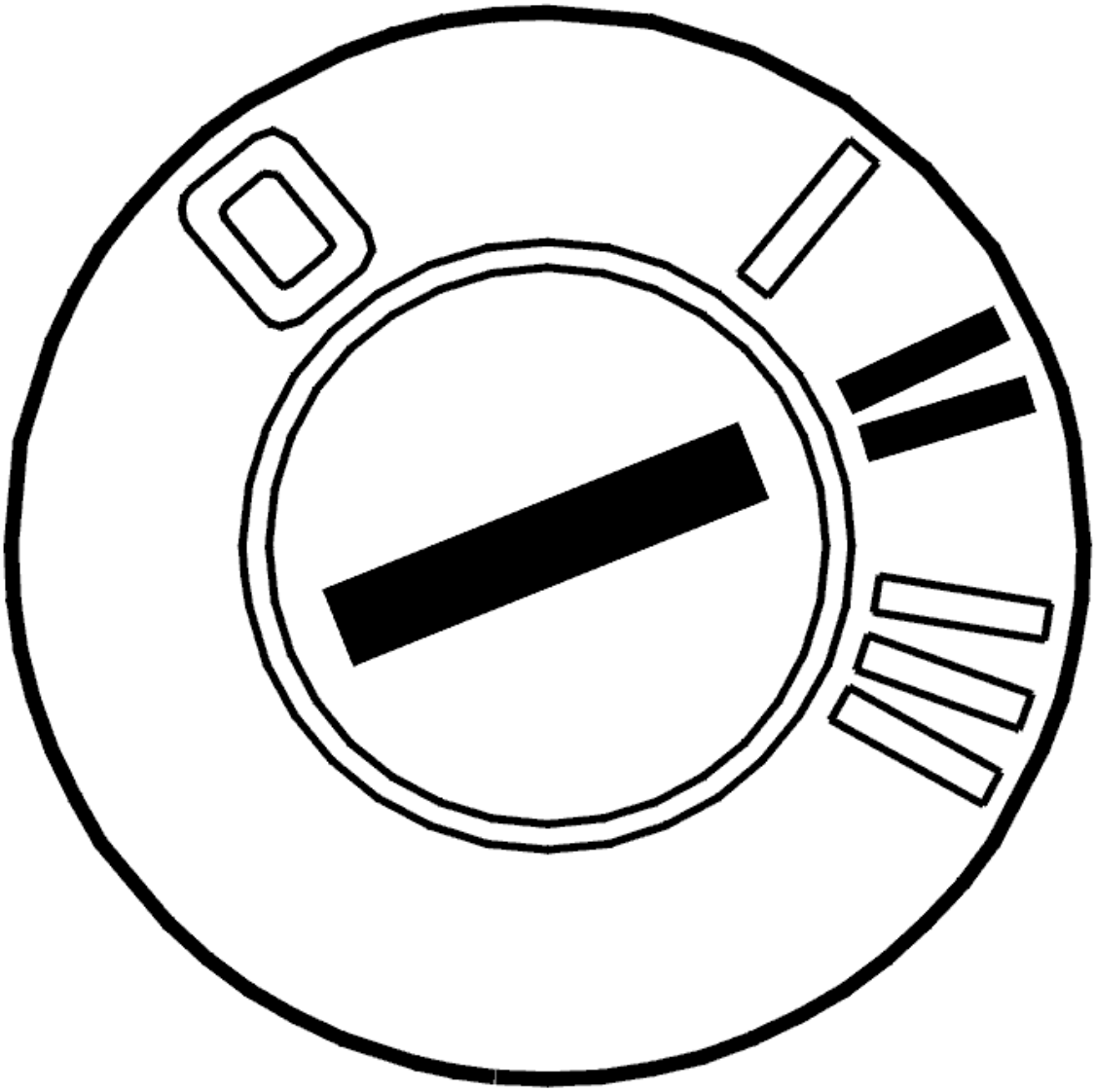

Fig. 43: Identifying Ignition ON
Courtesy of VOLVO CARS CORPORATION

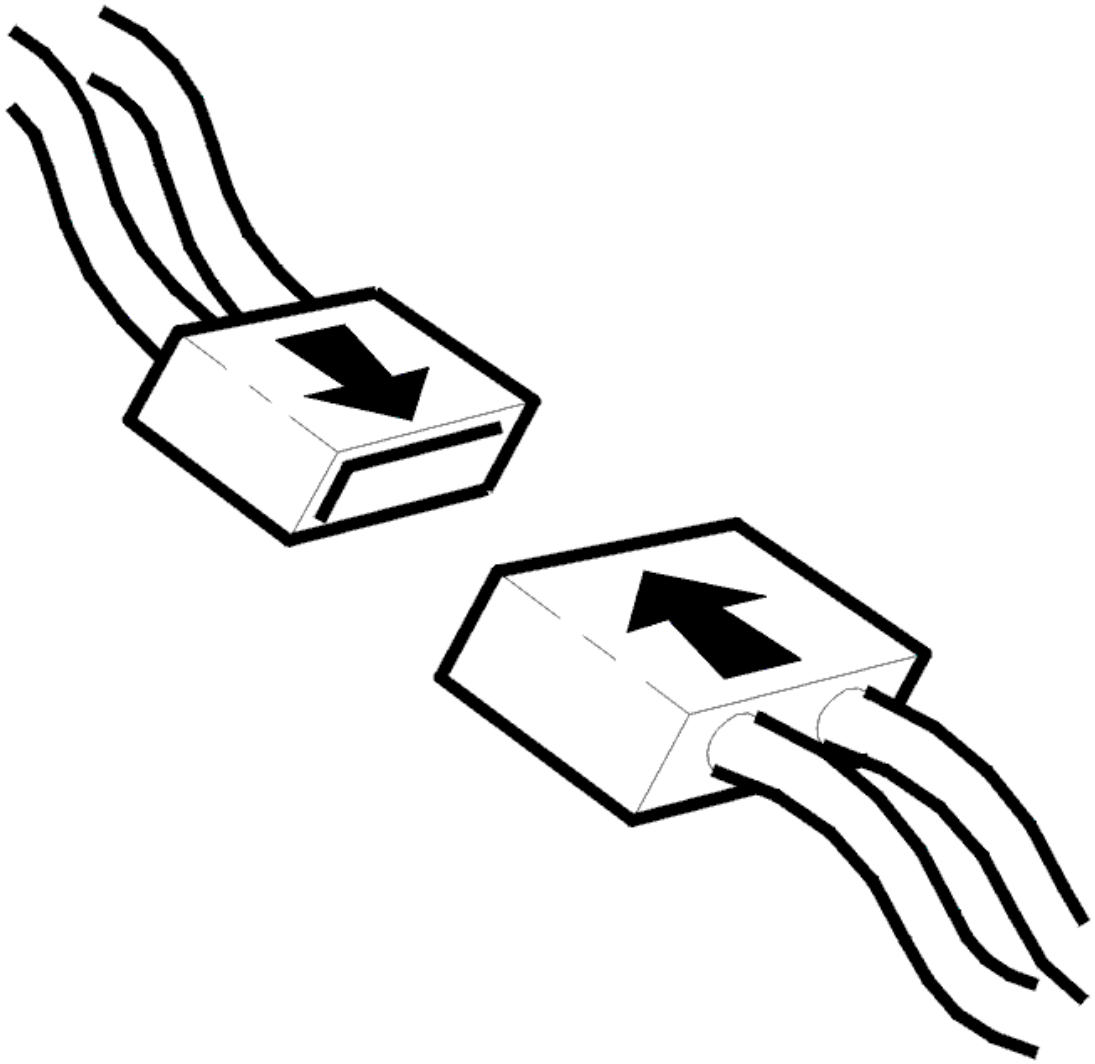

Fig. 44: Connecting Connector
Courtesy of VOLVO CARS CORPORATION

- Ignition off.
- Connect the connectors, install the components, etc.
- Ignition on.
- Handbrake on.

Does the lamp work correctly?

- **YES**

  VERIFIED: Troubleshooting has been completed.

- **NO**

Refer to **INFORMATION**

INFORMATION

FAULT-TRACING INFORMATION

The fault should have been detected and remedied. As this is not the case fault-tracing has failed.

Exit fault-tracing for this diagnostic trouble code (DTC) or make another attempt.

CHECKING THE PARKING BRAKE (WARNING LAMP DOES NOT COME ON) (2003-04)

CHECKING THE PARKING BRAKE (WARNING LAMP DOES NOT COME ON)

CHECKING THE INPUT

- Handbrake on.

  Read status of lamp.

  When handbrake is on status should be "ON", and when handbrake is released status should be "OFF".

  Additional information:

  - To connect the test box, see **CONNECTING THE DRIVER INFORMATION MODULE (DIM) TEST BOX** .

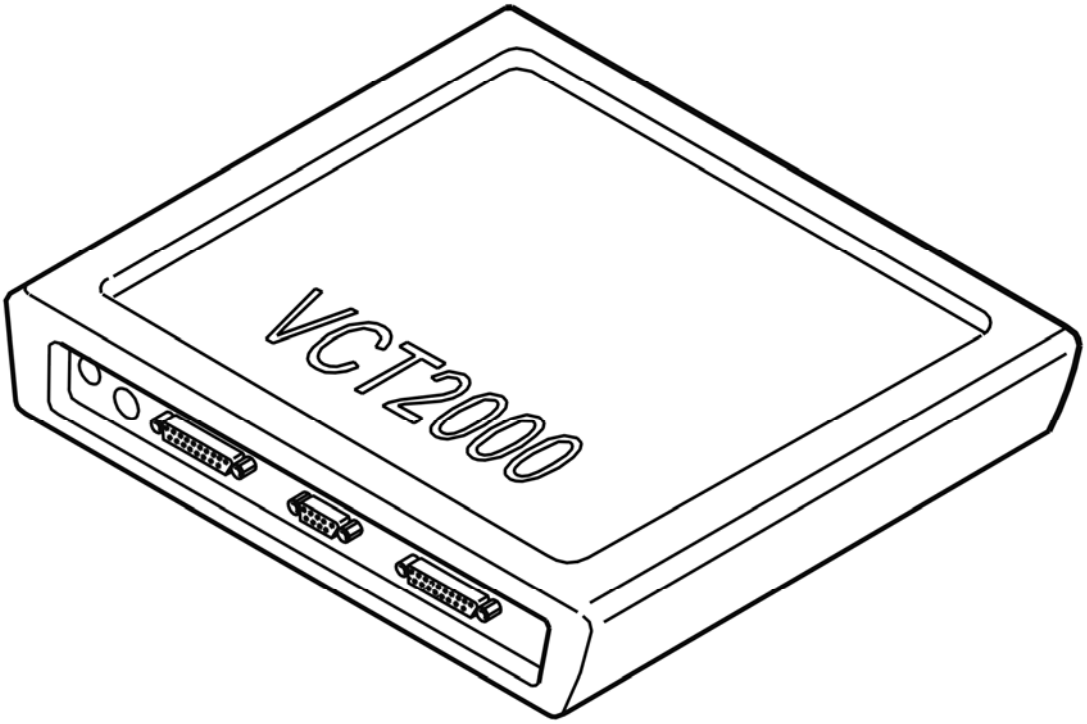

Fig. 45: Identifying VCT2000 Diagnostic Tool Symbol In VIDA
Courtesy of VOLVO CARS CORPORATION

Are the values correct?

- **YES**

  Refer to **VERIFICATION**

- **NO**

  Refer to **CHECKING THE WIRE AND HANDBRAKE CONTACT**

CHECKING THE WIRE AND HANDBRAKE CONTACT

Check function of handbrake switch. Measure the voltage between 1 and ground.

HINT: When handbrake is on, pin 1 should be grounded.

Check and measure the wire between combined instrument 6 and handbrake contact 1 for an open circuit as described in, see **OPEN-CIRCUIT, PERMANENT FAULTS**, and for a short circuit to voltage supply as described in **SHORT-CIRCUIT TO SUPPLY VOLTAGE. PERMANENT FAULTS**.

Additional information:

- To connect the test box, see **CONNECTING THE DRIVER INFORMATION MODULE (DIM) TEST BOX** .

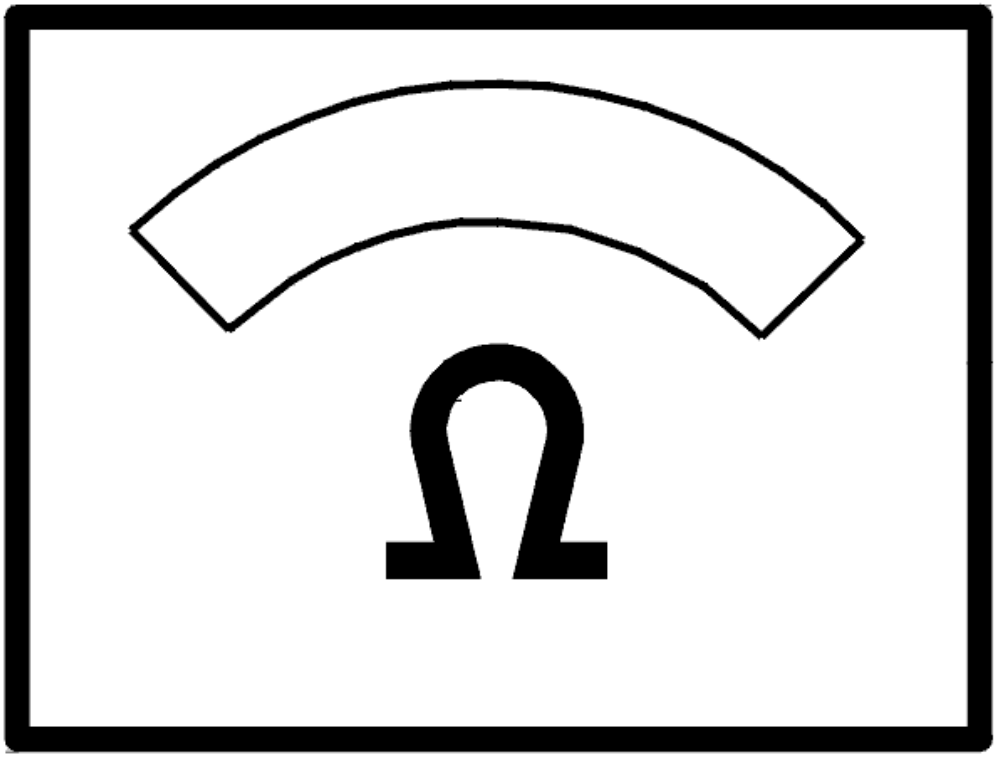

Fig. 46: Identifying Ohmmeter
Courtesy of VOLVO CARS CORPORATION

Is there a fault?

- **YES**

  Refer to **VERIFICATION**

- **NO**

  FAULT NOT FOUND: Troubleshooting has been completed.

VERIFICATION

HINT: After the repair it is necessary to check that the fault has been rectified.

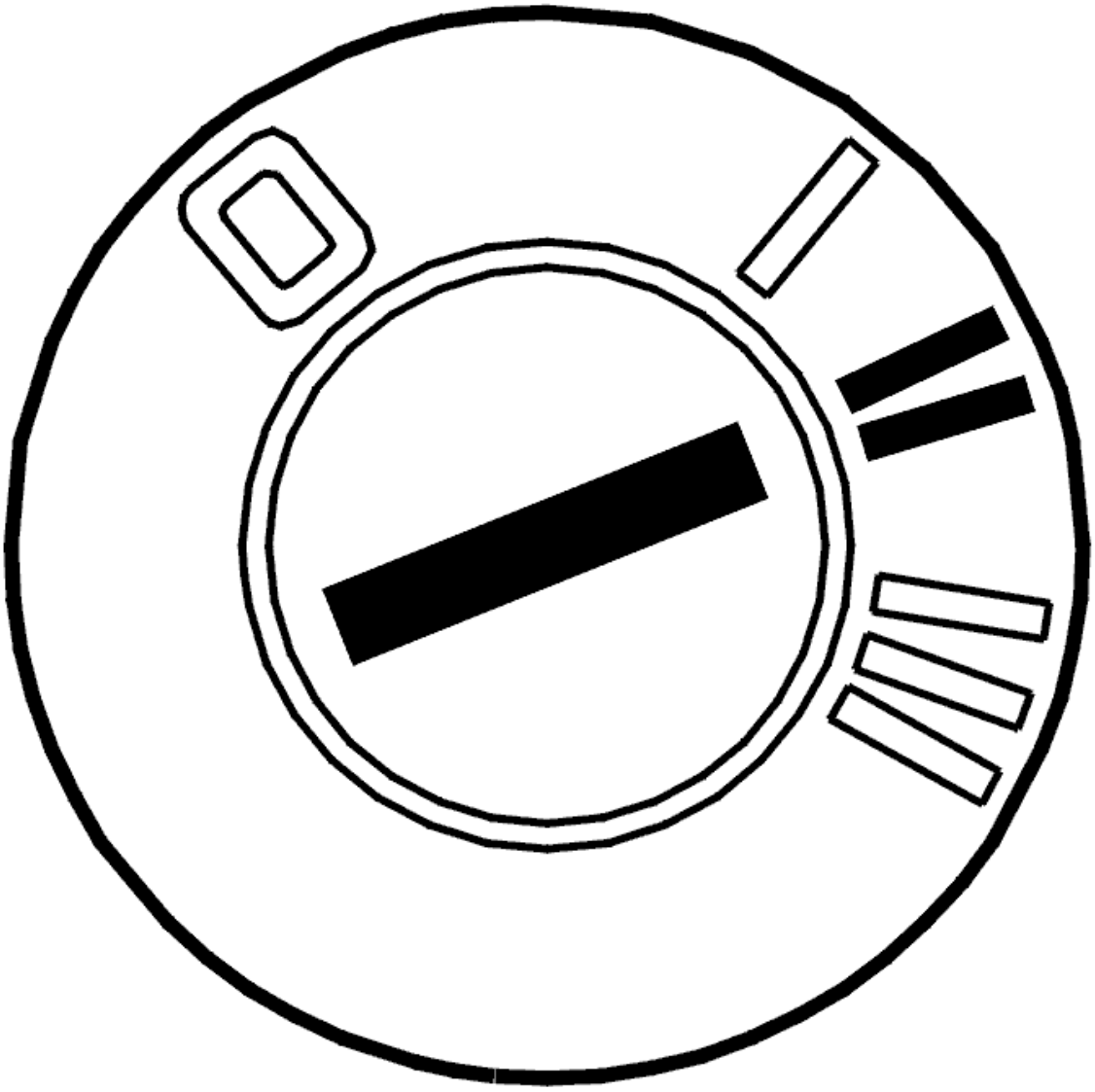

Fig. 47: Identifying Ignition ON
Courtesy of VOLVO CARS CORPORATION

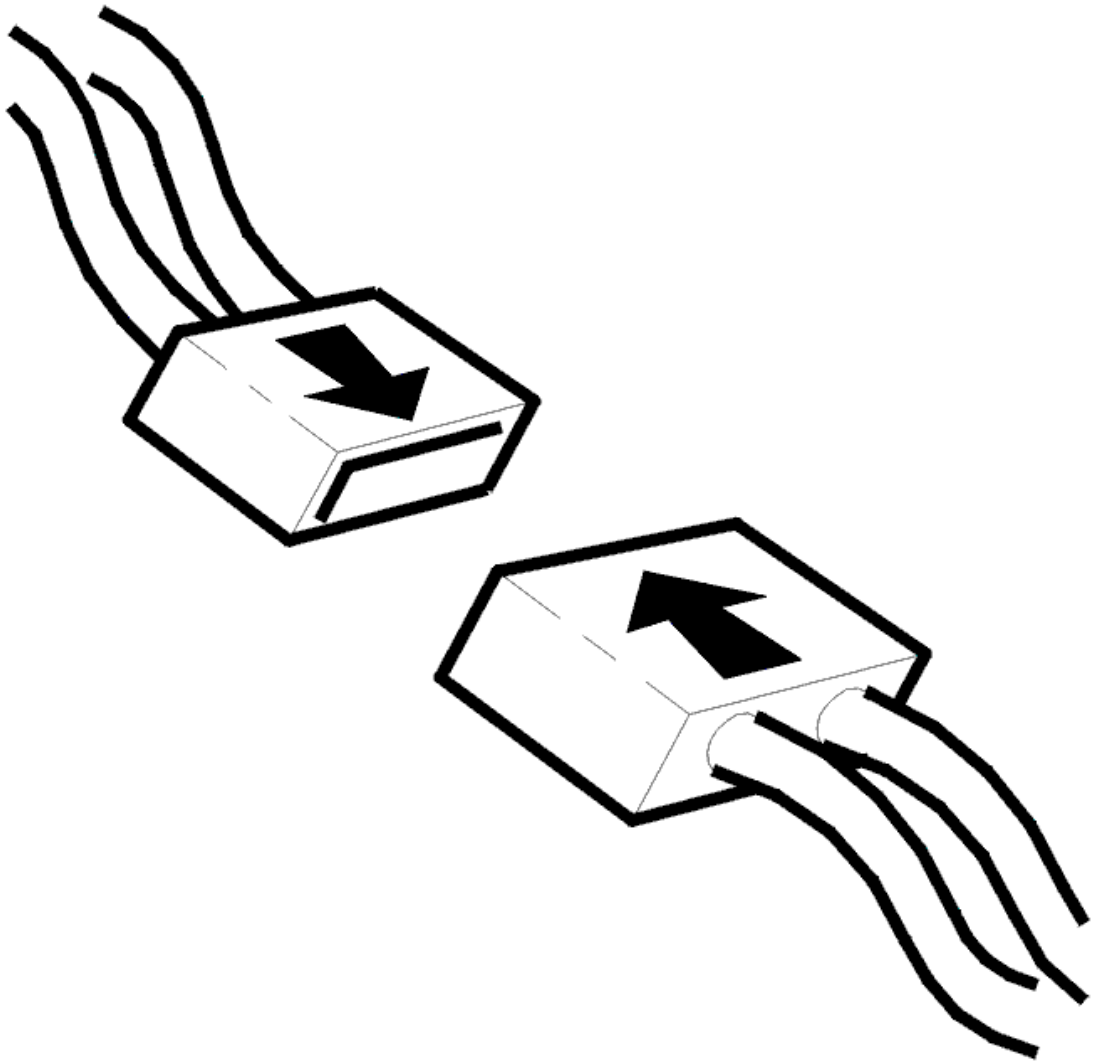

Fig. 48: Connecting Connector
Courtesy of VOLVO CARS CORPORATION

- Ignition off.
- Connect the connectors, install the components, etc.
- Ignition on.
- Handbrake on.

Does the lamp work correctly?

- **YES**

  VERIFIED: Troubleshooting has been completed.

- **NO**

Refer to **INFORMATION**

INFORMATION

FAULT-TRACING INFORMATION

The fault should have been detected and remedied. As this is not the case fault-tracing has failed.

Exit fault-tracing for this diagnostic trouble code (DTC) or make another attempt.

TROUBLE-SHOOTING INFORMATION

Condition

- No diagnostic trouble codes displayed
- Fault is permanent
- Handbrake on.

Possible Source

- Lamp defective
- Wire short circuited to voltage supply
- Open circuit in wire
- Handbrake contact does not work.

Fault symptom[s]

- Parking brake warning lamp does not come on.

CHECKING THE PARKING BRAKE (WARNING LAMP ON) (2003-04)

CHECKING THE PARKING BRAKE (WARNING LAMP ON)

CHECKING THE INPUT

Read status of lamp.

When handbrake is on status should be "ON", and when handbrake is released status should be "OFF".

Additional information:

- To connect the test box, see **CONNECTING THE DRIVER INFORMATION MODULE (DIM) TEST BOX** .

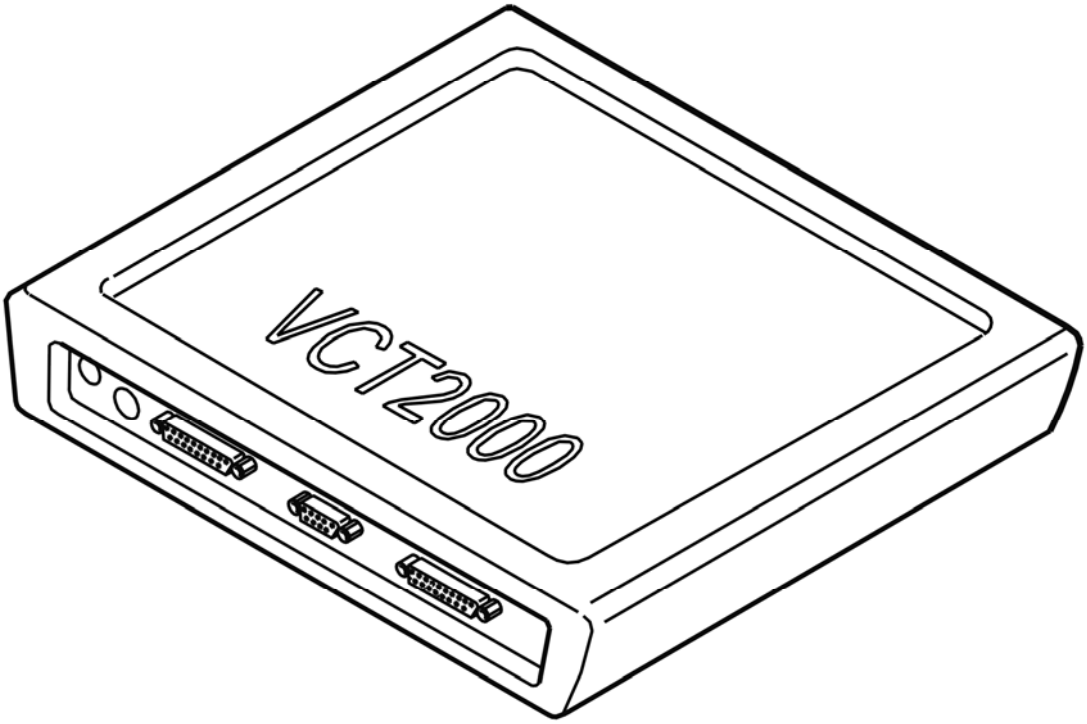

Fig. 49: Identifying VCT2000 Diagnostic Tool Symbol In VIDA
Courtesy of VOLVO CARS CORPORATION

Are the values correct?

- **YES**

  FAULT NOT FOUND: Troubleshooting has been completed.

- **NO**

  Refer to **CHECKING THE WIRE AND HANDBRAKE CONTACT**

CHECKING THE WIRE AND HANDBRAKE CONTACT

Check and measure handbrake switch function.

HINT: Handbrake pin 1 is only grounded when handbrake is on (lamp on).

Check and measure wire between combined instrument 6 and handbrake contact 1 for a short circuit to ground as described in, see **SHORT-CIRCUIT TO GROUND, PERMANENT FAULTS**.

Additional information:

- To connect the test box, see **CONNECTING THE DRIVER INFORMATION MODULE (DIM) TEST BOX** .

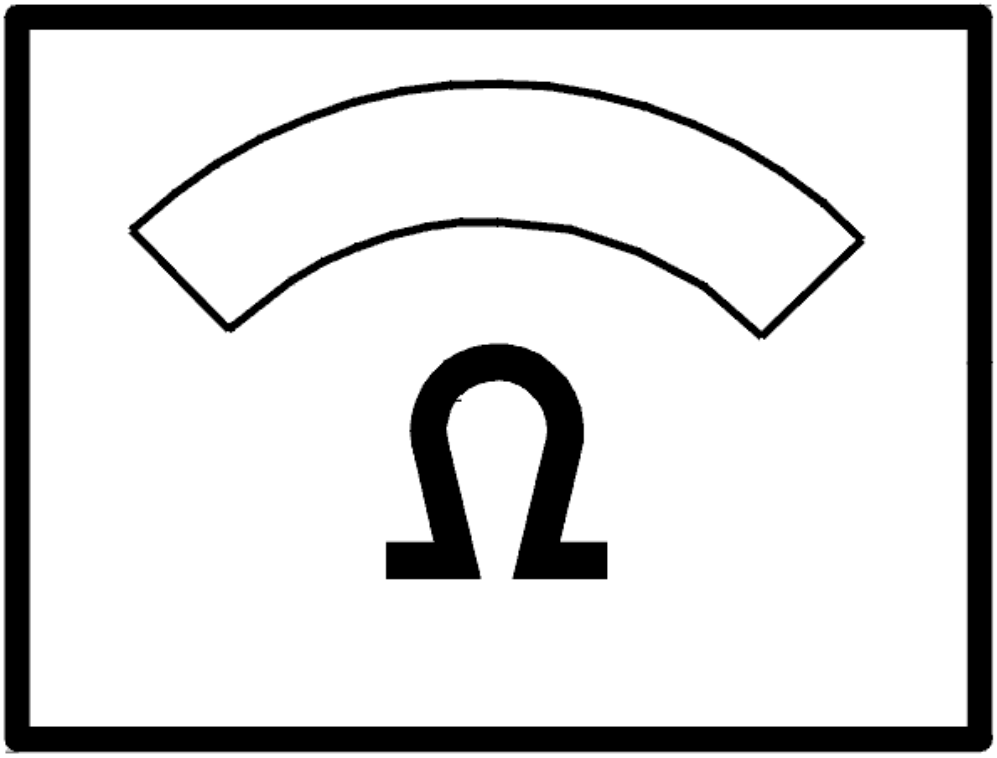

Fig. 50: Identifying Ohmmeter
Courtesy of VOLVO CARS CORPORATION

TROUBLE-SHOOTING INFORMATION

Condition

- No diagnostic trouble codes displayed
- Fault is permanent
- Hand brake not on.

Possible Source

- Wire short circuited to ground
- Handbrake contact does not work.

Fault symptom[s]

- Parking brake warning lamp on.

CHECKING THE POWER SUPPLY (2003-04)

CHECKING SUPPLY

Check passenger compartment fuse 24 (11C/24:2).

Check the cable between combined instrument panel supply relay (2/29) #3 and passenger compartment fuse 24 (11C/24:2) for an open-circuit according to **OPEN-CIRCUIT, PERMANENT FAULTS** and a short-circuit to ground according to **SHORT-CIRCUIT TO GROUND, PERMANENT FAULTS**.

Check that the relay is not defective.

Check the cable between combined instrument panel #1 and parking brake connector #1 for a short-circuit to ground according to **SHORT-CIRCUIT TO GROUND, PERMANENT FAULTS**.

Check the cable between combined instrument panel #1 and combined instrument panel supply relay (2/29) #1 for an open-circuit according to **OPEN-CIRCUIT, PERMANENT FAULTS** and a short-circuit to ground according to **SHORT-CIRCUIT TO GROUND, PERMANENT FAULTS**.

Check the cable between combined instrument panel #14 and ground for an open-circuit according to **OPEN-CIRCUIT, PERMANENT FAULTS** and a short-circuit to supply voltage according to **SHORT-CIRCUIT TO SUPPLY VOLTAGE. PERMANENT FAULTS**.

Remedy as necessary

Other information:

- To connect the breakout box, see **CONNECTING THE DRIVER INFORMATION MODULE (DIM) TEST BOX** .
- For other values, see **DRIVER INFORMATION MODULE (DIM) SIGNAL DESCRIPTION** .

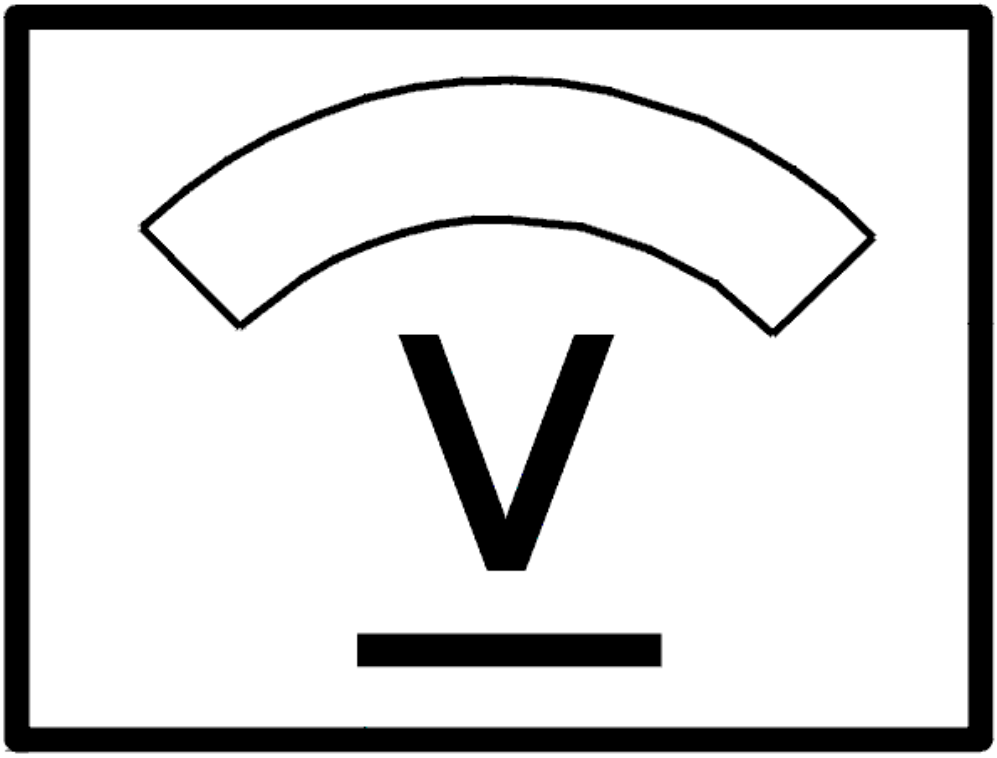

Fig. 51: Identifying Voltage Display
Courtesy of VOLVO CARS CORPORATION

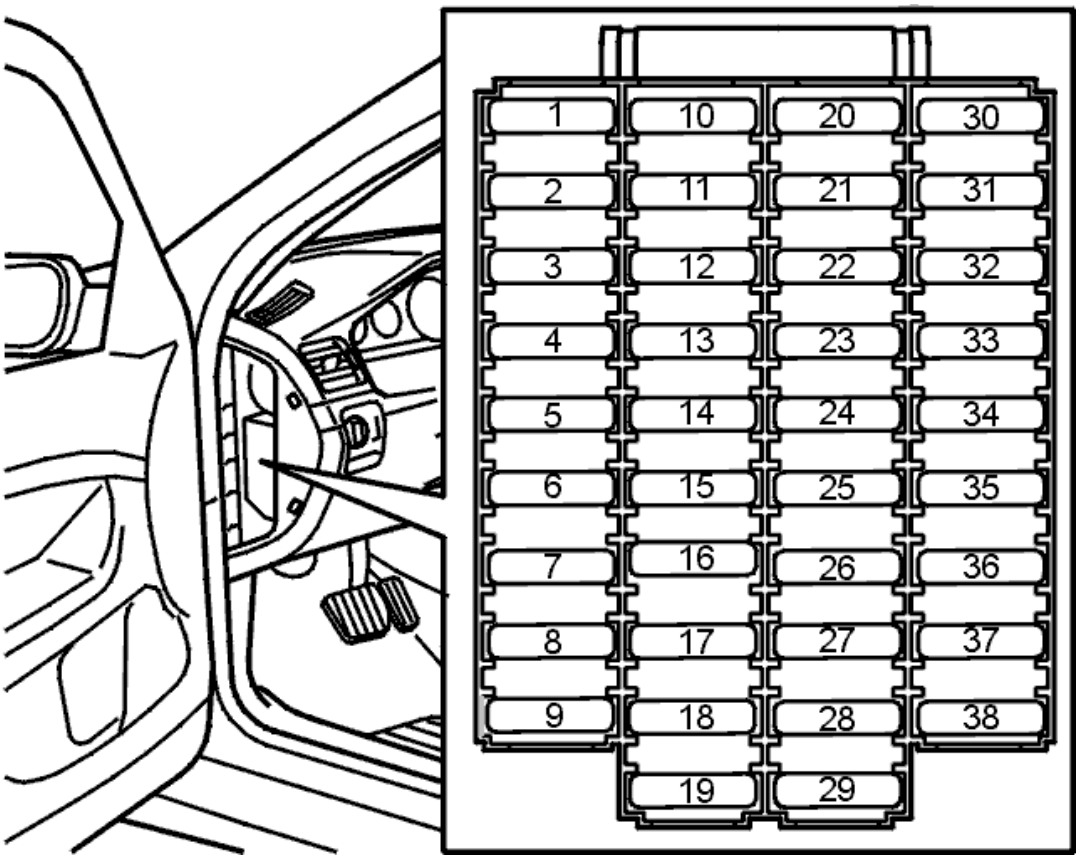

Fig. 52: Fuse Holder (Passenger Compartment)
Courtesy of VOLVO CARS CORPORATION

Was a fault detected?

- **YES**

  Refer to **VERIFICATION**

- **NO**

  FAULT NOT FOUND: Troubleshooting has been completed.

VERIFICATION

HINT: After the repair it is necessary to check that the fault has been rectified.

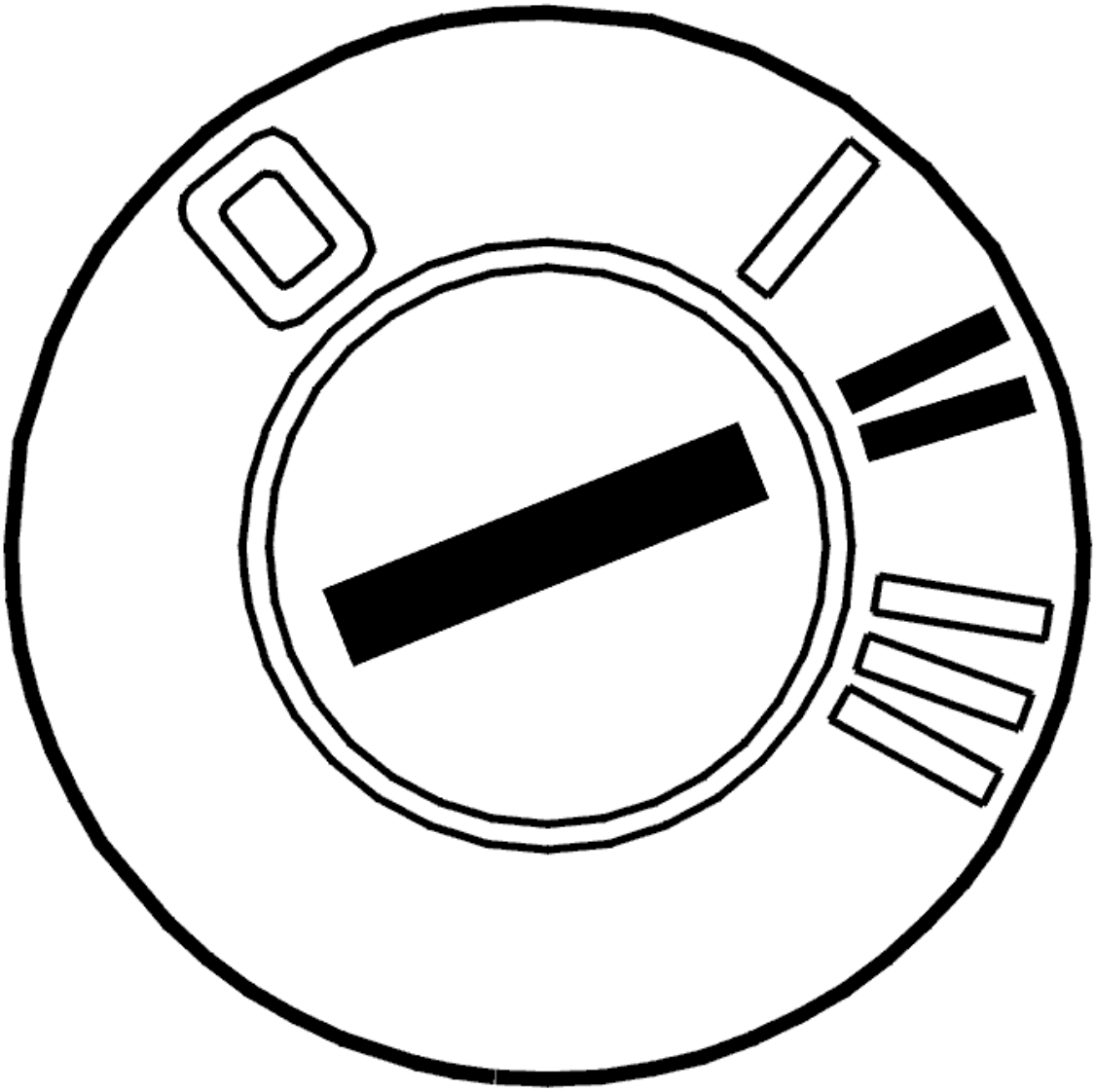

Fig. 53: Identifying Ignition ON
Courtesy of VOLVO CARS CORPORATION

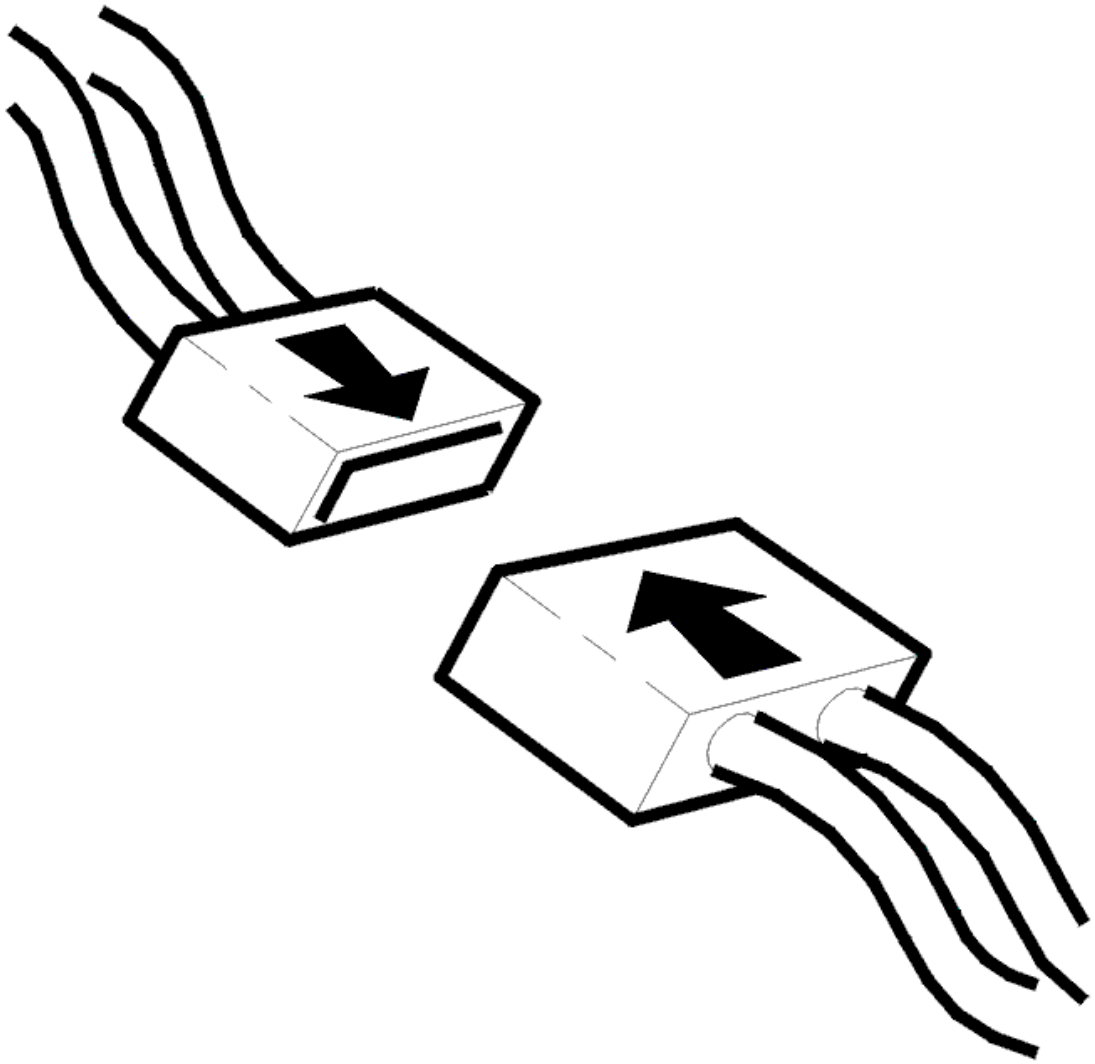

Fig. 54: Connecting Connector
Courtesy of VOLVO CARS CORPORATION

- Ignition off.
- Connect the connectors, install the components, etc.
- Ignition on.

Do control and warning lamps come on when ignition is on?

- **YES**

  VERIFIED: Troubleshooting has been completed.

- **NO**

Refer to **INFORMATION**

INFORMATION

FAULT-TRACING INFORMATION

The fault should have been detected and remedied. As this is not the case fault-tracing has failed.

Exit fault-tracing for this diagnostic trouble code (DTC) or make another attempt.

TROUBLE-SHOOTING INFORMATION

Condition

- No diagnostic trouble codes displayed
- Fault is permanent.

Possible Source

- Wire short circuited to ground
- Wire short circuited to voltage supply
- Open circuit in wire
- Defective fuse.

Fault symptom[s]

- No control or warning lamps are on when ignition is on.

PROGRAMMING THE SERVICE PARAMETERS (2003-04)

PROGRAMMING THE SERVICE PARAMETERS

The following data can be programmed in the driver information module (DIM).

Programming of:

- New meter indication.
- Conditions for activation of Service Reminder Lamp (SRL), distance covered for service, service time and engine service time.
- Instrument displaying zeros for driving distance.
- Temperature unit.
- Trip computer unit (applies only to cars with trip computers).
- 12 or 24 hour clock display.

- **Continue**

Refer to **SELECTING THE INSTRUMENT TYPE**

SELECTING THE INSTRUMENT TYPE

Select the appropriate alternative depending on whether the instrument is set for kilometers or miles. If the speedometer range is from 0-260 it is a kilometre instrument and if the range is from 0-160 it is a miles instrument.

1. Km. Refer to **RESETTING THE ODOMETER SETTING**.
2. Miles. Refer to **RESETTING THE ODOMETER SETTING**

RESETTING THE ODOMETER SETTING

RESETTING THE ODOMETER SETTING (KM)

- Ignition on

CAUTION: It is only possible to program this parameter once and then only if the reading is below 500 km. It may be illegal to change the odometer setting in the driver information module (DIM).

To reset the odometer setting, click the VCT2000 symbol.

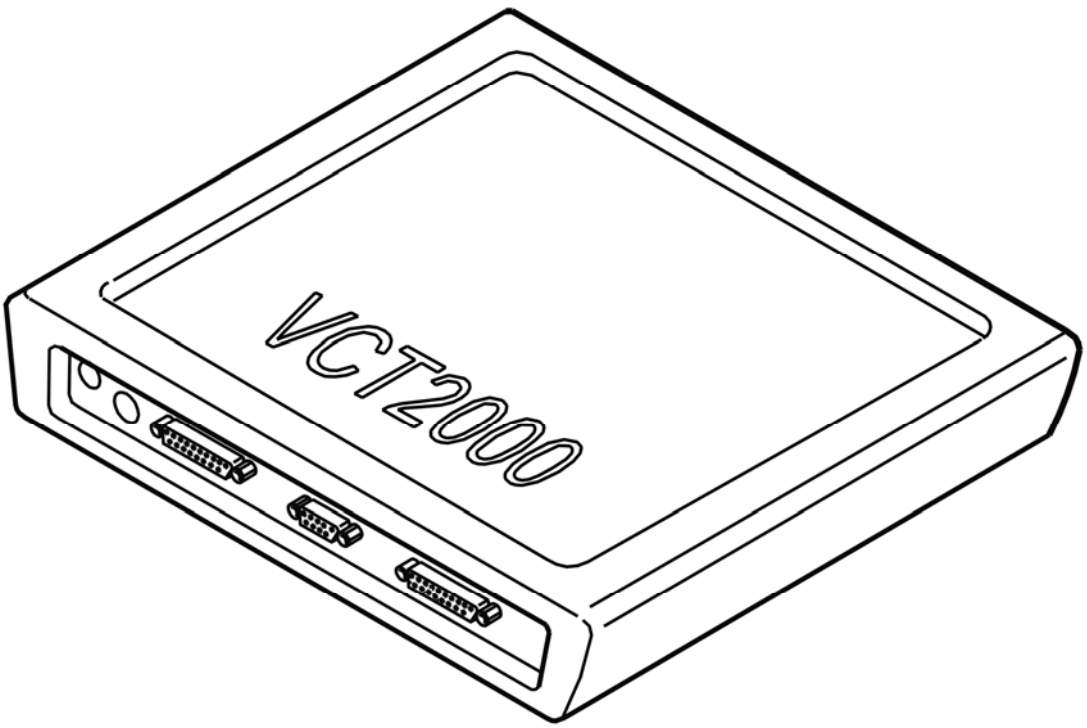

Fig. 55: Identifying VCT2000 Diagnostic Tool Symbol In VIDA
Courtesy of VOLVO CARS CORPORATION

- **Continue**

Refer to **PROGRAMMING THE DISTANCE COVERED FOR SERVICE**

RESETTING THE ODOMETER SETTING

RESETTING THE ODOMETER SETTING (MILES)

- Ignition on

CAUTION: It is only possible to program this parameter once and then only if the reading is below 310 miles. It may be illegal to change the odometer setting in the driver information module (DIM).

To reset the odometer setting, click the VCT2000 symbol.

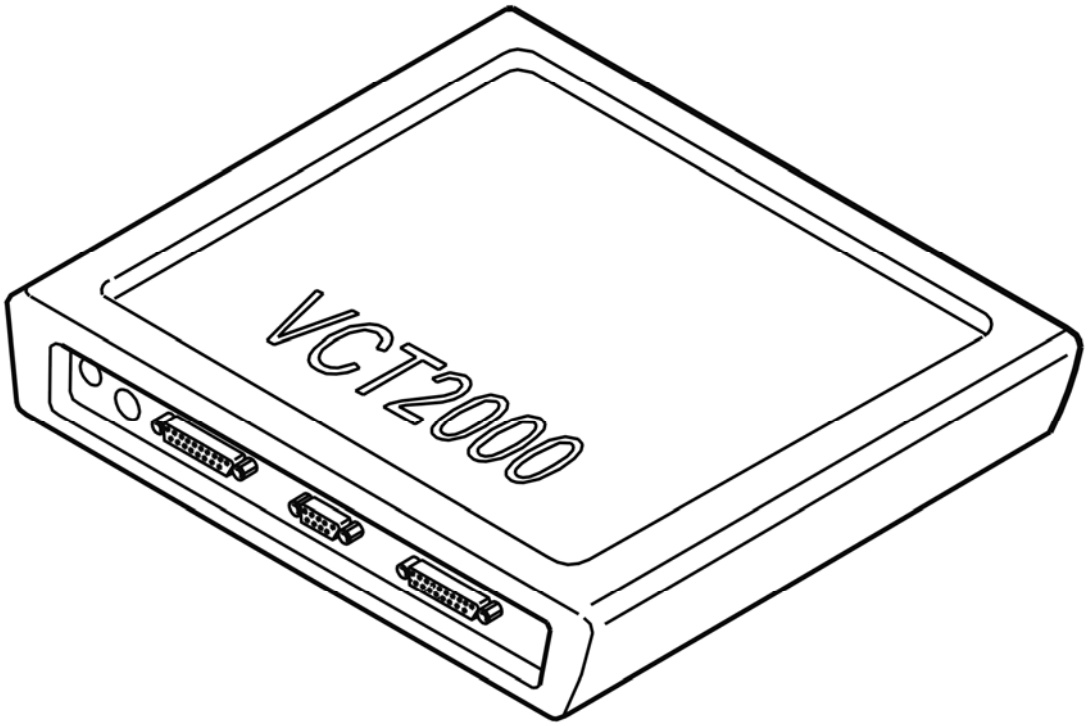

Fig. 56: Identifying VCT2000 Diagnostic Tool Symbol In VIDA
Courtesy of VOLVO CARS CORPORATION

- **Continue**

Refer to **PROGRAMMING DISTANCE CONDITIONS FOR SERVICE**

PROGRAMMING THE DISTANCE COVERED FOR SERVICE

PROGRAMMING THE DISTANCE COVERED FOR SERVICE (KM)

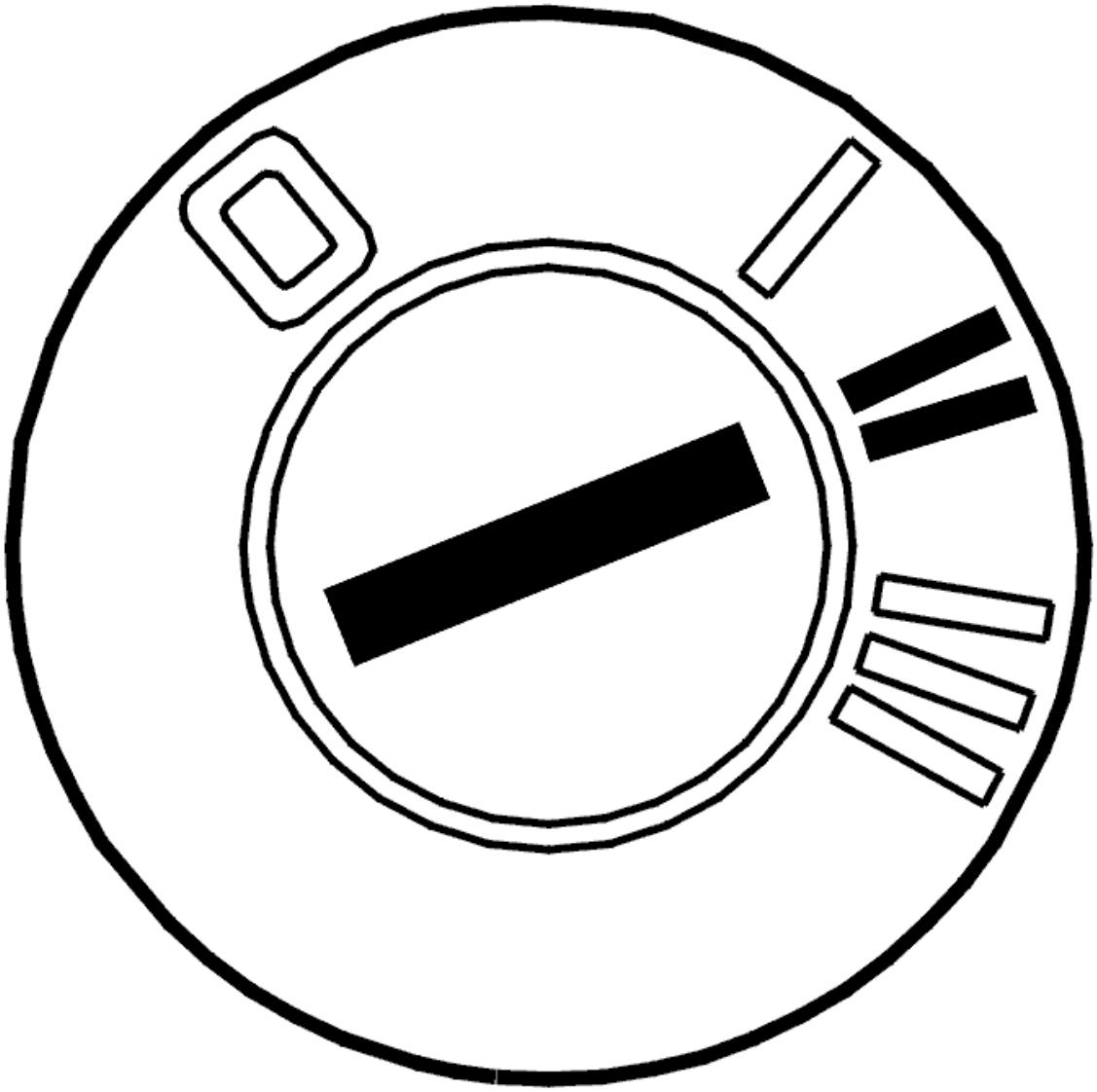

Fig. 57: Identifying Ignition ON
Courtesy of VOLVO CARS CORPORATION

- Ignition on.

  There are three service parameter units which can be programmed. Using this parameter, the number of km (miles) is set which the car must cover before the SRL lamp switches on. (Service reminder lamp)

  Choices can be made between 5000, 7500, 10000, 15000 or 20000 km (miles).

Read the programmed data.

If the service parameter is to be changed, mark the desired value in the scrolling list and start the programming.

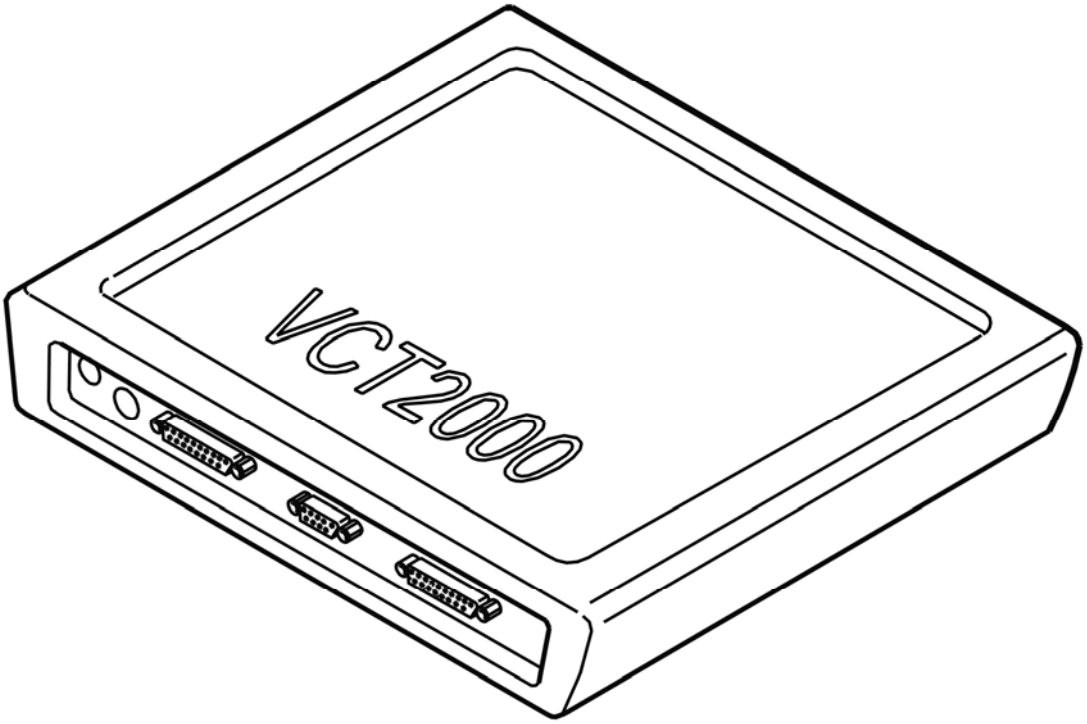

Fig. 58: Identifying VCT2000 Diagnostic Tool Symbol In VIDA
Courtesy of VOLVO CARS CORPORATION

- **Continue**

Refer to **PROGRAMMING THE SERVICE TIME PARAMETERS**

PROGRAMMING DISTANCE CONDITIONS FOR SERVICE

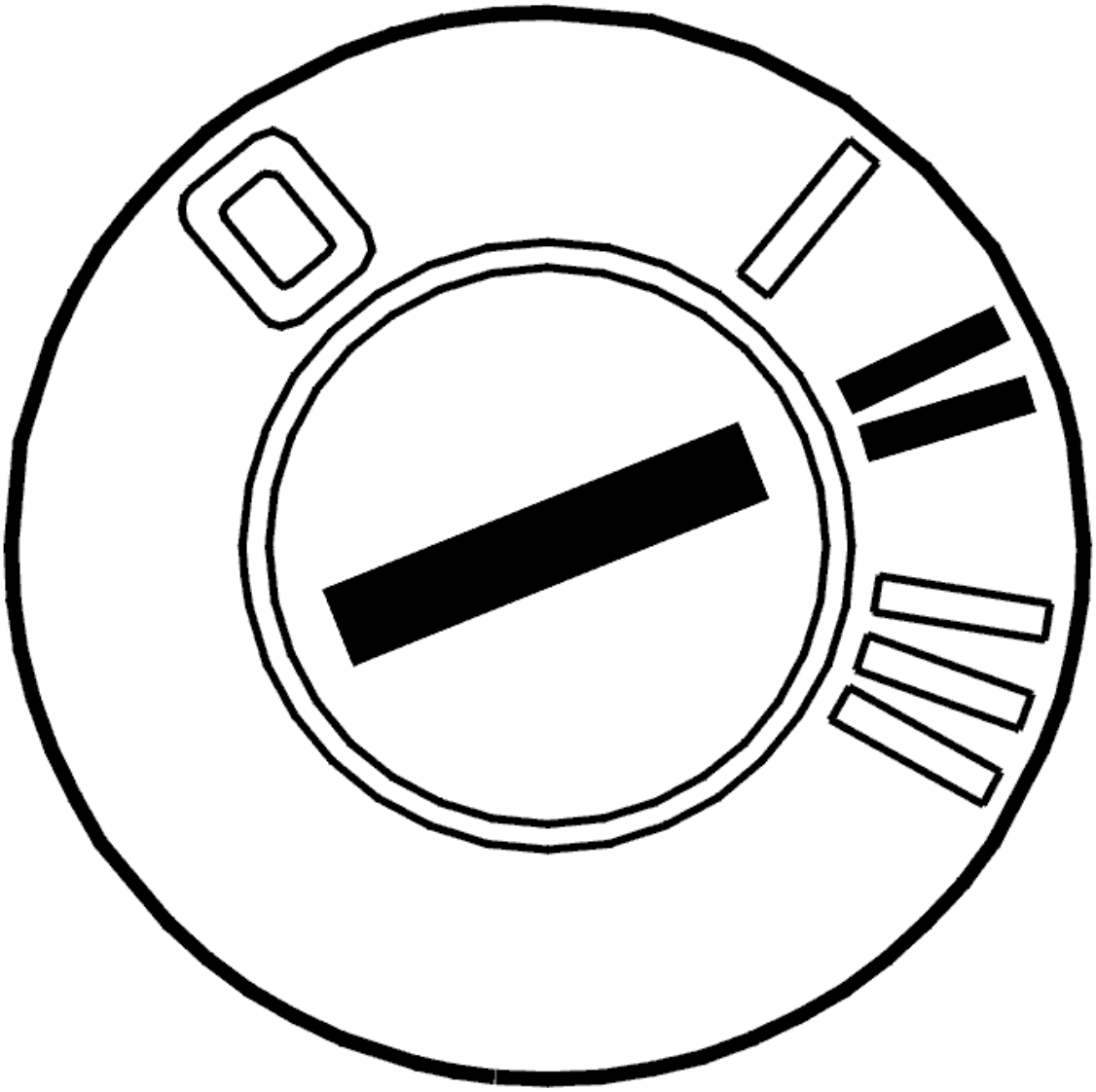

Fig. 59: Identifying Ignition ON
Courtesy of VOLVO CARS CORPORATION

- Ignition on.

  There are three programmable service parameters. This parameter is used to set the number of miles a car can be driven before the Service Reminder Indicator (SRI) is lit. (Service reminder lamp)

  2, 500, 5, 000, 6000, 7, 500, 10, 000 or 12, 000 miles can be selected.

  Read off the parameter that is programmed.

  To change the service parameter, mark the desired value in the scrolling list and start programming.

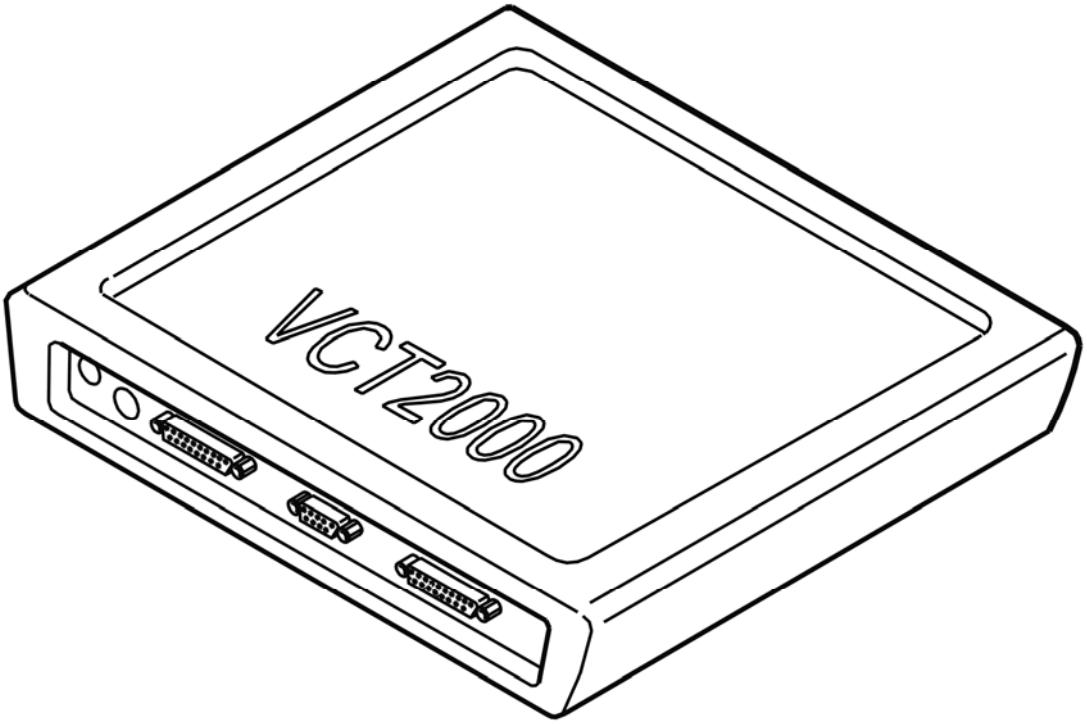

Fig. 60: Identifying VCT2000 Diagnostic Tool Symbol In VIDA
Courtesy of VOLVO CARS CORPORATION

- **Continue**

  Refer to **PROGRAMMING THE SERVICE TIME PARAMETERS**

PROGRAMMING THE SERVICE TIME PARAMETERS

Fig. 61: Checking Traffic Load On CAN Cables
Courtesy of VOLVO CARS CORPORATION

There are three service parameters that can be programmed. This parameter is used to set the number of months before the Service Reminder Indicator (SRI) lights.

The following options are available:

- 6 months

- 12 months

Read the input data.

If the service parameter is to be changed, key the necessary value into the scrolling list and start the programming.

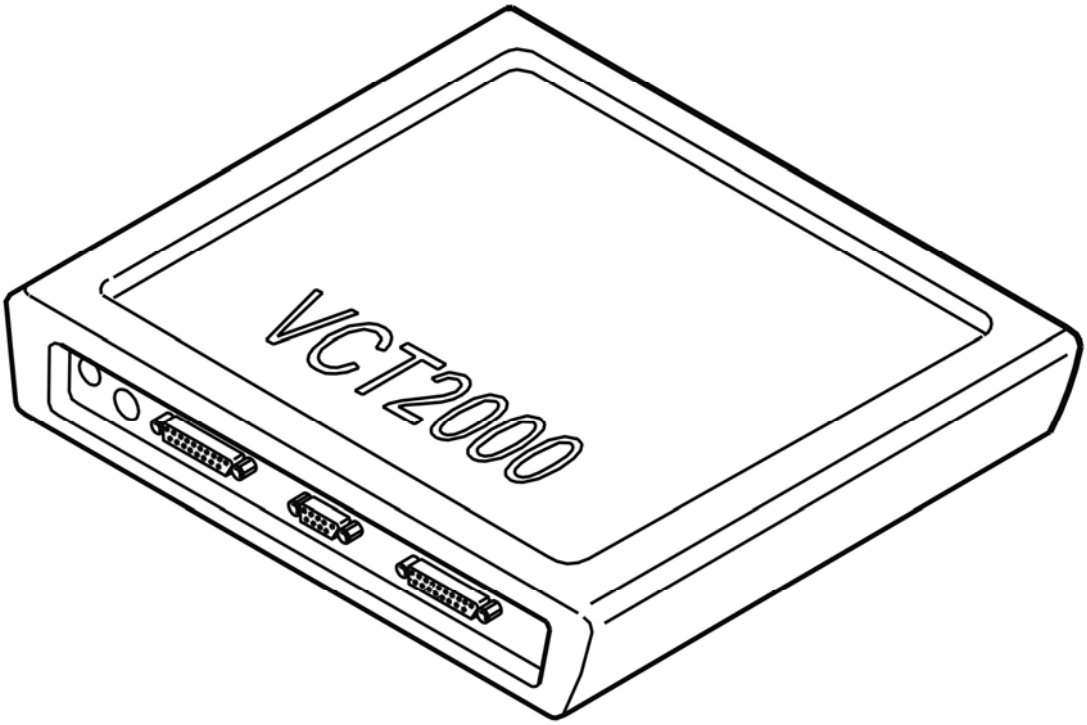

Fig. 62: Identifying VCT2000 Diagnostic Tool Symbol In VIDA
Courtesy of VOLVO CARS CORPORATION

- **Continue**

  Refer to **PROGRAMMING THE ENGINE SERVICE TIME PARAMETERS**

PROGRAMMING THE ENGINE SERVICE TIME PARAMETERS

There are three service parameter units which can be programmed. Using these parameters, the number of hours is set which the engine may run before the SRL lamp switches on. (Service reminder lamp).

The permitted settings are 500, 750 or 1000 hours.

Read the input data.

If the service parameter is to be changed, key the necessary value into the scrolling list and start the programming.

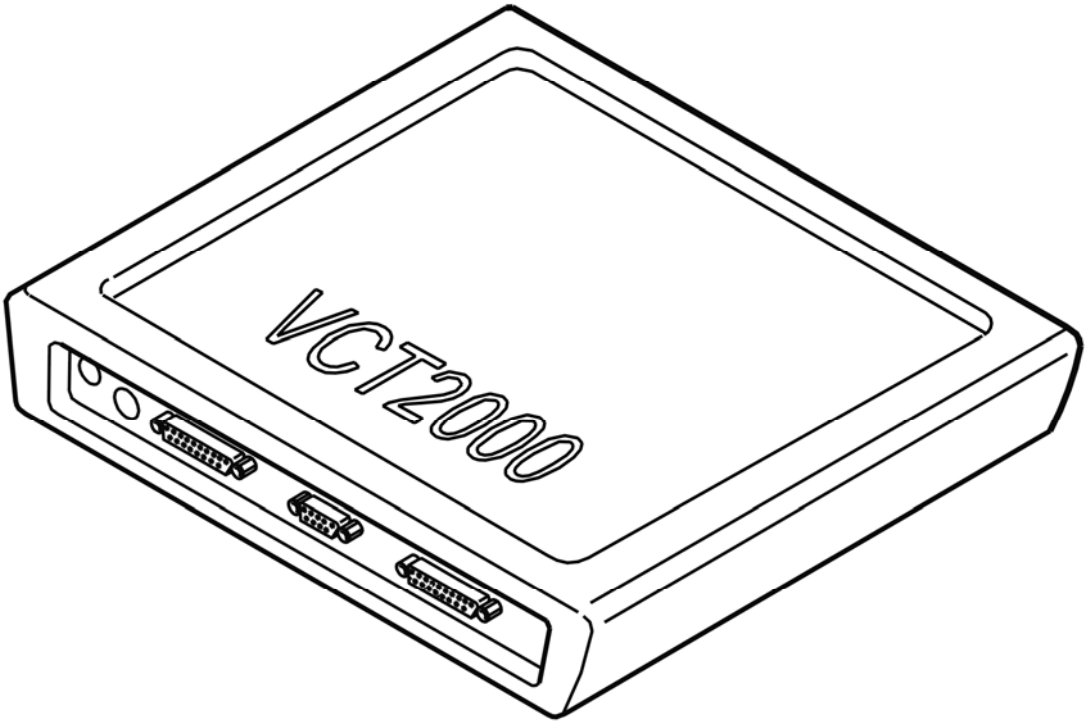

Fig. 63: Identifying VCT2000 Diagnostic Tool Symbol In VIDA
Courtesy of VOLVO CARS CORPORATION

- **Continue**

  Refer to **PROGRAMMING OF ZEROS (CUSTOMER PREFERENCE)**

PROGRAMMING OF ZEROS (CUSTOMER PREFERENCE)

The zeros in the instrument can be set to be displayed or hidden. If the zeros are displayed, all the positions before the number of kilometres covered are filled with zeros, and if the zeros are hidden these positions remain blank.

Read the input data.

If the value is to be changed, enter the necessary value into the scrolling list and start the programming.

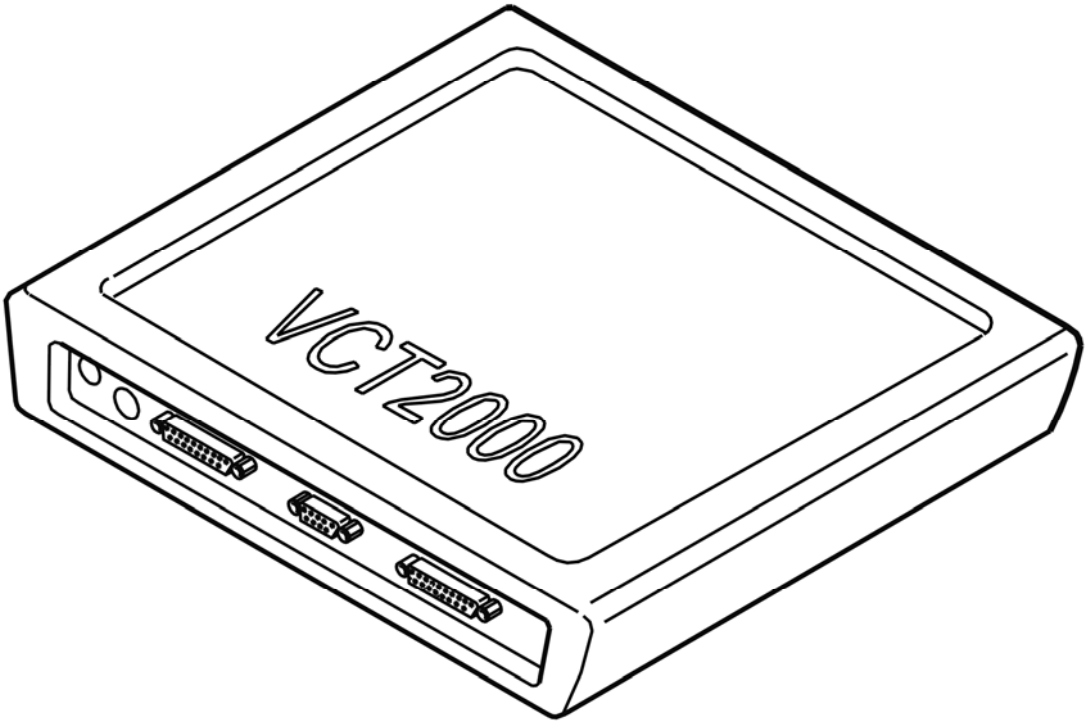

Fig. 64: Identifying VCT2000 Diagnostic Tool Symbol In VIDA
Courtesy of VOLVO CARS CORPORATION

- **Continue**

  Refer to **PROGRAMMING UNITS OF MEASUREMENT FOR TEMPERATURE (CUSTOMER PROGRAMMABLE)**

PROGRAMMING UNITS OF MEASUREMENT FOR TEMPERATURE (CUSTOMER PROGRAMMABLE)

The units of measurement for the temperature can be set.

Options are: Celsius or Fahrenheit.

Read off the parameter that is programmed.

To change the value, mark the desired value in the scrolling list and start programming.

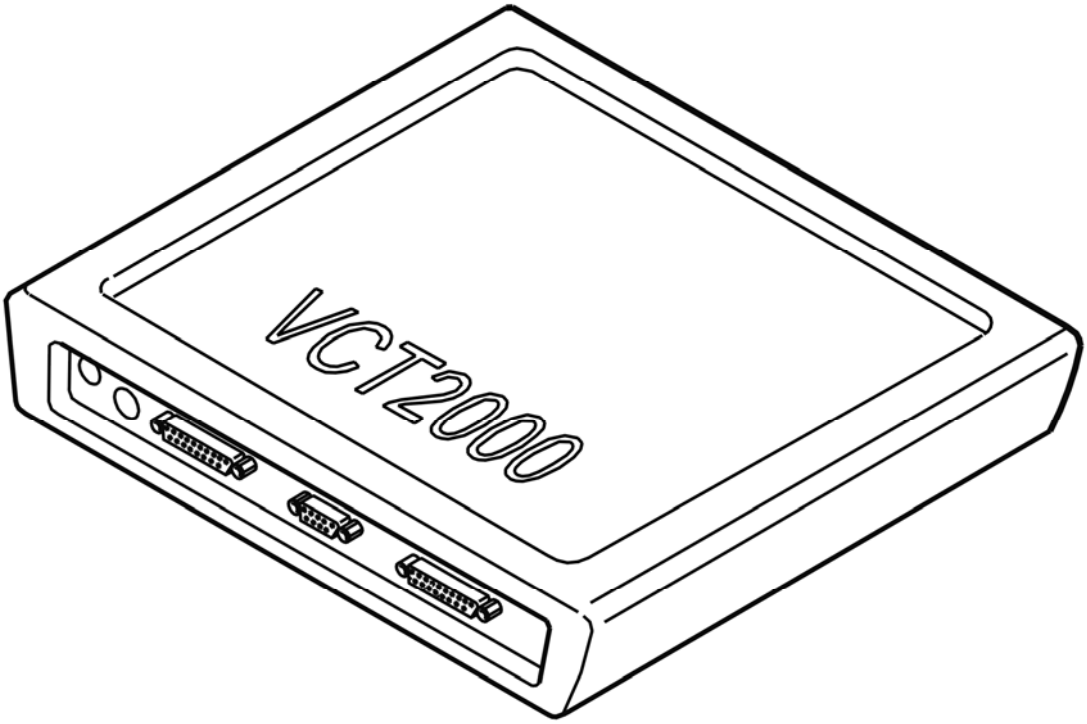

Fig. 65: Identifying VCT2000 Diagnostic Tool Symbol In VIDA
Courtesy of VOLVO CARS CORPORATION

- **Continue**

  Refer to **PROGRAMMING OF TRIP COMPUTER UNIT (CUSTOMER PREFERENCE)**

PROGRAMMING OF TRIP COMPUTER UNIT (CUSTOMER PREFERENCE)

A desired unit may be set for the trip computer if you have purchased this function. The permitted choices are litres, GB gallons or US gallons.

Read the input data.

If the value is to be changed, enter the necessary value into the scrolling list and start the programming.

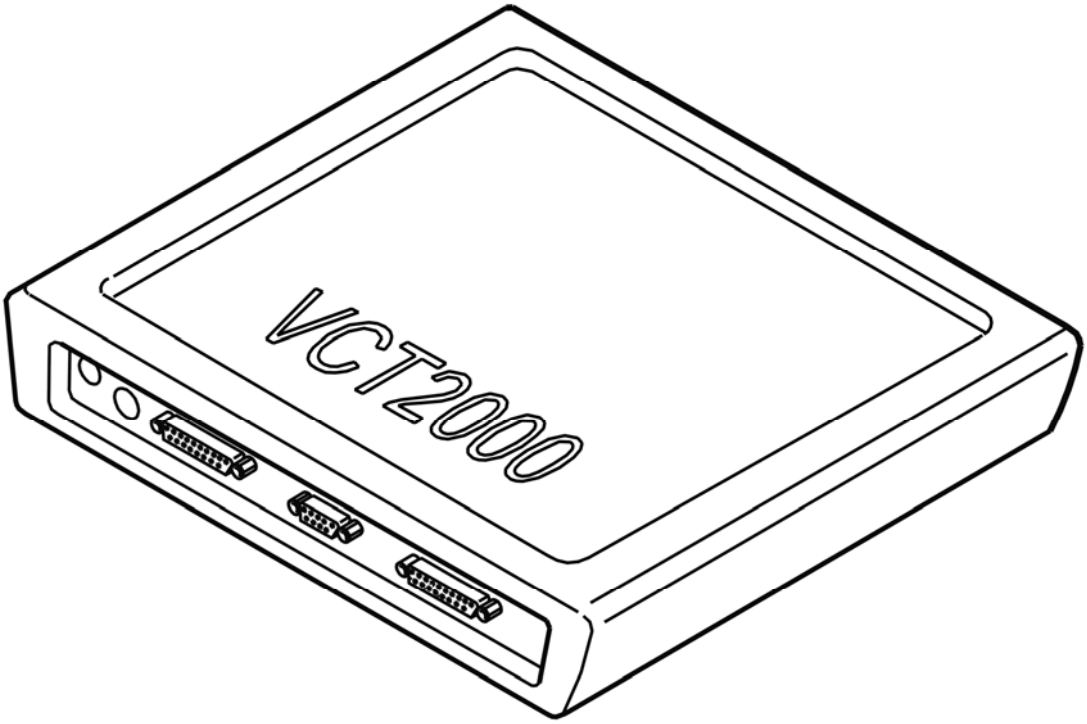

Fig. 66: Identifying VCT2000 Diagnostic Tool Symbol In VIDA
Courtesy of VOLVO CARS CORPORATION

- **Continue**

  Refer to **PROGRAMMING OF CLOCK BY CUSTOMER**

PROGRAMMING OF CLOCK BY CUSTOMER

The clock may be displayed.

This may be either a 12 hour display or 24 hour display.

Read the input data.

If the value is to be changed, key the necessary value into the scrolling list and start the programming.

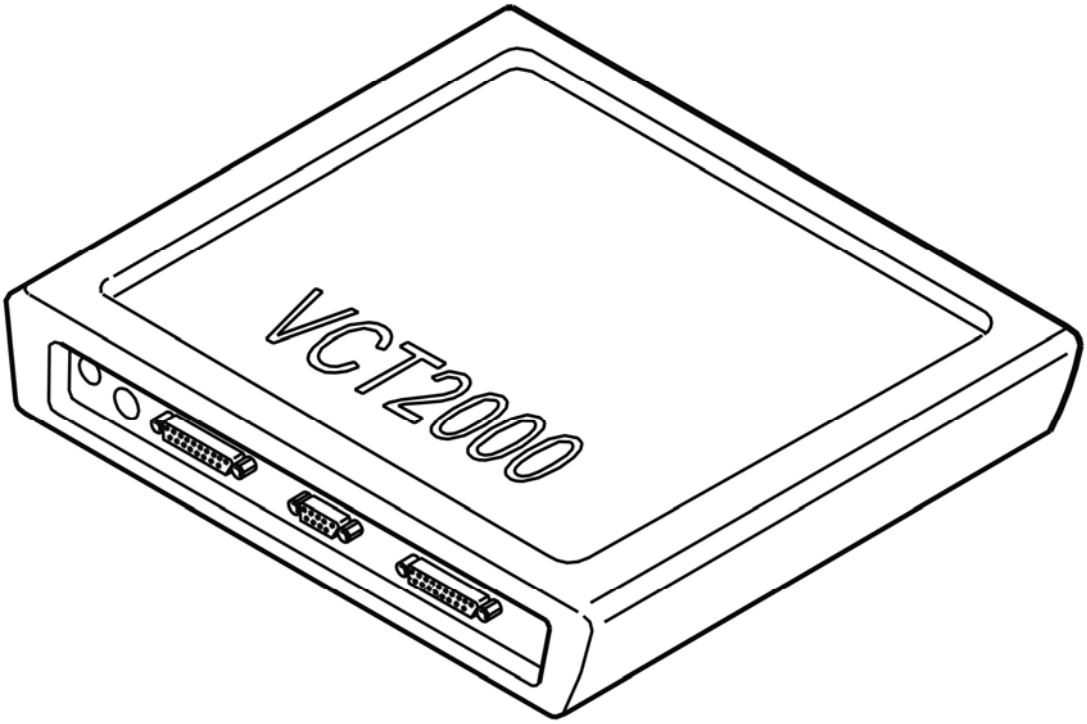

Fig. 67: Identifying VCT2000 Diagnostic Tool Symbol In VIDA
Courtesy of VOLVO CARS CORPORATION

ACCESSORIES AND BODY, CAB

Media, Communication And Navigation - Cleaning, Inspection and Adjustment

COMMUNICATION RADIO, MOBILE TELEPHONE

VOLVO ON CALL, ACTIVATION

ACTIVATION PROCEDURE

Access the Volvo On Call database. Volvo VIDA is necessary.

VOLVO ON CALL, DEACTIVATION (CANCELING)

DEACTIVATION PROCEDURE

To deactivate Volvo On Call at the request of the customer, switch off the internal SIM card for the Volvo On Call subscription.

VOLVO ON CALL, RE-ACTIVATION

RE-ACTIVATION PROCEDURE

Reactivating Volvo On Call is carried out when the subscription has previously expired.

ACCESSORIES AND EQUIPMENT

Media, Communication And Navigation - Component Location

COMPONENT LOCATION, AUDIO MODULE (AUD) (2003-06)

LOCATION OF COMPONENTS

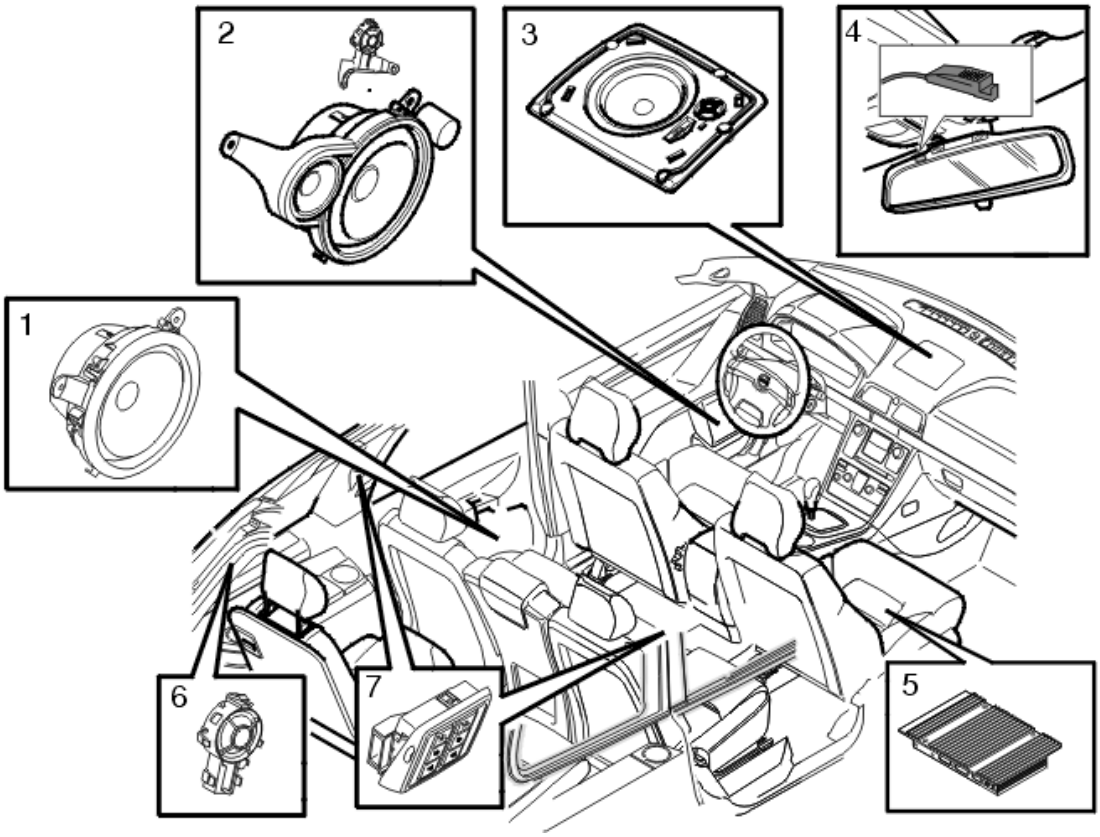

Fig. 1: Identifying Audio Module (AUD) Components
Courtesy of VOLVO CARS CORPORATION

Overview

1. Loudspeakers left and right rear door
2. Loudspeaker and treble loudspeakers (only certain models) left and right front door
3. Center loudspeaker (certain models only)
4. Microphone rear view mirror
5. Audio module (AUD)
6. Treble loudspeakers left and right D-post (only certain models)
7. Headset panel left and right C-post.

COMPONENT LOCATION, INFOTAINMENT (2009-10)

LOCATION OF COMPONENTS

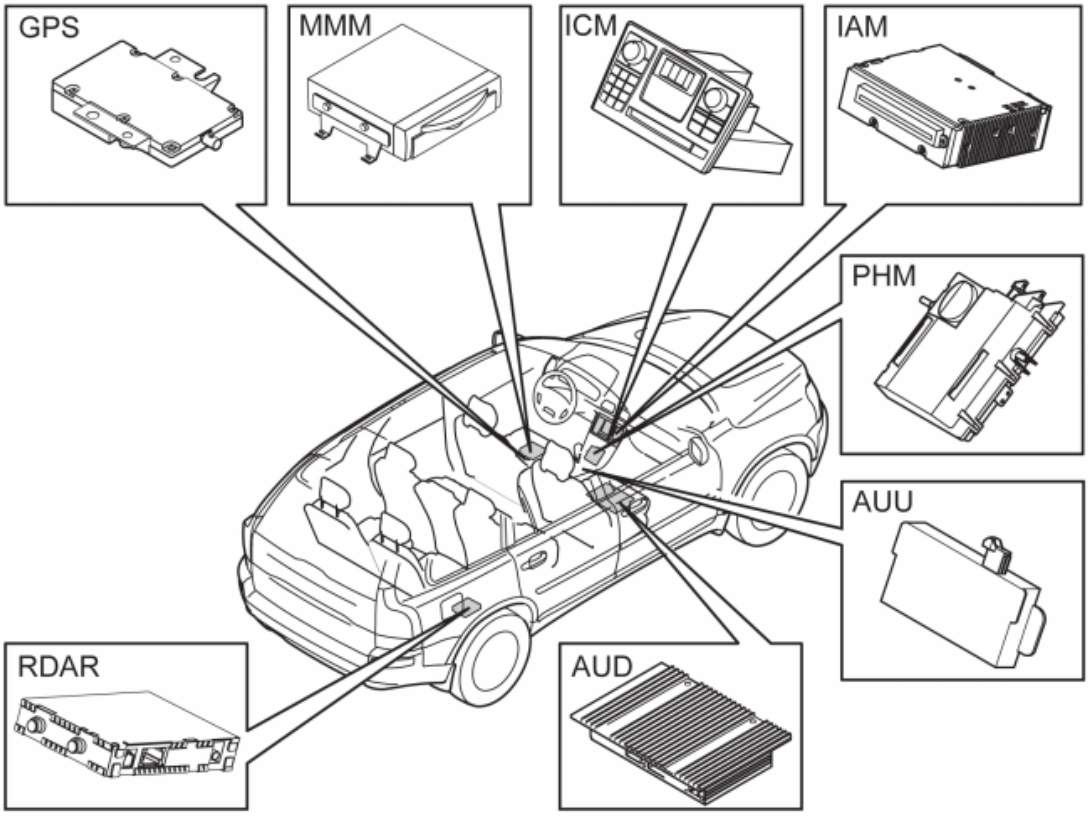

Fig. 2: Identifying Infotainment Components
Courtesy of VOLVO CARS CORPORATION

The graphic shows the location of components included in the infotainment system. The control modules are numbered in the order they are located in the MOST network.

1. Infotainment control module (ICM)
2. Remote Digital Audio Receiver (RDAR)/Phone module (PHM)
3. Audio module (AUD)
4. Accessory USB unit (AUU)
5. Multimedia module (MMM)/Global positioning system module (GPS)
6. Integrated Audio Module (IAM)

COMPONENT LOCATION, INFOTAINMENT (2011-12)

LOCATION OF COMPONENTS

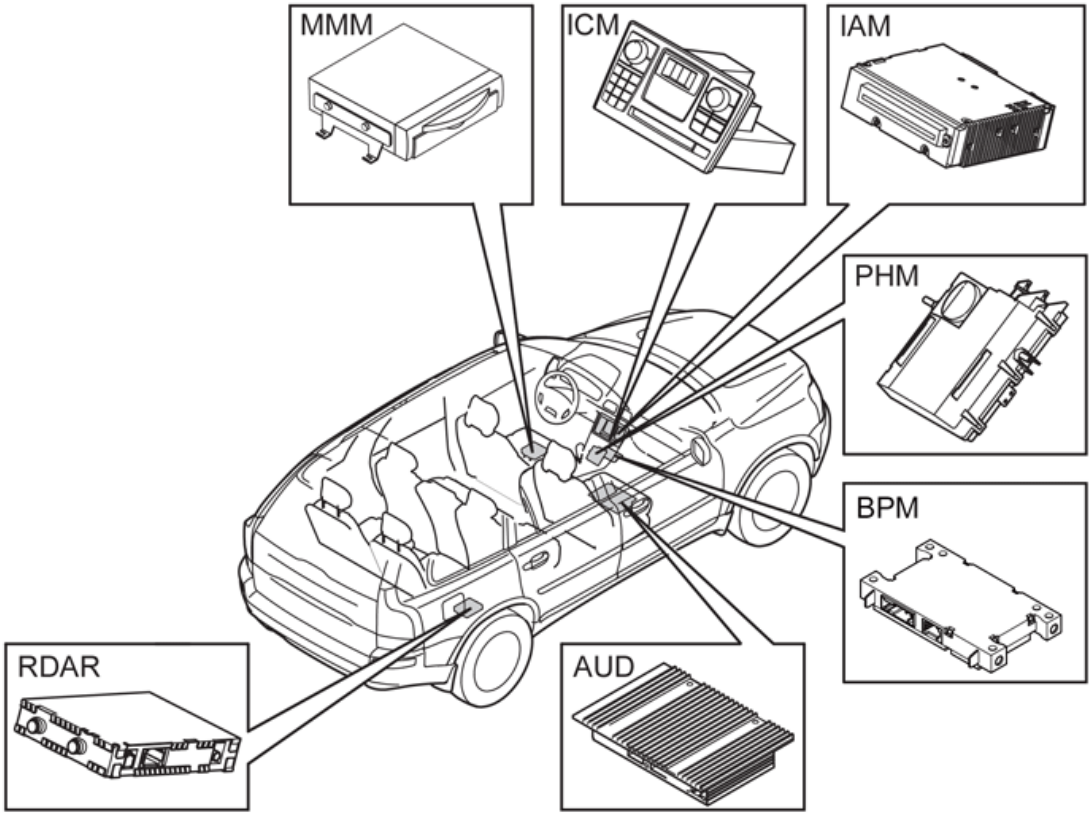

Fig. 3: Identifying MOST Network Control Modules (Up To Seven)
Courtesy of VOLVO CARS CORPORATION

The image shows the location of components for the control modules that are part of the infotainment system. The control modules are located in the MOST network in the following order:

1. Infotainment control module (ICM)
2. Remote Digital Audio Receiver (RDAR) / Phone module (PHM)
3. Audio module (AUD)
4. Multimedia module (MMM)
5. Integrated Audio Module (IAM)
6. Bluetooth phone module (BPM)

COMPONENT LOCATION, INFOTAINMENT (2007-08)

LOCATION OF COMPONENTS

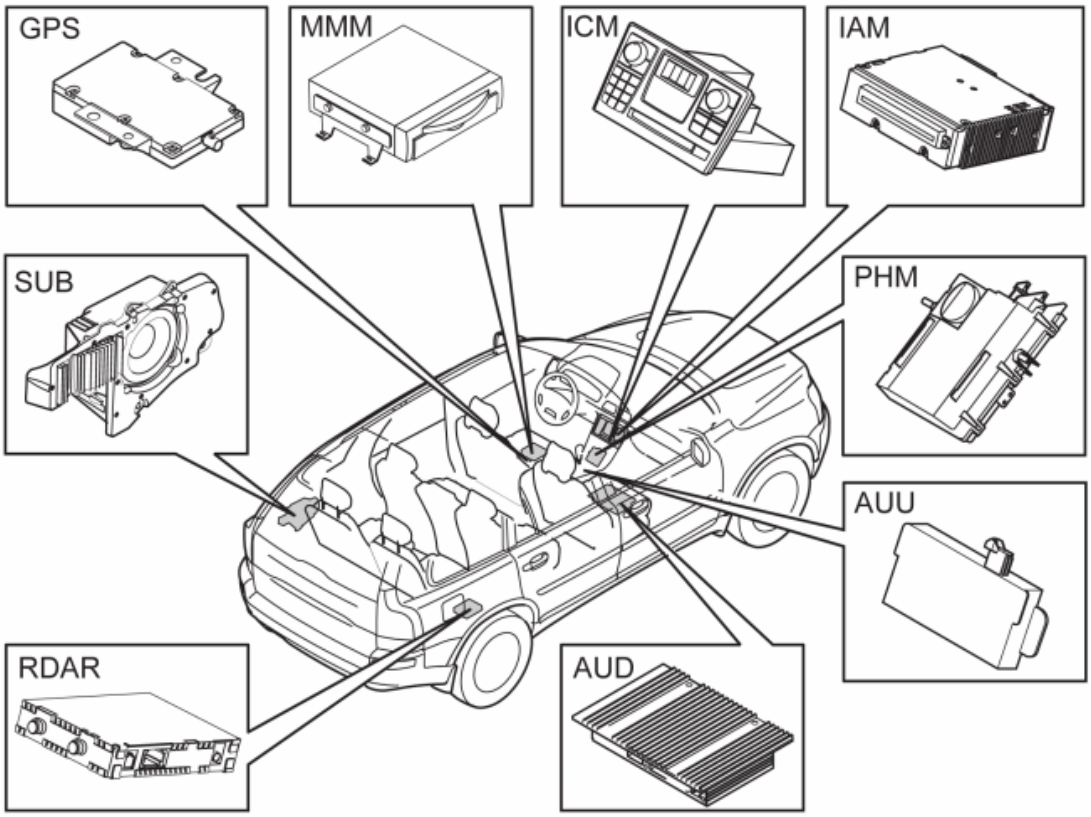

Fig. 4: Control Modules In MOST Network
Courtesy of VOLVO CARS CORPORATION

The graphics shows the location of components included in the infotainment system. The control modules are numbered in the order they are located in the MOST network.

1. Infotainment control module (ICM)
2. Remote Digital Audio Receiver (RDAR)/Phone module (PHM)
3. Audio module (AUD)
4. Accessory USB unit (AUU)
5. Multimedia module (MMM)/Global positioning system module (GPS)
6. Integrated Audio Module (IAM)
7. Subwoofer module (SUB)

COMPONENT LOCATION, INTEGRATED AUDIO MODULE (IAM) (2007-12)

LOCATION OF COMPONENTS

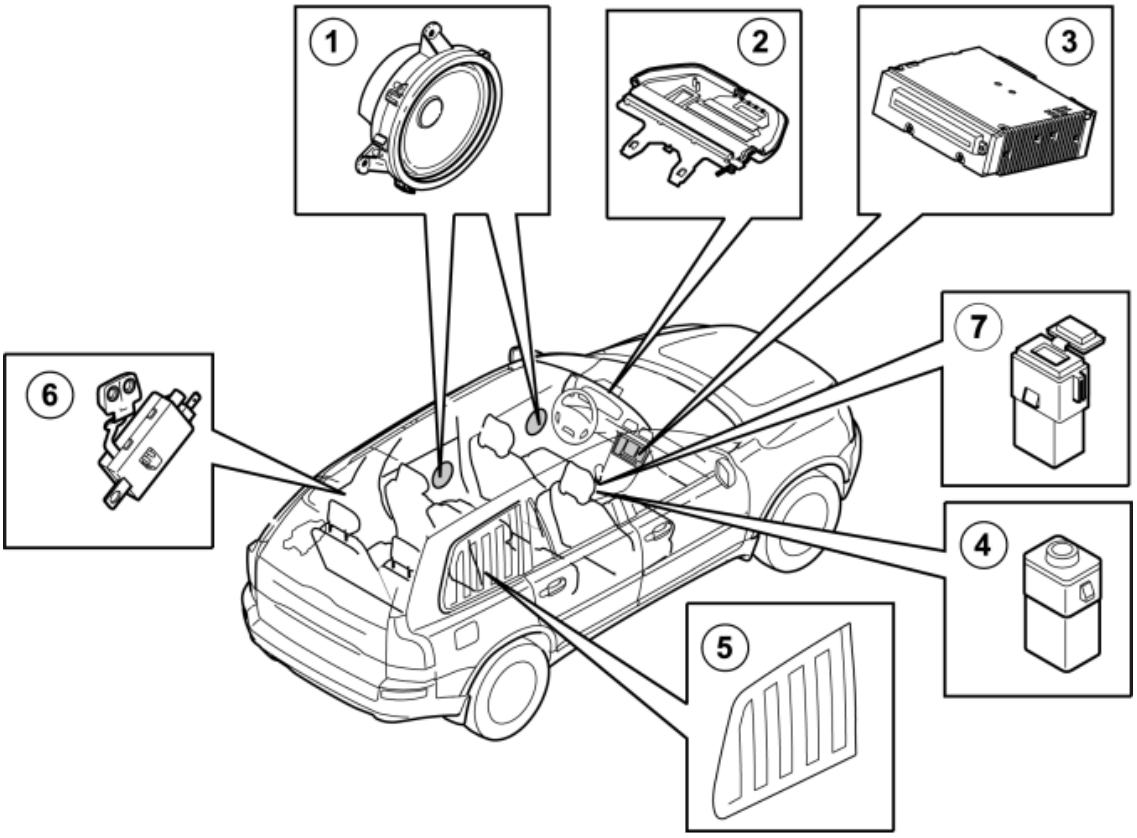

Fig. 5: Identifying Integrated Audio Module (IAM) Components
Courtesy of VOLVO CARS CORPORATION

Overview

1. Speaker.
2. GSM/GPS antenna.
3. Integrated audio module (IAM).
4. AUX input.
5. AM/FM antenna.
6. Antenna amplifier.
7. USB/iPod-connection (from structure week 200848).

COMPONENT LOCATION, REMOTE DIGITAL AUDIO RECEIVER (RDAR) (2007-12)

LOCATION OF COMPONENTS

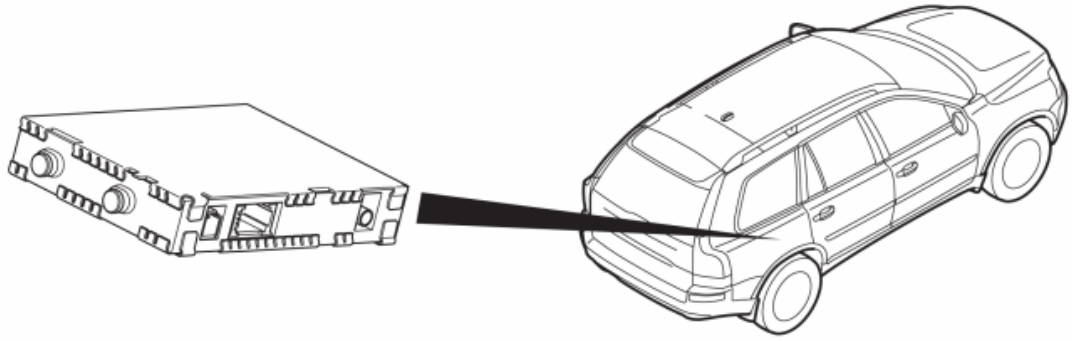

Fig. 6: Identifying Remote Digital Audio Receiver (RDAR)
Courtesy of VOLVO CARS CORPORATION

Overview

- Remote Digital Audio Receiver (RDAR)

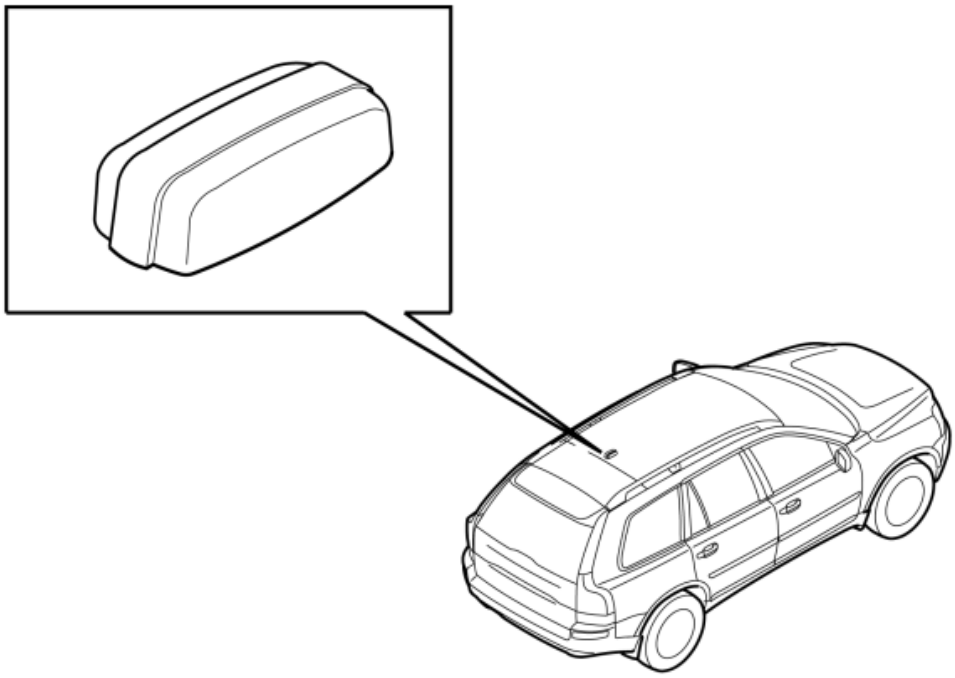

Fig. 7: Identifying Antenna Digital Radio
Courtesy of VOLVO CARS CORPORATION

Overview

- Antenna digital radio

LOCATION OF COMPONENTS, INFOTAINMENT (2003-06)

LOCATION OF COMPONENTS

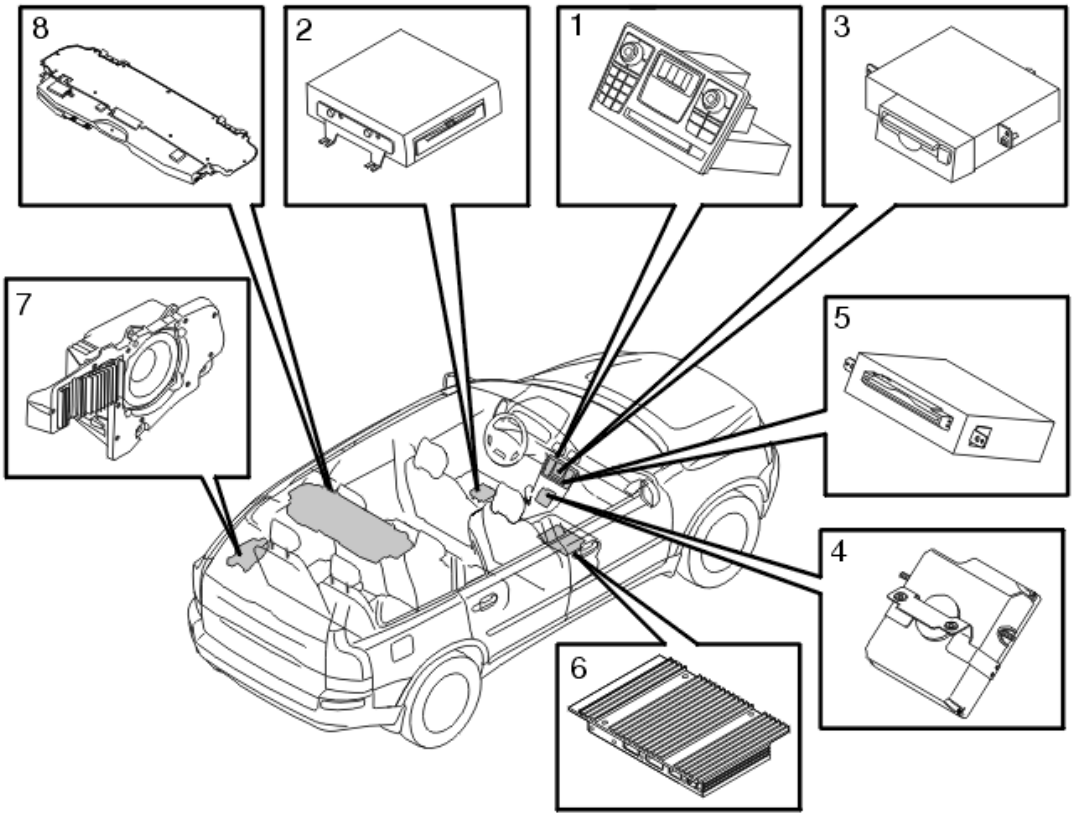

Fig. 8: Identifying MOST Network Control Modules (Up To Eight)
Courtesy of VOLVO CARS CORPORATION

The illustration shows the location of components included in the infotainment system. The control modules are numbered in the order they are located in the MOST network.

Overview

1. Infotainment Control Module (ICM)
2. Multimedia module (MMM)
3. MD module (MP1)
4. Phone module (PHM)
5. CD module (MP2)
6. Audio module (AUD)
7. Subwoofer module (SUB)
8. Antenna Module (ATM).

LOCATION OF COMPONENTS, REAR SEAT ENTERTAINMENT MODULE (RSE), GENERATION 4.2 (2007-08)

LOCATION OF COMPONENTS

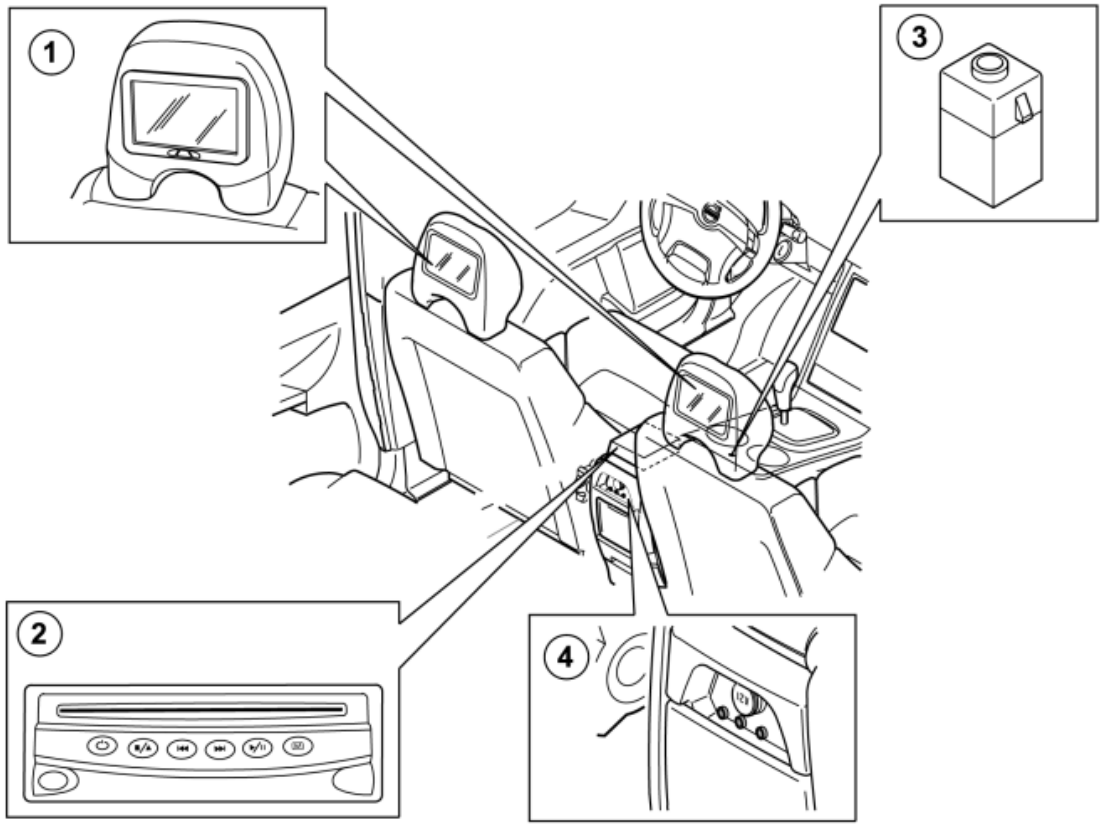

Fig. 9: Identifying Headrest Screen, DVD-Player, AUX-Input And AV-Panel
Courtesy of VOLVO CARS CORPORATION

1. Screen, headrest (16/81A, B).
2. DVD-player with integrated Rear seat entertainment module (RSE) (16/109).
3. AUX-input (16/123.2).
4. AV-panel (16/123.3).

LOCATION OF COMPONENTS, SYSTEM FOR REAR SEAT ENTERTAINMENT, GENERATION 4.1 (2006-07)

COMPONENT POSITION

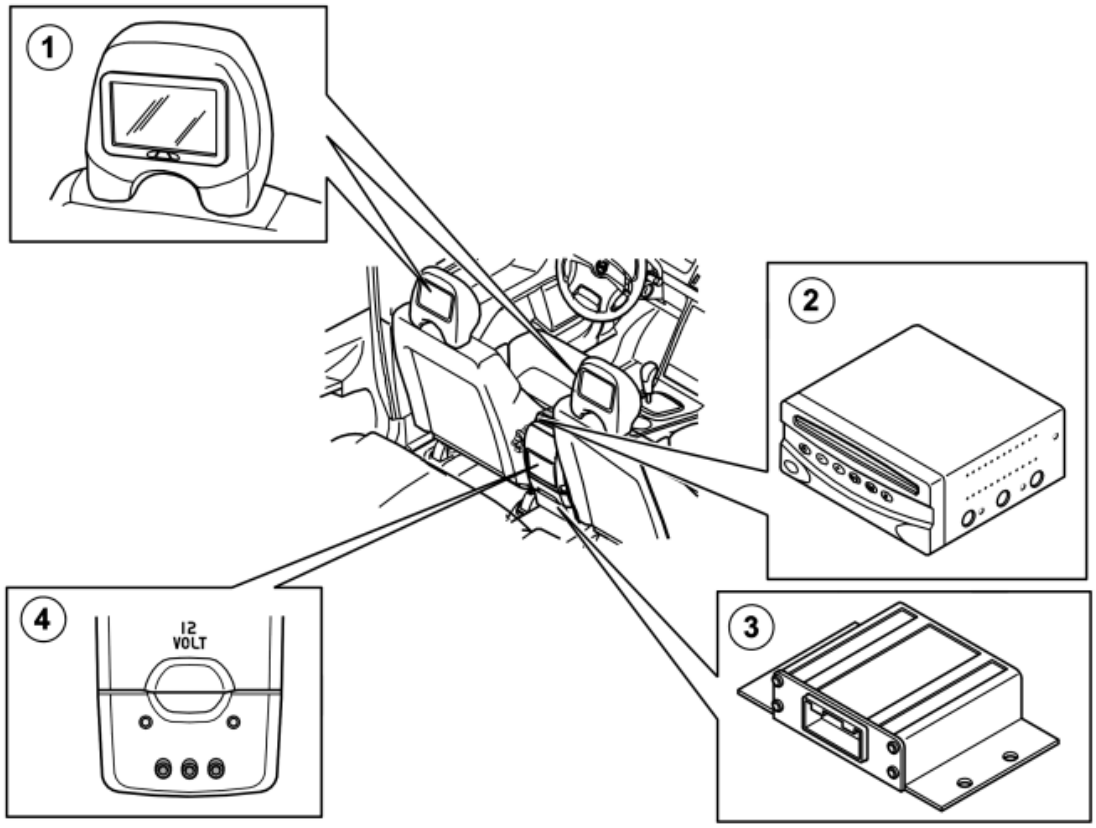

Fig. 10: Identifying Rear Seat Entertainment Components
Courtesy of VOLVO CARS CORPORATION

1. Screen, headrest (16/81A, B).
2. DVD-player with integrated Rear seat entertainment module (RSE) (16/82).
3. Rear audio separation module (16/122).
4. Aux-outlet (16/123).

LOCATION OF COMPONENTS, SYSTEM FOR REAR SEAT ENTERTAINMENT, GENERATION 4.3 (2009-12)

LOCATION OF COMPONENTS

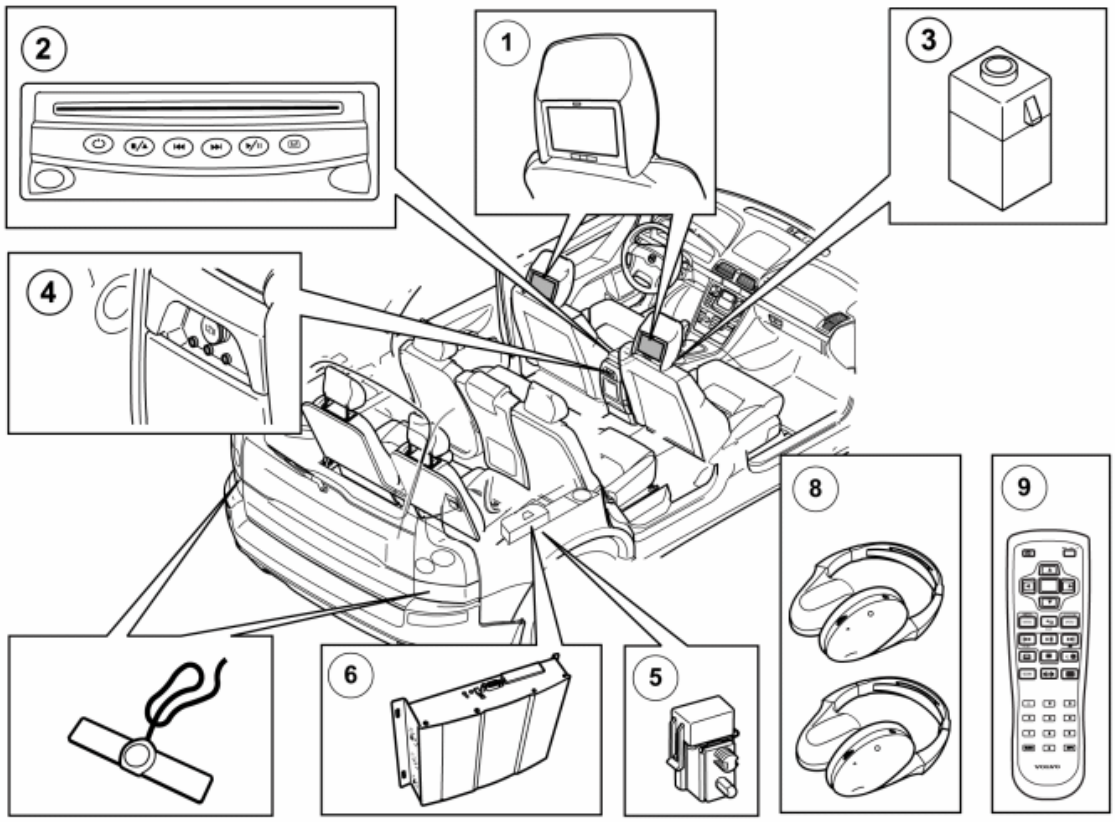

Fig. 11: Rear Seat Entertainment System Components
Courtesy of VOLVO CARS CORPORATION

1. Screen, headrest (16/81A, B).
2. DVD-player with integrated Rear seat entertainment module (RSE) (16/109).
3. AUX input (17/40.1).
4. AV-panel (16/123.3).
5. Digital TV-receiver (DVB-T) (16/36) (if the option is installed).
6. Fuse holder and fuse for TV receiver (only if TC receiver is installed).
7. Antennas (left 16/69, right 16/70) (two) for digital TV receiver (only if TV receiver is installed).
8. Headsets
9. Remote control

REAR SEAT ENTERTAINMENT MODULE (RSE) (EXECUTIVE; PREMIER; 2004-05)

REAR SEAT ENTERTAINMENT MODULE (RSE)

LOCATION OF COMPONENTS

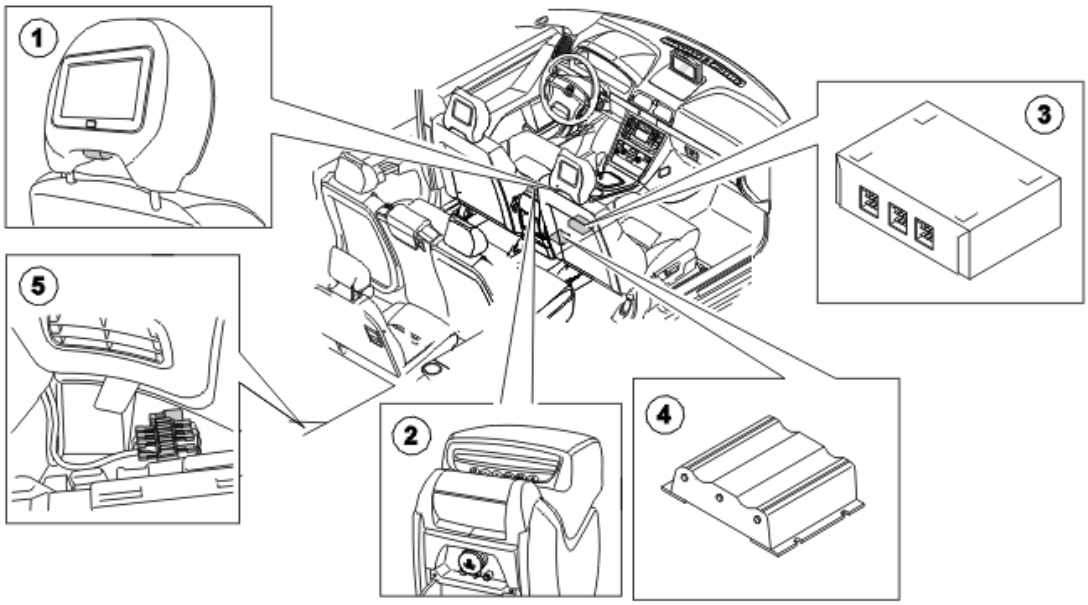

Fig. 12: Identifying Rear Seat Entertainment Module (RSE)
Courtesy of VOLVO CARS CORPORATION

1. Display screen, infra red transmitter
2. DVD
3. Rear seat entertainment module (RSE)
4. Rear audio separation module
5. Fuse holder.

LOCATION OF COMPONENT, BLUETOOTH PHONE MODULE (BPM) (2011-12)

LOCATION OF COMPONENTS

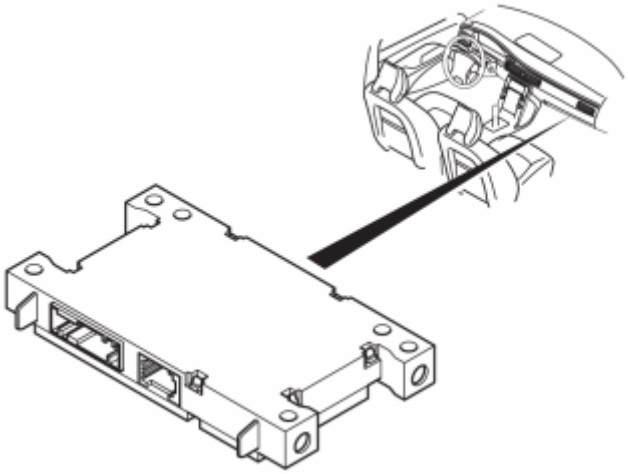

Fig. 13: Locating Bluetooth Phone Module (BPM)
Courtesy of VOLVO CARS CORPORATION

- Bluetooth phone module (BPM)

LOCATION OF COMPONENTS, INFOTAINMENT (2003-06)

LOCATION OF COMPONENTS

see **LOCATION OF COMPONENTS**

LOCATION OF COMPONENTS, PHONE MODULE (PHM) (2006-12)

LOCATION OF COMPONENTS

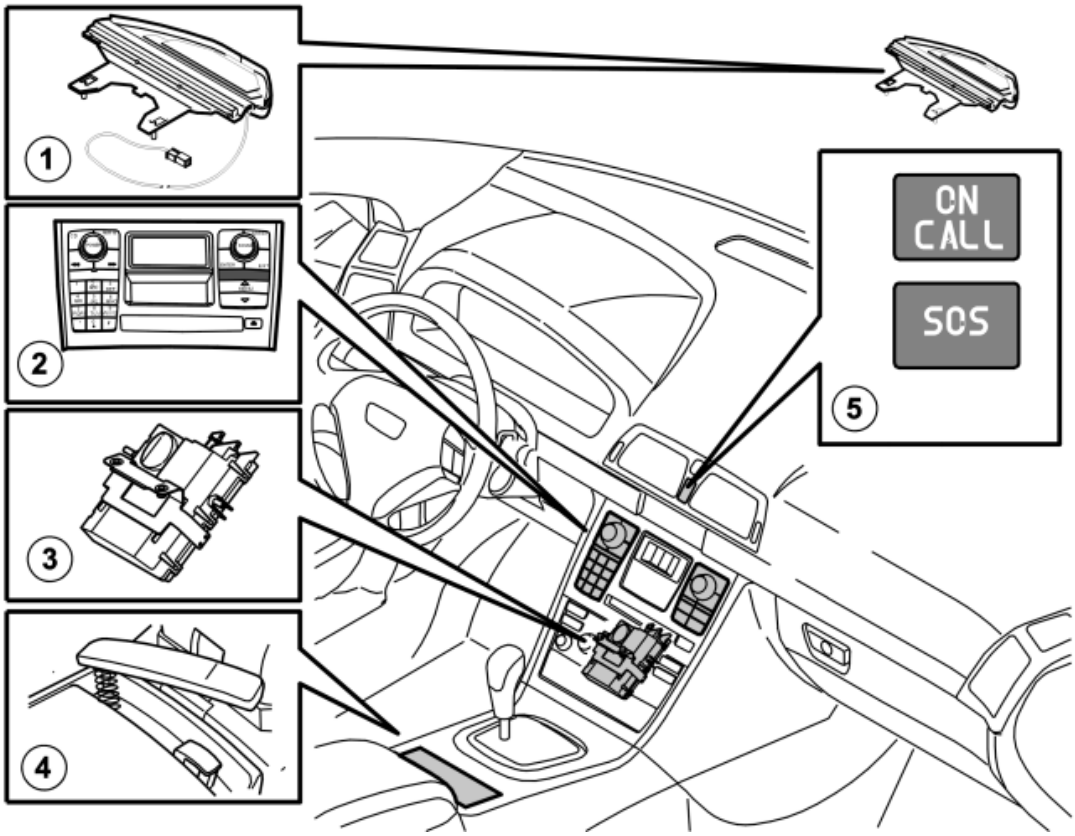

Fig. 14: Identifying Phone Module (PHM) Components
Courtesy of VOLVO CARS CORPORATION

Overview

1. Telephone aerial mounted in front windscreen
2. The SIM card reader is installed in the keypad for the infotainment control module (ICM)
3. Phone module (PHM)
4. Handset.
5. Switch for Volvo On Call.

LOCATION OF COMPONENTS, PHONE MODULE (PHM) (2003-05)

LOCATION OF COMPONENTS

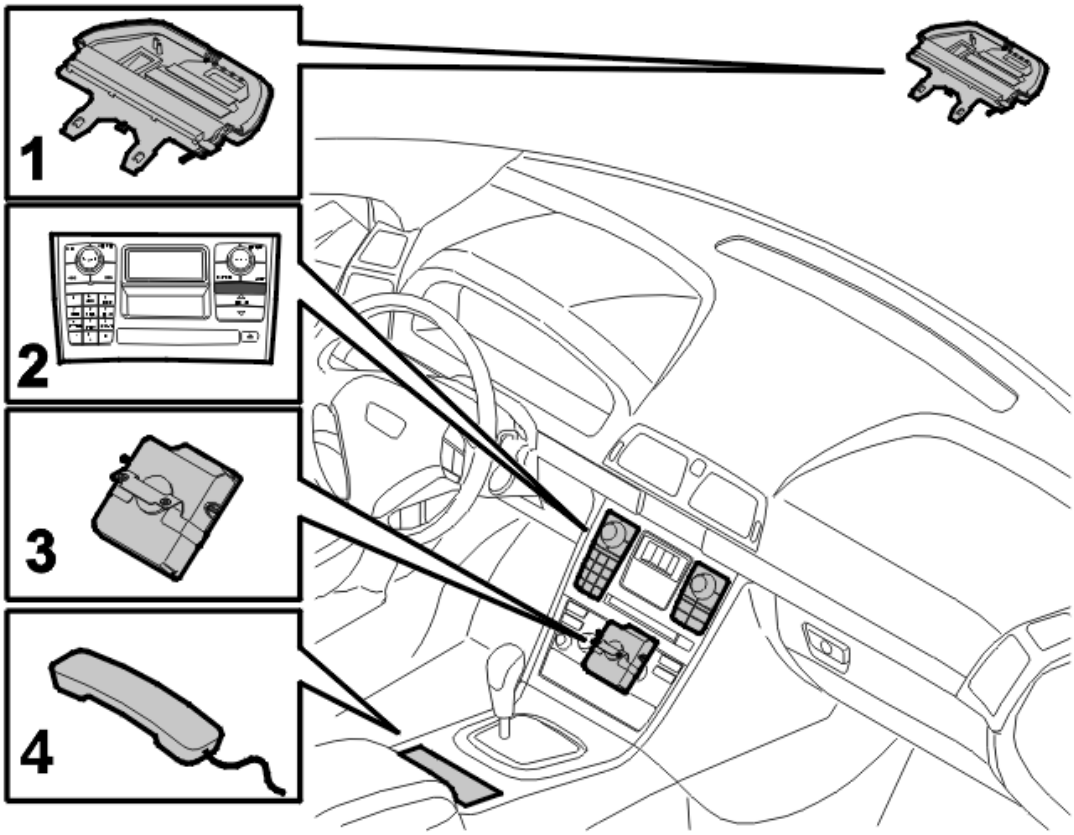

Fig. 15: Identifying Telephone Antenna, SIM Card Reader, Phone Module (PHM) And Handset
Courtesy of VOLVO CARS CORPORATION

Overview

1. Telephone antenna mounted in front windshield
2. The SIM card reader is installed in the keypad for the infotainment control module (ICM)
3. Phone module (PHM)
4. Handset.

LOCATION OF COMPONENTS, ANTENNA MODULE (ATM) (2003-06)

LOCATION OF COMPONENTS

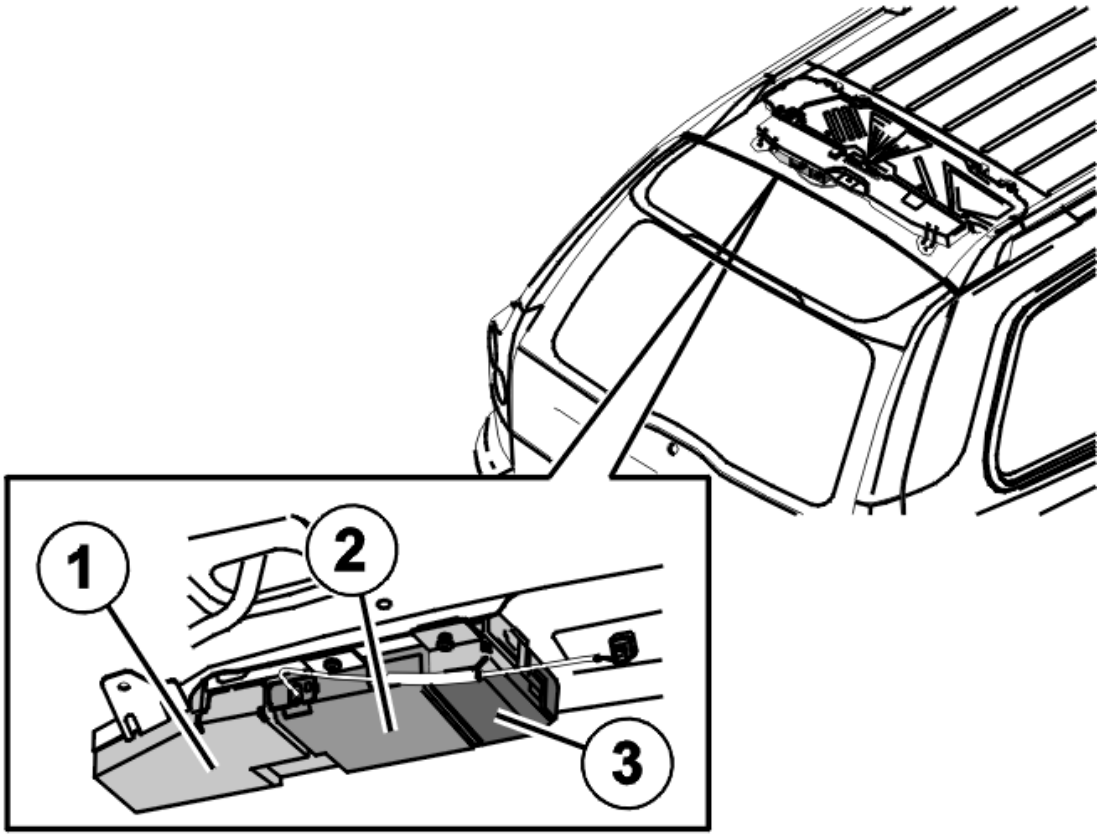

Fig. 16: Identifying AM/FM Tuner, TMC Receiver And GPS Unit
Courtesy of VOLVO CARS CORPORATION

Overview

1. AM/FM Tuner
2. TMC receiver
3. GPS unit.

COMPONENT LOCATION, GLOBAL POSITIONING SYSTEM MODULE (GPS) (2007-12)

LOCATION OF COMPONENTS

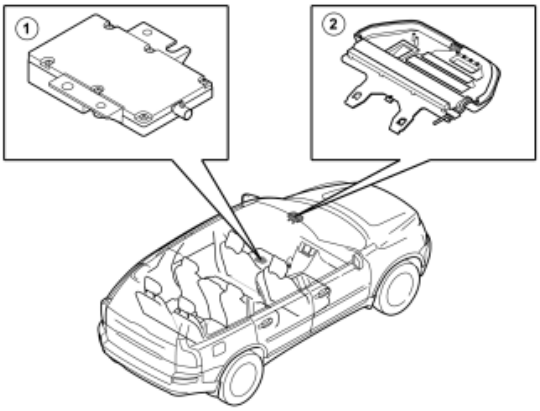

Fig. 17: Identifying GPS Module And Antenna
Courtesy of VOLVO CARS CORPORATION

Overview

1. Global positioning system module (GPS)
2. GPS antenna.

ACCESSORIES AND BODY, CAB

Media, Communication And Navigation - Design and Function

PARKING ASSISTANCE CAMERA (PAC) (2007-2012)

DESIGN

see **DESIGN**

DIAGNOSTIC FUNCTIONS

see **DIAGNOSTIC FUNCTIONS**

DOWNLOADING SOFTWARE AND REPLACING THE CONTROL MODULE

see **DOWNLOADING SOFTWARE AND REPLACING THE CONTROL MODULE**

FUNCTION

see **FUNCTION**

SYSTEM OVERVIEW

see **SYSTEM OVERVIEW**

AUDIO MODULE (AUD) (2003-2006)

DESIGN

see **DESIGN**

DIAGNOSTIC FUNCTIONS

see **DIAGNOSTIC FUNCTIONS**

DOWNLOADING SOFTWARE AND REPLACING THE CONTROL MODULE

see **DOWNLOADING SOFTWARE AND REPLACING THE CONTROL MODULE**

FUNCTION

see **FUNCTION**

SYSTEM OVERVIEW

see **SYSTEM OVERVIEW**

AUDIO MODULE (AUD) (2007-2012)

DESIGN

see **DESIGN**

DIAGNOSTIC FUNCTIONS

see **DIAGNOSTIC FUNCTIONS**

DOWNLOADING SOFTWARE AND REPLACING THE CONTROL MODULE

see **DOWNLOADING SOFTWARE AND REPLACING THE CONTROL MODULE**

FUNCTION

see **FUNCTION**

SYSTEM OVERVIEW

see **SYSTEM OVERVIEW**

INFOTAINMENT CONTROL MODULE (ICM) (2003-2006)

DESIGN

see **DESIGN**

DIAGNOSTIC FUNCTIONS

see **DIAGNOSTIC FUNCTIONS**

DOWNLOADING SOFTWARE AND REPLACING THE CONTROL MODULE

see **DOWNLOADING SOFTWARE AND REPLACING THE CONTROL MODULE**

FUNCTION

see **FUNCTION**

SYSTEM OVERVIEW

see **SYSTEM OVERVIEW**

INFOTAINMENT CONTROL MODULE (ICM) (2007-2012)

DESIGN

see **DESIGN**

DIAGNOSTIC FUNCTIONS

see **DIAGNOSTIC FUNCTIONS**

DOWNLOADING SOFTWARE AND REPLACING THE CONTROL MODULE

see **DOWNLOADING SOFTWARE AND REPLACING THE CONTROL MODULE**

FUNCTION

see **FUNCTION**

SYSTEM OVERVIEW

see **SYSTEM OVERVIEW**

INTEGRATED AUDIO MODULE (IAM) (2007-2012)

DESIGN

see **DESIGN**

DIAGNOSTIC FUNCTIONS

see **DIAGNOSTIC FUNCTIONS**

DOWNLOADING SOFTWARE AND REPLACING THE CONTROL MODULE

see **DOWNLOADING SOFTWARE AND REPLACING THE CONTROL MODULE**

FUNCTION

see **FUNCTION**

SYSTEM OVERVIEW

see **SYSTEM OVERVIEW**

MD MODULE (MP1) AND CD MODULE (MP2) (2003-2006)

DESIGN

see **DESIGN**

DIAGNOSTIC FUNCTIONS

see **DIAGNOSTIC FUNCTIONS**

DOWNLOADING SOFTWARE AND REPLACING THE CONTROL MODULE

see **DOWNLOADING SOFTWARE AND REPLACING THE CONTROL MODULE**

FUNCTION

see **FUNCTION**

SYSTEM OVERVIEW

see **SYSTEM OVERVIEW**

MULTIMEDIA MODULE (MMM) (2003-2006)

DESIGN

see **DESIGN**

DIAGNOSTIC FUNCTIONS

see **DIAGNOSTIC FUNCTIONS**

DOWNLOADING SOFTWARE AND REPLACING THE CONTROL MODULE

see **DOWNLOADING SOFTWARE AND REPLACING THE CONTROL MODULE**

FUNCTION

see **FUNCTION**

SYSTEM OVERVIEW

see **SYSTEM OVERVIEW**

MULTIMEDIA MODULE (MMM) (2007-2012)

DESIGN

see **DESIGN**

DIAGNOSTIC FUNCTIONS

see **DIAGNOSTIC FUNCTIONS**

DOWNLOADING SOFTWARE, MAP UPDATING AND REPLACING THE CONTROL MODULE

see **DOWNLOADING SOFTWARE, MAP UPDATING AND REPLACING THE CONTROL MODULE**

FUNCTION

see **FUNCTION**

SYSTEM OVERVIEW

see **SYSTEM OVERVIEW**

REAR SEAT ENTERTAINMENT SYSTEM (RSE), GENERATION 3.1/3.2 (2005-2006)

DESIGN

see **DESIGN**

DIAGNOSTIC FUNCTIONS

see **DIAGNOSTIC FUNCTIONS**

FUNCTION

see **FUNCTION**

IDENTIFICATION OF GENERATION

see **IDENTIFICATION OF GENERATION**

SYSTEM OVERVIEW

see **SYSTEM OVERVIEW**

REAR SEAT ENTERTAINMENT SYSTEM (RSE), GENERATION 3.1/3.2 (EXECUTIVE; PREMIER; 2004)

DESIGN

see **DESIGN**

DIAGNOSTIC FUNCTIONS

see **DIAGNOSTIC FUNCTIONS**

FUNCTION

see **FUNCTION**

IDENTIFICATION OF GENERATION

see **IDENTIFICATION OF GENERATION**

SYSTEM OVERVIEW

see **SYSTEM OVERVIEW**

REAR SEAT ENTERTAINMENT SYSTEM (RSE), GENERATION 4.1 (2006-2007)

DESIGN

see **DESIGN**

DIAGNOSTIC FUNCTIONS

see **DIAGNOSTIC FUNCTIONS**

FUNCTION

see **FUNCTION**

IDENTIFICATION OF GENERATION

see **IDENTIFICATION OF GENERATION**

SYSTEM OVERVIEW

see **SYSTEM OVERVIEW**

REAR SEAT ENTERTAINMENT SYSTEM (RSE), GENERATION 4.2 (2007-2008)

DESIGN

see **DESIGN**

DIAGNOSTIC FUNCTIONS

see **DIAGNOSTIC FUNCTIONS**

FUNCTION

see **FUNCTION**

IDENTIFICATION OF GENERATION

see **IDENTIFICATION OF GENERATION**

SYSTEM OVERVIEW

see **SYSTEM OVERVIEW**

REAR SEAT ENTERTAINMENT SYSTEM (RSE), GENERATION 4.3 (2009-2012)

DESIGN

see **DESIGN**

DIAGNOSTIC FUNCTIONS

see **DIAGNOSTIC FUNCTIONS**

FUNCTION

see **FUNCTION**

IDENTIFICATION OF GENERATION

see **IDENTIFICATION OF GENERATION**

SYSTEM OVERVIEW

see **SYSTEM OVERVIEW**

REAR SEAT ENTERTAINMENT SYSTEM (RSE), M&D (2008-2012)

DESIGN

see **DESIGN**

DIAGNOSTIC FUNCTIONS

see **DIAGNOSTIC FUNCTIONS**

FUNCTION

see **FUNCTION**

SYSTEM OVERVIEW

see **SYSTEM OVERVIEW**

REMOTE DIGITAL AUDIO RECEIVER (RDAR) (2007-2012)

DESIGN

see **DESIGN**

DIAGNOSTIC FUNCTIONS

see **DIAGNOSTIC FUNCTIONS**

DOWNLOADING SOFTWARE AND REPLACING THE CONTROL MODULE

see **DOWNLOADING SOFTWARE AND REPLACING THE CONTROL MODULE**

FUNCTION

see **FUNCTION**

SYSTEM OVERVIEW

see **SYSTEM OVERVIEW**

ROOF-MOUNTED SYSTEM FOR REAR SEAT ENTERTAINMENT (2005-2010)

DESIGN

see **DESIGN**

DIAGNOSTIC FUNCTIONS

see **DIAGNOSTIC FUNCTIONS**

FUNCTION

see **FUNCTION**

SYSTEM OVERVIEW

see **SYSTEM OVERVIEW**

BLUETOOTH PHONE MODULE (BPM) (2011-2012)

DESIGN

see **DESIGN**

DIAGNOSTIC FUNCTIONS

see **DIAGNOSTIC FUNCTIONS**

DOWNLOADING SOFTWARE AND REPLACING THE CONTROL MODULE

see **DOWNLOADING SOFTWARE AND REPLACING THE CONTROL MODULE**

FUNCTION

see **FUNCTION**

SYSTEM OVERVIEW

see **SYSTEM OVERVIEW**

PHONE MODULE (PHM) (2006-2012)

DESIGN

see **DESIGN**

DIAGNOSTIC FUNCTIONS

see **DIAGNOSTIC FUNCTIONS**

DOWNLOADING SOFTWARE AND REPLACING THE CONTROL MODULE

see **DOWNLOADING SOFTWARE AND REPLACING THE CONTROL MODULE**

FUNCTION

see **FUNCTION**

SYSTEM OVERVIEW

see **SYSTEM OVERVIEW**

PHONE MODULE (PHM) (2003-2005)

DESIGN

see **DESIGN**

DIAGNOSTIC FUNCTIONS

see **DIAGNOSTIC FUNCTIONS**

DOWNLOADING SOFTWARE AND REPLACING THE CONTROL MODULE

see **DOWNLOADING SOFTWARE AND REPLACING THE CONTROL MODULE**

FUNCTION

see **FUNCTION**

SYSTEM OVERVIEW

see **SYSTEM OVERVIEW**

ANTENNA MODULE (ATM) (2003-2006)

DESIGN

see **DESIGN**

DIAGNOSTIC FUNCTIONS

see **DIAGNOSTIC FUNCTIONS**

DOWNLOADING SOFTWARE AND REPLACING THE CONTROL MODULE

see **DOWNLOADING SOFTWARE AND REPLACING THE CONTROL MODULE**

FUNCTION

see **FUNCTION**

SYSTEM OVERVIEW

see **SYSTEM OVERVIEW**

SUBWOOFER MODULE (SUB) (2003-2008)

DESIGN

see **DESIGN**

DIAGNOSTIC FUNCTIONS

see **DIAGNOSTIC FUNCTIONS**

DOWNLOADING SOFTWARE AND REPLACING THE CONTROL MODULE

see **DOWNLOADING SOFTWARE AND REPLACING THE CONTROL MODULE**

FUNCTION

see **FUNCTION**

SYSTEM OVERVIEW

see **SYSTEM OVERVIEW**

GLOBAL POSITIONING SYSTEM MODULE (GPS) (2007-2012)

DESIGN

see **DESIGN**

DIAGNOSTIC FUNCTIONS

see **DIAGNOSTIC FUNCTIONS**

DOWNLOADING SOFTWARE AND REPLACING THE CONTROL MODULE

see **DOWNLOADING SOFTWARE AND REPLACING THE CONTROL MODULE**

FUNCTION

see **FUNCTION**

SYSTEM OVERVIEW

see **SYSTEM OVERVIEW**

ACCESSORIES AND BODY, CAB

Media, Communication And Navigation - Diagnostic Trouble Codes and Associated Procedures

PHM-0013: CONTROL MODULE. INTERNAL FAULT (2003-2005)

DIAGNOSTIC TROUBLE CODE (DTC) INFORMATION PHM-0013

Condition

Diagnostic trouble code (DTC) PHM-0013 is stored if the phone module (PHM) registers an internal fault in the power supply.

Diagnostic trouble code (DTC) PHM-0013 can be diagnosed with the ignition on (not key position 3) and when the battery voltage is 9-16 V.

Substitute Value

- None.

Possible Source

- Internal fault in the power supply to the phone module (PHM).

Fault symptom[s]

- No or reduced carphone functionality.

INTERNAL FAULT

REPLACING THE COMPONENT

The phone module (PHM) has registered an internal fault.

If the fault is intermittent, it has been registered previously but is no longer present. Intermittent faults can be caused by interference at start up of the control module or may be a different type of fault which occurs on different occasions. The fault is evaluated depending on how it occurs. If the fault recurs, replace the control module.

In the event of a permanent fault, replace the control module. See **PHONE MODULE (PHM), REPLACING** .

Remedy as necessary.

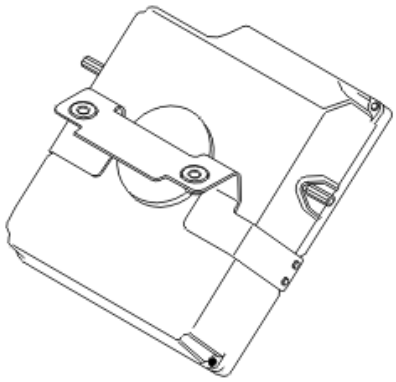

Fig. 1: Identifying Phone Module (PHM)
Courtesy of VOLVO CARS CORPORATION

- **Continue**

  See: **INFORMATION**

INFORMATION

FAULT-TRACING INFORMATION

In case of this defect, troubleshooting is not followed by verification.

The information can be displayed again or the fault-tracing for this fault can be interrupted.

PHM-0013: CONTROL MODULE. INTERNAL FAULT (2006-2012)

DIAGNOSTIC TROUBLE CODE (DTC) INFORMATION PHM-0013

Condition

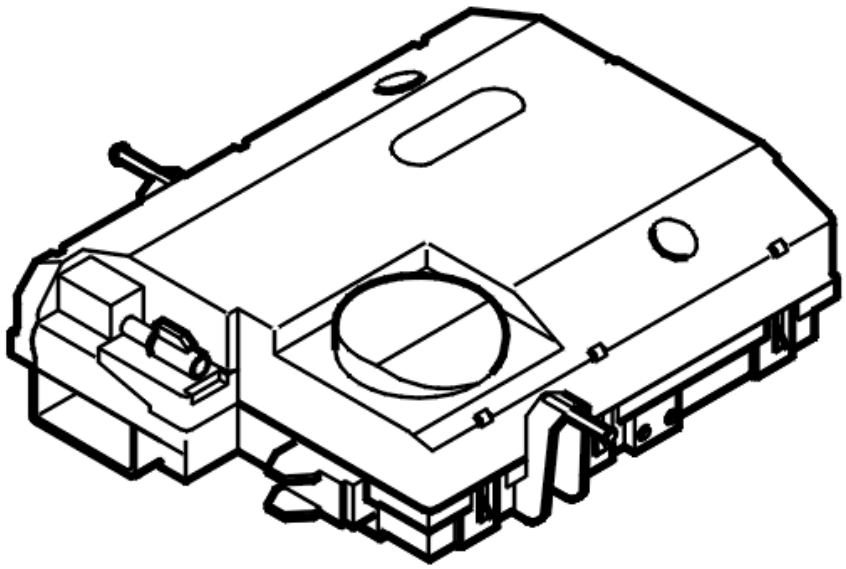

Fig. 2: Identifying Control Module
Courtesy of VOLVO CARS CORPORATION

The diagnostic trouble code (DTC) is stored if the phone module (PHM) registers an internal fault in the power supply.

The diagnostic trouble code (DTC) can be diagnosed when the ignition is switched on (not key position 3) and when the battery voltage is 9-16 V.

Substitute Value

- None.

Possible Source

- Internal fault in the power supply to the phone module (PHM).

Fault symptom[s]

- No or reduced carphone functionality.
- Message in the text display (applies only to phone modules (PHM) with Volvo On Call).

INTERNAL FAULT

REPLACING THE COMPONENT

The phone module (PHM) has registered an internal fault.

If the fault is intermittent, it has been registered previously but is no longer present. Intermittent faults may be due to interference at start up of the control module or may be a different type of fault which occurs on different occasions. The fault is evaluated depending on how it occurs. If the fault recurs, replace the control module.

In the event of a permanent fault, replace the control module.

Remedy as necessary.

Other information

- see **PHONE MODULE (PHM), REPLACING (2006-2010)**

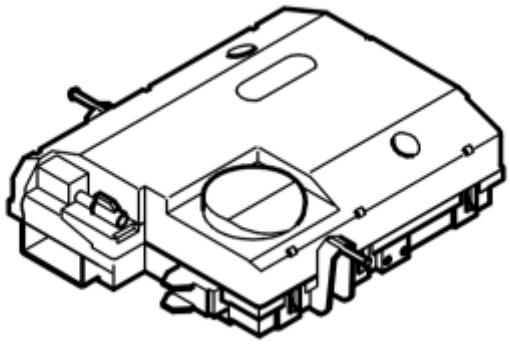

Fig. 3: Identifying Control Module
Courtesy of VOLVO CARS CORPORATION

- **Continue**

  See: **INFORMATION**

INFORMATION

FAULT-TRACING INFORMATION

In case of this defect, troubleshooting is not followed by verification.

The information can be displayed again or the fault-tracing for this fault can be interrupted.

PHM-0014: CARPHONE ANTENNA. SIGNAL TOO HIGH / SIGNAL MISSING (2006-2012)

DIAGNOSTIC TROUBLE CODE (DTC) INFORMATION PHM-0014

Condition

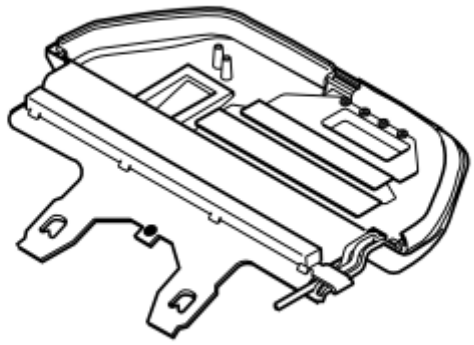

Fig. 4: Identifying Carphone Antenna
Courtesy of VOLVO CARS CORPORATION

The diagnostic trouble code (DTC) is stored if the phone module (PHM) registers an open-circuit or a short-circuit to +12 V in the cable for the carphone antenna signal.

The diagnostic trouble code (DTC) can be diagnosed when the ignition is switched on (not key position 3) and when the battery voltage is 9-16 V.

Substitute Value

- None.

Possible Source

- Open-circuit in the cable (carphone antenna signal) from the antenna to the control module
- Short-circuit to +12 V in the cable (carphone antenna signal)
- Contact resistance, oxidation or loose connections in the connectors.

Fault symptom[s]

- No or poor reception in the carphone.

SIGNAL TOO HIGH OR SIGNAL MISSING

CHECKING THE COMPONENT AND WIRING

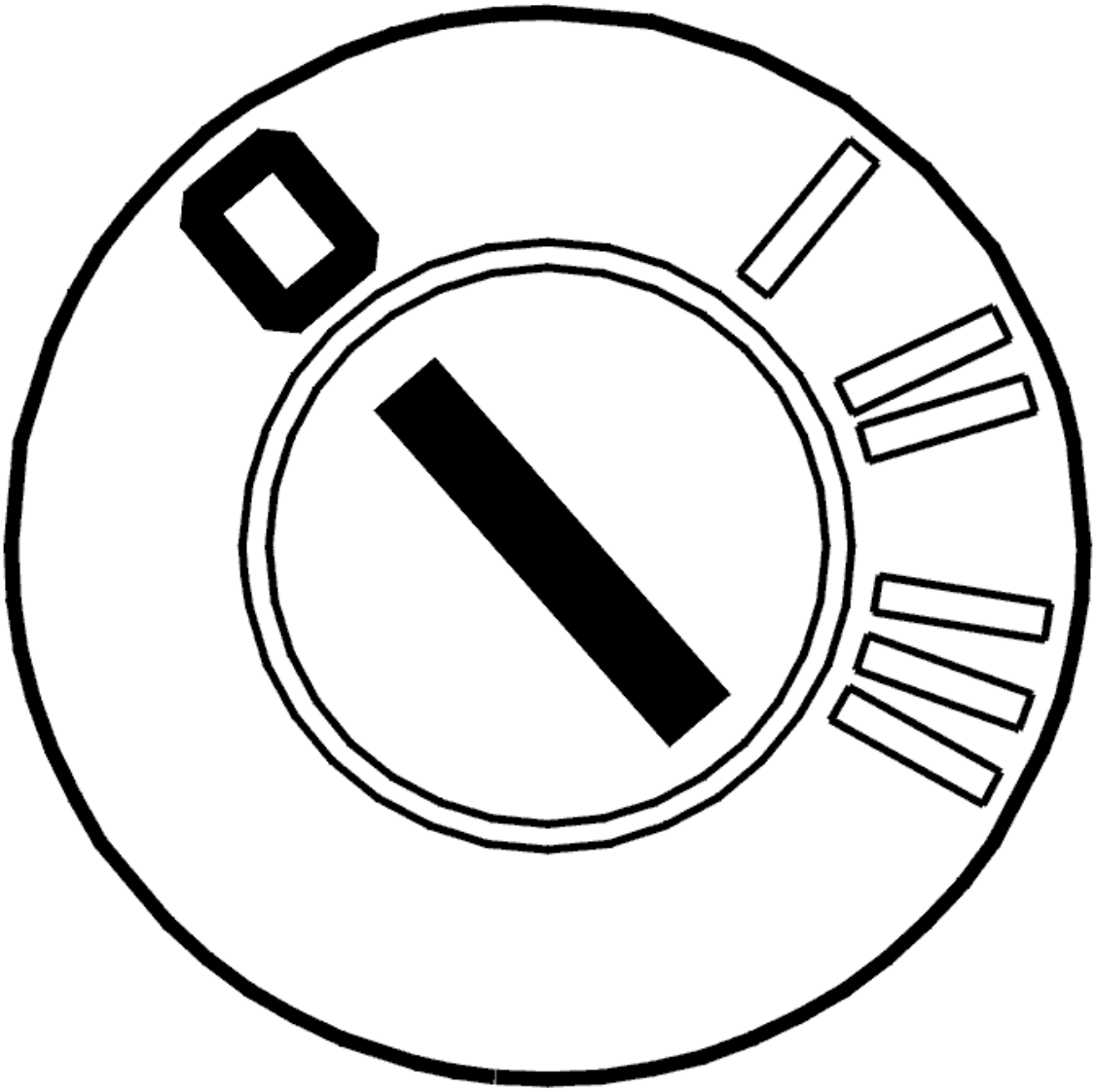

Fig. 5: Identifying Ignition OFF
Courtesy of VOLVO CARS CORPORATION

- Ignition off
- Disconnect connector C from the phone module (PHM)
- Disconnect connector A from the phone module (PHM).

Check the cable for the carphone antenna. Check for a short-circuit to supply voltage.

Check between:

- connector A terminal #5 (#5) and connector C terminal #1
- connector A terminal #5 (#5) and connector C terminal #2.

Check the cable for the carphone antenna. Check for an open-circuit.

Take a reading on the antenna cable connector between terminals #1 and #2. If the antenna cable is OK, the resistance must be approximately 10 kohms.

Check the connectors for loose connections, damaged or bent terminal pins and oxidation.

Try replacing the carphone antenna if the cables are OK.

Remedy as necessary.

Other information:

- see **SIGNAL SPECIFICATION**
- see **CONNECTING THE BREAKOUT BOX**
- see **LOCATION OF COMPONENTS**
- see **PHONE MODULE (PHM), REPLACING (2006-2010)**
- see **ANTENNA CARPHONE, REPLACING**
- see **CHECKING WIRING AND TERMINALS**

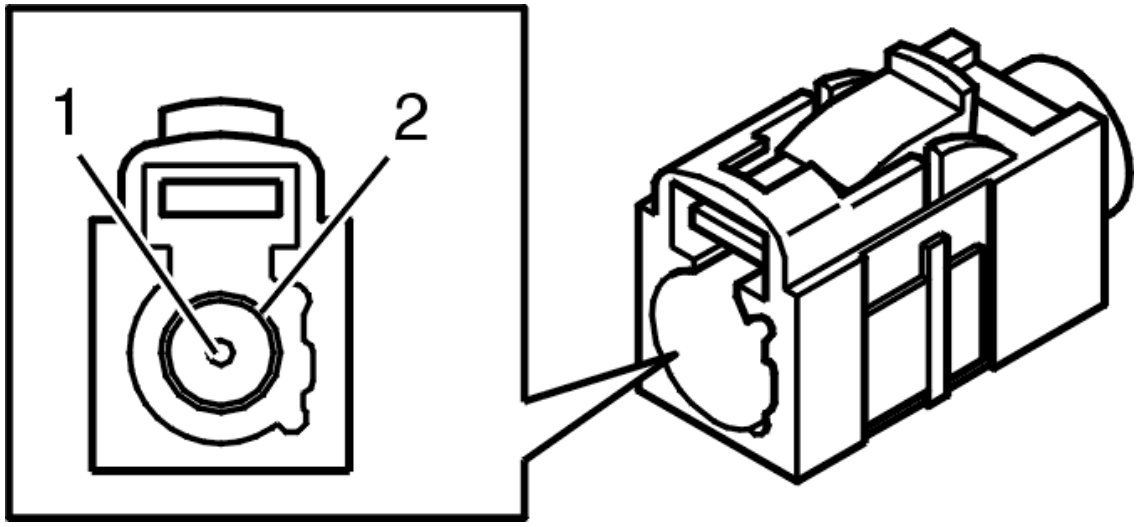

Fig. 6: Identifying 1-Bit Connector
Courtesy of VOLVO CARS CORPORATION

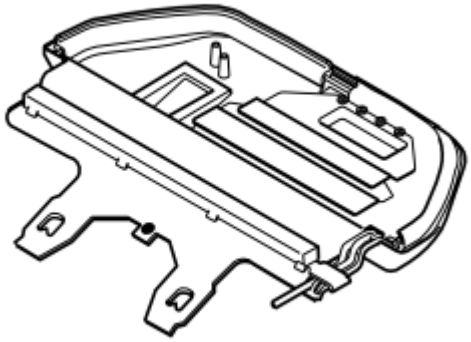

Fig. 7: Identifying Carphone Antenna
Courtesy of VOLVO CARS CORPORATION

- **Continue**

  See: **VERIFICATION**

VERIFICATION

VERIFICATION

HINT: After carrying out the repair, check that the fault has been remedied.

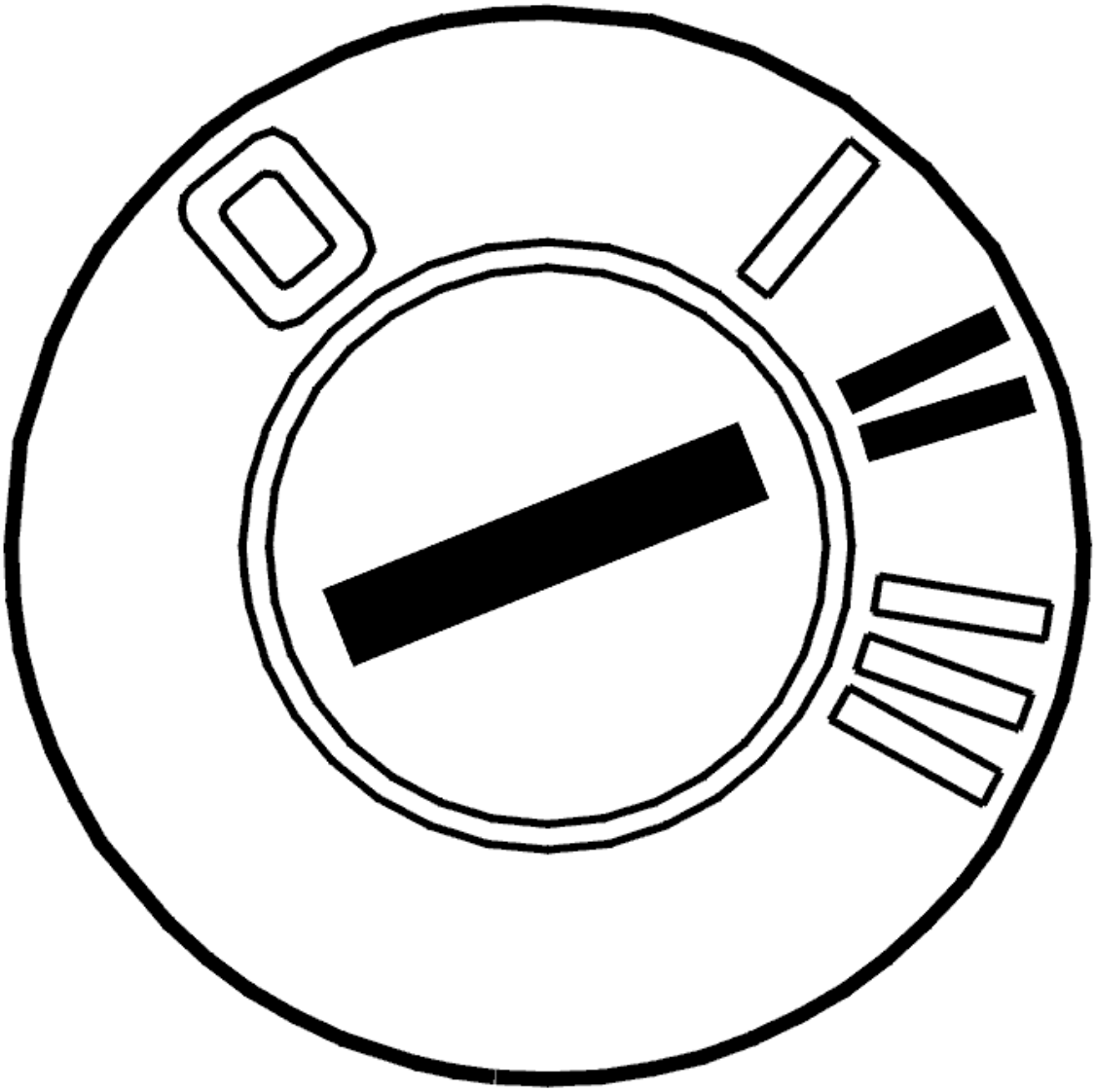

Fig. 8: Identifying Ignition ON
Courtesy of VOLVO CARS CORPORATION

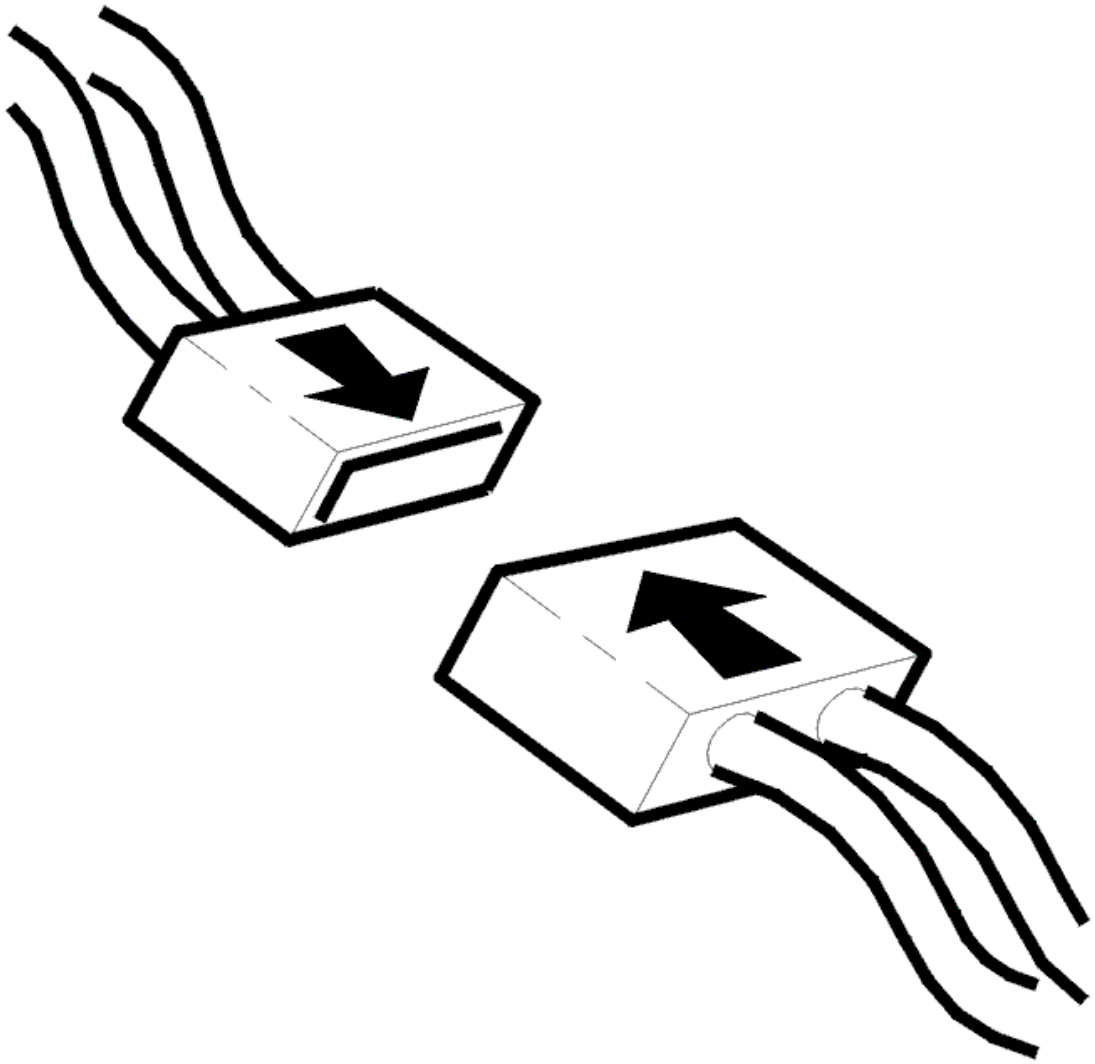

Fig. 9: Connecting Connector
Courtesy of VOLVO CARS CORPORATION

- Ignition off
- Reinstall the connectors, components etc.
- Ignition on
- Activate the carphone.

  Make a call so that both the handset and the hands-free system are used.

  - Ignition off.
  - Ignition on.
  - Read off the diagnostic trouble codes (DTCs).
  - Check that the relevant diagnostic trouble code (DTC) has switched status from permanent to

intermittent fault.

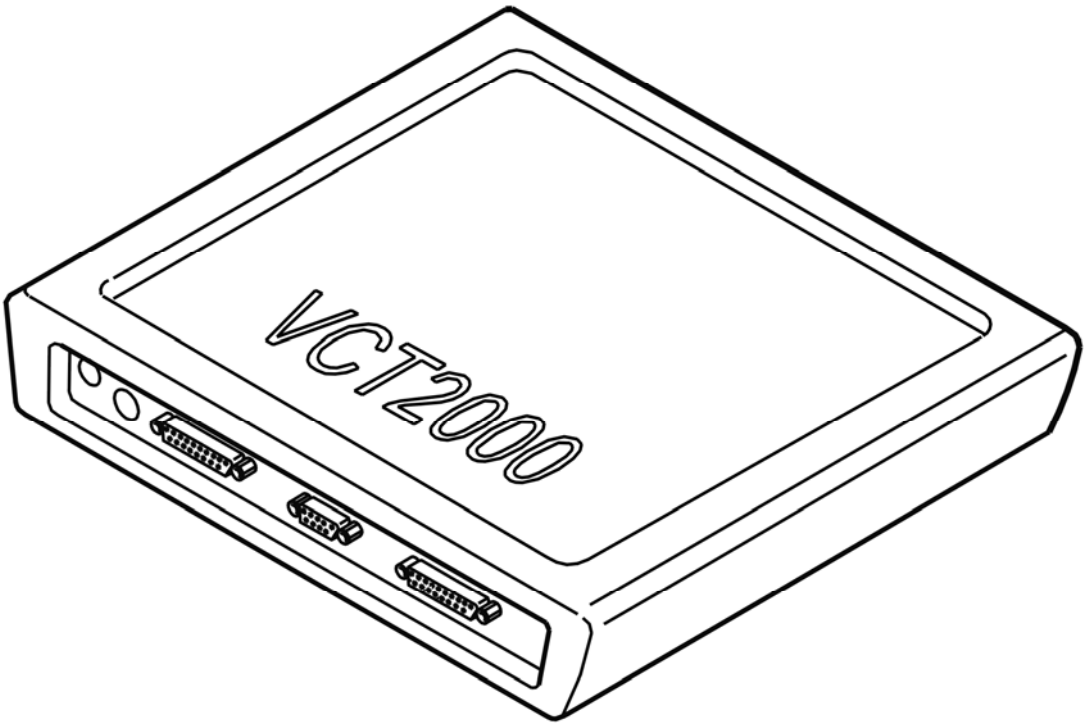

Fig. 10: Identifying VCT2000 Diagnostic Tool Symbol In VIDA
Courtesy of VOLVO CARS CORPORATION

Has the status of the diagnostic trouble code (DTC) changed?

- **YES**

  VERIFIED: Troubleshooting has been completed.

- **NO**

  See: **INFORMATION**

INFORMATION

FAULT-TRACING INFORMATION

The fault should have been detected and remedied. As this is not the case fault-tracing has failed.

Exit fault-tracing for this diagnostic trouble code (DTC) or make another attempt.

PHM-0014: CARPHONE ANTENNA. SIGNAL TOO HIGH OR SIGNAL

MISSING (2003-2004)

DIAGNOSTIC TROUBLE CODE (DTC) INFORMATION PHM-0014

Condition

Diagnostic trouble code (DTC) PHM-0014 is stored if the phone module (PHM) registers an open-circuit or a short-circuit to +12 V in the wiring for the carphone antenna signal.

Diagnostic trouble code (DTC) PHM-0014 can be diagnosed with the ignition on (not key position 3) and when the battery voltage is 9-16 V.

Substitute Value

- None.

Possible Source

- Open-circuit in the wiring (carphone antenna signal) from the antenna to the control module
- Short-circuit to +12 V in the wiring (carphone antenna signal).

Fault symptom[s]

- No or poor reception in the carphone.

SIGNAL TOO HIGH OR SIGNAL MISSING

CHECKING COMPONENTS AND WIRING

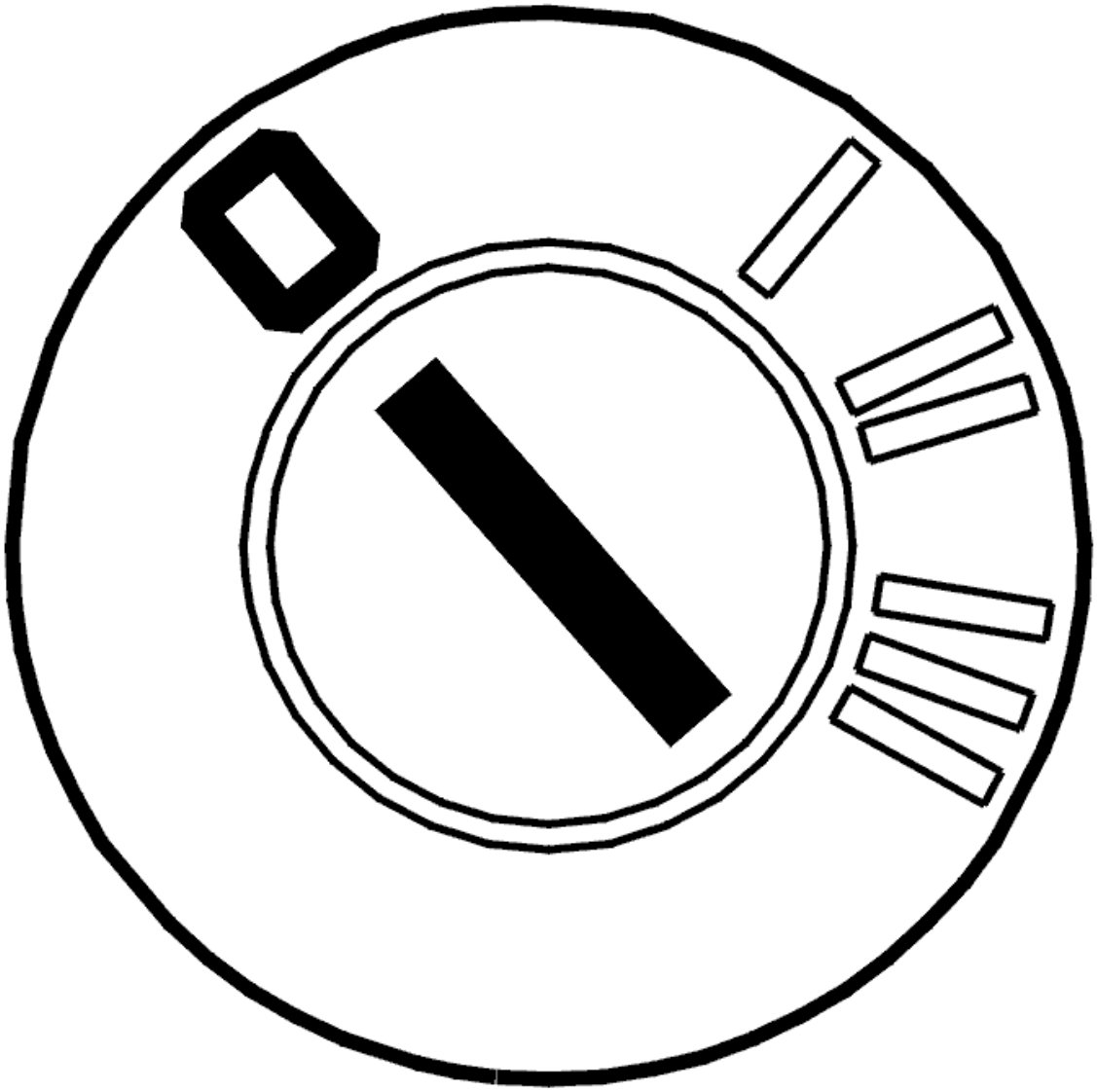

Fig. 11: Identifying Ignition OFF
Courtesy of VOLVO CARS CORPORATION

- Ignition off.

  Check the antenna cable between the phone module (PHM) connector C and the carphone antenna connector in the right-hand A post. Check for a short-circuit to supply voltage.

  Check the antenna cable between control module connector A and the carphone antenna connector in the right-hand A-post. Check for an open-circuit.

  Check the connectors for loose connections, damaged or bent terminal pins and oxidation.

  Remedy as necessary.

  Other information:

- To connect the breakout box, see **CONNECTING THE BREAKOUT BOX**
- For information about signals and connectors, see **SIGNAL SPECIFICATION**
- To access or replace the control module, see **PHONE MODULE (PHM), REPLACING**
- To access and replace the carphone antenna, see **ANTENNA CARPHONE, REPLACING**
- see **CHECKING WIRING AND TERMINALS** .

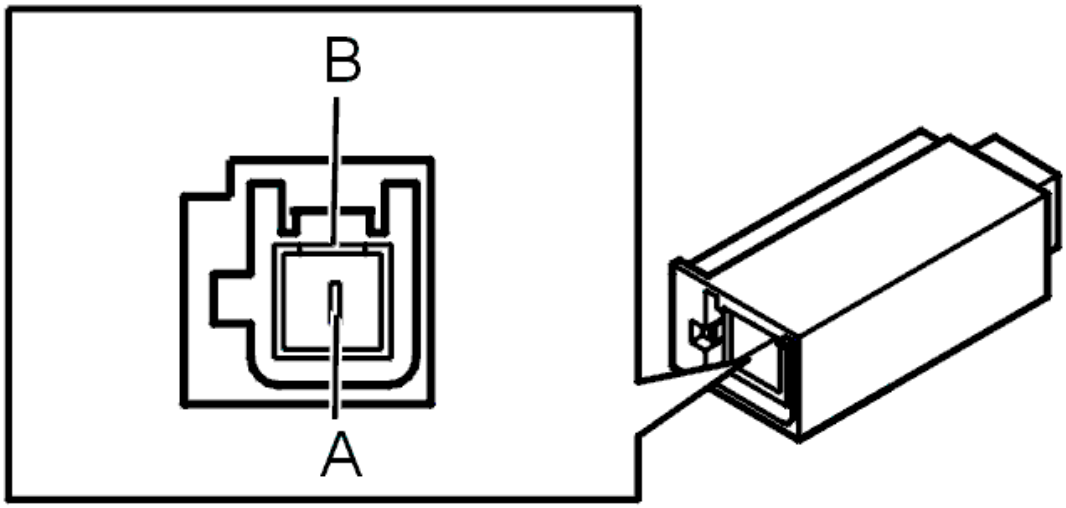

Fig. 12: Identifying 1-Bit Connector
Courtesy of VOLVO CARS CORPORATION

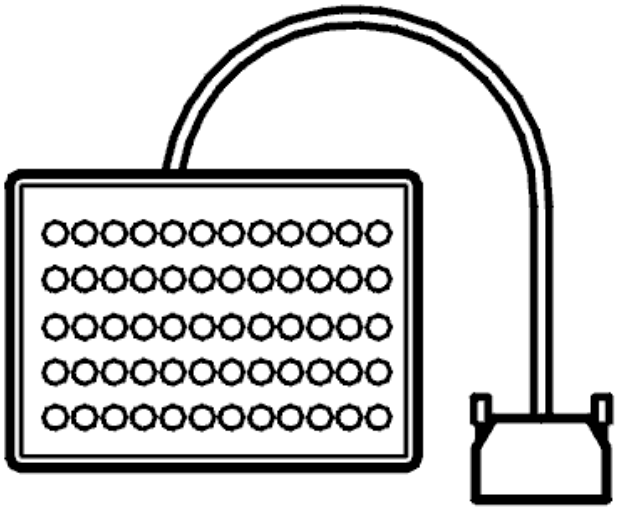

Fig. 13: Breakout Box
Courtesy of VOLVO CARS CORPORATION

Was a fault detected?

- **YES**

  See: **VERIFICATION**

- **NO**

  See: **CHECKING THE CONNECTORS AND WIRING**

CHECKING THE CONNECTORS AND WIRING

Raise the secondary lock on the connector in the right A-pillar.

Loosen the primary lock and remove the insulator.

Carefully remove the antenna from the headlining.

Measure the resistance between the signal line and screen ground on the connector. The resistance must be approximately 0 ohms.

Measure the resistance between screen ground and ground. The resistance must be infinite.

Carefully remove the three screws that hold the antenna's circuit board.

Carefully lift up the circuit board from the mounting point so that there is no contact between the circuit board and the casing.

Measure the resistance between the signal line and screen ground. The resistance must be infinite. If the resistance is infinite there is a short-circuit between the signal line and screen ground.

Remedy as necessary.

Other information

- see **ANTENNA CARPHONE, REPLACING**
- see **CONNECTORS, REPAIR**
- see **CHECKING WIRING AND TERMINALS**

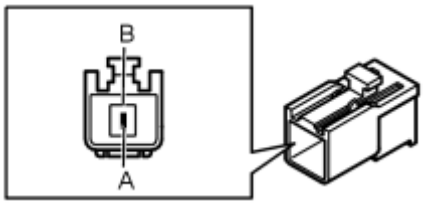

Fig. 14: Identifying Signal Line Connector
Courtesy of VOLVO CARS CORPORATION

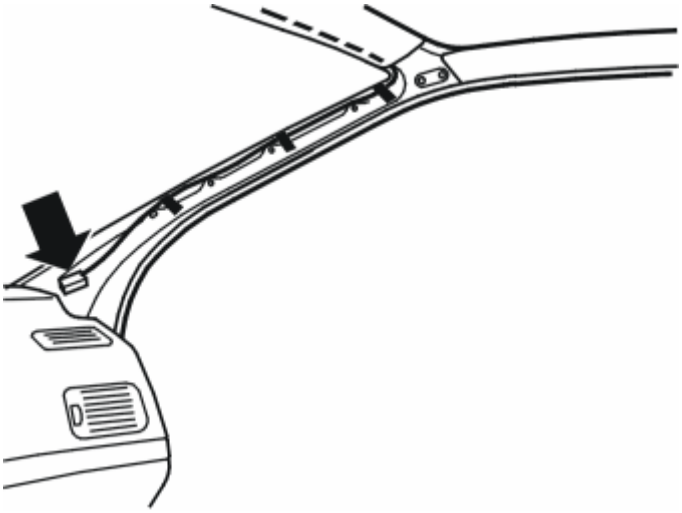

Fig. 15: Identifying Signal Line & Connector
Courtesy of VOLVO CARS CORPORATION

Was a fault detected?

- **YES**

  See: **VERIFICATION**

- **NO**

  See: **INFORMATION**

VERIFICATION

VERIFICATION

HINT: After carrying out the repair, check that the fault has been remedied.

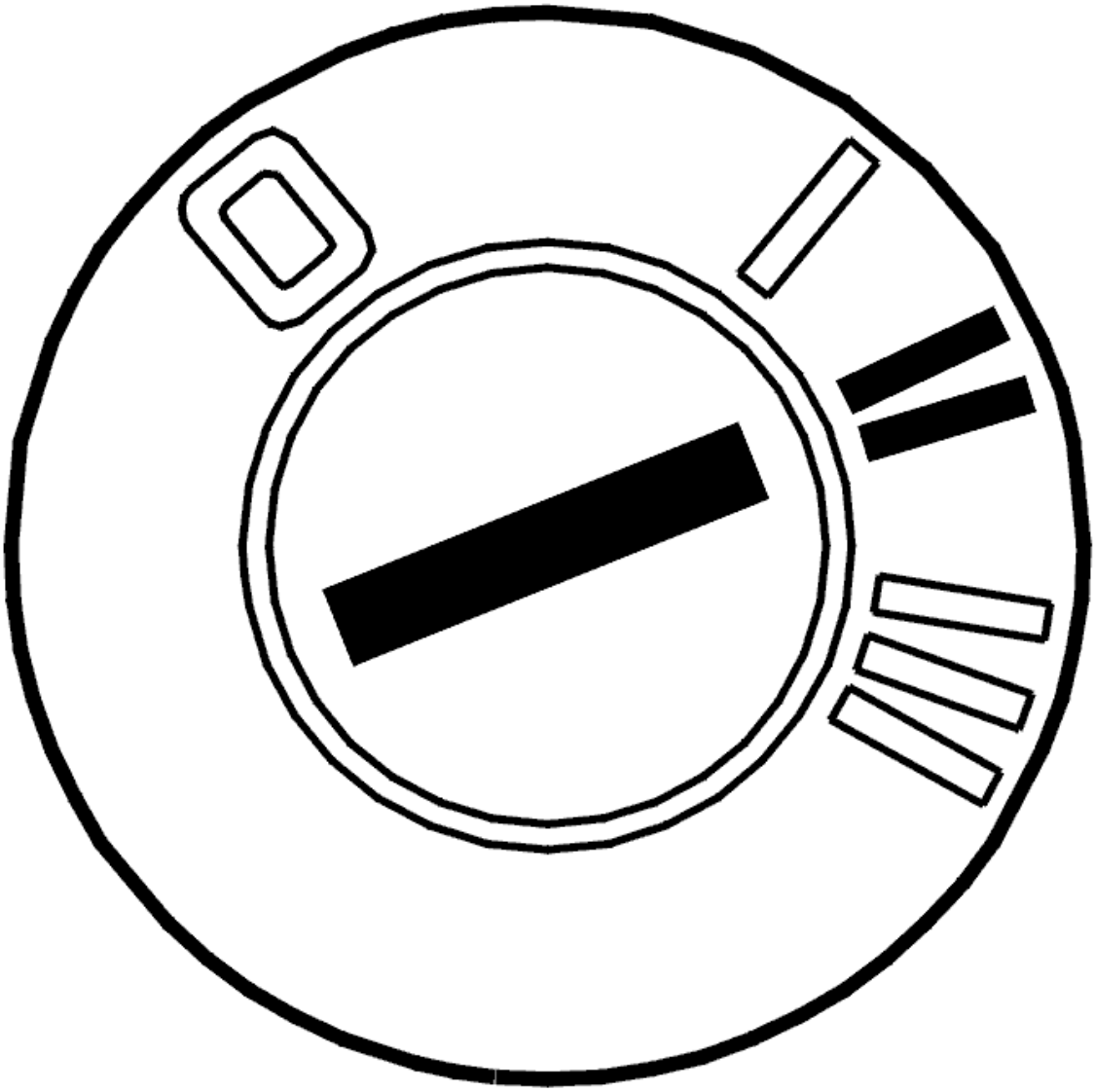

Fig. 16: Identifying Ignition ON
Courtesy of VOLVO CARS CORPORATION

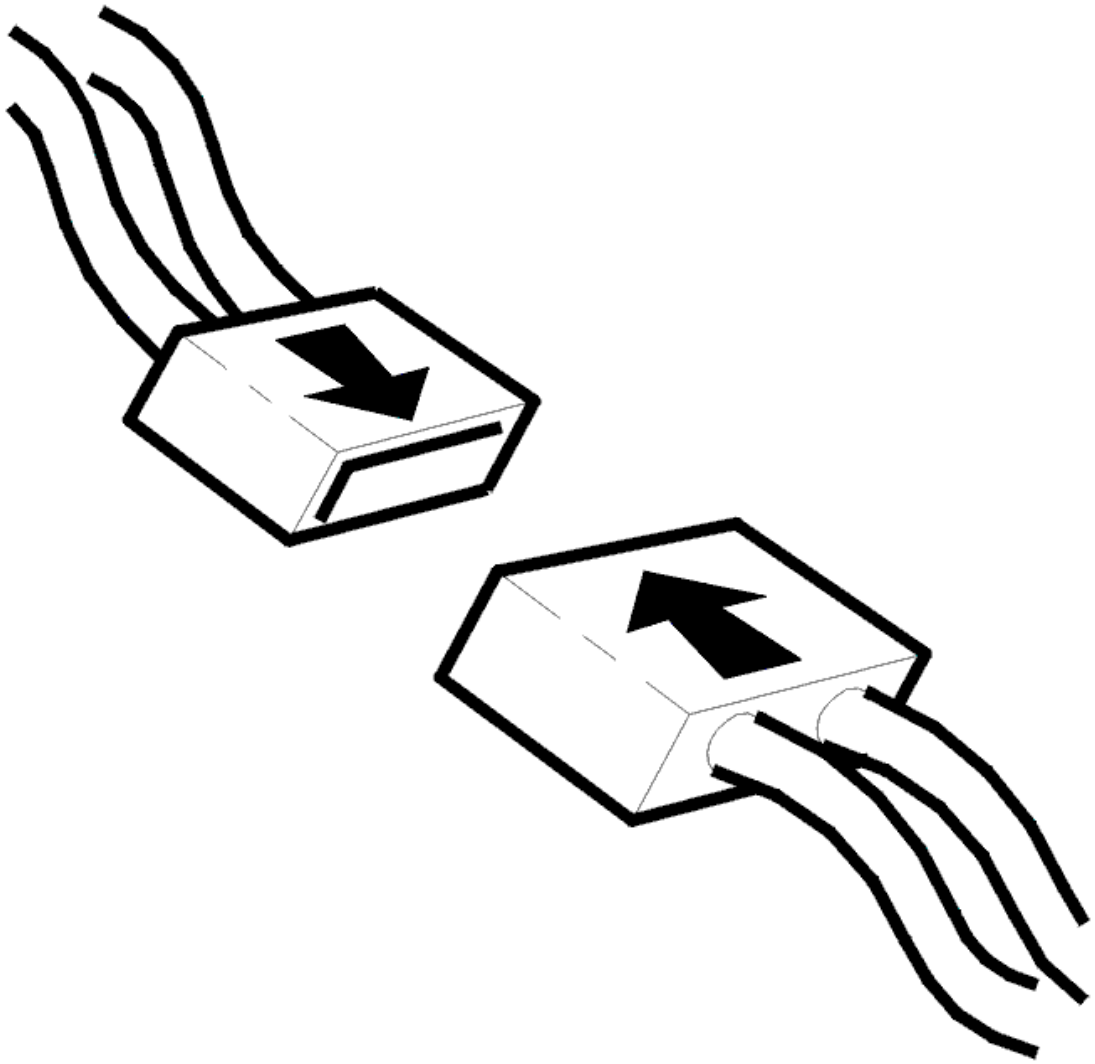

Fig. 17: Connecting Connector
Courtesy of VOLVO CARS CORPORATION

- Ignition off
- Reinstall the connectors, components etc.
- Ignition on
- Switch on the carphone.

  Make a call so that both the handset and the hands-free system are used.

  Ignition off.

  Ignition on.

  Read off the diagnostic trouble codes (DTCs).

Check that the relevant diagnostic trouble code (DTC) has switched status from permanent to intermittent fault.

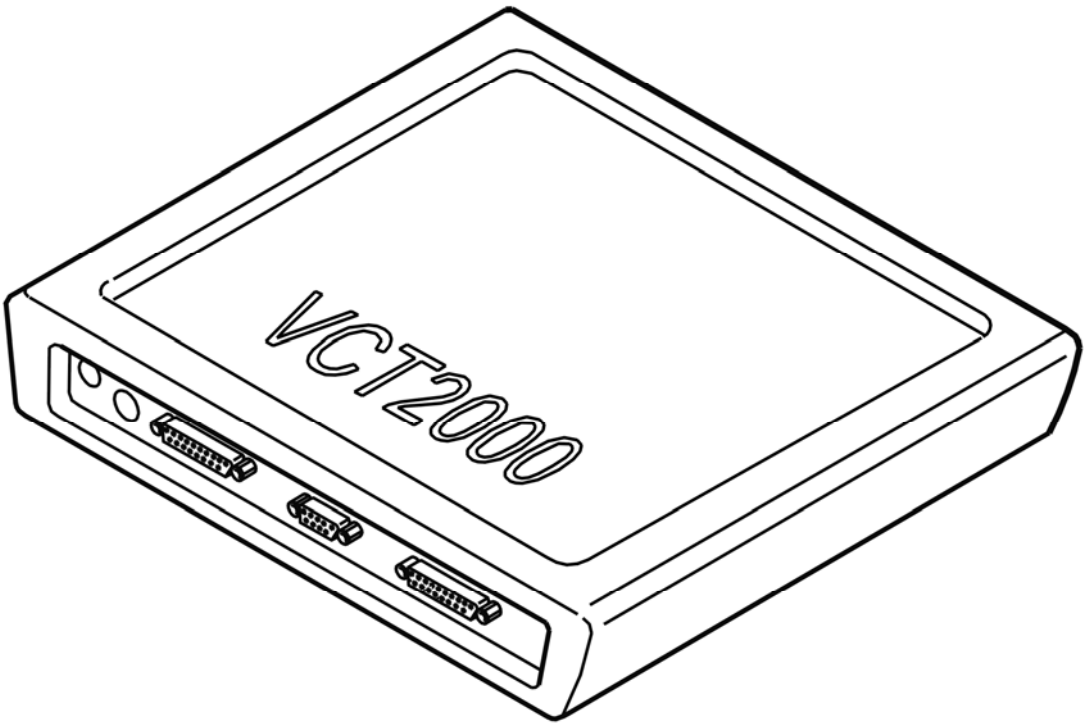

Fig. 18: Identifying VCT2000 Diagnostic Tool Symbol In VIDA
Courtesy of VOLVO CARS CORPORATION

Has the status of the diagnostic trouble code (DTC) changed?

- **YES**

  VERIFIED: Troubleshooting has been completed.

- **NO**

  See: **INFORMATION**

INFORMATION

FAULT-TRACING INFORMATION

The fault should have been detected and remedied. As this is not the case fault-tracing has failed.

Exit fault-tracing for this diagnostic trouble code (DTC) or make another attempt.

PHM-0014: TELEPHONE ANTENNA. SIGNAL TOO HIGH / SIGNAL MISSING (2005)

DIAGNOSTIC TROUBLE CODE (DTC) INFORMATION PHM-0014

see **DIAGNOSTIC TROUBLE CODE (DTC) INFORMATION PHM-0014**

SIGNAL TOO HIGH OR SIGNAL MISSING

CHECKING STRUCTURE WEEK

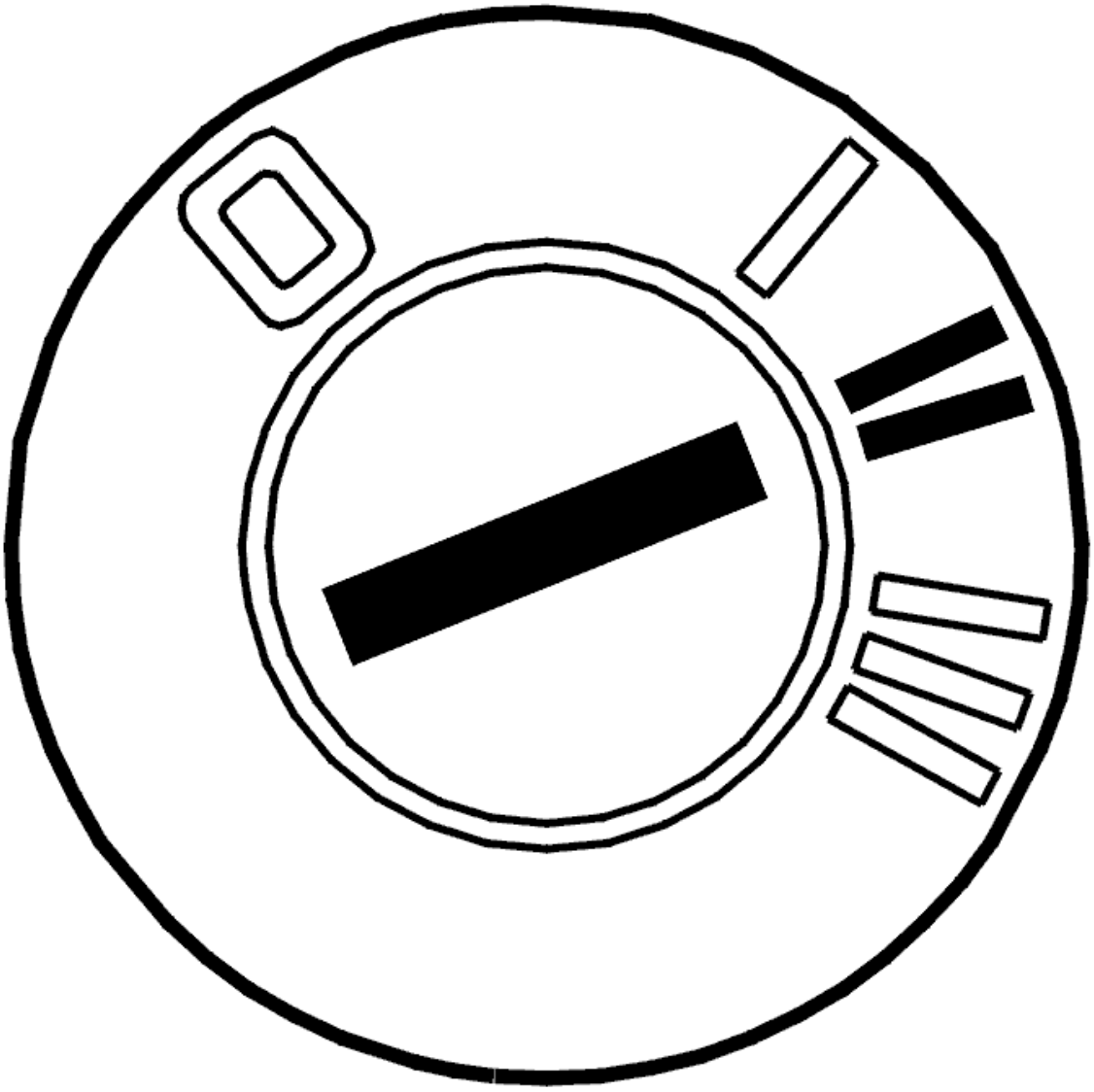

Fig. 19: Identifying Ignition ON
Courtesy of VOLVO CARS CORPORATION

- Ignition on

Read out the vehicle's structure week using the VCT2000 (or appropriate scan tool).

1. Vehicles with structure week up to and including 200445, that is, year 2004 week 45.
2. Vehicles with structure week from and including 200446, that is, year 2004 week 46.

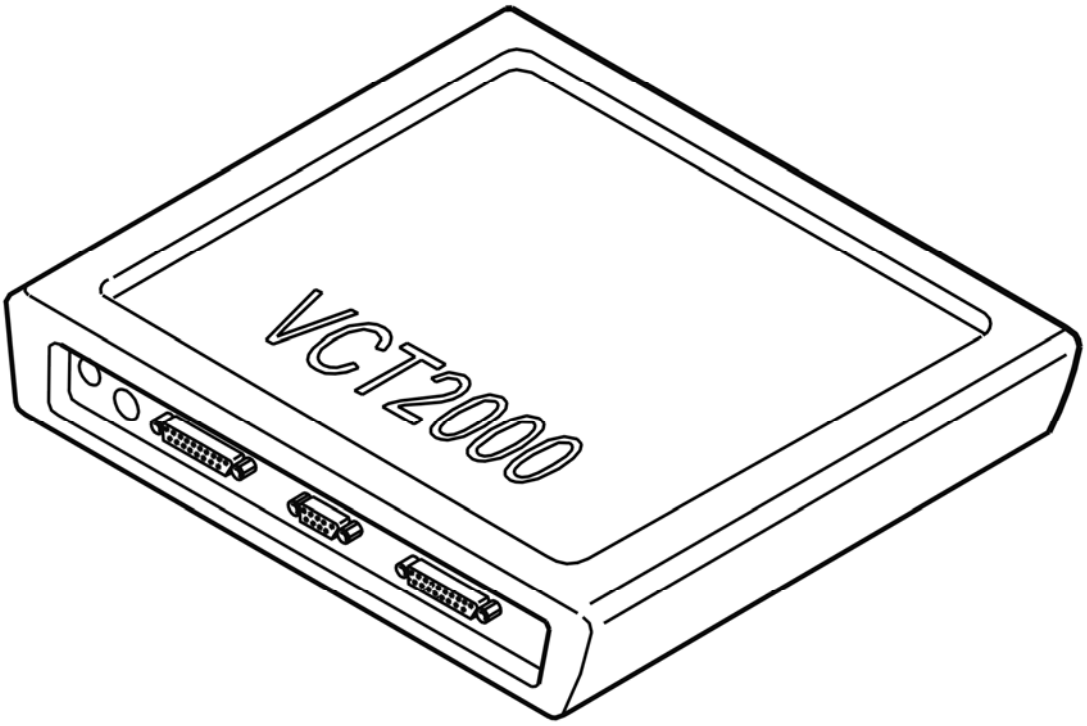

Fig. 20: Identifying VCT2000 Diagnostic Tool Symbol In VIDA
Courtesy of VOLVO CARS CORPORATION

Select one of the above options.

- **1**

  See: **SIGNAL TOO HIGH OR SIGNAL MISSING**

- **2**

  See: **CHECKING COMPONENTS AND WIRING**

CHECKING COMPONENTS AND WIRING

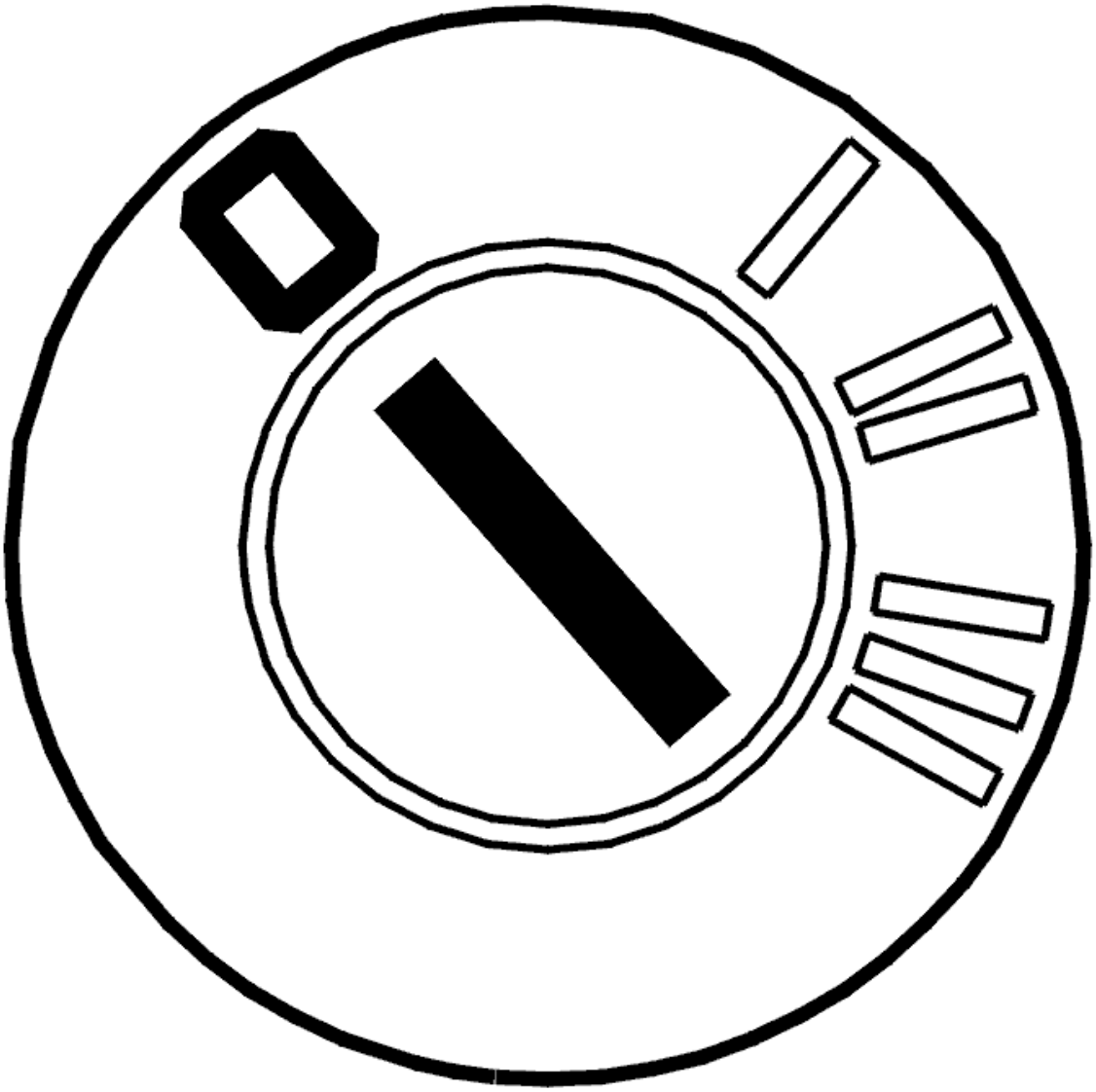

Fig. 21: Identifying Ignition OFF
Courtesy of VOLVO CARS CORPORATION

- Ignition off
- Disconnect connector C for the phone module (PHM).
- Disconnect connector A for the phone module (PHM).

Check the cable for the telephone antenna for short-circuit to voltage.

Check between:

- connector A #5 (#5) and connector C #1
- connector A #5 (#5) and connector C #2.

Check the cable for the telephone antenna for open circuit.

Measure on the antenna cable's connector between #1 and #2. The resistance for trouble-free antenna cable shall be approx. 10 kohms.

Check the connectors for loose connections, damaged or bent pins as well as oxidation.

Remedy as necessary.

Other information:

- see **CONNECTING THE BREAKOUT BOX**
- see **SIGNAL SPECIFICATION**
- see **LOCATION OF COMPONENTS**
- see **PHONE MODULE (PHM), REPLACING**
- see **ANTENNA CARPHONE, REPLACING**
- see **CHECKING WIRING AND TERMINALS**

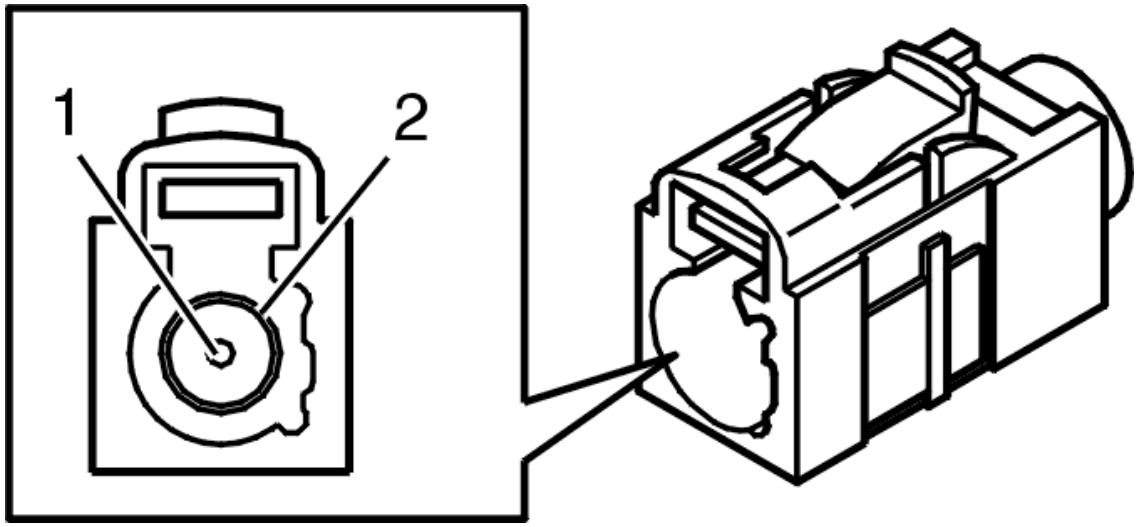

Fig. 22: Identifying 1-Bit Connector
Courtesy of VOLVO CARS CORPORATION

Was a fault detected?

- **YES**

  See: **VERIFICATION**

- **NO**

  See: **CHECKING THE CONNECTORS AND WIRING**

CHECKING THE CONNECTORS AND WIRING

Raise the secondary lock on the connector in the right A-pillar.

Loosen the primary lock and remove the insulator.

Carefully remove the antenna from the headlining.

Measure the resistance between the signal line and screen ground on the connector. The resistance must be approximately 0 ohms.

Measure the resistance between screen ground and ground. The resistance must be infinite.

Carefully remove the three screws that hold the antenna's circuit board.

Carefully lift up the circuit board from the mounting point so that there is no contact between the circuit board and the casing.

Measure the resistance between the signal line and screen ground. The resistance must be infinite. If the resistance is infinite there is a short-circuit between the signal line and screen ground.

Remedy as necessary.

Other information

- see **ANTENNA CARPHONE, REPLACING**
- see **CONNECTORS, REPAIR**
- see **CHECKING WIRING AND TERMINALS**

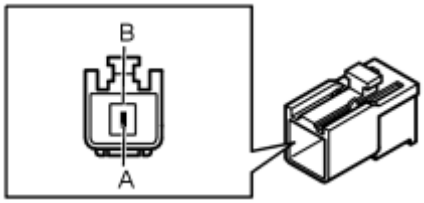

Fig. 23: Identifying Signal Line Connector
Courtesy of VOLVO CARS CORPORATION

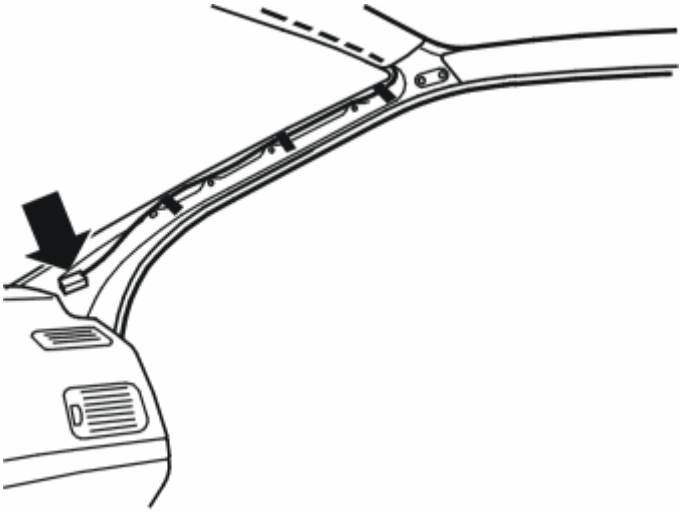

Fig. 24: Identifying Signal Line & Connector
Courtesy of VOLVO CARS CORPORATION

Was a fault detected?

- **YES**

  See: **VERIFICATION**

- **NO**

  See: **INFORMATION**

VERIFICATION

VERIFICATION

HINT: After carrying out the repair, check that the fault has been remedied.

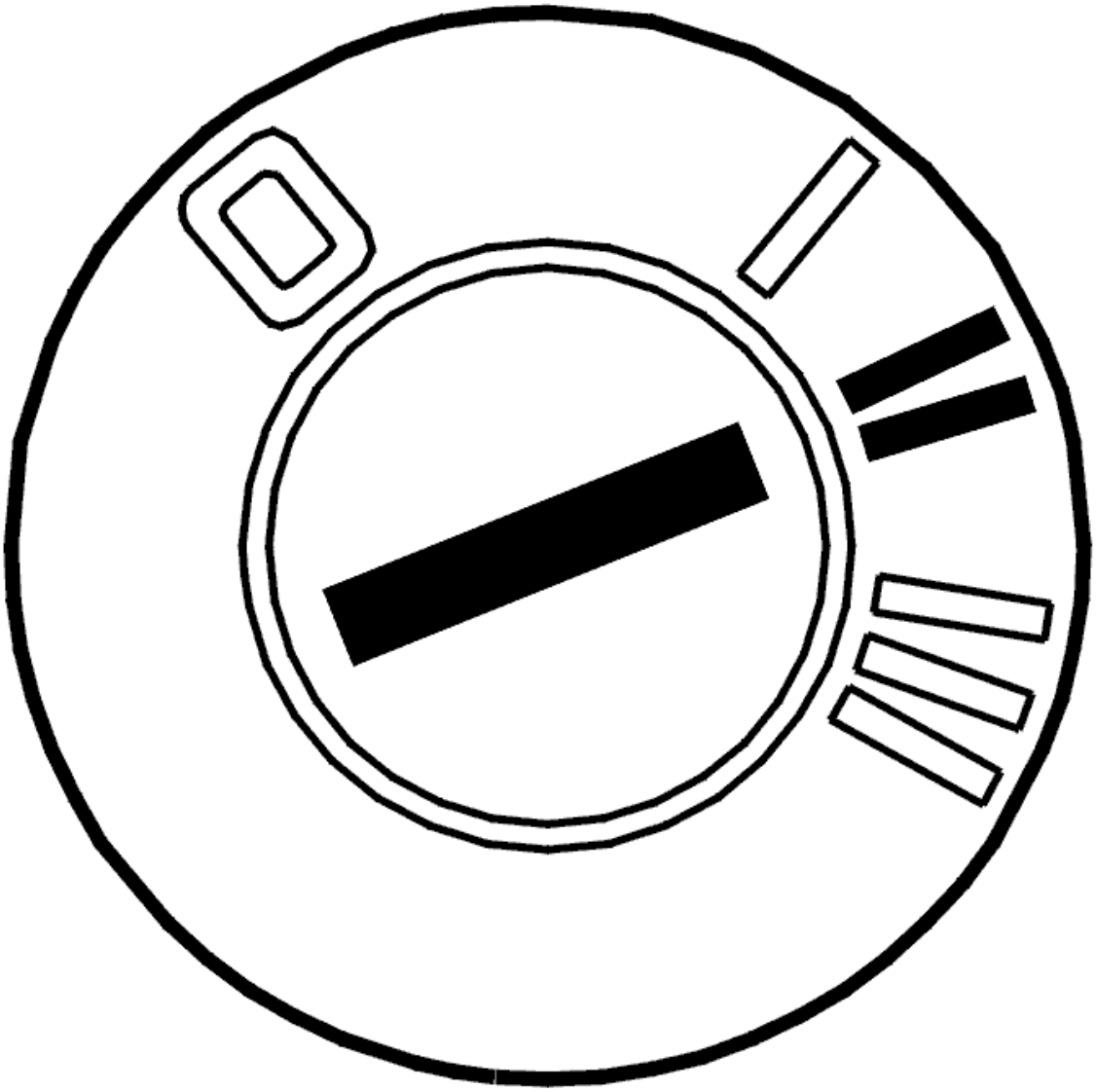

Fig. 25: Identifying Ignition ON
Courtesy of VOLVO CARS CORPORATION

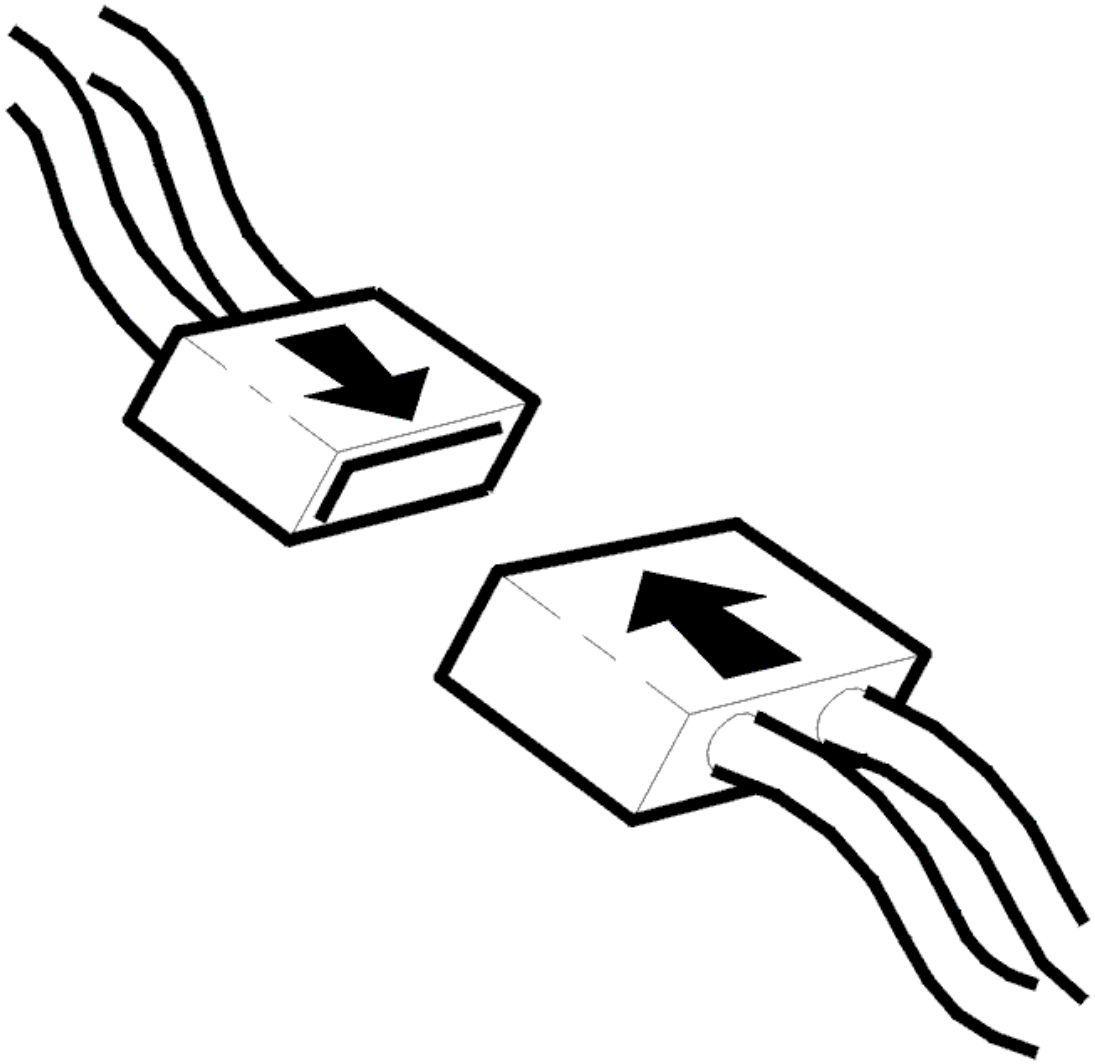

Fig. 26: Connecting Connector
Courtesy of VOLVO CARS CORPORATION

- Ignition off
- Reinstall the connectors, components etc.
- Ignition on
- Activate the carphone.

  Make a call so that both the handset and the hands-free system are used.

  Ignition off.

  Ignition on.

  Read off the diagnostic trouble codes (DTCs).

Check that the relevant diagnostic trouble code (DTC) has switched status from permanent to intermittent fault.

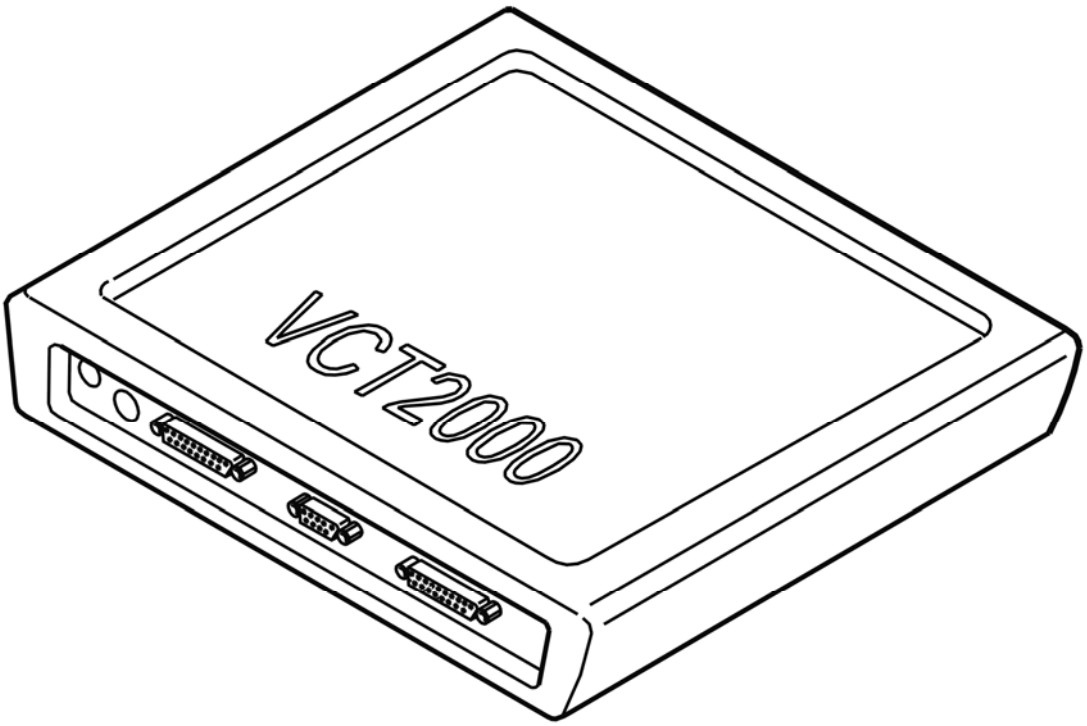

Fig. 27: Identifying VCT2000 Diagnostic Tool Symbol In VIDA
Courtesy of VOLVO CARS CORPORATION

Has the status of the diagnostic trouble code (DTC) changed?

- **YES**

  VERIFIED: Troubleshooting has been completed.

- **NO**

  See: **INFORMATION**

INFORMATION

FAULT-TRACING INFORMATION

The fault should have been detected and remedied. As this is not the case fault-tracing has failed.

Exit fault-tracing for this diagnostic trouble code (DTC) or make another attempt.

SIGNAL TOO HIGH OR SIGNAL MISSING

CHECKING COMPONENTS AND WIRING

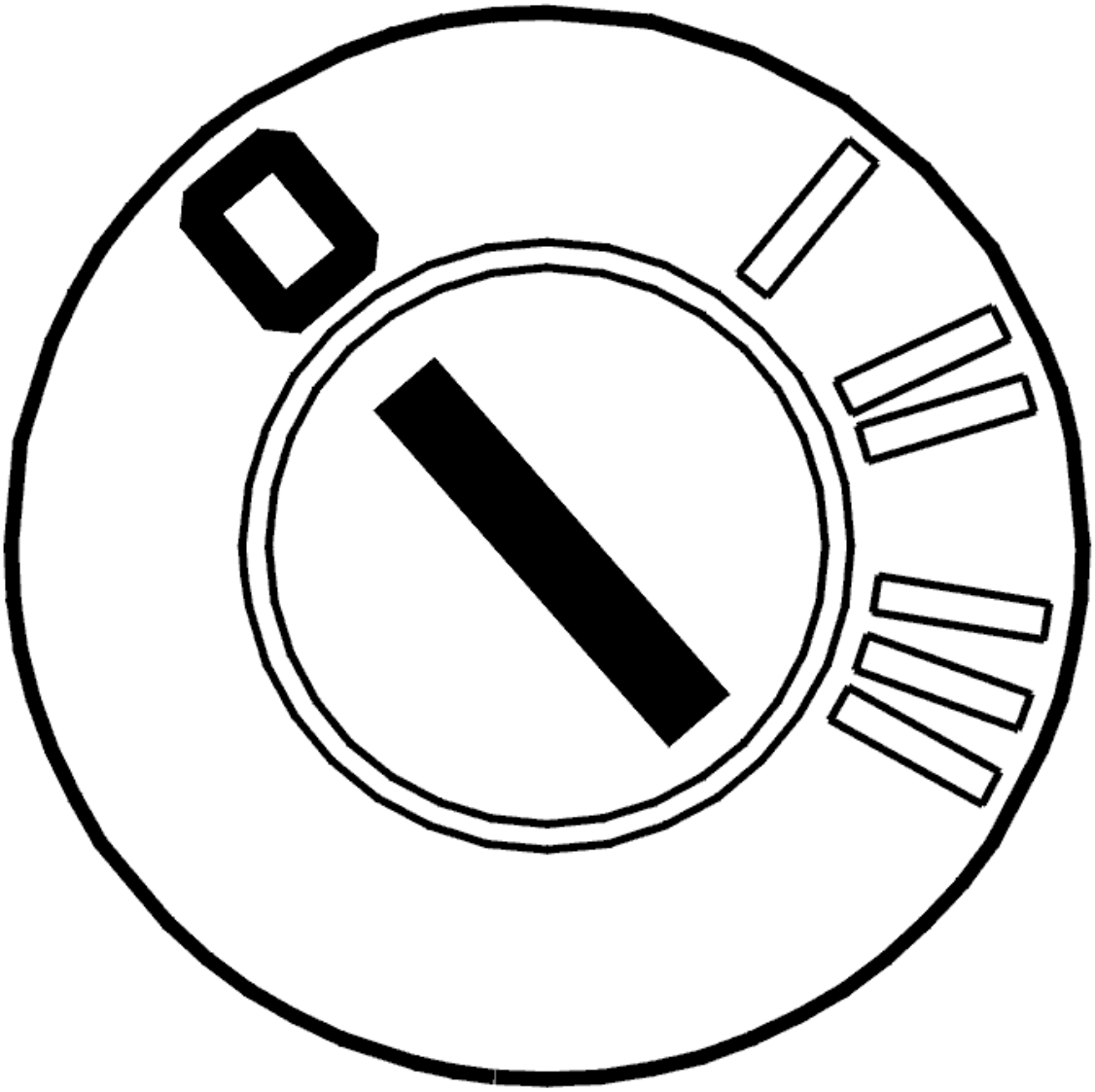

Fig. 28: Identifying Ignition OFF
Courtesy of VOLVO CARS CORPORATION

- Ignition off.

  Check the antenna cable between the phone module (PHM) connector C and the carphone antenna connector in the right-hand A post. Check for a short-circuit to supply voltage.

  Check the antenna cable between control module connector A and the carphone antenna connector in the right-hand A-post. Check for an open-circuit.

  Check the connectors for loose connections, damaged or bent terminal pins and oxidation.

Remedy as necessary.

Other information:

- To connect the breakout box, see **CONNECTING THE BREAKOUT BOX**
- For information about signals and connectors, see **SIGNAL SPECIFICATION**
- To access or replace the control module, see **PHONE MODULE (PHM), REPLACING**
- To access and replace the carphone antenna, see **ANTENNA CARPHONE, REPLACING**
- see **CHECKING WIRING AND TERMINALS** .

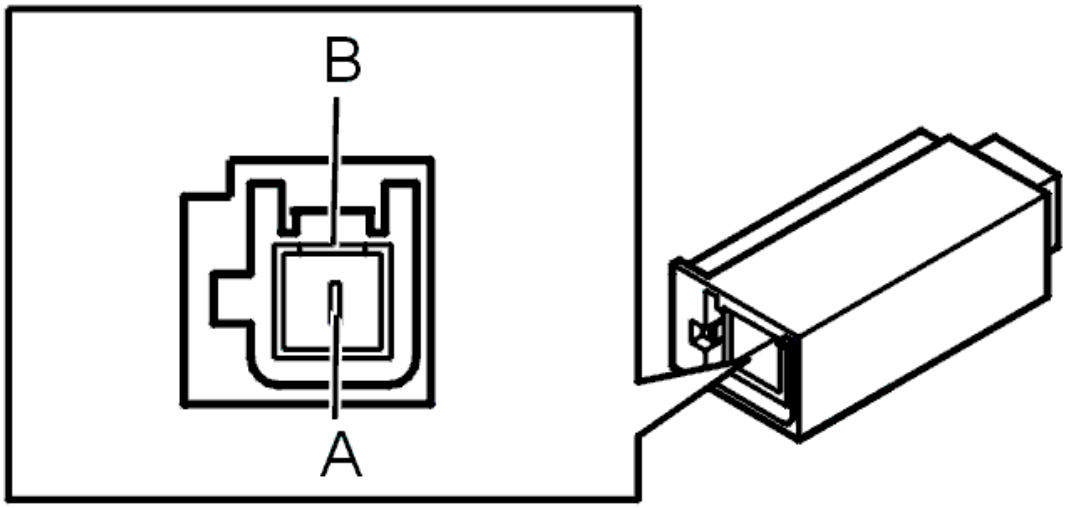

Fig. 29: Identifying 1-Bit Connector
Courtesy of VOLVO CARS CORPORATION

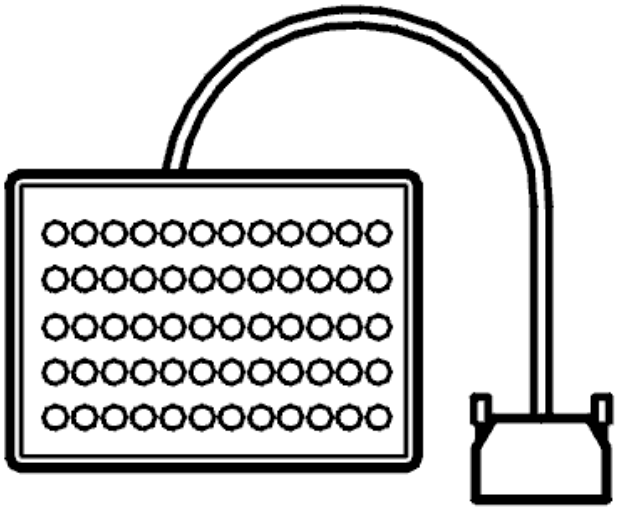

Fig. 30: Breakout Box
Courtesy of VOLVO CARS CORPORATION

Was a fault detected?

- **YES**

  See: **VERIFICATION**

- **NO**

  See: **CHECKING THE CONNECTORS AND WIRING**

CHECKING THE CONNECTORS AND WIRING

Raise the secondary lock on the connector in the right A-pillar.

Loosen the primary lock and remove the insulator.

Carefully remove the antenna from the headlining.

Measure the resistance between the signal line and screen ground on the connector. The resistance must be approximately 0 ohms.

Measure the resistance between screen ground and ground. The resistance must be infinite.

Carefully remove the three screws that hold the antenna's circuit board.

Carefully lift up the circuit board from the mounting point so that there is no contact between the circuit board and the casing.

Measure the resistance between the signal line and screen ground. The resistance must be infinite. If the resistance is infinite there is a short-circuit between the signal line and screen ground.

Remedy as necessary.

Other information

- see **ANTENNA CARPHONE, REPLACING**
- see **CONNECTORS, REPAIR**
- see **CHECKING WIRING AND TERMINALS**

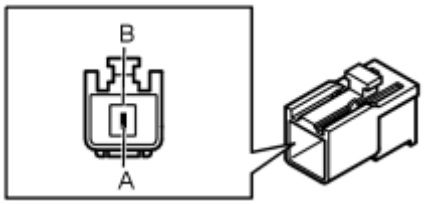

Fig. 31: Identifying Signal Line Connector
Courtesy of VOLVO CARS CORPORATION

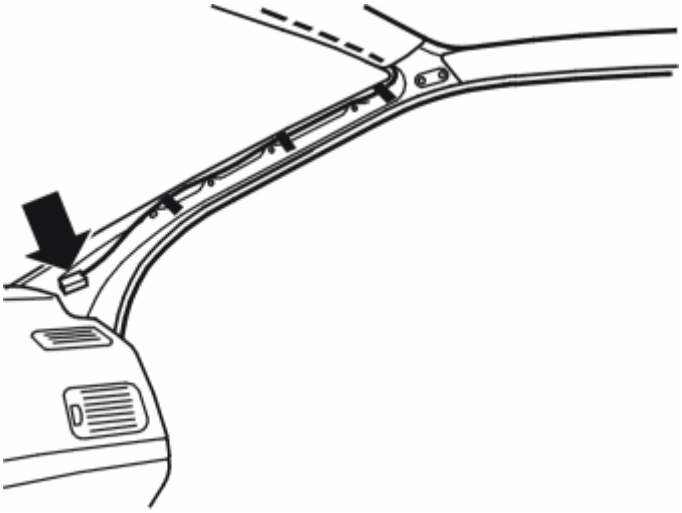

Fig. 32: Identifying Signal Line & Connector
Courtesy of VOLVO CARS CORPORATION

Was a fault detected?

- **YES**

  See: **VERIFICATION**

- **NO**

  See: **INFORMATION**

VERIFICATION

VERIFICATION

HINT: After carrying out the repair, check that the fault has been remedied.

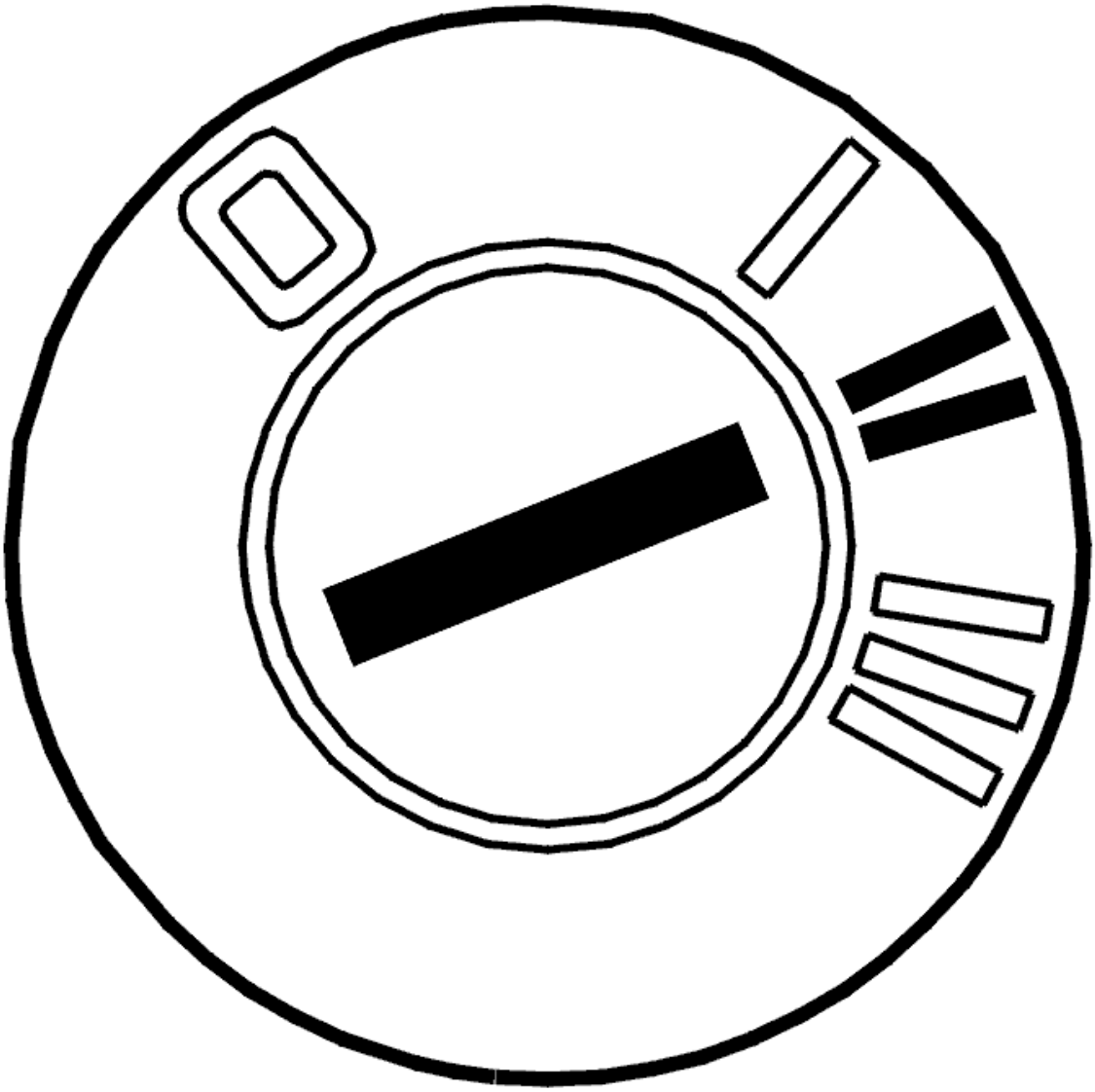

Fig. 33: Identifying Ignition ON
Courtesy of VOLVO CARS CORPORATION

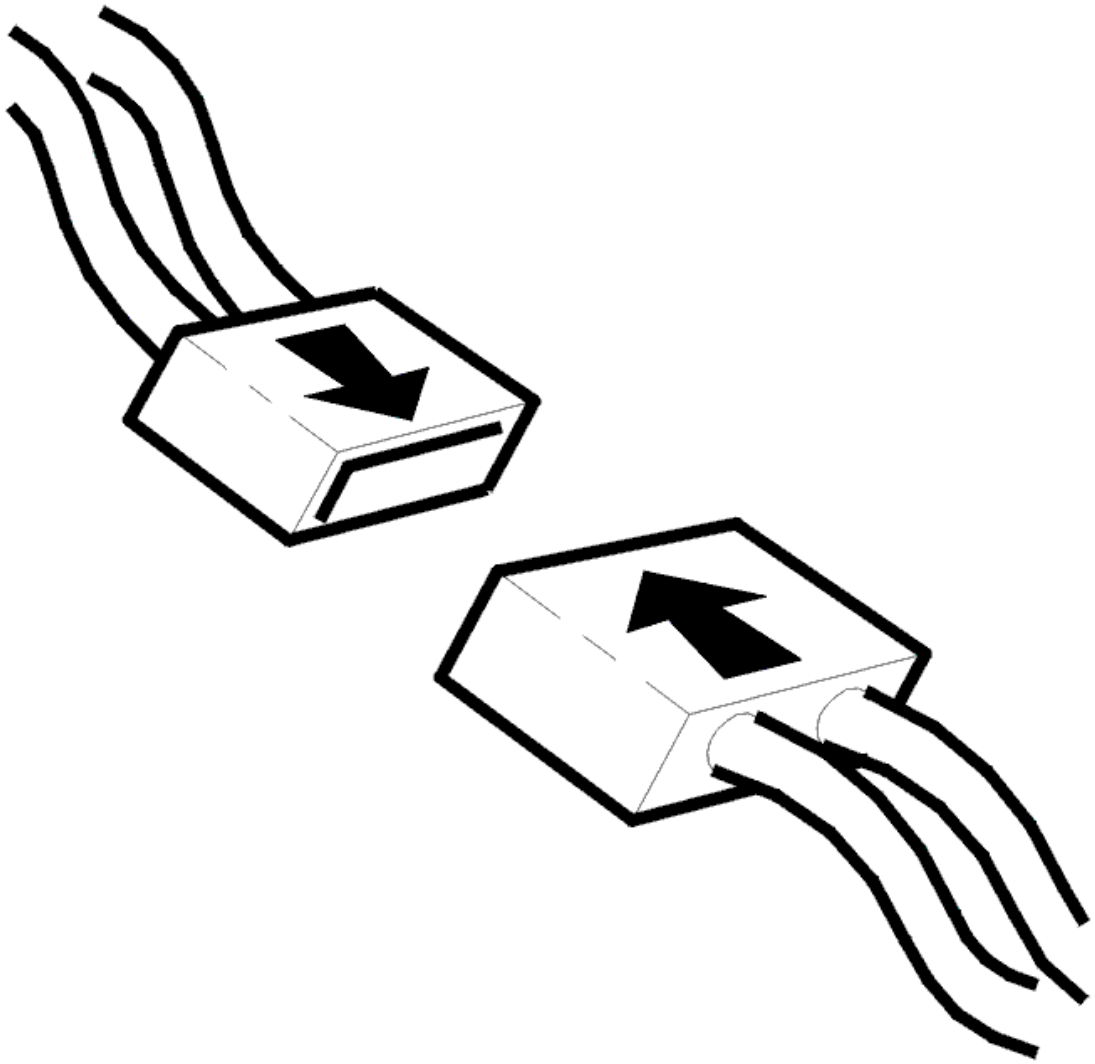

Fig. 34: Connecting Connector
Courtesy of VOLVO CARS CORPORATION

- Ignition off
- Reinstall the connectors, components etc.
- Ignition on
- Switch on the carphone.

  Make a call so that both the handset and the hands-free system are used.

  Ignition off.

  Ignition on.

  Read off the diagnostic trouble codes (DTCs).

Check that the relevant diagnostic trouble code (DTC) has switched status from permanent to intermittent fault.

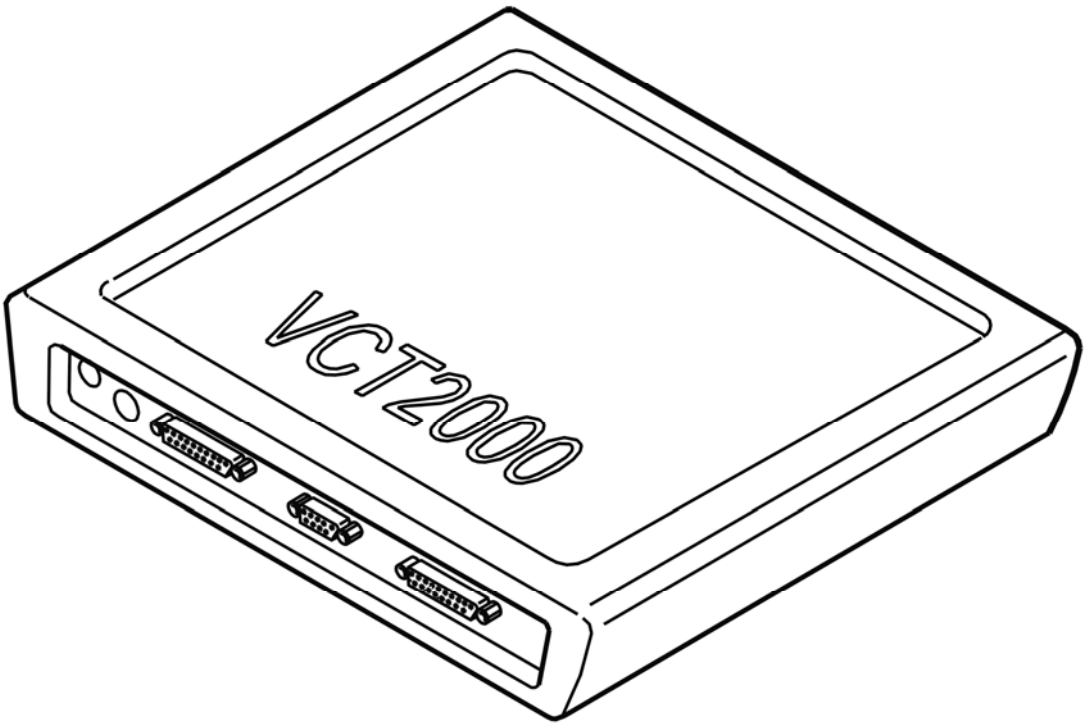

Fig. 35: Identifying VCT2000 Diagnostic Tool Symbol In VIDA
Courtesy of VOLVO CARS CORPORATION

Has the status of the diagnostic trouble code (DTC) changed?

- **YES**

  VERIFIED: Troubleshooting has been completed.

- **NO**

  See: **INFORMATION**

INFORMATION

FAULT-TRACING INFORMATION

The fault should have been detected and remedied. As this is not the case fault-tracing has failed.

Exit fault-tracing for this diagnostic trouble code (DTC) or make another attempt.

PHM-0015: CONTROL MODULE. INTERNAL FAULT (2006-2012)

DIAGNOSTIC TROUBLE CODE (DTC) INFORMATION PHM-0015

Condition

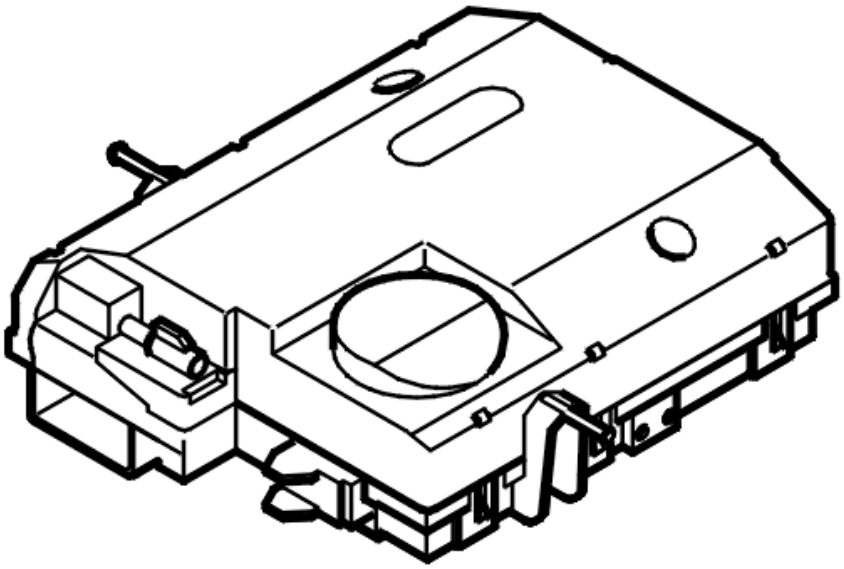

Fig. 36: Identifying Control Module
Courtesy of VOLVO CARS CORPORATION

The diagnostic trouble code (DTC) is stored if the phone module (PHM) registers an internal fault.

The diagnostic trouble code (DTC) can be diagnosed when the ignition is switched on (not key position 3) and when the battery voltage is 9-16 V.

Substitute Value

- None.

Possible Source

- Internal fault in the phone module (PHM).

Fault symptom[s]

- No or reduced carphone functionality.
- Message in the text display (applies only to phone modules (PHM) with Volvo On Call).

INTERNAL FAULT

see **INTERNAL FAULT**

PHM-0015: CONTROL MODULE. INTERNAL FAULT (2003-2005)

DIAGNOSTIC TROUBLE CODE (DTC) INFORMATION PHM-0015

Condition

Diagnostic trouble code (DTC) PHM-0015 is stored if the phone module (PHM) registers an internal fault.

Diagnostic trouble code (DTC) PHM-0015 can be diagnosed with the ignition on (not key position 3) and when the battery voltage is 9-16 V.

Substitute Value

- None.

Possible Source

- Internal fault in the phone module (PHM).

Fault symptom[s]

- No or reduced functionality in the phone module (PHM).

INTERNAL FAULT

REPLACING THE COMPONENT

The phone module (PHM) has registered an internal fault.

If the fault is intermittent, it has been registered previously but is no longer present. Intermittent faults can be caused by interference at start up of the control module or may be a different type of fault which occurs on different occasions. The fault is evaluated depending on how it occurs. If the fault recurs, replace the phone module (PHM).

In the event of a permanent fault, replace the control module. See **PHONE MODULE (PHM), REPLACING** .

Remedy as necessary.

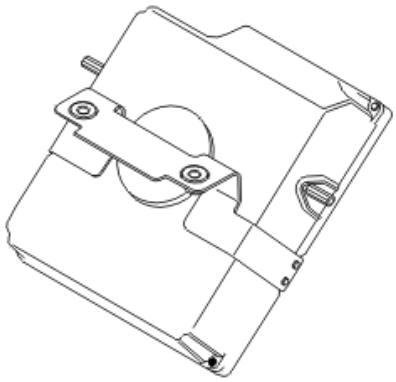

Fig. 37: Identifying Phone Module (PHM)
Courtesy of VOLVO CARS CORPORATION

- **Continue**

  See: **INFORMATION**

INFORMATION

FAULT-TRACING INFORMATION

In case of this defect, troubleshooting is not followed by verification.

The information can be displayed again or the fault-tracing for this fault can be interrupted.

PHM-0020: HANDSET MICROPHONE. SIGNAL TOO HIGH / SIGNAL MISSING (2006-2012)

DIAGNOSTIC TROUBLE CODE (DTC) INFORMATION PHM-0020

Condition

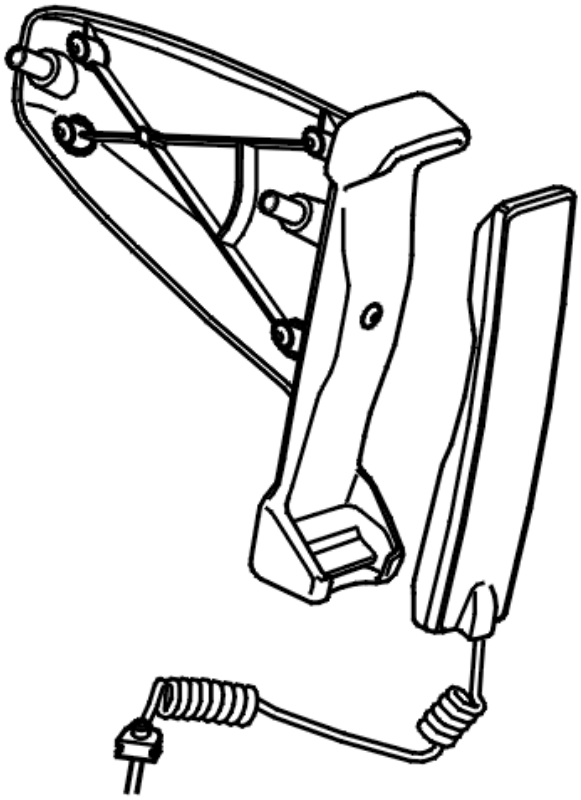

Fig. 38: Identifying Handset Cradle
Courtesy of VOLVO CARS CORPORATION

The diagnostic trouble code (DTC) is stored if the phone module (PHM) registers an open-circuit or a short-circuit to +12 V in the microphone signal to the handset.

The diagnostic trouble code (DTC) can be diagnosed when the ignition is switched on (not key position 3) and when the battery voltage is 9-16 V.

Substitute Value

- Only hands-free operates.

Possible Source

- Short-circuit to +12 V in the cable (microphone signal) between the handset and the control module
- Open-circuit in the cable (microphone signal) between the handset and the control module
- Contact resistance, oxidation or loose connections in the connectors.

Fault symptom[s]

- The carphone handset is not working.
- Message in the text display (applies only to phone modules (PHM) with Volvo On Call).

SIGNAL TOO HIGH / SIGNAL MISSING

CHECKING THE COMPONENT AND WIRING

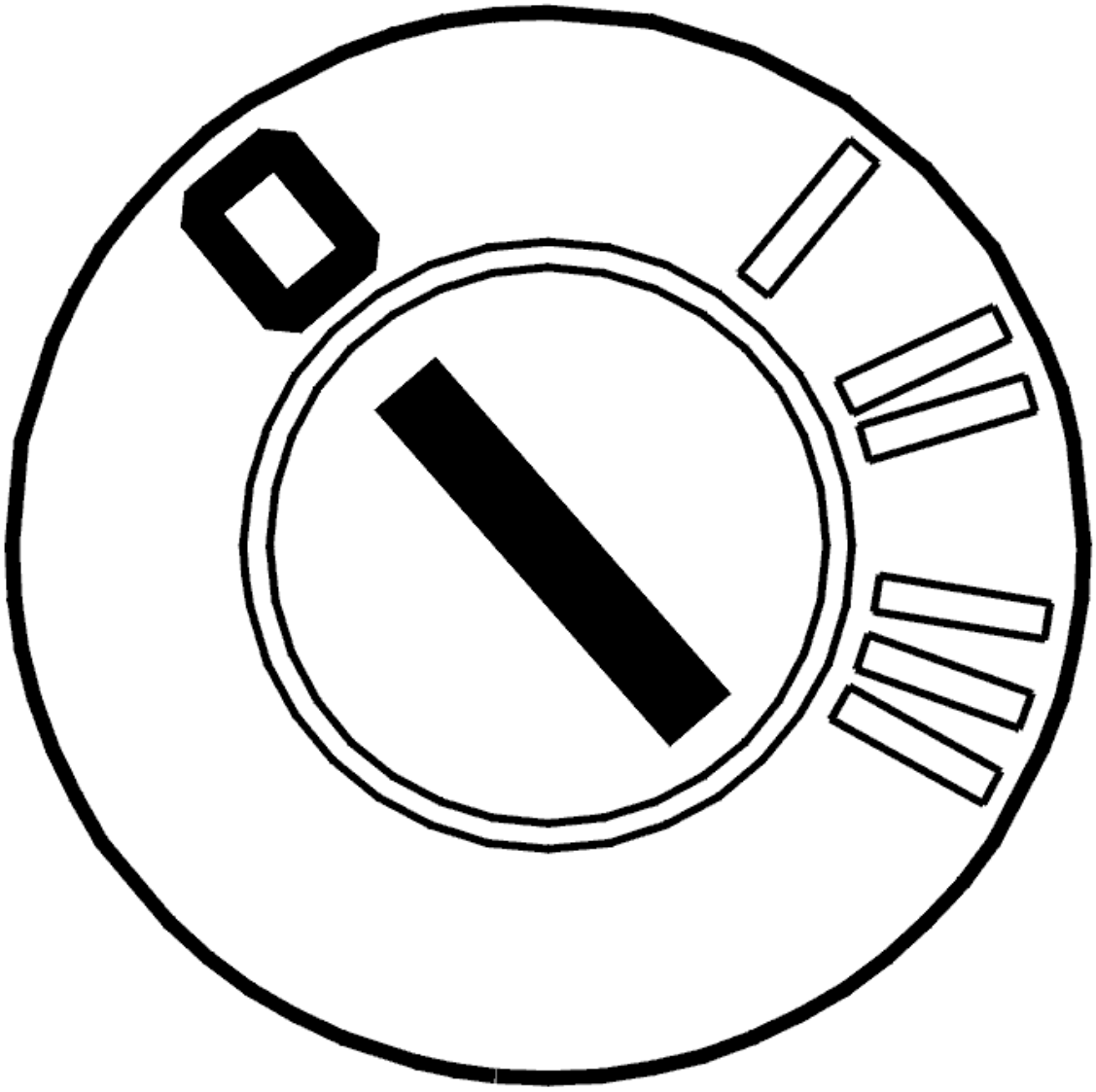

Fig. 39: Identifying Ignition OFF
Courtesy of VOLVO CARS CORPORATION

- Ignition off
- Disconnect connector A from the phone module (PHM)
- Disconnect the handset connector.

  Check the microphone signal cable at control module connector A. Check for a short-circuit to supply voltage.

  Check between:

- terminals #19 (#19) and #7 (#7)
- terminals #19 (#19) and #5 (#5).

Check the cable for the microphone signal. Check for an open-circuit.

Take a reading between control module connector terminal A#19 (#19) and handset connector terminal #1 (#21).

Check the connectors for loose connections, damaged or bent terminal pins and oxidation.

Try replacing the carphone handset or holder if no fault is found in the cable.

Remedy as necessary.

Other information:

- see **SIGNAL SPECIFICATION**
- see **CONNECTING THE BREAKOUT BOX**
- see **LOCATION OF COMPONENTS**
- see **PHONE MODULE (PHM), REPLACING (2006-2010)**
- see **HANDSET, REPLACING**
- see **CHECKING WIRING AND TERMINALS**

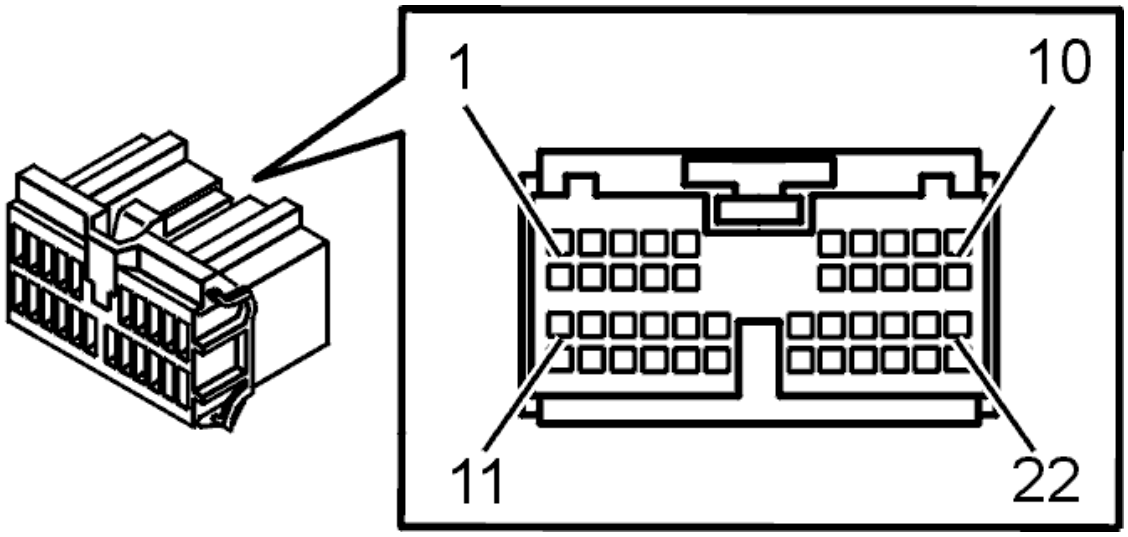

Fig. 40: Identifying Connector (F) Terminals
Courtesy of VOLVO CARS CORPORATION

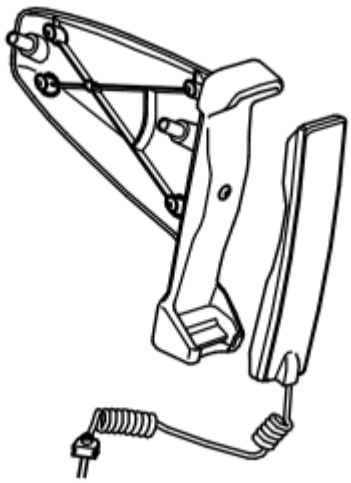

Fig. 41: Identifying Carphone Holder
Courtesy of VOLVO CARS CORPORATION

- **Continue**

  See: **VERIFICATION**

VERIFICATION

VERIFICATION

HINT: After carrying out the repair, check that the fault has been remedied.

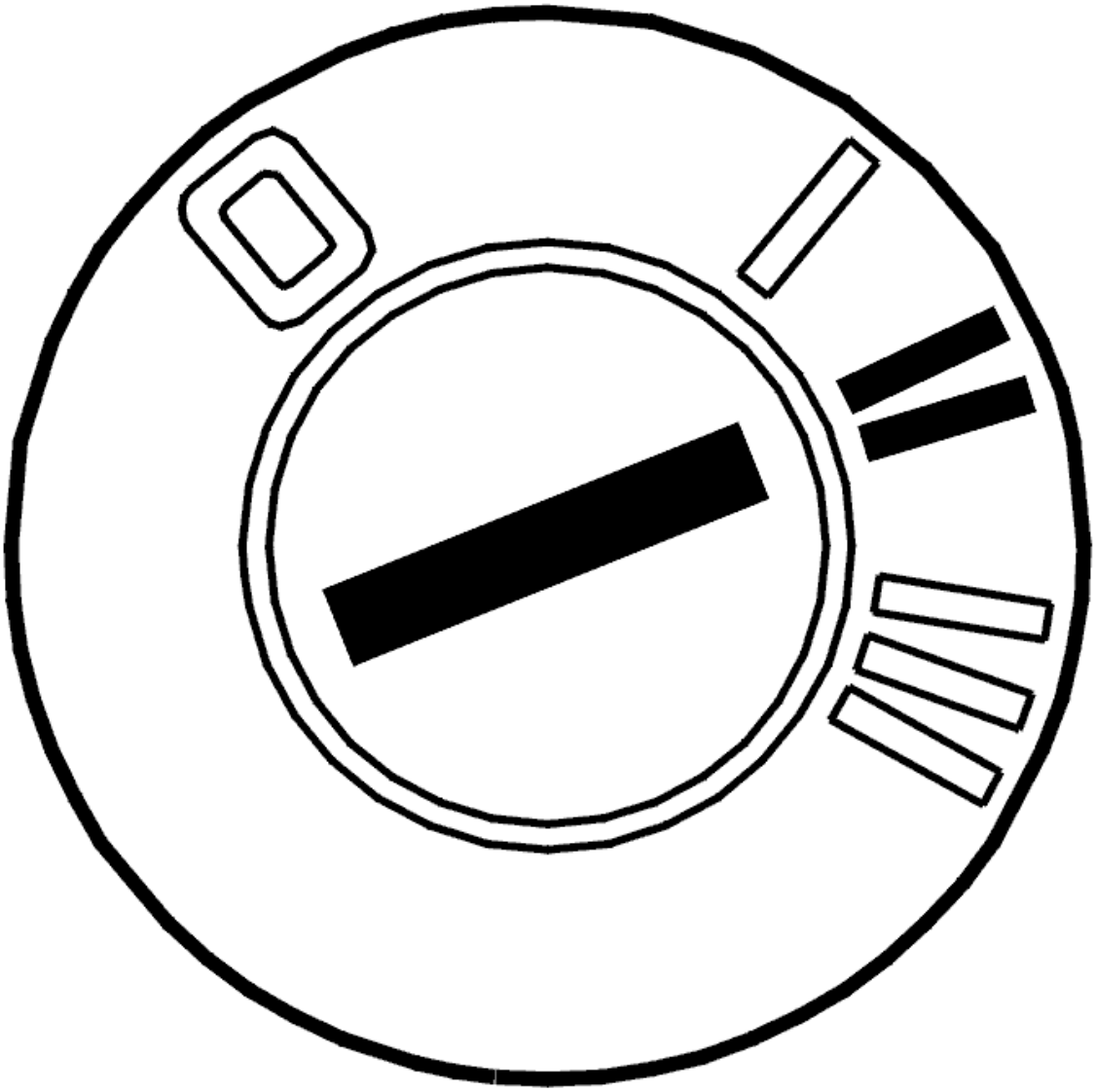

Fig. 42: Identifying Ignition ON
Courtesy of VOLVO CARS CORPORATION

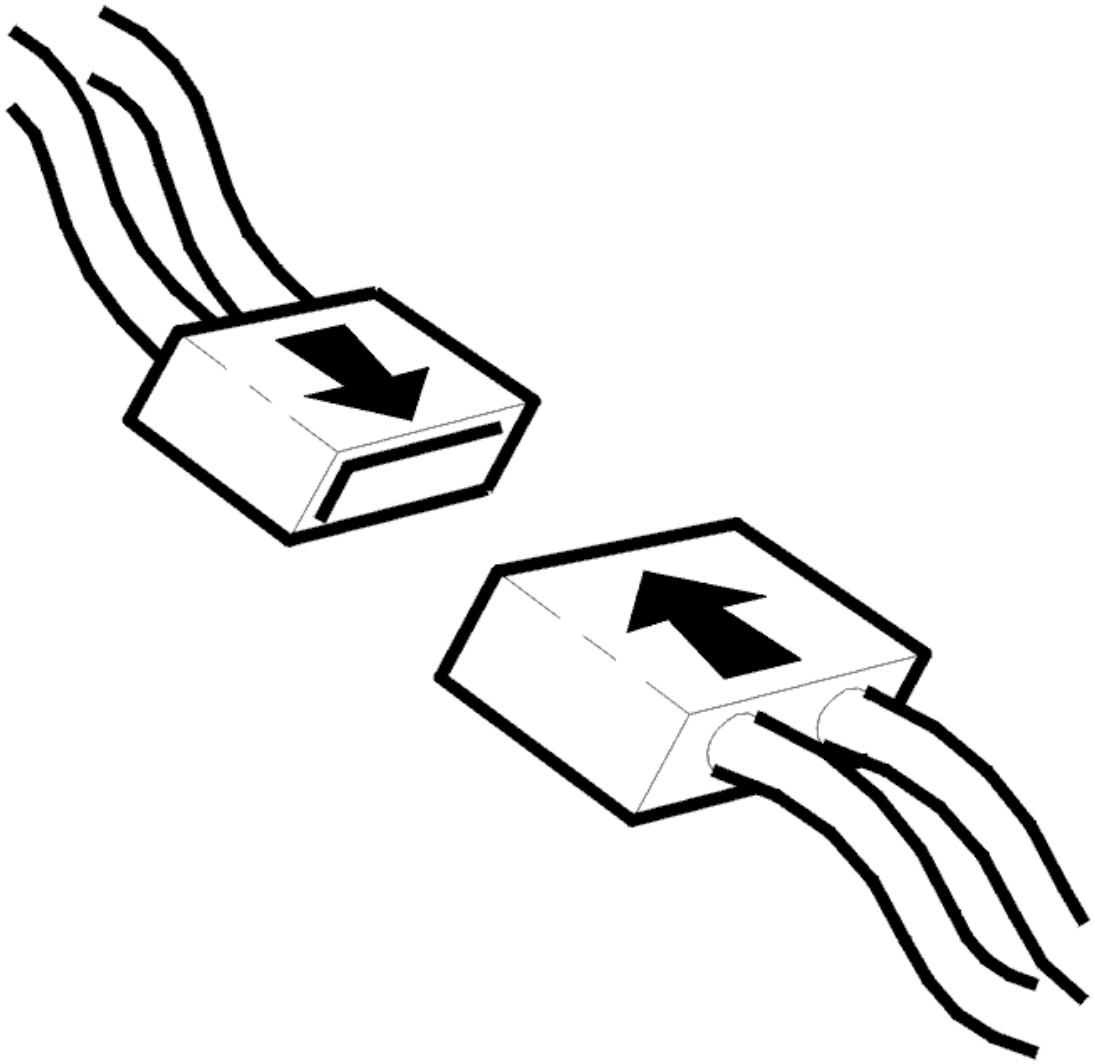

Fig. 43: Connecting Connector
Courtesy of VOLVO CARS CORPORATION

- Ignition off
- Reinstall the connectors, components etc.
- Ignition on
- Activate the carphone.

  Make a call so that both the handset and the hands-free system are used.

  - Ignition off.
  - Ignition on.
  - Read off the diagnostic trouble codes (DTCs).
  - Check that the relevant diagnostic trouble code (DTC) has switched status from permanent to

intermittent fault.

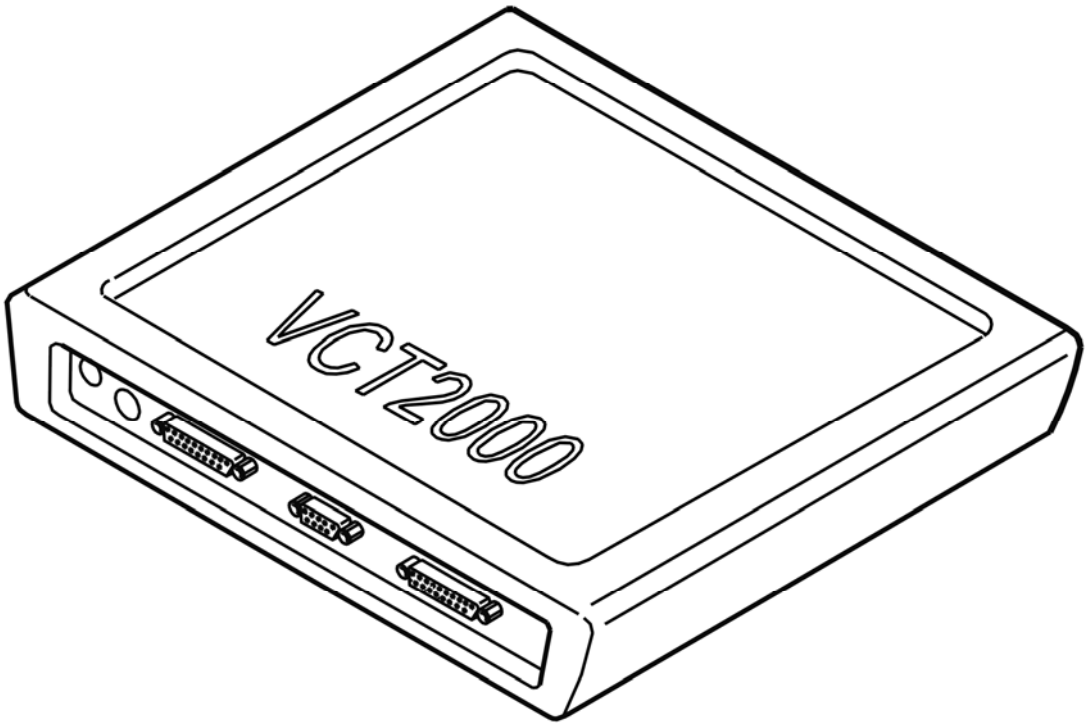

Fig. 44: Identifying VCT2000 Diagnostic Tool Symbol In VIDA
Courtesy of VOLVO CARS CORPORATION

Has the status of the diagnostic trouble code (DTC) changed?

- **YES**

  VERIFIED: Troubleshooting has been completed.

- **NO**

  See: **INFORMATION**

INFORMATION

FAULT-TRACING INFORMATION

The fault should have been detected and remedied. As this is not the case fault-tracing has failed.

Exit fault-tracing for this diagnostic trouble code (DTC) or make another attempt.

PHM-0020: HANDSET MICROPHONE. SIGNAL TOO HIGH OR SIGNAL

MISSING (2003-2004)

DIAGNOSTIC TROUBLE CODE (DTC) INFORMATION PHM-0020

Condition

Diagnostic trouble code (DTC) PHM-0020 is stored if the phone module (PHM) registers an open-circuit or a short-circuit to +12 V in the microphone signal to the handset.

Diagnostic trouble code (DTC) PHM-0020 can be diagnosed with the ignition on (not key position 3) and when the battery voltage is 9-16 V.

Substitute Value

- Only hands-free operates.

Possible Source

- Short-circuit to +12 V in the wiring (microphone signal) between the handset and the control module
- Open-circuit in the wiring (microphone signal) between the handset and the control module.

Fault symptom[s]

- The carphone handset is not working.

SIGNAL TOO HIGH OR SIGNAL MISSING

CHECKING COMPONENTS AND WIRING

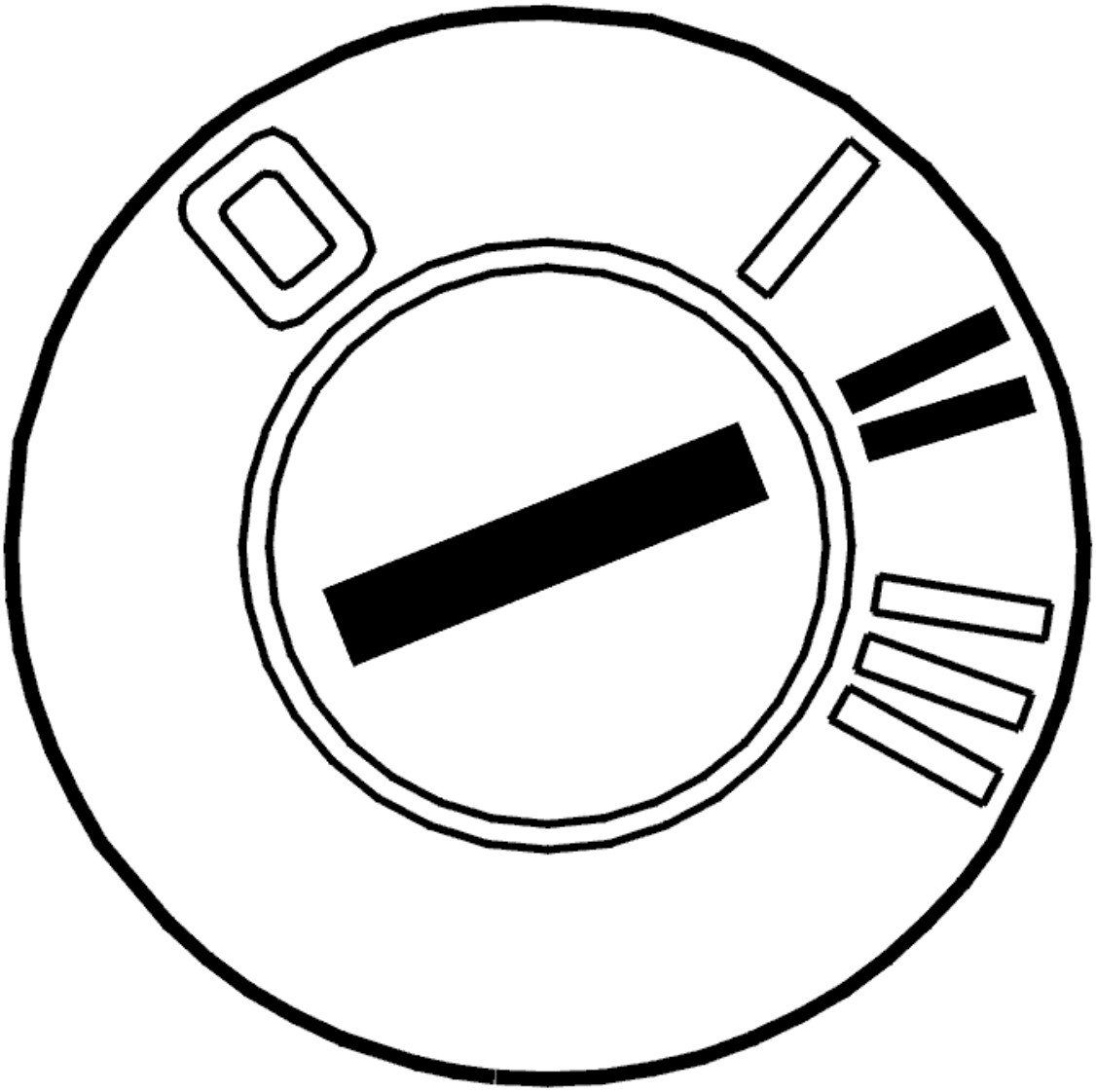

Fig. 45: Identifying Ignition ON
Courtesy of VOLVO CARS CORPORATION

- Ignition on.

  Check the microphone signal cable between phone module (PHM) connector B terminal #13 (#55) and handset connector terminal #1 (#21). Check for an open-circuit and for a short-circuit to supply voltage.

  Try replacing the carphone handset if no fault is found in the wiring.

  Remedy as necessary.

  Other information:

  - To connect the breakout box, see **CONNECTING THE BREAKOUT BOX**
  - For information about signals and connectors, see **SIGNAL SPECIFICATION**

- To access or replace the control module, see **PHONE MODULE (PHM), REPLACING**
- To access or replace the handset, see **HANDSET, REPLACING**
- see **CHECKING WIRING AND TERMINALS** .

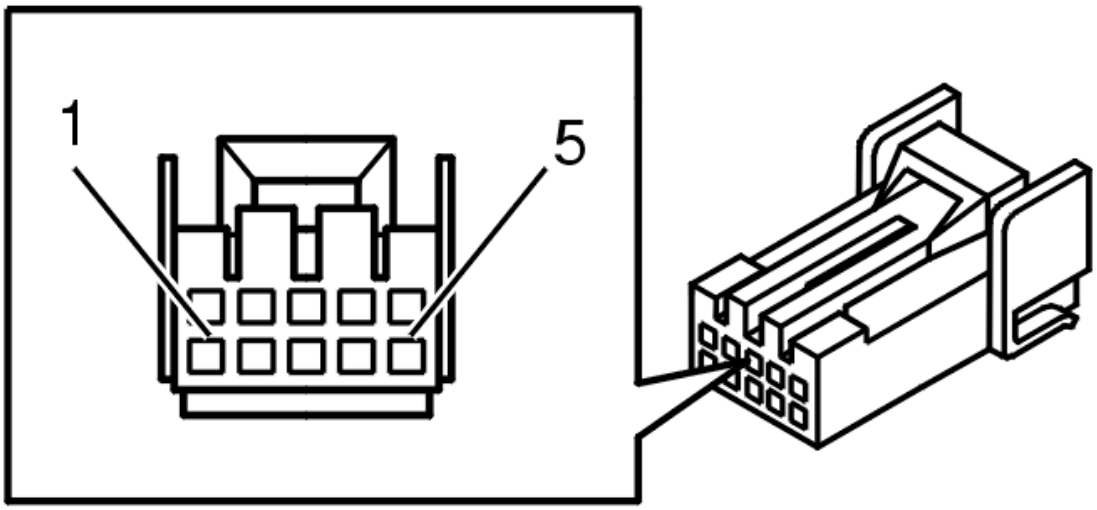

Fig. 46: 10 CD Changer Connector Terminals
Courtesy of VOLVO CARS CORPORATION

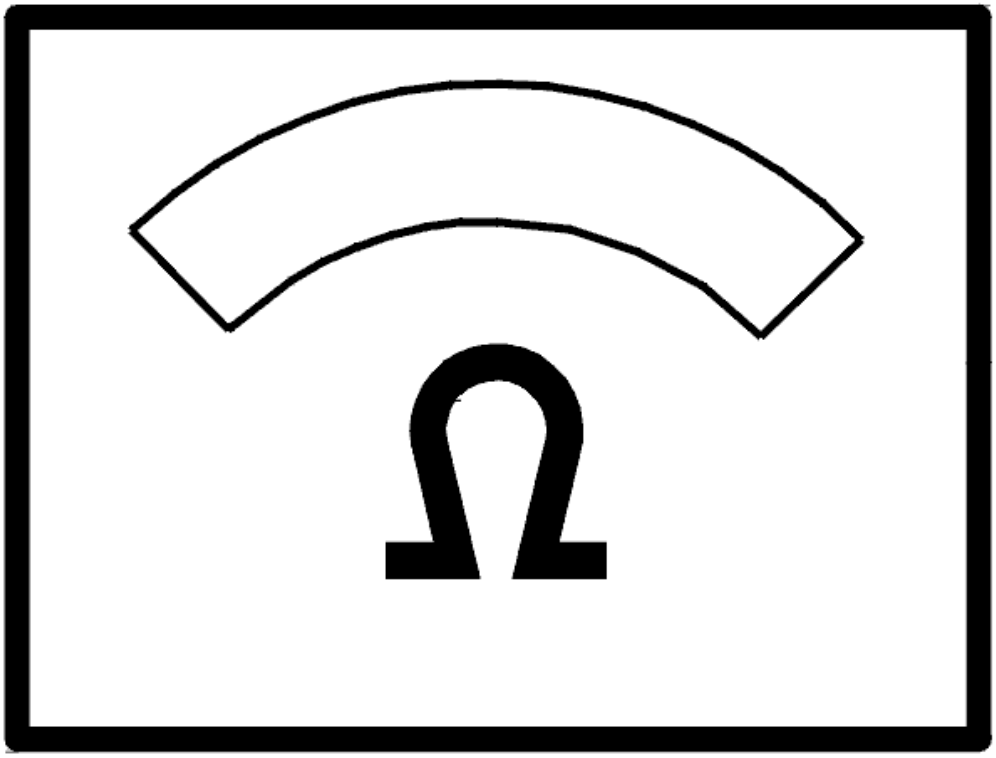

Fig. 47: Identifying Ohm Meter
Courtesy of VOLVO CARS CORPORATION

- **Continue**

  See: **VERIFICATION**

VERIFICATION

VERIFICATION

HINT: After carrying out the repair, check that the fault has been remedied.

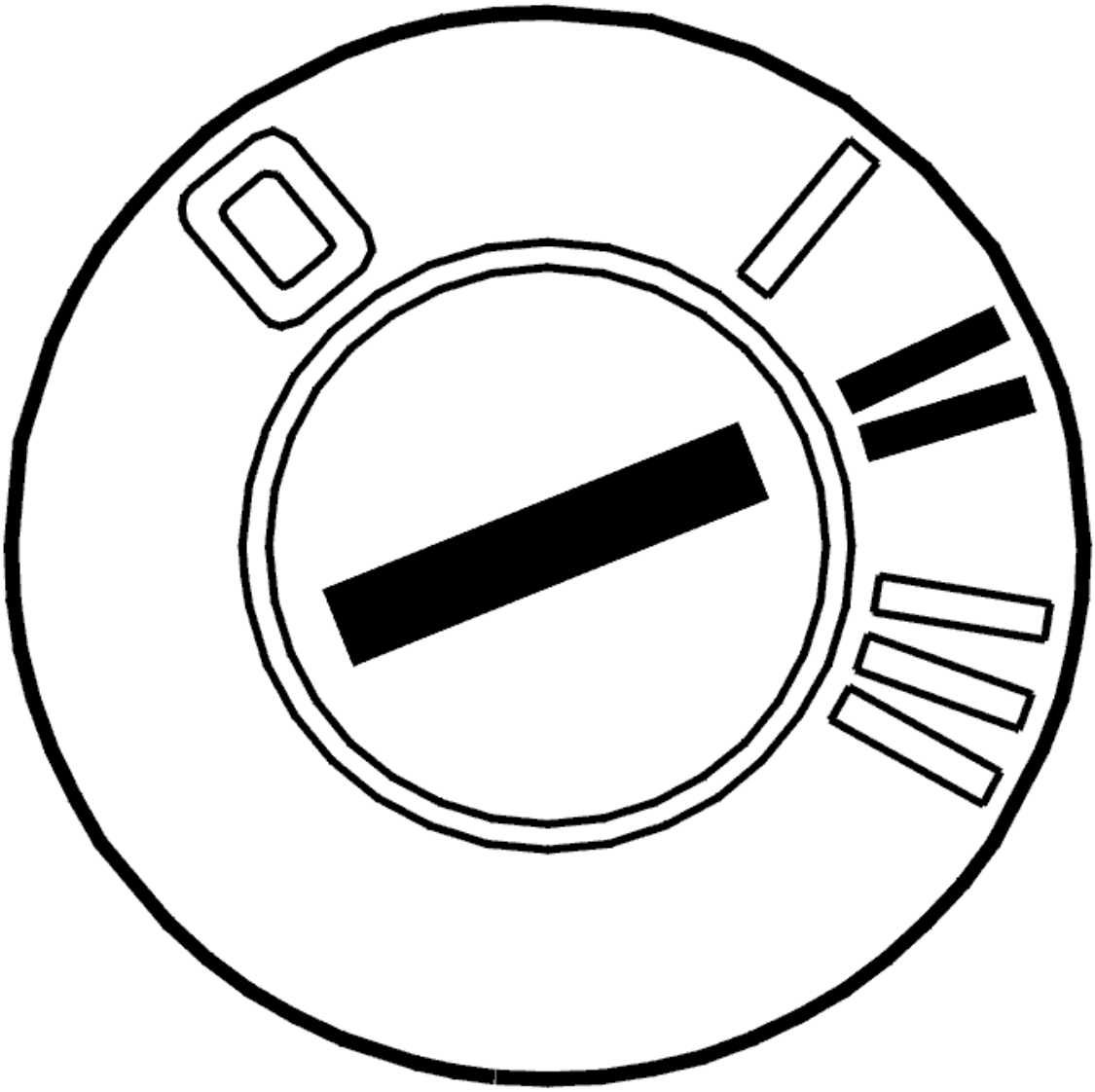

Fig. 48: Identifying Ignition ON
Courtesy of VOLVO CARS CORPORATION

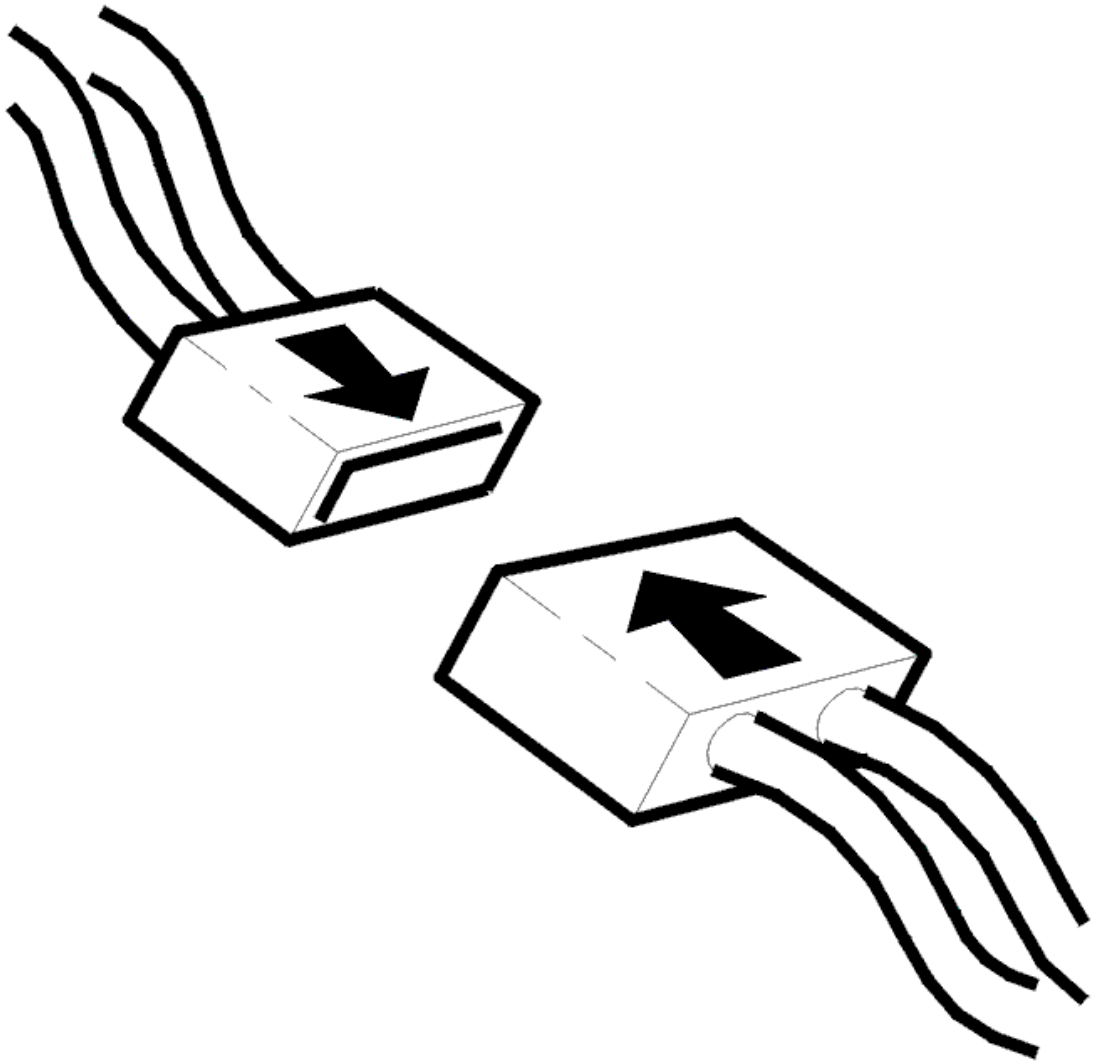

Fig. 49: Connecting Connector
Courtesy of VOLVO CARS CORPORATION

- Ignition off
- Reinstall the connectors, components etc.
- Ignition on
- Switch on the carphone.

  Make a call so that both the handset and the hands-free system are used.

  Ignition off.

  Ignition on.

  Read off the diagnostic trouble codes (DTCs).

Check that the relevant diagnostic trouble code (DTC) has switched status from permanent to intermittent fault.

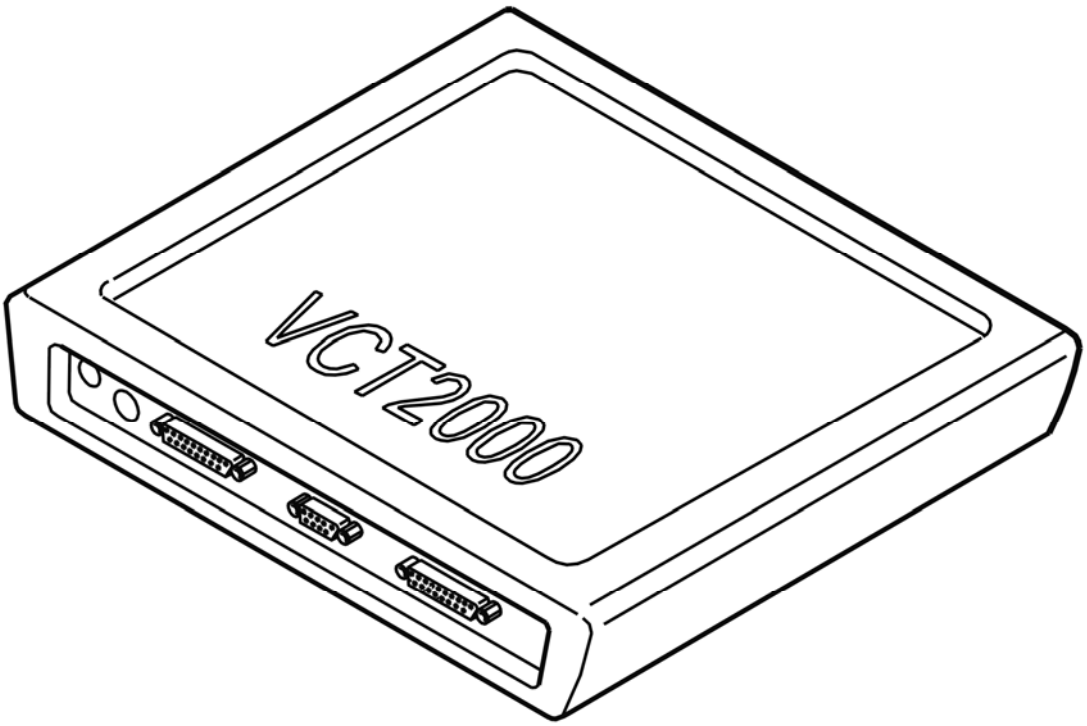

Fig. 50: Identifying VCT2000 Diagnostic Tool Symbol In VIDA
Courtesy of VOLVO CARS CORPORATION

Has the status of the diagnostic trouble code (DTC) changed?

- **YES**

  VERIFIED: Troubleshooting has been completed.

- **NO**

  See: **INFORMATION**

INFORMATION

FAULT-TRACING INFORMATION

The fault should have been detected and remedied. As this is not the case fault-tracing has failed.

Exit fault-tracing for this diagnostic trouble code (DTC) or make another attempt.

PHM-0020: TELEPHONE HANDSET MICROPHONE. SIGNAL TOO HIGH / SIGNAL MISSING (2005)

DIAGNOSTIC TROUBLE CODE (DTC) INFORMATION PHM-0020

see **DIAGNOSTIC TROUBLE CODE (DTC) INFORMATION PHM-0020**

SIGNAL TOO HIGH / SIGNAL MISSING

CHECKING STRUCTURE WEEK

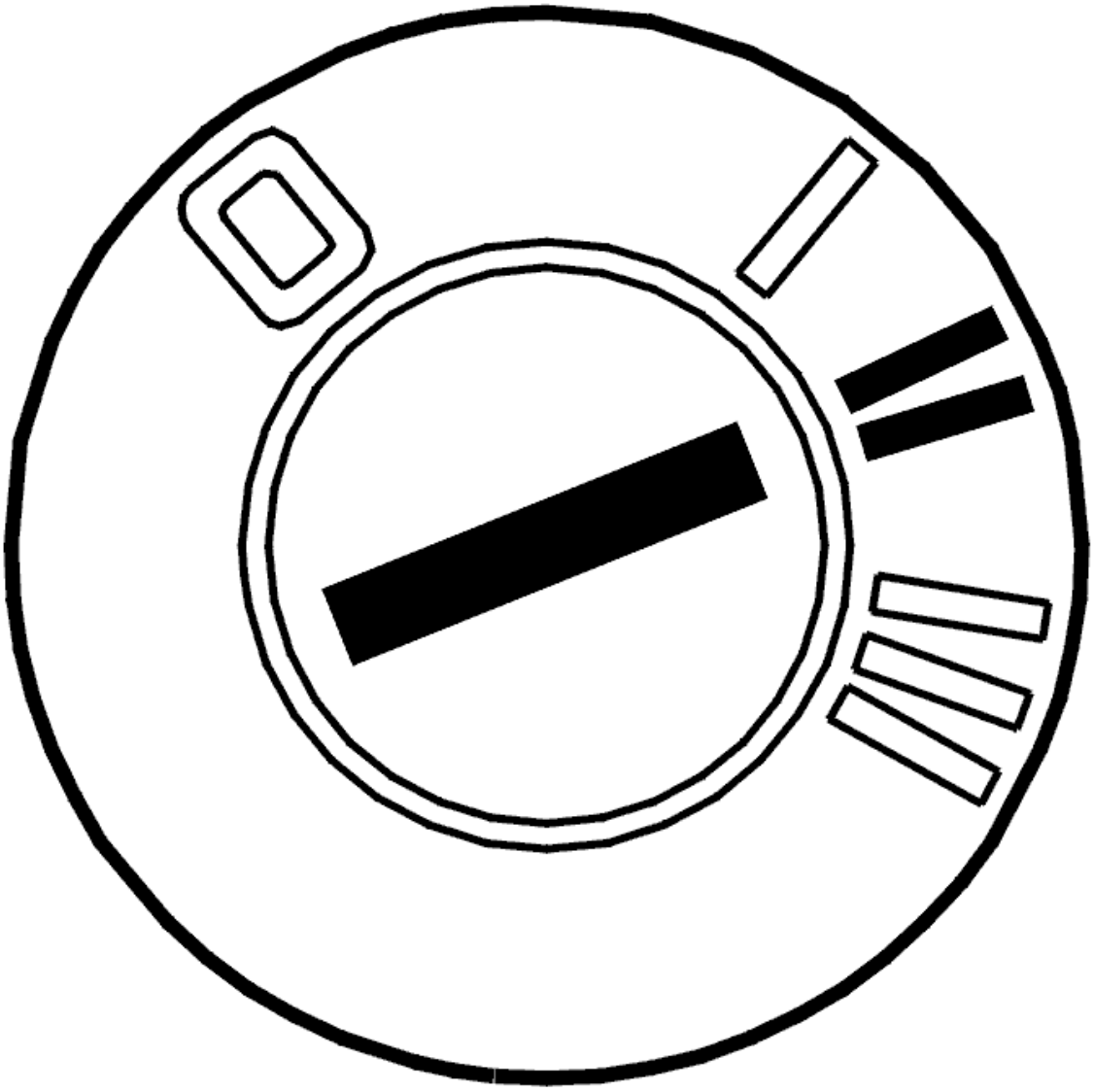

Fig. 51: Identifying Ignition ON
Courtesy of VOLVO CARS CORPORATION

- Ignition on

Read out the vehicle's structure week using the VCT2000 (or appropriate scan tool).

1. Vehicles with structure week up to and including 200445, that is, year 2004 week 45.
2. Vehicles with structure week from and including 200446, that is, year 2004 week 46.

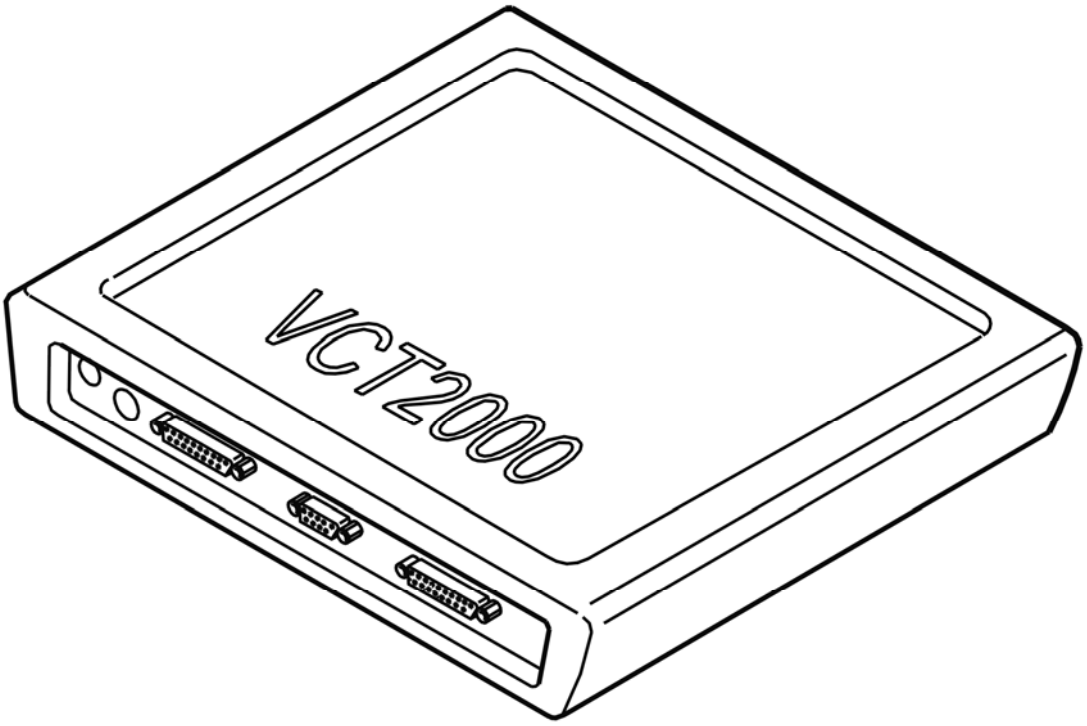

Fig. 52: Identifying VCT2000 Diagnostic Tool Symbol In VIDA
Courtesy of VOLVO CARS CORPORATION

Select one of the above alternatives.

- **1**

  See: **SIGNAL TOO HIGH OR SIGNAL MISSING**

- **2**

  See: **CHECKING COMPONENTS AND WIRING**

CHECKING COMPONENTS AND WIRING

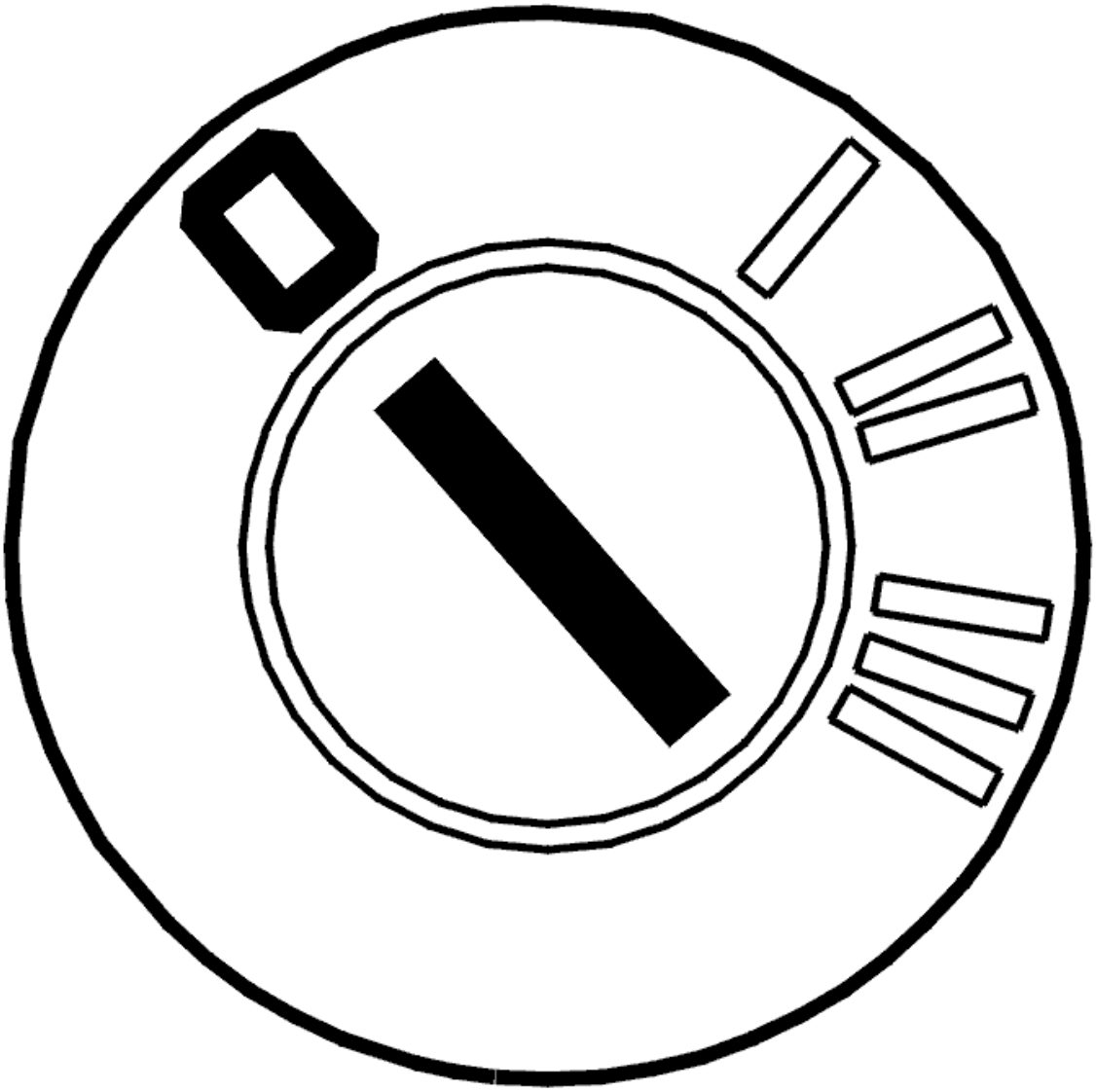

Fig. 53: Identifying Ignition OFF
Courtesy of VOLVO CARS CORPORATION

- Ignition off
- Disconnect connector A for the phone module (PHM).
- Disconnect the handset's connector.

Check the microphone signal's cable on the control module's connector A for short-circuit to voltage.

Check between:

- #19 (#19) and #7 (#7).
- #19 (#19) and #5 (#5).

Check the microphone signal's cable for open circuit.

Measure between the control module's connector A #19 (#19) and the handset's connector #1 (#21).

Check the connectors for loose connections, damaged or bent pins as well as oxidation.

If no malfunction was found on the cable, try replacing the handset or holder.

Remedy as necessary.

Other information:

- see **CONNECTING THE BREAKOUT BOX**
- see **SIGNAL SPECIFICATION**
- see **LOCATION OF COMPONENTS**
- see **PHONE MODULE (PHM), REPLACING**
- see **HANDSET, REPLACING**
- see **CHECKING WIRING AND TERMINALS**

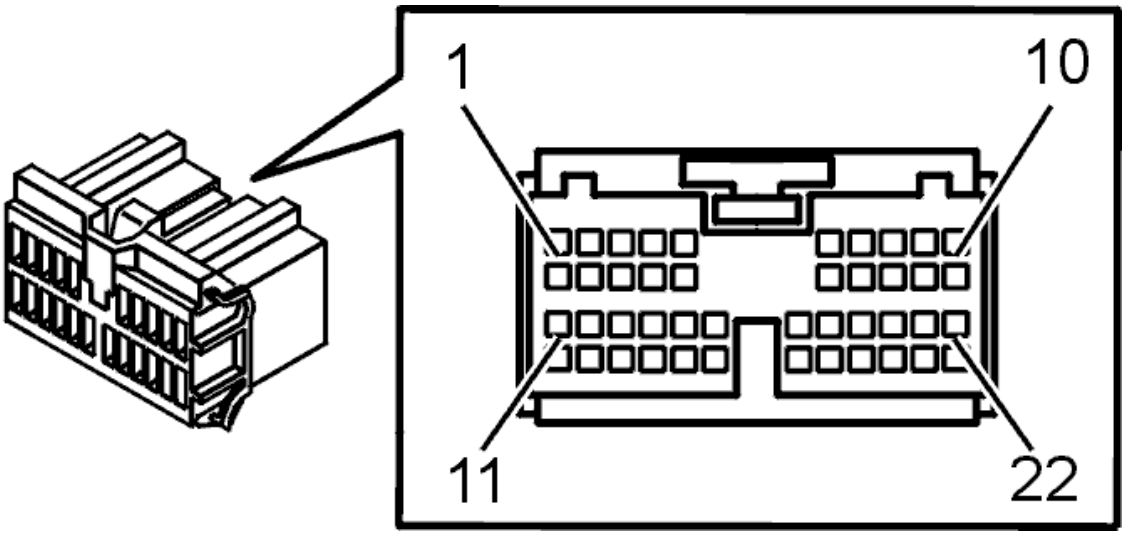

Fig. 54: Identifying Connector (F) Terminals
Courtesy of VOLVO CARS CORPORATION

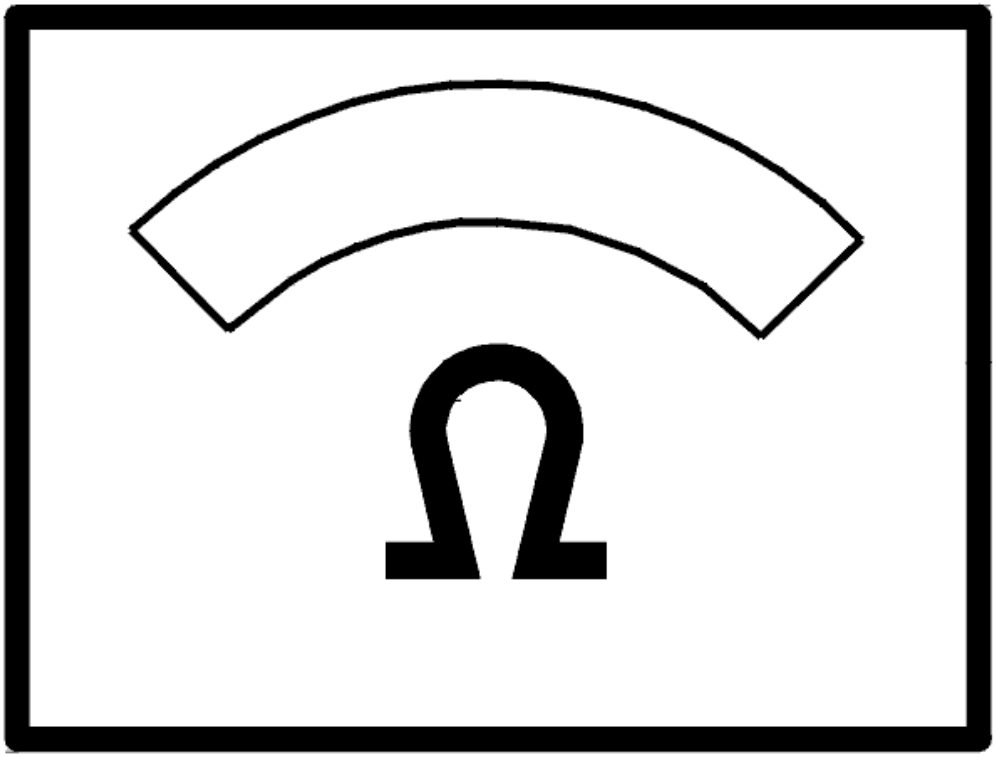

Fig. 55: Identifying Ohm Meter
Courtesy of VOLVO CARS CORPORATION

- **Continue**

  See: **VERIFICATION**

VERIFICATION

VERIFICATION

HINT: After carrying out the repair, check that the fault has been remedied.

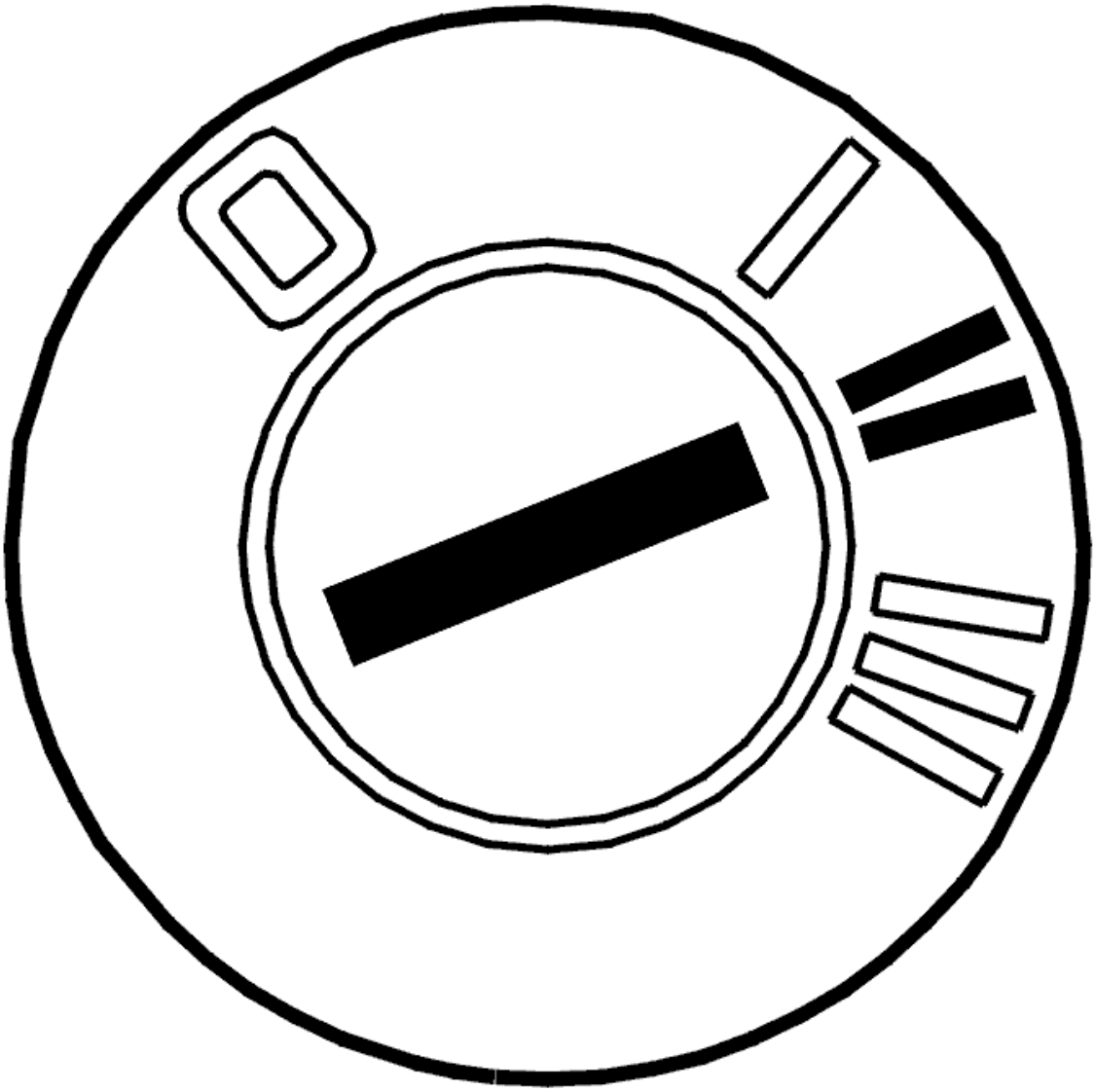

Fig. 56: Identifying Ignition ON
Courtesy of VOLVO CARS CORPORATION

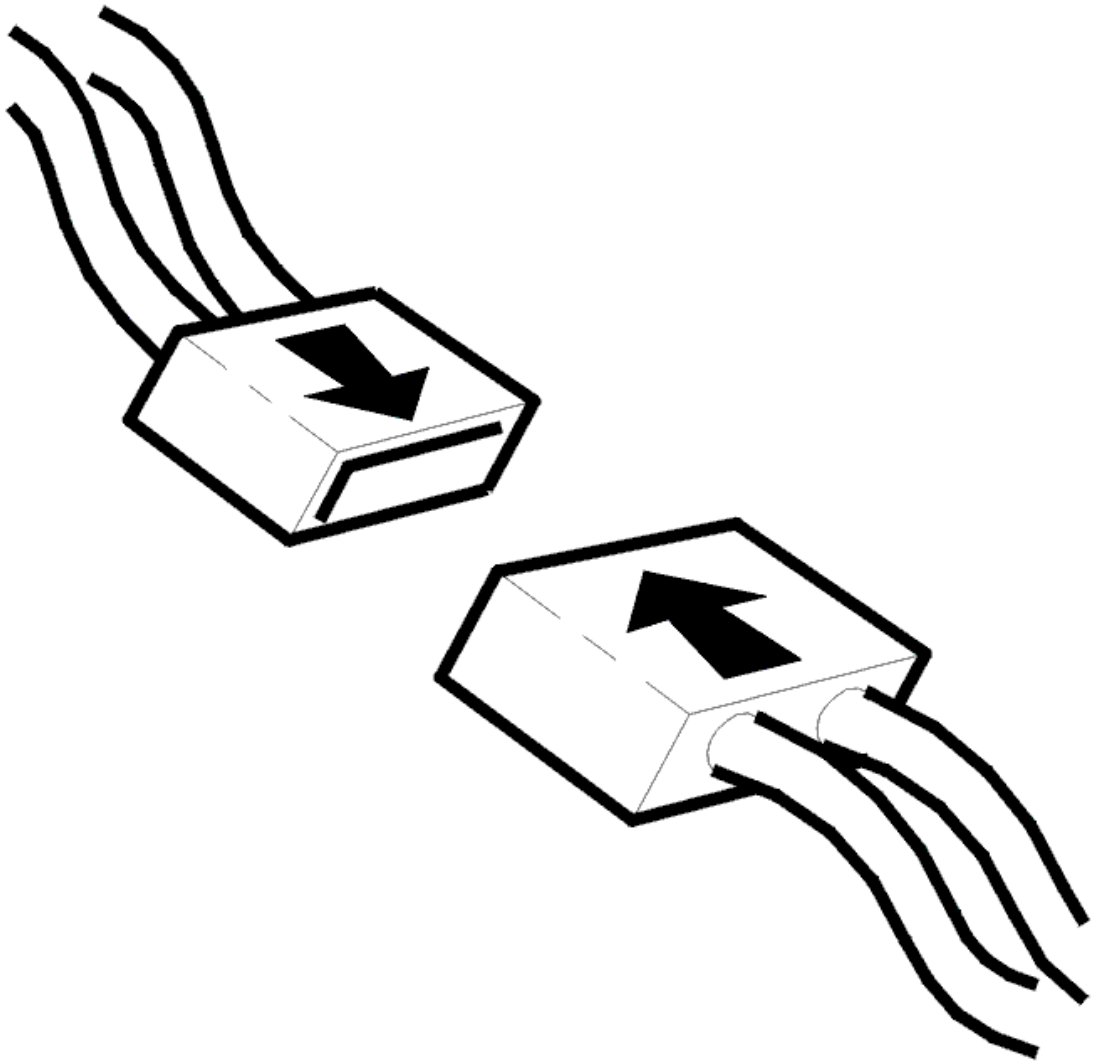

Fig. 57: Connecting Connector
Courtesy of VOLVO CARS CORPORATION

- Ignition off
- Reinstall the connectors, components etc.
- Ignition on
- Activate the carphone.

  Make a call so that both the handset and the hands-free system are used.

  Ignition off.

  Ignition on.

  Read off the diagnostic trouble codes (DTCs).

Check that the relevant diagnostic trouble code (DTC) has switched status from permanent to intermittent fault.

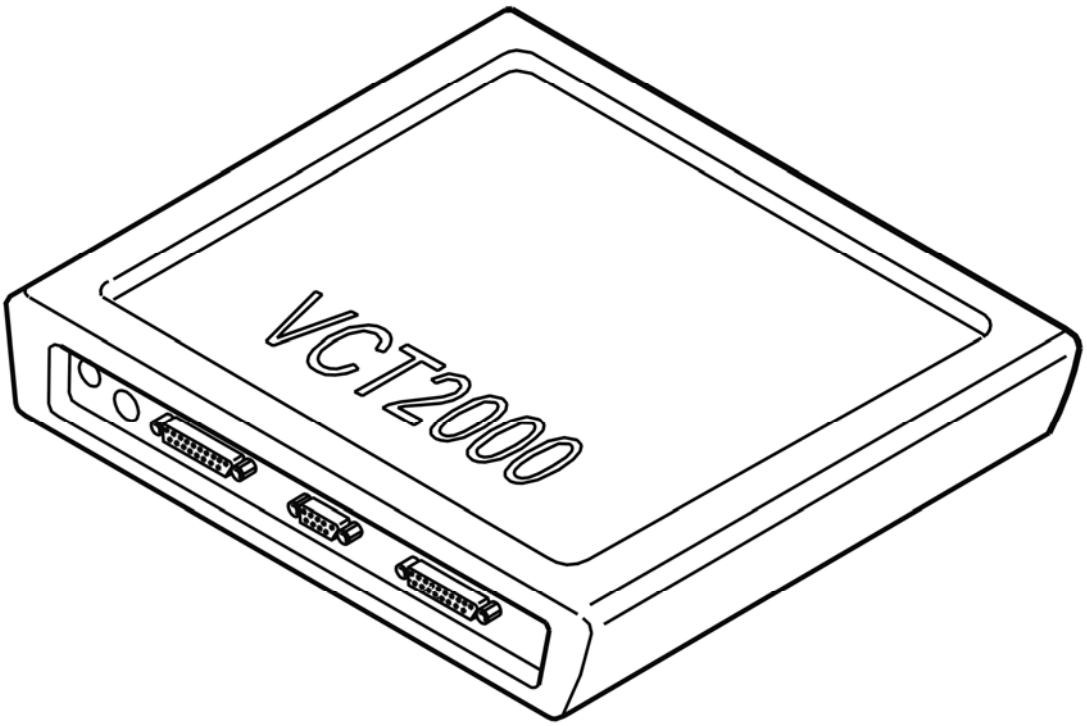

Fig. 58: Identifying VCT2000 Diagnostic Tool Symbol In VIDA
Courtesy of VOLVO CARS CORPORATION

Has the status of the diagnostic trouble code (DTC) changed?

- **YES**

  VERIFIED: Troubleshooting has been completed.

- **NO**

  See: **INFORMATION**

INFORMATION

FAULT-TRACING INFORMATION

The fault should have been detected and remedied. As this is not the case fault-tracing has failed.

Exit fault-tracing for this diagnostic trouble code (DTC) or make another attempt.

SIGNAL TOO HIGH OR SIGNAL MISSING

CHECKING COMPONENTS AND WIRING

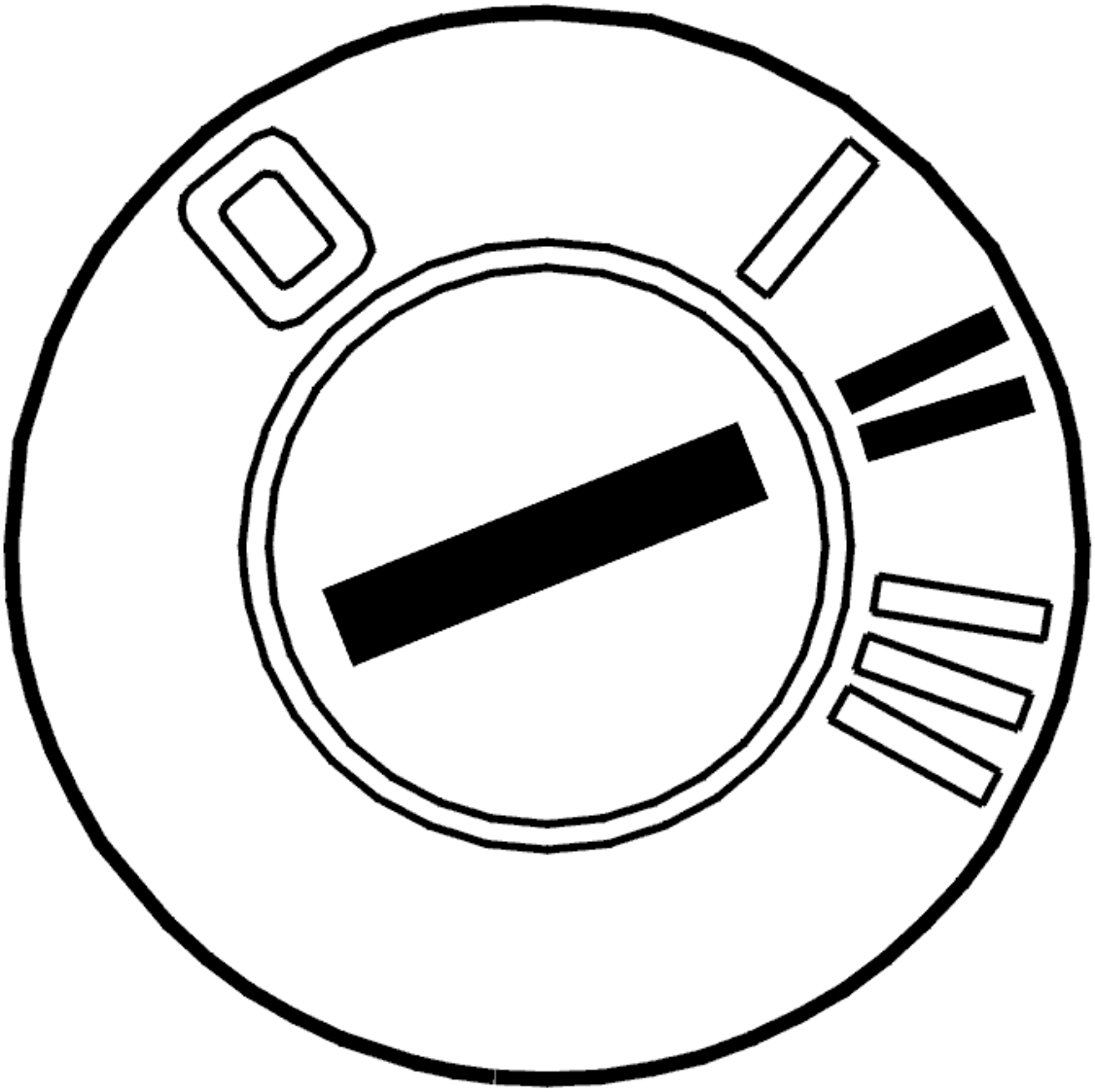

Fig. 59: Identifying Ignition ON
Courtesy of VOLVO CARS CORPORATION

- Ignition on.

  Check the microphone signal cable between phone module (PHM) connector B terminal #13 (#55) and handset connector terminal #1 (#21). Check for an open-circuit and for a short-circuit to supply voltage.

  Try replacing the carphone handset if no fault is found in the wiring.

  Remedy as necessary.

Other information:

- To connect the breakout box, see **CONNECTING THE BREAKOUT BOX**
- For information about signals and connectors, see **SIGNAL SPECIFICATION**
- To access or replace the control module, see **PHONE MODULE (PHM), REPLACING**
- To access or replace the handset, see **HANDSET, REPLACING**
- see **CHECKING WIRING AND TERMINALS** .

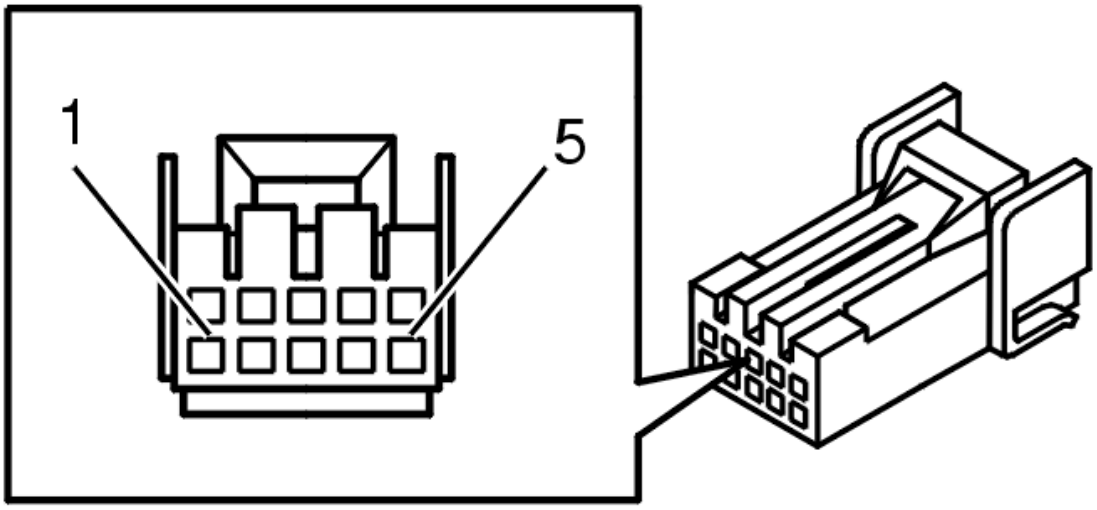

Fig. 60: 10 CD Changer Connector Terminals
Courtesy of VOLVO CARS CORPORATION

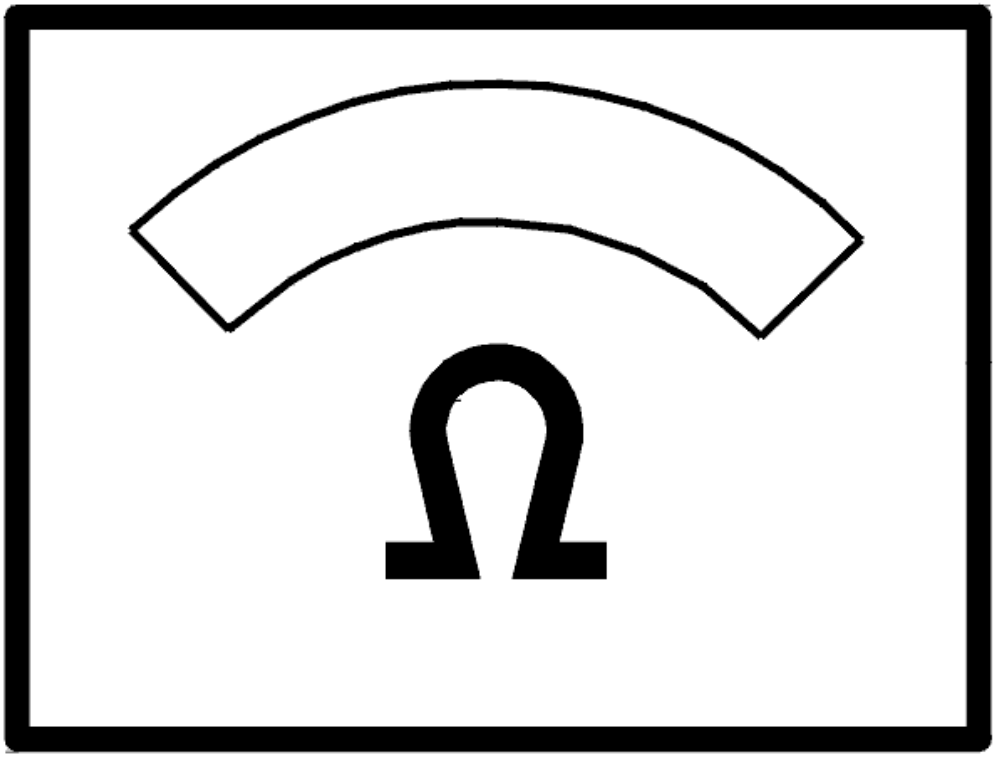

Fig. 61: Identifying Ohm Meter
Courtesy of VOLVO CARS CORPORATION

- **Continue**

  See: **VERIFICATION**

VERIFICATION

VERIFICATION

HINT: After carrying out the repair, check that the fault has been remedied.

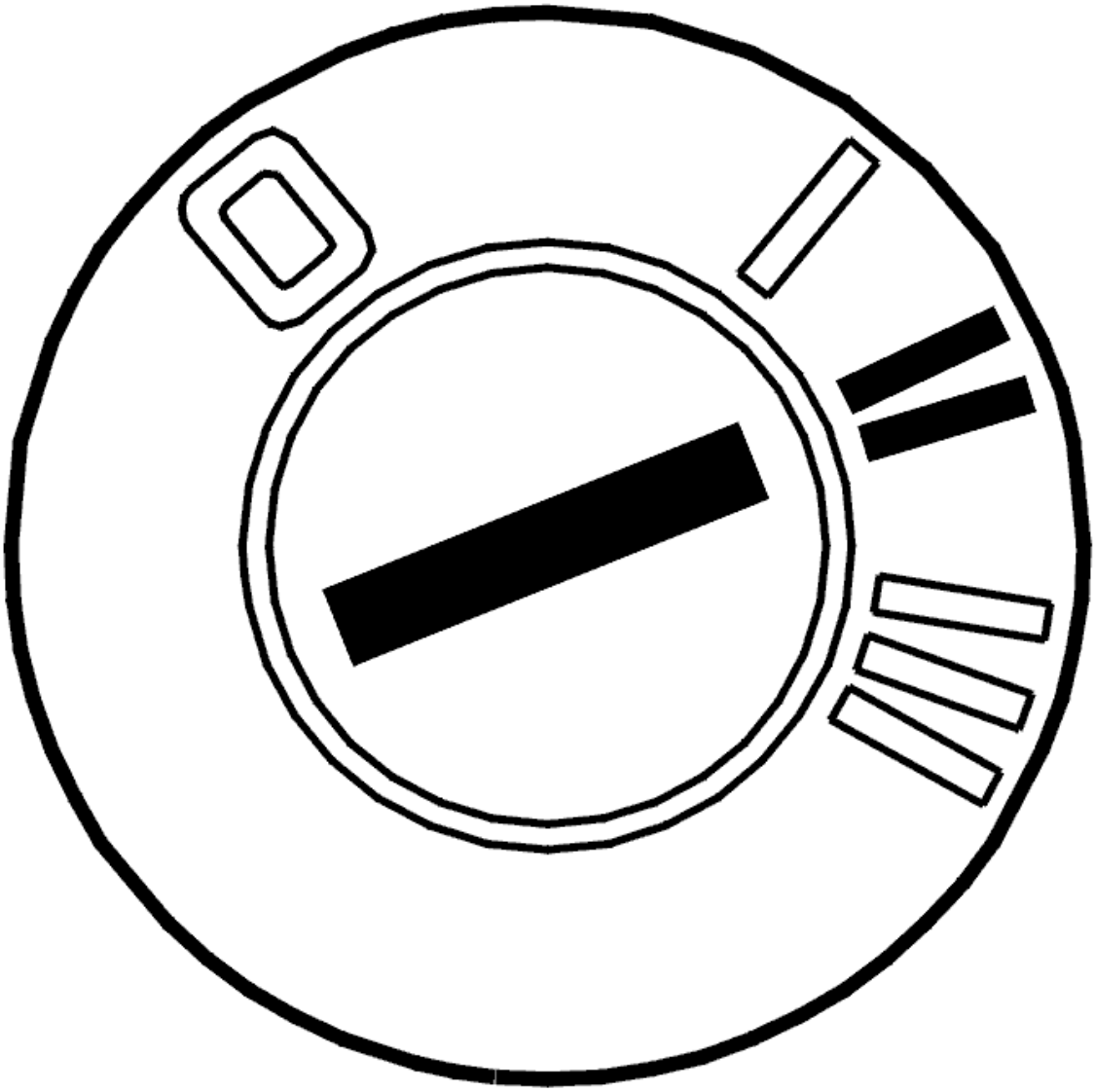

Fig. 62: Identifying Ignition ON
Courtesy of VOLVO CARS CORPORATION

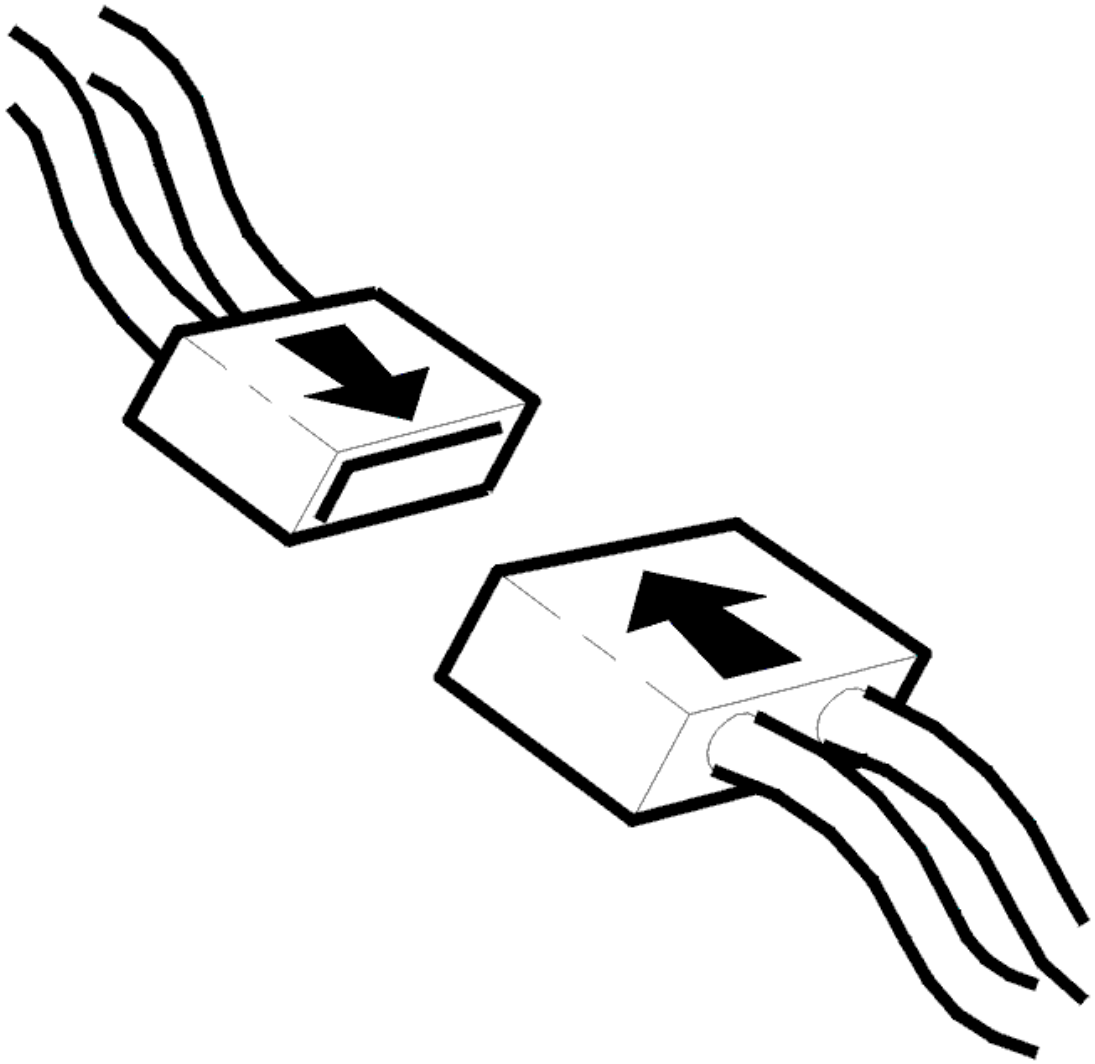

Fig. 63: Connecting Connector
Courtesy of VOLVO CARS CORPORATION

- Ignition off
- Reinstall the connectors, components etc.
- Ignition on
- Switch on the carphone.

  Make a call so that both the handset and the hands-free system are used.

  Ignition off.

  Ignition on.

  Read off the diagnostic trouble codes (DTCs).

Check that the relevant diagnostic trouble code (DTC) has switched status from permanent to intermittent fault.

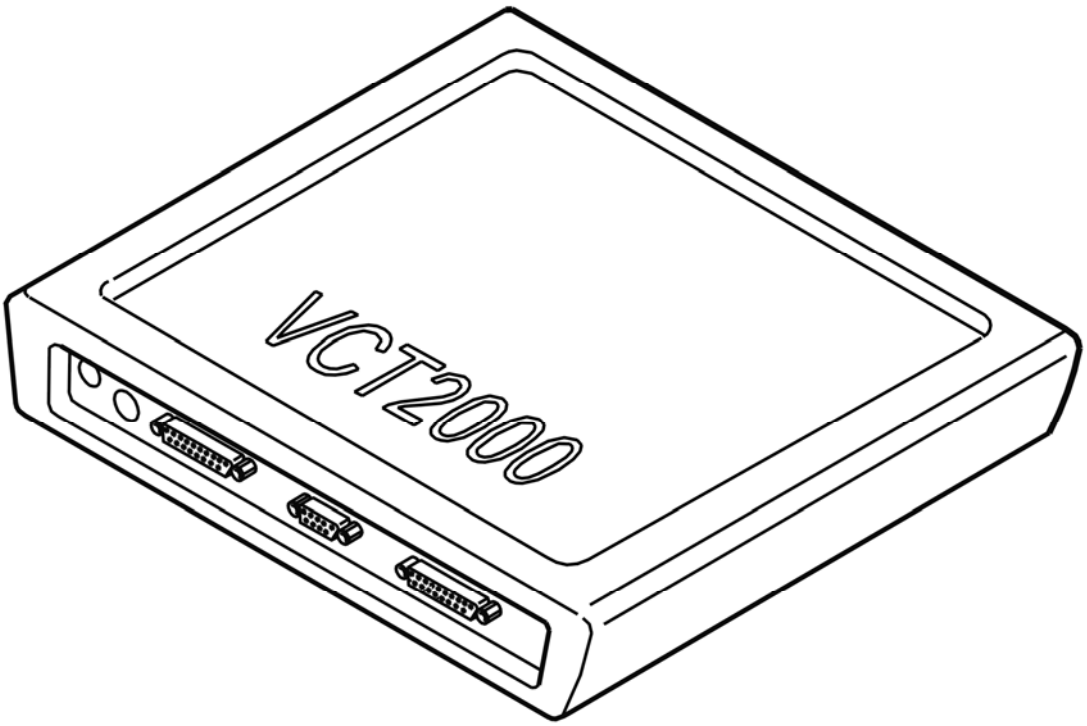

Fig. 64: Identifying VCT2000 Diagnostic Tool Symbol In VIDA
Courtesy of VOLVO CARS CORPORATION

Has the status of the diagnostic trouble code (DTC) changed?

- **YES**

  VERIFIED: Troubleshooting has been completed.

- **NO**

  See: **INFORMATION**

INFORMATION

FAULT-TRACING INFORMATION

The fault should have been detected and remedied. As this is not the case fault-tracing has failed.

Exit fault-tracing for this diagnostic trouble code (DTC) or make another attempt.

PHM-0022: HANDSET SUPPLY. SIGNAL TOO HIGH (2006-2012)

DIAGNOSTIC TROUBLE CODE (DTC) INFORMATION PHM-0022

Condition

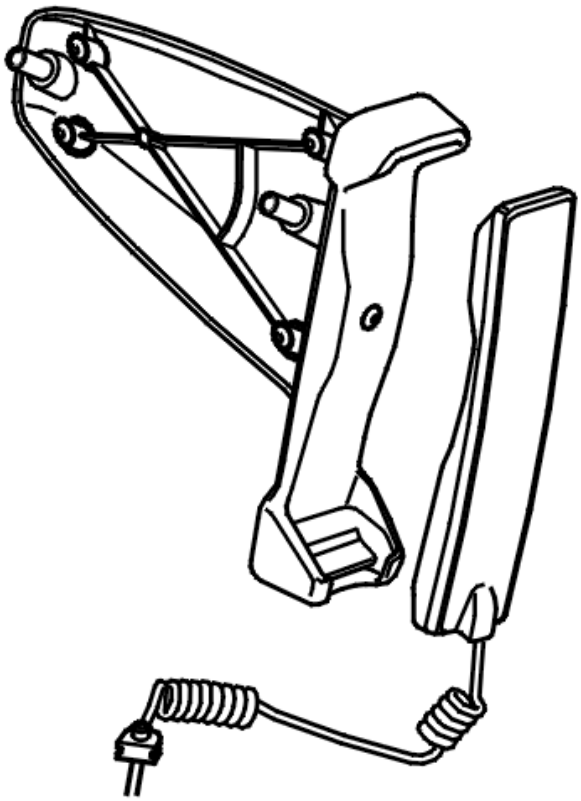

Fig. 65: Identifying Handset Cradle
Courtesy of VOLVO CARS CORPORATION

The diagnostic trouble code (DTC) is stored if the phone module (PHM) registers a short-circuit to +12 V in the power supply to the handset.

The diagnostic trouble code (DTC) can be diagnosed when the ignition is switched on (not key position 3) and when the battery voltage is 9-16 V.

Substitute Value

- Only hands-free operates.

Possible Source

- Short-circuit to +12 V in the cable (power supply) from the phone module (PHM) to the handset.

Fault symptom[s]

- The carphone handset is not working.
- Message in the text display (applies only to phone modules (PHM) with Volvo On Call).

SIGNAL TOO HIGH

CHECKING THE COMPONENT AND WIRING

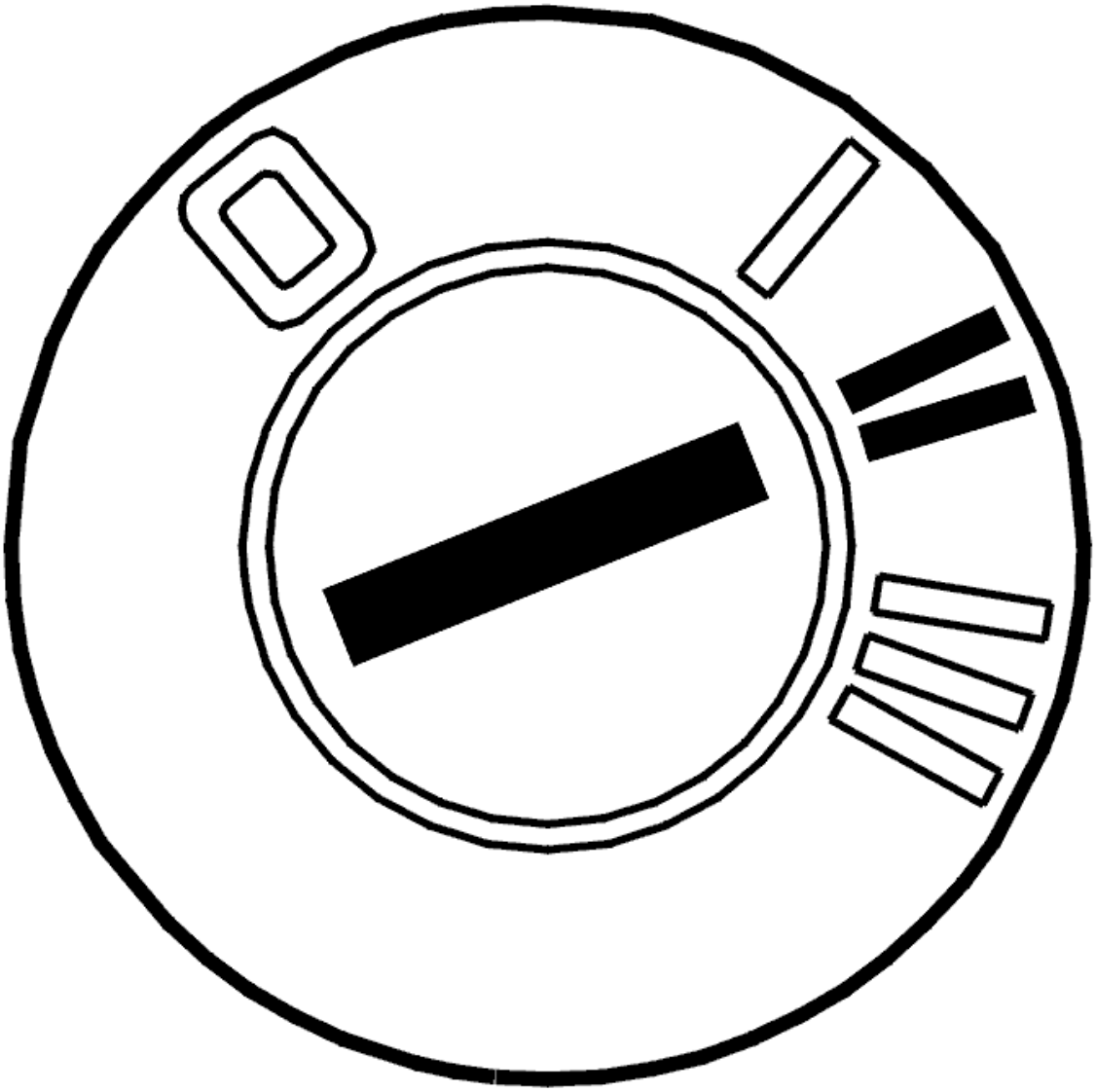

Fig. 66: Identifying Ignition ON
Courtesy of VOLVO CARS CORPORATION

- Ignition off
- Disconnect connector A from the phone module (PHM)
- Disconnect the handset connector

- Ignition on.

  Check the power supply cable. Check for a short-circuit to supply voltage.

  Take a reading at connector A for the phone module (PHM) between terminals #7 (#7) and #6 (#6).

  Try replacing the carphone handset if no fault is found in the wiring.

  Remedy as necessary.

  Other information:

  - see **SIGNAL SPECIFICATION**
  - see **CONNECTING THE BREAKOUT BOX**
  - see **LOCATION OF COMPONENTS**
  - see **PHONE MODULE (PHM), REPLACING (2006-2010)**
  - see **HANDSET, REPLACING**
  - see **CHECKING WIRING AND TERMINALS**

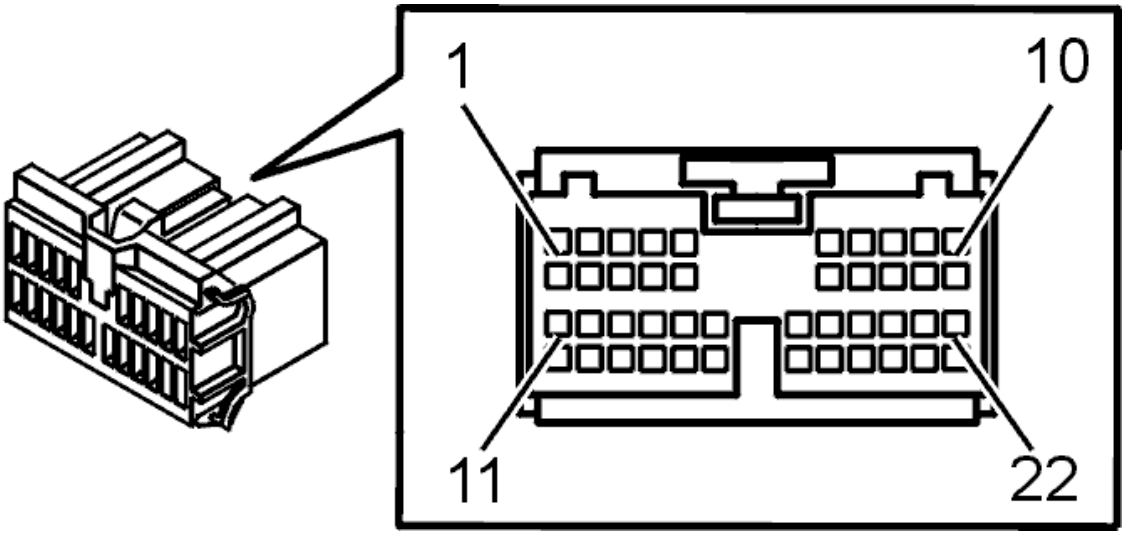

Fig. 67: Identifying Connector (F) Terminals
Courtesy of VOLVO CARS CORPORATION

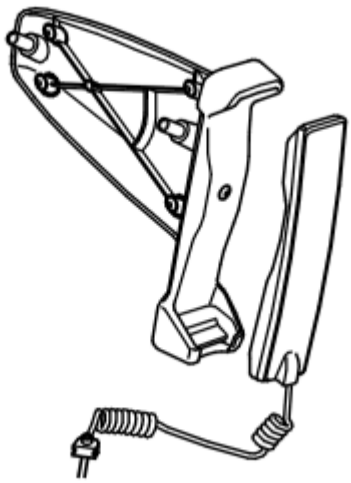

Fig. 68: Identifying Carphone Holder
Courtesy of VOLVO CARS CORPORATION

- **Continue**

  See: **VERIFICATION**

VERIFICATION

VERIFICATION

HINT: After carrying out the repair, check that the fault has been remedied.

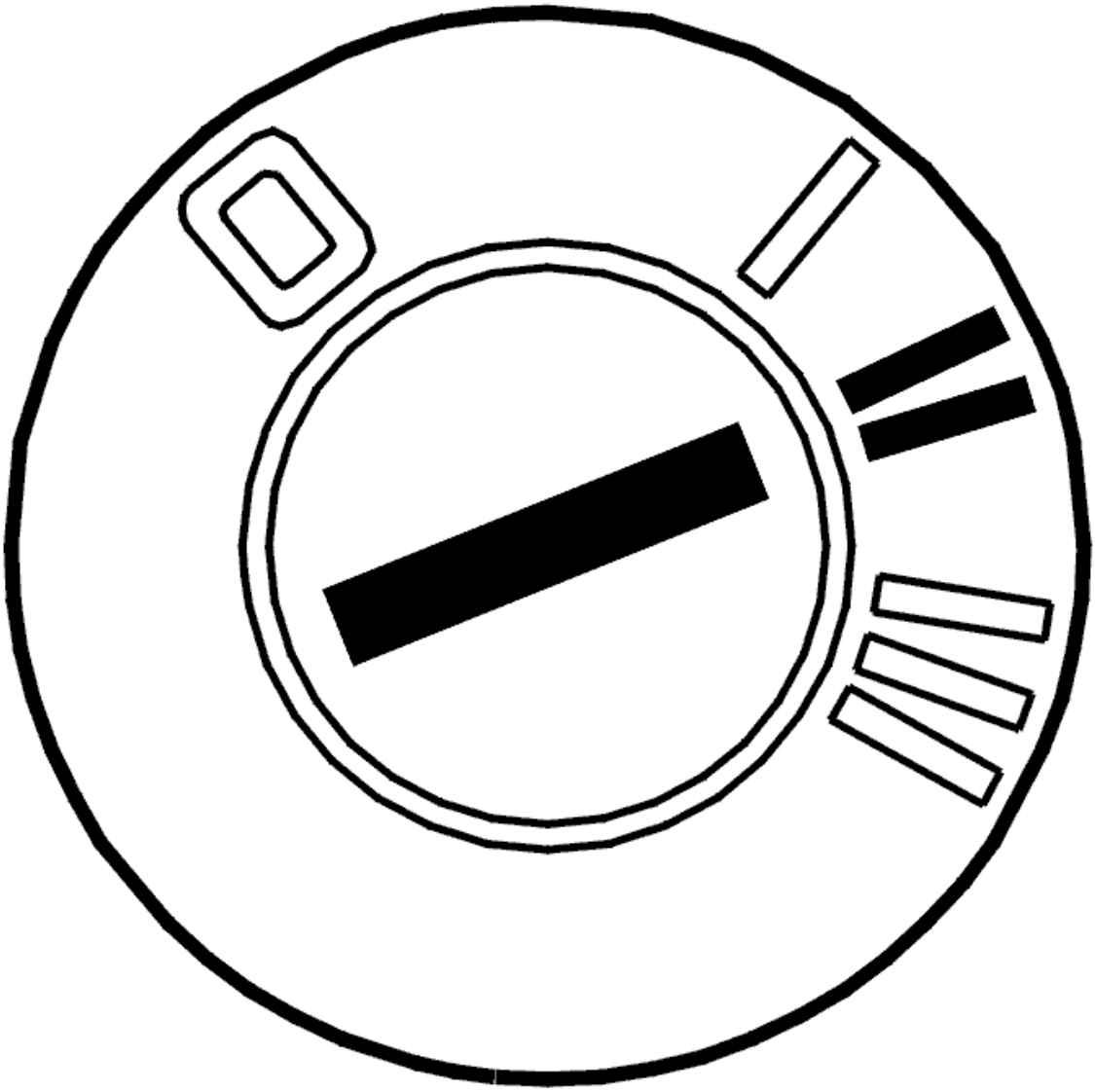

Fig. 69: Identifying Ignition ON
Courtesy of VOLVO CARS CORPORATION

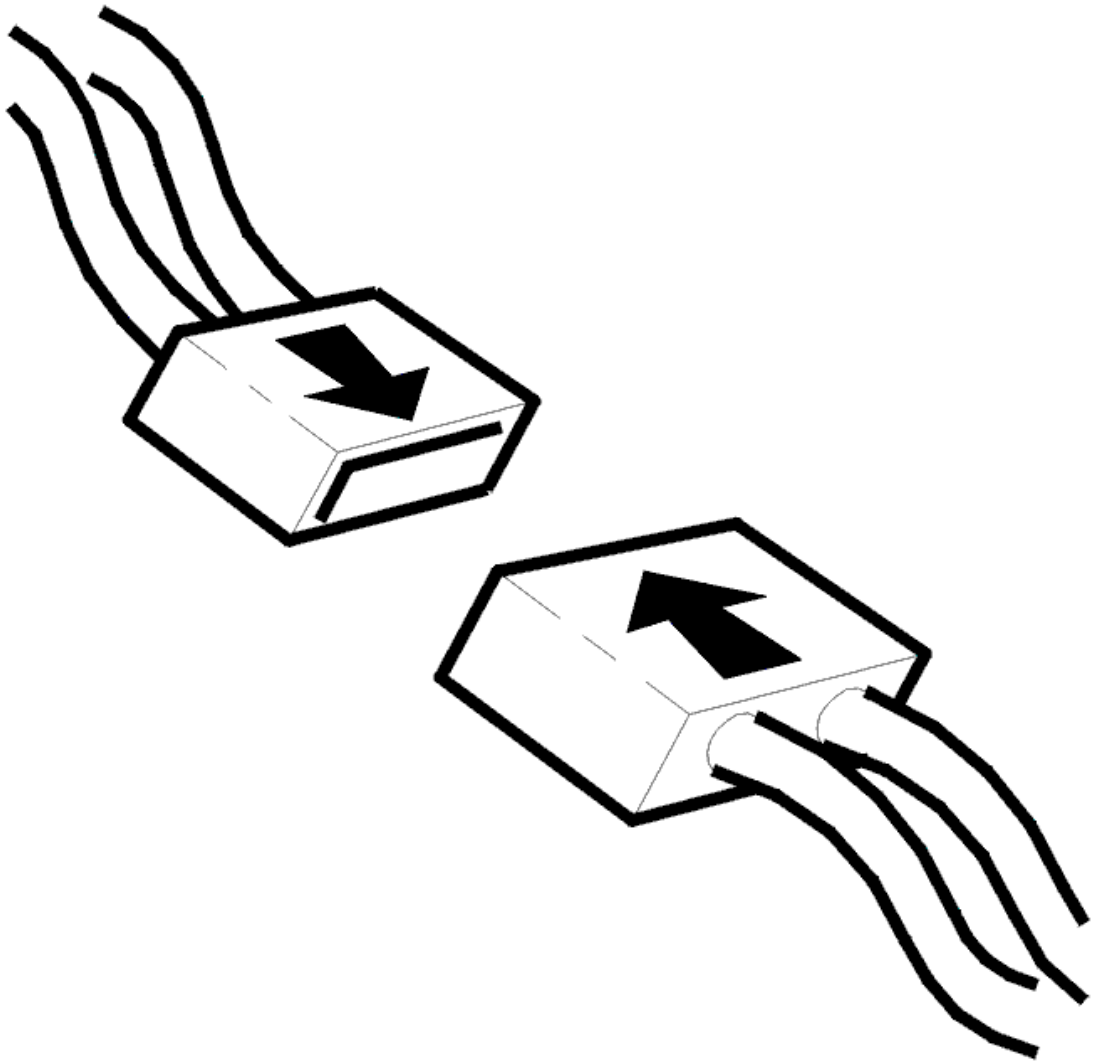

Fig. 70: Connecting Connector
Courtesy of VOLVO CARS CORPORATION

- Ignition off
- Reinstall the connectors, components etc.
- Ignition on
- Activate the carphone.

  Make a call so that both the handset and the hands-free system are used.

  - Ignition off.
  - Ignition on.
  - Read off the diagnostic trouble codes (DTCs).
  - Check that the relevant diagnostic trouble code (DTC) has switched status from permanent to

intermittent fault.

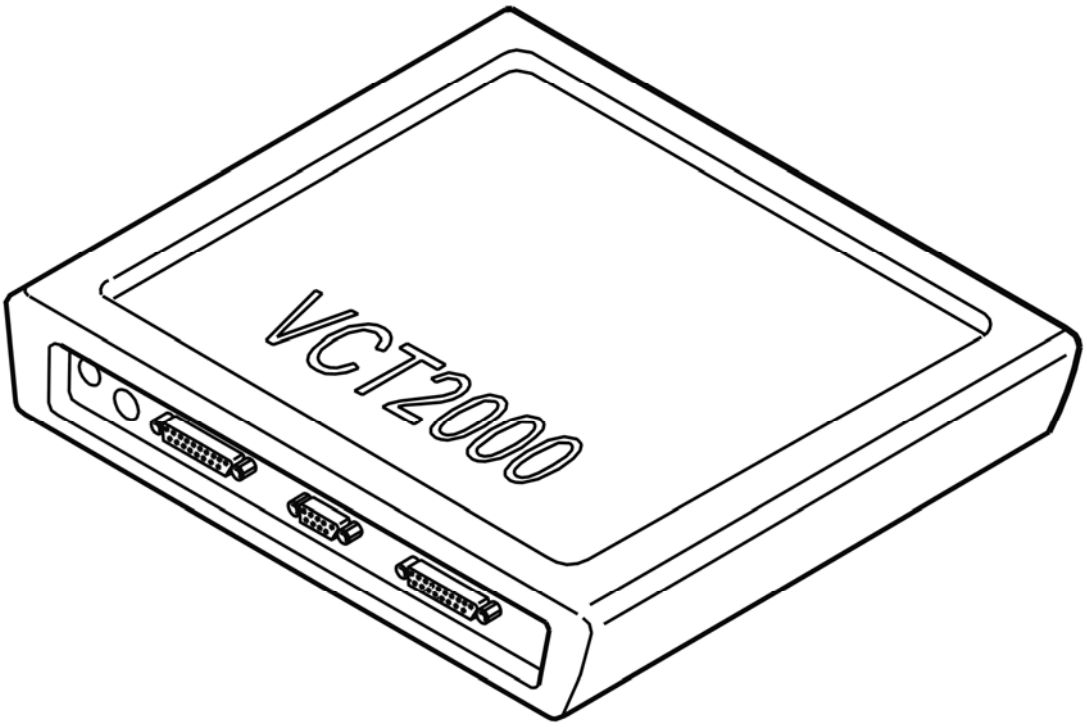

Fig. 71: Identifying VCT2000 Diagnostic Tool Symbol In VIDA
Courtesy of VOLVO CARS CORPORATION

Has the status of the diagnostic trouble code (DTC) changed?

- **YES**

  VERIFIED: Troubleshooting has been completed.

- **NO**

  See: **INFORMATION**

INFORMATION

FAULT-TRACING INFORMATION

The fault should have been detected and remedied. As this is not the case fault-tracing has failed.

Exit fault-tracing for this diagnostic trouble code (DTC) or make another attempt.

PHM-0022: HANDSET SUPPLY. SIGNAL TOO HIGH (2003-2004)

DIAGNOSTIC TROUBLE CODE (DTC) INFORMATION PHM-0022

Condition

Diagnostic trouble code (DTC) PHM-0022 is stored if the phone module (PHM) registers that there is a short-circuit to +12 V in the power supply to the handset.

Diagnostic trouble code (DTC) PHM-0022 can be diagnosed with the ignition on (not key position 3) and when the battery voltage is 9-16 V.

Substitute Value

- Only hands-free operates.

Possible Source

- Short-circuit to +12 V in the wiring (power supply) to the handset from the phone module (PHM).

Fault symptom[s]

- The carphone handset is not working.

SIGNAL TOO HIGH

CHECKING COMPONENTS AND WIRING

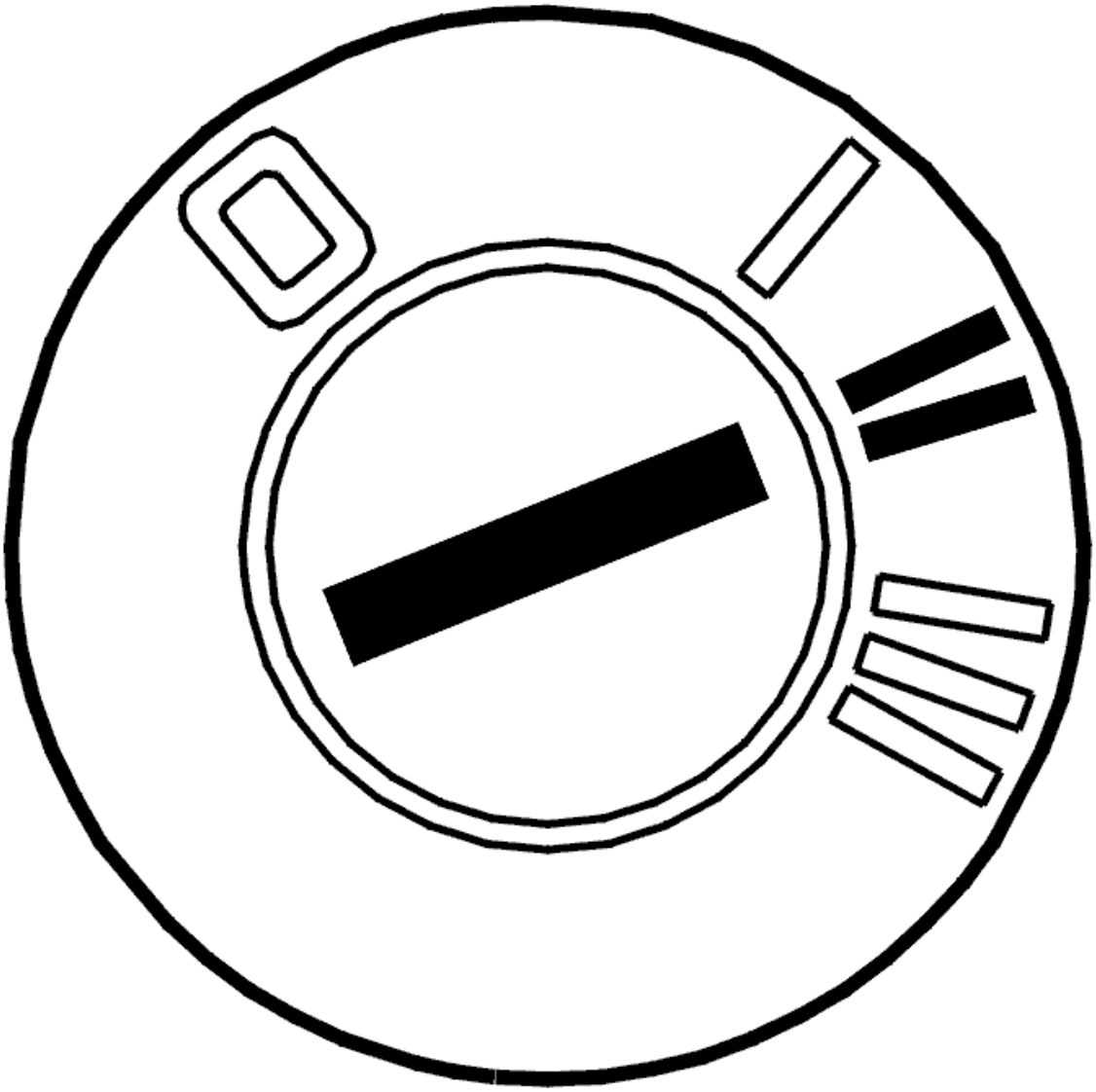

Fig. 72: Identifying Ignition ON
Courtesy of VOLVO CARS CORPORATION

- Ignition on.

  Check the power cable between phone module (PHM) connector B terminal #11 (#53) and handset connector terminal #5 (#25). Check for a short-circuit to supply voltage.

  Try replacing the carphone handset if no fault is found in the wiring.

  Remedy as necessary.

  Other information:

  - To connect the breakout box, see **CONNECTING THE BREAKOUT BOX**
  - For information about signals and connectors, see **SIGNAL SPECIFICATION**

- To access or replace the control module, see **PHONE MODULE (PHM), REPLACING**
- To access or replace the handset, see **HANDSET, REPLACING**
- see **CHECKING WIRING AND TERMINALS** .

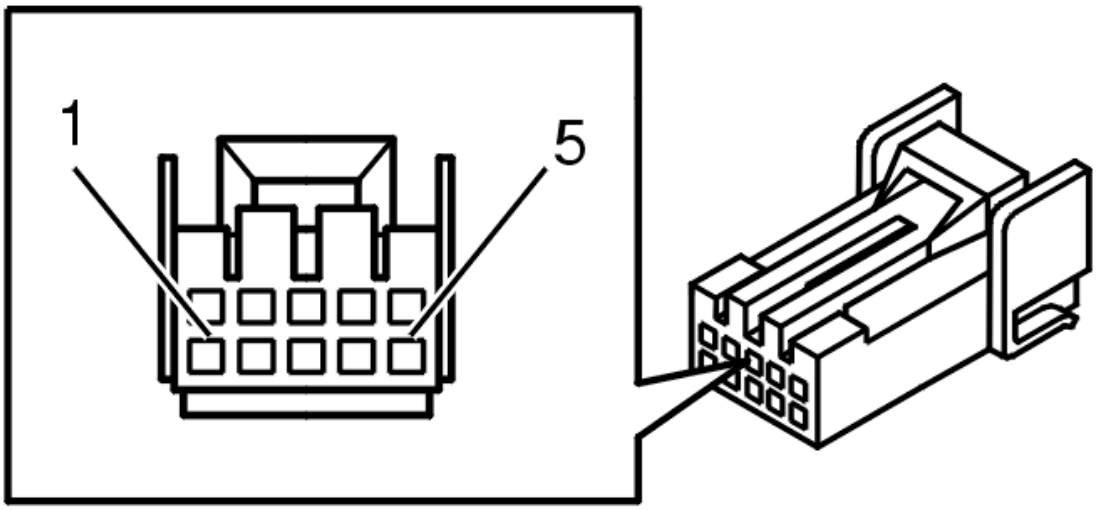

Fig. 73: 10 CD Changer Connector Terminals
Courtesy of VOLVO CARS CORPORATION

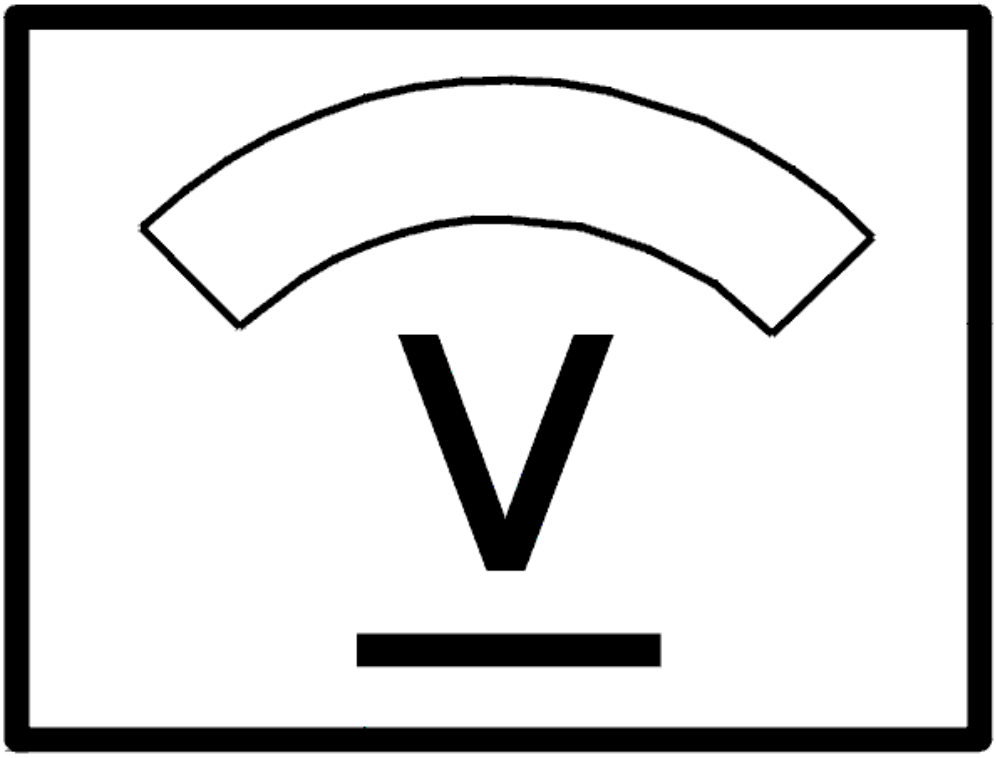

Fig. 74: Identifying Voltage Display
Courtesy of VOLVO CARS CORPORATION

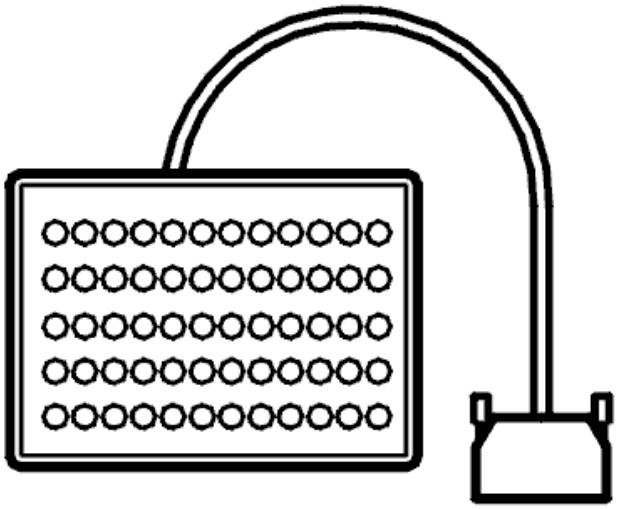

Fig. 75: Breakout Box
Courtesy of VOLVO CARS CORPORATION

- **Continue**

  See: **VERIFICATION**

VERIFICATION

VERIFICATION

HINT: After carrying out the repair, check that the fault has been remedied.

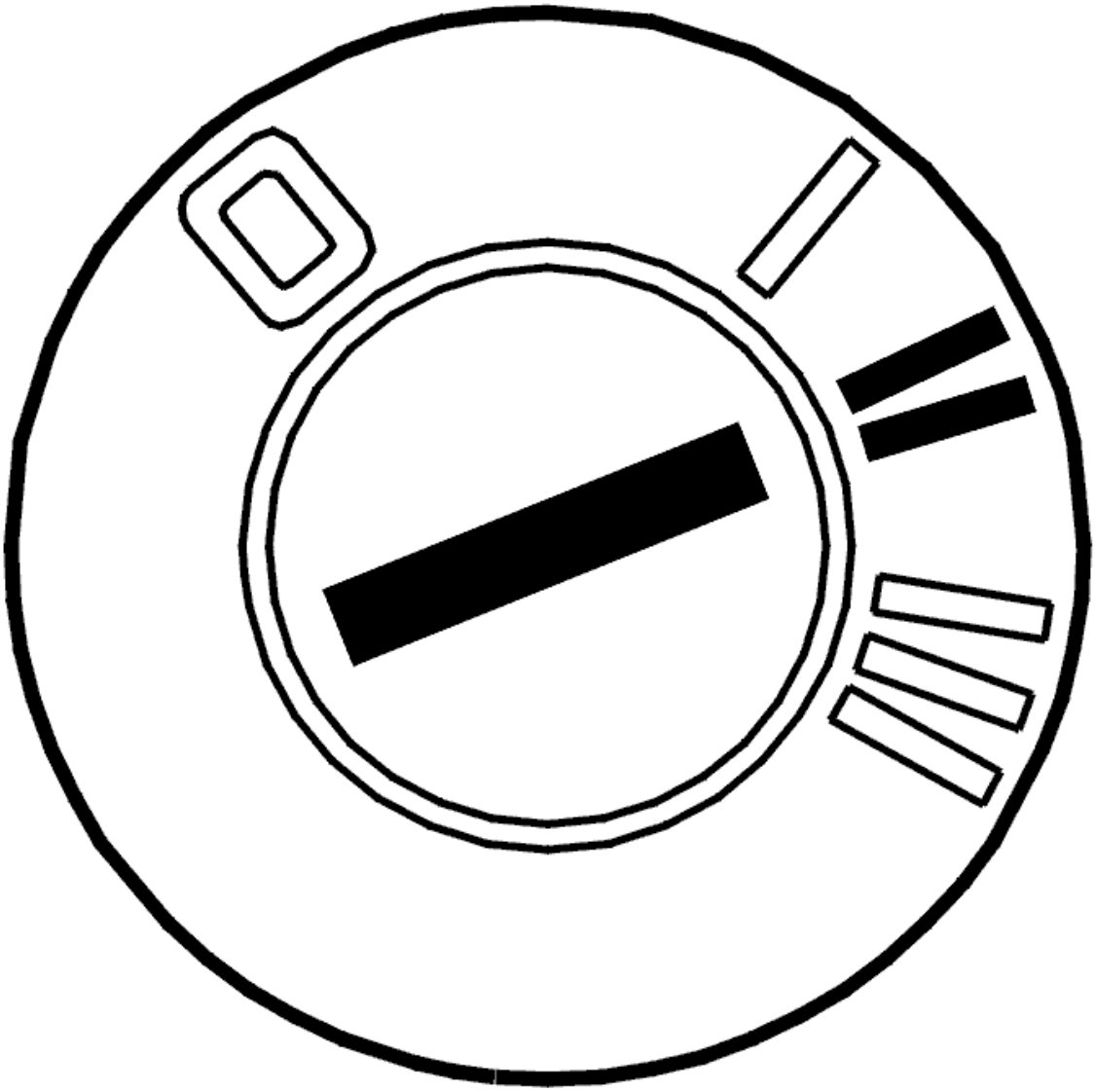

Fig. 76: Identifying Ignition ON
Courtesy of VOLVO CARS CORPORATION

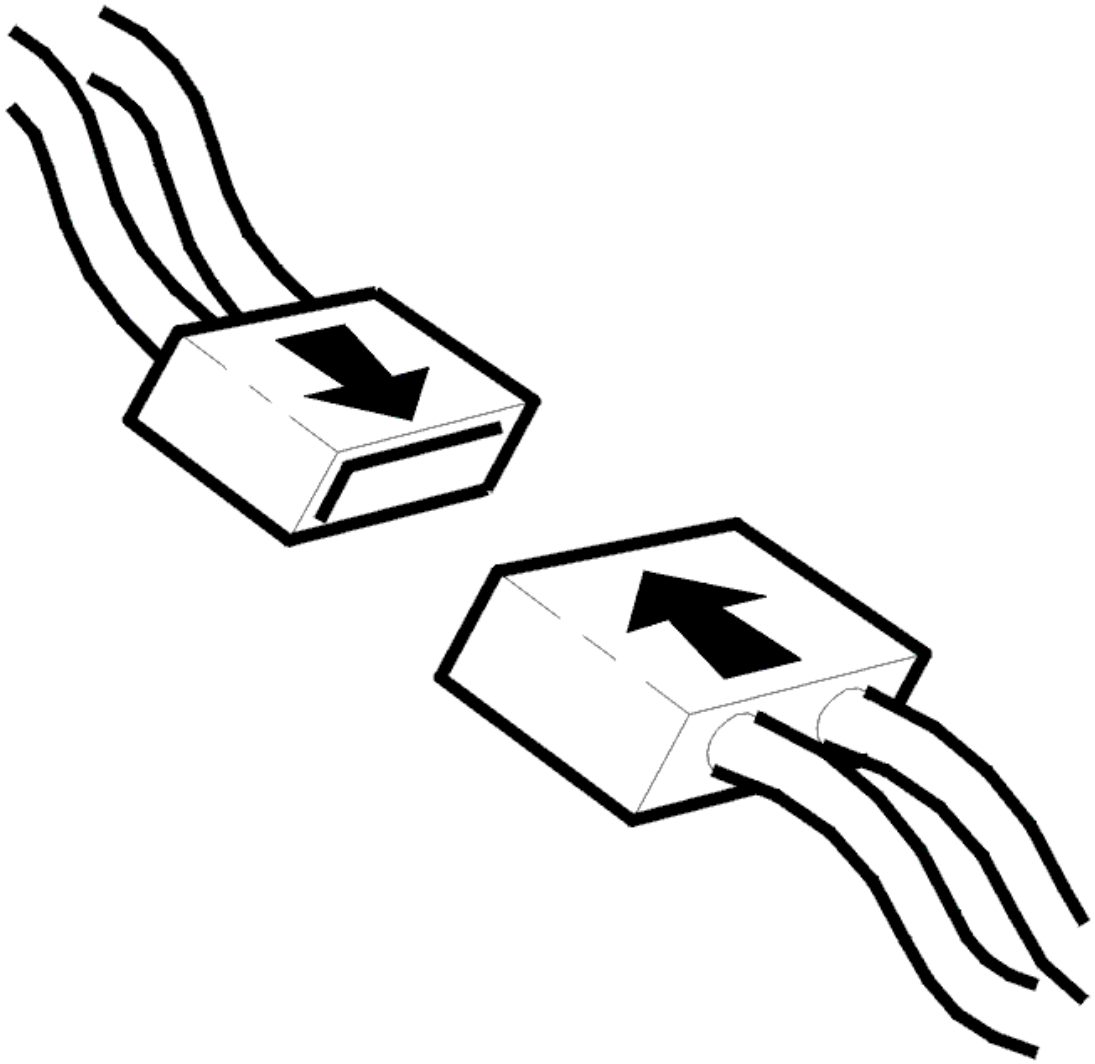

Fig. 77: Connecting Connector
Courtesy of VOLVO CARS CORPORATION

- Ignition off
- Reinstall the connectors, components etc.
- Ignition on
- Switch on the carphone.

  Make a call so that both the handset and the hands-free system are used.

  Ignition off.

  Ignition on.

  Read off the diagnostic trouble codes (DTCs).

Check that the relevant diagnostic trouble code (DTC) has switched status from permanent to intermittent fault.

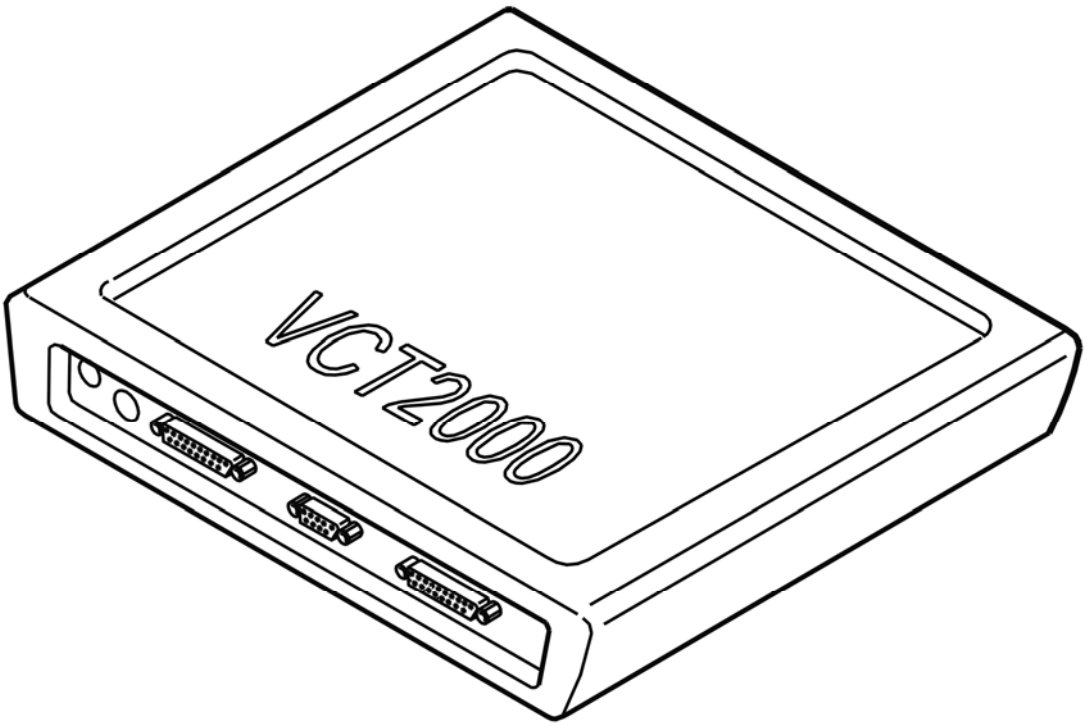

Fig. 78: Identifying VCT2000 Diagnostic Tool Symbol In VIDA
Courtesy of VOLVO CARS CORPORATION

Has the status of the diagnostic trouble code (DTC) changed?

- **YES**

  VERIFIED: Troubleshooting has been completed.

- **NO**

  See: **INFORMATION**

INFORMATION

FAULT-TRACING INFORMATION

The fault should have been detected and remedied. As this is not the case fault-tracing has failed.

Exit fault-tracing for this diagnostic trouble code (DTC) or make another attempt.

PHM-0022: TELEPHONE HANDSET VOLTAGE FEED. SIGNAL TOO HIGH (2005)

DIAGNOSTIC TROUBLE CODE (DTC) INFORMATION PHM-0022

see **DIAGNOSTIC TROUBLE CODE (DTC) INFORMATION PHM-0022**

SIGNAL TOO HIGH

CHECKING STRUCTURE WEEK

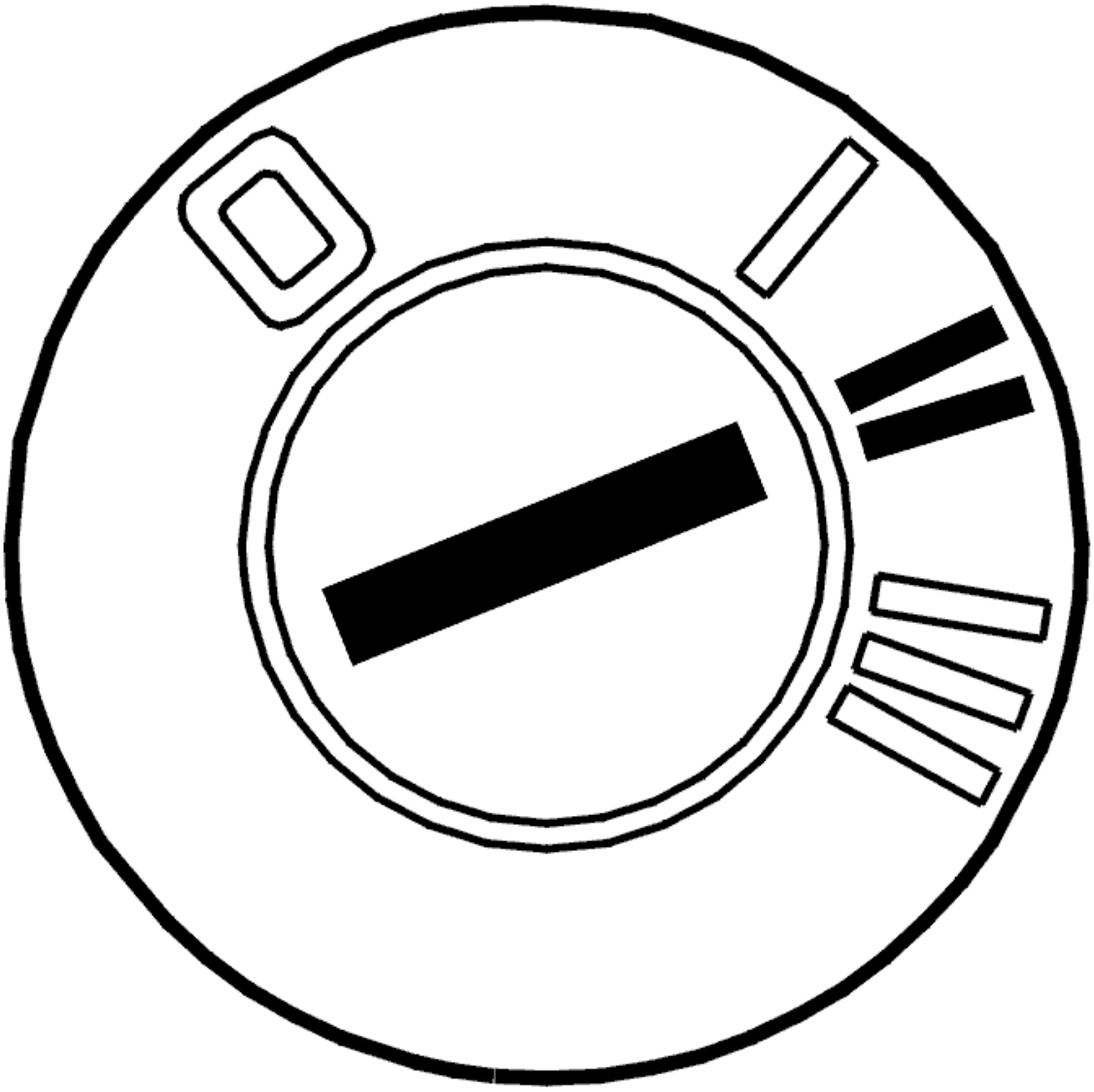

Fig. 79: Identifying Ignition ON
Courtesy of VOLVO CARS CORPORATION

- Ignition on

Read out the vehicle's structure week using the VCT2000 (or appropriate scan tool).

1. Vehicles with structure week up to and including 200445, that is, year 2004 week 45.
2. Vehicles with structure week from and including 200446, that is, year 2004 week 46.

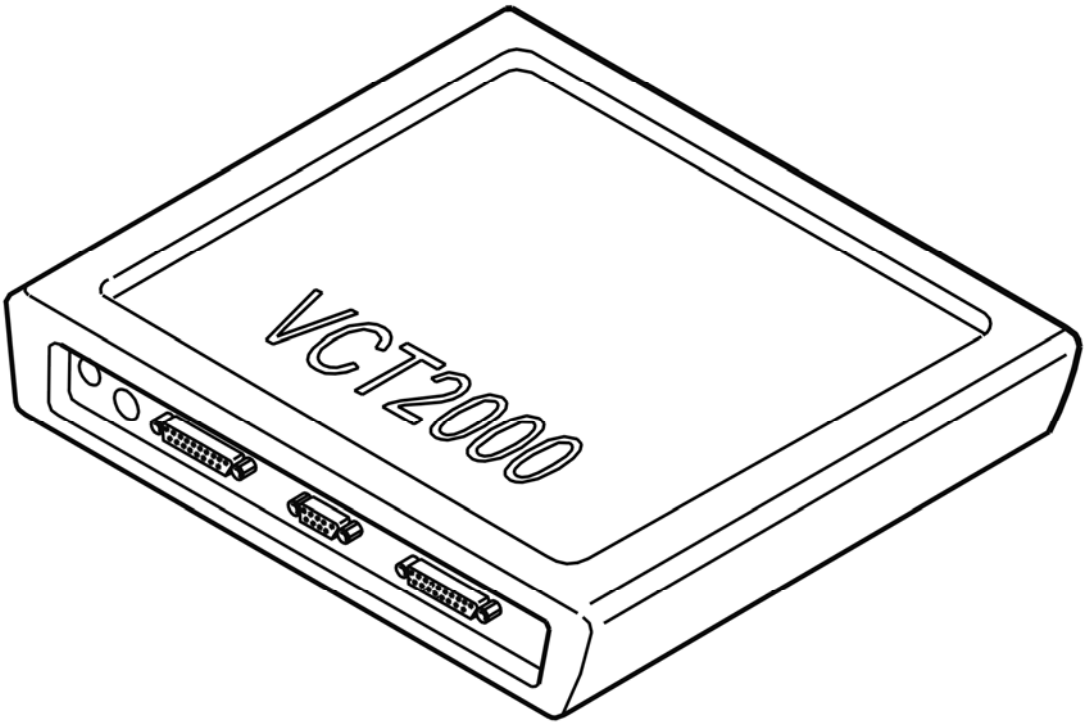

Fig. 80: Identifying VCT2000 Diagnostic Tool Symbol In VIDA
Courtesy of VOLVO CARS CORPORATION

Select one of the above alternatives.

- **1**

  See: **SIGNAL TOO HIGH**

- **2**

  See: **CHECKING COMPONENTS AND WIRING**

CHECKING COMPONENTS AND WIRING

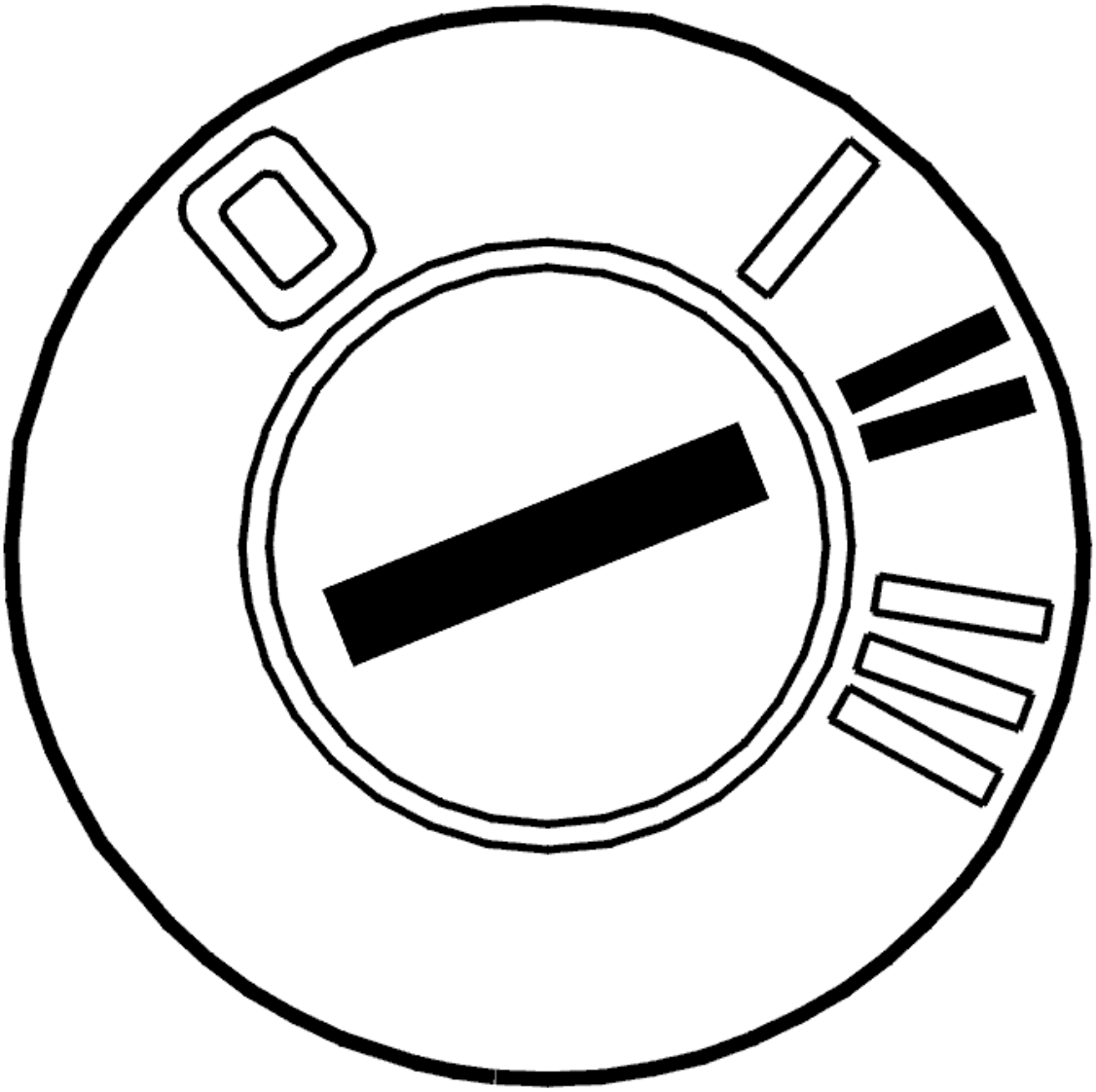

Fig. 81: Identifying Ignition ON
Courtesy of VOLVO CARS CORPORATION

- Ignition off
- Disconnect connector A for the phone module (PHM).
- Disconnect the handset's connector.
- Ignition on

  Check the feed voltage cable for short-circuit to voltage.

  Measure on connector A for the phone module (PHM) between #7 (#7) and #6 (#6).

  If no malfunction was found on the cable, try replacing the handset.

  Remedy as necessary.

Other information:

- see **CONNECTING THE BREAKOUT BOX**
- see **SIGNAL SPECIFICATION**
- see **LOCATION OF COMPONENTS**
- see **PHONE MODULE (PHM), REPLACING**
- see **HANDSET, REPLACING**
- see **CHECKING WIRING AND TERMINALS**

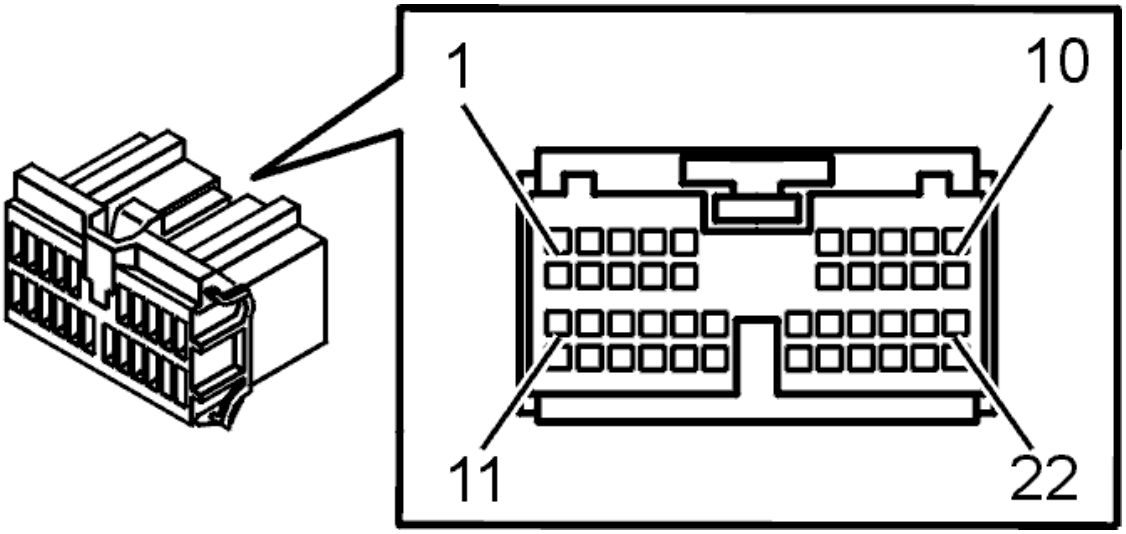

Fig. 82: Identifying Connector (F) Terminals
Courtesy of VOLVO CARS CORPORATION

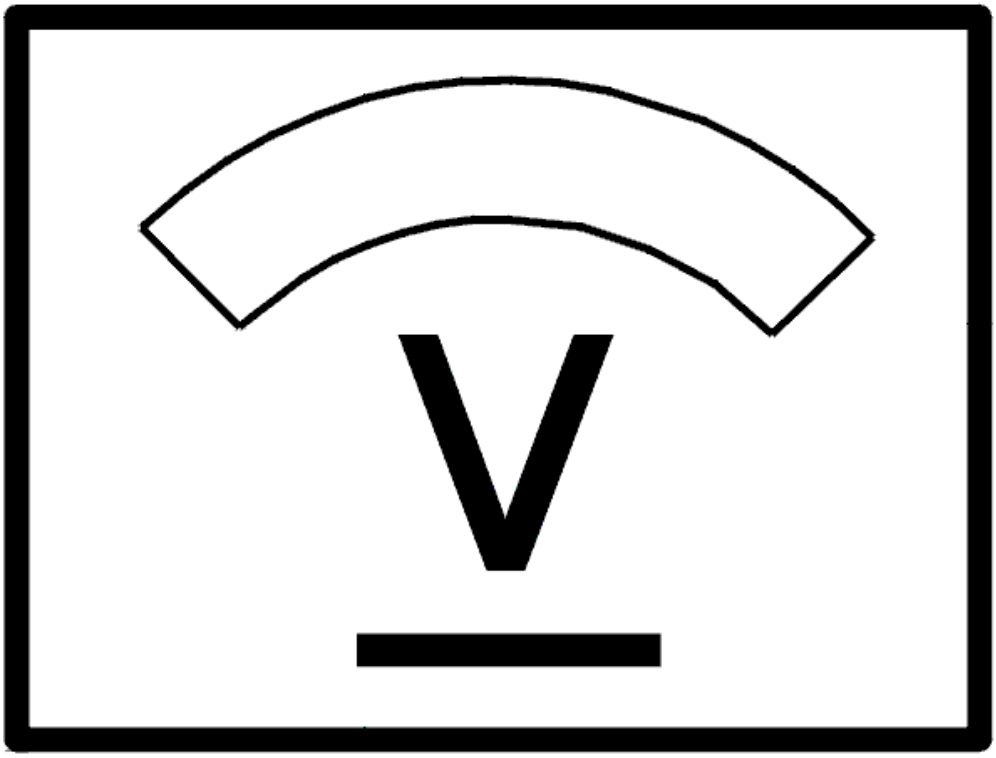

Fig. 83: Identifying Voltage Display
Courtesy of VOLVO CARS CORPORATION

- **Continue**

  See: **VERIFICATION**

VERIFICATION

VERIFICATION

HINT: After carrying out the repair, check that the fault has been remedied.

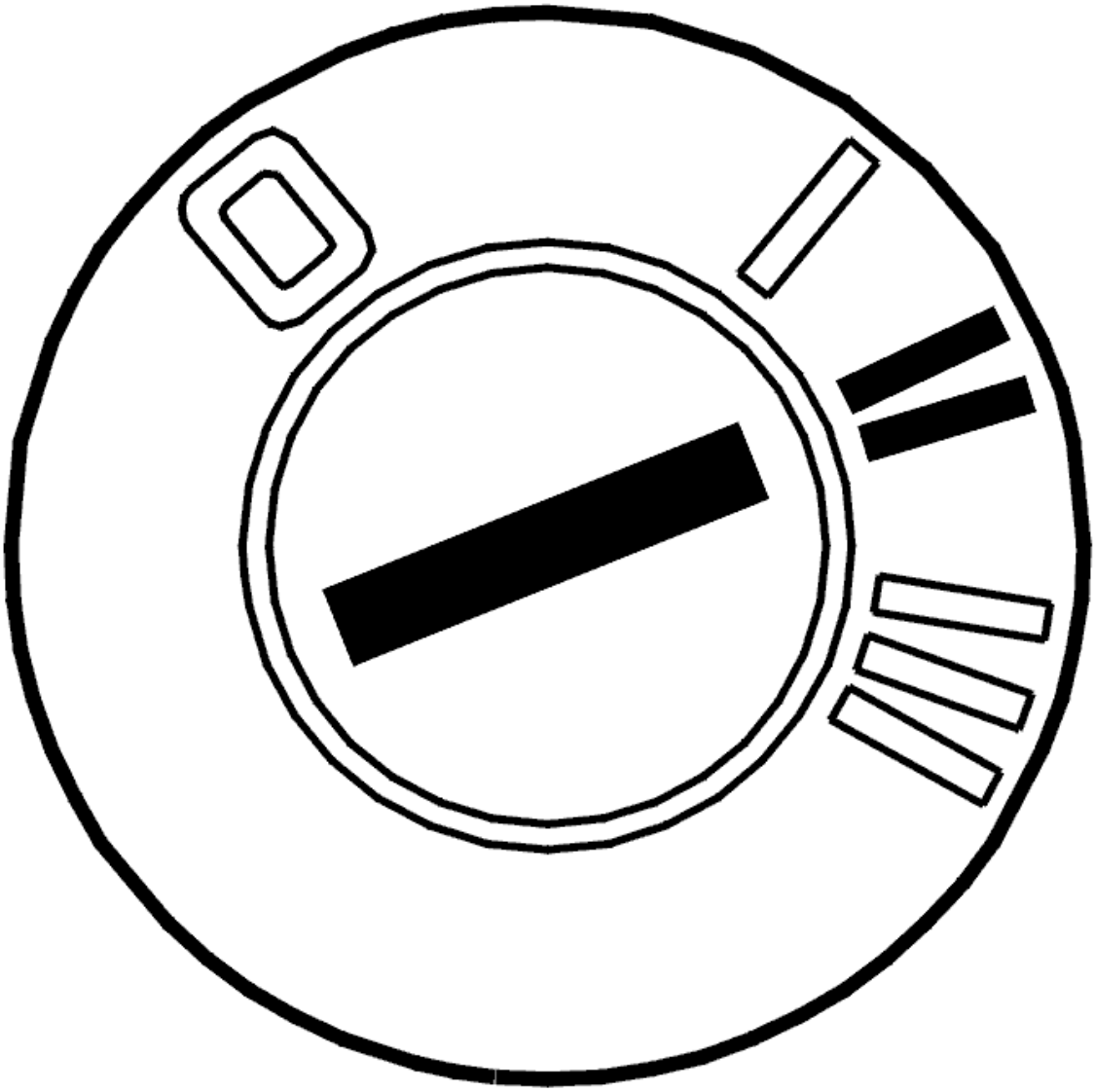

Fig. 84: Identifying Ignition ON
Courtesy of VOLVO CARS CORPORATION

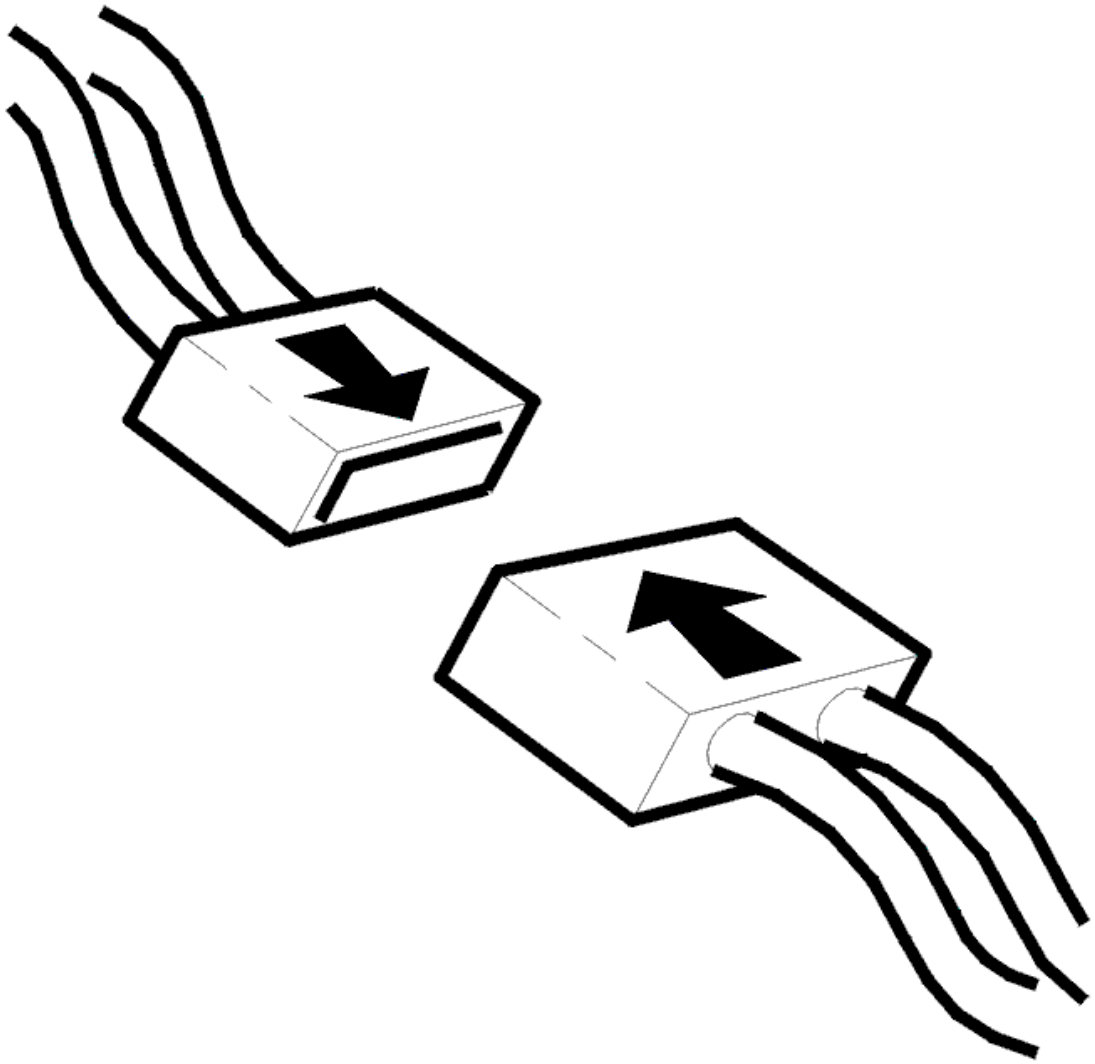

Fig. 85: Connecting Connector
Courtesy of VOLVO CARS CORPORATION

- Ignition off
- Reinstall the connectors, components etc.
- Ignition on
- Activate the carphone.

  Make a call so that both the handset and the hands-free system are used.

  Ignition off.

  Ignition on.

  Read off the diagnostic trouble codes (DTCs).

Check that the relevant diagnostic trouble code (DTC) has switched status from permanent to intermittent fault.

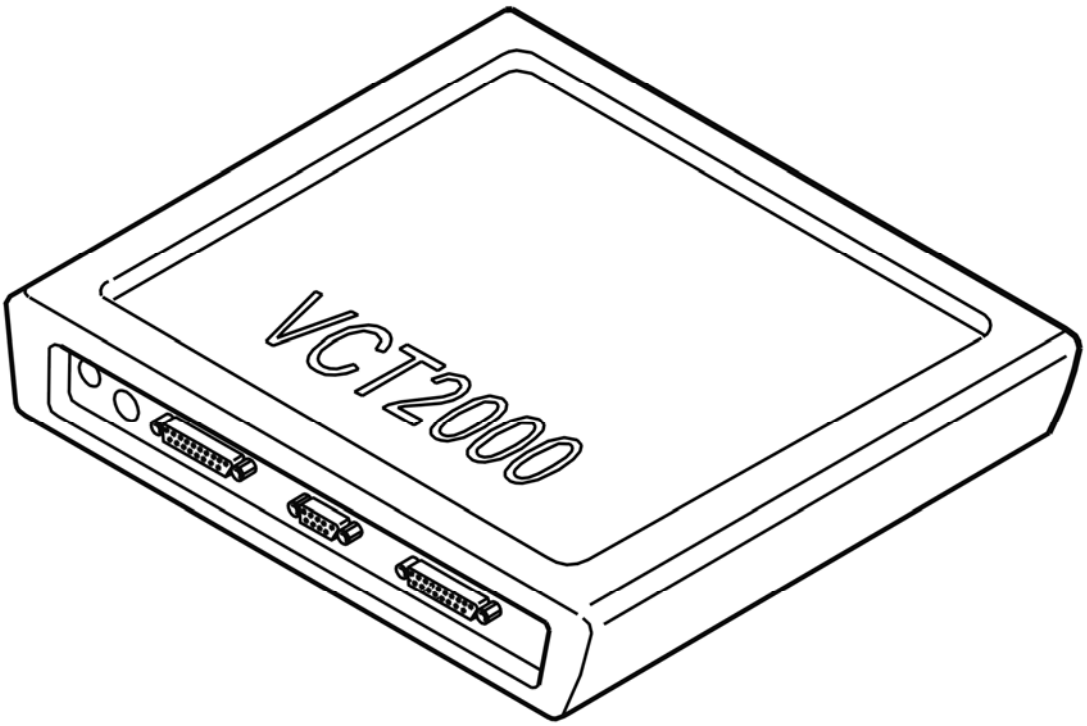

Fig. 86: Identifying VCT2000 Diagnostic Tool Symbol In VIDA
Courtesy of VOLVO CARS CORPORATION

Has the status of the diagnostic trouble code (DTC) changed?

- **YES**

  VERIFIED: Troubleshooting has been completed.

- **NO**

  See: **INFORMATION**

INFORMATION

FAULT-TRACING INFORMATION

The fault should have been detected and remedied. As this is not the case fault-tracing has failed.

Exit fault-tracing for this diagnostic trouble code (DTC) or make another attempt.

SIGNAL TOO HIGH

CHECKING COMPONENTS AND WIRING

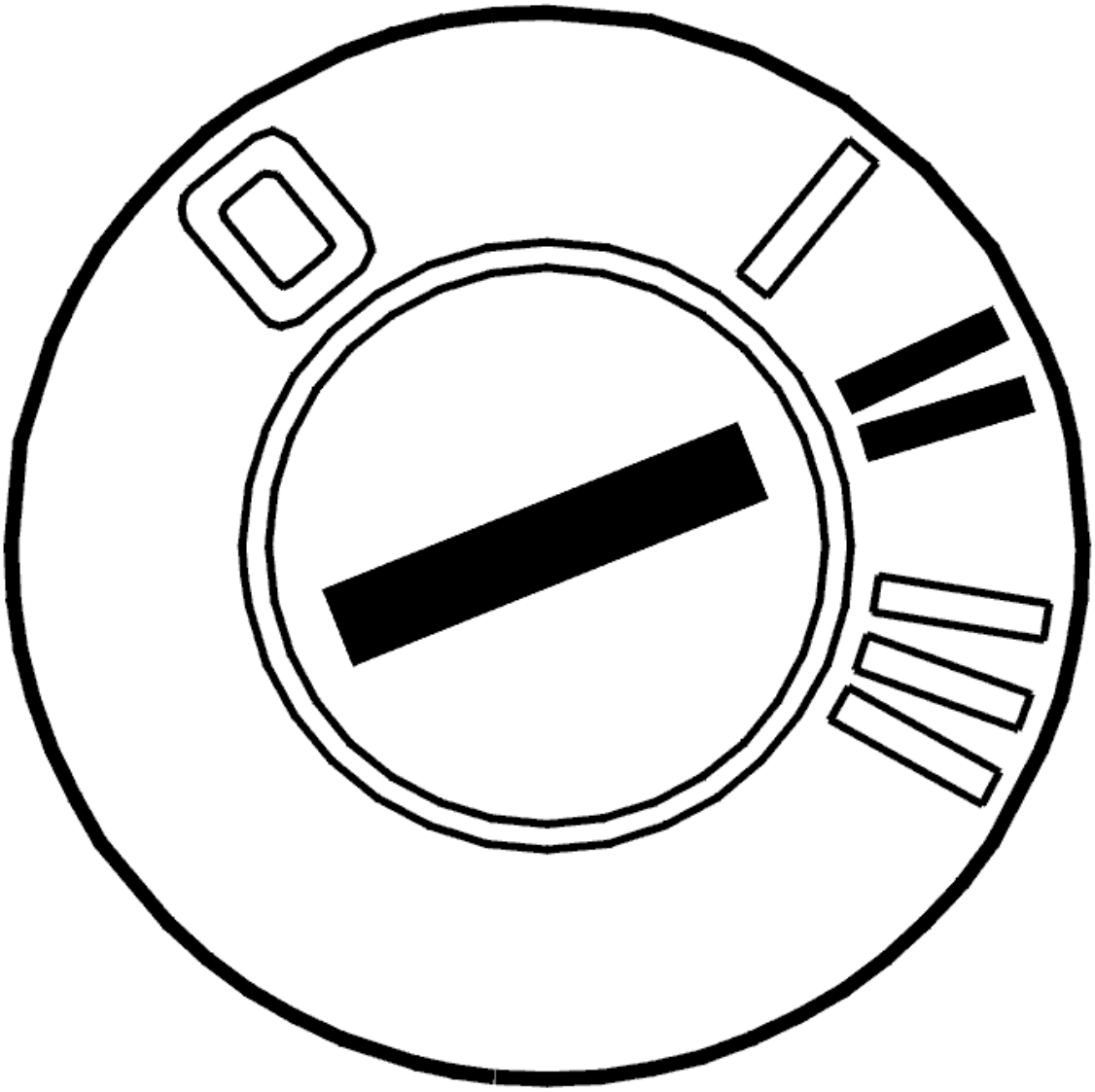

Fig. 87: Identifying Ignition ON
Courtesy of VOLVO CARS CORPORATION

- Ignition on.

  Check the power cable between phone module (PHM) connector B terminal #11 (#53) and handset connector terminal #5 (#25). Check for a short-circuit to supply voltage.

  Try replacing the carphone handset if no fault is found in the wiring.

  Remedy as necessary.

Other information:

- To connect the breakout box, see **CONNECTING THE BREAKOUT BOX**
- For information about signals and connectors, see **SIGNAL SPECIFICATION**
- To access or replace the control module, see **PHONE MODULE (PHM), REPLACING**
- To access or replace the handset, see **HANDSET, REPLACING**
- see **CHECKING WIRING AND TERMINALS** .

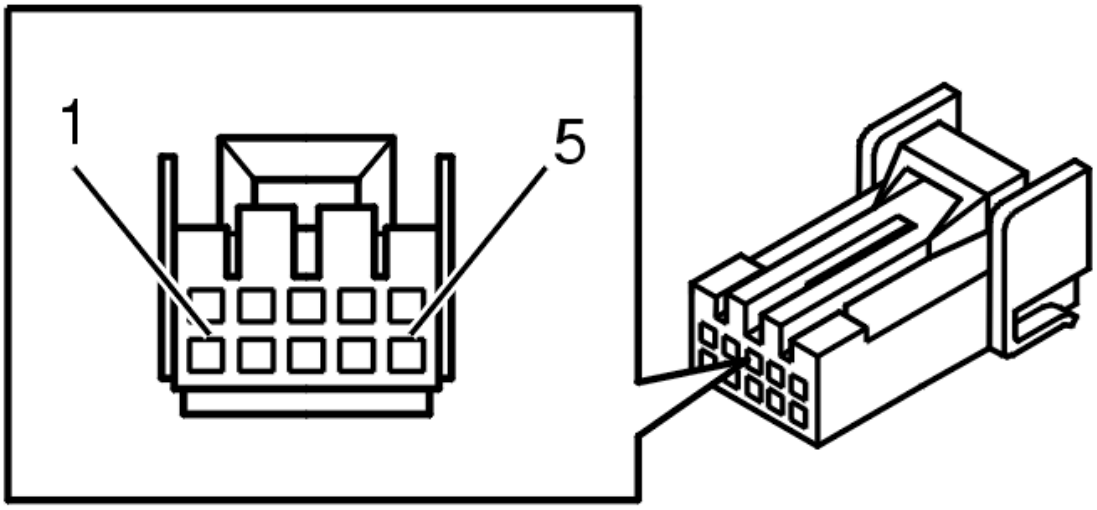

Fig. 88: 10 CD Changer Connector Terminals
Courtesy of VOLVO CARS CORPORATION

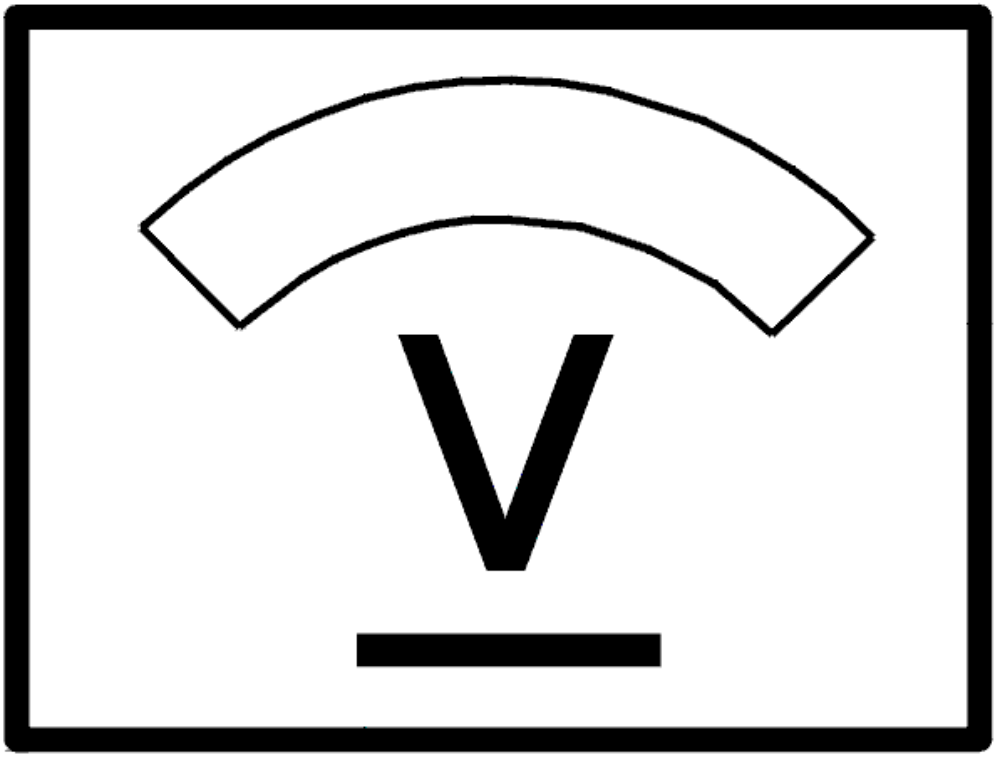

Fig. 89: Identifying Voltage Display
Courtesy of VOLVO CARS CORPORATION

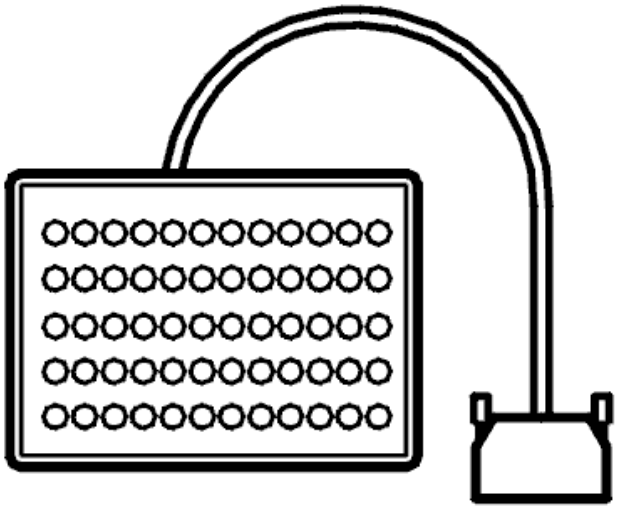

Fig. 90: Breakout Box
Courtesy of VOLVO CARS CORPORATION

- **Continue**

  See: **VERIFICATION**

VERIFICATION

VERIFICATION

HINT: After carrying out the repair, check that the fault has been remedied.

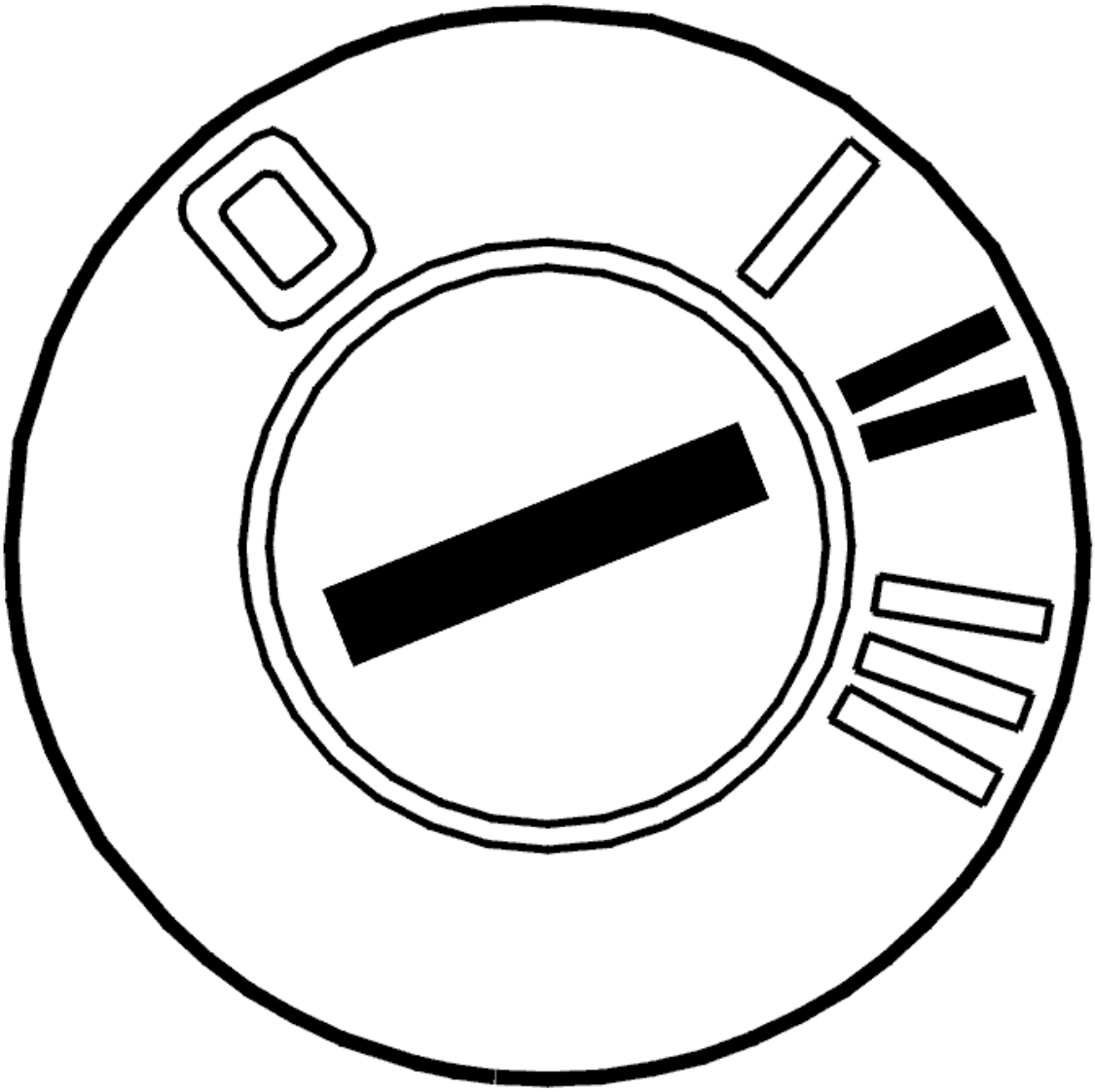

Fig. 91: Identifying Ignition ON
Courtesy of VOLVO CARS CORPORATION

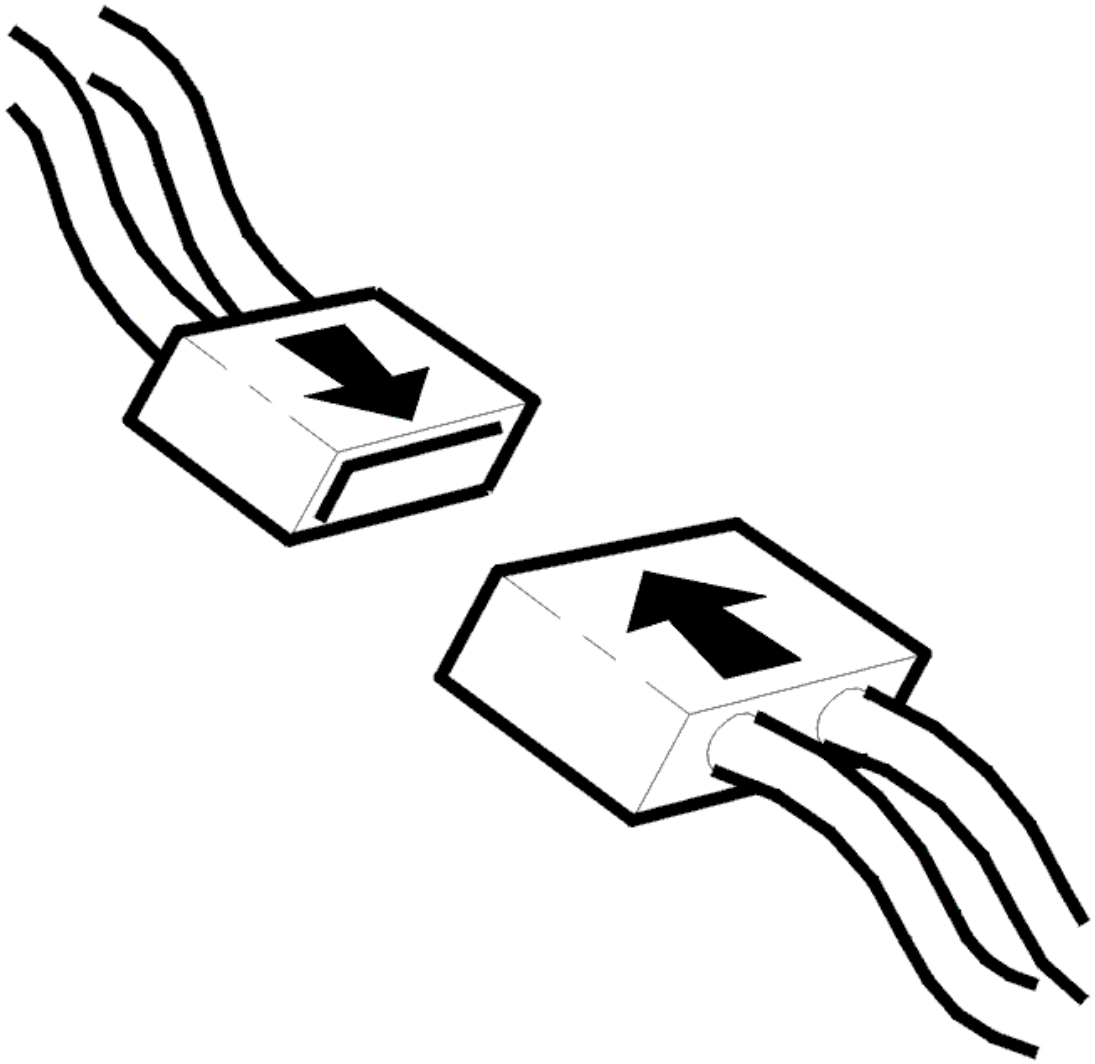

Fig. 92: Connecting Connector
Courtesy of VOLVO CARS CORPORATION

- Ignition off
- Reinstall the connectors, components etc.
- Ignition on
- Switch on the carphone.

  Make a call so that both the handset and the hands-free system are used.

  Ignition off.

  Ignition on.

  Read off the diagnostic trouble codes (DTCs).

Check that the relevant diagnostic trouble code (DTC) has switched status from permanent to intermittent fault.

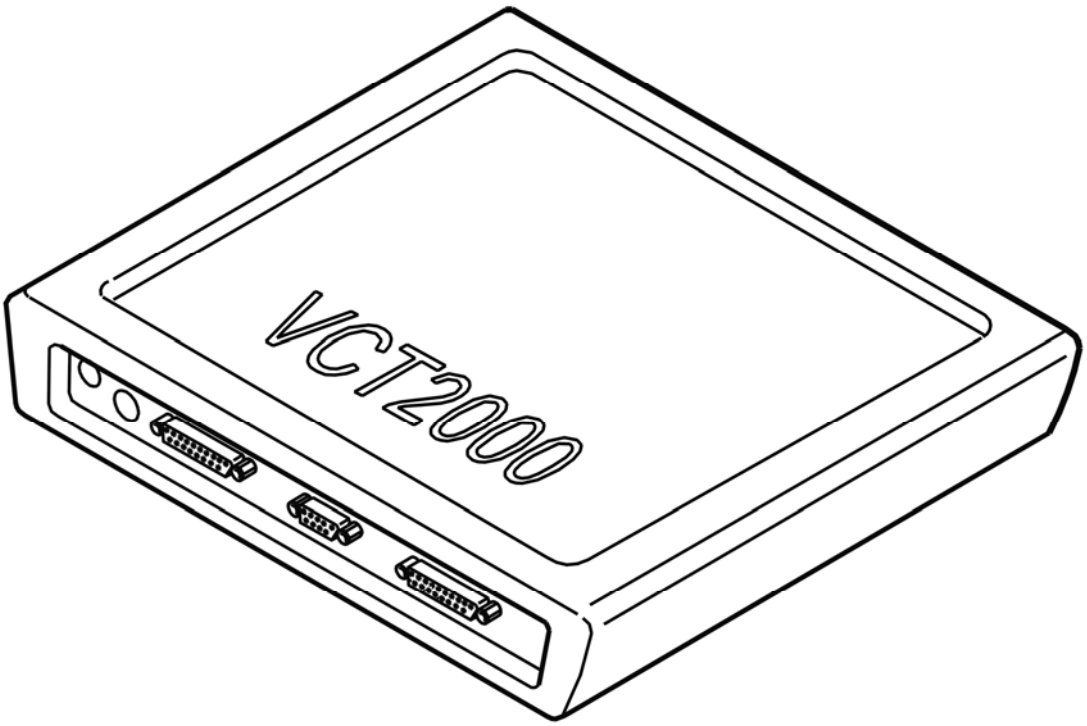

Fig. 93: Identifying VCT2000 Diagnostic Tool Symbol In VIDA
Courtesy of VOLVO CARS CORPORATION

Has the status of the diagnostic trouble code (DTC) changed?

- **YES**

  VERIFIED: Troubleshooting has been completed.

- **NO**

  See: **INFORMATION**

INFORMATION

FAULT-TRACING INFORMATION

The fault should have been detected and remedied. As this is not the case fault-tracing has failed.

Exit fault-tracing for this diagnostic trouble code (DTC) or make another attempt.

PHM-0030: RESERVE BATTERY. VOLTAGE TOO LOW (2006-2012)

DIAGNOSTIC TROUBLE CODE (DTC) INFORMATION PHM-0030

Condition

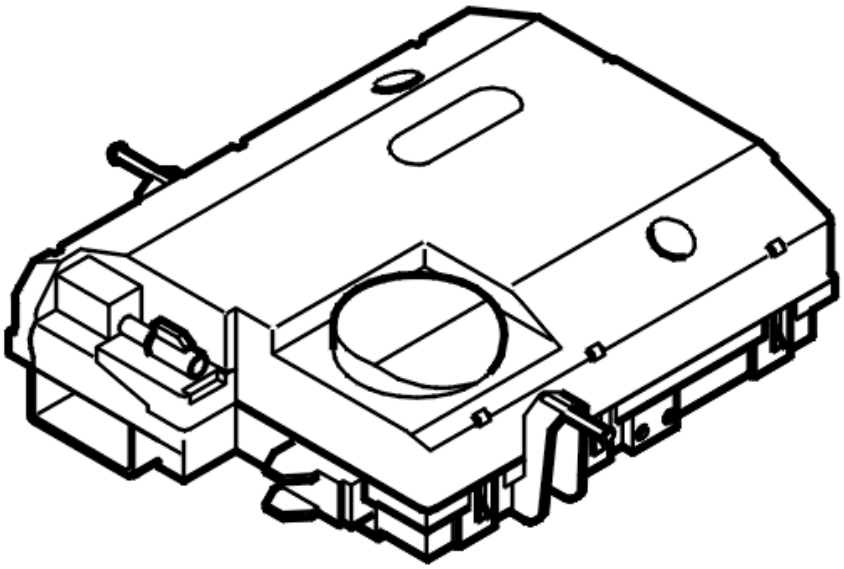

Fig. 94: Identifying Control Module
Courtesy of VOLVO CARS CORPORATION

The diagnostic trouble code (DTC) is stored if the phone module (PHM) detects that the capacity of the internal reserve battery is too low. The reserve battery is in the phone module (PHM). The reserve battery is used when a Volvo On Call service is connected and the phone module (PHM) does not have access to the power supply from the main battery.

The diagnostic trouble code (DTC) can be diagnosed when the ignition is switched on (not key position 3) and when the battery voltage is between 9-16 V. The diagnostic trouble code (DTC) can only be diagnosed for a phone module (PHM) with Volvo On Call functionality.

Substitute Value

- None.

Possible Source

- The capacity of the internal reserve battery is too low.

Fault symptom[s]

- Volvo On Call/Does not work
- Text window and warning symbol/Text message

VOLTAGE TOO LOW

REPLACING THE COMPONENT

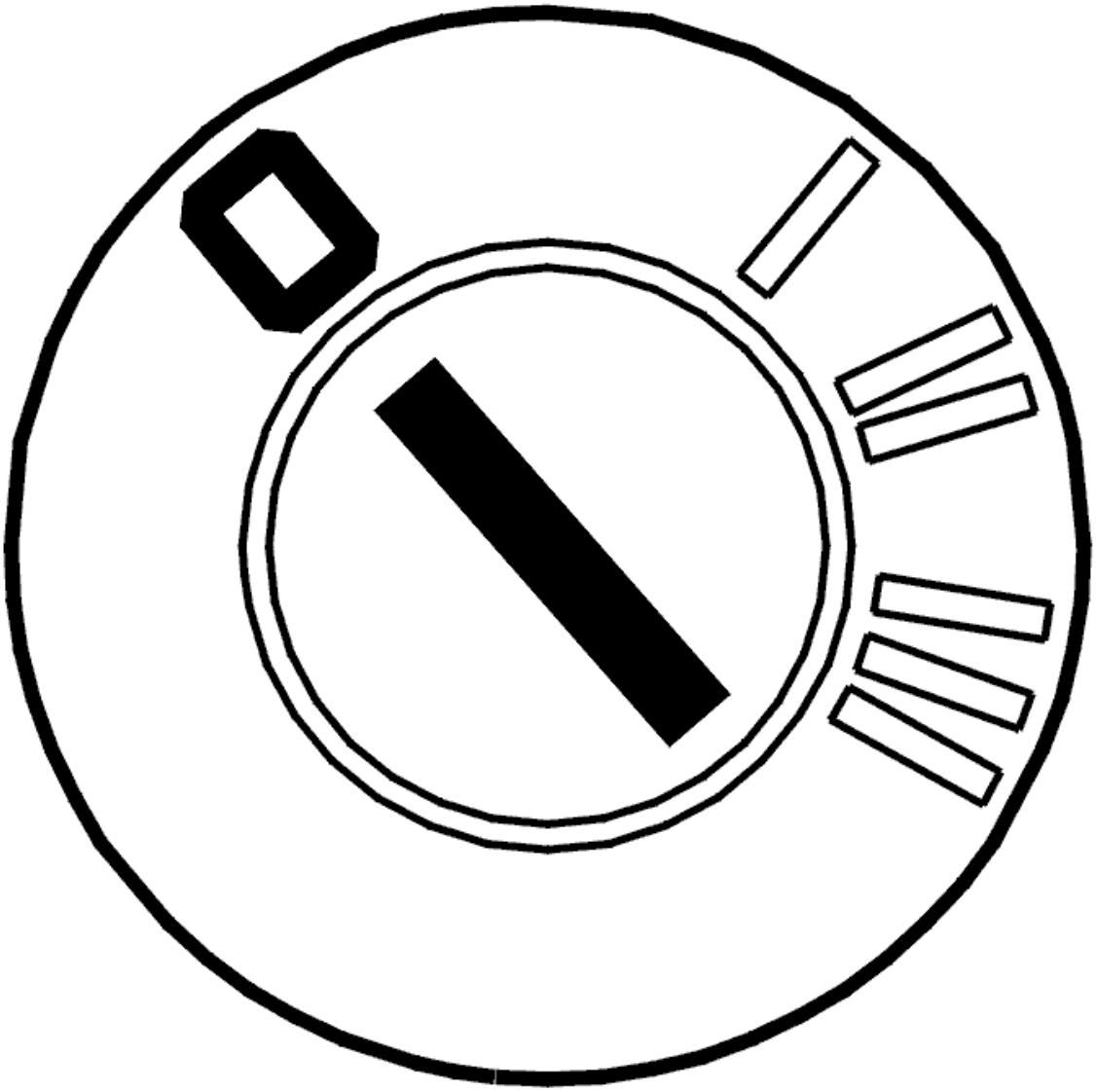

Fig. 95: Identifying Ignition OFF
Courtesy of VOLVO CARS CORPORATION

- Ignition off.

The diagnostic trouble code (DTC) is stored when the calculated capacity of the reserve battery is too low.

Replace the reserve battery. See:

see **BATTERY PHONE MODULE (PHM), REPLACING**

Remedy as necessary.

Other information:

- see **LOCATION OF COMPONENTS**
- see **PHONE MODULE (PHM), REPLACING (2006-2010)**

- **Continue**

See: **VERIFICATION**

VERIFICATION

VERIFICATION

HINT: After carrying out the repair, check that the fault has been remedied.

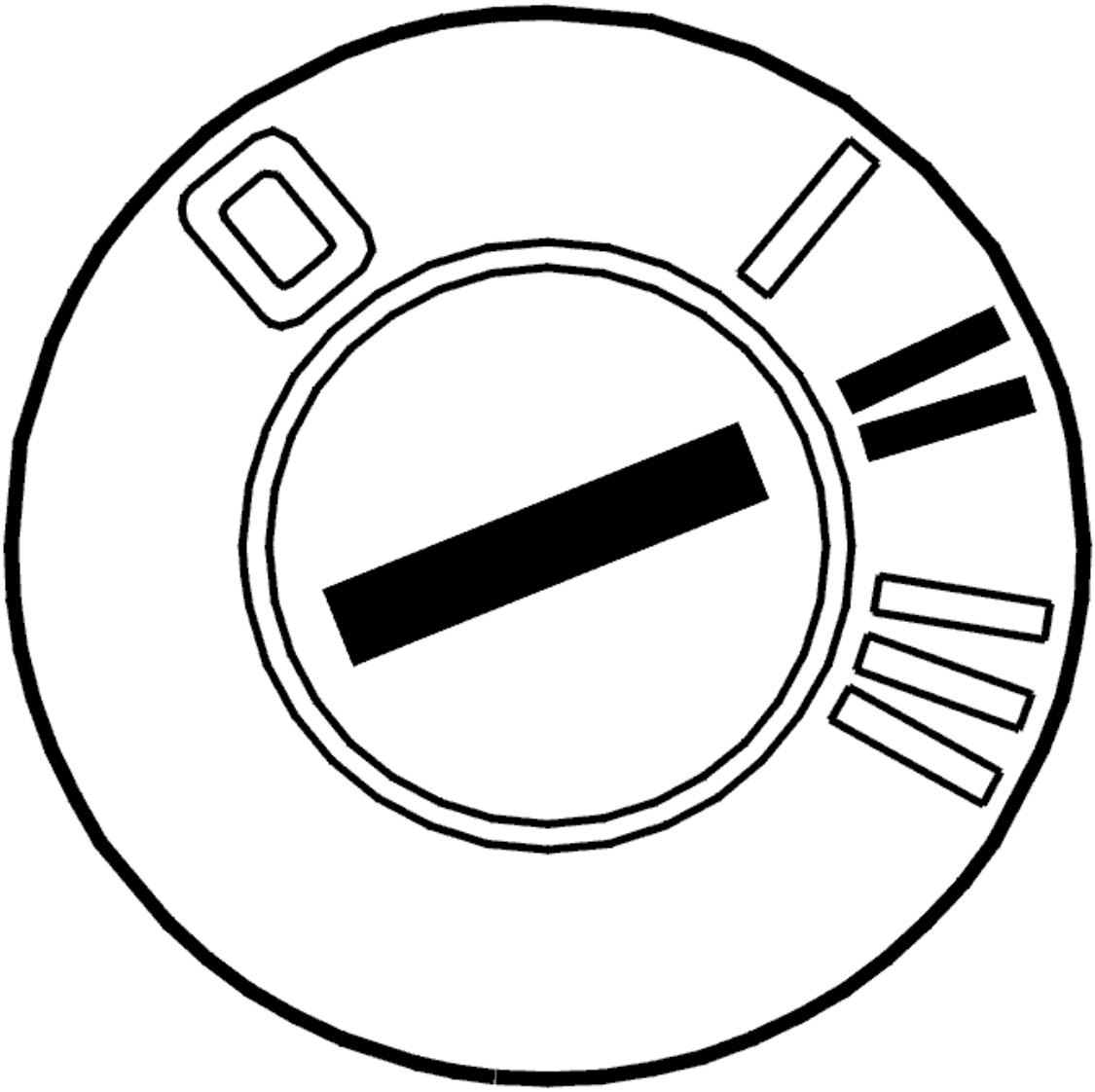

Fig. 96: Identifying Ignition ON
Courtesy of VOLVO CARS CORPORATION

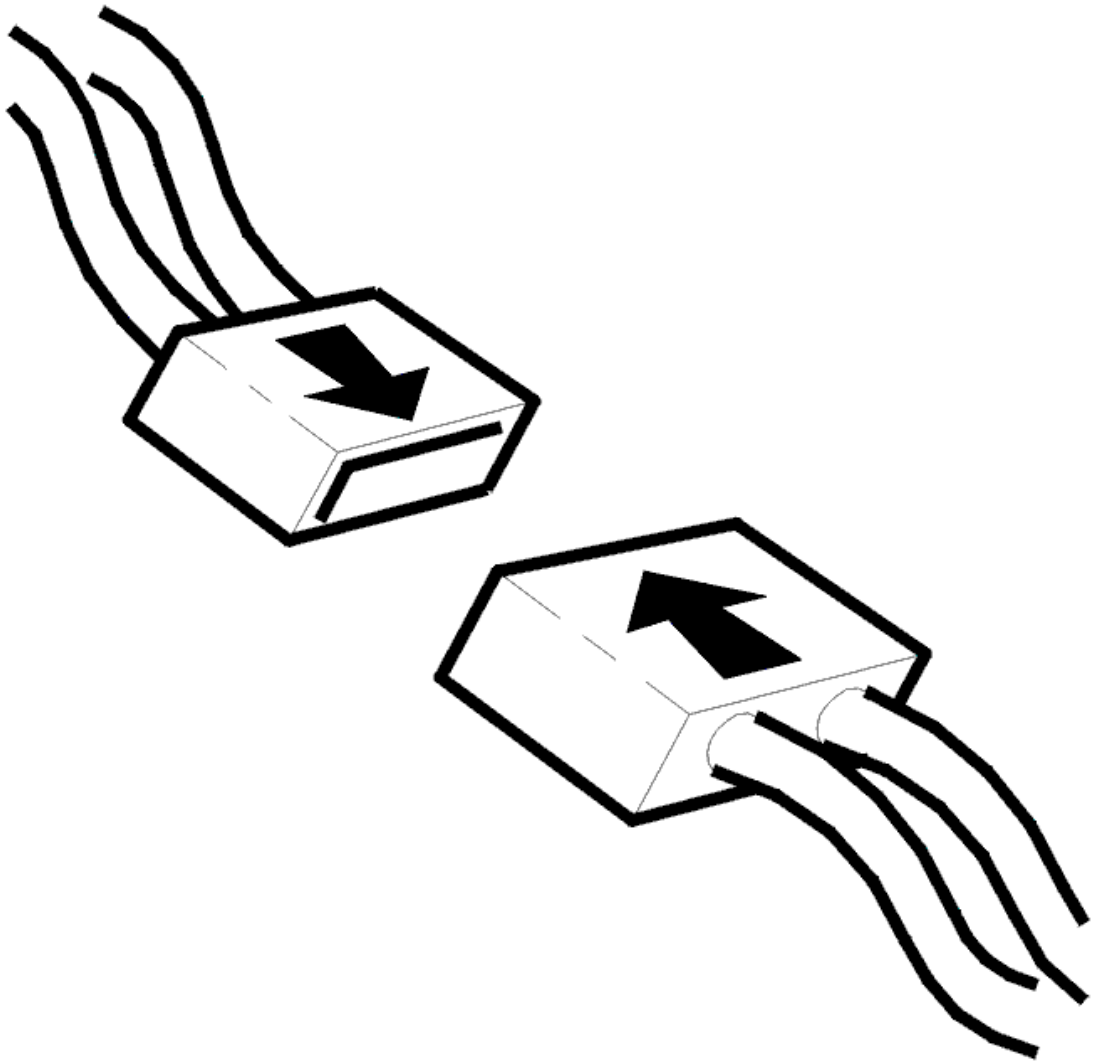

Fig. 97: Connecting Connector
Courtesy of VOLVO CARS CORPORATION

- Ignition off
- Reinstall the connectors, components etc.
- Ignition on
- Activate the carphone.

  Make a call so that both the handset and the hands-free system are used.

  - Ignition off.
  - Ignition on.
  - Read off the diagnostic trouble codes (DTCs).
  - Check that the relevant diagnostic trouble code (DTC) has switched status from permanent to

intermittent fault.

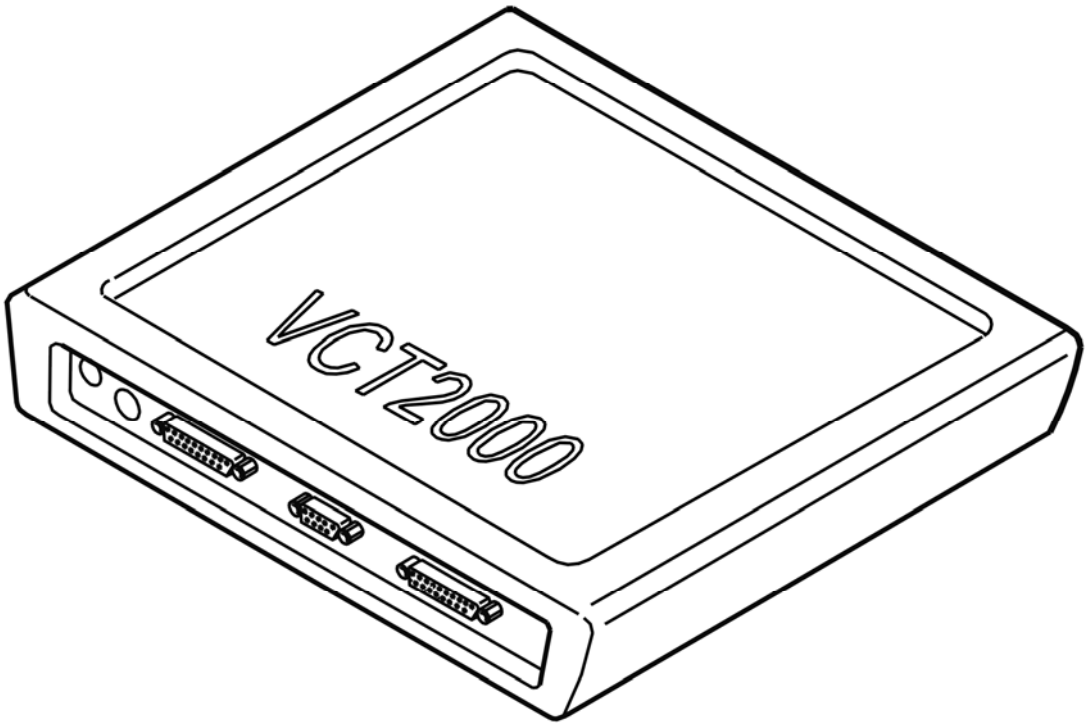

Fig. 98: Identifying VCT2000 Diagnostic Tool Symbol In VIDA
Courtesy of VOLVO CARS CORPORATION

Has the status of the diagnostic trouble code (DTC) changed?

- **YES**

  VERIFIED: Troubleshooting has been completed.

- **NO**

  See: **INFORMATION**

INFORMATION

FAULT-TRACING INFORMATION

The fault should have been detected and remedied. As this is not the case fault-tracing has failed.

Exit fault-tracing for this diagnostic trouble code (DTC) or make another attempt.

PHM-003A: INTERNAL ANTENNA. SIGNAL MISSING (2006-2012)

DIAGNOSTIC TROUBLE CODE (DTC) INFORMATION PHM-003A

Condition

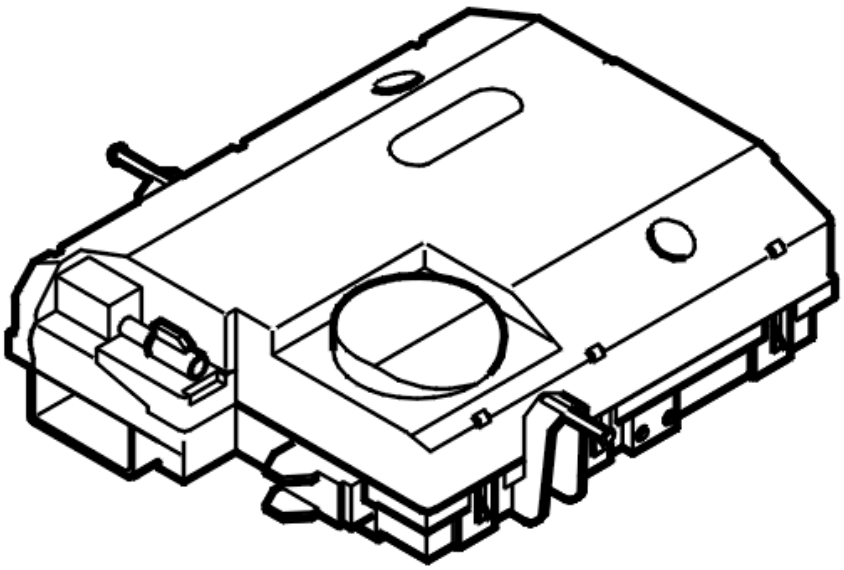

Fig. 99: Identifying Control Module
Courtesy of VOLVO CARS CORPORATION

The diagnostic trouble code (DTC) is stored if the phone module (PHM) detects an open-circuit in the signal to the internal reserve antenna. The reserve antenna is in the phone module (PHM). The reserve antenna is used when a Volvo On Call service is connected and the normal telephone antenna is not functioning.

The diagnostic trouble code (DTC) can be diagnosed when the ignition is switched on (not key position 3) and when the battery voltage is between 9-16 V. The diagnostic trouble code (DTC) can only be diagnosed for a phone module (PHM) with Volvo On Call functionality.

Substitute Value

- None.

Possible Source

- Open-circuit in the signal to the internal reserve antenna.

Fault symptom[s]

- Messages in the display.
- No or poor carphone reception.

SIGNAL MISSING

REPLACING THE COMPONENT

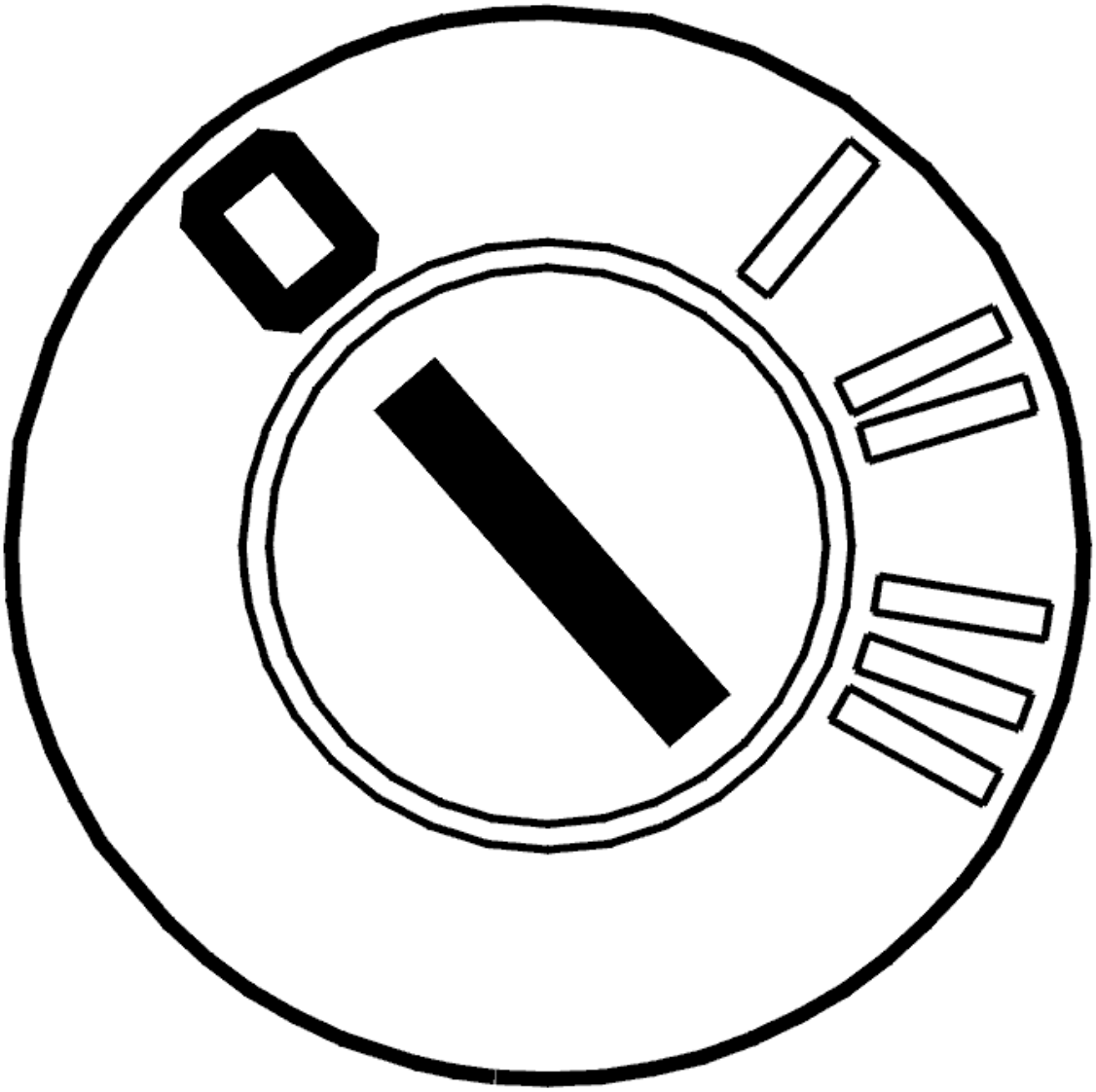

Fig. 100: Identifying Ignition OFF
Courtesy of VOLVO CARS CORPORATION

- Ignition off.

  The phone module (PHM) has detected a fault in the internal antenna for Volvo On Call functionality. This type of fault means that the control module must be replaced.

Remedy as necessary.

Other information:

- see **PHONE MODULE (PHM), REPLACING (2006-2010)**
- see **LOCATION OF COMPONENTS**

- **Continue**

See: **VERIFICATION**

VERIFICATION

VERIFICATION

HINT: After carrying out the repair, check that the fault has been remedied.

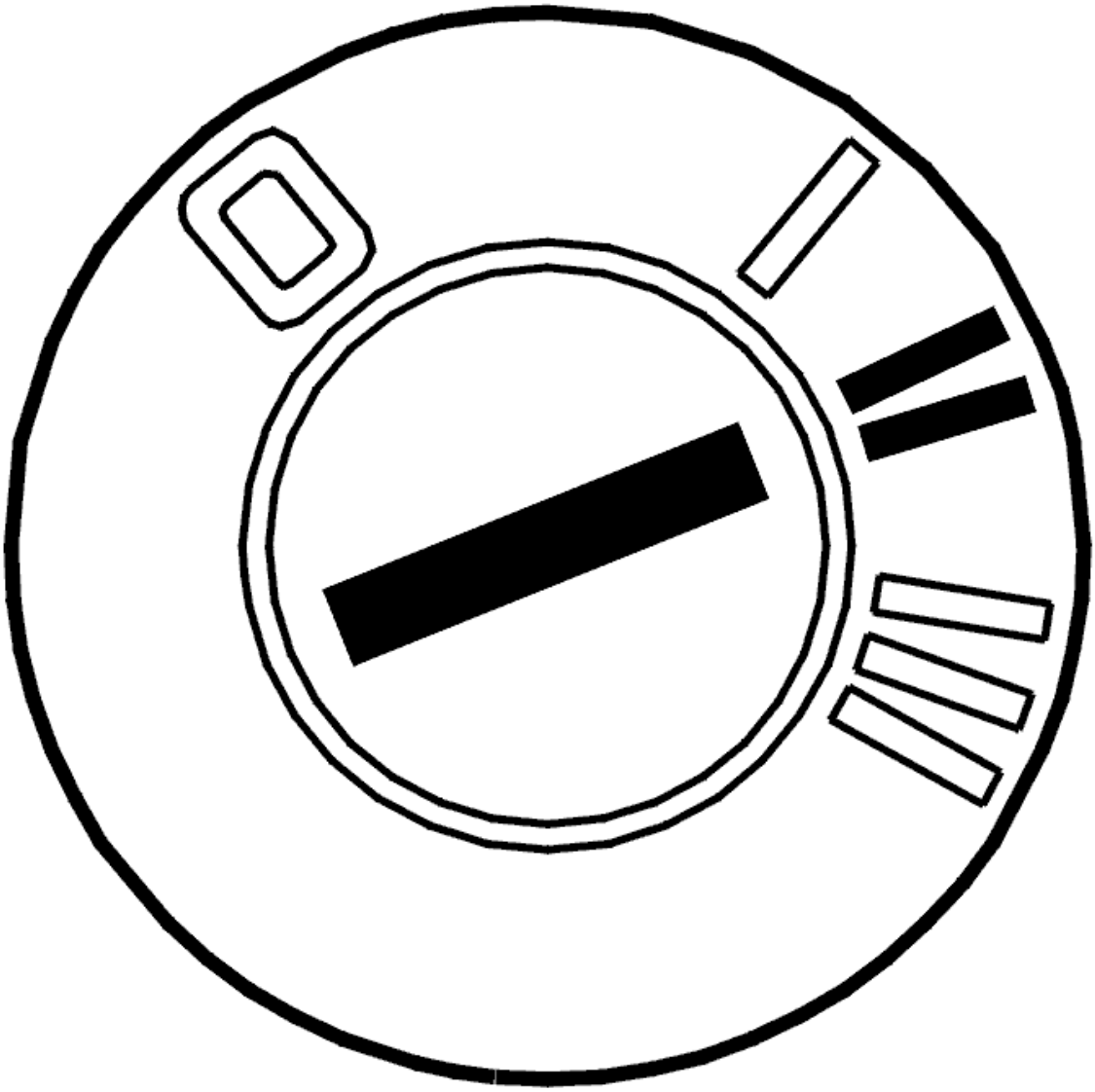

Fig. 101: Identifying Ignition ON
Courtesy of VOLVO CARS CORPORATION

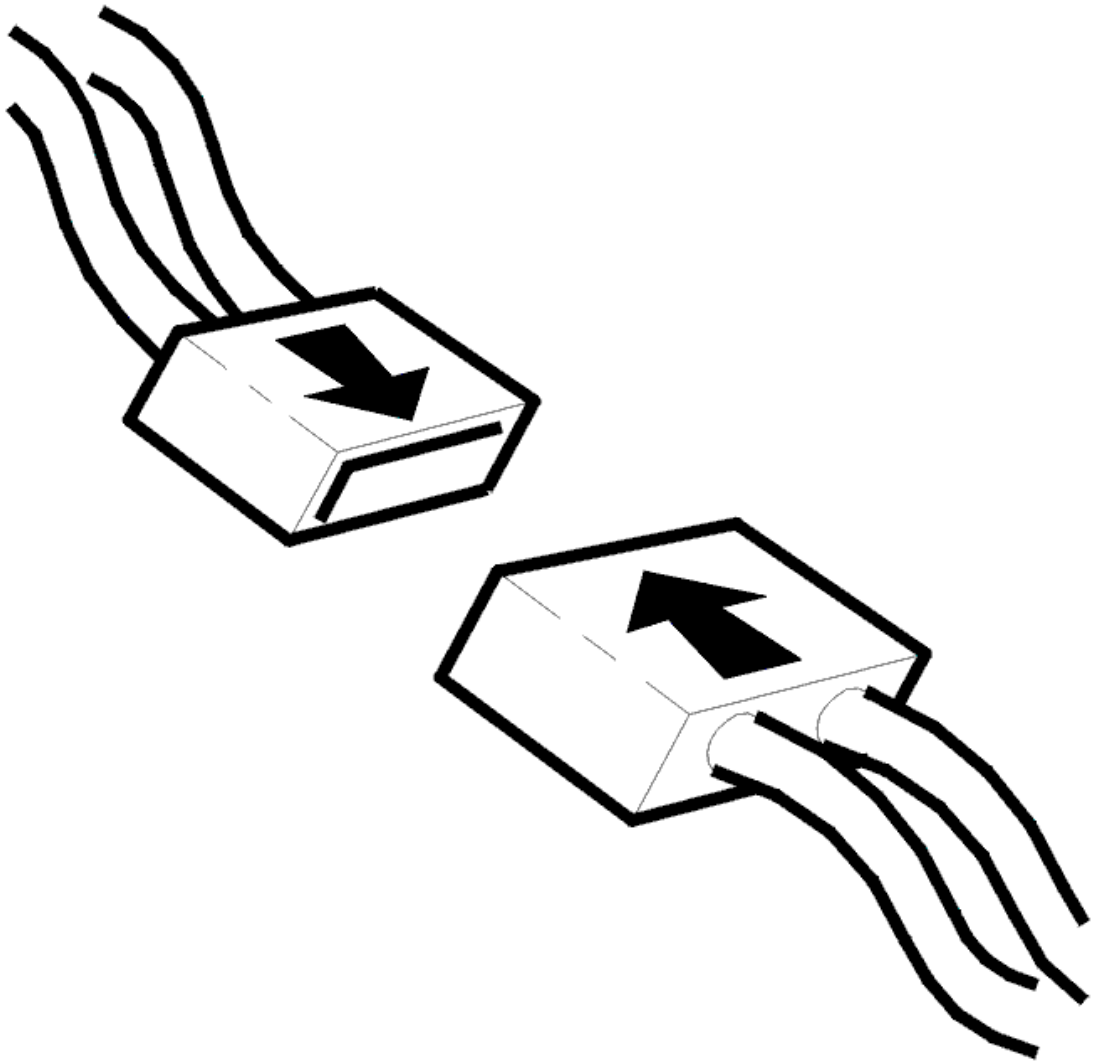

Fig. 102: Connecting Connector
Courtesy of VOLVO CARS CORPORATION

- Ignition off
- Reinstall the connectors, components etc.
- Ignition on
- Activate the carphone.

  Make a call so that both the handset and the hands-free system are used.

  - Ignition off.
  - Ignition on.
  - Read off the diagnostic trouble codes (DTCs).
  - Check that the relevant diagnostic trouble code (DTC) has switched status from permanent to

intermittent fault.

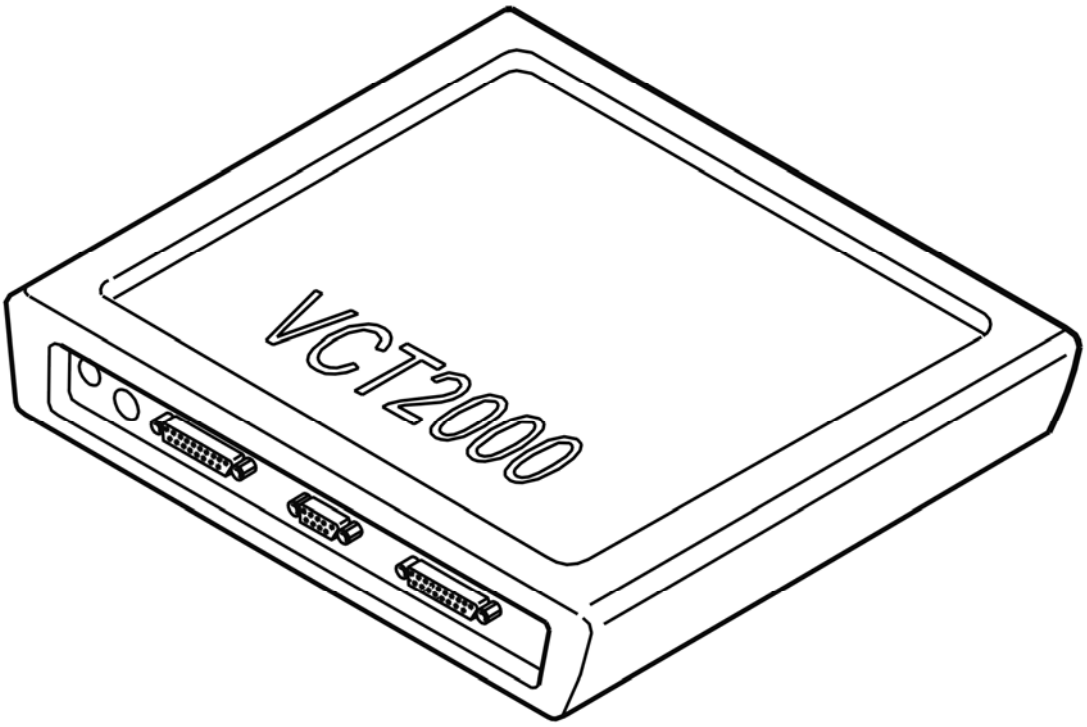

Fig. 103: Identifying VCT2000 Diagnostic Tool Symbol In VIDA
Courtesy of VOLVO CARS CORPORATION

Has the status of the diagnostic trouble code (DTC) changed?

- **YES**

  VERIFIED: Troubleshooting has been completed.

- **NO**

  See: **INFORMATION**

INFORMATION

FAULT-TRACING INFORMATION

The fault should have been detected and remedied. As this is not the case fault-tracing has failed.

Exit fault-tracing for this diagnostic trouble code (DTC) or make another attempt.

PHM-0040: SIM CARD. INTERNAL FAULT (2006-2012)

DIAGNOSTIC TROUBLE CODE (DTC) INFORMATION PHM-0040

Condition

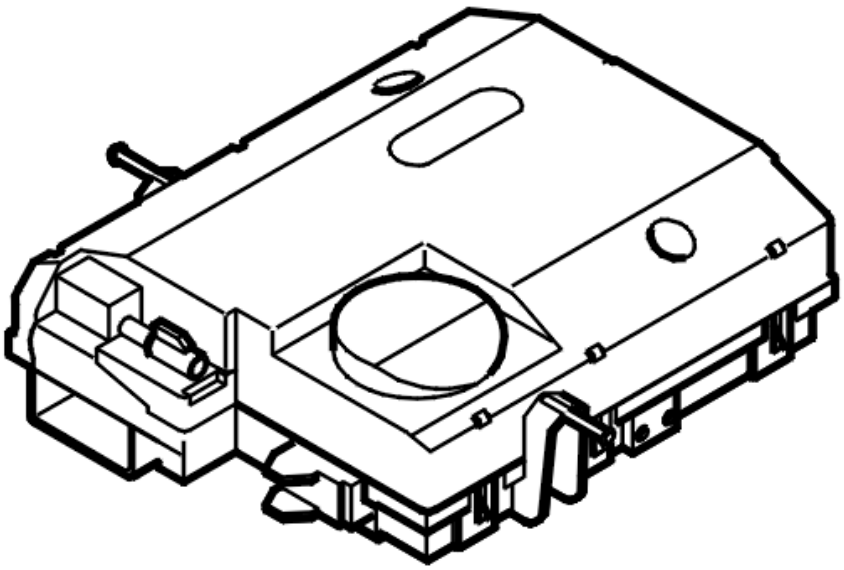

Fig. 104: Identifying Control Module
Courtesy of VOLVO CARS CORPORATION

The diagnostic trouble code (DTC) is stored if the phone module (PHM) detects that the internal SIM card (Subscription Identification Module) for Volvo On Call services is not available. The SIM card is in the control module and is only used for Volvo On Call services.

The diagnostic trouble code (DTC) can be diagnosed when the ignition is switched on (not key position 3) and when the battery voltage is between 9-16 V. The diagnostic trouble code (DTC) can only be diagnosed for a phone module (PHM) with Volvo On Call functionality.

Substitute Value

- None.

Possible Source

- Damaged SIM card
- The SIM card is not installed in the phone module (PHM).

Fault symptom[s]

- Messages in the display.
- No or reduced Volvo On Call functionality.

INTERNAL FAULT

REPLACING THE COMPONENT

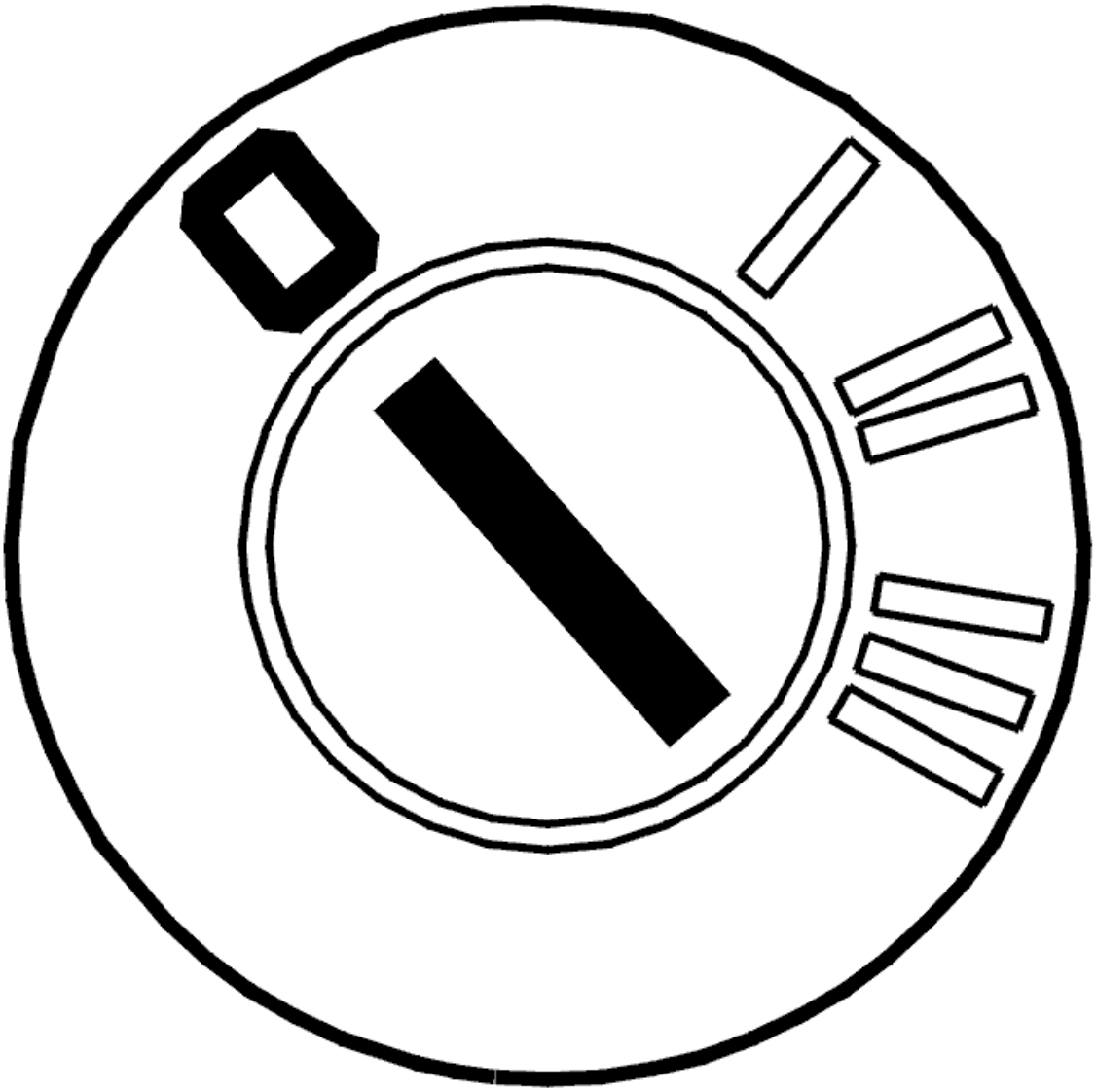

Fig. 105: Identifying Ignition OFF
Courtesy of VOLVO CARS CORPORATION

- Ignition off.

  The phone module (PHM) has detected a fault in the internal SIM card for the Volvo On Call subscription. This type of fault means that the control module must be replaced.

Remedy as necessary.

Other information:

- see **PHONE MODULE (PHM), REPLACING (2006-2010)**
- see **LOCATION OF COMPONENTS**

- **Continue**

See: **VERIFICATION**

VERIFICATION

VERIFICATION

HINT: After carrying out the repair, check that the fault has been remedied.

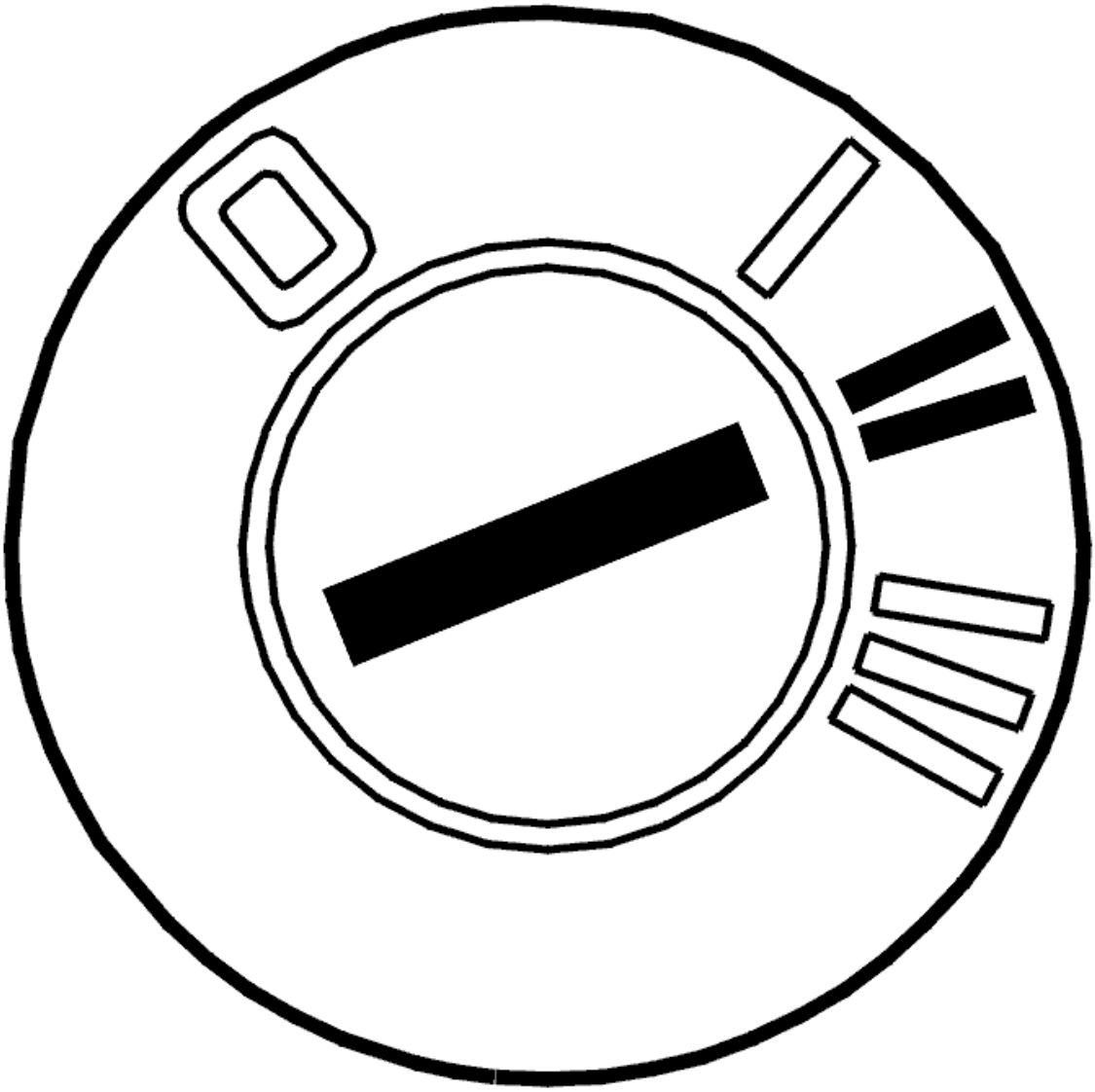

Fig. 106: Identifying Ignition ON
Courtesy of VOLVO CARS CORPORATION

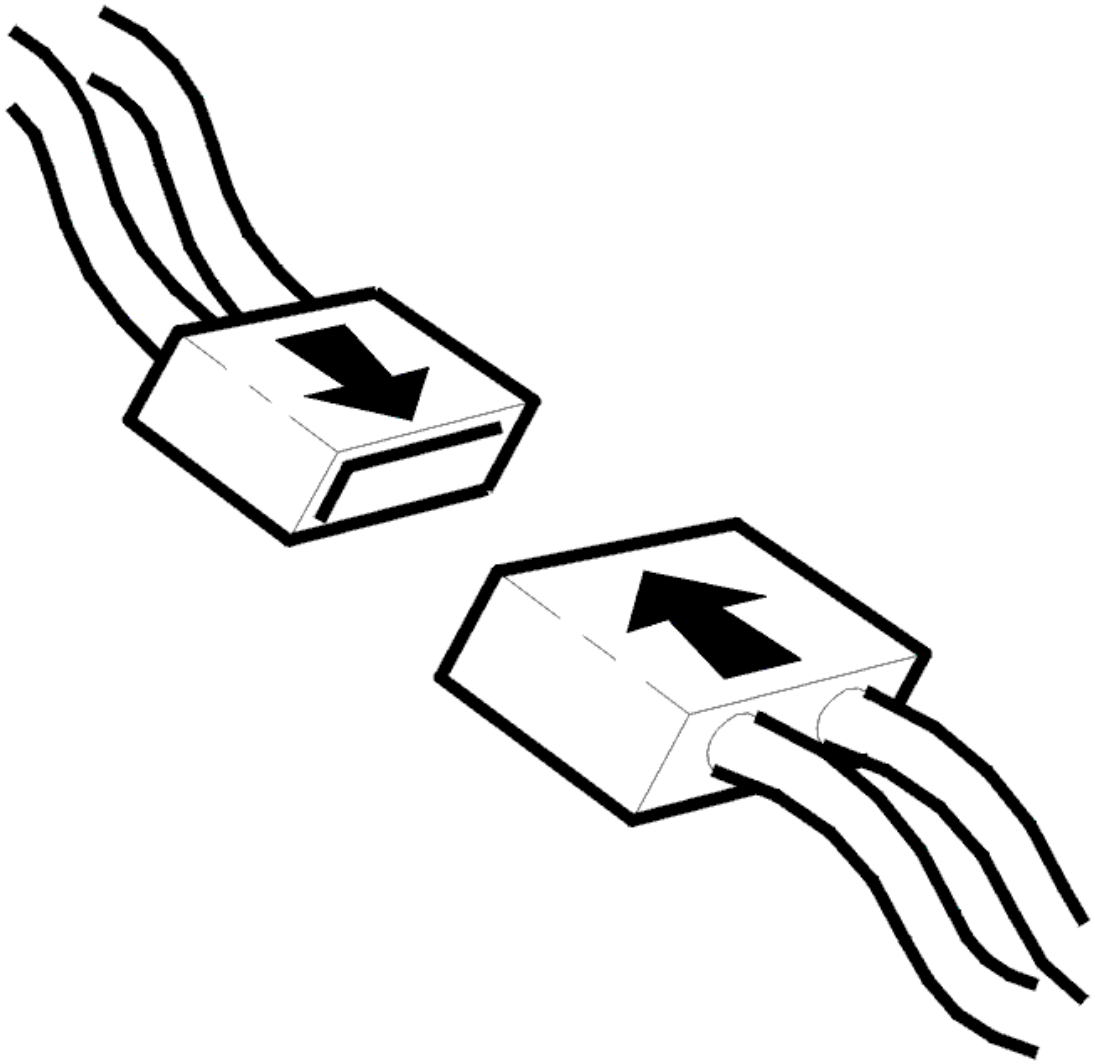

Fig. 107: Connecting Connector
Courtesy of VOLVO CARS CORPORATION

- Ignition off
- Reinstall the connectors, components etc.
- Ignition on
- Activate the carphone.

  Make a call so that both the handset and the hands-free system are used.

  - Ignition off.
  - Ignition on.
  - Read off the diagnostic trouble codes (DTCs).
  - Check that the relevant diagnostic trouble code (DTC) has switched status from permanent to

intermittent fault.

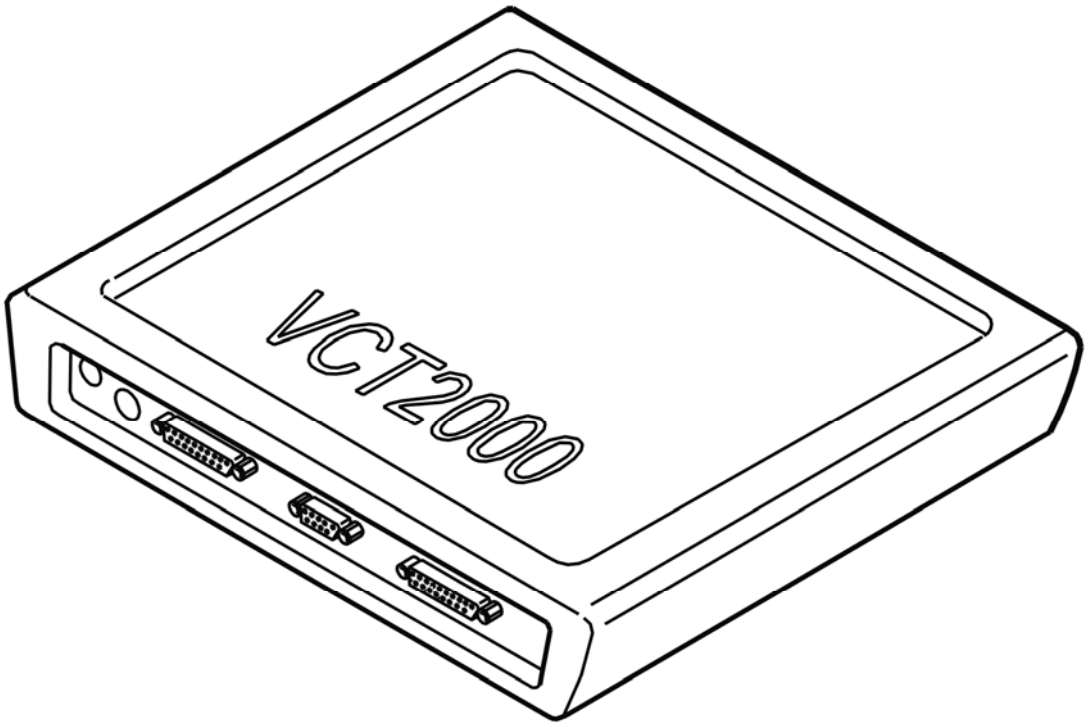

Fig. 108: Identifying VCT2000 Diagnostic Tool Symbol In VIDA
Courtesy of VOLVO CARS CORPORATION

Has the status of the diagnostic trouble code (DTC) changed?

- **YES**

  VERIFIED: Troubleshooting has been completed.

- **NO**

  See: **INFORMATION**

INFORMATION

FAULT-TRACING INFORMATION

The fault should have been detected and remedied. As this is not the case fault-tracing has failed.

Exit fault-tracing for this diagnostic trouble code (DTC) or make another attempt.

PHM-0063: LIGHTING SWITCH. SIGNAL TOO HIGH / SIGNAL MISSING

(2006-2012)

DIAGNOSTIC TROUBLE CODE (DTC) INFORMATION PHM-0063

Condition

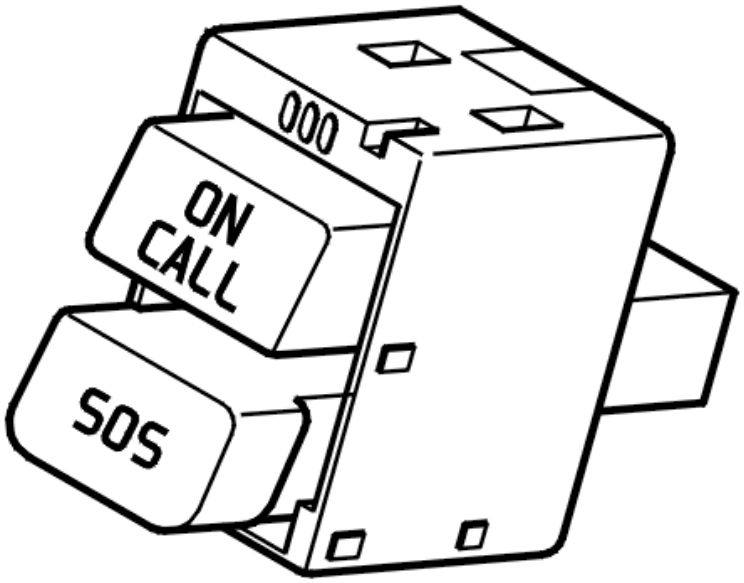

Fig. 109: Identifying Phone Module (PHM)
Courtesy of VOLVO CARS CORPORATION

The diagnostic trouble code (DTC) is stored if the phone module (PHM) detects an open-circuit or a short-circuit to supply voltage in the signal for lighting the Volvo On Call switches. The lighting for the Volvo On Call switches is powered via the phone module (PHM). The power supply is a PWM signal (Pulse Width Modulated).

The diagnostic trouble code (DTC) can be diagnosed when the ignition is switched on (not key position 3) and when the battery voltage is between 9-16 V. The diagnostic trouble code (DTC) can only be diagnosed for a phone module (PHM) with Volvo On Call functionality.

Substitute Value

- None.

Possible Source

- Short-circuit to supply voltage in the cable for lighting the Volvo On Call switch
- Open-circuit in the cable for lighting the Volvo On Call switch.

Fault symptom[s]

- No or reduced Volvo On Call functionality.

SIGNAL TOO HIGH / SIGNAL MISSING

CHECKING THE COMPONENT AND WIRING

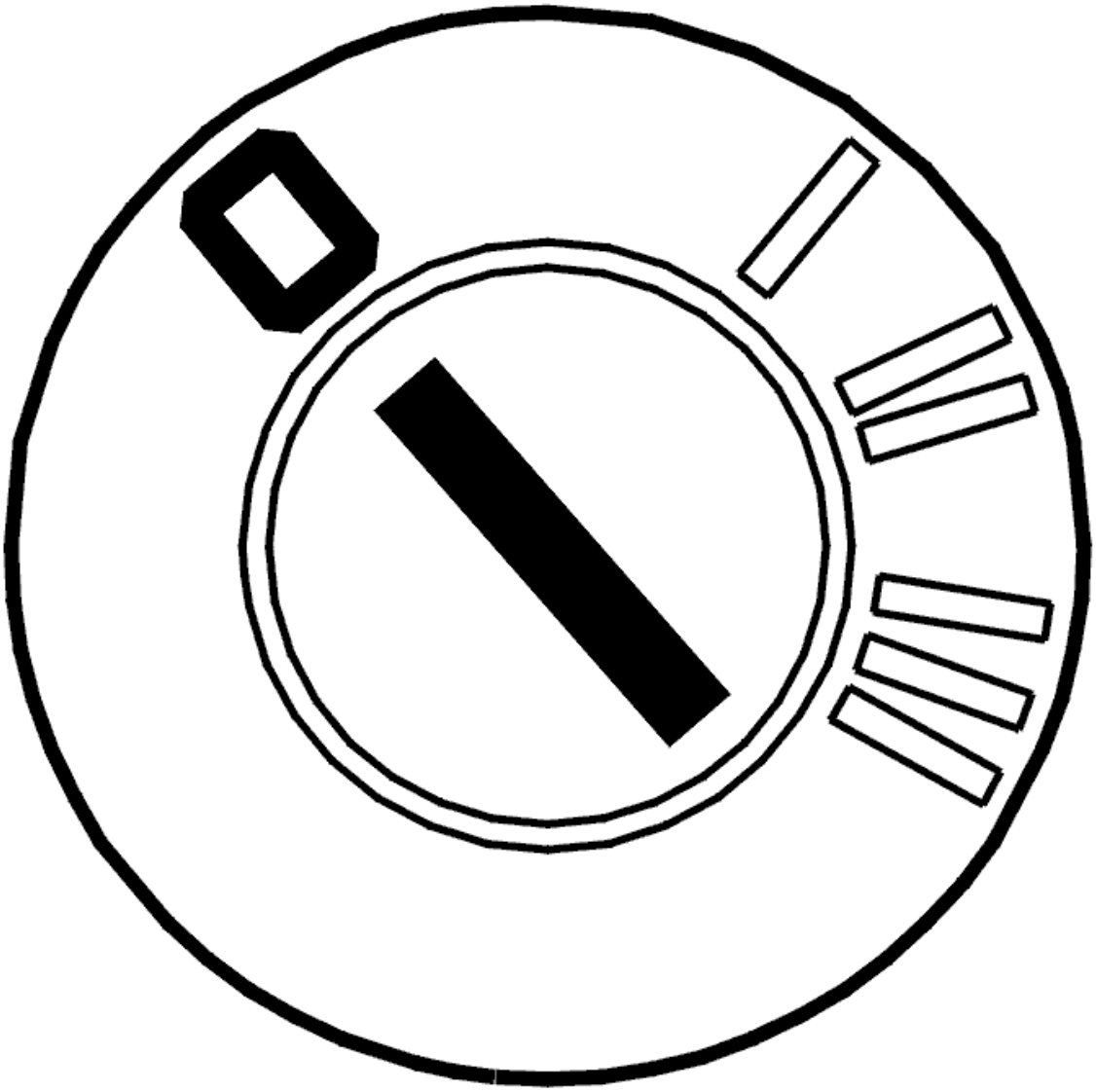

Fig. 110: Identifying Ignition OFF
Courtesy of VOLVO CARS CORPORATION

- Ignition off

- Disconnect connector A from the phone module (PHM)
- Disconnect the connector for the Volvo On Call switch.

HINT: There is probably a short-circuit to supply voltage in one of the cables if the ON CALL/SOS switch lights too brightly. There is probably an open-circuit in the cables if the ON CALL/SOS switch does not light at all.

Check the cables for control module connector A for lighting the switch. Check for a short-circuit to supply voltage.

Check between:

- terminals #3 (#3) and #5 (#5)
- terminals #4 (#4) and #5 (#5).

Check the cables for lighting the switch. Check for an open-circuit.

Check between:

- control module connector A terminal #4 (#4) and the connector for switch terminal #4 (#16)
- control module connector A terminal #3 (#3) and the connector for switch terminal #3 (#15).

Try replacing the switch if the cables are OK.

Remedy as necessary.

Other information:

- see **SIGNAL SPECIFICATION**
- see **CONNECTING THE BREAKOUT BOX**
- see **LOCATION OF COMPONENTS**
- see **PHONE MODULE (PHM), REPLACING (2006-2010)**
- see **SWITCH VOLVO ON CALL, REPLACING (2006-2010)**
- see **CHECKING WIRING AND TERMINALS**

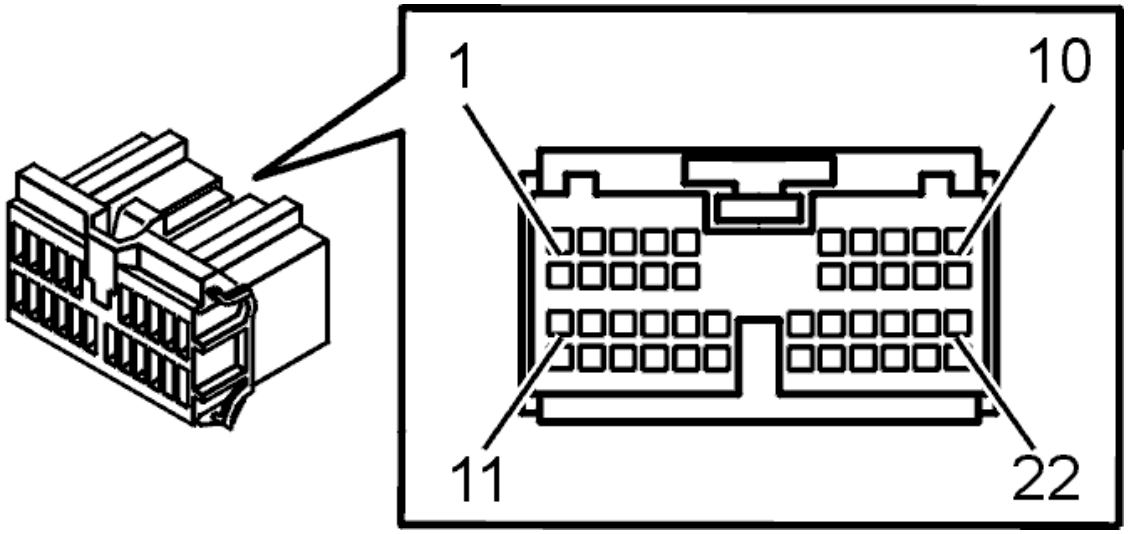

Fig. 111: Identifying Connector (F) Terminals
Courtesy of VOLVO CARS CORPORATION

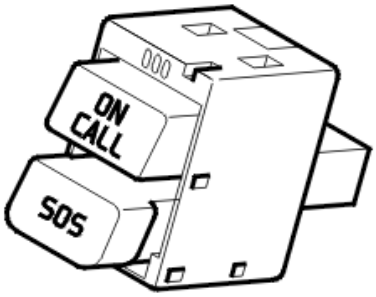

Fig. 112: Identifying Phone Module (PHM) Connector
Courtesy of VOLVO CARS CORPORATION

- **Continue**

  See: **VERIFICATION**

VERIFICATION

VERIFICATION

HINT: After carrying out the repair, check that the fault has been remedied.

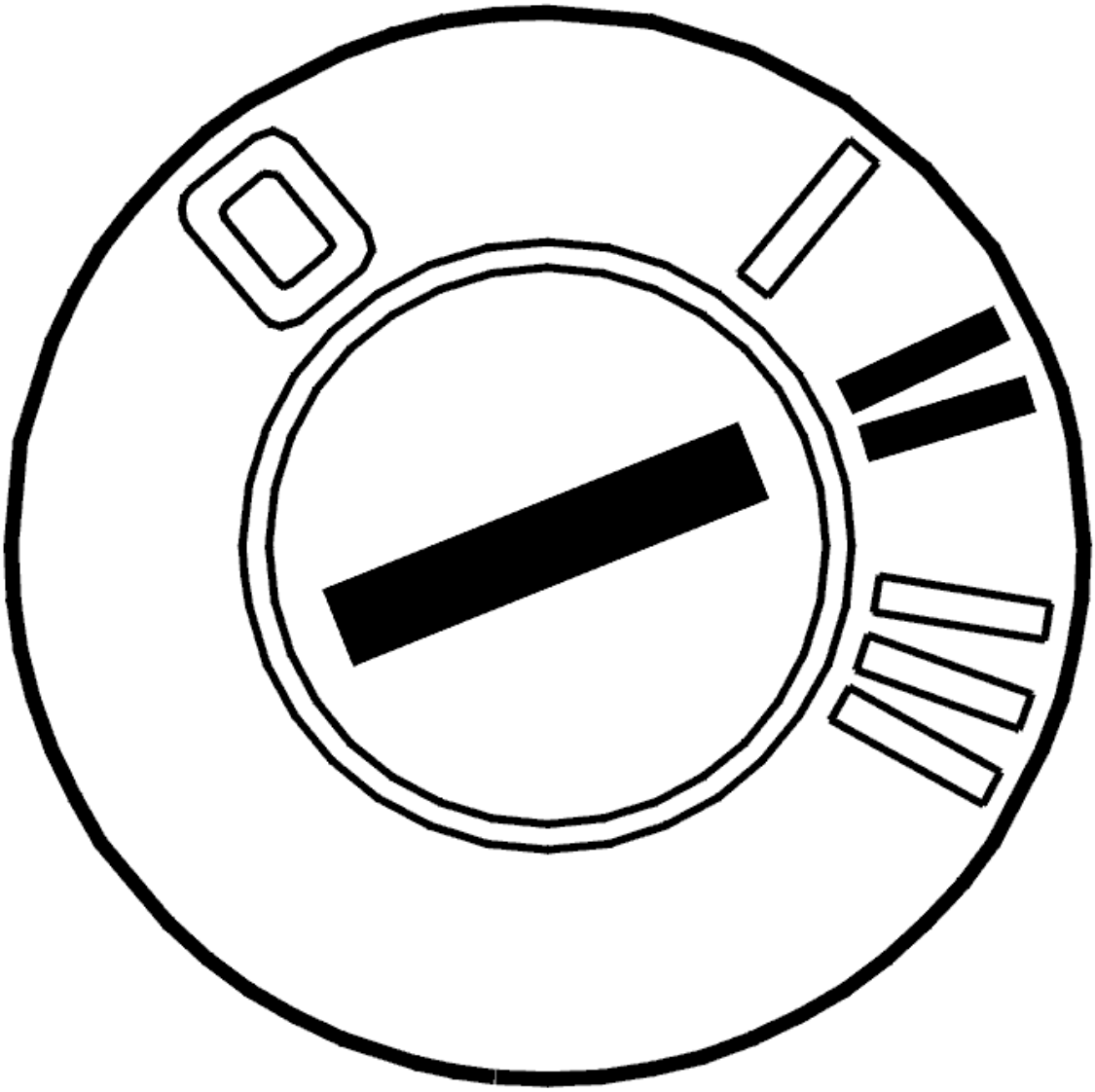

Fig. 113: Identifying Ignition ON
Courtesy of VOLVO CARS CORPORATION

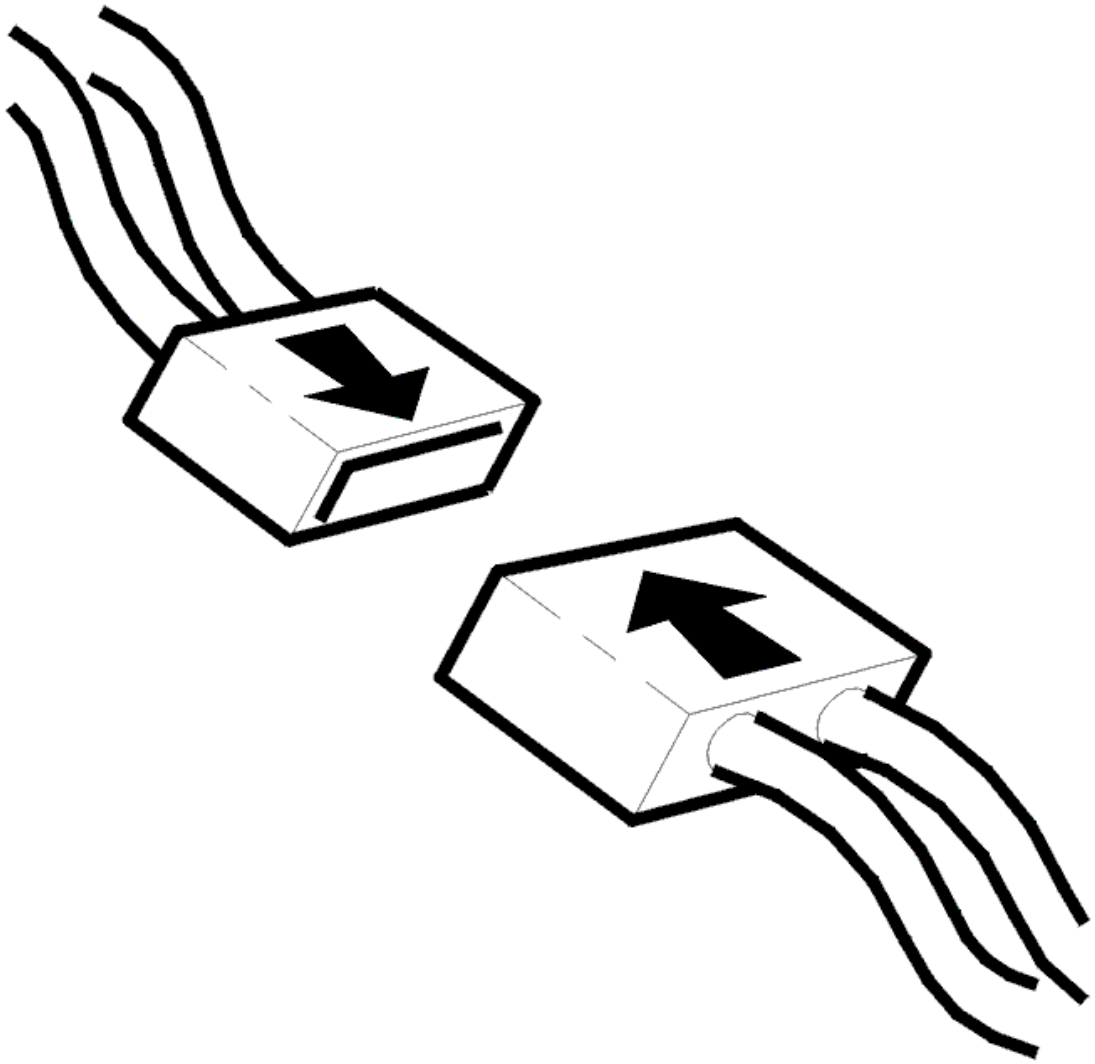

Fig. 114: Connecting Connector
Courtesy of VOLVO CARS CORPORATION

- Ignition off
- Reinstall the connectors, components etc.
- Ignition on
- Activate the carphone.

  Make a call so that both the handset and the hands-free system are used.

  - Ignition off.
  - Ignition on.
  - Read off the diagnostic trouble codes (DTCs).
  - Check that the relevant diagnostic trouble code (DTC) has switched status from permanent to

intermittent fault.

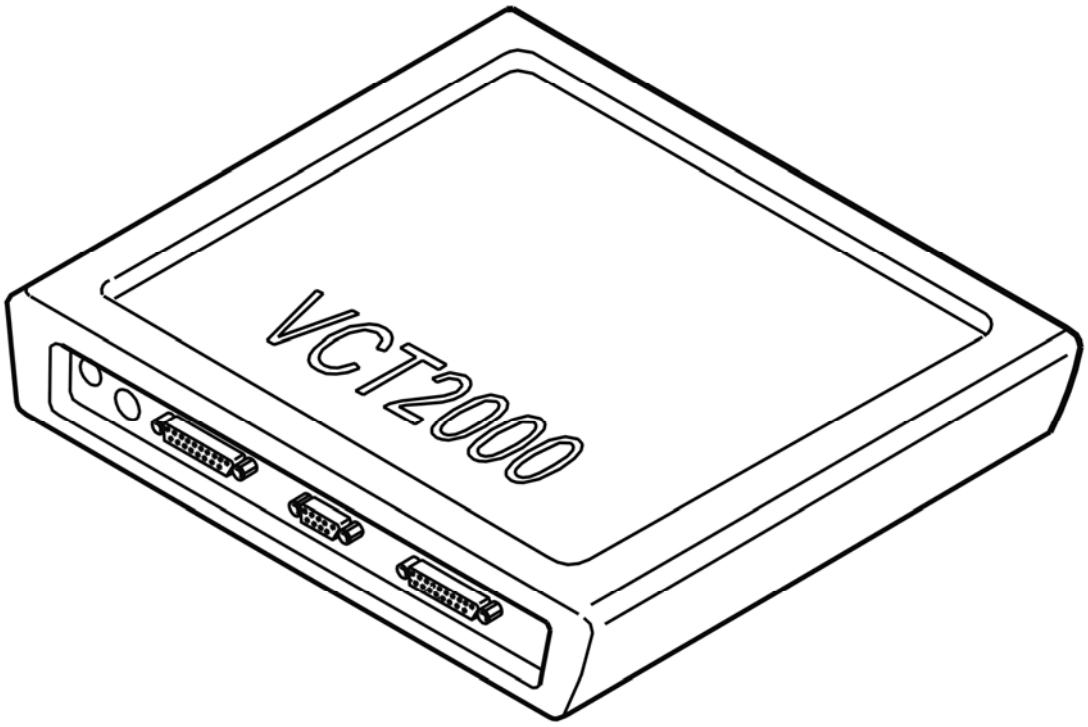

Fig. 115: Identifying VCT2000 Diagnostic Tool Symbol In VIDA
Courtesy of VOLVO CARS CORPORATION

Has the status of the diagnostic trouble code (DTC) changed?

- **YES**

  VERIFIED: Troubleshooting has been completed.

- **NO**

  See: **INFORMATION**

INFORMATION

FAULT-TRACING INFORMATION

The fault should have been detected and remedied. As this is not the case fault-tracing has failed.

Exit fault-tracing for this diagnostic trouble code (DTC) or make another attempt.

PHM-0064: LIGHTING SWITCH. SIGNAL TOO LOW (2006-2012)

DIAGNOSTIC TROUBLE CODE (DTC) INFORMATION PHM-0064

Condition

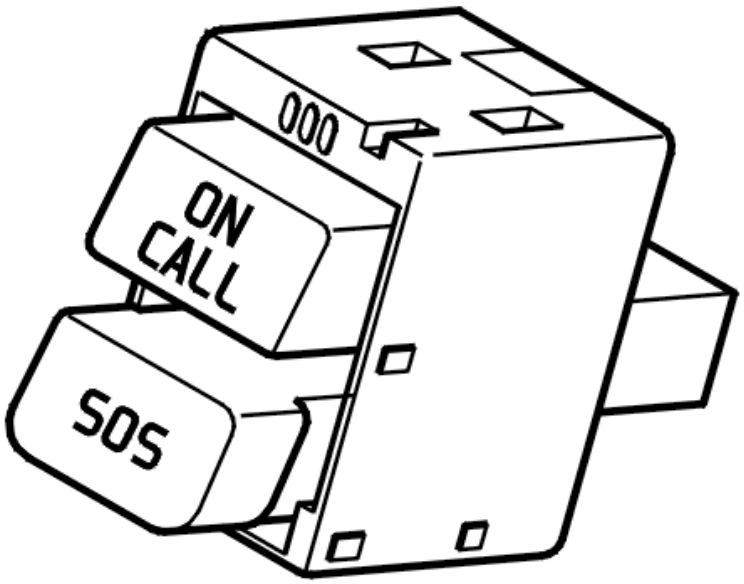

Fig. 116: Identifying Phone Module (PHM)
Courtesy of VOLVO CARS CORPORATION

The diagnostic trouble code (DTC) is stored if the phone module (PHM) detects a short-circuit to ground in the signal for lighting the Volvo On Call switches. The lighting for the Volvo On Call switches is powered via the phone module (PHM). The power supply is a PWM signal (Pulse Width Modulated).

The diagnostic trouble code (DTC) can be diagnosed when the ignition is switched on (not key position 3) and when the battery voltage is between 9-16 V. The diagnostic trouble code (DTC) can only be diagnosed for a phone module (PHM) with Volvo On Call functionality.

Substitute Value

- None.

Possible Source

- Short-circuit to ground in the cable for lighting the Volvo On Call switch.

Fault symptom[s]

- No or reduced Volvo On Call functionality.

SIGNAL TOO LOW

CHECKING THE COMPONENT AND WIRING

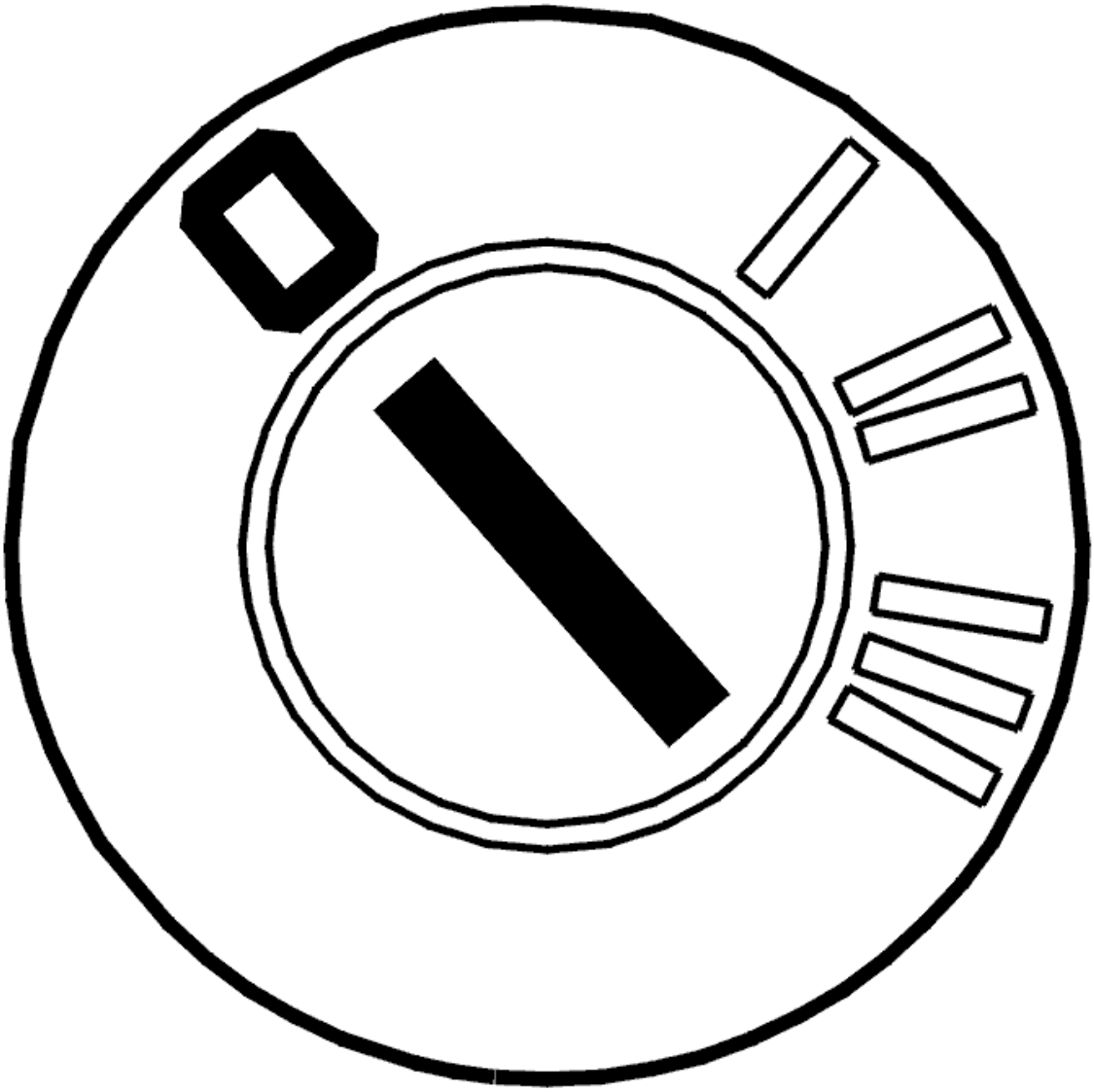

Fig. 117: Identifying Ignition OFF
Courtesy of VOLVO CARS CORPORATION

- Ignition off
- Disconnect connector A from the phone module (PHM).

  Check the cables for lighting the switch at control module connector A. Check for a short-circuit to ground.

Check between:

- terminals #3 (#3) and #13 (#13)
- terminals #3 (#3) and #14 (#14)
- terminals #3 (#3) and #6 (#6)
- terminals #4 (#4) and #13 (#13)
- terminals #4 (#4) and #14 (#14)A
- terminals #4 (#4) and #6 (#6).

Try replacing the switch if the cables are OK.

Remedy as necessary.

Other information:

- see **SIGNAL SPECIFICATION**
- see **CONNECTING THE BREAKOUT BOX**
- see **LOCATION OF COMPONENTS**
- see **PHONE MODULE (PHM), REPLACING (2006-2010)**
- see **SWITCH VOLVO ON CALL, REPLACING (2006-2010)**
- see **CHECKING WIRING AND TERMINALS**

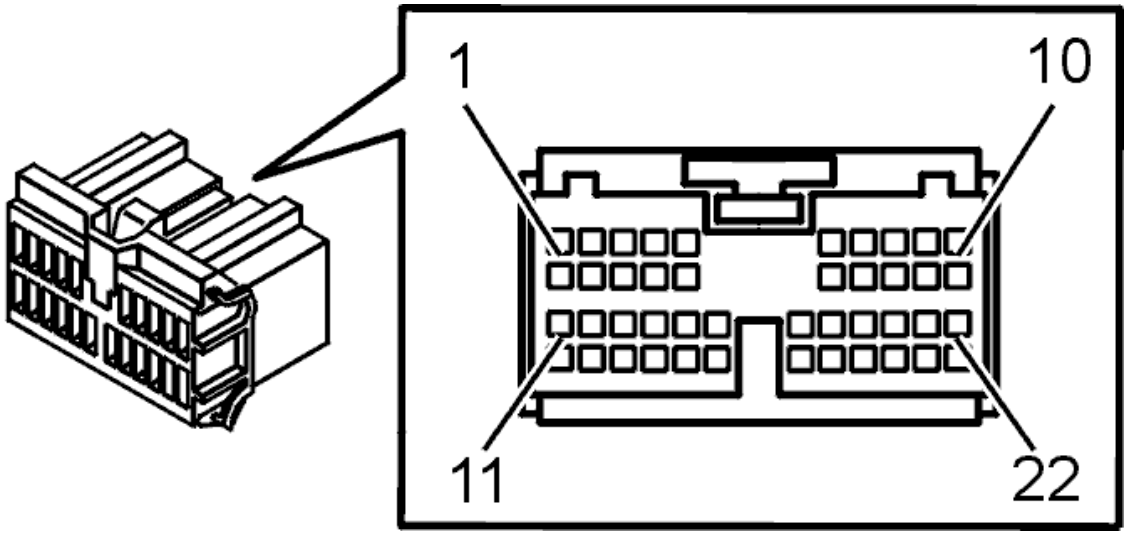

Fig. 118: Identifying Connector (F) Terminals
Courtesy of VOLVO CARS CORPORATION

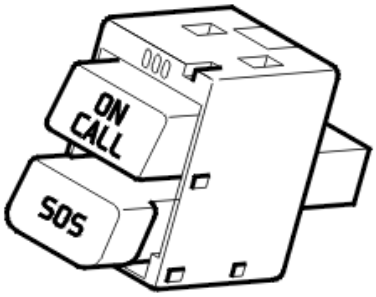

Fig. 119: Identifying Phone Module (PHM) Connector
Courtesy of VOLVO CARS CORPORATION

- **Continue**

  See: **VERIFICATION**

VERIFICATION

VERIFICATION

HINT: After carrying out the repair, check that the fault has been remedied.

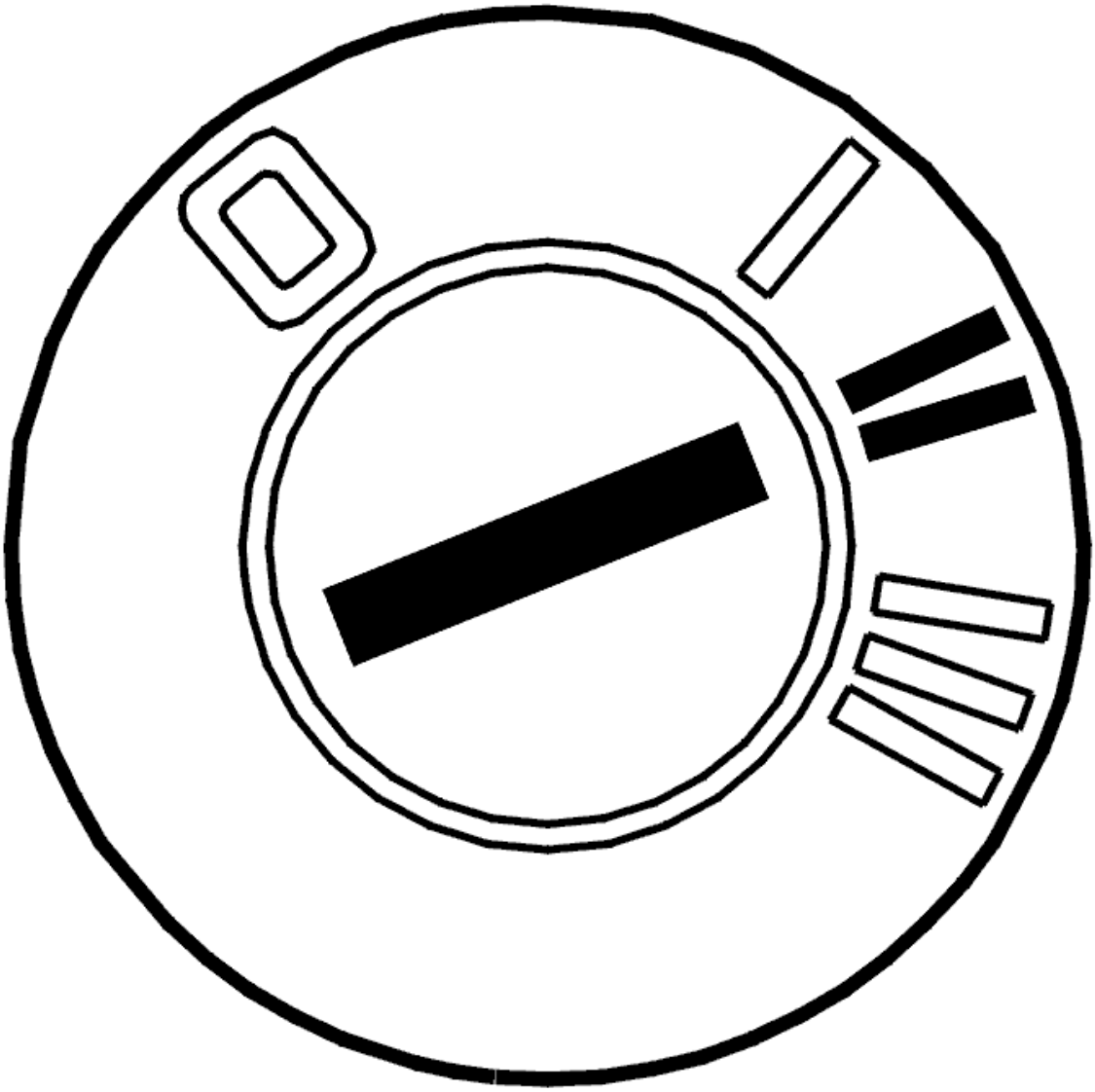

Fig. 120: Identifying Ignition ON
Courtesy of VOLVO CARS CORPORATION

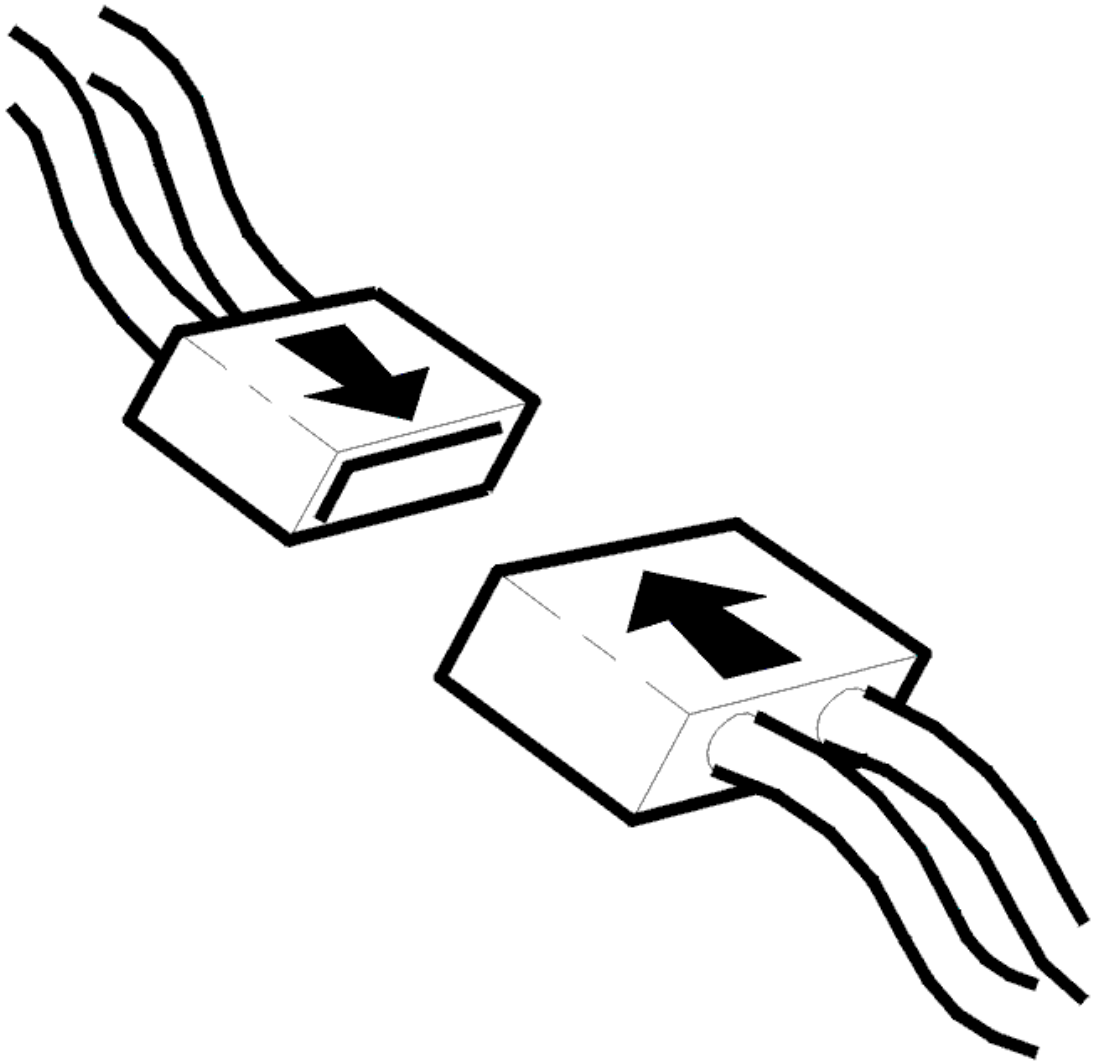

Fig. 121: Connecting Connector
Courtesy of VOLVO CARS CORPORATION

- Ignition off
- Reinstall the connectors, components etc.
- Ignition on
- Activate the carphone.

  Make a call so that both the handset and the hands-free system are used.

  - Ignition off.
  - Ignition on.
  - Read off the diagnostic trouble codes (DTCs).
  - Check that the relevant diagnostic trouble code (DTC) has switched status from permanent to

intermittent fault.

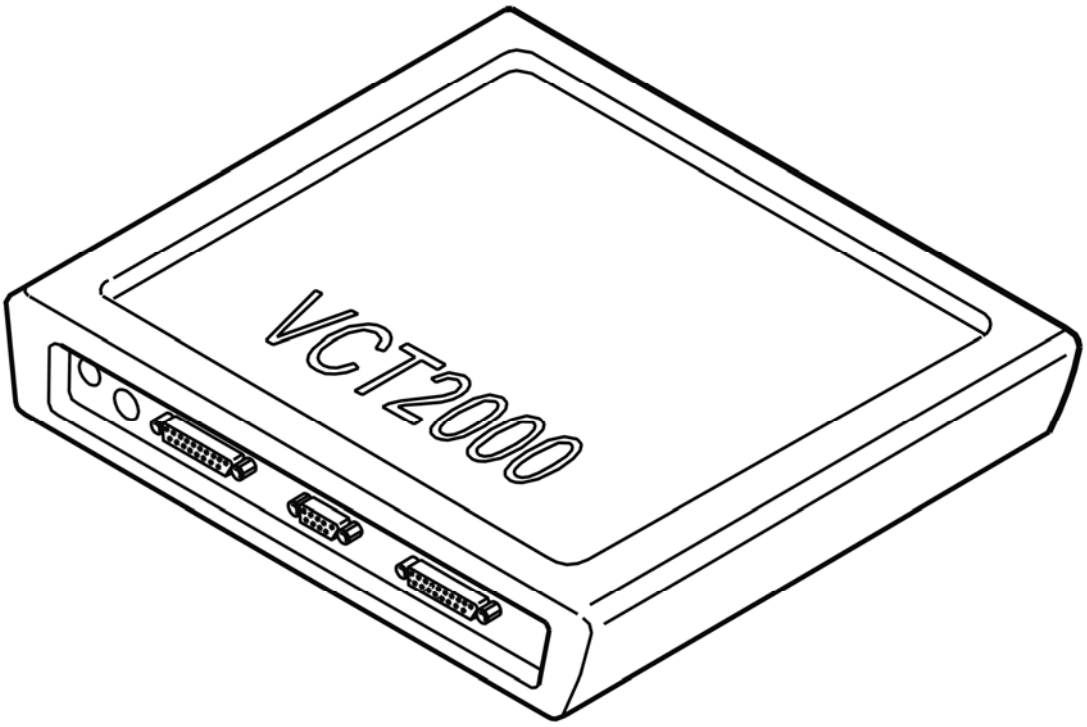

Fig. 122: Identifying VCT2000 Diagnostic Tool Symbol In VIDA
Courtesy of VOLVO CARS CORPORATION

Has the status of the diagnostic trouble code (DTC) changed?

- **YES**

  VERIFIED: Troubleshooting has been completed.

- **NO**

  See: **INFORMATION**

INFORMATION

FAULT-TRACING INFORMATION

The fault should have been detected and remedied. As this is not the case fault-tracing has failed.

Exit fault-tracing for this diagnostic trouble code (DTC) or make another attempt.

PHM-0065: VOLVO ON CALL SWITCH. SIGNAL TOO LOW OR SIGNAL

MISSING (2006-2012)

DIAGNOSTIC TROUBLE CODE (DTC) INFORMATION PHM-0065

Condition

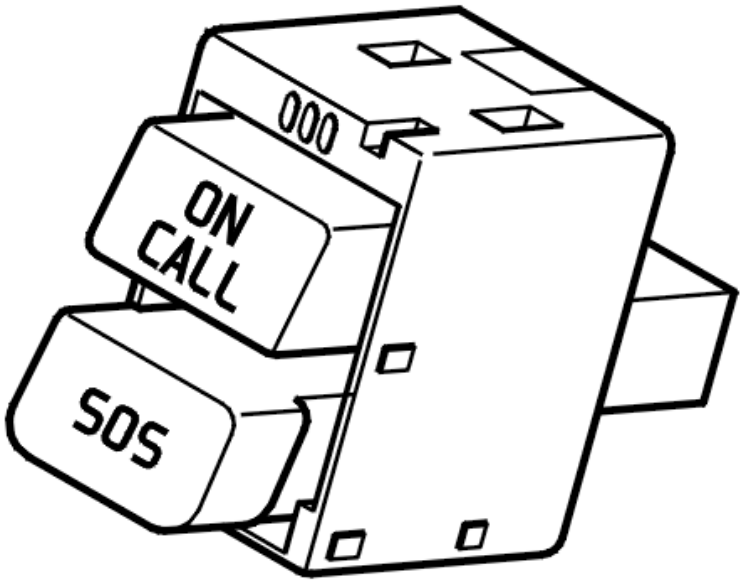

Fig. 123: Identifying Phone Module (PHM)
Courtesy of VOLVO CARS CORPORATION

The diagnostic trouble code (DTC) is stored if the phone module (PHM) detects an open-circuit or a short-circuit to ground in the signals for either the SOS or the ON CALL switch.

The diagnostic trouble code (DTC) can be diagnosed when the ignition is switched on (not key position 3) and when the battery voltage is between 9-16 V. The diagnostic trouble code (DTC) can only be diagnosed for a phone module (PHM) with Volvo On Call functionality.

Substitute Value

- None.

Possible Source

- Open-circuit in the cable between the phone module (PHM) and the ON CALL switch

- Open-circuit in the cable between the phone module (PHM) and the SOS switch
- Short-circuit to ground in the cable between the phone module (PHM) and the ON CALL switch
- Short-circuit to ground in the cable between the phone module (PHM) and the SOS switch.

Fault symptom[s]

- Messages in the display
- No or reduced Volvo On Call functionality.

SIGNAL TOO LOW OR SIGNAL MISSING

CHECKING THE COMPONENT AND WIRING

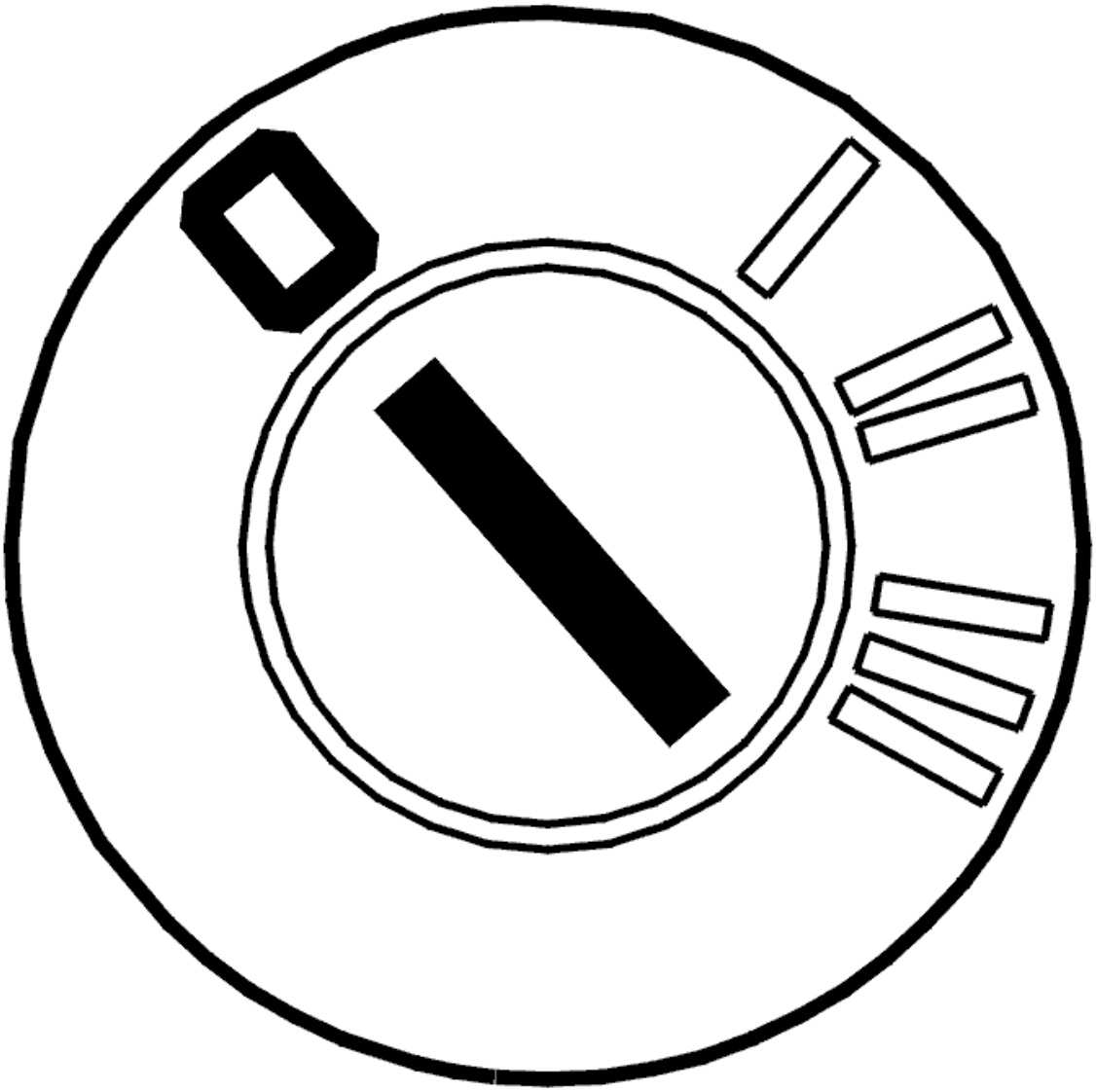

Fig. 124: Identifying Ignition OFF
Courtesy of VOLVO CARS CORPORATION

- Ignition off
- Disconnect connector A from the phone module (PHM).

Check the cables for the Volvo On Call switch at control module connector A. Check for a short-circuit to ground.

Check between:

- terminals #2 (#2) and #13 (#13)
- terminals #2 (#2) and #14 (#14)
- terminals #2 (#2) and #6 (#6).

Check the cables for the Volvo On Call switch. Check for an open-circuit.

Take a reading between control module connector A terminal #2 (#2) and the connector for switch terminal #6 (#18).

Try replacing the switch if the cables are OK.

Remedy as necessary.

Other information:

- see **SIGNAL SPECIFICATION**
- see **CONNECTING THE BREAKOUT BOX**
- see **LOCATION OF COMPONENTS**
- see **PHONE MODULE (PHM), REPLACING (2006-2010)**
- see **SWITCH VOLVO ON CALL, REPLACING (2006-2010)**
- see **CHECKING WIRING AND TERMINALS**

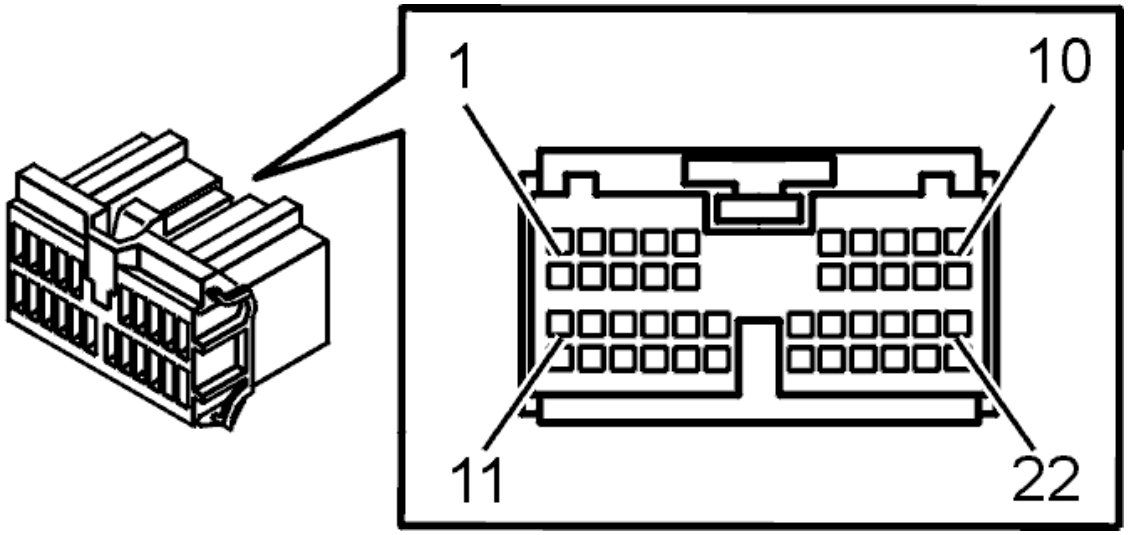

Fig. 125: Identifying Connector (F) Terminals
Courtesy of VOLVO CARS CORPORATION

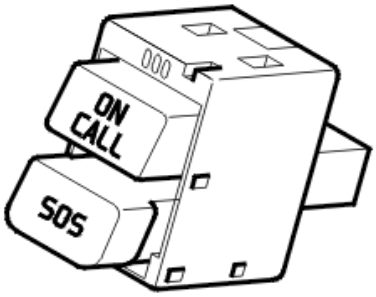

Fig. 126: Identifying Phone Module (PHM) Connector
Courtesy of VOLVO CARS CORPORATION

- **Continue**

  See: **VERIFICATION**

VERIFICATION

VERIFICATION

HINT: After carrying out the repair, check that the fault has been remedied.

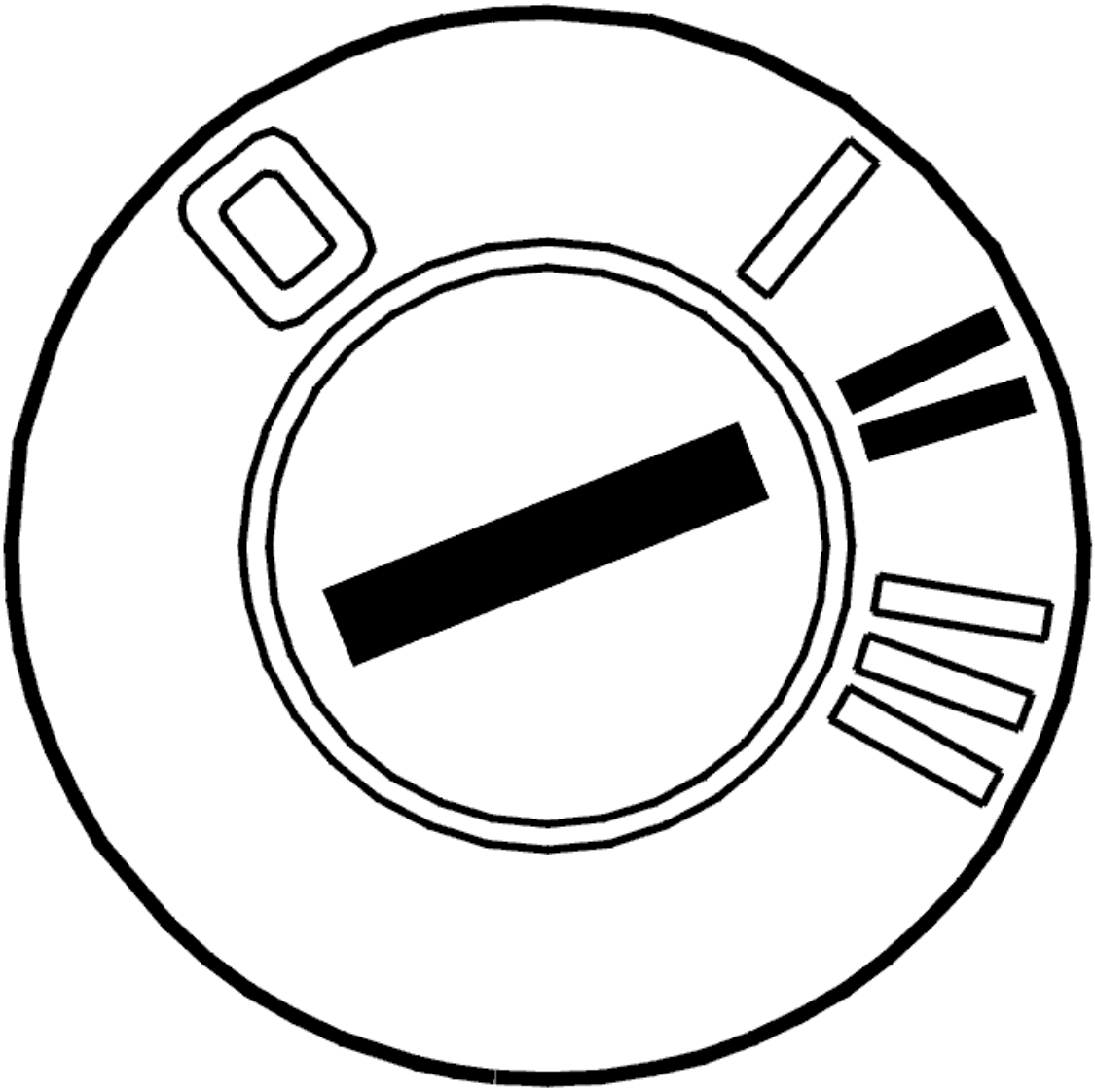

Fig. 127: Identifying Ignition ON
Courtesy of VOLVO CARS CORPORATION

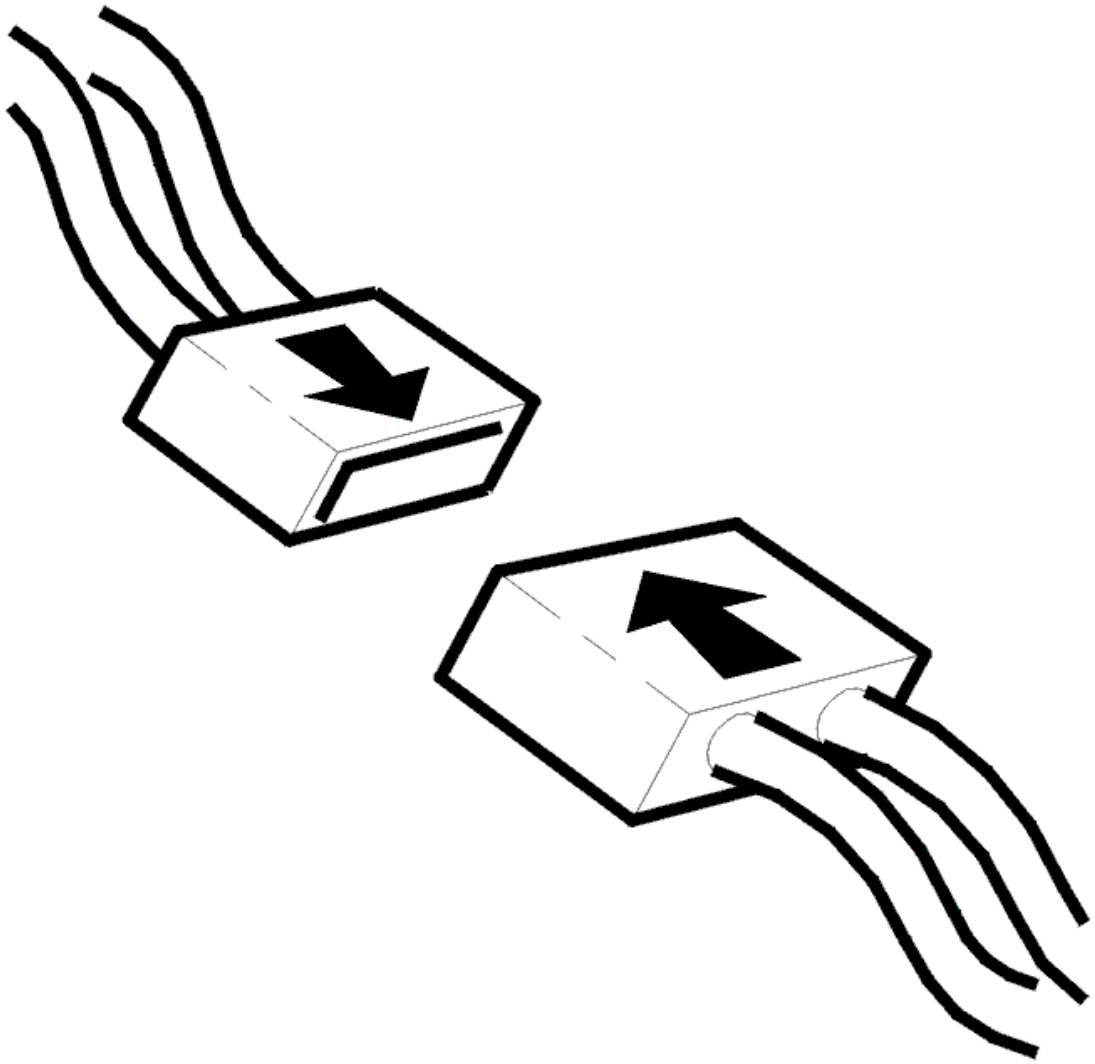

Fig. 128: Connecting Connector
Courtesy of VOLVO CARS CORPORATION

- Ignition off
- Reinstall the connectors, components etc.
- Ignition on
- Activate the carphone.

  Make a call so that both the handset and the hands-free system are used.

  - Ignition off.
  - Ignition on.
  - Read off the diagnostic trouble codes (DTCs).
  - Check that the relevant diagnostic trouble code (DTC) has switched status from permanent to

intermittent fault.

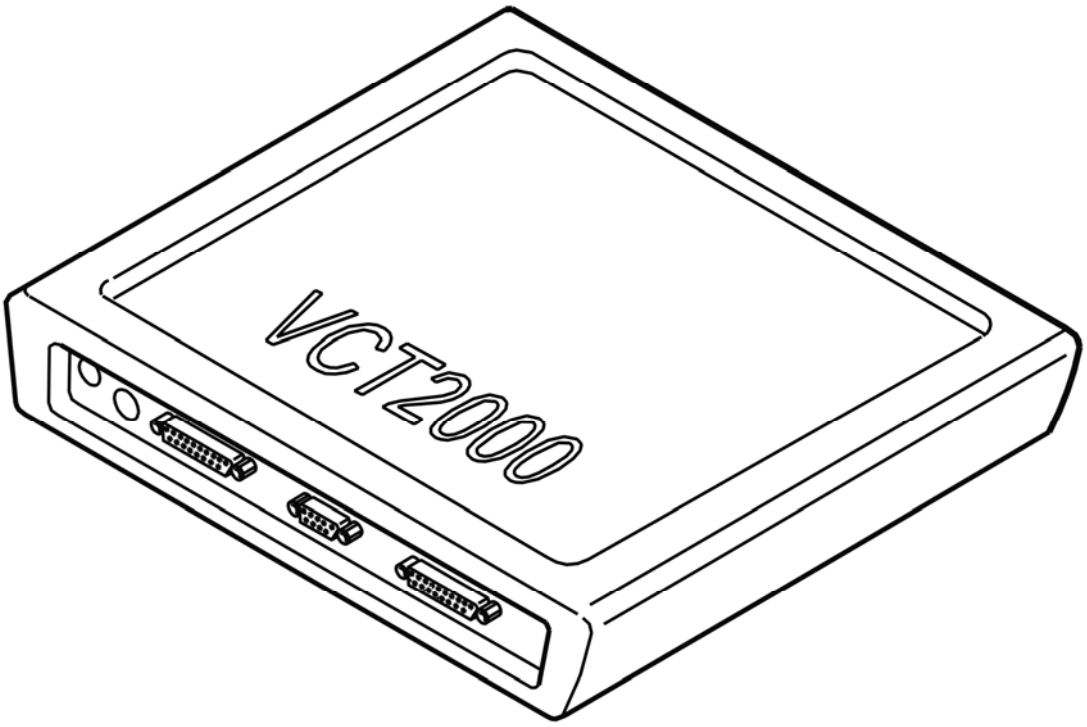

Fig. 129: Identifying VCT2000 Diagnostic Tool Symbol In VIDA
Courtesy of VOLVO CARS CORPORATION

Has the status of the diagnostic trouble code (DTC) changed?

- **YES**

  VERIFIED: Troubleshooting has been completed.

- **NO**

  See: **INFORMATION**

INFORMATION

FAULT-TRACING INFORMATION

The fault should have been detected and remedied. As this is not the case fault-tracing has failed.

Exit fault-tracing for this diagnostic trouble code (DTC) or make another attempt.

PHM-0066: VOLVO ON CALL SWITCH. SIGNAL TOO HIGH (2006-2012)

DIAGNOSTIC TROUBLE CODE (DTC) INFORMATION PHM-0066

Condition

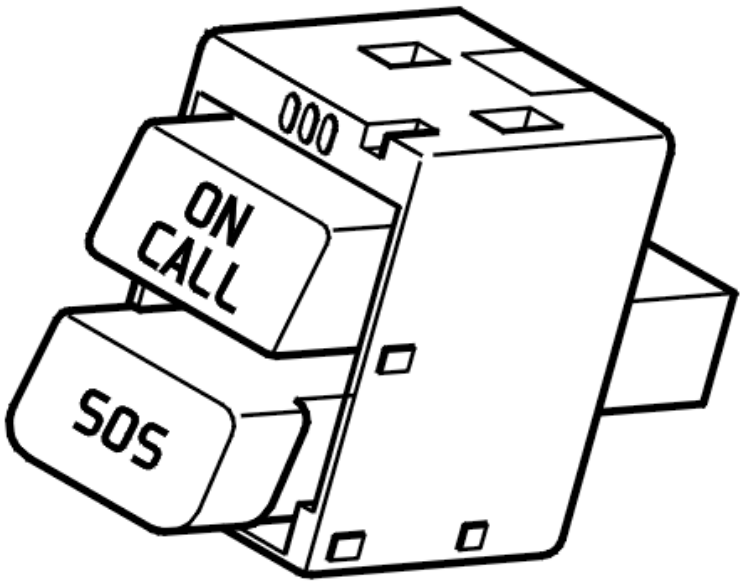

Fig. 130: Identifying Phone Module (PHM)
Courtesy of VOLVO CARS CORPORATION

The diagnostic trouble code (DTC) is stored if the phone module (PHM) detects a short-circuit to supply voltage in the signals for either the SOS or the ON CALL switch.

The diagnostic trouble code (DTC) can be diagnosed when the ignition is switched on (not key position 3) and when the battery voltage is between 9-16 V. The diagnostic trouble code (DTC) can only be diagnosed for a phone module (PHM) with Volvo On Call functionality.

Substitute Value

- None.

Possible Source

- Short-circuit to supply voltage in the cable between the phone module (PHM) and the SOS switch
- Short-circuit to supply voltage in the cable between the phone module (PHM) and the On Call switch.

Fault symptom[s]

- Messages in the display.
- No or reduced Volvo On Call functionality.

SIGNAL TOO HIGH

CHECKING THE COMPONENT AND WIRING

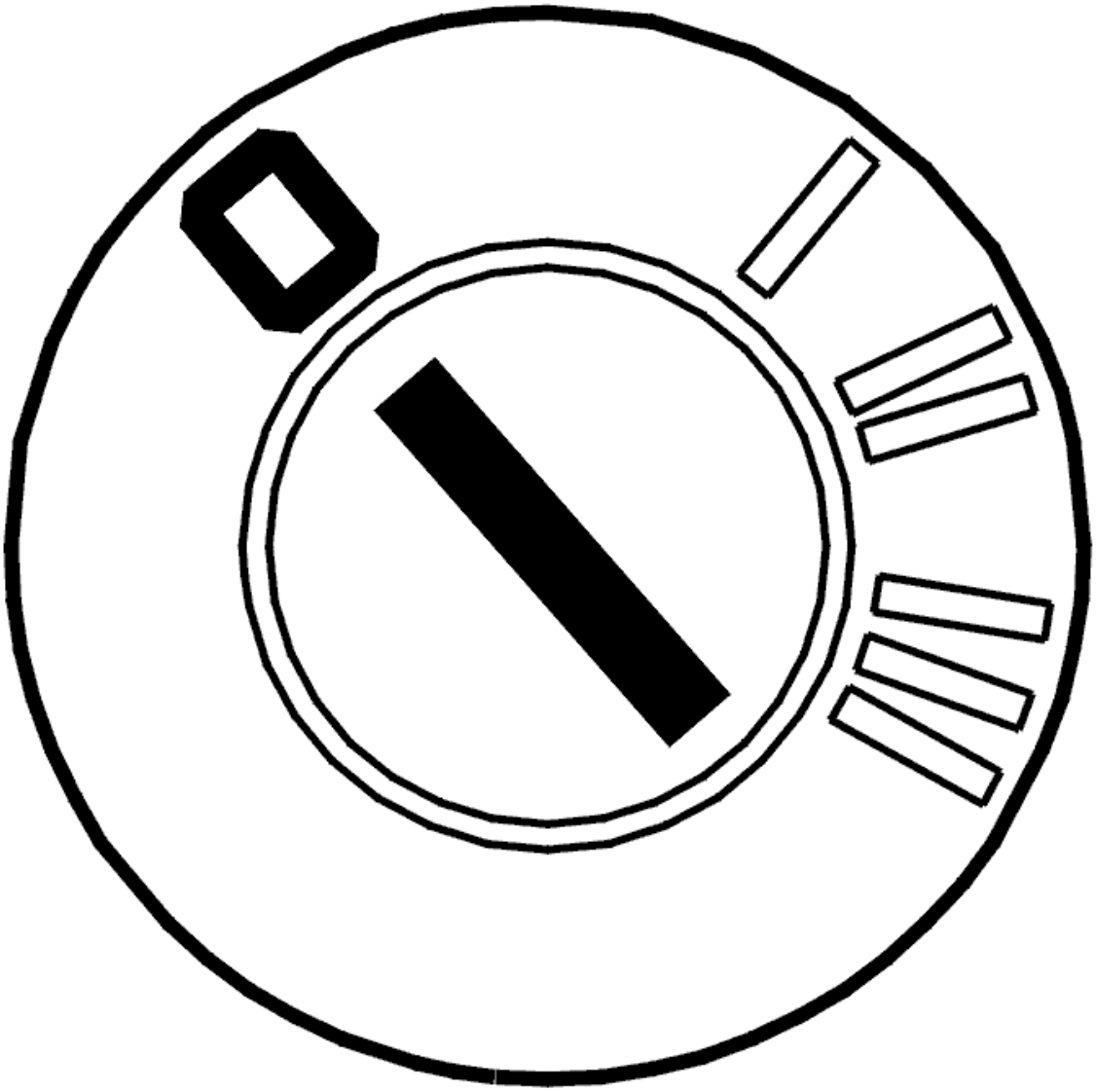

Fig. 131: Identifying Ignition OFF
Courtesy of VOLVO CARS CORPORATION

- Ignition off
- Disconnect connector A from the phone module (PHM).

Check the cables for the Volvo On Call switch. Check for a short-circuit to supply voltage.

Take a reading between control module connector A terminals #2 (#2) and #5 (#5).

Try replacing the switch if the cable is OK.

Remedy as necessary.

Other information:

- see **SIGNAL SPECIFICATION**
- see **CONNECTING THE BREAKOUT BOX**
- see **LOCATION OF COMPONENTS**
- see **PHONE MODULE (PHM), REPLACING (2006-2010)**
- see **SWITCH VOLVO ON CALL, REPLACING (2006-2010)**
- see **CHECKING WIRING AND TERMINALS**

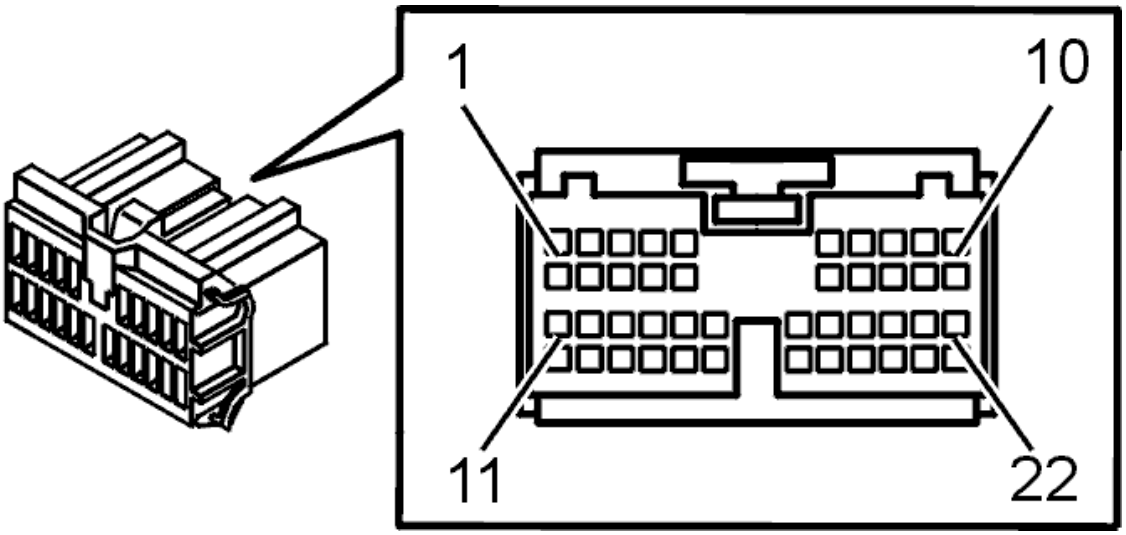

Fig. 132: Identifying Connector (F) Terminals
Courtesy of VOLVO CARS CORPORATION

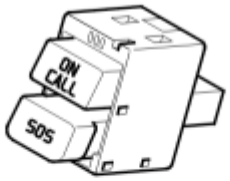

Fig. 133: Identifying Volvo On Call Switch
Courtesy of VOLVO CARS CORPORATION

- **Continue**

  See: **VERIFICATION**

INFORMATION

FAULT-TRACING INFORMATION

The fault should have been detected and remedied. As this is not the case fault-tracing has failed.

Exit fault-tracing for this diagnostic trouble code (DTC) or make another attempt.

VERIFICATION

VERIFICATION

HINT: After carrying out the repair, check that the fault has been remedied.

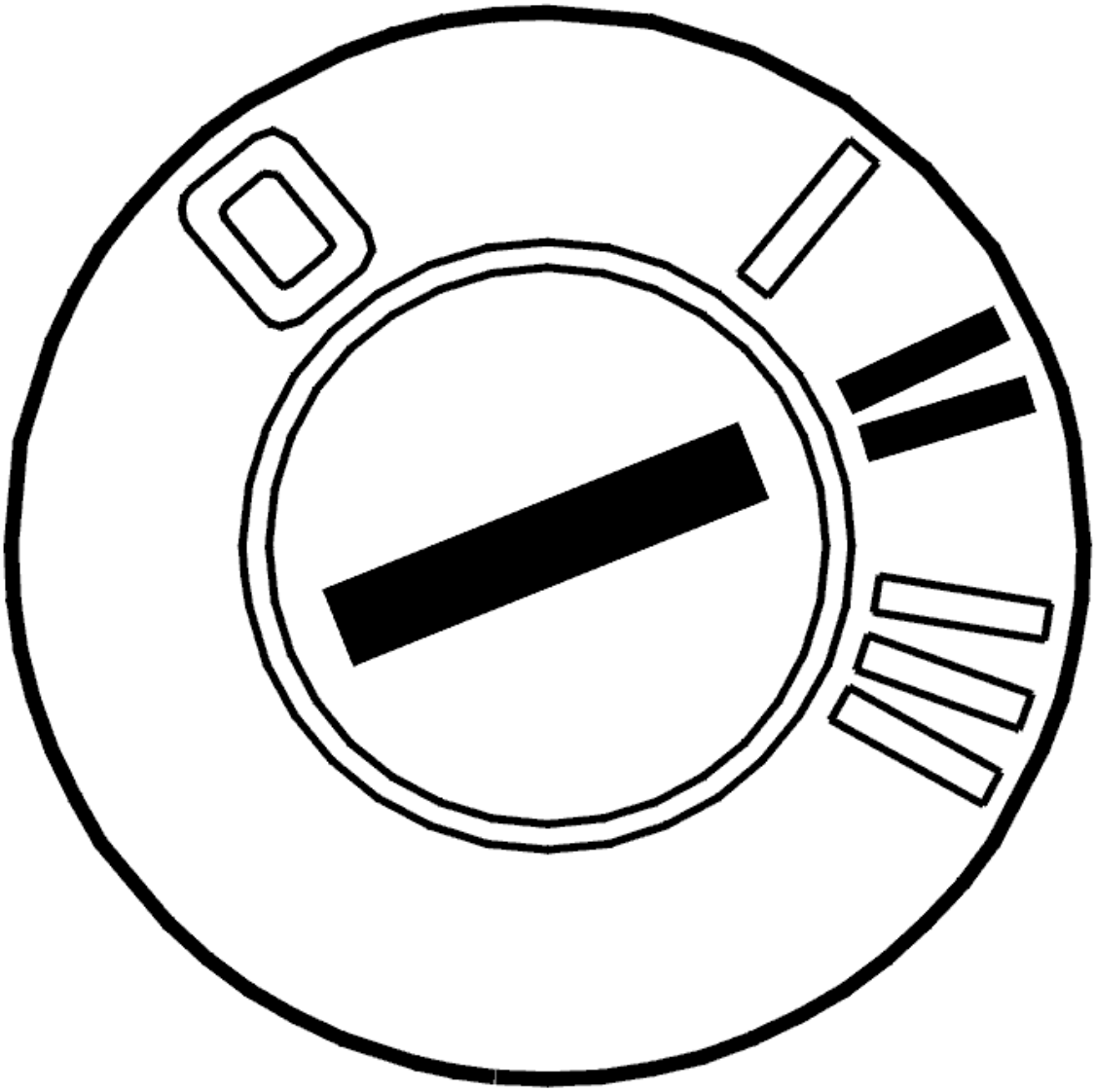

Fig. 134: Identifying Ignition ON
Courtesy of VOLVO CARS CORPORATION

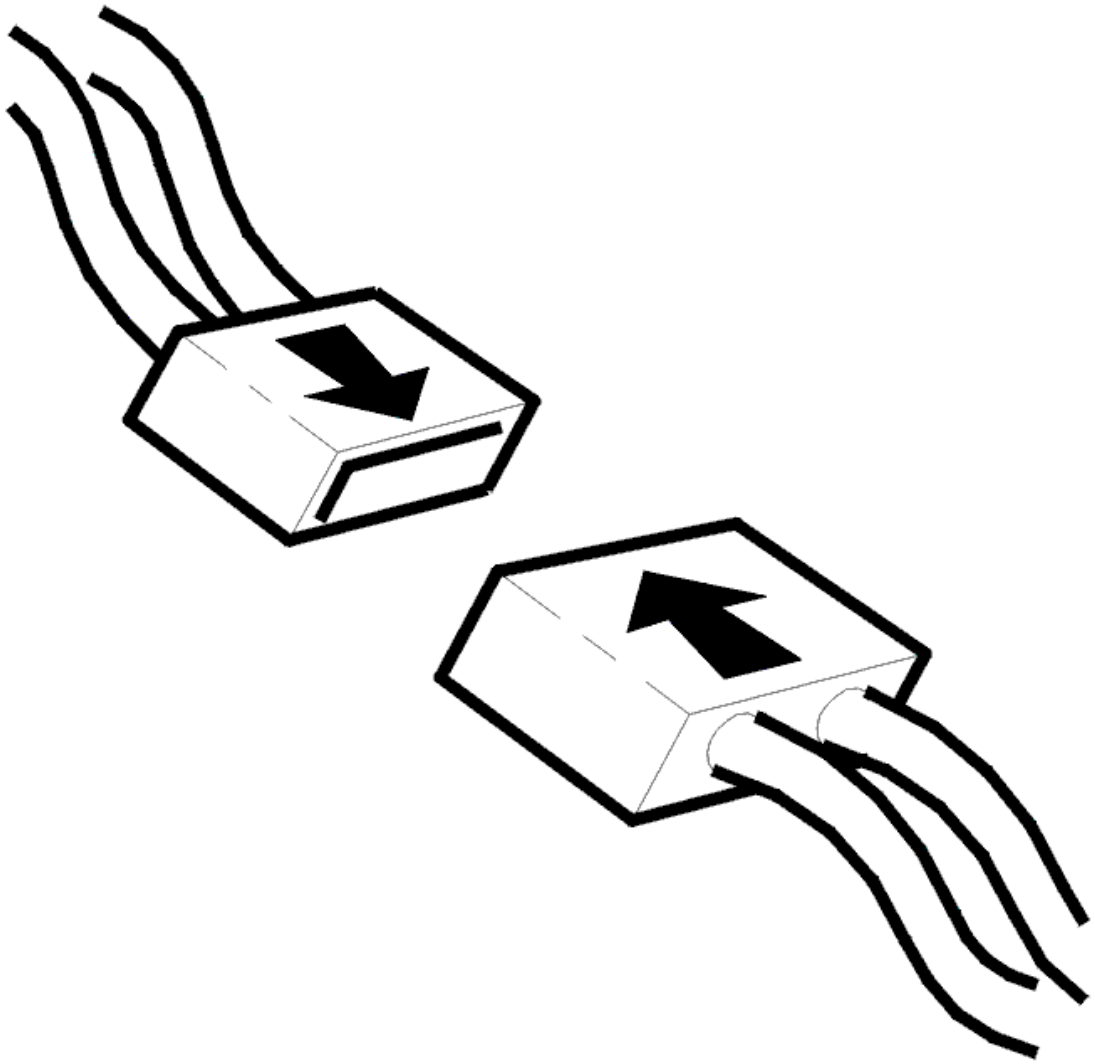

Fig. 135: Connecting Connector
Courtesy of VOLVO CARS CORPORATION

- Ignition off
- Reinstall the connectors, components etc.
- Ignition on
- Activate the carphone.

  Make a call so that both the handset and the hands-free system are used.

  - Ignition off.
  - Ignition on.
  - Read off the diagnostic trouble codes (DTCs).
  - Check that the relevant diagnostic trouble code (DTC) has switched status from permanent to

intermittent fault.

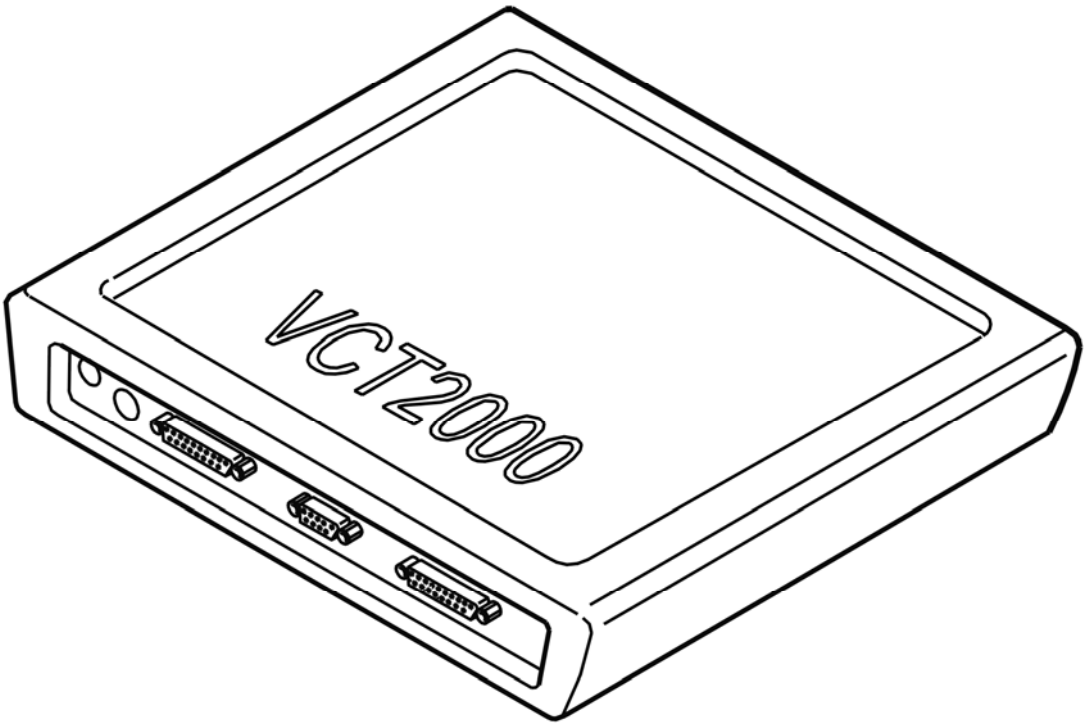

Fig. 136: Identifying VCT2000 Diagnostic Tool Symbol In VIDA
Courtesy of VOLVO CARS CORPORATION

Has the status of the diagnostic trouble code (DTC) changed?

- **YES**

  VERIFIED: Troubleshooting has been completed.

- **NO**

  See: **INFORMATION**

PHM-0067: RESERV BATTERY. NOT CONNECTED (2006-2012)

DIAGNOSTIC TROUBLE CODE (DTC) INFORMATION PHM-0067

Condition

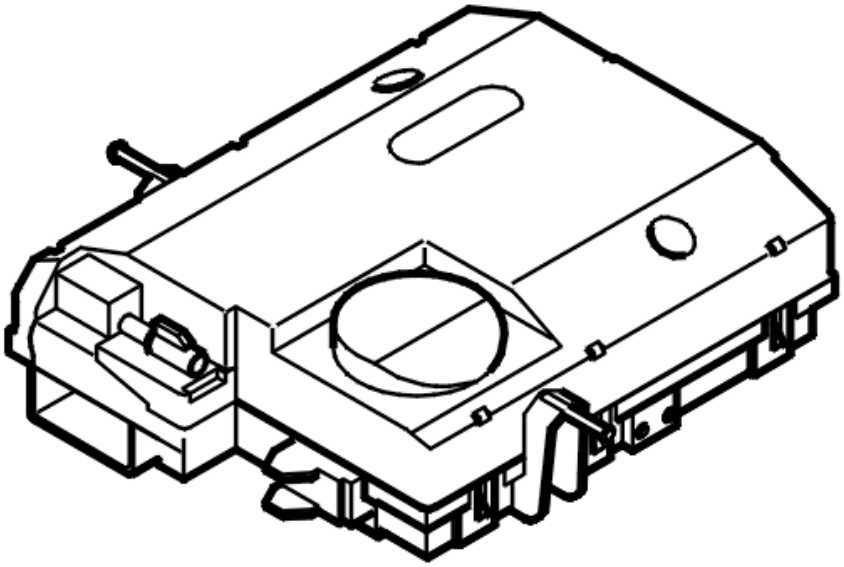

Fig. 137: Identifying Control Module
Courtesy of VOLVO CARS CORPORATION

The spare battery is located in the Phone module (PHM) and used when a Volvo On Call service is connected and the Phone module (PHM) does not have access to voltage supply from the main battery.

The diagnostic trouble code (DTC) is stored if the control module detects that:

- The internal auxiliary battery is damaged or not connected.

The control module's test for the diagnostic trouble code (DTC) starts in the event of:

- At least 30 days have passed since the last test or after an activation of checking the auxiliary battery.
- Battery voltage between 9 - 16 V.
- Ignition off for at least 10 seconds.

Substitute Value

- None.

Possible Source

- The internal reserve battery is not connected to the phone module (PHM)

- The internal reserve battery is damaged.
- Capacity too low on the spare battery.

Fault symptom[s]

- Volvo On Call/Does not work
- Text window and warning symbol/Text message

NOT CONNECTED

CHECKING THE COMPONENT

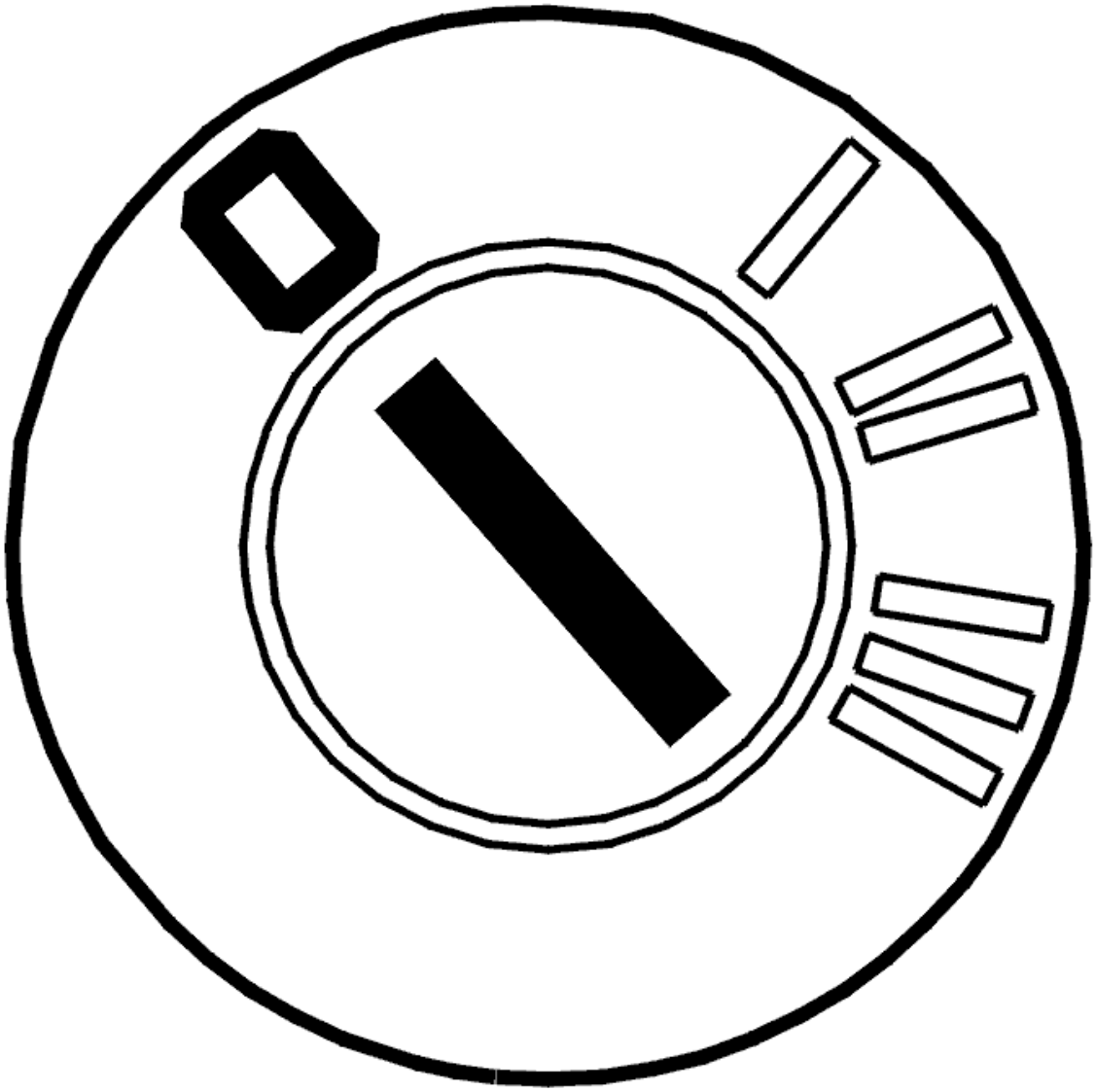

Fig. 138: Identifying Ignition OFF
Courtesy of VOLVO CARS CORPORATION

- Ignition off.

  Check that the internal reserve battery for Volvo On Call is correctly connected.

  Check the connector.

  Remedy as necessary.

  Other information:

  - see **LOCATION OF COMPONENTS**
  - see **PHONE MODULE (PHM), REPLACING (2006-2010)**
  - see **BATTERY PHONE MODULE (PHM), REPLACING**

- **Continue**

  See: **VERIFICATION**

INFORMATION

FAULT-TRACING INFORMATION

The fault should have been detected and remedied. As this is not the case fault-tracing has failed.

Exit fault-tracing for this diagnostic trouble code (DTC) or make another attempt.

VERIFICATION

VERIFICATION

HINT: After carrying out the repair, check that the fault has been remedied.

Fig. 139: Identifying Ignition On Position
Courtesy of VOLVO CARS CORPORATION

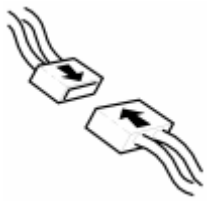

Fig. 140: Identifying Connector(s) Reinstallation
Courtesy of VOLVO CARS CORPORATION

- Ignition off.
- Reinstall the connectors, components etc.
- Ignition on.

Erase and read out DTCs using the VCT2000 (or appropriate scan tool).

A spare battery check will be performed in connection with reading off the diagnostic trouble codes (DTCs).

Check that the diagnostic trouble code has disappeared or changed status to intermittent.

Fig. 141: Identifying VCT2000 Diagnostic Tool Symbol In VIDA
Courtesy of VOLVO CARS CORPORATION

Is the carphone working?

- **YES**

  OKAY: Troubleshooting has been completed.

- **NO**

  See: **INFORMATION**

PHM-0068: SIM CARD HOLDER. SIGNAL MISSING (2006-2012)

DIAGNOSTIC TROUBLE CODE (DTC) INFORMATION PHM-0068

Condition

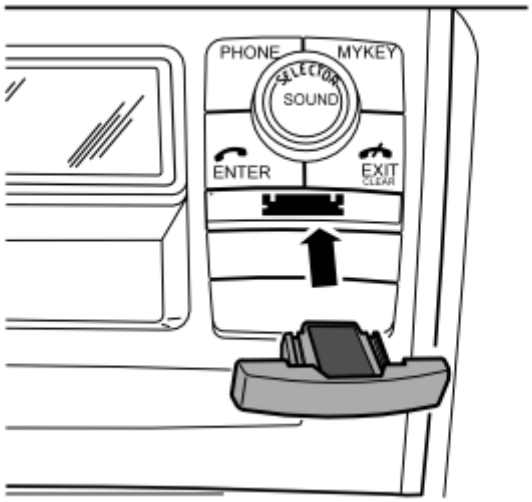

Fig. 142: Identifying Sim Card Holder
Courtesy of VOLVO CARS CORPORATION

The diagnostic trouble code (DTC) is stored if the phone module (PHM) registers that there is no signal from the external SIM card reader.

The diagnostic trouble code (DTC) can be diagnosed when the ignition is switched on (not key position 3) and when the battery voltage is 9-16 V.

Substitute Value

- None.

Possible Source

- Open-circuit in the cable between the SIM card reader and the control module
- Fault in the SIM card reader
- The SIM card holder is not properly pressed into the SIM card reader.

Fault symptom[s]

- The SIM card reader is not working.

SIGNAL MISSING

CHECKING THE COMPONENT AND WIRING

Check the cable between phone module (PHM) connector B and the connector for the SIM card reader. Check for an open-circuit.

Check between:

- control module connector terminal B#1 (#21) and SIM card reader connector terminal #1

- control module connector terminal B#2 (#22) and SIM card reader connector terminal #2
- control module connector terminal B#3 (#3) and SIM card reader connector terminal #3
- control module connector terminal B#4 (#4) and SIM card reader connector terminal #4
- control module connector terminal B#5 (#5) and SIM card reader connector terminal #5
- control module connector terminal B#6 (#6) and SIM card reader connector terminal #6.

Check the connectors for loose connections, damaged or bent terminal pins and oxidation.

Try replacing the SIM card reader if no fault is found in the cable.

Remedy as necessary.

Other information:

- see **SIGNAL SPECIFICATION**
- see **CONNECTING THE BREAKOUT BOX**
- see **LOCATION OF COMPONENTS**
- see **PHONE MODULE (PHM), REPLACING (2006-2010)**
- see **CHECKING WIRING AND TERMINALS**

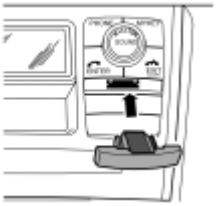

Fig. 143: Identifying SIM Card Holder
Courtesy of VOLVO CARS CORPORATION

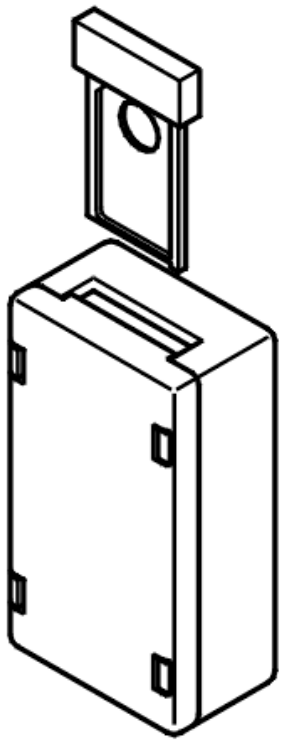

Fig. 144: Identifying SIM Card
Courtesy of VOLVO CARS CORPORATION

- **Continue**

  See: **VERIFICATION**

INFORMATION

FAULT-TRACING INFORMATION

The fault should have been detected and remedied. As this is not the case fault-tracing has failed.

Exit fault-tracing for this diagnostic trouble code (DTC) or make another attempt.

VERIFICATION

VERIFICATION

HINT: After carrying out the repair, check that the fault has been remedied.

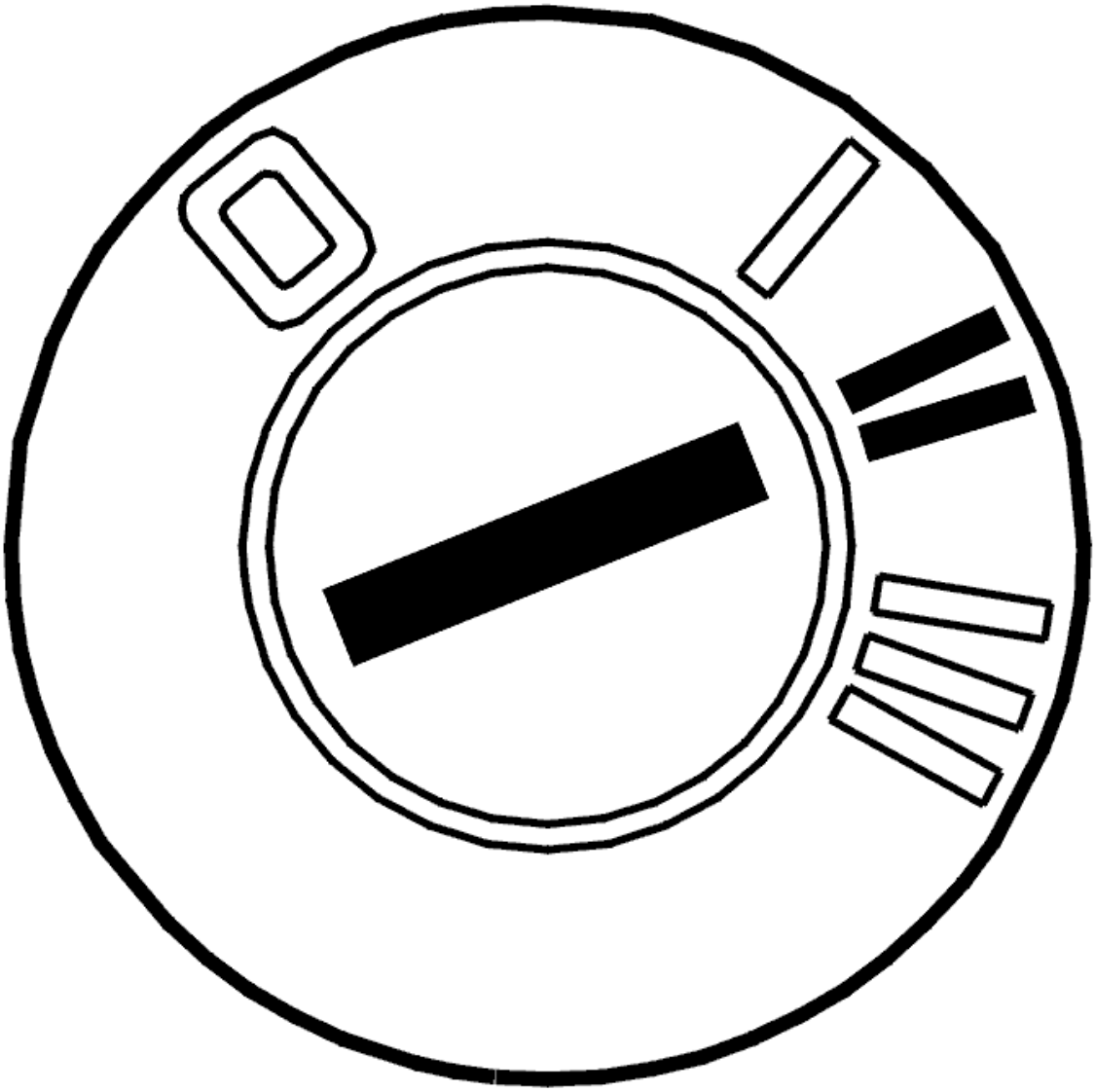

Fig. 145: Identifying Ignition ON
Courtesy of VOLVO CARS CORPORATION

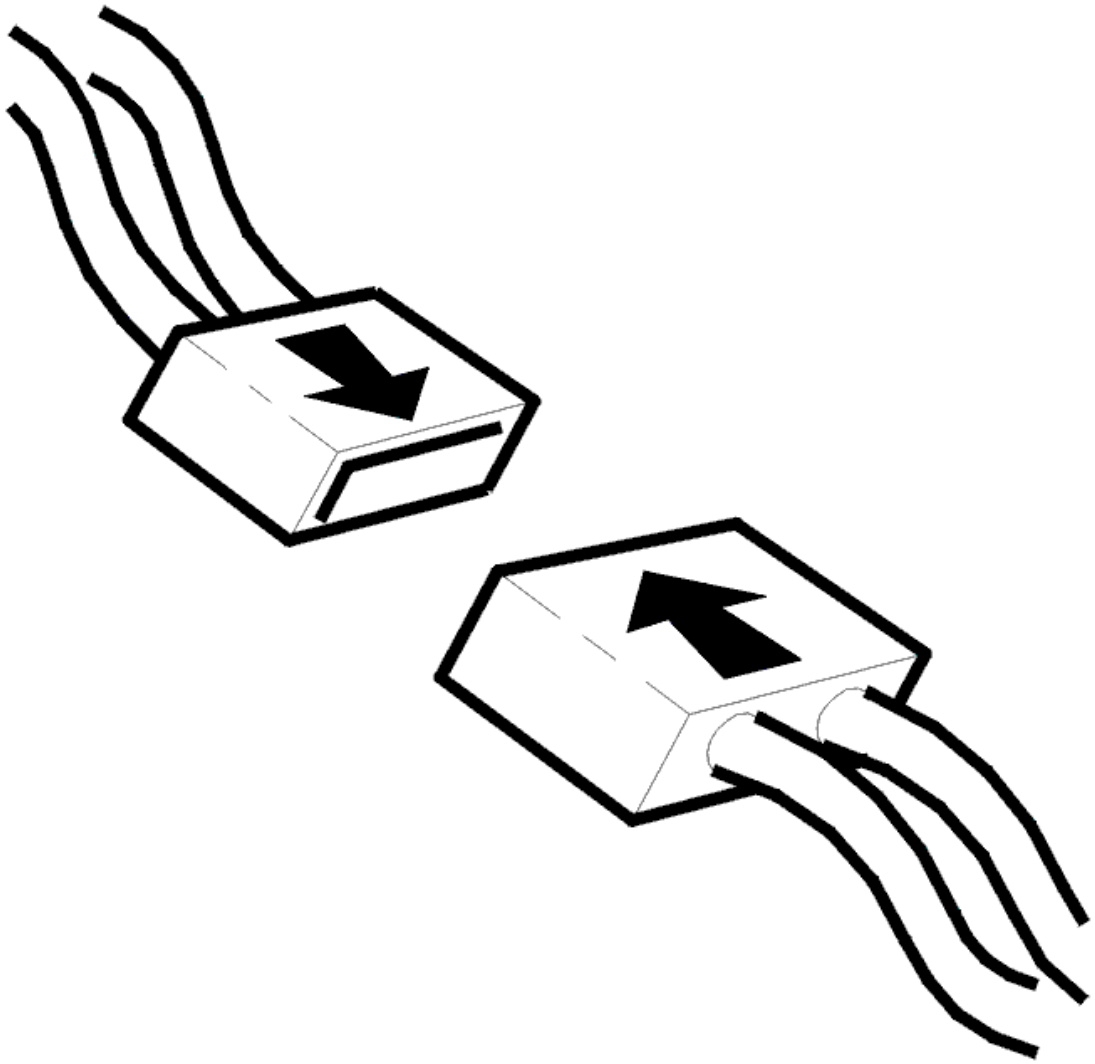

Fig. 146: Connecting Connector
Courtesy of VOLVO CARS CORPORATION

- Ignition off
- Reinstall the connectors, components etc.
- Ignition on
- Activate the carphone.

  Make a call so that both the handset and the hands-free system are used.

  - Ignition off.
  - Ignition on.
  - Read off the diagnostic trouble codes (DTCs).
  - Check that the relevant diagnostic trouble code (DTC) has switched status from permanent to

intermittent fault.

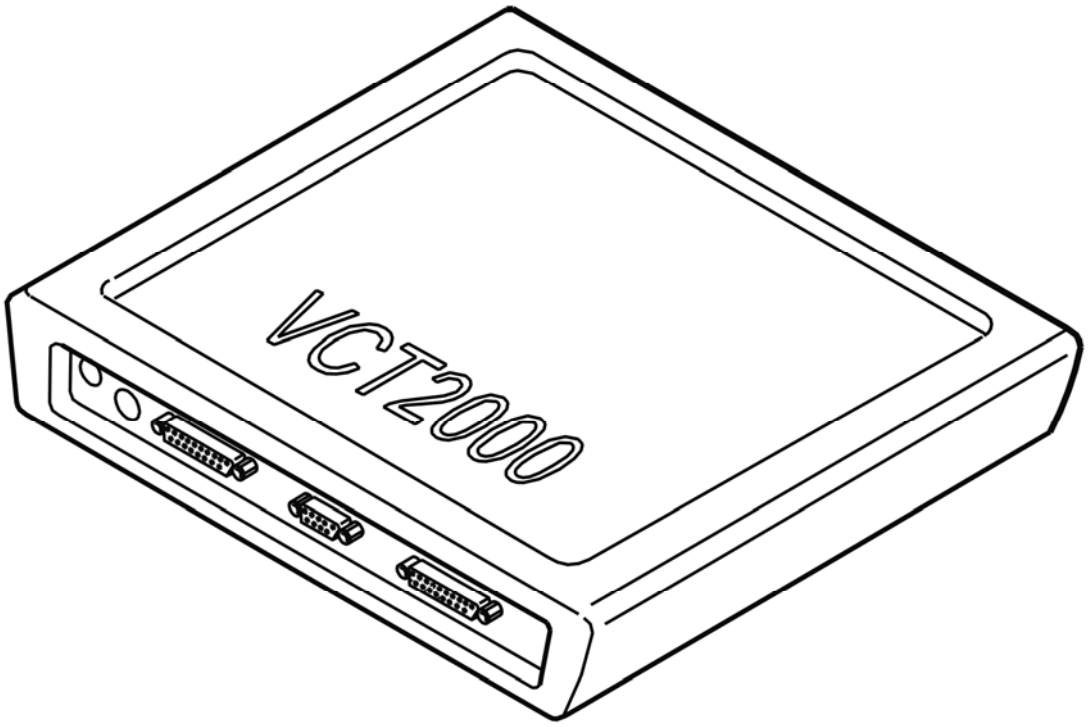

Fig. 147: Identifying VCT2000 Diagnostic Tool Symbol In VIDA
Courtesy of VOLVO CARS CORPORATION

Has the status of the diagnostic trouble code (DTC) changed?

- **YES**

  VERIFIED: Troubleshooting has been completed.

- **NO**

  See: **INFORMATION**

PHM-0068: SIM CARD READER. SIGNAL MISSING (2003-2004)

DIAGNOSTIC TROUBLE CODE (DTC) INFORMATION PHM-0068

Condition

Diagnostic trouble code (DTC) PHM-0068 is stored if the phone module (PHM) registers that there is no signal from the external SIM card reader.

Diagnostic trouble code (DTC) PHM-0068 can be diagnosed with the ignition on (not key position 3) and when the battery voltage is 9-16 V.

Substitute Value

- None.

Possible Source

- Open-circuit in the wiring between the SIM card reader and the control module
- Fault in the SIM card reader
- The SIM card holder is not properly pressed into the SIM card reader.

Fault symptom[s]

- The SIM card reader is not working.

SIGNAL MISSING

CHECKING THE COMPONENT AND WIRING

Check the wiring between phone module (PHM) connector A and the SIM card reader connector. Check for an open-circuit.

Take readings between:

- control module connector A terminal #9 (#9) and SIM card reader connector terminal #1
- control module connector A terminal #8 (#8) and SIM card reader connector terminal #2
- control module connector A terminal #7 (#7) and SIM card reader connector terminal #3
- control module connector A terminal #21 (#21) and SIM card reader connector terminal #4
- control module connector A terminal #19 (#19) and SIM card reader connector terminal #5
- control module connector A terminal #20 (#20) and SIM card reader connector terminal #6.

Check the connectors for loose connections, damaged or bent terminal pins and oxidation.

Try replacing the SIM card reader if no fault is found in the cable.

Remedy as necessary.

Other information:

- To connect the breakout box, see **CONNECTING THE BREAKOUT BOX**
- For information about signals and connectors, see **SIGNAL SPECIFICATION**
- To access and replace the control module, see **PHONE MODULE (PHM), REPLACING**
- To access or replace the SIM card reader, see **INFOTAINMENT CONTROL MODULE (ICM),**

REPLACING

- see **CHECKING WIRING AND TERMINALS** .

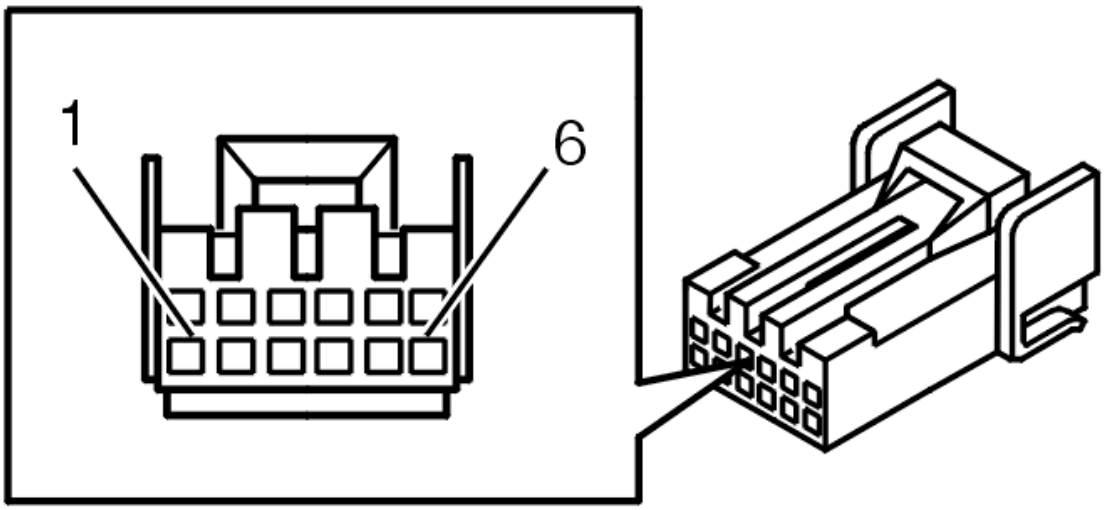

Fig. 148: Identifying Signal Table Connector B, Phone Module (PHM)
Courtesy of VOLVO CARS CORPORATION

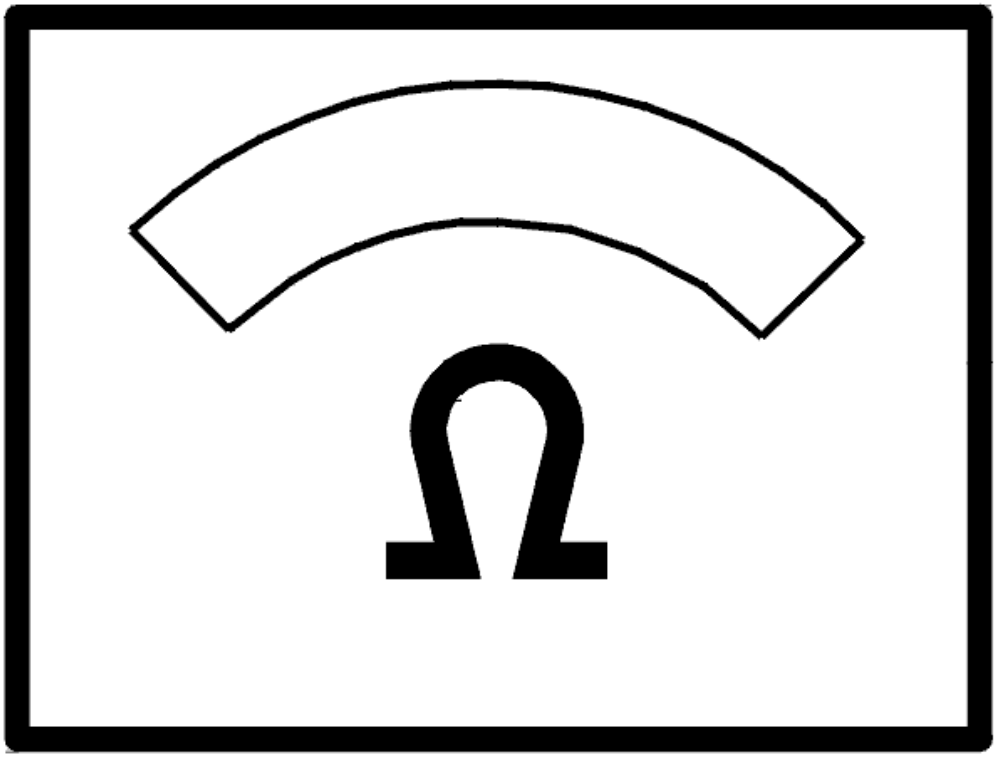

Fig. 149: Identifying Ohm Meter
Courtesy of VOLVO CARS CORPORATION

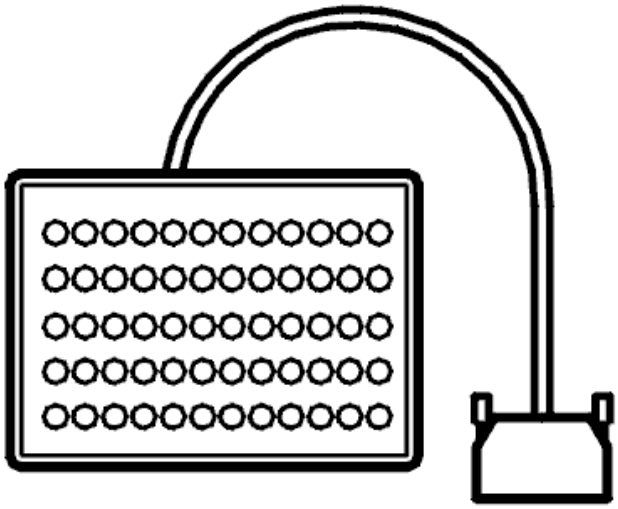

Fig. 150: Breakout Box
Courtesy of VOLVO CARS CORPORATION

- **Continue**

  See: **VERIFICATION**

VERIFICATION

VERIFICATION

HINT: After carrying out the repair, check that the fault has been remedied.

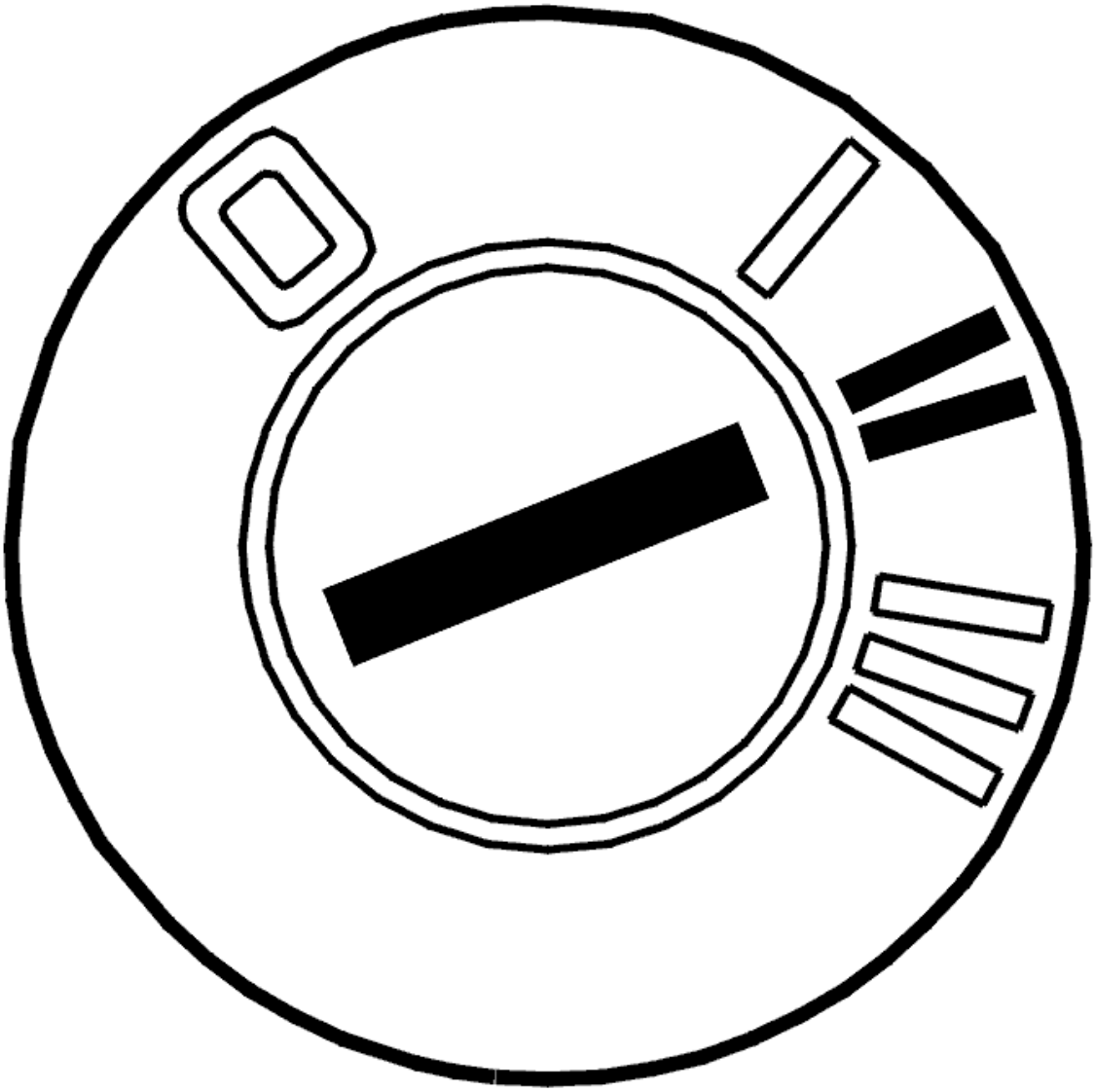

Fig. 151: Identifying Ignition ON
Courtesy of VOLVO CARS CORPORATION

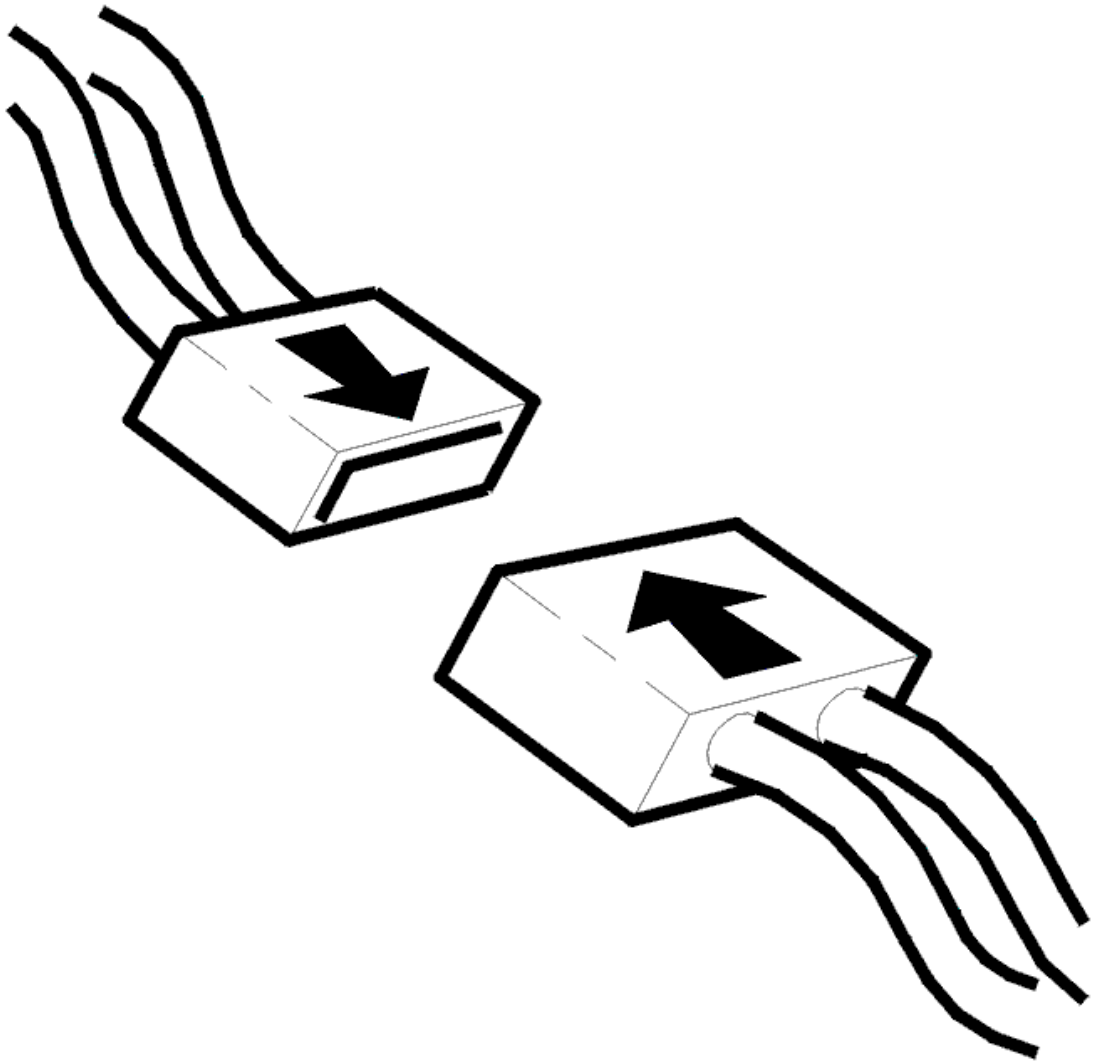

Fig. 152: Connecting Connector
Courtesy of VOLVO CARS CORPORATION

- Ignition off
- Reinstall the connectors, components etc.
- Ignition on
- Switch on the carphone.

  Make a call so that both the handset and the hands-free system are used.

  Ignition off.

  Ignition on.

  Read off the diagnostic trouble codes (DTCs).

Check that the relevant diagnostic trouble code (DTC) has switched status from permanent to intermittent fault.

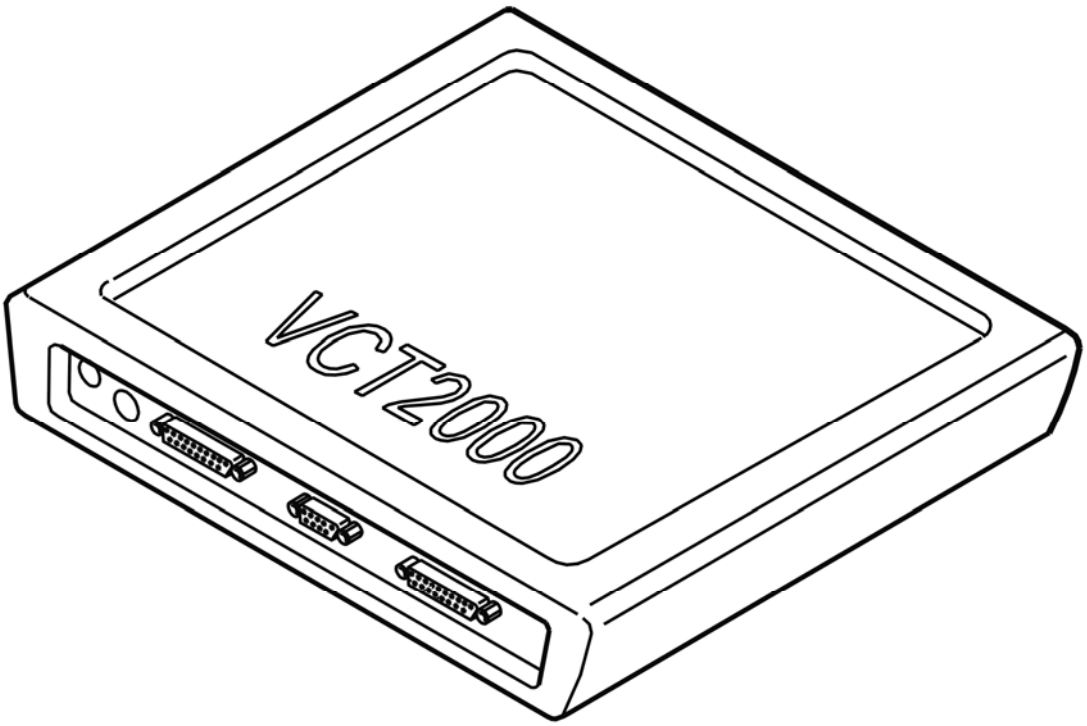

Fig. 153: Identifying VCT2000 Diagnostic Tool Symbol In VIDA
Courtesy of VOLVO CARS CORPORATION

Has the status of the diagnostic trouble code (DTC) changed?

- **YES**

  VERIFIED: Troubleshooting has been completed.

- **NO**

  See: **INFORMATION**

INFORMATION

FAULT-TRACING INFORMATION

The fault should have been detected and remedied. As this is not the case fault-tracing has failed.

Exit fault-tracing for this diagnostic trouble code (DTC) or make another attempt.

PHM-0068: SIM-CARD HOLDER. SIGNAL MISSING (2005)

DIAGNOSTIC TROUBLE CODE (DTC) INFORMATION PHM-0068

see **DIAGNOSTIC TROUBLE CODE (DTC) INFORMATION PHM-0068**

SIGNAL MISSING

CHECKING STRUCTURE WEEK

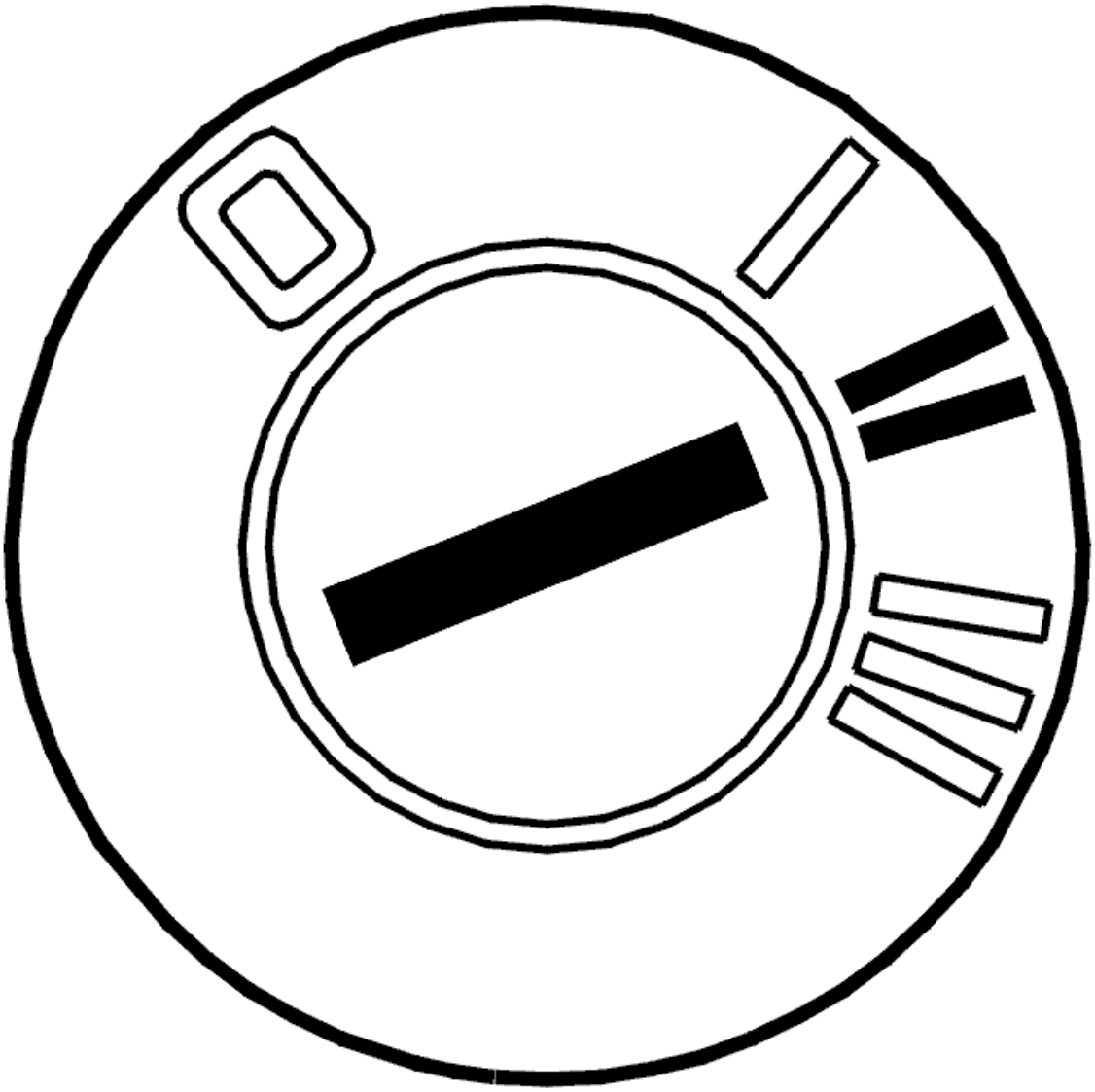

Fig. 154: Identifying Ignition ON
Courtesy of VOLVO CARS CORPORATION

- Ignition on

  Read out the vehicle's structure week using the VCT2000 (or appropriate scan tool).

1. Vehicles with structure week up to and including 200445, that is, year 2004 week 45.
2. Vehicles with structure week from and including 200446, that is, year 2004 week 46.

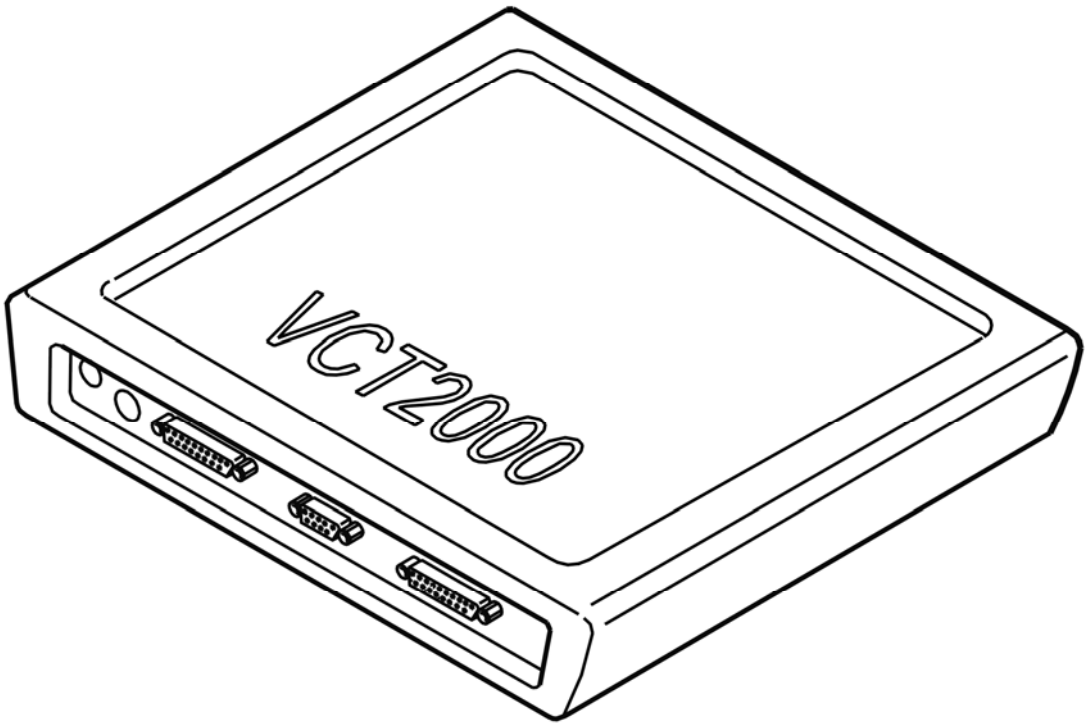

Fig. 155: Identifying VCT2000 Diagnostic Tool Symbol In VIDA
Courtesy of VOLVO CARS CORPORATION

Select one of the above alternatives.

- **1**

  See: **SIGNAL MISSING**

- **2**

  See: **CHECKING COMPONENTS AND WIRING**

CHECKING COMPONENTS AND WIRING

Check the cable between connector B to phone module (PHM) and the SIM-card reader's connector for open circuit.

Check between:

- control module's connector B#1 (#21) and SIM-card reader's connector #1
- control module's connector B#2 (#22) and SIM-card reader's connector #2
- control module's connector B#3 (#3) and SIM-card reader's connector #3
- control module's connector B#4 (#4) and SIM-card reader's connector #4
- control module's connector B#5 (#5) and SIM-card reader's connector #5
- control module's connector B#6 (#6) and SIM-card reader's connector #6.

Check the connectors for loose connections, damaged or bent pins as well as oxidation.

If no malfunction was found on the cable, try replacing the SIM-card reader.

Remedy as necessary.

Other information:

- see **CONNECTING THE BREAKOUT BOX**
- see **SIGNAL SPECIFICATION**
- see **LOCATION OF COMPONENTS**
- see **PHONE MODULE (PHM), REPLACING**
- see **HANDSET, REPLACING**
- see **CHECKING WIRING AND TERMINALS**

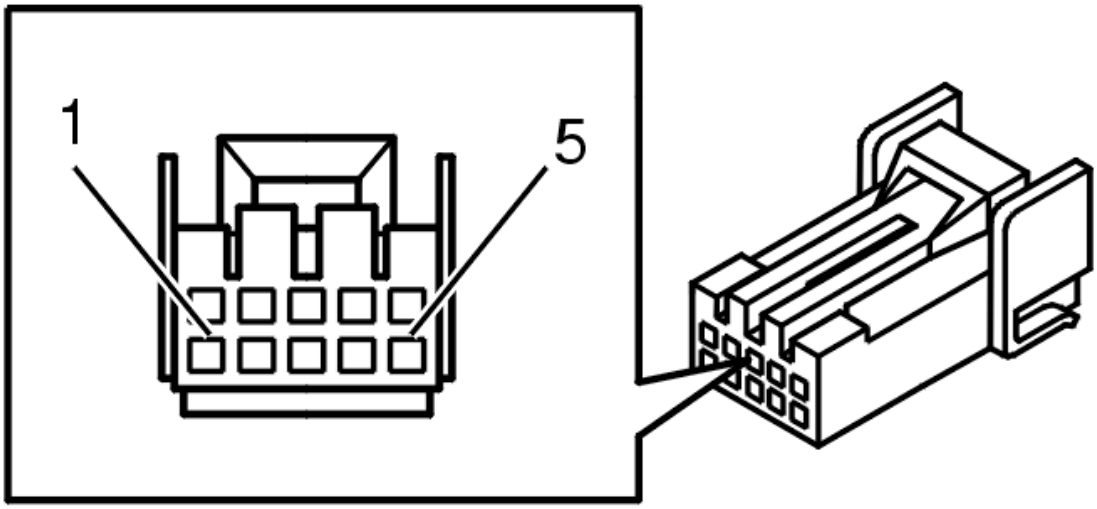

Fig. 156: 10 CD Changer Connector Terminals
Courtesy of VOLVO CARS CORPORATION

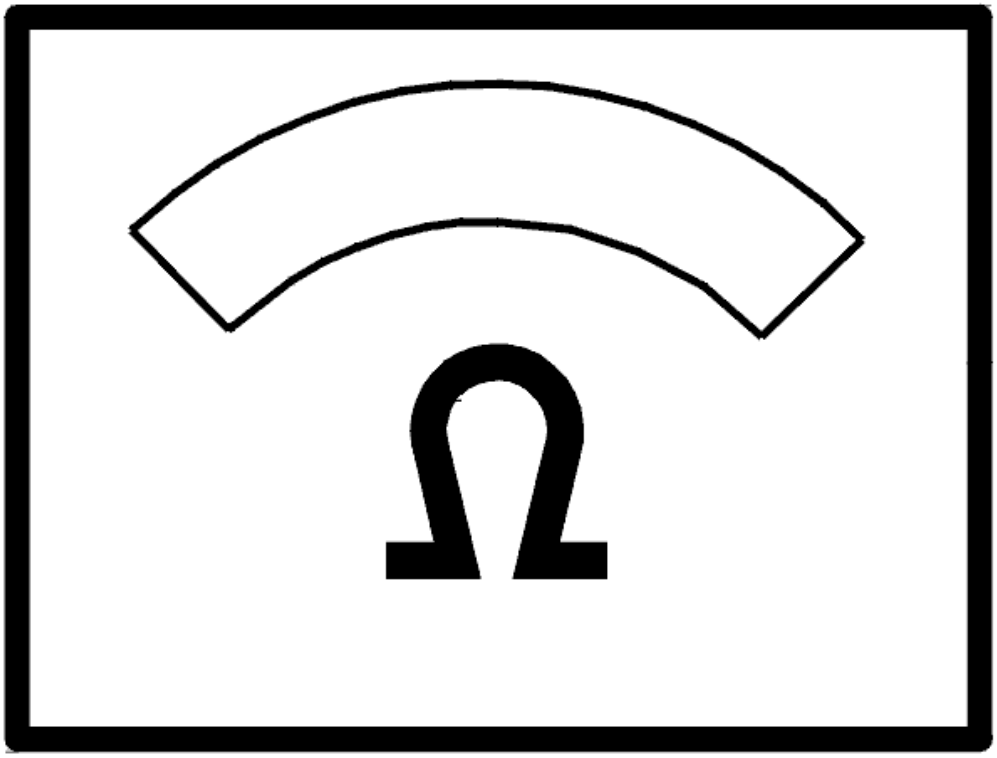

Fig. 157: Identifying Ohm Meter
Courtesy of VOLVO CARS CORPORATION

- **Continue**

  See: **VERIFICATION**

VERIFICATION

VERIFICATION

HINT: After carrying out the repair, check that the fault has been remedied.

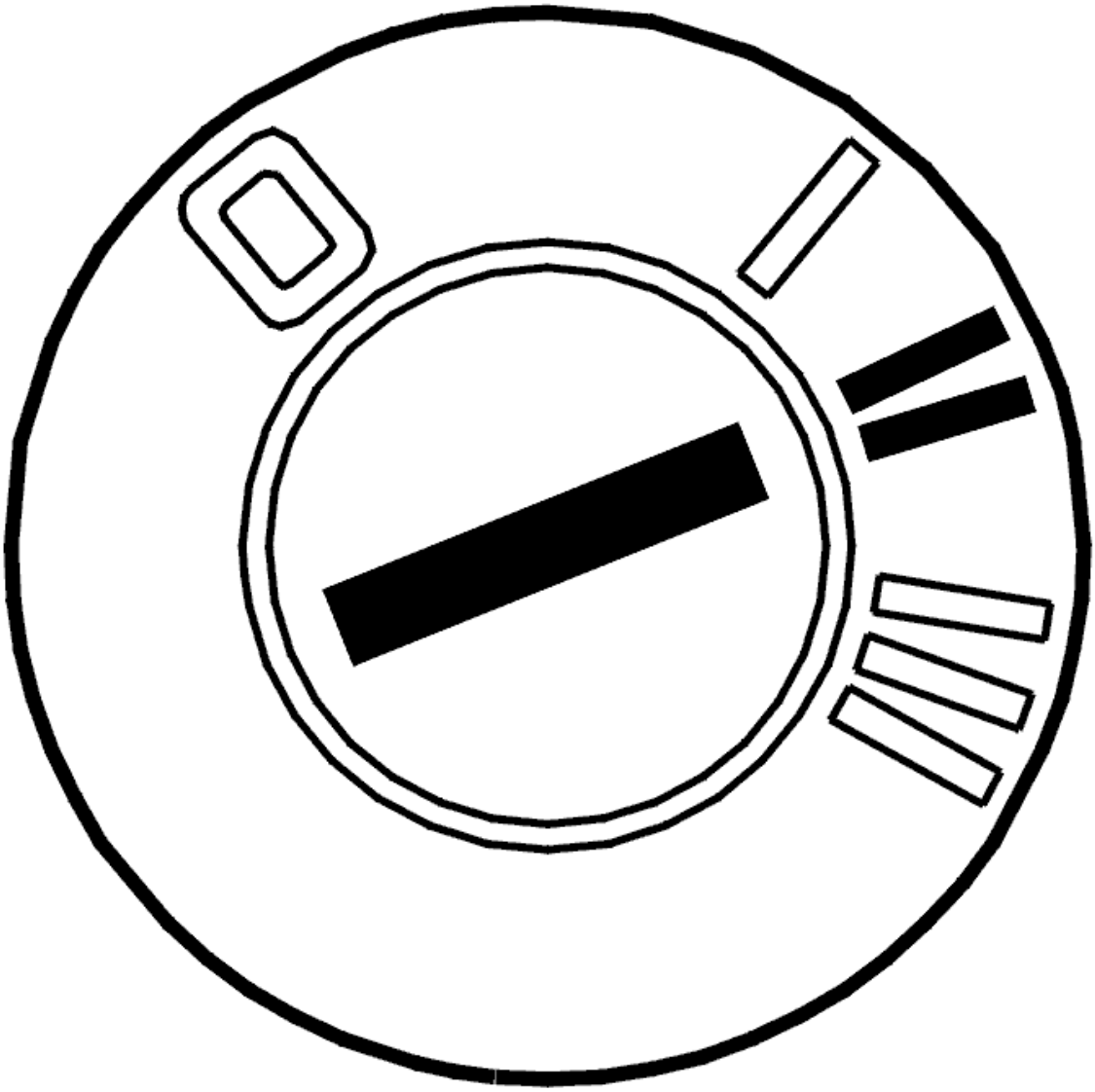

Fig. 158: Identifying Ignition ON
Courtesy of VOLVO CARS CORPORATION

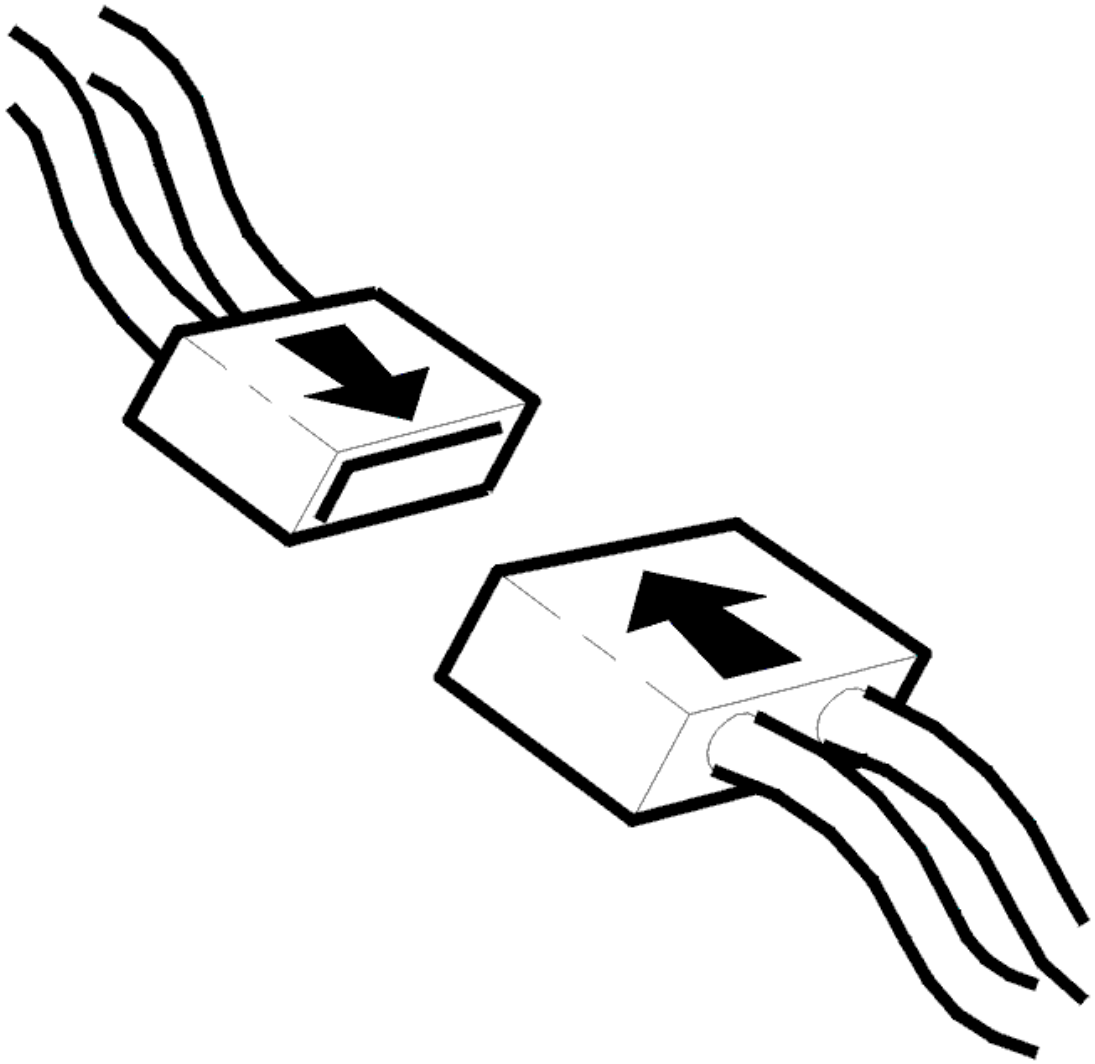

Fig. 159: Connecting Connector
Courtesy of VOLVO CARS CORPORATION

- Ignition off
- Reinstall the connectors, components etc.
- Ignition on
- Activate the carphone.

  Make a call so that both the handset and the hands-free system are used.

  Ignition off.

  Ignition on.

  Read off the diagnostic trouble codes (DTCs).

Check that the relevant diagnostic trouble code (DTC) has switched status from permanent to intermittent fault.

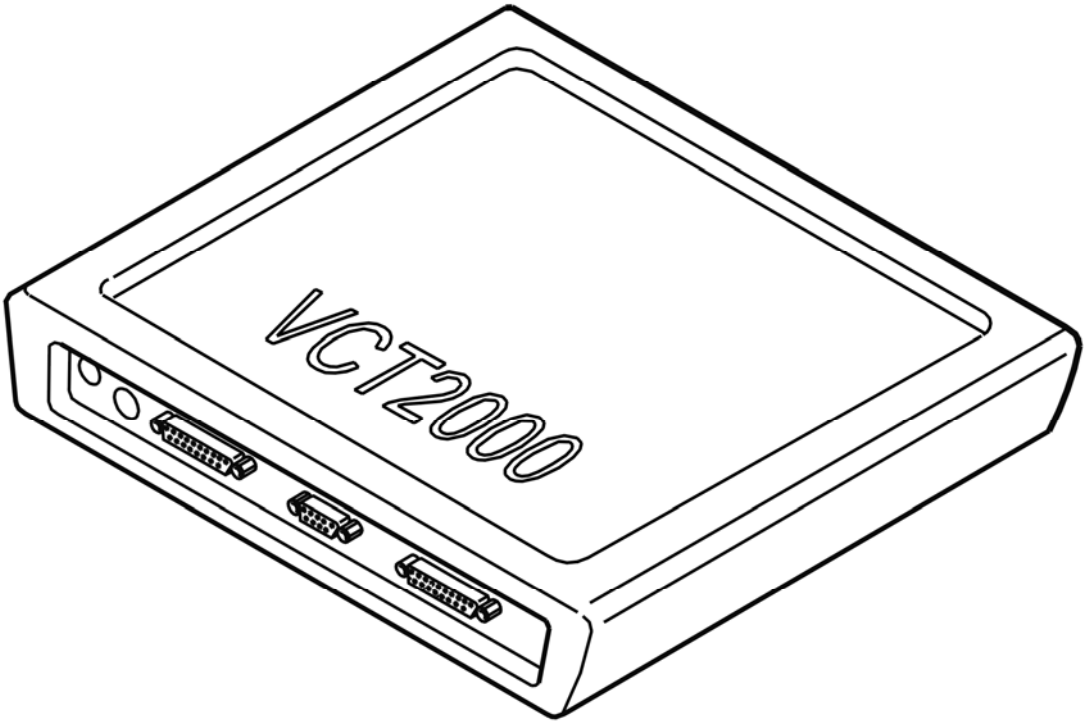

Fig. 160: Identifying VCT2000 Diagnostic Tool Symbol In VIDA
Courtesy of VOLVO CARS CORPORATION

Has the status of the diagnostic trouble code (DTC) changed?

- **YES**

  VERIFIED: Troubleshooting has been completed.

- **NO**

  See: **INFORMATION**

INFORMATION

FAULT-TRACING INFORMATION

The fault should have been detected and remedied. As this is not the case fault-tracing has failed.

Exit fault-tracing for this diagnostic trouble code (DTC) or make another attempt.

SIGNAL MISSING

CHECKING THE COMPONENT AND WIRING

Check the wiring between phone module (PHM) connector A and the SIM card reader connector. Check for an open-circuit.

Take readings between:

- control module connector A terminal #9 (#9) and SIM card reader connector terminal #1
- control module connector A terminal #8 (#8) and SIM card reader connector terminal #2
- control module connector A terminal #7 (#7) and SIM card reader connector terminal #3
- control module connector A terminal #21 (#21) and SIM card reader connector terminal #4
- control module connector A terminal #19 (#19) and SIM card reader connector terminal #5
- control module connector A terminal #20 (#20) and SIM card reader connector terminal #6.

Check the connectors for loose connections, damaged or bent terminal pins and oxidation.

Try replacing the SIM card reader if no fault is found in the cable.

Remedy as necessary.

Other information:

- To connect the breakout box, see **CONNECTING THE BREAKOUT BOX**
- For information about signals and connectors, see **SIGNAL SPECIFICATION**
- To access and replace the control module, see **PHONE MODULE (PHM), REPLACING**
- To access or replace the SIM card reader, see **INFOTAINMENT CONTROL MODULE (ICM), REPLACING**
- see **CHECKING WIRING AND TERMINALS** .

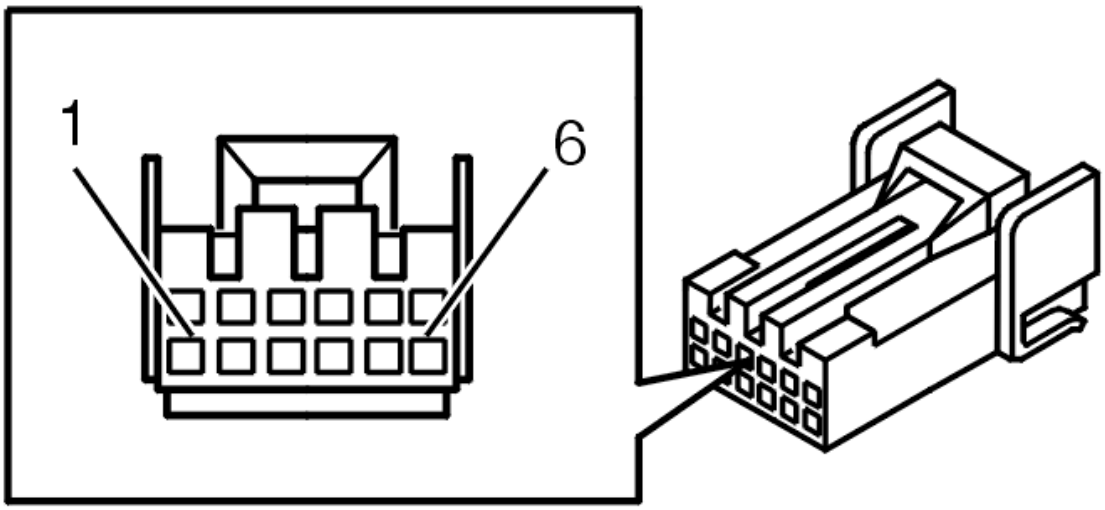

Fig. 161: Identifying Signal Table Connector B, Phone Module (PHM)
Courtesy of VOLVO CARS CORPORATION

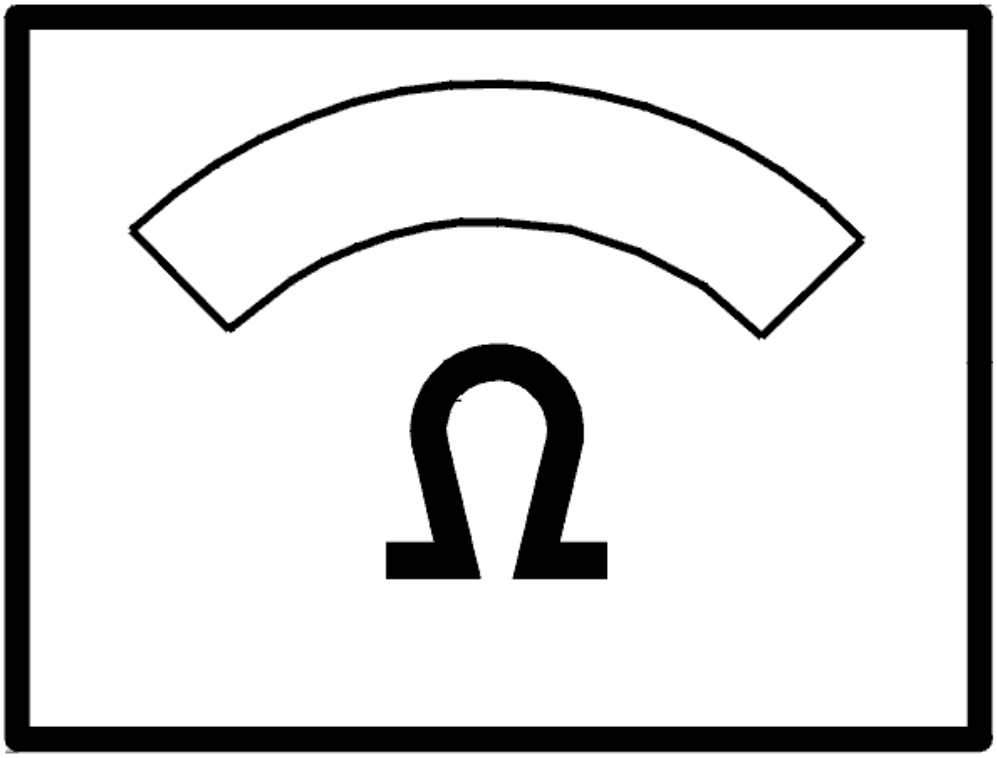

Fig. 162: Identifying Ohm Meter
Courtesy of VOLVO CARS CORPORATION

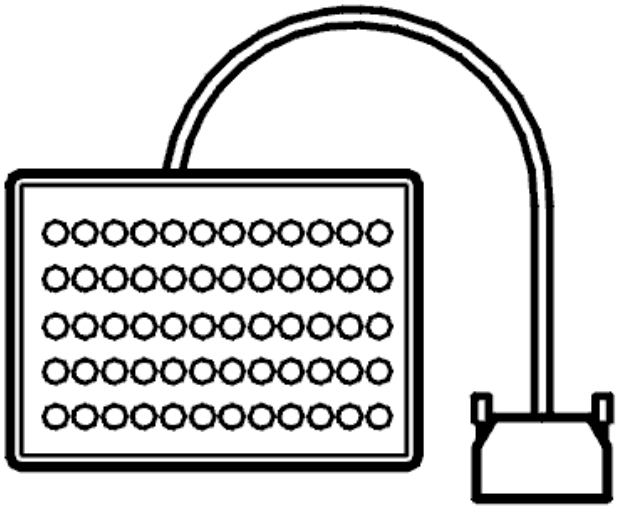

Fig. 163: Breakout Box
Courtesy of VOLVO CARS CORPORATION

- **Continue**

  See: **VERIFICATION**

VERIFICATION

VERIFICATION

HINT: After carrying out the repair, check that the fault has been remedied.

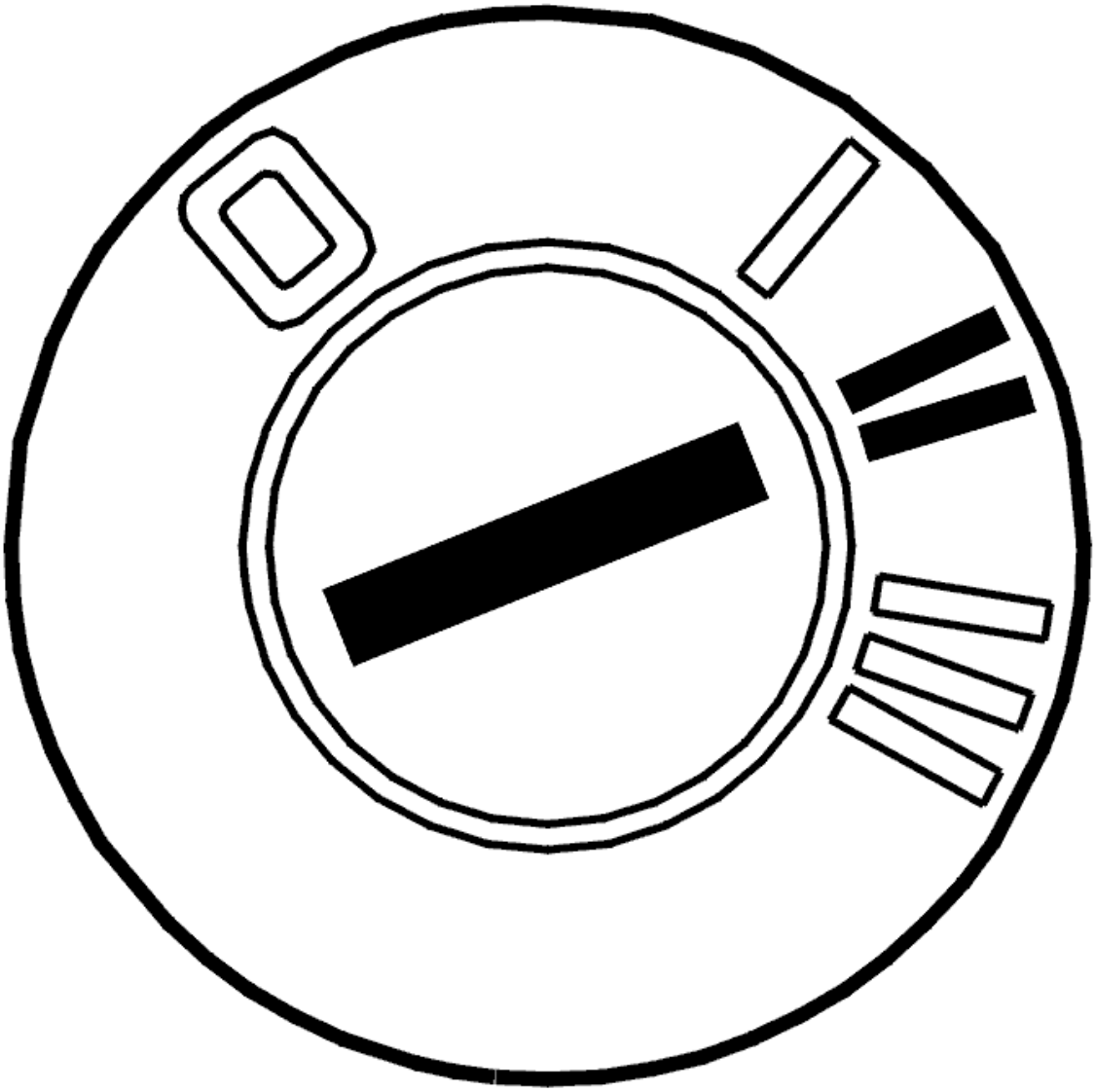

Fig. 164: Identifying Ignition ON
Courtesy of VOLVO CARS CORPORATION

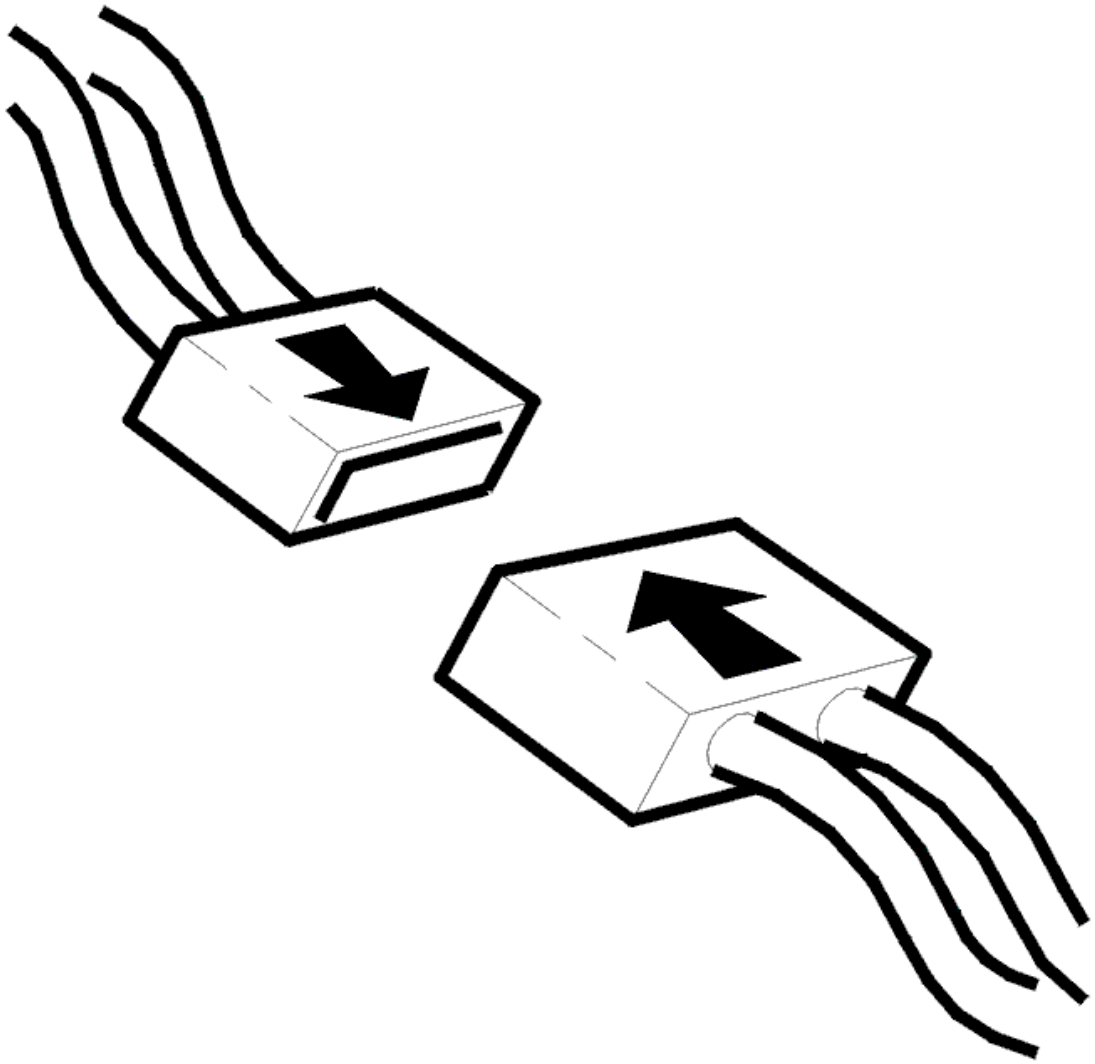

Fig. 165: Connecting Connector
Courtesy of VOLVO CARS CORPORATION

- Ignition off
- Reinstall the connectors, components etc.
- Ignition on
- Switch on the carphone.

  Make a call so that both the handset and the hands-free system are used.

  Ignition off.

  Ignition on.

  Read off the diagnostic trouble codes (DTCs).

Check that the relevant diagnostic trouble code (DTC) has switched status from permanent to intermittent fault.

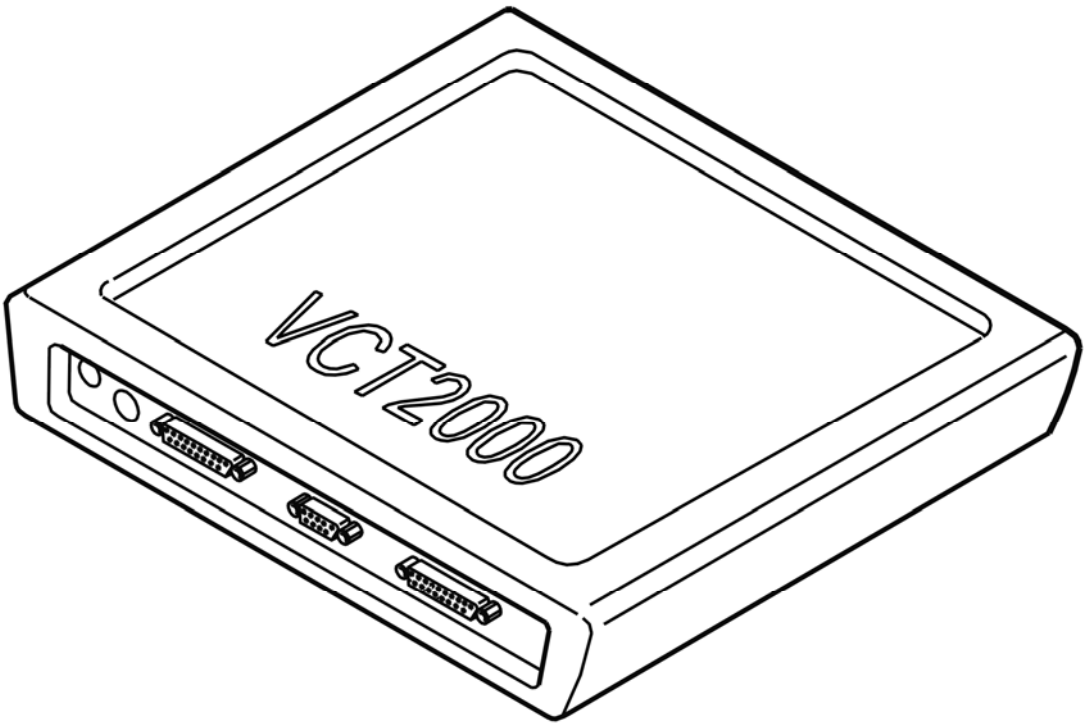

Fig. 166: Identifying VCT2000 Diagnostic Tool Symbol In VIDA
Courtesy of VOLVO CARS CORPORATION

Has the status of the diagnostic trouble code (DTC) changed?

- **YES**

  VERIFIED: Troubleshooting has been completed.

- **NO**

  See: **INFORMATION**

INFORMATION

FAULT-TRACING INFORMATION

The fault should have been detected and remedied. As this is not the case fault-tracing has failed.

Exit fault-tracing for this diagnostic trouble code (DTC) or make another attempt.

PHM-006A: COMMUNICATION PROBLEMS MOST. INTERNAL FAULT (2003-2005)

DIAGNOSTIC TROUBLE CODE (DTC) INFORMATION PHM-006A

Condition

Diagnostic trouble code (DTC) PHM-006A is stored if the phone module (PHM) registers a fault in the MOST communication.

Diagnostic trouble code (DTC) PHM-006A can be diagnosed with the ignition on (not key position 3) and when the battery voltage is 9-16 V.

Substitute Value

- None.

Possible Source

- Fault in the connection to MOST
- Fault in the MOST transceiver for the phone module (PHM).

Fault symptom[s]

- No or reduced carphone functionality
- Functions in the infotainment system do not work.

INTERNAL FAULT

CHECKING CONTROL MODULES ON THE MOST NETWORK

The phone module (PHM) has registered a fault in the communication on the MOST network. This is either due to a fault in the MOST transceiver for the phone module (PHM) or because of interrupted communication on the MOST network.

Start the fault-tracing by checking whether other control modules on the MOST network function by listening to the radio or a CD / MiniDisc.

Are the other control modules on the MOST network working?

- **YES**

  See: **REPLACING THE COMPONENT**

- **NO**

See: **FAULT-TRACING MOST**

REPLACING THE COMPONENT

If the other control modules on the MOST network are working normally, there is probably an internal fault in the phone module (PHM).

If the fault is intermittent, it has been registered previously but is no longer present. Intermittent faults can be caused by interference at start up of the phone module (PHM) or may be a different type of fault which occurs on different occasions. The fault is evaluated depending on how it occurs. If the fault recurs, replace the control module.

In the event of a permanent fault, replace the control module.

Remedy as necessary.

Other information:

- To access or replace the control module, see **PHONE MODULE (PHM), REPLACING** .

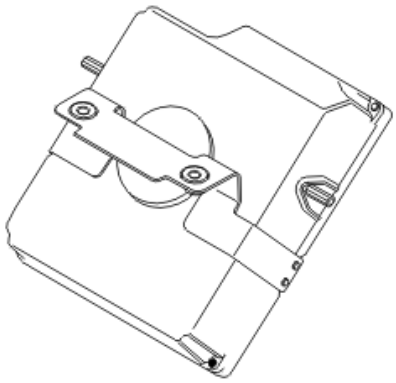

Fig. 167: Identifying Phone Module (PHM)
Courtesy of VOLVO CARS CORPORATION

- **Continue**

See: **INFORMATION**

FAULT-TRACING MOST

If other control modules on the MOST network are not working, MOST communication is not possible. The fault may be an open-circuit on the MOST cable or because a control module is not working. The phone module (PHM) can only diagnose that it is unable to communicate on the MOST network, but not where the fault is. Continue the fault-tracing therefore by reading off diagnostic trouble codes (DTCs) from the infotainment control module (ICM) and then following the relevant fault-tracing procedures.

- **Continue**

OKAY: Troubleshooting has been completed.

INFORMATION

FAULT-TRACING INFORMATION

In case of this defect, troubleshooting is not followed by verification.

The information can be displayed again or the fault-tracing for this fault can be interrupted.

PHM-006B: CONTROL MODULE MEMORY FAULT. INTERNAL FAULT (2006-2012)

DIAGNOSTIC TROUBLE CODE (DTC) INFORMATION PHM-006B

Condition

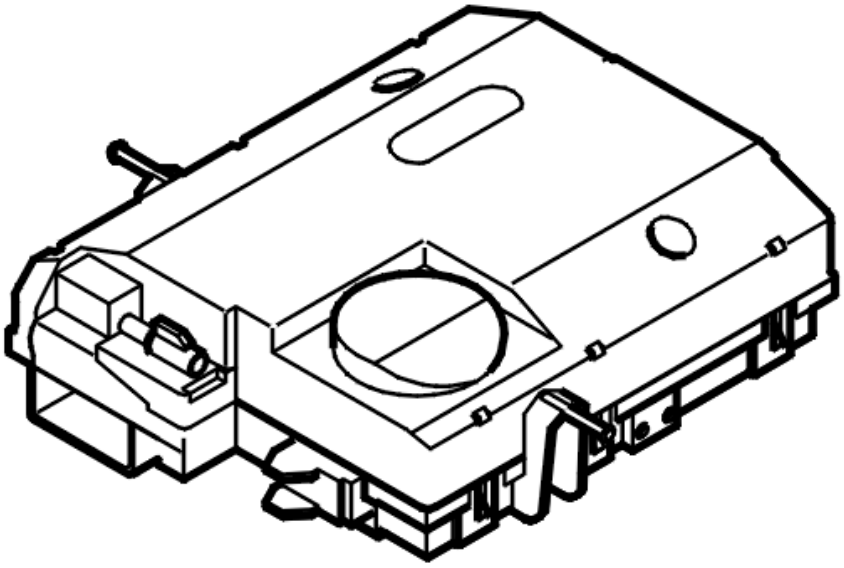

Fig. 168: Identifying Control Module
Courtesy of VOLVO CARS CORPORATION

The diagnostic trouble code (DTC) is stored if the phone module (PHM) registers an internal fault.

The diagnostic trouble code (DTC) can be diagnosed when the ignition is switched on (not key position 3) and

when the battery voltage is 9-16 V.

Substitute Value

- None.

Possible Source

- Internal fault in the control module.

Fault symptom[s]

- No or reduced carphone functionality.
- Message in the text display (applies only to phone modules (PHM) with Volvo On Call)

INTERNAL FAULT

see **INTERNAL FAULT**

PHM-006B: CONTROL MODULE. INTERNAL FAULT (2003-2005)

DIAGNOSTIC TROUBLE CODE (DTC) INFORMATION PHM-006B

Condition

Diagnostic trouble code (DTC) PHM-006B is stored if the phone module (PHM) registers an internal fault.

Diagnostic trouble code (DTC) PHM-006B can be diagnosed with the ignition on (not key position 3) and when the battery voltage is 9-16 V.

Substitute Value

- None.

Possible Source

- Internal fault in the control module.

Fault symptom[s]

- No or reduced carphone functionality.

INTERNAL FAULT

REPLACING THE COMPONENT

The phone module (PHM) has registered an internal fault.

If the fault is intermittent, it has been registered previously but is no longer present. Intermittent faults can be caused by interference at start up of the phone module (PHM) or may be a different type of fault which occurs on different occasions. The fault is evaluated depending on how it occurs. If the fault recurs, replace the control module.

In the event of a permanent fault, replace the control module. See **PHONE MODULE (PHM), REPLACING** .

Remedy as necessary.

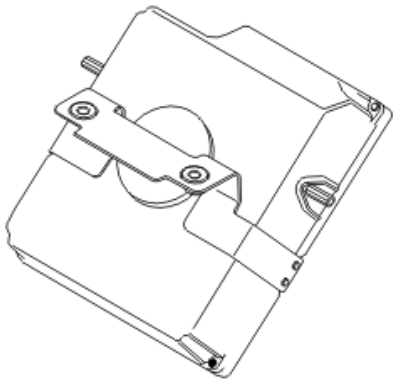

Fig. 169: Identifying Phone Module (PHM)
Courtesy of VOLVO CARS CORPORATION

- **Continue**

  See: **INFORMATION**

INFORMATION

FAULT-TRACING INFORMATION

In case of this defect, troubleshooting is not followed by verification.

The information can be displayed again or the fault-tracing for this fault can be interrupted.

PHM-006C: HANDSET CRADLE. SIGNAL TOO LOW (2003-2004)

DIAGNOSTIC TROUBLE CODE (DTC) INFORMATION PHM-006C

Condition

Diagnostic trouble code (DTC) PHM-006C is stored if the phone module (PHM) registers that there is a short-circuit to ground in the signal to the handset or cradle switch.

Diagnostic trouble code (DTC) PHM-006C can be diagnosed with the ignition on (not key position 3) and when the battery voltage is 9-16 V.

Substitute Value

- Only hands-free operates.

Possible Source

- Short-circuit to ground in the wiring (cradle signal) between the handset and the control module.

Fault symptom[s]

- The handset does not function.

SIGNAL TOO LOW

CHECKING THE COMPONENT AND WIRING

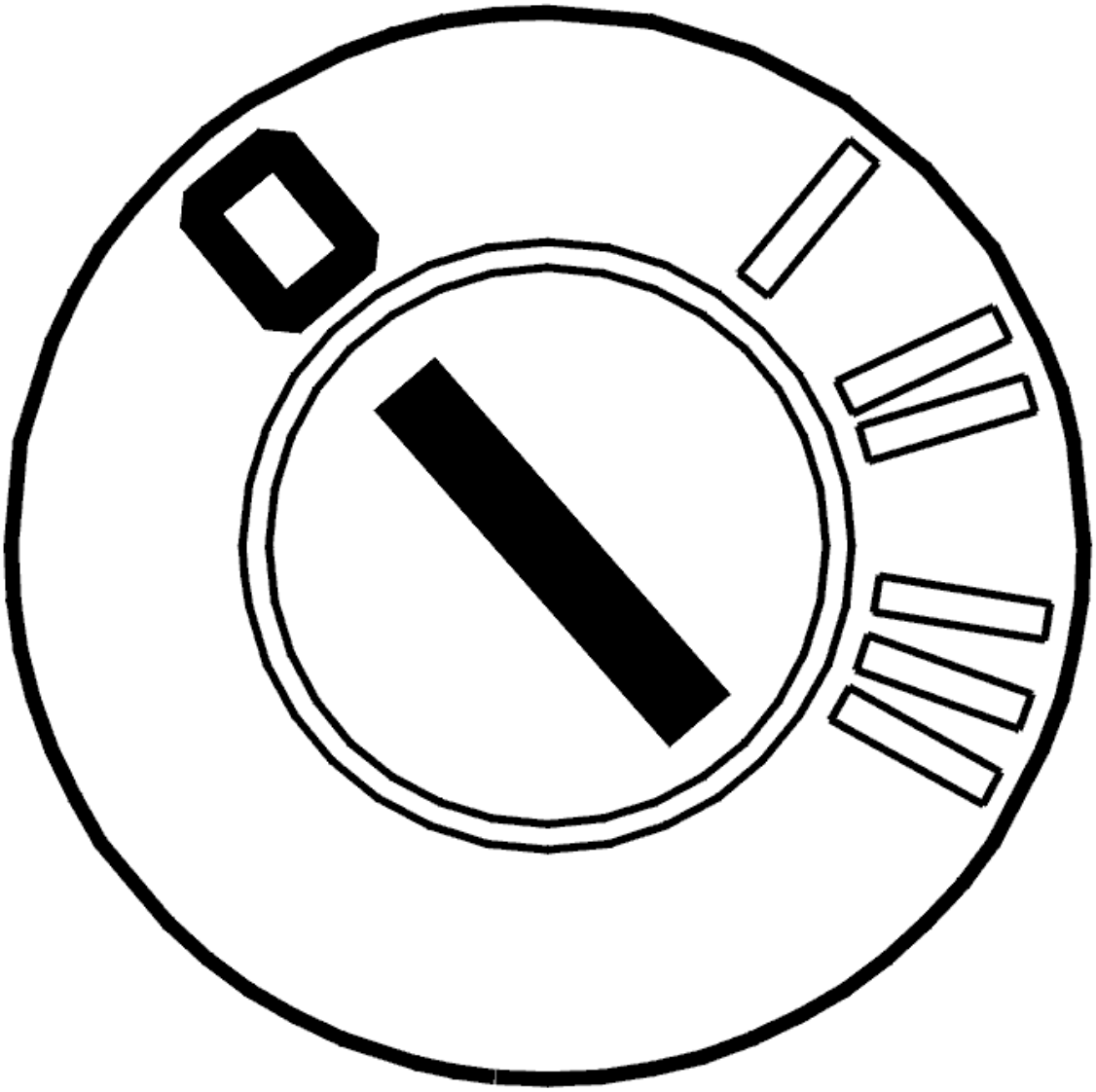

Fig. 170: Identifying Ignition OFF
Courtesy of VOLVO CARS CORPORATION

- Ignition off.

  Check the cradle signal cable between phone module (PHM) connector B terminal #12 (#54) and handset connector terminal #4 (#24). Check for a short-circuit to ground.

  Try replacing the handset if the wiring is OK.

  Remedy as necessary.

  Other information:

  - The cradle signal is approximately 2.9-3.7 V when the handset is in use
  - The cradle signal is approximately 1.6-2.1 V when the handset is in the cradle
  - To connect the breakout box, see **CONNECTING THE BREAKOUT BOX**
  - For information about signals and connectors, see **SIGNAL SPECIFICATION**
  - To access and replace the control module, see **PHONE MODULE (PHM), REPLACING**
  - To access or replace the handset, see **HANDSET, REPLACING**
  - see **CHECKING WIRING AND TERMINALS** .

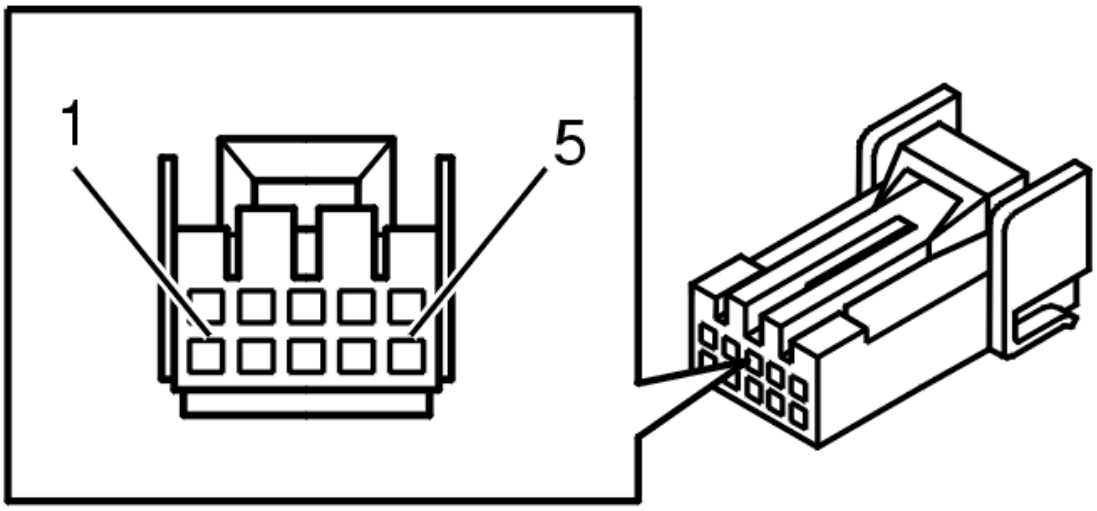

Fig. 171: 10 CD Changer Connector Terminals
Courtesy of VOLVO CARS CORPORATION

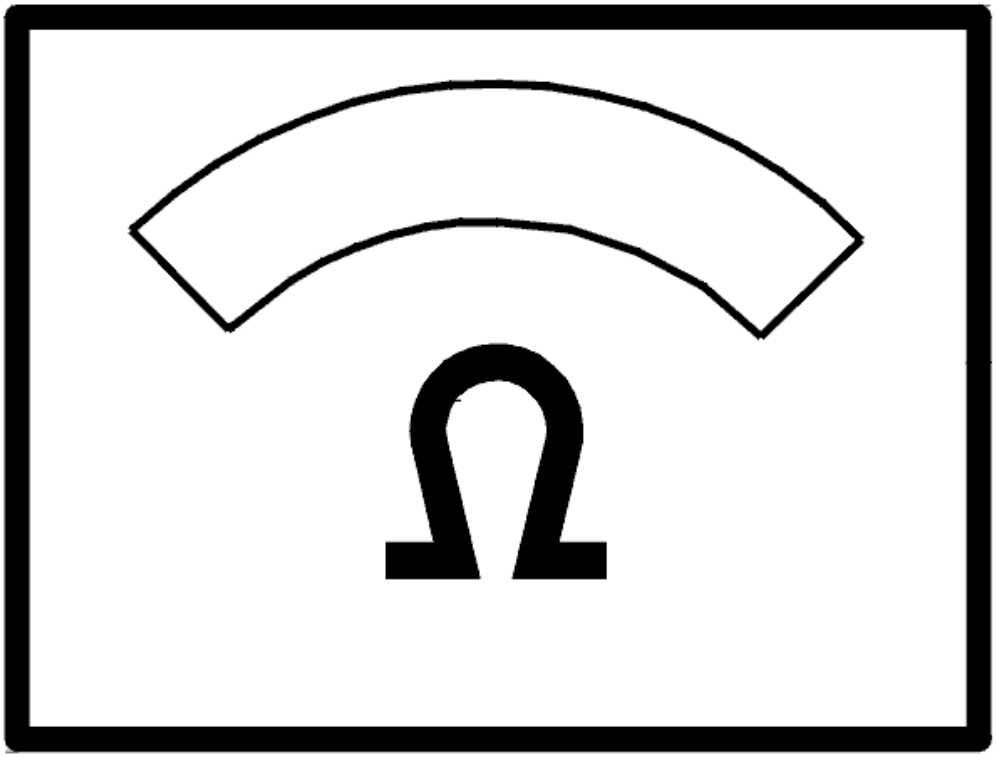

Fig. 172: Identifying Ohm Meter
Courtesy of VOLVO CARS CORPORATION

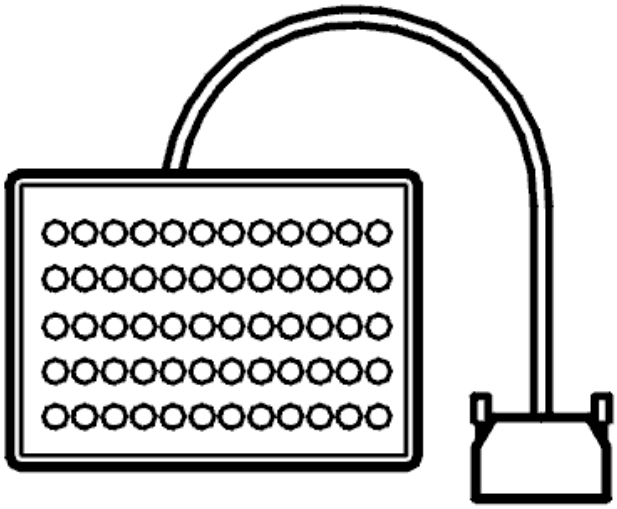

Fig. 173: Breakout Box
Courtesy of VOLVO CARS CORPORATION

- **Continue**

  See: **VERIFICATION**

VERIFICATION

VERIFICATION

HINT: After carrying out the repair, check that the fault has been remedied.

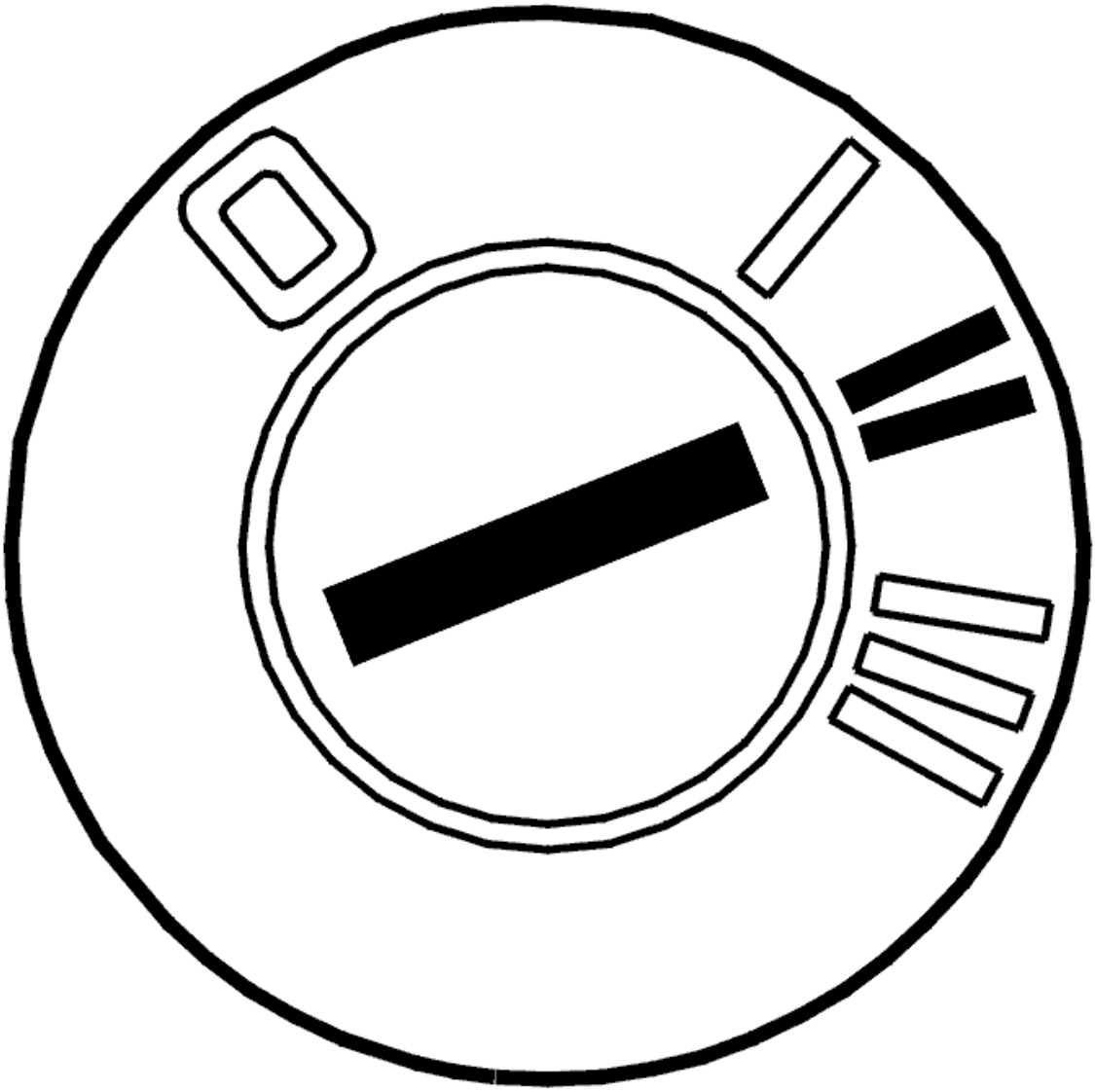

Fig. 174: Identifying Ignition ON
Courtesy of VOLVO CARS CORPORATION

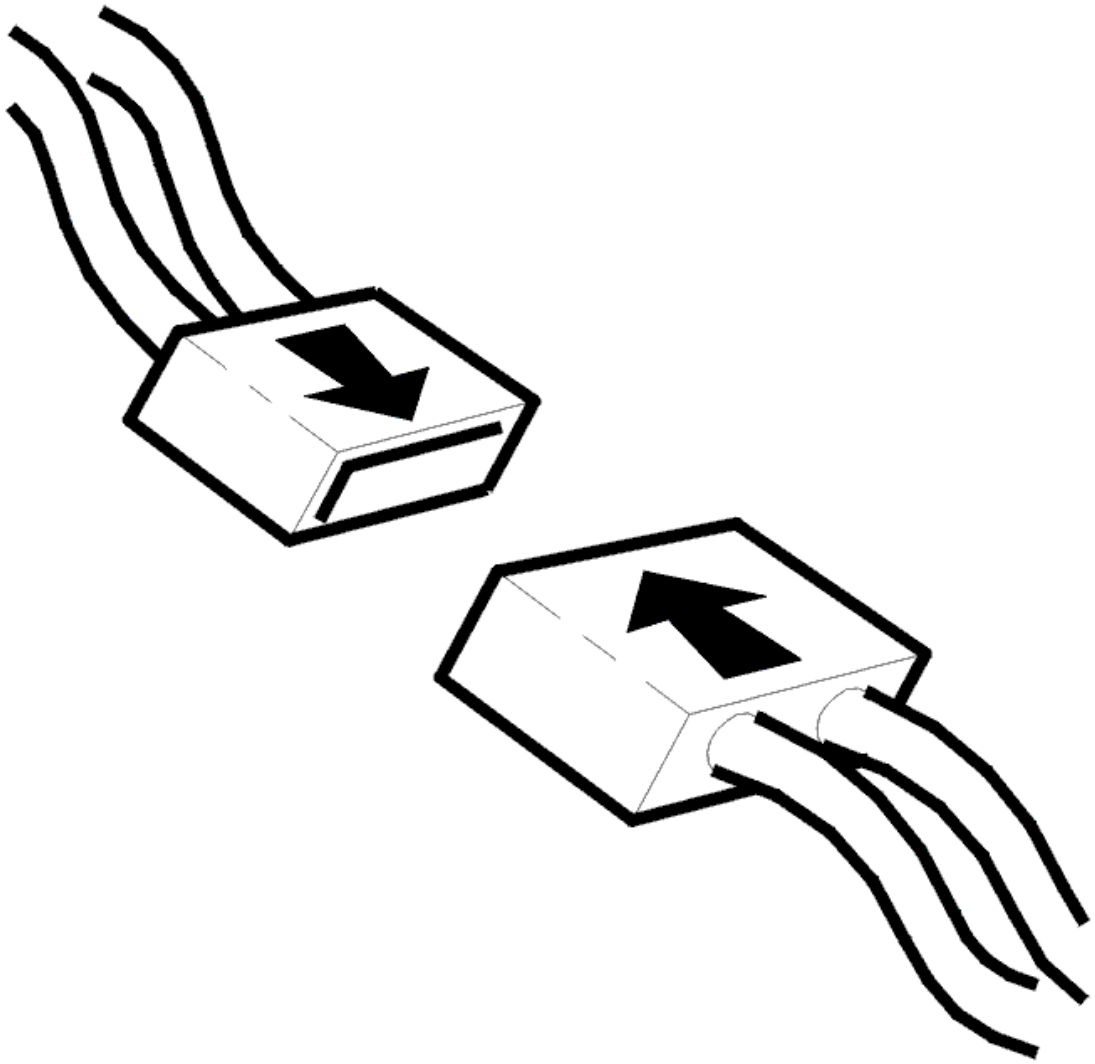

Fig. 175: Connecting Connector
Courtesy of VOLVO CARS CORPORATION

- Ignition off
- Reinstall the connectors, components etc.
- Ignition on
- Switch on the carphone.

  Make a call so that both the handset and the hands-free system are used.

  Ignition off.

  Ignition on.

  Read off the diagnostic trouble codes (DTCs).

Check that the relevant diagnostic trouble code (DTC) has switched status from permanent to intermittent fault.

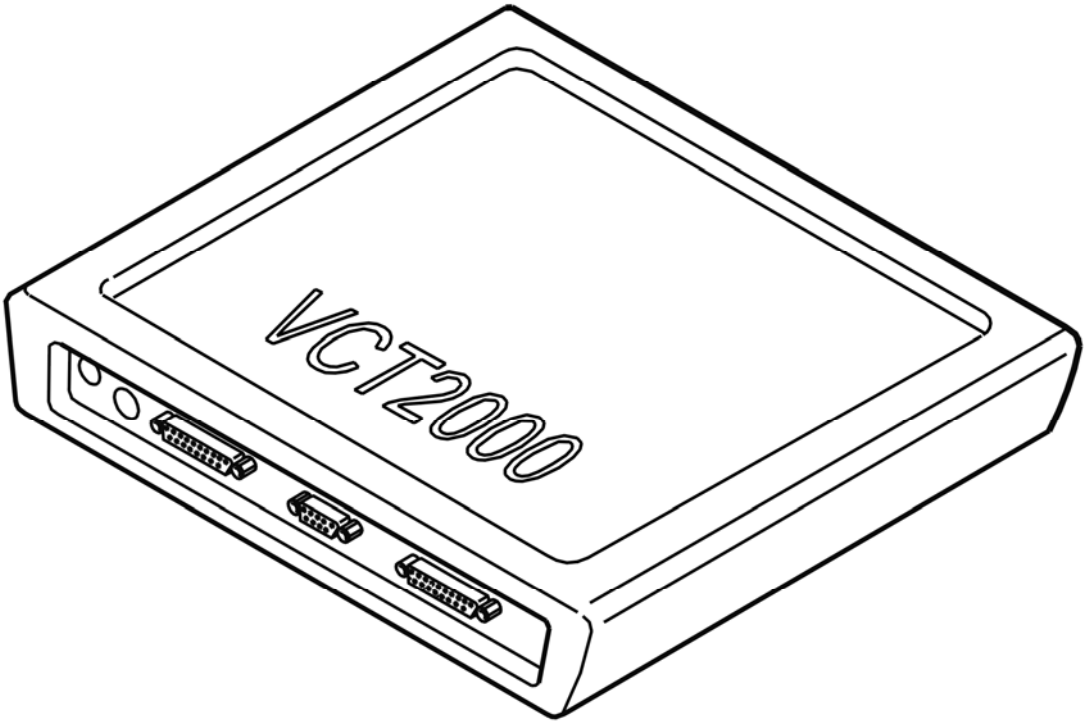

Fig. 176: Identifying VCT2000 Diagnostic Tool Symbol In VIDA
Courtesy of VOLVO CARS CORPORATION

Has the status of the diagnostic trouble code (DTC) changed?

- **YES**

  VERIFIED: Troubleshooting has been completed.

- **NO**

  See: **INFORMATION**

INFORMATION

FAULT-TRACING INFORMATION

The fault should have been detected and remedied. As this is not the case fault-tracing has failed.

Exit fault-tracing for this diagnostic trouble code (DTC) or make another attempt.

PHM-006C: HANDSET CRADLE. SIGNAL TOO LOW (2006-2012)

DIAGNOSTIC TROUBLE CODE (DTC) INFORMATION PHM-006C

Condition

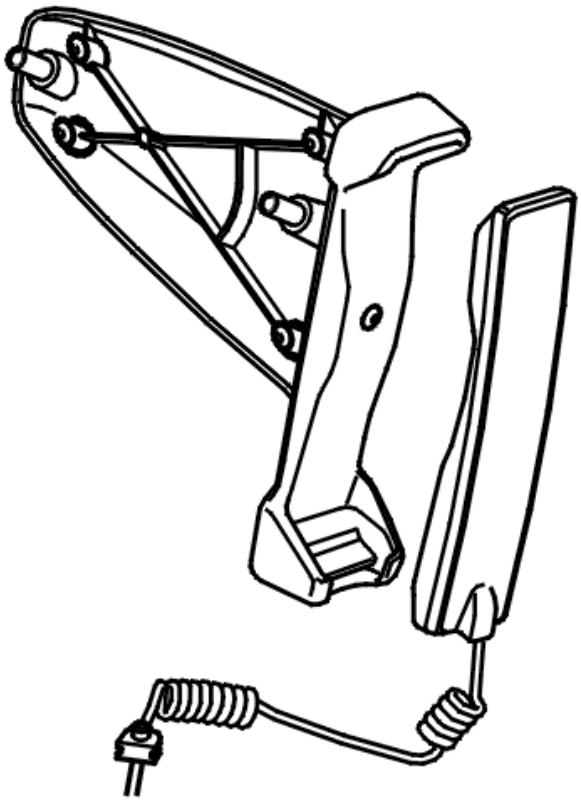

Fig. 177: Identifying Handset Cradle
Courtesy of VOLVO CARS CORPORATION

The diagnostic trouble code (DTC) is stored if the phone module (PHM) registers a short-circuit to ground in the signal to the handset (cradle switch).

The diagnostic trouble code (DTC) can be diagnosed when the ignition is switched on (not key position 3) and when the battery voltage is 9-16 V.

Substitute Value

- Only hands-free operates.

Possible Source

- Short-circuit to ground in the cable (cradle signal) between the handset and the control module.

Fault symptom[s]

- The handset does not function.
- Message in the text display (applies only to phone modules (PHM) with Volvo On Call).

SIGNAL TOO LOW

CHECKING THE COMPONENT AND WIRING

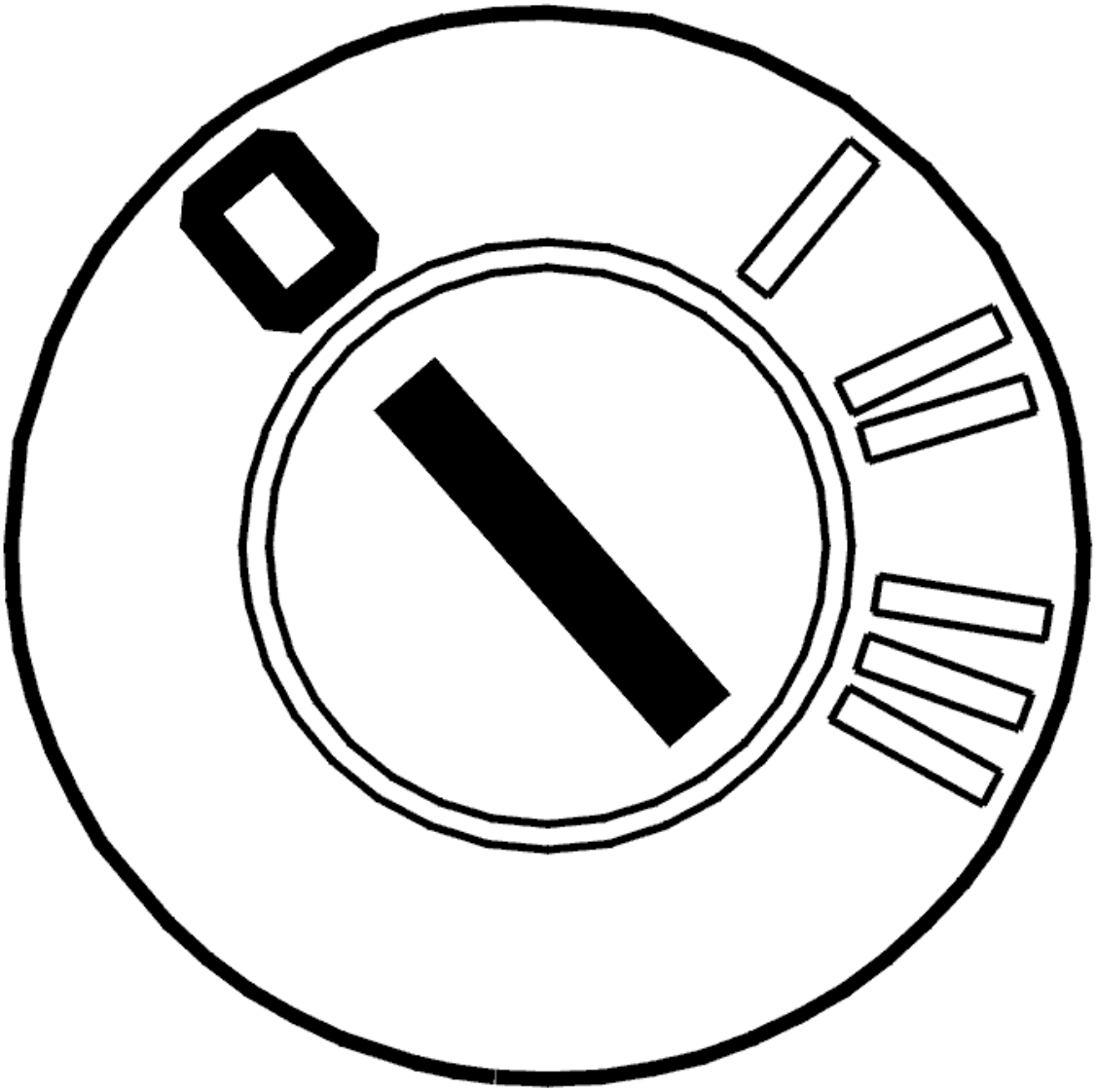

Fig. 178: Identifying Ignition OFF
Courtesy of VOLVO CARS CORPORATION

- Ignition off
- Disconnect connector A from the phone module (PHM).

Check the cable for the cradle signal. Check for a short-circuit to ground.

Check between:

- terminals #8 (#8) and #18 (#18) on control module connector A
- terminals #8 (#8) and #6 (#6) on control module connector A.

Try replacing the handset if the wiring is OK.

Remedy as necessary.

Other information:

- The cradle signal is approximately 5 V when the handset is in use
- The cradle signal is approximately 0 V when the handset is in the cradle
- see **SIGNAL SPECIFICATION**
- see **CONNECTING THE BREAKOUT BOX**
- see **LOCATION OF COMPONENTS**
- see **PHONE MODULE (PHM), REPLACING (2006-2010)**
- see **HANDSET, REPLACING**
- see **CHECKING WIRING AND TERMINALS**

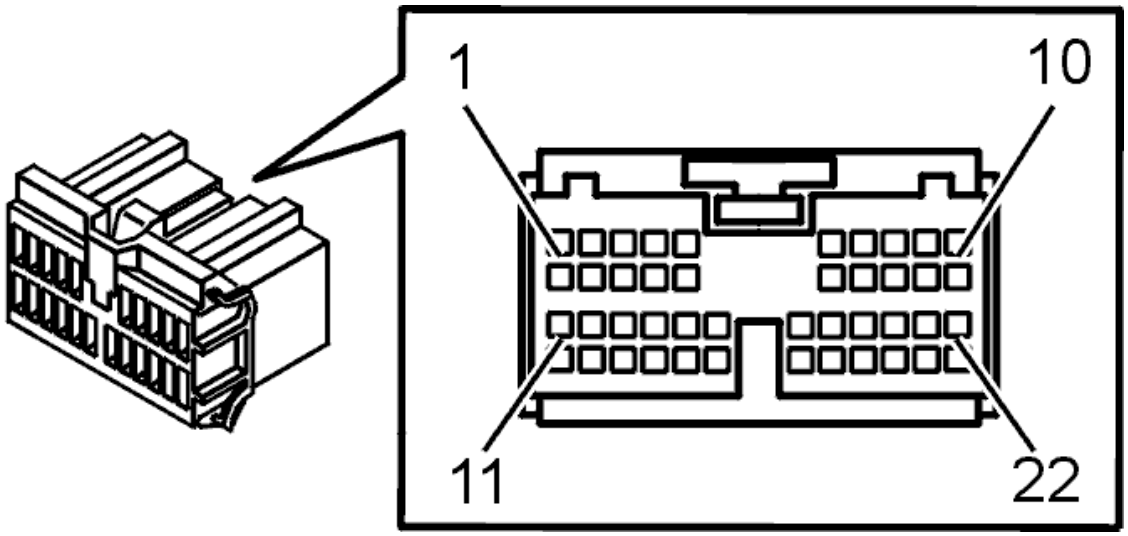

Fig. 179: Identifying Connector (F) Terminals
Courtesy of VOLVO CARS CORPORATION

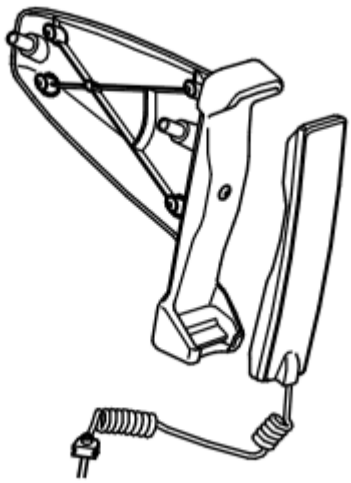

Fig. 180: Identifying Carphone Holder
Courtesy of VOLVO CARS CORPORATION

- **Continue**

  See: **VERIFICATION**

VERIFICATION

VERIFICATION

HINT: After carrying out the repair, check that the fault has been remedied.

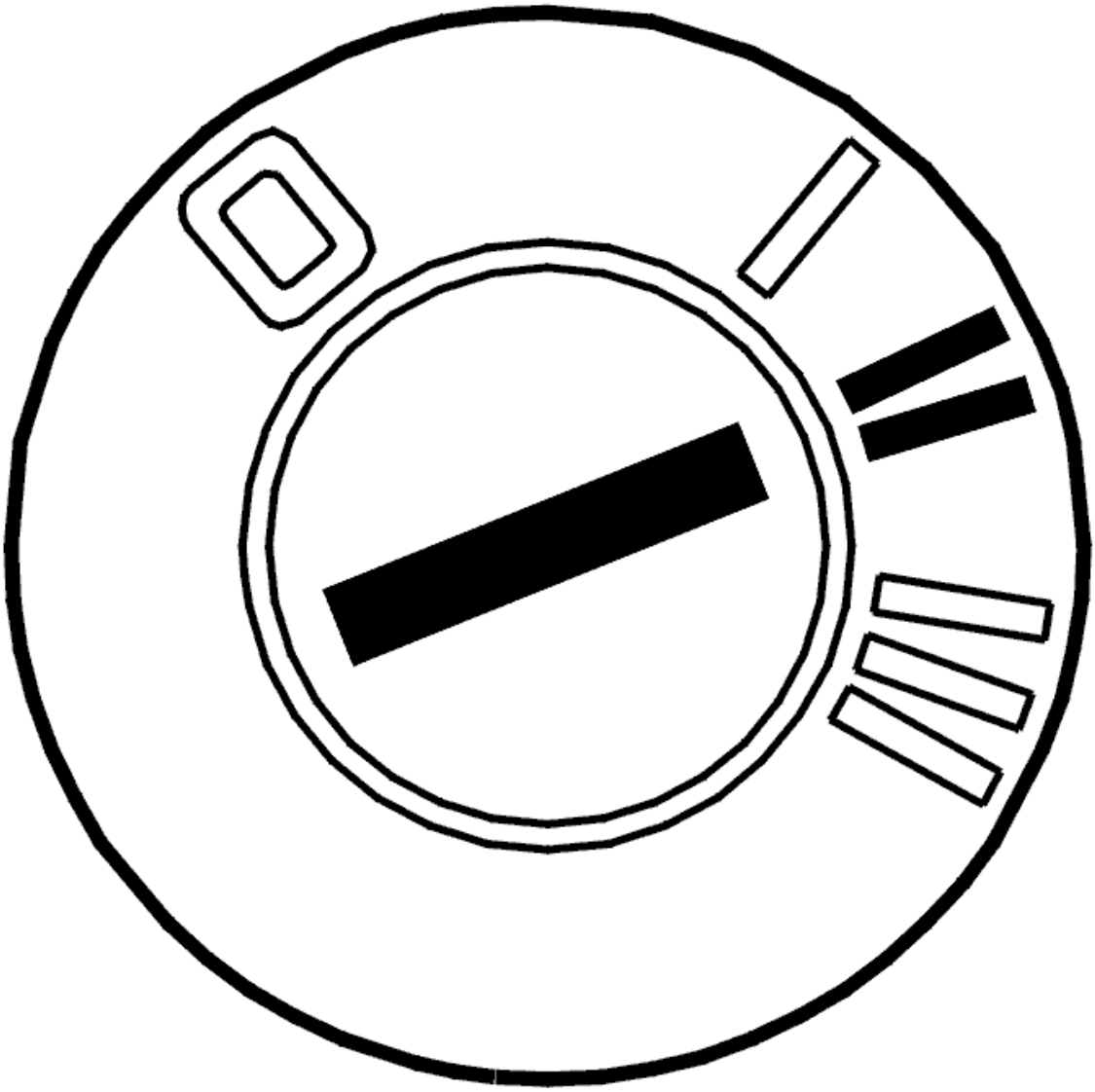

Fig. 181: Identifying Ignition ON
Courtesy of VOLVO CARS CORPORATION

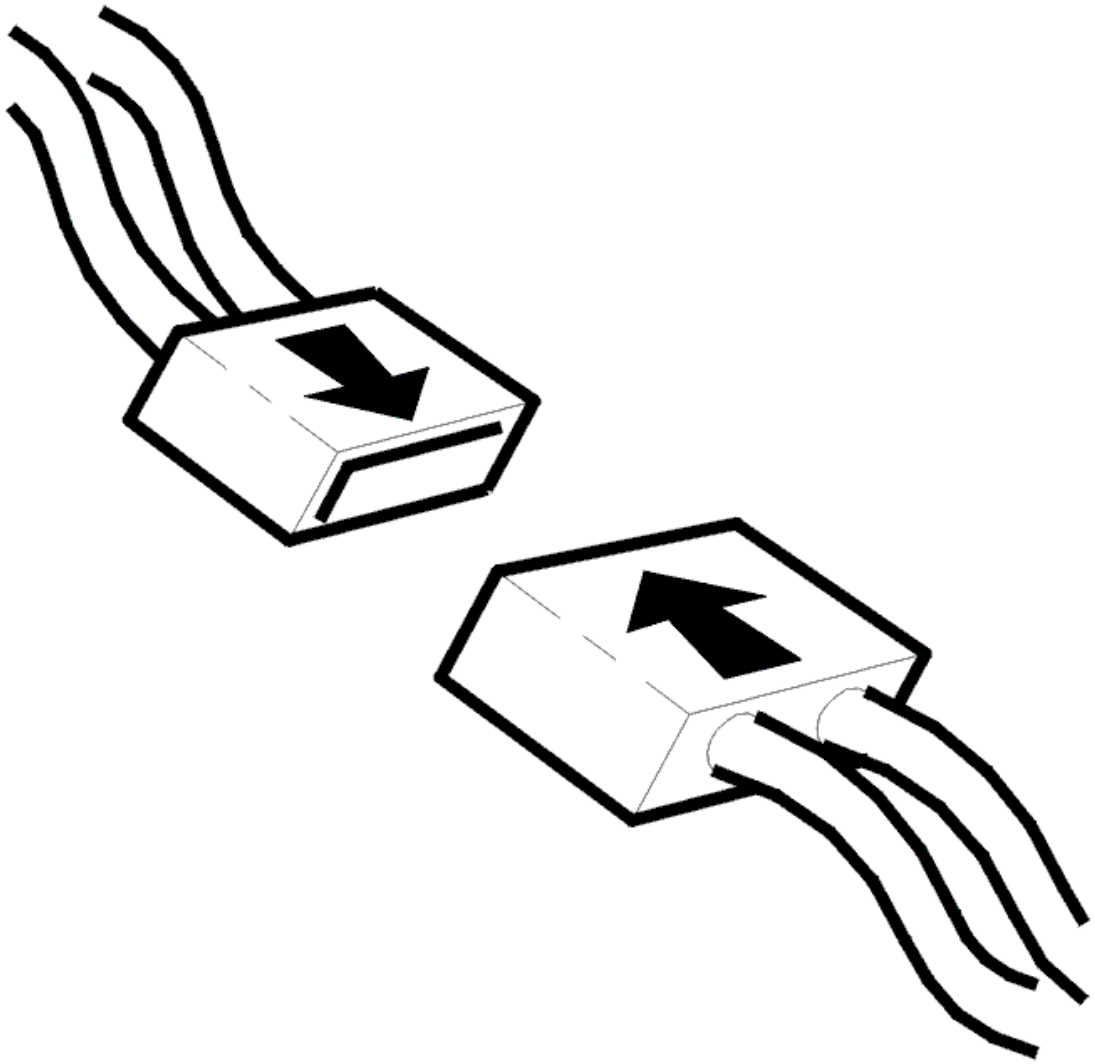

Fig. 182: Connecting Connector
Courtesy of VOLVO CARS CORPORATION

- Ignition off
- Reinstall the connectors, components etc.
- Ignition on
- Activate the carphone.

  Make a call so that both the handset and the hands-free system are used.

  - Ignition off.
  - Ignition on.
  - Read off the diagnostic trouble codes (DTCs).
  - Check that the relevant diagnostic trouble code (DTC) has switched status from permanent to

intermittent fault.

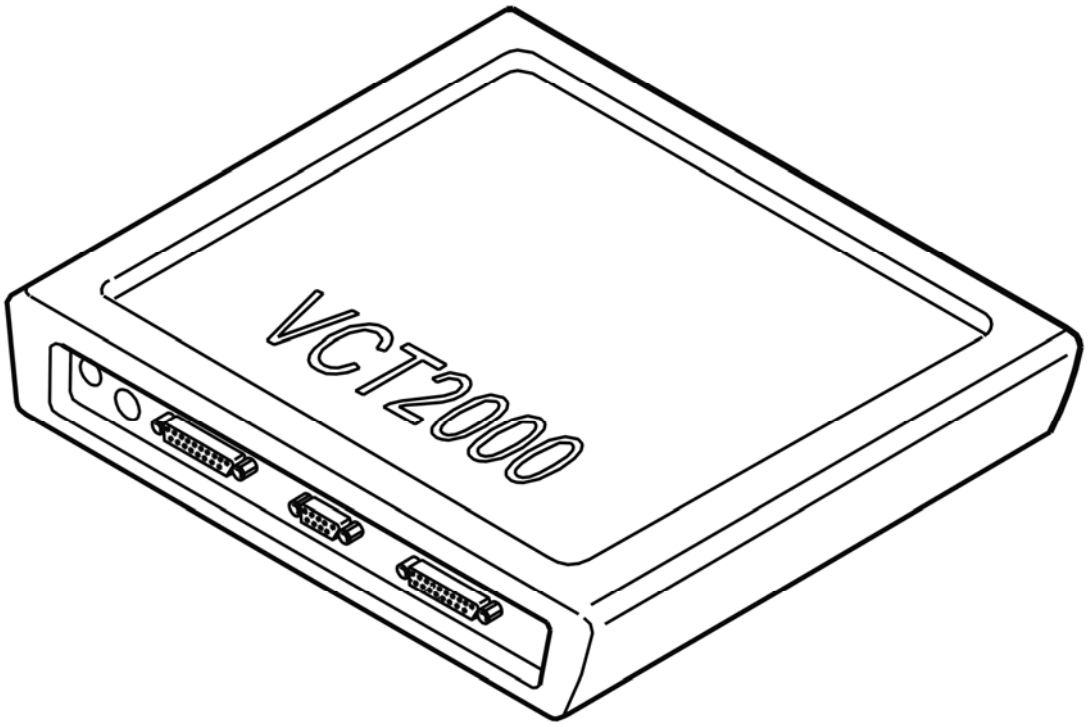

Fig. 183: Identifying VCT2000 Diagnostic Tool Symbol In VIDA
Courtesy of VOLVO CARS CORPORATION

Has the status of the diagnostic trouble code (DTC) changed?

- **YES**

  VERIFIED: Troubleshooting has been completed.

- **NO**

  See: **INFORMATION**

INFORMATION

FAULT-TRACING INFORMATION

The fault should have been detected and remedied. As this is not the case fault-tracing has failed.

Exit fault-tracing for this diagnostic trouble code (DTC) or make another attempt.

PHM-006C: TELEPHONE HANDSET CRADLE. SIGNAL TOO LOW (2005)

DIAGNOSTIC TROUBLE CODE (DTC) INFORMATION PHM-006C

see **DIAGNOSTIC TROUBLE CODE (DTC) INFORMATION PHM-006C**

SIGNAL TOO LOW

CHECKING STRUCTURE WEEK

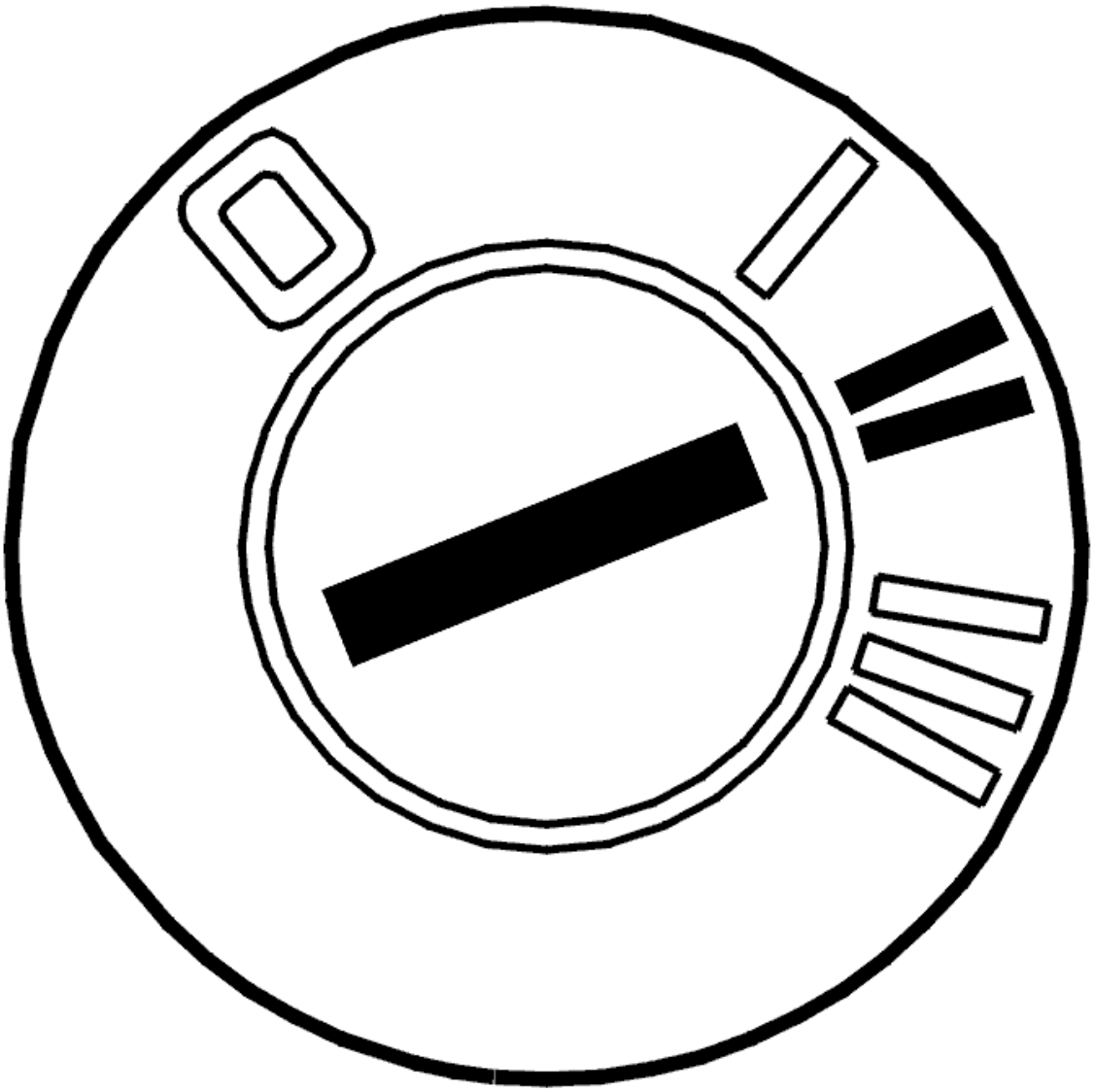

Fig. 184: Identifying Ignition ON
Courtesy of VOLVO CARS CORPORATION

- Ignition on

  Read out the vehicle's structure week using the VCT2000 (or appropriate scan tool).

  1. Vehicles with structure week up to and including 200445, that is, year 2004 week 45.

2. Vehicles with structure week from and including 200446, that is, year 2004 week 46.

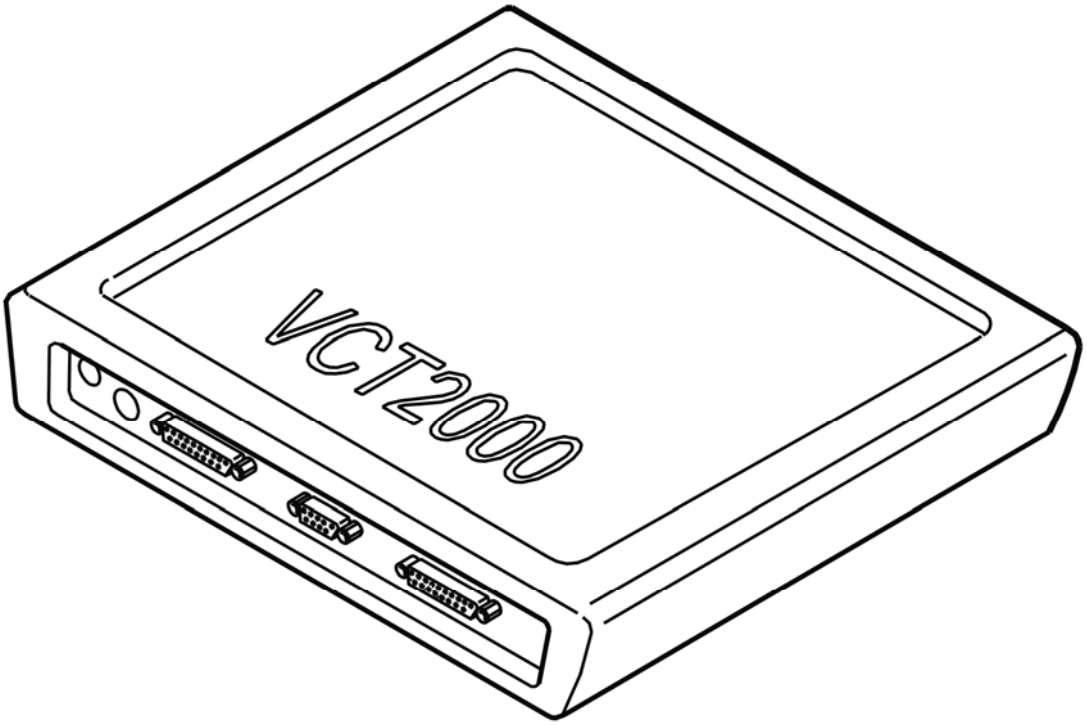

Fig. 185: Identifying VCT2000 Diagnostic Tool Symbol In VIDA
Courtesy of VOLVO CARS CORPORATION

Select one of the above alternatives.

- **1**

  See: **SIGNAL TOO LOW**

- **2**

  See: **CHECKING COMPONENTS AND WIRING**

CHECKING COMPONENTS AND WIRING

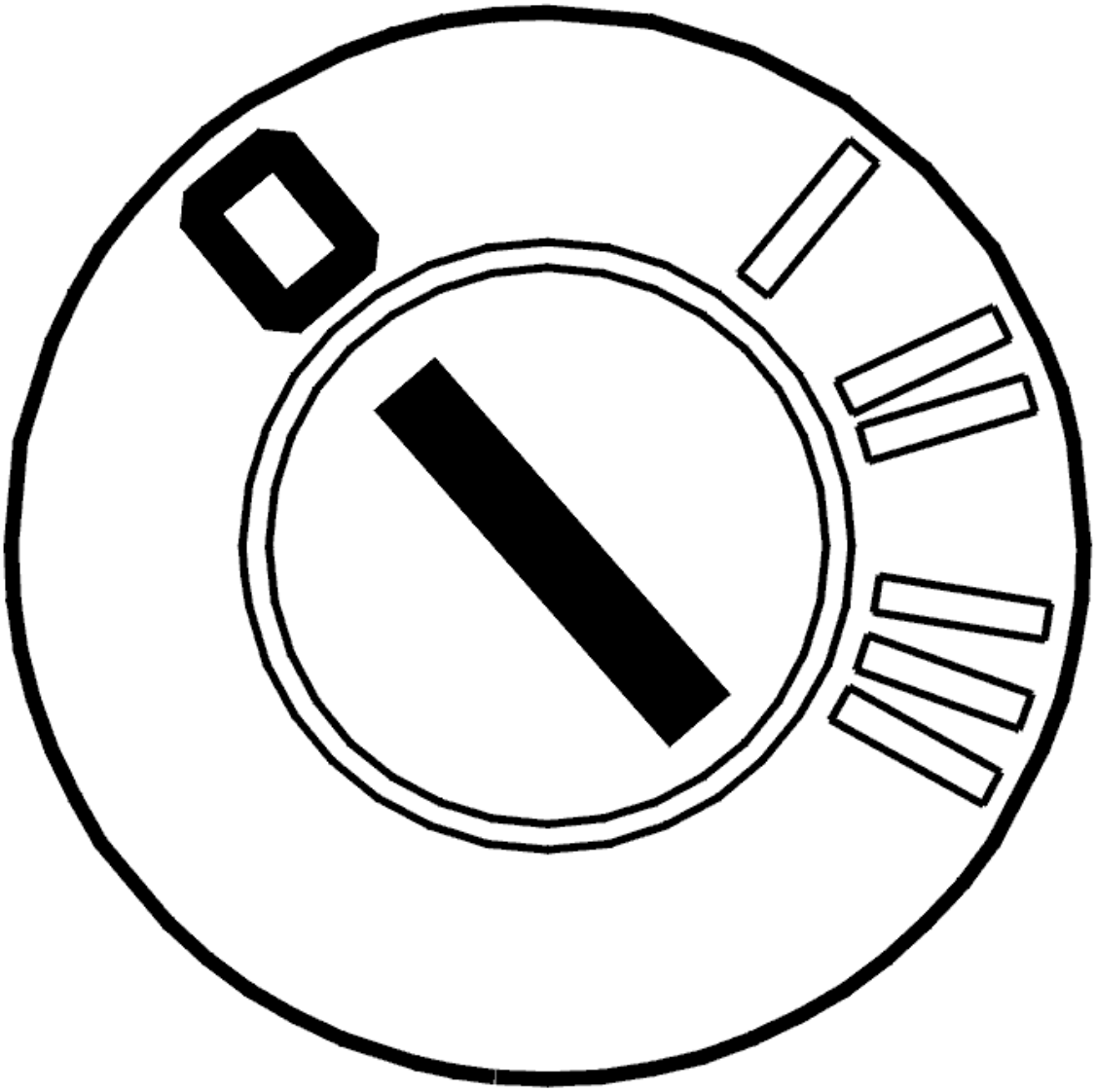

Fig. 186: Identifying Ignition OFF
Courtesy of VOLVO CARS CORPORATION

- Ignition off
- Disconnect connector A for the phone module (PHM).

  Check the cradle signal's cable for short-circuit to ground.

  Check between:

  - #8 (#8) and #18 (#18) on the control module's connector A.
  - #8 (#8) and #6 (#6) on the control module's connector A.

  If the cable harness is trouble-free, try replacing handset.

Remedy as necessary.

Other information:

- see **CONNECTING THE BREAKOUT BOX**
- see **SIGNAL SPECIFICATION**
- see **LOCATION OF COMPONENTS**
- see **PHONE MODULE (PHM), REPLACING**
- see **HANDSET, REPLACING**
- see **CHECKING WIRING AND TERMINALS**

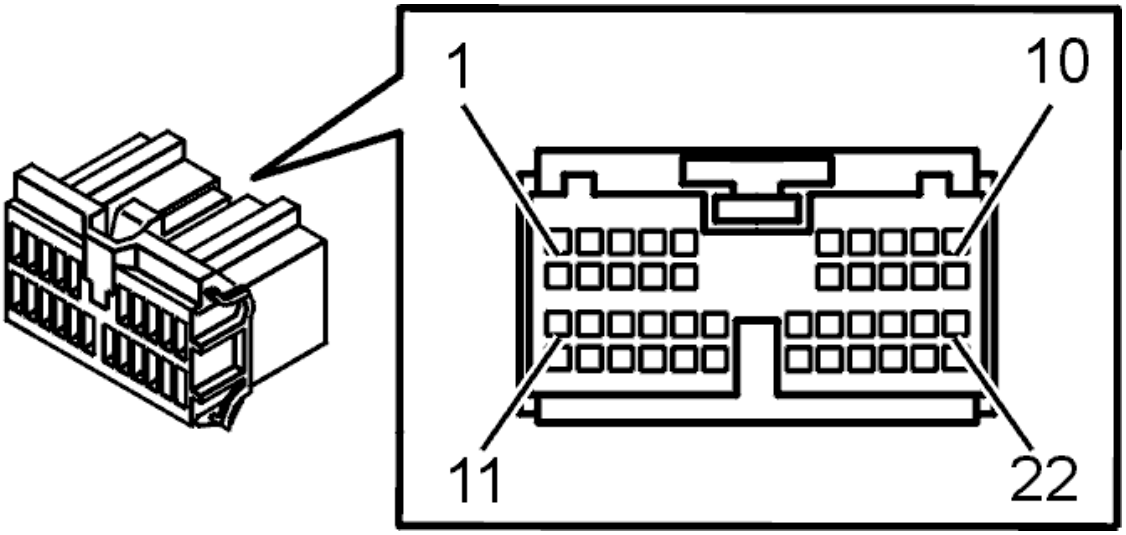

Fig. 187: Identifying Connector (F) Terminals
Courtesy of VOLVO CARS CORPORATION

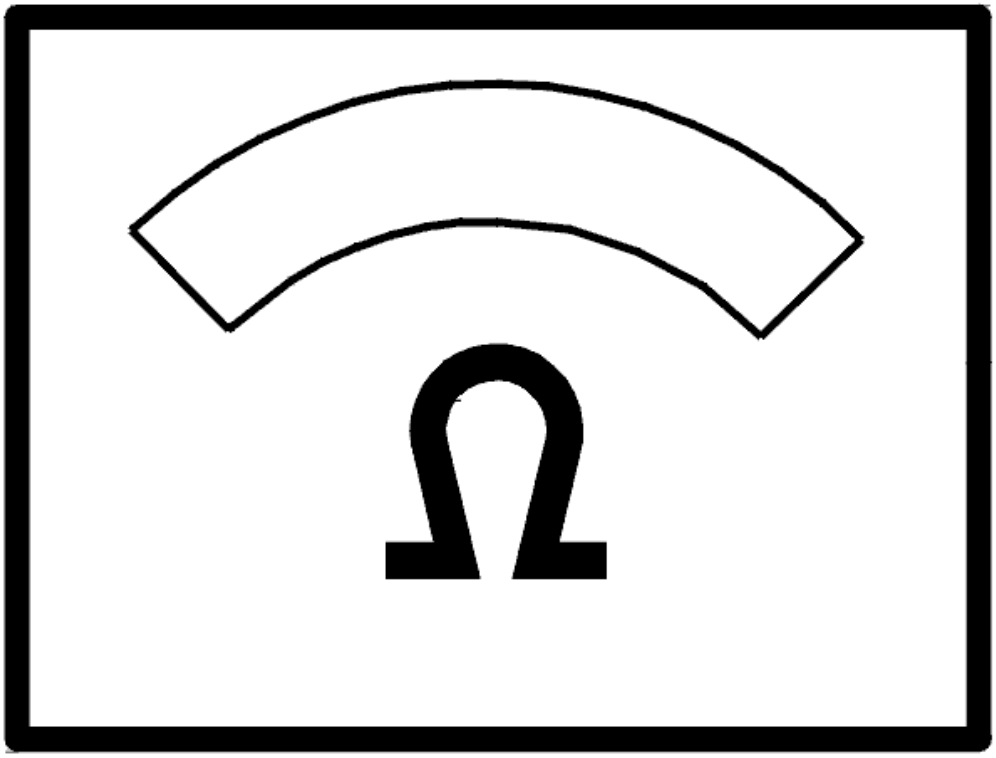

Fig. 188: Identifying Ohm Meter
Courtesy of VOLVO CARS CORPORATION

- **Continue**

  See: **VERIFICATION**

VERIFICATION

VERIFICATION

HINT: After carrying out the repair, check that the fault has been remedied.

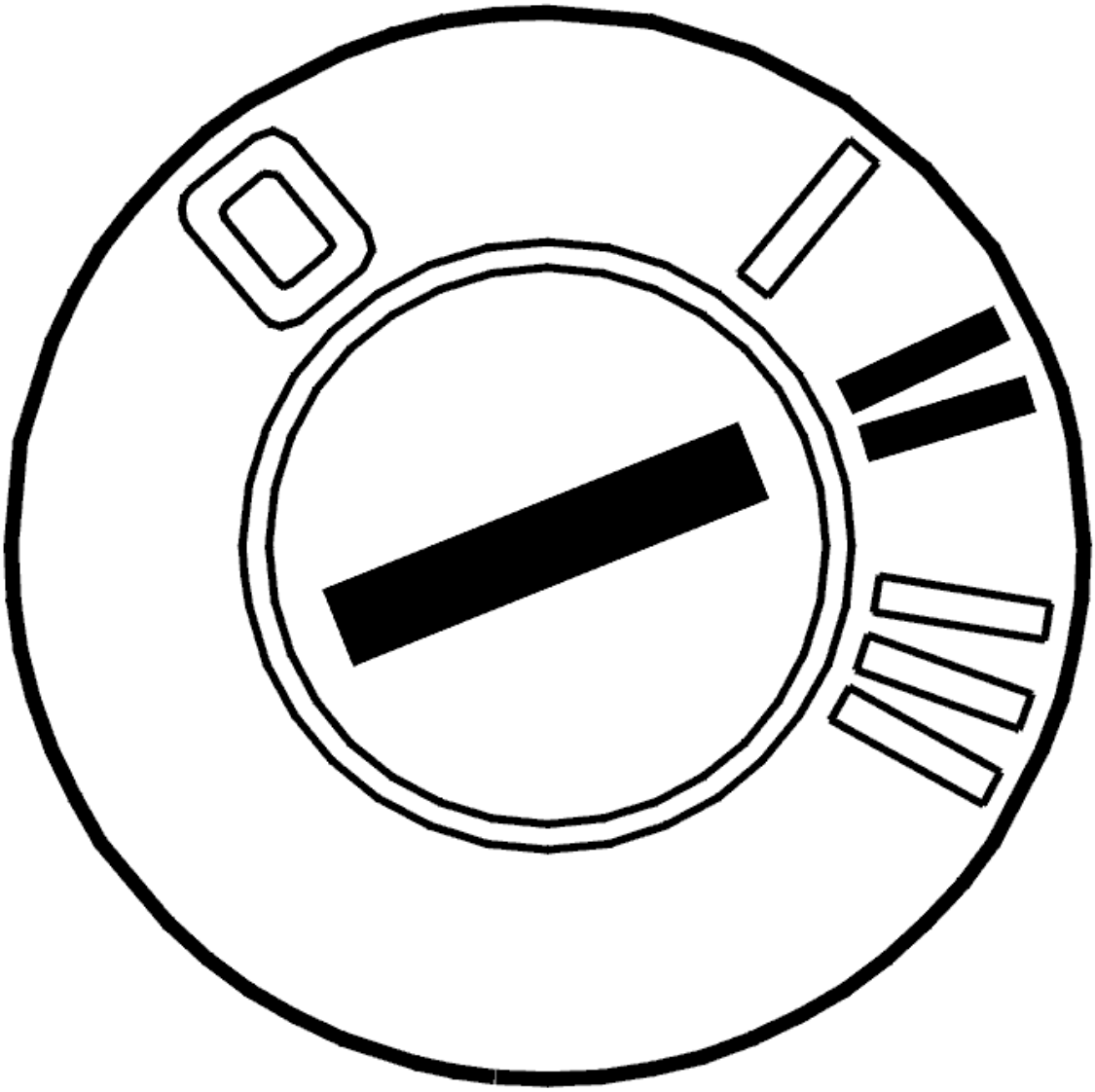

Fig. 189: Identifying Ignition ON
Courtesy of VOLVO CARS CORPORATION

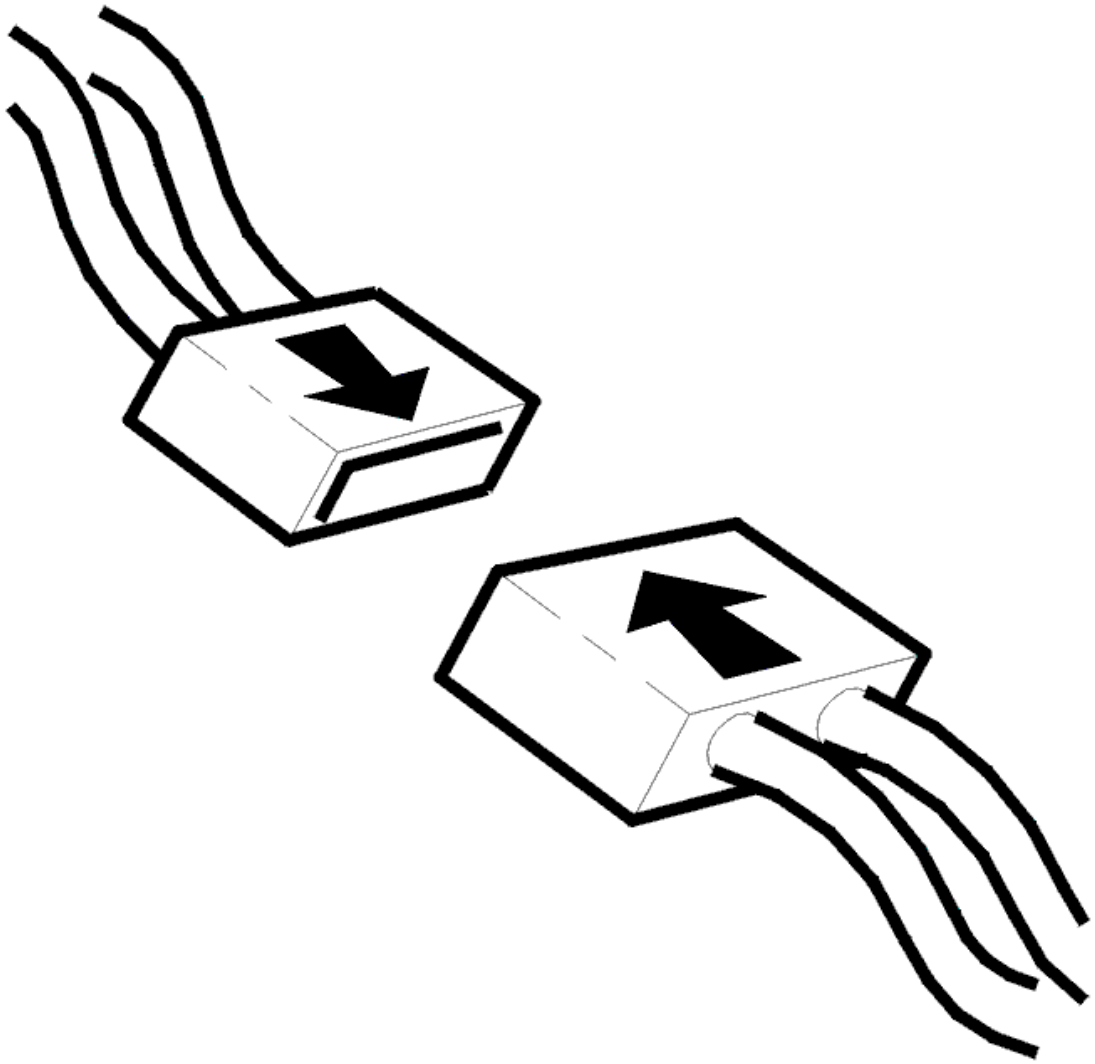

Fig. 190: Connecting Connector
Courtesy of VOLVO CARS CORPORATION

- Ignition off
- Reinstall the connectors, components etc.
- Ignition on
- Activate the carphone.

  Make a call so that both the handset and the hands-free system are used.

  Ignition off.

  Ignition on.

  Read off the diagnostic trouble codes (DTCs).

Check that the relevant diagnostic trouble code (DTC) has switched status from permanent to intermittent fault.

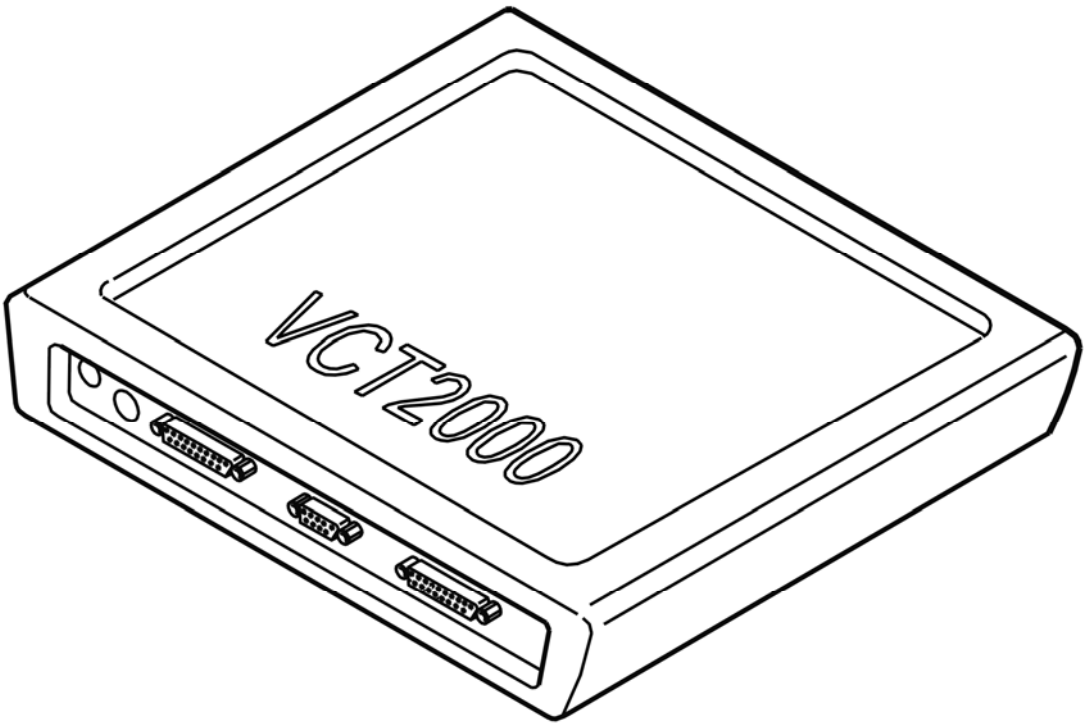

Fig. 191: Identifying VCT2000 Diagnostic Tool Symbol In VIDA
Courtesy of VOLVO CARS CORPORATION

Has the status of the diagnostic trouble code (DTC) changed?

- **YES**

  VERIFIED: Troubleshooting has been completed.

- **NO**

  See: **INFORMATION**

INFORMATION

FAULT-TRACING INFORMATION

The fault should have been detected and remedied. As this is not the case fault-tracing has failed.

Exit fault-tracing for this diagnostic trouble code (DTC) or make another attempt.

SIGNAL TOO LOW

CHECKING THE COMPONENT AND WIRING

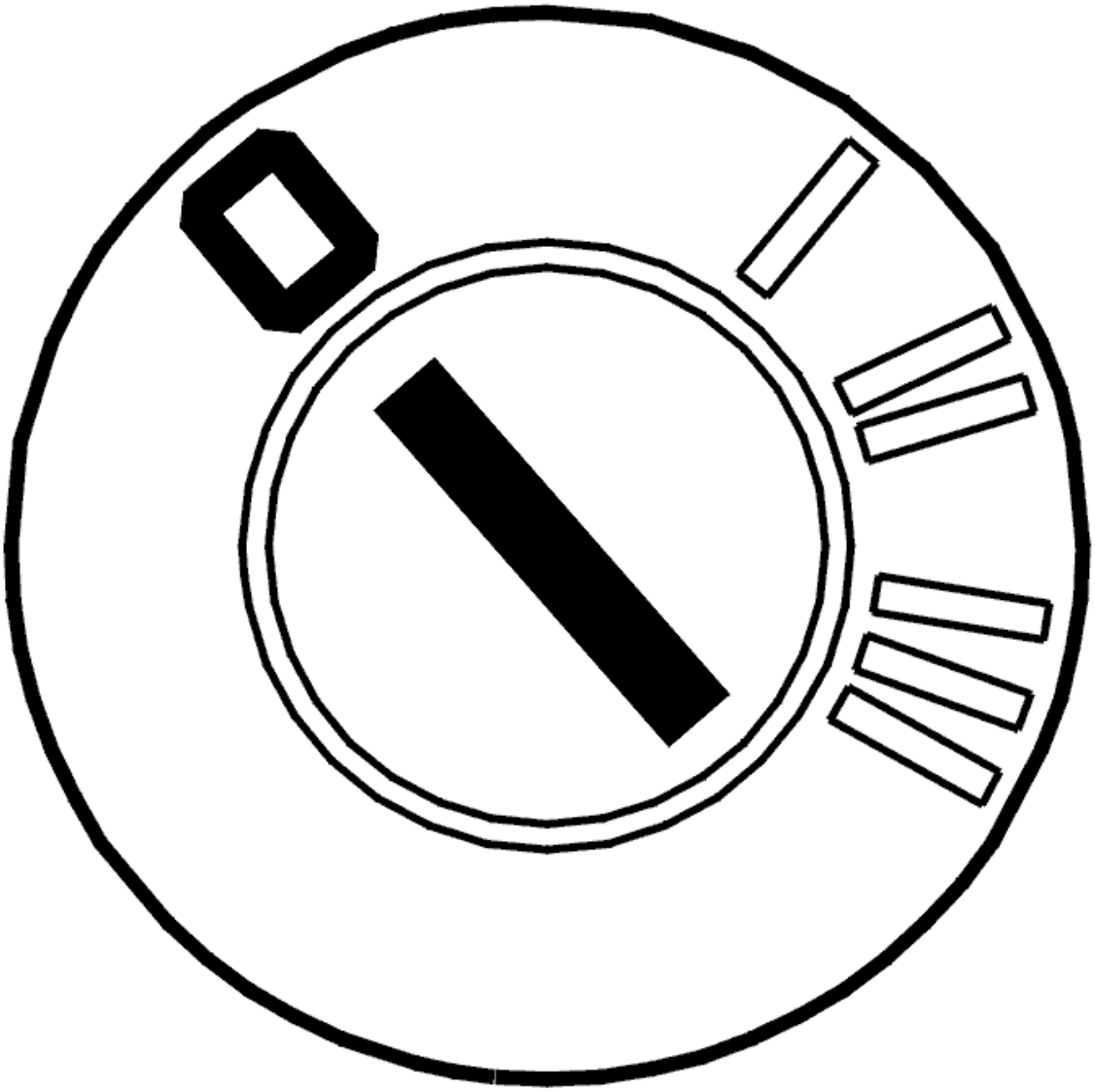

Fig. 192: Identifying Ignition OFF
Courtesy of VOLVO CARS CORPORATION

- Ignition off.

  Check the cradle signal cable between phone module (PHM) connector B terminal #12 (#54) and handset connector terminal #4 (#24). Check for a short-circuit to ground.

  Try replacing the handset if the wiring is OK.

  Remedy as necessary.

Other information:

- The cradle signal is approximately 2.9-3.7 V when the handset is in use
- The cradle signal is approximately 1.6-2.1 V when the handset is in the cradle
- To connect the breakout box, see **CONNECTING THE BREAKOUT BOX**
- For information about signals and connectors, see **SIGNAL SPECIFICATION**
- To access and replace the control module, see **PHONE MODULE (PHM), REPLACING**
- To access or replace the handset, see **HANDSET, REPLACING**
- see **CHECKING WIRING AND TERMINALS** .

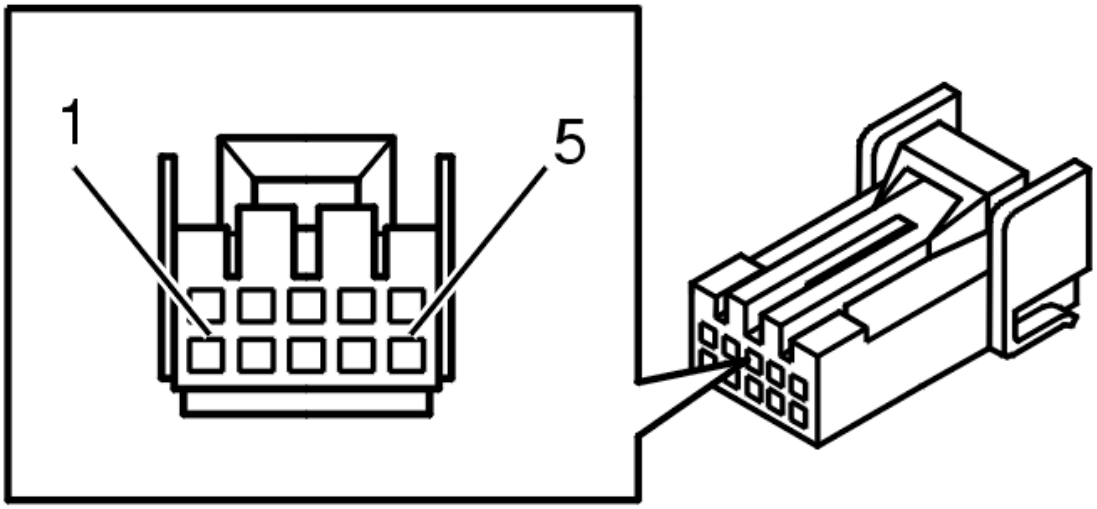

Fig. 193: 10 CD Changer Connector Terminals
Courtesy of VOLVO CARS CORPORATION

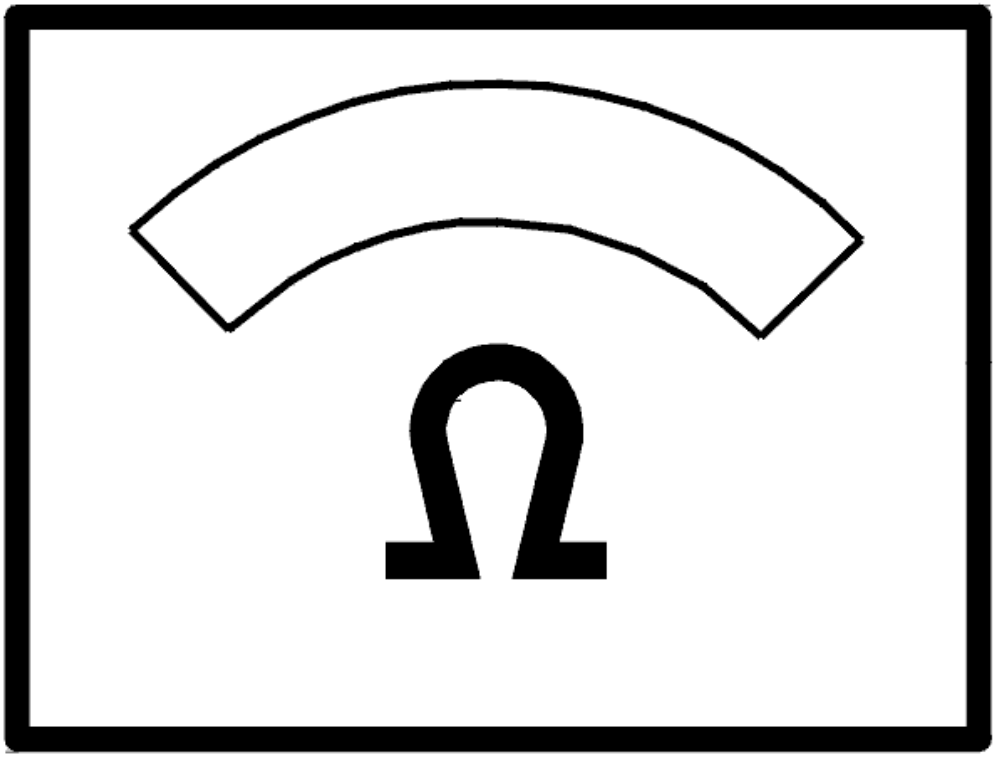

Fig. 194: Identifying Ohm Meter
Courtesy of VOLVO CARS CORPORATION

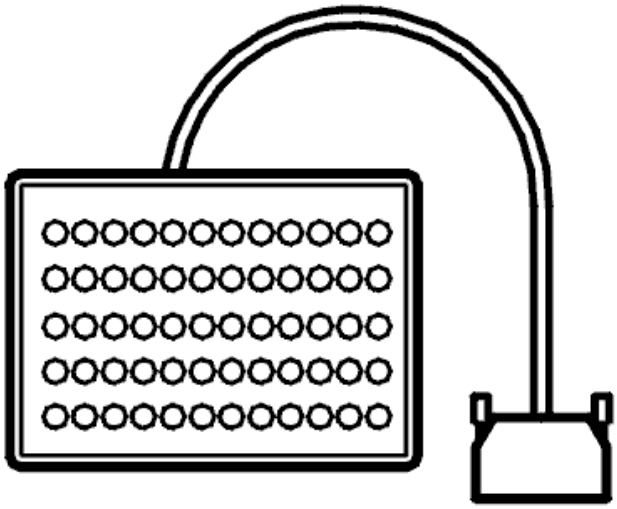

Fig. 195: Breakout Box
Courtesy of VOLVO CARS CORPORATION

- **Continue**

  See: **VERIFICATION**

VERIFICATION

VERIFICATION

HINT: After carrying out the repair, check that the fault has been remedied.

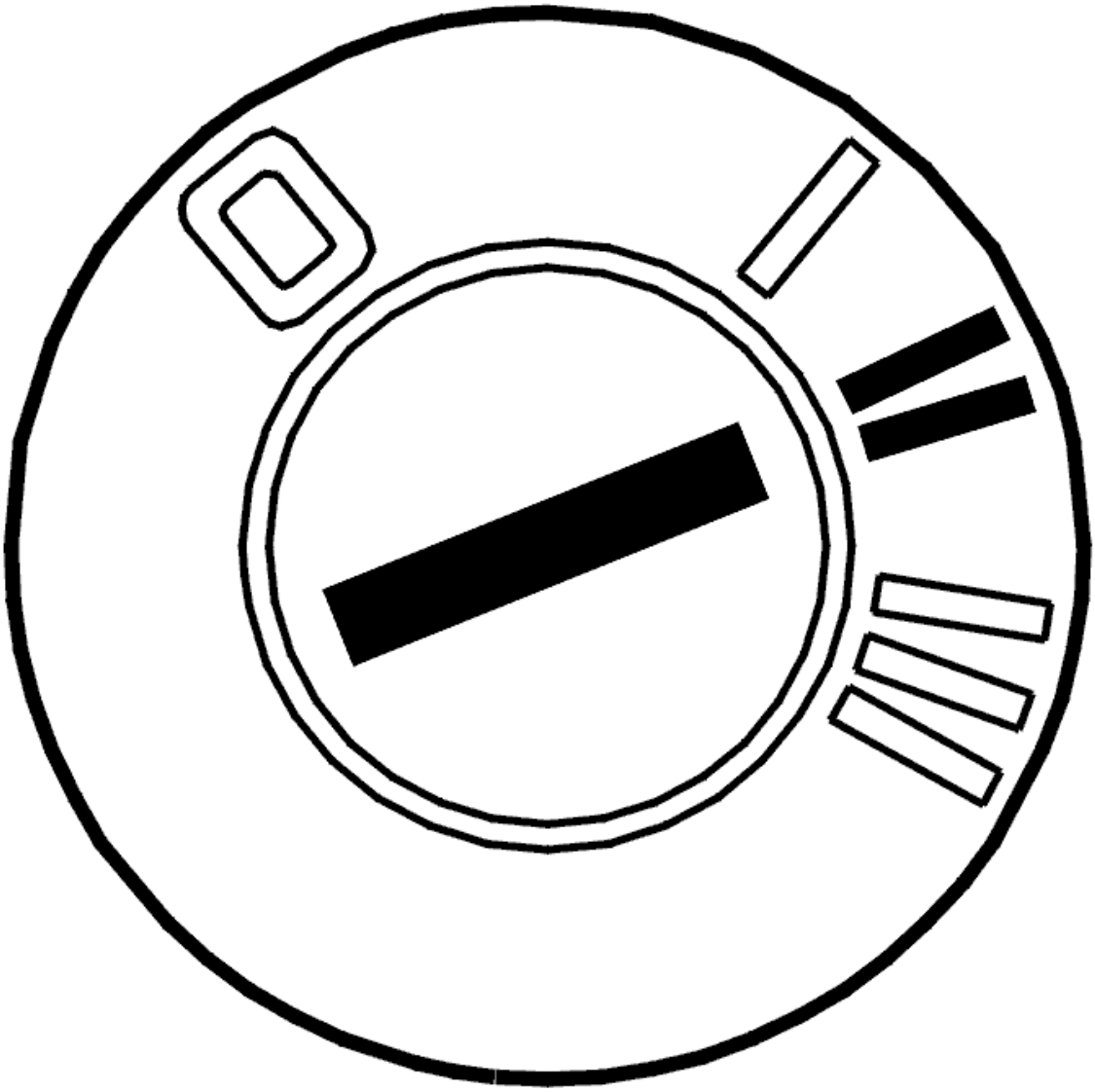

Fig. 196: Identifying Ignition ON
Courtesy of VOLVO CARS CORPORATION

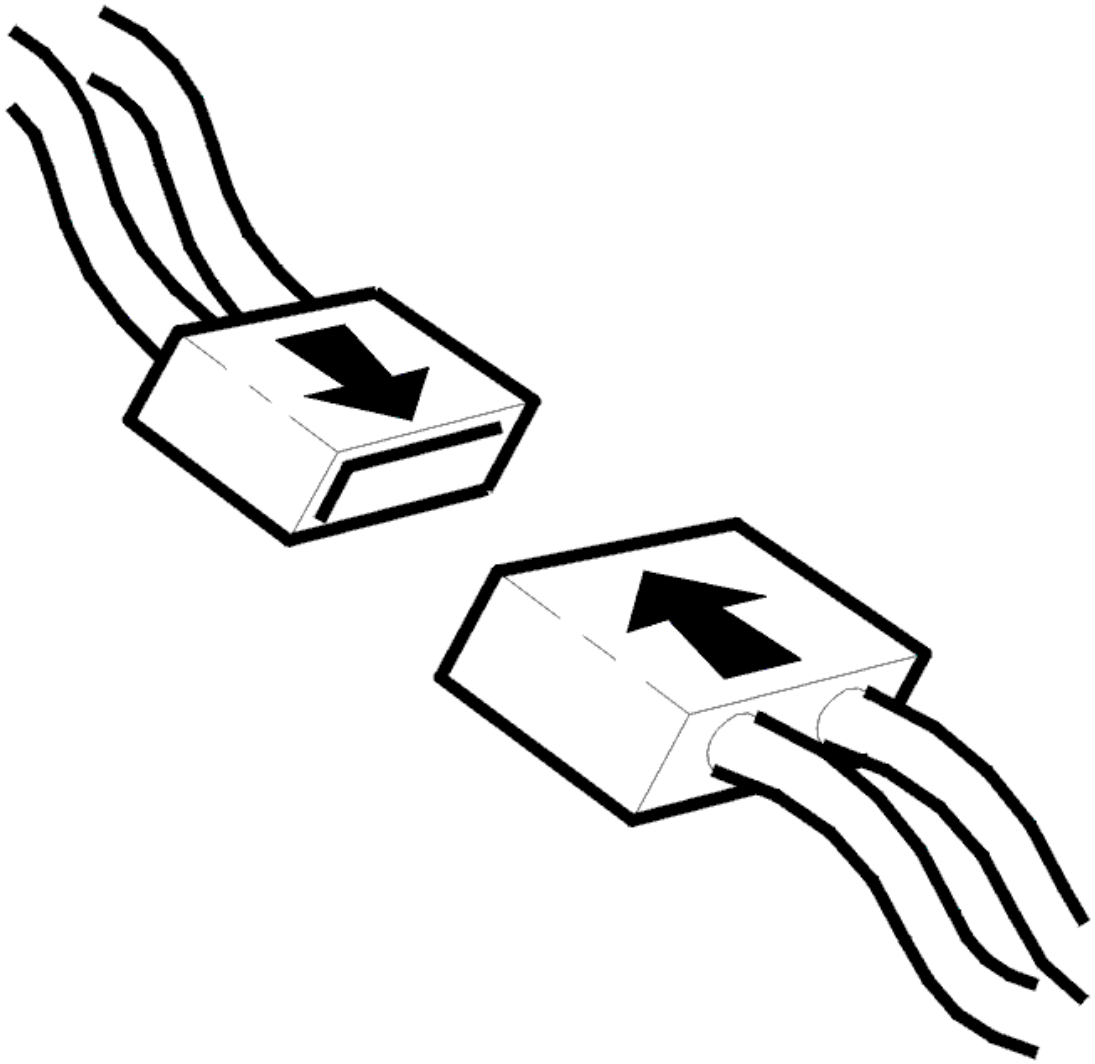

Fig. 197: Connecting Connector
Courtesy of VOLVO CARS CORPORATION

- Ignition off
- Reinstall the connectors, components etc.
- Ignition on
- Switch on the carphone.

  Make a call so that both the handset and the hands-free system are used.

  Ignition off.

  Ignition on.

  Read off the diagnostic trouble codes (DTCs).

Check that the relevant diagnostic trouble code (DTC) has switched status from permanent to intermittent fault.

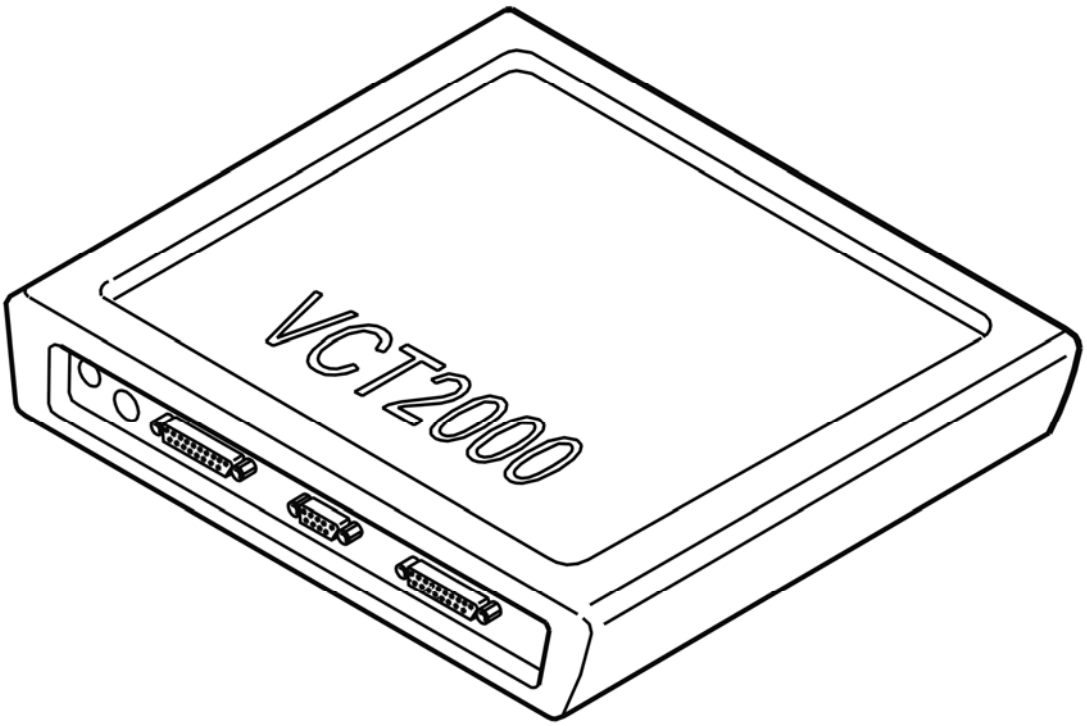

Fig. 198: Identifying VCT2000 Diagnostic Tool Symbol In VIDA
Courtesy of VOLVO CARS CORPORATION

Has the status of the diagnostic trouble code (DTC) changed?

- **YES**

  VERIFIED: Troubleshooting has been completed.

- **NO**

  See: **INFORMATION**

INFORMATION

FAULT-TRACING INFORMATION

The fault should have been detected and remedied. As this is not the case fault-tracing has failed.

Exit fault-tracing for this diagnostic trouble code (DTC) or make another attempt.

PHM-0070: CONTROL MODULE. INCORRECT SOFTWARE (2006-2012)

DIAGNOSTIC TROUBLE CODE (DTC) INFORMATION PHM-0070

Condition

The phone module (PHM) has an internal parameter file that tells the control module how it is configured. The software in the Phone module (PHM) checks that the internal parameter file is correct.

The control module's test for the diagnostic trouble code (DTC) starts in the event of:

- Start-up of the control module.

The diagnostic trouble code (DTC) is stored if the control module detects that:

- The parameter file is of the wrong format.

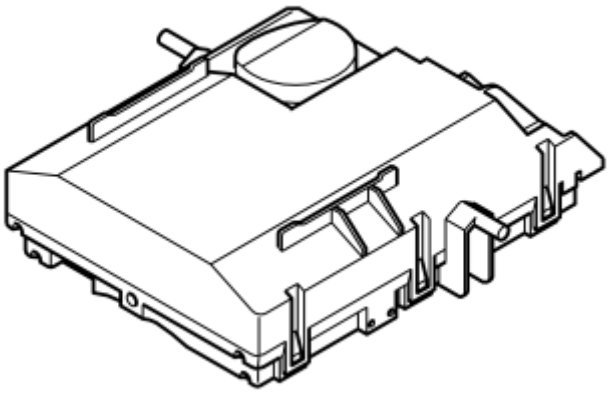

Fig. 199: Identifying Phone Module (PHM)
Courtesy of VOLVO CARS CORPORATION

Substitute Value

- None

Possible Source

- Incorrect internal parameter file.

Fault symptom[s]

- Cellular phone/Does not work
- Cellular phone/Other cellular phone problems

FAULTY SOFTWARE

FAULTY SOFTWARE

Problems with the local parameter file are remedied by downloading new software to the Phone module (PHM).

- Load new software into the control module.
- **Continue**

  See: **VERIFICATION**

VERIFICATION

VERIFICATION

HINT: After carrying out the repair, check that the fault has been remedied.

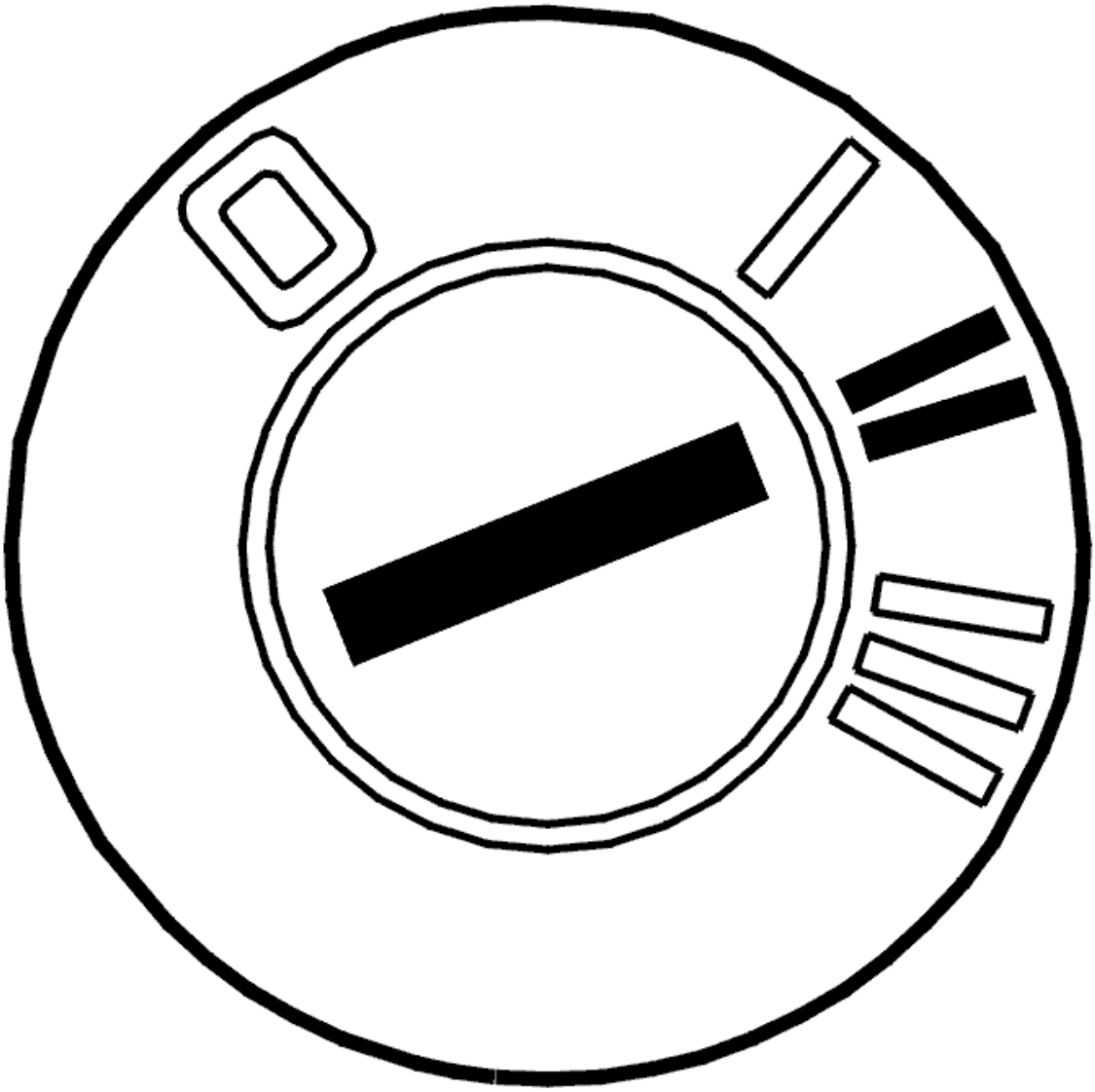

Fig. 200: Identifying Ignition ON
Courtesy of VOLVO CARS CORPORATION

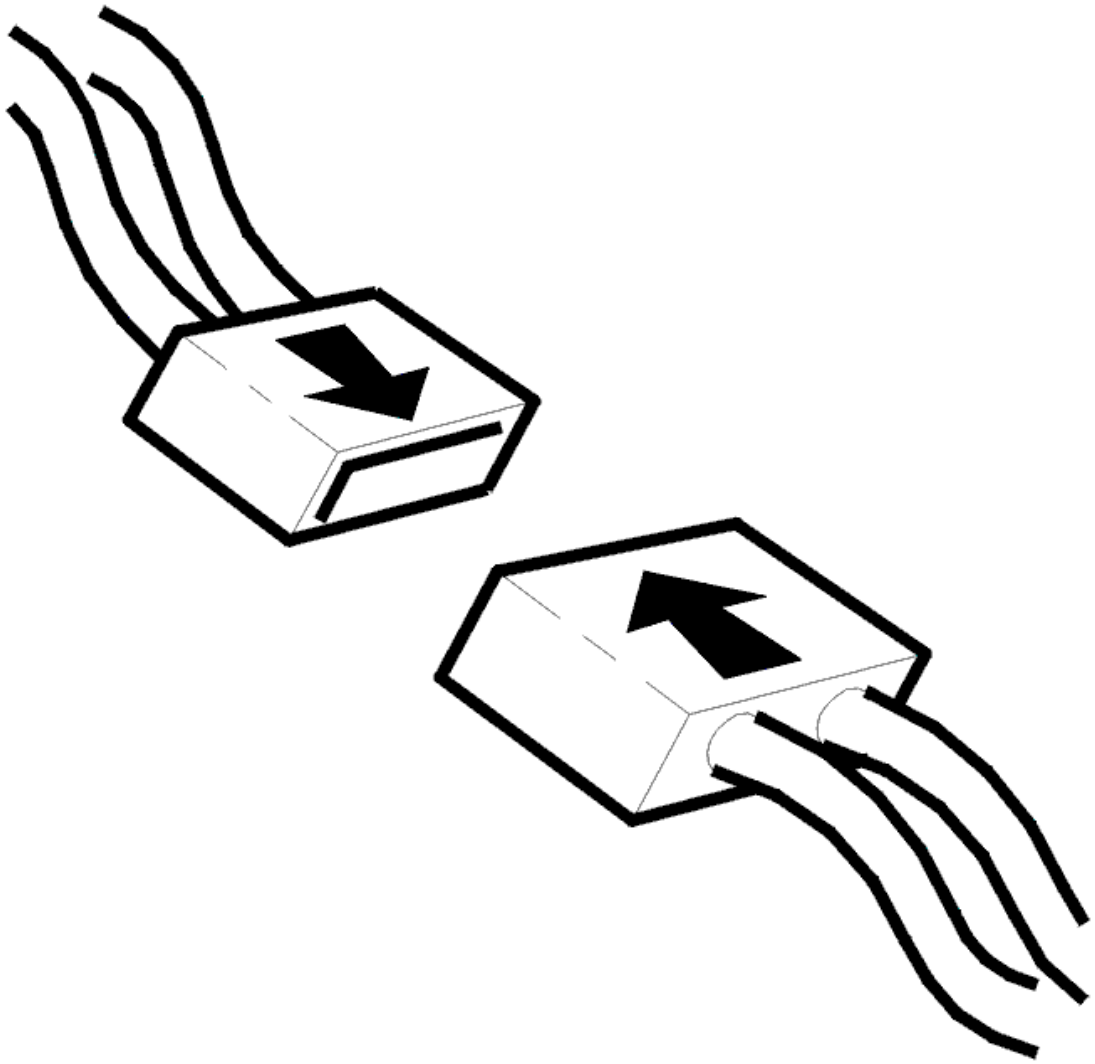

Fig. 201: Connecting Connector
Courtesy of VOLVO CARS CORPORATION

- Ignition off
- Reinstall the connectors, components etc.
- Ignition on
- Activate the carphone.

  Make a call so that both the handset and the hands-free system are used.

  - Ignition off.
  - Ignition on.
  - Read off the diagnostic trouble codes (DTCs).
  - Check that the relevant diagnostic trouble code (DTC) has switched status from permanent to

intermittent fault.

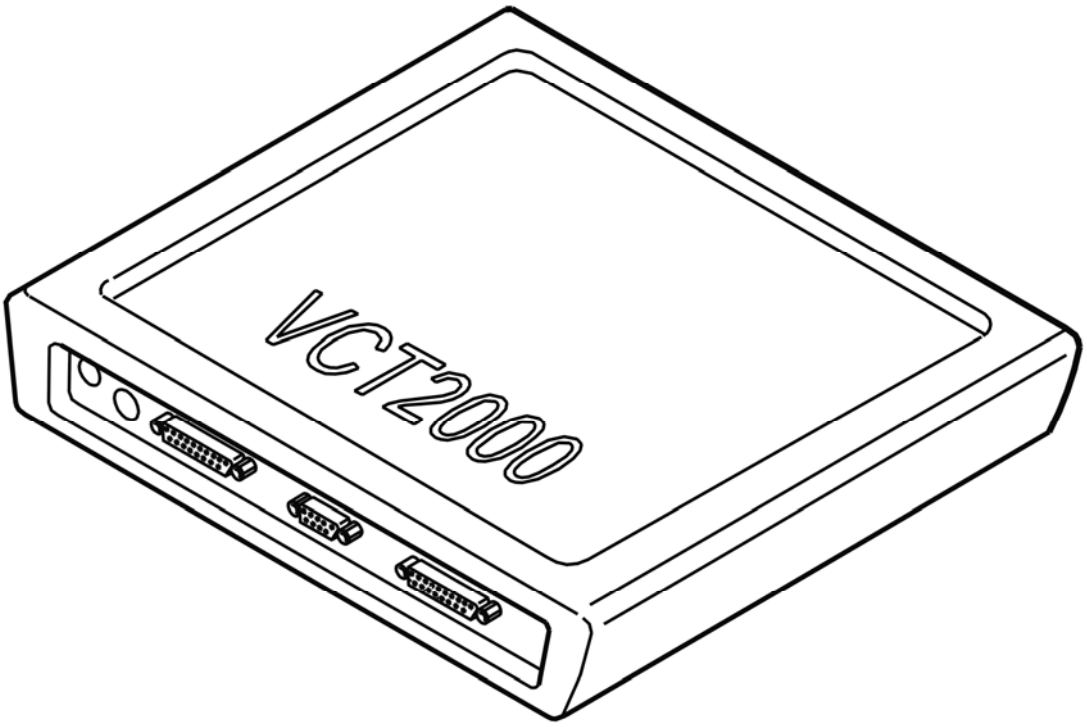

Fig. 202: Identifying VCT2000 Diagnostic Tool Symbol In VIDA
Courtesy of VOLVO CARS CORPORATION

Has the status of the diagnostic trouble code (DTC) changed?

- **YES**

  VERIFIED: Troubleshooting has been completed.

- **NO**

  VERIFICATION FAILED: The fault should have been detected and remedied. As this is not the case fault-tracing has failed. Exit fault-tracing for this diagnostic trouble code (DTC) or make another attempt.

PHM-0080: VOLVO ON CALL SWITCH. INCORRECT KEYPAD INSTALLED (2006-2012)

DIAGNOSTIC TROUBLE CODE (DTC) INFORMATION PHM-0080

Condition

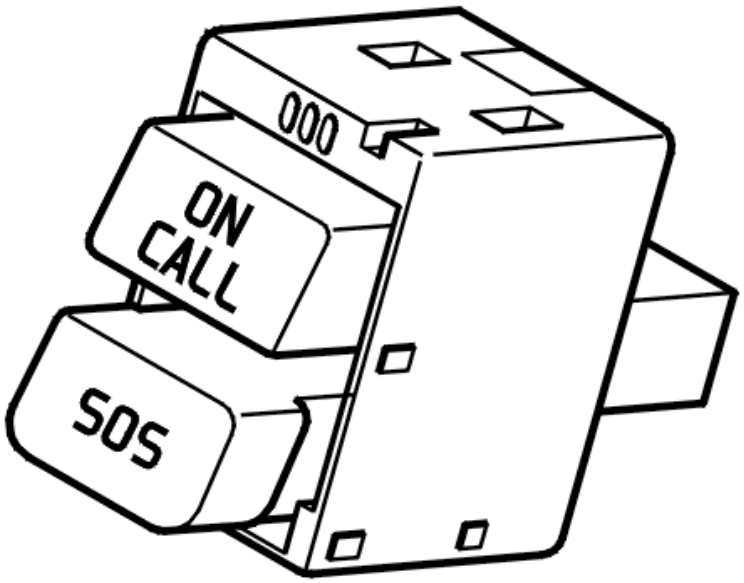

Fig. 203: Identifying Phone Module (PHM)
Courtesy of VOLVO CARS CORPORATION

The diagnostic trouble code (DTC) is stored if a phone module (PHM) without Volvo On Call functionality registers that the Volvo On Call switches are incorrectly connected to the control module.

The diagnostic trouble code (DTC) can be diagnosed when the ignition is switched on (not key position 3) and when the battery voltage is between 9-16 V. The diagnostic trouble code (DTC) can only be diagnosed for a phone module (PHM) without Volvo On Call functionality.

Substitute Value

- None.

Possible Source

- The switches for Volvo On Call are incorrectly installed and connected in a vehicle that should have a phone module (PHM) without Volvo On Call functionality
- A phone module (PHM) without Volvo On Call functionality is incorrectly installed in a vehicle that should be equipped with Volvo On Call.

Fault symptom[s]

- No or reduced Volvo On Call functionality.

INCORRECT KEYPAD INSTALLED

CHECKING THE COMPONENT

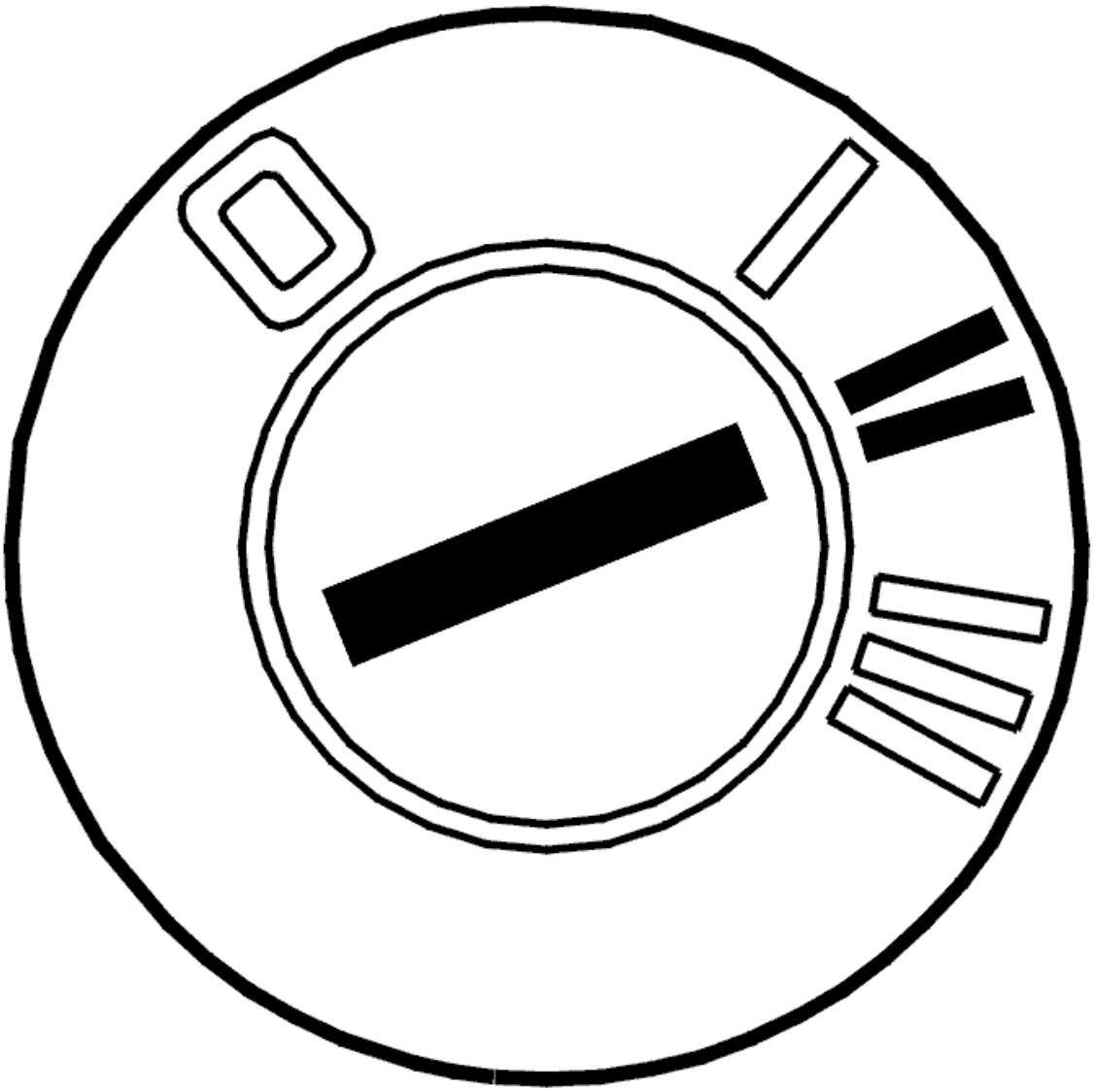

Fig. 204: Identifying Ignition ON
Courtesy of VOLVO CARS CORPORATION

- Ignition on.

  The fault is because the Volvo On Call switches were mistakenly connected to a phone module (PHM) without Volvo On Call functionality.

  Use the VCT2000 (or appropriate scan tool) to check whether the phone module (PHM) in the vehicle is prepared for Volvo On Call functionality.

Remedy as necessary.

Other information:

- see **SIGNAL SPECIFICATION**
- see **CONNECTING THE BREAKOUT BOX**
- see **LOCATION OF COMPONENTS**
- see **PHONE MODULE (PHM), REPLACING (2006-2010)**
- see **CHECKING WIRING AND TERMINALS**

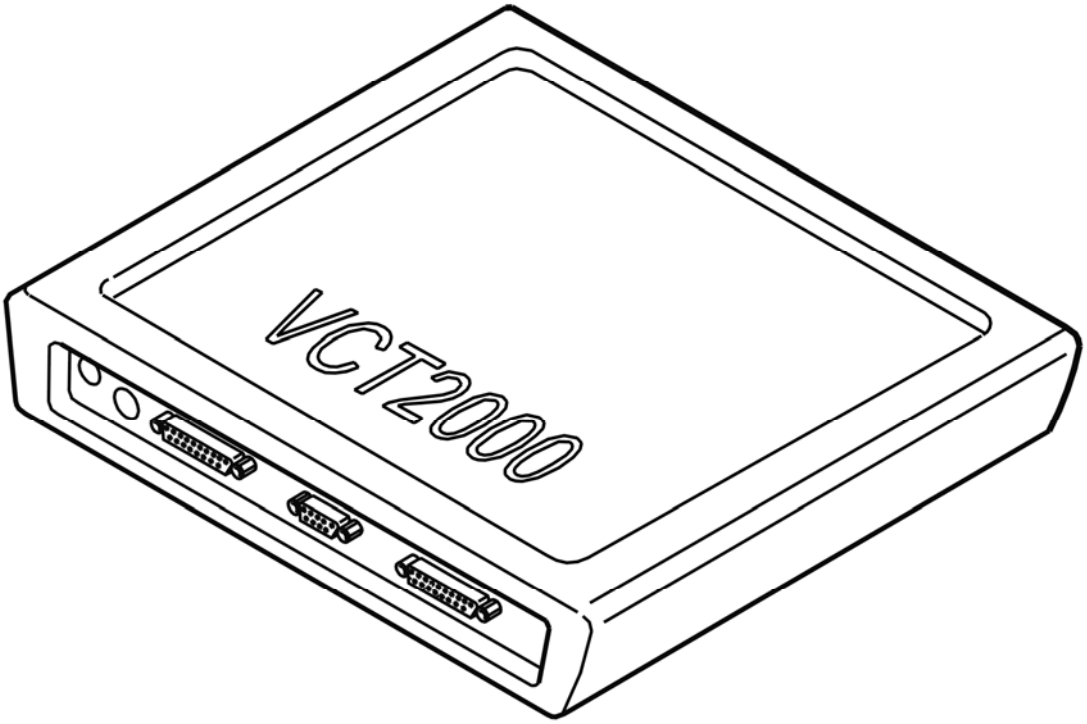

Fig. 205: Identifying VCT2000 Diagnostic Tool Symbol In VIDA
Courtesy of VOLVO CARS CORPORATION

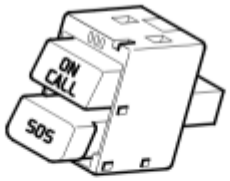

Fig. 206: Identifying Volvo On Call Switch
Courtesy of VOLVO CARS CORPORATION

- **Continue**

  See: **VERIFICATION**

VERIFICATION

VERIFICATION

HINT: After carrying out the repair, check that the fault has been remedied.

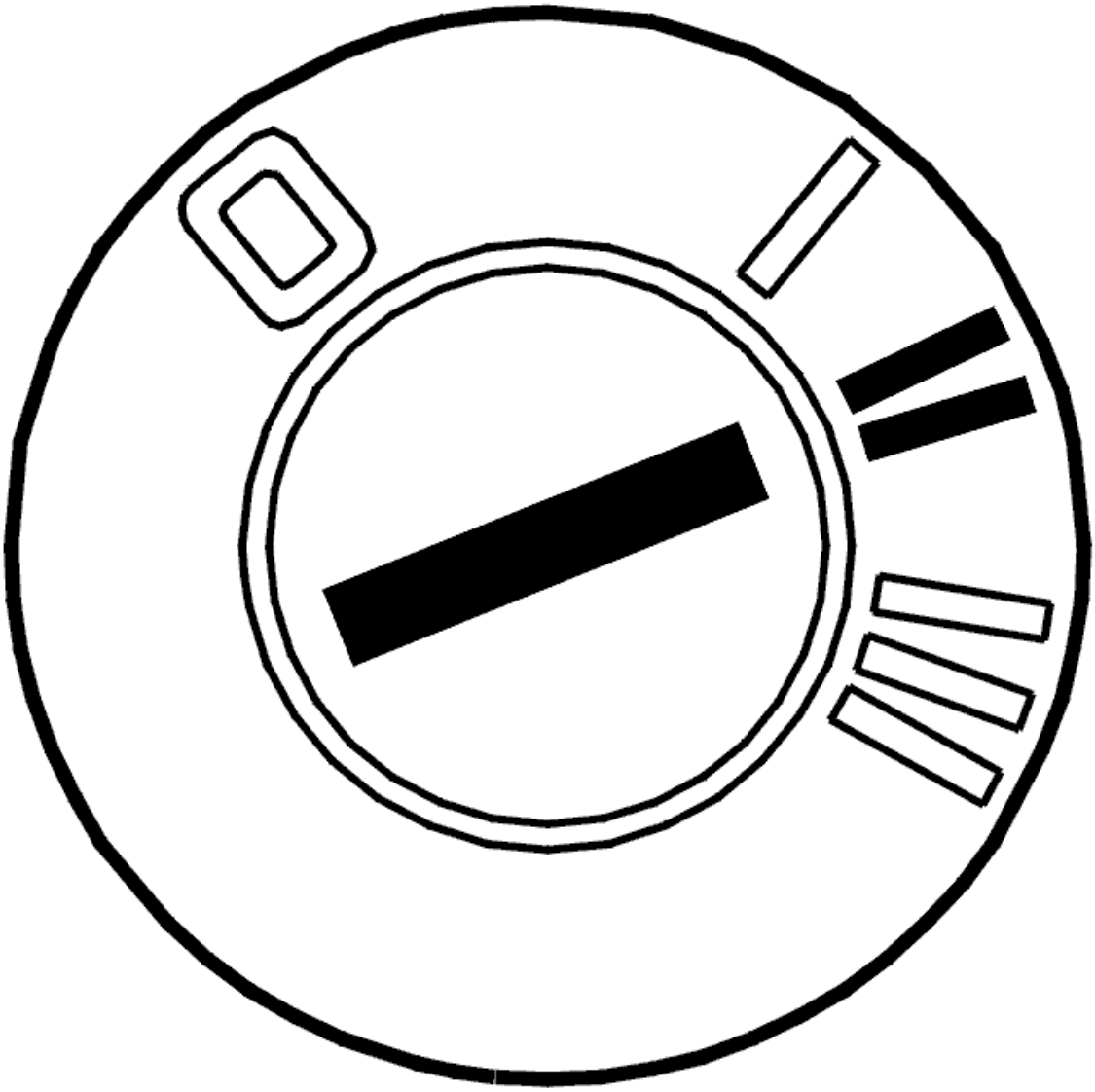

Fig. 207: Identifying Ignition ON
Courtesy of VOLVO CARS CORPORATION

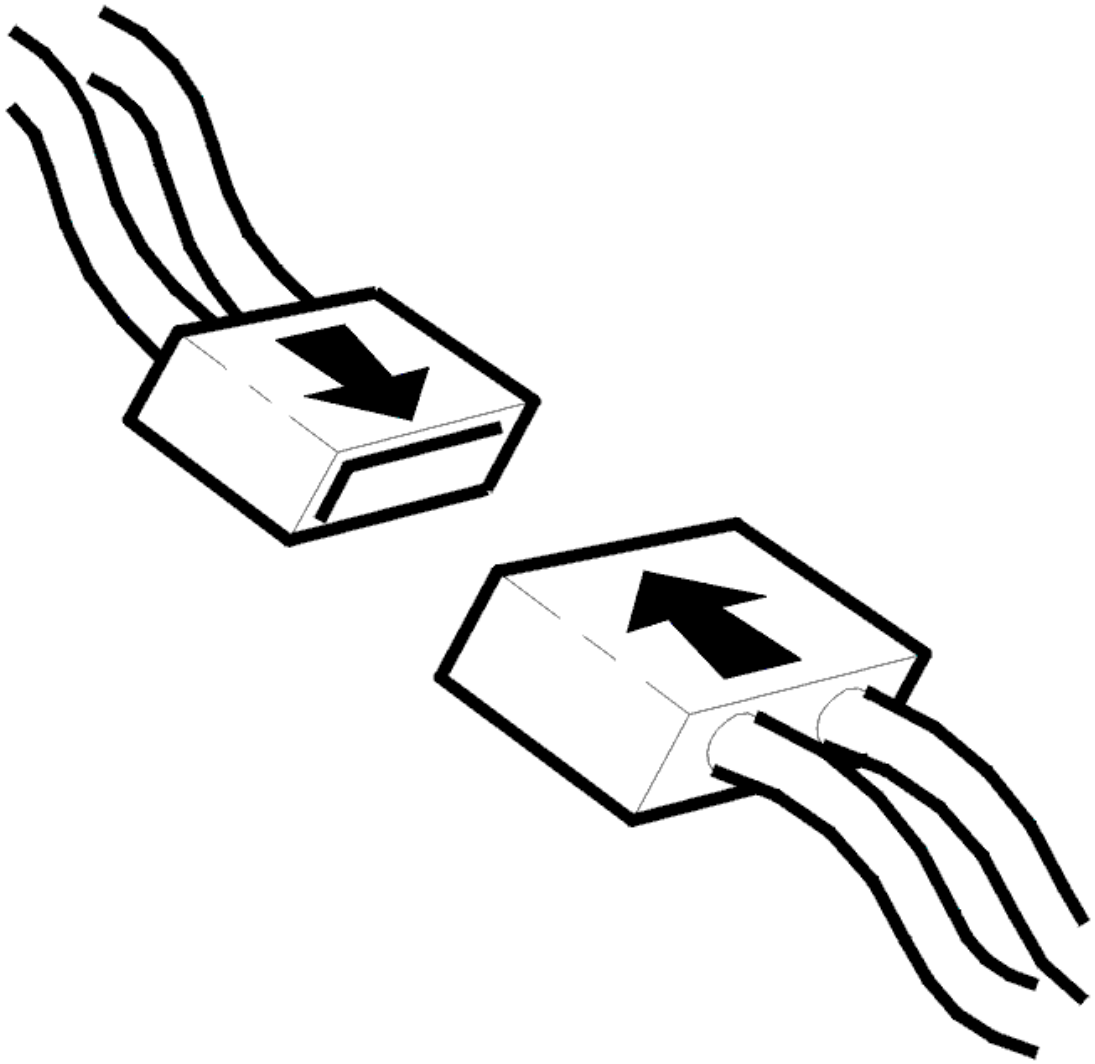

Fig. 208: Connecting Connector
Courtesy of VOLVO CARS CORPORATION

- Ignition off
- Reinstall the connectors, components etc.
- Ignition on
- Activate the carphone.

  Make a call so that both the handset and the hands-free system are used.

  - Ignition off.
  - Ignition on.
  - Read off the diagnostic trouble codes (DTCs).
  - Check that the relevant diagnostic trouble code (DTC) has switched status from permanent to

intermittent fault.

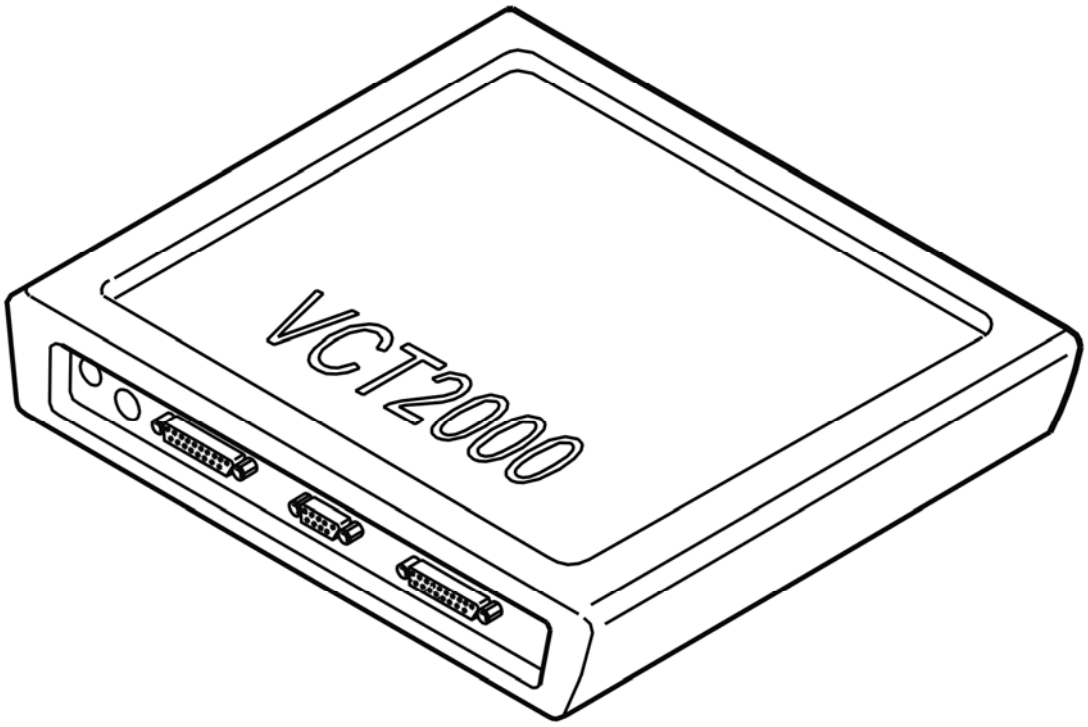

Fig. 209: Identifying VCT2000 Diagnostic Tool Symbol In VIDA
Courtesy of VOLVO CARS CORPORATION

Has the status of the diagnostic trouble code (DTC) changed?

- **YES**

  VERIFIED: Troubleshooting has been completed.

- **NO**

  See: **INFORMATION**

INFORMATION

FAULT-TRACING INFORMATION

The fault should have been detected and remedied. As this is not the case fault-tracing has failed.

Exit fault-tracing for this diagnostic trouble code (DTC) or make another attempt.

PHM-0082: VOLVO ON CALL SWITCH. ACTIVATED TOO LONG (2006-2012)

DIAGNOSTIC TROUBLE CODE (DTC) INFORMATION PHM-0082

Condition

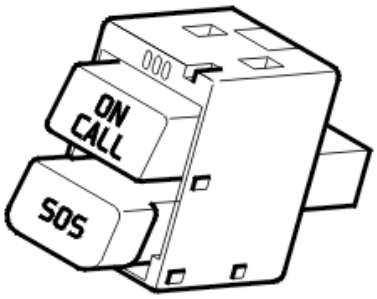

Fig. 210: Identifying Phone Module (PHM) Connector
Courtesy of VOLVO CARS CORPORATION

The diagnostic trouble code (DTC) is stored if the phone module (PHM) detects that the switch for ON CALL or SOS is pressed in for longer than two minutes.

The diagnostic trouble code (DTC) can be diagnosed when the ignition is switched on (not key position 3) and when the battery voltage is between 9-16 V. The diagnostic trouble code (DTC) can only be diagnosed for a phone module (PHM) with Volvo On Call functionality.

Substitute Value

- None. The phone module (PHM) makes a call to Volvo On Call Customer Service Center for as long as the switch is pressed in.

Possible Source

- The switch for Volvo On Call is stuck in the pressed in position
- Unintentionally long activation of the switch.

Fault symptom[s]

- No or reduced Volvo On Call functionality.

ACTIVATED TOO LONG

CHECKING THE COMPONENT

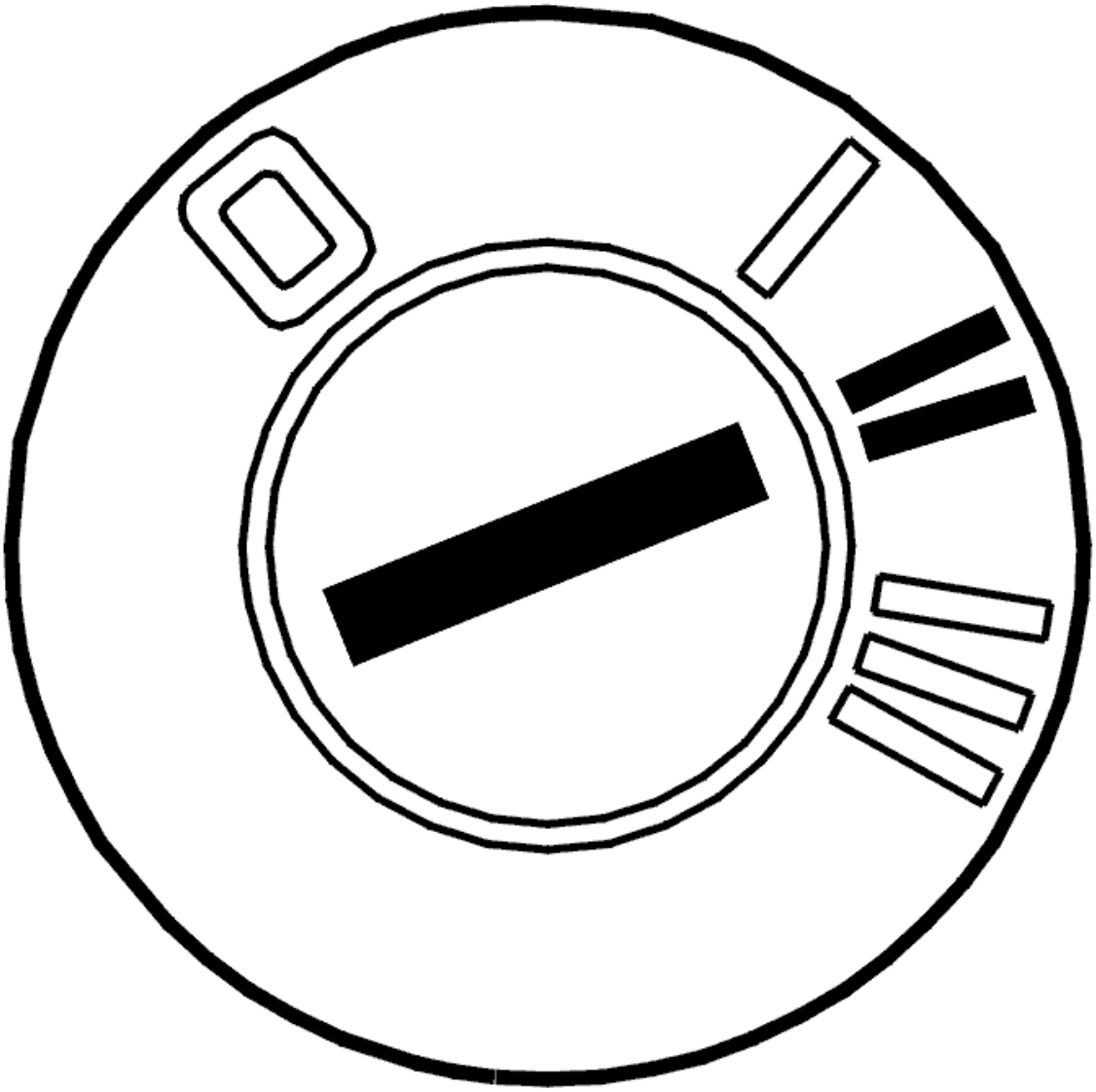

Fig. 211: Identifying Ignition ON
Courtesy of VOLVO CARS CORPORATION

- Ignition on.

  Check if the switch is sticking due to dirt or there is an obstruction preventing the switch from returning.

  NOTE: **If the SOS- or ON CALL-button is held pressed in for at least two seconds one of the services will be activated. The phone module (PHM) will then make a call to Volvo On Call Service Center. An activated ON CALL service can be cancelled by pressing the NO button twice. An activated SOS service can only be cancelled by the Volvo On Call Customer Service Center.**

  The keypad must be replaced if the switch does not spring back and the fault is not due to dirt or an external object.

Use the VCT2000 (or appropriate scan tool) to check how the phone module (PHM) interprets the status of the switch.

Other information:

- see **SIGNAL SPECIFICATION**
- see **CONNECTING THE BREAKOUT BOX**
- see **LOCATION OF COMPONENTS**
- see **PHONE MODULE (PHM), REPLACING (2006-2010)**
- see **CHECKING WIRING AND TERMINALS**

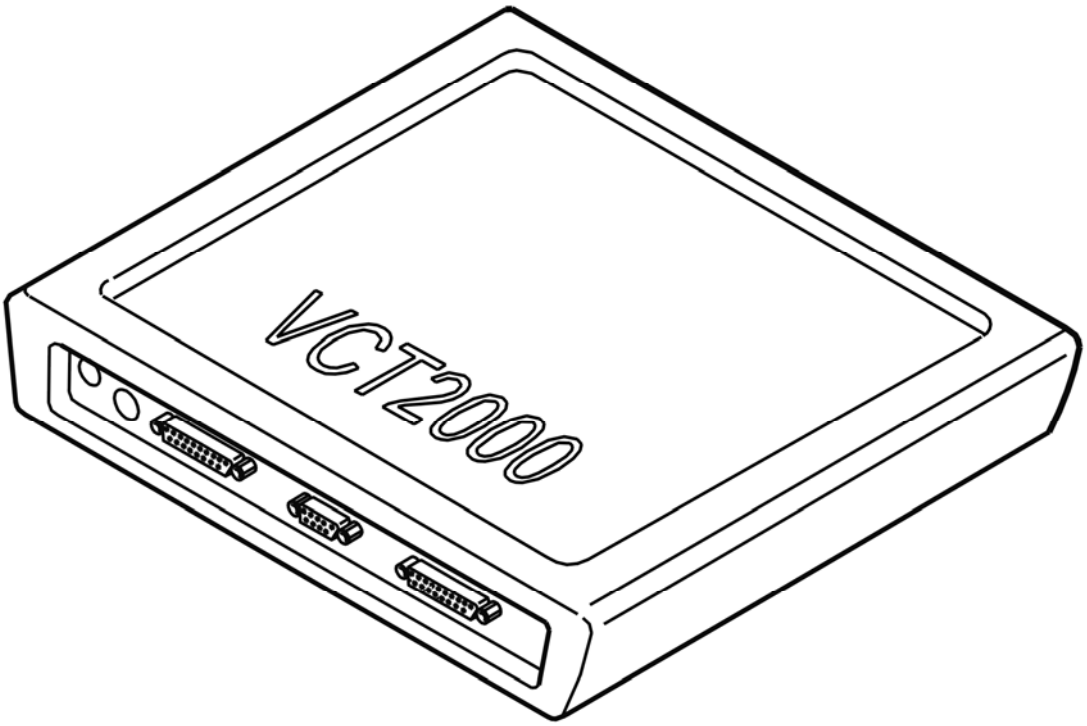

Fig. 212: Identifying VCT2000 Diagnostic Tool Symbol In VIDA
Courtesy of VOLVO CARS CORPORATION

Was a fault detected?

- **YES**

  See: **VERIFICATION**

- **NO**

  See: **FAULT-TRACING INFORMATION**

FAULT-TRACING INFORMATION

The fault is probably because a switch has been activated for too long during individual operating cycles. No further corrective action is required if the diagnostic trouble code (DTC) does not recur.

- **Continue**

  See: **INFORMATION**

VERIFICATION

VERIFICATION

HINT: After carrying out the repair, check that the fault has been remedied.

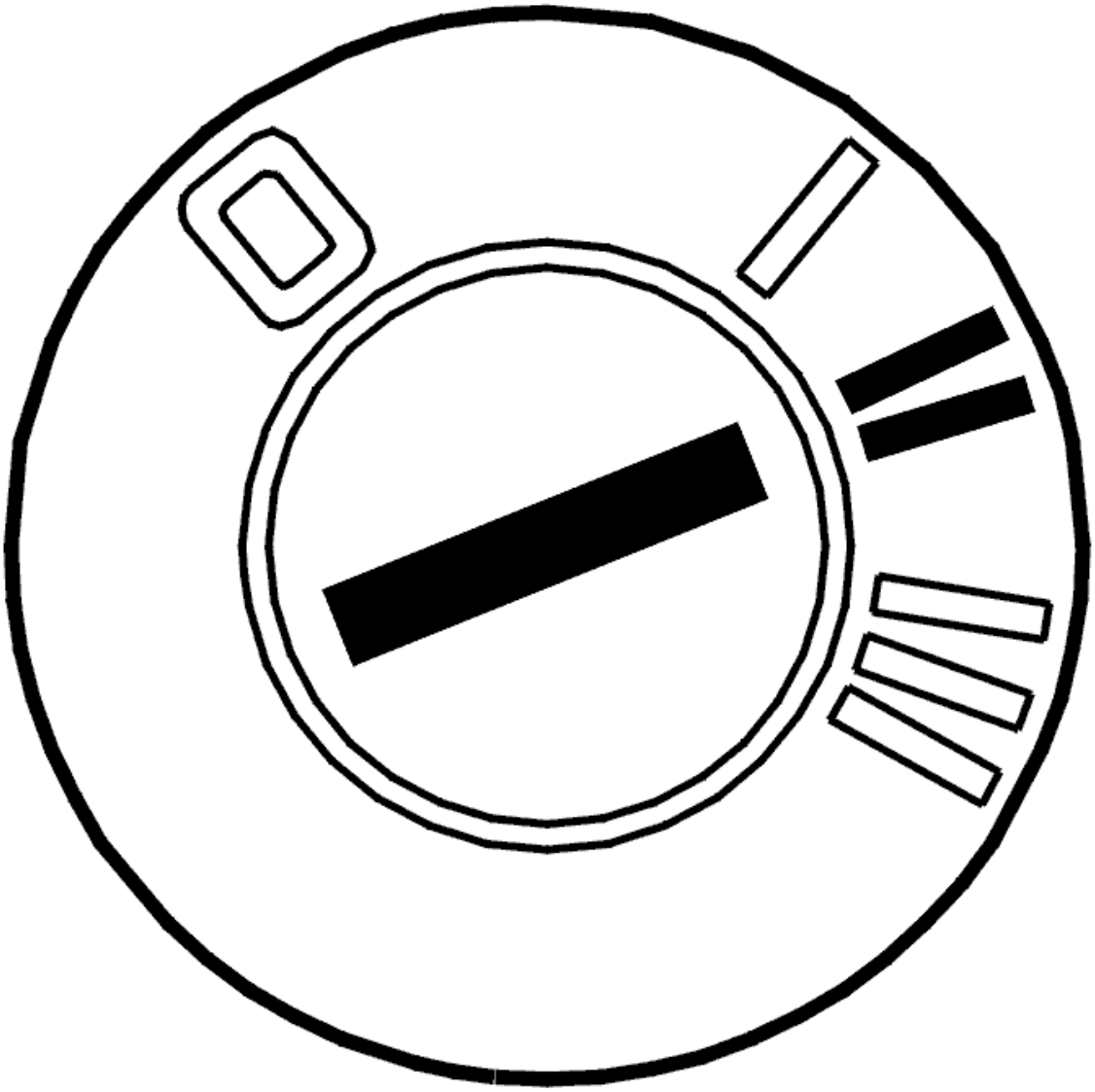

Fig. 213: Identifying Ignition ON

Courtesy of VOLVO CARS CORPORATION

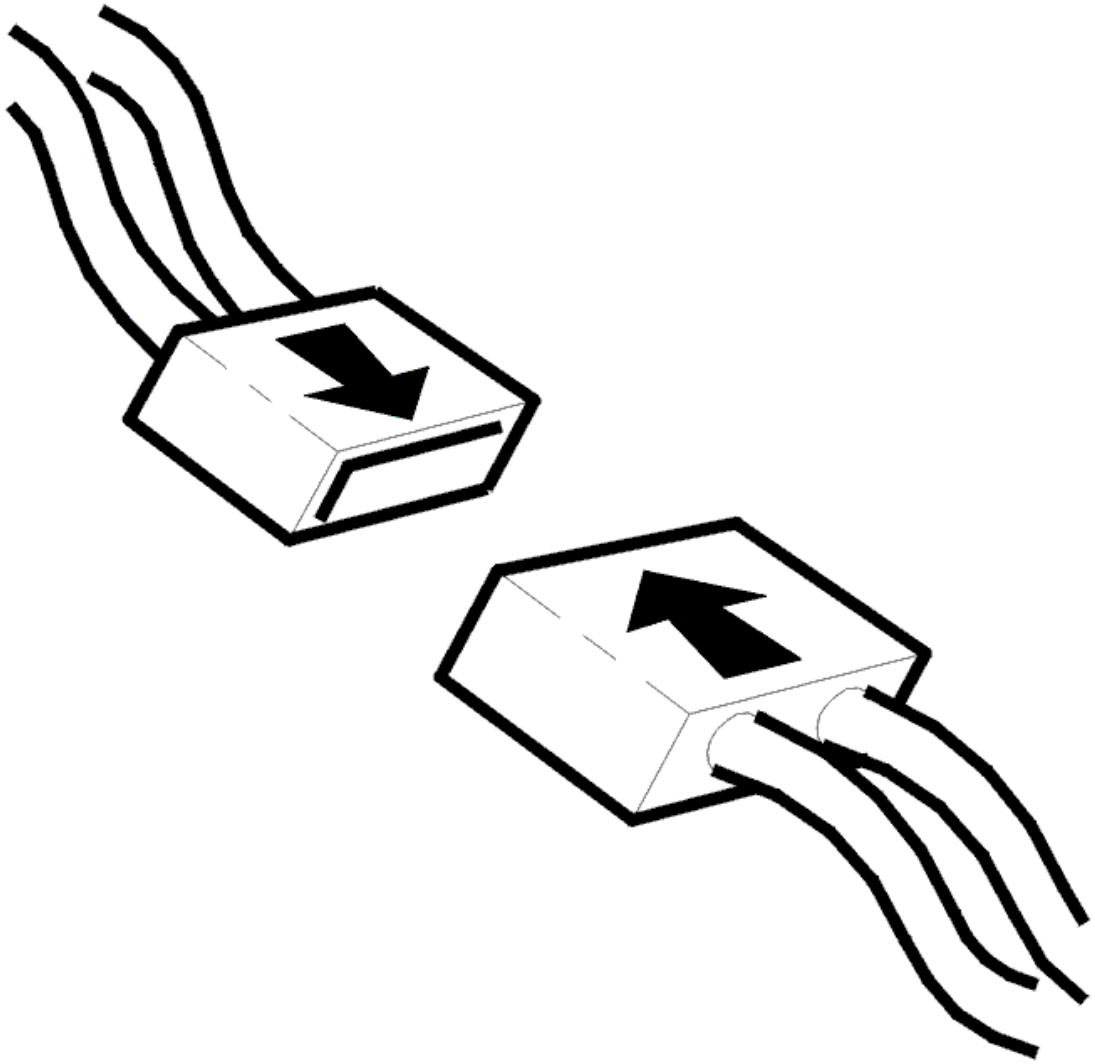

Fig. 214: Connecting Connector
Courtesy of VOLVO CARS CORPORATION

- Ignition off
- Reinstall the connectors, components etc.
- Ignition on
- Activate the carphone.

  Make a call so that both the handset and the hands-free system are used.

  - Ignition off.
  - Ignition on.
  - Read off the diagnostic trouble codes (DTCs).

- Check that the relevant diagnostic trouble code (DTC) has switched status from permanent to intermittent fault.

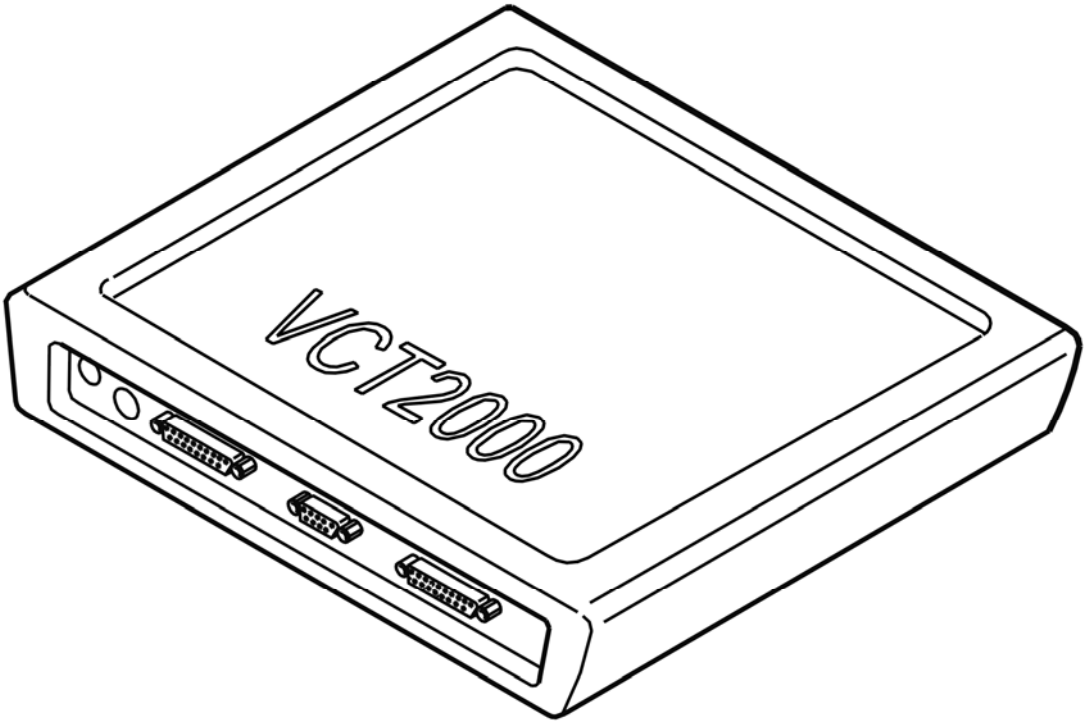

Fig. 215: Identifying VCT2000 Diagnostic Tool Symbol In VIDA
Courtesy of VOLVO CARS CORPORATION

Has the status of the diagnostic trouble code (DTC) changed?

- **YES**

  VERIFIED: Troubleshooting has been completed.

- **NO**

  See: **INFORMATION**

INFORMATION

FAULT-TRACING INFORMATION

The fault should have been detected and remedied. As this is not the case fault-tracing has failed.

Exit fault-tracing for this diagnostic trouble code (DTC) or make another attempt.

INFORMATION

FAULT-TRACING INFORMATION

If the fault is intermittent, do not verify fault-tracing if the fault does not recur.

It is possible to view the information again, or leave fault-tracing for this diagnostic trouble code (DTC).

PHM-0090: CONTROL MODULE. INCORRECT SOFTWARE (2008-2012)

DIAGNOSTIC TROUBLE CODE (DTC) INFORMATION PHM-0090

Condition

Phone module (PHM) has an internal flash memory which, among others, stores the VIN-number. Software in Phone module (PHM) checks that the VIN-number is correct.

The control module's test for the diagnostic trouble code (DTC) starts in the event of:

- Start-up of the control module.

The diagnostic trouble code (DTC) is stored if the control module detects that:

- VIN-number is incorrect and cannot be re-created from other places in the memory.

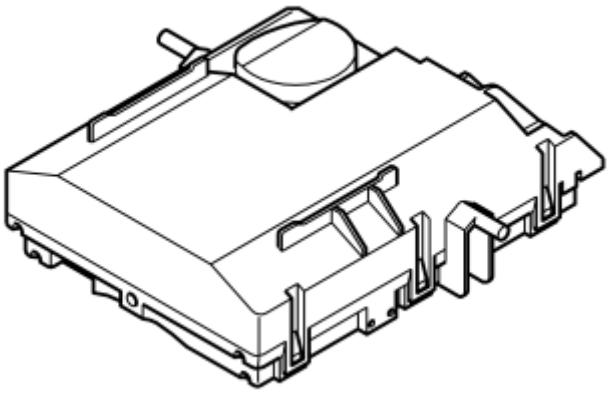

Fig. 216: Identifying Phone Module (PHM)
Courtesy of VOLVO CARS CORPORATION

Substitute Value

- None

Possible Source

- Incorrect VIN-number.

Fault symptom[s]

- Cellular phone/Other cellular phone problems

FAULTY SOFTWARE

FAULTY SOFTWARE

Problems with the internal flash memory remedied by downloading new software to the Phone module (PHM).

- Load new software into the control module.
- **Continue**

  See: **VERIFICATION**

VERIFICATION

VERIFICATION

HINT: After carrying out the repair, check that the fault has been remedied.

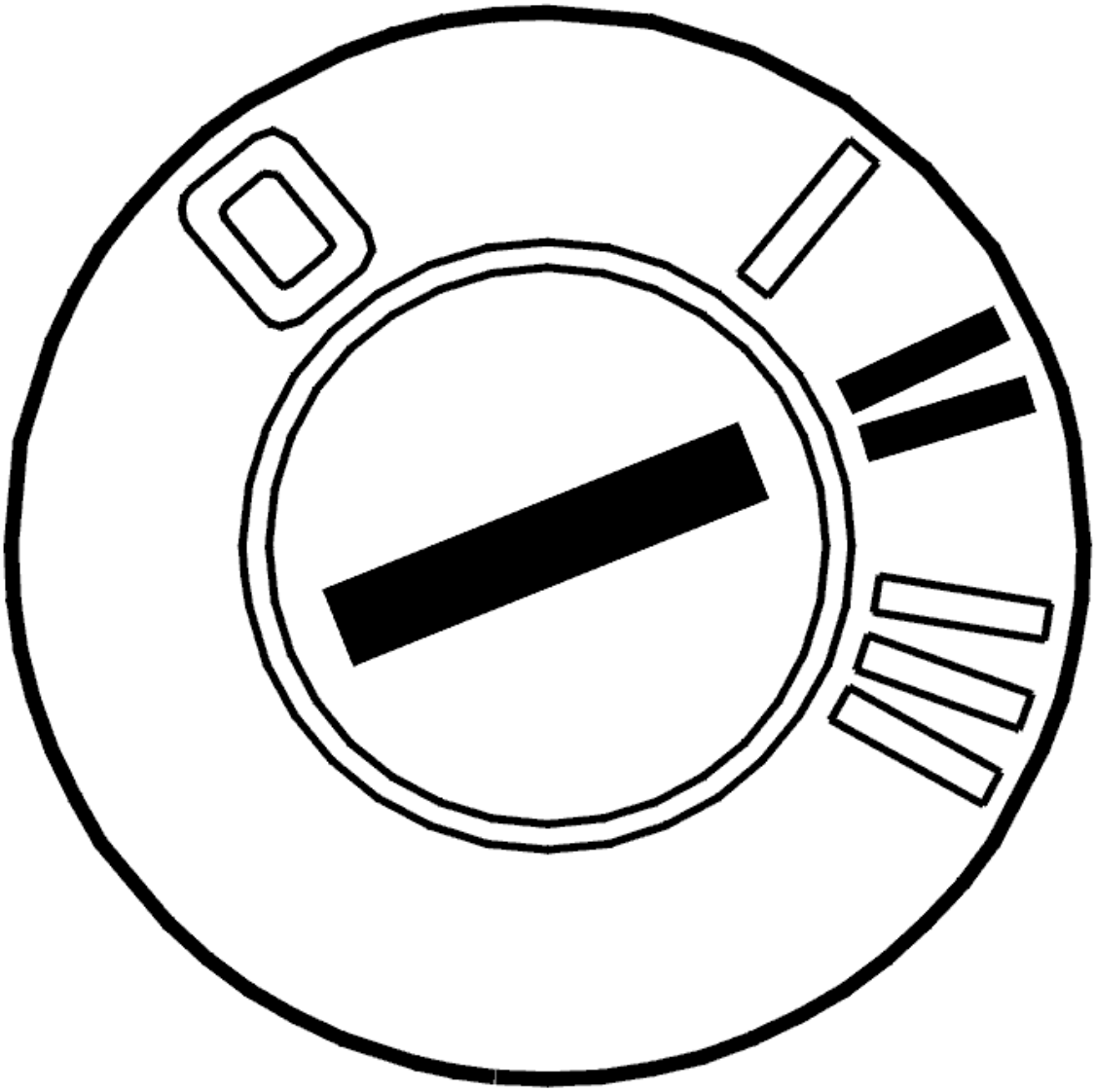

Fig. 217: Identifying Ignition ON
Courtesy of VOLVO CARS CORPORATION

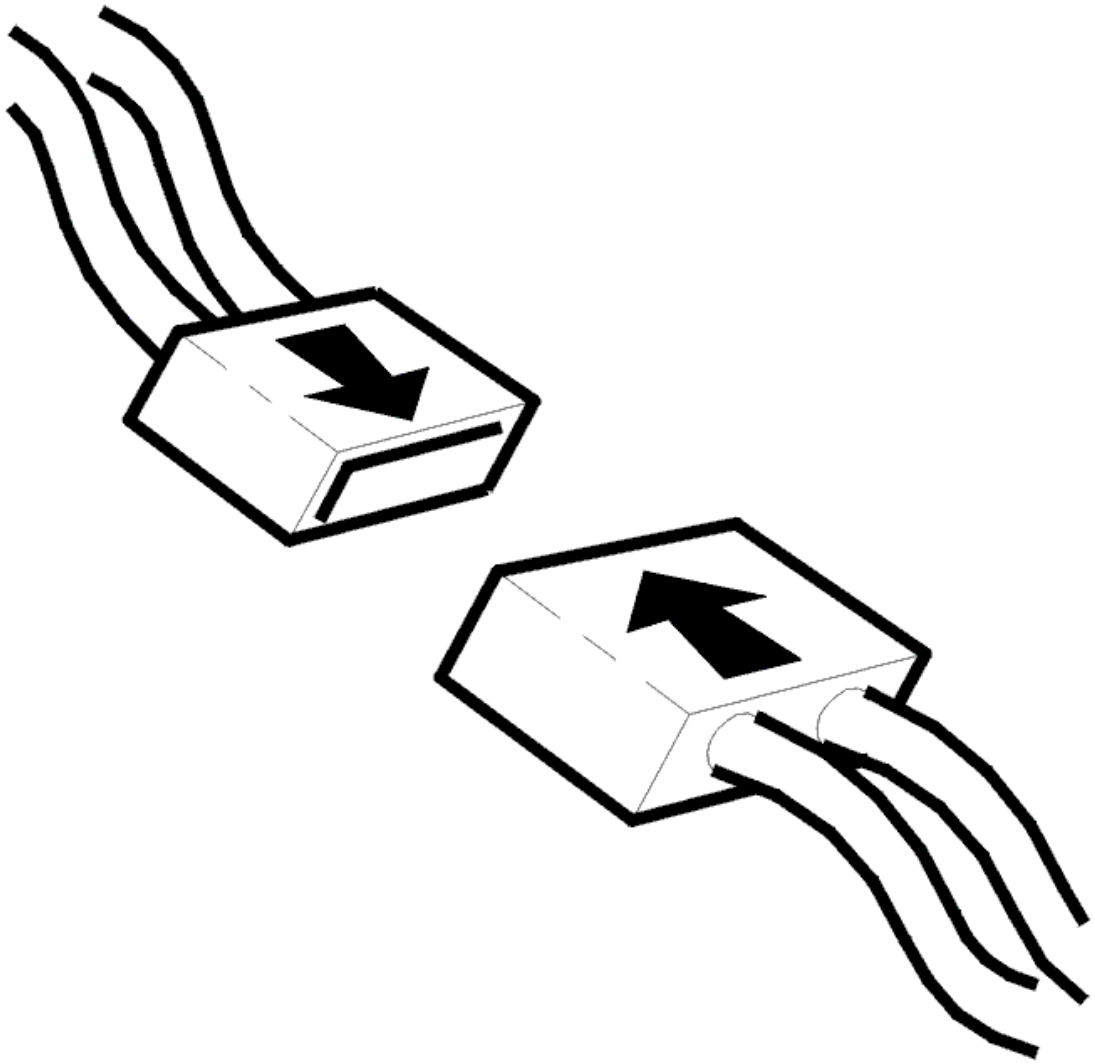

Fig. 218: Connecting Connector
Courtesy of VOLVO CARS CORPORATION

- Ignition off
- Reinstall the connectors, components etc.
- Ignition on
- Activate the carphone.

  Make a call so that both the handset and the hands-free system are used.

  Ignition off.

  Ignition on.

  Read off the diagnostic trouble codes (DTCs).

Check that the relevant diagnostic trouble code (DTC) has switched status from permanent to intermittent fault.

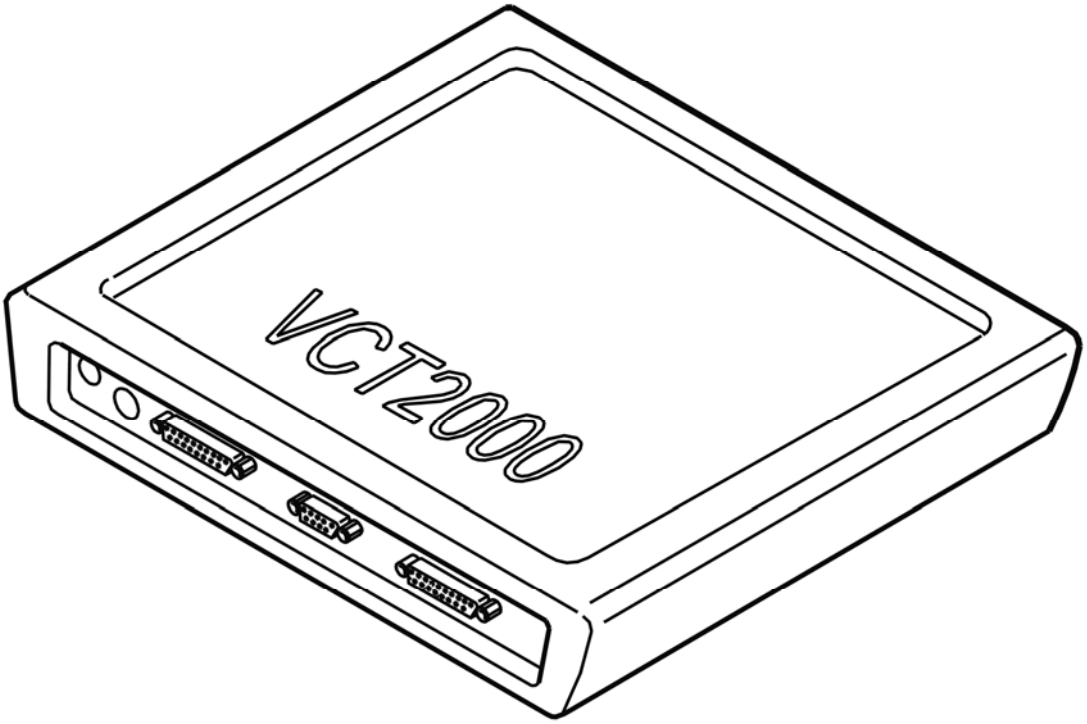

Fig. 219: Identifying VCT2000 Diagnostic Tool Symbol In VIDA
Courtesy of VOLVO CARS CORPORATION

Has the status of the diagnostic trouble code (DTC) changed?

- **YES**

  VERIFIED: Troubleshooting has been completed.

- **NO**

  VERIFICATION FAILED: The fault should have been detected and remedied. As this is not the case fault-tracing has failed. Exit fault-tracing for this diagnostic trouble code (DTC) or make another attempt.

PHM-E001: CONTROL MODULE COMMUNICATION. FAULTY COMMUNICATION (2006-2012)

DIAGNOSTIC TROUBLE CODE (DTC) INFORMATION PHM-E001

Condition

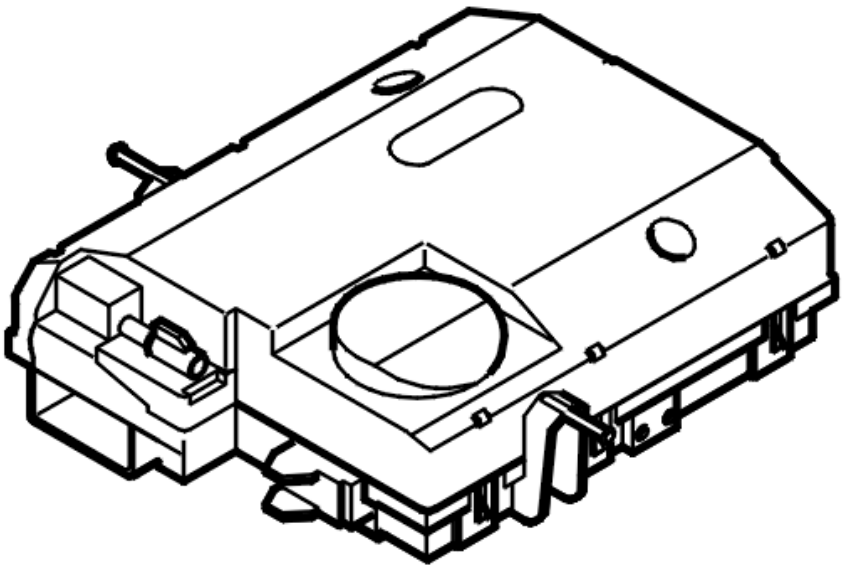

Fig. 220: Identifying Control Module
Courtesy of VOLVO CARS CORPORATION

The control modules transmit and receive information via a standardized serial communication method - CAN (Control Area Network). The diagnostic trouble code (DTC) is stored if the control module registers serious interference on the low speed network (CAN communication blocked).

NOTE: **In the event of system communication problems, it is not possible to communicate with the control module. Therefore it will only be possible to read off the diagnostic trouble code (DTC) if the fault is intermittent.**

Substitute Value

- The control module shuts itself off ("bus-off").

HINT: The control module will remain shut off until the power supply is broken (15, 30, X). When the power supply is connected the control module will make a new attempt to communicate.

Possible Source

- Short-circuit between the control area network (CAN) wiring
- Open-circuit in the control area network (CAN) wiring
- Internal fault in the control module

- Internal fault in another control module in the same part of the control area network (CAN).

Fault symptom[s]

- No or reduced carphone functionality
- No or reduced Volvo On Call functionality.

FAULTY COMMUNICATION

see **FAULTY COMMUNICATION**

PHM-E001: CONTROL MODULE COMMUNICATION. FAULTY COMMUNICATION (2003-2005)

DIAGNOSTIC TROUBLE CODE (DTC) INFORMATION PHM-E001

Condition

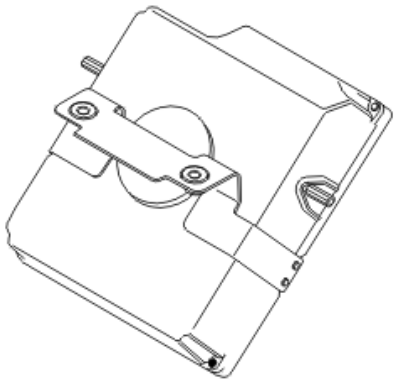

Fig. 221: Identifying Phone Module (PHM)
Courtesy of VOLVO CARS CORPORATION

The control modules transmit and receive information via a standardized serial communication method - CAN (Control Area Network). The diagnostic trouble code (DTC) is stored if the control module registers serious interference (CAN communication blocked).

NOTE: In the event of system communication problems, it is not possible to communicate with the control module. Therefore it will only be possible to read off the diagnostic trouble code (DTC) if the fault is intermittent.

Substitute Value

- The control module shuts itself off ("bus-off").

  HINT: The control module will remain shut off until the power supply is broken (15, 30, X). When

the power supply is connected the control module will make a new attempt to communicate.

Possible Source

- Short-circuit between the control area network (CAN) wiring
- Open-circuit in the control area network (CAN) wiring
- Internal fault in the control module
- Internal fault in another control module in the same part of the control area network (CAN).

Fault symptom[s]

- None.

FAULTY COMMUNICATION

see **FAULTY COMMUNICATION**

PHM-E003: CONFIGURATION FAULT. FAULTY CONFIGURATION (2006-2012)

DIAGNOSTIC TROUBLE CODE (DTC) INFORMATION PHM-E003

Condition

The control module compares its configuration ID with the signal configuration transmitted on the control area network (CAN) by the central electronic module (CEM). If the configuration IDs do not correspond the fault code is stored. The diagnostic trouble code (DTC) is also stored if the communication between the control module and the central electronic module (CEM) is interrupted.

NOTE: **In the event of an open-circuit in both the control area network (CAN) cables, it is not possible to communicate with the control module. Therefore it will only be possible to read off the diagnostic trouble code (DTC) if this type of fault is intermittent. When the diagnostic trouble code (DTC) is stored, the control module responds to the diagnostic commands. However, the normal CAN communication does not function. ("Expulsion mode")**

Substitute Value

- None.

Possible Source

- Faulty control area network (CAN) configuration ID. (The node is not intended for this car (for example a used control module with different software/hardware))
- Open-circuit in the control area network (CAN) wiring between the control module and the central

electrical module (CEM).

Fault symptom[s]

- No or reduced carphone functionality
- No or reduced Volvo On Call functionality.

FAULTY CONFIGURATION

GENERAL INFORMATION

In order to check the control area network (CAN) cables, the resistance in the network must be measured. The resistance between the two controller area network (CAN) wiring, with the network connected 60 ohms. The resistance can differ depending on the configuration of the car. Permitted values are 55-65 ohms. This applies to both the high speed side network and the low speed side network.

HINT: Note which diagnostic trouble codes (DTCs) are stored in each control module. This facilitates fault-tracing considerably.

Also check if the diagnostic trouble codes (DTCs) for failed communication are stored in the central electronic module (CEM). If this is the case: first fault-trace according to these diagnostic trouble codes (DTCs).

Other information

- see **GENERAL INFORMATION ABOUT FAULT-TRACING IN THE CAN NETWORK (2005-2012)**

- **Continue**

  See: **CHECKING THE RESISTANCE OF THE CONTROL AREA NETWORK (CAN) CABLES**

CHECKING THE RESISTANCE OF THE CONTROL AREA NETWORK (CAN) CABLES

- Disconnect the battery negative lead. The power to the network must be cut when taking resistance readings. The reading may otherwise be incorrect.

  NOTE: Also read: BATTERY, DISCONNECTING

- Connect the adapter wiring to the central electronic module (CEM).

  HINT: Where a breakout box cannot be used, take readings from the rear of the affected connectors if possible. This prevents terminal pins and socket housings being damaged.

  When taking readings on the low speed network

  - When taking readings on the low speed network, the adapter wiring should be connected to the central electronic module (CEM) and the readings taken from there. The readings can also be taken

in the connector for the power seat module (PSM). The advantage of using the adapter wiring connected to the central electronic module (CEM) is that all control modules can be connected to the network when taking readings and there is access to both the high speed and the low speed networks.

This resistance reading only measures main arteries in the low speed network, not the junctions for the road traffic information module (RTI), accessory electronic module (AEM), power seat module (PSM), phone module (PHM), audio module (AUM), driver's door module (DDM) and passenger door module (PDM).

When taking readings on the high speed network

- When taking readings on the high speed network, the readings should be taken at the engine control module (ECM) using adapter wiring. The engine control module (ECM) must be connected. This resistance reading only takes readings from the main arteries in the high speed network.

Connect the ohmmeter to the terminals for CAN-L and CAN-H on the relevant network. Work the connectors and twist the cable harness. The resistance must be approximately 60 ohms. Permitted values are 55-65 ohms.

Other information

- see **CONNECTING THE BREAKOUT BOX**
- see **CHECKING WIRING AND TERMINALS**

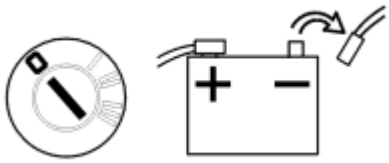

Fig. 222: Identifying Ignition OFF & Negative Battery Cable Disconnected
Courtesy of VOLVO CARS CORPORATION

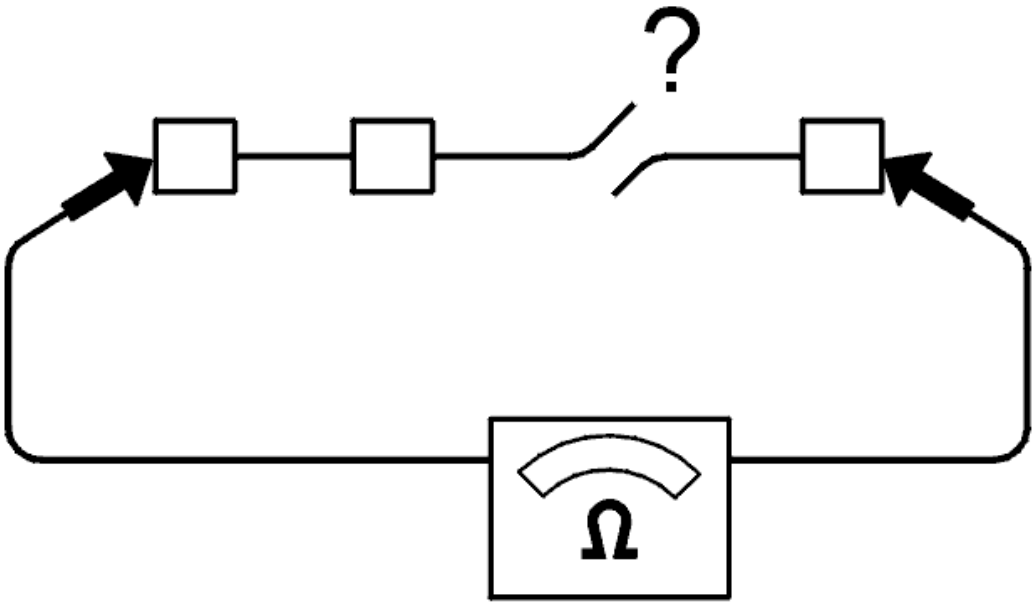

Fig. 223: Checking For Open Circuit
Courtesy of VOLVO CARS CORPORATION

Is the value OK?

- **YES**

  See: **CHECKING A SHORT-CIRCUIT IN CAN CABLES**

- **NO**

  See: **IDENTIFYING FAULT CAUSES IN THE CAN NETWORK**

CHECKING A SHORT-CIRCUIT IN CAN CABLES

Connect an ohmmeter between the relevant CAN cable (CAN-L and CAN-H) and the power supply, and between the CAN cable and ground. Twist the connectors and turn the cable harness to different positions at each reading to determine any intermittent short-circuits.

Take the following readings:

- The resistance between CAN-L and ground
- The resistance between CAN-L and voltage

- The resistance between CAN-H and ground
- The resistance between CAN-H and voltage.

The resistance must be infinite or very high in all cases (greater than 1 Mohms).

HINT: The reading can be taken from the same connector if the CAN cables, power supply and ground are exposed. If possible, take readings on the rear of the connector to prevent damage to the terminals in the connector. If this is not possible, use the adapter wiring or loose terminal pins to obtain a good contact.

Was a fault detected?

- **YES**

  See: **IDENTIFYING FAULT CAUSES IN THE CAN NETWORK**

- **NO**

  See: **CHECKING THE TRAFFIC LOAD ON THE CAN CABLES**

CHECKING THE TRAFFIC LOAD ON THE CAN CABLES

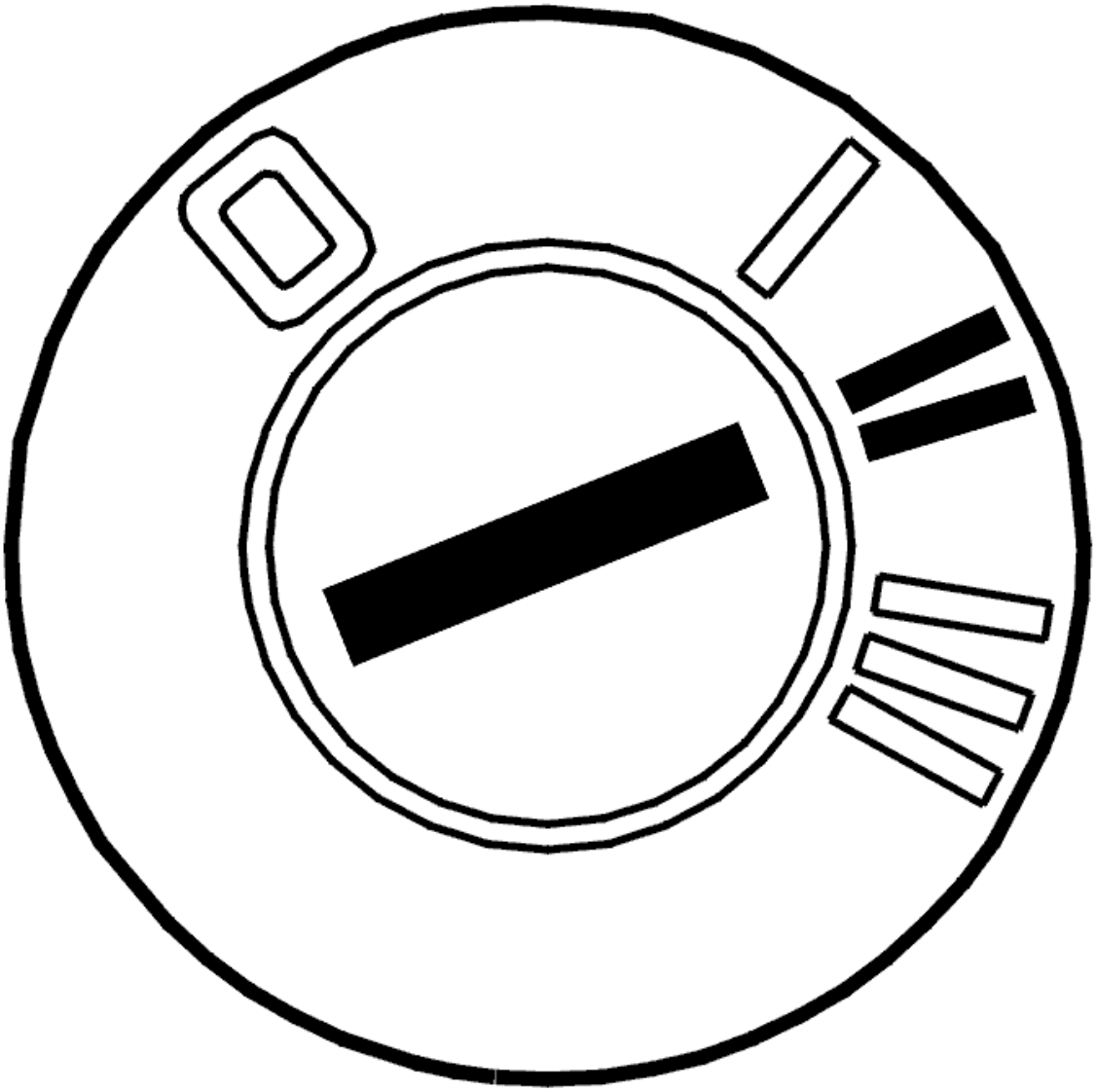

Fig. 224: Identifying Ignition ON
Courtesy of VOLVO CARS CORPORATION

- Connect the battery
- Ignition on

Also read: **BATTERY, DISCONNECTING**

Faults in the CAN network may be due to a control module sending faulty messages that disrupt "normal" communication. When messages are sent incorrectly, this results in a considerable increase in the amount of traffic on the CAN network. Check the load by measuring the average voltage value on the CAN cables in relation to ground.

Connect a voltmeter between CAN-L and ground. The voltage must be approximately 2.3 V.

Then connect a voltmeter between CAN-H and ground. The voltage must be approximately 2.8 V.

HINT: If possible measure from the rear of the affected connectors so that they are not damaged.

Is the value OK?

- **YES**

  See: **DOWNLOADING NEW SOFTWARE**

- **NO**

  See: **IDENTIFYING A CONTROL MODULE IN THE CAN NETWORK**

IDENTIFYING FAULT CAUSES IN THE CAN NETWORK

- Disconnect a control module that disconnects the CAN network (a control module that has four terminals to the CAN network).

  HINT: For the low speed network, suitable places for disconnecting the network are at the steering wheel module (SWM), the driver information module (DIM) or the climate control module (CCM).

  In the event of a short-circuit between one of the CAN cables and voltage or ground, the fault can be located by disconnecting a control module that disconnects the CAN network. Readings can then be taken to determine on which side of the disconnected control module the fault is located.

  Connect an ohmmeter between the CAN cable and supply voltage or ground. Take readings at both ends of the CAN network where the network is disconnected. Twist and bend the cable harness to locate any intermittent short-circuits. The resistance must be infinite or very high (greater than 1Mohms).

  If a fault can be localized in one direction, disconnect the network at a point further down on the CAN network in the direction in which the fault was discovered and repeat the reading. In this way, try to identify where in the network the fault might be located.

  HINT: A short-circuit between the CAN cables and supply voltage or ground may be in either the wiring or in a control module.

  Rectify the wiring as necessary. Replace the control module if the fault has been localized to a control module.

- **Continue**

  See: **VERIFICATION**

IDENTIFYING A CONTROL MODULE IN THE CAN NETWORK

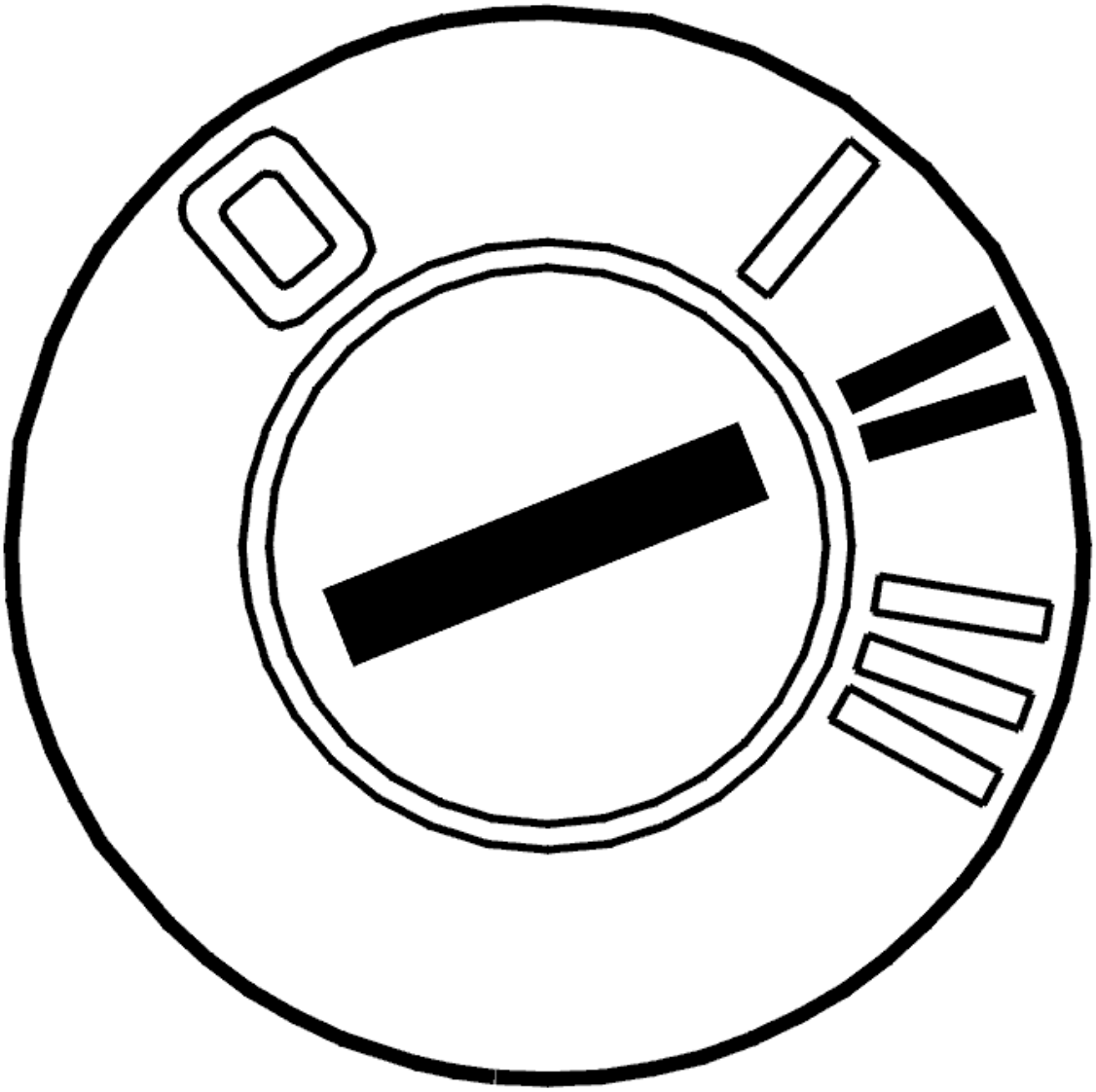

Fig. 225: Identifying Ignition ON
Courtesy of VOLVO CARS CORPORATION

- Connect the battery

  Also read: **BATTERY, DISCONNECTING**

- Ignition on

  If the load on the CAN network is too high, this may be due to a control module sending faulty messages on the CAN network (known as a disruptive control module). The fault may also be due to an intermittent short-circuit to supply voltage or ground in one of the CAN cables. This results in the control modules on the CAN network starting to send faulty messages. The faults can occur without a diagnostic trouble code (DTC) being stored by the control modules. The voltage can be measured between the CAN cables in order to check the load on the CAN network.

Connect a voltmeter between the CAN cables. If the communication on the network is correct, the average voltage value should be approximately 0.5 V (0.4 V to 0.6 V). If there is a fault in the communication, the voltage reading will be approximately 0.7 V or higher.

In order to identify from which control module the faulty communication is being transmitted, cut the supply voltage to one control module at a time and check the voltage in the CAN cables again. The easiest way to cut the supply voltage is to remove a fuse. Repeat until the voltage between the CAN cables drops to approximately 0.5 V.

HINT: When the probable faulty control module has been identified, connect and disconnect the supply voltage to the control module a number of times to verify that the fault appears and disappears.

NOTE: Do not cut the power to the central electronic module (CEM) unless it is the last control module left to check.

The control module that is communicating incorrectly must be replaced. Remedy as necessary.

NOTE: Following a fault involving "disruptive" control modules, other modules may remain in "Limp-Home mode" even after switching the ignition off and on a number of times. To remedy this, disconnect and reconnect the battery negative terminal to restore the control modules to normal function.

Was a fault detected?

- **YES**

  See: **VERIFICATION**

- **NO**

  See: **DOWNLOADING NEW SOFTWARE**

IDENTIFYING FAULT CAUSES IN THE CAN NETWORK

- Disconnect a control module that disconnects the CAN network (a control module that has four terminals to the CAN network).

  HINT: For the low speed network, suitable places for disconnecting the network are at the steering wheel module (SWM), the driver information module (DIM) or the climate control module (CCM).

  In the event of an open-circuit or a short-circuit between the CAN cables, the fault can be localized by disconnecting a control module that disconnects the CAN network. Readings can then be taken to determine on which side of the disconnected control module the fault is located.

  Connect an ohmmeter between the CAN cables. Take readings at both ends of the CAN network where

the network is disconnected. Twist and bend the cable harness to locate any intermittent short-circuits. The resistance must be 120 ohm.

If a fault can be localized in one direction, disconnect the network at a point further down on the CAN network in the direction in which the fault was discovered and repeat the reading. In this way, try to identify where in the network the fault might be located.

Remedy the cables as necessary.

Was a fault detected?

- **YES**

  See: **VERIFICATION**

- **NO**

  See: **DOWNLOADING NEW SOFTWARE**

DOWNLOADING NEW SOFTWARE

HINT: If no other faults are found, new software can be downloaded to remedy the fault in the control module which stored the diagnostic trouble code (DTC). Downloading of software must occur after agreement with the customer.

Downloading of software occurs according to the replacement parts catalogue/Index Software components.

HINT: Install a bookmark on this side to continue fault-tracing after downloading new software.

- **Continue**

  See: **VERIFICATION**

VERIFICATION

HINT: After carrying out the repair, check that the fault has been remedied.

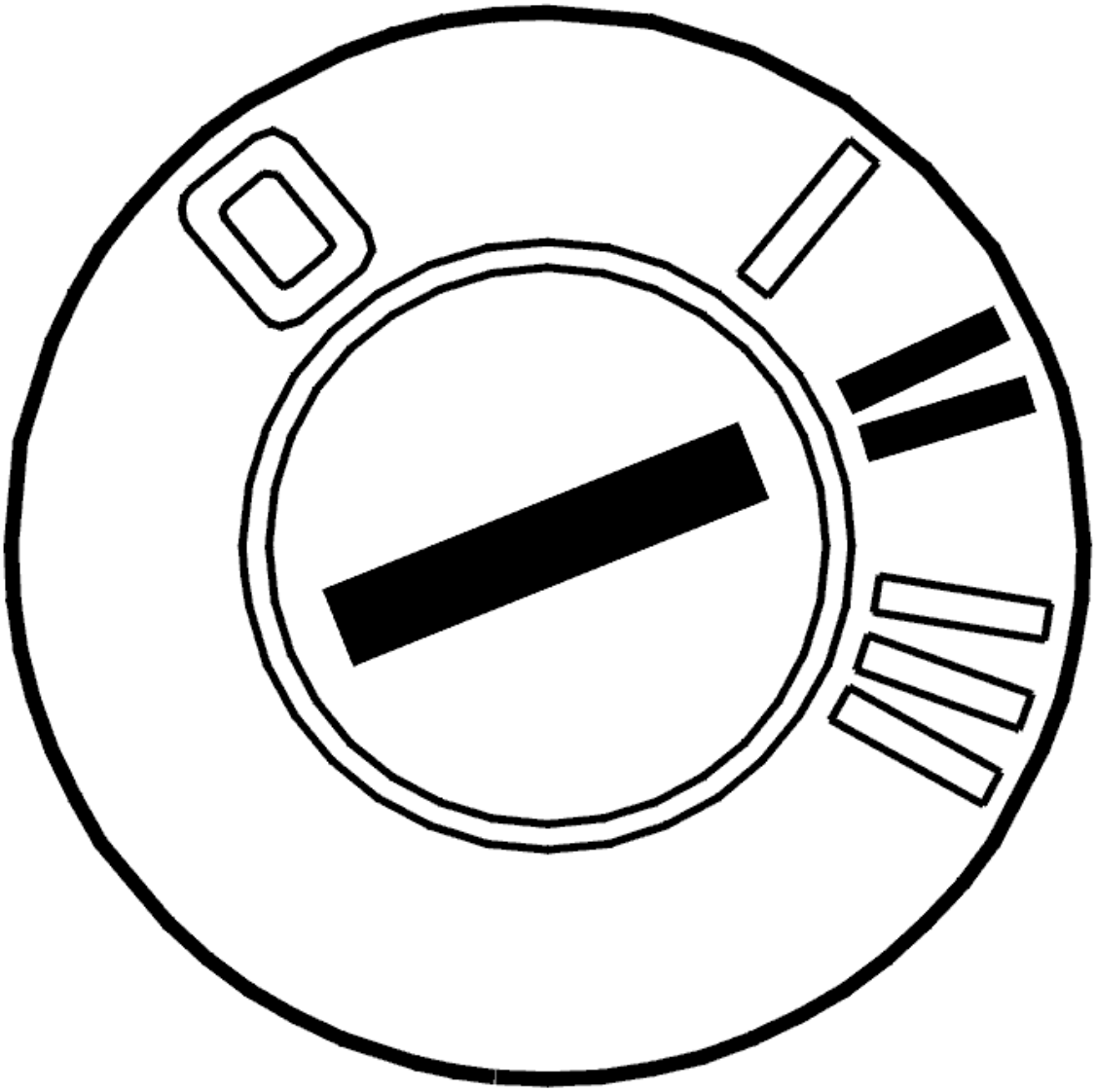

Fig. 226: Identifying Ignition ON
Courtesy of VOLVO CARS CORPORATION

- Reinstall the connectors, components, etc.
- Ignition on
- Erase diagnostic trouble codes using the VCT2000 (or appropriate scan tool)
- Start the car. Allow the car to run for 10 minutes.
- Read off diagnostic trouble codes (DTCs).

Does the diagnostic trouble code (DTC) for a communication fault recur (CEM-1A5X or CEM-1A6X)?

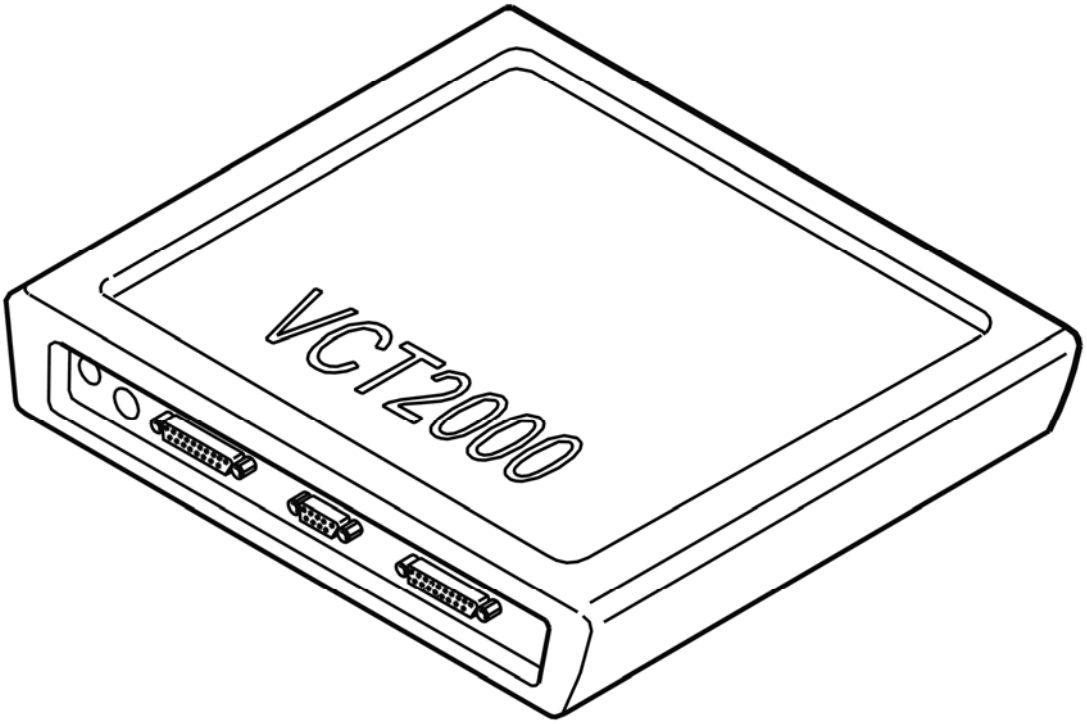

Fig. 227: Identifying VCT2000 Diagnostic Tool Symbol In VIDA
Courtesy of VOLVO CARS CORPORATION

Does the diagnostic trouble code (DTC) recur?

- **YES**

  See: **INFORMATION**

- **NO**

  OKAY: Troubleshooting has been completed.

INFORMATION

FAULT-TRACING INFORMATION

The fault should have been detected and remedied. As this is not the case fault-tracing has failed.

Exit fault-tracing for this diagnostic trouble code (DTC) or make another attempt.

PHM-E003: CONFIGURATION FAULT. FAULTY CONFIGURATION (2003-2005)

DIAGNOSTIC TROUBLE CODE (DTC) INFORMATION PHM-E003

Condition

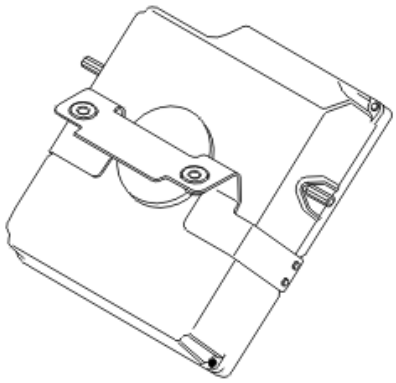

Fig. 228: Identifying Phone Module (PHM)
Courtesy of VOLVO CARS CORPORATION

The control module compares its configuration ID with the signal configuration transmitted on the control area network (CAN) by the central electronic module (CEM). If the configuration IDs do not correspond the fault code is stored. The diagnostic trouble code (DTC) is also stored if the communication between the control module and the central electronic module (CEM) is interrupted.

NOTE: **In the event of an open-circuit in both the control area network (CAN) cables, it is not possible to communicate with the control module. Therefore it will only be possible to read off the diagnostic trouble code (DTC) if this type of fault is intermittent. When the diagnostic trouble code (DTC) is stored, the control module responds to the diagnostic command, however normal control area network (CAN) communication does not work. ("Expulsion mode")**

Substitute Value

- None.

Possible Source

- Faulty control area network (CAN) configuration ID. (The node is not intended for this car, for example a used control module with different software/hardware.)
- Open-circuit in the control area network (CAN) wiring between the control module and the central electrical module (CEM).

Fault symptom[s]

- None.

FAULTY CONFIGURATION (2003)

see **FAULTY CONFIGURATION (2003)**

FAULTY CONFIGURATION (2004)

see **FAULTY CONFIGURATION (2004)**

FAULTY CONFIGURATION (2005)

see **FAULTY CONFIGURATION**

PHM-E010: POWER SUPPLY. FAULTY SIGNAL (2006-2012)

DIAGNOSTIC TROUBLE CODE (DTC) INFORMATION PHM-E010

Condition

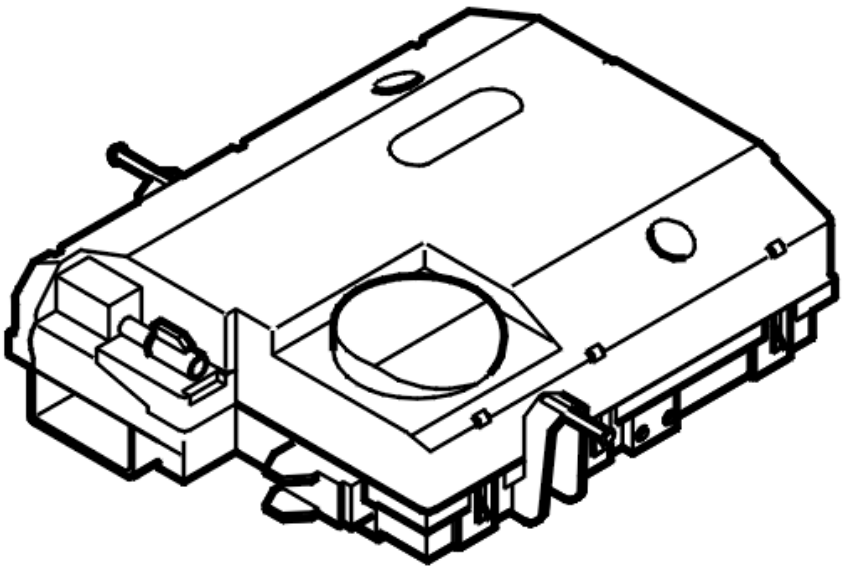

Fig. 229: Identifying Control Module
Courtesy of VOLVO CARS CORPORATION

The diagnostic trouble code (DTC) is stored if the supply voltage to the phone module (PHM) differs by more than 2.5 V from the supply voltage to the central electronic module (CEM).

The diagnostic trouble code (DTC) can be diagnosed when the ignition is switched on (not key position 3) and

when the battery voltage is 9-16 V.

Substitute Value

- None.

Possible Source

- Half-burned fuse for the phone module (PHM)
- Defective wiring
- Internal fault in the phone module (PHM).

Fault symptom[s]

- No or reduced carphone functionality.

FAULTY SIGNAL

CHECKING FUSES AND POWER SUPPLY

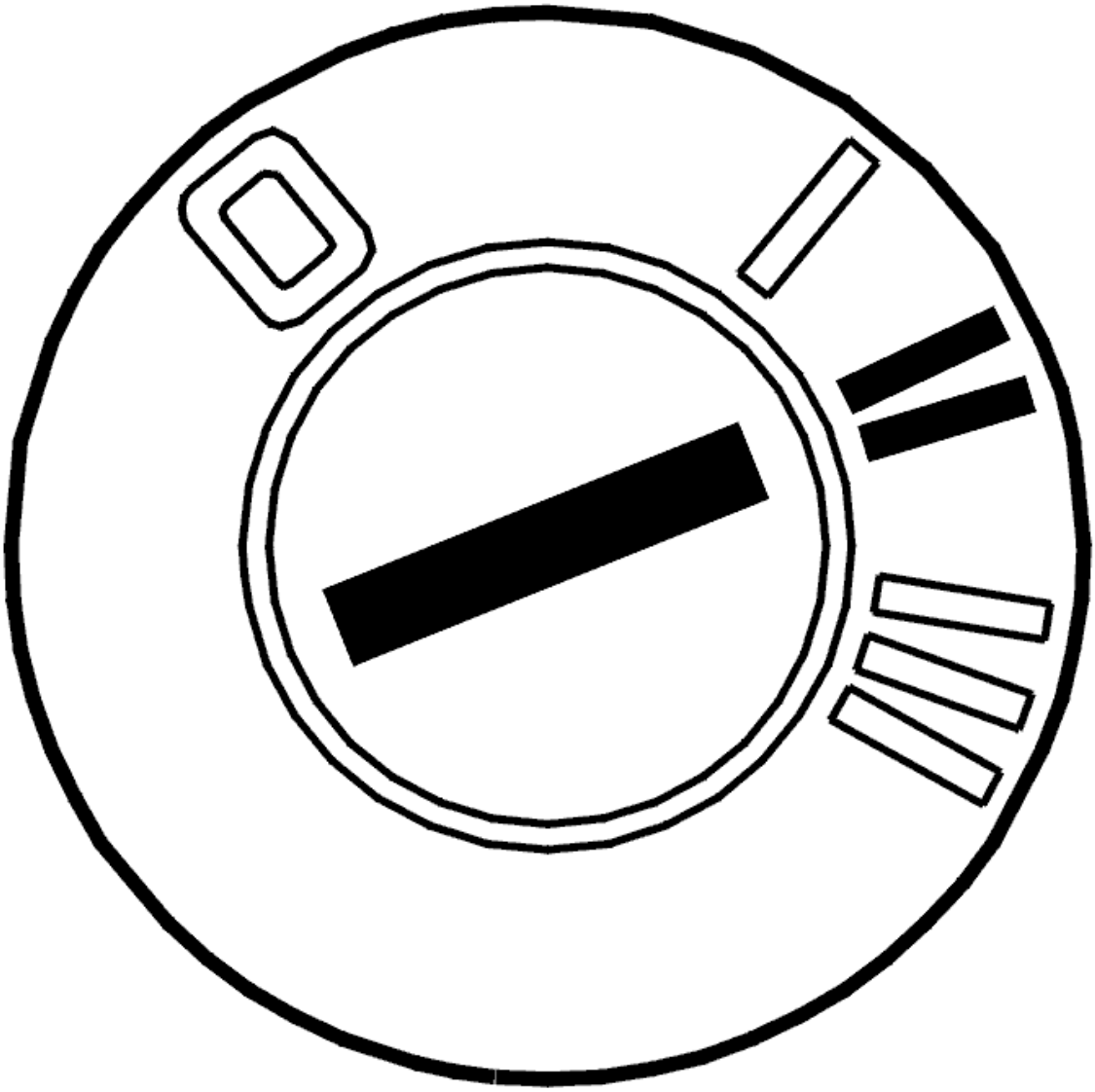

Fig. 230: Identifying Ignition ON
Courtesy of VOLVO CARS CORPORATION

- Ignition on.

  The phone module (PHM) is powered via a fuse from the central electronic module (CEM).

  Check whether the fuse for the phone module (PHM) is half burned by testing using a new fuse.

  HINT: A half burned fuse can cause intermittent faults.

  Check the power supply to the phone module (PHM) by:

  - measuring the voltage between phone module (PHM) connector A terminals #5 (#5) and A #6 (#6)
  - measure the battery voltage.

The fault is in the power supply cable if the difference between the power supply for the control module and battery voltage is greater than 2.5 V.

There may be an internal fault in the phone module (PHM) if the difference is less than 2.5 V.

Remedy as necessary.

Other information:

- see **SIGNAL SPECIFICATION**
- see **CONNECTING THE BREAKOUT BOX**
- see **LOCATION OF COMPONENTS**
- see **PHONE MODULE (PHM), REPLACING (2006-2010)**
- see **CHECKING WIRING AND TERMINALS**

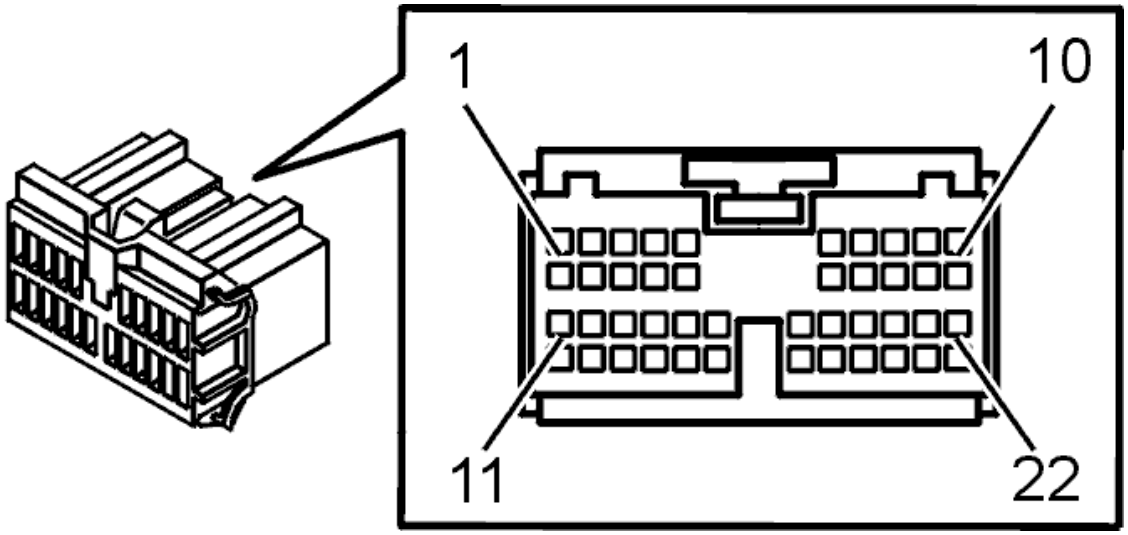

Fig. 231: Identifying Connector (F) Terminals
Courtesy of VOLVO CARS CORPORATION

- **Continue**

  See: **VERIFICATION**

VERIFICATION

VERIFICATION

HINT: After carrying out the repair, check that the fault has been remedied.

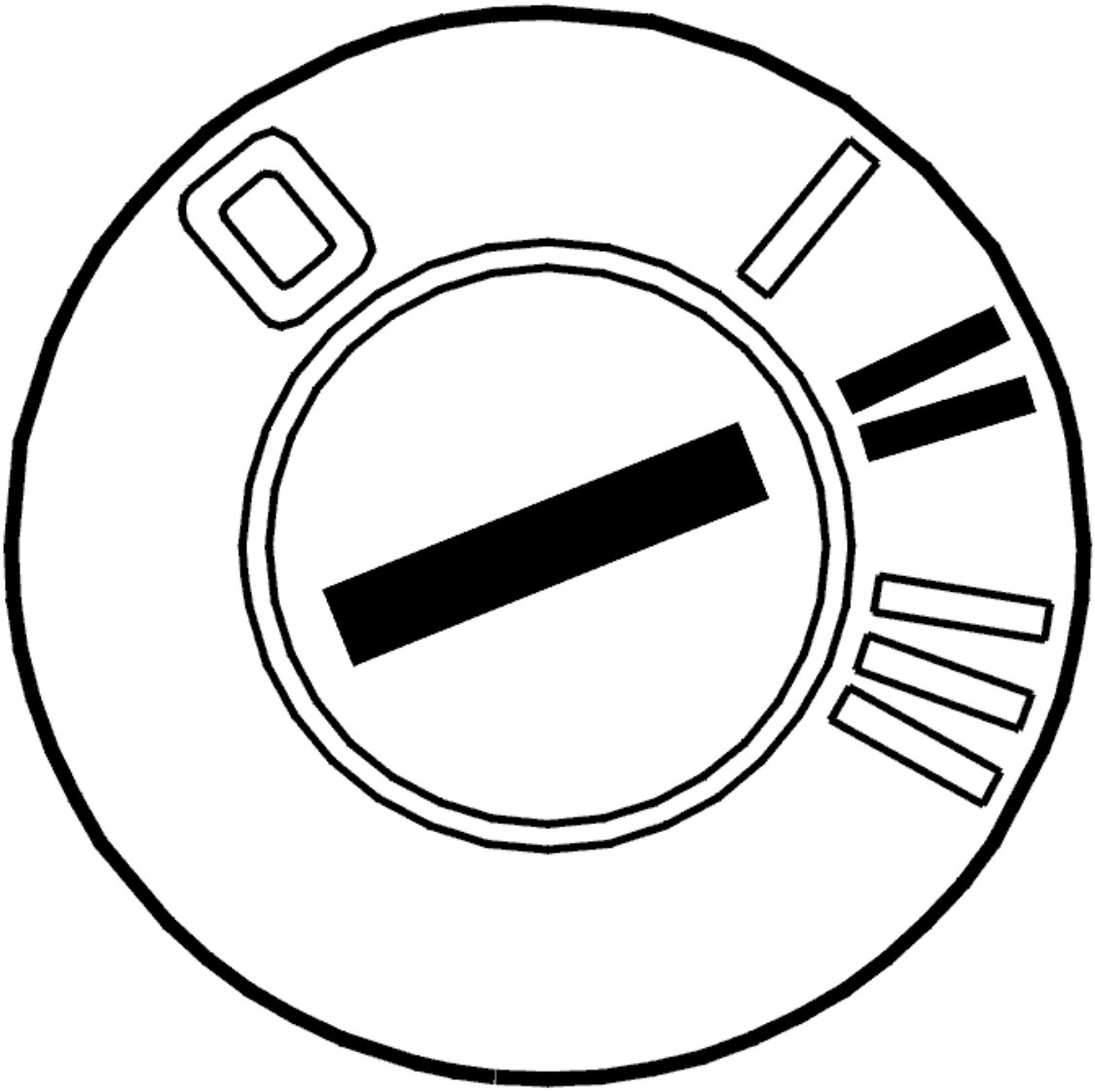

Fig. 232: Identifying Ignition ON
Courtesy of VOLVO CARS CORPORATION

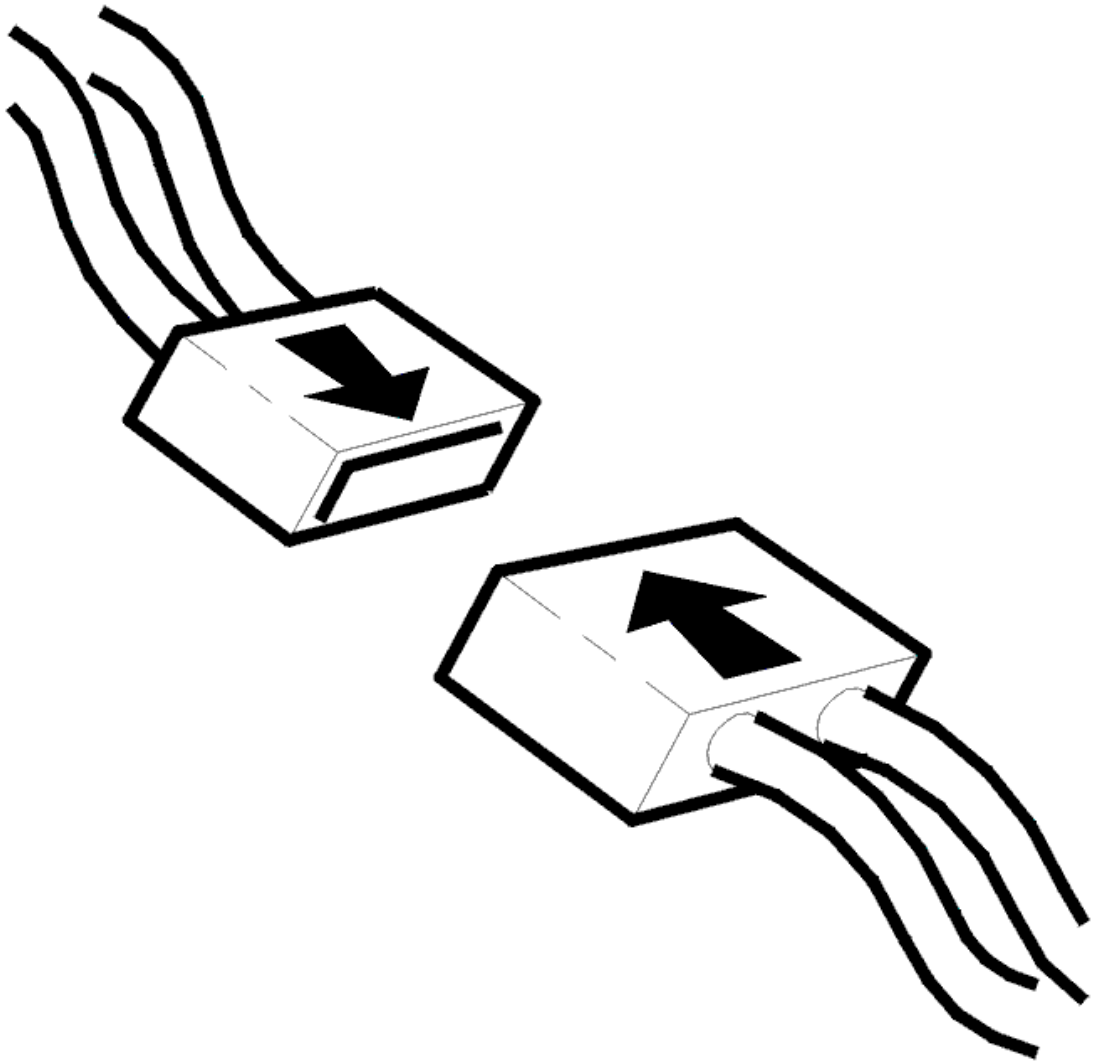

Fig. 233: Connecting Connector
Courtesy of VOLVO CARS CORPORATION

- Ignition off
- Reinstall the connectors, components etc.
- Ignition on
- Activate the carphone.

  Make a call so that both the handset and the hands-free system are used.

  - Ignition off.
  - Ignition on.
  - Read off the diagnostic trouble codes (DTCs).
  - Check that the relevant diagnostic trouble code (DTC) has switched status from permanent to

intermittent fault.

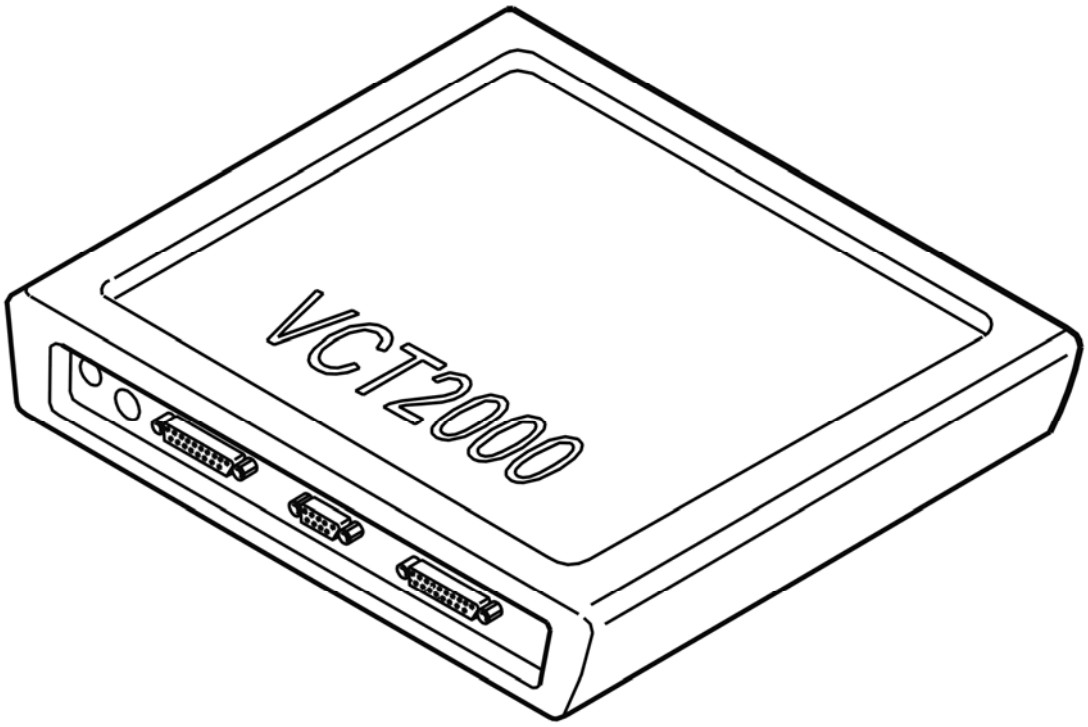

Fig. 234: Identifying VCT2000 Diagnostic Tool Symbol In VIDA
Courtesy of VOLVO CARS CORPORATION

Has the status of the diagnostic trouble code (DTC) changed?

- **YES**

  VERIFIED: Troubleshooting has been completed.

- **NO**

  See: **INFORMATION**

INFORMATION

FAULT-TRACING INFORMATION

The fault should have been detected and remedied. As this is not the case fault-tracing has failed.

Exit fault-tracing for this diagnostic trouble code (DTC) or make another attempt.

PHM-E010: VOLTAGE FEED. INCORRECT SIGNAL (2005)

DIAGNOSTIC TROUBLE CODE (DTC) INFORMATION PHM-E010

Condition

If the voltage to the phone module (PHM) differs by more than 2.5 V from the voltage to the central electronic module (CEM), the diagnostic trouble code is generated.

The diagnostic trouble code is diagnosed when the ignition is on (not key position 3) and when battery voltage is 9-16 V.

Substitute Value

- Nothing.

Possible Source

- Half-blown fuse for phone module (PHM).
- Damaged cable harness.
- Internal malfunction in phone module (PHM).

Fault symptom[s]

- No or reduced telephone function.

INCORRECT SIGNAL

CHECKING FUSE AND VOLTAGE FEED

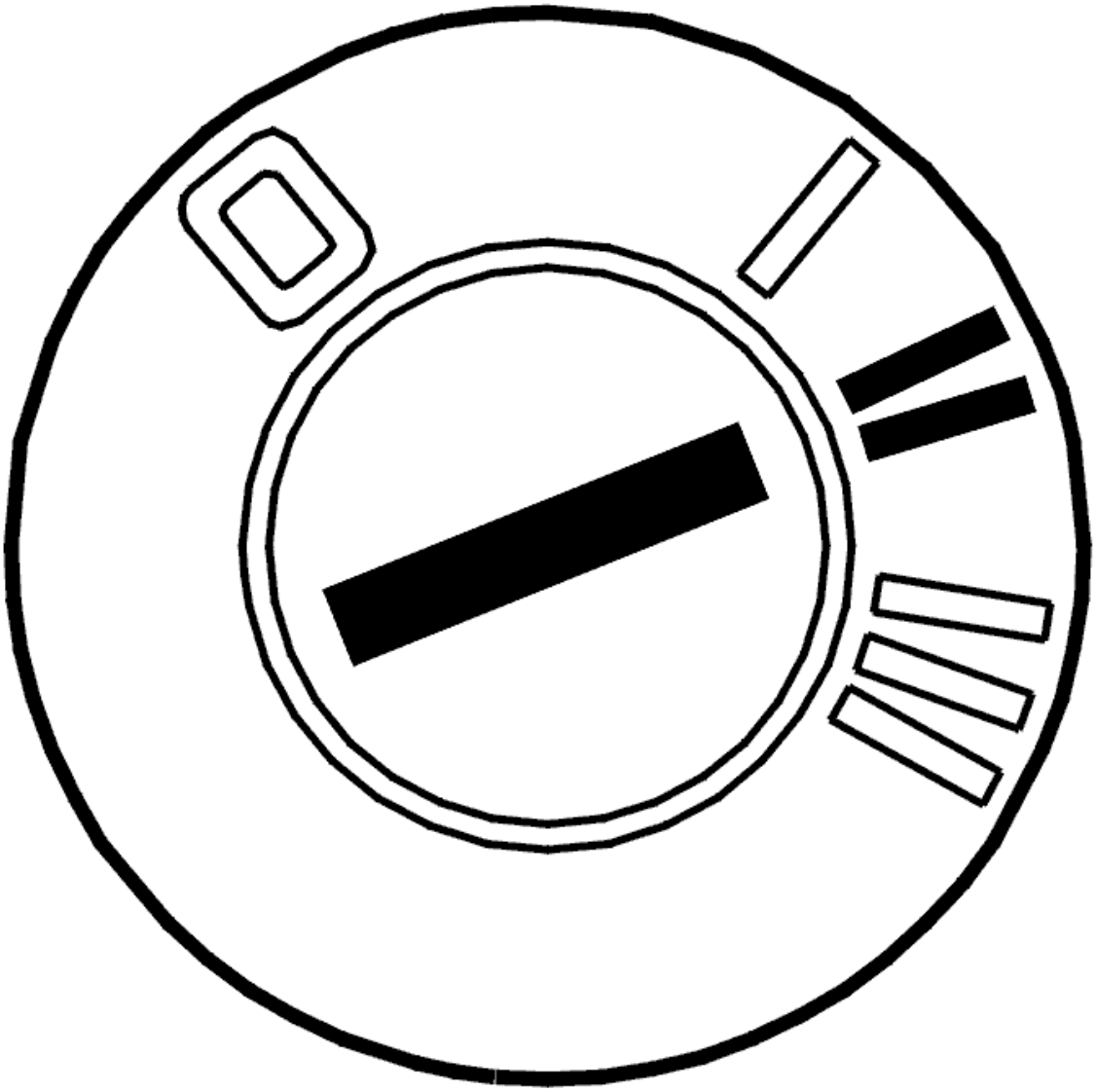

Fig. 235: Identifying Ignition ON
Courtesy of VOLVO CARS CORPORATION

- Ignition on

  Phone module (PHM) is supplied with voltage via a fuse from central electronic module (CEM).

  Check if the fuse for the phone module (PHM) is half-blown by testing with a new fuse.

  HINT: A half-blown fuse can give intermittent malfunctions.

  Check the voltage feed to the phone module (PHM) by:

  - measuring the voltage between the phone module's connector A #5 (#5) and A #6 (#6)
  - measuring the battery voltage.

If the difference is greater than 2.5 V between the control module's feed voltage and the battery voltage, the malfunction is in the feed cable.

If the difference is less than 2.5 V there may be an internal malfunction in the phone module (PHM).

Remedy as necessary.

Other information:

- see **CONNECTING THE BREAKOUT BOX**
- see **SIGNAL SPECIFICATION**
- see **LOCATION OF COMPONENTS**
- see **PHONE MODULE (PHM), REPLACING**
- see **HANDSET, REPLACING**
- see **CHECKING WIRING AND TERMINALS**

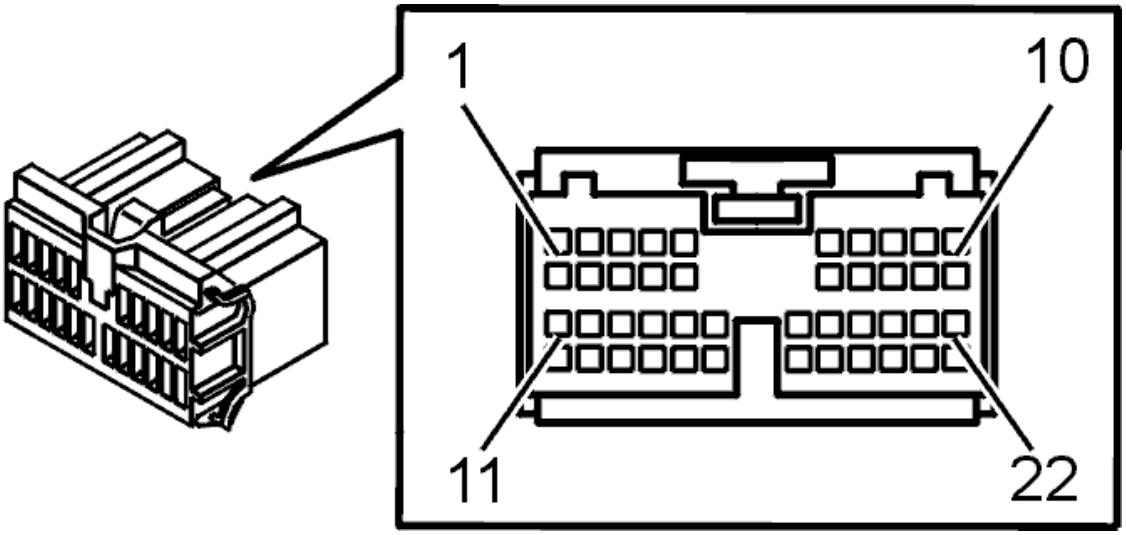

Fig. 236: Identifying Connector (F) Terminals
Courtesy of VOLVO CARS CORPORATION

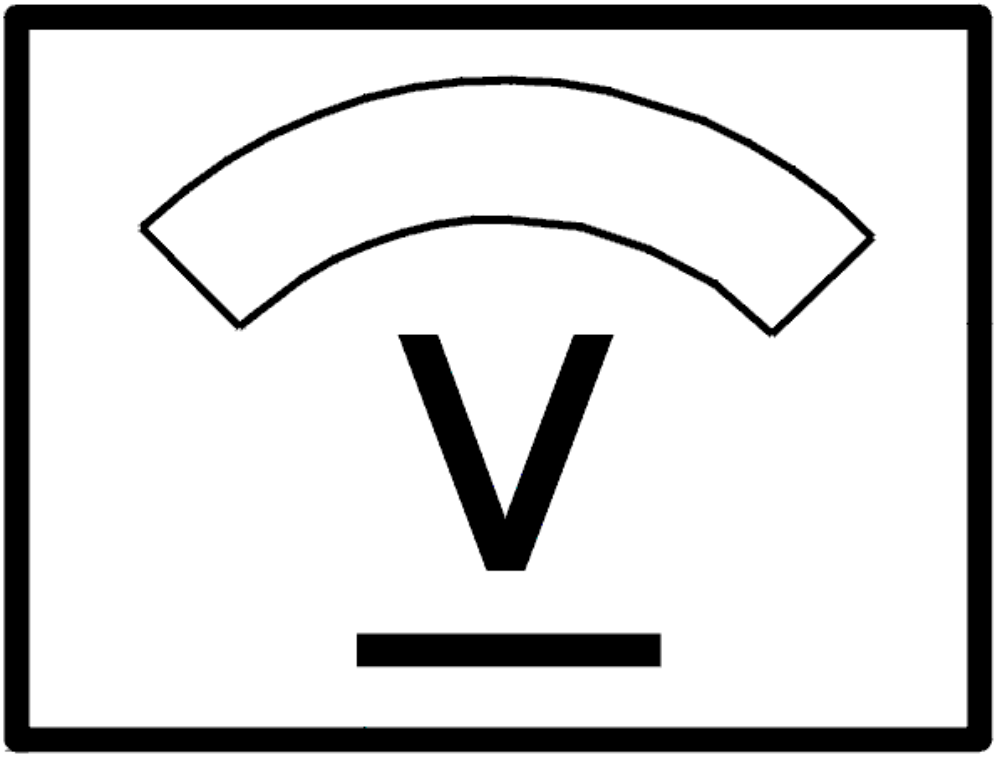

Fig. 237: Identifying Voltage Display
Courtesy of VOLVO CARS CORPORATION

- **Continue**

  See: **VERIFICATION**

VERIFICATION

VERIFICATION

HINT: After carrying out the repair, check that the fault has been remedied.

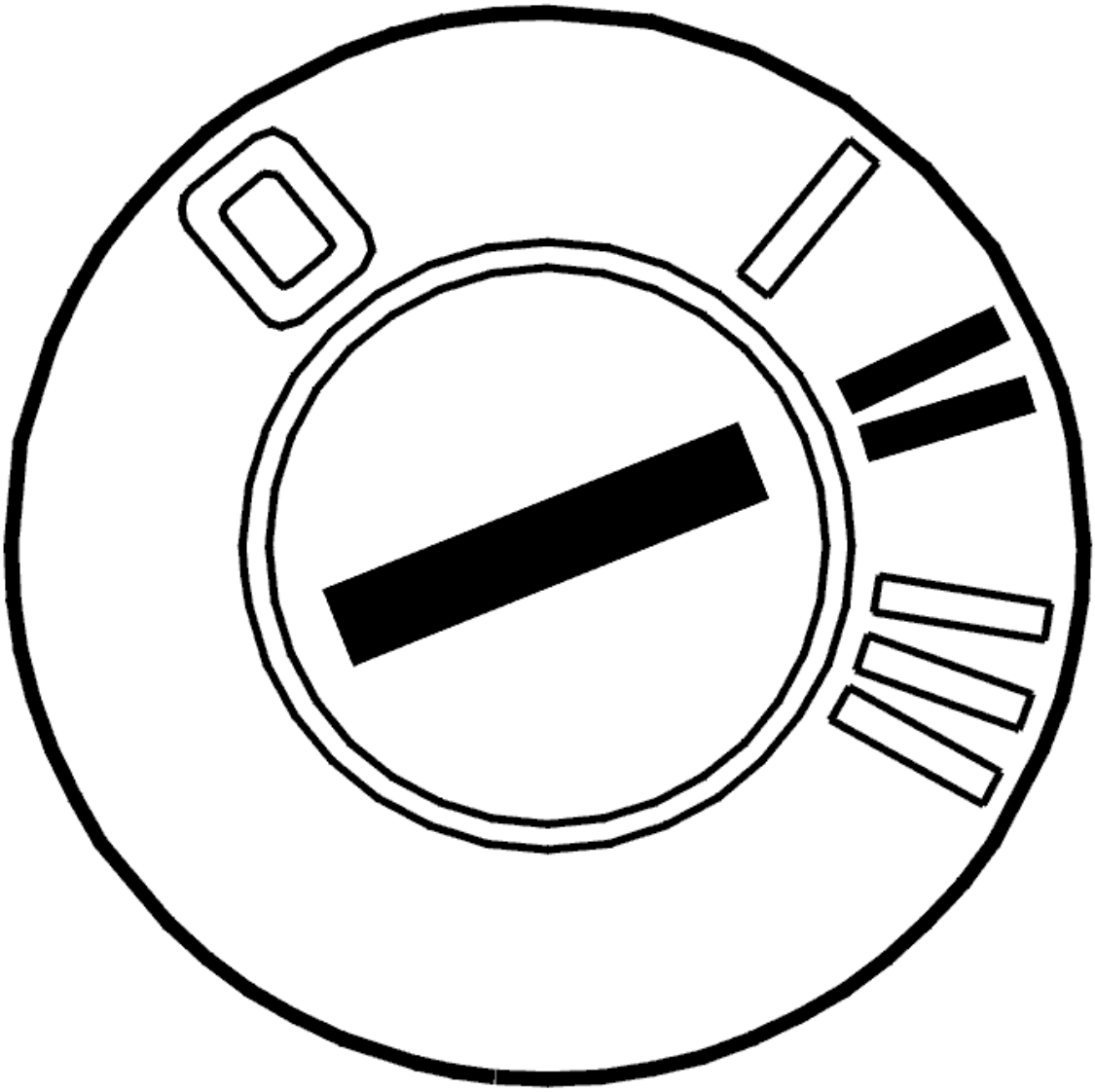

Fig. 238: Identifying Ignition ON
Courtesy of VOLVO CARS CORPORATION

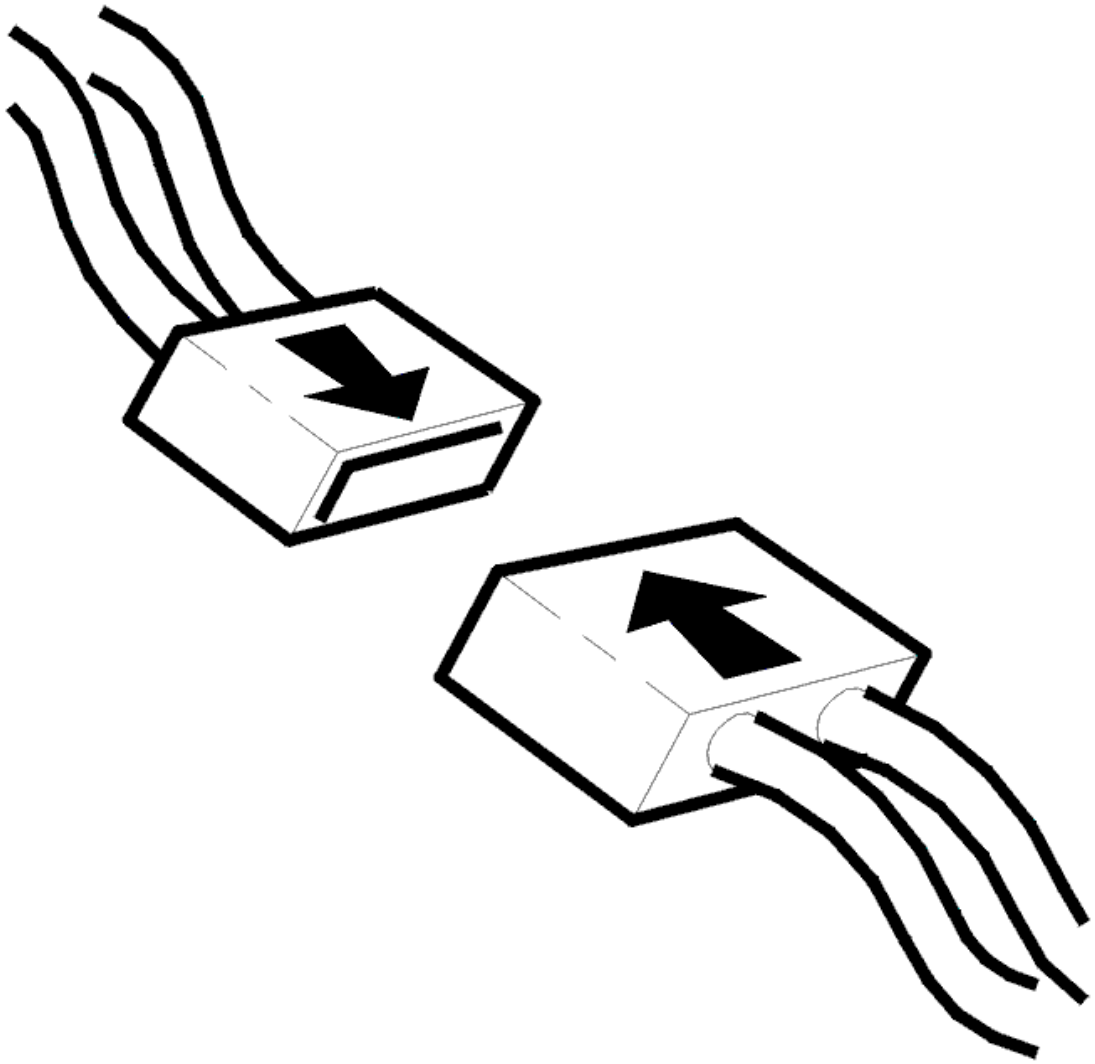

Fig. 239: Connecting Connector
Courtesy of VOLVO CARS CORPORATION

- Ignition off
- Reinstall the connectors, components etc.
- Ignition on
- Activate the carphone.

  Make a call so that both the handset and the hands-free system are used.

  Ignition off.

  Ignition on.

  Read off the diagnostic trouble codes (DTCs).

Check that the relevant diagnostic trouble code (DTC) has switched status from permanent to intermittent fault.

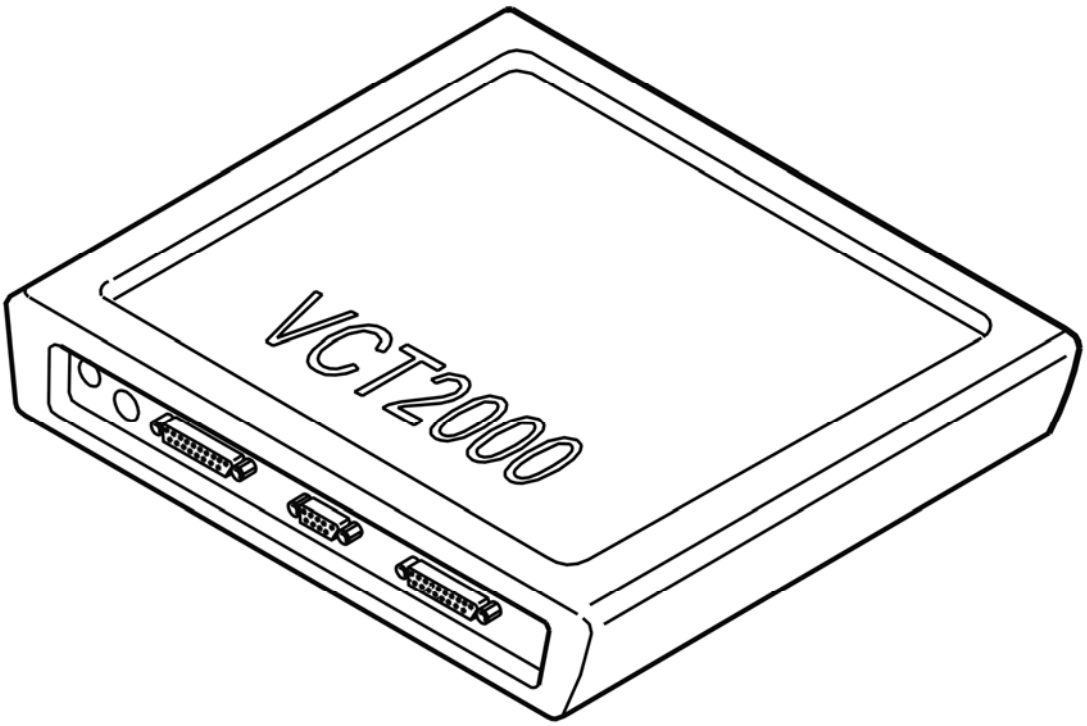

Fig. 240: Identifying VCT2000 Diagnostic Tool Symbol In VIDA
Courtesy of VOLVO CARS CORPORATION

Has the status of the diagnostic trouble code (DTC) changed?

- **YES**

  VERIFIED: Troubleshooting has been completed.

- **NO**

  See: **INFORMATION**

INFORMATION

FAULT-TRACING INFORMATION

The fault should have been detected and remedied. As this is not the case fault-tracing has failed.

Exit fault-tracing for this diagnostic trouble code (DTC) or make another attempt.

PHM-XXXX: UNKNOWN DIAGNOSTIC TROUBLE CODE (DTC) FOR THE CURRENT CONTROL MODULE VERSION (2003-2005)

UNKNOWN DIAGNOSTIC TROUBLE CODE (DTC) FOR THE CURRENT CONTROL MODULE VERSION

READING OFF DIAGNOSTIC TROUBLE CODES (DTCS)

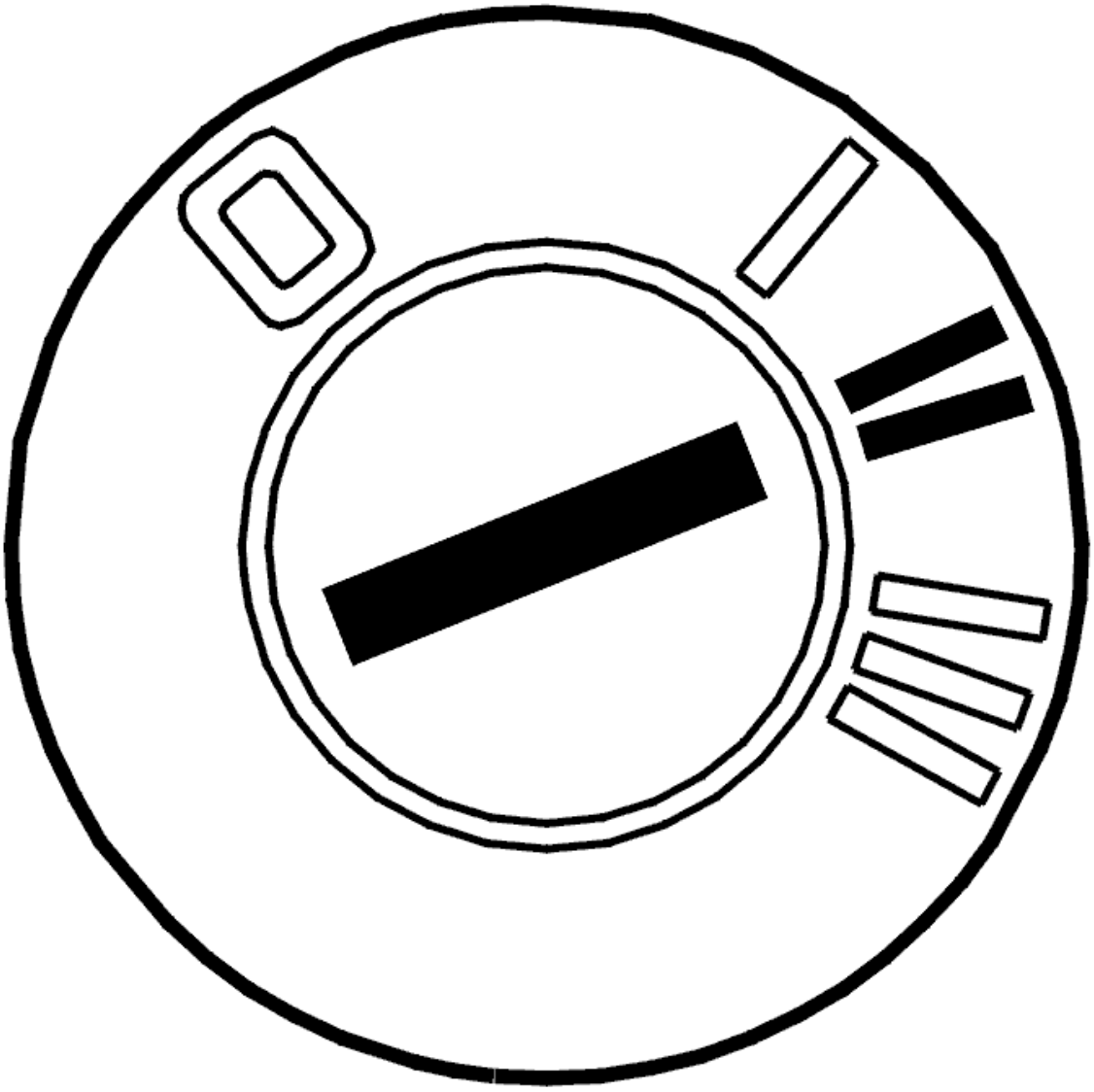

Fig. 241: Identifying Ignition ON
Courtesy of VOLVO CARS CORPORATION

- Ignition on.

  Read off the diagnostic trouble code (DTC) that is stored in the car.

Make a note of the code for reporting purposes.

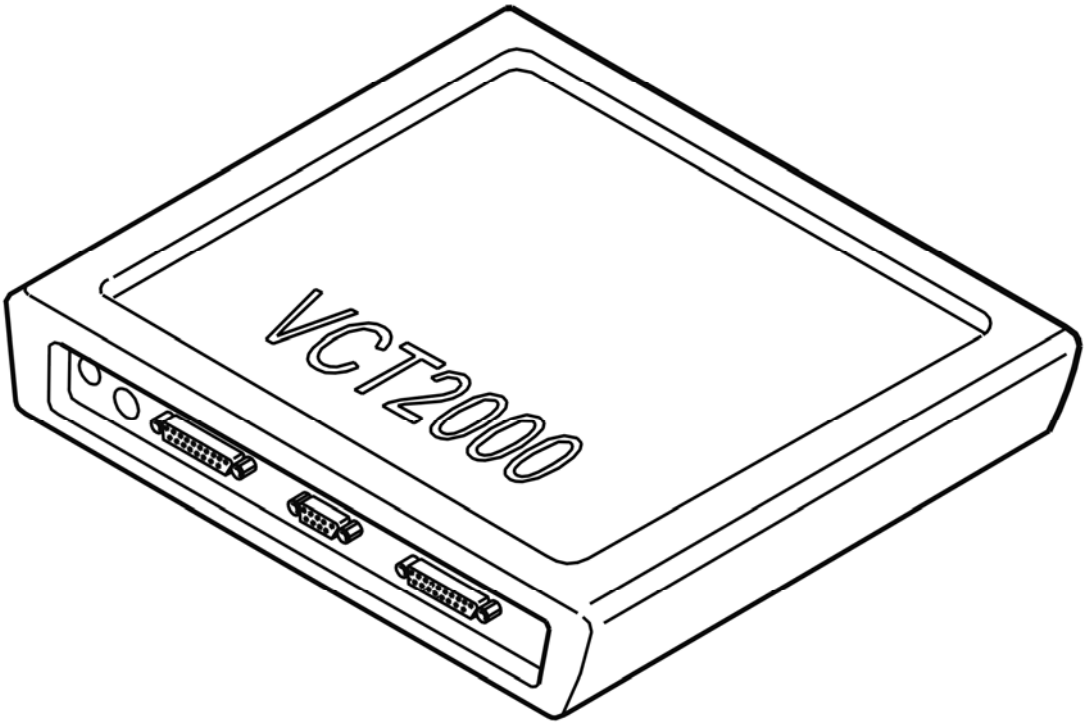

Fig. 242: Identifying VCT2000 Diagnostic Tool Symbol In VIDA
Courtesy of VOLVO CARS CORPORATION

- **Continue**

  OKAY: Troubleshooting has been completed.

PHM-XXXX: UNKNOWN DIAGNOSTIC TROUBLE CODE (DTC) FOR THE CURRENT CONTROL MODULE VERSION (2006-2012)

UNKNOWN DIAGNOSTIC TROUBLE CODE (DTC) FOR THE PRESENT CONTROL MODULE VERSION

READING OFF DIAGNOSTIC TROUBLE CODES (DTC)

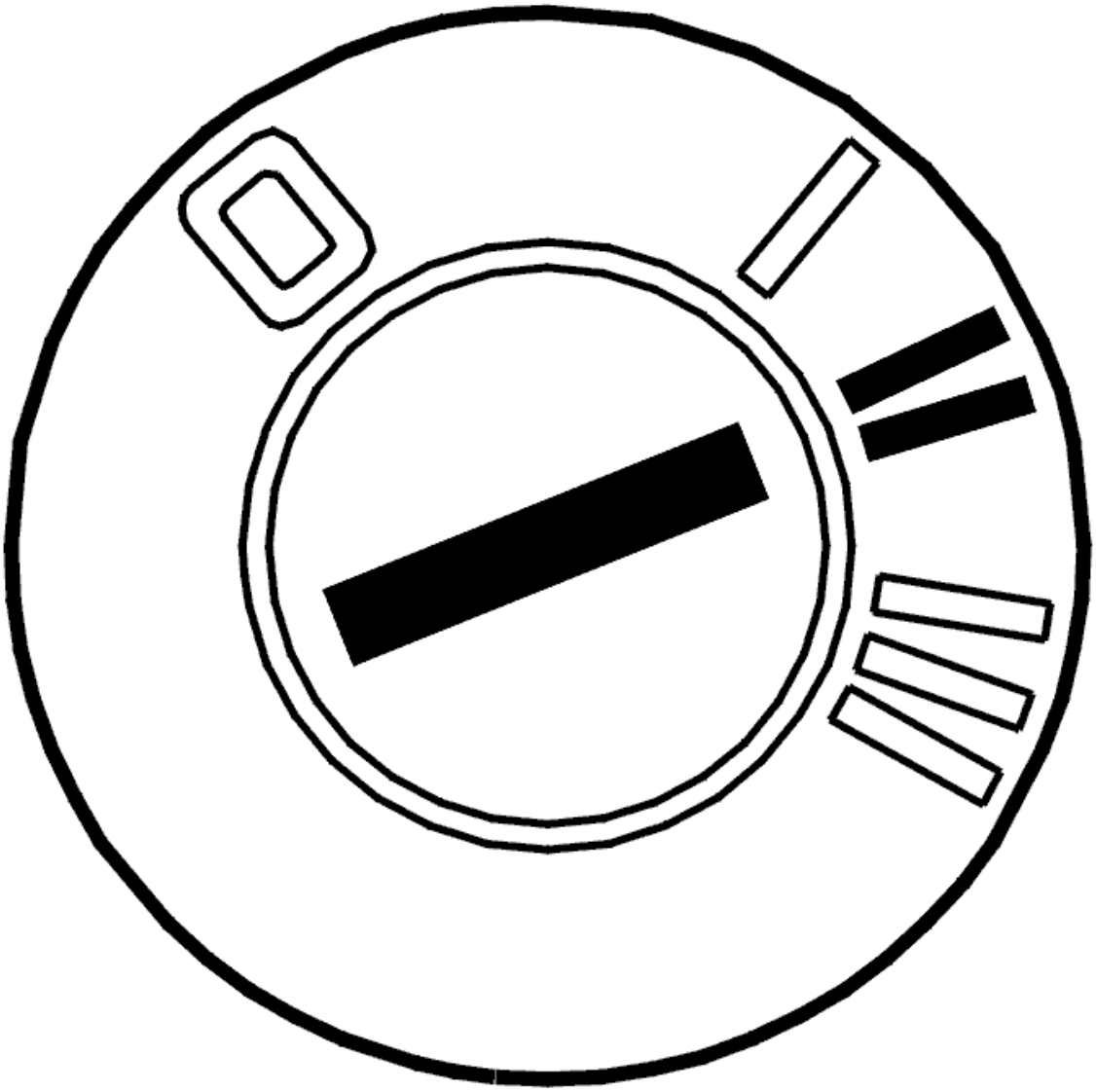

Fig. 243: Identifying Ignition ON
Courtesy of VOLVO CARS CORPORATION

- Ignition on.

  Read off the diagnostic trouble code (DTC) that is stored in the car.

  Make a note of the code for reporting purposes.

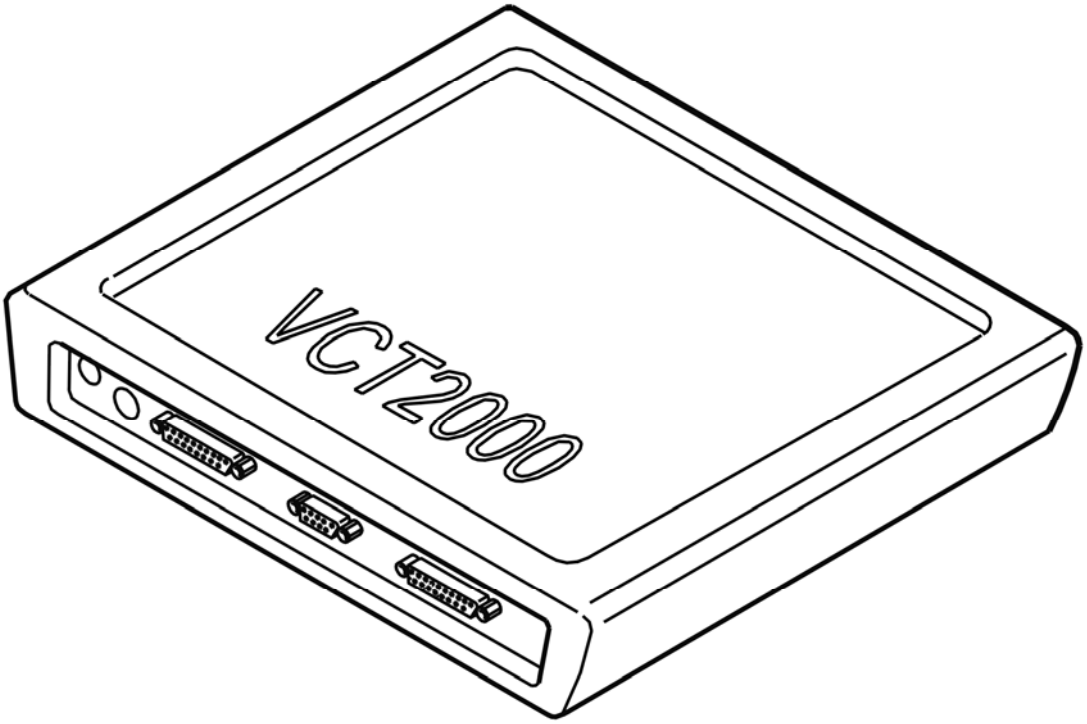

Fig. 244: Identifying VCT2000 Diagnostic Tool Symbol In VIDA
Courtesy of VOLVO CARS CORPORATION

- **Continue**

  OKAY: Troubleshooting has been completed.

ATM-0001: ANTENNA MODULE (ATM). NON MATCHING (2003-2006)

DIAGNOSTIC TROUBLE CODE (DTC) INFORMATION ATM-0001

Condition

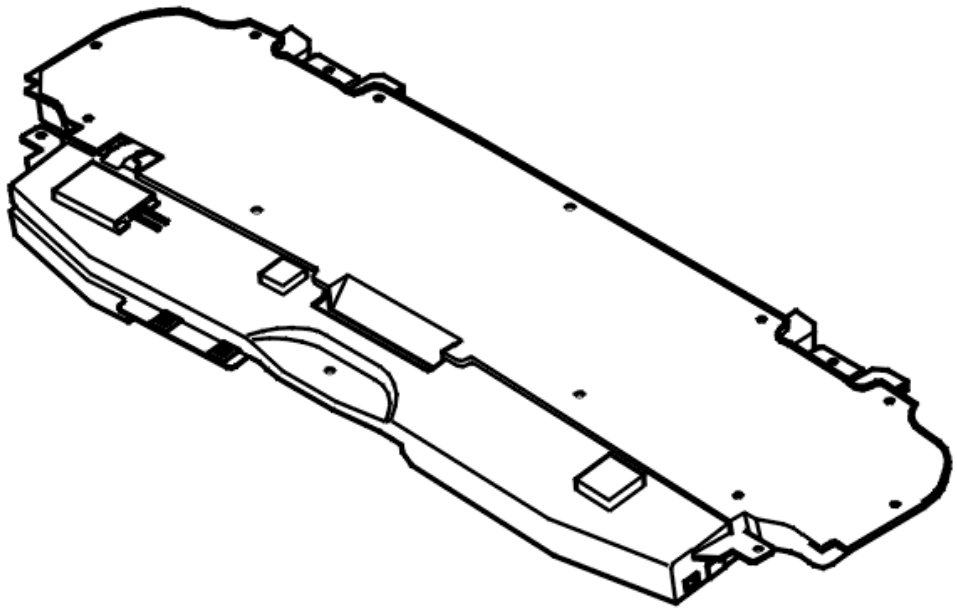

Fig. 245: Identifying Antenna Module (ATM)
Courtesy of VOLVO CARS CORPORATION

Diagnostic trouble code (DTC) ATM-0001 is stored if the antenna module (ATM) is not adapted to the same market as the car.

The diagnostic trouble code (DTC) can be diagnosed when the ignition is switched on.

Substitute Value

- None.

Possible Source

- The antenna module (ATM) is adapted for a different market than the car.

Fault symptom[s]

- No RDS functionality (this may happen for example if the car is adapted for the EU, US or AUS but the antenna module (ATM) is adapted for Japan)
- Not all frequencies are available.

ANTENNA MODULE (ATM), INCORRECTLY MATCHED

FAULT-TRACING INFORMATION

Diagnostic trouble code (DTC) ATM-0001 is stored if the antenna module (ATM) is not adapted to the same market as the car. For example an antenna module (ATM) for the Japanese market is installed in a car adapted for the EU, US or AUS.

If the fault is intermittent, it has been registered previously but is no longer present. Intermittent faults can be caused by interference at start up of the antenna module (ATM) or may be a different type of fault which occurs on different occasions. The fault is evaluated depending on how it occurs.

If the fault recurs, replace the antenna module (ATM).

If the fault is permanent, check that the radio wavebands and frequency settings are configured for the relevant market. This can be read off from vehicle communication for the central electronic module (CEM), reading off data for vehicle configuration, waveband and frequency settings radio. Replace the antenna module (ATM) if the radio is configured for the correct market.

Remedy as necessary.

Other information:

- To replace the antenna module (ATM), see **RECEIVER AM/FM (ATM), REPLACING** .
- **Continue**

  See: **VERIFICATION**

VERIFICATION

VERIFICATION

HINT: After carrying out the repair, check that the fault has been remedied.

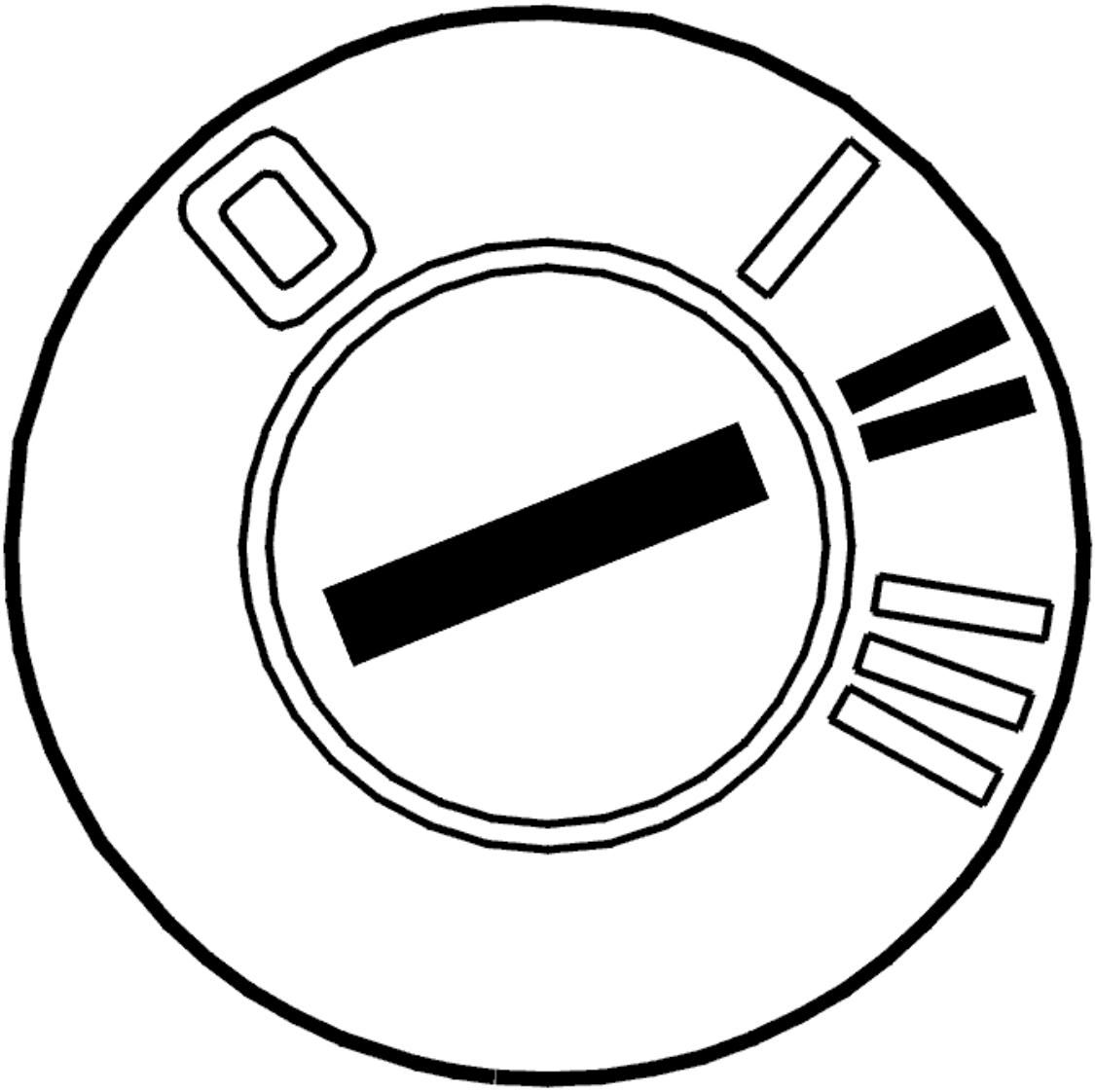

Fig. 246: Identifying Ignition ON
Courtesy of VOLVO CARS CORPORATION

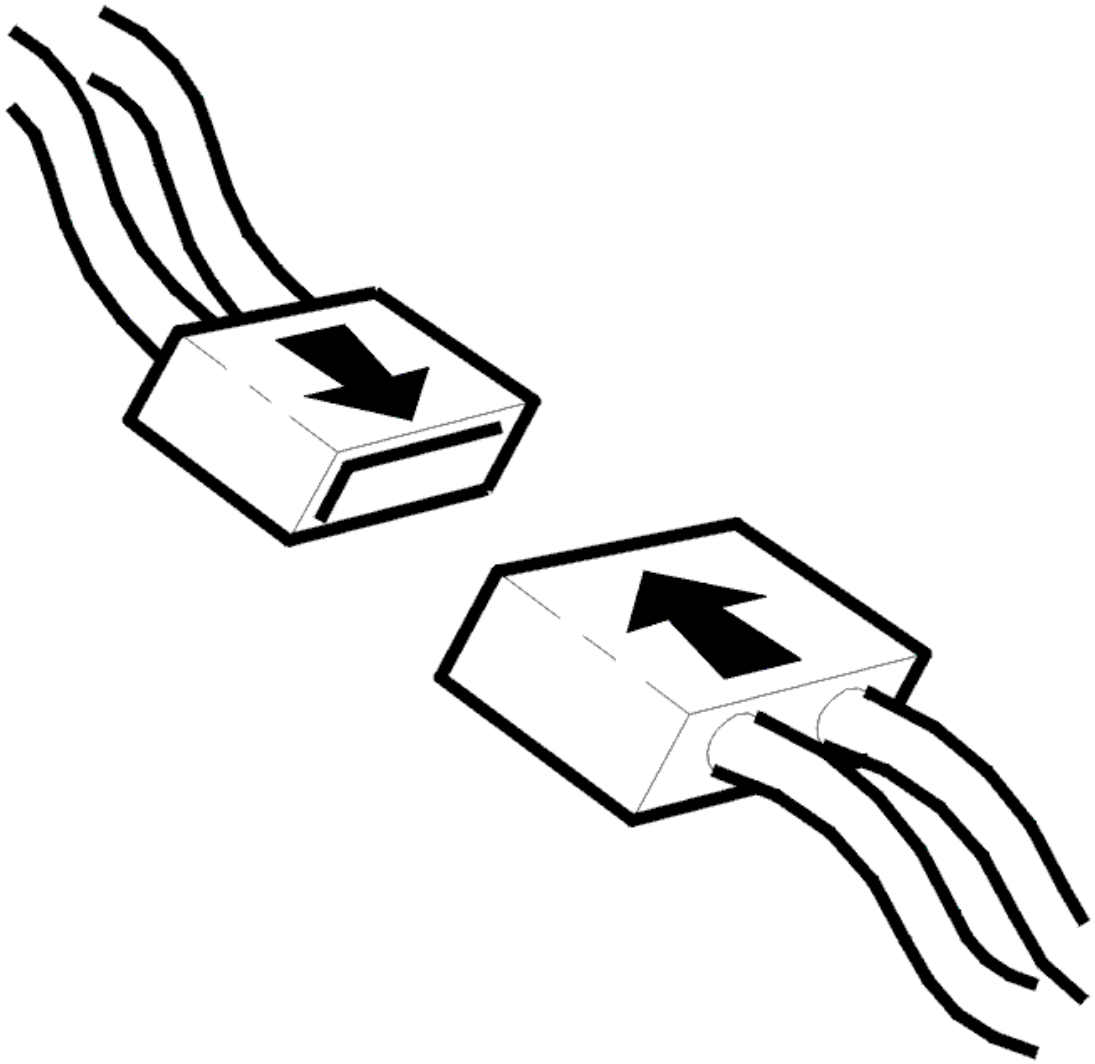

Fig. 247: Connecting Connector
Courtesy of VOLVO CARS CORPORATION

- Ignition off
- Reinstall the connectors, components etc.
- Ignition on.

  Check that all relevant frequencies are available.

Is the antenna module (ATM) working?

- **YES**

  VERIFIED: Troubleshooting has been completed.

- **NO**

  See: **INFORMATION**

INFORMATION

FAULT-TRACING INFORMATION

In case of this defect, troubleshooting is not followed by verification.

The information can be displayed again or the fault-tracing for this fault can be interrupted.

ATM-0002: TMC RECEIVER. CONFIGURATION FAULT (2003-2006)

DIAGNOSTIC TROUBLE CODE (DTC) INFORMATION ATM-0002

Condition

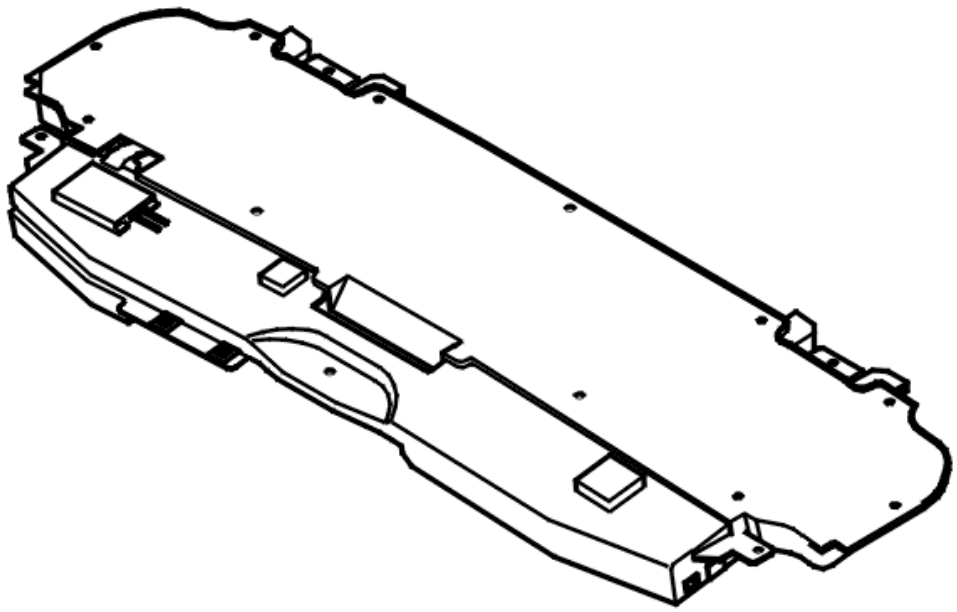

Fig. 248: Identifying Antenna Module (ATM)
Courtesy of VOLVO CARS CORPORATION

Diagnostic trouble code (DTC) ATM-0002 is stored if the antenna module (ATM) detects a traffic message channel (TMC) receiver even though the car is not configured for one.

The diagnostic trouble code (DTC) can be diagnosed when the ignition is switched on.

Substitute Value

- None.

Possible Source

- The car is not configured for a TMC receiver.

Fault symptom[s]

- Traffic information is not displayed in the navigation system.

CONFIGURATION FAULT

FAULT-TRACING INFORMATION

Diagnostic trouble code (DTC) ATM-0002 is stored if the antenna module (ATM) detects a TMC receiver even though the car is not configured for one. A possible cause of the fault is that a TMC receiver has been installed but the car configuration file has not been updated.

If the fault is intermittent, it has been registered previously but is no longer present. Intermittent faults can be caused by interference at start up of the antenna module (ATM) or may be a different type of fault which occurs on different occasions. The fault is evaluated depending on how it occurs.

Remedy as necessary for permanent faults.

- **Continue**

  See: **VERIFICATION**

VERIFICATION

VERIFICATION

HINT: After carrying out the repair, check that the fault has been remedied.

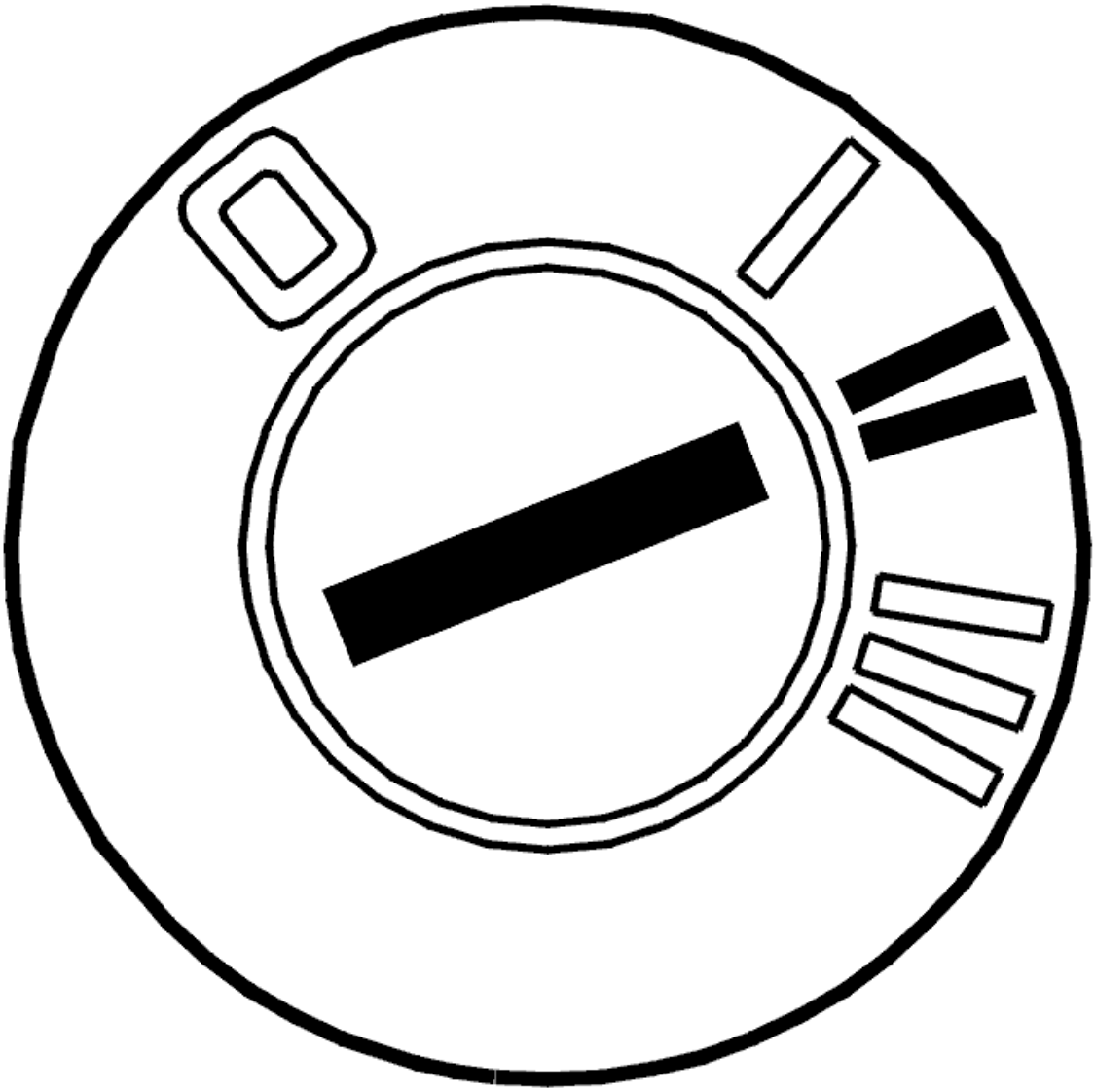

Fig. 249: Identifying Ignition ON
Courtesy of VOLVO CARS CORPORATION

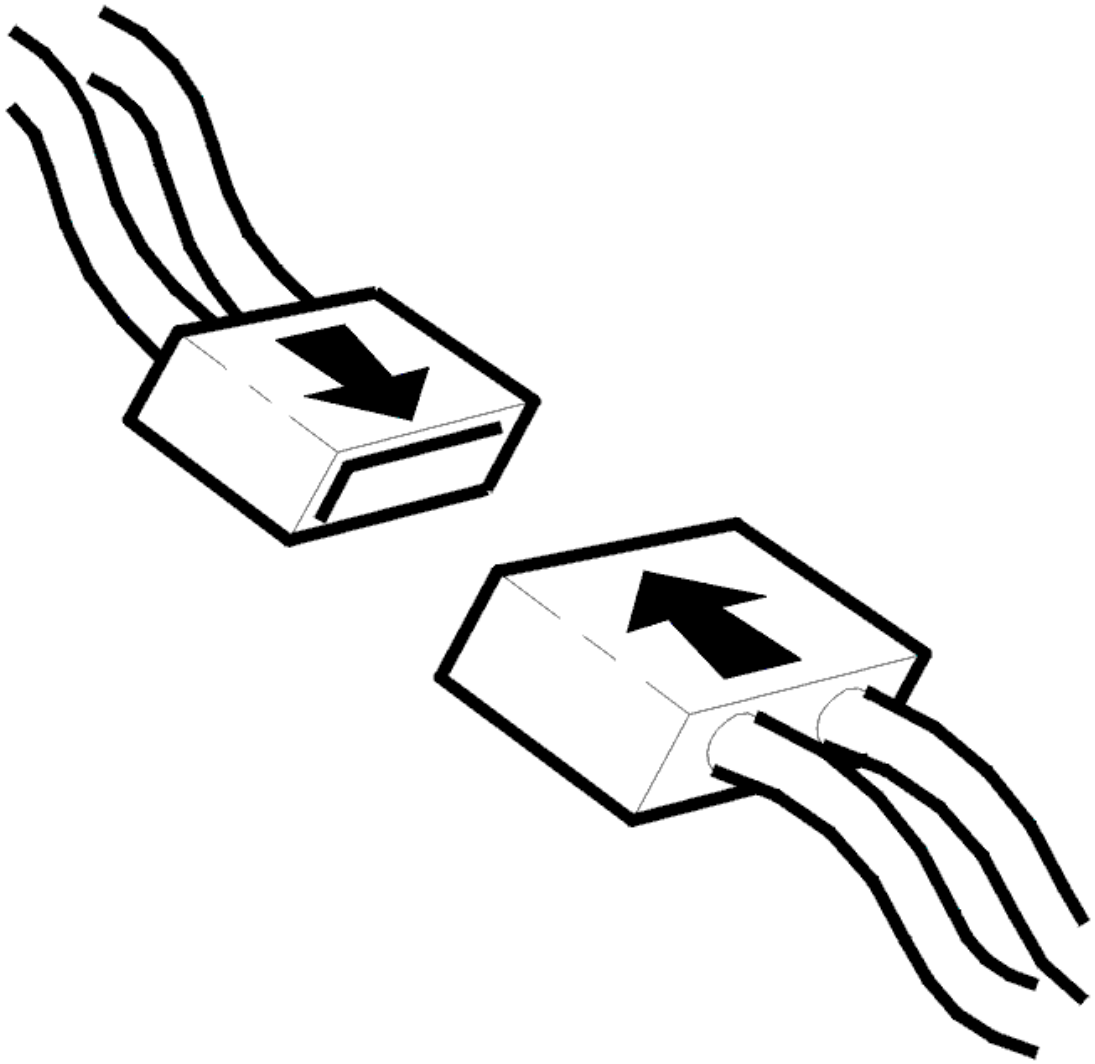

Fig. 250: Connecting Connector
Courtesy of VOLVO CARS CORPORATION

- Ignition off
- Reinstall the connectors, components etc.
- Ignition on.

HINT: Use a battery charger if the engine is not running.

Check that the traffic messages are correctly displayed in the navigation system. It may be necessary to zoom out to display a larger area of the map. Traffic message information is transmitted every 15 minutes.

HINT: This fault-tracing cannot verify whether traffic information is transmitted in a particular area.

Are the traffic messages displayed correctly?

- **YES**

  VERIFIED: Troubleshooting has been completed.

- **NO**

  See: **INFORMATION**

INFORMATION

FAULT-TRACING INFORMATION

In case of this defect, troubleshooting is not followed by verification.

The information can be displayed again or the fault-tracing for this fault can be interrupted.

ATM-0003: TMC RECEIVER. SIGNAL MISSING (2003-2006)

DIAGNOSTIC TROUBLE CODE (DTC) INFORMATION ATM-0003

Condition

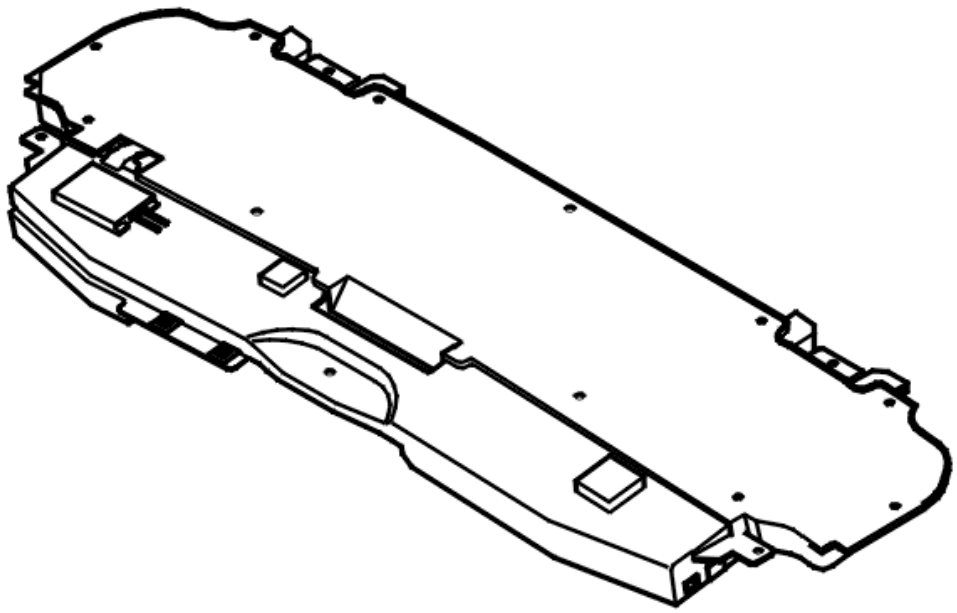

Fig. 251: Identifying Antenna Module (ATM)
Courtesy of VOLVO CARS CORPORATION

Diagnostic trouble code (DTC) ATM-0003 is stored if the antenna module (ATM) does not detect a traffic message channel (TMC) receiver even though the car is configured for one.

The diagnostic trouble code (DTC) is also stored if there are communication problems between the antenna module (ATM) and the TMC receiver.

The diagnostic trouble code (DTC) can be diagnosed when the ignition is switched on.

Substitute Value

- None.

Possible Source

- The car does not have a TMC receiver
- Fault in the communication between the antenna module (ATM) and the TMC receiver.

Fault symptom[s]

- Traffic information is not displayed or is not updated.

TMC RECEIVER, SIGNAL MISSING

FAULT-TRACING INFORMATION

Diagnostic trouble code (DTC) ATM-0003 is stored if the car does not detect a TMC receiver even though the car is configured for one.

The diagnostic trouble code (DTC) is also stored if there are communication problems between the antenna module (ATM) and the TMC receiver.

If the fault is intermittent, it has been registered previously but is no longer present. Intermittent faults can be caused by interference at start up of the antenna module (ATM) or may be a different type of fault which occurs on different occasions. The fault is evaluated depending on how it occurs. If the fault recurs, replace the TMC receiver.

If the fault is permanent, check that a TMC receiver is installed. Install a TMC receiver if there isn't one. In other cases replace the TMC receiver.

Remedy as necessary.

Other information:

- To replace the TMC receiver, see **RECEIVER GPS, TMC (ATM), REPLACE** .

- **Continue**

  See: **VERIFICATION**

VERIFICATION

VERIFICATION

HINT: After carrying out the repair, check that the fault has been remedied.

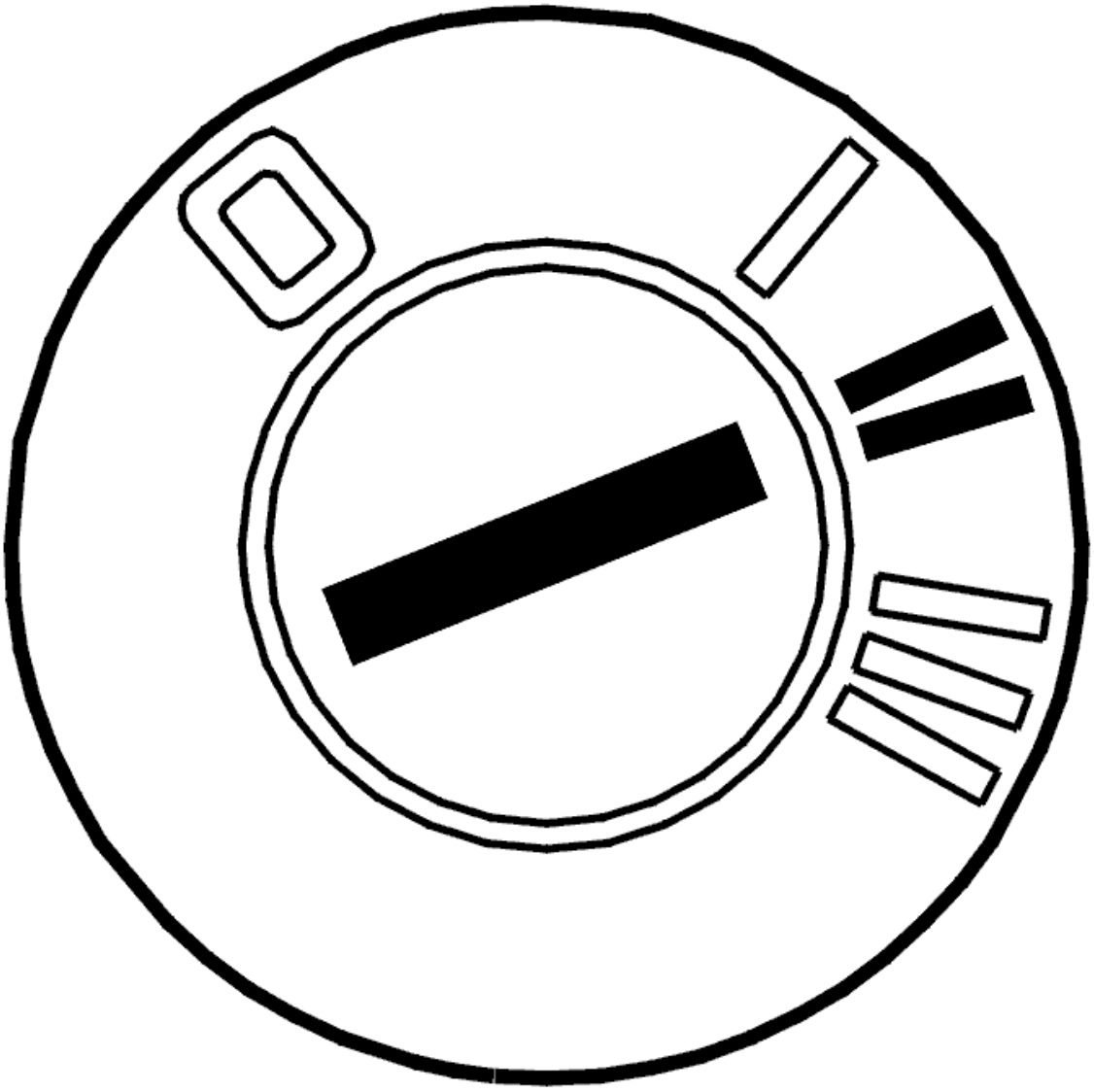

Fig. 252: Identifying Ignition ON
Courtesy of VOLVO CARS CORPORATION

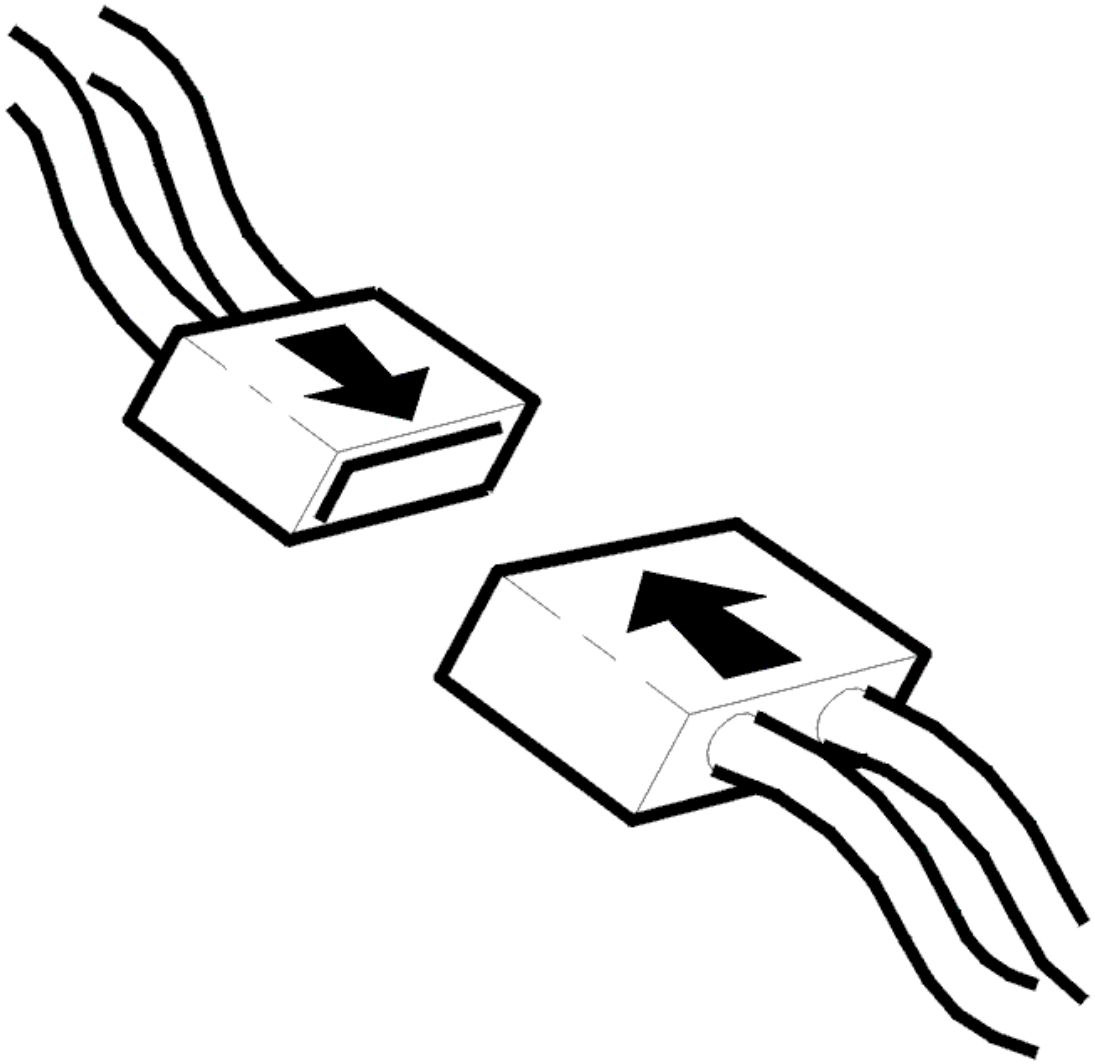

Fig. 253: Connecting Connector
Courtesy of VOLVO CARS CORPORATION

- Ignition off
- Reinstall the connectors, components etc.
- Ignition on.

HINT: Use a battery charger if the engine is not running.

Check that the traffic messages are correctly displayed in the navigation system. It may be necessary to zoom out to display a larger area of the map. Traffic message information is transmitted every 15 minutes.

HINT: This fault-tracing cannot verify whether traffic information is transmitted in a particular area.

Are the traffic messages displayed correctly?

- **YES**

  VERIFIED: Troubleshooting has been completed.

- **NO**

  See: **INFORMATION**

INFORMATION

FAULT-TRACING INFORMATION

In case of this defect, troubleshooting is not followed by verification.

The information can be displayed again or the fault-tracing for this fault can be interrupted.

ATM-0004: GPS UNIT. CONFIGURATION FAULT (2003-2006)

DIAGNOSTIC TROUBLE CODE (DTC) INFORMATION ATM-0004

Condition

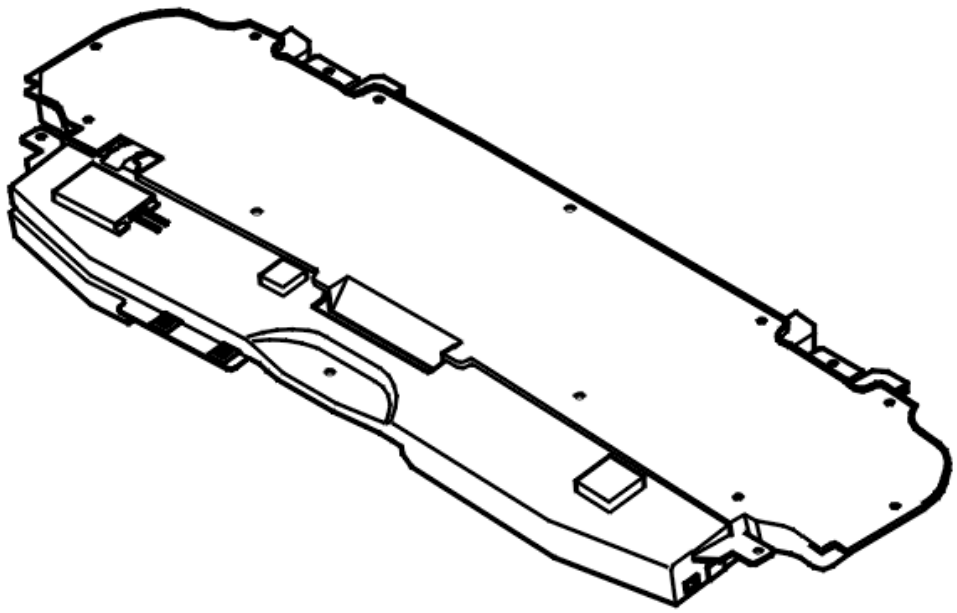

Fig. 254: Identifying Antenna Module (ATM)
Courtesy of VOLVO CARS CORPORATION

Diagnostic trouble code (DTC) ATM-0004 is stored if the antenna module (ATM) detects a GPS unit even though the car is not configured for one.

The diagnostic trouble code (DTC) can be diagnosed when the ignition is switched on.

Substitute Value

- None.

Possible Source

- The antenna module (ATM) has a GPS unit even though the car is not configured for it.

Fault symptom[s]

- An incorrect position is displayed in the navigation system.

GPS UNIT, CONFIGURATION FAULT

FAULT-TRACING INFORMATION

Diagnostic trouble code (DTC) ATM-0004 is stored if the antenna module (ATM) detects a GPS unit even though the car is not configured for one.

A possible cause of the fault is that a GPS unit has been installed but the car configuration file has not been updated.

If the fault is intermittent, it has been registered previously but is no longer present. Intermittent faults can be caused by interference at start up of the antenna module (ATM) or can be a different type of fault which occurs on different occasions. The fault is evaluated depending on how it occurs.

Remedy as necessary for permanent faults

- **Continue**

  See: **VERIFICATION**

VERIFICATION

VERIFICATION

HINT: After carrying out the repair, check that the fault has been remedied.

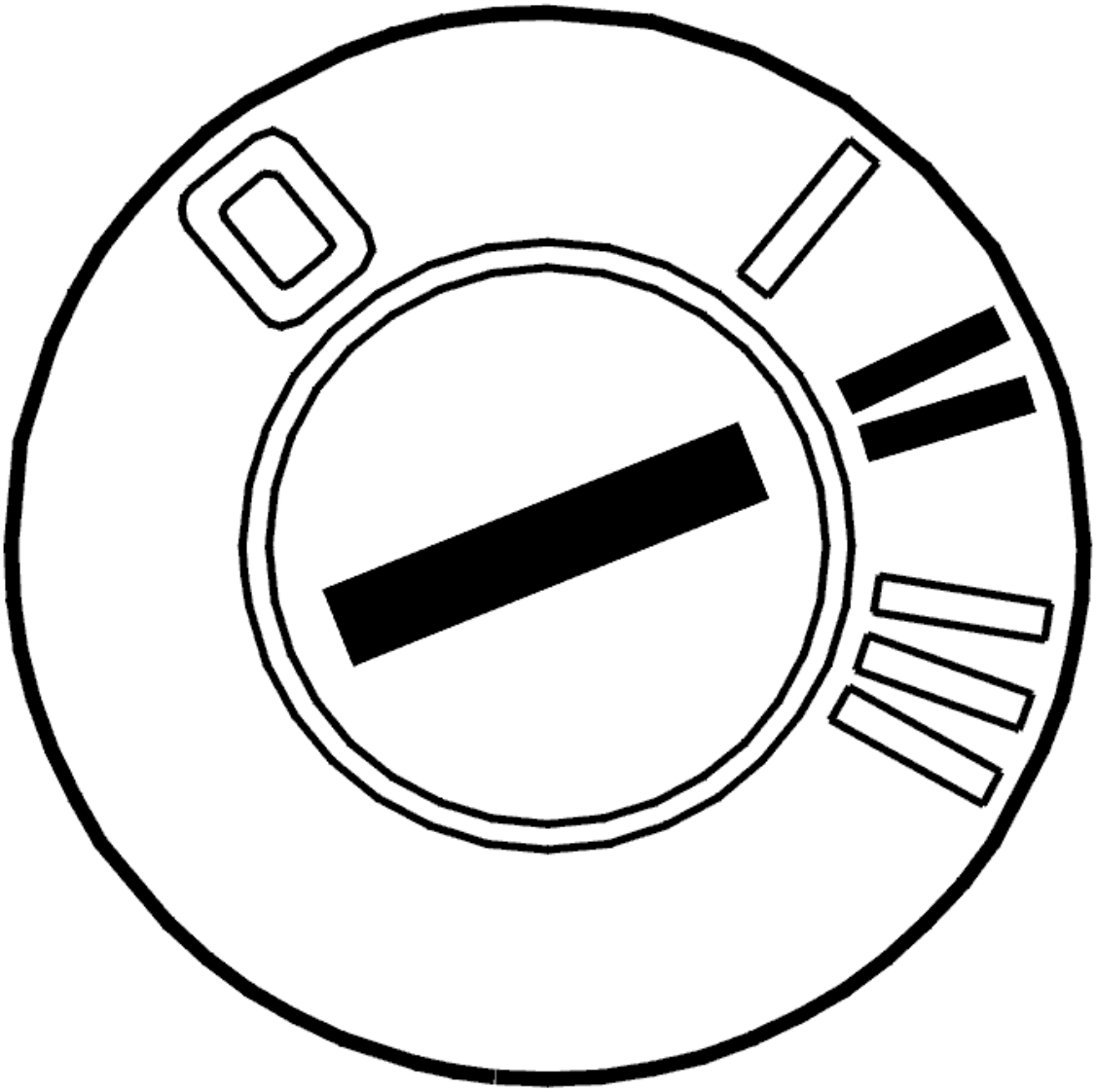

Fig. 255: Identifying Ignition ON
Courtesy of VOLVO CARS CORPORATION

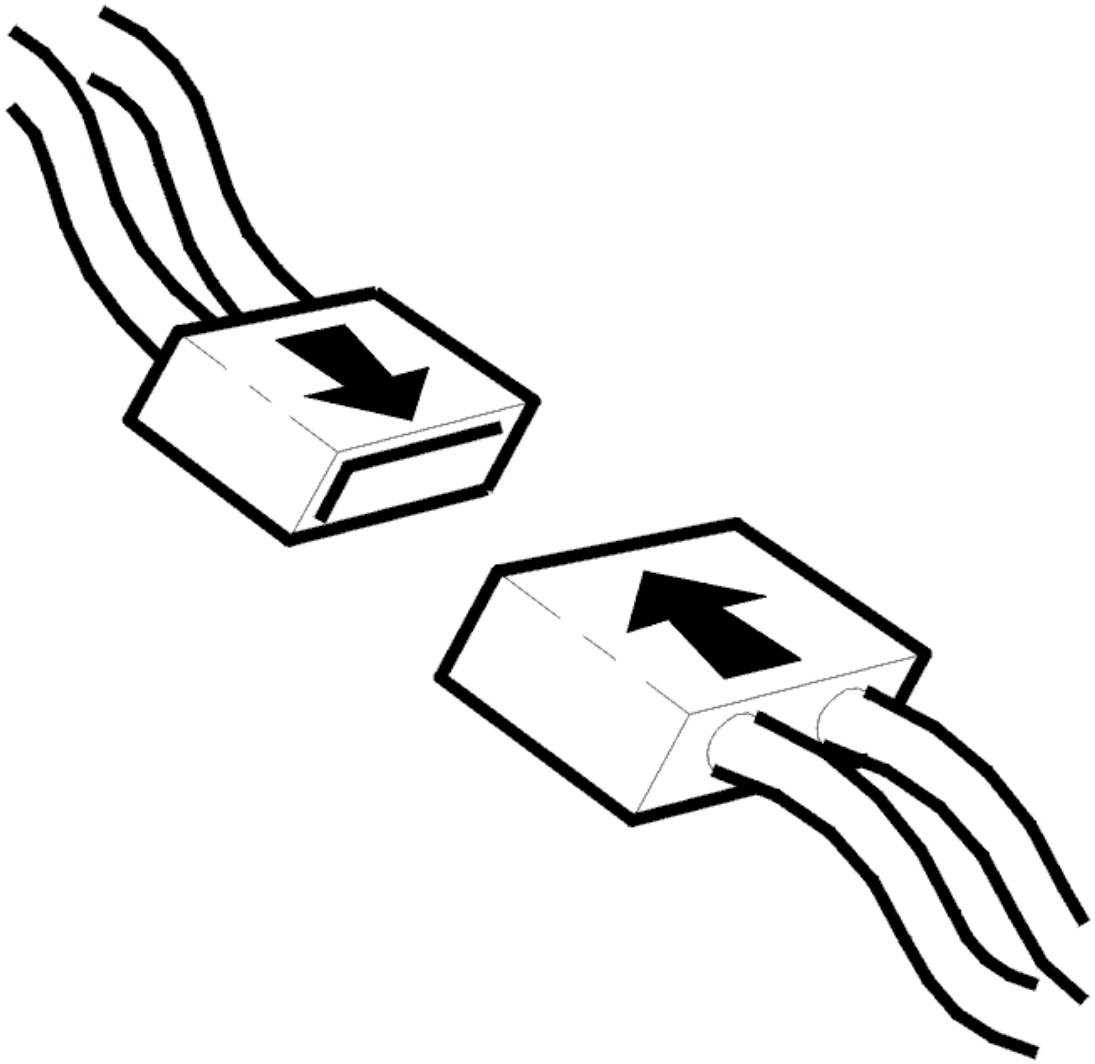

Fig. 256: Connecting Connector
Courtesy of VOLVO CARS CORPORATION

- Ignition off
- Reinstall the connectors, components etc.

  Park the car outside and switch on the ignition.

  HINT: Use a battery charger if the engine is not running.

  After a GPS unit has been replaced, it must search for satellites to fix the position. This can take up to 5 minutes.

Is the position of the car correct on the map?

- **YES**

VERIFIED: Troubleshooting has been completed.

- **NO**

  See: **INFORMATION**

INFORMATION

FAULT-TRACING INFORMATION

In case of this defect, troubleshooting is not followed by verification.

The information can be displayed again or the fault-tracing for this fault can be interrupted.

ATM-0005: GPS UNIT. SIGNAL MISSING (2003-2006)

DIAGNOSTIC TROUBLE CODE (DTC) INFORMATION ATM-0005

Condition

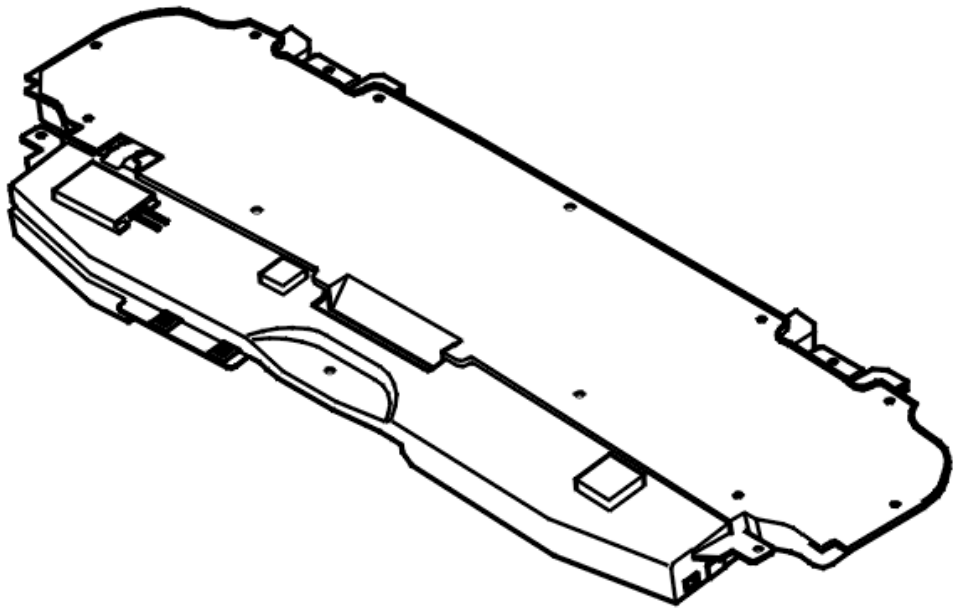

Fig. 257: Identifying Antenna Module (ATM)
Courtesy of VOLVO CARS CORPORATION

Diagnostic trouble code (DTC) ATM-0005 is stored if the antenna module (ATM) does not detect a GPS unit

even though the car is configured for one.

The diagnostic trouble code (DTC) is also stored if the communication between the antenna module (ATM) and the GPS unit is broken.

The multimedia module (MMM) displays the dead reckoning of the car position in the navigation system. This will be incorrect after a long period of driving.

The diagnostic trouble code (DTC) can be diagnosed when the ignition is switched on.

Substitute Value

- Dead reckoning the position.

Possible Source

- No GPS unit
- Fault in the communication between the antenna module (ATM) and the GPS unit.

Fault symptom[s]

- The car's position on the map is incorrect.

GPS UNIT, COMMUNICATION PROBLEMS

FAULT-TRACING INFORMATION

Diagnostic trouble code (DTC) ATM-0005 is stored if the car does not detect a GPS unit even though the car is configured for one.

The diagnostic trouble code (DTC) is also stored if there are communication problems between the antenna module (ATM) and the GPS unit.

If the fault is intermittent, it has been registered previously but is no longer present. Intermittent faults can be caused by interference at start up of the antenna module (ATM) or may be a different type of fault which occurs on different occasions. The fault is evaluated depending on how it occurs. If the fault recurs, replace the GPS unit.

If the fault is permanent, check that a GPS unit is installed. Install a GPS unit if there isn't one. In other cases replace the GPS unit.

Remedy as necessary.

Other information:

- To replace the GPS unit, see **RECEIVER GPS, TMC (ATM), REPLACE** .

- **Continue**

  See: **VERIFICATION**

VERIFICATION

VERIFICATION

HINT: After carrying out the repair, check that the fault has been remedied.

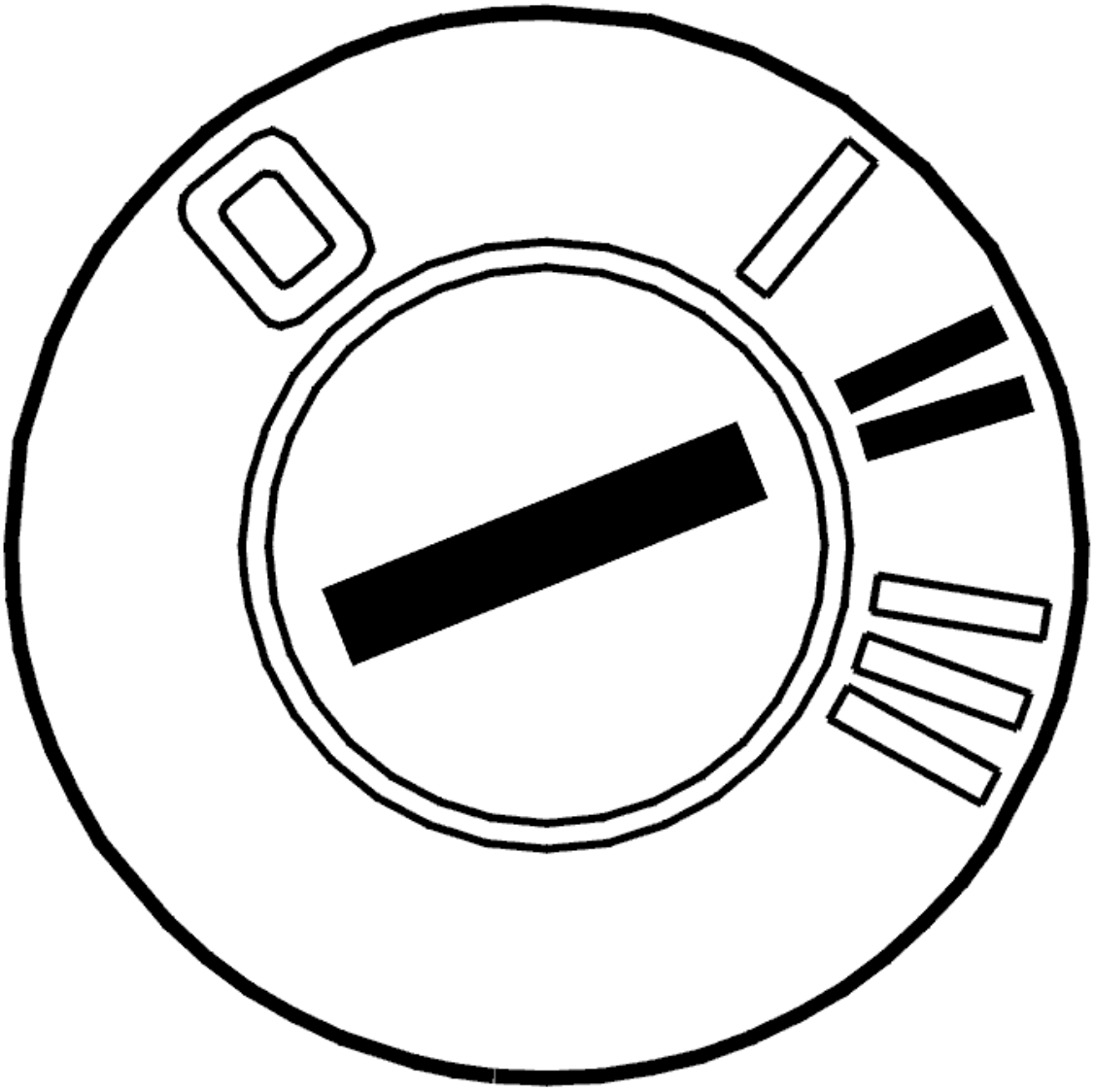

Fig. 258: Identifying Ignition ON
Courtesy of VOLVO CARS CORPORATION

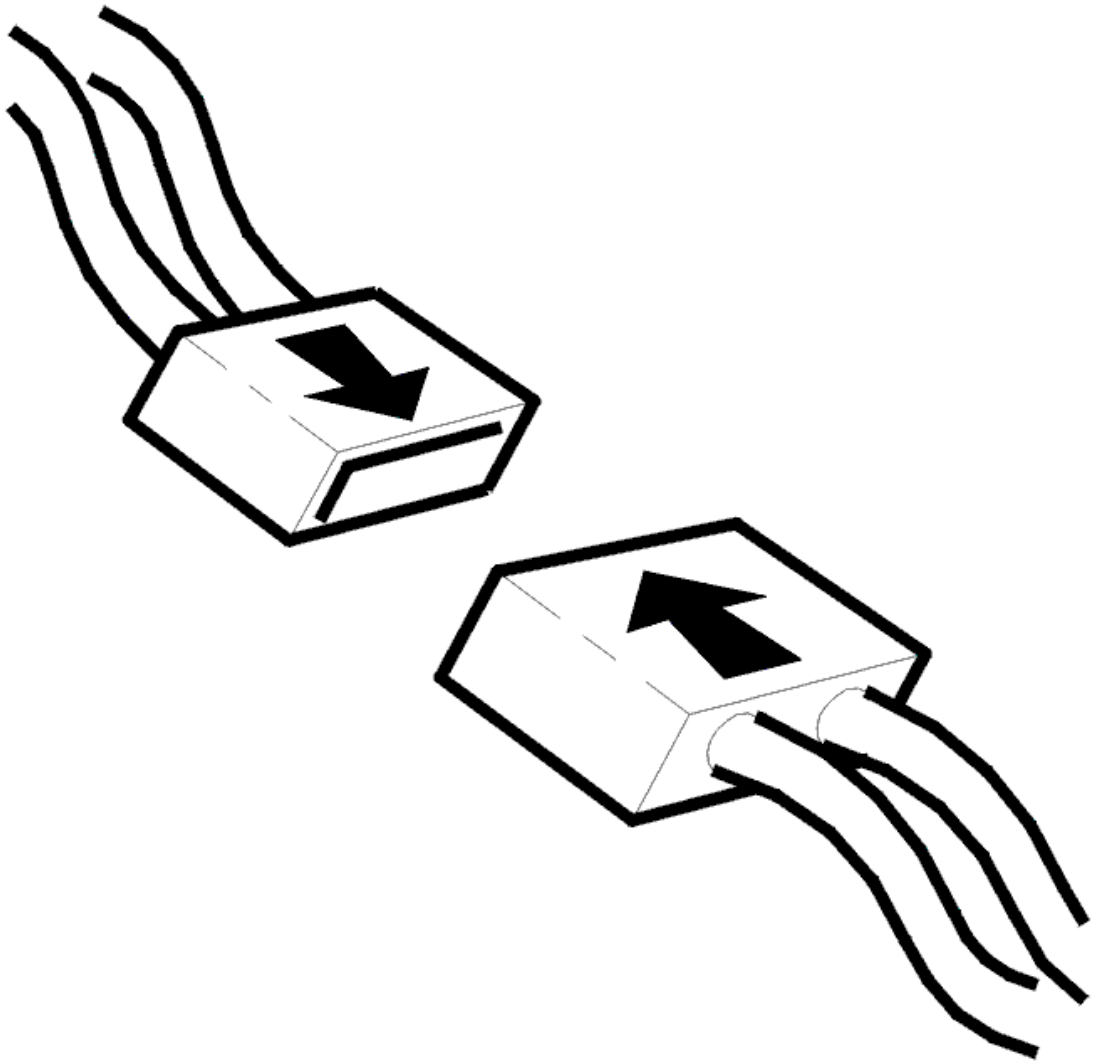

Fig. 259: Connecting Connector
Courtesy of VOLVO CARS CORPORATION

- Ignition off
- Reinstall the connectors, components etc.

  Park the car outside and switch on the ignition.

  HINT: Use a battery charger if the engine is not running.

  After a GPS unit has been replaced, it must search for satellites to fix the position. This can take up to 5 minutes.

Is the position of the car correct on the map?

- **YES**

VERIFIED: Troubleshooting has been completed.

- **NO**

  See: **INFORMATION**

INFORMATION

FAULT-TRACING INFORMATION

In case of this defect, troubleshooting is not followed by verification.

The information can be displayed again or the fault-tracing for this fault can be interrupted.

ATM-0006: GPS UNIT. INTERNAL FAULT (2003-2006)

DIAGNOSTIC TROUBLE CODE (DTC) INFORMATION ATM-0006

Condition

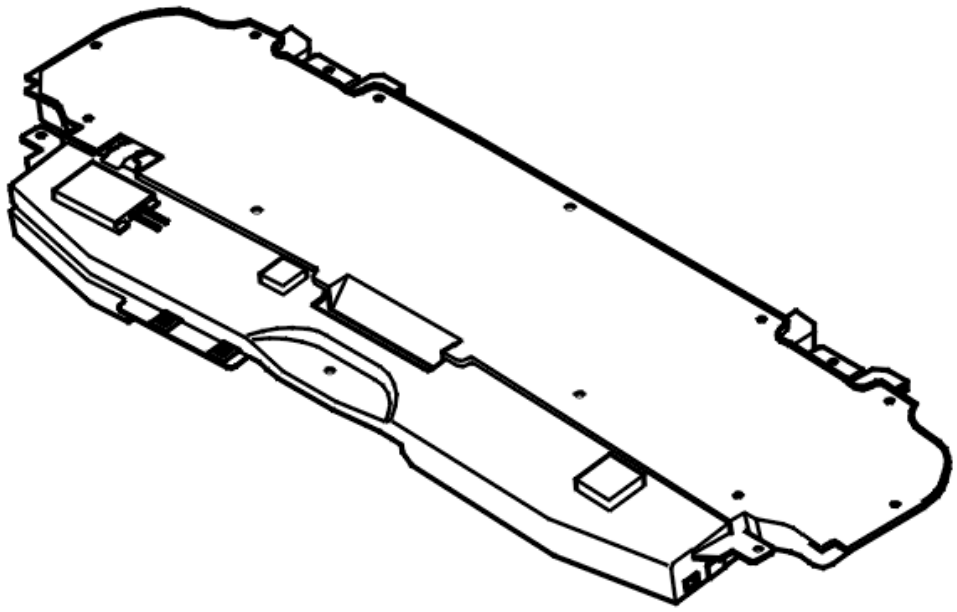

Fig. 260: Identifying Antenna Module (ATM)
Courtesy of VOLVO CARS CORPORATION

Diagnostic trouble code (DTC) ATM-0006 is stored if the antenna module (ATM) detects an internal fault in

the GPS unit.

Substitute Value

- Dead reckoning the position.

Possible Source

- Internal fault.

Fault symptom[s]

- The car's position on the map is incorrect.

GPS UNIT, INTERNAL FAULT

REPLACING THE COMPONENT

If the fault is intermittent, it has been registered previously but is no longer present. Intermittent faults can be caused by interference at start up or can be a different type of fault which occurs on different occasions. The fault is evaluated depending on how it occurs. If the fault recurs, replace the GPS unit.

In the event of a permanent fault, replace the GPS unit.

Remedy as necessary.

Other information:

- To replace the GPS unit, see **RECEIVER GPS, TMC (ATM), REPLACE** .
- **Continue**

  See: **VERIFICATION**

VERIFICATION

VERIFICATION

HINT: After carrying out the repair, check that the fault has been remedied.

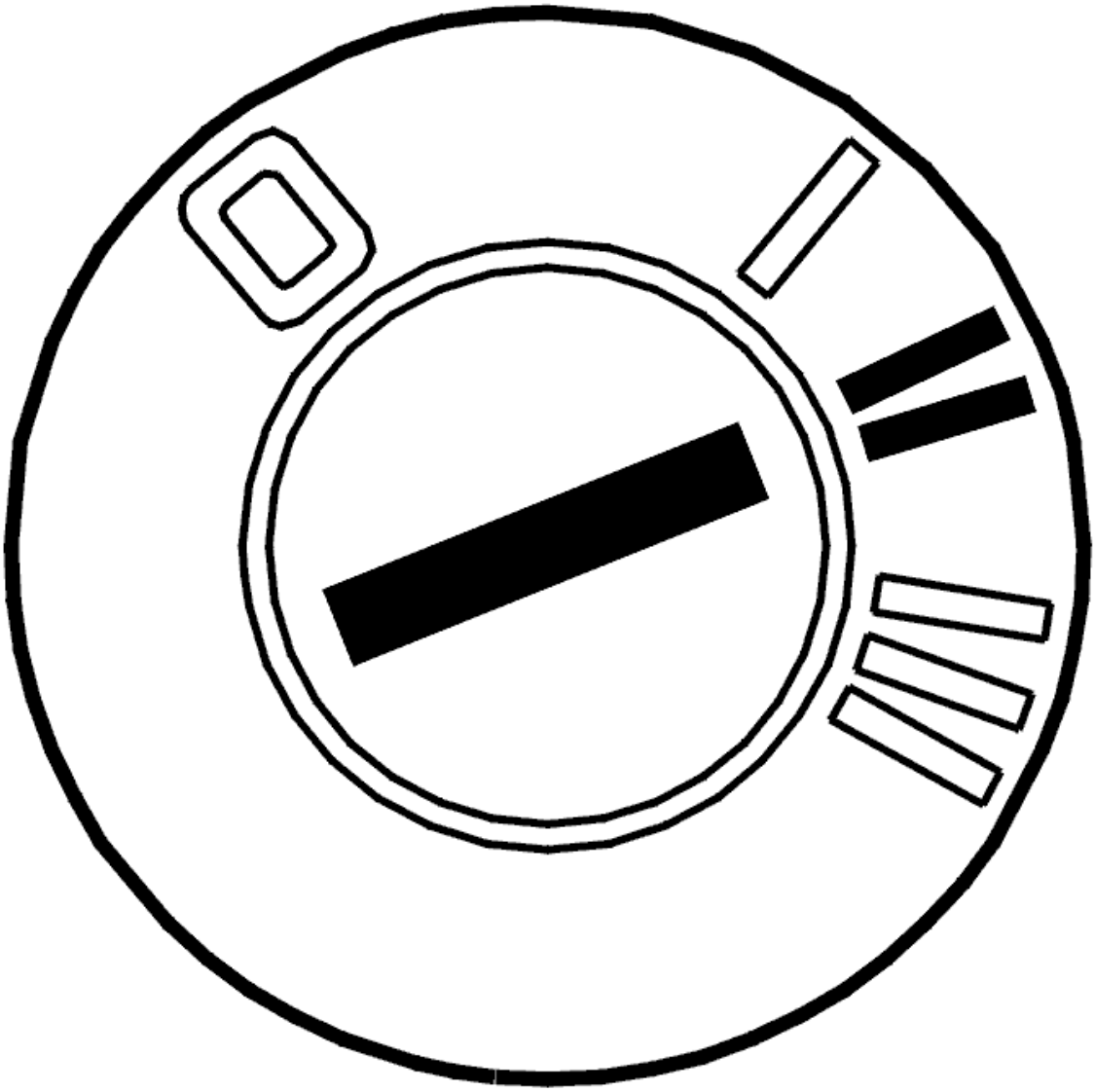

Fig. 261: Identifying Ignition ON
Courtesy of VOLVO CARS CORPORATION

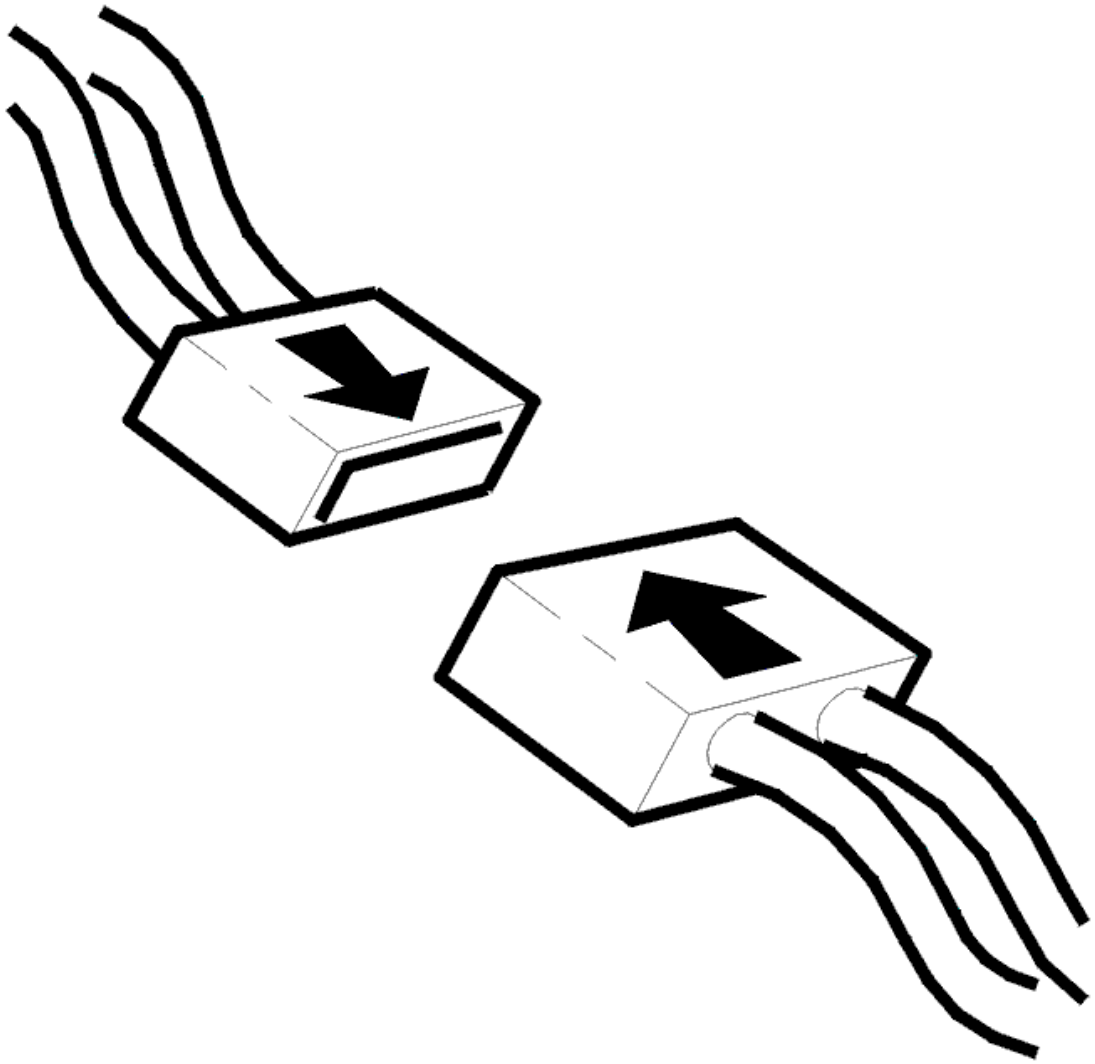

Fig. 262: Connecting Connector
Courtesy of VOLVO CARS CORPORATION

- Ignition off
- Reinstall the connectors, components etc.

  Park the car outside and switch on the ignition.

  HINT: Use a battery charger if the engine is not running.

  After a GPS unit has been replaced, it must search for satellites to fix the position. This can take up to 5 minutes.

Is the position of the car correct on the map?

- **YES**

VERIFIED: Troubleshooting has been completed.

- **NO**

  See: **INFORMATION**

INFORMATION

FAULT-TRACING INFORMATION

In case of this defect, troubleshooting is not followed by verification.

The information can be displayed again or the fault-tracing for this fault can be interrupted.

ATM-0007: GPS UNIT. INTERNAL FAULT (2003-2006)

DIAGNOSTIC TROUBLE CODE (DTC) INFORMATION ATM-0007

Condition

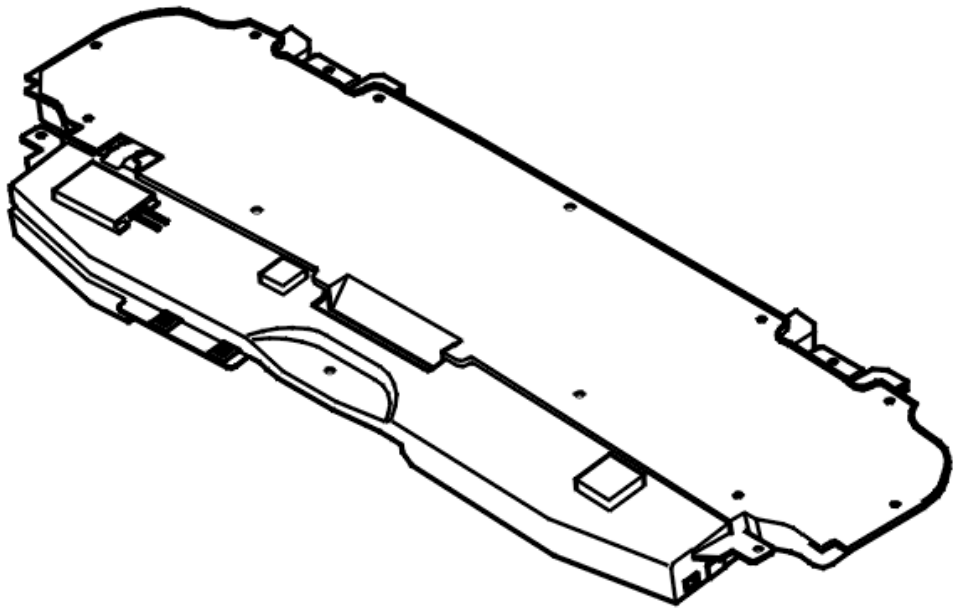

Fig. 263: Identifying Antenna Module (ATM)
Courtesy of VOLVO CARS CORPORATION

Diagnostic trouble code (DTC) ATM-0007 is stored if the antenna module (ATM) detects an internal fault in

the GPS unit.

The diagnostic trouble code (DTC) can be diagnosed when the ignition is switched on.

Substitute Value

- Dead reckoning the position.

Possible Source

- Internal fault in the GPS unit.

Fault symptom[s]

- The car's position on the map is incorrect.

GPS UNIT, INTERNAL FAULT

FAULT-TRACING INFORMATION

If the fault is intermittent, it has been registered previously but is no longer present. Intermittent faults can be caused by interference at start up or can be a different type of fault which occurs on different occasions. The fault is evaluated depending on how it occurs. If the fault recurs, replace the GPS unit.

In the event of a permanent fault, replace the GPS unit.

Remedy as necessary.

Other information:

- To replace the GPS unit, see **RECEIVER GPS, TMC (ATM), REPLACE** .
- **Continue**

  See: **VERIFICATION**

VERIFICATION

VERIFICATION

HINT: After carrying out the repair, check that the fault has been remedied.

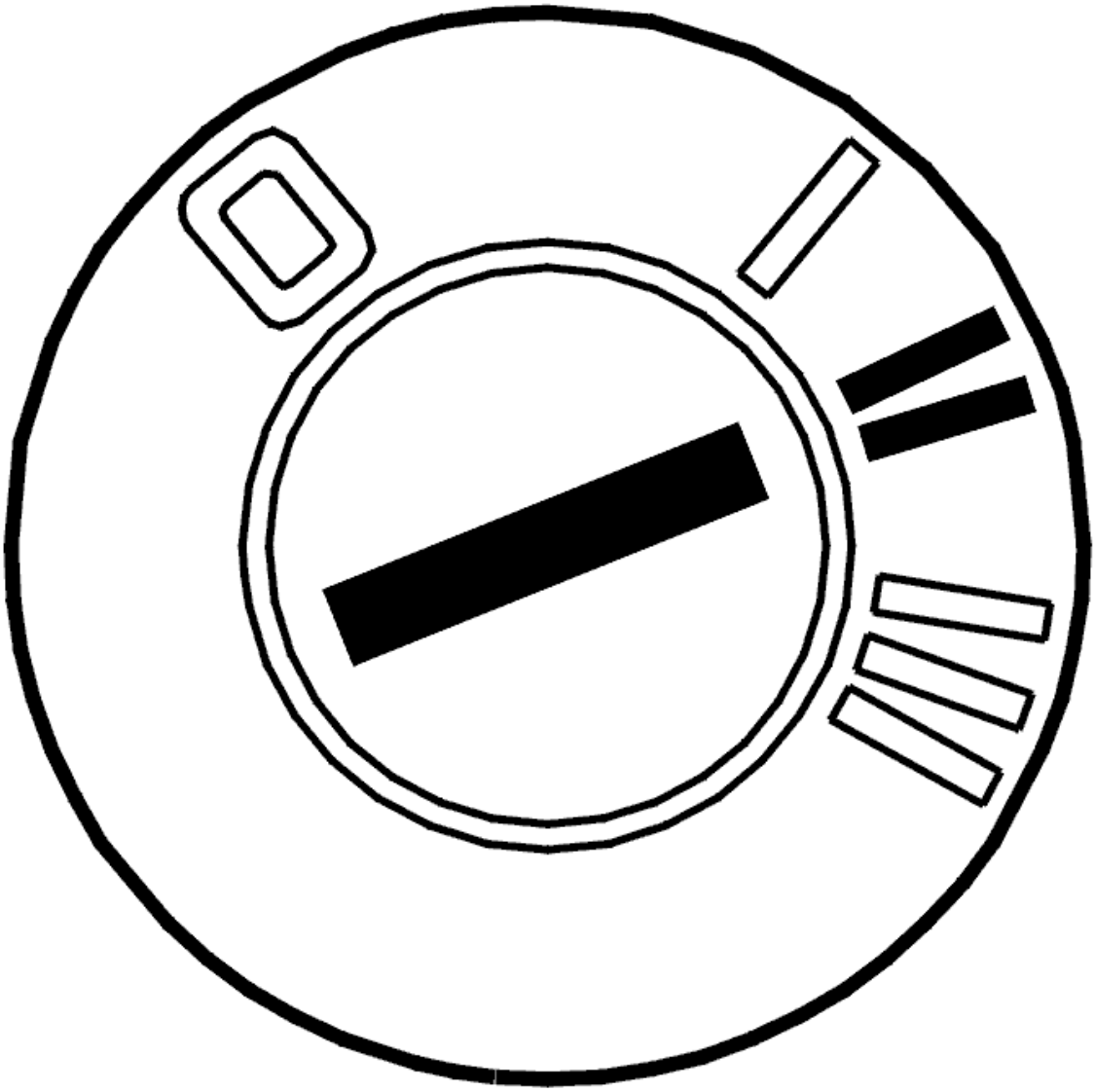

Fig. 264: Identifying Ignition ON
Courtesy of VOLVO CARS CORPORATION

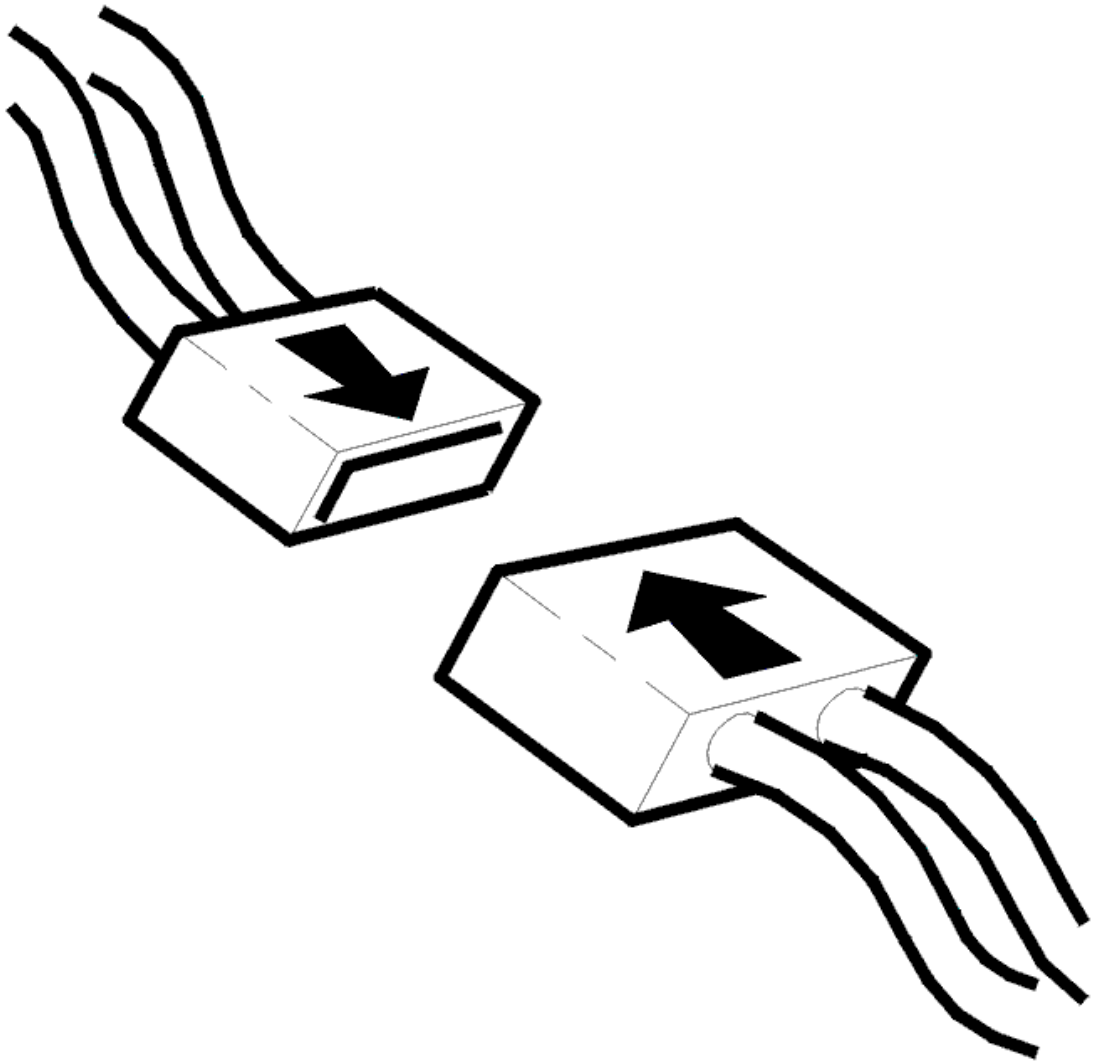

Fig. 265: Connecting Connector
Courtesy of VOLVO CARS CORPORATION

- Ignition off
- Reinstall the connectors, components etc.

  Park the car outside and switch on the ignition.

  HINT: Use a battery charger if the engine is not running.

  After a GPS unit has been replaced, it must search for satellites to fix the position. This can take up to 5 minutes.

Is the position of the car correct on the map?

- **YES**

VERIFIED: Troubleshooting has been completed.

- **NO**

  See: **INFORMATION**

INFORMATION

FAULT-TRACING INFORMATION

In case of this defect, troubleshooting is not followed by verification.

The information can be displayed again or the fault-tracing for this fault can be interrupted.

ATM-XXXX: UNKNOWN DIAGNOSTIC TROUBLE CODE (DTC) FOR THE CURRENT CONTROL MODULE VERSION (2003-2006)

UNKNOWN DIAGNOSTIC TROUBLE CODE (DTC) FOR THE CURRENT CONTROL MODULE VERSION

READING OFF DIAGNOSTIC TROUBLE CODES (DTC)

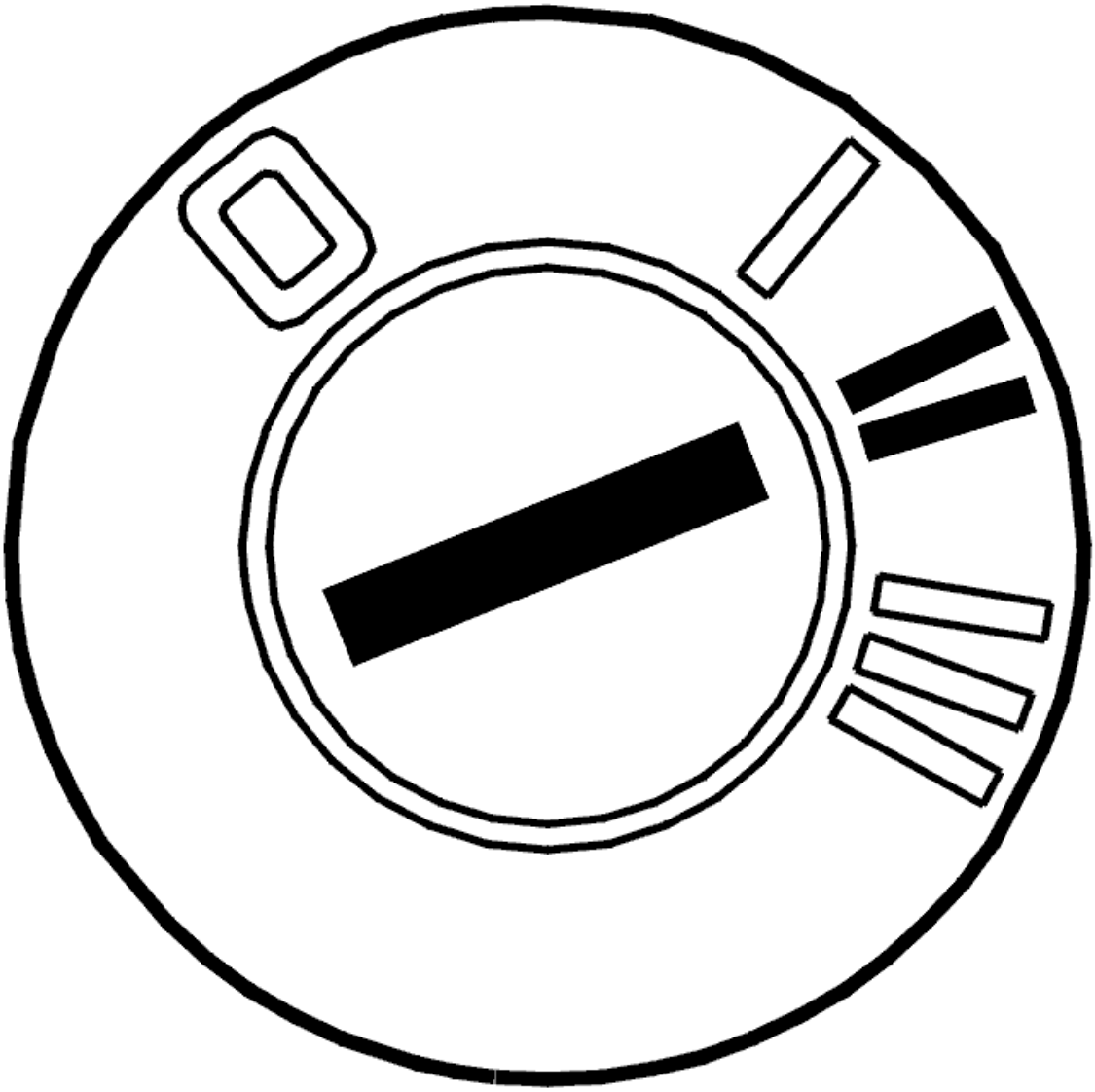

Fig. 266: Identifying Ignition ON
Courtesy of VOLVO CARS CORPORATION

- Ignition on.

  Read off the diagnostic trouble code (DTC) that is stored in the car.

  Make a note of the code for reporting purposes.

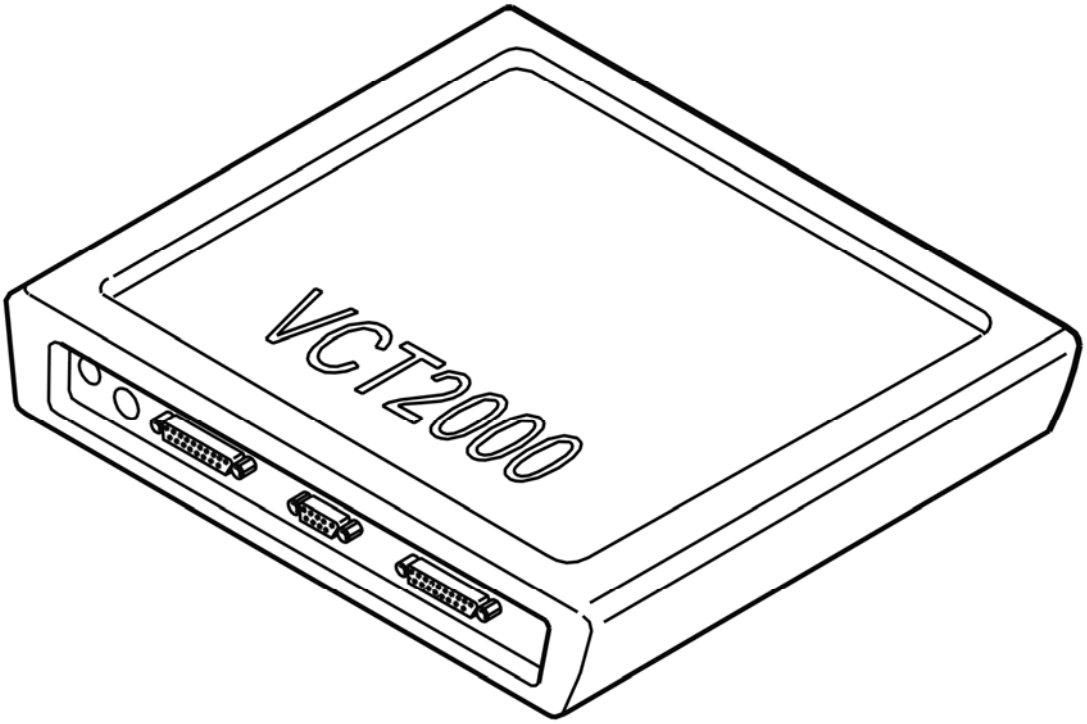

Fig. 267: Identifying VCT2000 Diagnostic Tool Symbol In VIDA
Courtesy of VOLVO CARS CORPORATION

- **Continue**

  OKAY: Troubleshooting has been completed.

SUB-0001: CONTROL MODULE. INTERNAL FAULT (2003-2008)

DIAGNOSTIC TROUBLE CODE (DTC) INFORMATION SUB-0001

Condition

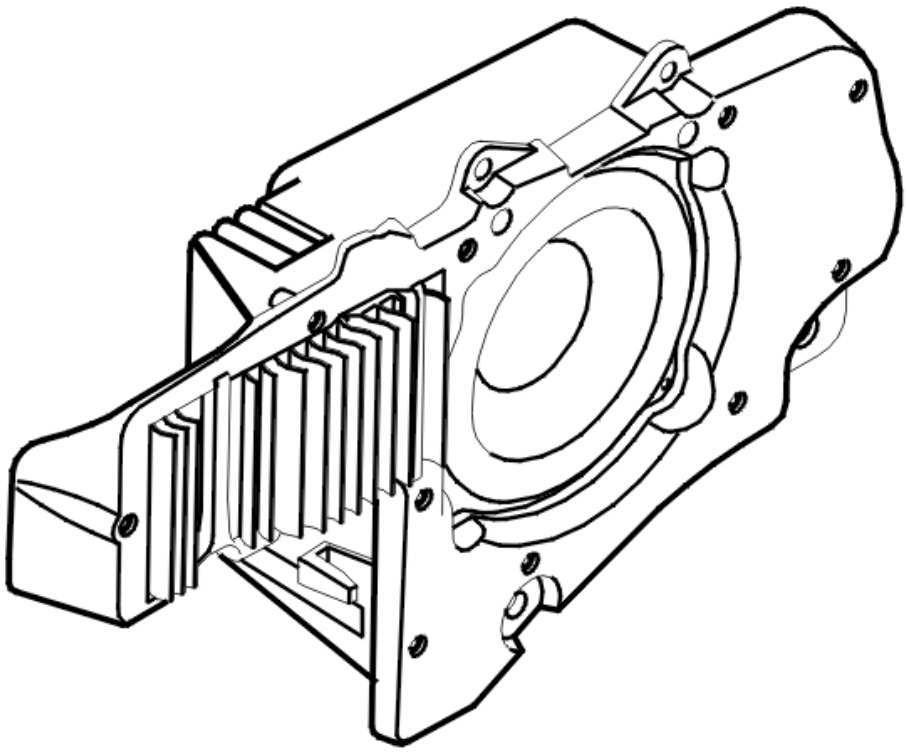

Fig. 268: Identifying Subwoofer Module (Sub)
Courtesy of VOLVO CARS CORPORATION

Diagnostic trouble code (DTC) SUB-0001 is stored if the subwoofer module (SUB) registers an internal fault.

Diagnostic trouble code (DTC) SUB-0001 can be diagnosed when the ignition is on.

Substitute Value

- None.

Possible Source

- Internal fault in the subwoofer module (SUB).

Fault symptom[s]

- No sound from the loudspeakers.

INTERNAL FAULT

REPLACING THE COMPONENT

The Subwoofer module (SUB) has registered an internal fault.

If the fault is intermittent it means that it has been registered previously but is no longer present. Intermittent faults can occur for a number of different reasons. The fault is evaluated depending on how it occurs. If the fault recurs, replace the Subwoofer module (SUB).

In the event of a permanent fault, replace the Subwoofer module (SUB). See **SUBWOOFER MODULE (SUB), REPLACING** .

Remedy as necessary.

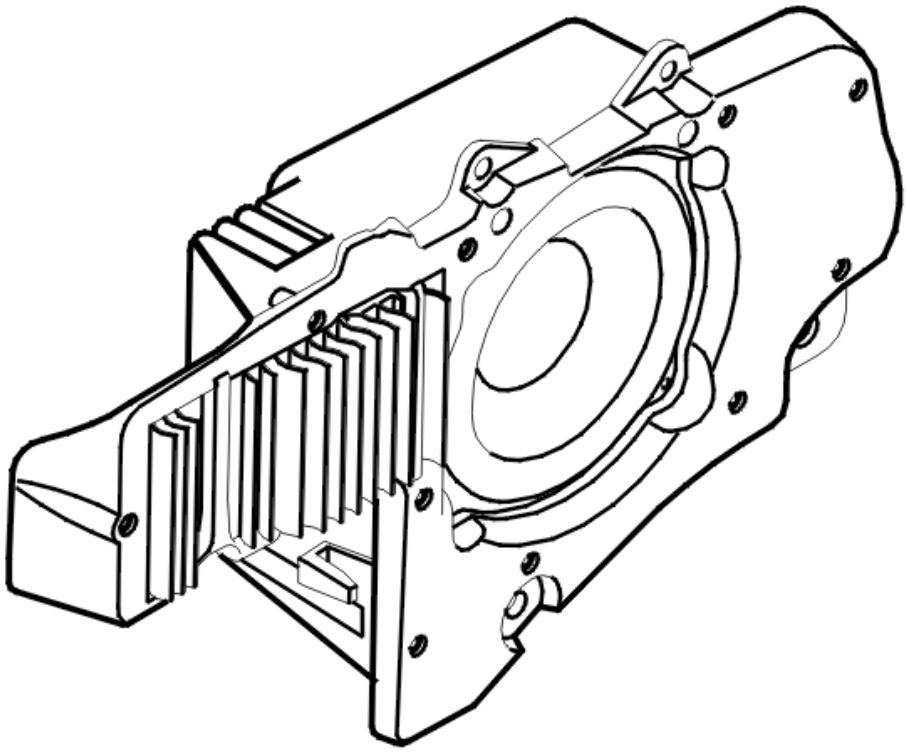

Fig. 269: Identifying Subwoofer Module (Sub)
Courtesy of VOLVO CARS CORPORATION

- **Continue**

  See: **INFORMATION**

INFORMATION

FAULT-TRACING INFORMATION

In case of this defect, troubleshooting is not followed by verification.

The information can be displayed again or the fault-tracing for this fault can be interrupted.

SUB-0002: CONTROL MODULE. INTERNAL FAULT (2003-2008)

DIAGNOSTIC TROUBLE CODE (DTC) INFORMATION SUB-0002

Condition

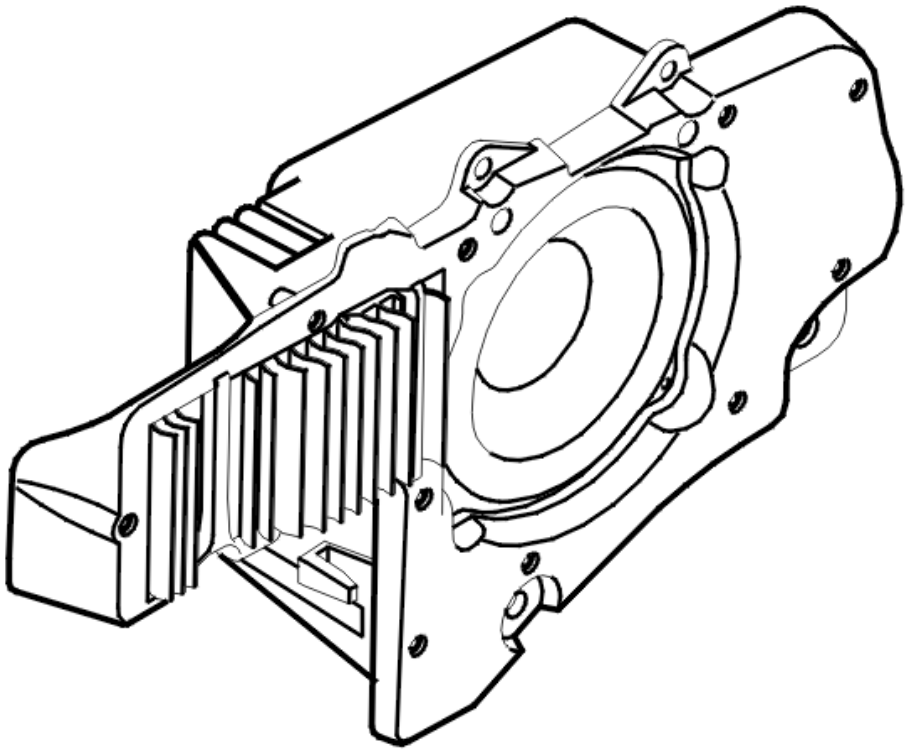

Fig. 270: Identifying Subwoofer Module (Sub)
Courtesy of VOLVO CARS CORPORATION

Diagnostic trouble code (DTC) SUB-002 is stored if the subwoofer module (SUB) registers an open-circuit in the signal cable for voice coil 1 in the bass speaker.

Diagnostic trouble code (DTC) SRS-0002 can only be diagnosed when the power is on (12 V). In other words, the diagnostic trouble code (DTC) can only be diagnosed when the ignition is turned from position 0 to positions II.

Substitute Value

- None.

Possible Source

- Open-circuit in the signal cable from the amplifier and voice coil 1 in the subwoofer module (SUB).

Fault symptom[s]

- No sound from the loudspeakers
- Muffled sound from the loudspeaker.

INTERNAL FAULT

see **INTERNAL FAULT**

SUB-0003: CONTROL MODULE. INTERNAL FAULT (2003-2008)

DIAGNOSTIC TROUBLE CODE (DTC) INFORMATION SUB-0003

Condition

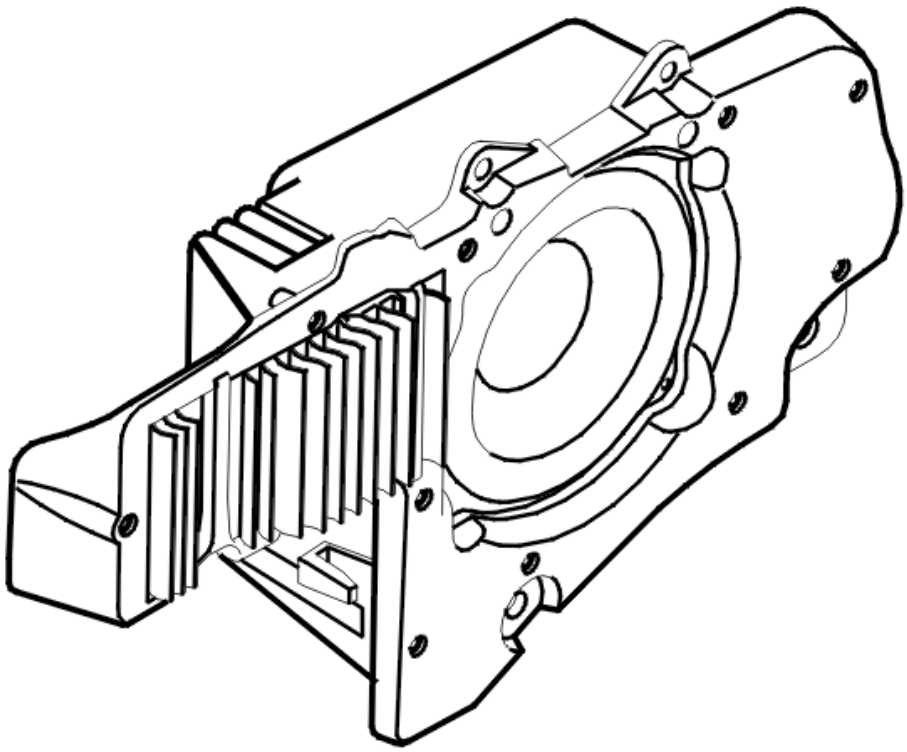

Fig. 271: Identifying Subwoofer Module (Sub)
Courtesy of VOLVO CARS CORPORATION

Diagnostic trouble code (DTC) SUB-003 is stored if the subwoofer module (SUB) registers an open-circuit in the signal cable for voice coil 2 in the bass speaker.

Diagnostic trouble code (DTC) SUB-0003 can only be diagnosed when powered (12 V). In other words, the diagnostic trouble code (DTC) can only be diagnosed when the ignition is turned from position 0 to positions II.

Substitute Value

- None.

Possible Source

- Open-circuit in the signal cable from the amplifier and voice coil 2 in the subwoofer module (SUB).

Fault symptom[s]

- No sound from the loudspeakers
- Muffled sound from the loudspeaker.

INTERNAL FAULT

see **INTERNAL FAULT**

SUB-0004: CONTROL MODULE. INTERNAL FAULT (2003-2008)

DIAGNOSTIC TROUBLE CODE (DTC) INFORMATION SUB-0004

Condition

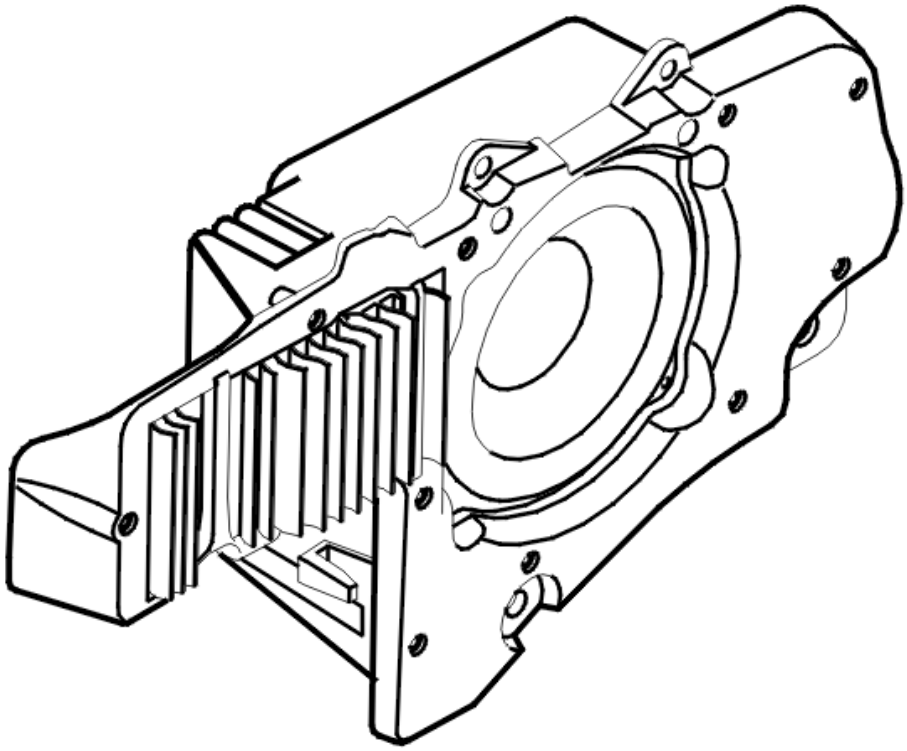

Fig. 272: Identifying Subwoofer Module (Sub)
Courtesy of VOLVO CARS CORPORATION

Diagnostic trouble code (DTC) SUB-0004 is stored if the subwoofer module (SUB) registers that the signal on the signal cable to voice coil 1 in the bass loudspeaker is too high or too low.

Diagnostic trouble code (DTC) SUB-0004 can be diagnosed when the ignition is on.

Substitute Value

- None.

Possible Source

- Short-circuit to supply voltage in the signal cable between the amplifier and voice coil 1 in the bass speaker.
- Short-circuit to ground in the signal cable between the amplifier and voice coil 1 in the bass speaker.

Fault symptom[s]

- No sound from the loudspeakers.

INTERNAL FAULT

see **INTERNAL FAULT**

SUB-0005: CONTROL MODULE. INTERNAL FAULT (2003-2008)

DIAGNOSTIC TROUBLE CODE (DTC) INFORMATION SUB-0005

Condition

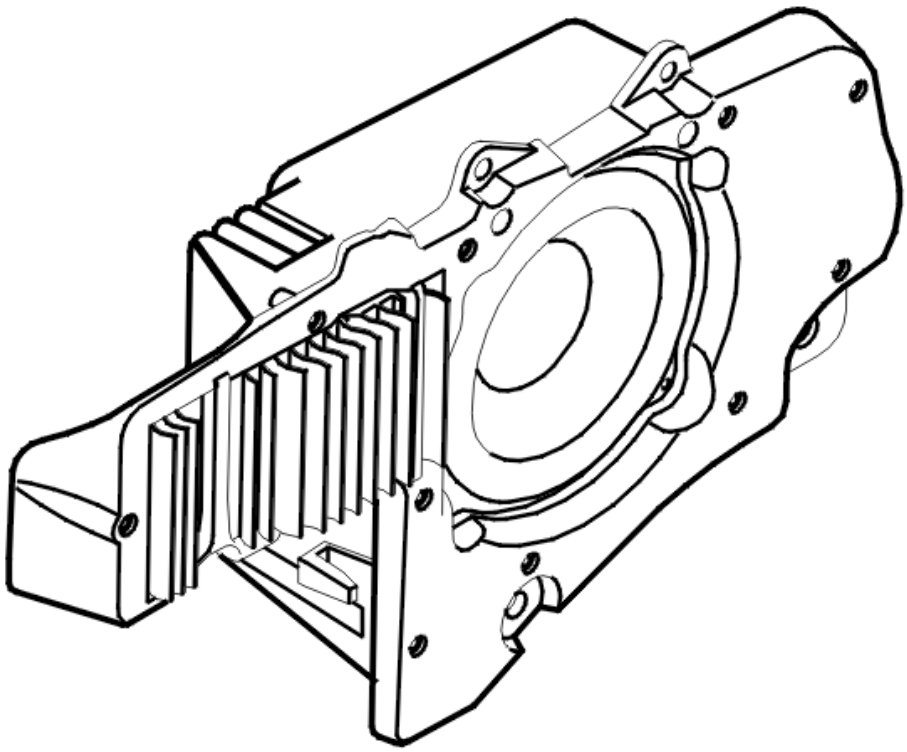

Fig. 273: Identifying Subwoofer Module (Sub)
Courtesy of VOLVO CARS CORPORATION

Diagnostic trouble code (DTC) SUB-0005 is stored if the subwoofer module (SUB) registers that the signal on the signal cable to voice coil 2 in the bass loudspeaker is too high or too low.

Diagnostic trouble code (DTC) SUB-0005 can be diagnosed when the ignition is on.

Substitute Value

- None.

Possible Source

- Short-circuit to supply voltage in the signal cable between the amplifier and voice coil 2 in the bass speaker
- Short-circuit to ground in the signal cable between the amplifier and voice coil 2 in the bass speaker.

Fault symptom[s]

- No sound from the loudspeakers.

INTERNAL FAULT

see **INTERNAL FAULT**

SUB-0006: CONTROL MODULE. INTERNAL FAULT (2003-2008)

DIAGNOSTIC TROUBLE CODE (DTC) INFORMATION SUB-0006

Condition

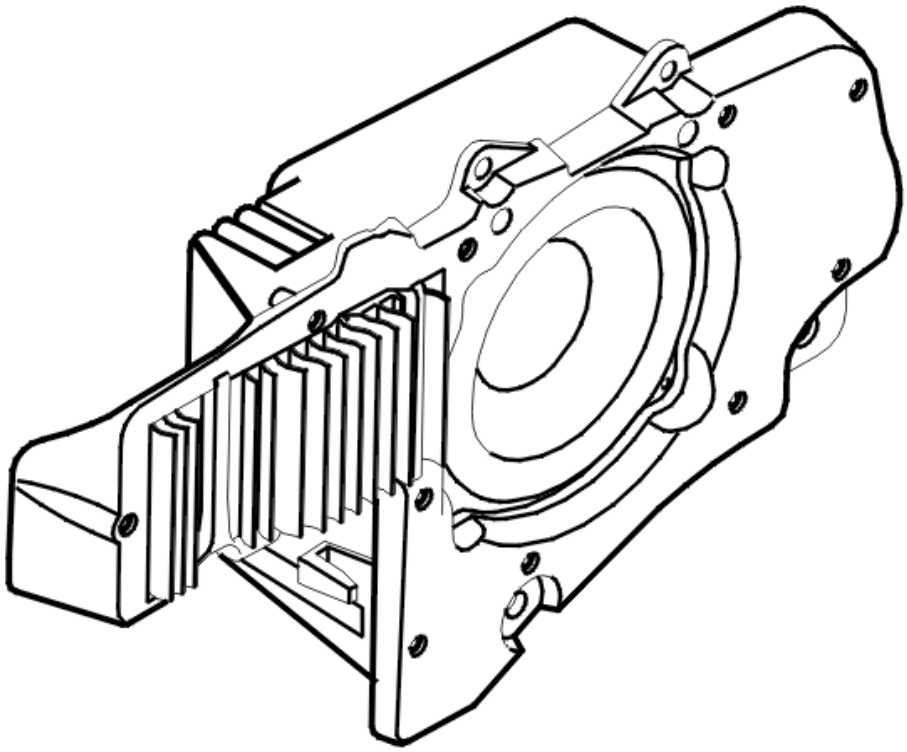

Fig. 274: Identifying Subwoofer Module (Sub)
Courtesy of VOLVO CARS CORPORATION

Diagnostic trouble code (DTC) SUB-0006 is stored if the Subwoofer module (SUB) registers too high a temperature. Diagnostic Trouble Code (DTC) SUB-0006 can be diagnosed with the ignition on.

Diagnostic trouble code (DTC) SUB-0006 can be diagnosed when the ignition is on.

Substitute Value

- Reduced output.

Possible Source

- Ambient temperature too hot

- Power consumption too high in the control module.

Fault symptom[s]

- Reduced volume
- No sound from the loudspeakers.

INTERNAL FAULT

see **INTERNAL FAULT**

SUB-XXXX: UNKNOWN DIAGNOSTIC TROUBLE CODE (DTC) FOR THE CURRENT CONTROL MODULE VERSION (2003-2008)

UNKNOWN DIAGNOSTIC TROUBLE CODE (DTC) FOR THE CURRENT CONTROL MODULE VERSION

READING OFF DIAGNOSTIC TROUBLE CODES (DTC)

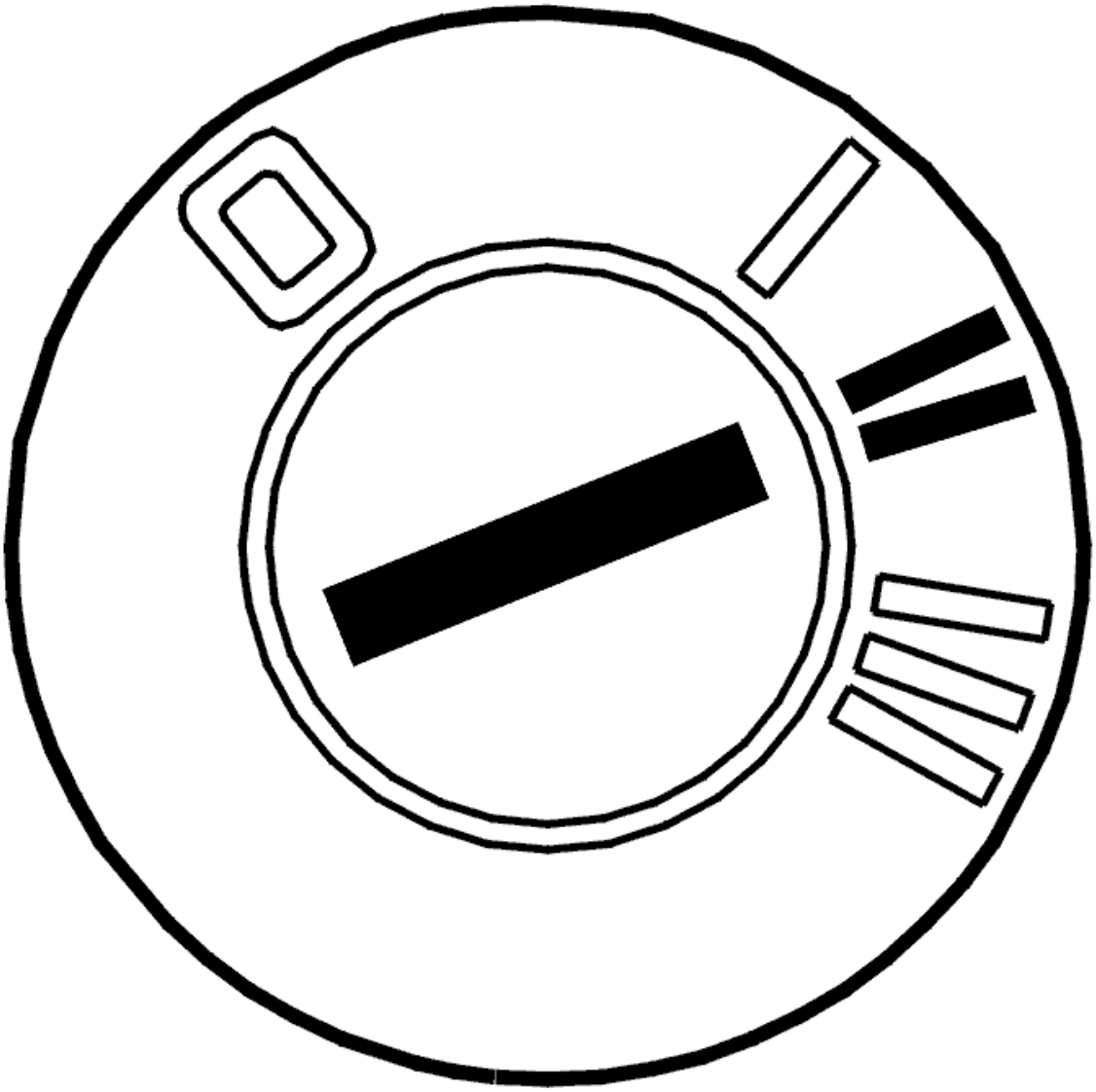

Fig. 275: Identifying Ignition ON
Courtesy of VOLVO CARS CORPORATION

- Ignition on.

  Read off the diagnostic trouble code (DTC) that is stored in the car.

  Make a note of the code for reporting purposes.

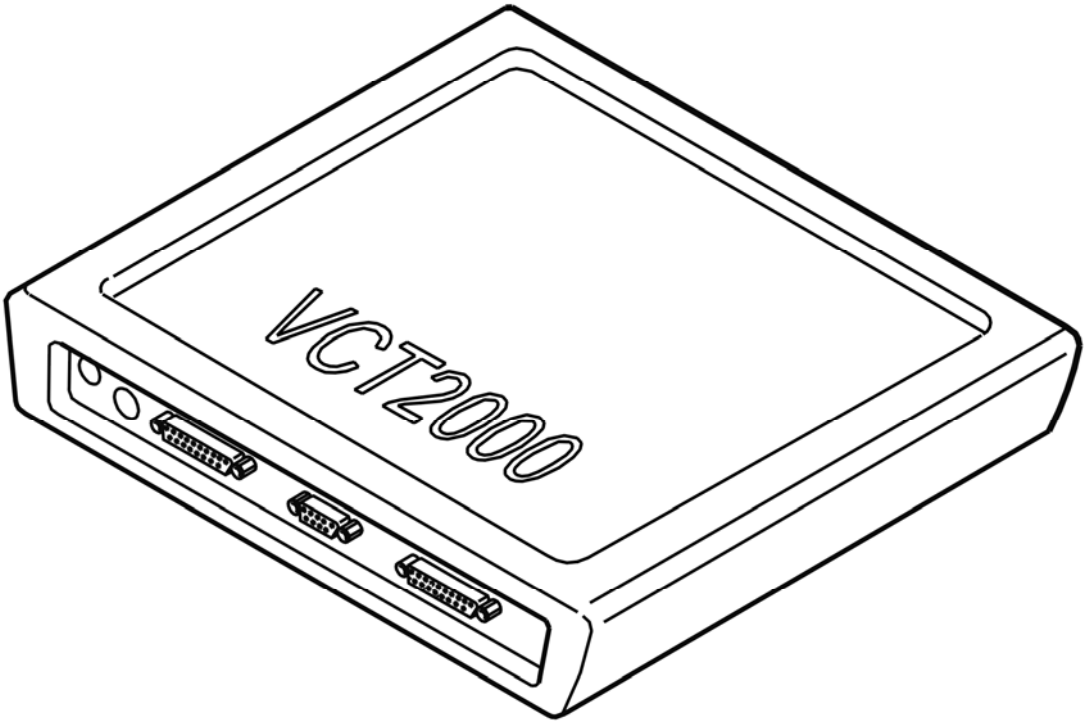

Fig. 276: Identifying VCT2000 Diagnostic Tool Symbol In VIDA
Courtesy of VOLVO CARS CORPORATION

- **Continue**

  OKAY: Troubleshooting has been completed.

GPS-0001: ANTENNA GPS. SIGNAL MISSING (2007-2012)

DIAGNOSTIC TROUBLE CODE (DTC) INFORMATION GPS-0001

Condition

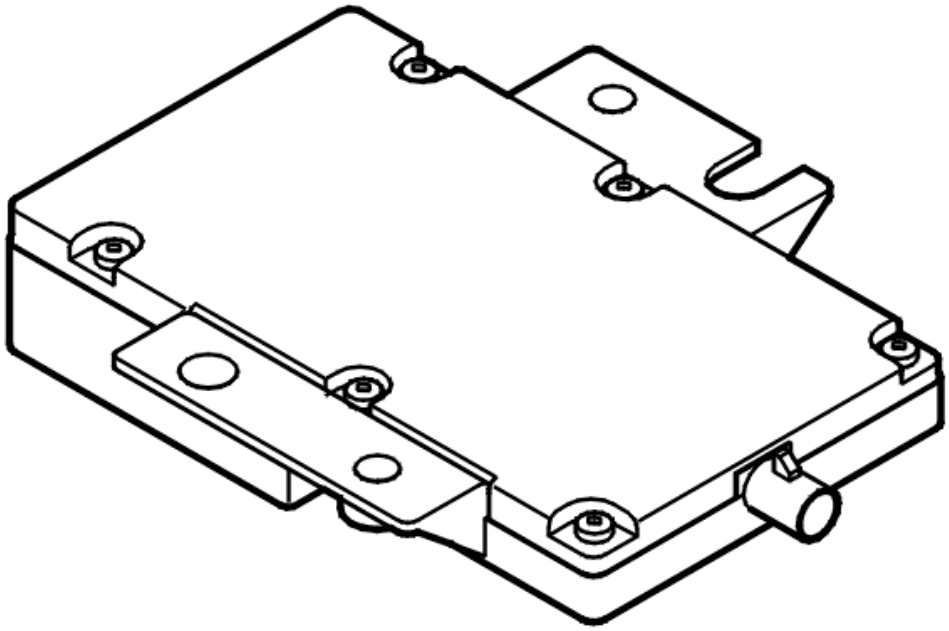

Fig. 277: Identifying Global Positioning System Module (GPS)
Courtesy of VOLVO CARS CORPORATION

The global positioning system module (GPS) continuously monitors the signal from the GPS antenna.

The diagnostic trouble code (DTC) is stored if the control module registers an open-circuit in the wiring from the GPS antenna.

The diagnostic trouble code (DTC) can be diagnosed when the global positioning system module (GPS) is activated

Substitute Value

- None.

Possible Source

- Open-circuit in the wiring between the GPS antenna and the global positioning system module (GPS)
- Damaged GPS antenna
- Contact resistance and/or oxidation.

Fault symptom[s]

- The position of the car on the map is incorrect.

SIGNAL MISSING

CHECKING THE WIRING

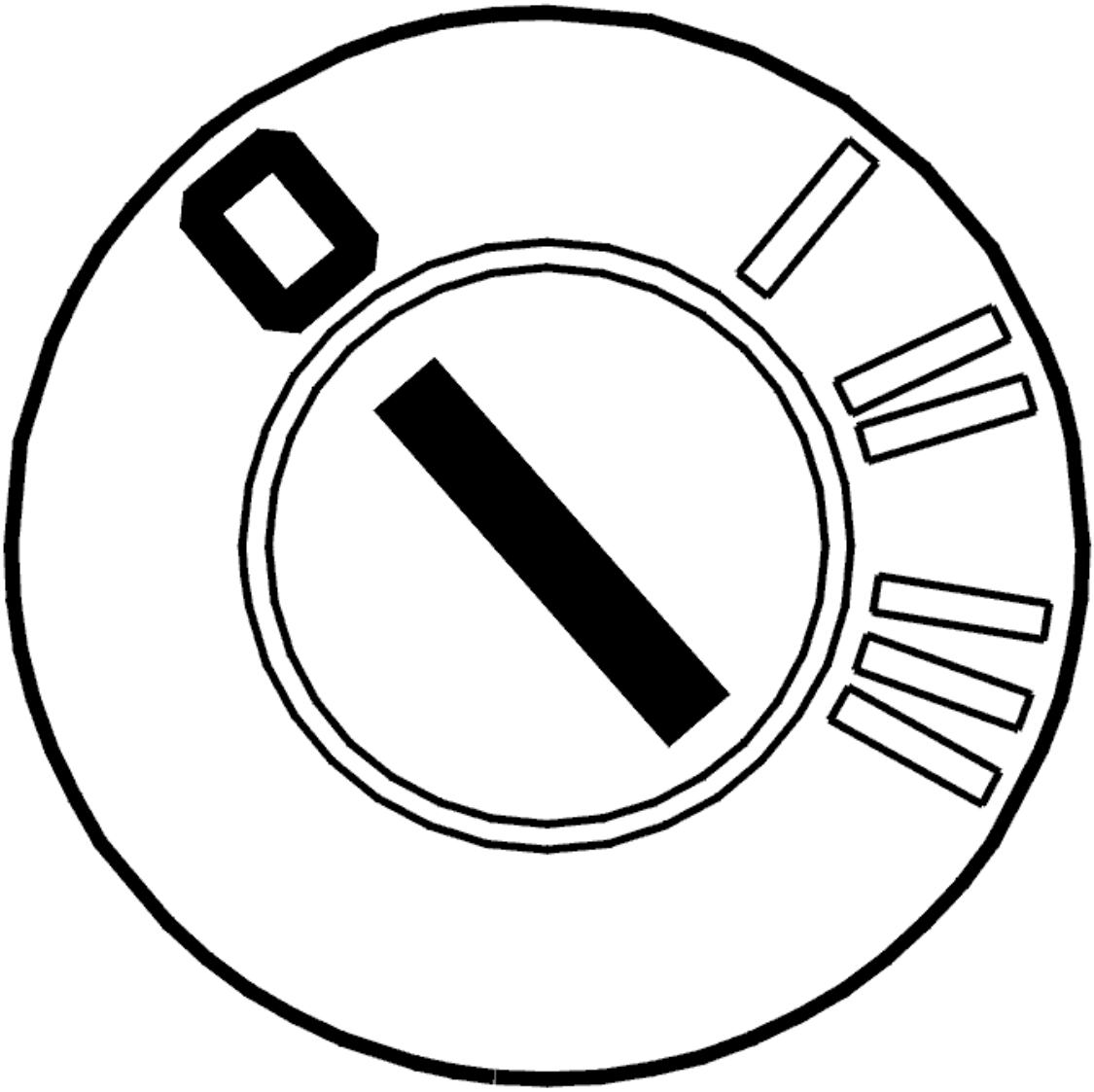

Fig. 278: Identifying Ignition OFF
Courtesy of VOLVO CARS CORPORATION

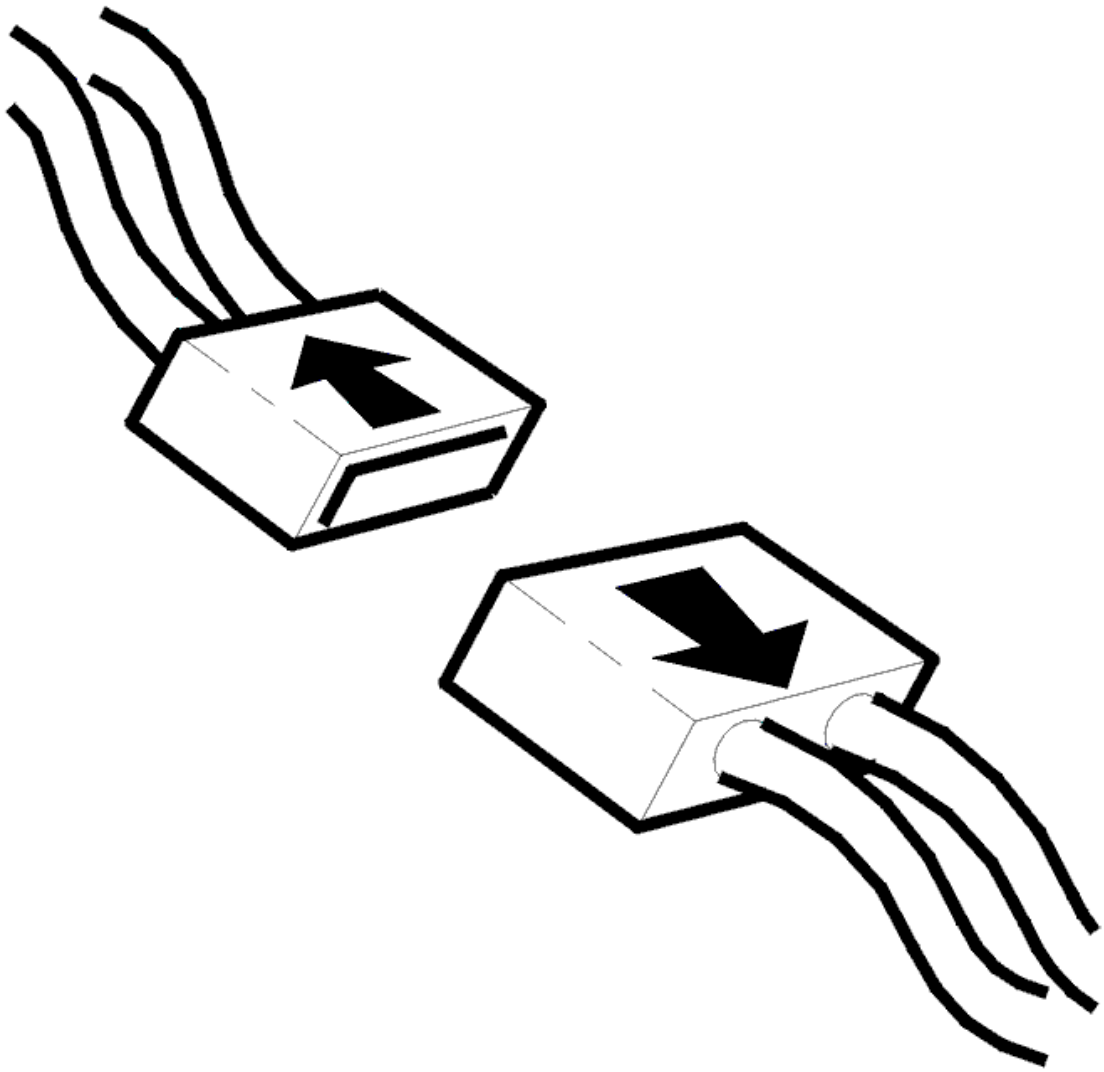

Fig. 279: Disconnecting Connector
Courtesy of VOLVO CARS CORPORATION

- Ignition off
- Disconnect the connector for the global positioning system module (GPS).

  Check the terminal. Check for contact resistance. Check for loose connections. Check for oxidation.

  Check the antenna cable between the global positioning system module (GPS) and the GPS antenna. Check for an open-circuit.

  Remedy as necessary.

  Other information

  - see **SIGNAL SPECIFICATION**

- see **LOCATION OF COMPONENTS**
- see **CHECKING WIRING AND TERMINALS**
- see **GLOBAL POSITIONING SYSTEM MODULE (GPS)**

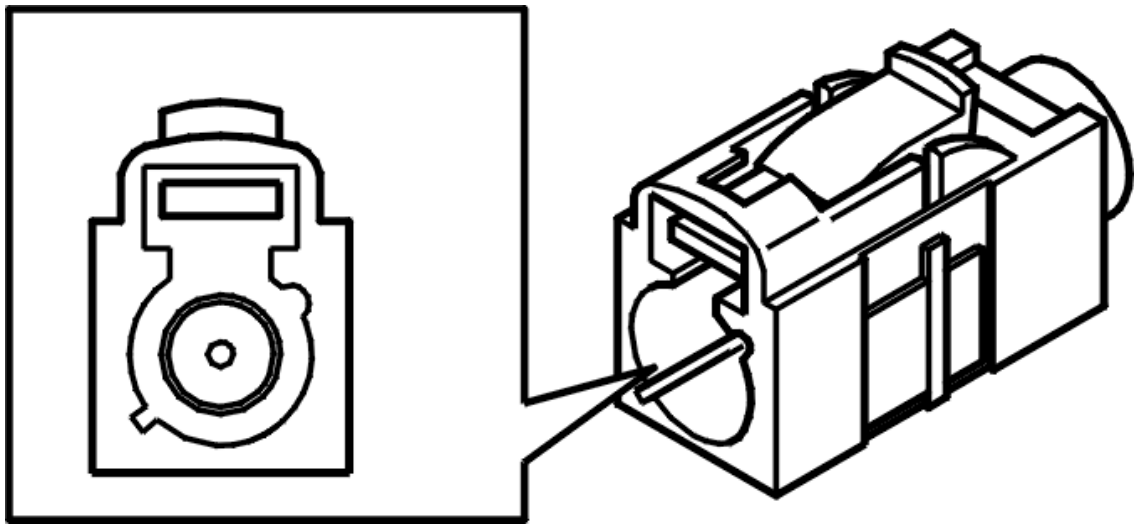

Fig. 280: Identifying Connector A
Courtesy of VOLVO CARS CORPORATION

- **Continue**

  See: **VERIFICATION**

VERIFICATION

VERIFICATION

HINT: After carrying out the repair, check that the fault has been remedied.

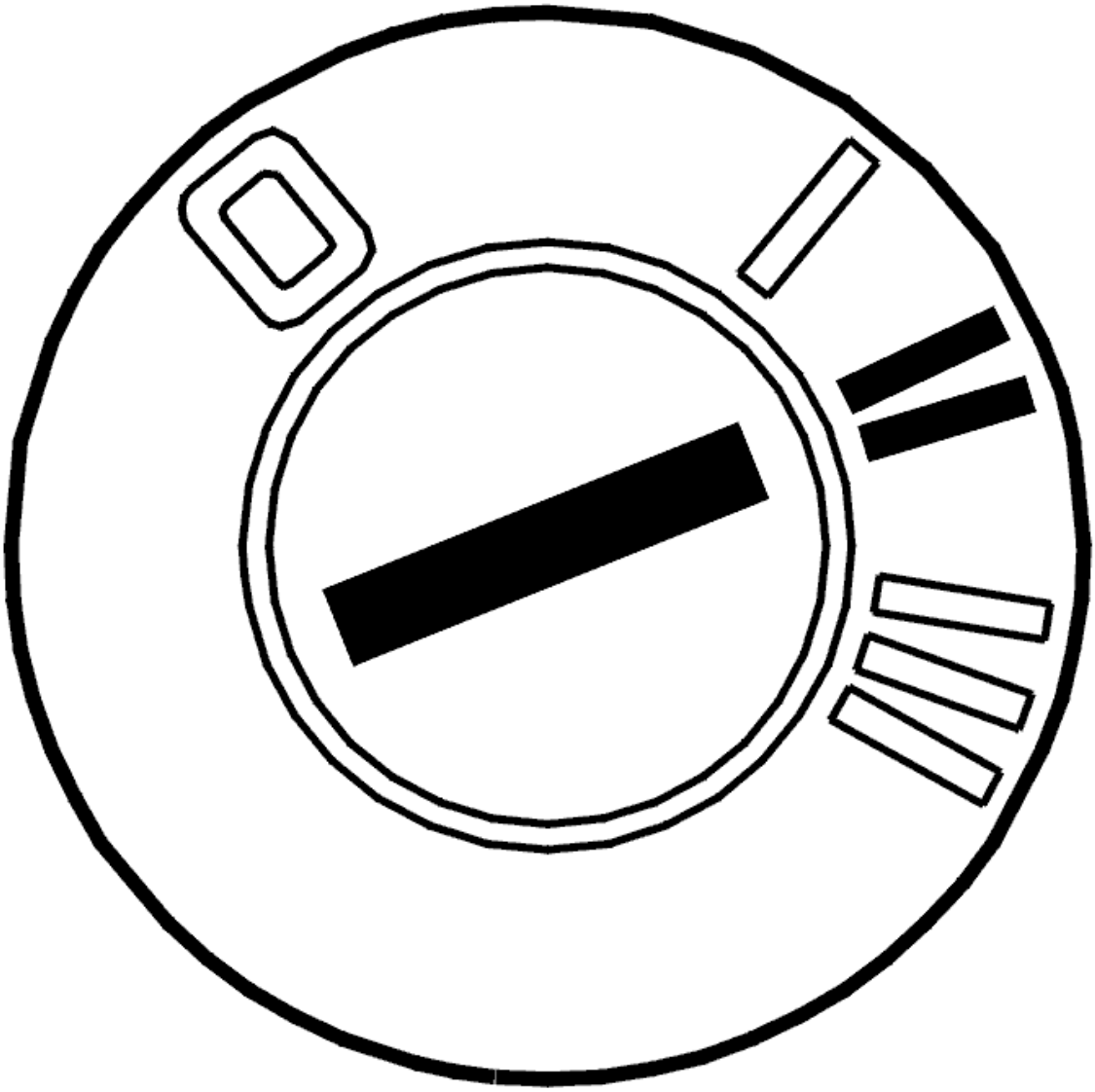

Fig. 281: Identifying Ignition ON
Courtesy of VOLVO CARS CORPORATION

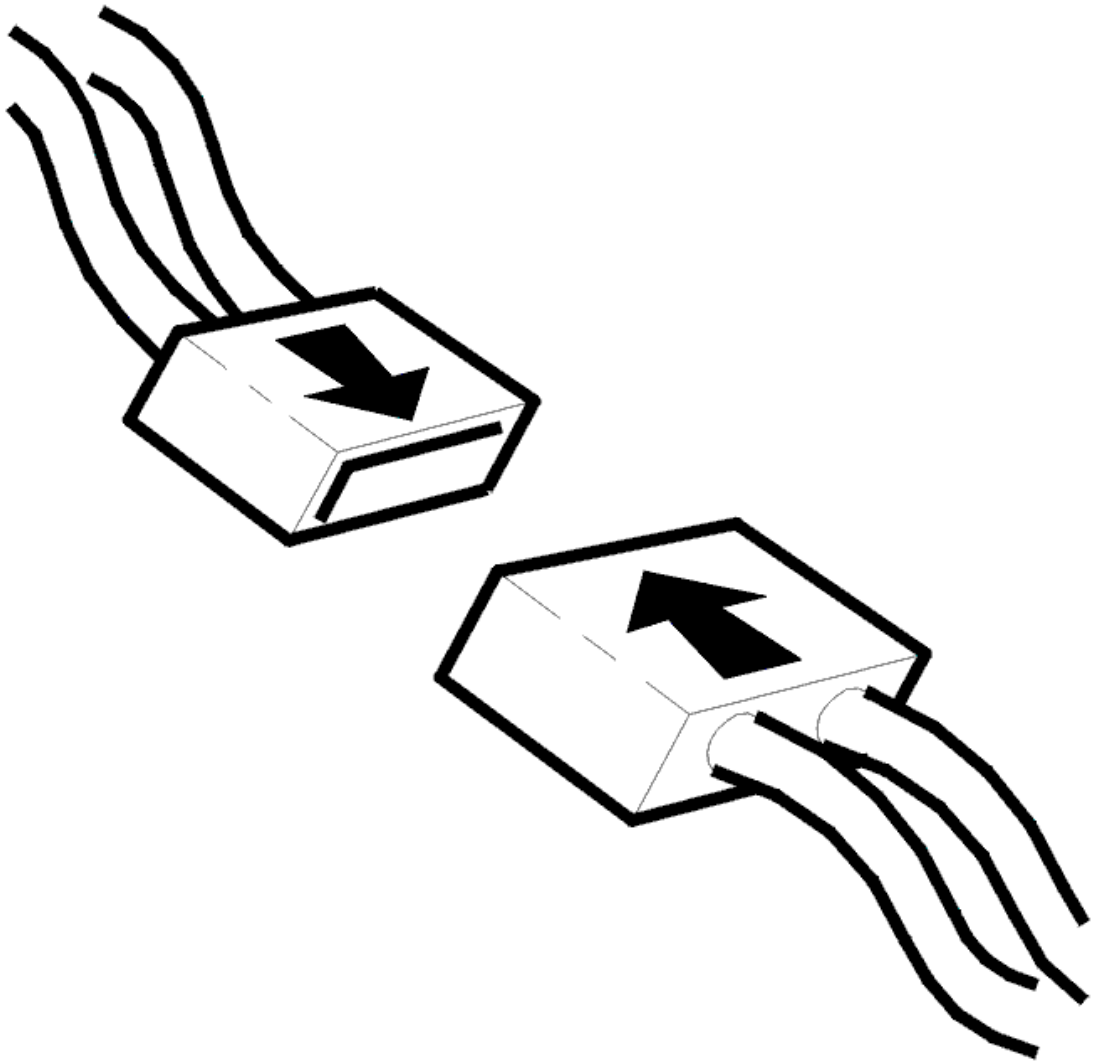

Fig. 282: Connecting Connector
Courtesy of VOLVO CARS CORPORATION

- Ignition off
- Reinstall the connectors, components etc.
- Ignition on.

  Park the car outdoors. Start up the GPS system. Check that the position of the car on the map is correct.

  HINT: Use a battery charger if the engine is not running.

  After a GPS unit has been replaced, it must search for satellites to fix the position. This can take up to 12 minutes.

Is the position of the car correct on the map?

- **YES**

  VERIFIED: Troubleshooting has been completed.

- **NO**

  See: **INFORMATION**

INFORMATION

FAULT-TRACING INFORMATION

The fault should have been detected and remedied. As this is not the case fault-tracing has failed.

Exit fault-tracing for this diagnostic trouble code (DTC) or make another attempt.

GPS-0002: ANTENNA GPS. SIGNAL TOO HIGH (2007-2012)

DIAGNOSTIC TROUBLE CODE (DTC) INFORMATION GPS-0002

Condition

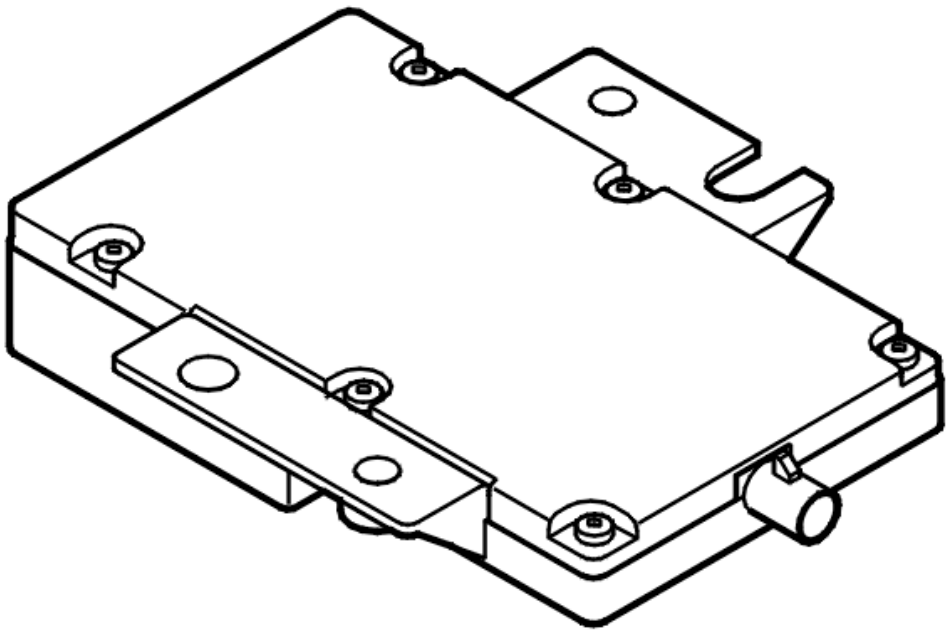

Fig. 283: Identifying Global Positioning System Module (GPS)

Courtesy of VOLVO CARS CORPORATION

The global positioning system module (GPS) continuously monitors the signal from the GPS antenna.

The diagnostic trouble code (DTC) is stored if the global positioning system module (GPS) registers that the signal in the wiring from the GPS antenna is too high.

The diagnostic trouble code (DTC) can be diagnosed when the global positioning system module (GPS) is activated.

Substitute Value

- None.

Possible Source

- Short-circuit to ground in the wiring between the GPS antenna and the global positioning system module (GPS).

Fault symptom[s]

- The position of the car on the map is incorrect.

SIGNAL TOO HIGH

CHECKING THE WIRING

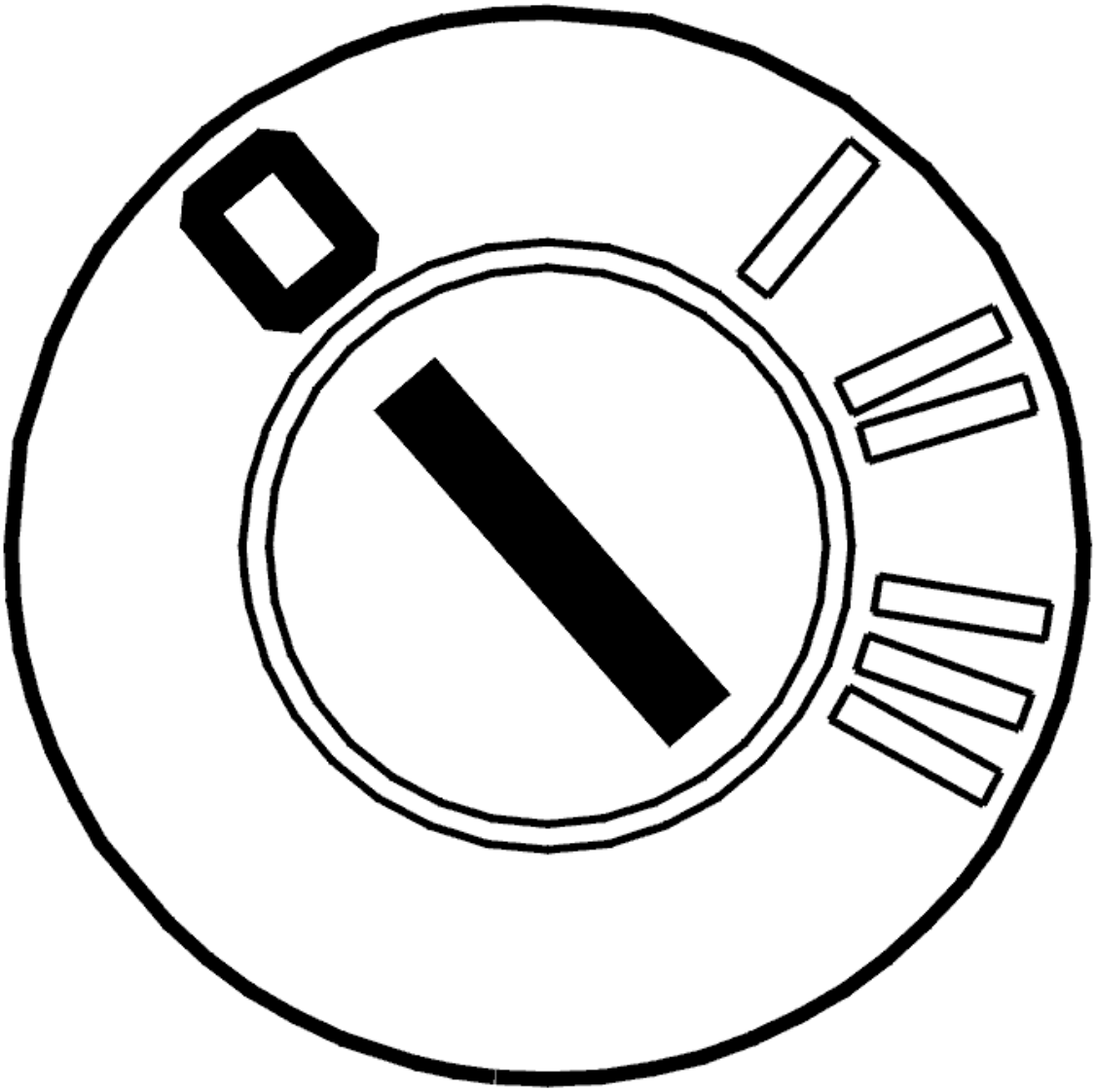

Fig. 284: Identifying Ignition OFF
Courtesy of VOLVO CARS CORPORATION

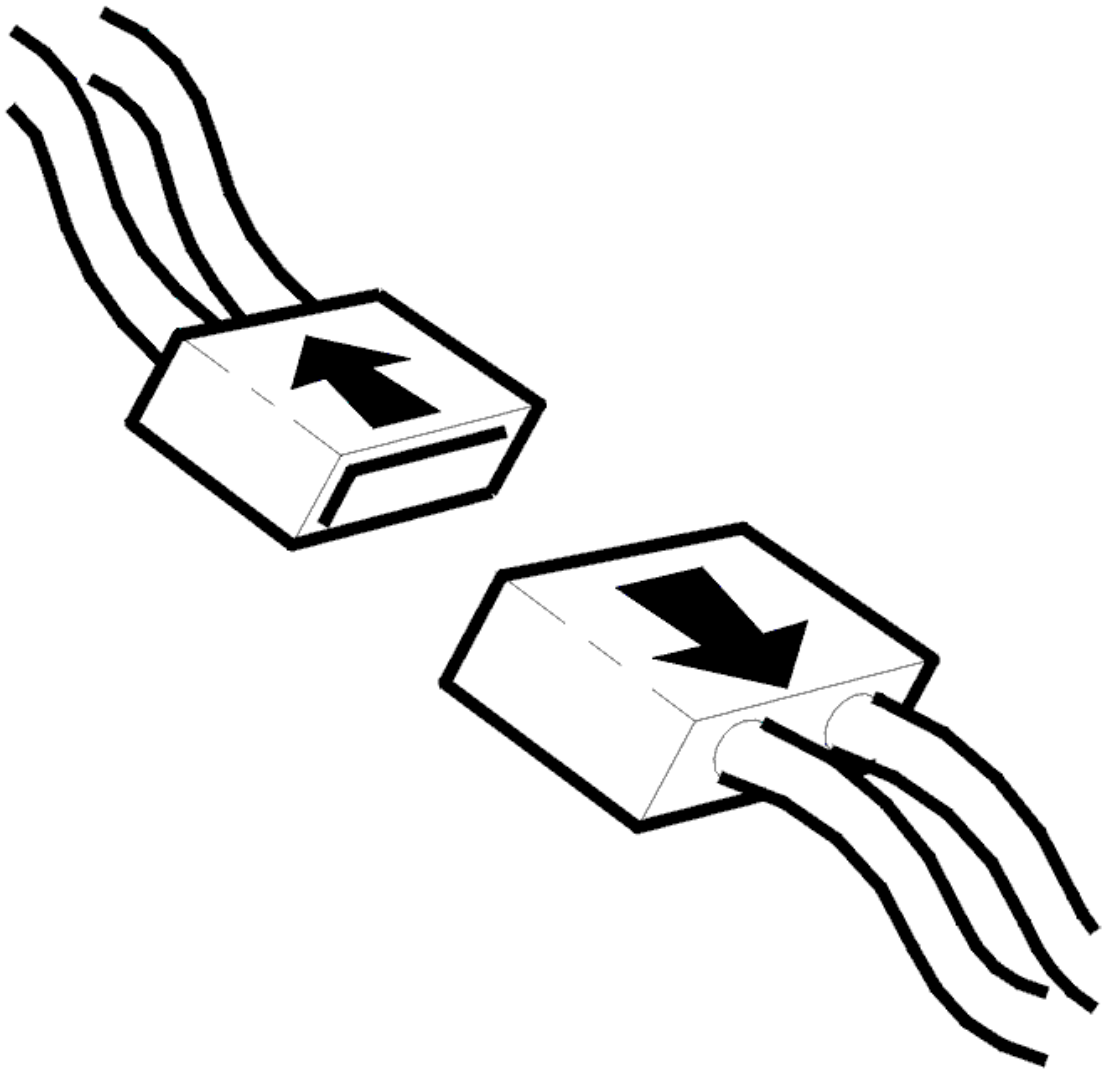

Fig. 285: Disconnecting Connector
Courtesy of VOLVO CARS CORPORATION

- Ignition off
- Disconnect the connector for the global positioning system module (GPS).

  Check the terminal. Check for contact resistance. Check for loose connections. Check for oxidation.

  Check the antenna cable between the global positioning system module (GPS) and the GPS antenna. Check for a short-circuit to supply voltage.

  Remedy as necessary.

  Other information

  - see **SIGNAL SPECIFICATION**

- see **LOCATION OF COMPONENTS**
- see **CHECKING WIRING AND TERMINALS**
- see **GLOBAL POSITIONING SYSTEM MODULE (GPS)**

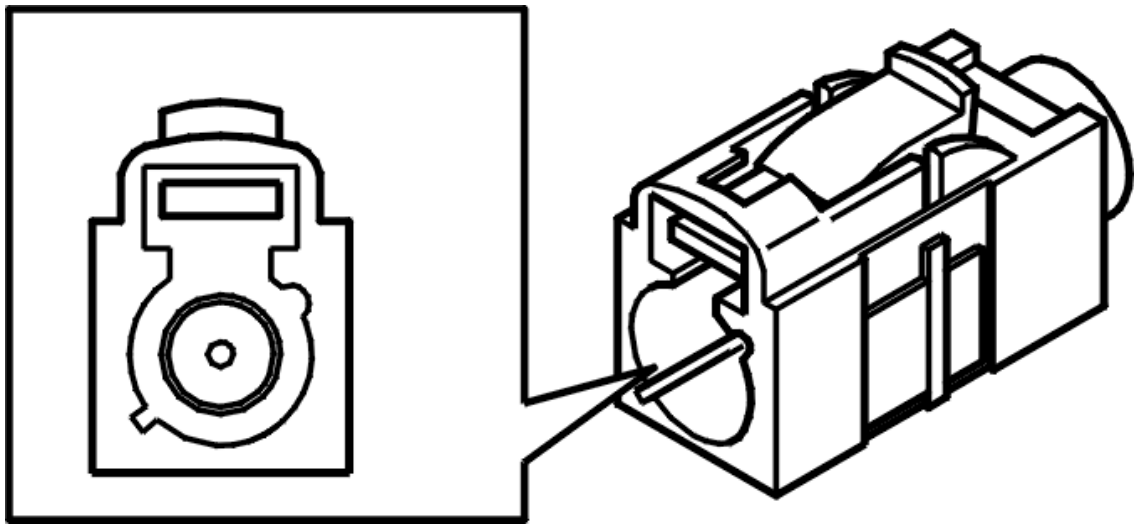

Fig. 286: Identifying Connector A
Courtesy of VOLVO CARS CORPORATION

- **Continue**

  See: **VERIFICATION**

VERIFICATION

VERIFICATION

HINT: After carrying out the repair, check that the fault has been remedied.

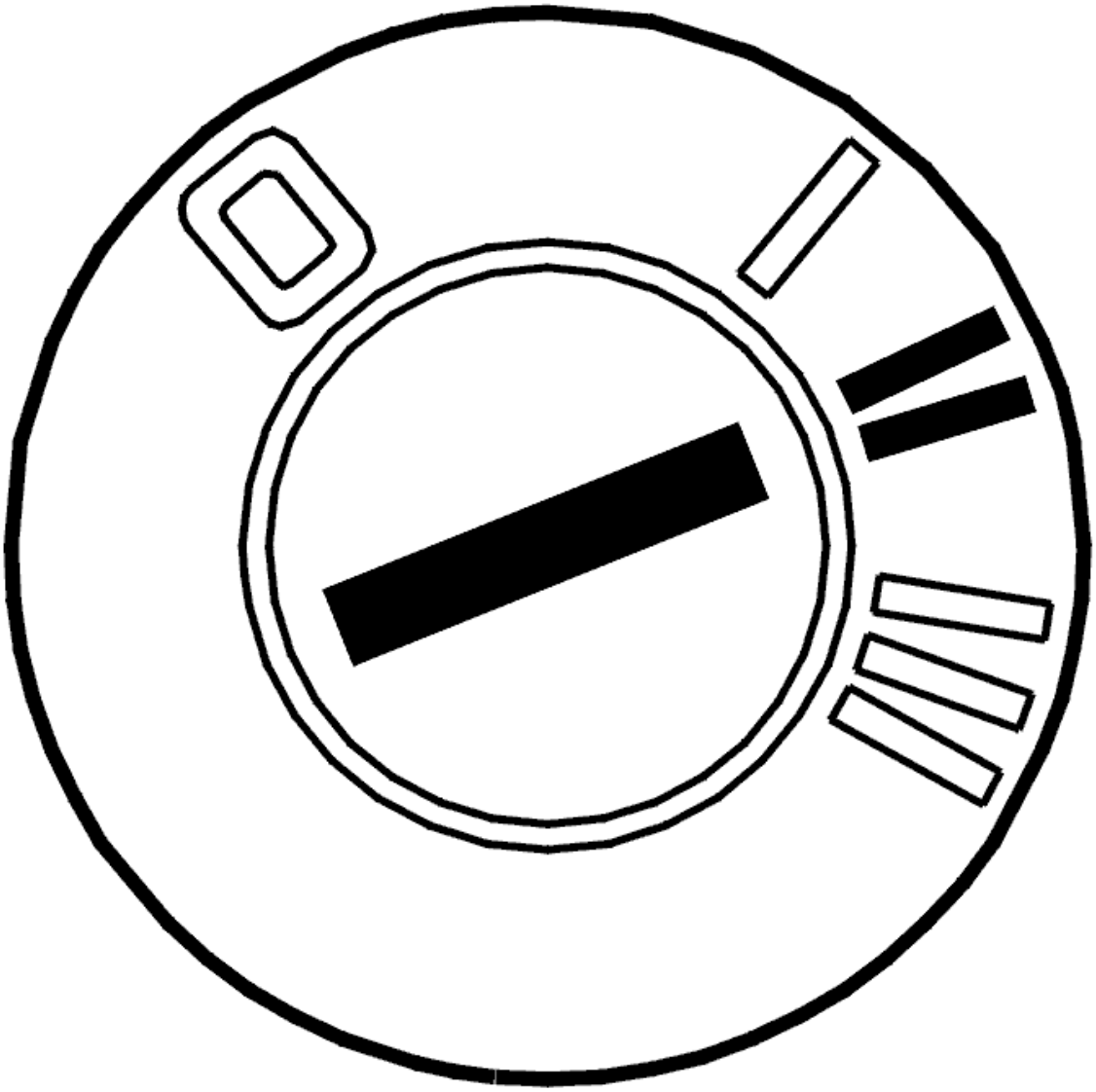

Fig. 287: Identifying Ignition ON
Courtesy of VOLVO CARS CORPORATION

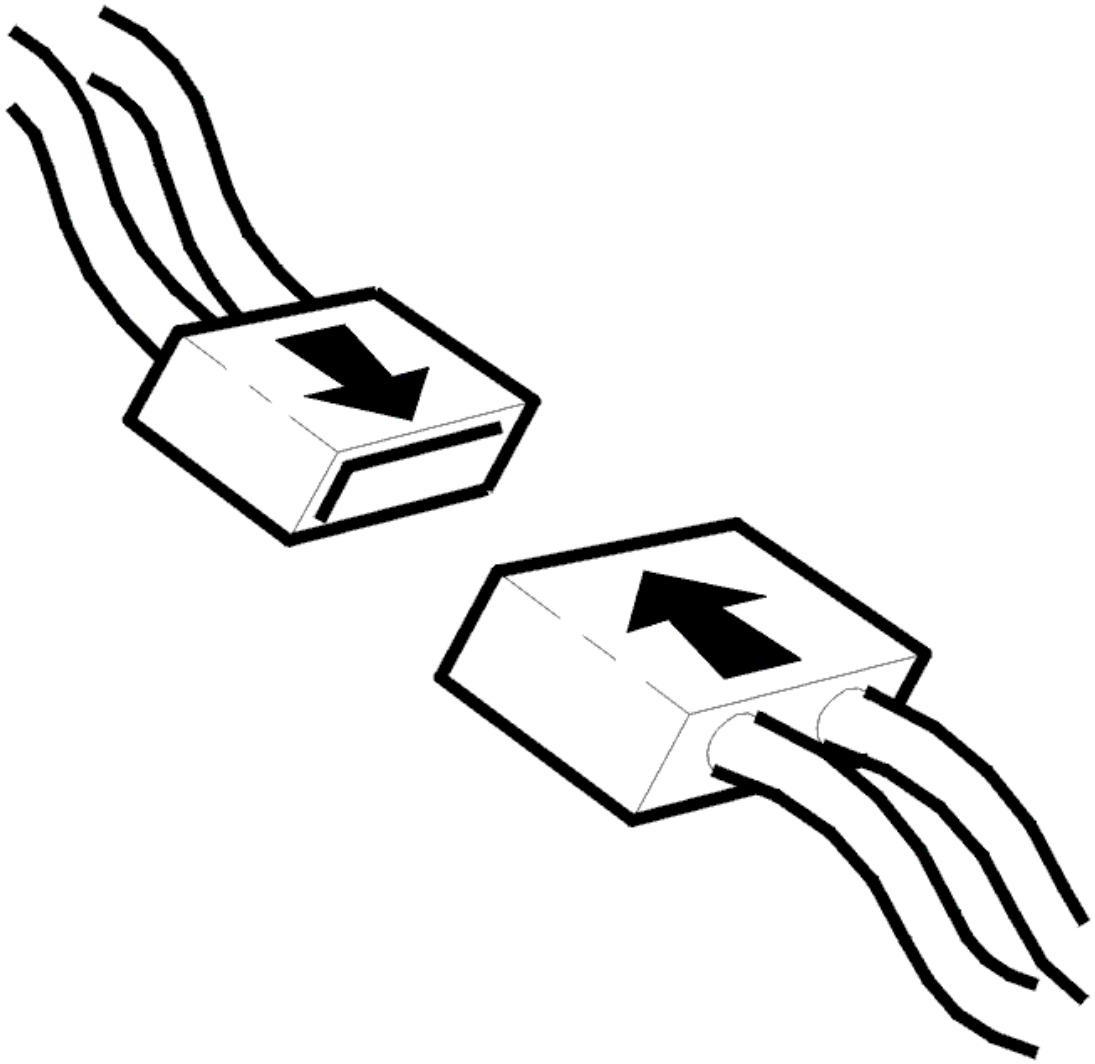

Fig. 288: Connecting Connector
Courtesy of VOLVO CARS CORPORATION

- Ignition off
- Reinstall the connectors, components etc.
- Ignition on.

  Park the car outdoors. Start up the GPS system. Check that the position of the car on the map is correct.

  HINT: Use a battery charger if the engine is not running.

  After a GPS unit has been replaced, it must search for satellites to fix the position. This can take up to 12 minutes.

Is the position of the car correct on the map?

- **YES**

  VERIFIED: Troubleshooting has been completed.

- **NO**

  See: **INFORMATION**

INFORMATION

FAULT-TRACING INFORMATION

The fault should have been detected and remedied. As this is not the case fault-tracing has failed.

Exit fault-tracing for this diagnostic trouble code (DTC) or make another attempt.

GPS-0003: CONTROL MODULE. INTERNAL FAULT (2007-2012)

DIAGNOSTIC TROUBLE CODE (DTC) INFORMATION GPS-0003

Condition

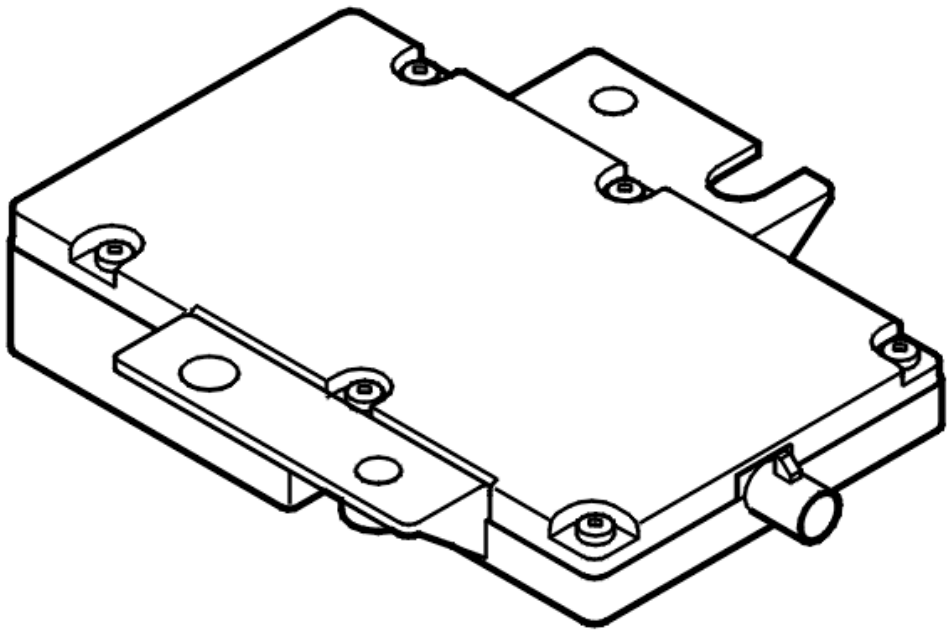

Fig. 289: Identifying Global Positioning System Module (GPS)

Courtesy of VOLVO CARS CORPORATION

The diagnostic trouble code (DTC) is stored if the global positioning system module (GPS) detects a damaged memory element inside the control module.

The diagnostic trouble code can be diagnosed upon start-up of the control module.

Substitute Value

- None.

Possible Source

- Internal fault in the global positioning system module (GPS).

Fault symptom[s]

- The position of the car on the map is incorrect.

INTERNAL FAULT

REPLACING THE COMPONENT

The global positioning system module (GPS) has registered an internal fault.

If the fault is intermittent, it has been registered previously but is no longer present. Intermittent faults can be caused by interference at start up or can be a different type of fault which occurs on different occasions. The fault is evaluated depending on how it occurs. Replace the global positioning system module (GPS) if the fault recurs.

Replace the global positioning system module (GPS) in the event of a permanent fault.

Remedy as necessary.

Other information

- see **LOCATION OF COMPONENTS**
- see **GLOBAL POSITIONING SYSTEM MODULE (GPS)**

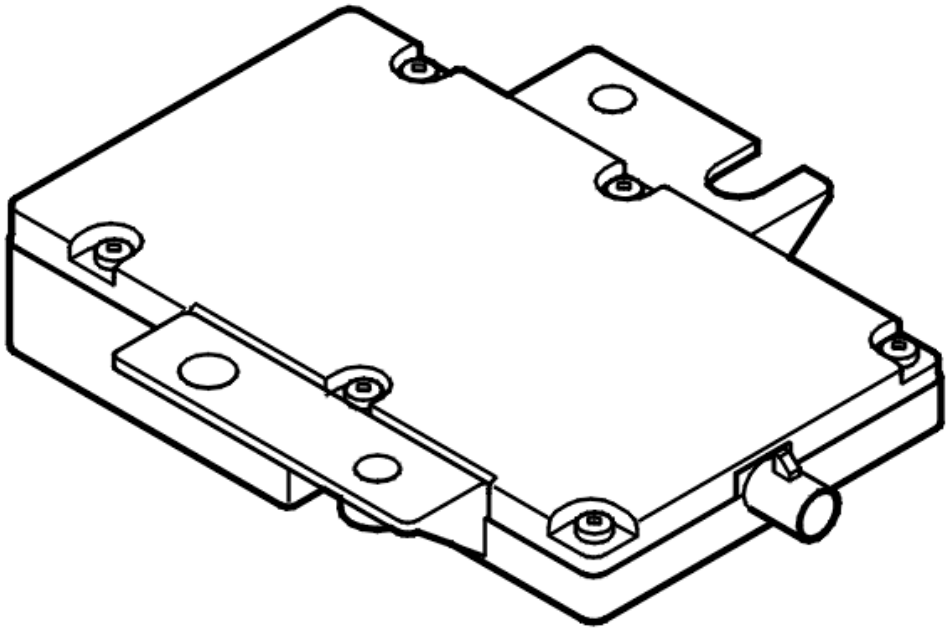

Fig. 290: Identifying Global Positioning System Module (GPS)
Courtesy of VOLVO CARS CORPORATION

- **Continue**

  See: **VERIFICATION**

VERIFICATION

VERIFICATION

HINT: After carrying out the repair, check that the fault has been remedied.

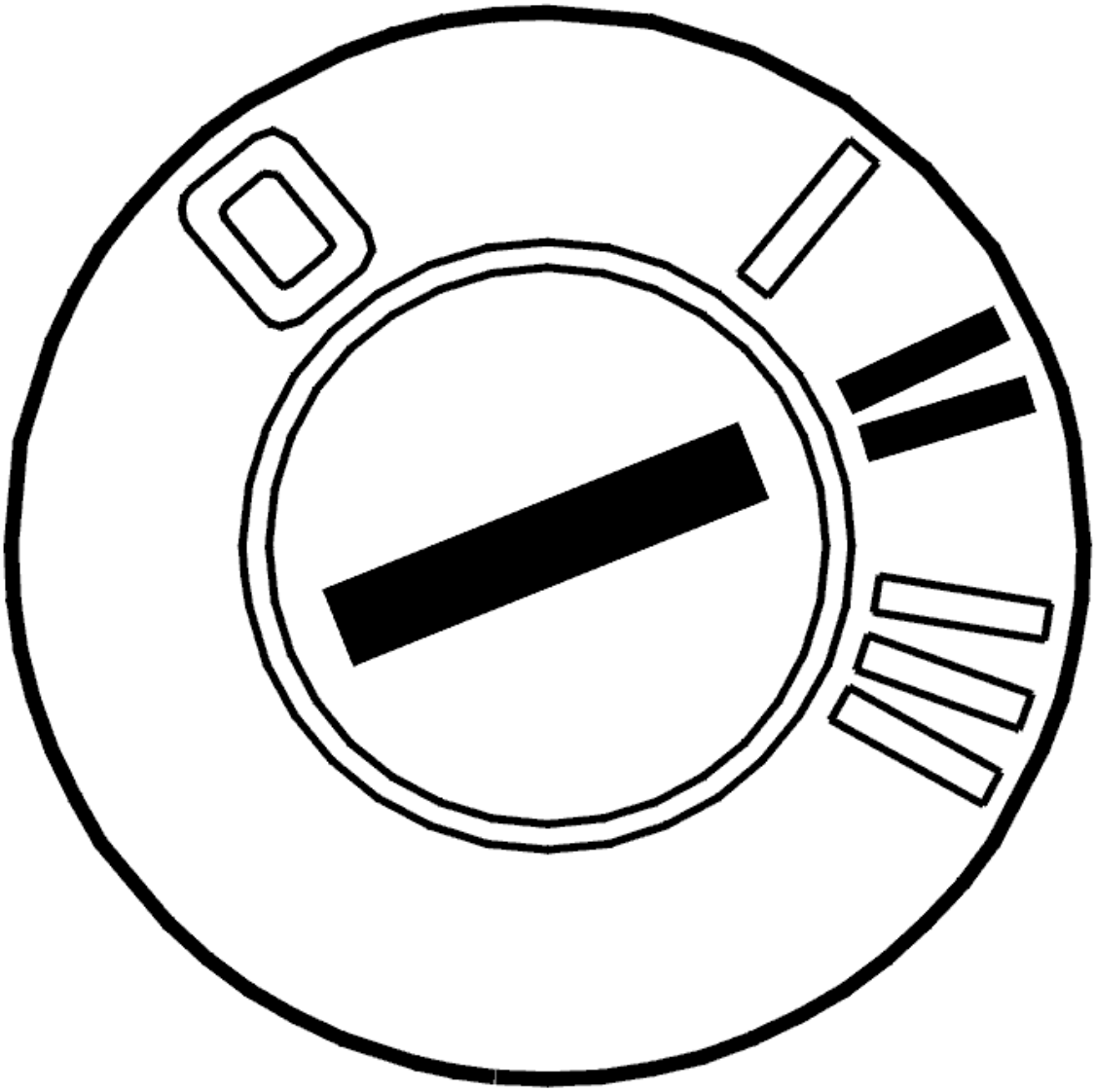

Fig. 291: Identifying Ignition ON
Courtesy of VOLVO CARS CORPORATION

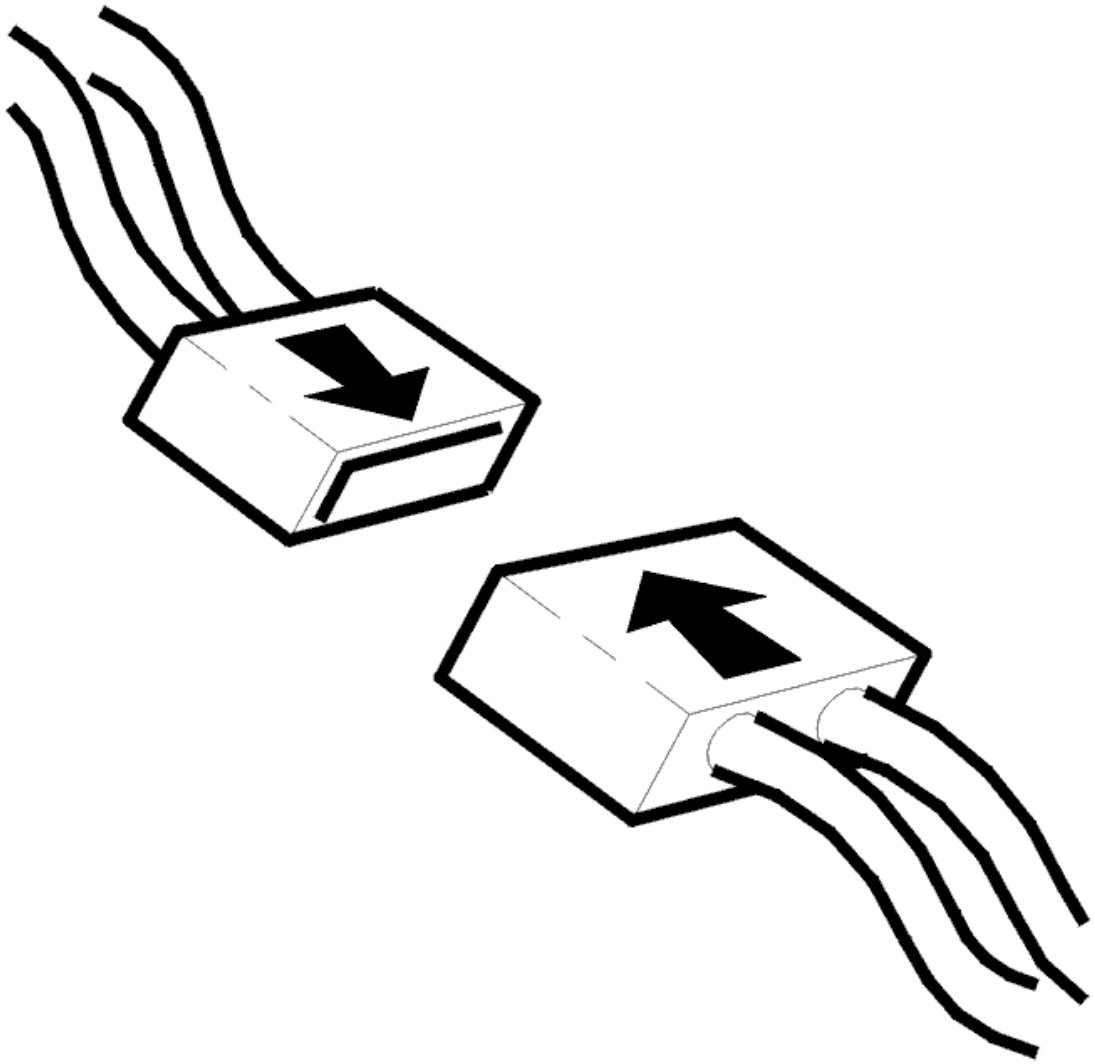

Fig. 292: Connecting Connector
Courtesy of VOLVO CARS CORPORATION

- Ignition off
- Reinstall the connectors, components etc.
- Ignition on.

  Park the car outdoors. Start up the GPS system. Check that the position of the car on the map is correct.

  HINT: Use a battery charger if the engine is not running.

  After a GPS unit has been replaced, it must search for satellites to fix the position. This can take up to 12 minutes.

Is the position of the car correct on the map?

- **YES**

  VERIFIED: Troubleshooting has been completed.

- **NO**

  See: **INFORMATION**

INFORMATION

FAULT-TRACING INFORMATION

The fault should have been detected and remedied. As this is not the case fault-tracing has failed.

Exit fault-tracing for this diagnostic trouble code (DTC) or make another attempt.

ACCESSORIES AND BODY, CAB

Media, Communication And Navigation - Diagnostic Trouble Codes and Associated Procedures

AUD-0001: CONTROL MODULE. INTERNAL FAULT (2007-2011)

DIAGNOSTIC TROUBLE CODE (DTC) INFORMATION AUD-0001

Condition

The diagnostic trouble code (DTC) is stored if the audio module (AUD) registers an internal fault.

The diagnostic trouble code can only be diagnosed when voltage is on (12 V). In other words, the diagnostic trouble code (DTC) can only be diagnosed when the ignition is turned from position 0 to positions II.

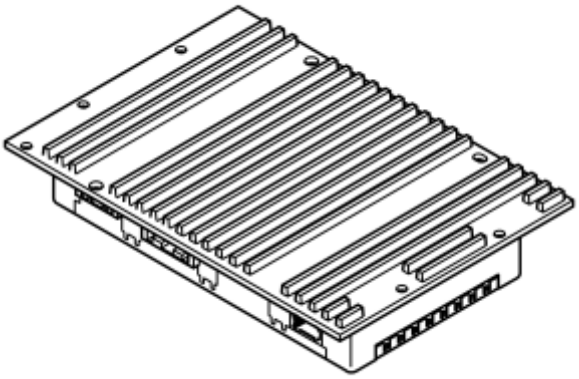

Fig. 1: Identifying Audio Module (AUD)
Courtesy of VOLVO CARS CORPORATION

Substitute Value

- None.

Possible Source

- Internal fault in the audio module (AUD).

Fault symptom[s]

- No sound from loudspeakers

INTERNAL FAULT

REPLACING A COMPONENT

The audio module (AUD) has registered an internal fault.

If the fault is intermittent, it has been registered previously but is no longer present.

In the event of a permanent fault, replace the audio module (AUD).

Remedy as necessary.

Other information

- see **AUDIO MODULE (AUD), REPLACING**

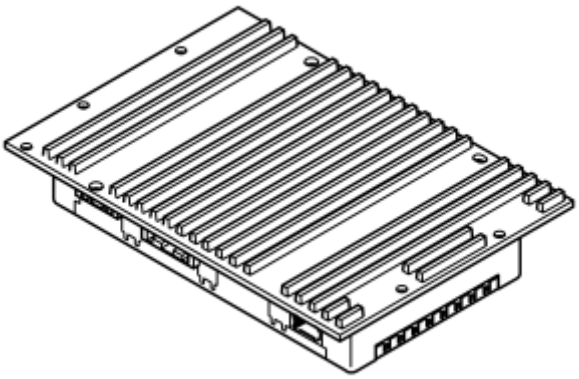

Fig. 2: Identifying Audio Module (AUD)
Courtesy of VOLVO CARS CORPORATION

- **Continue**

  Refer to **INFORMATION**

INFORMATION

FAULT-TRACING INFORMATION

In case of this defect, troubleshooting is not followed by verification.

The information can be displayed again or the fault-tracing for this fault can be interrupted.

AUD-0001: CONTROL MODULE. INTERNAL FAULT (2003-2006)

DIAGNOSTIC TROUBLE CODE (DTC) INFORMATION AUD-0001

Condition

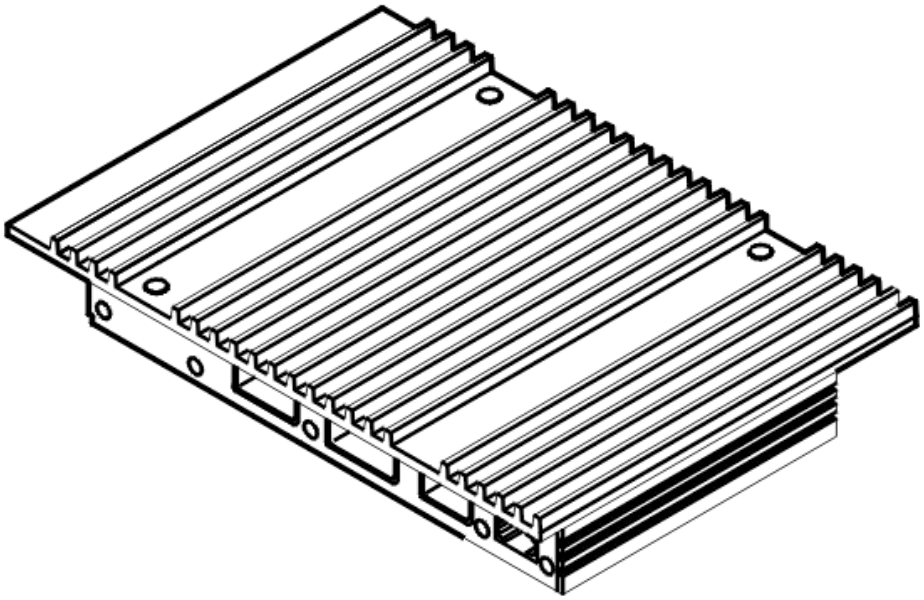

Fig. 3: Identifying Audio Control Module
Courtesy of VOLVO CARS CORPORATION

Diagnostic trouble code (DTC) AUD-0001 is stored if the audio module (AUD) registers an internal fault.

Diagnostic trouble code (DTC) AUD-0001 can be diagnosed when the ignition is on.

Substitute Value

- None.

Possible Source

- Internal fault in the audio module (AUD).

Fault symptom[s]

- No sound from the loudspeakers.

INTERNAL FAULT

REPLACING THE COMPONENT

The audio module (AUD) has registered an internal fault.

If the fault is intermittent, it has been registered previously but is no longer present.

In the event of a permanent fault, replace the audio module (AUD). See **AUDIO MODULE (AUD), REPLACING** .

Remedy as necessary.

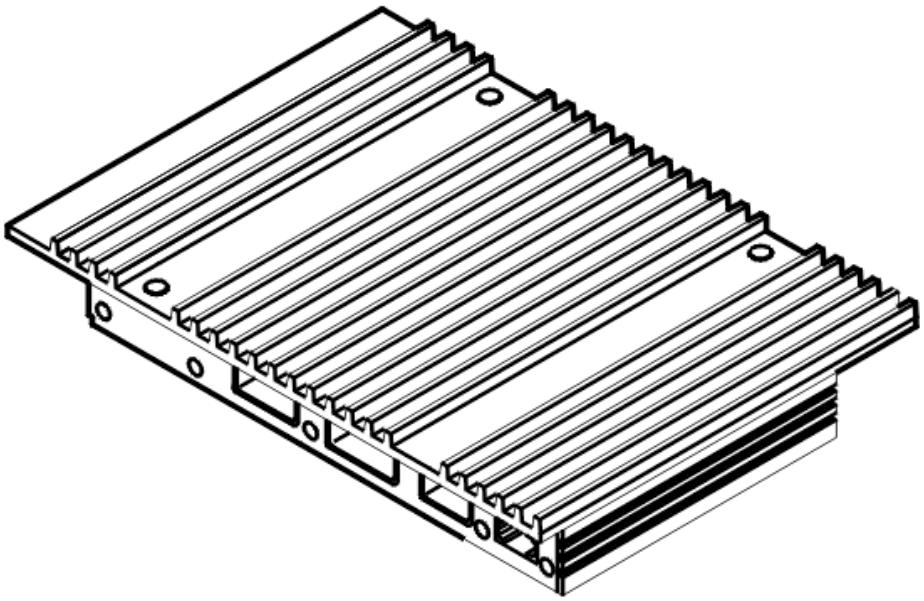

Fig. 4: Identifying Audio Control Module
Courtesy of VOLVO CARS CORPORATION

- **Continue**

  Refer to **INFORMATION**

INFORMATION

FAULT-TRACING INFORMATION

In case of this defect, troubleshooting is not followed by verification.

The information can be displayed again or the fault-tracing for this fault can be interrupted.

AUD-0002: LOUDSPEAKER LEFT FRONT. SIGNAL MISSING (2007-2011)

DIAGNOSTIC TROUBLE CODE (DTC) INFORMATION AUD-0002

Condition

If the Audio module (AUD) registers open circuit on the signal cable from the loudspeaker in the left door, the diagnostic trouble code is generated.

The diagnostic trouble code can be diagnosed when Audio module (AUD) is activated.

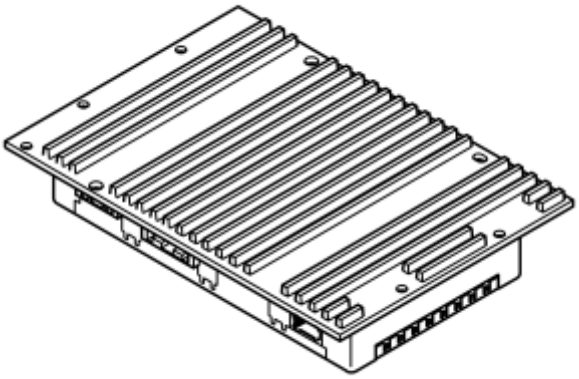

Fig. 5: Identifying Audio Module (AUD)
Courtesy of VOLVO CARS CORPORATION

Substitute Value

- None.

Possible Source

- Open circuit on the signal cable between the loudspeaker in the left door and the control module.
- Open-circuit in the loudspeaker.

Fault symptom[s]

- No sound from loudspeakers

SIGNAL MISSING

CHECKING THE COMPONENT AND WIRING

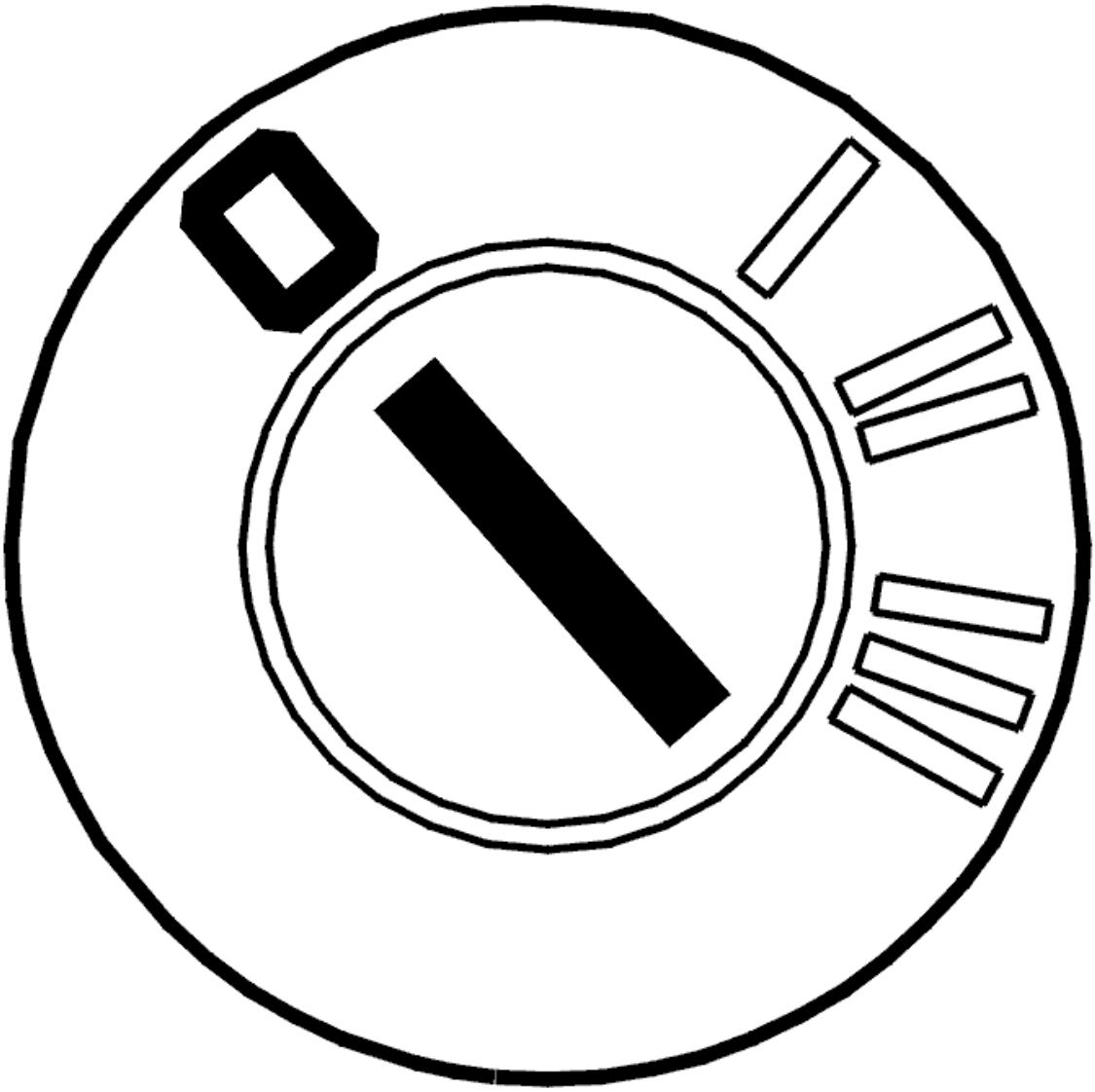

Fig. 6: Identifying Ignition OFF
Courtesy of VOLVO CARS CORPORATION

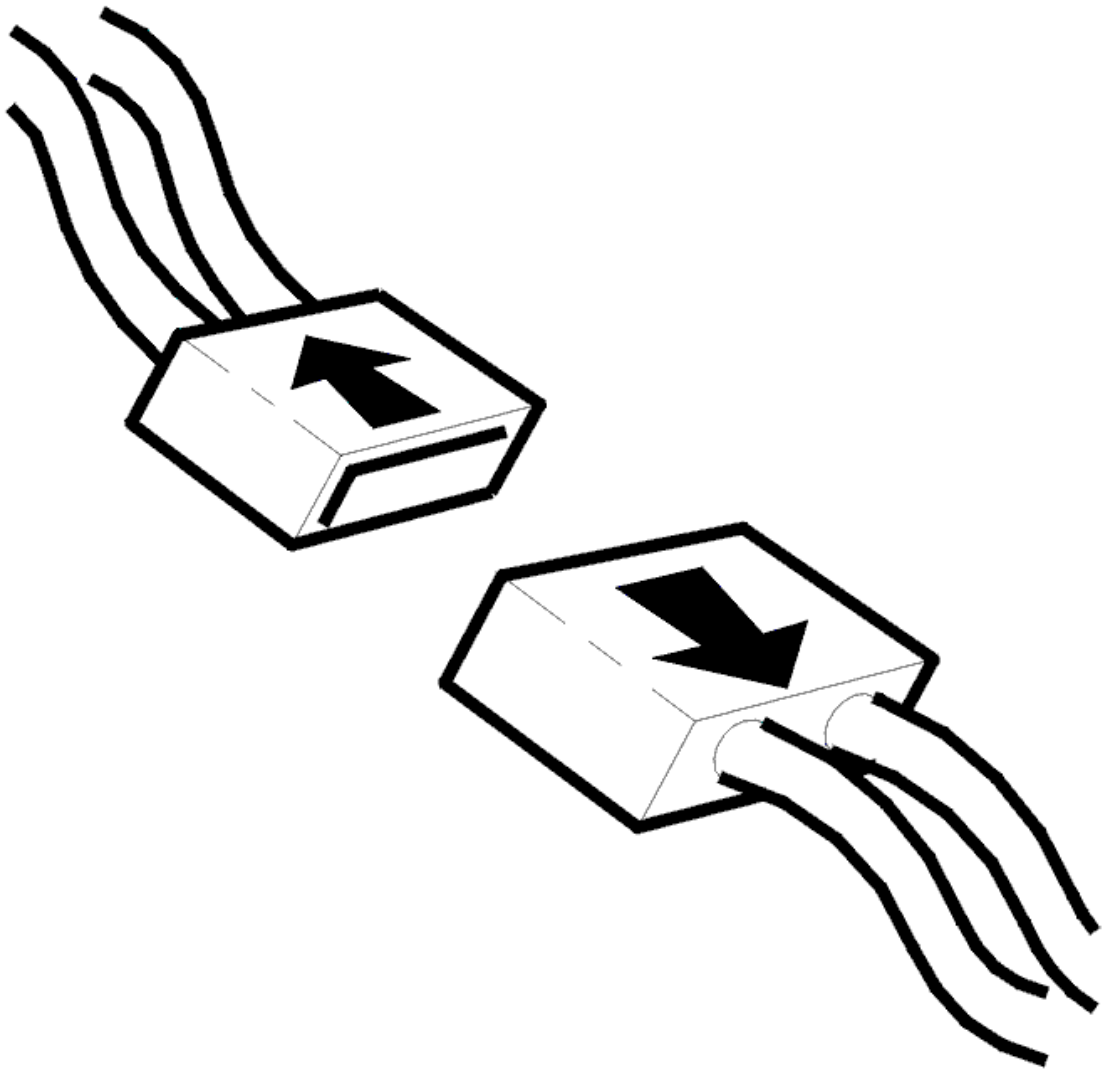

Fig. 7: Disconnecting Connector
Courtesy of VOLVO CARS CORPORATION

- Ignition off
- Unplug the connector for the loudspeaker in the left door.

Check the cable terminals. Check for contact resistance, loose connections and oxidation.

NOTE: **Only visually check the treble loudspeaker. Check for oxidation and loose connections. Do not carry out any electrical fault-tracing on the treble loudspeaker.**

Check the cable terminals in the female and male sections of the connector. The cable terminals must not be damaged or pressed back.

Check the signal cable between the Audio module (AUD) #B1 and the loudspeaker #2 in the left door. Check for an open circuit.

Check the signal cable between the Audio module (AUD) #B9 and the loudspeaker #1 in the left-hand door. Check for an open circuit.

HINT: Check the connector between Audio module (AUD) and the loudspeaker in the left door for contact resistance, loose connection and oxidation.

Check the loudspeaker connector terminals #1 and 2 in the left-hand door. Check for an open-circuit.

Remedy as necessary.

Other information

- see **CONNECTING THE BREAKOUT BOX**
- see **AUDIO MODULE (AUD), REPLACING**
- see **LOUDSPEAKER, FRONT SIDE DOOR, REPLACING**
- see **SIGNAL SPECIFICATION**
- see **CHECKING WIRING AND TERMINALS**

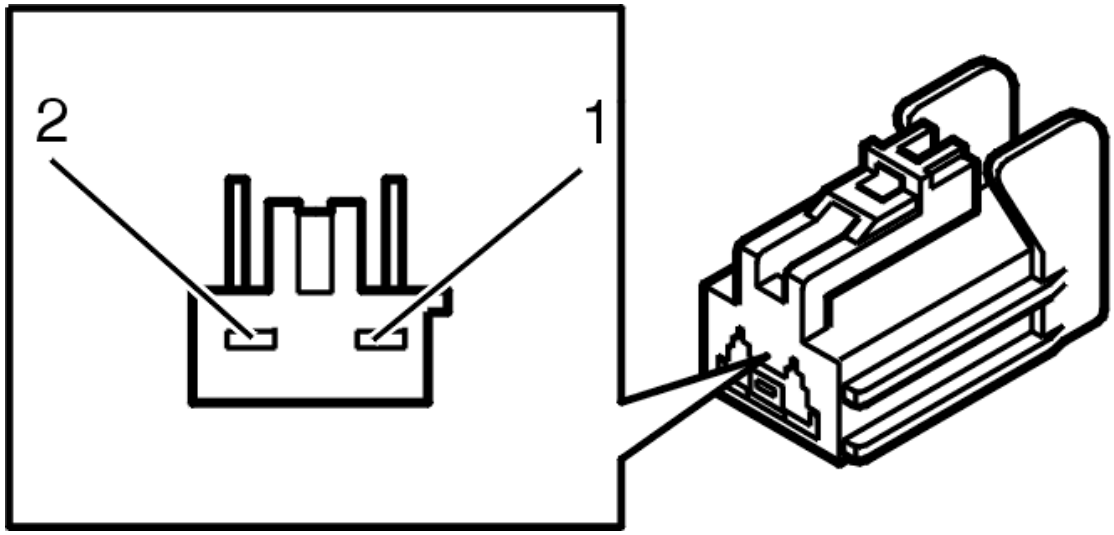

Fig. 8: Identifying 2-Bit Connector
Courtesy of VOLVO CARS CORPORATION

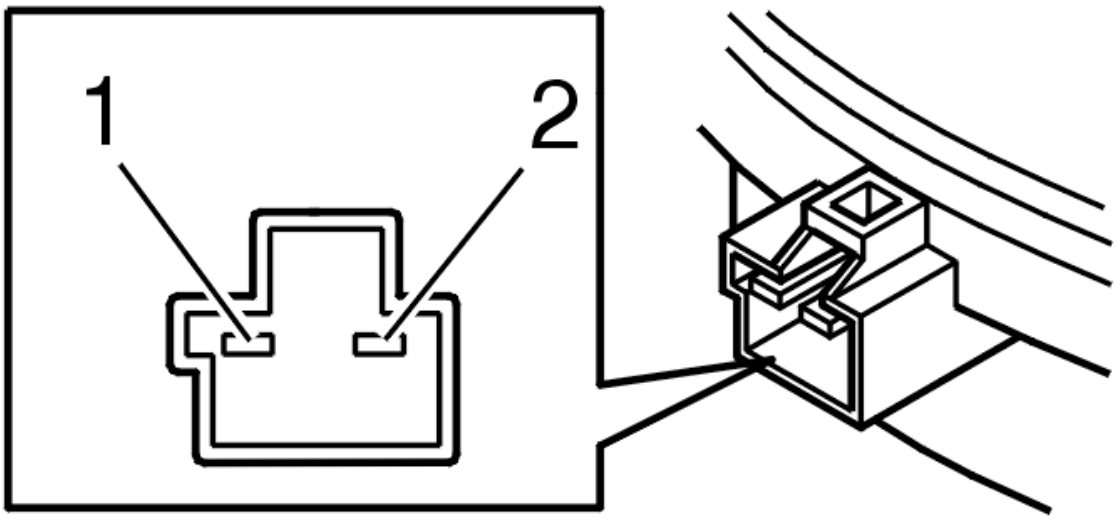

Fig. 9: Identifying 2-Bit Connector
Courtesy of VOLVO CARS CORPORATION

- **Continue**

  Refer to **VERIFICATION**

VERIFICATION

VERIFICATION

HINT: After carrying out the repair, check that the fault has been remedied.

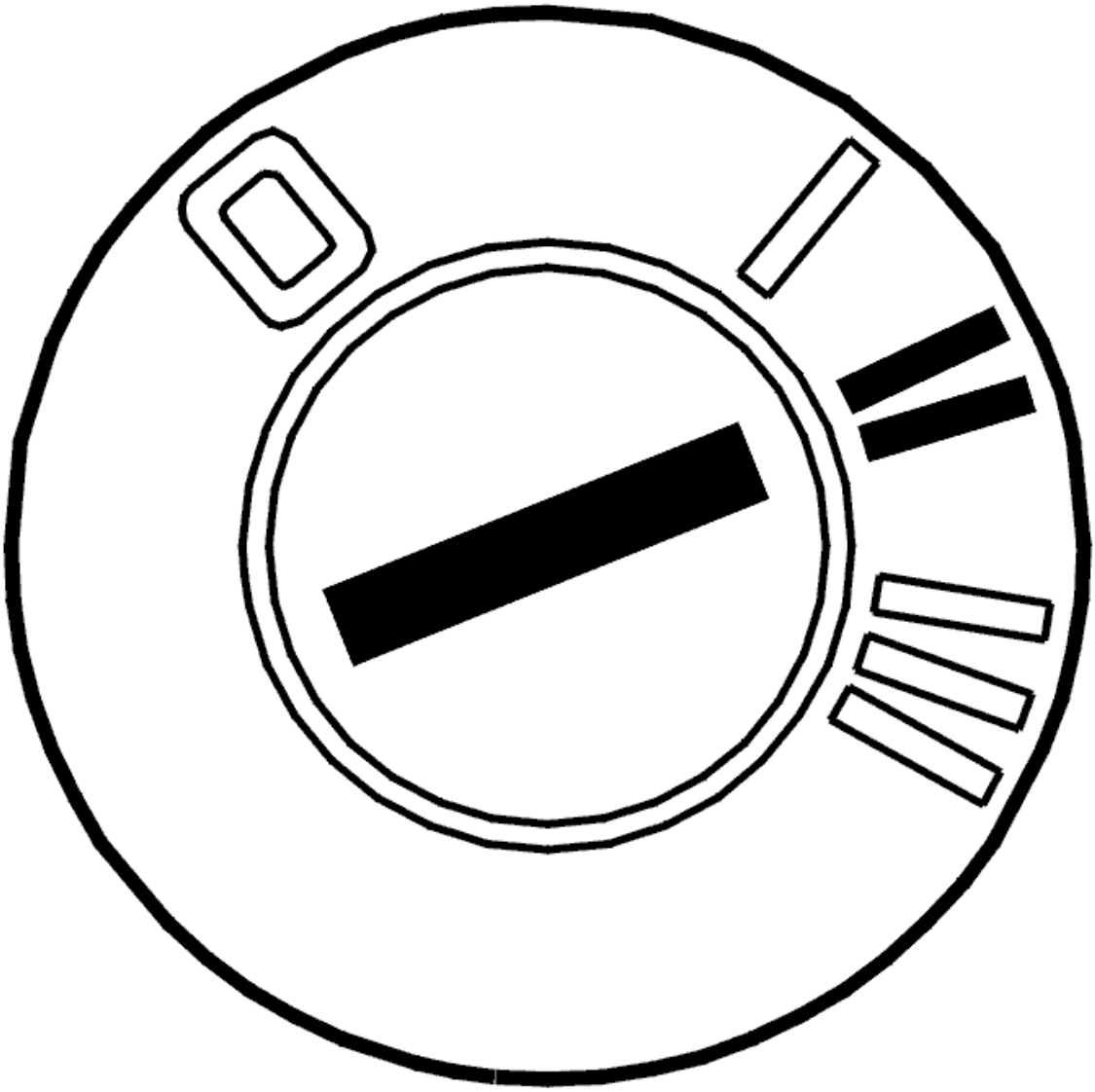

Fig. 10: Identifying Ignition ON
Courtesy of VOLVO CARS CORPORATION

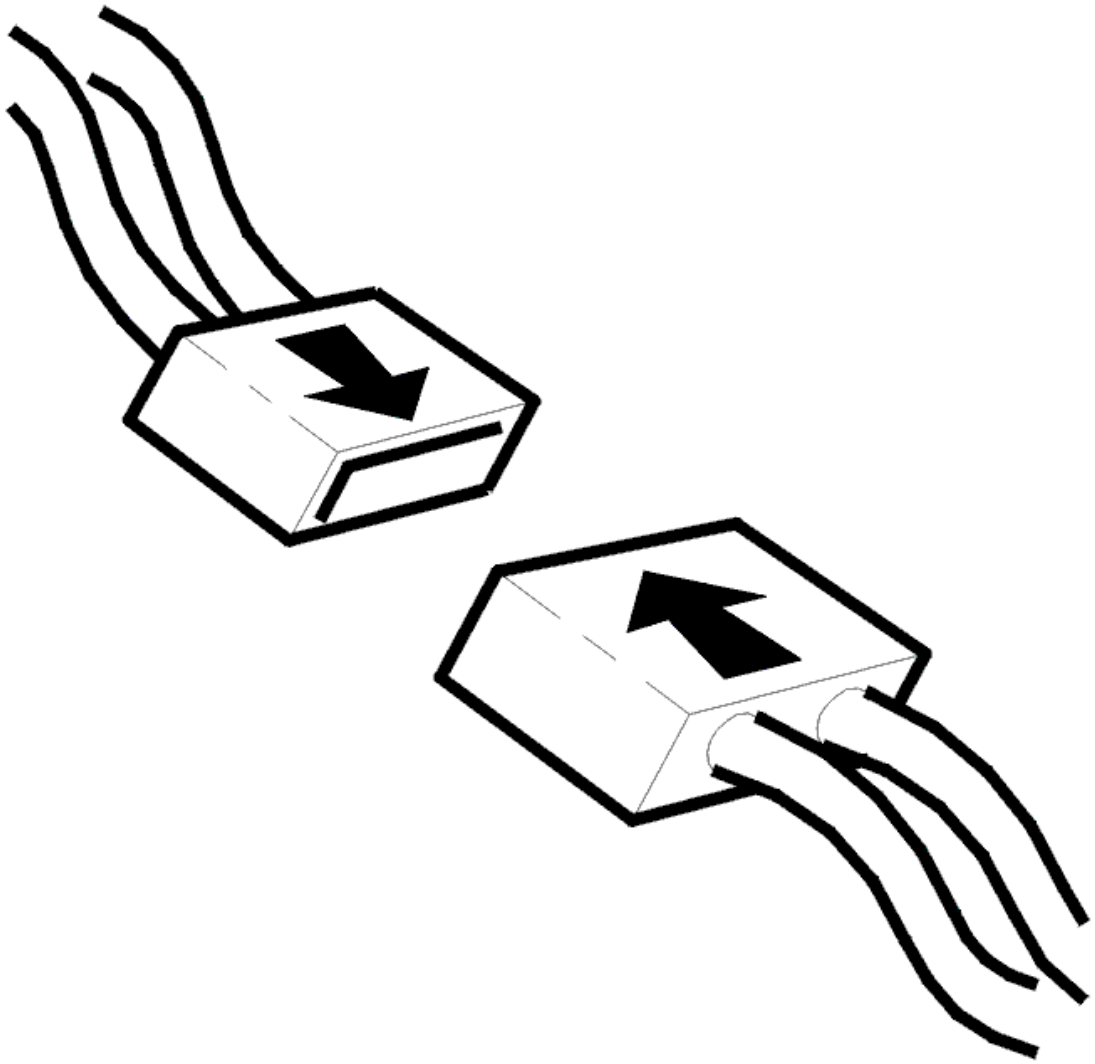

Fig. 11: Connecting Connector
Courtesy of VOLVO CARS CORPORATION

- Ignition off
- Reinstall the connectors, components etc.
- Ignition on.

  Check that the sound is heard from speaker for Audio module (AUD) by trying the radio FM/AM or the cd-player.

Is the function OK?

- **YES**

  VERIFIED: Troubleshooting has been completed.

- **NO**

  Refer to **INFORMATION**

INFORMATION

FAULT-TRACING INFORMATION

The fault should have been detected and remedied. As this is not the case fault-tracing has failed.

Exit fault-tracing for this diagnostic trouble code (DTC) or make another attempt.

AUD-0002: LOUDSPEAKER LEFT FRONT. SIGNAL MISSING (2003-2006)

DIAGNOSTIC TROUBLE CODE (DTC) INFORMATION AUD-0002

Condition

Diagnostic trouble code (DTC) AUD-0002 is stored if the audio module (AUD) registers an open-circuit in the signal cable from the loudspeaker in the left front door.

Diagnostic trouble code (DTC) AUD-0002 can be diagnosed when the ignition is on.

Substitute Value

- None.

Possible Source

- Open-circuit in the signal cable between the loudspeaker in the left front door and the control module
- Open-circuit in the loudspeaker.

Fault symptom[s]

- No sound from the loudspeakers.

SIGNAL MISSING

CHECKING COMPONENTS AND WIRING

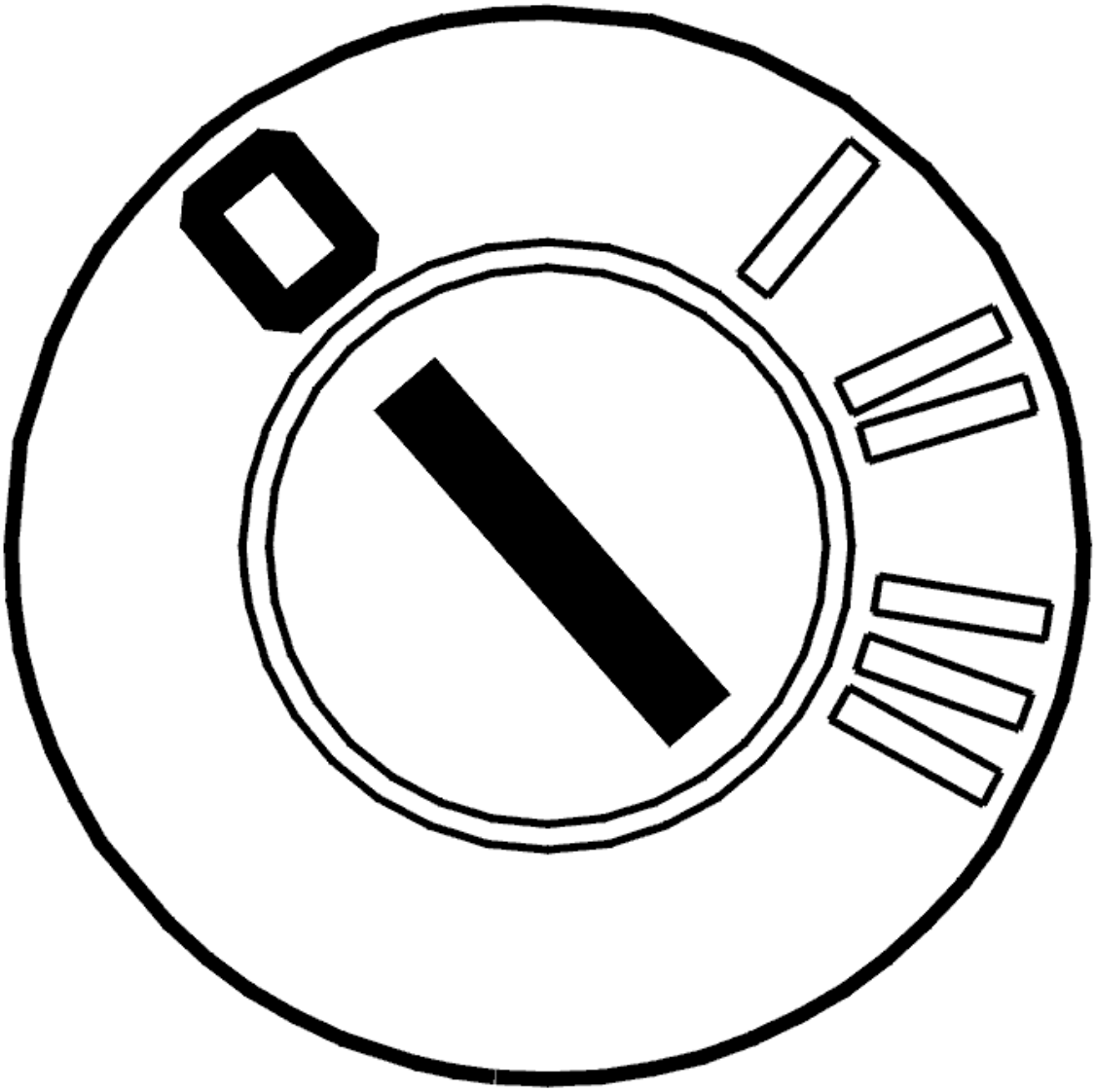

Fig. 12: Identifying Ignition OFF
Courtesy of VOLVO CARS CORPORATION

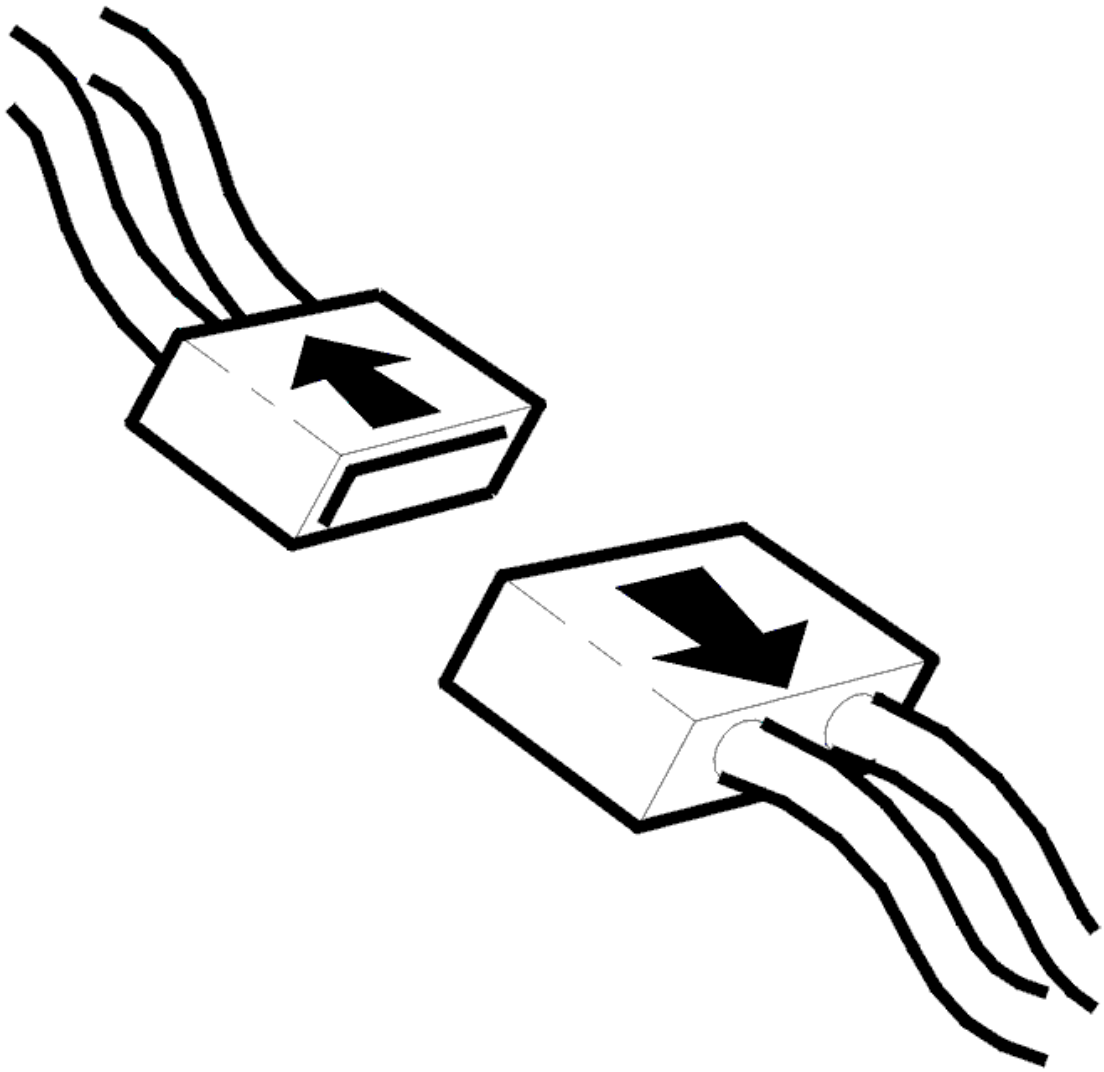

Fig. 13: Disconnecting Connector
Courtesy of VOLVO CARS CORPORATION

- Ignition off
- Disconnect the connector for the loudspeaker in the left front door.

Check the cable terminals. Check for contact resistance, loose connections and oxidation.

NOTE: **Only visually check the treble loudspeaker for oxidation and loose connections. Do not carry out any electrical fault-tracing on the treble loudspeaker.**

Check the cable terminals in the female and male sections of the connector. The cable terminals must not be damaged or pressed back.

Check the signal cable between audio module (AUD) terminal #B1 and loudspeaker terminal #2 in the left front door. Check for an open-circuit.

Check the signal cable between audio module (AUD) terminal #B9 and loudspeaker terminal #1 in the left front door. Check for an open-circuit.

Check loudspeaker connector terminals #1 and #2 in the left front door. Check for an open-circuit.

Remedy as necessary.

Other information:

- To connect the breakout box, see **CONNECTING THE BREAKOUT BOX**
- To access or replace the audio module (AUD), see **AUDIO MODULE (AUD), REPLACING**
- To access and replace the loudspeaker in the front side door, see **LOUDSPEAKER, FRONT SIDE DOOR, REPLACING**
- For information about signals, see **SIGNAL SPECIFICATION**
- see **CONTENTS** .

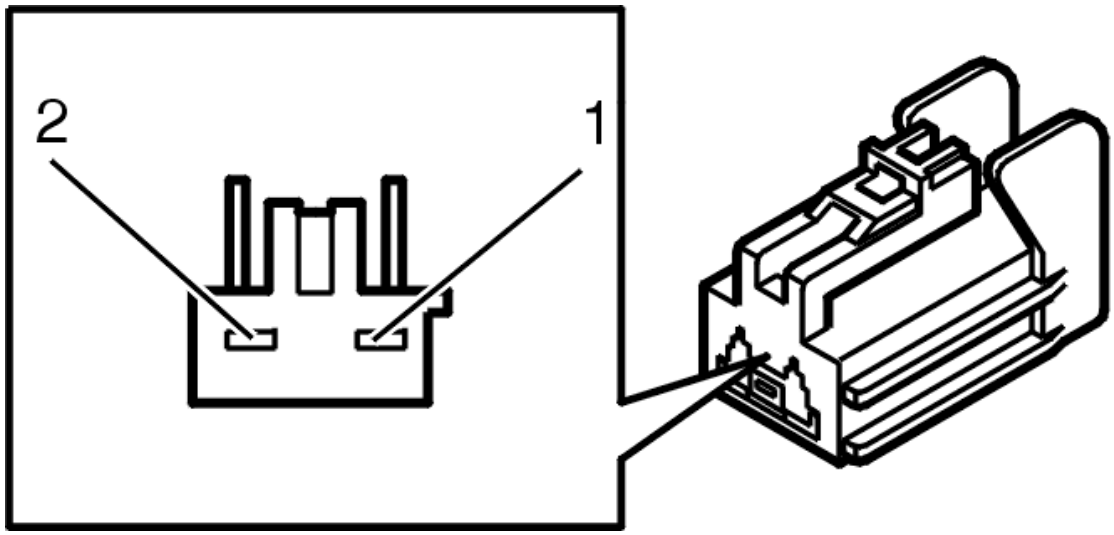

Fig. 14: Identifying 2-Bit Connector
Courtesy of VOLVO CARS CORPORATION

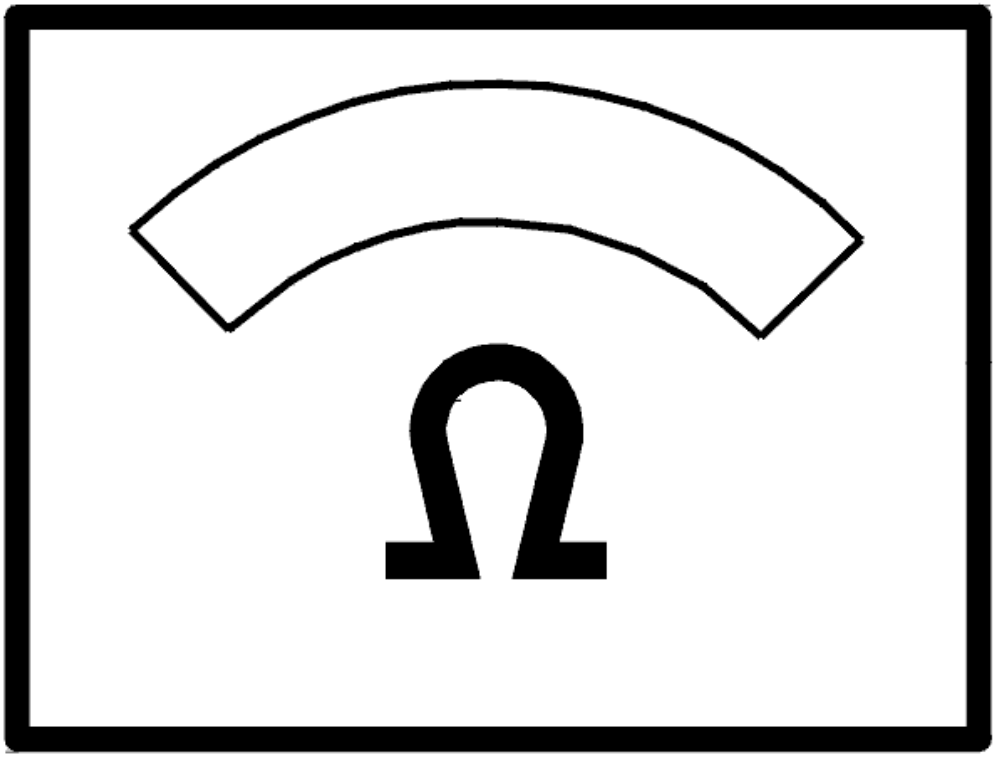

Fig. 15: Identifying Ohm Meter
Courtesy of VOLVO CARS CORPORATION

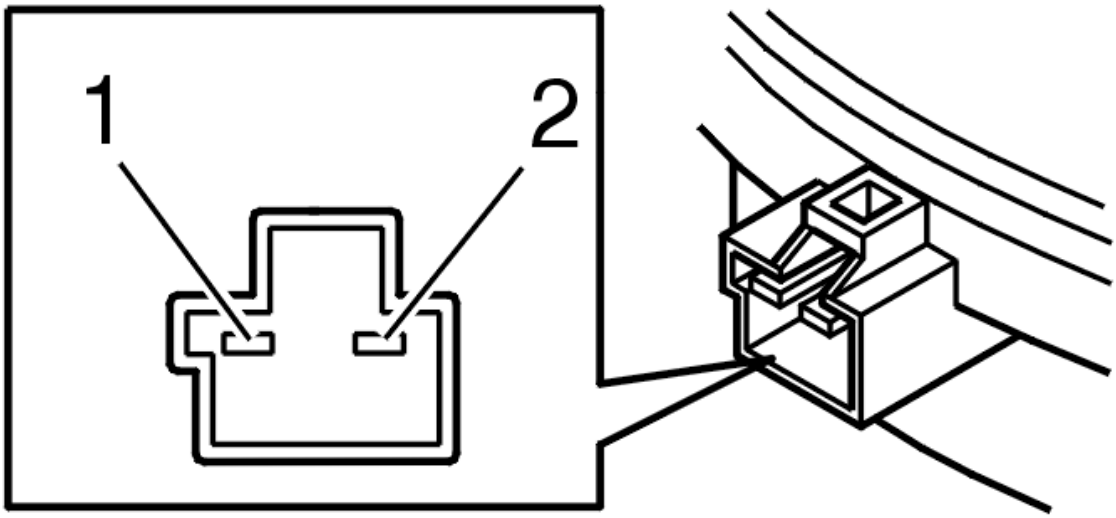

Fig. 16: Identifying 2-Bit Connector
Courtesy of VOLVO CARS CORPORATION

- **Continue**

  Refer to **VERIFICATION**

VERIFICATION

VERIFICATION

HINT: After carrying out the repair, check that the fault has been remedied.

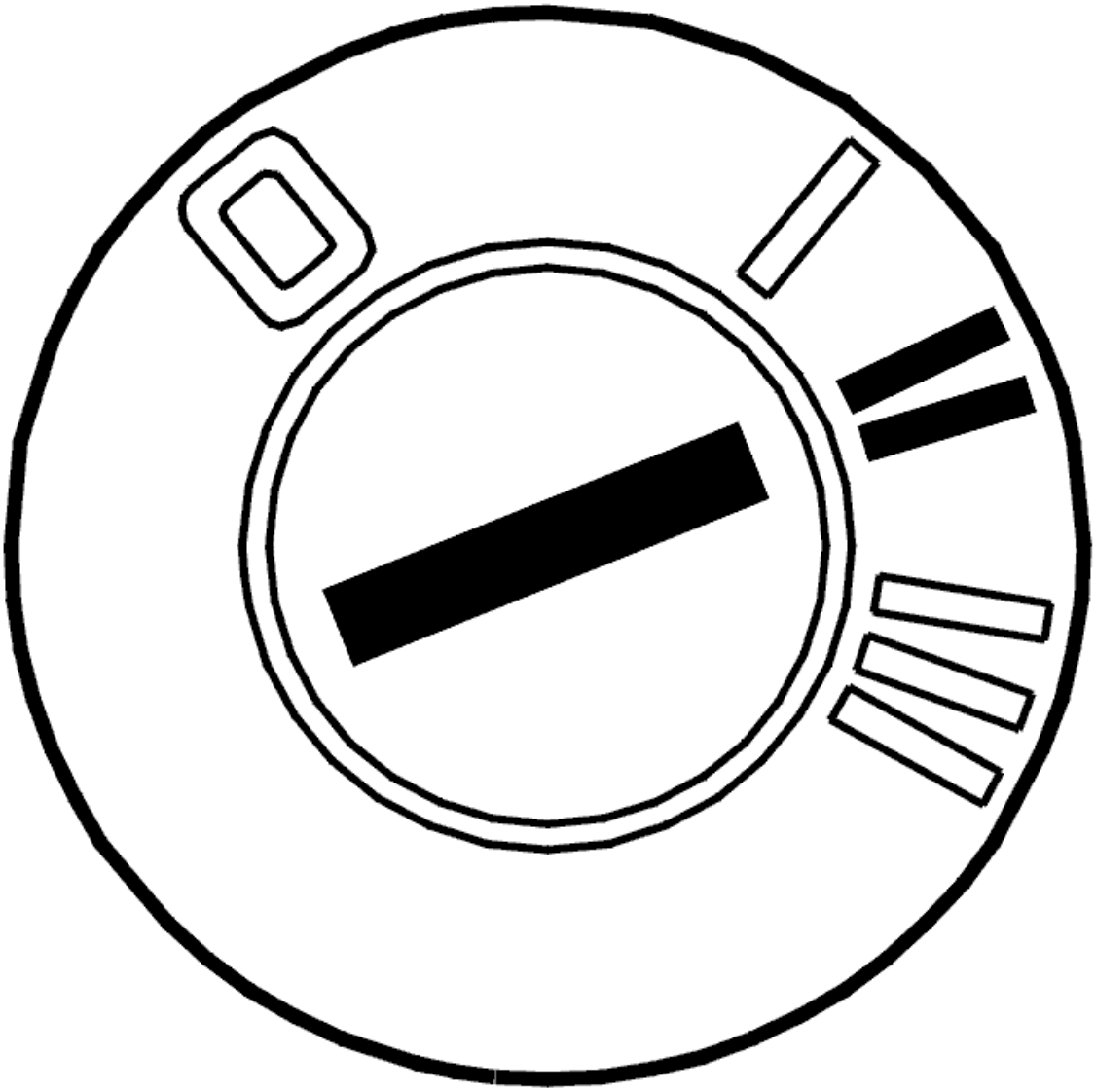

Fig. 17: Identifying Ignition ON
Courtesy of VOLVO CARS CORPORATION

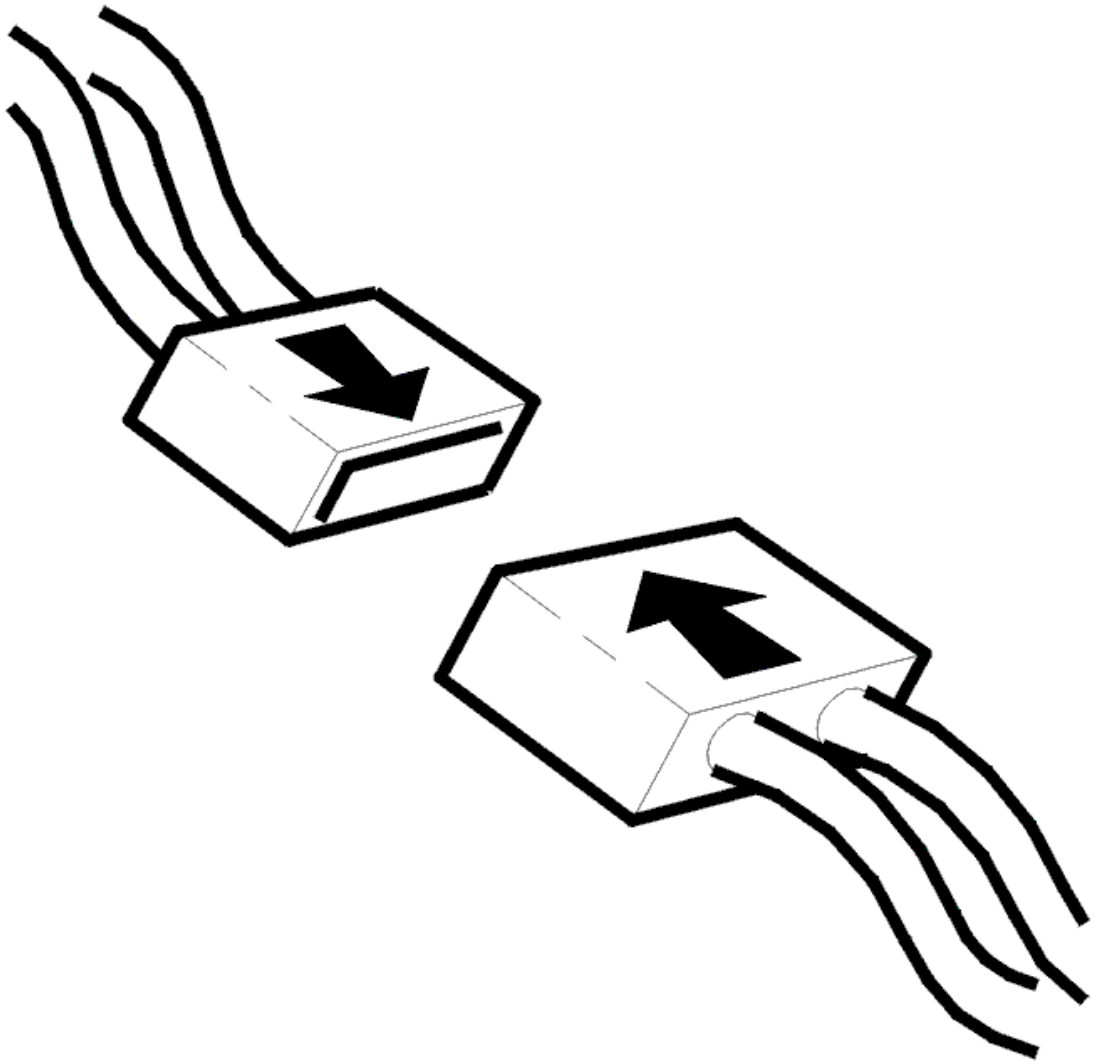

Fig. 18: Connecting Connector
Courtesy of VOLVO CARS CORPORATION

- Ignition off
- Reinstall the connectors, components etc.
- Ignition on.

  Check that sound can be heard from the loudspeakers from the Audio module (AUD) by trying the radio FM/AM, CD or MD player.

Do the loudspeakers work?

- **YES**

  VERIFIED: Troubleshooting has been completed.

- **NO**

  Refer to **INFORMATION**

INFORMATION

FAULT-TRACING INFORMATION

The fault should have been detected and remedied. As this is not the case fault-tracing has failed.

Exit fault-tracing for this diagnostic trouble code (DTC) or make another attempt.

AUD-0003: LOUDSPEAKER RIGHT FRONT. SIGNAL MISSING (2007-2011)

DIAGNOSTIC TROUBLE CODE (DTC) INFORMATION AUD-0003

Condition

If the Audio module (AUD) registers open circuit on the signal cable from the loudspeaker in the right door, the diagnostic trouble code is generated.

The diagnostic trouble code can be diagnosed when Audio module (AUD) is activated.

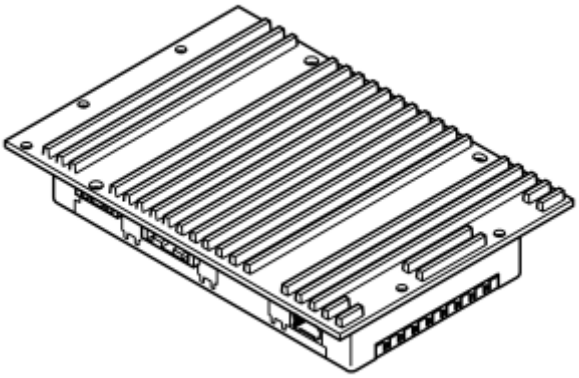

Fig. 19: Identifying Audio Module (AUD)
Courtesy of VOLVO CARS CORPORATION

Substitute Value

- None.

Possible Source

- Open circuit on the signal cable between the loudspeaker in the right door and the control module.

- Open-circuit in the loudspeaker.

Fault symptom[s]

- No sound from loudspeakers

SIGNAL MISSING

CHECKING THE COMPONENT AND WIRING

Fig. 20: Identifying Ignition In Off Position
Courtesy of VOLVO CARS CORPORATION

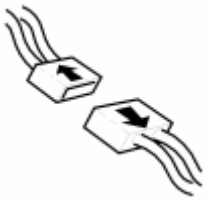

Fig. 21: Identifying Connectors
Courtesy of VOLVO CARS CORPORATION

- Ignition off.
- Unplug the connector for the loudspeaker in the right door.

Check the cable terminals. Check for contact resistance, loose connections and oxidation.

NOTE: Only visually check the treble loudspeaker. Check for oxidation and loose connections. Do not carry out any electrical fault-tracing on the treble loudspeaker.

Check the cable terminals in the female and male sections of the connector. The cable terminals must not be damaged or pressed back.

Check the signal cable between the Audio module (AUD) #B3 and the loudspeaker #2 in the right door for open circuit.

Check the signal cable between the Audio module (AUD) #B11 and the loudspeaker #1 in the right door for open circuit.

HINT: Check the connector between Audio module (AUD) and the loudspeaker in the right door for

contact resistance, loose connection and oxidation.

Check the loudspeaker connector terminals #1 and 2 in the right-hand door. Check for an open-circuit.

Remedy as necessary.

Other information

- see **CONNECTING THE BREAKOUT BOX**
- see **AUDIO MODULE (AUD), REPLACING**
- see **LOUDSPEAKER, FRONT SIDE DOOR, REPLACING**
- see **SIGNAL SPECIFICATION**
- see **CHECKING WIRING AND TERMINALS**

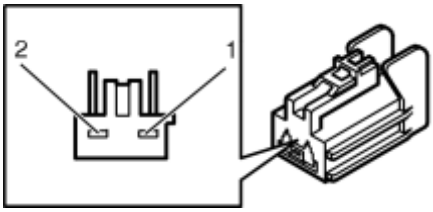

Fig. 22: Identifying 2-Bit Connector
Courtesy of VOLVO CARS CORPORATION

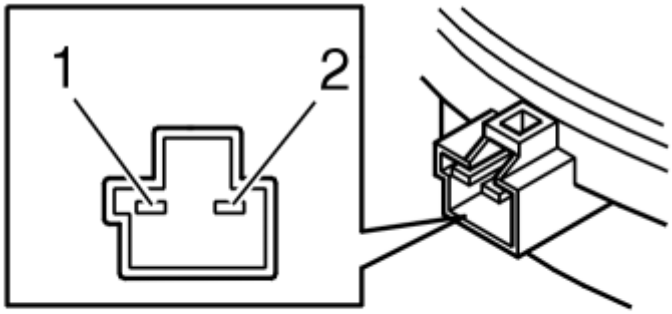

Fig. 23: Identifying 2-Bit Connector
Courtesy of VOLVO CARS CORPORATION

- **Continue**

  Refer to **VERIFICATION**

VERIFICATION

VERIFICATION

HINT: After carrying out the repair, check that the fault has been remedied.

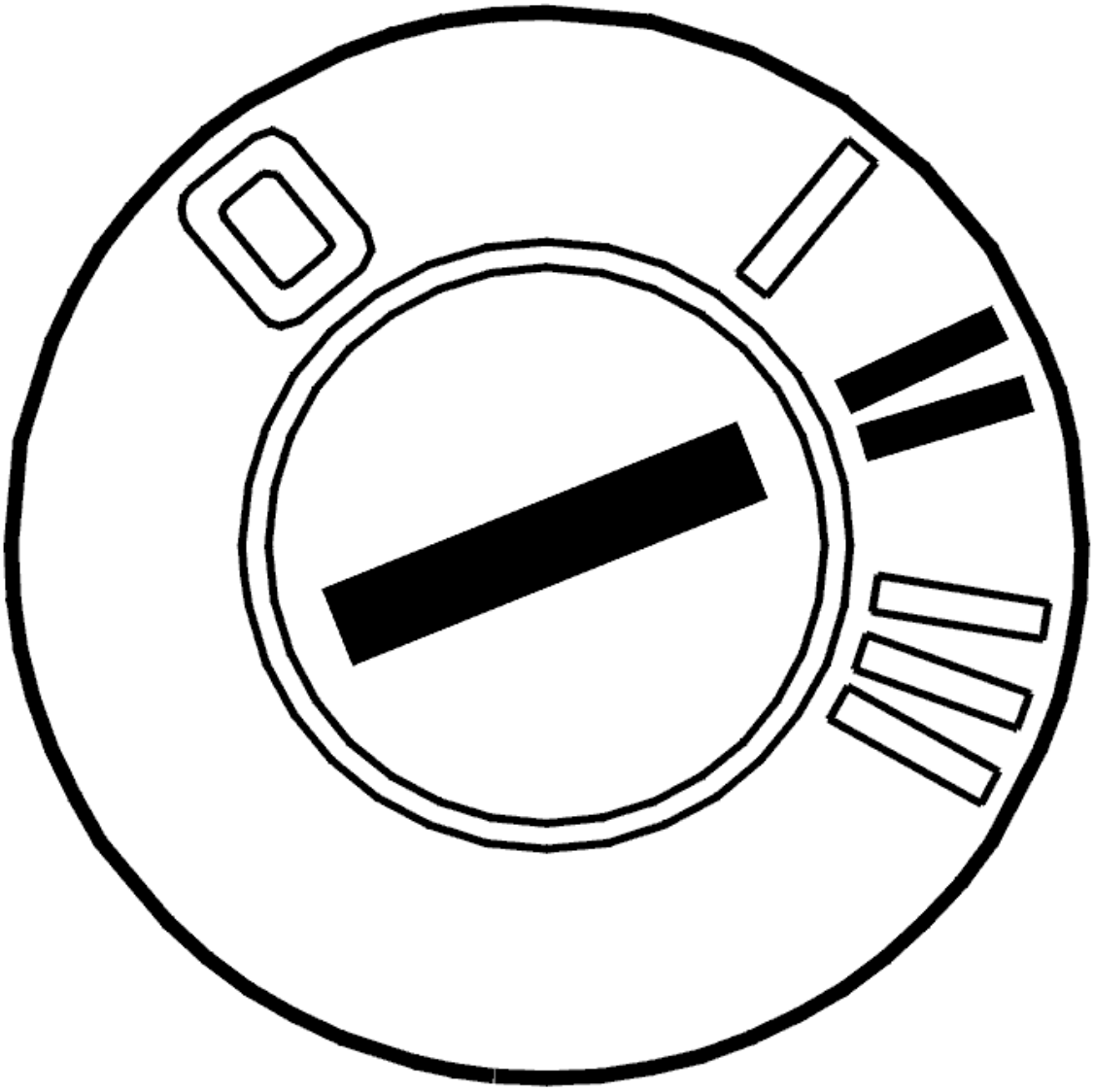

Fig. 24: Identifying Ignition ON
Courtesy of VOLVO CARS CORPORATION

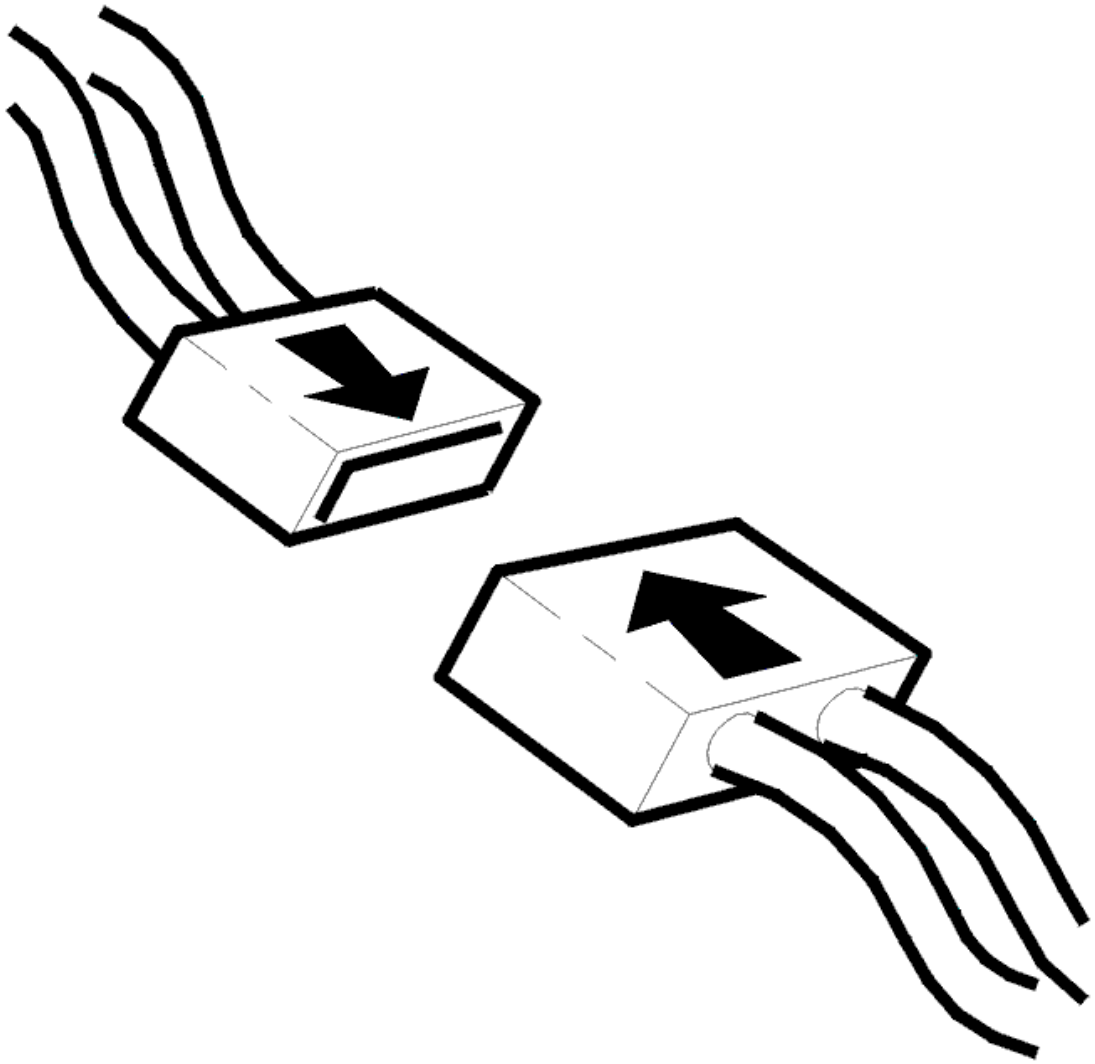

Fig. 25: Connecting Connector
Courtesy of VOLVO CARS CORPORATION

- Ignition off
- Reinstall the connectors, components etc.
- Ignition on.

  Check that the sound is heard from speaker for Audio module (AUD) by trying the radio FM/AM or the cd-player.

Is the function OK?

- **YES**

  VERIFIED: Troubleshooting has been completed.

- **NO**

  Refer to **INFORMATION**

INFORMATION

FAULT-TRACING INFORMATION

The fault should have been detected and remedied. As this is not the case fault-tracing has failed.

Exit fault-tracing for this diagnostic trouble code (DTC) or make another attempt.

AUD-0003: LOUDSPEAKER RIGHT FRONT. SIGNAL MISSING (2003-2006)

DIAGNOSTIC TROUBLE CODE (DTC) INFORMATION AUD-0003

Condition

Diagnostic trouble code (DTC) AUD-0003 is stored if the audio module (AUD) registers an open-circuit in the signal cable from the loudspeaker in the right front door.

Diagnostic trouble code (DTC) AUD-0003 can be diagnosed when the ignition is on.

Substitute Value

- None.

Possible Source

- Open-circuit in the signal cable between the loudspeaker in the right front door and the control module
- Open-circuit in the loudspeaker.

Fault symptom[s]

- No sound from the loudspeakers.

SIGNAL MISSING

CHECKING COMPONENTS AND WIRING

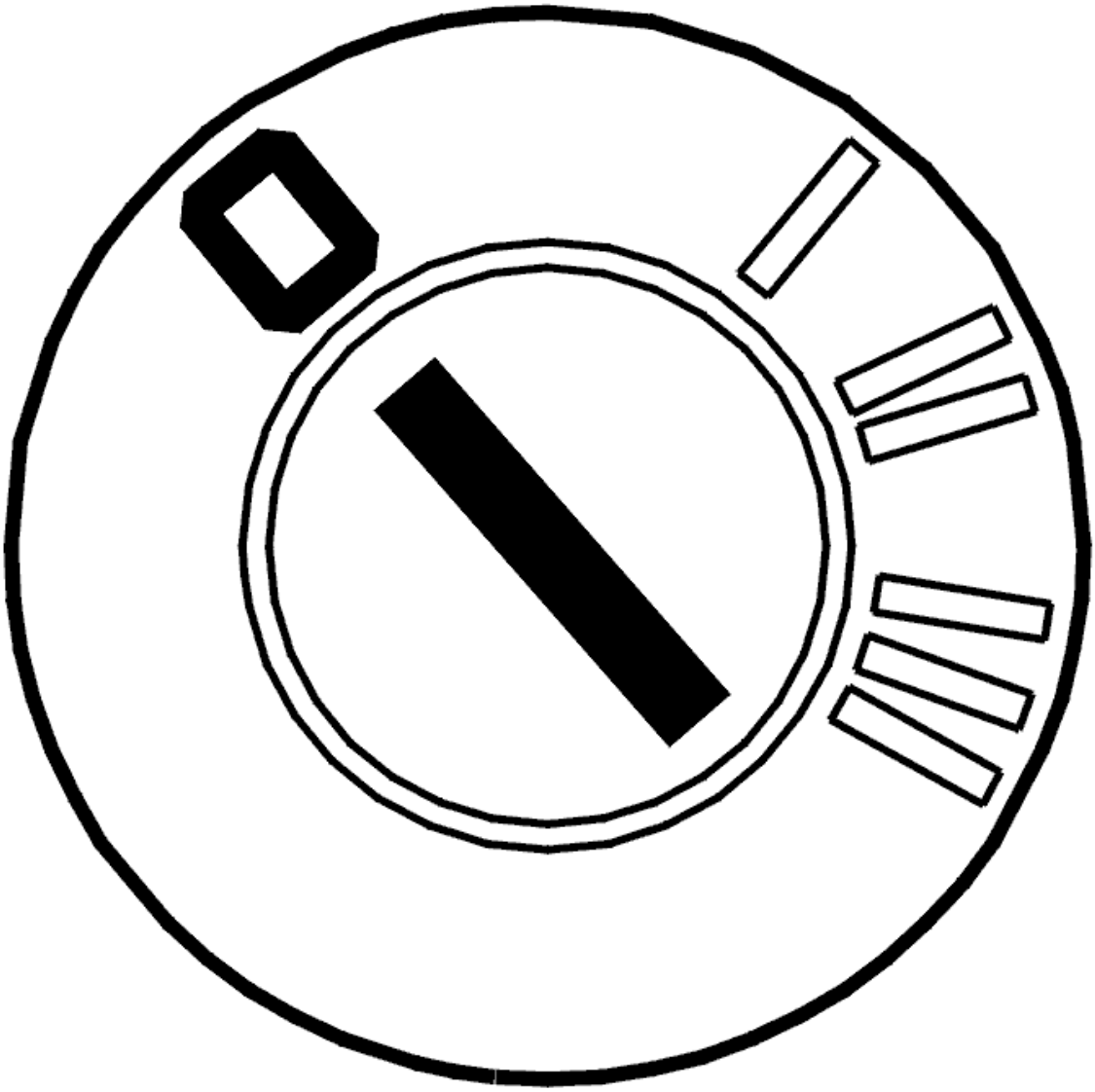

Fig. 26: Identifying Ignition OFF
Courtesy of VOLVO CARS CORPORATION

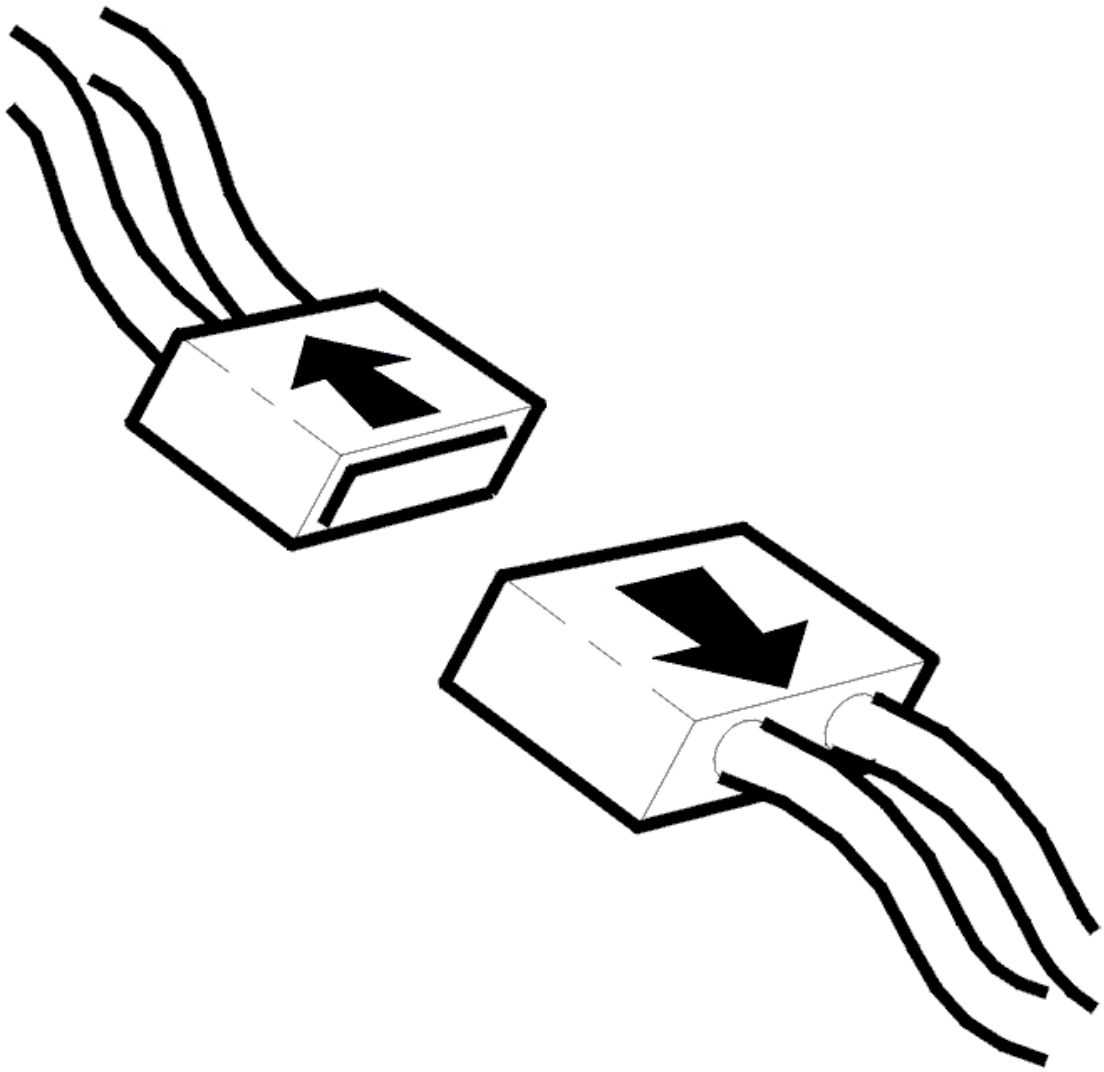

Fig. 27: Disconnecting Connector
Courtesy of VOLVO CARS CORPORATION

- Ignition off
- Disconnect the connector for the loudspeaker in the right front door.

Check the cable terminals. Check for contact resistance, loose connections and oxidation.

NOTE: **Only visually check the treble loudspeaker for oxidation and loose connections. Do not carry out any electrical fault-tracing on the treble loudspeaker.**

Check the cable terminals in the female and male sections of the connector. The cable terminals must not be damaged or pressed back.

Check the signal cable between audio module (AUD) terminal #B3 and loudspeaker terminal #2 in the right front door. Check for an open-circuit.

Check the signal cable between audio module (AUD) terminal #B11 and loudspeaker terminal #1 in the right front door. Check for an open-circuit.

Check loudspeaker connector terminals #1 and #2 in the right front door. Check for an open-circuit.

Remedy as necessary.

Other information:

- To connect the breakout box, see **CONNECTING THE BREAKOUT BOX**
- To access or replace the audio module (AUD), see **AUDIO MODULE (AUD), REPLACING**
- To access and replace the loudspeaker in the front side door, see **LOUDSPEAKER, FRONT SIDE DOOR, REPLACING**
- For information about signals, see **SIGNAL SPECIFICATION**
- see **CONTENTS** .

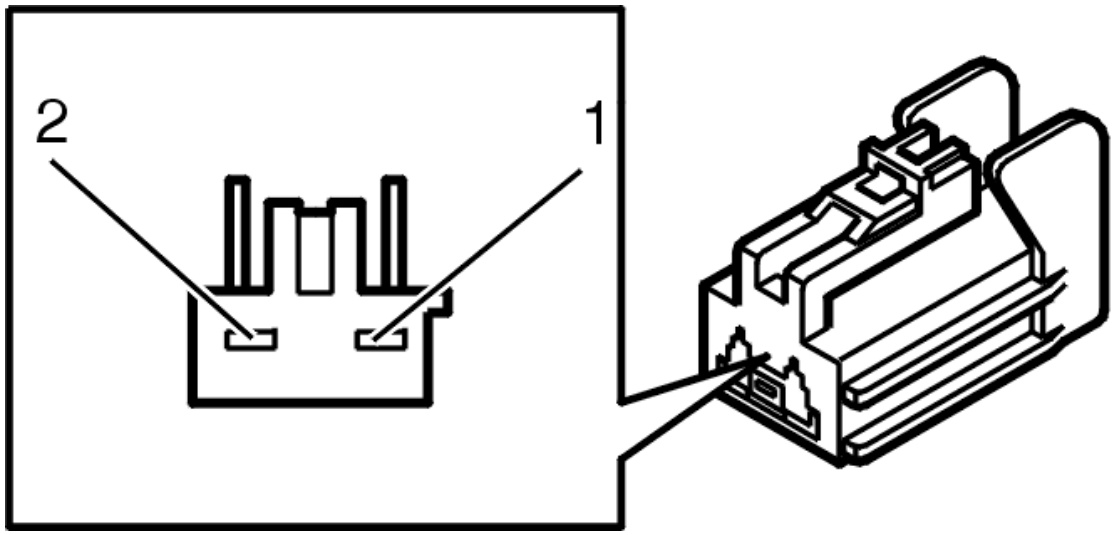

Fig. 28: Identifying 2-Bit Connector
Courtesy of VOLVO CARS CORPORATION

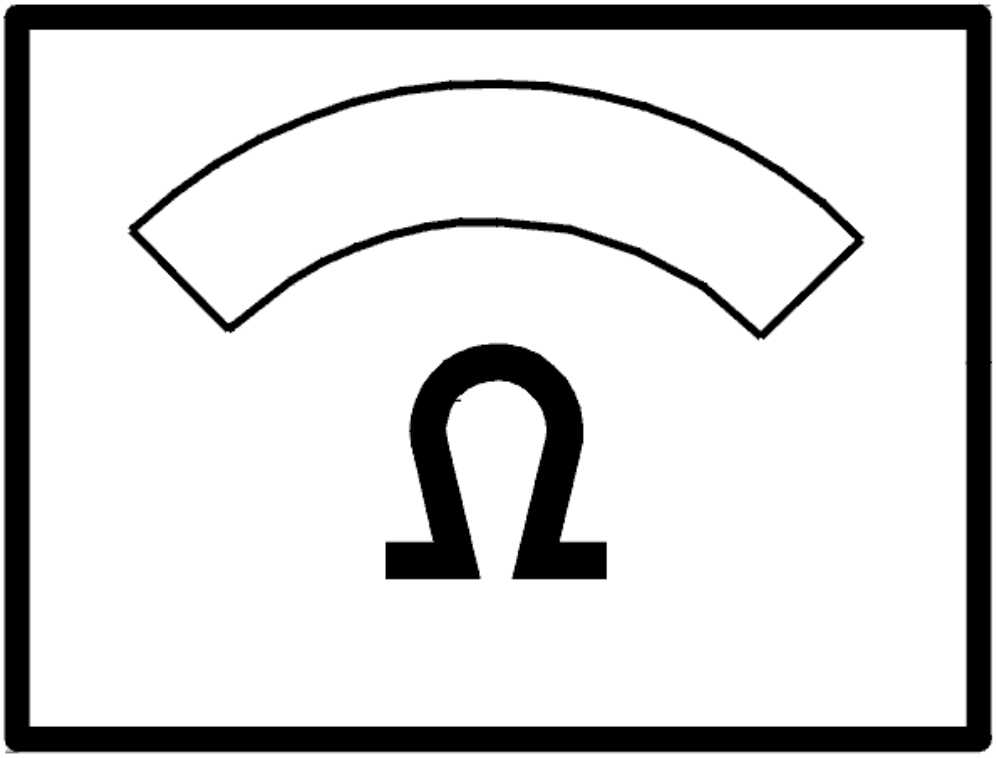

Fig. 29: Identifying Ohm Meter
Courtesy of VOLVO CARS CORPORATION

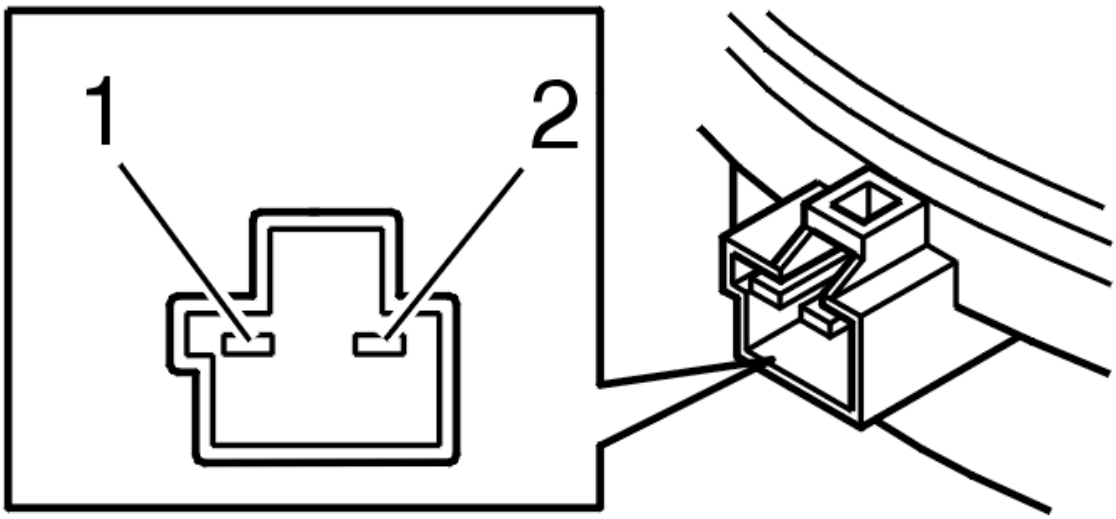

Fig. 30: Identifying 2-Bit Connector
Courtesy of VOLVO CARS CORPORATION

- **Continue**

  Refer to **VERIFICATION**

VERIFICATION

VERIFICATION

HINT: After carrying out the repair, check that the fault has been remedied.

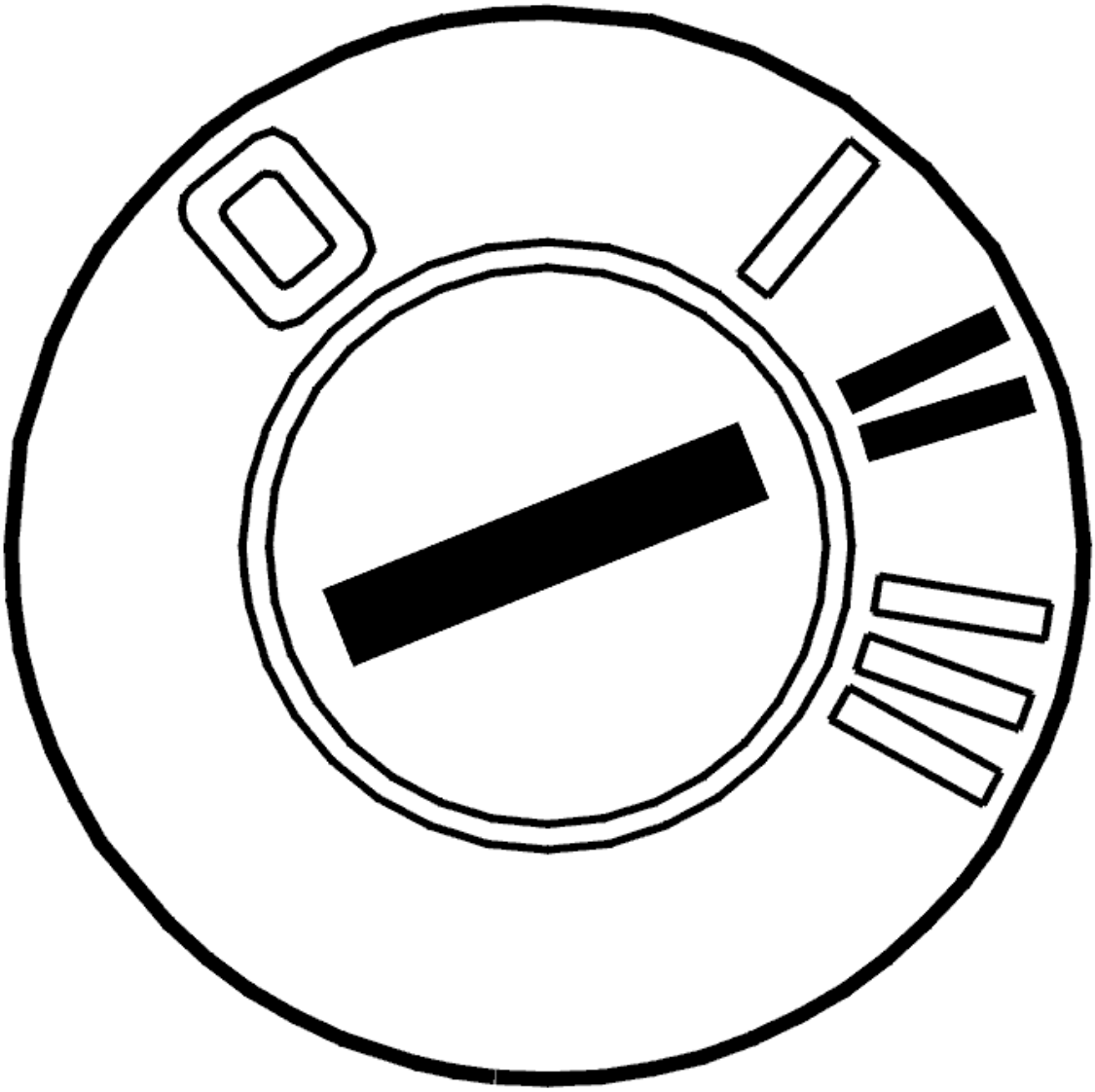

Fig. 31: Identifying Ignition ON
Courtesy of VOLVO CARS CORPORATION

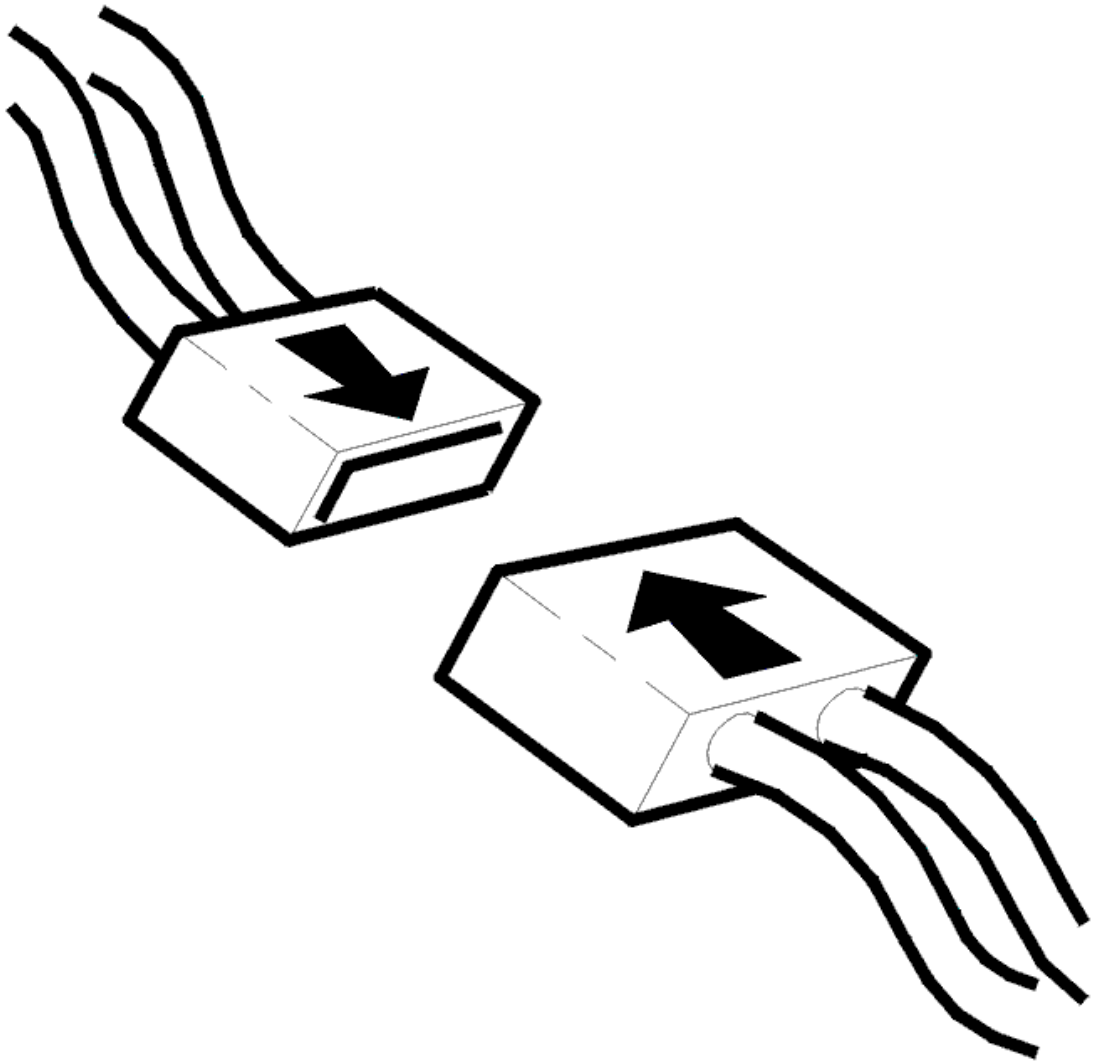

Fig. 32: Connecting Connector
Courtesy of VOLVO CARS CORPORATION

- Ignition off
- Reinstall the connectors, components etc.
- Ignition on.

  Check that sound can be heard from the loudspeakers from the Audio module (AUD) by trying the radio FM/AM, CD or MD player.

Do the loudspeakers work?

- **YES**

  VERIFIED: Troubleshooting has been completed.

- **NO**

  Refer to **INFORMATION**

INFORMATION

FAULT-TRACING INFORMATION

The fault should have been detected and remedied. As this is not the case fault-tracing has failed.

Exit fault-tracing for this diagnostic trouble code (DTC) or make another attempt.

AUD-0004: LOUDSPEAKER LEFT REAR. SIGNAL MISSING (2007-2011)

DIAGNOSTIC TROUBLE CODE (DTC) INFORMATION AUD-0004

Condition

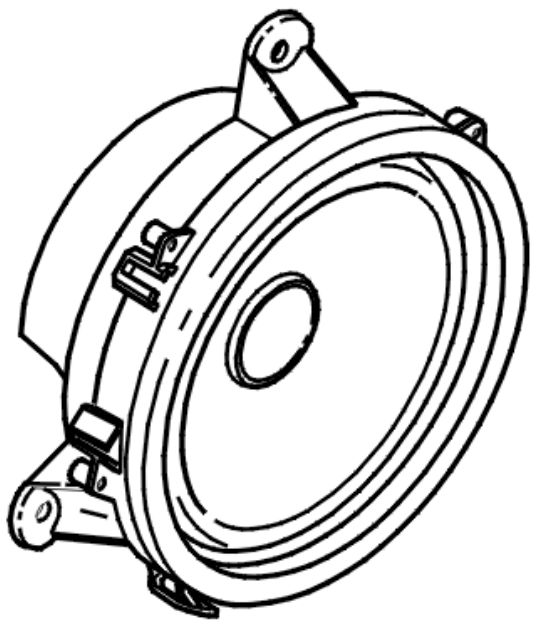

Fig. 33: Identifying Loudspeaker
Courtesy of VOLVO CARS CORPORATION

If the Audio module (AUD) registers open circuit on the signal cable from the rear left loudspeaker, the diagnostic trouble code is generated.

The diagnostic trouble code can be diagnosed when Audio module (AUD) is activated.

Substitute Value

- None.

Possible Source

- Open circuit on the signal cable between the rear left loudspeaker and the control module.
- Open-circuit in the loudspeaker.

Fault symptom[s]

- No sound from the loudspeakers.

SIGNAL MISSING

CHECKING THE COMPONENT AND WIRING

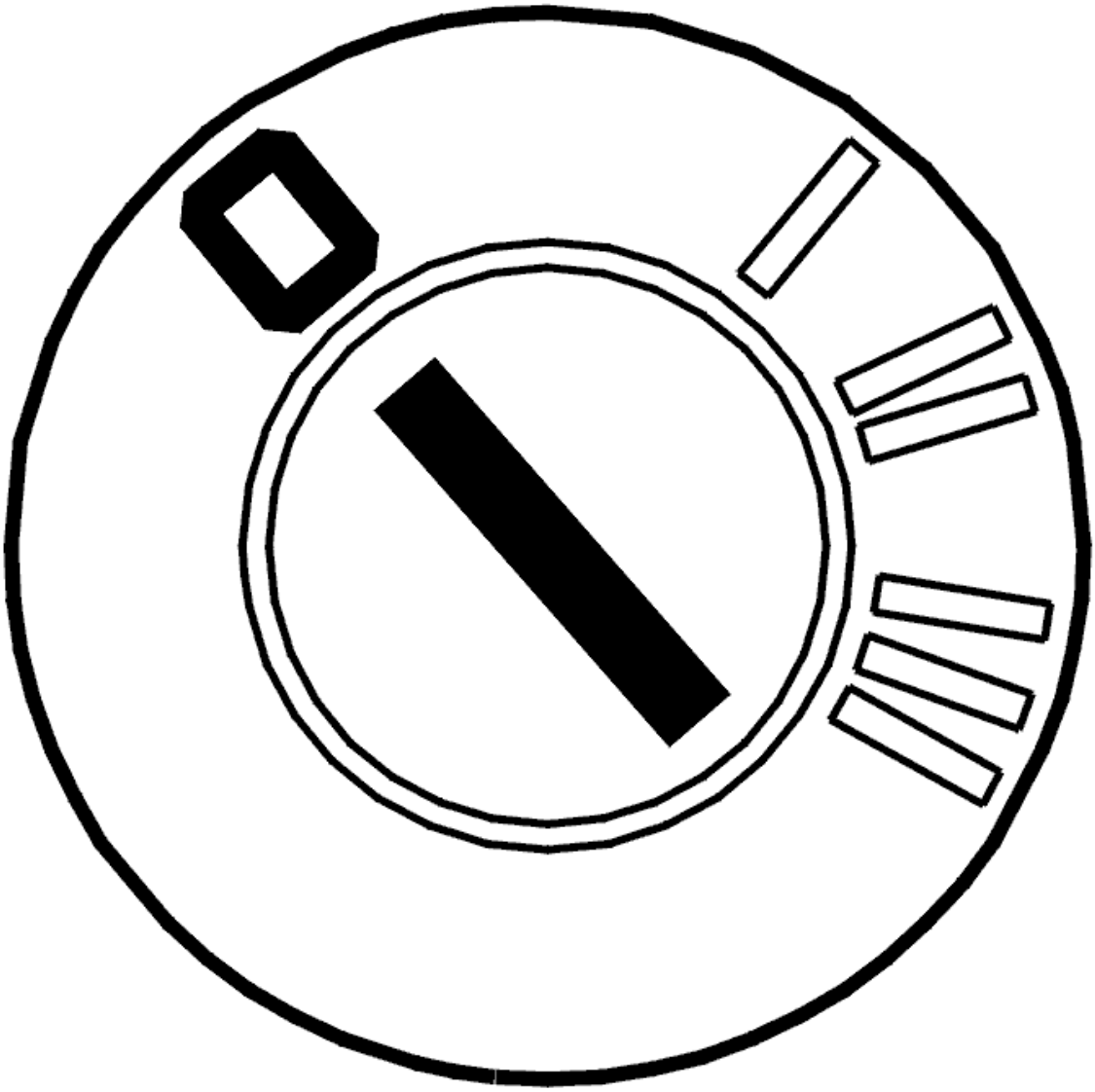

Fig. 34: Identifying Ignition OFF
Courtesy of VOLVO CARS CORPORATION

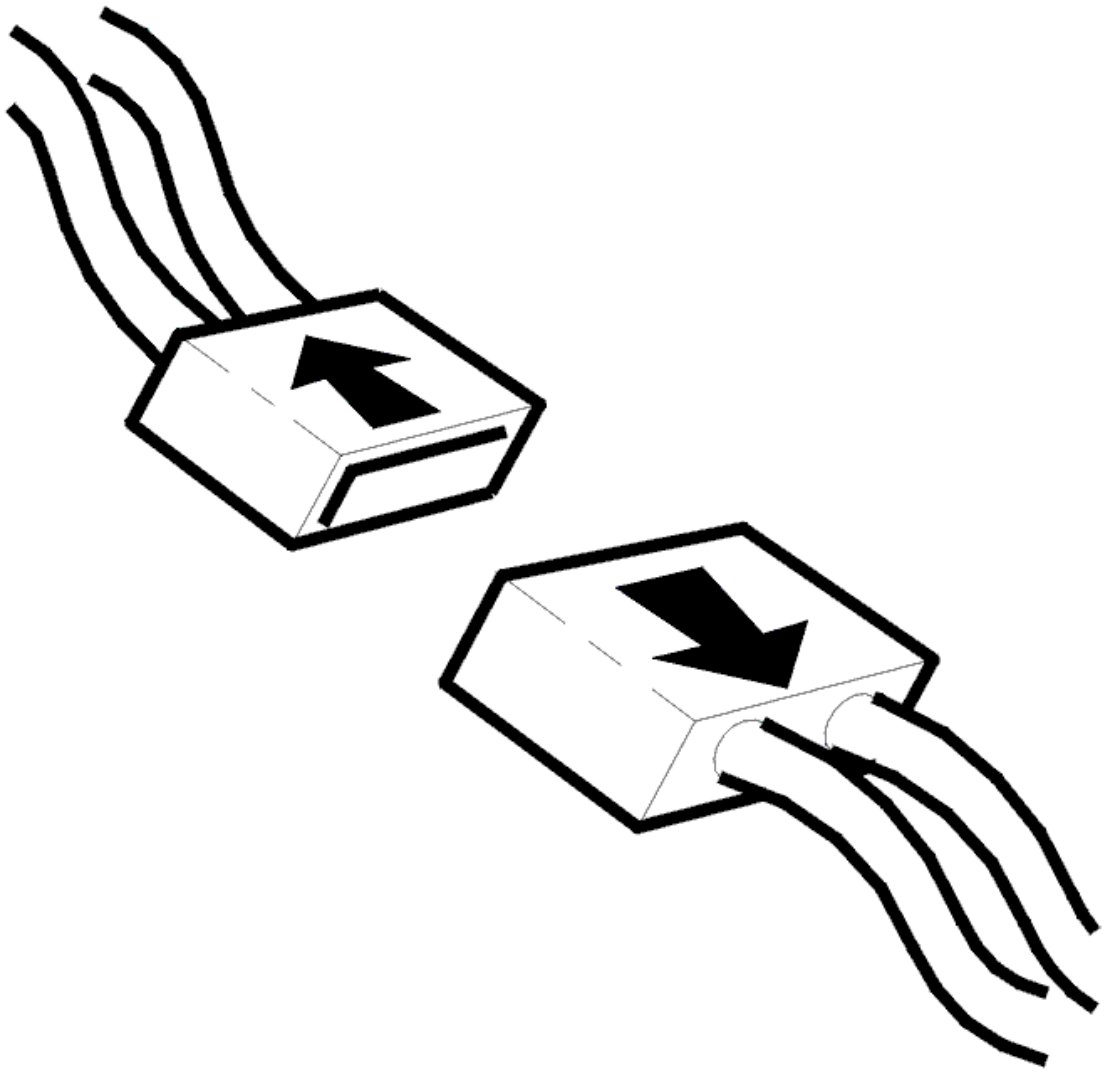

Fig. 35: Disconnecting Connector
Courtesy of VOLVO CARS CORPORATION

- Ignition off
- Unplug the connector for the rear left loudspeaker.

Check the cable terminals. Check for contact resistance, loose connections and oxidation.

NOTE: **Only visually check the treble loudspeaker. Check for oxidation and loose connections. Do not carry out any electrical fault-tracing on the treble loudspeaker.**

Check the cable terminals in the female and male sections of the connector. The cable terminals must not be damaged or pressed back.

Check the signal cable between the Audio module (AUD) #B4 and the left rear loudspeaker #2 for open circuit.

Check the signal cable between the Audio module (AUD) #B12 and the left rear loudspeaker #1 for open circuit.

Check the rear left loudspeaker's connector #1 and #2 for open circuit.

Remedy as necessary.

Other information

- see **CONNECTING THE BREAKOUT BOX**
- see **AUDIO MODULE (AUD), REPLACING**
- see **LOUDSPEAKER, REAR SIDE DOOR, REPLACING**
- see **SIGNAL SPECIFICATION**
- see **CHECKING WIRING AND TERMINALS**

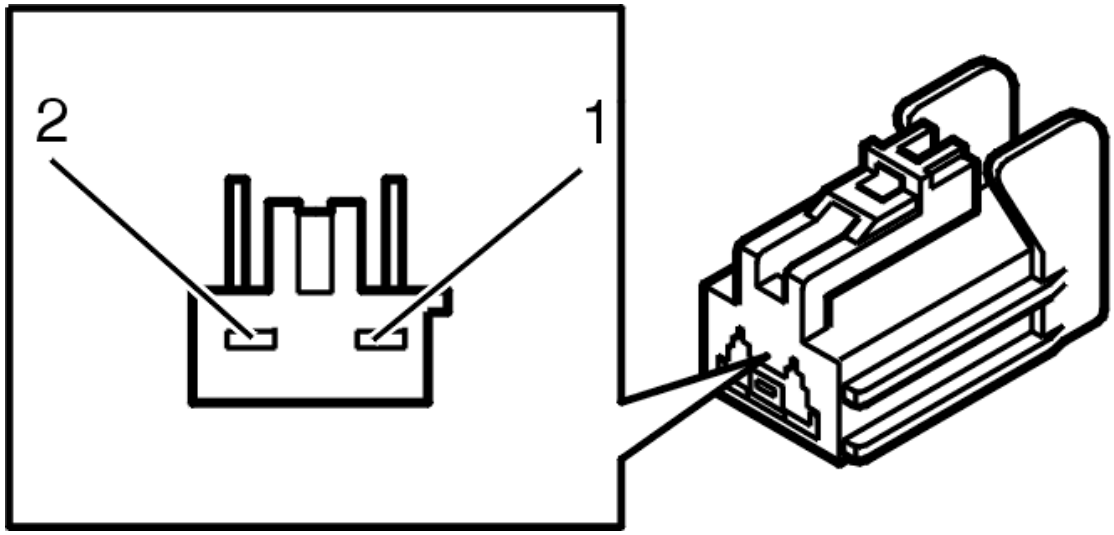

Fig. 36: Identifying 2-Bit Connector
Courtesy of VOLVO CARS CORPORATION

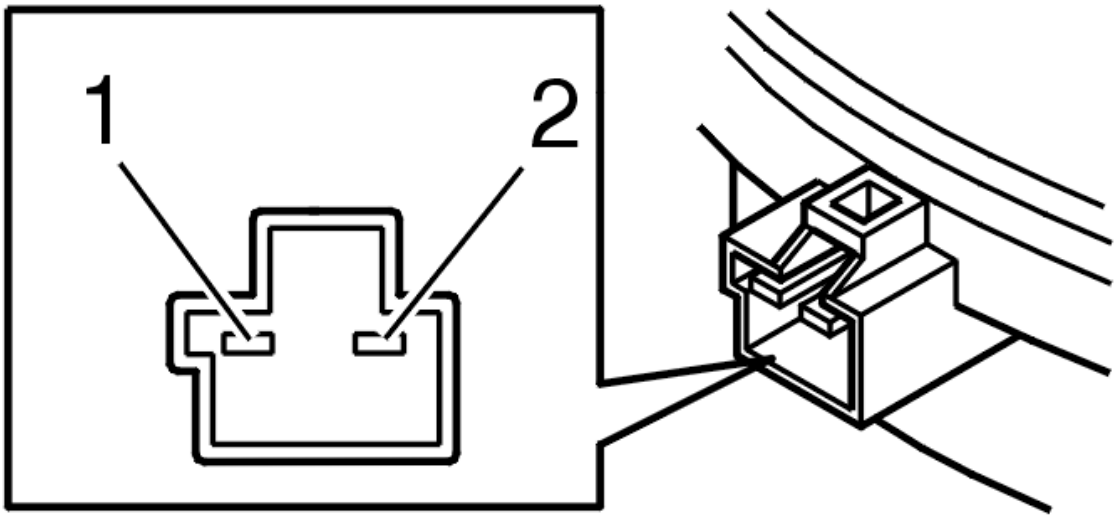

Fig. 37: Identifying 2-Bit Connector
Courtesy of VOLVO CARS CORPORATION

- **Continue**

  Refer to **VERIFICATION**

VERIFICATION

VERIFICATION

HINT: After carrying out the repair, check that the fault has been remedied.

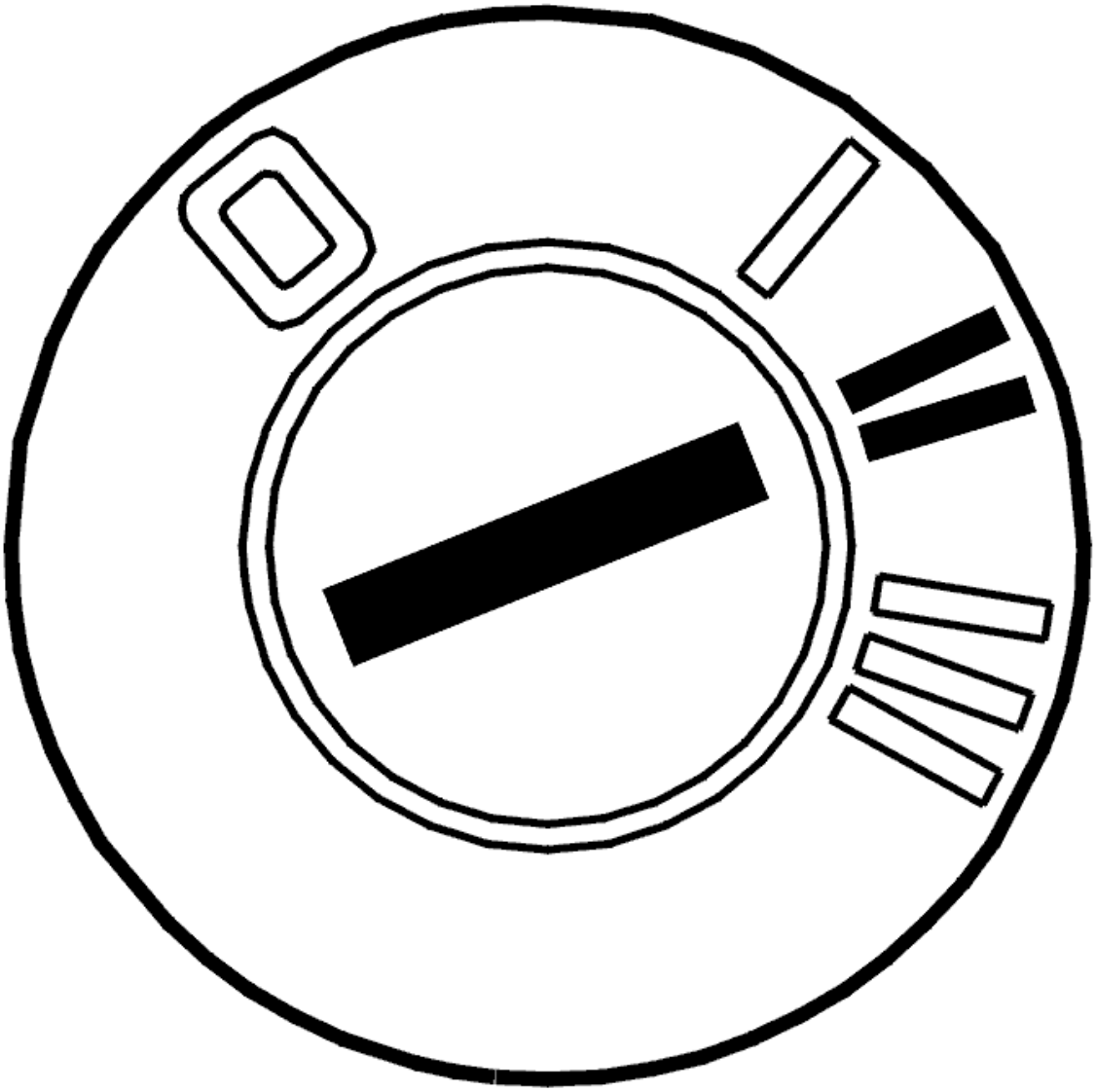

Fig. 38: Identifying Ignition ON
Courtesy of VOLVO CARS CORPORATION

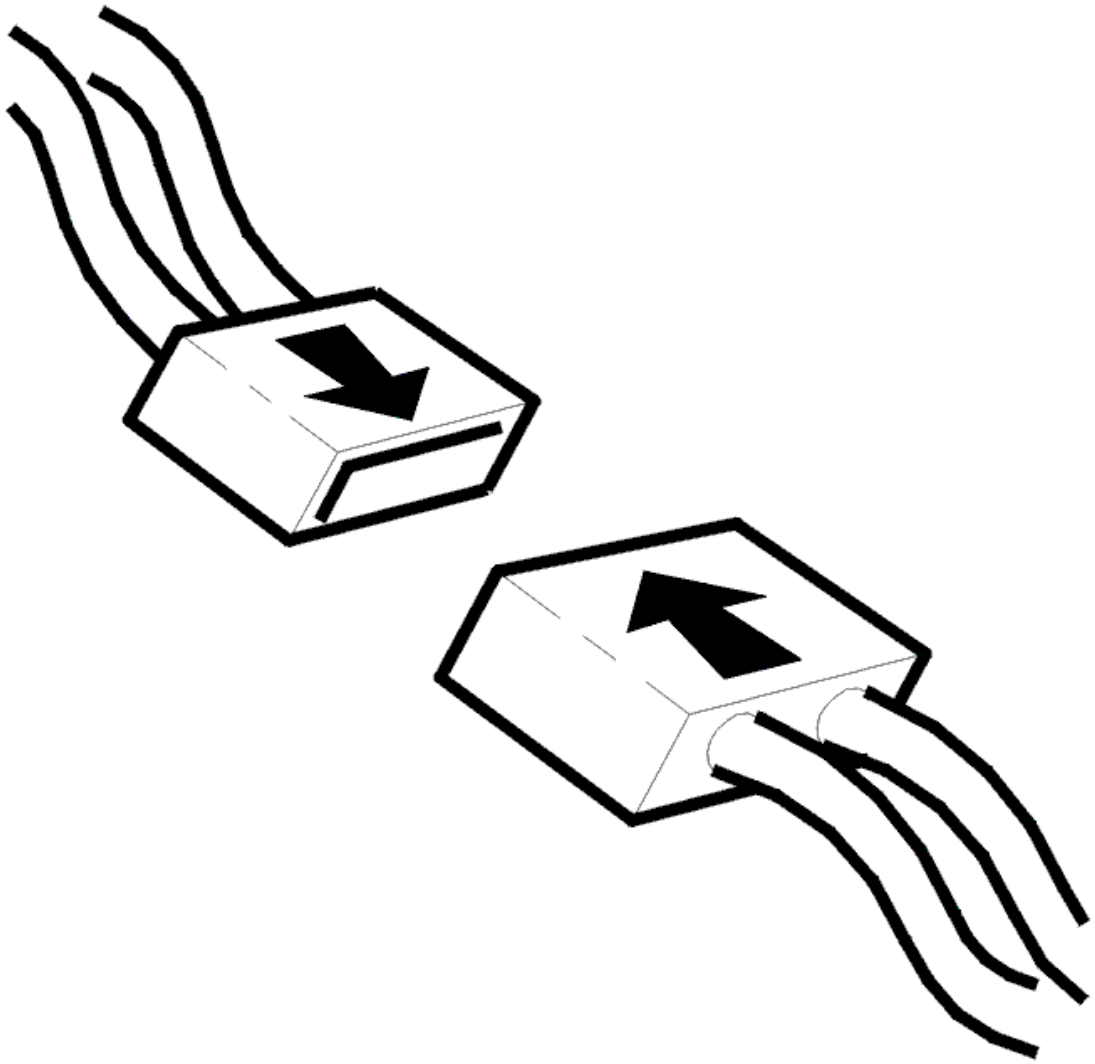

Fig. 39: Connecting Connector
Courtesy of VOLVO CARS CORPORATION

- Ignition off
- Reinstall the connectors, components etc.
- Ignition on.

  Check that the sound is heard from speaker for Audio module (AUD) by trying the radio FM/AM or the cd-player.

Is the function OK?

- **YES**

  VERIFIED: Troubleshooting has been completed.

- **NO**

  Refer to **INFORMATION**

INFORMATION

FAULT-TRACING INFORMATION

The fault should have been detected and remedied. As this is not the case fault-tracing has failed.

Exit fault-tracing for this diagnostic trouble code (DTC) or make another attempt.

AUD-0004: LOUDSPEAKER LEFT REAR. SIGNAL MISSING (2003-2006)

DIAGNOSTIC TROUBLE CODE (DTC) INFORMATION AUD-0004

Condition

Diagnostic trouble code (DTC) AUD-0004 is stored if the audio module (AUD) registers an open-circuit in the signal cable from the loudspeaker in the left rear door.

Substitute Value

- None.

Possible Source

- Open-circuit in the signal cable between the loudspeaker in the left rear door and the control module
- Open-circuit in the loudspeaker.

Fault symptom[s]

- No sound from the loudspeakers.

SIGNAL MISSING

CHECKING COMPONENTS AND WIRING

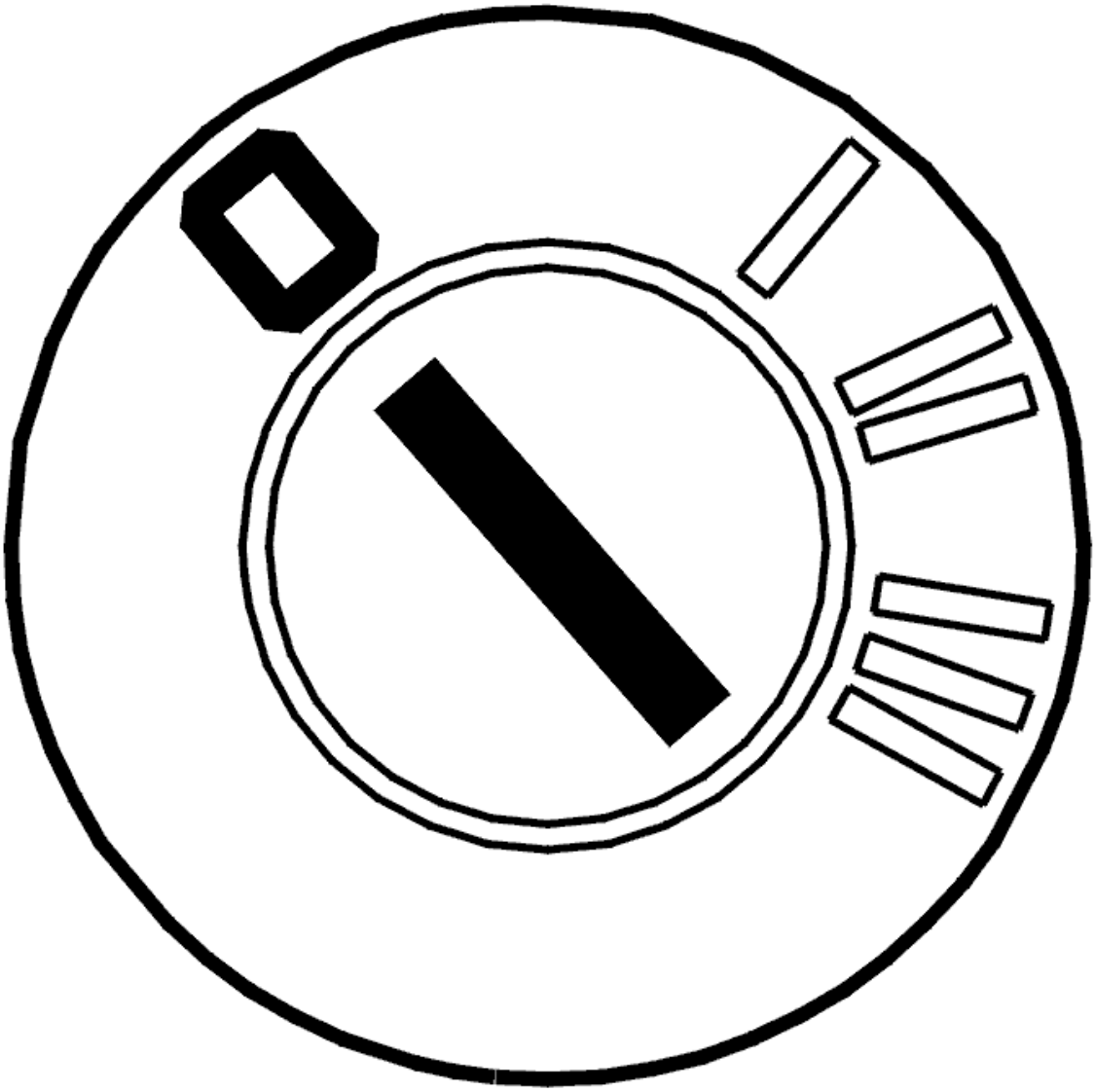

Fig. 40: Identifying Ignition OFF
Courtesy of VOLVO CARS CORPORATION

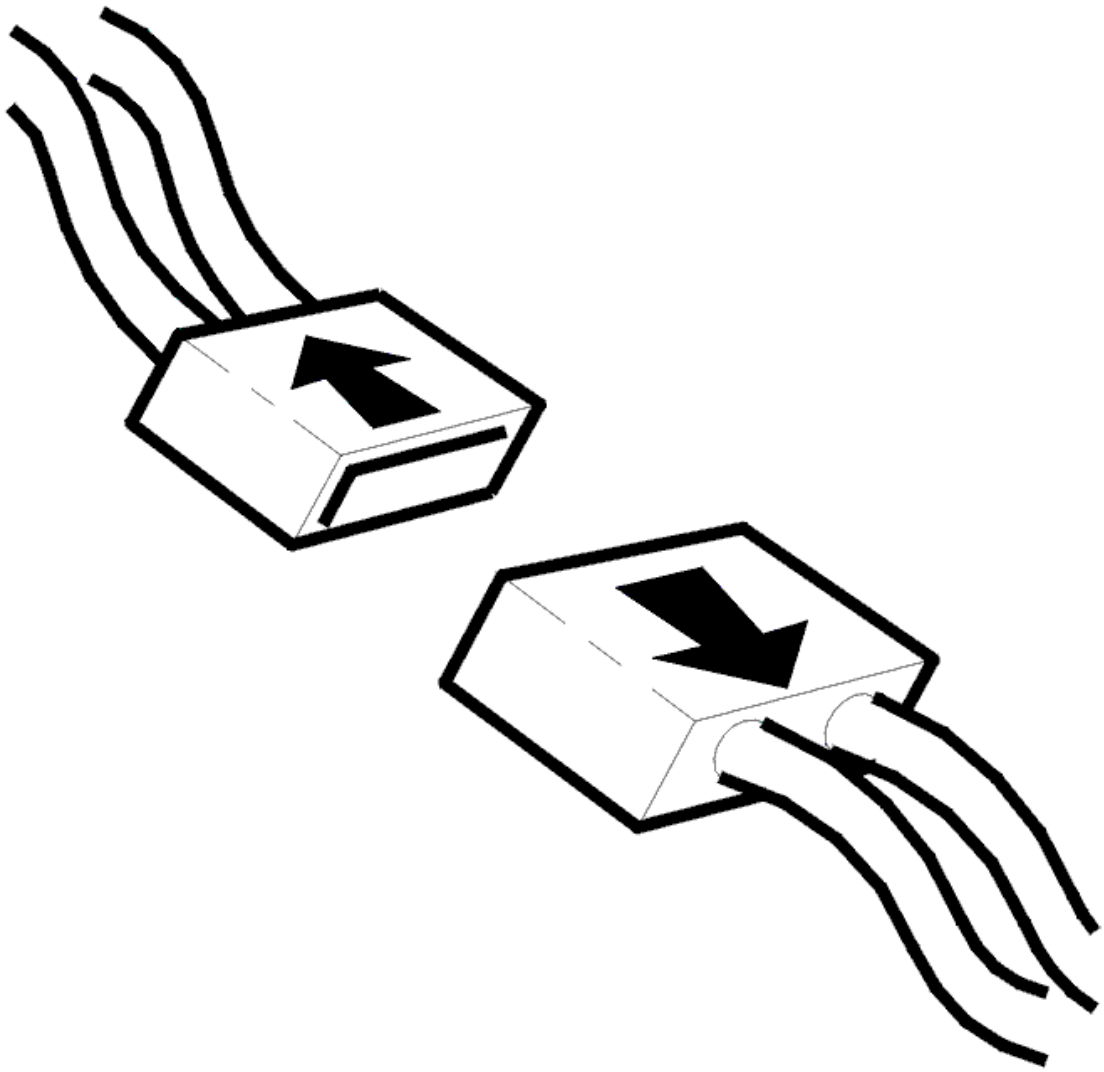

Fig. 41: Disconnecting Connector
Courtesy of VOLVO CARS CORPORATION

- Ignition off
- Disconnect the connector for the loudspeaker in the left rear door.

Check the cable terminals. Check for contact resistance, loose connections and oxidation.

NOTE: **Only visually check the treble loudspeaker in the D-post for oxidation and loose connections. Do not carry out any electrical fault-tracing on the treble loudspeaker.**

Check the cable terminals in the female and male sections of the connector. The cable terminals must not be damaged or pressed back.

Check the signal cable between audio module (AUD) terminal #B4 and loudspeaker terminal #2 in the left rear door. Check for an open-circuit.

Check the signal cable between audio module (AUD) terminal #B12 and loudspeaker terminal #1 in the left rear door. Check for an open-circuit.

Check loudspeaker connector terminals #1 and #2 in the left rear door. Check for an open-circuit

Remedy as necessary.

Other information:

- To connect the breakout box, see **CONNECTING THE BREAKOUT BOX**
- To access or replace the audio module (AUD), see **AUDIO MODULE (AUD), REPLACING**
- To access and replace the loudspeaker in the rear side door, see **LOUDSPEAKER, REAR SIDE DOOR, REPLACING**
- For information about signals, see **SIGNAL SPECIFICATION**
- see **CONTENTS** .

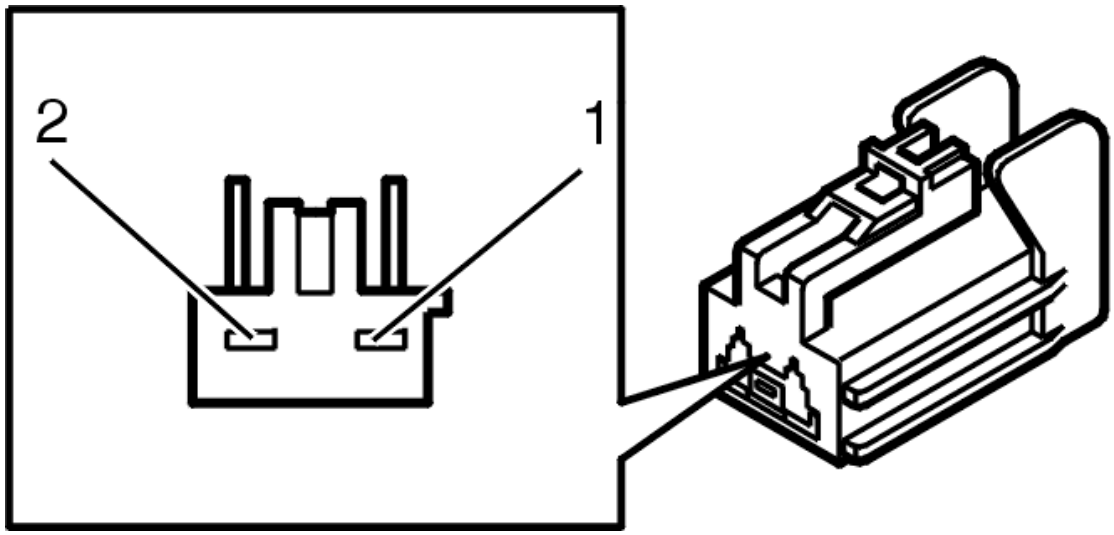

Fig. 42: Identifying 2-Bit Connector
Courtesy of VOLVO CARS CORPORATION

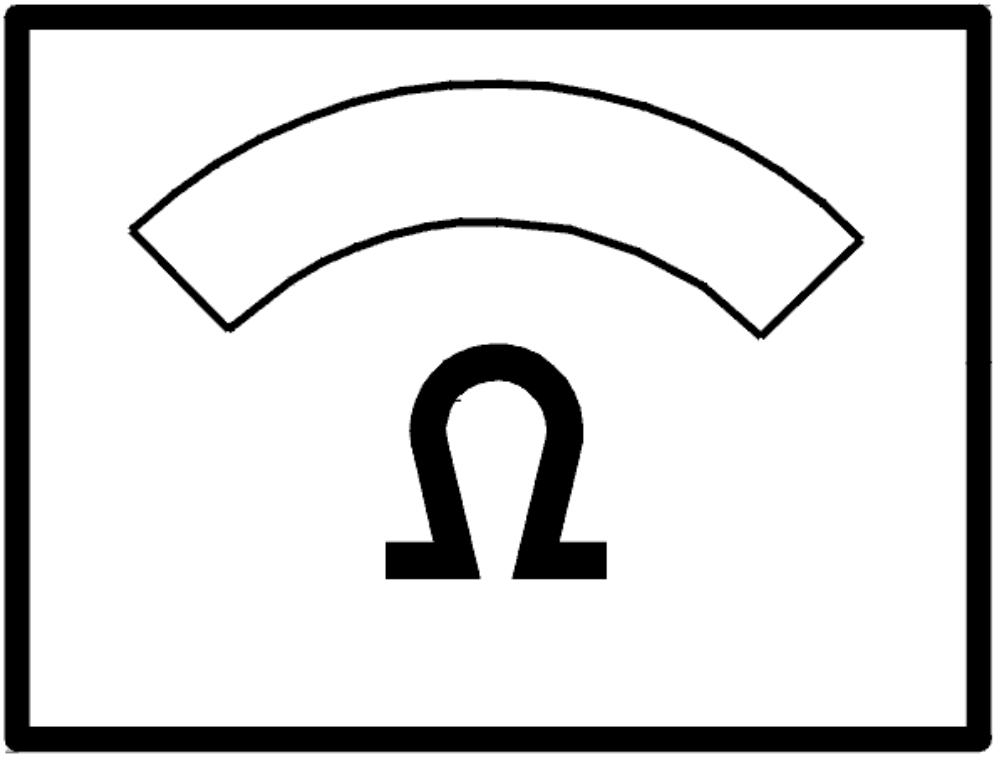

Fig. 43: Identifying Ohm Meter
Courtesy of VOLVO CARS CORPORATION

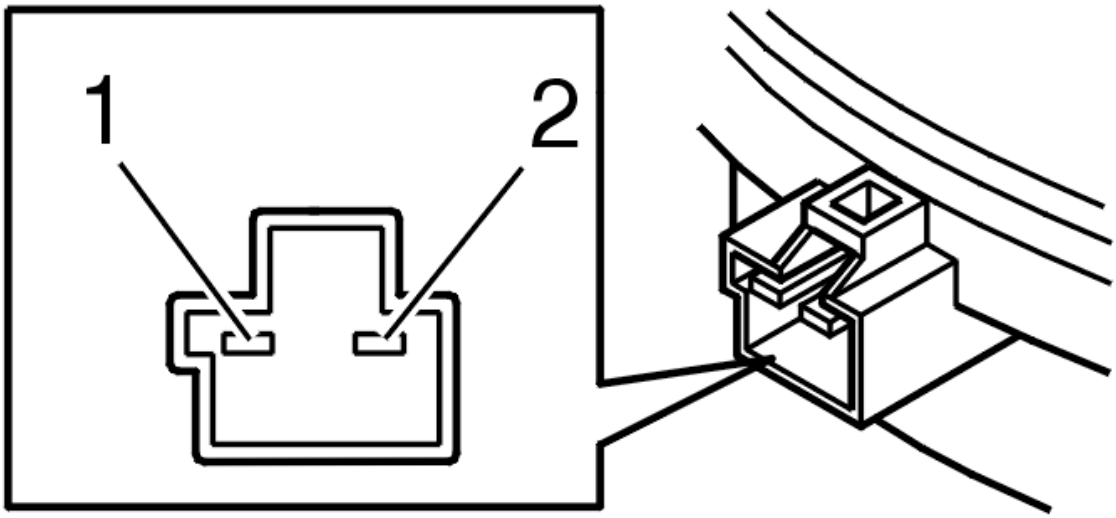

Fig. 44: Identifying 2-Bit Connector
Courtesy of VOLVO CARS CORPORATION

- **Continue**

  Refer to **VERIFICATION**

VERIFICATION

VERIFICATION

HINT: After carrying out the repair, check that the fault has been remedied.

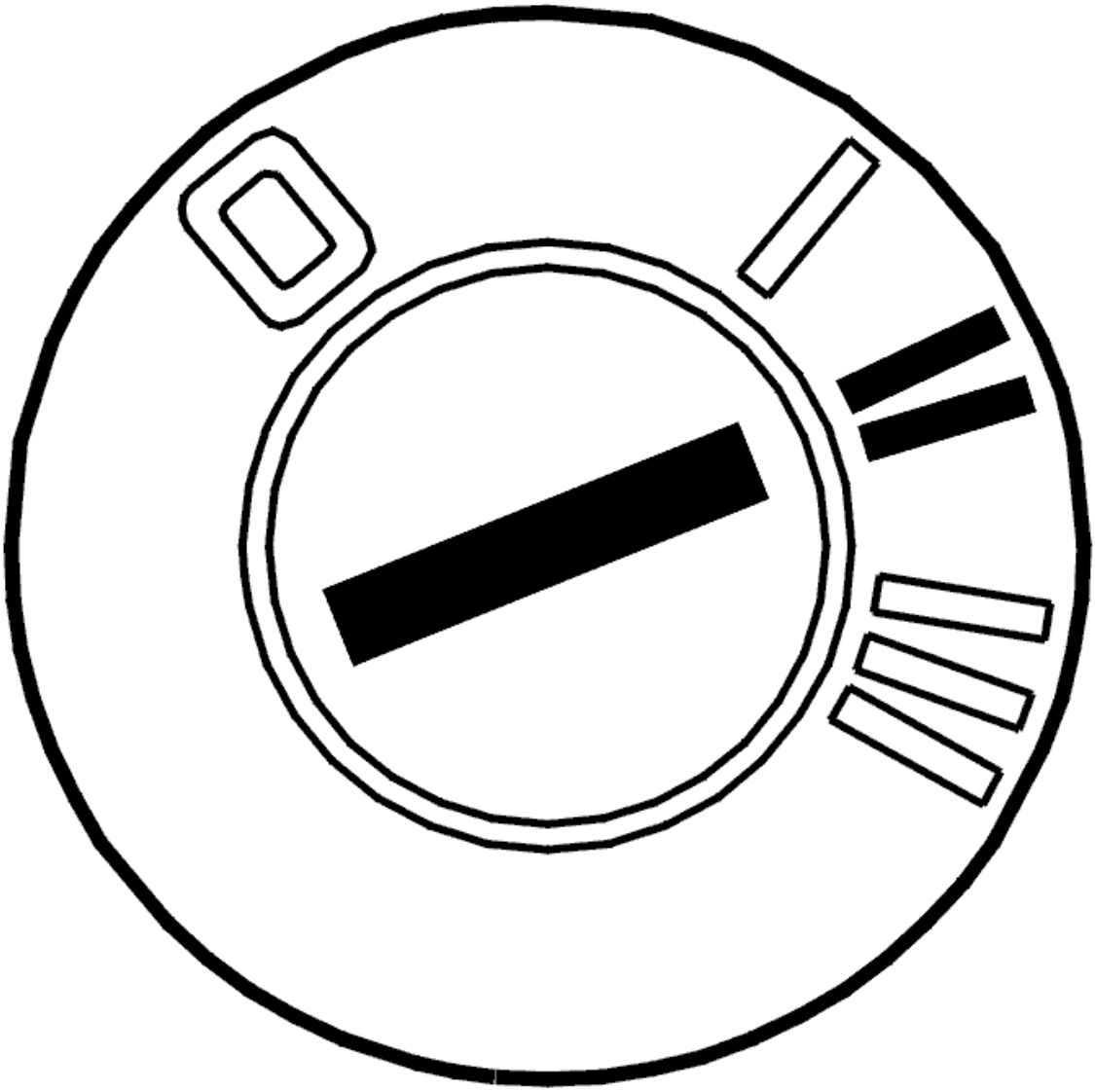

Fig. 45: Identifying Ignition ON
Courtesy of VOLVO CARS CORPORATION

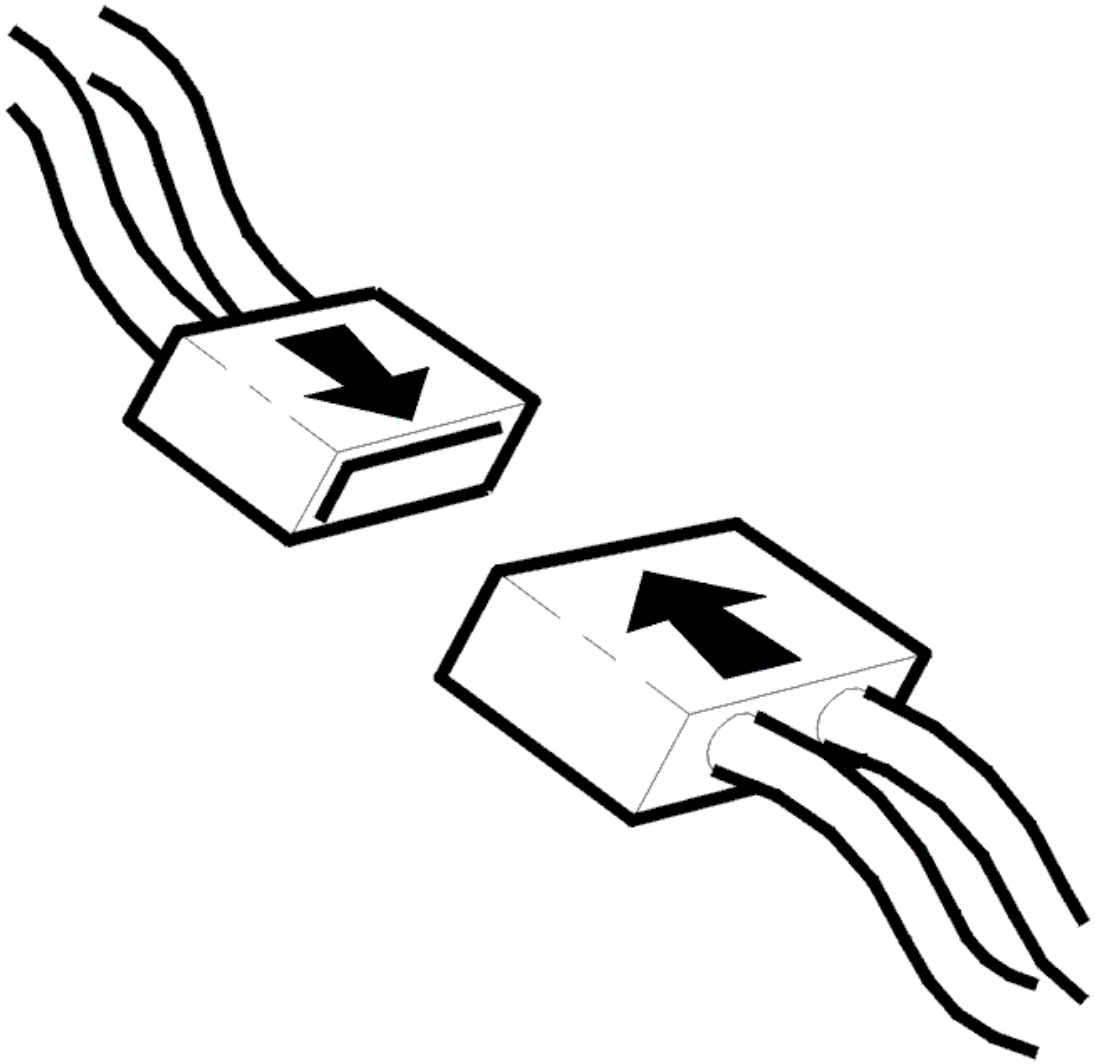

Fig. 46: Connecting Connector
Courtesy of VOLVO CARS CORPORATION

- Ignition off
- Reinstall the connectors, components etc.
- Ignition on.

  Check that sound can be heard from the loudspeakers from the Audio module (AUD) by trying the radio FM/AM, CD or MD player.

Do the loudspeakers work?

- **YES**

  VERIFIED: Troubleshooting has been completed.

- **NO**

  Refer to **INFORMATION**

INFORMATION

FAULT-TRACING INFORMATION

The fault should have been detected and remedied. As this is not the case fault-tracing has failed.

Exit fault-tracing for this diagnostic trouble code (DTC) or make another attempt.

AUD-0005: LOUDSPEAKER RIGHT REAR. SIGNAL MISSING (2007-2011)

DIAGNOSTIC TROUBLE CODE (DTC) INFORMATION AUD-0005

Condition

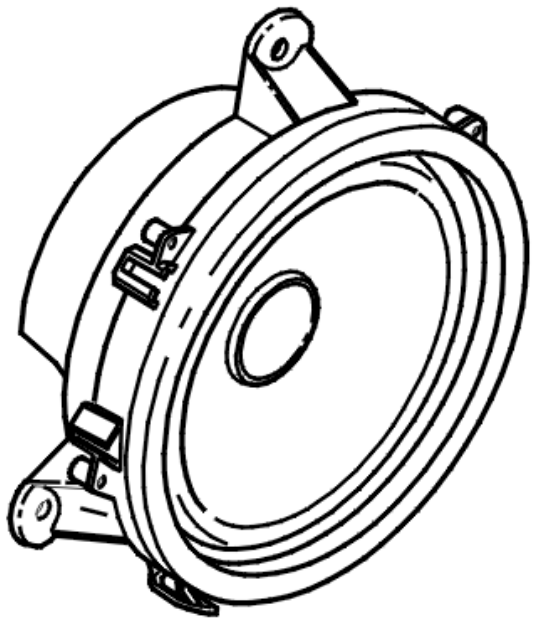

Fig. 47: Identifying Loudspeaker
Courtesy of VOLVO CARS CORPORATION

If the Audio module (AUD) registers open circuit on the signal cable from the rear right loudspeaker, the diagnostic trouble code is generated.

The diagnostic trouble code can be diagnosed when Audio module (AUD) is activated.

Substitute Value

- None.

Possible Source

- Open circuit on the signal cable between the rear right loudspeaker and the control module.
- Open-circuit in the loudspeaker.

Fault symptom[s]

- No sound from the loudspeakers.

SIGNAL MISSING

CHECKING THE COMPONENT AND WIRING

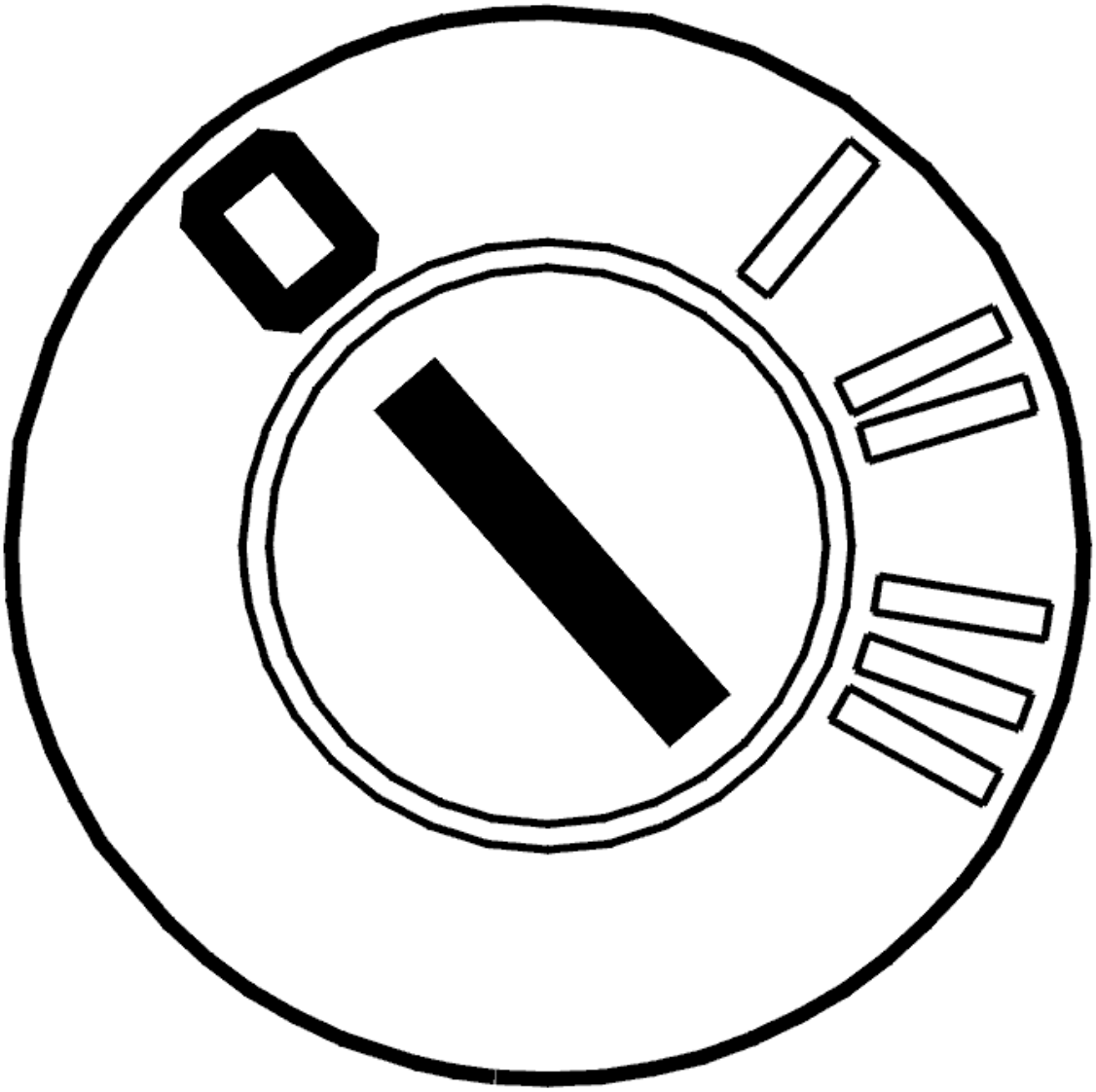

Fig. 48: Identifying Ignition OFF
Courtesy of VOLVO CARS CORPORATION

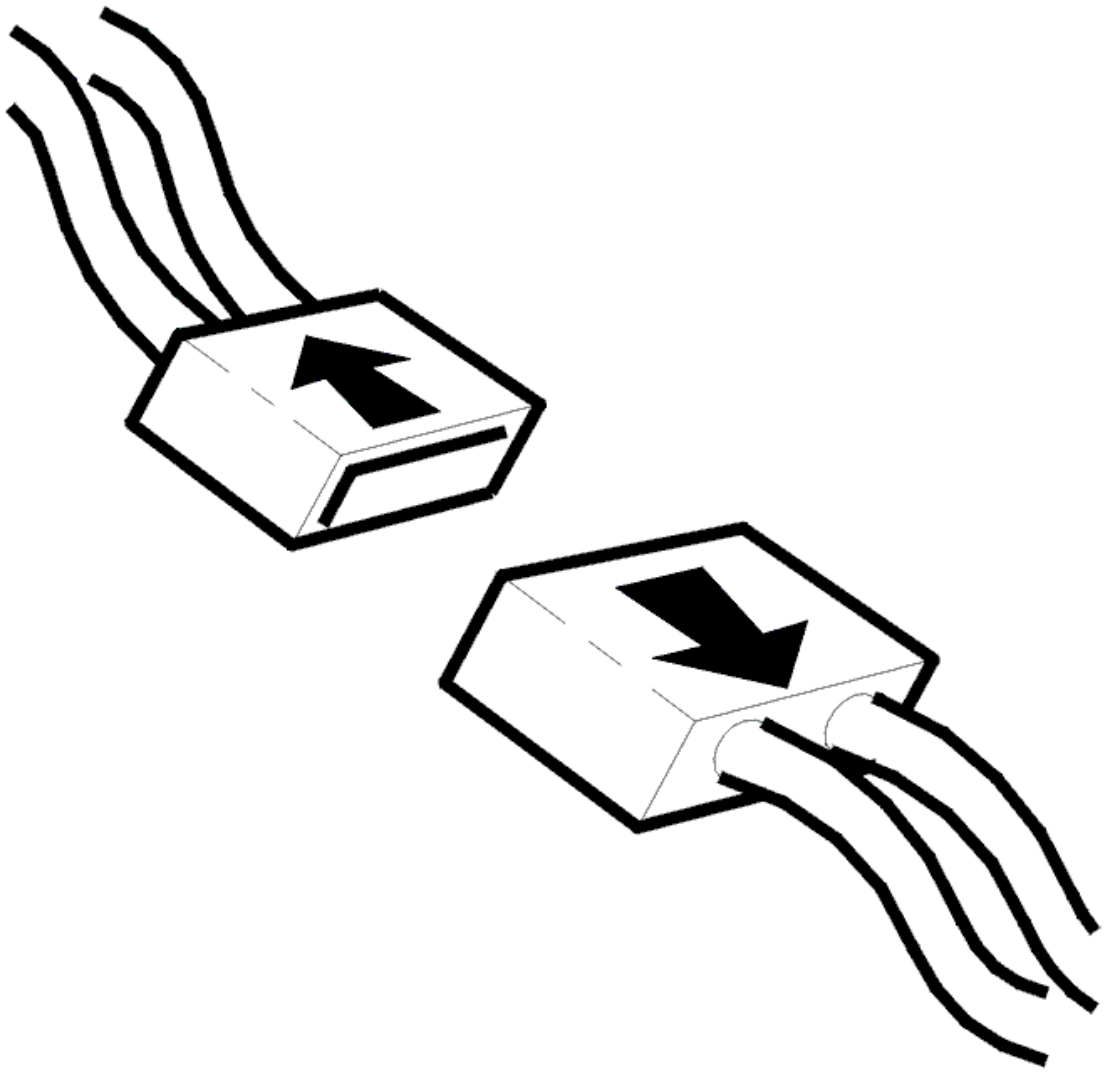

Fig. 49: Disconnecting Connector
Courtesy of VOLVO CARS CORPORATION

- Ignition off
- Unplug the connector for the rear right loudspeaker.

Check the cable terminals. Check for contact resistance, loose connections and oxidation.

NOTE: **Only visually check the treble loudspeaker. Check for oxidation and loose connections. Do not carry out any electrical fault-tracing on the treble loudspeaker.**

Check the cable terminals in the female and male sections of the connector. The cable terminals must not be damaged or pressed back.

Check the signal cable between the Audio module (AUD) #B5 and the right rear loudspeaker #2 for open circuit.

Check the signal cable between the Audio module (AUD) #B13 and the right rear loudspeaker #1 for open circuit.

Check the rear right loudspeaker's connector #1 and #2 for open circuit.

Remedy as necessary.

Other information

- see **CONNECTING THE BREAKOUT BOX**
- see **AUDIO MODULE (AUD), REPLACING**
- see **LOUDSPEAKER, REAR SIDE DOOR, REPLACING**
- see **SIGNAL SPECIFICATION**
- see **CHECKING WIRING AND TERMINALS**

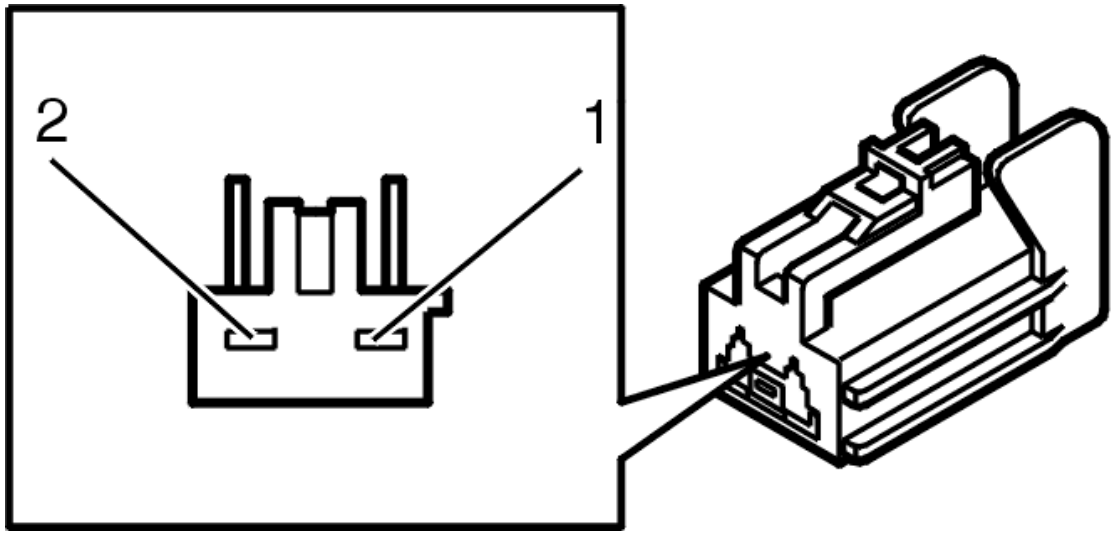

Fig. 50: Identifying 2-Bit Connector
Courtesy of VOLVO CARS CORPORATION

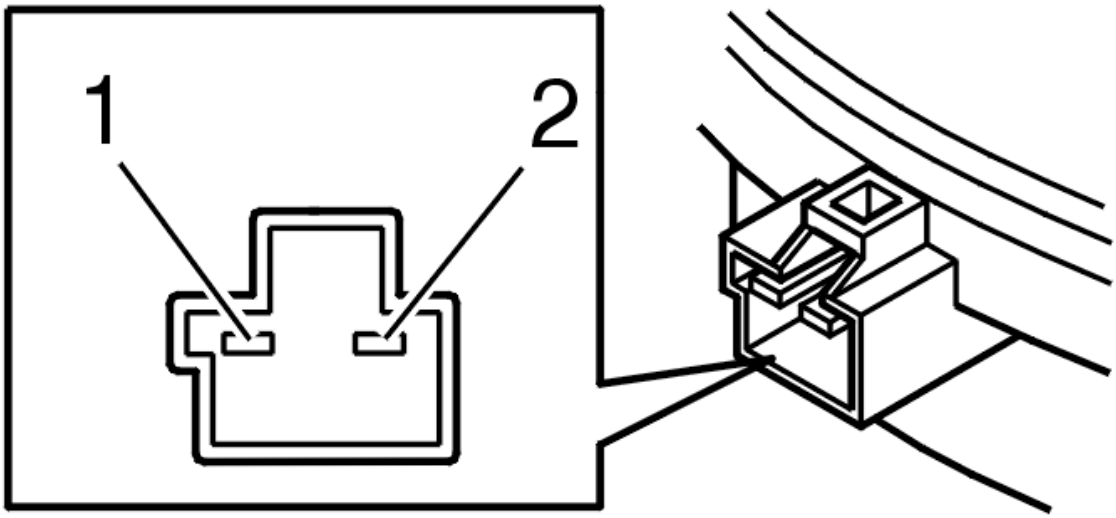

Fig. 51: Identifying 2-Bit Connector
Courtesy of VOLVO CARS CORPORATION

- **Continue**

  Refer to **VERIFICATION**

VERIFICATION

VERIFICATION

HINT: After carrying out the repair, check that the fault has been remedied.

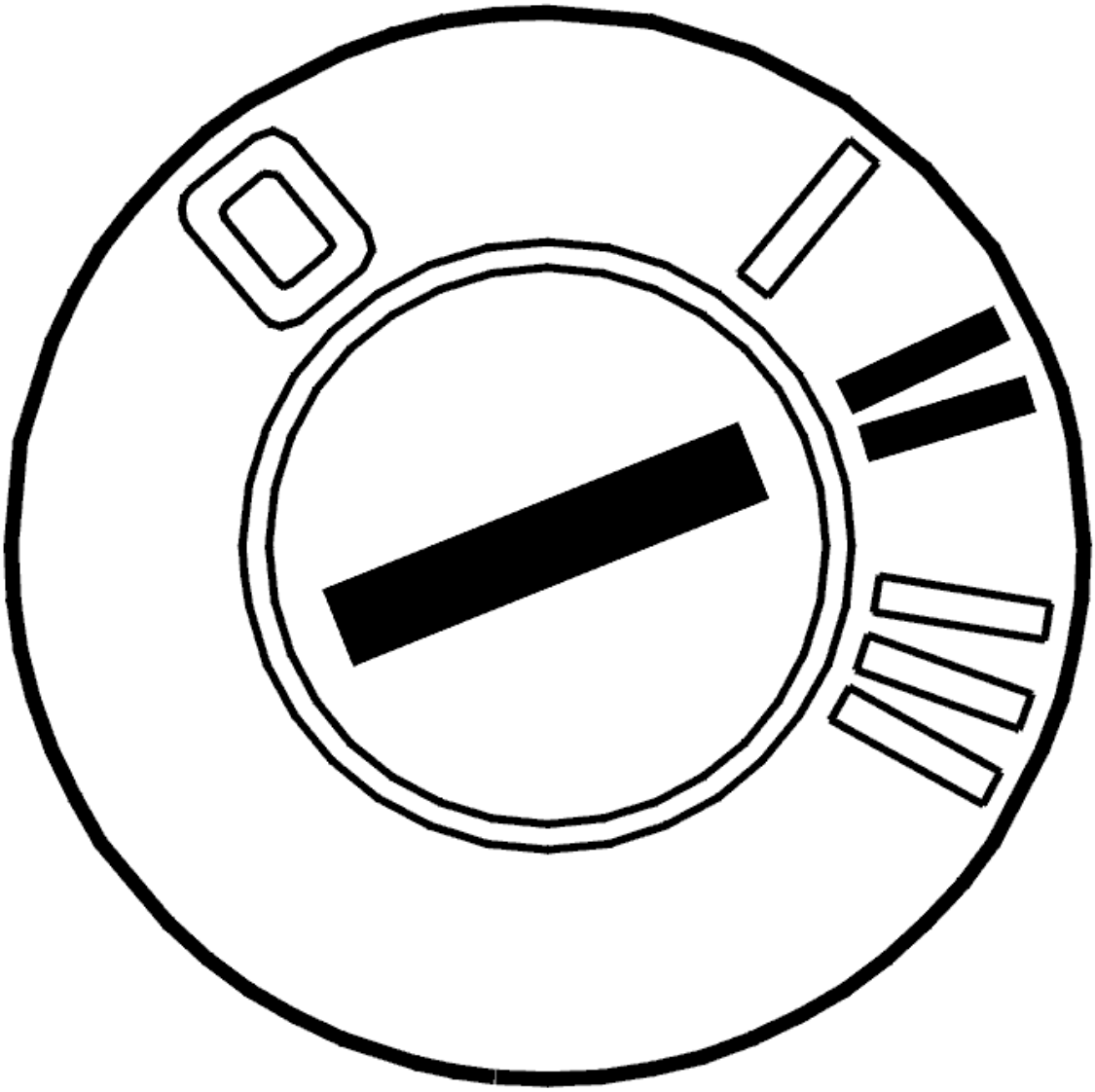

Fig. 52: Identifying Ignition ON
Courtesy of VOLVO CARS CORPORATION

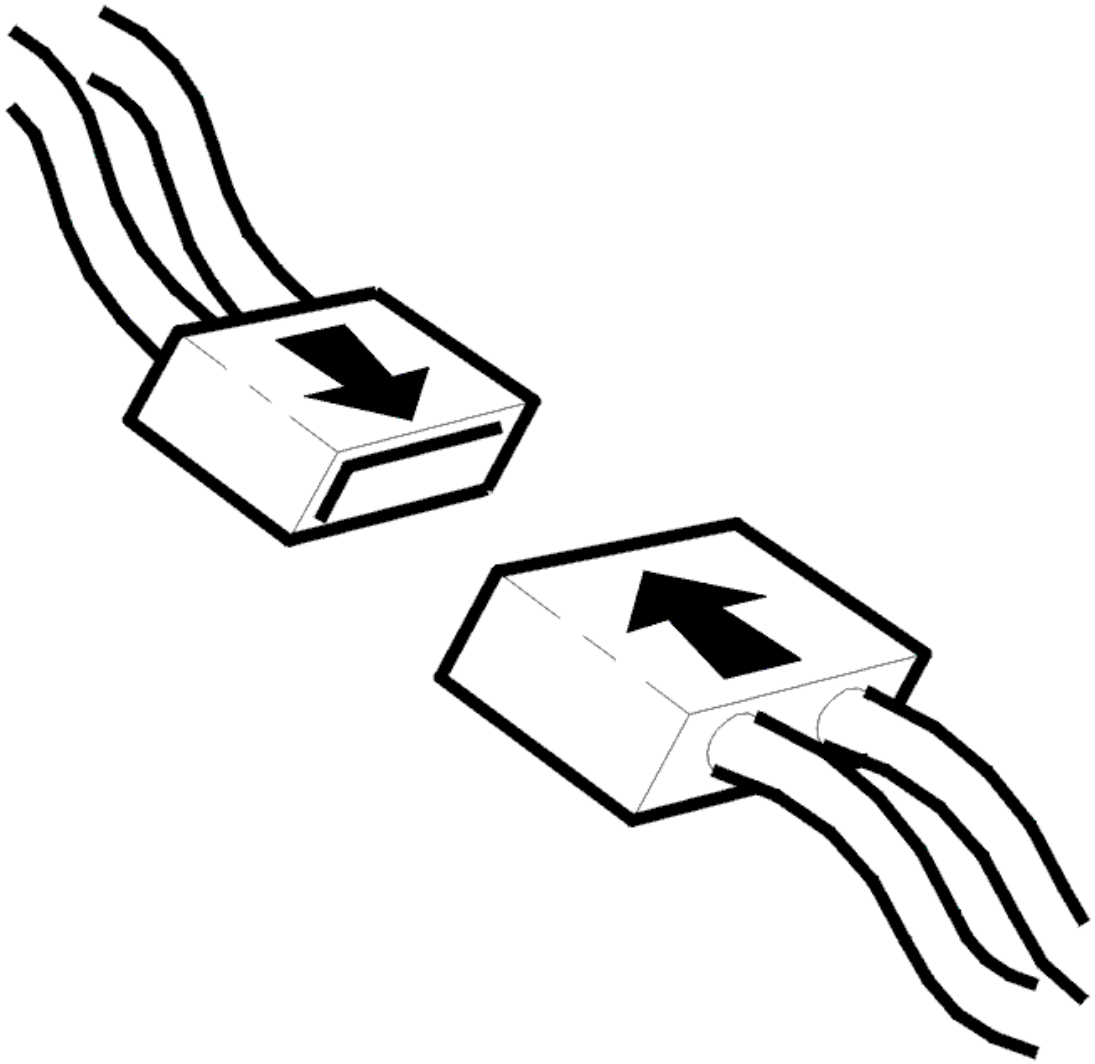

Fig. 53: Connecting Connector
Courtesy of VOLVO CARS CORPORATION

- Ignition off
- Reinstall the connectors, components etc.
- Ignition on.

  Check that the sound is heard from speaker for Audio module (AUD) by trying the radio FM/AM or the cd-player.

Is the function OK?

- **YES**

  VERIFIED: Troubleshooting has been completed.

- **NO**

  Refer to **INFORMATION**

INFORMATION

FAULT-TRACING INFORMATION

The fault should have been detected and remedied. As this is not the case fault-tracing has failed.

Exit fault-tracing for this diagnostic trouble code (DTC) or make another attempt.

AUD-0005: LOUDSPEAKER RIGHT REAR. SIGNAL MISSING (2003-2006)

DIAGNOSTIC TROUBLE CODE (DTC) INFORMATION AUD-0005

Condition

Diagnostic trouble code (DTC) AUD-0005 is stored if the audio module (AUD) registers an open-circuit in the signal cable from the loudspeaker in the right rear door.

Diagnostic trouble code (DTC) AUD-0005 can be diagnosed when the ignition is on.

Substitute Value

- None.

Possible Source

- Open-circuit in the signal cable between the loudspeaker in the right rear door and the control module
- Open-circuit in the loudspeaker.

Fault symptom[s]

- No sound from the loudspeakers.

SIGNAL MISSING

CHECKING COMPONENTS AND WIRING

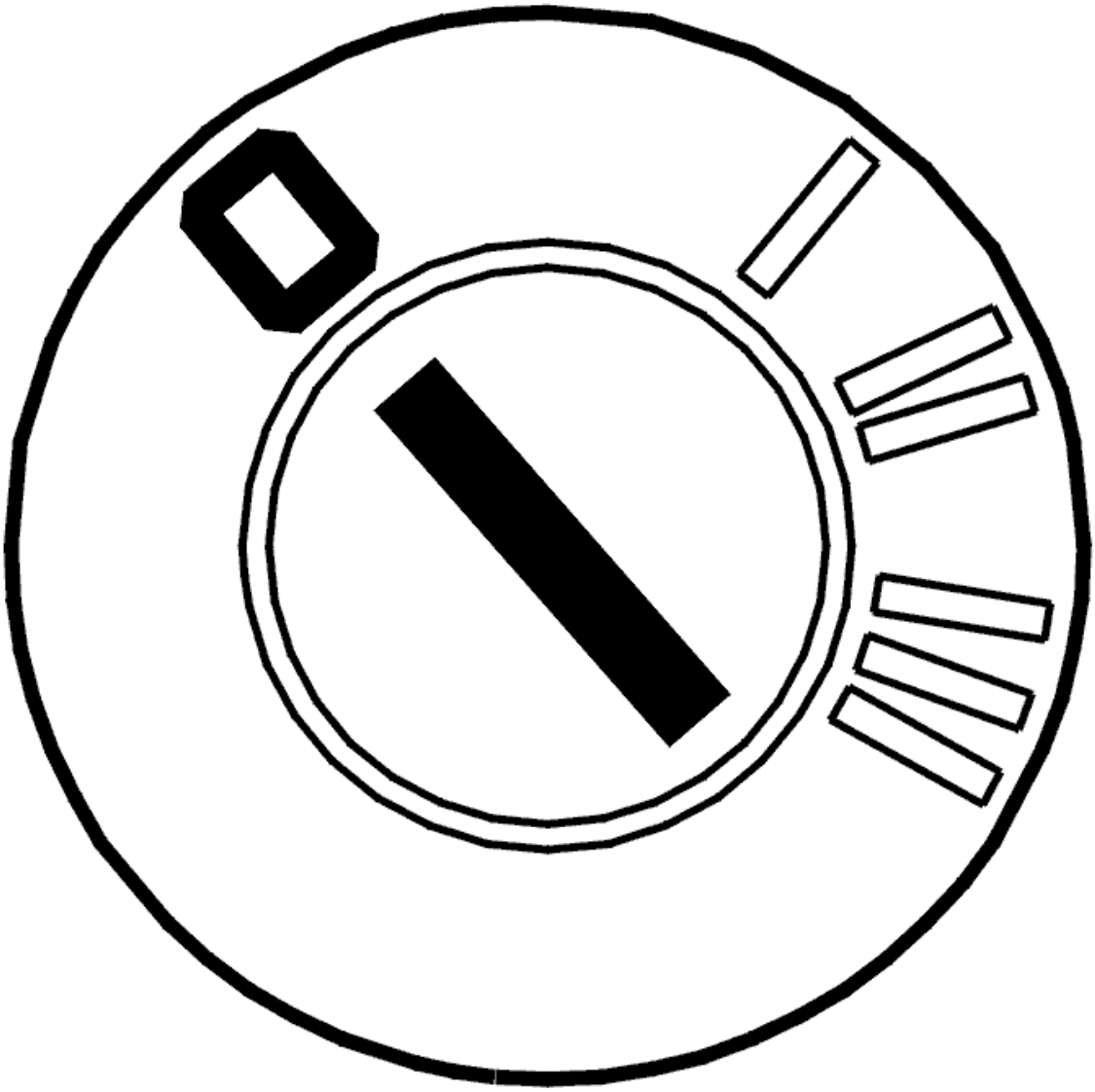

Fig. 54: Identifying Ignition OFF
Courtesy of VOLVO CARS CORPORATION

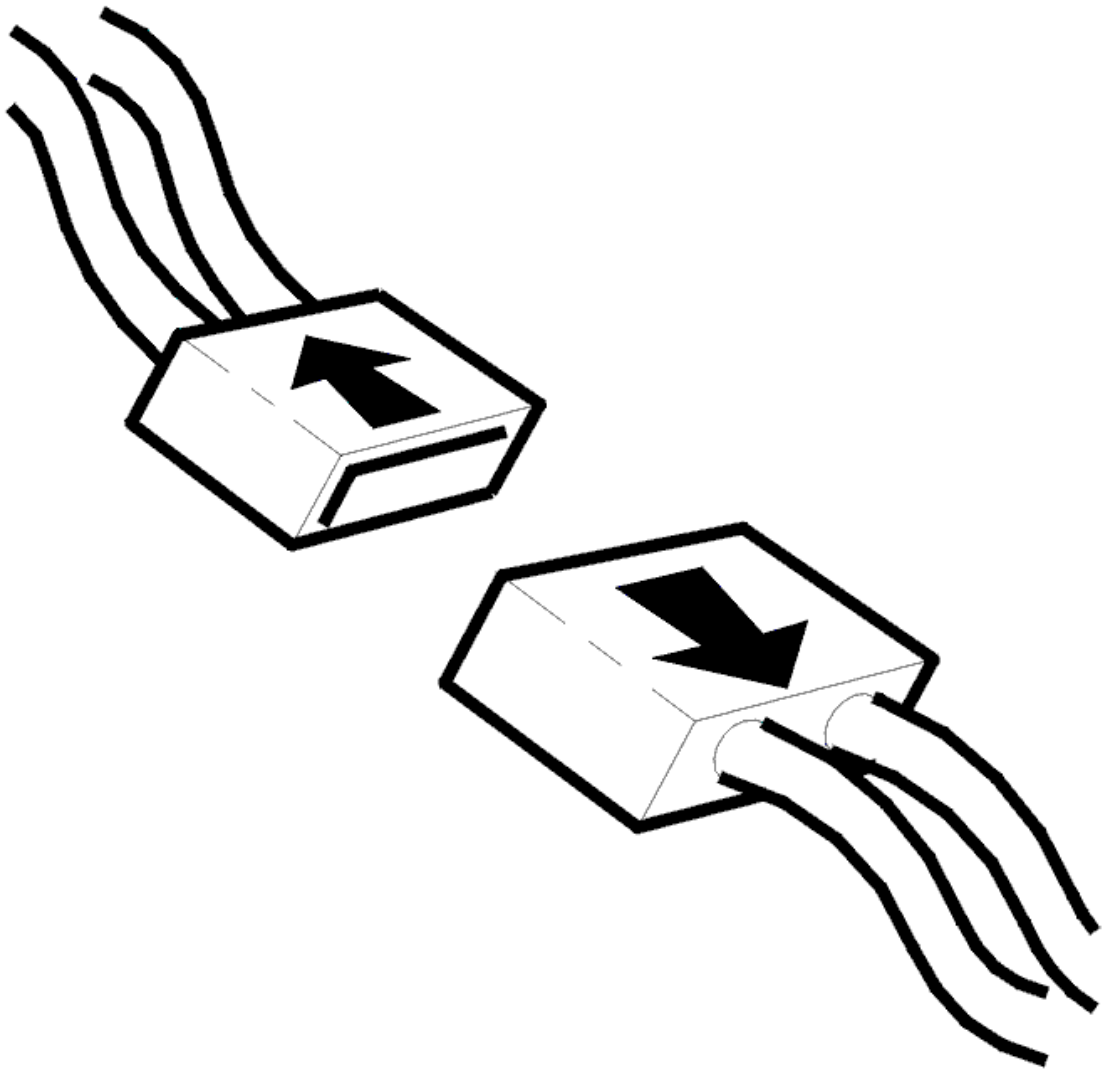

Fig. 55: Disconnecting Connector
Courtesy of VOLVO CARS CORPORATION

- Ignition off
- Disconnect the connector for the loudspeaker in the right rear door.

Check the cable terminals. Check for contact resistance, loose connections and oxidation.

NOTE: **Only visually check the treble loudspeaker in the D-post for oxidation and loose connections. Do not carry out any electrical fault-tracing on the treble loudspeaker.**

Check the cable terminals in the female and male sections of the connector. The cable terminals must not be damaged or pressed back.

Check the signal cable between audio module (AUD) terminal #B5 and loudspeaker terminal #2 in the right rear door. Check for an open-circuit.

Check the signal cable between audio module (AUD) terminal #B13 and loudspeaker terminal #1 in the right rear door. Check for an open-circuit.

Check loudspeaker connector terminals #1 and #2 in the right rear door. Check for an open-circuit.

Remedy as necessary.

Other information:

- To connect the breakout box, see **CONNECTING THE BREAKOUT BOX**
- To access or replace the audio module (AUD), see **AUDIO MODULE (AUD), REPLACING**
- To access and replace the loudspeaker in the rear side door, see **LOUDSPEAKER, REAR SIDE DOOR, REPLACING**
- For information about signals, see **SIGNAL SPECIFICATION**
- see **CONTENTS** .

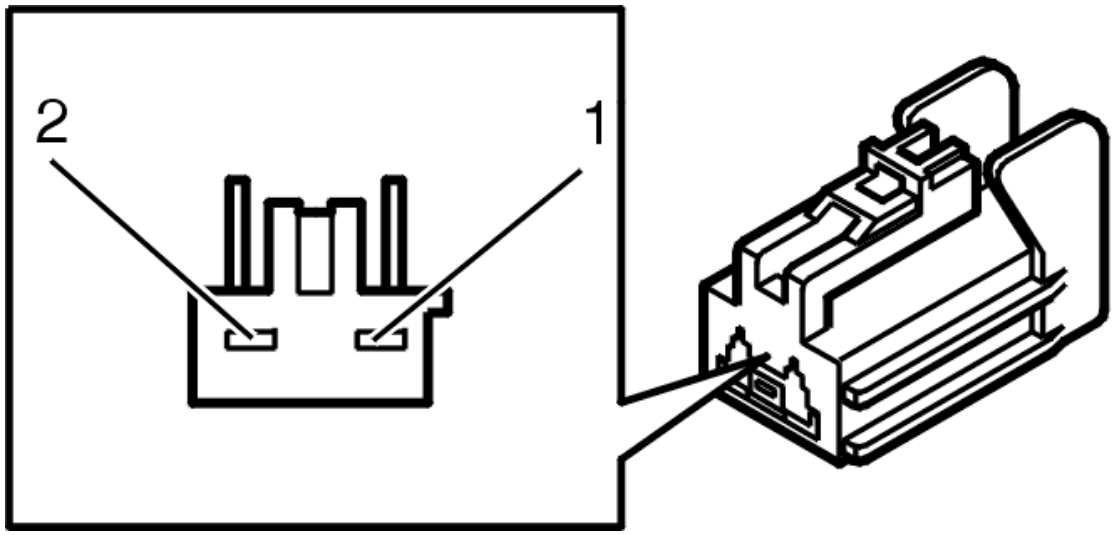

Fig. 56: Identifying 2-Bit Connector
Courtesy of VOLVO CARS CORPORATION

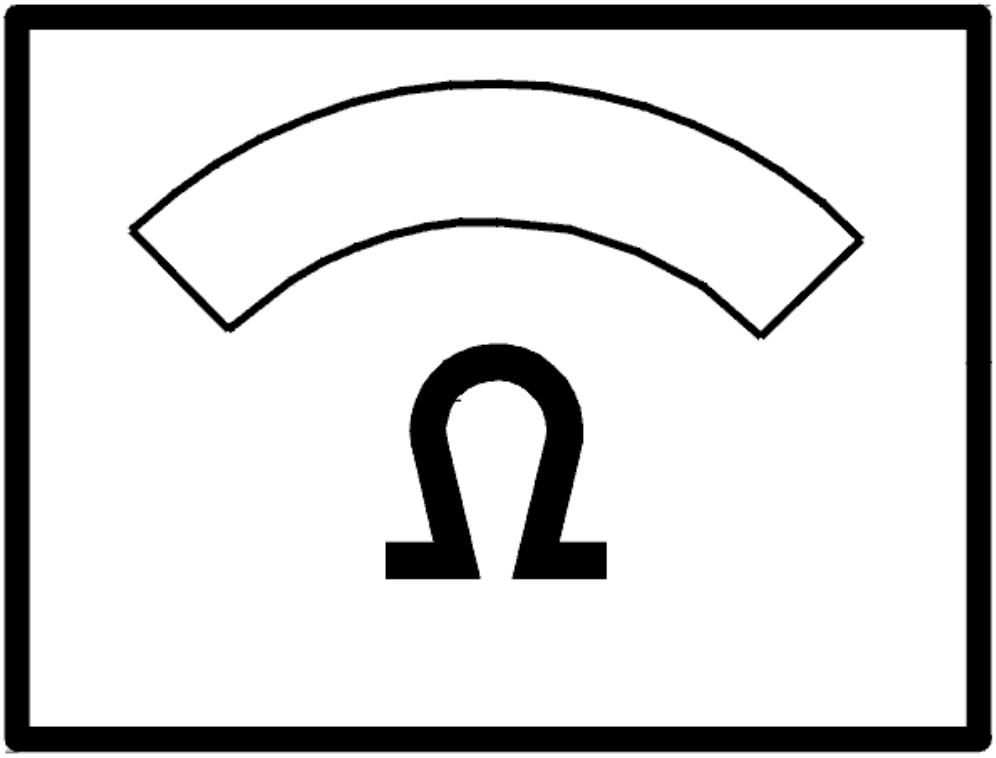

Fig. 57: Identifying Ohm Meter
Courtesy of VOLVO CARS CORPORATION

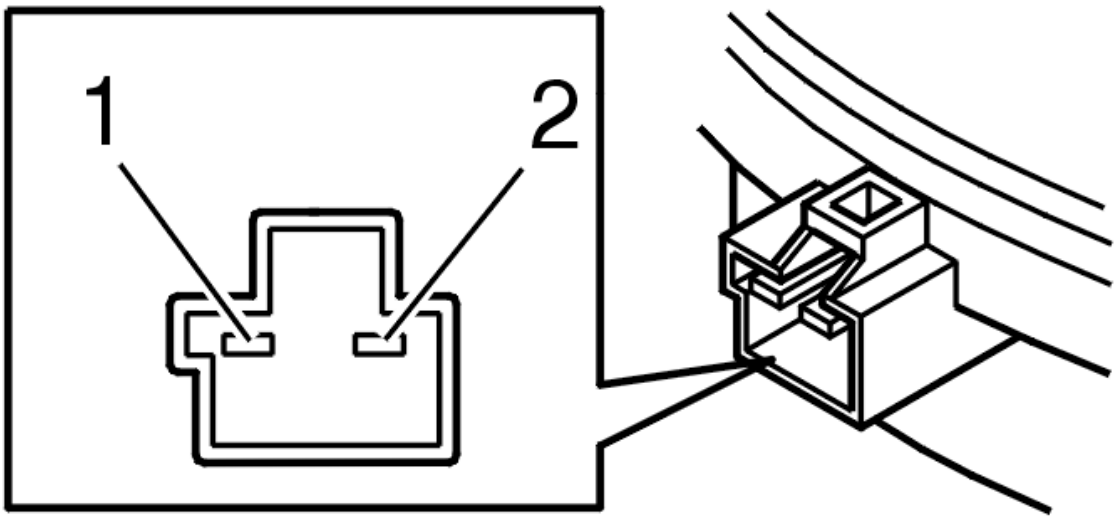

Fig. 58: Identifying 2-Bit Connector
Courtesy of VOLVO CARS CORPORATION

- **Continue**

  Refer to **VERIFICATION**

VERIFICATION

VERIFICATION

HINT: After carrying out the repair, check that the fault has been remedied.

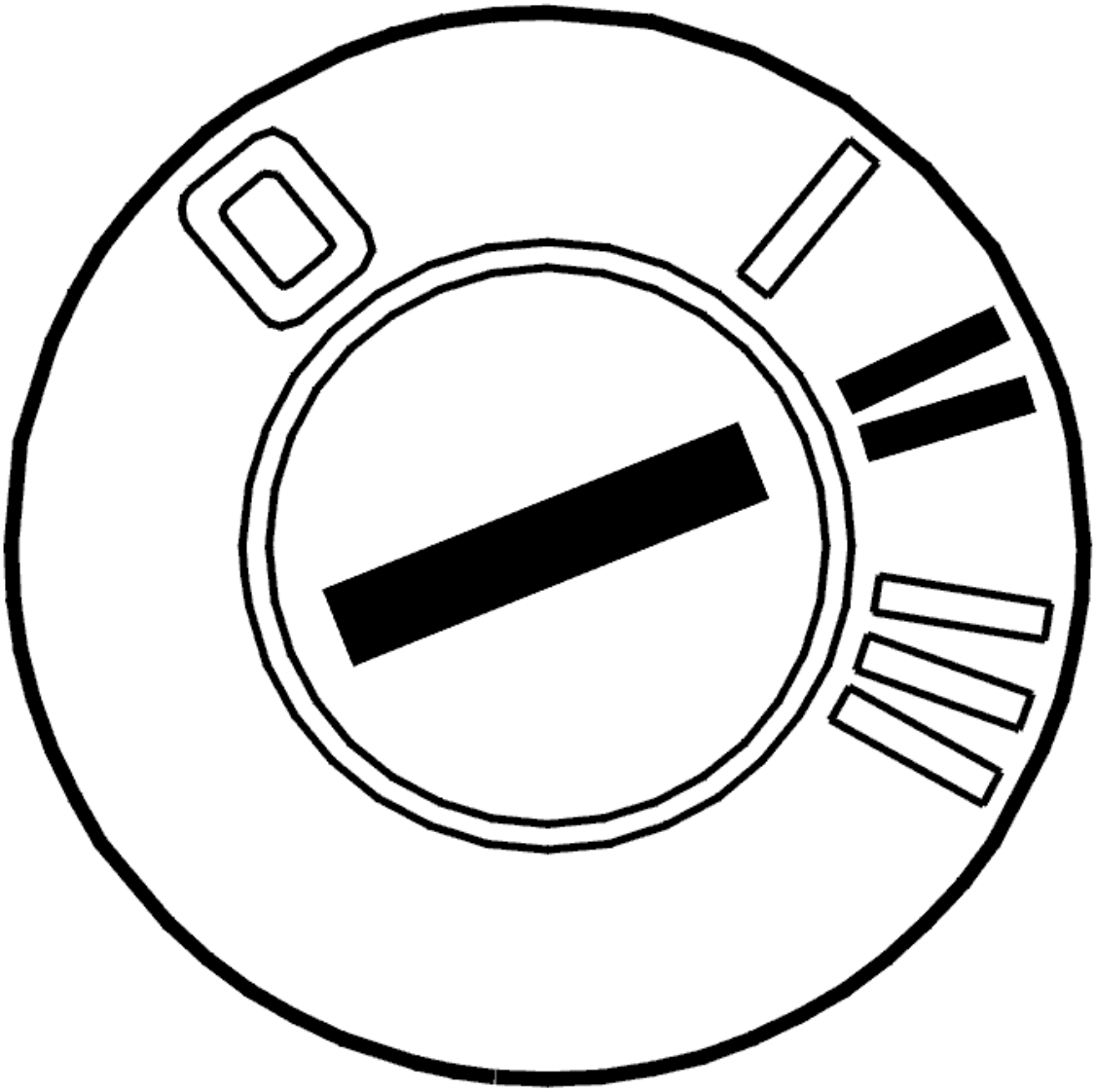

Fig. 59: Identifying Ignition ON
Courtesy of VOLVO CARS CORPORATION

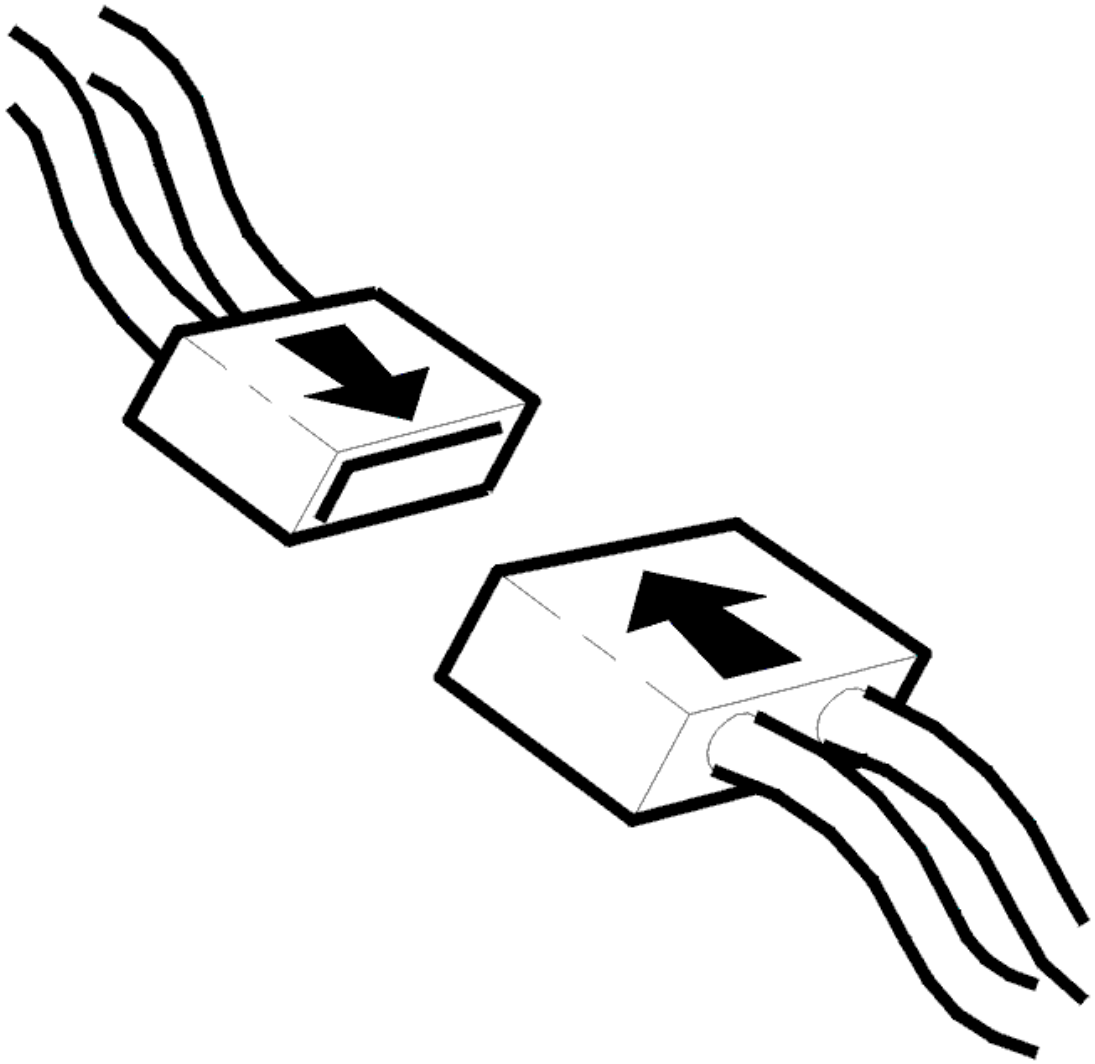

Fig. 60: Connecting Connector
Courtesy of VOLVO CARS CORPORATION

- Ignition off
- Reinstall the connectors, components etc.
- Ignition on.

  Check that sound can be heard from the loudspeakers from the Audio module (AUD) by trying the radio FM/AM, CD or MD player.

Do the loudspeakers work?

- **YES**

  VERIFIED: Troubleshooting has been completed.

- **NO**

  Refer to **INFORMATION**

INFORMATION

FAULT-TRACING INFORMATION

The fault should have been detected and remedied. As this is not the case fault-tracing has failed.

Exit fault-tracing for this diagnostic trouble code (DTC) or make another attempt.

AUD-0006: LOUDSPEAKER LEFT FRONT. SHORT-CIRCUIT TO GROUND (2007-2011)

DIAGNOSTIC TROUBLE CODE (DTC) INFORMATION AUD-0006

Condition

The diagnostic trouble code (DTC) is stored if the Audio module (AUD) registers that the signal on the signal cable to the loudspeaker in the left-hand door is too low.

The diagnostic trouble code can only be diagnosed when voltage is on (12 V). In other words, the diagnostic trouble code (DTC) can only be diagnosed when the ignition is turned from position 0 to positions II.

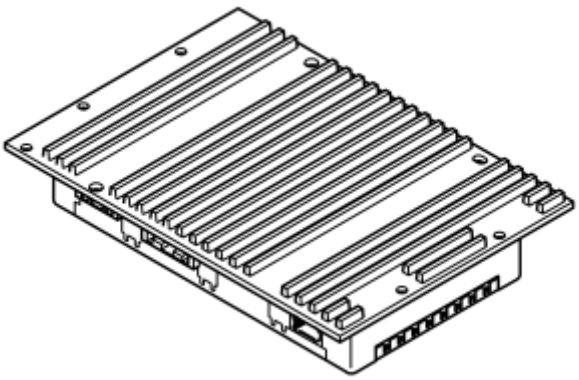

Fig. 61: Identifying Audio Module (AUD)
Courtesy of VOLVO CARS CORPORATION

Substitute Value

- None.

Possible Source

- Short-circuit to ground in the signal cable between the control module and the loudspeaker in the left door.

Fault symptom[s]

- No sound from loudspeakers

SHORT-CIRCUIT TO GROUND

CHECKING THE CABLE

Fig. 62: Identifying Ignition In Off Position
Courtesy of VOLVO CARS CORPORATION

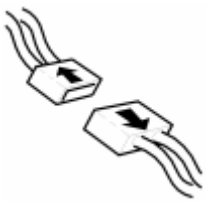

Fig. 63: Identifying Connectors
Courtesy of VOLVO CARS CORPORATION

- Ignition off.
- Disconnect the connector for the treble loudspeaker/upper loudspeaker in the left-hand door.
- Unplug the 16-pin connector for the Audio module (AUD).

HINT: The front left-hand treble loudspeaker/upper loudspeaker and the front left-hand loudspeaker are connected to these signal cables.

Check the cable terminals in the female and male sections of the connector. The cable terminals must not be damaged or pressed back.

Check the signal cable between the Audio module (AUD) terminal #B1 and treble/upper loudspeaker terminal #2 in the left-hand door. Check for a short-circuit to ground.

Check the signal cable between the Audio module (AUD) terminal #B9 and treble/upper loudspeaker terminal #1 in the left-hand door. Check for a short-circuit to ground.

Remedy as necessary.

Other information

- see **CONNECTING THE BREAKOUT BOX**
- see **AUDIO MODULE (AUD), REPLACING**
- see **LOUDSPEAKER, FRONT SIDE DOOR, REPLACING**
- see **SIGNAL SPECIFICATION**
- see **CHECKING WIRING AND TERMINALS**

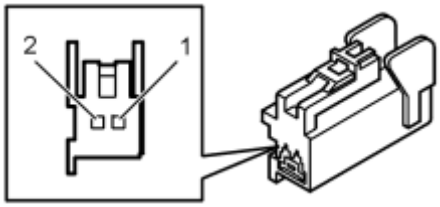

Fig. 64: Identifying 2-Bit Connector
Courtesy of VOLVO CARS CORPORATION

- **Continue**

  Refer to **VERIFICATION**

VERIFICATION

VERIFICATION

HINT: After carrying out the repair, check that the fault has been remedied.

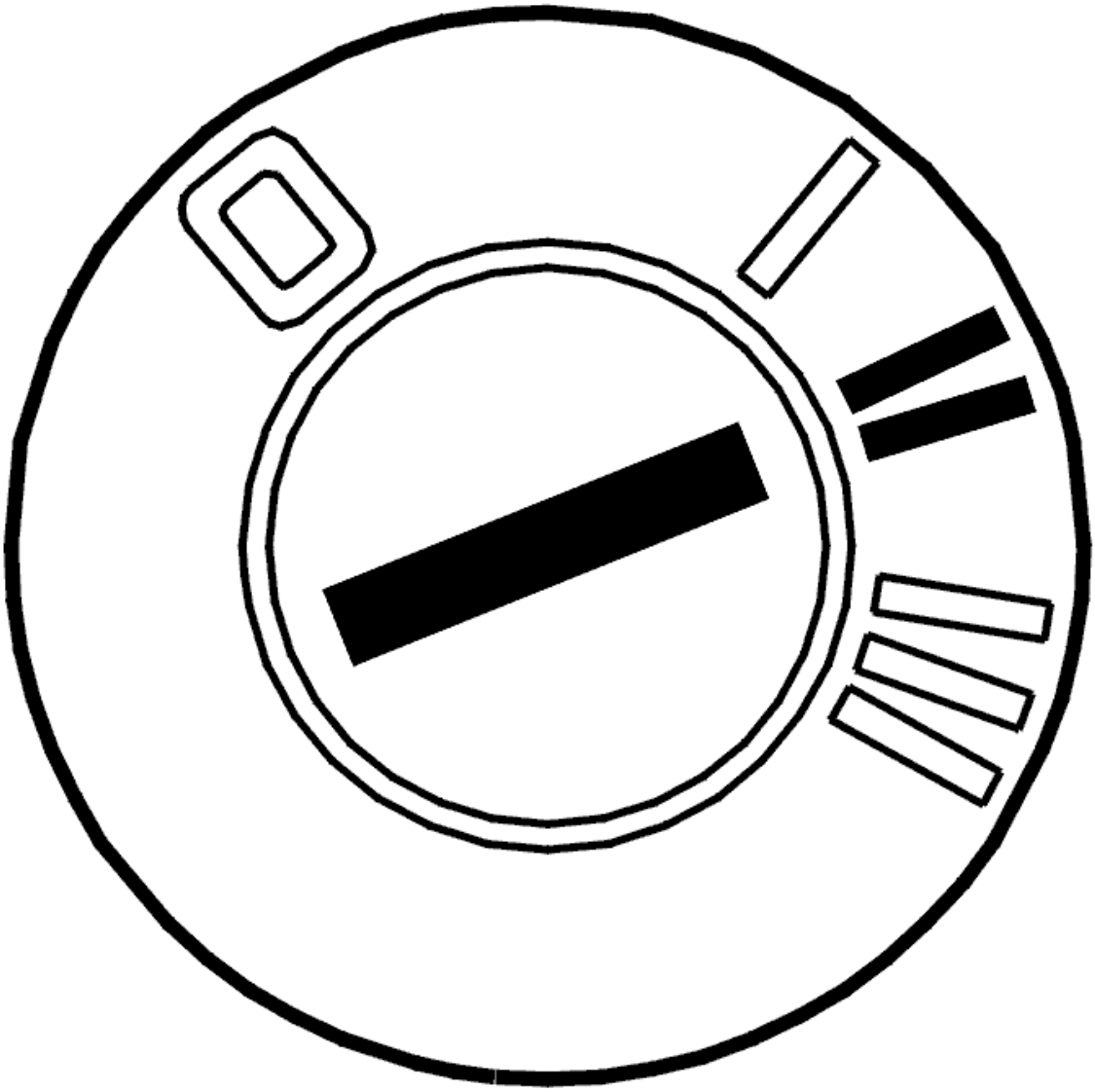

Fig. 65: Identifying Ignition ON
Courtesy of VOLVO CARS CORPORATION

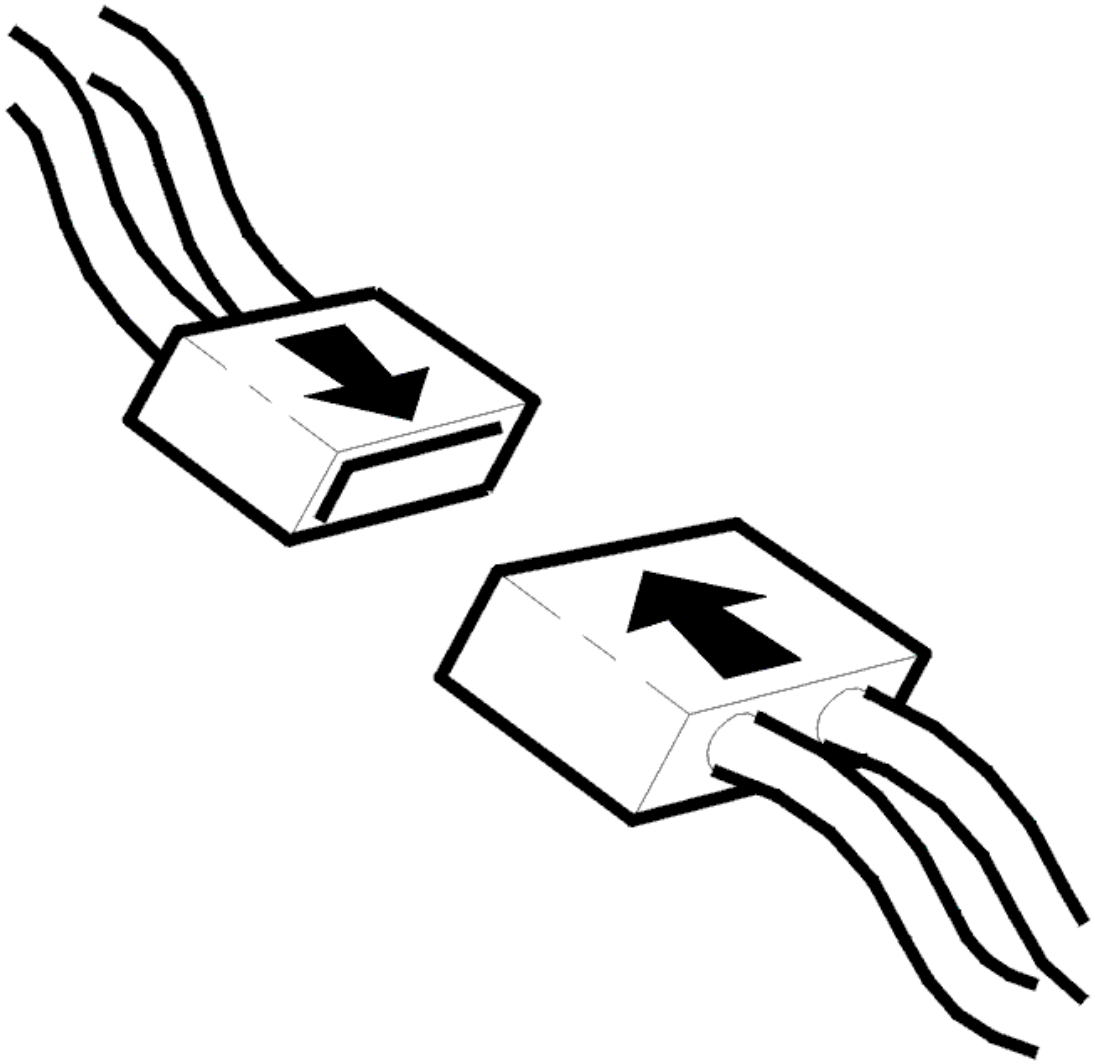

Fig. 66: Connecting Connector
Courtesy of VOLVO CARS CORPORATION

- Ignition off
- Reinstall the connectors, components etc.
- Ignition on.

  Check that the sound is heard from speaker for Audio module (AUD) by trying the radio FM/AM or the cd-player.

Is the function OK?

- **YES**

  VERIFIED: Troubleshooting has been completed.

- **NO**

  Refer to **INFORMATION**

INFORMATION

FAULT-TRACING INFORMATION

The fault should have been detected and remedied. As this is not the case fault-tracing has failed.

Exit fault-tracing for this diagnostic trouble code (DTC) or make another attempt.

AUD-0006: LOUDSPEAKER LEFT FRONT. SIGNAL TOO HIGH / LOW (2003-2006)

DIAGNOSTIC TROUBLE CODE (DTC) INFORMATION AUD-0006

Condition

Diagnostic trouble code (DTC) AUD-0006 is stored if the audio module (AUD) registers that the signal on the signal cable from the loudspeaker in the left front door is too high or too low.

Diagnostic trouble code (DTC) AUD-0006 can be diagnosed when the ignition is on.

Substitute Value

- None.

Possible Source

- Short-circuit to supply voltage in the signal cable between the control module and the loudspeaker in the left front door
- Short-circuit to ground in the signal cable between the control module and the loudspeaker in the left front door.

Fault symptom[s]

- No sound from the loudspeakers.

SIGNAL TOO HIGH / LOW

CHECKING THE CABLE

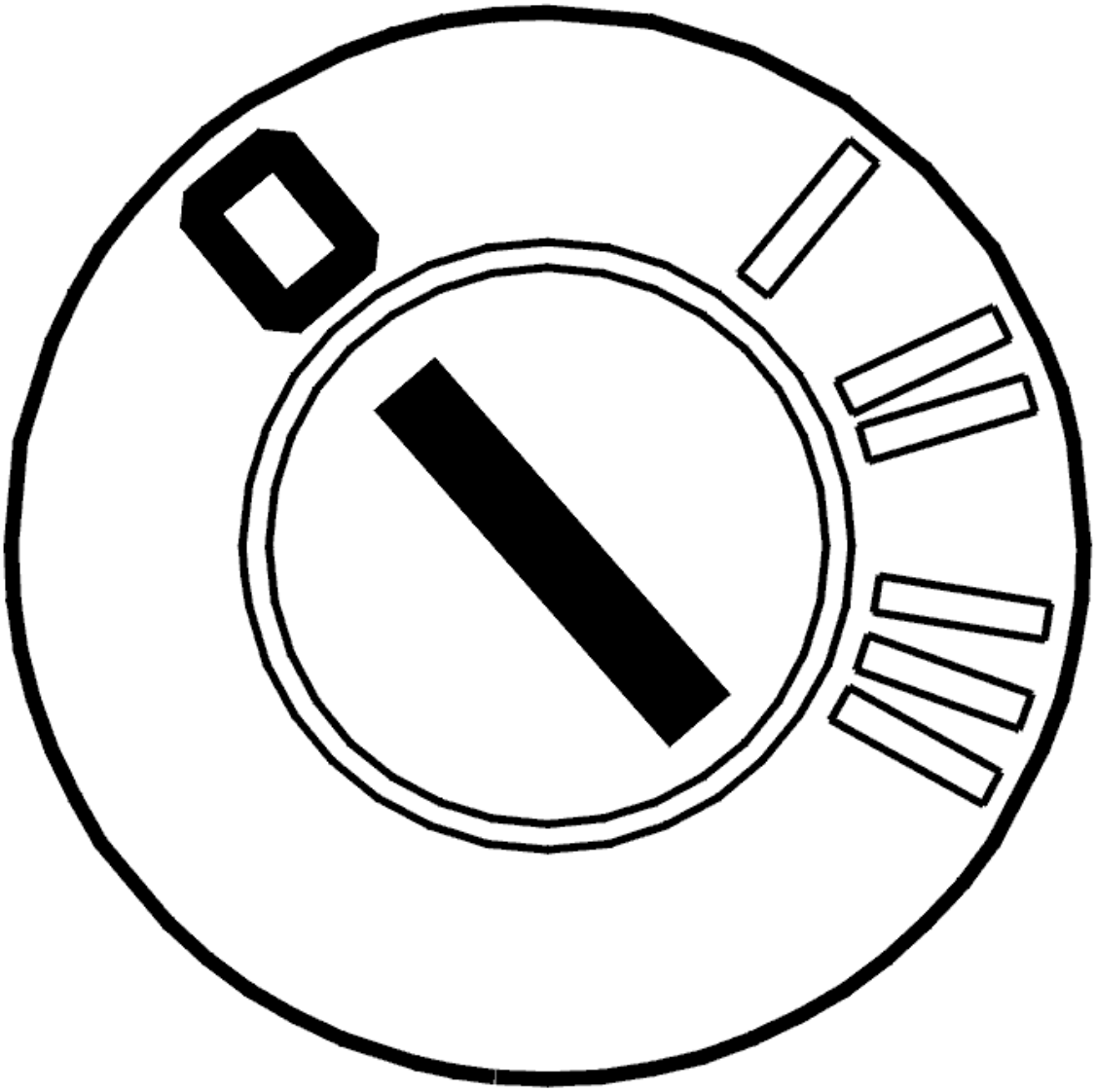

Fig. 67: Identifying Ignition OFF
Courtesy of VOLVO CARS CORPORATION

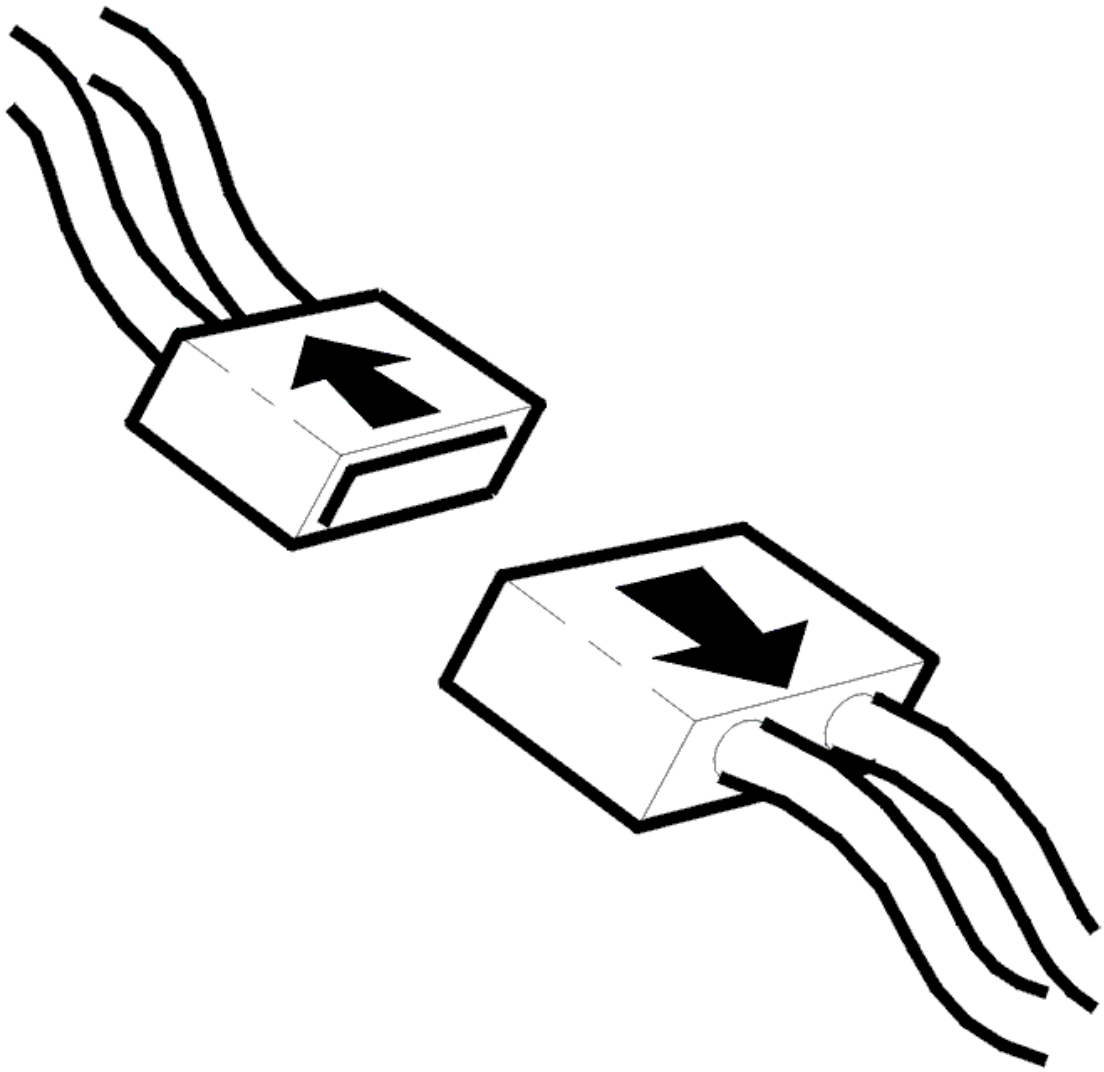

Fig. 68: Disconnecting Connector
Courtesy of VOLVO CARS CORPORATION

- Ignition off
- Disconnect the connector for the treble loudspeaker/upper loudspeaker in the left front door
- Disconnect the 16-pin connector for the audio module (AUD).

  HINT: The front left treble loudspeaker/upper loudspeaker and the front left loudspeaker are connected to these signal cables.

  Check the cable terminals in the female and male sections of the connector. The cable terminals must not be damaged or pressed back.

  Check the signal cable between audio module (AUD) terminal #B1 and treble speaker/upper loudspeaker terminal #2 in the front left door. Check for a short-circuit to ground. Check for a short-circuit to supply

voltage.

Check the signal cable between audio module (AUD) terminal #B9 and treble speaker/upper loudspeaker terminal #1 in the front left door. Check for a short-circuit to ground. Check for a short-circuit to supply voltage.

Remedy as necessary.

Other information:

- To connect the breakout box, see **CONNECTING THE BREAKOUT BOX**
- To access or replace the audio module (AUD), see **AUDIO MODULE (AUD), REPLACING**
- To access or replace the loudspeaker in the front side door, see **LOUDSPEAKER, FRONT SIDE DOOR, REPLACING**
- For information about signals, see **SIGNAL SPECIFICATION**
- see **CONTENTS** .

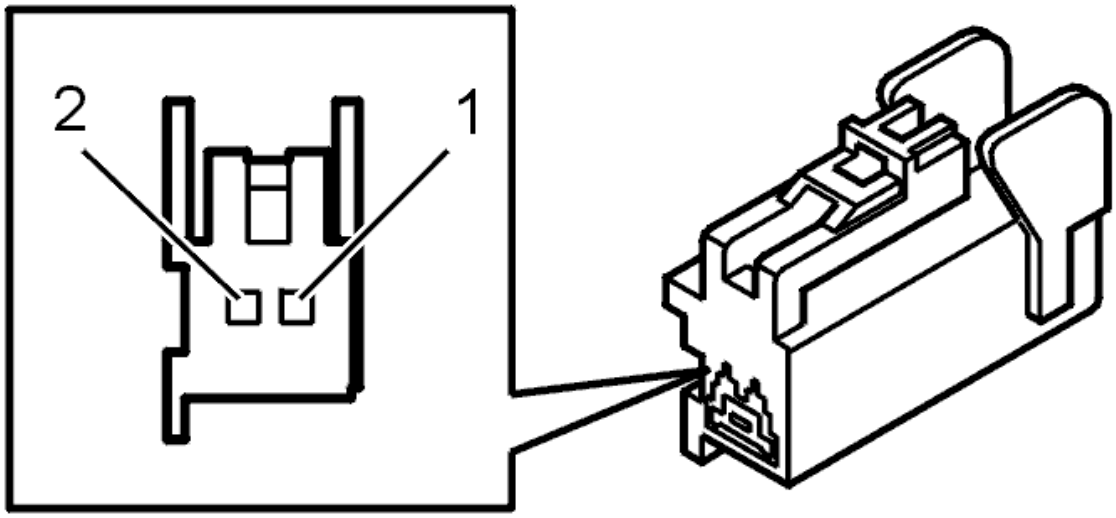

Fig. 69: Identifying 2-Bit Connector
Courtesy of VOLVO CARS CORPORATION

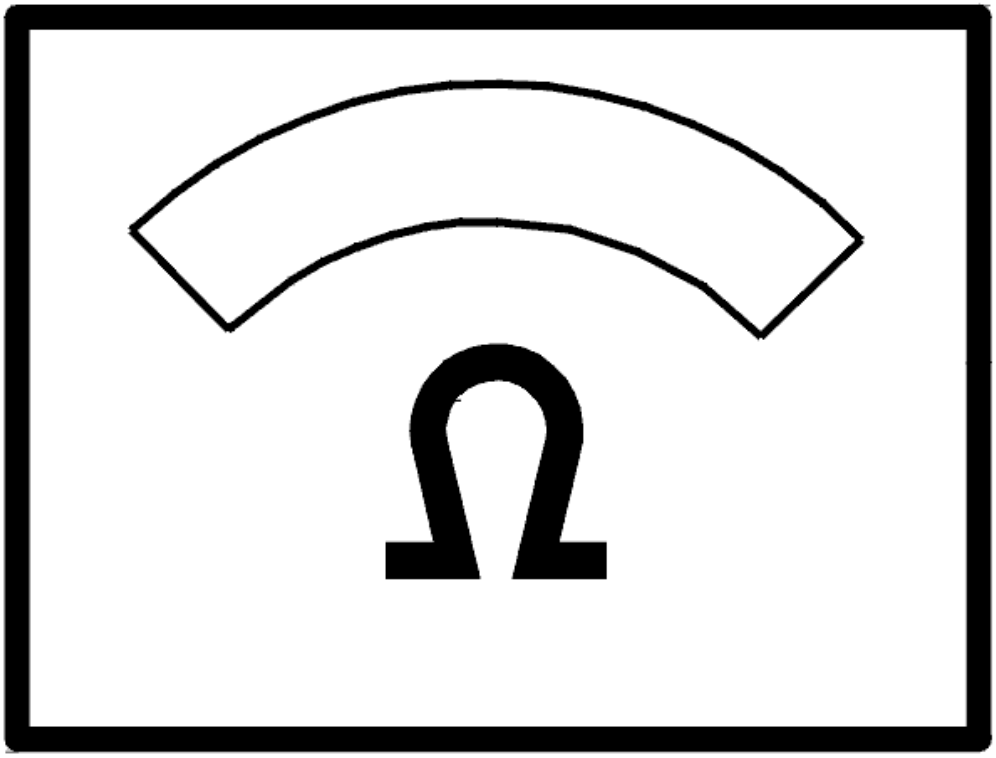

Fig. 70: Identifying Ohm Meter
Courtesy of VOLVO CARS CORPORATION

- **Continue**

  Refer to **VERIFICATION**

VERIFICATION

VERIFICATION

HINT: After carrying out the repair, check that the fault has been remedied.

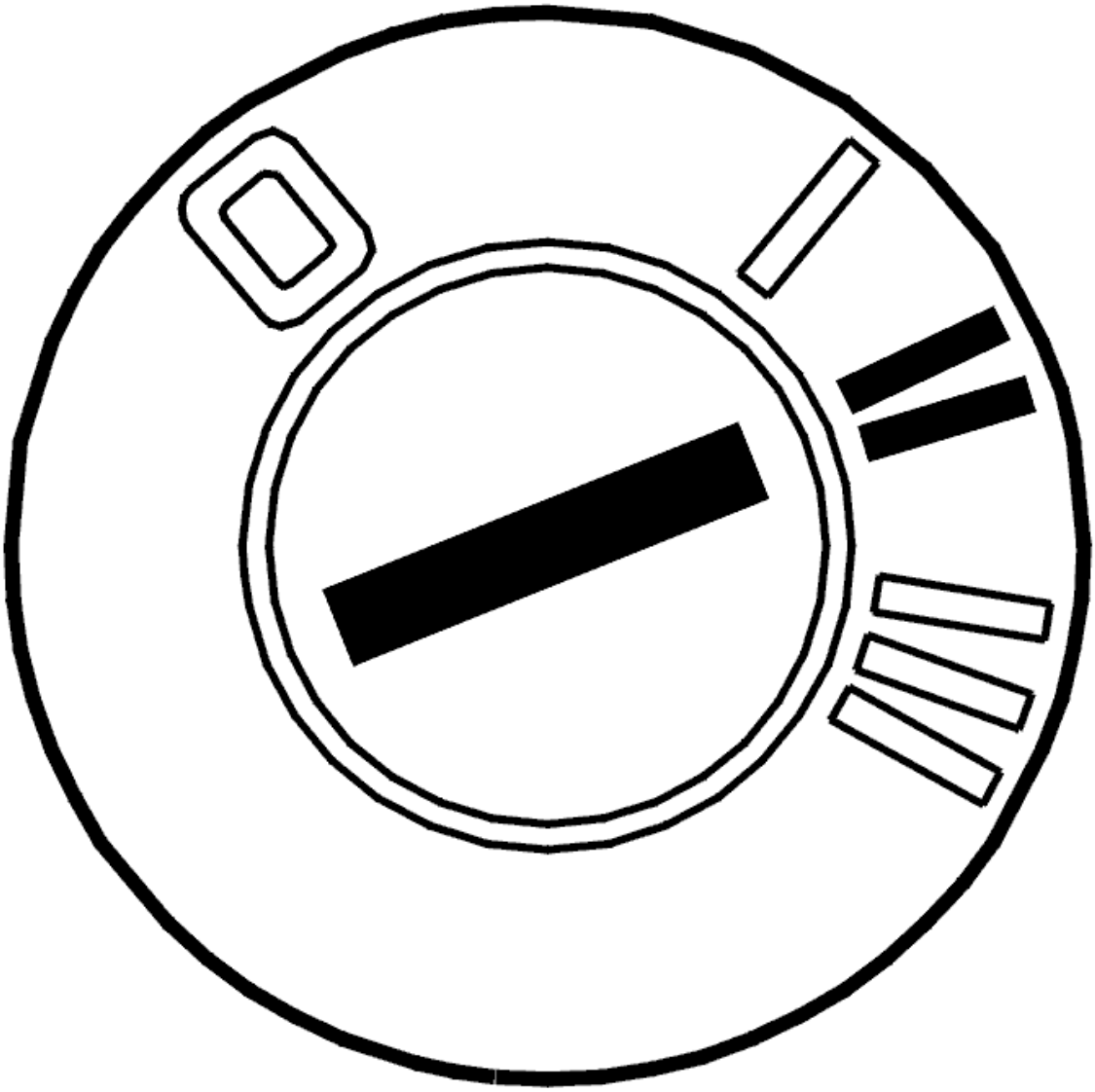

Fig. 71: Identifying Ignition ON
Courtesy of VOLVO CARS CORPORATION

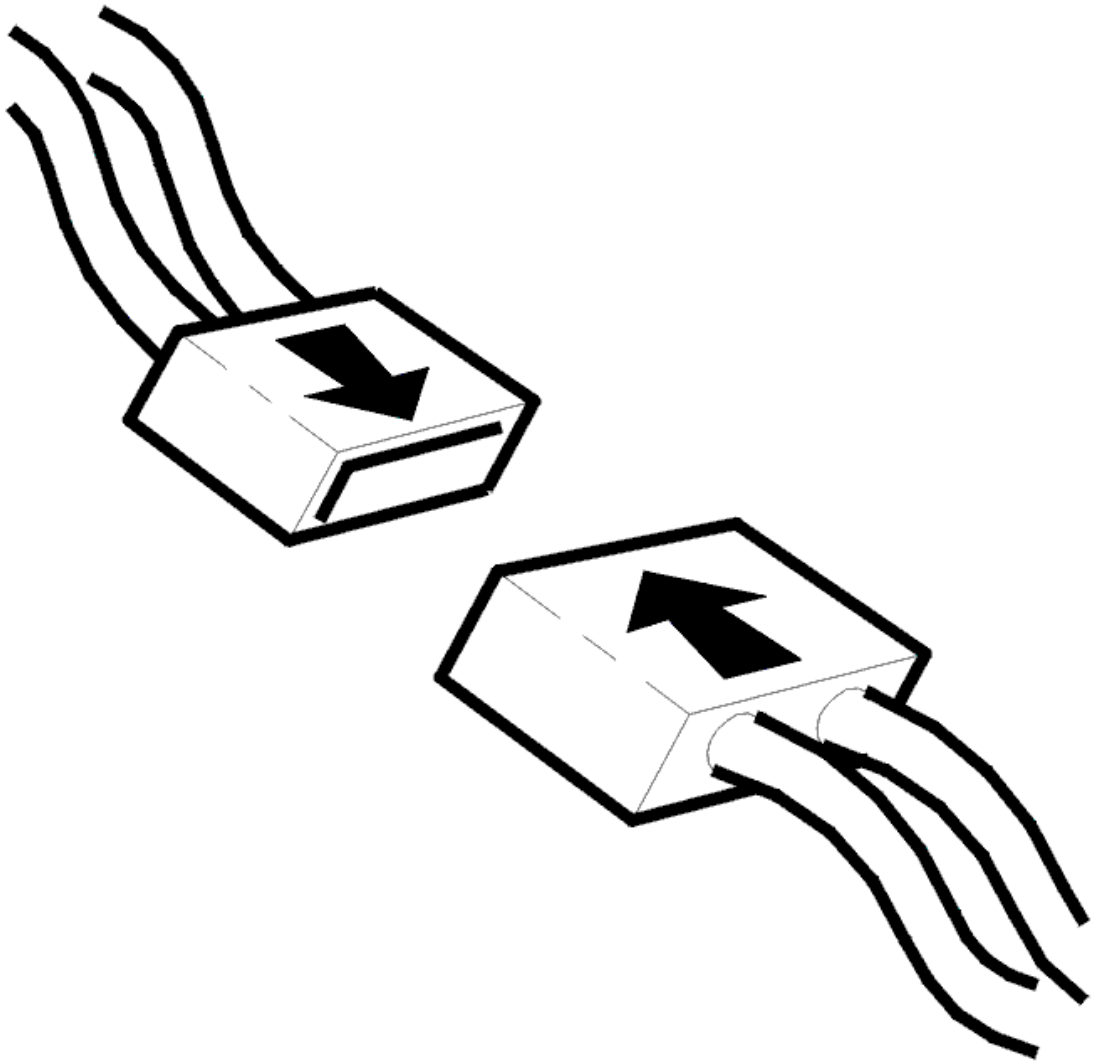

Fig. 72: Connecting Connector
Courtesy of VOLVO CARS CORPORATION

- Ignition off
- Reinstall the connectors, components etc.
- Ignition on.

  Check that sound can be heard from the loudspeakers from the Audio module (AUD) by trying the radio FM/AM, CD or MD player.

Do the loudspeakers work?

- **YES**

  VERIFIED: Troubleshooting has been completed.

- **NO**

  Refer to **INFORMATION**

INFORMATION

FAULT-TRACING INFORMATION

The fault should have been detected and remedied. As this is not the case fault-tracing has failed.

Exit fault-tracing for this diagnostic trouble code (DTC) or make another attempt.

AUD-0007: CENTRE LOUDSPEAKER. SHORT-CIRCUIT TO GROUND (2007-2011)

DIAGNOSTIC TROUBLE CODE (DTC) INFORMATION AUD-0007

Condition

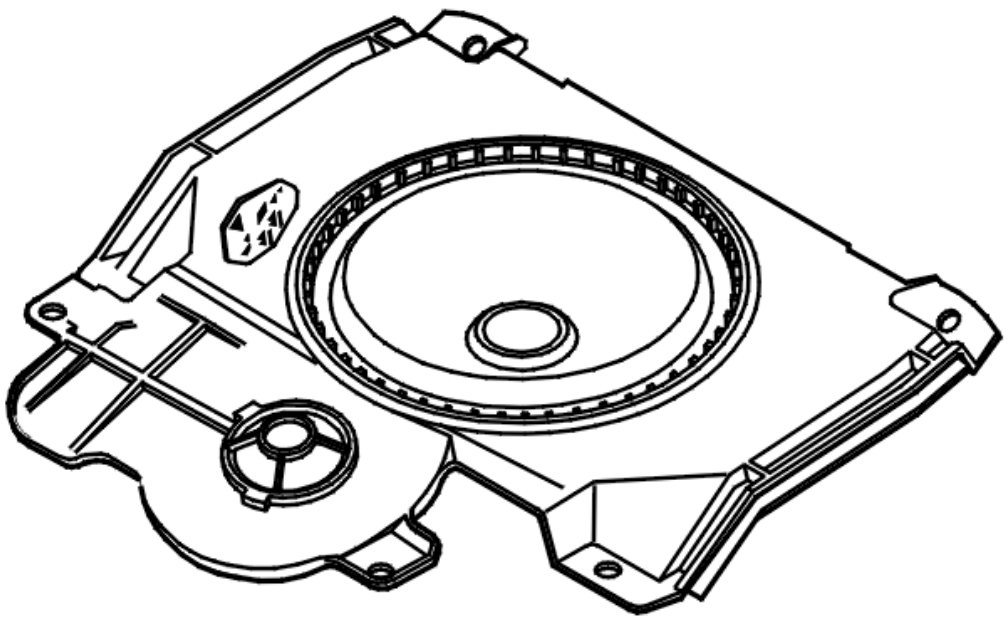

Fig. 73: Identifying Central Loudspeaker
Courtesy of VOLVO CARS CORPORATION

The diagnostic trouble code (DTC) is stored if the Audio module (AUD) registers that the signal on the signal

cable to the central loudspeaker is too low.

The diagnostic trouble code (DTC) can be diagnosed when the ignition is switched on.

Substitute Value

- None.

Possible Source

- Short-circuit to ground in the signal cable between the center loudspeaker and the control module.

Fault symptom[s]

- No sound from the loudspeakers.

SHORT-CIRCUIT TO GROUND

CHECKING THE WIRING

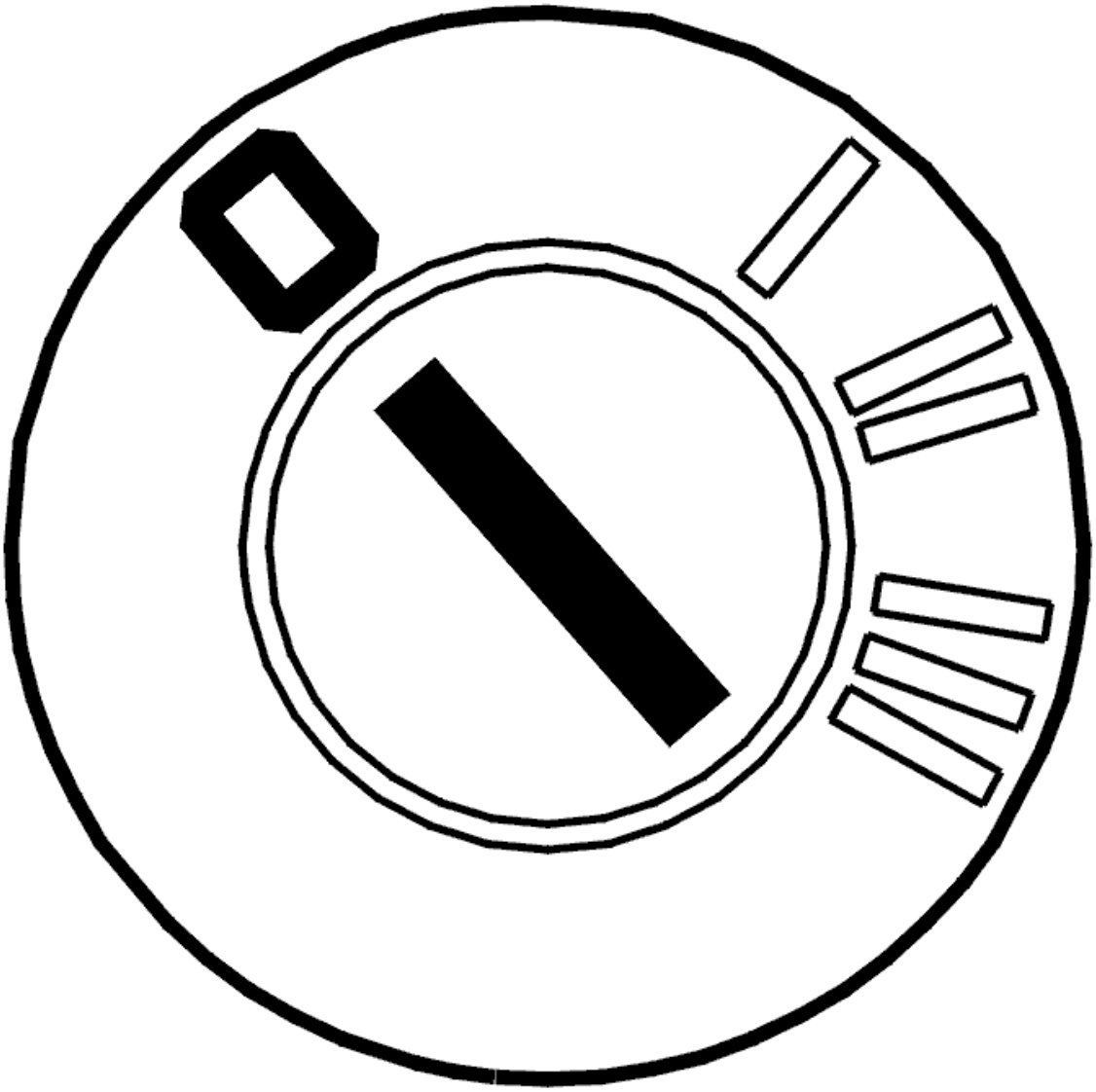

Fig. 74: Identifying Ignition OFF
Courtesy of VOLVO CARS CORPORATION

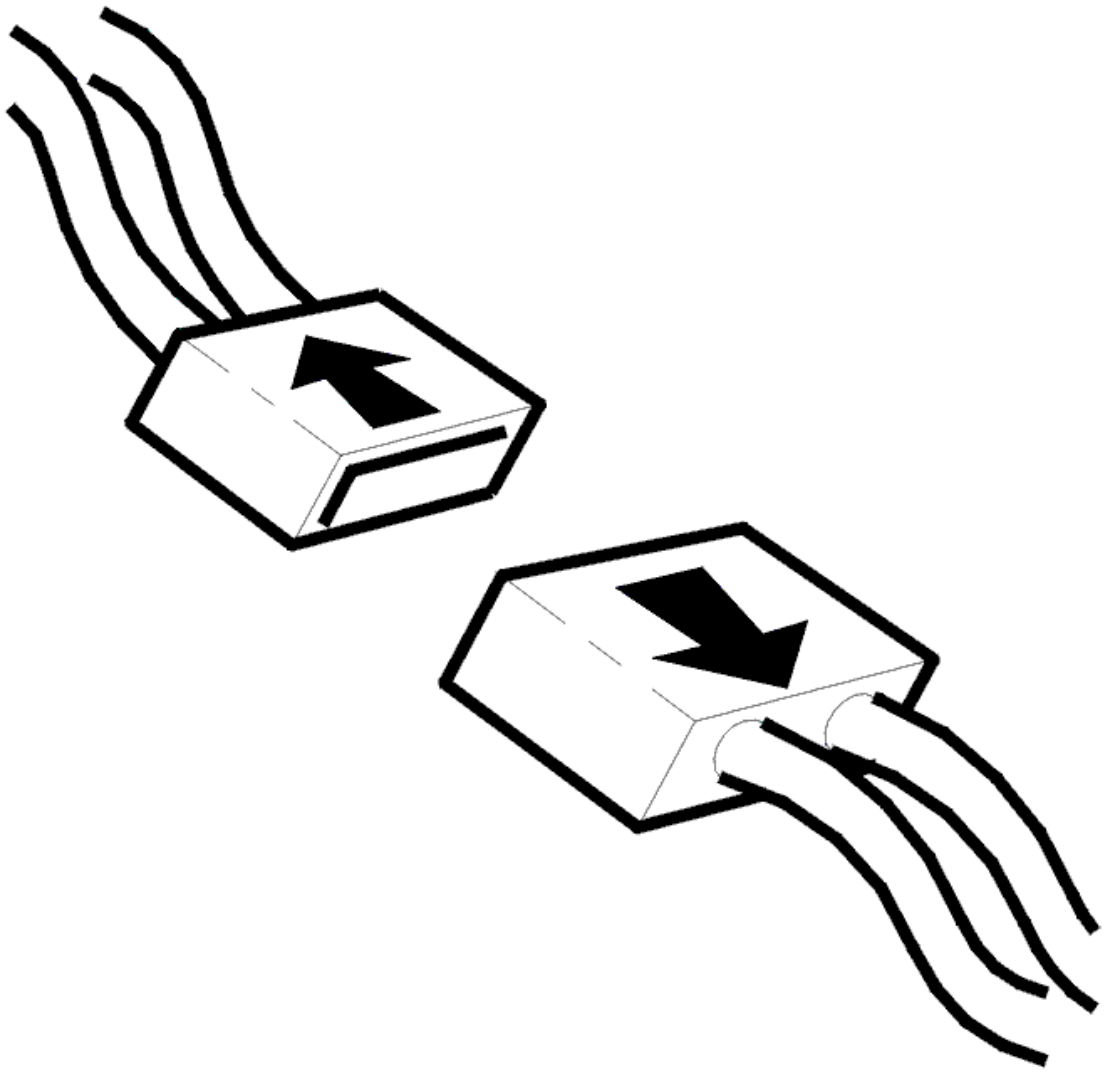

Fig. 75: Disconnecting Connector
Courtesy of VOLVO CARS CORPORATION

- Ignition off
- Disconnect the connector for the center loudspeaker.

  Check the cable terminals in the female and male sections of the connector. The cable terminals must not be damaged or pressed back.

  Check the signal cable between the Audio module (AUD) terminal #B10 and the central loudspeaker terminal #1. Check for a short-circuit to ground.

  Check the signal cable between the Audio module (AUD) terminal #B2 and the central loudspeaker terminal #2. Check for a short-circuit to ground.

  Remedy as necessary.

Other information

- see **CONNECTING THE BREAKOUT BOX**
- see **AUDIO MODULE (AUD), REPLACING**
- see **CENTRAL LOUDSPEAKER, REPLACING**
- see **SIGNAL SPECIFICATION**
- see **CHECKING WIRING AND TERMINALS**

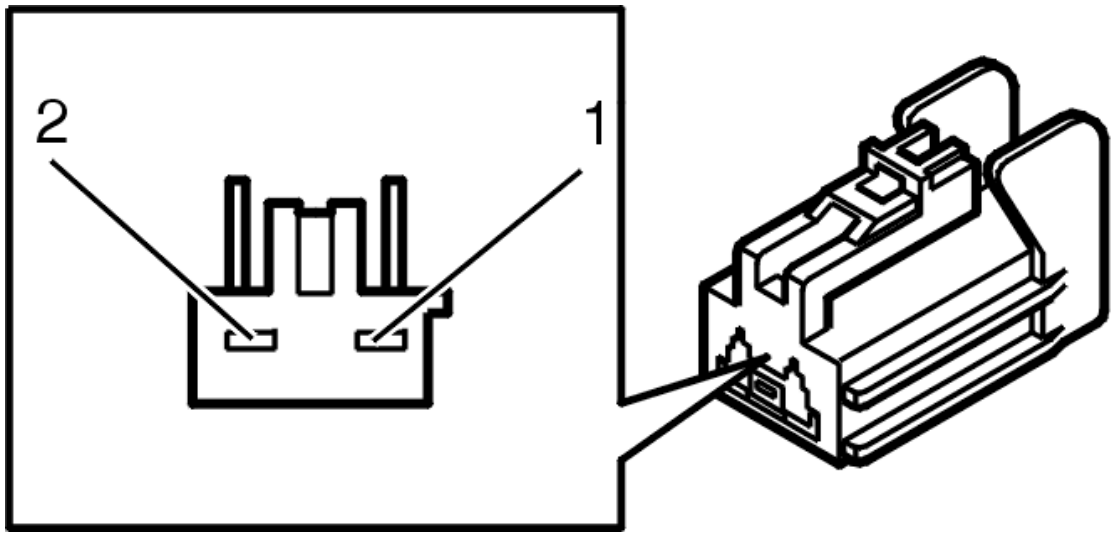

Fig. 76: Identifying 2-Bit Connector
Courtesy of VOLVO CARS CORPORATION

- **Continue**

  Refer to **VERIFICATION**

VERIFICATION

VERIFICATION

HINT: After carrying out the repair, check that the fault has been remedied.

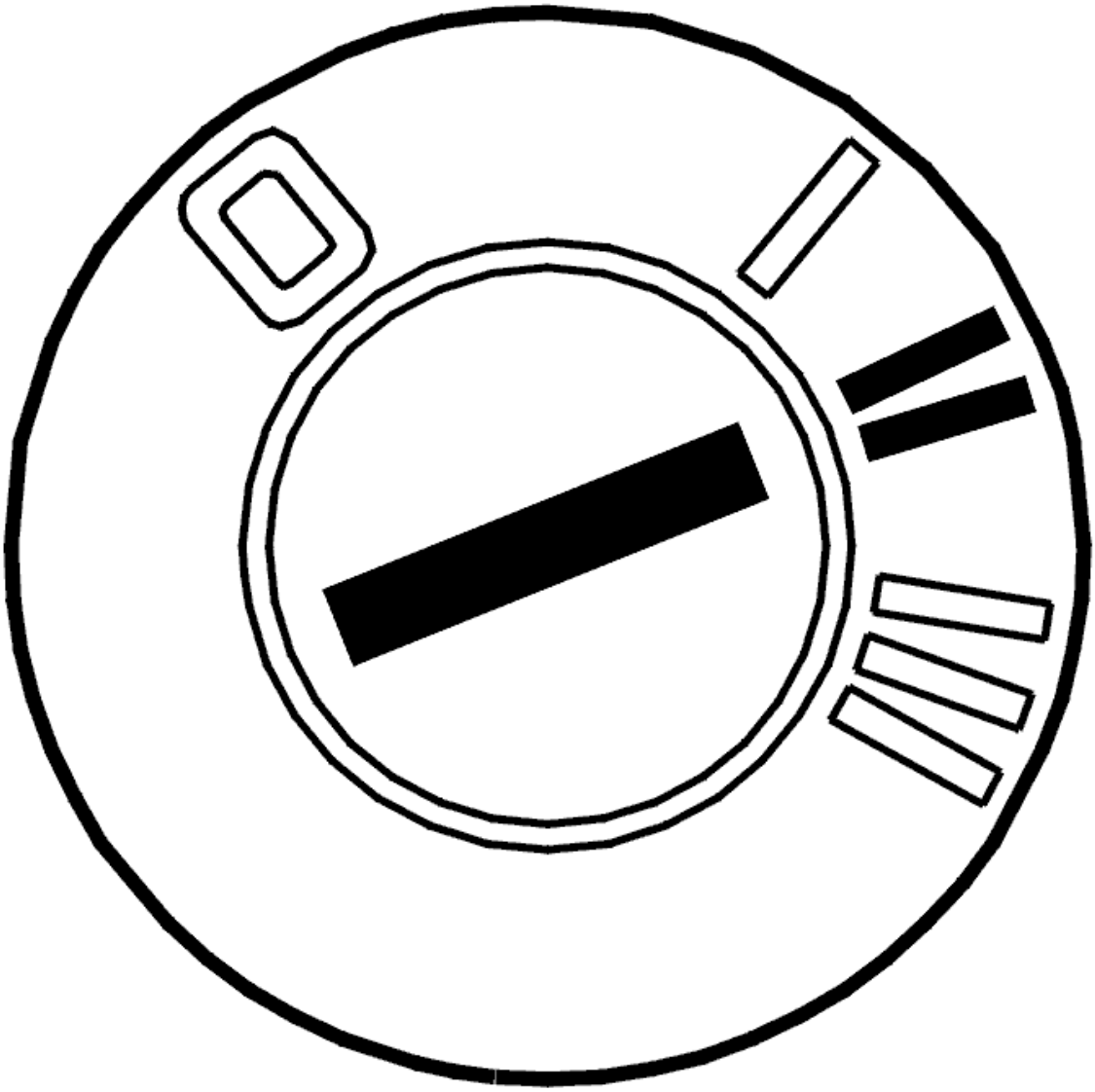

Fig. 77: Identifying Ignition ON
Courtesy of VOLVO CARS CORPORATION

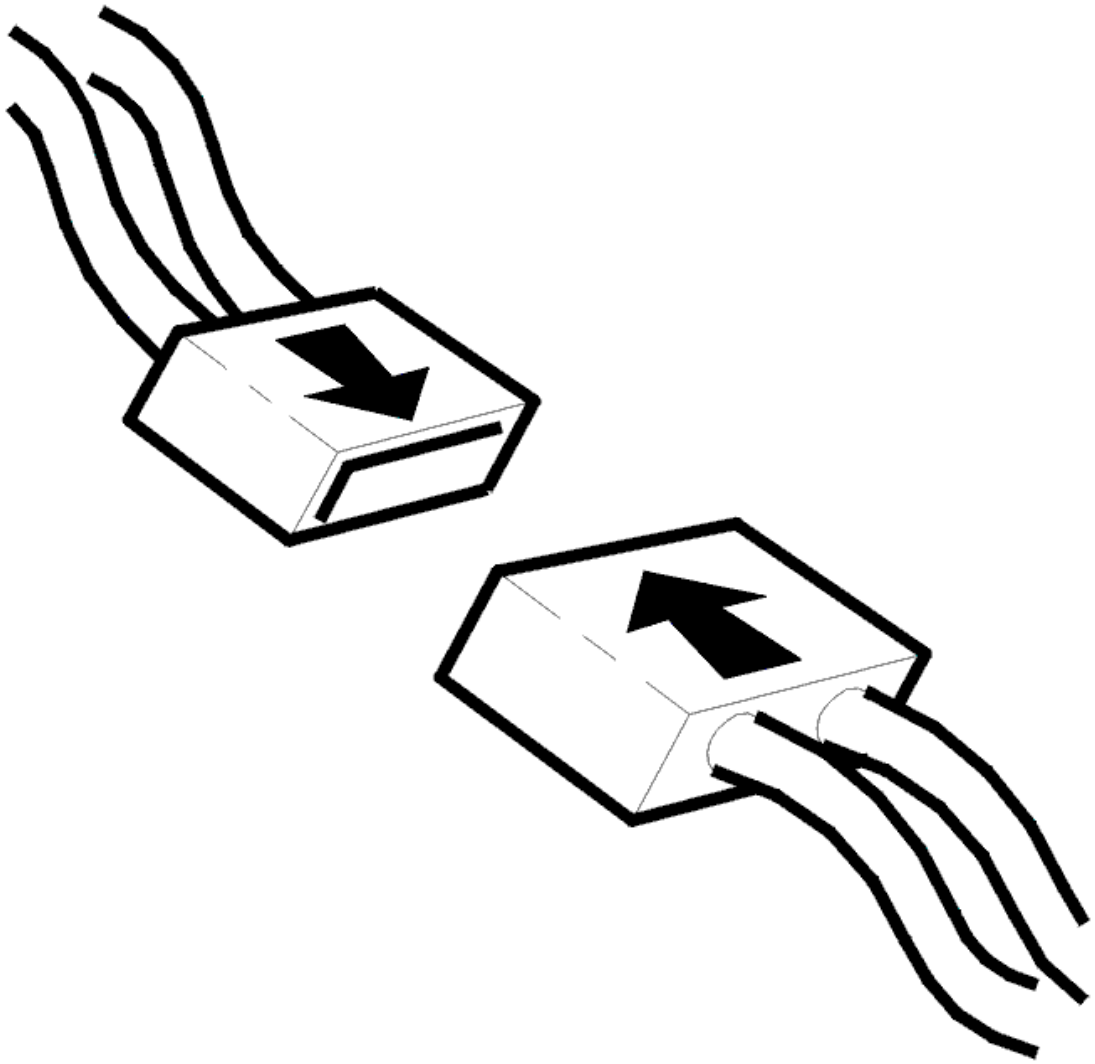

Fig. 78: Connecting Connector
Courtesy of VOLVO CARS CORPORATION

- Ignition off
- Reinstall the connectors, components etc.
- Ignition on.

  Check that the sound is heard from speaker for Audio module (AUD) by trying the radio FM/AM or the cd-player.

Is the function OK?

- **YES**

  VERIFIED: Troubleshooting has been completed.

- **NO**

  Refer to **INFORMATION**

INFORMATION

FAULT-TRACING INFORMATION

The fault should have been detected and remedied. As this is not the case fault-tracing has failed.

Exit fault-tracing for this diagnostic trouble code (DTC) or make another attempt.

AUD-0007: CENTER LOUDSPEAKER. SIGNAL TOO HIGH / LOW (2003-2006)

DIAGNOSTIC TROUBLE CODE (DTC) INFORMATION AUD-0007

Condition

Diagnostic trouble code (DTC) AUD-0007 is stored if the audio module (AUD) registers that the signal on the signal cable from the center loudspeaker is too high or too low.

Diagnostic trouble code (DTC) AUD-0007 can be diagnosed when the ignition is on.

Substitute Value

- None.

Possible Source

- Short-circuit to supply voltage in the signal cable between the center loudspeaker and the control module
- Short-circuit to ground in the signal cable between the center loudspeaker and the control module.

Fault symptom[s]

- No sound from the loudspeakers.

SIGNAL TOO HIGH / LOW

CHECKING THE WIRING

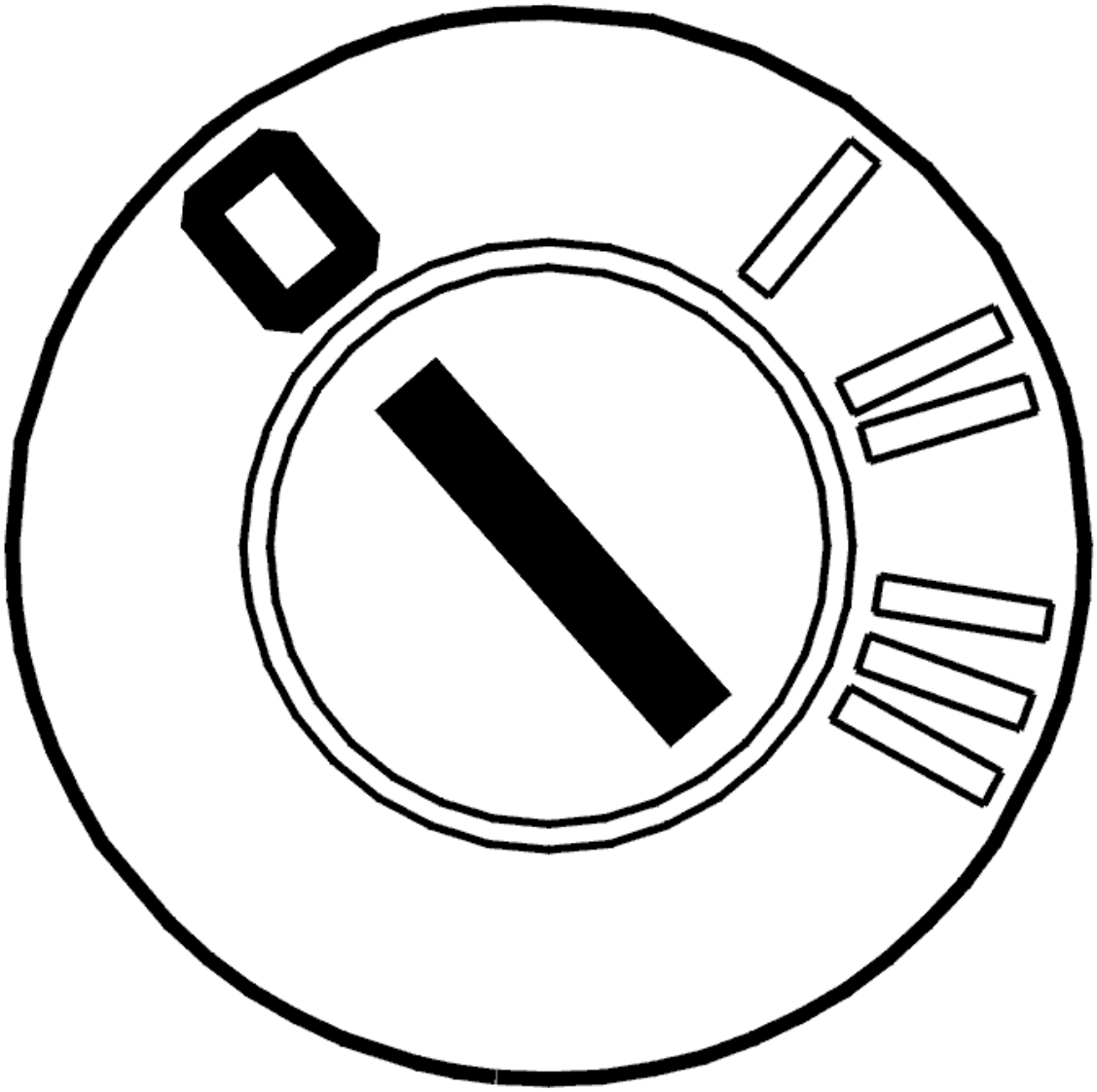

Fig. 79: Identifying Ignition OFF
Courtesy of VOLVO CARS CORPORATION

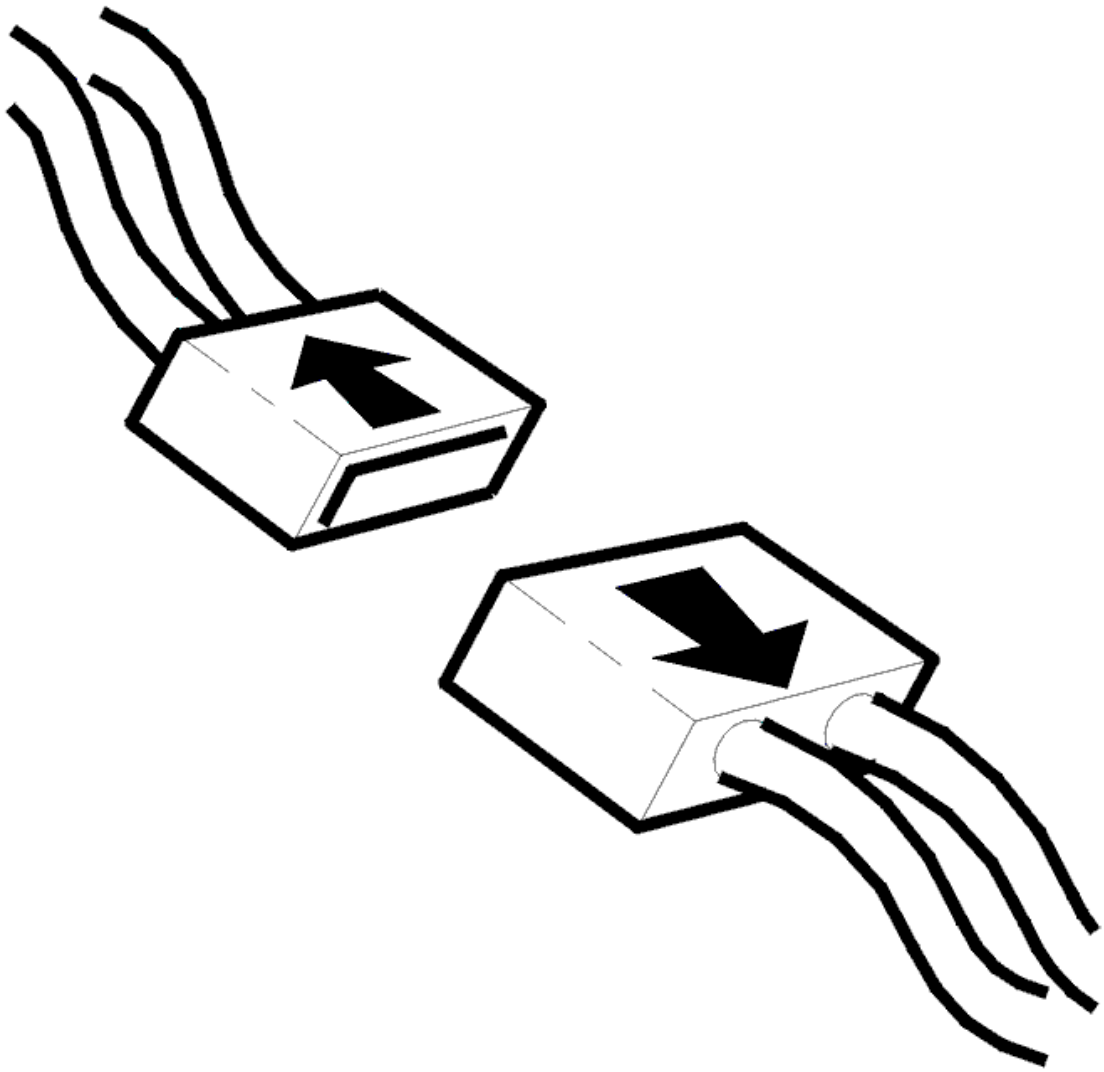

Fig. 80: Disconnecting Connector
Courtesy of VOLVO CARS CORPORATION

- Ignition off
- Disconnect the connector for the center loudspeaker.

  Check the cable terminals in the female and male sections of the connector. The cable terminals must not be damaged or pressed back.

  Check the signal cable between audio module (AUD) terminal #B10 and center loudspeaker terminal #1. Check for a short-circuit to ground. Check for a short-circuit to supply voltage.

  Check the signal cable between audio module (AUD) terminal #B2 and center loudspeaker terminal #2. Check for a short-circuit to ground. Check for a short-circuit to supply voltage.

  Remedy as necessary.

Other information:

- To connect the breakout box, see **CONNECTING THE BREAKOUT BOX**
- To access or replace the audio module (AUD), see **AUDIO MODULE (AUD), REPLACING**
- To access or replace the center loudspeaker, see **CENTRAL LOUDSPEAKER, REPLACING**
- For information about signals, see **SIGNAL SPECIFICATION**
- see **CONTENTS** .

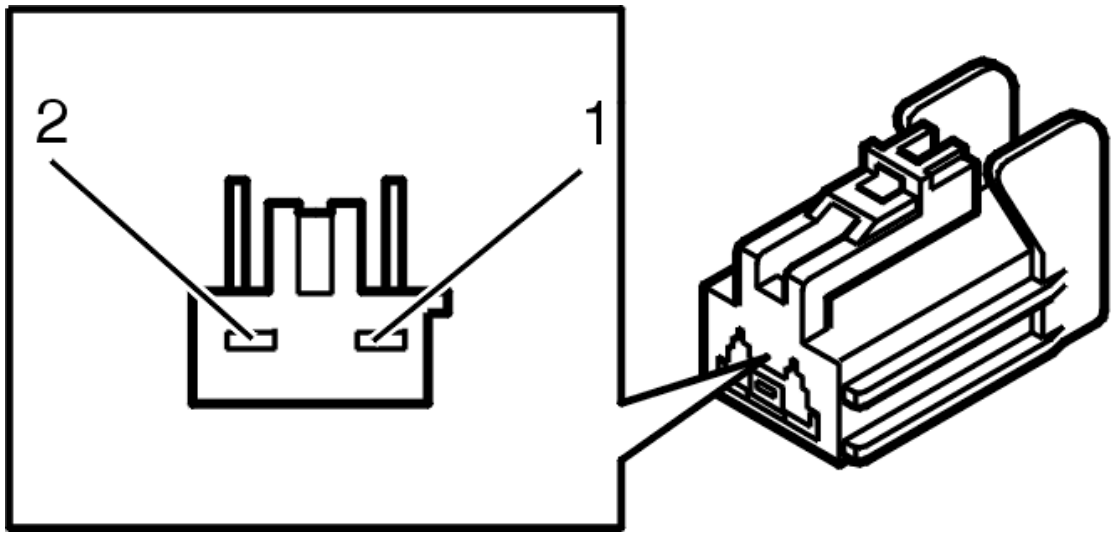

Fig. 81: Identifying 2-Bit Connector
Courtesy of VOLVO CARS CORPORATION

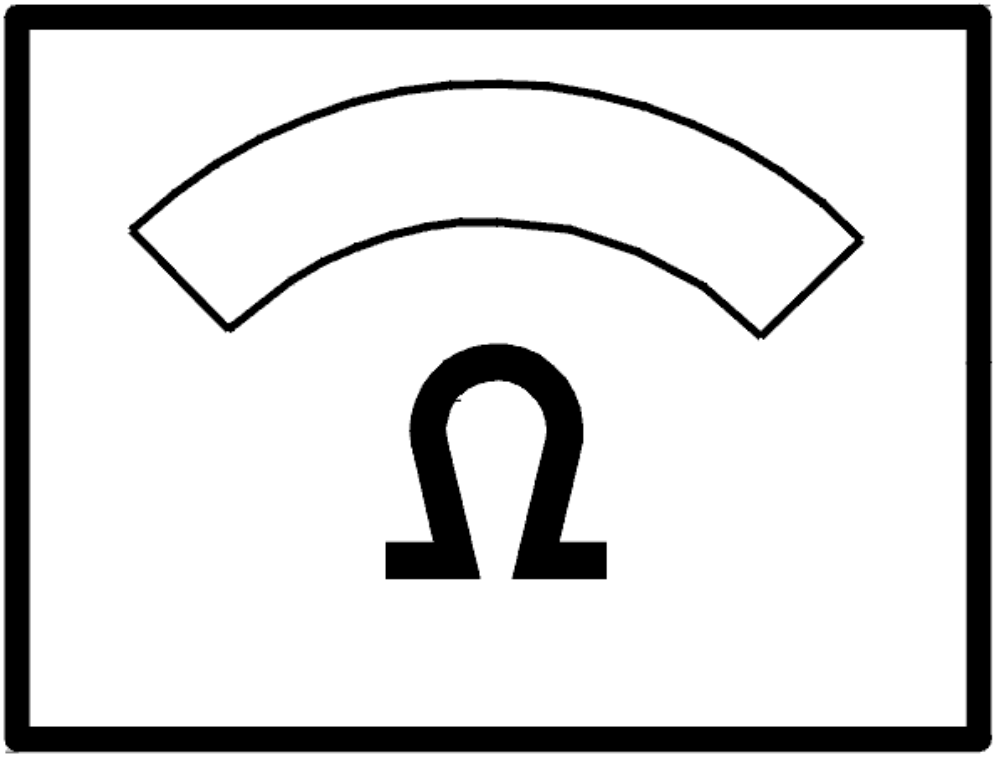

Fig. 82: Identifying Ohm Meter
Courtesy of VOLVO CARS CORPORATION

- **Continue**

  Refer to **VERIFICATION**

VERIFICATION

VERIFICATION

HINT: After carrying out the repair, check that the fault has been remedied.

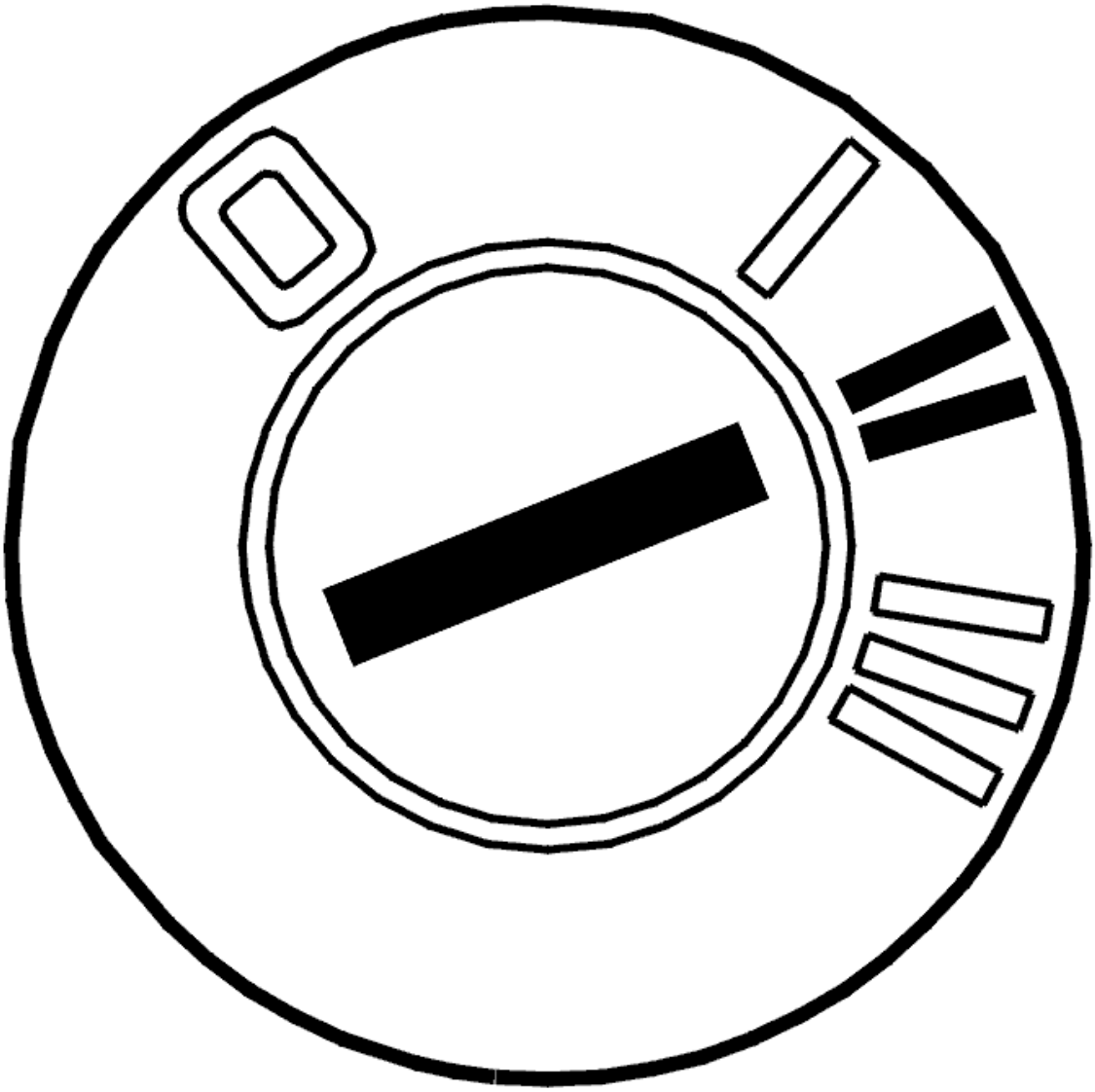

Fig. 83: Identifying Ignition ON
Courtesy of VOLVO CARS CORPORATION

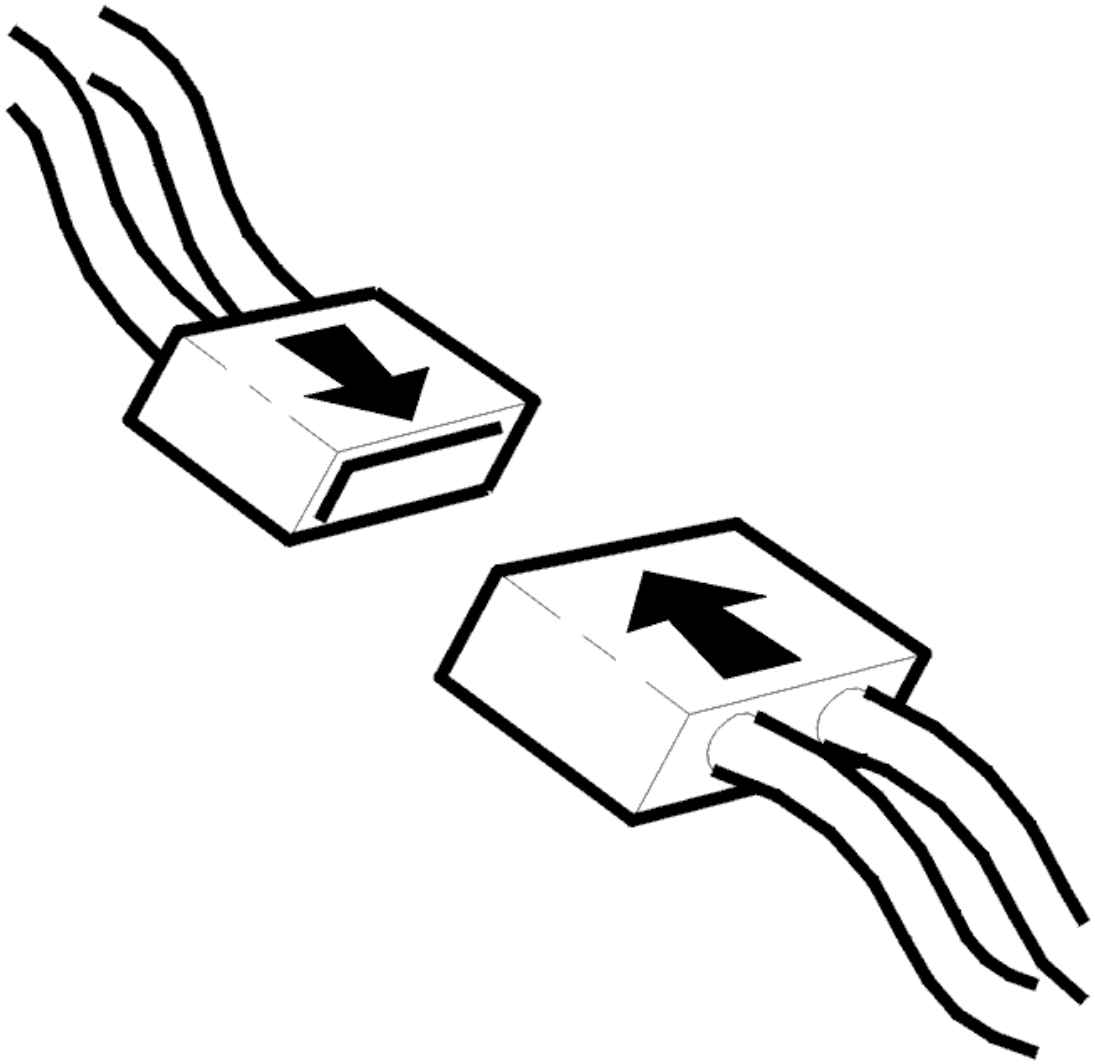

Fig. 84: Connecting Connector
Courtesy of VOLVO CARS CORPORATION

- Ignition off
- Reinstall the connectors, components etc.
- Ignition on.

  Check that sound can be heard from the loudspeakers from the Audio module (AUD) by trying the radio FM/AM, CD or MD player.

Do the loudspeakers work?

- **YES**

  VERIFIED: Troubleshooting has been completed.

- **NO**

  Refer to **INFORMATION**

INFORMATION

FAULT-TRACING INFORMATION

The fault should have been detected and remedied. As this is not the case fault-tracing has failed.

Exit fault-tracing for this diagnostic trouble code (DTC) or make another attempt.

AUD-0008: LOUDSPEAKER RIGHT FRONT. SHORT-CIRCUIT TO GROUND (2007-2011)

DIAGNOSTIC TROUBLE CODE (DTC) INFORMATION AUD-0008

Condition

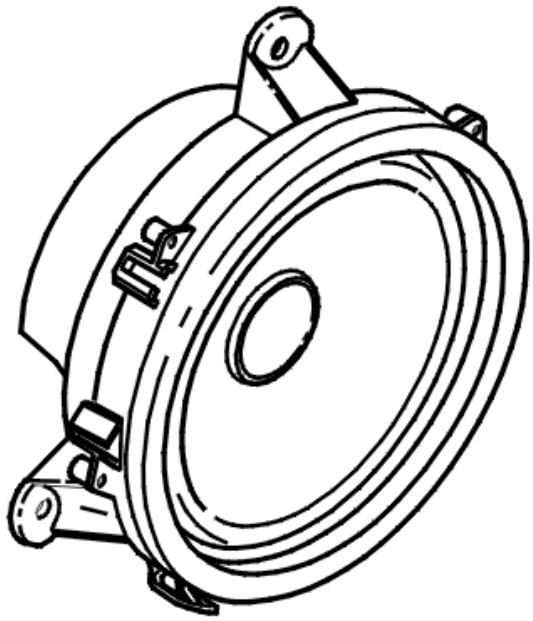

Fig. 85: Identifying Loudspeaker
Courtesy of VOLVO CARS CORPORATION

The diagnostic trouble code (DTC) is stored if the Audio module (AUD) registers that the signal on the signal

cable to the loudspeaker in the right-hand door is too low.

The diagnostic trouble code can only be diagnosed when voltage is on (12 V). In other words, the diagnostic trouble code (DTC) can only be diagnosed when the ignition is turned from position 0 to positions II.

Substitute Value

- None.

Possible Source

- Short-circuit to voltage in the signal cable between the control module and the loudspeaker in the right door.

Fault symptom[s]

- No sound from the loudspeakers.

SHORT-CIRCUIT TO GROUND

CHECKING THE CABLE

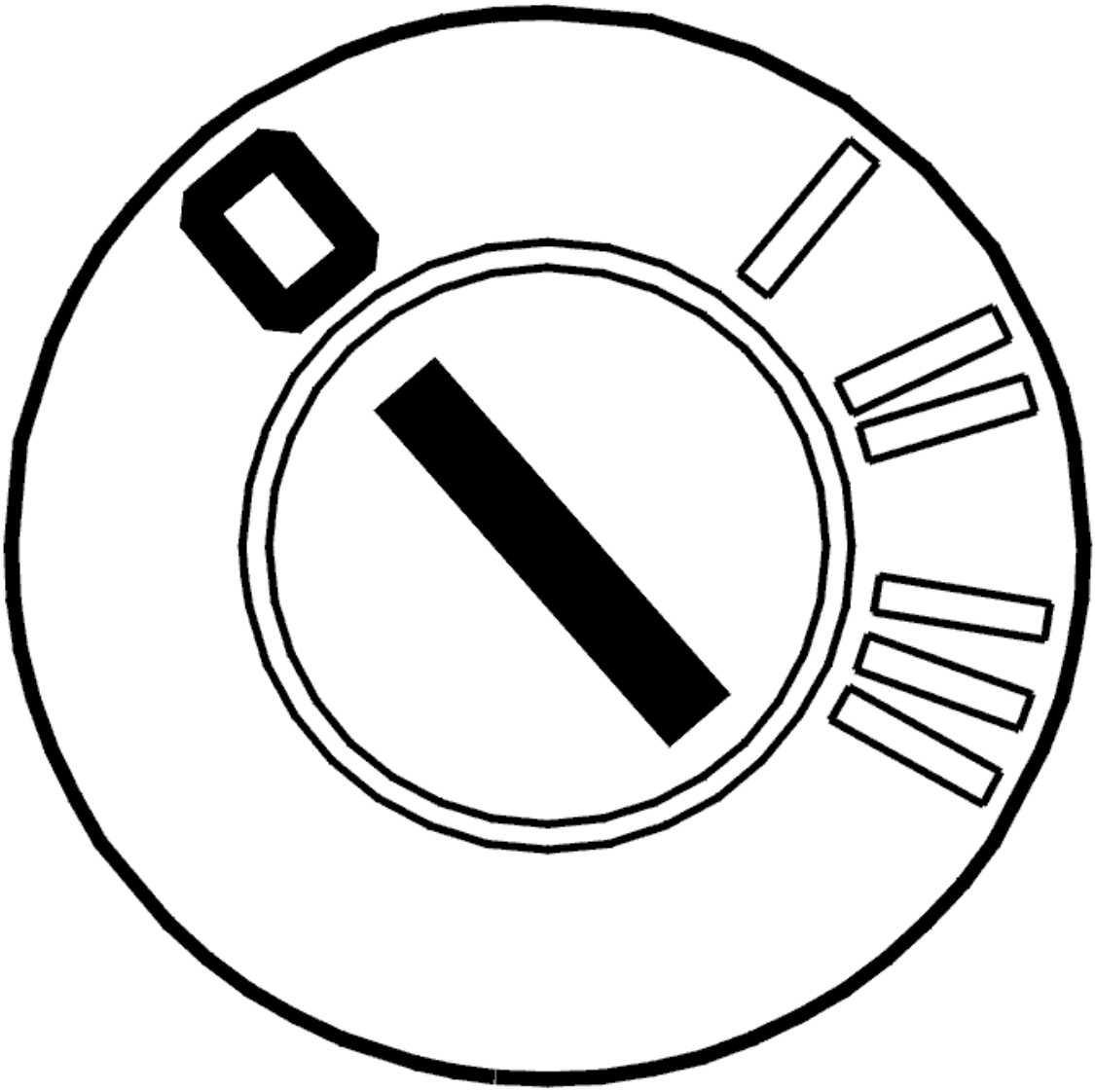

Fig. 86: Identifying Ignition OFF
Courtesy of VOLVO CARS CORPORATION

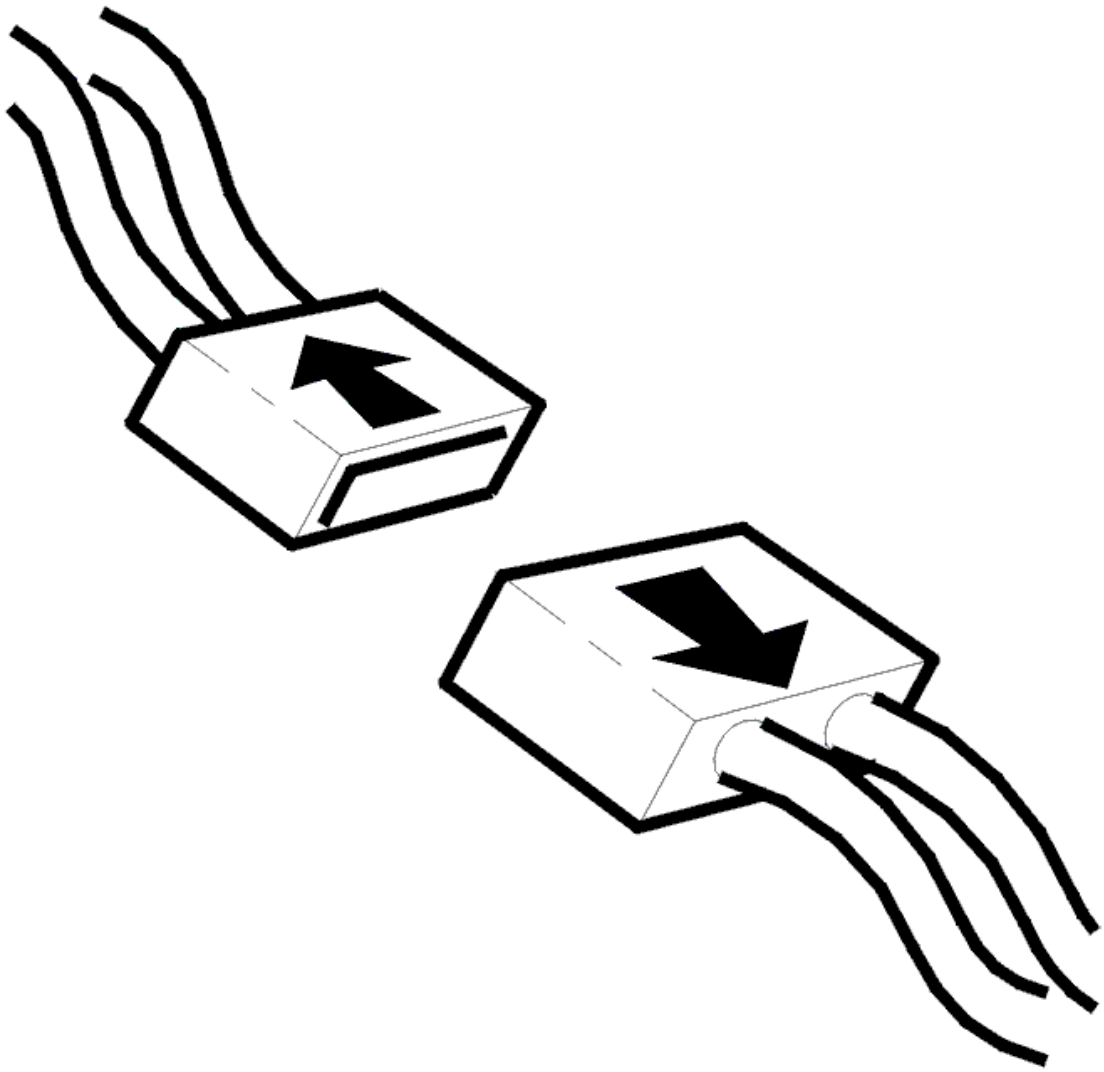

Fig. 87: Disconnecting Connector
Courtesy of VOLVO CARS CORPORATION

- Ignition off
- Disconnect the connector for the treble loudspeaker/upper loudspeaker in the right-hand door.
- Disconnect the 16-pin connector for the audio module (AUD).

  HINT: The front right treble loudspeaker/upper loudspeaker and bass speaker are connected to these signal cables.

  Check the cable terminals in the female and male sections of the connector. The cable terminals must not be damaged or pressed back.

  Check the signal cable between the Audio module (AUD) terminal #B3 and treble/upper loudspeaker terminal #2 in the right-hand door. Check for a short-circuit to ground.

Check the signal cable between the Audio module (AUD) terminal #B11 and treble/upper loudspeaker terminal #1 in the right-hand door. Check for a short-circuit to ground.

Remedy as necessary.

Other information

- see **CONNECTING THE BREAKOUT BOX**
- see **AUDIO MODULE (AUD), REPLACING**
- see **LOUDSPEAKER, FRONT SIDE DOOR, REPLACING**
- see **SIGNAL SPECIFICATION**
- see **CHECKING WIRING AND TERMINALS**

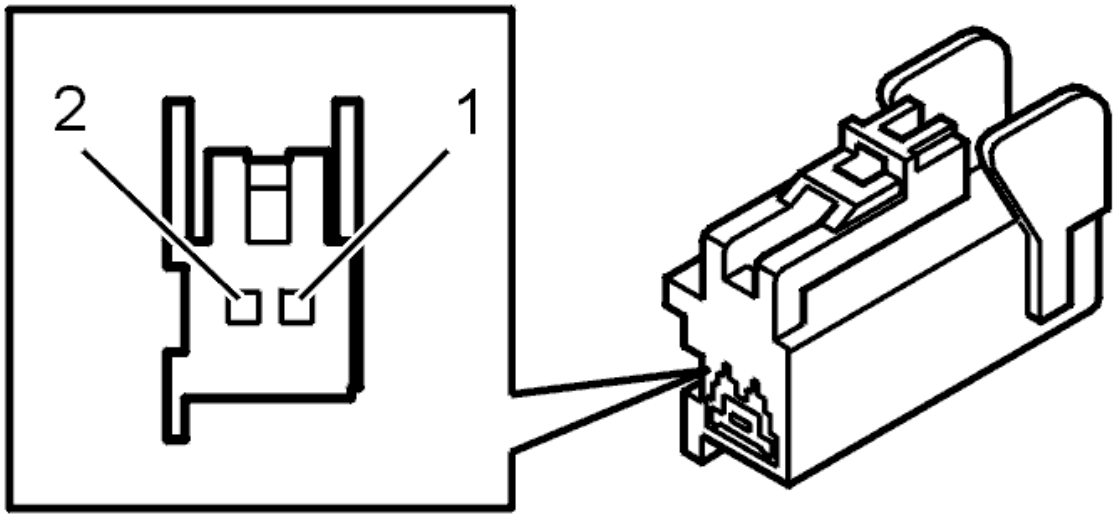

Fig. 88: Identifying 2-Bit Connector
Courtesy of VOLVO CARS CORPORATION

- **Continue**

Refer to **VERIFICATION**

VERIFICATION

VERIFICATION

HINT: After carrying out the repair, check that the fault has been remedied.

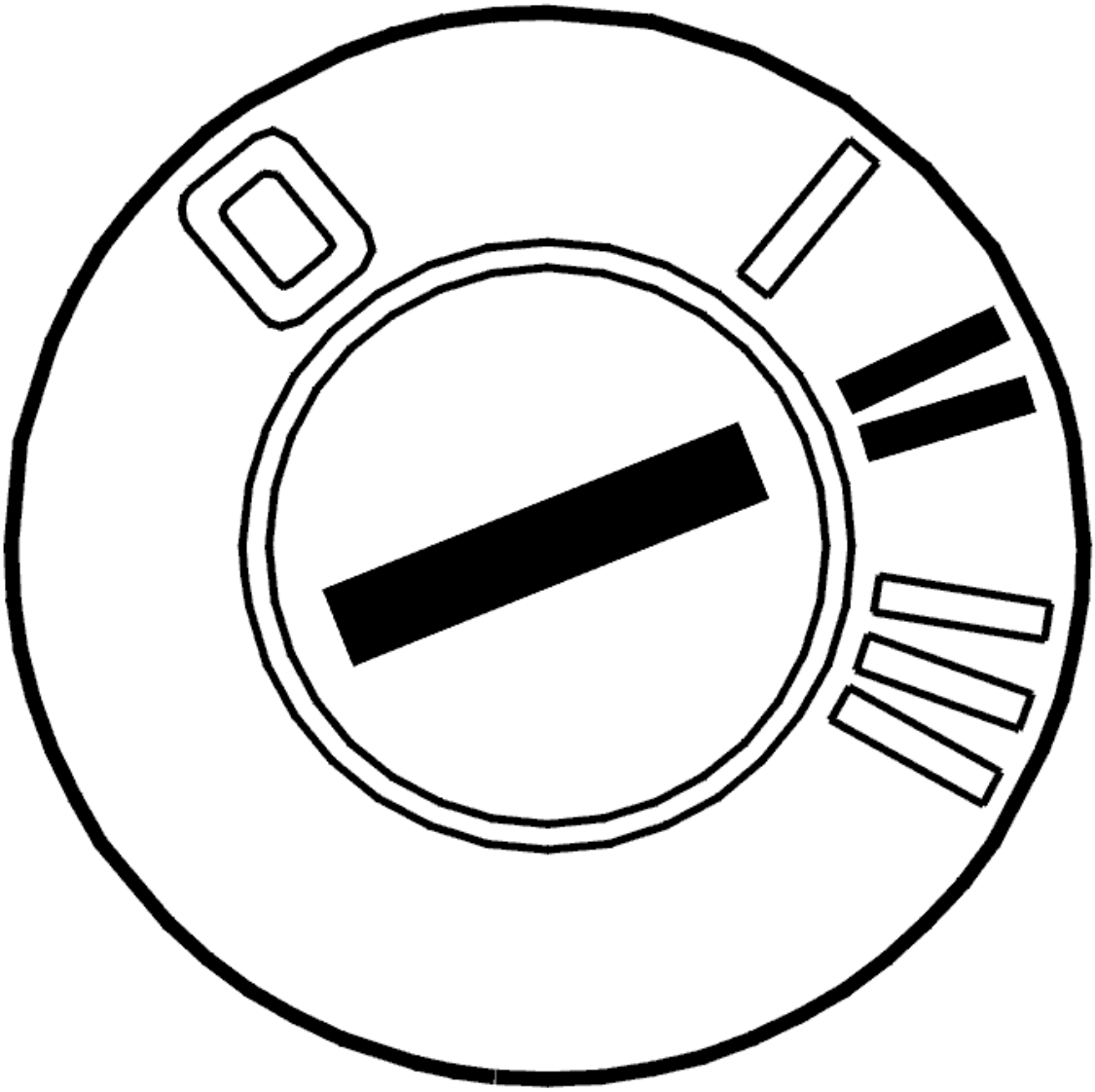

Fig. 89: Identifying Ignition ON
Courtesy of VOLVO CARS CORPORATION

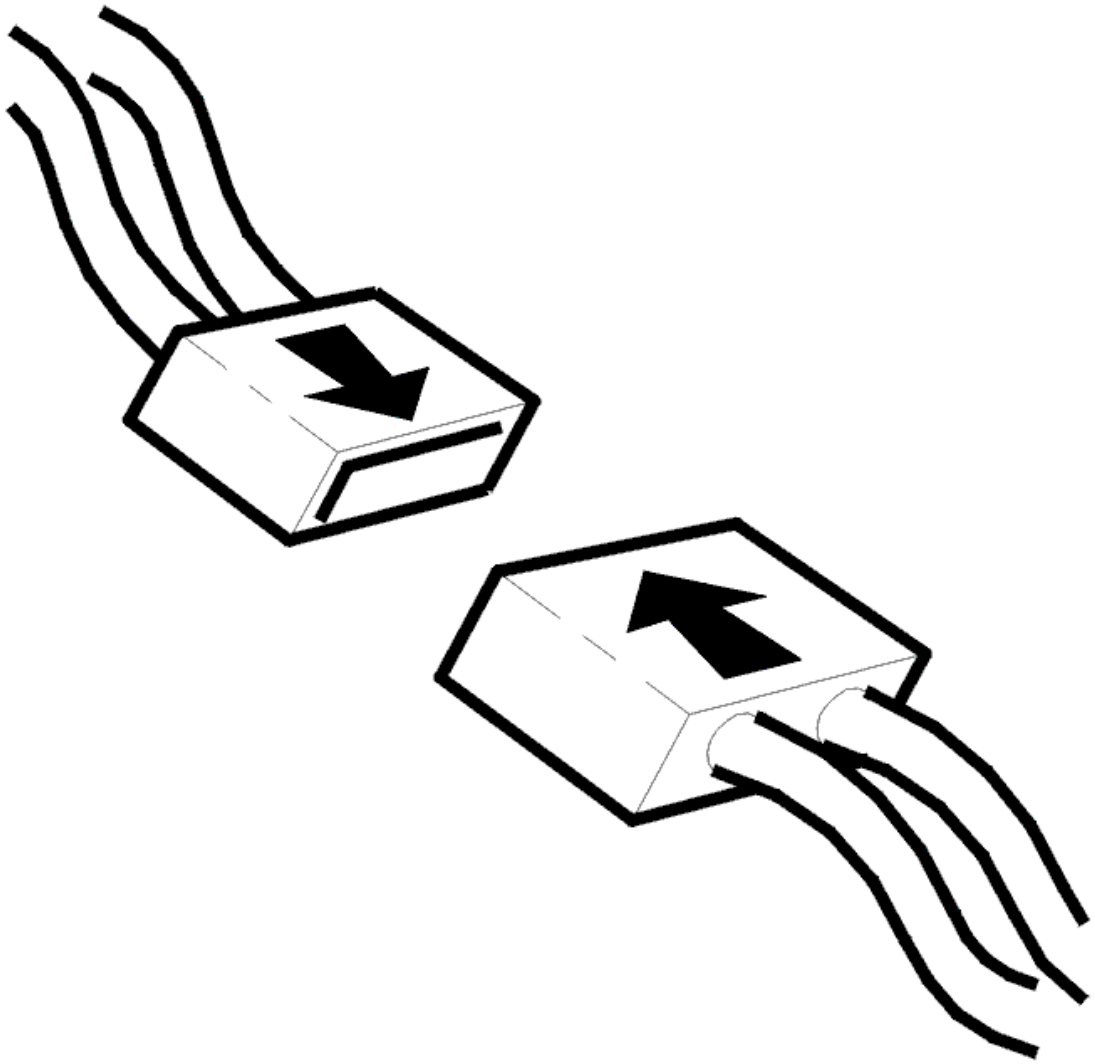

Fig. 90: Connecting Connector
Courtesy of VOLVO CARS CORPORATION

- Ignition off
- Reinstall the connectors, components etc.
- Ignition on.

  Check that the sound is heard from speaker for Audio module (AUD) by trying the radio FM/AM or the cd-player.

Is the function OK?

- **YES**

  VERIFIED: Troubleshooting has been completed.

- **NO**

  Refer to **INFORMATION**

INFORMATION

FAULT-TRACING INFORMATION

The fault should have been detected and remedied. As this is not the case fault-tracing has failed.

Exit fault-tracing for this diagnostic trouble code (DTC) or make another attempt.

AUD-0008: LOUDSPEAKER RIGHT FRONT. SIGNAL TOO HIGH / LOW (2003-2006)

DIAGNOSTIC TROUBLE CODE (DTC) INFORMATION AUD-0008

Condition

Diagnostic trouble code (DTC) AUD-0008 is stored if the audio module (AUD) registers that the signal on the signal cable from the loudspeaker in the right front door is too high or too low.

Diagnostic trouble code (DTC) AUD-0008 can be diagnosed when the ignition is on.

Substitute Value

- None.

Possible Source

- Short-circuit to supply voltage in the signal cable between the control module and the loudspeaker in the right front door
- Short-circuit to ground in the signal cable between the control module and the loudspeaker in the right front door.

Fault symptom[s]

- No sound from the loudspeakers.

SIGNAL TOO HIGH / LOW

CHECKING THE CABLE

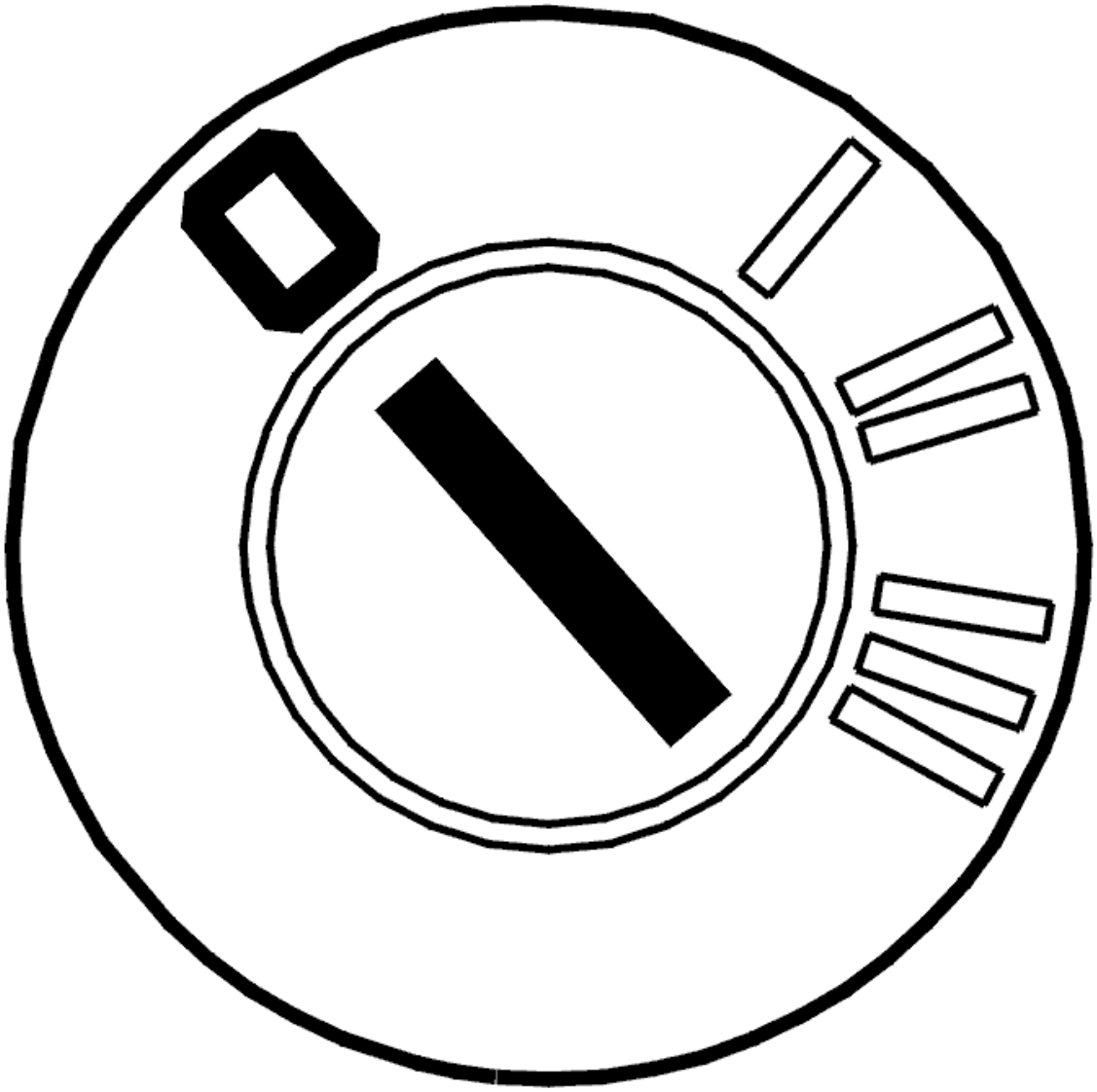

Fig. 91: Identifying Ignition OFF
Courtesy of VOLVO CARS CORPORATION

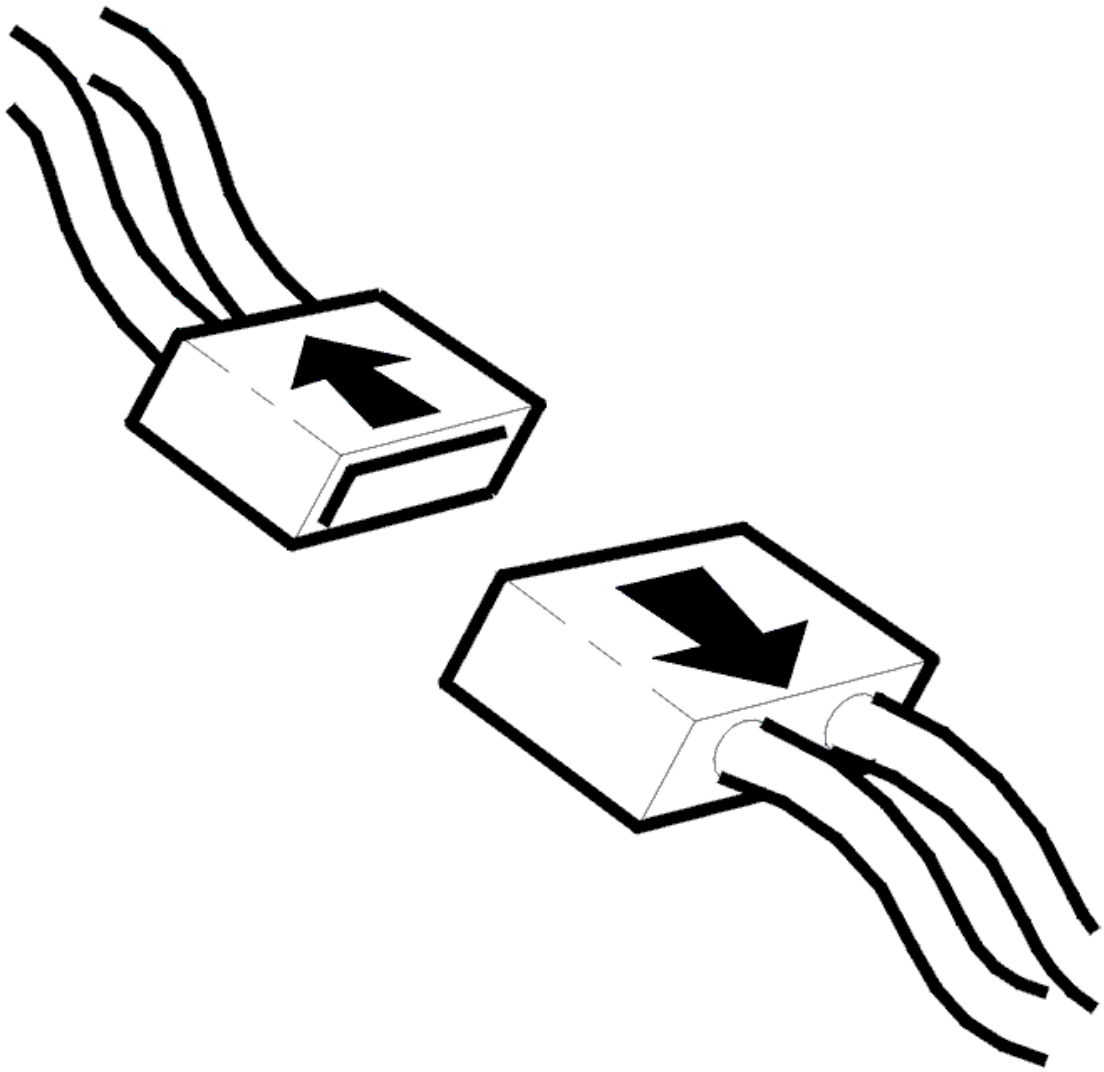

Fig. 92: Disconnecting Connector
Courtesy of VOLVO CARS CORPORATION

- Ignition off
- Disconnect the connector for the treble loudspeaker/upper loudspeaker in the right front door
- Disconnect the 16-pin connector for the audio module (AUD).

  HINT: The front right treble loudspeaker/upper loudspeaker and bass speaker are connected to these signal cables.

  Check the cable terminals in the female and male sections of the connector. The cable terminals must not be damaged or pressed back.

  Check the signal cable between audio module (AUD) terminal #B3 and treble speaker/upper loudspeaker terminal #2 in the front right door. Check for a short-circuit to ground. Check for a short-circuit to supply

voltage.

Check the signal cable between audio module (AUD) terminal #B11 and treble speaker/upper loudspeaker terminal #1 in the front right door. Check for a short-circuit to ground. Check for a short-circuit to supply voltage.

Remedy as necessary.

Other information:

- To connect the breakout box, see **CONNECTING THE BREAKOUT BOX**
- To access or replace the audio module (AUD), see **AUDIO MODULE (AUD), REPLACING**
- To access or replace the loudspeaker in the front side door, see **LOUDSPEAKER, FRONT SIDE DOOR, REPLACING**
- For information about signals, see **SIGNAL SPECIFICATION**
- see **CONTENTS** .

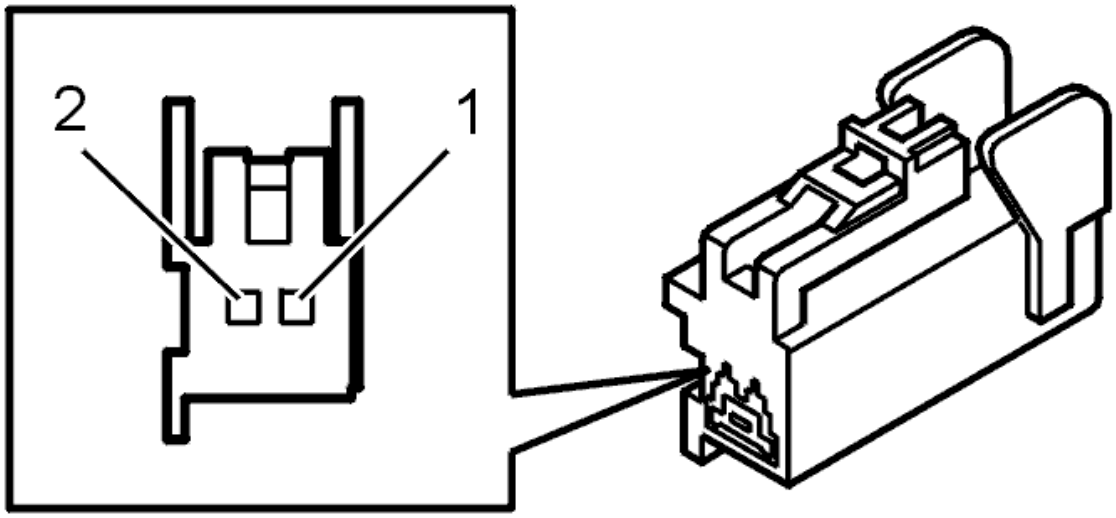

Fig. 93: Identifying 2-Bit Connector
Courtesy of VOLVO CARS CORPORATION

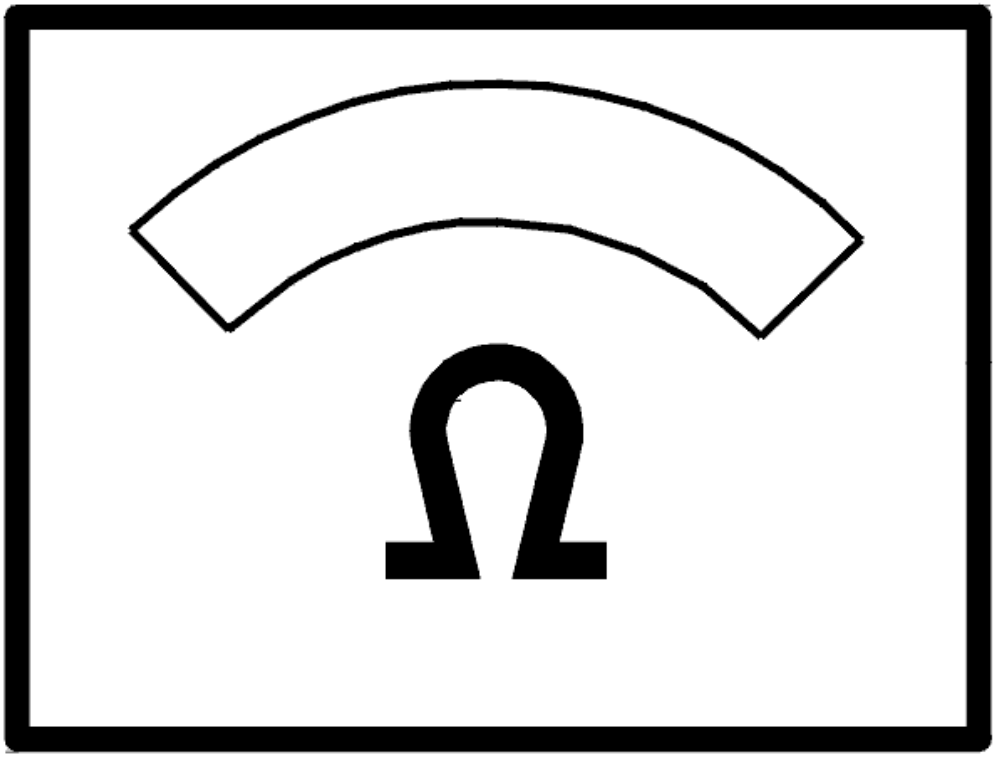

Fig. 94: Identifying Ohm Meter
Courtesy of VOLVO CARS CORPORATION

- **Continue**

  Refer to **VERIFICATION**

VERIFICATION

VERIFICATION

HINT: After carrying out the repair, check that the fault has been remedied.

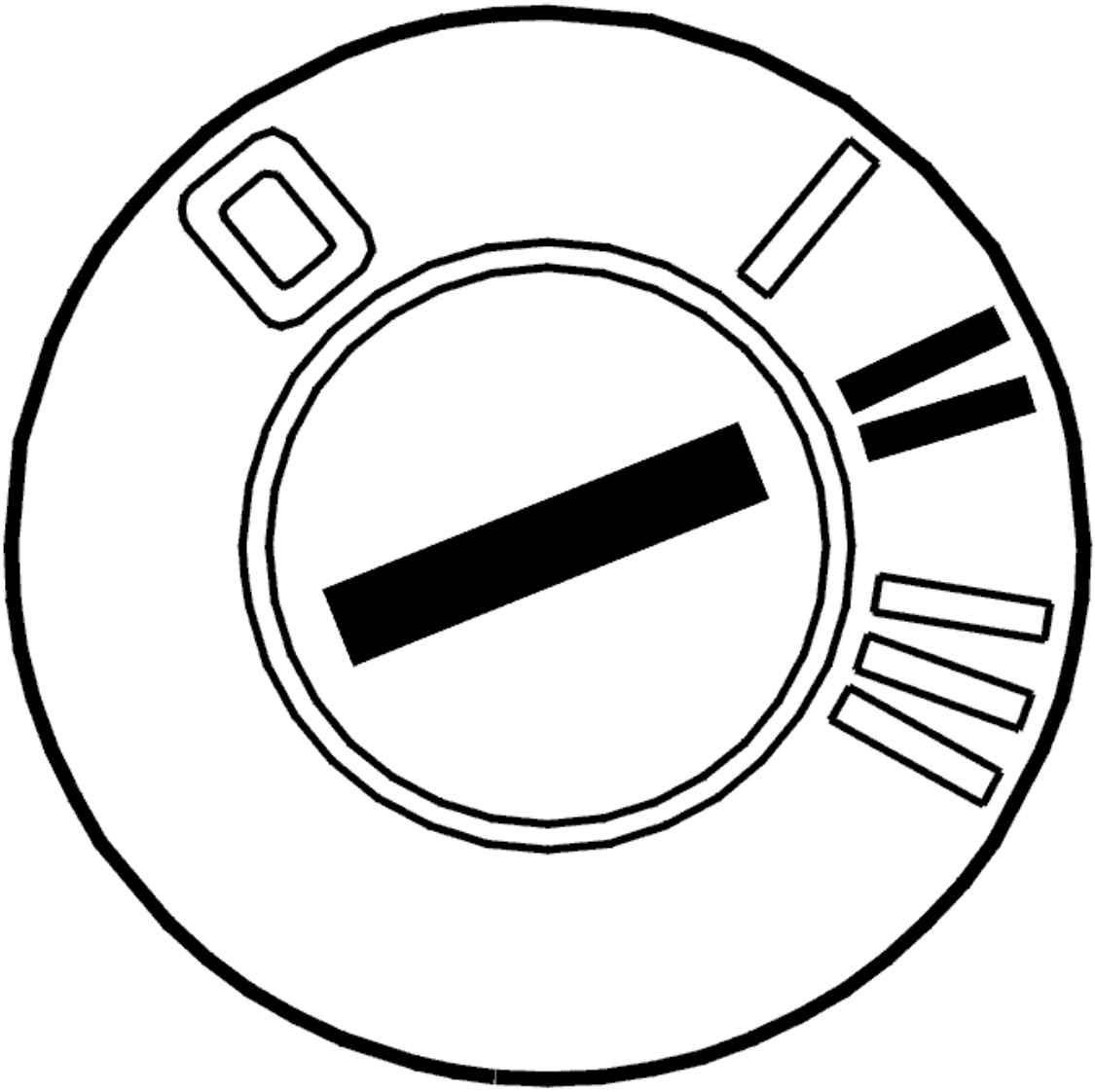

Fig. 95: Identifying Ignition ON
Courtesy of VOLVO CARS CORPORATION

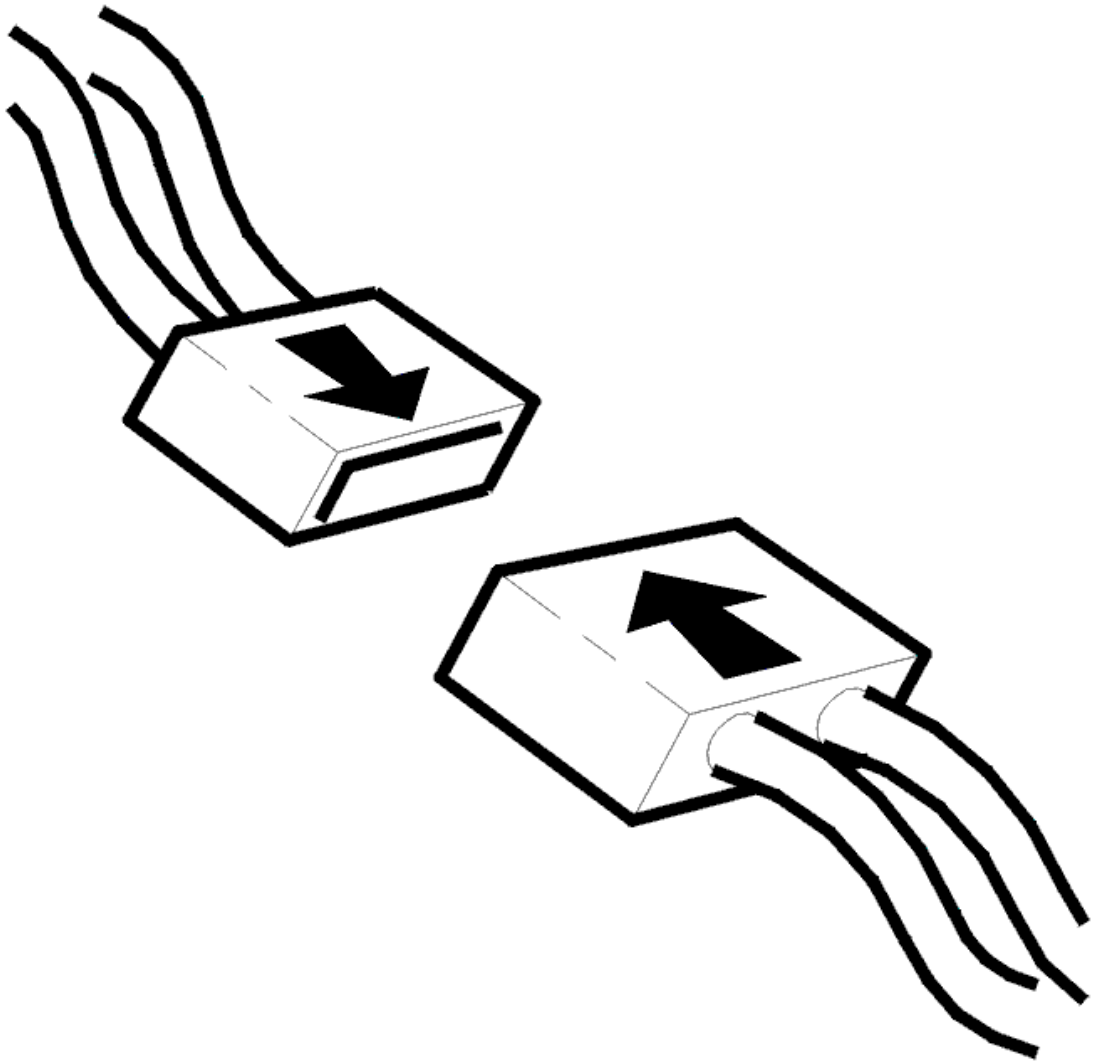

Fig. 96: Connecting Connector
Courtesy of VOLVO CARS CORPORATION

- Ignition off
- Reinstall the connectors, components etc.
- Ignition on.

  Check that sound can be heard from the loudspeakers from the Audio module (AUD) by trying the radio FM/AM, CD or MD player.

Do the loudspeakers work?

- **YES**

  VERIFIED: Troubleshooting has been completed.

- **NO**

  Refer to **INFORMATION**

INFORMATION

FAULT-TRACING INFORMATION

The fault should have been detected and remedied. As this is not the case fault-tracing has failed.

Exit fault-tracing for this diagnostic trouble code (DTC) or make another attempt.

AUD-0009: LOUDSPEAKER LEFT REAR. SHORT-CIRCUIT TO GROUND (2007-2011)

DIAGNOSTIC TROUBLE CODE (DTC) INFORMATION AUD-0009

Condition

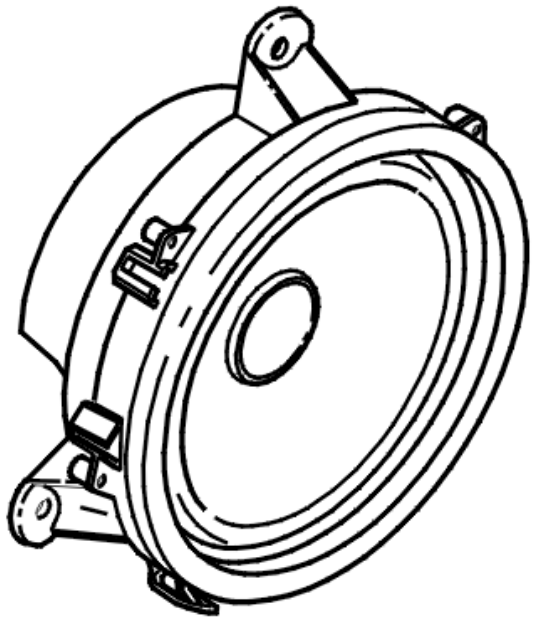

Fig. 97: Identifying Loudspeaker
Courtesy of VOLVO CARS CORPORATION

The diagnostic trouble code (DTC) is stored if the Audio module (AUD) registers that the signal on the signal

cable to the rear left loudspeaker is too low.

The diagnostic trouble code can only be diagnosed when voltage is on (12 V). In other words, the diagnostic trouble code (DTC) can only be diagnosed when the ignition is turned from position 0 to positions II.

Substitute Value

- None.

Possible Source

- The signal cable between the rear left-hand loudspeaker and the control module has a short-circuit to ground.

Fault symptom[s]

- No sound from the loudspeakers.

SHORT-CIRCUIT TO GROUND

CHECKING THE CABLE

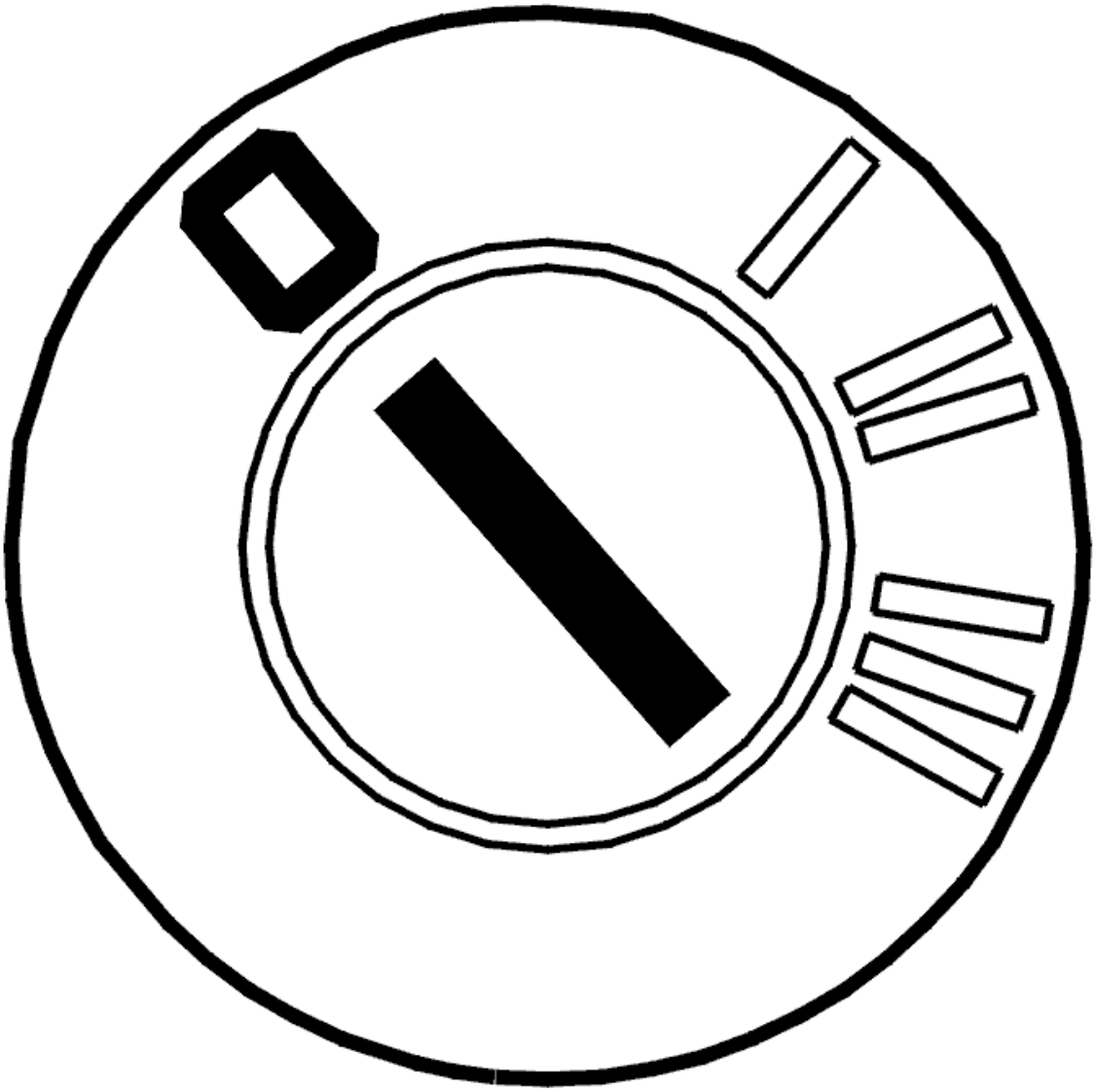

Fig. 98: Identifying Ignition OFF
Courtesy of VOLVO CARS CORPORATION

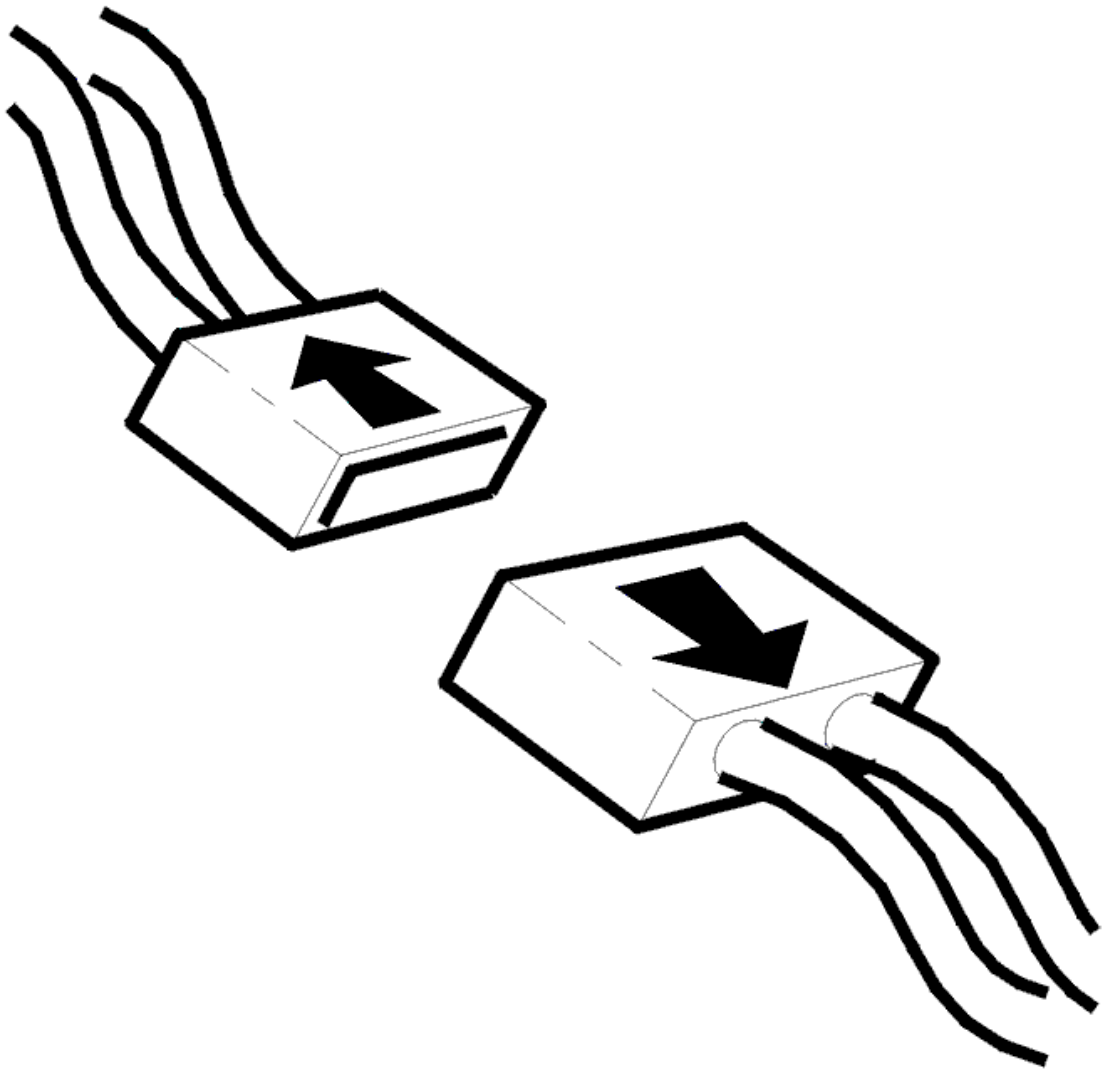

Fig. 99: Disconnecting Connector
Courtesy of VOLVO CARS CORPORATION

- Ignition off
- Disconnect the connector for the rear left-hand treble loudspeaker/upper loudspeaker.
- Disconnect the 16-pin connector for the audio module (AUD).

HINT: Both the treble loudspeakers and left-hand rear loudspeakers are connected on the following signal cables.

Check the cable terminals in the female and male sections of the connector. The cable terminals must not be damaged or pressed back.

Check the signal cable between the Audio module (AUD) terminal #B4 and the treble/upper loudspeaker terminal #2, left rear. Check for a short-circuit to ground.

Check the signal cable between the Audio module (AUD) terminal #B12 and the treble/upper loudspeaker terminal #1, left rear. Check for a short-circuit to ground.

Remedy as necessary.

Other information

- see **CONNECTING THE BREAKOUT BOX**
- see **AUDIO MODULE (AUD), REPLACING**
- see **LOUDSPEAKER, REAR SIDE DOOR, REPLACING**
- see **SIGNAL SPECIFICATION**
- see **CHECKING WIRING AND TERMINALS**

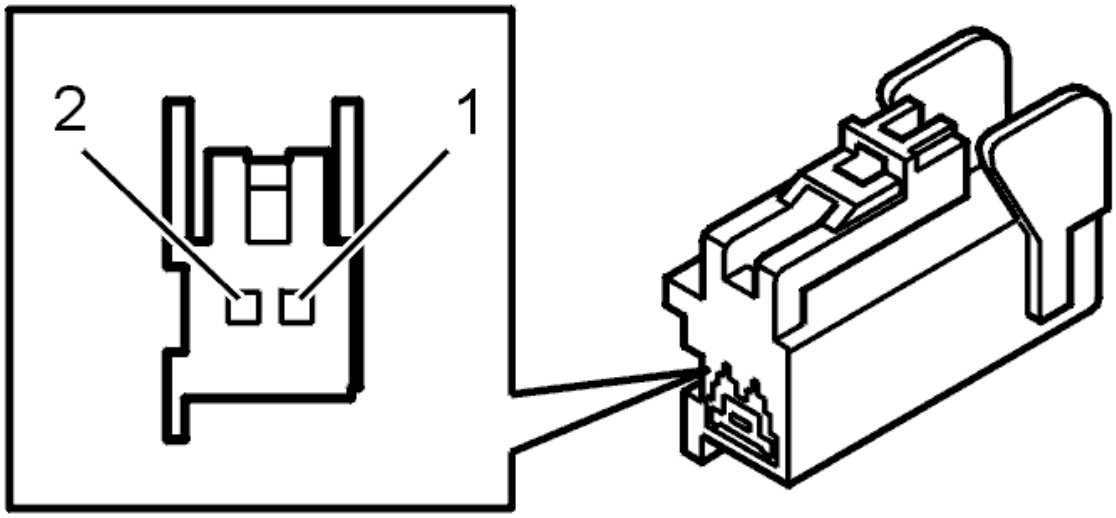

Fig. 100: Identifying 2-Bit Connector
Courtesy of VOLVO CARS CORPORATION

- **Continue**

Refer to **VERIFICATION**

VERIFICATION

VERIFICATION

HINT: After carrying out the repair, check that the fault has been remedied.

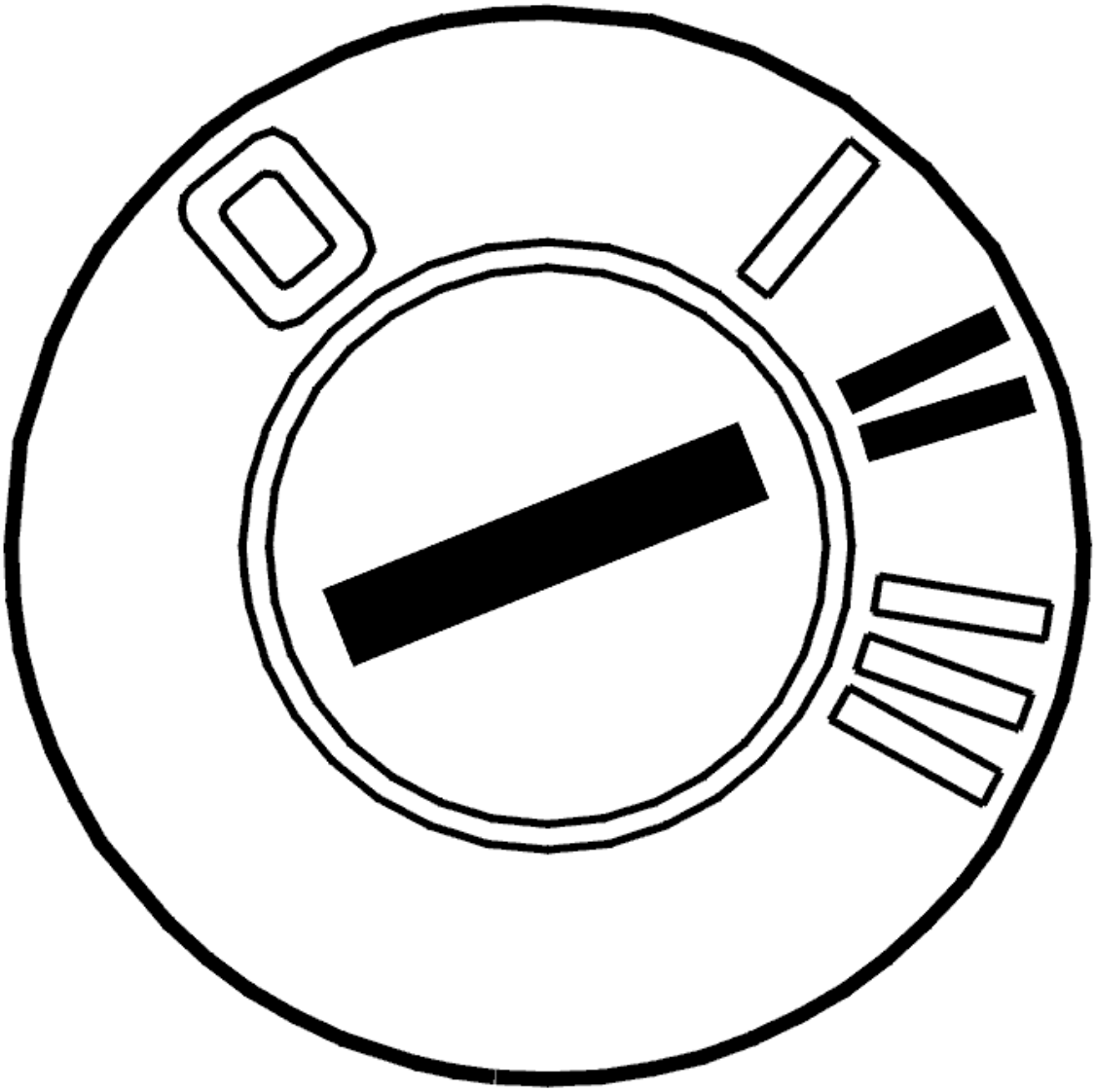

Fig. 101: Identifying Ignition ON
Courtesy of VOLVO CARS CORPORATION

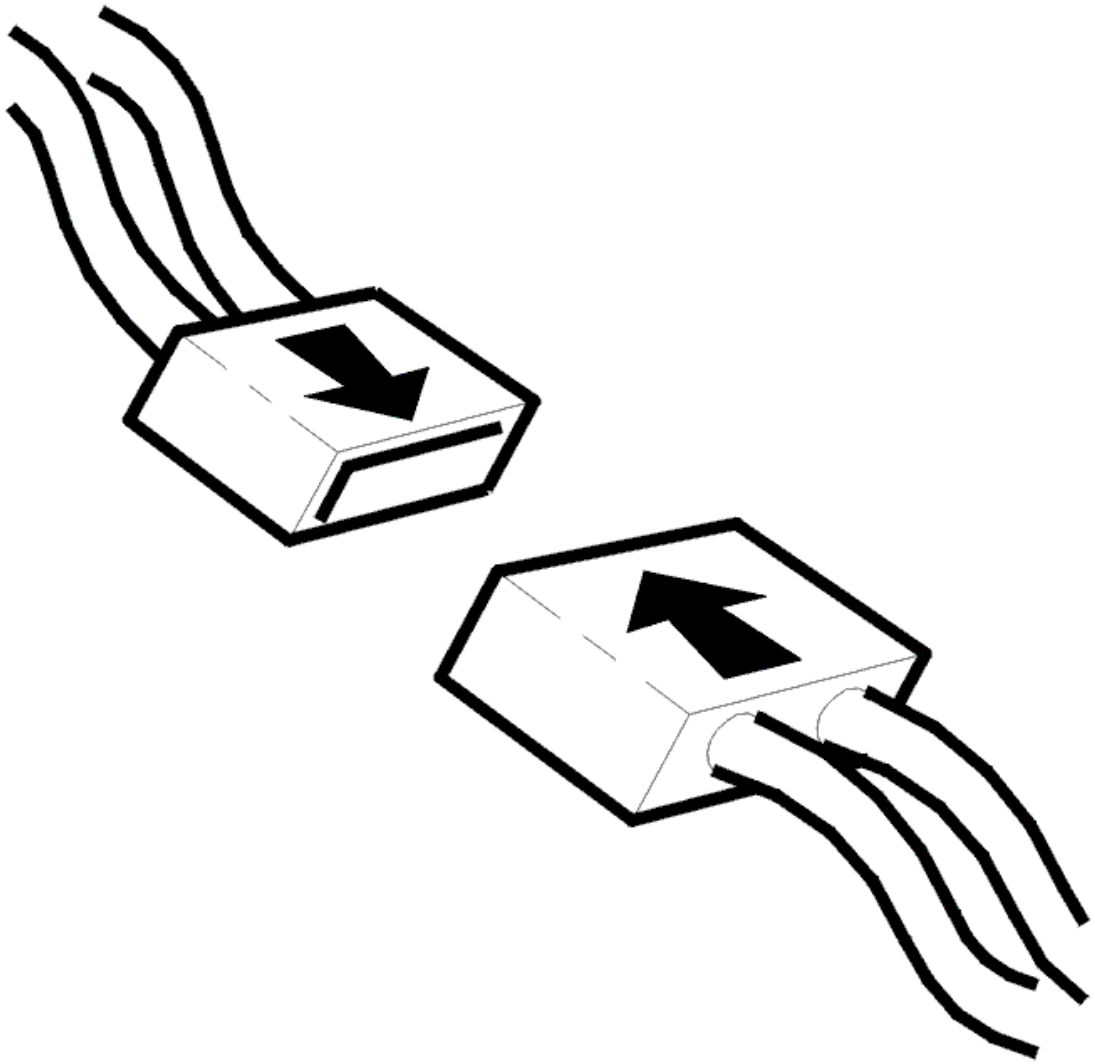

Fig. 102: Connecting Connector
Courtesy of VOLVO CARS CORPORATION

- Ignition off
- Reinstall the connectors, components etc.
- Ignition on.

  Check that the sound is heard from speaker for Audio module (AUD) by trying the radio FM/AM or the cd-player.

Is the function OK?

- **YES**

  VERIFIED: Troubleshooting has been completed.

- **NO**

  Refer to **INFORMATION**

INFORMATION

FAULT-TRACING INFORMATION

The fault should have been detected and remedied. As this is not the case fault-tracing has failed.

Exit fault-tracing for this diagnostic trouble code (DTC) or make another attempt.

AUD-0009: LOUDSPEAKER LEFT REAR. SIGNAL TOO HIGH / LOW (2003-2006)

DIAGNOSTIC TROUBLE CODE (DTC) INFORMATION AUD-0009

Condition

Diagnostic trouble code (DTC) AUD-0009 is stored if the audio module (AUD) registers that the signal on the signal cable from the loudspeaker in the left rear door is too high or too low.

Diagnostic trouble code (DTC) AUD-0009 can be diagnosed when the ignition is on.

Substitute Value

- None.

Possible Source

- Short-circuit to supply voltage in the signal cable between the control module and the loudspeaker in the left rear door
- Short-circuit to ground in the signal cable between the control module and the loudspeaker in the left rear door.

Fault symptom[s]

- No sound from the loudspeakers.

SIGNAL TOO HIGH / LOW

CHECKING THE CABLE

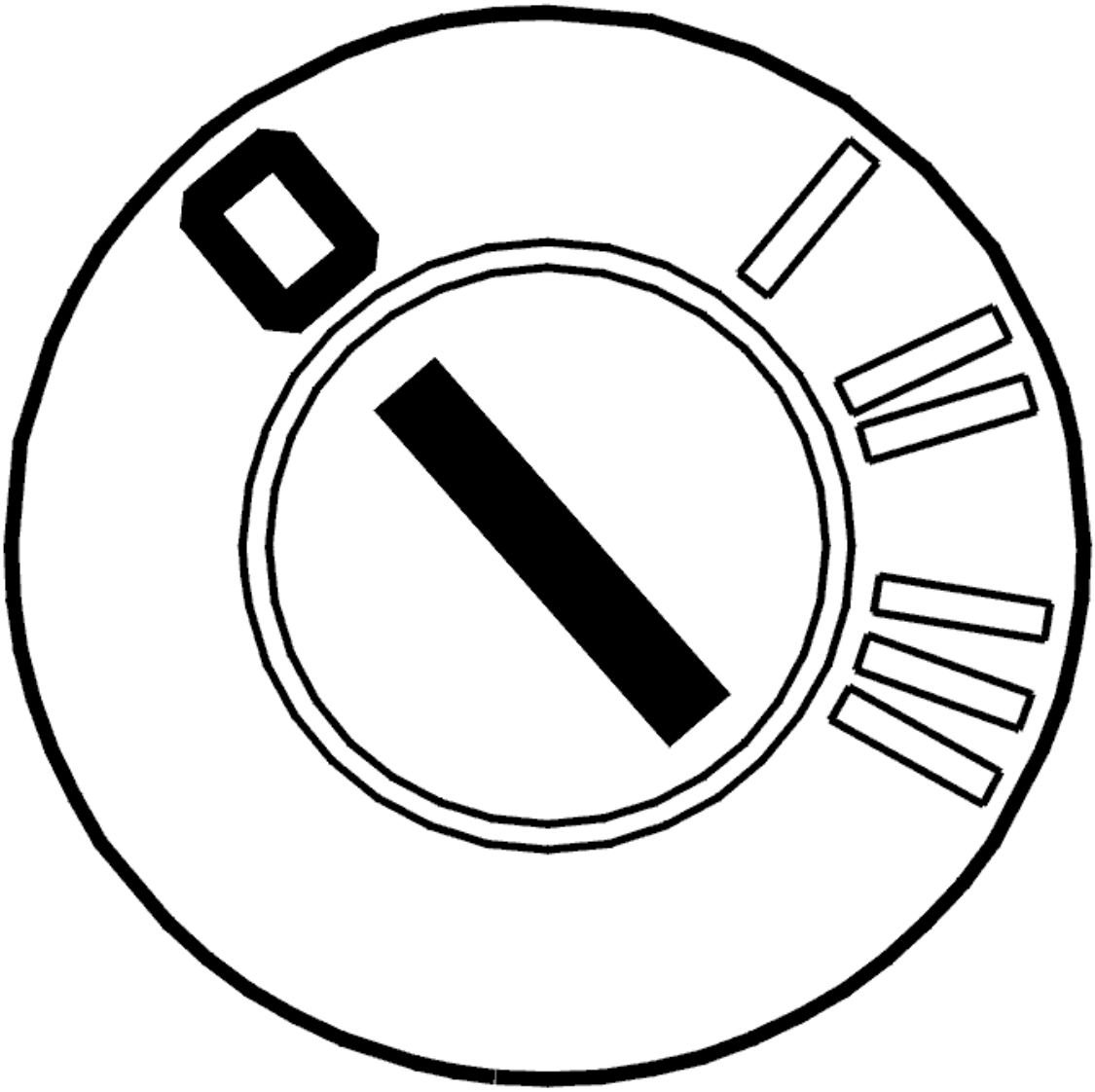

Fig. 103: Identifying Ignition OFF
Courtesy of VOLVO CARS CORPORATION

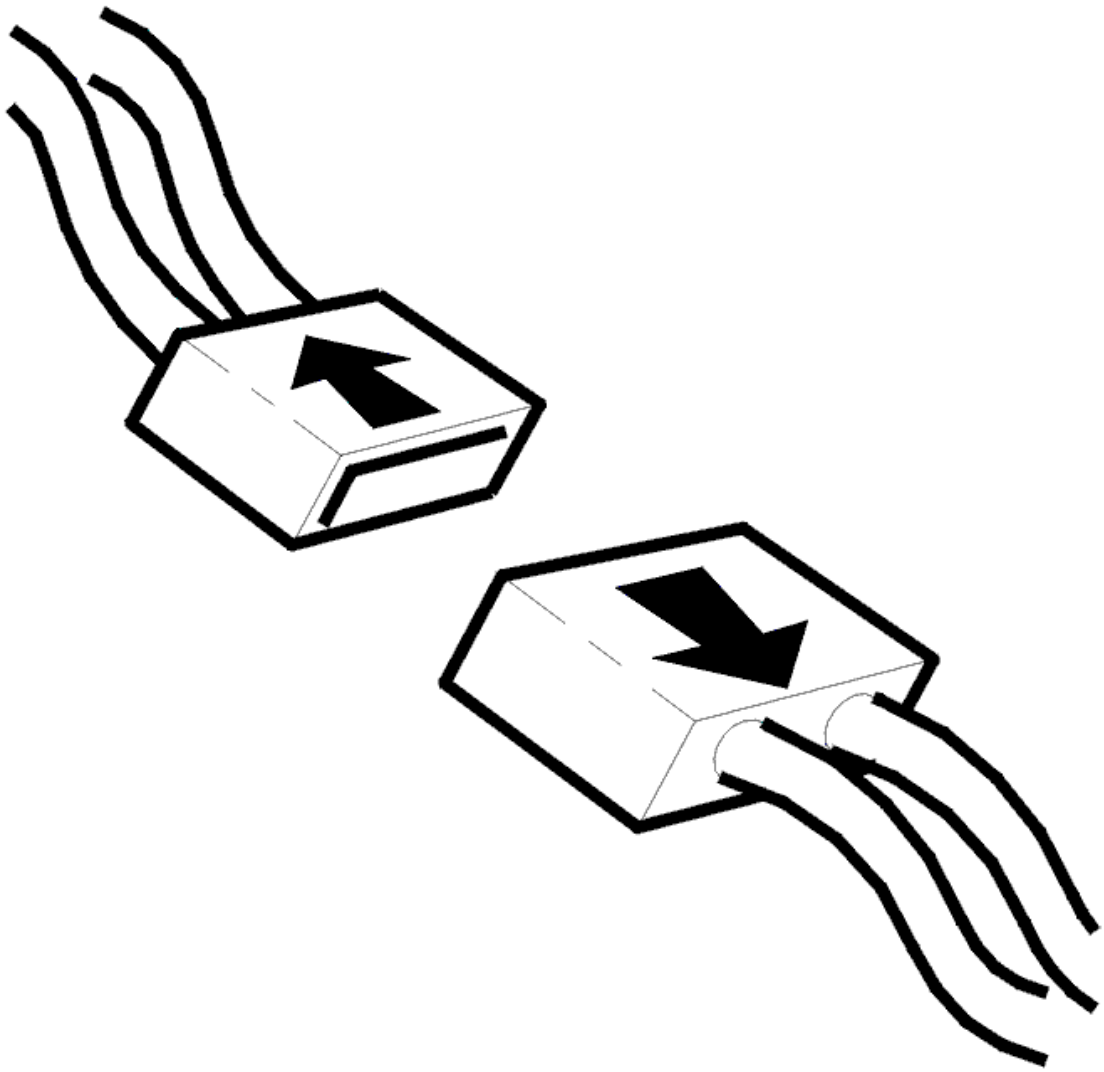

Fig. 104: Disconnecting Connector
Courtesy of VOLVO CARS CORPORATION

- Ignition off
- Disconnect the connector for the treble loudspeaker in the left-hand D-post
- Disconnect the 16-pin connector for the audio module (AUD).

  HINT: The treble loudspeaker in the left-hand D-post and the loudspeaker in the left-hand rear door are connected to these signal cables.

  Check the cable terminals in the female and male sections of the connector. The cable terminals must not be damaged or pressed back.

  Check the signal cable between audio module (AUD) terminal #B4 and loudspeaker terminal #2 in the left D-post. Check for a short-circuit to ground. Check for a short-circuit to supply voltage.

Check the signal cable between audio module (AUD) terminal #B12 and loudspeaker terminal #1 in the left D-post. Check for a short-circuit to ground. Check for a short-circuit to supply voltage.

Remedy as necessary.

Other information:

- To connect the breakout box, see **CONNECTING THE BREAKOUT BOX**
- To access or replace the audio module (AUD), see **AUDIO MODULE (AUD), REPLACING**
- To access or replace the loudspeaker in the rear side door, see **LOUDSPEAKER, REAR SIDE DOOR, REPLACING**
- To access or replace the loudspeaker in the D-post, see **LOUDSPEAKER, D-POST, REPLACING**
- For information about signals, see **SIGNAL SPECIFICATION**
- see **CONTENTS** .

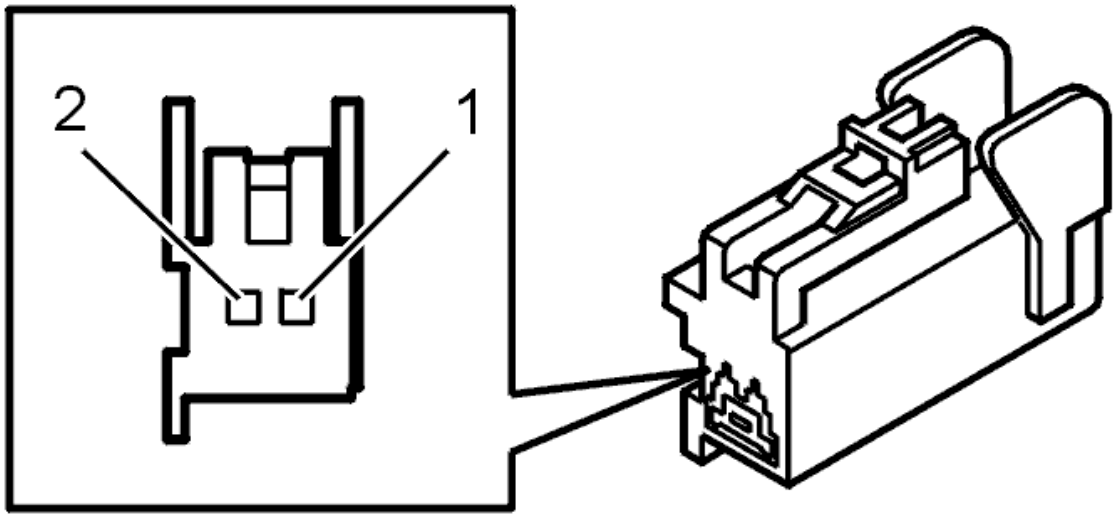

Fig. 105: Identifying 2-Bit Connector
Courtesy of VOLVO CARS CORPORATION

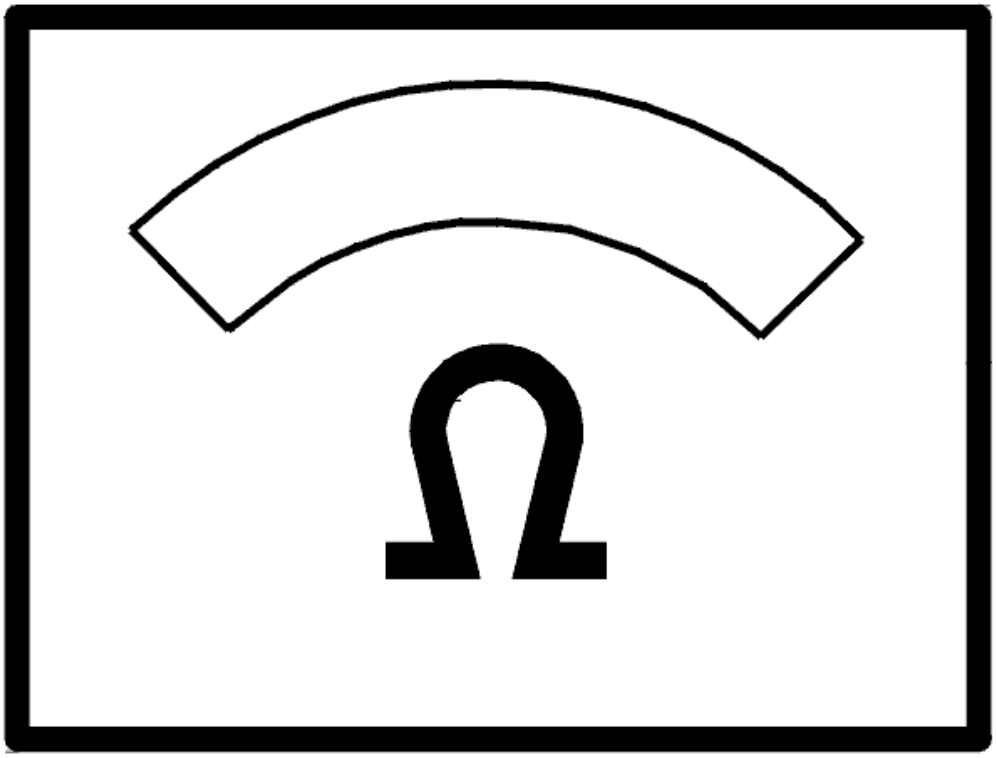

Fig. 106: Identifying Ohm Meter
Courtesy of VOLVO CARS CORPORATION

- **Continue**

  Refer to **VERIFICATION**

VERIFICATION

VERIFICATION

HINT: After carrying out the repair, check that the fault has been remedied.

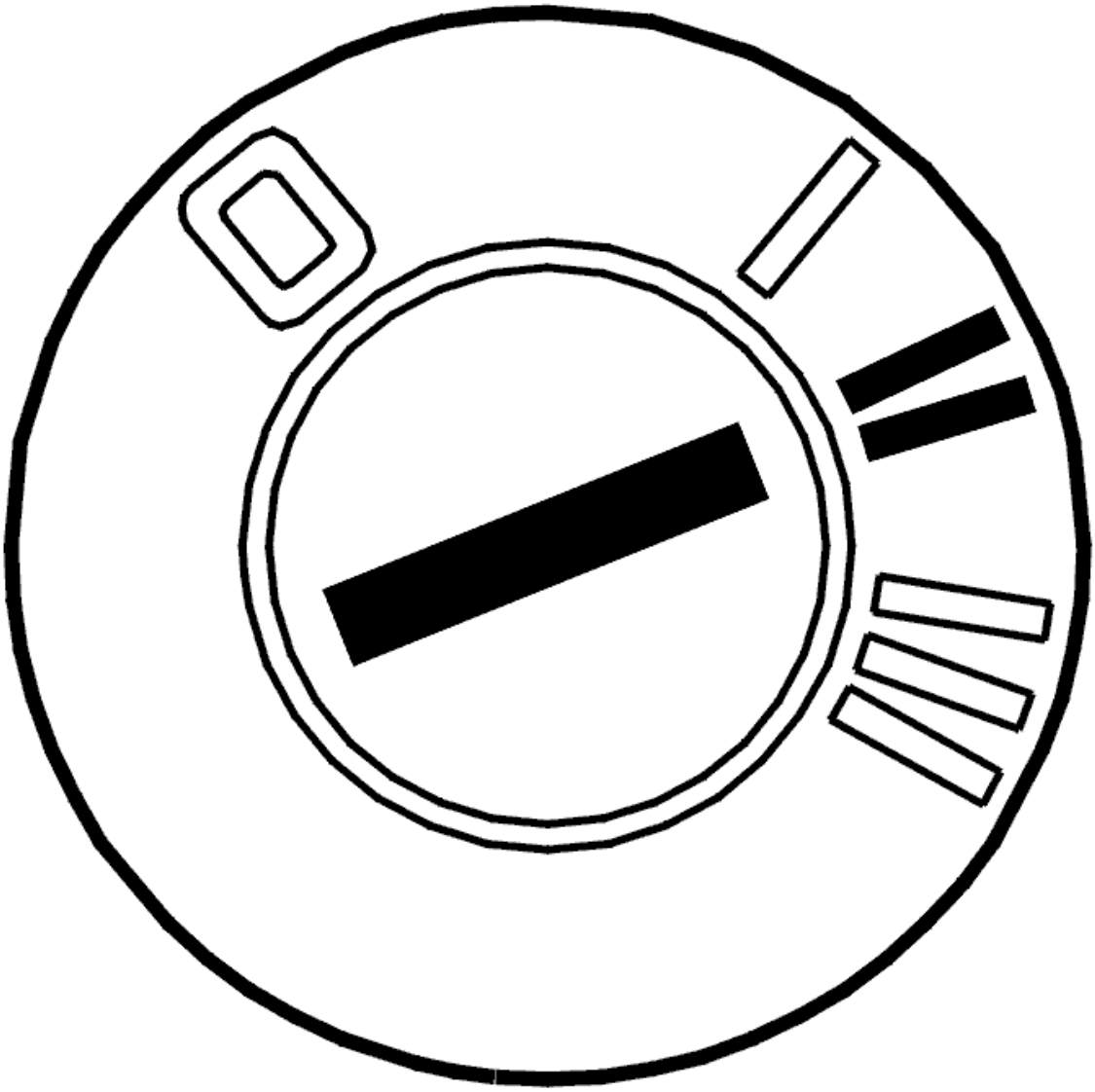

Fig. 107: Identifying Ignition ON
Courtesy of VOLVO CARS CORPORATION

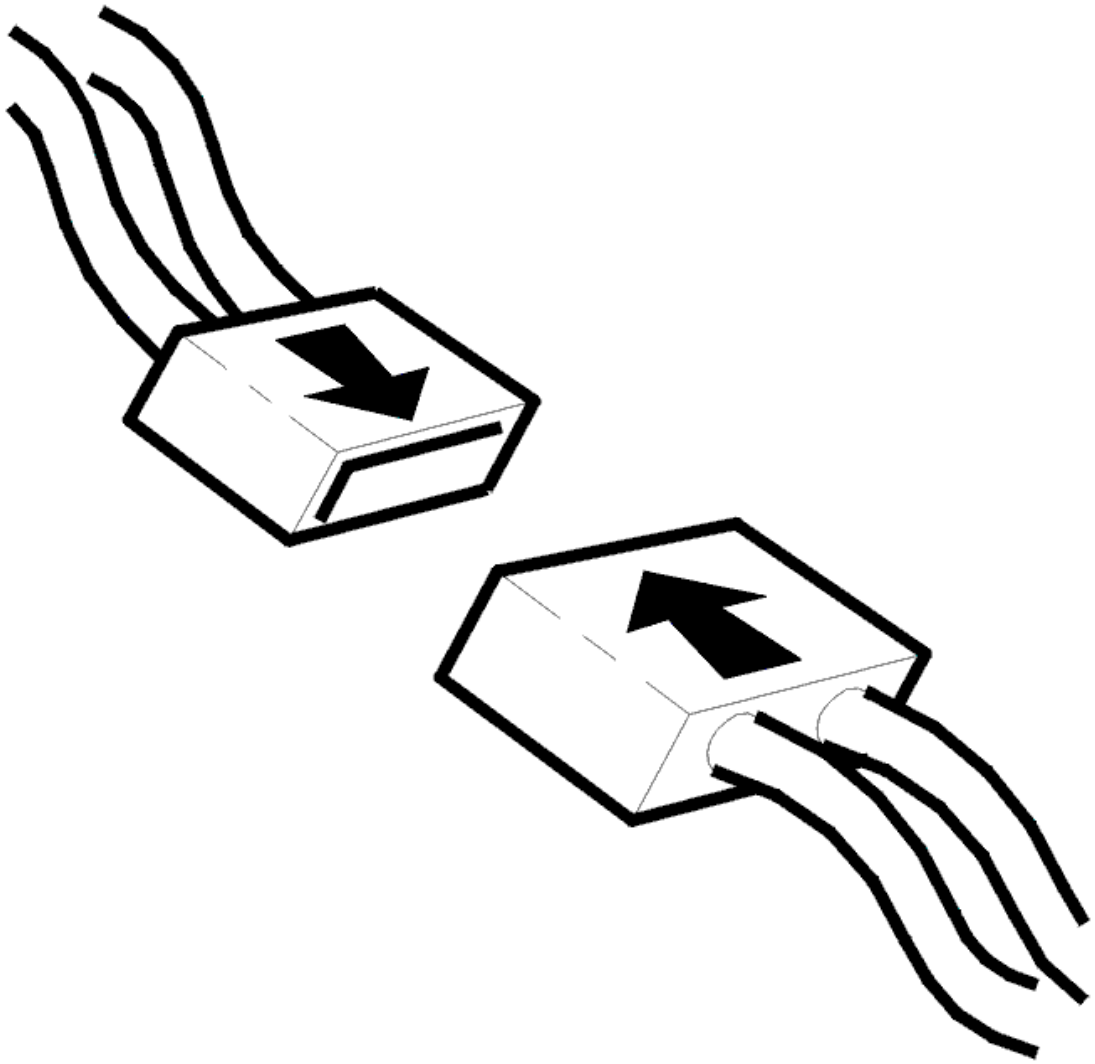

Fig. 108: Connecting Connector
Courtesy of VOLVO CARS CORPORATION

- Ignition off
- Reinstall the connectors, components etc.
- Ignition on.

  Check that sound can be heard from the loudspeakers from the Audio module (AUD) by trying the radio FM/AM, CD or MD player.

Do the loudspeakers work?

- **YES**

  VERIFIED: Troubleshooting has been completed.

- **NO**

  Refer to **INFORMATION**

INFORMATION

FAULT-TRACING INFORMATION

The fault should have been detected and remedied. As this is not the case fault-tracing has failed.

Exit fault-tracing for this diagnostic trouble code (DTC) or make another attempt.

AUD-000A: LOUDSPEAKER RIGHT REAR. SHORT-CIRCUIT TO GROUND (2007-2011)

DIAGNOSTIC TROUBLE CODE (DTC) INFORMATION AUD-000A

Condition

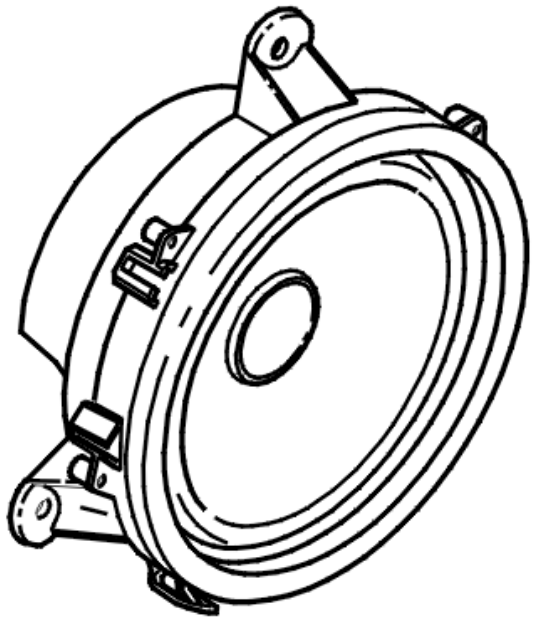

Fig. 109: Identifying Loudspeaker
Courtesy of VOLVO CARS CORPORATION

If the Audio module (AUD) registers too high or too low signal on the signal cable to the rear right loudspeaker,

the diagnostic trouble code is generated.

The diagnostic trouble code can be diagnosed when Audio module (AUD) is activated.

Substitute Value

- None.

Possible Source

- The signal cable between the rear right-hand loudspeaker and the control module has a short-circuit to ground.

Fault symptom[s]

- No sound from the loudspeakers.

SHORT-CIRCUIT TO GROUND

CHECKING THE CABLE

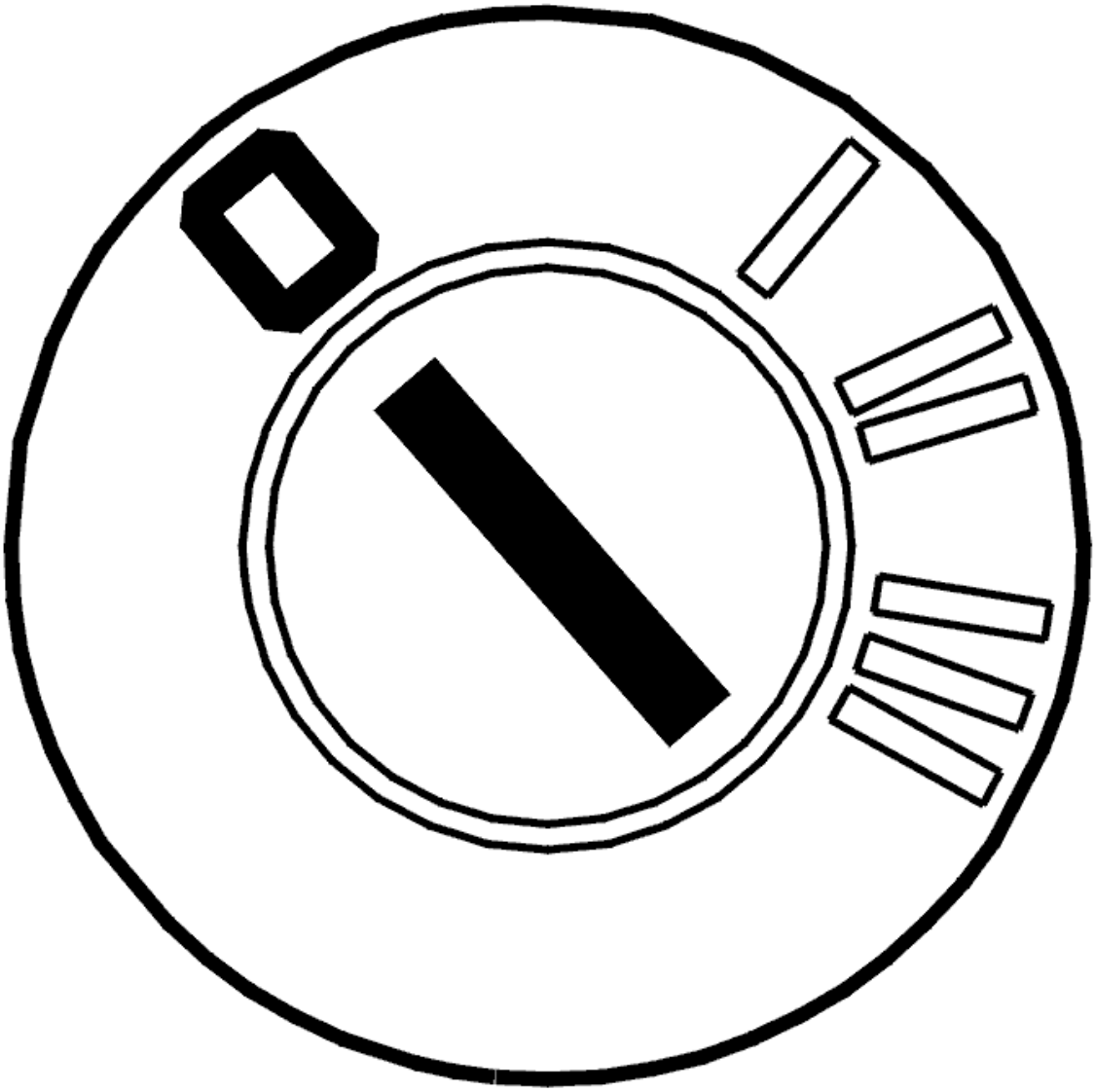

Fig. 110: Identifying Ignition OFF
Courtesy of VOLVO CARS CORPORATION

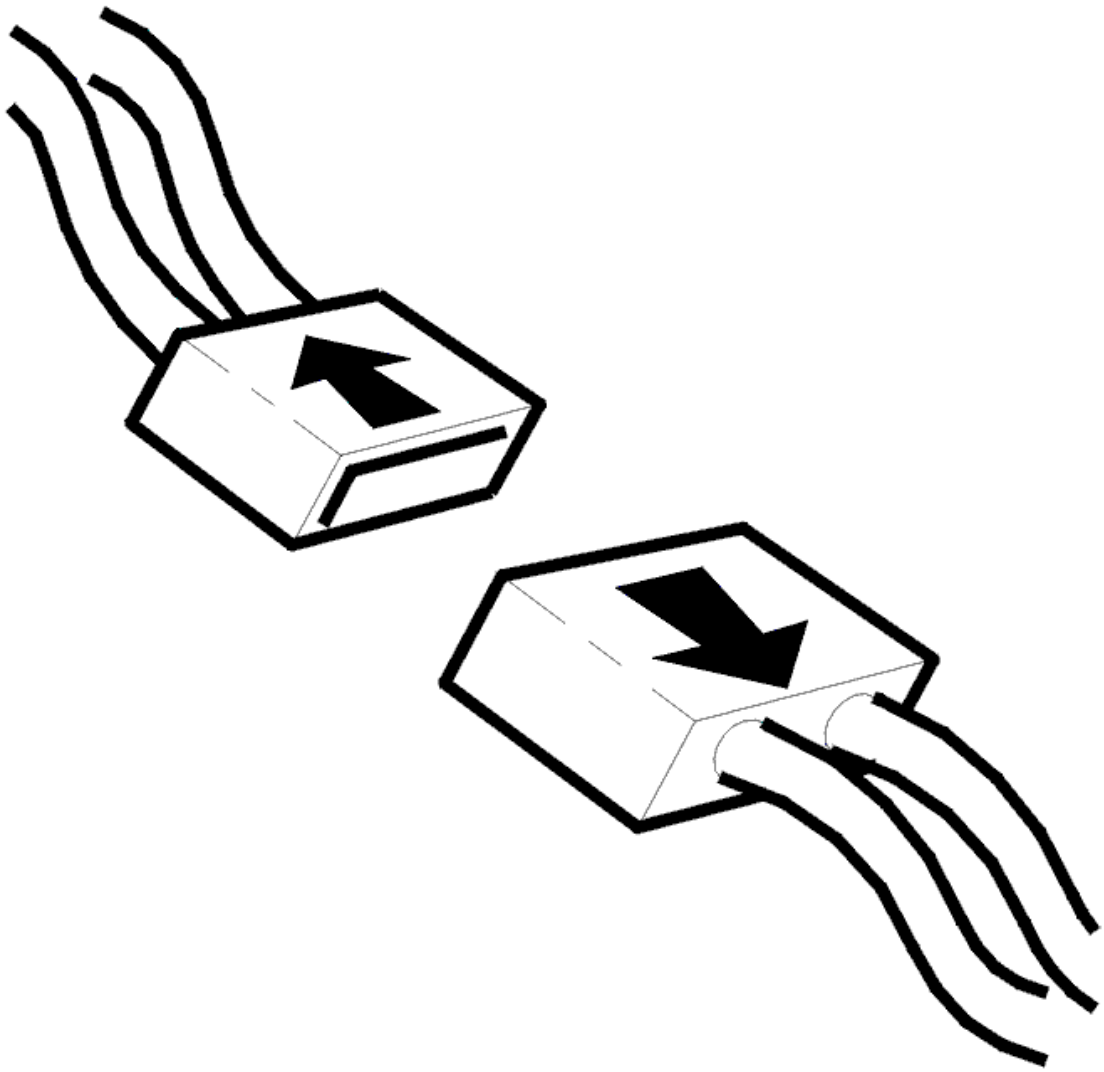

Fig. 111: Disconnecting Connector
Courtesy of VOLVO CARS CORPORATION

- Ignition off
- Disconnect the connector for the rear right-hand treble loudspeaker/upper loudspeaker.
- Disconnect the 16-pin connector for the audio module (AUD).

  HINT: Both the treble loudspeakers and right-hand rear loudspeakers are connected on the following signal cables.

  Check the cable terminals in the female and male sections of the connector. The cable terminals must not be damaged or pressed back.

  Check the signal cable between the Audio module (AUD) terminal #B5 and the rear right loudspeaker terminal #2. Check for a short-circuit to ground.

Check the signal cable between the Audio module (AUD) terminal #B13 and the rear right loudspeaker terminal #1. Check for a short-circuit to ground.

Remedy as necessary.

Other information

- see **CONNECTING THE BREAKOUT BOX**
- see **AUDIO MODULE (AUD), REPLACING**
- see **LOUDSPEAKER, REAR SIDE DOOR, REPLACING**
- see **SIGNAL SPECIFICATION**
- see **CHECKING WIRING AND TERMINALS**

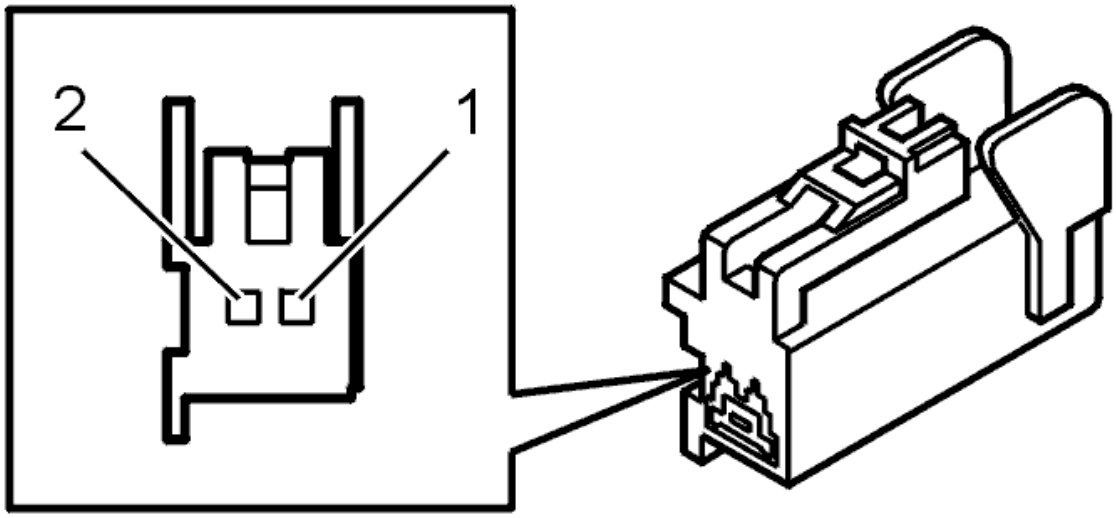

Fig. 112: Identifying 2-Bit Connector
Courtesy of VOLVO CARS CORPORATION

- **Continue**

Refer to **VERIFICATION**

VERIFICATION

VERIFICATION

HINT: After carrying out the repair, check that the fault has been remedied.

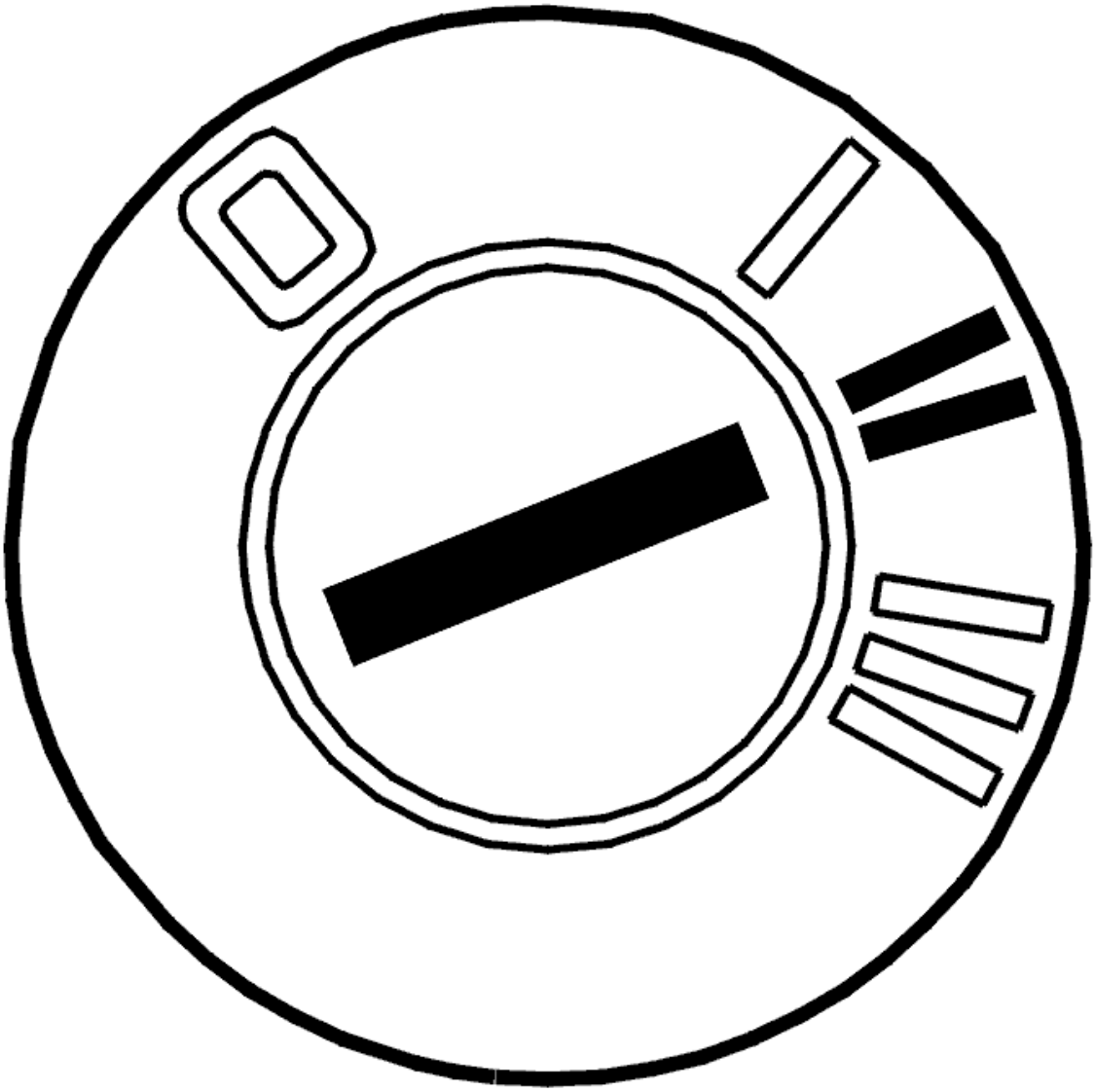

Fig. 113: Identifying Ignition ON
Courtesy of VOLVO CARS CORPORATION

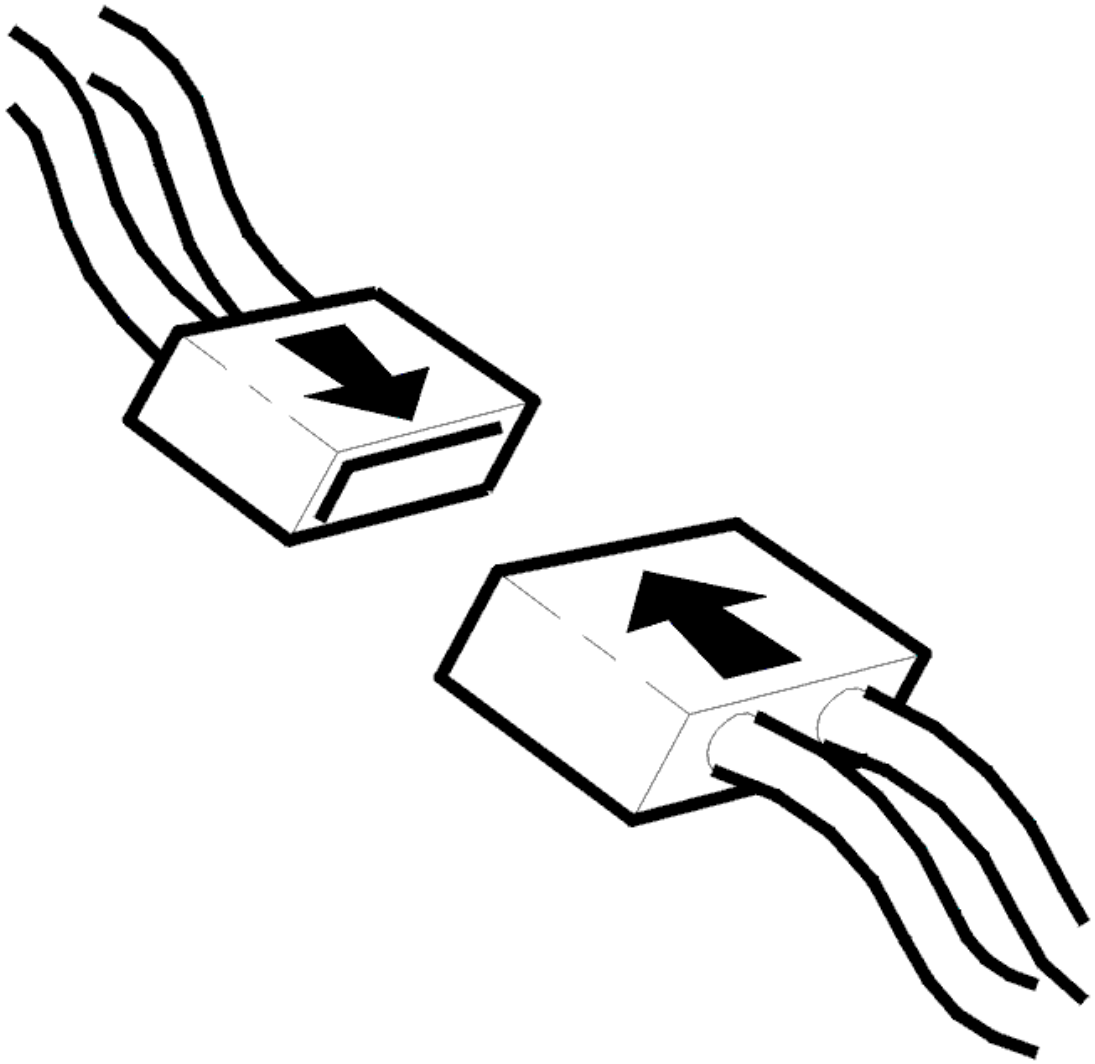

Fig. 114: Connecting Connector
Courtesy of VOLVO CARS CORPORATION

- Ignition off
- Reinstall the connectors, components etc.
- Ignition on.

  Check that the sound is heard from speaker for Audio module (AUD) by trying the radio FM/AM or the cd-player.

Is the function OK?

- **YES**

  VERIFIED: Troubleshooting has been completed.

- **NO**

  Refer to **INFORMATION**

INFORMATION

FAULT-TRACING INFORMATION

The fault should have been detected and remedied. As this is not the case fault-tracing has failed.

Exit fault-tracing for this diagnostic trouble code (DTC) or make another attempt.

AUD-000A: LOUDSPEAKER RIGHT REAR. SIGNAL TOO HIGH / LOW (2003-2006)

DIAGNOSTIC TROUBLE CODE (DTC) INFORMATION AUD-000A

Condition

Diagnostic trouble code (DTC) AUD-000A is stored if the audio module (AUD) registers that the signal on the signal cable from the loudspeaker in the right rear door is too high or too low.

Diagnostic trouble code (DTC) AUD-000A can be diagnosed when the ignition is on.

Substitute Value

- None.

Possible Source

- Short-circuit to supply voltage in the signal cable between the control module and the loudspeaker in the right rear door
- Short-circuit to ground in the signal cable between the control module and the loudspeaker in the right rear door.

Fault symptom[s]

- No sound from the loudspeakers.

SIGNAL TOO HIGH / LOW

CHECKING THE CABLE

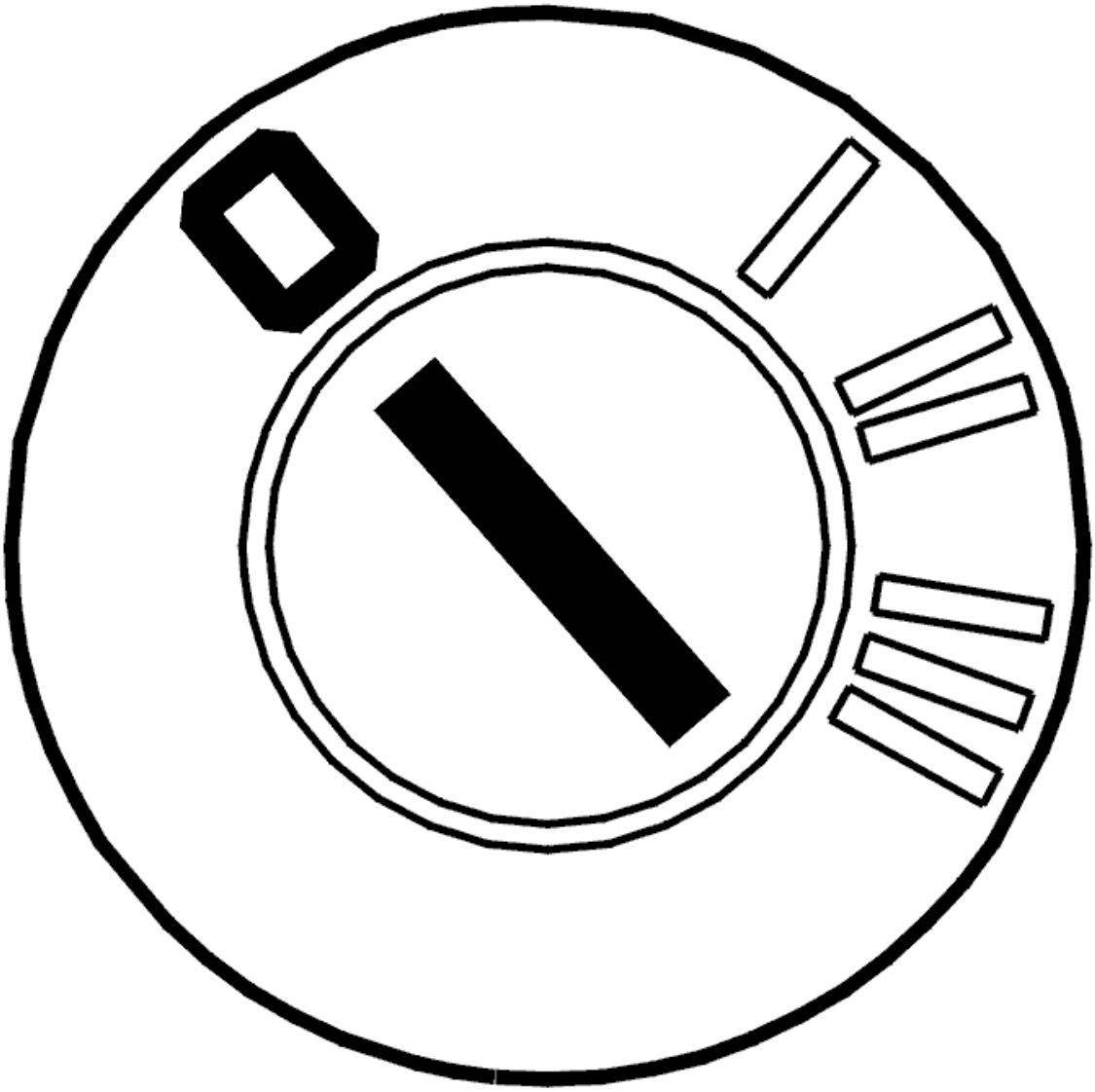

Fig. 115: Identifying Ignition OFF
Courtesy of VOLVO CARS CORPORATION

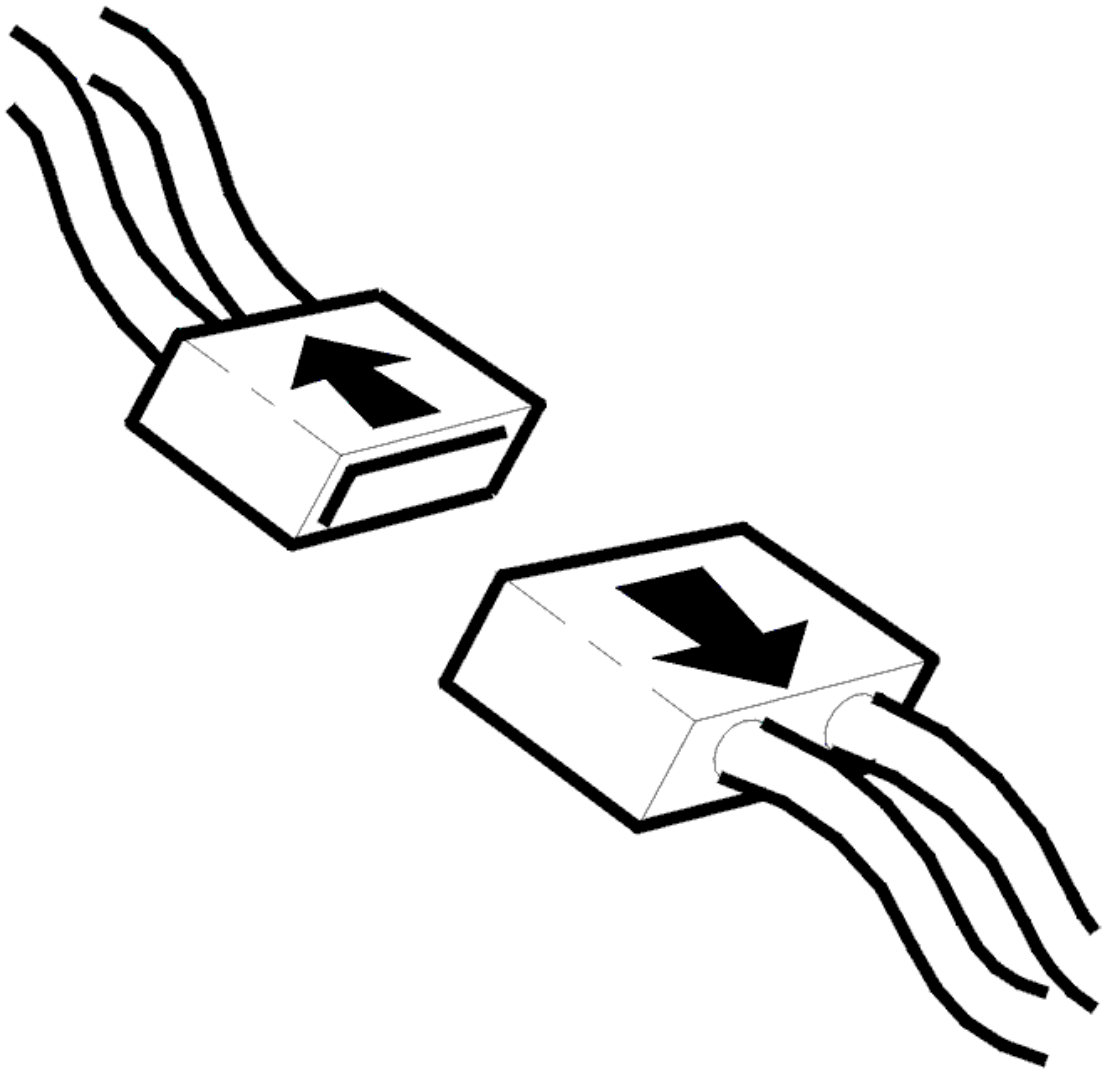

Fig. 116: Disconnecting Connector
Courtesy of VOLVO CARS CORPORATION

- Ignition off
- Disconnect the connector for the treble loudspeaker in the right-hand D-post
- Disconnect the 16-pin connector for the audio module (AUD).

  HINT: The treble loudspeaker in the right-hand D-post and the loudspeaker in the right-hand rear door are connected to these signal cables.

  Check the cable terminals in the female and male sections of the connector. The cable terminals must not be damaged or pressed back.

  Check the signal cable between audio module (AUD) terminal #B5 and loudspeaker terminal #2 in the right-hand D-post. Check for a short-circuit to ground. Check for a short-circuit to supply voltage.

Check the signal cable between audio module (AUD) terminal #B13 and loudspeaker terminal #1 in the right-hand D-post. Check for a short-circuit to ground. Check for a short-circuit to supply voltage.

Remedy as necessary.

Other information:

- To connect the breakout box, see **CONNECTING THE BREAKOUT BOX**
- To access or replace the audio module (AUD), see **AUDIO MODULE (AUD), REPLACING**
- To access or replace the loudspeaker in the rear side door, see **LOUDSPEAKER, REAR SIDE DOOR, REPLACING**
- To access or replace the loudspeaker in the D-post, see **LOUDSPEAKER, D-POST, REPLACING**
- For information about signals, see **SIGNAL SPECIFICATION**
- see **CONTENTS** .

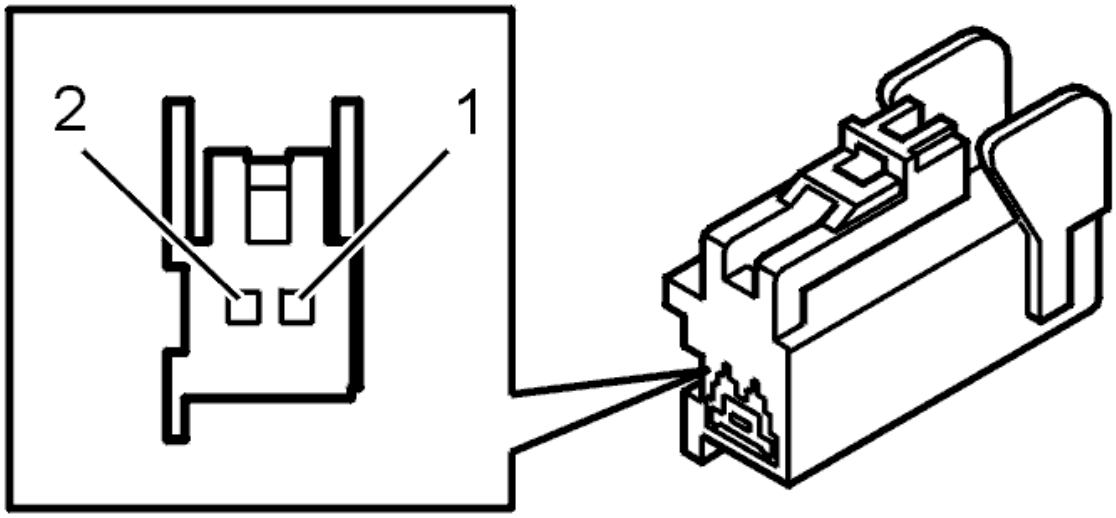

Fig. 117: Identifying 2-Bit Connector
Courtesy of VOLVO CARS CORPORATION

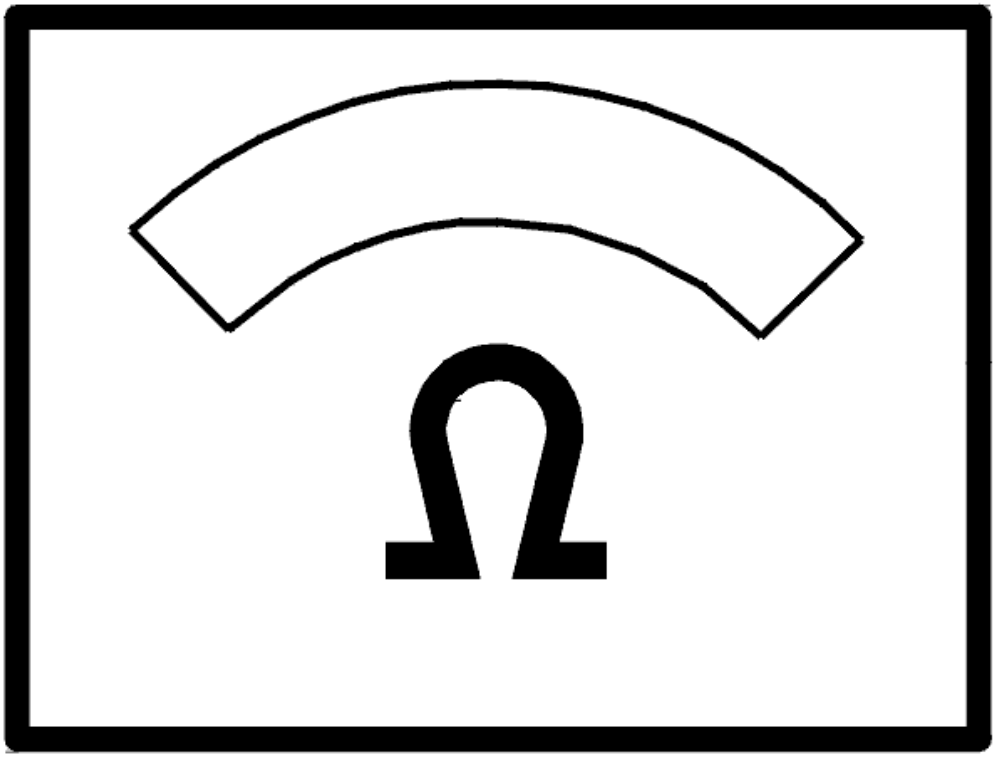

Fig. 118: Identifying Ohm Meter
Courtesy of VOLVO CARS CORPORATION

- **Continue**

  Refer to **VERIFICATION**

VERIFICATION

VERIFICATION

HINT: After carrying out the repair, check that the fault has been remedied.

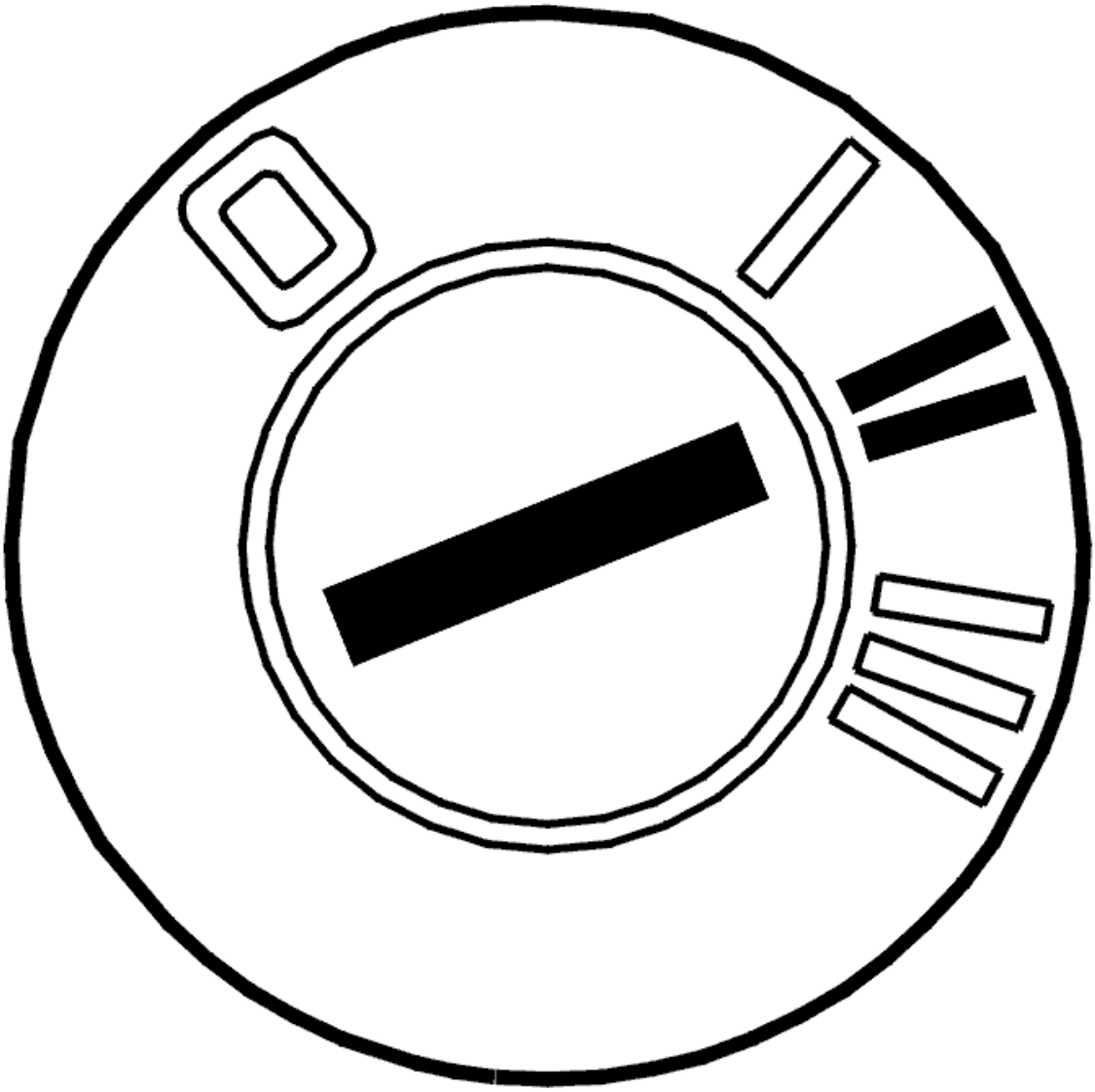

Fig. 119: Identifying Ignition ON
Courtesy of VOLVO CARS CORPORATION

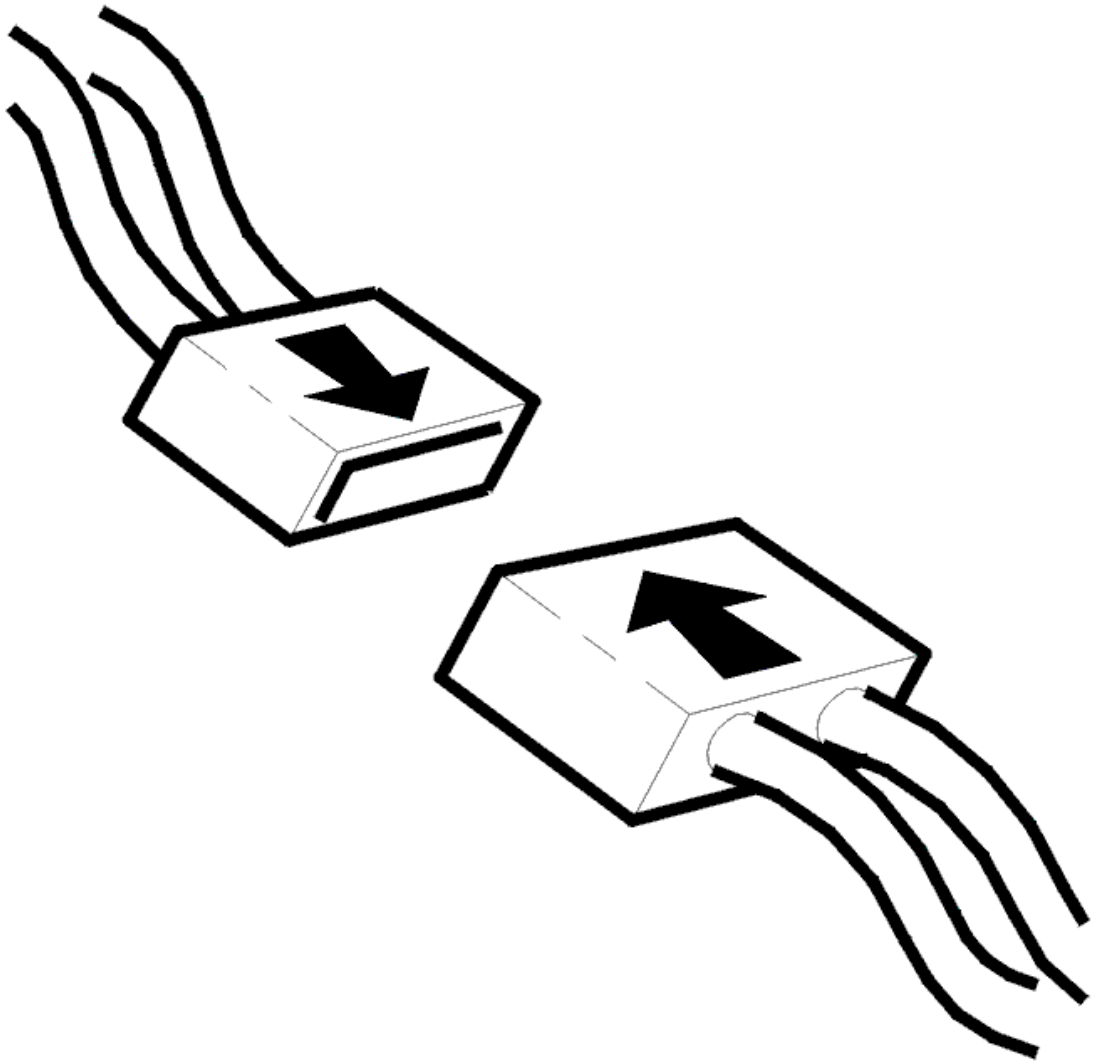

Fig. 120: Connecting Connector
Courtesy of VOLVO CARS CORPORATION

- Ignition off
- Reinstall the connectors, components etc.
- Ignition on.

  Check that sound can be heard from the loudspeakers from the Audio module (AUD) by trying the radio FM/AM, CD or MD player.

Do the loudspeakers work?

- **YES**

  VERIFIED: Troubleshooting has been completed.

- **NO**

  Refer to **INFORMATION**

INFORMATION

FAULT-TRACING INFORMATION

The fault should have been detected and remedied. As this is not the case fault-tracing has failed.

Exit fault-tracing for this diagnostic trouble code (DTC) or make another attempt.

AUD-000B: LOUDSPEAKERS FRONT. SIGNAL TOO HIGH / LOW (2003-2006)

DIAGNOSTIC TROUBLE CODE (DTC) INFORMATION AUD-000B

Condition

Diagnostic trouble code (DTC) AUD-000B is stored if the audio module (AUD) registers that the signal on the signal cable from the front loudspeaker is too high or too low.

Diagnostic trouble code (DTC) AUD-000B can be diagnosed when the ignition is on.

HINT: The signal cable to one or both of the front loudspeakers may be faulty.

Substitute Value

- None.

Possible Source

- Short-circuit to supply voltage in the signal cables between the front loudspeakers and the control module
- Short-circuit to ground in the signal cables between the front loudspeakers and the control module.

Fault symptom[s]

- No sound from the loudspeakers.

SIGNAL TOO HIGH / LOW

CHECKING THE WIRING

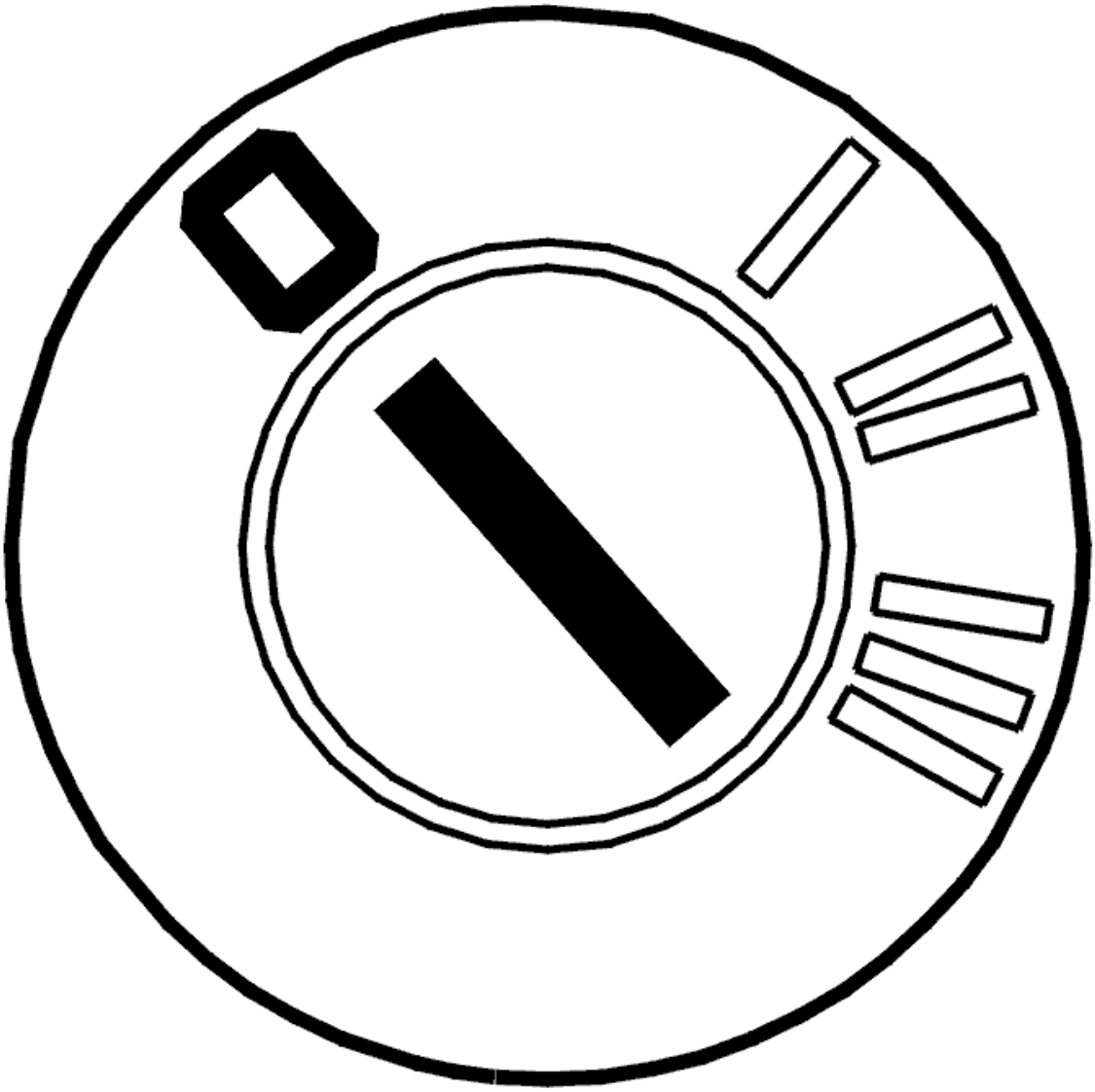

Fig. 121: Identifying Ignition OFF
Courtesy of VOLVO CARS CORPORATION

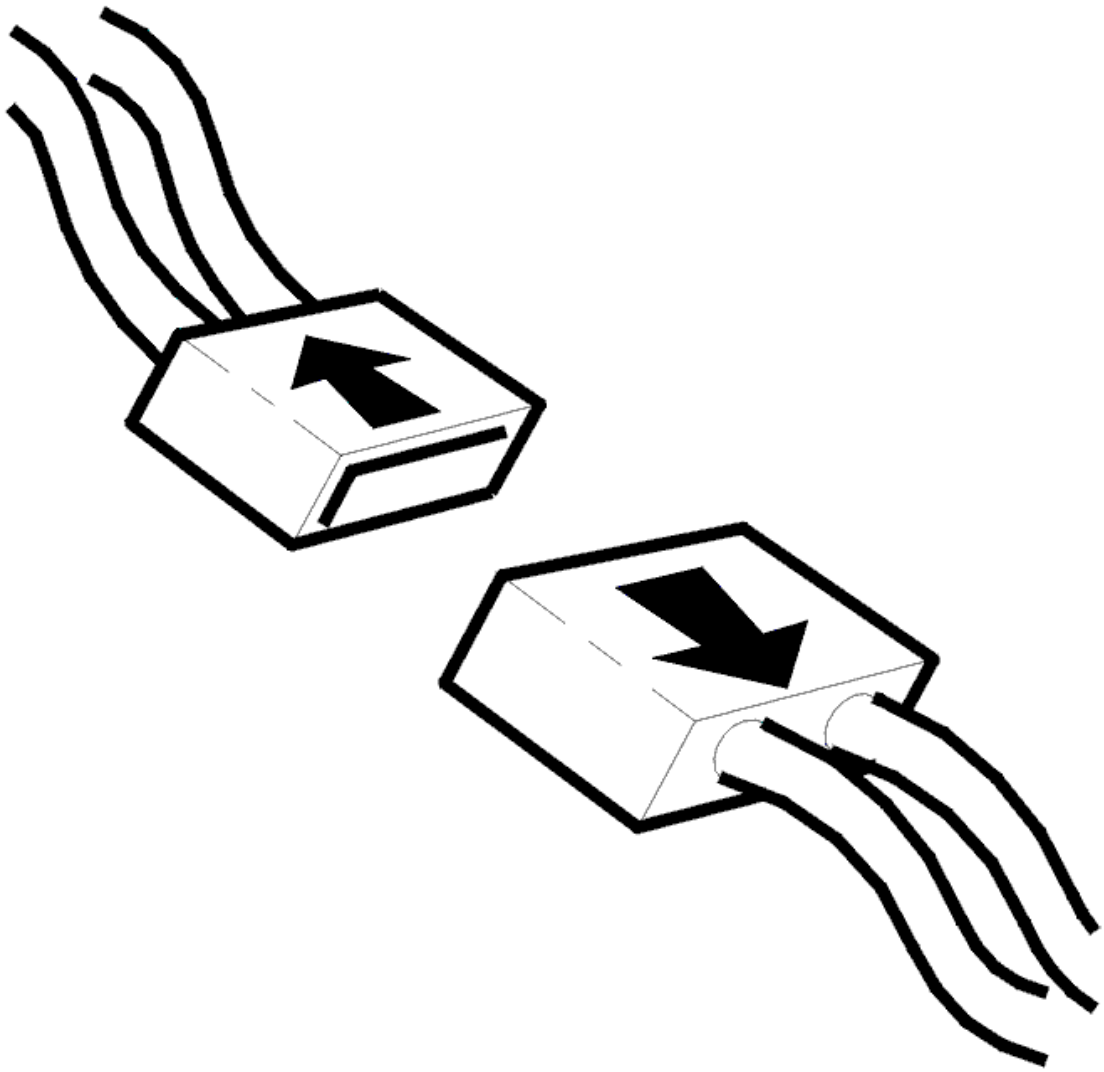

Fig. 122: Disconnecting Connector
Courtesy of VOLVO CARS CORPORATION

- Ignition off
- Disconnect the connectors for the front loudspeakers
- Disconnect the 16-pin connector for the audio module (AUD).

  HINT: Certain systems may have two loudspeakers connected on the same signal cable, one treble loudspeaker/upper loudspeaker and one front loudspeaker.

  Check the cable terminals in the female and male sections of the connector. The cable terminals must not be damaged or pressed back.

  Check the signal cable between audio module (AUD) terminal #B1 and loudspeaker terminal #2 in the front left door. Check for a short-circuit to ground. Check for a short-circuit to supply voltage.

Check the signal cable between audio module (AUD) terminal #B9 and loudspeaker terminal #1 in the front left door. Check for a short-circuit to ground. Check for a short-circuit to supply voltage.

Check the signal cable between audio module (AUD) terminal #B3 and loudspeaker terminal #2 in the front right door and the front right treble speaker. Check for a short-circuit to ground. Check for a short-circuit to supply voltage.

Check the signal cable between audio module (AUD) terminal #B11 and loudspeaker terminal #1 in the front right door. Check for a short-circuit to ground. Check for a short-circuit to supply voltage.

Remedy as necessary.

Other information:

- To connect the breakout box, see **CONNECTING THE BREAKOUT BOX**
- To access or replace the audio module (AUD), see **AUDIO MODULE (AUD), REPLACING**
- To access or replace the loudspeaker in the front side door, see **LOUDSPEAKER, FRONT SIDE DOOR, REPLACING**
- For information about signals, see **SIGNAL SPECIFICATION**
- see **CONTENTS** .

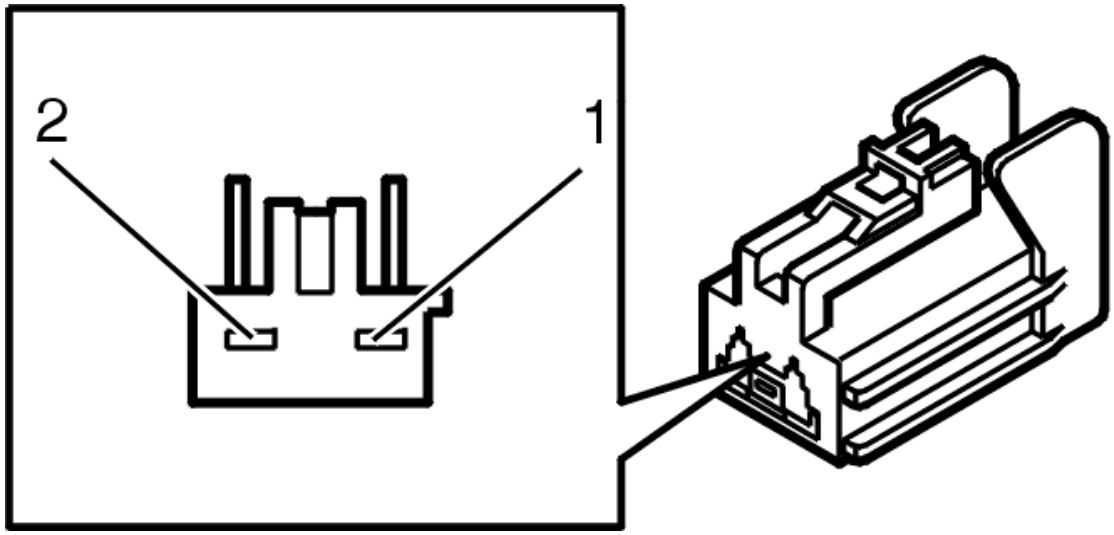

Fig. 123: Identifying 2-Bit Connector
Courtesy of VOLVO CARS CORPORATION

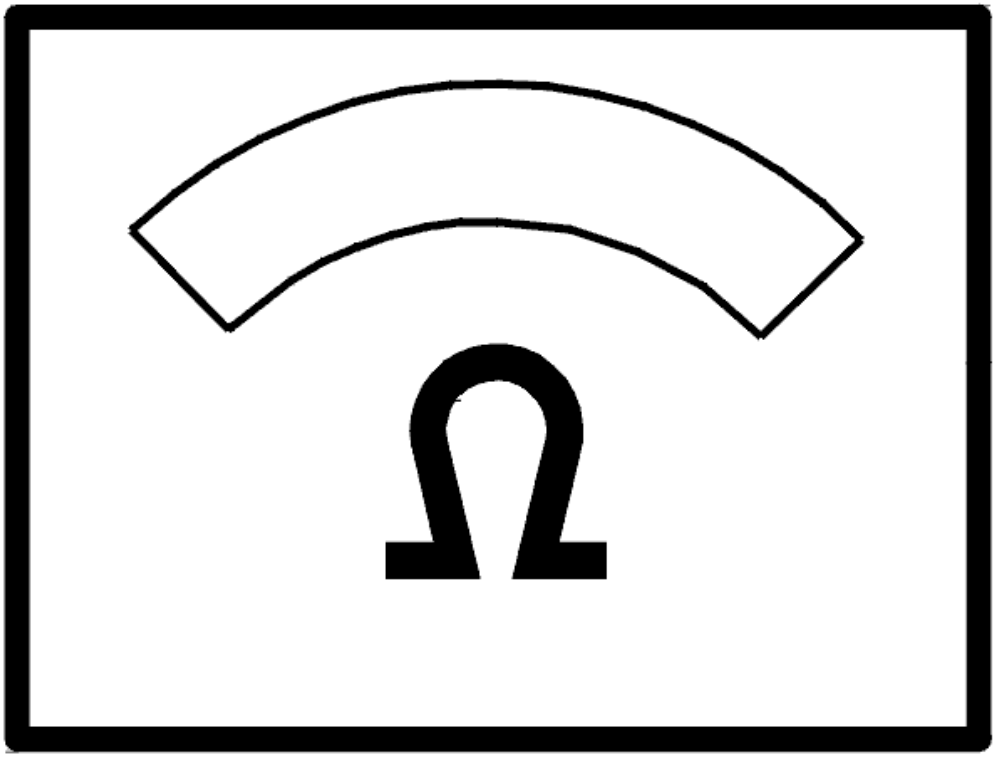

Fig. 124: Identifying Ohm Meter
Courtesy of VOLVO CARS CORPORATION

- **Continue**

  Refer to **VERIFICATION**

VERIFICATION

VERIFICATION

HINT: After carrying out the repair, check that the fault has been remedied.

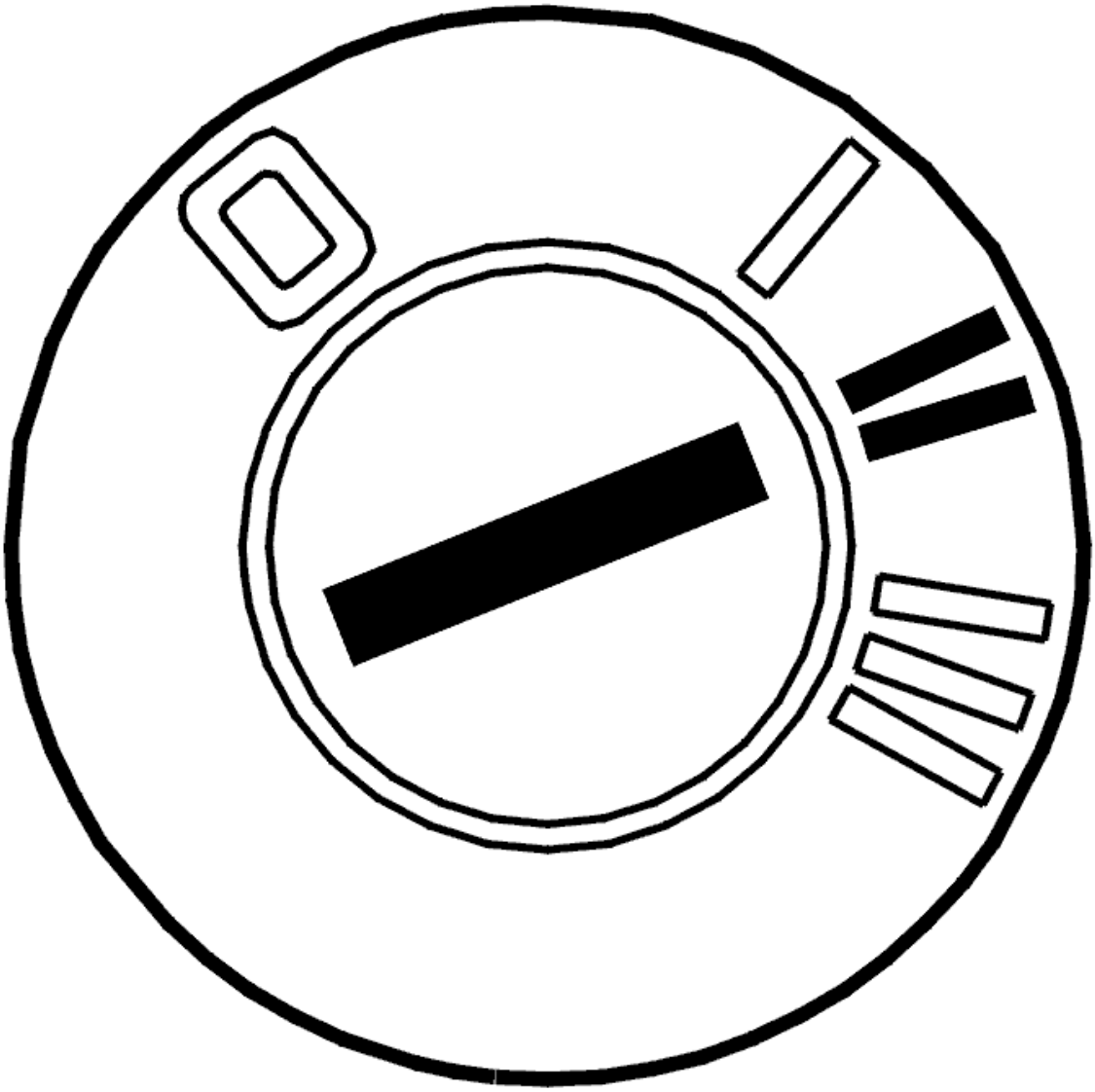

Fig. 125: Identifying Ignition ON
Courtesy of VOLVO CARS CORPORATION

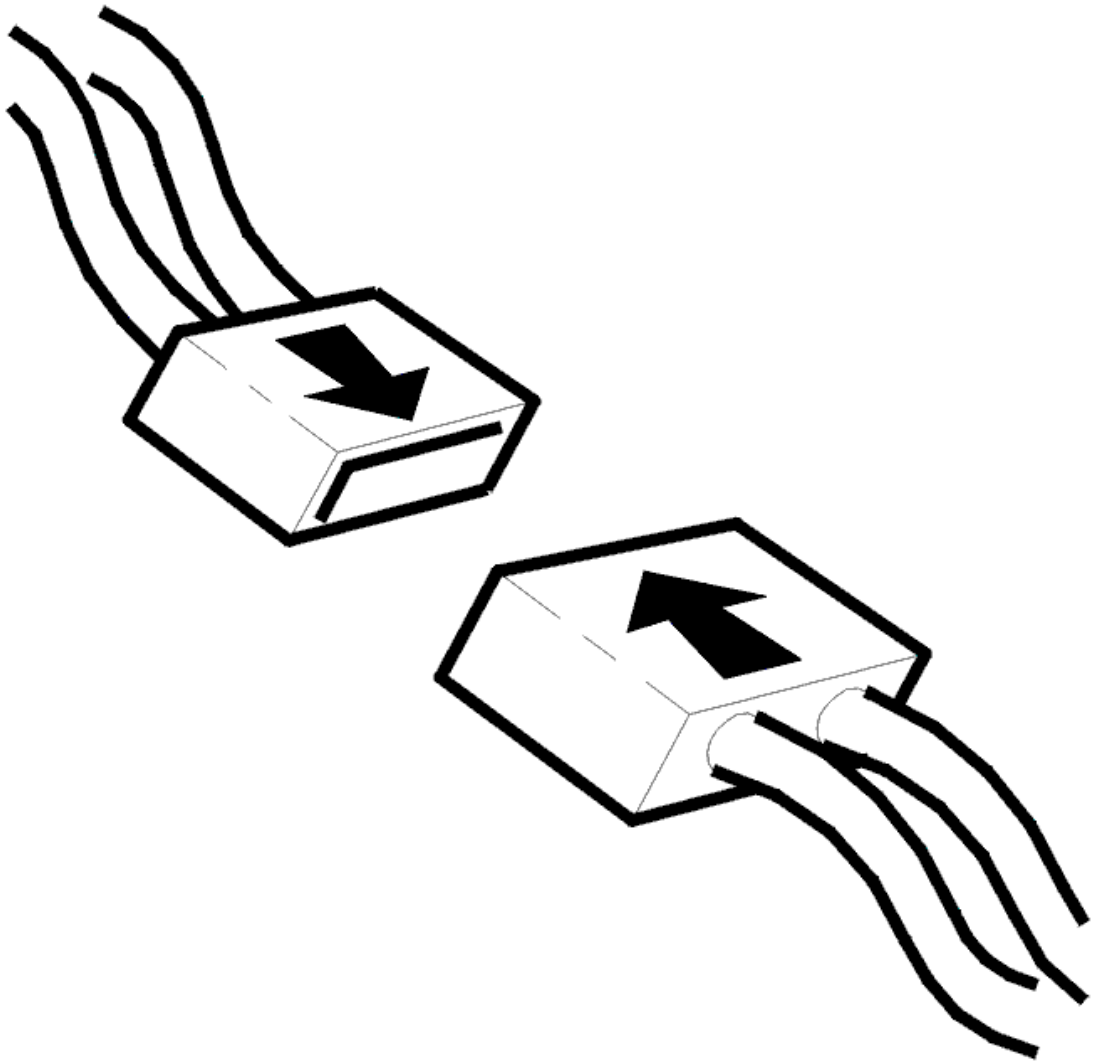

Fig. 126: Connecting Connector
Courtesy of VOLVO CARS CORPORATION

- Ignition off
- Reinstall the connectors, components etc.
- Ignition on.

  Check that sound can be heard from the loudspeakers from the Audio module (AUD) by trying the radio FM/AM, CD or MD player.

Do the loudspeakers work?

- **YES**

  VERIFIED: Troubleshooting has been completed.

- **NO**

  Refer to **INFORMATION**

INFORMATION

FAULT-TRACING INFORMATION

The fault should have been detected and remedied. As this is not the case fault-tracing has failed.

Exit fault-tracing for this diagnostic trouble code (DTC) or make another attempt.

AUD-000C: LOUDSPEAKER REAR. SIGNAL TOO HIGH / LOW (2003-2006)

DIAGNOSTIC TROUBLE CODE (DTC) INFORMATION AUD-000C

Condition

Diagnostic trouble code (DTC) AUD-000C is stored if the audio module (AUD) registers that the signal on the signal cable from the rear loudspeaker is too high or too low.

Diagnostic trouble code (DTC) AUD-000C can be diagnosed when the ignition is on.

HINT: The signal cable to one or both of the rear loudspeakers may be faulty.

Substitute Value

- None.

Possible Source

- Short-circuit to supply voltage in the signal cable between the rear loudspeakers and the control module
- Short-circuit to ground in the signal cables between the rear loudspeakers and the control module.

Fault symptom[s]

- No sound from the loudspeakers.

SIGNAL TOO HIGH / LOW

CHECKING THE WIRING

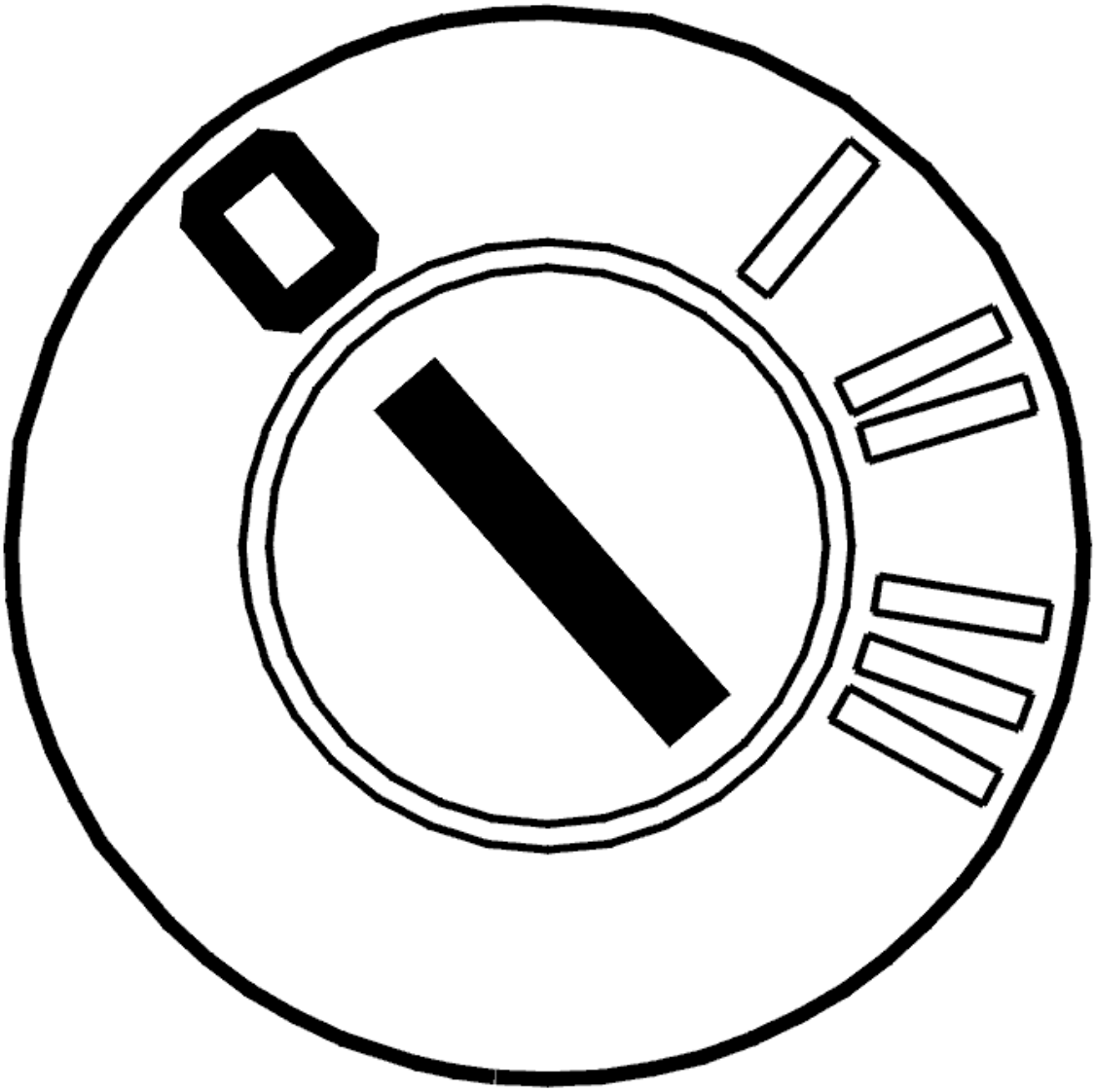

Fig. 127: Identifying Ignition OFF
Courtesy of VOLVO CARS CORPORATION

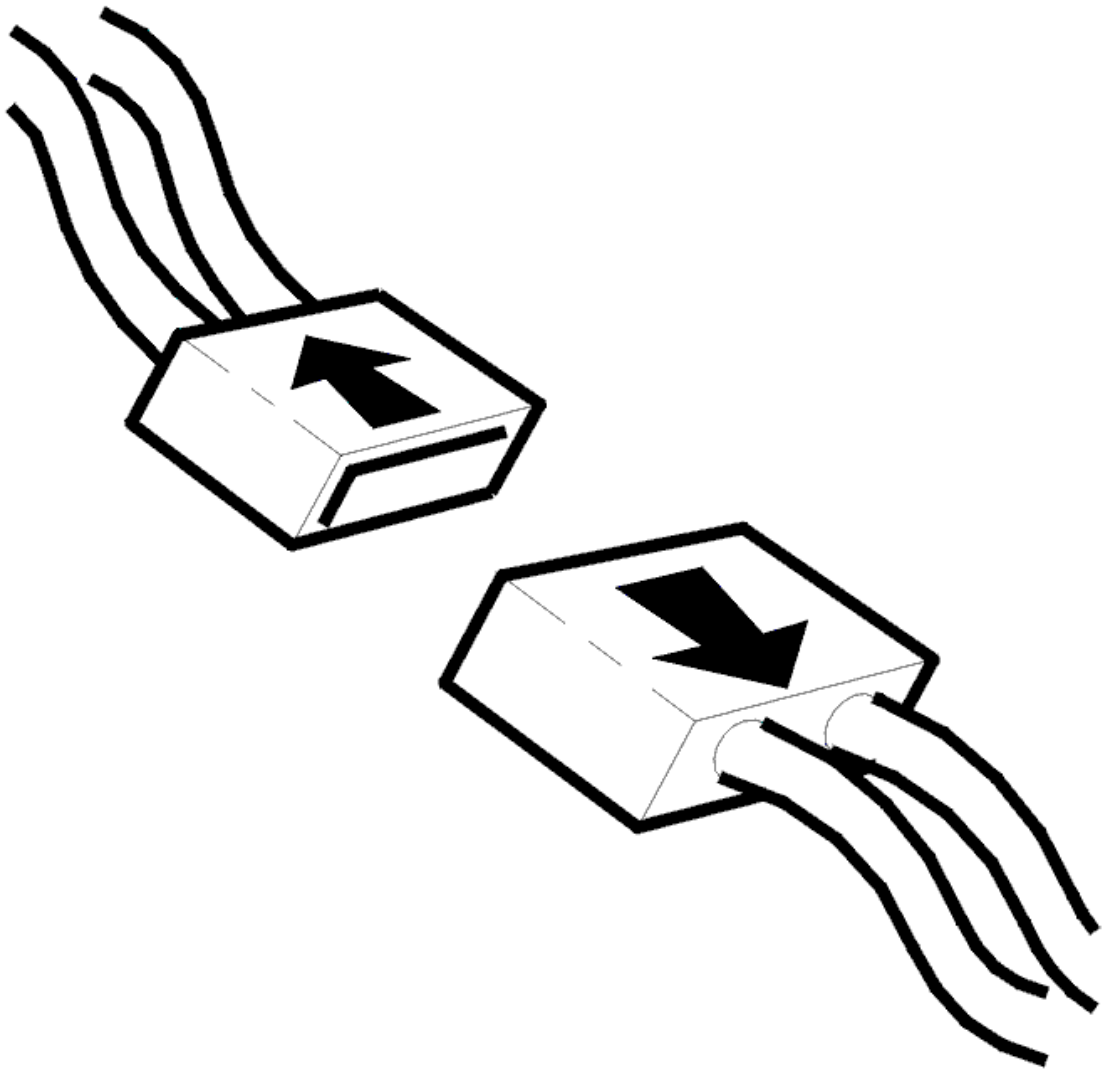

Fig. 128: Disconnecting Connector
Courtesy of VOLVO CARS CORPORATION

- Ignition off
- Disconnect the connectors for the rear loudspeakers
- Disconnect the 16-pin connector for the audio module (AUD).

HINT: Certain systems may have two loudspeakers connected on the same signal cable, one treble loudspeaker in the D-post and one rear loudspeaker.

NOTE: The treble loudspeaker in the D-post is not included in all systems. Check whether the treble loudspeaker is included.

Check the cable terminals in the female and male sections of the connector. The cable terminals must not be damaged or pressed back.

Check the signal cable between audio module (AUD) terminal #B4 and loudspeaker terminal #2 in the rear left door. Check for a short-circuit to ground. Check for a short-circuit to supply voltage.

Check the signal cable between audio module (AUD) terminal #B12 and loudspeaker terminal #1 in the rear left door. Check for a short-circuit to ground. Check for a short-circuit to supply voltage.

Check the signal cable between audio module (AUD) terminal #B5 and loudspeaker terminal #2 in the rear right door. Check for a short-circuit to ground. Check for a short-circuit to supply voltage.

Check the signal cable between audio module (AUD) terminal #B13 and loudspeaker terminal #1 in the rear right door. Check for a short-circuit to ground. Check for a short-circuit to supply voltage.

Remedy as necessary.

Other information:

- To connect the breakout box, see **CONNECTING THE BREAKOUT BOX**
- To access or replace the audio module (AUD), see **AUDIO MODULE (AUD), REPLACING**
- To access or replace the loudspeaker in the rear side door, see **LOUDSPEAKER, REAR SIDE DOOR, REPLACING**
- To access or replace the loudspeaker in the D-post, see **LOUDSPEAKER, D-POST, REPLACING**
- For information about signals, see **SIGNAL SPECIFICATION**
- see **CONTENTS** .

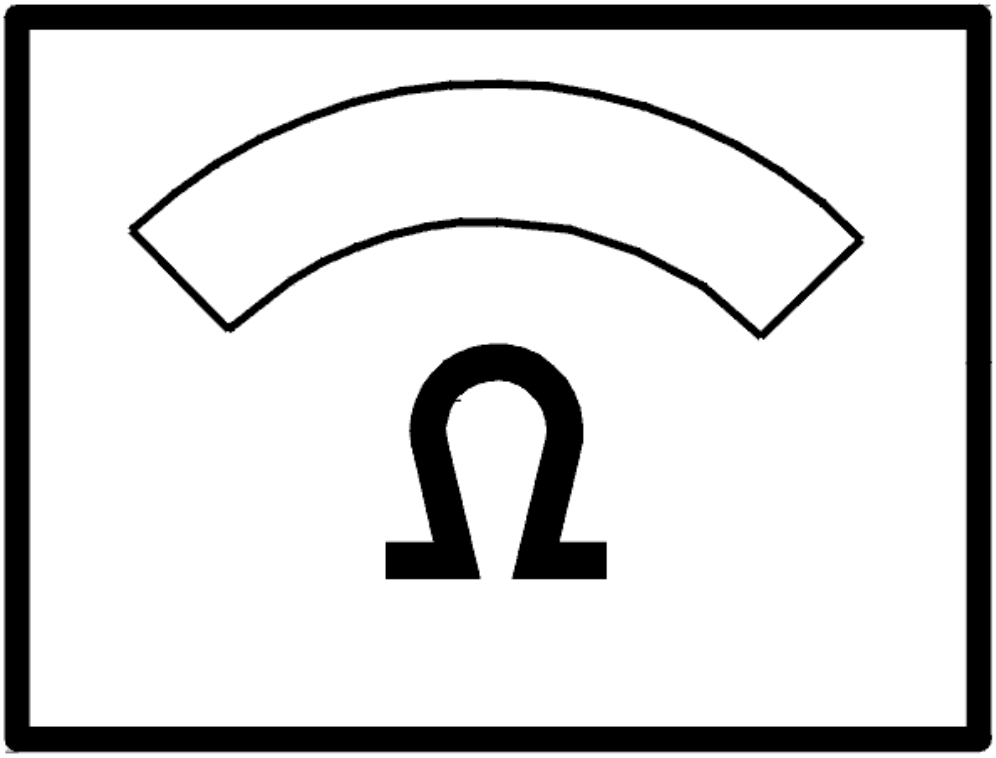

Fig. 129: Identifying Ohm Meter
Courtesy of VOLVO CARS CORPORATION

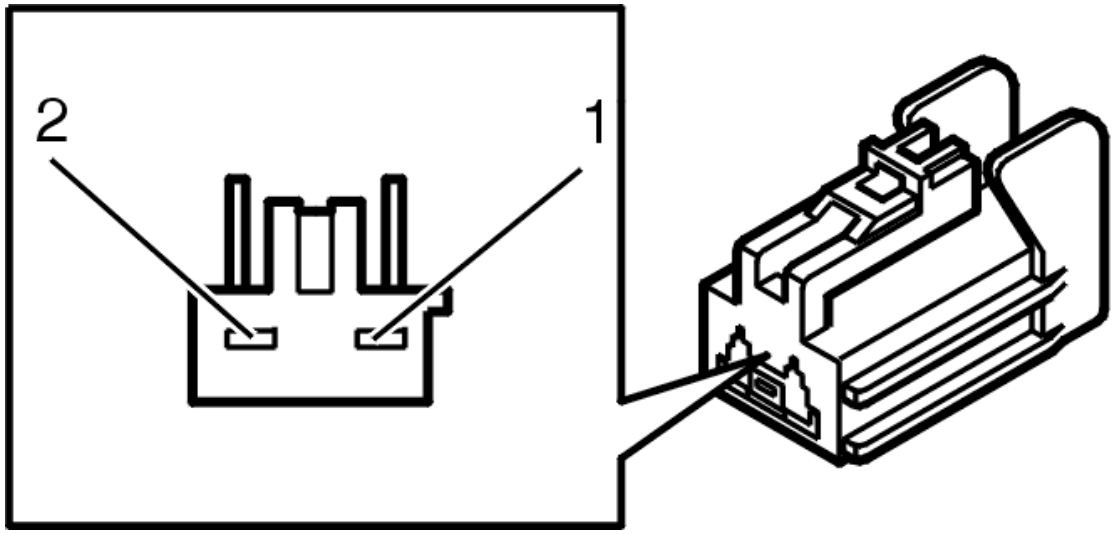

Fig. 130: Identifying 2-Bit Connector
Courtesy of VOLVO CARS CORPORATION

- **Continue**

  Refer to **VERIFICATION**

VERIFICATION

VERIFICATION

HINT: After carrying out the repair, check that the fault has been remedied.

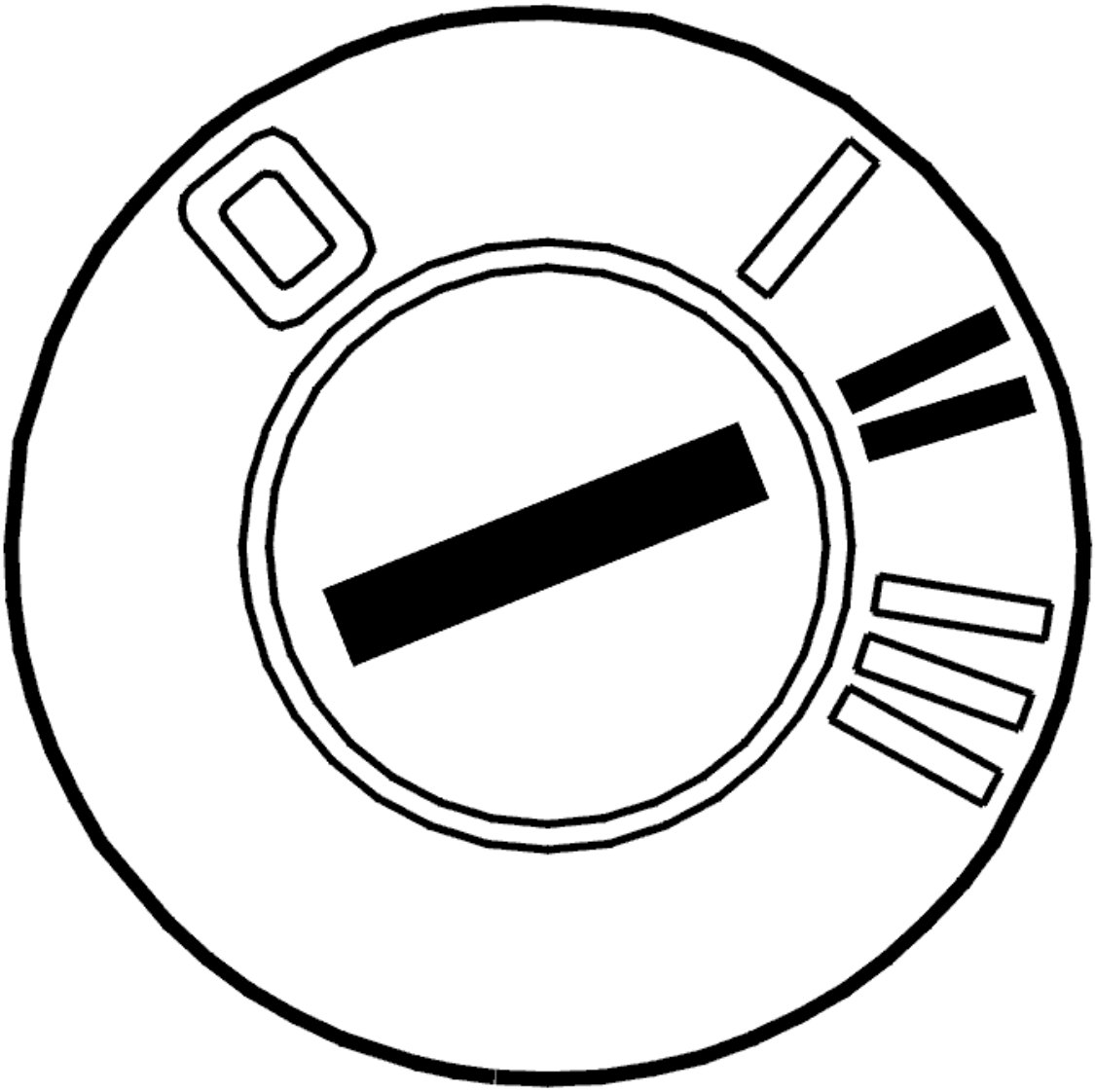

Fig. 131: Identifying Ignition ON
Courtesy of VOLVO CARS CORPORATION

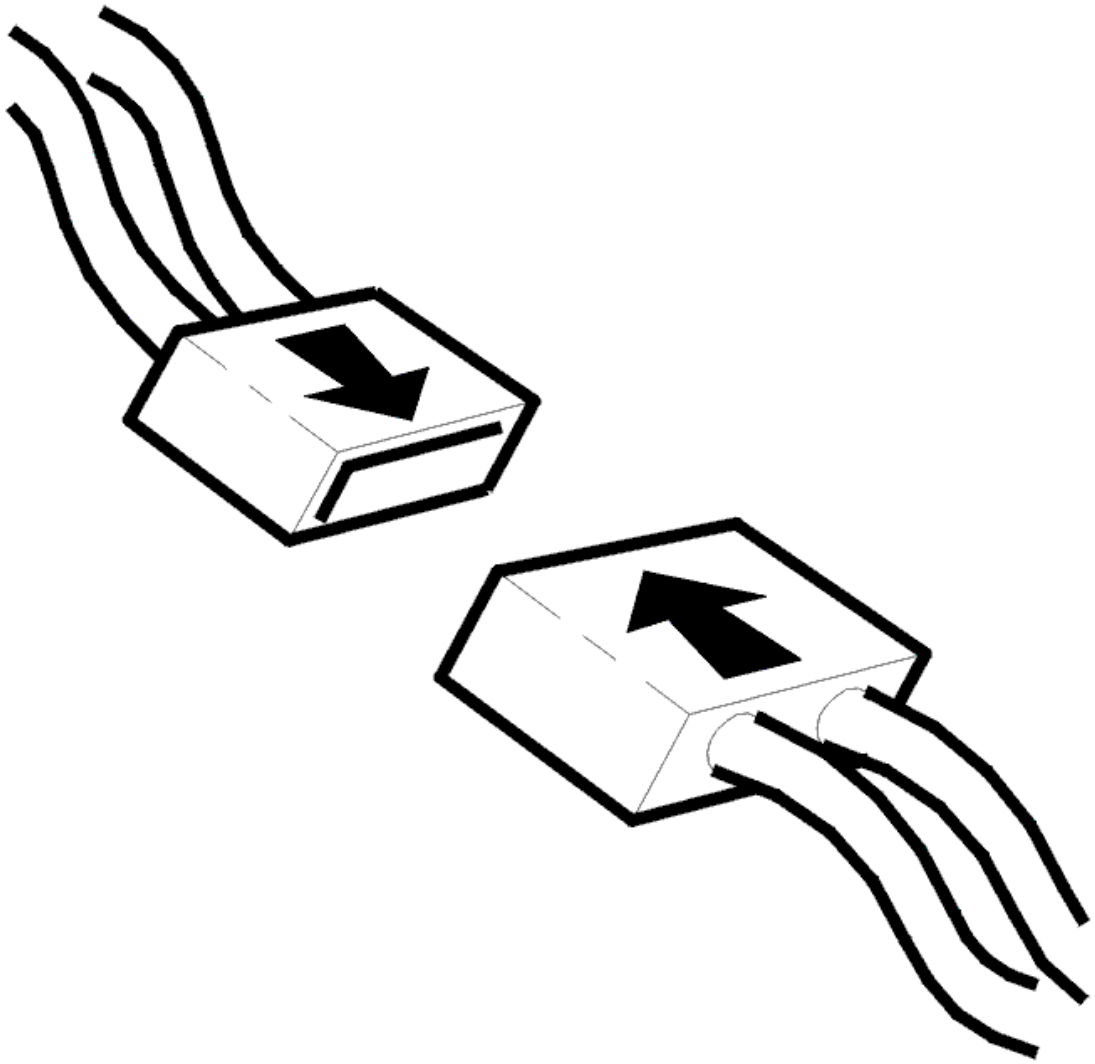

Fig. 132: Connecting Connector
Courtesy of VOLVO CARS CORPORATION

- Ignition off
- Reinstall the connectors, components etc.
- Ignition on.

  Check that sound can be heard from the loudspeakers from the Audio module (AUD) by trying the radio FM/AM, CD or MD player.

Do the loudspeakers work?

- **YES**

  VERIFIED: Troubleshooting has been completed.

- **NO**

  Refer to **INFORMATION**

INFORMATION

FAULT-TRACING INFORMATION

The fault should have been detected and remedied. As this is not the case fault-tracing has failed.

Exit fault-tracing for this diagnostic trouble code (DTC) or make another attempt.

AUD-000D: CONTROL MODULE. OVER HEATED (2003-2006)

DIAGNOSTIC TROUBLE CODE (DTC) INFORMATION AUD-000D

Condition

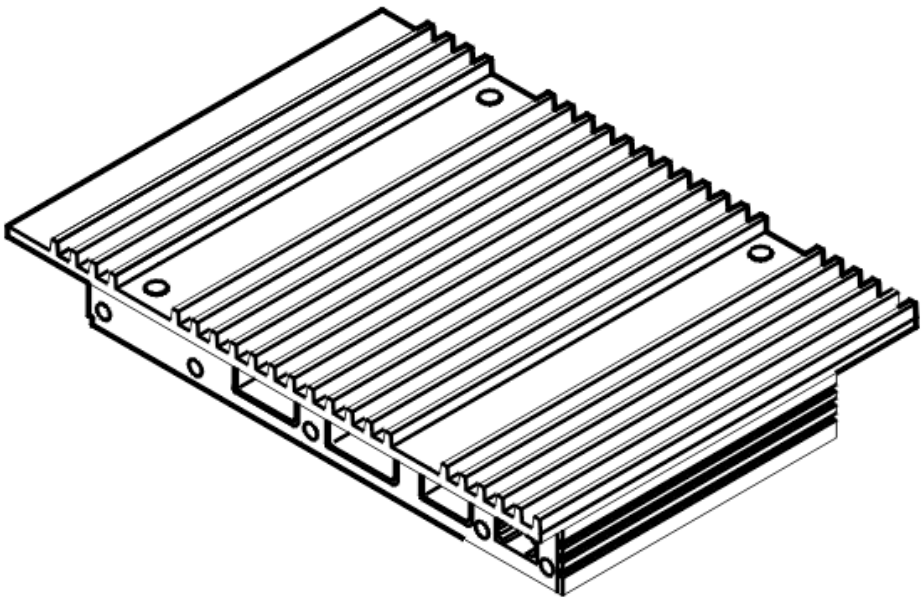

Fig. 133: Identifying Audio Control Module
Courtesy of VOLVO CARS CORPORATION

Diagnostic trouble code (DTC) AUD-000D is stored if the audio module (AUD) registers internal overheating in the control module.

Diagnostic trouble code (DTC) AUD-000D can be diagnosed when the ignition is on.

Substitute Value

- Reduced control module power handling capacity or the control module switches off.

Possible Source

- Ambient temperature too high
- Power consumption too high in the control module.

Fault symptom[s]

- No sound from the loudspeakers when the control module is switched off.

OVER HEATED

REPLACING THE COMPONENT

The audio module (AUD) has registered an internal fault.

If the fault is intermittent it means that it has been registered previously but is no longer present. Intermittent faults can occur for a number of different reasons. The fault is evaluated depending on how it occurs. If the fault recurs, replace the Audio module (AUD).

In the event of a permanent fault, replace the audio module (AUD). See **AUDIO MODULE (AUD), REPLACING** .

Remedy as necessary.

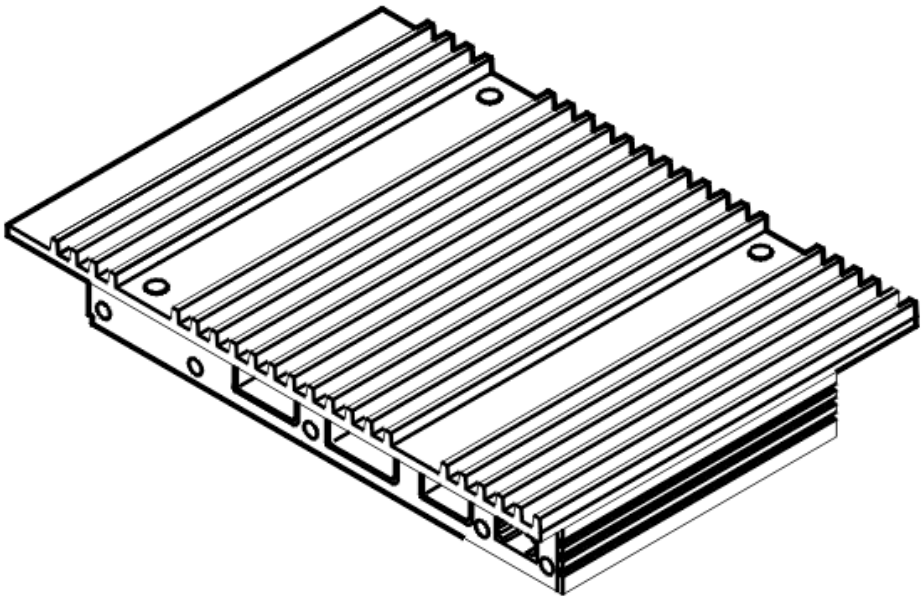

Fig. 134: Identifying Audio Control Module
Courtesy of VOLVO CARS CORPORATION

- **Continue**

  Refer to **INFORMATION**

INFORMATION

FAULT-TRACING INFORMATION

In case of this defect, troubleshooting is not followed by verification.

The information can be displayed again or the fault-tracing for this fault can be interrupted.

AUD-000E: MICROPHONE INPUT. SIGNAL MISSING (2007-2011)

DIAGNOSTIC TROUBLE CODE (DTC) INFORMATION AUD-000E

Condition

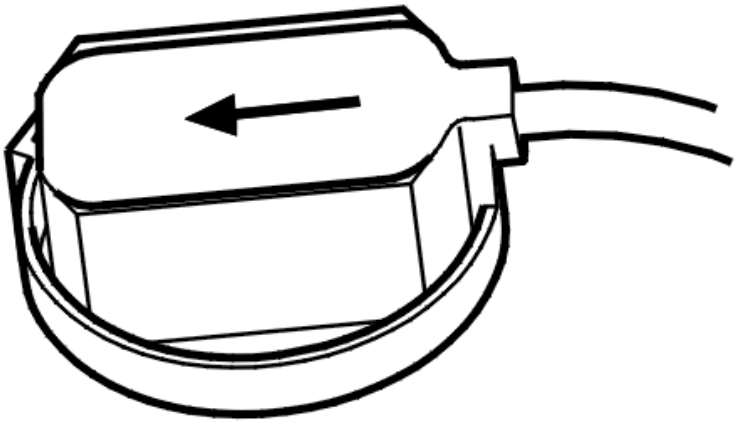

Fig. 135: Identifying Microphone
Courtesy of VOLVO CARS CORPORATION

The diagnostic trouble code (DTC) is stored if the audio module (AUD) registers an open-circuit in the signal cable to the microphone.

The diagnostic trouble code (DTC) can be diagnosed when the ignition is switched on.

Substitute Value

- None.

Possible Source

- Open-circuit in the signal cable between the microphone and the control module
- Damaged microphone.

Fault symptom[s]

- The microphone is not working.

SIGNAL MISSING

CHECKING THE COMPONENT AND WIRING

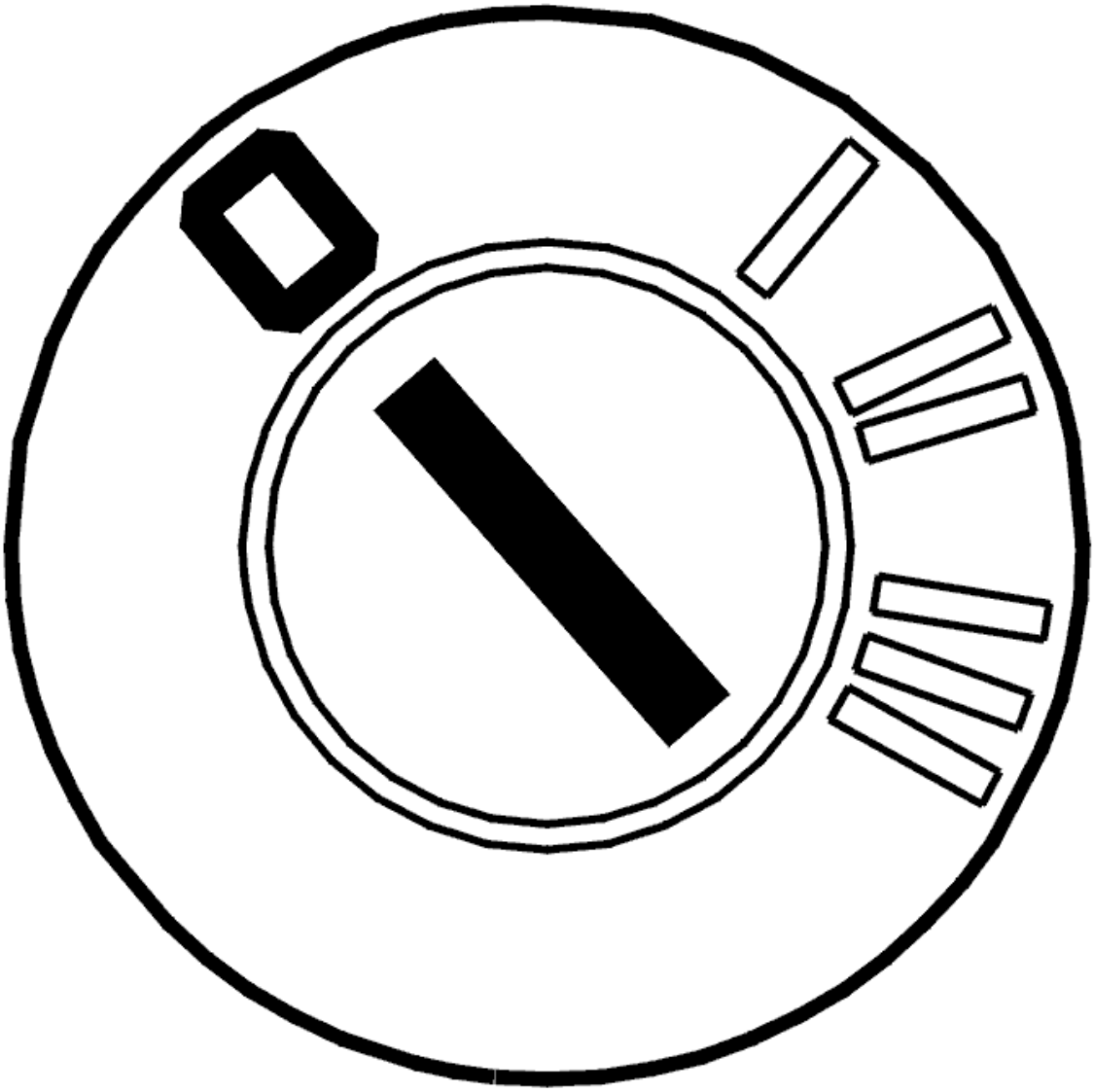

Fig. 136: Identifying Ignition OFF
Courtesy of VOLVO CARS CORPORATION

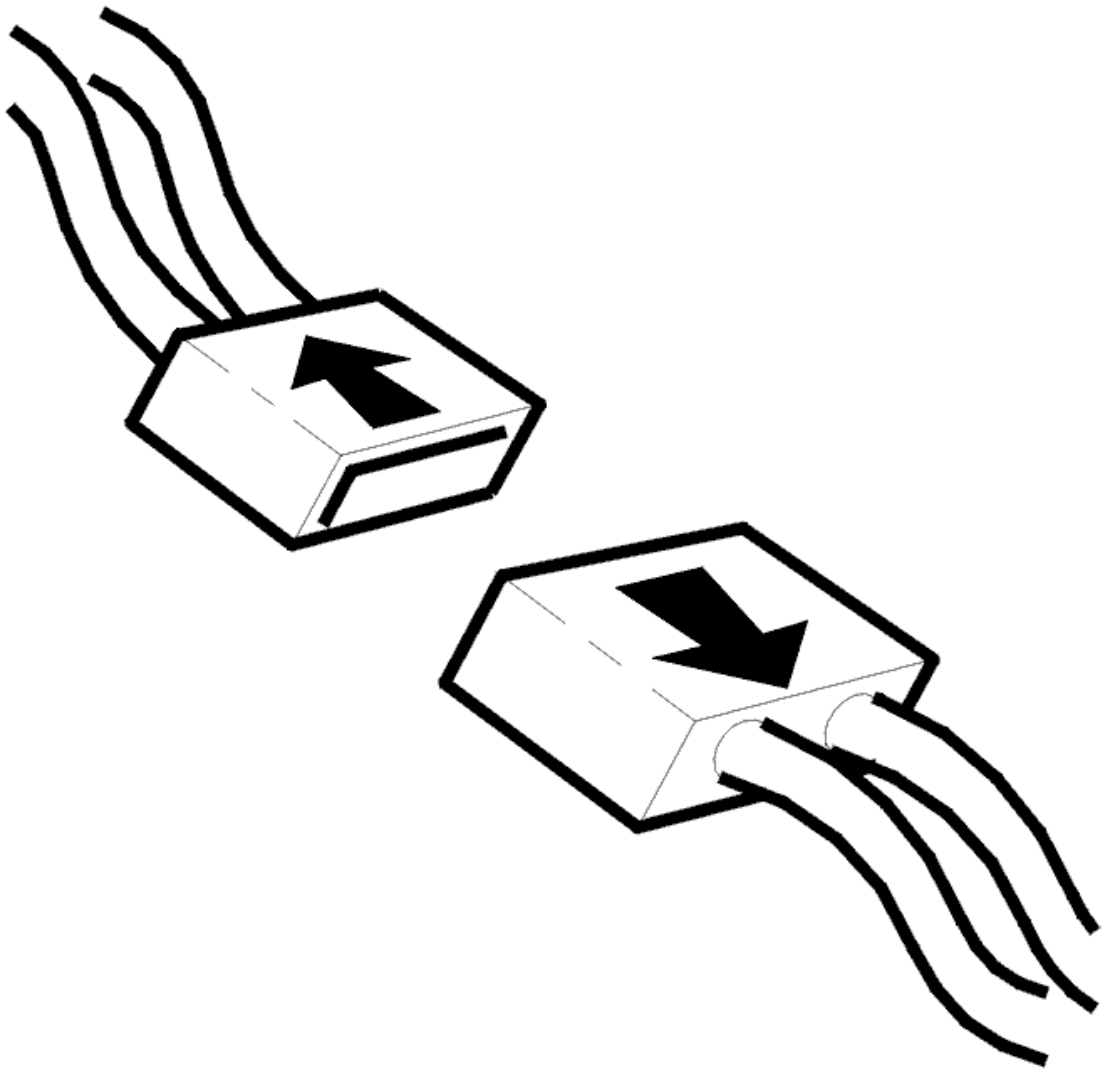

Fig. 137: Disconnecting Connector
Courtesy of VOLVO CARS CORPORATION

- Ignition off
- Disconnect the connector for the microphone.

  Check the cable terminals. Check for contact resistance, loose connections and oxidation.

  Check the cable terminals in the female and male sections of the connector. The cable terminals must not be damaged or pressed back.

  Check the signal cable between audio module (AUD) terminal #B8 and microphone input terminal #A2 (pin B). Check for an open-circuit.

  Check the signal cable between audio module (AUD) terminal #B16 and microphone input terminal #A1 (pin A). Check for an open-circuit.

Check the resistance between terminal #A1 (pin A) and #A2 (pin B) in the microphone connector. The resistance should be between 100 ohms - 10 kohms.

Remedy as necessary.

Other information

- see **CONNECTING THE BREAKOUT BOX**
- see **AUDIO MODULE (AUD), REPLACING**
- see **MICROPHONE, REPLACING**
- see **SIGNAL SPECIFICATION**
- see **CONTENTS**

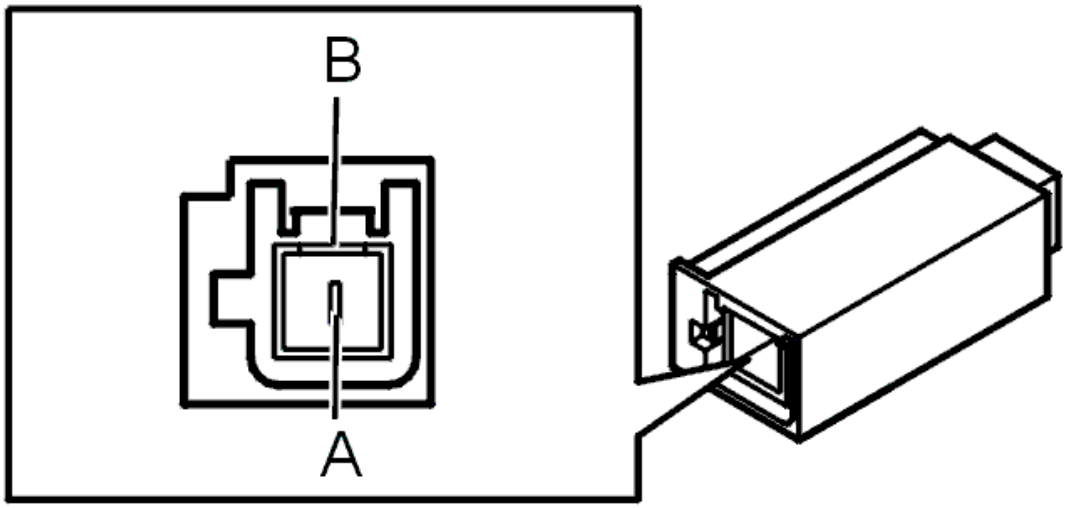

Fig. 138: Identifying 1-Bit Connector
Courtesy of VOLVO CARS CORPORATION

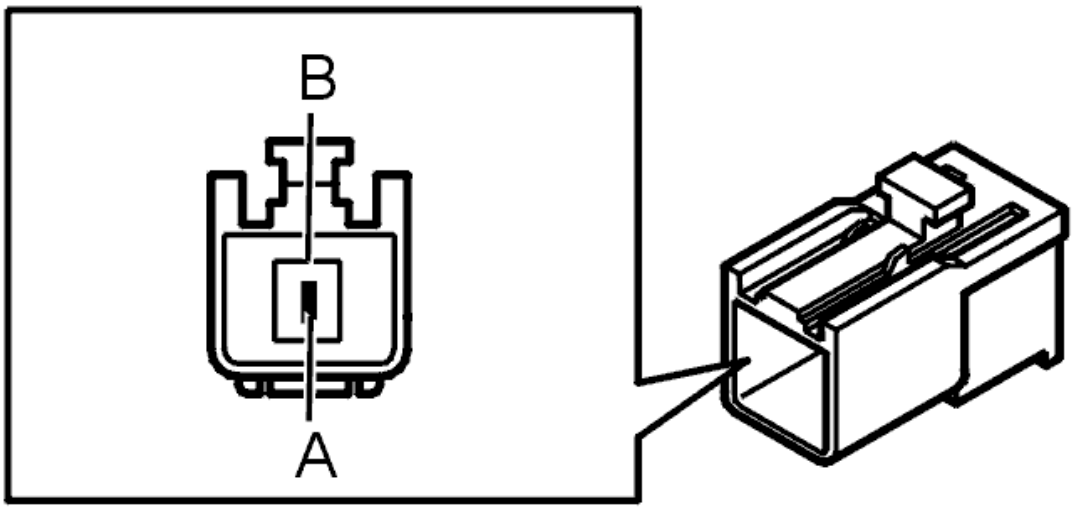

Fig. 139: Connector F, Carphone Antenna (Brown Connector)

Courtesy of VOLVO CARS CORPORATION

- **Continue**

  Refer to **VERIFICATION**

VERIFICATION

VERIFICATION

HINT: After carrying out the repair, check that the fault has been remedied.

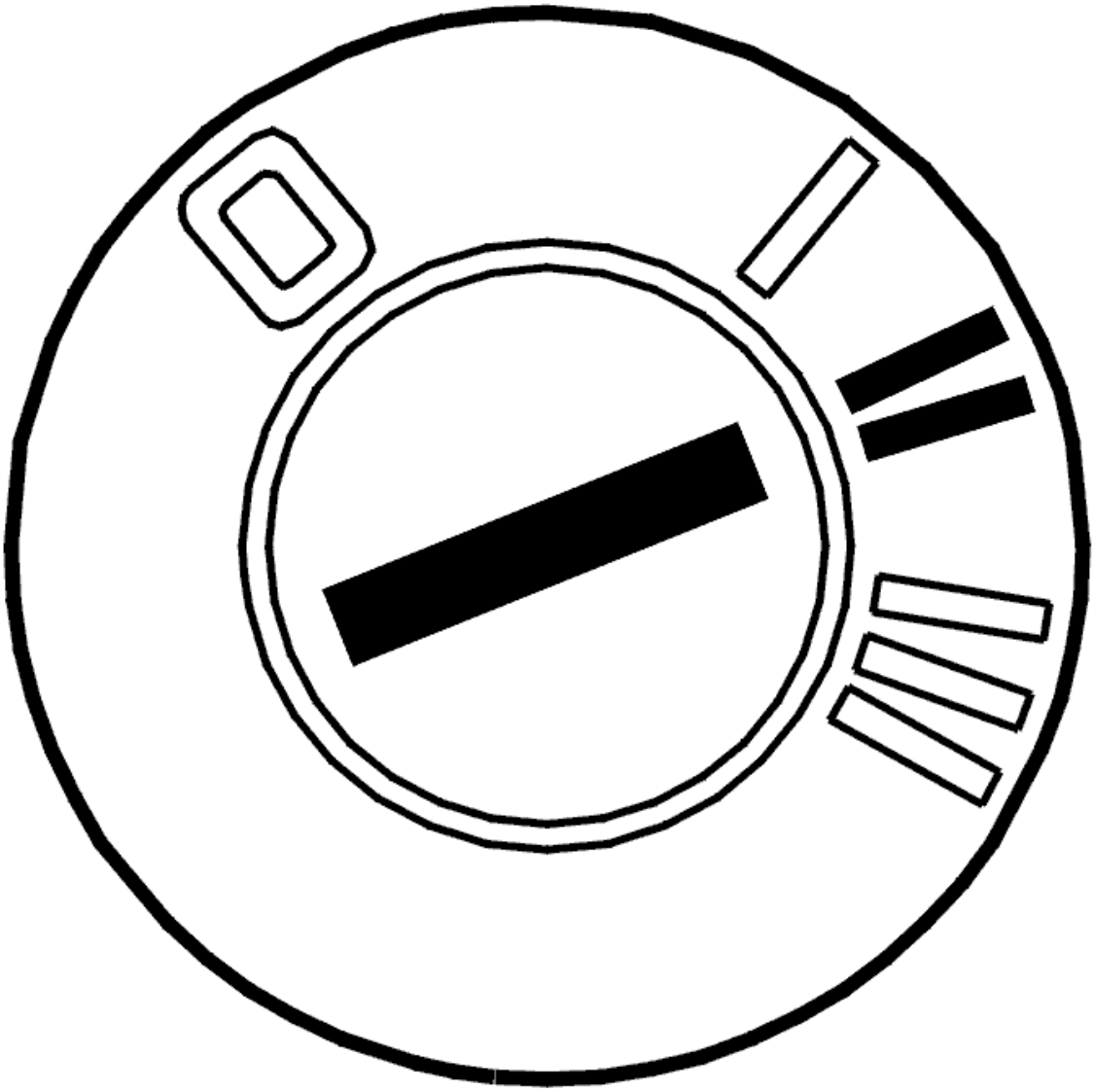

Fig. 140: Identifying Ignition ON
Courtesy of VOLVO CARS CORPORATION

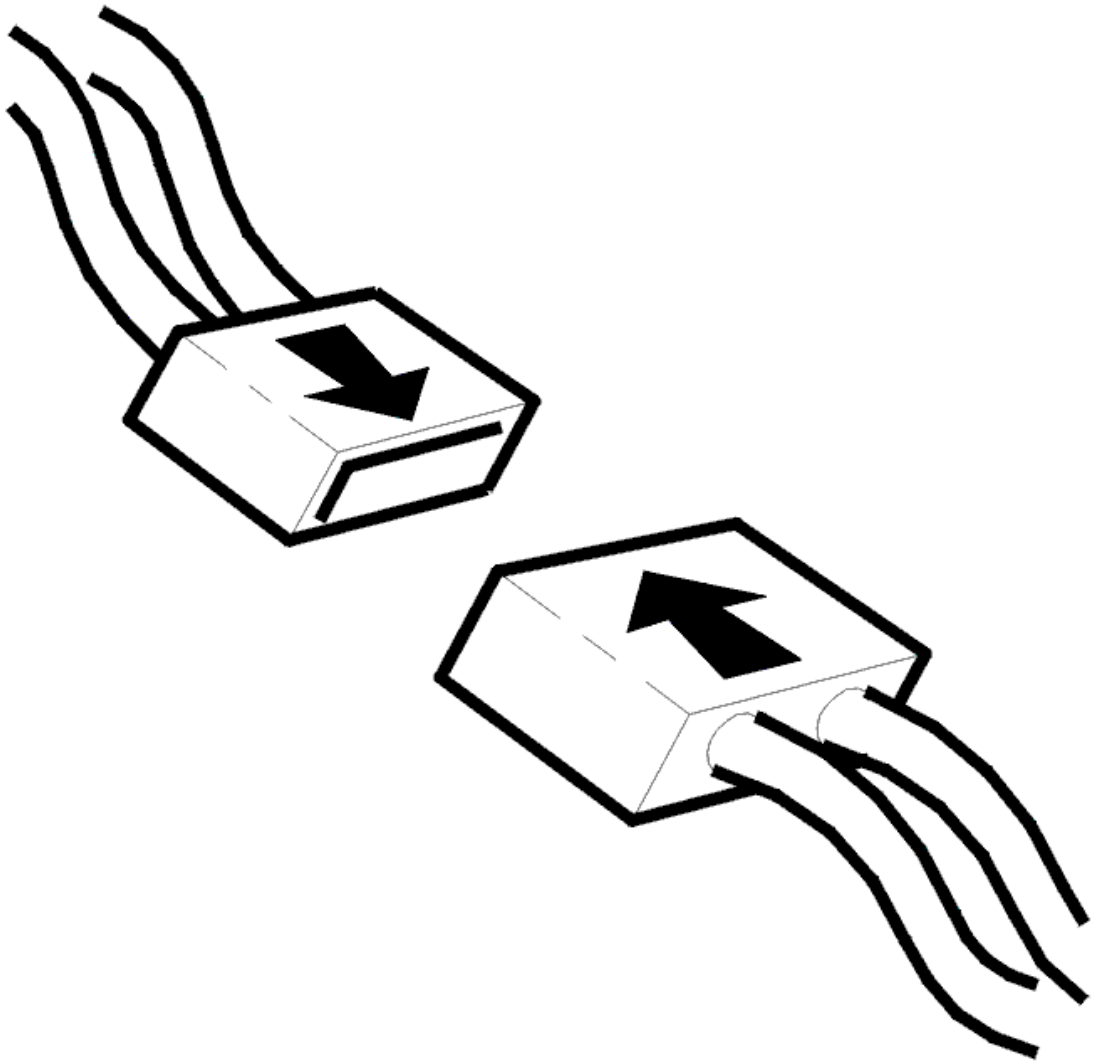

Fig. 141: Connecting Connector
Courtesy of VOLVO CARS CORPORATION

- Ignition off
- Reinstall the connectors, components etc.
- Ignition on.

  Check that the microphone input functions by activating the microphone appropriately. For example, make a call using the hands-free system.

Does the microphone function?

- **YES**

  VERIFIED: Troubleshooting has been completed.

- **NO**

  Refer to **INFORMATION**

INFORMATION

FAULT-TRACING INFORMATION

The fault should have been detected and remedied. As this is not the case fault-tracing has failed.

Exit fault-tracing for this diagnostic trouble code (DTC) or make another attempt.

AUD-000E: MICROPHONE TERMINAL. SIGNAL MISSING (2003-2006)

DIAGNOSTIC TROUBLE CODE (DTC) INFORMATION AUD-000E

Condition

Diagnostic trouble code (DTC) AUD-000E is stored if the audio module (AUD) registers an open-circuit in the signal cable for the microphone.

Diagnostic trouble code (DTC) AUD-000E can be diagnosed when the ignition is on.

Substitute Value

- None.

Possible Source

- Open-circuit in the signal cable between the microphone and the control module
- Defective microphone.

Fault symptom[s]

- The microphone is not working.

SIGNAL MISSING

CHECKING COMPONENTS AND WIRING

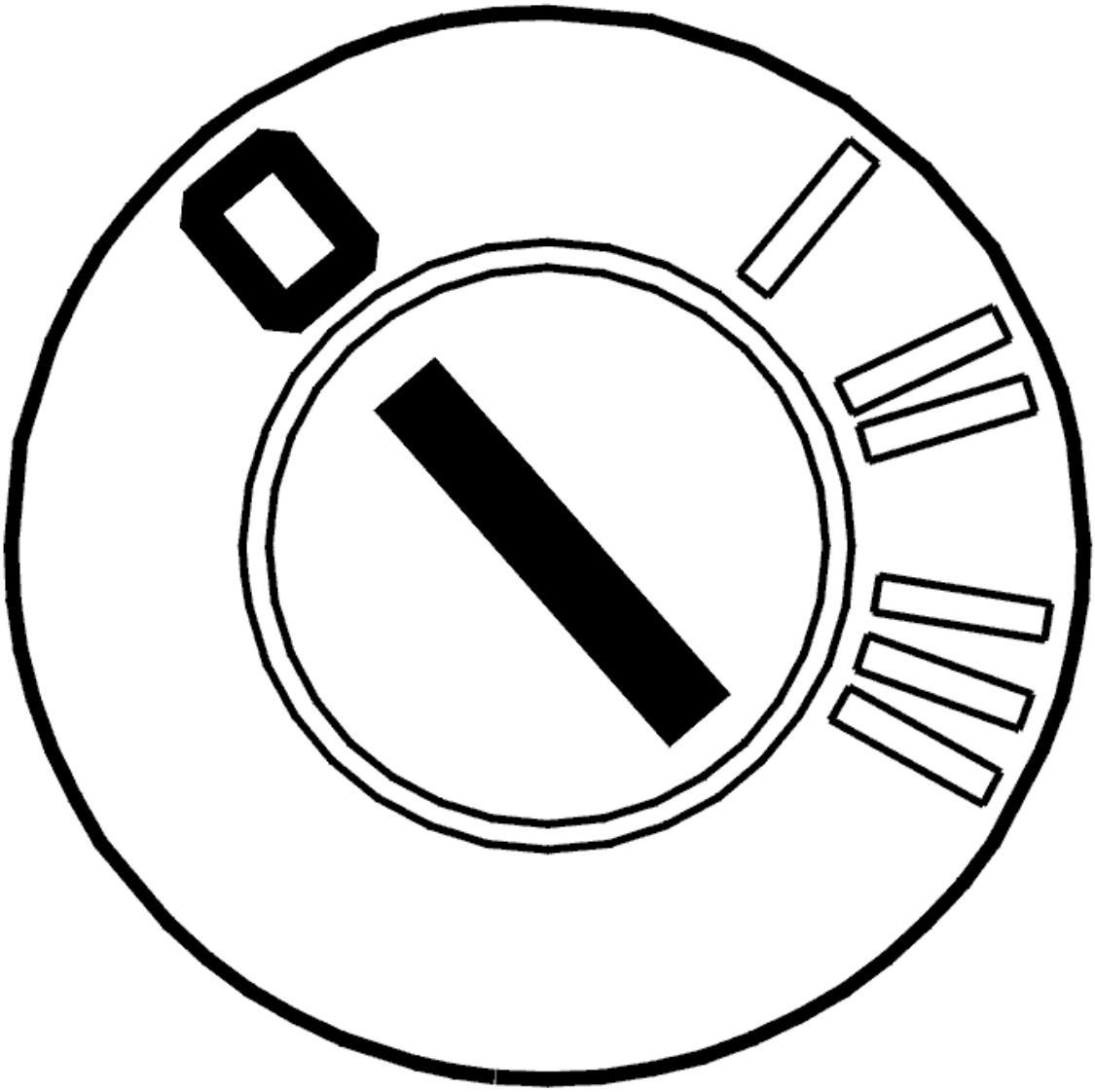

Fig. 142: Identifying Ignition OFF
Courtesy of VOLVO CARS CORPORATION

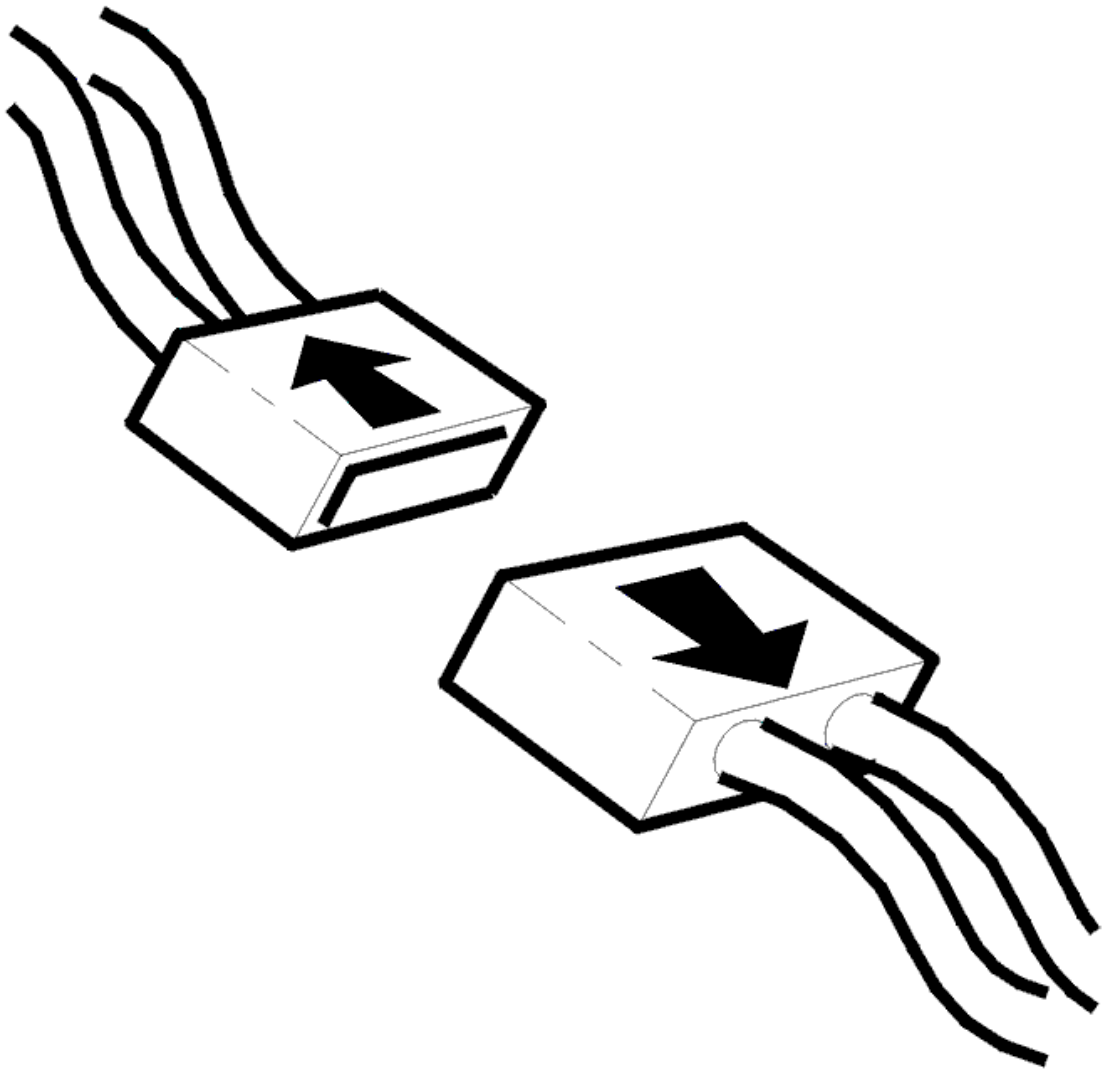

Fig. 143: Disconnecting Connector
Courtesy of VOLVO CARS CORPORATION

- Ignition off
- Disconnect the connector for the microphone in the rear view mirror.

  Check the cable terminals. Check for contact resistance, loose connections and oxidation.

  Check the cable terminals in the female and male sections of the connector. The cable terminals must not be damaged or pressed back.

  Check the signal cable between audio module (AUD) terminal #B8 and microphone input terminal #A2 (pin B). Check for an open-circuit.

  Check the signal cable between audio module (AUD) terminal #B16 and microphone input terminal #A1 (pin A). Check for an open-circuit.

Check the resistance between terminal #A1 (pin A) and #A2 (pin B) in the microphone connector. The resistance should be between 100 ohms - 10 kohms.

Remedy as necessary.

Other information:

- To connect the breakout box, see **CONNECTING THE BREAKOUT BOX**
- To access or replace the audio module (AUD), see **AUDIO MODULE (AUD), REPLACING**
- To access or replace the microphone, see **MICROPHONE, REPLACING**
- For information about signals, see **SIGNAL SPECIFICATION**
- see **CONTENTS** .

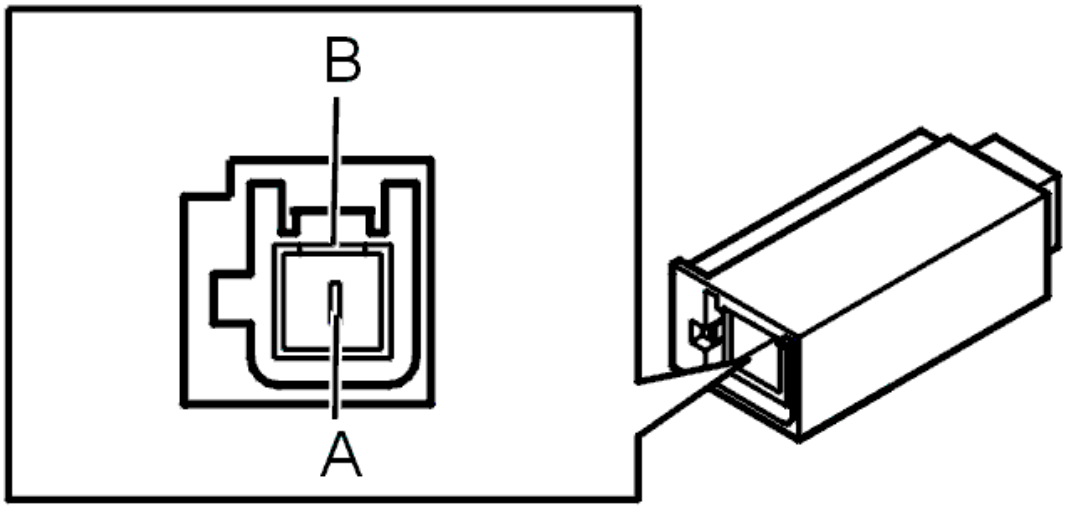

Fig. 144: Identifying 1-Bit Connector
Courtesy of VOLVO CARS CORPORATION

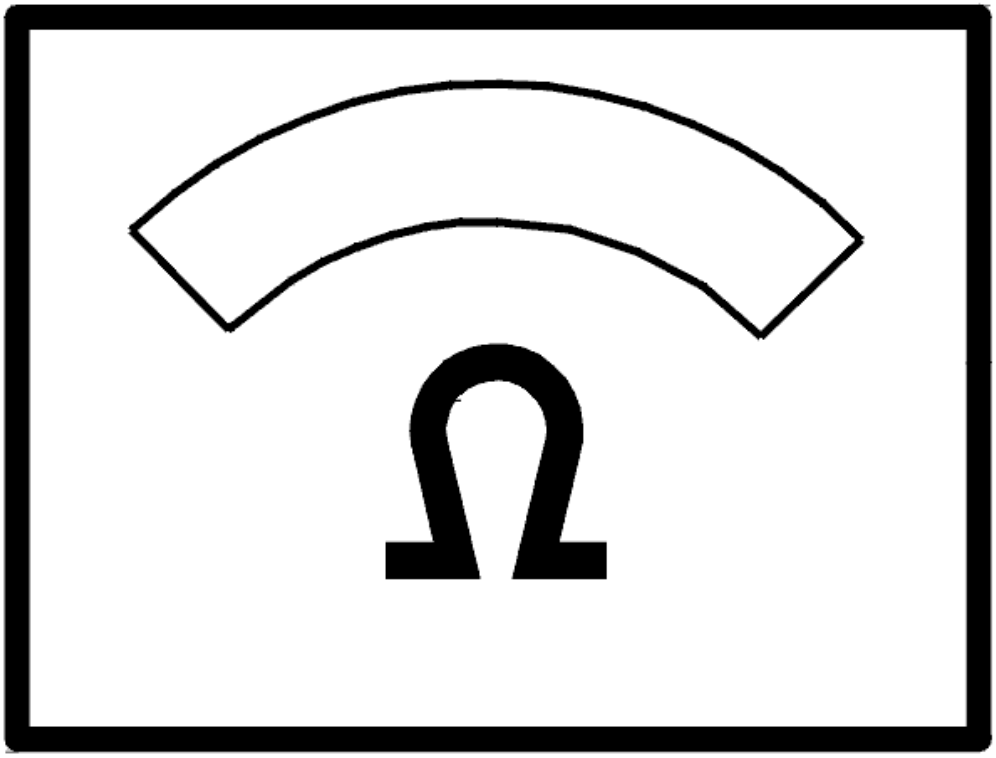

Fig. 145: Identifying Ohm Meter
Courtesy of VOLVO CARS CORPORATION

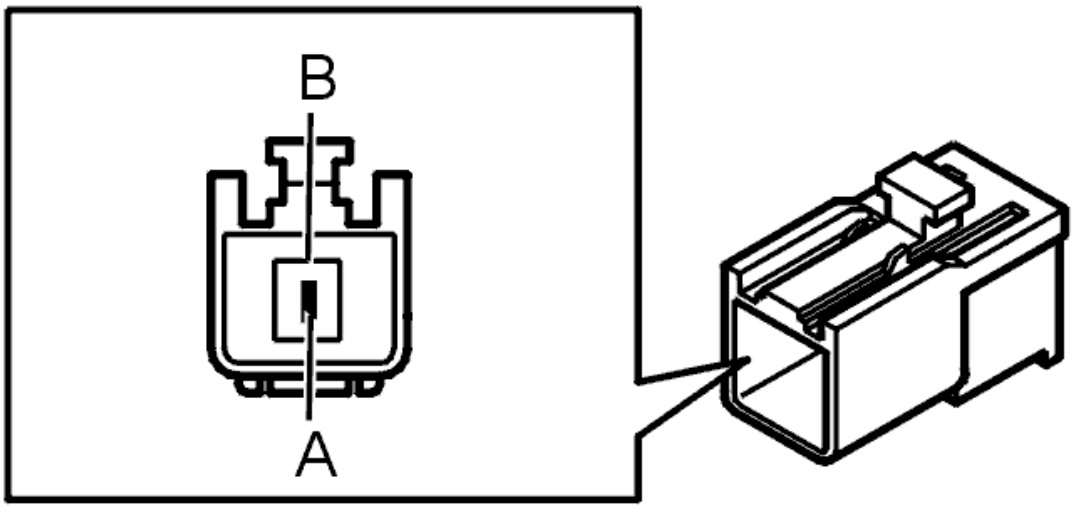

Fig. 146: Connector F, Carphone Antenna (Brown Connector)
Courtesy of VOLVO CARS CORPORATION

- **Continue**

  Refer to **VERIFICATION**

VERIFICATION

VERIFICATION

HINT: After carrying out the repair, check that the fault has been remedied.

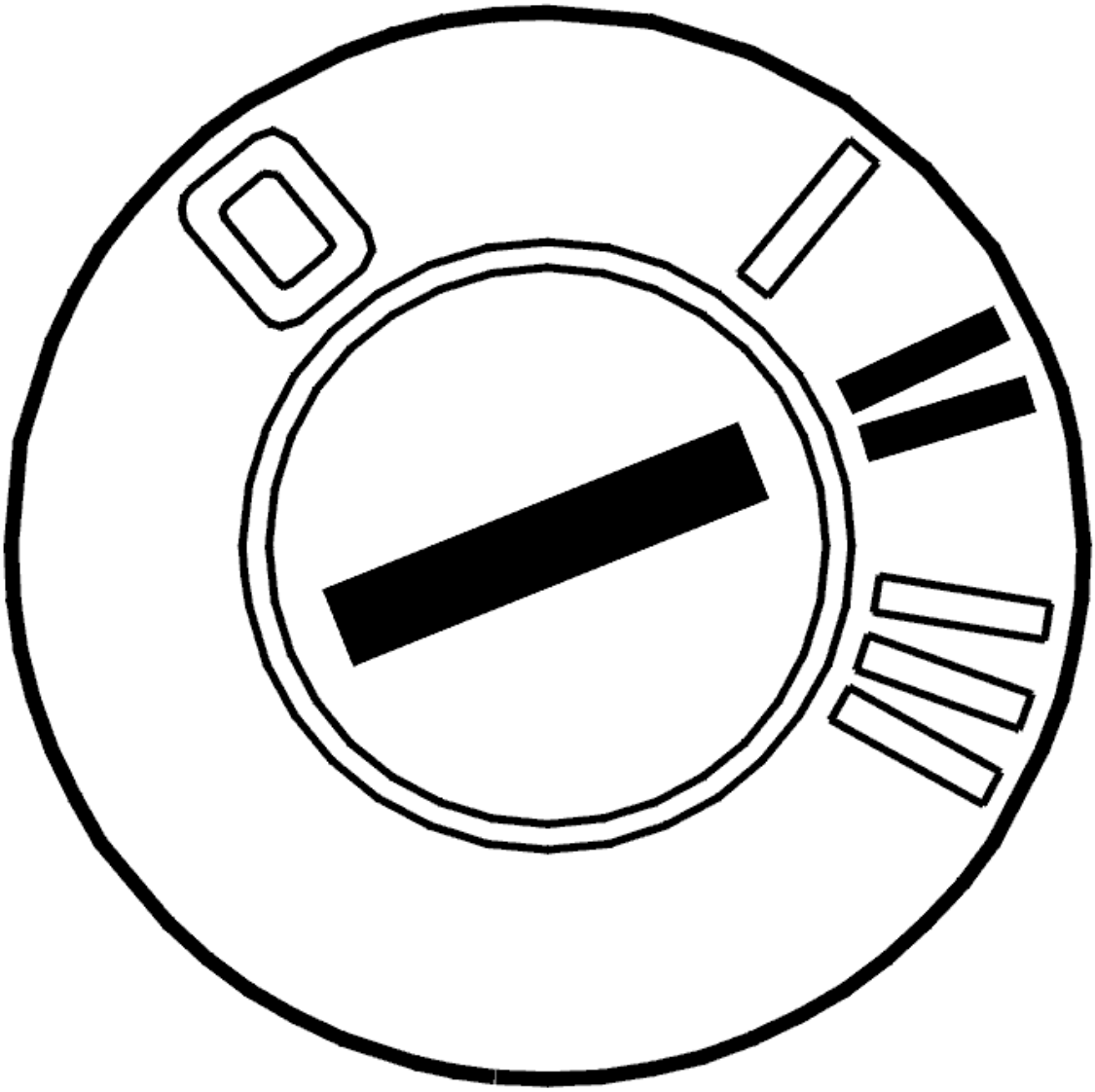

Fig. 147: Identifying Ignition ON
Courtesy of VOLVO CARS CORPORATION

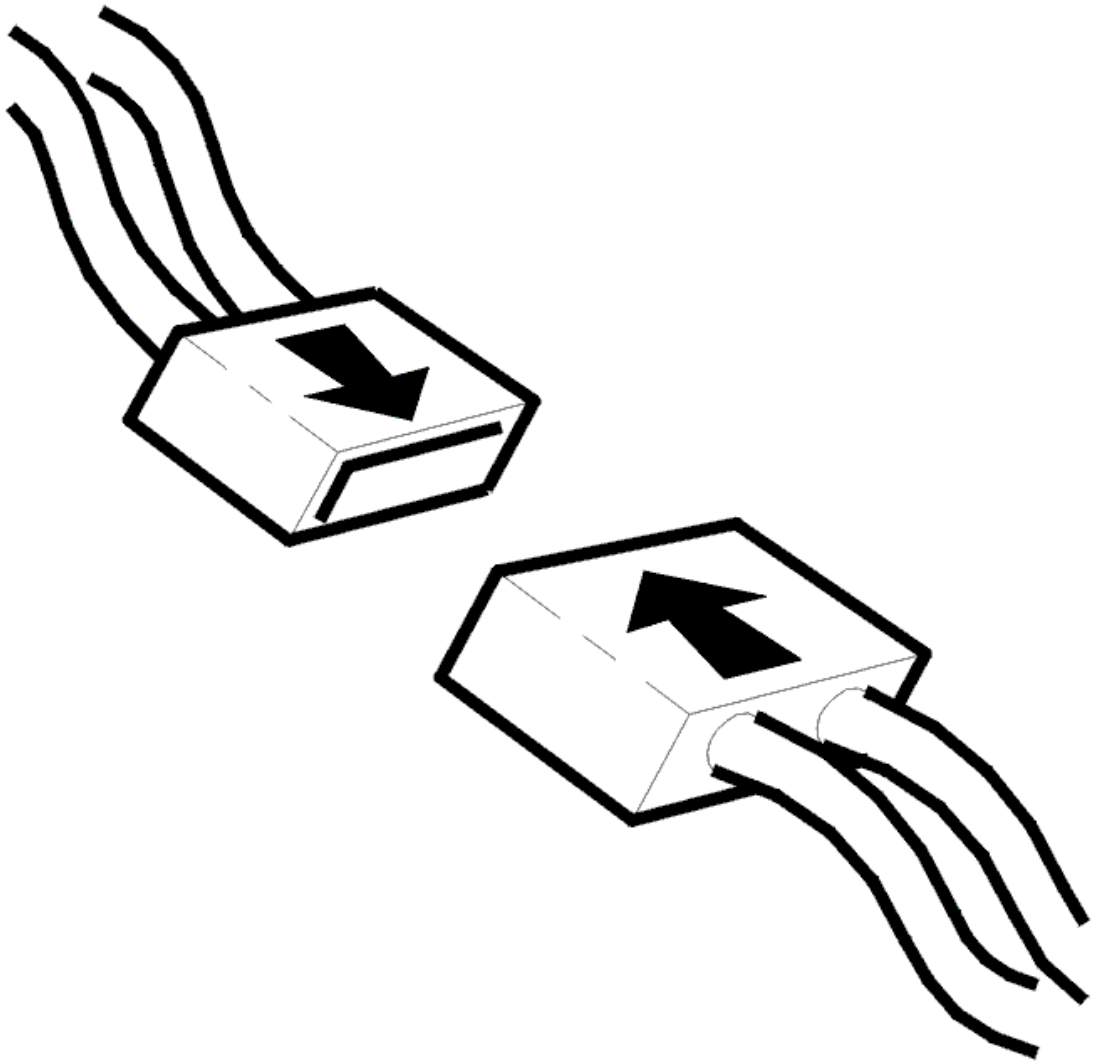

Fig. 148: Connecting Connector
Courtesy of VOLVO CARS CORPORATION

- Ignition off
- Reinstall the connectors, components etc.
- Ignition on.

  Check that the microphone input functions by activating the microphone appropriately. Make a telephone call using the handsfree system or use the voice control function.

Does the microphone function?

- **YES**

  VERIFIED: Troubleshooting has been completed.

- **NO**

  Refer to **INFORMATION**

INFORMATION

FAULT-TRACING INFORMATION

The fault should have been detected and remedied. As this is not the case fault-tracing has failed.

Exit fault-tracing for this diagnostic trouble code (DTC) or make another attempt.

AUD-000F: MICROPHONE INPUT. SIGNAL TOO HIGH (2007-2011)

DIAGNOSTIC TROUBLE CODE (DTC) INFORMATION AUD-000F

Condition

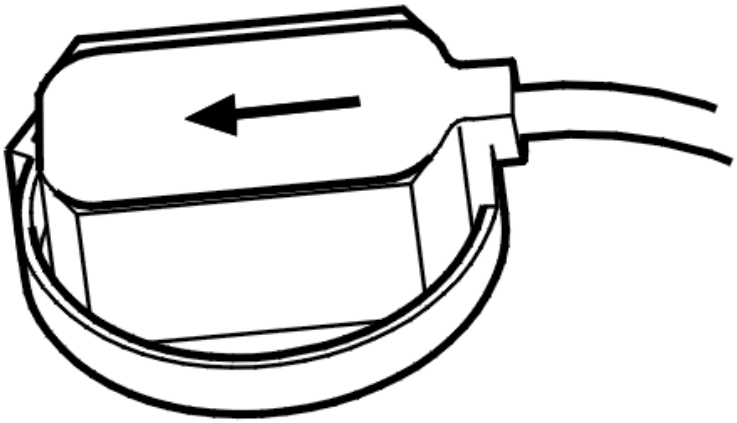

Fig. 149: Identifying Microphone
Courtesy of VOLVO CARS CORPORATION

The diagnostic trouble code (DTC) is stored if the audio module (AUD) registers that the signal to the microphone is too high.

The diagnostic trouble code (DTC) can be diagnosed when the ignition is switched on.

Substitute Value

- None.

Possible Source

- Short-circuit to supply voltage in the signal cable between the microphone and the control module.

Fault symptom[s]

- The microphone is not working.

SIGNAL TOO HIGH

CHECKING THE COMPONENT AND WIRING

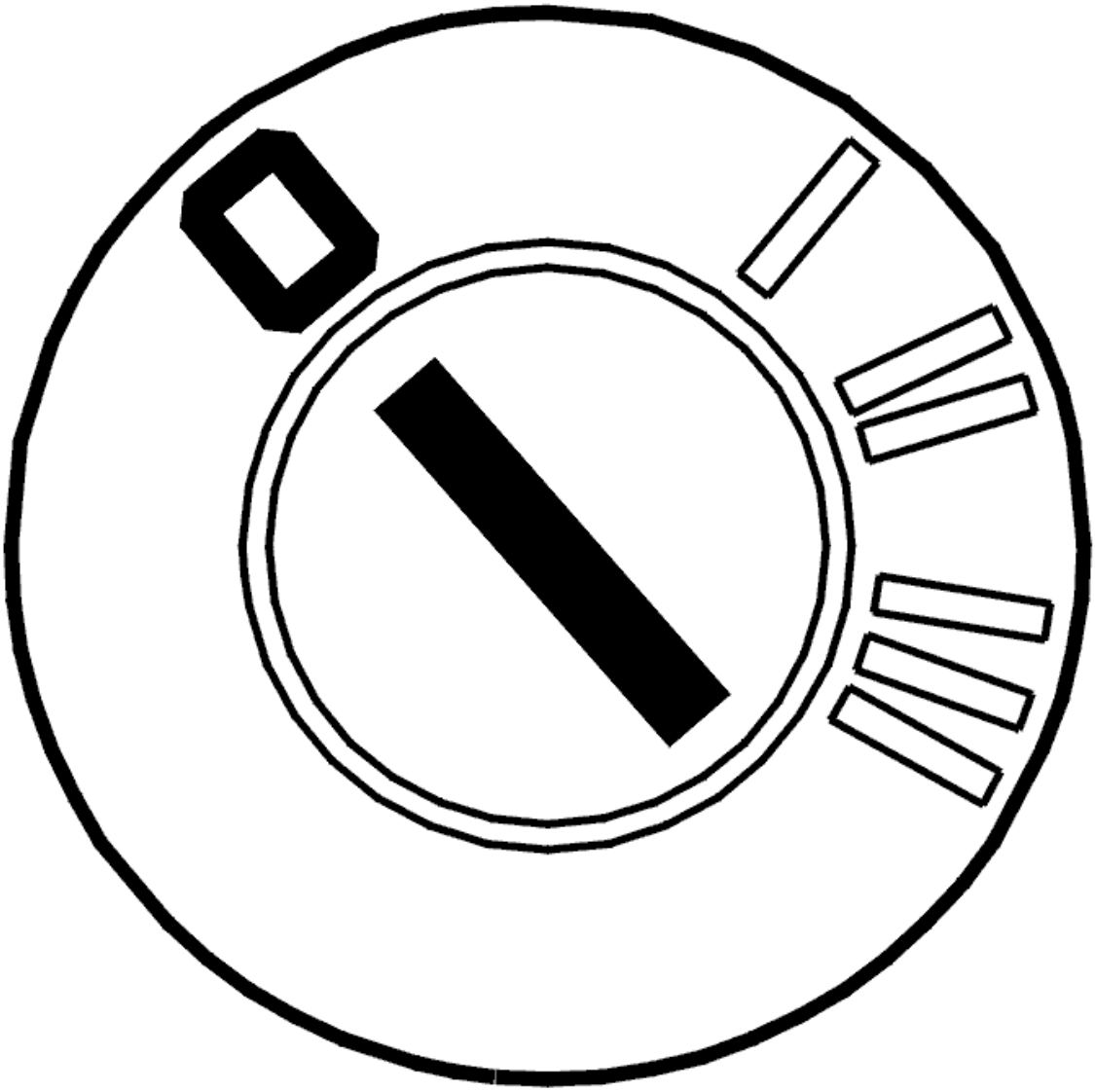

Fig. 150: Identifying Ignition OFF
Courtesy of VOLVO CARS CORPORATION

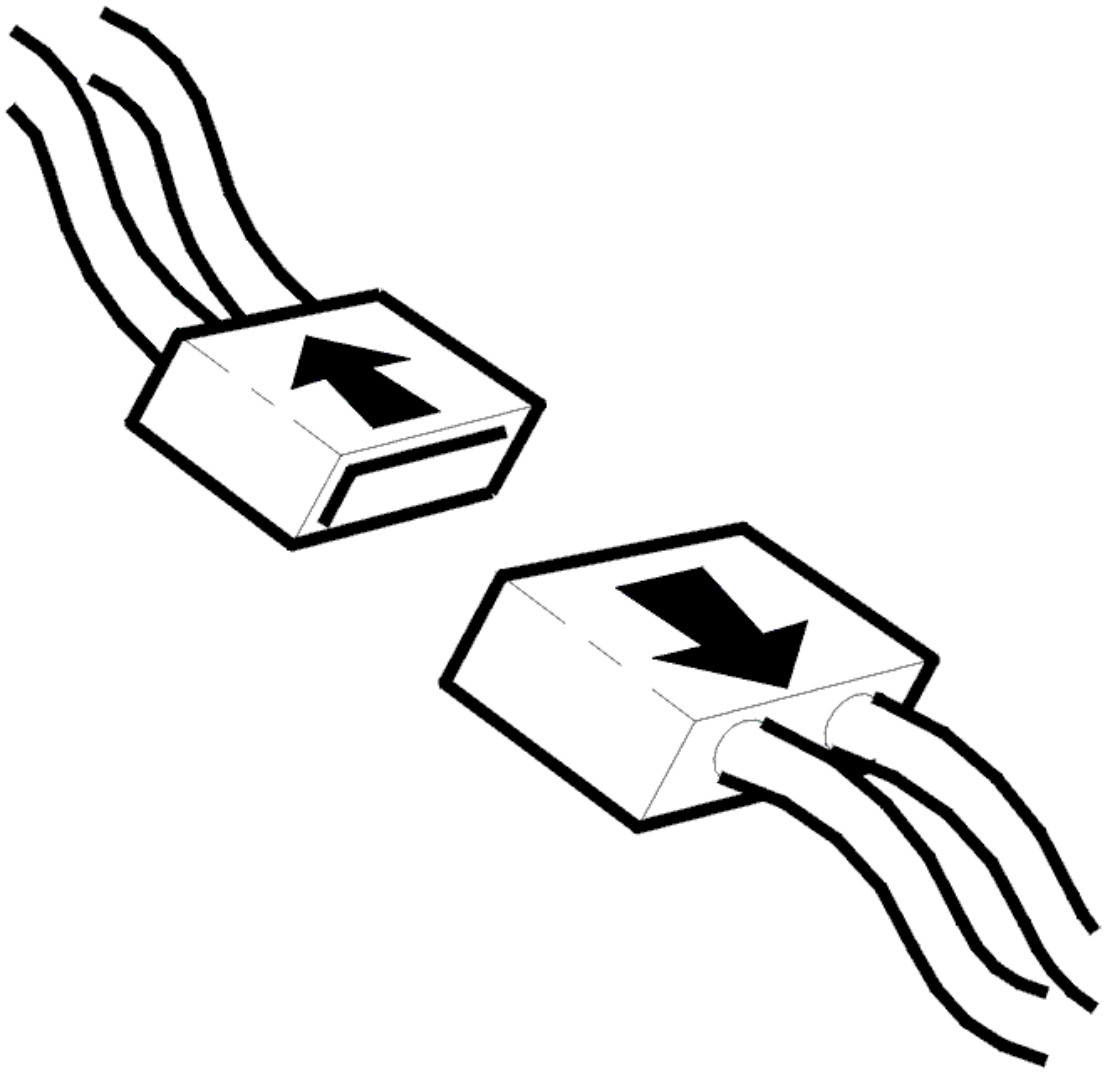

Fig. 151: Disconnecting Connector
Courtesy of VOLVO CARS CORPORATION

- Ignition off
- Disconnect the connector for the microphone.

  Check the cable terminals. Check for contact resistance, loose connections and oxidation.

  Check the cable terminals in the female and male sections of the connector. The cable terminals must not be damaged or pressed back.

  Check the signal cable between audio module (AUD) terminal #B8 and microphone input terminal #A2 (pin B). Check for a short-circuit to supply voltage.

  Check the signal cable between audio module (AUD) terminal #B16 and microphone input terminal #A1 (pin A). Check for a short-circuit to supply voltage.

Check the resistance between terminal #A1 (pin A) and #A2 (pin B) in the microphone connector. The resistance should be between 100 ohms - 10 kohms.

Remedy as necessary.

Other information

- see **CONNECTING THE BREAKOUT BOX**
- see **AUDIO MODULE (AUD), REPLACING**
- see **MICROPHONE, REPLACING**
- see **SIGNAL SPECIFICATION**
- see **CONTENTS**

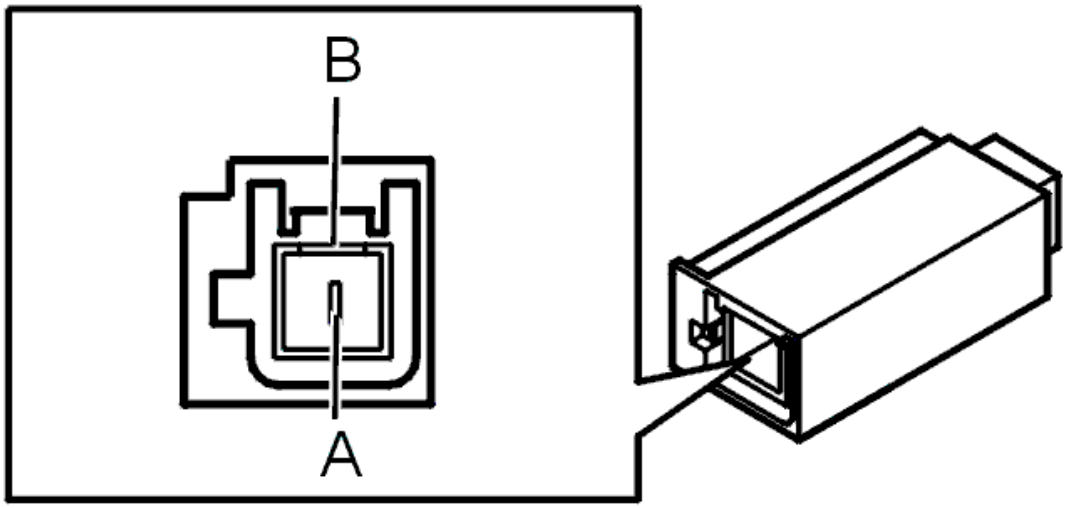

Fig. 152: Identifying 1-Bit Connector
Courtesy of VOLVO CARS CORPORATION

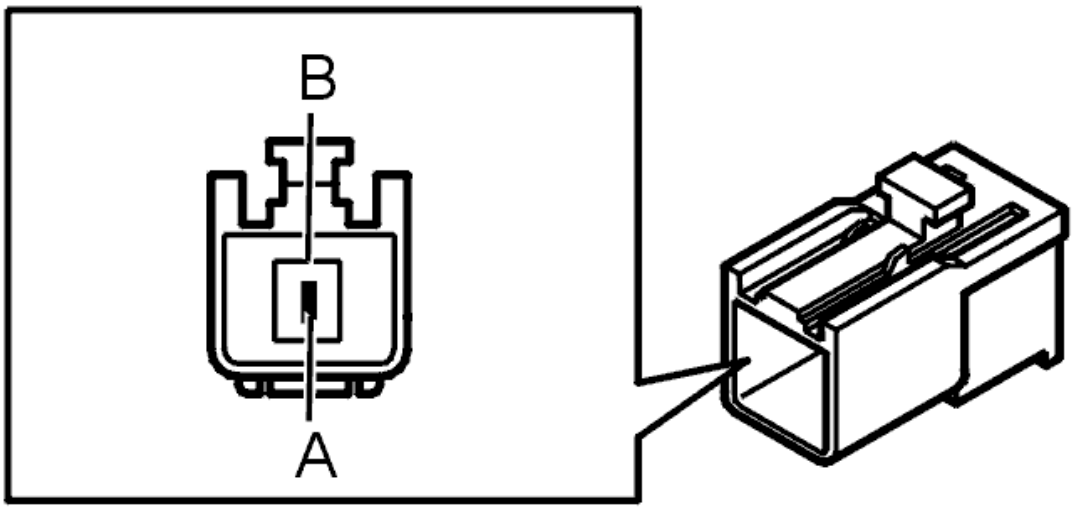

Fig. 153: Connector F, Carphone Antenna (Brown Connector)

Courtesy of VOLVO CARS CORPORATION

- **Continue**

  Refer to **VERIFICATION**

VERIFICATION

VERIFICATION

HINT: After carrying out the repair, check that the fault has been remedied.

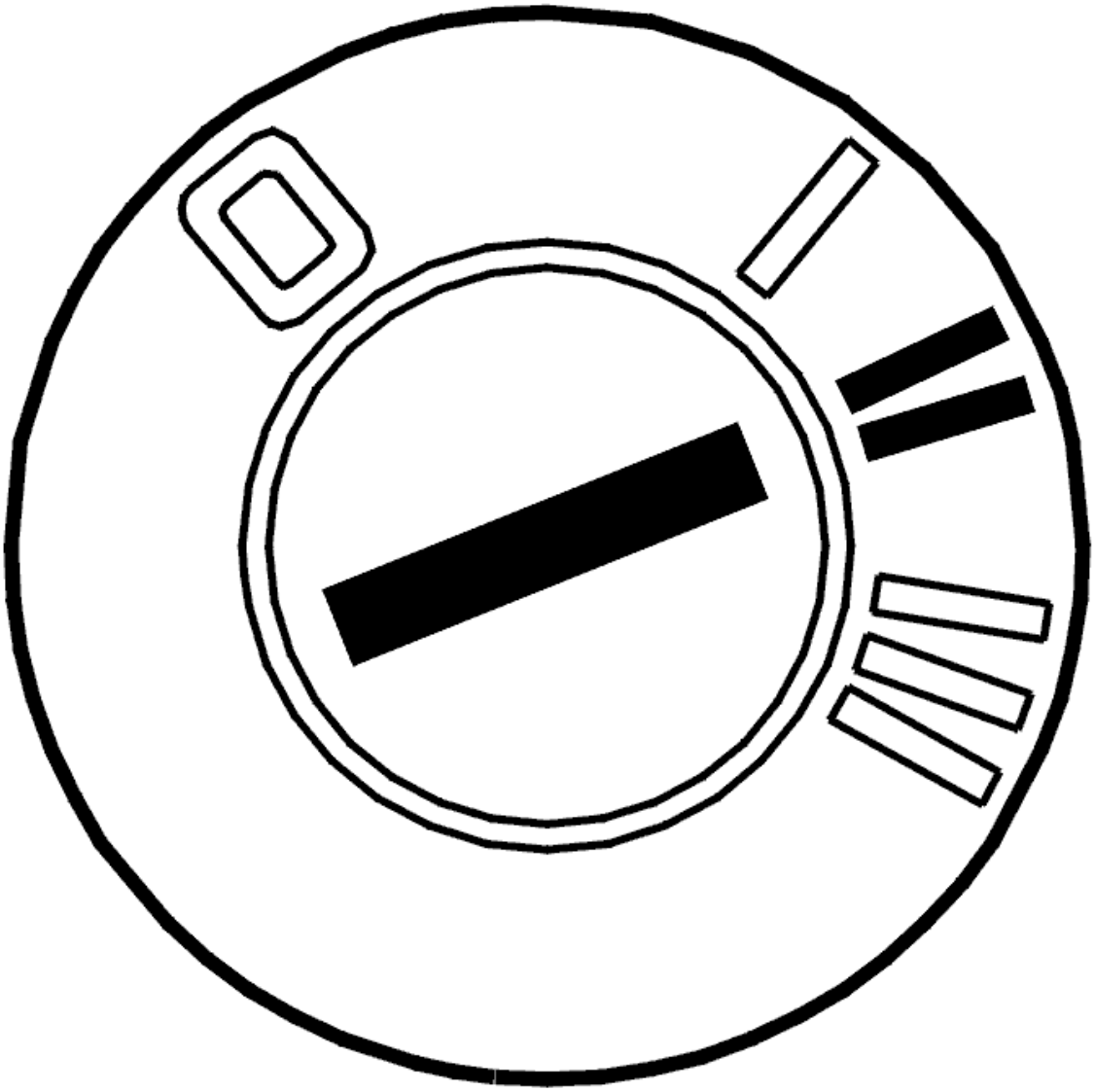

Fig. 154: Identifying Ignition ON
Courtesy of VOLVO CARS CORPORATION

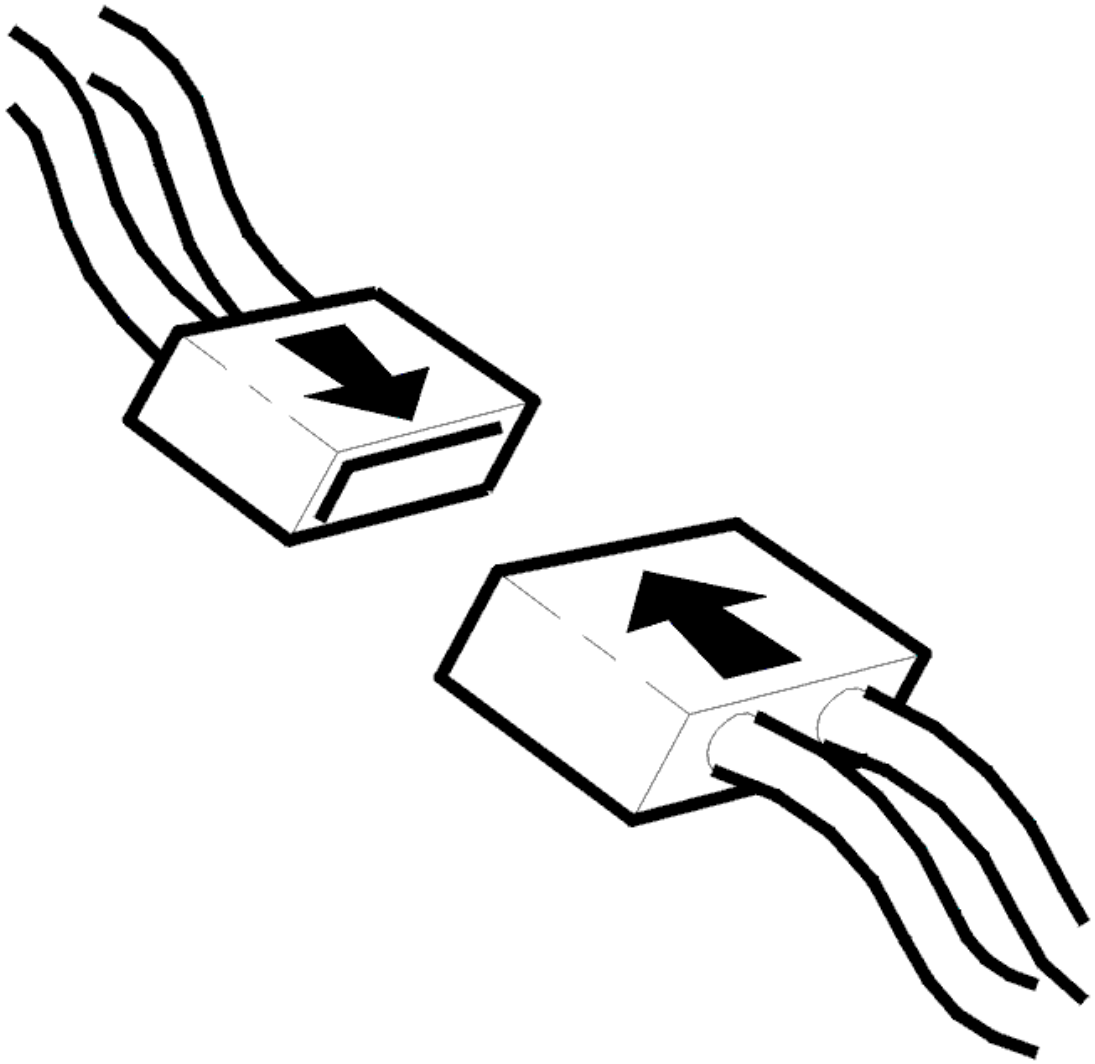

Fig. 155: Connecting Connector
Courtesy of VOLVO CARS CORPORATION

- Ignition off
- Reinstall the connectors, components etc.
- Ignition on.

  Check that the microphone input functions by activating the microphone appropriately. For example, make a call using the hands-free system.

Does the microphone function?

- **YES**

  VERIFIED: Troubleshooting has been completed.

- **NO**

  Refer to **INFORMATION**

INFORMATION

FAULT-TRACING INFORMATION

The fault should have been detected and remedied. As this is not the case fault-tracing has failed.

Exit fault-tracing for this diagnostic trouble code (DTC) or make another attempt.

AUD-000F: MICROPHONE TERMINAL. SIGNAL TOO HIGH (2003-2006)

DIAGNOSTIC TROUBLE CODE (DTC) INFORMATION AUD-000F

Condition

Diagnostic trouble code (DTC) AUD-000F is stored if the audio module (AUD) registers that the signal to the microphone is too high.

Diagnostic trouble code (DTC) AUD-000F can be diagnosed when the ignition is on.

Substitute Value

- None.

Possible Source

- Short-circuit to supply voltage in the signal cable between the microphone and the control module.

Fault symptom[s]

- The microphone is not working.

HIGH SIGNAL

CHECKING COMPONENTS AND WIRING

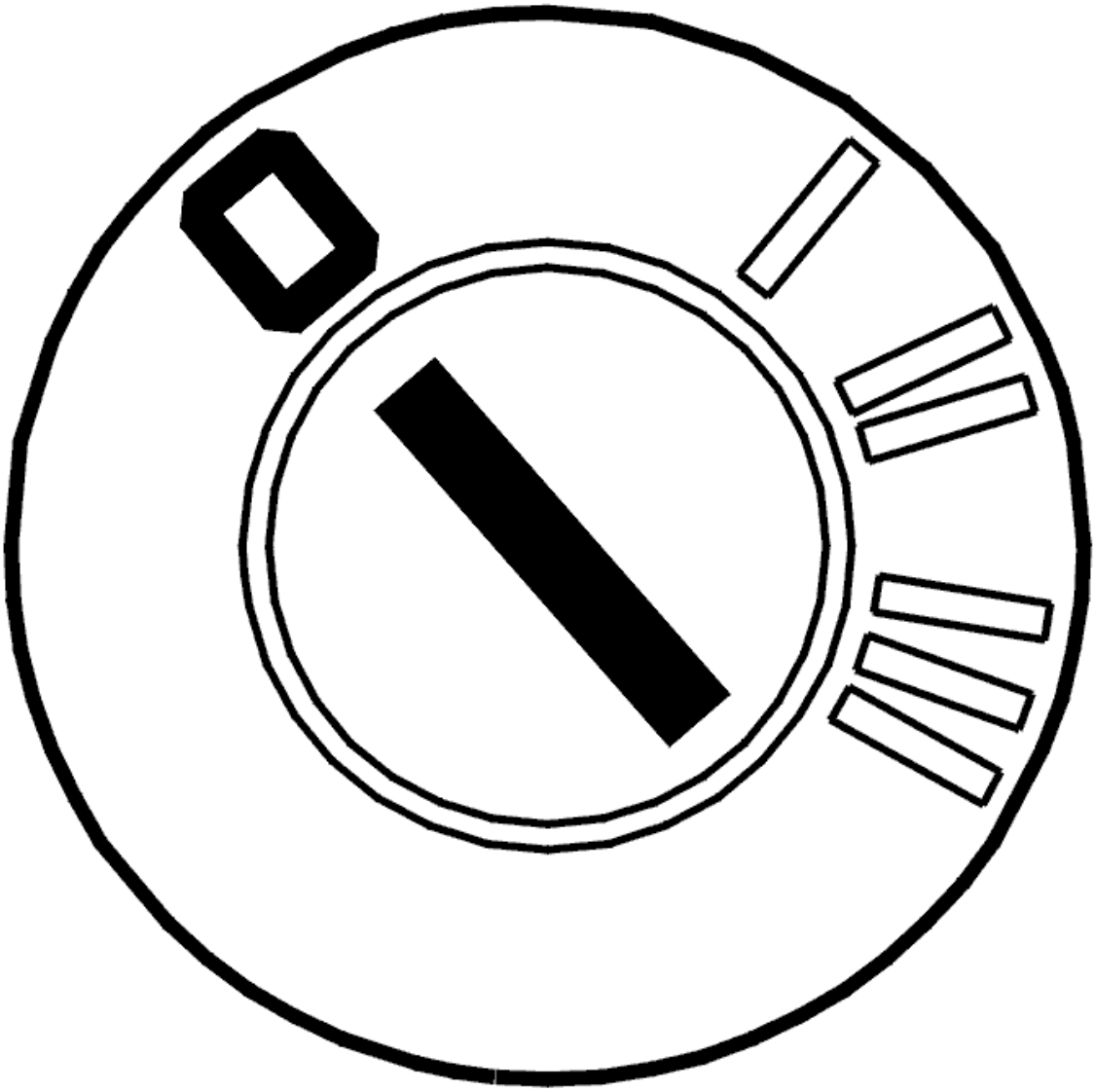

Fig. 156: Identifying Ignition OFF
Courtesy of VOLVO CARS CORPORATION

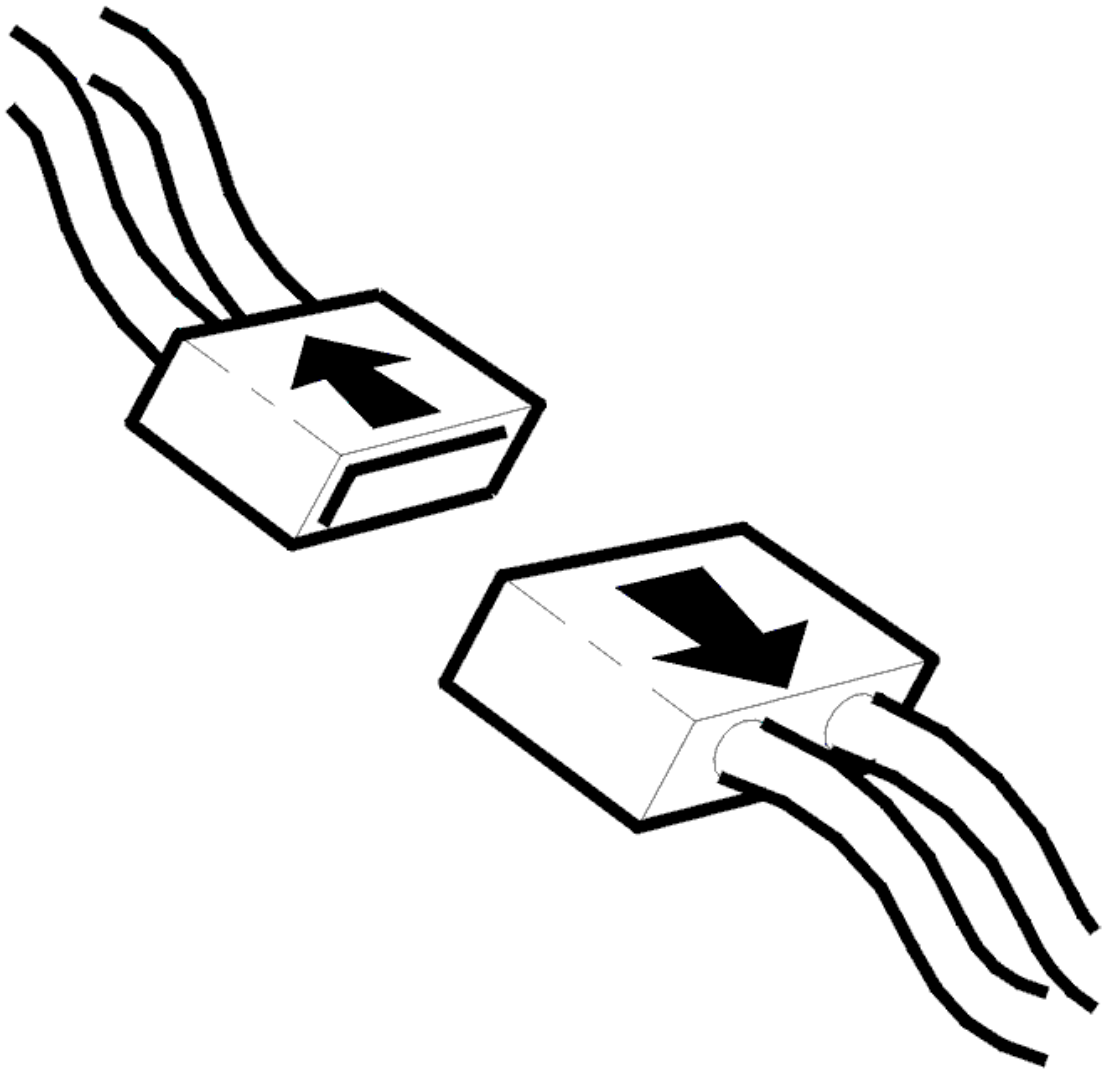

Fig. 157: Disconnecting Connector
Courtesy of VOLVO CARS CORPORATION

- Ignition off
- Disconnect the connector for the microphone in the rear view mirror.

  Check the cable terminals. Check for contact resistance, loose connections and oxidation.

  Check the cable terminals in the female and male sections of the connector. The cable terminals must not be damaged or pressed back.

  Check the signal cable between audio module (AUD) terminal #B8 and microphone input terminal #A2 (pin B). Check for voltage.

  Check the signal cable between audio module (AUD) terminal #B16 and microphone input terminal #A1 (pin A). Check for voltage.

Check the resistance between terminal #A1 (pin A) and #A2 (pin B) in the microphone connector. The resistance should be between 100 ohms - 10 kohms.

Remedy as necessary.

Other information:

- To connect the breakout box, see **CONNECTING THE BREAKOUT BOX**
- To access or replace the audio module (AUD), see **AUDIO MODULE (AUD), REPLACING**
- To access or replace the microphone, see **MICROPHONE, REPLACING**
- For information about signals, see **SIGNAL SPECIFICATION**
- see **CONTENTS** .

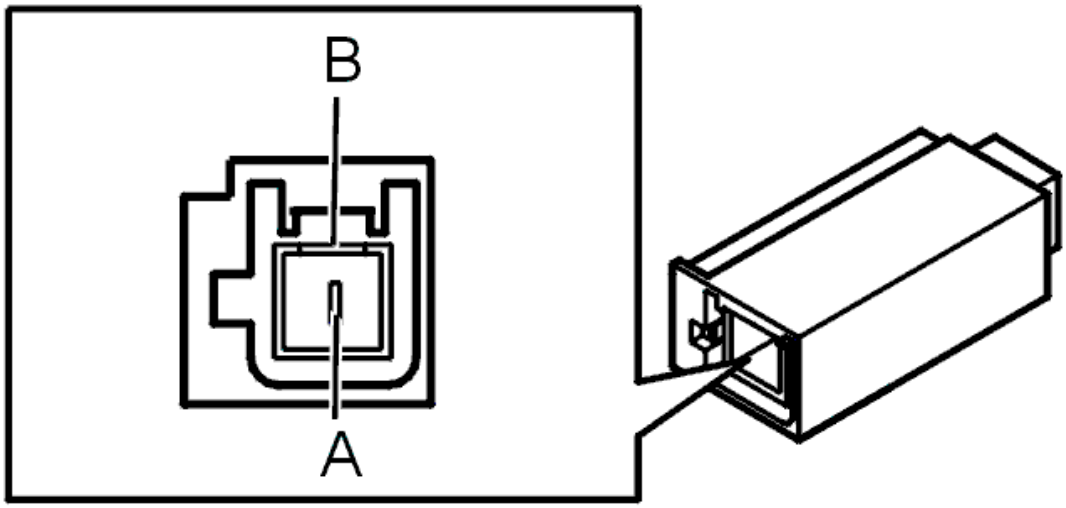

Fig. 158: Identifying 1-Bit Connector
Courtesy of VOLVO CARS CORPORATION

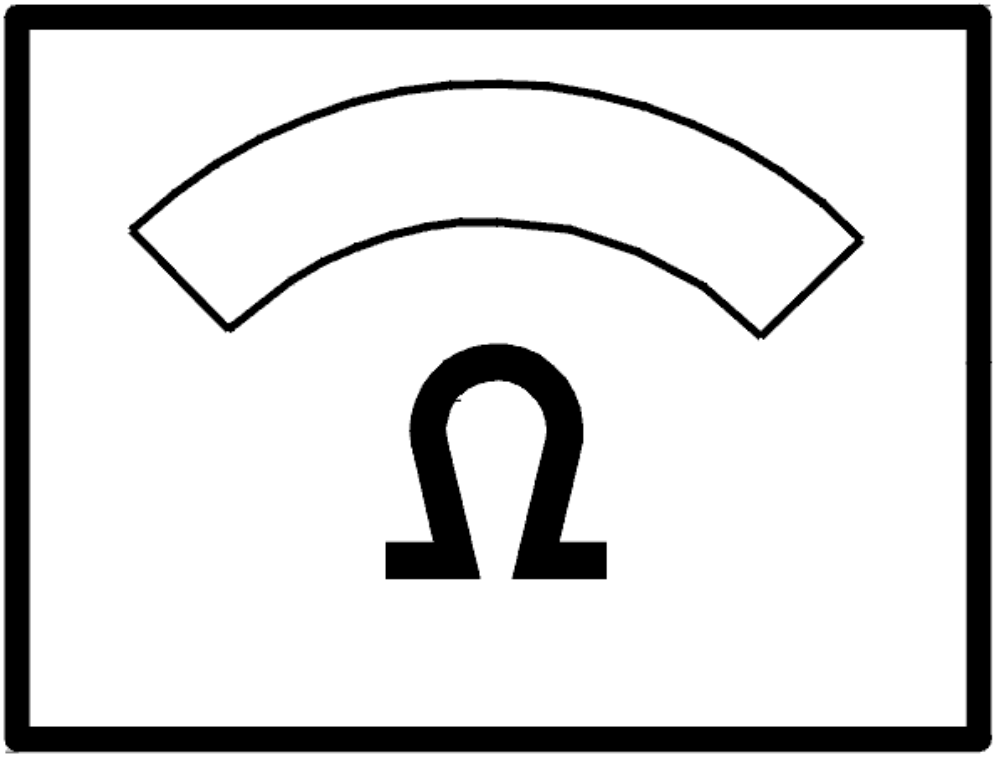

Fig. 159: Identifying Ohm Meter
Courtesy of VOLVO CARS CORPORATION

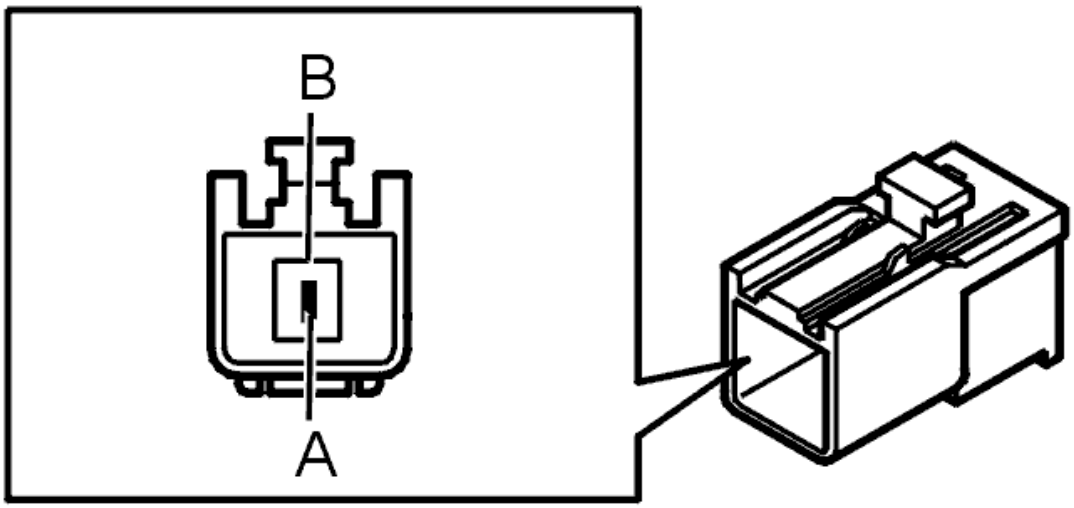

Fig. 160: Connector F, Carphone Antenna (Brown Connector)
Courtesy of VOLVO CARS CORPORATION

- **Continue**

  Refer to **VERIFICATION**

VERIFICATION

VERIFICATION

HINT: After carrying out the repair, check that the fault has been remedied.

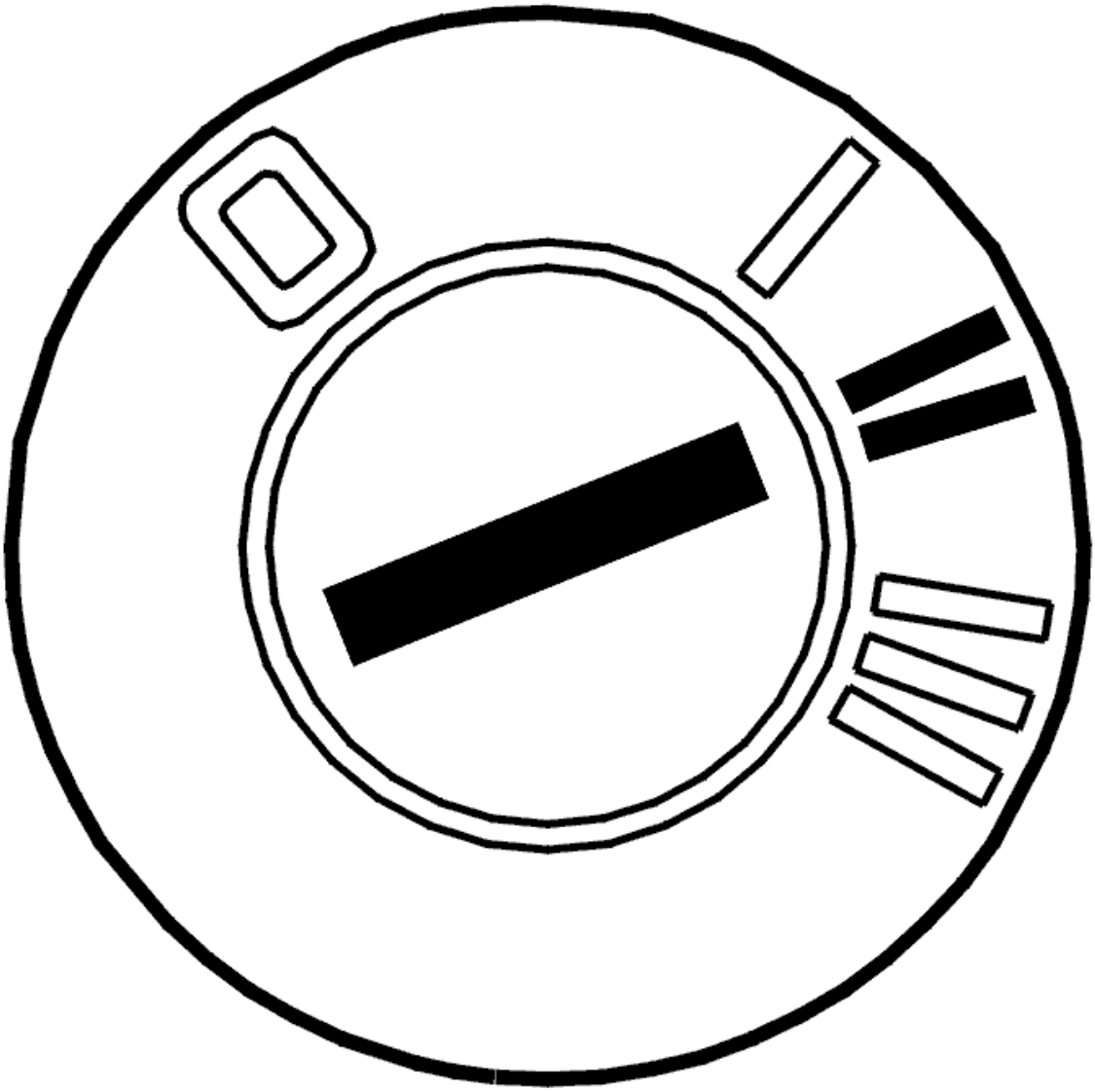

Fig. 161: Identifying Ignition ON
Courtesy of VOLVO CARS CORPORATION

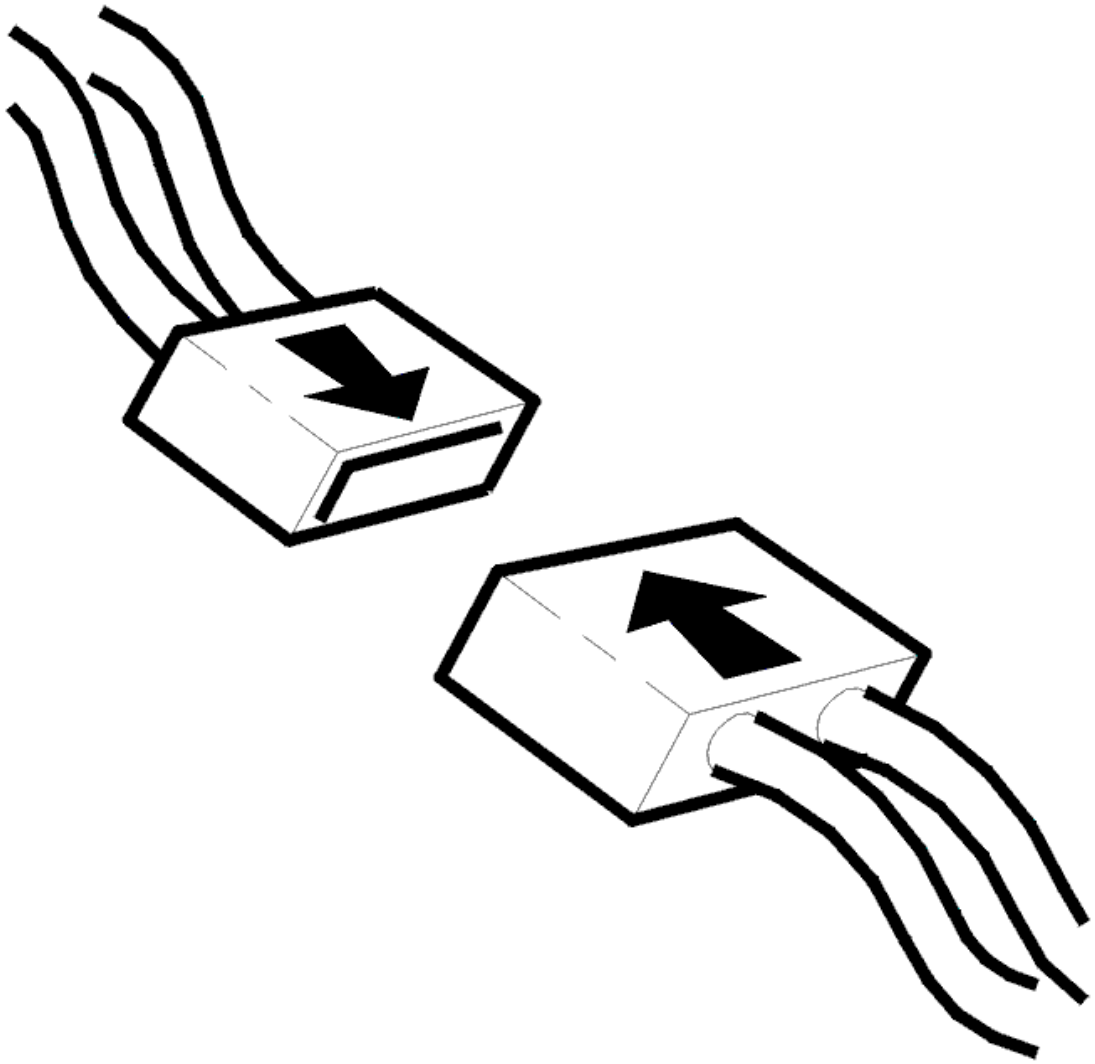

Fig. 162: Connecting Connector
Courtesy of VOLVO CARS CORPORATION

- Ignition off
- Reinstall the connectors, components etc.
- Ignition on.

  Check that the microphone input functions by activating the microphone appropriately. Make a telephone call using the handsfree system or use the voice control function.

Does the microphone function?

- **YES**

  VERIFIED: Troubleshooting has been completed.

- **NO**

  Refer to **INFORMATION**

INFORMATION

FAULT-TRACING INFORMATION

The fault should have been detected and remedied. As this is not the case fault-tracing has failed.

Exit fault-tracing for this diagnostic trouble code (DTC) or make another attempt.

AUD-0010: MICROPHONE INPUT. SIGNAL TOO LOW (2007-2011)

DIAGNOSTIC TROUBLE CODE (DTC) INFORMATION AUD-0010

Condition

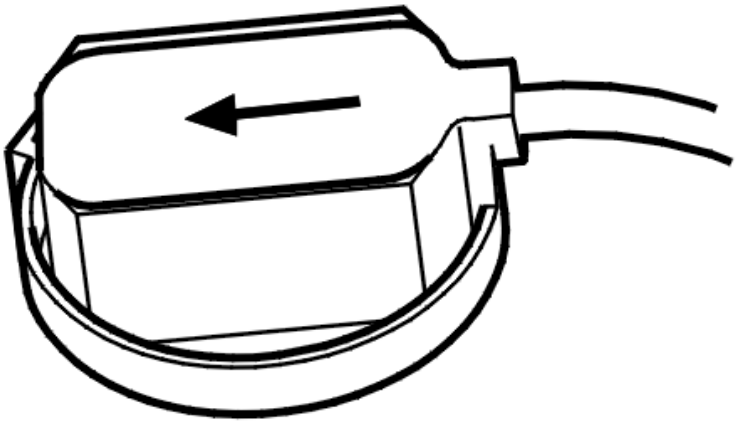

Fig. 163: Identifying Microphone
Courtesy of VOLVO CARS CORPORATION

The diagnostic trouble code (DTC) is stored if the audio module (AUD) registers that the signal to the microphone is too low.

The diagnostic trouble code (DTC) can be diagnosed when the ignition is switched on.

Substitute Value

- None.

Possible Source

- Short-circuit to ground in the signal cable between the microphone and the control module
- Short-circuit between the signal cables to the microphone.

Fault symptom[s]

- The microphone is not working.

SIGNAL TOO LOW

CHECKING THE COMPONENT AND WIRING

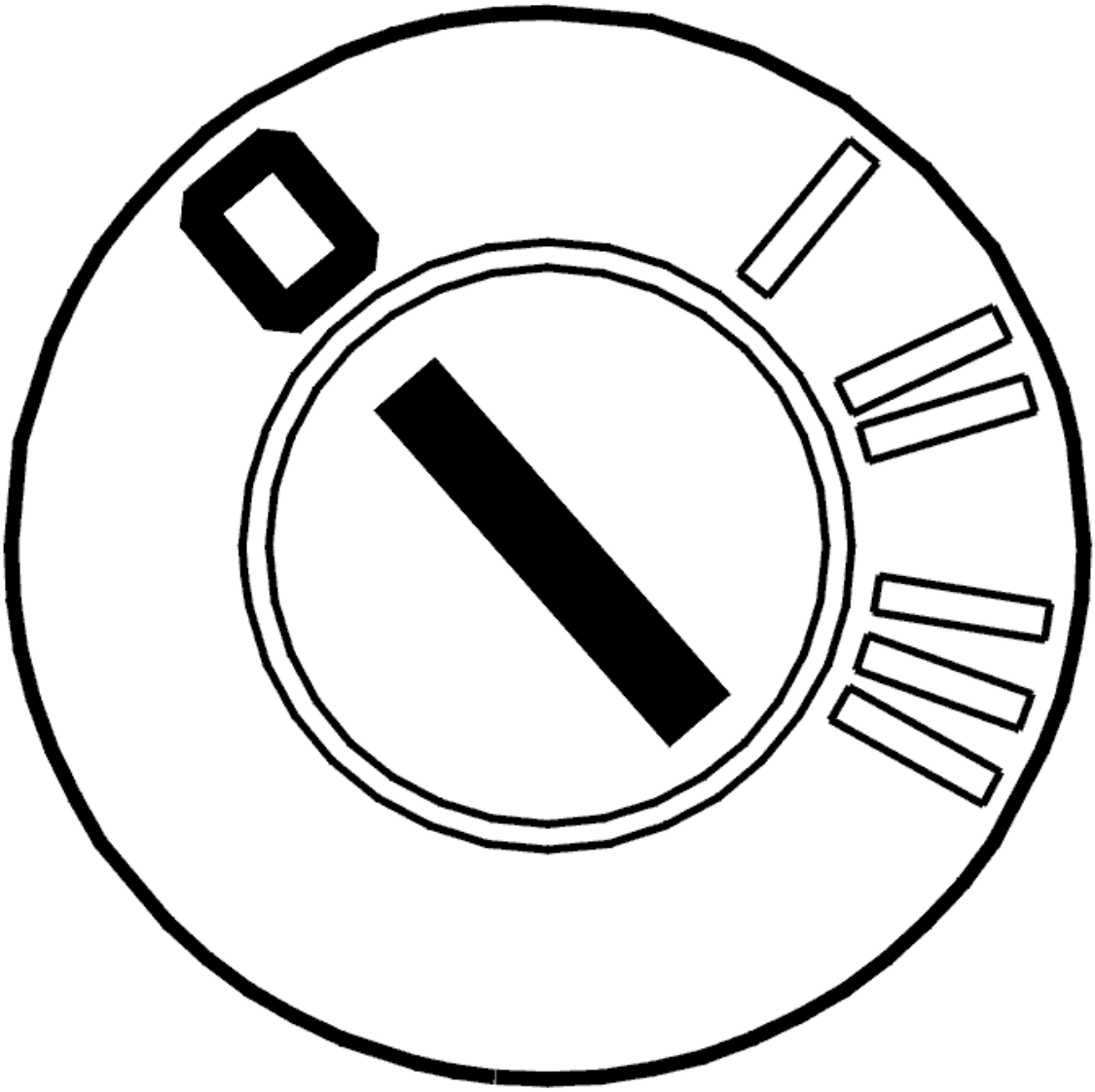

Fig. 164: Identifying Ignition OFF
Courtesy of VOLVO CARS CORPORATION

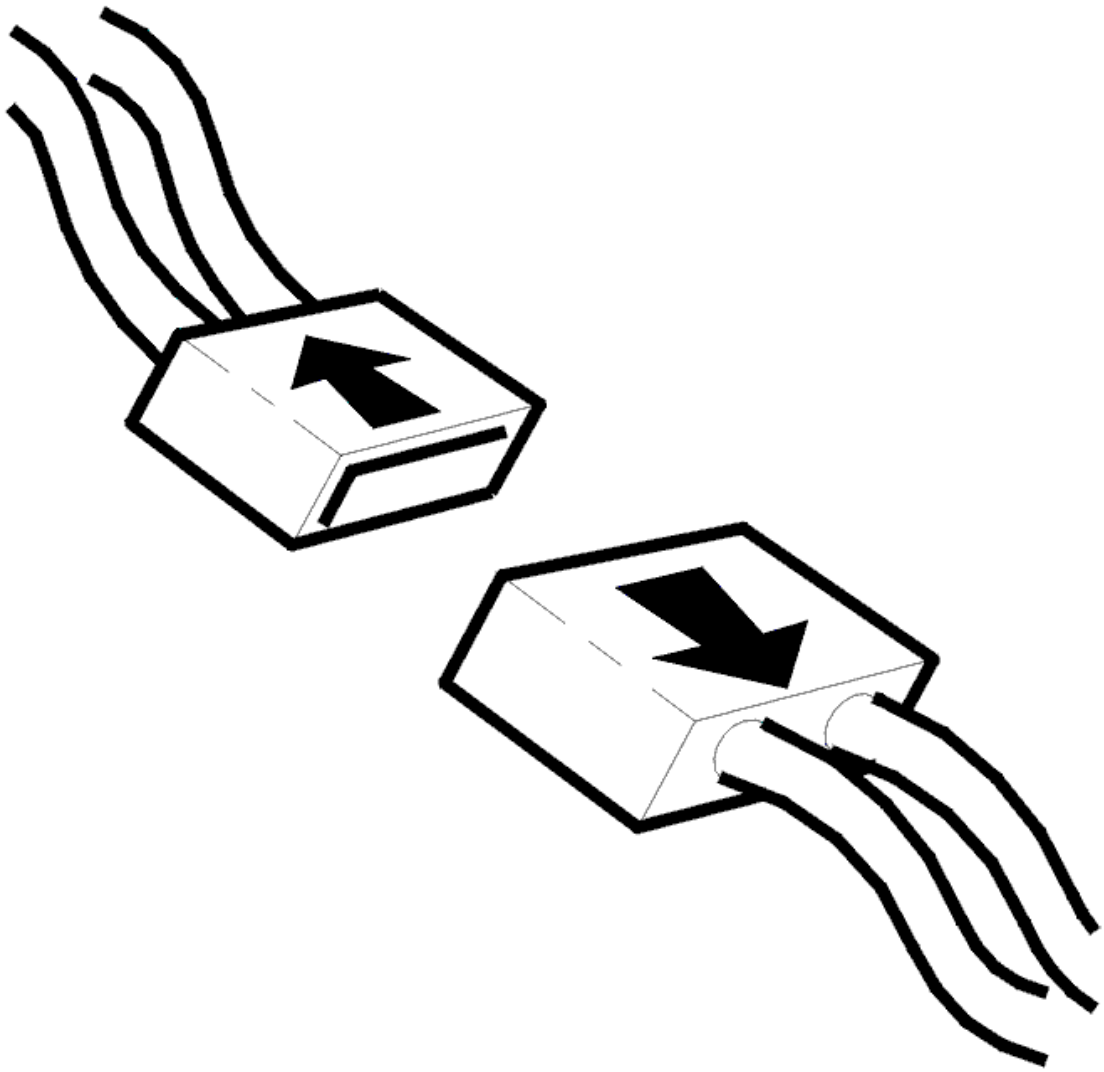

Fig. 165: Disconnecting Connector
Courtesy of VOLVO CARS CORPORATION

- Ignition off
- Disconnect the connector for the microphone in the rear view mirror
- Disconnect the 16-pin connector for the audio module (AUD).

  Check the cable terminals in the female and male sections of the connector. The cable terminals must not be damaged or pressed back.

  Check the signal cable between audio module (AUD) terminal #B8 and microphone input terminal #A2 (pin B). Check for a short-circuit to ground.

  Check the signal cable between audio module (AUD) terminal #B16 and microphone input terminal #A1 (pin A). Check for a short-circuit to ground.

Check the resistance between terminal #A1 (pin A) and #A2 (pin B) in the microphone connector. The resistance should be between 100 ohms - 10 kohms.

Remedy as necessary.

Other information

- see **CONNECTING THE BREAKOUT BOX**
- see **AUDIO MODULE (AUD), REPLACING**
- see **MICROPHONE, REPLACING**
- see **SIGNAL SPECIFICATION**
- see **CONTENTS**

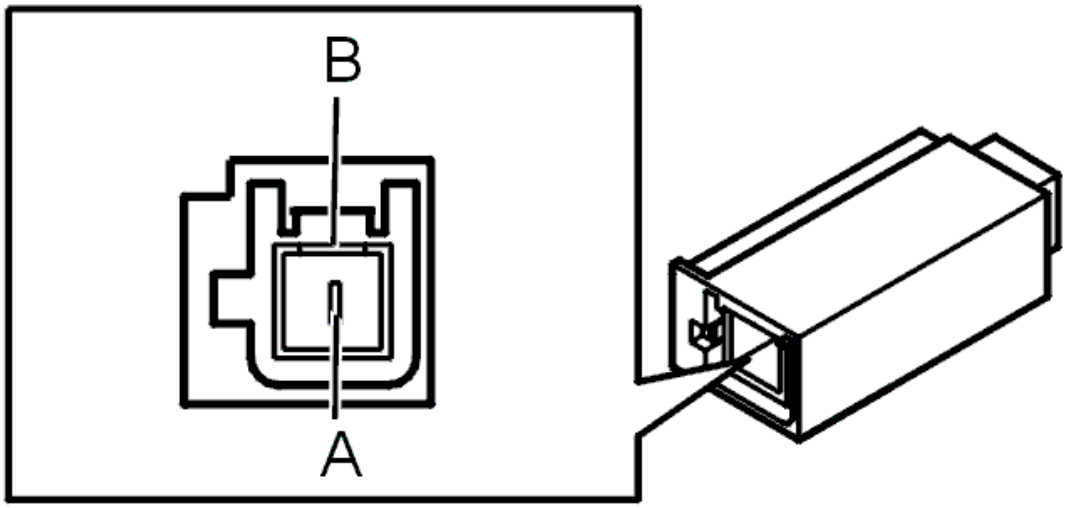

Fig. 166: Identifying 1-Bit Connector
Courtesy of VOLVO CARS CORPORATION

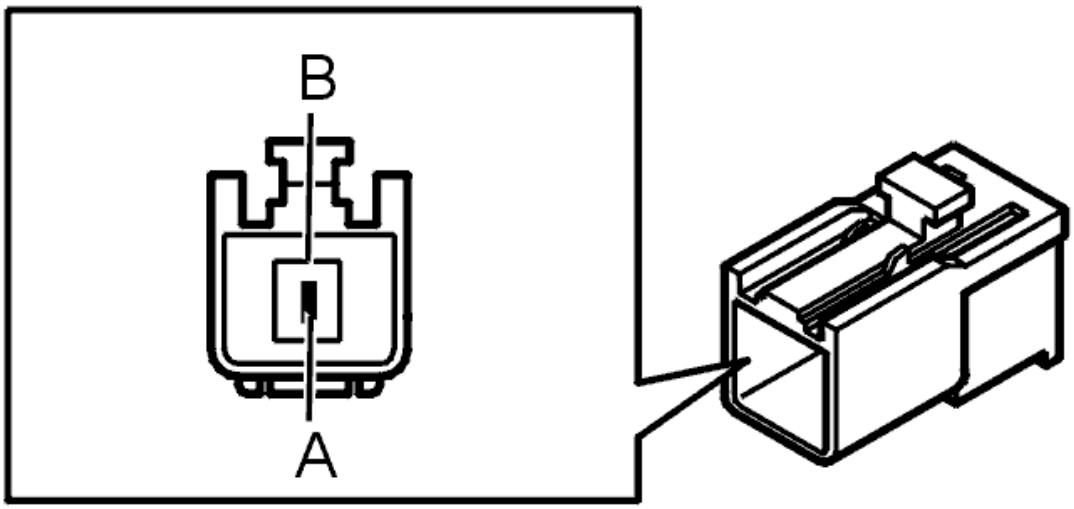

Fig. 167: Connector F, Carphone Antenna (Brown Connector)

Courtesy of VOLVO CARS CORPORATION

- **Continue**

  Refer to **VERIFICATION**

VERIFICATION

VERIFICATION

HINT: After carrying out the repair, check that the fault has been remedied.

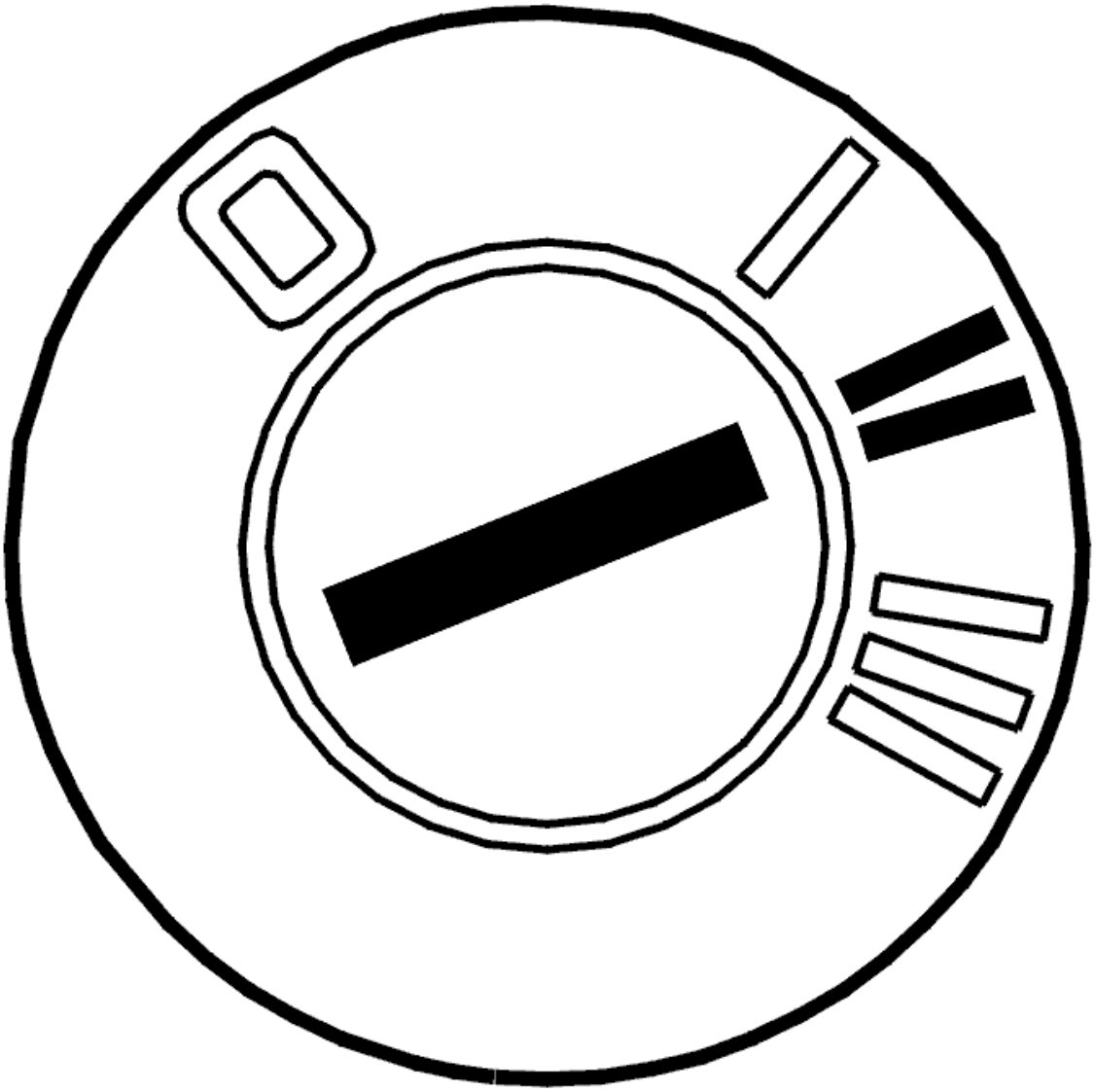

Fig. 168: Identifying Ignition ON
Courtesy of VOLVO CARS CORPORATION

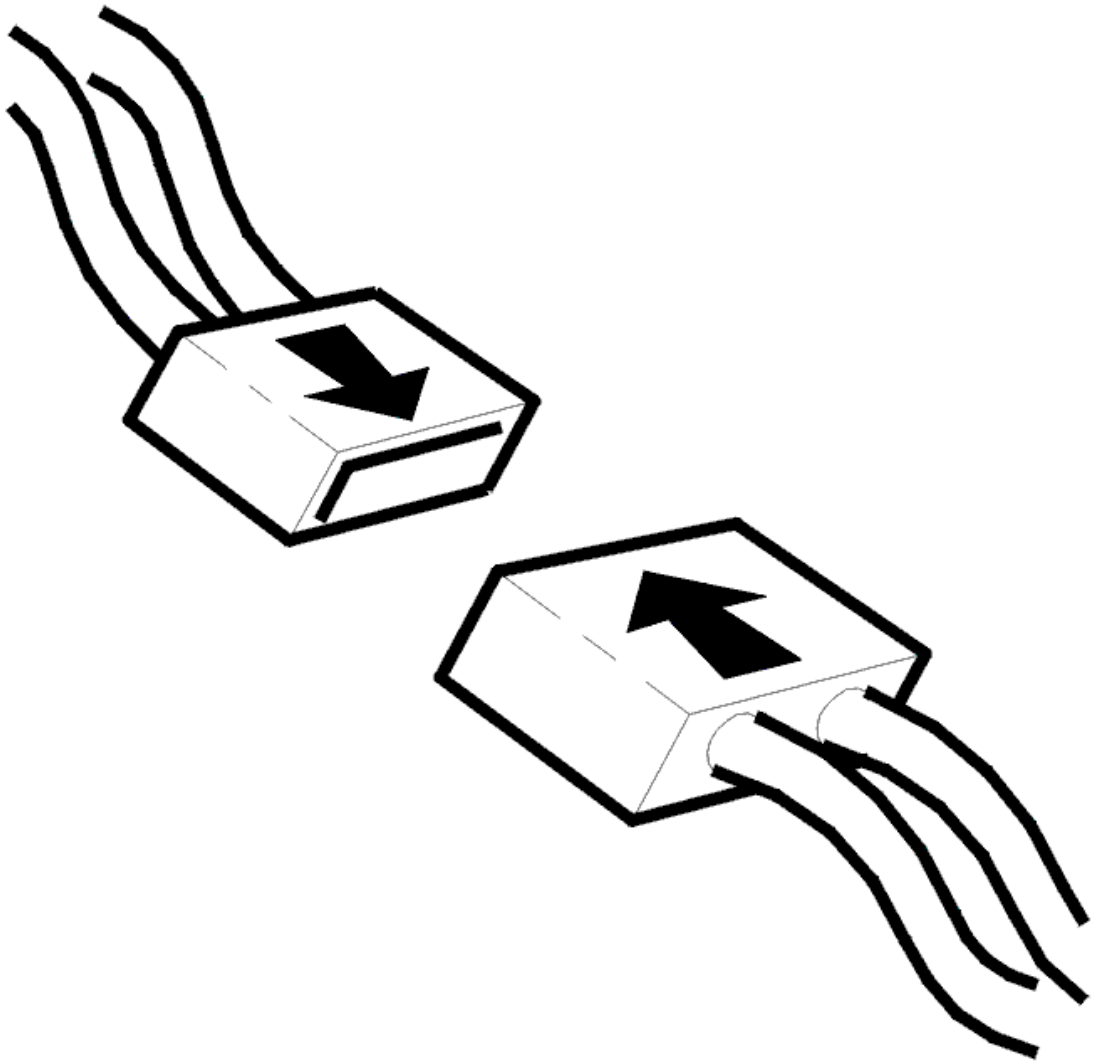

Fig. 169: Connecting Connector
Courtesy of VOLVO CARS CORPORATION

- Ignition off
- Reinstall the connectors, components etc.
- Ignition on.

  Check that the microphone input functions by activating the microphone appropriately. For example, make a call using the hands-free system.

Does the microphone function?

- **YES**

  VERIFIED: Troubleshooting has been completed.

- **NO**

  Refer to **INFORMATION**

INFORMATION

FAULT-TRACING INFORMATION

The fault should have been detected and remedied. As this is not the case fault-tracing has failed.

Exit fault-tracing for this diagnostic trouble code (DTC) or make another attempt.

AUD-0010: MICROPHONE TERMINAL. SIGNAL TOO LOW (2003-2006)

DIAGNOSTIC TROUBLE CODE (DTC) INFORMATION AUD-0010

Condition

Diagnostic trouble code (DTC) AUD-0010 is stored if the audio module (AUD) registers that the signal to the microphone is too low.

Diagnostic trouble code (DTC) AUD-0010 can be diagnosed when the ignition is on.

Substitute Value

- None.

Possible Source

- Short-circuit to ground in the signal cable between the microphone and the control module
- Short-circuit between the signal cables to the microphone.

Fault symptom[s]

- The microphone is not working.

SIGNAL LOW

CHECKING COMPONENTS AND WIRING

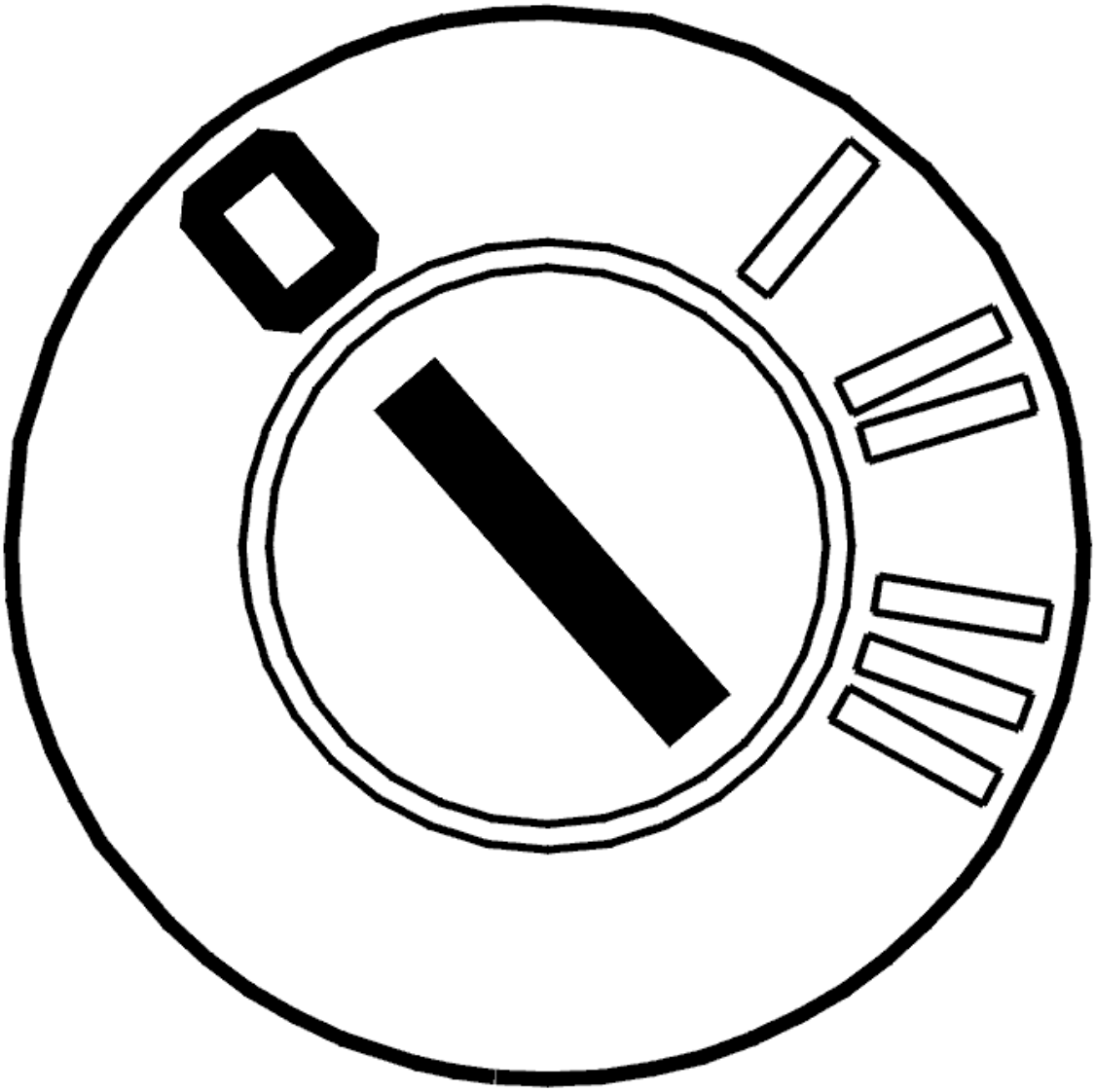

Fig. 170: Identifying Ignition OFF
Courtesy of VOLVO CARS CORPORATION

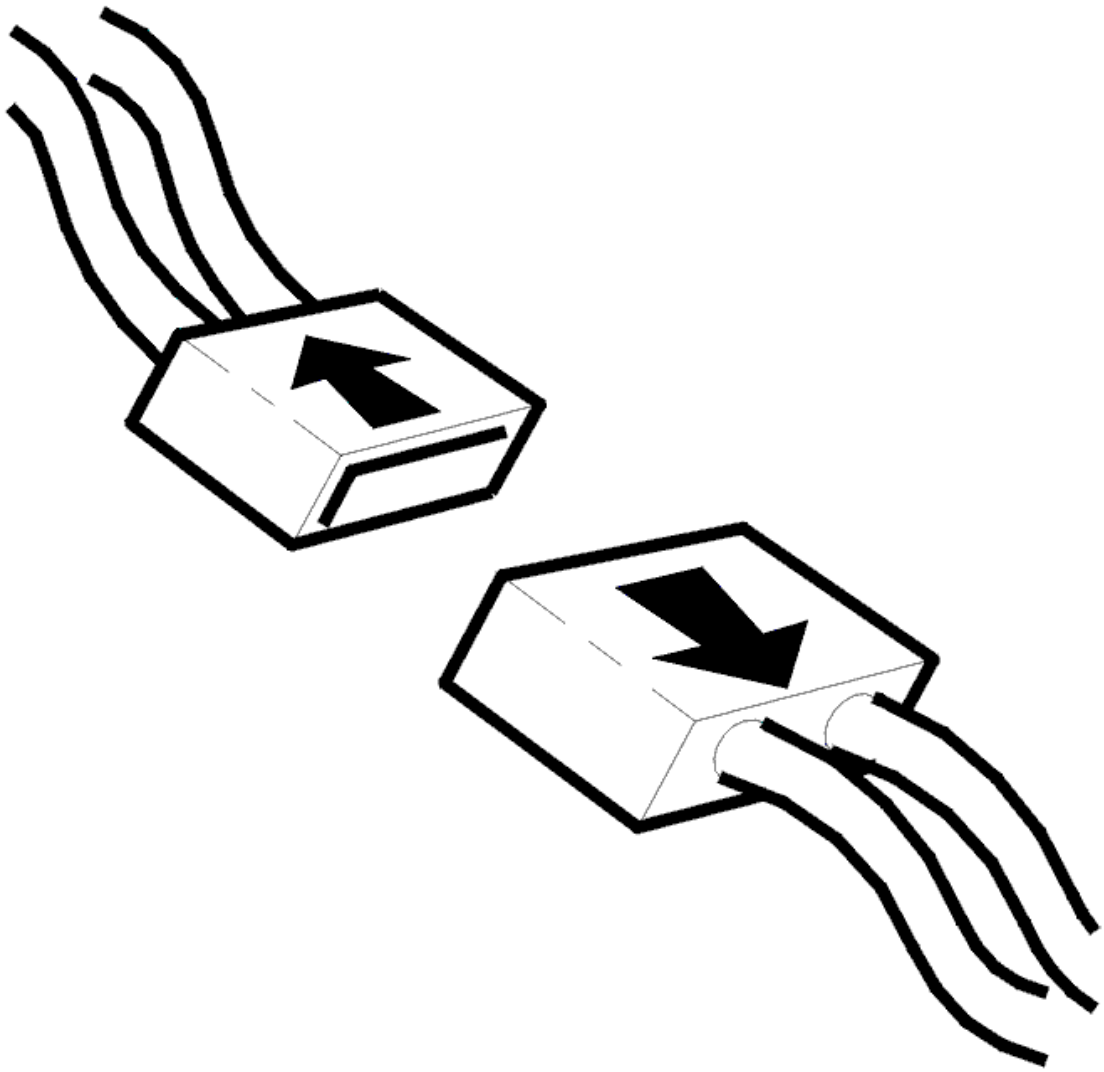

Fig. 171: Disconnecting Connector
Courtesy of VOLVO CARS CORPORATION

- Ignition off
- Disconnect the connector for the microphone in the rear view mirror
- Disconnect the 16-pin connector for the audio module (AUD).

  Check the cable terminals in the female and male sections of the connector. The cable terminals must not be damaged or pressed back.

  Check the signal cable between audio module (AUD) terminal #B8 and microphone input terminal #A2 (pin B). Check for ground.

  Check the signal cable between audio module (AUD) terminal #B16 and microphone input terminal #A1 (pin A). Check for ground.

Check the resistance between terminal #A1 (pin A) and #A2 (pin B) in the microphone connector. The resistance should be between 100 ohms - 10 kohms.

Remedy as necessary.

Other information:

- To connect the breakout box, see **CONNECTING THE BREAKOUT BOX**
- To access or replace the audio module (AUD), see **AUDIO MODULE (AUD), REPLACING**
- To access or replace the microphone, see **MICROPHONE, REPLACING**
- For information about signals, see **SIGNAL SPECIFICATION**
- see **CONTENTS** .

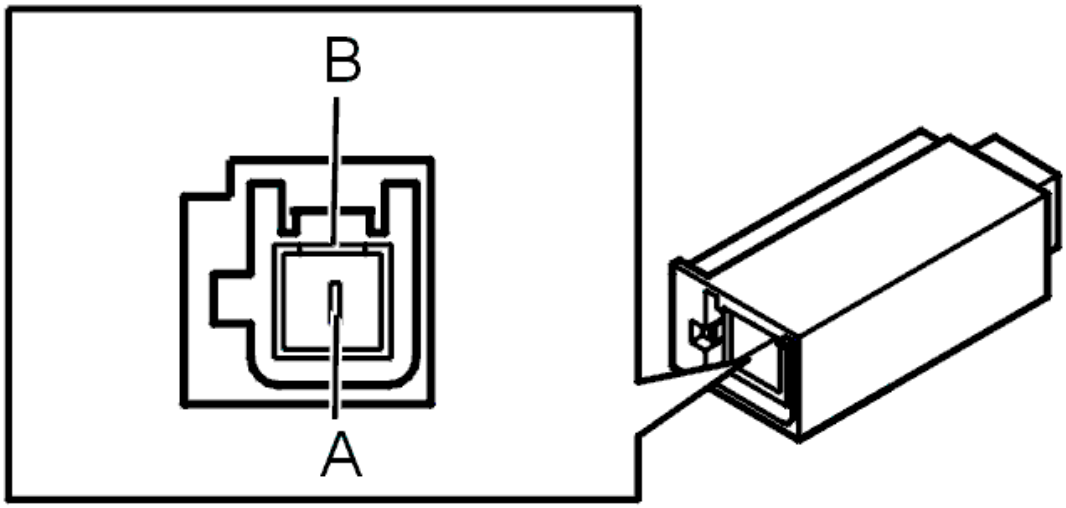

Fig. 172: Identifying 1-Bit Connector
Courtesy of VOLVO CARS CORPORATION

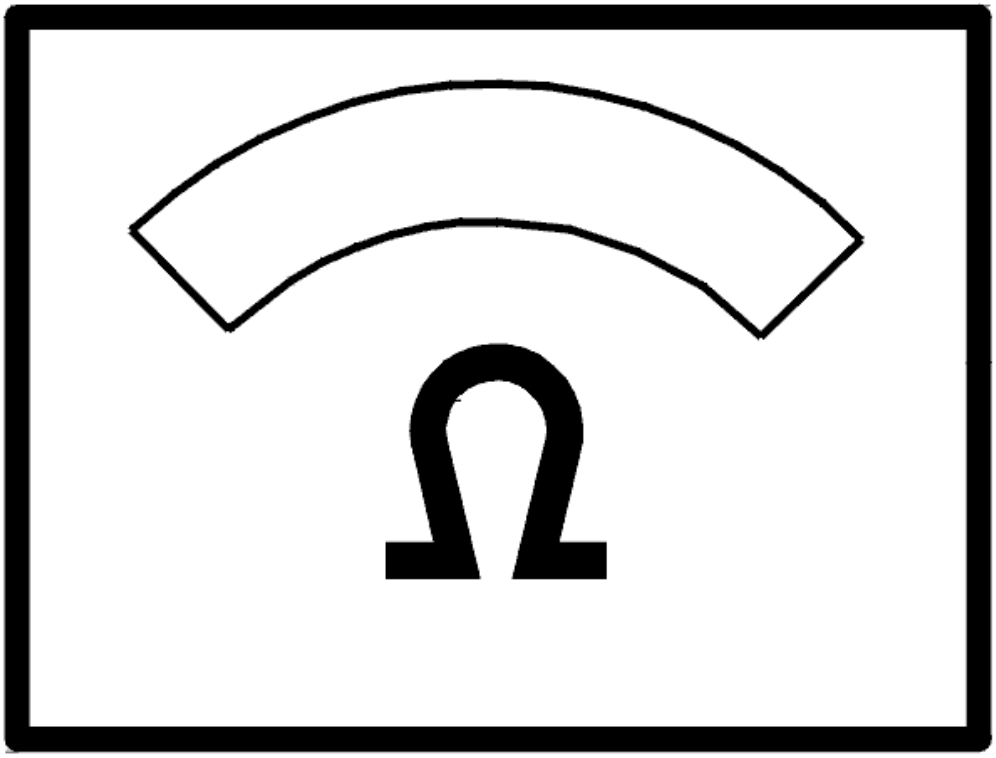

Fig. 173: Identifying Ohm Meter
Courtesy of VOLVO CARS CORPORATION

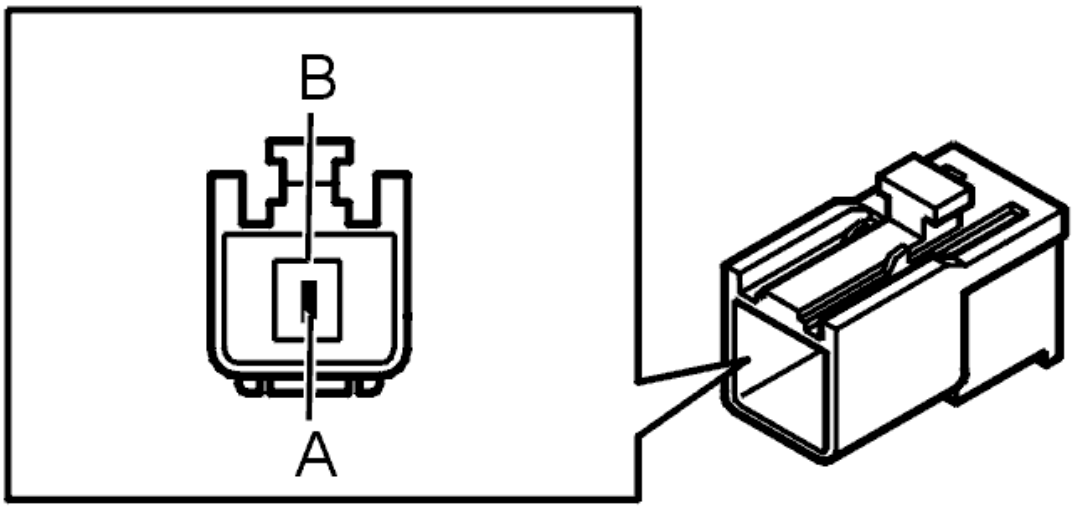

Fig. 174: Connector F, Carphone Antenna (Brown Connector)
Courtesy of VOLVO CARS CORPORATION

- **Continue**

  Refer to **VERIFICATION**

VERIFICATION

VERIFICATION

HINT: After carrying out the repair, check that the fault has been remedied.

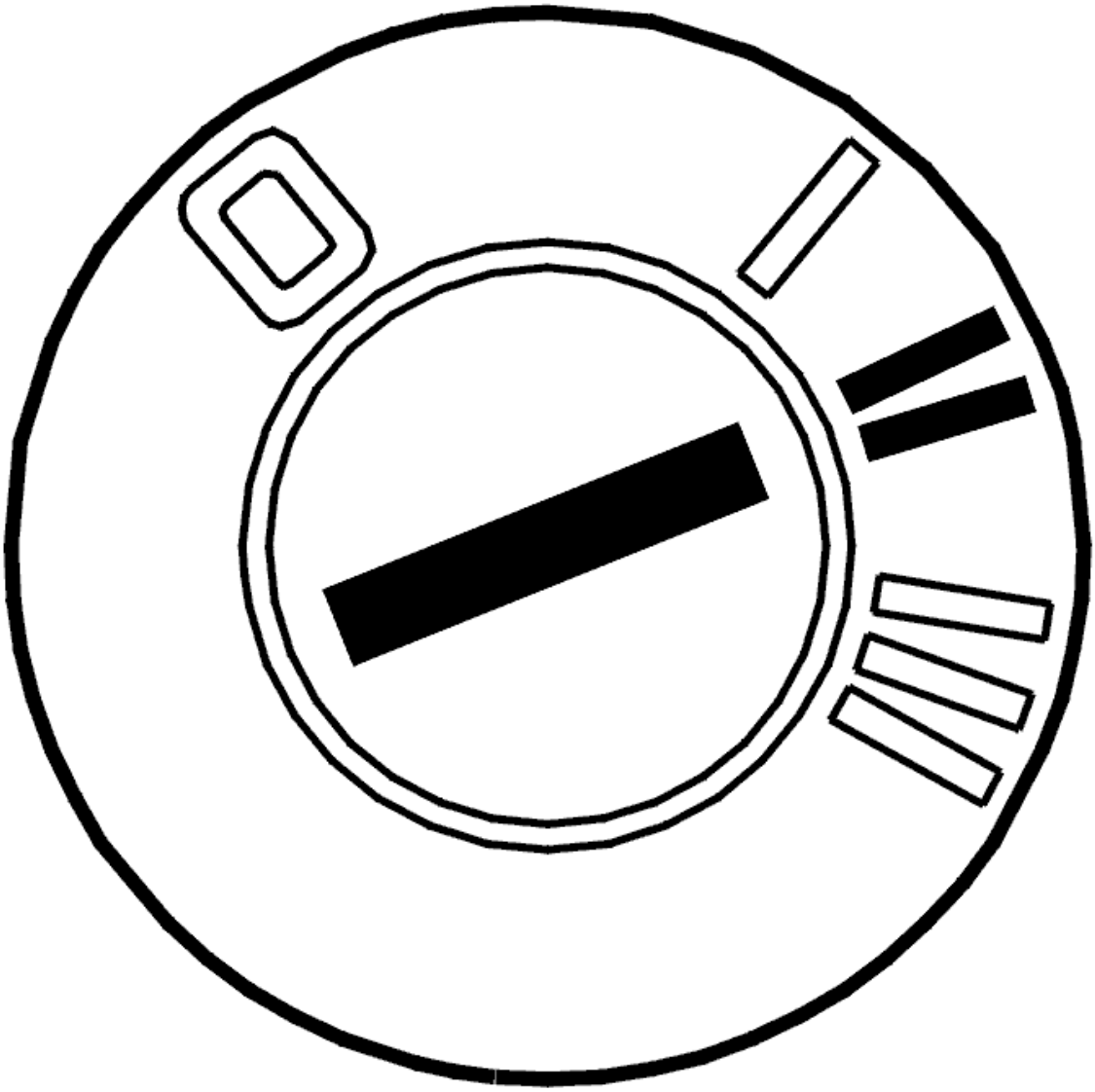

Fig. 175: Identifying Ignition ON
Courtesy of VOLVO CARS CORPORATION

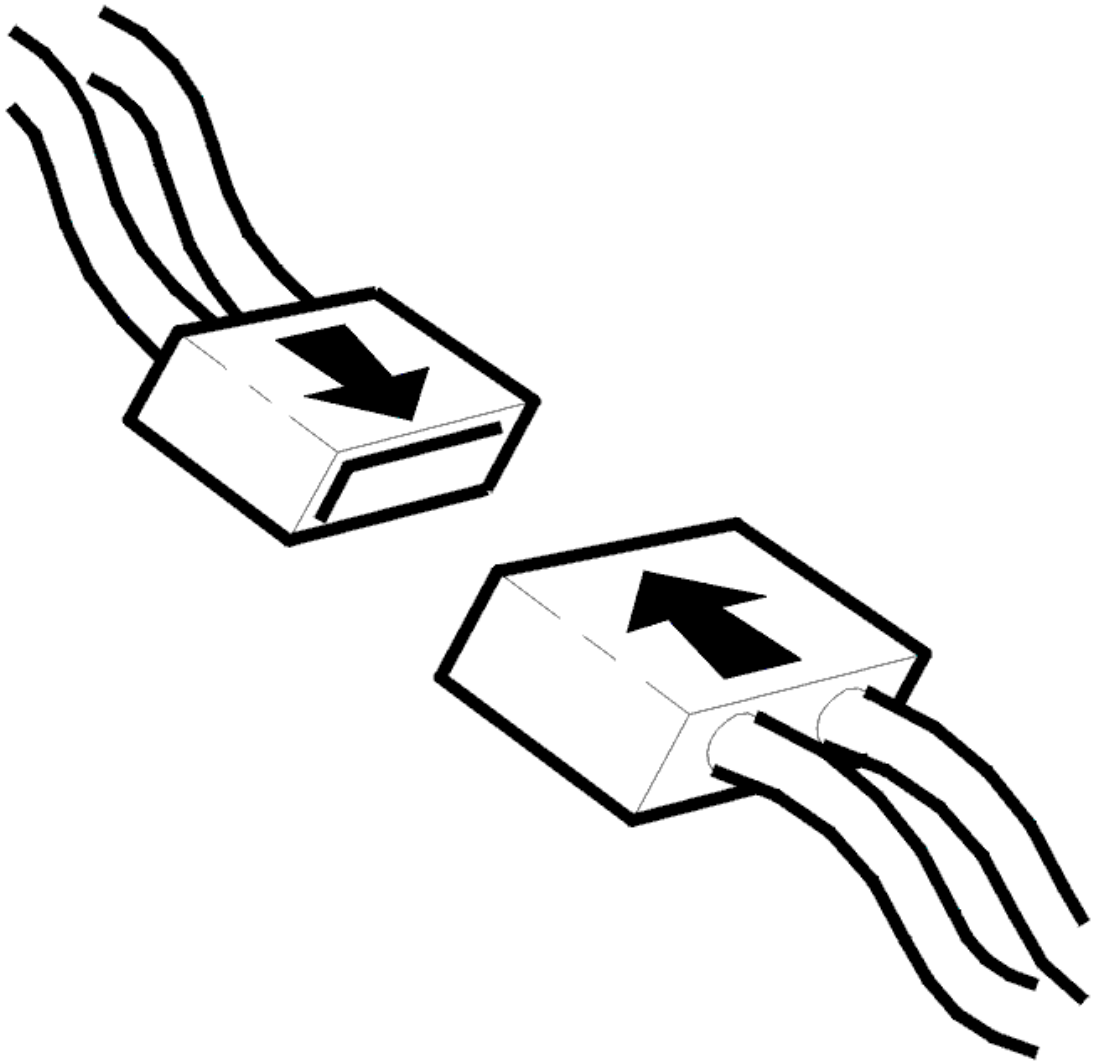

Fig. 176: Connecting Connector
Courtesy of VOLVO CARS CORPORATION

- Ignition off
- Reinstall the connectors, components etc.
- Ignition on.

  Check that the microphone input functions by activating the microphone appropriately. Make a telephone call using the handsfree system or use the voice control function.

Does the microphone function?

- **YES**

  VERIFIED: Troubleshooting has been completed.

- **NO**

  Refer to **INFORMATION**

INFORMATION

FAULT-TRACING INFORMATION

The fault should have been detected and remedied. As this is not the case fault-tracing has failed.

Exit fault-tracing for this diagnostic trouble code (DTC) or make another attempt.

AUD-0011: BUTTONS HEADSET 1. SIGNAL MISSING (2003-2011)

DIAGNOSTIC TROUBLE CODE (DTC) INFORMATION AUD-0011

Condition

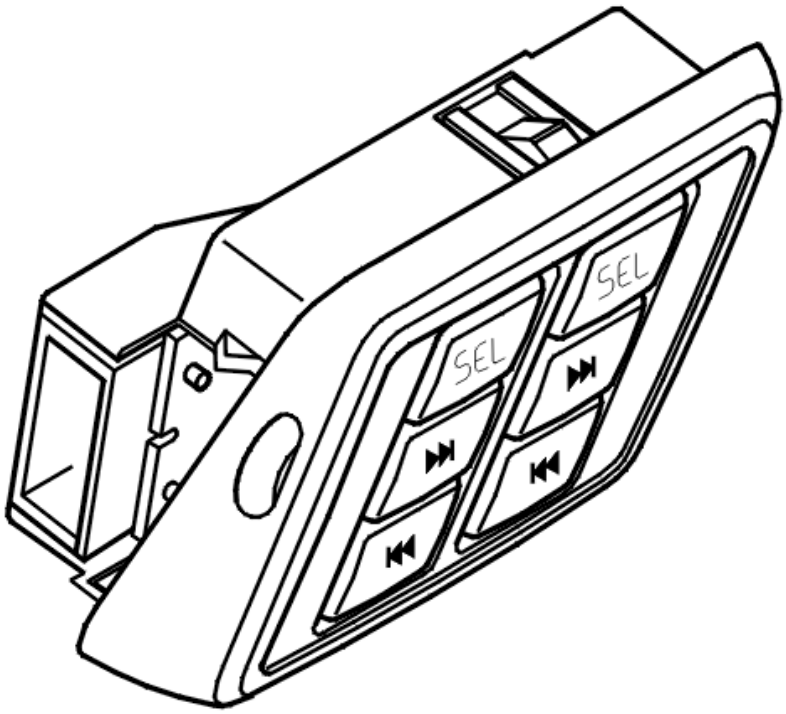

Fig. 177: Identifying Buttons Headset Component
Courtesy of VOLVO CARS CORPORATION

Diagnostic trouble code (DTC) AUD-0011 is stored if the audio module (AUD) registers an open-circuit in the signal cable to the buttons at headset output 1.

Diagnostic trouble code (DTC) AUD-0011 can be diagnosed when the ignition is on.

Substitute Value

- None.

Possible Source

- Open-circuit in the signal cable between headset output 1 and the control module
- Open-circuit in the headset panel (defective headset panel).

Fault symptom[s]

- The buttons for the headset output are not working.

SIGNAL MISSING (2003-2006)

CHECKING COMPONENTS AND WIRING

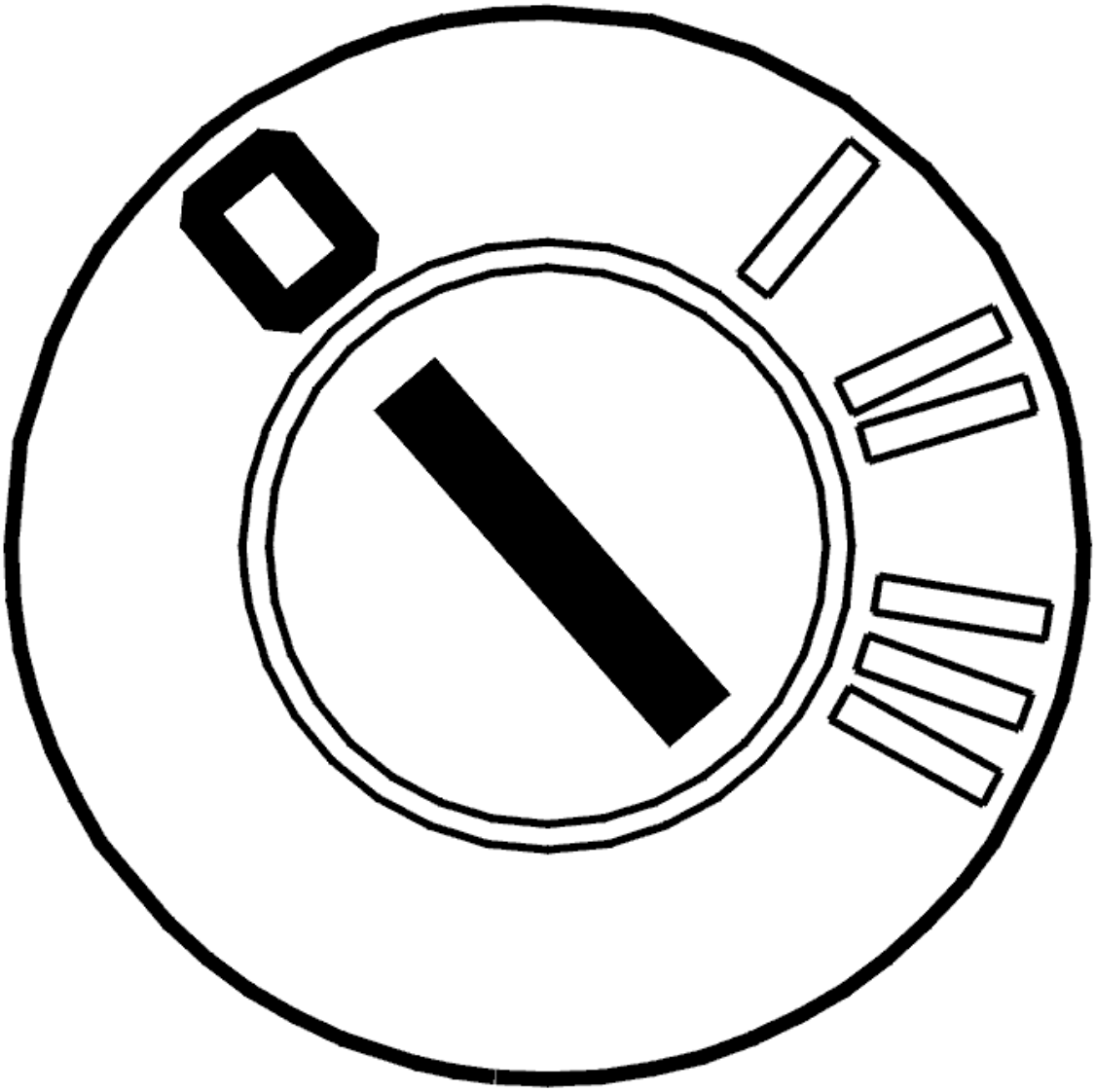

Fig. 178: Identifying Ignition OFF
Courtesy of VOLVO CARS CORPORATION

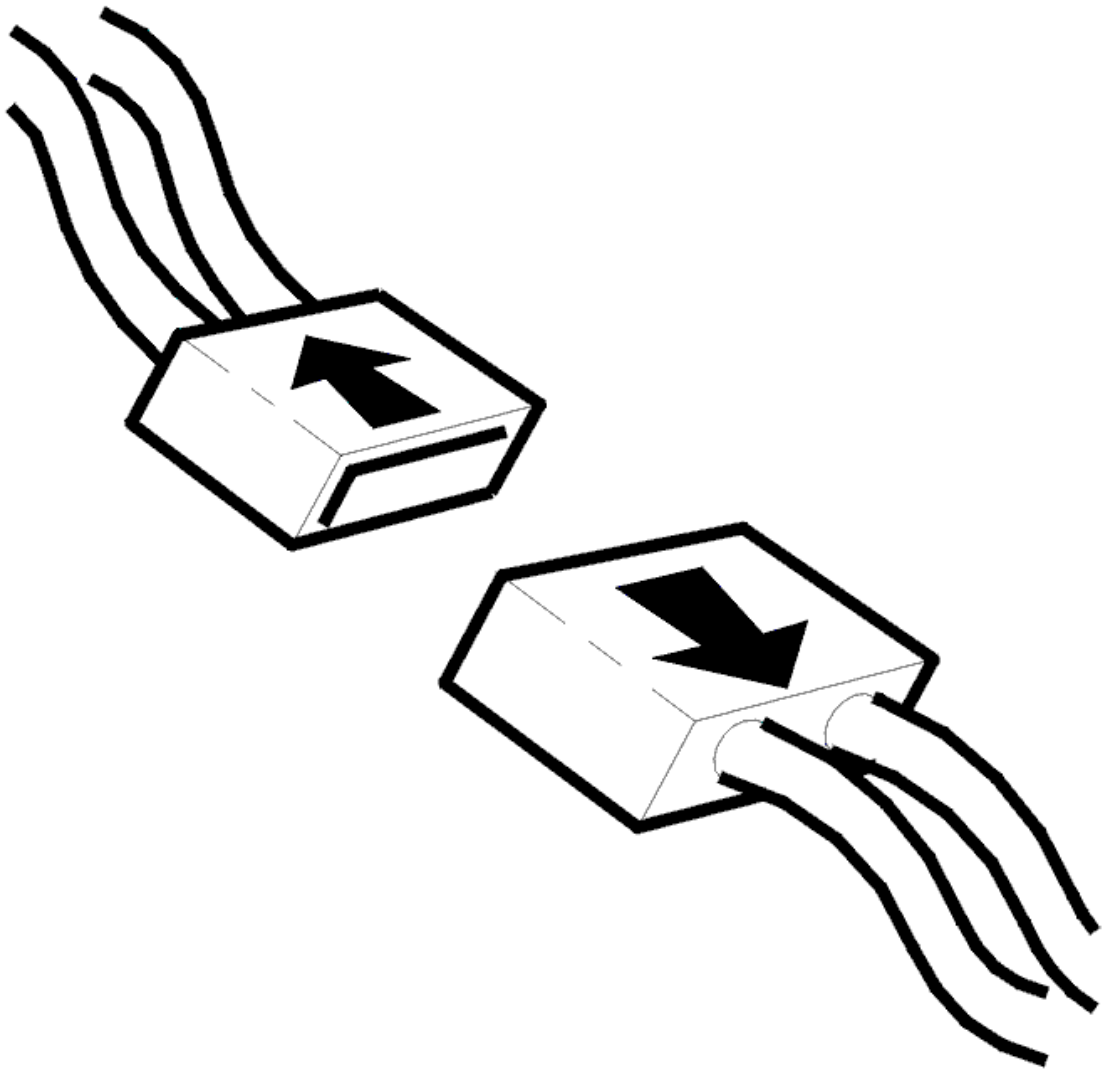

Fig. 179: Disconnecting Connector
Courtesy of VOLVO CARS CORPORATION

- Ignition off
- Disconnect the connector for the left headset panel.

  Check the buttons for the left headset output 1. Test the buttons by changing between previous and next track selection and changing between CD/MD and radio.

  Check the connectors. Check for loose connections and oxidation.

  Check the cable terminals in the female and male sections of the connector. The cable terminals must not be damaged or pressed back.

  Check the signal cable between audio module (AUD) terminal #C15 and headset terminal #10 in the left C-post. Check for an open-circuit.

Check the signal cable between audio module (AUD) terminal #C16 and headset output 1 terminal #8 in the left C-post. Check for an open-circuit.

Check the resistance between terminals #8 and #10 in the connector for the left headset panel. The resistance must be approximately 39 kohms.

Remedy as necessary.

Other information:

- To connect the breakout box, see **CONNECTING THE BREAKOUT BOX**
- To access or replace the audio module (AUD), see **AUDIO MODULE (AUD), REPLACING**
- For information about signals, see **SIGNAL SPECIFICATION**
- see **CONTENTS** .

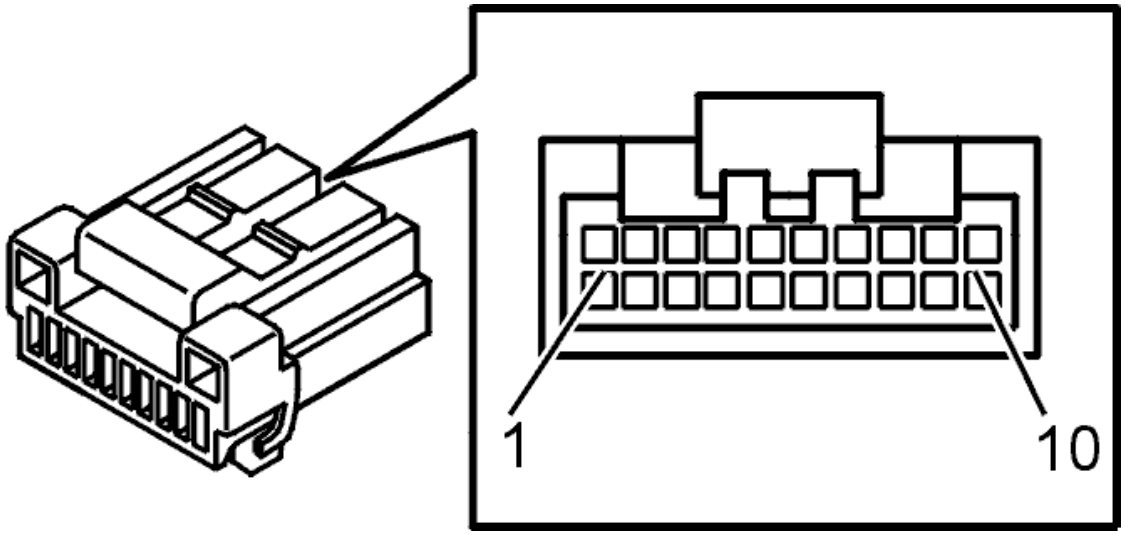

Fig. 180: Identifying Connector (D) Terminals
Courtesy of VOLVO CARS CORPORATION

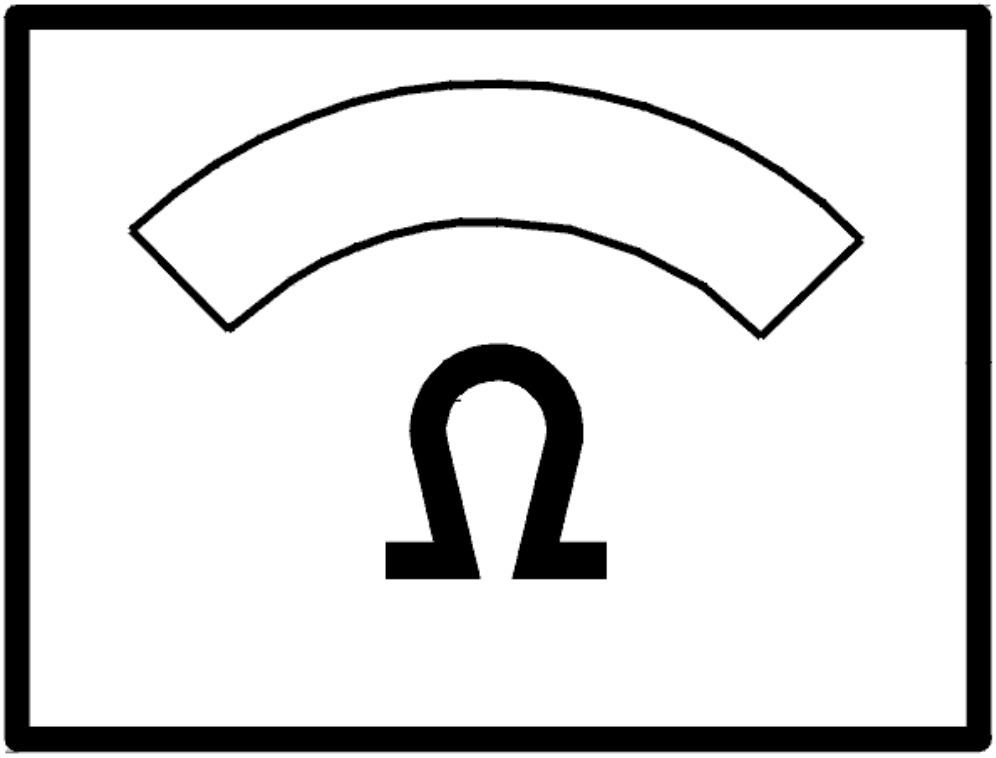

Fig. 181: Identifying Ohm Meter
Courtesy of VOLVO CARS CORPORATION

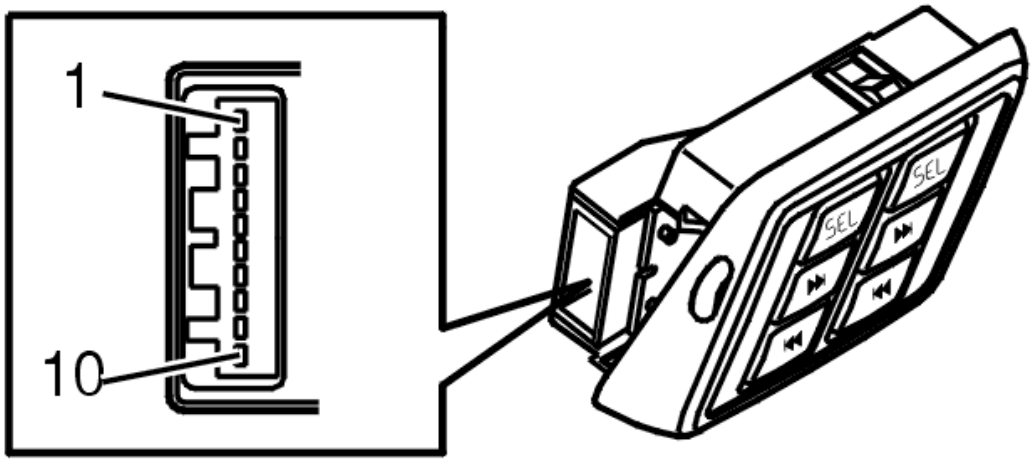

Fig. 182: Identifying Buttons Headset Connector
Courtesy of VOLVO CARS CORPORATION

- **Continue**

  Refer to **VERIFICATION**

VERIFICATION

VERIFICATION

HINT: After carrying out the repair, check that the fault has been remedied.

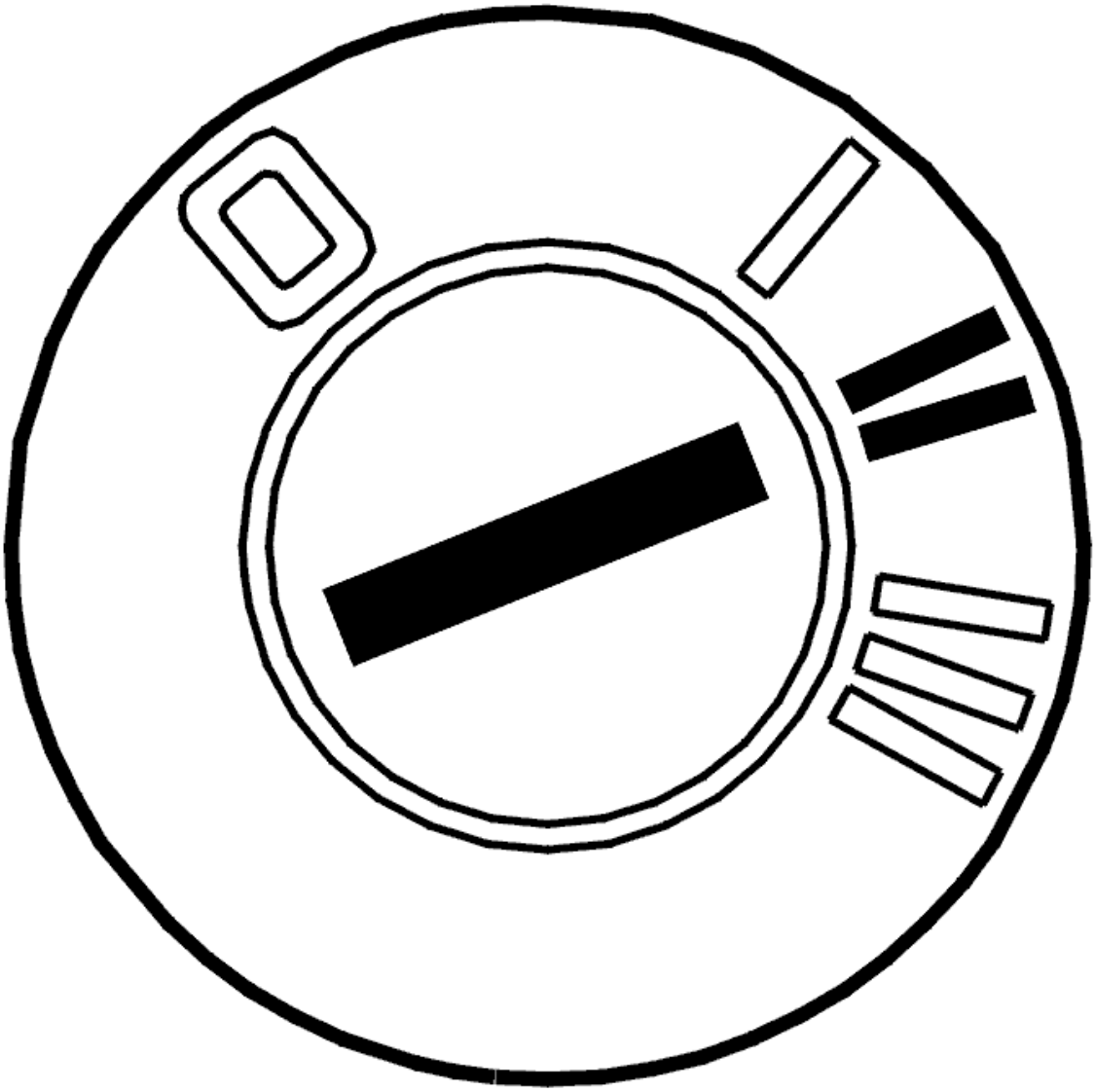

Fig. 183: Identifying Ignition ON
Courtesy of VOLVO CARS CORPORATION

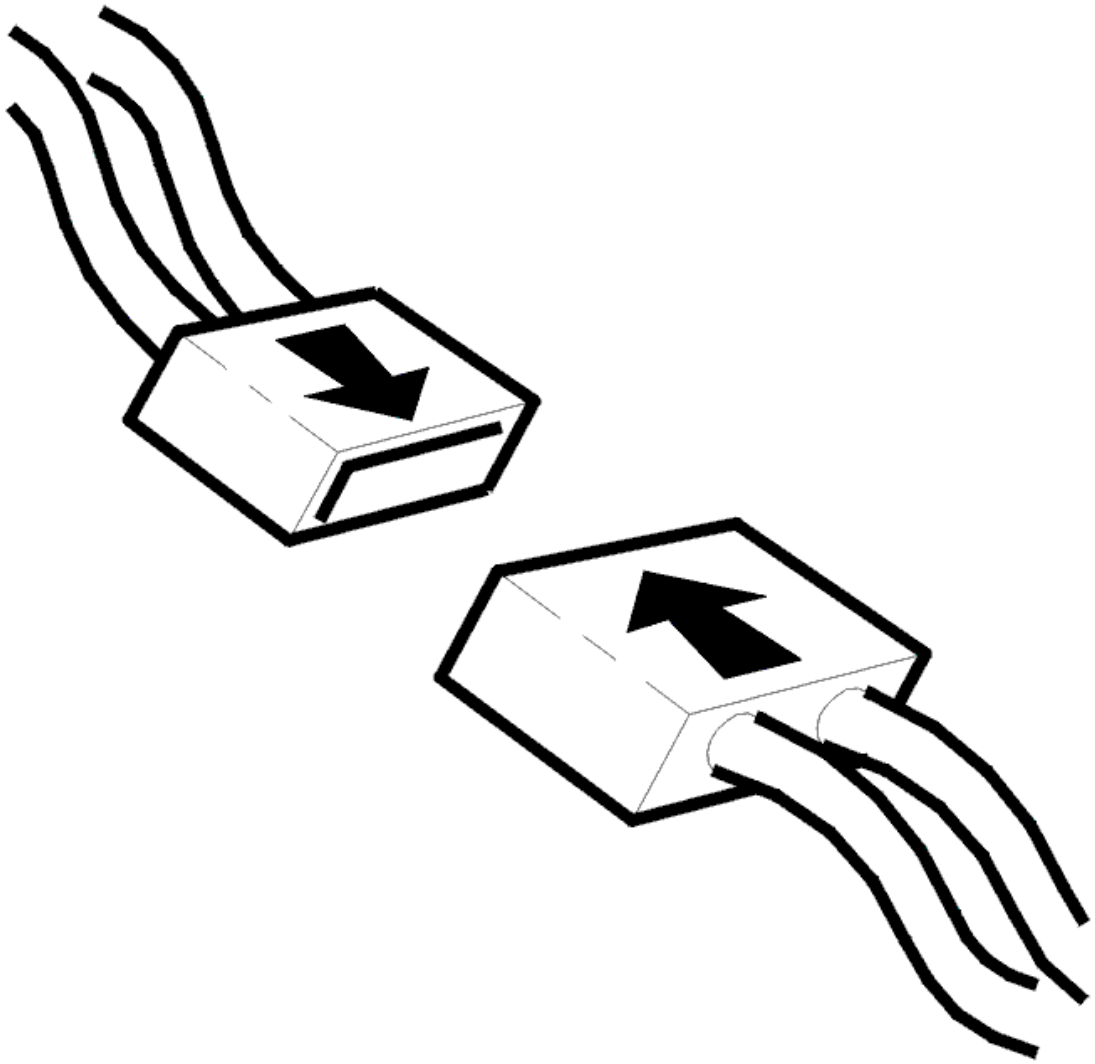

Fig. 184: Connecting Connector
Courtesy of VOLVO CARS CORPORATION

- Ignition off
- Reinstall the connectors, components etc.
- Ignition on.

  Check that the buttons for the headset output function. Check this by pressing the buttons for the next track and the previous track and by changing between the CD/MD and the radio using the SEL button.

Do the buttons function?

- **YES**

  VERIFIED: Troubleshooting has been completed.

- **NO**

  Refer to **INFORMATION**

INFORMATION

FAULT-TRACING INFORMATION

The fault should have been detected and remedied. As this is not the case fault-tracing has failed.

Exit fault-tracing for this diagnostic trouble code (DTC) or make another attempt.

SIGNAL MISSING (2007-2011)

CHECKING COMPONENTS AND WIRING

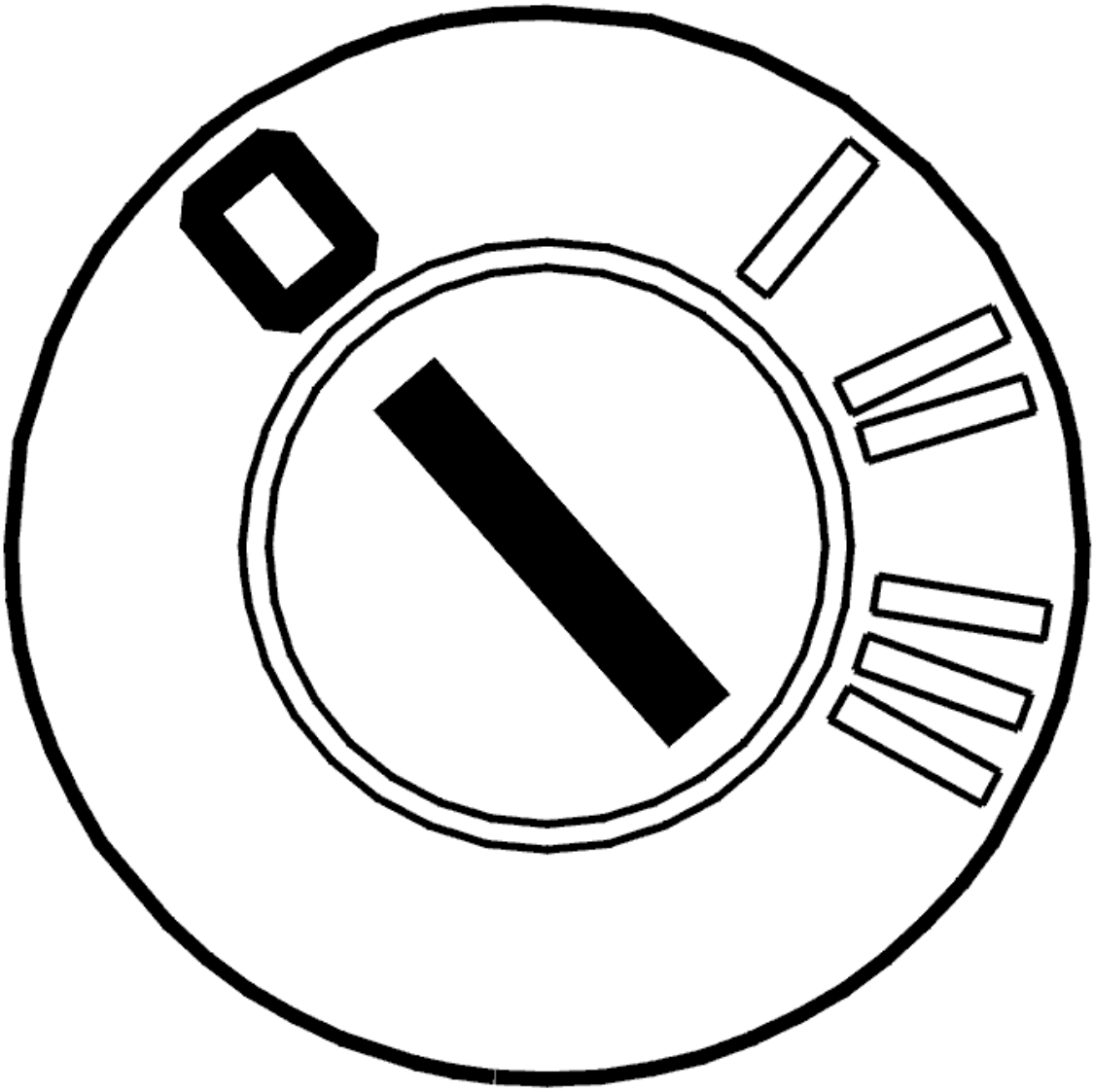

Fig. 185: Identifying Ignition OFF
Courtesy of VOLVO CARS CORPORATION

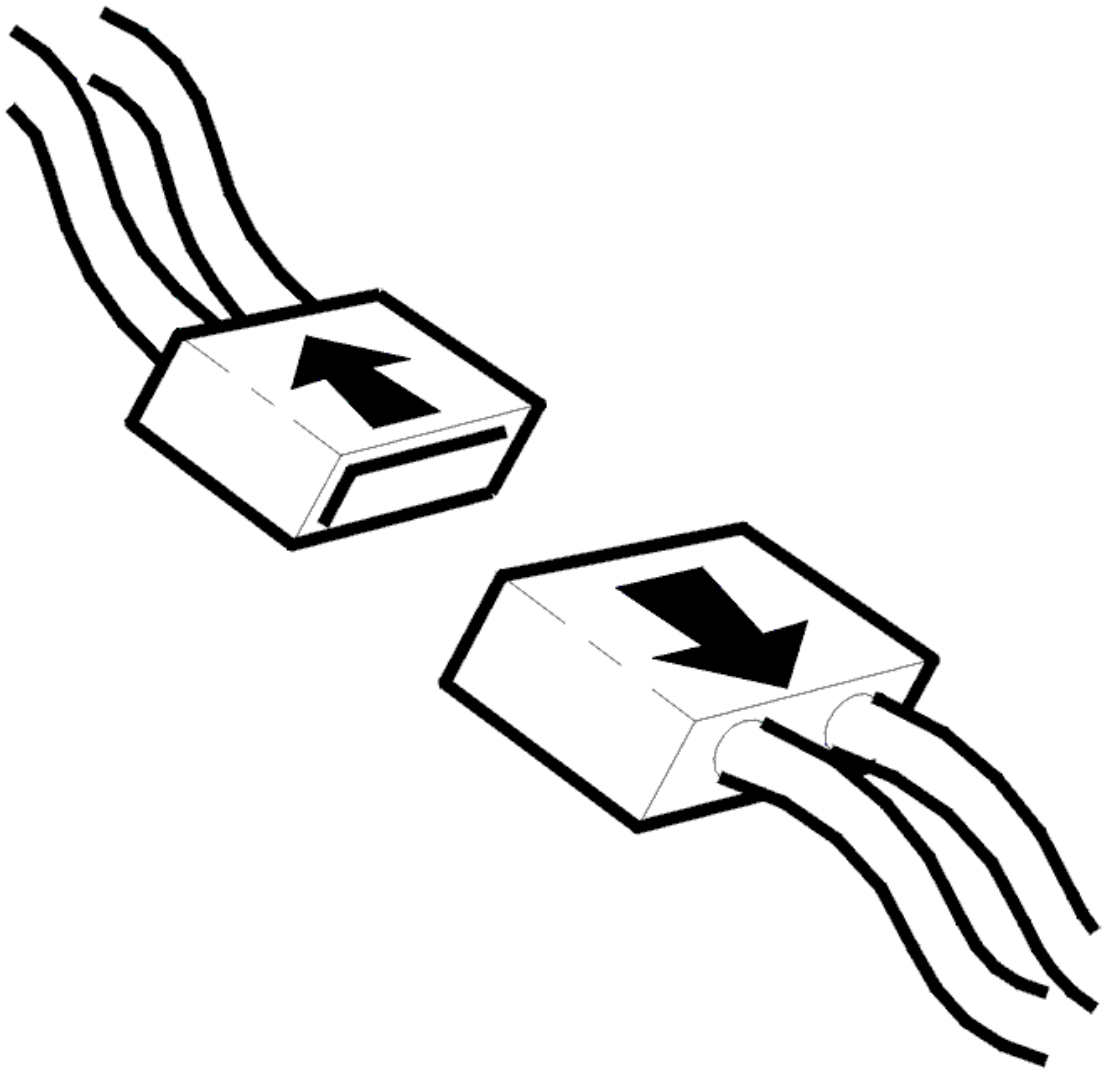

Fig. 186: Disconnecting Connector
Courtesy of VOLVO CARS CORPORATION

- Ignition off
- Disconnect the connector for the left headset panel.

  Check the buttons for the left headset output 1. Test the buttons by changing between previous and next track selection and changing between CD/MD and radio.

  Check the connectors. Check for loose connections and oxidation.

  Check the cable terminals in the female and male sections of the connector. The cable terminals must not be damaged or pressed back.

Check the signal cable between audio module (AUD) terminal #C15 and headset terminal #10 in the left C-post. Check for an open-circuit.

Check the signal cable between audio module (AUD) terminal #C16 and headset output 1 terminal #8 in the left C-post. Check for an open-circuit.

Check the resistance between terminals #8 and #10 in the connector for the left headset panel. The resistance must be approximately 39 kohms.

Remedy as necessary.

Other information:

- To connect the breakout box, see **CONNECTING THE BREAKOUT BOX**
- To access or replace the audio module (AUD), see **AUDIO MODULE (AUD), REPLACING**
- For information about signals, see **SIGNAL SPECIFICATION**
- see **CONTENTS** .

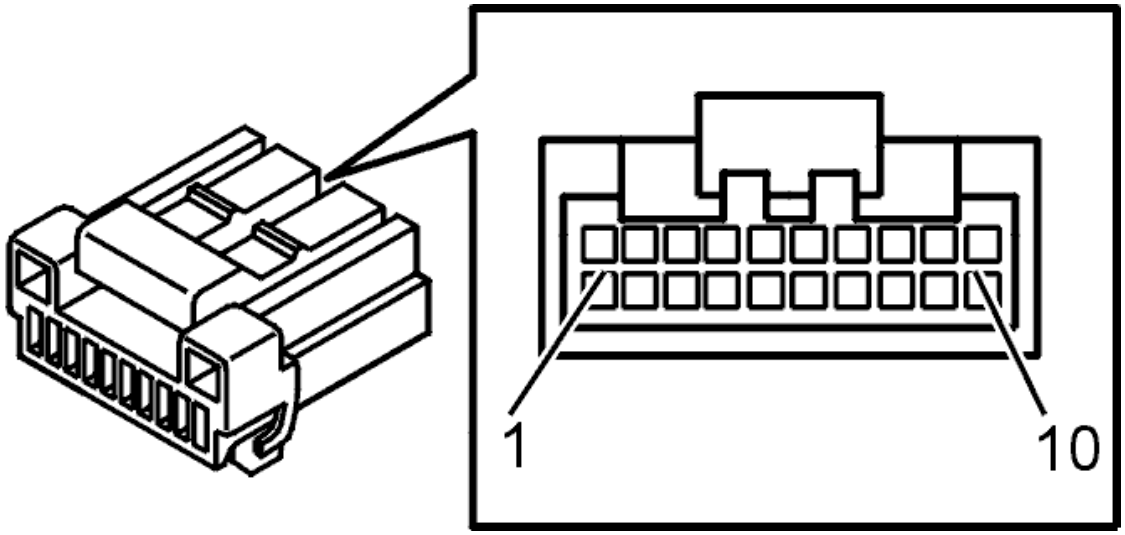

Fig. 187: Identifying Connector (D) Terminals
Courtesy of VOLVO CARS CORPORATION

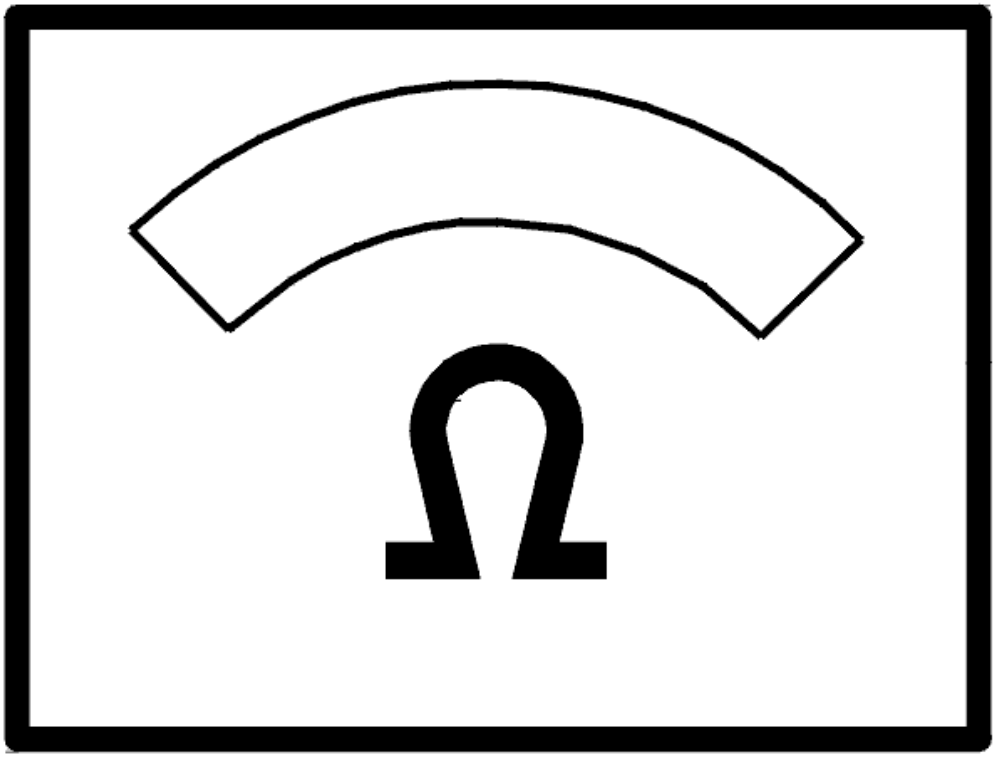

Fig. 188: Identifying Ohm Meter
Courtesy of VOLVO CARS CORPORATION

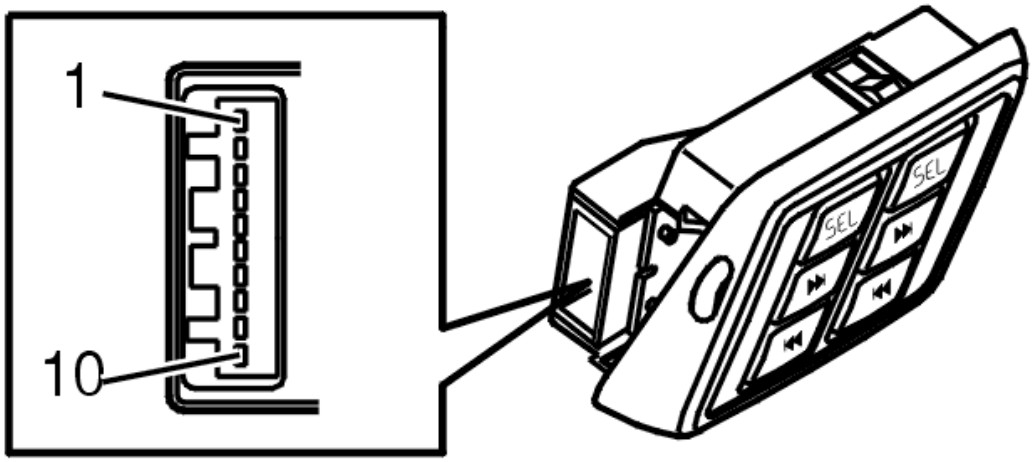

Fig. 189: Identifying Buttons Headset Connector
Courtesy of VOLVO CARS CORPORATION

- **Continue**

  Refer to **VERIFICATION**

VERIFICATION

VERIFICATION

HINT: After carrying out the repair, check that the fault has been remedied.

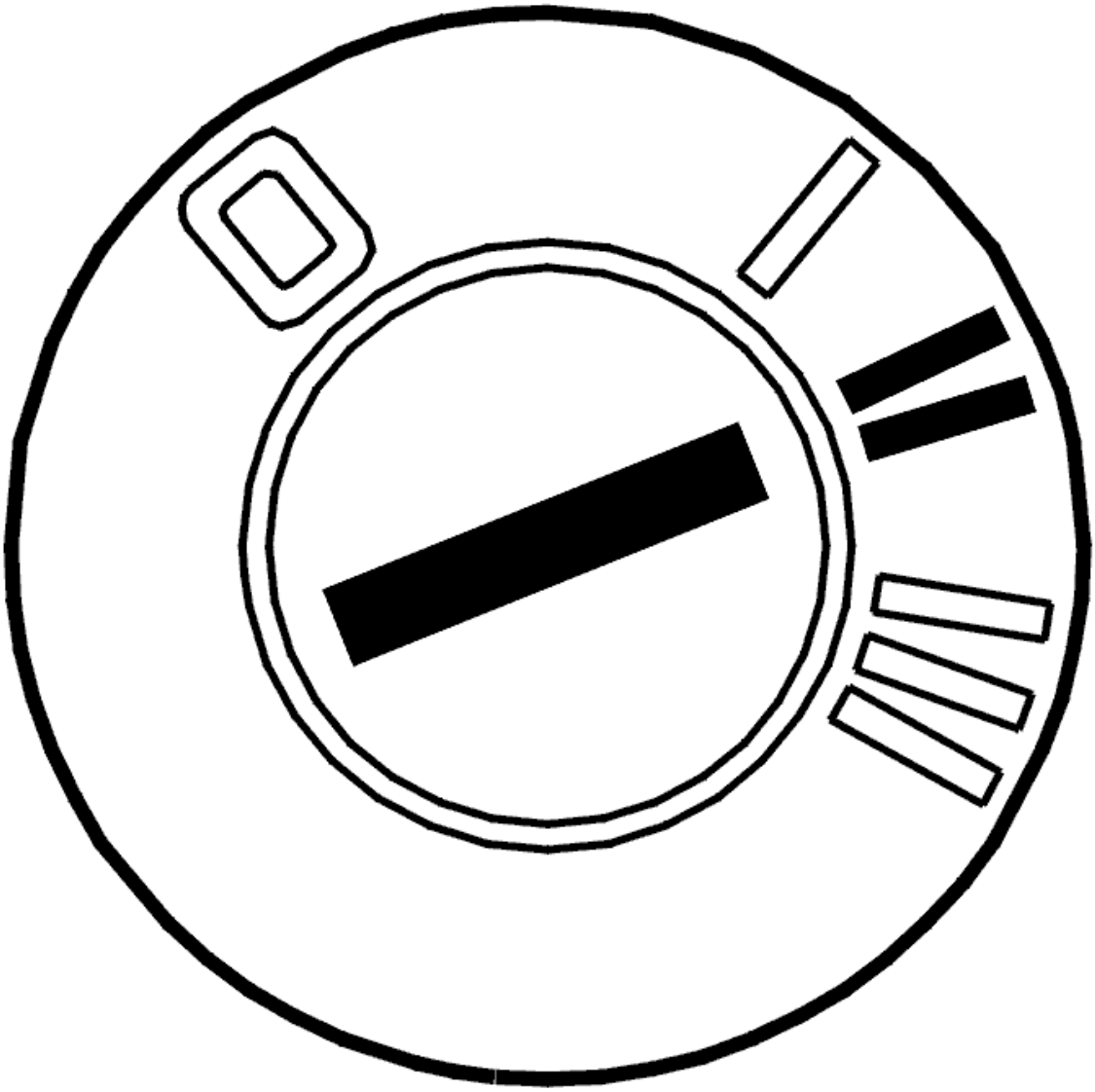

Fig. 190: Identifying Ignition ON
Courtesy of VOLVO CARS CORPORATION

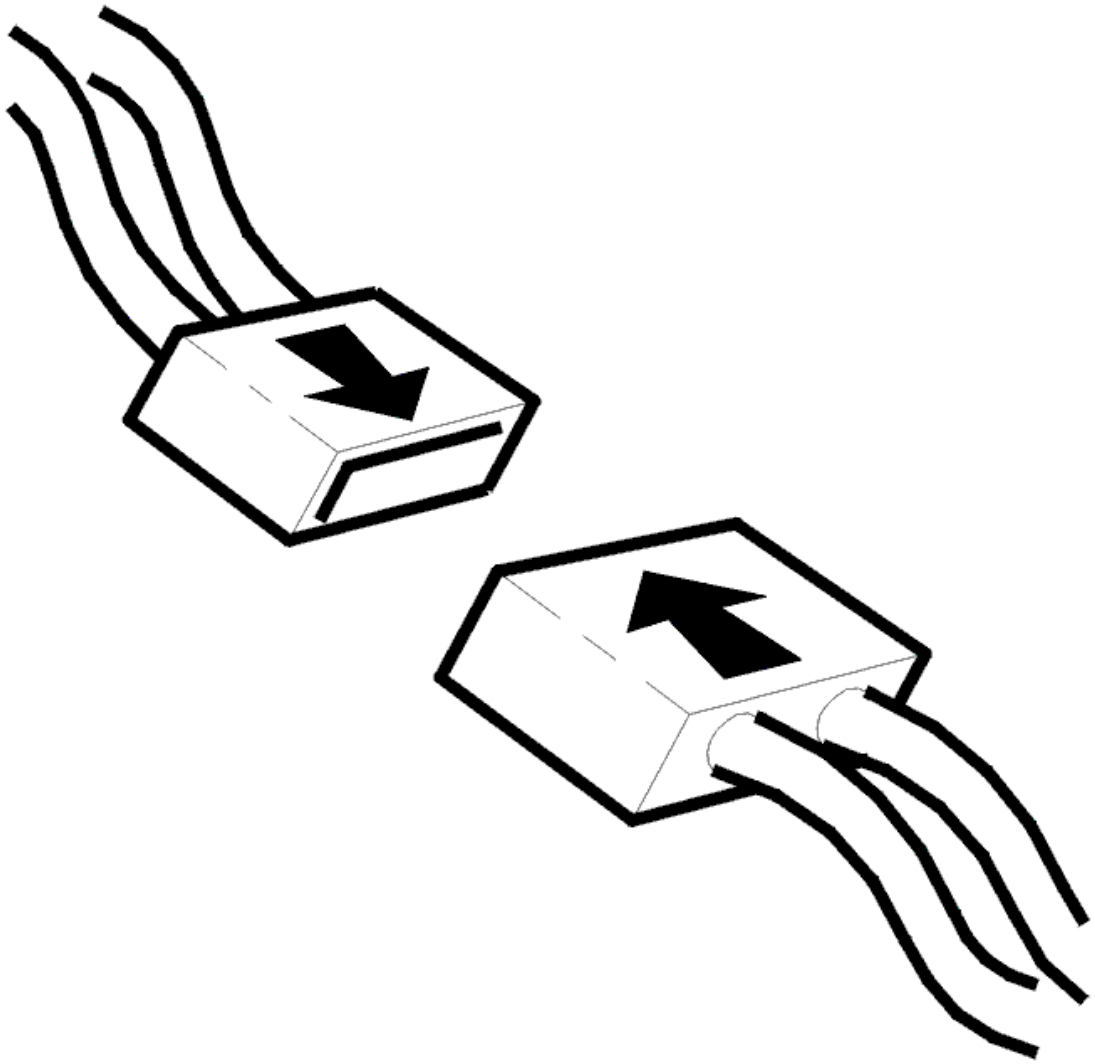

Fig. 191: Connecting Connector
Courtesy of VOLVO CARS CORPORATION

- Ignition off
- Reinstall the connectors, components etc.
- Ignition on.

  Check that the buttons for the headset output function. Check this by pressing the buttons for the next track and the previous track and by changing between the CD/MD and the radio using the SEL button.

Do the buttons function?

- **YES**

  VERIFIED: Troubleshooting has been completed.

- **NO**

  Refer to **INFORMATION**

INFORMATION

FAULT-TRACING INFORMATION

The fault should have been detected and remedied. As this is not the case fault-tracing has failed.

Exit fault-tracing for this diagnostic trouble code (DTC) or make another attempt.

AUD-0012: BUTTONS HEADSET 1. SIGNAL TOO LOW (2003-2011)

DIAGNOSTIC TROUBLE CODE (DTC) INFORMATION AUD-0012

Condition

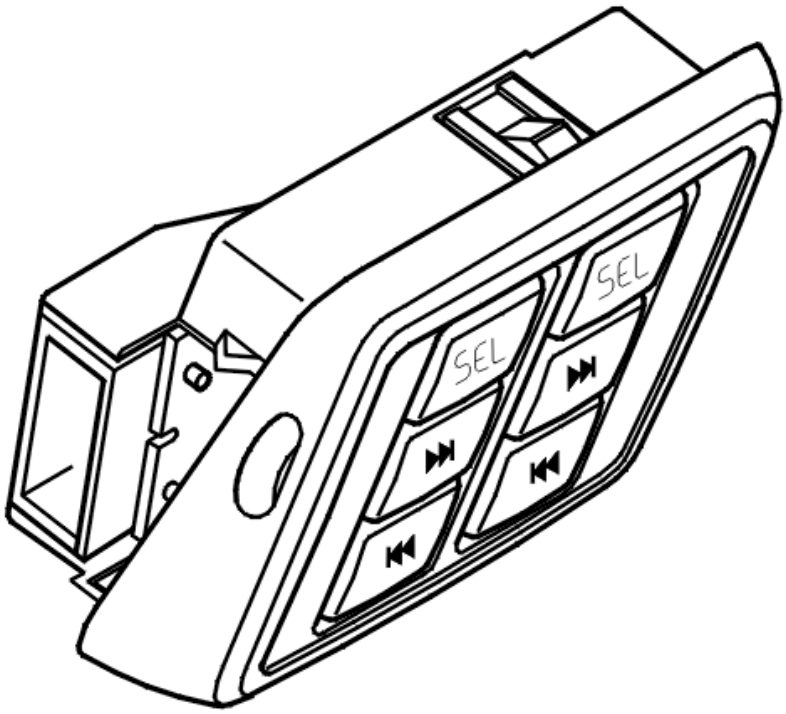

Fig. 192: Identifying Buttons Headset Component
Courtesy of VOLVO CARS CORPORATION

Diagnostic trouble code (DTC) AUD-0012 is stored if the audio module (AUD) registers that the signal to the buttons for headset output 1 is too low.

Diagnostic trouble code (DTC) AUD-0012 can be diagnosed when the ignition is on.

Substitute Value

- None.

Possible Source

- Short-circuit to ground in the signal cable between headset output 1 and the control module
- Short-circuit between the signal cables to headset output 1
- Short-circuit in the headset panel (defective headset panel).

Fault symptom[s]

- The buttons for the headset output are not working.

SIGNAL LOW (2003-2006)

CHECKING COMPONENTS AND WIRING

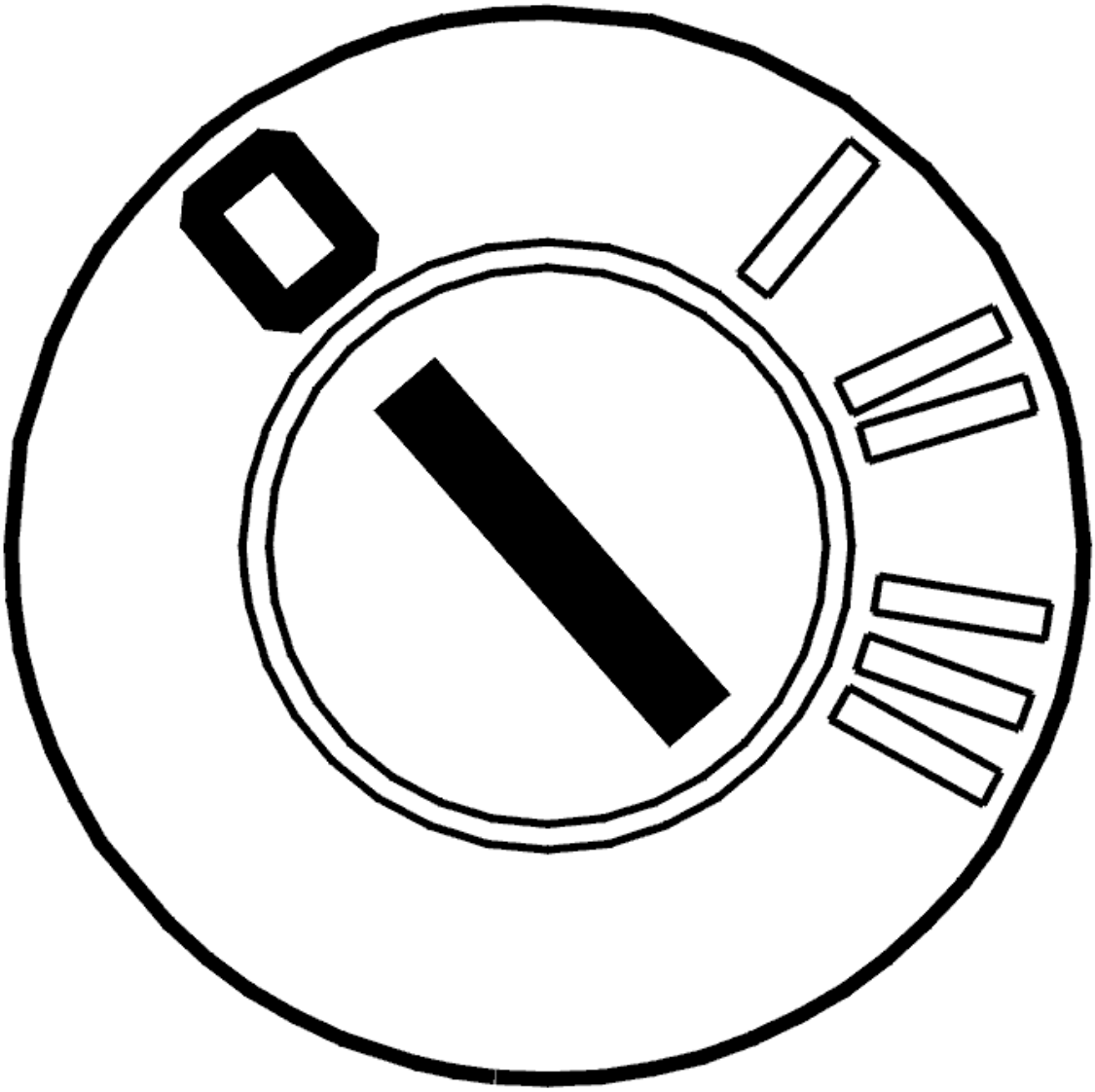

Fig. 193: Identifying Ignition OFF
Courtesy of VOLVO CARS CORPORATION

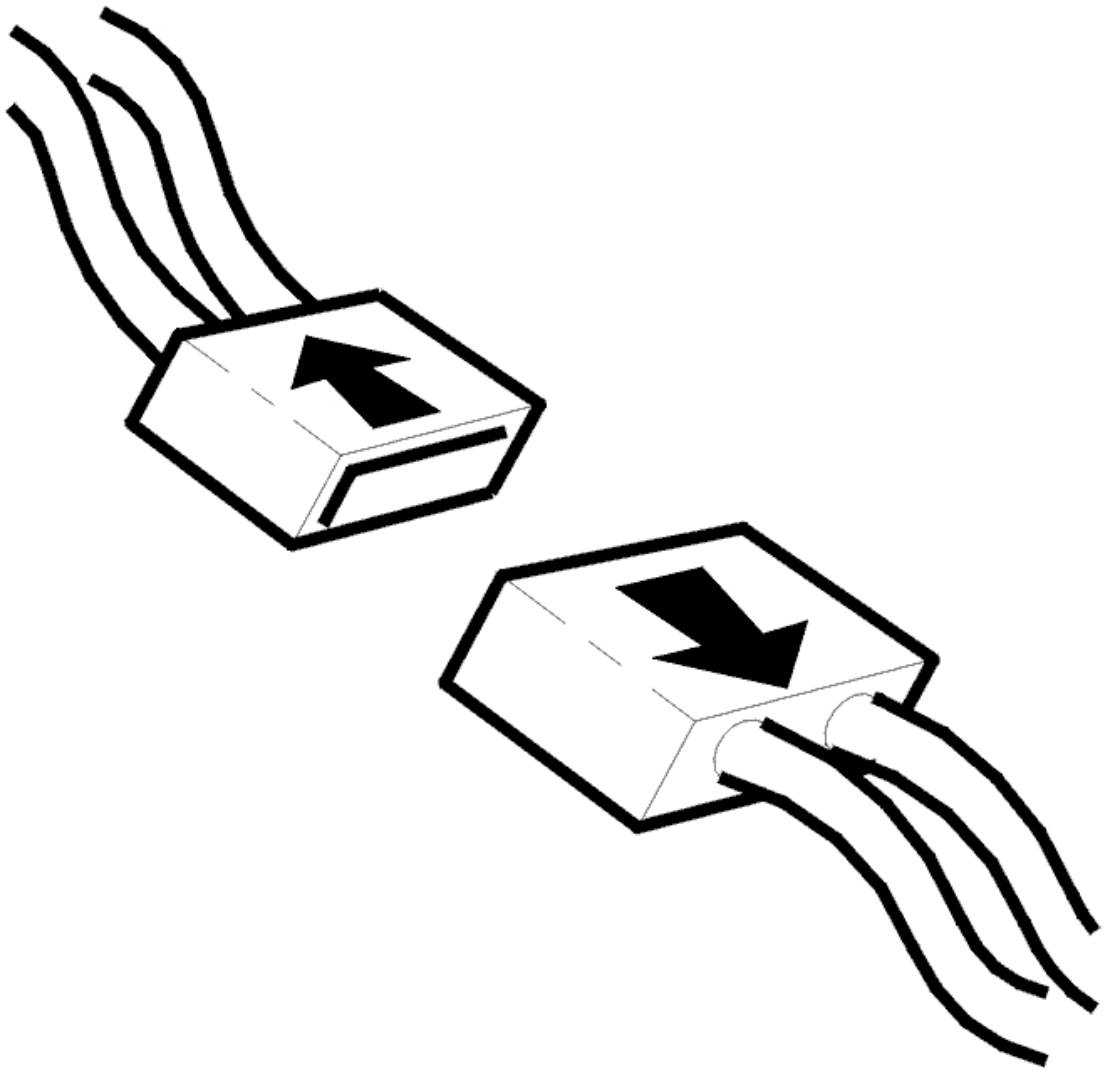

Fig. 194: Disconnecting Connector
Courtesy of VOLVO CARS CORPORATION

- Ignition off
- Disconnect the connector for the left headset panel
- Disconnect the 22-pin connector for the audio module (AUD).

  Check the cable terminals in the female and male sections of the connector. The cable terminals must not be damaged or pressed back.

  Check the signal cable between audio module (AUD) terminal #C15 and headset terminal #10 in the left C-post. Check for a short-circuit to ground.

  Check the signal cable between audio module (AUD) terminal #C16 and headset output 1 terminal #8 in the left C-post. Check for a short-circuit to ground.

Check the resistance between terminals #C16 and #C15 in the connector for the audio module (AUD). The resistance must be infinite.

Check the resistance between terminals #8 and #10 in the connector for the left headset panel. The resistance must be approximately 39 kohms.

Remedy as necessary.

Other information:

- To connect the breakout box, see **CONNECTING THE BREAKOUT BOX**
- To access or replace the audio module (AUD), see **AUDIO MODULE (AUD), REPLACING**
- For information about signals, see **SIGNAL SPECIFICATION**
- see **CONTENTS** .

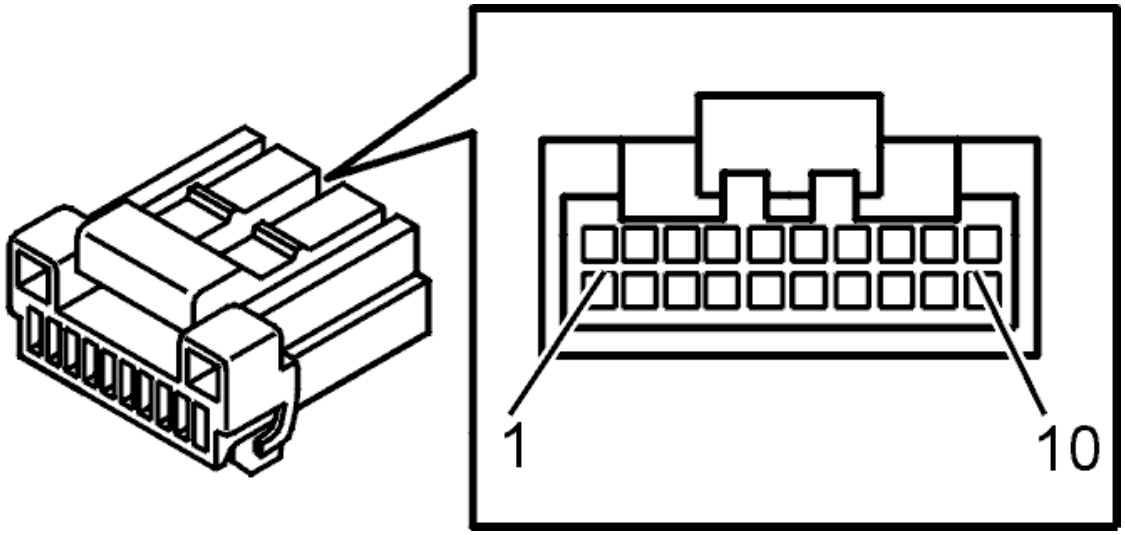

Fig. 195: Identifying Connector (D) Terminals
Courtesy of VOLVO CARS CORPORATION

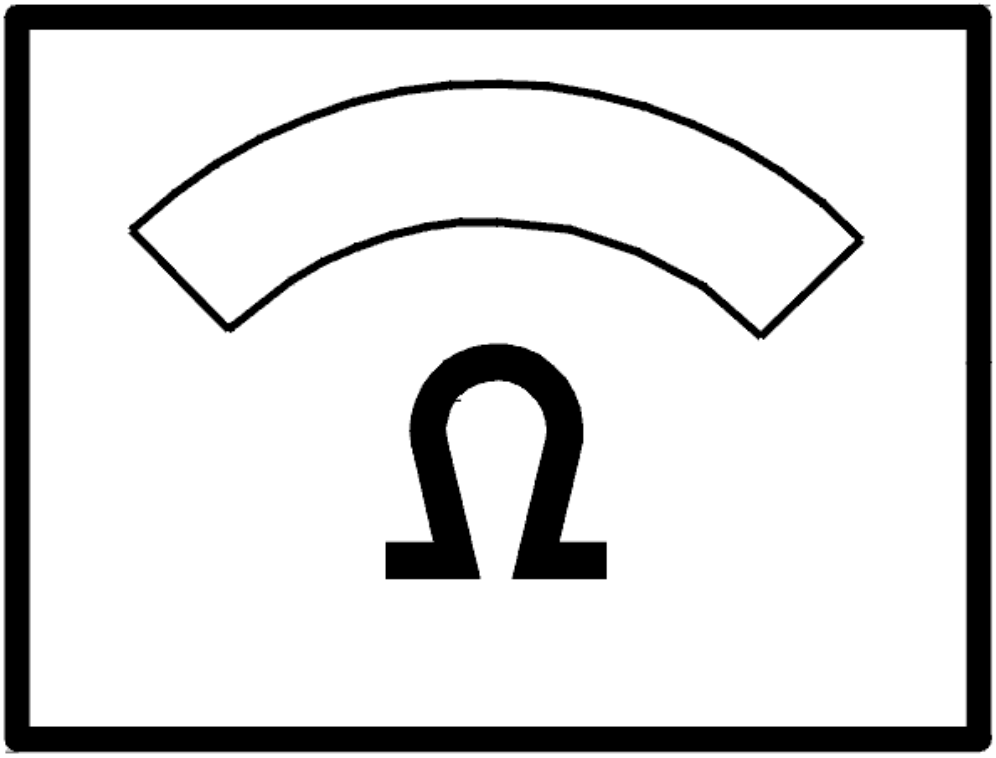

Fig. 196: Identifying Ohm Meter
Courtesy of VOLVO CARS CORPORATION

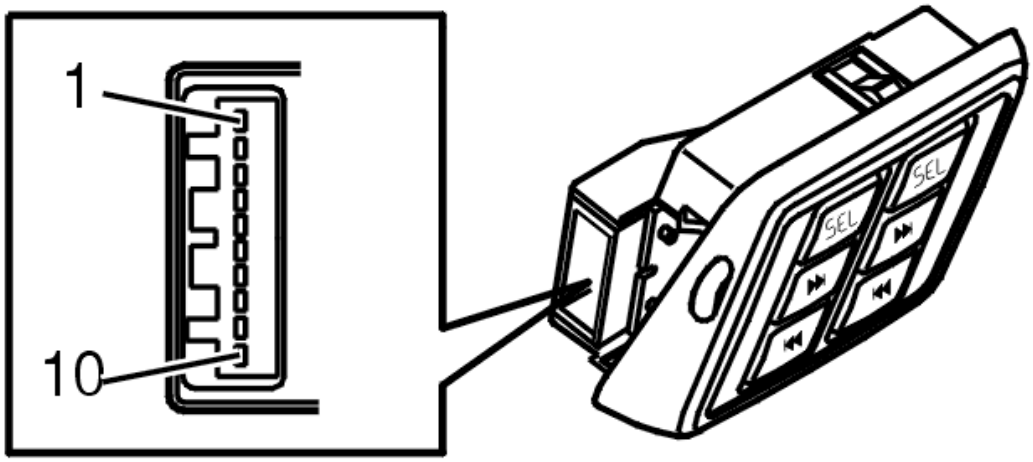

Fig. 197: Identifying Buttons Headset Connector
Courtesy of VOLVO CARS CORPORATION

- **Continue**

  Refer to **VERIFICATION**

VERIFICATION

VERIFICATION

HINT: After carrying out the repair, check that the fault has been remedied.

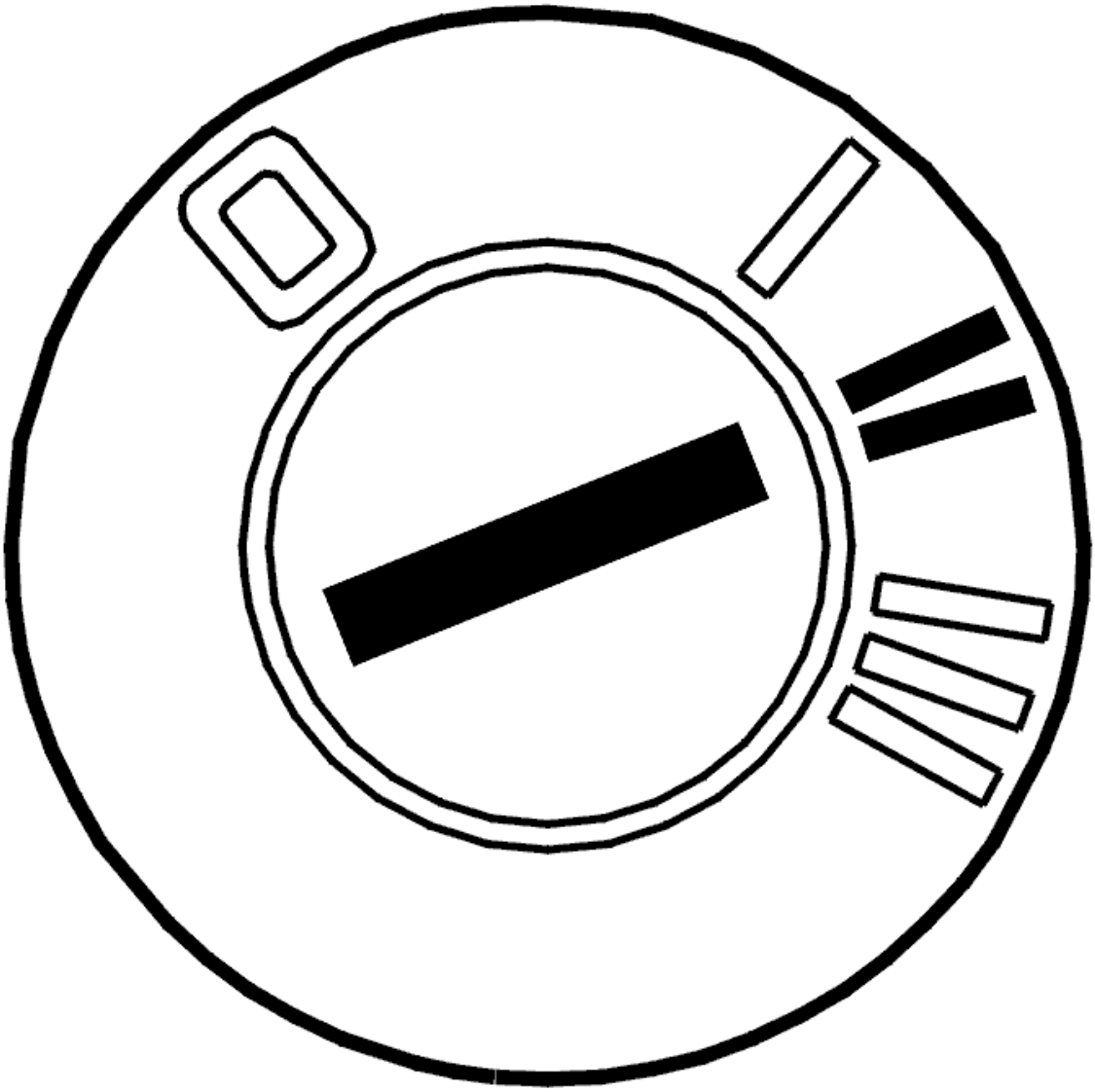

Fig. 198: Identifying Ignition ON
Courtesy of VOLVO CARS CORPORATION

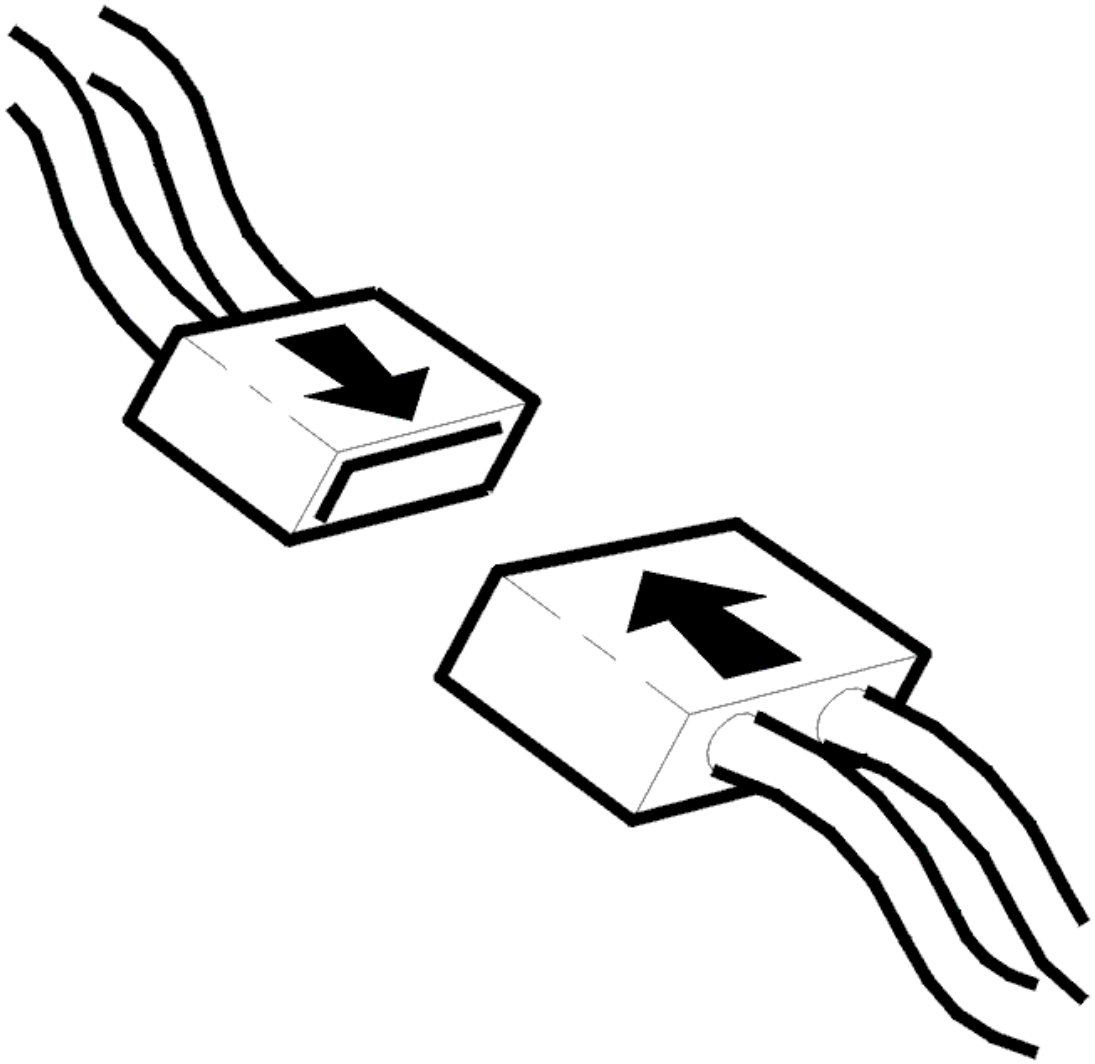

Fig. 199: Connecting Connector
Courtesy of VOLVO CARS CORPORATION

- Ignition off
- Reinstall the connectors, components etc.
- Ignition on.

  Check that the buttons for the headset output function. Check this by pressing the buttons for the next track and the previous track and by changing between the CD/MD and the radio using the SEL button.

Do the buttons function?

- **YES**

  VERIFIED: Troubleshooting has been completed.

- **NO**

  Refer to **INFORMATION**

INFORMATION

FAULT-TRACING INFORMATION

The fault should have been detected and remedied. As this is not the case fault-tracing has failed.

Exit fault-tracing for this diagnostic trouble code (DTC) or make another attempt.

SIGNAL LOW (2007-2011)

CHECKING COMPONENTS AND WIRING

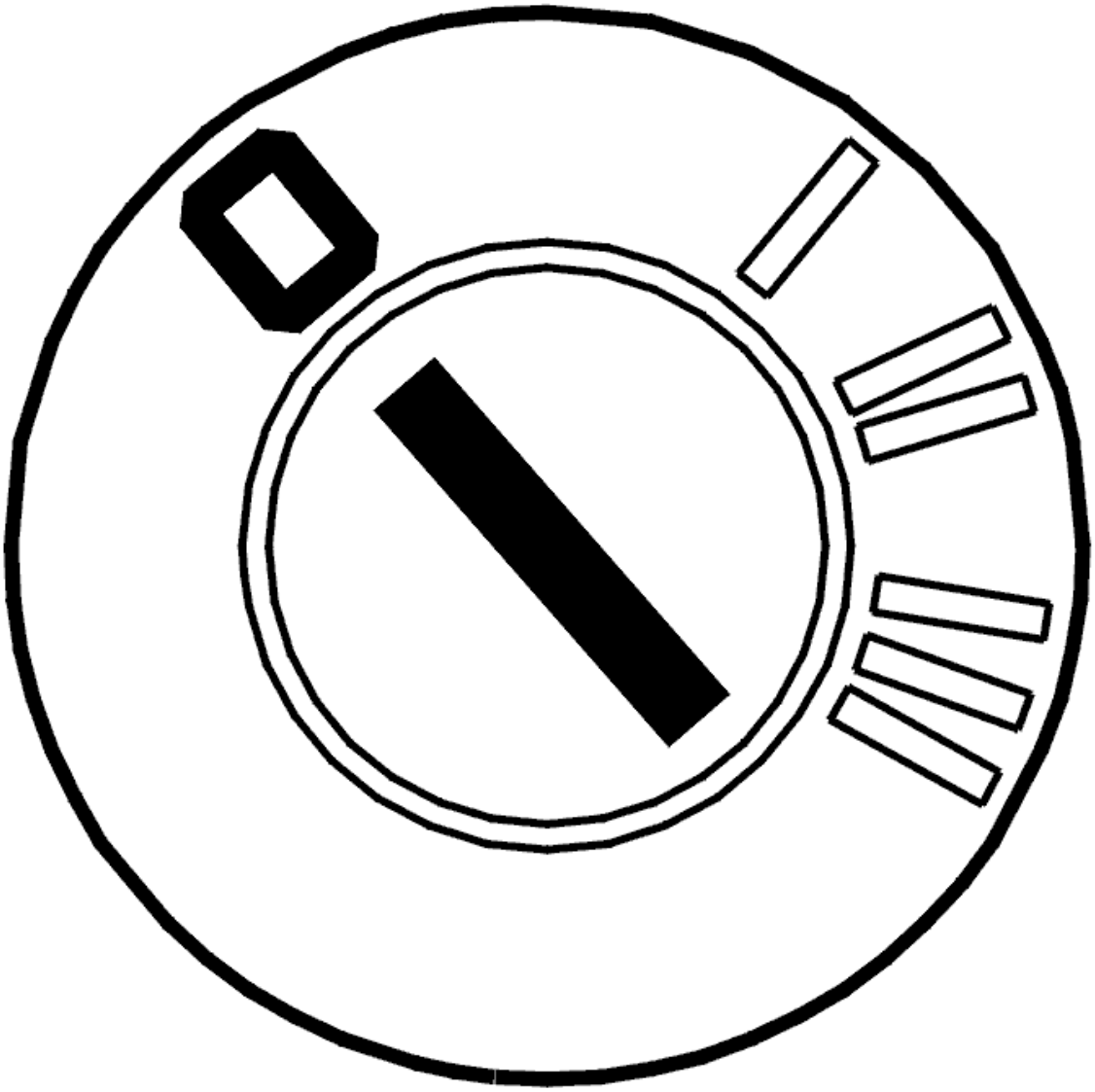

Fig. 200: Identifying Ignition OFF
Courtesy of VOLVO CARS CORPORATION

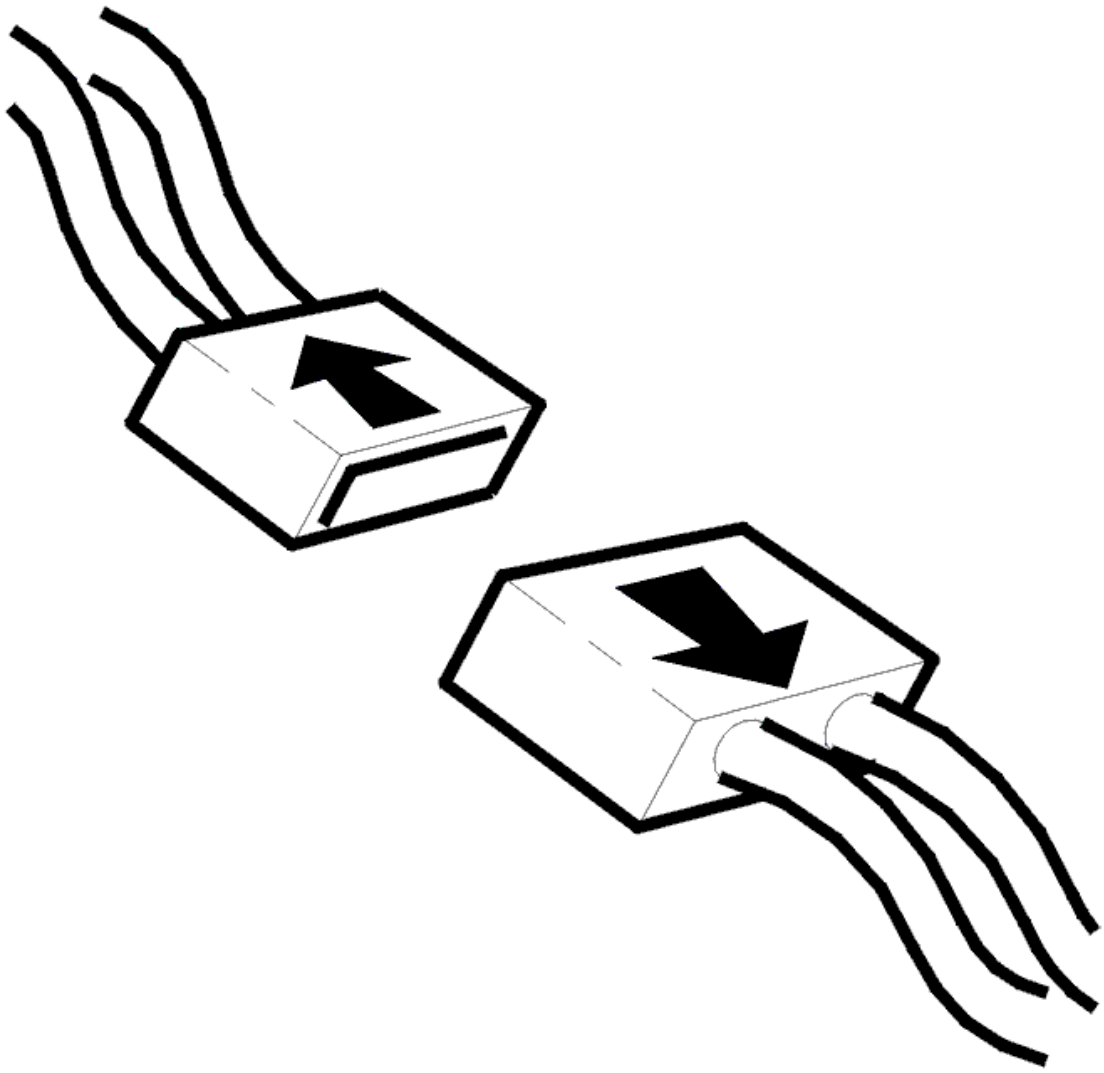

Fig. 201: Disconnecting Connector
Courtesy of VOLVO CARS CORPORATION

- Ignition off
- Disconnect the connector for the left headset panel
- Disconnect the 22-pin connector for the audio module (AUD).

  Check the cable terminals in the female and male sections of the connector. The cable terminals must not be damaged or pressed back.

  Check the signal cable between audio module (AUD) terminal #C15 and headset terminal #10 in the left C-post. Check for a short-circuit to ground.

Check the signal cable between audio module (AUD) terminal #C16 and headset output 1 terminal #8 in the left C-post. Check for a short-circuit to ground.

Check the resistance between terminals #C16 and #C15 in the connector for the audio module (AUD). The resistance must be infinite.

Check the resistance between terminals #8 and #10 in the connector for the left headset panel. The resistance must be approximately 39 kohms.

Remedy as necessary.

Other information:

- To connect the breakout box, see **CONNECTING THE BREAKOUT BOX**
- To access or replace the audio module (AUD), see **AUDIO MODULE (AUD), REPLACING**
- For information about signals, see **SIGNAL SPECIFICATION**
- see **CONTENTS** .

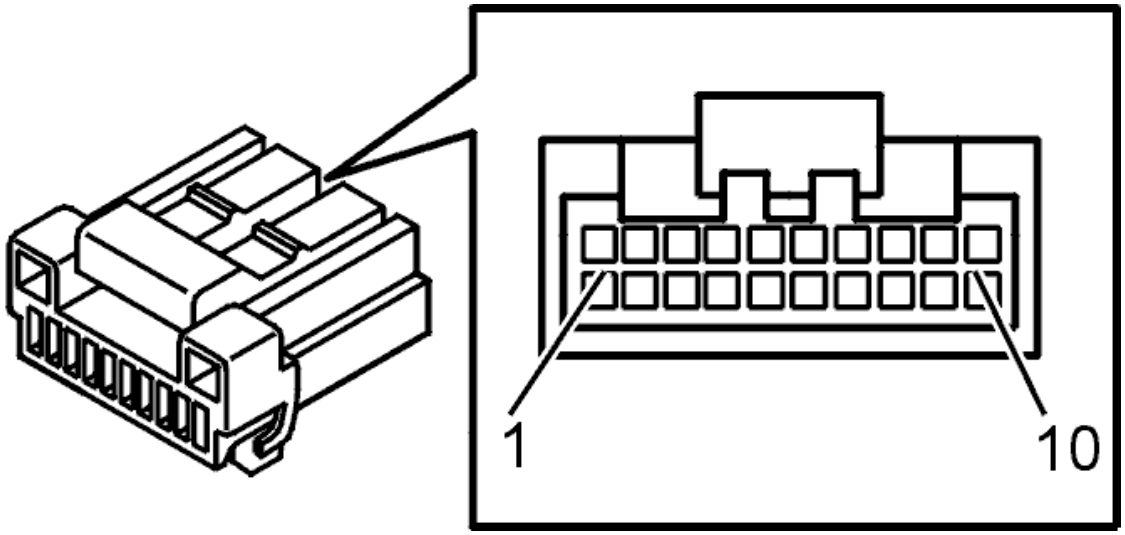

Fig. 202: Identifying Connector (D) Terminals
Courtesy of VOLVO CARS CORPORATION

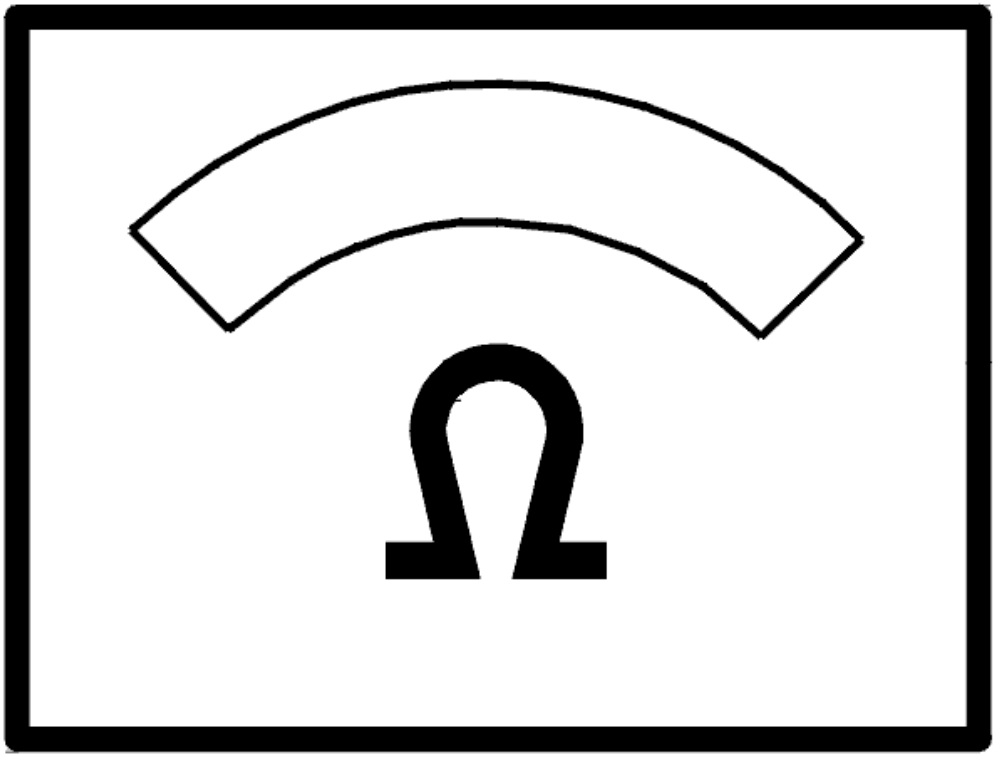

Fig. 203: Identifying Ohm Meter
Courtesy of VOLVO CARS CORPORATION

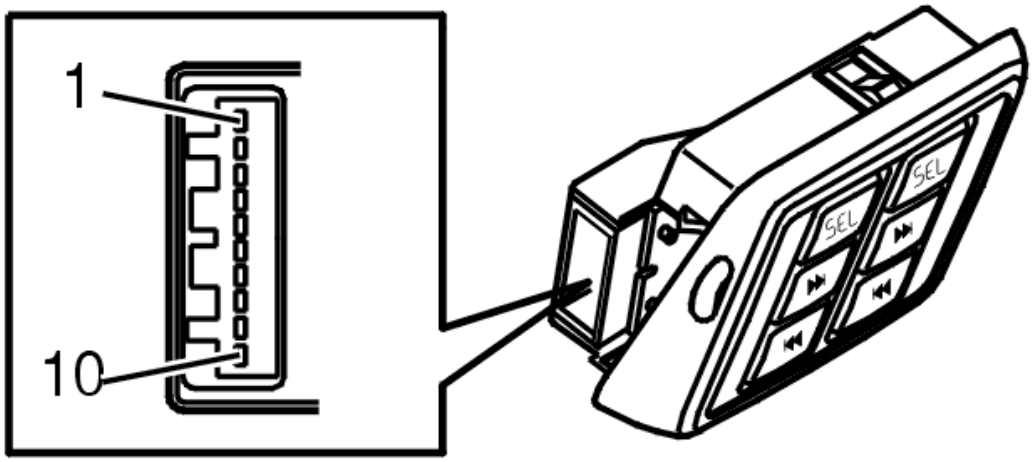

Fig. 204: Identifying Buttons Headset Connector
Courtesy of VOLVO CARS CORPORATION

- **Continue**

  Refer to **VERIFICATION**

VERIFICATION

VERIFICATION

HINT: After carrying out the repair, check that the fault has been remedied.

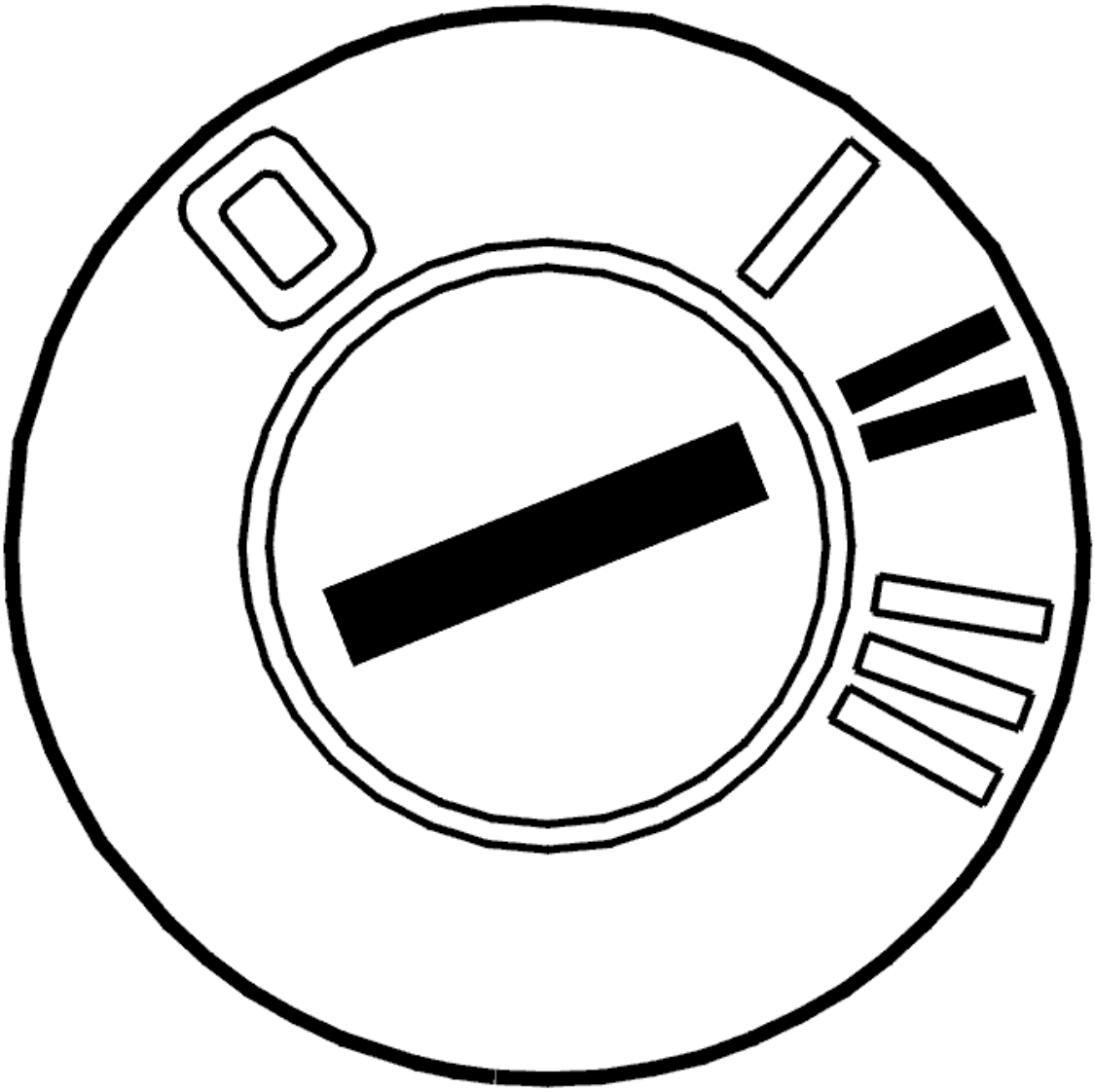

Fig. 205: Identifying Ignition ON
Courtesy of VOLVO CARS CORPORATION

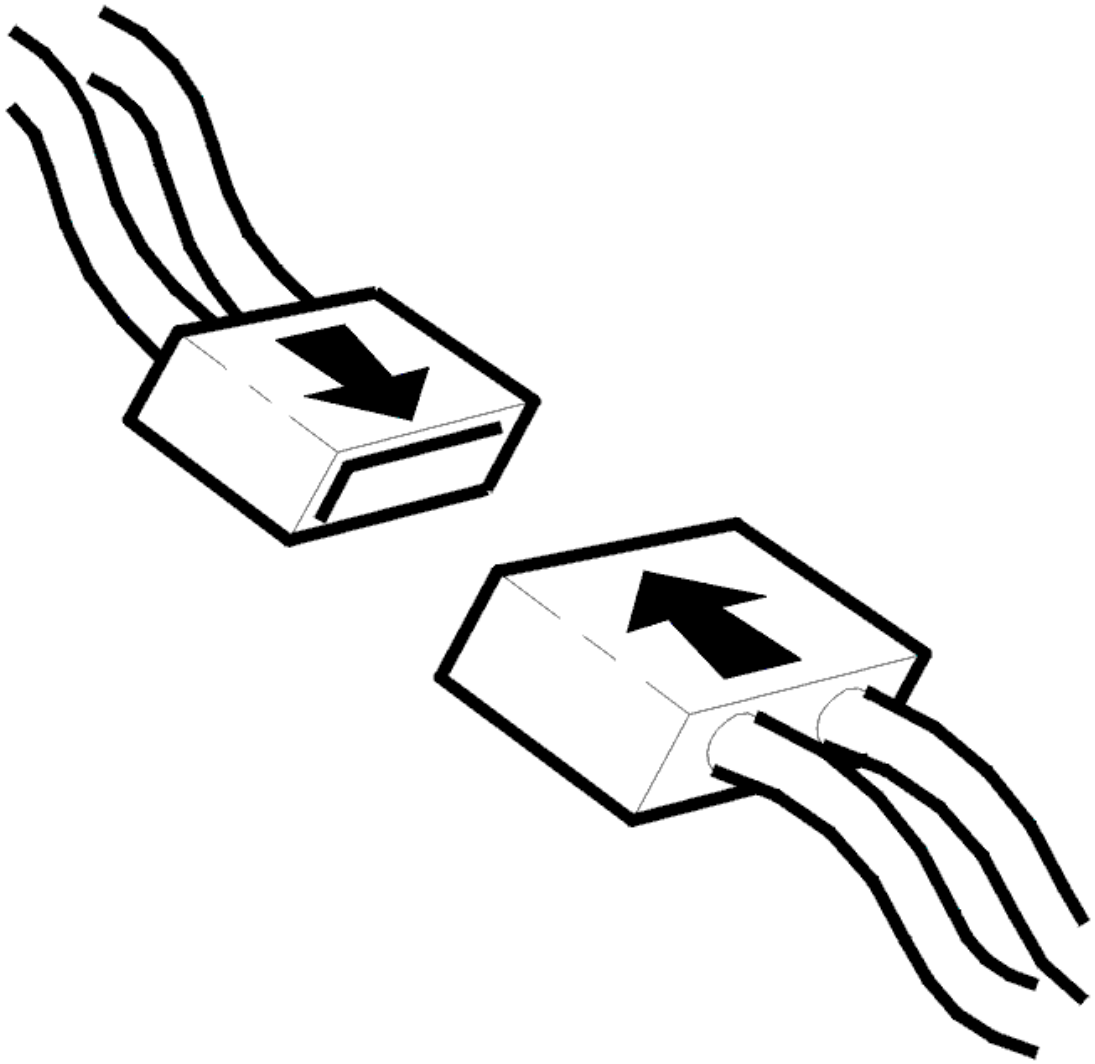

Fig. 206: Connecting Connector
Courtesy of VOLVO CARS CORPORATION

- Ignition off
- Reinstall the connectors, components etc.
- Ignition on.

  Check that the buttons for the headset output function. Check this by pressing the buttons for the next track and the previous track and by changing between the CD/MD and the radio using the SEL button.

Do the buttons function?

- **YES**

  VERIFIED: Troubleshooting has been completed.

- **NO**

  Refer to **INFORMATION**

INFORMATION

FAULT-TRACING INFORMATION

The fault should have been detected and remedied. As this is not the case fault-tracing has failed.

Exit fault-tracing for this diagnostic trouble code (DTC) or make another attempt.

AUD-0013: BUTTONS HEADSET 2. SIGNAL TOO LOW (2003-2011)

DIAGNOSTIC TROUBLE CODE (DTC) INFORMATION AUD-0013

Condition

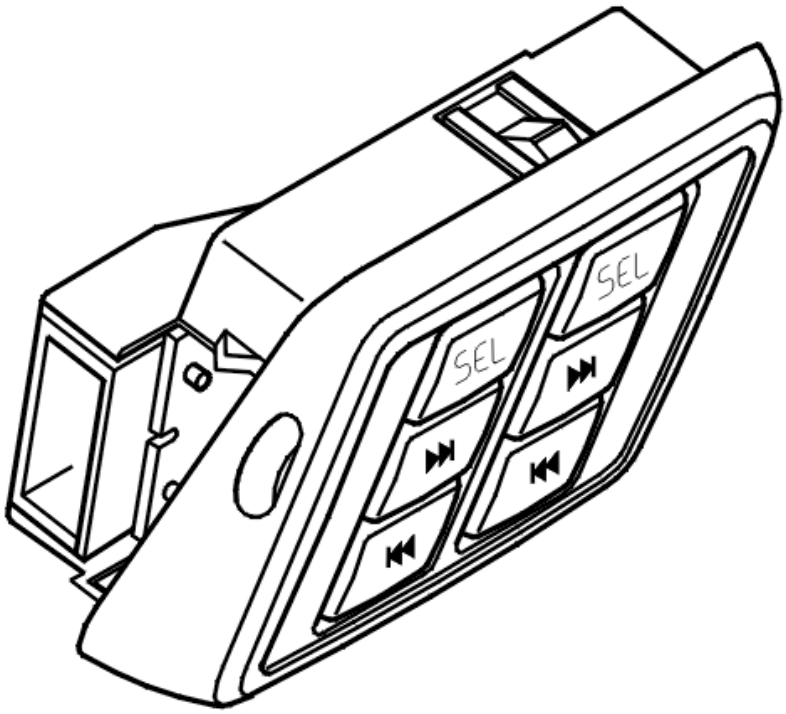

Fig. 207: Identifying Buttons Headset Component
Courtesy of VOLVO CARS CORPORATION

Diagnostic trouble code (DTC) AUD-0013 is stored if the audio module (AUD) registers that the signal to the buttons for headset output 2 is too low.

Diagnostic trouble code (DTC) AUD-0013 can be diagnosed when the ignition is on.

Substitute Value

- None.

Possible Source

- Short-circuit to ground in the signal cable between headset output 2 and the control module
- Short-circuit between the signal cables to headset output 2
- Short-circuit in the headset panel (defective headset panel).

Fault symptom[s]

- The buttons for the headset output are not working.

SIGNAL LOW (2003-2006)

CHECKING COMPONENTS AND WIRING

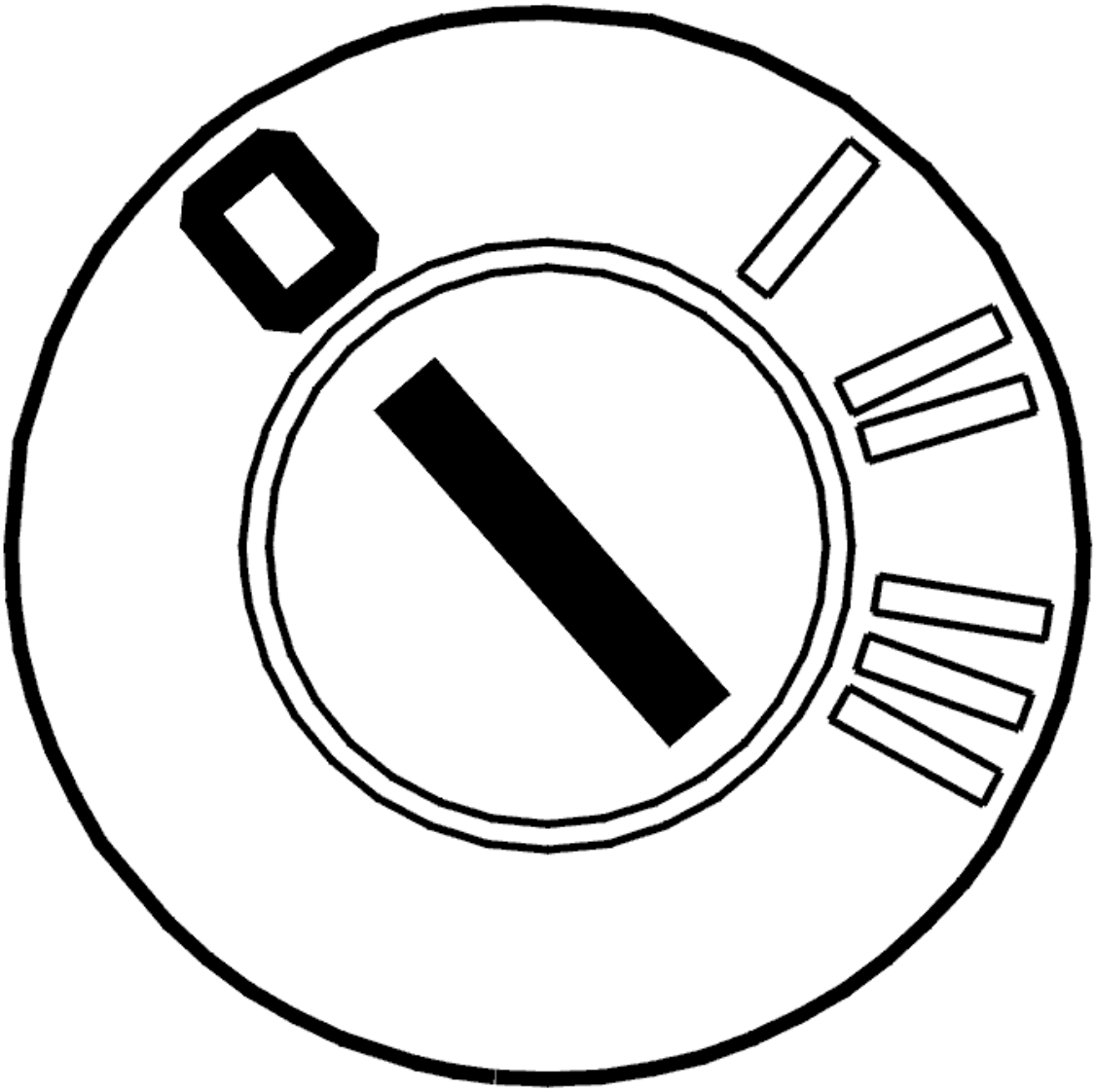

Fig. 208: Identifying Ignition OFF
Courtesy of VOLVO CARS CORPORATION

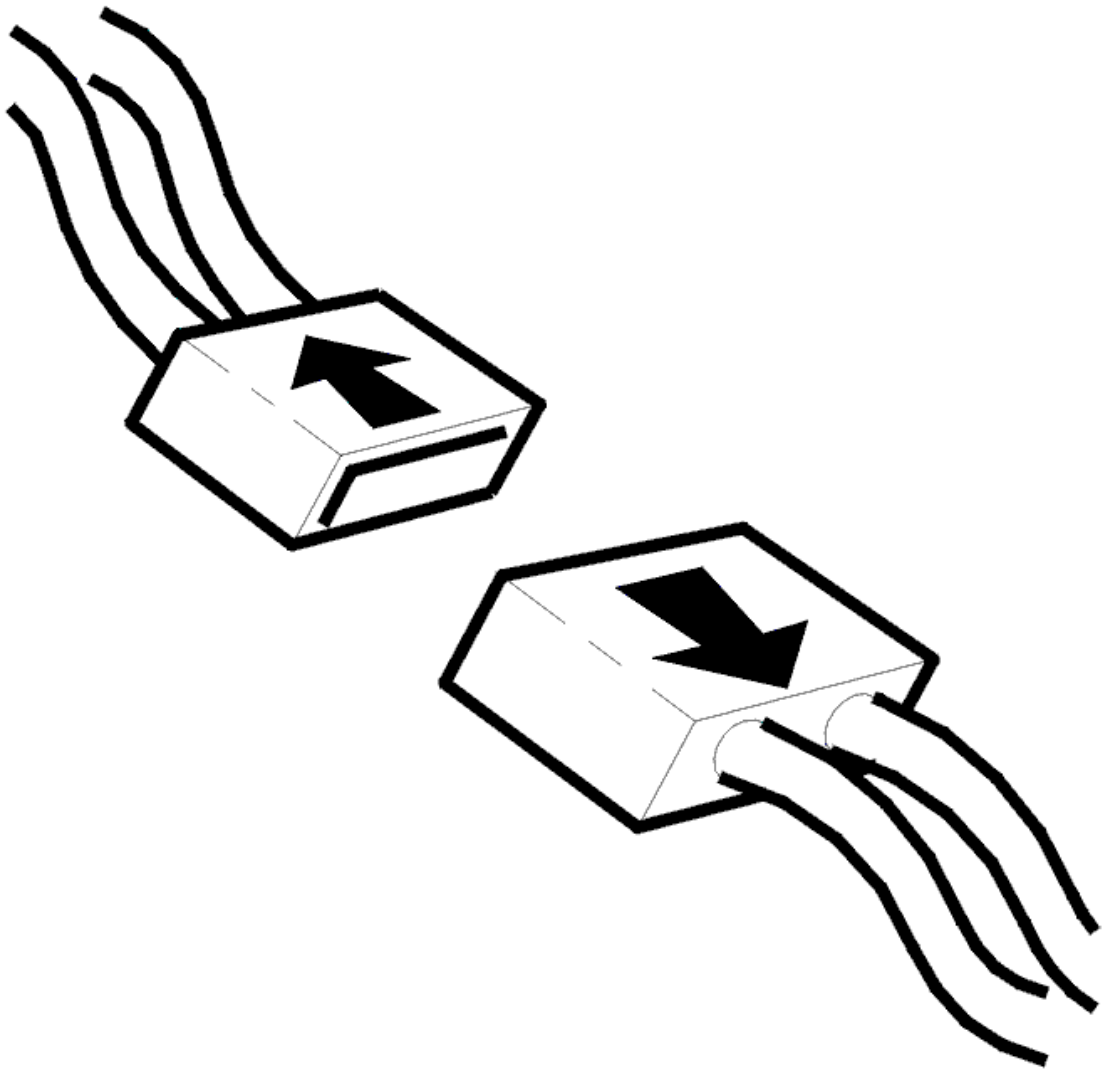

Fig. 209: Disconnecting Connector
Courtesy of VOLVO CARS CORPORATION

- Ignition off
- Disconnect the connector for the left headset panel
- Disconnect the 22-pin connector for the audio module (AUD).

  Check the cable terminals in the female and male sections of the connector. The cable terminals must not be damaged or pressed back.

  Check the signal cable between audio module (AUD) terminal #C15 and headset terminal #10 in the left C-post. Check for a short-circuit to ground.

  Check the signal cable between audio module (AUD) terminal #C17 and headset output 2 terminal #9 in the left C-post. Check for a short-circuit to ground.

Check the resistance between terminals #C17 and #C15 in the connector for the audio module (AUD). The resistance must be infinite.

Check the resistance between terminals #9 and #10 in the connector for the left headset panel. The resistance must be approximately 39 kohms.

Remedy as necessary.

Other information:

- To connect the breakout box, see **CONNECTING THE BREAKOUT BOX**
- To access or replace the audio module (AUD), see **AUDIO MODULE (AUD), REPLACING**
- For information about signals, see **SIGNAL SPECIFICATION**
- see **CONTENTS** .

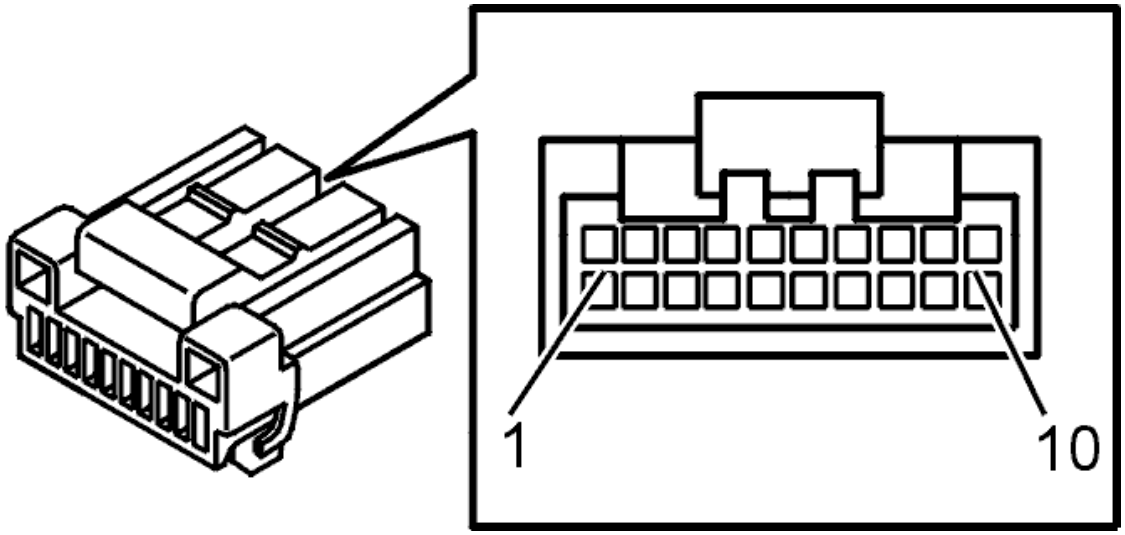

Fig. 210: Identifying Connector (D) Terminals
Courtesy of VOLVO CARS CORPORATION

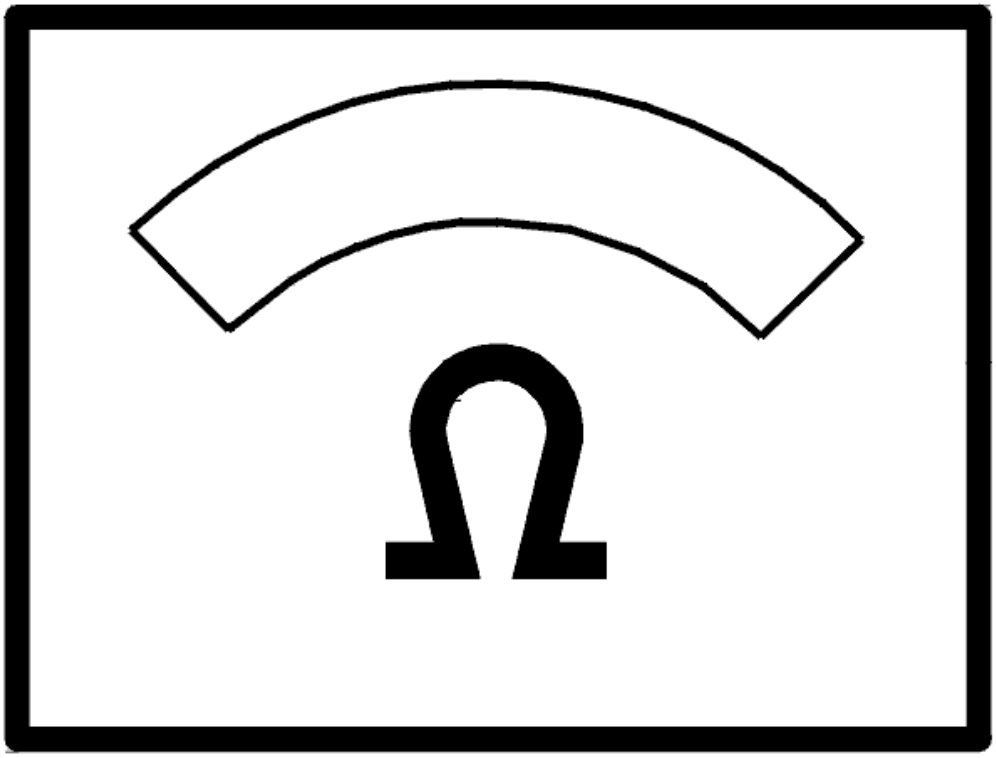

Fig. 211: Identifying Ohm Meter
Courtesy of VOLVO CARS CORPORATION

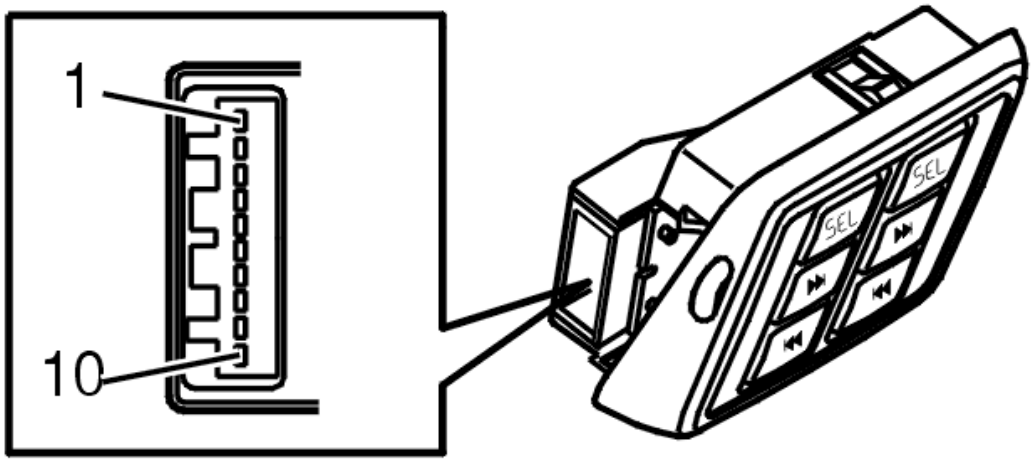

Fig. 212: Identifying Buttons Headset Connector
Courtesy of VOLVO CARS CORPORATION

- **Continue**

  Refer to **VERIFICATION**

VERIFICATION

VERIFICATION

HINT: After carrying out the repair, check that the fault has been remedied.

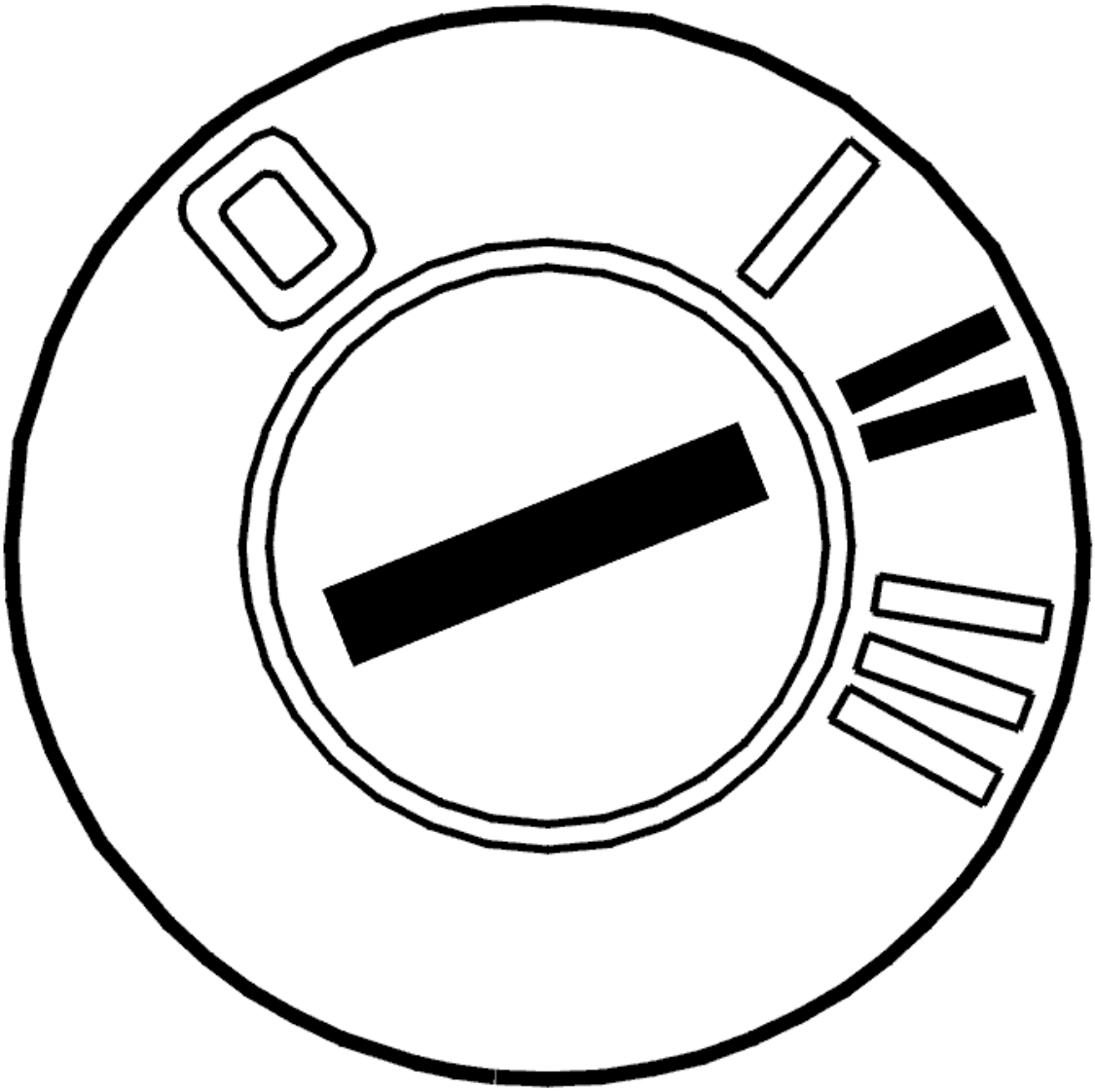

Fig. 213: Identifying Ignition ON
Courtesy of VOLVO CARS CORPORATION

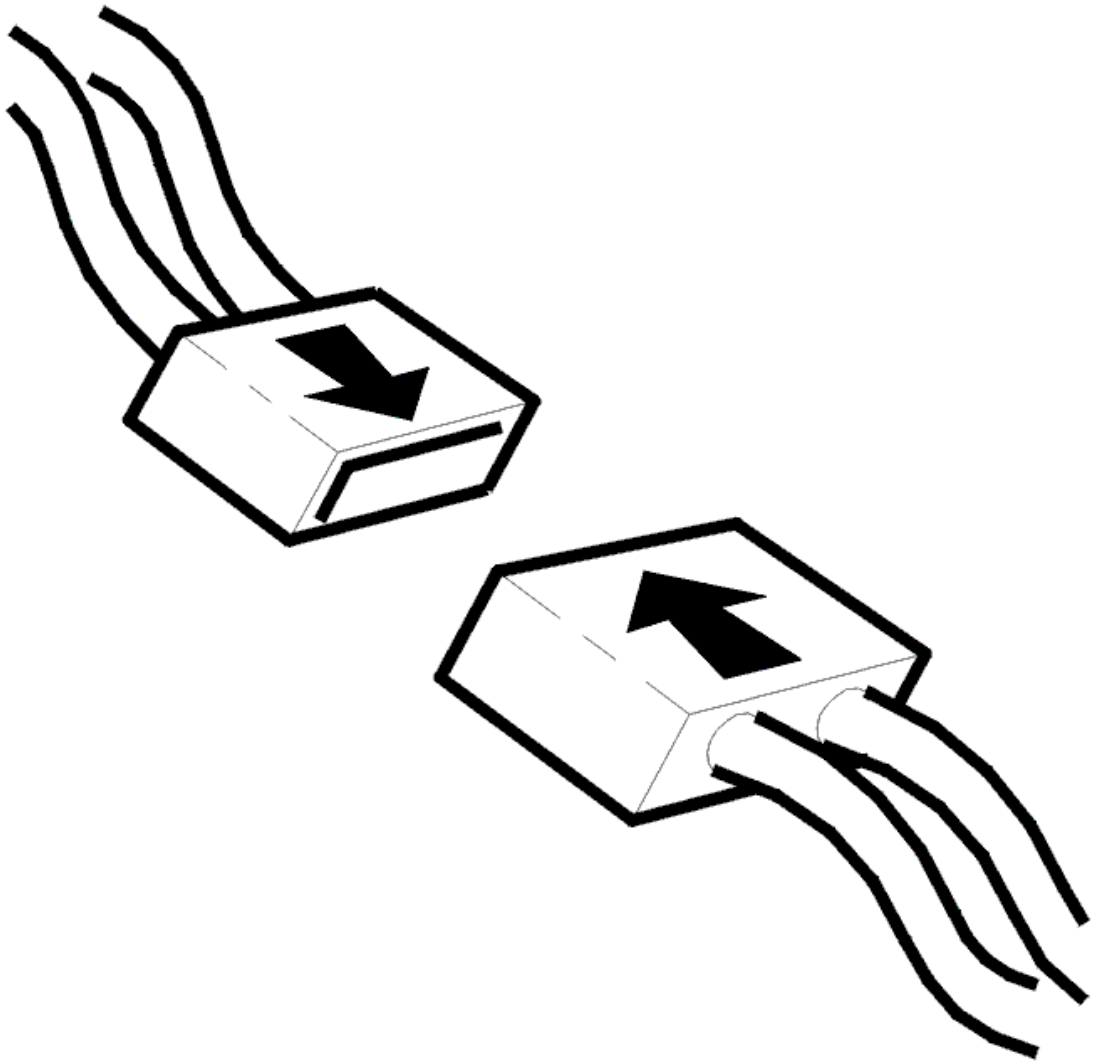

Fig. 214: Connecting Connector
Courtesy of VOLVO CARS CORPORATION

- Ignition off
- Reinstall the connectors, components etc.
- Ignition on.

  Check that the buttons for the headset output function. Check this by pressing the buttons for the next track and the previous track and by changing between the CD/MD and the radio using the SEL button.

Do the buttons function?

- **YES**

  VERIFIED: Troubleshooting has been completed.

- **NO**

  Refer to **INFORMATION**

INFORMATION

FAULT-TRACING INFORMATION

The fault should have been detected and remedied. As this is not the case fault-tracing has failed.

Exit fault-tracing for this diagnostic trouble code (DTC) or make another attempt.

SIGNAL LOW (2007-2011)

CHECKING COMPONENTS AND WIRING

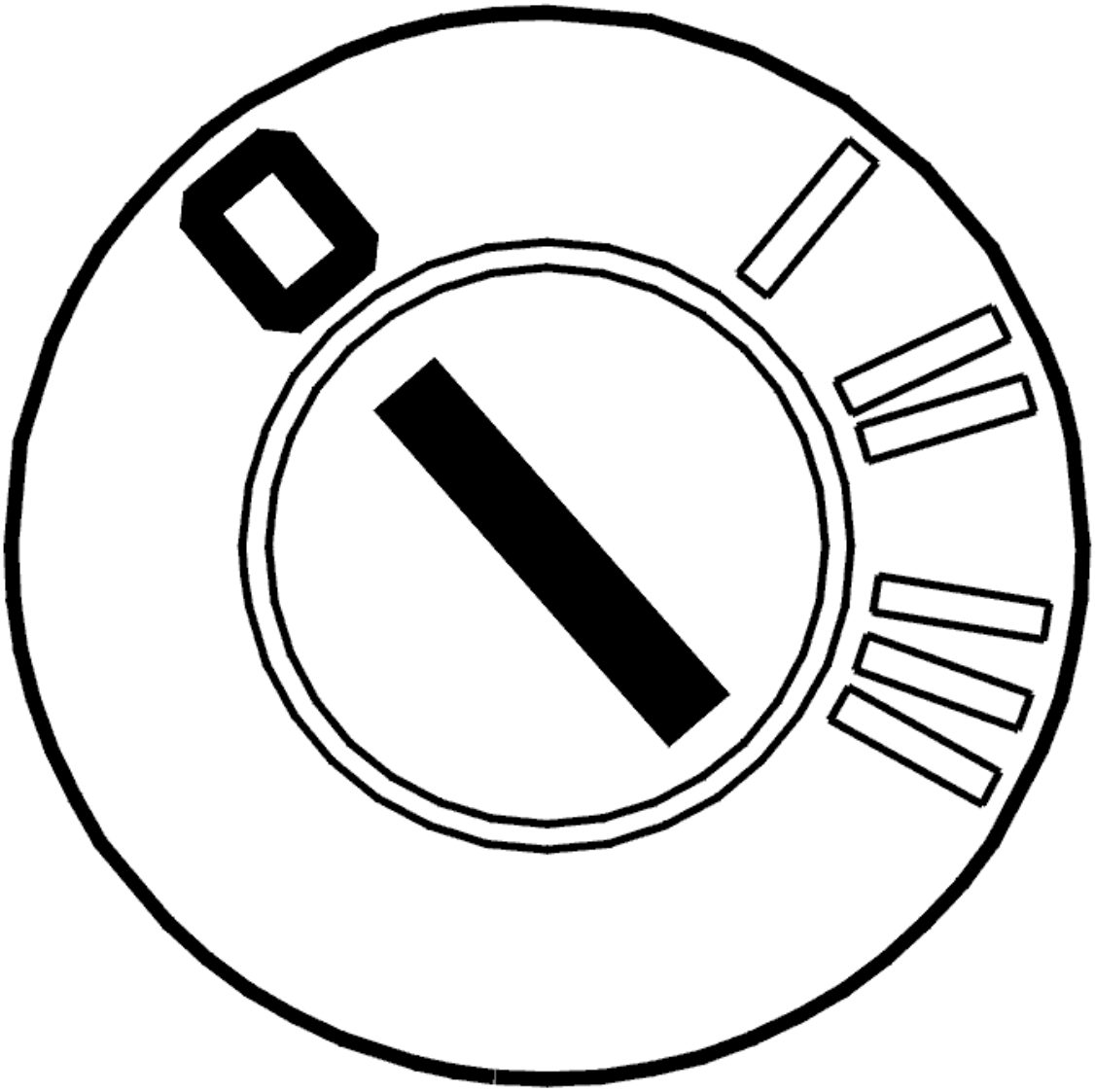

Fig. 215: Identifying Ignition OFF
Courtesy of VOLVO CARS CORPORATION

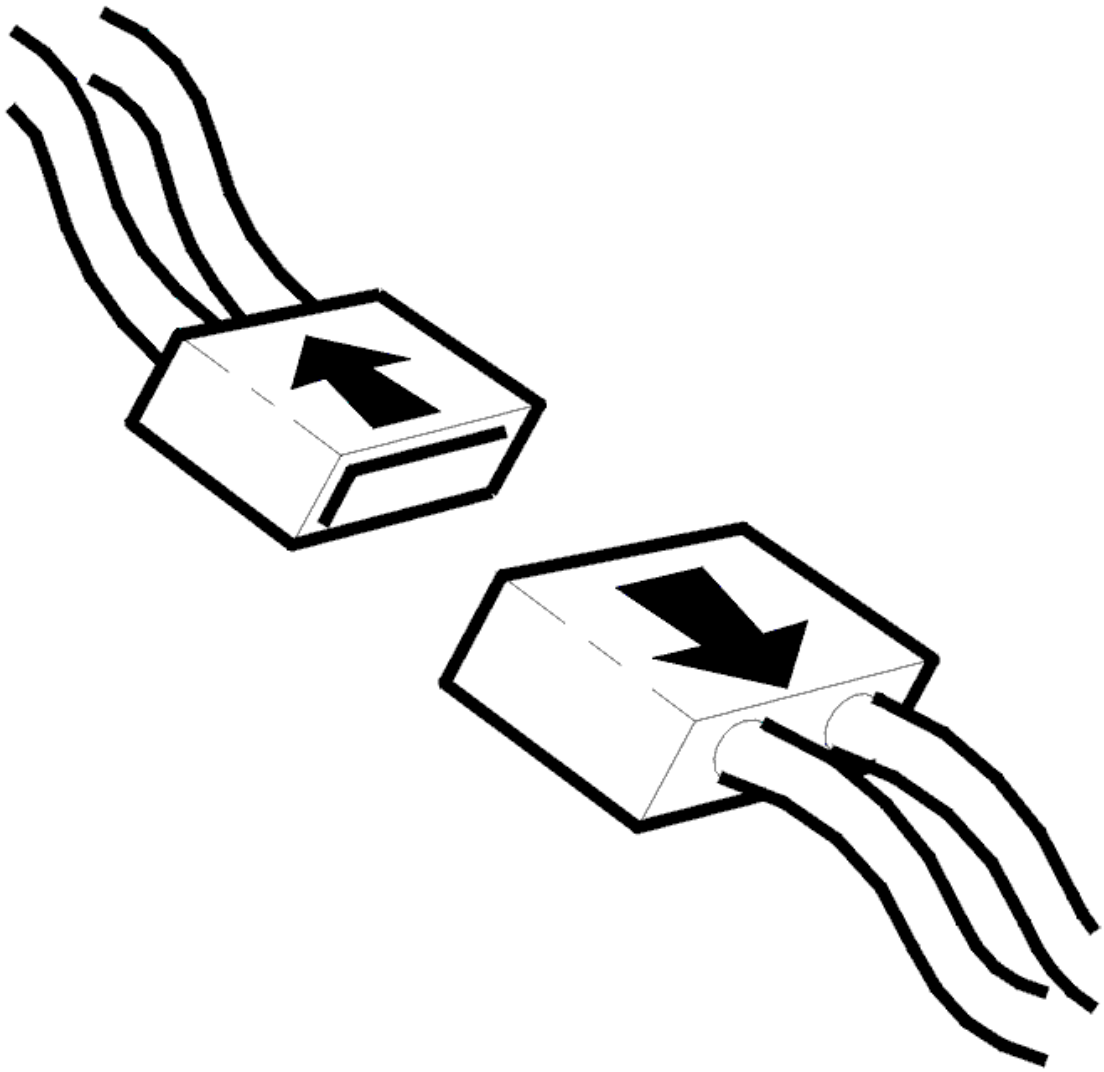

Fig. 216: Disconnecting Connector
Courtesy of VOLVO CARS CORPORATION

- Ignition off
- Disconnect the connector for the left headset panel
- Disconnect the 22-pin connector for the audio module (AUD).

  Check the cable terminals in the female and male sections of the connector. The cable terminals must not be damaged or pressed back.

  Check the signal cable between audio module (AUD) terminal #C15 and headset terminal #10 in the left C-post. Check for a short-circuit to ground.

Check the signal cable between audio module (AUD) terminal #C17 and headset output 2 terminal #9 in the left C-post. Check for a short-circuit to ground.

Check the resistance between terminals #C17 and #C15 in the connector for the audio module (AUD). The resistance must be infinite.

Check the resistance between terminals #9 and #10 in the connector for the left headset panel. The resistance must be approximately 39 kohms.

Remedy as necessary.

Other information:

- To connect the breakout box, see **CONNECTING THE BREAKOUT BOX**
- To access or replace the audio module (AUD), see **AUDIO MODULE (AUD), REPLACING**
- For information about signals, see **SIGNAL SPECIFICATION**
- see **CONTENTS** .

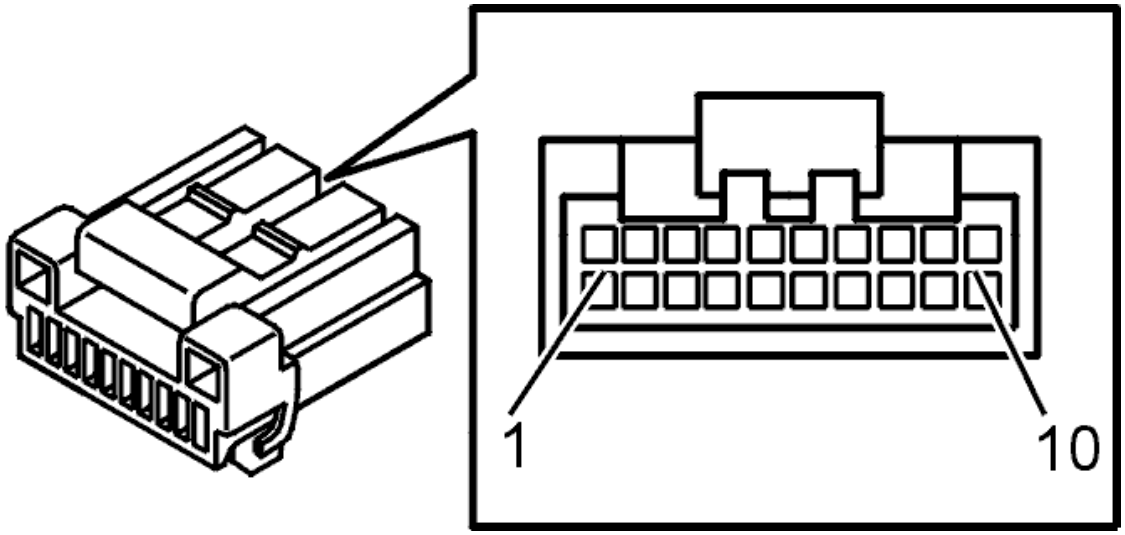

Fig. 217: Identifying Connector (D) Terminals
Courtesy of VOLVO CARS CORPORATION

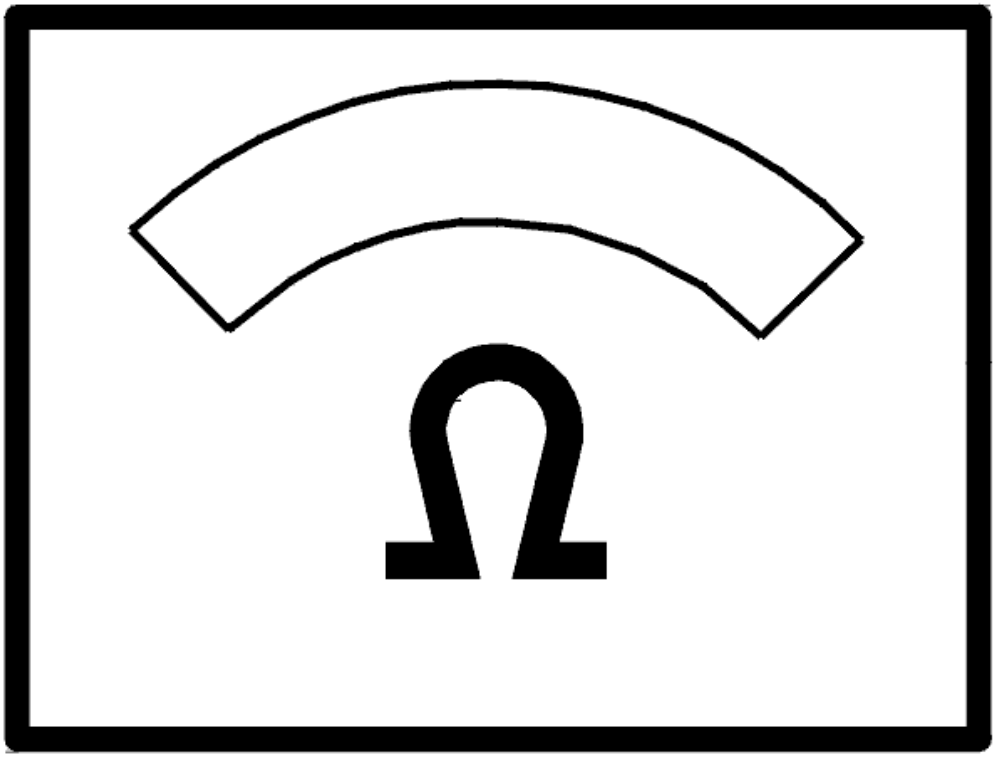

Fig. 218: Identifying Ohm Meter
Courtesy of VOLVO CARS CORPORATION

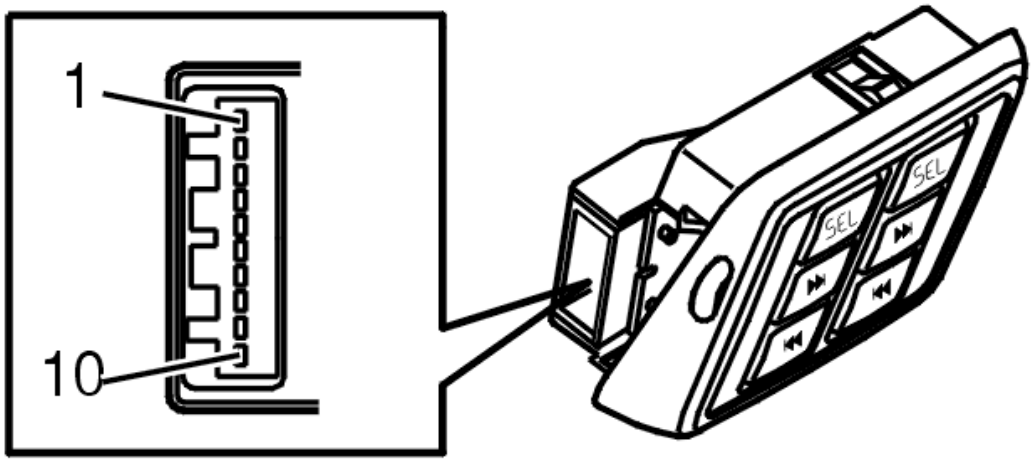

Fig. 219: Identifying Buttons Headset Connector
Courtesy of VOLVO CARS CORPORATION

- **Continue**

  Refer to **VERIFICATION**

VERIFICATION

VERIFICATION

HINT: After carrying out the repair, check that the fault has been remedied.

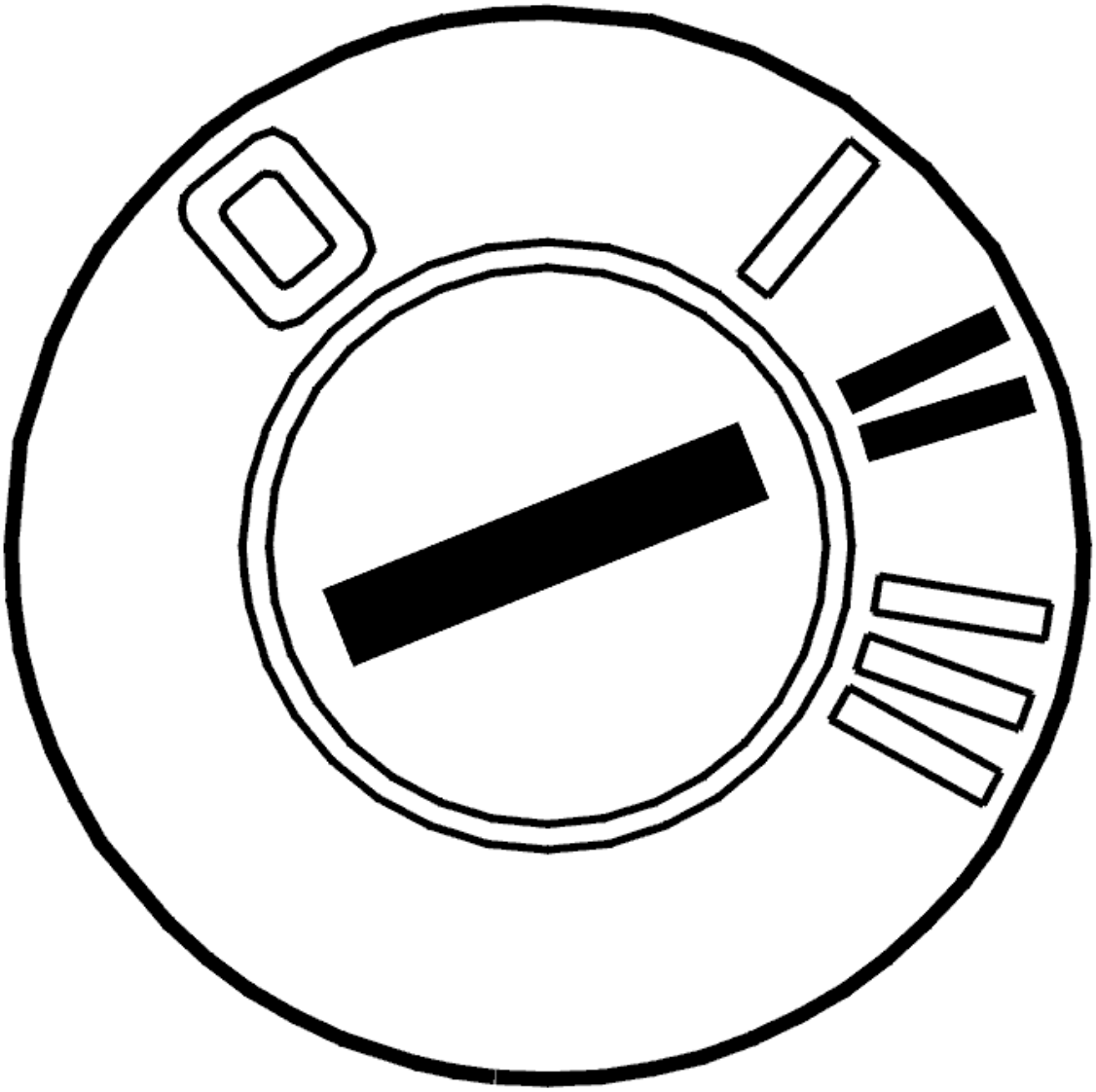

Fig. 220: Identifying Ignition ON
Courtesy of VOLVO CARS CORPORATION

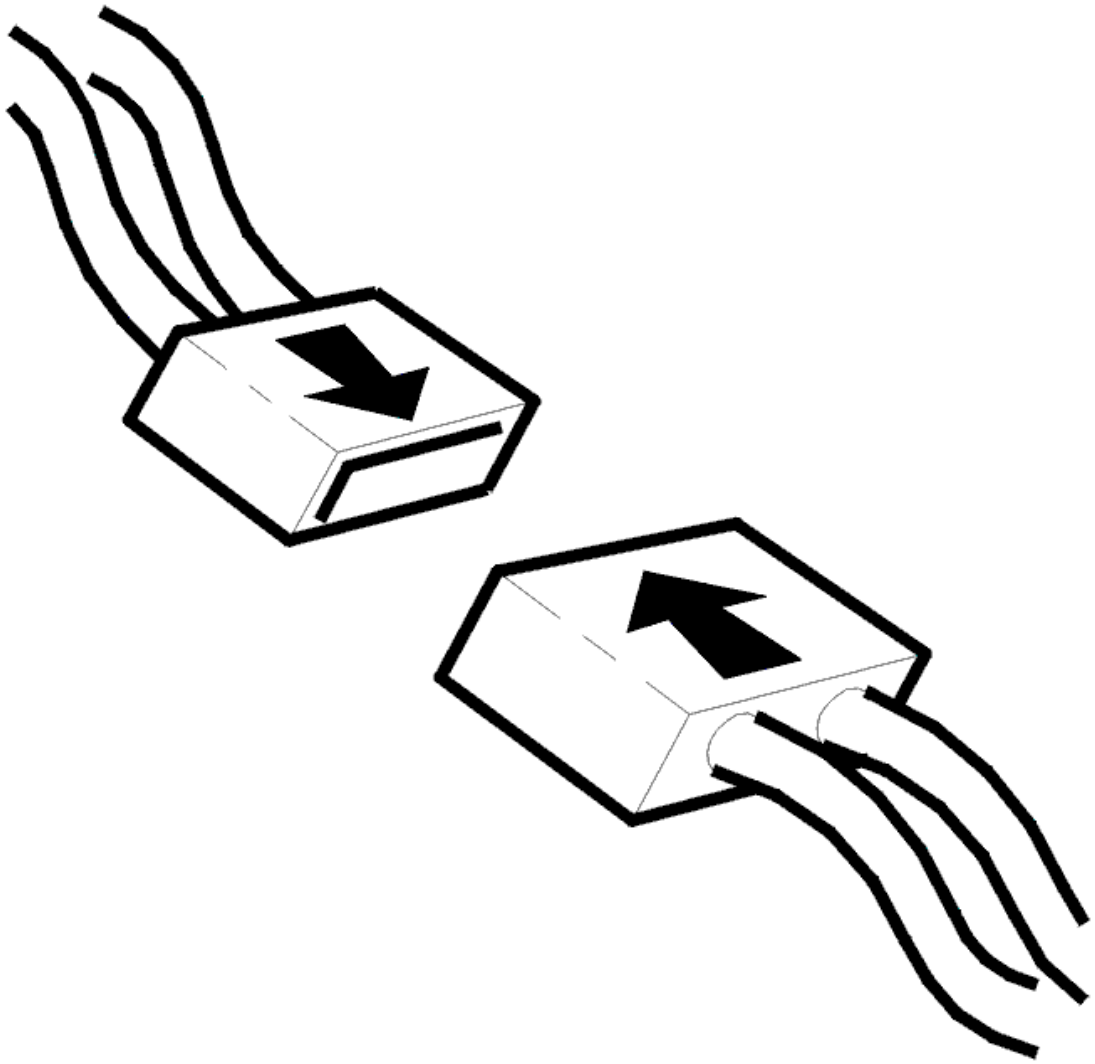

Fig. 221: Connecting Connector
Courtesy of VOLVO CARS CORPORATION

- Ignition off
- Reinstall the connectors, components etc.
- Ignition on.

  Check that the buttons for the headset output function. Check this by pressing the buttons for the next track and the previous track and by changing between the CD/MD and the radio using the SEL button.

Do the buttons function?

- **YES**

  VERIFIED: Troubleshooting has been completed.

- **NO**

  Refer to **INFORMATION**

INFORMATION

FAULT-TRACING INFORMATION

The fault should have been detected and remedied. As this is not the case fault-tracing has failed.

Exit fault-tracing for this diagnostic trouble code (DTC) or make another attempt.

AUD-0014: BUTTONS HEADSET 2. SIGNAL MISSING (2003-2011)

DIAGNOSTIC TROUBLE CODE (DTC) INFORMATION AUD-0014

Condition

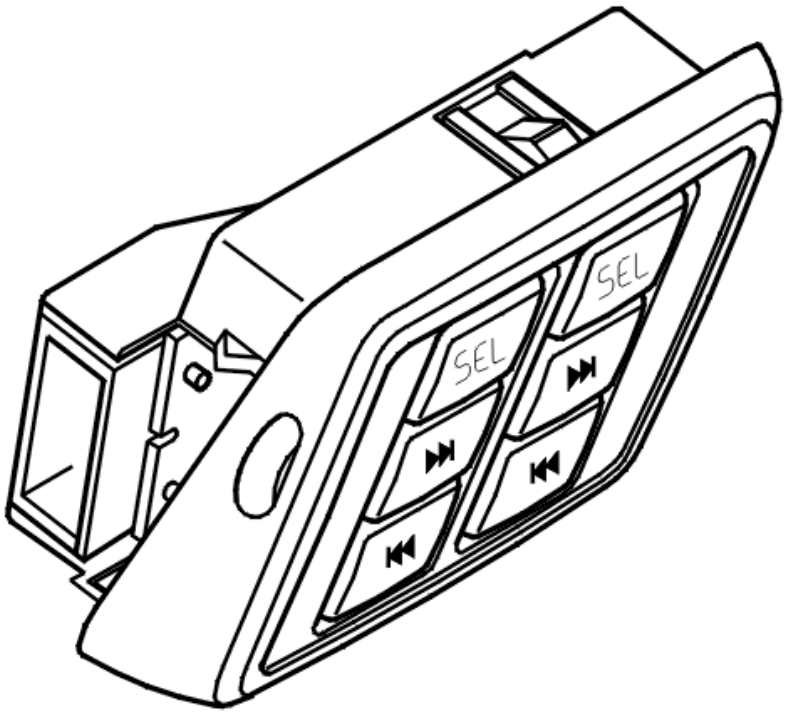

Fig. 222: Identifying Buttons Headset Component
Courtesy of VOLVO CARS CORPORATION

Diagnostic trouble code (DTC) AUD-0014 is stored if the audio module (AUD) registers an open-circuit in the signal cable to the buttons at headset output 2.

Diagnostic trouble code (DTC) AUD-0014 can be diagnosed when the ignition is on.

Substitute Value

- None.

Possible Source

- Open-circuit in the signal cable between headset output 2 and the control module
- Open-circuit in the headset panel (defective headset panel).

Fault symptom[s]

- The buttons for the headset output are not working.

SIGNAL MISSING (2003-2006)

CHECKING COMPONENTS AND WIRING

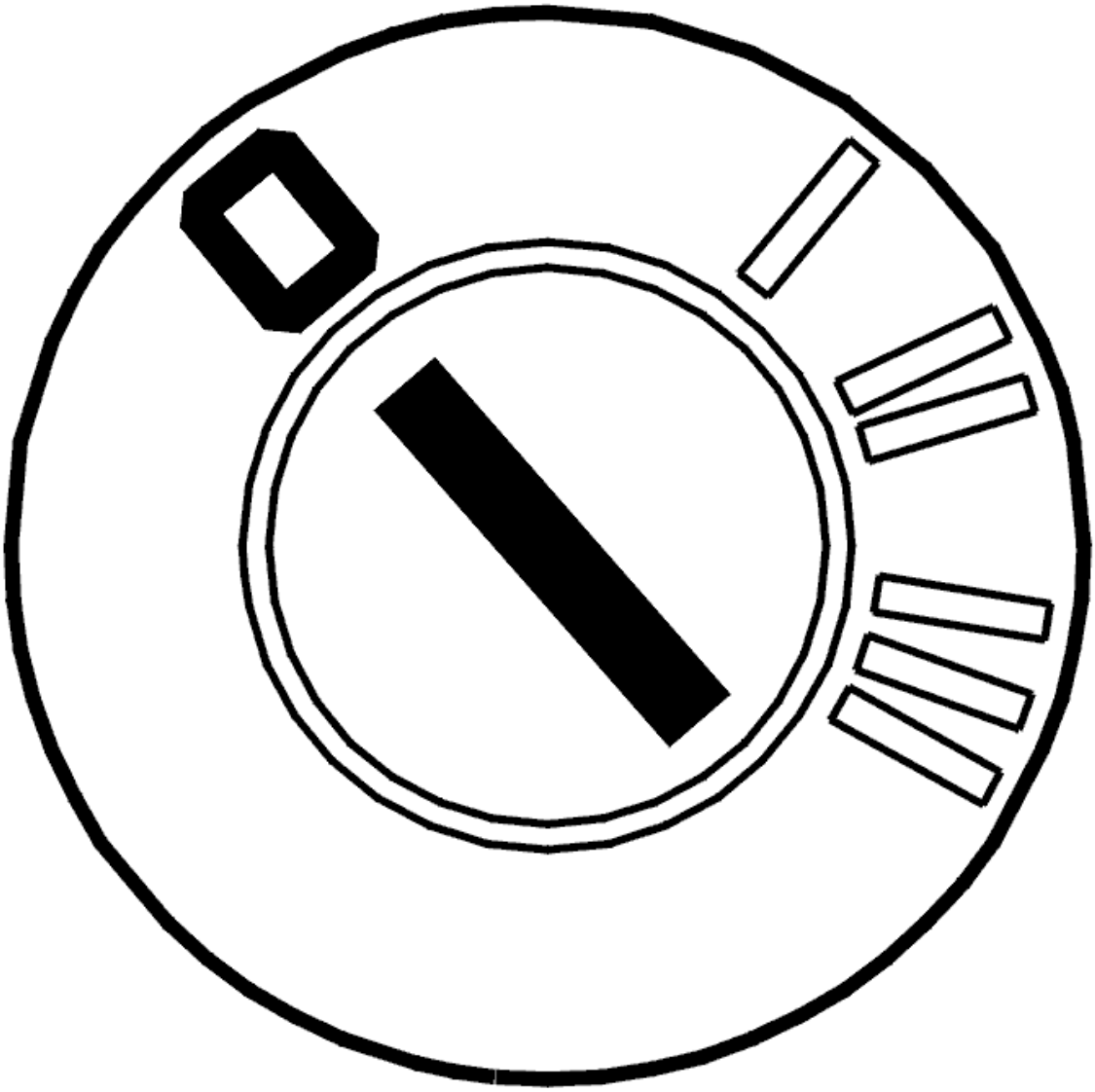

Fig. 223: Identifying Ignition OFF
Courtesy of VOLVO CARS CORPORATION

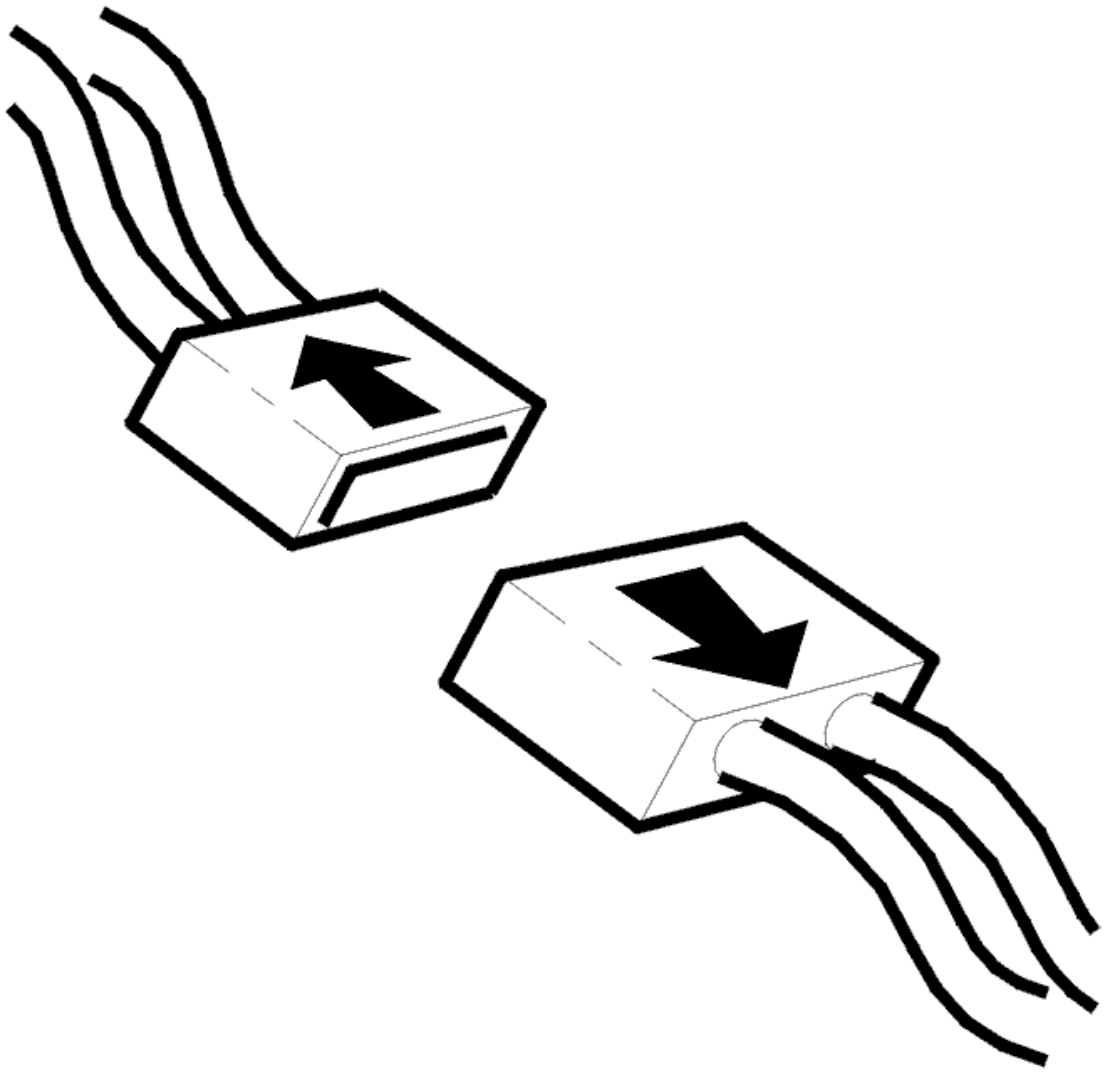

Fig. 224: Disconnecting Connector
Courtesy of VOLVO CARS CORPORATION

- Ignition off
- Disconnect the connector for the left headset panel.

  Check the buttons for the left headset output 2. Test the buttons by changing between previous and next track selection and changing between CD/MD and radio.

  Check the connectors. Check for loose connections and oxidation.

  Check the cable terminals in the female and male sections of the connector. The cable terminals must not be damaged or pressed back.

  Check the signal cable between audio module (AUD) terminal #C15 and headset output terminal #10 in the left C-post. Check for an open-circuit.

Check the signal cable between audio module (AUD) terminal #C17 and headset output 2 terminal #9 in the left C-post. Check for an open-circuit.

Check the resistance between terminals #9 and #10 in the connector for the left headset panel. The resistance must be approximately 39 kohms.

Remedy as necessary.

Other information:

- To connect the breakout box, see **CONNECTING THE BREAKOUT BOX**
- To access or replace the audio module (AUD), see **AUDIO MODULE (AUD), REPLACING**
- For information about signals, see **SIGNAL SPECIFICATION**
- see **CONTENTS** .

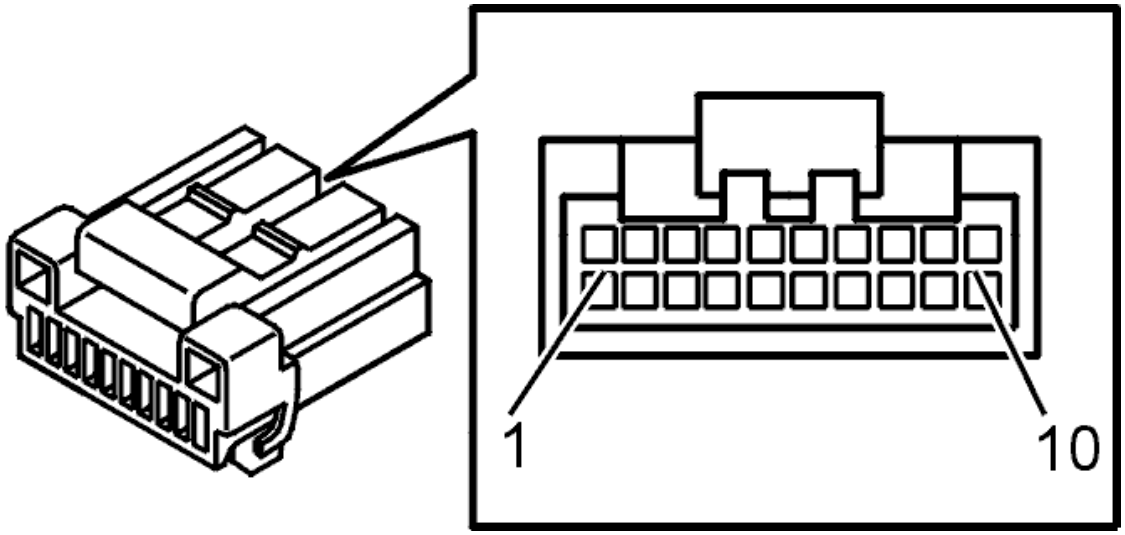

Fig. 225: Identifying Connector (D) Terminals
Courtesy of VOLVO CARS CORPORATION

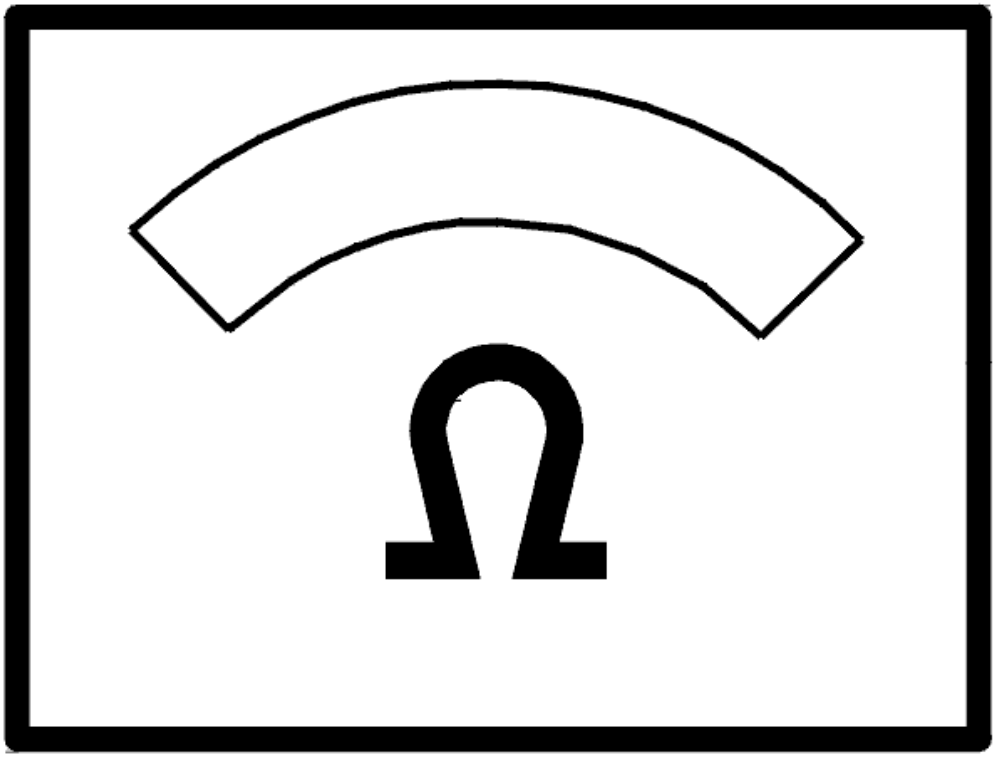

Fig. 226: Identifying Ohm Meter
Courtesy of VOLVO CARS CORPORATION

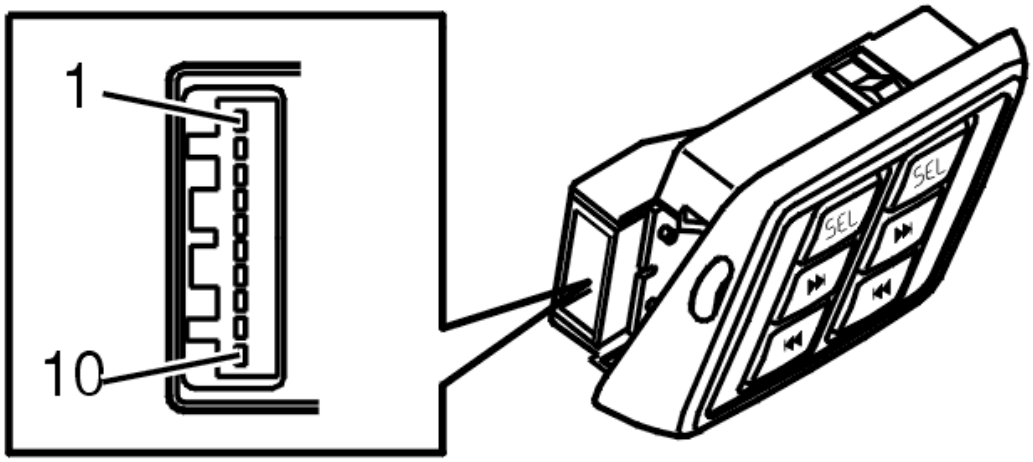

Fig. 227: Identifying Buttons Headset Connector
Courtesy of VOLVO CARS CORPORATION

- **Continue**

  Refer to **VERIFICATION**

VERIFICATION

VERIFICATION

HINT: After carrying out the repair, check that the fault has been remedied.

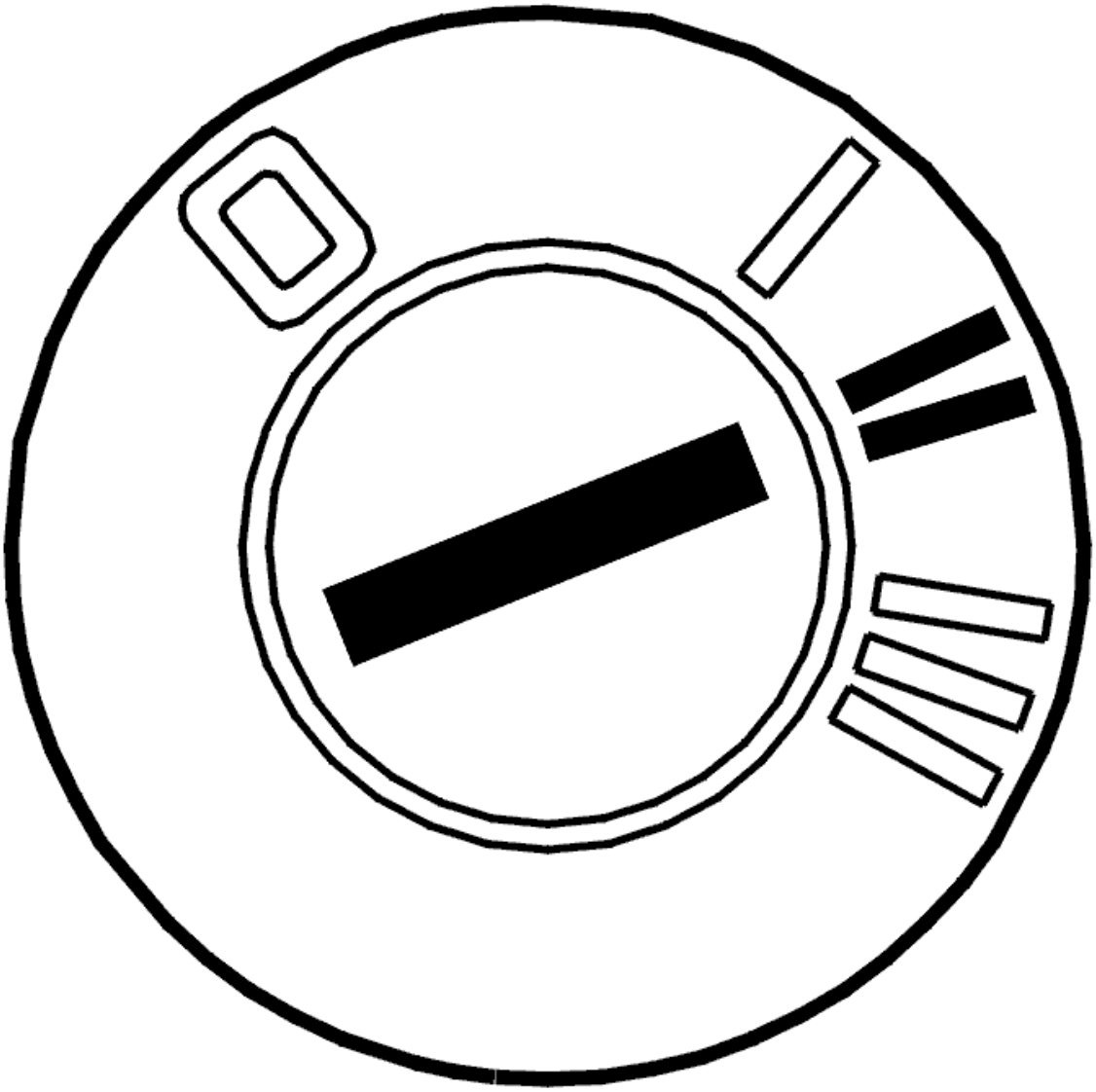

Fig. 228: Identifying Ignition ON
Courtesy of VOLVO CARS CORPORATION

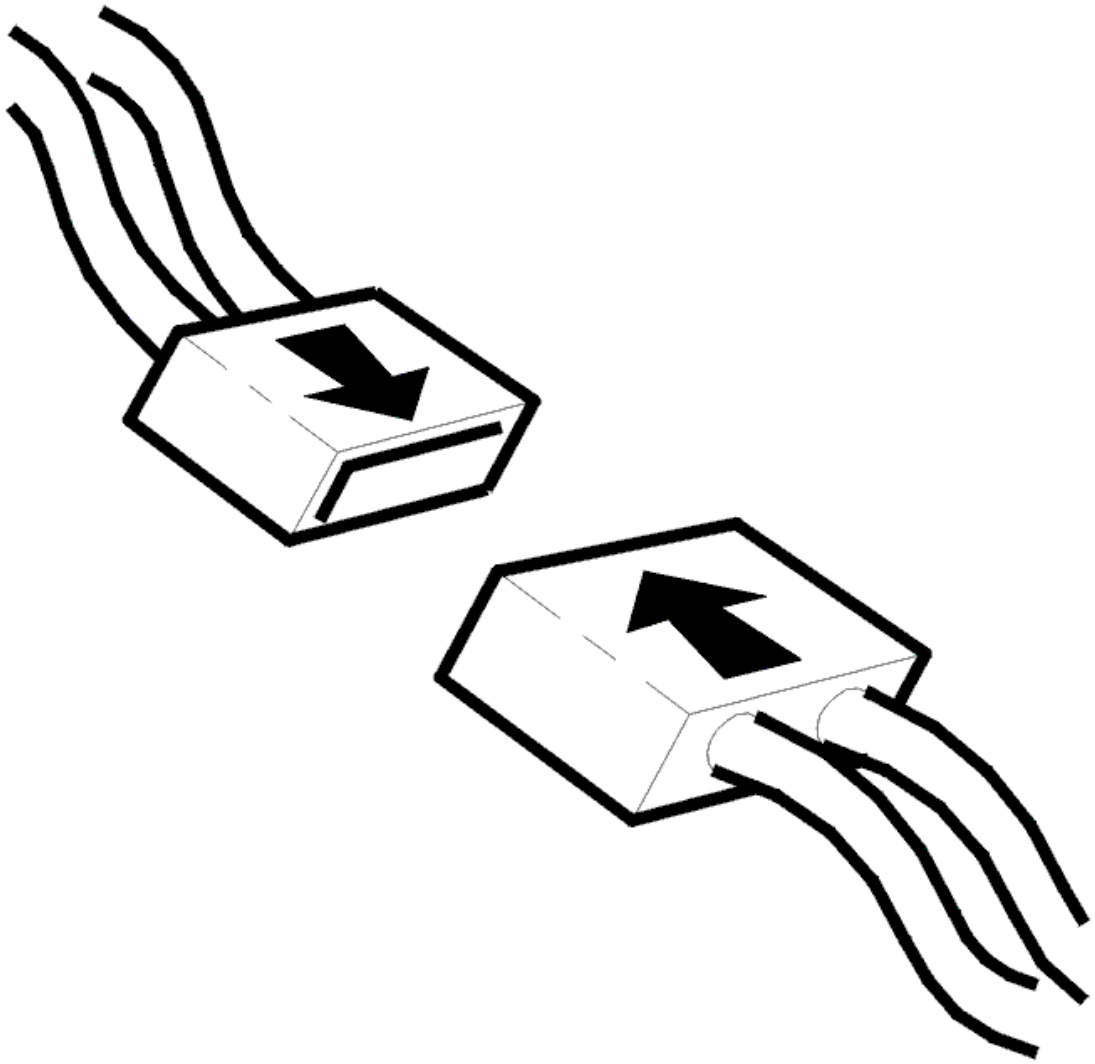

Fig. 229: Connecting Connector
Courtesy of VOLVO CARS CORPORATION

- Ignition off
- Reinstall the connectors, components etc.
- Ignition on.

  Check that the buttons for the headset output function. Check this by pressing the buttons for the next track and the previous track and by changing between the CD/MD and the radio using the SEL button.

Do the buttons function?

- **YES**

  VERIFIED: Troubleshooting has been completed.

- **NO**

  Refer to **INFORMATION**

INFORMATION

FAULT-TRACING INFORMATION

The fault should have been detected and remedied. As this is not the case fault-tracing has failed.

Exit fault-tracing for this diagnostic trouble code (DTC) or make another attempt.

SIGNAL MISSING (2007-2011)

CHECKING COMPONENTS AND WIRING

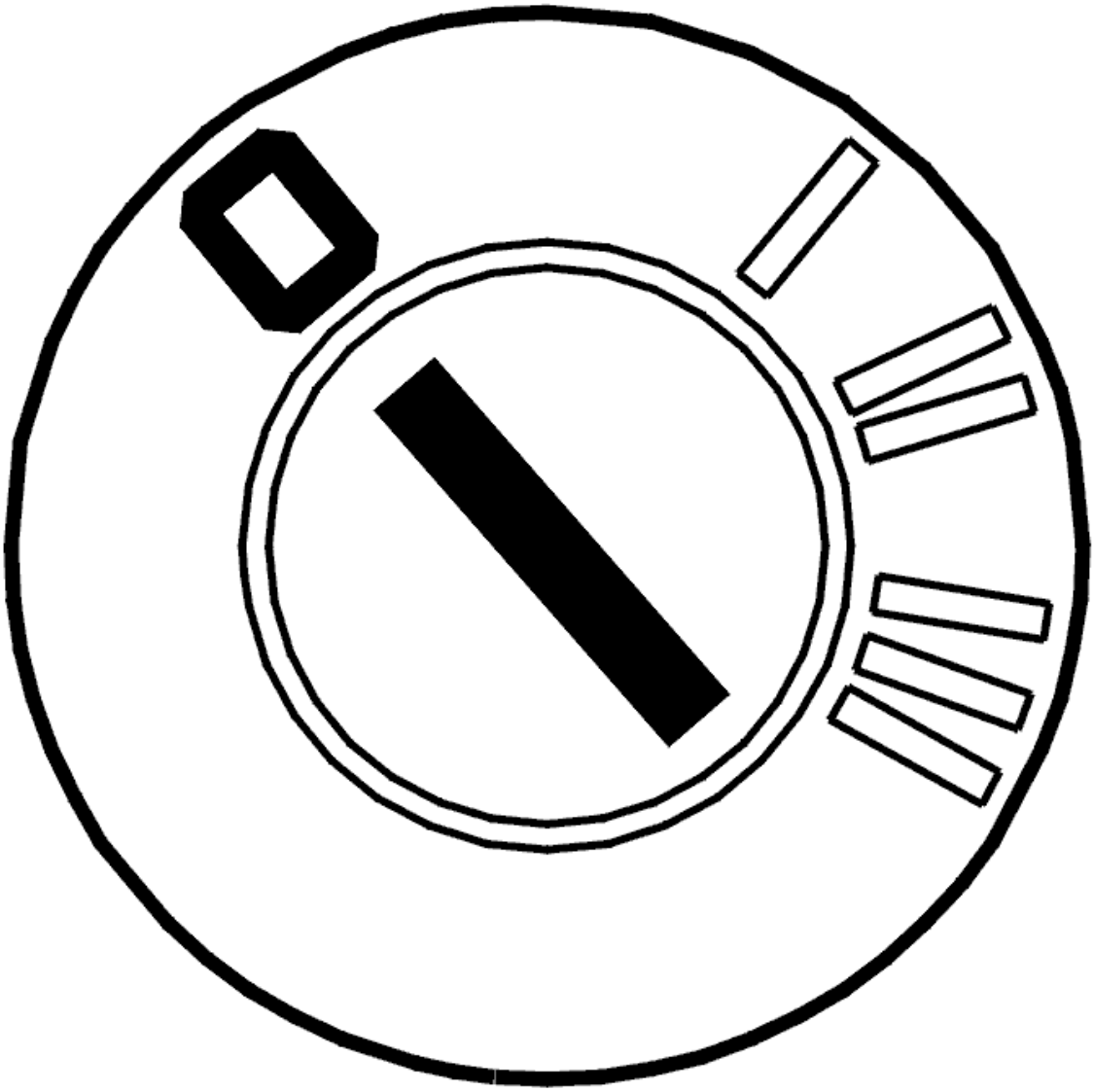

Fig. 230: Identifying Ignition OFF
Courtesy of VOLVO CARS CORPORATION

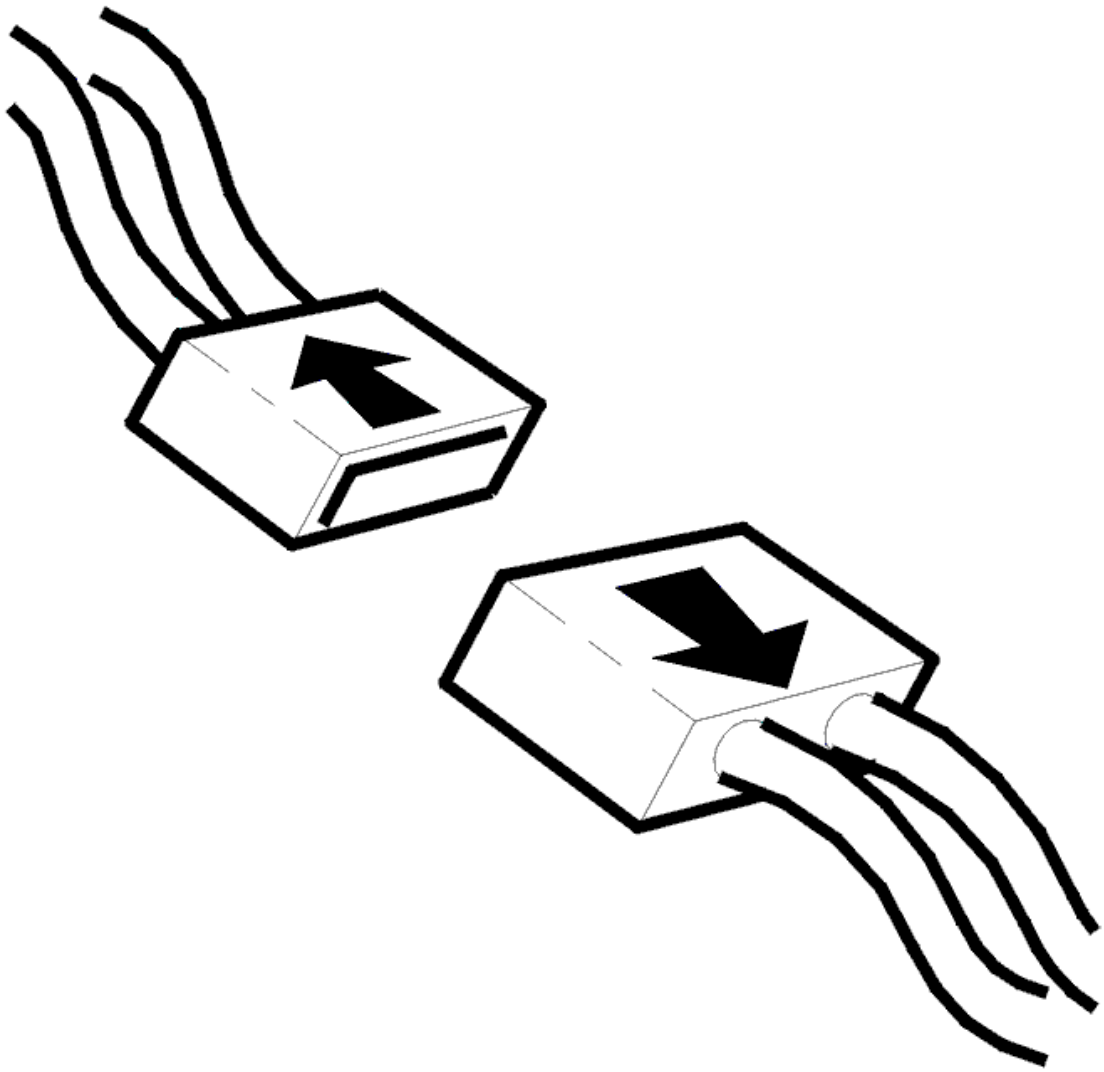

Fig. 231: Disconnecting Connector
Courtesy of VOLVO CARS CORPORATION

- Ignition off
- Disconnect the connector for the left headset panel.

  Check the buttons for the left headset output 2. Test the buttons by changing between previous and next track selection and changing between CD/MD and radio.

  Check the connectors. Check for loose connections and oxidation.

  Check the cable terminals in the female and male sections of the connector. The cable terminals must not be damaged or pressed back.

Check the signal cable between audio module (AUD) terminal #C15 and headset output terminal #10 in the left C-post. Check for an open-circuit.

Check the signal cable between audio module (AUD) terminal #C17 and headset output 2 terminal #9 in the left C-post. Check for an open-circuit.

Check the resistance between terminals #9 and #10 in the connector for the left headset panel. The resistance must be approximately 39 kohms.

Remedy as necessary.

Other information:

- To connect the breakout box, see **CONNECTING THE BREAKOUT BOX**
- To access or replace the audio module (AUD), see **AUDIO MODULE (AUD), REPLACING**
- For information about signals, see **SIGNAL SPECIFICATION**
- see **CONTENTS** .

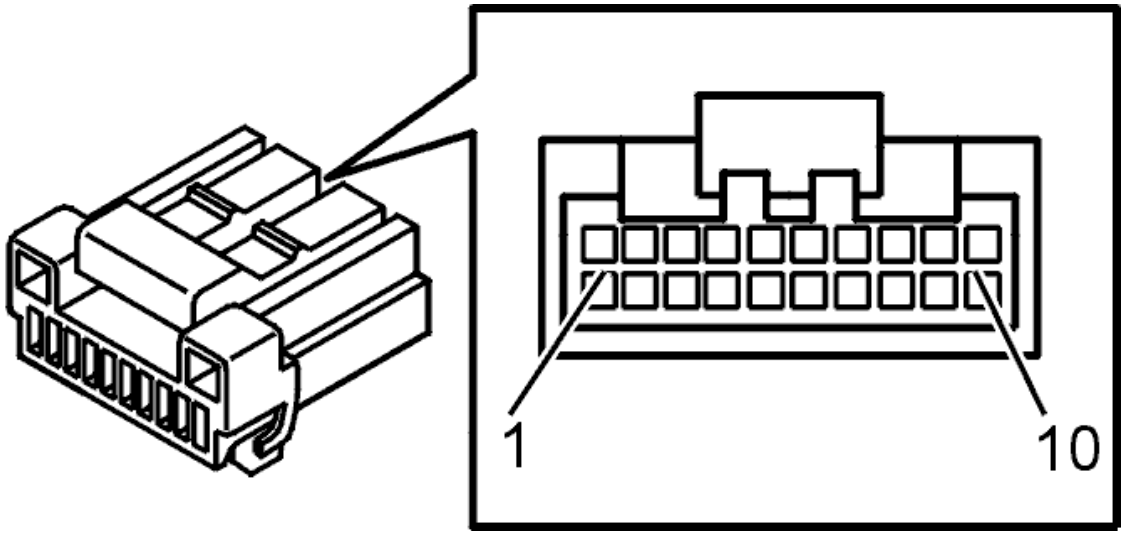

Fig. 232: Identifying Connector (D) Terminals
Courtesy of VOLVO CARS CORPORATION

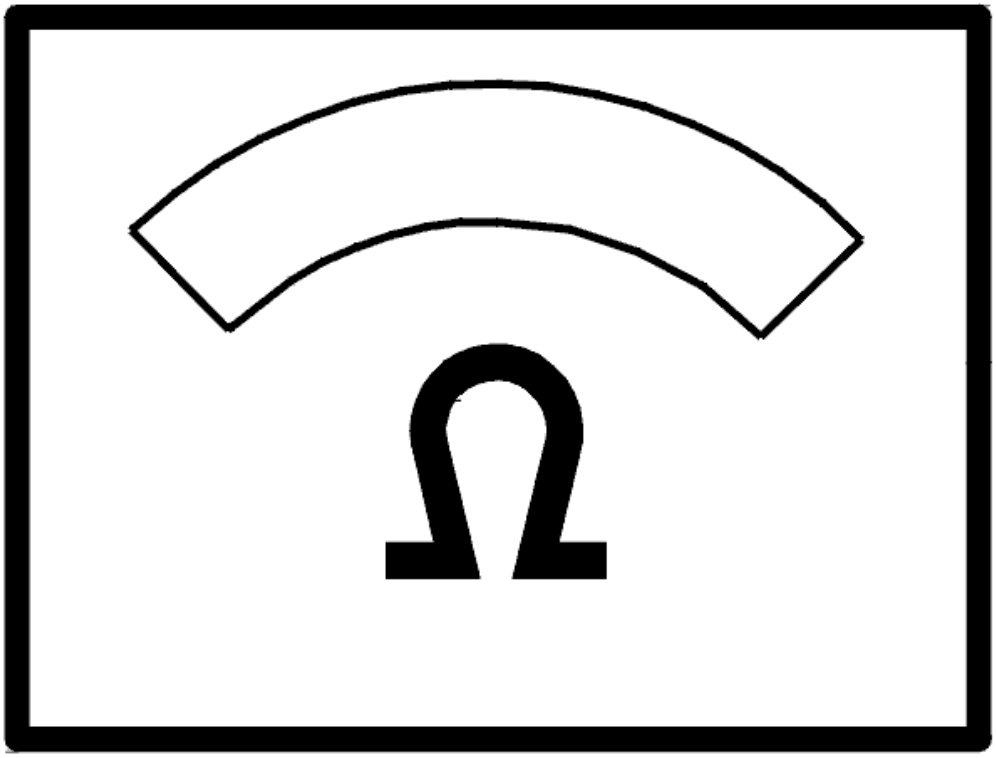

Fig. 233: Identifying Ohm Meter
Courtesy of VOLVO CARS CORPORATION

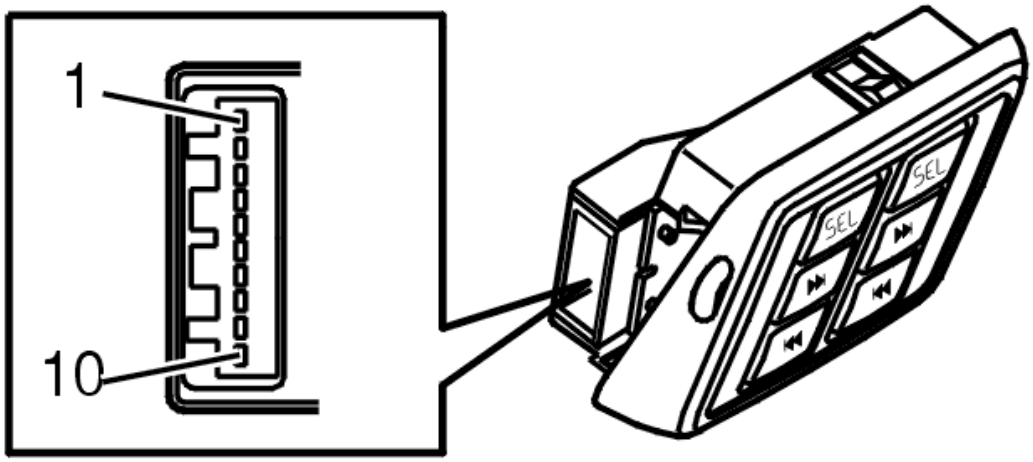

Fig. 234: Identifying Buttons Headset Connector
Courtesy of VOLVO CARS CORPORATION

- **Continue**

  Refer to **VERIFICATION**

VERIFICATION

VERIFICATION

HINT: After carrying out the repair, check that the fault has been remedied.

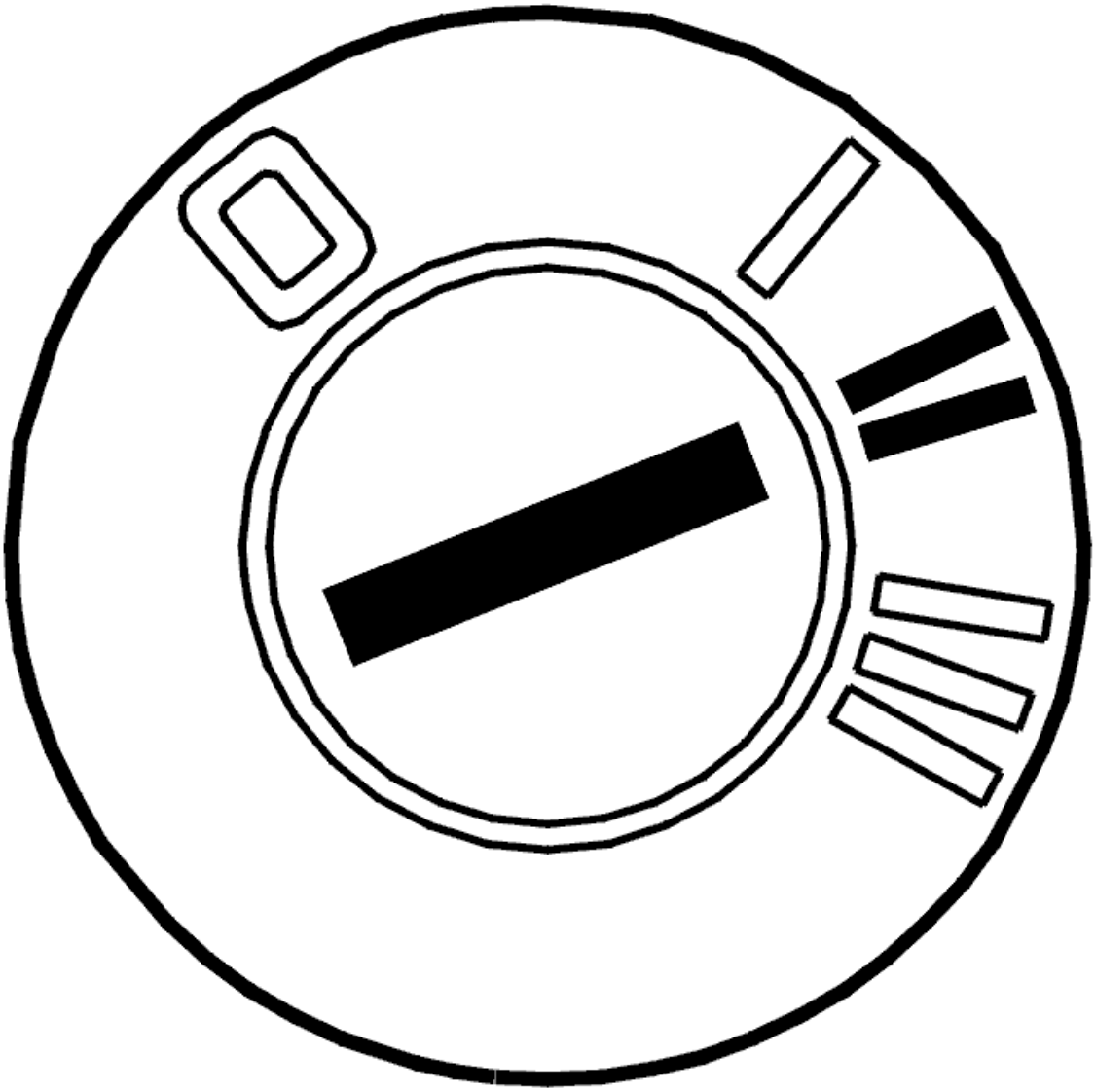

Fig. 235: Identifying Ignition ON
Courtesy of VOLVO CARS CORPORATION

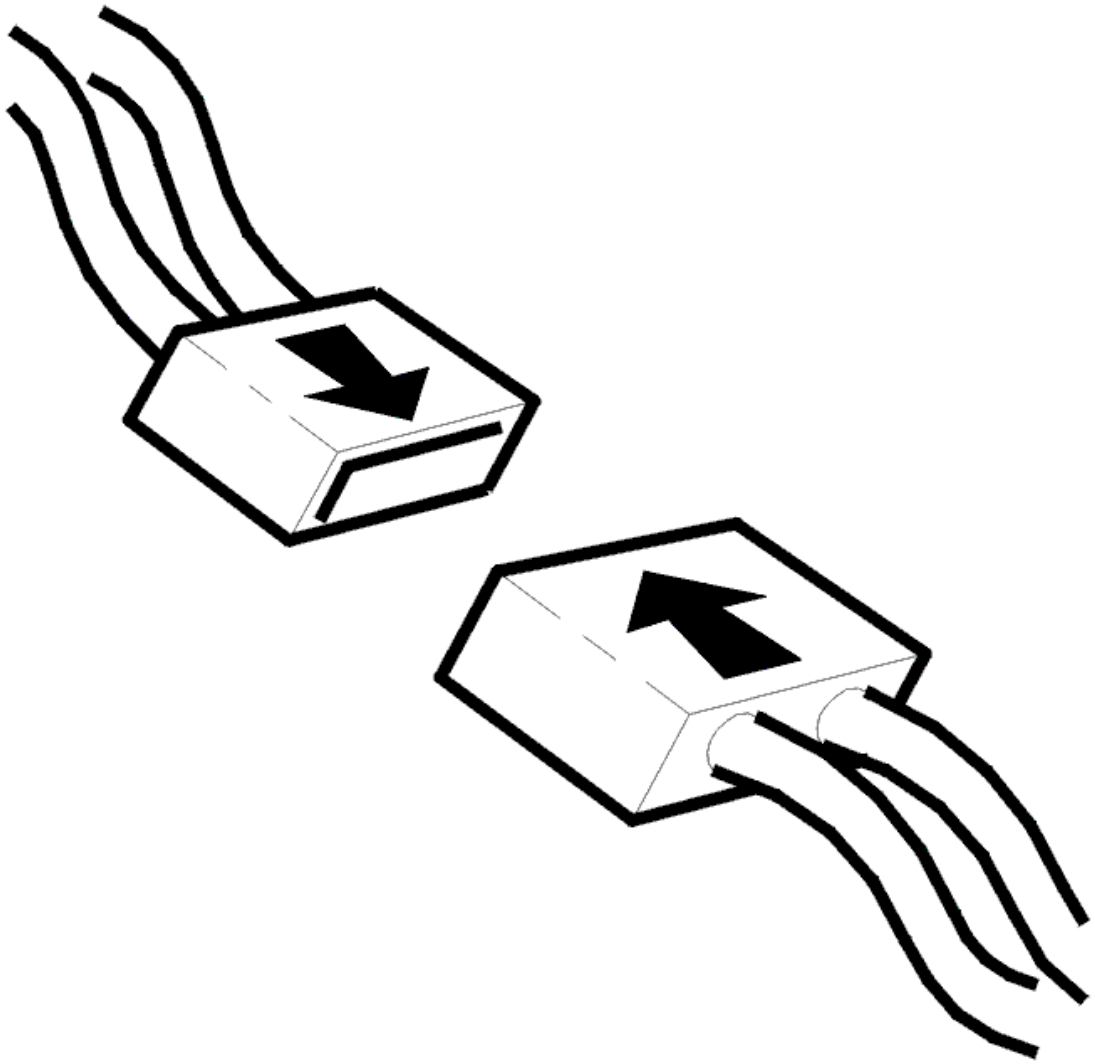

Fig. 236: Connecting Connector
Courtesy of VOLVO CARS CORPORATION

- Ignition off
- Reinstall the connectors, components etc.
- Ignition on.

  Check that the buttons for the headset output function. Check this by pressing the buttons for the next track and the previous track and by changing between the CD/MD and the radio using the SEL button.

Do the buttons function?

- **YES**

  VERIFIED: Troubleshooting has been completed.

- **NO**

  Refer to **INFORMATION**

INFORMATION

FAULT-TRACING INFORMATION

The fault should have been detected and remedied. As this is not the case fault-tracing has failed.

Exit fault-tracing for this diagnostic trouble code (DTC) or make another attempt.

AUD-0015: BUTTONS HEADSET 3. SIGNAL MISSING (2003-2011)

DIAGNOSTIC TROUBLE CODE (DTC) INFORMATION AUD-0015

Condition

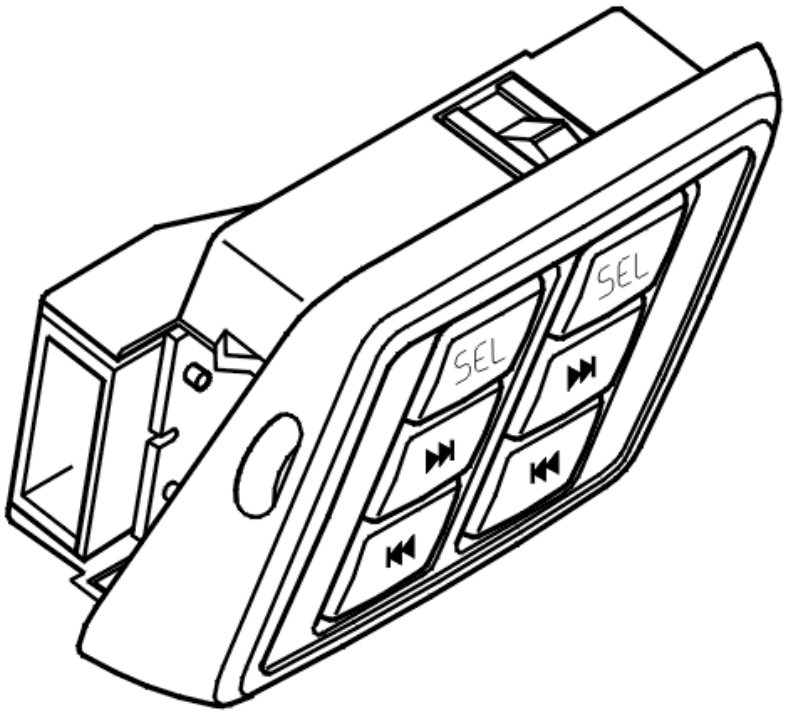

Fig. 237: Identifying Buttons Headset Component
Courtesy of VOLVO CARS CORPORATION

Diagnostic trouble code (DTC) AUD-0015 is stored if the audio module (AUD) registers an open-circuit in the signal cable to the buttons at headset output 3.

Diagnostic trouble code (DTC) AUD-0015 can be diagnosed when the ignition is on.

Substitute Value

- None.

Possible Source

- Open-circuit in the signal cable between headset output 3 and the control module
- Open-circuit in the headset panel (defective headset panel).

Fault symptom[s]

- The buttons for the headset output are not working.

SIGNAL MISSING (2003-2006)

CHECKING COMPONENTS AND WIRING

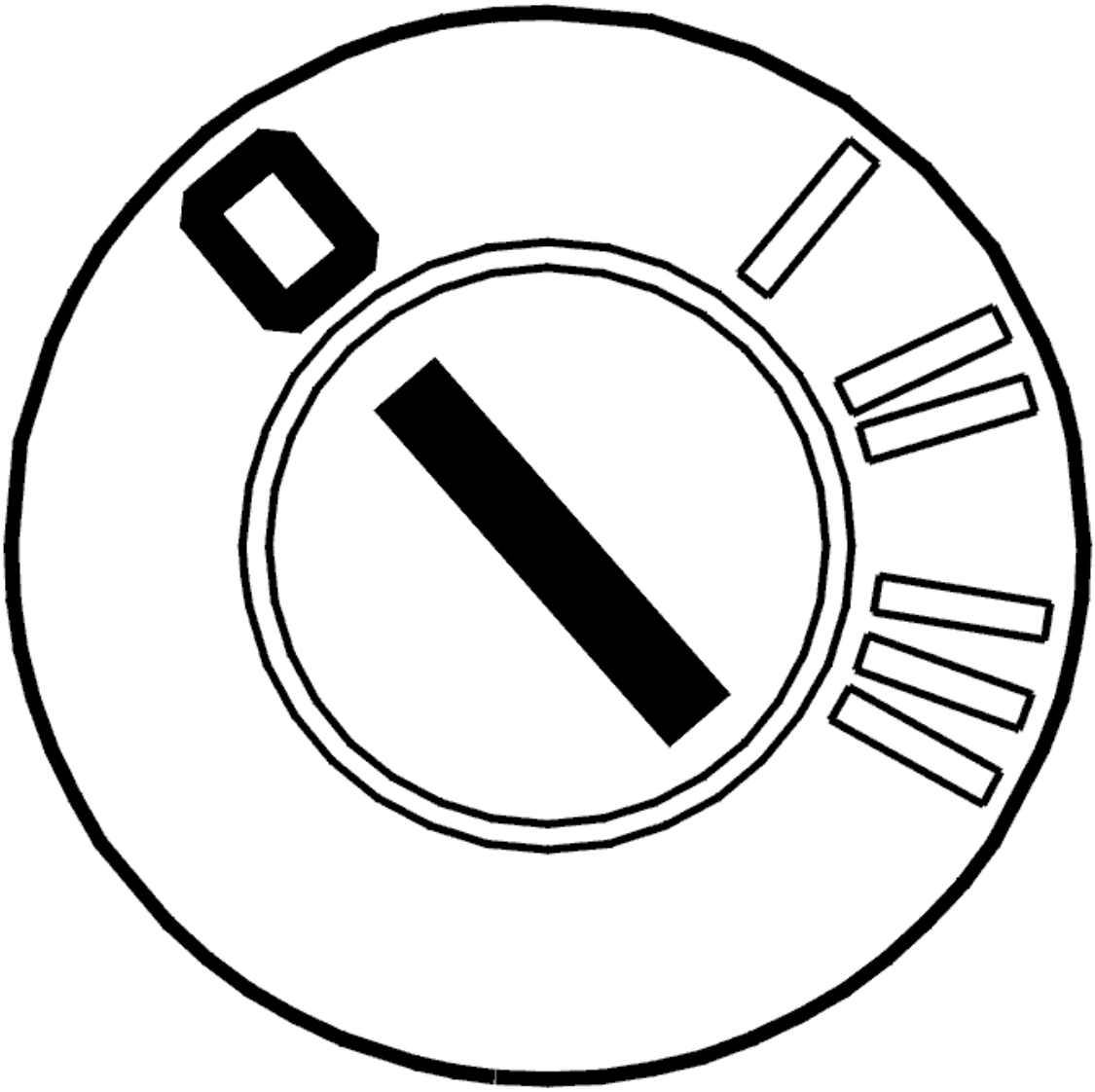

Fig. 238: Identifying Ignition OFF
Courtesy of VOLVO CARS CORPORATION

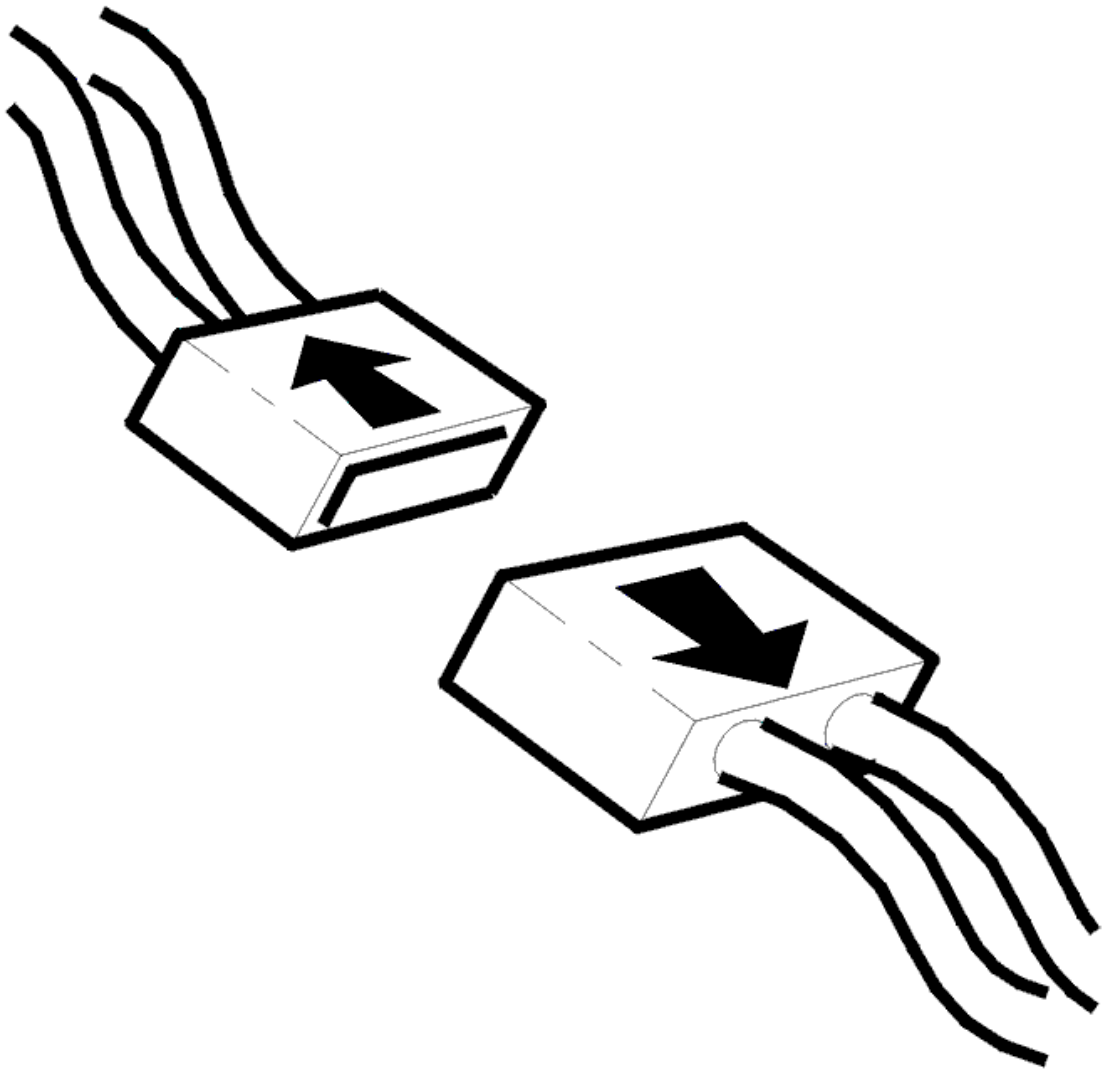

Fig. 239: Disconnecting Connector
Courtesy of VOLVO CARS CORPORATION

- Ignition off
- Disconnect the connector for the right headset panel.

  Check the buttons for the right headset output 3. Test the buttons by changing between previous and next track selection and changing between CD/MD and radio.

  Check the cable terminals. Check for contact resistance, loose connections and oxidation.

  Check the cable terminals in the female and male sections of the connector. The cable terminals must not be damaged or pressed back.

  Check the signal cable between audio module (AUD) terminal #C20 and headset output terminal #10 in the right C-post. Check for an open-circuit.

Check the signal cable between audio module (AUD) terminal #C21 and headset output 3 terminal #8 in the right C-post. Check for an open-circuit.

Check the resistance between terminals #8 and #10 in the connector for the right headset panel. The resistance must be approximately 39 kohms.

Remedy as necessary.

Other information:

- To connect the breakout box, see **CONNECTING THE BREAKOUT BOX**
- To access or replace the audio module (AUD), see **AUDIO MODULE (AUD), REPLACING**
- For information about signals, see **SIGNAL SPECIFICATION**
- see **CONTENTS** .

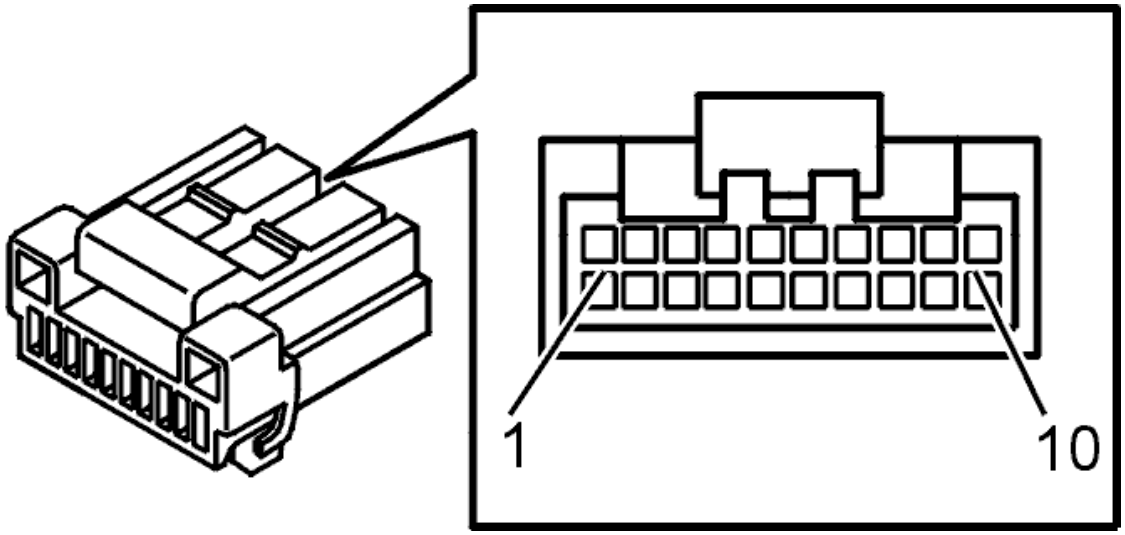

Fig. 240: Identifying Connector (D) Terminals
Courtesy of VOLVO CARS CORPORATION

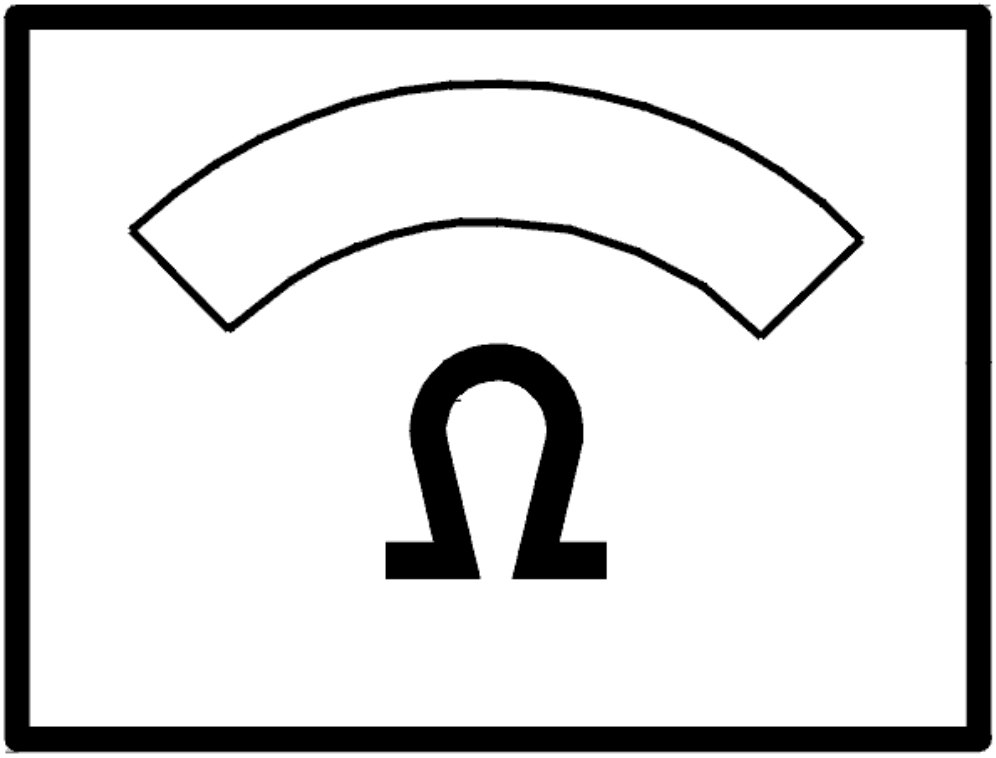

Fig. 241: Identifying Ohm Meter
Courtesy of VOLVO CARS CORPORATION

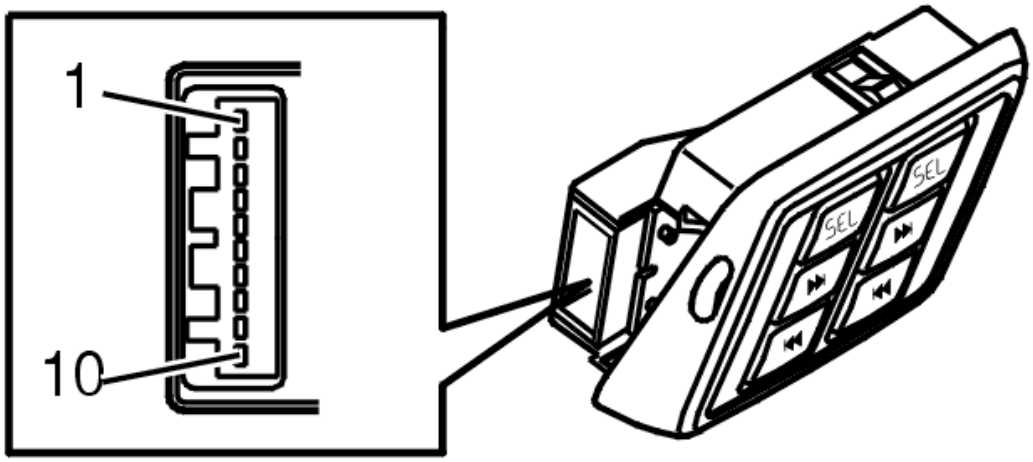

Fig. 242: Identifying Buttons Headset Connector
Courtesy of VOLVO CARS CORPORATION

- **Continue**

  Refer to **VERIFICATION**

VERIFICATION

VERIFICATION

HINT: After carrying out the repair, check that the fault has been remedied.

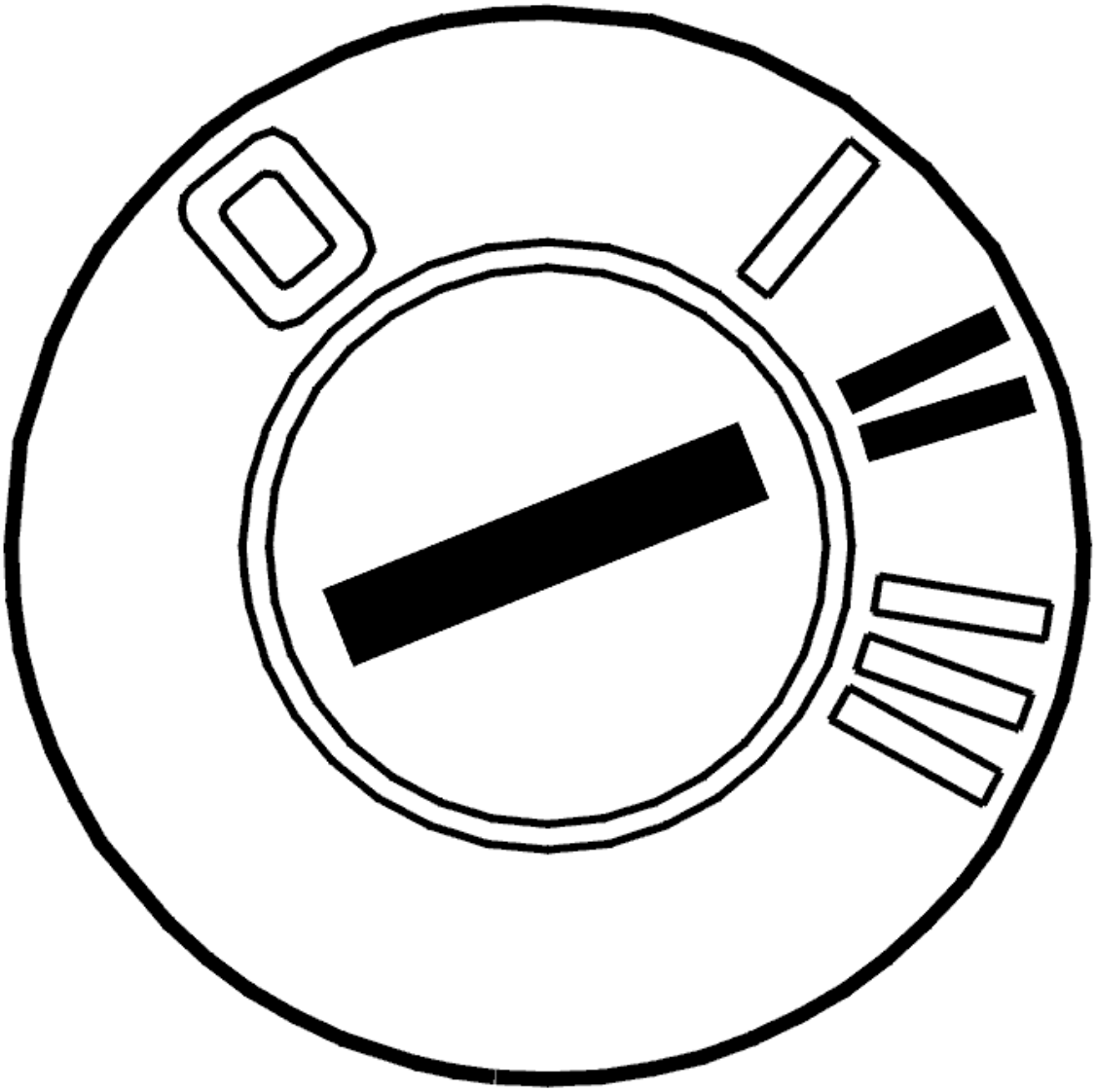

Fig. 243: Identifying Ignition ON
Courtesy of VOLVO CARS CORPORATION

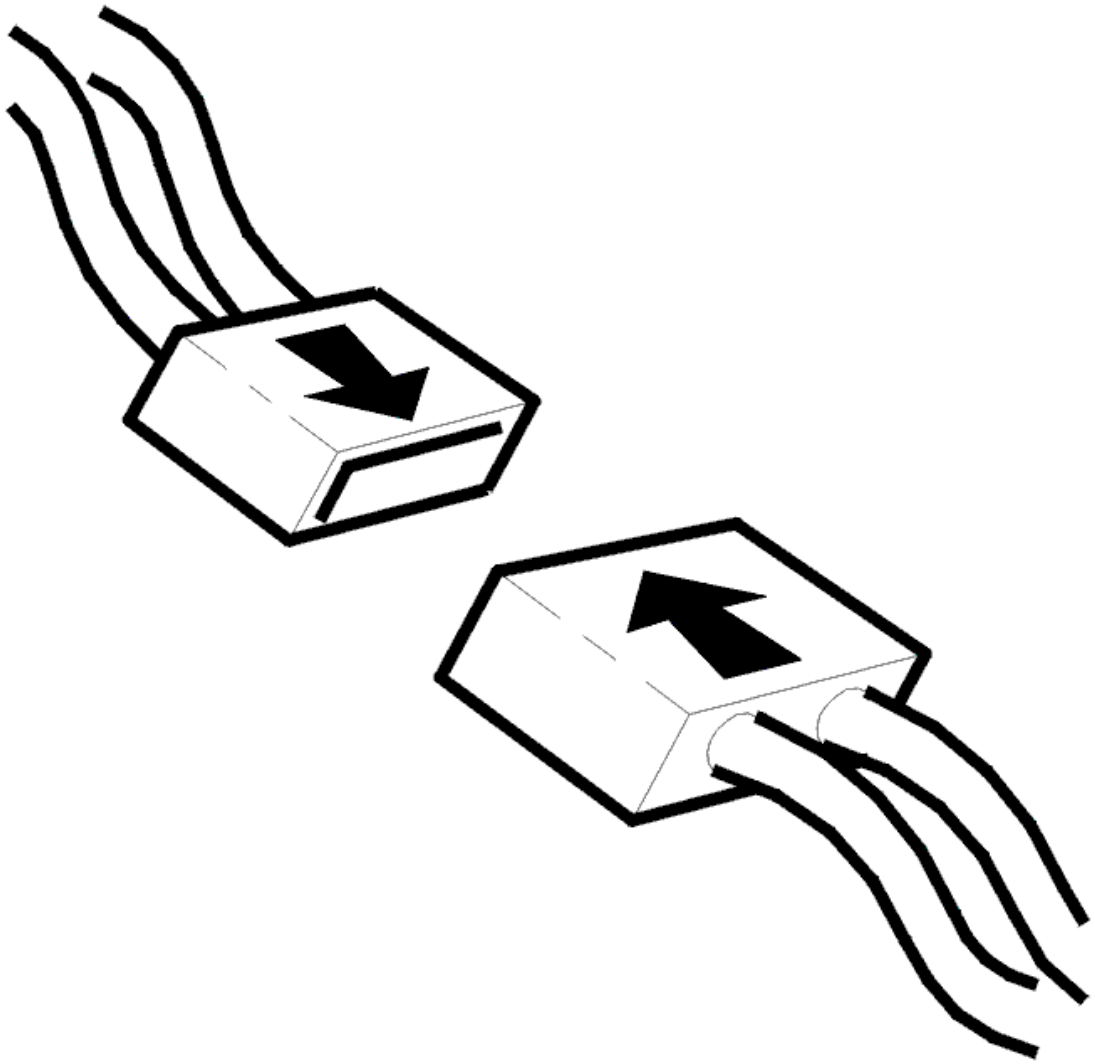

Fig. 244: Connecting Connector
Courtesy of VOLVO CARS CORPORATION

- Ignition off
- Reinstall the connectors, components etc.
- Ignition on.

  Check that the buttons for the headset output function. Check this by pressing the buttons for the next track and the previous track and by changing between the CD/MD and the radio using the SEL button.

Do the buttons function?

- **YES**

  VERIFIED: Troubleshooting has been completed.

- **NO**

  Refer to **INFORMATION**

INFORMATION

FAULT-TRACING INFORMATION

The fault should have been detected and remedied. As this is not the case fault-tracing has failed.

Exit fault-tracing for this diagnostic trouble code (DTC) or make another attempt.

SIGNAL MISSING (2007-2011)

CHECKING COMPONENTS AND WIRING

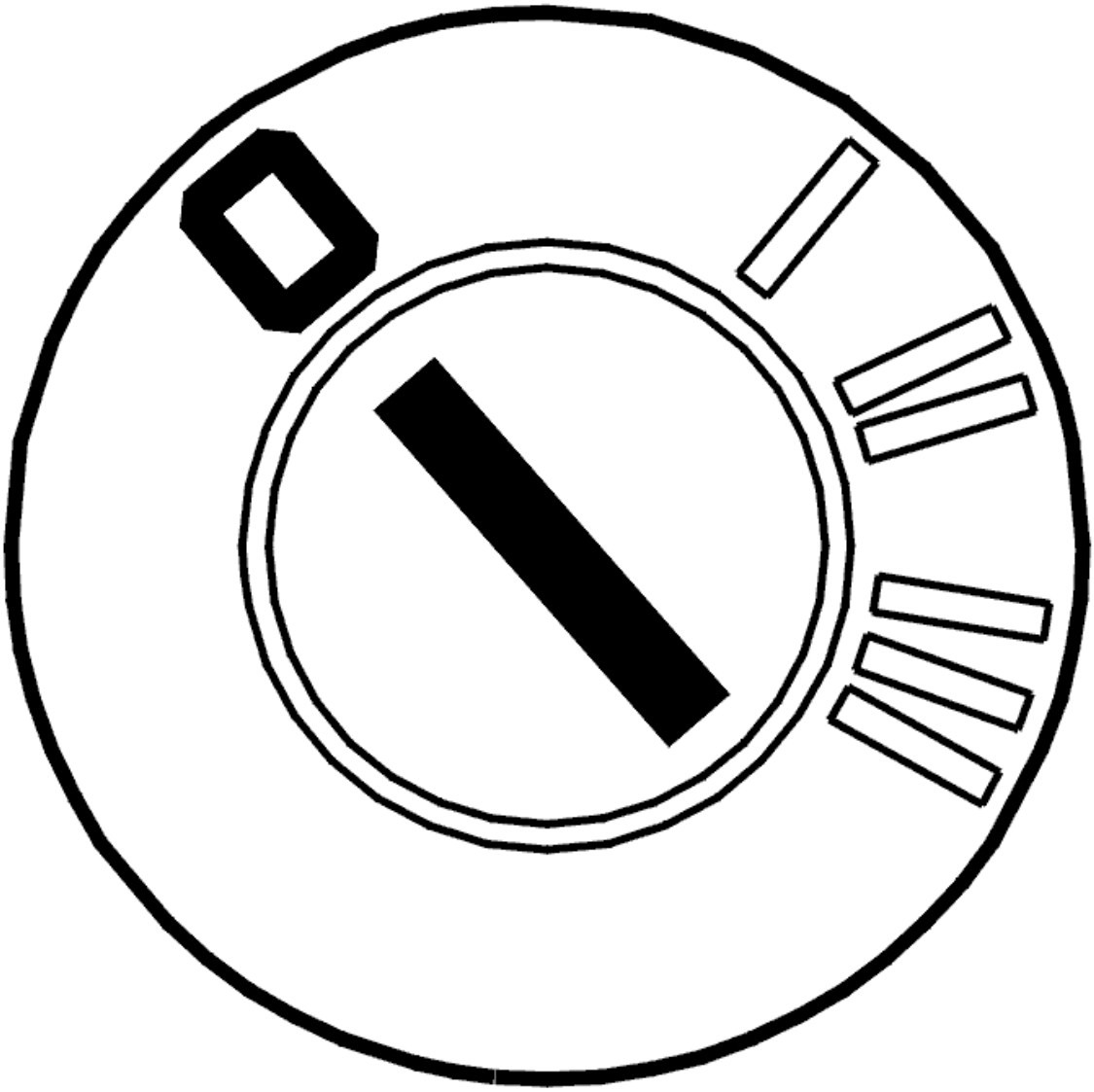

Fig. 245: Identifying Ignition OFF
Courtesy of VOLVO CARS CORPORATION

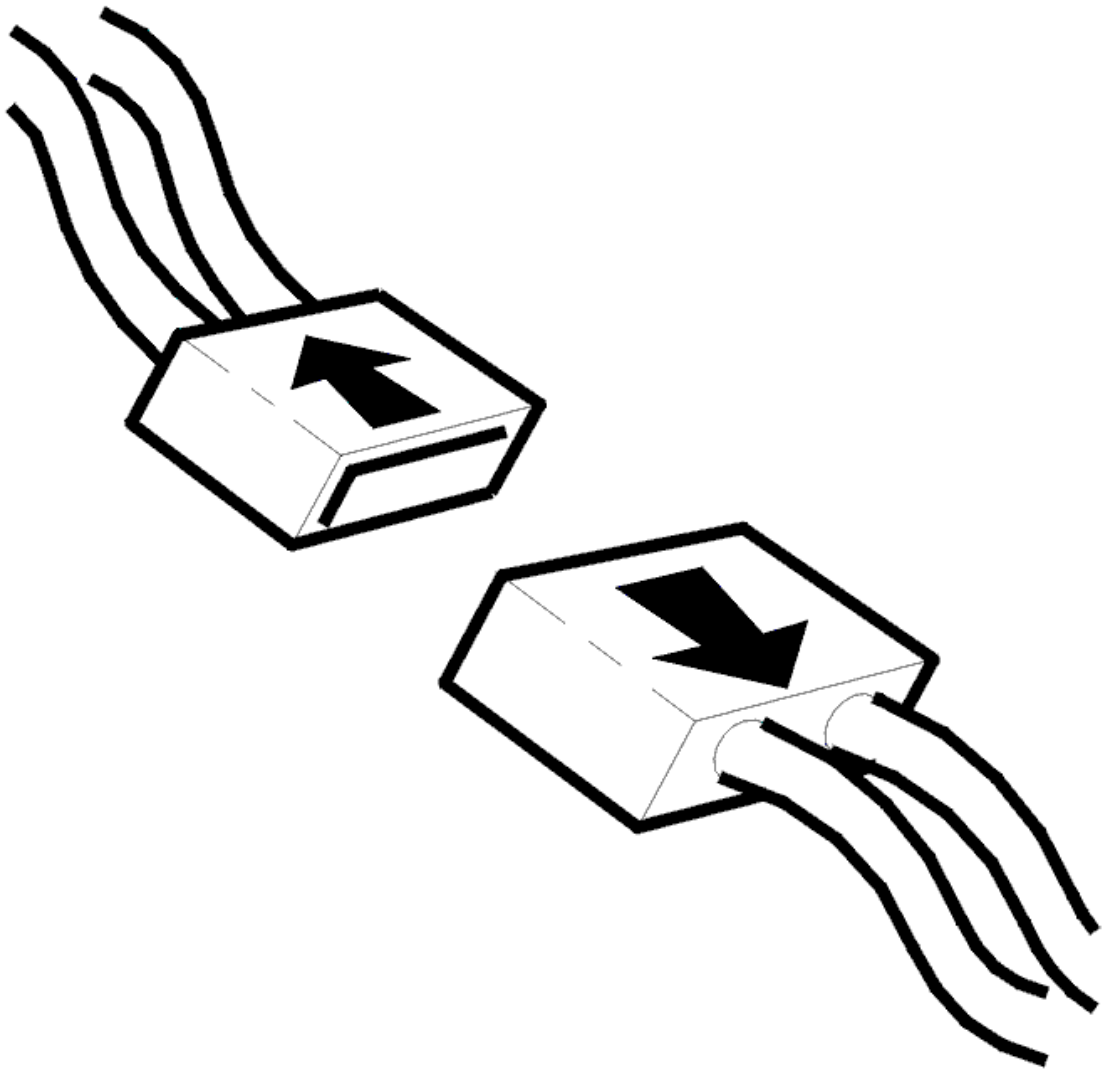

Fig. 246: Disconnecting Connector
Courtesy of VOLVO CARS CORPORATION

- Ignition off
- Disconnect the connector for the right headset panel.

  Check the buttons for the right headset output 3. Test the buttons by changing between previous and next track selection and changing between CD/MD and radio.

  Check the cable terminals. Check for contact resistance, loose connections and oxidation.

  Check the cable terminals in the female and male sections of the connector. The cable terminals must not be damaged or pressed back.

Check the signal cable between audio module (AUD) terminal #C20 and headset output terminal #10 in the right C-post. Check for an open-circuit.

Check the signal cable between audio module (AUD) terminal #C21 and headset output 3 terminal #8 in the right C-post. Check for an open-circuit.

Check the resistance between terminals #8 and #10 in the connector for the right headset panel. The resistance must be approximately 39 kohms.

Remedy as necessary.

Other information:

- To connect the breakout box, see **CONNECTING THE BREAKOUT BOX**
- To access or replace the audio module (AUD), see **AUDIO MODULE (AUD), REPLACING**
- For information about signals, see **SIGNAL SPECIFICATION**
- see **CONTENTS** .

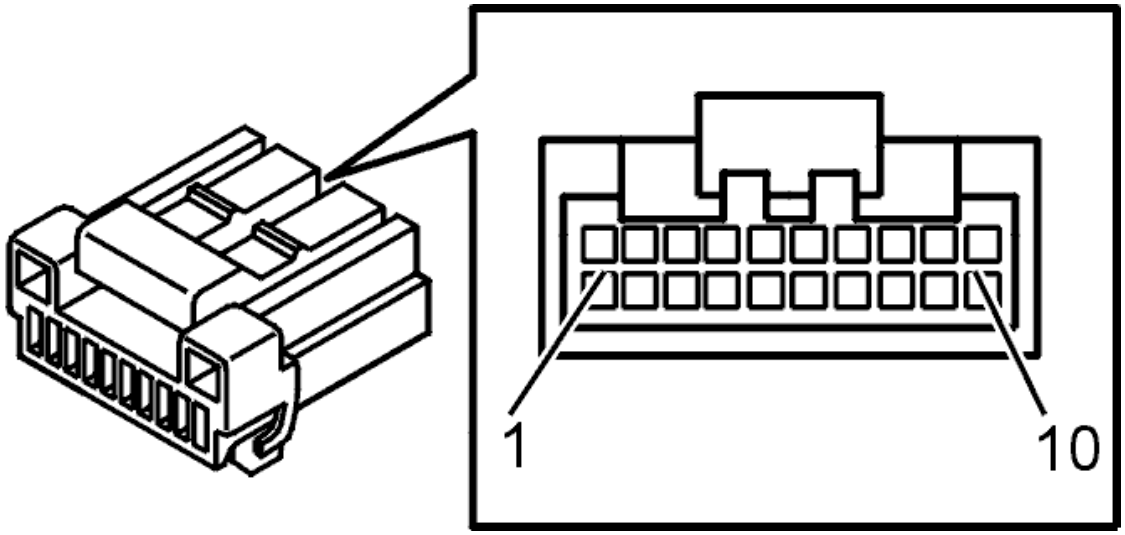

Fig. 247: Identifying Connector (D) Terminals
Courtesy of VOLVO CARS CORPORATION

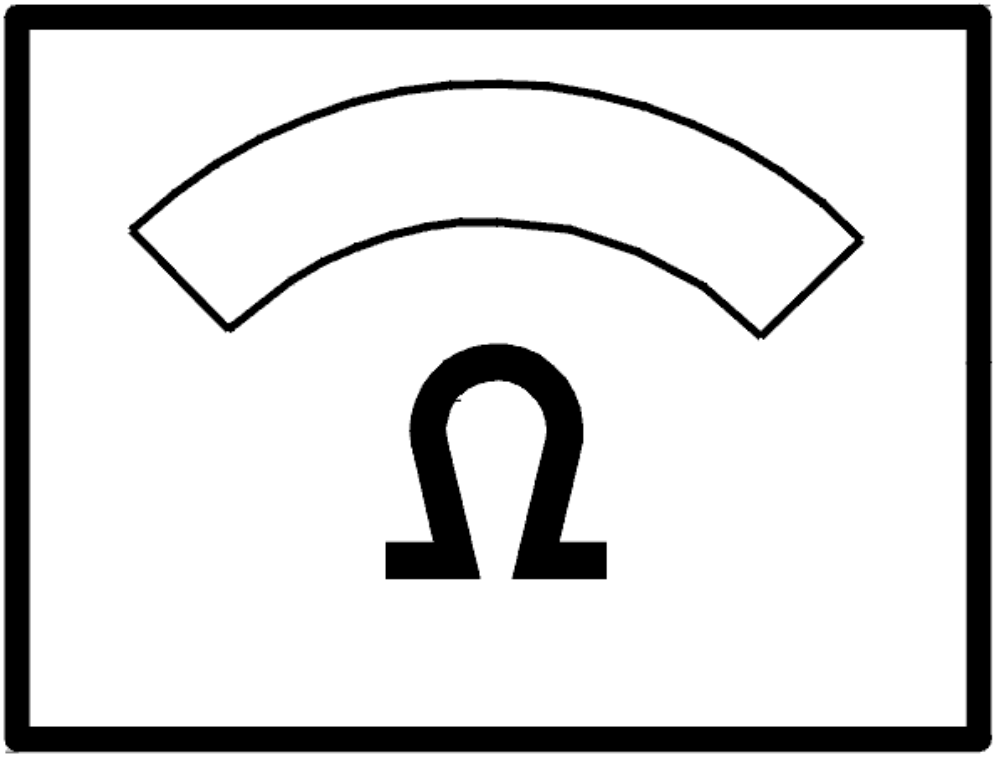

Fig. 248: Identifying Ohm Meter
Courtesy of VOLVO CARS CORPORATION

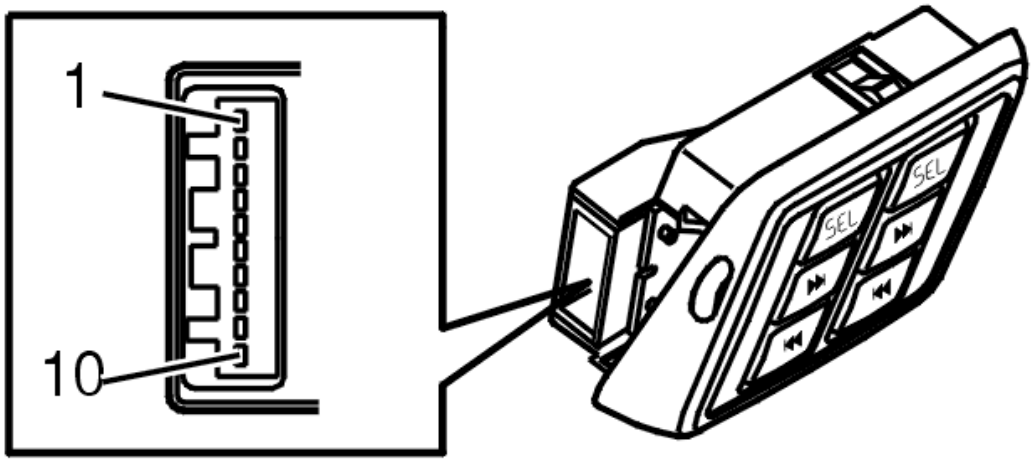

Fig. 249: Identifying Buttons Headset Connector
Courtesy of VOLVO CARS CORPORATION

- **Continue**

  Refer to **VERIFICATION**

VERIFICATION

VERIFICATION

HINT: After carrying out the repair, check that the fault has been remedied.

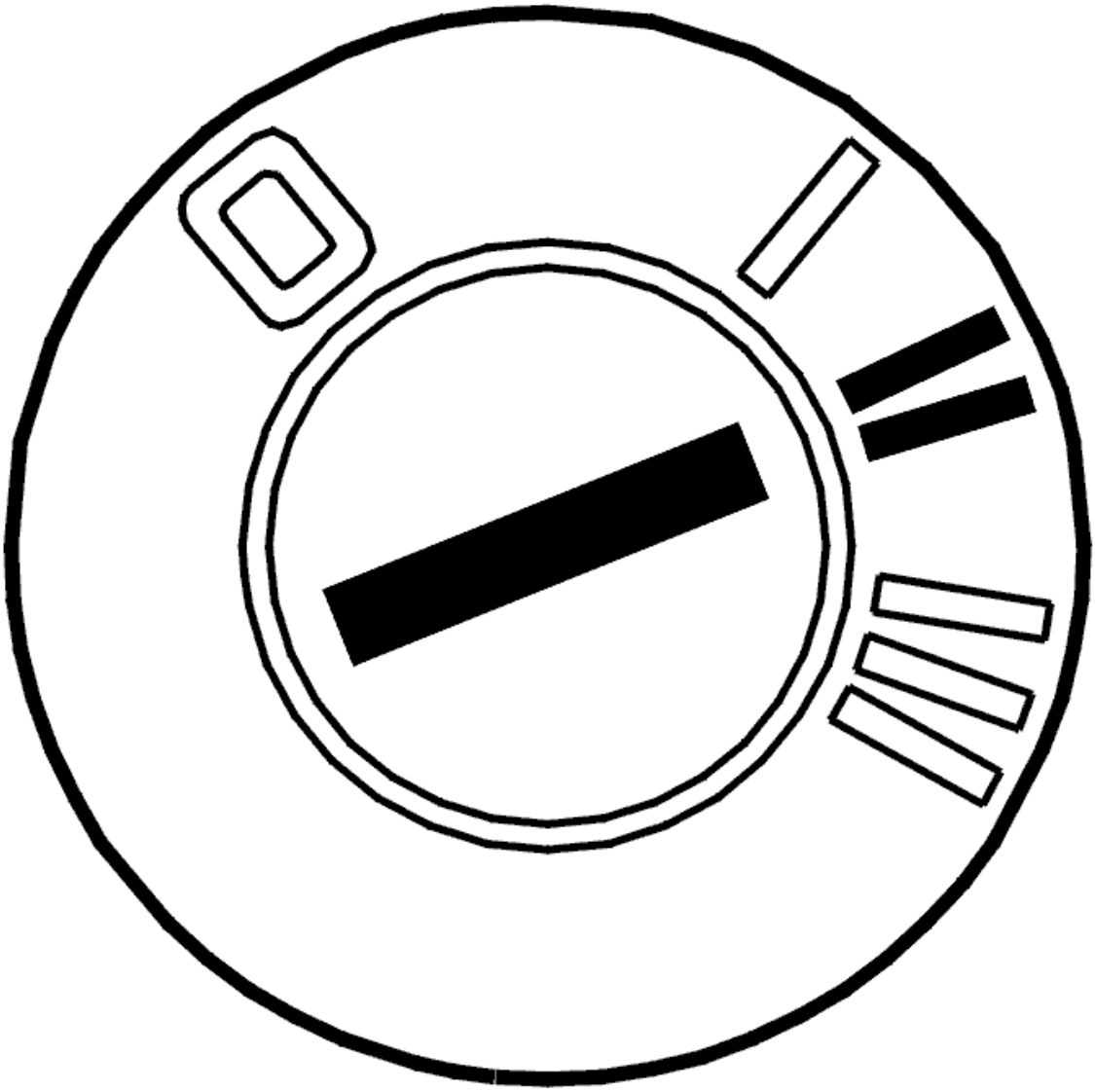

Fig. 250: Identifying Ignition ON
Courtesy of VOLVO CARS CORPORATION

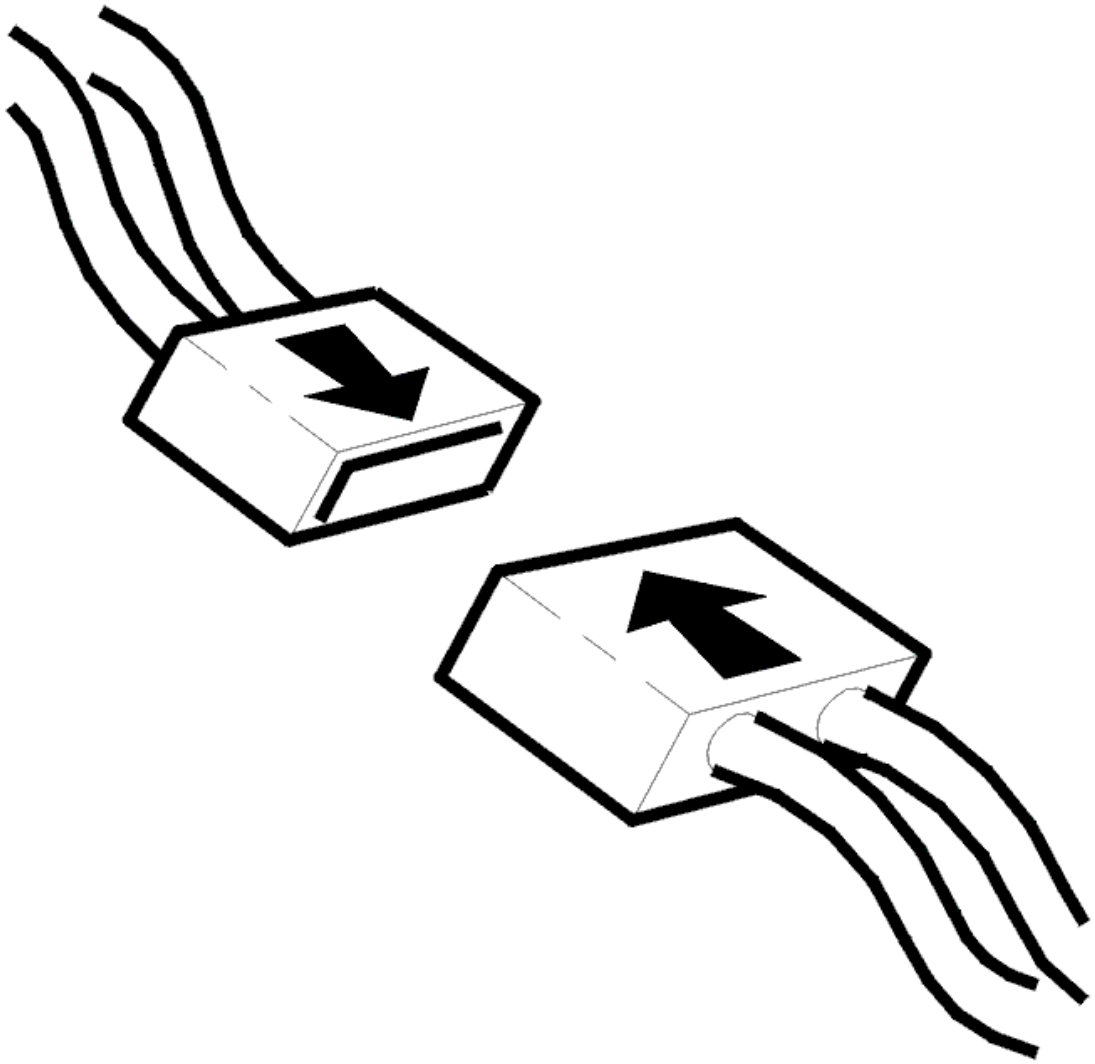

Fig. 251: Connecting Connector
Courtesy of VOLVO CARS CORPORATION

- Ignition off
- Reinstall the connectors, components etc.
- Ignition on.

  Check that the buttons for the headset output function. Check this by pressing the buttons for the next track and the previous track and by changing between the CD/MD and the radio using the SEL button.

Do the buttons function?

- **YES**

  VERIFIED: Troubleshooting has been completed.

- **NO**

  Refer to **INFORMATION**

INFORMATION

FAULT-TRACING INFORMATION

The fault should have been detected and remedied. As this is not the case fault-tracing has failed.

Exit fault-tracing for this diagnostic trouble code (DTC) or make another attempt.

AUD-0016: BUTTONS HEADSET 3. SIGNAL TOO LOW (2003-2011)

DIAGNOSTIC TROUBLE CODE (DTC) INFORMATION AUD-0016

Condition

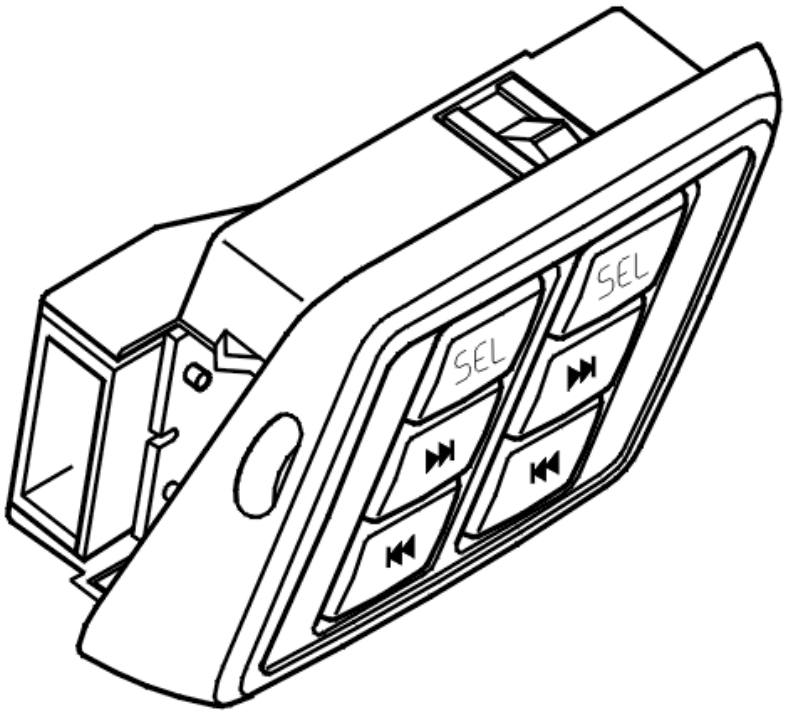

Fig. 252: Identifying Buttons Headset Component
Courtesy of VOLVO CARS CORPORATION

Diagnostic trouble code (DTC) AUD-0016 is stored if the audio module (AUD) registers that the signal to the buttons for headset output 3 is too low.

Diagnostic trouble code (DTC) AUD-0016 can be diagnosed when the ignition is on.

Substitute Value

- None.

Possible Source

- Short-circuit to ground in the signal cable between headset output 3 and the control module
- Short-circuit between the signal cables to headset output 3
- Short-circuit in the headset panel (defective headset panel).

Fault symptom[s]

- The buttons for the headset output are not working.

SIGNAL LOW (2003-2006)

CHECKING COMPONENTS AND WIRING

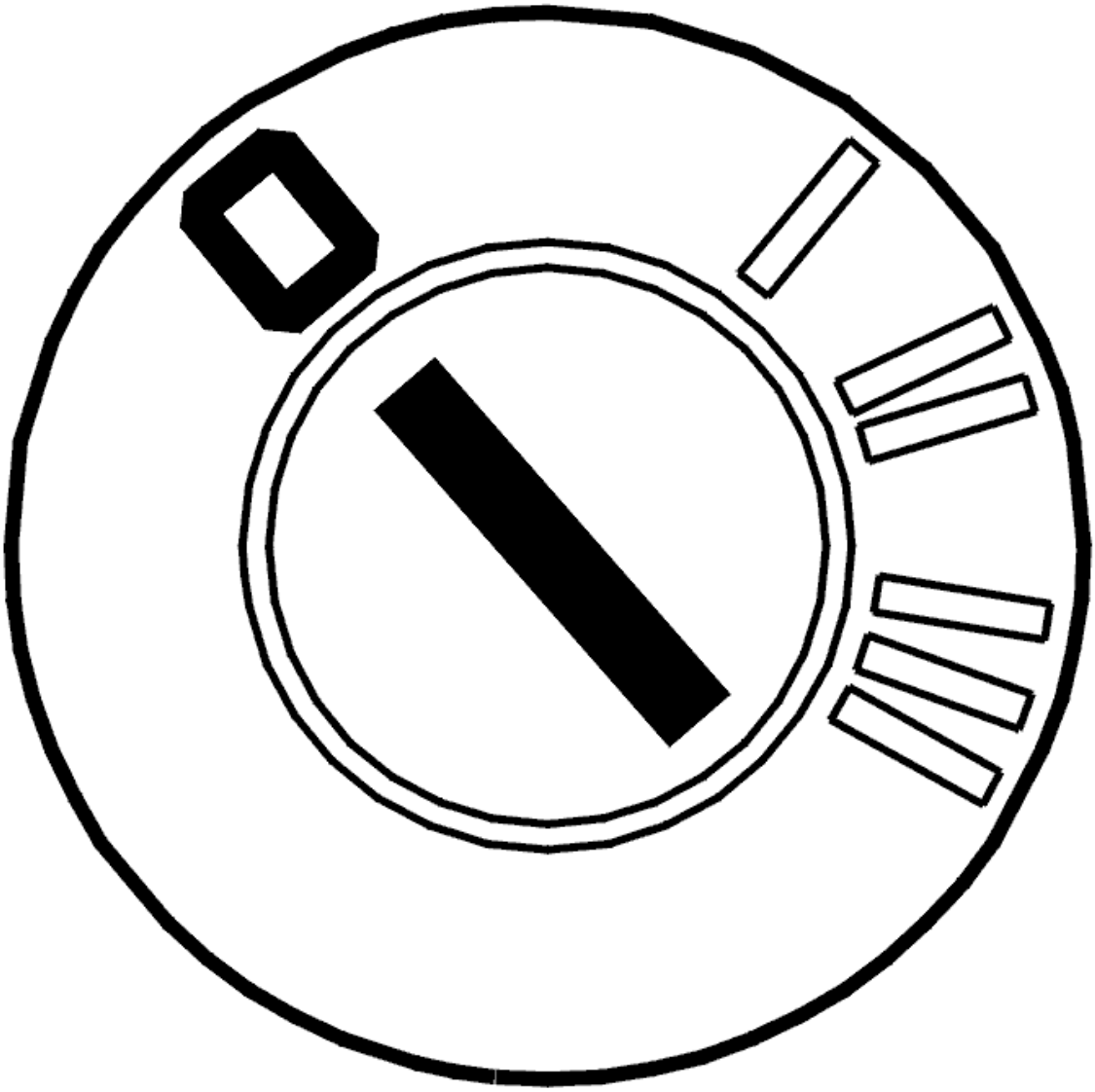

Fig. 253: Identifying Ignition OFF
Courtesy of VOLVO CARS CORPORATION

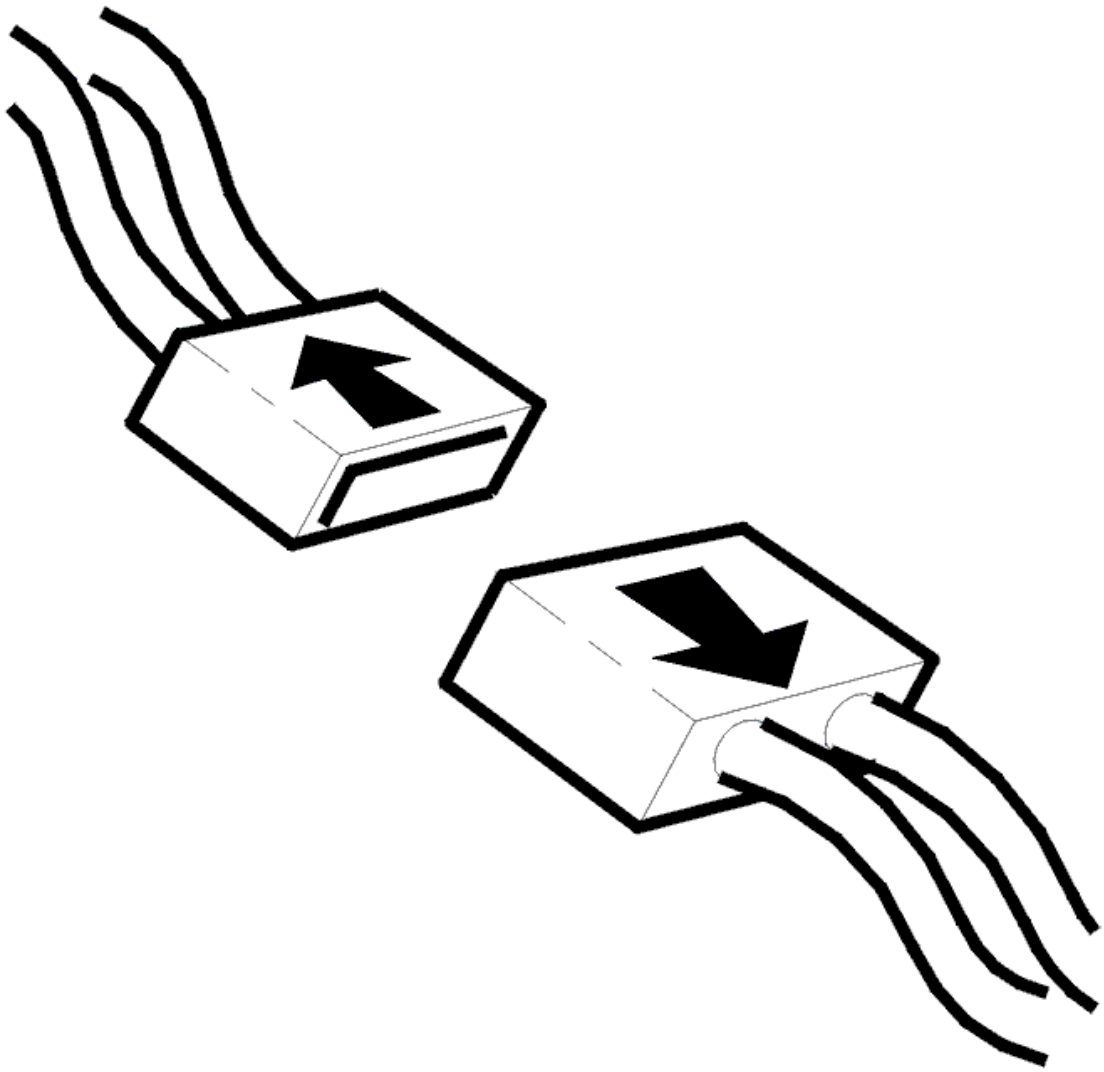

Fig. 254: Disconnecting Connector
Courtesy of VOLVO CARS CORPORATION

- Ignition off
- Disconnect the connector for the right headset panel
- Disconnect the 22-pin connector for the audio module (AUD).

  Check the cable terminals in the female and male sections of the connector. The cable terminals must not be damaged or pressed back.

  Check the signal cable between audio module (AUD) terminal #C20 and headset output terminal #10 in the right C-post. Check for a short-circuit to ground.

  Check the signal cable between audio module (AUD) terminal #C21 and headset output 3 terminal #8 in the right C-post. Check for a short-circuit to ground.

Check the resistance between terminals #C20 and #C21 in the connector for the audio module (AUD). The resistance must be infinite.

Check the resistance between terminals #8 and #10 in the connector for the right headset panel. The resistance must be approximately 39 kohms.

Remedy as necessary.

Other information:

- To connect the breakout box, see **CONNECTING THE BREAKOUT BOX**
- To access or replace the audio module (AUD), see **AUDIO MODULE (AUD), REPLACING**
- For information about signals, see **SIGNAL SPECIFICATION**
- see **CONTENTS** .

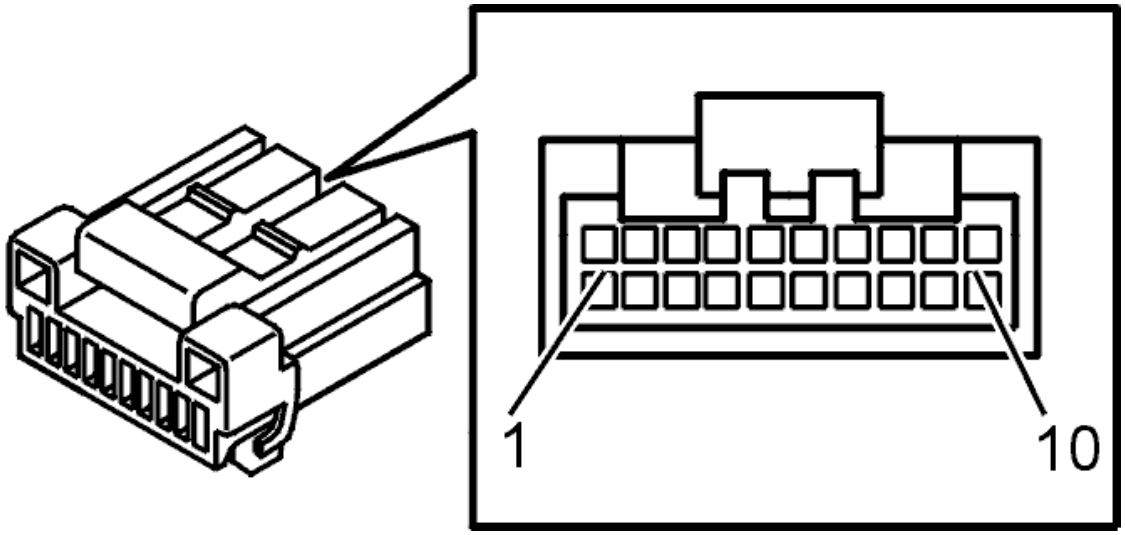

Fig. 255: Identifying Connector (D) Terminals
Courtesy of VOLVO CARS CORPORATION

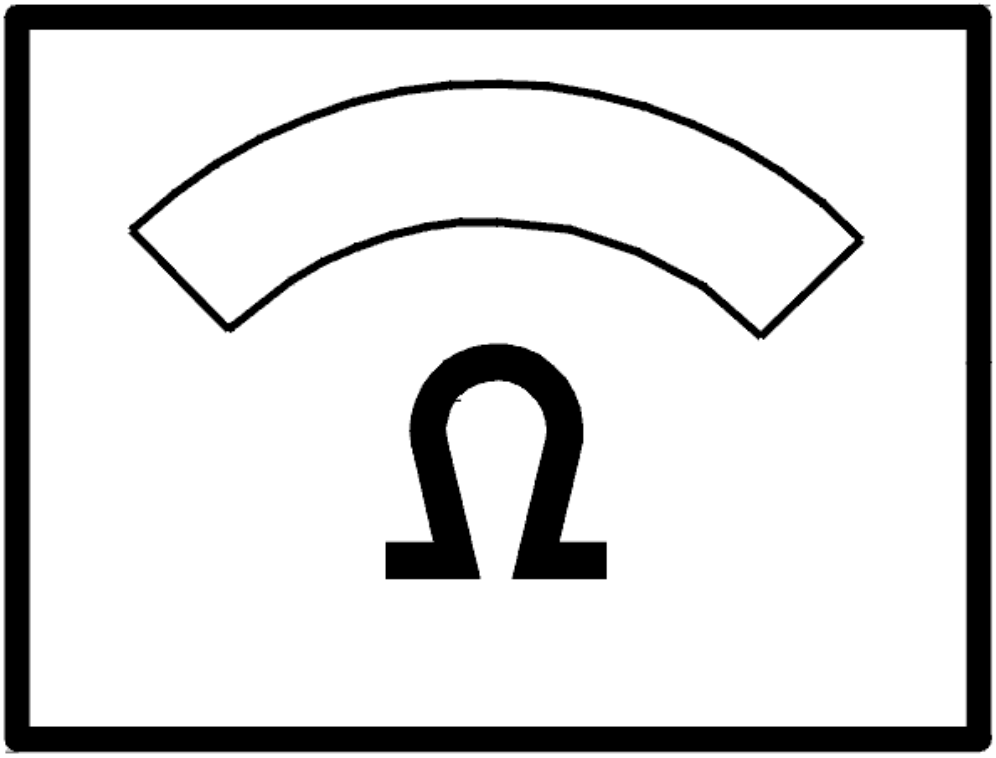

Fig. 256: Identifying Ohm Meter
Courtesy of VOLVO CARS CORPORATION

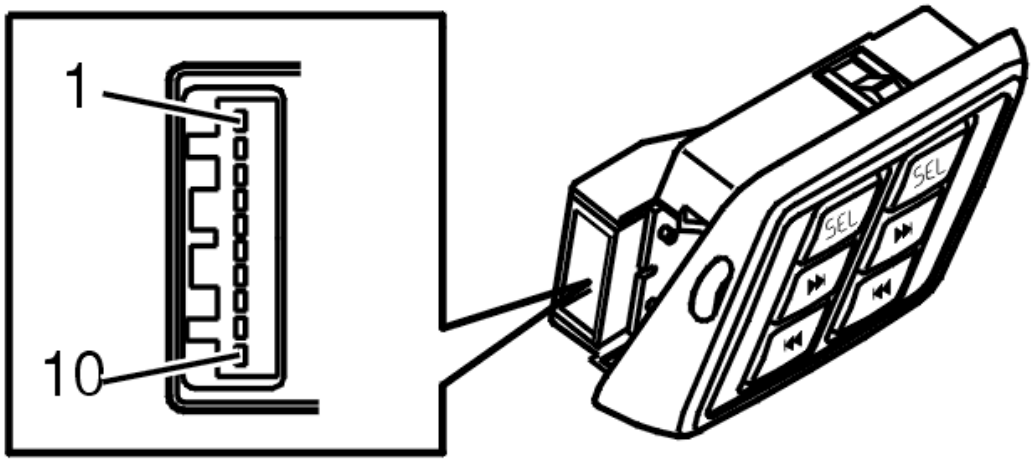

Fig. 257: Identifying Buttons Headset Connector
Courtesy of VOLVO CARS CORPORATION

- **Continue**

  Refer to **VERIFICATION**

VERIFICATION

VERIFICATION

HINT: After carrying out the repair, check that the fault has been remedied.

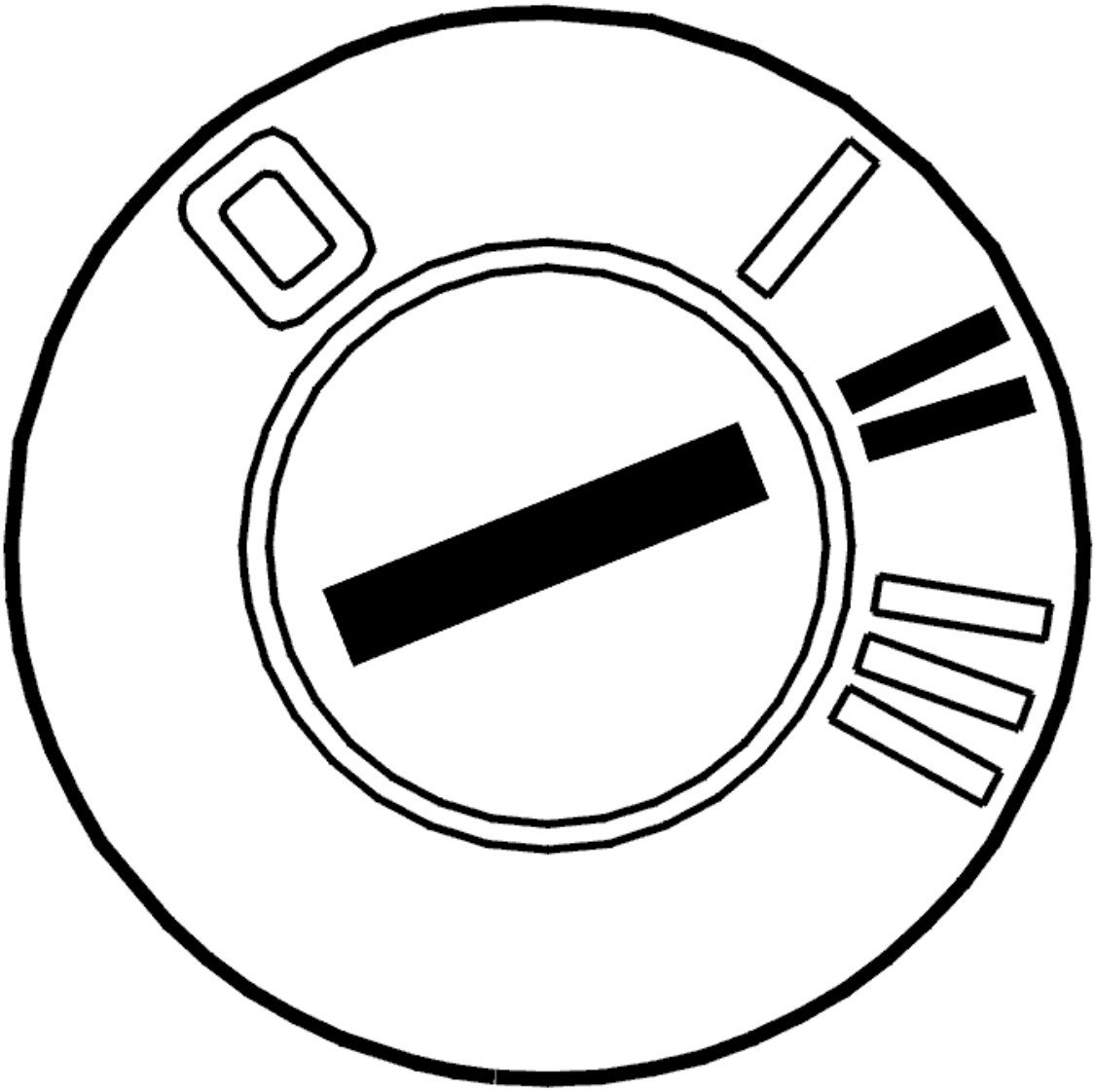

Fig. 258: Identifying Ignition ON
Courtesy of VOLVO CARS CORPORATION

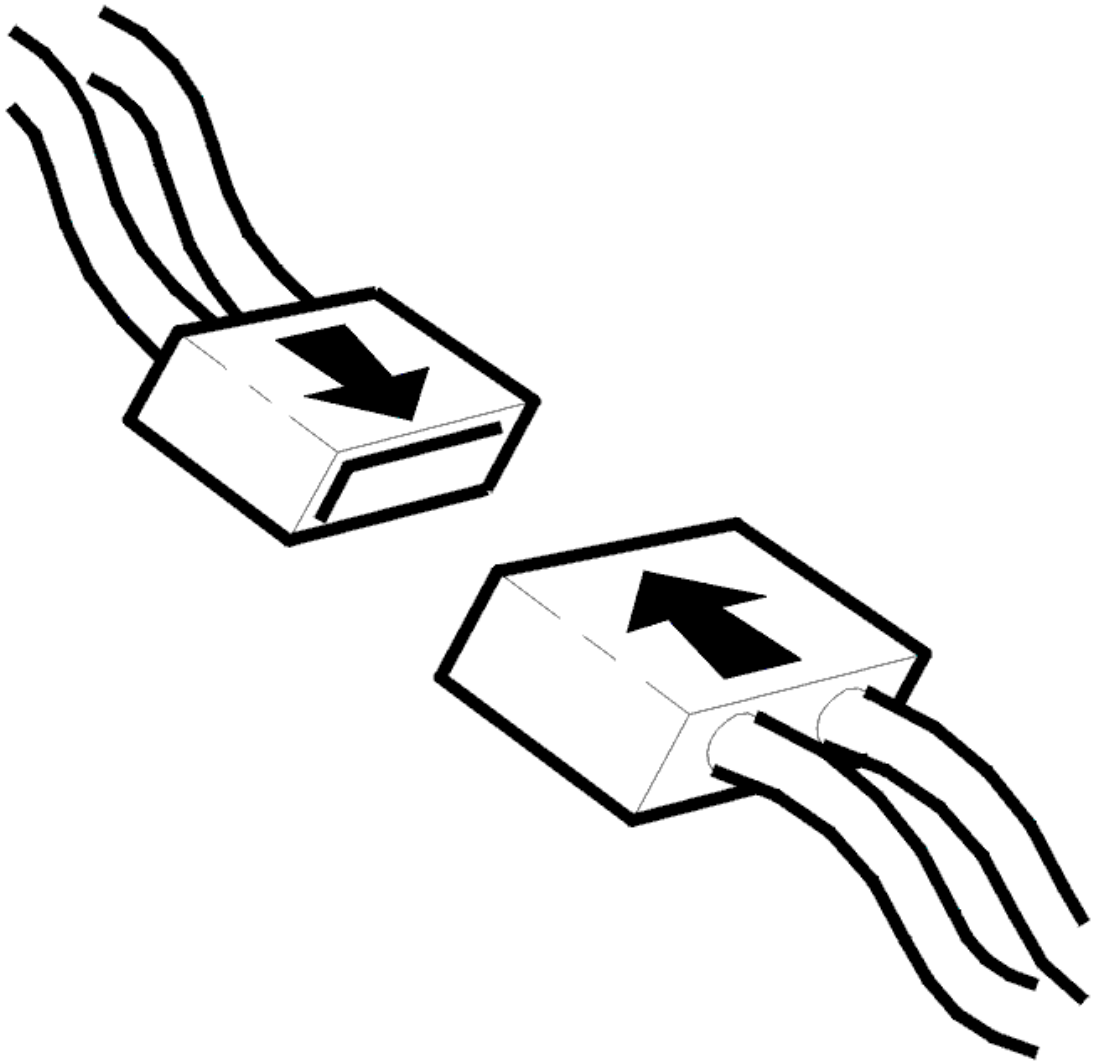

Fig. 259: Connecting Connector
Courtesy of VOLVO CARS CORPORATION

- Ignition off
- Reinstall the connectors, components etc.
- Ignition on.

  Check that the buttons for the headset output function. Check this by pressing the buttons for the next track and the previous track and by changing between the CD/MD and the radio using the SEL button.

Do the buttons function?

- **YES**

  VERIFIED: Troubleshooting has been completed.

- **NO**

  Refer to **INFORMATION**

INFORMATION

FAULT-TRACING INFORMATION

The fault should have been detected and remedied. As this is not the case fault-tracing has failed.

Exit fault-tracing for this diagnostic trouble code (DTC) or make another attempt.

SIGNAL LOW (2007-2011)

CHECKING COMPONENTS AND WIRING

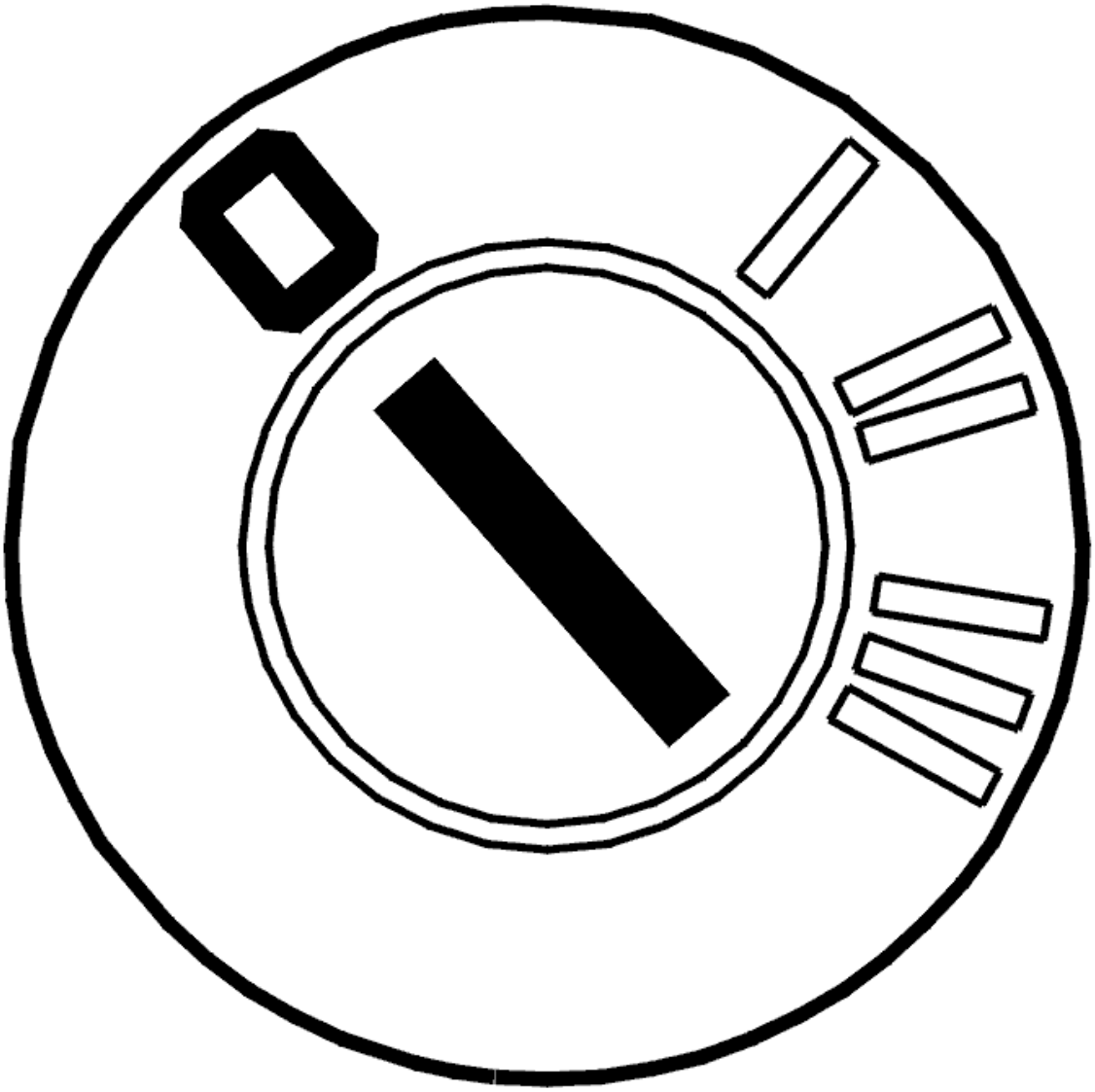

Fig. 260: Identifying Ignition OFF
Courtesy of VOLVO CARS CORPORATION

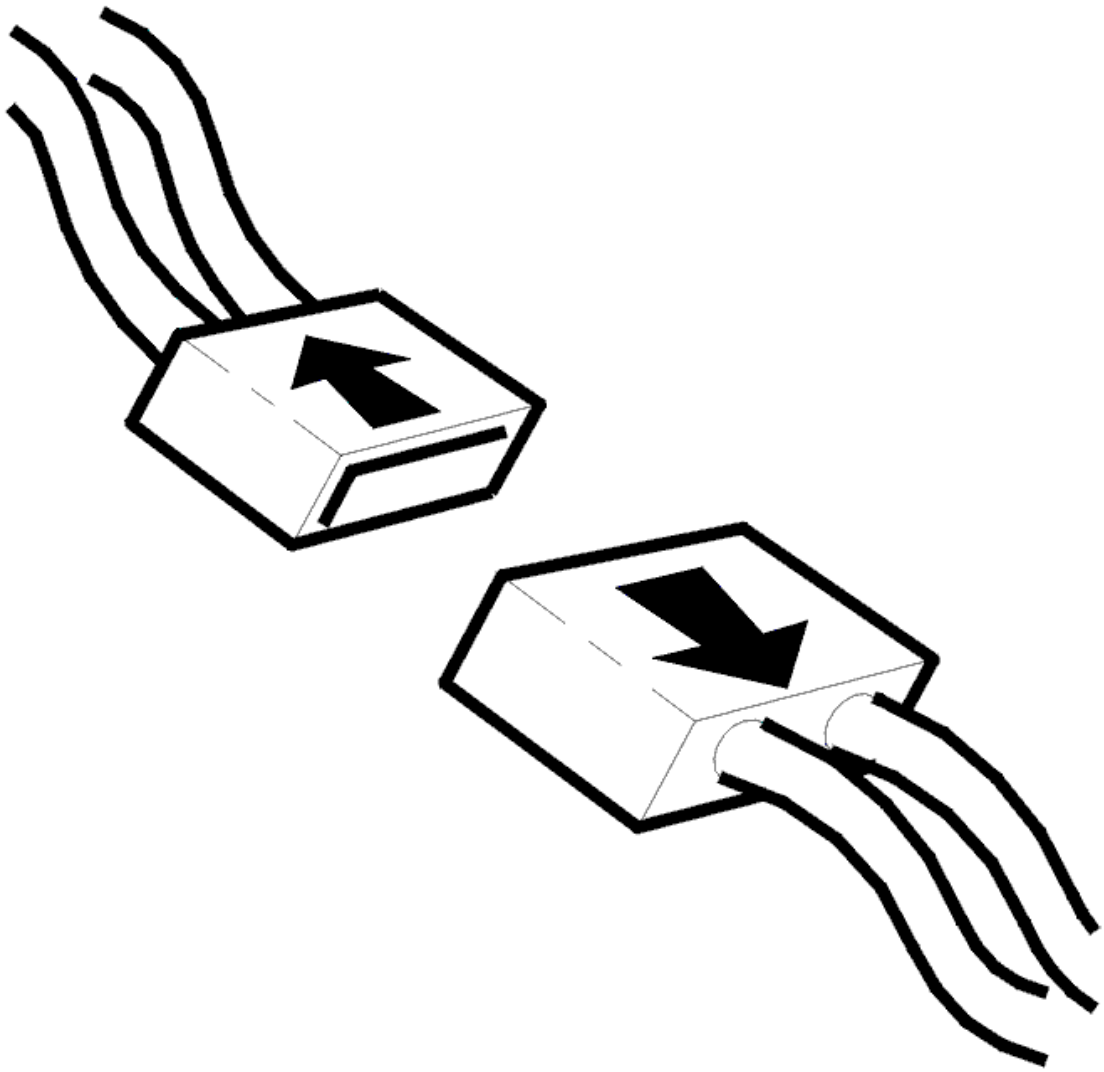

Fig. 261: Disconnecting Connector
Courtesy of VOLVO CARS CORPORATION

- Ignition off
- Disconnect the connector for the right headset panel
- Disconnect the 22-pin connector for the audio module (AUD).

  Check the cable terminals in the female and male sections of the connector. The cable terminals must not be damaged or pressed back.

  Check the signal cable between audio module (AUD) terminal #C20 and headset output terminal #10 in the right C-post. Check for a short-circuit to ground.

Check the signal cable between audio module (AUD) terminal #C21 and headset output 3 terminal #8 in the right C-post. Check for a short-circuit to ground.

Check the resistance between terminals #C20 and #C21 in the connector for the audio module (AUD). The resistance must be infinite.

Check the resistance between terminals #8 and #10 in the connector for the right headset panel. The resistance must be approximately 39 kohms.

Remedy as necessary.

Other information:

- To connect the breakout box, see **CONNECTING THE BREAKOUT BOX**
- To access or replace the audio module (AUD), see **AUDIO MODULE (AUD), REPLACING**
- For information about signals, see **SIGNAL SPECIFICATION**
- see **CONTENTS** .

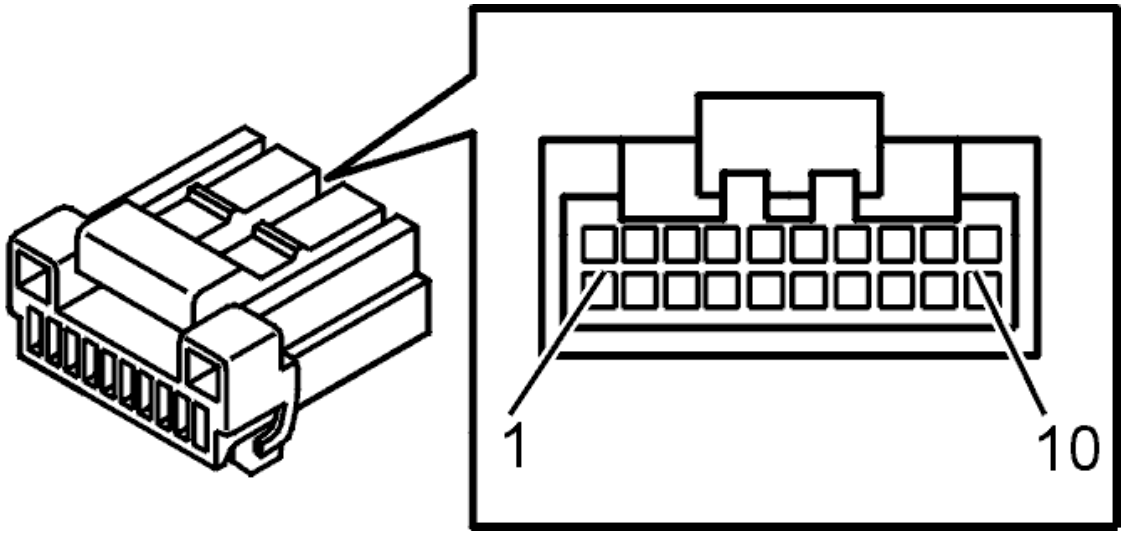

Fig. 262: Identifying Connector (D) Terminals
Courtesy of VOLVO CARS CORPORATION

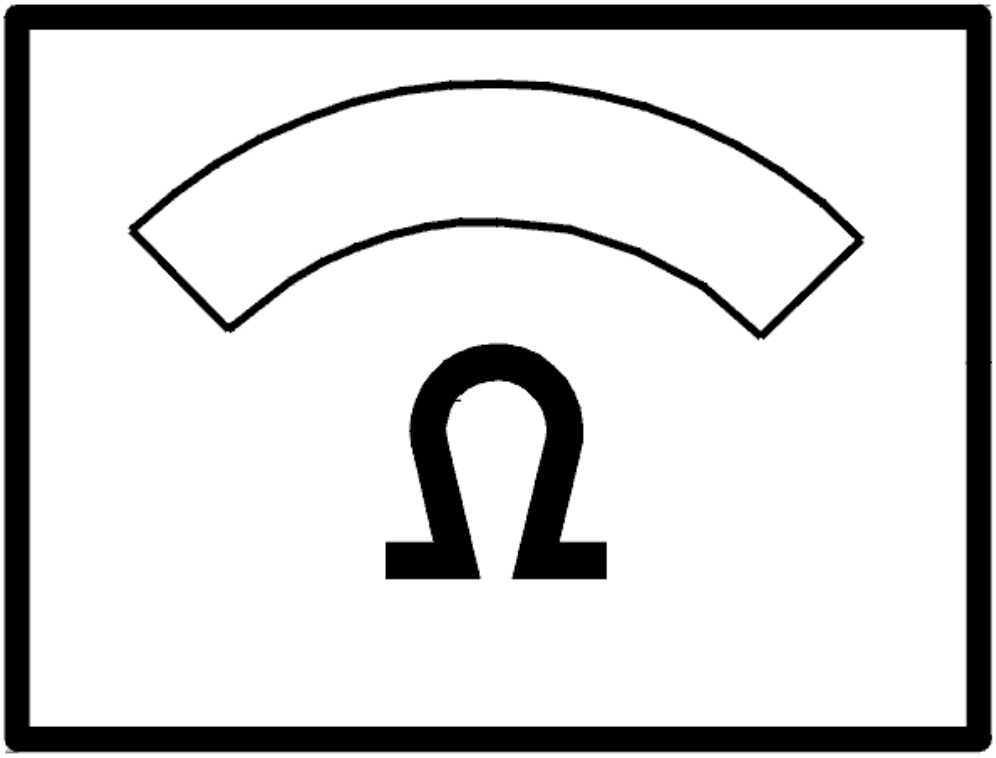

Fig. 263: Identifying Ohm Meter
Courtesy of VOLVO CARS CORPORATION

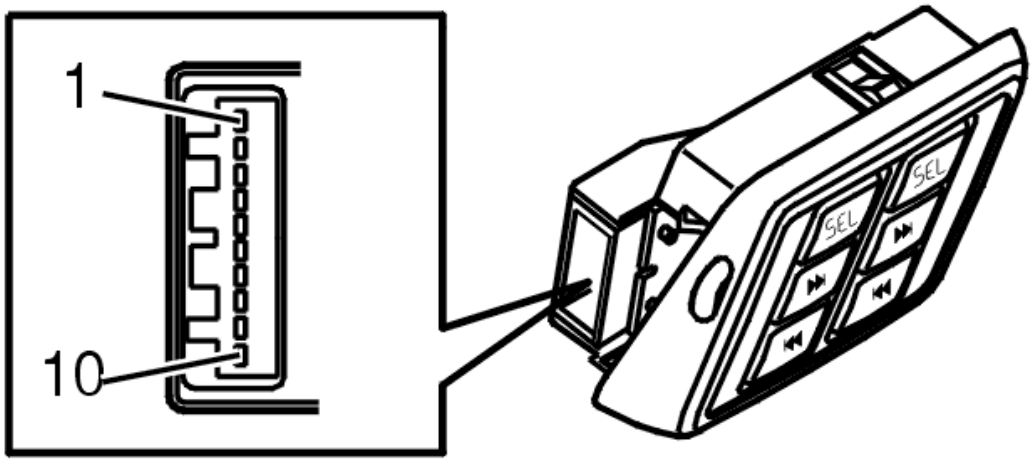

Fig. 264: Identifying Buttons Headset Connector
Courtesy of VOLVO CARS CORPORATION

- **Continue**

  Refer to **VERIFICATION**

VERIFICATION

VERIFICATION

HINT: After carrying out the repair, check that the fault has been remedied.

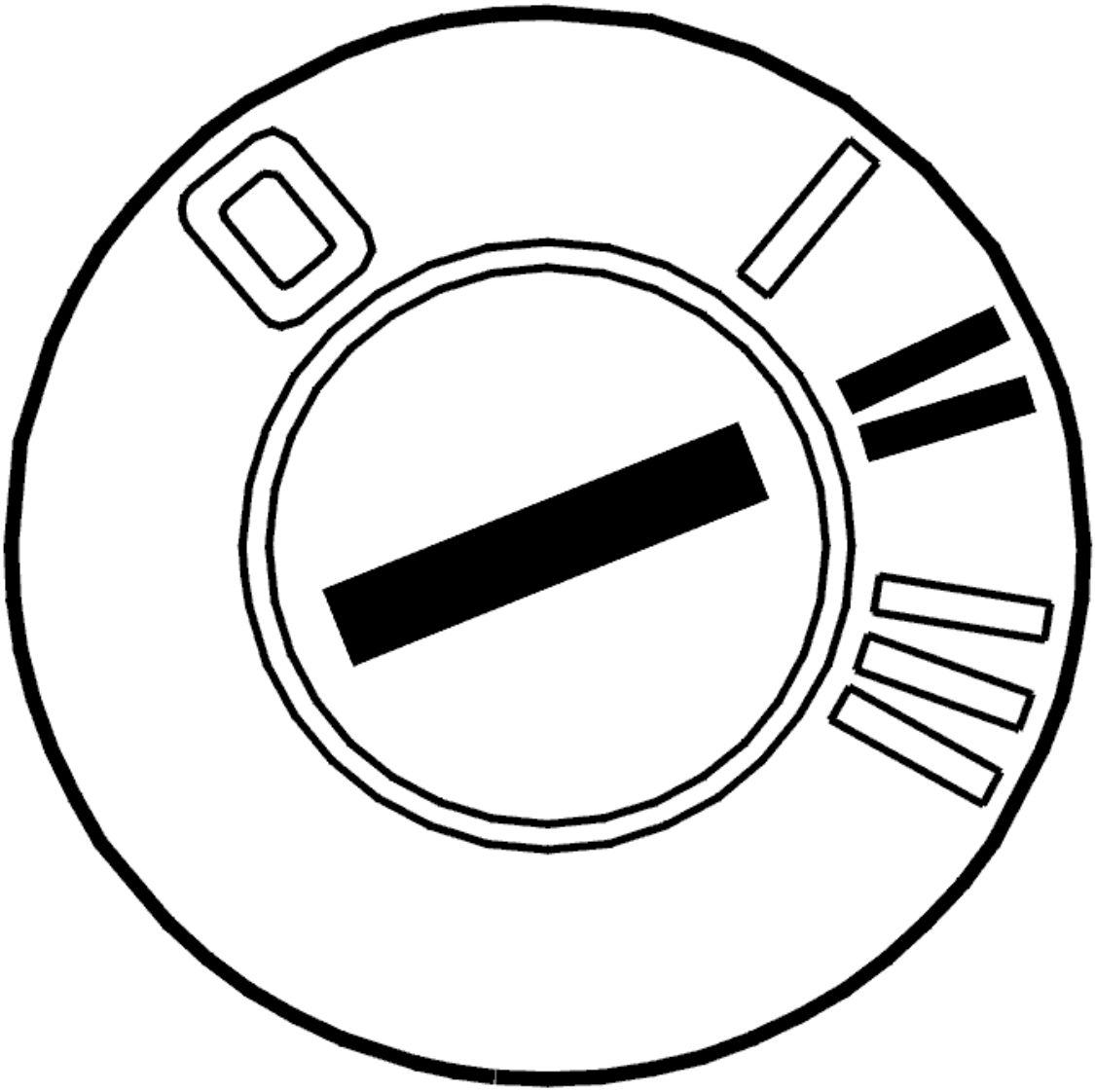

Fig. 265: Identifying Ignition ON
Courtesy of VOLVO CARS CORPORATION

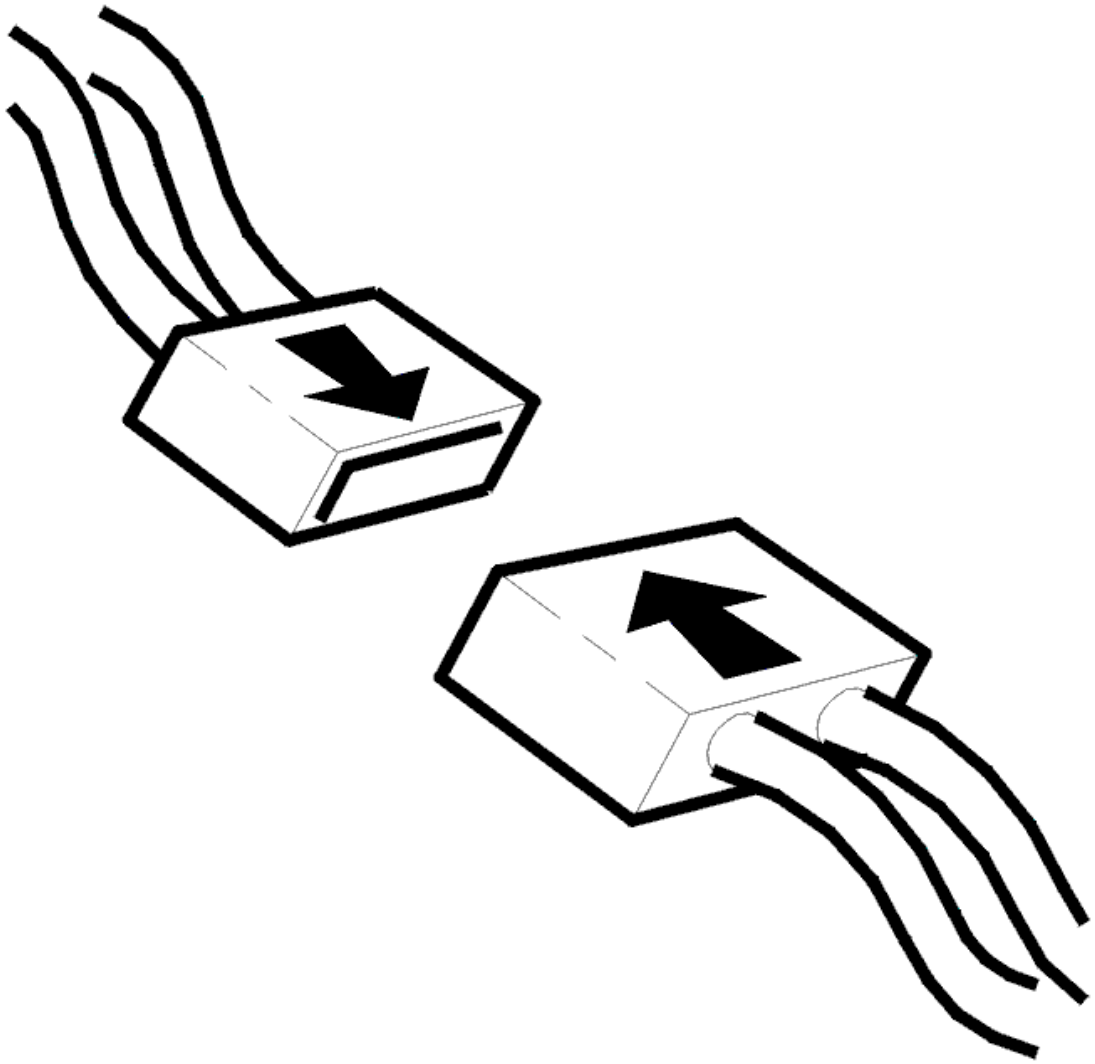

Fig. 266: Connecting Connector
Courtesy of VOLVO CARS CORPORATION

- Ignition off
- Reinstall the connectors, components etc.
- Ignition on.

  Check that the buttons for the headset output function. Check this by pressing the buttons for the next track and the previous track and by changing between the CD/MD and the radio using the SEL button.

Do the buttons function?

- **YES**

  VERIFIED: Troubleshooting has been completed.

- **NO**

  Refer to **INFORMATION**

INFORMATION

FAULT-TRACING INFORMATION

The fault should have been detected and remedied. As this is not the case fault-tracing has failed.

Exit fault-tracing for this diagnostic trouble code (DTC) or make another attempt.

AUD-0017: BUTTONS HEADSET 4. SIGNAL MISSING (2003-2011)

DIAGNOSTIC TROUBLE CODE (DTC) INFORMATION AUD-0017

Condition

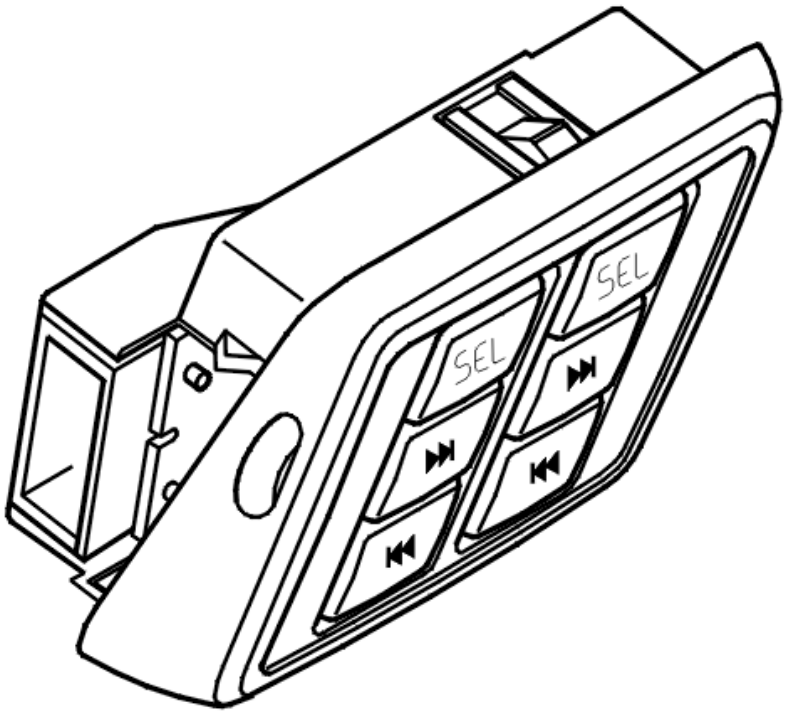

Fig. 267: Identifying Buttons Headset Component
Courtesy of VOLVO CARS CORPORATION

Diagnostic trouble code (DTC) AUD-0017 is stored if the audio module (AUD) registers an open-circuit in the signal cable to the buttons at headset output 4.

Diagnostic trouble code (DTC) AUD-0017 can be diagnosed when the ignition is on.

Substitute Value

- None.

Possible Source

- Open-circuit in the signal cable between headset output 4 and the control module
- Open-circuit in the headset panel (defective headset panel).

Fault symptom[s]

- The buttons for the headset output are not working.

SIGNAL MISSING (2003-2006)

CHECKING COMPONENTS AND WIRING

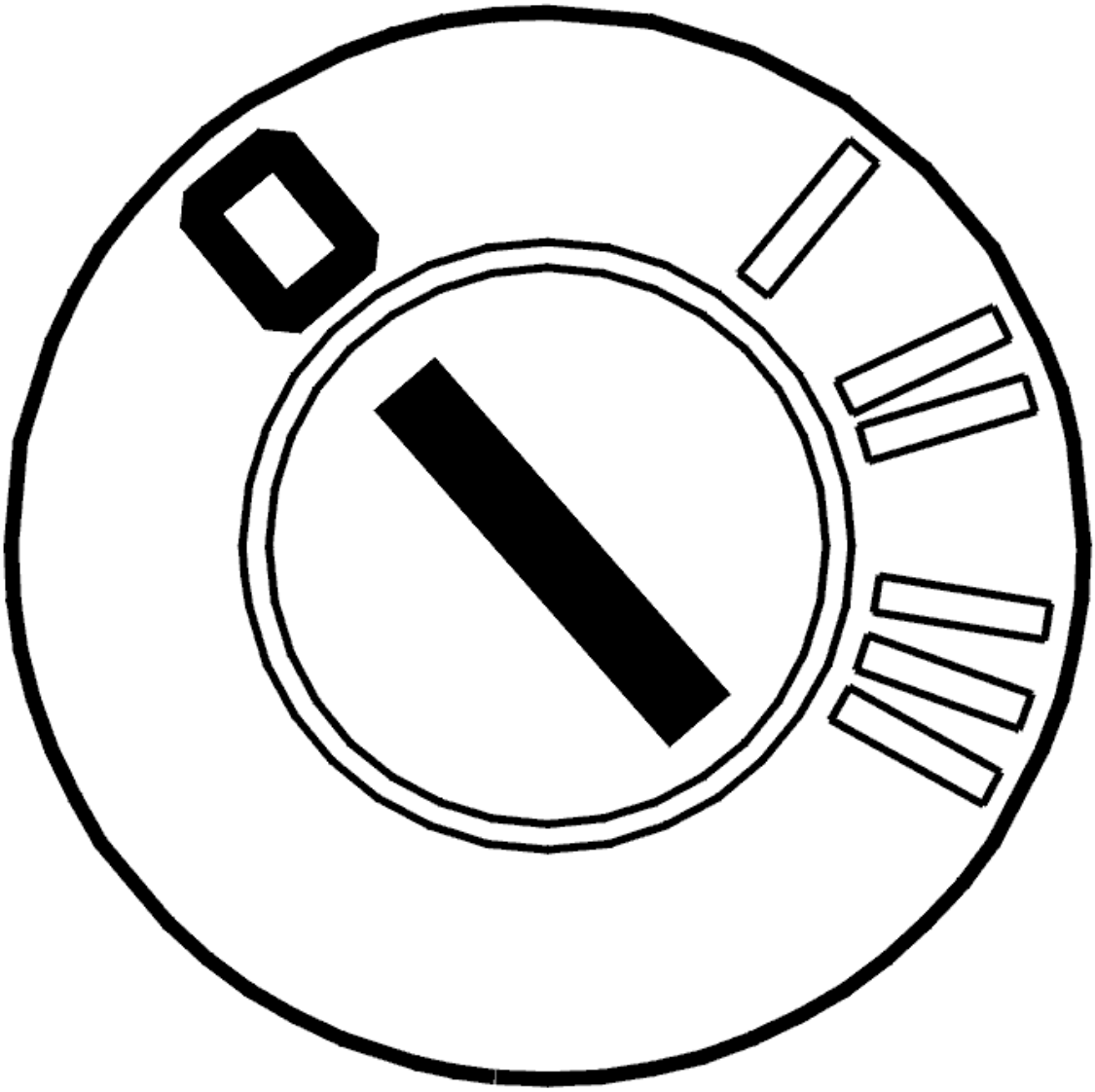

Fig. 268: Identifying Ignition OFF
Courtesy of VOLVO CARS CORPORATION

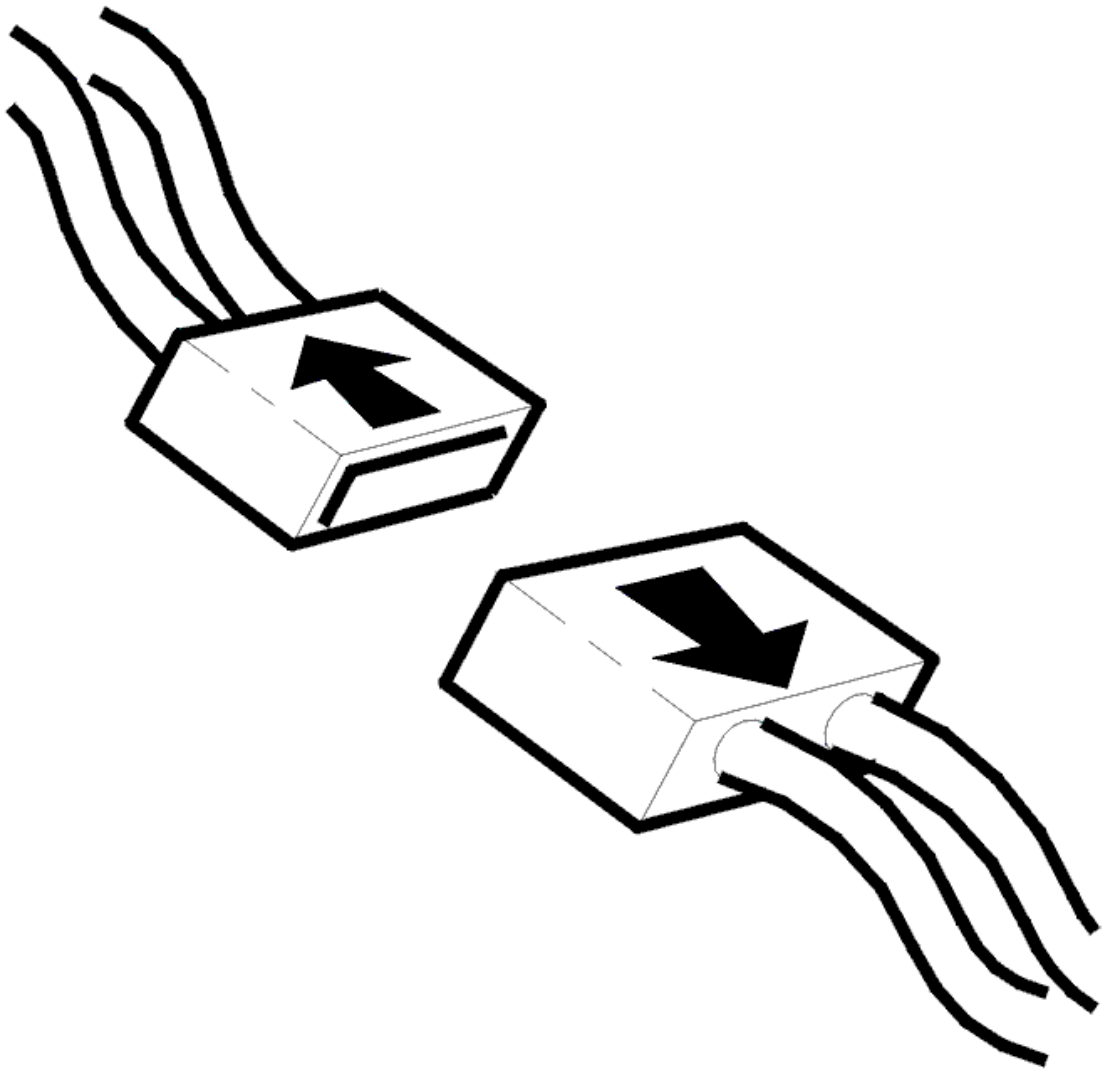

Fig. 269: Disconnecting Connector
Courtesy of VOLVO CARS CORPORATION

- Ignition off
- Disconnect the connector for the right headset panel.

  Check the buttons for the right headset output 4. Test the buttons by changing between previous and next track selection and changing between CD/MD and radio.

  Check the cable terminals. Check for contact resistance, loose connections and oxidation.

  Check the cable terminals in the female and male sections of the connector. The cable terminals must not be damaged or pressed back

  Check the signal cable between audio module (AUD) terminal #C20 and headset output terminal #10 in the right C-post. Check for an open-circuit.

Check the signal cable between audio module (AUD) terminal #C22 and headset output 4 terminal #9 in the right C-post. Check for an open-circuit.

Check the resistance between terminals #9 and #10 in the connector for the right headset panel. The resistance must be approximately 39 kohms.

Remedy as necessary.

Other information:

- To connect the breakout box, see **CONNECTING THE BREAKOUT BOX**
- To access or replace the audio module (AUD), see **AUDIO MODULE (AUD), REPLACING**
- For information about signals, see **SIGNAL SPECIFICATION**
- see **CONTENTS** .

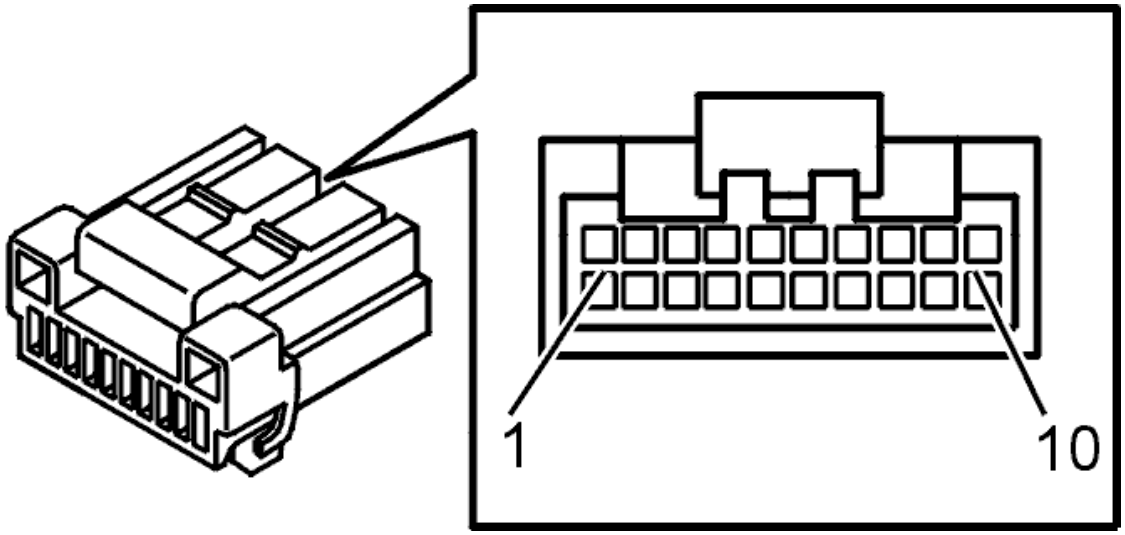

Fig. 270: Identifying Connector (D) Terminals
Courtesy of VOLVO CARS CORPORATION

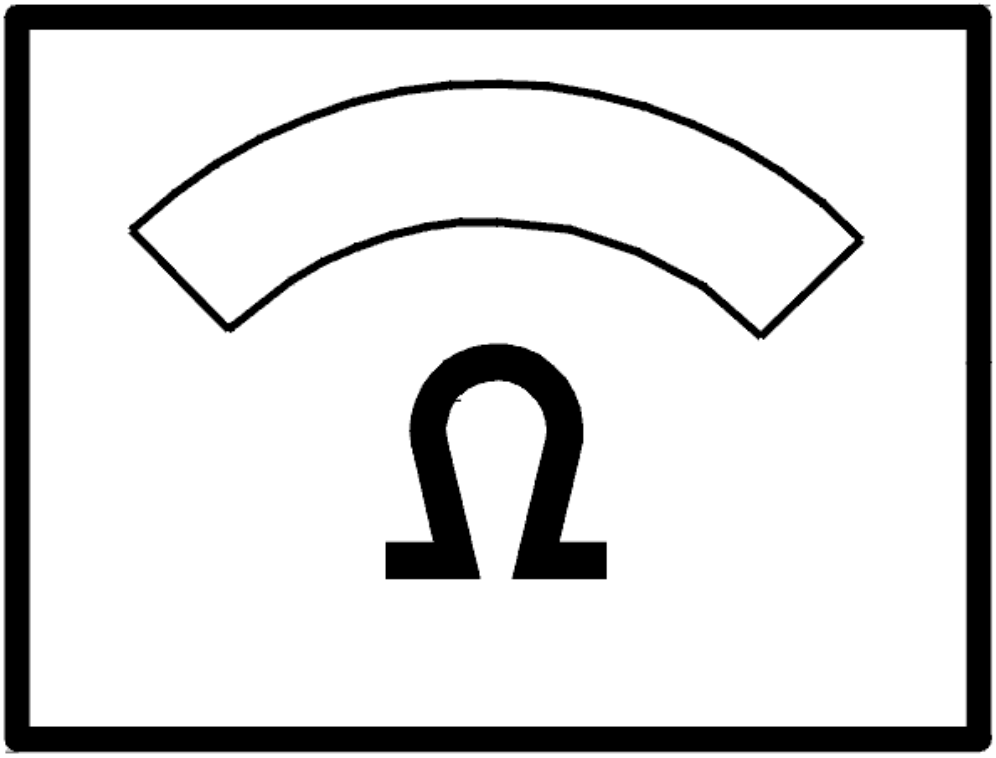

Fig. 271: Identifying Ohm Meter
Courtesy of VOLVO CARS CORPORATION

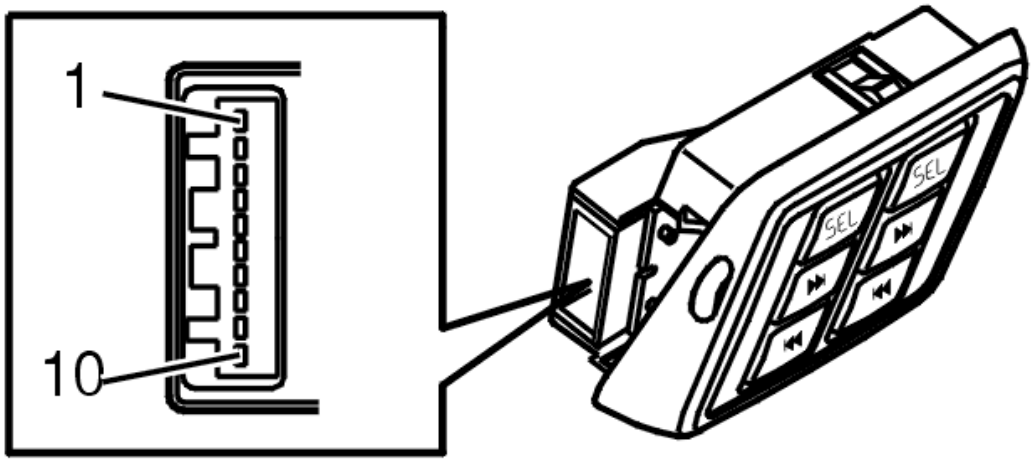

Fig. 272: Identifying Buttons Headset Connector
Courtesy of VOLVO CARS CORPORATION

- **Continue**

  Refer to **VERIFICATION**

VERIFICATION

VERIFICATION

HINT: After carrying out the repair, check that the fault has been remedied.

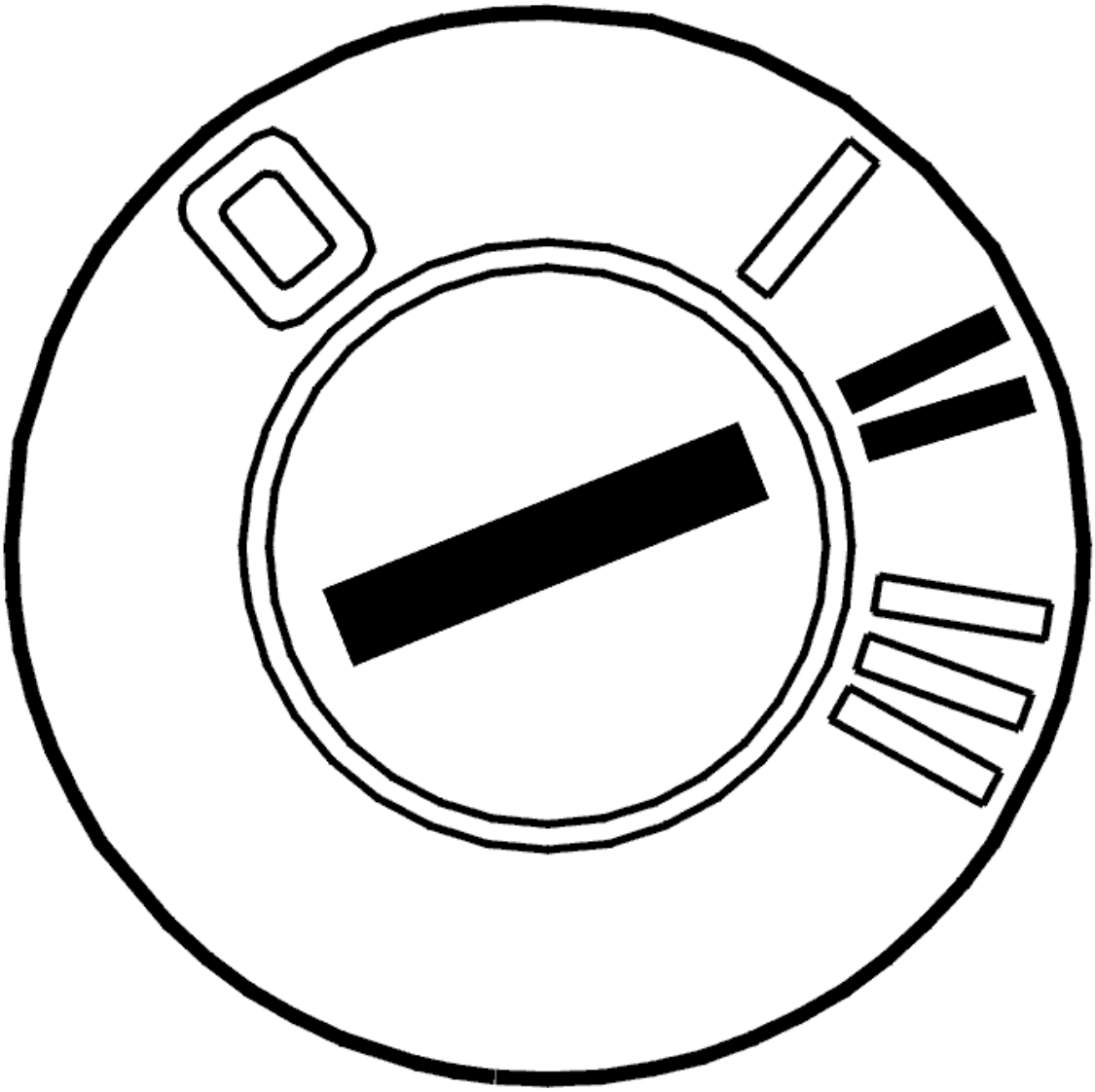

Fig. 273: Identifying Ignition ON
Courtesy of VOLVO CARS CORPORATION

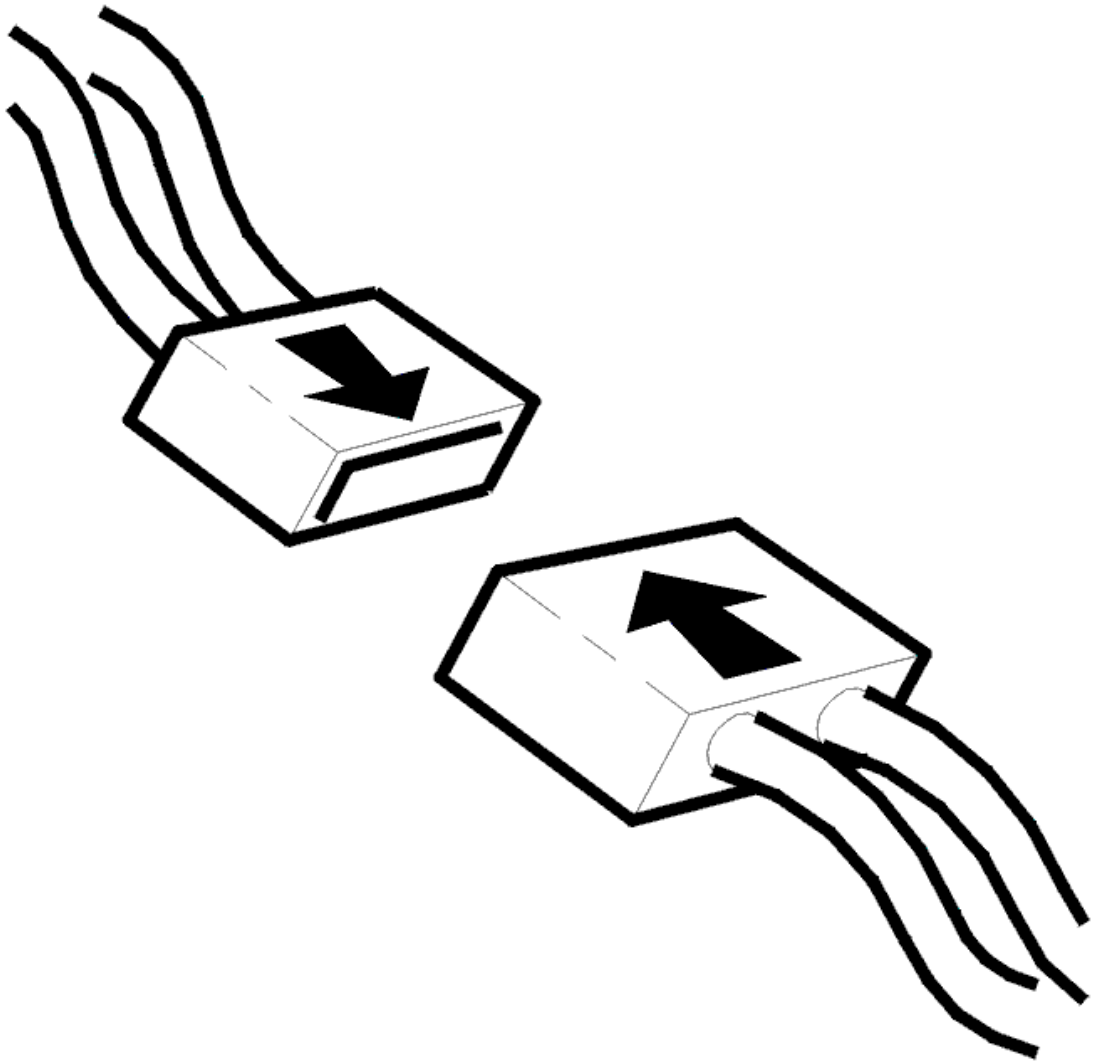

Fig. 274: Connecting Connector
Courtesy of VOLVO CARS CORPORATION

- Ignition off
- Reinstall the connectors, components etc.
- Ignition on.

  Check that the buttons for the headset output function. Check this by pressing the buttons for the next track and the previous track and by changing between the CD/MD and the radio using the SEL button.

Do the buttons function?

- **YES**

  VERIFIED: Troubleshooting has been completed.

- **NO**

  Refer to **INFORMATION**

INFORMATION

FAULT-TRACING INFORMATION

The fault should have been detected and remedied. As this is not the case fault-tracing has failed.

Exit fault-tracing for this diagnostic trouble code (DTC) or make another attempt.

SIGNAL MISSING (2007-2011)

CHECKING COMPONENTS AND WIRING

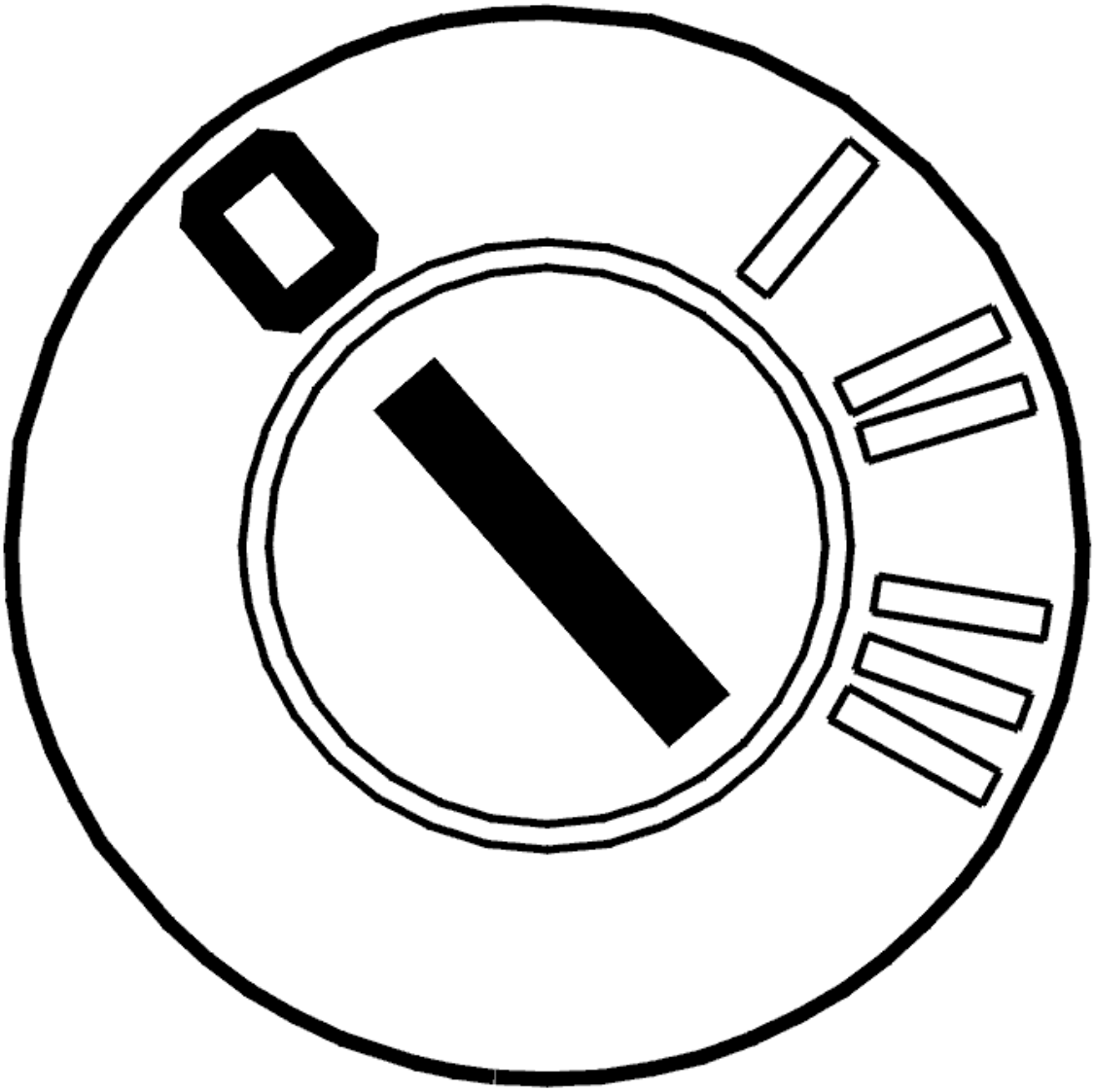

Fig. 275: Identifying Ignition OFF
Courtesy of VOLVO CARS CORPORATION

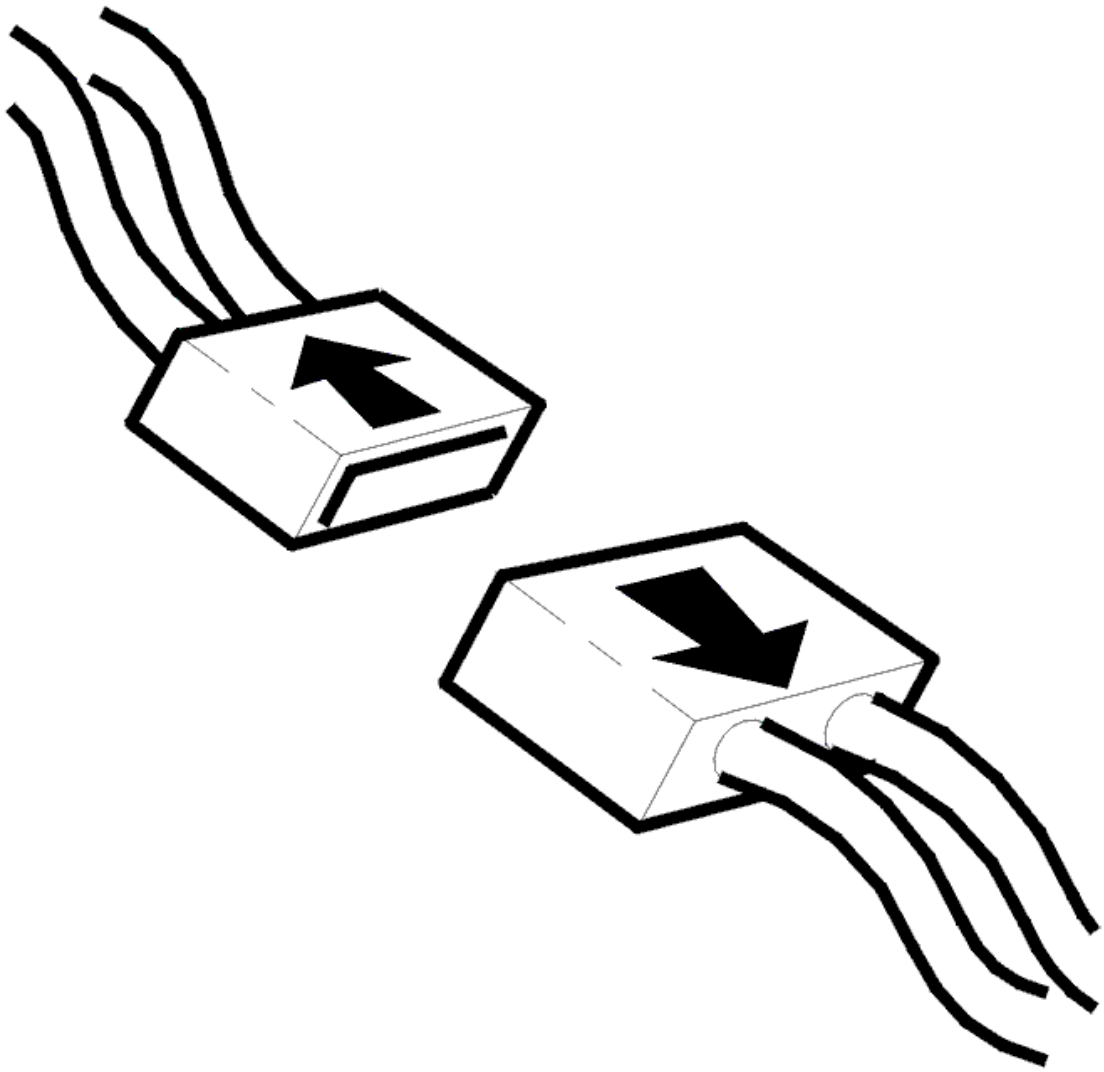

Fig. 276: Disconnecting Connector
Courtesy of VOLVO CARS CORPORATION

- Ignition off
- Disconnect the connector for the right headset panel.

  Check the buttons for the right headset output 4. Test the buttons by changing between previous and next track selection and changing between CD/MD and radio.

  Check the cable terminals. Check for contact resistance, loose connections and oxidation.

  Check the cable terminals in the female and male sections of the connector. The cable terminals must not be damaged or pressed back

Check the signal cable between audio module (AUD) terminal #C20 and headset output terminal #10 in the right C-post. Check for an open-circuit.

Check the signal cable between audio module (AUD) terminal #C22 and headset output 4 terminal #9 in the right C-post. Check for an open-circuit.

Check the resistance between terminals #9 and #10 in the connector for the right headset panel. The resistance must be approximately 39 kohms.

Remedy as necessary.

Other information:

- To connect the breakout box, see **CONNECTING THE BREAKOUT BOX**
- To access or replace the audio module (AUD), see **AUDIO MODULE (AUD), REPLACING**
- For information about signals, see **SIGNAL SPECIFICATION**
- see **CONTENTS** .

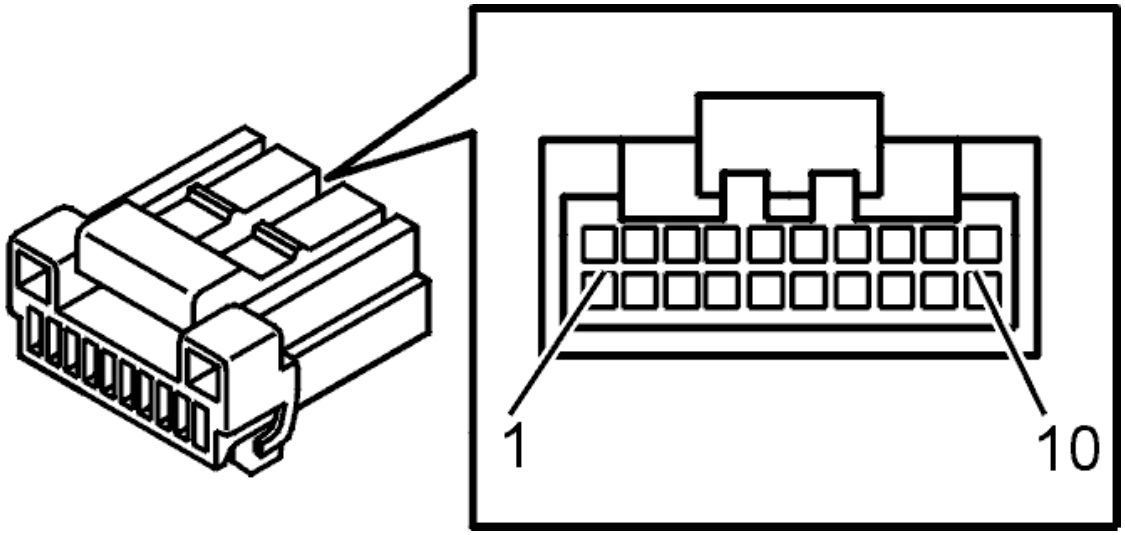

Fig. 277: Identifying Connector (D) Terminals
Courtesy of VOLVO CARS CORPORATION

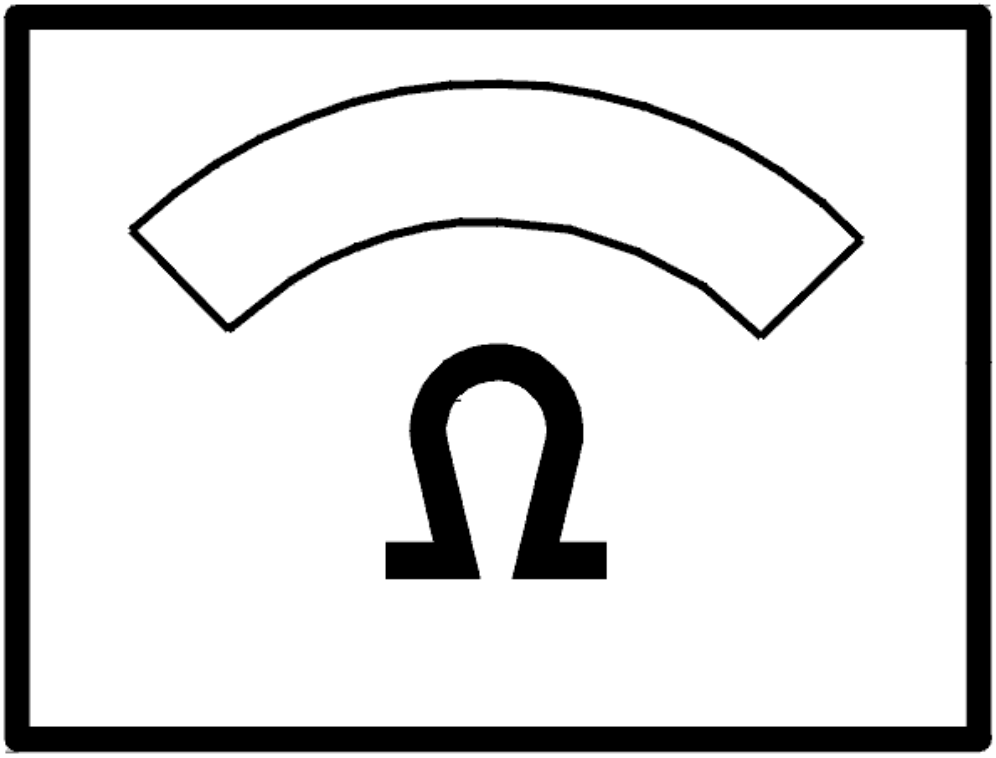

Fig. 278: Identifying Ohm Meter
Courtesy of VOLVO CARS CORPORATION

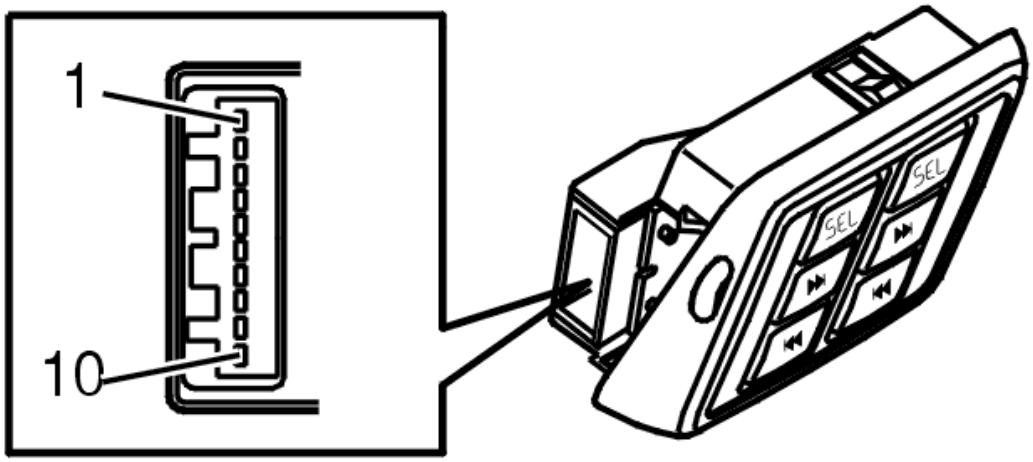

Fig. 279: Identifying Buttons Headset Connector
Courtesy of VOLVO CARS CORPORATION

- **Continue**

  Refer to **VERIFICATION**

VERIFICATION

VERIFICATION

HINT: After carrying out the repair, check that the fault has been remedied.

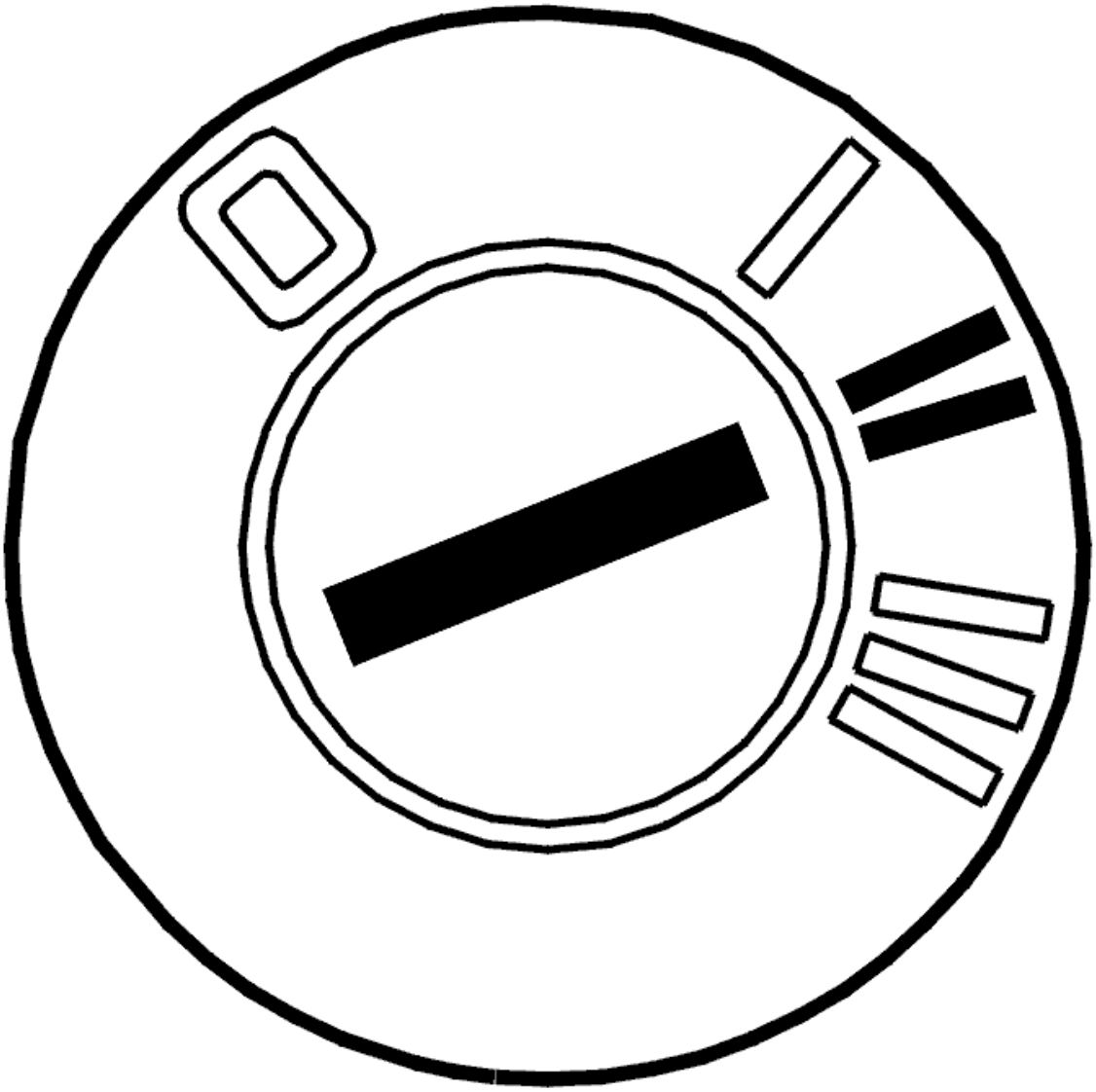

Fig. 280: Identifying Ignition ON
Courtesy of VOLVO CARS CORPORATION

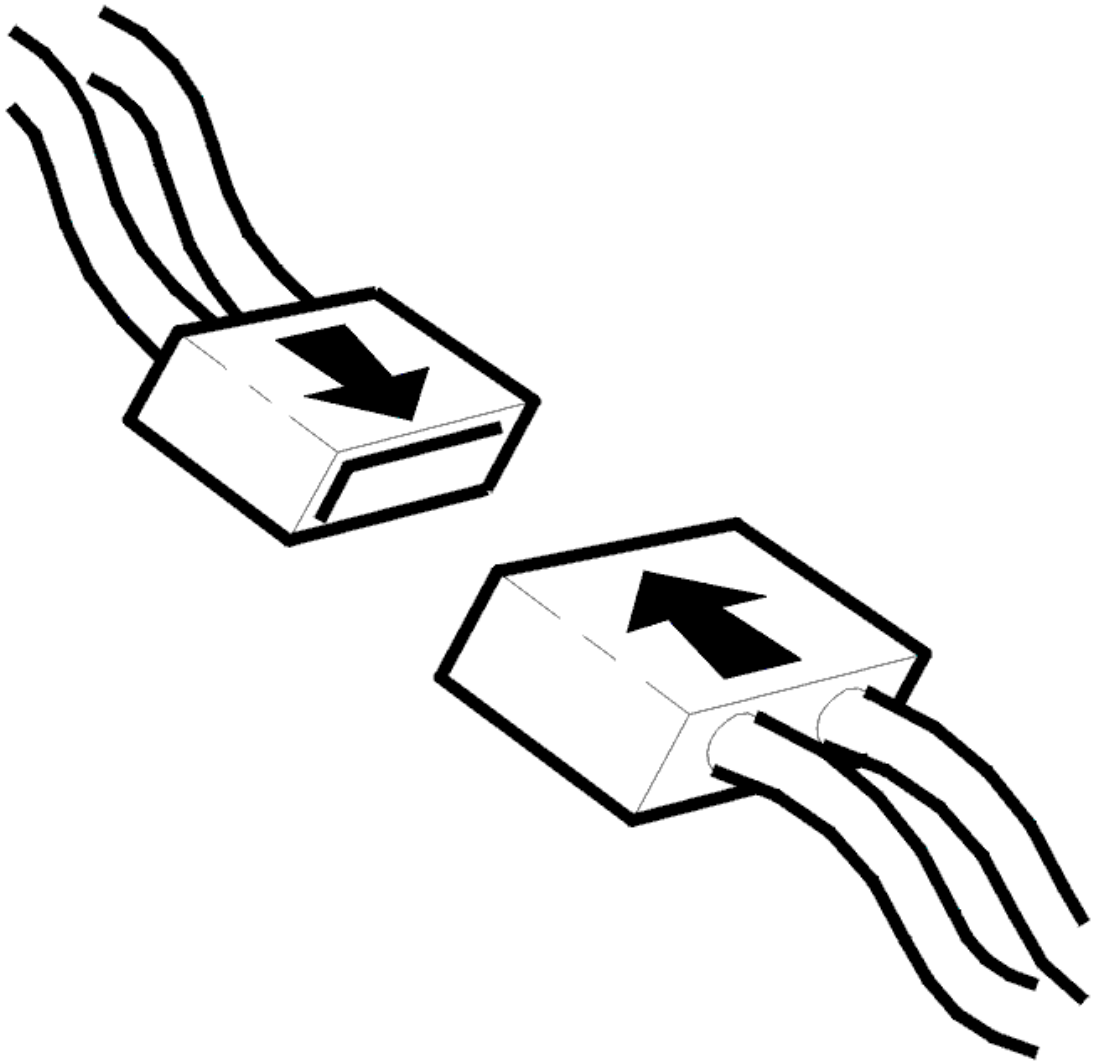

Fig. 281: Connecting Connector
Courtesy of VOLVO CARS CORPORATION

- Ignition off
- Reinstall the connectors, components etc.
- Ignition on.

  Check that the buttons for the headset output function. Check this by pressing the buttons for the next track and the previous track and by changing between the CD/MD and the radio using the SEL button.

Do the buttons function?

- **YES**

  VERIFIED: Troubleshooting has been completed.

- **NO**

  Refer to **INFORMATION**

INFORMATION

FAULT-TRACING INFORMATION

The fault should have been detected and remedied. As this is not the case fault-tracing has failed.

Exit fault-tracing for this diagnostic trouble code (DTC) or make another attempt.

AUD-0018: BUTTONS HEADSET 4. SIGNAL TOO LOW (2003-2011)

DIAGNOSTIC TROUBLE CODE (DTC) INFORMATION AUD-0018

Condition

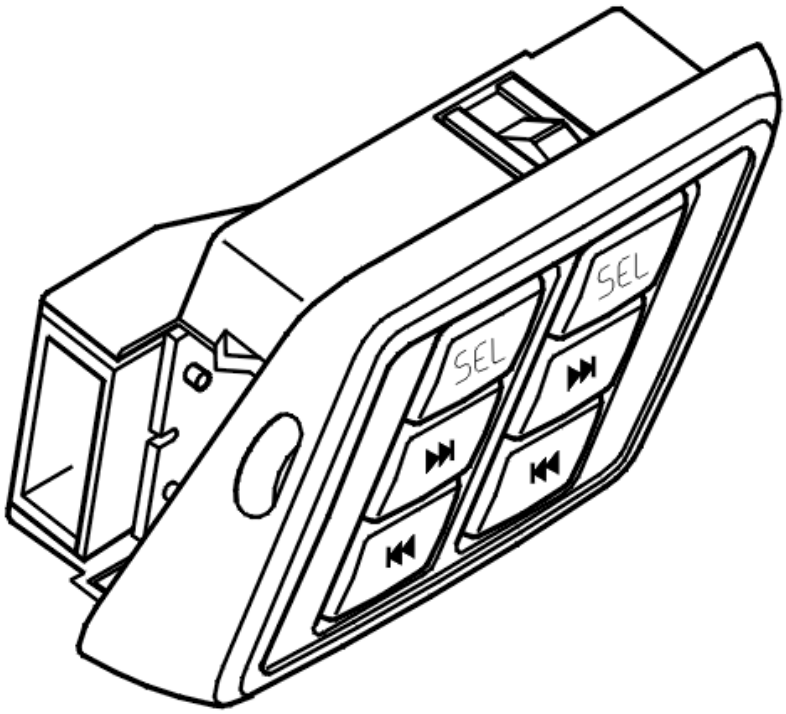

Fig. 282: Identifying Buttons Headset Component
Courtesy of VOLVO CARS CORPORATION

Diagnostic trouble code (DTC) AUD-0018 is stored if the audio module (AUD) registers that the signal to the buttons for headset output 4 is too low.

Diagnostic trouble code (DTC) AUD-0018 can be diagnosed when the ignition is on.

Substitute Value

- None.

Possible Source

- Short-circuit to ground in the signal cable between headset output 4 and the control module
- Short-circuit between the signal cables to headset output 4
- Short-circuit in the headset panel (defective headset panel).

Fault symptom[s]

- The buttons for the headset output are not working.

SIGNAL LOW (2003-2006)

CHECKING COMPONENTS AND WIRING

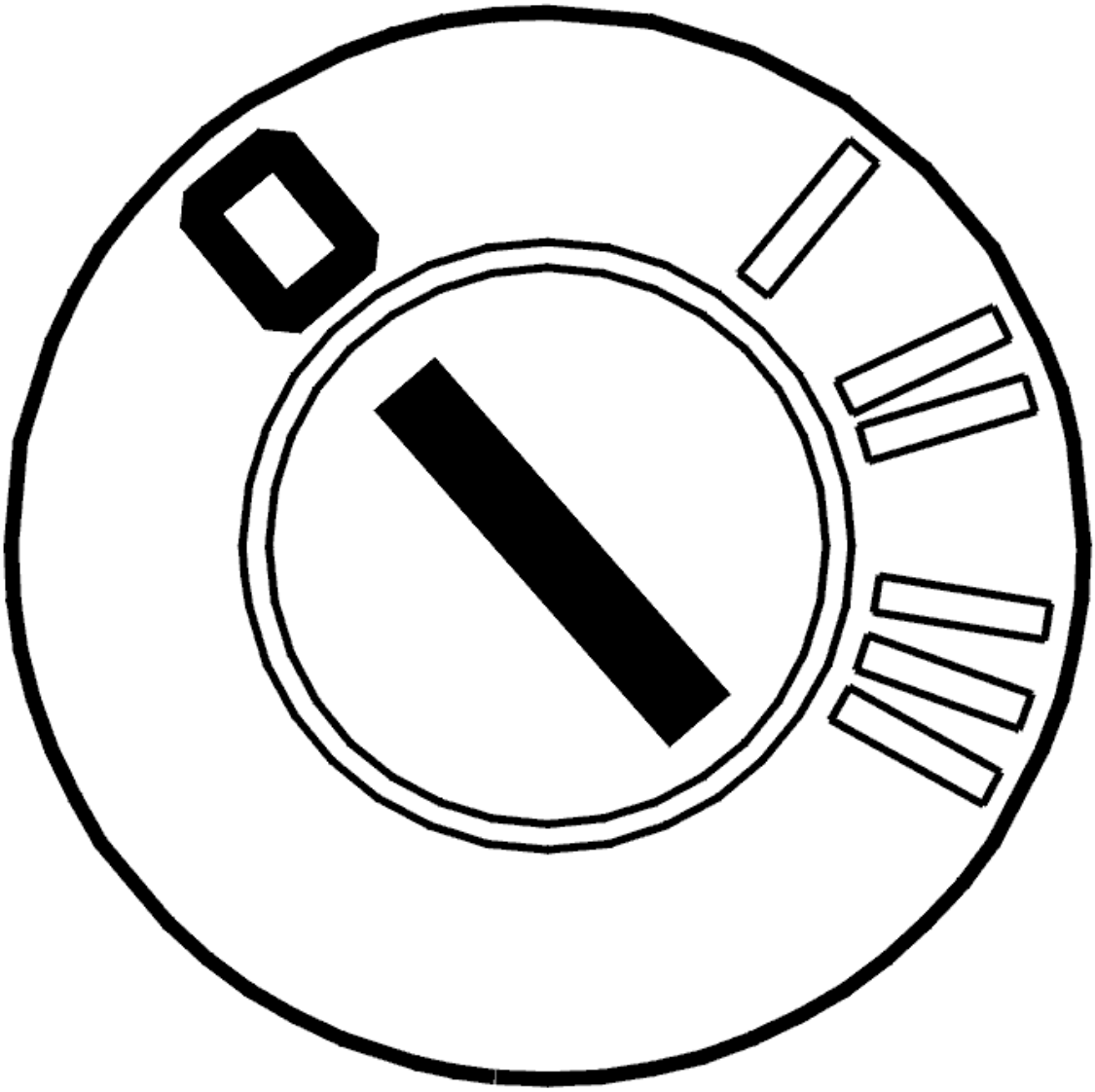

Fig. 283: Identifying Ignition OFF
Courtesy of VOLVO CARS CORPORATION

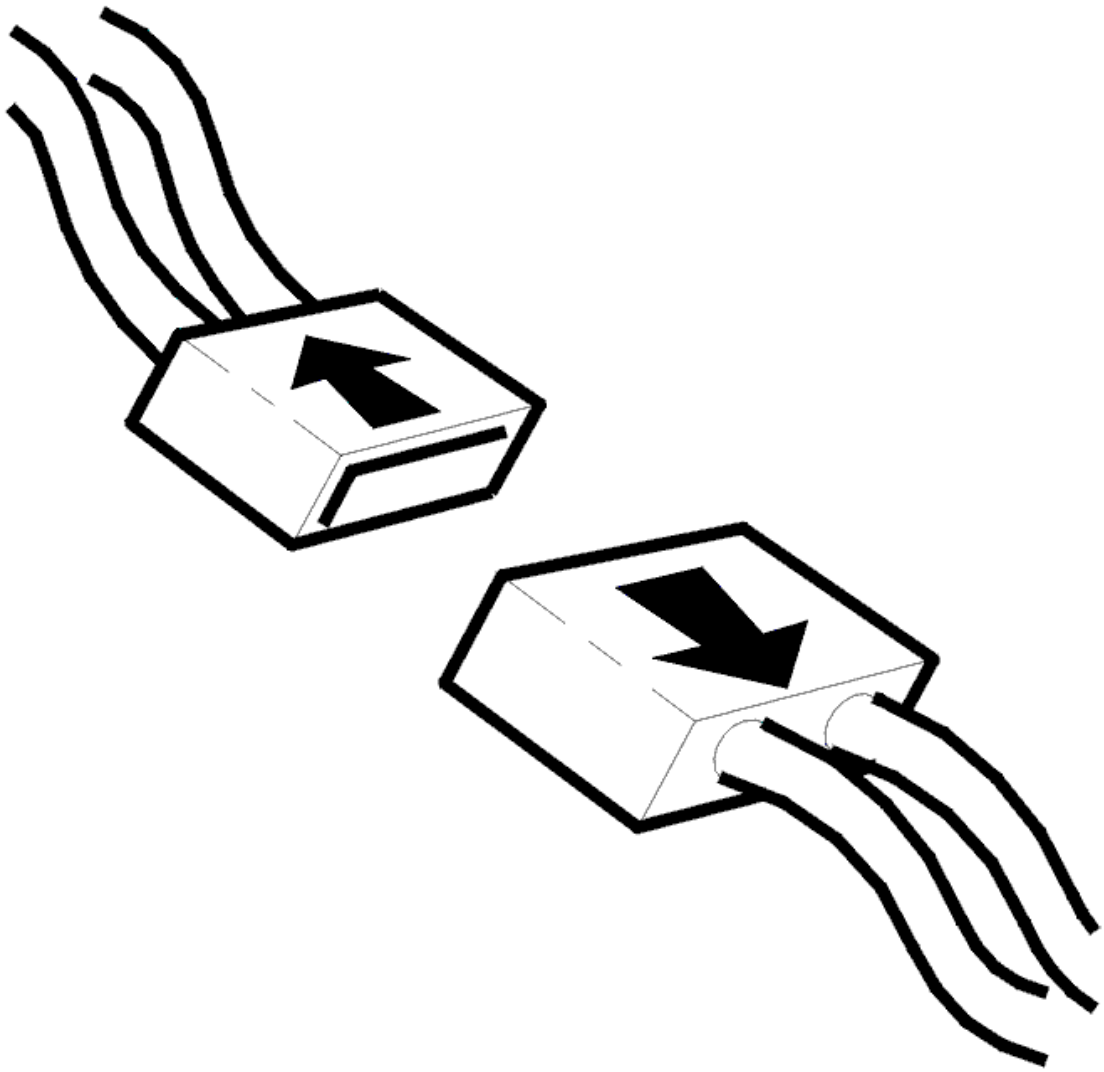

Fig. 284: Disconnecting Connector
Courtesy of VOLVO CARS CORPORATION

- Ignition off
- Disconnect the connector for the right headset panel
- Disconnect the 22-pin connector for the audio module (AUD).

  Check the cable terminals in the female and male sections of the connector. The cable terminals must not be damaged or pressed back.

  Check the signal cable between audio module (AUD) terminal #C20 and headset output terminal #10 in the right C-post. Check for a short-circuit to ground.

  Check the signal cable between audio module (AUD) terminal #C22 and headset output 4 terminal #9 in the right C-post. Check for a short-circuit to ground.

Check the resistance between terminals #C20 and #C22 in the connector for the audio module (AUD). The resistance must be infinite.

Check the resistance between terminals #9 and #10 in the connector for the right headset panel. The resistance must be approximately 39 kohms.

Remedy as necessary.

Other information:

- To connect the breakout box, see **CONNECTING THE BREAKOUT BOX**
- To access or replace the audio module (AUD), see **AUDIO MODULE (AUD), REPLACING**
- For information about signals, see **SIGNAL SPECIFICATION**
- see **CONTENTS** .

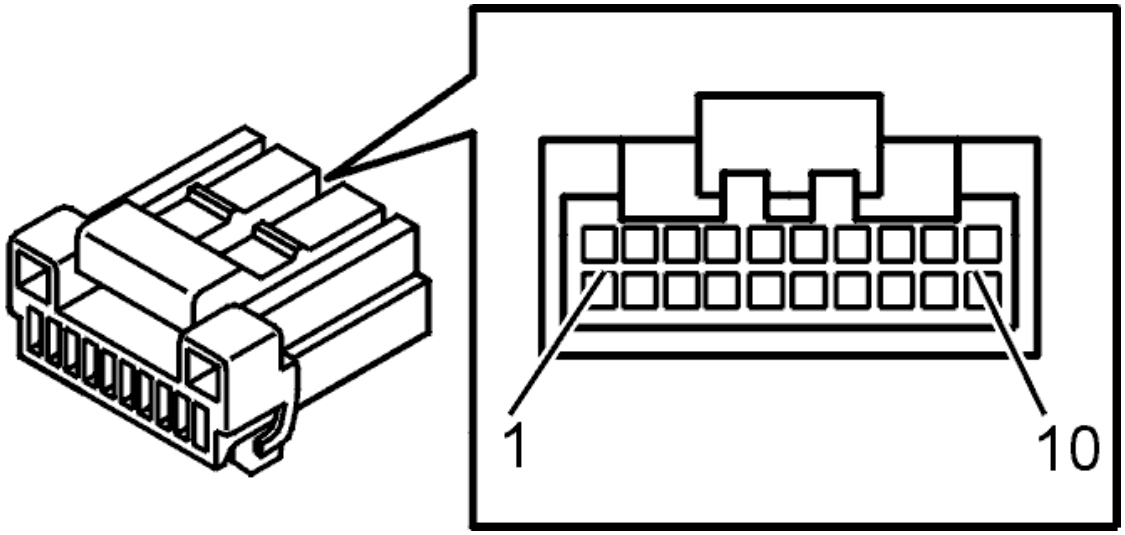

Fig. 285: Identifying Connector (D) Terminals
Courtesy of VOLVO CARS CORPORATION

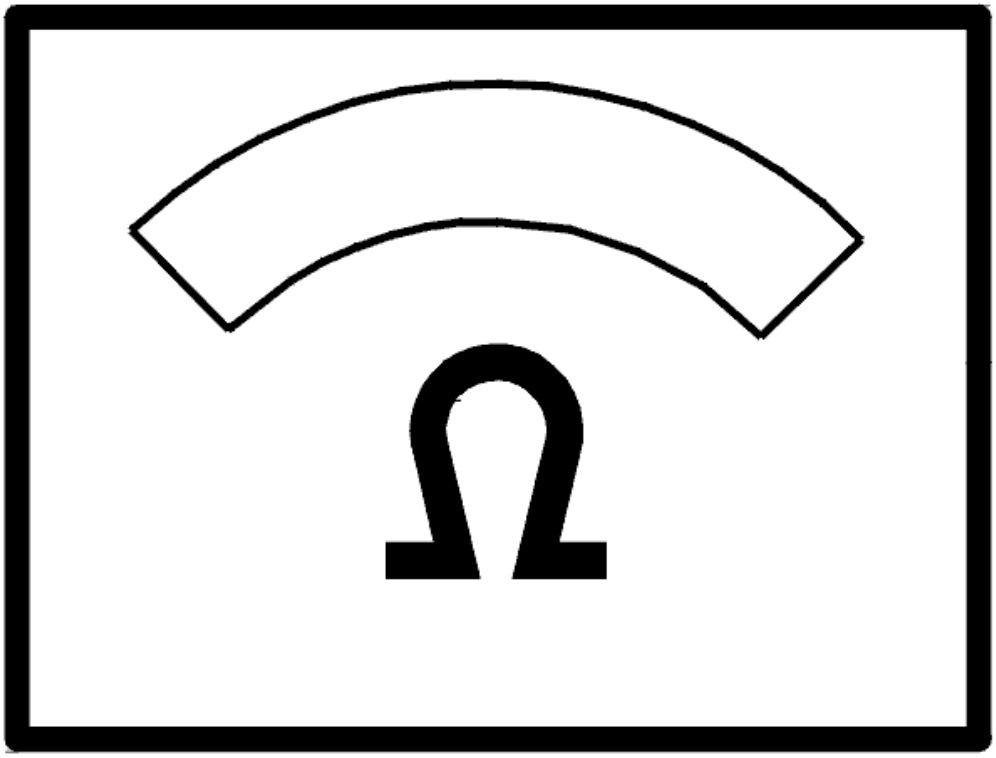

Fig. 286: Identifying Ohm Meter
Courtesy of VOLVO CARS CORPORATION

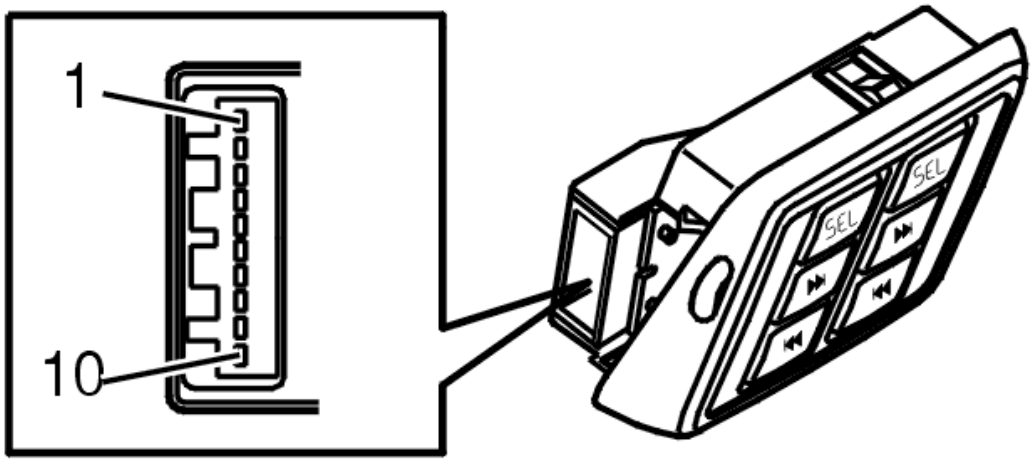

Fig. 287: Identifying Buttons Headset Connector
Courtesy of VOLVO CARS CORPORATION

- **Continue**

  Refer to **VERIFICATION**

VERIFICATION

VERIFICATION

HINT: After carrying out the repair, check that the fault has been remedied.

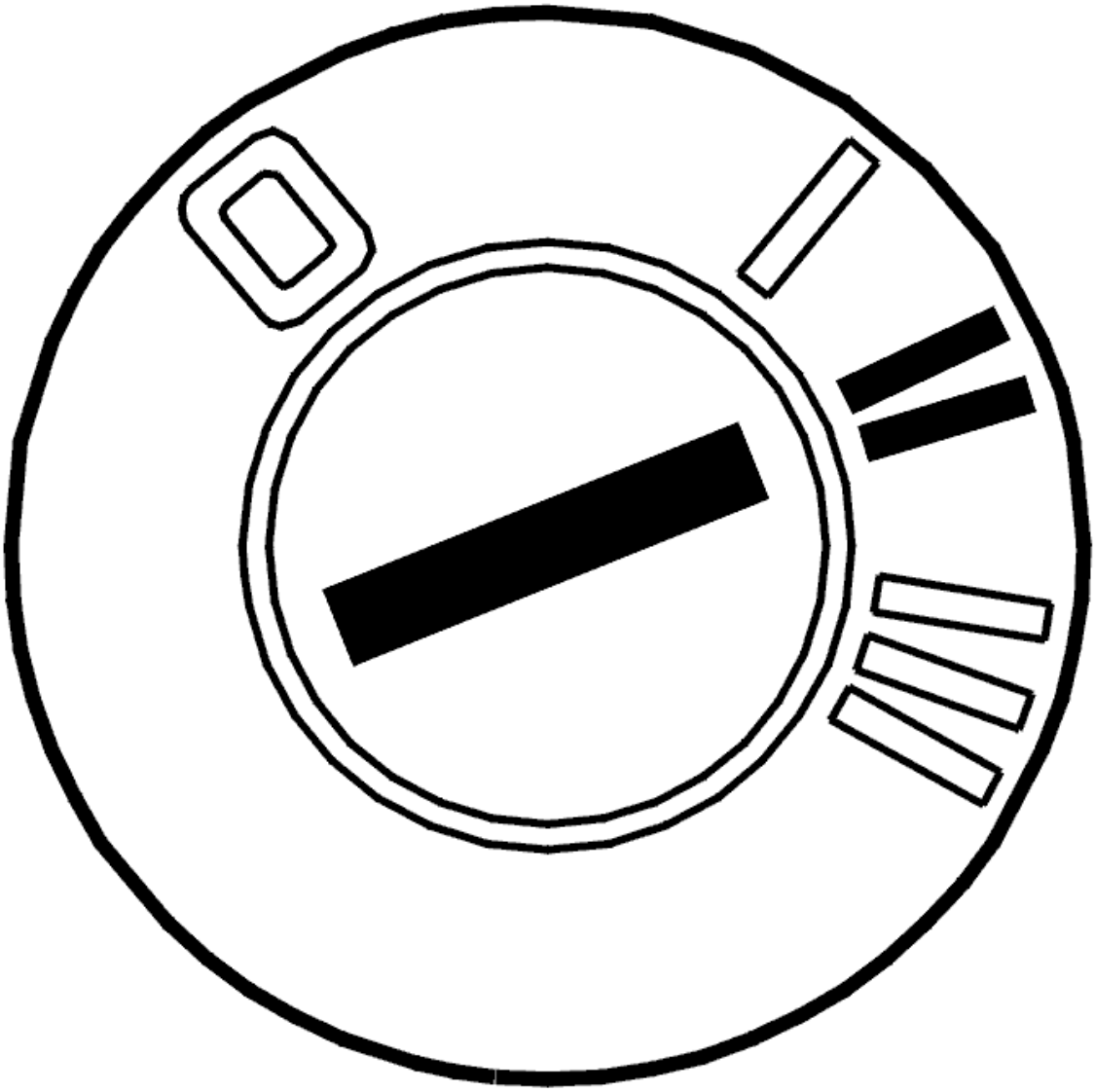

Fig. 288: Identifying Ignition ON
Courtesy of VOLVO CARS CORPORATION

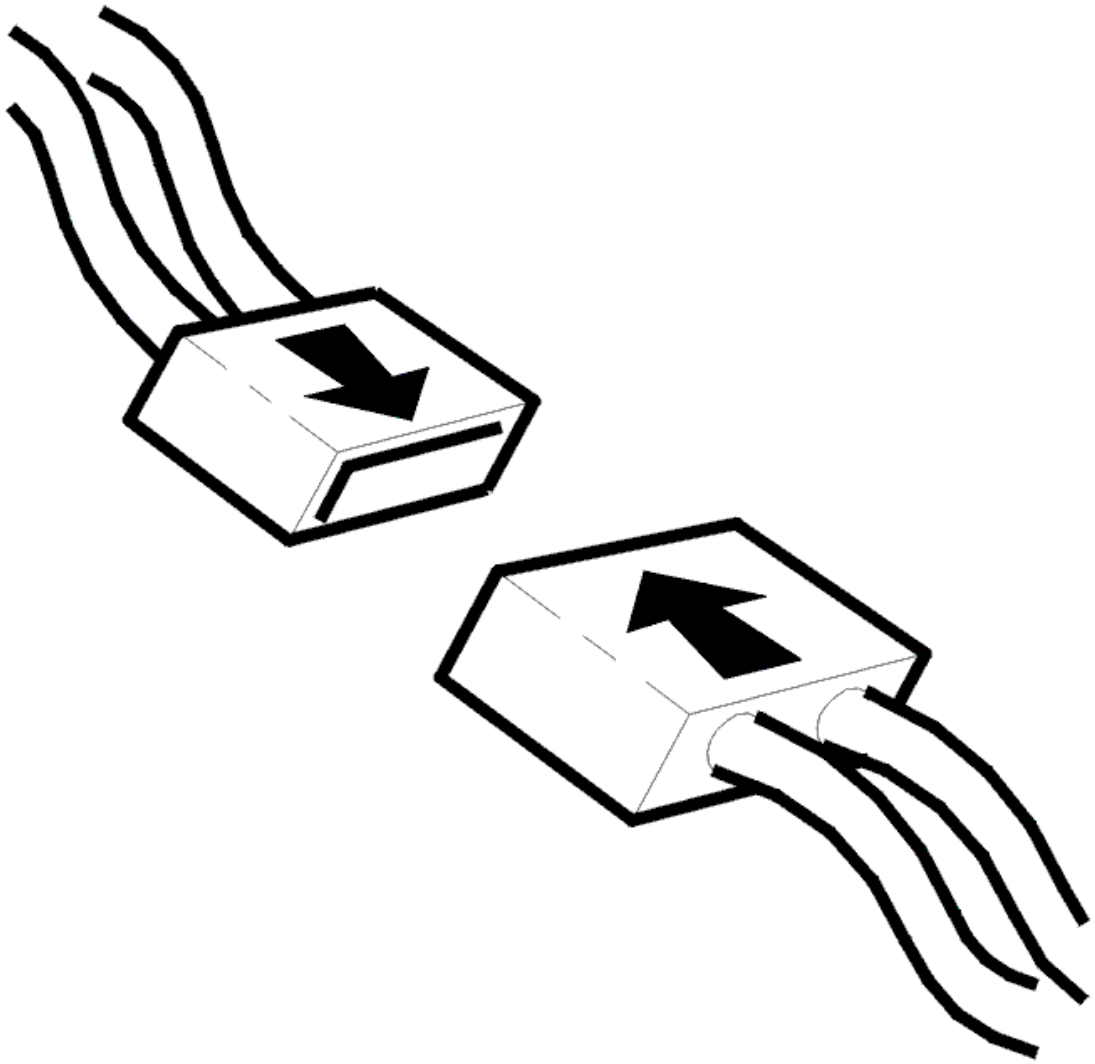

Fig. 289: Connecting Connector
Courtesy of VOLVO CARS CORPORATION

- Ignition off
- Reinstall the connectors, components etc.
- Ignition on.

  Check that the buttons for the headset output function. Check this by pressing the buttons for the next track and the previous track and by changing between the CD/MD and the radio using the SEL button.

Do the buttons function?

- **YES**

  VERIFIED: Troubleshooting has been completed.

- **NO**

  Refer to **INFORMATION**

INFORMATION

FAULT-TRACING INFORMATION

The fault should have been detected and remedied. As this is not the case fault-tracing has failed.

Exit fault-tracing for this diagnostic trouble code (DTC) or make another attempt.

SIGNAL LOW (2007-2011)

CHECKING COMPONENTS AND WIRING

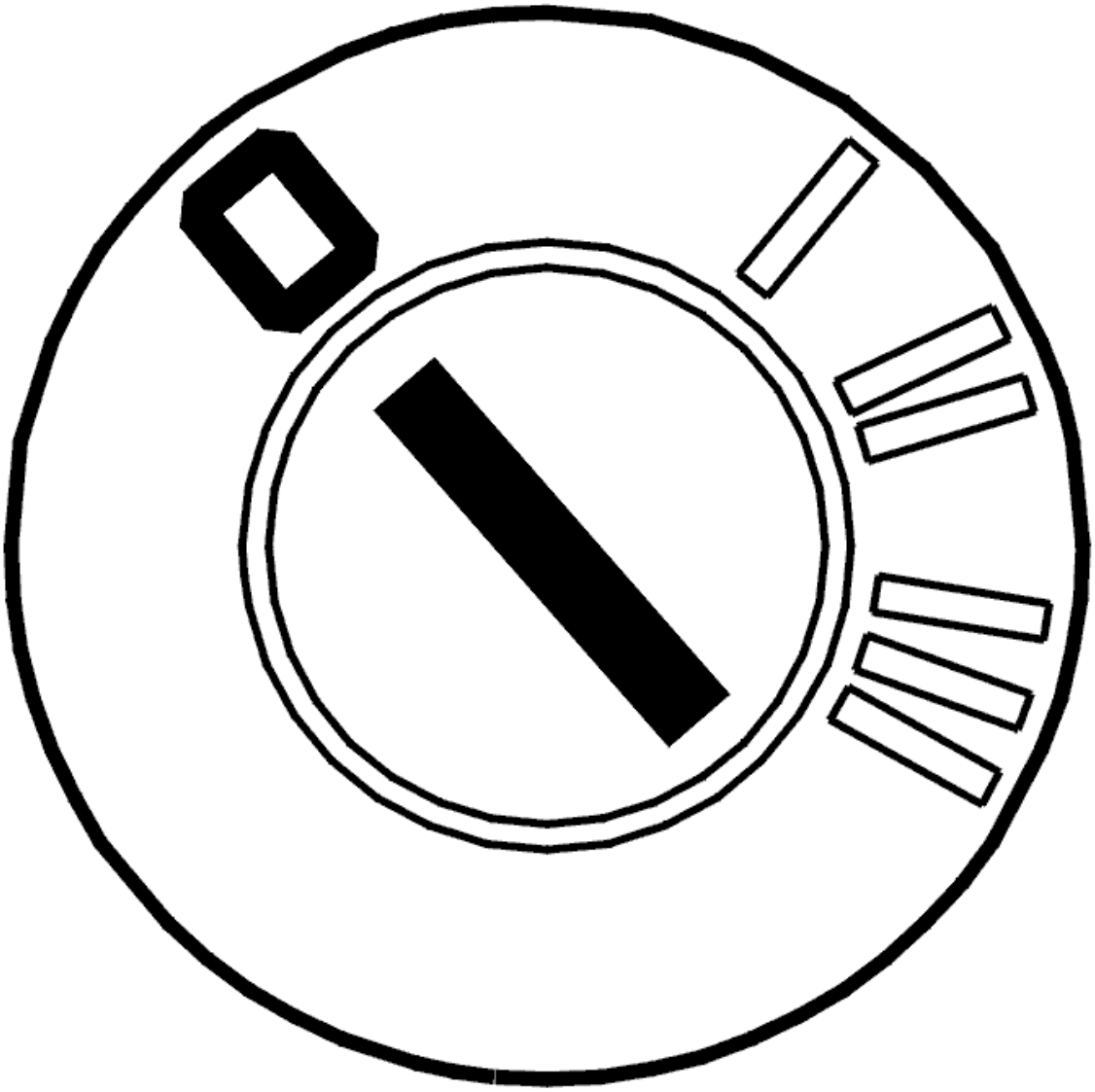

Fig. 290: Identifying Ignition OFF
Courtesy of VOLVO CARS CORPORATION

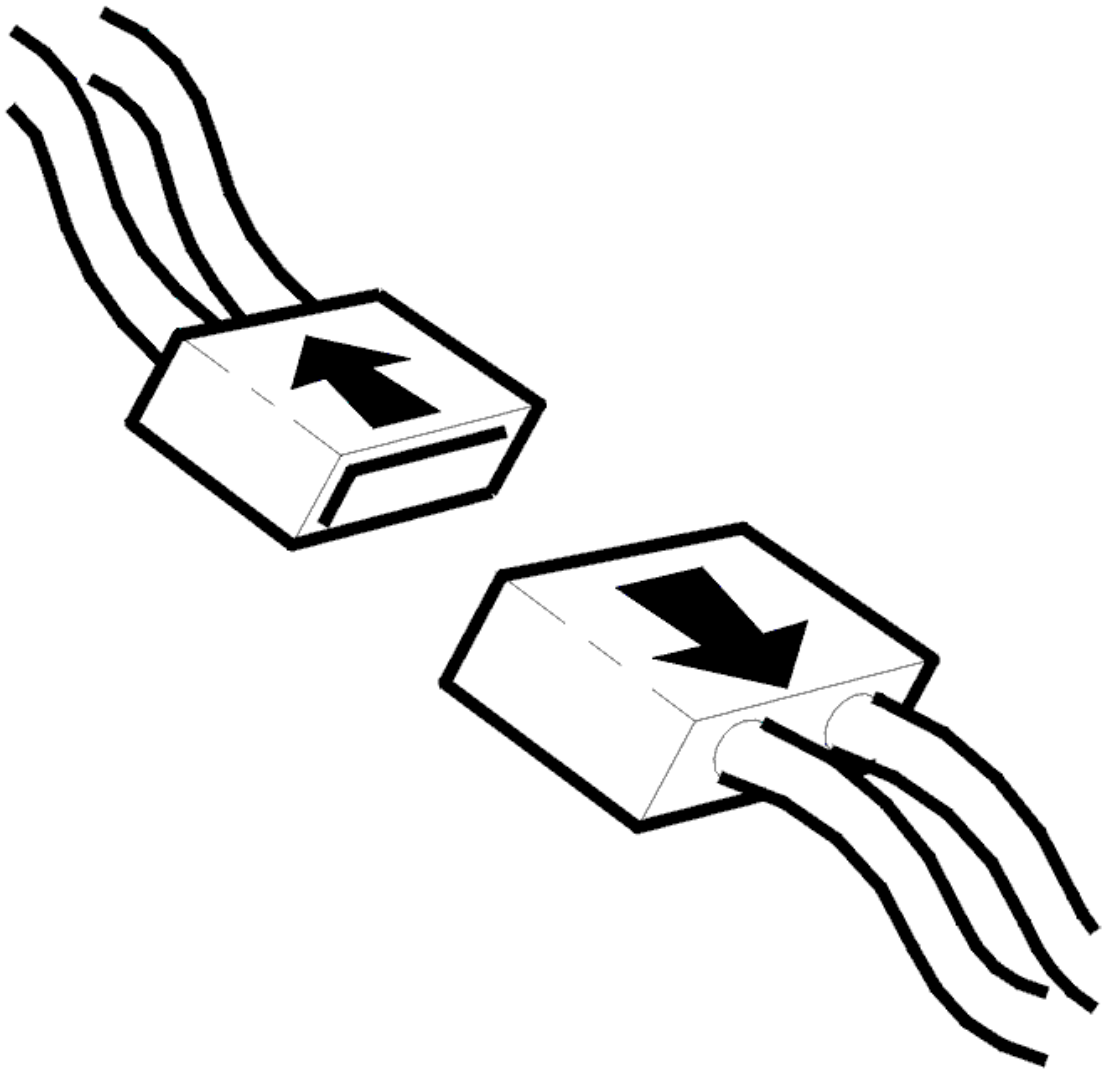

Fig. 291: Disconnecting Connector
Courtesy of VOLVO CARS CORPORATION

- Ignition off
- Disconnect the connector for the right headset panel
- Disconnect the 22-pin connector for the audio module (AUD).

  Check the cable terminals in the female and male sections of the connector. The cable terminals must not be damaged or pressed back.

  Check the signal cable between audio module (AUD) terminal #C20 and headset output terminal #10 in the right C-post. Check for a short-circuit to ground.

Check the signal cable between audio module (AUD) terminal #C22 and headset output 4 terminal #9 in the right C-post. Check for a short-circuit to ground.

Check the resistance between terminals #C20 and #C22 in the connector for the audio module (AUD). The resistance must be infinite.

Check the resistance between terminals #9 and #10 in the connector for the right headset panel. The resistance must be approximately 39 kohms.

Remedy as necessary.

Other information:

- To connect the breakout box, see **CONNECTING THE BREAKOUT BOX**
- To access or replace the audio module (AUD), see **AUDIO MODULE (AUD), REPLACING**
- For information about signals, see **SIGNAL SPECIFICATION**
- see **CONTENTS** .

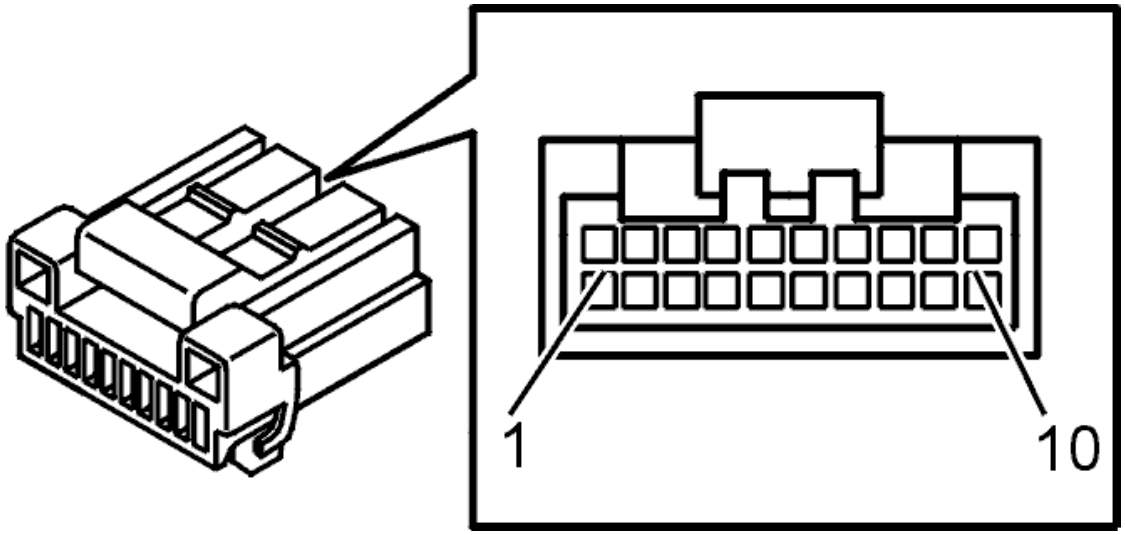

Fig. 292: Identifying Connector (D) Terminals
Courtesy of VOLVO CARS CORPORATION

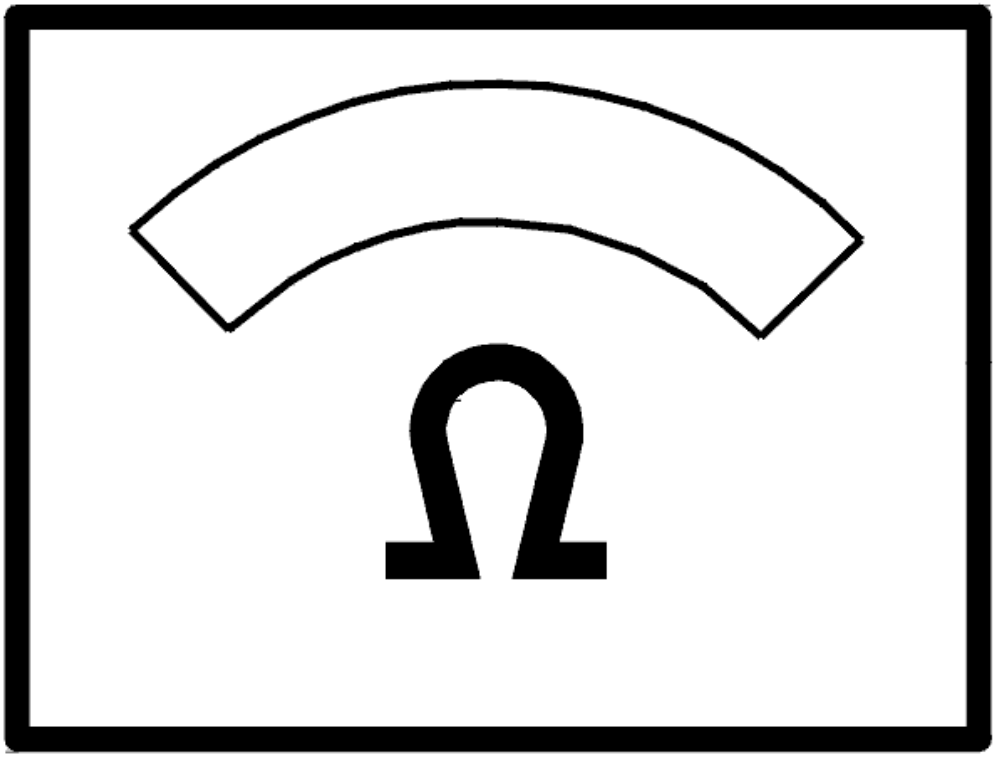

Fig. 293: Identifying Ohm Meter
Courtesy of VOLVO CARS CORPORATION

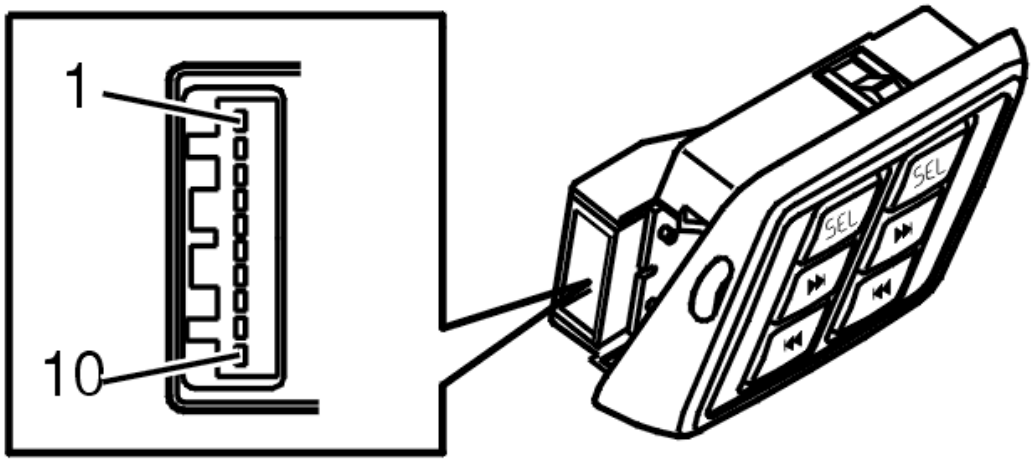

Fig. 294: Identifying Buttons Headset Connector
Courtesy of VOLVO CARS CORPORATION

- **Continue**

  Refer to **VERIFICATION**

VERIFICATION

VERIFICATION

HINT: After carrying out the repair, check that the fault has been remedied.

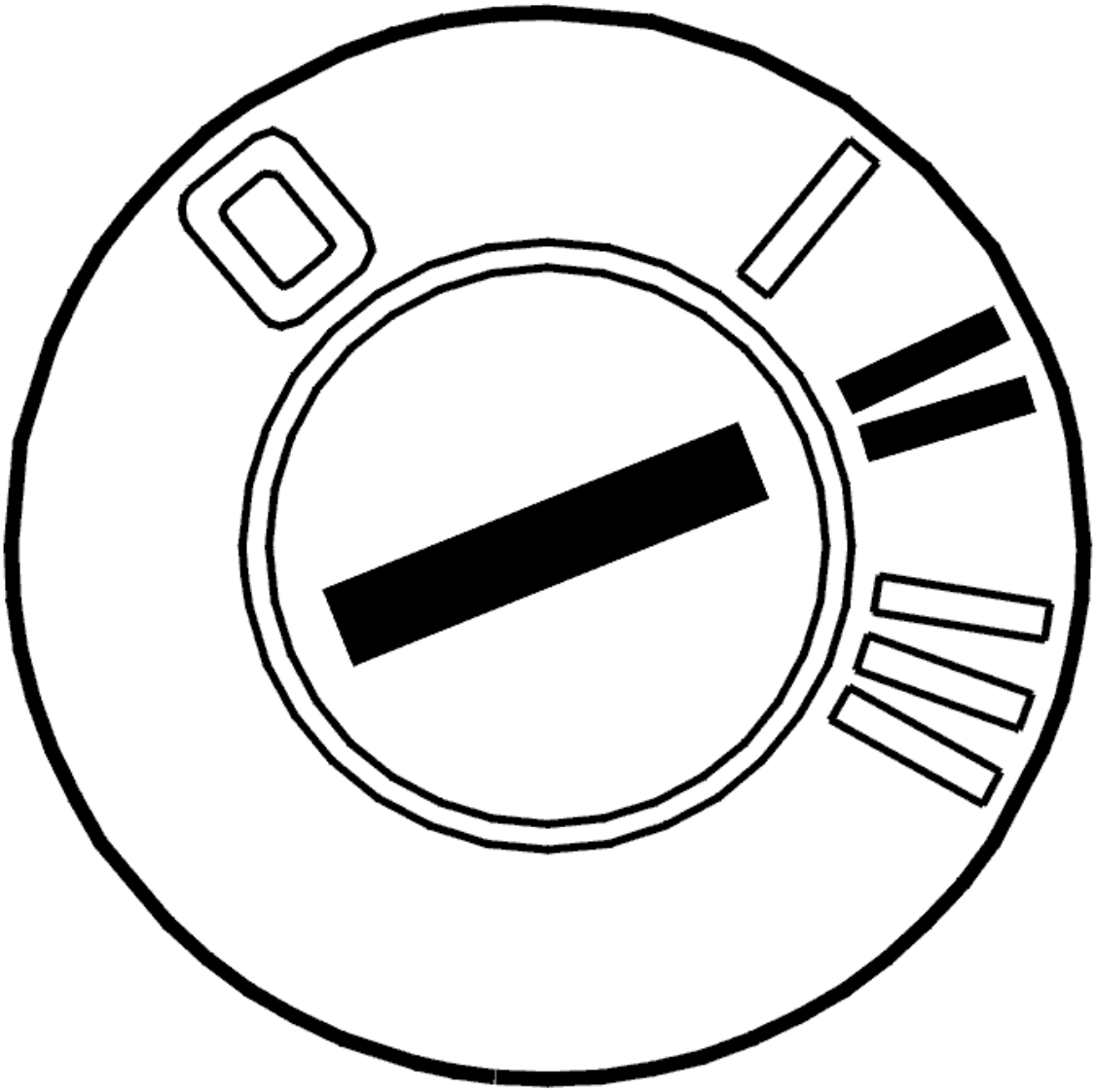

Fig. 295: Identifying Ignition ON
Courtesy of VOLVO CARS CORPORATION

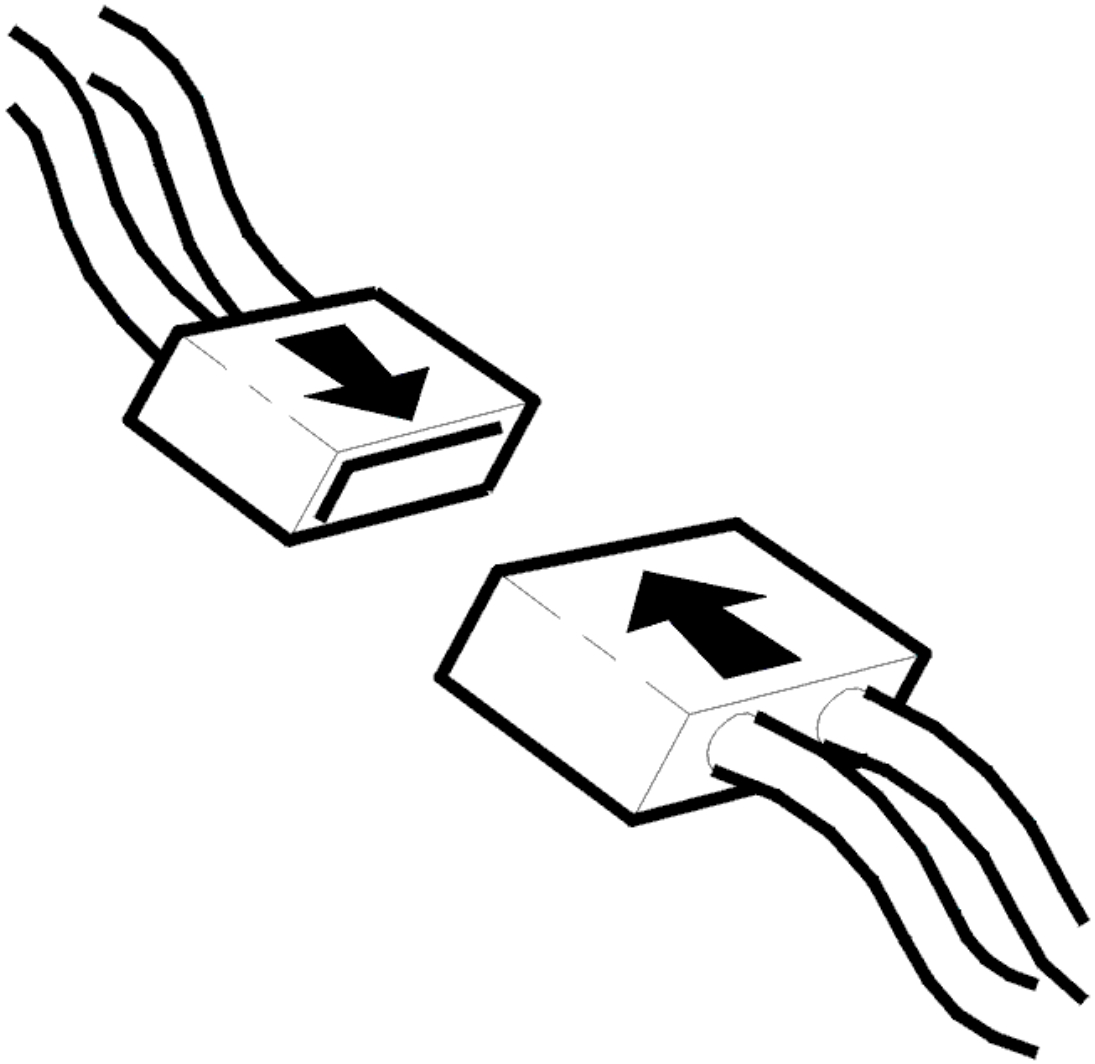

Fig. 296: Connecting Connector
Courtesy of VOLVO CARS CORPORATION

- Ignition off
- Reinstall the connectors, components etc.
- Ignition on.

  Check that the buttons for the headset output function. Check this by pressing the buttons for the next track and the previous track and by changing between the CD/MD and the radio using the SEL button.

Do the buttons function?

- **YES**

  VERIFIED: Troubleshooting has been completed.

- **NO**

  Refer to **INFORMATION**

INFORMATION

FAULT-TRACING INFORMATION

The fault should have been detected and remedied. As this is not the case fault-tracing has failed.

Exit fault-tracing for this diagnostic trouble code (DTC) or make another attempt.

AUD-0019: HEADSET PANEL LEFT. ACTIVATED TOO LONG (2003-2011)

DIAGNOSTIC TROUBLE CODE (DTC) INFORMATION AUD-0019

Condition

Diagnostic trouble code (DTC) AUD-0019 is stored if the audio module (AUD) registers that a button is stuck in on the left-hand headset outputs for more than 3 minutes.

Diagnostic trouble code (DTC) AUD-0019 can be diagnosed when the ignition is on.

Substitute Value

- None.

Possible Source

- Button constantly pressed in on one of the left-hand headset outputs
- Defective button.

Fault symptom[s]

- The buttons for the headset output are not working.

ACTIVATED TOO LONG (2003-2006)

CHECKING COMPONENTS AND WIRING

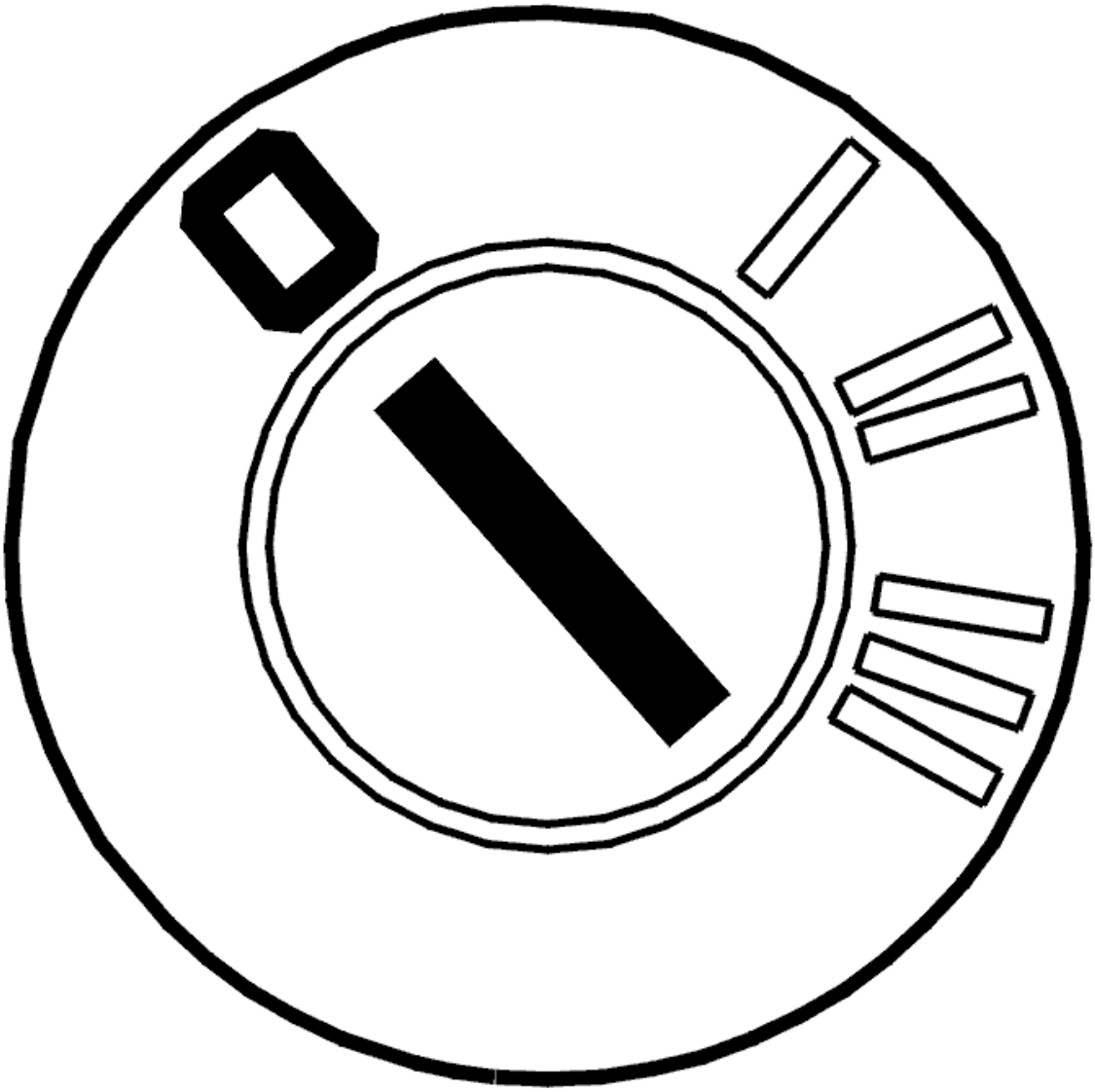

Fig. 297: Identifying Ignition OFF
Courtesy of VOLVO CARS CORPORATION

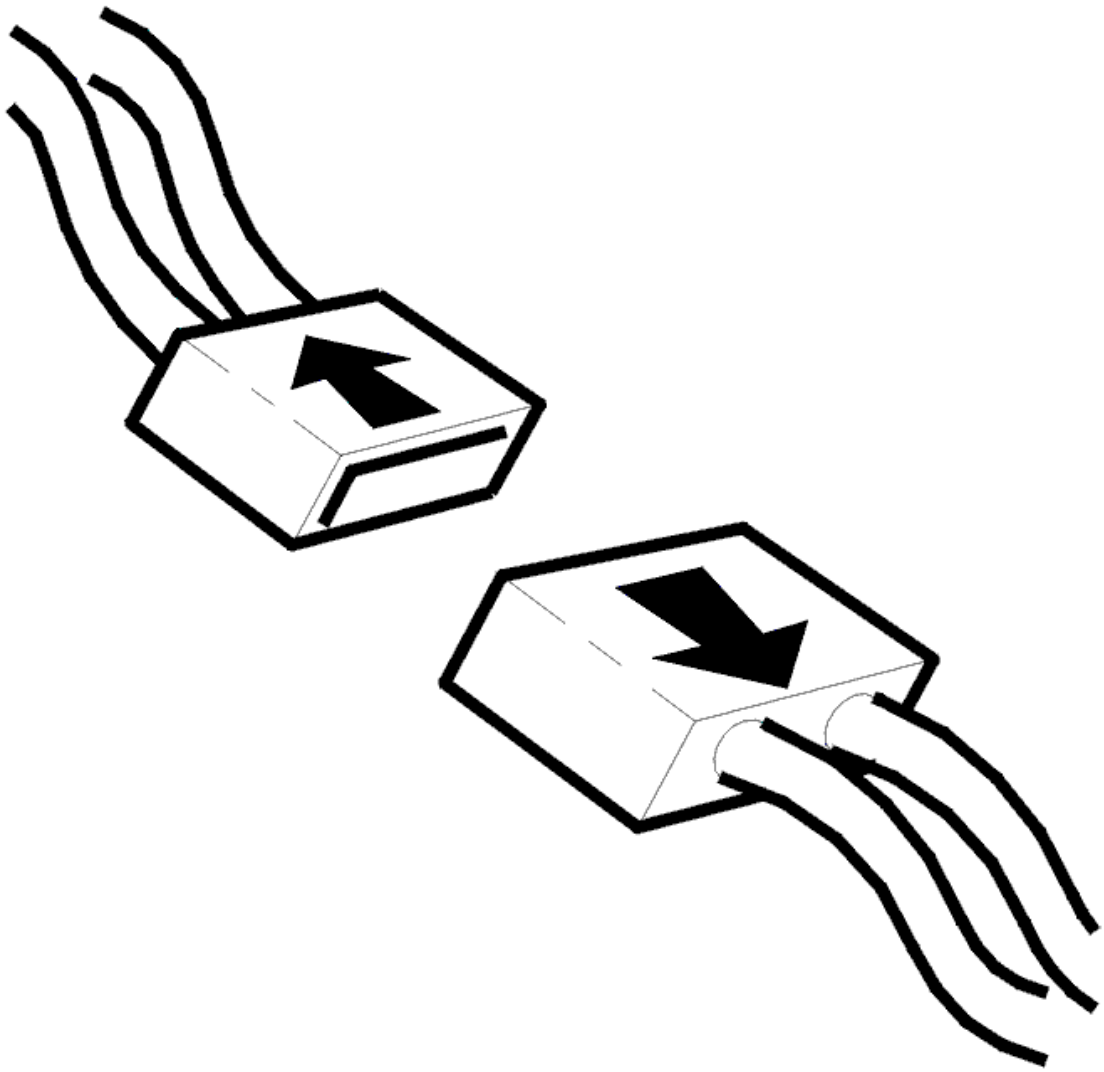

Fig. 298: Disconnecting Connector
Courtesy of VOLVO CARS CORPORATION

- Ignition off
- Disconnect the connector for the left headset panel.

  HINT: If the fault is intermittent it means that the fault has disappeared. Erase the diagnostic trouble code (DTC) and read out again. If the diagnostic trouble code (DTC) recurs, fault trace.

  Check the buttons on the left-hand headset panel. Test the buttons by changing between previous and next track selection and changing between CD/MD and radio.

  Check the cable terminals in the female and male sections of the connector. The cable terminals must not be damaged or pressed back.

  Check the signal cable between terminals #10 and #8 in the connector for the left headset panel. The

resistance must be approximately 39 kohms.

Check the signal cable between terminals #10 and #9 in the connector for the left headset panel. The resistance must be approximately 39 kohms.

Remedy as necessary.

Other information:

- To connect the breakout box, see **CONNECTING THE BREAKOUT BOX**
- To access or replace the audio module (AUD), see **AUDIO MODULE (AUD), REPLACING**
- For information about signals, see **SIGNAL SPECIFICATION**
- see **CONTENTS** .

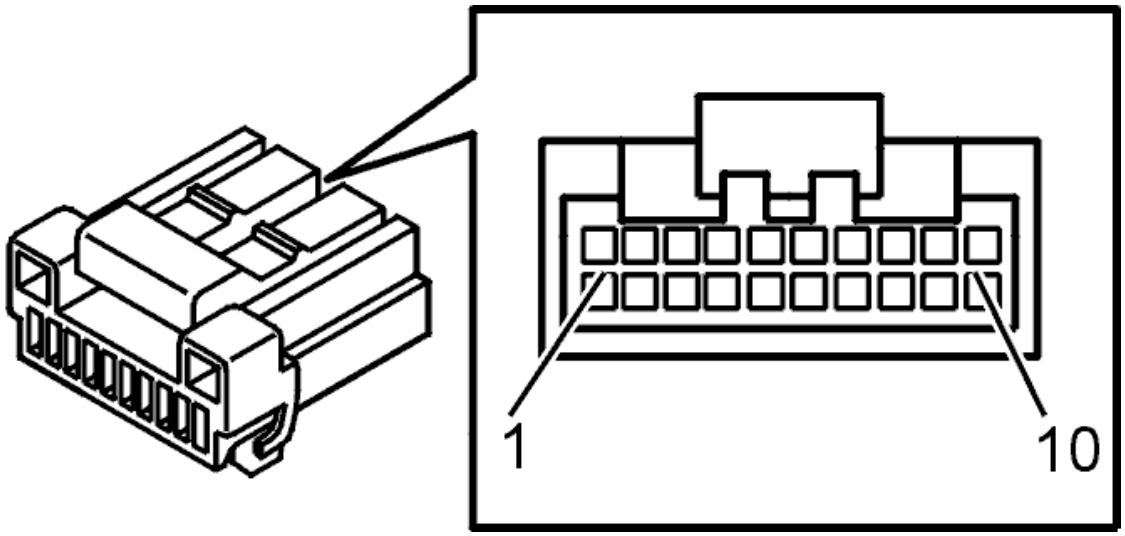

Fig. 299: Identifying Connector (D) Terminals
Courtesy of VOLVO CARS CORPORATION

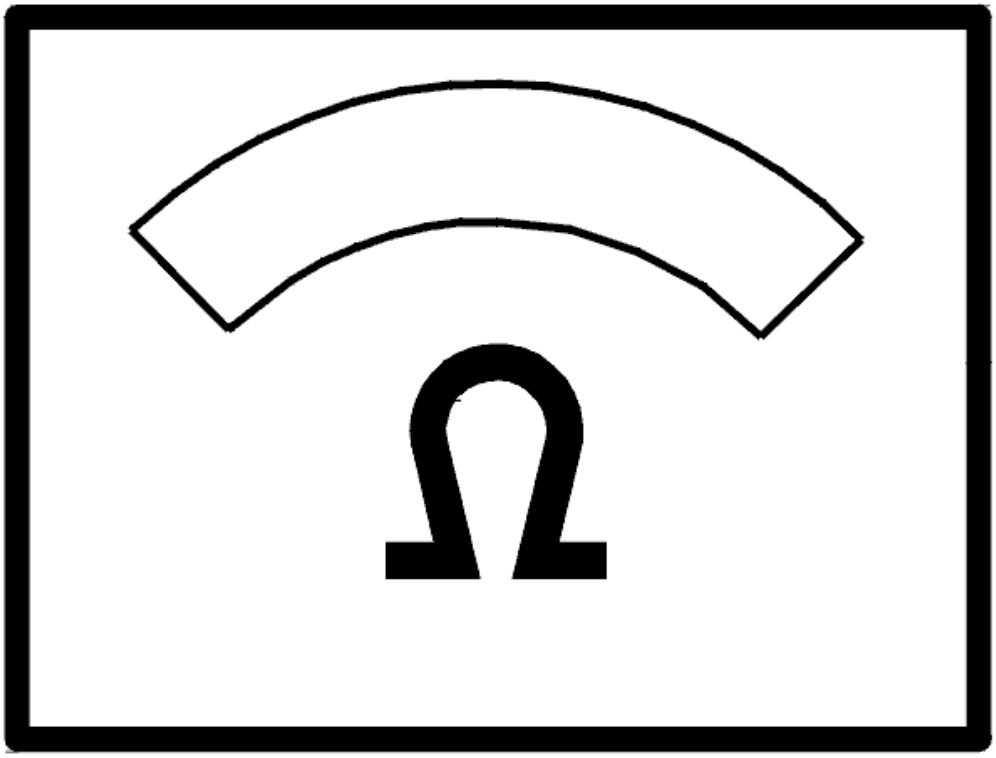

Fig. 300: Identifying Ohm Meter
Courtesy of VOLVO CARS CORPORATION

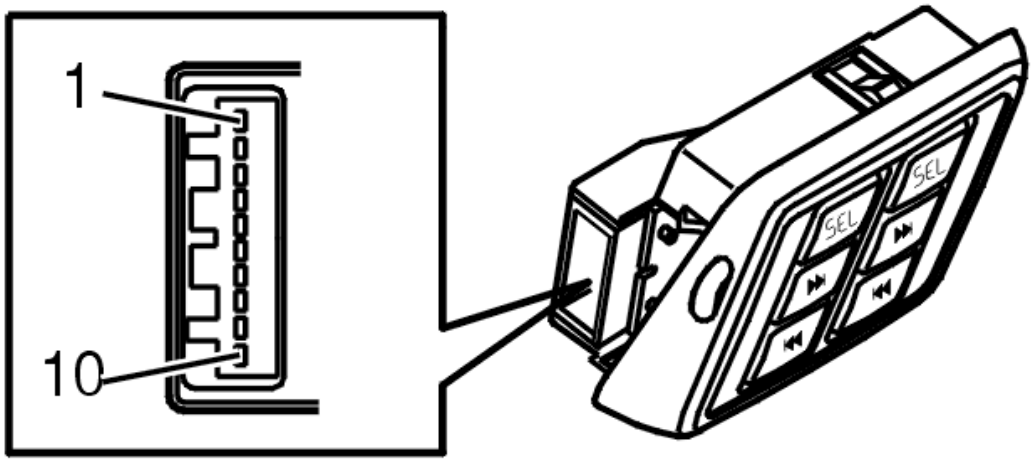

Fig. 301: Identifying Buttons Headset Connector
Courtesy of VOLVO CARS CORPORATION

- **Continue**

  Refer to **VERIFICATION**

VERIFICATION

VERIFICATION

HINT: After carrying out the repair, check that the fault has been remedied.

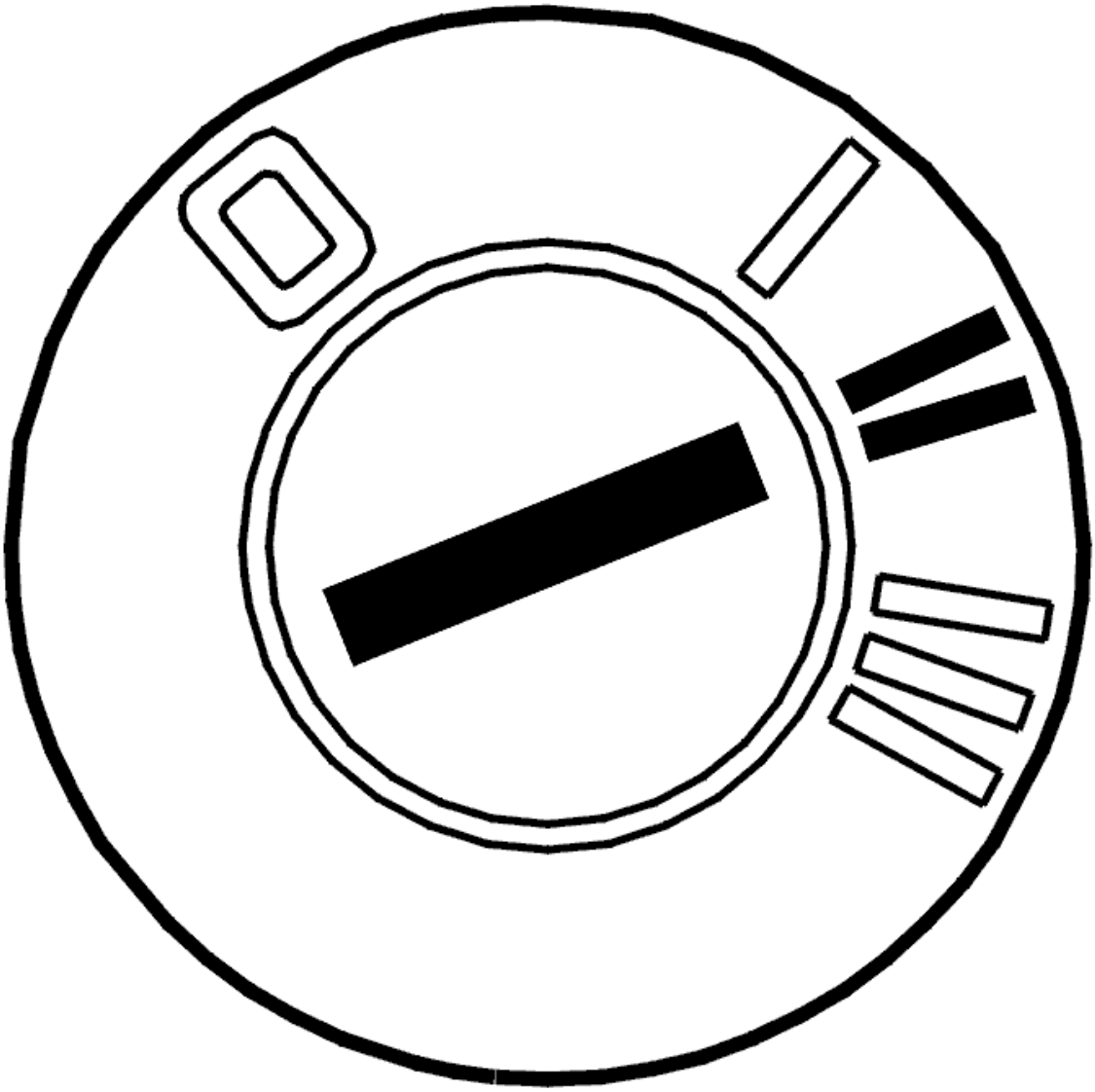

Fig. 302: Identifying Ignition ON
Courtesy of VOLVO CARS CORPORATION

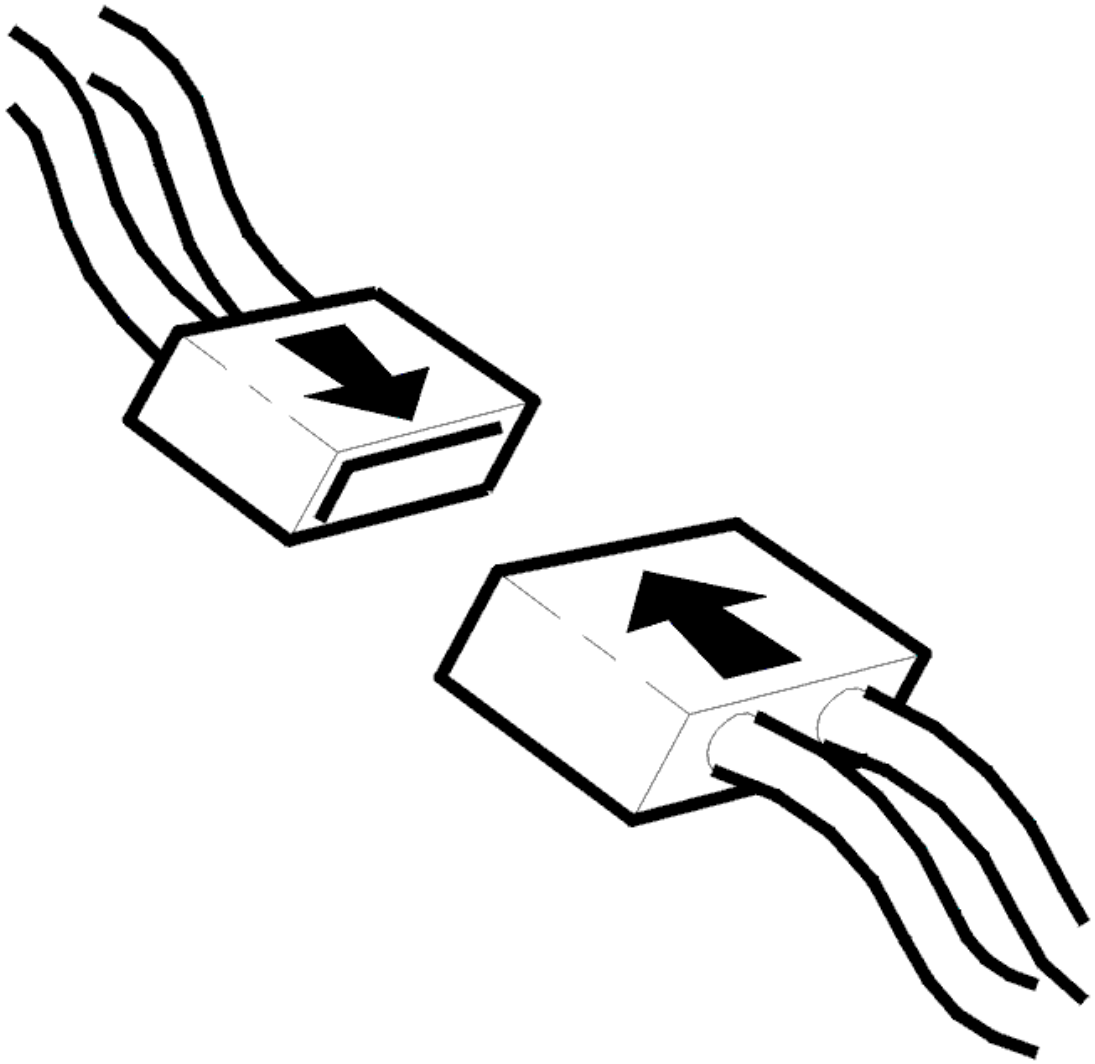

Fig. 303: Connecting Connector
Courtesy of VOLVO CARS CORPORATION

- Ignition off
- Reinstall the connectors, components etc.
- Ignition on.

  Check that the buttons for the headset output function. Check this by pressing the buttons for the next track and the previous track and by changing between the CD/MD and the radio using the SEL button.

Do the buttons function?

- **YES**

  VERIFIED: Troubleshooting has been completed.

- **NO**

  Refer to **INFORMATION**

INFORMATION

FAULT-TRACING INFORMATION

The fault should have been detected and remedied. As this is not the case fault-tracing has failed.

Exit fault-tracing for this diagnostic trouble code (DTC) or make another attempt.

ACTIVATED TOO LONG (2007-2011)

CHECKING COMPONENTS AND WIRING

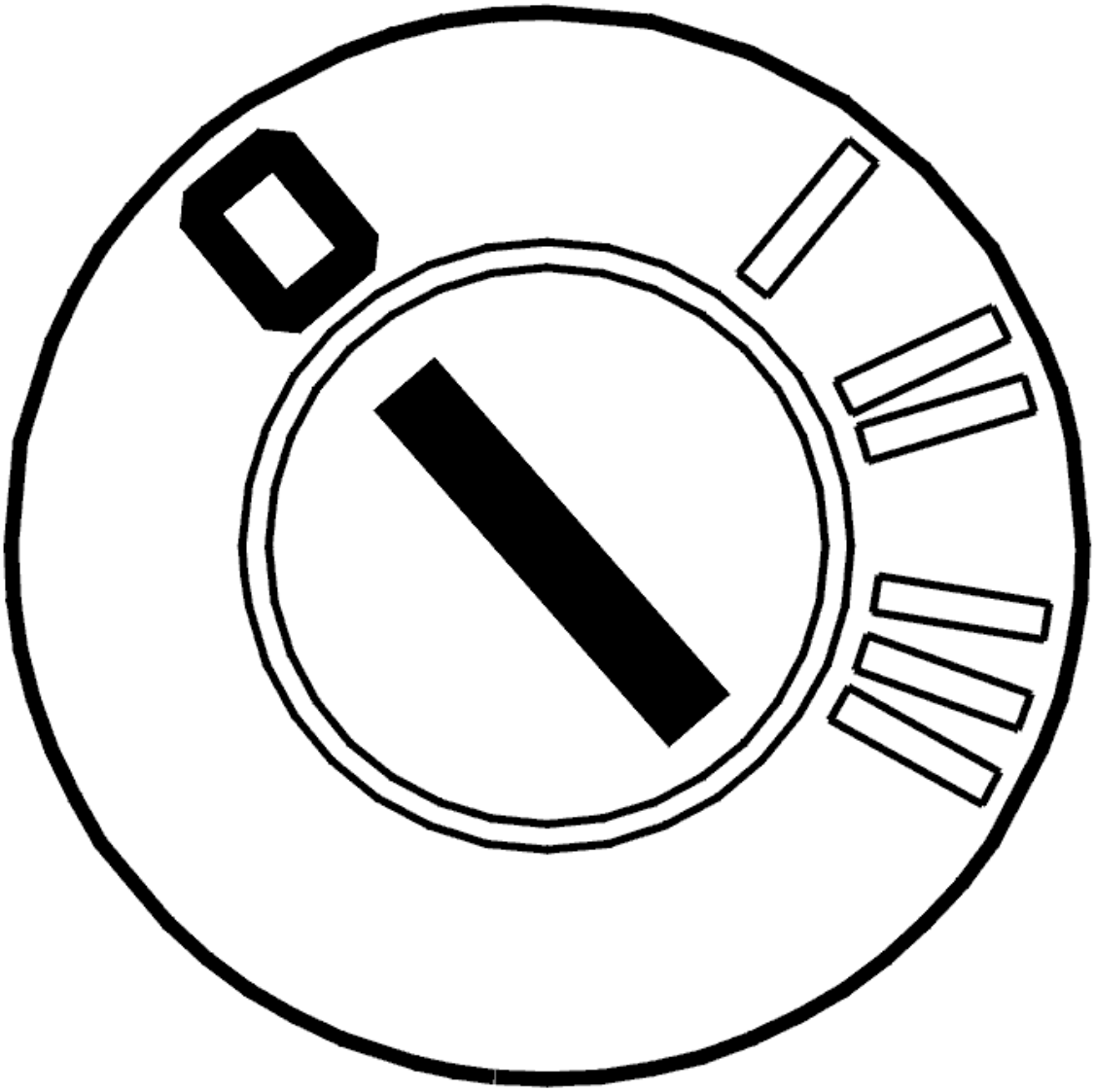

Fig. 304: Identifying Ignition OFF
Courtesy of VOLVO CARS CORPORATION

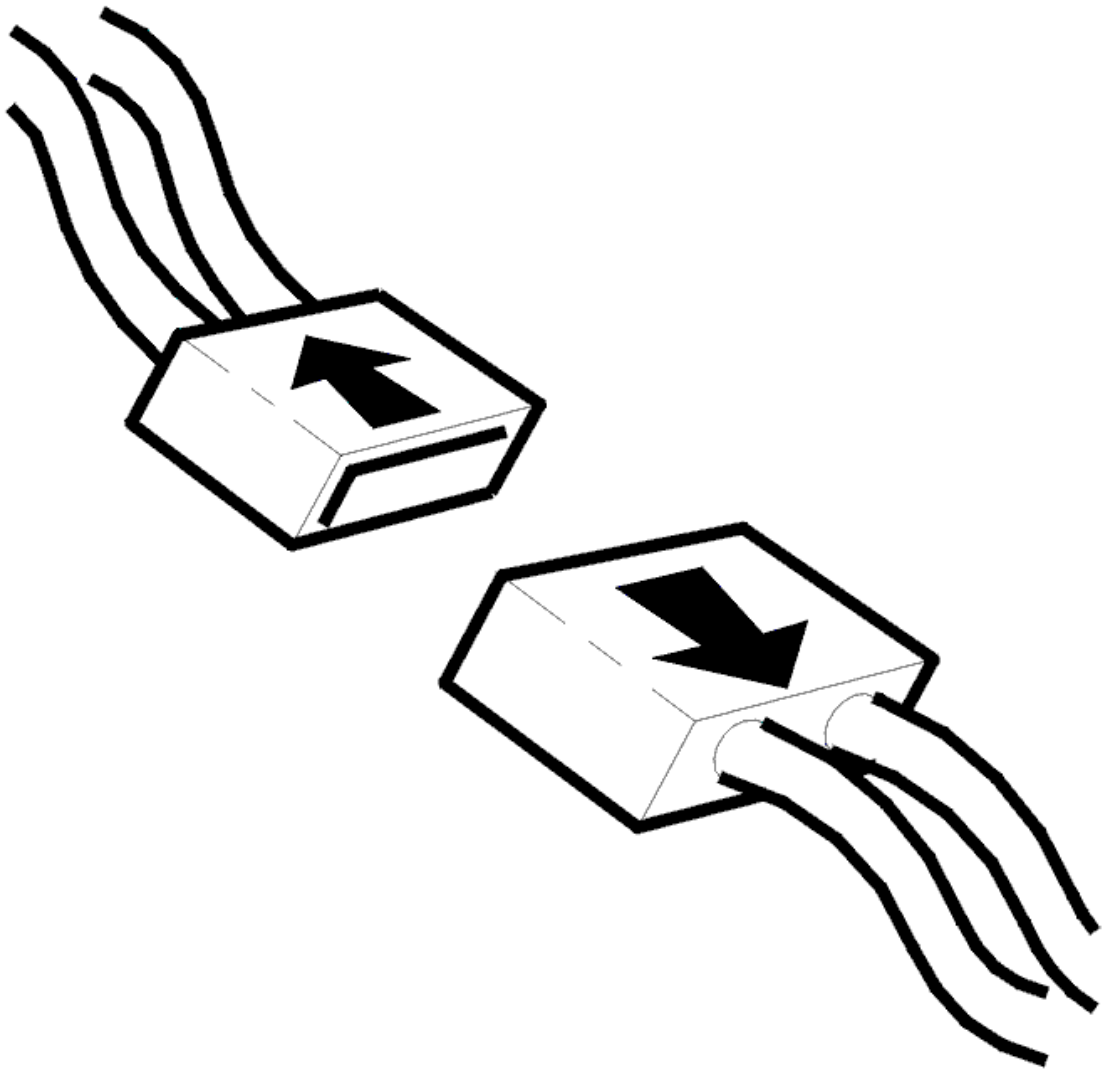

Fig. 305: Disconnecting Connector
Courtesy of VOLVO CARS CORPORATION

- Ignition off
- Disconnect the connector for the left headset panel.

  HINT: If the fault is intermittent it means that the fault has disappeared. Erase the diagnostic trouble code (DTC) and read out again. If the diagnostic trouble code (DTC) recurs, fault trace.

  Check the buttons on the left-hand headset panel. Test the buttons by changing between previous and next track selection and changing between CD/MD and radio.

  Check the cable terminals in the female and male sections of the connector. The cable terminals must not

be damaged or pressed back.

Check the signal cable between terminals #10 and #8 in the connector for the left headset panel. The resistance must be approximately 39 kohms.

Check the signal cable between terminals #10 and #9 in the connector for the left headset panel. The resistance must be approximately 39 kohms.

Remedy as necessary.

Other information:

- To connect the breakout box, see **CONNECTING THE BREAKOUT BOX**
- To access or replace the audio module (AUD), see **AUDIO MODULE (AUD), REPLACING**
- For information about signals, see **SIGNAL SPECIFICATION**
- see **CONTENTS** .

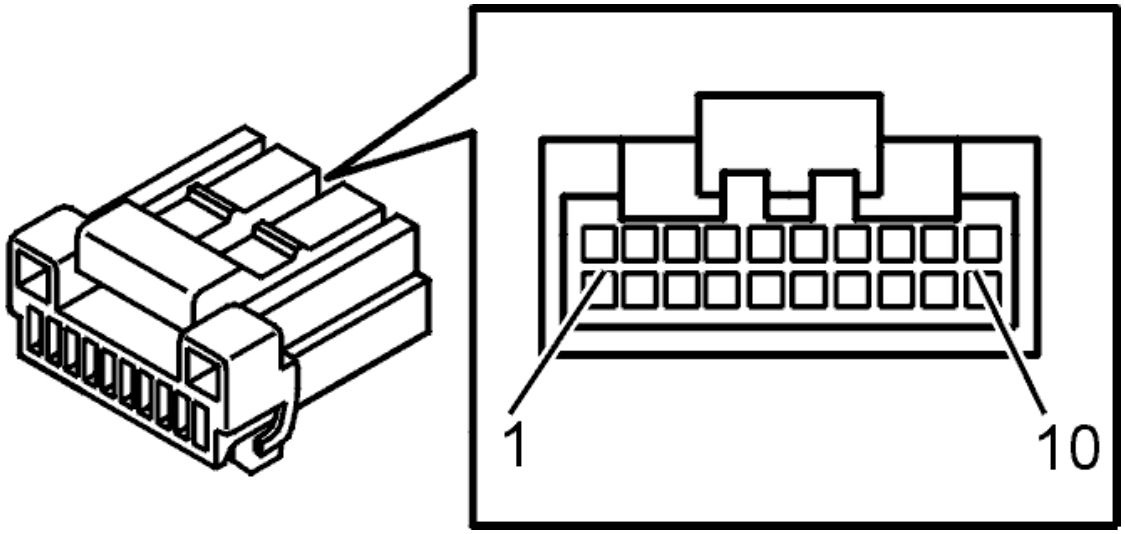

Fig. 306: Identifying Connector (D) Terminals
Courtesy of VOLVO CARS CORPORATION

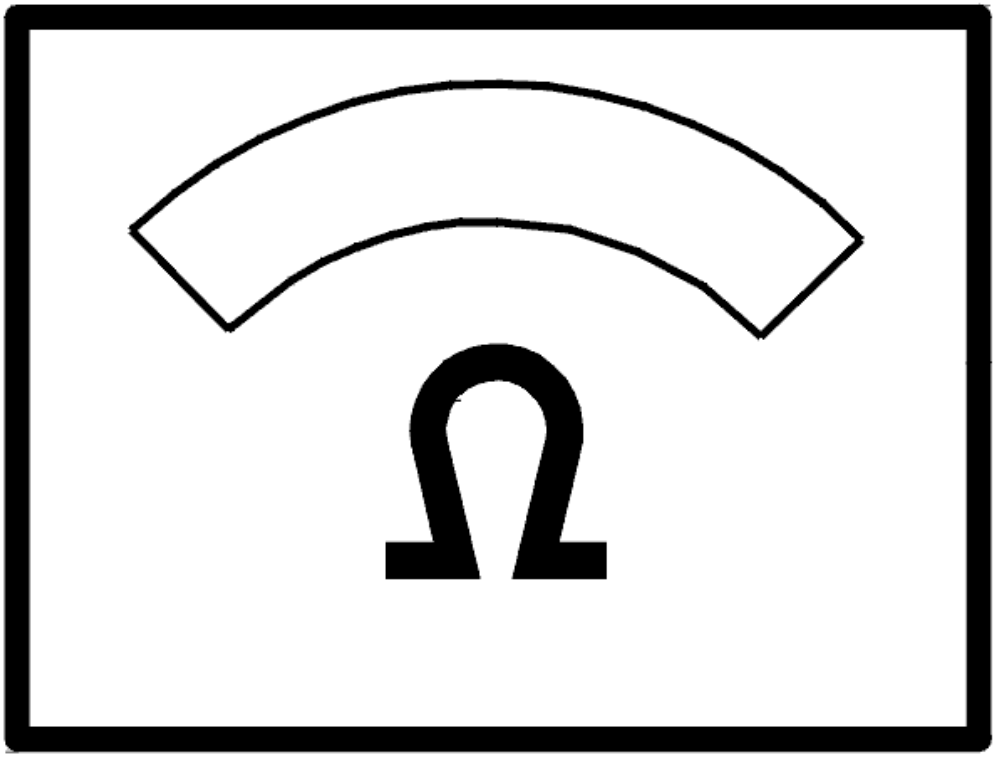

Fig. 307: Identifying Ohm Meter
Courtesy of VOLVO CARS CORPORATION

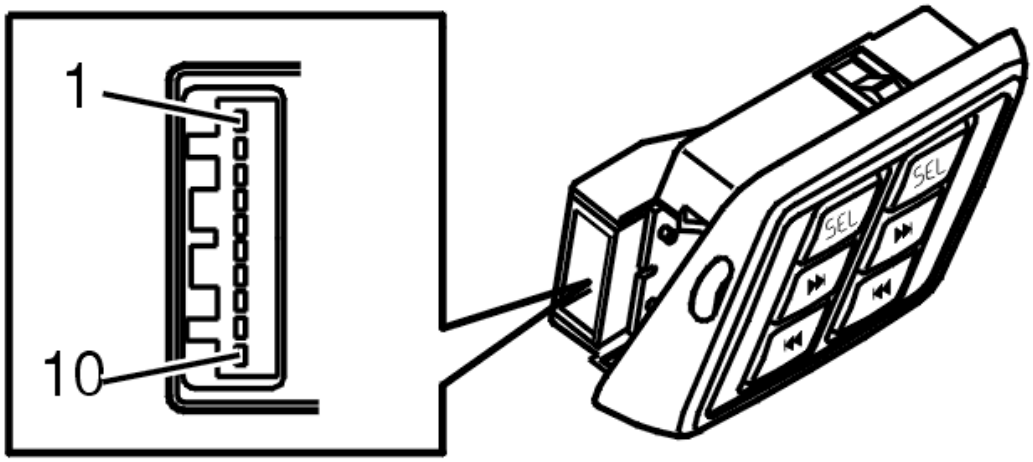

Fig. 308: Identifying Buttons Headset Connector
Courtesy of VOLVO CARS CORPORATION

- **Continue**

  Refer to **VERIFICATION**

VERIFICATION

VERIFICATION

HINT: After carrying out the repair, check that the fault has been remedied.

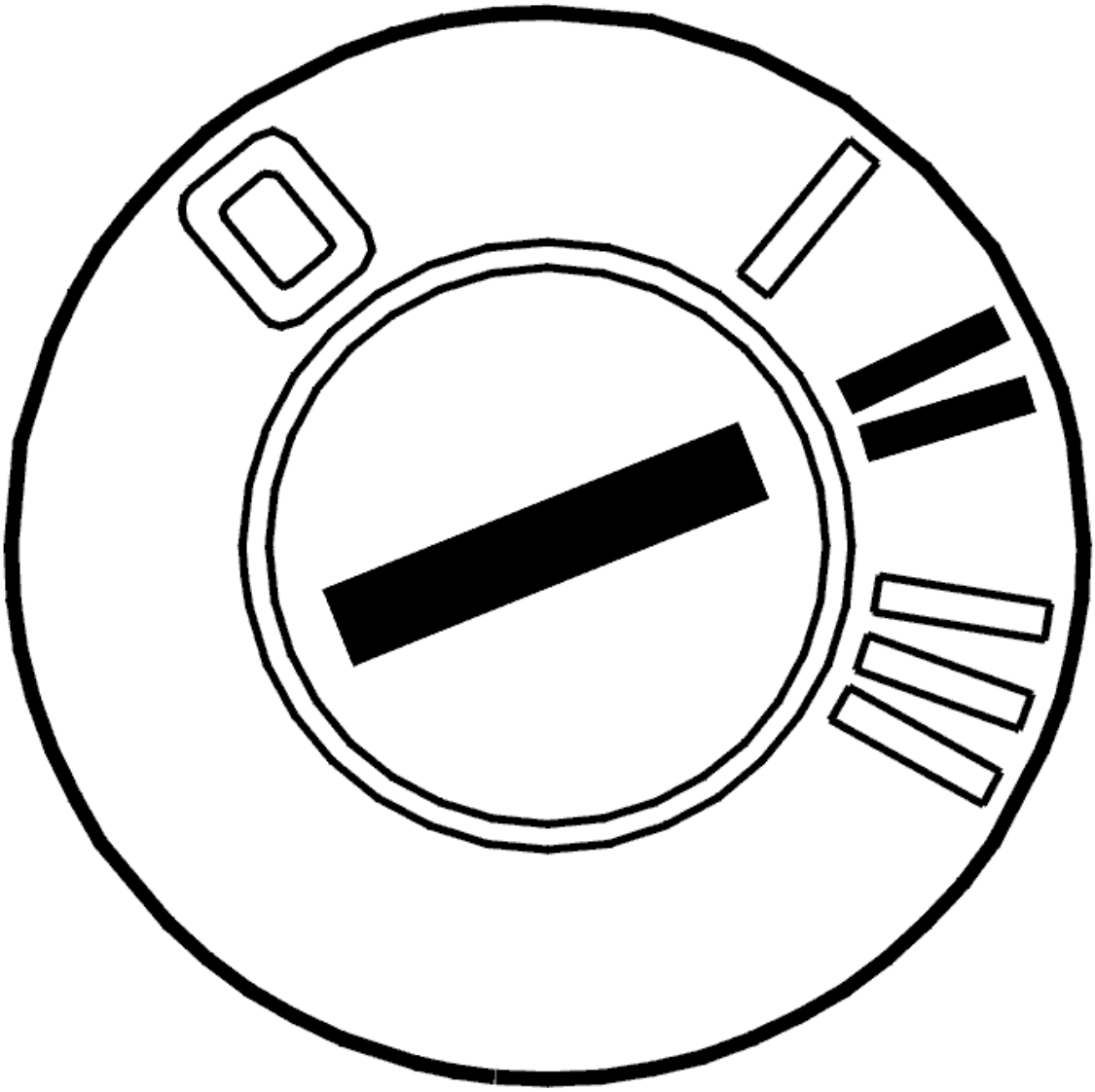

Fig. 309: Identifying Ignition ON
Courtesy of VOLVO CARS CORPORATION

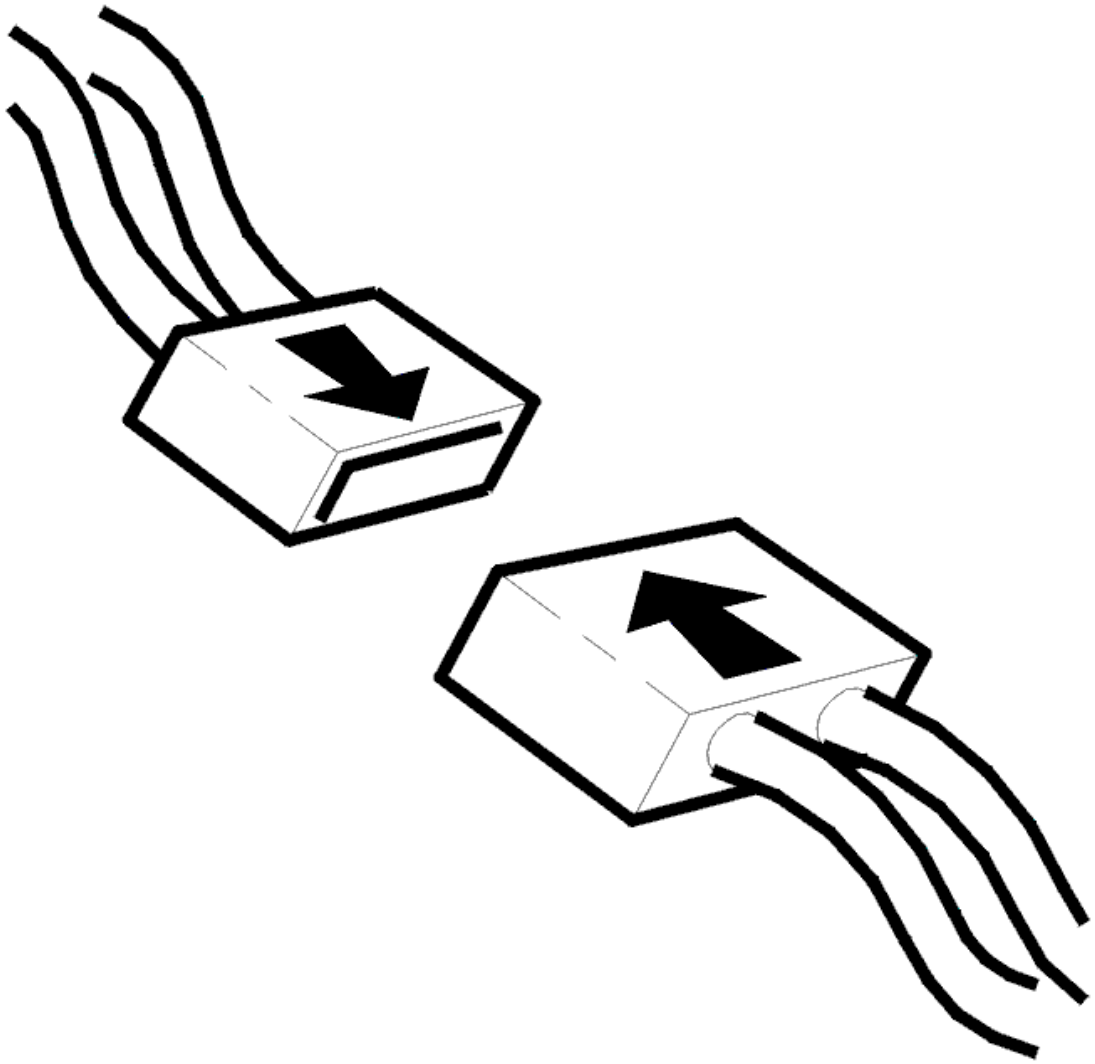

Fig. 310: Connecting Connector
Courtesy of VOLVO CARS CORPORATION

- Ignition off
- Reinstall the connectors, components etc.
- Ignition on.

  Check that the buttons for the headset output function. Check this by pressing the buttons for the next track and the previous track and by changing between the CD/MD and the radio using the SEL button.

Do the buttons function?

- **YES**

  VERIFIED: Troubleshooting has been completed.

- **NO**

  Refer to **INFORMATION**

INFORMATION

FAULT-TRACING INFORMATION

The fault should have been detected and remedied. As this is not the case fault-tracing has failed.

Exit fault-tracing for this diagnostic trouble code (DTC) or make another attempt.

AUD-001A: HEADSET PANEL RIGHT. ACTIVATED TOO LONG (2003-2011)

DIAGNOSTIC TROUBLE CODE (DTC) INFORMATION AUD-001A

Condition

Diagnostic trouble code (DTC) AUD-001A is stored if the audio module (AUD) registers that a button is stuck in on the right-hand headset outputs for more than 3 minutes.

Diagnostic trouble code (DTC) AUD-001A can be diagnosed when the ignition is on.

Substitute Value

- None.

Possible Source

- Button constantly pressed in on one of the right-hand headset outputs
- Defective button.

Fault symptom[s]

- The buttons on the right-hand headset output are not working.

ACTIVATED TOO LONG (2003-2006)

CHECKING COMPONENTS AND WIRING

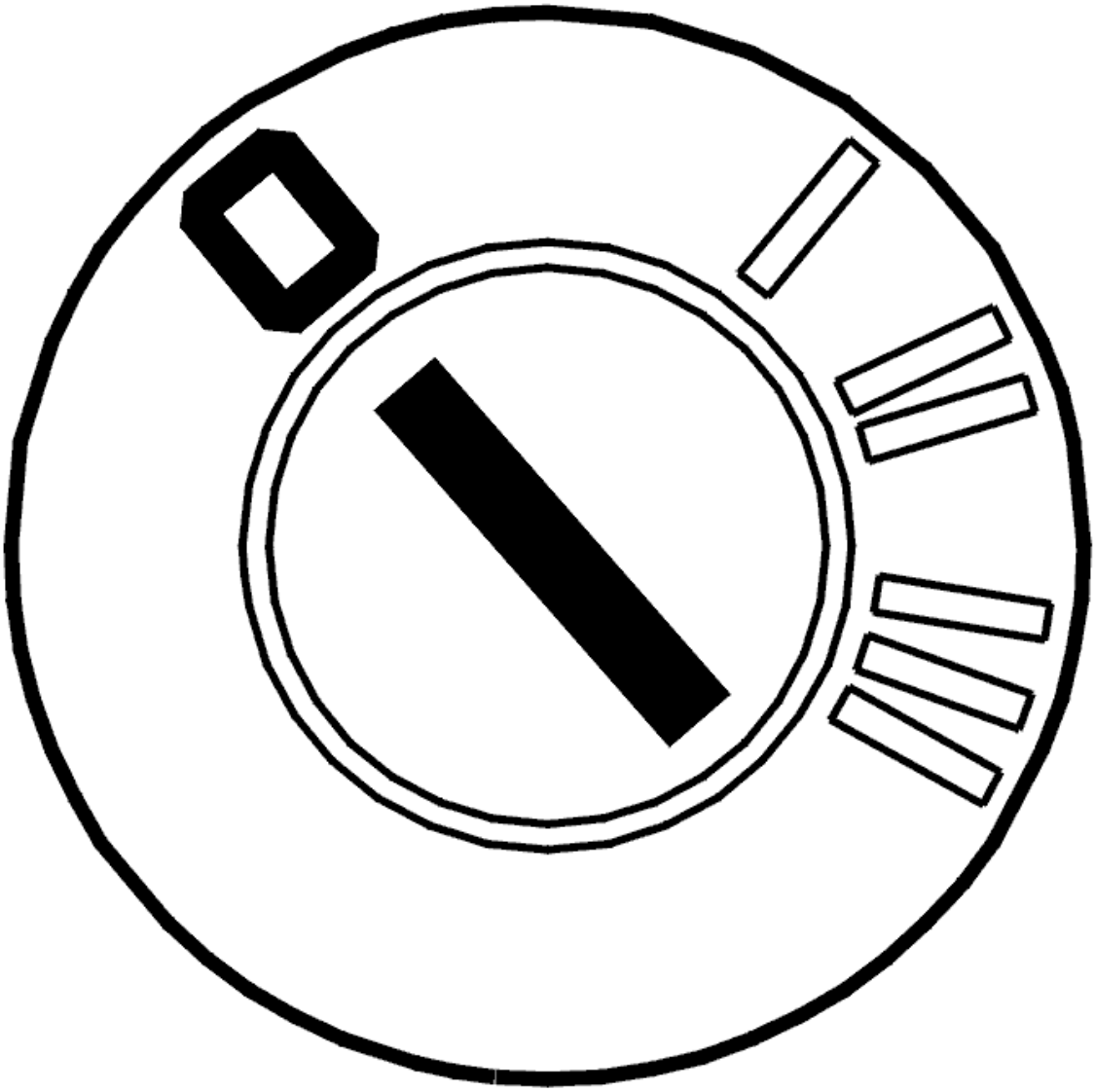

Fig. 311: Identifying Ignition OFF
Courtesy of VOLVO CARS CORPORATION

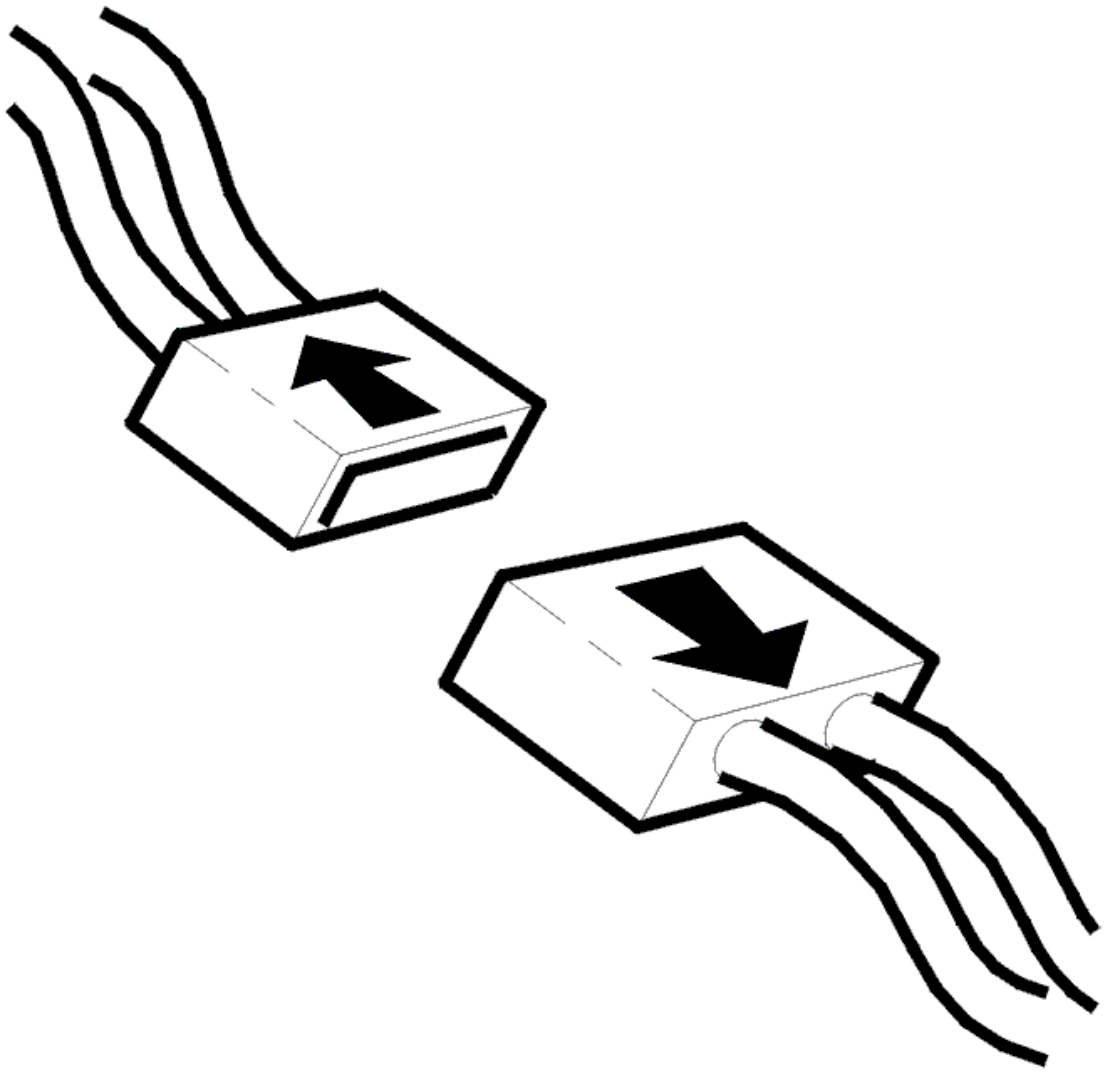

Fig. 312: Disconnecting Connector
Courtesy of VOLVO CARS CORPORATION

- Ignition off
- Disconnect the connector for the right headset panel.

  HINT: If the fault is intermittent it means that the fault has disappeared. Erase the diagnostic trouble code (DTC) and read out again. If the diagnostic trouble code (DTC) recurs, fault trace.

  Check the buttons on the right-hand headset panel. Test the buttons by changing between previous and next track selection and changing between CD/MD and radio.

  Check the cable terminals in the female and male sections of the connector. The cable terminals must not be damaged or pressed back.

  Check the signal cable between terminals #10 and #8 in the connector for the right headset panel. The

resistance must be approximately 39 kohms.

Check the signal cable between terminals #10 and #9 in the connector for the right headset panel. The resistance must be approximately 39 kohms.

Remedy as necessary.

Other information:

- To connect the breakout box, see **CONNECTING THE BREAKOUT BOX**
- To access or replace the audio module (AUD), see **AUDIO MODULE (AUD), REPLACING**
- For information about signals, see **SIGNAL SPECIFICATION**
- see **CONTENTS** .

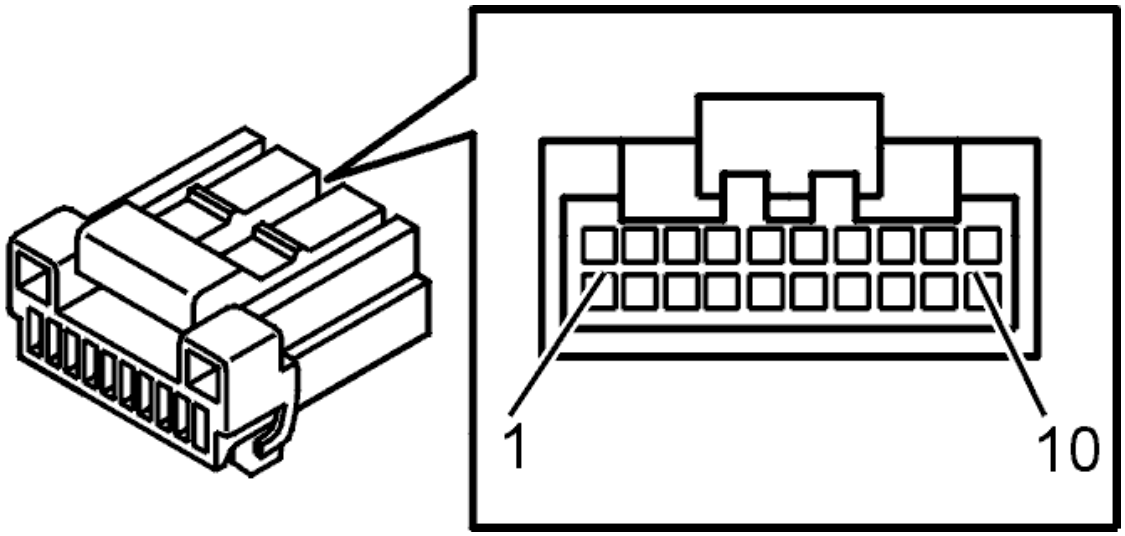

Fig. 313: Identifying Connector (D) Terminals
Courtesy of VOLVO CARS CORPORATION

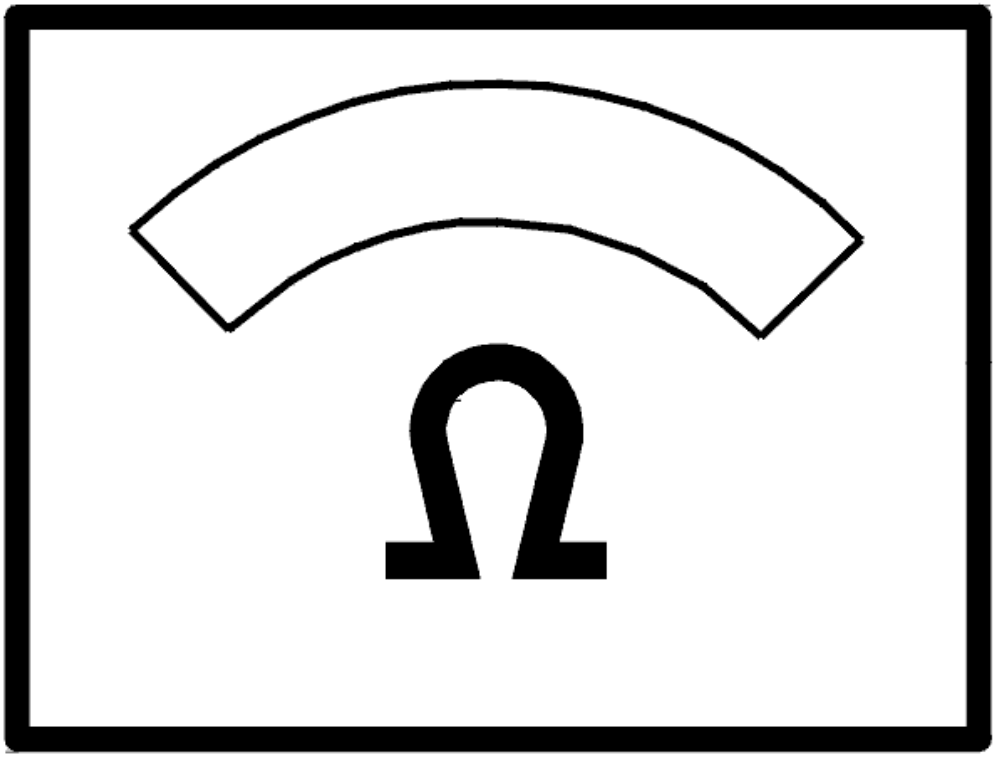

Fig. 314: Identifying Ohm Meter
Courtesy of VOLVO CARS CORPORATION

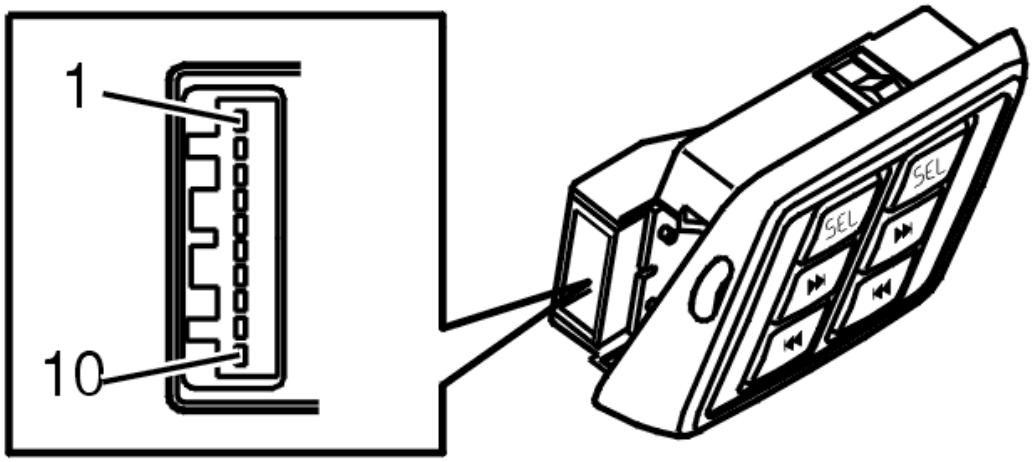

Fig. 315: Identifying Buttons Headset Connector
Courtesy of VOLVO CARS CORPORATION

- **Continue**

  Refer to **VERIFICATION**

VERIFICATION

VERIFICATION

HINT: After carrying out the repair, check that the fault has been remedied.

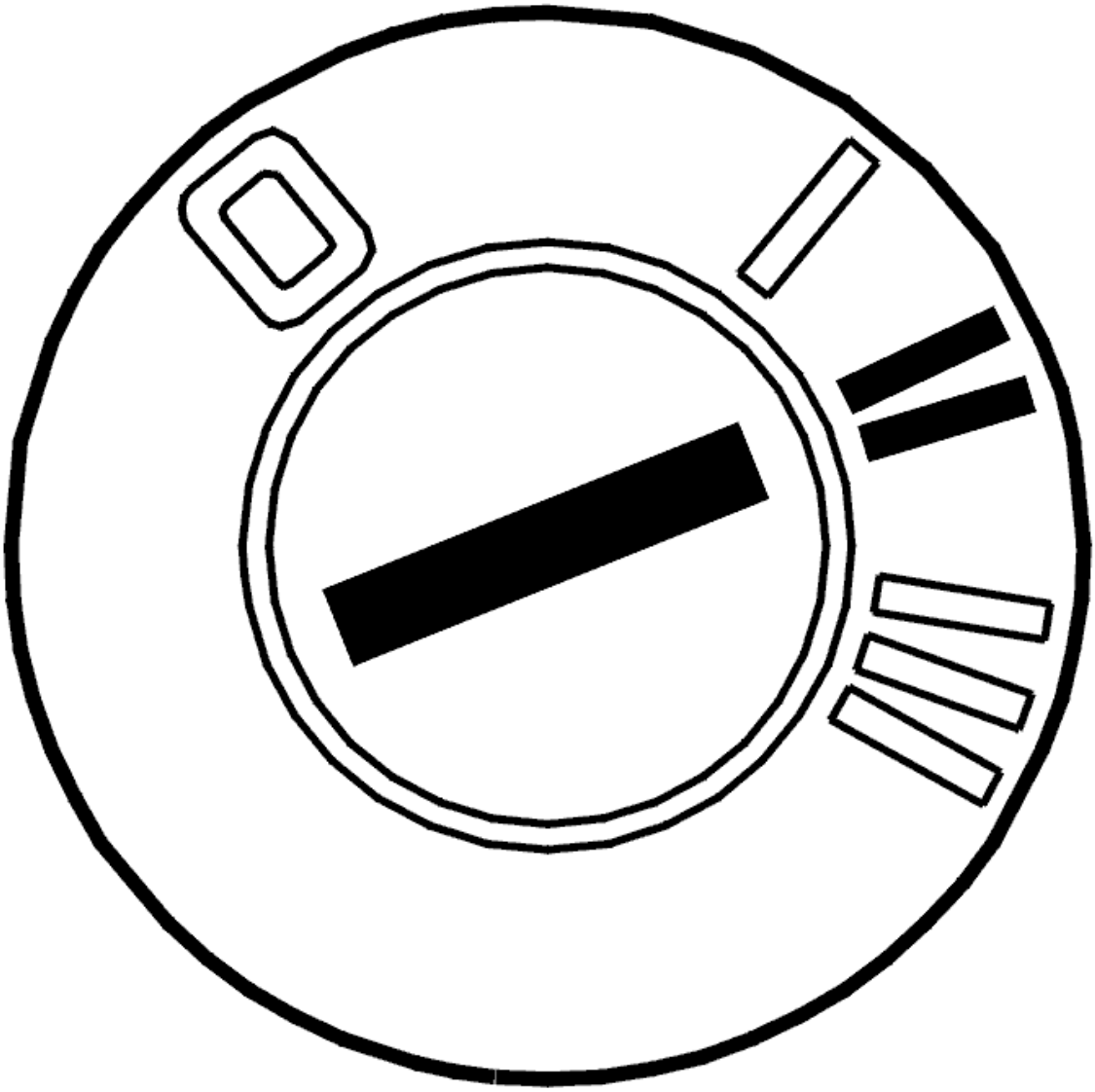

Fig. 316: Identifying Ignition ON
Courtesy of VOLVO CARS CORPORATION

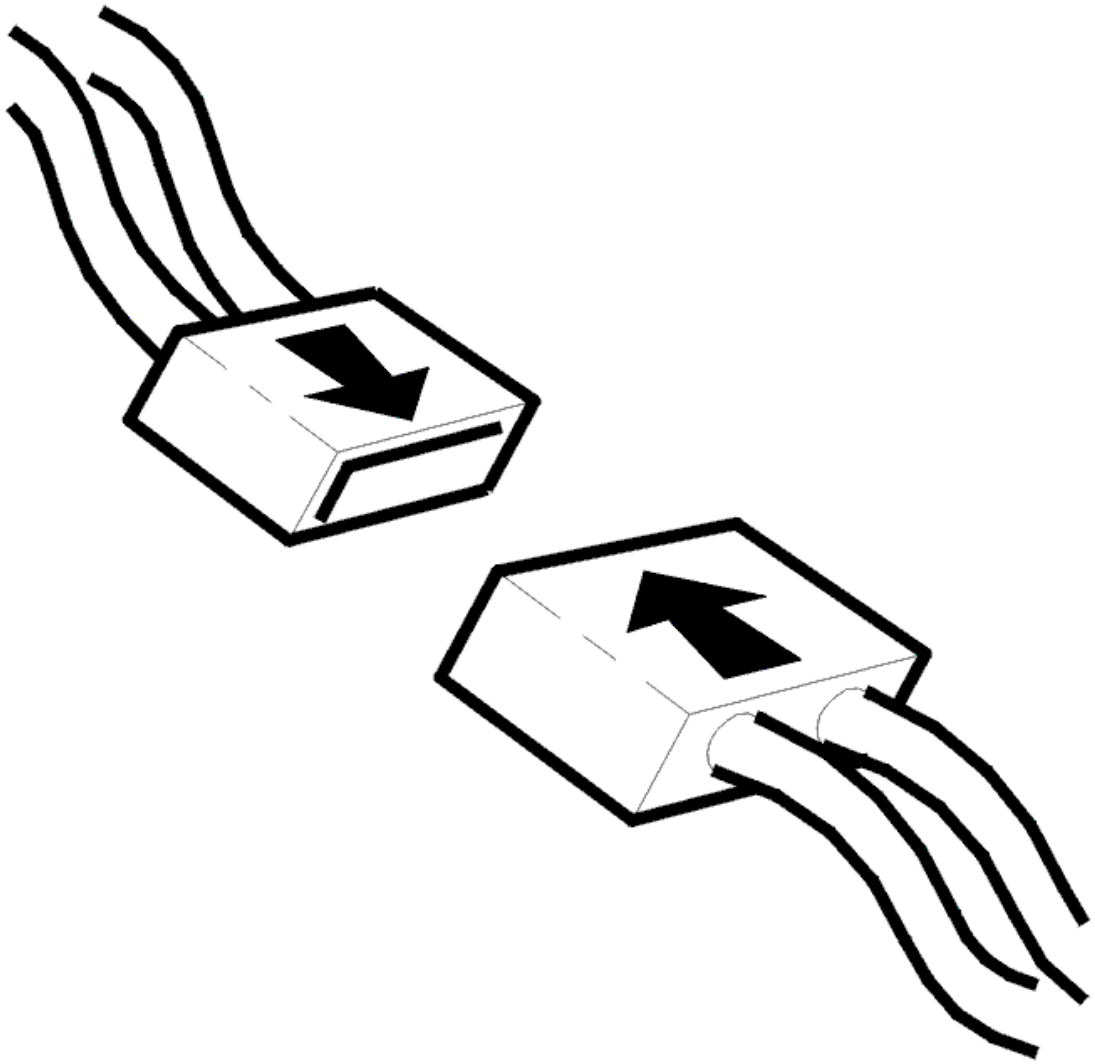

Fig. 317: Connecting Connector
Courtesy of VOLVO CARS CORPORATION

- Ignition off
- Reinstall the connectors, components etc.
- Ignition on.

  Check that the buttons for the headset output function. Check this by pressing the buttons for the next track and the previous track and by changing between the CD/MD and the radio using the SEL button.

Do the buttons function?

- **YES**

  VERIFIED: Troubleshooting has been completed.

- **NO**

  Refer to **INFORMATION**

INFORMATION

FAULT-TRACING INFORMATION

The fault should have been detected and remedied. As this is not the case fault-tracing has failed.

Exit fault-tracing for this diagnostic trouble code (DTC) or make another attempt.

ACTIVATED TOO LONG (2007-2011)

CHECKING COMPONENTS AND WIRING

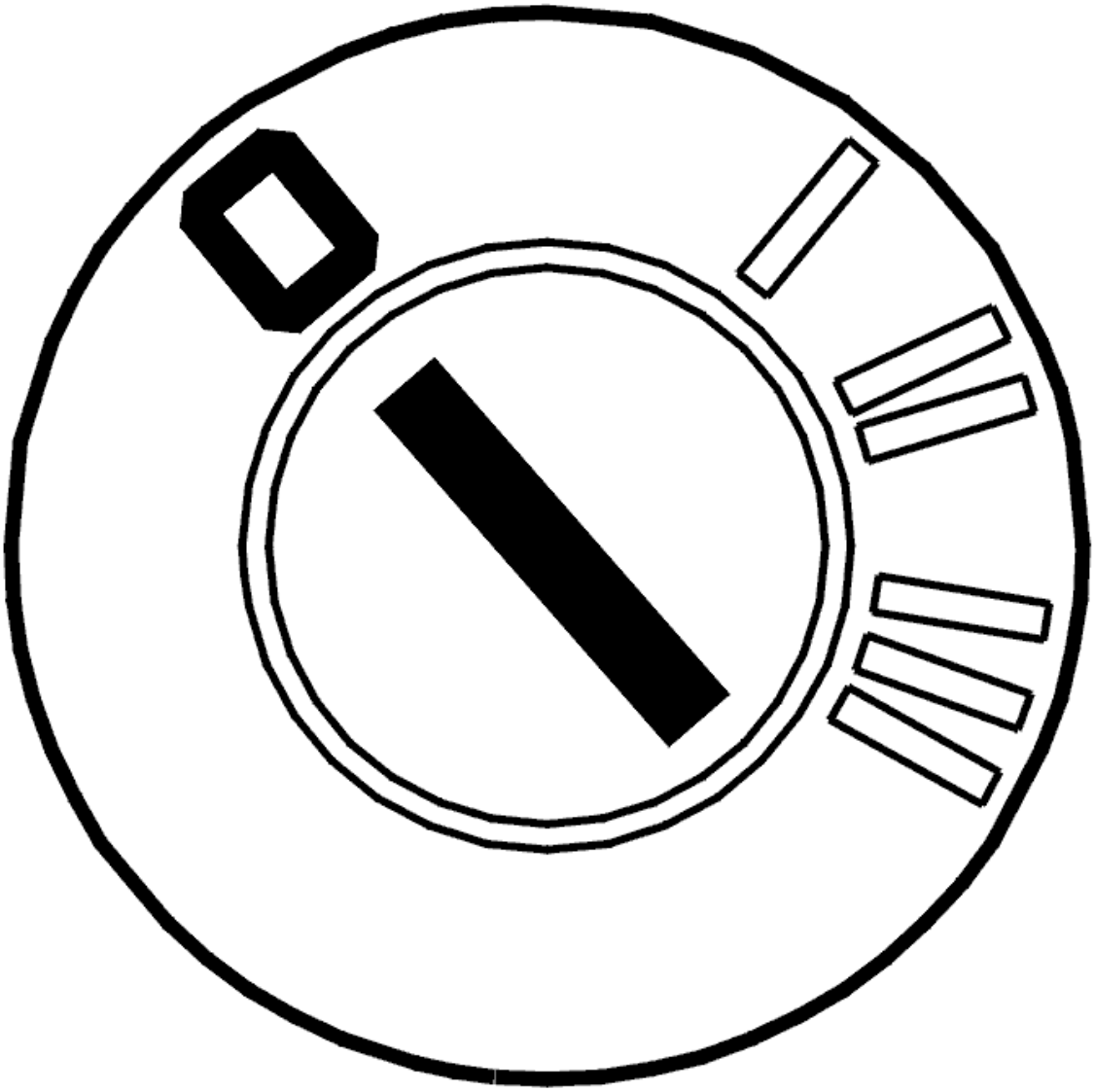

Fig. 318: Identifying Ignition OFF
Courtesy of VOLVO CARS CORPORATION

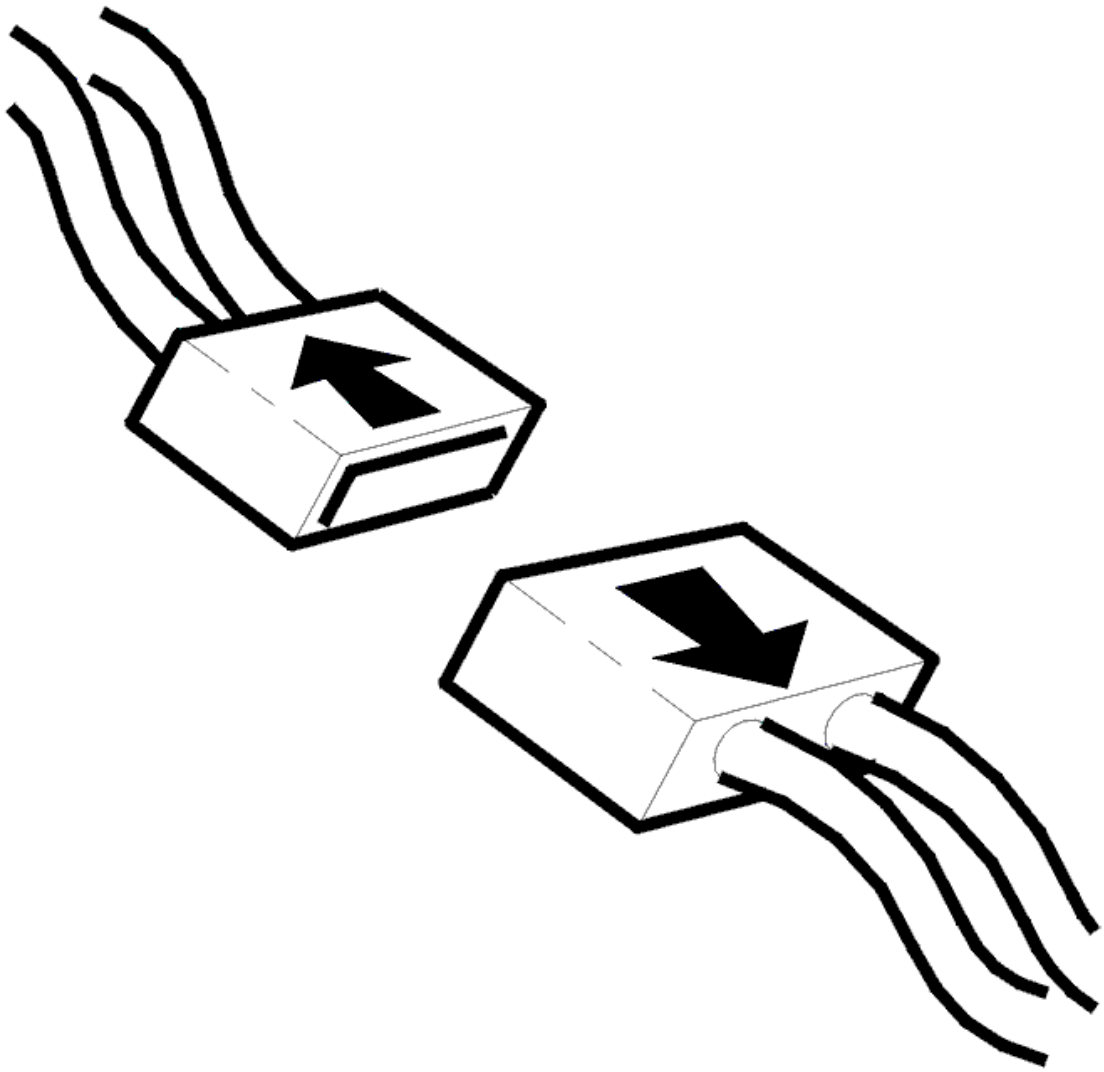

Fig. 319: Disconnecting Connector
Courtesy of VOLVO CARS CORPORATION

- Ignition off
- Disconnect the connector for the right headset panel.

  HINT: If the fault is intermittent it means that the fault has disappeared. Erase the diagnostic trouble code (DTC) and read out again. If the diagnostic trouble code (DTC) recurs, fault trace.

  Check the buttons on the right-hand headset panel. Test the buttons by changing between previous and next track selection and changing between CD/MD and radio.

  Check the cable terminals in the female and male sections of the connector. The cable terminals must not

be damaged or pressed back.

Check the signal cable between terminals #10 and #8 in the connector for the right headset panel. The resistance must be approximately 39 kohms.

Check the signal cable between terminals #10 and #9 in the connector for the right headset panel. The resistance must be approximately 39 kohms.

Remedy as necessary.

Other information:

- To connect the breakout box, see **CONNECTING THE BREAKOUT BOX**
- To access or replace the audio module (AUD), see **AUDIO MODULE (AUD), REPLACING**
- For information about signals, see **SIGNAL SPECIFICATION**
- see **CONTENTS** .

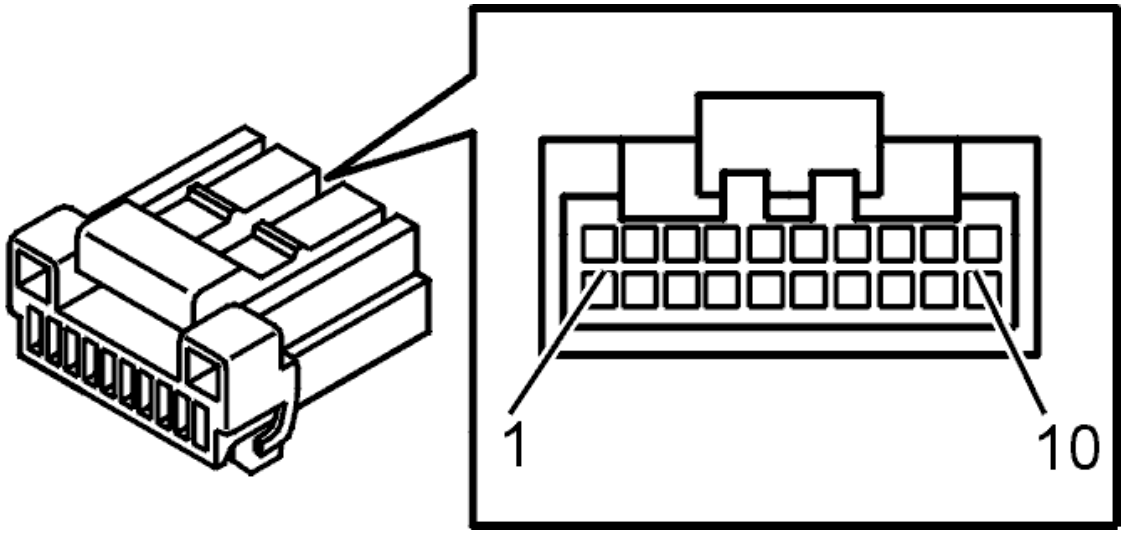

Fig. 320: Identifying Connector (D) Terminals
Courtesy of VOLVO CARS CORPORATION

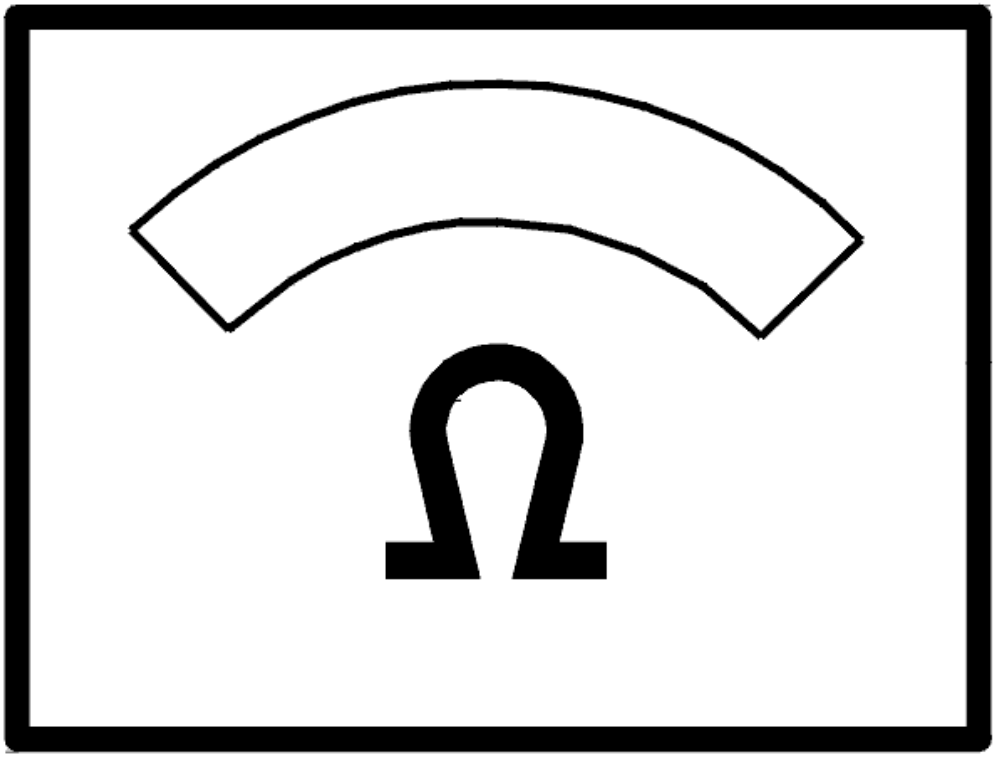

Fig. 321: Identifying Ohm Meter
Courtesy of VOLVO CARS CORPORATION

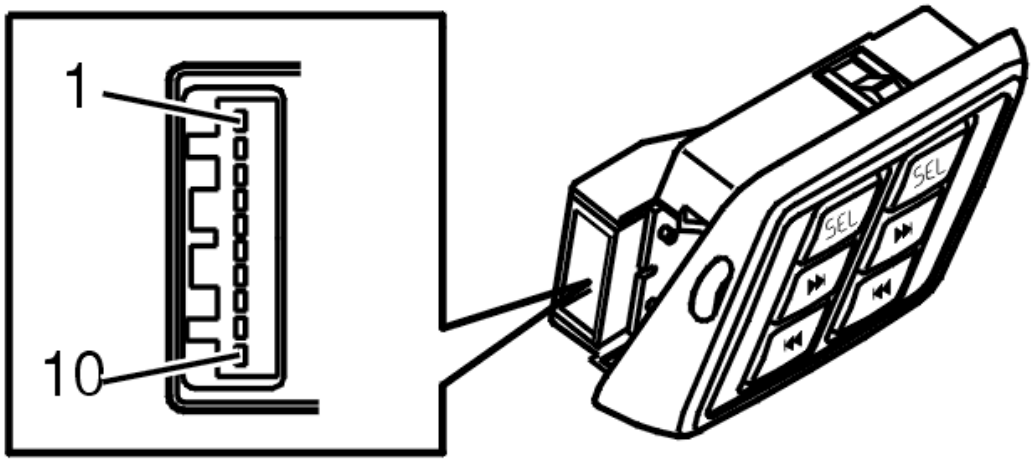

Fig. 322: Identifying Buttons Headset Connector
Courtesy of VOLVO CARS CORPORATION

- **Continue**

  Refer to **VERIFICATION**

VERIFICATION

VERIFICATION

HINT: After carrying out the repair, check that the fault has been remedied.

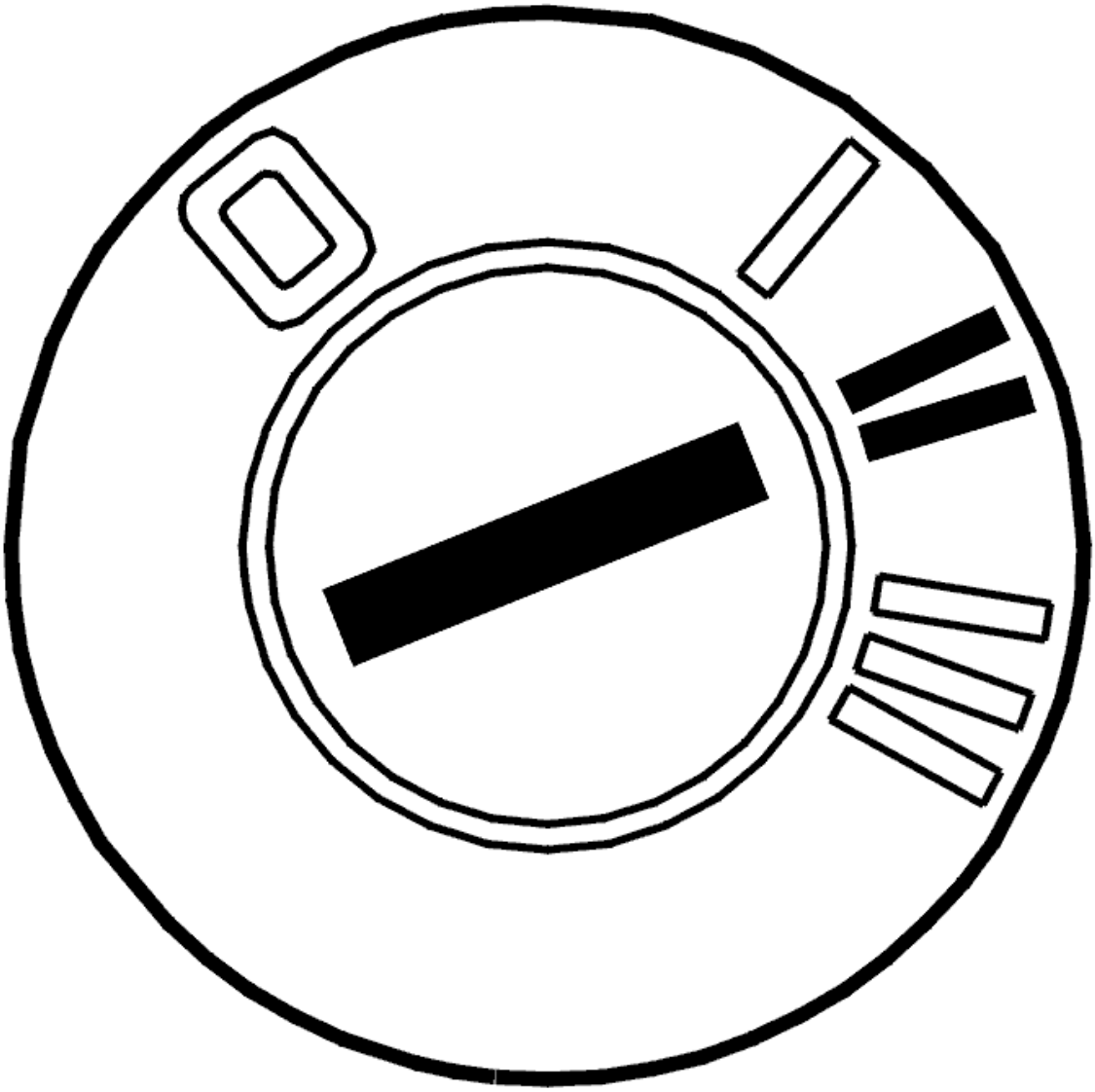

Fig. 323: Identifying Ignition ON
Courtesy of VOLVO CARS CORPORATION

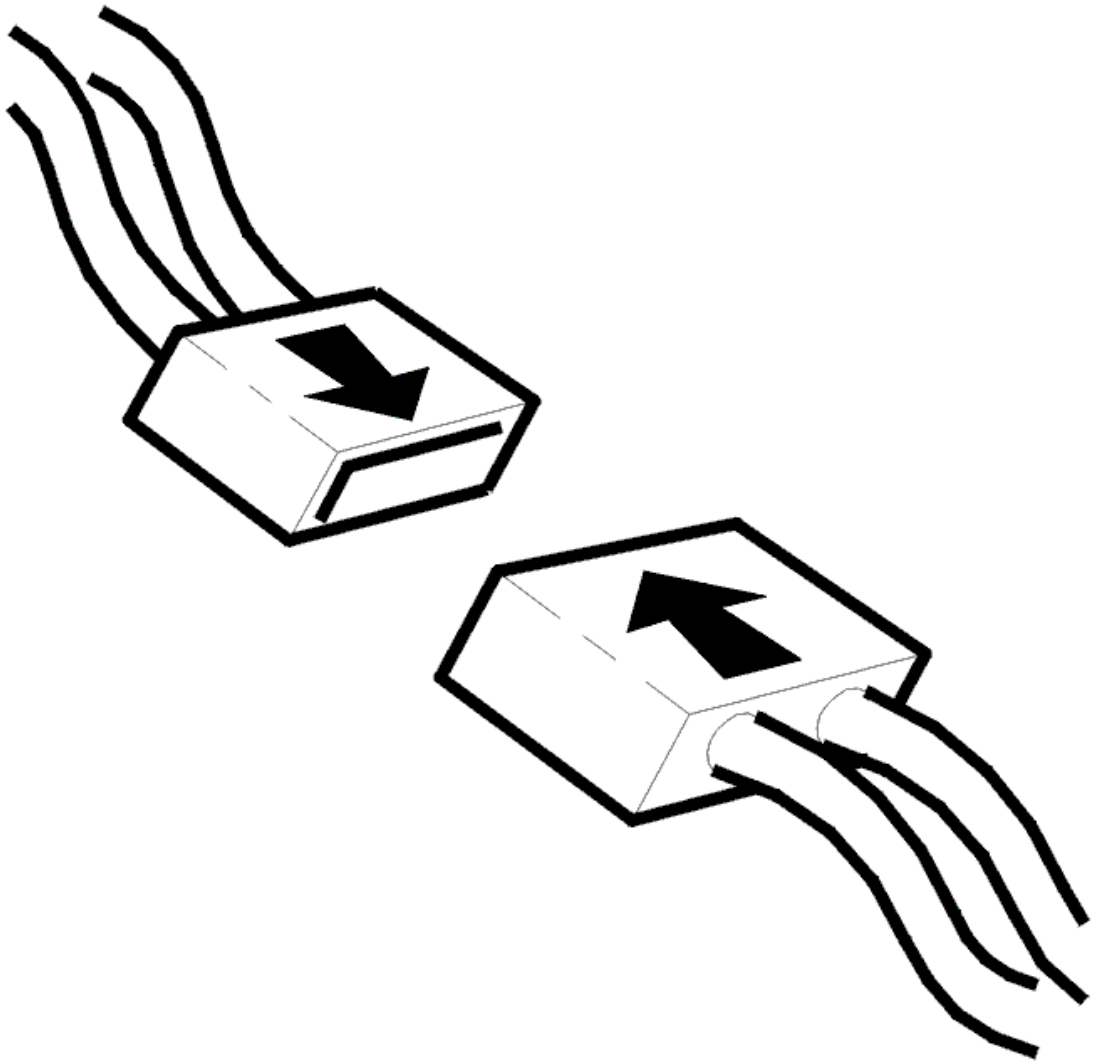

Fig. 324: Connecting Connector
Courtesy of VOLVO CARS CORPORATION

- Ignition off
- Reinstall the connectors, components etc.
- Ignition on.

  Check that the buttons for the headset output function. Check this by pressing the buttons for the next track and the previous track and by changing between the CD/MD and the radio using the SEL button.

Do the buttons function?

- **YES**

  VERIFIED: Troubleshooting has been completed.

- **NO**

  Refer to **INFORMATION**

INFORMATION

FAULT-TRACING INFORMATION

The fault should have been detected and remedied. As this is not the case fault-tracing has failed.

Exit fault-tracing for this diagnostic trouble code (DTC) or make another attempt.

AUD-001B: CONTROL MODULE. SOFTWARE FAULT (2007-2011)

DIAGNOSTIC TROUBLE CODE (DTC) INFORMATION AUD-001B

Condition

The Audio module (AUD) checks the software in the control module.

The diagnostic trouble code (DTC) is stored if the control module detects that:

- Incorrect or no settings in the local configuration file.

The control module's test for the diagnostic trouble code (DTC) starts in the event of:

- Start up of the MOST network.

NOTE: The control module can only detect the fault once the test has been started and the diagnostic trouble code (DTC) is stored when the conditions are met.

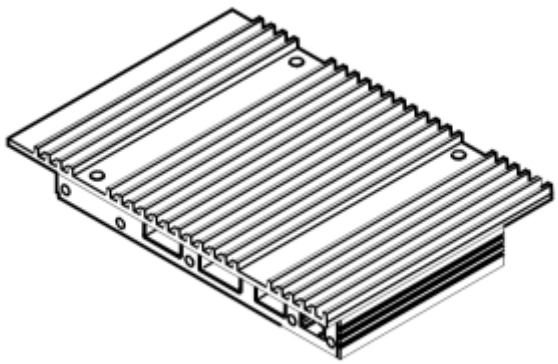

Fig. 325: Identifying Control Module

Courtesy of VOLVO CARS CORPORATION

Substitute Value

- The control module assumes standard configuration.

Possible Source

- Software download is not complete.
- Damaged audio module (AUD).

Fault symptom[s]

- Poor or bad sound
- No sound from loudspeakers

INTERNAL FAULT

GENERAL INFORMATION

The diagnostic trouble code (DTC) is stored if the software has an incorrect version number.

The fault can be due to a customer or workshop replacing a control module without downloading new software for the replacement.

Corrective actions

1. Download the latest software to the Audio module (AUD).
2. If downloading new software did not help, replace the Audio module (AUD).

Other information

- To download software to the relevant control module, see appropriate catalog/Software index.
- see **AUDIO MODULE (AUD), REPLACING**

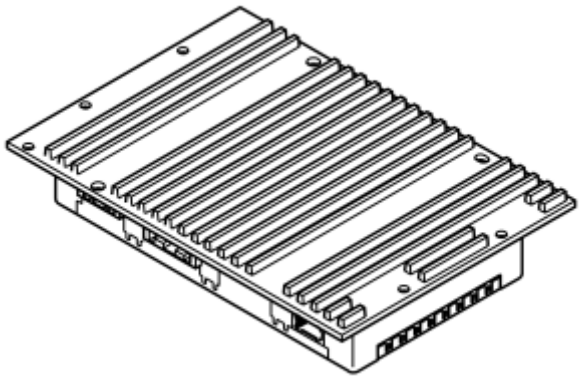

Fig. 326: Identifying Audio Module (AUD)
Courtesy of VOLVO CARS CORPORATION

- **Continue**

  Refer to **INFORMATION**

INFORMATION

FAULT-TRACING INFORMATION

In case of this defect, troubleshooting is not followed by verification.

The information can be displayed again or the fault-tracing for this fault can be interrupted.

AUD-001C: CENTRE LOUDSPEAKER. SIGNAL MISSING (2007-2011)

DIAGNOSTIC TROUBLE CODE (DTC) INFORMATION AUD-001C

Condition

The diagnostic trouble code (DTC) is stored if the Audio module (AUD) registers an open-circuit on the signal cable from the center loudspeaker.

The diagnostic trouble code can be diagnosed when Audio module (AUD) is activated.

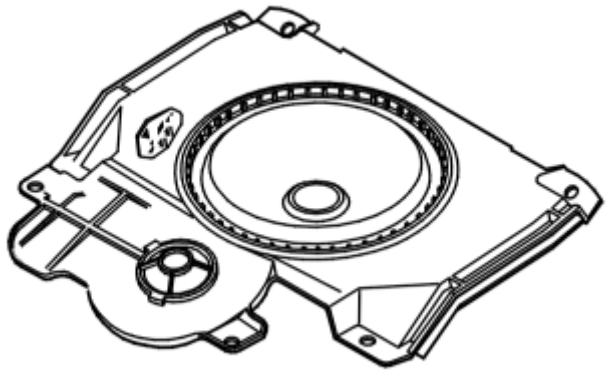

Fig. 327: Identifying Center Loudspeaker
Courtesy of VOLVO CARS CORPORATION

Substitute Value

- None.

Possible Source

- Open-circuit on the signal cable between the center loudspeaker and the control module.
- Open-circuit in the loudspeaker.

Fault symptom[s]

- No sound from loudspeakers

SIGNAL MISSING

CHECKING THE COMPONENT AND WIRING

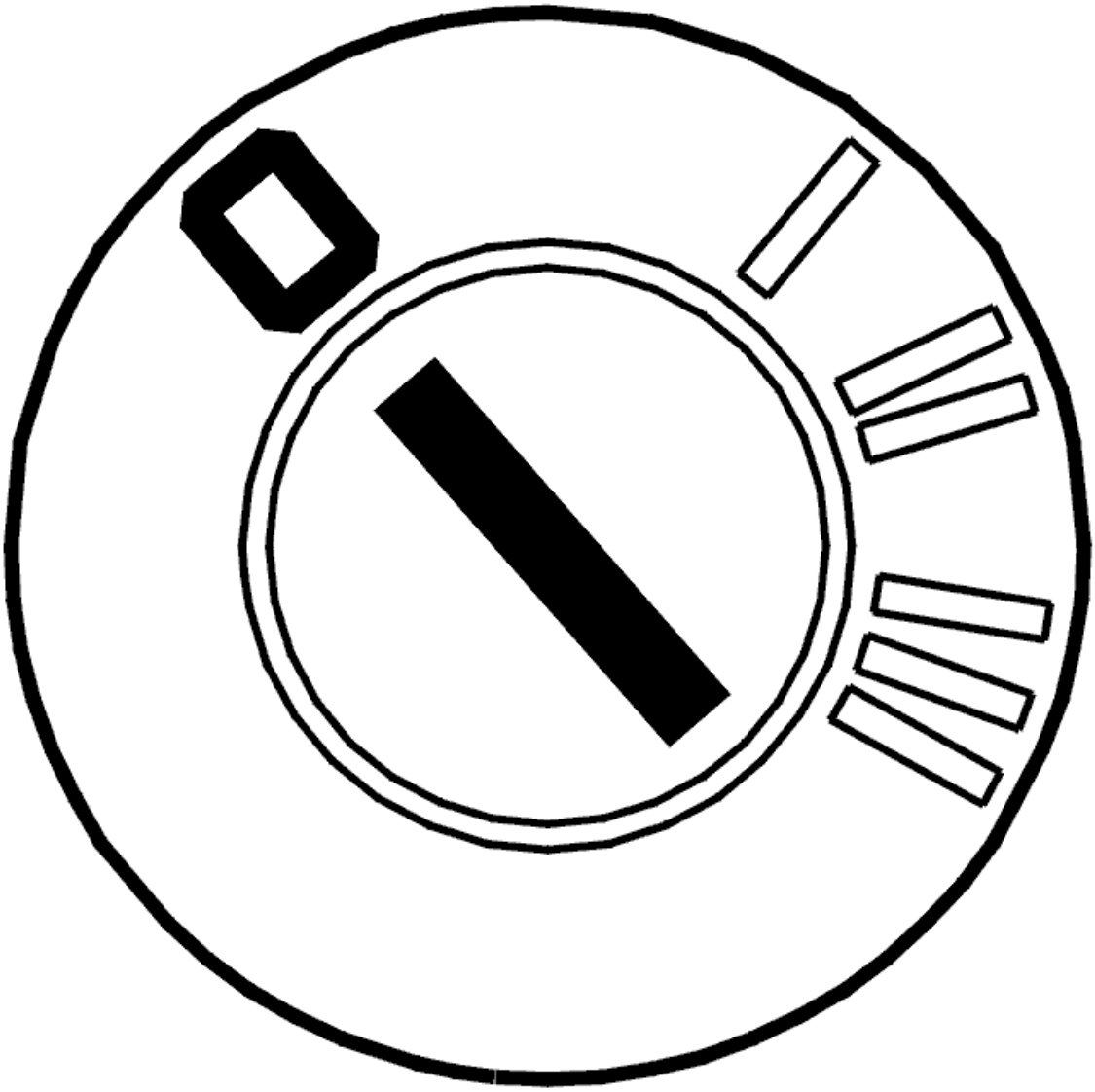

Fig. 328: Identifying Ignition OFF
Courtesy of VOLVO CARS CORPORATION

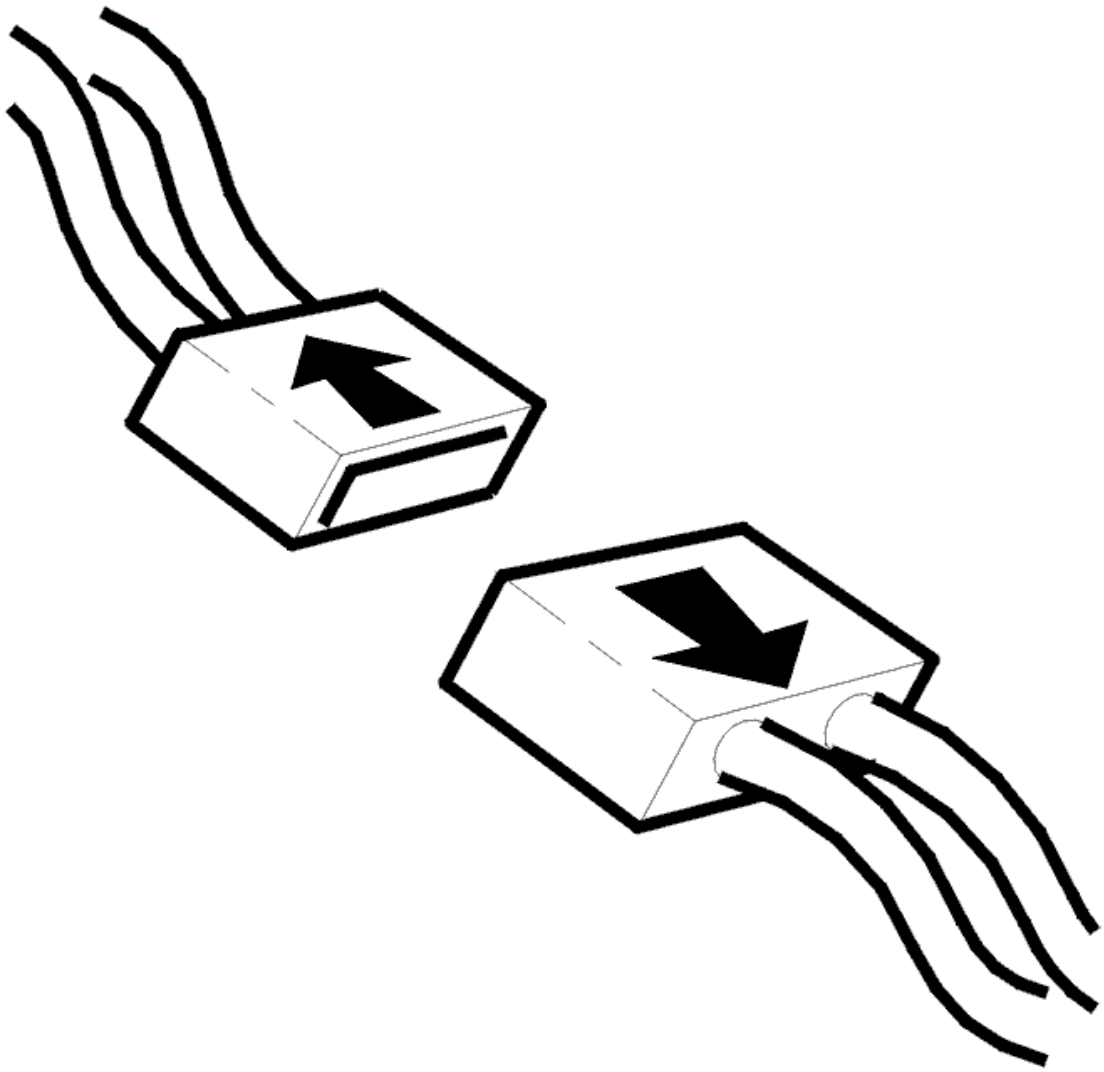

Fig. 329: Disconnecting Connector
Courtesy of VOLVO CARS CORPORATION

- Ignition off
- Disconnect the connector for the center loudspeaker.

Check the cable terminals. Check for contact resistance, loose connections and oxidation.

NOTE: **Only visually check the treble loudspeaker. Check for oxidation and loose connections. Do not carry out any electrical fault-tracing on the treble loudspeaker.**

Check the cable terminals in the female and male sections of the connector. The cable terminals must not be damaged or pressed back.

Check the signal cable between audio module (AUD) terminal #B10 and center loudspeaker terminal #1. Check for an open-circuit.

Check the signal cable between audio module (AUD) terminal #B2 and center loudspeaker terminal #2. Check for an open-circuit.

HINT: Check the connector between the Audio module (AUD) and the center loudspeaker. Check for contact resistance, play and oxidation.

Check the center loudspeaker connector terminals #1 and 2. Check for an open-circuit.

Remedy as necessary.

Other information

- see **CONNECTING THE BREAKOUT BOX**
- see **AUDIO MODULE (AUD), REPLACING**
- see **CENTRAL LOUDSPEAKER, REPLACING**
- see **SIGNAL SPECIFICATION**
- see **CHECKING WIRING AND TERMINALS**

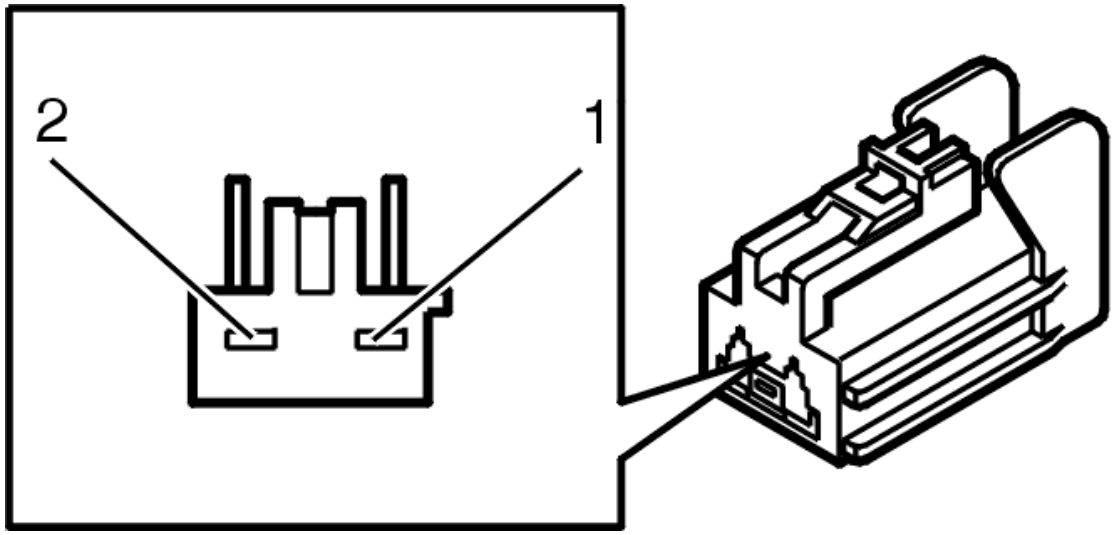

Fig. 330: Identifying 2-Bit Connector
Courtesy of VOLVO CARS CORPORATION

- **Continue**

  Refer to **VERIFICATION**

VERIFICATION

VERIFICATION

HINT: After carrying out the repair, check that the fault has been remedied.

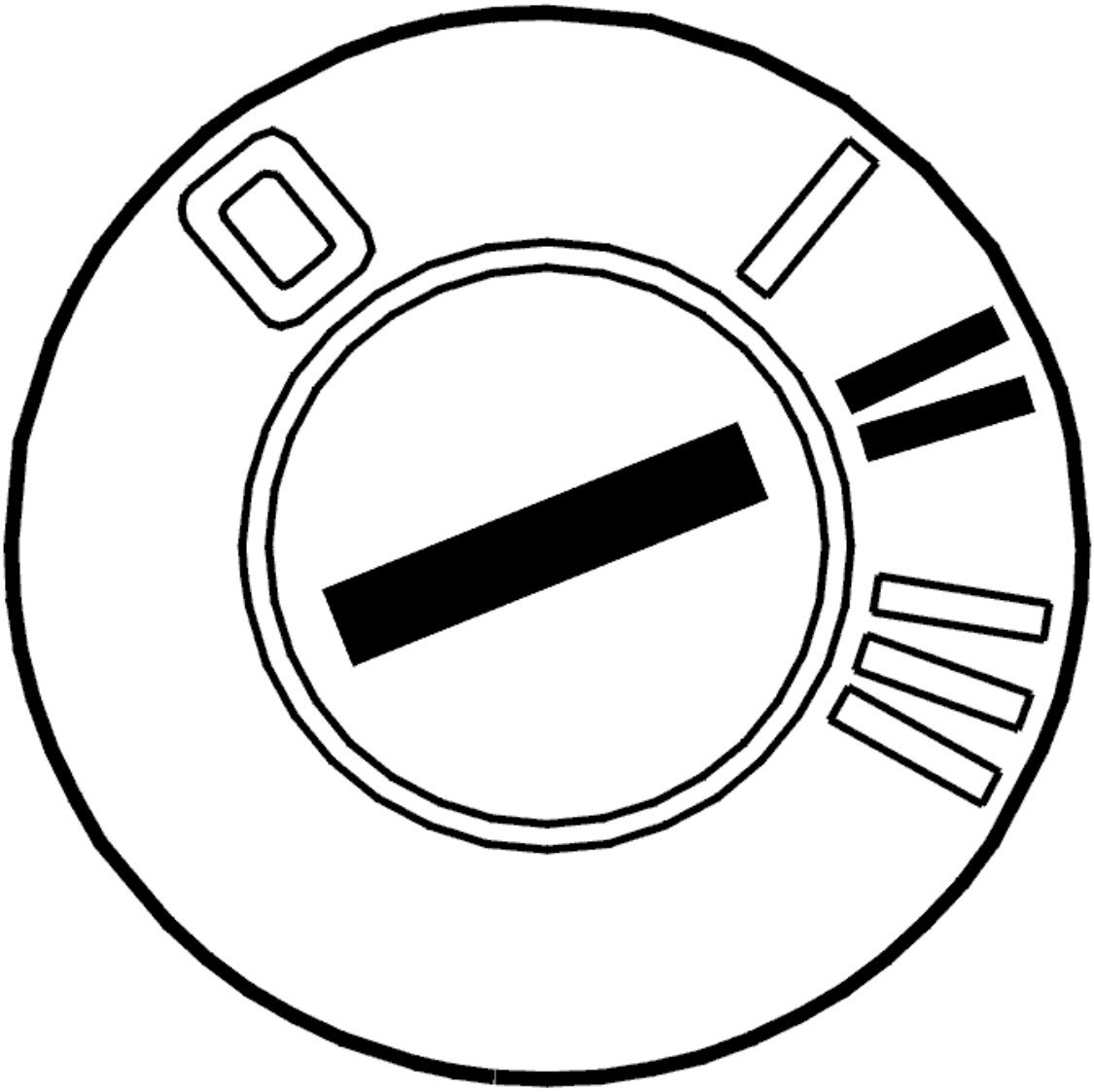

Fig. 331: Identifying Ignition ON
Courtesy of VOLVO CARS CORPORATION

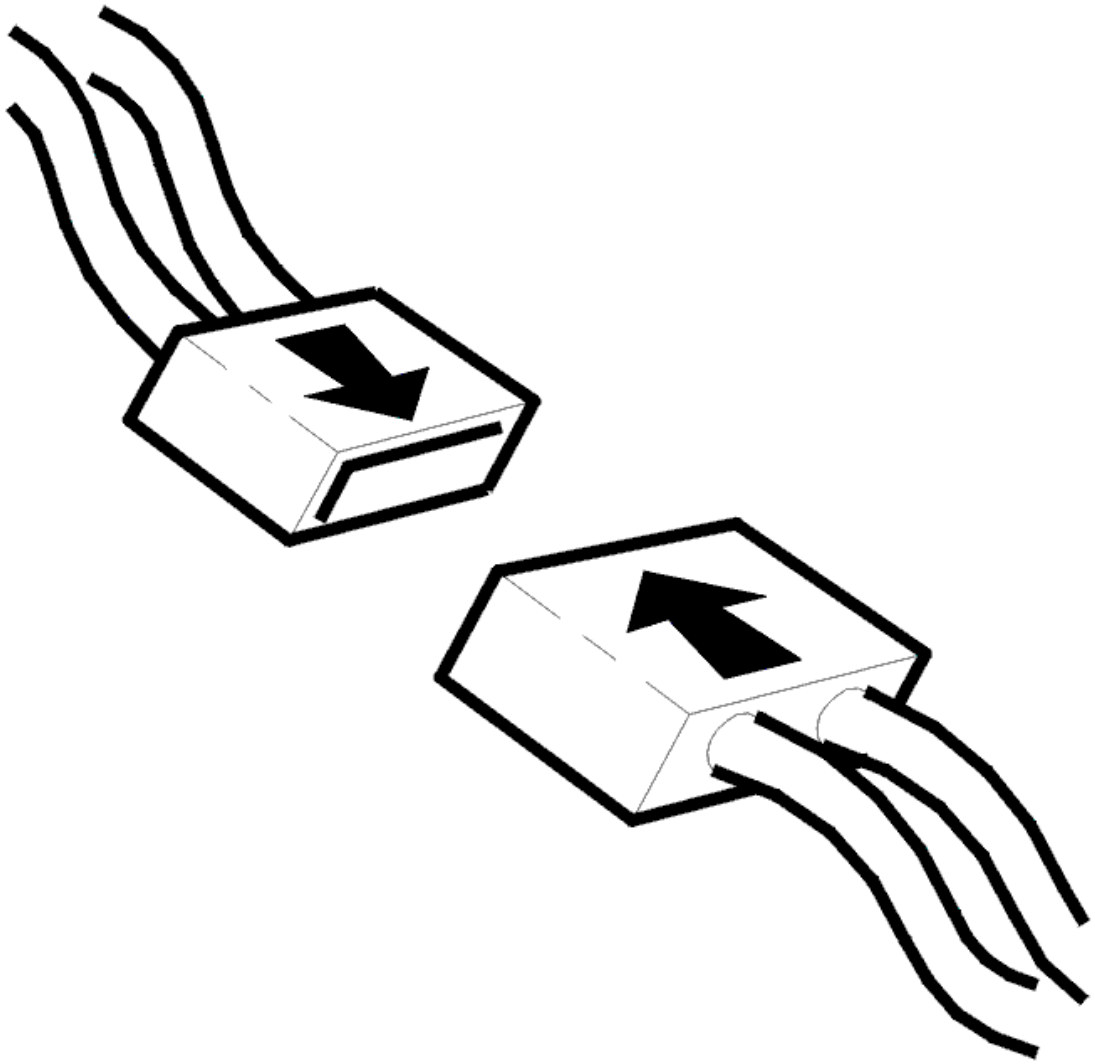

Fig. 332: Connecting Connector
Courtesy of VOLVO CARS CORPORATION

- Ignition off
- Reinstall the connectors, components etc.
- Ignition on.

  Check that the sound is heard from speaker for Audio module (AUD) by trying the radio FM/AM or the cd-player.

Is the function OK?

- **YES**

  VERIFIED: Troubleshooting has been completed.

- **NO**

  Refer to **INFORMATION**

INFORMATION

FAULT-TRACING INFORMATION

The fault should have been detected and remedied. As this is not the case fault-tracing has failed.

Exit fault-tracing for this diagnostic trouble code (DTC) or make another attempt.

AUD-001D: CONTROL MODULE. INTERNAL FAULT (2007-2011)

DIAGNOSTIC TROUBLE CODE (DTC) INFORMATION AUD-001D

Condition

The Audio module (AUD) checks the temperature at the transmitting diode in the MOST connector.

The diagnostic trouble code (DTC) is stored if the control module detects that:

- The temperature is too high.

The control module's test for the diagnostic trouble code (DTC) starts in the event of:

- Activated control module.

NOTE: The control module can only detect the fault once the test has been started and the diagnostic trouble code (DTC) is stored when the conditions are met.

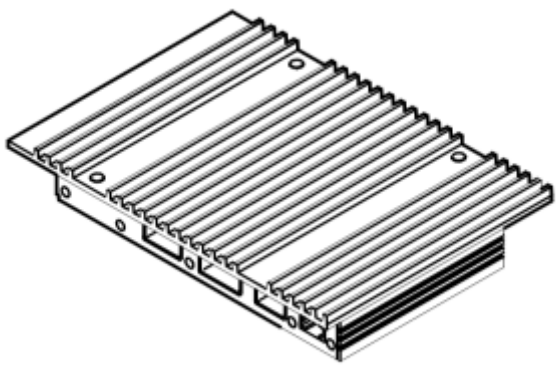

Fig. 333: Identifying Control Module

Courtesy of VOLVO CARS CORPORATION

Substitute Value

- Switched off control module.

Possible Source

- Ambient temperature too high.
- Power consumption too high in the control module.
- Damaged audio module (AUD).

Fault symptom[s]

- No sound from loudspeakers

INTERNAL FAULT

REPLACING A COMPONENT

The audio module (AUD) has registered an internal fault.

If the fault is intermittent it means that it has been registered previously but is no longer present. Intermittent faults can occur for a number of different reasons. The fault is evaluated depending on how it occurs. If the fault recurs, replace the audio module (AUD).

In the event of a permanent fault, replace the audio module (AUD).

Remedy as necessary.

Other information

- see **AUDIO MODULE (AUD), REPLACING**

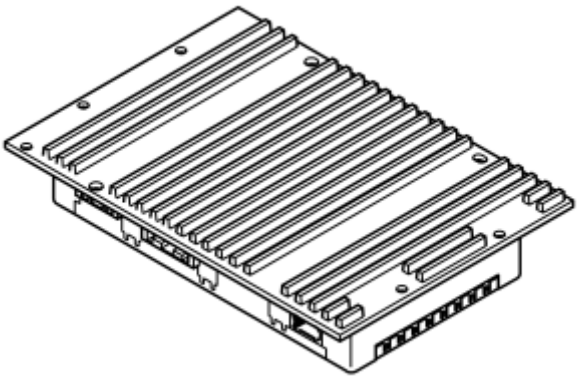

Fig. 334: Identifying Audio Module (AUD)
Courtesy of VOLVO CARS CORPORATION

- **Continue**

  Refer to **VERIFICATION**

VERIFICATION

VERIFICATION

HINT: After carrying out the repair, check that the fault has been remedied.

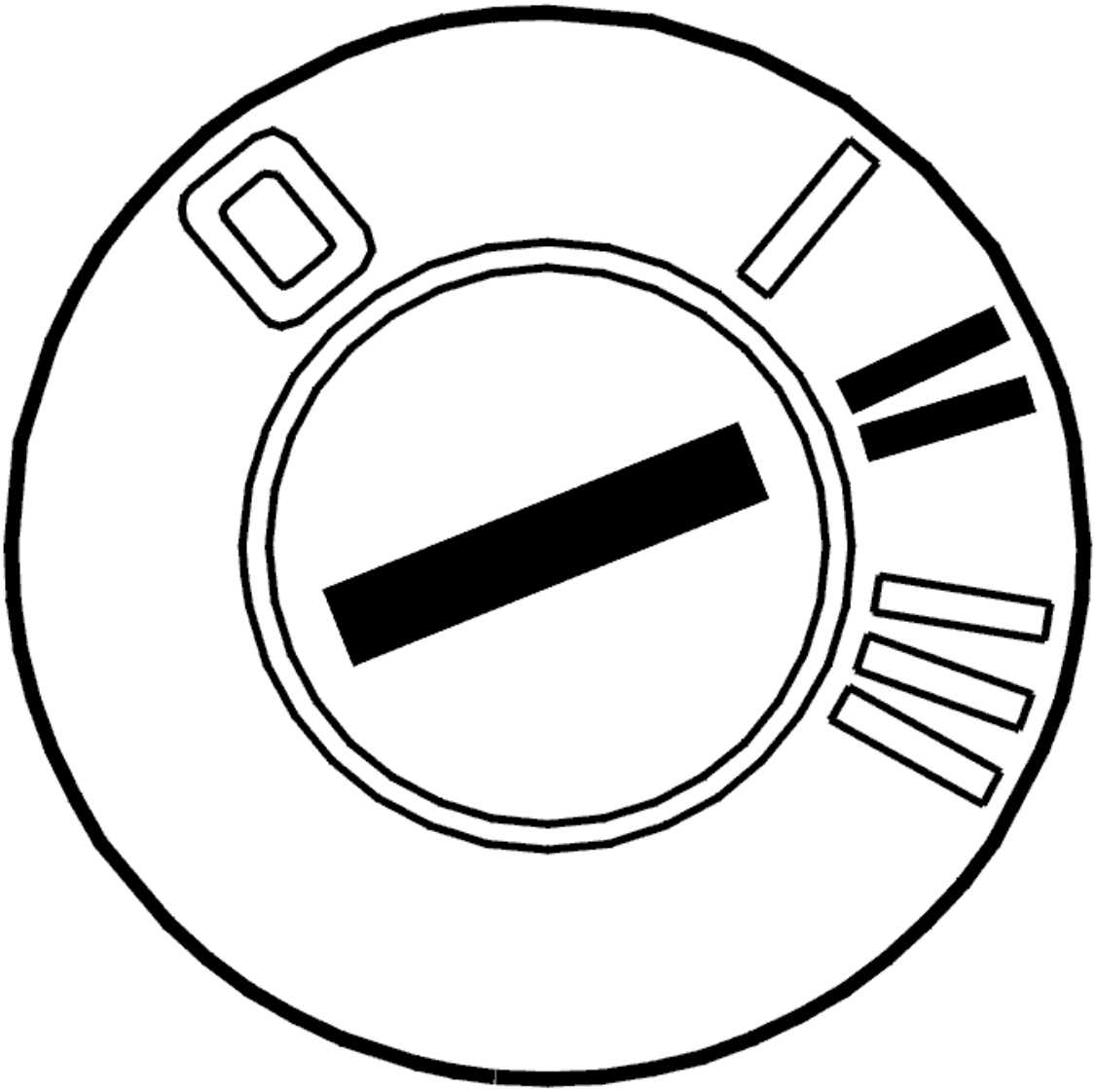

Fig. 335: Identifying Ignition ON
Courtesy of VOLVO CARS CORPORATION

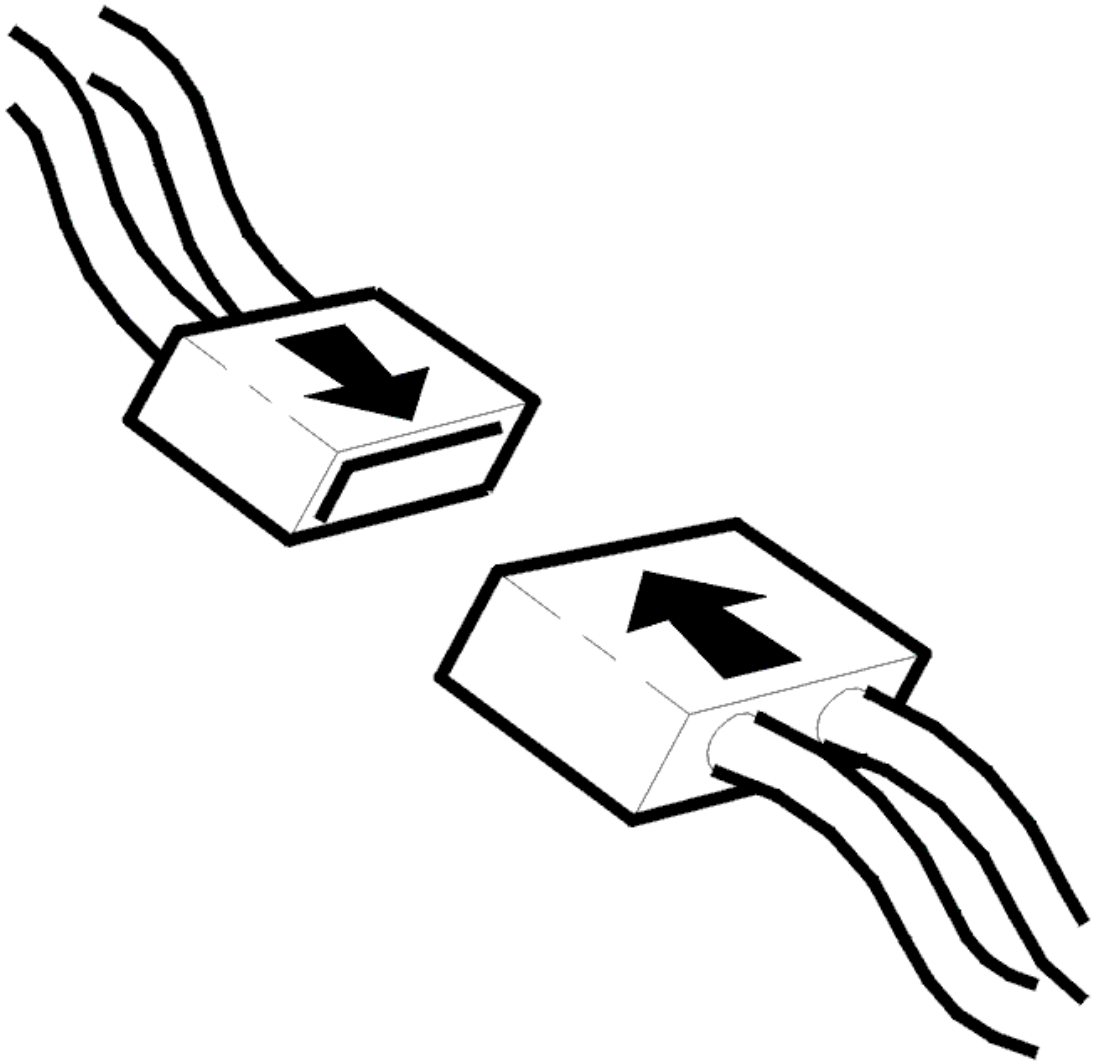

Fig. 336: Connecting Connector
Courtesy of VOLVO CARS CORPORATION

- Ignition off
- Reinstall the connectors, components etc.
- Ignition on.

  Check that the sound is heard from speaker for Audio module (AUD) by trying the radio FM/AM or the cd-player.

Is the function OK?

- **YES**

  VERIFIED: Troubleshooting has been completed.

- **NO**

  Refer to **INFORMATION**

INFORMATION

FAULT-TRACING INFORMATION

The fault should have been detected and remedied. As this is not the case fault-tracing has failed.

Exit fault-tracing for this diagnostic trouble code (DTC) or make another attempt.

AUD-001E: CONTROL MODULE. INTERNAL FAULT (2007-2011)

DIAGNOSTIC TROUBLE CODE (DTC) INFORMATION AUD-001E

Condition

The diagnostic trouble code (DTC) is stored if the audio module (AUD) registers an internal fault.

The diagnostic trouble code (DTC) can be diagnosed when the ignition is switched on.

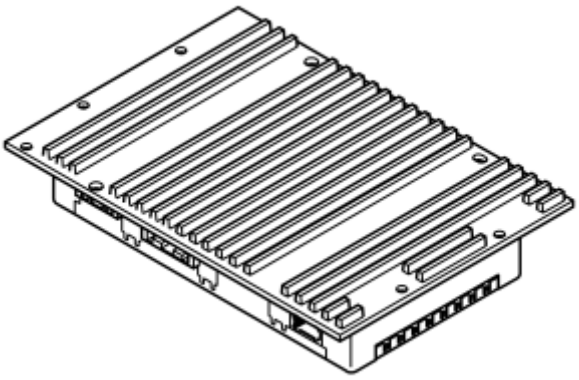

Fig. 337: Identifying Audio Module (AUD)
Courtesy of VOLVO CARS CORPORATION

Substitute Value

- None.

Possible Source

- Internal fault in the audio module (AUD).

Fault symptom[s]

- Speaker sound reproduction. Doesn't correspond to set position.

INTERNAL FAULT

see **INTERNAL FAULT**

AUD-001F: CONTROL MODULE. INTERNAL FAULT (2007-2011)

DIAGNOSTIC TROUBLE CODE (DTC) INFORMATION AUD-001F

Condition

The diagnostic trouble code (DTC) is stored if the audio module (AUD) registers an internal fault.

The diagnostic trouble code (DTC) can be diagnosed when the ignition is switched on.

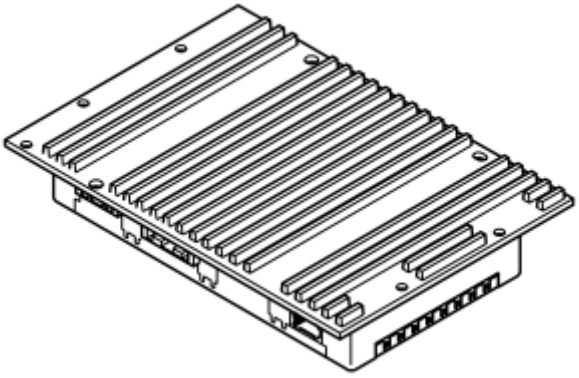

Fig. 338: Identifying Audio Module (AUD)
Courtesy of VOLVO CARS CORPORATION

Substitute Value

- None.

Possible Source

- Internal fault in the audio module (AUD).

Fault symptom[s]

- Speaker sound reproduction. Doesn't correspond to set position.

INTERNAL FAULT

see **INTERNAL FAULT**

AUD-0020: CONTROL MODULE. INTERNAL FAULT (2007-2011)

DIAGNOSTIC TROUBLE CODE (DTC) INFORMATION AUD-0020

Condition

The diagnostic trouble code (DTC) is stored if the audio module (AUD) registers an internal fault.

The diagnostic trouble code (DTC) can be diagnosed when the ignition is switched on.

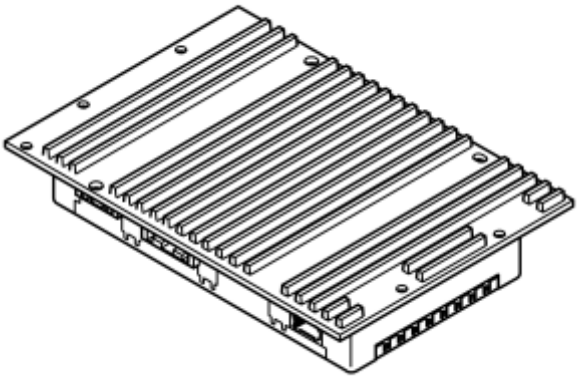

Fig. 339: Identifying Audio Module (AUD)
Courtesy of VOLVO CARS CORPORATION

Substitute Value

- None.

Possible Source

- Internal fault in the audio module (AUD).

Fault symptom[s]

- Speaker sound reproduction. Doesn't correspond to set position.

INTERNAL FAULT

see **INTERNAL FAULT**

AUD-0021: CONTROL MODULE. INTERNAL FAULT (2007-2011)

DIAGNOSTIC TROUBLE CODE (DTC) INFORMATION AUD-0021

Condition

The diagnostic trouble code (DTC) is stored if the audio module (AUD) registers an internal fault.

The diagnostic trouble code (DTC) can be diagnosed when the ignition is switched on.

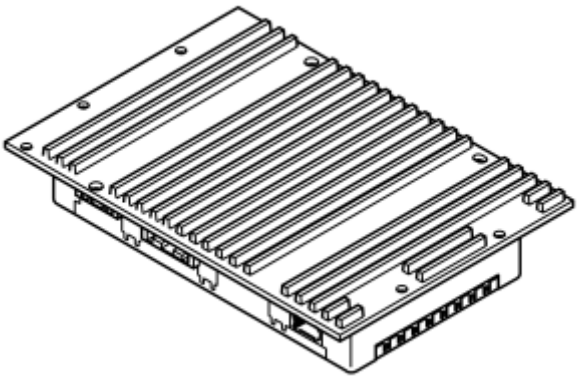

Fig. 340: Identifying Audio Module (AUD)
Courtesy of VOLVO CARS CORPORATION

Substitute Value

- None.

Possible Source

- Internal fault in the audio module (AUD).

Fault symptom[s]

- No sound from loudspeakers

INTERNAL FAULT

see **INTERNAL FAULT**

AUD-0022: CONTROL MODULE. INTERNAL FAULT (2007-2011)

DIAGNOSTIC TROUBLE CODE (DTC) INFORMATION AUD-0022

Condition

The diagnostic trouble code (DTC) is stored if the audio module (AUD) registers an internal fault.

The diagnostic trouble code (DTC) can be diagnosed when the ignition is switched on.

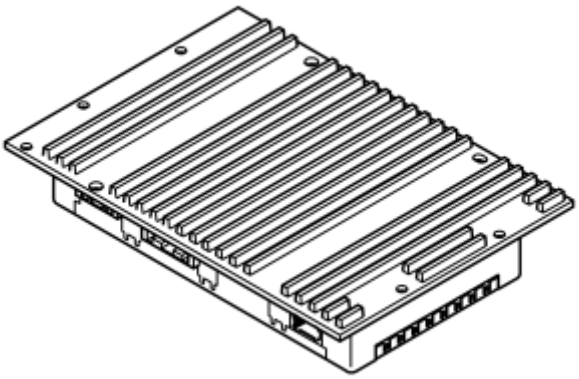

Fig. 341: Identifying Audio Module (AUD)
Courtesy of VOLVO CARS CORPORATION

Substitute Value

- None.

Possible Source

- Internal fault in the audio module (AUD).

Fault symptom[s]

- No sound from loudspeakers

INTERNAL FAULT

see **INTERNAL FAULT**

AUD-0023: LOUDSPEAKER FRONT. SIGNAL TOO HIGH/SIGNAL TOO LOW (2007-2011)

DIAGNOSTIC TROUBLE CODE (DTC) INFORMATION AUD-0023

Condition

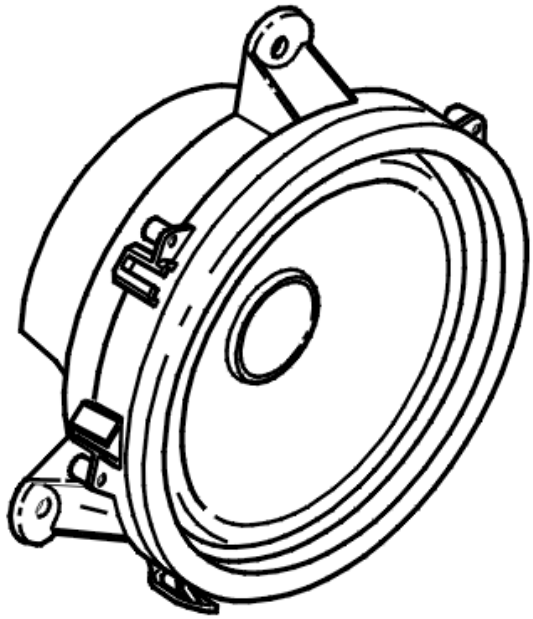

Fig. 342: Identifying Loudspeaker
Courtesy of VOLVO CARS CORPORATION

The diagnostic trouble code (DTC) is stored if the Audio module (AUD) registers that the signal on the signal cable from one or both front loudspeakers is too high or too low.

The diagnostic trouble code can be diagnosed when Audio module (AUD) is activated.

Substitute Value

- None.

Possible Source

- The signal cable between the loudspeaker in the right-hand door and the control module has a short-circuit to supply voltage.
- Short-circuit to voltage in the signal cable between the control module and the loudspeaker in the right door.
- Short-circuit to voltage in the signal cable between the control module and the loudspeaker in the left door.
- Short-circuit to ground in the signal cable between the control module and the loudspeaker in the left door.

Fault symptom[s]

- No sound from the loudspeakers.

SIGNAL TOO HIGH/SIGNAL TOO LOW

CHECKING THE CABLE

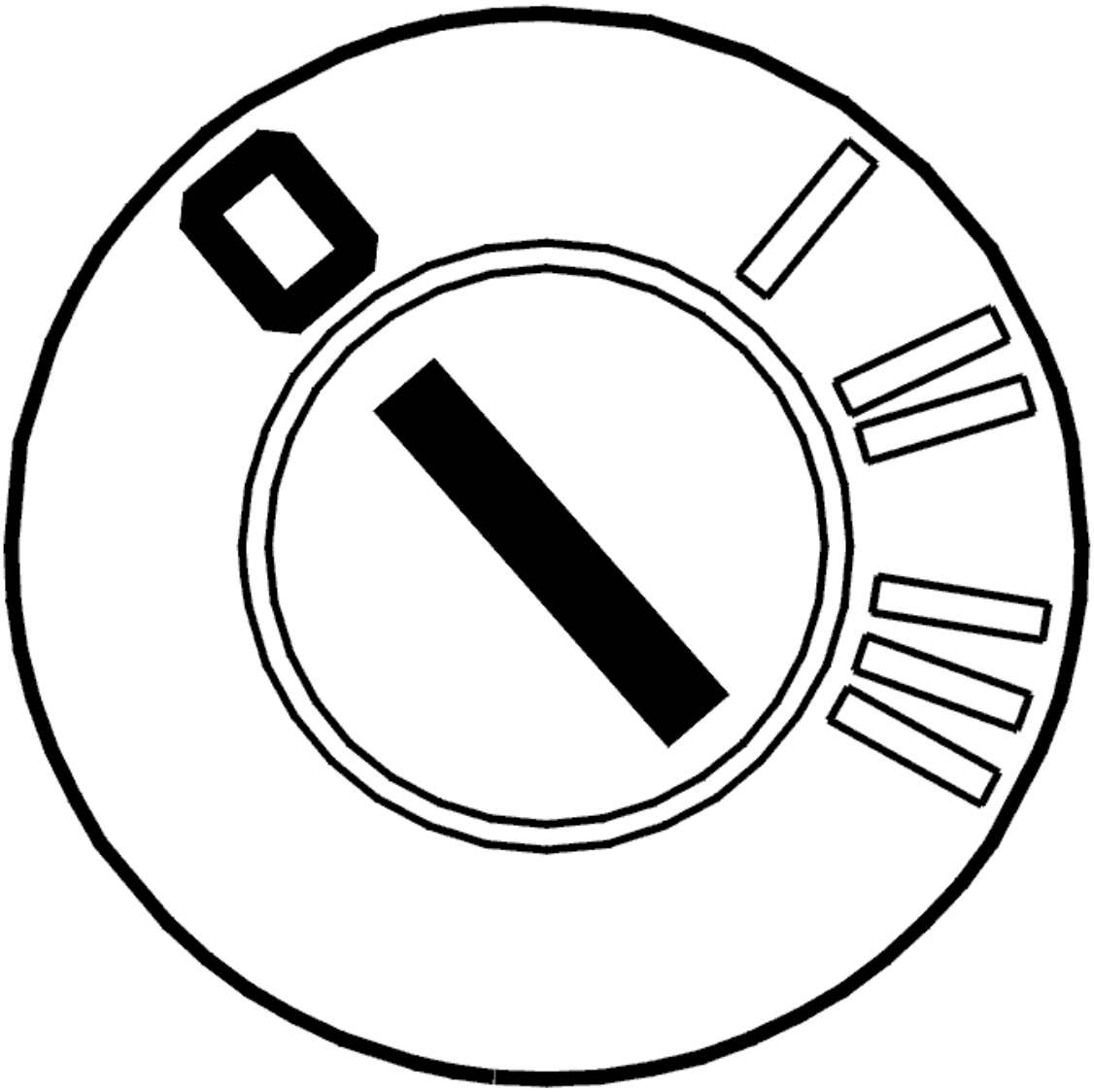

Fig. 343: Identifying Ignition OFF
Courtesy of VOLVO CARS CORPORATION

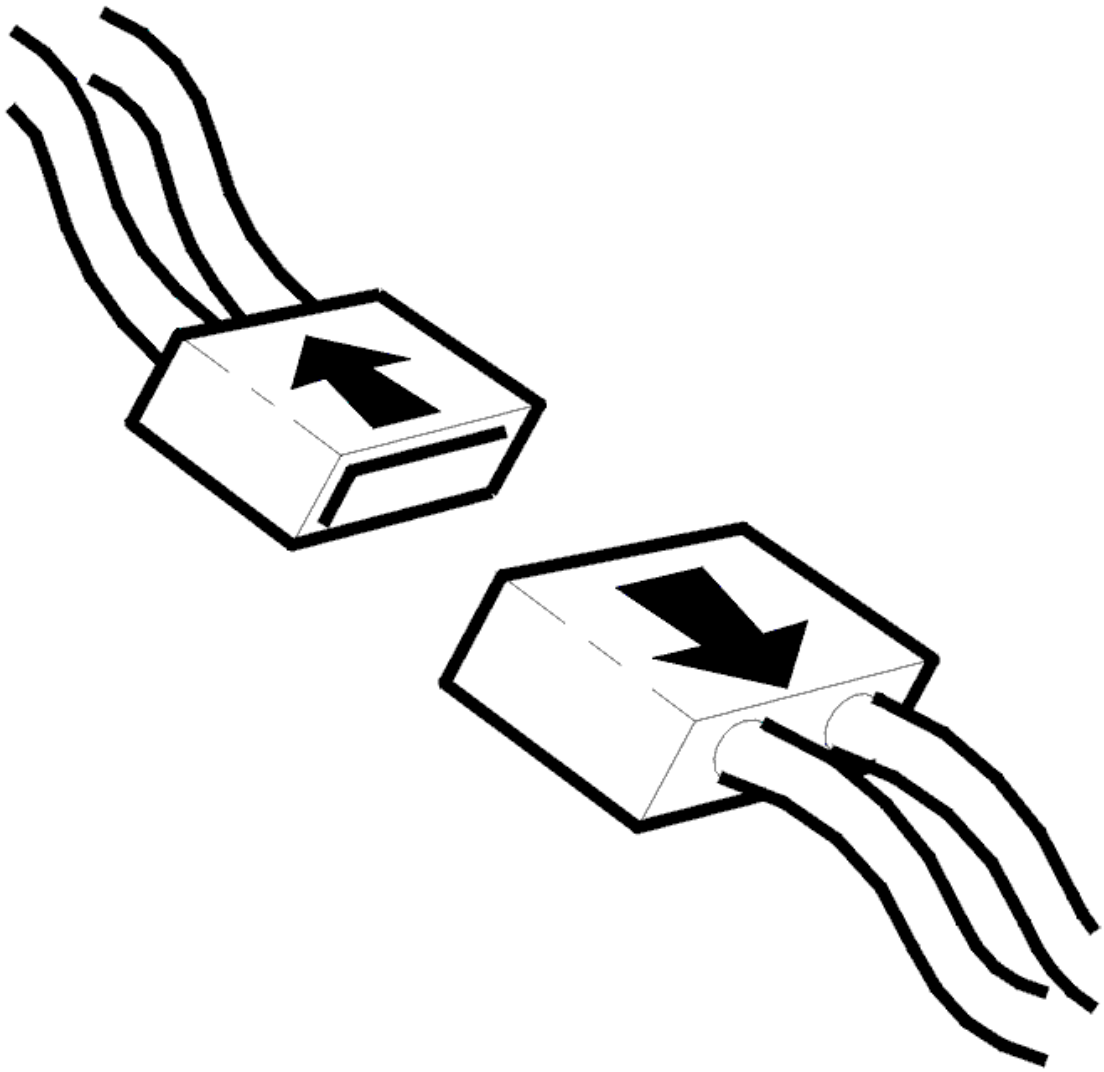

Fig. 344: Disconnecting Connector
Courtesy of VOLVO CARS CORPORATION

- Ignition off
- Disconnect the connector for the treble loudspeaker/upper loudspeaker in the right-hand door.
- Disconnect the connector for the treble loudspeaker/upper loudspeaker in the left-hand door.
- Disconnect the 16-pin connector for the audio module (AUD).

HINT: Both treble loudspeaker/upper loudspeakers and the right and left-hand front base loudspeakers are connected on the following signal cables.

Check the cable terminals in the female and male sections of the connector. The cable terminals must not be damaged or pressed back.

Check the signal cable between audio module (AUD) terminal #B3 and treble speaker/upper loudspeaker

terminal #2 in the right-hand door. Check for a short-circuit to ground. Check for a short-circuit to supply voltage.

Check the signal cable between audio module (AUD) terminal #B11 and treble speaker/upper loudspeaker terminal #1 in the right-hand door. Check for a short-circuit to ground. Check for a short-circuit to supply voltage.

Check the signal cable between audio module (AUD) terminal #B1 and treble speaker/upper loudspeaker terminal #2 in the left-hand door. Check for a short-circuit to ground. Check for a short-circuit to supply voltage.

Check the signal cable between audio module (AUD) terminal #B9 and treble speaker/upper loudspeaker terminal #1 in the left-hand door. Check for a short-circuit to ground. Check for a short-circuit to supply voltage.

Remedy as necessary.

Other information

- see **CONNECTING THE BREAKOUT BOX**
- see **AUDIO MODULE (AUD), REPLACING**
- see **LOUDSPEAKER, FRONT SIDE DOOR, REPLACING**
- see **SIGNAL SPECIFICATION**
- see **CHECKING WIRING AND TERMINALS**

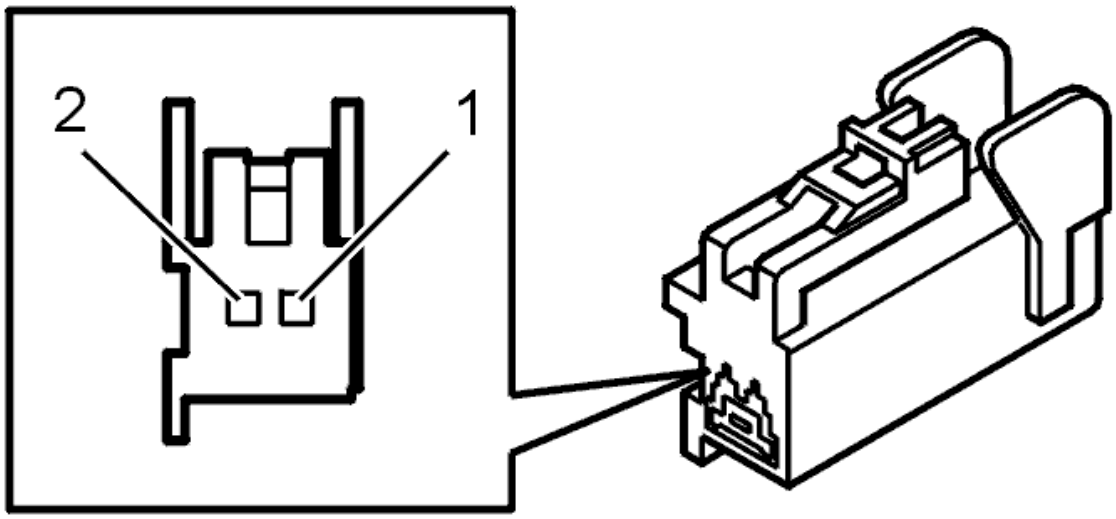

Fig. 345: Identifying 2-Bit Connector
Courtesy of VOLVO CARS CORPORATION

- **Continue**

Refer to **VERIFICATION**

VERIFICATION

VERIFICATION

HINT: After carrying out the repair, check that the fault has been remedied.

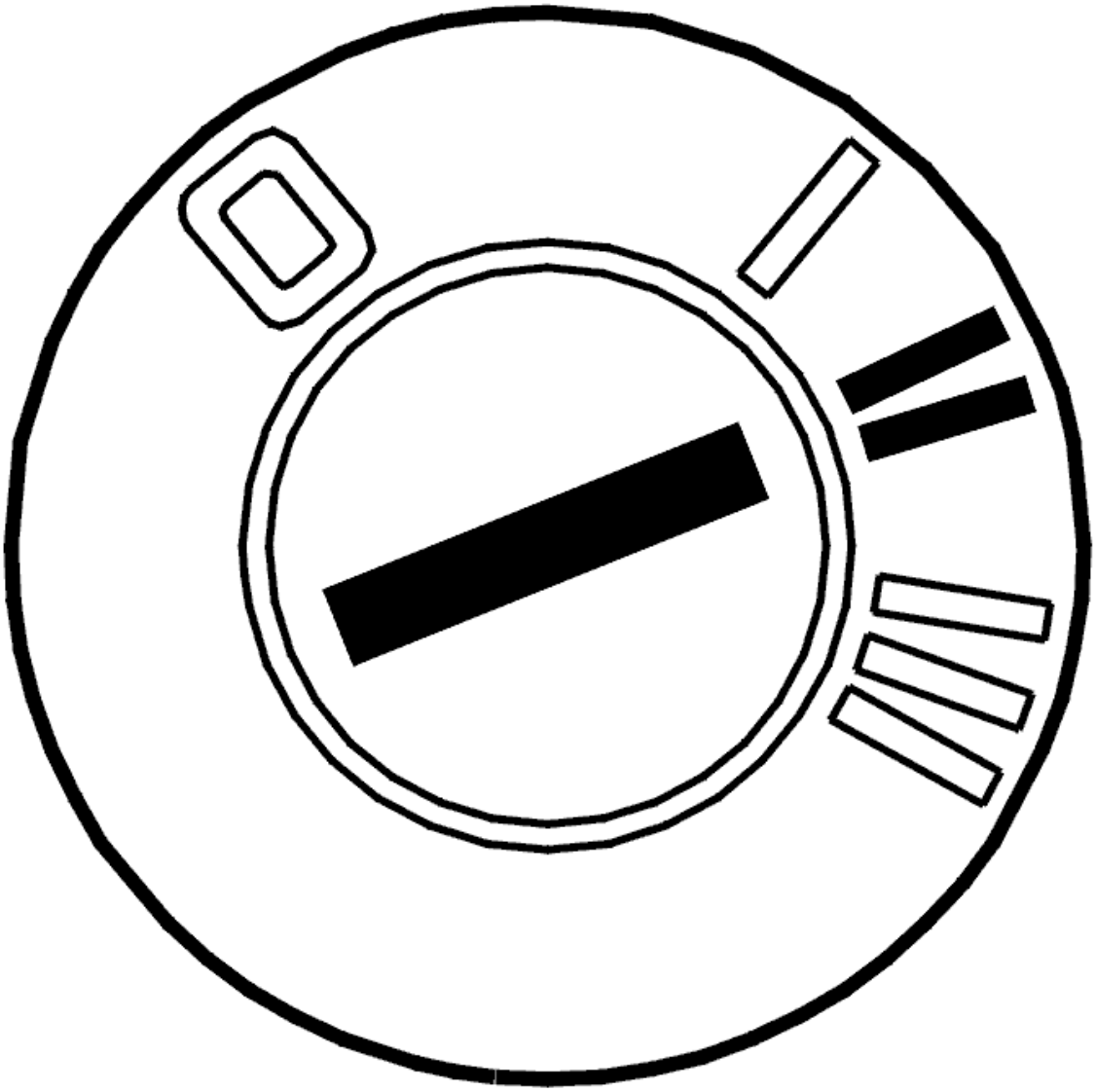

Fig. 346: Identifying Ignition ON
Courtesy of VOLVO CARS CORPORATION

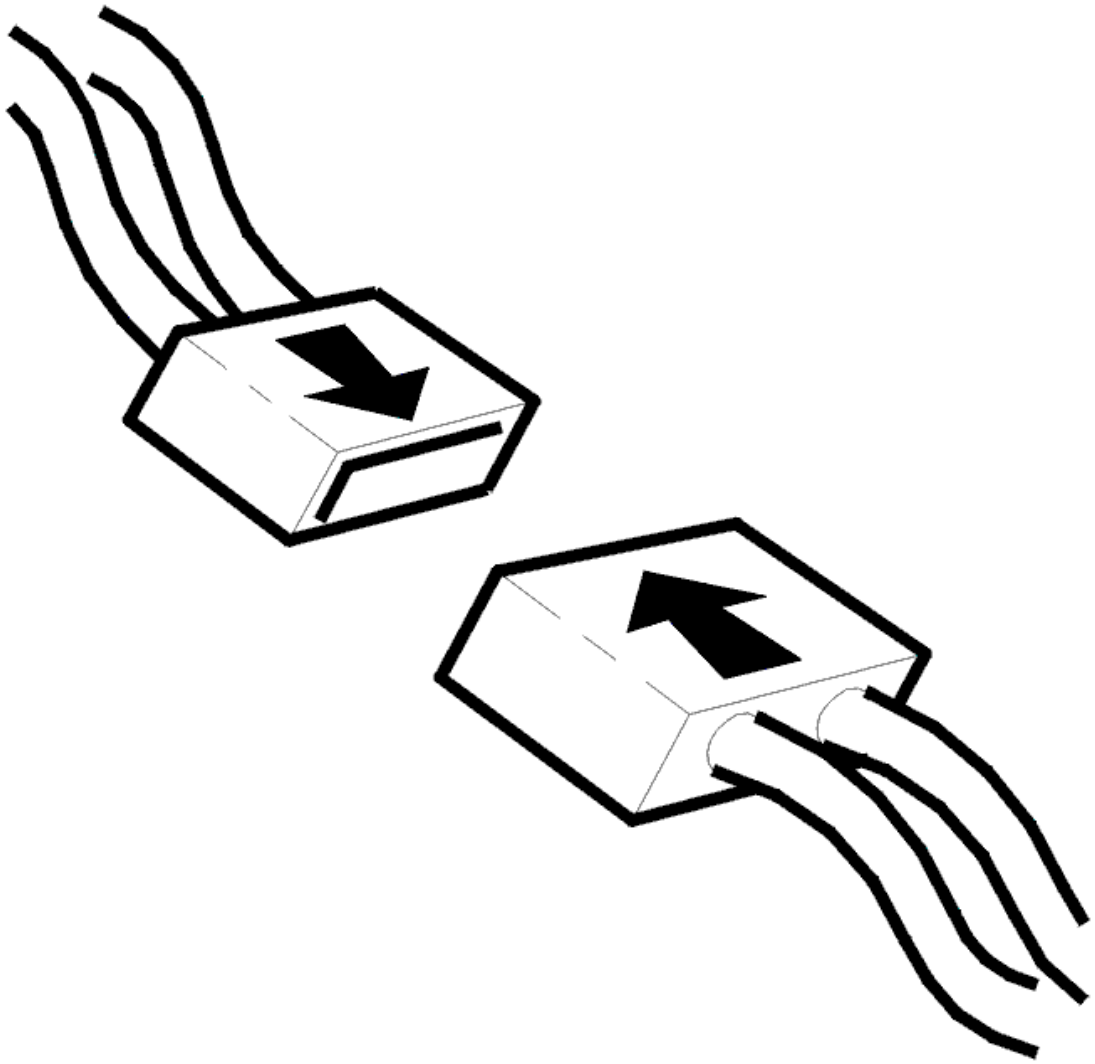

Fig. 347: Connecting Connector
Courtesy of VOLVO CARS CORPORATION

- Ignition off
- Reinstall the connectors, components etc.
- Ignition on.

  Check that the sound is heard from speaker for Audio module (AUD) by trying the radio FM/AM or the cd-player.

Is the function OK?

- **YES**

  VERIFIED: Troubleshooting has been completed.

- **NO**

  Refer to **INFORMATION**

INFORMATION

FAULT-TRACING INFORMATION

The fault should have been detected and remedied. As this is not the case fault-tracing has failed.

Exit fault-tracing for this diagnostic trouble code (DTC) or make another attempt.

AUD-0024: LOUDSPEAKER REAR. SIGNAL TOO HIGH/SIGNAL TOO LOW (2007-2012)

DIAGNOSTIC TROUBLE CODE (DTC) INFORMATION AUD-0024

Condition

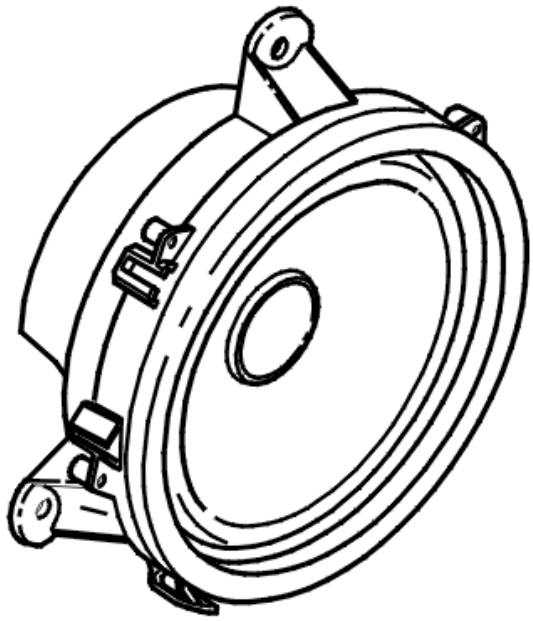

Fig. 348: Identifying Loudspeaker
Courtesy of VOLVO CARS CORPORATION

The diagnostic trouble code (DTC) is stored if the Audio module (AUD) registers that the signal on the signal

cable from one or both rear loudspeakers is too high or too low.

The diagnostic trouble code can be diagnosed when Audio module (AUD) is activated.

Substitute Value

- None.

Possible Source

- The signal cable between the rear left-hand loudspeaker and the control module has a short-circuit to supply voltage.
- The signal cable between the rear left-hand loudspeaker and the control module has a short-circuit to ground.
- The signal cable between the rear right-hand loudspeaker and the control module has a short-circuit to supply voltage.
- The signal cable between the rear right-hand loudspeaker and the control module has a short-circuit to ground.

Fault symptom[s]

- No sound from the loudspeakers.

SIGNAL TOO HIGH/SIGNAL TOO LOW

CHECKING THE CABLE

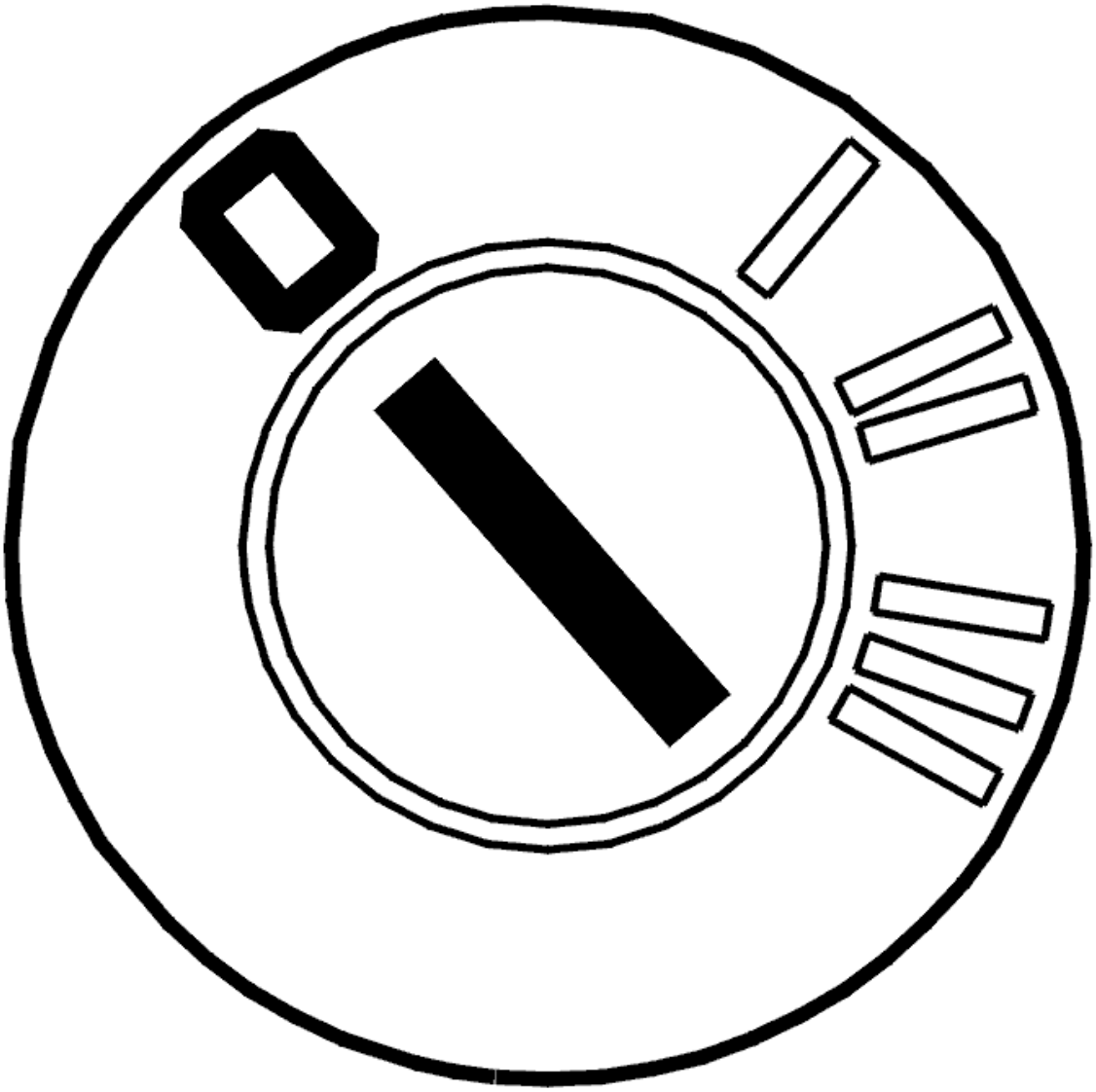

Fig. 349: Identifying Ignition OFF
Courtesy of VOLVO CARS CORPORATION

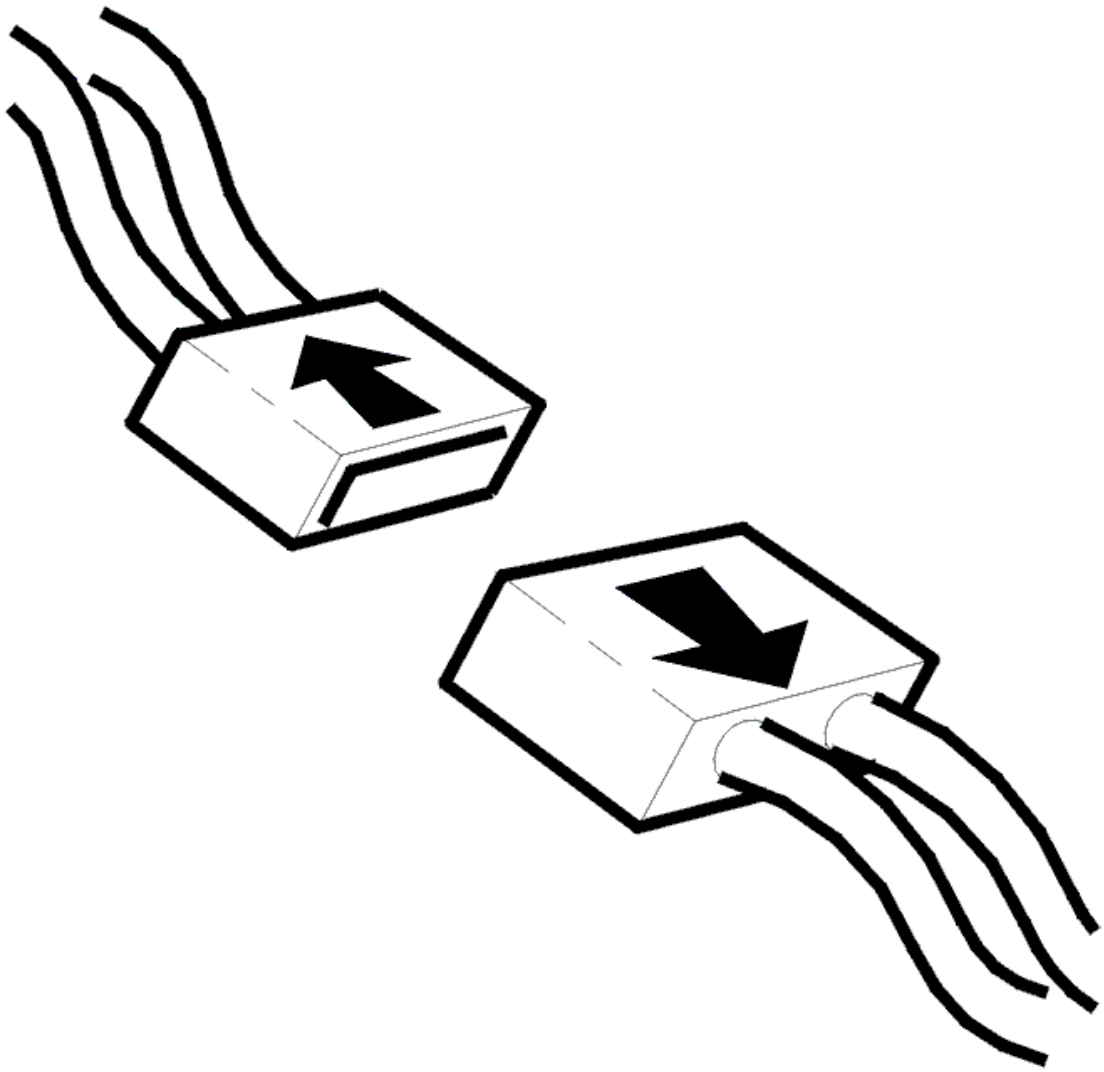

Fig. 350: Disconnecting Connector
Courtesy of VOLVO CARS CORPORATION

- Ignition off
- Disconnect the connector for the rear left-hand treble loudspeaker/upper loudspeaker.
- Disconnect the connector for the rear right-hand treble loudspeaker/upper loudspeaker.
- Disconnect the 16-pin connector for the audio module (AUD).

HINT: Both treble loudspeakers and the right and left-hand rear loudspeakers are connected on the following signal cables.

Check the cable terminals in the female and male sections of the connector. The cable terminals must not be damaged or pressed back.

Check the signal cable between audio module (AUD) terminal #B4 and treble speaker/upper loudspeaker

terminal #2 in the rear left. Check for a short-circuit to ground. Check for a short-circuit to supply voltage.

Check the signal cable between audio module (AUD) terminal #B12 and treble speaker/upper loudspeaker terminal #1 in the rear left. Check for a short-circuit to ground. Check for a short-circuit to supply voltage.

Check the signal cable between audio module (AUD) terminal #B5 and rear right-hand loudspeaker terminal #2. Check for a short-circuit to ground. Check for a short-circuit to supply voltage.

Check the signal cable between audio module (AUD) terminal #B13 and the rear right-hand loudspeaker terminal #1. Check for a short-circuit to ground. Check for a short-circuit to supply voltage.

Remedy as necessary.

Other information

- see **CONNECTING THE BREAKOUT BOX**
- see **AUDIO MODULE (AUD), REPLACING**
- see **LOUDSPEAKER, REAR SIDE DOOR, REPLACING**
- see **SIGNAL SPECIFICATION**
- see **CHECKING WIRING AND TERMINALS**

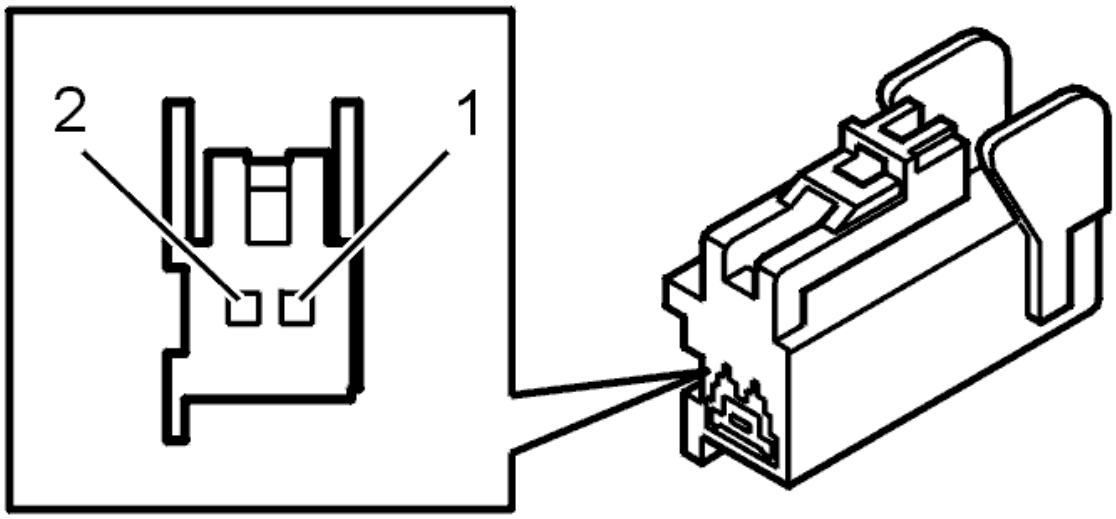

Fig. 351: Identifying 2-Bit Connector
Courtesy of VOLVO CARS CORPORATION

- **Continue**

  Refer to **VERIFICATION**

VERIFICATION

VERIFICATION

HINT: After carrying out the repair, check that the fault has been remedied.

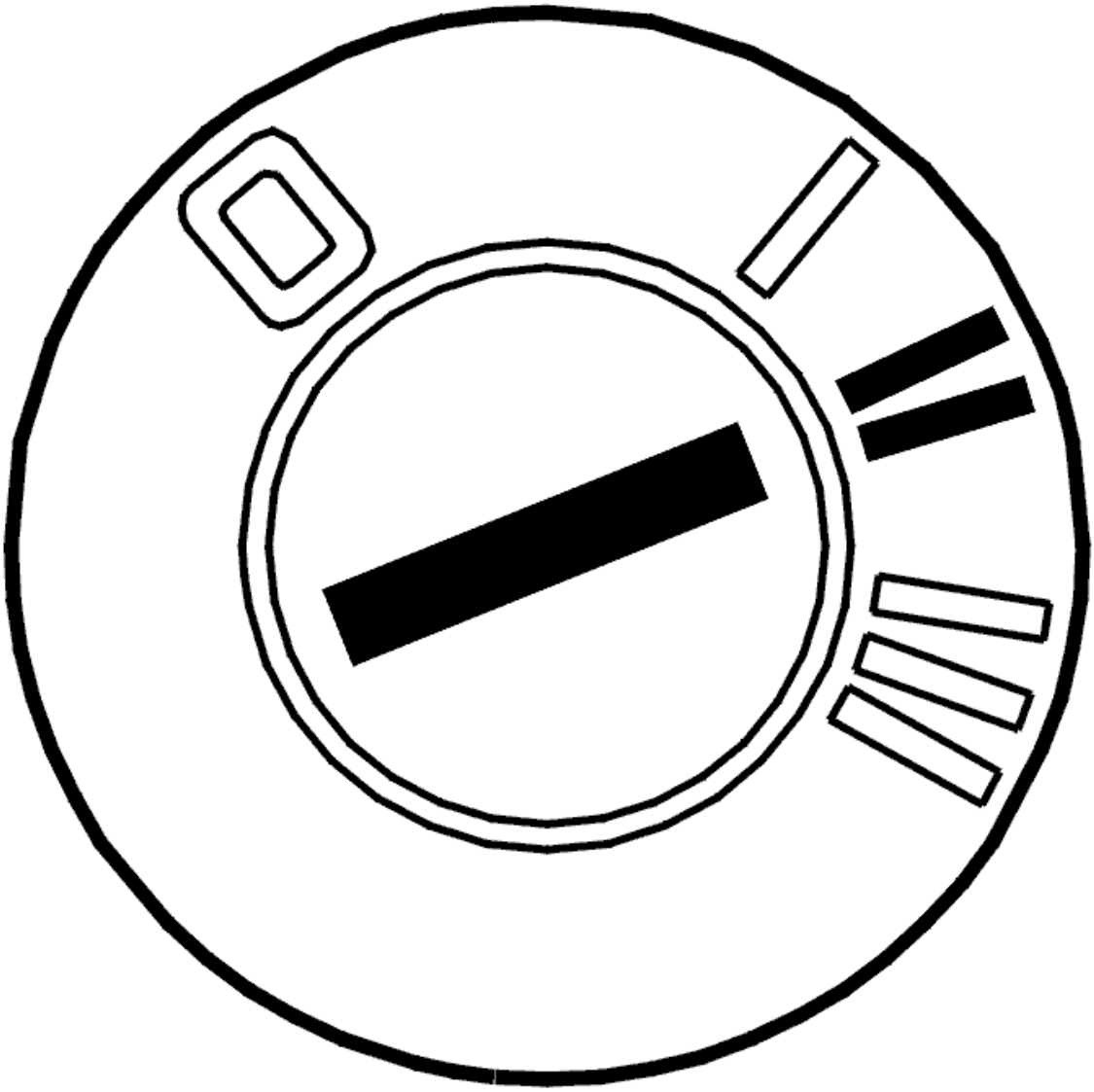

Fig. 352: Identifying Ignition ON
Courtesy of VOLVO CARS CORPORATION

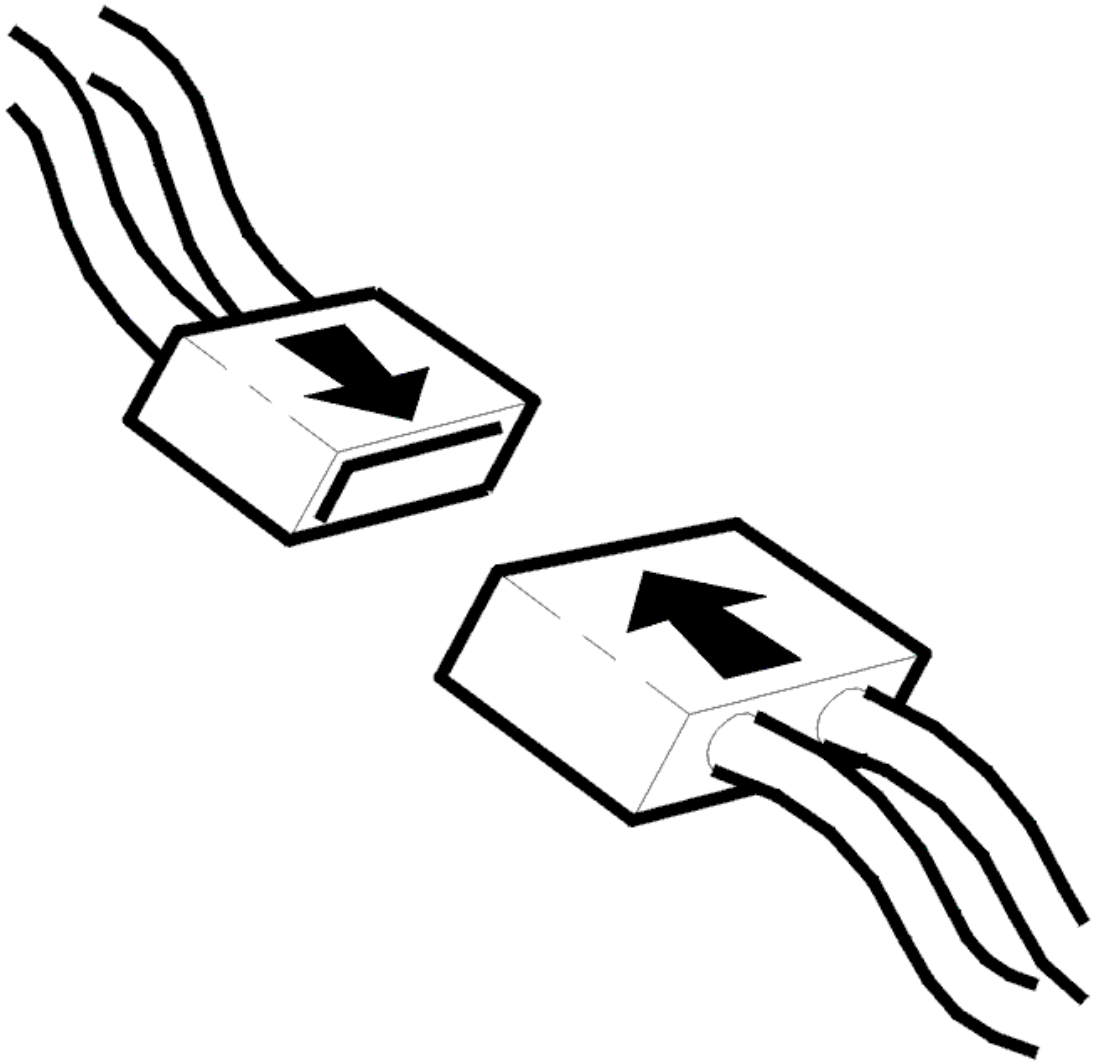

Fig. 353: Connecting Connector
Courtesy of VOLVO CARS CORPORATION

- Ignition off
- Reinstall the connectors, components etc.
- Ignition on.

  Check that the sound is heard from speaker for Audio module (AUD) by trying the radio FM/AM or the cd-player.

Is the function OK?

- **YES**

  VERIFIED: Troubleshooting has been completed.

- **NO**

  Refer to **INFORMATION**

INFORMATION

FAULT-TRACING INFORMATION

The fault should have been detected and remedied. As this is not the case fault-tracing has failed.

Exit fault-tracing for this diagnostic trouble code (DTC) or make another attempt.

AUD-0025: CONTROL MODULE. INTERNAL FAULT (2007-2012)

DIAGNOSTIC TROUBLE CODE (DTC) INFORMATION AUD-0025

Condition

The diagnostic trouble code (DTC) is stored if the audio module (AUD) registers an internal fault.

The diagnostic trouble code can be diagnosed when Audio module (AUD) is activated.

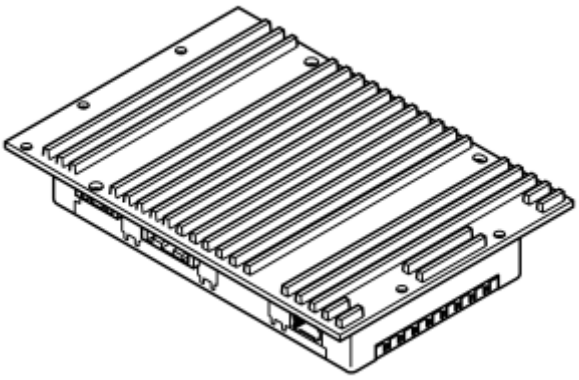

Fig. 354: Identifying Audio Module (AUD)
Courtesy of VOLVO CARS CORPORATION

Substitute Value

- None.

Possible Source

- Internal fault in the audio module (AUD).

Fault symptom[s]

- No sound from loudspeakers

INTERNAL FAULT

see **INTERNAL FAULT**

AUD-0025: LOUDSPEAKER LEFT FRONT. FAULTY SIGNAL (2007-2012)

DIAGNOSTIC TROUBLE CODE (DTC) INFORMATION AUD-0025

Condition

The Audio module (AUD) checks the signal in the signal cable to the loudspeaker in the left-hand front door.

The diagnostic trouble code (DTC) is stored if the control module detects that:

- The resistance is too low.

The control module's test for the diagnostic trouble code (DTC) starts in the event of:

- Activated control module.

NOTE: The control module can only detect the fault once the test has been started and the diagnostic trouble code (DTC) is stored when the conditions are met.

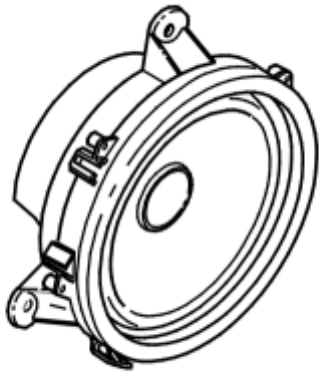

Fig. 355: Identifying Loudspeaker
Courtesy of VOLVO CARS CORPORATION

Substitute Value

- None.

Possible Source

- Short circuit between signal cables to speaker.

Fault symptom[s]

- No sound from loudspeakers

FAULT-TRACING INFORMATION

FAULT-TRACING INFORMATION

Use the following information and general checks during fault-tracing.

NOTE: Check that the fuses are intact. For locations, cover for fuse box, fuse ratings or similar.

1. Check, if possible, relevant functions in the vehicle using buttons/controls/test drives to determine the status of the fault.

   NOTE: If the vehicle does not show any of the given symptoms in the diagnostic trouble code information (DTC), this may mean that the fault is intermittent or that the control module is not detecting the fault at this moment.

2. Use the diagnostic trouble code's **frozen values** , **status identifiers** and **counter** to determine the operating conditions when the fault was detected, the fault's current status and any degree of intermittence of the fault.
3. Check and fault-trace according to **the fault causes** that are specified in the **diagnostic trouble code (DTC) information** .
4. Use **VIDA Vehicle communication** . Read off the parameters, activate components and functions, carry out quick tests and checking routines for the diagnostic trouble codes to identify the fault.
5. Check relevant components according to **Component specifications** .
6. Check relevant signals using appropriate **wiring diagram** , **signal specification** and **breakout box** .

Remedy as necessary.

Other information

- see **DESCRIPTION OF FROZEN VALUES**
- see **STATUS IDENTIFIER, DESCRIPTION**
- see **COUNTERS, DESCRIPTION**
- see **SIGNAL SPECIFICATION**

- see **CONNECTING THE BREAKOUT BOX**
- see **CHECKING WIRING AND TERMINALS**

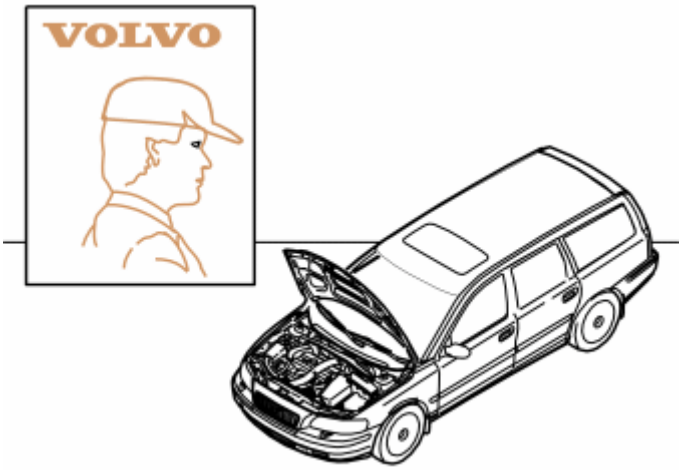

Fig. 356: Identifying VOLVO Certified Service Personnel
Courtesy of VOLVO CARS CORPORATION

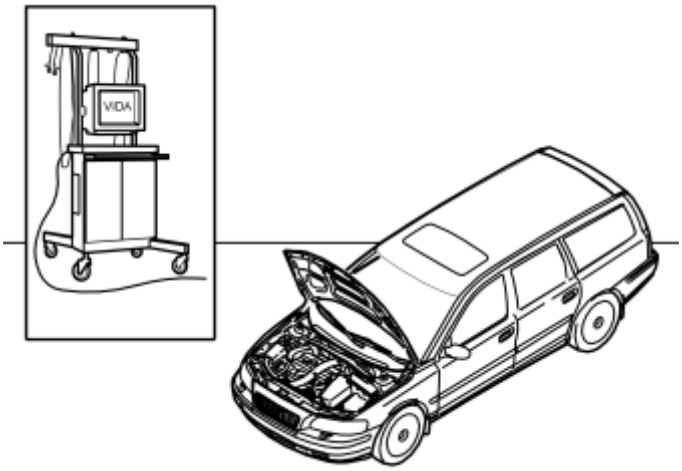

Fig. 357: Identifying VIDA
Courtesy of VOLVO CARS CORPORATION

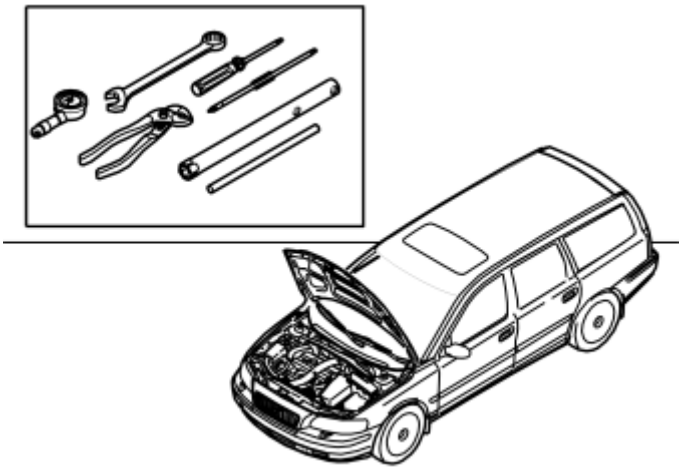

Fig. 358: Identifying Relevant Tools
Courtesy of VOLVO CARS CORPORATION

- **Continue**

  Refer to **INFORMATION**

INFORMATION

FAULT-TRACING INFORMATION

In case of this defect, troubleshooting is not followed by verification.

The information can be displayed again or the fault-tracing for this fault can be interrupted.

AUD-0026: LOUDSPEAKER RIGHT FRONT. FAULTY SIGNAL (2007-2011)

DIAGNOSTIC TROUBLE CODE (DTC) INFORMATION AUD-0026

Condition

The Audio module (AUD) checks the signal in the signal cable to the loudspeaker in the right-hand front door.

The diagnostic trouble code (DTC) is stored if the control module detects that:

- The resistance is too low.

The control module's test for the diagnostic trouble code (DTC) starts in the event of:

- Activated control module.

NOTE: The control module can only detect the fault once the test has been started and the diagnostic trouble code (DTC) is stored when the conditions are met.

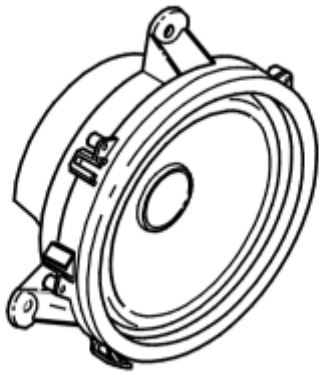

Fig. 359: Identifying Loudspeaker
Courtesy of VOLVO CARS CORPORATION

Substitute Value

- None.

Possible Source

- Short circuit between signal cables to speaker.

Fault symptom[s]

- No sound from loudspeakers

FAULT-TRACING INFORMATION

see **FAULT-TRACING INFORMATION**

AUD-0027: LOUDSPEAKER LEFT REAR. FAULTY SIGNAL (2007-2011)

DIAGNOSTIC TROUBLE CODE (DTC) INFORMATION AUD-0027

Condition

The Audio module (AUD) checks the signal in the signal cable to the loudspeaker in the left-hand rear door.

The diagnostic trouble code (DTC) is stored if the control module detects that:

- The resistance is too low.

The control module's test for the diagnostic trouble code (DTC) starts in the event of:

- Activated control module.

NOTE: **The control module can only detect the fault once the test has been started and the diagnostic trouble code (DTC) is stored when the conditions are met.**

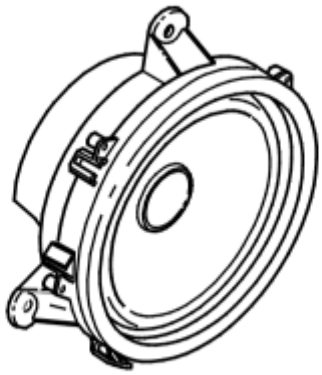

Fig. 360: Identifying Loudspeaker
Courtesy of VOLVO CARS CORPORATION

Substitute Value

- None.

Possible Source

- Short circuit between signal cables to speaker.

Fault symptom[s]

- No sound from loudspeakers

FAULT-TRACING INFORMATION

see **FAULT-TRACING INFORMATION**

AUD-0028: LOUDSPEAKER RIGHT REAR. FAULTY SIGNAL (2007-2011)

DIAGNOSTIC TROUBLE CODE (DTC) INFORMATION AUD-0028

Condition

The Audio module (AUD) checks the signal in the signal cable to the loudspeaker in the right-hand rear door.

The diagnostic trouble code (DTC) is stored if the control module detects that:

- The resistance is too low.

The control module's test for the diagnostic trouble code (DTC) starts in the event of:

- Activated control module.

NOTE: The control module can only detect the fault once the test has been started and the diagnostic trouble code (DTC) is stored when the conditions are met.

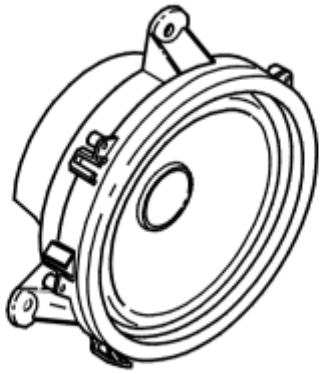

Fig. 361: Identifying Loudspeaker
Courtesy of VOLVO CARS CORPORATION

Substitute Value

- None.

Possible Source

- Short circuit between signal cables to speaker.

Fault symptom[s]

- No sound from loudspeakers

FAULT-TRACING INFORMATION

see **FAULT-TRACING INFORMATION**

AUD-0029: LOUDSPEAKER LEFT FRONT. SIGNAL TOO LOW (2007-2011)

DIAGNOSTIC TROUBLE CODE (DTC) INFORMATION AUD-0029

Condition

The Audio module (AUD) checks the signal in the signal cable to the loudspeaker in the left-hand front door.

The diagnostic trouble code (DTC) is stored if the control module detects that:

- The signal in the signal cable to the loudspeaker in the left-hand front door is too low.

The control module's test for the diagnostic trouble code (DTC) starts in the event of:

- Activated control module.

NOTE: The control module can only detect the fault once the test has been started and the diagnostic trouble code (DTC) is stored when the conditions are met.

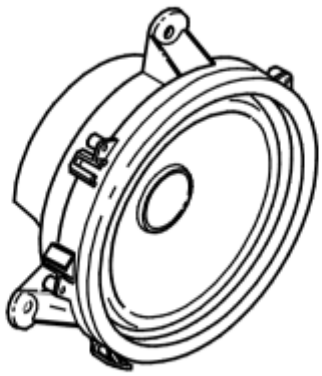

Fig. 362: Identifying Loudspeaker
Courtesy of VOLVO CARS CORPORATION

Substitute Value

- None.

Possible Source

- Short-circuit to ground in the signal cable between the control module and the loudspeaker in the left front door.

Fault symptom[s]

- No sound from loudspeakers

FAULT-TRACING INFORMATION

see **FAULT-TRACING INFORMATION**

AUD-002A: LOUDSPEAKER RIGHT FRONT. SIGNAL TOO LOW (2007-2011)

DIAGNOSTIC TROUBLE CODE (DTC) INFORMATION AUD-002A

Condition

The Audio module (AUD) checks the signal in the signal cable to the loudspeaker in the right-hand front door.

The diagnostic trouble code (DTC) is stored if the control module detects that:

- The signal in the signal cable to the loudspeaker in the right-hand front door is too low.

The control module's test for the diagnostic trouble code (DTC) starts in the event of:

- Activated control module.

NOTE: The control module can only detect the fault once the test has been started and the diagnostic trouble code (DTC) is stored when the conditions are met.

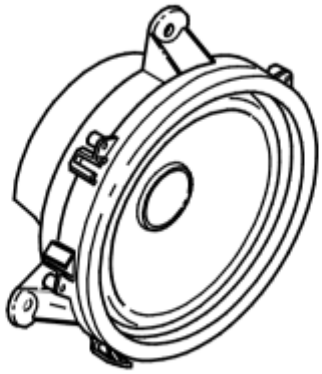

Fig. 363: Identifying Loudspeaker
Courtesy of VOLVO CARS CORPORATION

Substitute Value

- None.

Possible Source

- Short-circuit to ground in the signal cable between the control module and the loudspeaker in the right front door.

Fault symptom[s]

- No sound from loudspeakers

FAULT-TRACING INFORMATION

see **FAULT-TRACING INFORMATION**

AUD-002B: LOUDSPEAKER LEFT REAR. SIGNAL TOO LOW (2007-2011)

DIAGNOSTIC TROUBLE CODE (DTC) INFORMATION AUD-002B

Condition

The Audio module (AUD) checks the signal in the signal cable to the loudspeaker in the left-hand rear door.

The diagnostic trouble code (DTC) is stored if the control module detects that:

- The signal in the signal cable to the loudspeaker in the left-hand rear door is too low.

The control module's test for the diagnostic trouble code (DTC) starts in the event of:

- Activated control module.

NOTE: The control module can only detect the fault once the test has been started and the diagnostic trouble code (DTC) is stored when the conditions are met.

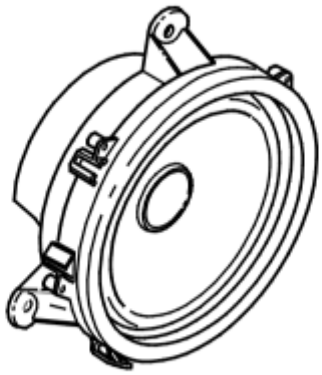

Fig. 364: Identifying Loudspeaker
Courtesy of VOLVO CARS CORPORATION

Substitute Value

- None.

Possible Source

- Short-circuit to ground in the signal cable between the control module and the loudspeaker in the left rear door.

Fault symptom[s]

- No sound from loudspeakers

FAULT-TRACING INFORMATION

see **FAULT-TRACING INFORMATION**

AUD-002C: LOUDSPEAKER RIGHT REAR. SIGNAL TOO LOW (2007-2011)

DIAGNOSTIC TROUBLE CODE (DTC) INFORMATION AUD-002C

Condition

The Audio module (AUD) checks the signal in the signal cable to the loudspeaker in the right-hand rear door.

The diagnostic trouble code (DTC) is stored if the control module detects that:

- The signal in the signal cable to the loudspeaker in the right-hand rear door is too low.

The control module's test for the diagnostic trouble code (DTC) starts in the event of:

- Activated control module.

NOTE: The control module can only detect the fault once the test has been started and the diagnostic trouble code (DTC) is stored when the conditions are met.

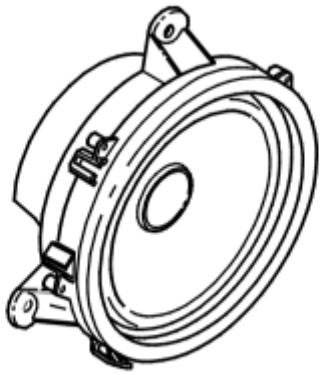

Fig. 365: Identifying Loudspeaker
Courtesy of VOLVO CARS CORPORATION

Substitute Value

- None.

Possible Source

- Short-circuit to ground in the signal cable between the control module and the loudspeaker in the right rear door.

Fault symptom[s]

- No sound from loudspeakers

FAULT-TRACING INFORMATION

see **FAULT-TRACING INFORMATION**

AUD-002D: LOUDSPEAKER LEFT FRONT. SIGNAL TOO HIGH (2007-2011)

DIAGNOSTIC TROUBLE CODE (DTC) INFORMATION AUD-002D

Condition

The Audio module (AUD) checks the signal in the signal cable to the loudspeaker in the left-hand front door.

The diagnostic trouble code (DTC) is stored if the control module detects that:

- The signal in the signal cable to the loudspeaker in the left-hand front door is too high.

The control module's test for the diagnostic trouble code (DTC) starts in the event of:

- Activated control module.

NOTE: **The control module can only detect the fault once the test has been started and the diagnostic trouble code (DTC) is stored when the conditions are met.**

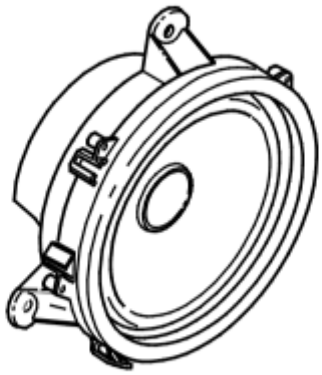

Fig. 366: Identifying Loudspeaker
Courtesy of VOLVO CARS CORPORATION

Substitute Value

- None.

Possible Source

- Short-circuit to supply voltage in the signal cable between the control module and the loudspeaker in the left front door.

Fault symptom[s]

- No sound from loudspeakers

FAULT-TRACING INFORMATION

see **FAULT-TRACING INFORMATION**

AUD-002E: LOUDSPEAKER RIGHT FRONT. SIGNAL TOO HIGH (2007-2011)

DIAGNOSTIC TROUBLE CODE (DTC) INFORMATION AUD-002E

Condition

The Audio module (AUD) checks the signal in the signal cable to the loudspeaker in the right-hand front door.

The diagnostic trouble code (DTC) is stored if the control module detects that:

- The signal in the signal cable to the loudspeaker in the right-hand front door is too high.

The control module's test for the diagnostic trouble code (DTC) starts in the event of:

- Activated control module.

NOTE: The control module can only detect the fault once the test has been started and the diagnostic trouble code (DTC) is stored when the conditions are met.

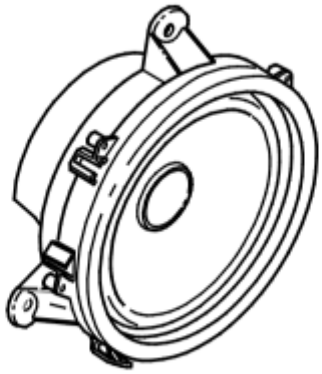

Fig. 367: Identifying Loudspeaker
Courtesy of VOLVO CARS CORPORATION

Substitute Value

- None.

Possible Source

- Short-circuit to supply voltage in the signal cable between the control module and the loudspeaker in the right front door.

Fault symptom[s]

- No sound from loudspeakers

FAULT-TRACING INFORMATION

see **FAULT-TRACING INFORMATION**

AUD-002F: LOUDSPEAKER LEFT REAR. SIGNAL TOO HIGH (2007-2011)

DIAGNOSTIC TROUBLE CODE (DTC) INFORMATION AUD-002F

Condition

The Audio module (AUD) checks the signal in the signal cable to the loudspeaker in the left-hand rear door.

The diagnostic trouble code (DTC) is stored if the control module detects that:

- The signal in the signal cable to the loudspeaker in the left-hand rear door is too high.

The control module's test for the diagnostic trouble code (DTC) starts in the event of:

- Activated control module.

NOTE: The control module can only detect the fault once the test has been started and the diagnostic trouble code (DTC) is stored when the conditions are met.

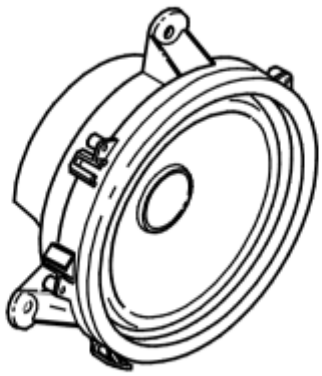

Fig. 368: Identifying Loudspeaker
Courtesy of VOLVO CARS CORPORATION

Substitute Value

- None.

Possible Source

- Short-circuit to supply voltage in the signal cable between the control module and the loudspeaker in the left rear door.

Fault symptom[s]

- No sound from loudspeakers

FAULT-TRACING INFORMATION

see **FAULT-TRACING INFORMATION**

AUD-0030: LOUDSPEAKER RIGHT REAR. SIGNAL TOO HIGH (2007-2011)

DIAGNOSTIC TROUBLE CODE (DTC) INFORMATION AUD-0030

Condition

The Audio module (AUD) checks the signal in the signal cable to the loudspeaker in the right-hand rear door.

The diagnostic trouble code (DTC) is stored if the control module detects that:

- The signal in the signal cable to the loudspeaker in the right-hand rear door is too high.

The control module's test for the diagnostic trouble code (DTC) starts in the event of:

- Activated control module.

NOTE: The control module can only detect the fault once the test has been started and the diagnostic trouble code (DTC) is stored when the conditions are met.

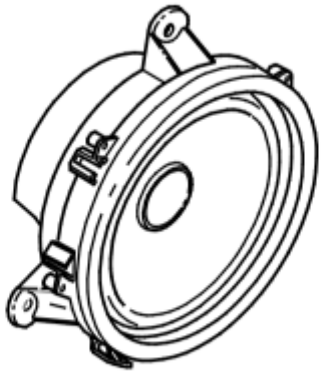

Fig. 369: Identifying Loudspeaker
Courtesy of VOLVO CARS CORPORATION

Substitute Value

- None.

Possible Source

- Short-circuit to supply voltage in the signal cable between the control module and the loudspeaker in the right rear door.

Fault symptom[s]

- No sound from loudspeakers

FAULT-TRACING INFORMATION

see **FAULT-TRACING INFORMATION**

AUD-XXXX: UNKNOWN DIAGNOSTIC TROUBLE CODE (DTC) FOR THE CURRENT CONTROL MODULE VERSION (2003-2006)

UNKNOWN DIAGNOSTIC TROUBLE CODE (DTC) FOR THE CURRENT CONTROL MODULE VERSION

READING OFF DIAGNOSTIC TROUBLE CODES (DTC)

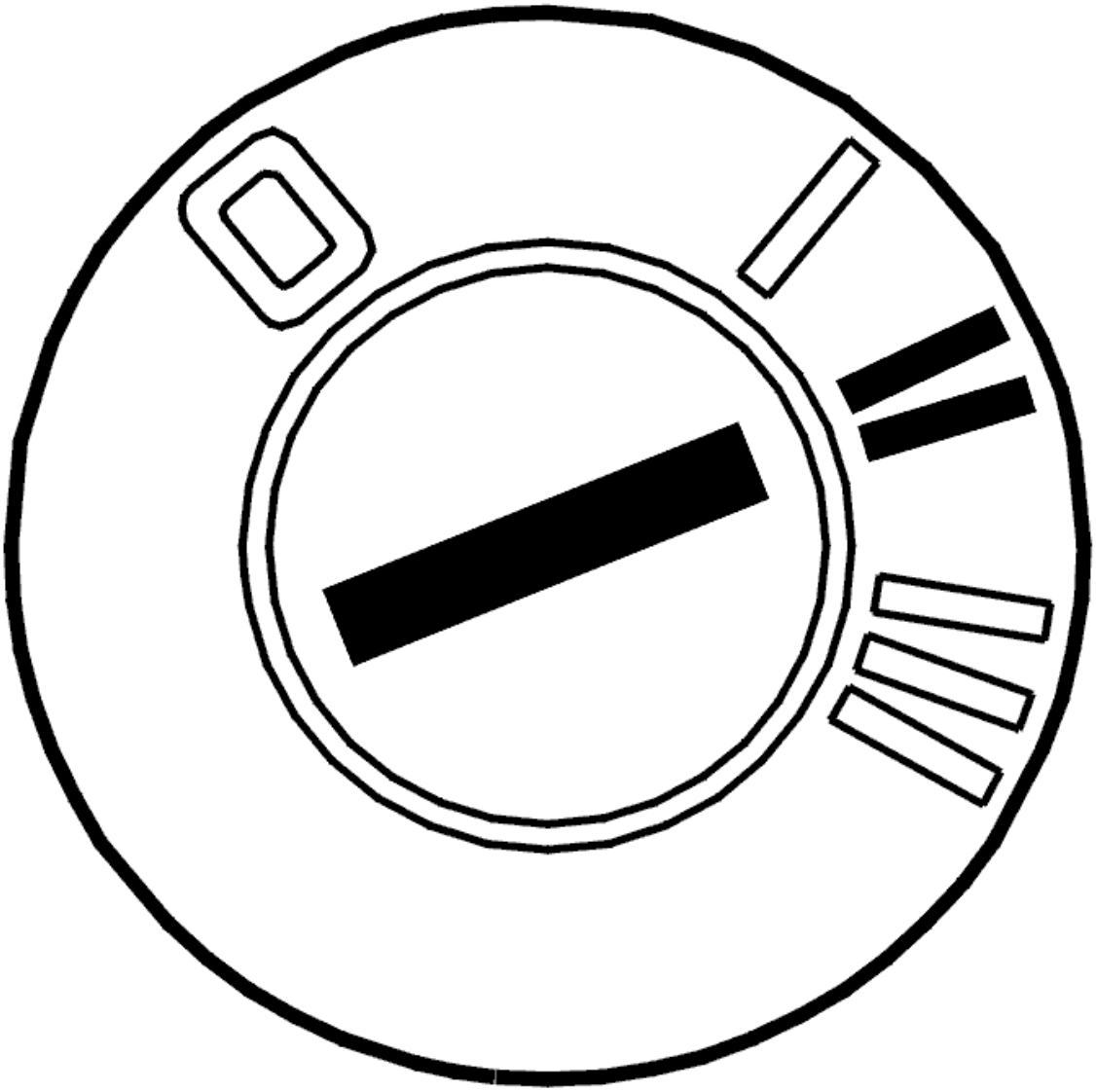

Fig. 370: Identifying Ignition ON
Courtesy of VOLVO CARS CORPORATION

- Ignition on.

  Read off the diagnostic trouble code (DTC) that is stored in the car.

  Make a note of the code.

Fig. 371: Identifying VCT2000 Diagnostic Tool Symbol In VIDA
Courtesy of VOLVO CARS CORPORATION

IAM-1001: AM/FM ANTENNA. NO SIGNAL (2007-2011)

DIAGNOSTIC TROUBLE CODE (DTC) INFORMATION IAM-1001

Condition

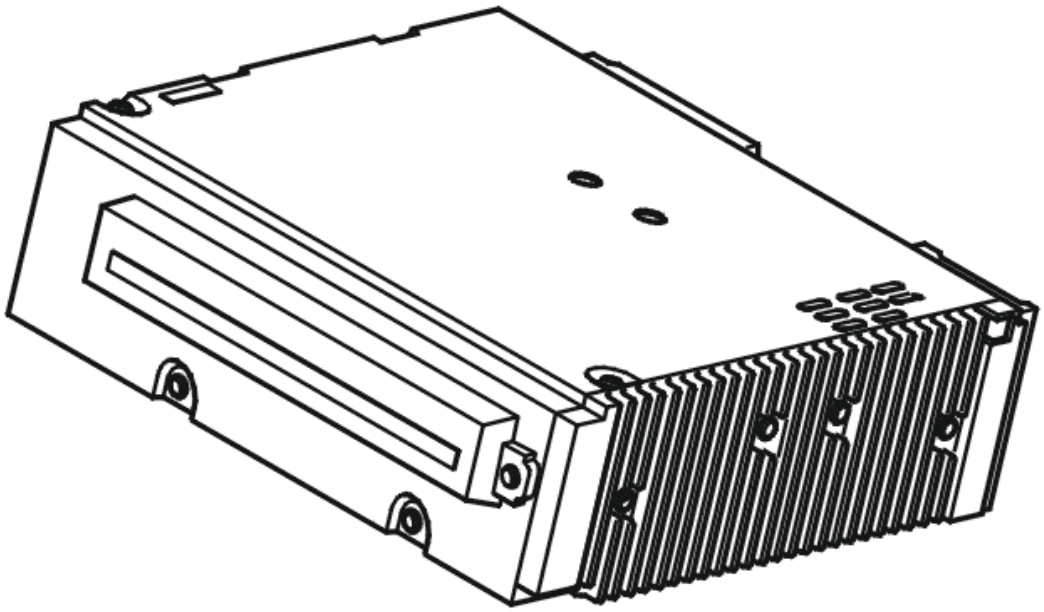

Fig. 372: Identifying Integrated Audio Module (IAM)
Courtesy of VOLVO CARS CORPORATION

If the Integrated Audio Module (IAM) does not detect a signal from the AM/FM antenna, then the Diagnostic Trouble Code (DTC) is generated.

The diagnostic trouble code can be diagnosed when the ignition is on.

Substitute Value

- Nothing.

Possible Source

- Open circuit on the cable harness between the antenna amplifier and Integrated Audio Module (IAM).
- Damaged antenna amplifier.
- Contact resistance and/or oxidation.

Fault symptom[s]

- Radio inoperative.
- Poor radio reception.

SIGNAL MISSING

CHECKING THE WIRING

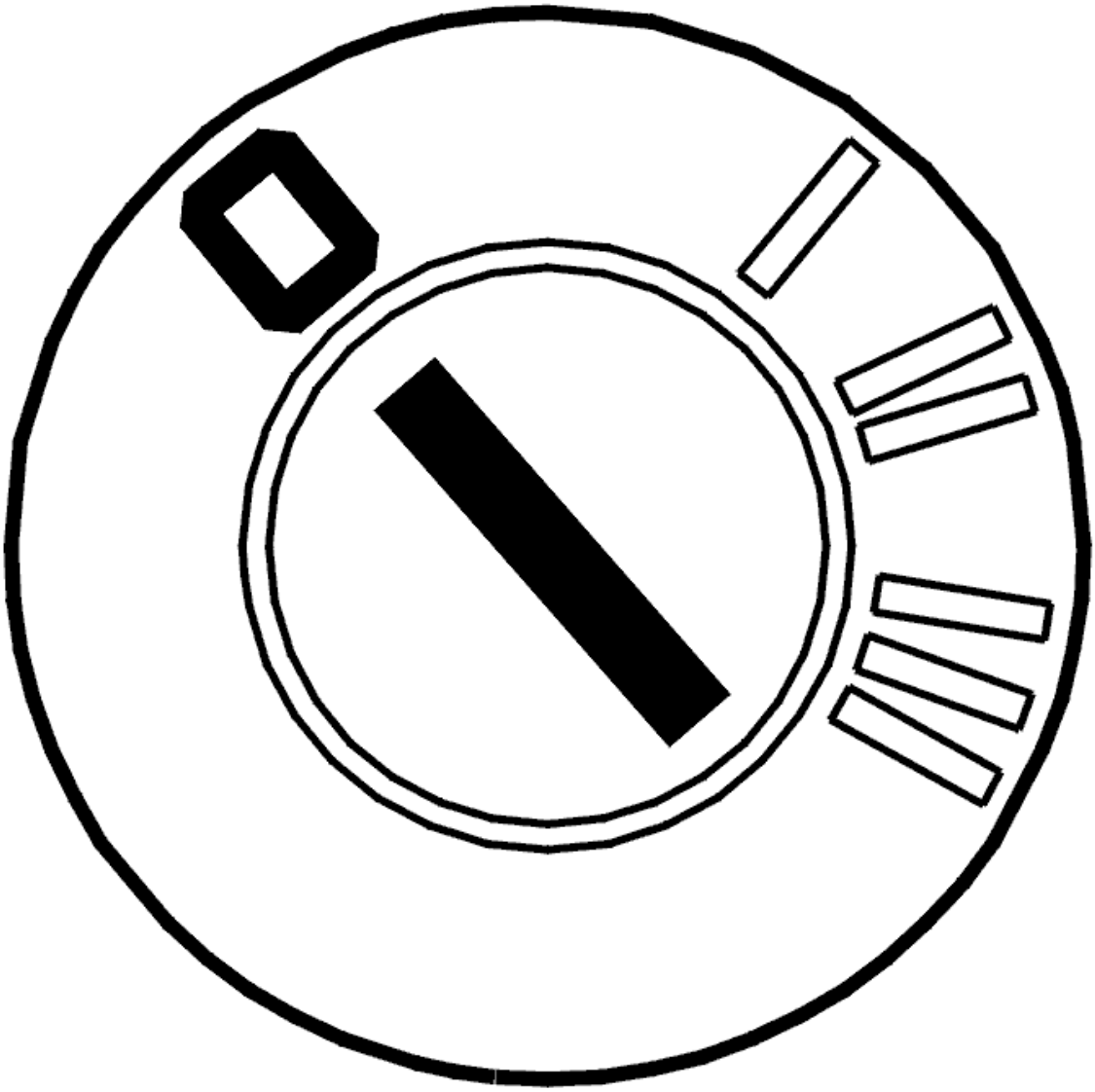

Fig. 373: Identifying Ignition OFF
Courtesy of VOLVO CARS CORPORATION

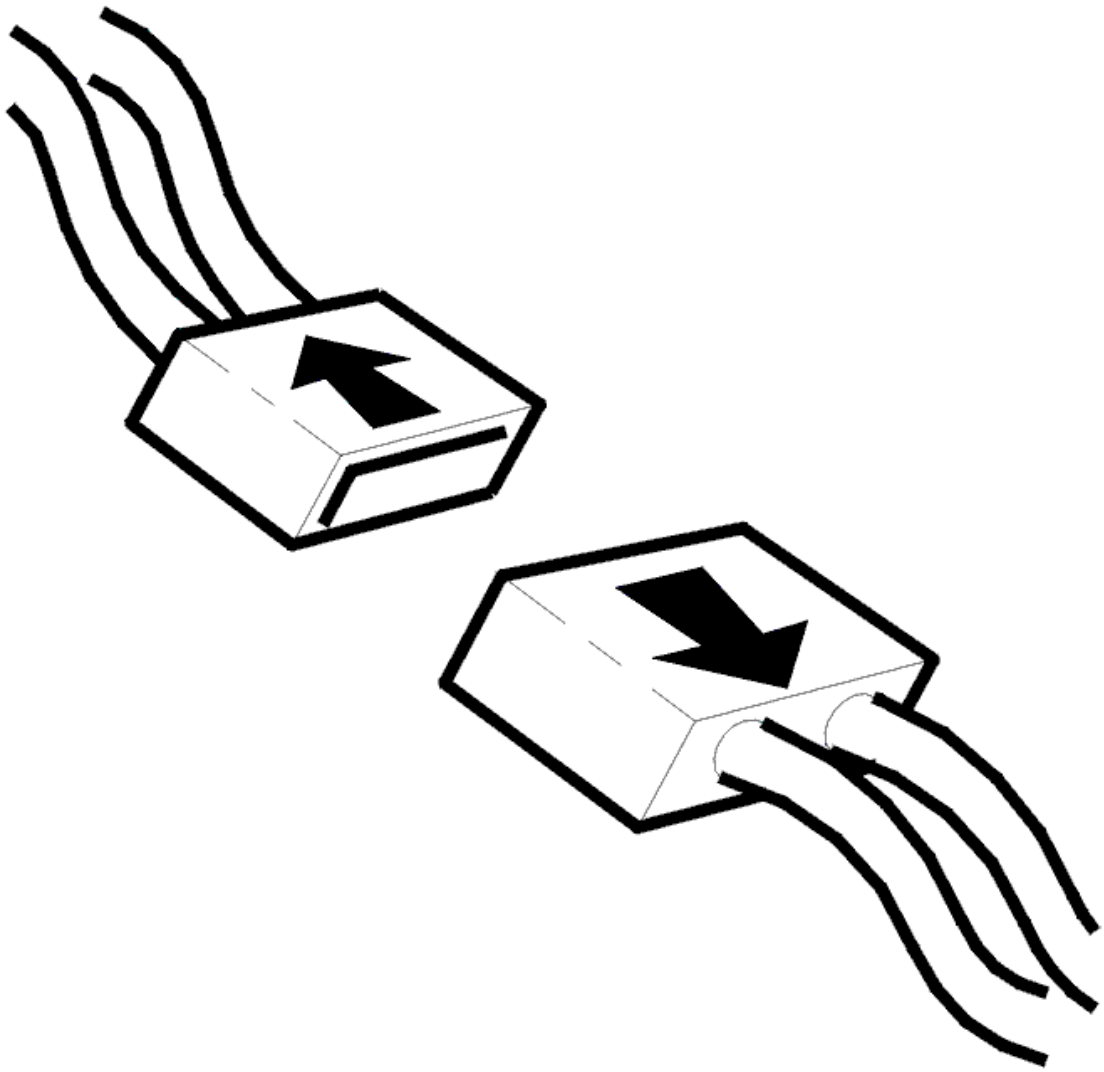

Fig. 374: Disconnecting Connector
Courtesy of VOLVO CARS CORPORATION

- Ignition off
- Disconnect the connector to the Integrated Audio Module (IAM).

  Check the connections with regard to contact resistance, play and oxidation.

  Check the antenna cable between the Integrated Audio Module (IAM) and the antenna amplifier with regard to open circuits.

  Measure between:

  - Integrated Audio Module (IAM) #B1 and antenna amplifier #1.
  - Integrated Audio Module (IAM) #B2 and antenna amplifier #2.

If the vehicle is equipped with navigation system (does not apply to US) the antenna lead runs from Integrated Audio Module (IAM) #B1, via Multimedia module (MMM), to antenna amplifier #1.

Remedy as necessary.

Other information

- see **SIGNAL SPECIFICATION**
- see **LOCATION OF COMPONENTS**
- see **CONTROL MODULE GENERAL SOUND PLAYER**
- see **CONTENTS**

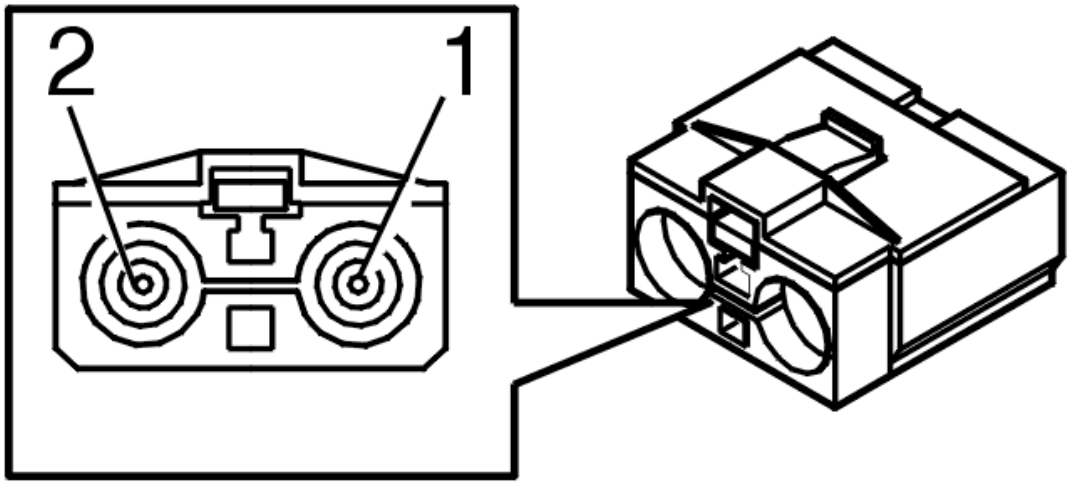

Fig. 375: Identifying 2-Bit Connector
Courtesy of VOLVO CARS CORPORATION

- **Continue**

Refer to **VERIFICATION**

VERIFICATION

VERIFICATION

HINT: After carrying out the repair, check that the fault has been remedied.

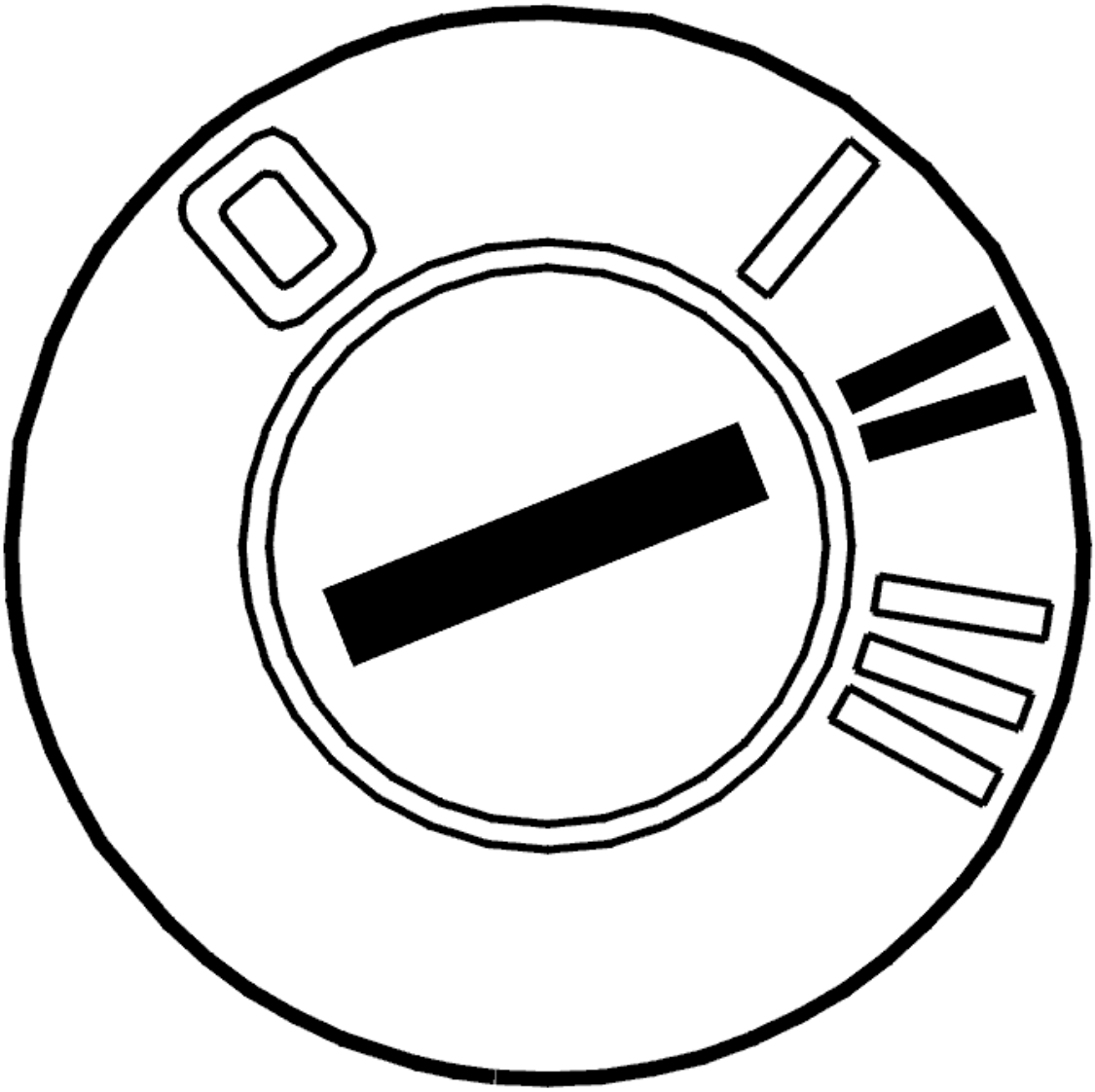

Fig. 376: Identifying Ignition ON
Courtesy of VOLVO CARS CORPORATION

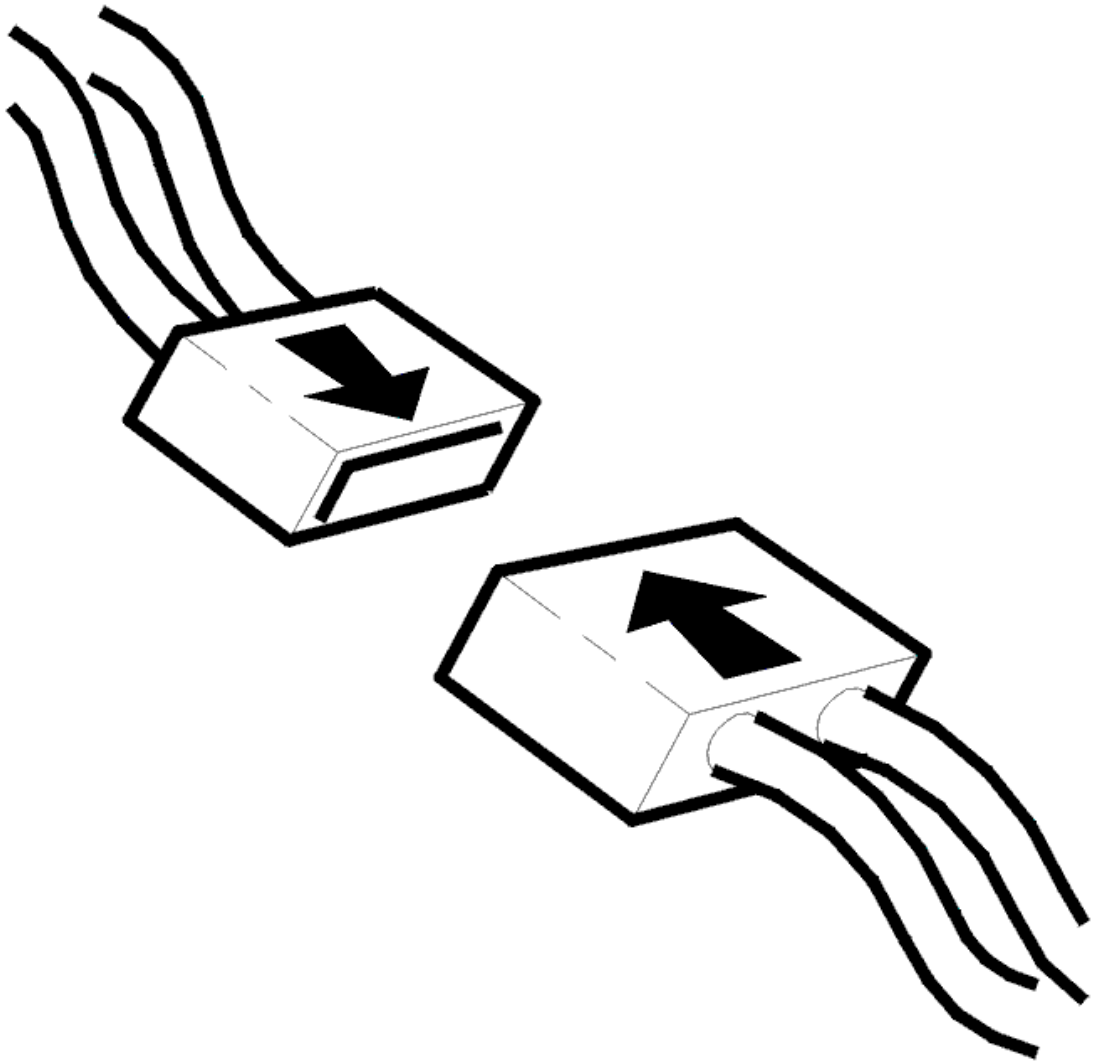

Fig. 377: Connecting Connector
Courtesy of VOLVO CARS CORPORATION

- Ignition off
- Reinstall the connectors, components etc.
- Ignition on

  Check that the radio is working and that reception is acceptable.

Is the function OK?

- **YES**

  VERIFIED: Troubleshooting has been completed.

- **NO**

  Refer to **INFORMATION**

INFORMATION

FAULT-TRACING INFORMATION

The fault should have been detected and remedied. As this is not the case fault-tracing has failed.

Exit fault-tracing for this diagnostic trouble code (DTC) or make another attempt.

IAM-1002: AM/FM ANTENNA. FAULTY SIGNAL (2007-2011)

DIAGNOSTIC TROUBLE CODE (DTC) INFORMATION IAM-1002

Condition

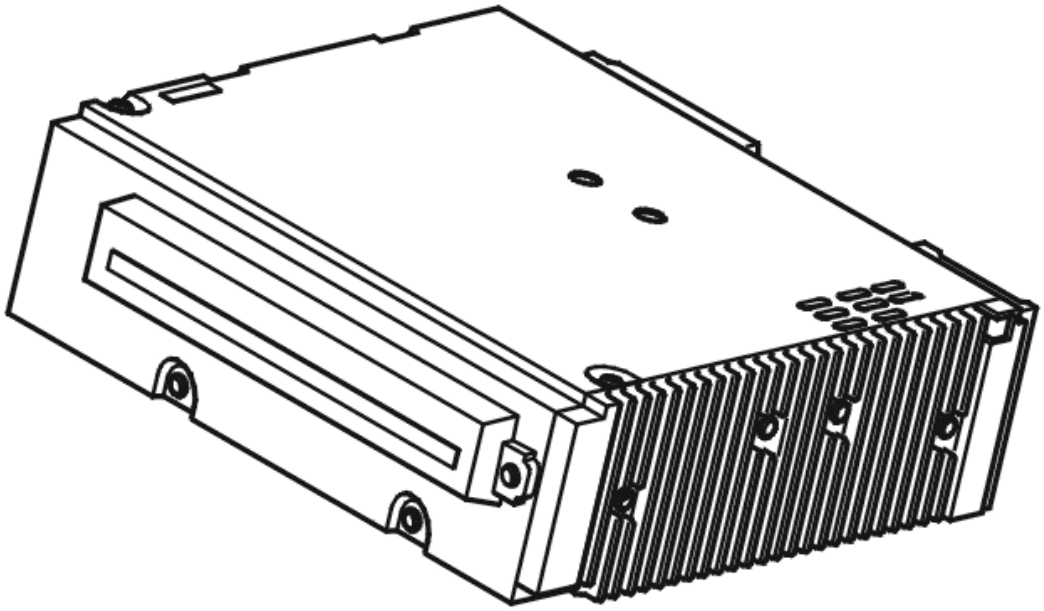

Fig. 378: Identifying Integrated Audio Module (IAM)
Courtesy of VOLVO CARS CORPORATION

If the Integrated Audio Module (IAM) detects an erroneous signal from the AM/FM antenna, then the Diagnostic Trouble Code (DTC) is generated.

The diagnostic trouble code can be diagnosed when the ignition is on.

Substitute Value

- Nothing

Possible Source

- Short circuit on the cable harness between the antenna amplifier and Integrated Audio Module (IAM).

Fault symptom[s]

- Radio inoperative.
- Poor radio reception.

FAULTY SIGNAL

CHECKING THE WIRING

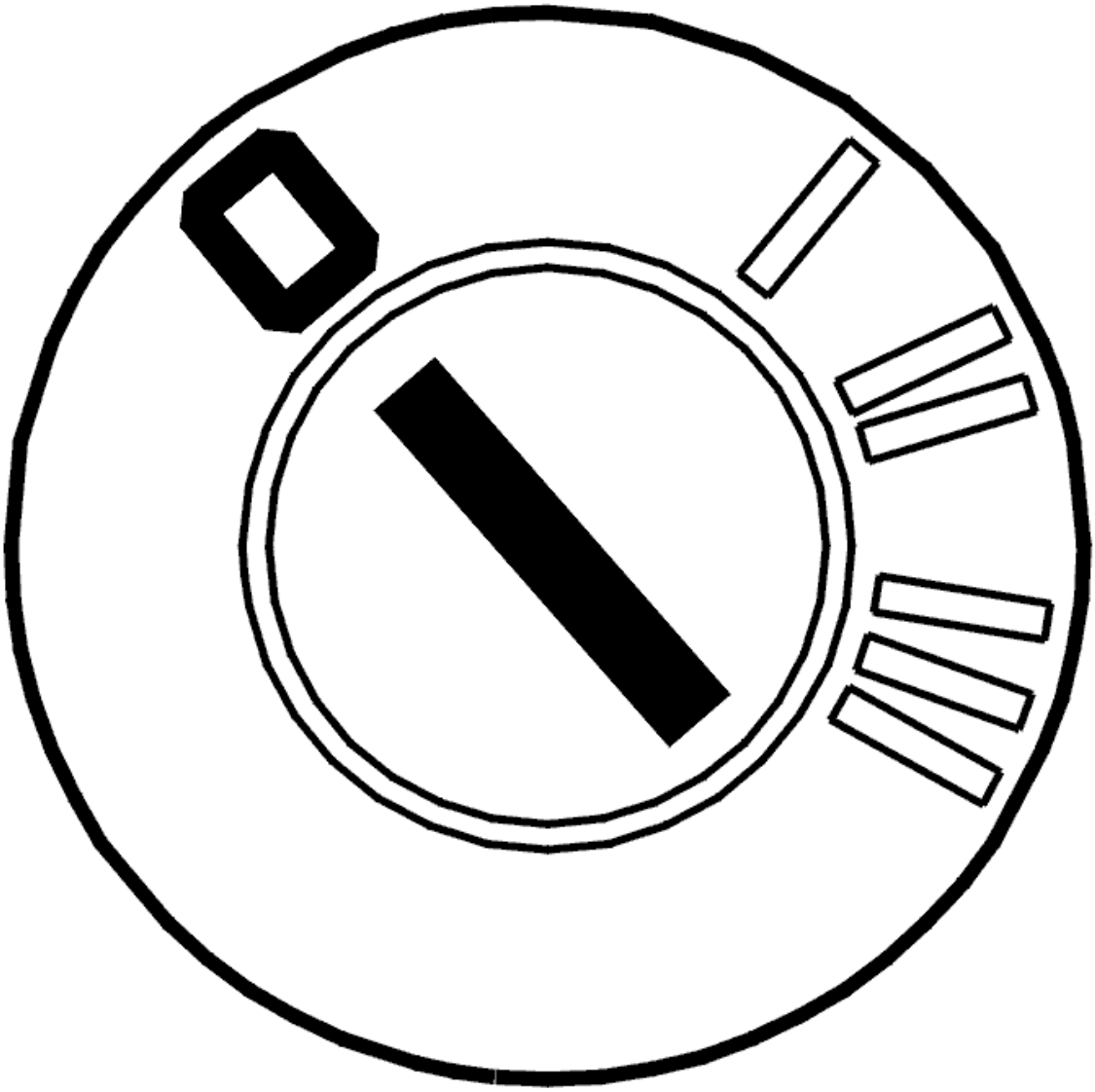

Fig. 379: Identifying Ignition OFF
Courtesy of VOLVO CARS CORPORATION

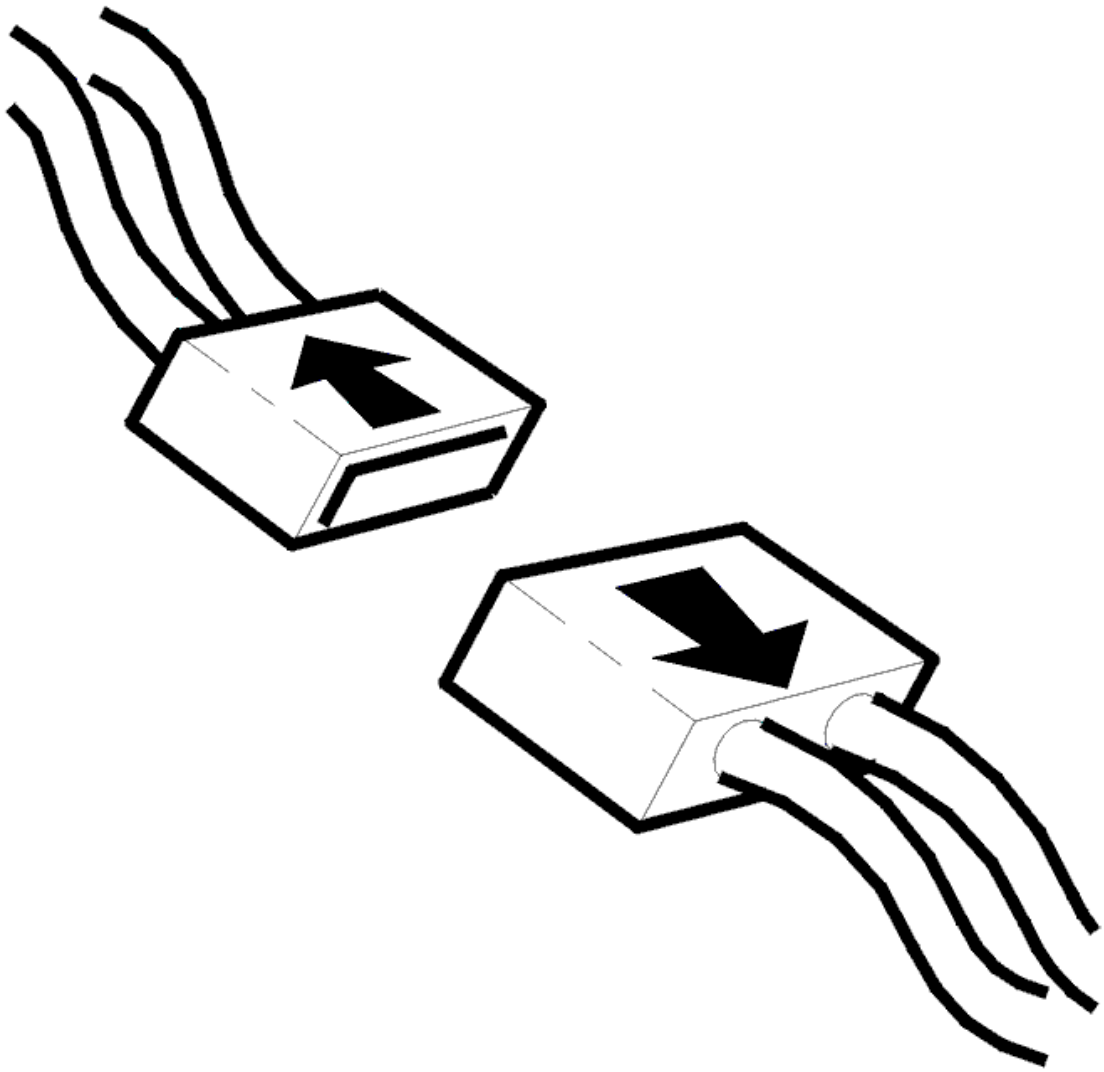

Fig. 380: Disconnecting Connector
Courtesy of VOLVO CARS CORPORATION

- Ignition off
- Disconnect the connector to the Integrated Audio Module (IAM).

  Check the connections with regard to contact resistance, play and oxidation.

  Check the antenna cable between the Integrated Audio Module (IAM) and the antenna amplifier with regard to short circuits to supply voltage.

  Check the antenna cable between the Integrated Audio Module (IAM) and the antenna amplifier with regard to short circuits to ground.

  Measure between:

- Integrated Audio Module (IAM) #B1 and antenna amplifier #1.
- Integrated Audio Module (IAM) #B2 and antenna amplifier #2.

If the vehicle is equipped with navigation system (does not apply to US) the antenna lead runs from Integrated Audio Module (IAM) #B1, via Multimedia module (MMM), to antenna amplifier #1.

Remedy as necessary.

Other information

- see **SIGNAL SPECIFICATION**
- see **LOCATION OF COMPONENTS**
- see **CONTROL MODULE GENERAL SOUND PLAYER**
- see **CONTENTS**

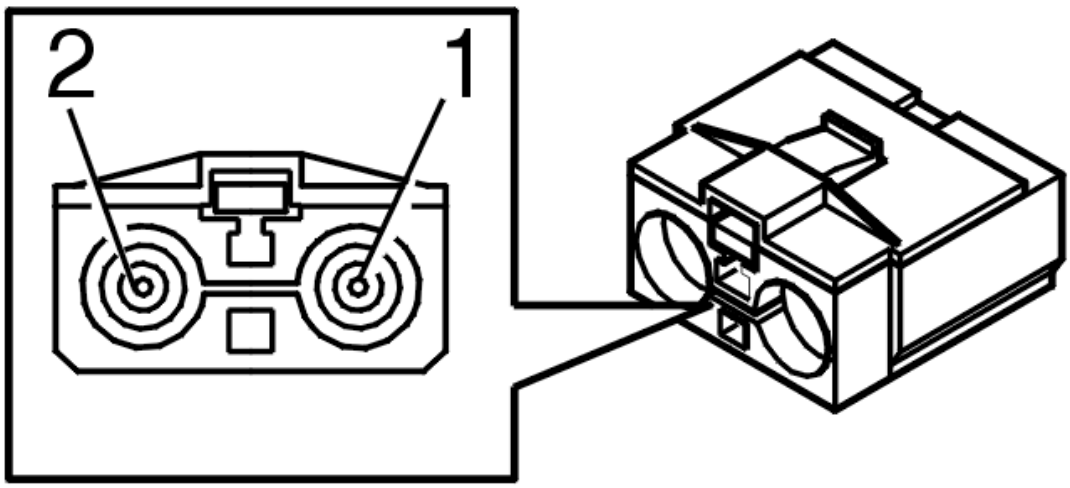

Fig. 381: Identifying 2-Bit Connector
Courtesy of VOLVO CARS CORPORATION

- **Continue**

Refer to **VERIFICATION**

VERIFICATION

VERIFICATION

HINT: After carrying out the repair, check that the fault has been remedied.

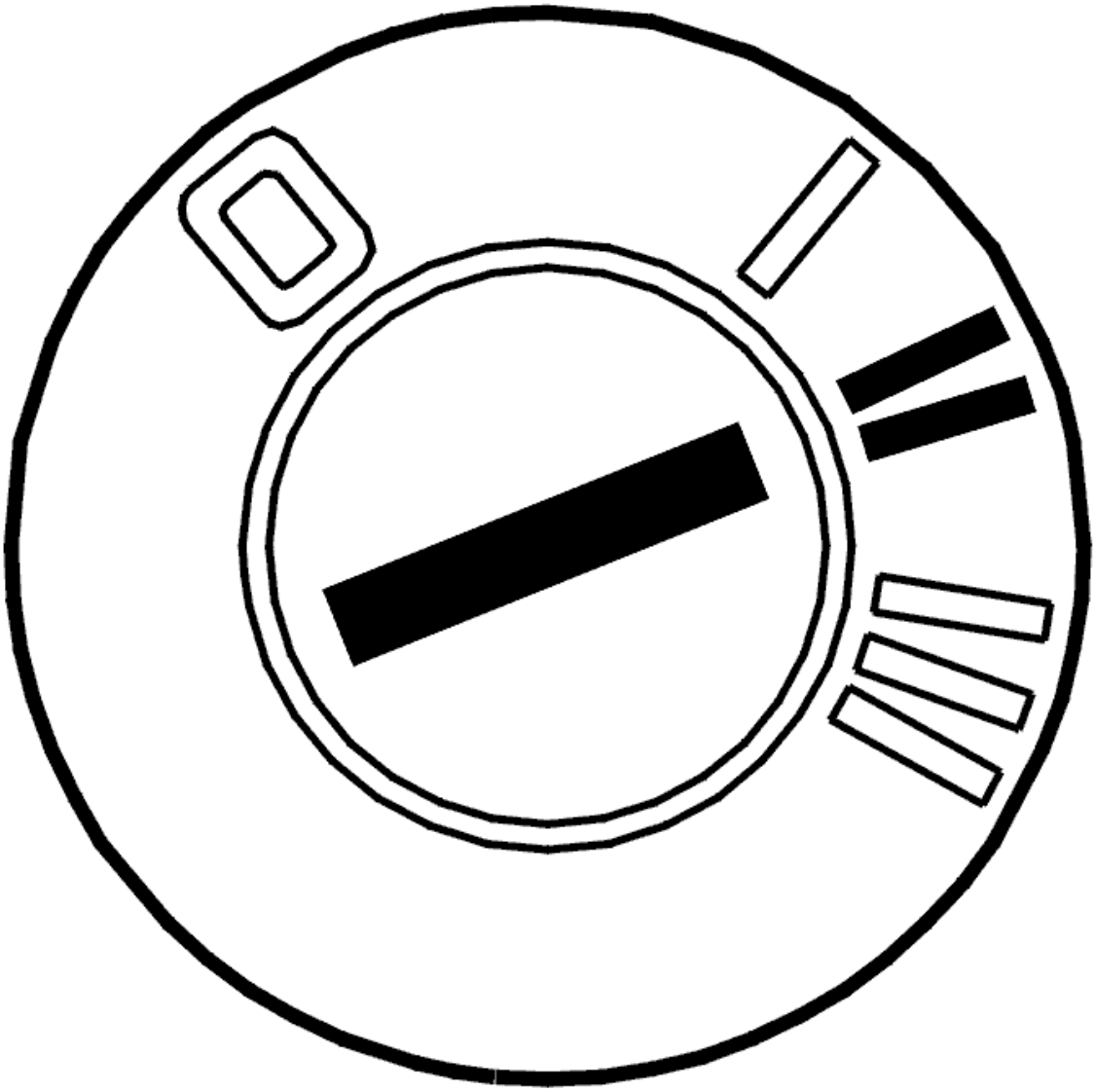

Fig. 382: Identifying Ignition ON
Courtesy of VOLVO CARS CORPORATION

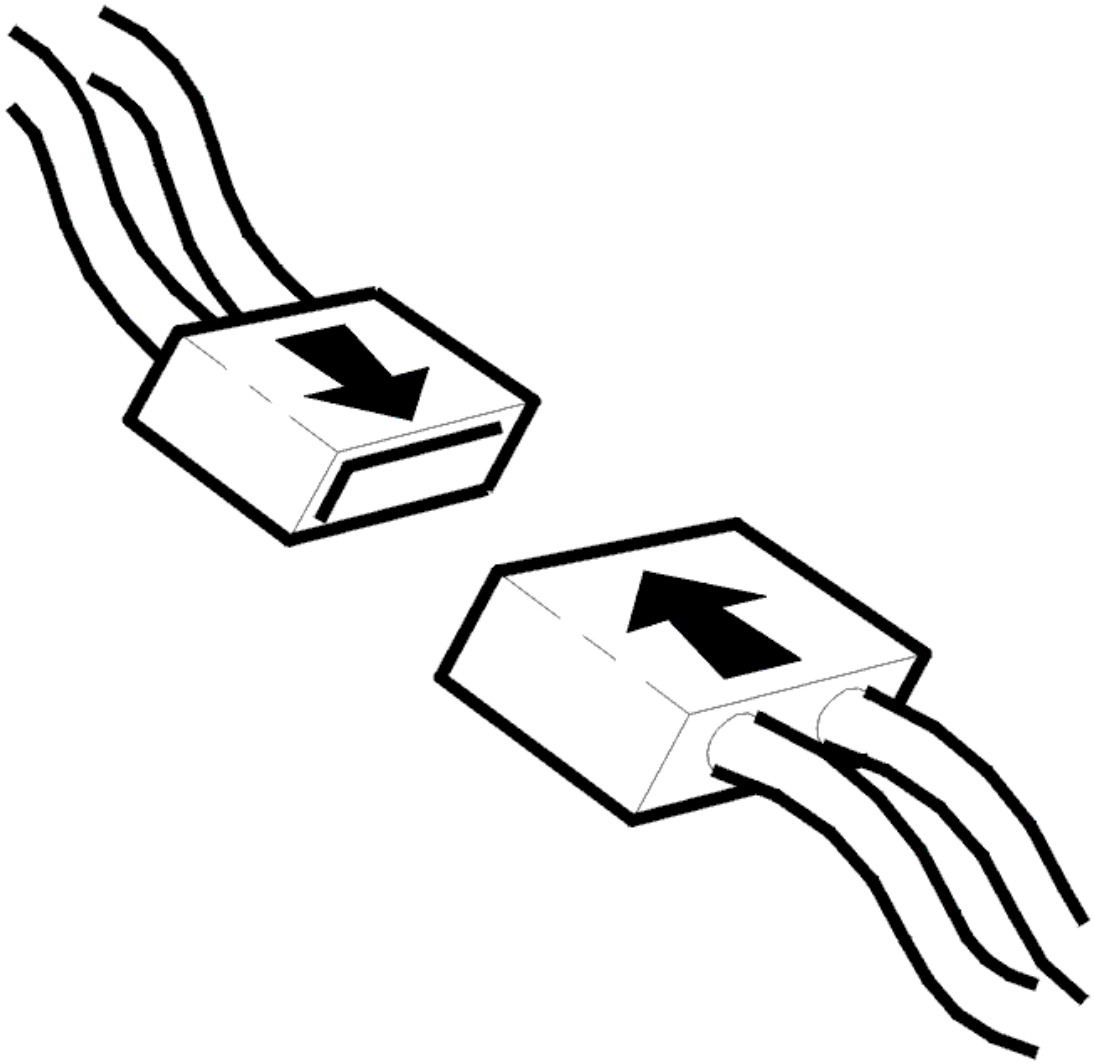

Fig. 383: Connecting Connector
Courtesy of VOLVO CARS CORPORATION

- Ignition off
- Reinstall the connectors, components etc.
- Ignition on

  Check that the radio is working and that reception is acceptable.

Is the function OK?

- **YES**

  VERIFIED: Troubleshooting has been completed.

- **NO**

  Refer to **INFORMATION**

INFORMATION

FAULT-TRACING INFORMATION

The fault should have been detected and remedied. As this is not the case fault-tracing has failed.

Exit fault-tracing for this diagnostic trouble code (DTC) or make another attempt.

IAM-2001: CONTROL MODULE. INTERNAL FAULT (2007-2011)

DIAGNOSTIC TROUBLE CODE (DTC) INFORMATION IAM-2001

Condition

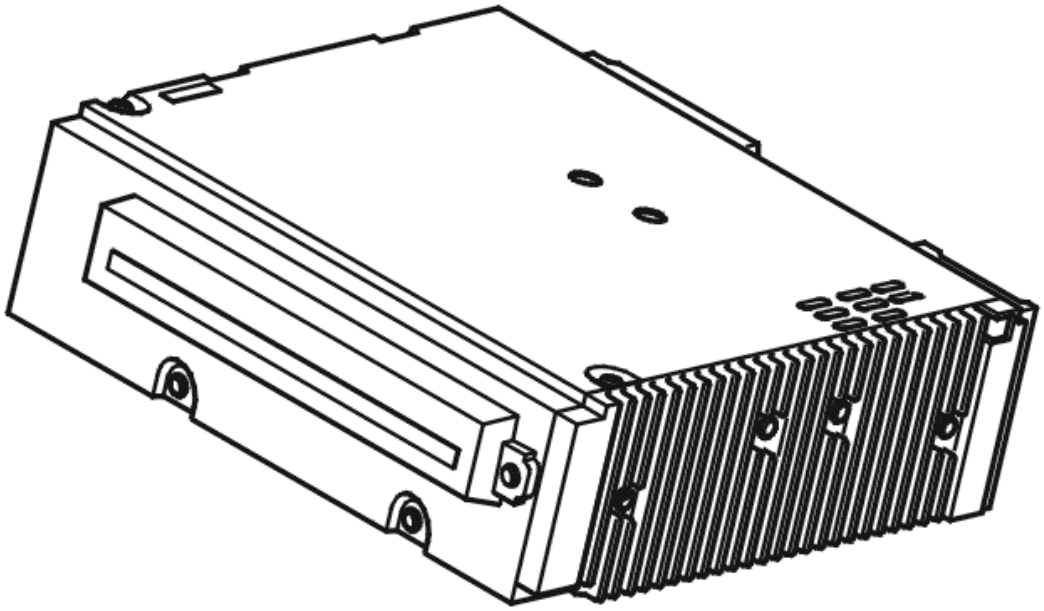

Fig. 384: Identifying Integrated Audio Module (IAM)
Courtesy of VOLVO CARS CORPORATION

If the Integrated Audio Module (IAM) detects an internal fault in the CD player, then the Diagnostic Trouble Code (DTC) is generated.

The diagnostic trouble code can be diagnosed when the ignition is on.

Substitute Value

- Nothing.

Possible Source

- Internal fault.

Fault symptom[s]

- CD player inoperative.

INTERNAL FAULT

REPLACING THE COMPONENT

The Integrated Audio Module (IAM) has registered an internal fault.

If the fault is intermittent then this means that the fault has been registered earlier but is no longer present. Intermittent faults can be due to interference when starting up or can be another type of fault which can return on different occasions. Evaluation of the fault is made from case to case. If the fault returns, replace the Integrated Audio Module (IAM).

In the case of a permanent fault, change the integrated audio module (IAM).

Remedy as necessary.

- see **CONTROL MODULE GENERAL SOUND PLAYER**

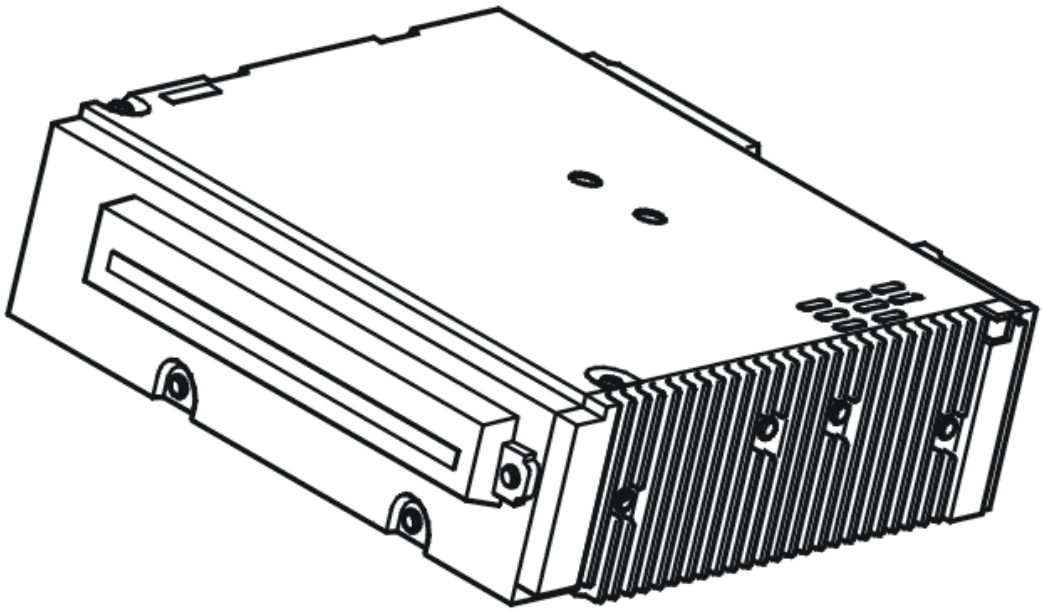

Fig. 385: Identifying Integrated Audio Module (IAM)
Courtesy of VOLVO CARS CORPORATION

- **Continue**

  Refer to **VERIFICATION**

VERIFICATION

VERIFICATION

HINT: After carrying out the repair, check that the fault has been remedied.

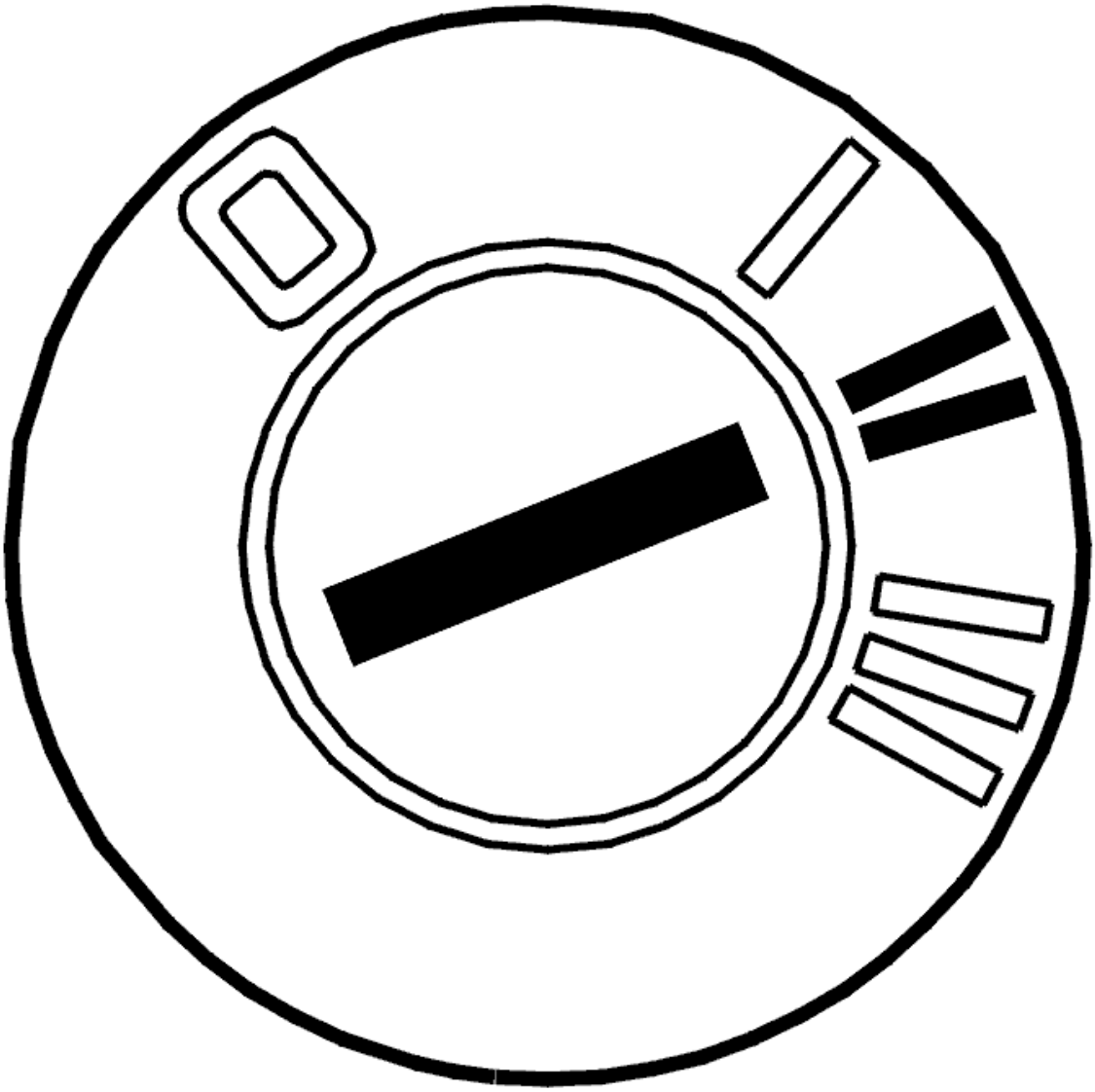

Fig. 386: Identifying Ignition ON
Courtesy of VOLVO CARS CORPORATION

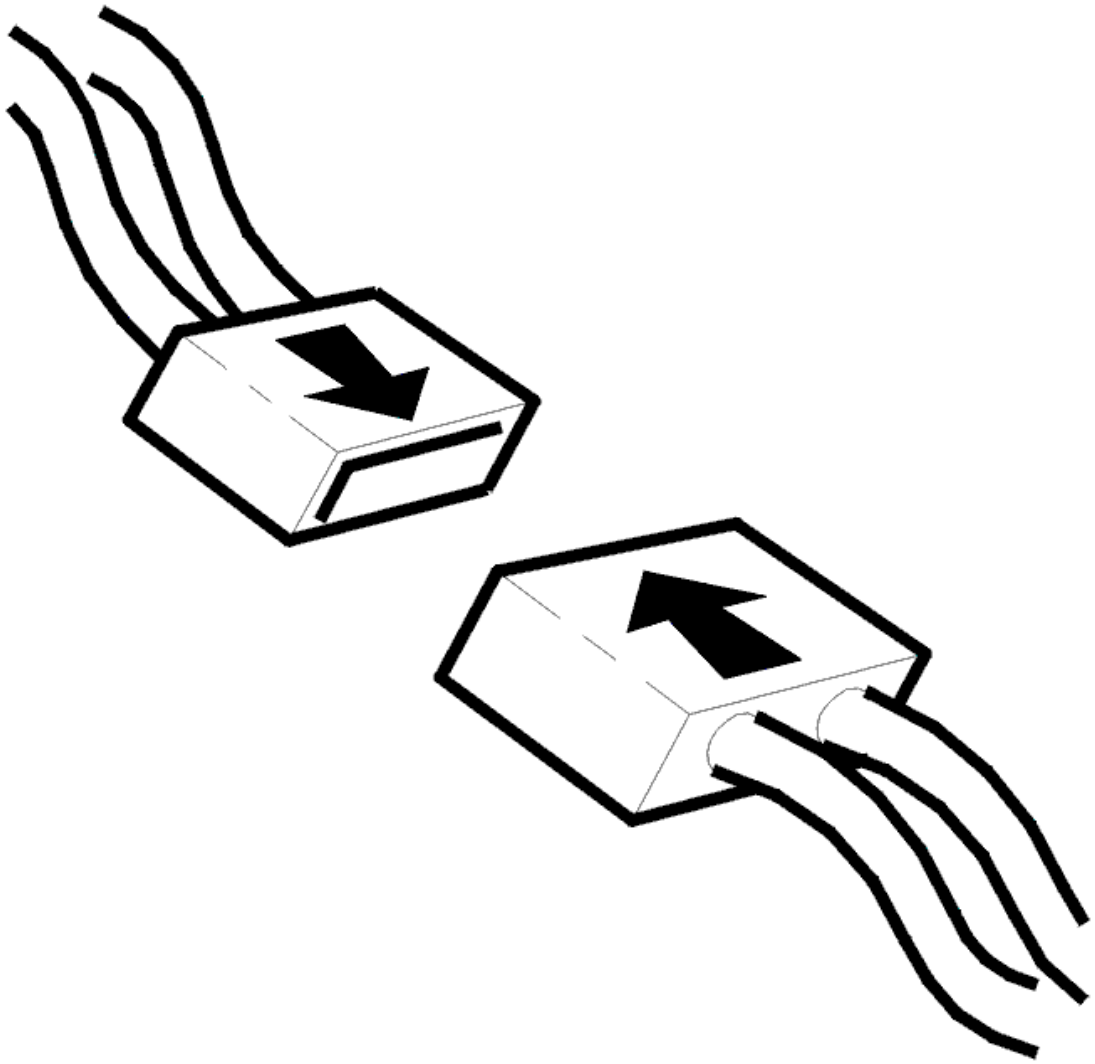

Fig. 387: Connecting Connector
Courtesy of VOLVO CARS CORPORATION

- Ignition off
- Reinstall the connectors, components etc.
- Ignition on

  Load a CD disc and check that the media player is working.

Is the media player working?

- **YES**

  VERIFIED: Troubleshooting has been completed.

- **NO**

  Refer to **INFORMATION**

INFORMATION

FAULT-TRACING INFORMATION

The fault should have been detected and remedied. As this is not the case fault-tracing has failed.

Exit fault-tracing for this diagnostic trouble code (DTC) or make another attempt.

ICM-6C7C: BLUETOOTH PHONE MODULE (BPM) NOT VALID FAULTY SIGNAL (2011-2012)

DIAGNOSTIC TROUBLE CODE (DTC) INFORMATION ICM-6C7C

Condition

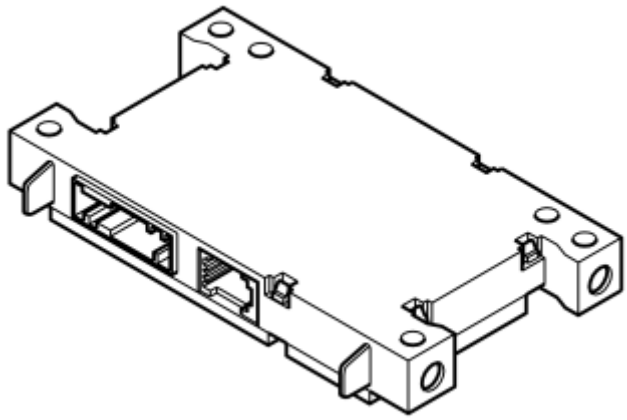

Fig. 1: Identifying Bluetooth Phone Module (BPM)
Courtesy of VOLVO CARS CORPORATION

The serial number for each control module in the infotainment system is stored in the central electronic module (CEM). The stored numbers are compared with the serial numbers of the control modules at start up. If any number does not correspond, that particular control module is blocked and the function is not available. The blocking function for non-approved control modules is designated security on MOST.

The infotainment module (ICM) checks whether the Bluetooth phone module (BPM) is in the valid list stored in the central electronic module (CEM).

The diagnostic trouble code (DTC) is stored if the control module detects that:

- Bluetooth phone module (BPM) is not in the approved list.

The control module's test for the diagnostic trouble code (DTC) starts in the event of:

- When the ignition is on for at least 12 seconds and the battery voltage is above 11 V and security on MOST is activated.

Substitute Value

- None.

Possible Source

- Replacement of the Bluetooth phone module (BPM) invalid according to the valid list stored in the Central electronic module (CEM).
- Software was not downloaded upon replacement of the Bluetooth phone module (BPM).
- Failed or incomplete software download to Bluetooth phone module (BPM).

Fault symptom[s]

- Bluetooth Telephone: No Functionality

FAULTY SIGNAL

CHECKING THE COMPONENT

The infotainment module (ICM) has registered that the Bluetooth phone module (BPM) is invalid according to the list stored in the central electronic module (CEM).

The cause of the fault is probably that no software has been downloaded or that software downloading has failed after replacing Bluetooth phone module (BPM).

HINT: When downloading software after replacing a control module, the serial number of the control module is stored in the central electronic module (CEM). This is so that the security on MOST function can approve the control module in the MOST network in the car.

If the fault persists after software download, try replacing the Bluetooth phone module (BPM).

Remedy as necessary.

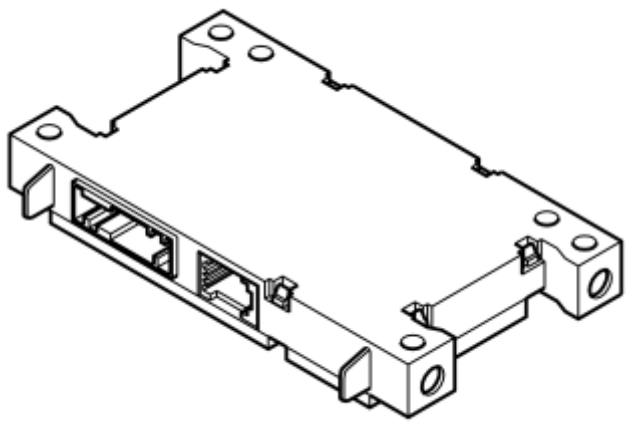

Fig. 2: Identifying Bluetooth Phone Module (BPM)
Courtesy of VOLVO CARS CORPORATION

- **Continue**

Refer to **VERIFICATION**

VERIFICATION

HINT: After carrying out the repair, check that the fault has been remedied.

- Ignition off.
- Reinstall the connectors, components etc.
- Ignition on.

Check the function of the Bluetooth phone module (BPM).

Is the carphone working?

- **YES**

  OKAY: Troubleshooting has been completed.

- **NO**

  Refer to **INFORMATION**

INFORMATION

FAULT-TRACING INFORMATION

The fault should have been detected and remedied. As this is not the case fault-tracing has failed.

Exit fault-tracing for this diagnostic trouble code (DTC) or make another attempt.

ICM-6C7D: ACCESSORY USB UNIT (AUU) NOT VALID FAULTY SIGNAL (2007-2012)

FAULTY SIGNAL

CHECKING THE COMPONENT

The infotainment module (ICM) has registered that the Accessory USB unit (AUU) is invalid according to the list stored in the central electronic module (CEM).

The cause of the fault is probably that no software has been downloaded or that software downloading has failed after replacing Accessory USB unit (AUU).

HINT: When downloading software after replacing a control module, the serial number of the control module is stored in the central electronic module (CEM). This is so that the security on MOST function can approve the control module in the MOST network in the car.

If the fault persists after software download, try replacing the Accessory USB unit (AUU).

Remedy as necessary.

Other information

- see **UNIVERSAL BUS MODULE (USB)**

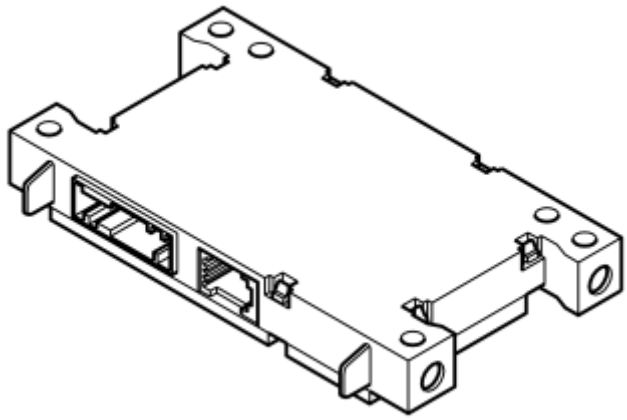

Fig. 3: Identifying Bluetooth Phone Module (BPM)
Courtesy of VOLVO CARS CORPORATION

- **Continue**

  Refer to **VERIFICATION**

VERIFICATION

HINT: After carrying out the repair, check that the fault has been remedied.

- Ignition off.
- Reinstall the connectors, components etc.
- Ignition on.

Check function of the Accessory USB Unit (AUU).

Is the system working?

- **YES**

  OKAY: Troubleshooting has been completed.

- **NO**

Refer to **INFORMATION**

INFORMATION

FAULT-TRACING INFORMATION

The fault should have been detected and remedied. As this is not the case fault-tracing has failed.

Exit fault-tracing for this diagnostic trouble code (DTC) or make another attempt.

DIAGNOSTIC TROUBLE CODE (DTC) INFORMATION ICM-6C7D

Condition

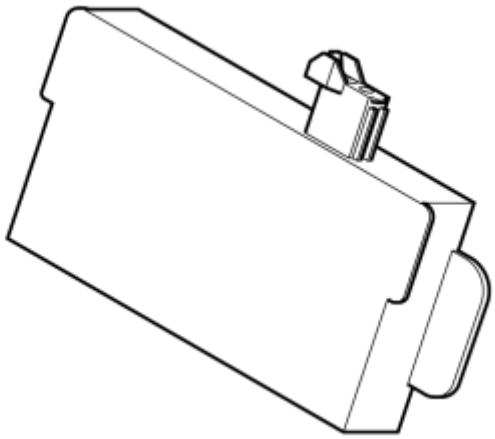

Fig. 4: Identifying Accessory USB Unit (AUU)
Courtesy of VOLVO CARS CORPORATION

The serial number for each control module in the infotainment system is stored in the central electronic module (CEM). The stored numbers are compared with the serial numbers of the control modules at start up. If any number does not correspond, that particular control module is blocked and the function is not available. The blocking function for non-approved control modules is designated security on MOST.

The infotainment control module (ICM) checks whether the Accessory USB unit (AUU) is in the approved list stored in the central electronic module (CEM).

The diagnostic trouble code (DTC) is stored if the control module detects that:

- Accessory USB unit (AUU) is not in the approved list.

The control module's test for the diagnostic trouble code (DTC) starts in the event of:

- When the ignition is on for at least 12 seconds and the battery voltage is above 11 V and security on MOST is activated.

Substitute Value

- None.

Possible Source

- Replacement with an Accessory USB unit (AUU), which is not approved in the list stored in the central electronic module (CEM).
- Software was not downloaded upon replacement of the Accessory USB unit (AUU).
- Failed or incomplete software download to Accessory USB unit (AUU).

Fault symptom[s]

- USB unit/Does not work

ICM-DC00: CONTROL MODULE COMMUNICATION. INTERNAL FAULT (2003-2012)

DIAGNOSTIC TROUBLE CODE (DTC) INFORMATION ICM-DC00

Condition

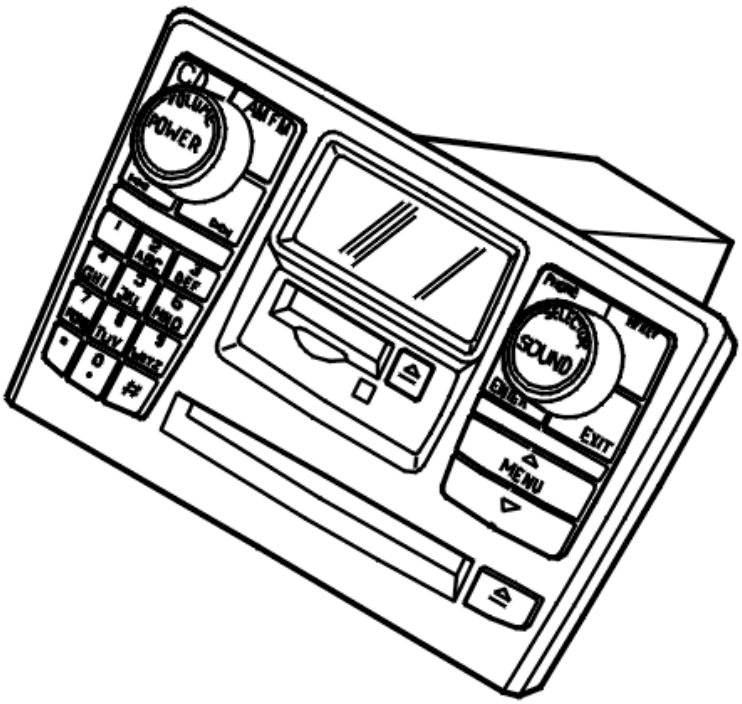

Fig. 5: Infotainment Control Module

Courtesy of VOLVO CARS CORPORATION

Diagnostic trouble code (DTC) ICM-DC00 is stored if the infotainment control module (ICM) registers a fault in the unit for controlling the MOST network.

Substitute Value

- None.

Possible Source

- Internal fault in the infotainment control module (ICM).

Fault symptom[s]

- Audio unit not working
- The display does not light
- Functions in the infotainment system are not working
- No or reduced carphone functionality.

INTERNAL FAULT

see **INTERNAL FAULT**

ICM-DC01: CONTROL MODULE COMMUNICATION. FAULTY SIGNAL (2007-2008)

DIAGNOSTIC TROUBLE CODE (DTC) INFORMATION ICM-DC01

Condition

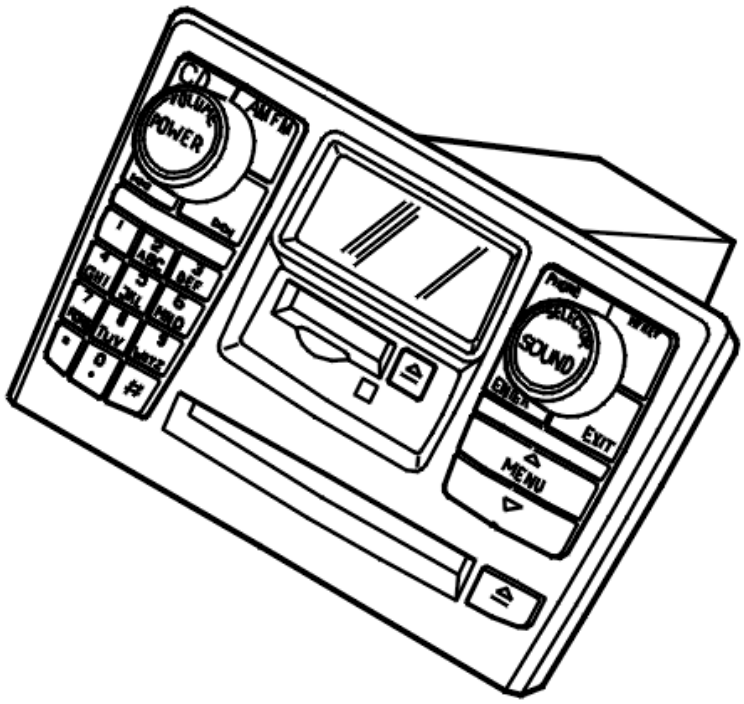

Fig. 6: Infotainment Control Module
Courtesy of VOLVO CARS CORPORATION

The infotainment control module (ICM) can detect an open-circuit in the MOST network after the ring break diagnostic has been run.

Diagnostic trouble code (DTC) ICM-DC01 is stored if an open-circuit is detected.

Substitute Value

- None.

Possible Source

- Dirty or damaged MOST cable connector
- Open-circuit in the MOST cable
- The MOST transceiver is defective in one of the control modules in the MOST network
- No power supply to a control module in the MOST network.

Fault symptom[s]

- Audio unit not working
- The display does not light

- Functions in the infotainment system are not working
- No or reduced carphone functionality.

NO COMMUNICATION

Special tools:

see **9512867**

CHECKING THE WIRING AND COMPONENT

The infotainment control module (ICM) has detected an open-circuit in communication on the MOST network.

The MOST network is a fiber optic ring network. This means that all control modules which are connected to the network must be powered and grounded for the infotainment system to work. If, for any reason, a control module is unable to handle (receive or transmit) signals onwards on the MOST network, or if there is an open-circuit in the fiber optic cable, the infotainment control module (ICM) will shut down all functionality.

Communication on the fiber optic net is one-directional. The control modules on the MOST network receive light signals, amplify them and then send them onwards. The MOST connectors for the control modules contain two fiber optic cables, one for incoming and one for outgoing signals.

If the fault is intermittent, it has been registered previously but is no longer present. Intermittent faults can either be caused by interference when starting the MOST network, or by intermittent faults in the power supply/ground for one of the control modules in the network. The fault is evaluated depending on how it occurs. If the fault recurs, fault-trace for permanent faults.

It can be difficult to diagnose intermittent faults using a ring break diagnostic because for this to work the fault must occur during the diagnostic.

If the fault is permanent, perform a ring break diagnostic to locate the open-circuit.

- **Continue**

  Refer to **CHECKING FOR OPEN-CIRCUITS**

CHECKING FOR OPEN-CIRCUITS

Fig. 7: Checking Traffic Load On CAN Cables
Courtesy of VOLVO CARS CORPORATION

Ring break diagnostic

A ring break diagnostic should be run to determine whether the fault has occurred.

To carry out a full ring break diagnostic of the MOST system, proceed as follows:

1. Switch off the ignition and remove the key
2. Connect separate external voltage feed to the communication tool.
3. Disconnect the battery negative lead. See **BATTERY, DISCONNECTING**
4. Wait 1 minute.
5. Ignition switch position II.
6. Connect the battery negative terminal.
7. Wait at least 30 seconds after switching on the ignition before reading off the position of the open-circuit.

Other information:

- For information about fuses, see the appropriate service information.
- For information on battery location:**BATTERY, REPLACING**

- **Continue**

  Refer to **READING OFF THE POSITION OF THE OPEN-CIRCUIT**

CHECKING CABLE AND COMPONENT

If the result of the ring break diagnostic is POOR, the infotainment control module (ICM) is receiving a signal on the MOST network. However it is unable to decode the signals because the luminance of the signals is too weak or the signals are distorted.

If the result from the ring break diagnostic is OK, the fault is intermittent.

Fault-tracing using the ring break diagnostic assumes that the fault is permanent or active when the test is run, i. e. the system is powered having been off.

HINT: If diagnostic trouble code (DTC) ICM-DC01 is intermittent, read off the status of the ring break diagnostic from the frozen values in Vehicle communication.

Check the communication on the MOST network by bypassing the control modules one by one on the MOST network as follows:

- Ignition off
- Disconnect the MOST connector from the relevant control module
- Connect the MOST cable to special tool see **9512867**
- Ignition on
- Activate the infotainment system

- Check that the communication on the MOST network is functioning by reading off the status of the MOST locked parameter for at least 30 seconds. The parameter indicates whether the MOST network is closed and communication possible. Click the VCT2000 symbol to read off the status of the MOST network.

If the communication on the MOST network is stable when a control module is disconnected, check the power supply and the ground terminal on the relevant control module. Check for intermittent faults. Try replacing the component if no fault is found.

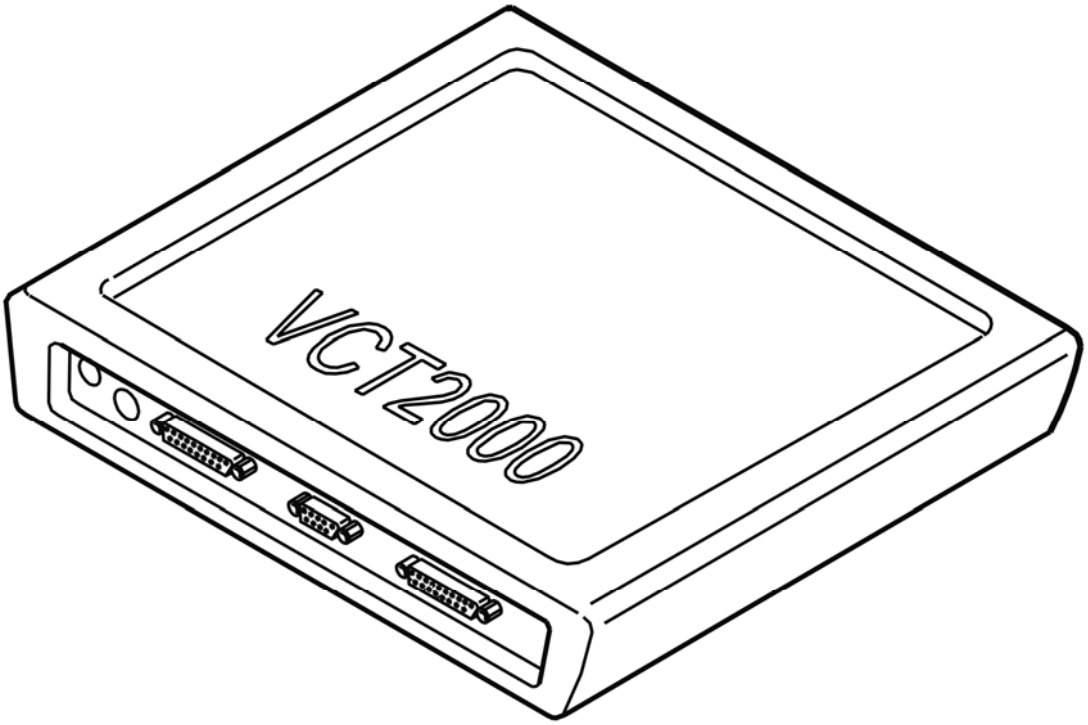

Fig. 8: Identifying VCT2000 Diagnostic Tool Symbol In VIDA
Courtesy of VOLVO CARS CORPORATION

- **Continue**

  Refer to **VERIFICATION**

READING OFF THE POSITION OF THE OPEN-CIRCUIT

Fig. 9: Checking Traffic Load On CAN Cables
Courtesy of VOLVO CARS CORPORATION

- Ignition on.

Reading off the result from a ring break diagnostic

Click the VCT2000 symbol to read off the result of the ring break diagnostic.

As well as the result from the ring break diagnostic, a list of the control modules included in the MOST network is provided for that car.

NOTE: Configuration in the illustration only applies to vehicles equipped with Audio module (AUD). In vehicles without Audio module (AUD), the Accessory USB unit (AUU) is located after the Integrated Audio Module (IAM).

The following results can be obtained from a ring break diagnosis:

- If the diagnostic indicates an open-circuit in the communication on the MOST network, the result will be an open-circuit position
- The result will be OK if there is no fault on the MOST network Continue by selecting option 3 below.
- If the infotainment control module (ICM) receives a signal on the MOST network but is unable to decode it because the luminance is weak or the signals are distorted, the result will be POOR. Continue by selecting option 3 below.

Determining the position of the open-circuit

The position of the open-circuit is calculated by working backwards in the MOST network from the infotainment control module (ICM).

NOTE: The ring break diagnostic always counts backwards, irrespective of which, or how many control modules, are installed in the vehicle. To determine the position of the open-circuit, check the list to, see which control modules are installed in that particular vehicle. Then count backwards following the determined order. The number of control modules can vary between 2 and 7.

Two examples are outlined below:

- First open circuit position is indicated by 1. This means that the open circuit is in the integrated audio module (IAM) or in the cable between the subwoofer (SUB) and the integrated audio module (IAM).
- First open circuit position is indicated by 4. This means that the open circuit is in Audio module (AUD) or in the cable between Audio module (AUD) and Accessory USB unit (AUU). The open

circuit may be caused by the optical connector in Accessory USB unit (AUU) being damaged. This means that Accessory USB unit (AUU) cannot interpret the incoming signal from Audio module (AUD).

Select the alternative for the control module to be checked.

Alternative 1: Refer to CHECKING CABLE AND COMPONENT

Remote Digital Audio Receiver (RDAR).

Audio module (AUD)

Integrated audio module (IAM).

Subwoofer Module (SUB)

Accessory USB unit (AUU).

Alternative 2: Refer to CHECKING CABLE AND COMPONENT

Phone module (PHM)

Global positioning system module (GPS).

Multimedia module (MMM)

Infotainment control module (ICM)

Alternative 3: Refer to CHECKING CABLE AND COMPONENT

The result from the ring break diagnostic indicates that the MOST network is OK.

The result from the ring break diagnostic is POOR.

Other information:

- For information on the location and arrangement of the MOST control modules:**LOCATION OF COMPONENTS**

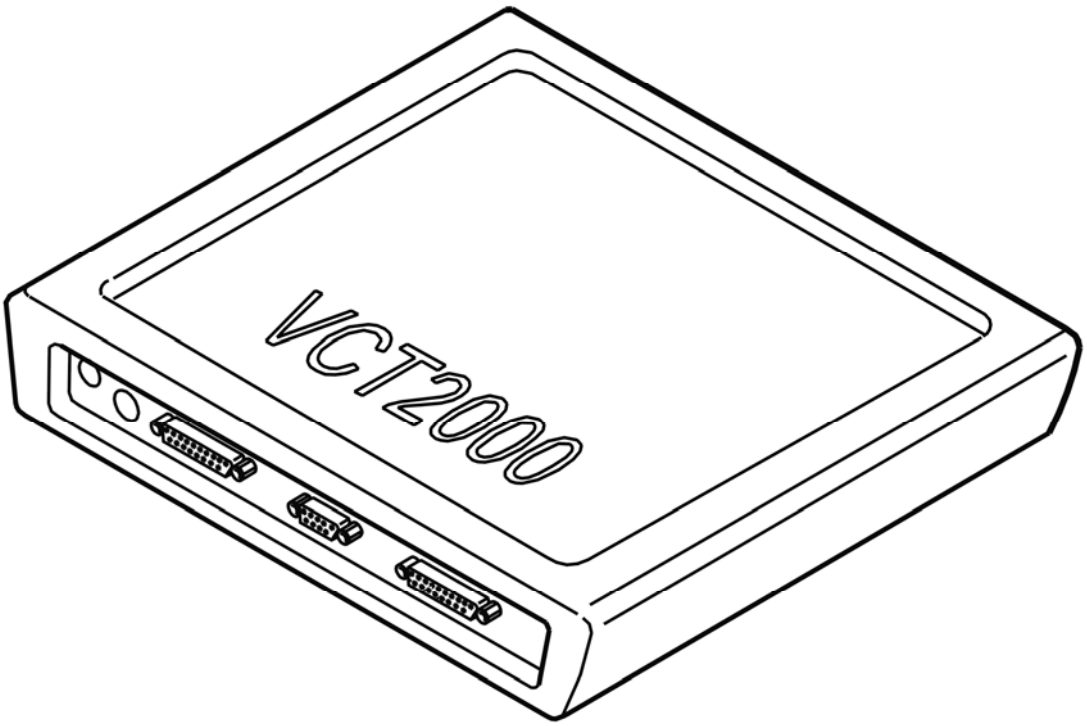

Fig. 10: Identifying VCT2000 Diagnostic Tool Symbol In VIDA
Courtesy of VOLVO CARS CORPORATION

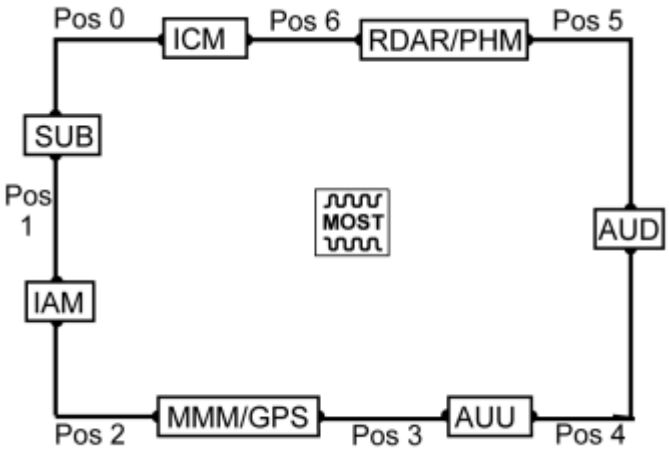

Fig. 11: Control Module Diagram
Courtesy of VOLVO CARS CORPORATION

CHECKING CABLE AND COMPONENT

Select the control module to be checked from the list.

1. Remote Digital Audio Receiver (RDAR). Refer to **CHECKING CABLE AND COMPONENT**
2. Audio Control Module (AUD). Refer to **CHECKING CABLE AND COMPONENT**
3. Integrated audio module (IAM). Refer to **CHECKING CABLE AND COMPONENT**
4. Subwoofer Module (SUB). Refer to **CHECKING THE CABLE AND COMPONENT**
5. Accessory USB unit (AUU). Refer to **CHECKING THE CABLE AND COMPONENT**

CHECKING CABLE AND COMPONENT

Select the control module to be checked from the list.

1. Phone module (PHM). Refer to **CHECKING CABLE AND COMPONENT**
2. Global positioning system module (GPS). Refer to **CHECKING CABLE AND COMPONENT**
3. Multimedia module (MMM). Refer to **CHECKING CABLE AND COMPONENT**
4. Infotainment Control Module (ICM). Refer to **CHECKING CABLE AND COMPONENT**

CHECKING CABLE AND COMPONENT

Fig. 12: Checking Traffic Load On CAN Cables
Courtesy of VOLVO CARS CORPORATION

Checking the fault cause

Check the fault cause as follows:

1. Ignition off
2. Disconnect the MOST connector from Remote Digital Audio Receiver (RDAR).
3. Connect the MOST cable to special tool see **9512867**
4. Ignition on
5. Activate the infotainment system
6. Check that the communication on the MOST network is functioning by reading off the status of the MOST locked parameter for at least 30 seconds. The parameter indicates whether the MOST network is closed and communication possible Click the VCT2000 symbol to read off the status of the MOST network.
7. If the parameter displays that the MOST network is not correctly connected, check the receiving control module in the same way as above.

The communication on the MOST network is working if the menu text is displayed. The cause of the fault is then in the Remote Digital Audio Receiver (RDAR). Continue the fault-tracing by checking the component.

The communication on the MOST network is not working if the menu text is not displayed. The fault cause is then in the MOST cable for the next control module. Continue the fault-tracing by checking the fiber optic cable.

Checking cable

- Check the MOST connection. Check for dirt, loose connections and damage
- Replace the MOST cable if no fault is found in the MOST terminal.

Checking the component

- Check the power supply and ground connection for the Remote Digital Audio Receiver (RDAR).
- Check the MOST connection. Check for dirt, loose connections and damage
- If no fault is found, replace the Remote Digital Audio Receiver (RDAR).

Remedy as necessary.

Other information:

- Remote Digital Audio Receiver (RDAR). See **SIGNAL SPECIFICATION**
- see **OPTICAL WIRING HARNESS CHECK**
- For information about checking and replacing the MOST cable, see **FIBER OPTIC CABLE HARNESS, REPAIRING**
- see **LOCATION OF COMPONENTS**
- see **SATELLITE RADIO CONTROL MODULE**

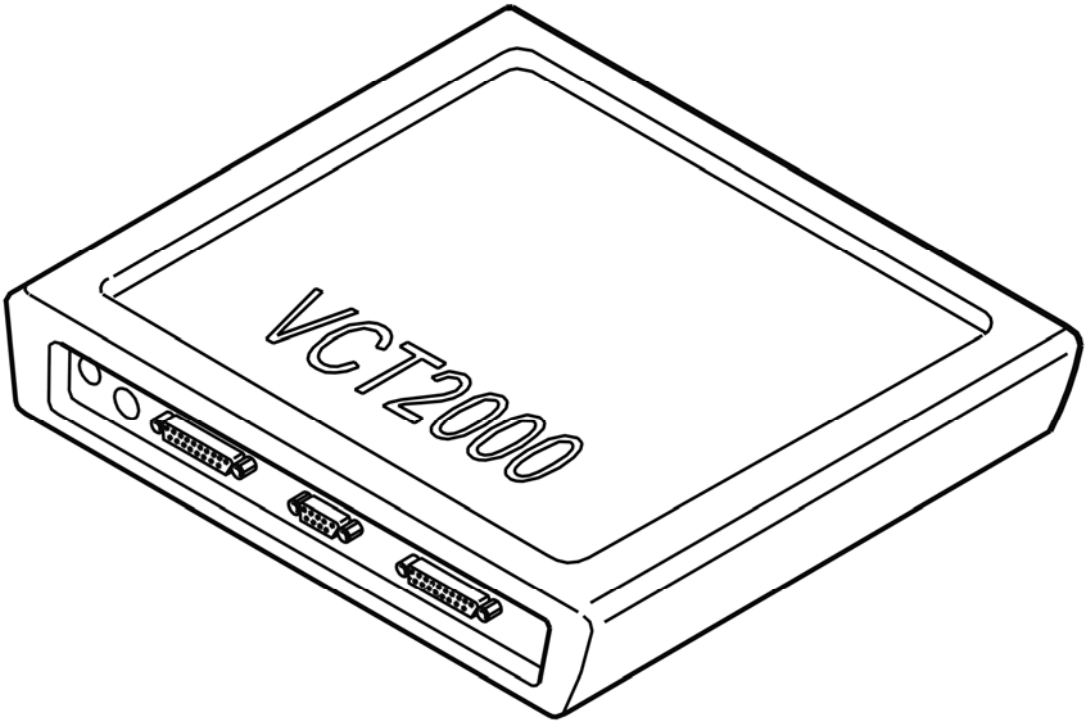

Fig. 13: Identifying VCT2000 Diagnostic Tool Symbol In VIDA
Courtesy of VOLVO CARS CORPORATION

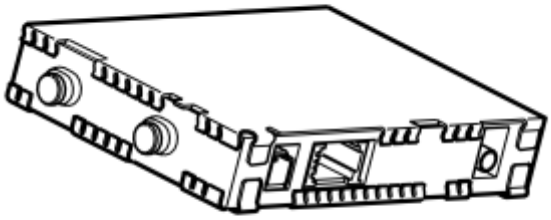

Fig. 14: Identifying Remote Digital Audio Receiver Module (RDAR)
Courtesy of VOLVO CARS CORPORATION

- **Continue**

  Refer to **VERIFICATION**

CHECKING CABLE AND COMPONENT

Fig. 15: Checking Traffic Load On CAN Cables
Courtesy of VOLVO CARS CORPORATION

Checking the fault cause

Check the fault cause as follows:

1. Ignition off
2. Disconnect the MOST connector from the audio module (AUD)
3. Connect the MOST cable to special tool see **9512867**
4. Ignition on
5. Activate the infotainment system
6. Check that the communication on the MOST network is functioning by reading off the status of the MOST locked parameter for at least 30 seconds. The parameter indicates whether the MOST network is closed and communication possible Click the VCT2000 symbol to read off the status of the MOST network.
7. If the parameter displays that the MOST network is not correctly connected, check the receiving control module in the same way as above.

The communication on the MOST network is working if the menu text is displayed. If this is the case, the fault cause is in the audio module (AUD). Continue the fault-tracing by checking the component.

The communication on the MOST network is not working if the menu text is not displayed. The fault cause is then in the MOST cable for the next control module. Continue the fault-tracing by checking the fiber optic cable.

Checking cable

- Check the MOST connection. Check for dirt, loose connections and damage
- Replace the MOST cable if no fault is found in the MOST terminal.

Checking the component

- Check the power supply and the ground terminal for the audio module (AUD)
- Check the MOST connection. Check for dirt, loose connections and damage
- Replace the audio module (AUD) if no fault is found.

Remedy as necessary.

Other information:

- To access or replace the audio module (AUD), see **AUDIO MODULE (AUD), REPLACING**
- see **CHECKING THE VOLTAGE / GROUND TERMINAL**
- see **SIGNAL SPECIFICATION**
- For information about checking and replacing the MOST cable, see **FIBER OPTIC CABLE HARNESS, REPAIRING**
- see **OPTICAL WIRING HARNESS CHECK**
- see **LOCATION OF COMPONENTS**

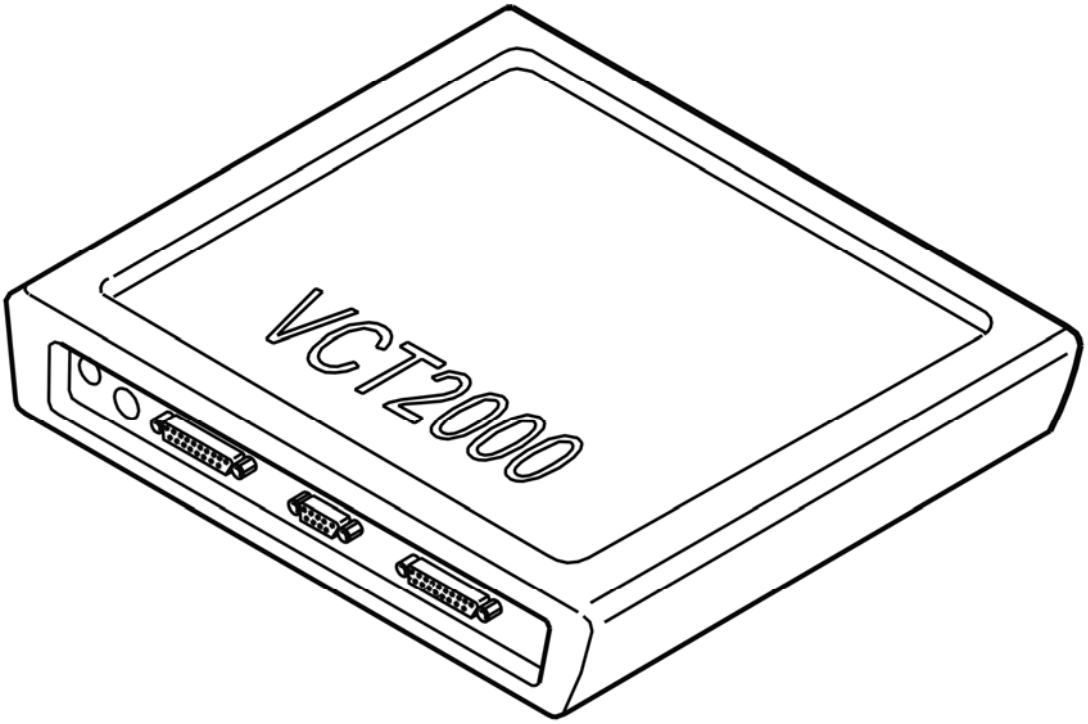

Fig. 16: Identifying VCT2000 Diagnostic Tool Symbol In VIDA
Courtesy of VOLVO CARS CORPORATION

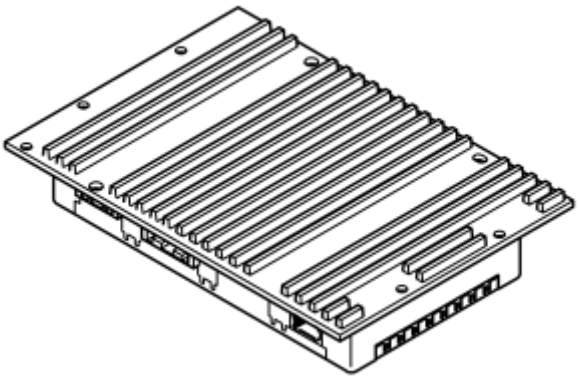

Fig. 17: Identifying Audio Module (AUD)
Courtesy of VOLVO CARS CORPORATION

- **Continue**

  Refer to **VERIFICATION**

CHECKING CABLE AND COMPONENT

Fig. 18: Checking Traffic Load On CAN Cables
Courtesy of VOLVO CARS CORPORATION

Checking the fault cause

Check the fault cause as follows:

1. Ignition off
2. Unplug the MOST connector from the integrated audio module (IAM).
3. Connect the MOST cable to special tool see **9512867**
4. Ignition on
5. Activate the infotainment system
6. Check that the communication on the MOST network is functioning by reading off the status of the MOST locked parameter for at least 30 seconds. The parameter indicates whether the MOST network is closed and communication possible Click the VCT2000 symbol to read off the status of the MOST network.
7. If the parameter displays that the MOST network is not correctly connected, check the receiving control

module in the same way as above.

The communication on the MOST network is working if the menu text is displayed. If this is the case, the fault cause is in the integrated audio module (IAM). Continue the fault-tracing by checking the component.

The communication on the MOST network is not working if the menu text is not displayed. The fault cause is then in the MOST cable for the next control module. Continue the fault-tracing by checking the fiber optic cable.

Checking cable

- Check the MOST connection. Check for dirt, loose connections and damage
- Replace the MOST cable if no fault is found in the MOST terminal.

Checking the component

- Check the integrated audio module (IAM) power supply and ground connection.
- Check the MOST connection. Check for dirt, loose connections and damage
- If no fault can be found, change the integrated audio module (IAM).

Remedy as necessary.

Other information:

- see **CONTROL MODULE GENERAL SOUND PLAYER**
- see **CHECKING THE SUPPLY VOLTAGE/GROUND TERMINAL**
- see **SIGNAL SPECIFICATION**
- For information about checking and replacing the MOST cable, see **FIBER OPTIC CABLE HARNESS, REPAIRING**
- see **OPTICAL WIRING HARNESS CHECK**
- see **LOCATION OF COMPONENTS**

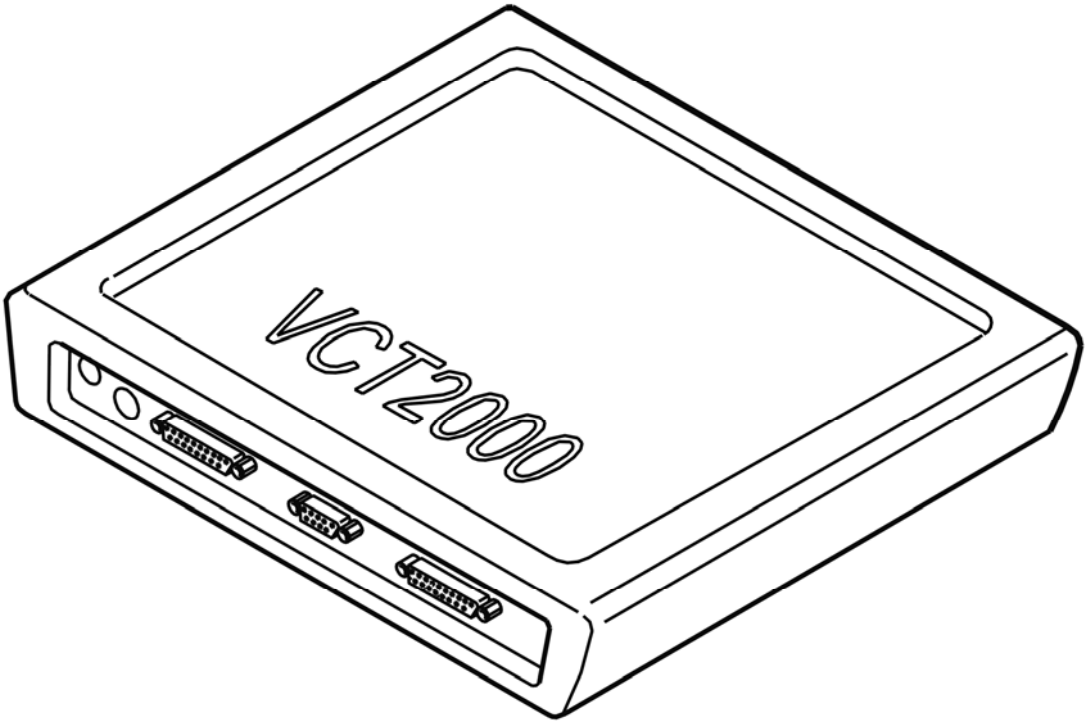

Fig. 19: Identifying VCT2000 Diagnostic Tool Symbol In VIDA
Courtesy of VOLVO CARS CORPORATION

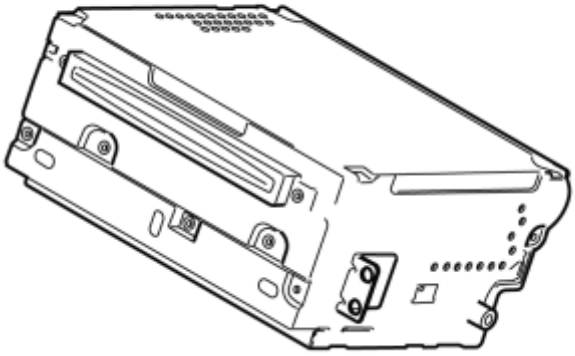

Fig. 20: General Sound Player Control Module
Courtesy of VOLVO CARS CORPORATION

- **Continue**

  Refer to **VERIFICATION**

CHECKING CABLE AND COMPONENT

Fig. 21: Checking Traffic Load On CAN Cables
Courtesy of VOLVO CARS CORPORATION

Checking the fault cause

Check the fault cause as follows:

1. Ignition off
2. Disconnect the MOST connector from the phone module (PHM)
3. Connect the MOST cable to special tool see **9512867**
4. Ignition on
5. Activate the infotainment system
6. Check that the communication on the MOST network is functioning by reading off the status of the MOST locked parameter for at least 30 seconds. The parameter indicates whether the MOST network is closed and communication possible Click the VCT2000 symbol to read off the status of the MOST network.
7. If the parameter displays that the MOST network is not correctly connected, check the receiving control module in the same way as above.

The communication on the MOST network is working if the menu text is displayed. If this is the case, the fault cause is in the phone module (PHM). Continue the fault-tracing by checking the component.

The communication on the MOST network is not working if the menu text is not displayed. The fault cause is then in the MOST cable for the next control module. Continue the fault-tracing by checking the fiber optic cable.

Checking cable

- Check the MOST connection. Check for dirt, loose connections and damage
- Replace the MOST cable if no fault is found in the MOST terminal.

Checking the component

- Check the power supply and the ground terminal for the phone module (PHM)
- Check the MOST connection. Check for dirt, loose connections and damage
- Replace the phone module (PHM) if no fault is found.

Remedy as necessary.

Other information:

- see **PHONE MODULE (PHM), REPLACING (2006-2010)**
- see **CHECKING VOLTAGE / GROUND CONNECTION**
- see **SIGNAL SPECIFICATION**
- For information about checking and replacing the MOST cable, see **FIBER OPTIC CABLE HARNESS, REPAIRING**
- see **OPTICAL WIRING HARNESS CHECK**
- see **LOCATION OF COMPONENTS**

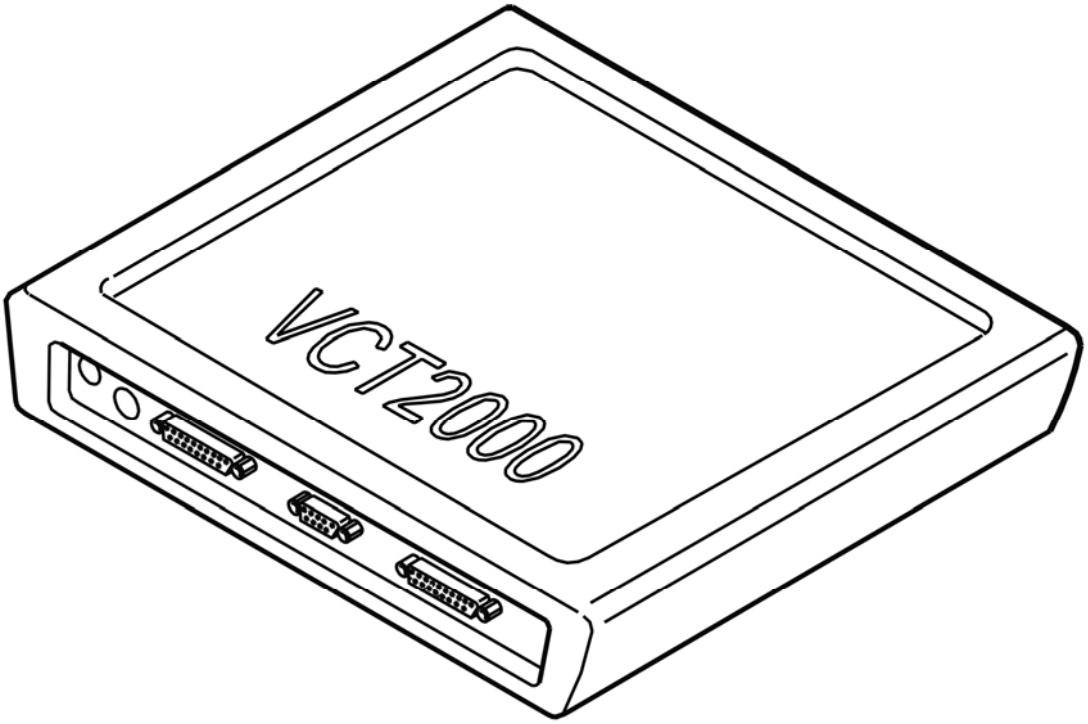

Fig. 22: Identifying VCT2000 Diagnostic Tool Symbol In VIDA
Courtesy of VOLVO CARS CORPORATION

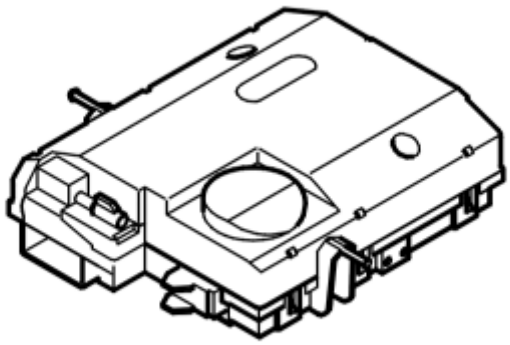

Fig. 23: Phone Module (PHM)
Courtesy of VOLVO CARS CORPORATION

- **Continue**

  Refer to **VERIFICATION**

CHECKING CABLE AND COMPONENT

Fig. 24: Checking Traffic Load On CAN Cables
Courtesy of VOLVO CARS CORPORATION

Checking the fault cause

Check the fault cause as follows:

1. Ignition off
2. Unplug the MOST connector from the global positioning system module (GPS).
3. Connect the MOST cable to special tool see **9512867**
4. Ignition on
5. Activate the infotainment system
6. Check that the communication on the MOST network is functioning by reading off the status of the MOST locked parameter for at least 30 seconds. The parameter indicates whether the MOST network is closed and communication possible Click the VCT2000 symbol to read off the status of the MOST network.
7. If the parameter displays that the MOST network is not correctly connected, check the receiving control

module in the same way as above.

The communication on the MOST network is working if the menu text is displayed. If this is the case, the fault cause is in the global positioning system module (GPS). Continue the fault-tracing by checking the component.

The communication on the MOST network is not working if the menu text is not displayed. The fault cause is then in the MOST cable for the next control module. Continue the fault-tracing by checking the fiber optic cable.

Checking cable

- Check the MOST connection. Check for dirt, loose connections and damage
- Replace the MOST cable if no fault is found in the MOST terminal.

Checking the component

- Check the global positioning system module (GPS) power supply and ground connection.
- Check the MOST connection. Check for dirt, loose connections and damage
- If no fault can be found, change the global positioning system module (GPS).

Remedy as necessary.

Other information:

- see **GLOBAL POSITIONING SYSTEM MODULE (GPS)**
- see **CHECKING THE SUPPLY VOLTAGE/GROUND TERMINAL**
- see **SIGNAL SPECIFICATION**
- For information about checking and replacing the MOST cable, see **FIBER OPTIC CABLE HARNESS, REPAIRING**
- see **OPTICAL WIRING HARNESS CHECK**
- see **LOCATION OF COMPONENTS**

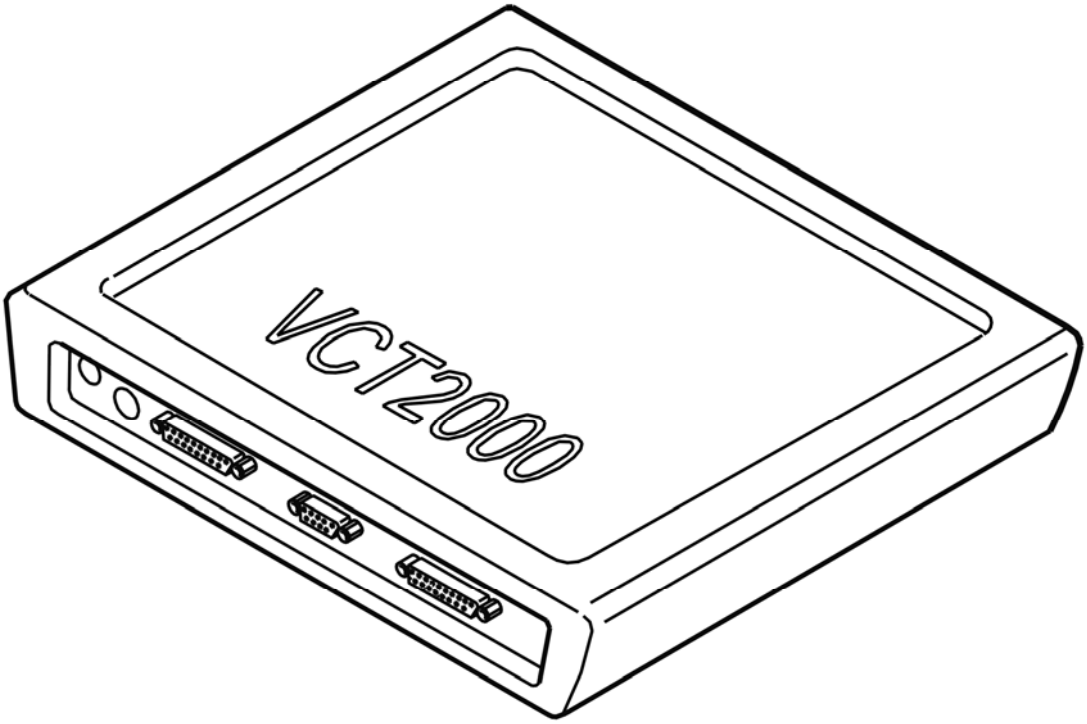

Fig. 25: Identifying VCT2000 Diagnostic Tool Symbol In VIDA
Courtesy of VOLVO CARS CORPORATION

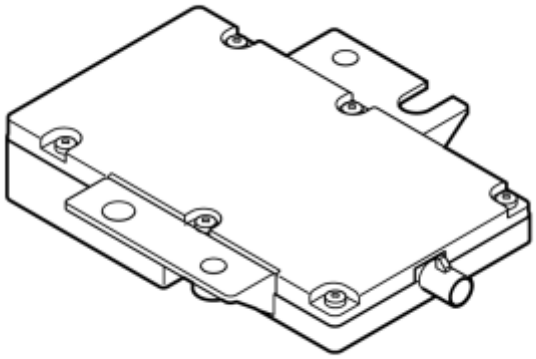

Fig. 26: Global Positioning System Module (GPS)
Courtesy of VOLVO CARS CORPORATION

- **Continue**

  Refer to **VERIFICATION**

CHECKING CABLE AND COMPONENT

Fig. 27: Checking Traffic Load On CAN Cables
Courtesy of VOLVO CARS CORPORATION

Checking the fault cause

Check the fault cause as follows:

1. Ignition off
2. Disconnect the MOST connector from the multimedia module (MMM)
3. Connect the MOST cable to special tool see **9512867**
4. Ignition on
5. Activate the infotainment system
6. Check that the communication on the MOST network is functioning by reading off the status of the MOST locked parameter for at least 30 seconds. The parameter indicates whether the MOST network is closed and communication possible Click the VCT2000 symbol to read off the status of the MOST network.
7. If the parameter displays that the MOST network is not correctly connected, check the receiving control module in the same way as above.

The communication on the MOST network is working if the menu text is displayed. If this is the case, the fault cause is in the multimedia module (MMM). Continue the fault-tracing by checking the component.

The communication on the MOST network is not working if the menu text is not displayed. The fault cause is then in the MOST cable for the next control module. Continue the fault-tracing by checking the fiber optic cable.

Checking cable

- Check the MOST connection. Check for dirt, loose connections and damage
- Replace the MOST cable if no fault is found in the MOST terminal.

Checking the component

- Check the power supply and the ground terminal for the multimedia module (MMM)
- Check the MOST connection. Check for dirt, loose connections and damage
- Replace the multimedia module (MMM) if no fault is found.

Remedy as necessary.

Other information:

- To access / replace the multimedia module (MMM), see **MULTIMEDIA MODULE (MMM), REPLACING**
- For information about checking the power supply and ground terminal, see **CHECKING THE VOLTAGE / GROUND TERMINAL (2007-2012)**
- see **SIGNAL SPECIFICATION**
- For information about checking and replacing the MOST cable, see **FIBER OPTIC CABLE HARNESS, REPAIRING**
- see **OPTICAL WIRING HARNESS CHECK**
- see **LOCATION OF COMPONENTS**

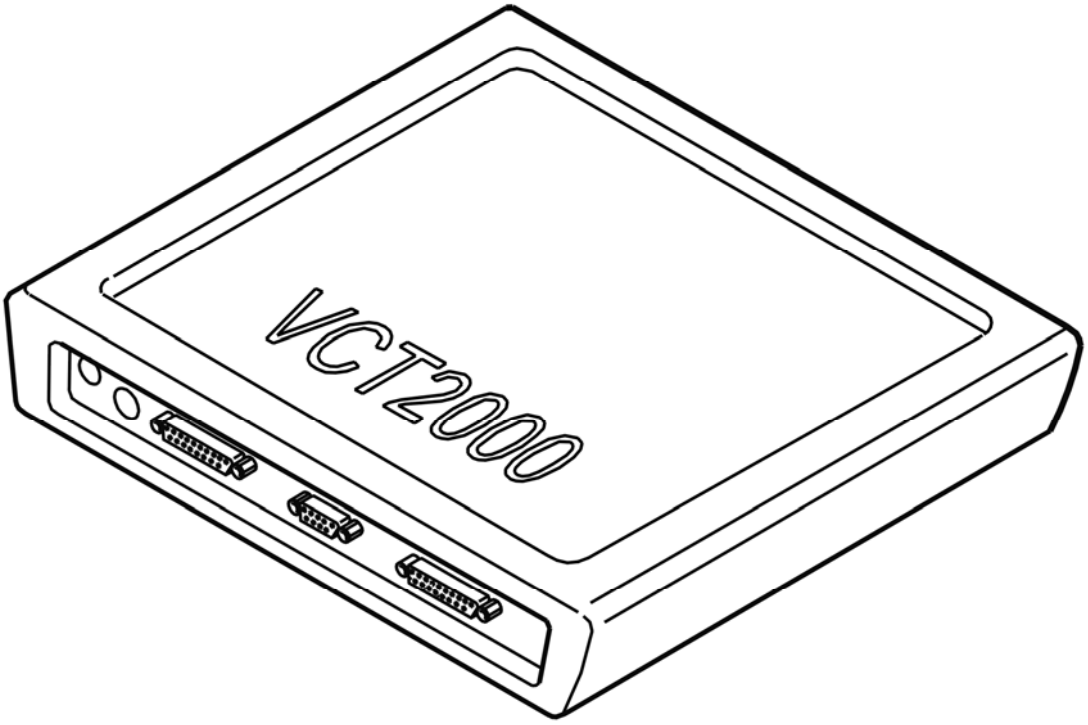

Fig. 28: Identifying VCT2000 Diagnostic Tool Symbol In VIDA
Courtesy of VOLVO CARS CORPORATION

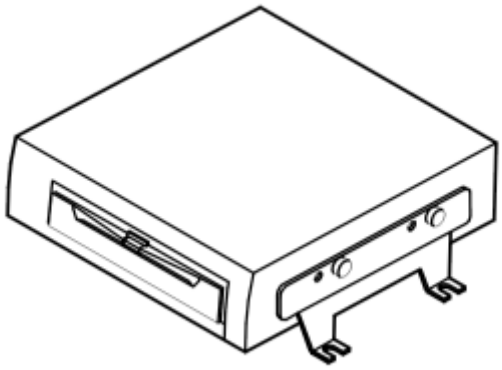

Fig. 29: Identifying Multimedia Module (MMM)
Courtesy of VOLVO CARS CORPORATION

- **Continue**

  Refer to **VERIFICATION**

CHECKING CABLE AND COMPONENT

Fig. 30: Checking Traffic Load On CAN Cables
Courtesy of VOLVO CARS CORPORATION

- Ignition off
- Disconnect the MOST cable connector from the infotainment control module (ICM)
- Ignition on
- Activate the infotainment system.

  Check visually whether the infotainment control module (ICM) is emitting light from the MOST connector.

  The control module is defective if the infotainment control module (ICM) is not emitting light.

  If the infotainment control module (ICM) is transmitting light, the fault is in the MOST cable for the next control module.

  Check the MOST connection. Check for dirt, loose connections and damage.

Replace the MOST cable if no fault is found in the MOST terminal.

Remedy as necessary.

Other information:

- To access / replace the infotainment control module (ICM), see **INFOTAINMENT CONTROL MODULE (ICM), REPLACING**
- For information about checking and replacing the MOST cable, see **FIBER OPTIC CABLE HARNESS, REPAIRING**
- see **LOCATION OF COMPONENTS**

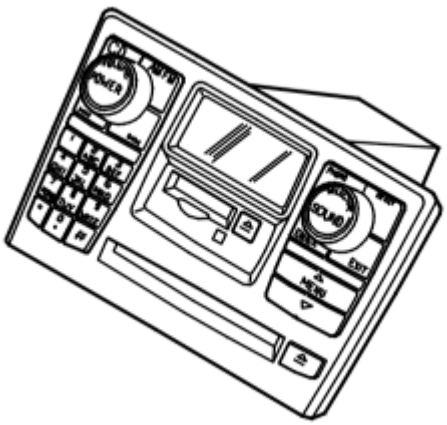

Fig. 31: Infotainment Control Module
Courtesy of VOLVO CARS CORPORATION

- **Continue**

Refer to **VERIFICATION**

CHECKING THE CABLE AND COMPONENT

Fig. 32: Checking Traffic Load On CAN Cables
Courtesy of VOLVO CARS CORPORATION

Checking the fault cause

Check the fault cause as follows:

1. Ignition off.
2. Disconnect the MOST connector from the subwoofer module (SUB).
3. Connect the MOST cable to special tool: see **9512867**
4. Ignition on.
5. Activate the infotainment unit.
6. Check that the communication on the MOST-net works by reading out the status for the parameter **MOST locked** for at least 30 seconds. The parameter indicates whether the MOST network is closed and communication possible. Click on the VCT2000 symbol to obtain a MOST network status reading.
7. If the parameter shows that the MOST network is not closed, check the receiving control module in the same way as described above.

The communication on the MOST network is working if the menu text is displayed. If this is the case, the fault cause is in the subwoofer module (SUB). Continue the fault-tracing by checking the component.

The communication on the MOST network is not working if the menu text is not displayed. The fault cause is then in the MOST cable for the next control module. Continue the fault-tracing by checking the fiber optic cable.

Checking the cable

- Check the MOST connection. Check for dirt, loose connections and damage.
- Replace the MOST cable if no fault is found in the MOST terminal.

Checking the component

- Check the audio module (AUD) power supply and ground connection for the Accessory USB unit (AUU).
- Check the MOST connection. Check for dirt, loose connections and damage.
- If no fault is found, replace the Accessory USB unit (AUU).

Remedy as necessary.

Other information

- see **SUBWOOFER MODULE (SUB), REPLACING**
- see **CHECKING THE VOLTAGE / GROUND TERMINAL**
- see **SIGNAL SPECIFICATION**
- see **FIBER OPTIC CABLE HARNESS, REPAIRING**
- see **OPTICAL WIRING HARNESS CHECK**
- see **LOCATION OF COMPONENTS**

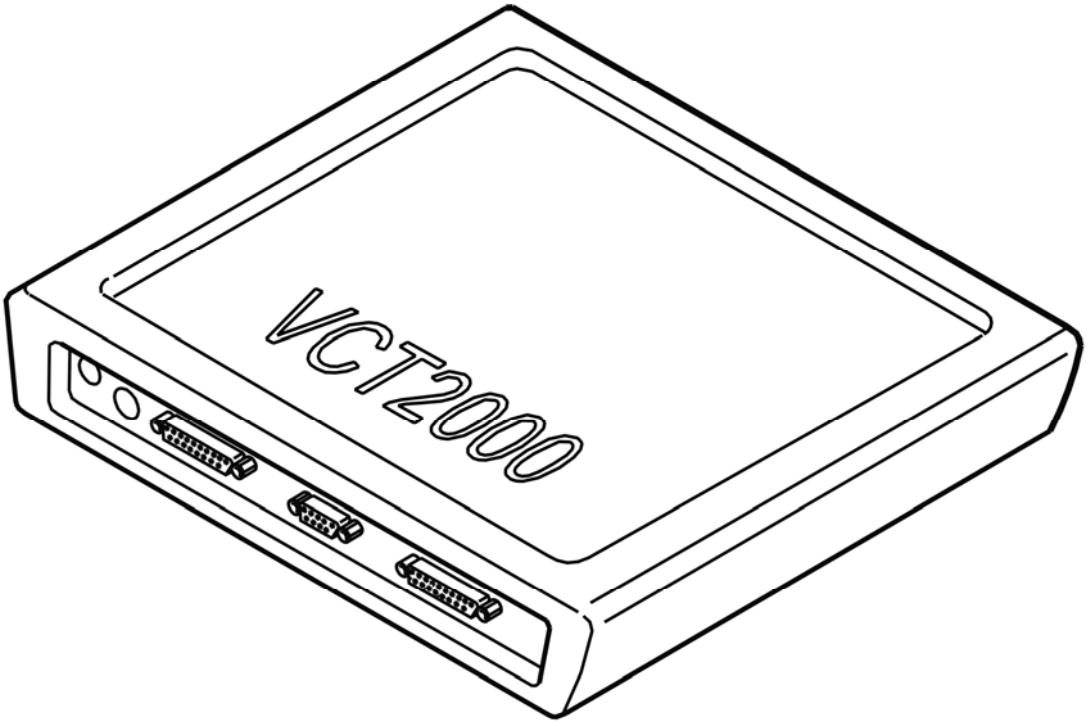

Fig. 33: Identifying VCT2000 Diagnostic Tool Symbol In VIDA
Courtesy of VOLVO CARS CORPORATION

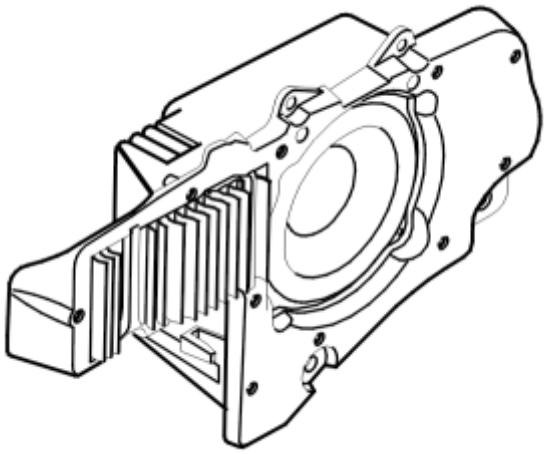

Fig. 34: Subwoofer Module
Courtesy of VOLVO CARS CORPORATION

- **Continue**

  Refer to **VERIFICATION**

CHECKING THE CABLE AND COMPONENT

Fig. 35: Checking Traffic Load On CAN Cables
Courtesy of VOLVO CARS CORPORATION

Checking the fault cause

Check the fault cause as follows:

1. Ignition off.
2. Unplug the MOST-connector from Accessory USB unit (AUU).
3. Connect the MOST cable to special tool: see **9512867**
4. Ignition on.
5. Activate the infotainment system.
6. Check that the communication on the MOST-net works by reading out the status for the parameter **MOST locked** for at least 30 seconds. The parameter indicates whether the MOST network is closed and communication possible. Click on the VCT2000 symbol to obtain a MOST network status reading.
7. If the parameter shows that the MOST network is not closed, check the receiving control module in the same way as described above.

The communication on the MOST network is working if the menu text is displayed. The cause of the fault is in the Accessory USB unit (AUU). Continue the fault-tracing by checking the component.

The communication on the MOST network is not working if the menu text is not displayed. The fault cause is then in the MOST cable for the next control module. Continue the fault-tracing by checking the fiber optic cable.

Checking the cable

- Check the MOST connection. Check for dirt, loose connections and damage.
- Replace the MOST cable if no fault is found in the MOST terminal.

Checking the component

- Check the audio module (AUD) power supply and ground connection for the Accessory USB unit (AUU).
- Check the MOST connection. Check for dirt, loose connections and damage.
- If no fault is found, replace the Accessory USB unit (AUU).

Remedy as necessary.

Other information

- see **UNIVERSAL BUS MODULE (USB)**
- see **CHECKING THE SUPPLY VOLTAGE/GROUND TERMINAL**
- see **SIGNAL SPECIFICATION**
- see **FIBER OPTIC CABLE HARNESS, REPAIRING**
- see **OPTICAL WIRING HARNESS CHECK**
- see **LOCATION OF COMPONENTS**

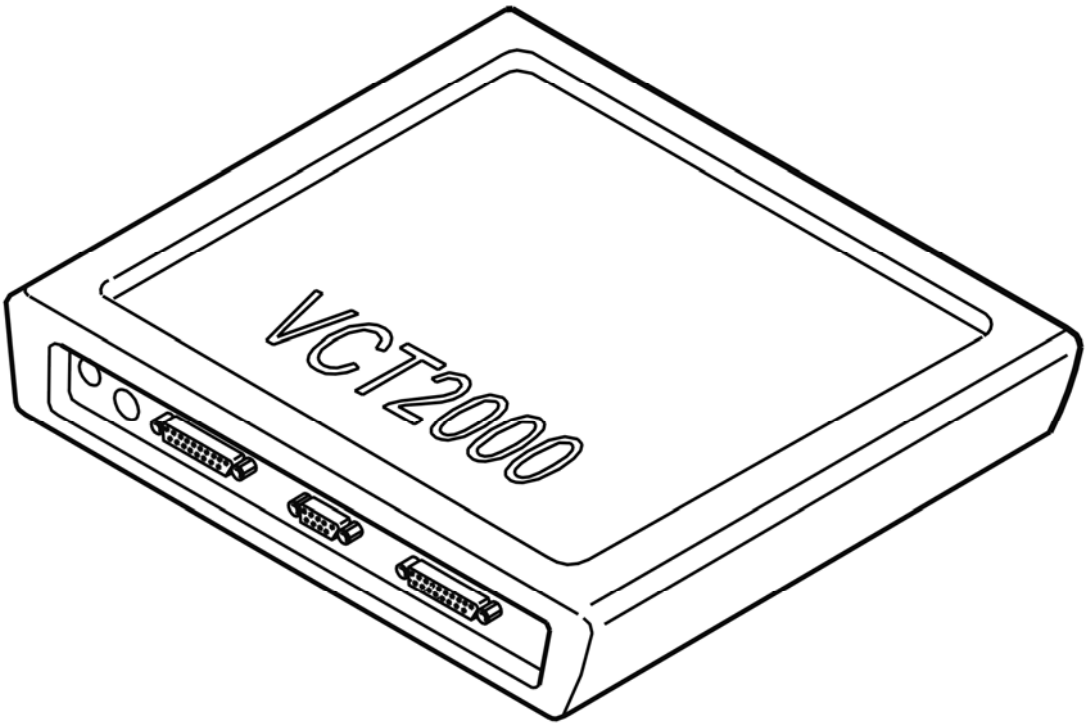

Fig. 36: Identifying VCT2000 Diagnostic Tool Symbol In VIDA
Courtesy of VOLVO CARS CORPORATION

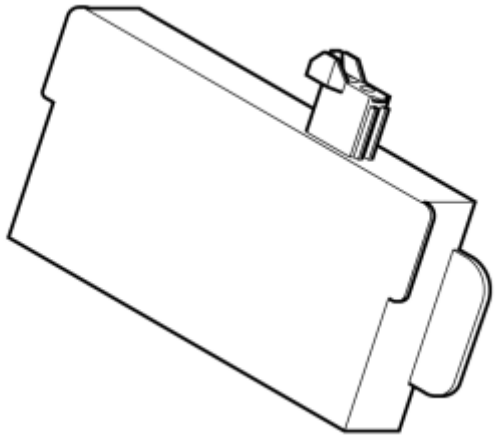

Fig. 37: Identifying Accessory USB Unit (AUU)
Courtesy of VOLVO CARS CORPORATION

- **Continue**

  Refer to **VERIFICATION**

VERIFICATION

HINT: After carrying out the repair, check that the fault has been remedied.

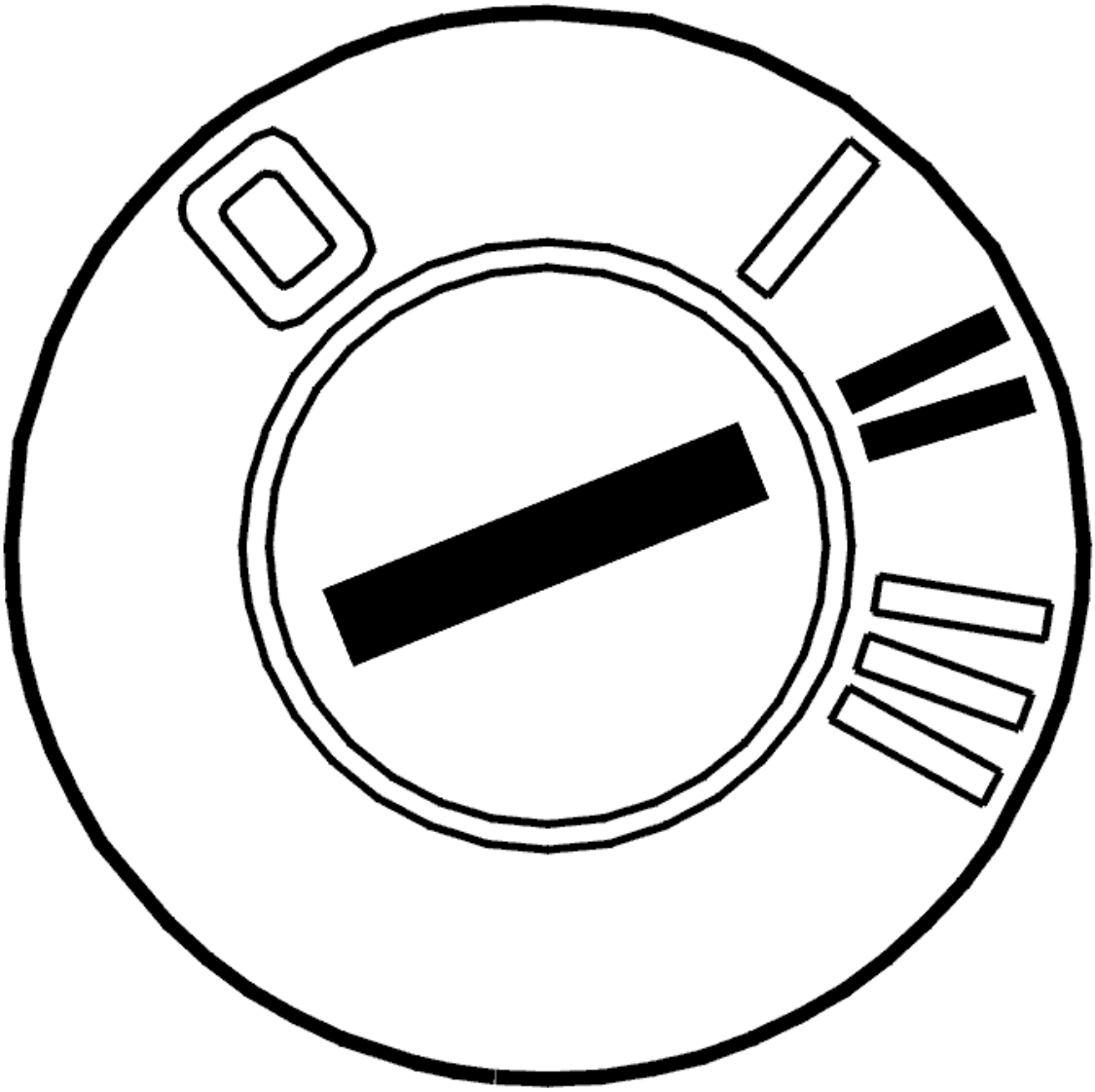

Fig. 38: Identifying Ignition ON
Courtesy of VOLVO CARS CORPORATION

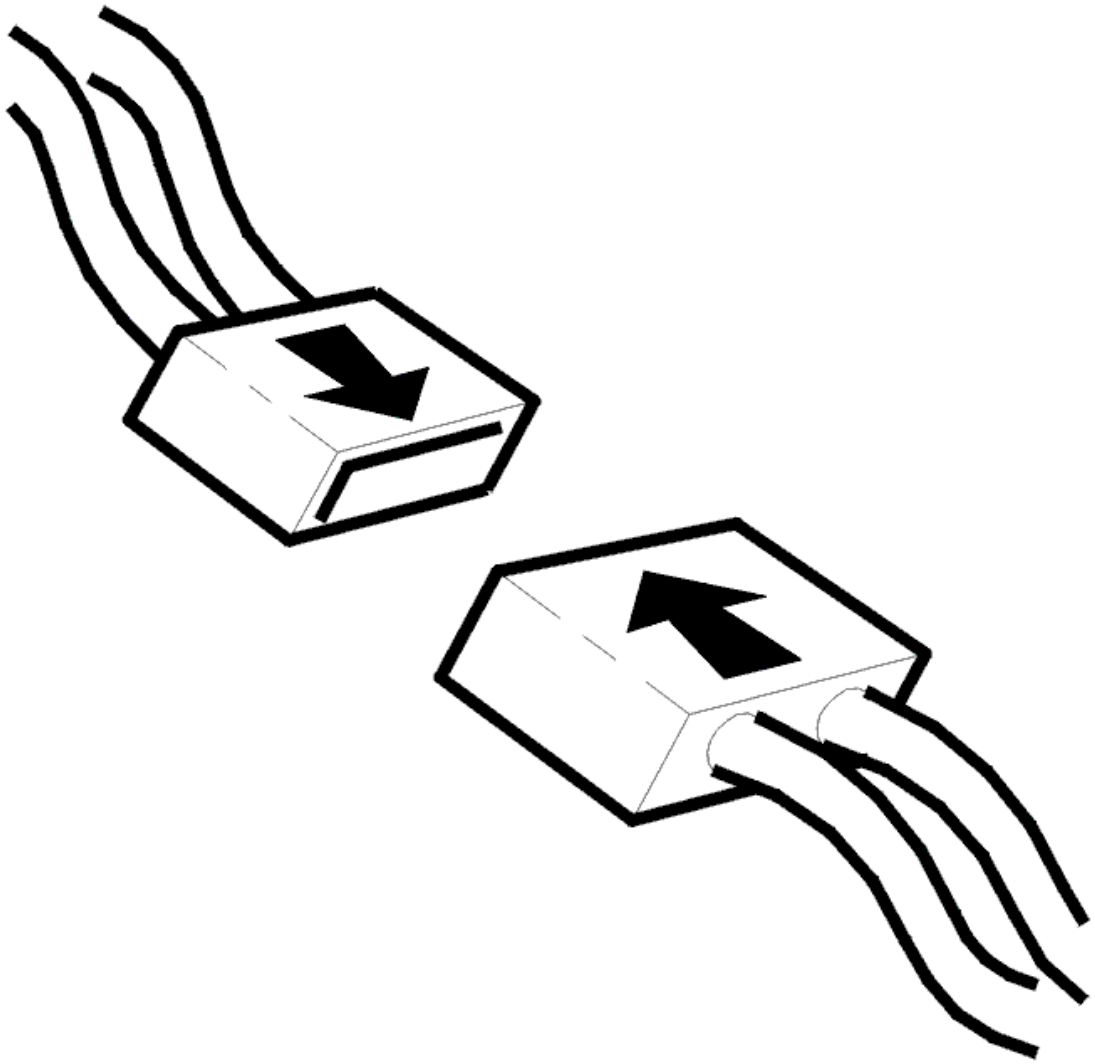

Fig. 39: Connecting Connector
Courtesy of VOLVO CARS CORPORATION

- Ignition off
- Reinstall the connectors, components etc.
- Ignition on.

  Using VCT2000 (Volvo Scan Tool) Activate the infotainment system and select the radio.

  Check whether there is sound from the radio in the loudspeakers.

Is the sound of the radio coming through the loudspeakers?

- **YES**

VERIFIED: Troubleshooting has been completed.

- **NO**

  Refer to **INFORMATION**

INFORMATION

FAULT-TRACING INFORMATION

The fault should have been detected and remedied. As this is not the case fault-tracing has failed.

Exit fault-tracing for this diagnostic trouble code (DTC) or make another attempt.

SIGNAL SPECIFICATION

General

All the values given below are between the respective connection in column 1 and connection #A6 in column 2 (power ground) unless otherwise stated in brackets.

NOTE: **It is important to connect the breakout box and check the ground terminals before taking readings.**

For information on:

- Connecting the breakout box, see "Connecting the breakout box, phone module (PHM)".
- Checking ground connection, see "Checking voltage / ground connection, phone module (PHM)".

There may be several connections and connectors between control modules and components. For more information, see the appropriate service information.

U=	DC voltage in volts (V)	U_{AC} =	AC voltage in volts (V)
U_{bat} =	Battery voltage (V)	f =	Frequency in Hertz (Hz)
U_{low} =	Voltage approx. 0 V	t =	Time in s (seconds)
PWM =	Pulse-width modulated signal in %		

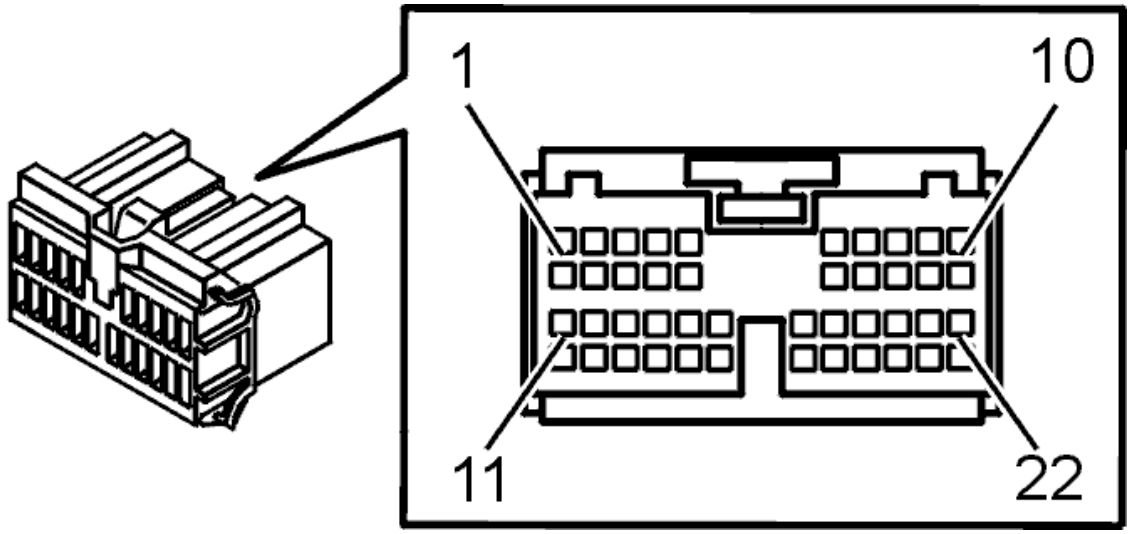

Fig. 40: Identifying Connector (F) Terminals
Courtesy of VOLVO CARS CORPORATION

SIGNAL TABLE CONNECTOR A, PHONE MODULE (PHM)

Connection breakout box	Connection control module	Signal type	Ignition on	Idle	Other
#1	#A1	-	-	-	-
#2	#A2	-	-	-	-
#3	#A3	-	-	-	-
#4	#A4	-	-	-	-
#5	#A5	+30-feed	U_{bat}	U_{bat}	-
#6	#A6	Power ground	U_{low}	U_{low}	-
#7	#A7	Handset, voltage feed	U_{bat}	U_{bat}	-
#8	#A8	Handset, cradle signal	U=5 V when handset is used, otherwise U=0 V.	U=5 V when handset is used, otherwise U=0 V.	-
#9	#A9	-	-	-	-
#10	#A10	-	-	-	-
#11	#A11	CAN (L)	Digital signal	Digital signal	-
#12	#A12	CAN (H)	Digital signal	Digital signal	-
#13	#A13	-	-	-	-l
#14	#A14	-	-	-	-
#15	#A15	-	-	-	-
#16	#A16	-	-	-	-
#17	#A17	Impact cable from SRS	U=12 V at activated SRS-component, otherwise U=0 V	U=12 V at activated SRS-component, otherwise U=0 V	-

#18	#A18	Handset, ground	U_{low}	U_{low}	-
#19	#A19	Handset, microphone	Alternating voltage at sound in microphone	Alternating voltage at sound in microphone	Difficult to measure
#20	#A20	Handset, speaker	Alternating voltage at sound in speaker	Alternating voltage at sound in speaker	Difficult to measure
#21	#A21	-	-	-	-
#22	#A22	-	-	-	-

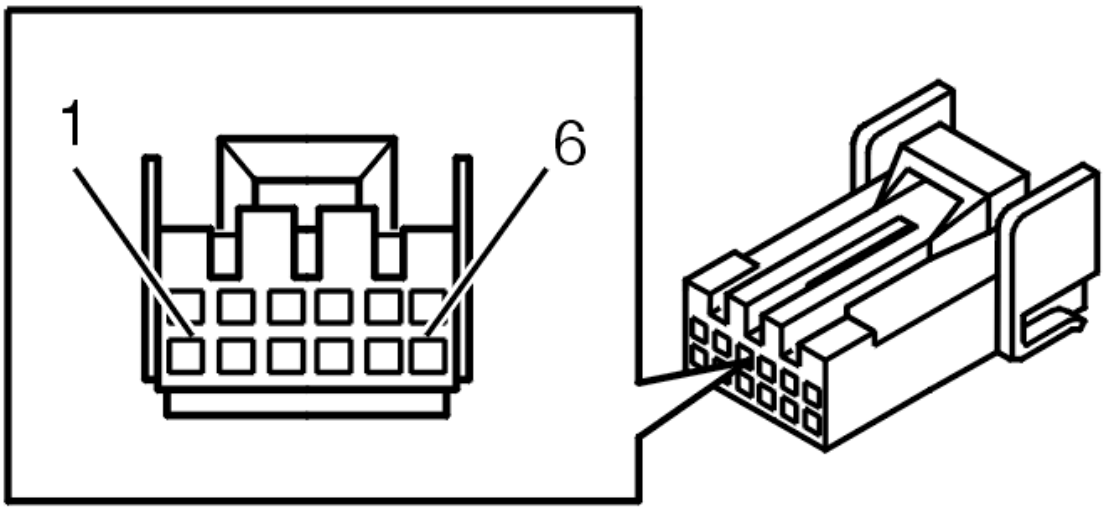

Fig. 41: Identifying Signal Table Connector B, Phone Module (PHM)
Courtesy of VOLVO CARS CORPORATION

SIGNAL TABLE CONNECTOR B, PHONE MODULE (PHM)

Connection breakout box	Connection control module	Signal type	Ignition on	Idle	Other
#21	#B1	Clock signal to SIM-card	Pound signal	Pound signal	-
#22	#B2	Signal ground, SIM-card	U_{low}	U_{low}	-
#23	#B3	Voltage feed, SIM-card	U=2.8 V	U=2.8 V	-
#24	#B4	Communication cable, SIM-card	Pulsed signal	Pulsed signal	-
#25	#B5	Control signal, SIM-card	Pulsed signal	Pulsed signal	-
#26	#B6	Diagnostic cable, SIM-card	U_{low}	U_{low}	-

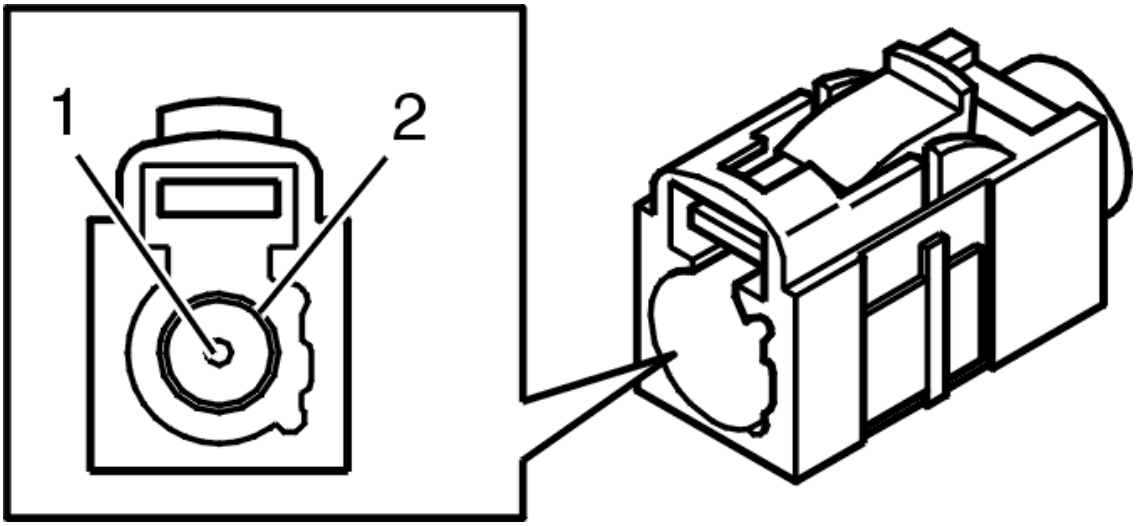

Fig. 42: Identifying 1-Bit Connector
Courtesy of VOLVO CARS CORPORATION

SIGNAL TABLE CONNECTOR C, PHONE MODULE (PHM)

Connection breakout box	Connection control module	Signal type	Ignition on	Idle	Other
-	#C1	Telephone antenna	Antenna signal telephone	Antenna signal telephone	-
-	#C2	Antenna ground	U_{low}	U_{low}	-

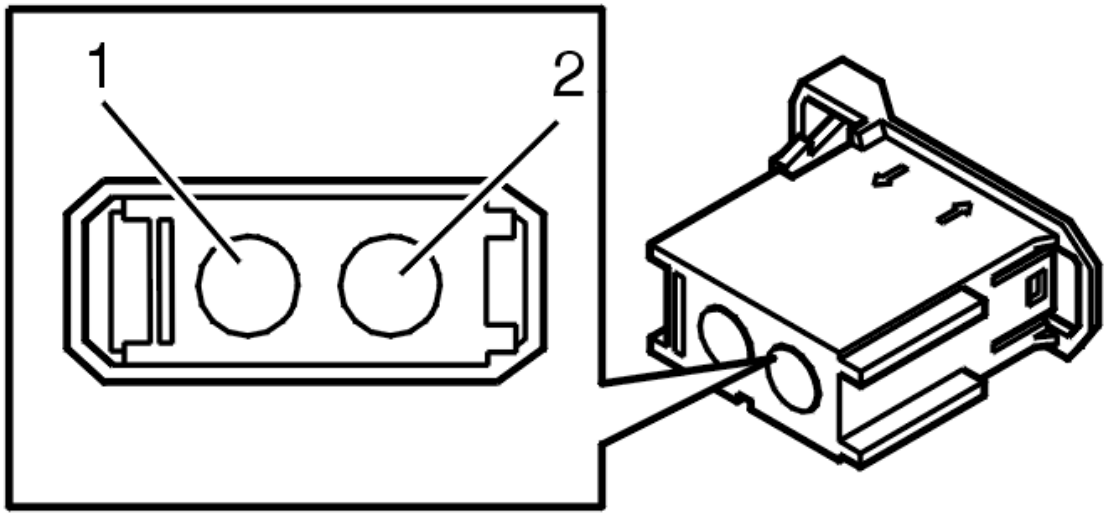

Fig. 43: Identifying Connector C
Courtesy of VOLVO CARS CORPORATION

SIGNAL TABLE CONNECTOR D, PHONE MODULE (PHM)

Connection breakout box	Connection control module	Signal type	Ignition on	Idle	Other
-	#D1	MOST input	Optical input	Optical input	-

		signal	signal when the MOST network is activated	signal when the MOST network is activated	
-	#D2	MOST output signal	Optical output signal when the MOST network is activated	Optical output signal when the MOST network is activated	-

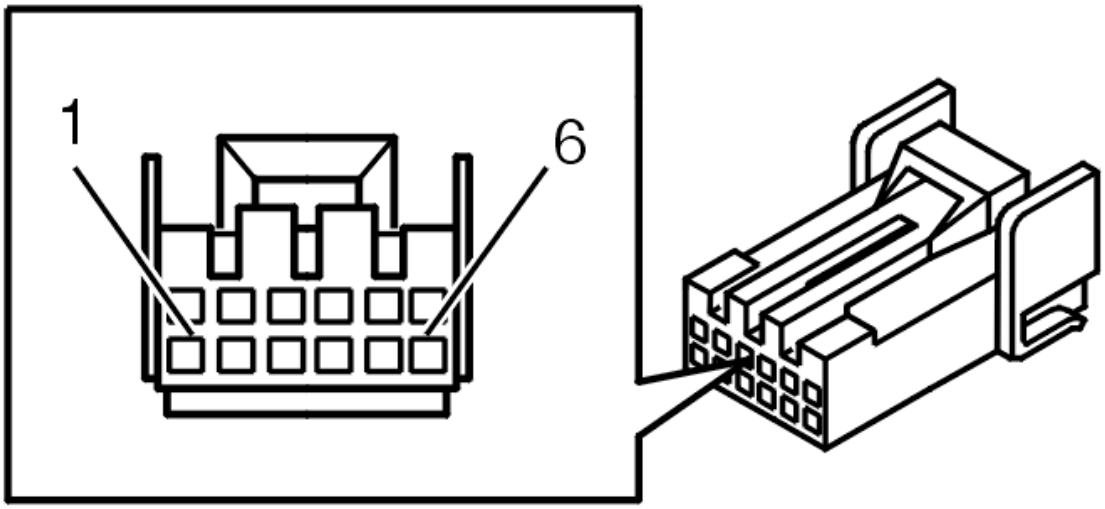

Fig. 44: Identifying Signal Table Connector B, Phone Module (PHM)
Courtesy of VOLVO CARS CORPORATION

SIGNAL TABLE CONNECTOR SIM-CARD HOLDER

Connection breakout box	Connection control module	Signal type	Ignition on	Idle	Other
#21	#1	Clock signal to SIM-card	Pound signal	Pound signal	-
#22	#2	Signal ground, SIM-card	U_{low}	U_{low}	-
#23	#3	Voltage feed, SIM-card	U=2.8 V	U=2.8 V	-
#24	#4	Communication cable, SIM-card	Pulsed signal	Pulsed signal	-
#25	#5	Control signal, SIM-card	Pulsed signal	Pulsed signal	-
#26	#6	Diagnostic cable, SIM-card	U_{low}	U_{low}	-

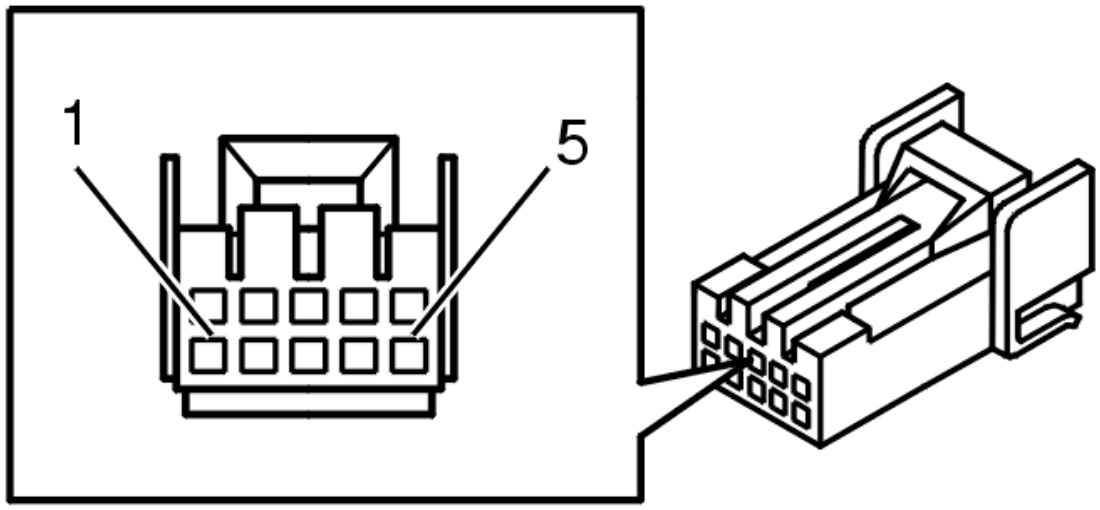

Fig. 45: 10 CD Changer Connector Terminals
Courtesy of VOLVO CARS CORPORATION

SIGNAL TABLE CONNECTOR HANDSET

Connection breakout box	Connection control module	Signal type	Ignition on	Idle	Other
#21	#1	Handset, microphone	Alternating voltage at sound in microphone	Alternating voltage at sound in microphone	Difficult to measure
#22	#2	Handset, speaker	Alternating voltage at sound in microphone	Alternating voltage at sound in microphone	Difficult to measure
#23	#3	Handset, ground	U_{low}	U_{low}	-
#24	#4	Handset, cradle signal	U=5 V when handset is used, otherwise U=0 V.	U=5 V when handset is used, otherwise U=0 V.	-
#25	#5	Handset, voltage feed	U_{bat}	U_{bat}	-

ICM-DC01: CONTROL MODULE COMMUNICATION. FAULTY SIGNAL (2011-2012)

DIAGNOSTIC TROUBLE CODE (DTC) INFORMATION ICM-DC01

see **DIAGNOSTIC TROUBLE CODE (DTC) INFORMATION ICM-DC01**

NO COMMUNICATION

Special tools:

see **9512867**

CHECKING THE WIRING AND COMPONENT

The infotainment control module (ICM) has detected an open-circuit in communication on the MOST network.

The MOST network is a fiber optic ring network. This means that all control modules which are connected to the network must be powered and grounded for the infotainment system to work. If, for any reason, a control module is unable to handle (receive or transmit) signals onwards on the MOST network, or if there is an open-circuit in the fiber optic cable, the infotainment control module (ICM) will shut down all functionality.

Communication on the fiber optic net is one-directional. The control modules on the MOST network receive light signals, amplify them and then send them onwards. The MOST connectors for the control modules contain two fiber optic cables, one for incoming and one for outgoing signals.

If the fault is intermittent, it has been registered previously but is no longer present. Intermittent faults can either be caused by interference when starting the MOST network, or by intermittent faults in the power supply/ground for one of the control modules in the network. The fault is evaluated depending on how it occurs. If the fault recurs, fault-trace for permanent faults.

It can be difficult to diagnose intermittent faults using a ring break diagnostic because for this to work the fault must occur during the diagnostic.

If the fault is permanent, perform a ring break diagnostic to locate the open-circuit.

- **Continue**

  Refer to **CHECKING FOR OPEN-CIRCUITS**

CHECKING FOR OPEN-CIRCUITS

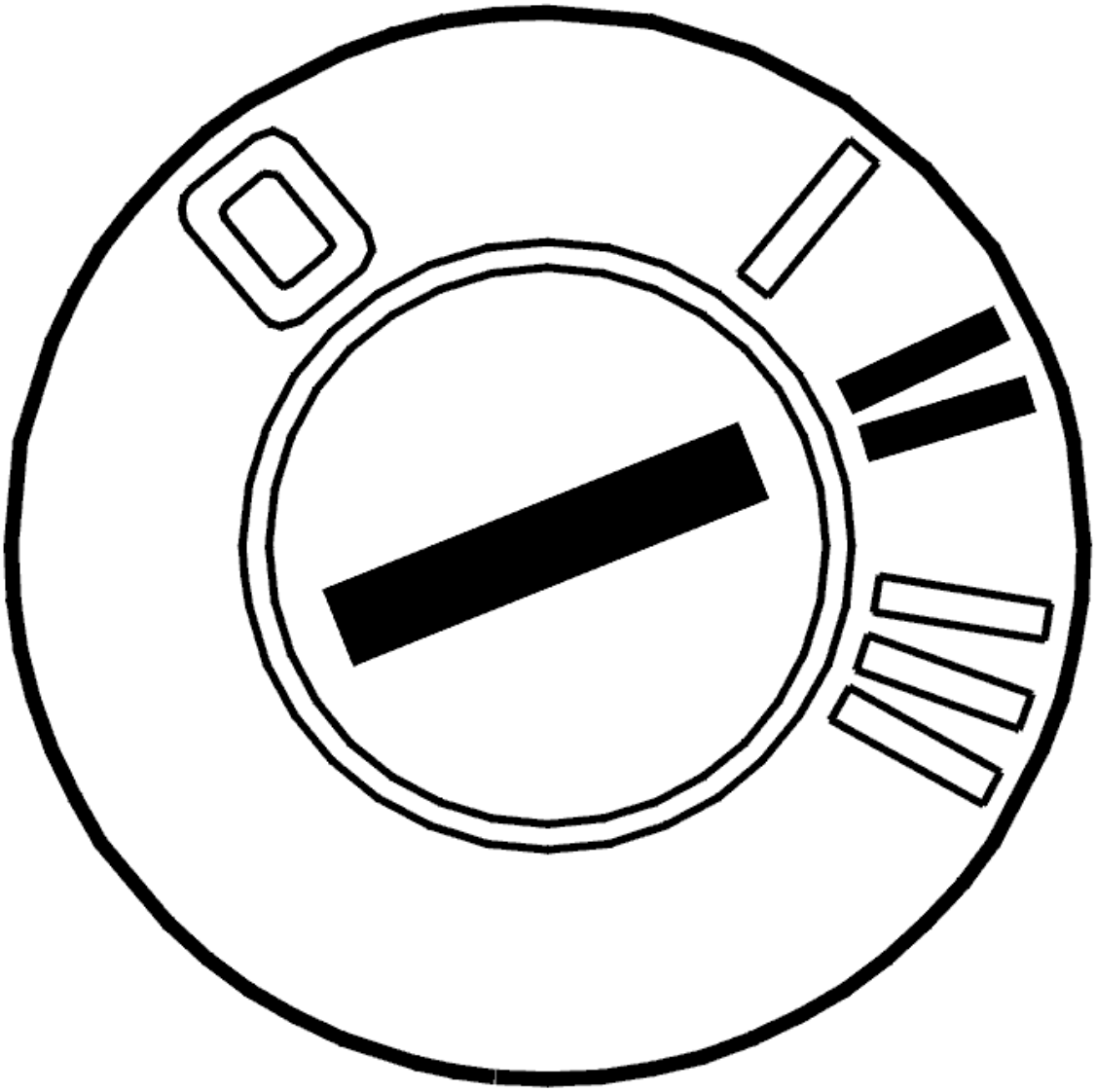

Fig. 46: Identifying Ignition ON
Courtesy of VOLVO CARS CORPORATION

Ring break diagnostic

A ring break diagnostic should be run to determine whether the fault has occurred.

To carry out a full ring break diagnostic of the MOST system, proceed as follows:

1. Switch off the ignition and remove the key
2. Connect separate external voltage feed to the communication tool.
3. Disconnect the battery negative lead. See **BATTERY, DISCONNECTING**
4. Wait 1 minute.
5. Ignition switch position II.
6. Connect the battery negative terminal.

7. Wait at least 30 seconds after switching on the ignition before reading off the position of the open-circuit.

Other information:

- For information about fuses, see the appropriate service information.
- For information on battery location:**BATTERY, REPLACING**

- **Continue**

  Refer to **READING OFF THE POSITION OF THE OPEN-CIRCUIT**

CHECKING CABLE AND COMPONENT

If the result of the ring break diagnostic is POOR, the infotainment control module (ICM) is receiving a signal on the MOST network. However it is unable to decode the signals because the luminance of the signals is too weak or the signals are distorted.

If the result from the ring break diagnostic is OK, the fault is intermittent.

Fault-tracing using the ring break diagnostic assumes that the fault is permanent or active when the test is run, i. e. the system is powered having been off.

HINT: If diagnostic trouble code (DTC) ICM-DC01 is intermittent, read off the status of the ring break diagnostic from the frozen values in Vehicle communication.

Check the communication on the MOST network by bypassing the control modules one by one on the MOST network as follows:

- Ignition off
- Disconnect the MOST connector from the relevant control module
- Connect the MOST cable to special tool see **9512867**
- Ignition on
- Activate the infotainment system
- Check that the communication on the MOST network is functioning by reading off the status of the MOST locked parameter for at least 30 seconds. The parameter indicates whether the MOST network is closed and communication possible. Click the VCT2000 symbol to read off the status of the MOST network.

If the communication on the MOST network is stable when a control module is disconnected, check the power supply and the ground terminal on the relevant control module. Check for intermittent faults. Try replacing the component if no fault is found.

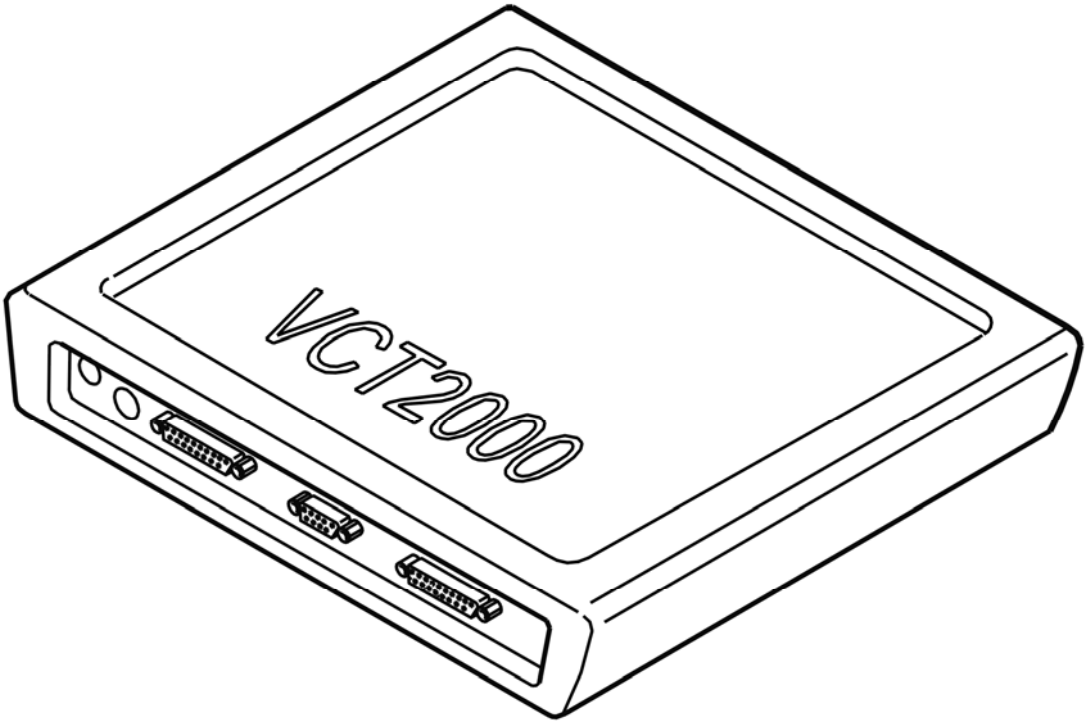

Fig. 47: Identifying VCT2000 Diagnostic Tool Symbol In VIDA
Courtesy of VOLVO CARS CORPORATION

- **Continue**

  Refer to **VERIFICATION**

READING OFF THE POSITION OF THE OPEN-CIRCUIT

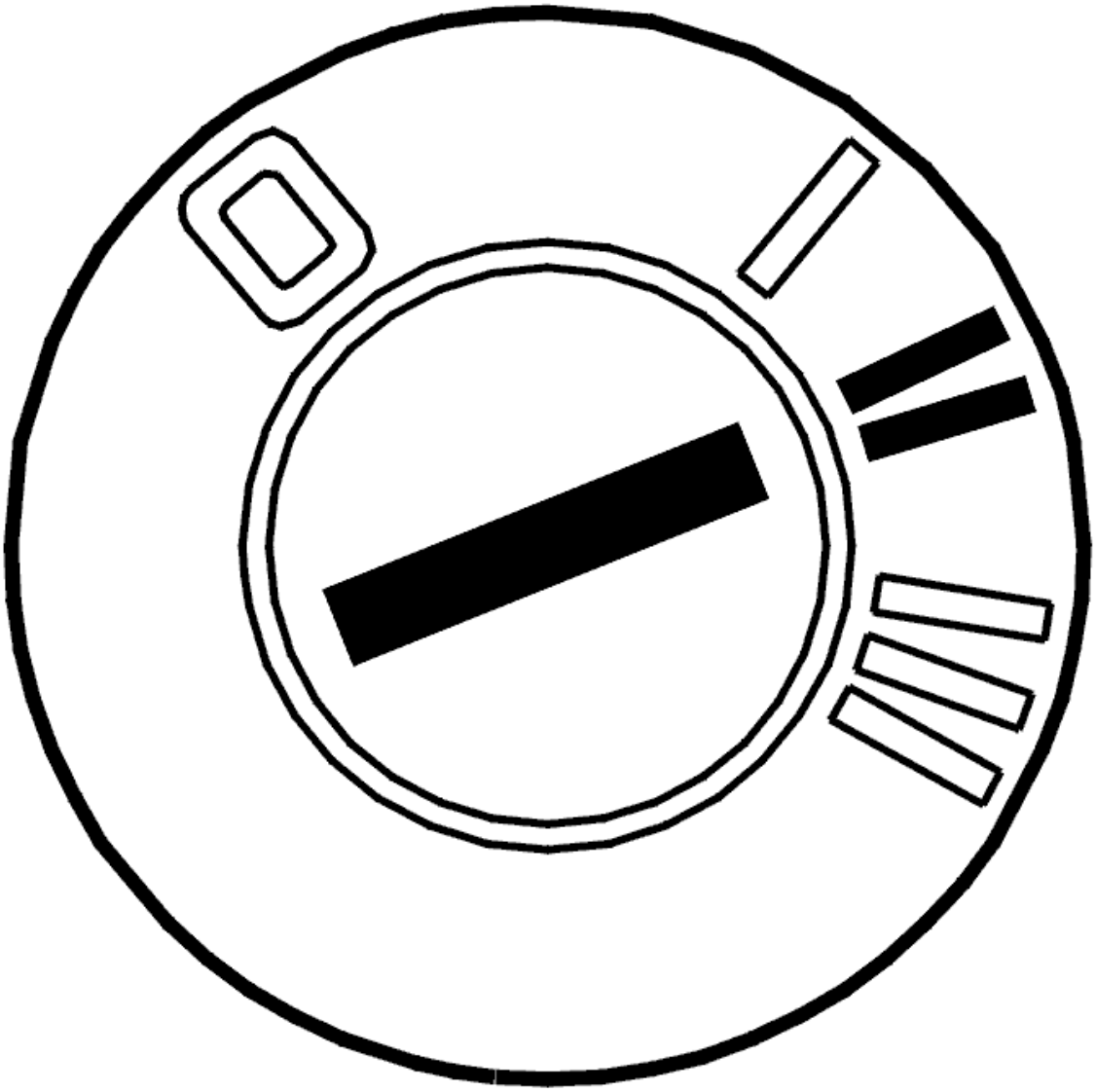

Fig. 48: Identifying Ignition ON
Courtesy of VOLVO CARS CORPORATION

- Ignition on.

  Reading off the result from a ring break diagnostic

  Click the VCT2000 symbol to read off the result of the ring break diagnostic.

  As well as the result from the ring break diagnostic, a list of the control modules included in the MOST network is provided for that car.

  NOTE: The figure shows the MOST-net with maximum number of possible control modules. The number of control modules can vary between 2 and 6.

  The following results can be obtained from a ring break diagnosis:

- If the diagnostic indicates an open-circuit in the communication on the MOST network, the result will be an open-circuit position
- The result will be OK if there is no fault on the MOST network Continue by selecting option 3 below.
- If the infotainment control module (ICM) receives a signal on the MOST network but is unable to decode it because the luminance is weak or the signals are distorted, the result will be POOR. Continue by selecting option 3 below.

Determining the position of the open-circuit

The position of the open-circuit is calculated by working backwards in the MOST network from the infotainment control module (ICM).

NOTE: **The ring break diagnostic always counts backwards, irrespective of which, or how many control modules, are installed in the vehicle. To determine the position of the open-circuit, check the list to, see which control modules are installed in that particular vehicle. Then count backwards following the determined order. The number of control modules can vary between 2 and 6.**

Two examples are outlined below:

- First open circuit position is indicated by 1. This means that the open circuit is in the Integrated Audio Module (IAM) or in the cable between the Bluetooth phone module (BPM) and the Integrated Audio Module (IAM).
- First open circuit position is indicated by 3. This means that the open circuit is in the Audio module (AUD) or in the cable between the Audio module (AUD) and the Multimedia module (MMM). The open circuit may be caused by a damaged optical connector in the Multimedia module (MMM). This means that Multimedia module (MMM) cannot interpret the incoming signal from Audio module (AUD).

Select the alternative for the control module to be checked.

Alternative 1: Refer to CHECKING CABLE AND COMPONENT

Remote Digital Audio Receiver (RDAR).

Audio module (AUD)

Integrated audio module (IAM).

Alternative 2: Refer to CHECKING CABLE AND COMPONENT

Phone module (PHM)

Bluetooth phone module (BPM).

Multimedia module (MMM)

Infotainment control module (ICM)

Alternative 3: Refer to CHECKING CABLE AND COMPONENT

The result from the ring break diagnostic indicates that the MOST network is OK.

The result from the ring break diagnostic is POOR.

Other information:

- see **LOCATION OF COMPONENTS**

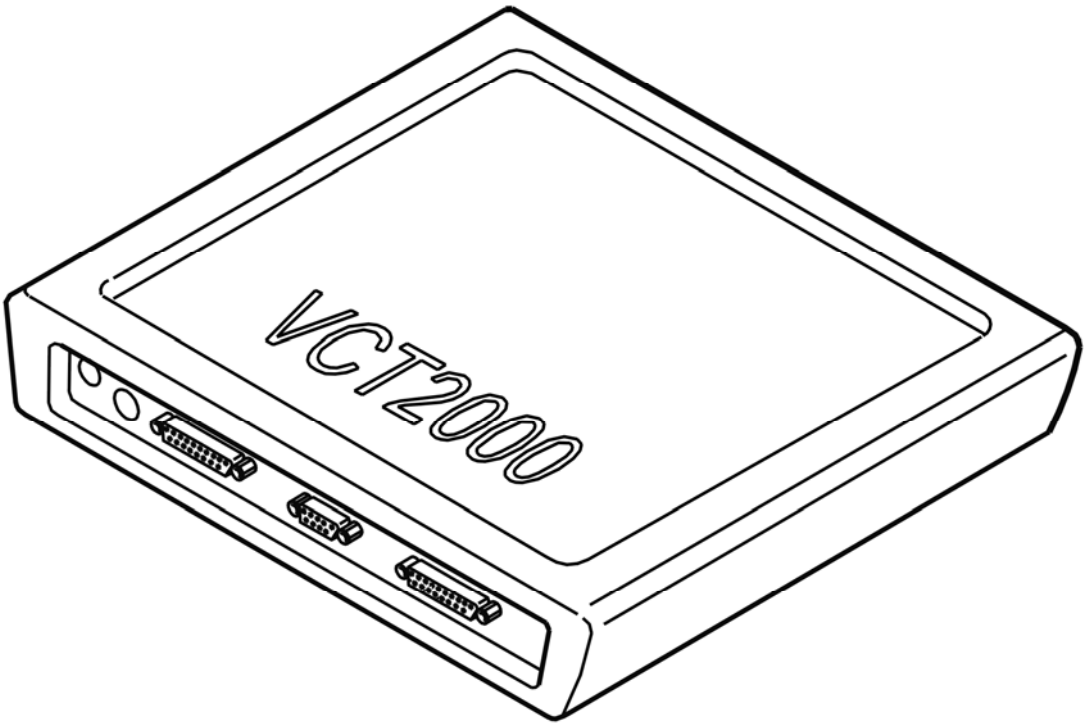

Fig. 49: Identifying VCT2000 Diagnostic Tool Symbol In VIDA
Courtesy of VOLVO CARS CORPORATION

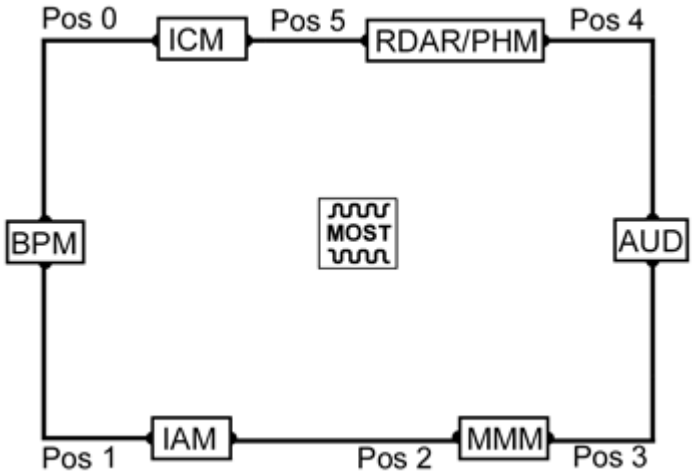

Fig. 50: Control Module Diagram
Courtesy of VOLVO CARS CORPORATION

CHECKING CABLE AND COMPONENT

Select the control module to be checked from the list.

1. Remote Digital Audio Receiver (RDAR). Refer to **CHECKING CABLE AND COMPONENT**
2. Audio Control Module (AUD). Refer to **CHECKING CABLE AND COMPONENT**
3. Integrated audio module (IAM). Refer to **CHECKING CABLE AND COMPONENT**

CHECKING CABLE AND COMPONENT

Select the control module to be checked from the list.

1. Phone module (PHM). Refer to **CHECKING CABLE AND COMPONENT**
2. Bluetooth phone module (BPM). Refer to **CHECKING CABLE AND COMPONENT**
3. Multimedia module (MMM). Refer to **CHECKING CABLE AND COMPONENT**
4. Infotainment Control Module (ICM). Refer to **CHECKING CABLE AND COMPONENT**

CHECKING CABLE AND COMPONENT

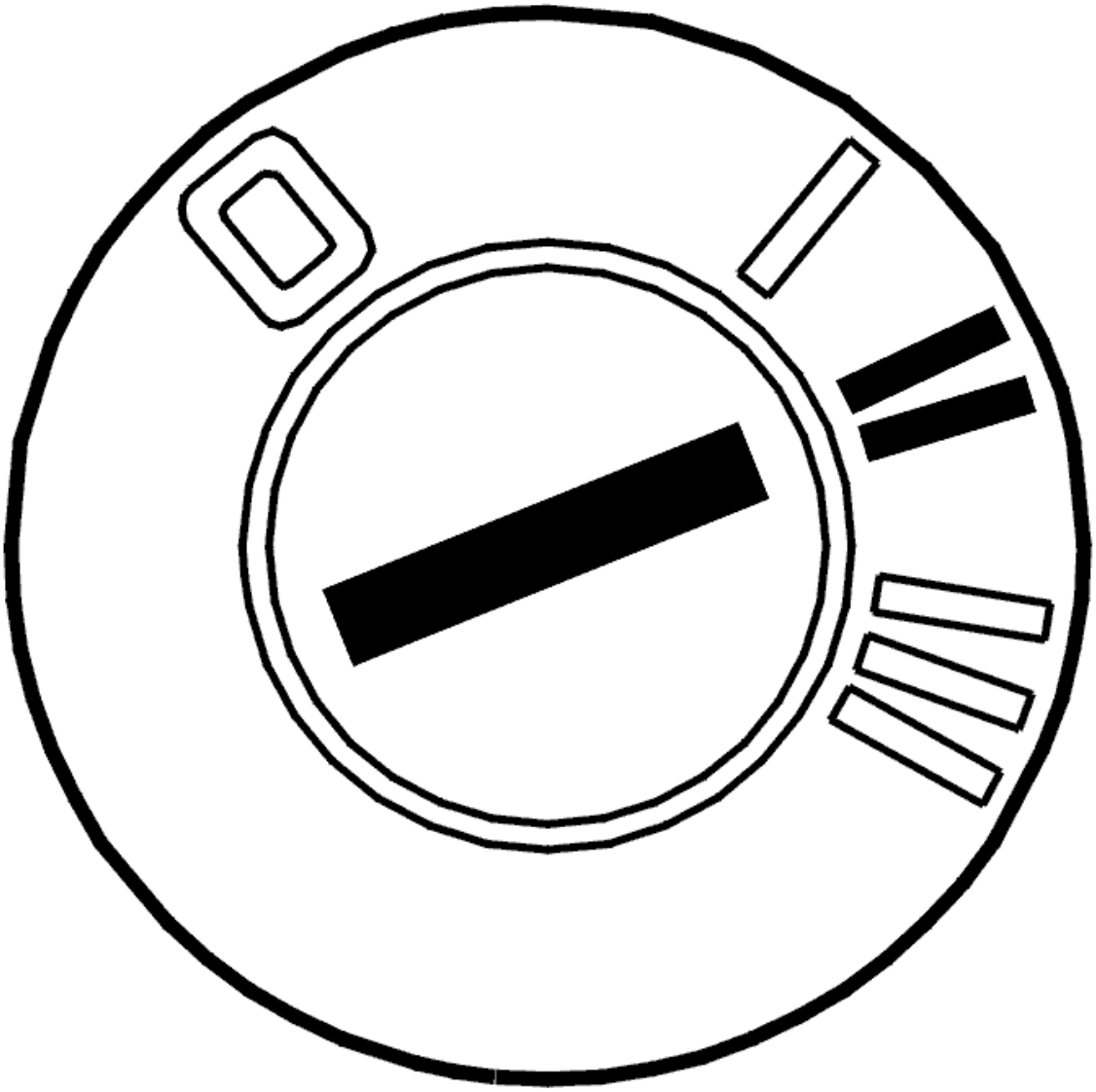

Fig. 51: Identifying Ignition ON
Courtesy of VOLVO CARS CORPORATION

Checking the fault cause

Check the fault cause as follows:

1. Ignition off
2. Disconnect the MOST connector from Remote Digital Audio Receiver (RDAR).
3. Connect the MOST cable to special tool see **9512867**
4. Ignition on
5. Activate the infotainment system
6. Check that the communication on the MOST network is functioning by reading off the status of the MOST locked parameter for at least 30 seconds. The parameter indicates whether the MOST network is closed and communication possible. Click the VCT2000 symbol to read off the status of the MOST

network.

7. If the parameter displays that the MOST network is not correctly connected, check the receiving control module in the same way as above.

The communication on the MOST network is working if the menu text is displayed. The cause of the fault is then in the Remote Digital Audio Receiver (RDAR). Continue the fault-tracing by checking the component.

The communication on the MOST network is not working if the menu text is not displayed. The fault cause is then in the MOST cable for the next control module. Continue the fault-tracing by checking the fiber optic cable.

Checking cable

- Check the MOST connection. Check for dirt, loose connections and damage
- Replace the MOST cable if no fault is found in the MOST terminal.

Checking the component

- Check the power supply and ground connection for the Remote Digital Audio Receiver (RDAR).
- Check the MOST connection. Check for dirt, loose connections and damage
- If no fault is found, replace the Remote Digital Audio Receiver (RDAR).

Remedy as necessary.

Other information:

- see **SIGNAL SPECIFICATION**
- see **OPTICAL WIRING HARNESS CHECK**
- see **FIBER OPTIC CABLE HARNESS, REPAIRING**
- see **LOCATION OF COMPONENTS**
- see **SATELLITE RADIO CONTROL MODULE**

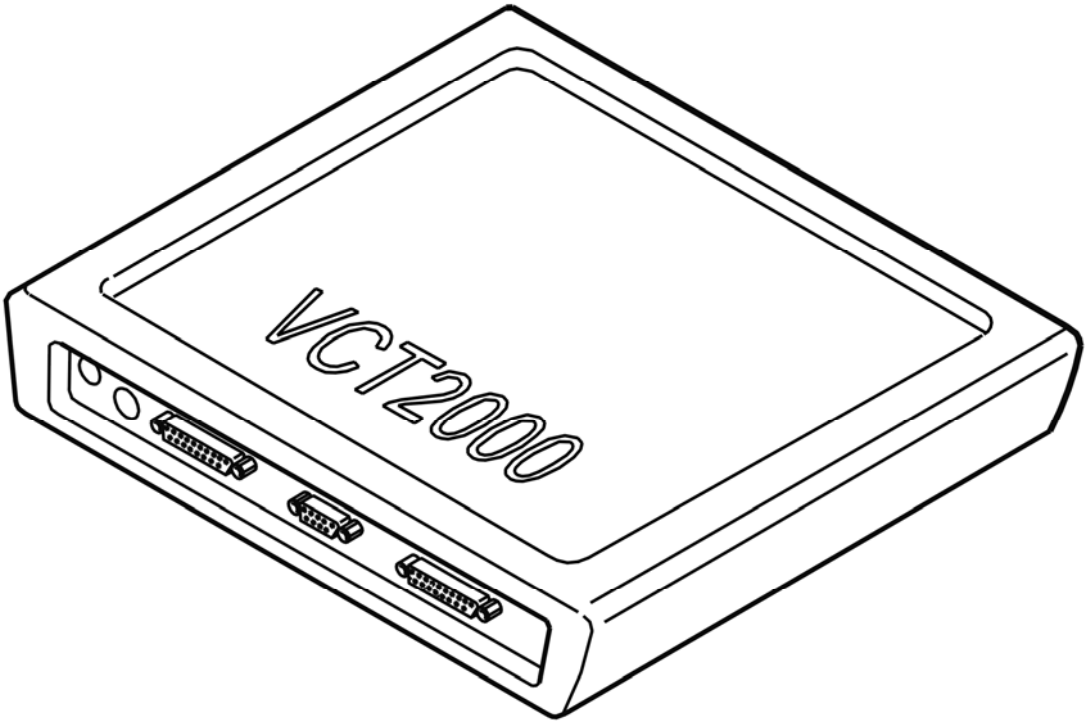

Fig. 52: Identifying VCT2000 Diagnostic Tool Symbol In VIDA
Courtesy of VOLVO CARS CORPORATION

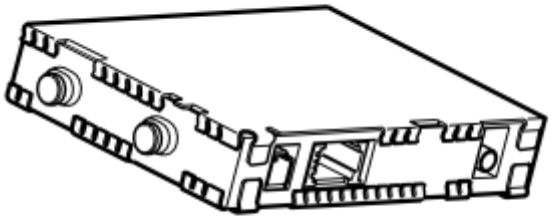

Fig. 53: Identifying Remote Digital Audio Receiver Module (RDAR)
Courtesy of VOLVO CARS CORPORATION

- **Continue**

  Refer to **VERIFICATION**

CHECKING CABLE AND COMPONENT

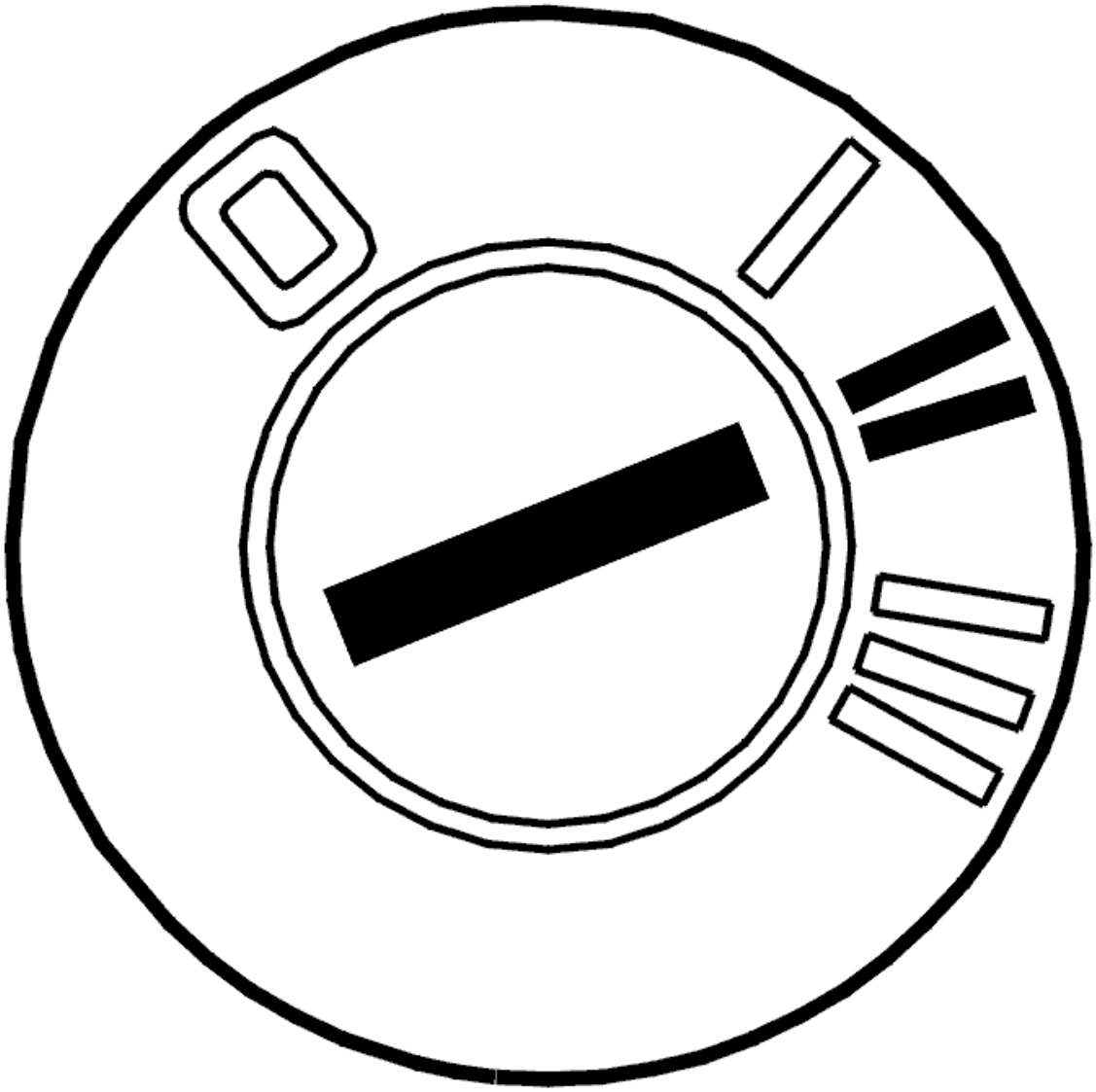

Fig. 54: Identifying Ignition ON
Courtesy of VOLVO CARS CORPORATION

Checking the fault cause

Check the fault cause as follows:

1. Ignition off
2. Disconnect the MOST connector from the audio module (AUD)
3. Connect the MOST cable to special tool see **9512867**
4. Ignition on
5. Activate the infotainment system
6. Check that the communication on the MOST network is functioning by reading off the status of the

MOST locked parameter for at least 30 seconds. The parameter indicates whether the MOST network is closed and communication possible. Click the VCT2000 symbol to read off the status of the MOST network.

7. If the parameter displays that the MOST network is not correctly connected, check the receiving control module in the same way as above.

The communication on the MOST network is working if the menu text is displayed. If this is the case, the fault cause is in the audio module (AUD). Continue the fault-tracing by checking the component.

The communication on the MOST network is not working if the menu text is not displayed. The fault cause is then in the MOST cable for the next control module. Continue the fault-tracing by checking the fiber optic cable.

Checking cable

- Check the MOST connection. Check for dirt, loose connections and damage
- Replace the MOST cable if no fault is found in the MOST terminal.

Checking the component

- Check the power supply and the ground terminal for the audio module (AUD)
- Check the MOST connection. Check for dirt, loose connections and damage
- Replace the audio module (AUD) if no fault is found.

Remedy as necessary.

Other information:

- see **AUDIO MODULE (AUD), REPLACING**
- see **CHECKING THE VOLTAGE / GROUND TERMINAL**
- see **SIGNAL SPECIFICATION**
- see **FIBER OPTIC CABLE HARNESS, REPAIRING**
- see **OPTICAL WIRING HARNESS CHECK**
- see **LOCATION OF COMPONENTS**

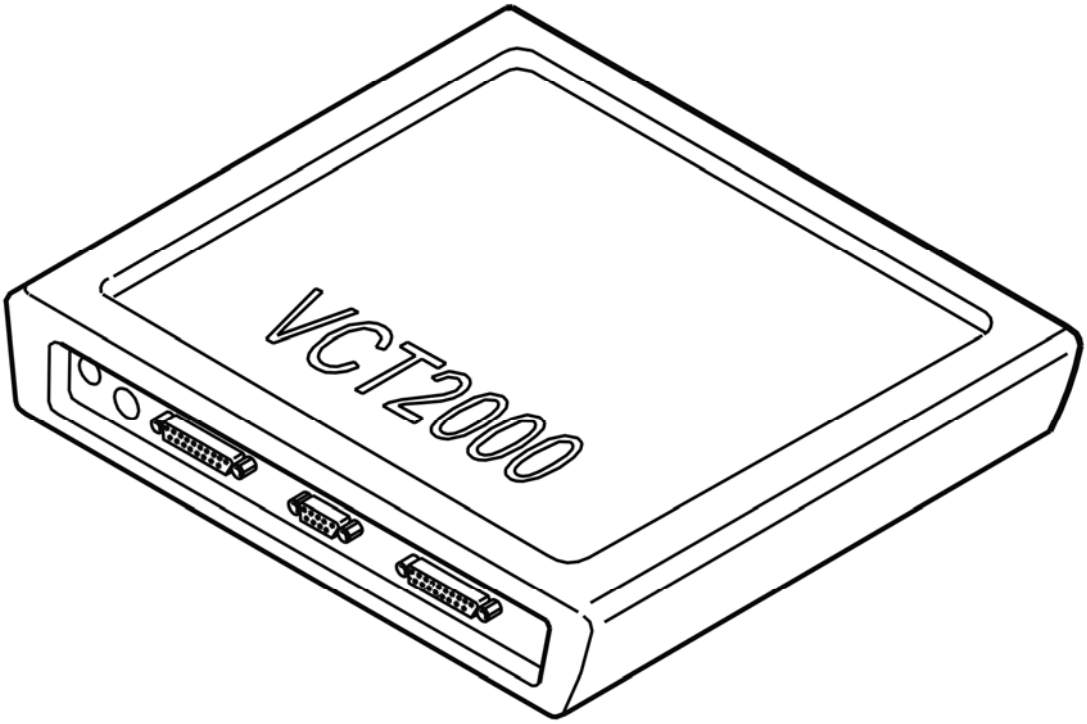

Fig. 55: Identifying VCT2000 Diagnostic Tool Symbol In VIDA
Courtesy of VOLVO CARS CORPORATION

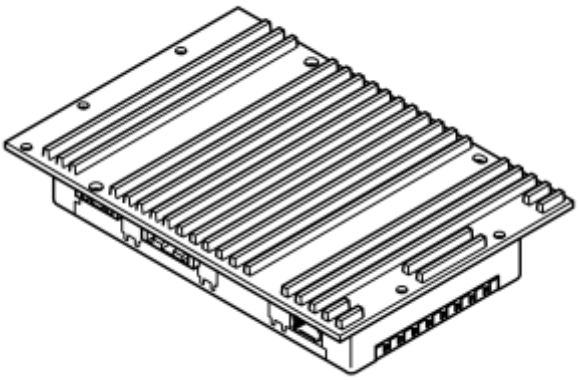

Fig. 56: Identifying Audio Module (AUD)
Courtesy of VOLVO CARS CORPORATION

- **Continue**

  Refer to **VERIFICATION**

CHECKING CABLE AND COMPONENT

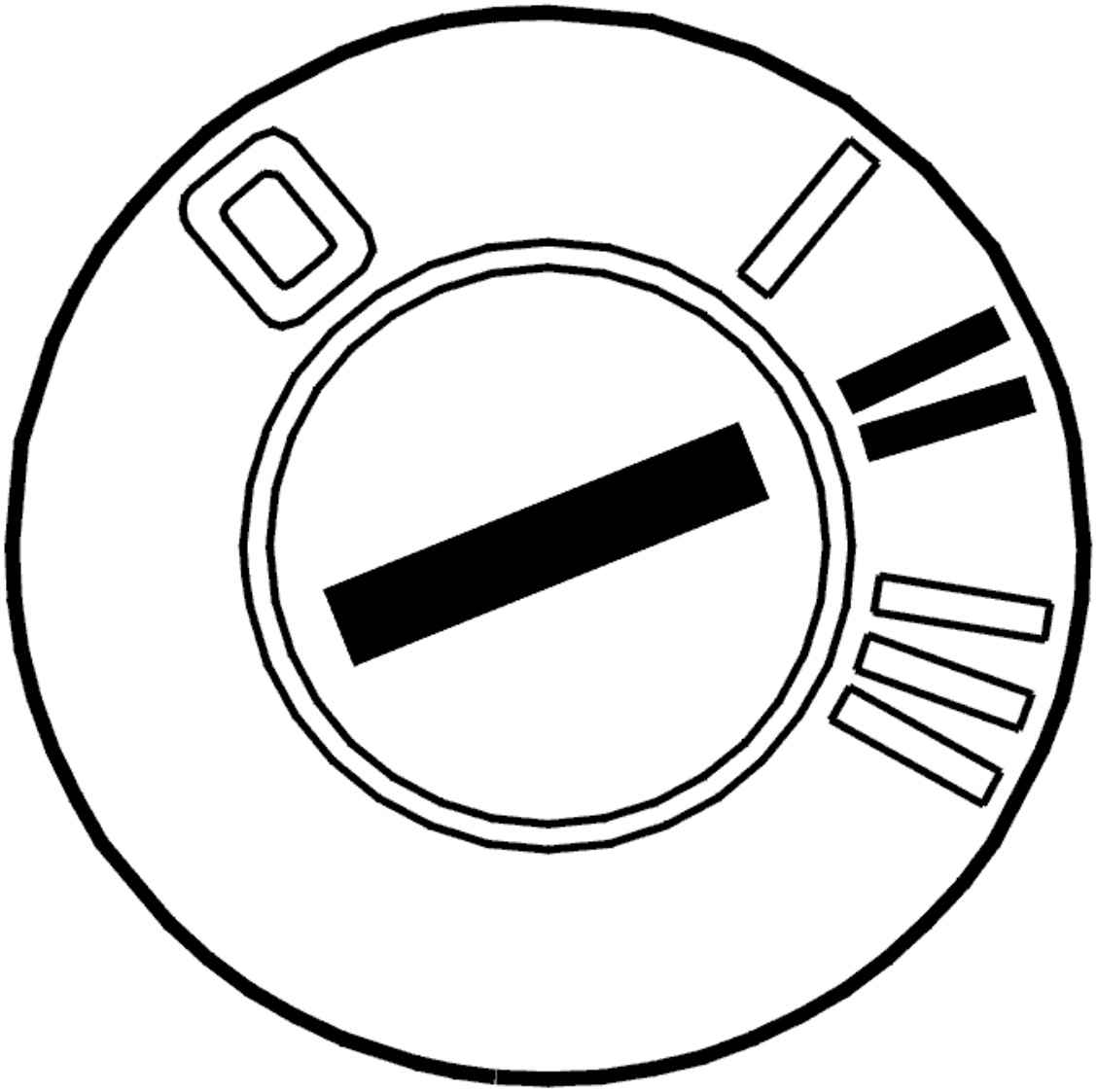

Fig. 57: Identifying Ignition ON
Courtesy of VOLVO CARS CORPORATION

Checking the fault cause

Check the fault cause as follows:

1. Ignition off
2. Unplug the MOST connector from the integrated audio module (IAM).
3. Connect the MOST cable to special tool see **9512867**
4. Ignition on
5. Activate the infotainment system
6. Check that the communication on the MOST network is functioning by reading off the status of the

MOST locked parameter for at least 30 seconds. The parameter indicates whether the MOST network is closed and communication possible. Click the VCT2000 symbol to read off the status of the MOST network.

7. If the parameter displays that the MOST network is not correctly connected, check the receiving control module in the same way as above.

The communication on the MOST network is working if the menu text is displayed. If this is the case, the fault cause is in the integrated audio module (IAM). Continue the fault-tracing by checking the component.

The communication on the MOST network is not working if the menu text is not displayed. The fault cause is then in the MOST cable for the next control module. Continue the fault-tracing by checking the fiber optic cable.

Checking cable

- Check the MOST connection. Check for dirt, loose connections and damage
- Replace the MOST cable if no fault is found in the MOST terminal.

Checking the component

- Check the integrated audio module (IAM) power supply and ground connection.
- Check the MOST connection. Check for dirt, loose connections and damage
- If no fault can be found, change the integrated audio module (IAM).

Remedy as necessary.

Other information:

- see **CONTROL MODULE GENERAL SOUND PLAYER**
- see **CHECKING THE SUPPLY VOLTAGE/GROUND TERMINAL**
- see **SIGNAL SPECIFICATION**
- see **FIBER OPTIC CABLE HARNESS, REPAIRING**
- see **OPTICAL WIRING HARNESS CHECK**
- see **LOCATION OF COMPONENTS**

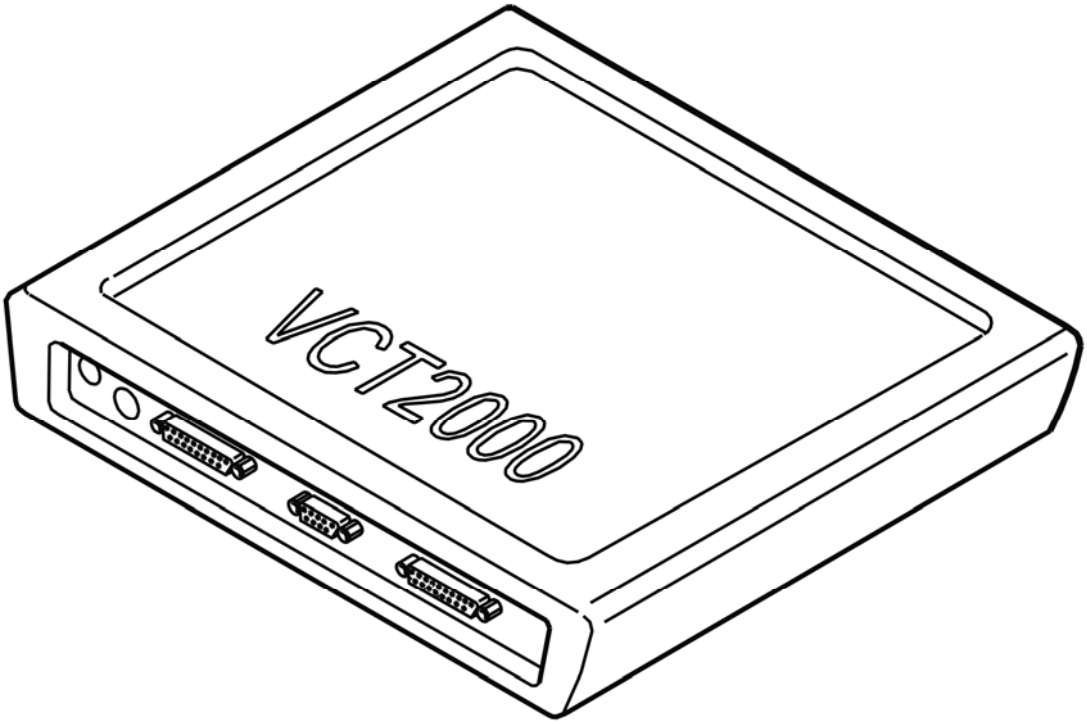

Fig. 58: Identifying VCT2000 Diagnostic Tool Symbol In VIDA
Courtesy of VOLVO CARS CORPORATION

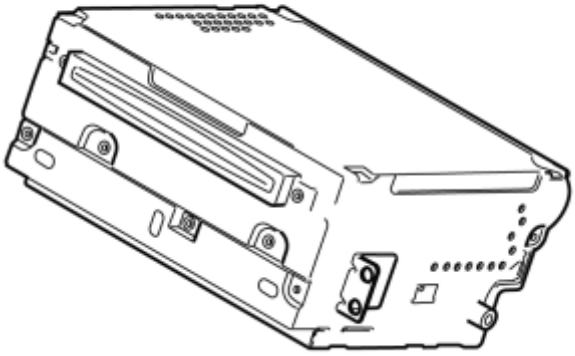

Fig. 59: General Sound Player Control Module
Courtesy of VOLVO CARS CORPORATION

- **Continue**

  Refer to **VERIFICATION**

CHECKING CABLE AND COMPONENT

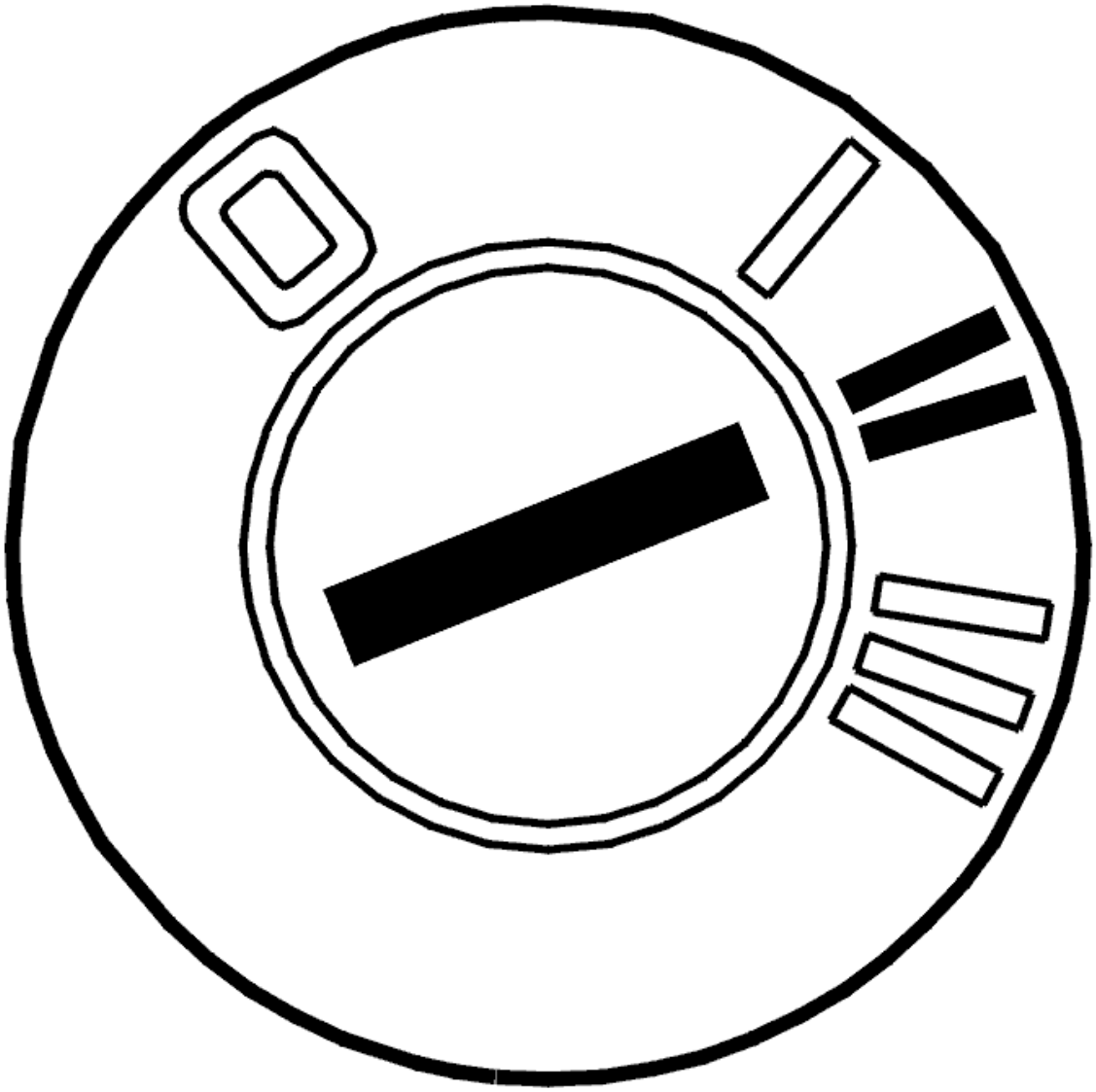

Fig. 60: Identifying Ignition ON
Courtesy of VOLVO CARS CORPORATION

Checking the fault cause

Check the fault cause as follows:

1. Ignition off
2. Disconnect the MOST connector from the phone module (PHM)
3. Connect the MOST cable to special tool see **9512867**
4. Ignition on
5. Activate the infotainment system
6. Check that the communication on the MOST network is functioning by reading off the status of the

MOST locked parameter for at least 30 seconds. The parameter indicates whether the MOST network is closed and communication possible. Click the VCT2000 symbol to read off the status of the MOST network.

7. If the parameter displays that the MOST network is not correctly connected, check the receiving control module in the same way as above.

The communication on the MOST network is working if the menu text is displayed. If this is the case, the fault cause is in the phone module (PHM). Continue the fault-tracing by checking the component.

The communication on the MOST network is not working if the menu text is not displayed. The fault cause is then in the MOST cable for the next control module. Continue the fault-tracing by checking the fiber optic cable.

Checking cable

- Check the MOST connection. Check for dirt, loose connections and damage
- Replace the MOST cable if no fault is found in the MOST terminal.

Checking the component

- Check the power supply and the ground terminal for the phone module (PHM)
- Check the MOST connection. Check for dirt, loose connections and damage
- Replace the phone module (PHM) if no fault is found.

Remedy as necessary.

Other information:

- see **PHONE MODULE (PHM)**
- see **CHECKING VOLTAGE / GROUND CONNECTION**
- see **SIGNAL SPECIFICATION**
- see **FIBER OPTIC CABLE HARNESS, REPAIRING**
- see **OPTICAL WIRING HARNESS CHECK**
- see **LOCATION OF COMPONENTS**

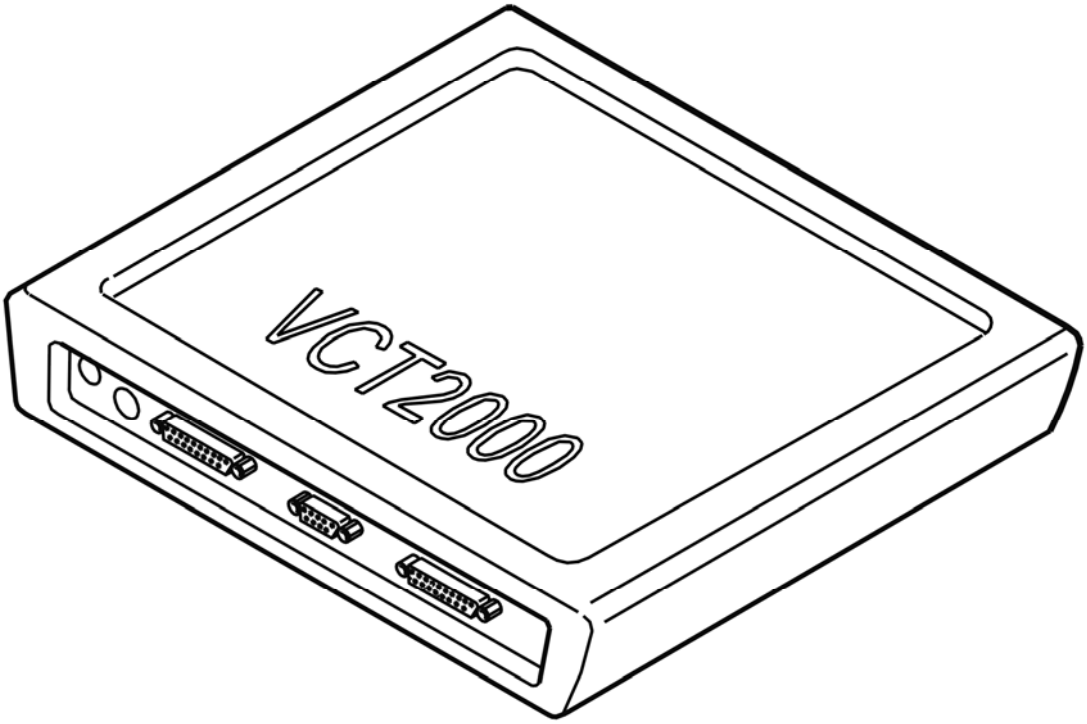

Fig. 61: Identifying VCT2000 Diagnostic Tool Symbol In VIDA
Courtesy of VOLVO CARS CORPORATION

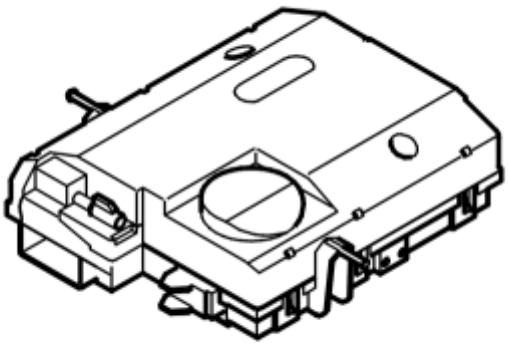

Fig. 62: Phone Module (PHM)
Courtesy of VOLVO CARS CORPORATION

- **Continue**

  Refer to **VERIFICATION**

CHECKING CABLE AND COMPONENT

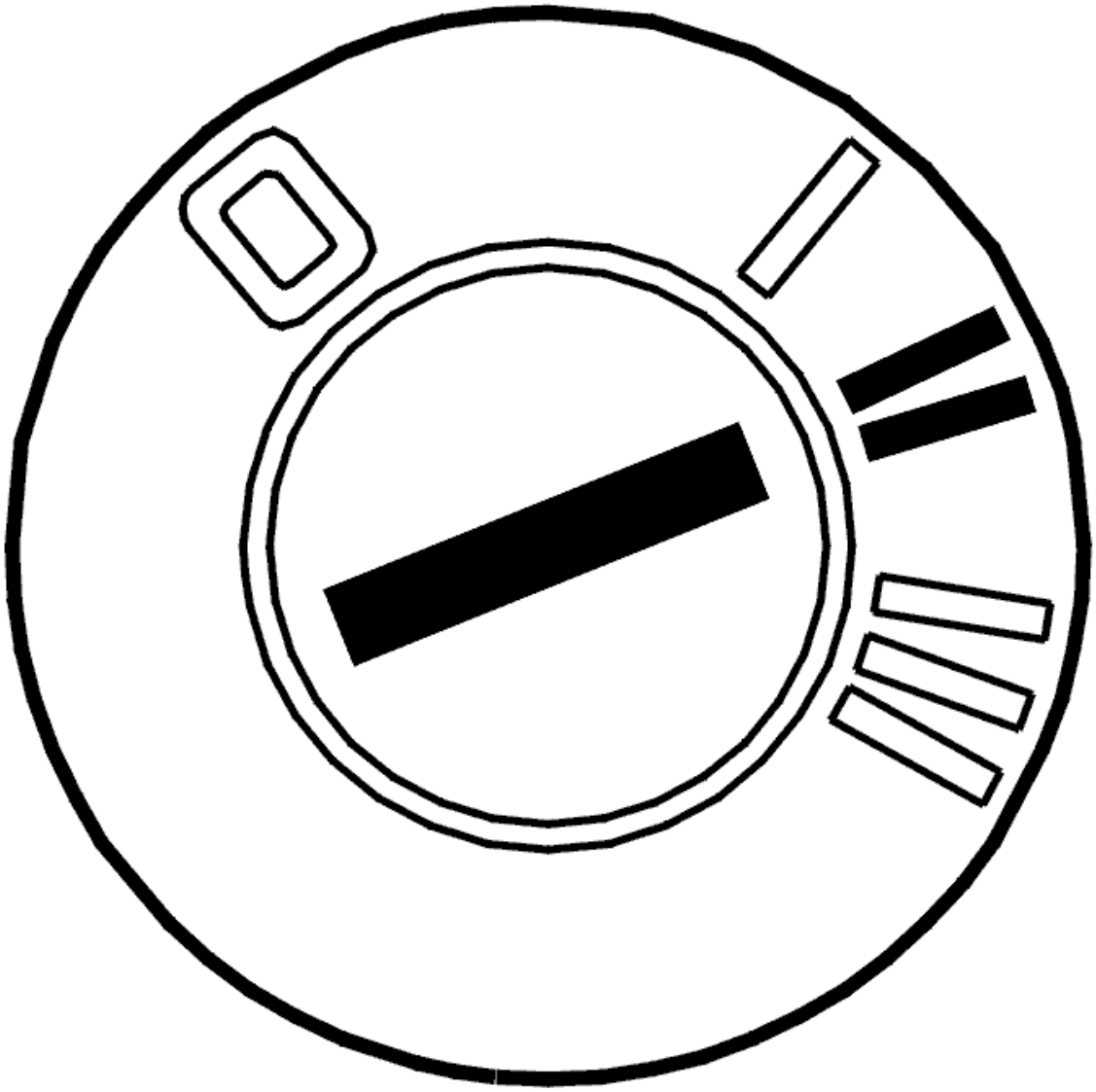

Fig. 63: Identifying Ignition ON
Courtesy of VOLVO CARS CORPORATION

Checking the fault cause

Check the fault cause as follows:

1. Ignition off
2. Unplug the MOST connector from the Bluetooth phone module (BPM).
3. Connect the MOST cable to special tool see **9512867**
4. Ignition on
5. Activate the infotainment system
6. Check that the communication on the MOST network is functioning by reading off the status of the

MOST locked parameter for at least 30 seconds. The parameter indicates whether the MOST network is closed and communication possible. Click the VCT2000 symbol to read off the status of the MOST network.

7. If the parameter displays that the MOST network is not correctly connected, check the receiving control module in the same way as above.

The communication on the MOST network is working if the menu text is displayed. If this is the case, the fault cause is in the global positioning system module (GPS). Continue the fault-tracing by checking the component.

The communication on the MOST network is not working if the menu text is not displayed. The fault cause is then in the MOST cable for the next control module. Continue the fault-tracing by checking the fiber optic cable.

Checking cable

- Check the MOST connection. Check for dirt, loose connections and damage
- Replace the MOST cable if no fault is found in the MOST terminal.

Checking the component

- Check the global positioning system module (GPS) power supply and ground connection.
- Check the MOST connection. Check for dirt, loose connections and damage
- If no fault can be found, change the global positioning system module (GPS).

Remedy as necessary.

Other information:

- see **BLUETOOTH CONTROL MODULE**
- see **CHECKING THE SUPPLY VOLTAGE/GROUND TERMINAL**
- see **SIGNAL SPECIFICATION**
- see **FIBER OPTIC CABLE HARNESS, REPAIRING**
- see **OPTICAL WIRING HARNESS CHECK**
- see **LOCATION OF COMPONENTS**

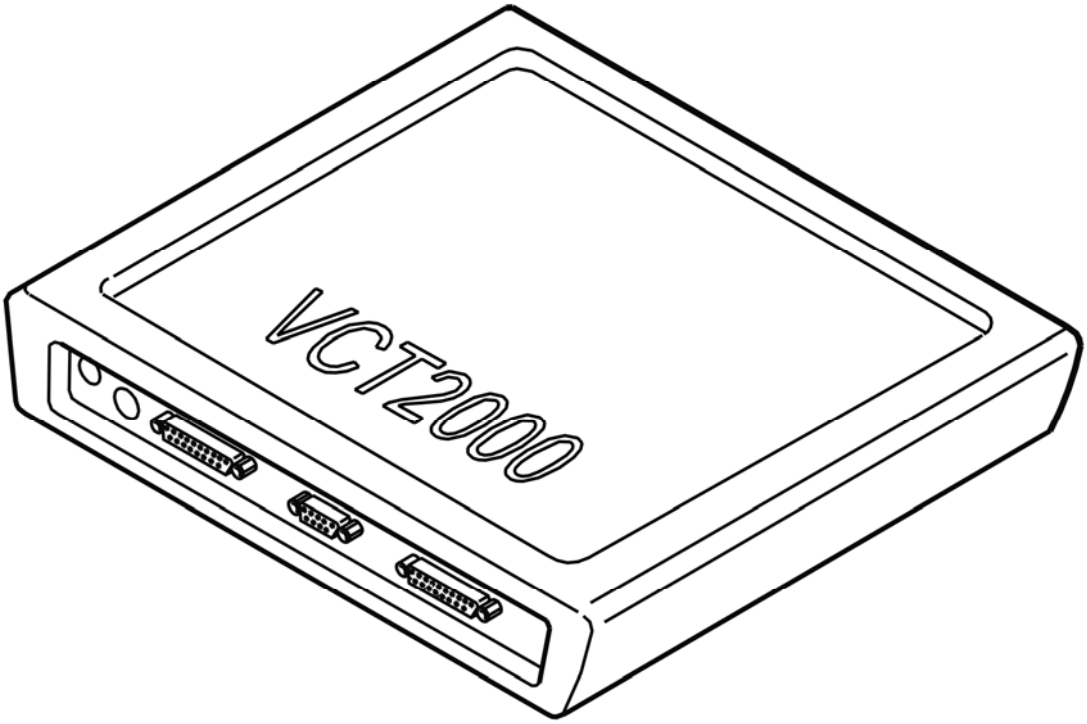

Fig. 64: Identifying VCT2000 Diagnostic Tool Symbol In VIDA
Courtesy of VOLVO CARS CORPORATION

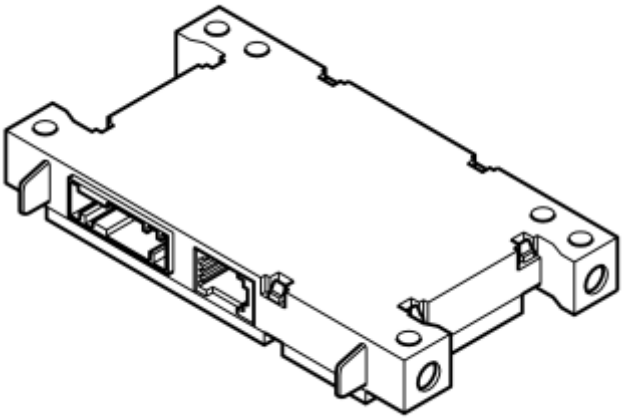

Fig. 65: Identifying Bluetooth Phone Module (BPM)
Courtesy of VOLVO CARS CORPORATION

- **Continue**

  Refer to **VERIFICATION**

CHECKING CABLE AND COMPONENT

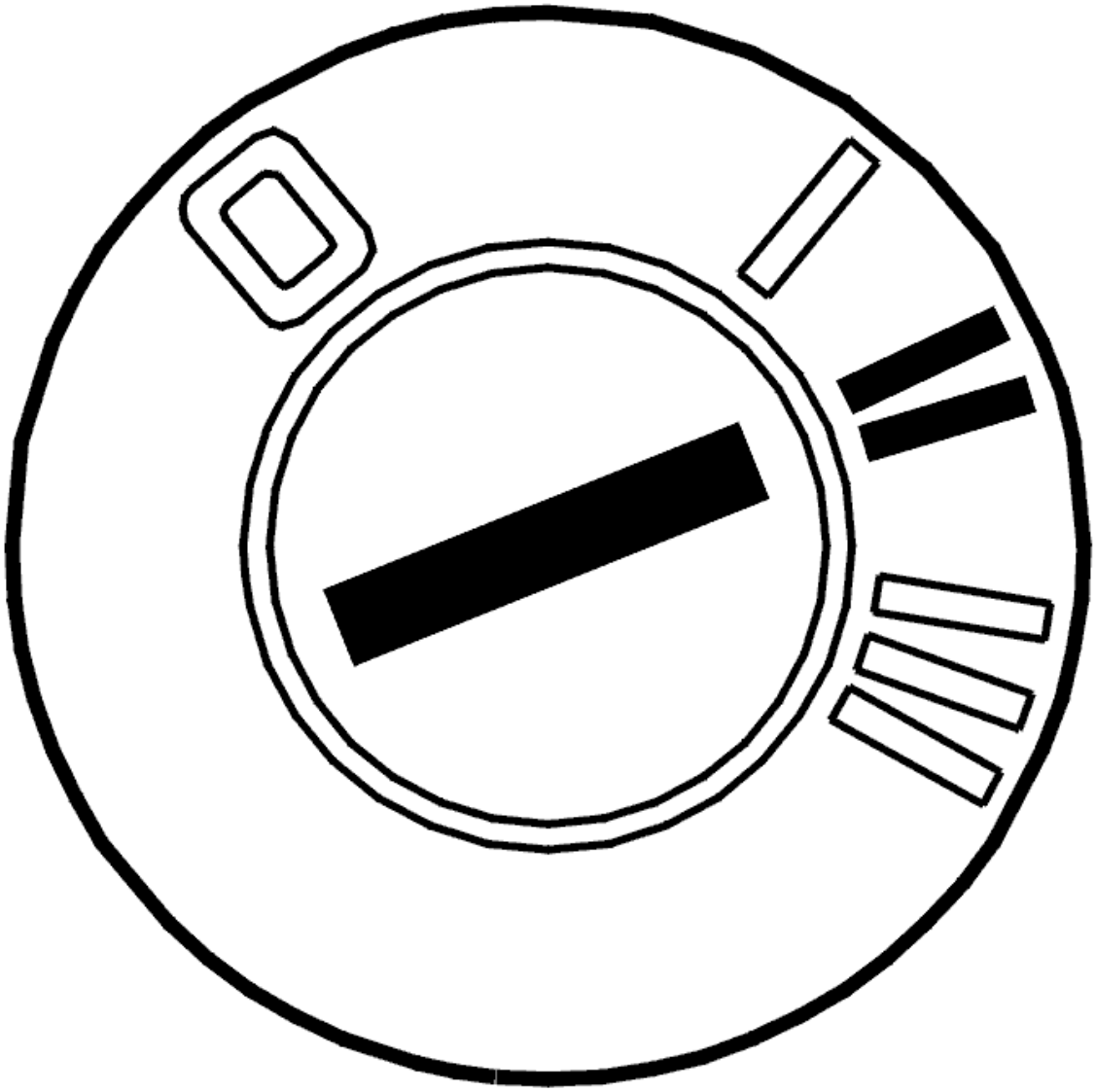

Fig. 66: Identifying Ignition ON
Courtesy of VOLVO CARS CORPORATION

Checking the fault cause

Check the fault cause as follows:

1. Ignition off
2. Disconnect the MOST connector from the multimedia module (MMM)
3. Connect the MOST cable to special tool see **9512867**
4. Ignition on
5. Activate the infotainment system
6. Check that the communication on the MOST network is functioning by reading off the status of the

MOST locked parameter for at least 30 seconds. The parameter indicates whether the MOST network is closed and communication possible. Click the VCT2000 symbol to read off the status of the MOST network.

7. If the parameter displays that the MOST network is not correctly connected, check the receiving control module in the same way as above.

The communication on the MOST network is working if the menu text is displayed. If this is the case, the fault cause is in the multimedia module (MMM). Continue the fault-tracing by checking the component.

The communication on the MOST network is not working if the menu text is not displayed. The fault cause is then in the MOST cable for the next control module. Continue the fault-tracing by checking the fiber optic cable.

Checking cable

- Check the MOST connection. Check for dirt, loose connections and damage
- Replace the MOST cable if no fault is found in the MOST terminal.

Checking the component

- Check the power supply and the ground terminal for the multimedia module (MMM)
- Check the MOST connection. Check for dirt, loose connections and damage
- Replace the multimedia module (MMM) if no fault is found.

Remedy as necessary.

Other information:

- see **MULTIMEDIA MODULE (MMM), REPLACING**
- see **CHECKING THE VOLTAGE / GROUND TERMINAL (2007-2012)**
- see **SIGNAL SPECIFICATION**
- see **FIBER OPTIC CABLE HARNESS, REPAIRING**
- see **OPTICAL WIRING HARNESS CHECK**
- see **LOCATION OF COMPONENTS**

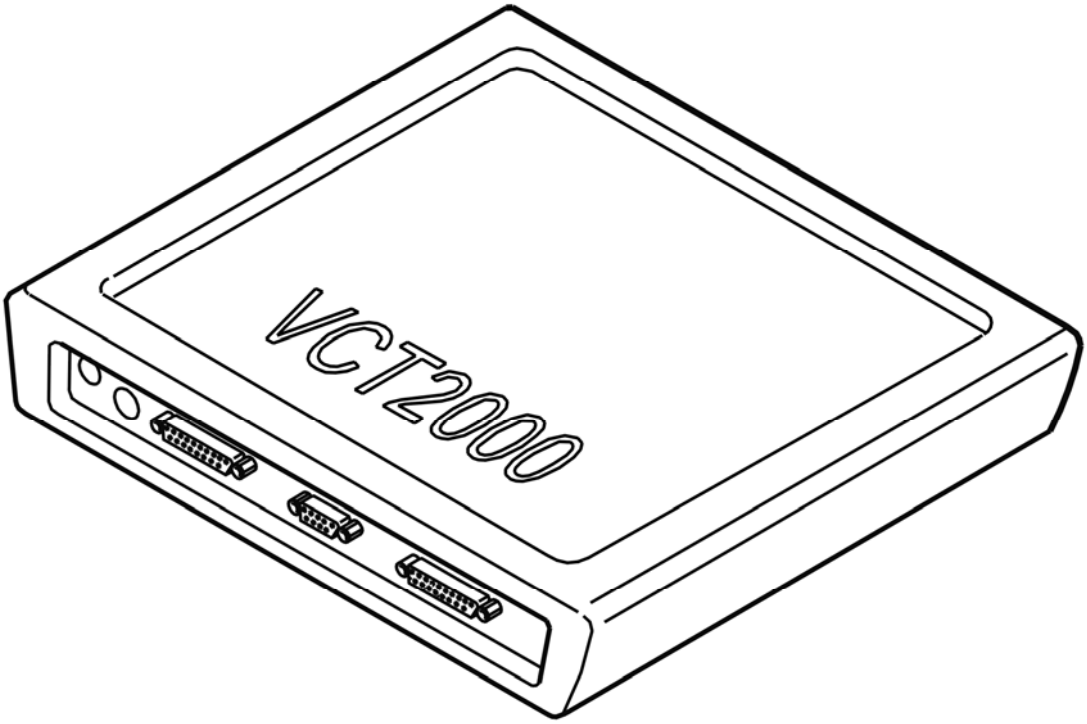

Fig. 67: Identifying VCT2000 Diagnostic Tool Symbol In VIDA
Courtesy of VOLVO CARS CORPORATION

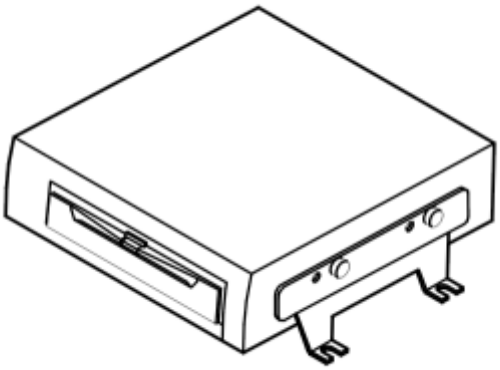

Fig. 68: Identifying Multimedia Module (MMM)
Courtesy of VOLVO CARS CORPORATION

- **Continue**

  Refer to **VERIFICATION**

CHECKING CABLE AND COMPONENT

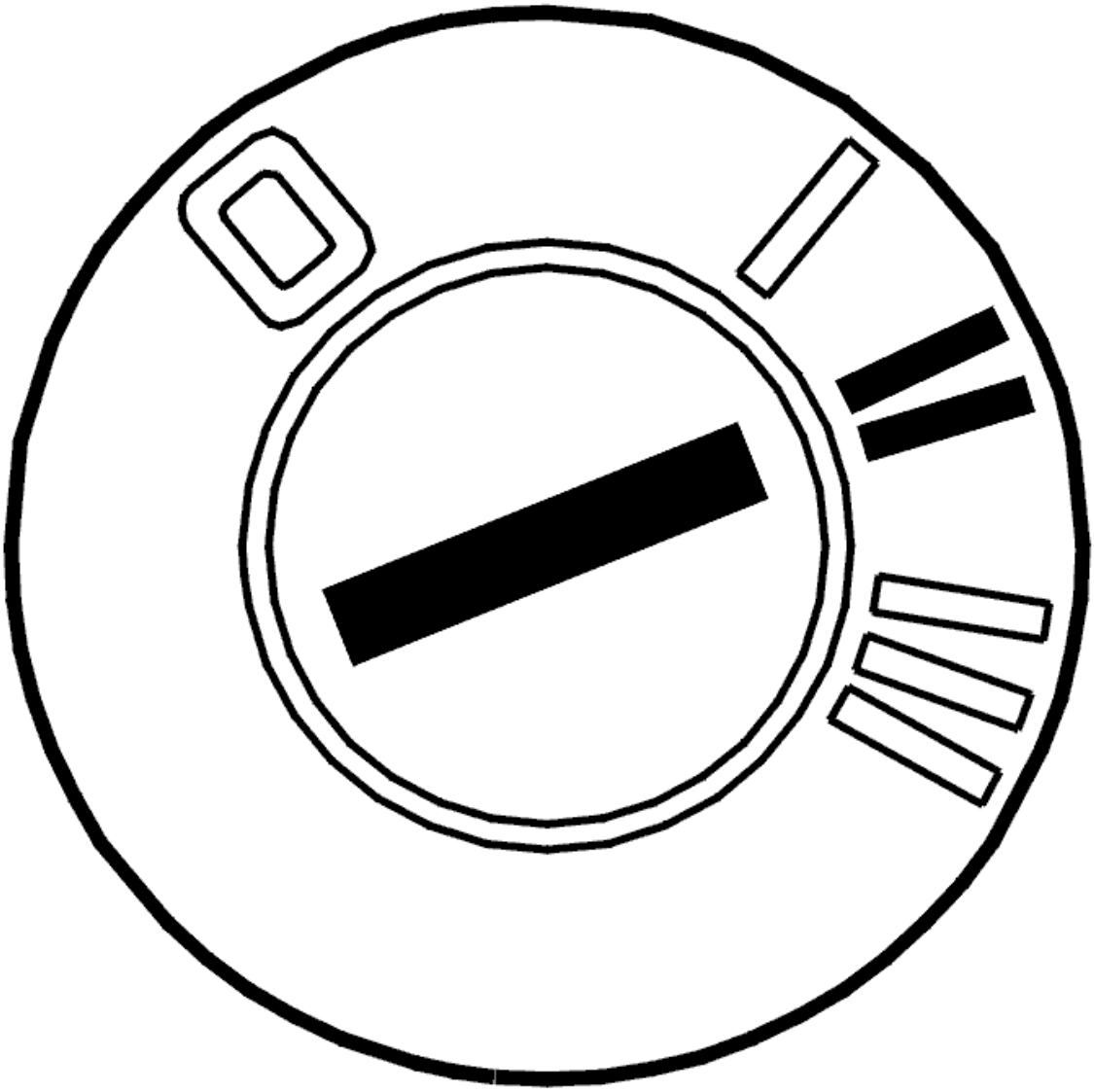

Fig. 69: Identifying Ignition ON
Courtesy of VOLVO CARS CORPORATION

- Ignition off
- Disconnect the MOST cable connector from the infotainment control module (ICM)
- Ignition on
- Activate the infotainment system.

  Check visually whether the infotainment control module (ICM) is emitting light from the MOST connector.

  The control module is defective if the infotainment control module (ICM) is not emitting light.

If the infotainment control module (ICM) is transmitting light, the fault is in the MOST cable for the next control module.

Check the MOST connection. Check for dirt, loose connections and damage.

Replace the MOST cable if no fault is found in the MOST terminal.

Remedy as necessary.

Other information:

- see **INFOTAINMENT CONTROL MODULE (ICM), REPLACING**
- see **FIBER OPTIC CABLE HARNESS, REPAIRING**
- see **LOCATION OF COMPONENTS**

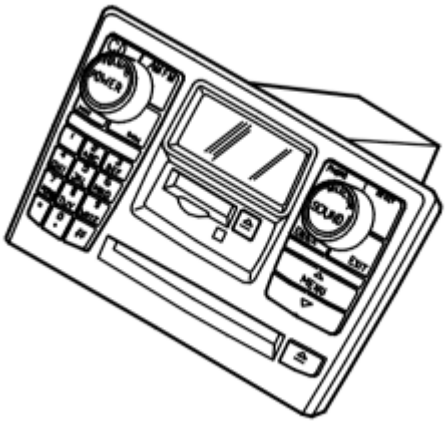

Fig. 70: Infotainment Control Module
Courtesy of VOLVO CARS CORPORATION

- **Continue**

Refer to **VERIFICATION**

VERIFICATION

HINT: After carrying out the repair, check that the fault has been remedied.

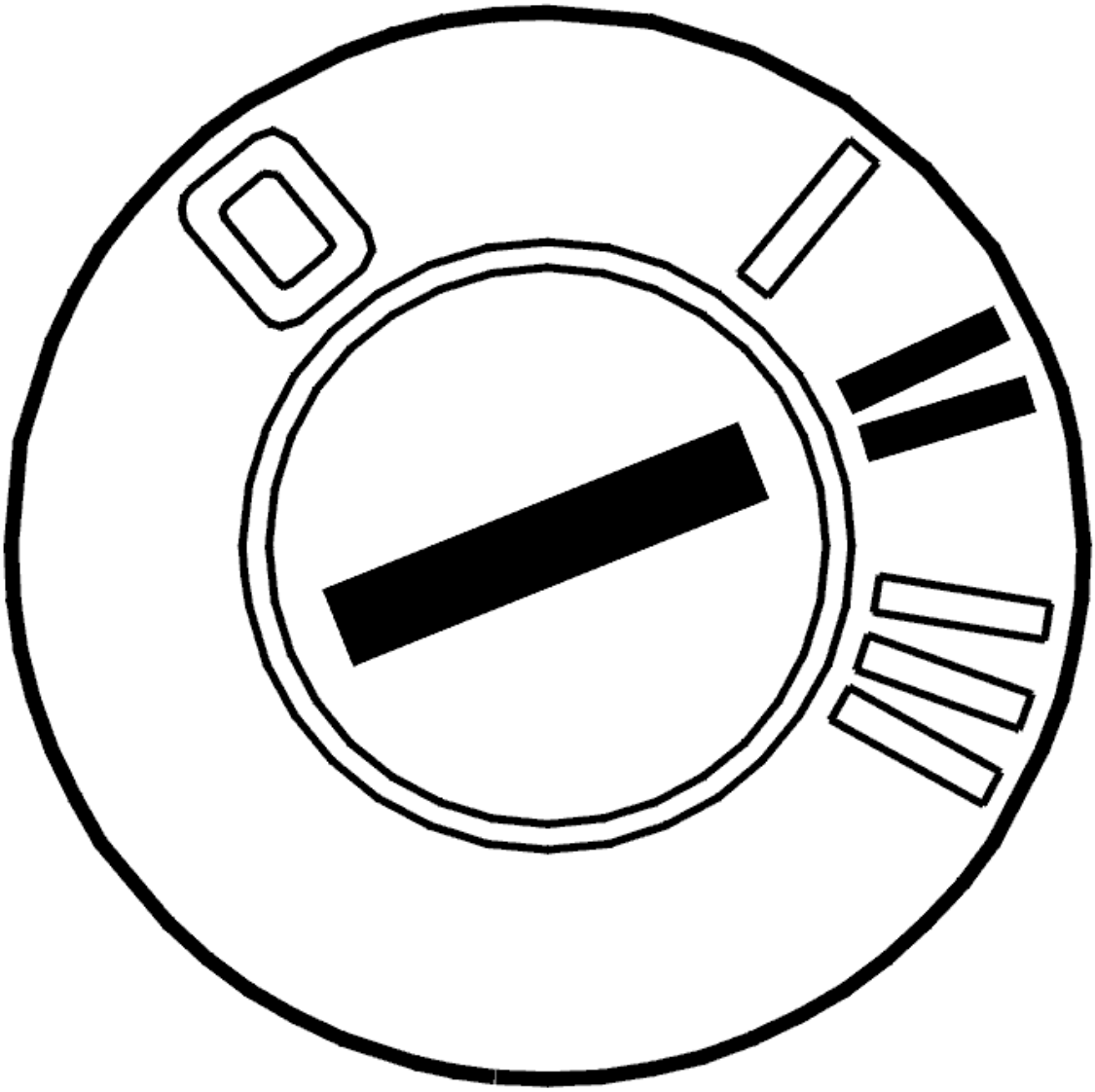

Fig. 71: Identifying Ignition ON
Courtesy of VOLVO CARS CORPORATION

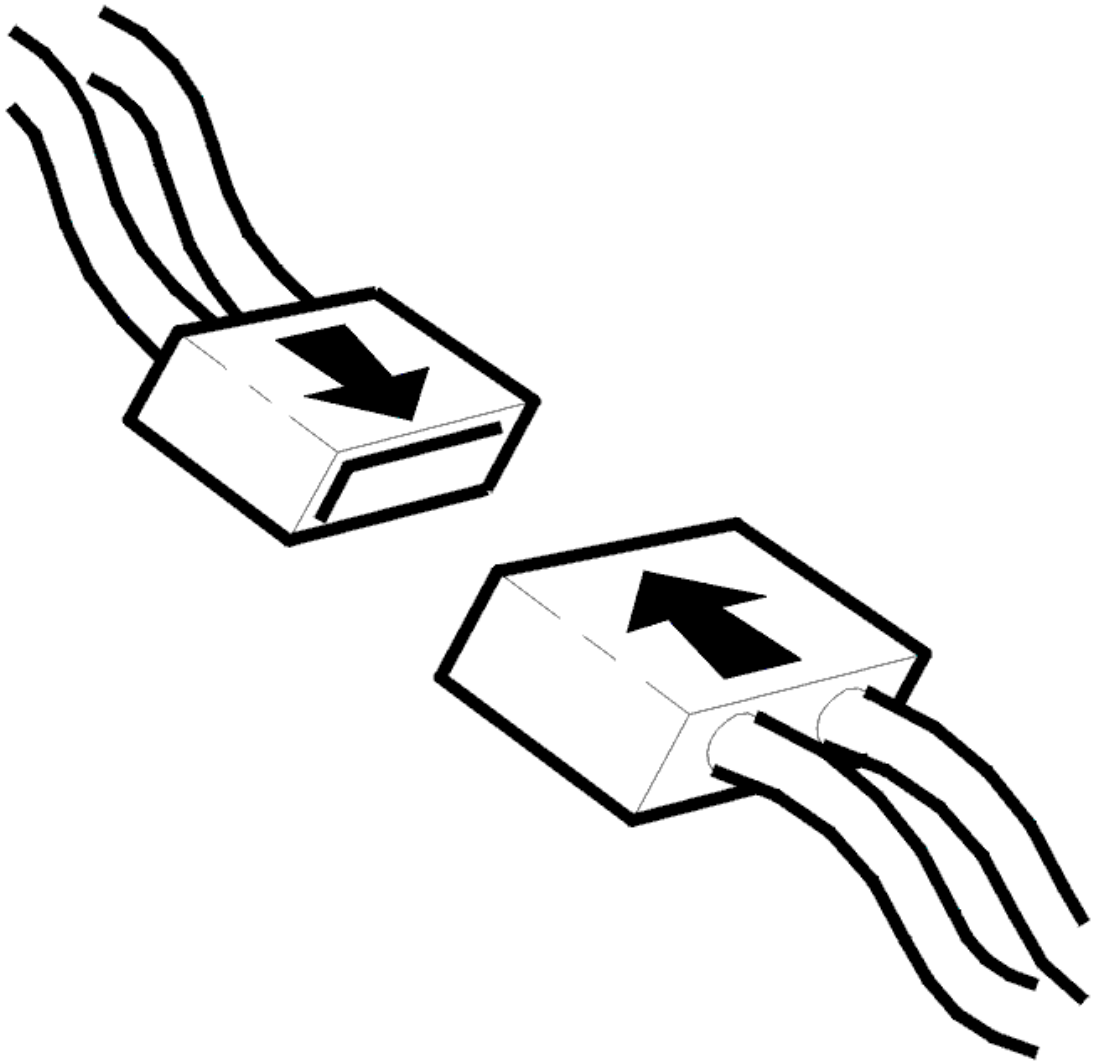

Fig. 72: Connecting Connector
Courtesy of VOLVO CARS CORPORATION

- Ignition off
- Reinstall the connectors, components etc.
- Ignition on.

  Using VCT2000 (Volvo Scan Tool) Activate the infotainment system and select the radio.

  Check whether there is sound from the radio in the loudspeakers.

Is the sound of the radio coming through the loudspeakers?

- **YES**

VERIFIED: Troubleshooting has been completed.

- **NO**

  Refer to **INFORMATION**

INFORMATION

FAULT-TRACING INFORMATION

The fault should have been detected and remedied. As this is not the case fault-tracing has failed.

Exit fault-tracing for this diagnostic trouble code (DTC) or make another attempt.

PHONE MODULE (PHM)

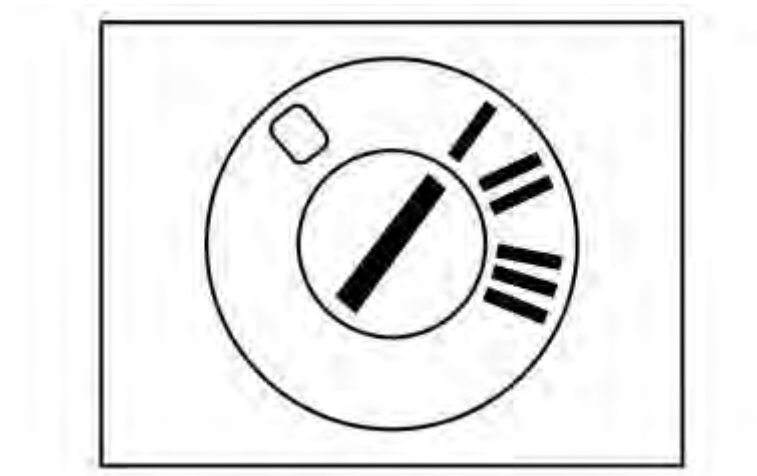

Fig. 73: Identifying Ignition In ACC Position
Courtesy of VOLVO CARS CORPORATION

Fig. 74: Removing Shift Cover (1 of 3)

Courtesy of VOLVO CARS CORPORATION

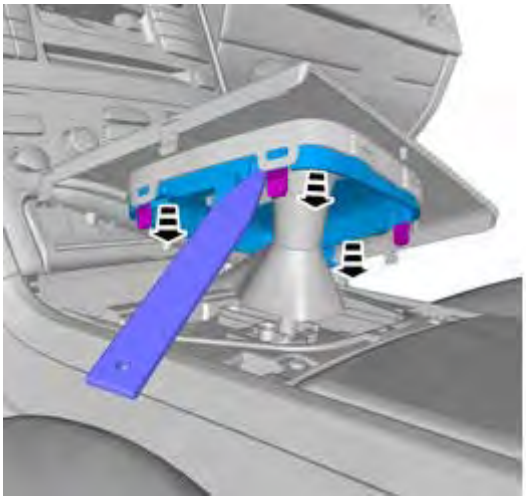

Fig. 75: Removing Shift Cover (2 of 3)
Courtesy of VOLVO CARS CORPORATION

Fig. 76: Removing Shift Cover (3 of 3)
Courtesy of VOLVO CARS CORPORATION

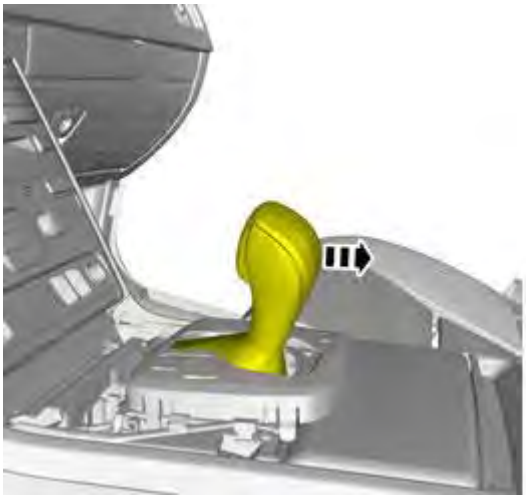

Fig. 77: Positioning Shift Knob
Courtesy of VOLVO CARS CORPORATION

VEHICLES WITH AFTER THEFT SYSTEM FOR VEHICLE RECOVERY (ATSVR)

Fig. 78: Identifying Service Tool (1 Of 3)
Courtesy of VOLVO CARS CORPORATION

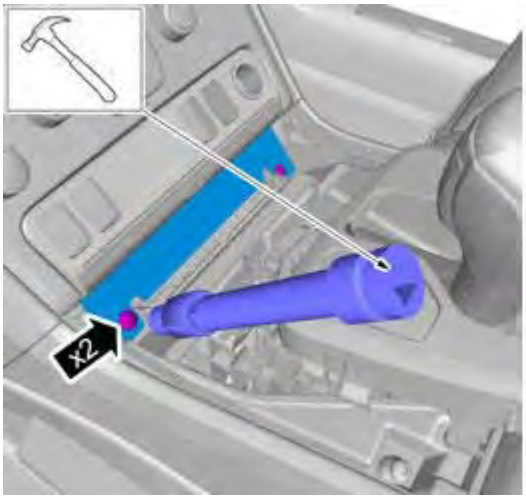

Fig. 79: Identifying Service Tool (2 Of 3)
Courtesy of VOLVO CARS CORPORATION

CAUTION: Only use moderate force.

Fig. 80: Identifying Service Tool (3 Of 3)
Courtesy of VOLVO CARS CORPORATION

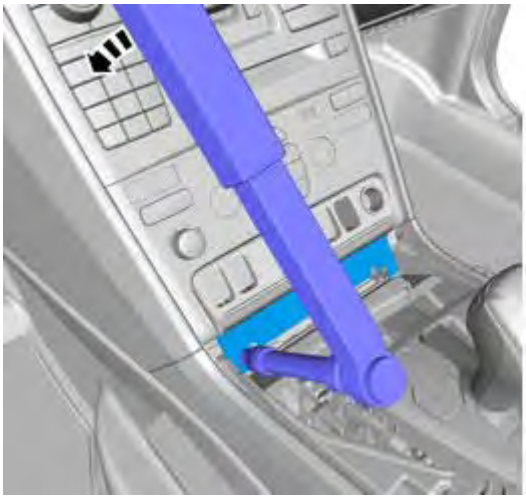

Fig. 81: Securing Component
Courtesy of VOLVO CARS CORPORATION

CAUTION: Make sure that the component is secured with shear bolt (or bolts).

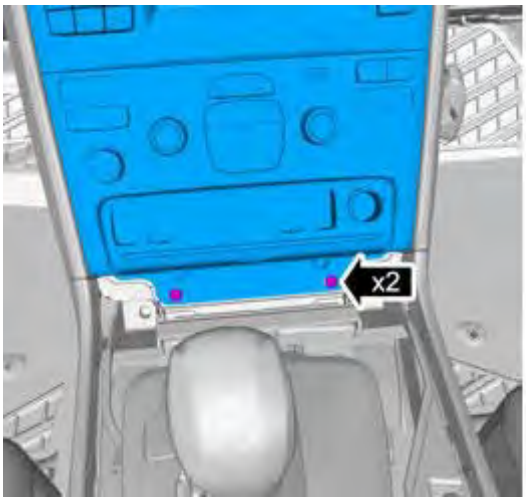

Fig. 82: Identifying Fasteners
Courtesy of VOLVO CARS CORPORATION

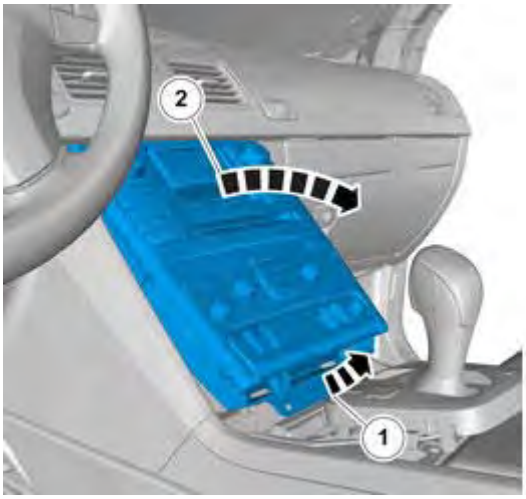

Fig. 83: Removing Face Plate
Courtesy of VOLVO CARS CORPORATION

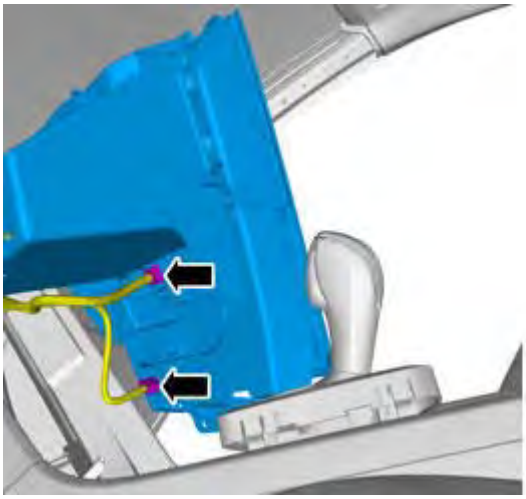

Fig. 84: Removing Cables
Courtesy of VOLVO CARS CORPORATION

CAUTION: Take extra care when handling the component.

CAUTION: Make sure that the fiber optic cables are not bent to a radius of less than 25 mm.

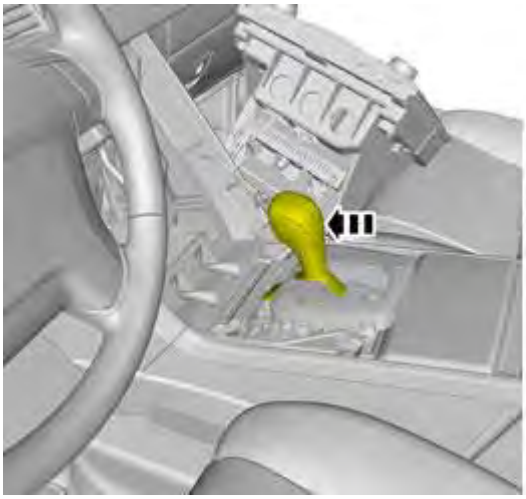

Fig. 85: Positioning Shift Knob
Courtesy of VOLVO CARS CORPORATION

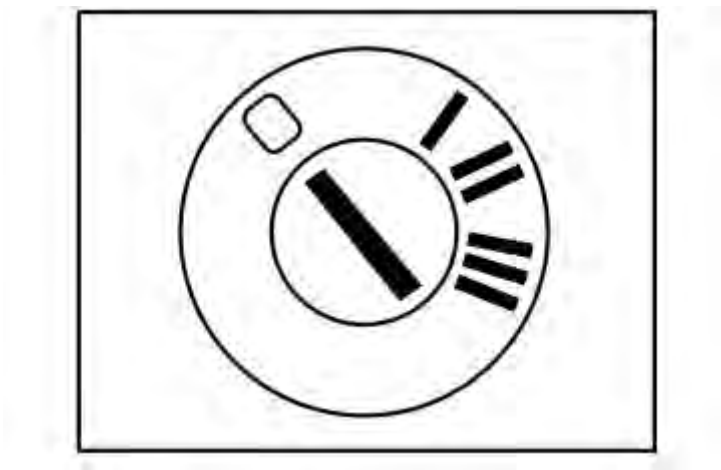

Fig. 86: Identifying Ignition In OFF Position
Courtesy of VOLVO CARS CORPORATION

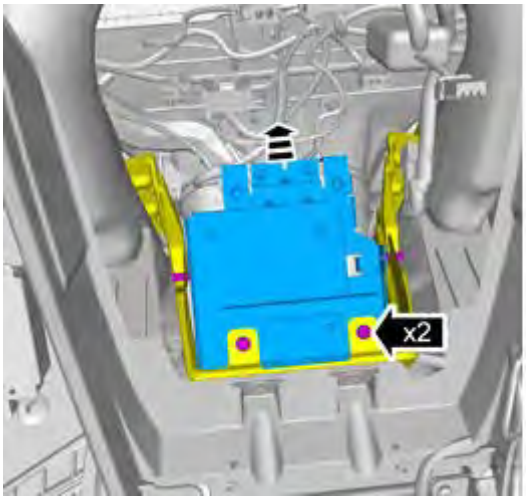

Fig. 87: Removing Phone Module

Courtesy of VOLVO CARS CORPORATION

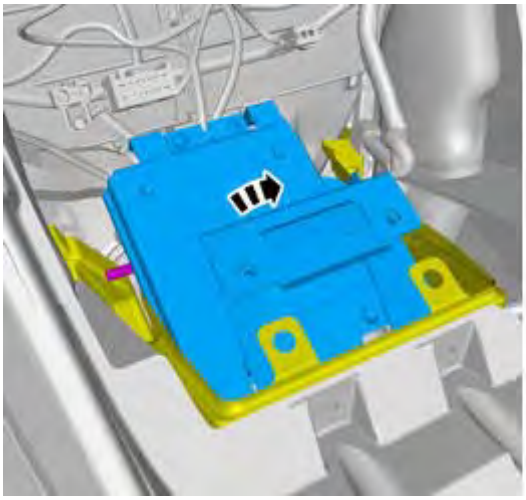

Fig. 88: Removing Phone Module
Courtesy of VOLVO CARS CORPORATION

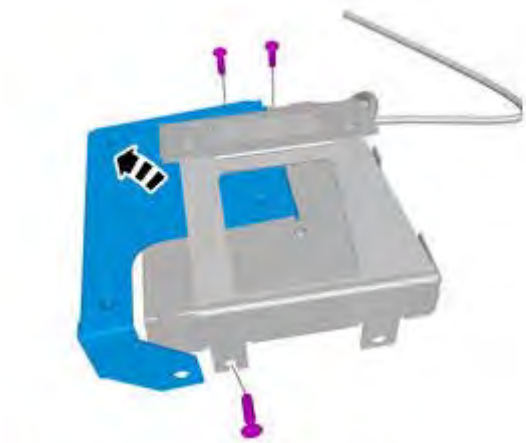

Fig. 89: Removing Phone Module
Courtesy of VOLVO CARS CORPORATION

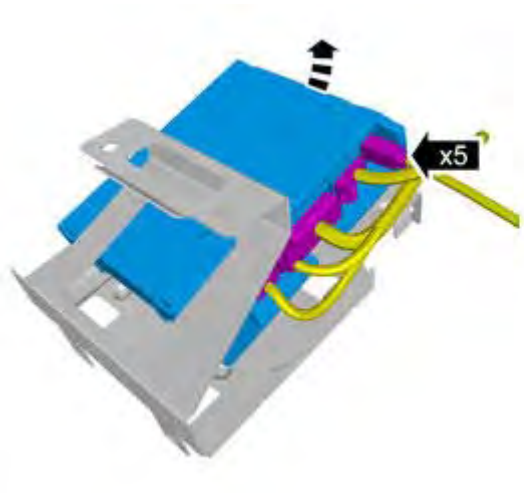

Fig. 90: Removing Cable Connections
Courtesy of VOLVO CARS CORPORATION

CAUTION: Make sure that the fiber optic cables are not bent to a radius of less than 25 mm.

CAUTION: Note the position of each component before removal.

NOTE: Make sure that the component terminals are not bent or damaged.

VEHICLES WITH AFTER THEFT SYSTEM FOR VEHICLE RECOVERY (ATSVR)

Fig. 91: Identifying Cable
Courtesy of VOLVO CARS CORPORATION

Fig. 92: Lower Panel Fasteners
Courtesy of VOLVO CARS CORPORATION

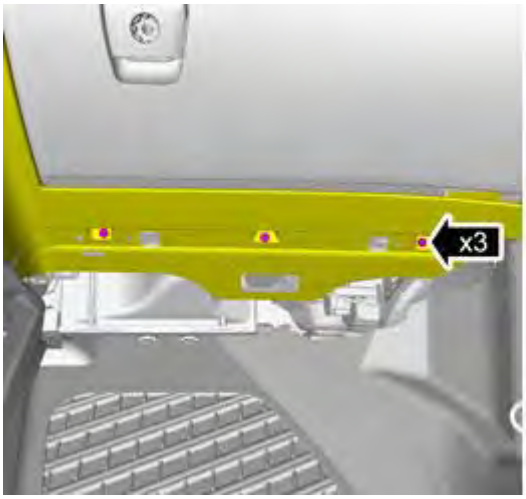

Fig. 93: Upper Panel Fasteners
Courtesy of VOLVO CARS CORPORATION

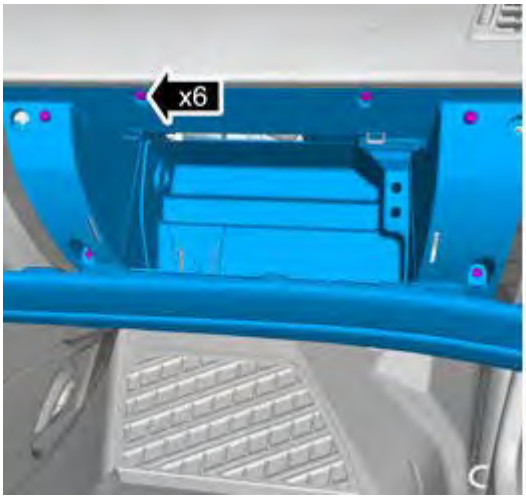

Fig. 94: Identifying Glove Compartment Assembly Screws
Courtesy of VOLVO CARS CORPORATION

Fig. 95: Removing Glove Compartment
Courtesy of VOLVO CARS CORPORATION

Fig. 96: Installing Cable Component
Courtesy of VOLVO CARS CORPORATION

Follow the instructions regarding components with double-sided adhesive tape acc. to: **COMPONENTS WITH DOUBLE-SIDED TAPE**

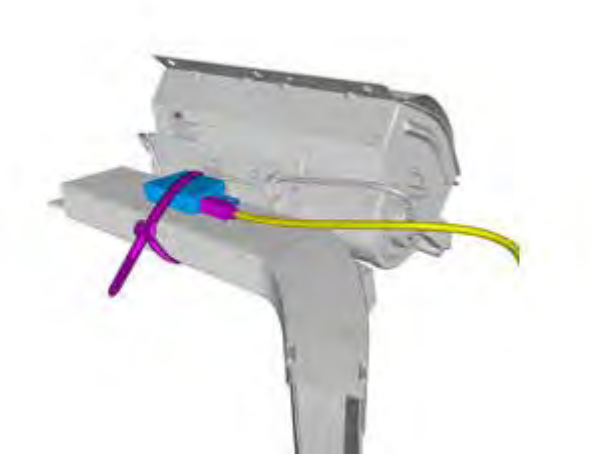

Fig. 97: Securing Cable Component
Courtesy of VOLVO CARS CORPORATION

ORDERING SOFTWARE

To install, reverse the removal procedure.

Order and download software acc. to: 9438270

VEHICLES WITH AFTER THEFT SYSTEM FOR VEHICLE RECOVERY (ATSVR)

Order and download software acc. to: 30745832

VEHICLES WITH VOLVO ON CALL

Order and download software acc. to: 30745832

Perform Volvo on call, activation acc. to: **VOLVO ON CALL, ACTIVATION**

Perform Volvo on call, reactivation acc. to: **VOLVO ON CALL, RE-ACTIVATION**

Perform Volvo on call, deactivation (annulment) acc. to: **VOLVO ON CALL, DEACTIVATION (CANCELING)**

ICM-DC01: CONTROL MODULE COMMUNICATION. FAULTY SIGNAL (2009-2010)

DIAGNOSTIC TROUBLE CODE (DTC) INFORMATION ICM-DC01

see **DIAGNOSTIC TROUBLE CODE (DTC) INFORMATION ICM-DC01**

NO COMMUNICATION

Special tools:

see **9512867**

CHECKING THE WIRING AND COMPONENT

The infotainment control module (ICM) has detected an open-circuit in communication on the MOST network.

The MOST network is a fiber optic ring network. This means that all control modules which are connected to the network must be powered and grounded for the infotainment system to work. If, for any reason, a control module is unable to handle (receive or transmit) signals onwards on the MOST network, or if there is an open-circuit in the fiber optic cable, the infotainment control module (ICM) will shut down all functionality.

Communication on the fiber optic net is one-directional. The control modules on the MOST network receive light signals, amplify them and then send them onwards. The MOST connectors for the control modules contain two fiber optic cables, one for incoming and one for outgoing signals.

If the fault is intermittent, it has been registered previously but is no longer present. Intermittent faults can either be caused by interference when starting the MOST network, or by intermittent faults in the power supply/ground for one of the control modules in the network. The fault is evaluated depending on how it occurs. If the fault recurs, fault-trace for permanent faults.

It can be difficult to diagnose intermittent faults using a ring break diagnostic because for this to work the fault must occur during the diagnostic.

If the fault is permanent, perform a ring break diagnostic to locate the open-circuit.

- **Continue**

  Refer to **CHECKING FOR OPEN-CIRCUITS**

CHECKING FOR OPEN-CIRCUITS

Fig. 98: Checking Traffic Load On CAN Cables
Courtesy of VOLVO CARS CORPORATION

Ring break diagnostic

A ring break diagnostic should be run to determine whether the fault has occurred.

To carry out a full ring break diagnostic of the MOST system, proceed as follows:

1. Switch off the ignition and remove the key
2. Connect separate external voltage feed to the communication tool.
3. Disconnect the battery negative lead. See **BATTERY, DISCONNECTING**
4. Wait 1 minute.
5. Ignition switch position II.
6. Connect the battery negative terminal.
7. Wait at least 30 seconds after switching on the ignition before reading off the position of the open-circuit.

Other information:

- For information about fuses, see the appropriate service information.
- For information on battery location:**BATTERY, REPLACING**

- **Continue**

  Refer to **READING OFF THE POSITION OF THE OPEN-CIRCUIT**

CHECKING CABLE AND COMPONENT

If the result of the ring break diagnostic is POOR, the infotainment control module (ICM) is receiving a signal on the MOST network. However it is unable to decode the signals because the luminance of the signals is too weak or the signals are distorted.

If the result from the ring break diagnostic is OK, the fault is intermittent.

Fault-tracing using the ring break diagnostic assumes that the fault is permanent or active when the test is run, i. e. the system is powered having been off.

HINT: If diagnostic trouble code (DTC) ICM-DC01 is intermittent, read off the status of the ring break diagnostic from the frozen values in Vehicle communication.

Check the communication on the MOST network by bypassing the control modules one by one on the MOST network as follows:

- Ignition off
- Disconnect the MOST connector from the relevant control module
- Connect the MOST cable to special tool see **9512867**
- Ignition on
- Activate the infotainment system
- Check that the communication on the MOST network is functioning by reading off the status of the MOST locked parameter for at least 30 seconds. The parameter indicates whether the MOST network is closed and communication possible. Click the VCT2000 symbol to read off the status of the MOST network.

If the communication on the MOST network is stable when a control module is disconnected, check the power supply and the ground terminal on the relevant control module. Check for intermittent faults. Try replacing the component if no fault is found.

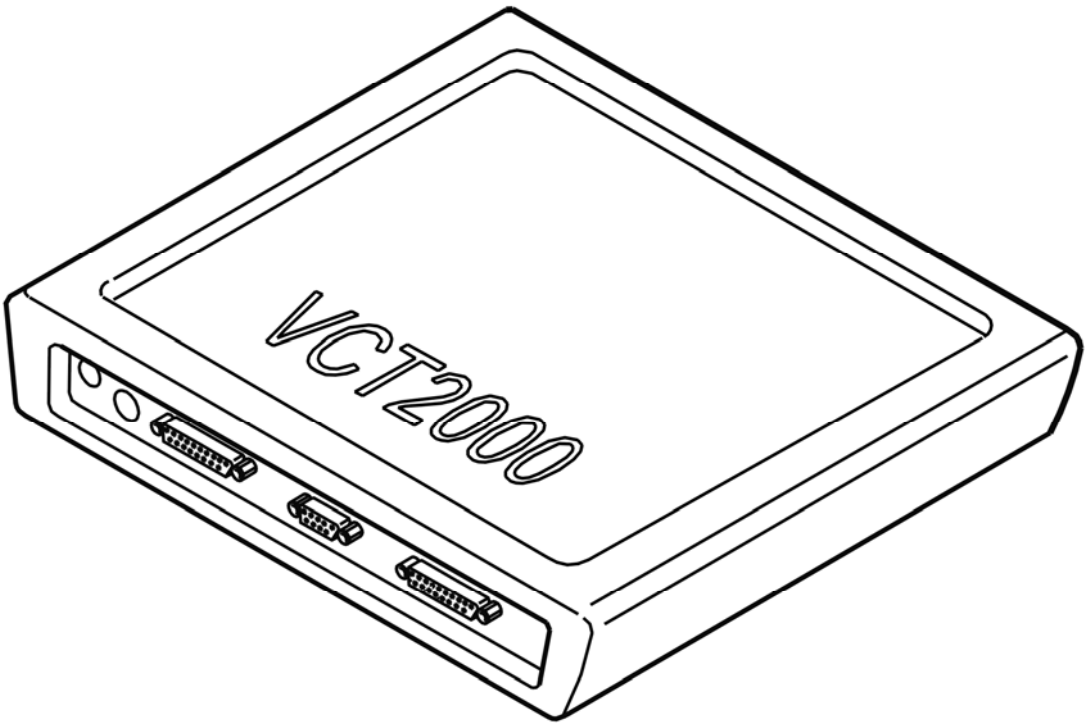

Fig. 99: Identifying VCT2000 Diagnostic Tool Symbol In VIDA
Courtesy of VOLVO CARS CORPORATION

- **Continue**

Refer to **VERIFICATION**

READING OFF THE POSITION OF THE OPEN-CIRCUIT

Fig. 100: Checking Traffic Load On CAN Cables
Courtesy of VOLVO CARS CORPORATION

- Ignition on.

Reading off the result from a ring break diagnostic

Click the VCT2000 symbol to read off the result of the ring break diagnostic.

As well as the result from the ring break diagnostic, a list of the control modules included in the MOST network is provided for that car.

NOTE: Configuration in the illustration only applies to vehicles equipped with Audio module (AUD). In vehicles without Audio module (AUD), the Accessory USB unit (AUU) is located after the Integrated Audio Module (IAM).

The following results can be obtained from a ring break diagnosis:

- If the diagnostic indicates an open-circuit in the communication on the MOST network, the result will be an open-circuit position
- The result will be OK if there is no fault on the MOST network. Continue by selecting option 3 below.
- If the infotainment control module (ICM) receives a signal on the MOST network but is unable to decode it because the luminance is weak or the signals are distorted, the result will be POOR. Continue by selecting option 3 below.

Determining the position of the open-circuit

The position of the open-circuit is calculated by working backwards in the MOST network from the infotainment control module (ICM).

NOTE: The ring break diagnostic always counts backwards, irrespective of which, or how many control modules, are installed in the vehicle. To determine the position of the open-circuit, check the list to, see which control modules are installed in that particular vehicle. Then count backwards following the determined order. The number of control modules can vary

between 2 and 6.

Two examples are outlined below:

- First open circuit position is indicated by 1. This means that the open-circuit is in the Multimedia module (MMM) or in the cable between the Integrated Audio Module (IAM) and the Multimedia module (MMM).
- First open circuit position is indicated by 3. This means that the open circuit is in Audio module (AUD) or in the cable between Audio module (AUD) and Accessory USB unit (AUU). The open circuit may be caused by the optical connector in Accessory USB unit (AUU) being damaged. This means that Accessory USB unit (AUU) cannot interpret the incoming signal from Audio module (AUD).

Select the alternative for the control module to be checked.

Alternative 1: Refer to CHECKING CABLE AND COMPONENT

Remote Digital Audio Receiver (RDAR).

Audio module (AUD)

Integrated audio module (IAM).

Accessory USB unit (AUU).

Alternative 2: Refer to CHECKING CABLE AND COMPONENT

Phone module (PHM)

Global positioning system module (GPS).

Multimedia module (MMM)

Infotainment control module (ICM)

Alternative 3: Refer to CHECKING CABLE AND COMPONENT

The result from the ring break diagnostic indicates that the MOST network is OK.

The result from the ring break diagnostic is POOR.

Other information:

- see **LOCATION OF COMPONENTS**

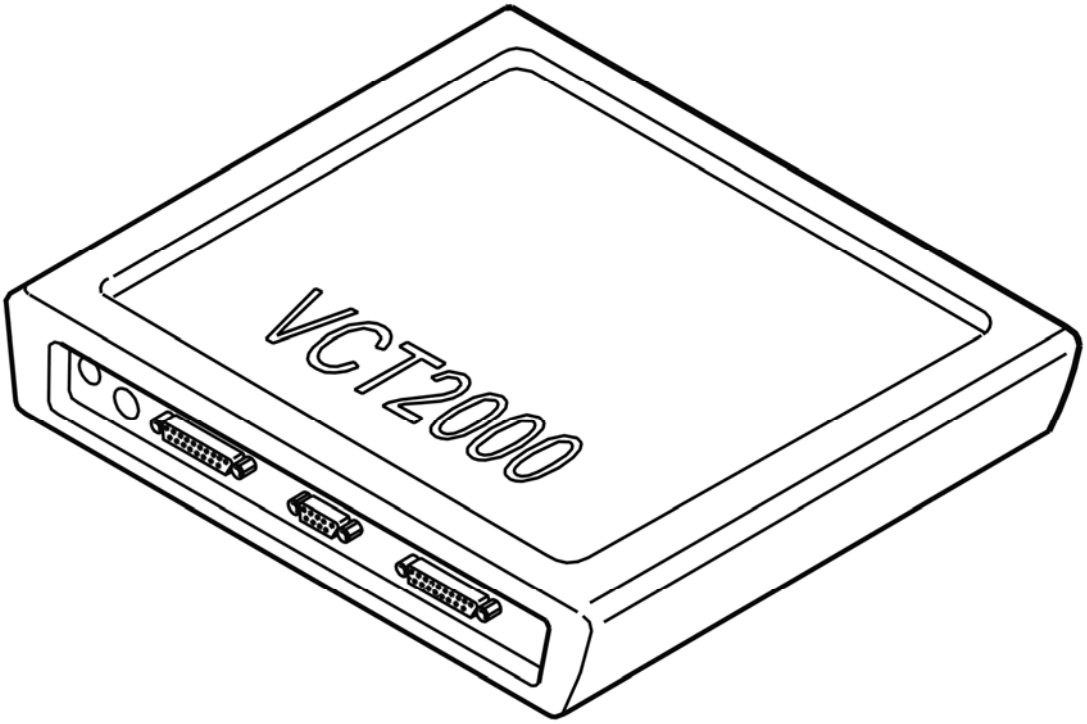

Fig. 101: Identifying VCT2000 Diagnostic Tool Symbol In VIDA
Courtesy of VOLVO CARS CORPORATION

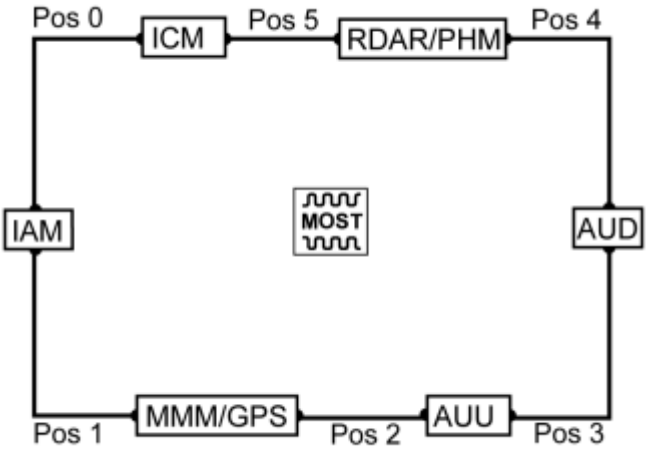

Fig. 102: Control Module Diagram
Courtesy of VOLVO CARS CORPORATION

CHECKING CABLE AND COMPONENT

Select the control module to be checked from the list.

1. Remote Digital Audio Receiver (RDAR). Refer to **CHECKING CABLE AND COMPONENT**
2. Audio Control Module (AUD). Refer to **CHECKING CABLE AND COMPONENT**
3. Integrated audio module (IAM). Refer to **CHECKING CABLE AND COMPONENT**
4. Accessory USB unit (AUU). Refer to **CHECKING THE CABLE AND COMPONENT**

CHECKING CABLE AND COMPONENT

Select the control module to be checked from the list.

1. Phone module (PHM). Refer to **CHECKING CABLE AND COMPONENT**
2. Global positioning system module (GPS). Refer to **CHECKING CABLE AND COMPONENT**
3. Multimedia module (MMM). Refer to **CHECKING CABLE AND COMPONENT**.
4. Infotainment Control Module (ICM). Refer to **CHECKING CABLE AND COMPONENT**

CHECKING CABLE AND COMPONENT

Fig. 103: Checking Traffic Load On CAN Cables
Courtesy of VOLVO CARS CORPORATION

Checking the fault cause

Check the fault cause as follows:

1. Ignition off
2. Disconnect the MOST connector from Remote Digital Audio Receiver (RDAR).
3. Connect the MOST cable to special tool see **9512867**
4. Ignition on
5. Activate the infotainment system
6. Check that the communication on the MOST network is functioning by reading off the status of the MOST locked parameter for at least 30 seconds. The parameter indicates whether the MOST network is closed and communication possible. Click the VCT2000 symbol to read off the status of the MOST network.
7. If the parameter displays that the MOST network is not correctly connected, check the receiving control module in the same way as above.

The communication on the MOST network is working if the menu text is displayed. The cause of the fault is then in the Remote Digital Audio Receiver (RDAR). Continue the fault-tracing by checking the component.

The communication on the MOST network is not working if the menu text is not displayed. The fault cause is then in the MOST cable for the next control module. Continue the fault-tracing by checking the fiber optic cable.

Checking cable

- Check the MOST connection. Check for dirt, loose connections and damage
- Replace the MOST cable if no fault is found in the MOST terminal.

Checking the component

- Check the power supply and ground connection for the Remote Digital Audio Receiver (RDAR).
- Check the MOST connection. Check for dirt, loose connections and damage
- If no fault is found, replace the Remote Digital Audio Receiver (RDAR).

Remedy as necessary.

Other information:

- see **SIGNAL SPECIFICATION**
- see **OPTICAL WIRING HARNESS CHECK**
- see **FIBER OPTIC CABLE HARNESS, REPAIRING**
- see **LOCATION OF COMPONENTS**
- see **SATELLITE RADIO CONTROL MODULE**

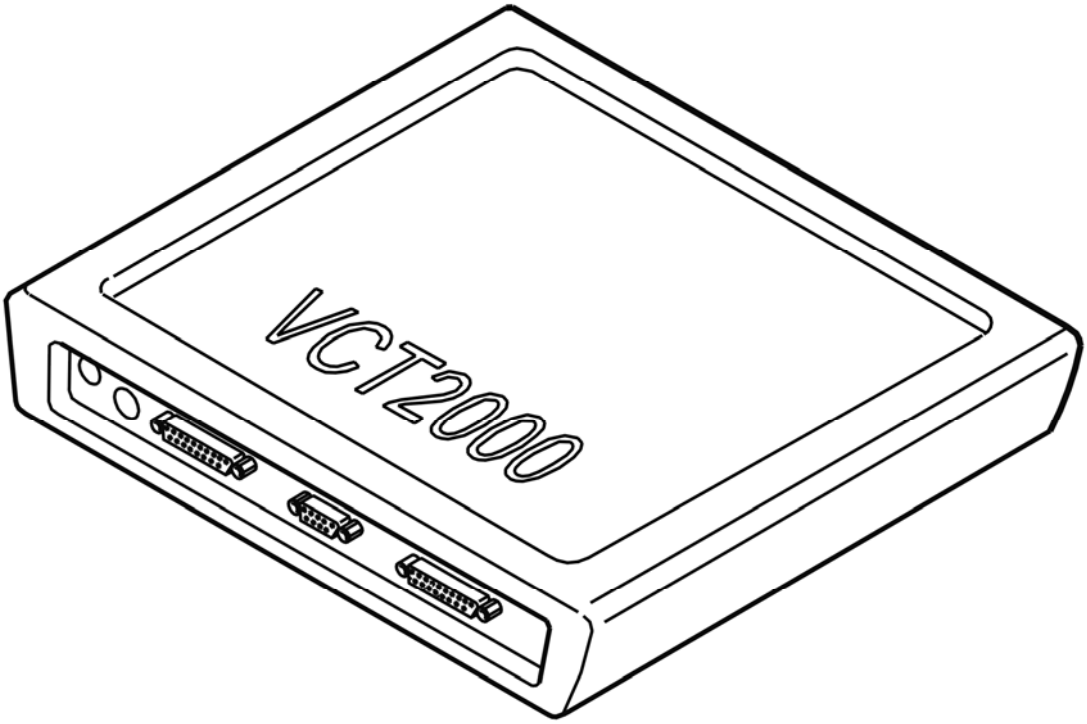

Fig. 104: Identifying VCT2000 Diagnostic Tool Symbol In VIDA
Courtesy of VOLVO CARS CORPORATION

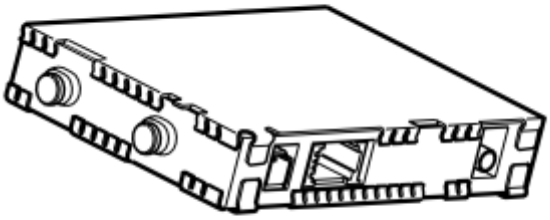

Fig. 105: Identifying Remote Digital Audio Receiver Module (RDAR)
Courtesy of VOLVO CARS CORPORATION

- **Continue**

  Refer to **VERIFICATION**

CHECKING CABLE AND COMPONENT

Fig. 106: Checking Traffic Load On CAN Cables
Courtesy of VOLVO CARS CORPORATION

Checking the fault cause

Check the fault cause as follows:

1. Ignition off
2. Disconnect the MOST connector from the audio module (AUD)
3. Connect the MOST cable to special tool see **9512867**
4. Ignition on
5. Activate the infotainment system
6. Check that the communication on the MOST network is functioning by reading off the status of the MOST locked parameter for at least 30 seconds. The parameter indicates whether the MOST network is closed and communication possible. Click the VCT2000 symbol to read off the status of the MOST network.
7. If the parameter displays that the MOST network is not correctly connected, check the receiving control module in the same way as above.

The communication on the MOST network is working if the menu text is displayed. If this is the case, the fault cause is in the audio module (AUD). Continue the fault-tracing by checking the component.

The communication on the MOST network is not working if the menu text is not displayed. The fault cause is then in the MOST cable for the next control module. Continue the fault-tracing by checking the fiber optic cable.

Checking cable

- Check the MOST connection. Check for dirt, loose connections and damage
- Replace the MOST cable if no fault is found in the MOST terminal.

Checking the component

- Check the power supply and the ground terminal for the audio module (AUD)
- Check the MOST connection. Check for dirt, loose connections and damage
- Replace the audio module (AUD) if no fault is found.

Remedy as necessary.

Other information:

- see **AUDIO MODULE (AUD), REPLACING**
- see **CHECKING THE VOLTAGE / GROUND TERMINAL**
- see **SIGNAL SPECIFICATION**
- see **FIBER OPTIC CABLE HARNESS, REPAIRING**
- see **OPTICAL WIRING HARNESS CHECK**
- see **LOCATION OF COMPONENTS**

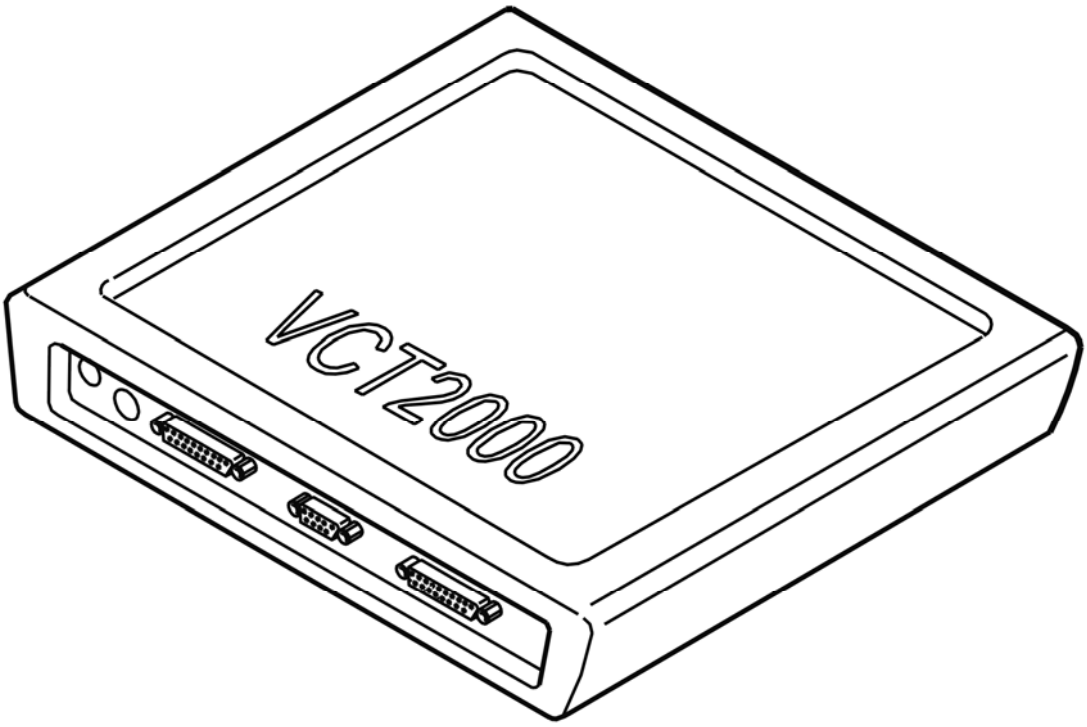

Fig. 107: Identifying VCT2000 Diagnostic Tool Symbol In VIDA
Courtesy of VOLVO CARS CORPORATION

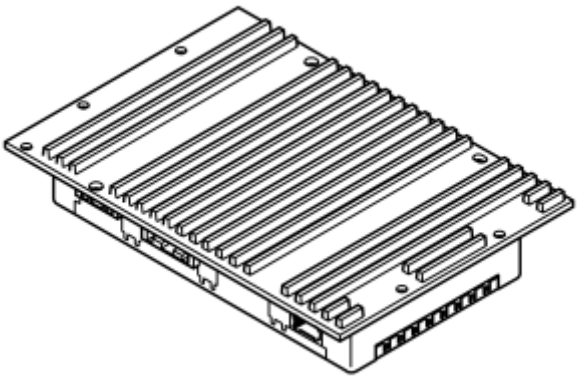

Fig. 108: Identifying Audio Module (AUD)
Courtesy of VOLVO CARS CORPORATION

- **Continue**

  Refer to **VERIFICATION**

CHECKING CABLE AND COMPONENT

Fig. 109: Checking Traffic Load On CAN Cables
Courtesy of VOLVO CARS CORPORATION

Checking the fault cause

Check the fault cause as follows:

1. Ignition off
2. Unplug the MOST connector from the integrated audio module (IAM).
3. Connect the MOST cable to special tool see **9512867**
4. Ignition on
5. Activate the infotainment system
6. Check that the communication on the MOST network is functioning by reading off the status of the MOST locked parameter for at least 30 seconds. The parameter indicates whether the MOST network is closed and communication possible. Click the VCT2000 symbol to read off the status of the MOST network.
7. If the parameter displays that the MOST network is not correctly connected, check the receiving control

module in the same way as above.

The communication on the MOST network is working if the menu text is displayed. If this is the case, the fault cause is in the integrated audio module (IAM). Continue the fault-tracing by checking the component.

The communication on the MOST network is not working if the menu text is not displayed. The fault cause is then in the MOST cable for the next control module. Continue the fault-tracing by checking the fiber optic cable.

Checking cable

- Check the MOST connection. Check for dirt, loose connections and damage
- Replace the MOST cable if no fault is found in the MOST terminal.

Checking the component

- Check the integrated audio module (IAM) power supply and ground connection.
- Check the MOST connection. Check for dirt, loose connections and damage
- If no fault can be found, change the integrated audio module (IAM).

Remedy as necessary.

Other information:

- see **CONTROL MODULE GENERAL SOUND PLAYER**
- see **CHECKING THE SUPPLY VOLTAGE/GROUND TERMINAL**
- see **SIGNAL SPECIFICATION**
- see **FIBER OPTIC CABLE HARNESS, REPAIRING**
- see **OPTICAL WIRING HARNESS CHECK**
- see **LOCATION OF COMPONENTS**

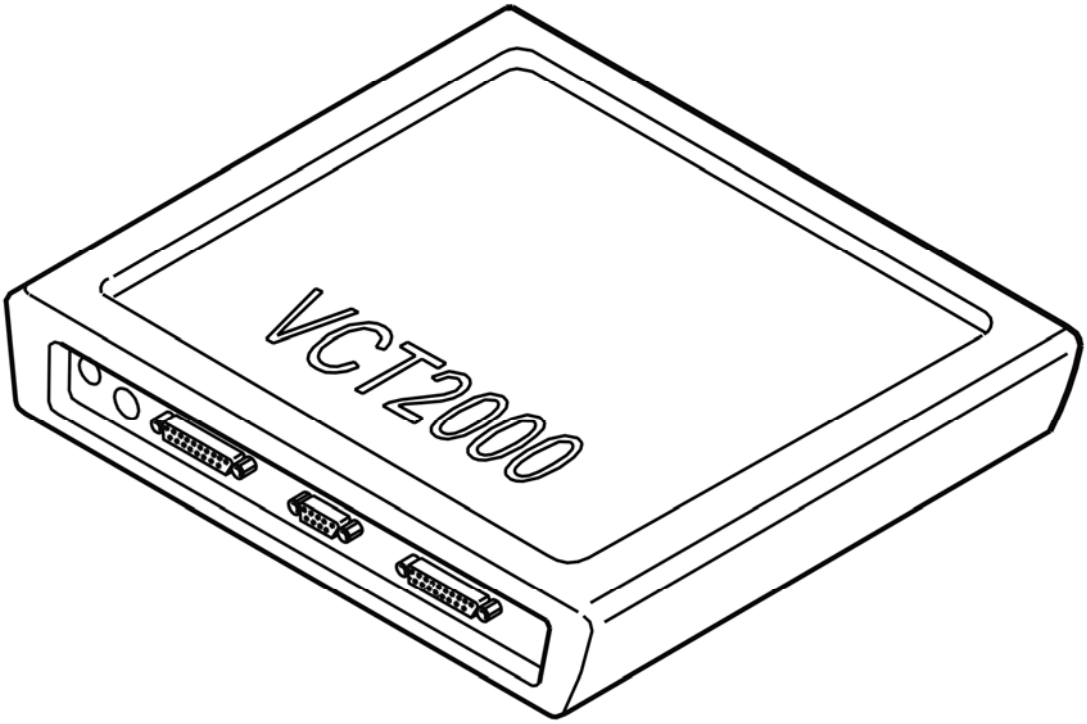

Fig. 110: Identifying VCT2000 Diagnostic Tool Symbol In VIDA
Courtesy of VOLVO CARS CORPORATION

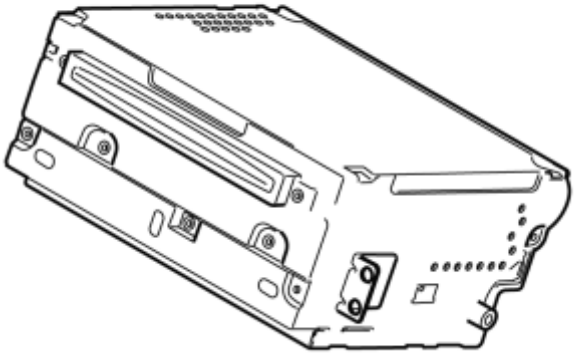

Fig. 111: General Sound Player Control Module
Courtesy of VOLVO CARS CORPORATION

- **Continue**

  Refer to **VERIFICATION**

CHECKING CABLE AND COMPONENT

Fig. 112: Checking Traffic Load On CAN Cables
Courtesy of VOLVO CARS CORPORATION

Checking the fault cause

Check the fault cause as follows:

1. Ignition off
2. Disconnect the MOST connector from the phone module (PHM)
3. Connect the MOST cable to special tool see **9512867**
4. Ignition on
5. Activate the infotainment system
6. Check that the communication on the MOST network is functioning by reading off the status of the MOST locked parameter for at least 30 seconds. The parameter indicates whether the MOST network is closed and communication possible. Click the VCT2000 symbol to read off the status of the MOST network.
7. If the parameter displays that the MOST network is not correctly connected, check the receiving control module in the same way as above.

The communication on the MOST network is working if the menu text is displayed. If this is the case, the fault cause is in the phone module (PHM). Continue the fault-tracing by checking the component.

The communication on the MOST network is not working if the menu text is not displayed. The fault cause is then in the MOST cable for the next control module. Continue the fault-tracing by checking the fiber optic cable.

Checking cable

- Check the MOST connection. Check for dirt, loose connections and damage
- Replace the MOST cable if no fault is found in the MOST terminal.

Checking the component

- Check the power supply and the ground terminal for the phone module (PHM)
- Check the MOST connection. Check for dirt, loose connections and damage
- Replace the phone module (PHM) if no fault is found.

Remedy as necessary.

Other information:

- see **PHONE MODULE (PHM), REPLACING (2006-2010)**
- see **CHECKING VOLTAGE / GROUND CONNECTION**
- see **SIGNAL SPECIFICATION**
- see **FIBER OPTIC CABLE HARNESS, REPAIRING**
- see **OPTICAL WIRING HARNESS CHECK**
- see **LOCATION OF COMPONENTS**

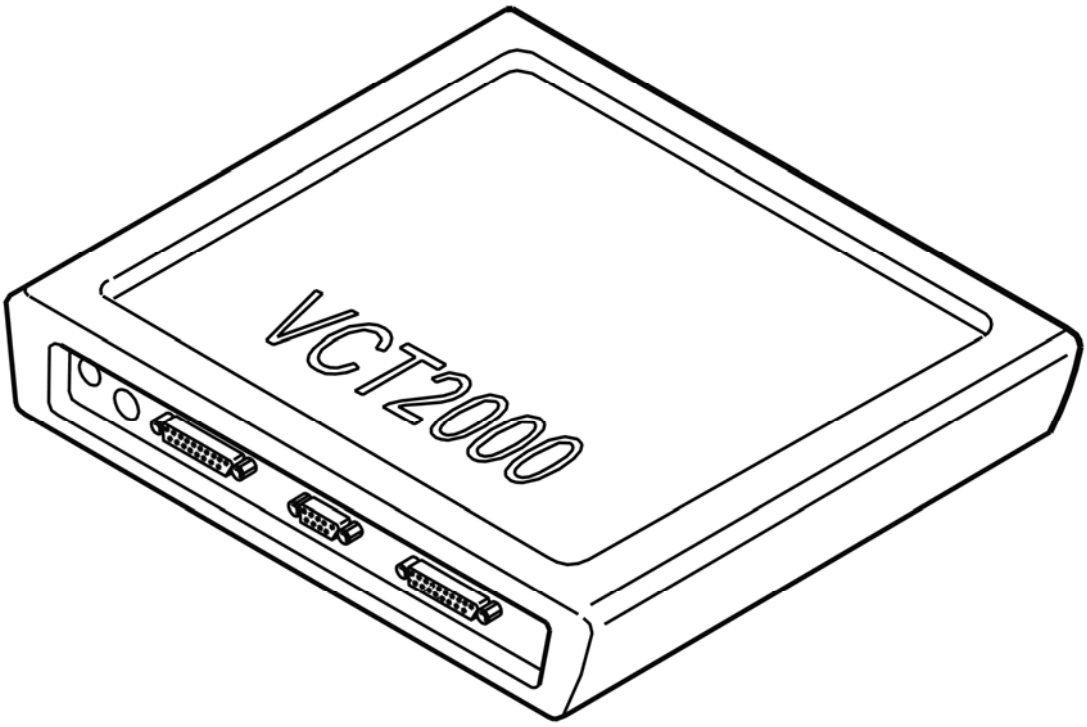

Fig. 113: Identifying VCT2000 Diagnostic Tool Symbol In VIDA
Courtesy of VOLVO CARS CORPORATION

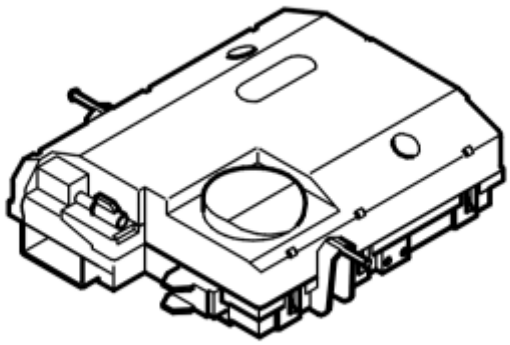

Fig. 114: Phone Module (PHM)
Courtesy of VOLVO CARS CORPORATION

- **Continue**

  Refer to **VERIFICATION**

CHECKING CABLE AND COMPONENT

Fig. 115: Checking Traffic Load On CAN Cables
Courtesy of VOLVO CARS CORPORATION

Checking the fault cause

Check the fault cause as follows:

1. Ignition off
2. Unplug the MOST connector from the global positioning system module (GPS).
3. Connect the MOST cable to special tool see **9512867**
4. Ignition on
5. Activate the infotainment system
6. Check that the communication on the MOST network is functioning by reading off the status of the MOST locked parameter for at least 30 seconds. The parameter indicates whether the MOST network is closed and communication possible. Click the VCT2000 symbol to read off the status of the MOST network.
7. If the parameter displays that the MOST network is not correctly connected, check the receiving control

module in the same way as above.

The communication on the MOST network is working if the menu text is displayed. If this is the case, the fault cause is in the global positioning system module (GPS). Continue the fault-tracing by checking the component.

The communication on the MOST network is not working if the menu text is not displayed. The fault cause is then in the MOST cable for the next control module. Continue the fault-tracing by checking the fiber optic cable.

Checking cable

- Check the MOST connection. Check for dirt, loose connections and damage
- Replace the MOST cable if no fault is found in the MOST terminal.

Checking the component

- Check the global positioning system module (GPS) power supply and ground connection.
- Check the MOST connection. Check for dirt, loose connections and damage
- If no fault can be found, change the global positioning system module (GPS).

Remedy as necessary.

Other information:

- see **GLOBAL POSITIONING SYSTEM MODULE (GPS)**
- see **CHECKING THE SUPPLY VOLTAGE/GROUND TERMINAL**
- see **SIGNAL SPECIFICATION**
- see **FIBER OPTIC CABLE HARNESS, REPAIRING**
- see **OPTICAL WIRING HARNESS CHECK**
- see **LOCATION OF COMPONENTS**

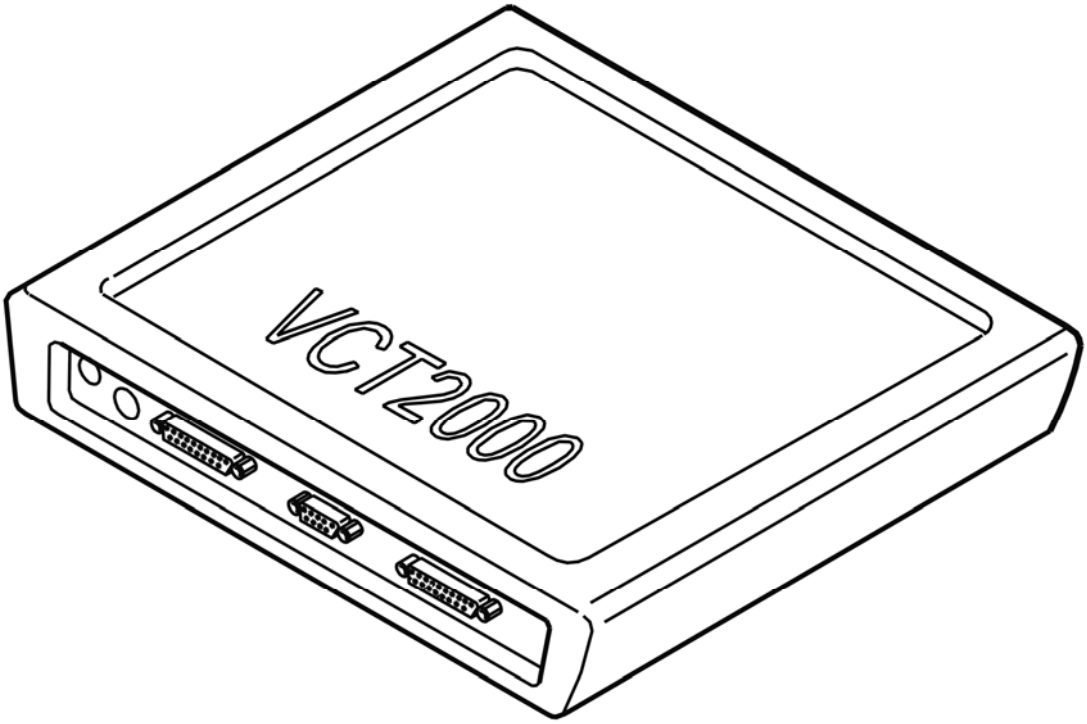

Fig. 116: Identifying VCT2000 Diagnostic Tool Symbol In VIDA
Courtesy of VOLVO CARS CORPORATION

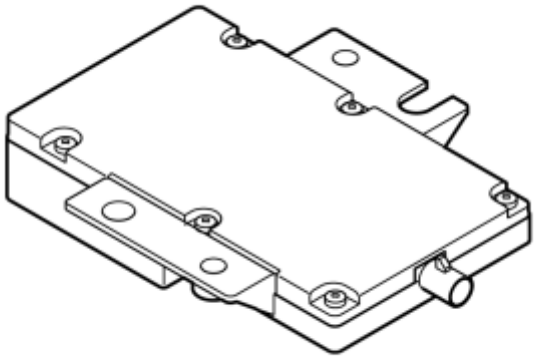

Fig. 117: Global Positioning System Module (GPS)
Courtesy of VOLVO CARS CORPORATION

- **Continue**

  Refer to **VERIFICATION**

CHECKING CABLE AND COMPONENT

Fig. 118: Checking Traffic Load On CAN Cables
Courtesy of VOLVO CARS CORPORATION

Checking the fault cause

Check the fault cause as follows:

1. Ignition off
2. Disconnect the MOST connector from the multimedia module (MMM)
3. Connect the MOST cable to special tool see **9512867**
4. Ignition on
5. Activate the infotainment system
6. Check that the communication on the MOST network is functioning by reading off the status of the MOST locked parameter for at least 30 seconds. The parameter indicates whether the MOST network is closed and communication possible. Click the VCT2000 symbol to read off the status of the MOST network.
7. If the parameter displays that the MOST network is not correctly connected, check the receiving control module in the same way as above.

The communication on the MOST network is working if the menu text is displayed. If this is the case, the fault cause is in the multimedia module (MMM). Continue the fault-tracing by checking the component.

The communication on the MOST network is not working if the menu text is not displayed. The fault cause is then in the MOST cable for the next control module. Continue the fault-tracing by checking the fiber optic cable.

Checking cable

- Check the MOST connection. Check for dirt, loose connections and damage
- Replace the MOST cable if no fault is found in the MOST terminal.

Checking the component

- Check the power supply and the ground terminal for the multimedia module (MMM)
- Check the MOST connection. Check for dirt, loose connections and damage
- Replace the multimedia module (MMM) if no fault is found.

Remedy as necessary.

Other information:

- see **MULTIMEDIA MODULE (MMM), REPLACING**
- see **CHECKING THE VOLTAGE / GROUND TERMINAL (2007-2012)**
- see **SIGNAL SPECIFICATION**
- see **FIBER OPTIC CABLE HARNESS, REPAIRING**
- see **OPTICAL WIRING HARNESS CHECK**
- see **LOCATION OF COMPONENTS**

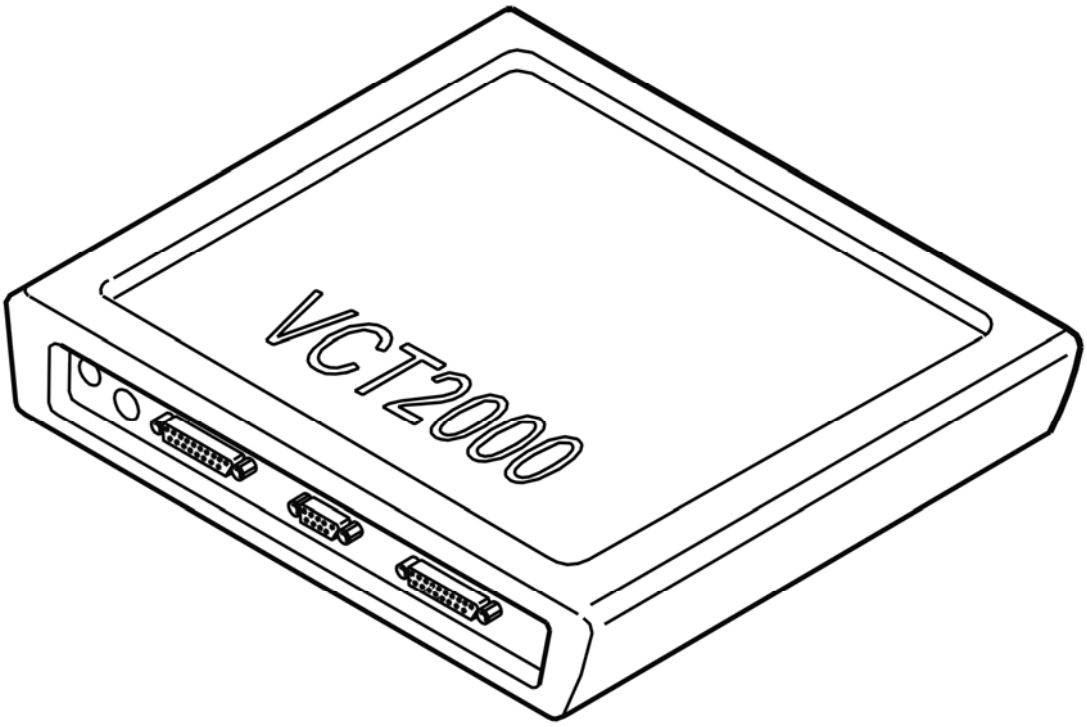

Fig. 119: Identifying VCT2000 Diagnostic Tool Symbol In VIDA
Courtesy of VOLVO CARS CORPORATION

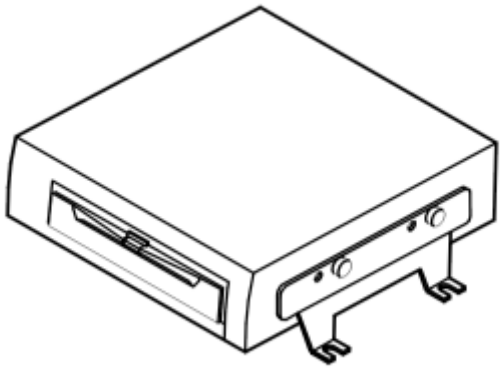

Fig. 120: Identifying Multimedia Module (MMM)
Courtesy of VOLVO CARS CORPORATION

- **Continue**

  Refer to **VERIFICATION**

CHECKING CABLE AND COMPONENT

Fig. 121: Checking Traffic Load On CAN Cables
Courtesy of VOLVO CARS CORPORATION

- Ignition off
- Disconnect the MOST cable connector from the infotainment control module (ICM)
- Ignition on
- Activate the infotainment system.

  Check visually whether the infotainment control module (ICM) is emitting light from the MOST connector.

  The control module is defective if the infotainment control module (ICM) is not emitting light.

  If the infotainment control module (ICM) is transmitting light, the fault is in the MOST cable for the next control module.

  Check the MOST connection. Check for dirt, loose connections and damage.

Replace the MOST cable if no fault is found in the MOST terminal.

Remedy as necessary.

Other information:

- see **INFOTAINMENT CONTROL MODULE (ICM), REPLACING**
- see **FIBER OPTIC CABLE HARNESS, REPAIRING**
- see **LOCATION OF COMPONENTS**

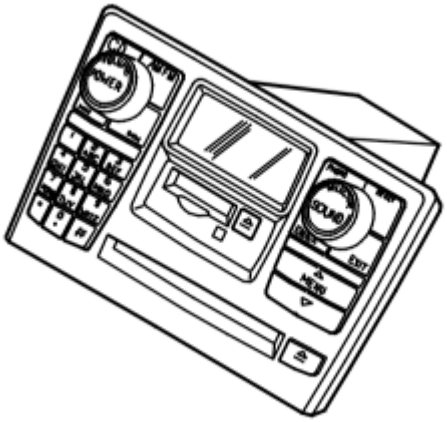

Fig. 122: Infotainment Control Module
Courtesy of VOLVO CARS CORPORATION

- **Continue**

Refer to **VERIFICATION**

CHECKING THE CABLE AND COMPONENT

Fig. 123: Checking Traffic Load On CAN Cables
Courtesy of VOLVO CARS CORPORATION

Checking the fault cause

Check the fault cause as follows:

1. Ignition off.

2. Unplug the MOST-connector from Accessory USB unit (AUU).
3. Connect the MOST cable to special tool: see **9512867**
4. Ignition on.
5. Activate the infotainment system.
6. Check that the communication on the MOST-net works by reading out the status for the parameter **MOST locked** for at least 30 seconds. The parameter indicates whether the MOST network is closed and communication possible. Click on the VCT2000 symbol to obtain a MOST network status reading.
7. If the parameter shows that the MOST network is not closed, check the receiving control module in the same way as described above.

The communication on the MOST network is working if the menu text is displayed. The cause of the fault is in the Accessory USB unit (AUU). Continue the fault-tracing by checking the component.

The communication on the MOST network is not working if the menu text is not displayed. The fault cause is then in the MOST cable for the next control module. Continue the fault-tracing by checking the fiber optic cable.

Checking the cable

- Check the MOST connection. Check for dirt, loose connections and damage.
- Replace the MOST cable if no fault is found in the MOST terminal.

Checking the component

- Check the audio module (AUD) power supply and ground connection for the Accessory USB unit (AUU).
- Check the MOST connection. Check for dirt, loose connections and damage.
- If no fault is found, replace the Accessory USB unit (AUU).

Remedy as necessary.

Other information

- see **UNIVERSAL BUS MODULE (USB)**
- see **CHECKING THE SUPPLY VOLTAGE/GROUND TERMINAL**
- see **SIGNAL SPECIFICATION**
- see **FIBER OPTIC CABLE HARNESS, REPAIRING**
- see **OPTICAL WIRING HARNESS CHECK**
- see **LOCATION OF COMPONENTS**

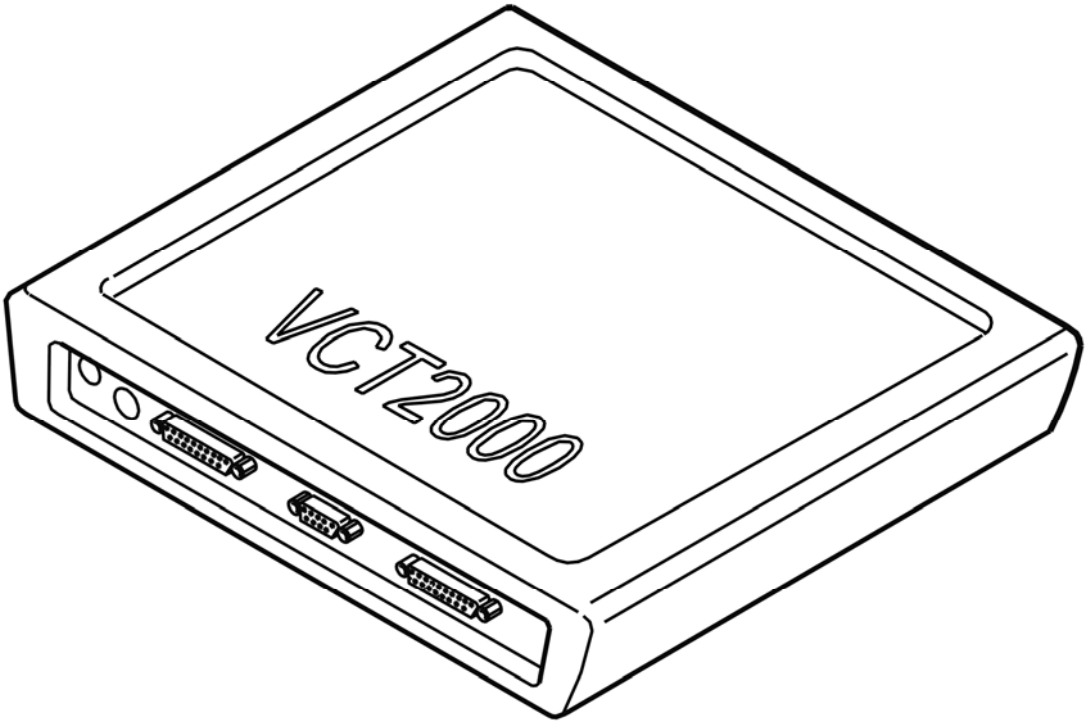

Fig. 124: Identifying VCT2000 Diagnostic Tool Symbol In VIDA
Courtesy of VOLVO CARS CORPORATION

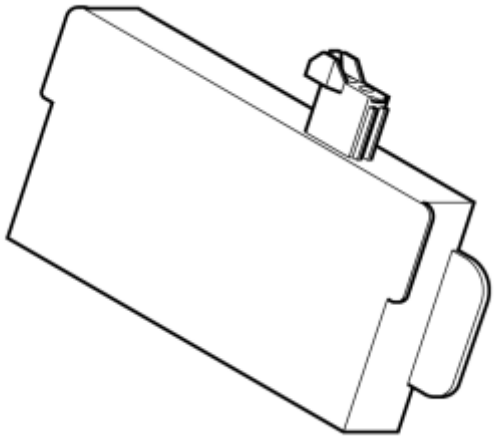

Fig. 125: Identifying Accessory USB Unit (AUU)
Courtesy of VOLVO CARS CORPORATION

- **Continue**

  Refer to **VERIFICATION**

VERIFICATION

HINT: After carrying out the repair, check that the fault has been remedied.

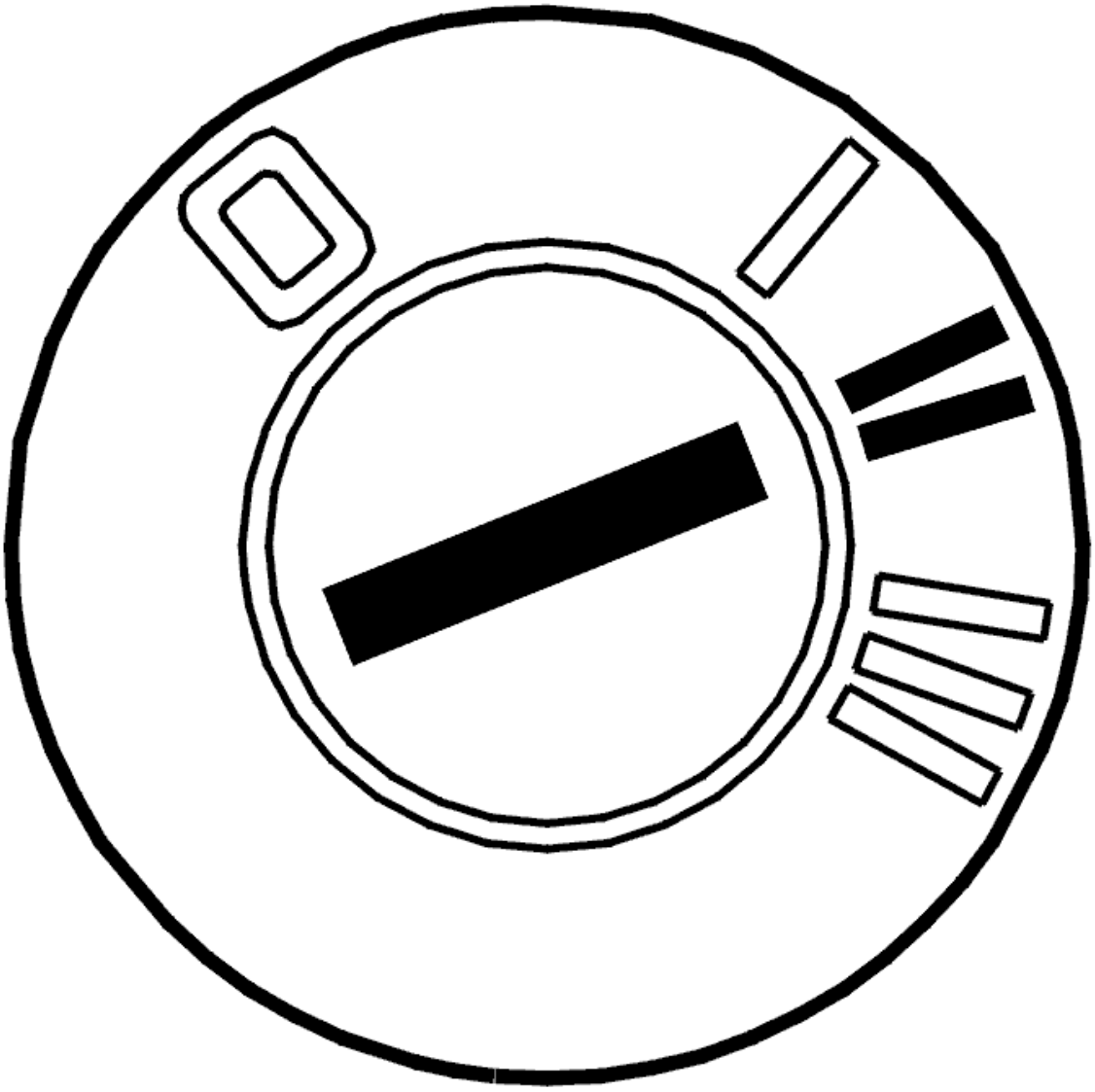

Fig. 126: Identifying Ignition ON
Courtesy of VOLVO CARS CORPORATION

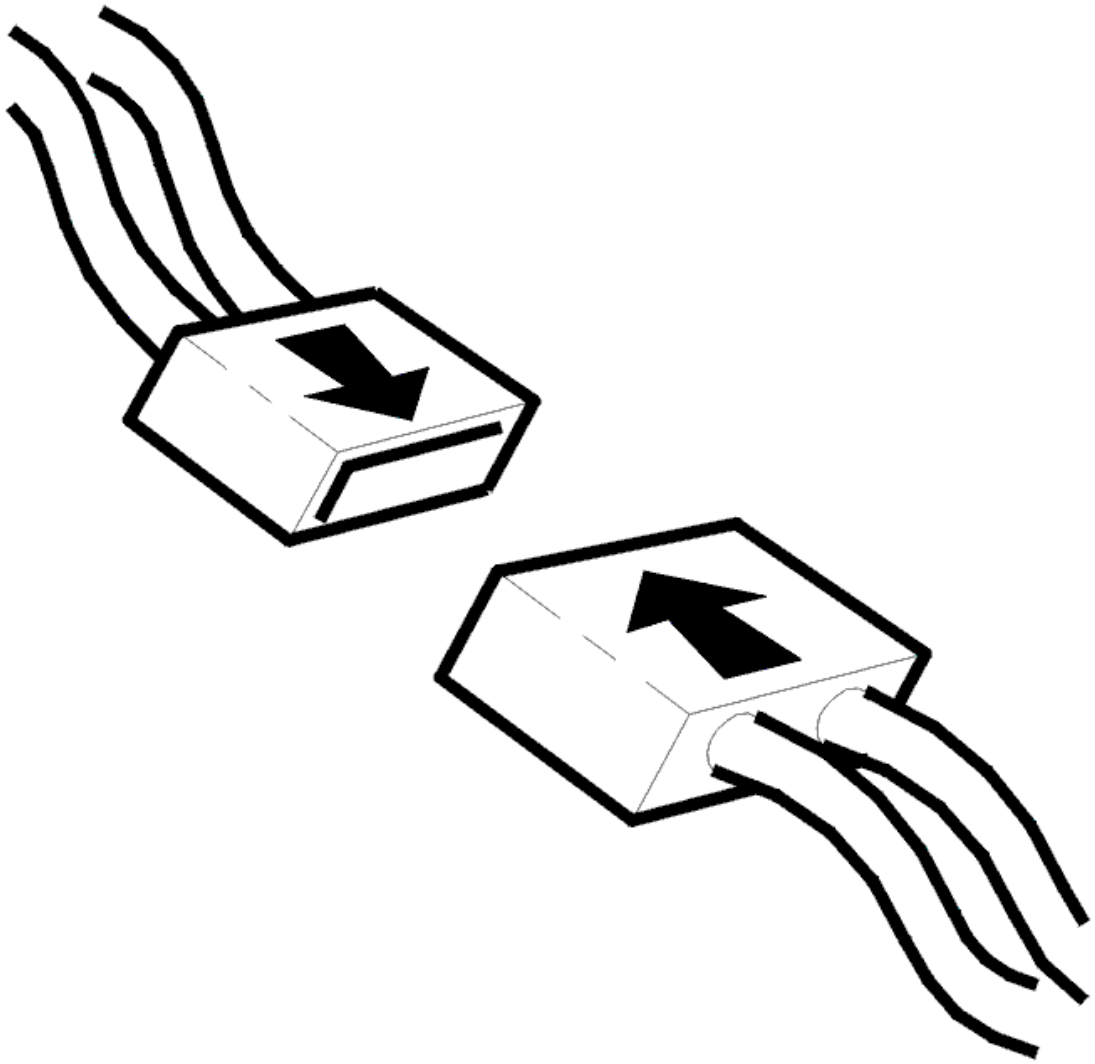

Fig. 127: Connecting Connector
Courtesy of VOLVO CARS CORPORATION

- Ignition off
- Reinstall the connectors, components etc.
- Ignition on.

  Using VCT2000 (Volvo Scan Tool) Activate the infotainment system and select the radio.

  Check whether there is sound from the radio in the loudspeakers.

Is the sound of the radio coming through the loudspeakers?

- **YES**

VERIFIED: Troubleshooting has been completed.

- **NO**

  Refer to **INFORMATION**

INFORMATION

FAULT-TRACING INFORMATION

The fault should have been detected and remedied. As this is not the case fault-tracing has failed.

Exit fault-tracing for this diagnostic trouble code (DTC) or make another attempt.

ICM-DC01: CONTROL MODULE COMMUNICATION. FAULTY SIGNAL (2003-2006)

DIAGNOSTIC TROUBLE CODE (DTC) INFORMATION ICM-DC01

see **DIAGNOSTIC TROUBLE CODE (DTC) INFORMATION ICM-DC01**

NO COMMUNICATION (2003, 2004)

Special tools:

see **9512867**

CHECKING THE WIRING AND COMPONENT

The infotainment control module (ICM) has detected an open-circuit in communication on the MOST network.

The MOST network is a fiber optic ring network. This means that all control modules which are connected to the network must be powered and grounded for the infotainment system to work. If, for any reason, a control module is unable to handle (receive or transmit) signals onwards on the MOST network, or if there is an open-circuit in the fiber optic cable, the infotainment control module (ICM) will shut down all functionality.

Communication on the fiber optic net is one-directional. The control modules on the MOST network receive light signals, amplify them and then send them onwards. The MOST connectors for the control modules contain two fiber optic cables, one for incoming and one for outgoing signals.

If the fault is intermittent, it has been registered previously but is no longer present. Intermittent faults can either be caused by interference when starting the MOST network, or by intermittent faults in the power supply/ground for one of the control modules in the network. The fault is evaluated depending on how it occurs. If the fault recurs, fault-trace for permanent faults.

It can be difficult to diagnose intermittent faults using a ring break diagnostic because for this to work the fault must occur during the diagnostic.

If the fault is permanent, perform a ring break diagnostic to locate the open-circuit.

- **Continue**

  Refer to **CHECKING FOR OPEN-CIRCUITS**

CHECKING FOR OPEN-CIRCUITS

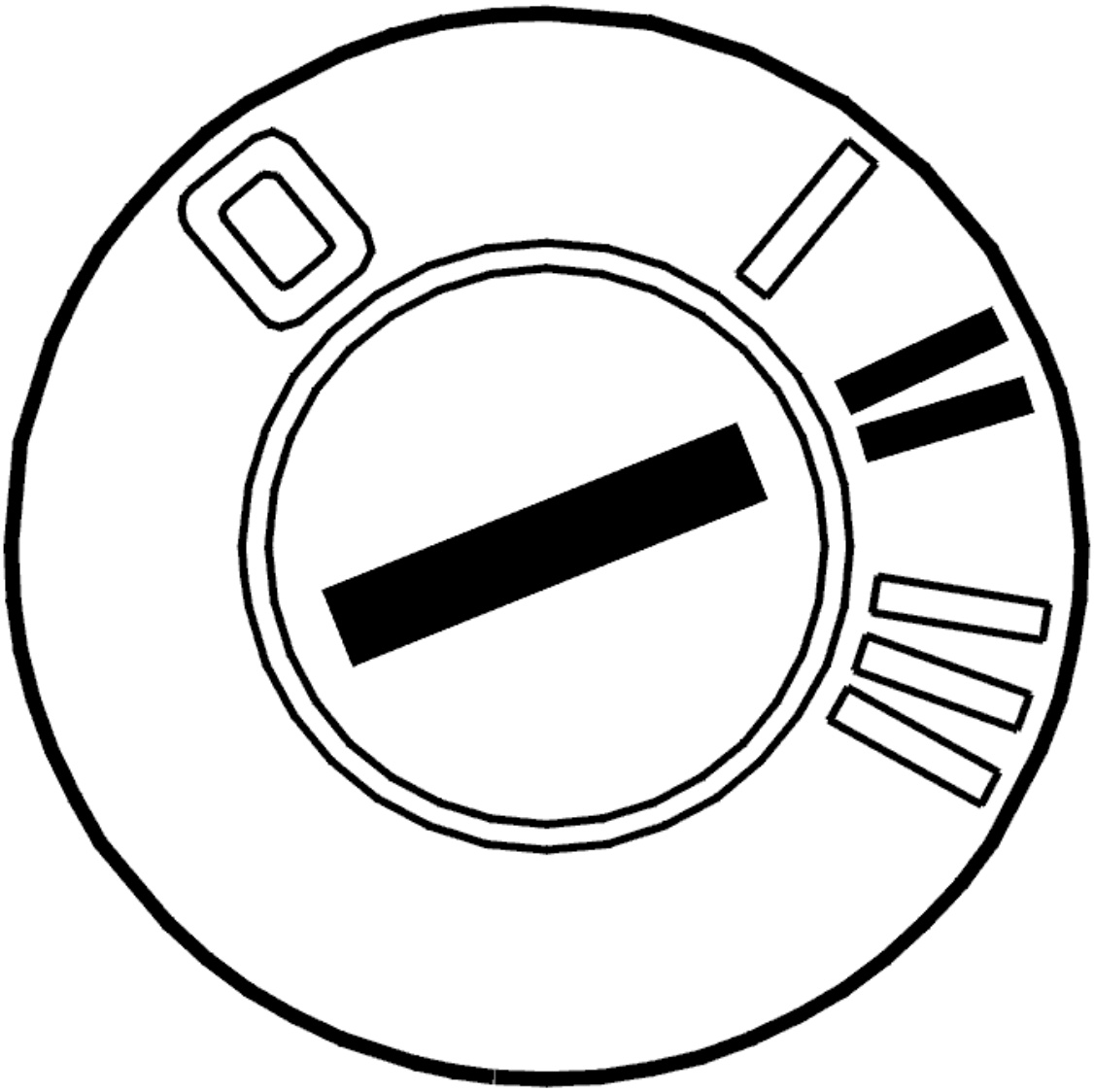

Fig. 128: Identifying Ignition ON
Courtesy of VOLVO CARS CORPORATION

Ring break diagnostic

A ring break diagnostic should be run to determine whether the fault has occurred.

To carry out a full ring break diagnostic of the MOST system, proceed as follows:

1. Switch off the ignition and remove the key
2. Remove the fuse for the antenna module (ATM)
3. Wait at least 3 minutes
4. Ignition on
5. Reinstall the fuse for the antenna module (ATM) within 25 seconds
6. Wait at least 30 seconds after switching on the ignition before reading off the position of the open-circuit.

Other information:

- For information about fuses, see the appropriate service information.
- **Continue**

  Refer to **READING OFF THE POSITION OF THE OPEN-CIRCUIT**

CHECKING CABLE AND COMPONENT

If the result of the ring break diagnostic is POOR, the infotainment control module (ICM) is receiving a signal on the MOST network. However it is unable to decode the signals because the luminance of the signals is too weak or the signals are distorted.

If the result from the ring break diagnostic is OK, the fault is intermittent.

Fault-tracing using the ring break diagnostic assumes that the fault is permanent or active when the test is run, i. e. the system is powered having been off.

HINT: If diagnostic trouble code (DTC) ICM-DC01 is intermittent, read off the status of the ring break diagnostic from the frozen values in Vehicle communication.

HINT: Note that the antenna module (ATM) is not normally included in a ring break diagnostic if the fuse is not removed. This means that the position of the open-circuit moves one step backwards in the MOST network.

HINT: On fully equipped vehicles, if the open-circuit position is 0, this may be because of:

- Subwoofer module (SUB)
- The fiber optic cable between the subwoofer module (SUB) and the antenna module (ATM)
- Antenna module (ATM)
- The fiber optic cable between the antenna module (ATM) and the infotainment control module (ICM)
- The optical switch in the infotainment control module (ICM). This means that the infotainment control module (ICM) is not able to interpret the incoming signal correctly.

Check the communication on the MOST network by bypassing the control modules one by one on the MOST network as follows:

- Ignition off
- Disconnect the MOST connector from the relevant control module
- Connect the MOST cable to special tool see **9512867**
- Ignition on
- Activate the infotainment system
- Check that the communication on the MOST network is functioning by reading off the status of the MOST locked parameter for at least 30 seconds. The parameter indicates whether the MOST network is closed and communication possible.

If the communication on the MOST network is stable when a control module is disconnected, check the power supply and the ground terminal on the relevant control module. Check for intermittent faults. Try replacing the component if no fault is found.

Click the VCT2000 symbol to read off the status of the MOST network.

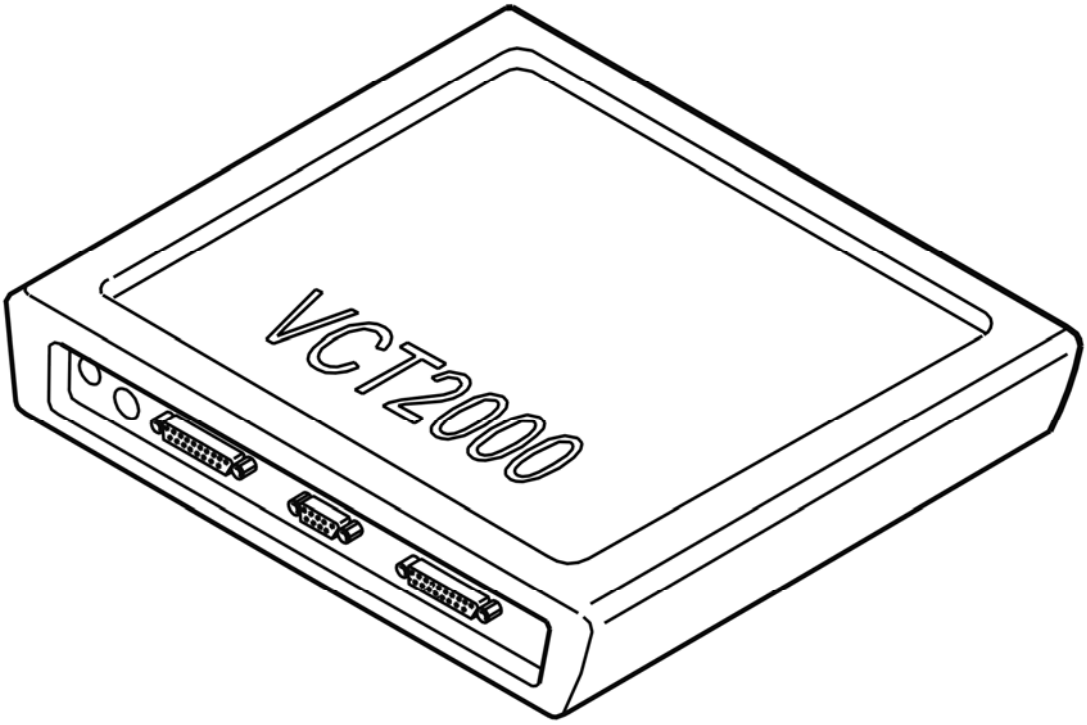

Fig. 129: Identifying VCT2000 Diagnostic Tool Symbol In VIDA
Courtesy of VOLVO CARS CORPORATION

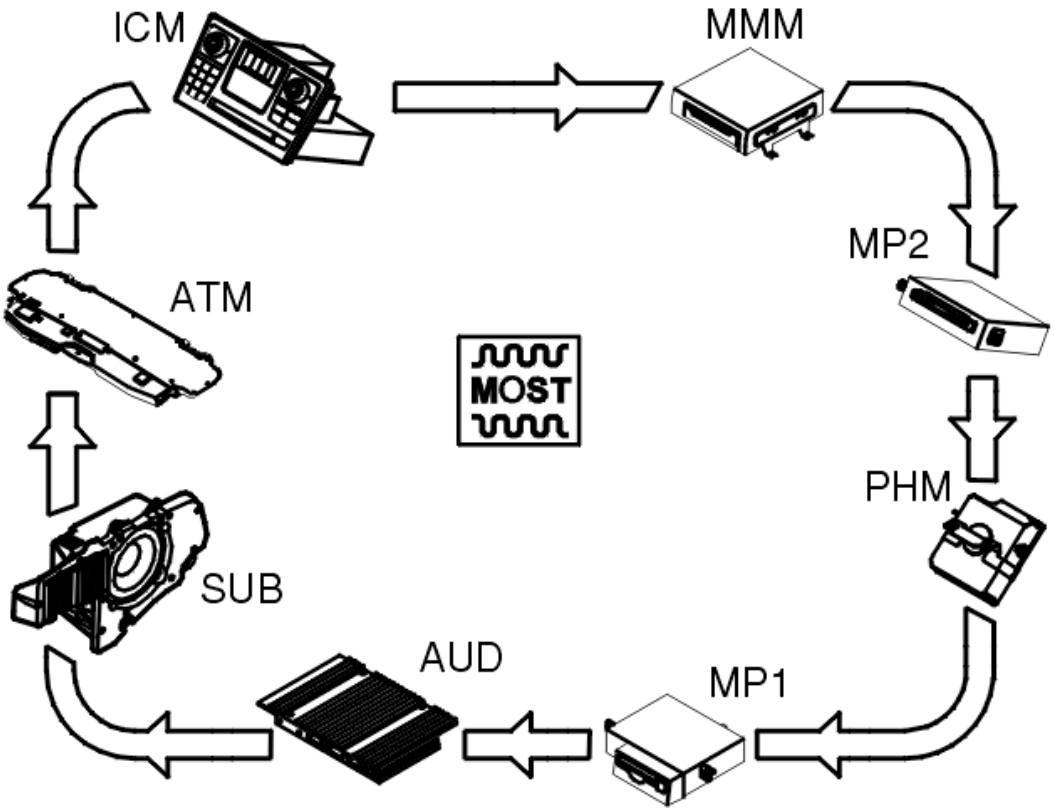

Fig. 130: MOST Bus (Media Oriented System Transportation) Communication Diagram
Courtesy of VOLVO CARS CORPORATION

- **Continue**

  Refer to **VERIFICATION**

READING OFF THE POSITION OF THE OPEN-CIRCUIT

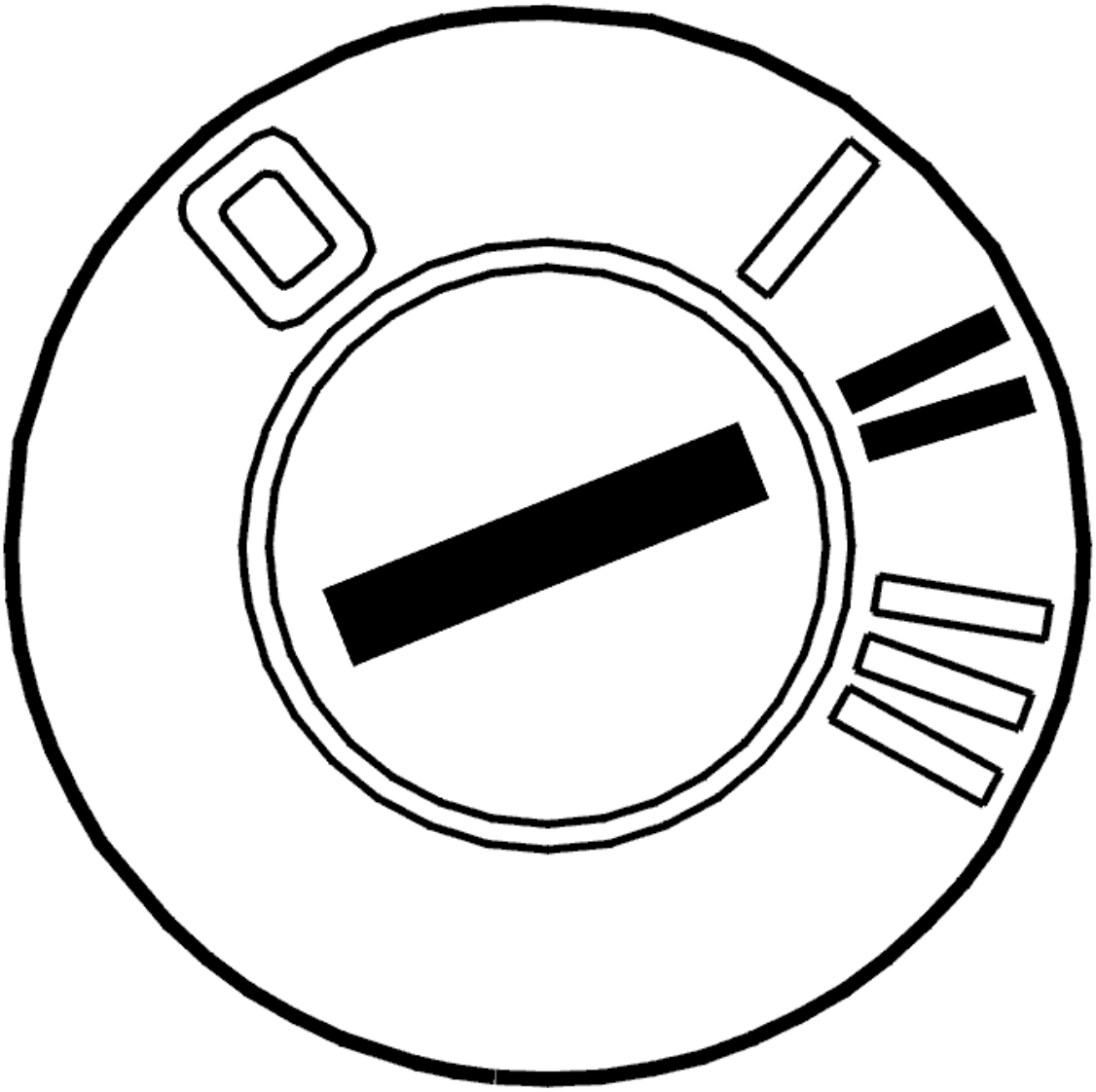

Fig. 131: Identifying Ignition ON
Courtesy of VOLVO CARS CORPORATION

- Ignition on.

  Reading off the result from a ring break diagnostic

  Click the VCT2000 symbol to read off the result of the ring break diagnostic.

  As well as the result from the ring break diagnostic, a list of the control modules included in the MOST network is provided for that car.

  The following result can be obtained from a ring break diagnostic:

  If the fault occurs when the ring break diagnostic is run, the result will be presented as an open-circuit position.

If the fault does not occur when the ring break diagnostic is run, the result will be OK. If this is the case, select alternative 3 below.

- If the diagnostic indicates an open-circuit in the communication on the MOST network, the result will be an open-circuit position
- The result will be OK if there is no fault on the MOST network
- If the infotainment control module (ICM) receives a signal on the MOST network but is unable to decode it because the luminance is weak or the signals are distorted, the result will be POOR.

Determining the position of the open-circuit

The position of the open-circuit is calculated by working backwards in the MOST network from the infotainment control module (ICM).

NOTE: The ring break diagnostic only counts backwards, irrespective of which, or how many control modules, are installed in the car. To determine the position of the open-circuit, check the list to, see which control modules are installed in that particular car. Then count backwards following the determined order. The number of control modules can vary between 3-8.

Two examples are outlined below:

- The first open-circuit position corresponds to 0. This means that the open-circuit is in the antenna module (ATM) or in the cable between the antenna module (ATM) and the infotainment control module (ICM)
- If the position is 1, go one step backwards in the chain. The open-circuit is in the subwoofer module (SUB) or in the cable between the subwoofer module (SUB) and the antenna module (ATM). The open-circuit can also be caused by the optical switch in the antenna module (ATM) being damaged so that the antenna module (ATM) is not able to interpret the incoming signal from the subwoofer module (SUB) correctly.

  NOTE: The subwoofer module (SUB) is not standard. If one is not installed, the open-circuit position 1 applies to the audio module (AUD).

Select the alternative for the control module to be checked.

Alternative 1: Refer to CHECKING CABLE AND COMPONENT

Antenna module (ATM)

Subwoofer module (SUB)

Audio module (AUD)

CD player module (MP2)

Alternative 2: Refer to CHECKING CABLE AND COMPONENT

Phone module (PHM)

MD player module (MP1)

Multimedia module (MMM)

Infotainment control module (ICM)

Alternative 3: Refer to CHECKING CABLE AND COMPONENT

The result from the ring break diagnostic indicates that the MOST network is OK.

The result from the ring break diagnostic is POOR.

Other information:

- For information about location and order of control modules in the MOST network, see **LOCATION OF COMPONENTS**

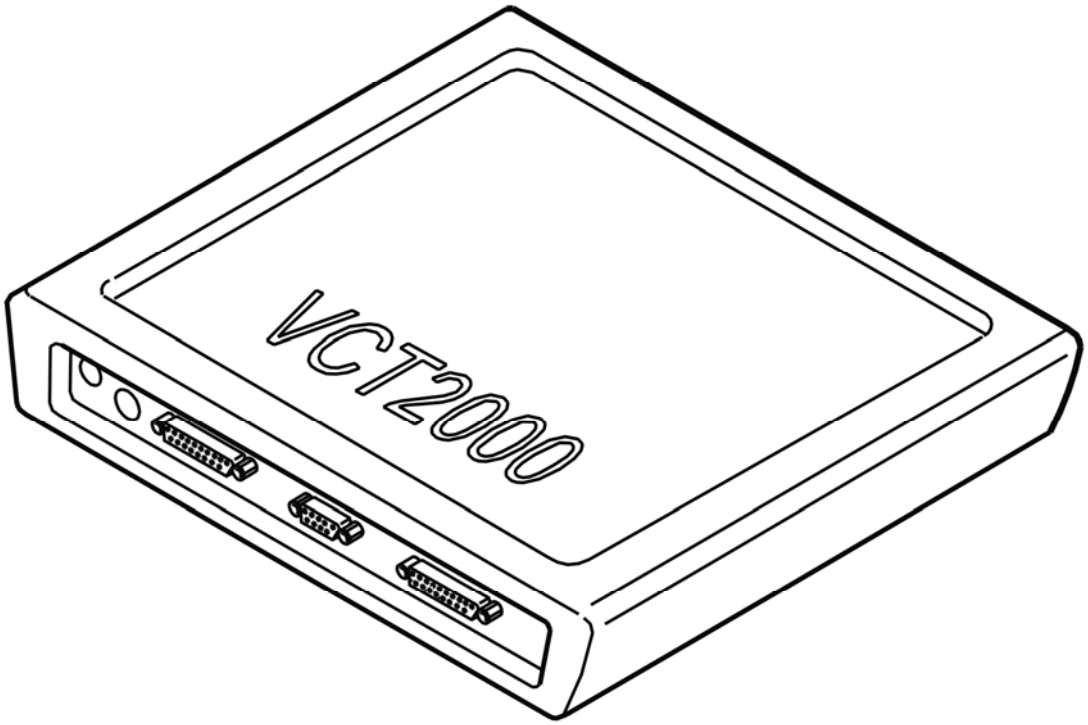

Fig. 132: Identifying VCT2000 Diagnostic Tool Symbol In VIDA
Courtesy of VOLVO CARS CORPORATION

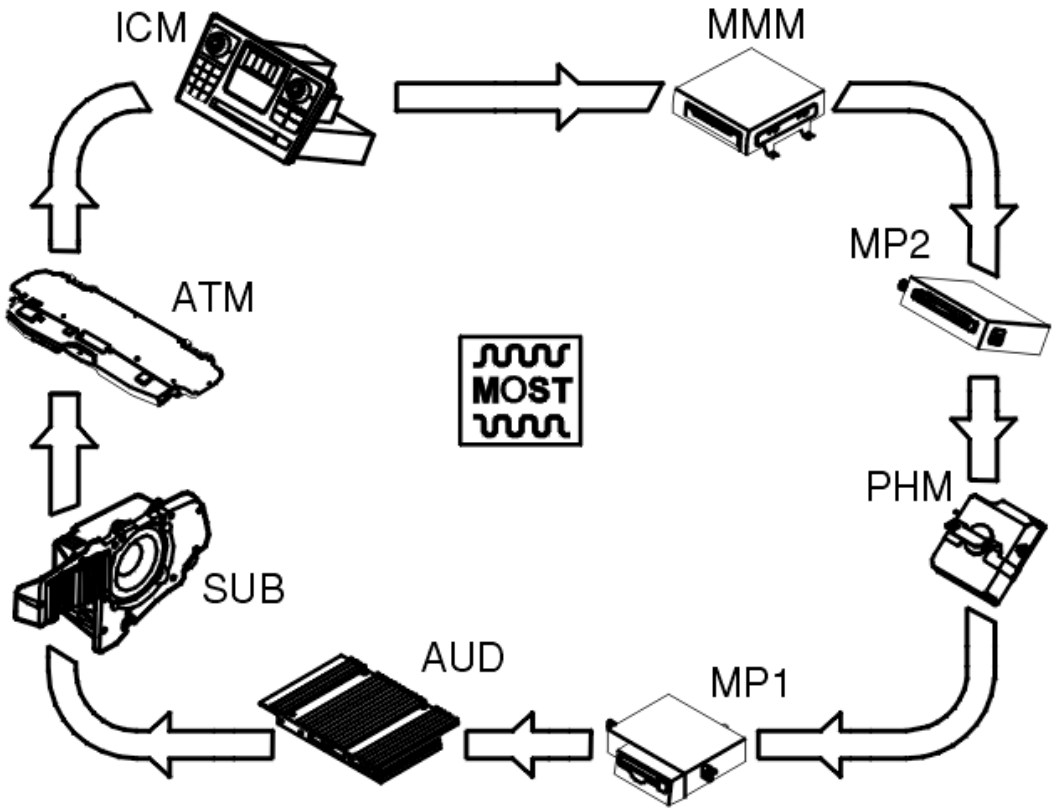

Fig. 133: MOST Bus (Media Oriented System Transportation) Communication Diagram
Courtesy of VOLVO CARS CORPORATION

CHECKING CABLE AND COMPONENT

Select the control module to be checked from the list.

1. Antenna module (ATM). Refer to **CHECKING CABLE AND COMPONENT**

2. Subwoofer module (SUB). Refer to **CHECKING CABLE AND COMPONENT**

3. Audio module (AUD). Refer to **CHECKING CABLE AND COMPONENT**

4. CD player module (MP2). Refer to **CHECKING CABLE AND COMPONENT**

CHECKING CABLE AND COMPONENT

Select the control module to be checked from the list.

1. Phone module (PHM). Refer to **CHECKING CABLE AND COMPONENT**

2. MD player module (MP1). Refer to **CHECKING CABLE AND COMPONENT**

3. Multimedia module (MMM). Refer to **CHECKING CABLE AND COMPONENT**

4. Infotainment control module (ICM). Refer to **CHECKING CABLE AND COMPONENT**

CHECKING CABLE AND COMPONENT

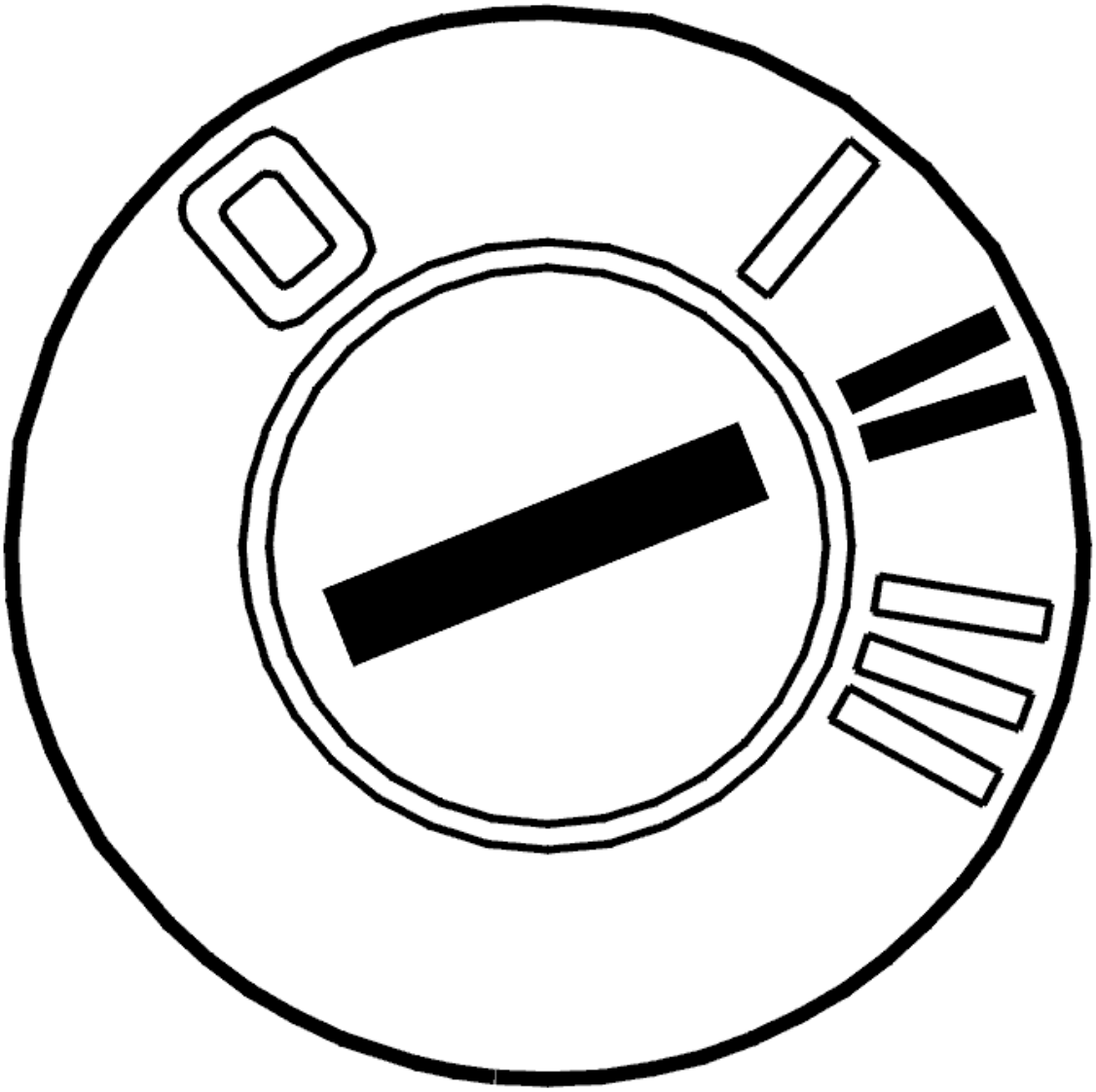

Fig. 134: Identifying Ignition ON
Courtesy of VOLVO CARS CORPORATION

Checking the fault cause

Check the fault cause as follows:

1. Ignition off
2. Disconnect the MOST connector from the antenna module (ATM)
3. Connect the MOST cable to special tool see **9512867**
4. Ignition on

5. Activate the infotainment system
6. Check that the communication on the MOST network is functioning by reading off the status of the MOST locked parameter for at least 30 seconds. The parameter indicates whether the MOST network is closed and communication possible
7. If the parameter displays that the MOST network is not correctly connected, check the receiving control module in the same way as above.

The communication on the MOST network is working if the menu text is displayed. If this is the case, the fault cause is in the antenna module (ATM). Continue the fault-tracing by checking the component.

The communication on the MOST network is not working if the menu text is not displayed. The fault cause is then in the MOST cable for the next control module. Continue the fault-tracing by checking the fiber optic cable.

Checking cable

- Check the MOST connection. Check for dirt, loose connections and damage
- Replace the MOST cable if no fault is found in the MOST terminal.

Checking the component

- Check the power supply and the ground terminal for the antenna module (ATM)
- Check the MOST connection. Check for dirt, loose connections and damage
- Replace the antenna module (ATM) if no fault is found.

Remedy as necessary.

Click the VCT2000 symbol to read off the status of the MOST network.

Other information:

- To access or replace the antenna module (ATM), see **RECEIVER GPS, TMC (ATM), REPLACE**
- For information about checking the power supply and ground terminal, see **CHECKING THE POWER SUPPLY AND GROUND TERMINALS**
- For information about signals, see **SIGNAL SPECIFICATION**
- see **OPTICAL WIRING HARNESS CHECK**
- For information about checking and replacing the MOST cable, see **FIBER OPTIC CABLE HARNESS, REPAIRING**
- For information about location and order of control modules in the MOST network, see **LOCATION OF COMPONENTS** .

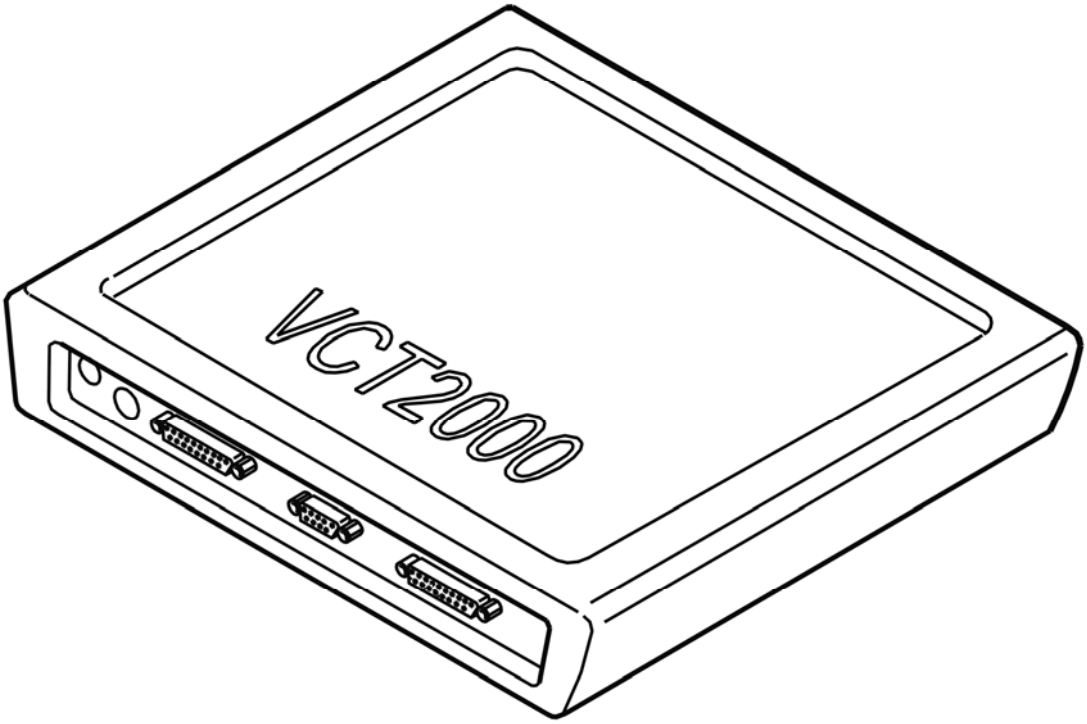

Fig. 135: Identifying VCT2000 Diagnostic Tool Symbol In VIDA
Courtesy of VOLVO CARS CORPORATION

- **Continue**

  Refer to **VERIFICATION**

CHECKING CABLE AND COMPONENT

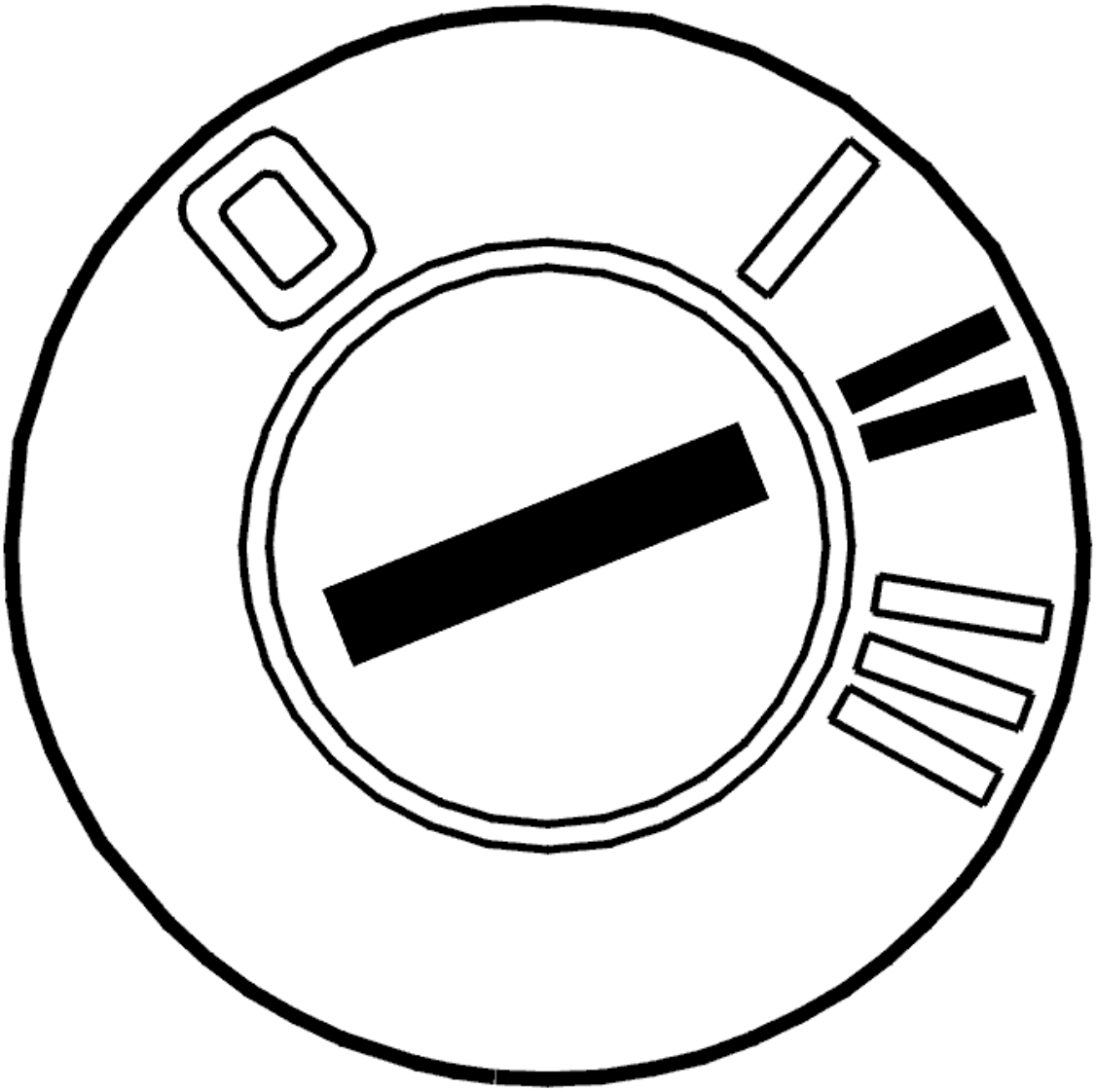

Fig. 136: Identifying Ignition ON
Courtesy of VOLVO CARS CORPORATION

Checking the fault cause

Check the fault cause as follows:

1. Ignition off
2. Disconnect the MOST connector from the subwoofer module (SUB)
3. Connect the MOST cable to special tool see **9512867**
4. Ignition on
5. Activate the infotainment system
6. Check that the communication on the MOST network is functioning by reading off the status of the MOST locked parameter for at least 30 seconds. The parameter indicates whether the MOST network is closed and communication possible

7. If the parameter displays that the MOST network is not correctly connected, check the receiving control module in the same way as above.

The communication on the MOST network is working if the menu text is displayed. If this is the case, the fault cause is in the bypassed control module. Continue the fault-tracing by checking the component.

The communication on the MOST network is not working if the menu text is not displayed. The fault cause is then in the MOST cable for the next control module. Continue the fault-tracing by checking the fiber optic cable.

Checking cable

- Check the MOST connection. Check for dirt, loose connections and damage
- Replace the MOST cable if no fault is found in the MOST terminal.

Checking the component

- Check the power supply and the ground terminal for the subwoofer module (SUB)
- Check the MOST connection. Check for dirt, loose connections and damage
- Replace the subwoofer module (SUB) if no fault is found.

Click the VCT2000 symbol to read off the status of the MOST network.

Remedy as necessary.

Other information:

- To access or replace the subwoofer module (SUB), see **SUBWOOFER MODULE (SUB), REPLACING**
- For information about checking the power supply and ground terminal, see **CHECKING THE VOLTAGE / GROUND TERMINAL**
- For information about signals, see **SIGNAL SPECIFICATION**
- For information about checking and replacing the MOST cable, see **FIBER OPTIC CABLE HARNESS, REPAIRING**
- see **OPTICAL WIRING HARNESS CHECK**
- For information about location and order of control modules in the MOST network, see **LOCATION OF COMPONENTS** .

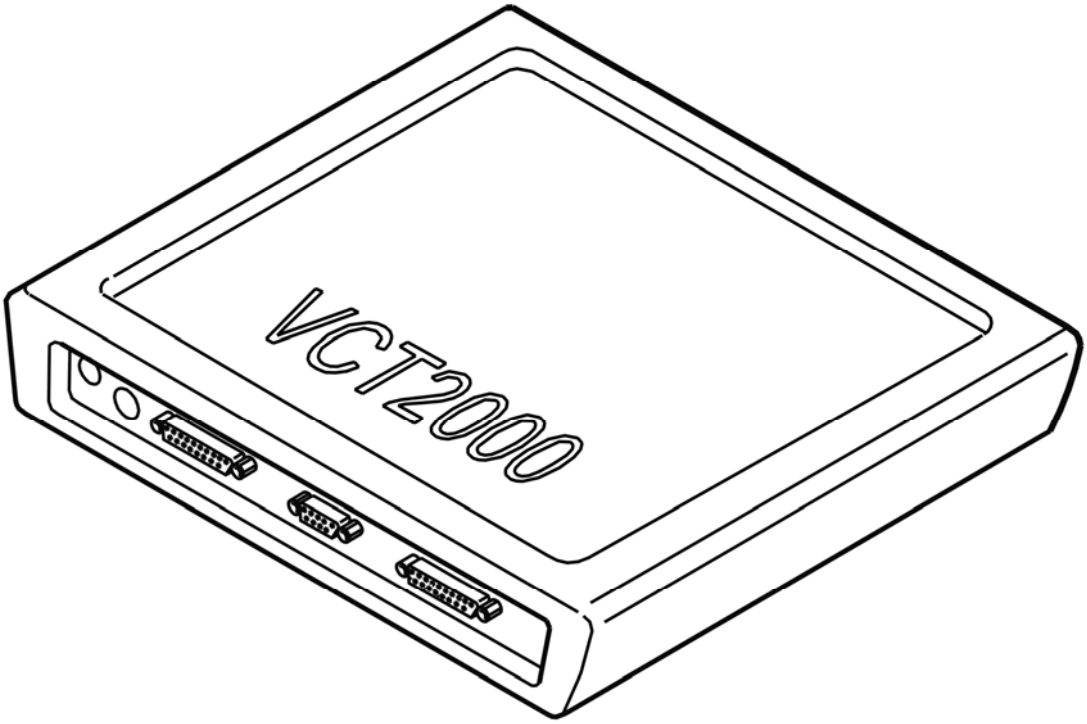

Fig. 137: Identifying VCT2000 Diagnostic Tool Symbol In VIDA
Courtesy of VOLVO CARS CORPORATION

- **Continue**

  Refer to **VERIFICATION**

CHECKING CABLE AND COMPONENT

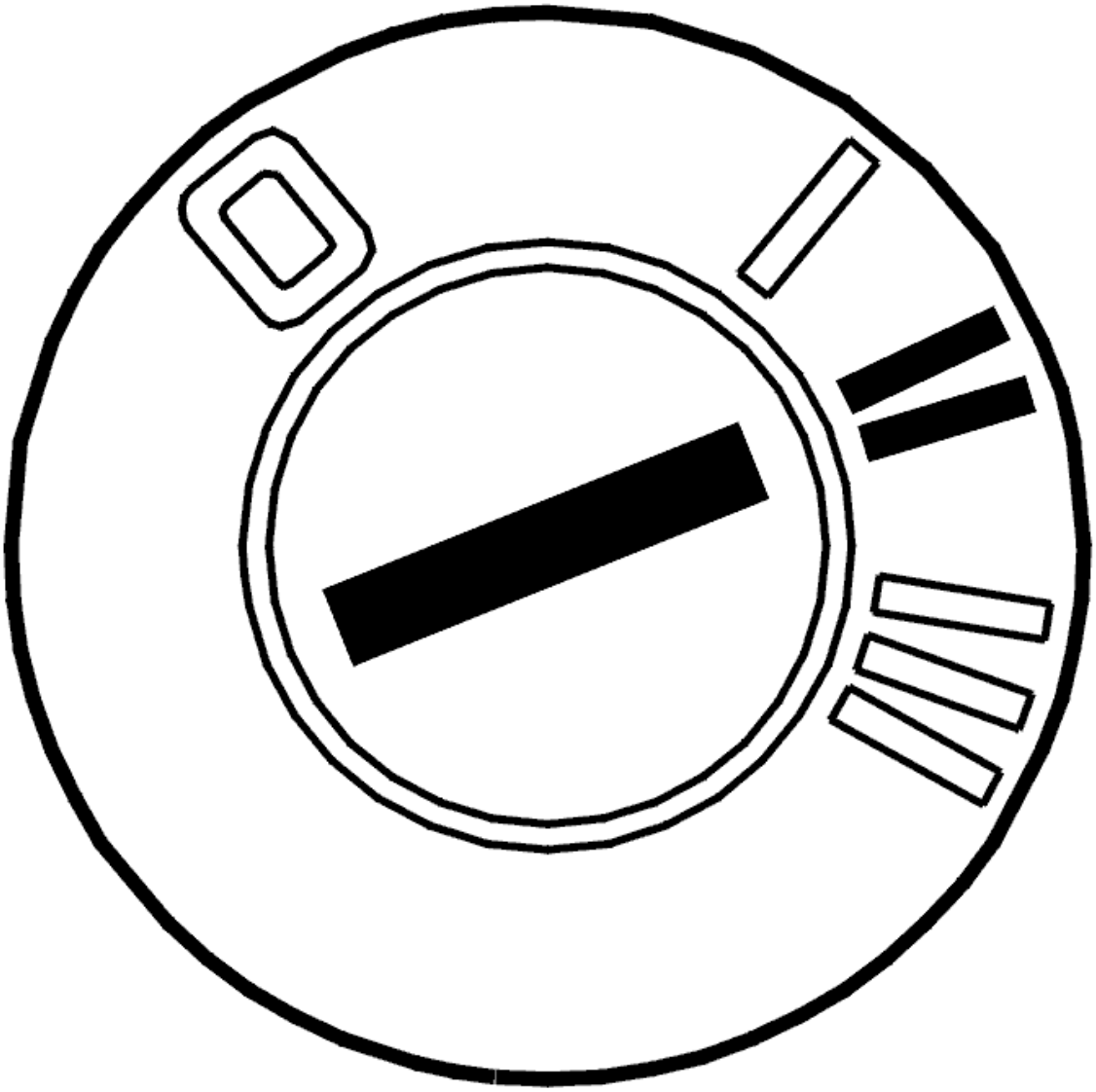

Fig. 138: Identifying Ignition ON
Courtesy of VOLVO CARS CORPORATION

Checking the fault cause

Check the fault cause as follows:

1. Ignition off
2. Disconnect the MOST connector from the audio module (AUD)
3. Connect the MOST cable to special tool see **9512867**
4. Ignition on
5. Activate the infotainment system
6. Check that the communication on the MOST network is functioning by reading off the status of the MOST locked parameter for at least 30 seconds. The parameter indicates whether the MOST network is closed and communication possible

7. If the parameter displays that the MOST network is not correctly connected, check the receiving control module in the same way as above.

The communication on the MOST network is working if the menu text is displayed. If this is the case, the fault cause is in the audio module (AUD). Continue the fault-tracing by checking the component.

The communication on the MOST network is not working if the menu text is not displayed. The fault cause is then in the MOST cable for the next control module. Continue the fault-tracing by checking the fiber optic cable.

Checking cable

- Check the MOST connection. Check for dirt, loose connections and damage
- Replace the MOST cable if no fault is found in the MOST terminal.

Checking the component

- Check the power supply and the ground terminal for the audio module (AUD)
- Check the MOST connection. Check for dirt, loose connections and damage
- Replace the audio module (AUD) if no fault is found.

Click the VCT2000 symbol to read off the status of the MOST network.

Remedy as necessary.

Other information:

- To access or replace the audio module (AUD), see **AUDIO MODULE (AUD), REPLACING**
- For information about checking the power supply and ground terminal, see **CHECKING THE VOLTAGE / GROUND TERMINAL**
- For information about signals, see **SIGNAL SPECIFICATION**
- For information about checking and replacing the MOST cable, see **FIBER OPTIC CABLE HARNESS, REPAIRING**
- see **OPTICAL WIRING HARNESS CHECK**
- For information about location and order of control modules in the MOST network, see **LOCATION OF COMPONENTS** .

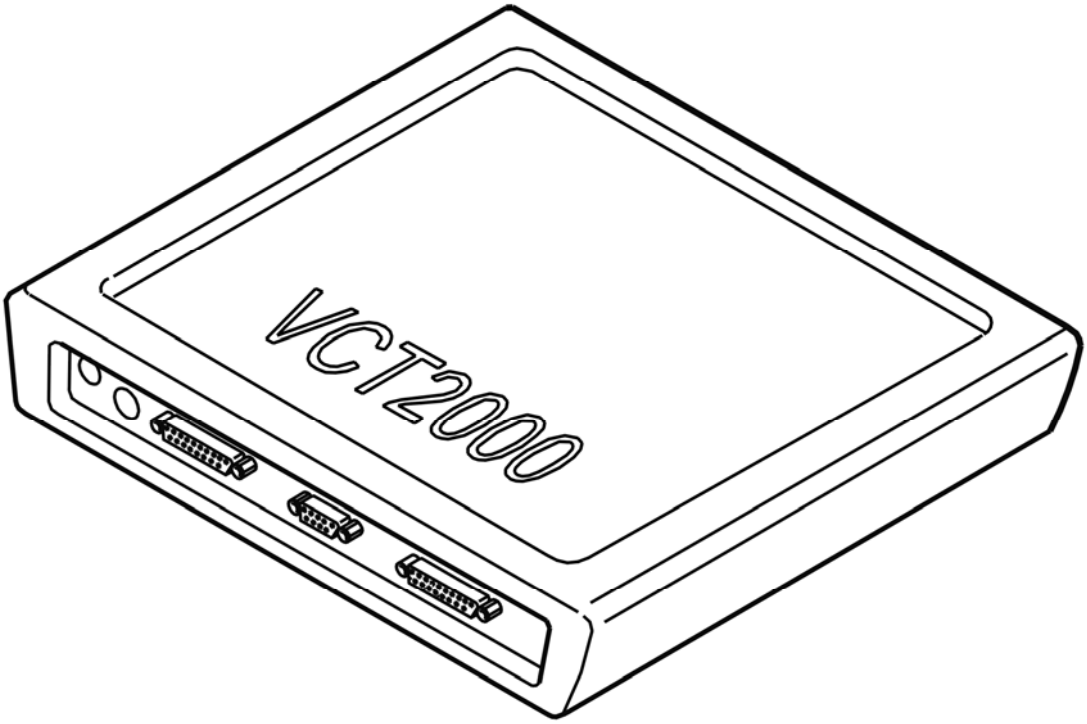

Fig. 139: Identifying VCT2000 Diagnostic Tool Symbol In VIDA
Courtesy of VOLVO CARS CORPORATION

- **Continue**

  Refer to **VERIFICATION**

CHECKING CABLE AND COMPONENT

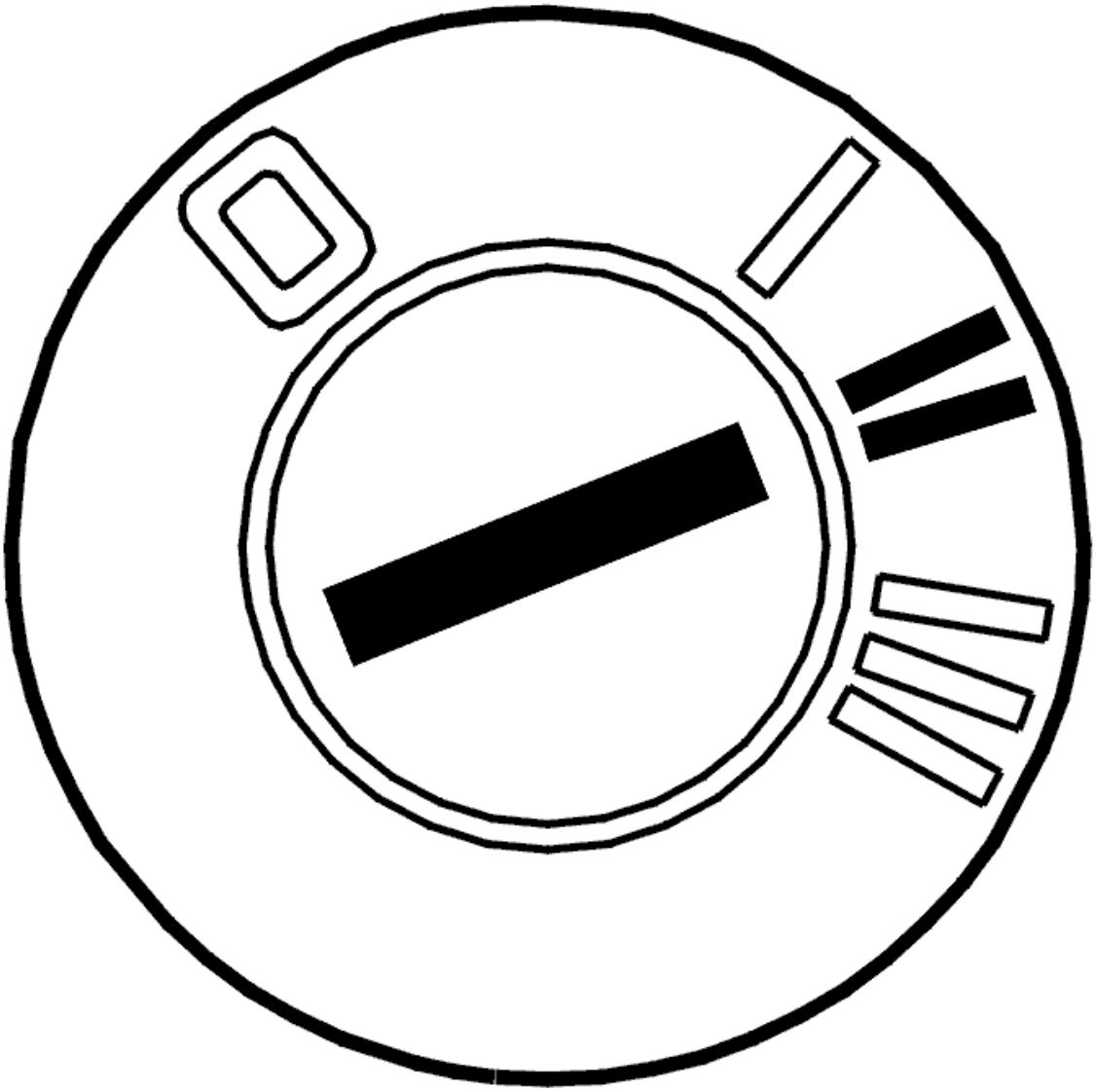

Fig. 140: Identifying Ignition ON
Courtesy of VOLVO CARS CORPORATION

Checking the fault cause

Check the fault cause as follows:

1. Ignition off
2. Disconnect the MOST connector from the CD player module (MP2)
3. Connect the MOST cable to special tool see **9512867**
4. Ignition on
5. Activate the infotainment system
6. Check that the communication on the MOST network is functioning by reading off the status of the MOST locked parameter for at least 30 seconds. The parameter indicates whether the MOST network is closed and communication possible

7. If the parameter displays that the MOST network is not correctly connected, check the receiving control module in the same way as above.

The communication on the MOST network is working if the menu text is displayed. The fault cause is then in the CD module (MP2). Continue the fault-tracing by checking the component.

The communication on the MOST network is not working if the menu text is not displayed. The fault cause is then in the MOST cable for the next control module. Continue the fault-tracing by checking the fiber optic cable.

Checking cable

- Check the MOST connection. Check for dirt, loose connections and damage
- Replace the MOST cable if no fault is found in the MOST terminal.

Checking the component

- Check the power supply and the ground terminal for the CD player module (MP2)
- Check the MOST connection. Check for dirt, loose connections and damage
- Replace the CD player module (MP2) if no fault is found.

Click the VCT2000 symbol to read off the status of the MOST network.

Remedy as necessary.

Other information:

- To access or replace the CD module (MP2), see **MINIDISC / CD CONTROL MODULE, REPLACING**
- For information about checking the power supply and ground terminal, see **CHECKING THE POWER SUPPLY AND GROUND TERMINALS**
- For information about signals, see **SIGNAL SPECIFICATION**
- For information about checking and replacing the MOST cable, see **FIBER OPTIC CABLE HARNESS, REPAIRING**
- see **OPTICAL WIRING HARNESS CHECK**
- For information about location and order of control modules in the MOST network, see **LOCATION OF COMPONENTS** .

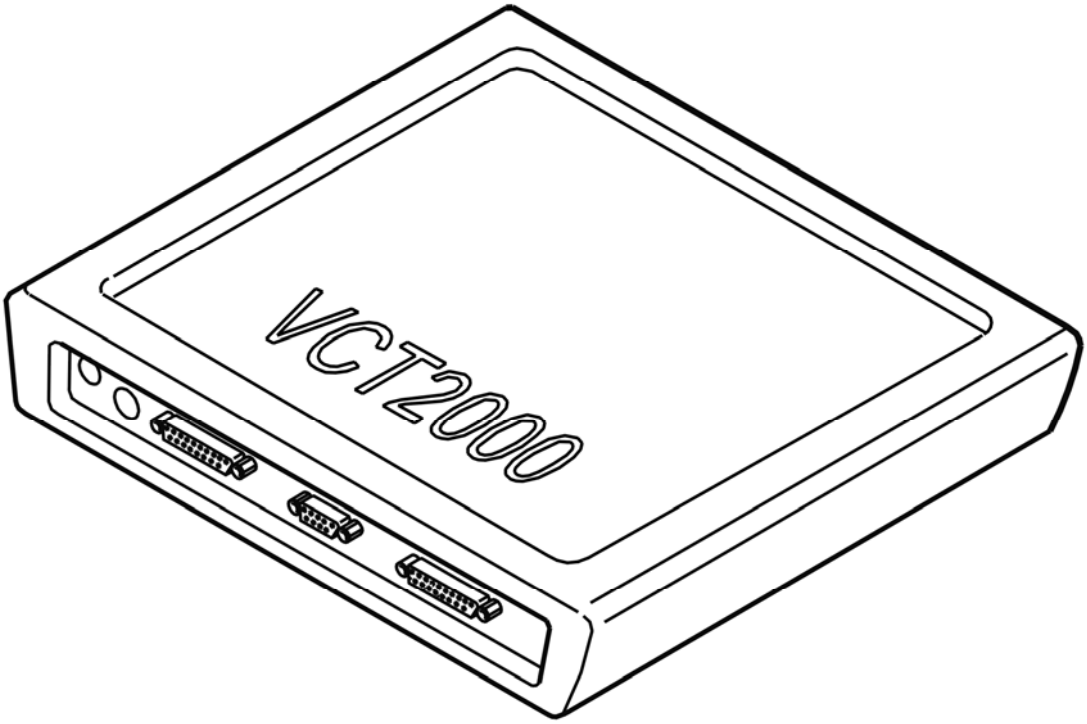

Fig. 141: Identifying VCT2000 Diagnostic Tool Symbol In VIDA
Courtesy of VOLVO CARS CORPORATION

- **Continue**

  Refer to **VERIFICATION**

CHECKING CABLE AND COMPONENT

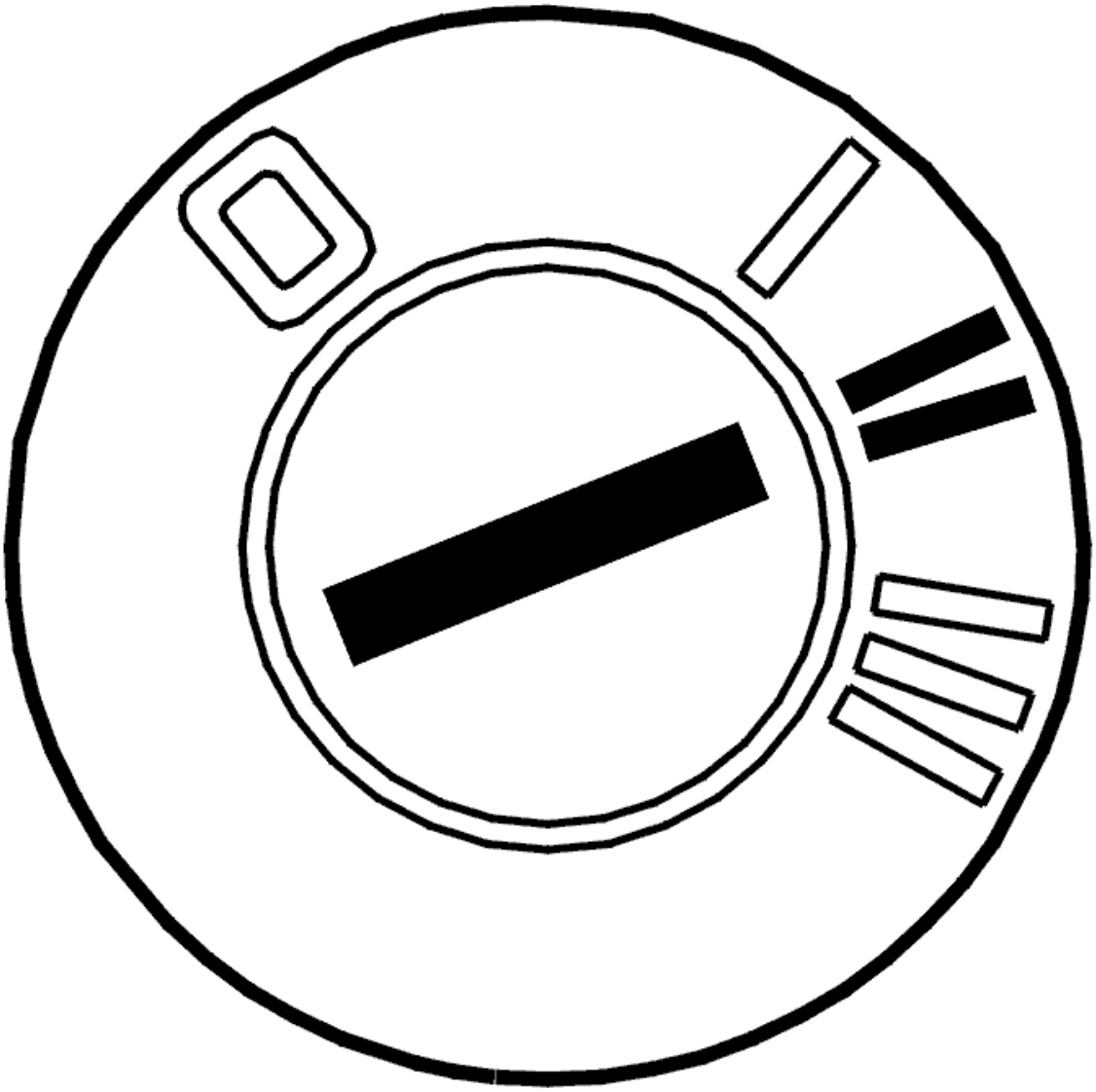

Fig. 142: Identifying Ignition ON
Courtesy of VOLVO CARS CORPORATION

Checking the fault cause

Check the fault cause as follows:

1. Ignition off
2. Disconnect the MOST connector from the phone module (PHM)
3. Connect the MOST cable to special tool see **9512867**
4. Ignition on
5. Activate the infotainment system
6. Check that the communication on the MOST network is functioning by reading off the status of the MOST locked parameter for at least 30 seconds. The parameter indicates whether the MOST network is closed and communication possible

7. If the parameter displays that the MOST network is not correctly connected, check the receiving control module in the same way as above.

The communication on the MOST network is working if the menu text is displayed. If this is the case, the fault cause is in the phone module (PHM). Continue the fault-tracing by checking the component.

The communication on the MOST network is not working if the menu text is not displayed. The fault cause is then in the MOST cable for the next control module. Continue the fault-tracing by checking the fiber optic cable.

Checking cable

- Check the MOST connection. Check for dirt, loose connections and damage
- Replace the MOST cable if no fault is found in the MOST terminal.

Checking the component

- Check the power supply and the ground terminal for the phone module (PHM)
- Check the MOST connection. Check for dirt, loose connections and damage
- Replace the phone module (PHM) if no fault is found.

Click the VCT2000 symbol to read off the status of the MOST network.

Remedy as necessary.

Other information:

- see **PHONE MODULE (PHM), REPLACING**
- see **SIGNAL SPECIFICATION**
- see **CHECKING THE VOLTAGE / GROUND TERMINAL**
- For information about checking and replacing the MOST cable, see **FIBER OPTIC CABLE HARNESS, REPAIRING**
- see **OPTICAL WIRING HARNESS CHECK**
- For information about location and order of control modules in the MOST network, see **LOCATION OF COMPONENTS** .

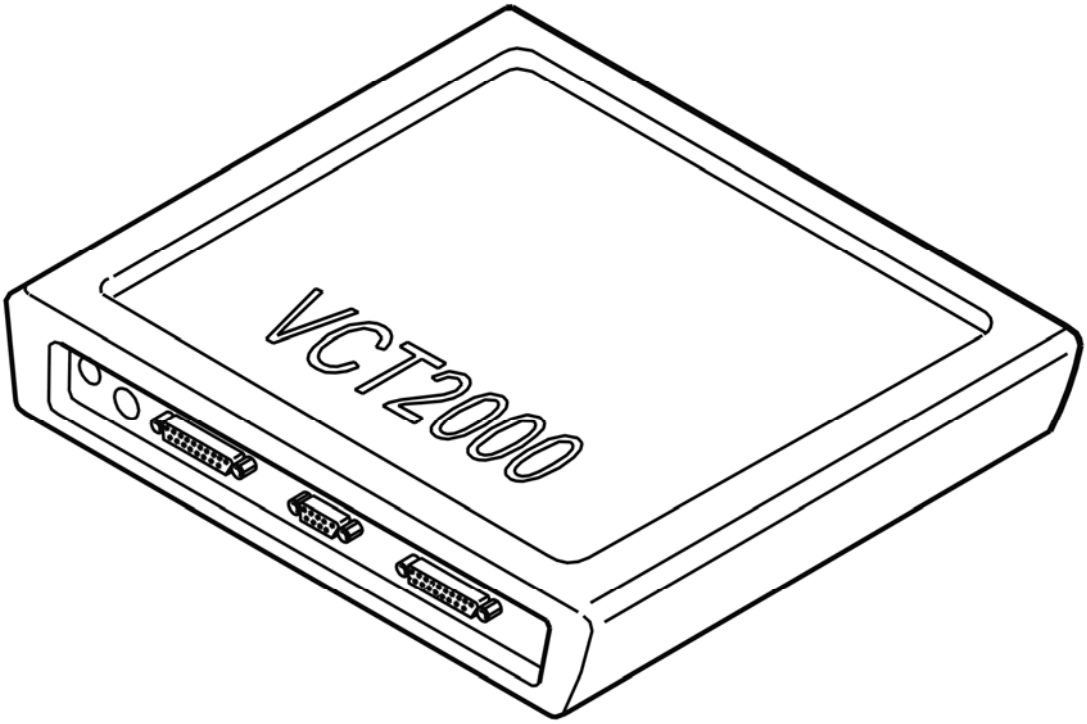

Fig. 143: Identifying VCT2000 Diagnostic Tool Symbol In VIDA
Courtesy of VOLVO CARS CORPORATION

- **Continue**

  Refer to **VERIFICATION**

CHECKING CABLE AND COMPONENT

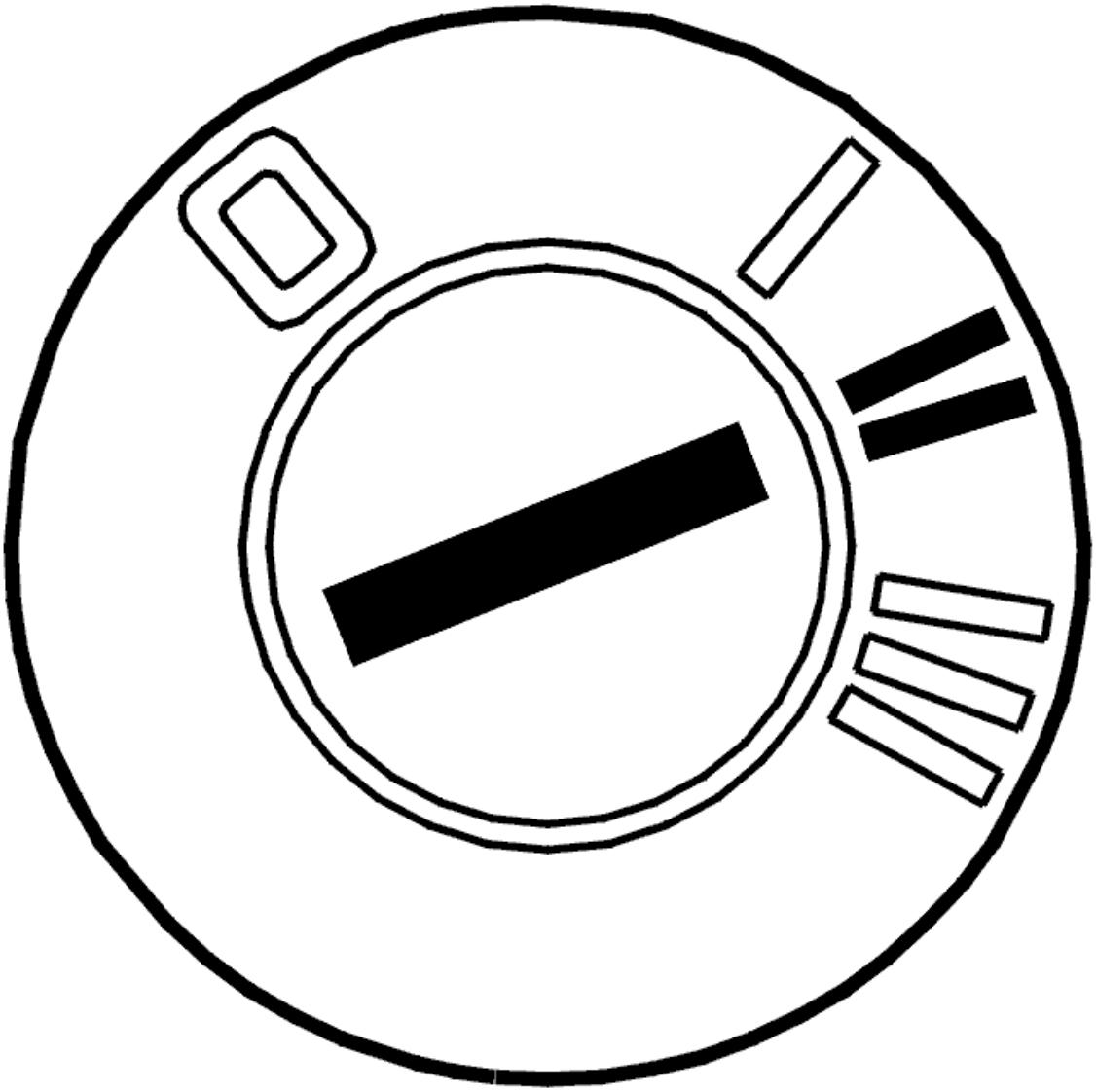

Fig. 144: Identifying Ignition ON
Courtesy of VOLVO CARS CORPORATION

Checking the fault cause

Check the fault cause as follows:

1. Ignition off
2. Disconnect the MOST connector from the MD player module (MP1)
3. Connect the MOST cable to special tool see **9512867**
4. Ignition on
5. Activate the infotainment system
6. Check that the communication on the MOST network is functioning by reading off the status of the MOST locked parameter for at least 30 seconds. The parameter indicates whether the MOST network is closed and communication possible

7. If the parameter displays that the MOST network is not correctly connected, check the receiving control module in the same way as above.

The communication on the MOST network is working if the menu text is displayed. The fault cause is then in the MD player module (MP1). Continue the fault-tracing by checking the component.

The communication on the MOST network is not working if the menu text is not displayed. The fault cause is then in the MOST cable for the next control module. Continue the fault-tracing by checking the fiber optic cable.

Checking cable

- Check the MOST connection. Check for dirt, loose connections and damage
- Replace the MOST cable if no fault is found in the MOST terminal.

Checking the component

- Check the power supply and the ground terminal for the MD player module (MP1)
- Check the MOST connection. Check for dirt, loose connections and damage
- Replace the MD player module (MP1) if no fault is found.

Click the VCT2000 symbol to read off the status of the MOST network.

Remedy as necessary.

Other information:

- To access or replace the MD module (MP1), see **MINIDISC / CD CONTROL MODULE, REPLACING**
- For information about checking the power supply and ground terminal, see **CHECKING THE POWER SUPPLY AND GROUND TERMINALS**
- For information about signals, see **SIGNAL SPECIFICATION**
- For information about checking and replacing the MOST cable, see **FIBER OPTIC CABLE HARNESS, REPAIRING**
- see **OPTICAL WIRING HARNESS CHECK**
- For information about location and order of control modules in the MOST network, see **LOCATION OF COMPONENTS** .

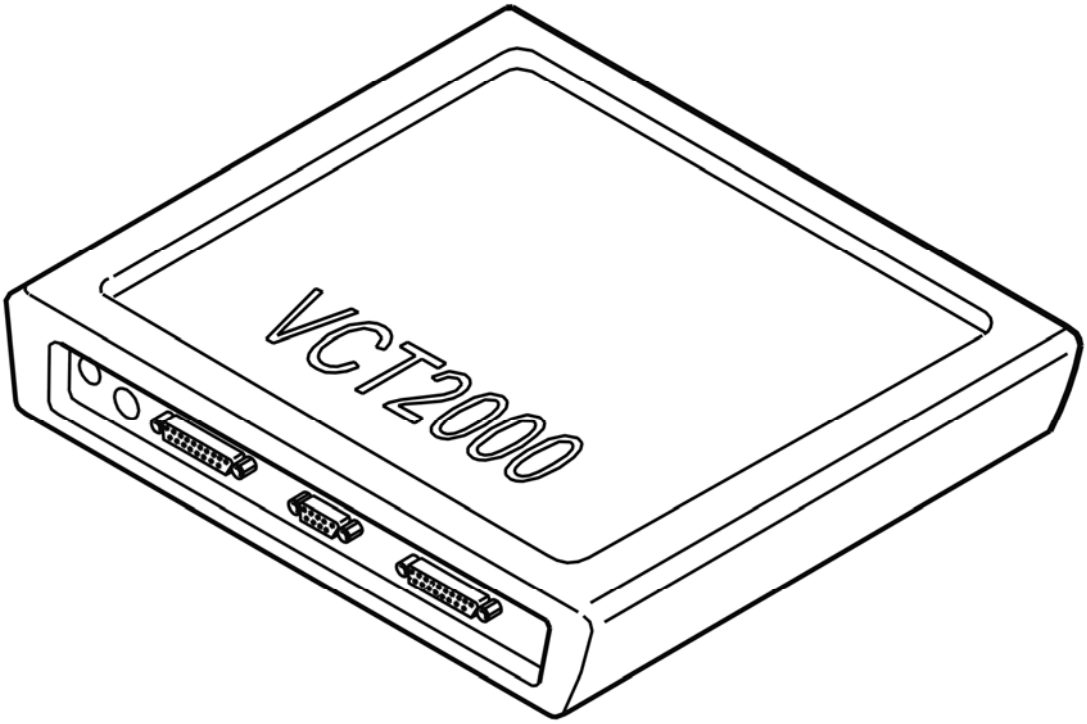

Fig. 145: Identifying VCT2000 Diagnostic Tool Symbol In VIDA
Courtesy of VOLVO CARS CORPORATION

- **Continue**

  Refer to **VERIFICATION**

CHECKING CABLE AND COMPONENT

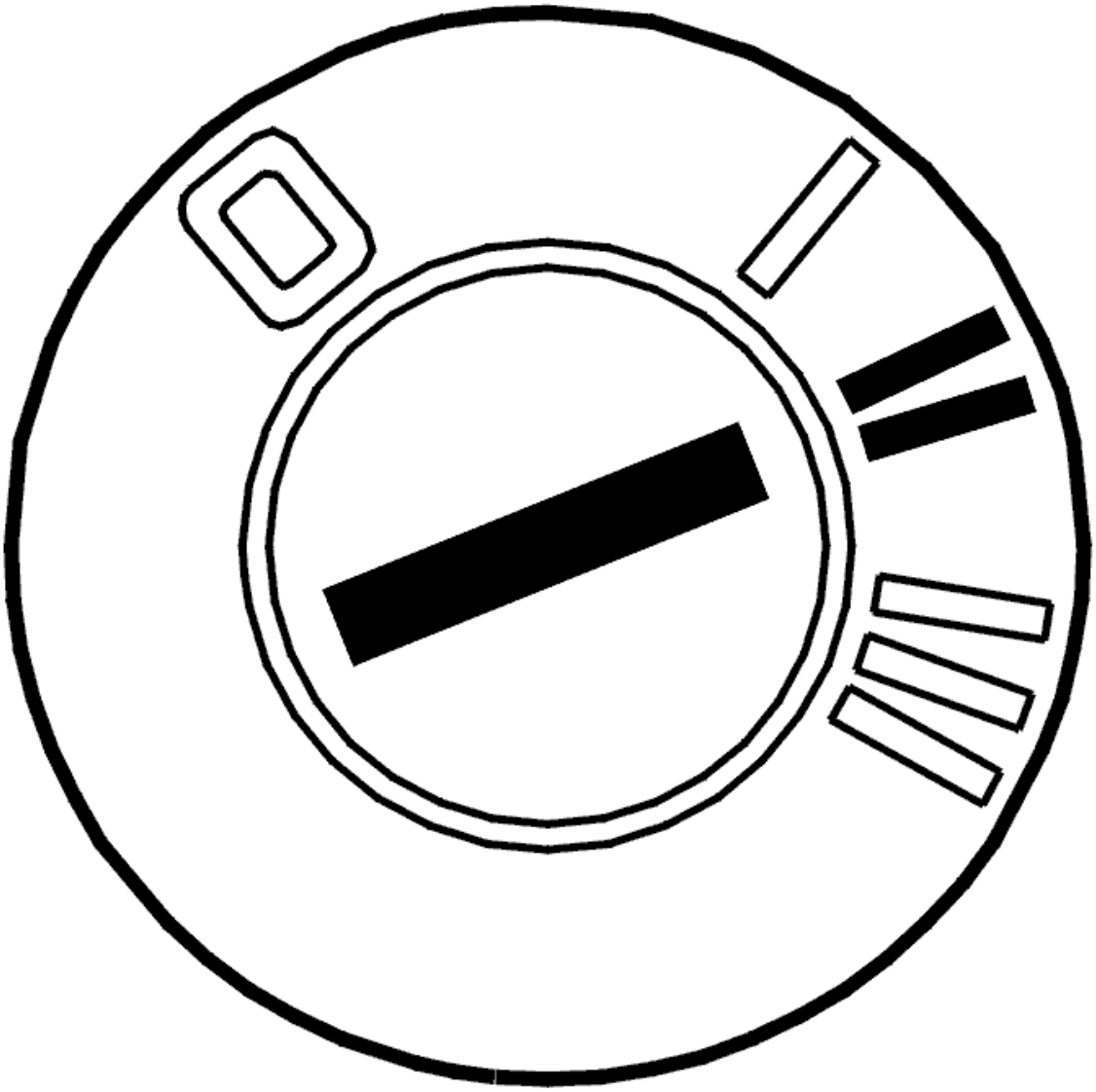

Fig. 146: Identifying Ignition ON
Courtesy of VOLVO CARS CORPORATION

Checking the fault cause

Check the fault cause as follows:

1. Ignition off
2. Disconnect the MOST connector from the multimedia module (MMM)
3. Connect the MOST cable to special tool see **9512867**
4. Ignition on
5. Activate the infotainment system
6. Check that the communication on the MOST network is functioning by reading off the status of the MOST locked parameter for at least 30 seconds. The parameter indicates whether the MOST network is closed and communication possible

7. If the parameter displays that the MOST network is not correctly connected, check the receiving control module in the same way as above.

The communication on the MOST network is working if the menu text is displayed. If this is the case, the fault cause is in the multimedia module (MMM). Continue the fault-tracing by checking the component.

The communication on the MOST network is not working if the menu text is not displayed. The fault cause is then in the MOST cable for the next control module. Continue the fault-tracing by checking the fiber optic cable.

Checking cable

- Check the MOST connection. Check for dirt, loose connections and damage
- Replace the MOST cable if no fault is found in the MOST terminal.

Checking the component

- Check the power supply and the ground terminal for the multimedia module (MMM)
- Check the MOST connection. Check for dirt, loose connections and damage
- Replace the multimedia module (MMM) if no fault is found.

Click the VCT2000 symbol to read off the status of the MOST network.

Remedy as necessary.

Other information:

- To access / replace the multimedia module (MMM), see **MULTIMEDIA MODULE (MMM), REPLACING**
- For information about checking the power supply and ground terminal, see **CHECKING THE VOLTAGE / GROUND TERMINAL (2003-2006)**
- For information about signals, see **SIGNAL SPECIFICATION**
- For information about checking and replacing the MOST cable, see **FIBER OPTIC CABLE HARNESS, REPAIRING**
- see **OPTICAL WIRING HARNESS CHECK**
- For information about location and order of control modules in the MOST network, see **LOCATION OF COMPONENTS** .

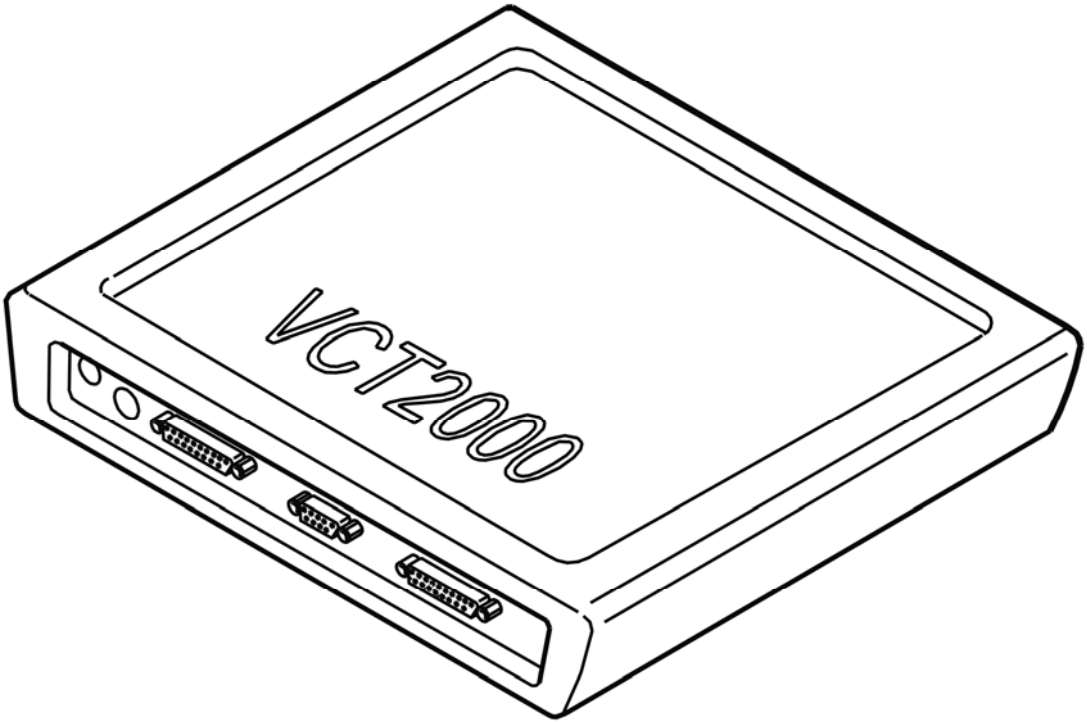

Fig. 147: Identifying VCT2000 Diagnostic Tool Symbol In VIDA
Courtesy of VOLVO CARS CORPORATION

- **Continue**

  Refer to **VERIFICATION**

CHECKING CABLE AND COMPONENT

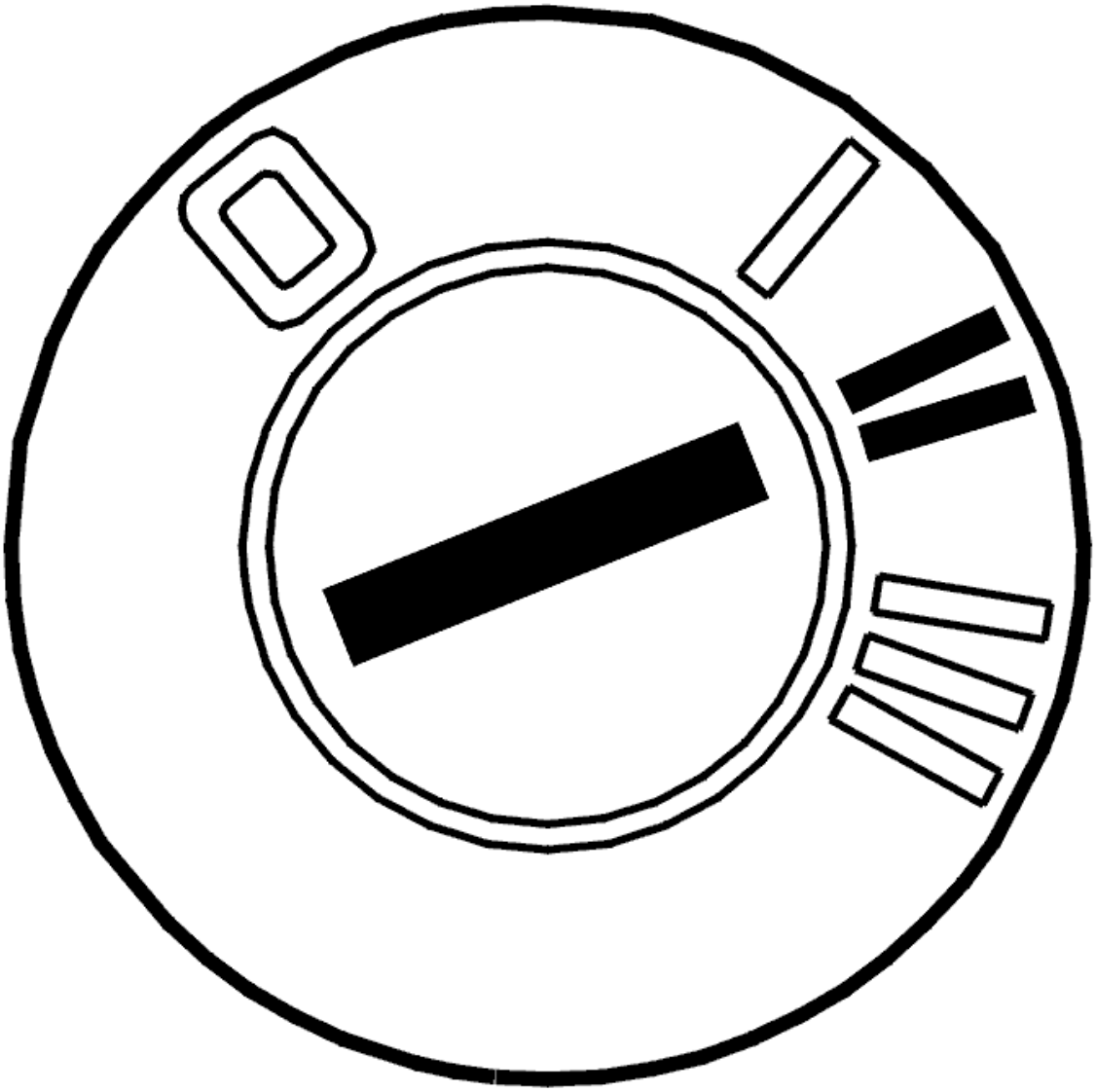

Fig. 148: Identifying Ignition ON
Courtesy of VOLVO CARS CORPORATION

- Ignition off
- Disconnect the MOST cable connector from the infotainment control module (ICM)
- Ignition on
- Activate the infotainment system.

  Check visually whether the infotainment control module (ICM) is emitting light from the MOST connector.

  The control module is defective if the infotainment control module (ICM) is not emitting light.

  If the infotainment control module (ICM) is transmitting light, the fault is in the MOST cable for the next control module.

Check the MOST connection. Check for dirt, loose connections and damage.

Replace the MOST cable if no fault is found in the MOST terminal.

Remedy as necessary.

Other information:

- To access / replace the infotainment control module (ICM), see **INFOTAINMENT CONTROL MODULE (ICM), REPLACING**
- For information about checking and replacing the MOST cable, see **FIBER OPTIC CABLE HARNESS, REPAIRING**
- For information about location and order of control modules in the MOST network, see **LOCATION OF COMPONENTS** .

- **Continue**

  Refer to **VERIFICATION**

VERIFICATION

HINT: After carrying out the repair, check that the fault has been remedied.

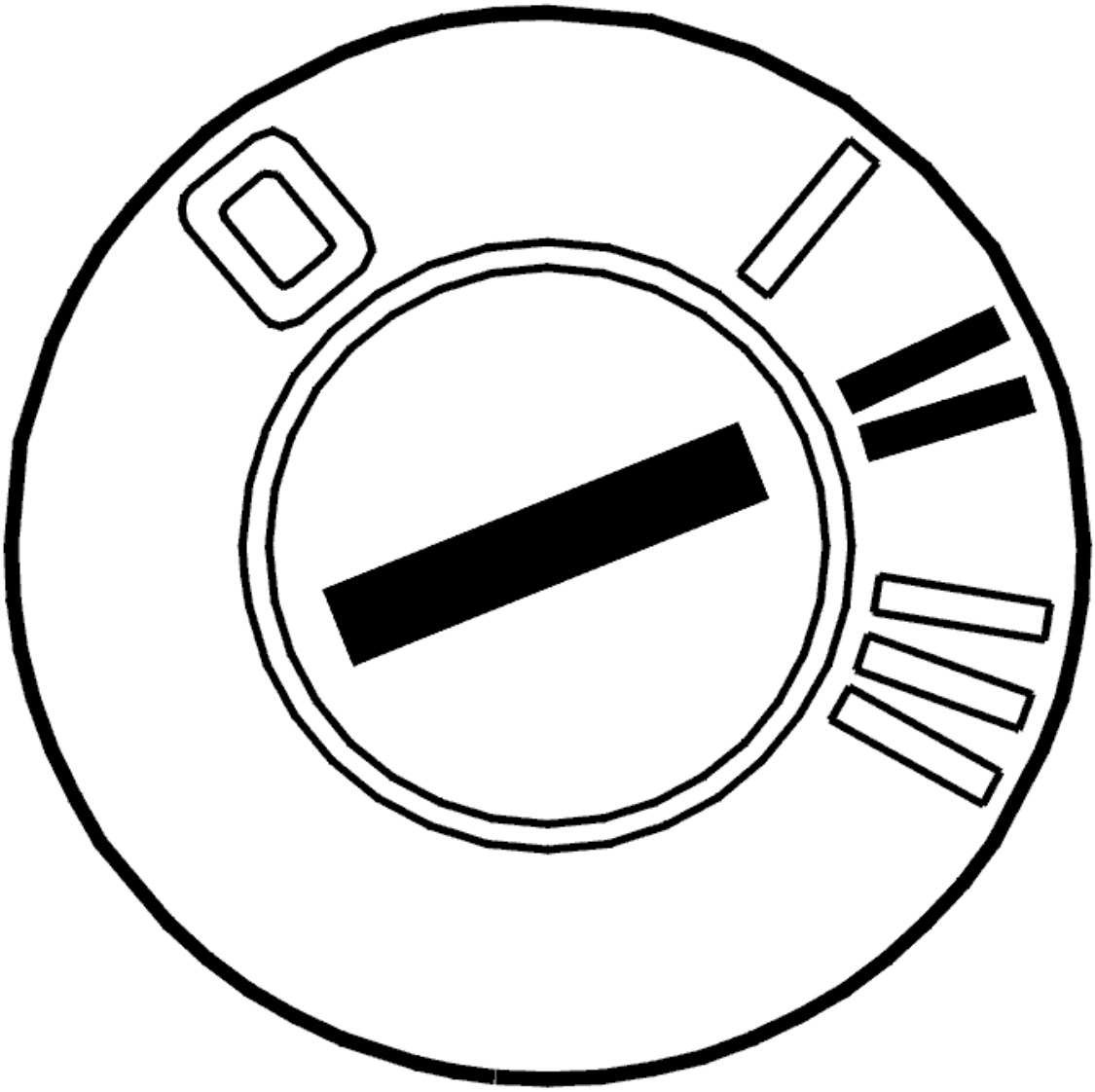

Fig. 149: Identifying Ignition ON
Courtesy of VOLVO CARS CORPORATION

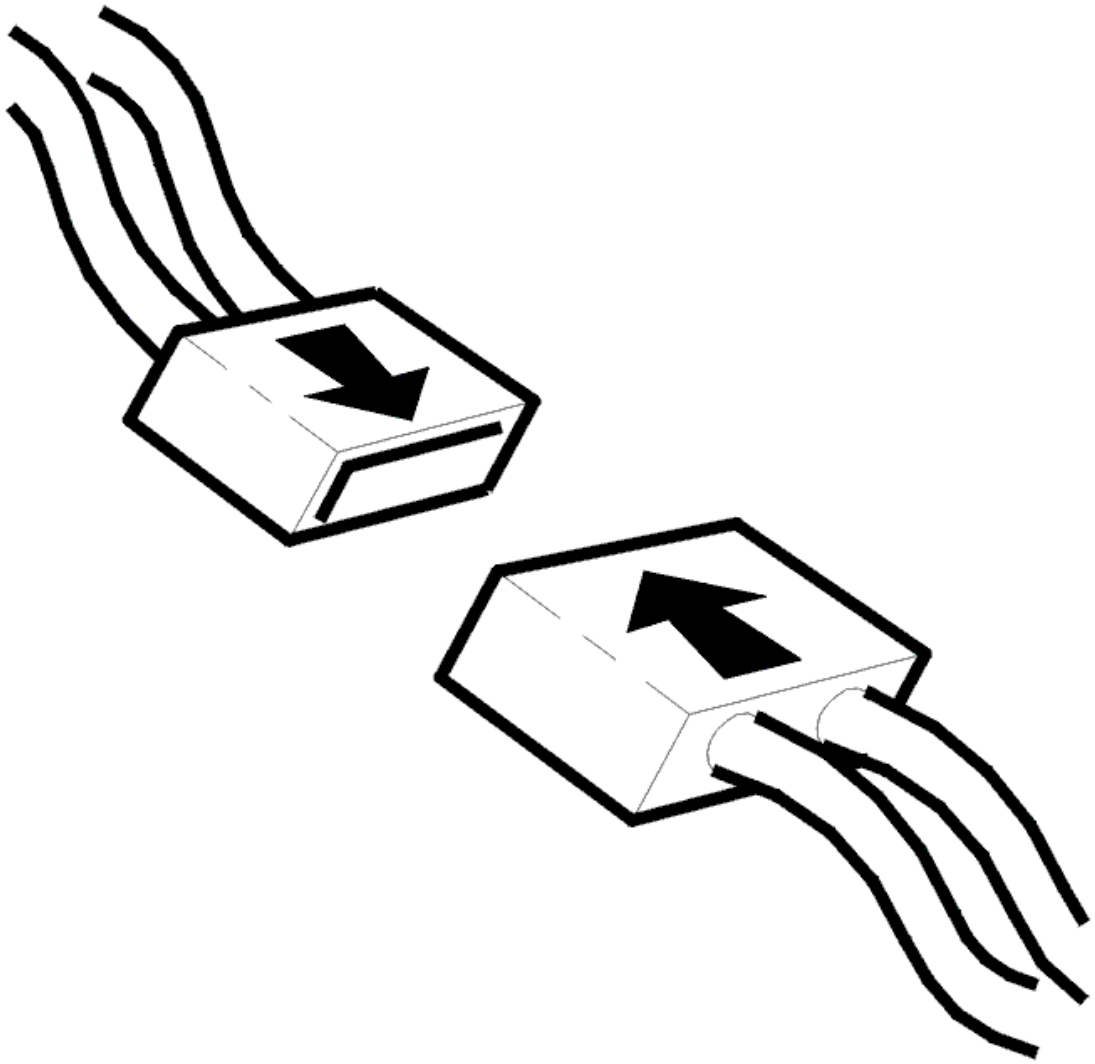

Fig. 150: Connecting Connector
Courtesy of VOLVO CARS CORPORATION

- Ignition off
- Reinstall the connectors, components etc.
- Ignition on.

  Using VCT2000 (Volvo Scan Tool) Activate the infotainment system and select the radio.

  Check whether there is sound from the radio in the loudspeakers.

Is the sound of the radio coming through the loudspeakers?

- **YES**

VERIFIED: Troubleshooting has been completed.

- **NO**

  Refer to **INFORMATION**

INFORMATION

FAULT-TRACING INFORMATION

The fault should have been detected and remedied. As this is not the case fault-tracing has failed.

Exit fault-tracing for this diagnostic trouble code (DTC) or make another attempt.

NO COMMUNICATION (2005)

Special tools:

see **9512867**

CHECKING THE WIRING AND COMPONENT

The infotainment control module (ICM) has detected an open-circuit in communication on the MOST network.

The MOST network is a fiber optic ring network. This means that all control modules which are connected to the network must be powered and grounded for the infotainment system to work. If, for any reason, a control module is unable to handle (receive or transmit) signals onwards on the MOST network, or if there is an open-circuit in the fiber optic cable, the infotainment control module (ICM) will shut down all functionality.

Communication on the fiber optic net is one-directional. The control modules on the MOST network receive light signals, amplify them and then send them onwards. The MOST connectors for the control modules contain two fiber optic cables, one for incoming and one for outgoing signals.

If the fault is intermittent, it has been registered previously but is no longer present. Intermittent faults can either be caused by interference when starting the MOST network, or by intermittent faults in the power supply/ground for one of the control modules in the network. The fault is evaluated depending on how it occurs. If the fault recurs, fault-trace for permanent faults.

It can be difficult to diagnose intermittent faults using a ring break diagnostic because for this to work the fault must occur during the diagnostic.

If the fault is permanent, perform a ring break diagnostic to locate the open-circuit.

- **Continue**

  Refer to **CHECKING FOR OPEN-CIRCUITS**

CHECKING FOR OPEN-CIRCUITS

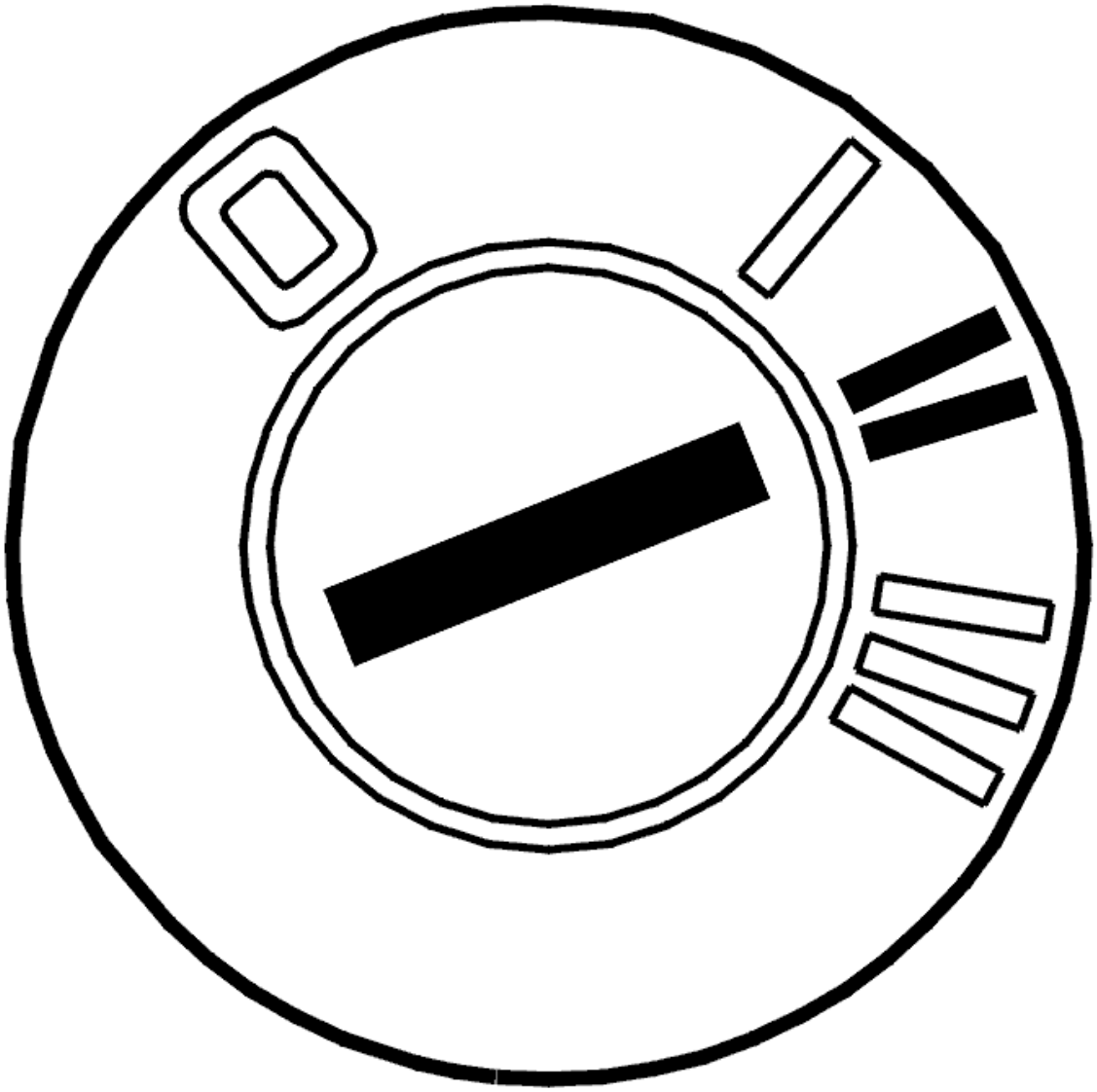

Fig. 151: Identifying Ignition ON
Courtesy of VOLVO CARS CORPORATION

Ring break diagnostic

A ring break diagnostic should be run to determine whether the fault has occurred.

To carry out a full ring break diagnostic of the MOST system, proceed as follows:

1. Switch off the ignition and remove the key
2. Remove the fuse for the antenna module (ATM)
3. Wait at least 3 minutes
4. Ignition on
5. Reinstall the fuse for the antenna module (ATM) within 25 seconds
6. Wait at least 30 seconds after switching on the ignition before reading off the position of the open-circuit.

Other information:

- For information about fuses, see the appropriate service information.
- **Continue**

  Refer to **READING OFF THE POSITION OF THE OPEN-CIRCUIT**

CHECKING CABLE AND COMPONENT

If the result of the ring break diagnostic is POOR, the infotainment control module (ICM) is receiving a signal on the MOST network. However it is unable to decode the signals because the luminance of the signals is too weak or the signals are distorted.

If the result from the ring break diagnostic is OK, the fault is intermittent.

Fault-tracing using the ring break diagnostic assumes that the fault is permanent or active when the test is run, i. e. the system is powered having been off.

HINT: If diagnostic trouble code (DTC) ICM-DC01 is intermittent, read off the status of the ring break diagnostic from the frozen values in Vehicle communication.

HINT: Note that the antenna module (ATM) is not normally included in a ring break diagnostic if the fuse is not removed. This means that the position of the open-circuit moves one step backwards in the MOST network.

HINT: On fully equipped vehicles, if the open-circuit position is 0, this may be because of:

- Subwoofer module (SUB)
- The fiber optic cable between the subwoofer module (SUB) and the antenna module (ATM)
- Antenna module (ATM)
- The fiber optic cable between the antenna module (ATM) and the infotainment control module (ICM)
- The optical switch in the infotainment control module (ICM). This means that the infotainment control module (ICM) is not able to interpret the incoming signal correctly.

Check the communication on the MOST network by bypassing the control modules one by one on the MOST network as follows:

- Ignition off
- Disconnect the MOST connector from the relevant control module
- Connect the MOST cable to special tool see **9512867**
- Ignition on
- Activate the infotainment system
- Check that the communication on the MOST network is functioning by reading off the status of the MOST locked parameter for at least 30 seconds. The parameter indicates whether the MOST network is

closed and communication possible.

If the communication on the MOST network is stable when a control module is disconnected, check the power supply and the ground terminal on the relevant control module. Check for intermittent faults. Try replacing the component if no fault is found.

Click the VCT2000 symbol to read off the status of the MOST network.

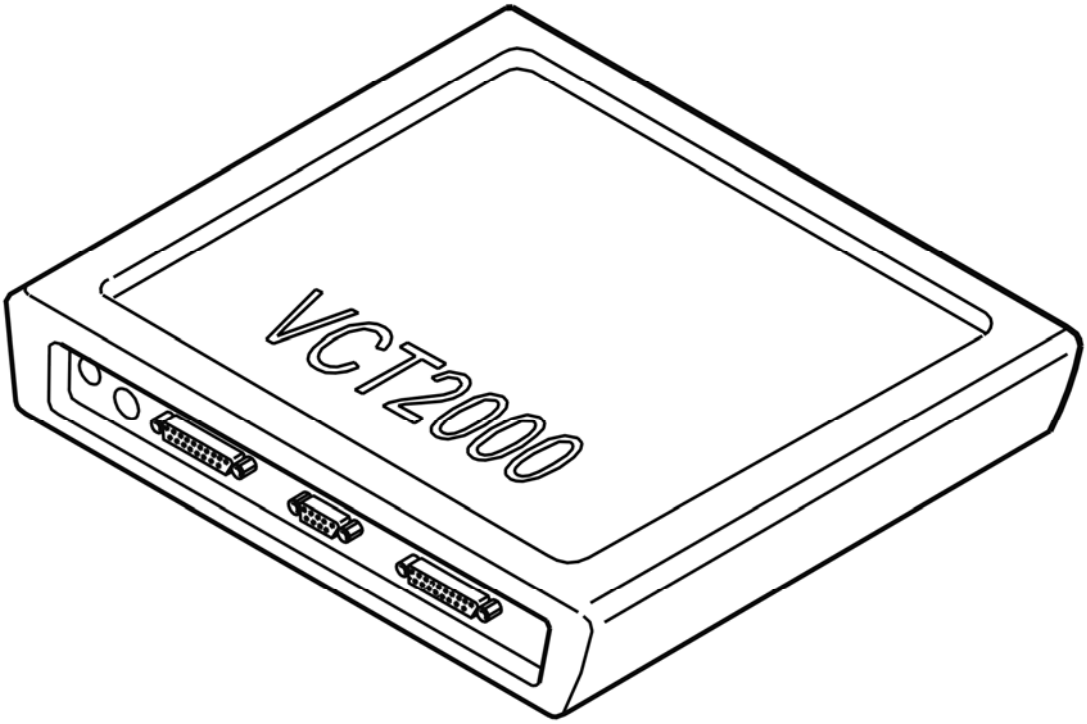

Fig. 152: Identifying VCT2000 Diagnostic Tool Symbol In VIDA
Courtesy of VOLVO CARS CORPORATION

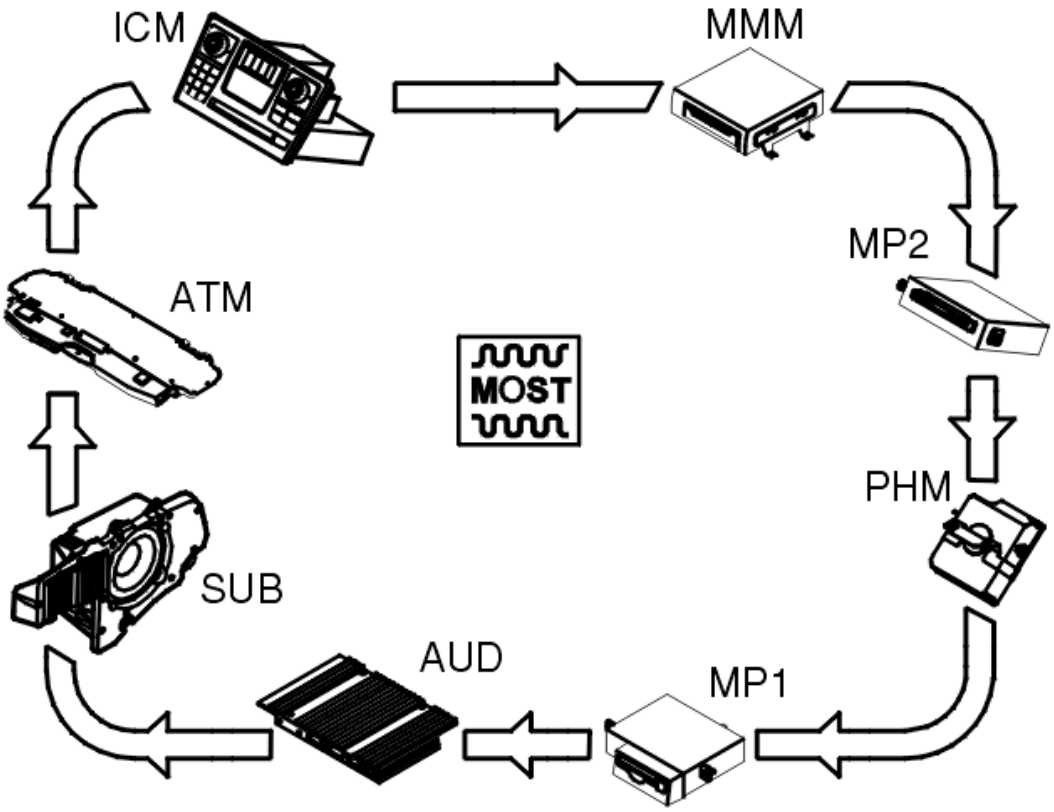

Fig. 153: MOST Bus (Media Oriented System Transportation) Communication Diagram
Courtesy of VOLVO CARS CORPORATION

- **Continue**

  Refer to **VERIFICATION**

READING OFF THE POSITION OF THE OPEN-CIRCUIT

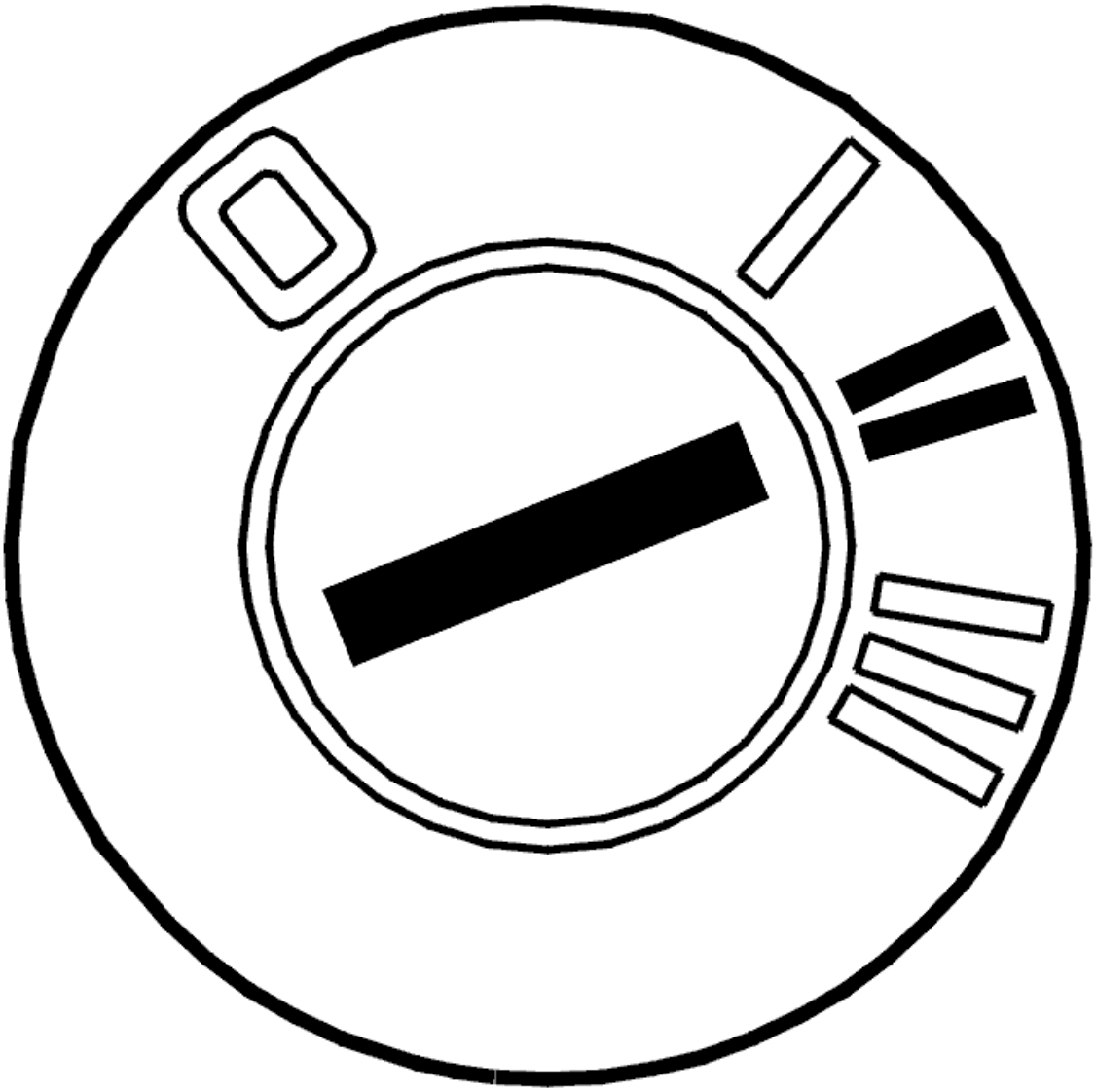

Fig. 154: Identifying Ignition ON
Courtesy of VOLVO CARS CORPORATION

- Ignition on.

  Reading off the result from a ring break diagnostic

  Click the VCT2000 symbol to read off the result of the ring break diagnostic.

  As well as the result from the ring break diagnostic, a list of the control modules included in the MOST network is provided for that car.

  The following result can be obtained from a ring break diagnostic:

  If the fault occurs when the ring break diagnostic is run, the result will be presented as an open-circuit position.

If the fault does not occur when the ring break diagnostic is run, the result will be OK. If this is the case, select alternative 3 below.

- If the diagnostic indicates an open-circuit in the communication on the MOST network, the result will be an open-circuit position
- The result will be OK if there is no fault on the MOST network
- If the infotainment control module (ICM) receives a signal on the MOST network but is unable to decode it because the luminance is weak or the signals are distorted, the result will be POOR.

Determining the position of the open-circuit

The position of the open-circuit is calculated by working backwards in the MOST network from the infotainment control module (ICM).

NOTE: The ring break diagnostic only counts backwards, irrespective of which, or how many control modules, are installed in the car. To determine the position of the open-circuit, check the list to, see which control modules are installed in that particular car. Then count backwards following the determined order. The number of control modules can vary between 3-8.

Two examples are outlined below:

- The first open-circuit position corresponds to 0. This means that the open-circuit is in the antenna module (ATM) or in the cable between the antenna module (ATM) and the infotainment control module (ICM)
- If the position is 1, go one step backwards in the chain. The open-circuit is in the subwoofer module (SUB) or in the cable between the subwoofer module (SUB) and the antenna module (ATM). The open-circuit can also be caused by the optical switch in the antenna module (ATM) being damaged so that the antenna module (ATM) is not able to interpret the incoming signal from the subwoofer module (SUB) correctly.

  NOTE: The subwoofer module (SUB) is not standard. If one is not installed, the open-circuit position 1 applies to the audio module (AUD).

Select the alternative for the control module to be checked.

Alternative 1: Refer to CHECKING CABLE AND COMPONENT

Antenna module (ATM)

Subwoofer module (SUB)

Audio module (AUD)

CD player module (MP2)

Alternative 2: Refer to CHECKING CABLE AND COMPONENT

Phone module (PHM)

MD player module (MP1)

Multimedia module (MMM)

Infotainment control module (ICM)

Alternative 3: Refer to CHECKING CABLE AND COMPONENT

The result from the ring break diagnostic indicates that the MOST network is OK.

The result from the ring break diagnostic is POOR.

Other information:

- For information about location and order of control modules in the MOST network, see **LOCATION OF COMPONENTS**

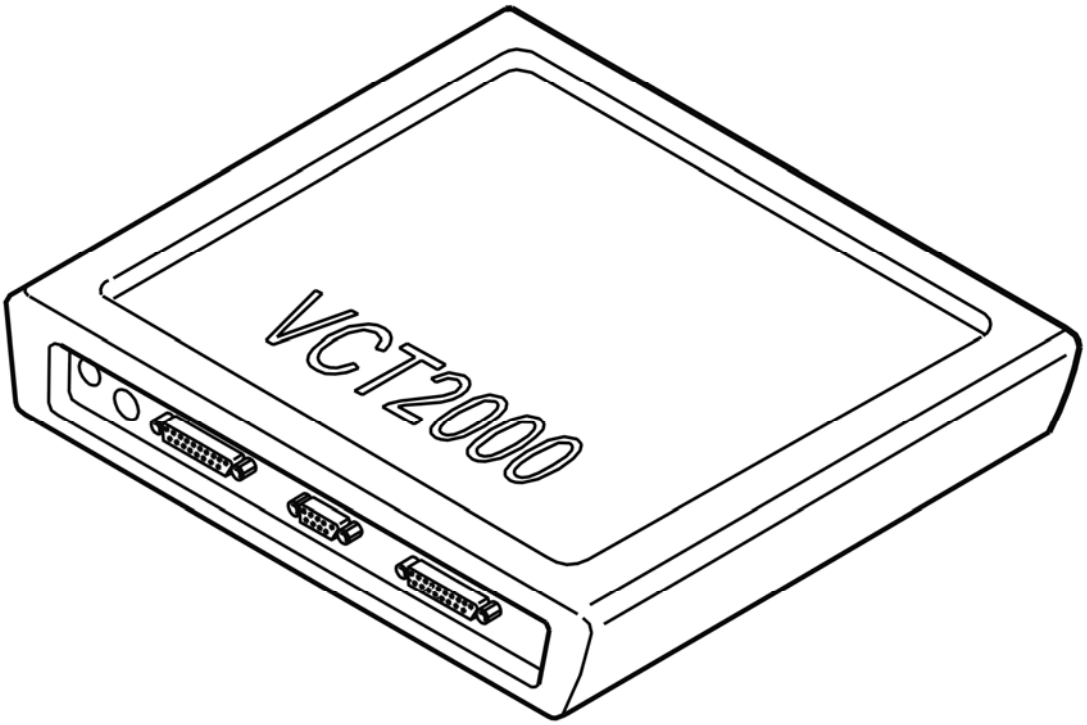

Fig. 155: Identifying VCT2000 Diagnostic Tool Symbol In VIDA
Courtesy of VOLVO CARS CORPORATION

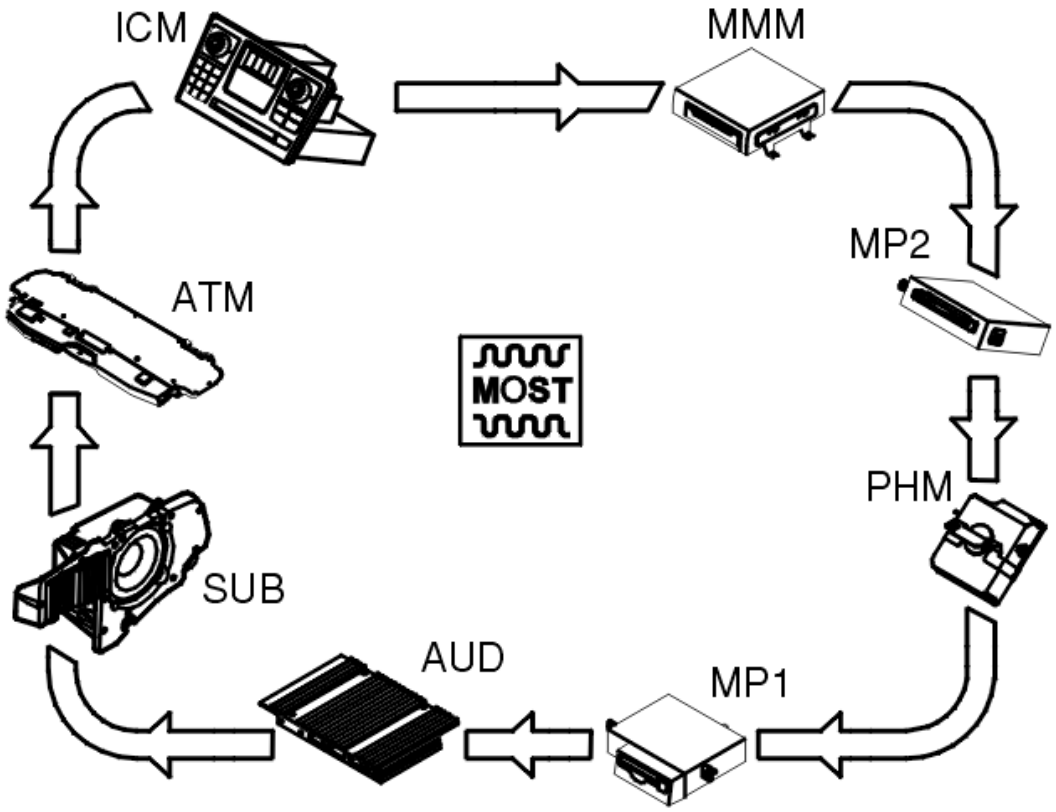

Fig. 156: MOST Bus (Media Oriented System Transportation) Communication Diagram
Courtesy of VOLVO CARS CORPORATION

CHECKING CABLE AND COMPONENT

Select the control module to be checked from the list.

1. Antenna module (ATM). Refer to **CHECKING CABLE AND COMPONENT**

2. Subwoofer module (SUB). Refer to **CHECKING CABLE AND COMPONENT**

3. Audio module (AUD). Refer to **CHECKING CABLE AND COMPONENT**

4. CD player module (MP2). Refer to **CHECKING CABLE AND COMPONENT**

CHECKING CABLE AND COMPONENT

Select the control module to be checked from the list.

1. Phone module (PHM). Refer to **CHECKING CABLE AND COMPONENT**

2. MD player module (MP1). Refer to **CHECKING CABLE AND COMPONENT**

3. Multimedia module (MMM). Refer to **CHECKING CABLE AND COMPONENT**

4. Infotainment control module (ICM). Refer to **CHECKING CABLE AND COMPONENT**

CHECKING CABLE AND COMPONENT

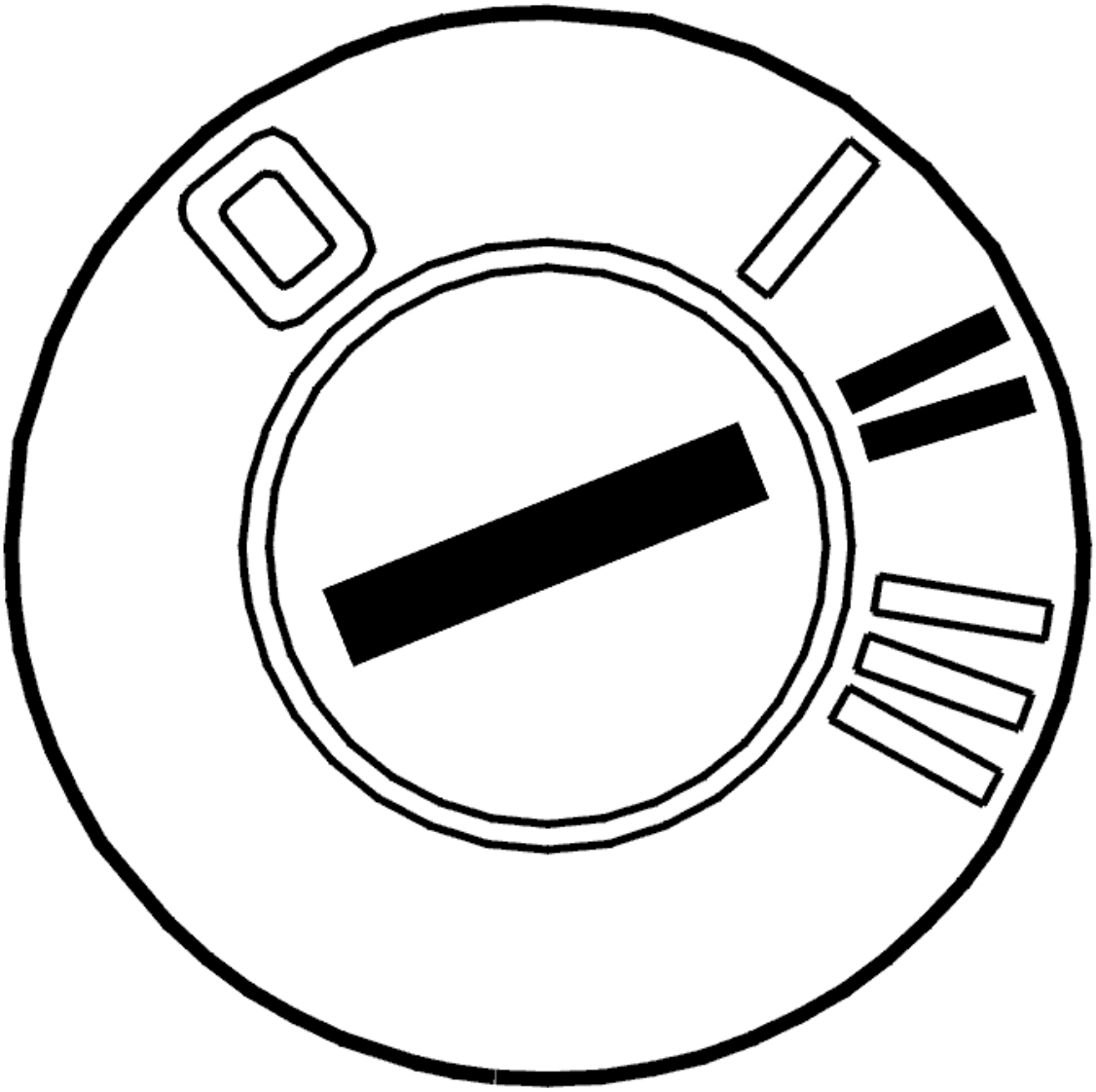

Fig. 157: Identifying Ignition ON
Courtesy of VOLVO CARS CORPORATION

Checking the fault cause

Check the fault cause as follows:

1. Ignition off
2. Disconnect the MOST connector from the antenna module (ATM)
3. Connect the MOST cable to special tool see **9512867**
4. Ignition on

5. Activate the infotainment system
6. Check that the communication on the MOST network is functioning by reading off the status of the MOST locked parameter for at least 30 seconds. The parameter indicates whether the MOST network is closed and communication possible
7. If the parameter displays that the MOST network is not correctly connected, check the receiving control module in the same way as above.

The communication on the MOST network is working if the menu text is displayed. If this is the case, the fault cause is in the antenna module (ATM). Continue the fault-tracing by checking the component.

The communication on the MOST network is not working if the menu text is not displayed. The fault cause is then in the MOST cable for the next control module. Continue the fault-tracing by checking the fiber optic cable.

Checking cable

- Check the MOST connection. Check for dirt, loose connections and damage
- Replace the MOST cable if no fault is found in the MOST terminal.

Checking the component

- Check the power supply and the ground terminal for the antenna module (ATM)
- Check the MOST connection. Check for dirt, loose connections and damage
- Replace the antenna module (ATM) if no fault is found.

Remedy as necessary.

Click the VCT2000 symbol to read off the status of the MOST network.

Other information:

- To access or replace the antenna module (ATM), see **RECEIVER GPS, TMC (ATM), REPLACE**
- For information about checking the power supply and ground terminal, see **CHECKING THE POWER SUPPLY AND GROUND TERMINALS**
- For information about signals, see **SIGNAL SPECIFICATION**
- see **OPTICAL WIRING HARNESS CHECK**
- For information about checking and replacing the MOST cable, see **FIBER OPTIC CABLE HARNESS, REPAIRING**
- For information about location and order of control modules in the MOST network, see **LOCATION OF COMPONENTS** .

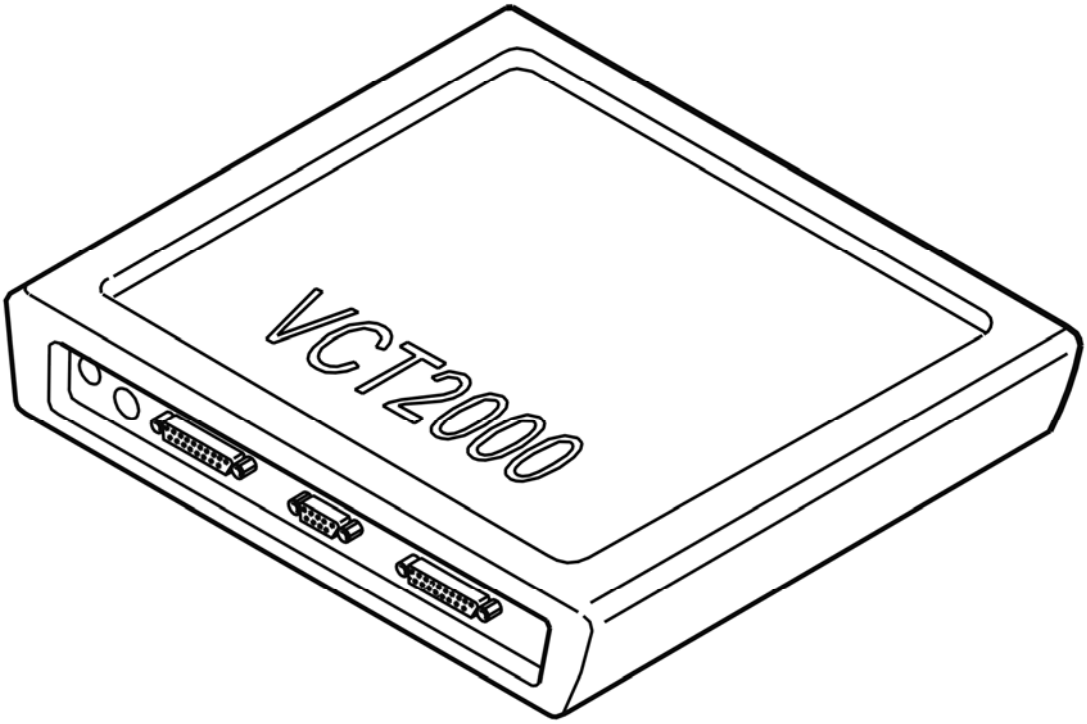

Fig. 158: Identifying VCT2000 Diagnostic Tool Symbol In VIDA
Courtesy of VOLVO CARS CORPORATION

- **Continue**

  Refer to **VERIFICATION**

CHECKING CABLE AND COMPONENT

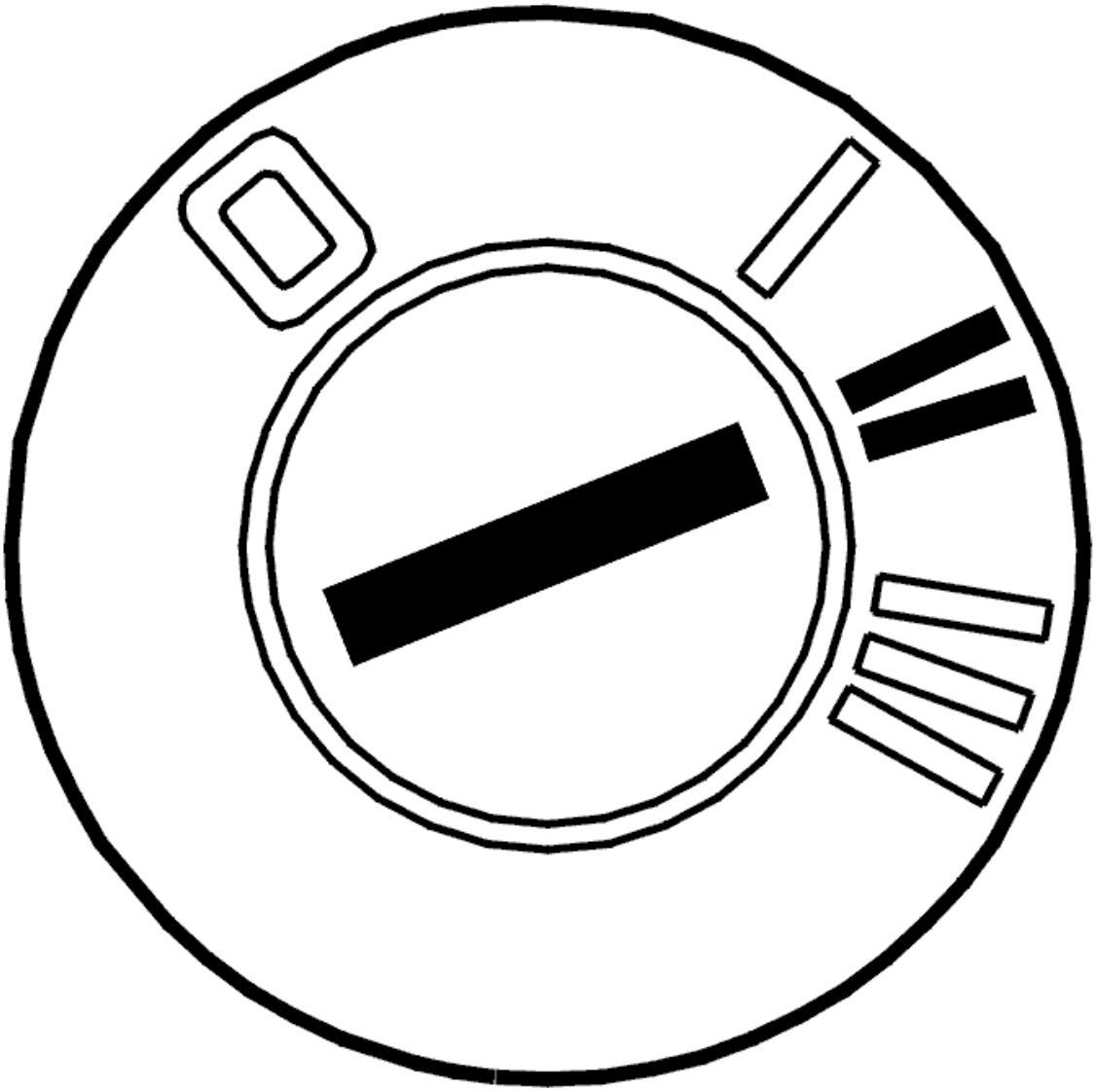

Fig. 159: Identifying Ignition ON
Courtesy of VOLVO CARS CORPORATION

Checking the fault cause

Check the fault cause as follows:

1. Ignition off
2. Disconnect the MOST connector from the subwoofer module (SUB)
3. Connect the MOST cable to special tool see **9512867**
4. Ignition on
5. Activate the infotainment system
6. Check that the communication on the MOST network is functioning by reading off the status of the MOST locked parameter for at least 30 seconds. The parameter indicates whether the MOST network is closed and communication possible

7. If the parameter displays that the MOST network is not correctly connected, check the receiving control module in the same way as above.

The communication on the MOST network is working if the menu text is displayed. If this is the case, the fault cause is in the bypassed control module. Continue the fault-tracing by checking the component.

The communication on the MOST network is not working if the menu text is not displayed. The fault cause is then in the MOST cable for the next control module. Continue the fault-tracing by checking the fiber optic cable.

Checking cable

- Check the MOST connection. Check for dirt, loose connections and damage
- Replace the MOST cable if no fault is found in the MOST terminal.

Checking the component

- Check the power supply and the ground terminal for the subwoofer module (SUB)
- Check the MOST connection. Check for dirt, loose connections and damage
- Replace the subwoofer module (SUB) if no fault is found.

Click the VCT2000 symbol to read off the status of the MOST network.

Remedy as necessary.

Other information:

- To access or replace the subwoofer module (SUB), see **SUBWOOFER MODULE (SUB), REPLACING**
- For information about checking the power supply and ground terminal, see **CHECKING THE VOLTAGE / GROUND TERMINAL**
- For information about signals, see **SIGNAL SPECIFICATION**
- For information about checking and replacing the MOST cable, see **FIBER OPTIC CABLE HARNESS, REPAIRING**
- see **OPTICAL WIRING HARNESS CHECK**
- For information about location and order of control modules in the MOST network, see **LOCATION OF COMPONENTS** .

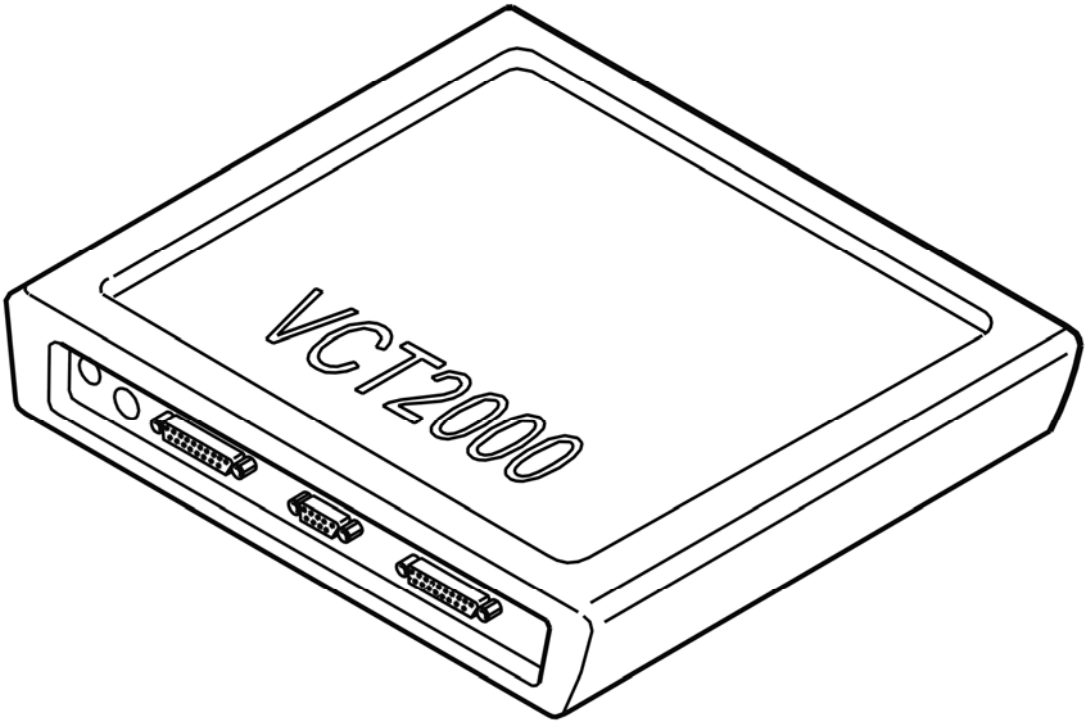

Fig. 160: Identifying VCT2000 Diagnostic Tool Symbol In VIDA
Courtesy of VOLVO CARS CORPORATION

- **Continue**

  Refer to **VERIFICATION**

CHECKING CABLE AND COMPONENT

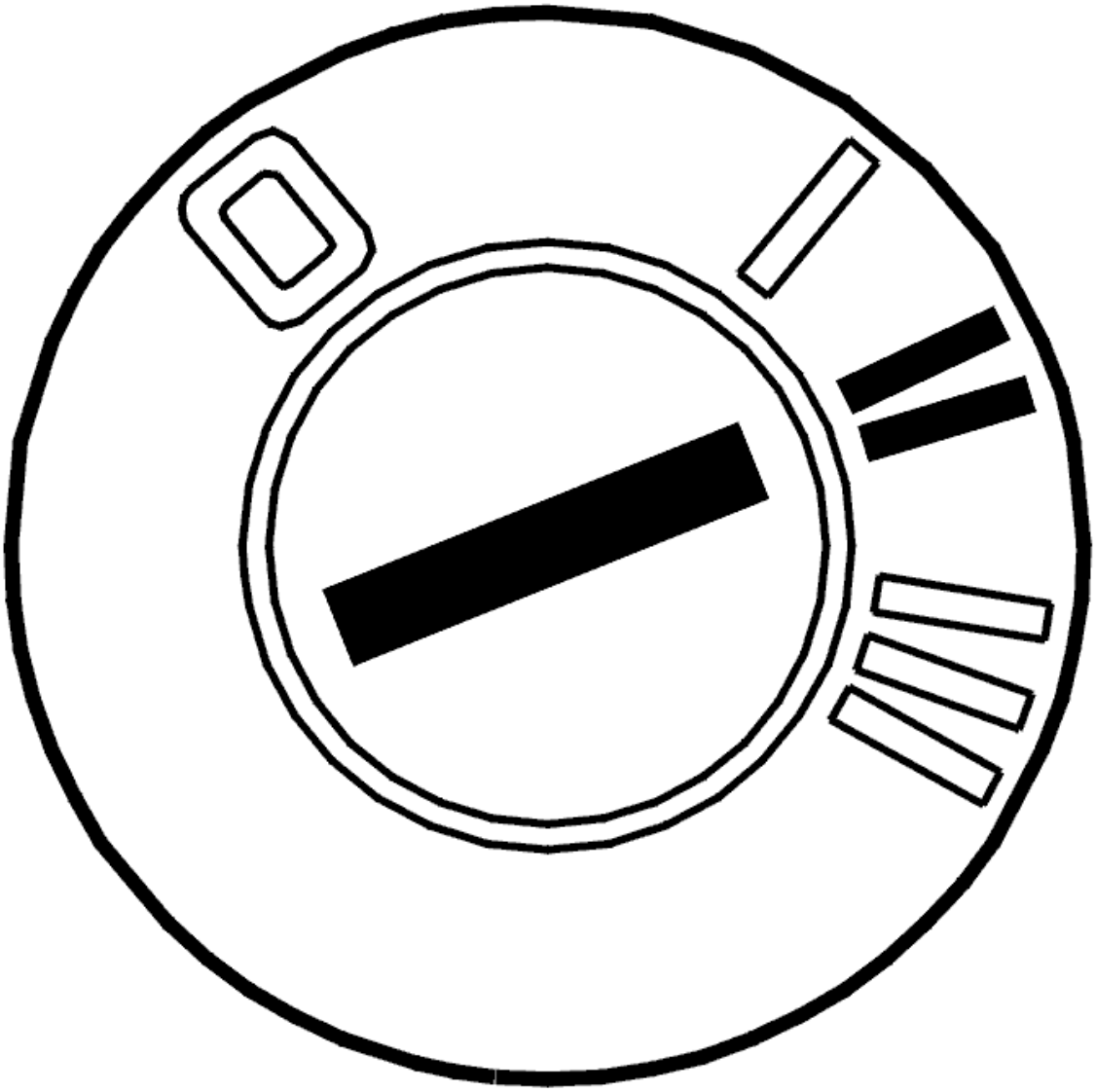

Fig. 161: Identifying Ignition ON
Courtesy of VOLVO CARS CORPORATION

Checking the fault cause

Check the fault cause as follows:

1. Ignition off
2. Disconnect the MOST connector from the audio module (AUD)
3. Connect the MOST cable to special tool see **9512867**
4. Ignition on
5. Activate the infotainment system
6. Check that the communication on the MOST network is functioning by reading off the status of the MOST locked parameter for at least 30 seconds. The parameter indicates whether the MOST network is closed and communication possible

7. If the parameter displays that the MOST network is not correctly connected, check the receiving control module in the same way as above.

The communication on the MOST network is working if the menu text is displayed. If this is the case, the fault cause is in the audio module (AUD). Continue the fault-tracing by checking the component.

The communication on the MOST network is not working if the menu text is not displayed. The fault cause is then in the MOST cable for the next control module. Continue the fault-tracing by checking the fiber optic cable.

Checking cable

- Check the MOST connection. Check for dirt, loose connections and damage
- Replace the MOST cable if no fault is found in the MOST terminal.

Checking the component

- Check the power supply and the ground terminal for the audio module (AUD)
- Check the MOST connection. Check for dirt, loose connections and damage
- Replace the audio module (AUD) if no fault is found.

Click the VCT2000 symbol to read off the status of the MOST network.

Remedy as necessary.

Other information:

- To access or replace the audio module (AUD), see **AUDIO MODULE (AUD), REPLACING**
- For information about checking the power supply and ground terminal, see **CHECKING THE VOLTAGE / GROUND TERMINAL**
- For information about signals, see **SIGNAL SPECIFICATION**
- For information about checking and replacing the MOST cable, see **FIBER OPTIC CABLE HARNESS, REPAIRING**
- see **OPTICAL WIRING HARNESS CHECK**
- For information about location and order of control modules in the MOST network, see **LOCATION OF COMPONENTS** .

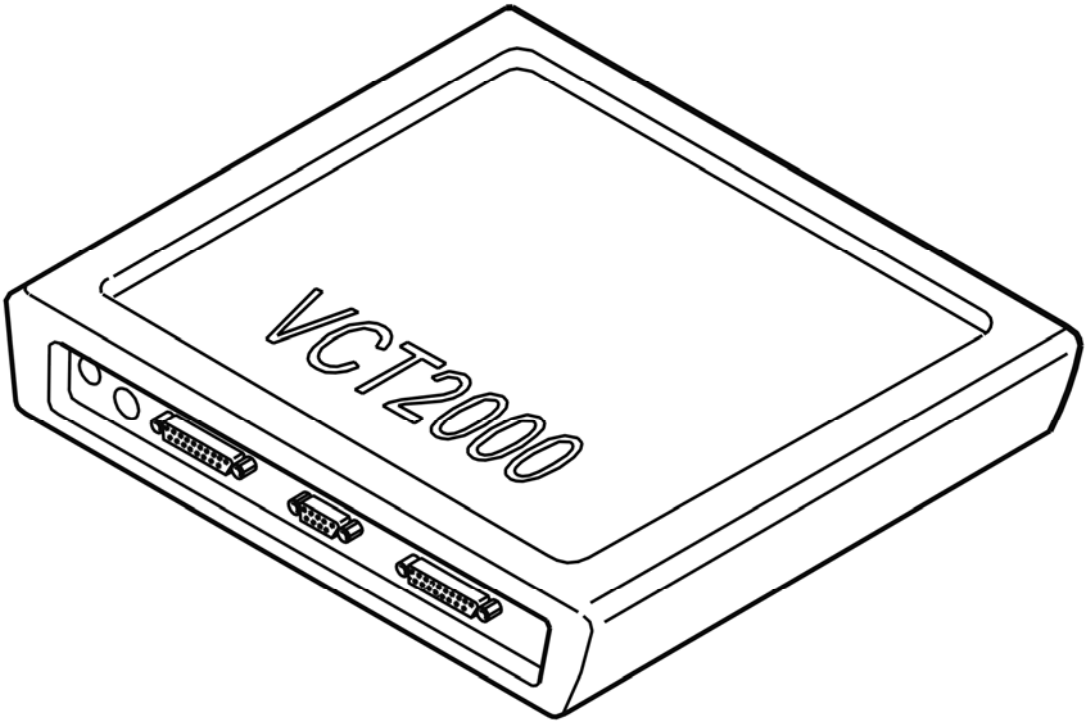

Fig. 162: Identifying VCT2000 Diagnostic Tool Symbol In VIDA
Courtesy of VOLVO CARS CORPORATION

- **Continue**

  Refer to **VERIFICATION**

CHECKING CABLE AND COMPONENT

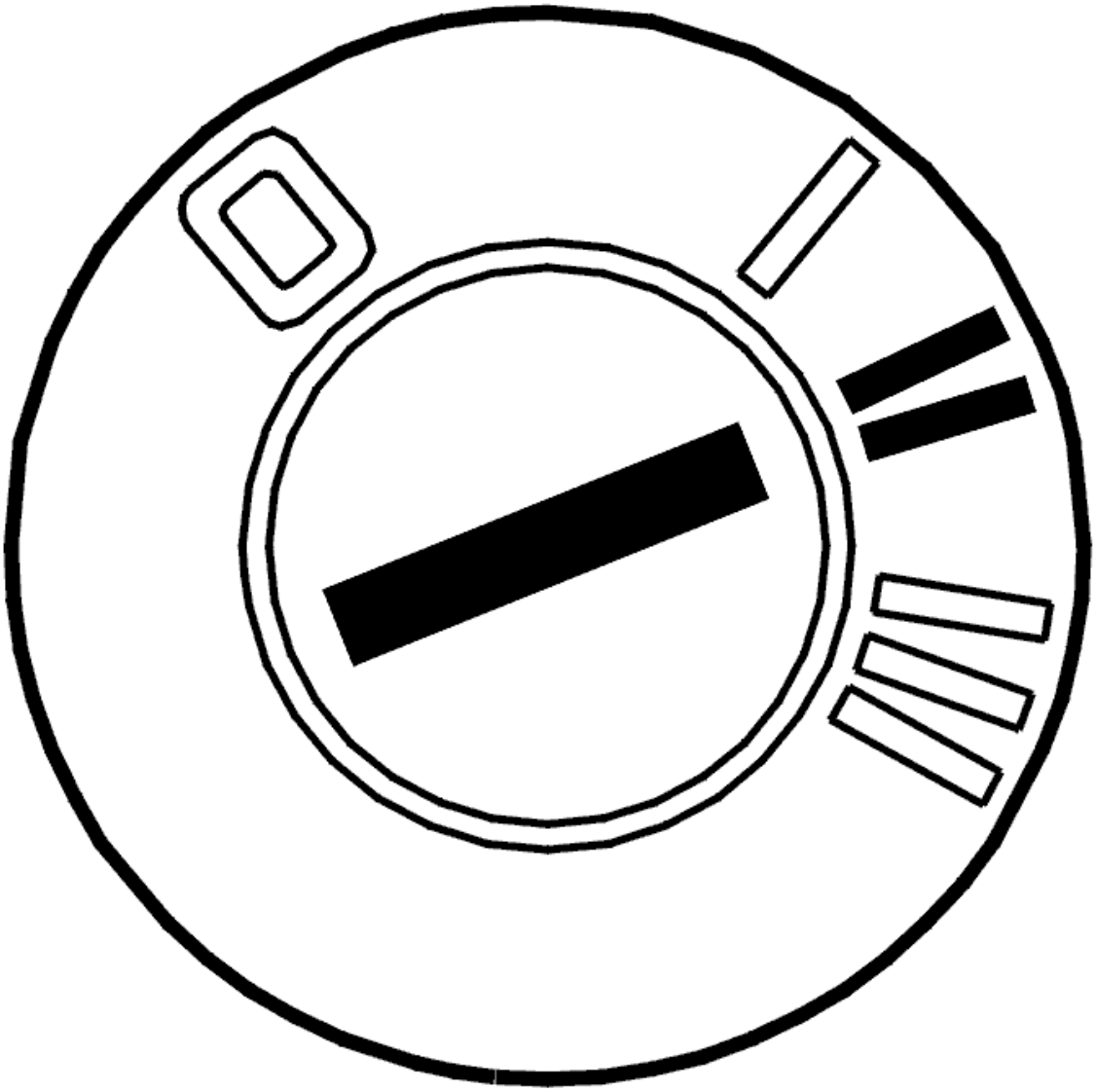

Fig. 163: Identifying Ignition ON
Courtesy of VOLVO CARS CORPORATION

Checking the fault cause

Check the fault cause as follows:

1. Ignition off
2. Disconnect the MOST connector from the CD player module (MP2)
3. Connect the MOST cable to special tool see **9512867**
4. Ignition on
5. Activate the infotainment system
6. Check that the communication on the MOST network is functioning by reading off the status of the MOST locked parameter for at least 30 seconds. The parameter indicates whether the MOST network is closed and communication possible

7. If the parameter displays that the MOST network is not correctly connected, check the receiving control module in the same way as above.

The communication on the MOST network is working if the menu text is displayed. The fault cause is then in the CD module (MP2). Continue the fault-tracing by checking the component.

The communication on the MOST network is not working if the menu text is not displayed. The fault cause is then in the MOST cable for the next control module. Continue the fault-tracing by checking the fiber optic cable.

Checking cable

- Check the MOST connection. Check for dirt, loose connections and damage
- Replace the MOST cable if no fault is found in the MOST terminal.

Checking the component

- Check the power supply and the ground terminal for the CD player module (MP2)
- Check the MOST connection. Check for dirt, loose connections and damage
- Replace the CD player module (MP2) if no fault is found.

Click the VCT2000 symbol to read off the status of the MOST network.

Remedy as necessary.

Other information:

- To access or replace the CD module (MP2), see **MINIDISC / CD CONTROL MODULE, REPLACING**
- For information about checking the power supply and ground terminal, see **CHECKING THE POWER SUPPLY AND GROUND TERMINALS**
- For information about signals, see **SIGNAL SPECIFICATION**
- For information about checking and replacing the MOST cable, see **FIBER OPTIC CABLE HARNESS, REPAIRING**
- see **OPTICAL WIRING HARNESS CHECK**
- For information about location and order of control modules in the MOST network, see **LOCATION OF COMPONENTS** .

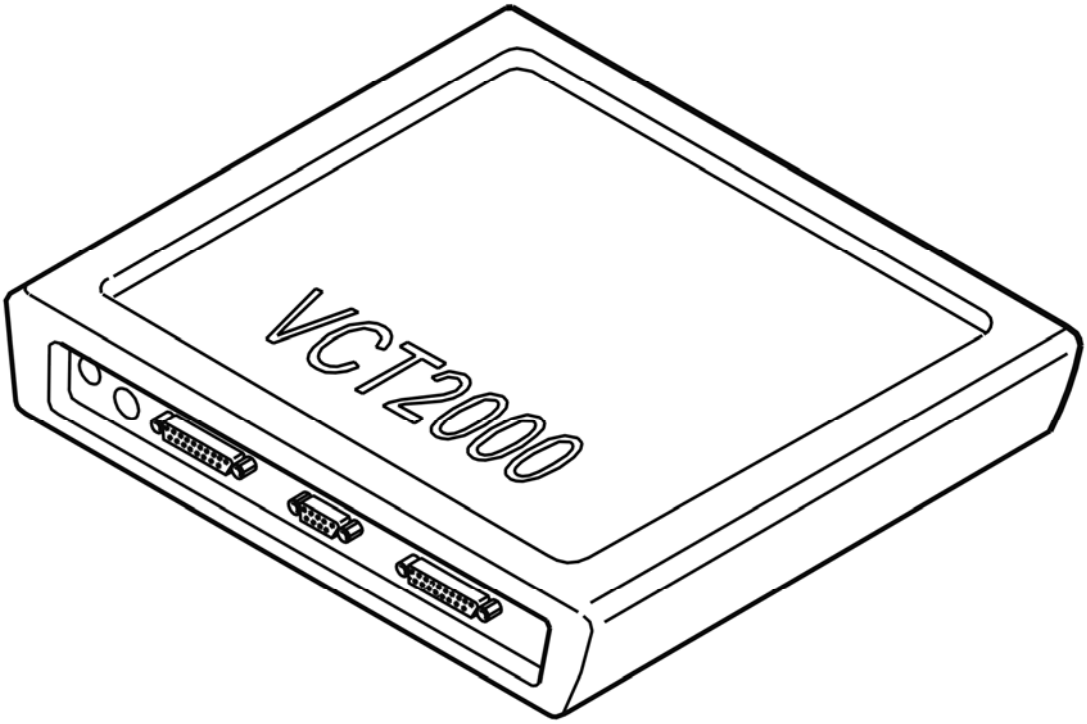

Fig. 164: Identifying VCT2000 Diagnostic Tool Symbol In VIDA
Courtesy of VOLVO CARS CORPORATION

- **Continue**

  Refer to **VERIFICATION**

CHECKING CABLE AND COMPONENT

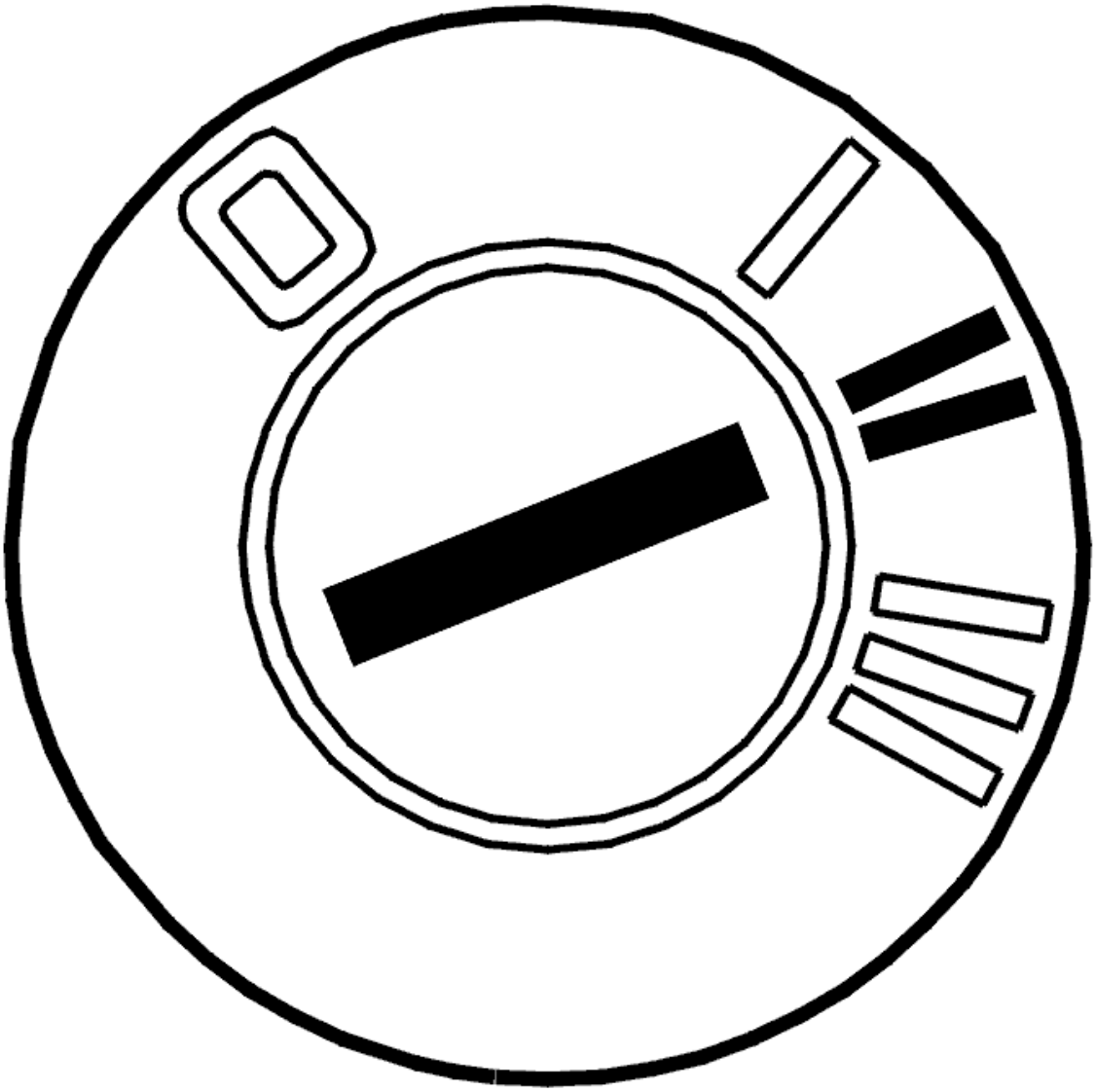

Fig. 165: Identifying Ignition ON
Courtesy of VOLVO CARS CORPORATION

Checking the fault cause

Check the fault cause as follows:

1. Ignition off
2. Disconnect the MOST connector from the phone module (PHM)
3. Connect the MOST cable to special tool see **9512867**
4. Ignition on
5. Activate the infotainment system
6. Check that the communication on the MOST network is functioning by reading off the status of the MOST locked parameter for at least 30 seconds. The parameter indicates whether the MOST network is closed and communication possible

7. If the parameter displays that the MOST network is not correctly connected, check the receiving control module in the same way as above.

The communication on the MOST network is working if the menu text is displayed. If this is the case, the fault cause is in the phone module (PHM). Continue the fault-tracing by checking the component.

The communication on the MOST network is not working if the menu text is not displayed. The fault cause is then in the MOST cable for the next control module. Continue the fault-tracing by checking the fiber optic cable.

Checking cable

- Check the MOST connection. Check for dirt, loose connections and damage
- Replace the MOST cable if no fault is found in the MOST terminal.

Checking the component

- Check the power supply and the ground terminal for the phone module (PHM)
- Check the MOST connection. Check for dirt, loose connections and damage
- Replace the phone module (PHM) if no fault is found.

Click the VCT2000 symbol to read off the status of the MOST network.

Remedy as necessary.

Other information:

- see **PHONE MODULE (PHM), REPLACING**
- see **SIGNAL SPECIFICATION**
- see **CHECKING VOLTAGE / GROUND CONNECTION**
- For information about checking and replacing the MOST cable, see **FIBER OPTIC CABLE HARNESS, REPAIRING**
- see **OPTICAL WIRING HARNESS CHECK**
- For information about location and order of control modules in the MOST network, see **LOCATION OF COMPONENTS** .

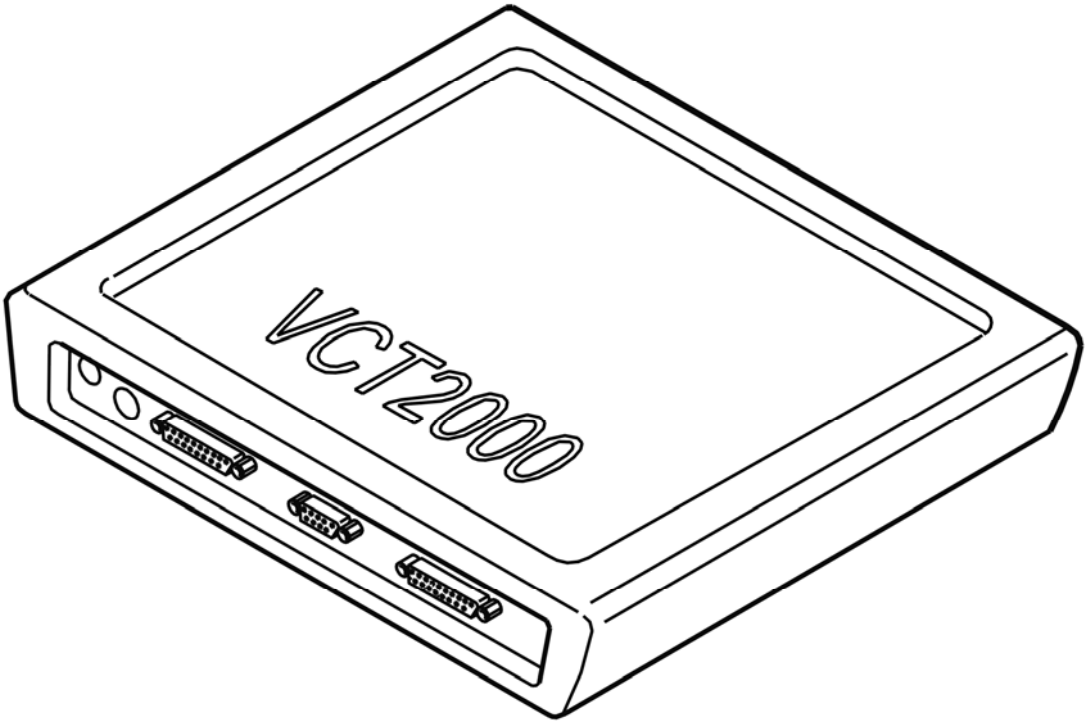

Fig. 166: Identifying VCT2000 Diagnostic Tool Symbol In VIDA
Courtesy of VOLVO CARS CORPORATION

- **Continue**

  Refer to **VERIFICATION**

CHECKING CABLE AND COMPONENT

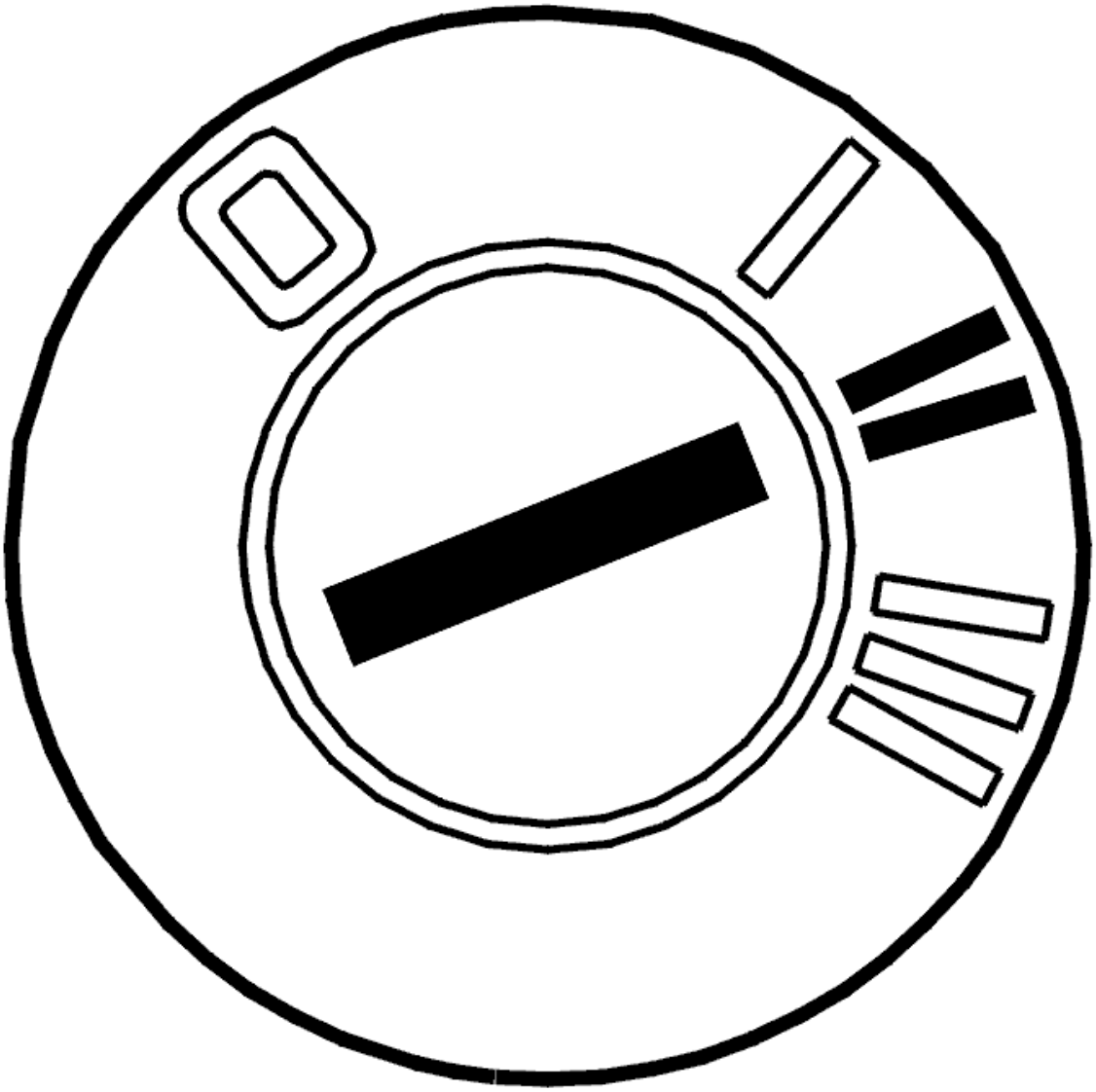

Fig. 167: Identifying Ignition ON
Courtesy of VOLVO CARS CORPORATION

Checking the fault cause

Check the fault cause as follows:

1. Ignition off
2. Disconnect the MOST connector from the MD player module (MP1)
3. Connect the MOST cable to special tool see **9512867**
4. Ignition on
5. Activate the infotainment system
6. Check that the communication on the MOST network is functioning by reading off the status of the MOST locked parameter for at least 30 seconds. The parameter indicates whether the MOST network is closed and communication possible

7. If the parameter displays that the MOST network is not correctly connected, check the receiving control module in the same way as above.

The communication on the MOST network is working if the menu text is displayed. The fault cause is then in the MD player module (MP1). Continue the fault-tracing by checking the component.

The communication on the MOST network is not working if the menu text is not displayed. The fault cause is then in the MOST cable for the next control module. Continue the fault-tracing by checking the fiber optic cable.

Checking cable

- Check the MOST connection. Check for dirt, loose connections and damage
- Replace the MOST cable if no fault is found in the MOST terminal.

Checking the component

- Check the power supply and the ground terminal for the MD player module (MP1)
- Check the MOST connection. Check for dirt, loose connections and damage
- Replace the MD player module (MP1) if no fault is found.

Click the VCT2000 symbol to read off the status of the MOST network.

Remedy as necessary.

Other information:

- To access or replace the MD module (MP1), see **MINIDISC / CD CONTROL MODULE, REPLACING**
- For information about checking the power supply and ground terminal, see **CHECKING THE POWER SUPPLY AND GROUND TERMINALS**
- For information about signals, see **SIGNAL SPECIFICATION**
- For information about checking and replacing the MOST cable, see **FIBER OPTIC CABLE HARNESS, REPAIRING**
- see **OPTICAL WIRING HARNESS CHECK**
- For information about location and order of control modules in the MOST network, see **LOCATION OF COMPONENTS** .

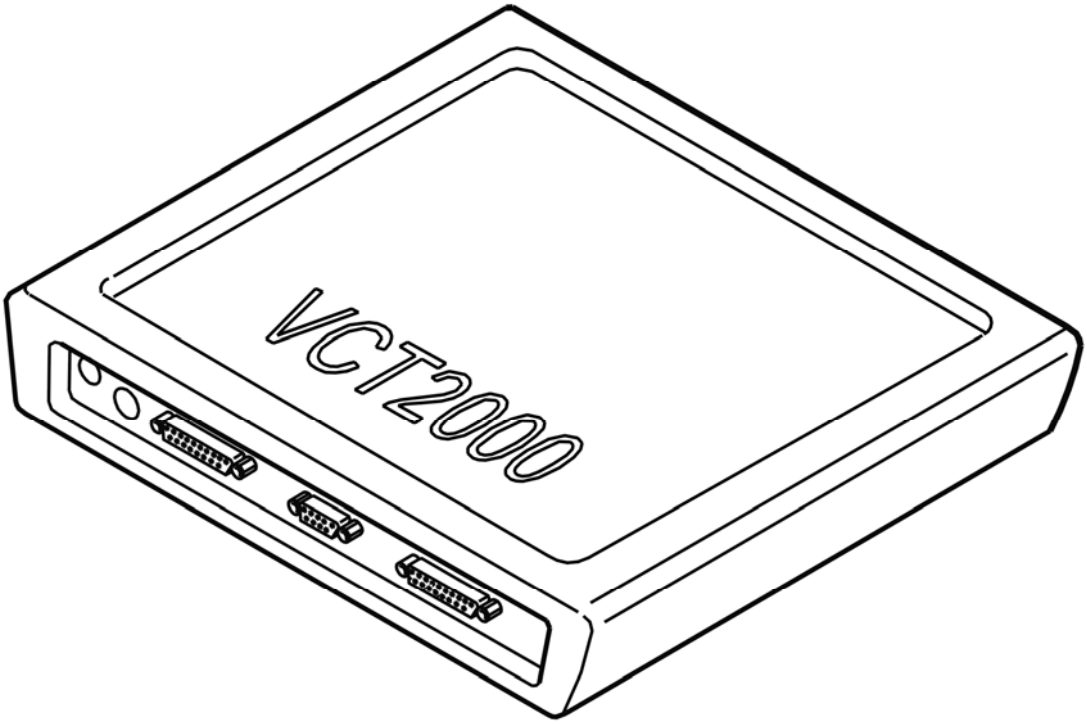

Fig. 168: Identifying VCT2000 Diagnostic Tool Symbol In VIDA
Courtesy of VOLVO CARS CORPORATION

- **Continue**

  Refer to **VERIFICATION**

CHECKING CABLE AND COMPONENT

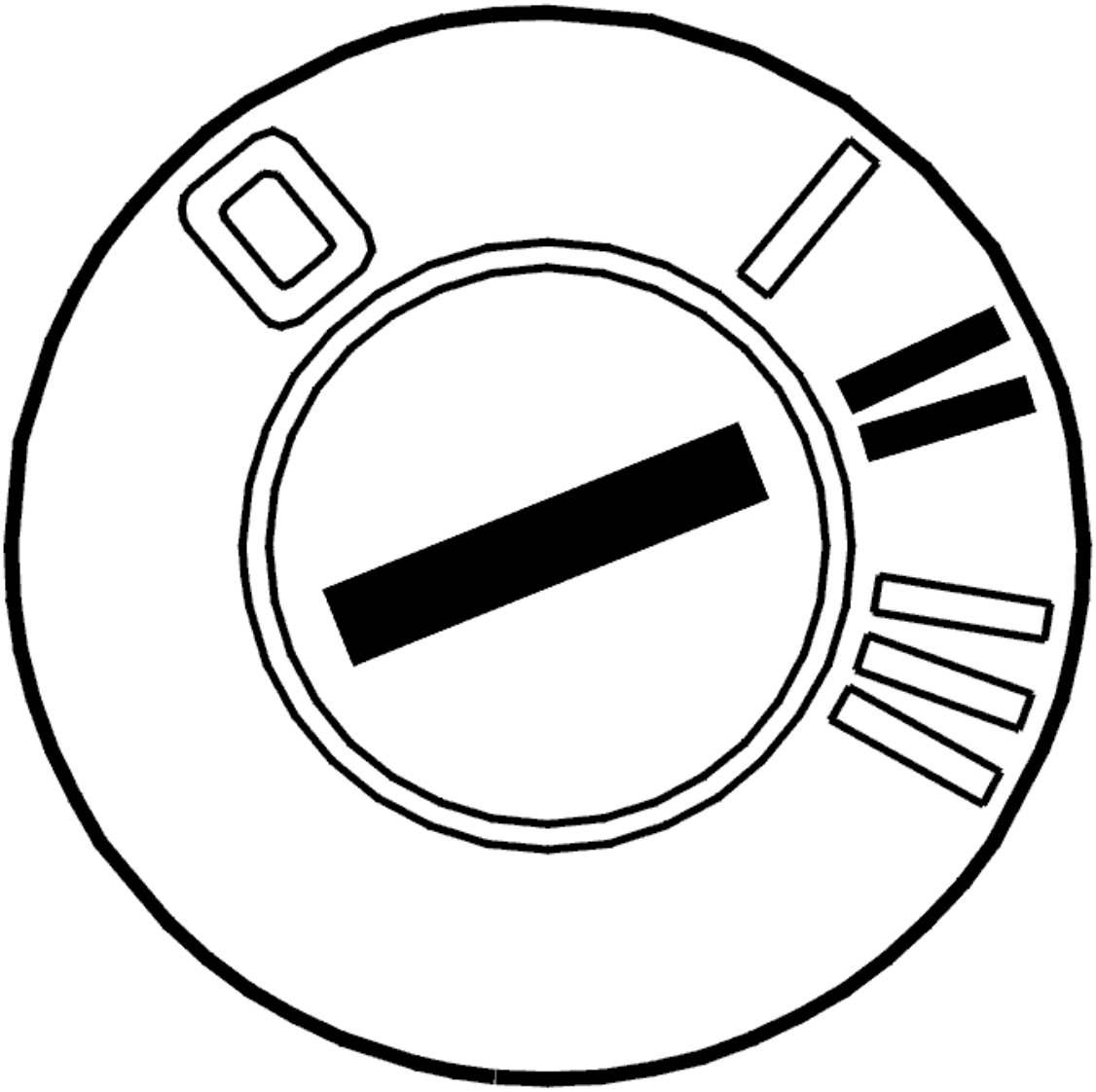

Fig. 169: Identifying Ignition ON
Courtesy of VOLVO CARS CORPORATION

Checking the fault cause

Check the fault cause as follows:

1. Ignition off
2. Disconnect the MOST connector from the multimedia module (MMM)
3. Connect the MOST cable to special tool see **9512867**
4. Ignition on
5. Activate the infotainment system
6. Check that the communication on the MOST network is functioning by reading off the status of the MOST locked parameter for at least 30 seconds. The parameter indicates whether the MOST network is closed and communication possible

7. If the parameter displays that the MOST network is not correctly connected, check the receiving control module in the same way as above.

The communication on the MOST network is working if the menu text is displayed. If this is the case, the fault cause is in the multimedia module (MMM). Continue the fault-tracing by checking the component.

The communication on the MOST network is not working if the menu text is not displayed. The fault cause is then in the MOST cable for the next control module. Continue the fault-tracing by checking the fiber optic cable.

Checking cable

- Check the MOST connection. Check for dirt, loose connections and damage
- Replace the MOST cable if no fault is found in the MOST terminal.

Checking the component

- Check the power supply and the ground terminal for the multimedia module (MMM)
- Check the MOST connection. Check for dirt, loose connections and damage
- Replace the multimedia module (MMM) if no fault is found.

Click the VCT2000 symbol to read off the status of the MOST network.

Remedy as necessary.

Other information:

- To access / replace the multimedia module (MMM), see **MULTIMEDIA MODULE (MMM), REPLACING**
- For information about checking the power supply and ground terminal, see **CHECKING THE VOLTAGE / GROUND TERMINAL (2003-2006)**
- For information about signals, see **SIGNAL SPECIFICATION**
- For information about checking and replacing the MOST cable, see **FIBER OPTIC CABLE HARNESS, REPAIRING**
- see **OPTICAL WIRING HARNESS CHECK**
- For information about location and order of control modules in the MOST network, see **LOCATION OF COMPONENTS** .

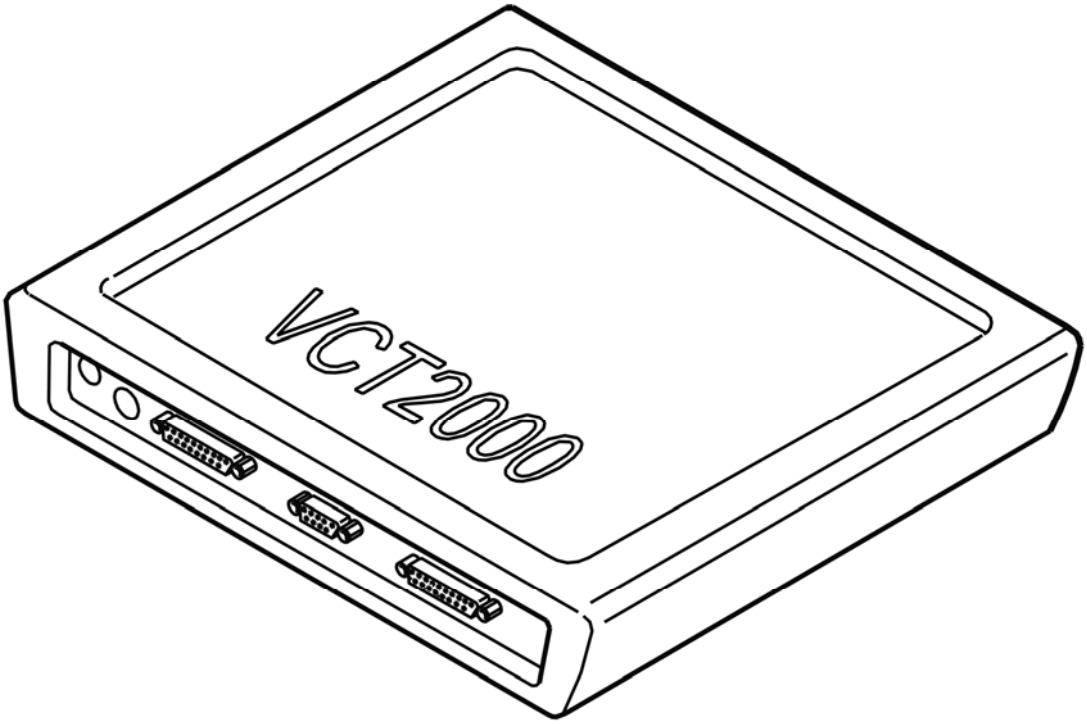

Fig. 170: Identifying VCT2000 Diagnostic Tool Symbol In VIDA
Courtesy of VOLVO CARS CORPORATION

- **Continue**

  Refer to **VERIFICATION**

CHECKING CABLE AND COMPONENT

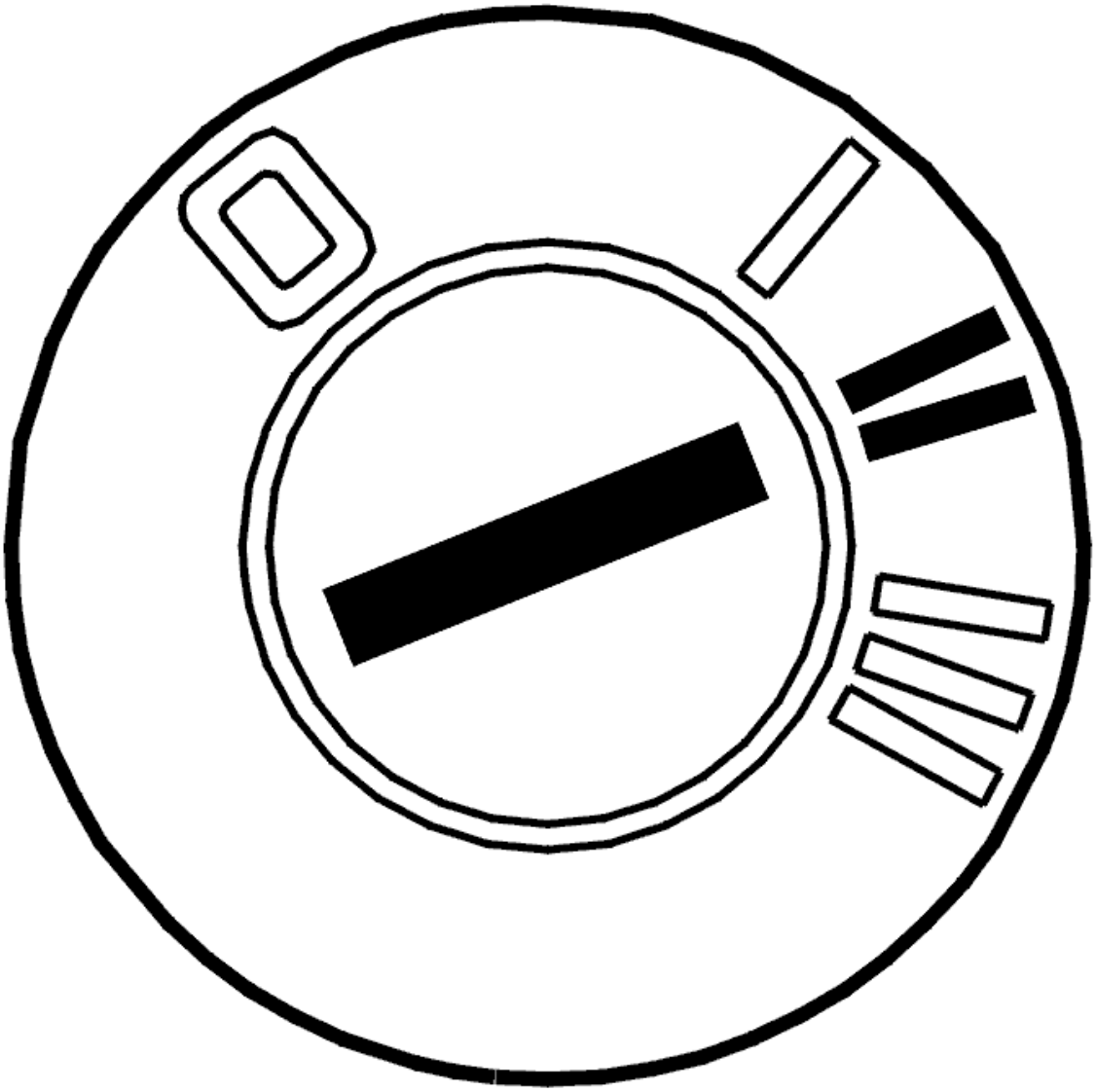

Fig. 171: Identifying Ignition ON
Courtesy of VOLVO CARS CORPORATION

- Ignition off
- Disconnect the MOST cable connector from the infotainment control module (ICM)
- Ignition on
- Activate the infotainment system.

  Check visually whether the infotainment control module (ICM) is emitting light from the MOST connector.

  The control module is defective if the infotainment control module (ICM) is not emitting light.

  If the infotainment control module (ICM) is transmitting light, the fault is in the MOST cable for the next control module.

Check the MOST connection. Check for dirt, loose connections and damage.

Replace the MOST cable if no fault is found in the MOST terminal.

Remedy as necessary.

Other information:

- To access / replace the infotainment control module (ICM), see **INFOTAINMENT CONTROL MODULE (ICM), REPLACING**
- For information about checking and replacing the MOST cable, see **FIBER OPTIC CABLE HARNESS, REPAIRING**
- For information about location and order of control modules in the MOST network, see **LOCATION OF COMPONENTS** .

- **Continue**

  Refer to **VERIFICATION**

VERIFICATION

HINT: After carrying out the repair, check that the fault has been remedied.

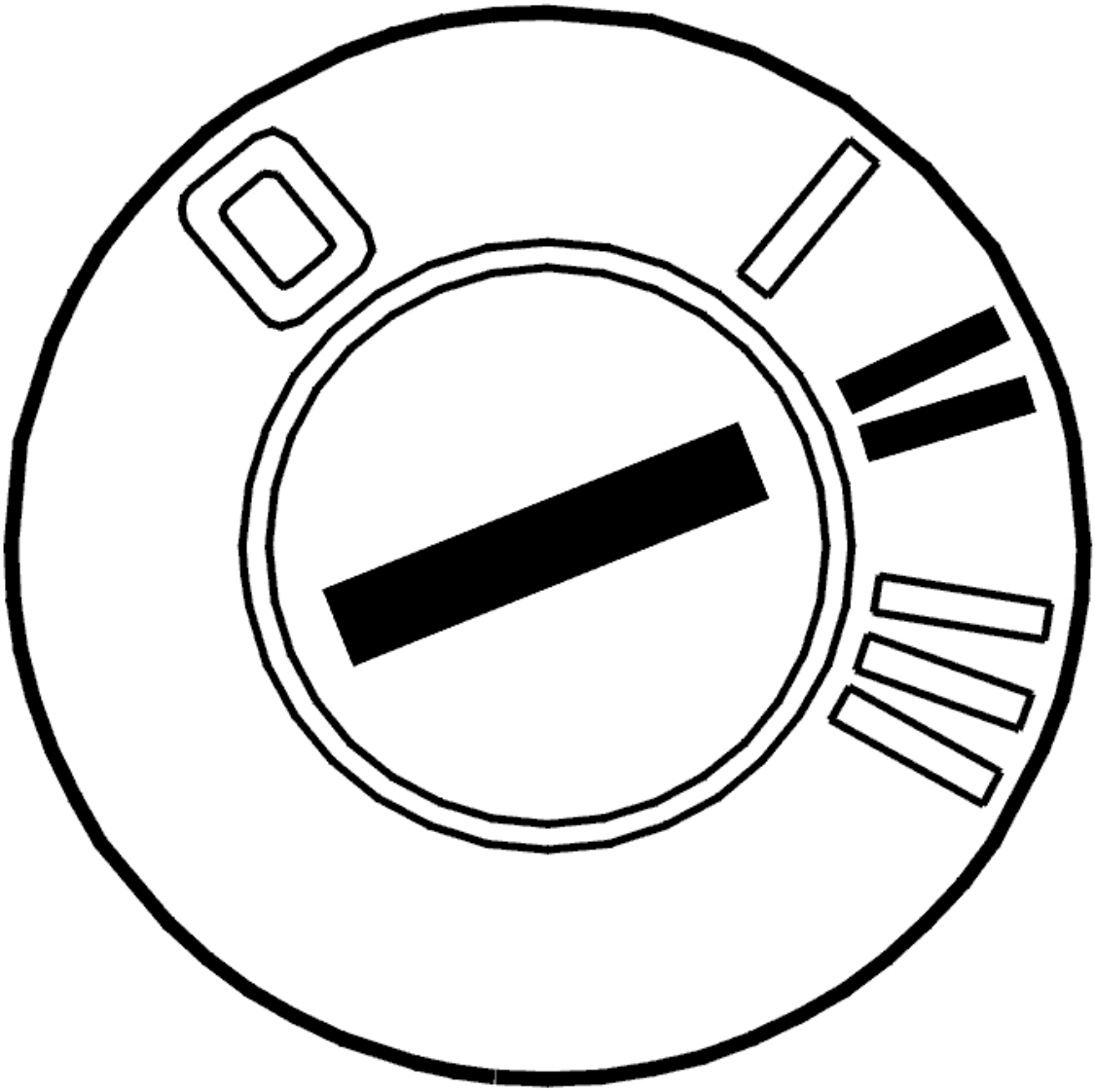

Fig. 172: Identifying Ignition ON
Courtesy of VOLVO CARS CORPORATION

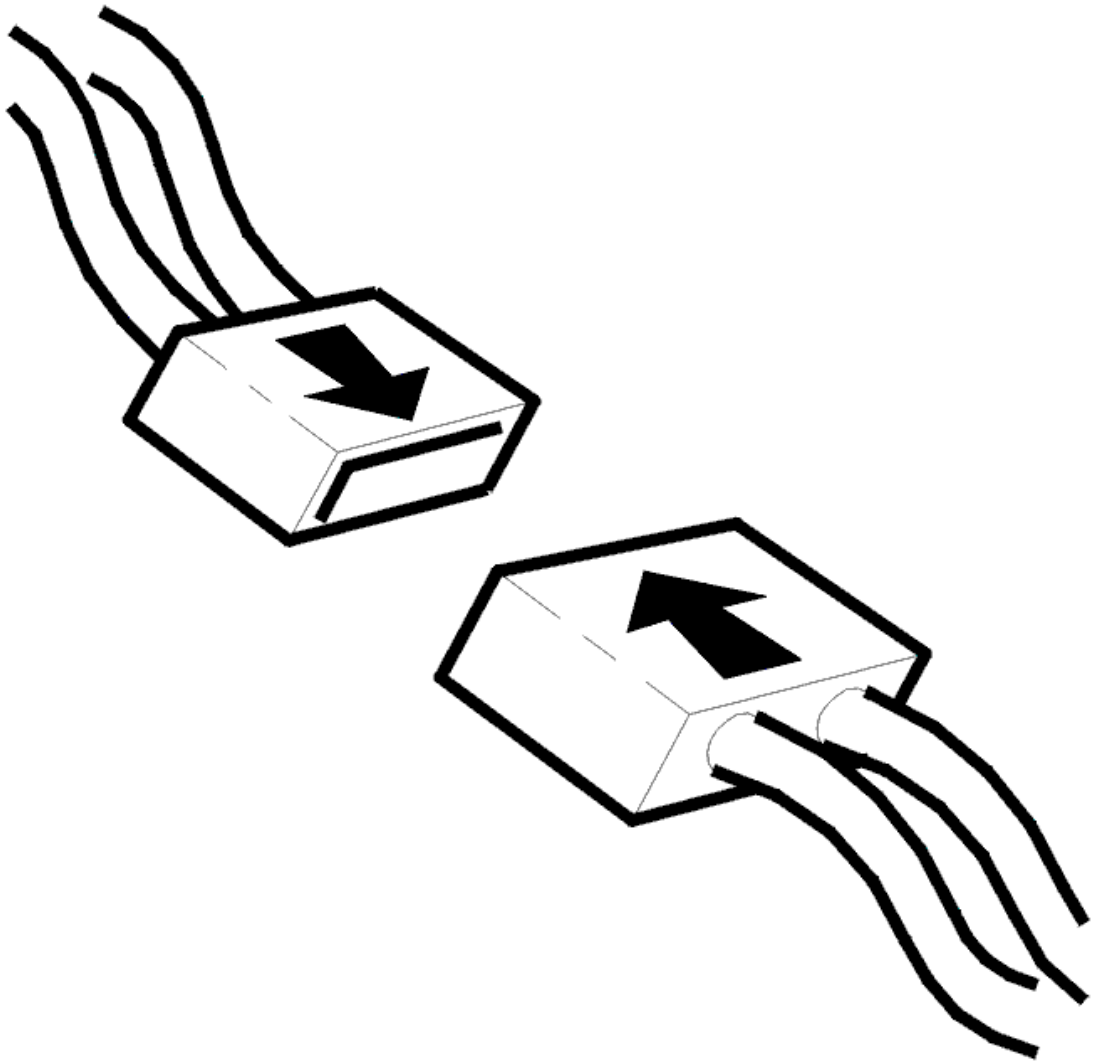

Fig. 173: Connecting Connector
Courtesy of VOLVO CARS CORPORATION

- Ignition off
- Reinstall the connectors, components etc.
- Ignition on.

  Using VCT2000 (Volvo Scan Tool) Activate the infotainment system and select the radio.

  Check whether there is sound from the radio in the loudspeakers.

Is the sound of the radio coming through the loudspeakers?

- **YES**

VERIFIED: Troubleshooting has been completed.

- **NO**

  Refer to **INFORMATION**

INFORMATION

FAULT-TRACING INFORMATION

The fault should have been detected and remedied. As this is not the case fault-tracing has failed.

Exit fault-tracing for this diagnostic trouble code (DTC) or make another attempt.

NO COMMUNICATION (2006)

Special tools:

see **9512867**

CHECKING THE WIRING AND COMPONENT

The infotainment control module (ICM) has detected an open-circuit in communication on the MOST network.

The MOST network is a fiber optic ring network. This means that all control modules which are connected to the network must be powered and grounded for the infotainment system to work. If, for any reason, a control module is unable to handle (receive or transmit) signals onwards on the MOST network, or if there is an open-circuit in the fiber optic cable, the infotainment control module (ICM) will shut down all functionality.

Communication on the fiber optic net is one-directional. The control modules on the MOST network receive light signals, amplify them and then send them onwards. The MOST connectors for the control modules contain two fiber optic cables, one for incoming and one for outgoing signals.

If the fault is intermittent, it has been registered previously but is no longer present. Intermittent faults can either be caused by interference when starting the MOST network, or by intermittent faults in the power supply/ground for one of the control modules in the network. The fault is evaluated depending on how it occurs. If the fault recurs, fault-trace for permanent faults.

It can be difficult to diagnose intermittent faults using a ring break diagnostic because for this to work the fault must occur during the diagnostic.

If the fault is permanent, perform a ring break diagnostic to locate the open-circuit.

- **Continue**

  Refer to **CHECKING FOR OPEN-CIRCUITS**

CHECKING FOR OPEN-CIRCUITS

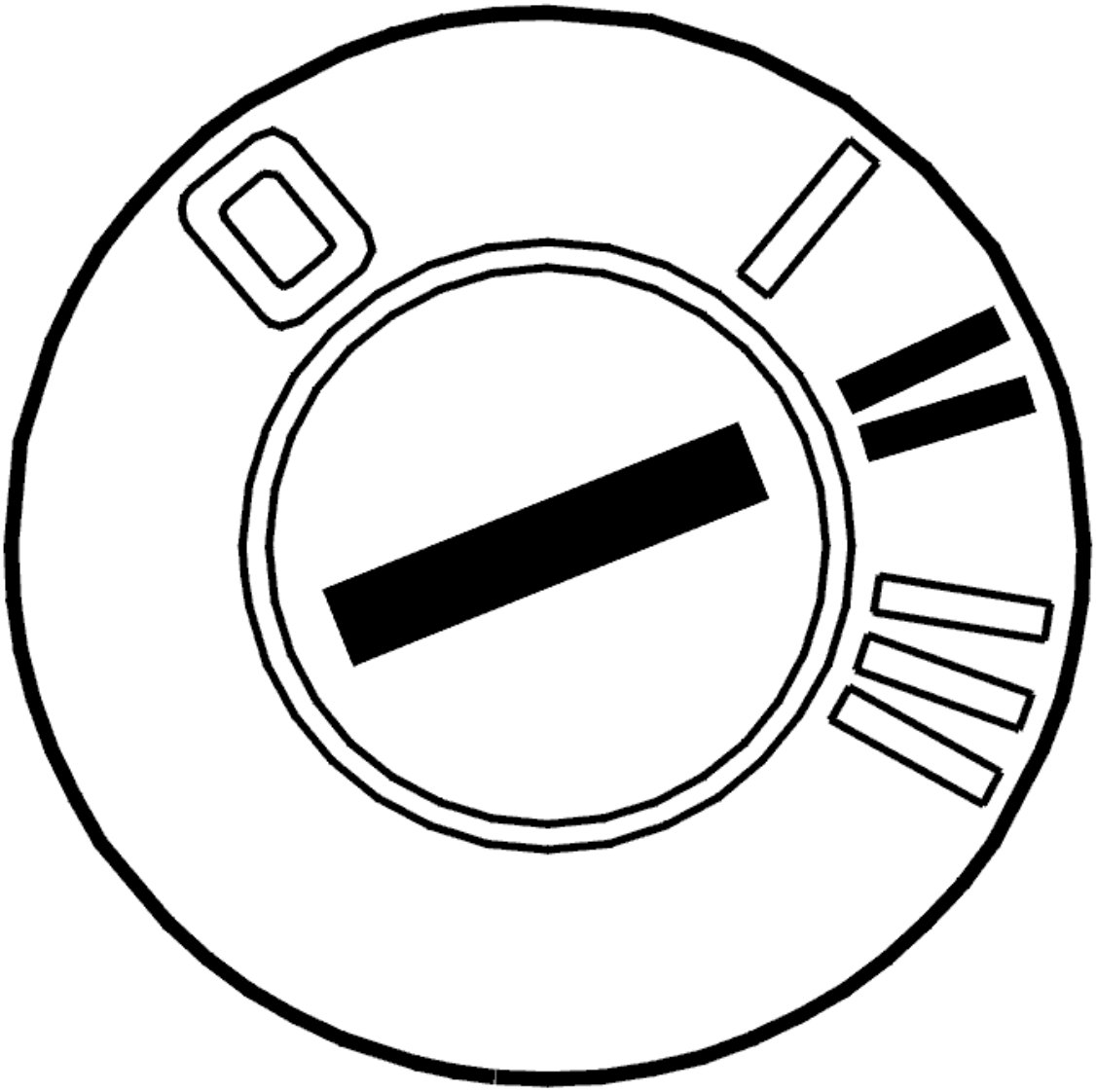

Fig. 174: Identifying Ignition ON
Courtesy of VOLVO CARS CORPORATION

Ring break diagnostic

A ring break diagnostic should be run to determine whether the fault has occurred.

To carry out a full ring break diagnostic of the MOST system, proceed as follows:

1. Switch off the ignition and remove the key
2. Remove the fuse for the antenna module (ATM)
3. Wait at least 3 minutes
4. Ignition on
5. Reinstall the fuse for the antenna module (ATM) within 25 seconds
6. Wait at least 30 seconds after switching on the ignition before reading off the position of the open-circuit.

Other information:

- For information about fuses, see the appropriate service information.
- **Continue**

  Refer to **READING OFF THE POSITION OF THE OPEN-CIRCUIT**

CHECKING CABLE AND COMPONENT

If the result of the ring break diagnostic is POOR, the infotainment control module (ICM) is receiving a signal on the MOST network. However it is unable to decode the signals because the luminance of the signals is too weak or the signals are distorted.

If the result from the ring break diagnostic is OK, the fault is intermittent.

Fault-tracing using the ring break diagnostic assumes that the fault is permanent or active when the test is run, i. e. the system is powered having been off.

HINT: If diagnostic trouble code (DTC) ICM-DC01 is intermittent, read off the status of the ring break diagnostic from the frozen values in Vehicle communication.

HINT: Note that the antenna module (ATM) is not normally included in a ring break diagnostic if the fuse is not removed. This means that the position of the open-circuit moves one step backwards in the MOST network.

HINT: On fully equipped vehicles, if the open-circuit position is 0, this may be because of:

- Subwoofer module (SUB)
- The fiber optic cable between the subwoofer module (SUB) and the antenna module (ATM)
- Antenna module (ATM)
- The fiber optic cable between the antenna module (ATM) and the infotainment control module (ICM)
- The optical switch in the infotainment control module (ICM). This means that the infotainment control module (ICM) is not able to interpret the incoming signal correctly.

Check the communication on the MOST network by bypassing the control modules one by one on the MOST network as follows:

- Ignition off
- Disconnect the MOST connector from the relevant control module
- Connect the MOST cable to special tool see **9512867**
- Ignition on
- Activate the infotainment system
- Check that the communication on the MOST network is functioning by reading off the status of the MOST locked parameter for at least 30 seconds. The parameter indicates whether the MOST network is

closed and communication possible.

If the communication on the MOST network is stable when a control module is disconnected, check the power supply and the ground terminal on the relevant control module. Check for intermittent faults. Try replacing the component if no fault is found.

Click the VCT2000 symbol to read off the status of the MOST network.

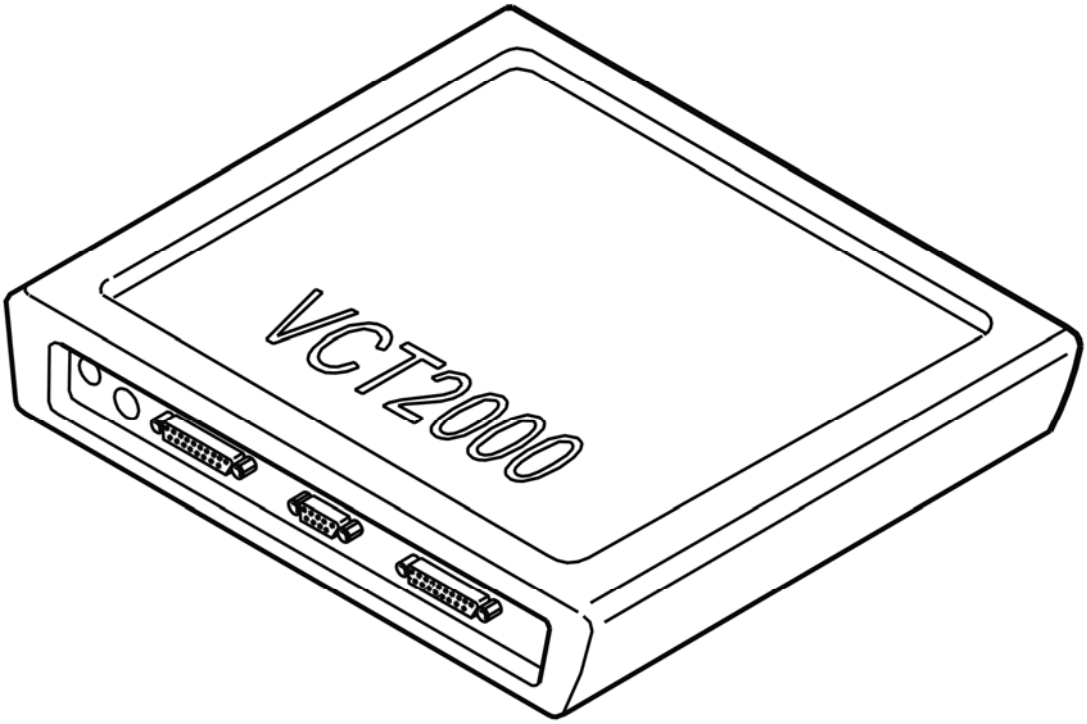

Fig. 175: Identifying VCT2000 Diagnostic Tool Symbol In VIDA
Courtesy of VOLVO CARS CORPORATION

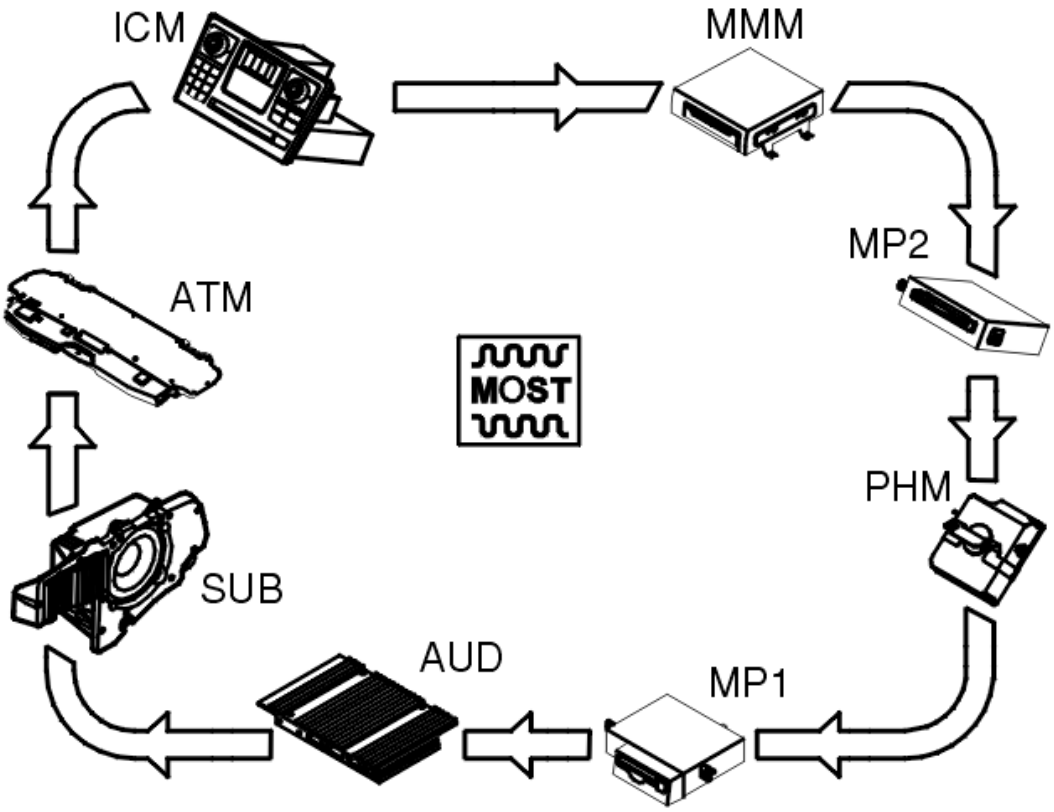

Fig. 176: MOST Bus (Media Oriented System Transportation) Communication Diagram
Courtesy of VOLVO CARS CORPORATION

- **Continue**

  Refer to **VERIFICATION**

READING OFF THE POSITION OF THE OPEN-CIRCUIT

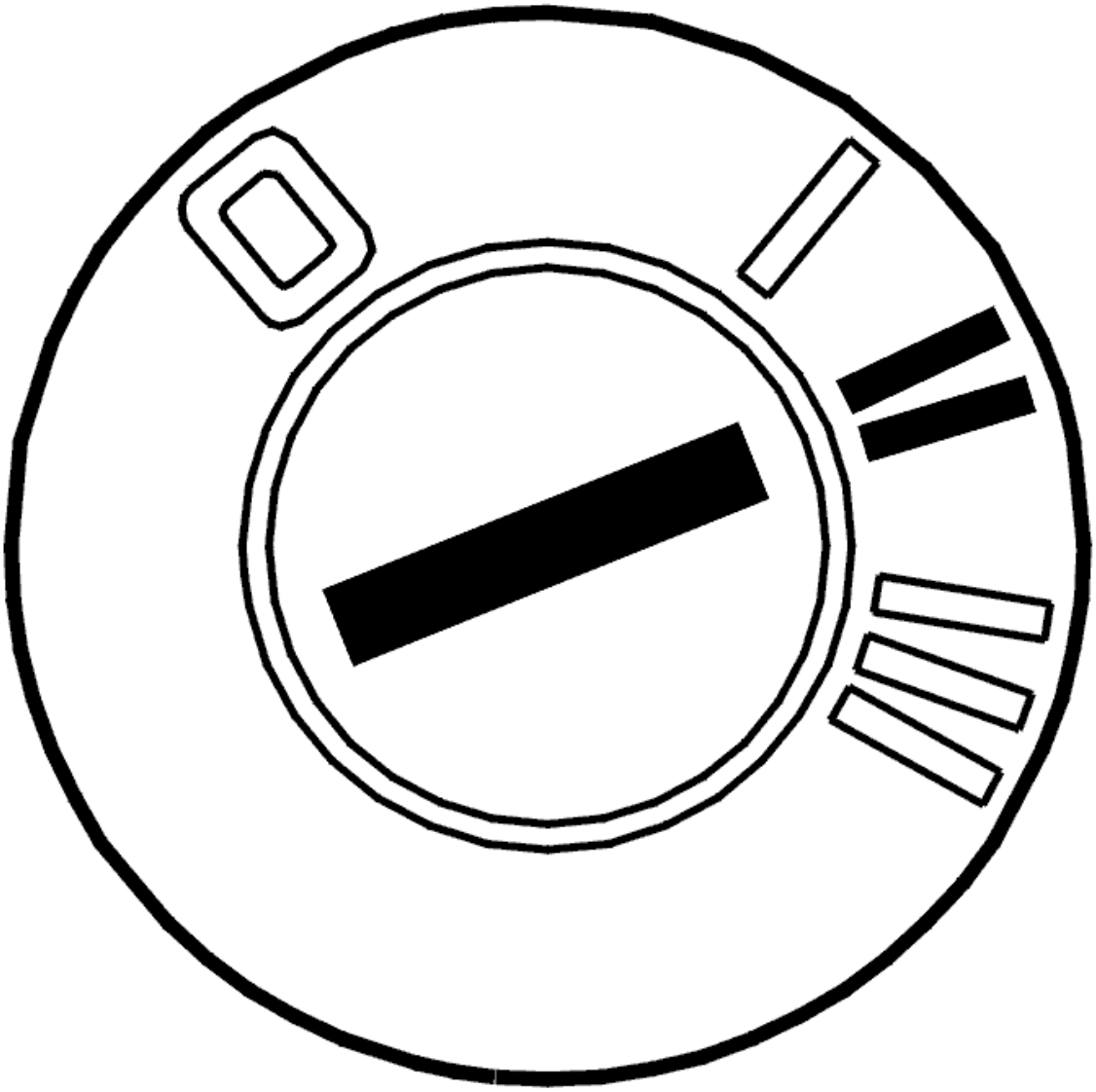

Fig. 177: Identifying Ignition ON
Courtesy of VOLVO CARS CORPORATION

- Ignition on.

  Reading off the result from a ring break diagnostic

  Click the VCT2000 symbol to read off the result of the ring break diagnostic.

  As well as the result from the ring break diagnostic, a list of the control modules included in the MOST network is provided for that car.

  The following result can be obtained from a ring break diagnostic:

  If the fault occurs when the ring break diagnostic is run, the result will be presented as an open-circuit position.

If the fault does not occur when the ring break diagnostic is run, the result will be OK. If this is the case, select alternative 3 below.

- If the diagnostic indicates an open-circuit in the communication on the MOST network, the result will be an open-circuit position
- The result will be OK if there is no fault on the MOST network
- If the infotainment control module (ICM) receives a signal on the MOST network but is unable to decode it because the luminance is weak or the signals are distorted, the result will be POOR.

Determining the position of the open-circuit

The position of the open-circuit is calculated by working backwards in the MOST network from the infotainment control module (ICM).

NOTE: The ring break diagnostic only counts backwards, irrespective of which, or how many control modules, are installed in the car. To determine the position of the open-circuit, check the list to, see which control modules are installed in that particular car. Then count backwards following the determined order. The number of control modules can vary between 3-8.

Two examples are outlined below:

- The first open-circuit position corresponds to 0. This means that the open-circuit is in the antenna module (ATM) or in the cable between the antenna module (ATM) and the infotainment control module (ICM)
- If the position is 1, go one step backwards in the chain. The open-circuit is in the subwoofer module (SUB) or in the cable between the subwoofer module (SUB) and the antenna module (ATM). The open-circuit can also be caused by the optical switch in the antenna module (ATM) being damaged so that the antenna module (ATM) is not able to interpret the incoming signal from the subwoofer module (SUB) correctly.

  NOTE: The subwoofer module (SUB) is not standard. If one is not installed, the open-circuit position 1 applies to the audio module (AUD).

Select the alternative for the control module to be checked.

Alternative 1: Refer to CHECKING CABLE AND COMPONENT

Antenna module (ATM)

Subwoofer module (SUB)

Audio module (AUD)

CD player module (MP2)

Alternative 2: Refer to CHECKING CABLE AND COMPONENT

Phone module (PHM)

MD player module (MP1)

Multimedia module (MMM)

Infotainment control module (ICM)

Alternative 3: Refer to CHECKING CABLE AND COMPONENT

The result from the ring break diagnostic indicates that the MOST network is OK.

The result from the ring break diagnostic is POOR.

Other information:

- For information about location and order of control modules in the MOST network, see **LOCATION OF COMPONENTS**

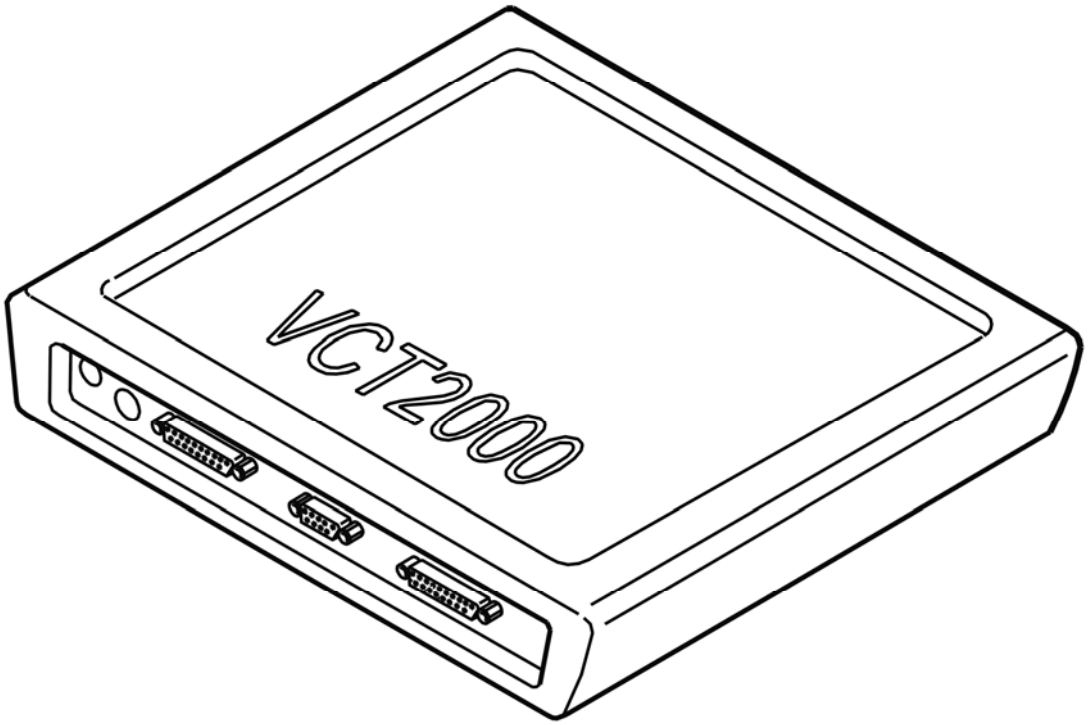

Fig. 178: Identifying VCT2000 Diagnostic Tool Symbol In VIDA
Courtesy of VOLVO CARS CORPORATION

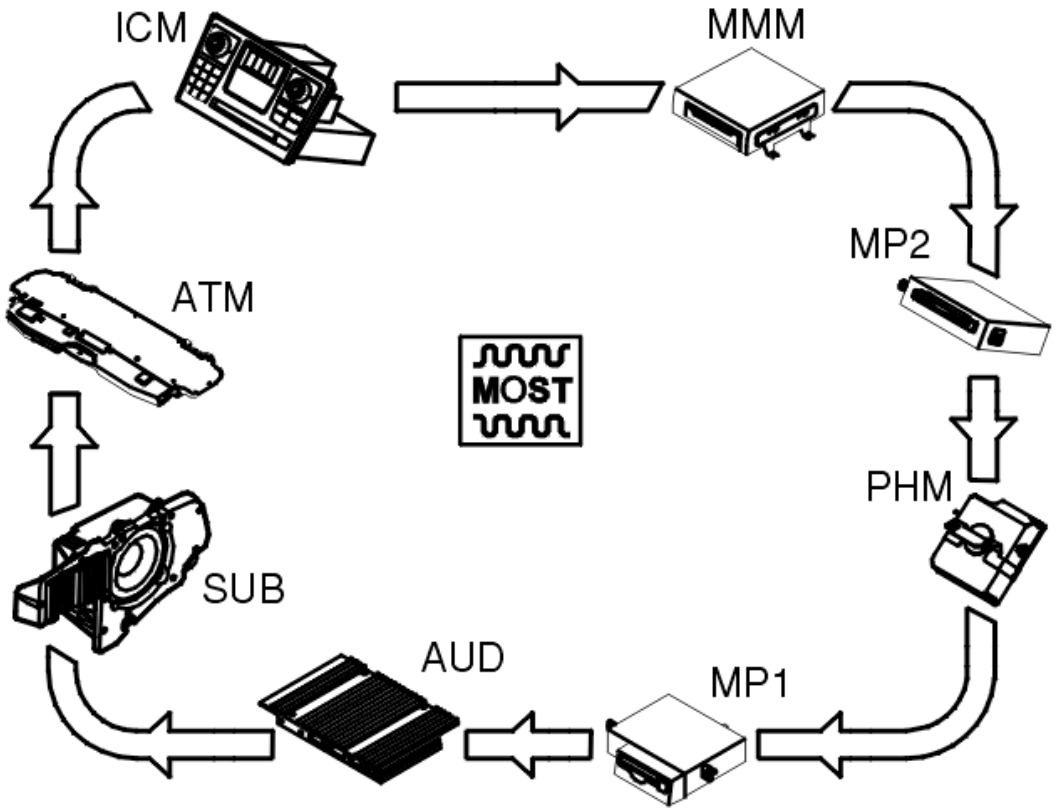

Fig. 179: MOST Bus (Media Oriented System Transportation) Communication Diagram
Courtesy of VOLVO CARS CORPORATION

CHECKING CABLE AND COMPONENT

Select the control module to be checked from the list.

1. Antenna module (ATM). Refer to **CHECKING CABLE AND COMPONENT**

2. Subwoofer module (SUB). Refer to **CHECKING CABLE AND COMPONENT**

3. Audio module (AUD). Refer to **CHECKING CABLE AND COMPONENT**

4. CD player module (MP2). Refer to **CHECKING CABLE AND COMPONENT**

CHECKING CABLE AND COMPONENT

Select the control module to be checked from the list.

1. Phone module (PHM). Refer to **CHECKING CABLE AND COMPONENT**

2. MD player module (MP1). Refer to **CHECKING CABLE AND COMPONENT**

3. Multimedia module (MMM). Refer to **CHECKING CABLE AND COMPONENT**

4. Infotainment control module (ICM). Refer to **CHECKING CABLE AND COMPONENT**

CHECKING CABLE AND COMPONENT

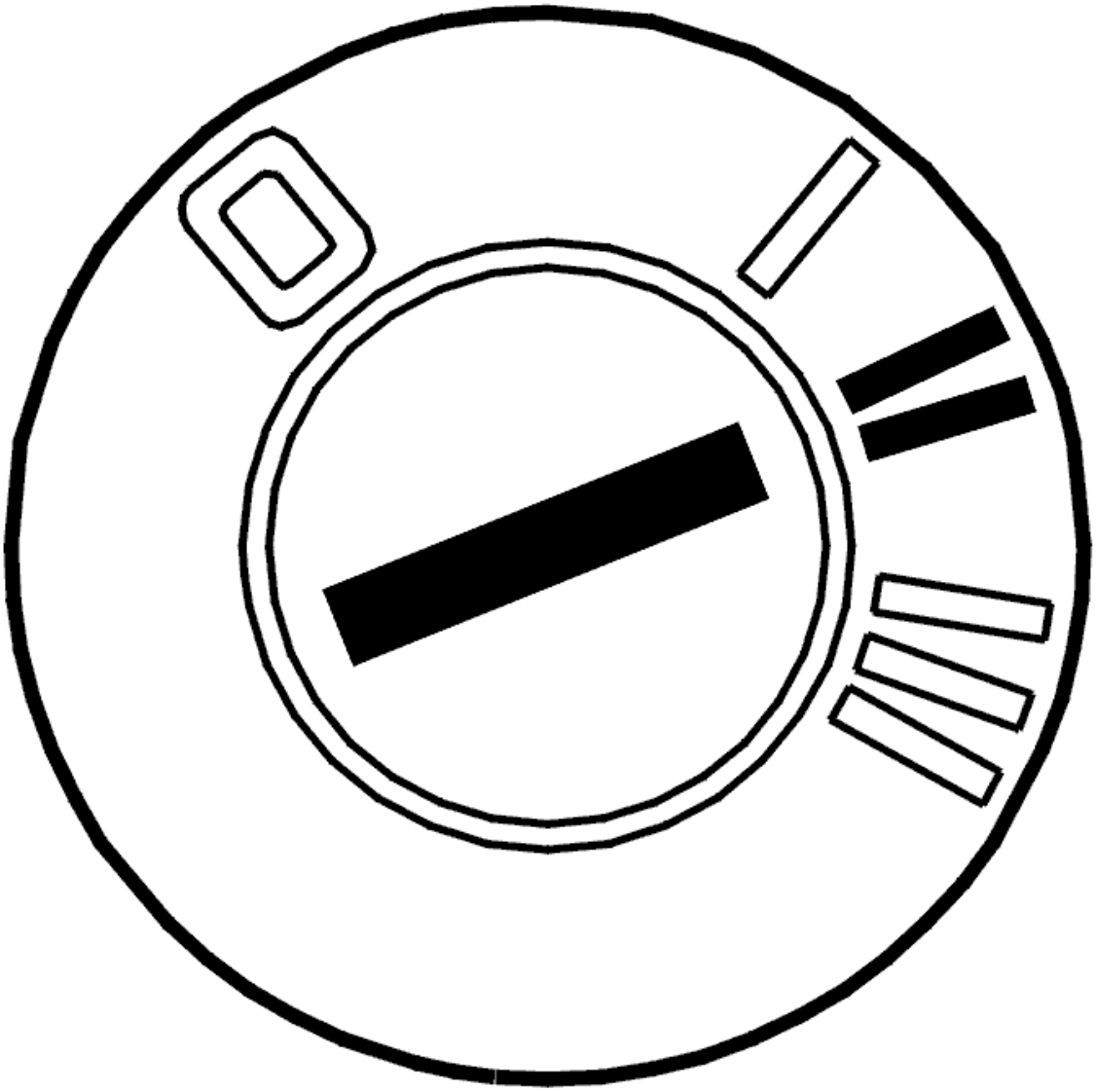

Fig. 180: Identifying Ignition ON
Courtesy of VOLVO CARS CORPORATION

Checking the fault cause

Check the fault cause as follows:

1. Ignition off
2. Disconnect the MOST connector from the antenna module (ATM)
3. Connect the MOST cable to special tool see **9512867**
4. Ignition on

5. Activate the infotainment system
6. Check that the communication on the MOST network is functioning by reading off the status of the MOST locked parameter for at least 30 seconds. The parameter indicates whether the MOST network is closed and communication possible
7. If the parameter displays that the MOST network is not correctly connected, check the receiving control module in the same way as above.

The communication on the MOST network is working if the menu text is displayed. If this is the case, the fault cause is in the antenna module (ATM). Continue the fault-tracing by checking the component.

The communication on the MOST network is not working if the menu text is not displayed. The fault cause is then in the MOST cable for the next control module. Continue the fault-tracing by checking the fiber optic cable.

Checking cable

- Check the MOST connection. Check for dirt, loose connections and damage
- Replace the MOST cable if no fault is found in the MOST terminal.

Checking the component

- Check the power supply and the ground terminal for the antenna module (ATM)
- Check the MOST connection. Check for dirt, loose connections and damage
- Replace the antenna module (ATM) if no fault is found.

Remedy as necessary.

Click the VCT2000 symbol to read off the status of the MOST network.

Other information:

- To access or replace the antenna module (ATM), see **RECEIVER GPS, TMC (ATM), REPLACE**
- For information about checking the power supply and ground terminal, see **CHECKING THE POWER SUPPLY AND GROUND TERMINALS**
- For information about signals, see **SIGNAL SPECIFICATION**
- see **OPTICAL WIRING HARNESS CHECK**
- For information about checking and replacing the MOST cable, see **FIBER OPTIC CABLE HARNESS, REPAIRING**
- For information about location and order of control modules in the MOST network, see **LOCATION OF COMPONENTS** .

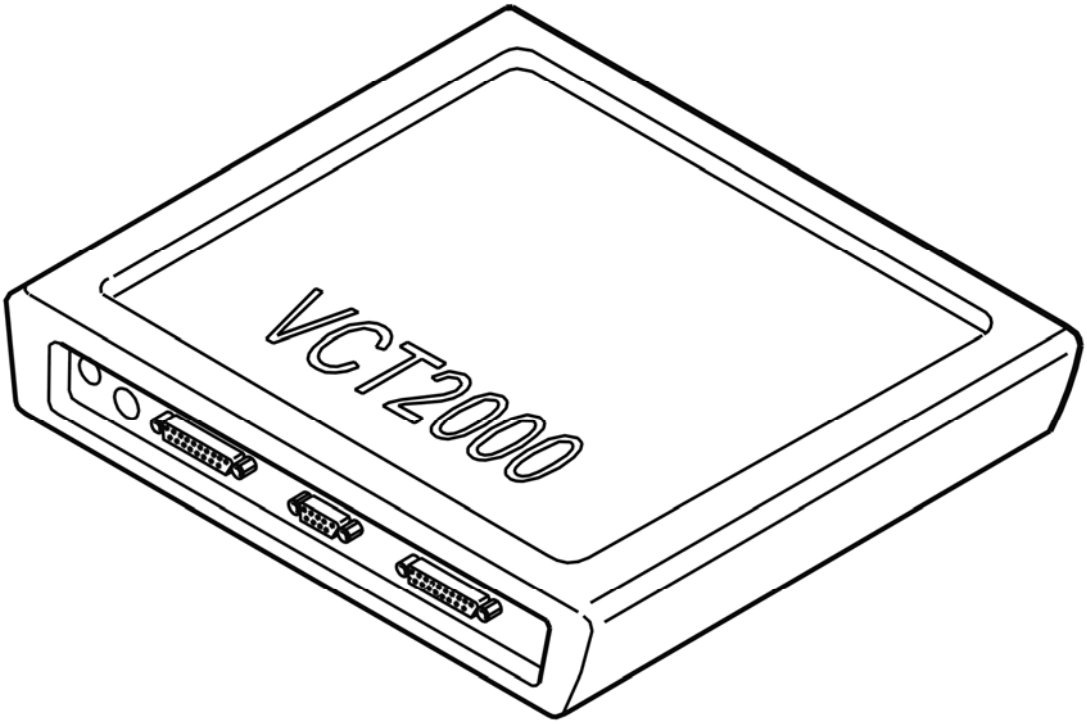

Fig. 181: Identifying VCT2000 Diagnostic Tool Symbol In VIDA
Courtesy of VOLVO CARS CORPORATION

- **Continue**

  Refer to **VERIFICATION**

CHECKING CABLE AND COMPONENT

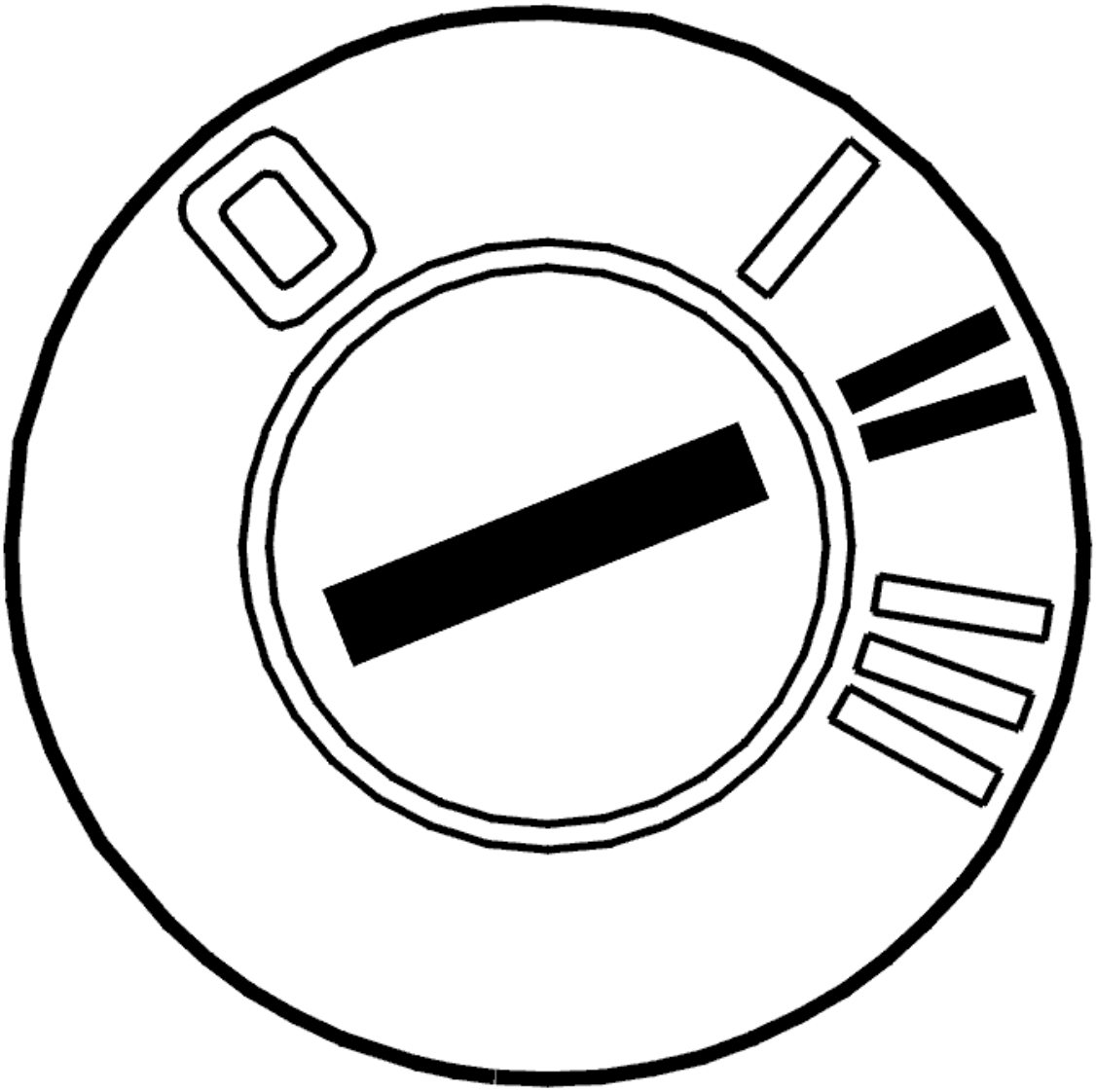

Fig. 182: Identifying Ignition ON
Courtesy of VOLVO CARS CORPORATION

Checking the fault cause

Check the fault cause as follows:

1. Ignition off
2. Disconnect the MOST connector from the subwoofer module (SUB)
3. Connect the MOST cable to special tool see **9512867**
4. Ignition on
5. Activate the infotainment system
6. Check that the communication on the MOST network is functioning by reading off the status of the MOST locked parameter for at least 30 seconds. The parameter indicates whether the MOST network is closed and communication possible

7. If the parameter displays that the MOST network is not correctly connected, check the receiving control module in the same way as above.

The communication on the MOST network is working if the menu text is displayed. If this is the case, the fault cause is in the bypassed control module. Continue the fault-tracing by checking the component.

The communication on the MOST network is not working if the menu text is not displayed. The fault cause is then in the MOST cable for the next control module. Continue the fault-tracing by checking the fiber optic cable.

Checking cable

- Check the MOST connection. Check for dirt, loose connections and damage
- Replace the MOST cable if no fault is found in the MOST terminal.

Checking the component

- Check the power supply and the ground terminal for the subwoofer module (SUB)
- Check the MOST connection. Check for dirt, loose connections and damage
- Replace the subwoofer module (SUB) if no fault is found.

Click the VCT2000 symbol to read off the status of the MOST network.

Remedy as necessary.

Other information:

- To access or replace the subwoofer module (SUB), see **SUBWOOFER MODULE (SUB), REPLACING**
- For information about checking the power supply and ground terminal, see **CHECKING THE VOLTAGE / GROUND TERMINAL**
- For information about signals, see **SIGNAL SPECIFICATION**
- For information about checking and replacing the MOST cable, see **FIBER OPTIC CABLE HARNESS, REPAIRING**
- see **OPTICAL WIRING HARNESS CHECK**
- For information about location and order of control modules in the MOST network, see **LOCATION OF COMPONENTS** .

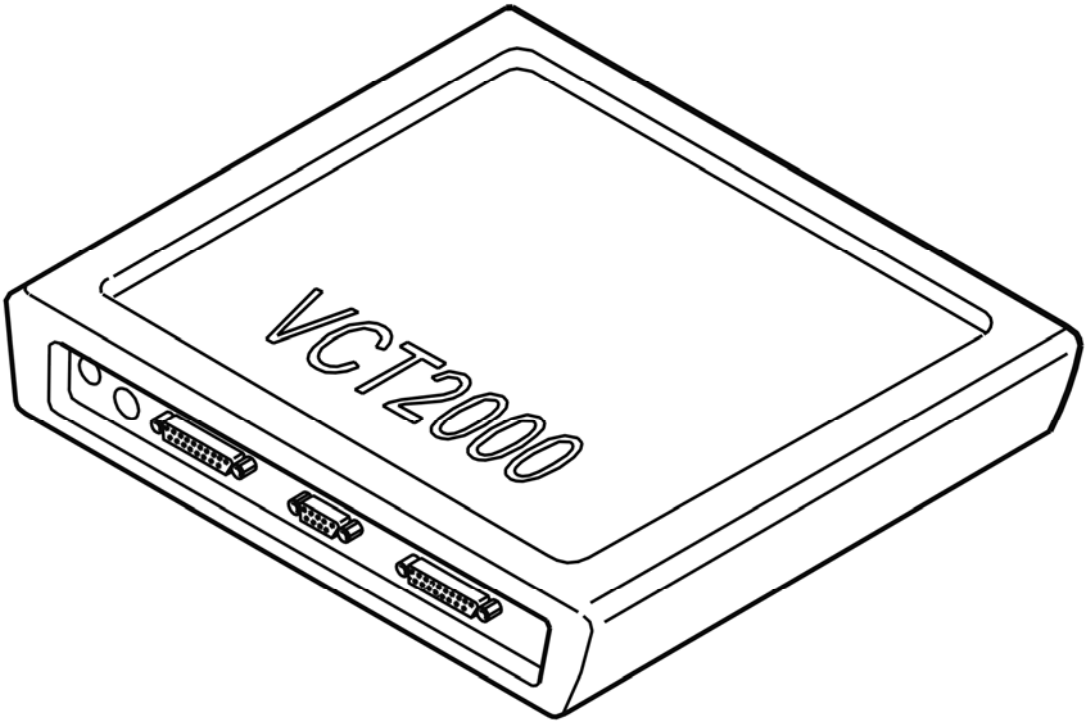

Fig. 183: Identifying VCT2000 Diagnostic Tool Symbol In VIDA
Courtesy of VOLVO CARS CORPORATION

- **Continue**

  Refer to **VERIFICATION**

CHECKING CABLE AND COMPONENT

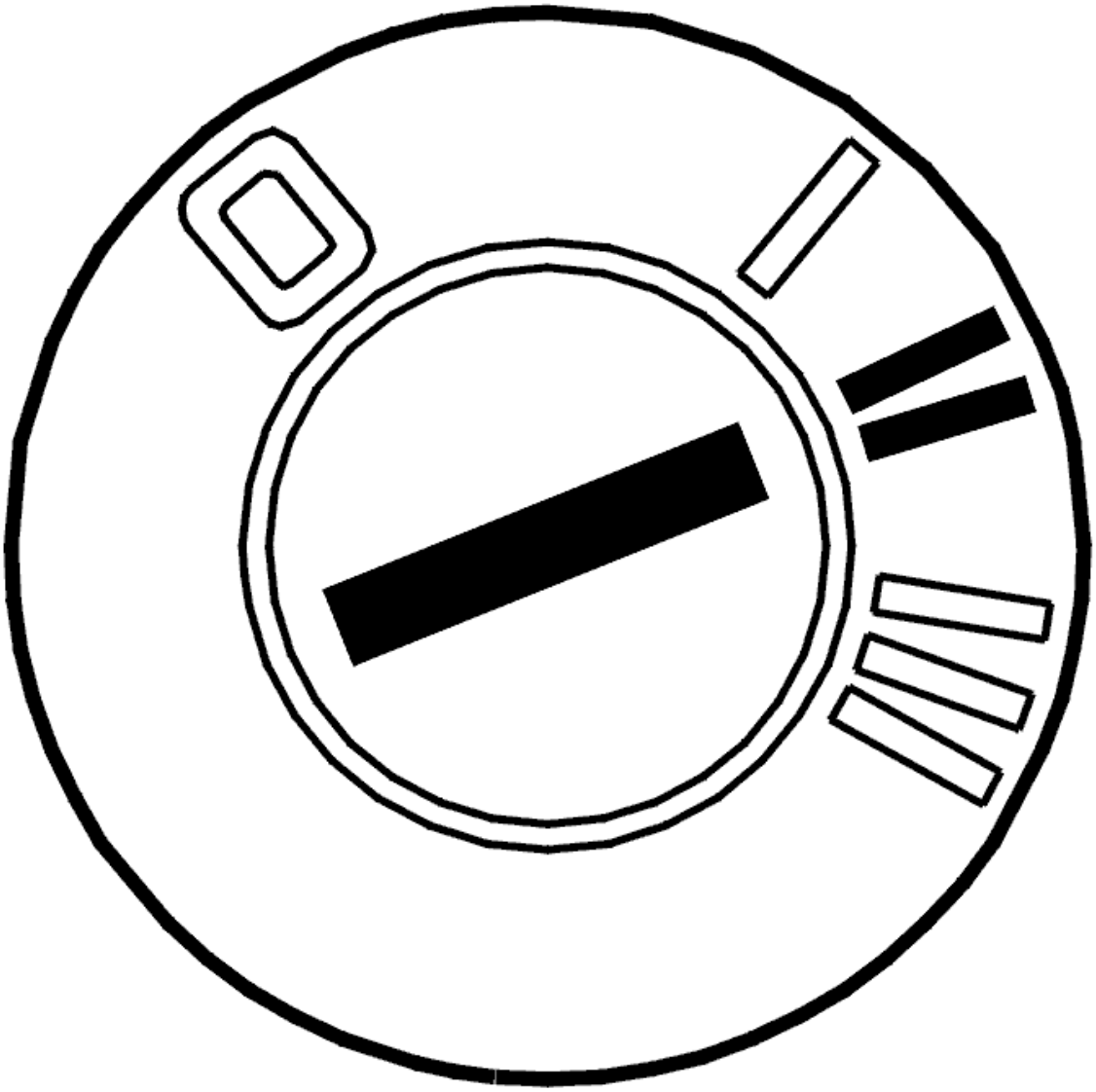

Fig. 184: Identifying Ignition ON
Courtesy of VOLVO CARS CORPORATION

Checking the fault cause

Check the fault cause as follows:

1. Ignition off
2. Disconnect the MOST connector from the audio module (AUD)
3. Connect the MOST cable to special tool see **9512867**
4. Ignition on
5. Activate the infotainment system
6. Check that the communication on the MOST network is functioning by reading off the status of the MOST locked parameter for at least 30 seconds. The parameter indicates whether the MOST network is closed and communication possible

7. If the parameter displays that the MOST network is not correctly connected, check the receiving control module in the same way as above.

The communication on the MOST network is working if the menu text is displayed. If this is the case, the fault cause is in the audio module (AUD). Continue the fault-tracing by checking the component.

The communication on the MOST network is not working if the menu text is not displayed. The fault cause is then in the MOST cable for the next control module. Continue the fault-tracing by checking the fiber optic cable.

Checking cable

- Check the MOST connection. Check for dirt, loose connections and damage
- Replace the MOST cable if no fault is found in the MOST terminal.

Checking the component

- Check the power supply and the ground terminal for the audio module (AUD)
- Check the MOST connection. Check for dirt, loose connections and damage
- Replace the audio module (AUD) if no fault is found.

Click the VCT2000 symbol to read off the status of the MOST network.

Remedy as necessary.

Other information:

- To access or replace the audio module (AUD), see **AUDIO MODULE (AUD), REPLACING**
- For information about checking the power supply and ground terminal, see **CHECKING THE VOLTAGE / GROUND TERMINAL**
- For information about signals, see **SIGNAL SPECIFICATION**
- For information about checking and replacing the MOST cable, see **FIBER OPTIC CABLE HARNESS, REPAIRING**
- see **OPTICAL WIRING HARNESS CHECK**
- For information about location and order of control modules in the MOST network, see **LOCATION OF COMPONENTS** .

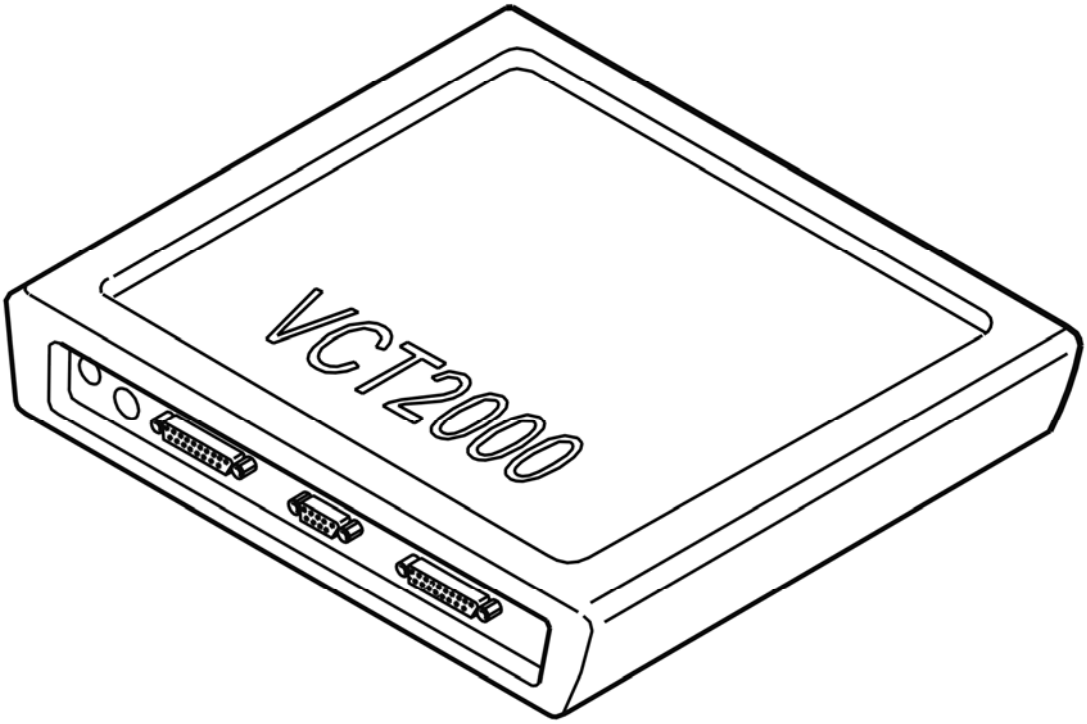

Fig. 185: Identifying VCT2000 Diagnostic Tool Symbol In VIDA
Courtesy of VOLVO CARS CORPORATION

- **Continue**

  Refer to **VERIFICATION**

CHECKING CABLE AND COMPONENT

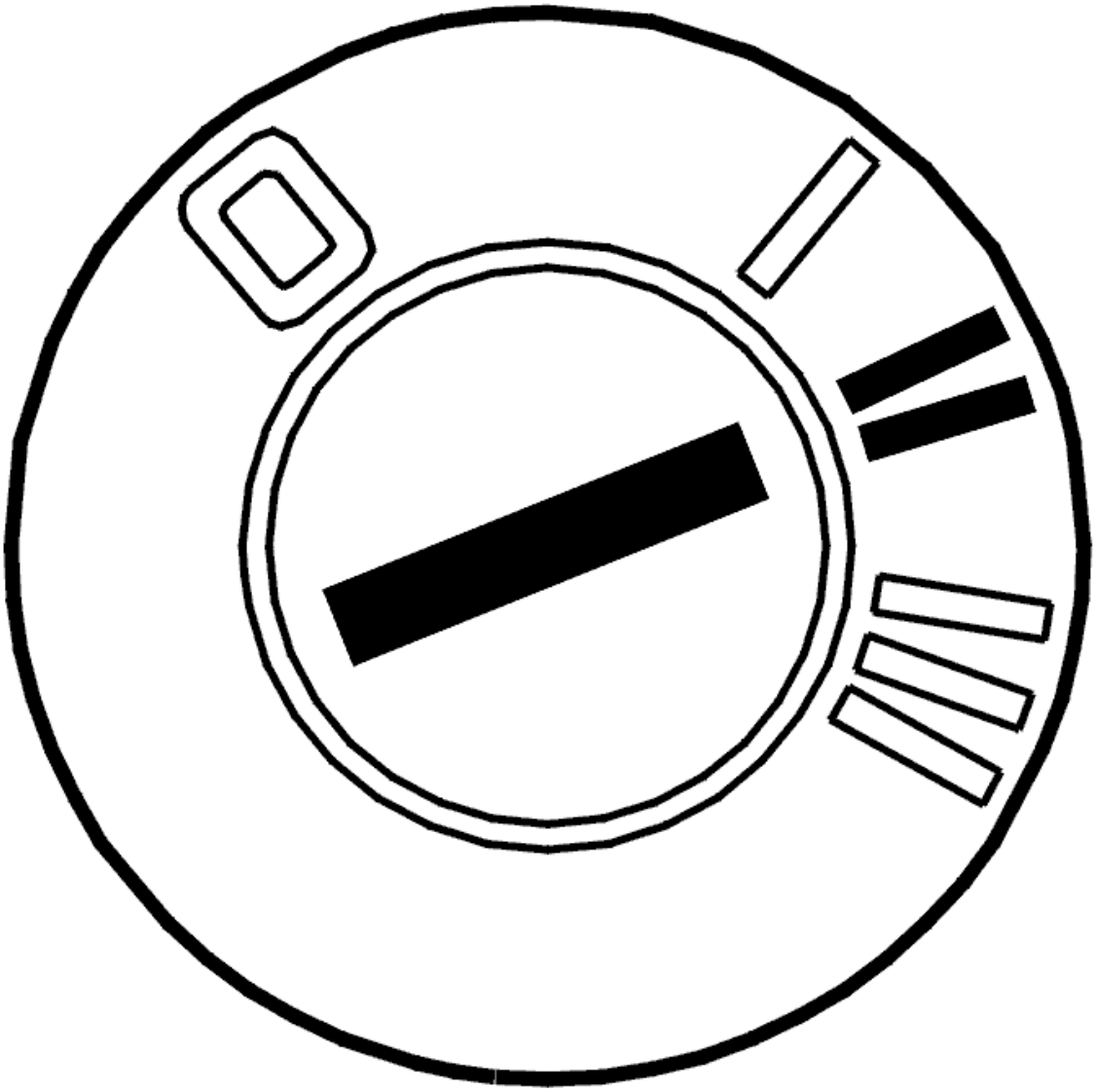

Fig. 186: Identifying Ignition ON
Courtesy of VOLVO CARS CORPORATION

Checking the fault cause

Check the fault cause as follows:

1. Ignition off
2. Disconnect the MOST connector from the CD player module (MP2)
3. Connect the MOST cable to special tool see **9512867**
4. Ignition on
5. Activate the infotainment system
6. Check that the communication on the MOST network is functioning by reading off the status of the MOST locked parameter for at least 30 seconds. The parameter indicates whether the MOST network is closed and communication possible

7. If the parameter displays that the MOST network is not correctly connected, check the receiving control module in the same way as above.

The communication on the MOST network is working if the menu text is displayed. The fault cause is then in the CD module (MP2). Continue the fault-tracing by checking the component.

The communication on the MOST network is not working if the menu text is not displayed. The fault cause is then in the MOST cable for the next control module. Continue the fault-tracing by checking the fiber optic cable.

Checking cable

- Check the MOST connection. Check for dirt, loose connections and damage
- Replace the MOST cable if no fault is found in the MOST terminal.

Checking the component

- Check the power supply and the ground terminal for the CD player module (MP2)
- Check the MOST connection. Check for dirt, loose connections and damage
- Replace the CD player module (MP2) if no fault is found.

Click the VCT2000 symbol to read off the status of the MOST network.

Remedy as necessary.

Other information:

- To access or replace the CD module (MP2), see **MINIDISC / CD CONTROL MODULE, REPLACING**
- For information about checking the power supply and ground terminal, see **CHECKING THE POWER SUPPLY AND GROUND TERMINALS**
- For information about signals, see **SIGNAL SPECIFICATION**
- For information about checking and replacing the MOST cable, see **FIBER OPTIC CABLE HARNESS, REPAIRING**
- see **OPTICAL WIRING HARNESS CHECK**
- For information about location and order of control modules in the MOST network, see **LOCATION OF COMPONENTS** .

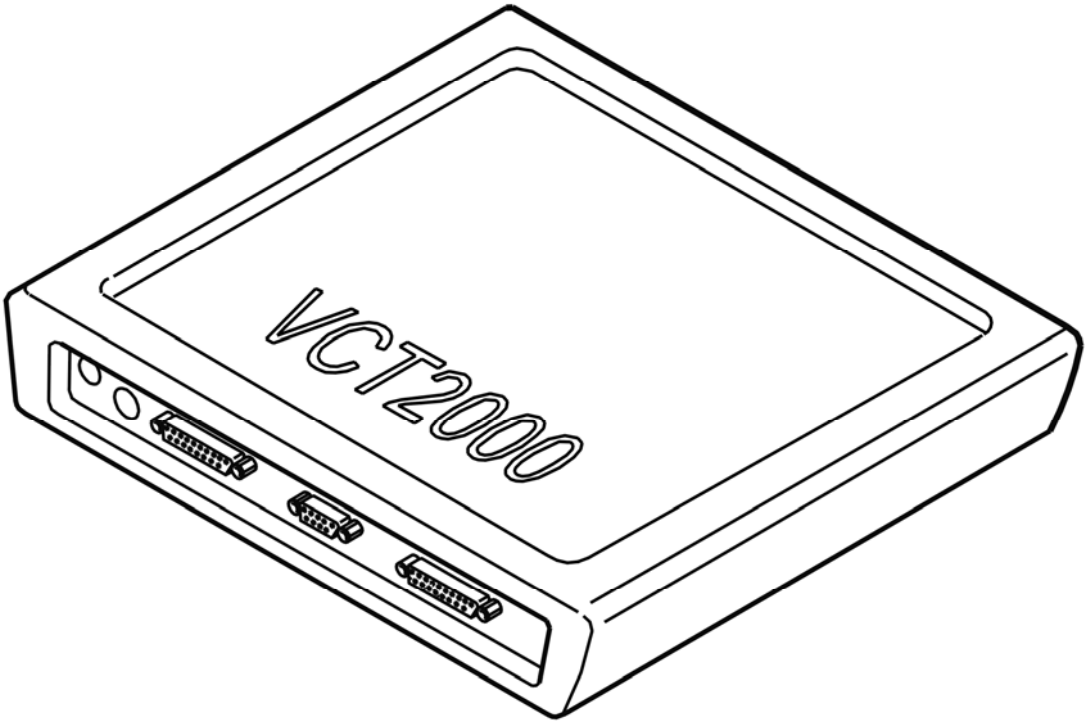

Fig. 187: Identifying VCT2000 Diagnostic Tool Symbol In VIDA
Courtesy of VOLVO CARS CORPORATION

- **Continue**

  Refer to **VERIFICATION**

CHECKING CABLE AND COMPONENT

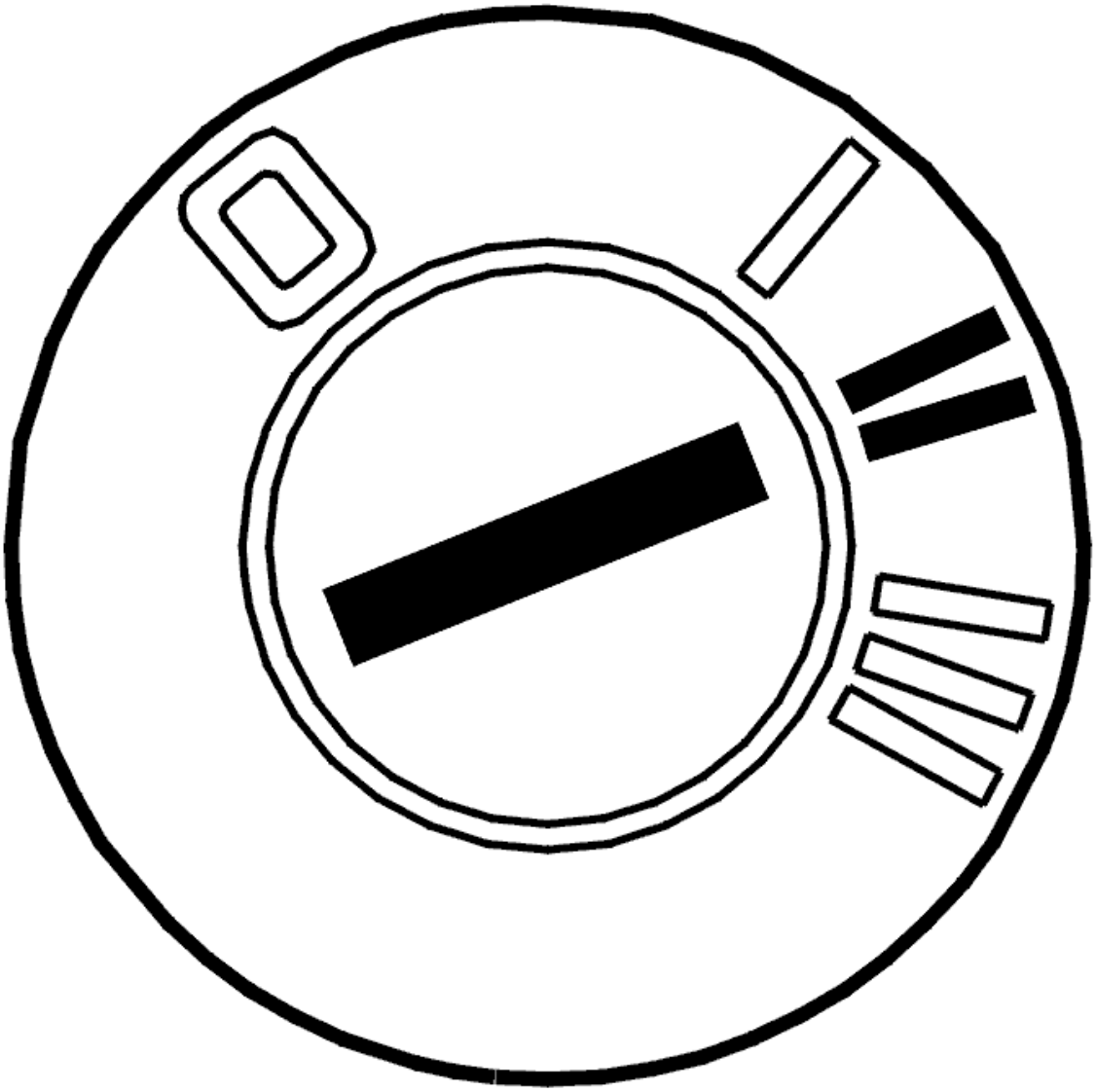

Fig. 188: Identifying Ignition ON
Courtesy of VOLVO CARS CORPORATION

Checking the fault cause

Check the fault cause as follows:

1. Ignition off
2. Disconnect the MOST connector from the phone module (PHM)
3. Connect the MOST cable to special tool see **9512867**
4. Ignition on
5. Activate the infotainment system
6. Check that the communication on the MOST network is functioning by reading off the status of the MOST locked parameter for at least 30 seconds. The parameter indicates whether the MOST network is closed and communication possible

7. If the parameter displays that the MOST network is not correctly connected, check the receiving control module in the same way as above.

The communication on the MOST network is working if the menu text is displayed. If this is the case, the fault cause is in the phone module (PHM). Continue the fault-tracing by checking the component.

The communication on the MOST network is not working if the menu text is not displayed. The fault cause is then in the MOST cable for the next control module. Continue the fault-tracing by checking the fiber optic cable.

Checking cable

- Check the MOST connection. Check for dirt, loose connections and damage
- Replace the MOST cable if no fault is found in the MOST terminal.

Checking the component

- Check the power supply and the ground terminal for the phone module (PHM)
- Check the MOST connection. Check for dirt, loose connections and damage
- Replace the phone module (PHM) if no fault is found.

Click the VCT2000 symbol to read off the status of the MOST network.

Remedy as necessary.

Other information:

- see **PHONE MODULE (PHM), REPLACING (2006-2010)**
- see **CHECKING THE SUPPLY VOLTAGE/GROUND TERMINAL**
- see **SIGNAL SPECIFICATION**
- For information about checking and replacing the MOST cable, see **FIBER OPTIC CABLE HARNESS, REPAIRING**
- see **OPTICAL WIRING HARNESS CHECK**
- For information about location and order of control modules in the MOST network, see **LOCATION OF COMPONENTS** .

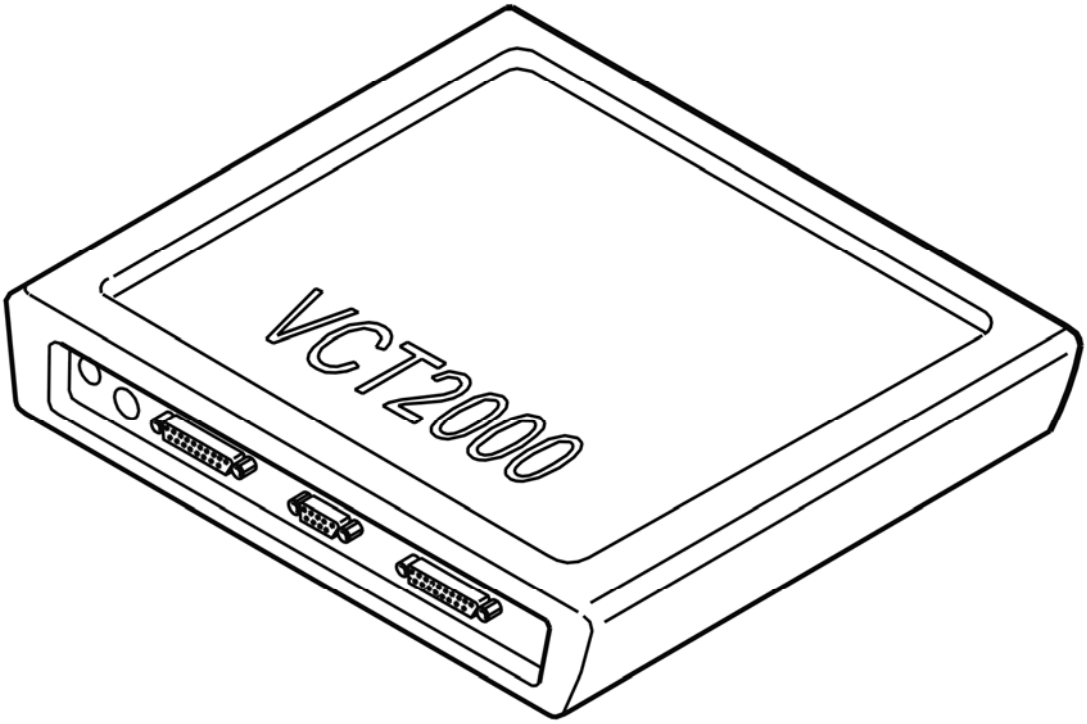

Fig. 189: Identifying VCT2000 Diagnostic Tool Symbol In VIDA
Courtesy of VOLVO CARS CORPORATION

- **Continue**

  Refer to **VERIFICATION**

CHECKING CABLE AND COMPONENT

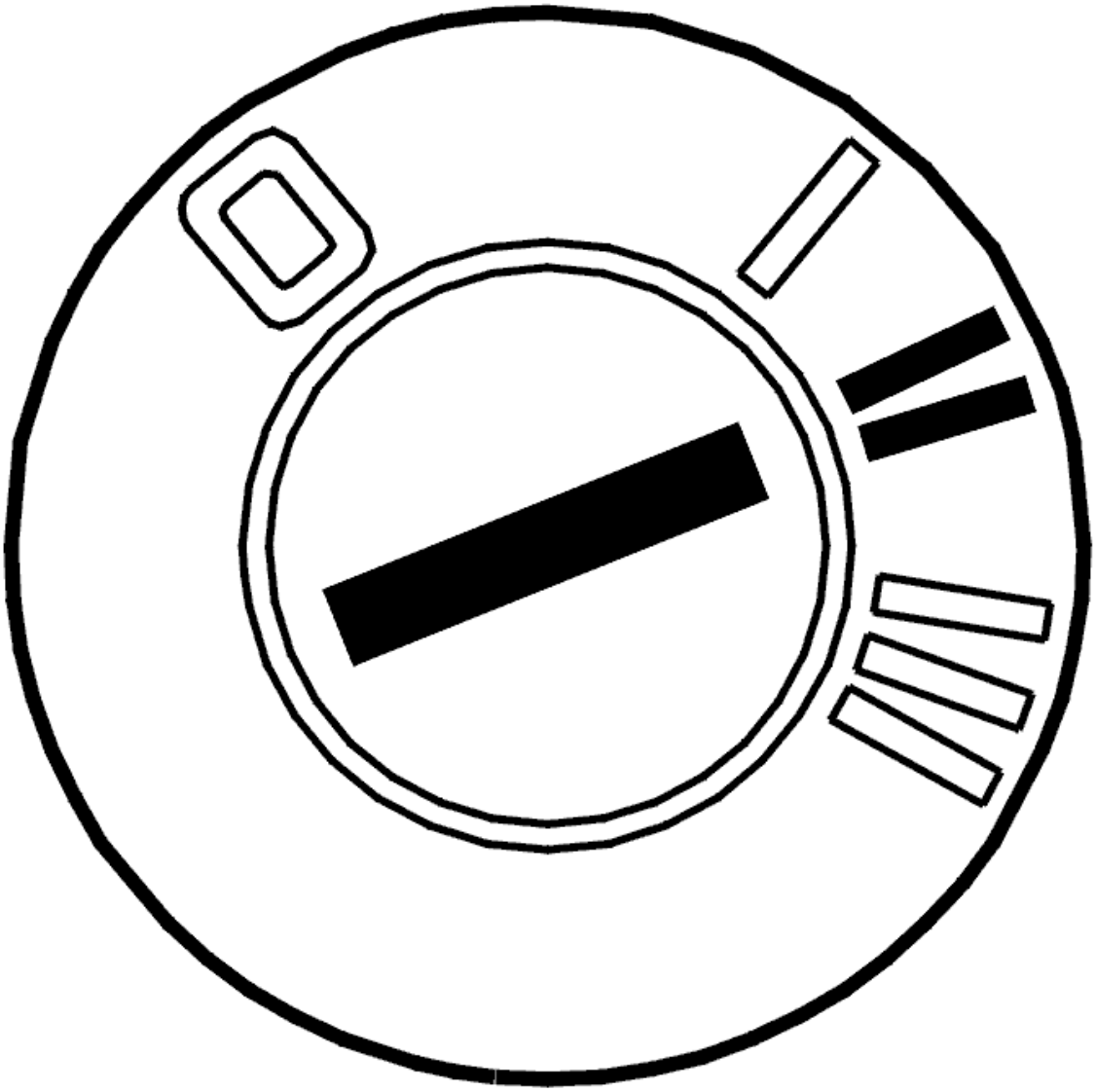

Fig. 190: Identifying Ignition ON
Courtesy of VOLVO CARS CORPORATION

Checking the fault cause

Check the fault cause as follows:

1. Ignition off
2. Disconnect the MOST connector from the MD player module (MP1)
3. Connect the MOST cable to special tool see **9512867**
4. Ignition on
5. Activate the infotainment system
6. Check that the communication on the MOST network is functioning by reading off the status of the MOST locked parameter for at least 30 seconds. The parameter indicates whether the MOST network is closed and communication possible

7. If the parameter displays that the MOST network is not correctly connected, check the receiving control module in the same way as above.

The communication on the MOST network is working if the menu text is displayed. The fault cause is then in the MD player module (MP1). Continue the fault-tracing by checking the component.

The communication on the MOST network is not working if the menu text is not displayed. The fault cause is then in the MOST cable for the next control module. Continue the fault-tracing by checking the fiber optic cable.

Checking cable

- Check the MOST connection. Check for dirt, loose connections and damage
- Replace the MOST cable if no fault is found in the MOST terminal.

Checking the component

- Check the power supply and the ground terminal for the MD player module (MP1)
- Check the MOST connection. Check for dirt, loose connections and damage
- Replace the MD player module (MP1) if no fault is found.

Click the VCT2000 symbol to read off the status of the MOST network.

Remedy as necessary.

Other information:

- To access or replace the MD module (MP1), see **MINIDISC / CD CONTROL MODULE, REPLACING**
- For information about checking the power supply and ground terminal, see **CHECKING THE POWER SUPPLY AND GROUND TERMINALS**
- For information about signals, see **SIGNAL SPECIFICATION**
- For information about checking and replacing the MOST cable, see **FIBER OPTIC CABLE HARNESS, REPAIRING**
- see **OPTICAL WIRING HARNESS CHECK**
- For information about location and order of control modules in the MOST network, see **LOCATION OF COMPONENTS** .

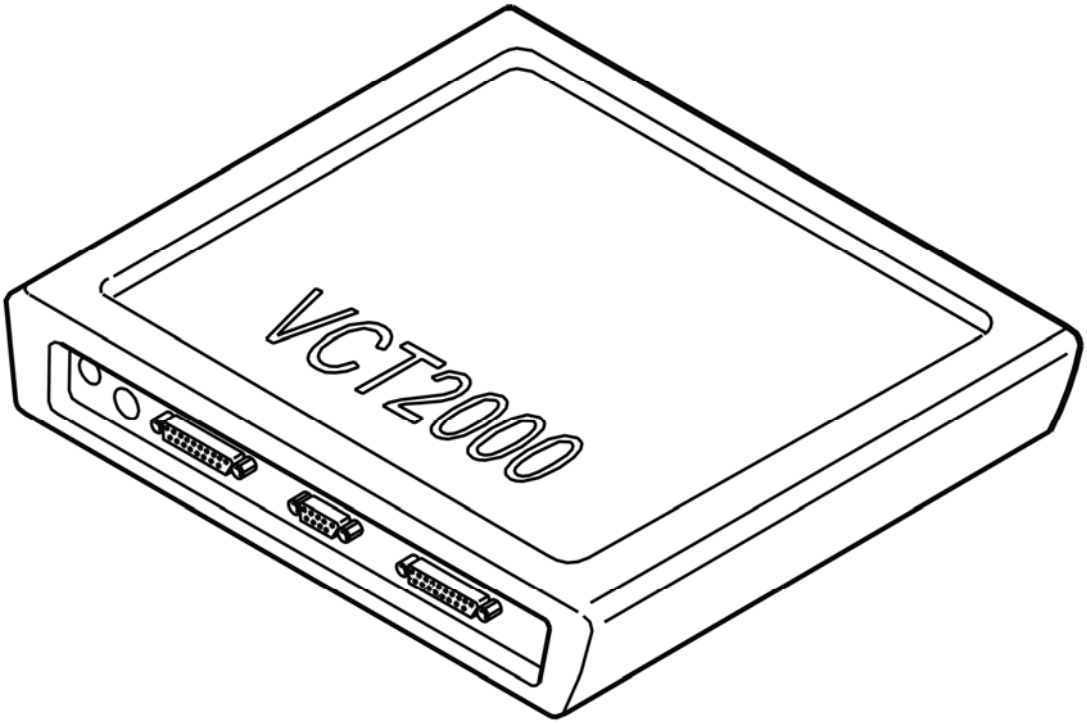

Fig. 191: Identifying VCT2000 Diagnostic Tool Symbol In VIDA
Courtesy of VOLVO CARS CORPORATION

- **Continue**

  Refer to **VERIFICATION**

CHECKING CABLE AND COMPONENT

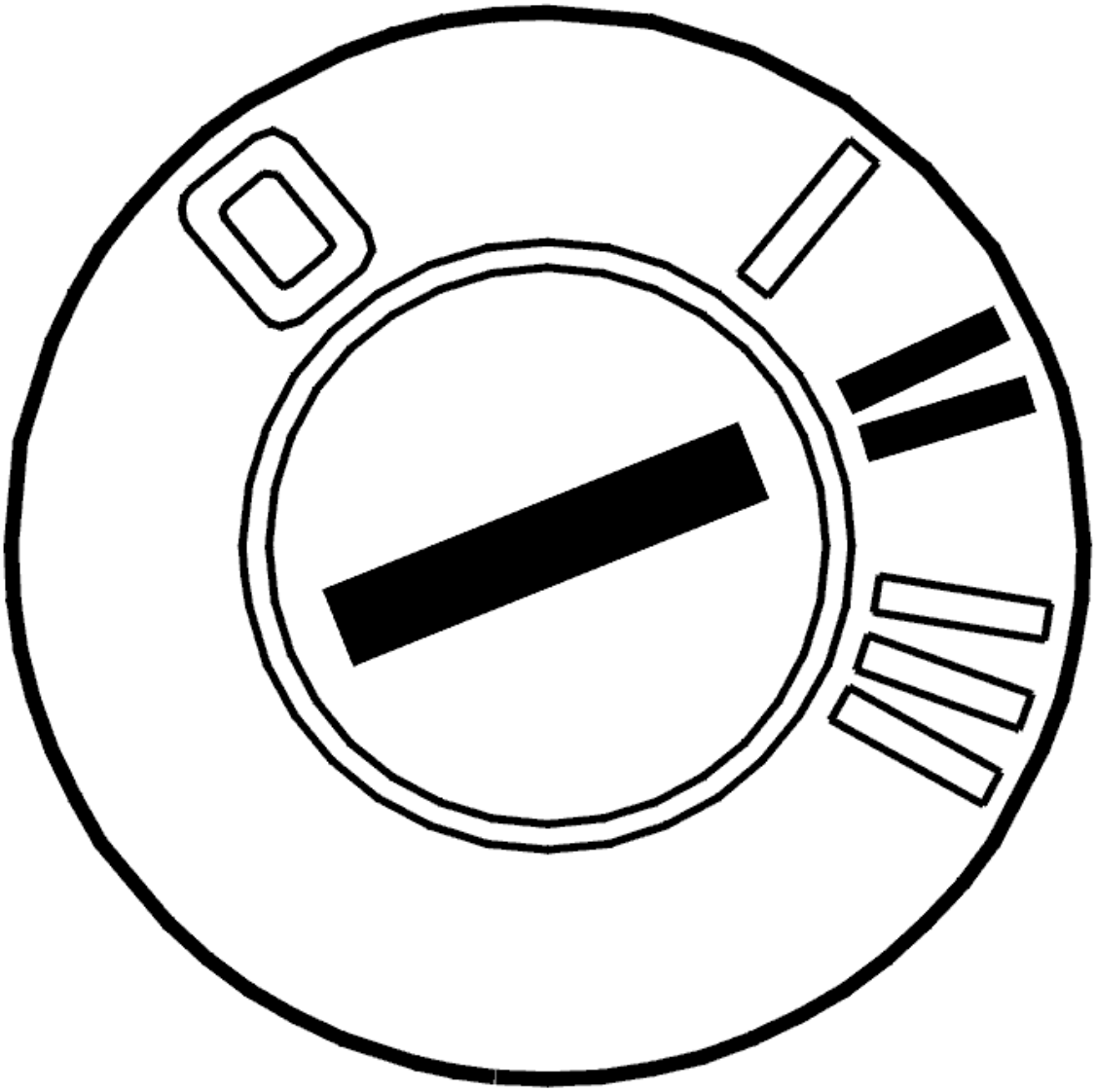

Fig. 192: Identifying Ignition ON
Courtesy of VOLVO CARS CORPORATION

Checking the fault cause

Check the fault cause as follows:

1. Ignition off
2. Disconnect the MOST connector from the multimedia module (MMM)
3. Connect the MOST cable to special tool see **9512867**
4. Ignition on
5. Activate the infotainment system
6. Check that the communication on the MOST network is functioning by reading off the status of the MOST locked parameter for at least 30 seconds. The parameter indicates whether the MOST network is closed and communication possible

7. If the parameter displays that the MOST network is not correctly connected, check the receiving control module in the same way as above.

The communication on the MOST network is working if the menu text is displayed. If this is the case, the fault cause is in the multimedia module (MMM). Continue the fault-tracing by checking the component.

The communication on the MOST network is not working if the menu text is not displayed. The fault cause is then in the MOST cable for the next control module. Continue the fault-tracing by checking the fiber optic cable.

Checking cable

- Check the MOST connection. Check for dirt, loose connections and damage
- Replace the MOST cable if no fault is found in the MOST terminal.

Checking the component

- Check the power supply and the ground terminal for the multimedia module (MMM)
- Check the MOST connection. Check for dirt, loose connections and damage
- Replace the multimedia module (MMM) if no fault is found.

Click the VCT2000 symbol to read off the status of the MOST network.

Remedy as necessary.

Other information:

- To access / replace the multimedia module (MMM), see **MULTIMEDIA MODULE (MMM), REPLACING**
- For information about checking the power supply and ground terminal, see **CHECKING THE VOLTAGE / GROUND TERMINAL (2003-2006)**
- For information about signals, see **SIGNAL SPECIFICATION**
- For information about checking and replacing the MOST cable, see **FIBER OPTIC CABLE HARNESS, REPAIRING**
- see **OPTICAL WIRING HARNESS CHECK**
- For information about location and order of control modules in the MOST network, see **LOCATION OF COMPONENTS** .

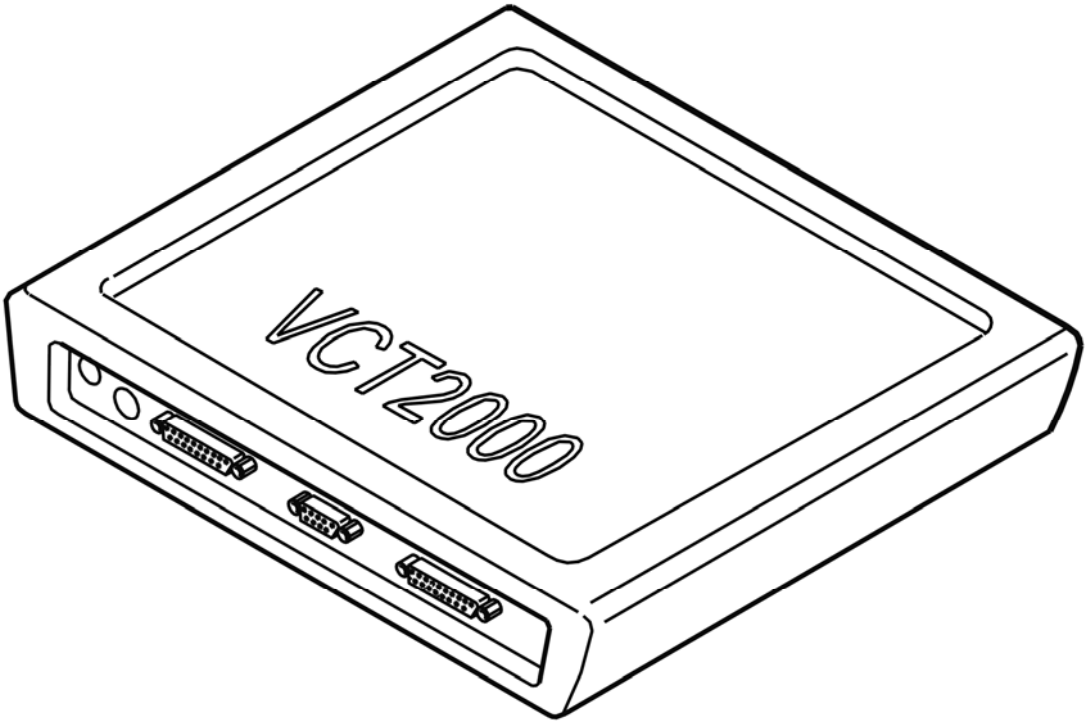

Fig. 193: Identifying VCT2000 Diagnostic Tool Symbol In VIDA
Courtesy of VOLVO CARS CORPORATION

- **Continue**

  Refer to **VERIFICATION**

CHECKING CABLE AND COMPONENT

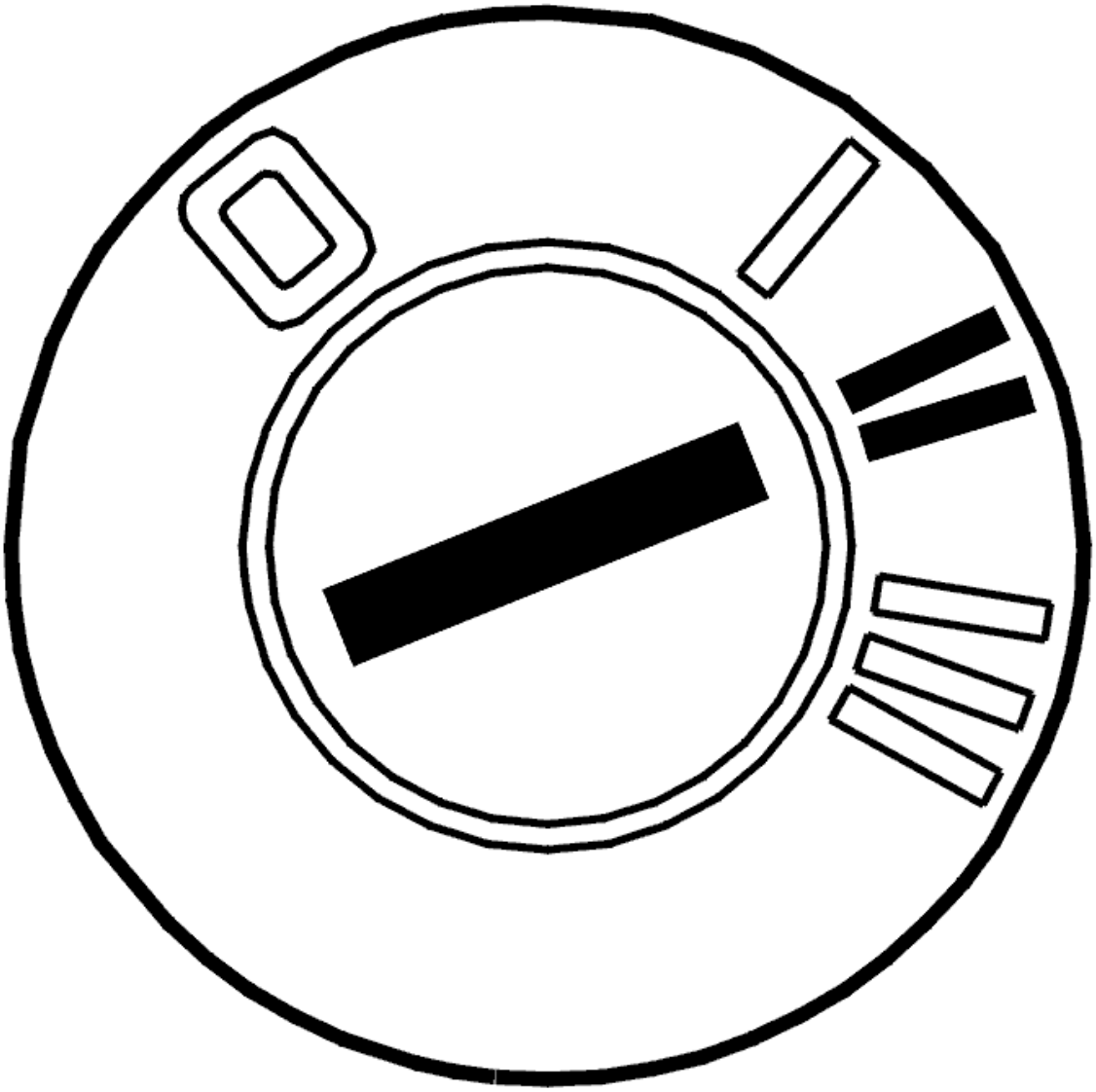

Fig. 194: Identifying Ignition ON
Courtesy of VOLVO CARS CORPORATION

- Ignition off
- Disconnect the MOST cable connector from the infotainment control module (ICM)
- Ignition on
- Activate the infotainment system.

  Check visually whether the infotainment control module (ICM) is emitting light from the MOST connector.

  The control module is defective if the infotainment control module (ICM) is not emitting light.

  If the infotainment control module (ICM) is transmitting light, the fault is in the MOST cable for the next control module.

Check the MOST connection. Check for dirt, loose connections and damage.

Replace the MOST cable if no fault is found in the MOST terminal.

Remedy as necessary.

Other information:

- To access / replace the infotainment control module (ICM), see **INFOTAINMENT CONTROL MODULE (ICM), REPLACING**
- For information about checking and replacing the MOST cable, see **FIBER OPTIC CABLE HARNESS, REPAIRING**
- For information about location and order of control modules in the MOST network, see **LOCATION OF COMPONENTS** .

- **Continue**

  Refer to **VERIFICATION**

VERIFICATION

HINT: After carrying out the repair, check that the fault has been remedied.

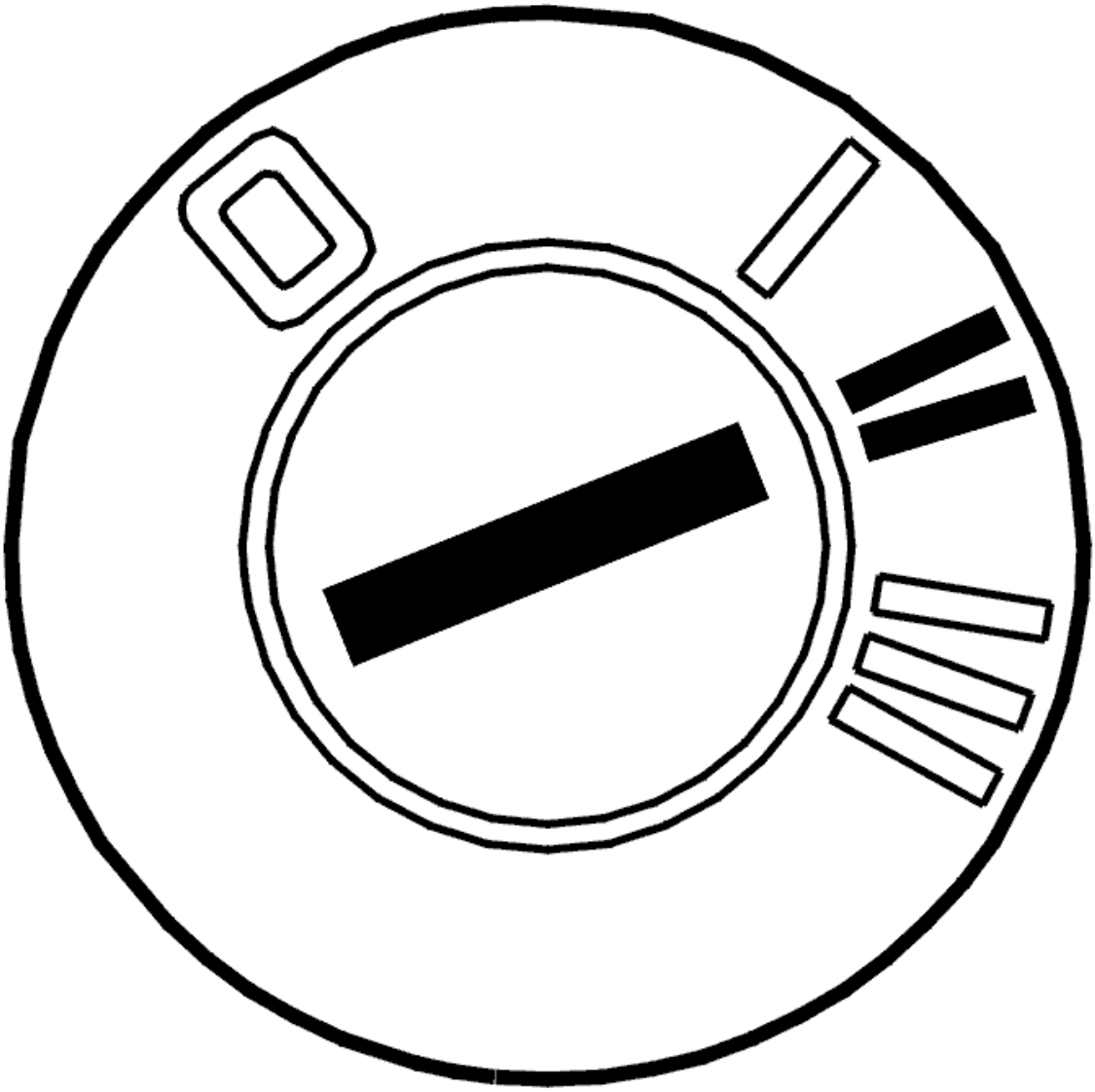

Fig. 195: Identifying Ignition ON
Courtesy of VOLVO CARS CORPORATION

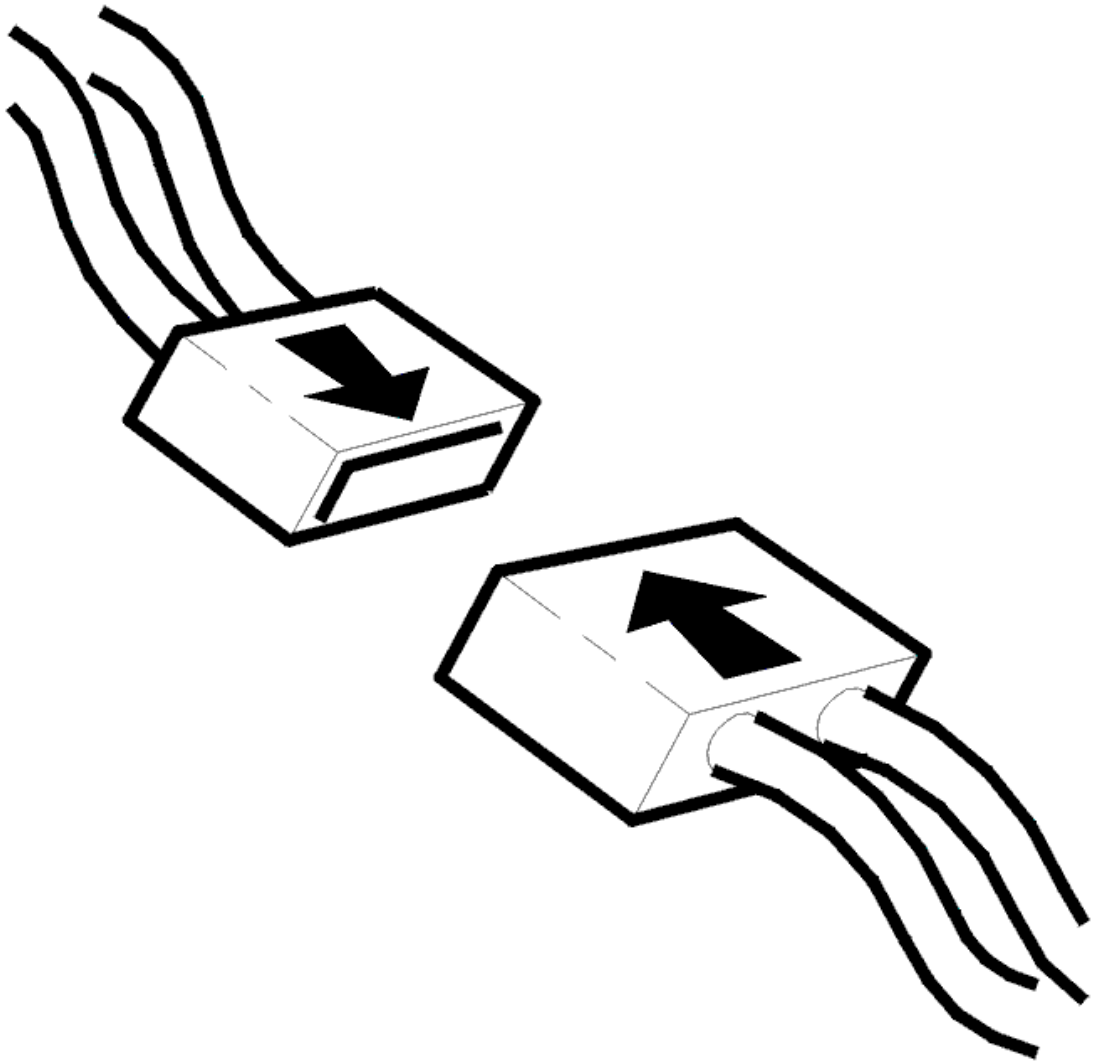

Fig. 196: Connecting Connector
Courtesy of VOLVO CARS CORPORATION

- Ignition off
- Reinstall the connectors, components etc.
- Ignition on.

  Using VCT2000 (Volvo Scan Tool) Activate the infotainment system and select the radio.

  Check whether there is sound from the radio in the loudspeakers.

Is the sound of the radio coming through the loudspeakers?

- **YES**

VERIFIED: Troubleshooting has been completed.

- **NO**

  Refer to **INFORMATION**

INFORMATION

FAULT-TRACING INFORMATION

The fault should have been detected and remedied. As this is not the case fault-tracing has failed.

Exit fault-tracing for this diagnostic trouble code (DTC) or make another attempt.

ICM-DC02: CONTROL MODULE COMMUNICATION. SIGNAL MISSING (2007-2008)

DIAGNOSTIC TROUBLE CODE (DTC) INFORMATION ICM-DC02

Condition

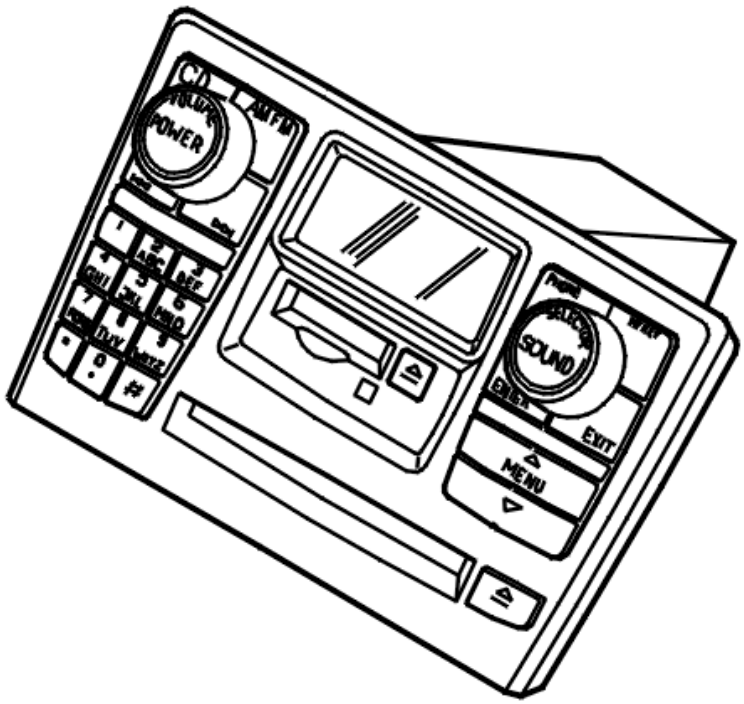

Fig. 197: Infotainment Control Module
Courtesy of VOLVO CARS CORPORATION

The infotainment control module (ICM) checks that the status of the MOST network is MOST-LOCK. MOST-LOCK means that the network is closed and that communication is possible.

Diagnostic trouble code (DTC) ICM-DC02 is stored if the infotainment control module (ICM) registers that the MOST network is not in MOST-LOCK mode.

ICM-DC02 can be detected when the ignition is in position I or II for at least 5 seconds.

Substitute Value

- None.

Possible Source

- Dirty or damaged MOST cable connector
- Open-circuit in the MOST cable
- The MOST transceiver is defective in one of the control modules in the MOST network
- No power supply to a control module in the MOST network.

Fault symptom[s]

- Audio unit not working
- The display does not light
- Functions in the infotainment system are not working
- No or reduced carphone functionality.

NO COMMUNICATION

see **NO COMMUNICATION**

ICM-DC02: CONTROL MODULE COMMUNICATION. SIGNAL MISSING (2003-2006)

DIAGNOSTIC TROUBLE CODE (DTC) INFORMATION ICM-DC02

see **DIAGNOSTIC TROUBLE CODE (DTC) INFORMATION ICM-DC02**

NO COMMUNICATION (2003, 2004)

Special tools:

see **9512867**

CHECKING THE WIRING AND COMPONENT

The infotainment control module (ICM) has detected an open-circuit in communication on the MOST network.

The MOST network is a fiber optic ring network. This means that all control modules which are connected to the network must be powered and grounded for the infotainment system to work. If, for any reason, a control module is unable to handle (receive or transmit) signals onwards on the MOST network, or if there is an open-circuit in the fiber optic cable, the infotainment control module (ICM) will shut down all functionality.

Communication on the fiber optic net is one-directional. The control modules on the MOST network receive light signals, amplify them and then send them onwards. The MOST connectors for the control modules contain two fiber optic cables, one for incoming and one for outgoing signals.

If the fault is intermittent, it has been registered previously but is no longer present. Intermittent faults can either be caused by interference when starting the MOST network, or by intermittent faults in the power supply/ground for one of the control modules in the network. The fault is evaluated depending on how it occurs. If the fault recurs, fault-trace for permanent faults.

It can be difficult to diagnose intermittent faults using a ring break diagnostic because for this to work the fault must occur during the diagnostic.

If the fault is permanent, perform a ring break diagnostic to locate the open-circuit.

- **Continue**

  Refer to **CHECKING FOR OPEN-CIRCUITS**

CHECKING FOR OPEN-CIRCUITS

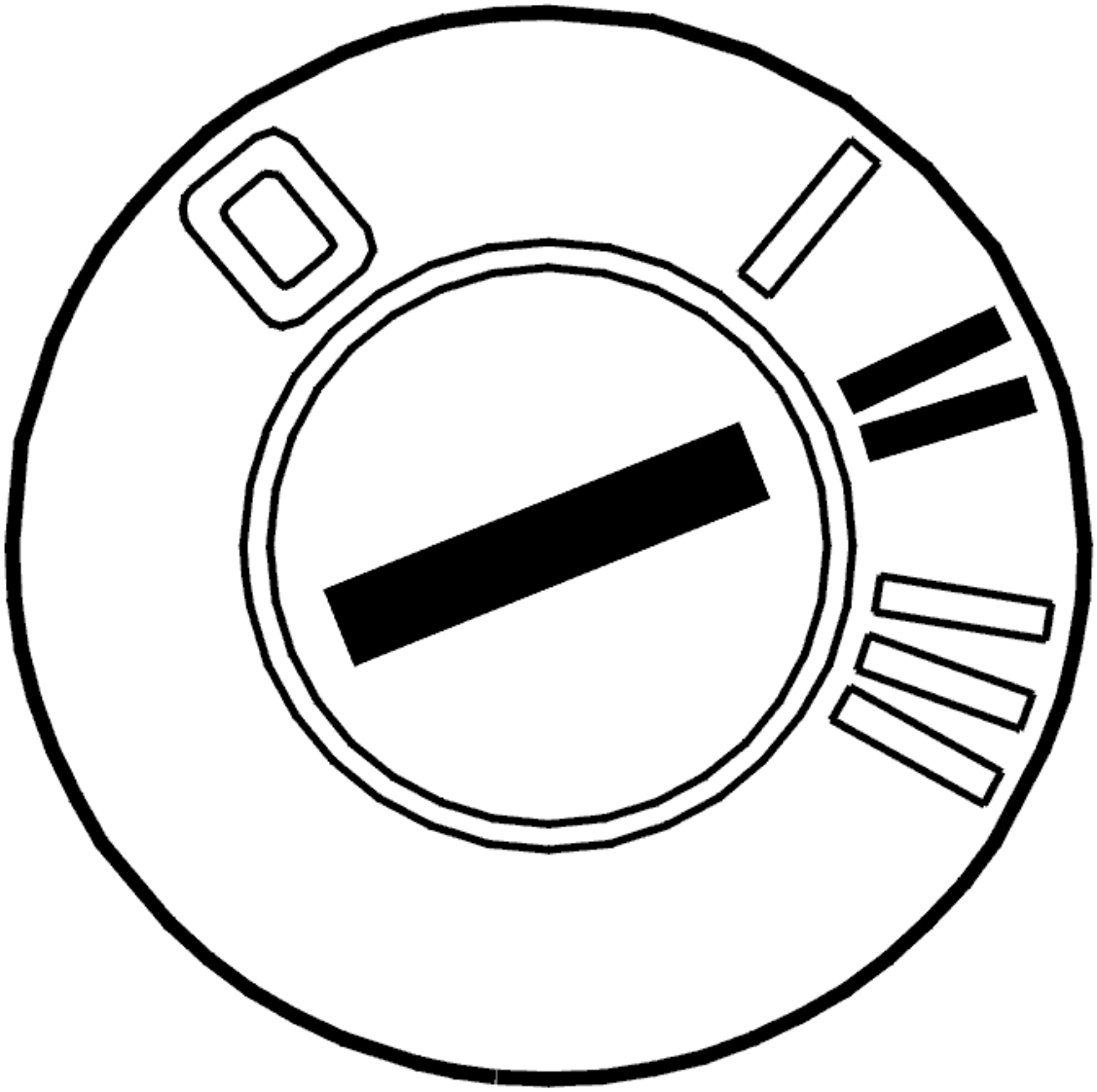

Fig. 198: Identifying Ignition ON
Courtesy of VOLVO CARS CORPORATION

Ring break diagnostic

A ring break diagnostic should be run to determine whether the fault has occurred.

To carry out a full ring break diagnostic of the MOST system, proceed as follows:

1. Switch off the ignition and remove the key
2. Remove the fuse for the antenna module (ATM)
3. Wait at least 3 minutes
4. Ignition on
5. Reinstall the fuse for the antenna module (ATM) within 25 seconds
6. Wait at least 30 seconds after switching on the ignition before reading off the position of the open-circuit.

Other information:

- For information about fuses, see the appropriate service information.
- **Continue**

  Refer to **READING OFF THE POSITION OF THE OPEN-CIRCUIT**

CHECKING CABLE AND COMPONENT

If the result of the ring break diagnostic is POOR, the infotainment control module (ICM) is receiving a signal on the MOST network. However it is unable to decode the signals because the luminance of the signals is too weak or the signals are distorted.

If the result from the ring break diagnostic is OK, the fault is intermittent.

Fault-tracing using the ring break diagnostic assumes that the fault is permanent or active when the test is run, i. e. the system is powered having been off.

HINT: If diagnostic trouble code (DTC) ICM-DC01 is intermittent, read off the status of the ring break diagnostic from the frozen values in Vehicle communication.

HINT: Note that the antenna module (ATM) is not normally included in a ring break diagnostic if the fuse is not removed. This means that the position of the open-circuit moves one step backwards in the MOST network.

HINT: On fully equipped vehicles, if the open-circuit position is 0, this may be because of:

- Subwoofer module (SUB)
- The fiber optic cable between the subwoofer module (SUB) and the antenna module (ATM)
- Antenna module (ATM)
- The fiber optic cable between the antenna module (ATM) and the infotainment control module (ICM)
- The optical connector in the infotainment control module (ICM). This means that the infotainment control module (ICM) is not able to interpret the incoming signal correctly.

Check the communication on the MOST network by bypassing the control modules one by one on the MOST network as follows:

- Ignition off
- Disconnect the MOST connector from the relevant control module
- Connect the MOST cable to special tool see **9512867**
- Ignition on
- Activate the infotainment system
- Check that the communication on the MOST network is functioning by reading off the status of the MOST locked parameter for at least 30 seconds. The parameter indicates whether the MOST network is

closed and communication possible.

If the communication on the MOST network is stable when a control module is disconnected, check the power supply and the ground terminal on the relevant control module. Check for intermittent faults. Try replacing the component if no fault is found.

Click the VCT2000 symbol to read off the status of the MOST network.

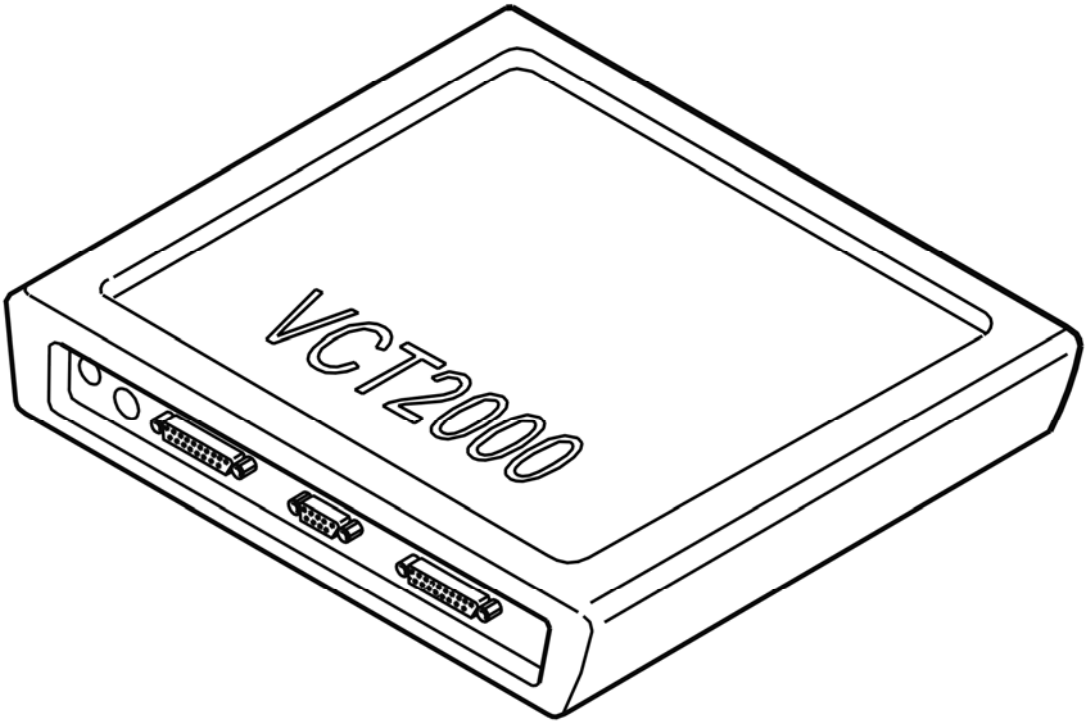

Fig. 199: Identifying VCT2000 Diagnostic Tool Symbol In VIDA
Courtesy of VOLVO CARS CORPORATION

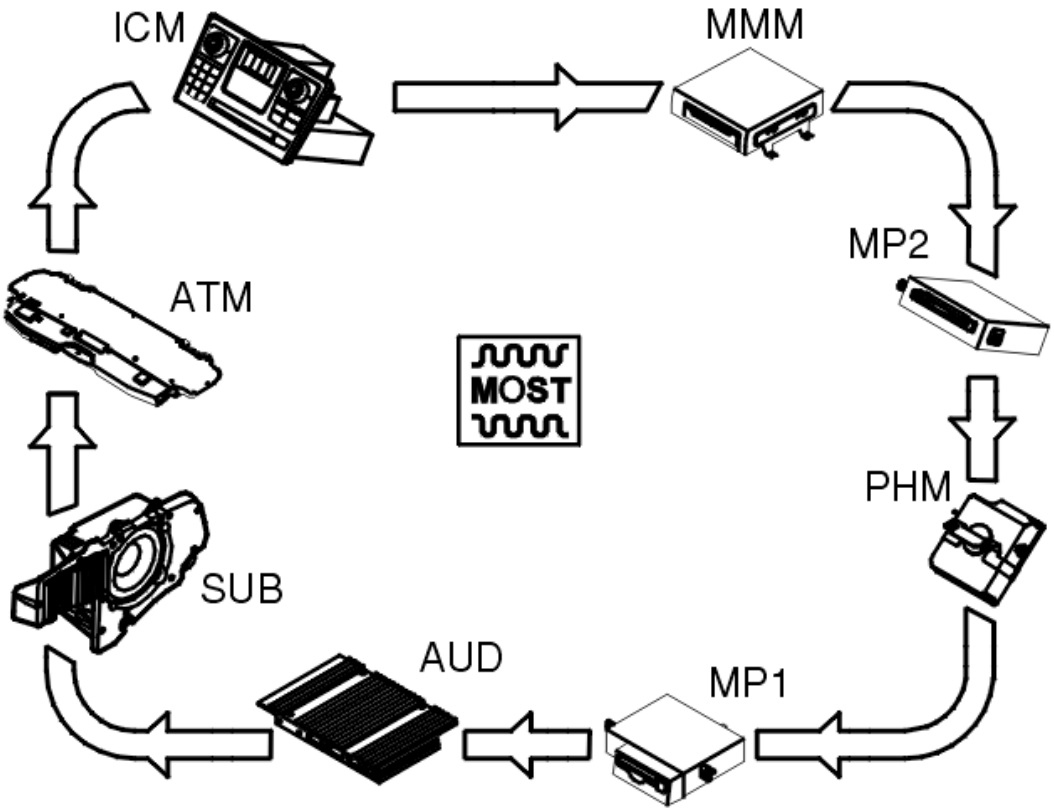

Fig. 200: MOST Bus (Media Oriented System Transportation) Communication Diagram
Courtesy of VOLVO CARS CORPORATION

- **Continue**

  Refer to **VERIFICATION**

READING OFF THE POSITION OF THE OPEN-CIRCUIT

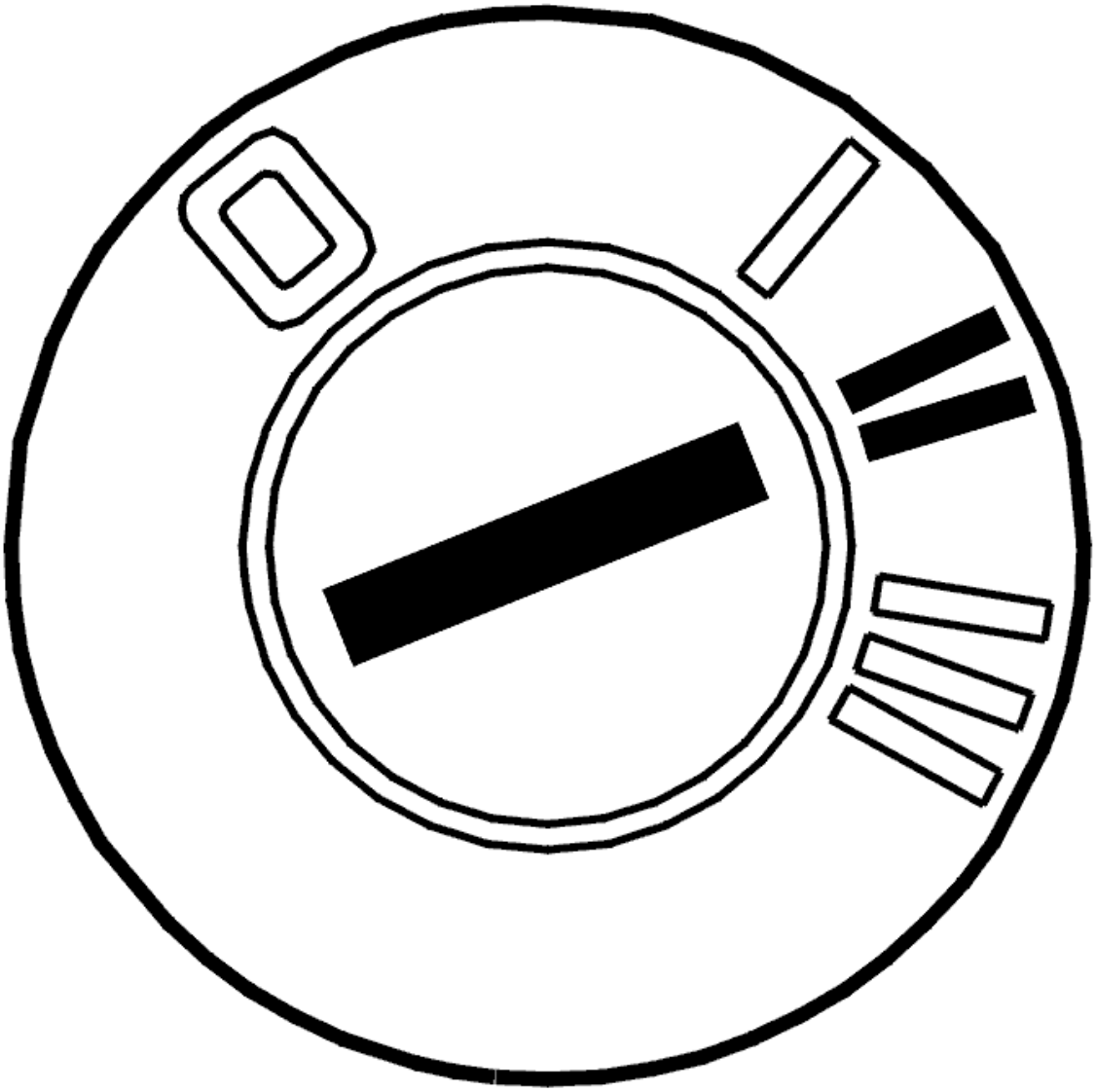

Fig. 201: Identifying Ignition ON
Courtesy of VOLVO CARS CORPORATION

- Ignition on.

  Reading off the result from a ring break diagnostic

  Click the VCT2000 symbol to read off the result of the ring break diagnostic.

  As well as the result from the ring break diagnostic, a list of the control modules included in the MOST network is provided for that car.

  The following result can be obtained from a ring break diagnostic:

  If the fault occurs when the ring break diagnostic is run, the result will be presented as an open-circuit position.

If the fault does not occur when the ring break diagnostic is run, the result will be OK. If this is the case, select alternative 3 below.

- If the diagnostic indicates an open-circuit in the communication on the MOST network, the result will be an open-circuit position
- The result will be OK if there is no fault on the MOST network
- If the infotainment control module (ICM) receives a signal on the MOST network but is unable to decode it because the luminance is weak or the signals are distorted, the result will be POOR.

Determining the position of the open-circuit

The position of the open-circuit is calculated by working backwards in the MOST network from the infotainment control module (ICM).

NOTE: The ring break diagnostic only counts backwards, irrespective of which, or how many control modules, are installed in the car. To determine the position of the open-circuit, check the list to, see which control modules are installed in that particular car. Then count backwards following the determined order. The number of control modules can vary between 3-8.

Two examples are outlined below:

- The first open-circuit position corresponds to 0. This means that the open-circuit is in the antenna module (ATM) or in the cable between the antenna module (ATM) and the infotainment control module (ICM)
- If the position is 1, go one step backwards in the chain. The open-circuit is in the subwoofer module (SUB) or in the cable between the subwoofer module (SUB) and the antenna module (ATM). The open-circuit can also be caused by the optical connector in the antenna module (ATM) being damaged so that the antenna module (ATM) is not able to interpret the incoming signal from the subwoofer module (SUB) correctly.

  NOTE: The subwoofer module (SUB) is not standard. If one is not installed, the open-circuit position 1 applies to the audio module (AUD).

Select the alternative for the control module to be checked.

Alternative 1: Refer to CHECKING CABLE AND COMPONENT

Antenna module (ATM)

Subwoofer module (SUB)

Audio module (AUD)

CD player module (MP2)

Alternative 2: Refer to CHECKING CABLE AND COMPONENT

Phone module (PHM)

MD player module (MP1)

Multimedia module (MMM)

Infotainment control module (ICM)

Alternative 3: Refer to CHECKING CABLE AND COMPONENT

The result from the ring break diagnostic indicates that the MOST network is OK.

The result from the ring break diagnostic is POOR.

Other information:

- For information about location and order of control modules in the MOST network, see **LOCATION OF COMPONENTS**

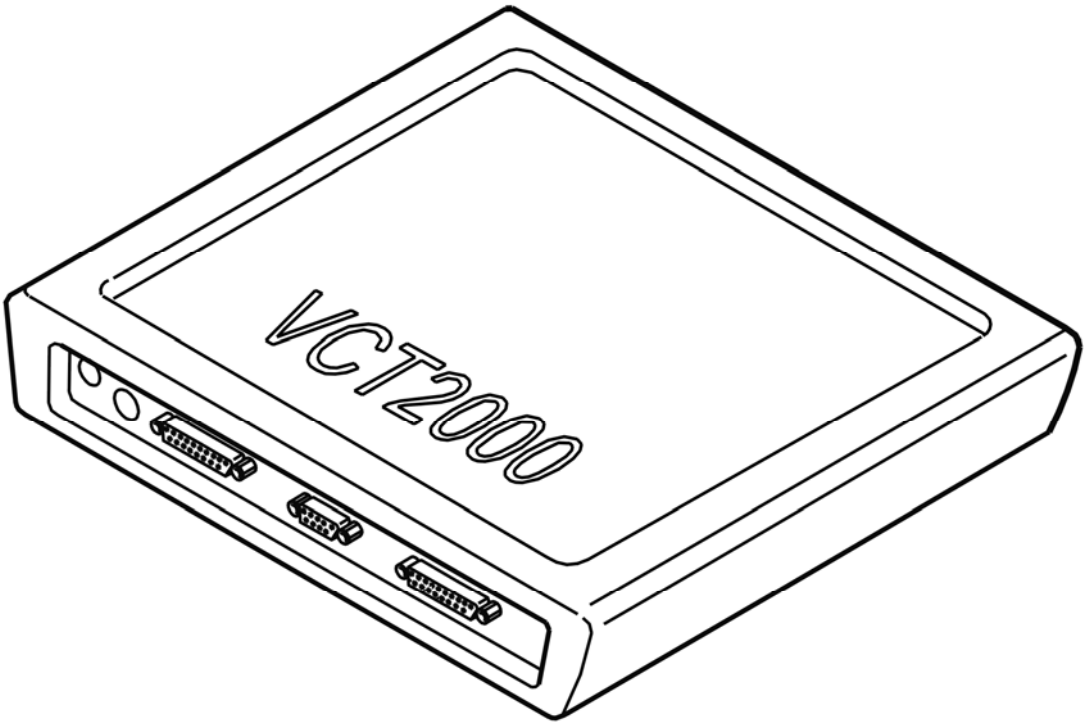

Fig. 202: Identifying VCT2000 Diagnostic Tool Symbol In VIDA
Courtesy of VOLVO CARS CORPORATION

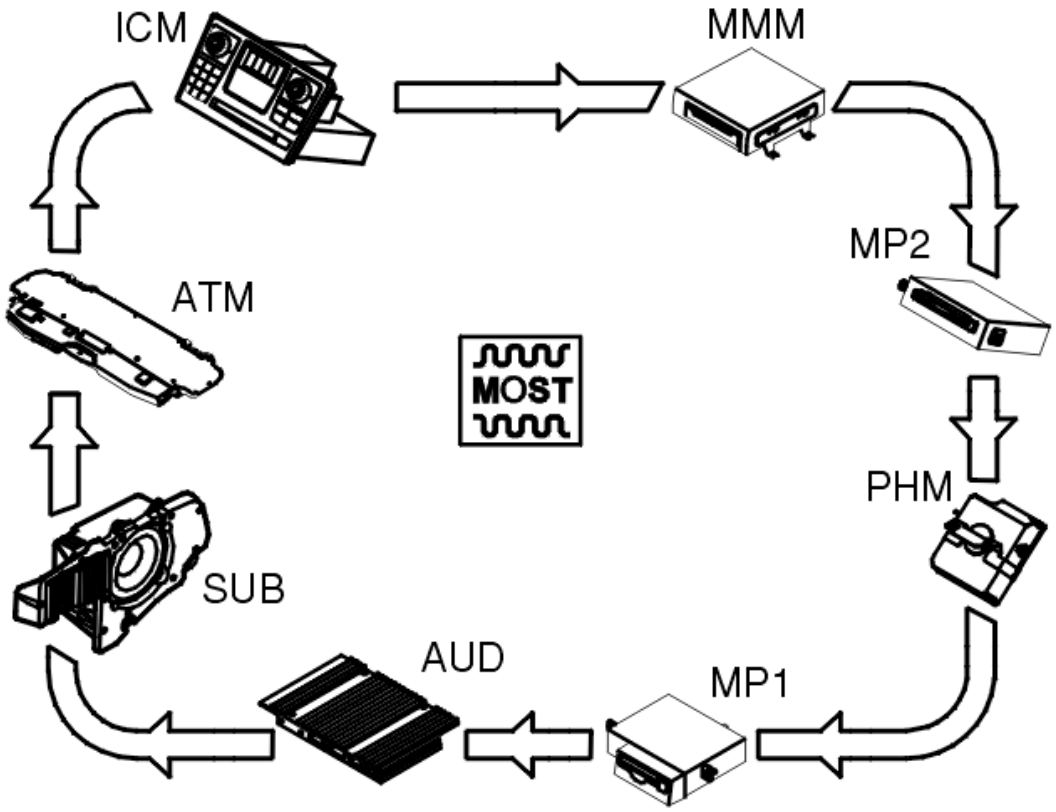

Fig. 203: MOST Bus (Media Oriented System Transportation) Communication Diagram
Courtesy of VOLVO CARS CORPORATION

CHECKING CABLE AND COMPONENT

Select the control module to be checked from the list.

1. Antenna module (ATM). Refer to **CHECKING CABLE AND COMPONENT**

2. Subwoofer module (SUB). Refer to **CHECKING CABLE AND COMPONENT**

3. Audio module (AUD). Refer to **CHECKING CABLE AND COMPONENT**

4. CD player module (MP2). Refer to **CHECKING CABLE AND COMPONENT**

CHECKING CABLE AND COMPONENT

Select the control module to be checked from the list.

1. Phone module (PHM). Refer to **CHECKING CABLE AND COMPONENT**

2. MD player module (MP1). Refer to **CHECKING CABLE AND COMPONENT**

3. Multimedia module (MMM). Refer to **CHECKING CABLE AND COMPONENT**

4. Infotainment control module (ICM). Refer to **CHECKING CABLE AND COMPONENT**

CHECKING CABLE AND COMPONENT

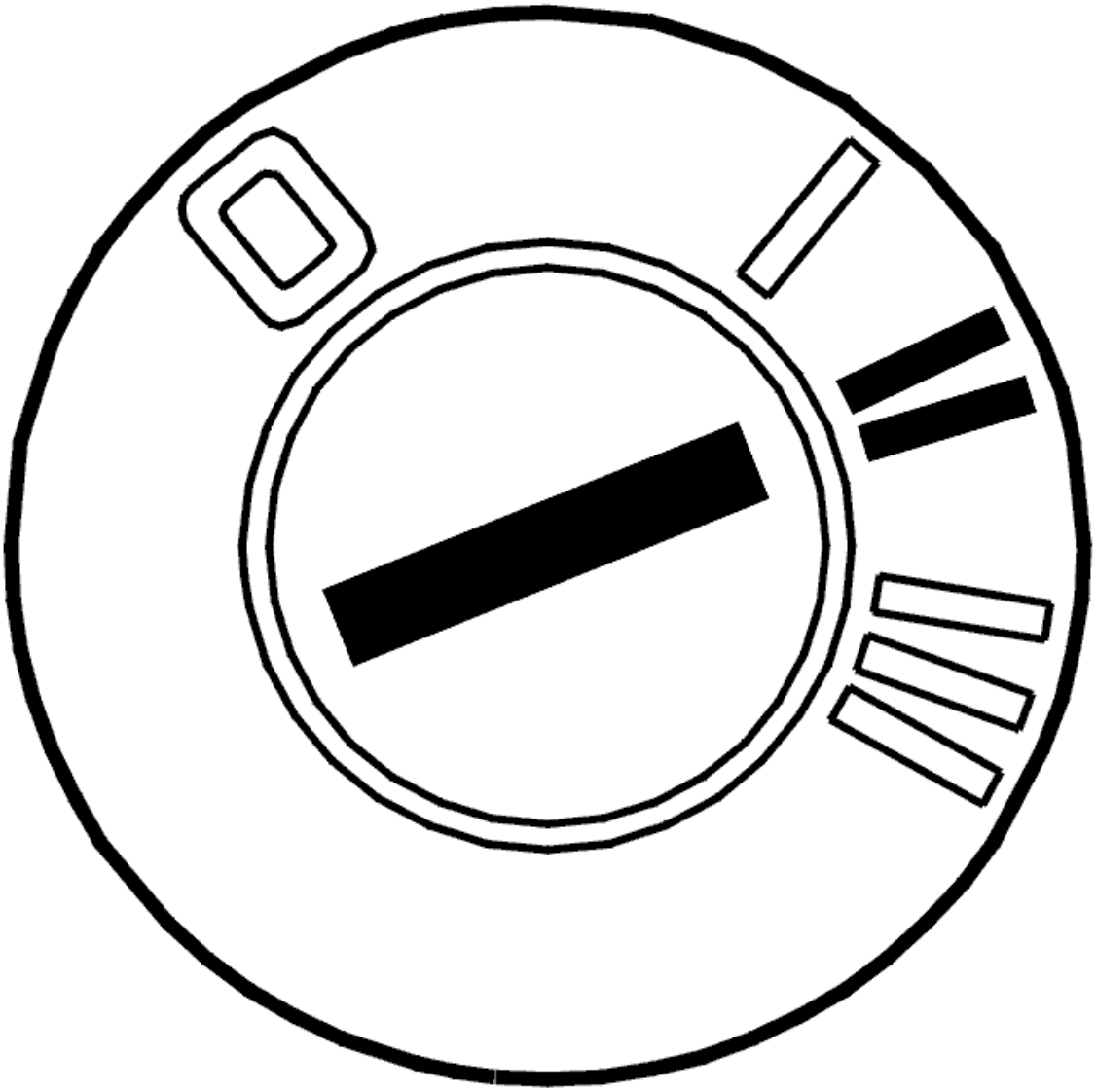

Fig. 204: Identifying Ignition ON
Courtesy of VOLVO CARS CORPORATION

Checking the fault cause

Check the fault cause as follows:

1. Ignition off
2. Disconnect the MOST connector from the antenna module (ATM)
3. Connect the MOST cable to special tool see **9512867**
4. Ignition on

5. Activate the infotainment system
6. Check that the communication on the MOST network is functioning by reading off the status of the MOST locked parameter for at least 30 seconds. The parameter indicates whether the MOST network is closed and communication possible
7. If the parameter displays that the MOST network is not correctly connected, check the receiving control module in the same way as above.

The communication on the MOST network is working if the menu text is displayed. If this is the case, the fault cause is in the antenna module (ATM). Continue the fault-tracing by checking the component.

The communication on the MOST network is not working if the menu text is not displayed. The fault cause is then in the MOST cable for the next control module. Continue the fault-tracing by checking the fiber optic cable.

Checking cable

- Check the MOST connection. Check for dirt, loose connections and damage
- Replace the MOST cable if no fault is found in the MOST terminal.

Checking the component

- Check the power supply and the ground terminal for the antenna module (ATM)
- Check the MOST connection. Check for dirt, loose connections and damage
- Replace the antenna module (ATM) if no fault is found.

Remedy as necessary.

Click the VCT2000 symbol to read off the status of the MOST network.

Other information:

- To access or replace the antenna module (ATM), see **RECEIVER GPS, TMC (ATM), REPLACE**
- For information about checking the power supply and ground terminal, see **CHECKING THE POWER SUPPLY AND GROUND TERMINALS**
- For information about signals, see **SIGNAL SPECIFICATION**
- see **OPTICAL WIRING HARNESS CHECK**
- For information about checking and replacing the MOST cable, see **FIBER OPTIC CABLE HARNESS, REPAIRING**
- For information about location and order of control modules in the MOST network, see **LOCATION OF COMPONENTS** .

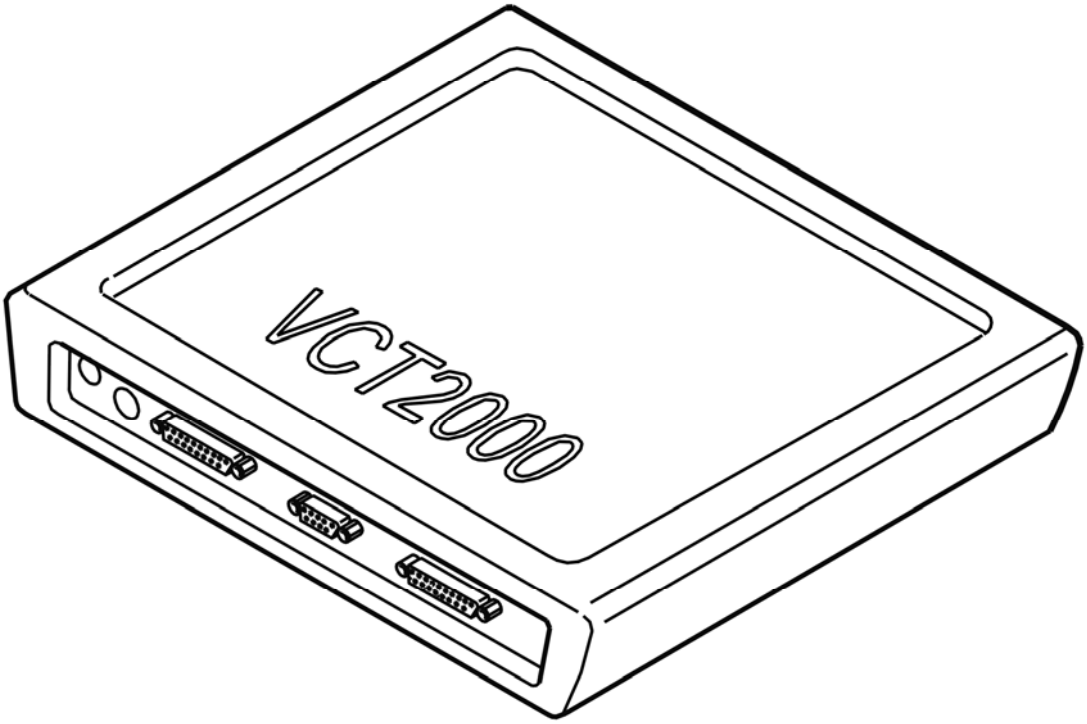

Fig. 205: Identifying VCT2000 Diagnostic Tool Symbol In VIDA
Courtesy of VOLVO CARS CORPORATION

- **Continue**

  Refer to **VERIFICATION**

CHECKING CABLE AND COMPONENT

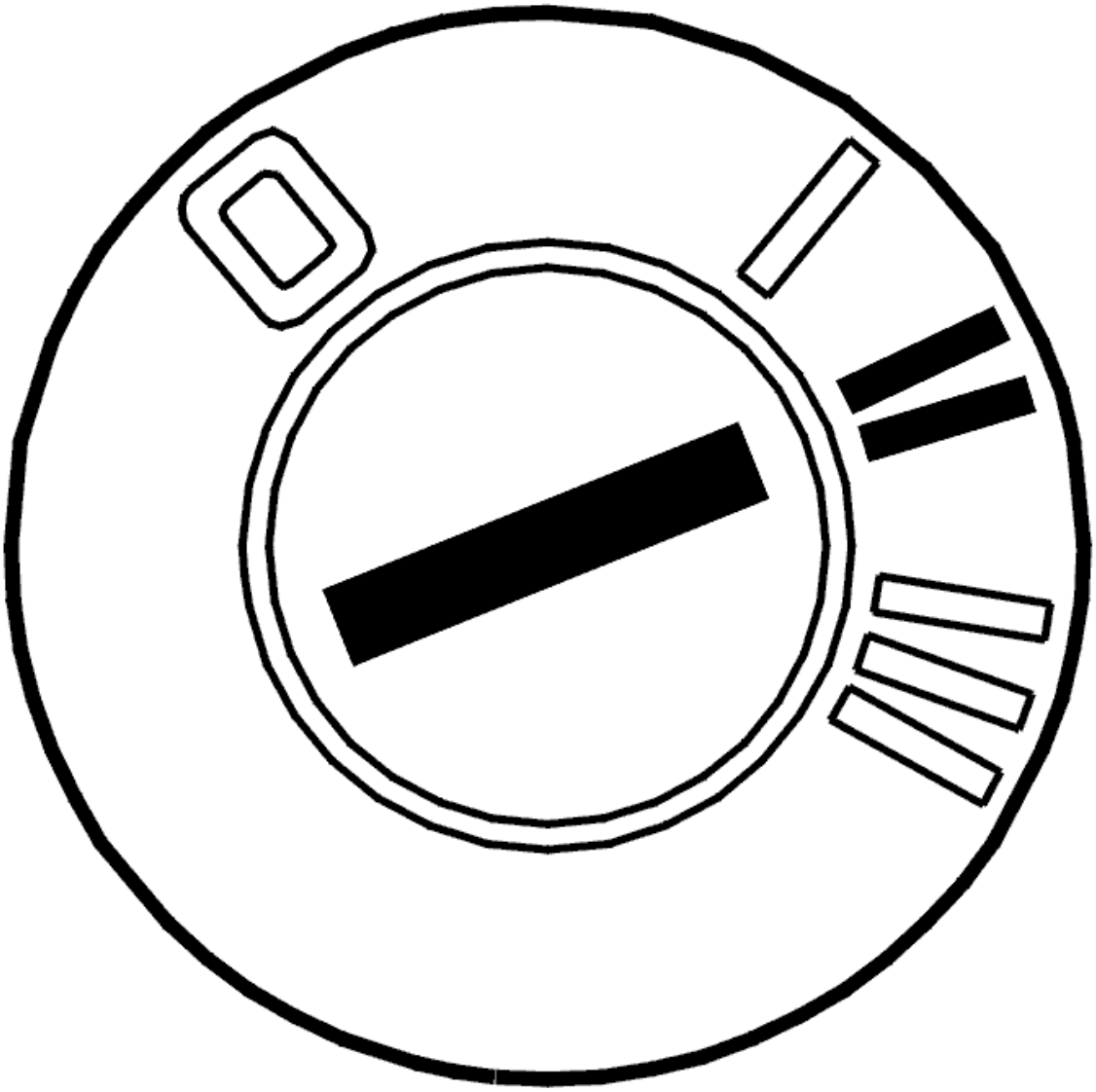

Fig. 206: Identifying Ignition ON
Courtesy of VOLVO CARS CORPORATION

Checking the fault cause

Check the fault cause as follows:

1. Ignition off
2. Disconnect the MOST connector from the subwoofer module (SUB)
3. Connect the MOST cable to special tool see **9512867**
4. Ignition on
5. Activate the infotainment system
6. Check that the communication on the MOST network is functioning by reading off the status of the MOST locked parameter for at least 30 seconds. The parameter indicates whether the MOST network is closed and communication possible

7. If the parameter displays that the MOST network is not correctly connected, check the receiving control module in the same way as above.

The communication on the MOST network is working if the menu text is displayed. If this is the case, the fault cause is in the bypassed control module. Continue the fault-tracing by checking the component.

The communication on the MOST network is not working if the menu text is not displayed. The fault cause is then in the MOST cable for the next control module. Continue the fault-tracing by checking the fiber optic cable.

Checking cable

- Check the MOST connection. Check for dirt, loose connections and damage
- Replace the MOST cable if no fault is found in the MOST terminal.

Checking the component

- Check the power supply and the ground terminal for the subwoofer module (SUB)
- Check the MOST connection. Check for dirt, loose connections and damage
- Replace the subwoofer module (SUB) if no fault is found.

Click the VCT2000 symbol to read off the status of the MOST network.

Remedy as necessary.

Other information:

- To access or replace the subwoofer module (SUB), see **SUBWOOFER MODULE (SUB), REPLACING**
- For information about checking the power supply and ground terminal, see **CHECKING THE VOLTAGE / GROUND TERMINAL**
- For information about signals, see **SIGNAL SPECIFICATION**
- For information about checking and replacing the MOST cable, see **FIBER OPTIC CABLE HARNESS, REPAIRING**
- see **OPTICAL WIRING HARNESS CHECK**
- For information about location and order of control modules in the MOST network, see **LOCATION OF COMPONENTS** .

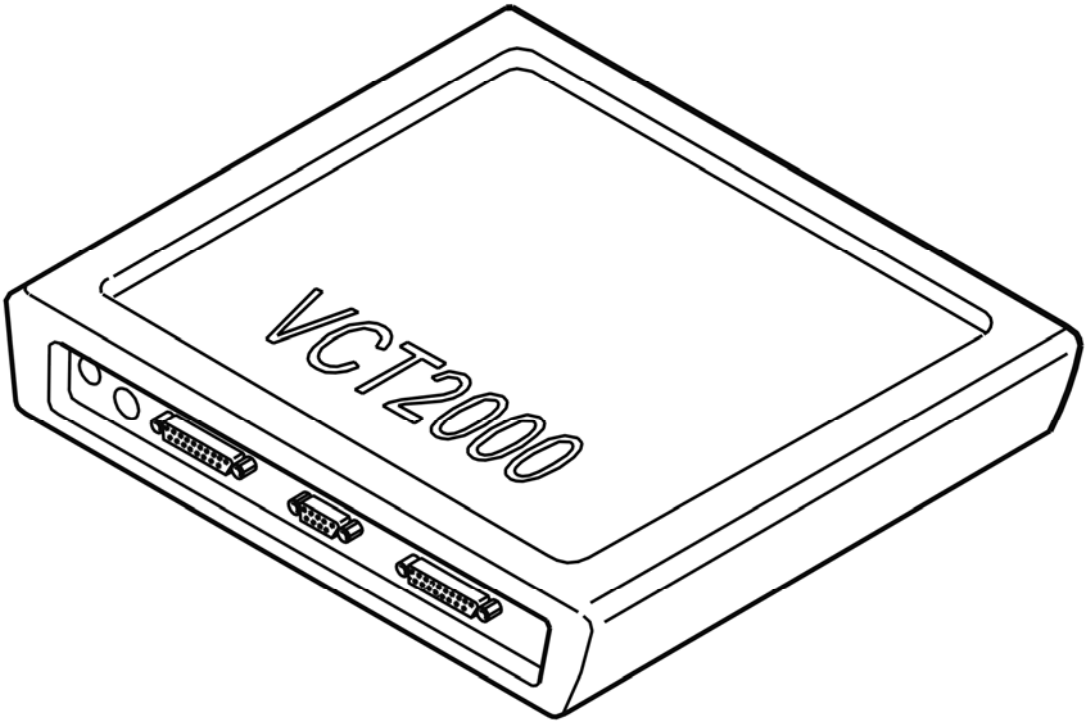

Fig. 207: Identifying VCT2000 Diagnostic Tool Symbol In VIDA
Courtesy of VOLVO CARS CORPORATION

- **Continue**

  Refer to **VERIFICATION**

CHECKING CABLE AND COMPONENT

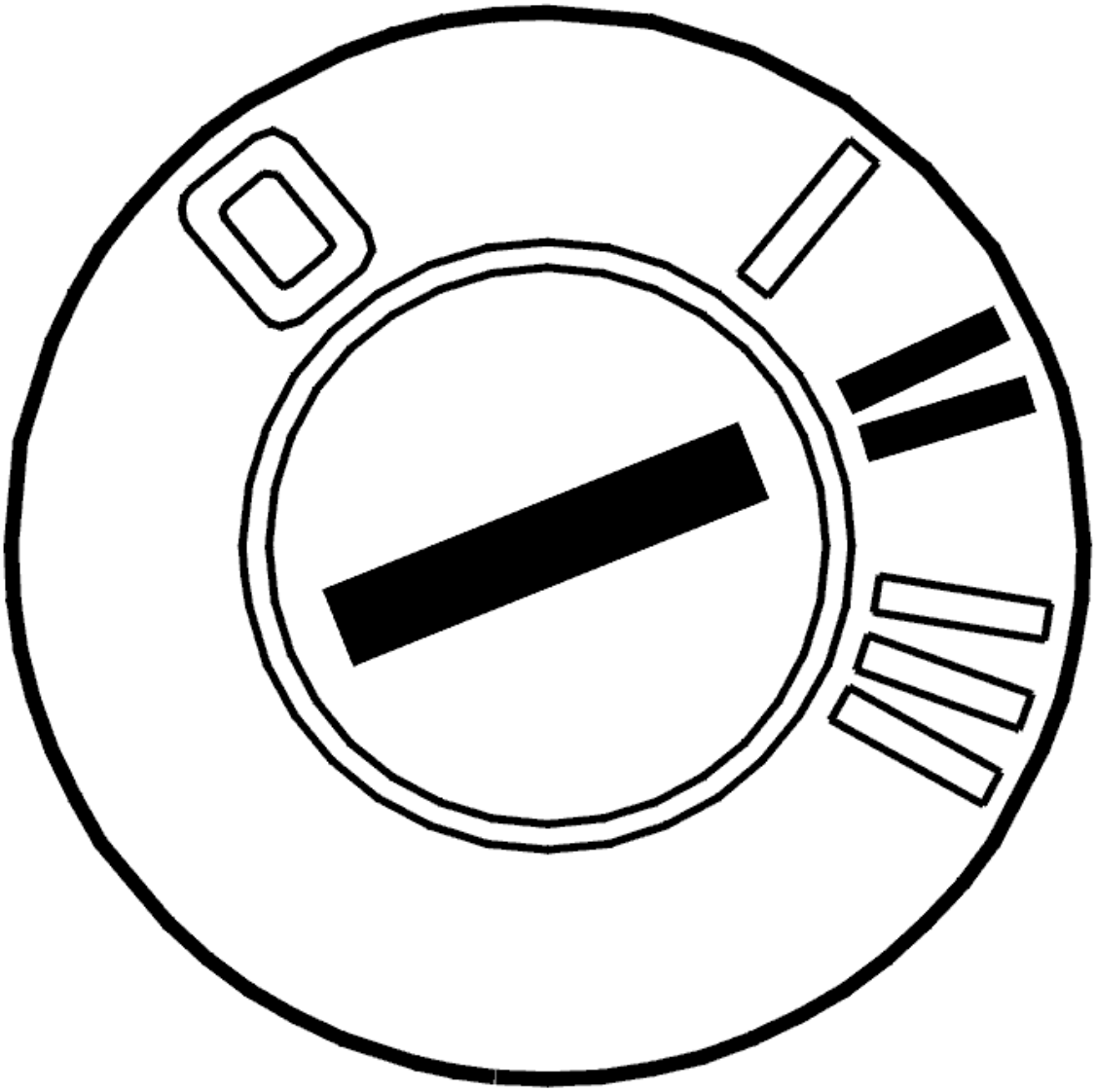

Fig. 208: Identifying Ignition ON
Courtesy of VOLVO CARS CORPORATION

Checking the fault cause

Check the fault cause as follows:

1. Ignition off
2. Disconnect the MOST connector from the audio module (AUD)
3. Connect the MOST cable to special tool see **9512867**
4. Ignition on
5. Activate the infotainment system
6. Check that the communication on the MOST network is functioning by reading off the status of the MOST locked parameter for at least 30 seconds. The parameter indicates whether the MOST network is closed and communication possible

7. If the parameter displays that the MOST network is not correctly connected, check the receiving control module in the same way as above.

The communication on the MOST network is working if the menu text is displayed. If this is the case, the fault cause is in the audio module (AUD). Continue the fault-tracing by checking the component.

The communication on the MOST network is not working if the menu text is not displayed. The fault cause is then in the MOST cable for the next control module. Continue the fault-tracing by checking the fiber optic cable.

Checking cable

- Check the MOST connection. Check for dirt, loose connections and damage
- Replace the MOST cable if no fault is found in the MOST terminal.

Checking the component

- Check the power supply and the ground terminal for the audio module (AUD)
- Check the MOST connection. Check for dirt, loose connections and damage
- Replace the audio module (AUD) if no fault is found.

Click the VCT2000 symbol to read off the status of the MOST network.

Remedy as necessary.

Other information:

- To access or replace the audio module (AUD), see **AUDIO MODULE (AUD), REPLACING**
- For information about checking the power supply and ground terminal, see **CHECKING THE VOLTAGE / GROUND TERMINAL**
- For information about signals, see **SIGNAL SPECIFICATION**
- For information about checking and replacing the MOST cable, see **FIBER OPTIC CABLE HARNESS, REPAIRING**
- see **OPTICAL WIRING HARNESS CHECK**
- For information about location and order of control modules in the MOST network, see **LOCATION OF COMPONENTS** .

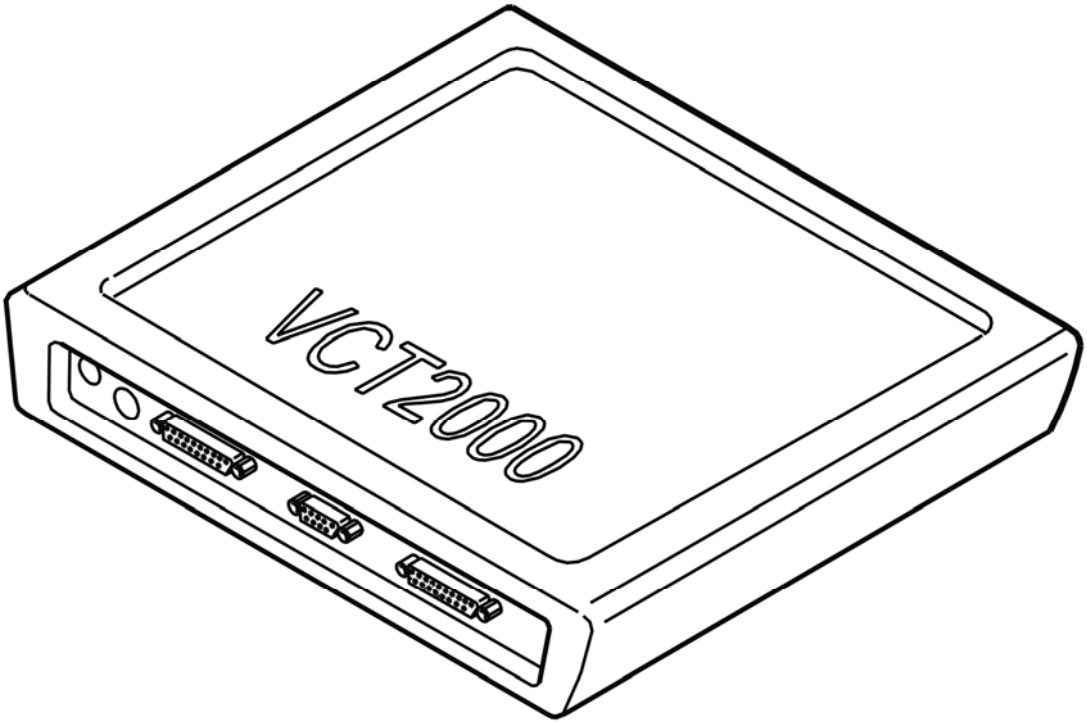

Fig. 209: Identifying VCT2000 Diagnostic Tool Symbol In VIDA
Courtesy of VOLVO CARS CORPORATION

- **Continue**

  Refer to **VERIFICATION**

CHECKING CABLE AND COMPONENT

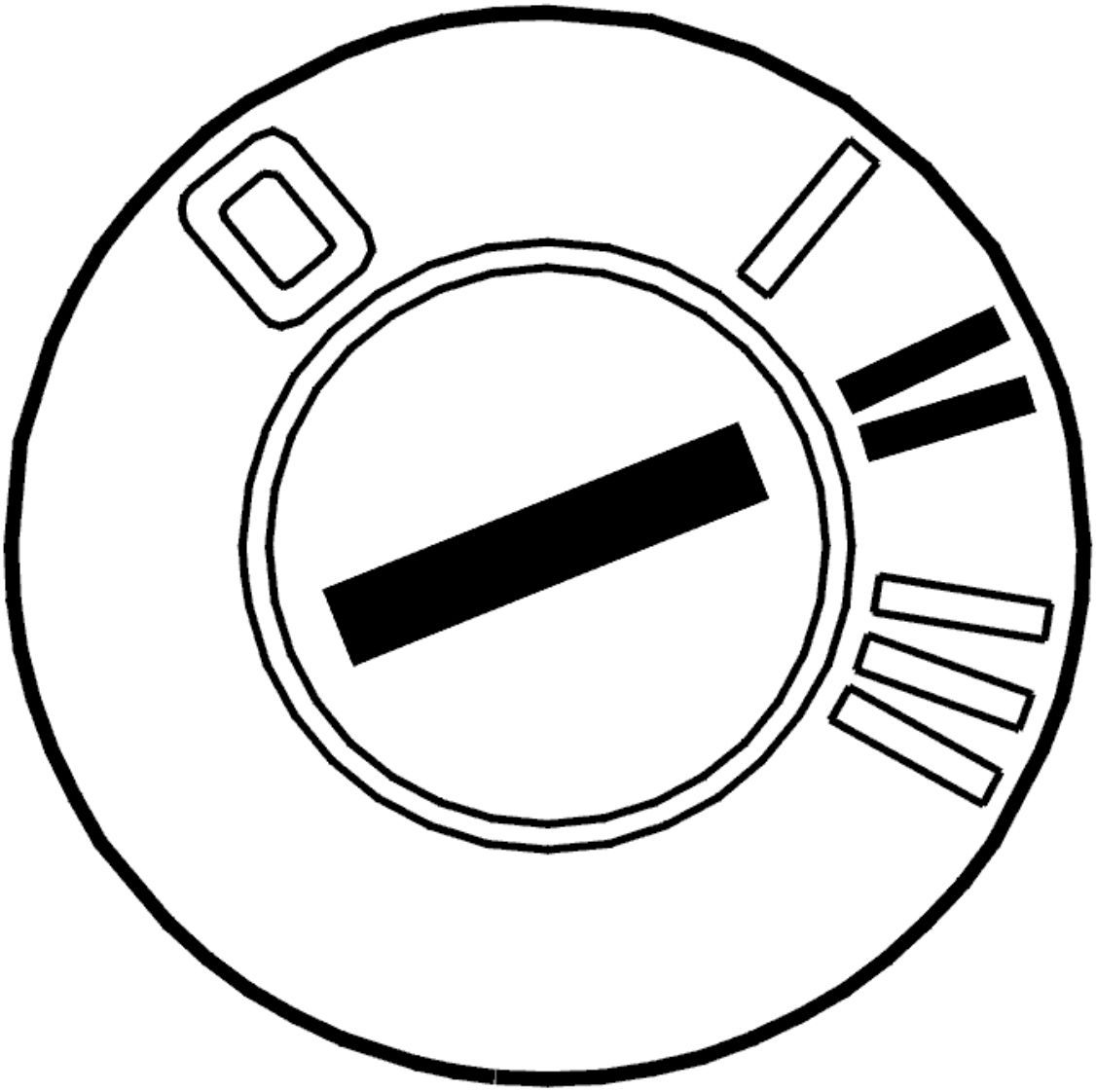

Fig. 210: Identifying Ignition ON
Courtesy of VOLVO CARS CORPORATION

Checking the fault cause

Check the fault cause as follows:

1. Ignition off
2. Disconnect the MOST connector from the CD player module (MP2)
3. Connect the MOST cable to special tool see **9512867**
4. Ignition on
5. Activate the infotainment system
6. Check that the communication on the MOST network is functioning by reading off the status of the MOST locked parameter for at least 30 seconds. The parameter indicates whether the MOST network is closed and communication possible

7. If the parameter displays that the MOST network is not correctly connected, check the receiving control module in the same way as above.

The communication on the MOST network is working if the menu text is displayed. The fault cause is then in the CD module (MP2). Continue the fault-tracing by checking the component.

The communication on the MOST network is not working if the menu text is not displayed. The fault cause is then in the MOST cable for the next control module. Continue the fault-tracing by checking the fiber optic cable.

Checking cable

- Check the MOST connection. Check for dirt, loose connections and damage
- Replace the MOST cable if no fault is found in the MOST terminal.

Checking the component

- Check the power supply and the ground terminal for the CD player module (MP2)
- Check the MOST connection. Check for dirt, loose connections and damage
- Replace the CD player module (MP2) if no fault is found.

Click the VCT2000 symbol to read off the status of the MOST network.

Remedy as necessary.

Other information:

- To access or replace the CD module (MP2), see **MINIDISC / CD CONTROL MODULE, REPLACING**
- For information about checking the power supply and ground terminal, see **CHECKING THE POWER SUPPLY AND GROUND TERMINALS**
- For information about signals, see **SIGNAL SPECIFICATION**
- For information about checking and replacing the MOST cable, see **FIBER OPTIC CABLE HARNESS, REPAIRING**
- see **OPTICAL WIRING HARNESS CHECK**
- For information about location and order of control modules in the MOST network, see **LOCATION OF COMPONENTS** .

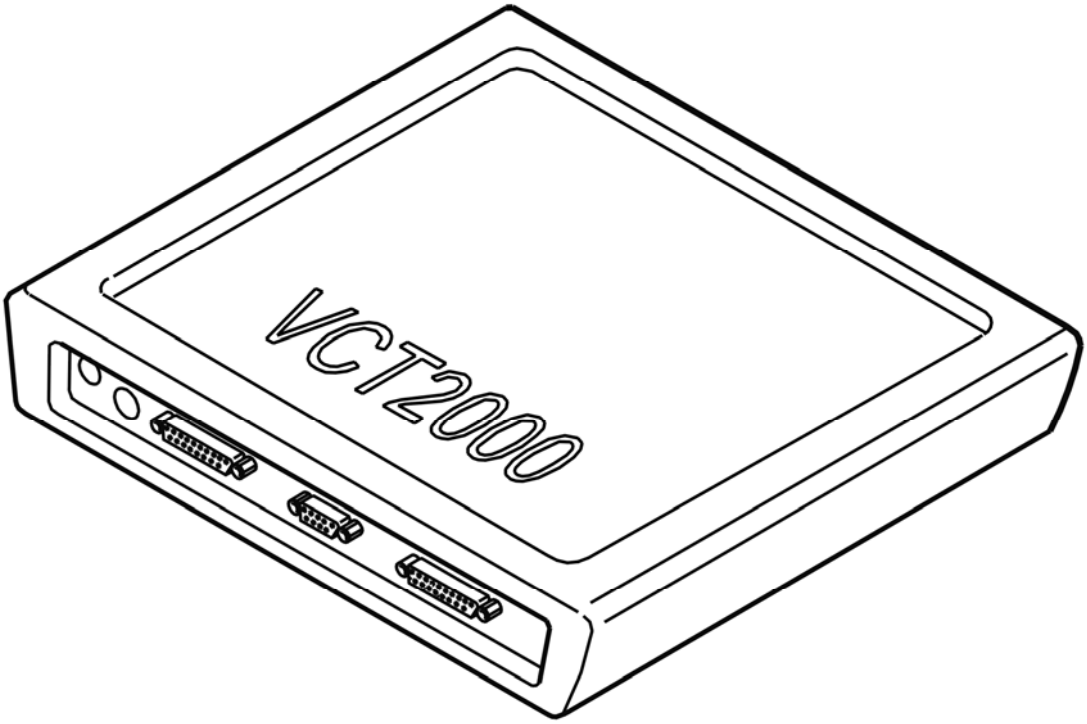

Fig. 211: Identifying VCT2000 Diagnostic Tool Symbol In VIDA
Courtesy of VOLVO CARS CORPORATION

- **Continue**

  Refer to **VERIFICATION**

CHECKING CABLE AND COMPONENT

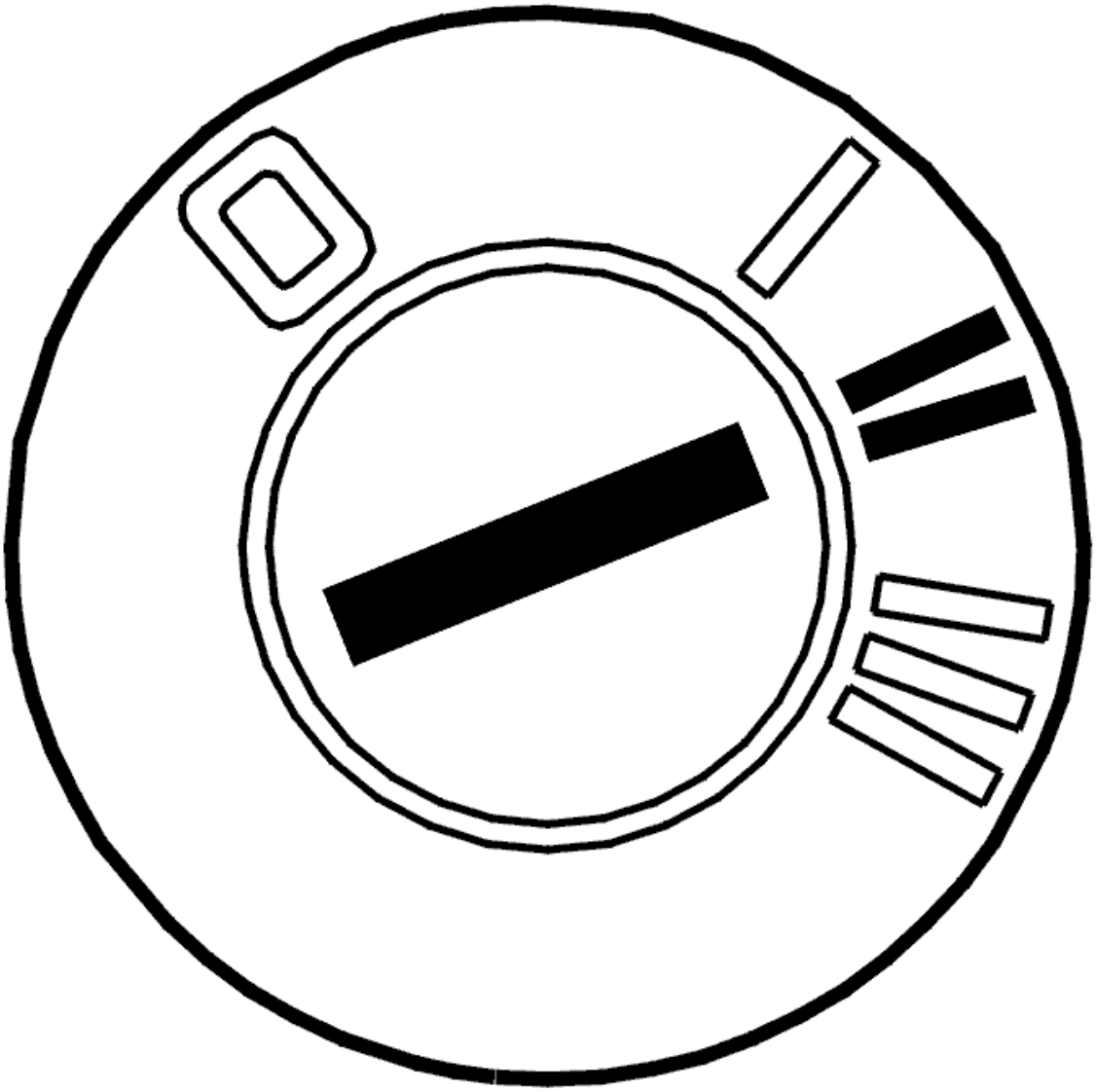

Fig. 212: Identifying Ignition ON
Courtesy of VOLVO CARS CORPORATION

Checking the fault cause

Check the fault cause as follows:

1. Ignition off
2. Disconnect the MOST connector from the phone module (PHM)
3. Connect the MOST cable to special tool see **9512867**
4. Ignition on
5. Activate the infotainment system
6. Check that the communication on the MOST network is functioning by reading off the status of the MOST locked parameter for at least 30 seconds. The parameter indicates whether the MOST network is closed and communication possible

7. If the parameter displays that the MOST network is not correctly connected, check the receiving control module in the same way as above.

The communication on the MOST network is working if the menu text is displayed. If this is the case, the fault cause is in the phone module (PHM). Continue the fault-tracing by checking the component.

The communication on the MOST network is not working if the menu text is not displayed. The fault cause is then in the MOST cable for the next control module. Continue the fault-tracing by checking the fiber optic cable.

Checking cable

- Check the MOST connection. Check for dirt, loose connections and damage
- Replace the MOST cable if no fault is found in the MOST terminal.

Checking the component

- Check the power supply and the ground terminal for the phone module (PHM)
- Check the MOST connection. Check for dirt, loose connections and damage
- Replace the phone module (PHM) if no fault is found.

Click the VCT2000 symbol to read off the status of the MOST network.

Remedy as necessary.

Other information:

- see **PHONE MODULE (PHM), REPLACING**
- see **CHECKING THE VOLTAGE / GROUND TERMINAL**
- see **SIGNAL SPECIFICATION**
- For information about checking and replacing the MOST cable, see **FIBER OPTIC CABLE HARNESS, REPAIRING**
- see **OPTICAL WIRING HARNESS CHECK**
- For information about location and order of control modules in the MOST network, see **LOCATION OF COMPONENTS** .

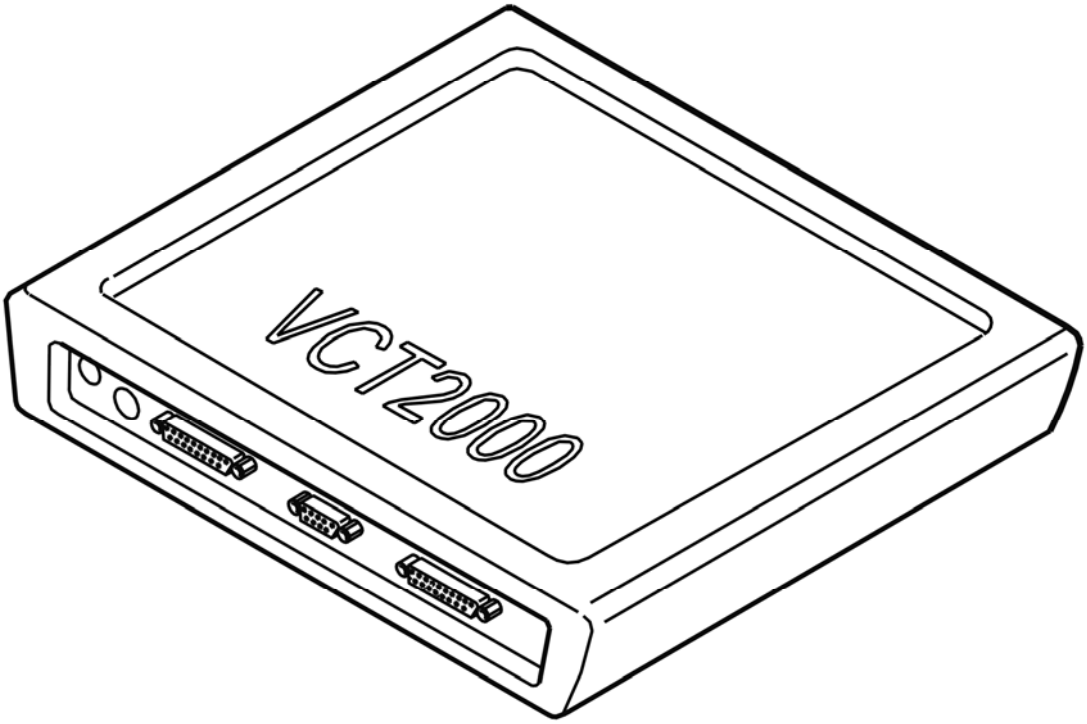

Fig. 213: Identifying VCT2000 Diagnostic Tool Symbol In VIDA
Courtesy of VOLVO CARS CORPORATION

- **Continue**

  Refer to **VERIFICATION**

CHECKING CABLE AND COMPONENT

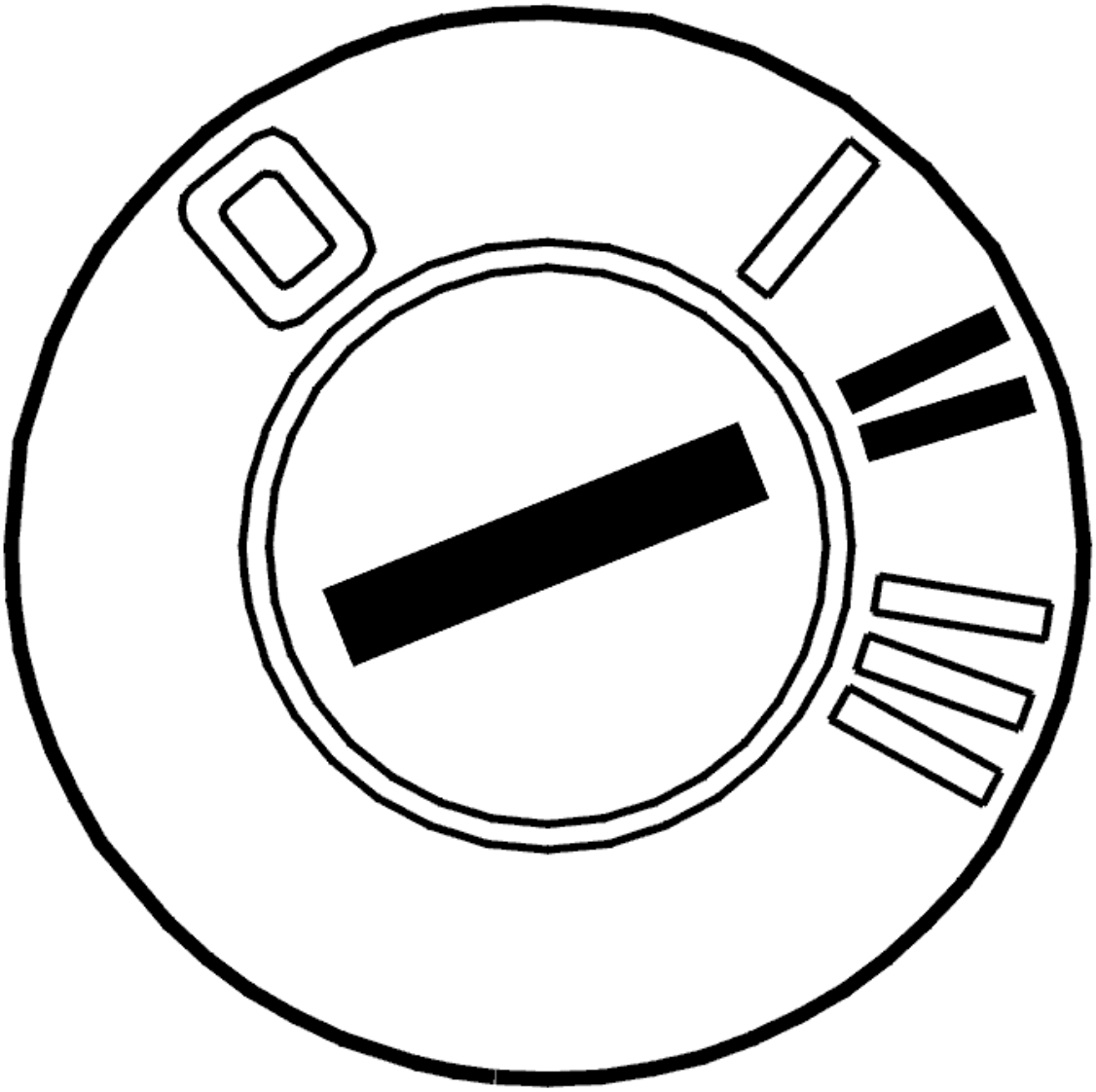

Fig. 214: Identifying Ignition ON
Courtesy of VOLVO CARS CORPORATION

Checking the fault cause

Check the fault cause as follows:

1. Ignition off
2. Disconnect the MOST connector from the MD player module (MP1)
3. Connect the MOST cable to special tool see **9512867**
4. Ignition on
5. Activate the infotainment system
6. Check that the communication on the MOST network is functioning by reading off the status of the MOST locked parameter for at least 30 seconds. The parameter indicates whether the MOST network is closed and communication possible

7. If the parameter displays that the MOST network is not correctly connected, check the receiving control module in the same way as above.

The communication on the MOST network is working if the menu text is displayed. The fault cause is then in the MD player module (MP1). Continue the fault-tracing by checking the component.

The communication on the MOST network is not working if the menu text is not displayed. The fault cause is then in the MOST cable for the next control module. Continue the fault-tracing by checking the fiber optic cable.

Checking cable

- Check the MOST connection. Check for dirt, loose connections and damage
- Replace the MOST cable if no fault is found in the MOST terminal.

Checking the component

- Check the power supply and the ground terminal for the MD player module (MP1)
- Check the MOST connection. Check for dirt, loose connections and damage
- Replace the MD player module (MP1) if no fault is found.

Click the VCT2000 symbol to read off the status of the MOST network.

Remedy as necessary.

Other information:

- To access / replace the MD module (MP1), see **MINIDISC / CD CONTROL MODULE, REPLACING**
- For information about checking the power supply and ground terminal, see **CHECKING THE POWER SUPPLY AND GROUND TERMINALS**
- For information about signals, see **SIGNAL SPECIFICATION**
- For information about checking and replacing the MOST cable, see **FIBER OPTIC CABLE HARNESS, REPAIRING**
- see **OPTICAL WIRING HARNESS CHECK**
- For information about location and order of control modules in the MOST network, see **LOCATION OF COMPONENTS** .

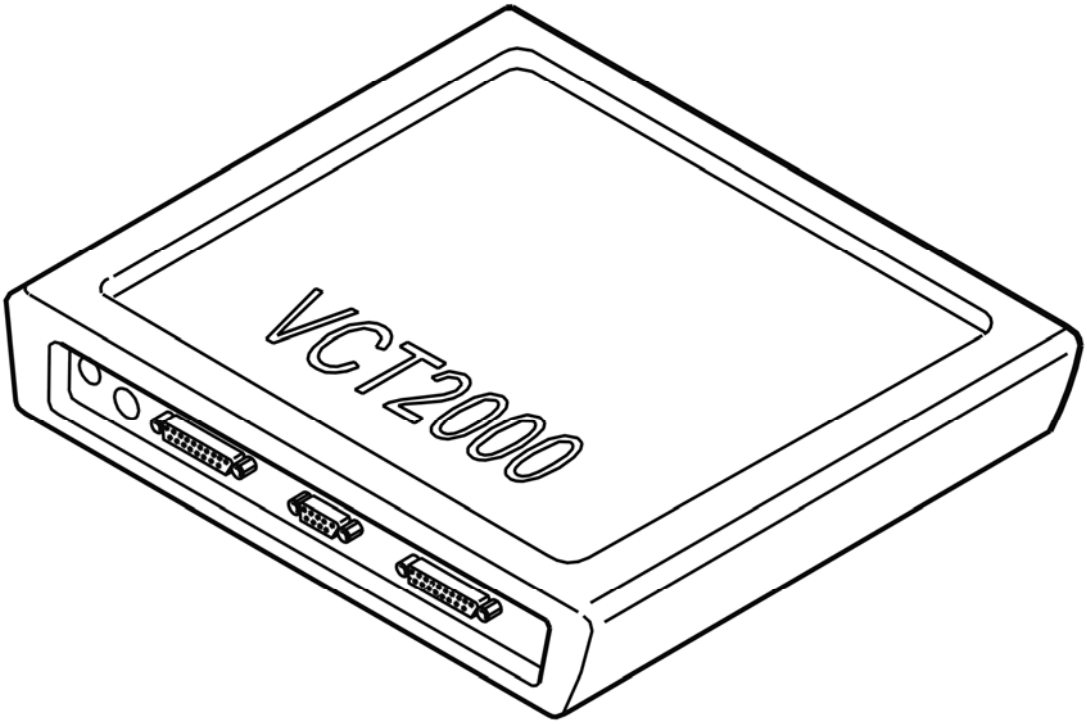

Fig. 215: Identifying VCT2000 Diagnostic Tool Symbol In VIDA
Courtesy of VOLVO CARS CORPORATION

- **Continue**

  Refer to **VERIFICATION**

CHECKING CABLE AND COMPONENT

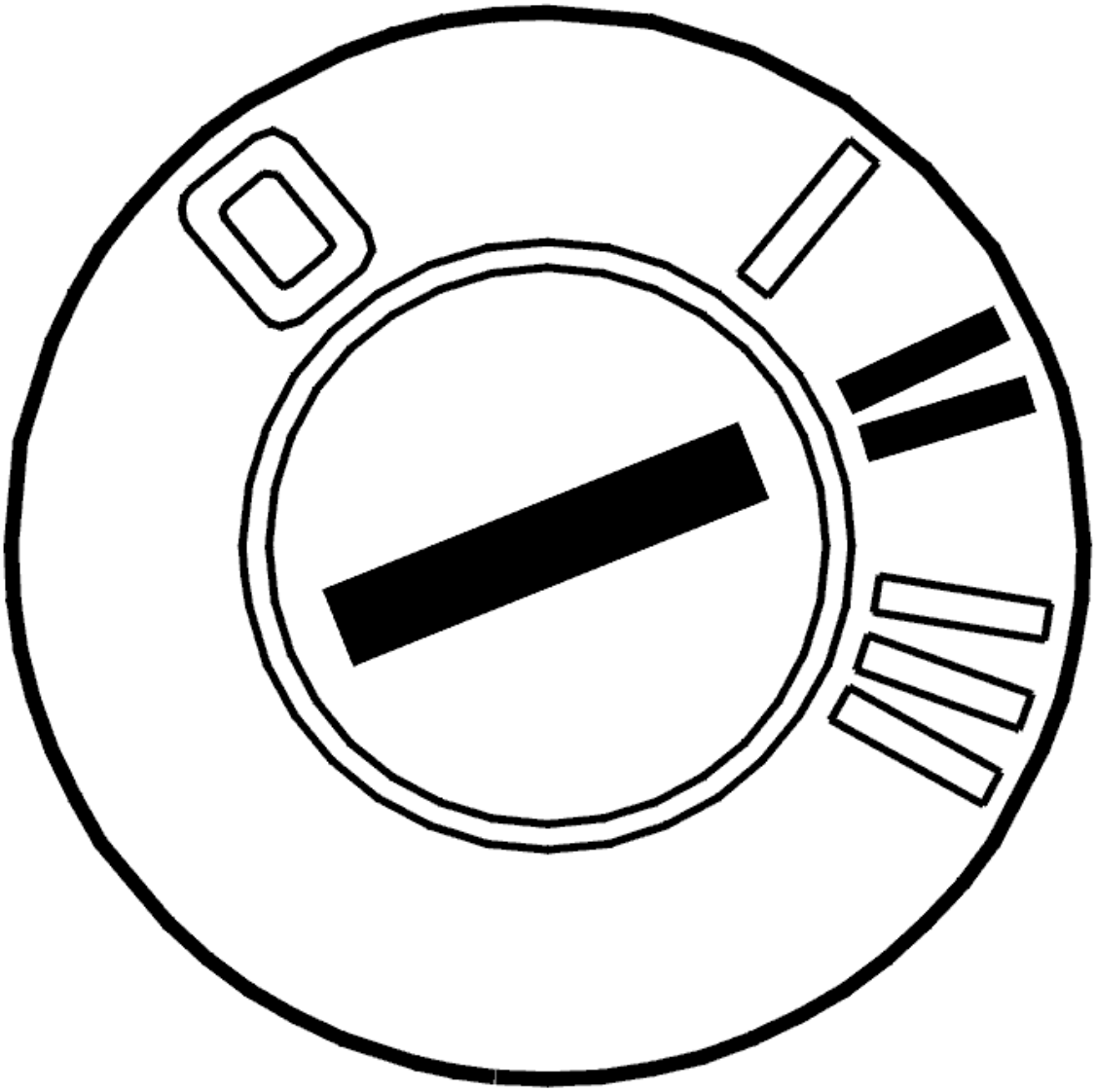

Fig. 216: Identifying Ignition ON
Courtesy of VOLVO CARS CORPORATION

Checking the fault cause

Check the fault cause as follows:

1. Ignition off
2. Disconnect the MOST connector from the multimedia module (MMM)
3. Connect the MOST cable to special tool see **9512867**
4. Ignition on
5. Activate the infotainment system
6. Check that the communication on the MOST network is functioning by reading off the status of the MOST locked parameter for at least 30 seconds. The parameter indicates whether the MOST network is closed and communication possible

7. If the parameter displays that the MOST network is not correctly connected, check the receiving control module in the same way as above.

The communication on the MOST network is working if the menu text is displayed. If this is the case, the fault cause is in the multimedia module (MMM). Continue the fault-tracing by checking the component.

The communication on the MOST network is not working if the menu text is not displayed. The fault cause is then in the MOST cable for the next control module. Continue the fault-tracing by checking the fiber optic cable.

Checking cable

- Check the MOST connection. Check for dirt, loose connections and damage
- Replace the MOST cable if no fault is found in the MOST terminal.

Checking the component

- Check the power supply and the ground terminal for the multimedia module (MMM)
- Check the MOST connection. Check for dirt, loose connections and damage
- Replace the multimedia module (MMM) if no fault is found.

Click the VCT2000 symbol to read off the status of the MOST network.

Remedy as necessary.

Other information:

- To access / replace the multimedia module (MMM), see **MULTIMEDIA MODULE (MMM), REPLACING**
- For information about checking the power supply and ground terminal, see **CHECKING THE VOLTAGE / GROUND TERMINAL (2003-2006)**
- For information about signals, see **SIGNAL SPECIFICATION**
- For information about checking and replacing the MOST cable, see **FIBER OPTIC CABLE HARNESS, REPAIRING**
- see **OPTICAL WIRING HARNESS CHECK**
- For information about location and order of control modules in the MOST network, see **LOCATION OF COMPONENTS** .

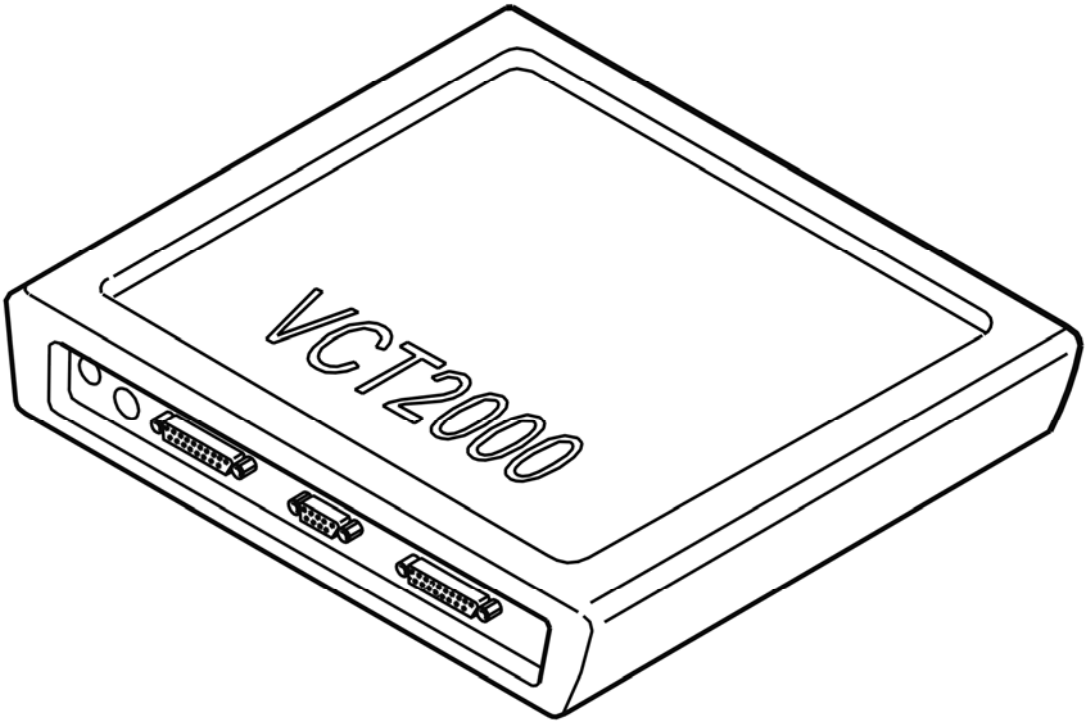

Fig. 217: Identifying VCT2000 Diagnostic Tool Symbol In VIDA
Courtesy of VOLVO CARS CORPORATION

- **Continue**

  Refer to **VERIFICATION**

CHECKING CABLE AND COMPONENT

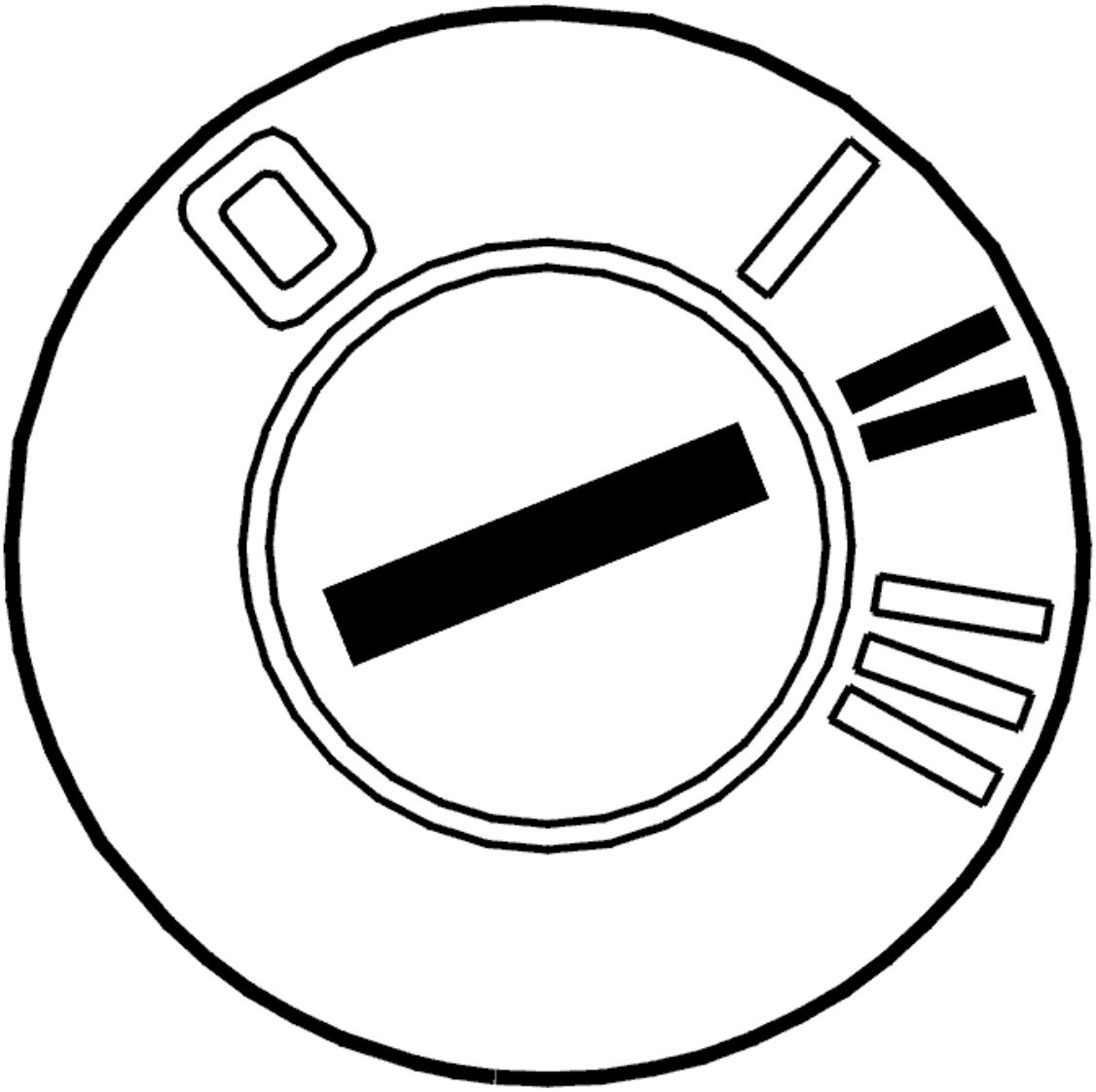

Fig. 218: Identifying Ignition ON
Courtesy of VOLVO CARS CORPORATION

- Ignition off
- Disconnect the MOST cable connector from the infotainment control module (ICM)
- Ignition on
- Activate the infotainment system.

  Check visually whether the infotainment control module (ICM) is emitting light from the MOST connector.

  The control module is defective if the infotainment control module (ICM) is not emitting light.

  If the infotainment control module (ICM) is transmitting light, the fault is in the MOST cable for the next control module.

Check the MOST connection. Check for dirt, loose connections and damage.

Replace the MOST cable if no fault is found in the MOST terminal.

Remedy as necessary.

Other information:

- To access / replace the infotainment control module (ICM), see **INFOTAINMENT CONTROL MODULE (ICM), REPLACING**
- For information about checking and replacing the MOST cable, see **FIBER OPTIC CABLE HARNESS, REPAIRING**
- For information about location and order of control modules in the MOST network, see **LOCATION OF COMPONENTS** .

- **Continue**

  Refer to **VERIFICATION**

VERIFICATION

HINT: After carrying out the repair, check that the fault has been remedied.

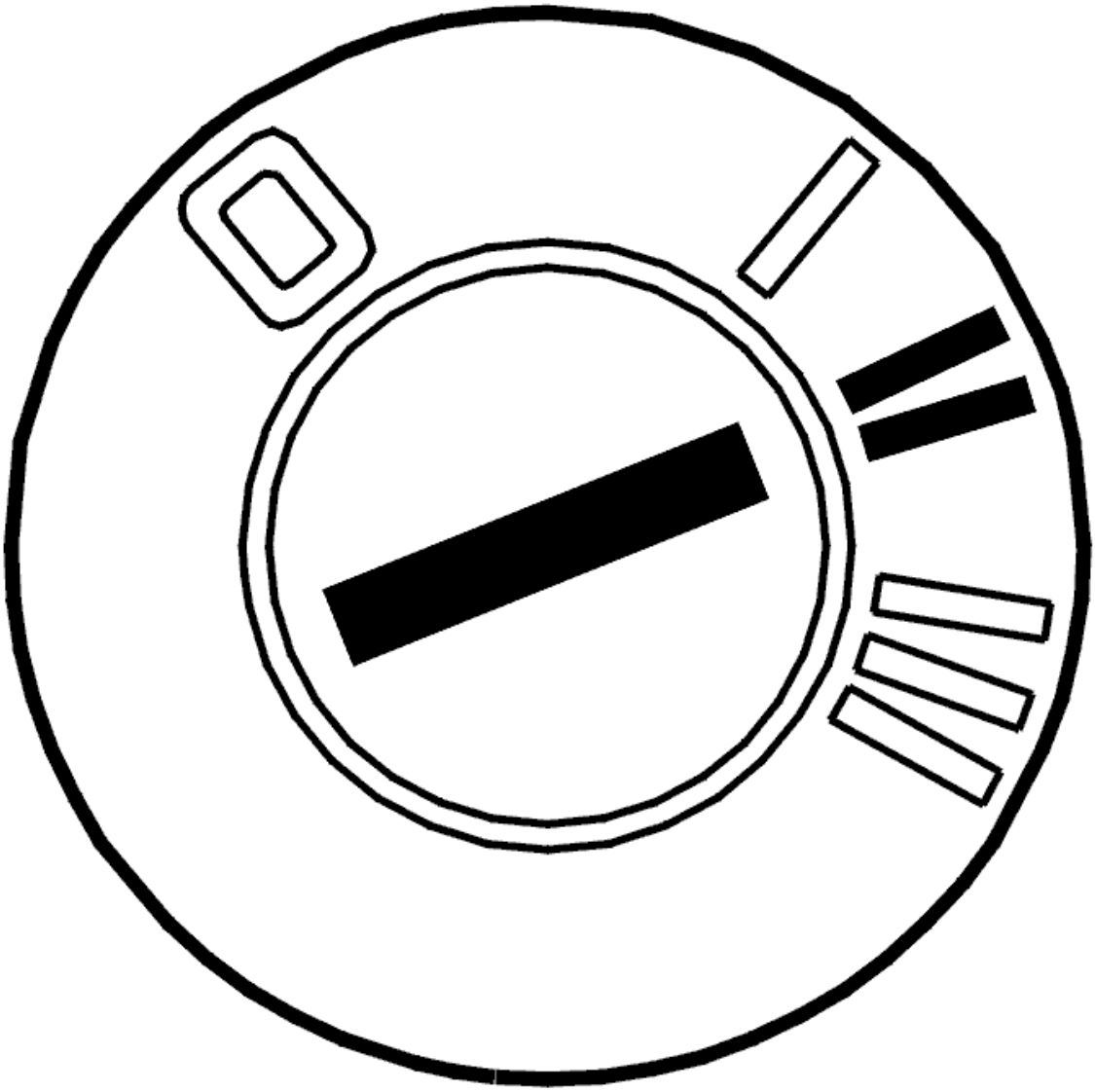

Fig. 219: Identifying Ignition ON
Courtesy of VOLVO CARS CORPORATION

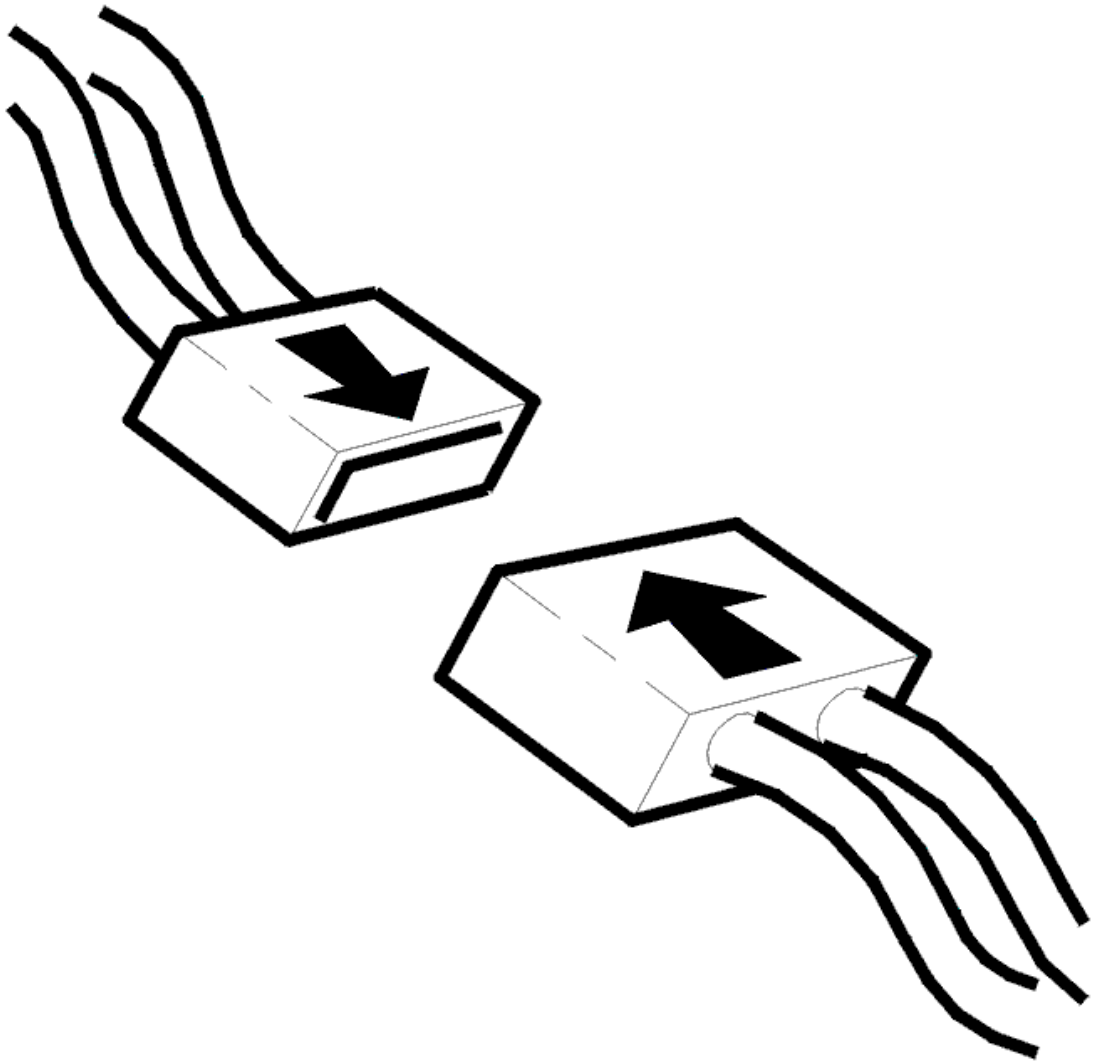

Fig. 220: Connecting Connector
Courtesy of VOLVO CARS CORPORATION

- Ignition off
- Reinstall the connectors, components etc.
- Ignition on.

  Using VCT2000 (Volvo Scan Tool) Activate the infotainment system and select the radio.

  Check whether there is sound from the radio in the loudspeakers.

Is the sound of the radio coming through the loudspeakers?

- **YES**

VERIFIED: Troubleshooting has been completed.

- **NO**

  Refer to **INFORMATION**

INFORMATION

FAULT-TRACING INFORMATION

The fault should have been detected and remedied. As this is not the case fault-tracing has failed.

Exit fault-tracing for this diagnostic trouble code (DTC) or make another attempt.

NO COMMUNICATION (2005)

Special tools:

see **9512867**

CHECKING THE WIRING AND COMPONENT

The infotainment control module (ICM) has detected an open-circuit in communication on the MOST network.

The MOST network is a fiber optic ring network. This means that all control modules which are connected to the network must be powered and grounded for the infotainment system to work. If, for any reason, a control module is unable to handle (receive or transmit) signals onwards on the MOST network, or if there is an open-circuit in the fiber optic cable, the infotainment control module (ICM) will shut down all functionality.

Communication on the fiber optic net is one-directional. The control modules on the MOST network receive light signals, amplify them and then send them onwards. The MOST connectors for the control modules contain two fiber optic cables, one for incoming and one for outgoing signals.

If the fault is intermittent, it has been registered previously but is no longer present. Intermittent faults can either be caused by interference when starting the MOST network, or by intermittent faults in the power supply/ground for one of the control modules in the network. The fault is evaluated depending on how it occurs. If the fault recurs, fault-trace for permanent faults.

It can be difficult to diagnose intermittent faults using a ring break diagnostic because for this to work the fault must occur during the diagnostic.

If the fault is permanent, perform a ring break diagnostic to locate the open-circuit.

- **Continue**

  Refer to **CHECKING FOR OPEN-CIRCUITS**

CHECKING FOR OPEN-CIRCUITS

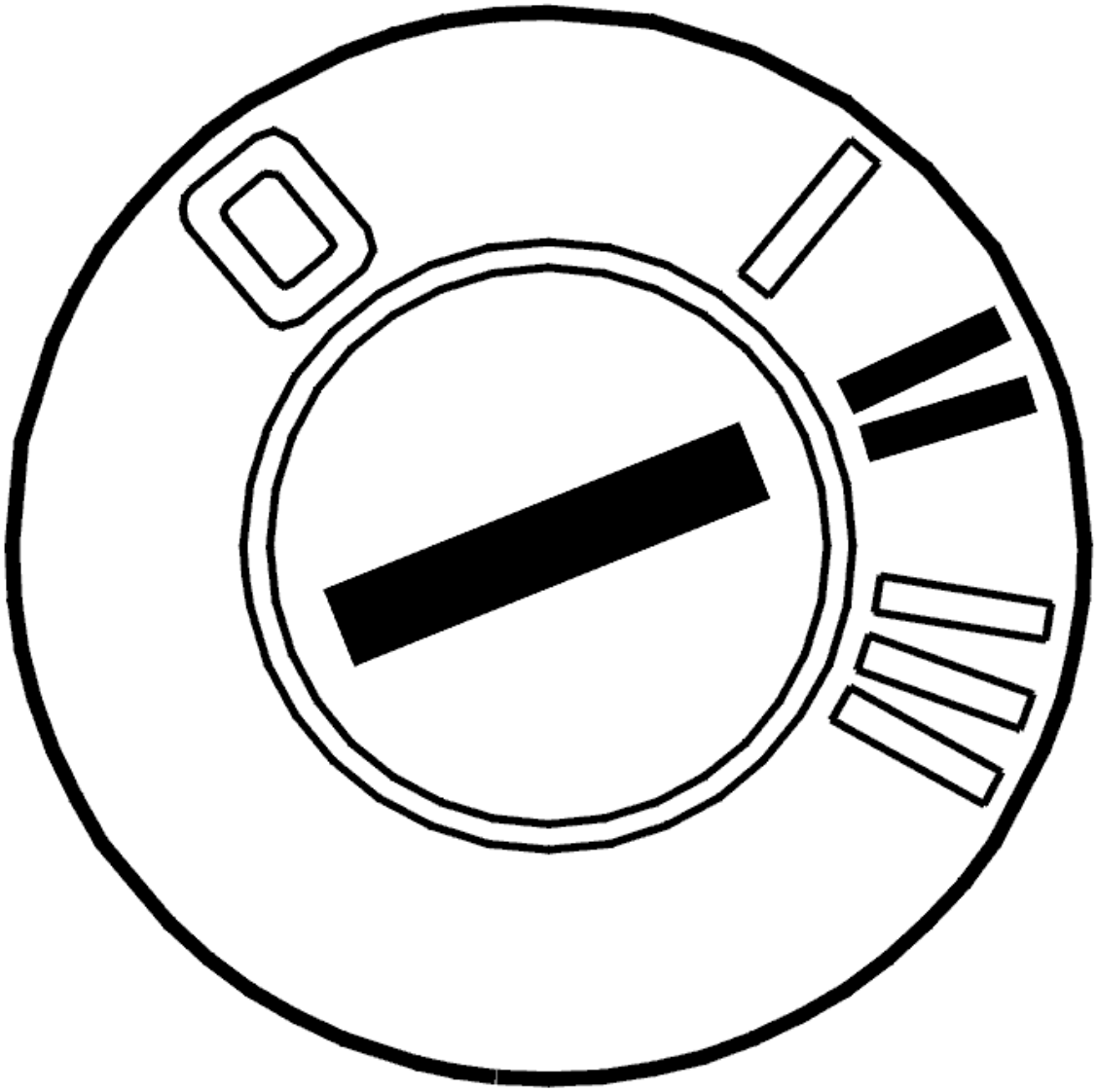

Fig. 221: Identifying Ignition ON
Courtesy of VOLVO CARS CORPORATION

Ring break diagnostic

A ring break diagnostic should be run to determine whether the fault has occurred.

To carry out a full ring break diagnostic of the MOST system, proceed as follows:

1. Switch off the ignition and remove the key
2. Remove the fuse for the antenna module (ATM)
3. Wait at least 3 minutes
4. Ignition on
5. Reinstall the fuse for the antenna module (ATM) within 25 seconds
6. Wait at least 30 seconds after switching on the ignition before reading off the position of the open-circuit.

- **Continue**

  Refer to **READING OFF THE POSITION OF THE OPEN-CIRCUIT**

CHECKING CABLE AND COMPONENT

If the result of the ring break diagnostic is POOR, the infotainment control module (ICM) is receiving a signal on the MOST network. However it is unable to decode the signals because the luminance of the signals is too weak or the signals are distorted.

If the result from the ring break diagnostic is OK, the fault is intermittent.

Fault-tracing using the ring break diagnostic assumes that the fault is permanent or active when the test is run, i. e. the system is powered having been off.

HINT: If diagnostic trouble code (DTC) ICM-DC01 is intermittent, read off the status of the ring break diagnostic from the frozen values in Vehicle communication.

HINT: Note that the antenna module (ATM) is not normally included in a ring break diagnostic if the fuse is not removed. This means that the position of the open-circuit moves one step backwards in the MOST network.

HINT: On fully equipped vehicles, if the open-circuit position is 0, this may be because of:

- Subwoofer module (SUB)
- The fiber optic cable between the subwoofer module (SUB) and the antenna module (ATM)
- Antenna module (ATM)
- The fiber optic cable between the antenna module (ATM) and the infotainment control module (ICM)
- The optical connector in the infotainment control module (ICM). This means that the infotainment control module (ICM) is not able to interpret the incoming signal correctly.

Check the communication on the MOST network by bypassing the control modules one by one on the MOST network as follows:

- Ignition off
- Disconnect the MOST connector from the relevant control module
- Connect the MOST cable to special tool see **9512867**
- Ignition on
- Activate the infotainment system
- Check that the communication on the MOST network is functioning by reading off the status of the MOST locked parameter for at least 30 seconds. The parameter indicates whether the MOST network is closed and communication possible.

If the communication on the MOST network is stable when a control module is disconnected, check the power supply and the ground terminal on the relevant control module. Check for intermittent faults. Try replacing the

component if no fault is found.

Click the VCT2000 symbol to read off the status of the MOST network.

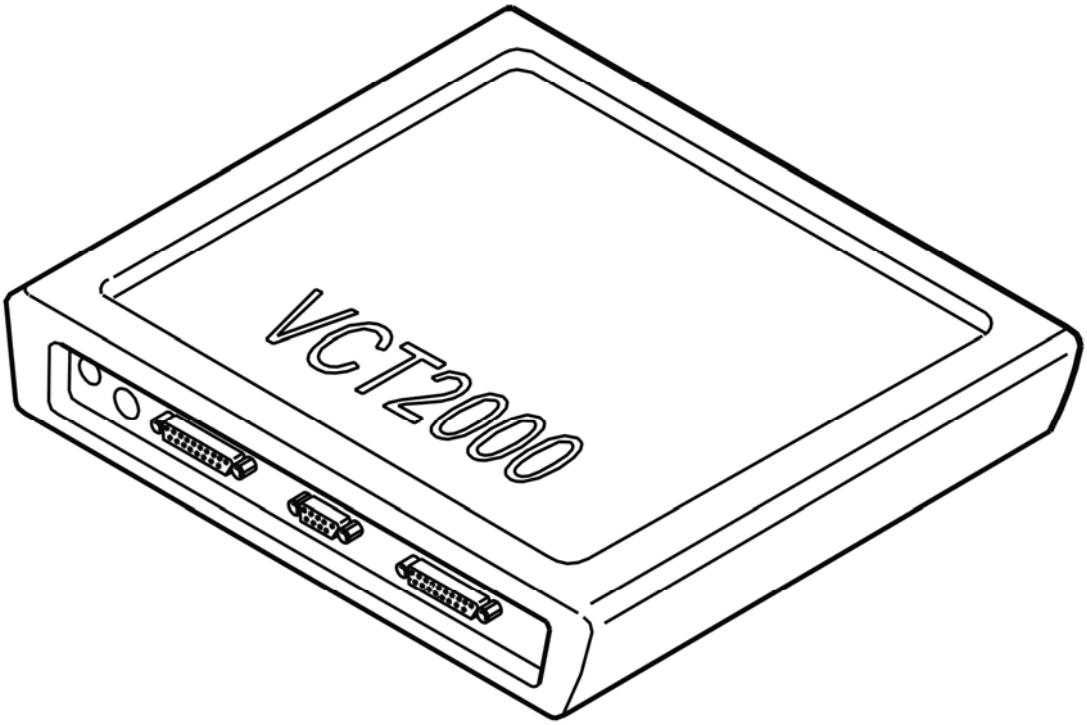

Fig. 222: Identifying VCT2000 Diagnostic Tool Symbol In VIDA
Courtesy of VOLVO CARS CORPORATION

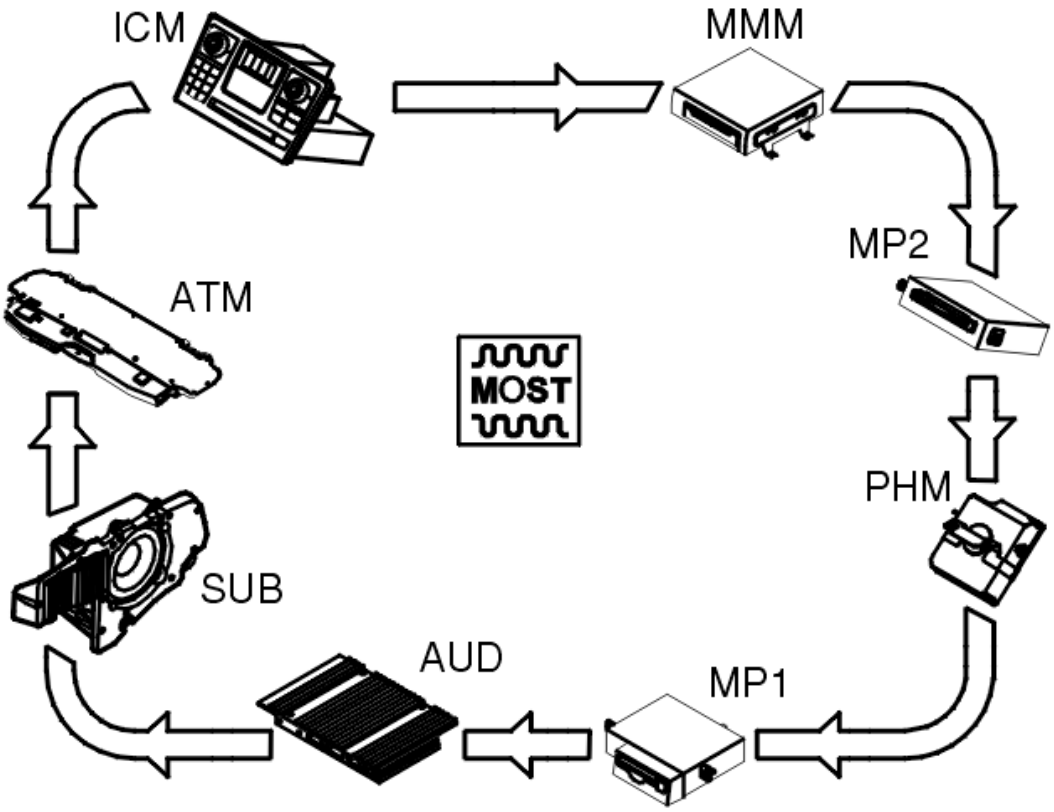

Fig. 223: MOST Bus (Media Oriented System Transportation) Communication Diagram
Courtesy of VOLVO CARS CORPORATION

- **Continue**

  Refer to **VERIFICATION**

READING OFF THE POSITION OF THE OPEN-CIRCUIT

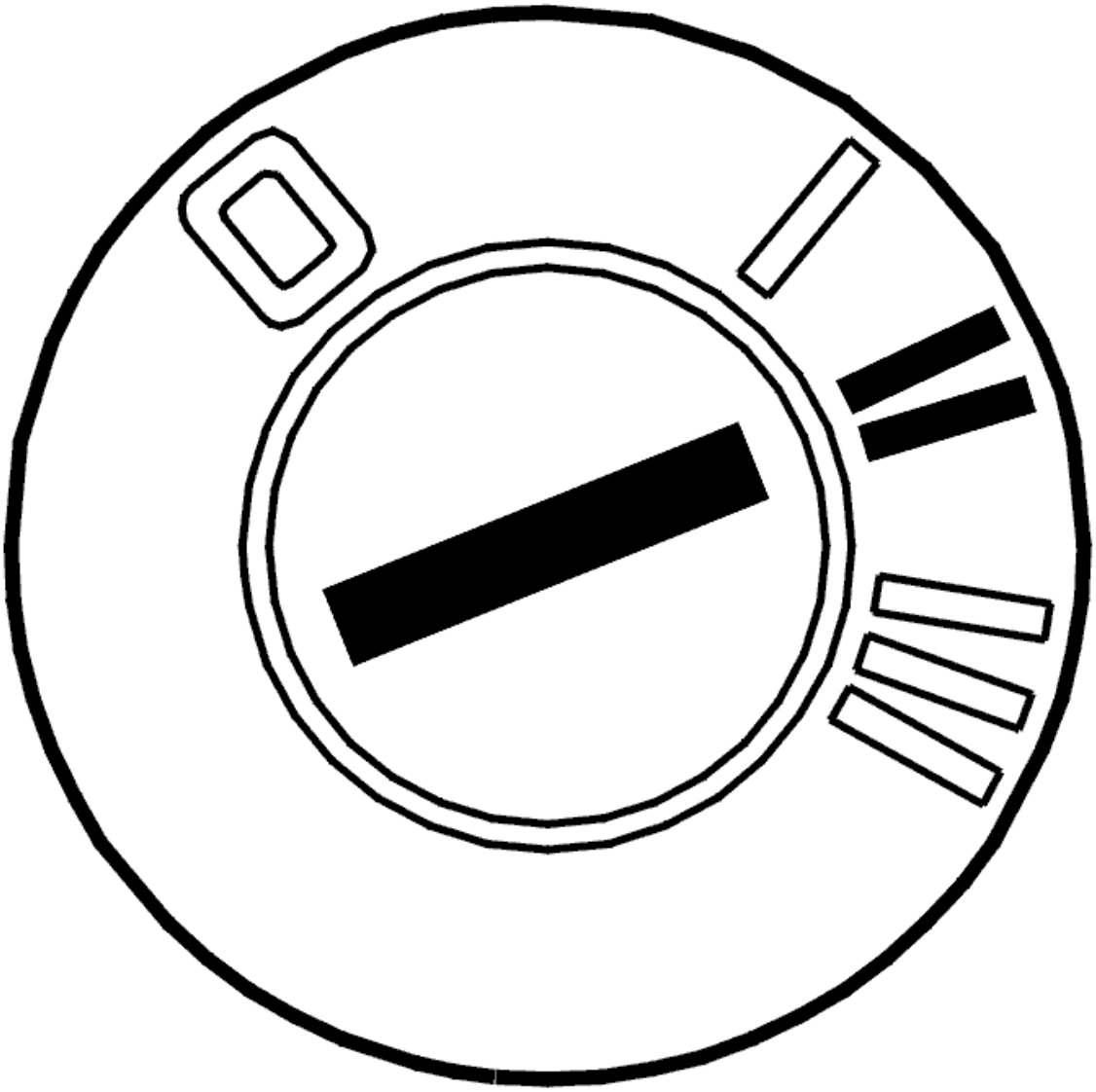

Fig. 224: Identifying Ignition ON
Courtesy of VOLVO CARS CORPORATION

- Ignition on.

  Reading off the result from a ring break diagnostic

  Click the VCT2000 symbol to read off the result of the ring break diagnostic.

  As well as the result from the ring break diagnostic, a list of the control modules included in the MOST network is provided for that car.

  The following result can be obtained from a ring break diagnostic:

  If the fault occurs when the ring break diagnostic is run, the result will be presented as an open-circuit position.

If the fault does not occur when the ring break diagnostic is run, the result will be OK. If this is the case, select alternative 3 below.

- If the diagnostic indicates an open-circuit in the communication on the MOST network, the result will be an open-circuit position
- The result will be OK if there is no fault on the MOST network
- If the infotainment control module (ICM) receives a signal on the MOST network but is unable to decode it because the luminance is weak or the signals are distorted, the result will be POOR.

Determining the position of the open-circuit

The position of the open-circuit is calculated by working backwards in the MOST network from the infotainment control module (ICM).

NOTE: The ring break diagnostic only counts backwards, irrespective of which, or how many control modules, are installed in the car. To determine the position of the open-circuit, check the list to, see which control modules are installed in that particular car. Then count backwards following the determined order. The number of control modules can vary between 3-8.

Two examples are outlined below:

- The first open-circuit position corresponds to 0. This means that the open-circuit is in the antenna module (ATM) or in the cable between the antenna module (ATM) and the infotainment control module (ICM)
- If the position is 1, go one step backwards in the chain. The open-circuit is in the subwoofer module (SUB) or in the cable between the subwoofer module (SUB) and the antenna module (ATM). The open-circuit can also be caused by the optical connector in the antenna module (ATM) being damaged so that the antenna module (ATM) is not able to interpret the incoming signal from the subwoofer module (SUB) correctly.

  NOTE: The subwoofer module (SUB) is not standard. If one is not installed, the open-circuit position 1 applies to the audio module (AUD).

Select the alternative for the control module to be checked.

Alternative 1:

Antenna module (ATM)

Subwoofer module (SUB)

Audio module (AUD)

CD player module (MP2)

Alternative 2:

Phone module (PHM)

MD player module (MP1)

Multimedia module (MMM)

Infotainment control module (ICM)

Alternative 3:

The result from the ring break diagnostic indicates that the MOST network is OK.

The result from the ring break diagnostic is POOR.

Other information:

- For information about location and order of control modules in the MOST network, see **LOCATION OF COMPONENTS**

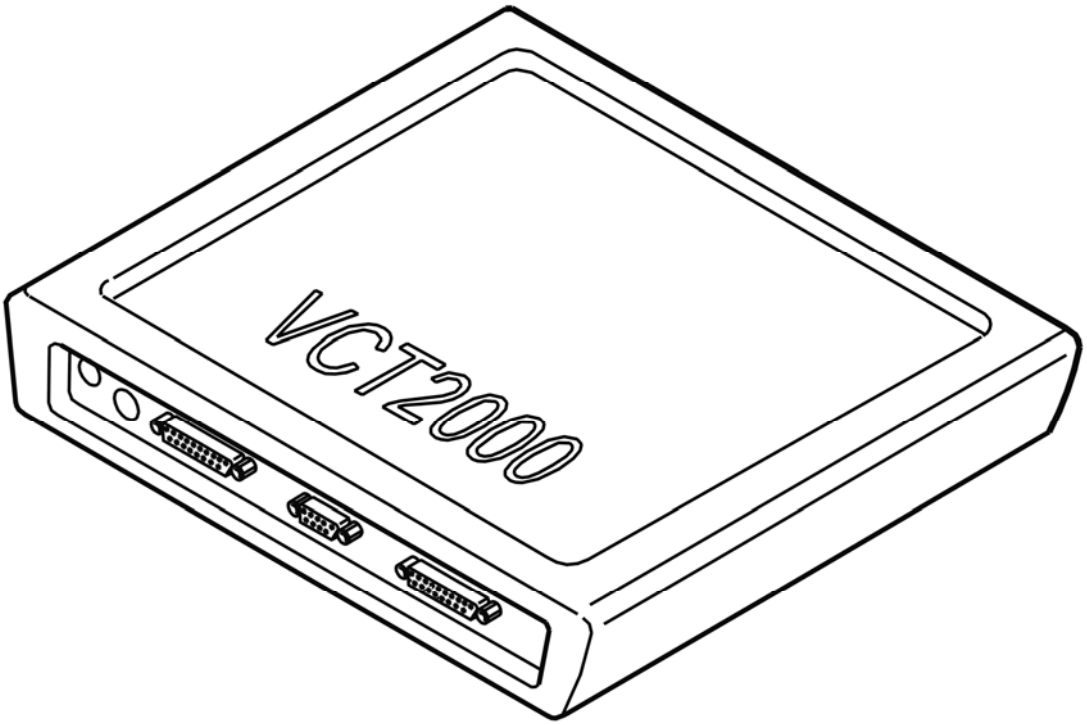

Fig. 225: Identifying VCT2000 Diagnostic Tool Symbol In VIDA
Courtesy of VOLVO CARS CORPORATION

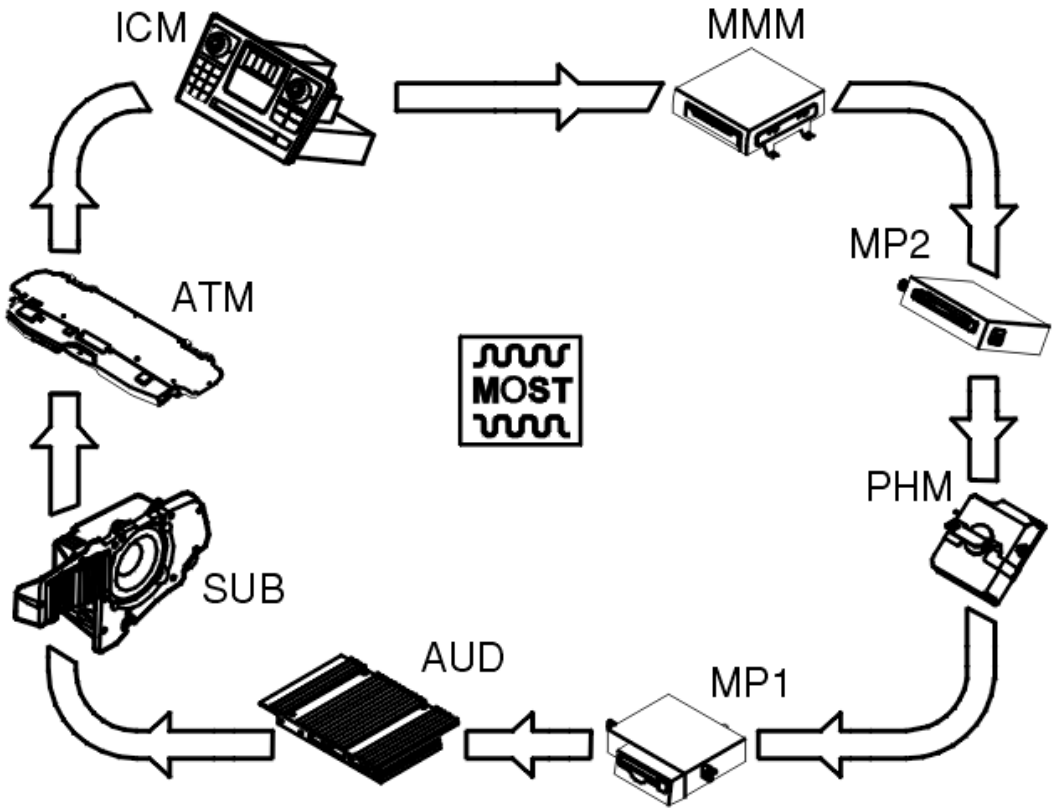

Fig. 226: MOST Bus (Media Oriented System Transportation) Communication Diagram
Courtesy of VOLVO CARS CORPORATION

Select an alternative.

- **1**

  Refer to **CHECKING CABLE AND COMPONENT**

- **2**

  Refer to **CHECKING CABLE AND COMPONENT**

- **3**

  Refer to **CHECKING CABLE AND COMPONENT**

CHECKING CABLE AND COMPONENT

Select the control module to be checked from the list.

1. Antenna module (ATM)

2. Subwoofer module (SUB)

3. Audio module (AUD)

4. CD player module (MP2)

Select the control module.

- **1**

  Refer to **CHECKING CABLE AND COMPONENT**

- **2**

  Refer to **CHECKING CABLE AND COMPONENT**

- **3**

  Refer to **CHECKING CABLE AND COMPONENT**

- **4**

  Refer to **CHECKING CABLE AND COMPONENT**

CHECKING CABLE AND COMPONENT

Select the control module to be checked from the list.

1. Phone module (PHM)

2. MD player module (MP1)

3. Multimedia module (MMM)

4. Infotainment control module (ICM)

Select the control module.

- **1**

  Refer to **CHECKING CABLE AND COMPONENT**

- **2**

  Refer to **CHECKING CABLE AND COMPONENT**

- **3**

  Refer to **CHECKING CABLE AND COMPONENT**

- **4**

  Refer to **CHECKING CABLE AND COMPONENT**

CHECKING CABLE AND COMPONENT

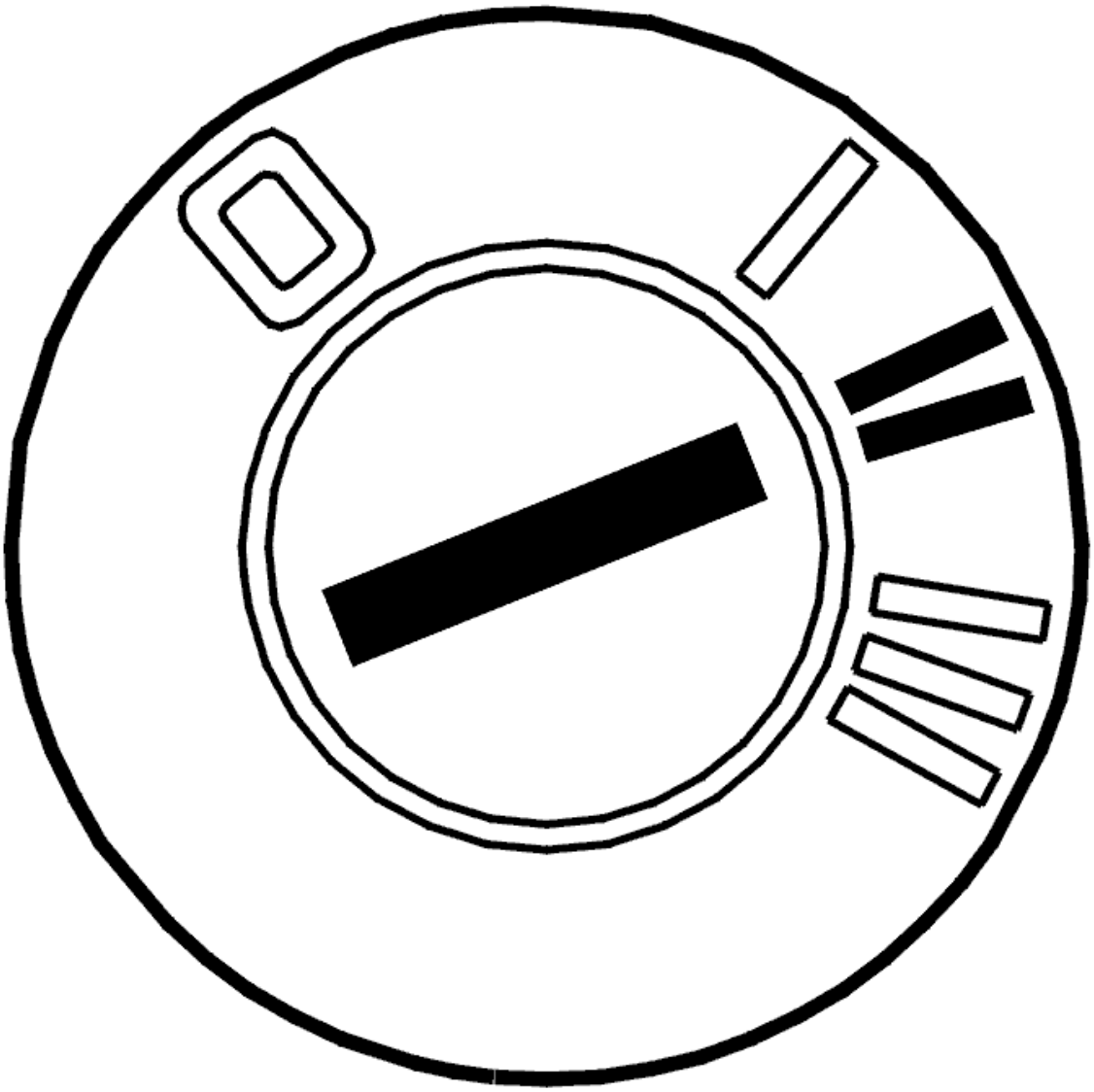

Fig. 227: Identifying Ignition ON
Courtesy of VOLVO CARS CORPORATION

Checking the fault cause

Check the fault cause as follows:

1. Ignition off
2. Disconnect the MOST connector from the antenna module (ATM)

3. Connect the MOST cable to special tool see **9512867**
4. Ignition on
5. Activate the infotainment system
6. Check that the communication on the MOST network is functioning by reading off the status of the MOST locked parameter for at least 30 seconds. The parameter indicates whether the MOST network is closed and communication possible
7. If the parameter displays that the MOST network is not correctly connected, check the receiving control module in the same way as above.

The communication on the MOST network is working if the menu text is displayed. If this is the case, the fault cause is in the antenna module (ATM). Continue the fault-tracing by checking the component.

The communication on the MOST network is not working if the menu text is not displayed. The fault cause is then in the MOST cable for the next control module. Continue the fault-tracing by checking the fiber optic cable.

Checking cable

- Check the MOST connection. Check for dirt, loose connections and damage
- Replace the MOST cable if no fault is found in the MOST terminal.

Checking the component

- Check the power supply and the ground terminal for the antenna module (ATM)
- Check the MOST connection. Check for dirt, loose connections and damage
- Replace the antenna module (ATM) if no fault is found.

Remedy as necessary.

Click the VCT2000 symbol to read off the status of the MOST network.

Other information:

- To access or replace the antenna module (ATM), see **RECEIVER GPS, TMC (ATM), REPLACE**
- For information about checking the power supply and ground terminal, see **CHECKING THE POWER SUPPLY AND GROUND TERMINALS**
- For information about signals, see **SIGNAL SPECIFICATION**
- see **OPTICAL WIRING HARNESS CHECK**
- For information about checking and replacing the MOST cable, see **FIBER OPTIC CABLE HARNESS, REPAIRING**
- For information about location and order of control modules in the MOST network, see **LOCATION OF COMPONENTS** .

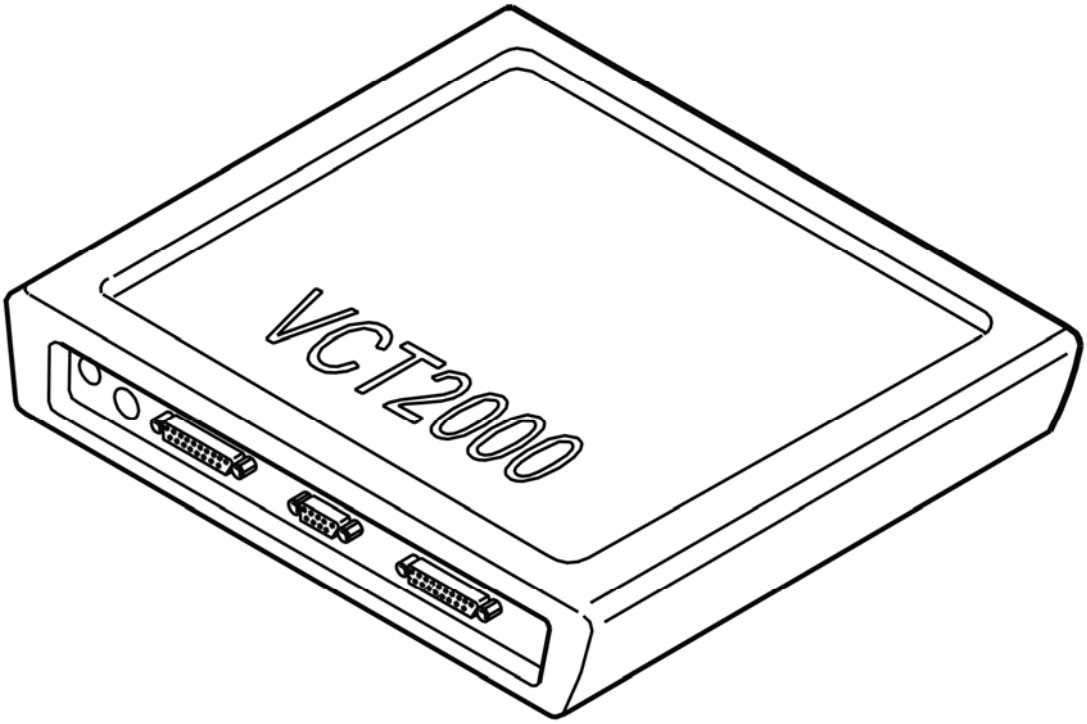

Fig. 228: Identifying VCT2000 Diagnostic Tool Symbol In VIDA
Courtesy of VOLVO CARS CORPORATION

Select continue.

- **Continue**

  Refer to **VERIFICATION**

CHECKING CABLE AND COMPONENT

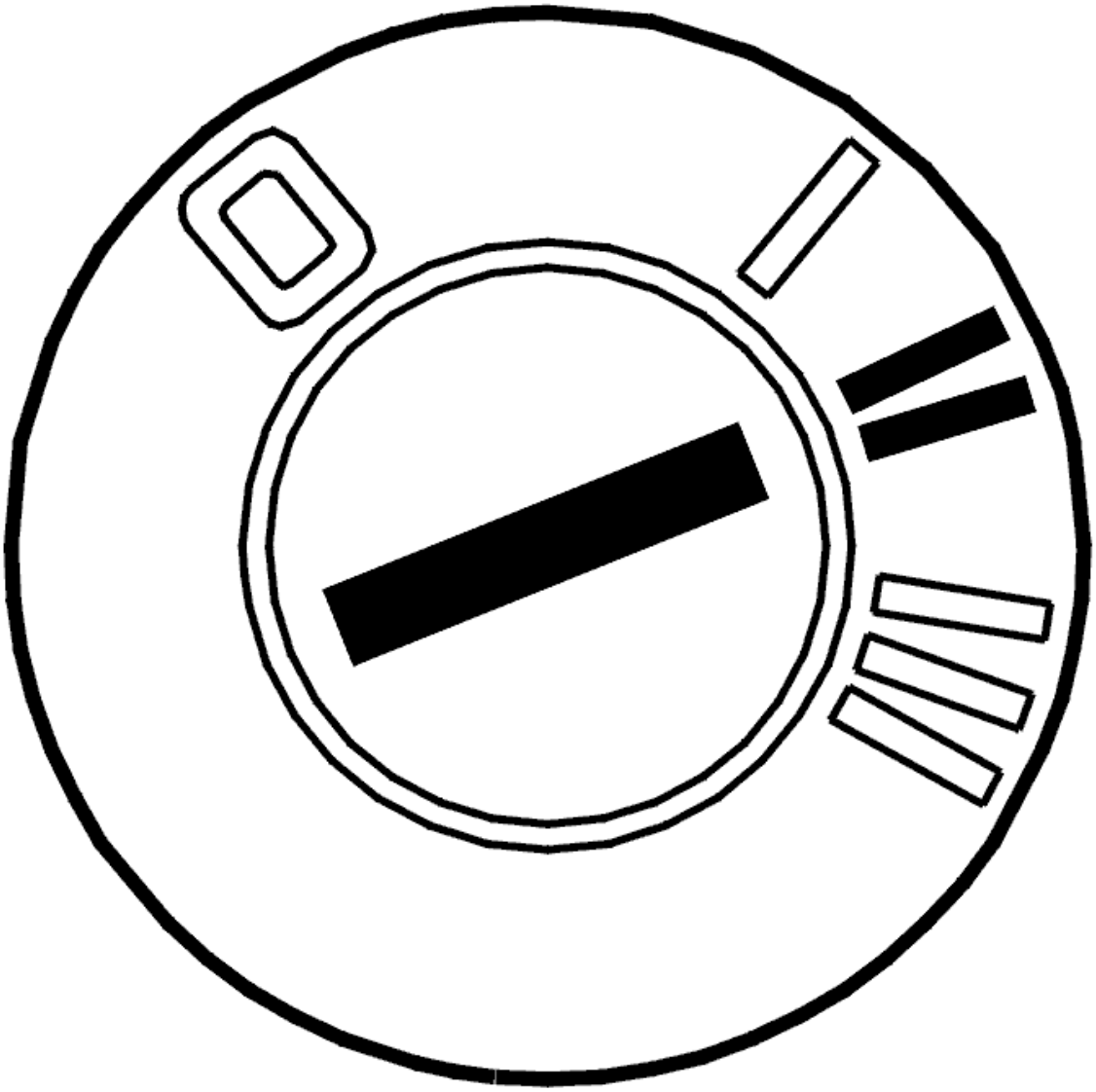

Fig. 229: Identifying Ignition ON
Courtesy of VOLVO CARS CORPORATION

Checking the fault cause

Check the fault cause as follows:

1. Ignition off
2. Disconnect the MOST connector from the subwoofer module (SUB)
3. Connect the MOST cable to special tool see **9512867**
4. Ignition on
5. Activate the infotainment system
6. Check that the communication on the MOST network is functioning by reading off the status of the MOST locked parameter for at least 30 seconds. The parameter indicates whether the MOST network is closed and communication possible

7. If the parameter displays that the MOST network is not correctly connected, check the receiving control module in the same way as above.

The communication on the MOST network is working if the menu text is displayed. If this is the case, the fault cause is in the bypassed control module. Continue the fault-tracing by checking the component.

The communication on the MOST network is not working if the menu text is not displayed. The fault cause is then in the MOST cable for the next control module. Continue the fault-tracing by checking the fiber optic cable.

Checking cable

- Check the MOST connection. Check for dirt, loose connections and damage
- Replace the MOST cable if no fault is found in the MOST terminal.

Checking the component

- Check the power supply and the ground terminal for the subwoofer module (SUB)
- Check the MOST connection. Check for dirt, loose connections and damage
- Replace the subwoofer module (SUB) if no fault is found.

Click the VCT2000 symbol to read off the status of the MOST network.

Remedy as necessary.

Other information:

- To access or replace the subwoofer module (SUB), see **SUBWOOFER MODULE (SUB), REPLACING**
- For information about checking the power supply and ground terminal, see **CHECKING THE VOLTAGE / GROUND TERMINAL**
- For information about signals, see **SIGNAL SPECIFICATION**
- For information about checking and replacing the MOST cable, see **FIBER OPTIC CABLE HARNESS, REPAIRING**
- see **OPTICAL WIRING HARNESS CHECK**
- For information about location and order of control modules in the MOST network, see **LOCATION OF COMPONENTS** .

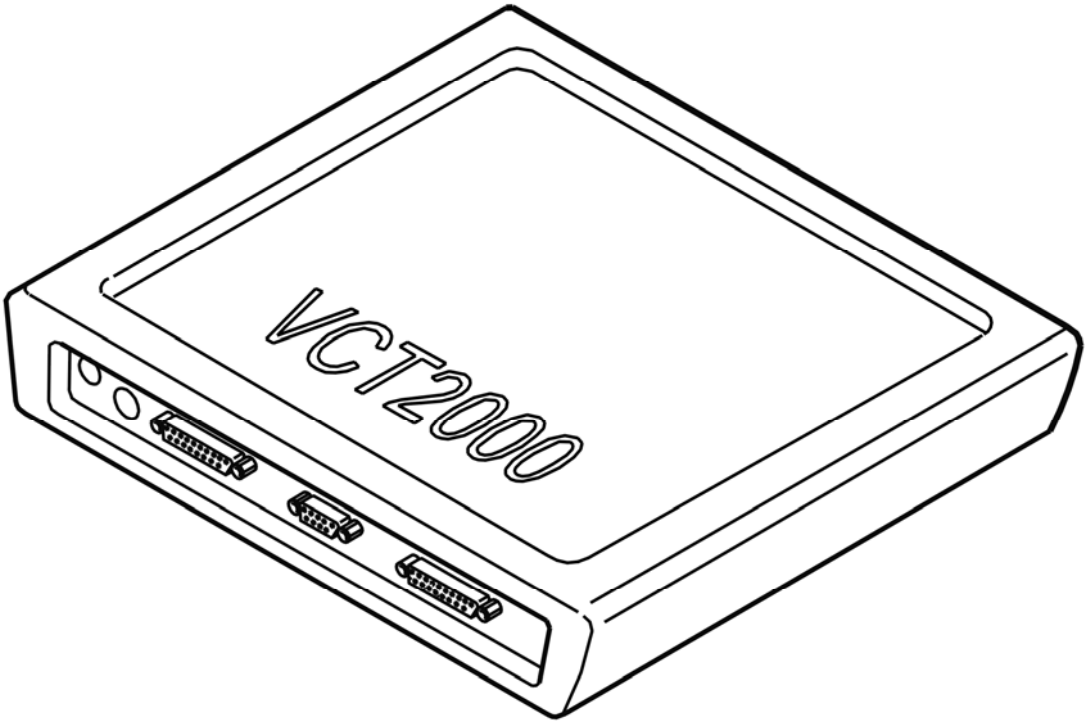

Fig. 230: Identifying VCT2000 Diagnostic Tool Symbol In VIDA
Courtesy of VOLVO CARS CORPORATION

- **Continue**

  Refer to **VERIFICATION**

CHECKING CABLE AND COMPONENT

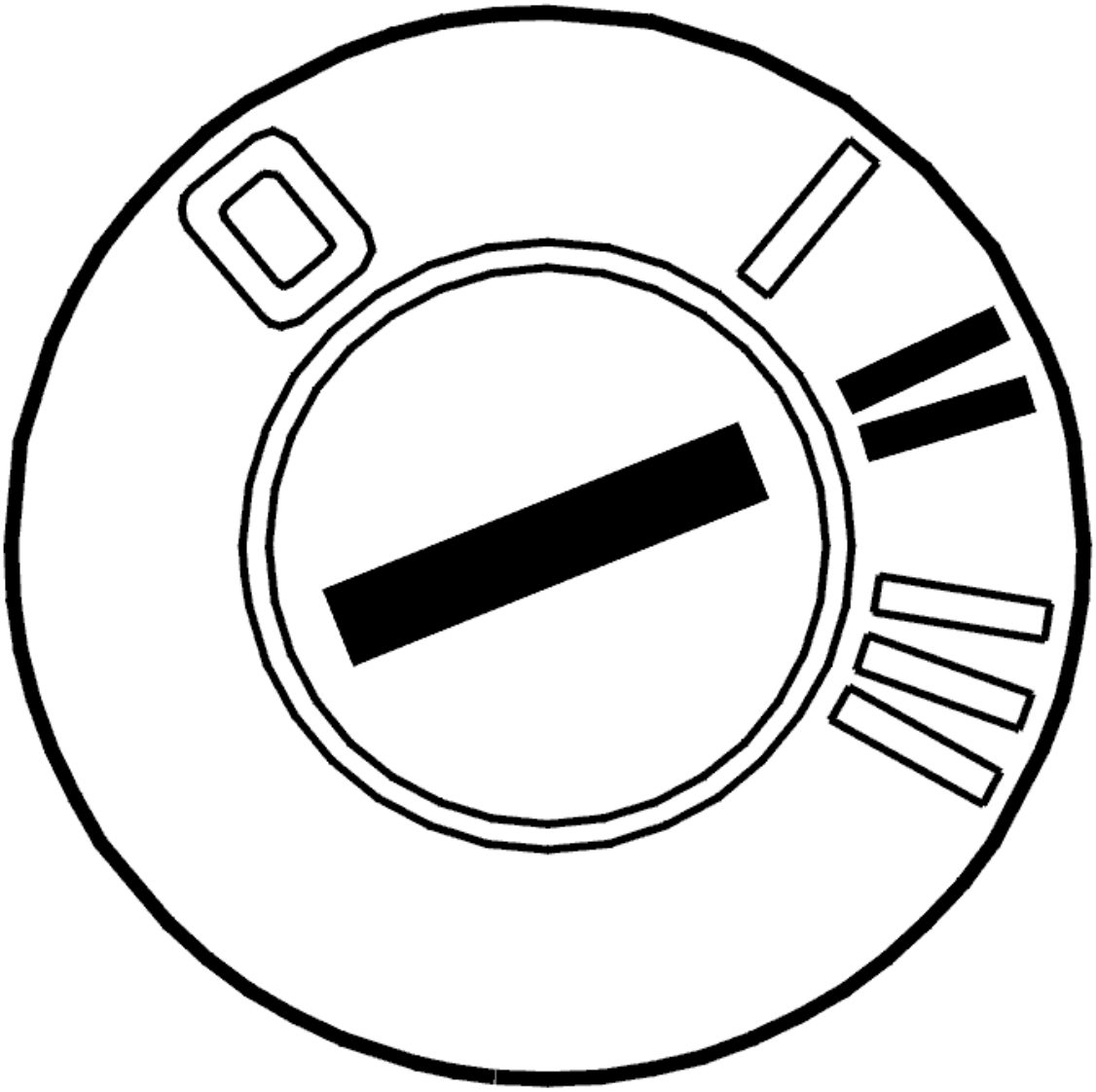

Fig. 231: Identifying Ignition ON
Courtesy of VOLVO CARS CORPORATION

Checking the fault cause

Check the fault cause as follows:

1. Ignition off
2. Disconnect the MOST connector from the audio module (AUD)
3. Connect the MOST cable to special tool see **9512867**
4. Ignition on
5. Activate the infotainment system
6. Check that the communication on the MOST network is functioning by reading off the status of the MOST locked parameter for at least 30 seconds. The parameter indicates whether the MOST network is closed and communication possible

7. If the parameter displays that the MOST network is not correctly connected, check the receiving control module in the same way as above.

The communication on the MOST network is working if the menu text is displayed. If this is the case, the fault cause is in the audio module (AUD). Continue the fault-tracing by checking the component.

The communication on the MOST network is not working if the menu text is not displayed. The fault cause is then in the MOST cable for the next control module. Continue the fault-tracing by checking the fiber optic cable.

Checking cable

- Check the MOST connection. Check for dirt, loose connections and damage
- Replace the MOST cable if no fault is found in the MOST terminal.

Checking the component

- Check the power supply and the ground terminal for the audio module (AUD)
- Check the MOST connection. Check for dirt, loose connections and damage
- Replace the audio module (AUD) if no fault is found.

Click the VCT2000 symbol to read off the status of the MOST network.

Remedy as necessary.

Other information:

- To access or replace the audio module (AUD), see **AUDIO MODULE (AUD), REPLACING**
- For information about checking the power supply and ground terminal, see **CHECKING THE VOLTAGE / GROUND TERMINAL**
- For information about signals, see **SIGNAL SPECIFICATION**
- For information about checking and replacing the MOST cable, see **FIBER OPTIC CABLE HARNESS, REPAIRING**
- see **OPTICAL WIRING HARNESS CHECK**
- For information about location and order of control modules in the MOST network, see **LOCATION OF COMPONENTS** .

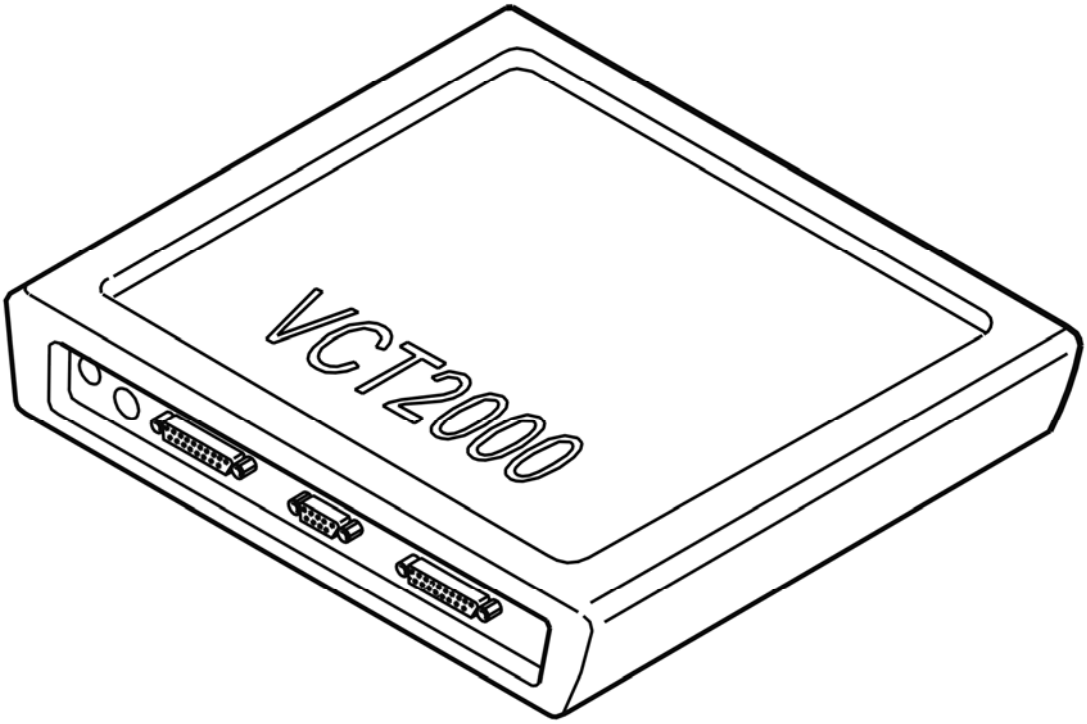

Fig. 232: Identifying VCT2000 Diagnostic Tool Symbol In VIDA
Courtesy of VOLVO CARS CORPORATION

- **Continue**

  Refer to **VERIFICATION**

CHECKING CABLE AND COMPONENT

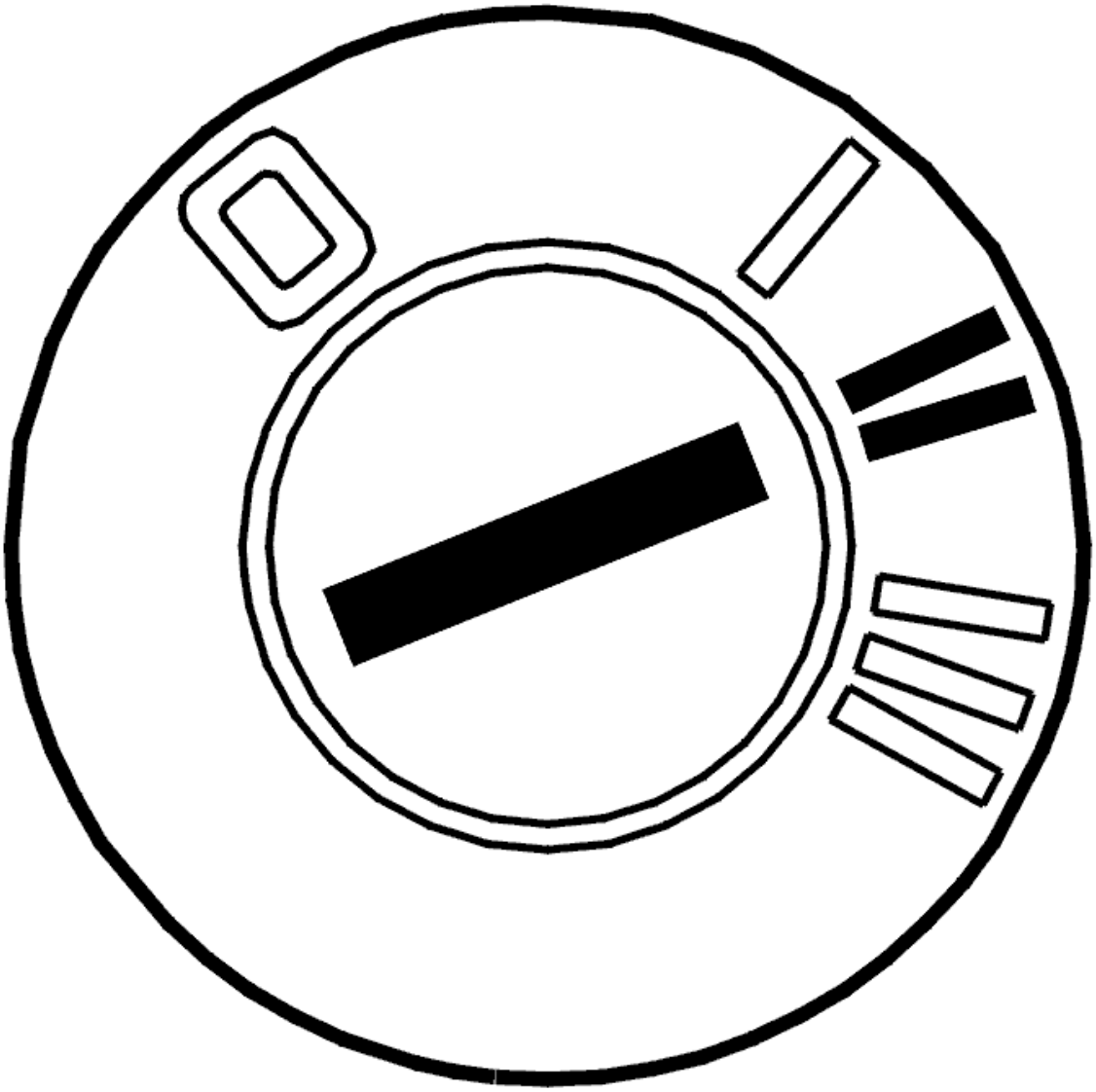

Fig. 233: Identifying Ignition ON
Courtesy of VOLVO CARS CORPORATION

Checking the fault cause

Check the fault cause as follows:

1. Ignition off
2. Disconnect the MOST connector from the CD player module (MP2)
3. Connect the MOST cable to special tool see **9512867**
4. Ignition on
5. Activate the infotainment system
6. Check that the communication on the MOST network is functioning by reading off the status of the MOST locked parameter for at least 30 seconds. The parameter indicates whether the MOST network is closed and communication possible

7. If the parameter displays that the MOST network is not correctly connected, check the receiving control module in the same way as above.

The communication on the MOST network is working if the menu text is displayed. The fault cause is then in the CD module (MP2). Continue the fault-tracing by checking the component.

The communication on the MOST network is not working if the menu text is not displayed. The fault cause is then in the MOST cable for the next control module. Continue the fault-tracing by checking the fiber optic cable.

Checking cable

- Check the MOST connection. Check for dirt, loose connections and damage
- Replace the MOST cable if no fault is found in the MOST terminal.

Checking the component

- Check the power supply and the ground terminal for the CD player module (MP2)
- Check the MOST connection. Check for dirt, loose connections and damage
- Replace the CD player module (MP2) if no fault is found.

Click the VCT2000 symbol to read off the status of the MOST network.

Remedy as necessary.

Other information:

- To access or replace the CD module (MP2), see **MINIDISC / CD CONTROL MODULE, REPLACING**
- For information about checking the power supply and ground terminal, see **CHECKING THE POWER SUPPLY AND GROUND TERMINALS**
- For information about signals, see **SIGNAL SPECIFICATION**
- For information about checking and replacing the MOST cable, see **FIBER OPTIC CABLE HARNESS, REPAIRING**
- see **OPTICAL WIRING HARNESS CHECK**
- For information about location and order of control modules in the MOST network, see **LOCATION OF COMPONENTS** .

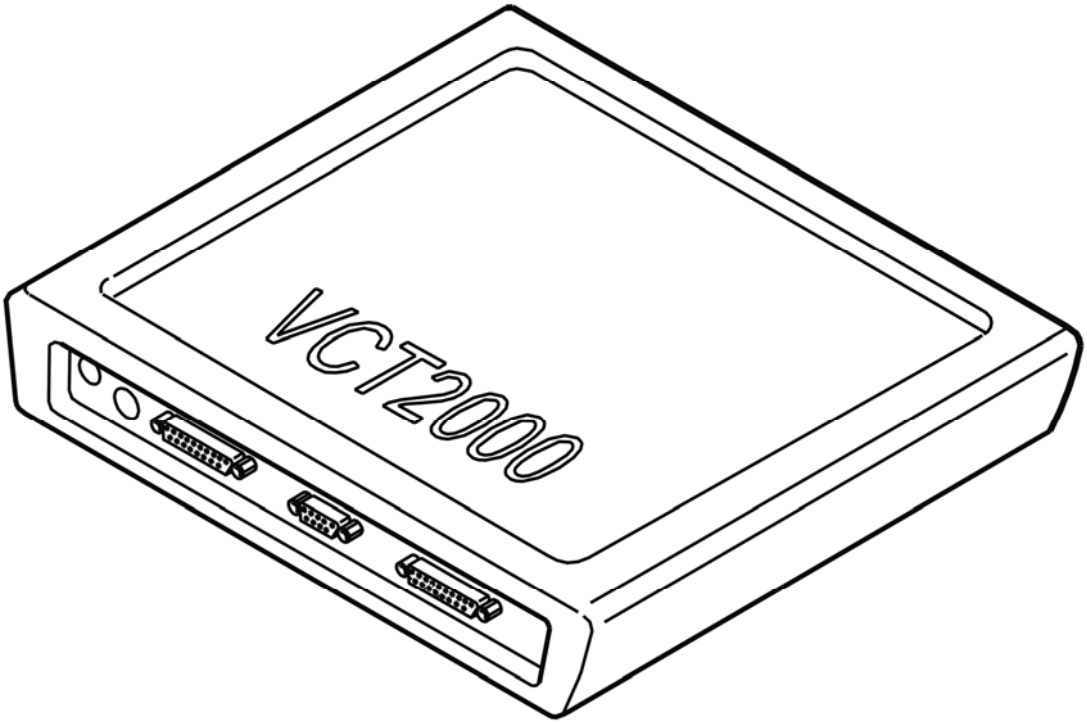

Fig. 234: Identifying VCT2000 Diagnostic Tool Symbol In VIDA
Courtesy of VOLVO CARS CORPORATION

- **Continue**

  Refer to **VERIFICATION**

CHECKING CABLE AND COMPONENT

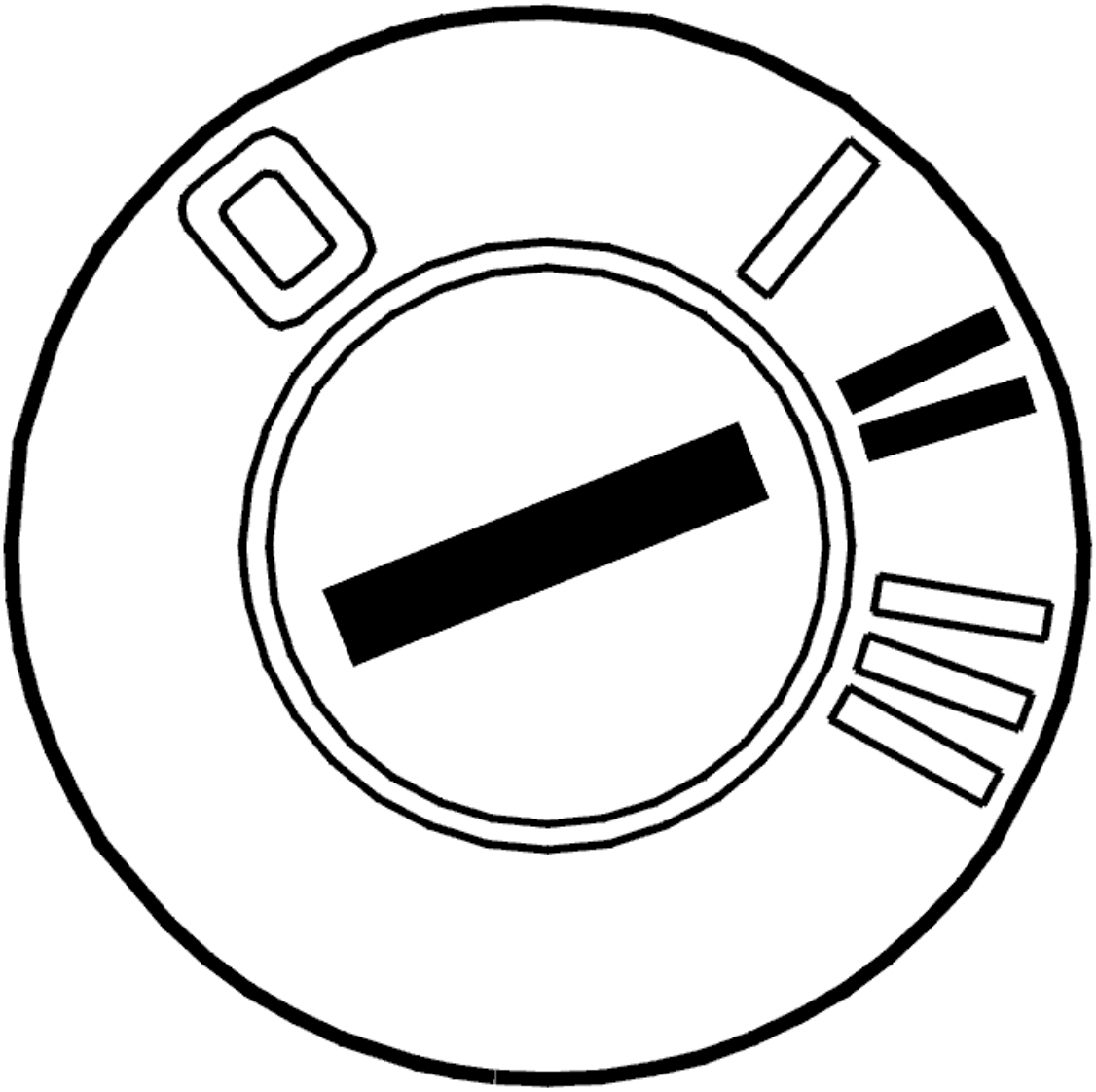

Fig. 235: Identifying Ignition ON
Courtesy of VOLVO CARS CORPORATION

Checking the fault cause

Check the fault cause as follows:

1. Ignition off
2. Disconnect the MOST connector from the phone module (PHM)
3. Connect the MOST cable to special tool see **9512867**
4. Ignition on
5. Activate the infotainment system
6. Check that the communication on the MOST network is functioning by reading off the status of the MOST locked parameter for at least 30 seconds. The parameter indicates whether the MOST network is closed and communication possible

7. If the parameter displays that the MOST network is not correctly connected, check the receiving control module in the same way as above.

The communication on the MOST network is working if the menu text is displayed. If this is the case, the fault cause is in the phone module (PHM). Continue the fault-tracing by checking the component.

The communication on the MOST network is not working if the menu text is not displayed. The fault cause is then in the MOST cable for the next control module. Continue the fault-tracing by checking the fiber optic cable.

Checking cable

- Check the MOST connection. Check for dirt, loose connections and damage
- Replace the MOST cable if no fault is found in the MOST terminal.

Checking the component

- Check the power supply and the ground terminal for the phone module (PHM)
- Check the MOST connection. Check for dirt, loose connections and damage
- Replace the phone module (PHM) if no fault is found.

Click the VCT2000 symbol to read off the status of the MOST network.

Remedy as necessary.

Other information:

- see **PHONE MODULE (PHM), REPLACING**
- see **CHECKING VOLTAGE / GROUND CONNECTION**
- see **SIGNAL SPECIFICATION**
- For information about checking and replacing the MOST cable, see **FIBER OPTIC CABLE HARNESS, REPAIRING**
- see **OPTICAL WIRING HARNESS CHECK**
- For information about location and order of control modules in the MOST network, see **LOCATION OF COMPONENTS** .

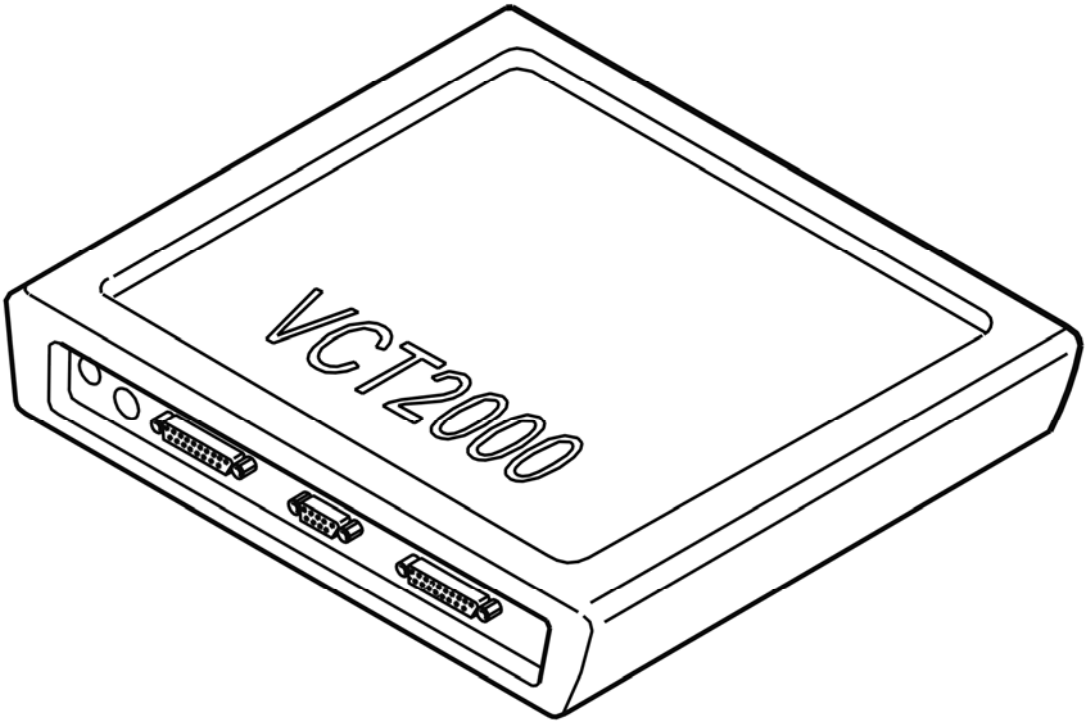

Fig. 236: Identifying VCT2000 Diagnostic Tool Symbol In VIDA
Courtesy of VOLVO CARS CORPORATION

- **Continue**

  Refer to **VERIFICATION**

CHECKING CABLE AND COMPONENT

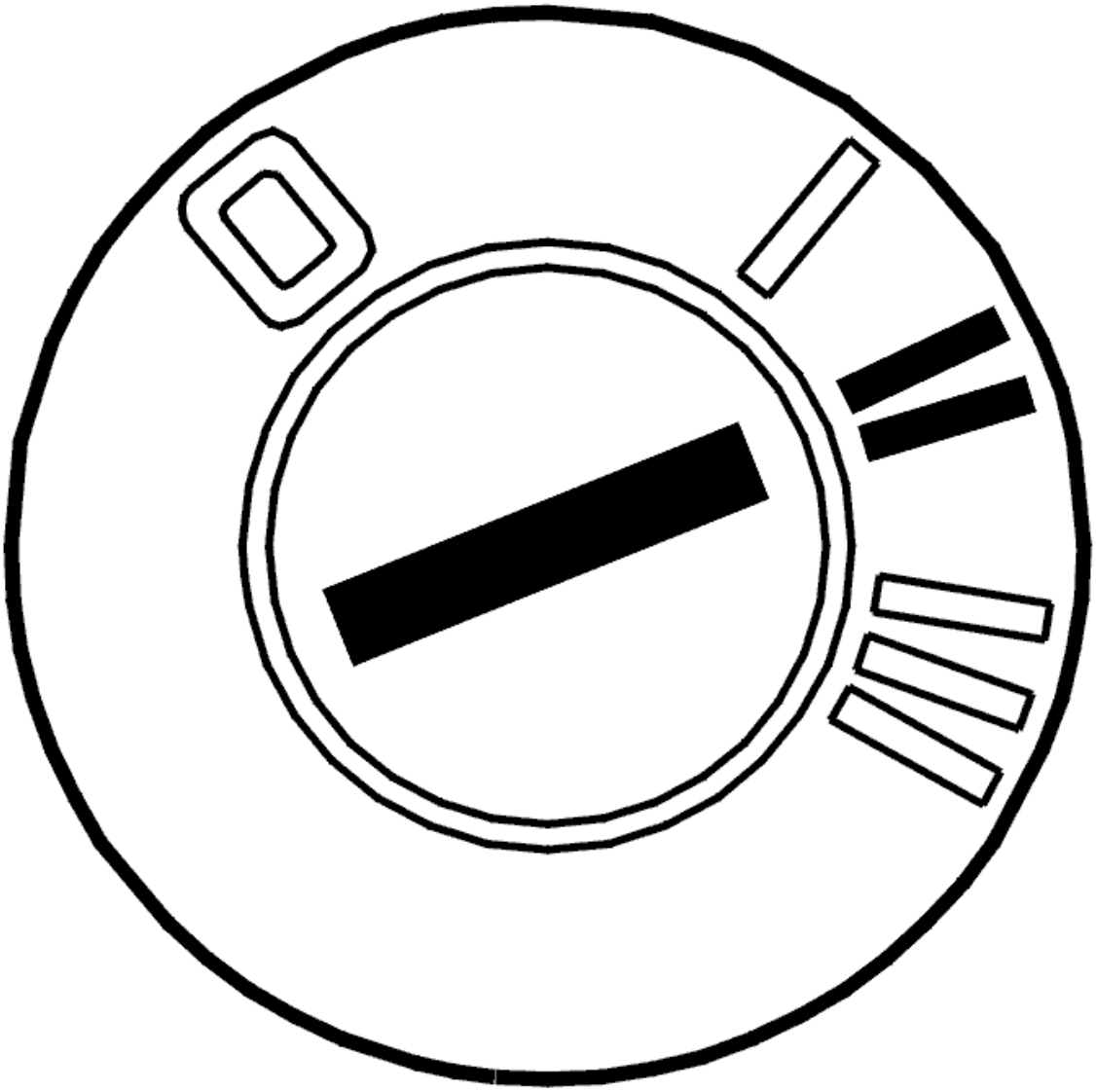

Fig. 237: Identifying Ignition ON
Courtesy of VOLVO CARS CORPORATION

Checking the fault cause

Check the fault cause as follows:

1. Ignition off
2. Disconnect the MOST connector from the MD player module (MP1)
3. Connect the MOST cable to special tool see **9512867**
4. Ignition on
5. Activate the infotainment system
6. Check that the communication on the MOST network is functioning by reading off the status of the MOST locked parameter for at least 30 seconds. The parameter indicates whether the MOST network is closed and communication possible

7. If the parameter displays that the MOST network is not correctly connected, check the receiving control module in the same way as above.

The communication on the MOST network is working if the menu text is displayed. The fault cause is then in the MD player module (MP1). Continue the fault-tracing by checking the component.

The communication on the MOST network is not working if the menu text is not displayed. The fault cause is then in the MOST cable for the next control module. Continue the fault-tracing by checking the fiber optic cable.

Checking cable

- Check the MOST connection. Check for dirt, loose connections and damage
- Replace the MOST cable if no fault is found in the MOST terminal.

Checking the component

- Check the power supply and the ground terminal for the MD player module (MP1)
- Check the MOST connection. Check for dirt, loose connections and damage
- Replace the MD player module (MP1) if no fault is found.

Click the VCT2000 symbol to read off the status of the MOST network.

Remedy as necessary.

Other information:

- To access / replace the MD module (MP1), see **MINIDISC / CD CONTROL MODULE, REPLACING**
- For information about checking the power supply and ground terminal, see **CHECKING THE POWER SUPPLY AND GROUND TERMINALS**
- For information about signals, see **SIGNAL SPECIFICATION**
- For information about checking and replacing the MOST cable, see **FIBER OPTIC CABLE HARNESS, REPAIRING**
- see **OPTICAL WIRING HARNESS CHECK**
- For information about location and order of control modules in the MOST network, see **LOCATION OF COMPONENTS** .

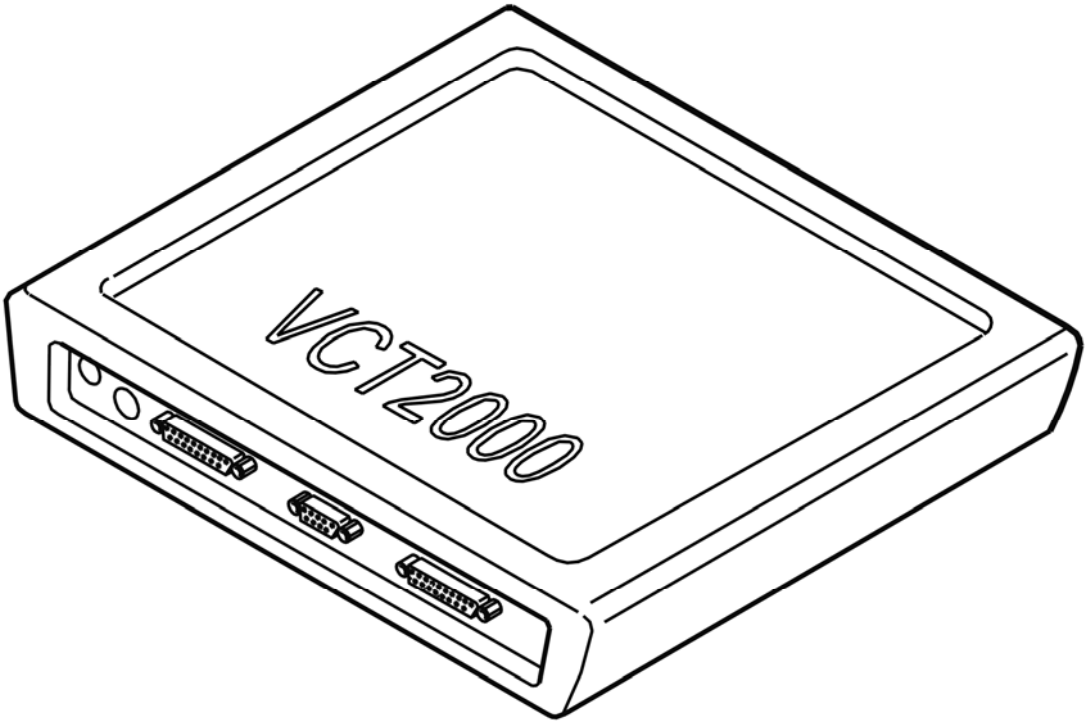

Fig. 238: Identifying VCT2000 Diagnostic Tool Symbol In VIDA
Courtesy of VOLVO CARS CORPORATION

- **Continue**

  Refer to **VERIFICATION**

CHECKING CABLE AND COMPONENT

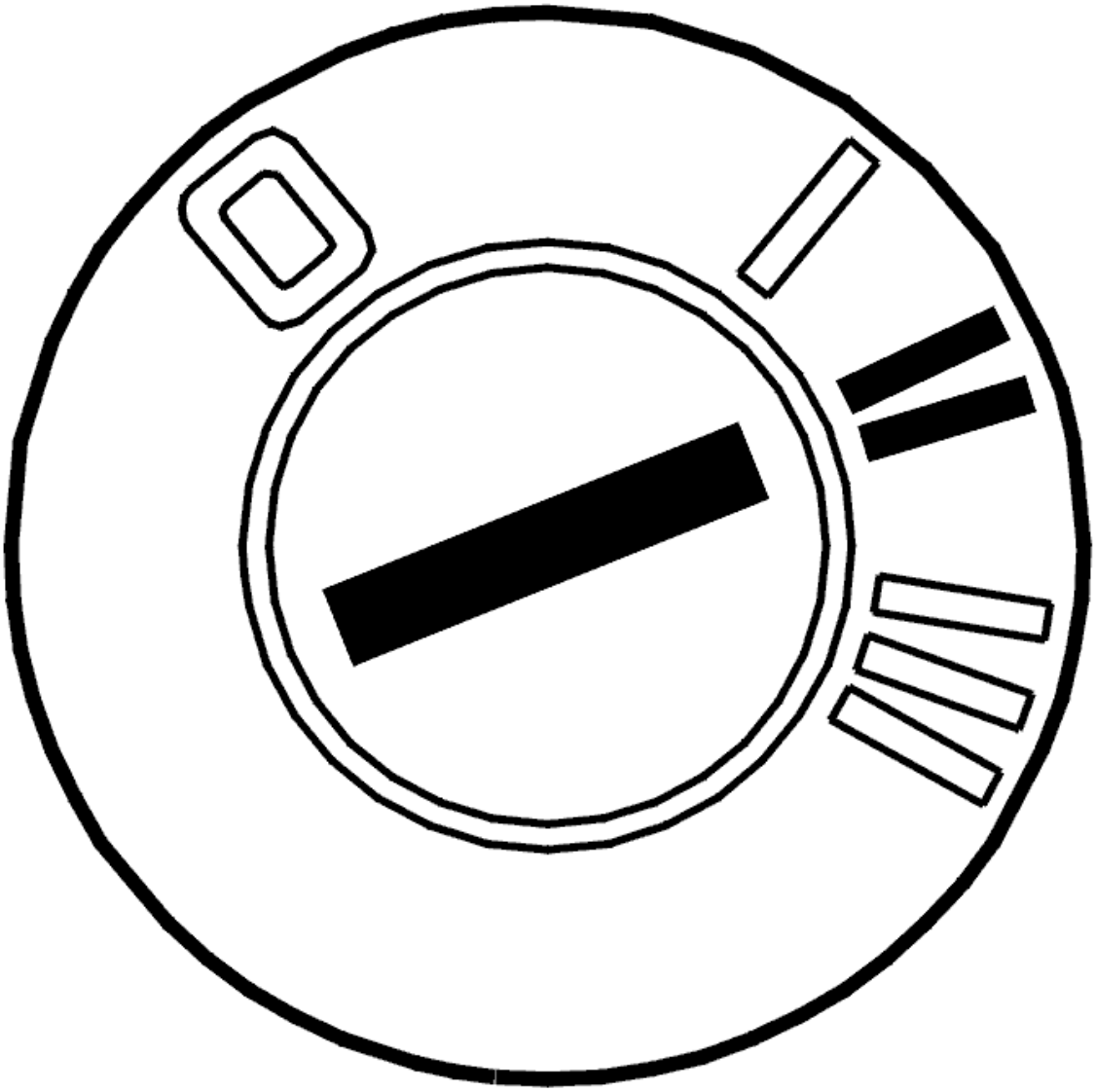

Fig. 239: Identifying Ignition ON
Courtesy of VOLVO CARS CORPORATION

Checking the fault cause

Check the fault cause as follows:

1. Ignition off
2. Disconnect the MOST connector from the multimedia module (MMM)
3. Connect the MOST cable to special tool see **9512867**
4. Ignition on
5. Activate the infotainment system
6. Check that the communication on the MOST network is functioning by reading off the status of the MOST locked parameter for at least 30 seconds. The parameter indicates whether the MOST network is closed and communication possible

7. If the parameter displays that the MOST network is not correctly connected, check the receiving control module in the same way as above.

The communication on the MOST network is working if the menu text is displayed. If this is the case, the fault cause is in the multimedia module (MMM). Continue the fault-tracing by checking the component.

The communication on the MOST network is not working if the menu text is not displayed. The fault cause is then in the MOST cable for the next control module. Continue the fault-tracing by checking the fiber optic cable.

Checking cable

- Check the MOST connection. Check for dirt, loose connections and damage
- Replace the MOST cable if no fault is found in the MOST terminal.

Checking the component

- Check the power supply and the ground terminal for the multimedia module (MMM)
- Check the MOST connection. Check for dirt, loose connections and damage
- Replace the multimedia module (MMM) if no fault is found.

Click the VCT2000 symbol to read off the status of the MOST network.

Remedy as necessary.

Other information:

- To access / replace the multimedia module (MMM), see **MULTIMEDIA MODULE (MMM), REPLACING**
- For information about checking the power supply and ground terminal, see **CHECKING THE VOLTAGE / GROUND TERMINAL (2003-2006)**
- For information about signals, see **SIGNAL SPECIFICATION**
- For information about checking and replacing the MOST cable, see **FIBER OPTIC CABLE HARNESS, REPAIRING**
- see **OPTICAL WIRING HARNESS CHECK**
- For information about location and order of control modules in the MOST network, see **LOCATION OF COMPONENTS** .

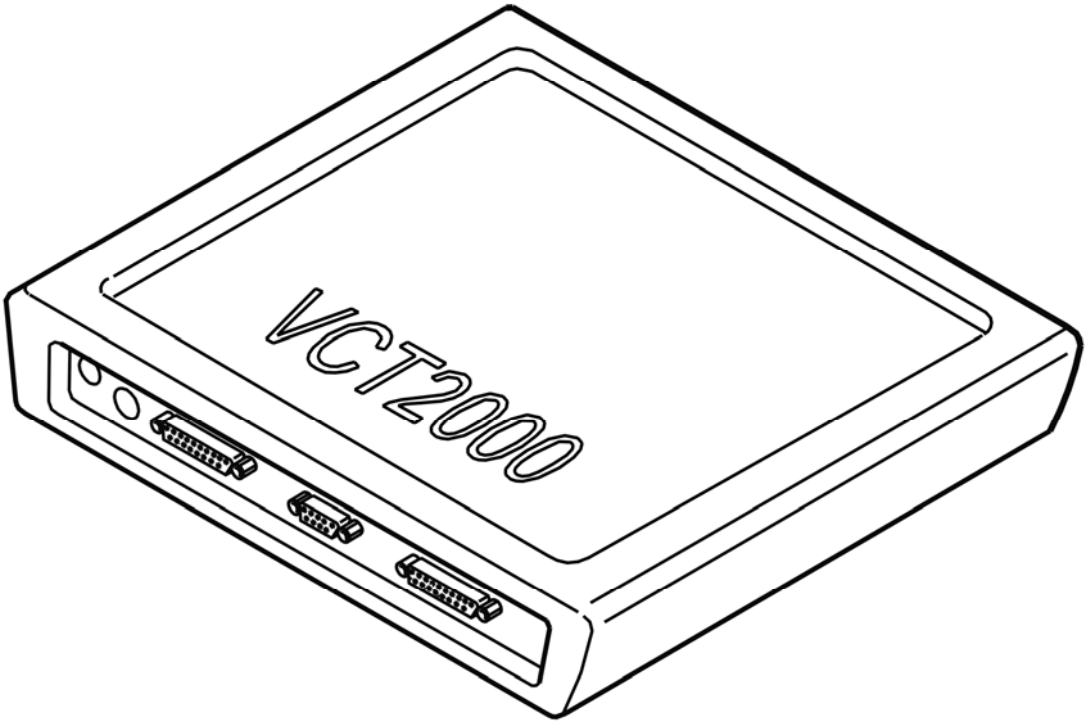

Fig. 240: Identifying VCT2000 Diagnostic Tool Symbol In VIDA
Courtesy of VOLVO CARS CORPORATION

- **Continue**

  Refer to **VERIFICATION**

CHECKING CABLE AND COMPONENT

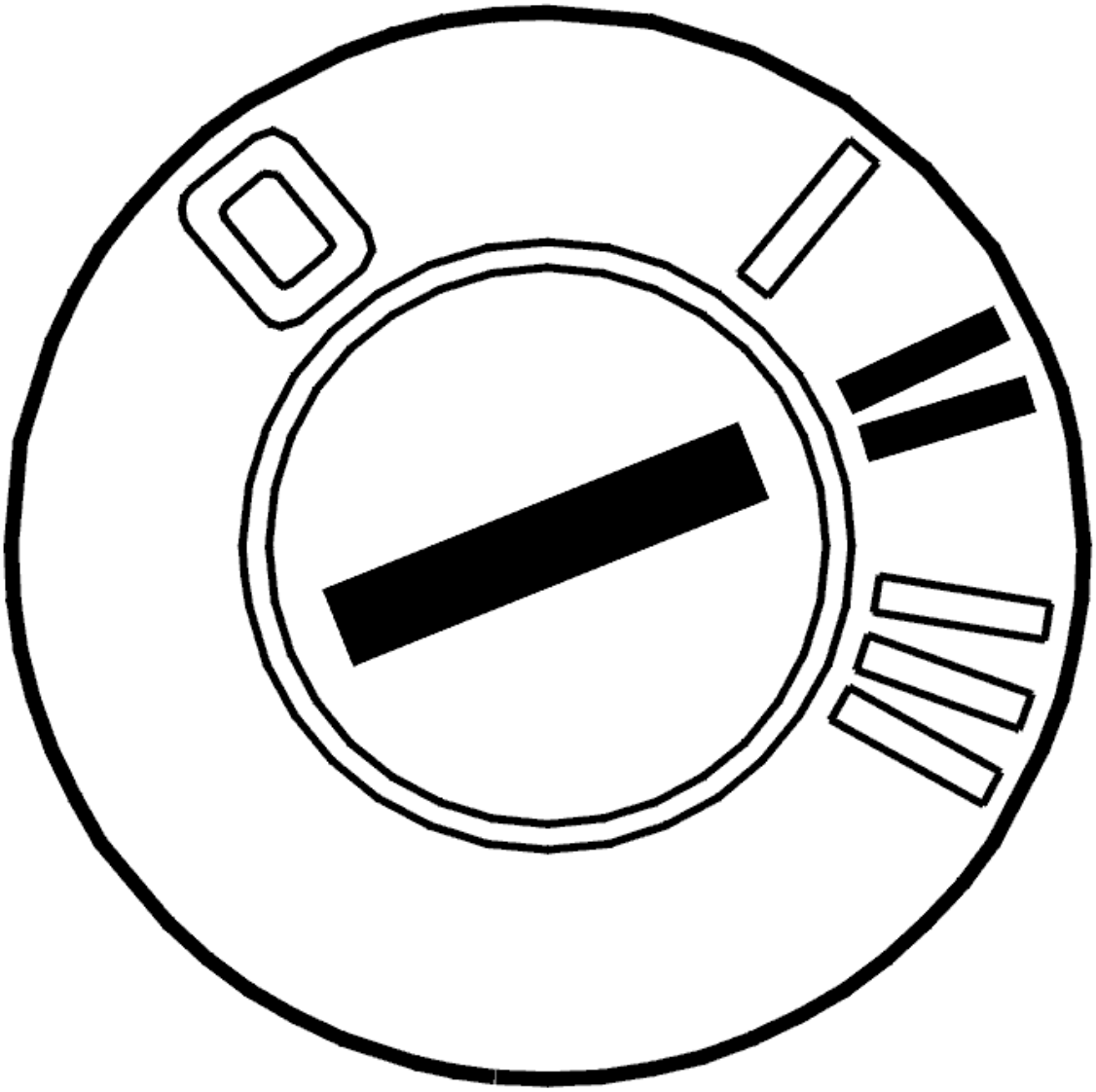

Fig. 241: Identifying Ignition ON
Courtesy of VOLVO CARS CORPORATION

- Ignition off
- Disconnect the MOST cable connector from the infotainment control module (ICM)
- Ignition on
- Activate the infotainment system.

  Check visually whether the infotainment control module (ICM) is emitting light from the MOST connector.

  The control module is defective if the infotainment control module (ICM) is not emitting light.

  If the infotainment control module (ICM) is transmitting light, the fault is in the MOST cable for the next control module.

Check the MOST connection. Check for dirt, loose connections and damage.

Replace the MOST cable if no fault is found in the MOST terminal.

Remedy as necessary.

Other information:

- To access / replace the infotainment control module (ICM), see **INFOTAINMENT CONTROL MODULE (ICM), REPLACING**
- For information about checking and replacing the MOST cable, see **FIBER OPTIC CABLE HARNESS, REPAIRING**
- For information about location and order of control modules in the MOST network, see **LOCATION OF COMPONENTS** .

- **Continue**

  Refer to **VERIFICATION**

VERIFICATION

VERIFICATION

HINT: After carrying out the repair, check that the fault has been remedied.

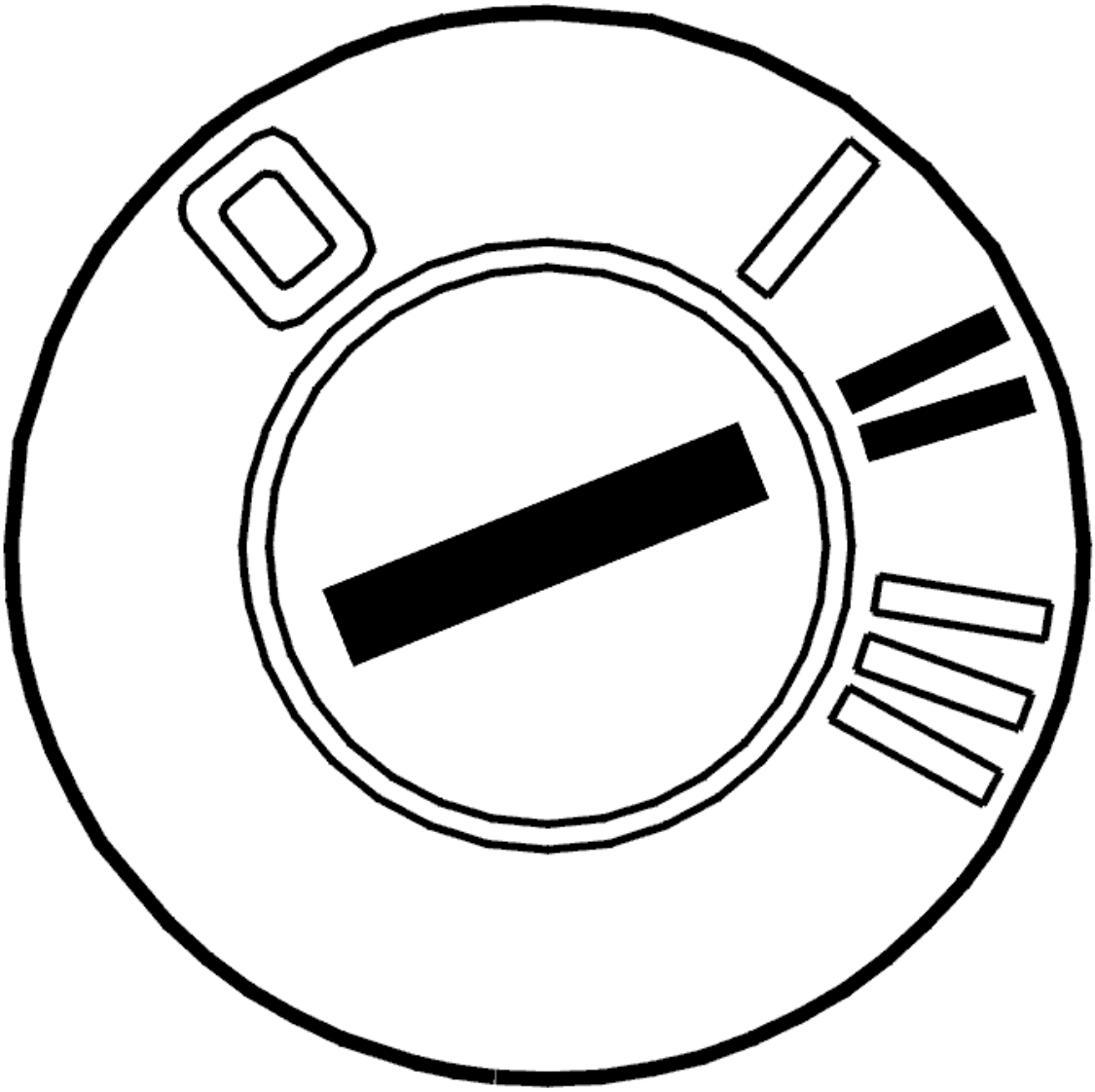

Fig. 242: Identifying Ignition ON
Courtesy of VOLVO CARS CORPORATION

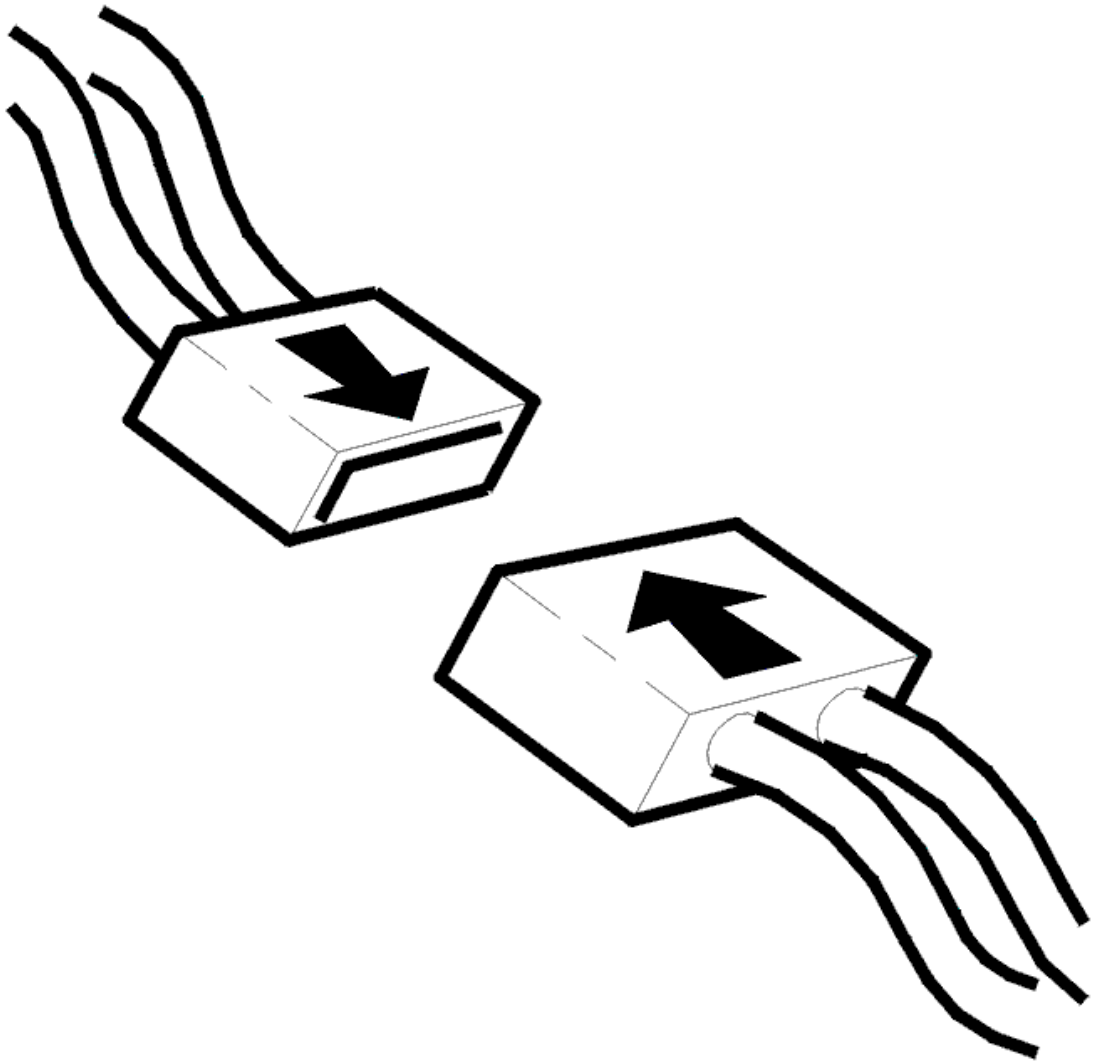

Fig. 243: Connecting Connector
Courtesy of VOLVO CARS CORPORATION

- Ignition off
- Reinstall the connectors, components etc.
- Ignition on.

  Activate the infotainment system and select the radio.

  Check whether there is sound from the radio in the loudspeakers.

Is the sound of the radio coming through the loudspeakers?

- **YES**

VERIFIED: Troubleshooting has been completed.

- **NO**

  Refer to **INFORMATION**

INFORMATION

FAULT-TRACING INFORMATION

The fault should have been detected and remedied. As this is not the case fault-tracing has failed.

Exit fault-tracing for this diagnostic trouble code (DTC) or make another attempt.

NO COMMUNICATION (2006)

Special tools:

see **9512867**

CHECKING THE WIRING AND COMPONENT

The infotainment control module (ICM) has detected an open-circuit in communication on the MOST network.

The MOST network is a fiber optic ring network. This means that all control modules which are connected to the network must be powered and grounded for the infotainment system to work. If, for any reason, a control module is unable to handle (receive or transmit) signals onwards on the MOST network, or if there is an open-circuit in the fiber optic cable, the infotainment control module (ICM) will shut down all functionality.

Communication on the fiber optic net is one-directional. The control modules on the MOST network receive light signals, amplify them and then send them onwards. The MOST connectors for the control modules contain two fiber optic cables, one for incoming and one for outgoing signals.

If the fault is intermittent, it has been registered previously but is no longer present. Intermittent faults can either be caused by interference when starting the MOST network, or by intermittent faults in the power supply/ground for one of the control modules in the network. The fault is evaluated depending on how it occurs. If the fault recurs, fault-trace for permanent faults.

It can be difficult to diagnose intermittent faults using a ring break diagnostic because for this to work the fault must occur during the diagnostic.

If the fault is permanent, perform a ring break diagnostic to locate the open-circuit.

- **Continue**

  Refer to **CHECKING FOR OPEN-CIRCUITS**

CHECKING FOR OPEN-CIRCUITS

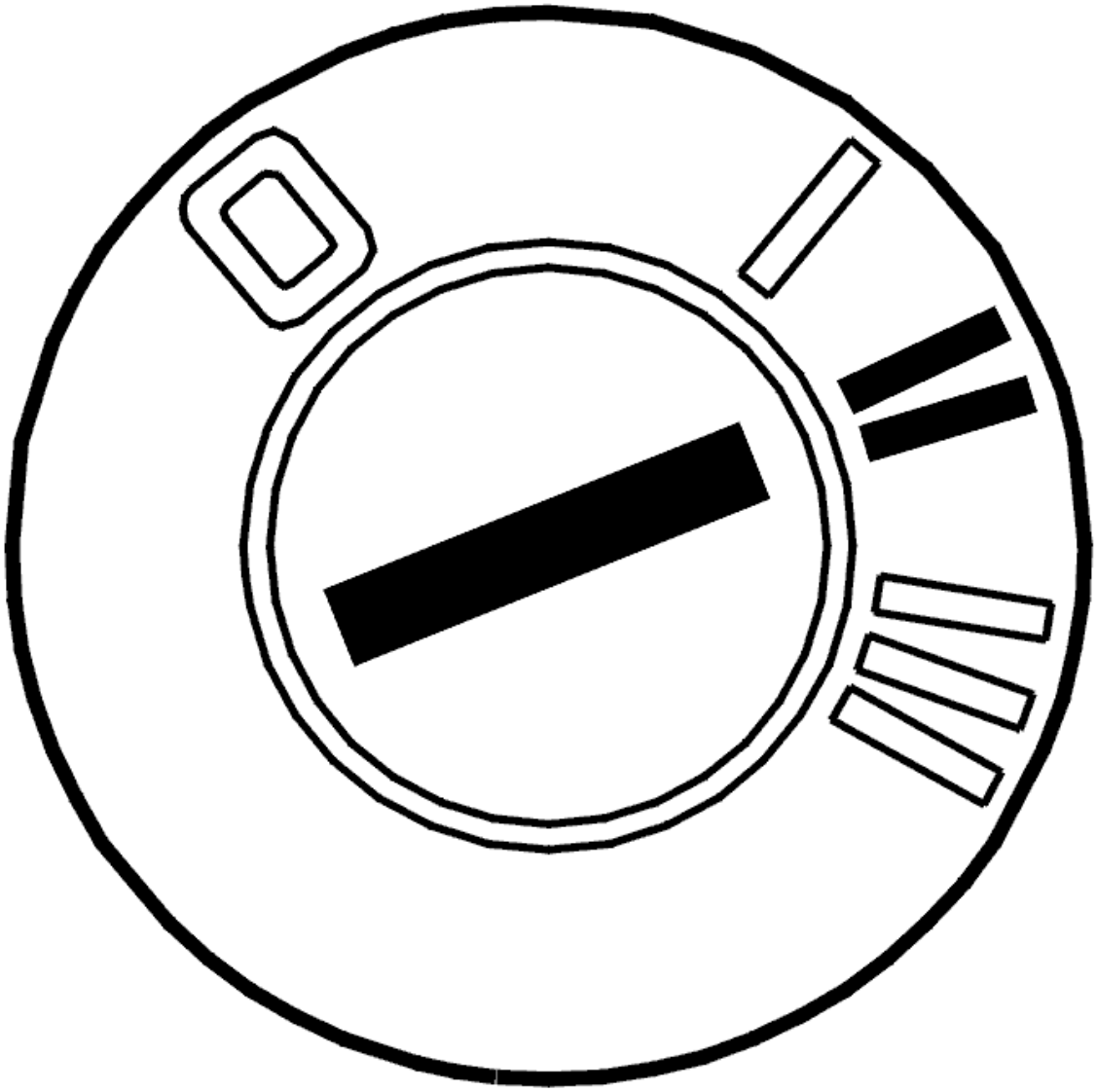

Fig. 244: Identifying Ignition ON
Courtesy of VOLVO CARS CORPORATION

Ring break diagnostic

A ring break diagnostic should be run to determine whether the fault has occurred.

To carry out a full ring break diagnostic of the MOST system, proceed as follows:

1. Switch off the ignition and remove the key
2. Remove the fuse for the antenna module (ATM)
3. Wait at least 3 minutes
4. Ignition on
5. Reinstall the fuse for the antenna module (ATM) within 25 seconds
6. Wait at least 30 seconds after switching on the ignition before reading off the position of the open-circuit.

- **Continue**

  Refer to **READING OFF THE POSITION OF THE OPEN-CIRCUIT**

CHECKING CABLE AND COMPONENT

If the result of the ring break diagnostic is POOR, the infotainment control module (ICM) is receiving a signal on the MOST network. However it is unable to decode the signals because the luminance of the signals is too weak or the signals are distorted.

If the result from the ring break diagnostic is OK, the fault is intermittent.

Fault-tracing using the ring break diagnostic assumes that the fault is permanent or active when the test is run, i. e. the system is powered having been off.

HINT: If diagnostic trouble code (DTC) ICM-DC01 is intermittent, read off the status of the ring break diagnostic from the frozen values in Vehicle communication.

HINT: Note that the antenna module (ATM) is not normally included in a ring break diagnostic if the fuse is not removed. This means that the position of the open-circuit moves one step backwards in the MOST network.

HINT: On fully equipped vehicles, if the open-circuit position is 0, this may be because of:

- Subwoofer module (SUB)
- The fiber optic cable between the subwoofer module (SUB) and the antenna module (ATM)
- Antenna module (ATM)
- The fiber optic cable between the antenna module (ATM) and the infotainment control module (ICM)
- The optical connector in the infotainment control module (ICM). This means that the infotainment control module (ICM) is not able to interpret the incoming signal correctly.

Check the communication on the MOST network by bypassing the control modules one by one on the MOST network as follows:

- Ignition off
- Disconnect the MOST connector from the relevant control module
- Connect the MOST cable to special tool see **9512867**
- Ignition on
- Activate the infotainment system
- Check that the communication on the MOST network is functioning by reading off the status of the MOST locked parameter for at least 30 seconds. The parameter indicates whether the MOST network is closed and communication possible.

If the communication on the MOST network is stable when a control module is disconnected, check the power supply and the ground terminal on the relevant control module. Check for intermittent faults. Try replacing the

component if no fault is found.

Click the VCT2000 symbol to read off the status of the MOST network.

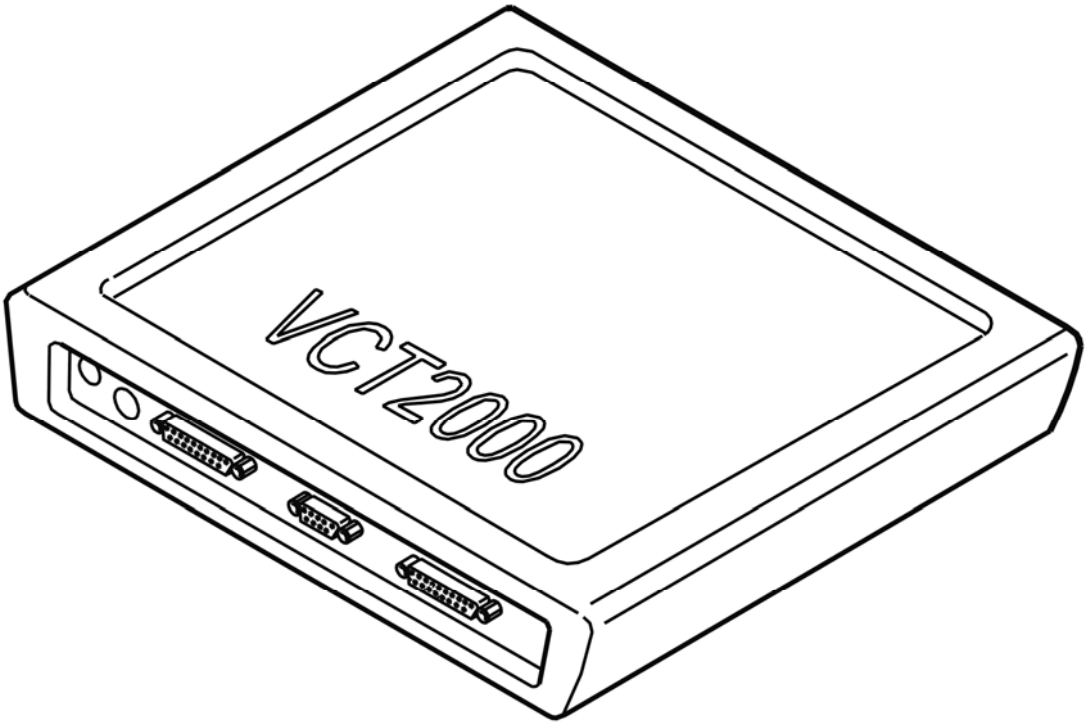

Fig. 245: Identifying VCT2000 Diagnostic Tool Symbol In VIDA
Courtesy of VOLVO CARS CORPORATION

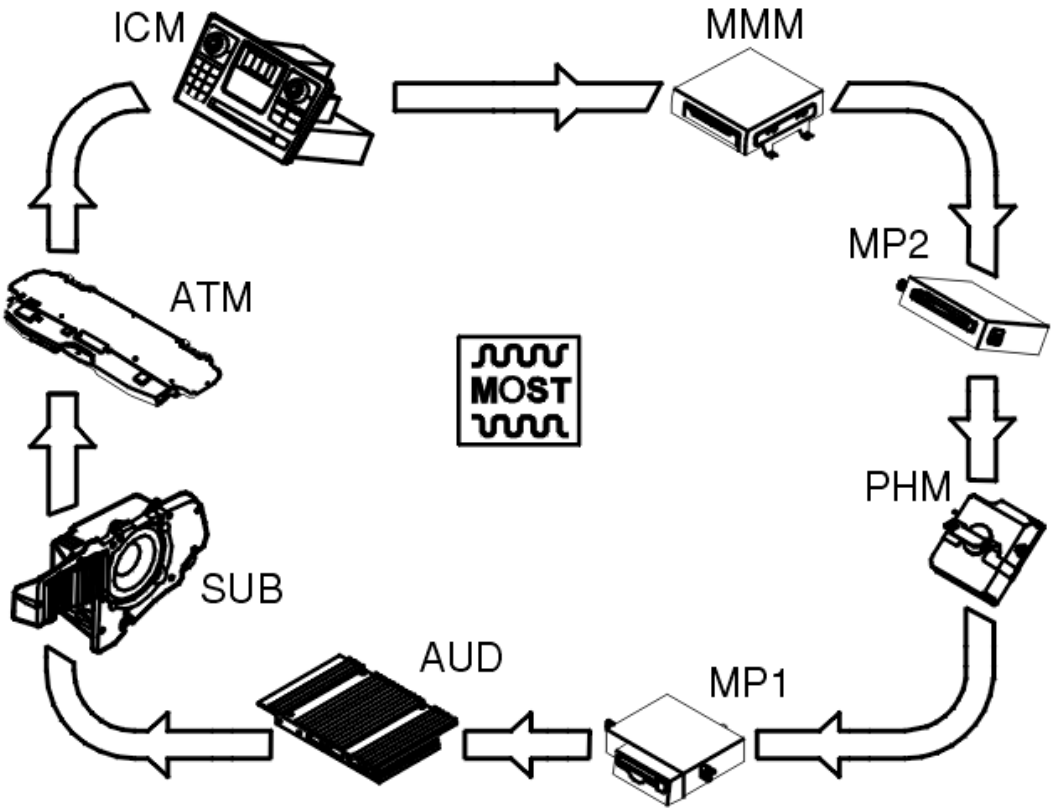

Fig. 246: MOST Bus (Media Oriented System Transportation) Communication Diagram
Courtesy of VOLVO CARS CORPORATION

- **Continue**

  Refer to **VERIFICATION**

READING OFF THE POSITION OF THE OPEN-CIRCUIT

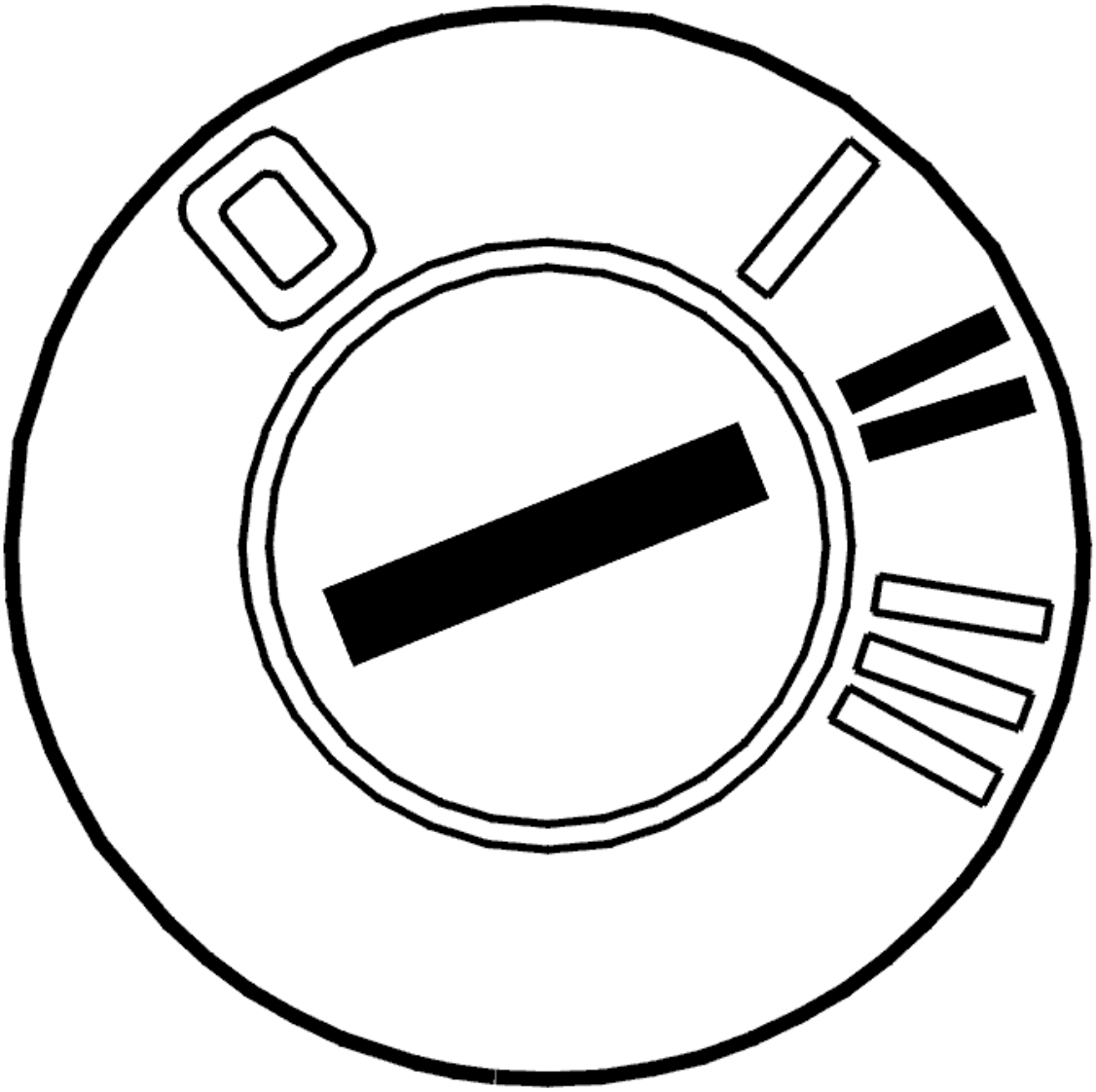

Fig. 247: Identifying Ignition ON
Courtesy of VOLVO CARS CORPORATION

- Ignition on.

  Reading off the result from a ring break diagnostic

  Click the VCT2000 symbol to read off the result of the ring break diagnostic.

  As well as the result from the ring break diagnostic, a list of the control modules included in the MOST network is provided for that car.

  The following result can be obtained from a ring break diagnostic:

  If the fault occurs when the ring break diagnostic is run, the result will be presented as an open-circuit position.

If the fault does not occur when the ring break diagnostic is run, the result will be OK. If this is the case, select alternative 3 below.

- If the diagnostic indicates an open-circuit in the communication on the MOST network, the result will be an open-circuit position
- The result will be OK if there is no fault on the MOST network
- If the infotainment control module (ICM) receives a signal on the MOST network but is unable to decode it because the luminance is weak or the signals are distorted, the result will be POOR.

Determining the position of the open-circuit

The position of the open-circuit is calculated by working backwards in the MOST network from the infotainment control module (ICM).

NOTE: The ring break diagnostic only counts backwards, irrespective of which, or how many control modules, are installed in the car. To determine the position of the open-circuit, check the list to, see which control modules are installed in that particular car. Then count backwards following the determined order. The number of control modules can vary between 3-8.

Two examples are outlined below:

- The first open-circuit position corresponds to 0. This means that the open-circuit is in the antenna module (ATM) or in the cable between the antenna module (ATM) and the infotainment control module (ICM)
- If the position is 1, go one step backwards in the chain. The open-circuit is in the subwoofer module (SUB) or in the cable between the subwoofer module (SUB) and the antenna module (ATM). The open-circuit can also be caused by the optical connector in the antenna module (ATM) being damaged so that the antenna module (ATM) is not able to interpret the incoming signal from the subwoofer module (SUB) correctly.

  NOTE: The subwoofer module (SUB) is not standard. If one is not installed, the open-circuit position 1 applies to the audio module (AUD).

Select the alternative for the control module to be checked.

Alternative 1:

Antenna module (ATM)

Subwoofer module (SUB)

Audio module (AUD)

CD player module (MP2)

Alternative 2:

Phone module (PHM)

MD player module (MP1)

Multimedia module (MMM)

Infotainment control module (ICM)

Alternative 3:

The result from the ring break diagnostic indicates that the MOST network is OK.

The result from the ring break diagnostic is POOR.

Other information:

- For information about location and order of control modules in the MOST network, see **LOCATION OF COMPONENTS**

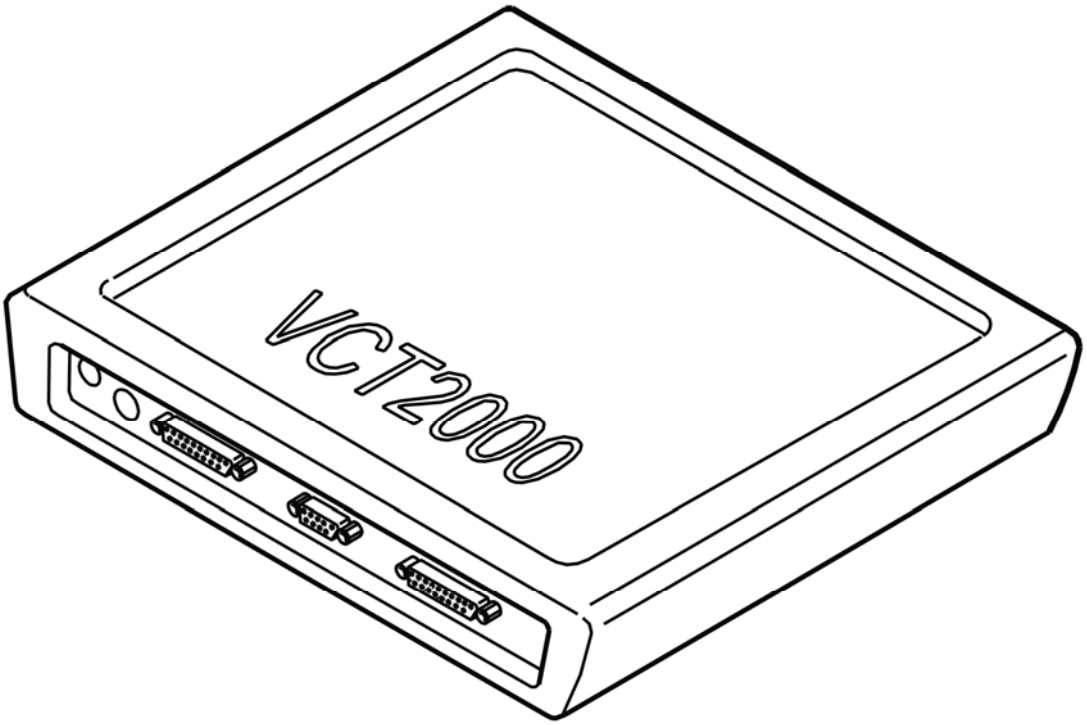

Fig. 248: Identifying VCT2000 Diagnostic Tool Symbol In VIDA
Courtesy of VOLVO CARS CORPORATION

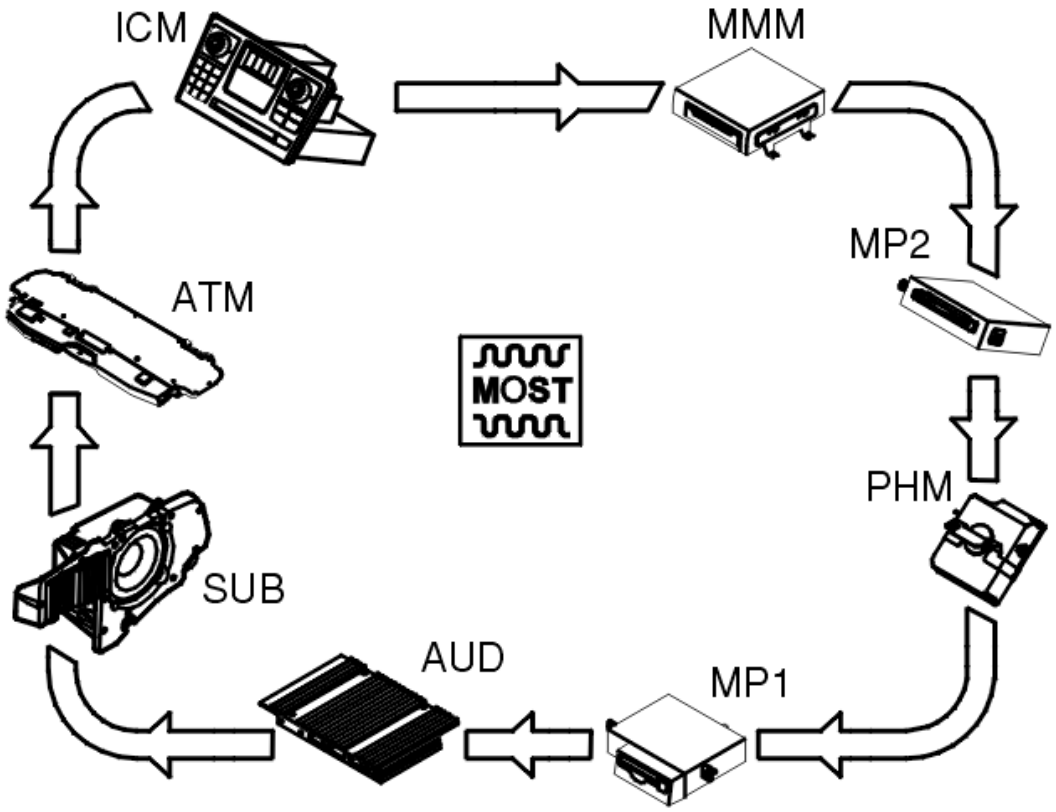

Fig. 249: MOST Bus (Media Oriented System Transportation) Communication Diagram
Courtesy of VOLVO CARS CORPORATION

Select an alternative.

- **1**

  Refer to **CHECKING CABLE AND COMPONENT**

- **2**

  Refer to **CHECKING CABLE AND COMPONENT**

- **3**

  Refer to **CHECKING CABLE AND COMPONENT**

CHECKING CABLE AND COMPONENT

Select the control module to be checked from the list.

1. Antenna module (ATM)

2. Subwoofer module (SUB)

3. Audio module (AUD)

4. CD player module (MP2)

Select the control module.

- **1**

  Refer to **CHECKING CABLE AND COMPONENT**

- **2**

  Refer to **CHECKING CABLE AND COMPONENT**

- **3**

  Refer to **CHECKING CABLE AND COMPONENT**

- **4**

  Refer to **CHECKING CABLE AND COMPONENT**

CHECKING CABLE AND COMPONENT

Select the control module to be checked from the list.

1. Phone module (PHM)

2. MD player module (MP1)

3. Multimedia module (MMM)

4. Infotainment control module (ICM)

Select the control module.

- **1**

  Refer to **CHECKING CABLE AND COMPONENT**

- **2**

  Refer to **CHECKING CABLE AND COMPONENT**

- **3**

  Refer to **CHECKING CABLE AND COMPONENT**

- **4**

  Refer to **CHECKING CABLE AND COMPONENT**

CHECKING CABLE AND COMPONENT

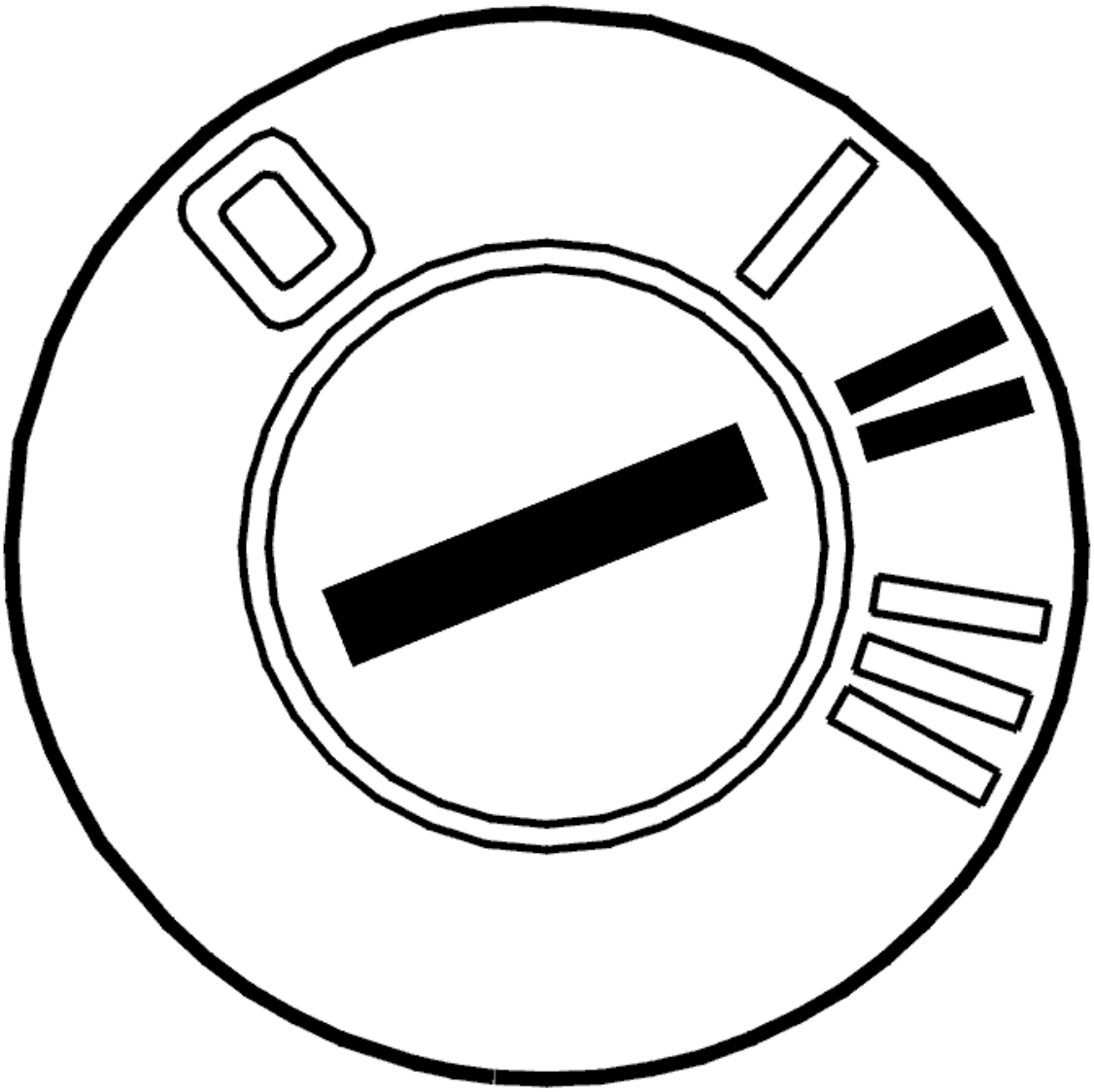

Fig. 250: Identifying Ignition ON
Courtesy of VOLVO CARS CORPORATION

Checking the fault cause

Check the fault cause as follows:

1. Ignition off
2. Disconnect the MOST connector from the antenna module (ATM)

3. Connect the MOST cable to special tool see **9512867**
4. Ignition on
5. Activate the infotainment system
6. Check that the communication on the MOST network is functioning by reading off the status of the MOST locked parameter for at least 30 seconds. The parameter indicates whether the MOST network is closed and communication possible
7. If the parameter displays that the MOST network is not correctly connected, check the receiving control module in the same way as above.

The communication on the MOST network is working if the menu text is displayed. If this is the case, the fault cause is in the antenna module (ATM). Continue the fault-tracing by checking the component.

The communication on the MOST network is not working if the menu text is not displayed. The fault cause is then in the MOST cable for the next control module. Continue the fault-tracing by checking the fiber optic cable.

Checking cable

- Check the MOST connection. Check for dirt, loose connections and damage
- Replace the MOST cable if no fault is found in the MOST terminal.

Checking the component

- Check the power supply and the ground terminal for the antenna module (ATM)
- Check the MOST connection. Check for dirt, loose connections and damage
- Replace the antenna module (ATM) if no fault is found.

Remedy as necessary.

Click the VCT2000 symbol to read off the status of the MOST network.

Other information:

- To access or replace the antenna module (ATM), see **RECEIVER GPS, TMC (ATM), REPLACE**
- For information about checking the power supply and ground terminal, see **CHECKING THE POWER SUPPLY AND GROUND TERMINALS**
- For information about signals, see **SIGNAL SPECIFICATION**
- see **OPTICAL WIRING HARNESS CHECK**
- For information about checking and replacing the MOST cable, see **FIBER OPTIC CABLE HARNESS, REPAIRING**
- For information about location and order of control modules in the MOST network, see **LOCATION OF COMPONENTS** .

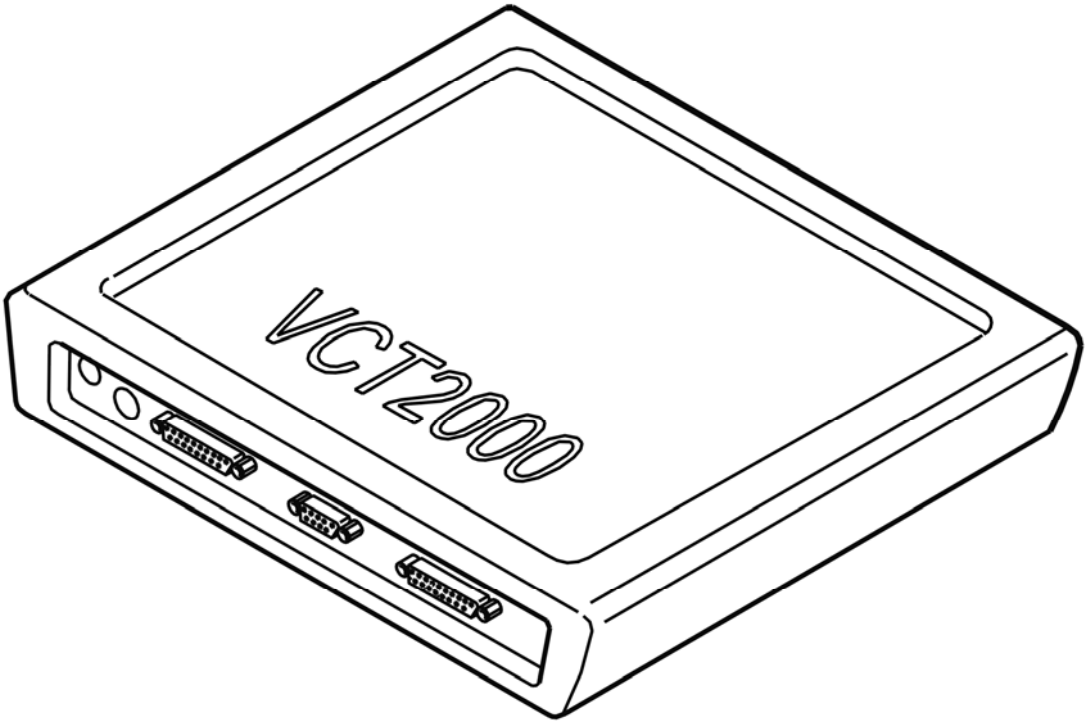

Fig. 251: Identifying VCT2000 Diagnostic Tool Symbol In VIDA
Courtesy of VOLVO CARS CORPORATION

Select continue.

- **Continue**

  Refer to **VERIFICATION**

CHECKING CABLE AND COMPONENT

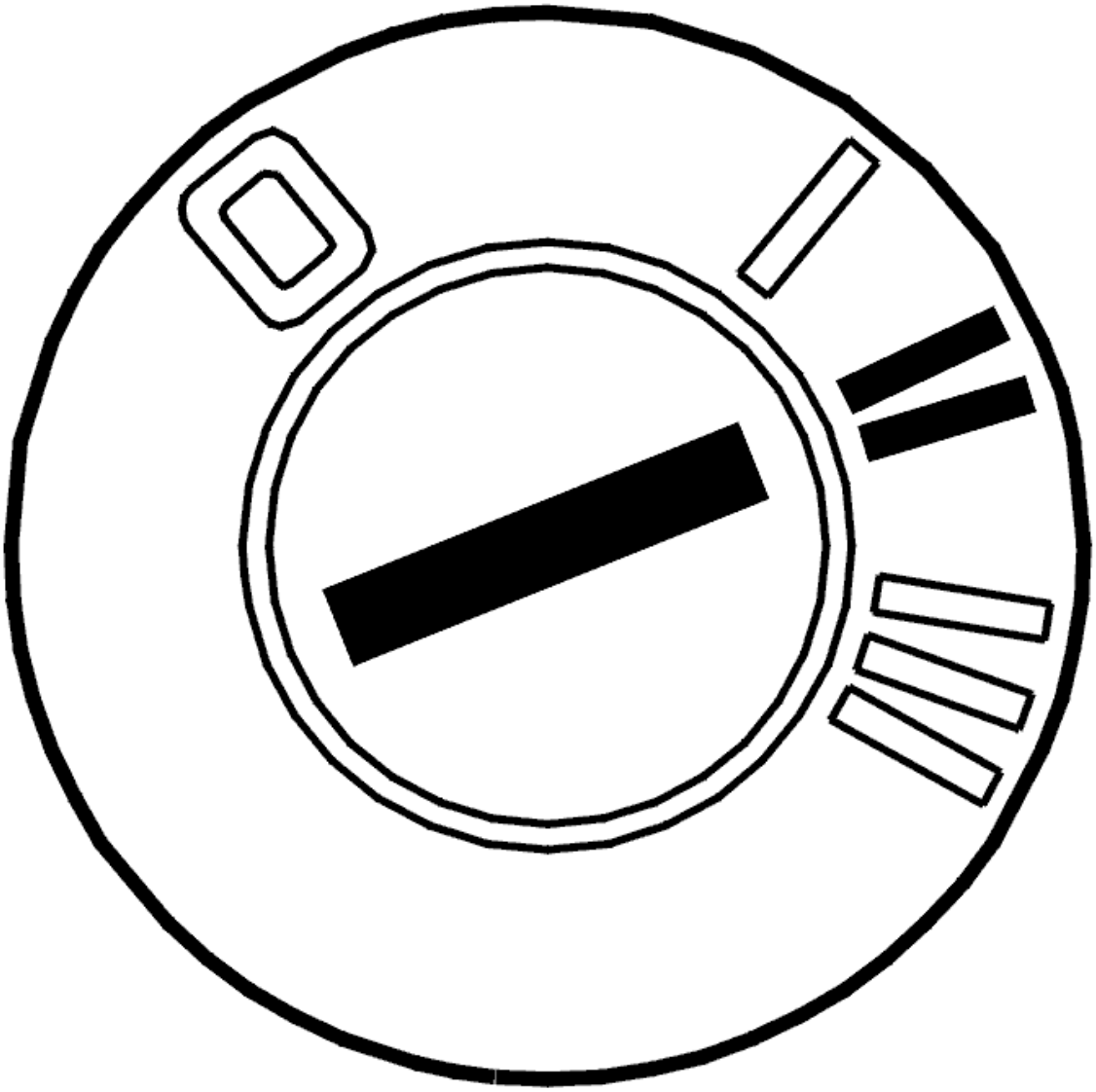

Fig. 252: Identifying Ignition ON
Courtesy of VOLVO CARS CORPORATION

Checking the fault cause

Check the fault cause as follows:

1. Ignition off
2. Disconnect the MOST connector from the subwoofer module (SUB)
3. Connect the MOST cable to special tool see **9512867**
4. Ignition on
5. Activate the infotainment system
6. Check that the communication on the MOST network is functioning by reading off the status of the MOST locked parameter for at least 30 seconds. The parameter indicates whether the MOST network is closed and communication possible

7. If the parameter displays that the MOST network is not correctly connected, check the receiving control module in the same way as above.

The communication on the MOST network is working if the menu text is displayed. If this is the case, the fault cause is in the bypassed control module. Continue the fault-tracing by checking the component.

The communication on the MOST network is not working if the menu text is not displayed. The fault cause is then in the MOST cable for the next control module. Continue the fault-tracing by checking the fiber optic cable.

Checking cable

- Check the MOST connection. Check for dirt, loose connections and damage
- Replace the MOST cable if no fault is found in the MOST terminal.

Checking the component

- Check the power supply and the ground terminal for the subwoofer module (SUB)
- Check the MOST connection. Check for dirt, loose connections and damage
- Replace the subwoofer module (SUB) if no fault is found.

Click the VCT2000 symbol to read off the status of the MOST network.

Remedy as necessary.

Other information:

- To access or replace the subwoofer module (SUB), see **SUBWOOFER MODULE (SUB), REPLACING**
- For information about checking the power supply and ground terminal, see **CHECKING THE VOLTAGE / GROUND TERMINAL**
- For information about signals, see **SIGNAL SPECIFICATION**
- For information about checking and replacing the MOST cable, see **FIBER OPTIC CABLE HARNESS, REPAIRING**
- see **OPTICAL WIRING HARNESS CHECK**
- For information about location and order of control modules in the MOST network, see **LOCATION OF COMPONENTS** .

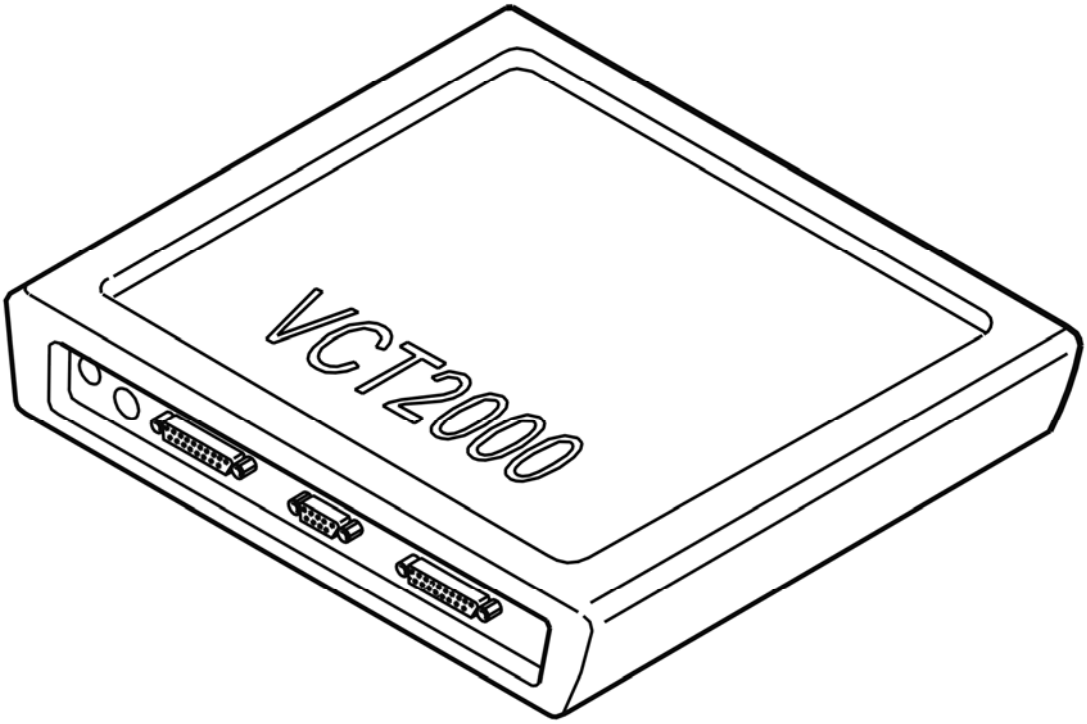

Fig. 253: Identifying VCT2000 Diagnostic Tool Symbol In VIDA
Courtesy of VOLVO CARS CORPORATION

- **Continue**

  Refer to **VERIFICATION**

CHECKING CABLE AND COMPONENT

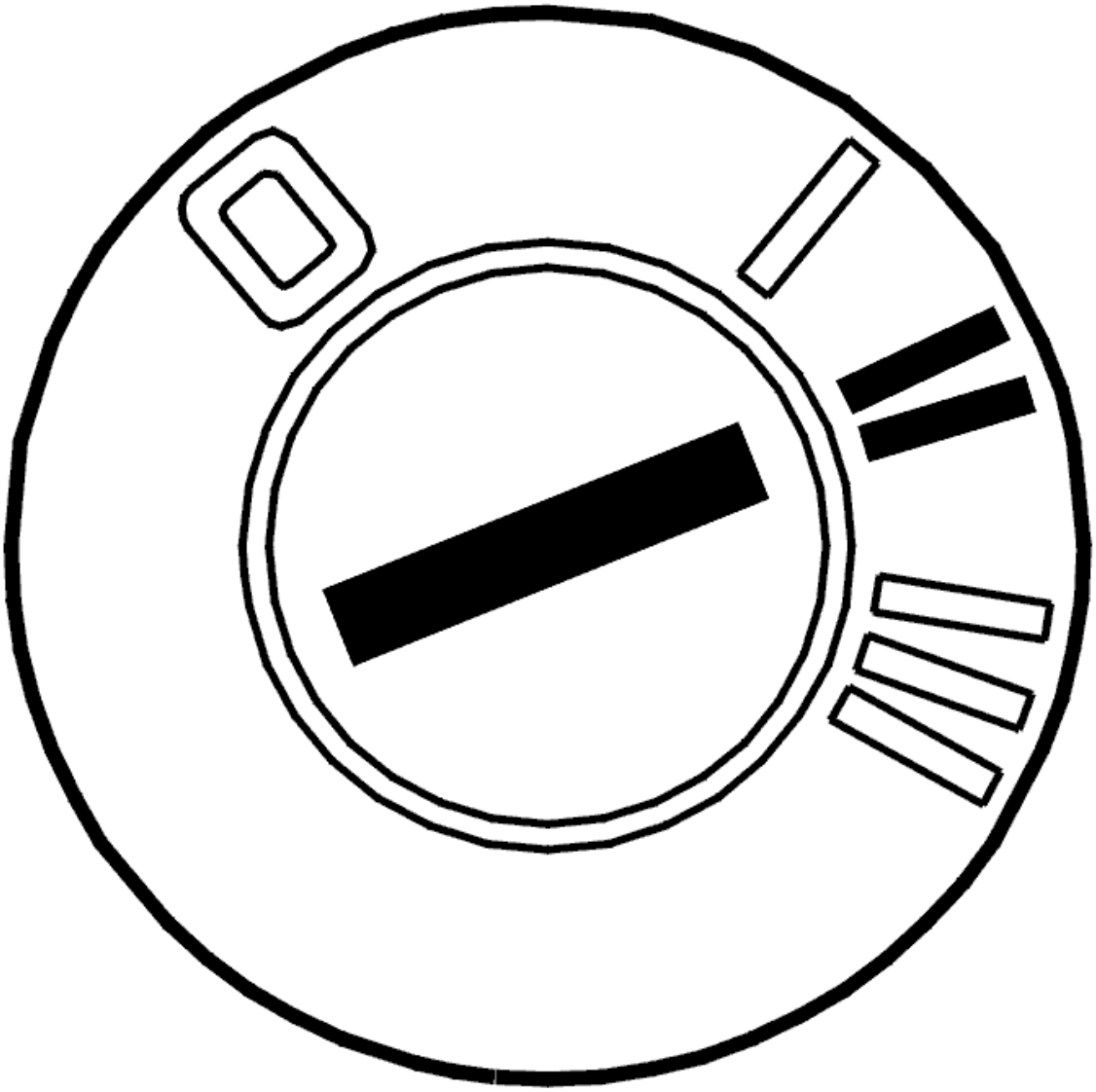

Fig. 254: Identifying Ignition ON
Courtesy of VOLVO CARS CORPORATION

Checking the fault cause

Check the fault cause as follows:

1. Ignition off
2. Disconnect the MOST connector from the audio module (AUD)
3. Connect the MOST cable to special tool see **9512867**
4. Ignition on
5. Activate the infotainment system
6. Check that the communication on the MOST network is functioning by reading off the status of the MOST locked parameter for at least 30 seconds. The parameter indicates whether the MOST network is closed and communication possible

7. If the parameter displays that the MOST network is not correctly connected, check the receiving control module in the same way as above.

The communication on the MOST network is working if the menu text is displayed. If this is the case, the fault cause is in the audio module (AUD). Continue the fault-tracing by checking the component.

The communication on the MOST network is not working if the menu text is not displayed. The fault cause is then in the MOST cable for the next control module. Continue the fault-tracing by checking the fiber optic cable.

Checking cable

- Check the MOST connection. Check for dirt, loose connections and damage
- Replace the MOST cable if no fault is found in the MOST terminal.

Checking the component

- Check the power supply and the ground terminal for the audio module (AUD)
- Check the MOST connection. Check for dirt, loose connections and damage
- Replace the audio module (AUD) if no fault is found.

Click the VCT2000 symbol to read off the status of the MOST network.

Remedy as necessary.

Other information:

- To access or replace the audio module (AUD), see **AUDIO MODULE (AUD), REPLACING**
- For information about checking the power supply and ground terminal, see **CHECKING THE VOLTAGE / GROUND TERMINAL**
- For information about signals, see **SIGNAL SPECIFICATION**
- For information about checking and replacing the MOST cable, see **FIBER OPTIC CABLE HARNESS, REPAIRING**
- see **OPTICAL WIRING HARNESS CHECK**
- For information about location and order of control modules in the MOST network, see **LOCATION OF COMPONENTS** .

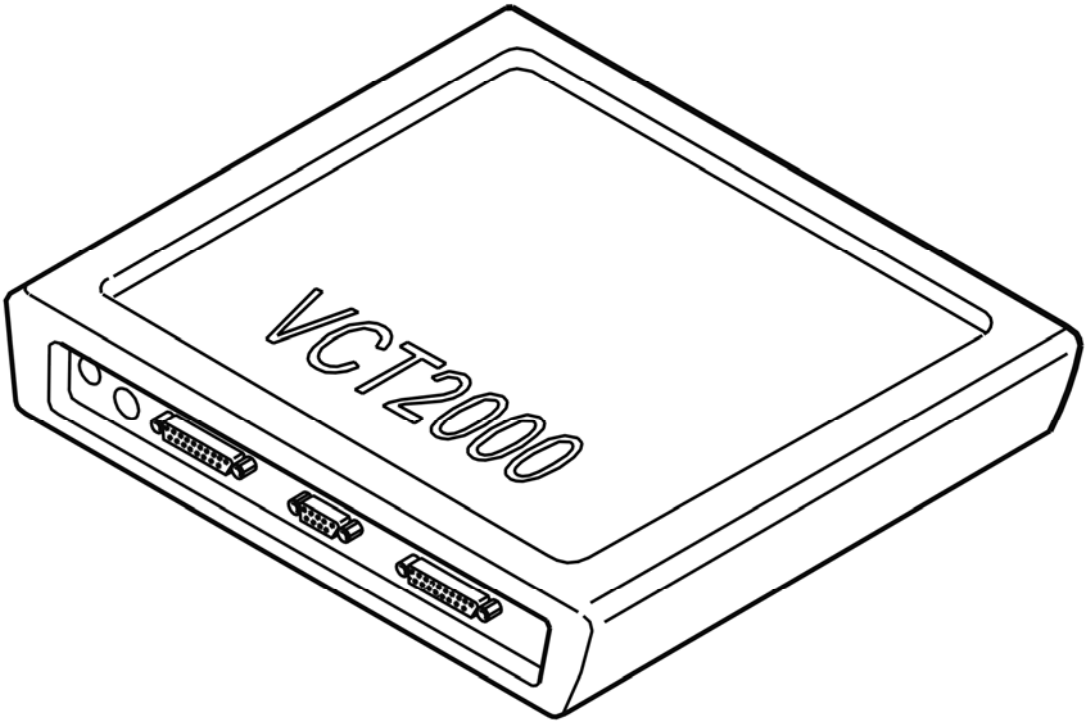

Fig. 255: Identifying VCT2000 Diagnostic Tool Symbol In VIDA
Courtesy of VOLVO CARS CORPORATION

- **Continue**

  Refer to **VERIFICATION**

CHECKING CABLE AND COMPONENT

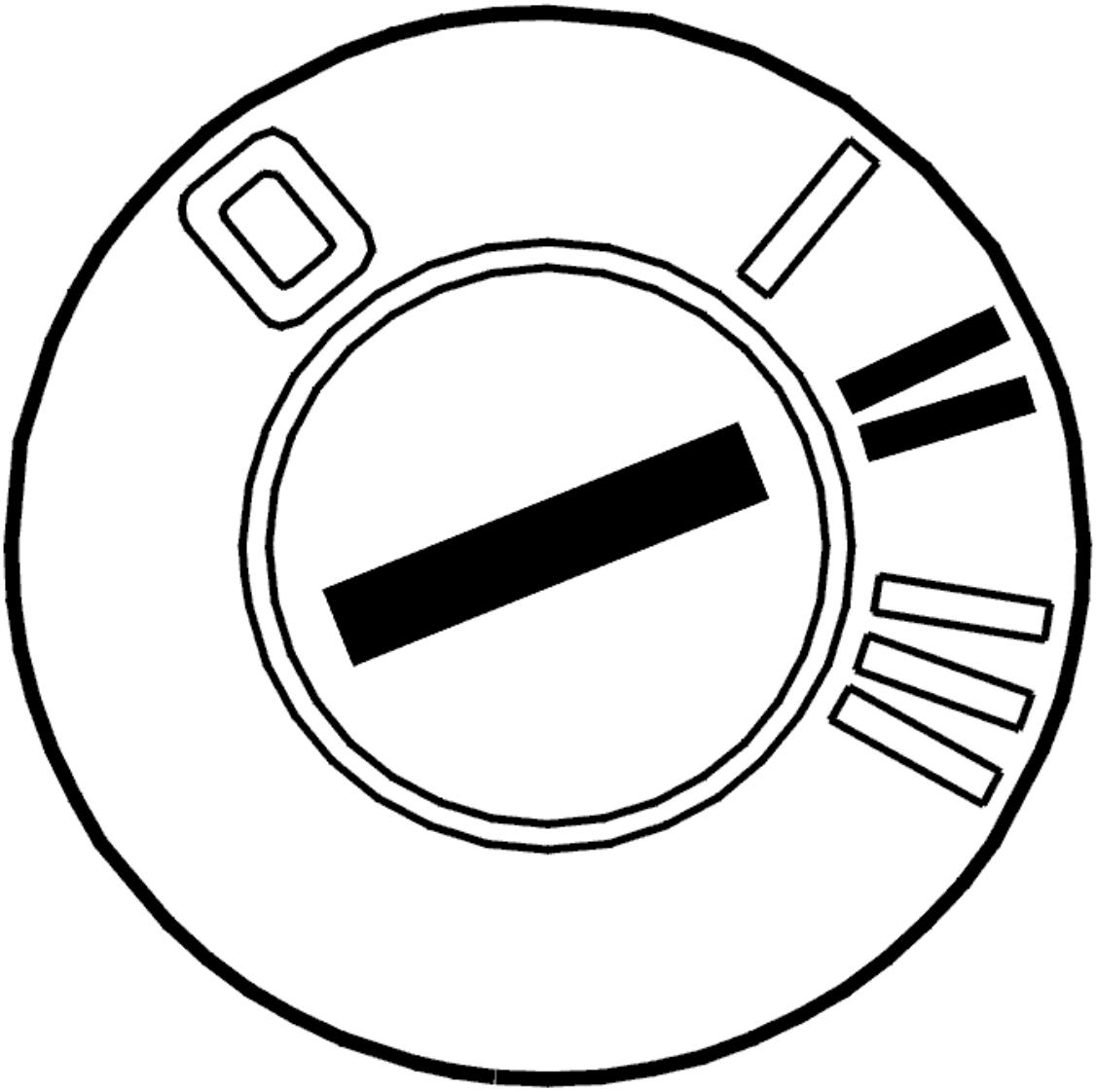

Fig. 256: Identifying Ignition ON
Courtesy of VOLVO CARS CORPORATION

Checking the fault cause

Check the fault cause as follows:

1. Ignition off
2. Disconnect the MOST connector from the CD player module (MP2)
3. Connect the MOST cable to special tool see **9512867**
4. Ignition on
5. Activate the infotainment system
6. Check that the communication on the MOST network is functioning by reading off the status of the MOST locked parameter for at least 30 seconds. The parameter indicates whether the MOST network is closed and communication possible

7. If the parameter displays that the MOST network is not correctly connected, check the receiving control module in the same way as above.

The communication on the MOST network is working if the menu text is displayed. The fault cause is then in the CD module (MP2). Continue the fault-tracing by checking the component.

The communication on the MOST network is not working if the menu text is not displayed. The fault cause is then in the MOST cable for the next control module. Continue the fault-tracing by checking the fiber optic cable.

Checking cable

- Check the MOST connection. Check for dirt, loose connections and damage
- Replace the MOST cable if no fault is found in the MOST terminal.

Checking the component

- Check the power supply and the ground terminal for the CD player module (MP2)
- Check the MOST connection. Check for dirt, loose connections and damage
- Replace the CD player module (MP2) if no fault is found.

Click the VCT2000 symbol to read off the status of the MOST network.

Remedy as necessary.

Other information:

- To access or replace the CD module (MP2), see **MINIDISC / CD CONTROL MODULE, REPLACING**
- For information about checking the power supply and ground terminal, see **CHECKING THE POWER SUPPLY AND GROUND TERMINALS**
- For information about signals, see **SIGNAL SPECIFICATION**
- For information about checking and replacing the MOST cable, see **FIBER OPTIC CABLE HARNESS, REPAIRING**
- see **OPTICAL WIRING HARNESS CHECK**
- For information about location and order of control modules in the MOST network, see **LOCATION OF COMPONENTS** .

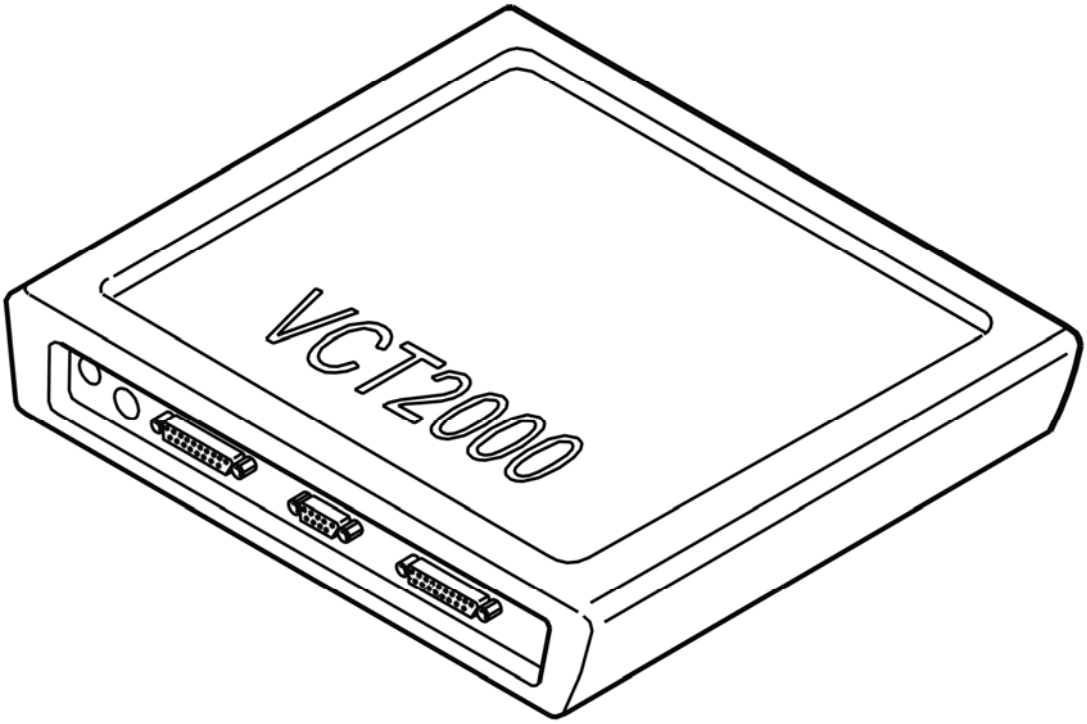

Fig. 257: Identifying VCT2000 Diagnostic Tool Symbol In VIDA
Courtesy of VOLVO CARS CORPORATION

- **Continue**

  Refer to **VERIFICATION**

CHECKING CABLE AND COMPONENT

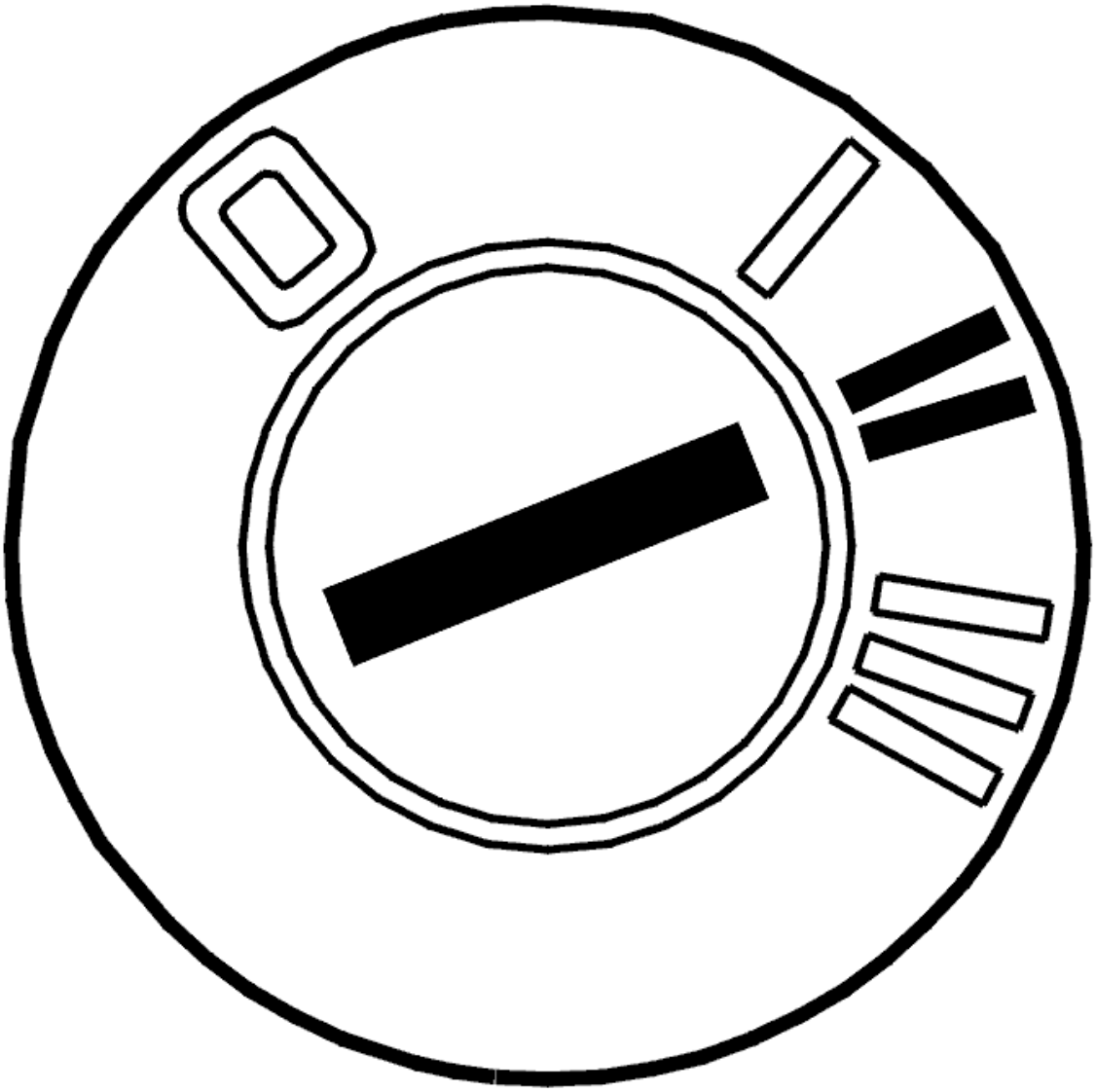

Fig. 258: Identifying Ignition ON
Courtesy of VOLVO CARS CORPORATION

Checking the fault cause

Check the fault cause as follows:

1. Ignition off
2. Disconnect the MOST connector from the phone module (PHM)
3. Connect the MOST cable to special tool see **9512867**
4. Ignition on
5. Activate the infotainment system
6. Check that the communication on the MOST network is functioning by reading off the status of the MOST locked parameter for at least 30 seconds. The parameter indicates whether the MOST network is closed and communication possible

7. If the parameter displays that the MOST network is not correctly connected, check the receiving control module in the same way as above.

The communication on the MOST network is working if the menu text is displayed. If this is the case, the fault cause is in the phone module (PHM). Continue the fault-tracing by checking the component.

The communication on the MOST network is not working if the menu text is not displayed. The fault cause is then in the MOST cable for the next control module. Continue the fault-tracing by checking the fiber optic cable.

Checking cable

- Check the MOST connection. Check for dirt, loose connections and damage
- Replace the MOST cable if no fault is found in the MOST terminal.

Checking the component

- Check the power supply and the ground terminal for the phone module (PHM)
- Check the MOST connection. Check for dirt, loose connections and damage
- Replace the phone module (PHM) if no fault is found.

Click the VCT2000 symbol to read off the status of the MOST network.

Remedy as necessary.

Other information:

- see **PHONE MODULE (PHM), REPLACING (2006-2010)**
- see **CHECKING THE SUPPLY VOLTAGE/GROUND TERMINAL**
- see **SIGNAL SPECIFICATION**
- For information about checking and replacing the MOST cable, see **FIBER OPTIC CABLE HARNESS, REPAIRING**
- see **OPTICAL WIRING HARNESS CHECK**
- For information about location and order of control modules in the MOST network, see **LOCATION OF COMPONENTS** .

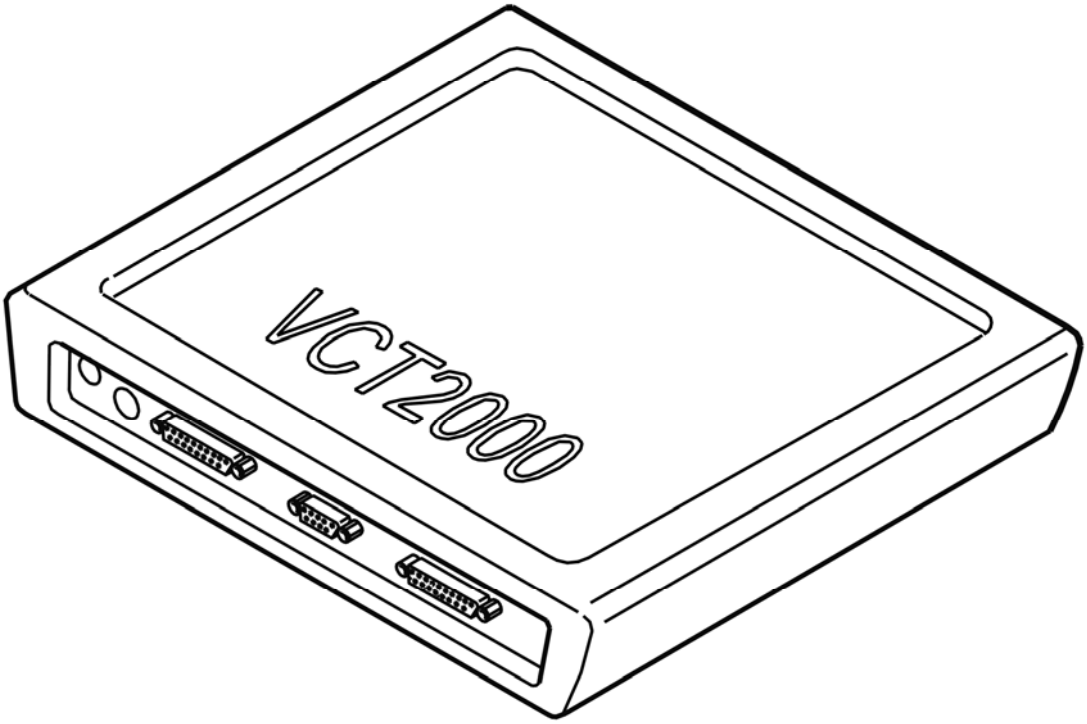

Fig. 259: Identifying VCT2000 Diagnostic Tool Symbol In VIDA
Courtesy of VOLVO CARS CORPORATION

- **Continue**

  Refer to **VERIFICATION**

CHECKING CABLE AND COMPONENT

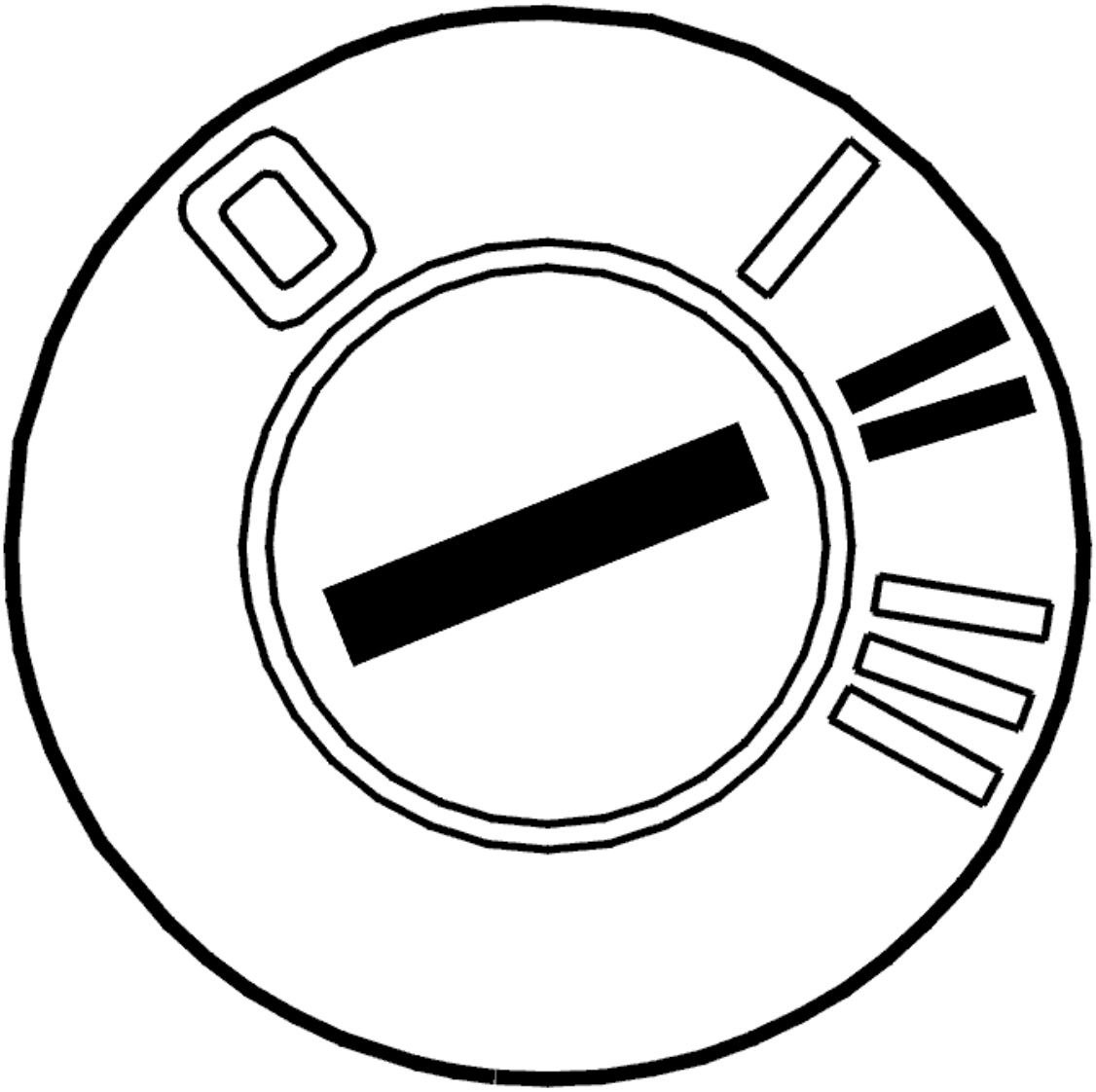

Fig. 260: Identifying Ignition ON
Courtesy of VOLVO CARS CORPORATION

Checking the fault cause

Check the fault cause as follows:

1. Ignition off
2. Disconnect the MOST connector from the MD player module (MP1)
3. Connect the MOST cable to special tool see **9512867**
4. Ignition on
5. Activate the infotainment system
6. Check that the communication on the MOST network is functioning by reading off the status of the MOST locked parameter for at least 30 seconds. The parameter indicates whether the MOST network is closed and communication possible

7. If the parameter displays that the MOST network is not correctly connected, check the receiving control module in the same way as above.

The communication on the MOST network is working if the menu text is displayed. The fault cause is then in the MD player module (MP1). Continue the fault-tracing by checking the component.

The communication on the MOST network is not working if the menu text is not displayed. The fault cause is then in the MOST cable for the next control module. Continue the fault-tracing by checking the fiber optic cable.

Checking cable

- Check the MOST connection. Check for dirt, loose connections and damage
- Replace the MOST cable if no fault is found in the MOST terminal.

Checking the component

- Check the power supply and the ground terminal for the MD player module (MP1)
- Check the MOST connection. Check for dirt, loose connections and damage
- Replace the MD player module (MP1) if no fault is found.

Click the VCT2000 symbol to read off the status of the MOST network.

Remedy as necessary.

Other information:

- To access / replace the MD module (MP1), see **MINIDISC / CD CONTROL MODULE, REPLACING**
- For information about checking the power supply and ground terminal, see **CHECKING THE POWER SUPPLY AND GROUND TERMINALS**
- For information about signals, see **SIGNAL SPECIFICATION**
- For information about checking and replacing the MOST cable, see **FIBER OPTIC CABLE HARNESS, REPAIRING**
- see **OPTICAL WIRING HARNESS CHECK**
- For information about location and order of control modules in the MOST network, see **LOCATION OF COMPONENTS** .

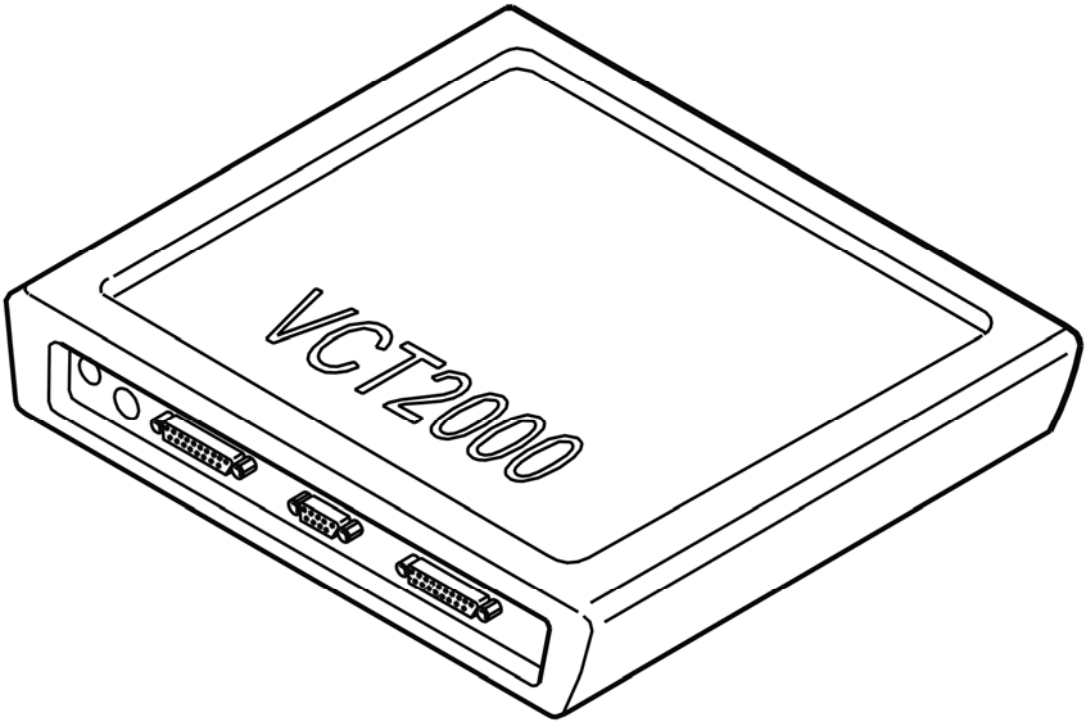

Fig. 261: Identifying VCT2000 Diagnostic Tool Symbol In VIDA
Courtesy of VOLVO CARS CORPORATION

- **Continue**

  Refer to **VERIFICATION**

CHECKING CABLE AND COMPONENT

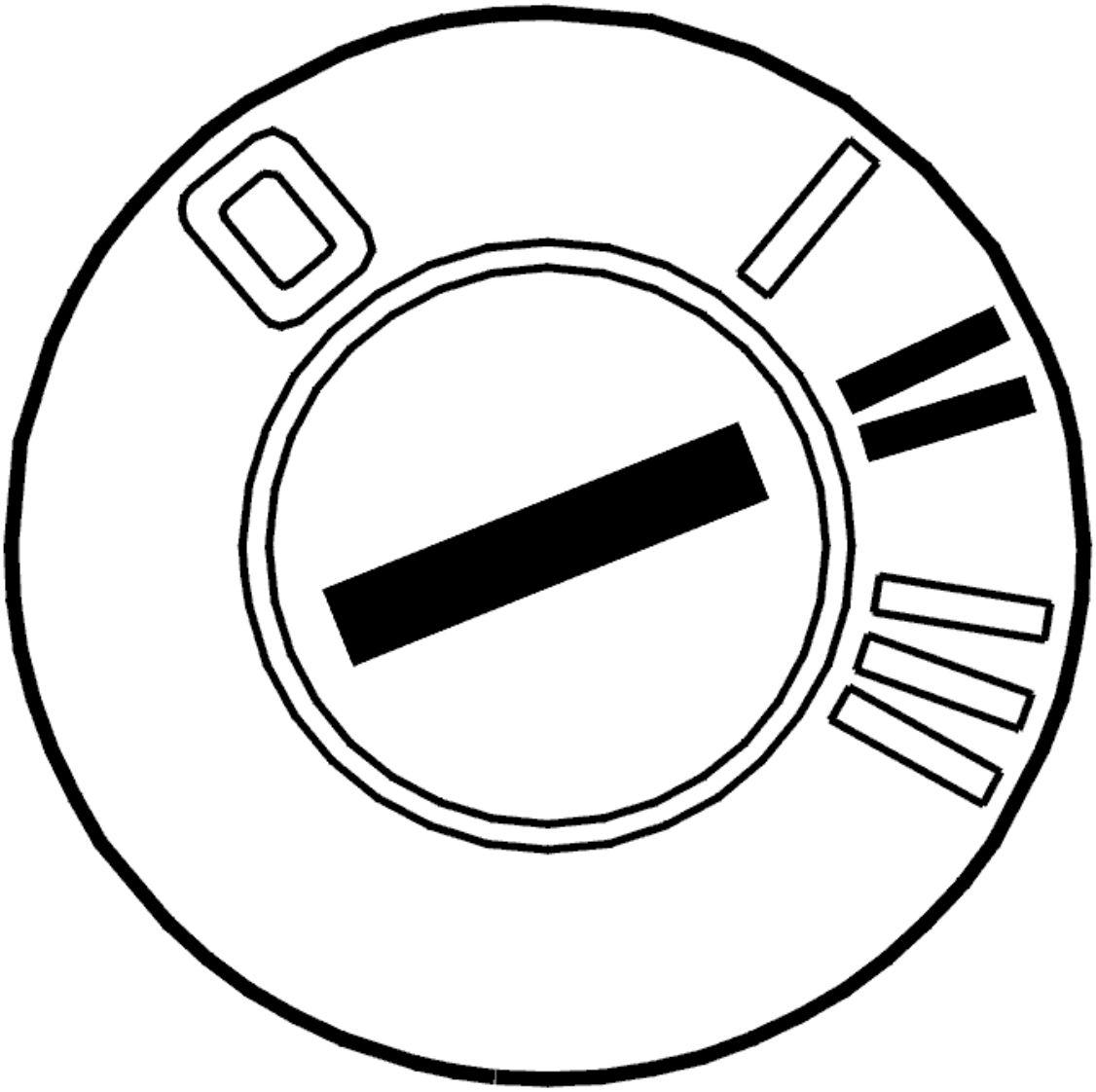

Fig. 262: Identifying Ignition ON
Courtesy of VOLVO CARS CORPORATION

Checking the fault cause

Check the fault cause as follows:

1. Ignition off
2. Disconnect the MOST connector from the multimedia module (MMM)
3. Connect the MOST cable to special tool see **9512867**
4. Ignition on
5. Activate the infotainment system
6. Check that the communication on the MOST network is functioning by reading off the status of the MOST locked parameter for at least 30 seconds. The parameter indicates whether the MOST network is closed and communication possible

7. If the parameter displays that the MOST network is not correctly connected, check the receiving control module in the same way as above.

The communication on the MOST network is working if the menu text is displayed. If this is the case, the fault cause is in the multimedia module (MMM). Continue the fault-tracing by checking the component.

The communication on the MOST network is not working if the menu text is not displayed. The fault cause is then in the MOST cable for the next control module. Continue the fault-tracing by checking the fiber optic cable.

Checking cable

- Check the MOST connection. Check for dirt, loose connections and damage
- Replace the MOST cable if no fault is found in the MOST terminal.

Checking the component

- Check the power supply and the ground terminal for the multimedia module (MMM)
- Check the MOST connection. Check for dirt, loose connections and damage
- Replace the multimedia module (MMM) if no fault is found.

Click the VCT2000 symbol to read off the status of the MOST network.

Remedy as necessary.

Other information:

- To access / replace the multimedia module (MMM), see **MULTIMEDIA MODULE (MMM), REPLACING**
- For information about checking the power supply and ground terminal, see **CHECKING THE VOLTAGE / GROUND TERMINAL (2003-2006)**
- For information about signals, see **SIGNAL SPECIFICATION**
- For information about checking and replacing the MOST cable, see **FIBER OPTIC CABLE HARNESS, REPAIRING**
- see **OPTICAL WIRING HARNESS CHECK**
- For information about location and order of control modules in the MOST network, see **LOCATION OF COMPONENTS** .

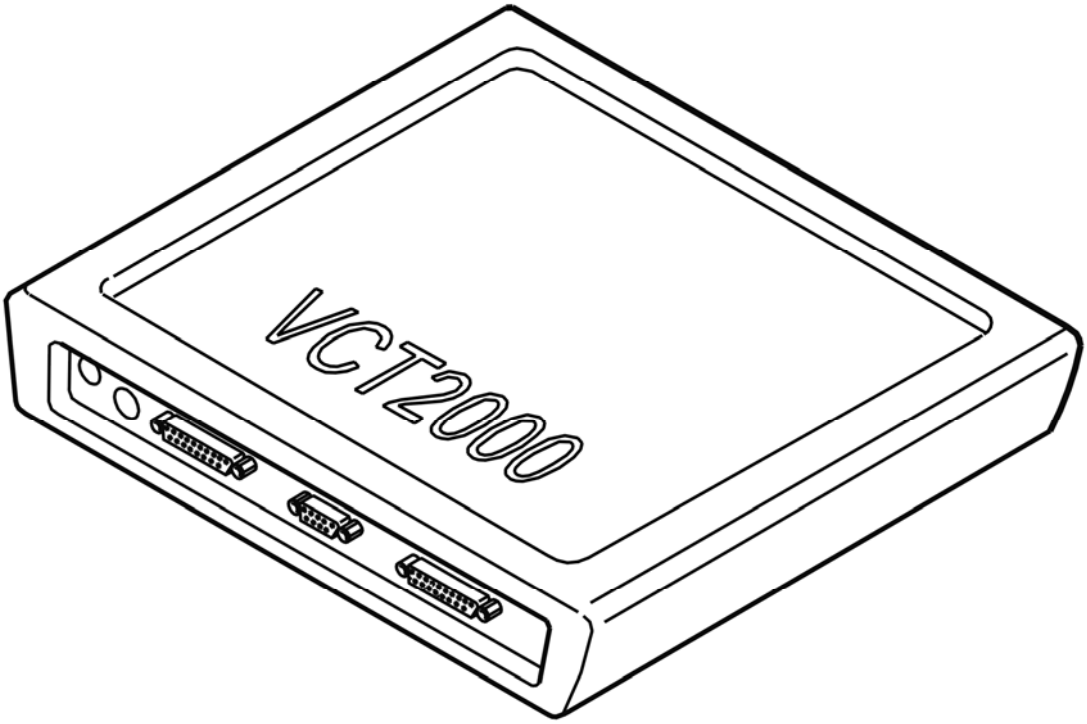

Fig. 263: Identifying VCT2000 Diagnostic Tool Symbol In VIDA
Courtesy of VOLVO CARS CORPORATION

- **Continue**

  Refer to **VERIFICATION**

CHECKING CABLE AND COMPONENT

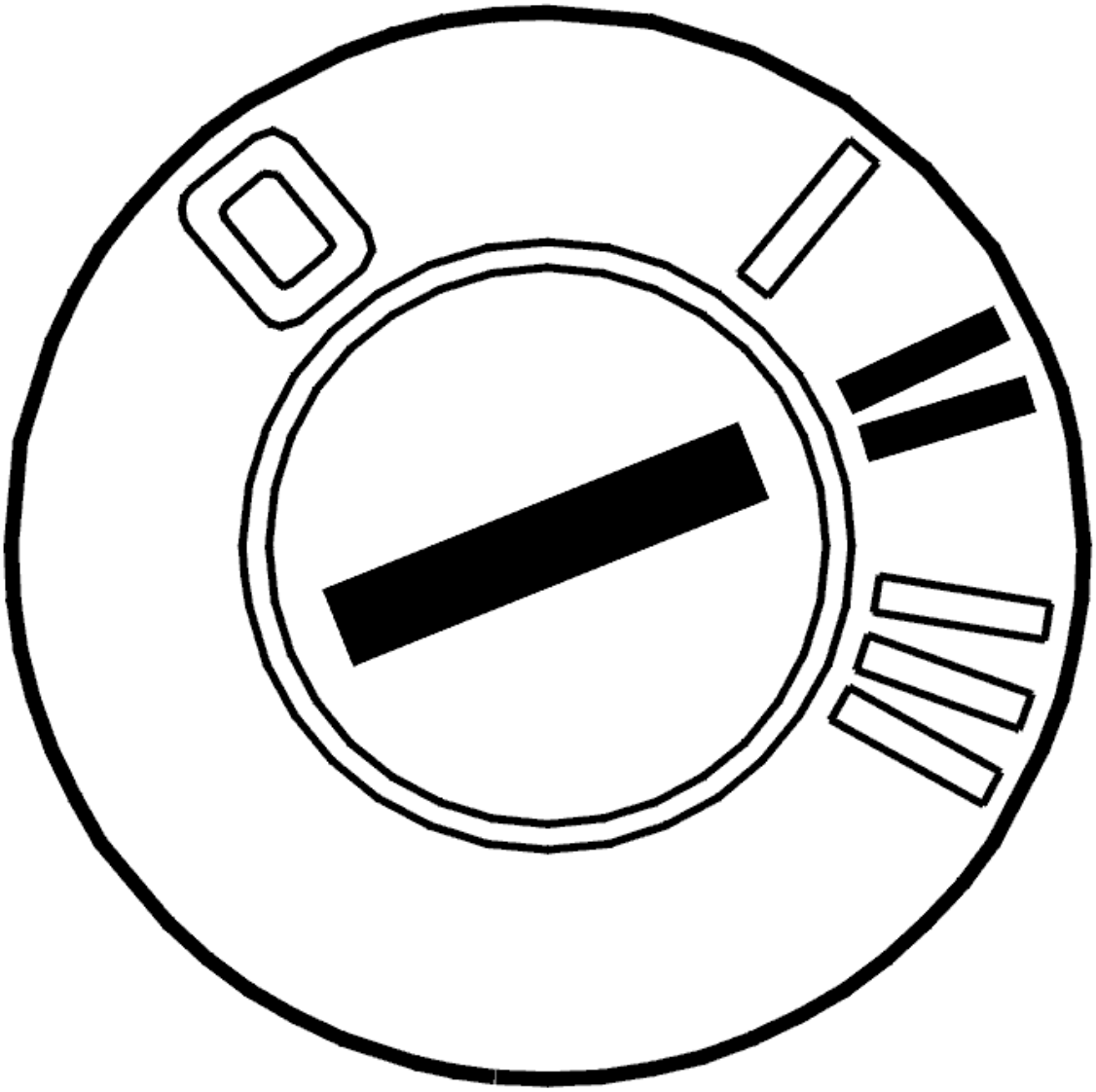

Fig. 264: Identifying Ignition ON
Courtesy of VOLVO CARS CORPORATION

- Ignition off
- Disconnect the MOST cable connector from the infotainment control module (ICM)
- Ignition on
- Activate the infotainment system.

  Check visually whether the infotainment control module (ICM) is emitting light from the MOST connector.

  The control module is defective if the infotainment control module (ICM) is not emitting light.

  If the infotainment control module (ICM) is transmitting light, the fault is in the MOST cable for the next control module.

Check the MOST connection. Check for dirt, loose connections and damage.

Replace the MOST cable if no fault is found in the MOST terminal.

Remedy as necessary.

Other information:

- To access / replace the infotainment control module (ICM), see **INFOTAINMENT CONTROL MODULE (ICM), REPLACING**
- For information about checking and replacing the MOST cable, see **FIBER OPTIC CABLE HARNESS, REPAIRING**
- For information about location and order of control modules in the MOST network, see **LOCATION OF COMPONENTS** .

- **Continue**

  Refer to **VERIFICATION**

VERIFICATION

VERIFICATION

HINT: After carrying out the repair, check that the fault has been remedied.

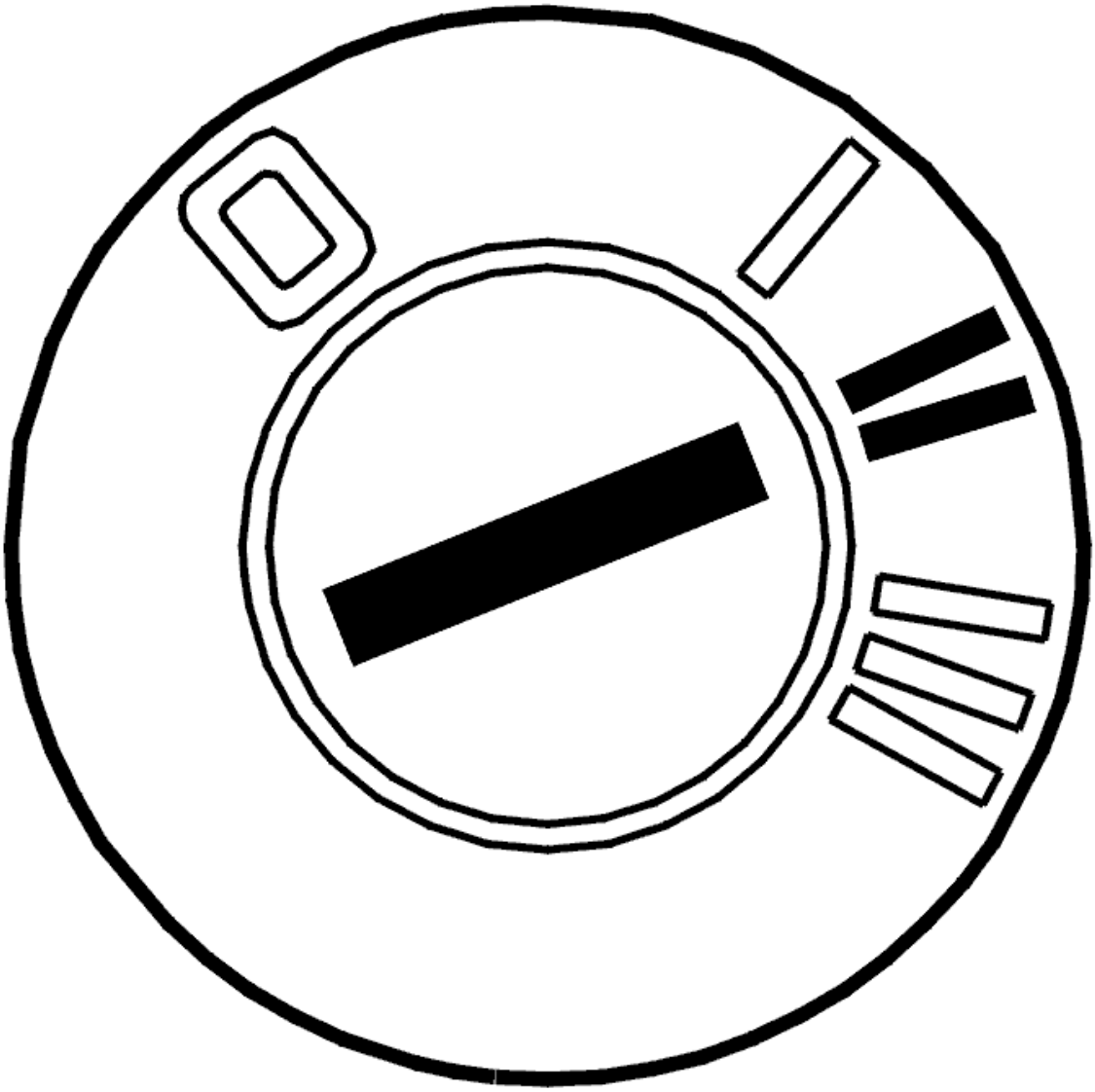

Fig. 265: Identifying Ignition ON
Courtesy of VOLVO CARS CORPORATION

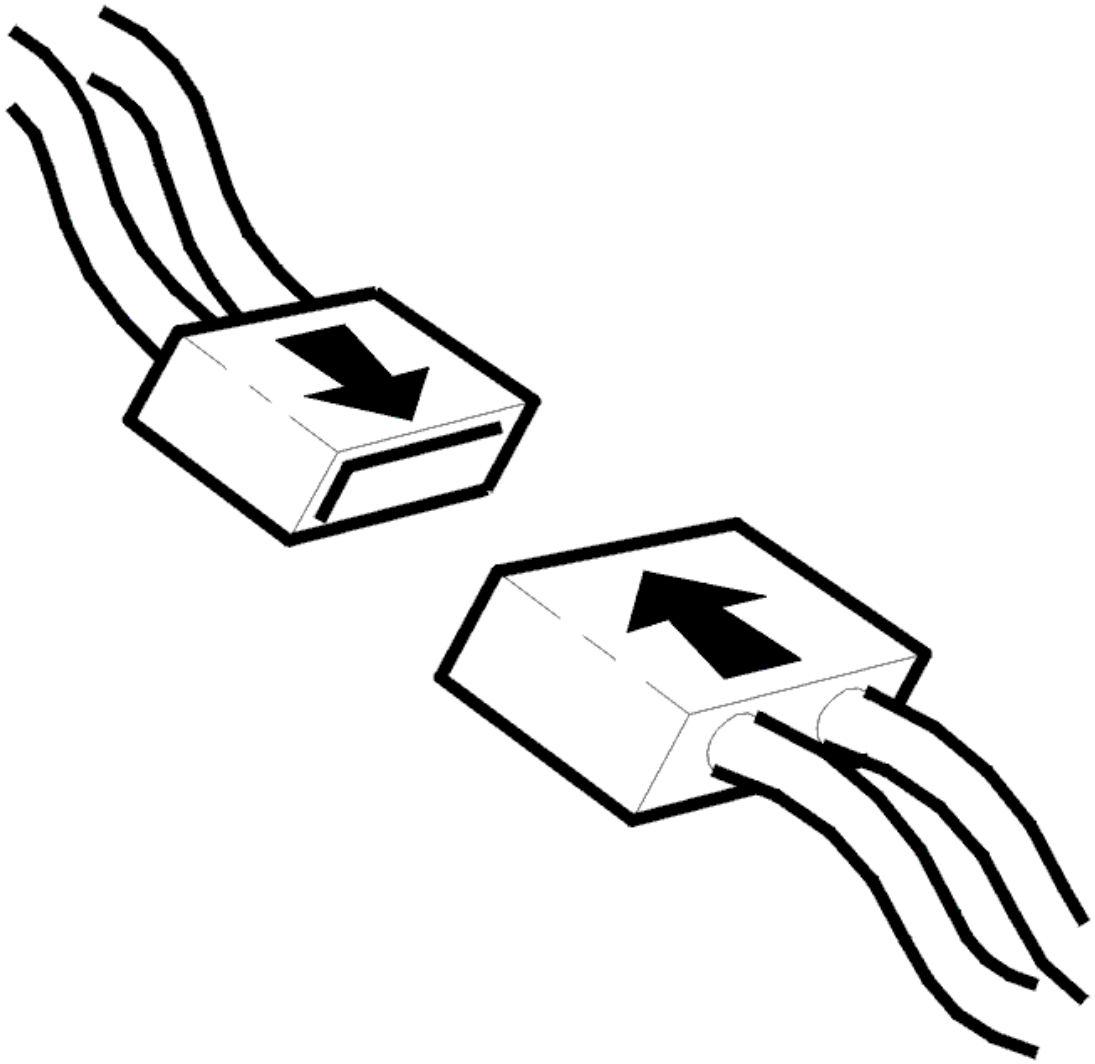

Fig. 266: Connecting Connector
Courtesy of VOLVO CARS CORPORATION

- Ignition off
- Reinstall the connectors, components etc.
- Ignition on.

  Activate the infotainment system and select the radio.

  Check whether there is sound from the radio in the loudspeakers.

Is the sound of the radio coming through the loudspeakers?

- **YES**

VERIFIED: Troubleshooting has been completed.

- **NO**

  Refer to **INFORMATION**

INFORMATION

FAULT-TRACING INFORMATION

The fault should have been detected and remedied. As this is not the case fault-tracing has failed.

Exit fault-tracing for this diagnostic trouble code (DTC) or make another attempt.

ACCESSORIES AND BODY, CAB

Media, Communication And Navigation - Diagnostic Trouble Codes and Associated Procedures

ICM-DC02: CONTROL MODULE COMMUNICATION. SIGNAL MISSING (2009-2010)

DIAGNOSTIC TROUBLE CODE (DTC) INFORMATION ICM-DC02

see **DIAGNOSTIC TROUBLE CODE (DTC) INFORMATION ICM-DC02**

NO COMMUNICATION

see **NO COMMUNICATION**

ICM-DC02: CONTROL MODULE COMMUNICATION. SIGNAL MISSING (2011-2012)

DIAGNOSTIC TROUBLE CODE (DTC) INFORMATION ICM-DC02

see **DIAGNOSTIC TROUBLE CODE (DTC) INFORMATION ICM-DC02**

NO COMMUNICATION

see **NO COMMUNICATION**

ICM-E001: CONTROL MODULE COMMUNICATION. INTERNAL FAULT (2003-2011)

DIAGNOSTIC TROUBLE CODE (DTC) INFORMATION ICM-E001

Condition

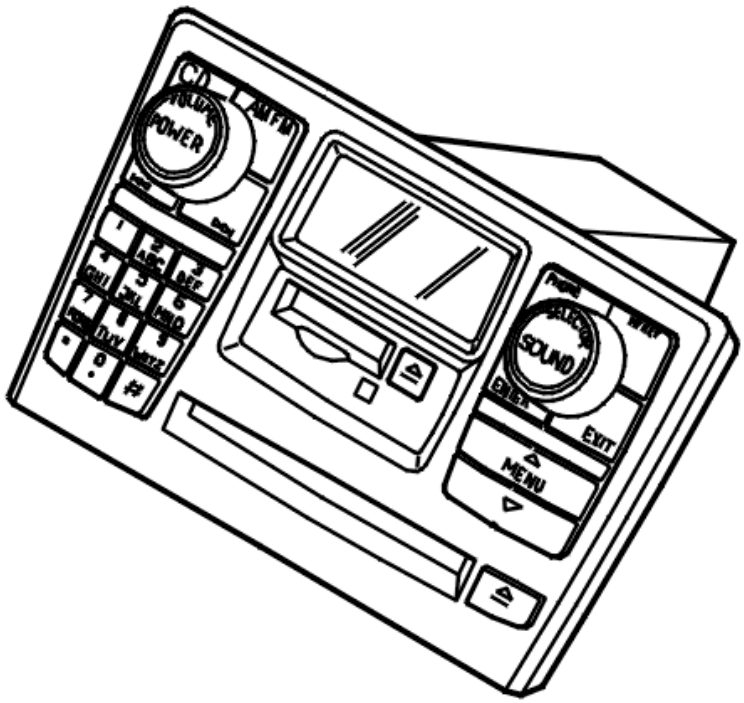

Fig. 1: Identifying Control Module Communication
Courtesy of VOLVO CARS CORPORATION

The control modules transmit and receive information via a standardized serial communication method - CAN (Control Area Network). The diagnostic trouble code (DTC) is stored if the control module registers serious interference (CAN communication blocked).

NOTE: **In the event of system communication problems, it is not possible to communicate with the control module. Therefore it will only be possible to read off the diagnostic trouble code (DTC) if the fault is intermittent.**

Substitute Value

- The control module shuts itself off ("bus-off")

  HINT: The control module will remain shut off until the power supply is broken (15, 30, X). When the power supply is connected the control module will make a new attempt to communicate.

Possible Source

- Short-circuit between the control area network (CAN) wiring
- Open-circuit in the control area network (CAN) wiring
- Internal fault in the control module

- Internal fault in another control module in the same part of the control area network (CAN).

Fault symptom[s]

- Display does not light
- Audio unit not working
- The radio buttons on the steering wheel do not function
- The navigation buttons on the steering wheel do not function.

INTERNAL FAULT

see **INTERNAL FAULT**

ICM-E003: CONFIGURATION FAULT. SOFTWARE FAULT (2003-2011)

DIAGNOSTIC TROUBLE CODE (DTC) INFORMATION ICM-E003

Condition

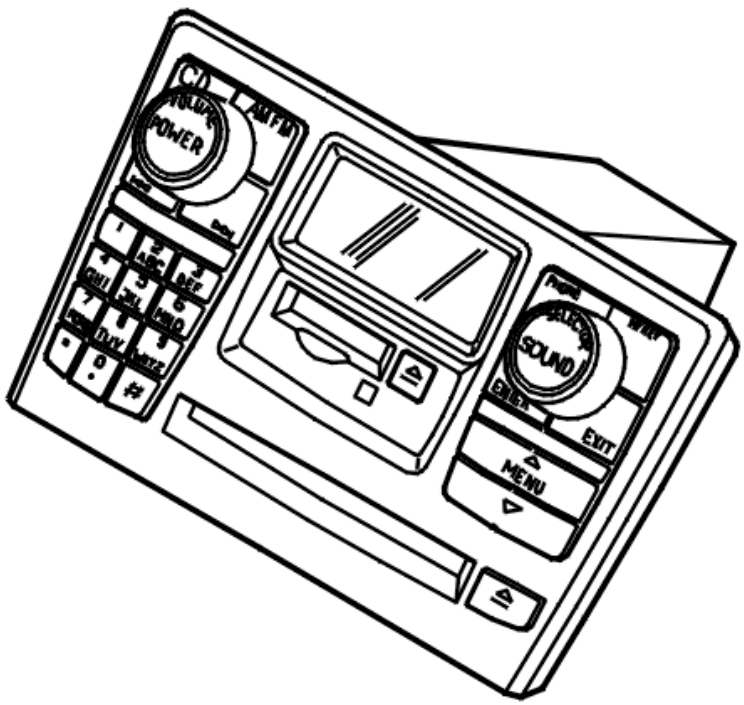

Fig. 2: Identifying Control Module Communication
Courtesy of VOLVO CARS CORPORATION

The control module compares its configuration ID with the signal configuration transmitted on the control area network (CAN) by the central electronic module (CEM). If the configuration IDs do not correspond the fault code is stored. The diagnostic trouble code (DTC) is also stored if the communication between the control module and the central electronic module (CEM) is interrupted.

NOTE: **In the event of an open-circuit in both the control area network (CAN) cables, it is not possible to communicate with the control module. Therefore it will only be possible to read off the diagnostic trouble code (DTC) if this type of fault is intermittent. When the diagnostic trouble code (DTC) is stored, the control module responds to the diagnostic command, however normal control area network (CAN) communication does not work. ("Expulsion mode")**

Substitute Value

- None.

Possible Source

- Faulty control area network (CAN) configuration ID. (The node is not intended for this car, for example a used control module with different software/hardware.)
- Open-circuit in the control area network (CAN) wiring between the control module and the central electrical module (CEM).

Fault symptom[s]

- Display does not light
- Audio unit not working
- The radio buttons on the steering wheel do not function
- The navigation buttons on the steering wheel do not function.

CONFIGURATION FAULT

CHECKING FOR PERMANENT OR INTERMITTENT FAULTS

Check to, see if any symptoms reported by the customer remain.

Are any symptoms reported by the customer still present?

- **YES**

  Refer to **INFORMATION**

- **NO**

  Refer to **INTERMITTENT FAULT**

INFORMATION

The control module has registered a software fault. The software does not correspond to the other configurations in the car.

A possible cause of the fault is that a used control module has been installed in the car. If this is the case, the cause of the fault has probably been discovered.

New software, corresponding to the configuration of the rest of the car, can be downloaded after consultation with the customer.

INTERMITTENT FAULT

The control module previously registered a software fault. The software did not correspond to the configuration of the rest of the car. The control module has detected that the fault is no longer present.

ICM-E010: POWER SUPPLY. SIGNAL TOO LOW (2003-2011)

DIAGNOSTIC TROUBLE CODE (DTC) INFORMATION ICM-E010

Condition

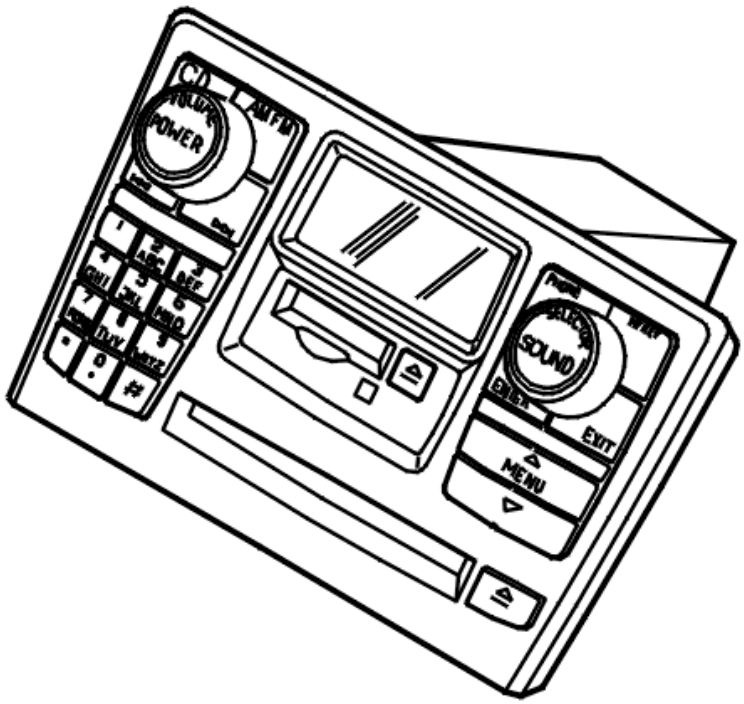

Fig. 3: Identifying Control Module Communication
Courtesy of VOLVO CARS CORPORATION

The infotainment control module (ICM) checks the power supply.

Diagnostic trouble code (DTC) ICM-E010 is stored if the control module registers that the power supply is more than 3 V below the supply to the central electronic module (CEM).

Diagnostic trouble codes (DTCs) can be detected with the ignition in positions I or II.

Substitute Value

- None.

Possible Source

- Open-circuit or short-circuit to ground in the power supply to the Infotainment Control Module (ICM)
- Contact resistance, oxidation or loose connections in the power supply to the control module
- Relay, infotainment defective.

Fault symptom[s]

- Audio unit not working
- The display does not light
- Functions in the infotainment system are not working
- No or reduced carphone functionality.

SIGNAL TOO LOW

CHECKING COMPONENTS AND WIRING

Check the connector on the infotainment control module (ICM). Check for contact resistance and oxidation and damage.

Check the fuse for the infotainment control module (ICM).

Check the relay for the infotainment system on the central electronic module (CEM).

HINT: A diagnostic trouble code (DTC) is stored in the central electronic module (CEM) if there is a fault in the deployment of the fuse for the infotainment system.

Check the power supply cable between the fuse for the infotainment system and relay terminal #3 and between relay terminal #1 and infotainment control module (ICM) terminal #1 (#A1). Check for an open-circuit. Check for a short-circuit to ground.

Check the ground lead between infotainment control module (ICM) terminal #10 (#A10) and the ground terminal. Check for an open-circuit. Check for a short-circuit to supply voltage. Also check the ground terminal for contact resistance and oxidation.

Remedy as necessary.

Other information:

- To access or replace the infotainment control module (ICM), see **INFOTAINMENT CONTROL MODULE (ICM), REPLACING**
- To connect the breakout box, see **CONNECTING THE BREAKOUT BOX**
- For information about signals, see **SIGNAL SPECIFICATION**
- see **CONTENTS**

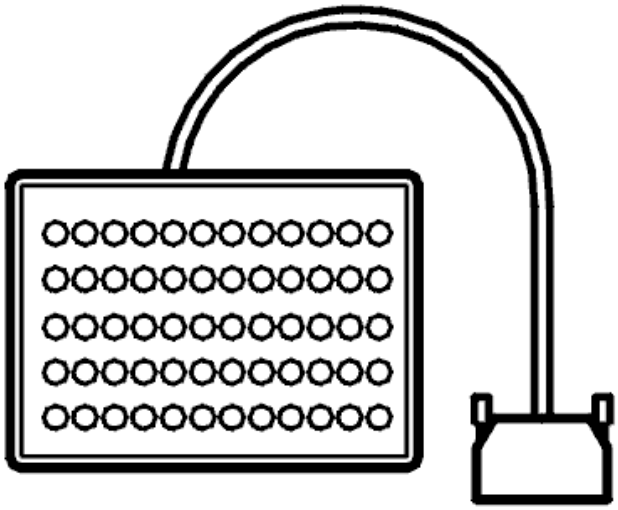

Fig. 4: Breakout Box
Courtesy of VOLVO CARS CORPORATION

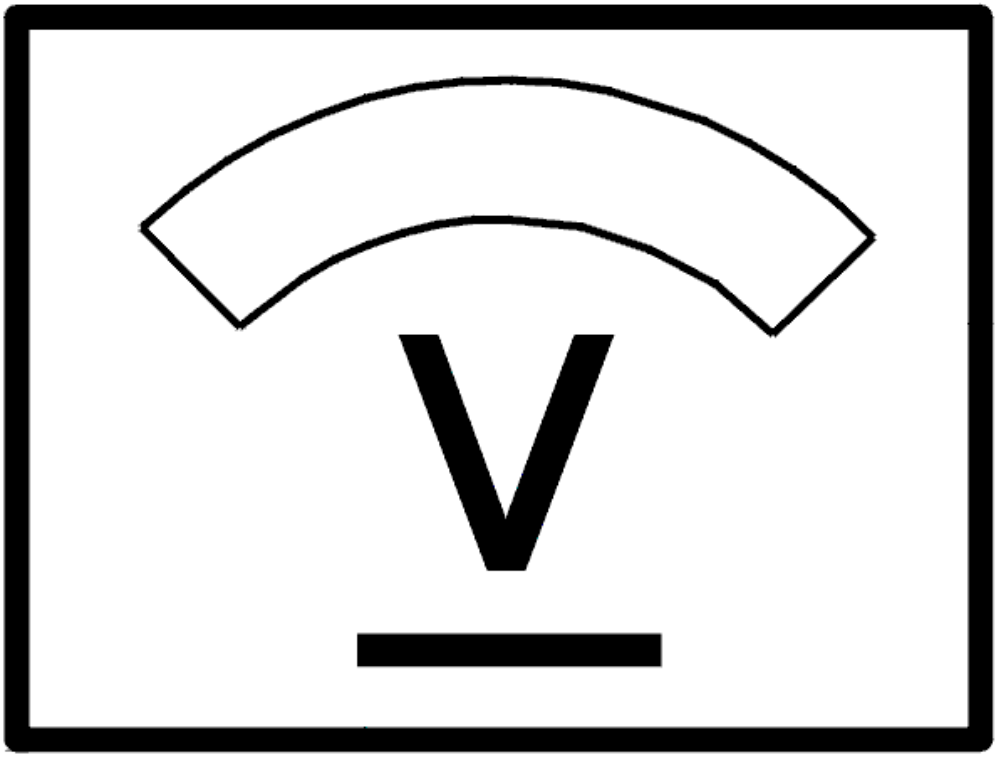

Fig. 5: Identifying Voltage Display
Courtesy of VOLVO CARS CORPORATION

- **Continue**

  Refer to **VERIFICATION**

VERIFICATION

HINT: After carrying out the repair, check that the fault has been remedied.

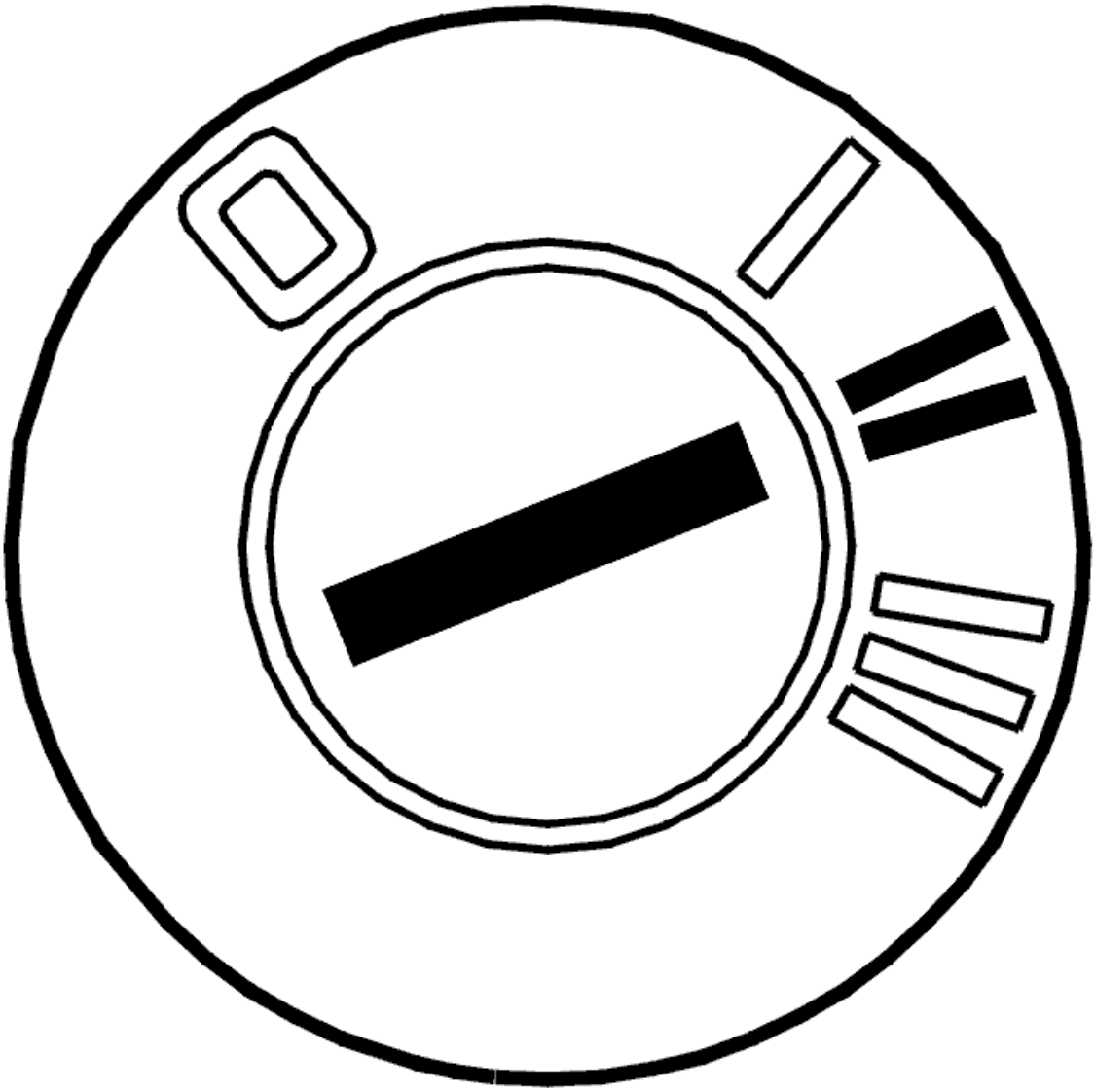

Fig. 6: Identifying Ignition ON
Courtesy of VOLVO CARS CORPORATION

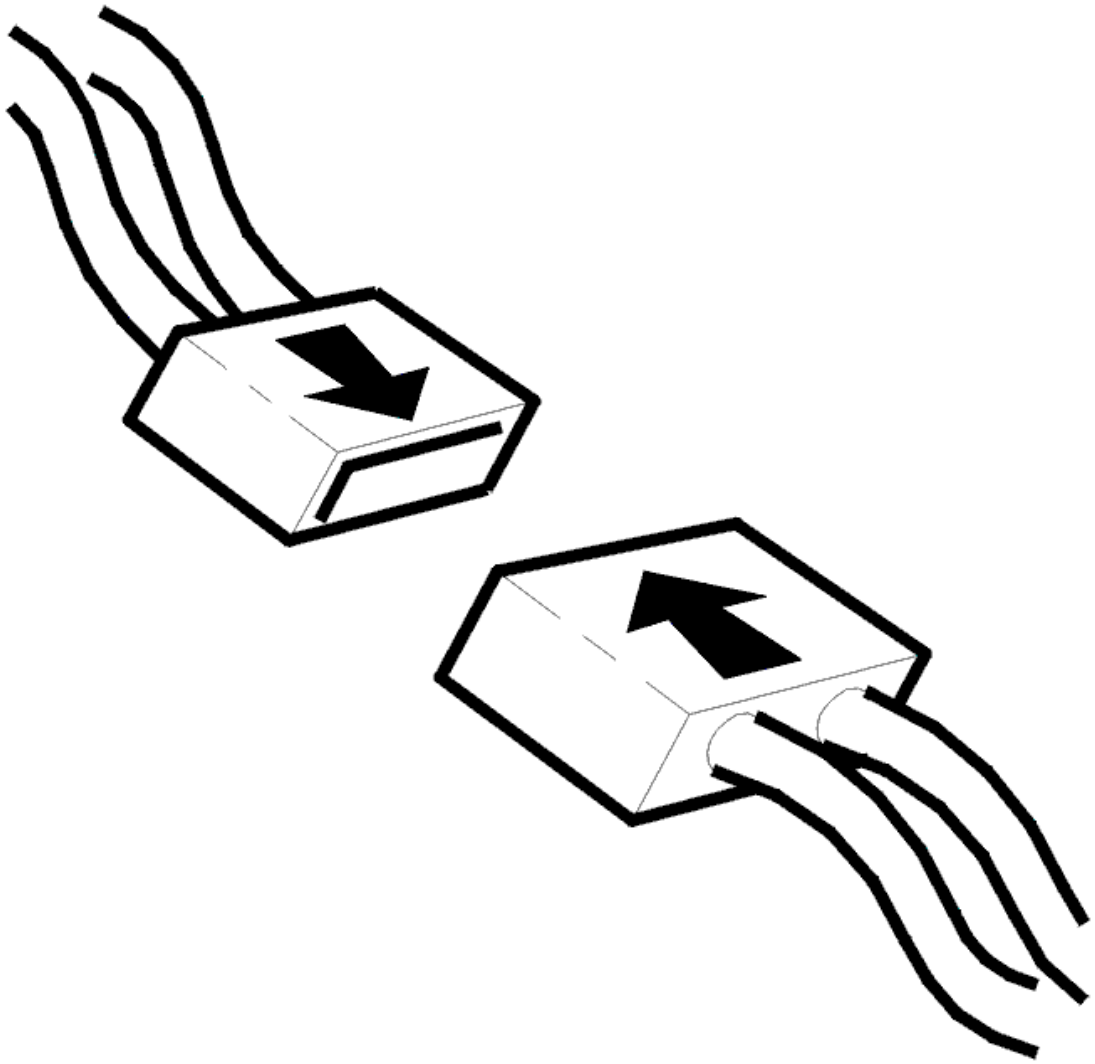

Fig. 7: Connecting Connector
Courtesy of VOLVO CARS CORPORATION

- Ignition off
- Reinstall the connectors, components etc.
- Ignition on.

  Read off the power supply to the infotainment control module (ICM) by clicking on the VCT2000 symbol.

  Check that the voltage is approximately battery voltage.

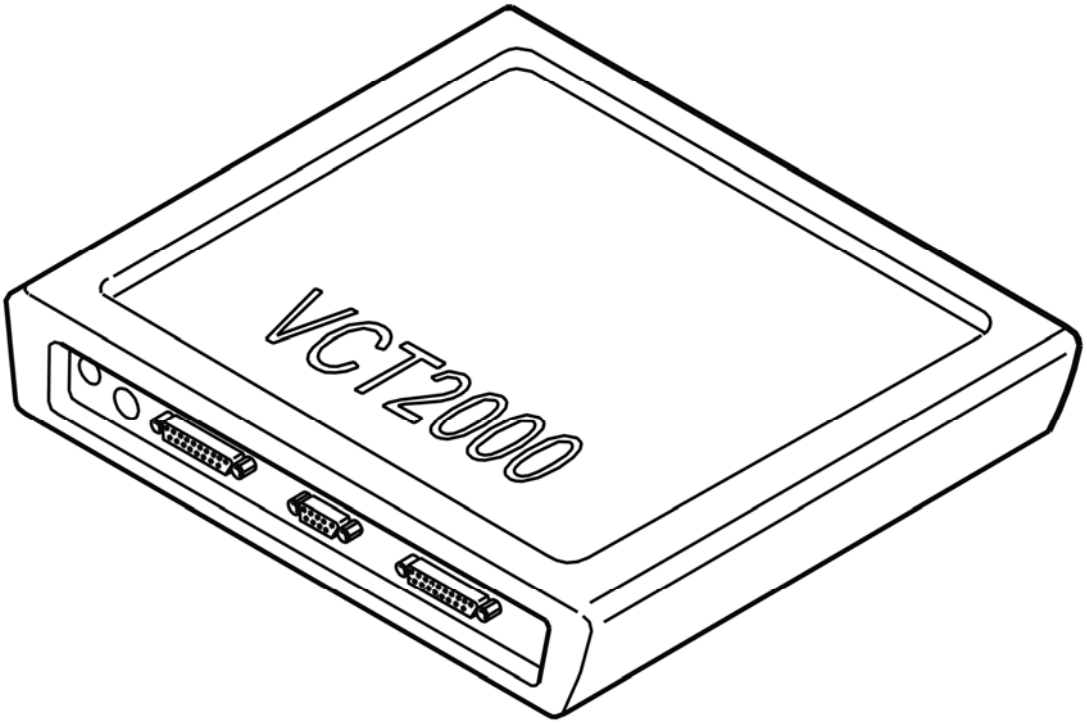

Fig. 8: Identifying VCT2000 Diagnostic Tool Symbol In VIDA
Courtesy of VOLVO CARS CORPORATION

Is the voltage OK?

- **YES**

  VERIFIED: Troubleshooting has been completed.

- **NO**

  Refer to **INFORMATION**

INFORMATION

FAULT-TRACING INFORMATION

The fault should have been detected and remedied. As this is not the case fault-tracing has failed.

Exit fault-tracing for this diagnostic trouble code (DTC) or make another attempt.

ICM-XXXX: UNKNOWN DIAGNOSTIC TROUBLE CODE (DTC) FOR THE CURRENT CONTROL MODULE VERSION (2003-2011)

UNKNOWN DIAGNOSTIC TROUBLE CODE (DTC) FOR THE CURRENT CONTROL MODULE VERSION

READING OFF DIAGNOSTIC TROUBLE CODES (DTC)

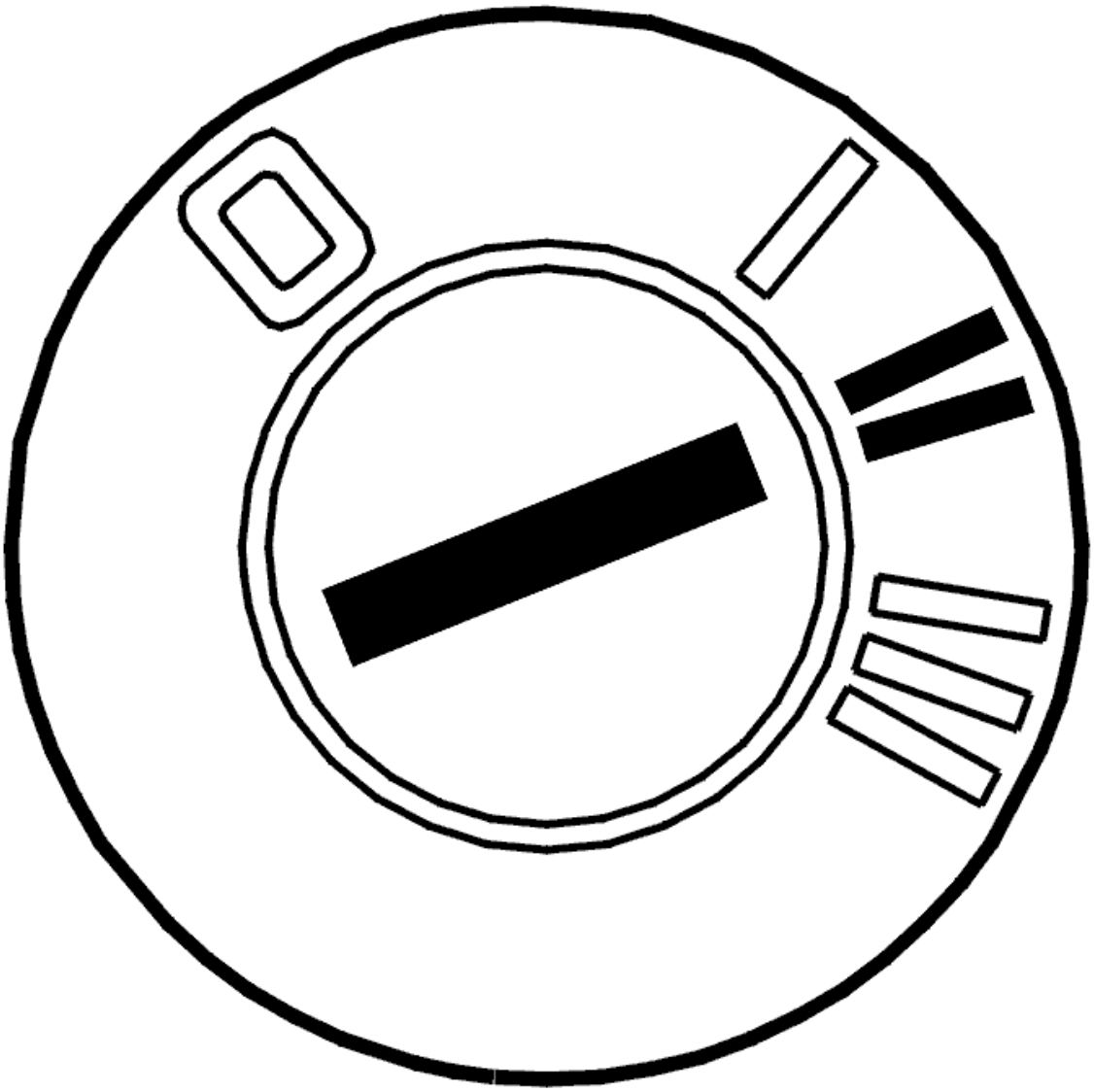

Fig. 9: Identifying Ignition ON
Courtesy of VOLVO CARS CORPORATION

- Ignition on.

  Read off the diagnostic trouble code (DTC) that is stored in the car.

  Make a note of the code. Report the code to VIDA customer support.

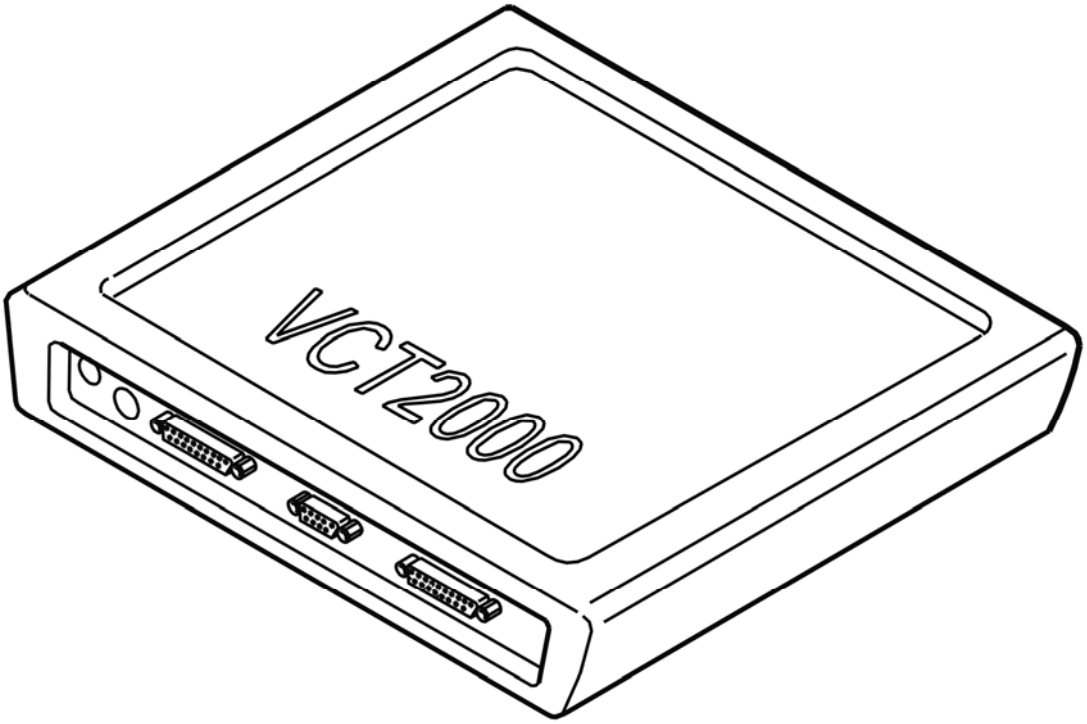

Fig. 10: Identifying VCT2000 Diagnostic Tool Symbol In VIDA
Courtesy of VOLVO CARS CORPORATION

MMM-1000: CONTROL MODULE. INTERNAL FAULT (2007-2011)

DIAGNOSTIC TROUBLE CODE (DTC) INFORMATION MMM-1000

Condition

The multimedia module (MMM) checks internal control module components.

The diagnostic trouble code (DTC) is stored if the control module detects that:

- Difference between the written and read data in the control module.

The control module's test for the diagnostic trouble code (DTC) starts in the event of:

- Start-up of the control module.

NOTE: **The control module can only detect the fault once the test has been started and the diagnostic trouble code (DTC) is stored when the conditions are met.**

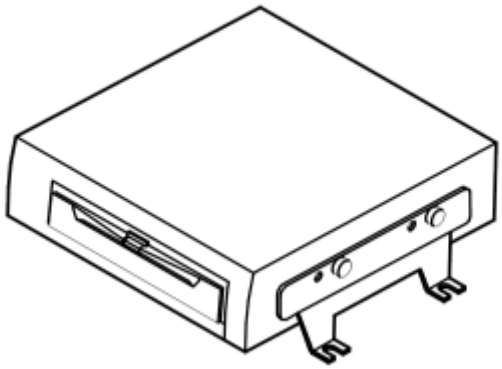

Fig. 11: Identifying Multimedia Module (MMM)
Courtesy of VOLVO CARS CORPORATION

Substitute Value

- None.

Possible Source

- Damaged multimedia module (MMM).

Fault symptom[s]

- Navigation; No Functionality

INTERNAL FAULT

REPLACING A COMPONENT

The multimedia module (MMM) has registered an internal fault.

If the fault is intermittent, it has been registered previously but is no longer present. Intermittent faults can be caused by interference at start up of the multimedia module (MMM) or may be a different type of fault which occurs on different occasions. The fault is evaluated depending on how it occurs. If the fault recurs, replace the multimedia module (MMM).

In the event of a permanent fault, replace the multimedia module (MMM).

Remedy as necessary.

Other information

- see **MULTIMEDIA MODULE (MMM), REPLACING**

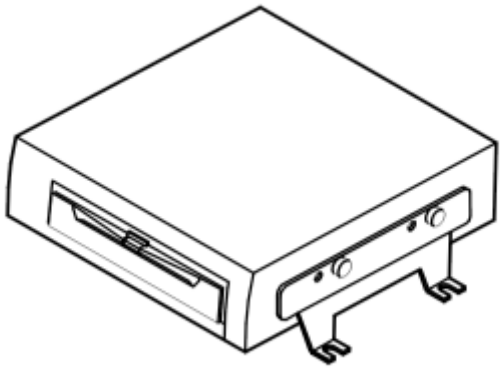

Fig. 12: Identifying Multimedia Module (MMM)
Courtesy of VOLVO CARS CORPORATION

- **Continue**

  Refer to **INFORMATION**

INFORMATION

FAULT-TRACING INFORMATION

In case of this defect, troubleshooting is not followed by verification.

The information can be displayed again or the fault-tracing for this fault can be interrupted.

MMM-1000: CONTROL MODULE. INTERNAL FAULT (2003-2006)

DIAGNOSTIC TROUBLE CODE (DTC) INFORMATION MMM-1000

Condition

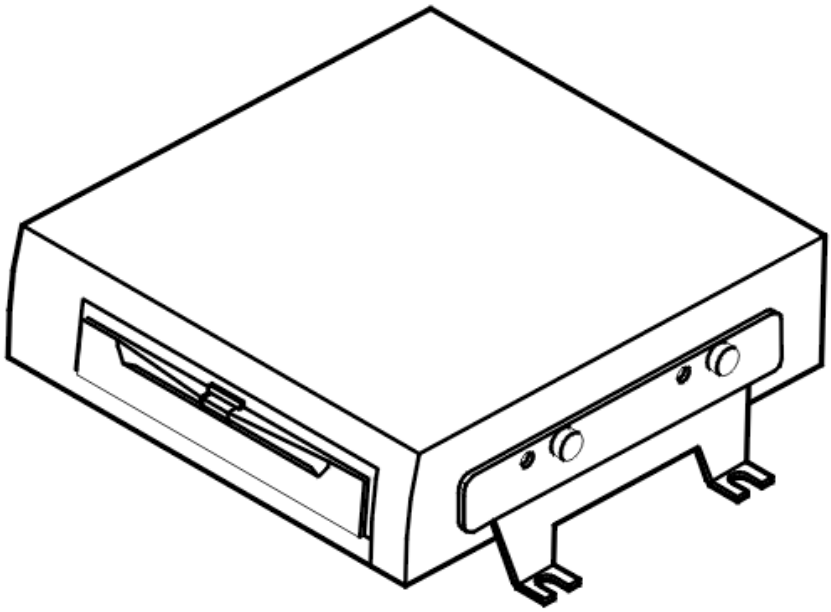

Fig. 13: Identifying Multimedia Module (MMM)
Courtesy of VOLVO CARS CORPORATION

Diagnostic trouble code (DTC) MMM-1000 is stored if the multimedia module (MMM) registers a difference between the written and read data.

Diagnostic trouble code (DTC) MMM-1000 can be diagnosed when the ignition is on.

Substitute Value

- None.

Possible Source

- Difference between the written and read data in the control module.

Fault symptom[s]

- The multimedia system is not working.

INTERNAL FAULT

REPLACING THE COMPONENT

The multimedia module (MMM) has registered an internal fault.

If the fault is intermittent it means that it has been registered previously but is no longer present. Intermittent faults can occur for a number of different reasons. The fault is evaluated depending on how it occurs. If the fault recurs, replace the Multimedia Module (MMM).

In the event of a permanent fault, replace the multimedia module (MMM). See **MULTIMEDIA MODULE (MMM), REPLACING** .

HINT: After replacement, up to 15 minutes of mixed driving may be necessary before the control module is calibrated and displays correct traffic information.

Remedy as necessary.

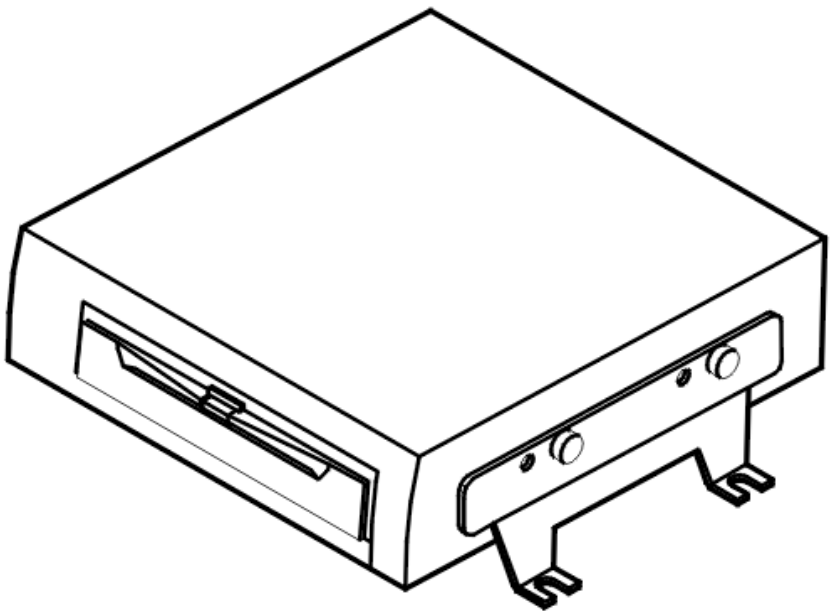

Fig. 14: Identifying Multimedia Module (MMM)
Courtesy of VOLVO CARS CORPORATION

- **Continue**

  Refer to **INFORMATION**

INFORMATION

FAULT-TRACING INFORMATION

In case of this defect, troubleshooting is not followed by verification.

The information can be displayed again or the fault-tracing for this fault can be interrupted.

MMM-1010: CONTROL MODULE. INTERNAL FAULT (2007-2011)

DIAGNOSTIC TROUBLE CODE (DTC) INFORMATION MMM-1010

Condition

The multimedia module (MMM) checks internal control module components.

The diagnostic trouble code (DTC) is stored if the control module detects that:

- Difference between the written and read data in the control module.

The control module's test for the diagnostic trouble code (DTC) starts in the event of:

- Start-up of the control module.

NOTE: The control module can only detect the fault once the test has been started and the diagnostic trouble code (DTC) is stored when the conditions are met.

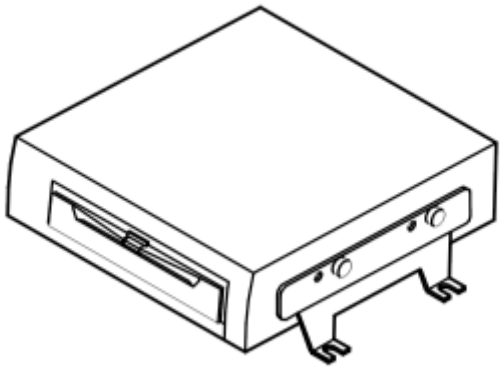

Fig. 15: Identifying Multimedia Module (MMM)
Courtesy of VOLVO CARS CORPORATION

Substitute Value

- None.

Possible Source

- Damaged multimedia module (MMM).

Fault symptom[s]

- Navigation; No Functionality

INTERNAL FAULT

see **INTERNAL FAULT**

MMM-1020: CONTROL MODULE. INTERNAL FAULT (2007-2011)

DIAGNOSTIC TROUBLE CODE (DTC) INFORMATION MMM-1020

Condition

The multimedia module (MMM) checks internal control module components.

The diagnostic trouble code (DTC) is stored if the control module detects that:

- Difference between the written and read data in the control module.

The control module's test for the diagnostic trouble code (DTC) starts in the event of:

- Start-up of the control module.

NOTE: The control module can only detect the fault once the test has been started and the diagnostic trouble code (DTC) is stored when the conditions are met.

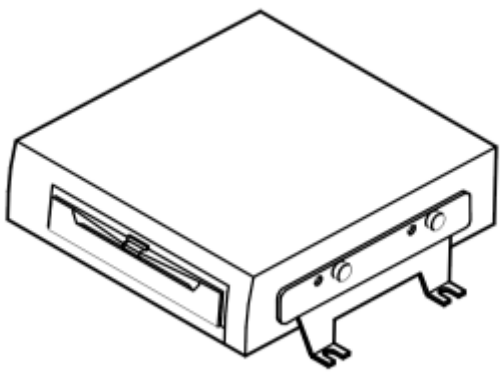

Fig. 16: Identifying Multimedia Module (MMM)
Courtesy of VOLVO CARS CORPORATION

Substitute Value

- None.

Possible Source

- Damaged multimedia module (MMM).

Fault symptom[s]

- Navigation; No Functionality

INTERNAL FAULT

see **INTERNAL FAULT**

MMM-2000: CONTROL MODULE. INTERNAL FAULT (2007-2011)

DIAGNOSTIC TROUBLE CODE (DTC) INFORMATION MMM-2000

Condition

The multimedia module (MMM) checks internal control module components.

The diagnostic trouble code (DTC) is stored if the control module detects that:

- The DVD player cannot carry out the requested task.

The control module's test for the diagnostic trouble code (DTC) starts in the event of:

- Ignition switch position II.
- Inserting the DVD in the control module.

NOTE: The control module can only detect the fault once the test has been started and the diagnostic trouble code (DTC) is stored when the conditions are met.

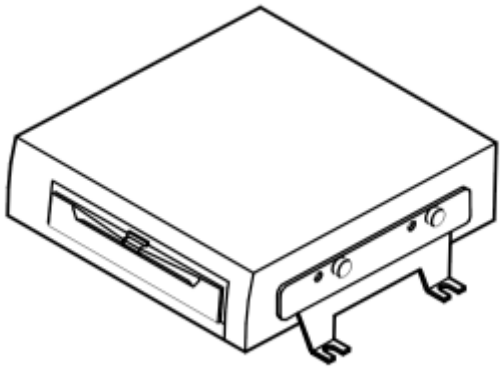

Fig. 17: Identifying Multimedia Module (MMM)
Courtesy of VOLVO CARS CORPORATION

Substitute Value

- None.

Possible Source

- Damaged multimedia module (MMM).

Fault symptom[s]

- DVD-player; Reduced/No functionality
- Navigation; No Functionality

INTERNAL FAULT

see **INTERNAL FAULT**

MMM-2000: CONTROL MODULE. INTERNAL FAULT (2003-2006)

DIAGNOSTIC TROUBLE CODE (DTC) INFORMATION MMM-2000

Condition

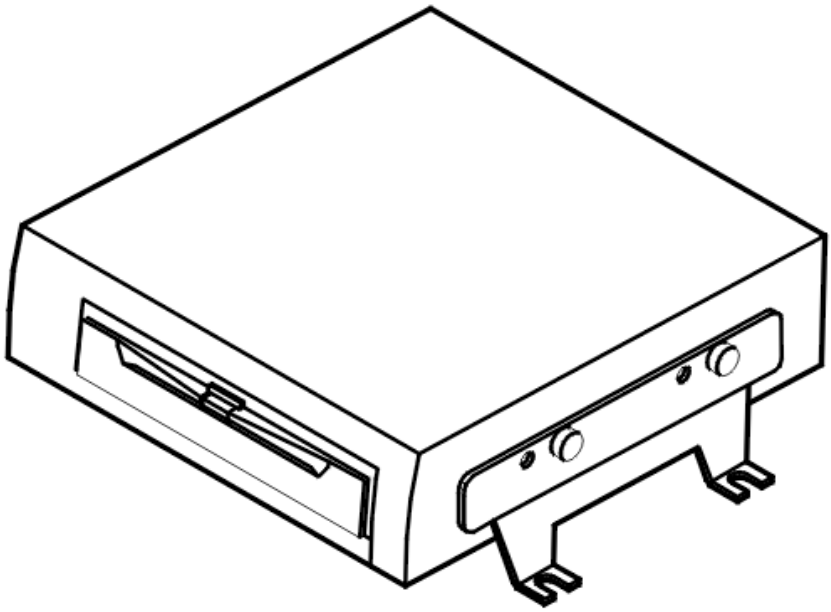

Fig. 18: Identifying Multimedia Module (MMM)
Courtesy of VOLVO CARS CORPORATION

Diagnostic trouble code (DTC) MMM-2000 is stored if the multimedia module (MMM) registers abnormal DVD player function.

Diagnostic trouble code (DTC) MMM-2000 can be diagnosed when the ignition is on.

Substitute Value

- None.

Possible Source

- The output signal quality is poor or disc rotation is unstable after ten attempts.
- Software fault in the control module.

Fault symptom[s]

- Information on the display is not updated.

INTERNAL FAULT

REPLACING THE COMPONENT

The multimedia module (MMM) has registered an internal fault.

It may be possible to remedy the fault by downloading new software into the control module. This makes the upgraded software more tolerant to short, intermittent disruptions. The software in Multimedia module (MMM) is upgraded with a cd-disc.

If the fault recurs, replace the multimedia module (MMM).

see **MULTIMEDIA MODULE (MMM), REPLACING**

HINT: After replacement, up to 15 minutes of mixed driving may be needed before the control module is calibrated and shows correct traffic information.

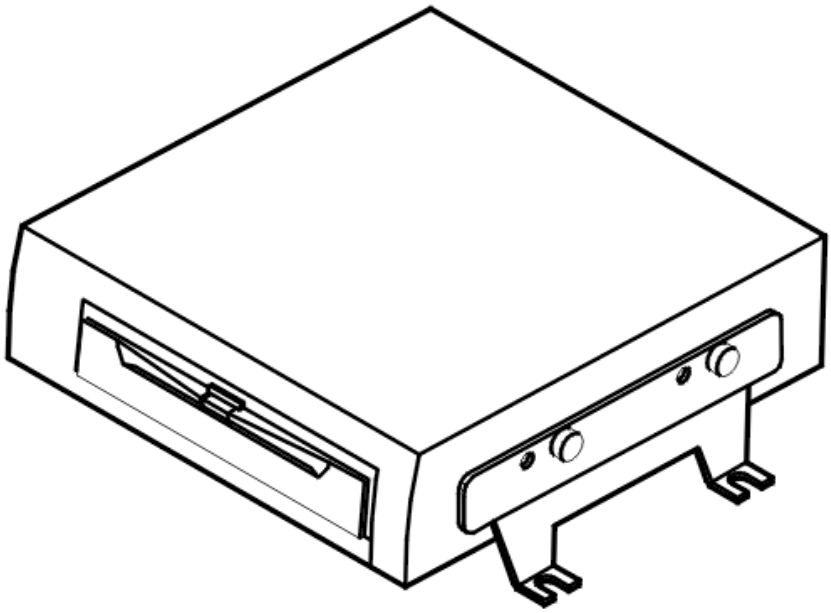

Fig. 19: Identifying Multimedia Module (MMM)
Courtesy of VOLVO CARS CORPORATION

- **Continue**

  Refer to **INFORMATION**

INFORMATION

FAULT-TRACING INFORMATION

In case of this defect, troubleshooting is not followed by verification.

The information can be displayed again or the fault-tracing for this fault can be interrupted.

MMM-2010: CONTROL MODULE. INTERNAL FAULT (2007-2011)

DIAGNOSTIC TROUBLE CODE (DTC) INFORMATION MMM-2010

Condition

The multimedia module (MMM) checks internal control module components.

The diagnostic trouble code (DTC) is stored if the control module detects that:

- The DVD player cannot carry out the requested task.

The control module's test for the diagnostic trouble code (DTC) starts in the event of:

- Ignition switch position II.
- Inserting the DVD in the control module.

NOTE: The control module can only detect the fault once the test has been started and the diagnostic trouble code (DTC) is stored when the conditions are met.

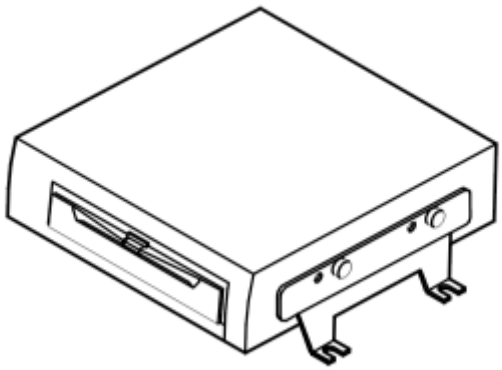

Fig. 20: Identifying Multimedia Module (MMM)
Courtesy of VOLVO CARS CORPORATION

Substitute Value

- None.

Possible Source

- Damaged multimedia module (MMM).

Fault symptom[s]

- DVD-player; Reduced/No functionality

INTERNAL FAULT

see **INTERNAL FAULT**

MMM-2100: CONTROL MODULE. INTERNAL FAULT (2007-2011)

DIAGNOSTIC TROUBLE CODE (DTC) INFORMATION MMM-2100

Condition

The multimedia module (MMM) checks internal control module components.

The diagnostic trouble code (DTC) is stored if the control module detects that:

- The DVD player cannot carry out the requested task.

The control module's test for the diagnostic trouble code (DTC) starts in the event of:

- Activating the DVD player.

NOTE: The control module can only detect the fault once the test has been started and the diagnostic trouble code (DTC) is stored when the conditions are met.

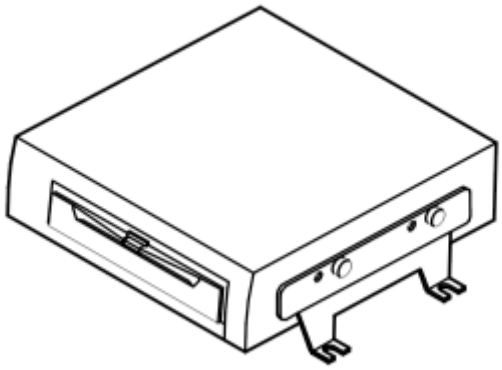

Fig. 21: Identifying Multimedia Module (MMM)

Courtesy of VOLVO CARS CORPORATION

Substitute Value

- None.

Possible Source

- Damaged multimedia module (MMM).

Fault symptom[s]

- DVD-player; Reduced/No functionality
- Navigation; No Functionality

INTERNAL FAULT

see **INTERNAL FAULT**

MMM-2100: CONTROL MODULE. SIGNAL MISSING (2003-2006)

DIAGNOSTIC TROUBLE CODE (DTC) INFORMATION MMM-2100

Condition

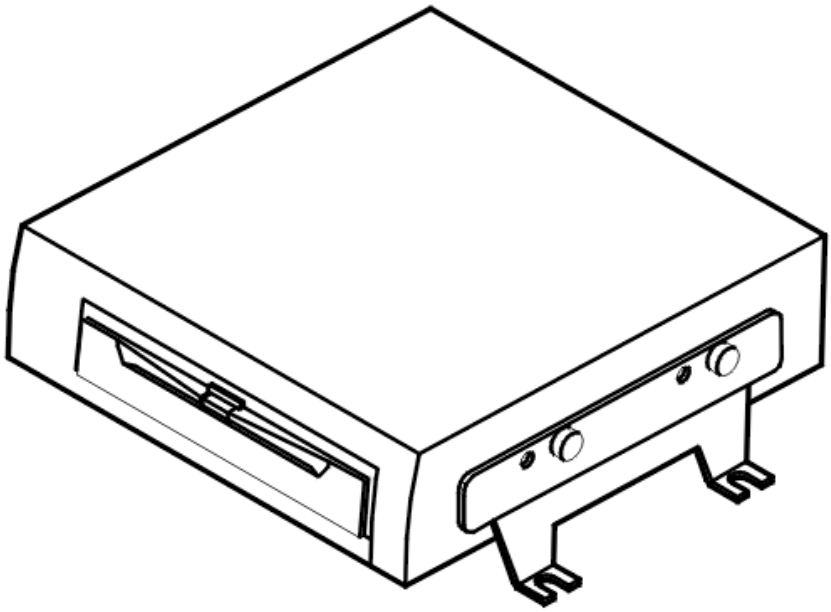

Fig. 22: Identifying Multimedia Module (MMM)
Courtesy of VOLVO CARS CORPORATION

Diagnostic trouble code (DTC) MMM-2100 is stored if the multimedia module (MMM) registers that communication with the DVD player is broken.

Diagnostic trouble code (DTC) MMM-2100 can be diagnosed when the ignition is on.

NOTE: The diagnostic trouble code (DTC) may be incorrectly stored as an intermittent fault in ignition position III. Try deleting the diagnostic trouble code (DTC).

Substitute Value

- None.

Possible Source

- The DVD player does not reply to communication from the control module after 10 attempts.

Fault symptom[s]

- Information on the display is not updated.

SIGNAL MISSING

REPLACING THE COMPONENT

The multimedia module (MMM) has registered an internal fault.

If the fault is intermittent it means that it has been registered previously but is no longer present. Intermittent faults can occur for a number of different reasons. The fault is evaluated depending on how it occurs. If the fault recurs, replace the Multimedia Module (MMM).

In the event of a permanent fault, replace the multimedia module (MMM). See **MULTIMEDIA MODULE (MMM), REPLACING** .

HINT: After replacement, up to 15 minutes of mixed driving may be necessary before the control module is calibrated and displays correct traffic information.

Remedy as necessary.

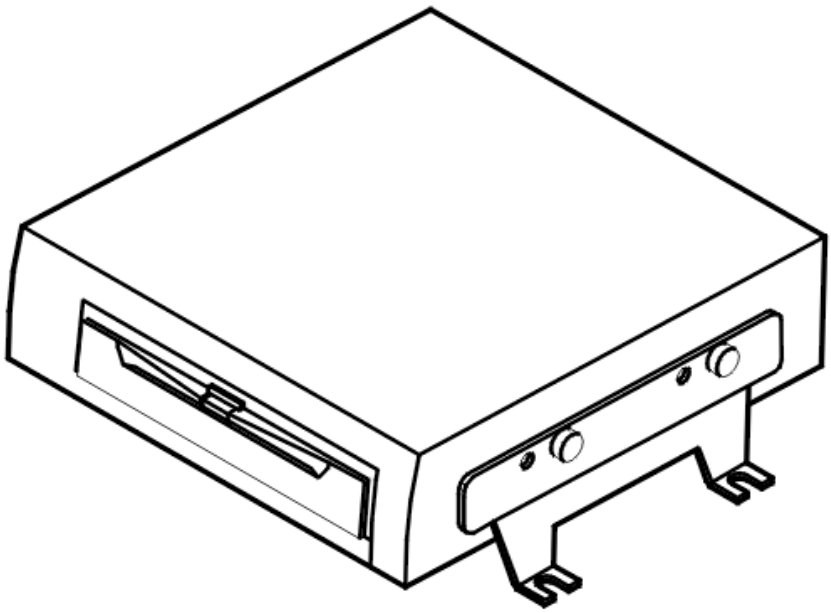

Fig. 23: Identifying Multimedia Module (MMM)
Courtesy of VOLVO CARS CORPORATION

- **Continue**

  Refer to **INFORMATION**

INFORMATION

FAULT-TRACING INFORMATION

In case of this defect, troubleshooting is not followed by verification.

The information can be displayed again or the fault-tracing for this fault can be interrupted.

MMM-2110: CONTROL MODULE. INTERNAL FAULT (2007-2011)

DIAGNOSTIC TROUBLE CODE (DTC) INFORMATION MMM-2110

Condition

The multimedia module (MMM) checks internal control module components.

The diagnostic trouble code (DTC) is stored if the control module detects that:

- The DVD player cannot carry out the requested task.

The control module's test for the diagnostic trouble code (DTC) starts in the event of:

- Activating the DVD player.

NOTE: **The control module can only detect the fault once the test has been started and the diagnostic trouble code (DTC) is stored when the conditions are met.**

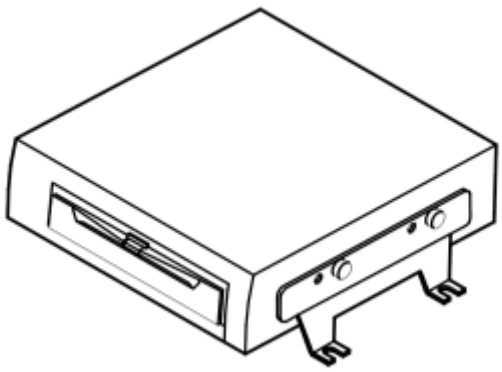

Fig. 24: Identifying Multimedia Module (MMM)
Courtesy of VOLVO CARS CORPORATION

Substitute Value

- None.

Possible Source

- Damaged multimedia module (MMM).

Fault symptom[s]

- DVD-player; Reduced/No functionality
- Navigation; No Functionality

INTERNAL FAULT

see **INTERNAL FAULT**

MMM-3100: GPS-ANTENNA. OPEN CIRCUIT (2007-2011)

DIAGNOSTIC TROUBLE CODE (DTC) INFORMATION MMM-3100

Condition

The Multimedia module (MMM) checks the current in the signal cable from the GPS antenna.

The diagnostic trouble code (DTC) is stored if the control module detects that:

- Power consumption is 8 mA or less.

The control module's test for the diagnostic trouble code (DTC) starts in the event of:

- Activated control module.

NOTE: The control module can only detect the fault once the test has been started and the diagnostic trouble code (DTC) is stored when the conditions are met.

Substitute Value

- None.

Possible Source

- Open-circuit in the signal cable.
- Loose connections.
- Contact resistance or oxidation.

Fault symptom[s]

- Car position on map is incorrect

- Navigation; No Functionality

FAULT-TRACING

CHECKING THE WIRING

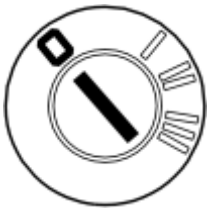

Fig. 25: Identifying Ignition In Off Position
Courtesy of VOLVO CARS CORPORATION

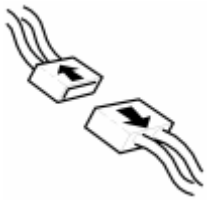

Fig. 26: Identifying Connectors
Courtesy of VOLVO CARS CORPORATION

- Ignition off.
- Unplug the multimedia module (MMM) connector.

  Check the antenna cable between the multimedia module (MMM) and the GPS antenna for open circuit.

  Take readings between:

  - Multimedia module (MMM) terminal #D1 and GPS antenna terminal #B1.

  Check the terminals. Check for contact resistance. Check for loose connections. Check for oxidation.

  Remedy as necessary.

  Other information

  - see **CHECKING WIRING AND TERMINALS**

- **Continue**

  Refer to **INFORMATION**

INFORMATION

FAULT-TRACING INFORMATION

The fault should have been detected and remedied. As this is not the case fault-tracing has failed.

Exit fault-tracing for this diagnostic trouble code (DTC) or make another attempt.

MMM-3110: GPS-ANTENNA. GROUND (GND) SHORT (2007-2011)

DIAGNOSTIC TROUBLE CODE (DTC) INFORMATION MMM-3110

Condition

The Multimedia module (MMM) checks the current in the signal cable from the GPS antenna.

The diagnostic trouble code (DTC) is stored if the control module detects that:

- Power consumption is 43 mA or greater.

The control module's test for the diagnostic trouble code (DTC) starts in the event of:

- Activated control module.

NOTE: The control module can only detect the fault once the test has been started and the diagnostic trouble code (DTC) is stored when the conditions are met.

Substitute Value

- None.

Possible Source

- The signal cable is short-circuited to ground.

Fault symptom[s]

- Car position on map is incorrect
- Navigation; No Functionality

FAULT-TRACING

CHECKING THE WIRING

Fig. 27: Identifying Ignition In Off Position
Courtesy of VOLVO CARS CORPORATION

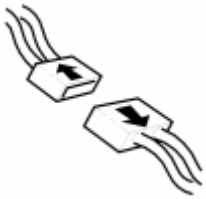

Fig. 28: Identifying Connectors
Courtesy of VOLVO CARS CORPORATION

- Ignition off.
- Unplug the multimedia module (MMM) connector.

  Check the antenna cable between the multimedia module (MMM) and the GPS antenna for short circuit to ground.

  Take readings between:

  - Multimedia module (MMM) terminal #D1 and GPS antenna terminal #B1.

  Remedy as necessary.

  Other information

  - see **CHECKING WIRING AND TERMINALS**

- **Continue**

  Refer to **INFORMATION**

INFORMATION

FAULT-TRACING INFORMATION

The fault should have been detected and remedied. As this is not the case fault-tracing has failed.

Exit fault-tracing for this diagnostic trouble code (DTC) or make another attempt.

MMM-4000: CONTROL MODULE. INTERNAL FAULT (2007-2011)

DIAGNOSTIC TROUBLE CODE (DTC) INFORMATION MMM-4000

Condition

The Multimedia module (MMM) checks the communication with the integrated TMC receiver.

The diagnostic trouble code (DTC) is stored if the control module detects that:

- No or interrupted communication with the integrated TMC receiver.

The control module's test for the diagnostic trouble code (DTC) starts in the event of:

- Activating the integrated TMC receiver.

NOTE: The control module can only detect the fault once the test has been started and the diagnostic trouble code (DTC) is stored when the conditions are met.

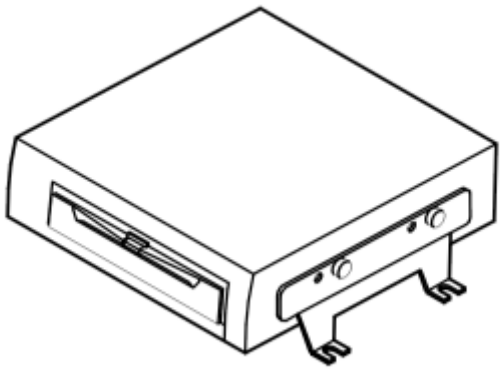

Fig. 29: Identifying Multimedia Module (MMM)
Courtesy of VOLVO CARS CORPORATION

Substitute Value

- None.

Possible Source

- Damaged multimedia module (MMM).

Fault symptom[s]

- Traffic information is not displayed/updated
- Navigation; No Functionality

INTERNAL FAULT

see **INTERNAL FAULT**

MMM-5000: CONTROL MODULE. INTERNAL FAULT (2007-2011)

DIAGNOSTIC TROUBLE CODE (DTC) INFORMATION MMM-5000

Condition

The multimedia module (MMM) checks internal control module components.

The diagnostic trouble code (DTC) is stored if the control module detects that:

- No or interrupted communication with the integrated hard disk.

The control module's test for the diagnostic trouble code (DTC) starts in the event of:

- Start-up of the control module.

NOTE: The control module can only detect the fault once the test has been started and the diagnostic trouble code (DTC) is stored when the conditions are met.

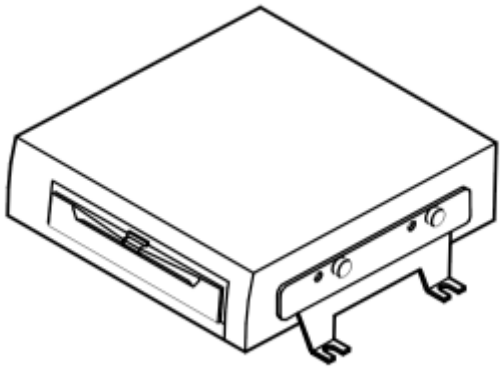

Fig. 30: Identifying Multimedia Module (MMM)
Courtesy of VOLVO CARS CORPORATION

Substitute Value

- None.

Possible Source

- Damaged multimedia module (MMM).

Fault symptom[s]

- Fault message displayed on display
- Navigation; No Functionality

INTERNAL FAULT

see **INTERNAL FAULT**

MMM-5010: CONTROL MODULE. INTERNAL FAULT (2007-2011)

DIAGNOSTIC TROUBLE CODE (DTC) INFORMATION MMM-5010

Condition

The multimedia module (MMM) checks internal control module components.

The diagnostic trouble code (DTC) is stored if the control module detects that:

- No or interrupted communication with the integrated hard disk.

The control module's test for the diagnostic trouble code (DTC) starts in the event of:

- Start-up of the control module.

NOTE: The control module can only detect the fault once the test has been started and the diagnostic trouble code (DTC) is stored when the conditions are met.

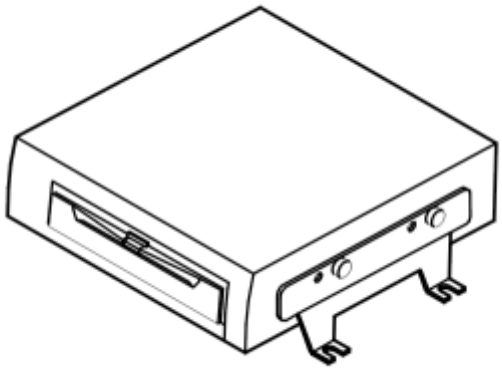

Fig. 31: Identifying Multimedia Module (MMM)
Courtesy of VOLVO CARS CORPORATION

Substitute Value

- None.

Possible Source

- Damaged multimedia module (MMM).

Fault symptom[s]

- Fault message displayed on display
- Navigation; No Functionality

INTERNAL FAULT

see **INTERNAL FAULT**

MMM-5020: CONTROL MODULE. INTERNAL FAULT (2007-2011)

DIAGNOSTIC TROUBLE CODE (DTC) INFORMATION MMM-5020

Condition

The multimedia module (MMM) checks internal control module components.

The diagnostic trouble code (DTC) is stored if the control module detects that:

- Problem reading the data from the hard disk.
- The fault is active for longer than two minutes.

The control module's test for the diagnostic trouble code (DTC) starts in the event of:

- Reading data from the hard disk.

NOTE: **The control module can only detect the fault once the test has been started and the diagnostic trouble code (DTC) is stored when the conditions are met.**

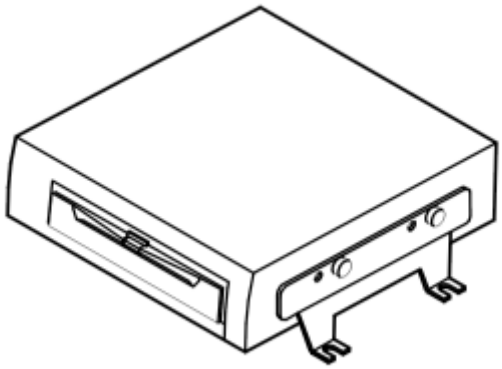

Fig. 32: Identifying Multimedia Module (MMM)
Courtesy of VOLVO CARS CORPORATION

Substitute Value

- None.

Possible Source

- Damaged multimedia module (MMM).

Fault symptom[s]

- Fault message displayed on display
- Navigation; No Functionality

INTERNAL FAULT

REPLACING A COMPONENT

The multimedia module (MMM) has registered an internal fault.

If the fault is intermittent, it has been registered previously but is no longer present. Intermittent faults can be caused by interference at start up of the multimedia module (MMM) or may be a different type of fault which occurs on different occasions.

The problem could be due to a damaged sector on the harddrive. Transfer map information from the DVD to the hard drive in the multimedia module (MMM).

If the fault recurs, replace the multimedia module (MMM).

Other information

- see **MULTIMEDIA MODULE (MMM), REPLACING**

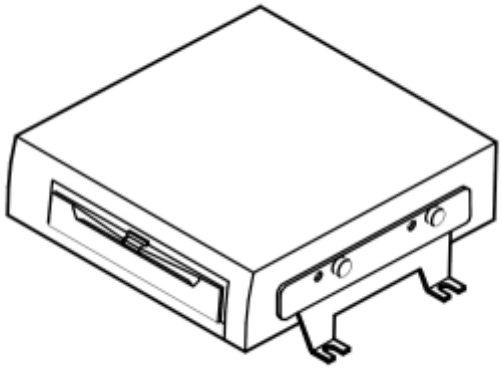

Fig. 33: Identifying Multimedia Module (MMM)
Courtesy of VOLVO CARS CORPORATION

- **Continue**

  Refer to **INFORMATION**

INFORMATION

FAULT-TRACING INFORMATION

In case of this defect, troubleshooting is not followed by verification.

The information can be displayed again or the fault-tracing for this fault can be interrupted.

MMM-6000: CONTROL MODULE FAULTY CONFIGURATION (2007-2011)

DIAGNOSTIC TROUBLE CODE (DTC) INFORMATION MMM-6000

Condition

The multimedia module (MMM) uses settings from the vehicle configuration file in the central electronic module (CEM).

The diagnostic trouble code (DTC) is stored if the control module detects that:

- The control module's configuration does not correspond with the vehicle's vehicle configuration.

The control module's test for the diagnostic trouble code (DTC) starts in the event of:

- Start-up of the control module.

NOTE: **The control module can only detect the fault once the test has been started and the diagnostic trouble code (DTC) is stored when the conditions are met.**

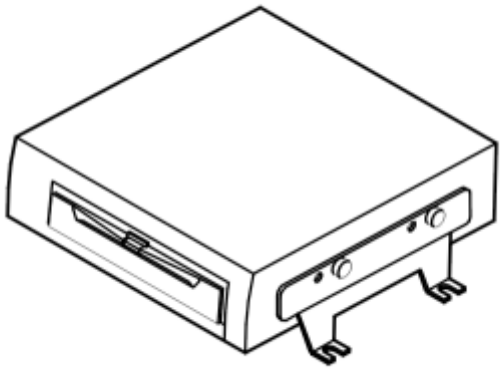

Fig. 34: Identifying Multimedia Module (MMM)
Courtesy of VOLVO CARS CORPORATION

Substitute Value

- None.

Possible Source

- The Multimedia module (MMM) is not intended for this vehicle, for example a used control module with different software/hardware has been used.
- Invalid or faulty data obtained from the vehicle configuration file.

Fault symptom[s]

- Navigation; No Functionality
- Car position on map is incorrect

FAULTY CONFIGURATION

FAULT-TRACING INFORMATION

The fault is due to one of the following:

- The Multimedia module (MMM) is not intended for this vehicle, for example a used control module with different software/hardware has been used. Check that the correct control module is installed in the car.
- Configuring the control module. Transfer map information from the DVD to the hard drive in the multimedia module (MMM).

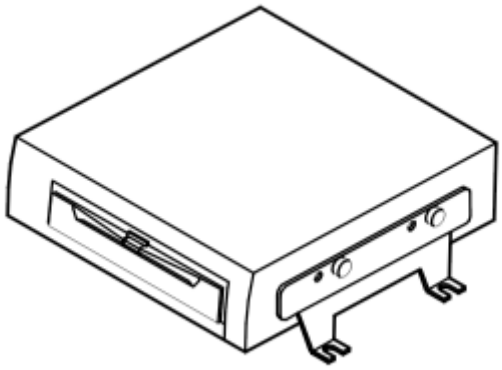

Fig. 35: Identifying Multimedia Module (MMM)
Courtesy of VOLVO CARS CORPORATION

- **Continue**

  Refer to **INFORMATION**

INFORMATION

FAULT-TRACING INFORMATION

In case of this defect, troubleshooting is not followed by verification.

The information can be displayed again or the fault-tracing for this fault can be interrupted.

MMM-XXXX: UNKNOWN DIAGNOSTIC TROUBLE CODE (DTC) FOR THE CURRENT CONTROL MODULE VERSION (2003-2011)

UNKNOWN DIAGNOSTIC TROUBLE CODE (DTC) FOR THE CURRENT CONTROL MODULE VERSION

READING OFF DIAGNOSTIC TROUBLE CODES (DTC)

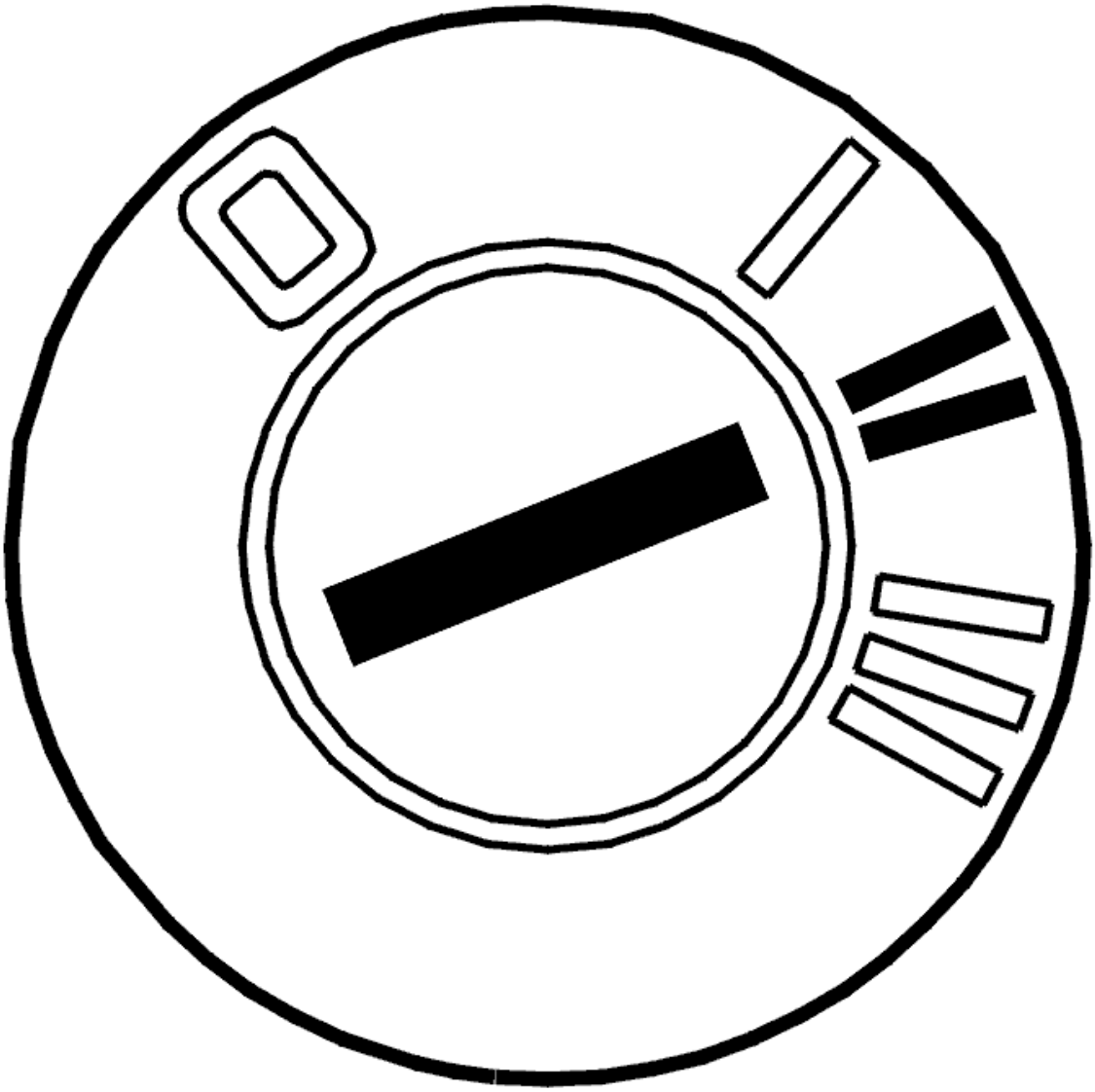

Fig. 36: Identifying Ignition ON
Courtesy of VOLVO CARS CORPORATION

- Ignition on.

  Read off the diagnostic trouble code (DTC) that is stored in the car.

  Make a note of the code. Report the code to VIDA customer support.

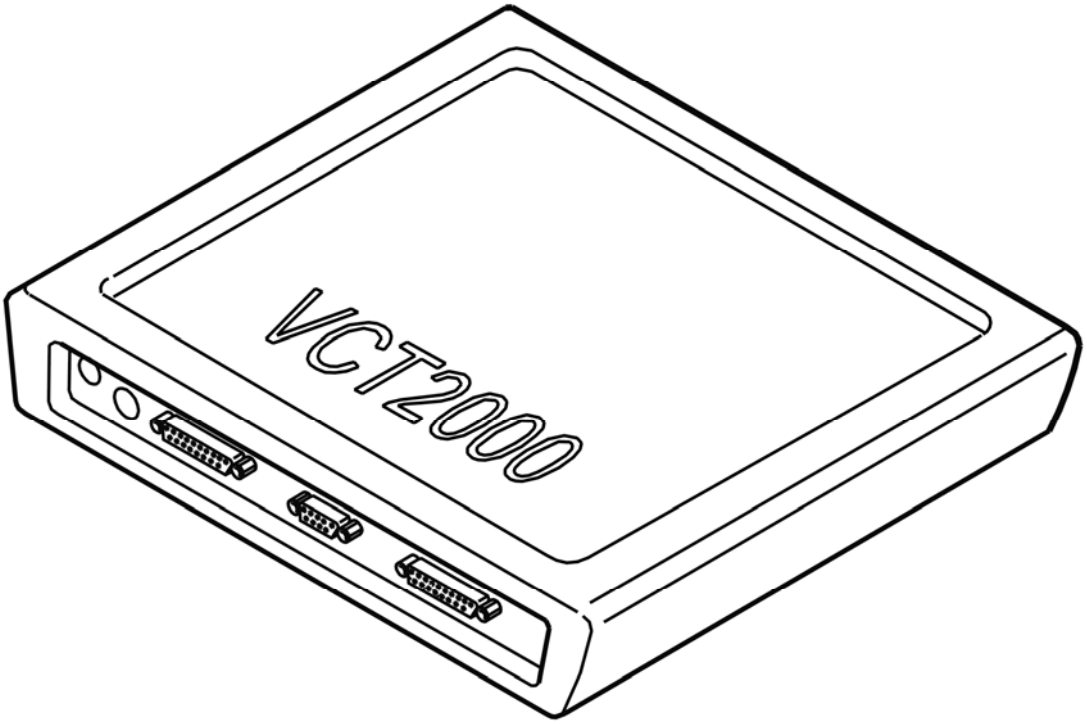

Fig. 37: Identifying VCT2000 Diagnostic Tool Symbol In VIDA
Courtesy of VOLVO CARS CORPORATION

MP1-0002 CONTROL MODULE. INTERNAL FAULT (2003-2006)

DIAGNOSTIC TROUBLE CODE (DTC) INFORMATION MP1-0002

Condition

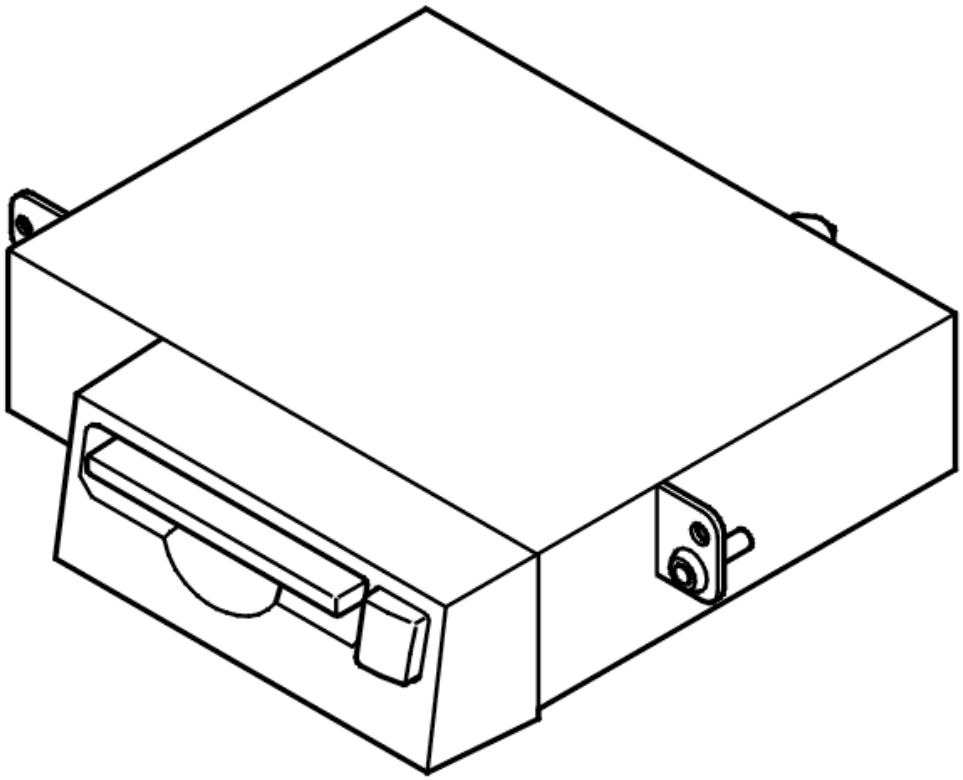

Fig. 38: Diagnostic Trouble Code (DTC) Information MP1-0002
Courtesy of VOLVO CARS CORPORATION

Diagnostic trouble code (DTC) MP1-0002 is stored if the MD module (MP1) registers an internal fault.

The diagnostic trouble code (DTC) can be diagnosed when the ignition is switched on.

Substitute Value

- None.

Possible Source

- Internal fault in the control module.

Fault symptom[s]

- The MD player is not working.

INTERNAL FAULT

REPLACING THE COMPONENT

The MD player has registered an internal fault.

If the fault is intermittent, it has been registered previously but is no longer present. Intermittent faults can be caused by interference at start up of the MD player or may be a different type of fault which occurs on different occasions. The fault is evaluated depending on how it occurs. If the fault recurs, replace the MD player.

In the event of a permanent fault, replace the MD player.

Remedy as necessary.

Other information:

- To replace the MD player, see **MINIDISC / CD CONTROL MODULE, REPLACING** .
- **Continue**

  Refer to **VERIFICATION**

VERIFICATION

VERIFICATION

HINT: After carrying out the repair, check that the fault has been remedied.

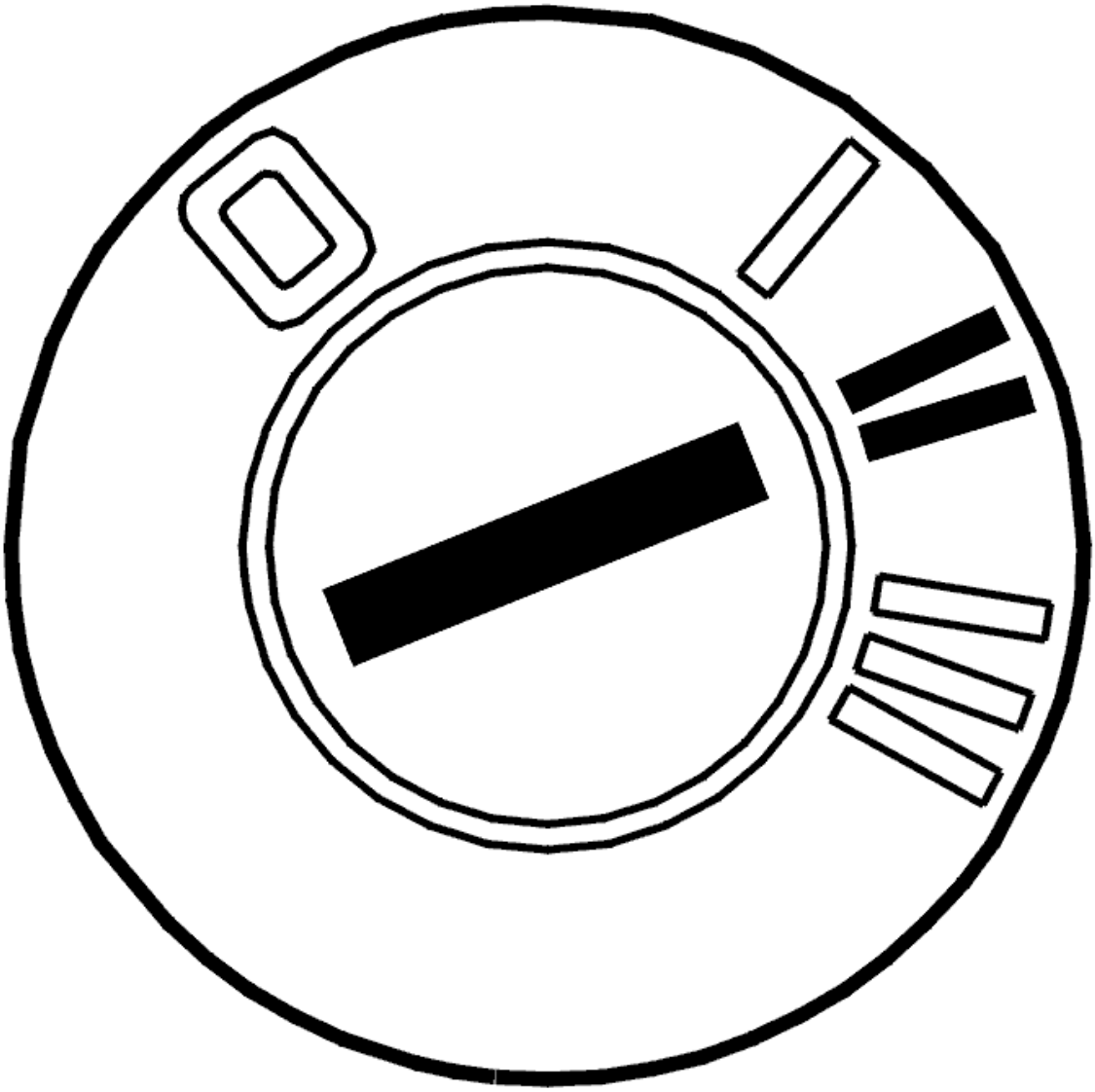

Fig. 39: Identifying Ignition ON
Courtesy of VOLVO CARS CORPORATION

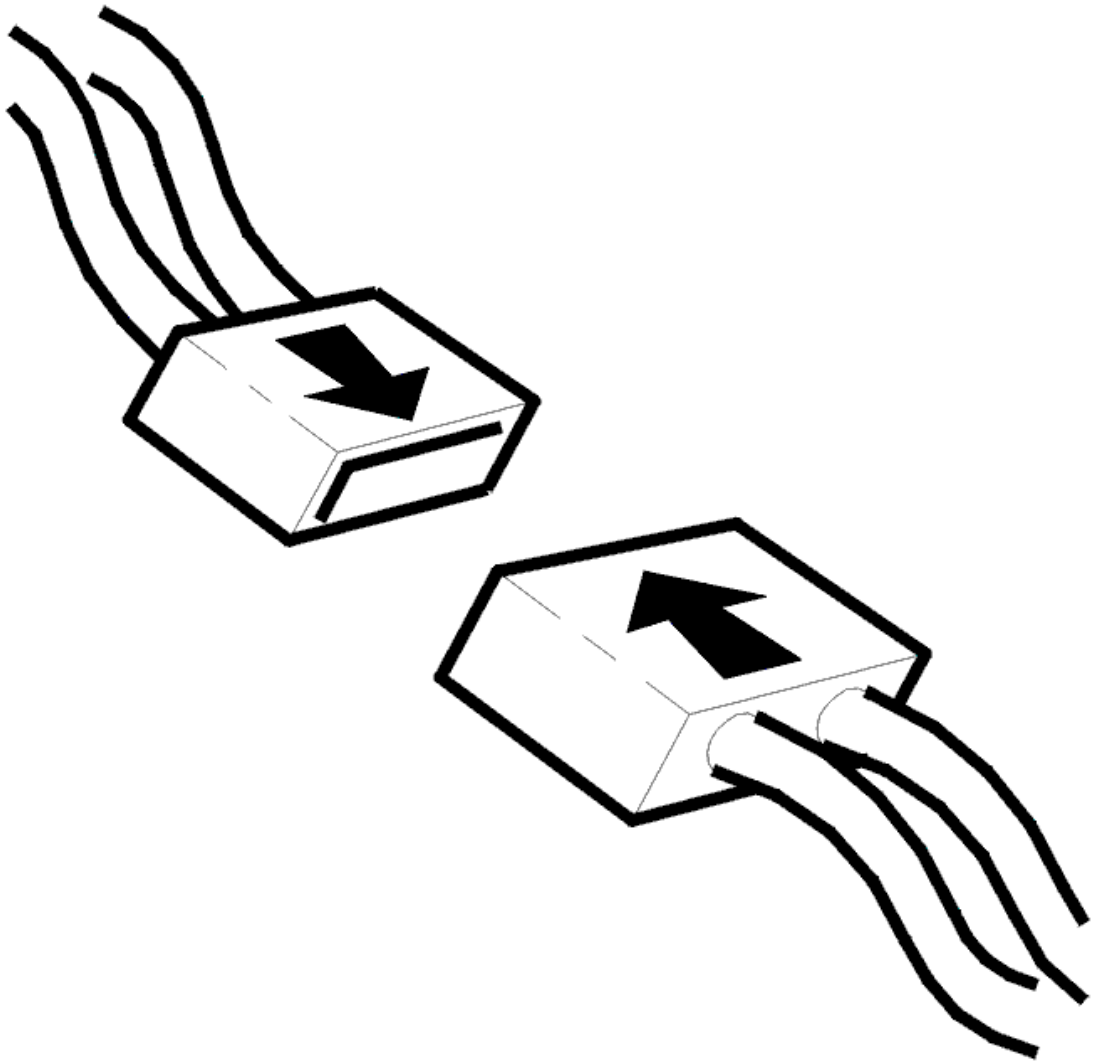

Fig. 40: Connecting Connector
Courtesy of VOLVO CARS CORPORATION

- Ignition off
- Reinstall the connectors, components etc.
- Ignition on.

  Insert a MiniDisc and check that the MD player is working.

Is the MD player working?

- **YES**

  VERIFIED: Troubleshooting has been completed.

- **NO**

  Refer to **INFORMATION**

INFORMATION

FAULT-TRACING INFORMATION

In case of this defect, troubleshooting is not followed by verification.

The information can be displayed again or the fault-tracing for this fault can be interrupted.

MP1-0003 CONTROL MODULE. INTERNAL FAULT (2003-2006)

DIAGNOSTIC TROUBLE CODE (DTC) INFORMATION MP1-0003

Condition

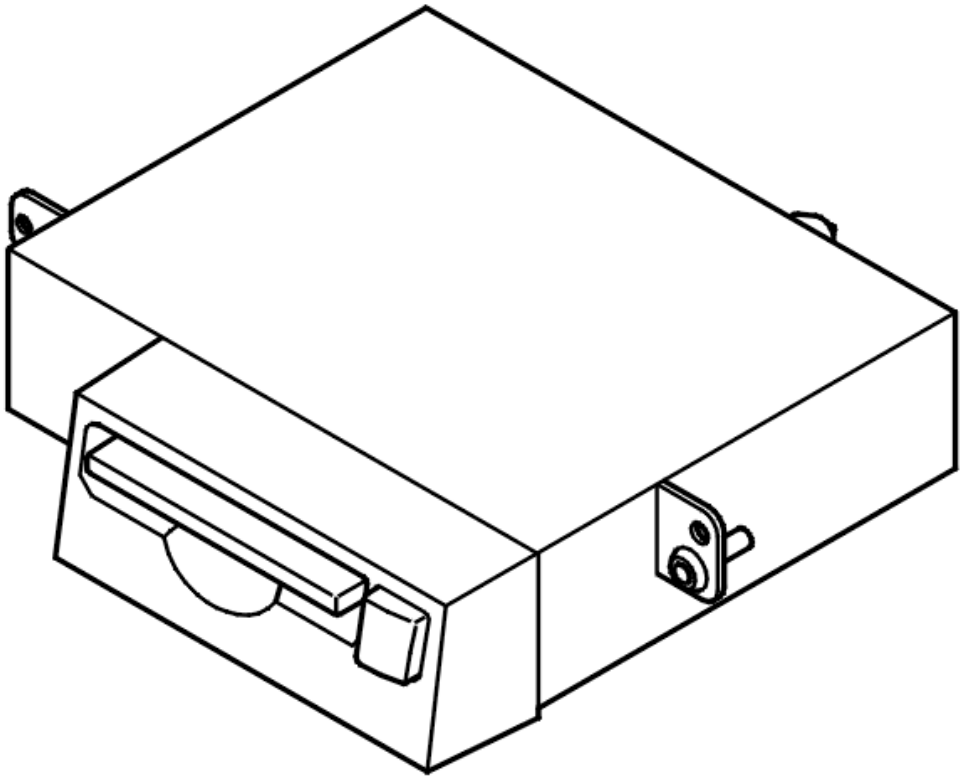

Fig. 41: Diagnostic Trouble Code (DTC) Information MP1-0002
Courtesy of VOLVO CARS CORPORATION

Diagnostic trouble code (DTC) MP1-0003 is stored if the MD module (MP1) registers an internal fault.

The diagnostic trouble code (DTC) can be diagnosed when the ignition is switched on.

Substitute Value

- None.

Possible Source

- Internal fault in the control module.

Fault symptom[s]

- The MD player is not working.

INTERNAL FAULT

REPLACING THE COMPONENT

The MD player has registered an internal fault.

If the fault is intermittent, it has been registered previously but is no longer present. Intermittent faults can be caused by interference at start up of the MD player or may be a different type of fault which occurs on different occasions. The fault is evaluated depending on how it occurs. If the fault recurs, replace the MD player.

In the event of a permanent fault, replace the MD player.

Remedy as necessary.

Other information:

- To replace the MD player, see **MINIDISC / CD CONTROL MODULE, REPLACING** .
- **Continue**

  Refer to **VERIFICATION**

VERIFICATION

VERIFICATION

HINT: After carrying out the repair, check that the fault has been remedied.

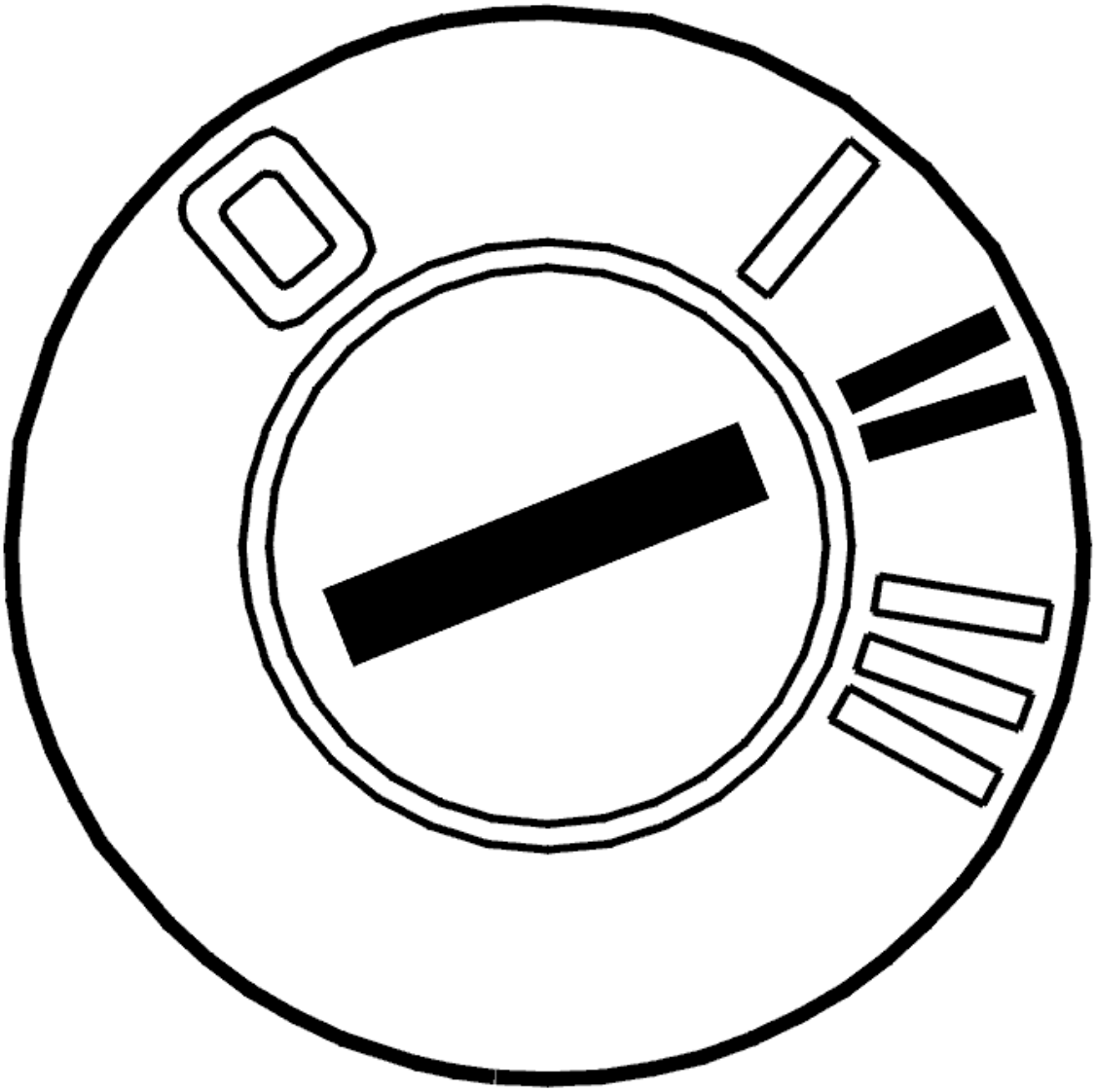

Fig. 42: Identifying Ignition ON
Courtesy of VOLVO CARS CORPORATION

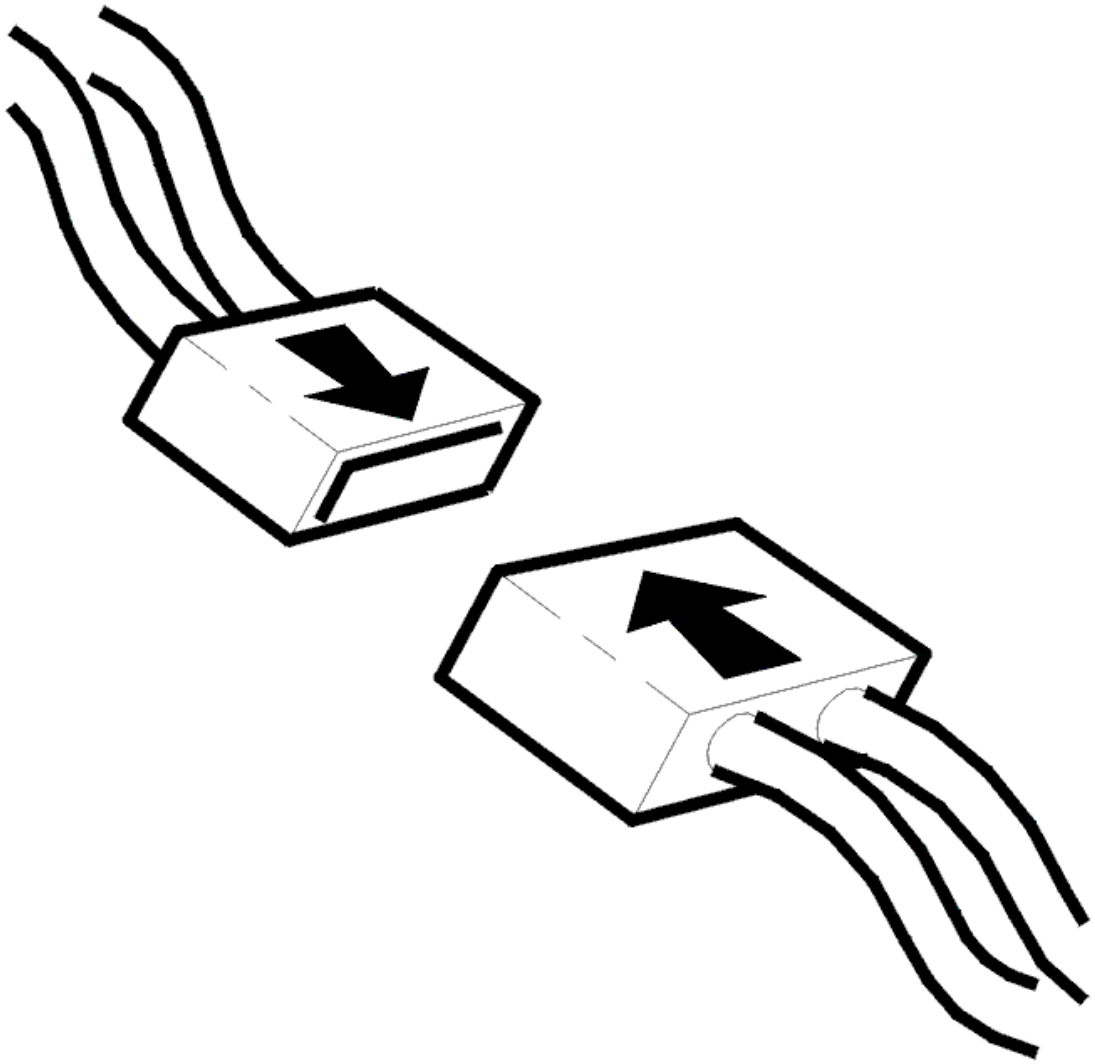

Fig. 43: Connecting Connector
Courtesy of VOLVO CARS CORPORATION

- Ignition off
- Reinstall the connectors, components etc.
- Ignition on.

  Insert a MiniDisc and check that the MD player is working.

Is the MD player working?

- **YES**

  VERIFIED: Troubleshooting has been completed.

- **NO**

  Refer to **INFORMATION**

INFORMATION

FAULT-TRACING INFORMATION

In case of this defect, troubleshooting is not followed by verification.

The information can be displayed again or the fault-tracing for this fault can be interrupted.

MP1-0005 CONTROL MODULE. INTERNAL FAULT (2003-2006)

DIAGNOSTIC TROUBLE CODE (DTC) INFORMATION MP1-0005

Condition

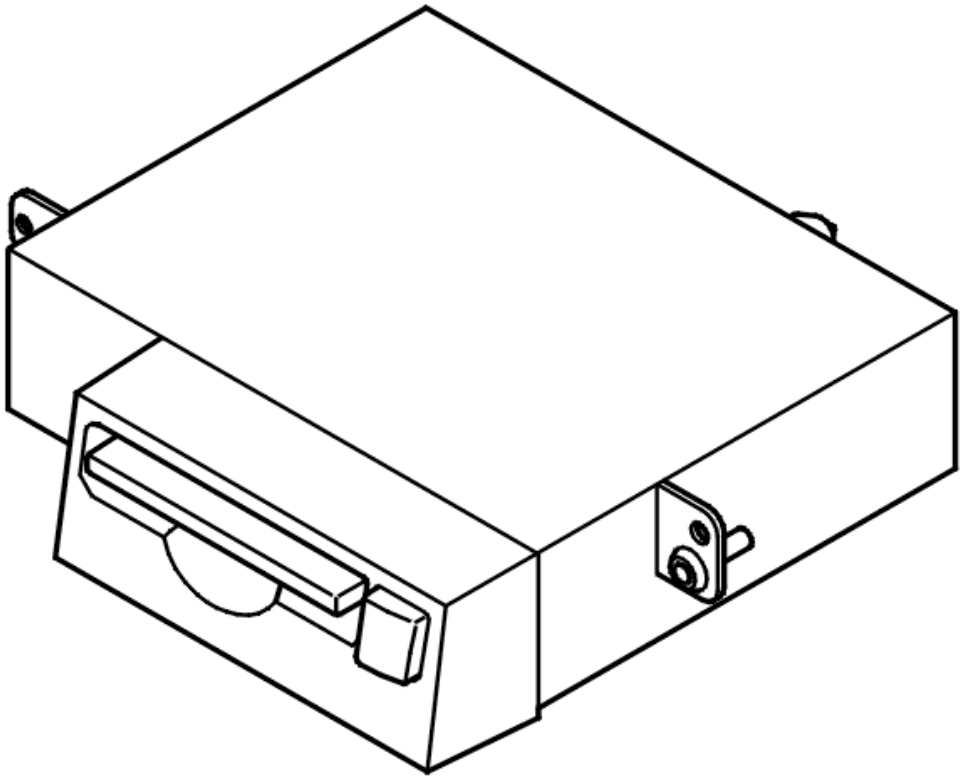

Fig. 44: Diagnostic Trouble Code (DTC) Information MP1-0002
Courtesy of VOLVO CARS CORPORATION

Diagnostic trouble code (DTC) MP1-0005 is stored if the MD module (MP1) registers an internal fault.

The diagnostic trouble code (DTC) can be diagnosed when the ignition is switched on.

Substitute Value

- None.

Possible Source

- Internal fault in the control module.

Fault symptom[s]

- The MD player is not working.

INTERNAL FAULT

REPLACING THE COMPONENT

The MD player has registered an internal fault.

If the fault is intermittent, it has been registered previously but is no longer present. Intermittent faults can be caused by interference at start up of the MD module (MP1) or may be a different type of fault which occurs on different occasions. The fault is evaluated depending on how it occurs. If the fault recurs, replace the MD player.

In the event of a permanent fault, replace the MD player.

Remedy as necessary.

Other information:

- To replace the MD player, see **MINIDISC / CD CONTROL MODULE, REPLACING** .
- **Continue**

  Refer to **VERIFICATION**

VERIFICATION

VERIFICATION

HINT: After carrying out the repair, check that the fault has been remedied.

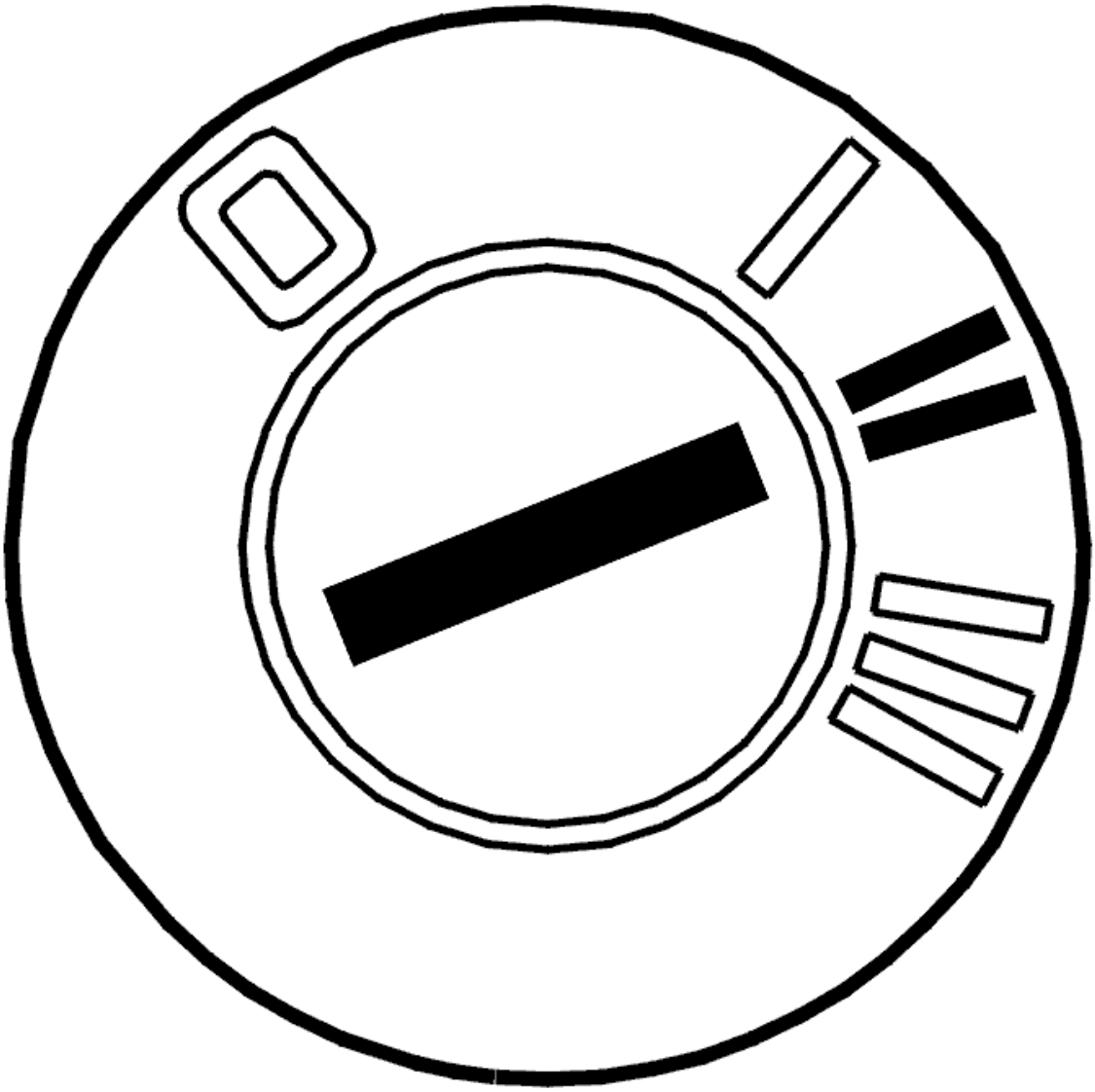

Fig. 45: Identifying Ignition ON
Courtesy of VOLVO CARS CORPORATION

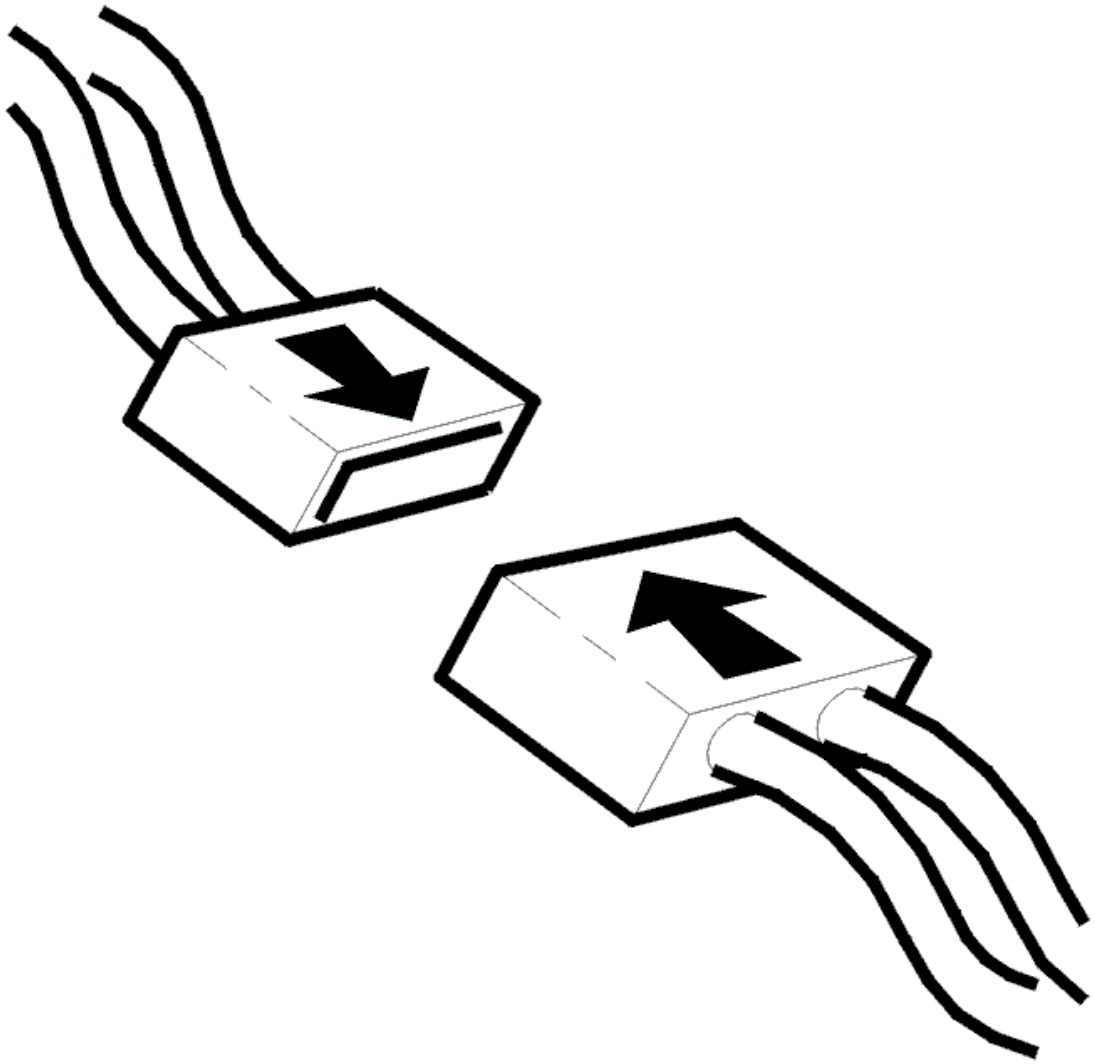

Fig. 46: Connecting Connector
Courtesy of VOLVO CARS CORPORATION

- Ignition off
- Reinstall the connectors, components etc.
- Ignition on.

  Insert a MiniDisc and check that the MD player is working.

Is the MD player working?

- **YES**

  VERIFIED: Troubleshooting has been completed.

- **NO**

  Refer to **INFORMATION**

INFORMATION

FAULT-TRACING INFORMATION

In case of this defect, troubleshooting is not followed by verification.

The information can be displayed again or the fault-tracing for this fault can be interrupted.

MP1-0006 CONTROL MODULE. INTERNAL FAULT (2003-2006)

DIAGNOSTIC TROUBLE CODE (DTC) INFORMATION MP1-0006

Condition

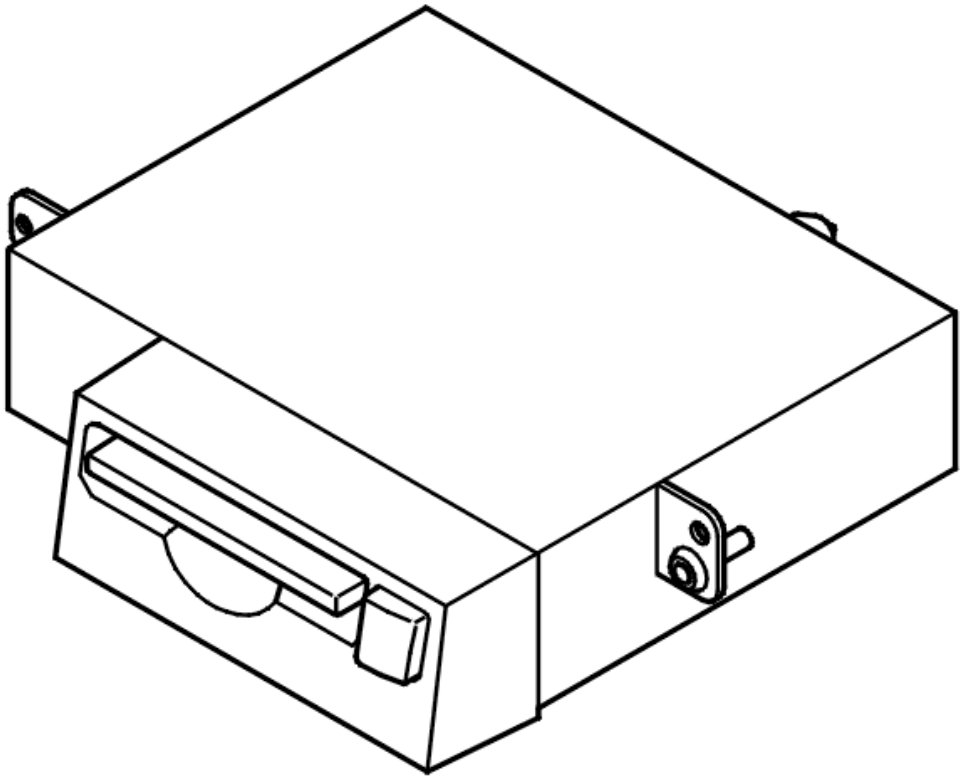

Fig. 47: Diagnostic Trouble Code (DTC) Information MP1-0002
Courtesy of VOLVO CARS CORPORATION

Diagnostic trouble code (DTC) MP1-0006 is stored if the MD module (MP1) registers an internal fault.

The diagnostic trouble code (DTC) can be diagnosed when the ignition is switched on.

Substitute Value

- None.

Possible Source

- Internal fault in the control module.

Fault symptom[s]

- The MD player is not working.

INTERNAL FAULT

REPLACING THE COMPONENT

The MD player has registered an internal fault.

If the fault is intermittent, it has been registered previously but is no longer present. Intermittent faults can be caused by interference at start up of the MD player or may be a different type of fault which occurs on different occasions. The fault is evaluated depending on how it occurs. If the fault recurs, replace the MD player.

In the event of a permanent fault, replace the MD player.

Remedy as necessary.

Other information:

- To replace the MD player, see **MINIDISC / CD CONTROL MODULE, REPLACING** .
- **Continue**

  Refer to **VERIFICATION**

VERIFICATION

VERIFICATION

HINT: After carrying out the repair, check that the fault has been remedied.

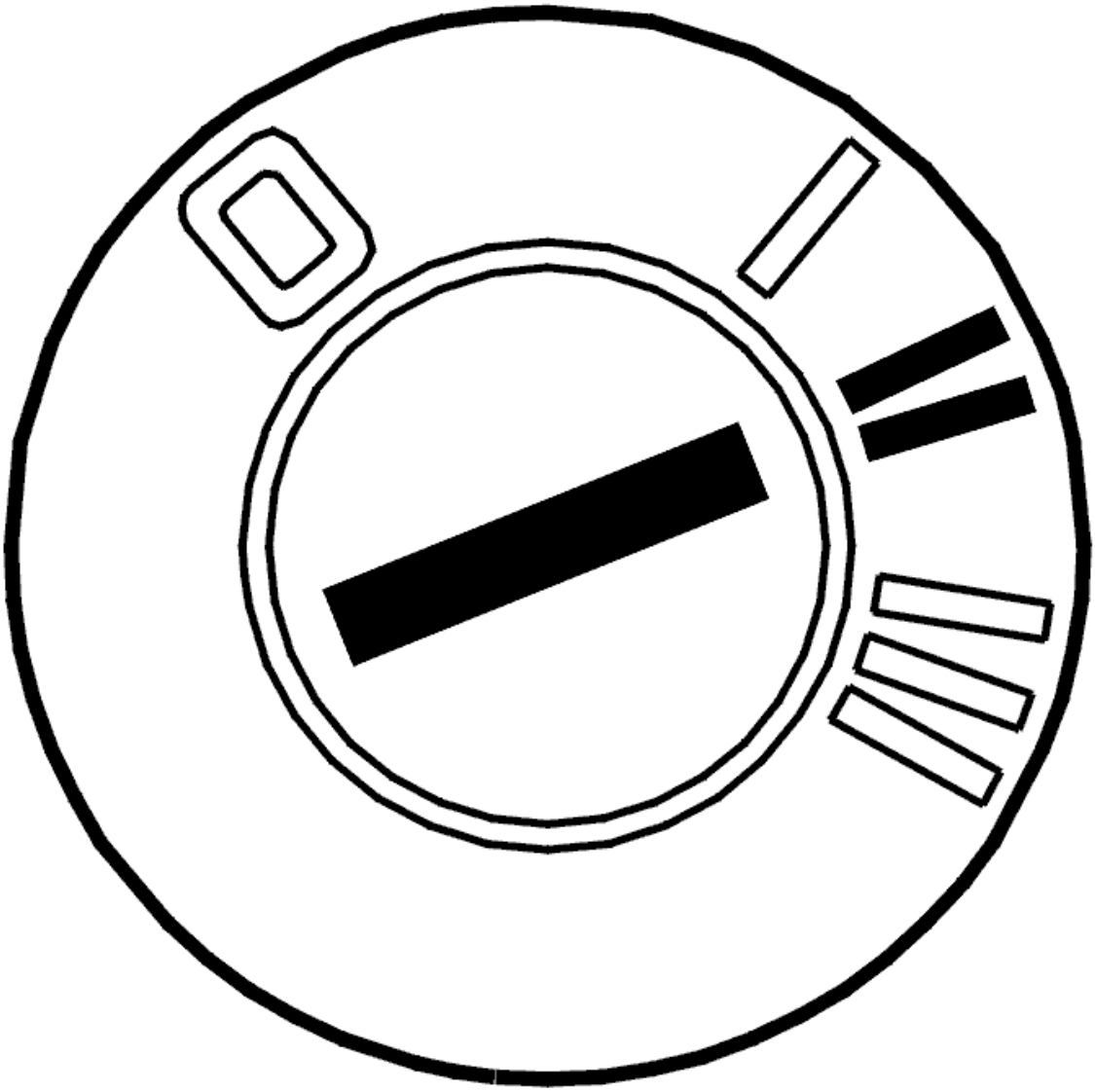

Fig. 48: Identifying Ignition ON
Courtesy of VOLVO CARS CORPORATION

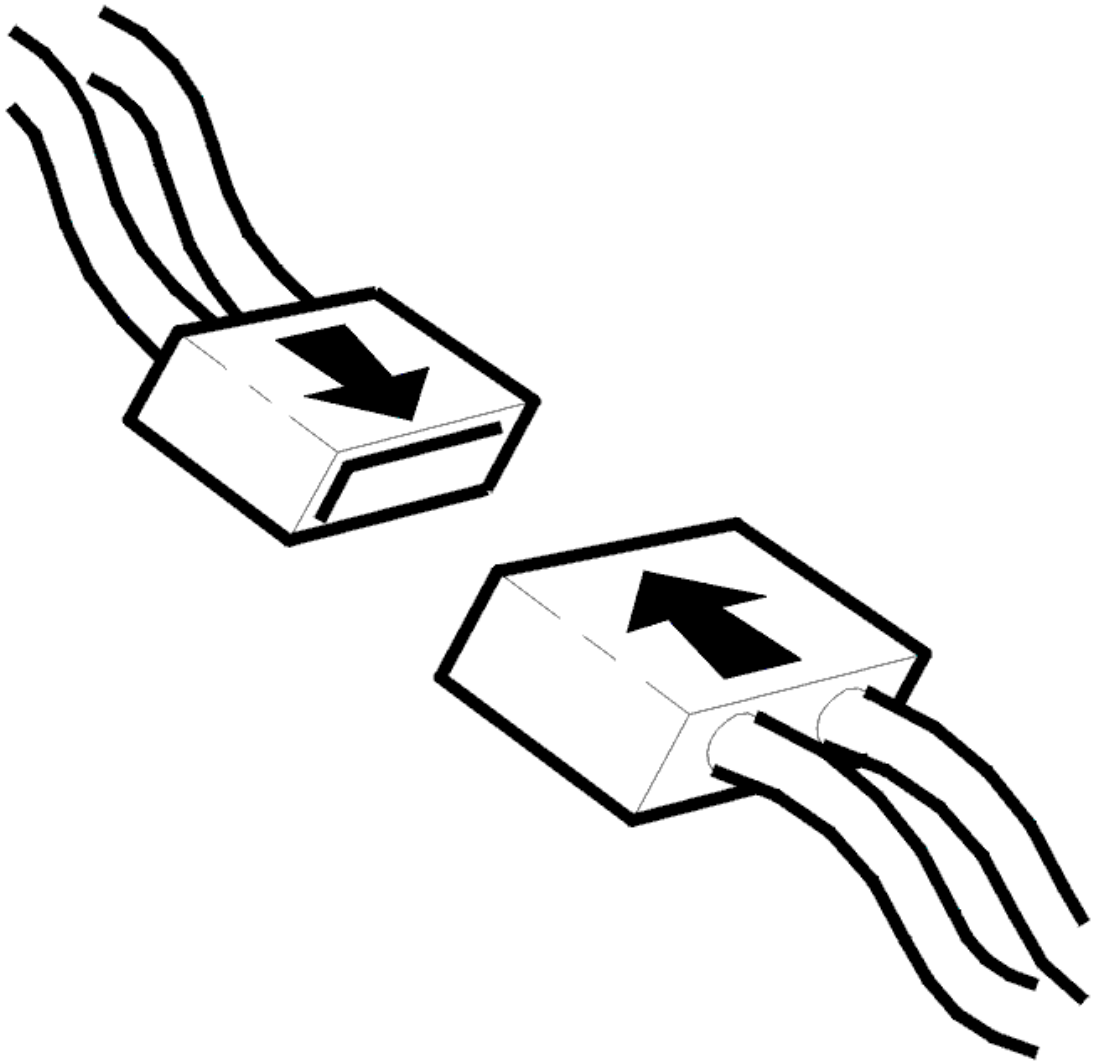

Fig. 49: Connecting Connector
Courtesy of VOLVO CARS CORPORATION

- Ignition off
- Reinstall the connectors, components etc.
- Ignition on.

  Insert a MiniDisc and check that the MD player is working.

Is the MD player working?

- **YES**

  VERIFIED: Troubleshooting has been completed.

- **NO**

  Refer to **INFORMATION**

INFORMATION

FAULT-TRACING INFORMATION

In case of this defect, troubleshooting is not followed by verification.

The information can be displayed again or the fault-tracing for this fault can be interrupted.

MP1-0007 EJECT BUTTON. ACTIVATED TOO LONG (2003-2006)

DIAGNOSTIC TROUBLE CODE (DTC) INFORMATION MP1-0007

Condition

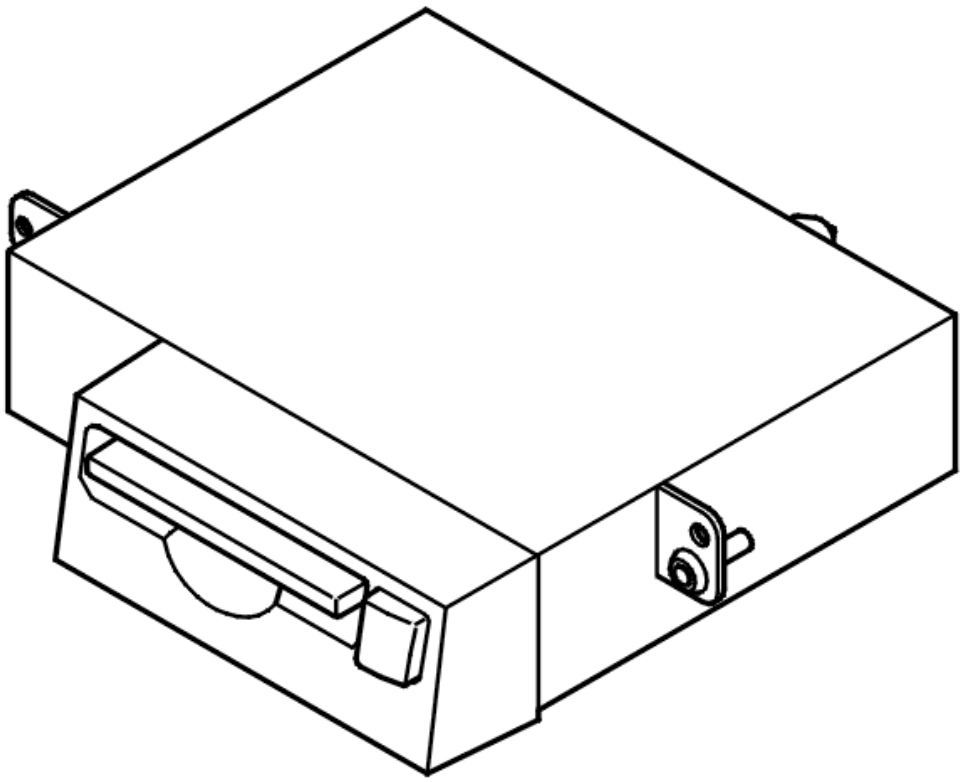

Fig. 50: Diagnostic Trouble Code (DTC) Information MP1-0002
Courtesy of VOLVO CARS CORPORATION

Diagnostic trouble code (DTC) MP1-0007 is stored if the MD module (MP1) registers that the eject button has been pressed for longer than 3 minutes.

The diagnostic trouble code (DTC) can be diagnosed when the ignition is switched on.

Substitute Value

- None.

Possible Source

- The eject button has been pressed for more than 3 minutes.

Fault symptom[s]

- The mini disc cannot be removed.

ACTIVATED TOO LONG

EJECT BUTTON

The MD module (MP1) has registered that the eject button has been pressed for more than 3 minutes.

If the fault is intermittent, it has been registered previously but is no longer present. Intermittent faults can be caused by interference at start up of the minidisc player or can be another type of fault which occurs on different occasions. The fault is evaluated depending on how it occurs. If the fault recurs, replace the MD module (MP1).

For permanent faults, manually check that the eject button has not stuck in the pressed in position.

Remedy as necessary.

MP1-XXXX UNKNOWN DIAGNOSTIC TROUBLE CODE (DTC) FOR THE CURRENT CONTROL MODULE VERSION (2003-2006)

UNKNOWN DIAGNOSTIC TROUBLE CODE (DTC) FOR THE CURRENT CONTROL MODULE VERSION

READING OFF DIAGNOSTIC TROUBLE CODES (DTC)

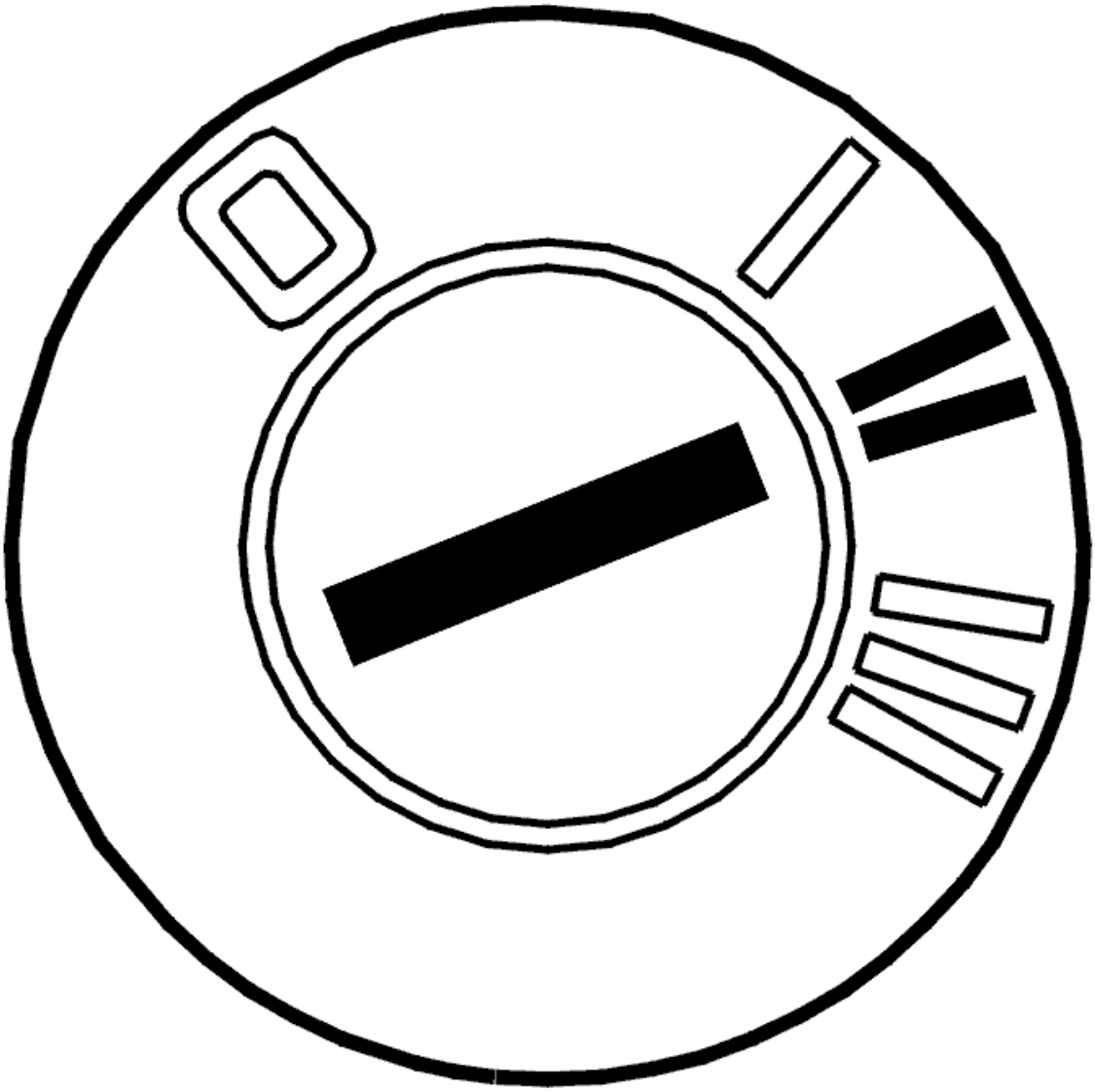

Fig. 51: Identifying Ignition ON
Courtesy of VOLVO CARS CORPORATION

- Ignition on.

  Read off the diagnostic trouble code (DTC) that is stored in the car.

  Make a note of the code. Report the code to VIDA customer support.

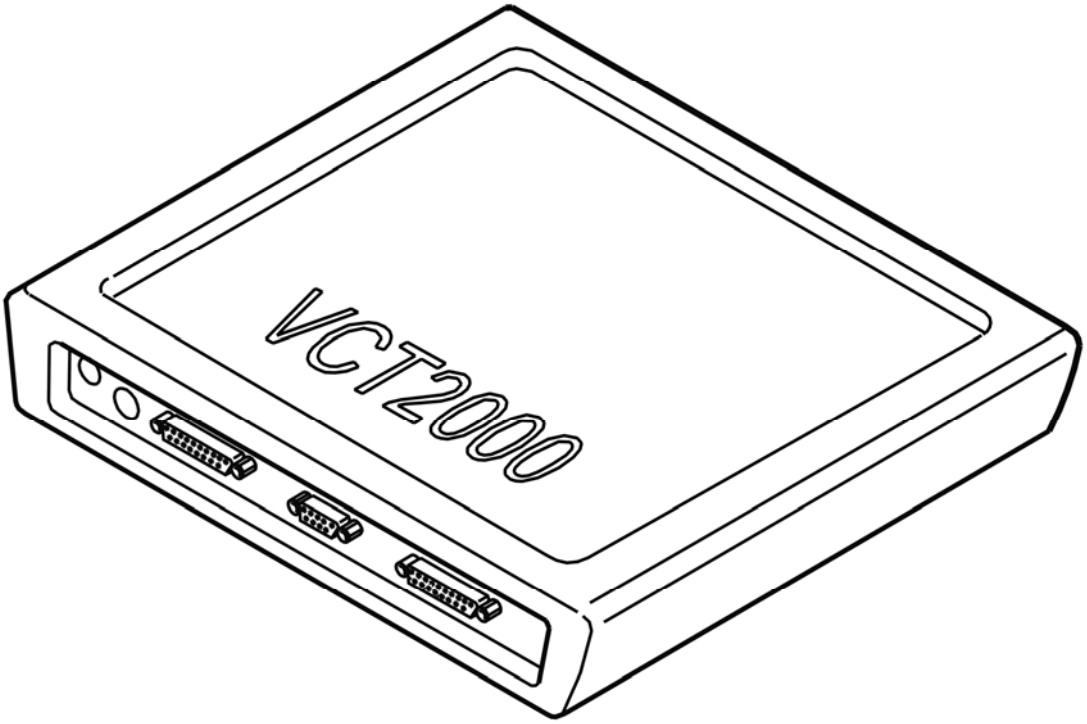

Fig. 52: Identifying VCT2000 Diagnostic Tool Symbol In VIDA
Courtesy of VOLVO CARS CORPORATION

MP2-0002 CONTROL MODULE. INTERNAL FAULT (2003-2006)

DIAGNOSTIC TROUBLE CODE (DTC) INFORMATION MP2-0002

Condition

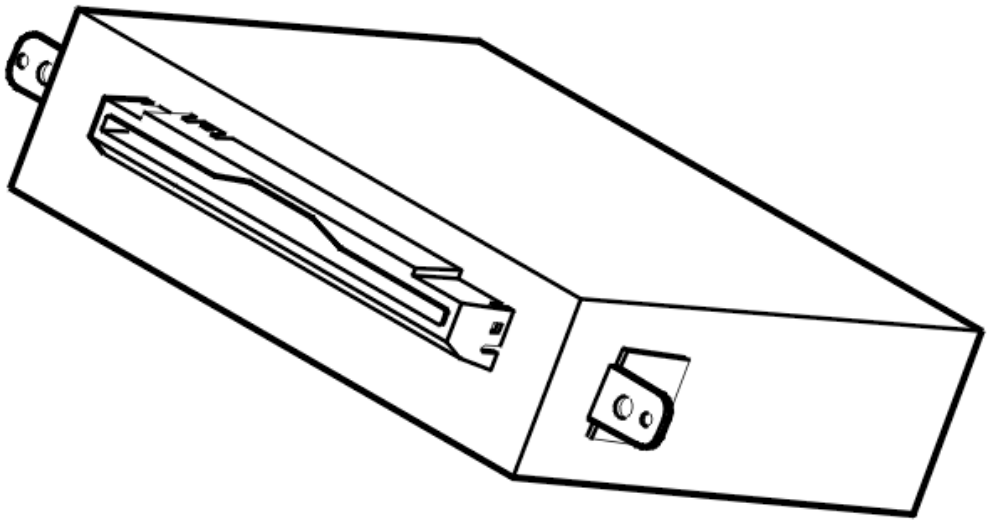

Fig. 53: Diagnostic Trouble Code (DTC) Information MP2-0002
Courtesy of VOLVO CARS CORPORATION

Diagnostic trouble code (DTC) MP2-0002 is stored if the CD module (MP2) registers an internal fault.

The diagnostic trouble code (DTC) can be diagnosed when the ignition is switched on.

Substitute Value

- None.

Possible Source

- Internal fault in the control module.

Fault symptom[s]

- The CD player does not work.

INTERNAL FAULT

REPLACING THE COMPONENT

The CD module (MP2) has registered an internal fault.

If the fault is intermittent, it has been registered previously but is no longer present. Intermittent faults can be caused by interference at start up of the CD module (MP2) or may be a different type of fault which occurs on different occasions. The fault is evaluated depending on how it occurs. If the fault recurs, replace the CD module (MP2).

In the event of a permanent fault, replace the CD module (MP2).

Remedy as necessary.

Other information:

- To replace the CD module (MP2), see **MINIDISC / CD CONTROL MODULE, REPLACING** .
- **Continue**

  Refer to **VERIFICATION**

VERIFICATION

VERIFICATION

HINT: After carrying out the repair, check that the fault has been remedied.

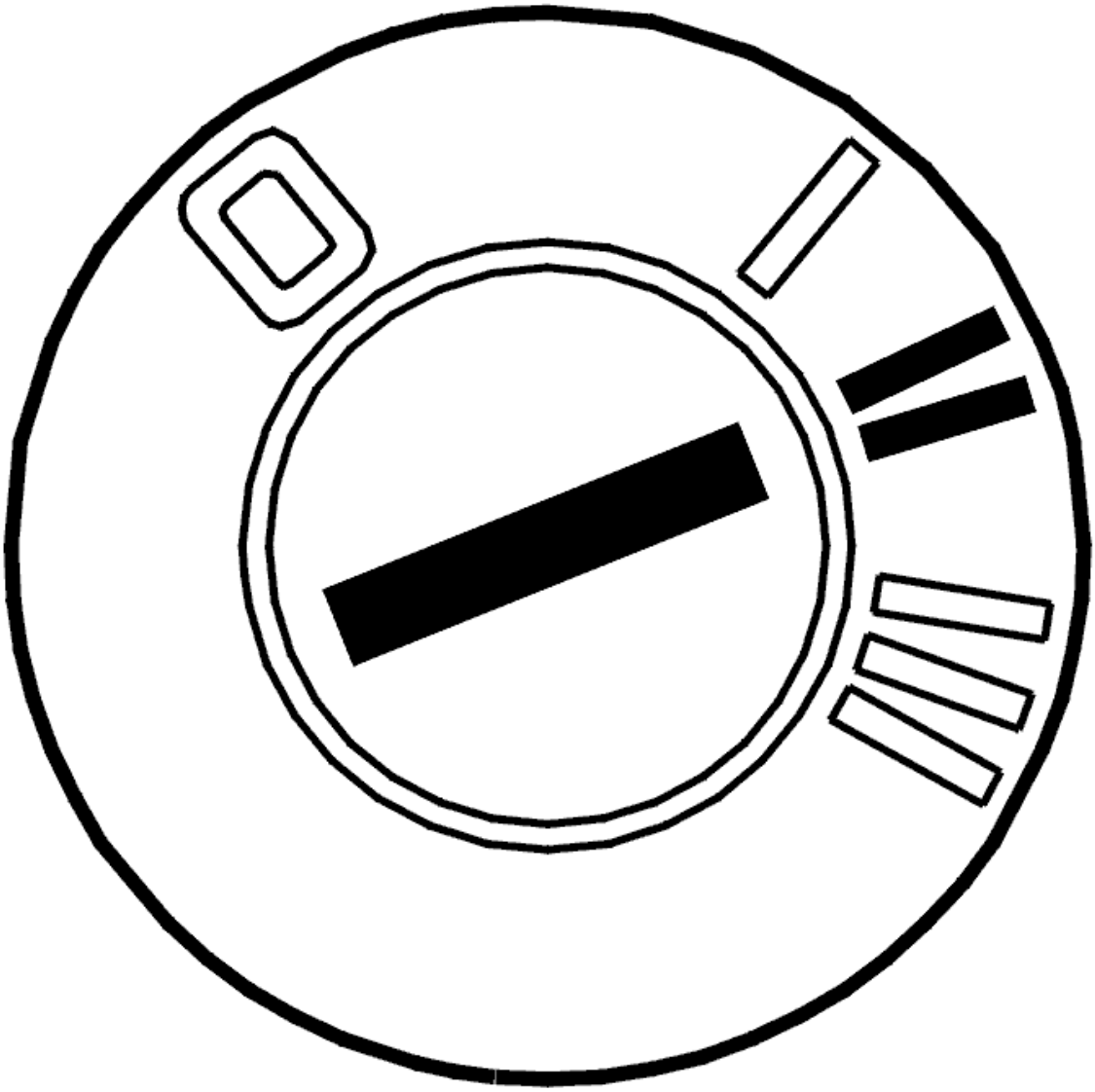

Fig. 54: Identifying Ignition ON
Courtesy of VOLVO CARS CORPORATION

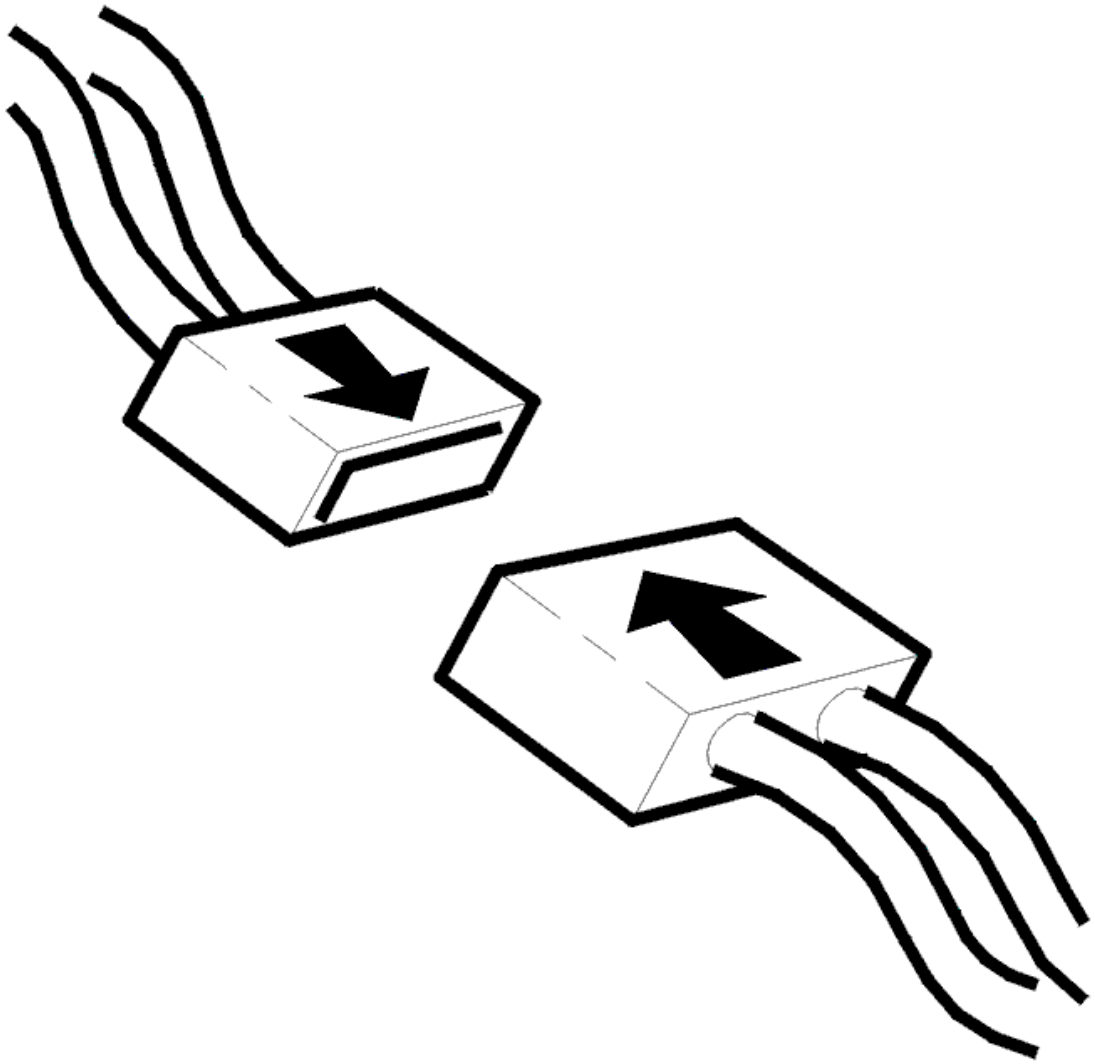

Fig. 55: Connecting Connector
Courtesy of VOLVO CARS CORPORATION

- Ignition off
- Reinstall the connectors, components etc.
- Ignition on.

  Insert a CD and check that the CD player is working.

Is the CD player working?

- **YES**

  VERIFIED: Troubleshooting has been completed.

- **NO**

  Refer to **INFORMATION**

INFORMATION

FAULT-TRACING INFORMATION

In case of this defect, troubleshooting is not followed by verification.

The information can be displayed again or the fault-tracing for this fault can be interrupted.

MP2-0003 CONTROL MODULE. INTERNAL FAULT (2003-2006)

DIAGNOSTIC TROUBLE CODE (DTC) INFORMATION MP2-0003

Condition

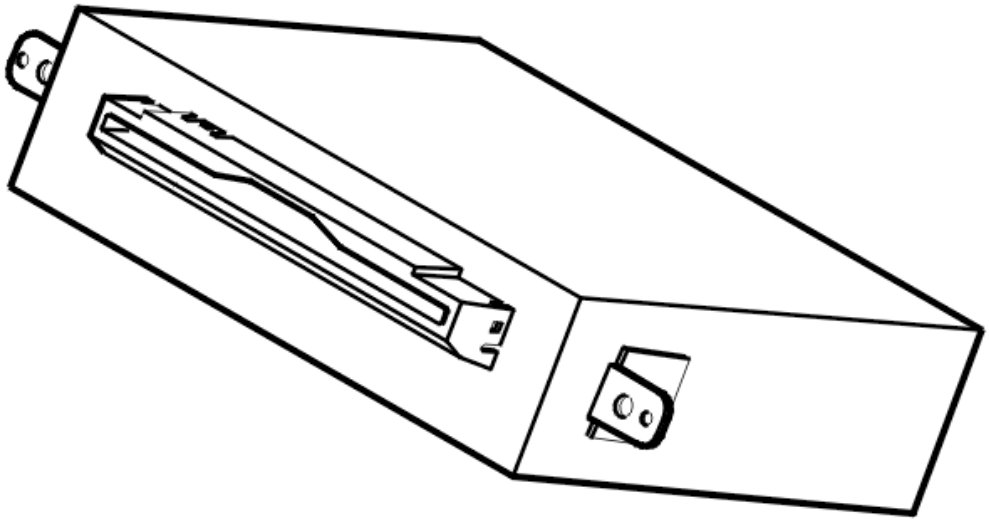

Fig. 56: Diagnostic Trouble Code (DTC) Information MP2-0002
Courtesy of VOLVO CARS CORPORATION

Diagnostic trouble code (DTC) MP2-0003 is stored if the CD module (MP2) registers an internal fault.

The diagnostic trouble code (DTC) can be diagnosed when the ignition is switched on.

Substitute Value

- None.

Possible Source

- Internal fault in the control module.

Fault symptom[s]

- The CD player does not work.

INTERNAL FAULT

REPLACING THE COMPONENT

The CD module (MP2) has registered an internal fault.

If the fault is intermittent, it has been registered previously but is no longer present. Intermittent faults can be caused by interference at start up of the CD module (MP2) or may be a different type of fault which occurs on different occasions. The fault is evaluated depending on how it occurs. If the fault recurs, replace the CD module (MP2).

In the event of a permanent fault, replace the CD module (MP2).

Remedy as necessary.

Other information:

- To replace the CD module (MP2), see **MINIDISC / CD CONTROL MODULE, REPLACING** .
- **Continue**

  Refer to **VERIFICATION**

VERIFICATION

VERIFICATION

HINT: After carrying out the repair, check that the fault has been remedied.

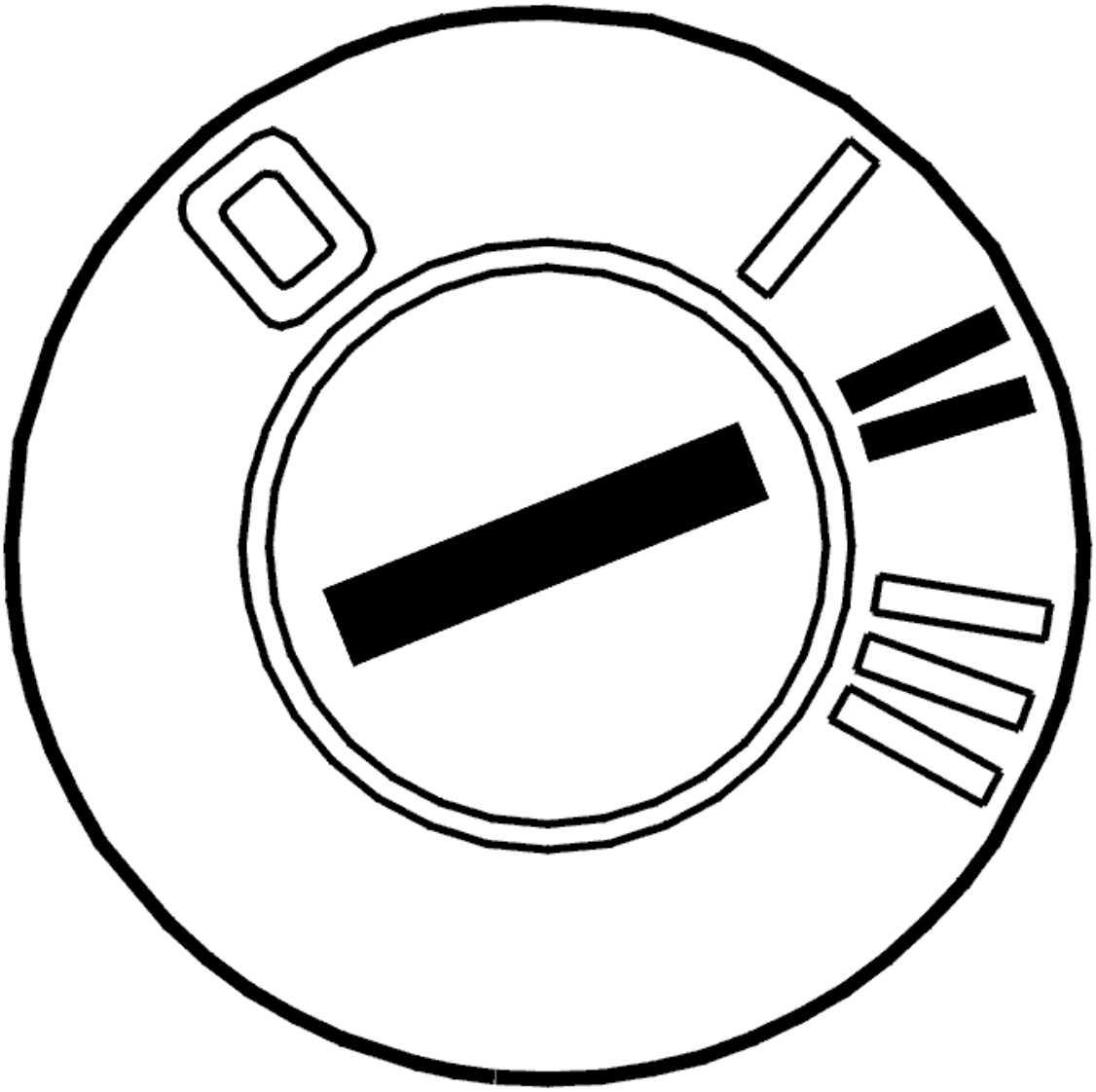

Fig. 57: Identifying Ignition ON
Courtesy of VOLVO CARS CORPORATION

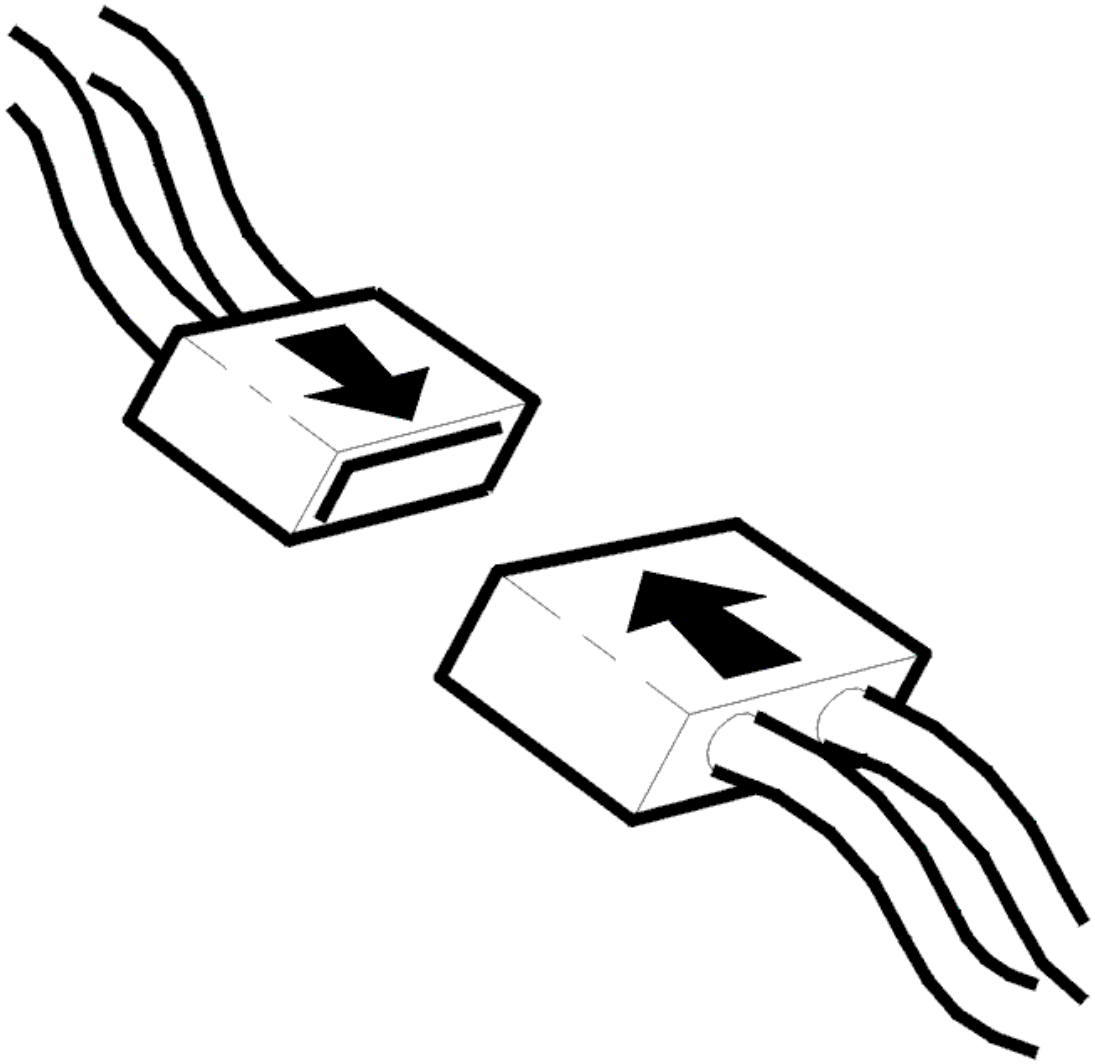

Fig. 58: Connecting Connector
Courtesy of VOLVO CARS CORPORATION

- Ignition off
- Reinstall the connectors, components etc.
- Ignition on.

  Insert a CD and check that the CD player is working.

Is the CD player working?

- **YES**

  VERIFIED: Troubleshooting has been completed.

- **NO**

  Refer to **INFORMATION**

INFORMATION

FAULT-TRACING INFORMATION

In case of this defect, troubleshooting is not followed by verification.

The information can be displayed again or the fault-tracing for this fault can be interrupted.

MP2-0004 CONTROL MODULE. INTERNAL FAULT (2003-2006)

DIAGNOSTIC TROUBLE CODE (DTC) INFORMATION MP2-0004

Condition

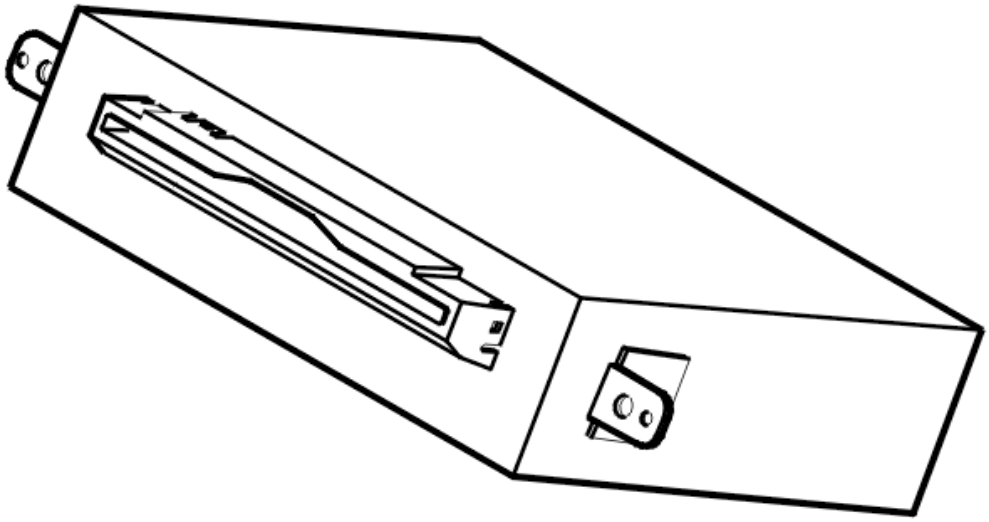

Fig. 59: Diagnostic Trouble Code (DTC) Information MP2-0002
Courtesy of VOLVO CARS CORPORATION

Diagnostic trouble code (DTC) MP2-0004 is stored if the CD module (MP2) registers an internal fault.

The diagnostic trouble code (DTC) can be diagnosed when the ignition is switched on.

Substitute Value

- None.

Possible Source

- Internal fault in the control module.

Fault symptom[s]

- The CD changer does not function.

INTERNAL FAULT

REPLACING THE COMPONENT

The CD module (MP2) has registered an internal fault.

If the fault is intermittent, it has been registered previously but is no longer present. Intermittent faults can be caused by interference at start up of the CD module (MP2) or may be a different type of fault which occurs on different occasions. The fault is evaluated depending on how it occurs. If the fault recurs, replace the CD module (MP2).

In the event of a permanent fault, replace the CD module (MP2).

Remedy as necessary.

Other information:

- To replace the CD module (MP2), see **MINIDISC / CD CONTROL MODULE, REPLACING** .
- **Continue**

  Refer to **VERIFICATION**

VERIFICATION

VERIFICATION

HINT: After carrying out the repair, check that the fault has been remedied.

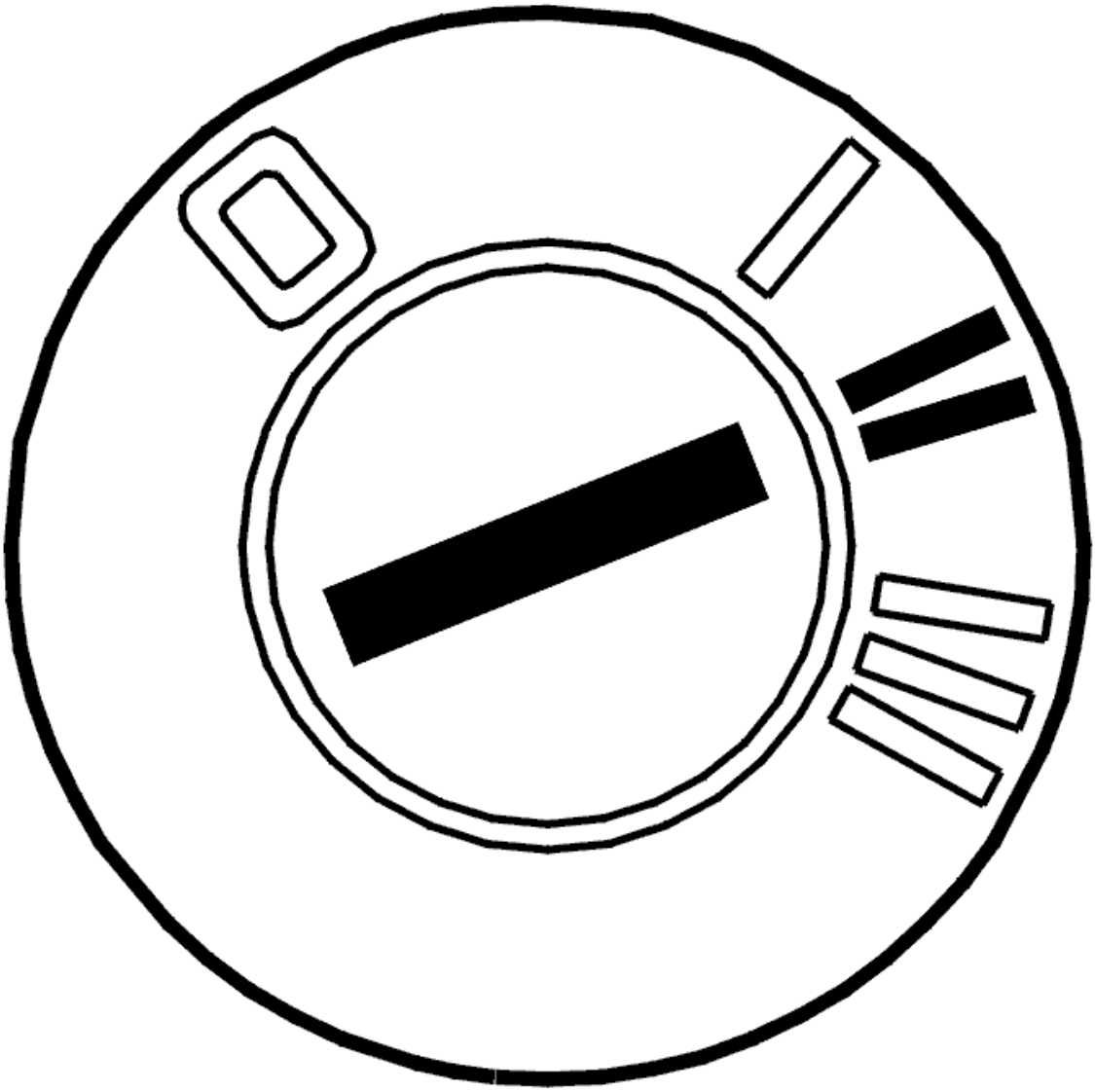

Fig. 60: Identifying Ignition ON
Courtesy of VOLVO CARS CORPORATION

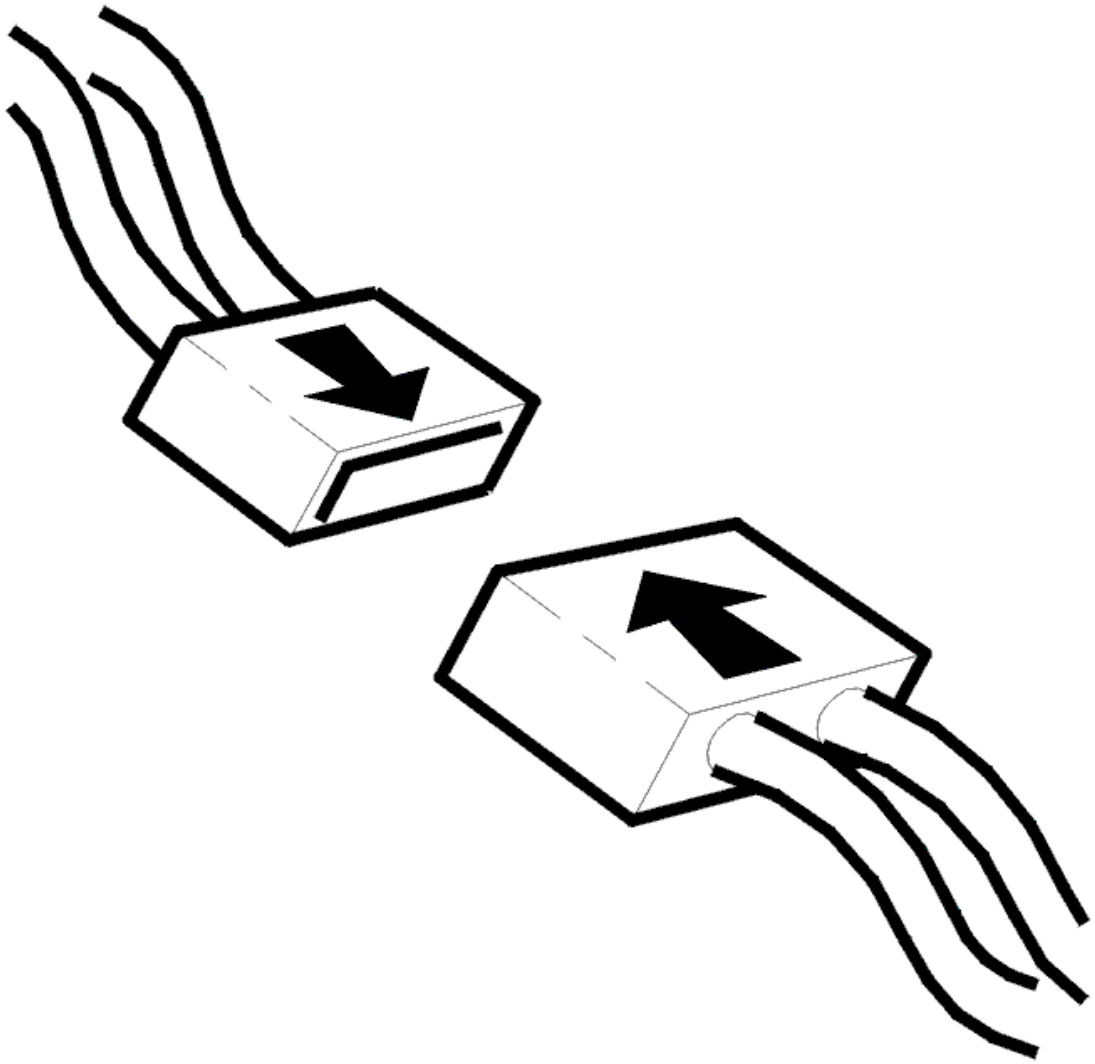

Fig. 61: Connecting Connector
Courtesy of VOLVO CARS CORPORATION

- Ignition off
- Reinstall the connectors, components etc.
- Ignition on.

  Insert a CD and check that the CD player is working.

Is the CD player working?

- **YES**

  VERIFIED: Troubleshooting has been completed.

- **NO**

  Refer to **INFORMATION**

INFORMATION

FAULT-TRACING INFORMATION

In case of this defect, troubleshooting is not followed by verification.

The information can be displayed again or the fault-tracing for this fault can be interrupted.

MP2-0005 CONTROL MODULE. INTERNAL FAULT (2003-2006)

DIAGNOSTIC TROUBLE CODE (DTC) INFORMATION MP2-0005

Condition

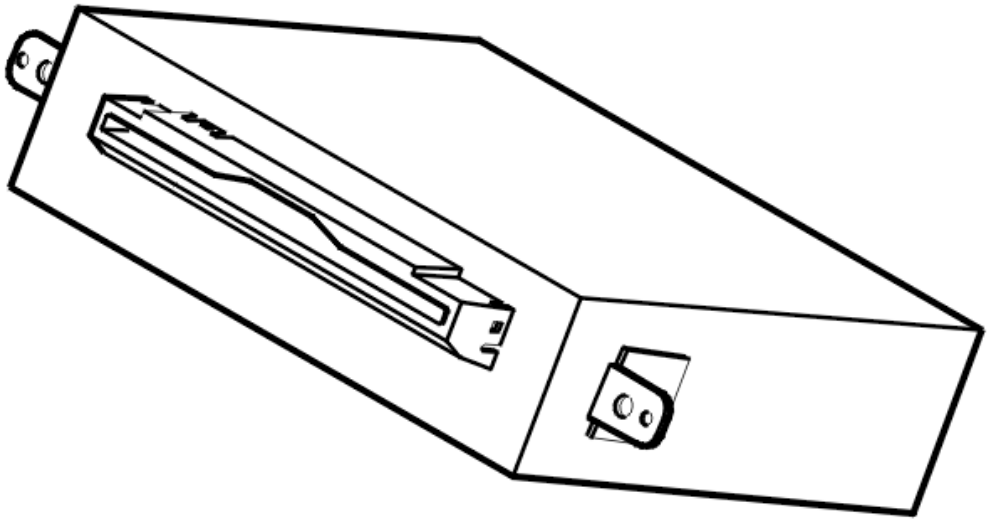

Fig. 62: Diagnostic Trouble Code (DTC) Information MP2-0002
Courtesy of VOLVO CARS CORPORATION

Diagnostic trouble code (DTC) MP2-0005 is stored if the CD module (MP2) registers an internal fault.

The diagnostic trouble code (DTC) can be diagnosed when the ignition is switched on.

Substitute Value

- None.

Possible Source

- Internal fault in the control module.

Fault symptom[s]

- The CD player does not work.

INTERNAL FAULT

REPLACING THE COMPONENT

The CD module (MP2) has registered an internal fault.

If the fault is intermittent, it has been registered previously but is no longer present. Intermittent faults can be caused by interference at start up of the CD module (MP2) or may be a different type of fault which occurs on different occasions. The fault is evaluated depending on how it occurs. If the fault recurs, replace the CD module (MP2).

In the event of a permanent fault, replace the CD module (MP2).

Remedy as necessary.

Other information:

- To replace the CD module (MP2), see **MINIDISC / CD CONTROL MODULE, REPLACING** .
- **Continue**

  Refer to **VERIFICATION**

VERIFICATION

VERIFICATION

HINT: After carrying out the repair, check that the fault has been remedied.

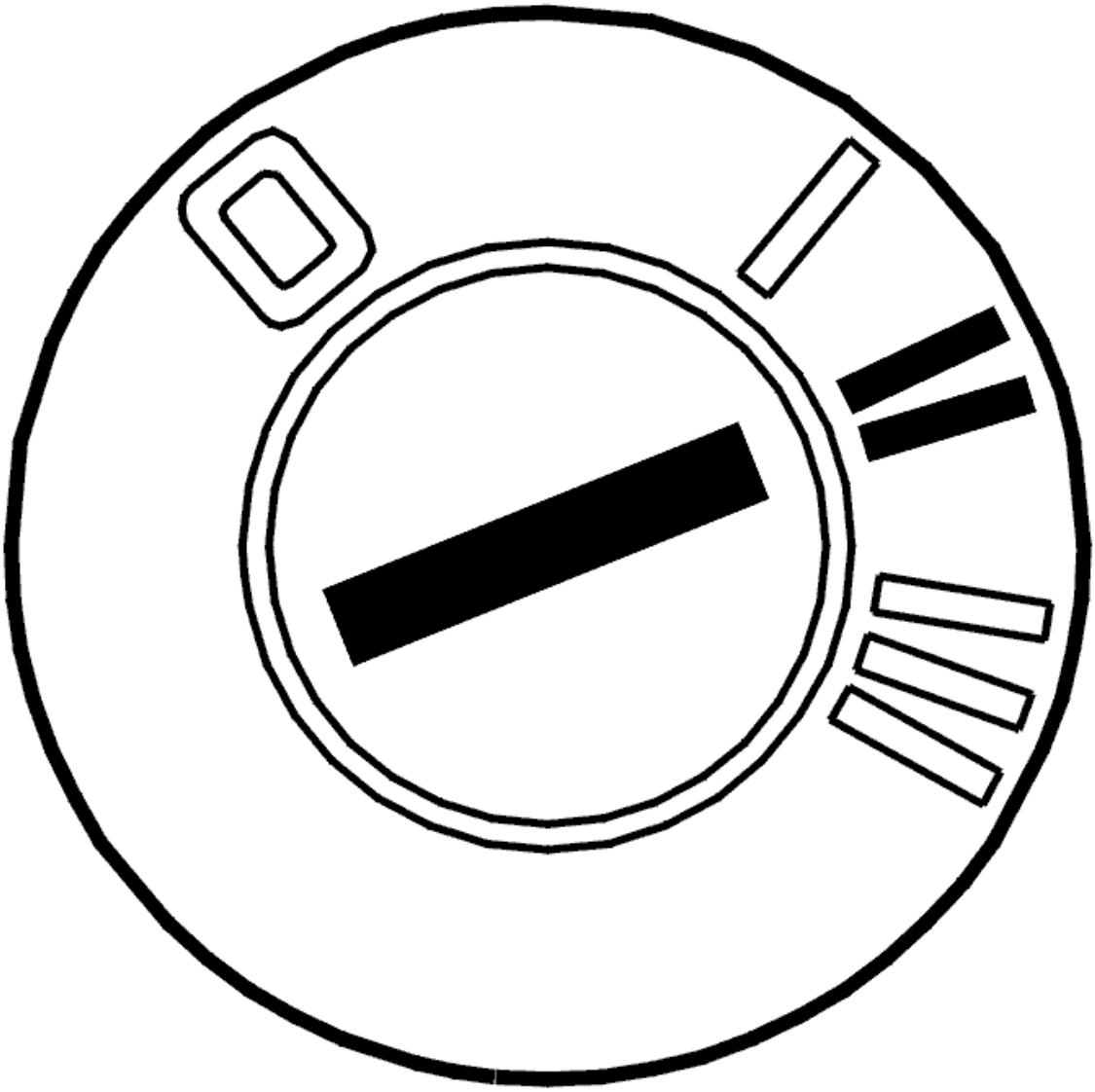

Fig. 63: Identifying Ignition ON
Courtesy of VOLVO CARS CORPORATION

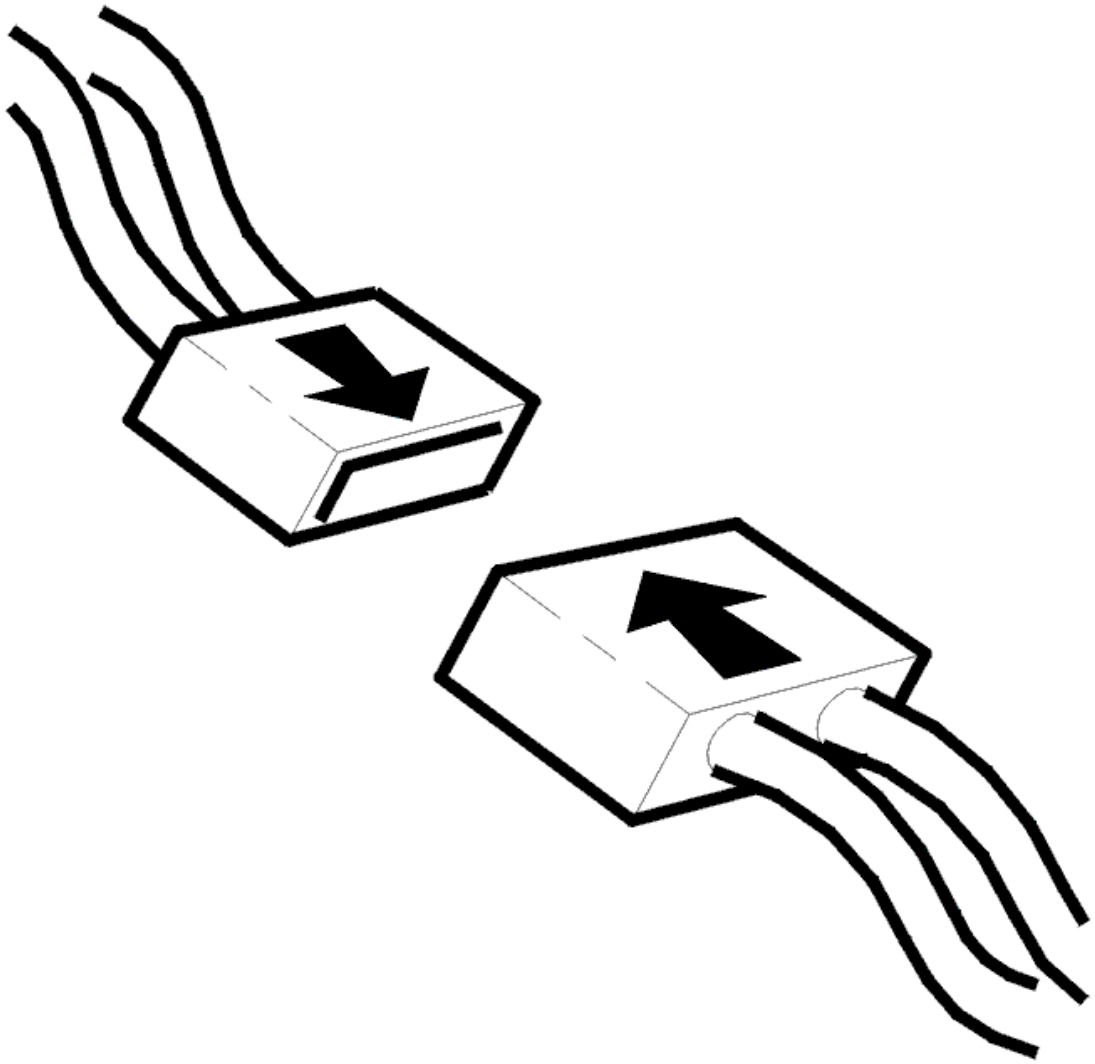

Fig. 64: Connecting Connector
Courtesy of VOLVO CARS CORPORATION

- Ignition off
- Reinstall the connectors, components etc.
- Ignition on.

  Insert a CD and check that the CD player is working.

Is the CD player working?

- **YES**

  VERIFIED: Troubleshooting has been completed.

- **NO**

  Refer to **INFORMATION**

INFORMATION

FAULT-TRACING INFORMATION

In case of this defect, troubleshooting is not followed by verification.

The information can be displayed again or the fault-tracing for this fault can be interrupted.

MP2-0006 CONTROL MODULE. INTERNAL FAULT (2003-2006)

DIAGNOSTIC TROUBLE CODE (DTC) INFORMATION MP2-0006

Condition

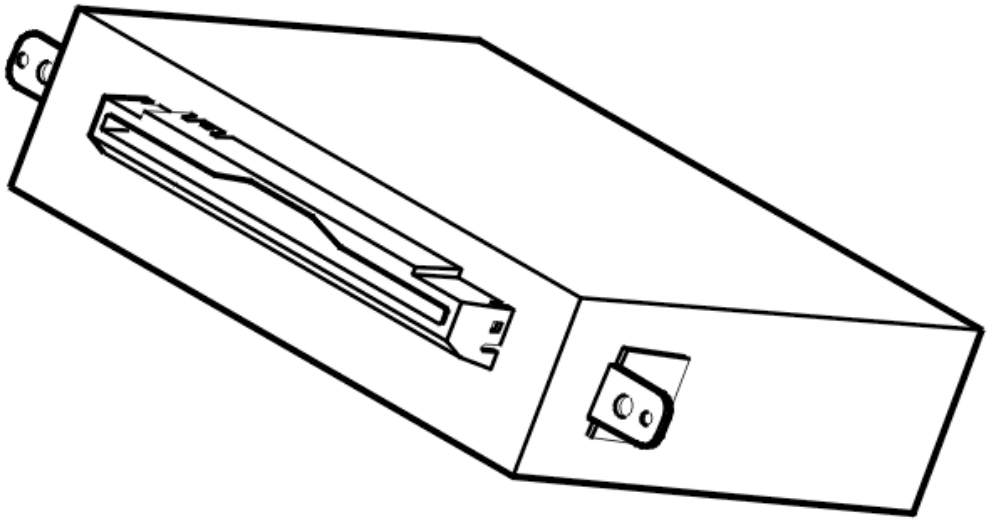

Fig. 65: Diagnostic Trouble Code (DTC) Information MP2-0002
Courtesy of VOLVO CARS CORPORATION

Diagnostic trouble code (DTC) MP2-0006 is stored if the CD module (MP2) registers an internal fault.

The diagnostic trouble code (DTC) can be diagnosed when the ignition is switched on.

Substitute Value

- None.

Possible Source

- Internal fault in the control module.

Fault symptom[s]

- The CD player does not work.

INTERNAL FAULT

REPLACING THE COMPONENT

The CD module (MP2) has registered an internal fault.

If the fault is intermittent, it has been registered previously but is no longer present. Intermittent faults can be caused by interference at start up of the CD module (MP2) or may be a different type of fault which occurs on different occasions. The fault is evaluated depending on how it occurs. If the fault recurs, replace the CD module (MP2).

In the event of a permanent fault, replace the CD module (MP2).

Remedy as necessary.

Other information:

- To replace the CD module (MP2), see **MINIDISC / CD CONTROL MODULE, REPLACING** .
- **Continue**

  Refer to **VERIFICATION**

VERIFICATION

VERIFICATION

HINT: After carrying out the repair, check that the fault has been remedied.

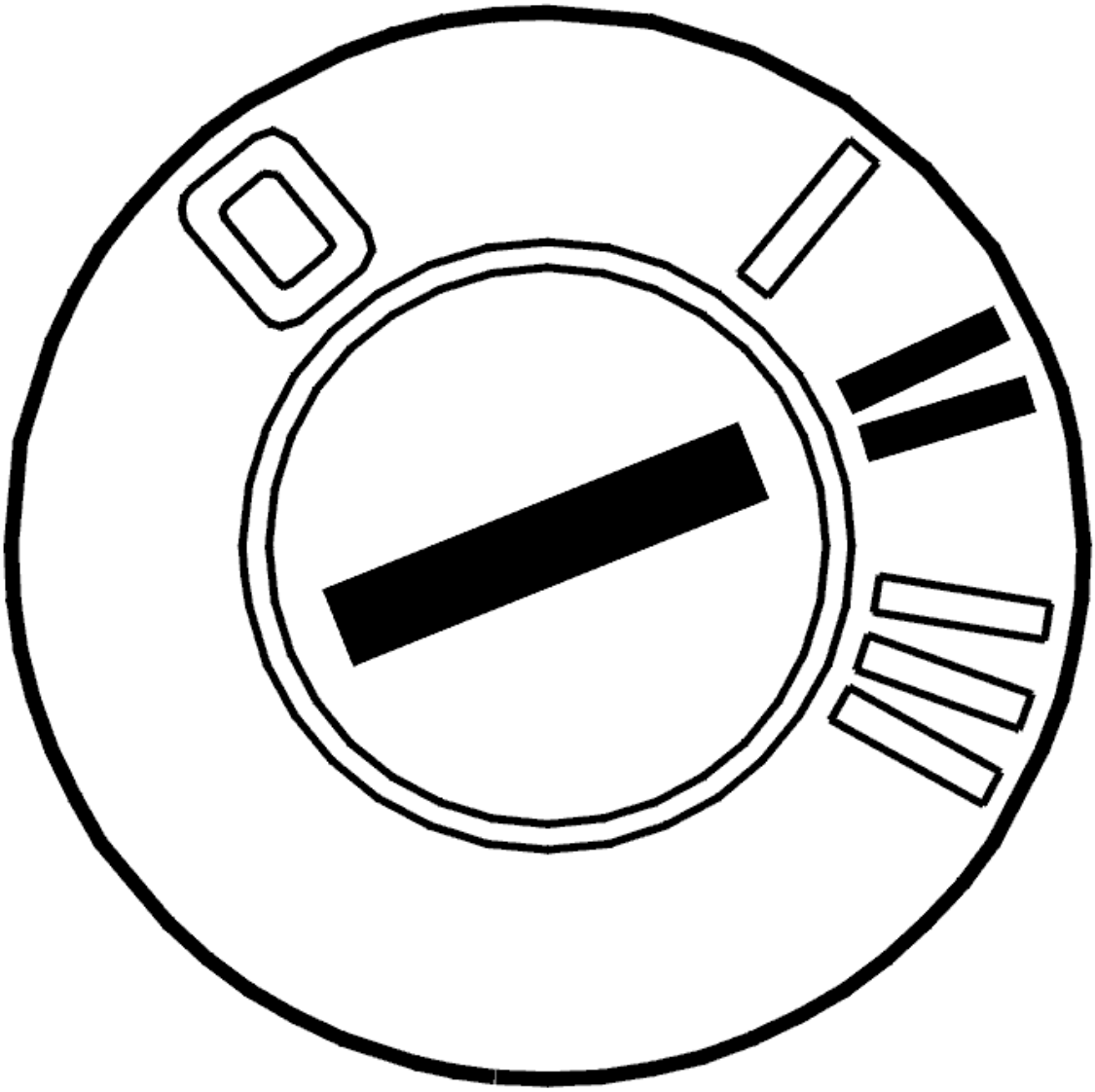

Fig. 66: Identifying Ignition ON
Courtesy of VOLVO CARS CORPORATION

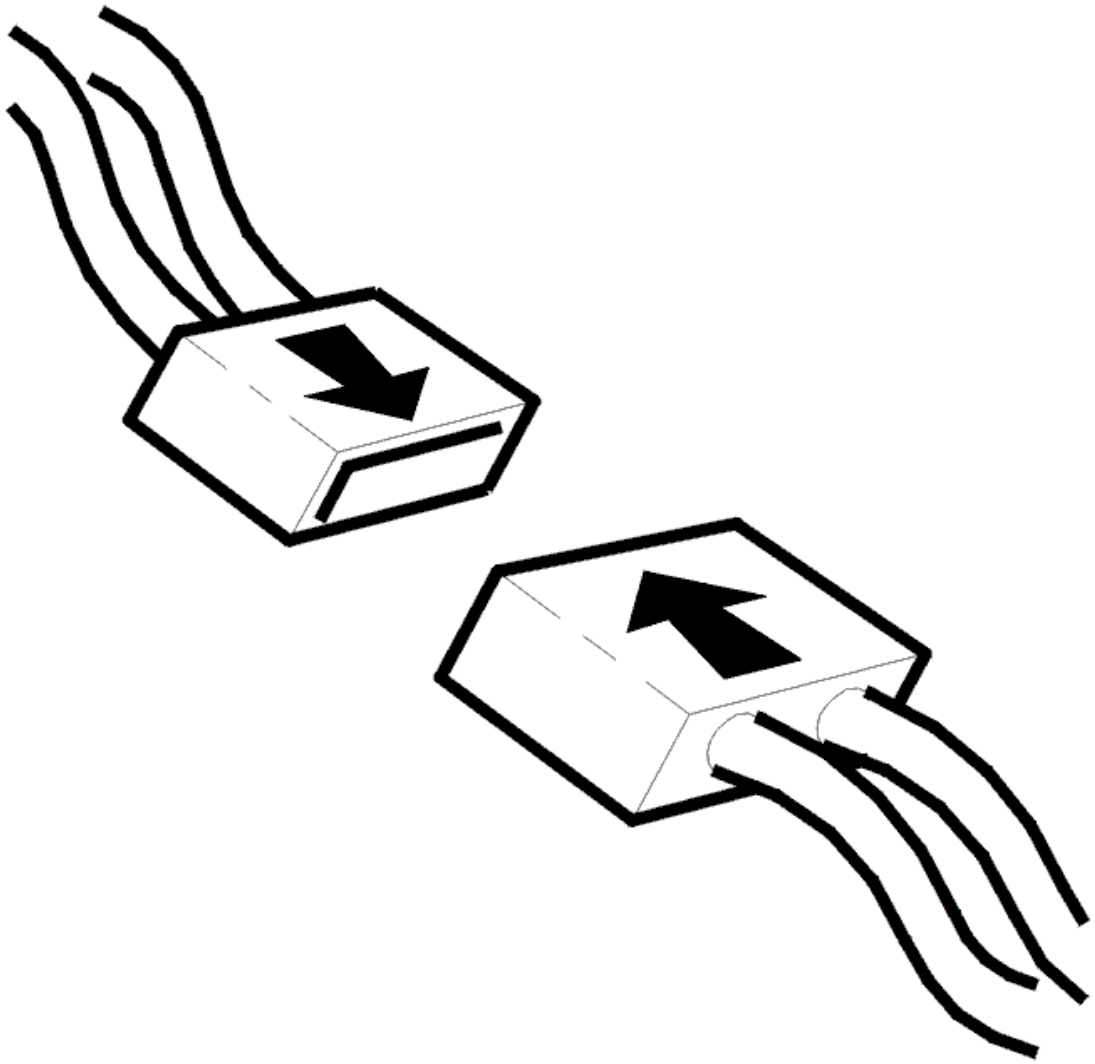

Fig. 67: Connecting Connector
Courtesy of VOLVO CARS CORPORATION

- Ignition off
- Reinstall the connectors, components etc.
- Ignition on.

  Insert a CD and check that the CD player is working.

Is the CD player working?

- **YES**

  VERIFIED: Troubleshooting has been completed.

- **NO**

  Refer to **INFORMATION**

INFORMATION

FAULT-TRACING INFORMATION

In case of this defect, troubleshooting is not followed by verification.

The information can be displayed again or the fault-tracing for this fault can be interrupted.

MP2-XXXX UNKNOWN DIAGNOSTIC TROUBLE CODE (DTC) FOR THE CURRENT CONTROL MODULE VERSION (2003-2006)

UNKNOWN DIAGNOSTIC TROUBLE CODE (DTC) FOR THE CURRENT CONTROL MODULE VERSION

READING OFF DIAGNOSTIC TROUBLE CODES (DTC)

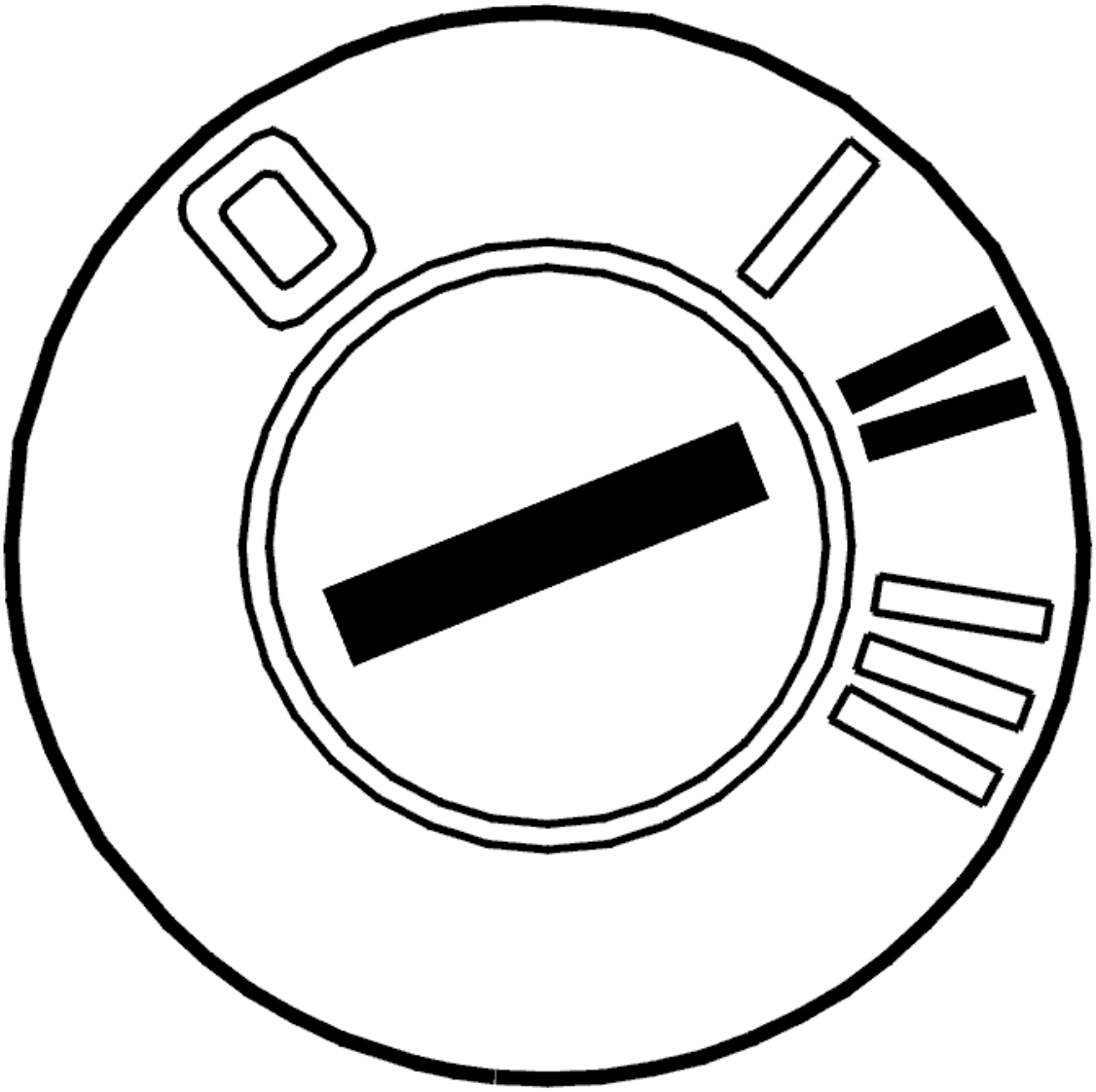

Fig. 68: Identifying Ignition ON
Courtesy of VOLVO CARS CORPORATION

- Ignition on.

  Read off the diagnostic trouble code (DTC) that is stored in the car.

  Make a note of the code. Report the code to VIDA customer support.

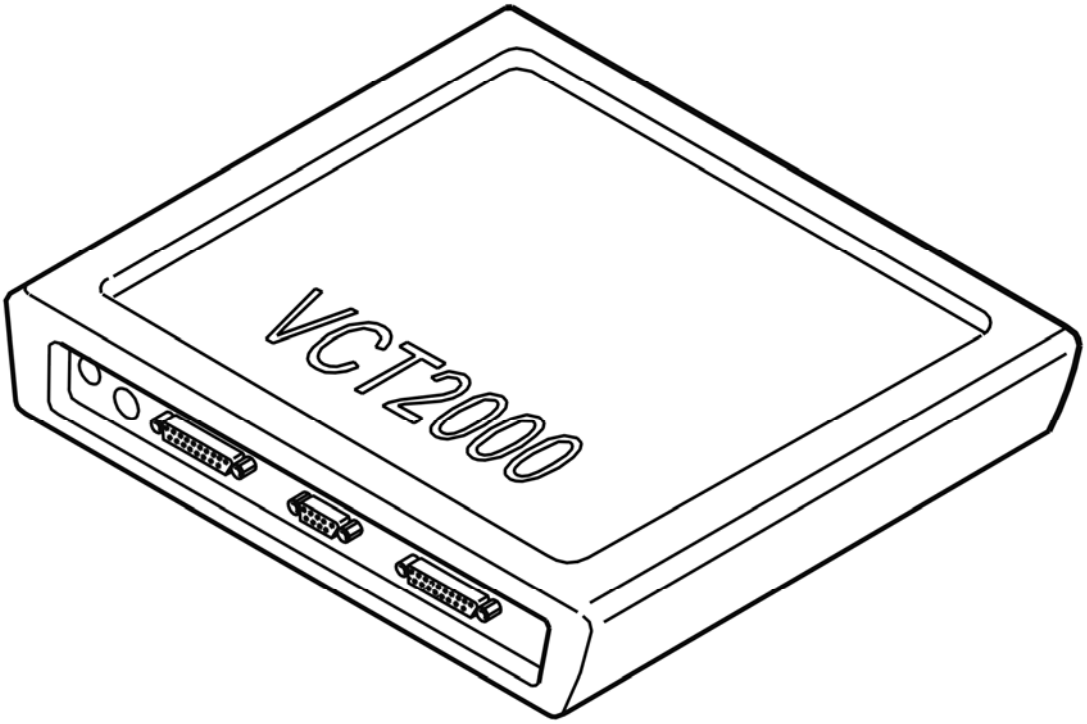

Fig. 69: Identifying VCT2000 Diagnostic Tool Symbol In VIDA
Courtesy of VOLVO CARS CORPORATION

RDAR-0001 CONTROL MODULE. INTERNAL FAULT (2007-2011)

DIAGNOSTIC TROUBLE CODE (DTC) INFORMATION RDAR-0001

Condition

The remote digital audio receiver module (RDAR) checks its internal status.

The diagnostic trouble code (DTC) is stored if the control module detects that:

- An internal fault has occurred.

The control module's test for the diagnostic trouble code (DTC) starts in the event of:

- Ignition switch position I and II.

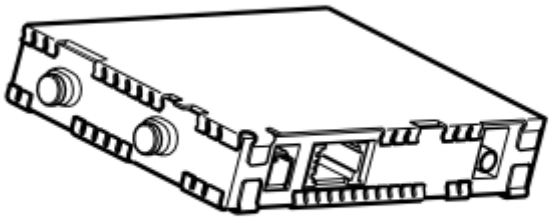

Fig. 70: Identifying Remote Digital Audio Receiver Module (RDAR)
Courtesy of VOLVO CARS CORPORATION

Substitute Value

- None.

Possible Source

- Internal fault in the control module.

Fault symptom[s]

- Digital Radio; No Functionality

INTERNAL FAULT

REPLACING THE COMPONENT

The remote digital audio receiver (RDAR) has registered an internal fault.

If the fault is intermittent, it has been registered previously but is no longer present. Intermittent faults may be due to interference upon start-up or may be another type of fault that can recur at different times. The fault is evaluated depending on how it occurs. If the fault recurs, replace the remote digital audio module (RDAR).

In the event of a permanent fault, replace the Remote Digital Audio Receiver (RDAR).

Remedy as necessary.

Other information

- see **LOCATION OF COMPONENTS**
- see **SATELLITE RADIO CONTROL MODULE**

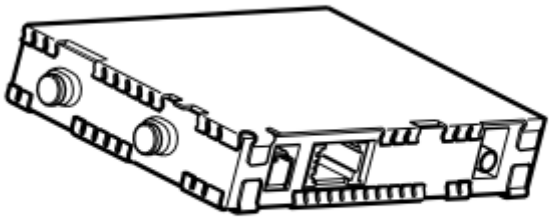

Fig. 71: Identifying Remote Digital Audio Receiver Module (RDAR)
Courtesy of VOLVO CARS CORPORATION

- **Continue**

  Refer to **VERIFICATION**

VERIFICATION

VERIFICATION

HINT: After carrying out the repair, check that the fault has been remedied.

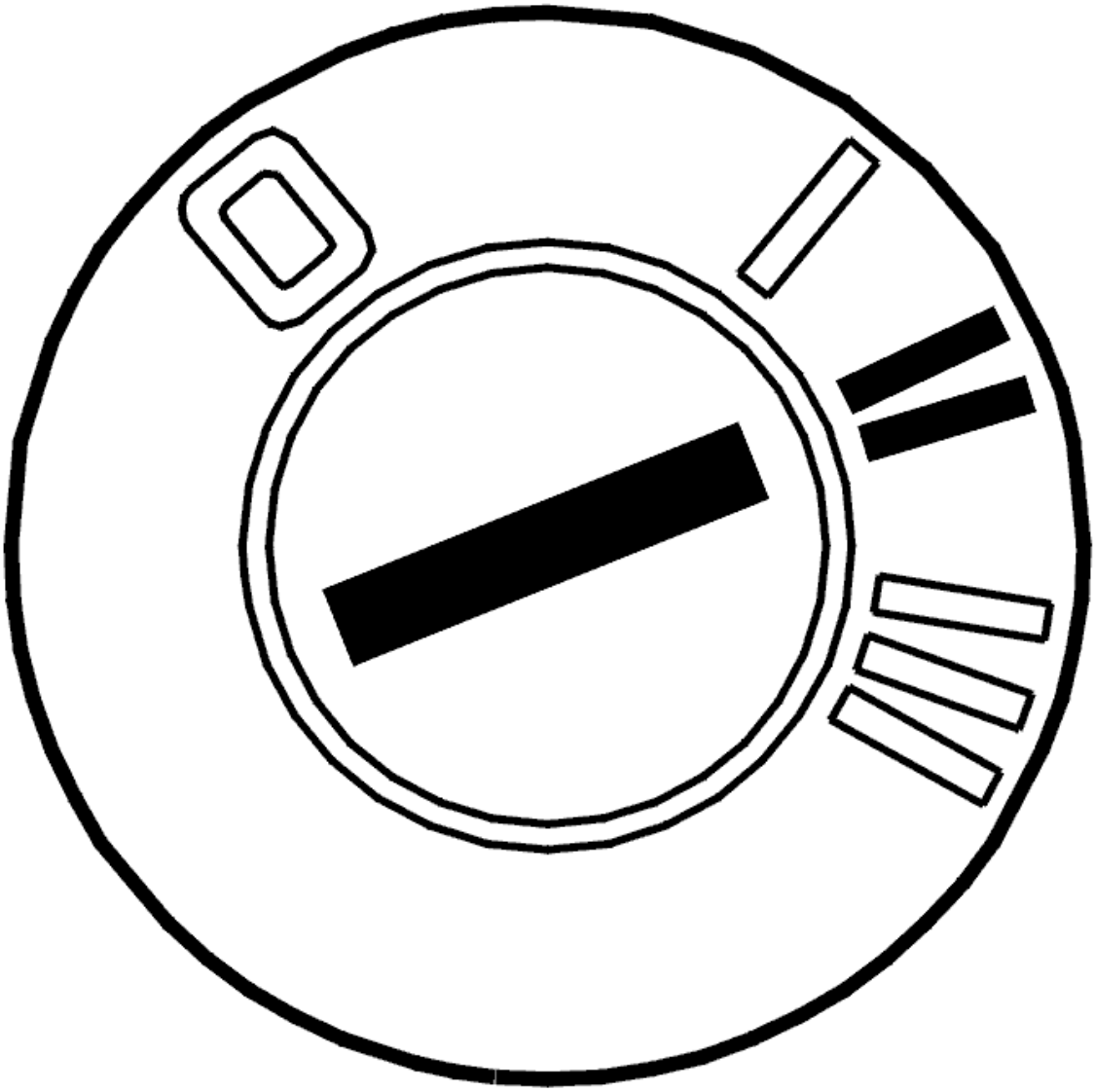

Fig. 72: Identifying Ignition ON
Courtesy of VOLVO CARS CORPORATION

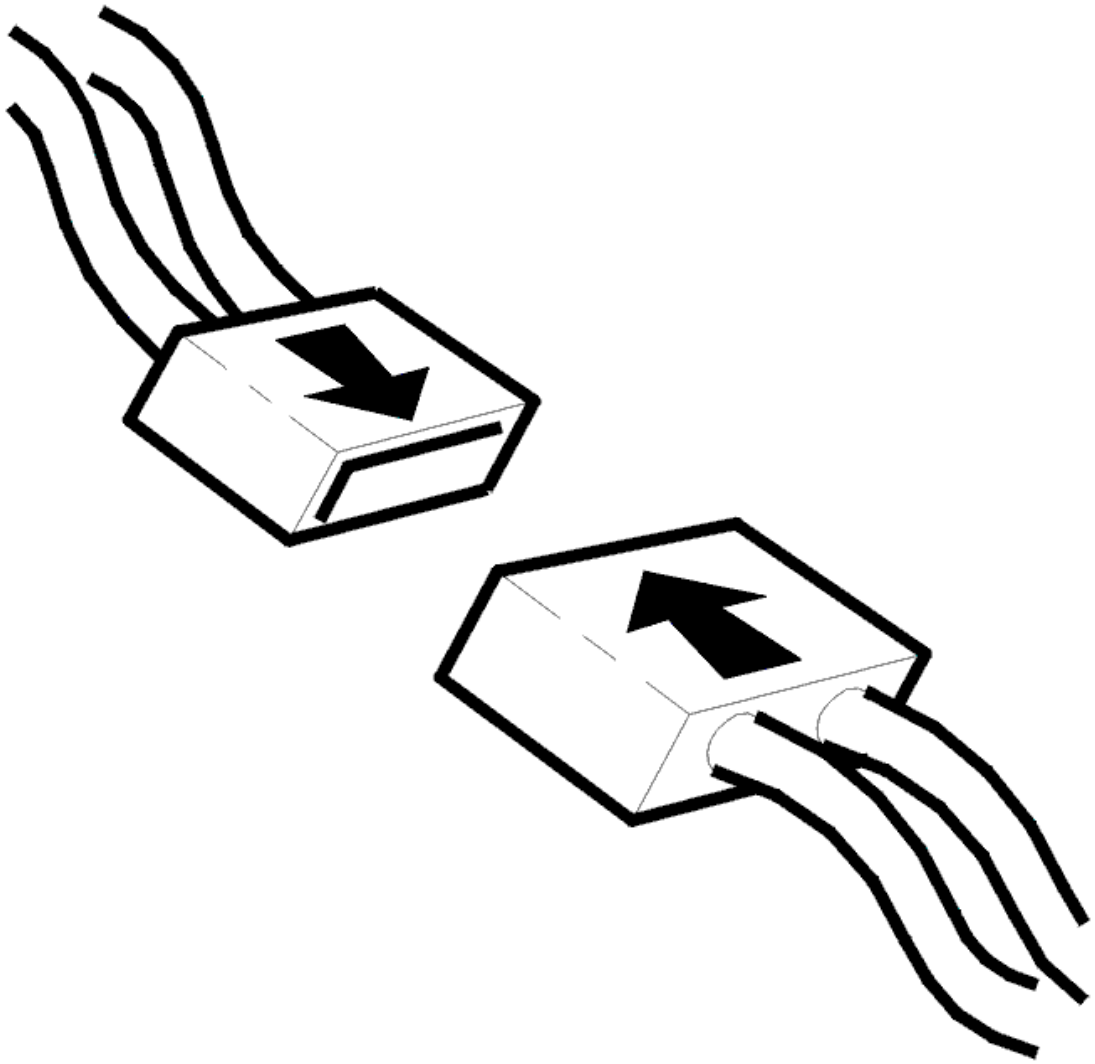

Fig. 73: Connecting Connector
Courtesy of VOLVO CARS CORPORATION

- Ignition off
- Reinstall the connectors, components etc.
- Ignition on.

  Check that the radio is working and that the reception is acceptable.

Is the radio playing through the loudspeakers?

- **YES**

  VERIFIED: Troubleshooting has been completed.

- **NO**

  Refer to **INFORMATION**

INFORMATION

FAULT-TRACING INFORMATION

The fault should have been detected and remedied. As this is not the case fault-tracing has failed.

Exit fault-tracing for this diagnostic trouble code (DTC) or make another attempt.

RDAR-0002 ANTENNA, SATELLITE RADIO. SIGNAL MISSING (2007-2011)

DIAGNOSTIC TROUBLE CODE (DTC) INFORMATION RDAR-0002

Condition

The remote digital audio receiver module (RDAR) checks the signal from the satellite antenna.

The diagnostic trouble code (DTC) is stored if the control module detects that:

- Antenna circuit is open.

The control module's test for the diagnostic trouble code (DTC) starts in the event of:

- Ignition switch position I and II.

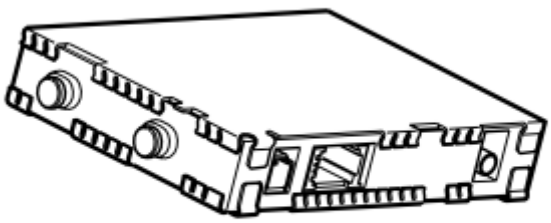

Fig. 74: Identifying Remote Digital Audio Receiver Module (RDAR)
Courtesy of VOLVO CARS CORPORATION

Substitute Value

- None.

Possible Source

- Antenna circuit is open.

Fault symptom[s]

- Digital Radio; No Functionality

SIGNAL MISSING

CHECKING THE WIRING

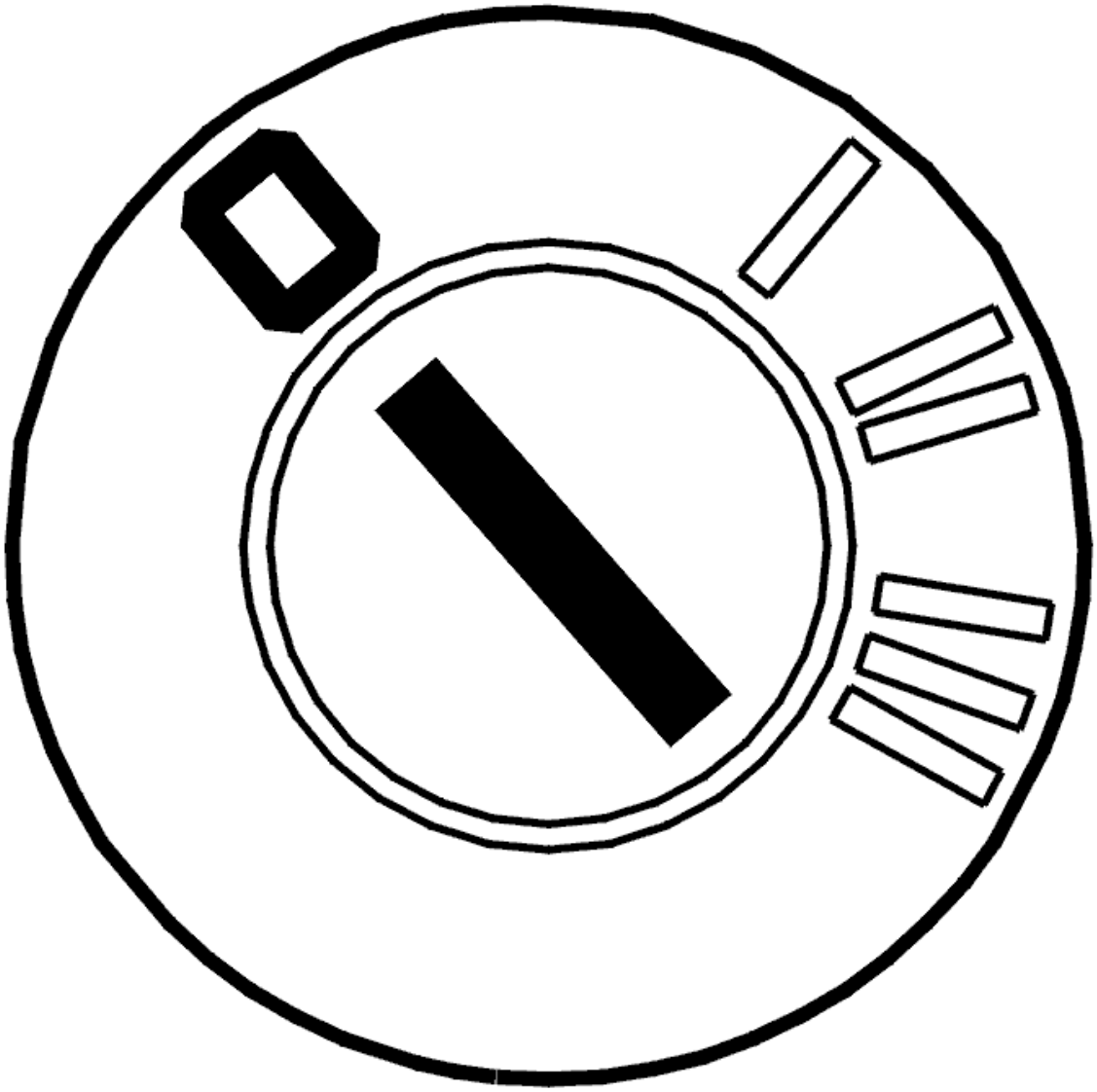

Fig. 75: Identifying Ignition OFF
Courtesy of VOLVO CARS CORPORATION

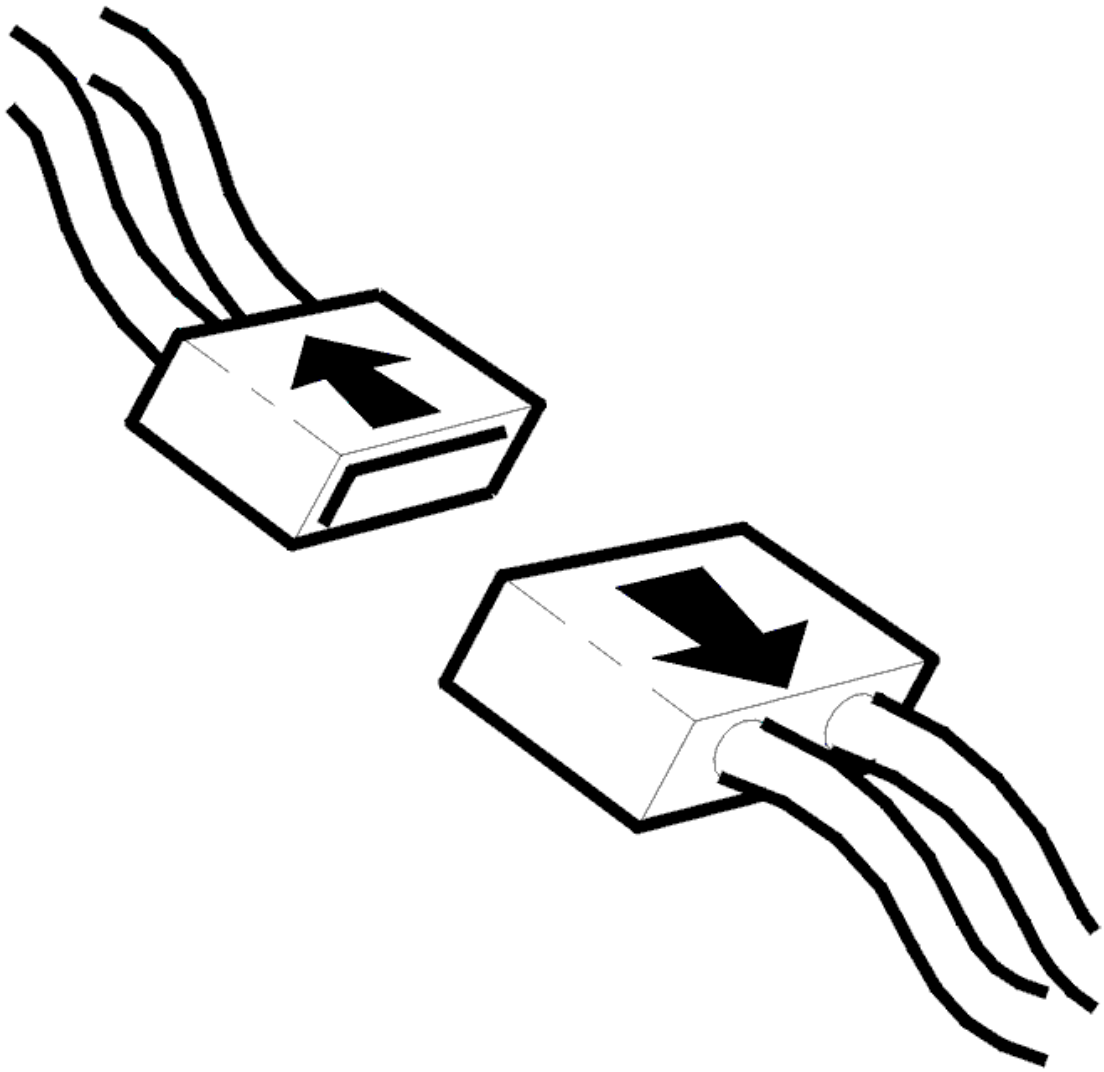

Fig. 76: Disconnecting Connector
Courtesy of VOLVO CARS CORPORATION

- Ignition off
- Disconnect the antenna connector.

  Check the terminal. Check for contact resistance. Check for loose connections. Check for oxidation.

  Checking the antenna cable between the remote digital audio receiver (RDAR) and the satellite antenna for open circuit.

  Remedy as necessary.

  Other information

  - see **SIGNAL SPECIFICATION**

- see **LOCATION OF COMPONENTS**
- see **CONTENTS**
- see **SATELLITE RADIO CONTROL MODULE**

- **Continue**

  Refer to **VERIFICATION**

VERIFICATION

VERIFICATION

HINT: After carrying out the repair, check that the fault has been remedied.

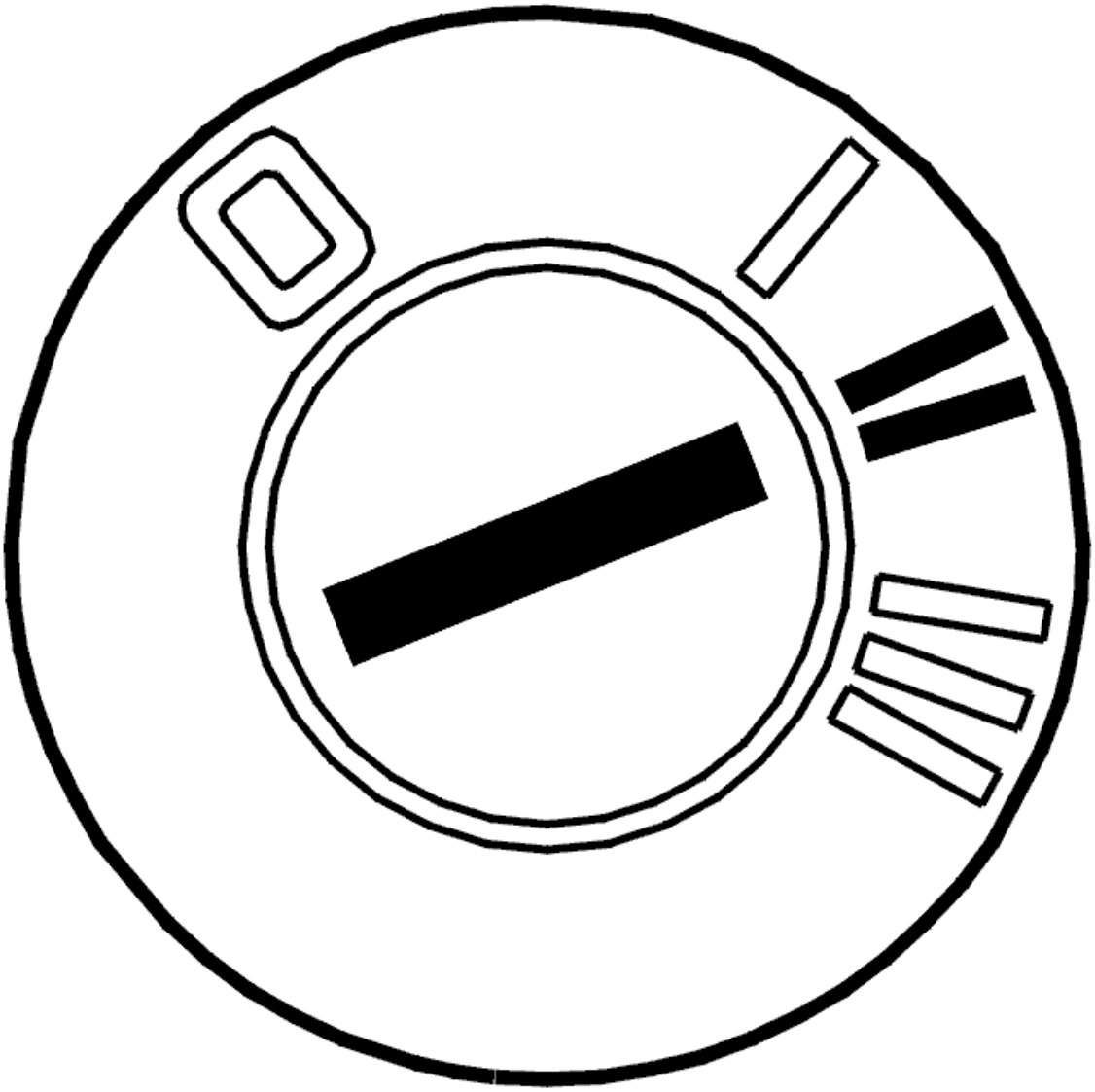

Fig. 77: Identifying Ignition ON

Courtesy of VOLVO CARS CORPORATION

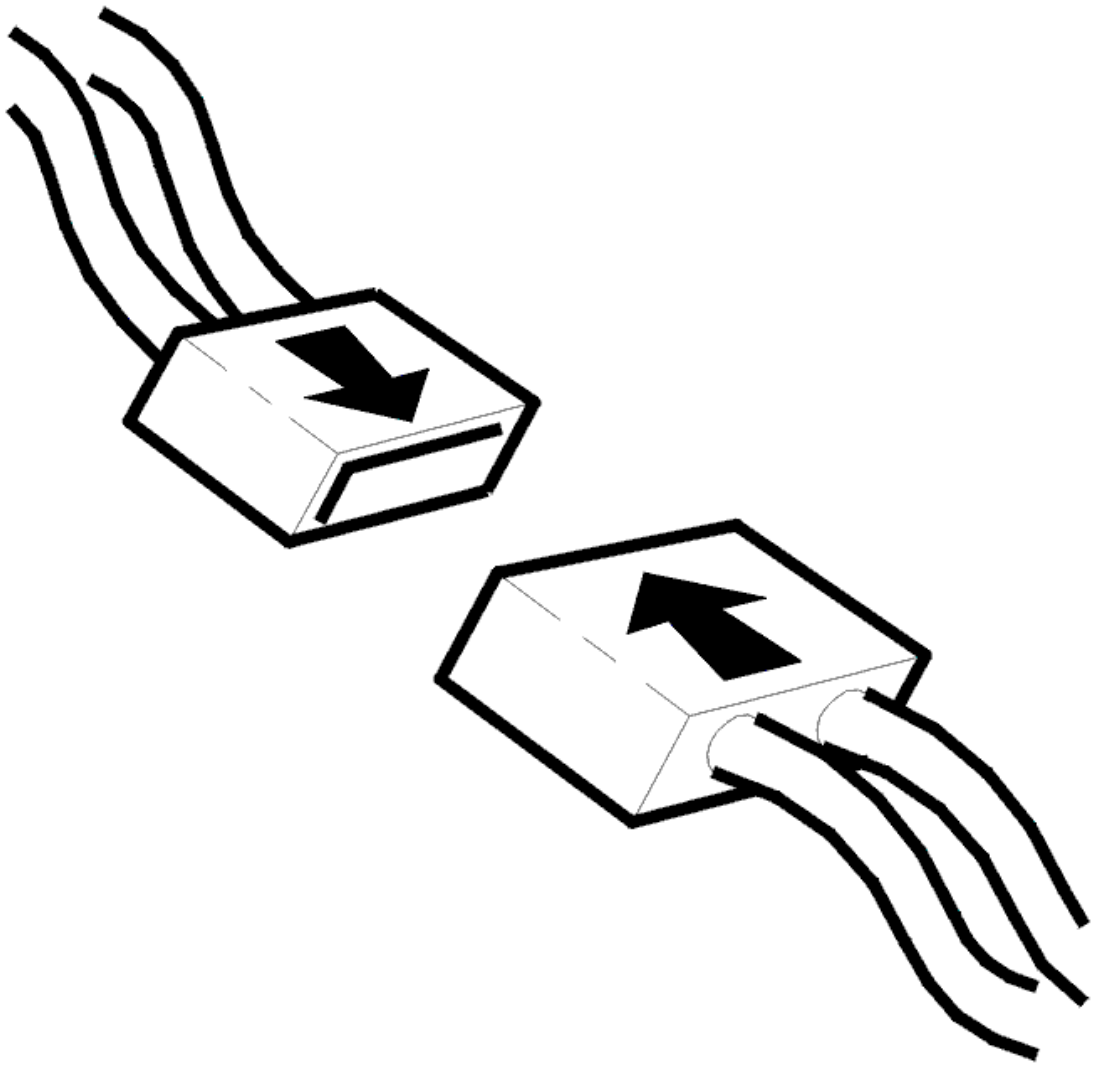

Fig. 78: Connecting Connector
Courtesy of VOLVO CARS CORPORATION

- Ignition off
- Reinstall the connectors, components etc.
- Ignition on.

  Check that the radio is working and that the reception is acceptable.

Is the radio playing through the loudspeakers?

- **YES**

VERIFIED: Troubleshooting has been completed.

- **NO**

  Refer to **INFORMATION**

INFORMATION

FAULT-TRACING INFORMATION

The fault should have been detected and remedied. As this is not the case fault-tracing has failed.

Exit fault-tracing for this diagnostic trouble code (DTC) or make another attempt.

RDAR-0003 ANTENNA, SATELLITE RADIO. SIGNAL TOO LOW (2007-2011)

DIAGNOSTIC TROUBLE CODE (DTC) INFORMATION RDAR-0003

Condition

The remote digital audio receiver module (RDAR) checks the signal from the satellite antenna.

The diagnostic trouble code (DTC) is stored if the control module detects that:

- Low antenna signal.

The control module's test for the diagnostic trouble code (DTC) starts in the event of:

- Ignition switch position I and II.

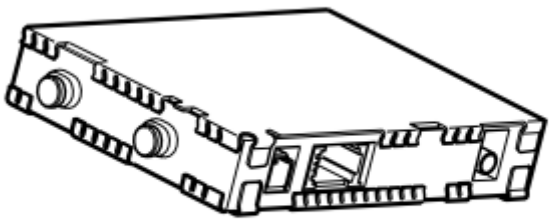

Fig. 79: Identifying Remote Digital Audio Receiver Module (RDAR)
Courtesy of VOLVO CARS CORPORATION

Substitute Value

- None.

Possible Source

- Antenna circuit is short circuited to ground.

Fault symptom[s]

- Digital Radio; No Functionality

SIGNAL TOO LOW

CHECKING THE WIRING

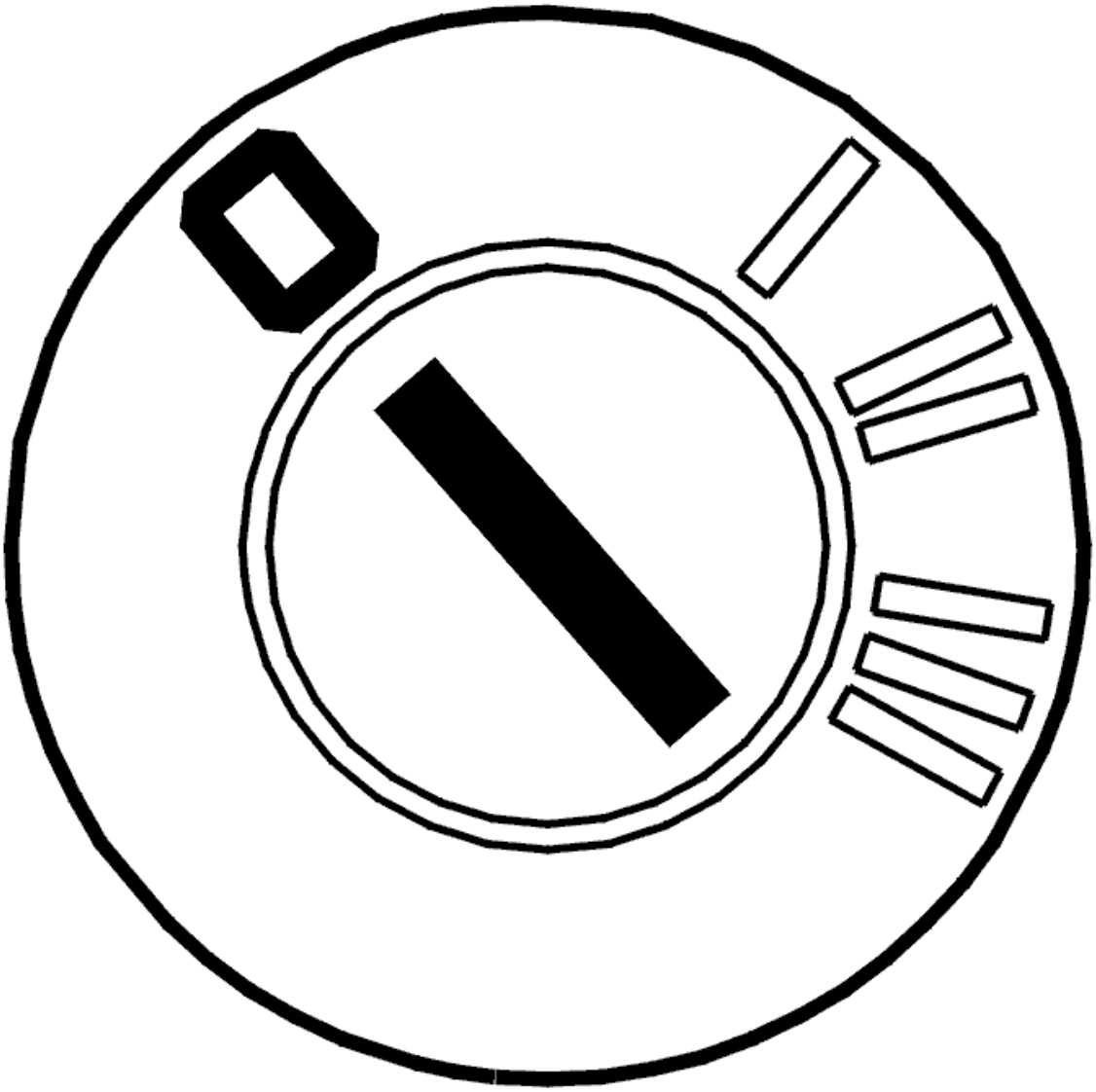

Fig. 80: Identifying Ignition OFF
Courtesy of VOLVO CARS CORPORATION

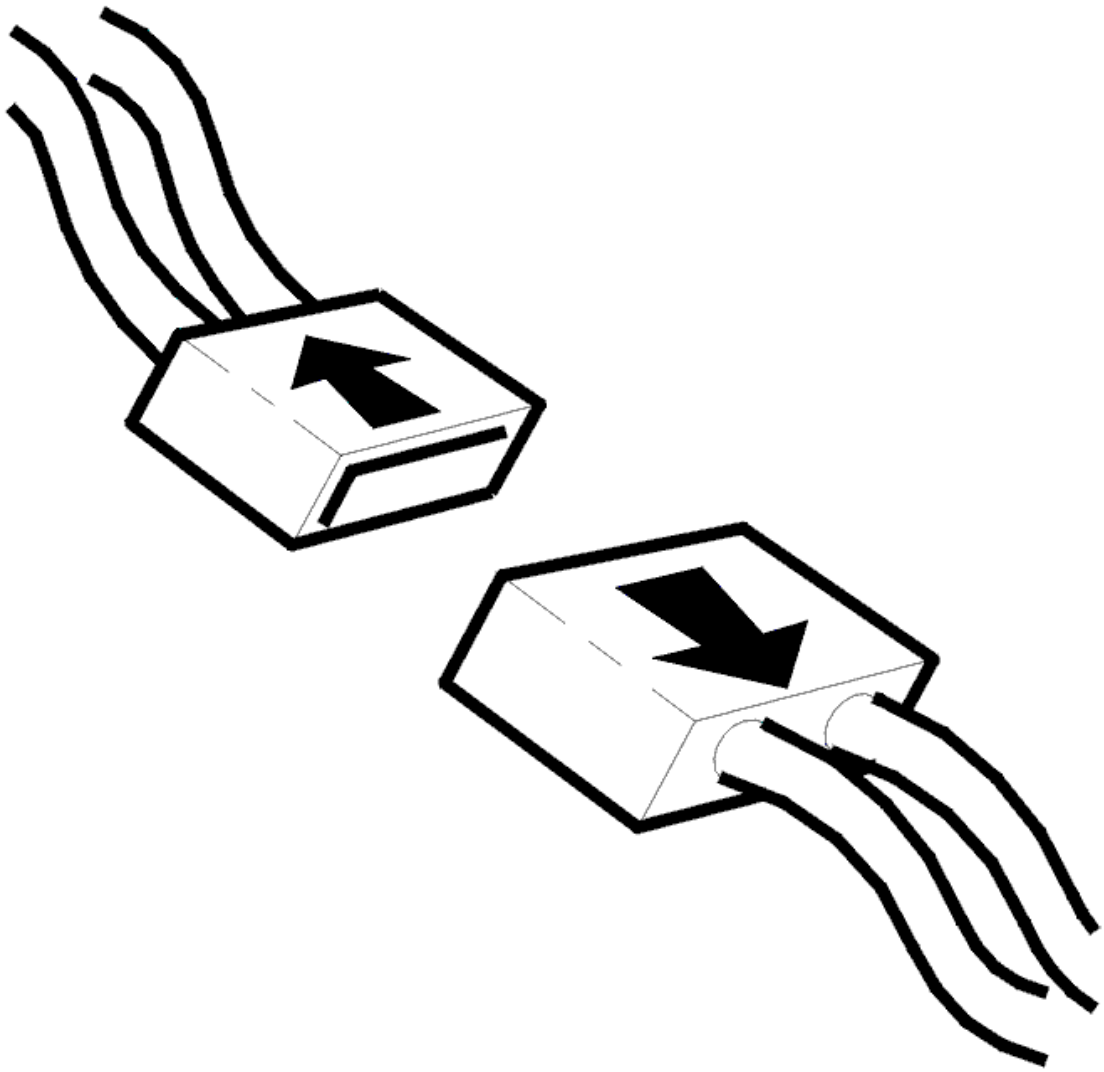

Fig. 81: Disconnecting Connector
Courtesy of VOLVO CARS CORPORATION

- Ignition off
- Disconnect the antenna connector.

  Check the terminal. Check for contact resistance. Check for loose connections. Check for oxidation.

  Check the connector and antenna cable between the Remote Digital Audio Receiver (RDAR) and satellite antenna. Check for a short-circuit to ground.

  Remedy as necessary.

Other information

- see **SIGNAL SPECIFICATION**
- see **LOCATION OF COMPONENTS**
- see **CONTENTS**
- see **SATELLITE RADIO CONTROL MODULE**

- **Continue**

  Refer to **VERIFICATION**

VERIFICATION

VERIFICATION

HINT: After carrying out the repair, check that the fault has been remedied.

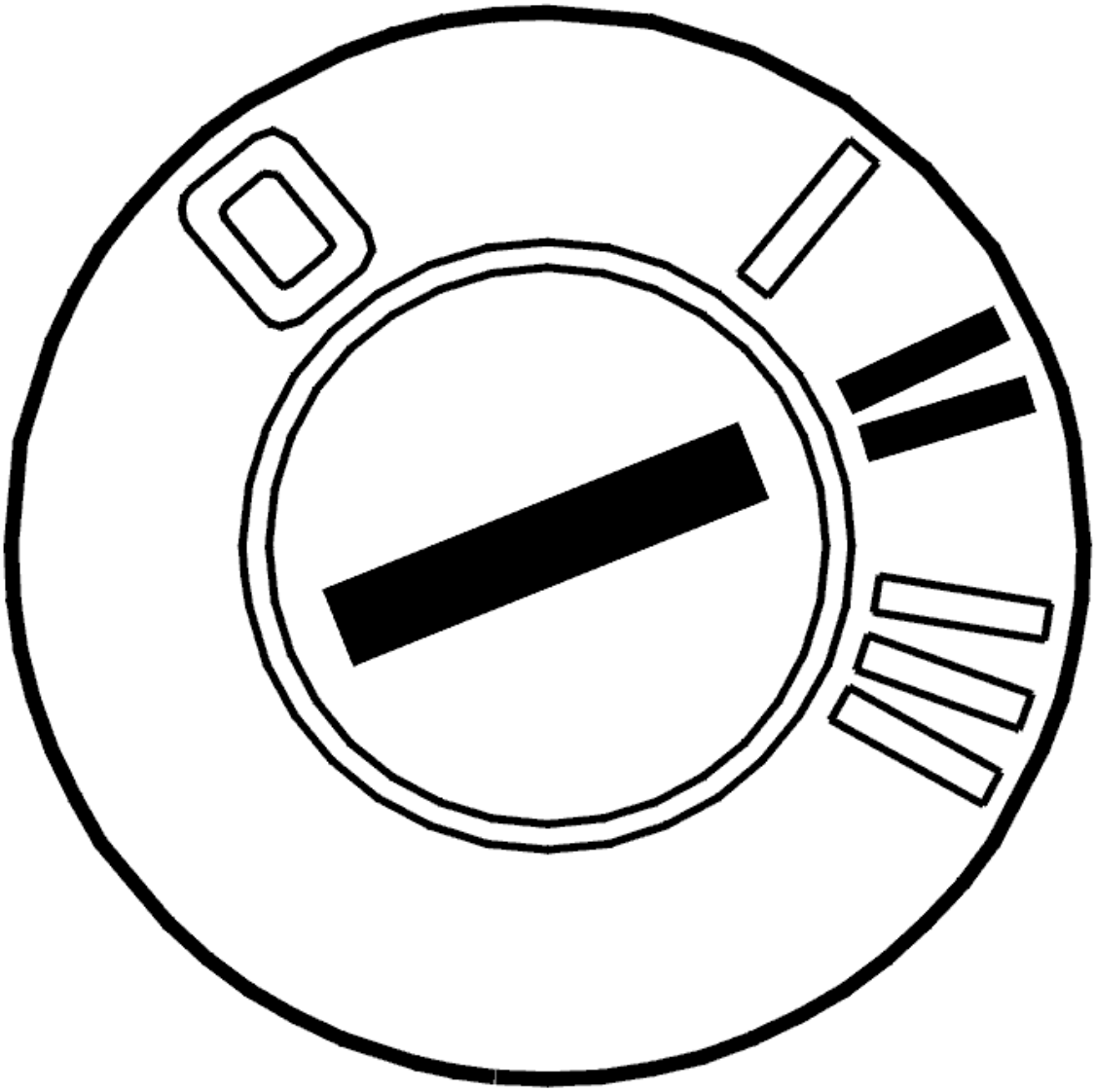

Fig. 82: Identifying Ignition ON
Courtesy of VOLVO CARS CORPORATION

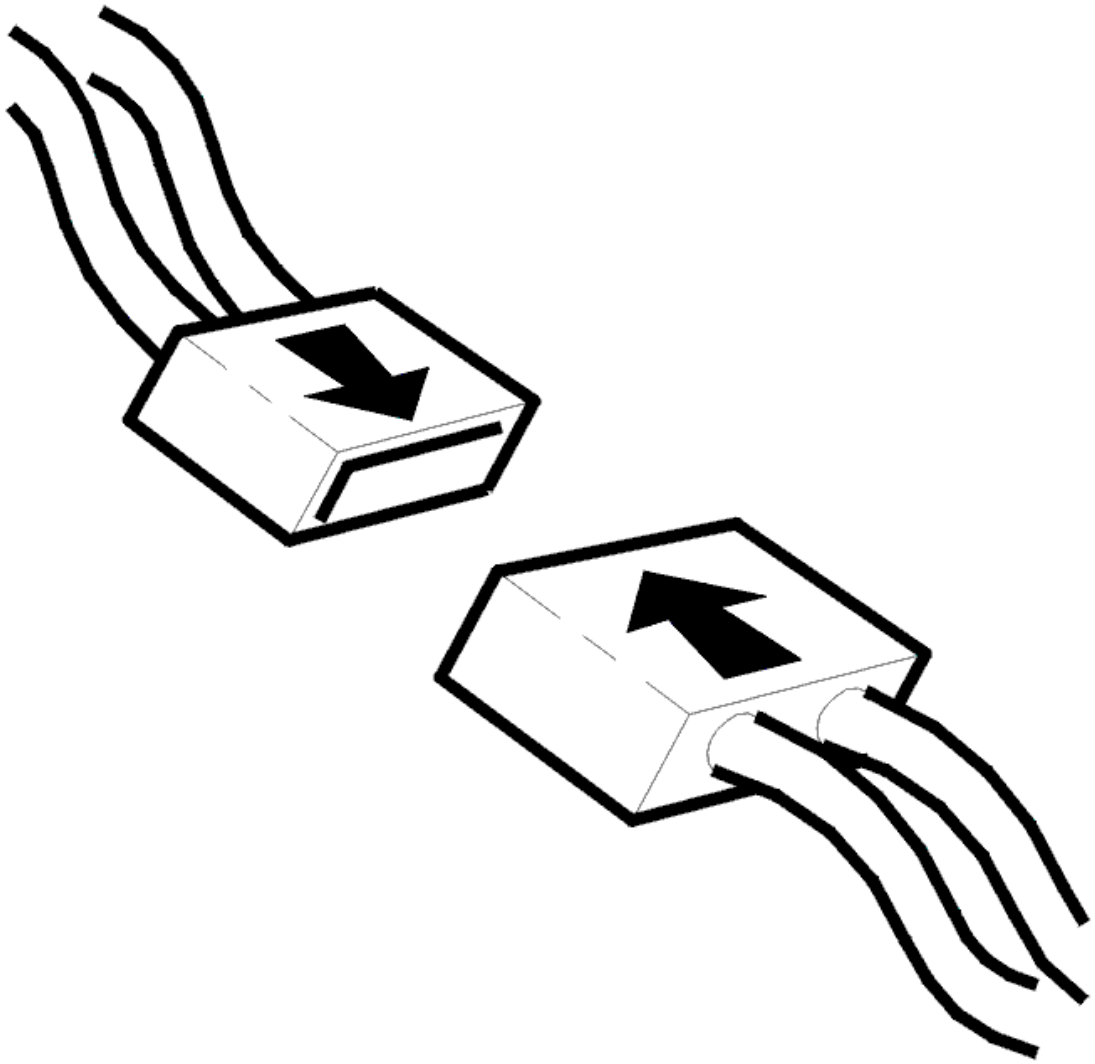

Fig. 83: Connecting Connector
Courtesy of VOLVO CARS CORPORATION

- Ignition off
- Reinstall the connectors, components etc.
- Ignition on.

  Check that the radio is working and that the reception is acceptable.

Is the radio playing through the loudspeakers?

- **YES**

  VERIFIED: Troubleshooting has been completed.

- **NO**

  Refer to **INFORMATION**

INFORMATION

FAULT-TRACING INFORMATION

The fault should have been detected and remedied. As this is not the case fault-tracing has failed.

Exit fault-tracing for this diagnostic trouble code (DTC) or make another attempt.

RDAR-0004 ANTENNA, SATELLITE RADIO. SIGNAL TOO HIGH (2007-2011)

DIAGNOSTIC TROUBLE CODE (DTC) INFORMATION RDAR-0004

Condition

The remote digital audio receiver module (RDAR) checks the signal from the satellite antenna.

The diagnostic trouble code (DTC) is stored if the control module detects that:

- High antenna signal.

The control module's test for the diagnostic trouble code (DTC) starts in the event of:

- Ignition switch position I and II.

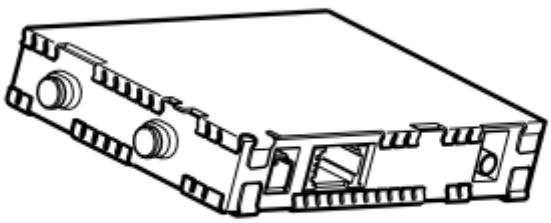

Fig. 84: Identifying Remote Digital Audio Receiver Module (RDAR)
Courtesy of VOLVO CARS CORPORATION

Substitute Value

- None.

Possible Source

- Antenna circuit is short circuited to supply voltage.

Fault symptom[s]

- Digital Radio; No Functionality

SIGNAL TOO HIGH

CHECKING THE WIRING

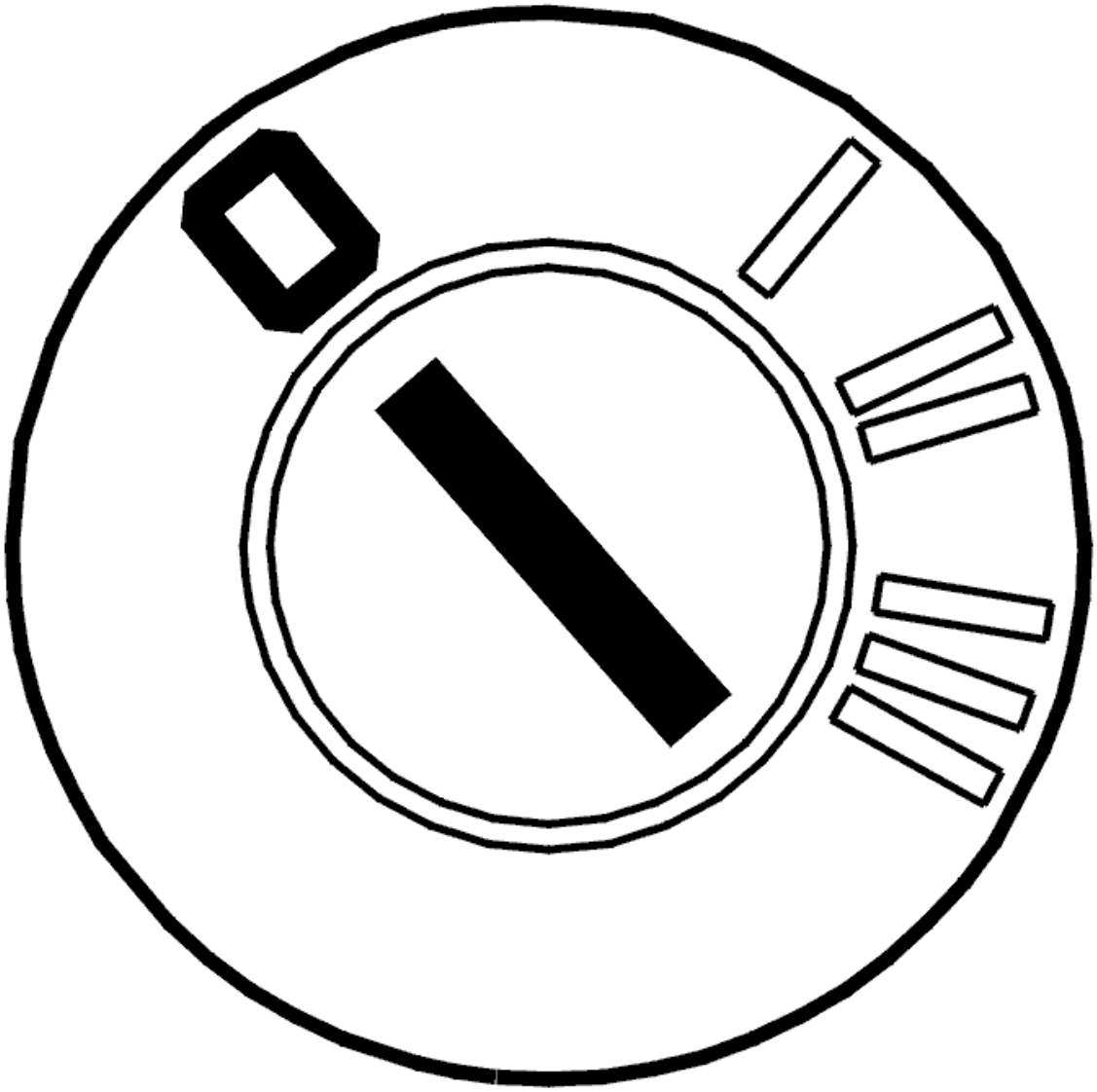

Fig. 85: Identifying Ignition OFF
Courtesy of VOLVO CARS CORPORATION

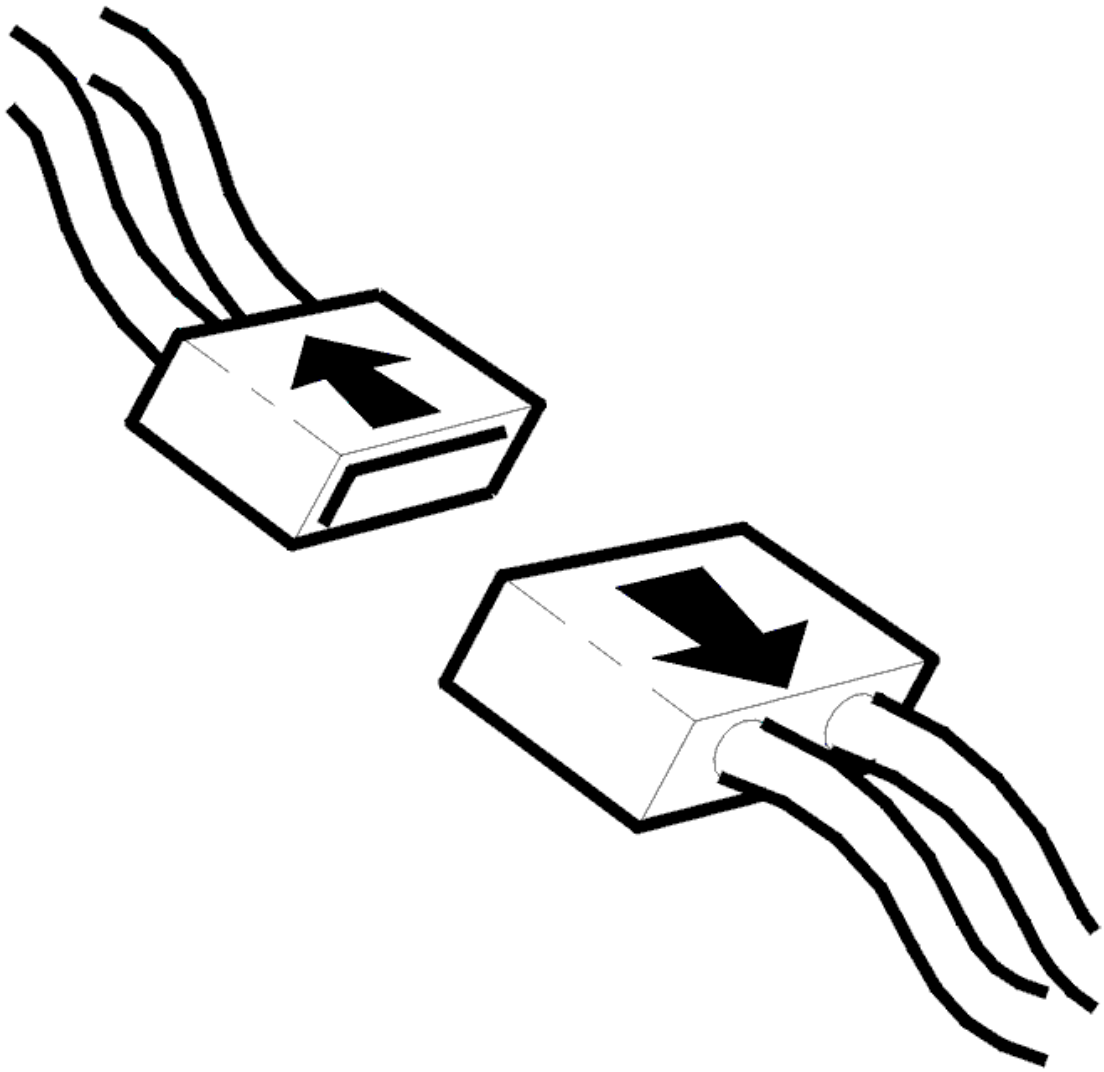

Fig. 86: Disconnecting Connector
Courtesy of VOLVO CARS CORPORATION

- Ignition off
- Disconnect the antenna connector.

  Check the connector and antenna cable between the Remote Digital Audio Receiver (RDAR) and satellite antenna. Check for a short-circuit to supply voltage.

  Remedy as necessary.

  Other information

  - see **SIGNAL SPECIFICATION**
  - see **LOCATION OF COMPONENTS**

- see **CONTENTS**
- see **SATELLITE RADIO CONTROL MODULE**

- **Continue**

  Refer to **VERIFICATION**

VERIFICATION

VERIFICATION

HINT: After carrying out the repair, check that the fault has been remedied.

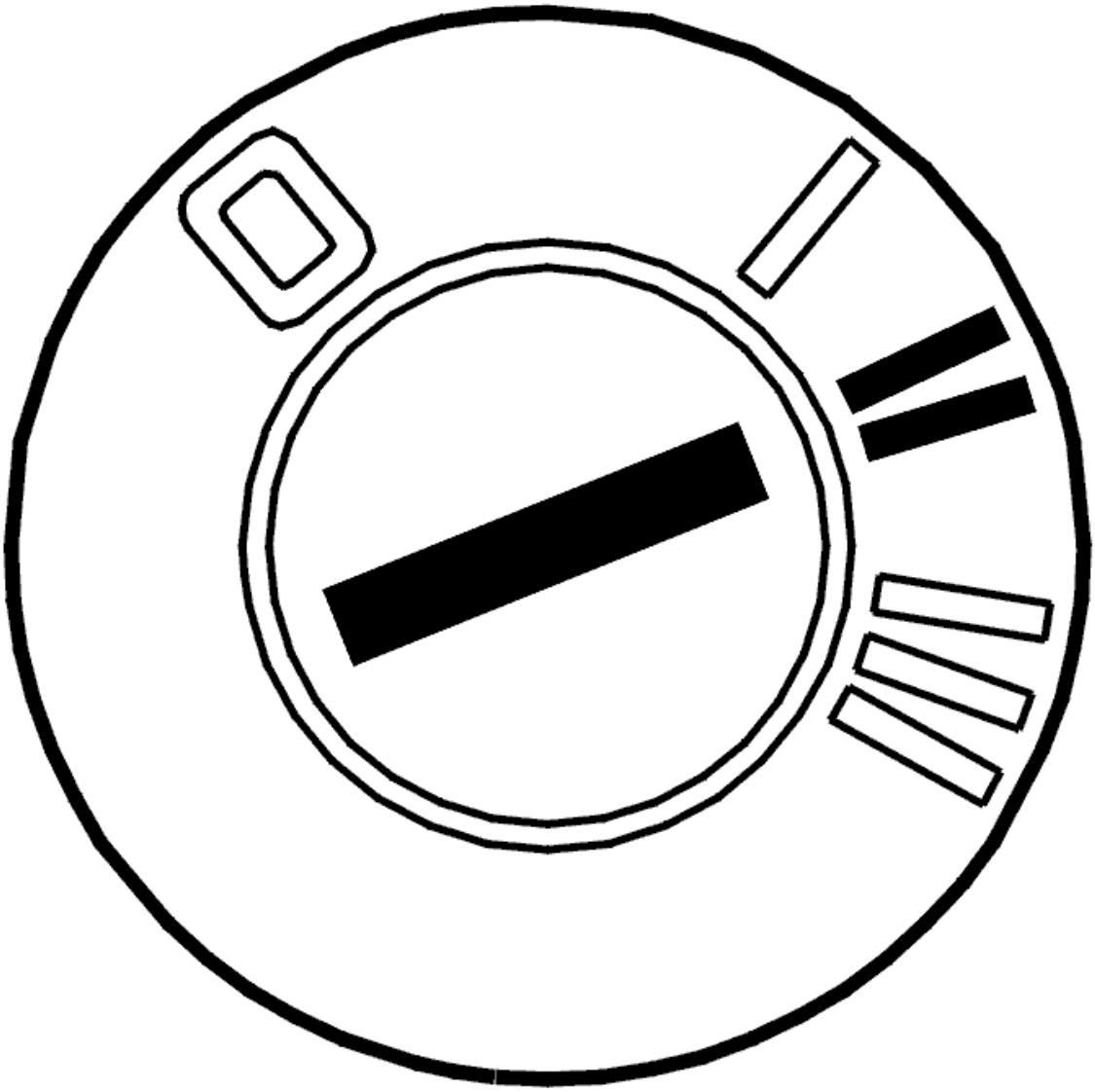

Fig. 87: Identifying Ignition ON
Courtesy of VOLVO CARS CORPORATION

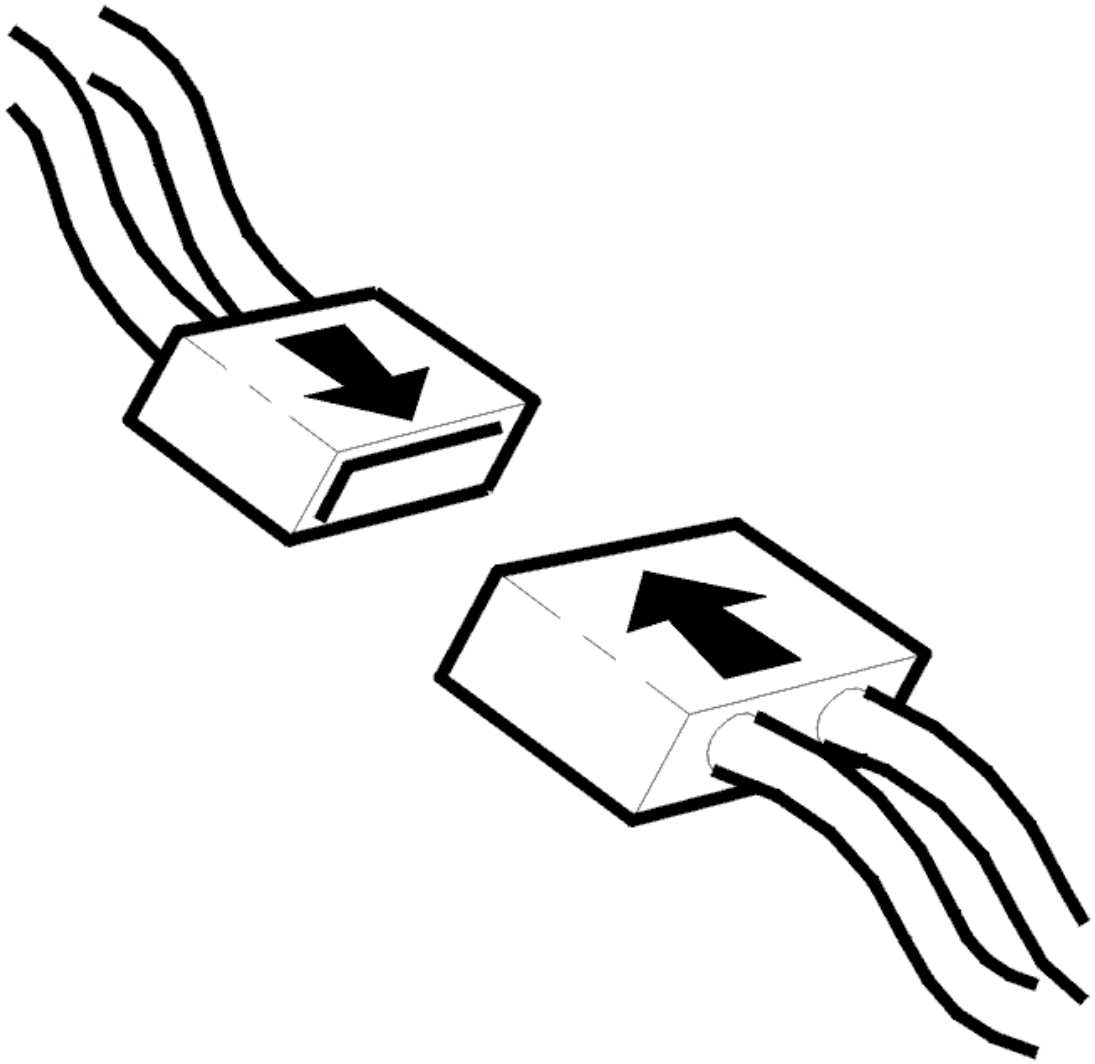

Fig. 88: Connecting Connector
Courtesy of VOLVO CARS CORPORATION

- Ignition off
- Reinstall the connectors, components etc.
- Ignition on.

  Check that the radio is working and that the reception is acceptable.

Is the radio playing through the loudspeakers?

- **YES**

  VERIFIED: Troubleshooting has been completed.

- **NO**

  Refer to **INFORMATION**

INFORMATION

FAULT-TRACING INFORMATION

The fault should have been detected and remedied. As this is not the case fault-tracing has failed.

Exit fault-tracing for this diagnostic trouble code (DTC) or make another attempt.

RDAR-0005 INCORRECT COMPONENT INSTALLED (2007-2011)

DIAGNOSTIC TROUBLE CODE (DTC) INFORMATION RDAR-0005

Condition

The control module compares its configuration ID with the signal configuration transmitted on the control area network (CAN) by the central electronic module (CEM).

The diagnostic trouble code (DTC) is stored if the control module detects that:

- The vehicle's configuration is incorrect.

The control module's test for the diagnostic trouble code (DTC) starts in the event of:

- Ignition switch position I and II.

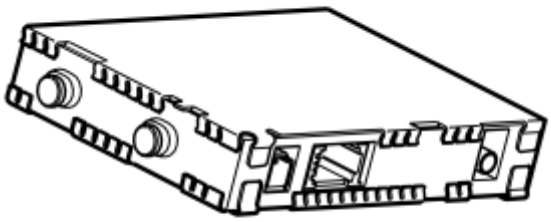

Fig. 89: Identifying Remote Digital Audio Receiver Module (RDAR)
Courtesy of VOLVO CARS CORPORATION

Substitute Value

- None.

Possible Source

- The function is not accessible according to the vehicle's configuration file in the Central electronic module (CEM).

Fault symptom[s]

- Digital Radio; No Functionality

CONFIGURATION FAULT

SOFTWARE FAULT

The vehicle's configuration file, which is stored in the central electronic module (CEM), does not indicate that the vehicle is equipped with a digital radio receiver.

- Remedy the fault by loading new software into the Central Electronic Module (CEM).
- **Continue**

  Refer to **VERIFICATION**

VERIFICATION

VERIFICATION

HINT: After carrying out the repair, check that the fault has been remedied.

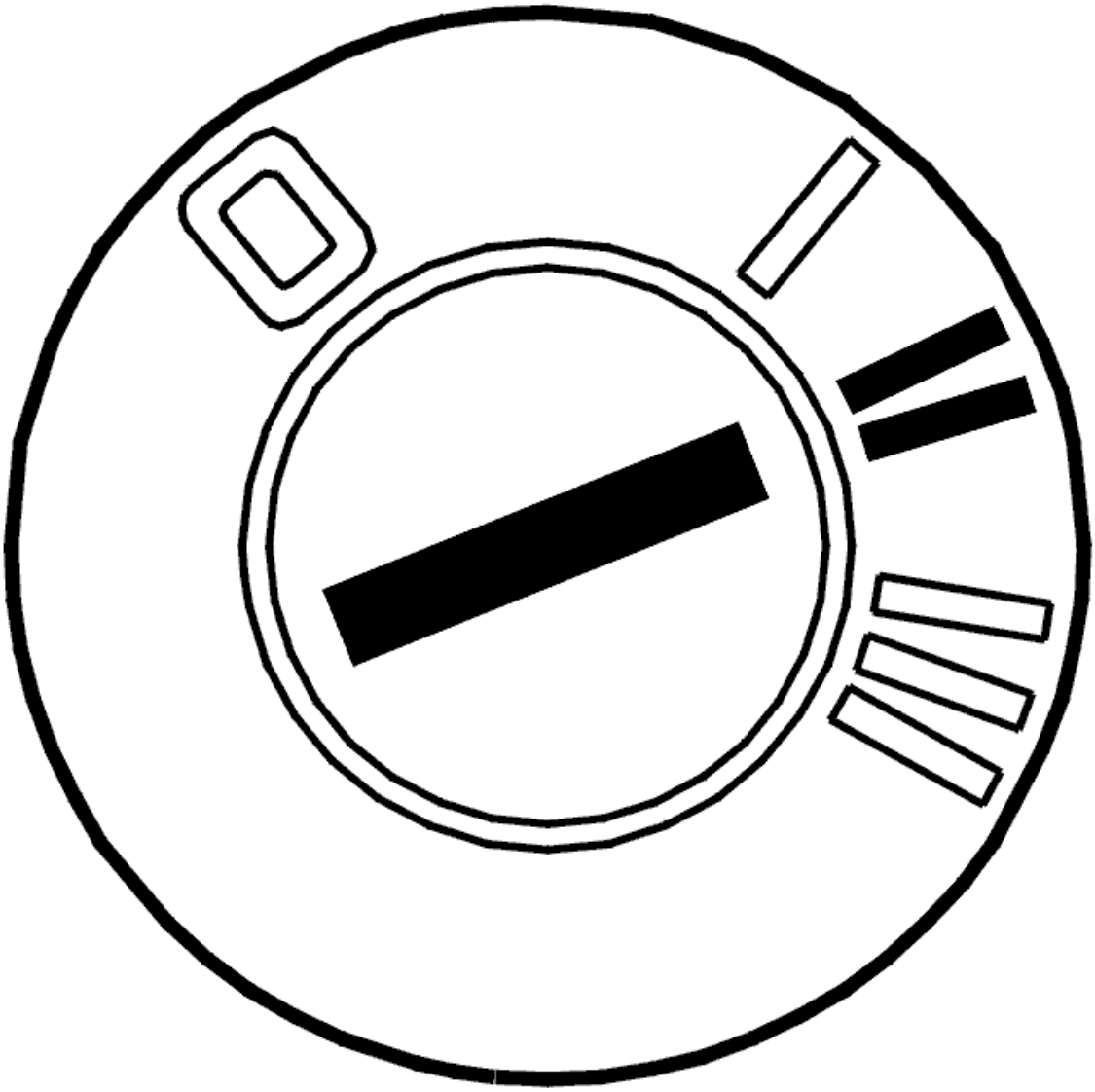

Fig. 90: Identifying Ignition ON
Courtesy of VOLVO CARS CORPORATION

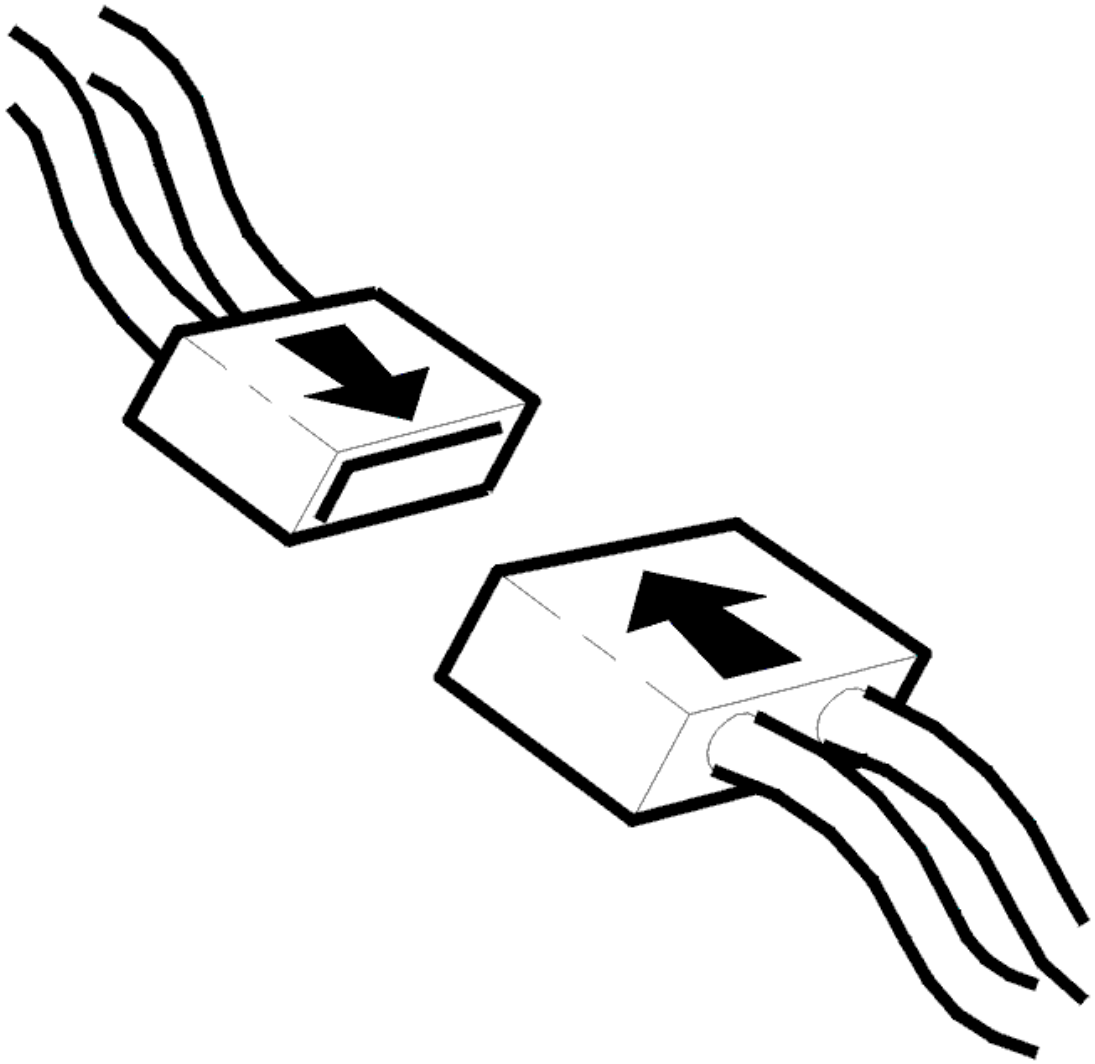

Fig. 91: Connecting Connector
Courtesy of VOLVO CARS CORPORATION

- Ignition off
- Reinstall the connectors, components etc.
- Ignition on.

  Check that the radio is working and that the reception is acceptable.

Is the radio playing through the loudspeakers?

- **YES**

  VERIFIED: Troubleshooting has been completed.

- **NO**

  Refer to **INFORMATION**

INFORMATION

FAULT-TRACING INFORMATION

The fault should have been detected and remedied. As this is not the case fault-tracing has failed.

Exit fault-tracing for this diagnostic trouble code (DTC) or make another attempt.

RDAR-0006 CONTROL MODULE. CONFIGURATION FAULT (2007-2011)

DIAGNOSTIC TROUBLE CODE (DTC) INFORMATION RDAR-0006

Condition

The remote digital audio receiver module (RDAR) compares its configuration ID with the signal configuration the central electronic module (CEM) transmits on the CAN network. If the configuration IDs do not correspond the fault code is stored.

The diagnostic trouble code (DTC) is stored if the control module detects that:

- The configurations IDs do not correspond.

The control module's test for the diagnostic trouble code (DTC) starts in the event of:

- Ignition switch position I and II.

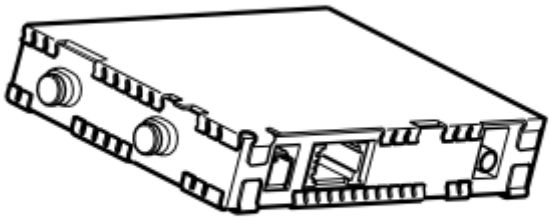

Fig. 92: Identifying Remote Digital Audio Receiver Module (RDAR)
Courtesy of VOLVO CARS CORPORATION

Substitute Value

- None.

Possible Source

- Incorrect CAN configuration ID. (The node is not intended for this vehicle, e. g. used control module with other software/hardware.)

Fault symptom[s]

- Digital Radio; No Functionality

CONFIGURATION FAULT

SOFTWARE FAULT

The control module has registered that the information about the vehicle's configuration is missing in the control module, or that it does not match the software that is downloaded in the control module.

- Download new software to the Remote Digital Audio Receiver (RDAR).

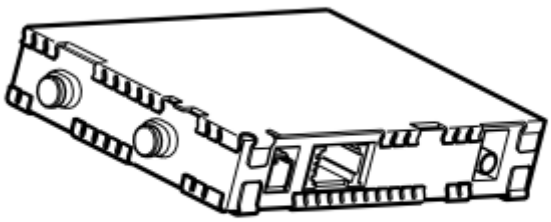

Fig. 93: Identifying Remote Digital Audio Receiver Module (RDAR)
Courtesy of VOLVO CARS CORPORATION

- **Continue**

  Refer to **VERIFICATION**

VERIFICATION

VERIFICATION

HINT: After carrying out the repair, check that the fault has been remedied.

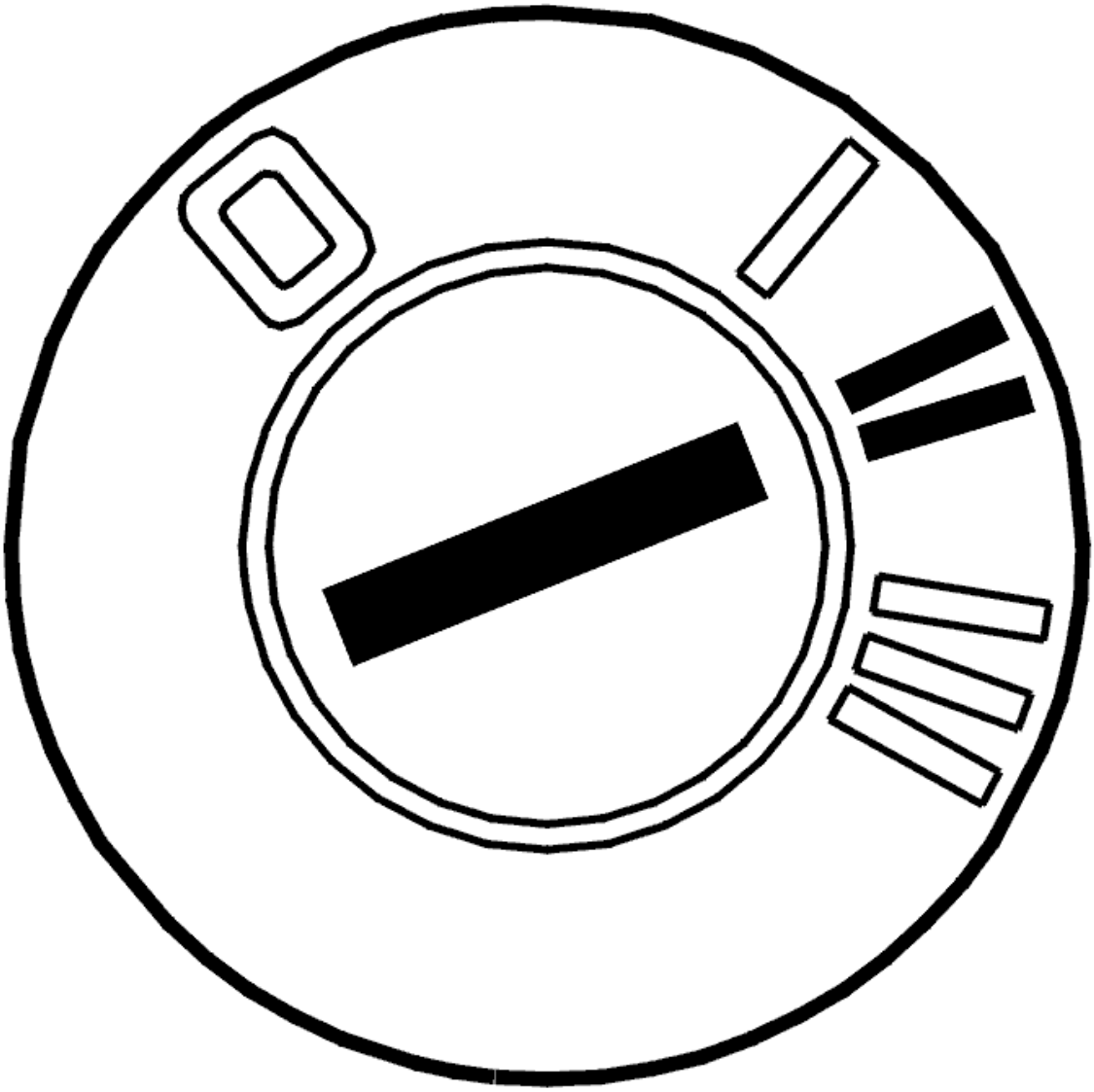

Fig. 94: Identifying Ignition ON
Courtesy of VOLVO CARS CORPORATION

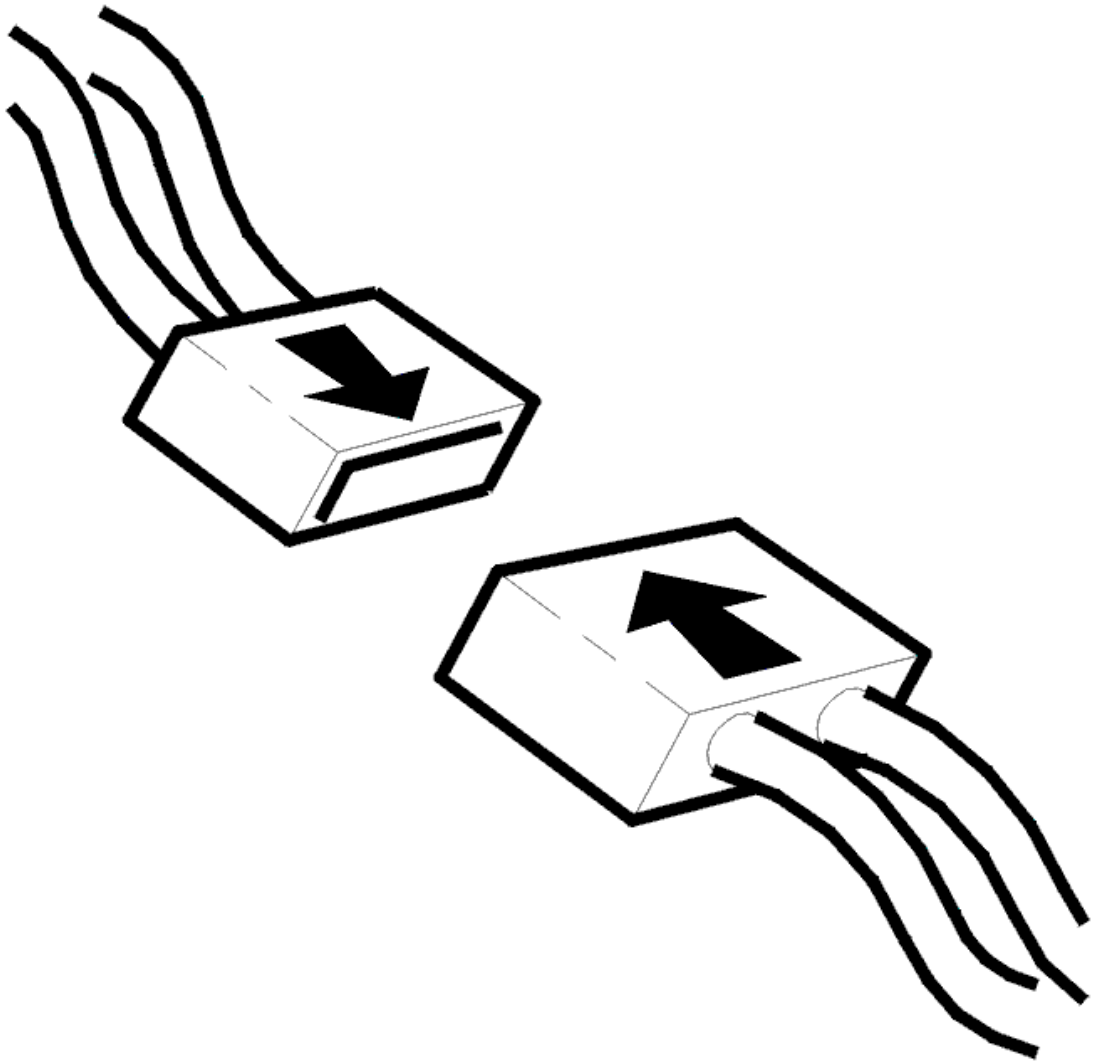

Fig. 95: Connecting Connector
Courtesy of VOLVO CARS CORPORATION

- Ignition off
- Reinstall the connectors, components etc.
- Ignition on.

  Check that the radio is working and that the reception is acceptable.

Is the radio playing through the loudspeakers?

- **YES**

  VERIFIED: Troubleshooting has been completed.

- **NO**

  Refer to **INFORMATION**

INFORMATION

FAULT-TRACING INFORMATION

The fault should have been detected and remedied. As this is not the case fault-tracing has failed.

Exit fault-tracing for this diagnostic trouble code (DTC) or make another attempt.

RDAR-0007 CONTROL MODULE. CONFIGURATION FAULT (2007-2011)

DIAGNOSTIC TROUBLE CODE (DTC) INFORMATION RDAR-0007

Condition

The remote digital audio receiver module (RDAR) checks internal control module components.

The diagnostic trouble code (DTC) is stored if the control module detects that:

- Incorrect or no settings in the local configuration file.

The control module's test for the diagnostic trouble code (DTC) starts in the event of:

- Ignition switch position I and II.

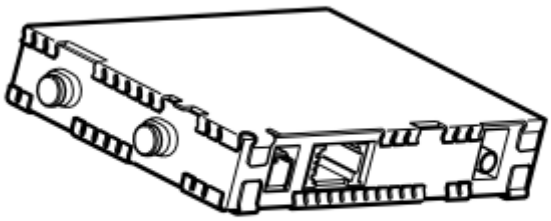

Fig. 96: Identifying Remote Digital Audio Receiver Module (RDAR)
Courtesy of VOLVO CARS CORPORATION

Substitute Value

- None.

Possible Source

- Software was not downloaded upon replacement of the remote digital audio receiver (RDAR).
- No local configuration file in the remote digital audio receiver (RDAR).

Fault symptom[s]

- Digital Radio; No Functionality

CONFIGURATION FAULT

see **CONFIGURATION FAULT**

RDAR-0008 CONTROL MODULE. OVERHEATED (2007-2011)

DIAGNOSTIC TROUBLE CODE (DTC) INFORMATION RDAR-0008

Condition

The remote digital audio receiver module (RDAR) checks its internal temperature.

The diagnostic trouble code (DTC) is stored if the control module detects that:

- Temperature exceeds a specific value.

The control module's test for the diagnostic trouble code (DTC) starts in the event of:

- Ignition switch position I and II.

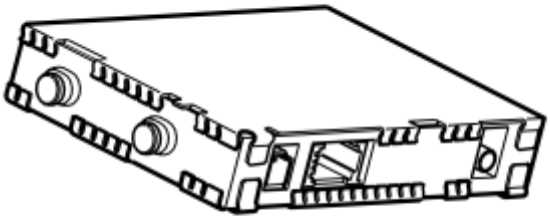

Fig. 97: Identifying Remote Digital Audio Receiver Module (RDAR)

Courtesy of VOLVO CARS CORPORATION

Substitute Value

- None.

Possible Source

- Temperature in the component or system too high.

Fault symptom[s]

- Digital Radio; No Functionality

OVER HEATED

REPLACING THE COMPONENT

The remote digital audio receiver (RDAR) has registered internal overheating in the control module.

If the fault is intermittent, it has been registered previously but is no longer present. Intermittent faults may be due to interference upon start-up or may be another type of fault that can recur at different times. The fault is evaluated depending on how it occurs. If the fault recurs, replace the remote digital audio module (RDAR). If the fault recurs, replace the remote digital audio module (RDAR).

In the event of a permanent fault, replace the Remote Digital Audio Receiver (RDAR).

Remedy as necessary.

Other information

- see **LOCATION OF COMPONENTS**
- see **SATELLITE RADIO CONTROL MODULE**

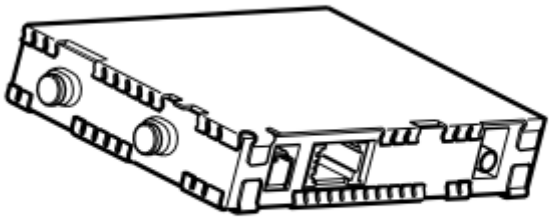

Fig. 98: Identifying Remote Digital Audio Receiver Module (RDAR)
Courtesy of VOLVO CARS CORPORATION

- **Continue**

  Refer to **VERIFICATION**

VERIFICATION

VERIFICATION

HINT: After carrying out the repair, check that the fault has been remedied.

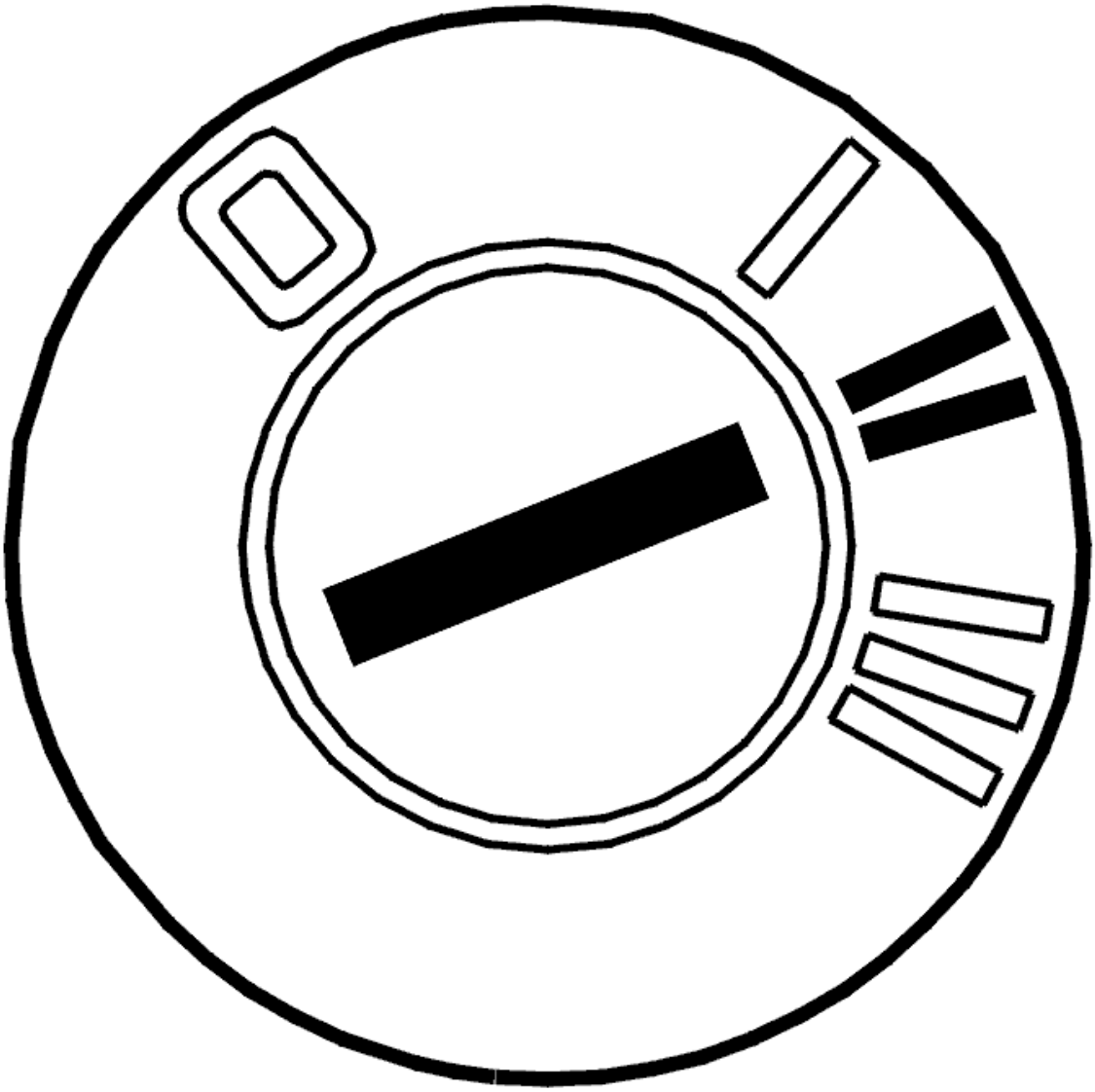

Fig. 99: Identifying Ignition ON
Courtesy of VOLVO CARS CORPORATION

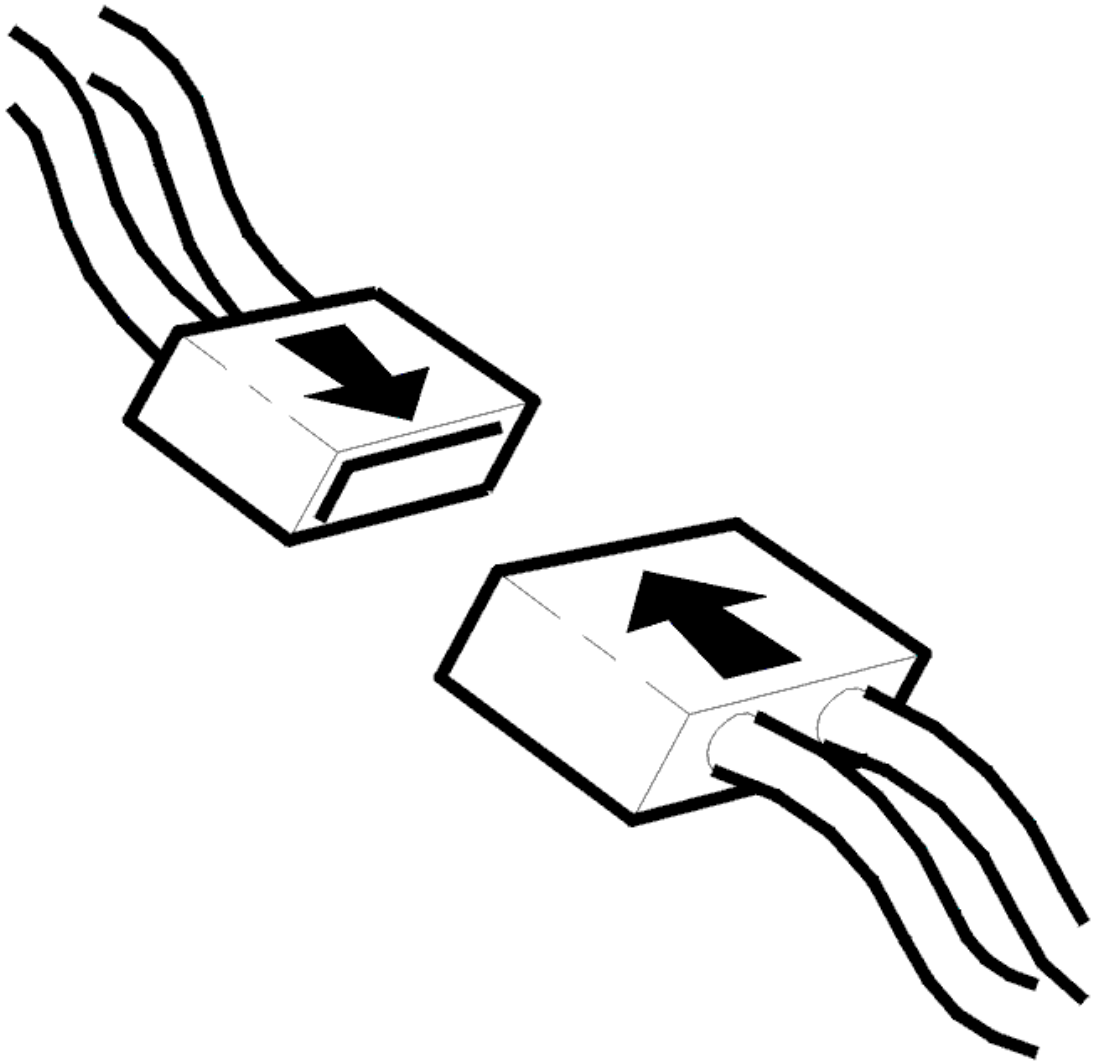

Fig. 100: Connecting Connector
Courtesy of VOLVO CARS CORPORATION

- Ignition off
- Reinstall the connectors, components etc.
- Ignition on.

  Check that the radio is working and that the reception is acceptable.

Is the radio playing through the loudspeakers?

- **YES**

  VERIFIED: Troubleshooting has been completed.

- **NO**

  Refer to **INFORMATION**

INFORMATION

FAULT-TRACING INFORMATION

The fault should have been detected and remedied. As this is not the case fault-tracing has failed.

Exit fault-tracing for this diagnostic trouble code (DTC) or make another attempt.

RDAR-0009 BATTERY VOLTAGE. FAULTY SIGNAL (2007-2011)

DIAGNOSTIC TROUBLE CODE (DTC) INFORMATION RDAR-0009

Condition

The remote digital audio receiver module (RDAR) checks the supply voltage relative to the voltage in the central electronic module (CEM).

The diagnostic trouble code (DTC) is stored if the control module detects that:

- Feed voltage is 2 V lower than the voltage in Central electronic module (CEM).

The control module's test for the diagnostic trouble code (DTC) starts in the event of:

- Ignition switch position I and II.

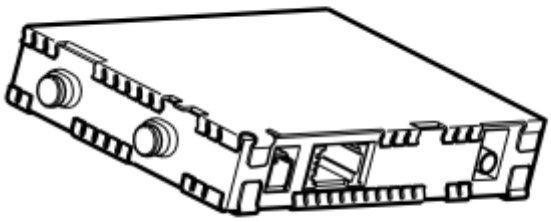

Fig. 101: Identifying Remote Digital Audio Receiver Module (RDAR)
Courtesy of VOLVO CARS CORPORATION

Substitute Value

- None.

Possible Source

- Contact resistance.
- Damaged supply voltage cable.

Fault symptom[s]

- Digital Radio; No Functionality

FAULTY SIGNAL

CHECKING FUSES AND POWER SUPPLY

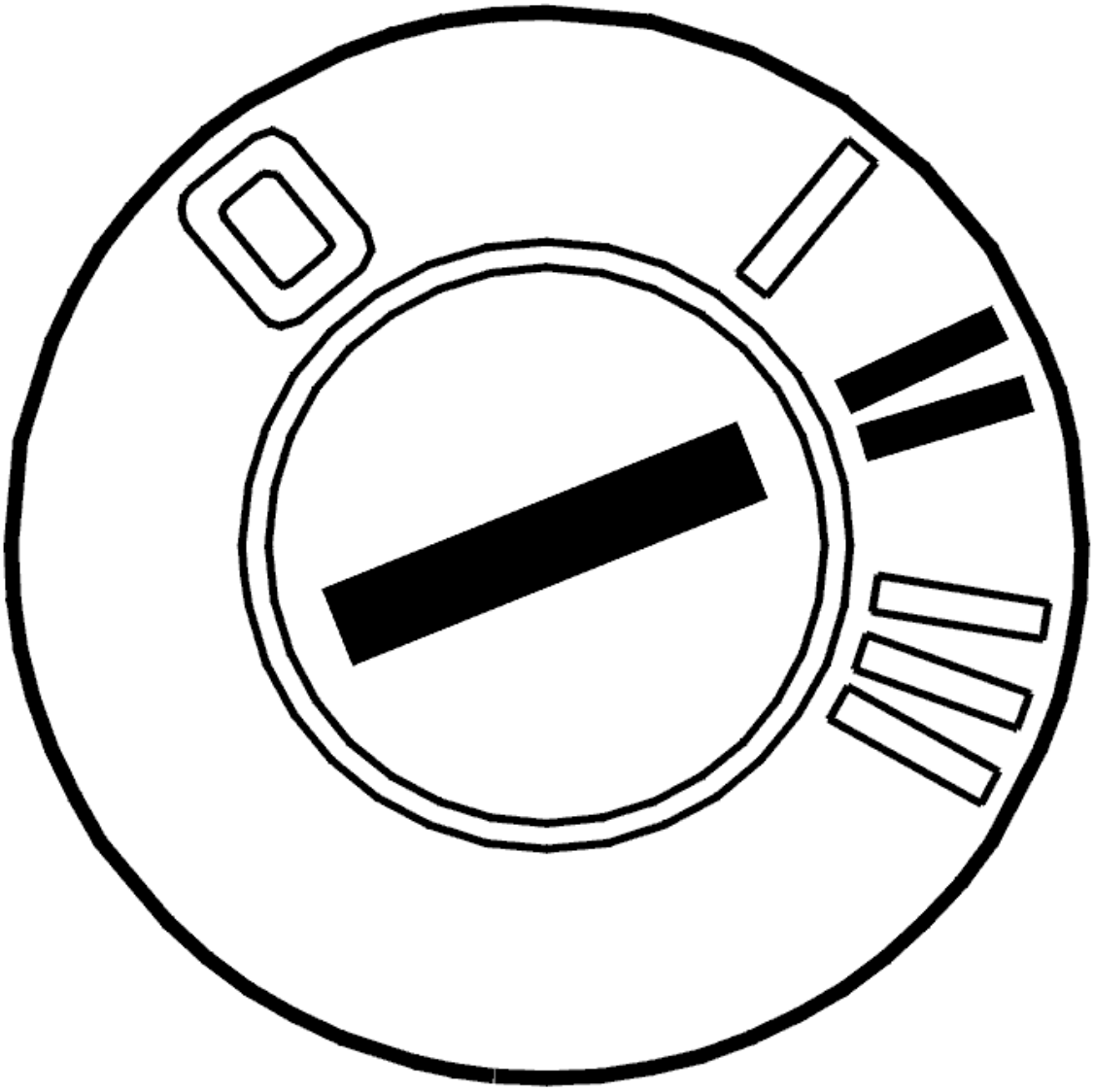

Fig. 102: Identifying Ignition ON
Courtesy of VOLVO CARS CORPORATION

The remote digital audio receiver (RDAR) is suppled power from the central electronic module (CEM) via a fuse.

Check if the fuse for the Remote Digital Audio Receiver (RDAR) is half burned by testing with a new fuse.

HINT: A half burned fuse can cause intermittent faults.

- Ignition on.

Check the supply voltage to the Remote Digital Audio Receiver (RDAR) by:

- Measure the voltage between control module connectors #C784-1 and #C784-2.
- Measuring the battery voltage.

If the difference between the control module's supply voltage and the battery voltage is greater than 2 V, the malfunction is in the supply cable.

If the difference is less than 2 V there may be an internal malfunction in the phone module (PHM).

- Remedy as necessary.

Other information

- see **SIGNAL SPECIFICATION**
- see **LOCATION OF COMPONENTS**
- see **CONTENTS**
- see **SATELLITE RADIO CONTROL MODULE**

- **Continue**

  Refer to **VERIFICATION**

VERIFICATION

VERIFICATION

HINT: After carrying out the repair, check that the fault has been remedied.

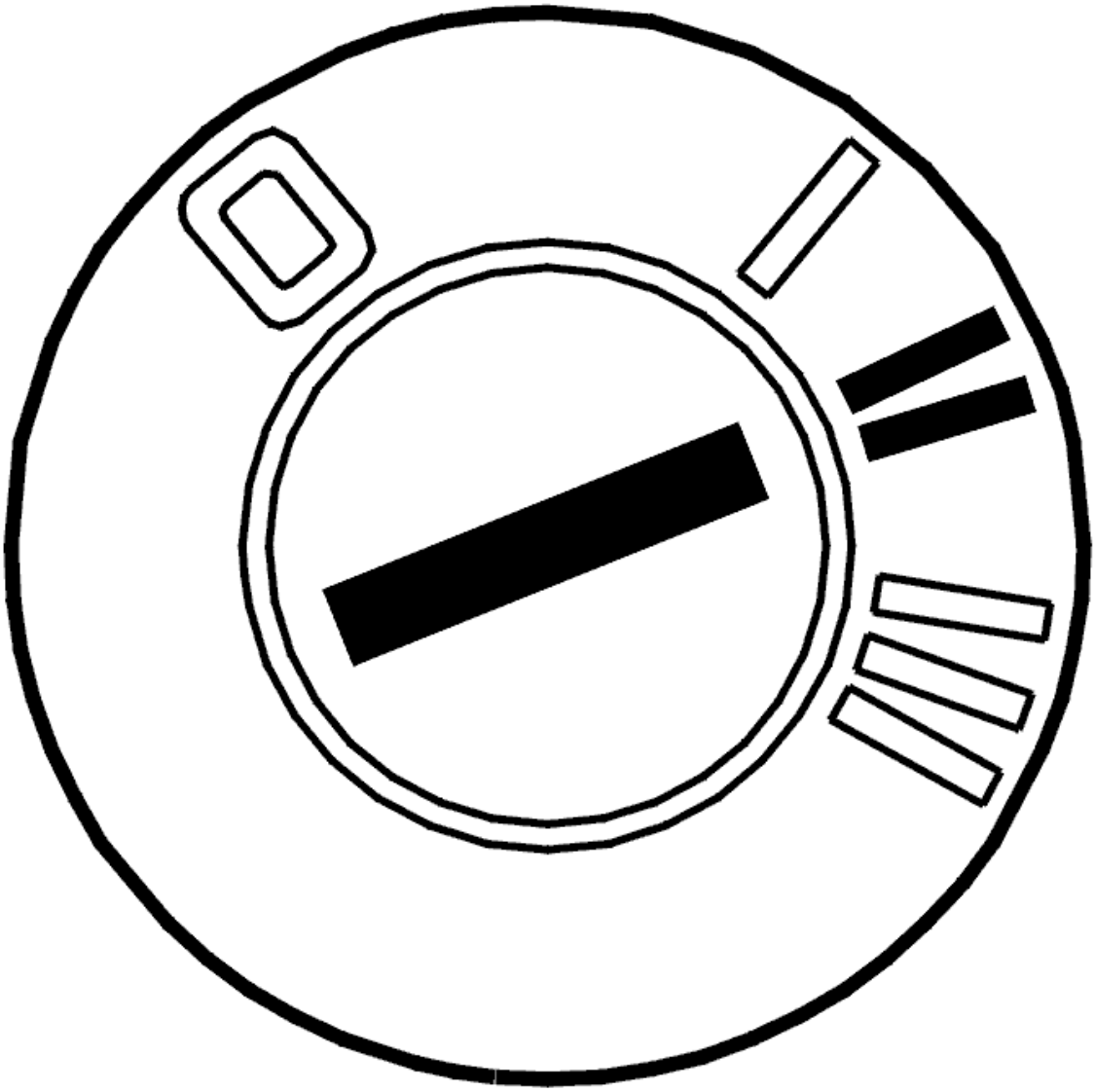

Fig. 103: Identifying Ignition ON
Courtesy of VOLVO CARS CORPORATION

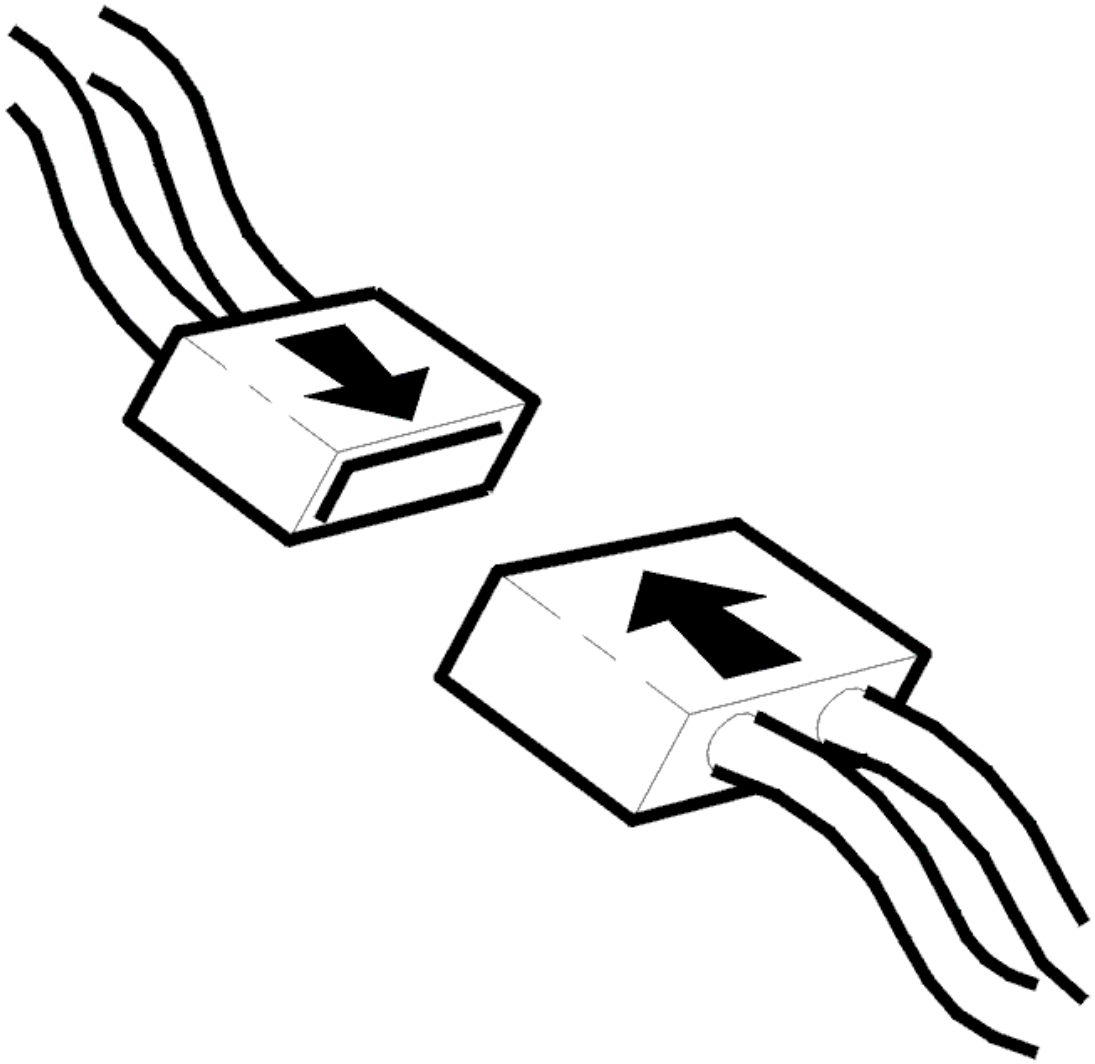

Fig. 104: Connecting Connector
Courtesy of VOLVO CARS CORPORATION

- Ignition off
- Reinstall the connectors, components etc.
- Ignition on.

  Check that the radio is working and that the reception is acceptable.

Is the radio playing through the loudspeakers?

- **YES**

  VERIFIED: Troubleshooting has been completed.

- **NO**

  Refer to **INFORMATION**

INFORMATION

FAULT-TRACING INFORMATION

The fault should have been detected and remedied. As this is not the case fault-tracing has failed.

Exit fault-tracing for this diagnostic trouble code (DTC) or make another attempt.

BPM-1101: CONTROL MODULE CONFIGURATION FAULT (2011)

DIAGNOSTIC TROUBLE CODE (DTC) INFORMATION BPM-1101

Condition

The Bluetooth phone module (BPM) checks the version of the local configuration file.

The diagnostic trouble code (DTC) is stored if the control module detects that:

- The local configuration file is the incorrect version.

The control module's test for the diagnostic trouble code (DTC) starts in the event of:

- Ignition on and battery voltage between 9 and 16 V.

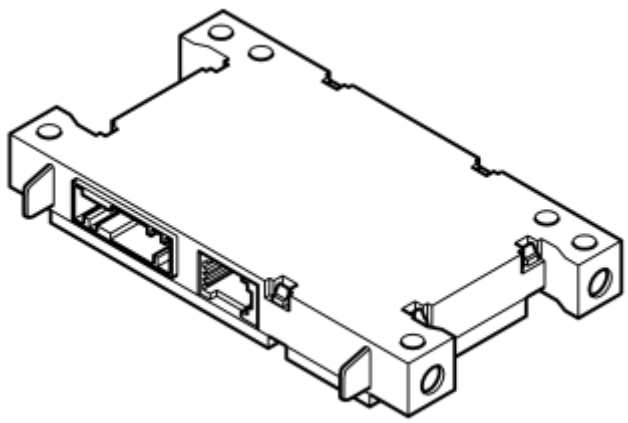

Fig. 105: Identifying Bluetooth Phone Module (BPM)
Courtesy of VOLVO CARS CORPORATION

Substitute Value

- None.

Possible Source

- The local configuration file is the incorrect version.

Fault symptom[s]

- Bluetooth Telephone: No Functionality

FAULT-TRACING

CHECKING SOFTWARE

The Bluetooth phone module (BPM) has registered that the local configuration file is the incorrect version.

This may be due to a fault in the software in the Bluetooth phone module (BPM). Remedy the fault by downloading new software into the Bluetooth phone module (BPM).

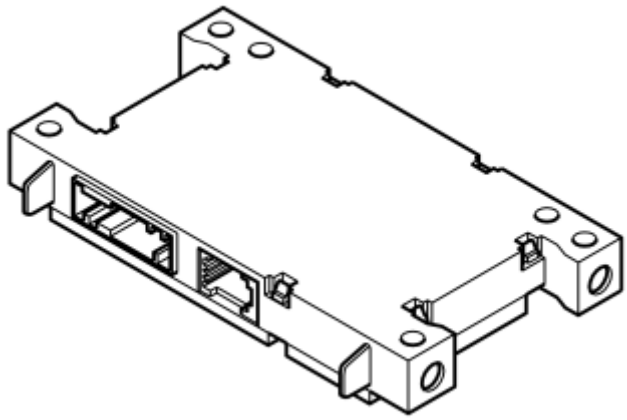

Fig. 106: Identifying Bluetooth Phone Module (BPM)
Courtesy of VOLVO CARS CORPORATION

Select "Continue" after programming.

- **Continue**

  Refer to **VERIFICATION**

VERIFICATION

Fig. 107: Checking Traffic Load On CAN Cables
Courtesy of VOLVO CARS CORPORATION

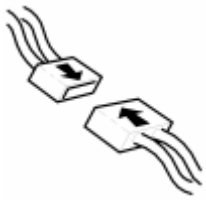

Fig. 108: Identifying Connector(s) Reinstallation
Courtesy of VOLVO CARS CORPORATION

HINT: After carrying out the repair, check that the fault has been remedied.

- Ignition off.
- Restore components and connectors.
- Ignition on.

Check the function of the Bluetooth phone module (BPM).

Is the carphone working?

- **YES**

  OKAY: Troubleshooting has been completed.

- **NO**

  Refer to **INFORMATION**

INFORMATION

FAULT-TRACING INFORMATION

The fault should have been detected and remedied. As this is not the case fault-tracing has failed.

Exit fault-tracing for this diagnostic trouble code (DTC) or make another attempt.

BPM-1102: CONTROL MODULE INTERNAL FAULT (2011)

DIAGNOSTIC TROUBLE CODE (DTC) INFORMATION BPM-1102

Condition

Bluetooth phone module (BPM) checks its internal status.

The diagnostic trouble code (DTC) is stored if the control module detects that:

- The control module has an internal memory error.

The control module's test for the diagnostic trouble code (DTC) starts in the event of:

- Ignition on and battery voltage between 9 and 16 V.

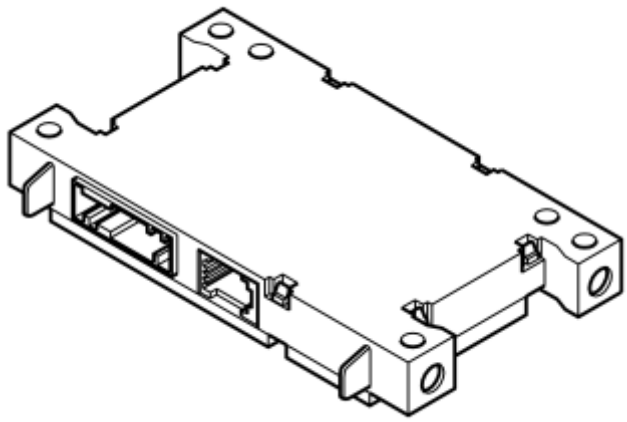

Fig. 109: Identifying Bluetooth Phone Module (BPM)
Courtesy of VOLVO CARS CORPORATION

Substitute Value

- None.

Possible Source

- Internal fault in the control module.

Fault symptom[s]

- Bluetooth Telephone: No Functionality

FAULT-TRACING

FAULT-TRACING INFORMATION

Use the following information and general checks during fault-tracing.

NOTE: Check that the fuses are intact. For locations, see the instruction manual, cover for fuse box, fuse ratings or similar.

1. Check, if possible, relevant functions in the vehicle using buttons/controls/test drives to determine the status of the fault.

   NOTE: If the vehicle does not show any of the given symptoms in the diagnostic trouble code information (DTC), this may mean that the fault is intermittent or that the control module is not detecting the fault at this moment.

2. Use the diagnostic trouble code's **frozen values** , **status identifiers** and **counter** to determine the operating conditions when the fault was detected, the fault's current status and any degree of intermittence of the fault.
3. Check and fault-trace according to **the fault causes** that are specified in the **diagnostic trouble code (DTC) information** .
4. Use **VIDA Vehicle communication** . Read off the parameters, activate components and functions, carry out quick tests and checking routines for the diagnostic trouble codes to identify the fault.
5. Check relevant components according to **Component specifications** .
6. Check relevant signals using **wiring diagram** , **signal specification** and **breakout box** .

NOTE: More information is available in Design and function .

Remedy as necessary.

Other information

- see **DESCRIPTION OF FROZEN VALUES**
- see **DESCRIPTION OF STATUS IDENTIFIER**
- see **DESCRIPTION OF COUNTER**
- see **DESCRIPTION OF PARAMETERS**
- see **LOCATION OF COMPONENTS**
- see **SIGNAL SPECIFICATION**
- see **CONTENTS**

Repair

- see **BLUETOOTH CONTROL MODULE**

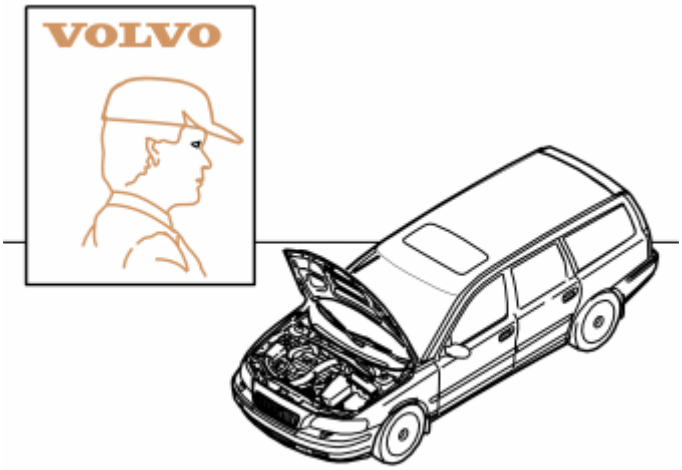

Fig. 110: Identifying VOLVO Certified Service Personnel
Courtesy of VOLVO CARS CORPORATION

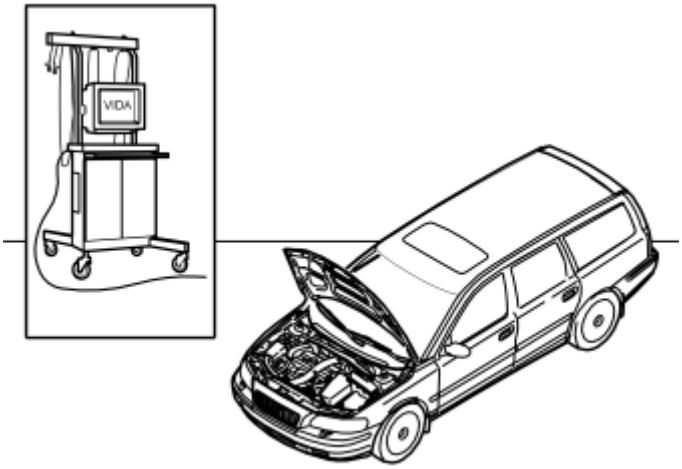

Fig. 111: Identifying VIDA
Courtesy of VOLVO CARS CORPORATION

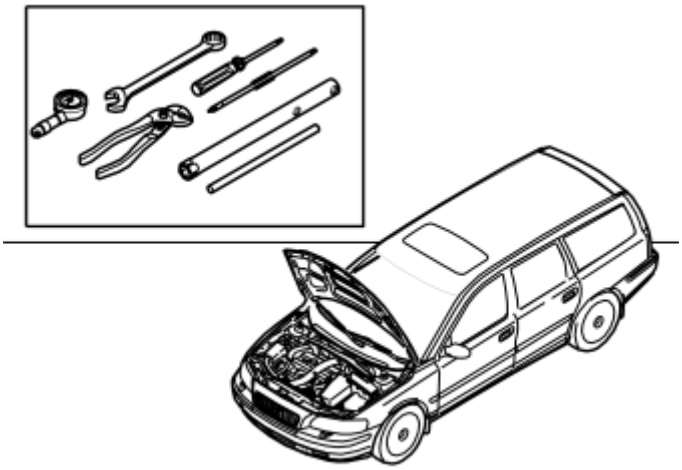

Fig. 112: Identifying Relevant Tools
Courtesy of VOLVO CARS CORPORATION

- **Continue**

  Refer to **INFORMATION**

DESCRIPTION OF FROZEN VALUES

EXPLANATION

Frozen values are parameter values that are stored when a diagnostic trouble code (DTC) is stored.

Not all parameters can be read off for all diagnostic trouble codes (DTCs). The parameter values can only be read off where they can provide more information about the prevailing circumstances when the diagnostic trouble code (DTC) was stored.

PARAMETERS, VALUE

TOTAL MILEAGE

Measurement range: 0 - 1.000.000 km.

The value indicates the vehicle's total mileage when the Diagnostic Trouble Code (DTC) was generated.

MECU POWER SUPPLY

Measurement range: 0 - 24 V.

Normal range: 12.0 - 14.5 V.

The value indicates the supply voltage to the central electronic module (CEM) when the diagnostic trouble code (DTC) was stored.

GLOBAL TIME

The value displays the time that has passed since the diagnostic trouble code (DTC) was stored.

PASSENGER COMPARTMENT TEMPERATURE

Measurement range: -40 to +80 °C.

The value indicates the passenger compartment temperature when the diagnostic trouble code (DTC) was stored.

ENGINE RUNNING

Indicates whether the engine was running when the Diagnostic Trouble Code (DTC) was generated.

Value set:

Yes = the engine was running

No = The engine was not running

MODULE 1 CONNECTED

Indicates status at Bluetooth module 1.

Value set:

True = Module 1 is connected.

False = Module 1 is not connected.

MODULE 2 CONNECTED

Indicates status at Bluetooth module 2.

Value set:

True = Module 2 is connected.

False = Module 2 is not connected.

CONTROL MODULE POWER SUPPLY

Measurement range: 0 to 25.5 V

The value indicates the power supply to the Bluetooth phone module (BPM).

TEMPERATURE UNIT

Measurement range: -40 to 215 °C.

The value indicates the internal temperature in the Bluetooth phone module (BPM).

INFORMATION

FAULT-TRACING INFORMATION

In case of this defect, troubleshooting is not followed by verification.

The information can be displayed again or the fault-tracing for this fault can be interrupted.

BPM-1103: CONTROL MODULE INTERNAL FAULT (2011)

DIAGNOSTIC TROUBLE CODE (DTC) INFORMATION BPM-1103

Condition

Bluetooth phone module (BPM) checks its internal status.

The diagnostic trouble code (DTC) is stored if the control module detects that:

- The control module has an internal memory error.

The control module's test for the diagnostic trouble code (DTC) starts in the event of:

- Ignition on and battery voltage between 9 and 16 V.

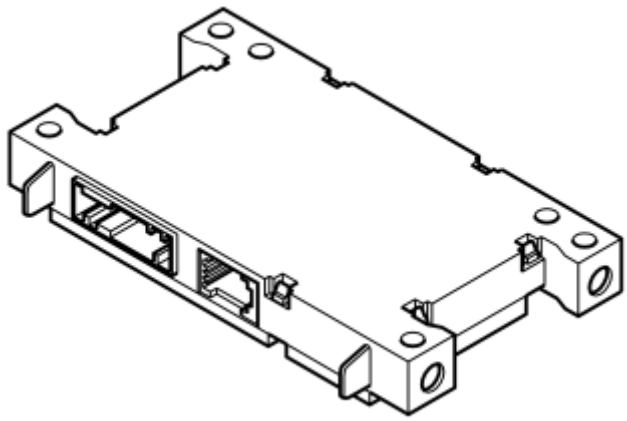

Fig. 113: Identifying Bluetooth Phone Module (BPM)
Courtesy of VOLVO CARS CORPORATION

Substitute Value

- None.

Possible Source

- Internal fault in the control module.

Fault symptom[s]

- Bluetooth Telephone: No Functionality

FAULT-TRACING

see **FAULT-TRACING**

BPM-1105: CONTROL MODULE CONFIGURATION FAULT (2011)

DIAGNOSTIC TROUBLE CODE (DTC) INFORMATION BPM-1105

Condition

At start, the Bluetooth phone module checks the vehicle configuration in question.

The diagnostic trouble code (DTC) is stored if the control module detects that:

- Vehicle configuration is not obtained within one minute.

The control module's test for the diagnostic trouble code (DTC) starts in the event of:

- Ignition on and battery voltage between 9 and 16 V.

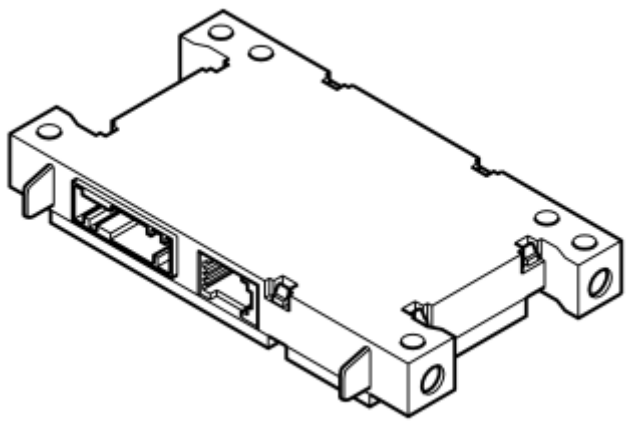

Fig. 114: Identifying Bluetooth Phone Module (BPM)
Courtesy of VOLVO CARS CORPORATION

Substitute Value

- None.

Possible Source

- Interference in communication between Bluetooth phone module (BPM) and Central electronic module (CEM).

Fault symptom[s]

- Bluetooth Telephone: No Functionality

FAULT-TRACING

see **FAULT-TRACING**

BPM-1106: CONTROL MODULE OVERHEATED (2011)

DIAGNOSTIC TROUBLE CODE (DTC) INFORMATION BPM-1106

Condition

Bluetooth phone module (BPM) checks its internal temperature.

The diagnostic trouble code (DTC) is stored if the control module detects that:

- The temperature is too high.

The control module's test for the diagnostic trouble code (DTC) starts in the event of:

- Ignition on and battery voltage between 9 and 16 V.

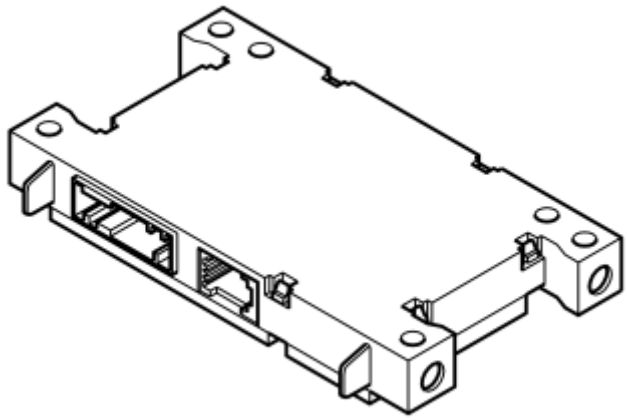

Fig. 115: Identifying Bluetooth Phone Module (BPM)
Courtesy of VOLVO CARS CORPORATION

Substitute Value

- None.

Possible Source

- Ambient temperature too high.
- Power consumption too high in the control module.

Fault symptom[s]

- Bluetooth Telephone: No Functionality

FAULT-TRACING

see **FAULT-TRACING**

BPM-1301: MICROPHONE INPUT. SIGNAL TOO LOW (2011)

DIAGNOSTIC TROUBLE CODE (DTC) INFORMATION BPM-1301

Condition

Bluetooth phone module (BPM) checks the signal from the microphone. The microphone belongs to the Integrated Audio Module (IAM) and communicates with the Bluetooth phone module (BPM) via the MOST-net.

The diagnostic trouble code (DTC) is stored if the control module detects that:

- The microphone has too low signal.

The control module's test for the diagnostic trouble code (DTC) starts in the event of:

- Ignition on and battery voltage between 9 and 16 V.

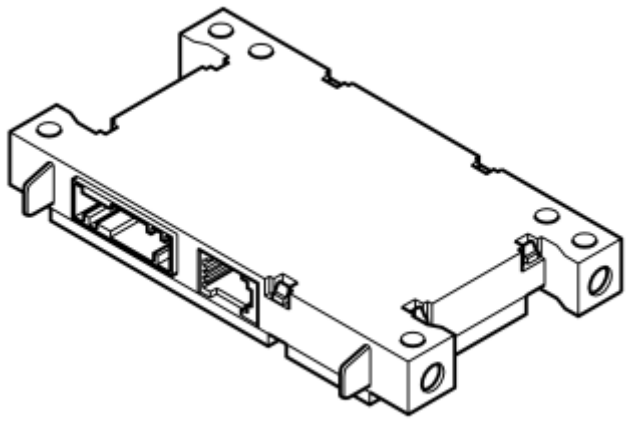

Fig. 116: Identifying Bluetooth Phone Module (BPM)
Courtesy of VOLVO CARS CORPORATION

Substitute Value

- None.

Possible Source

- Internal malfunction in the microphone.
- Internal fault in integrated audio module (IAM).
- Internal fault in the Bluetooth phone module (BPM).
- The MOST network is not working.

Fault symptom[s]

- Cellular phone/Other party cannot hear/Handsfree
- Cellular phone/Other party cannot hear/Unsure when/at all times

FAULT-TRACING

see **FAULT-TRACING**

BPM-1401: CONTROL MODULE INTERNAL FAULT (2011)

DIAGNOSTIC TROUBLE CODE (DTC) INFORMATION BPM-1401

Condition

Bluetooth phone module (BPM) checks communication with Bluetooth chip.

The diagnostic trouble code (DTC) is stored if the control module detects that:

- Communication with Bluetooth chip is lost.

The control module's test for the diagnostic trouble code (DTC) starts in the event of:

- Ignition on and battery voltage between 9 and 16 V.

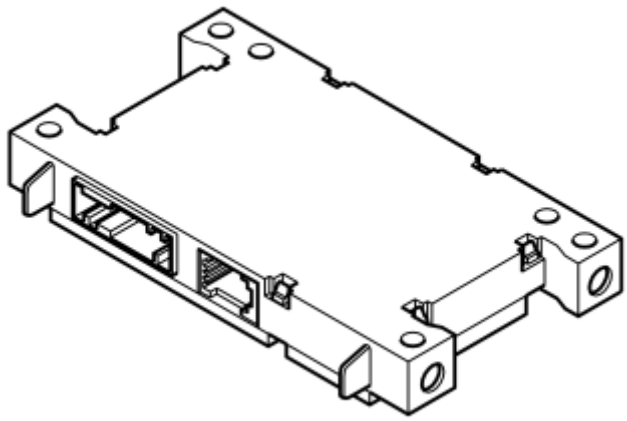

Fig. 117: Identifying Bluetooth Phone Module (BPM)
Courtesy of VOLVO CARS CORPORATION

Substitute Value

- None.

Possible Source

- Internal fault in the control module.

Fault symptom[s]

- Bluetooth Telephone: No Functionality

FAULT-TRACING

see **FAULT-TRACING**

BPM-B100: CONTROL MODULE CONFIGURATION FAULT (2011)

DIAGNOSTIC TROUBLE CODE (DTC) INFORMATION BPM-B100

Condition

The control module compares its configuration ID with the signal configuration transmitted on the control area

network (CAN) by the central electronic module (CEM).

The diagnostic trouble code (DTC) is stored if the control module detects that:

- The vehicle configuration has not been obtained.

The control module's test for the diagnostic trouble code (DTC) starts in the event of:

- Ignition on and battery voltage between 9 and 16 V.
- Ignition on for at least 60 seconds.

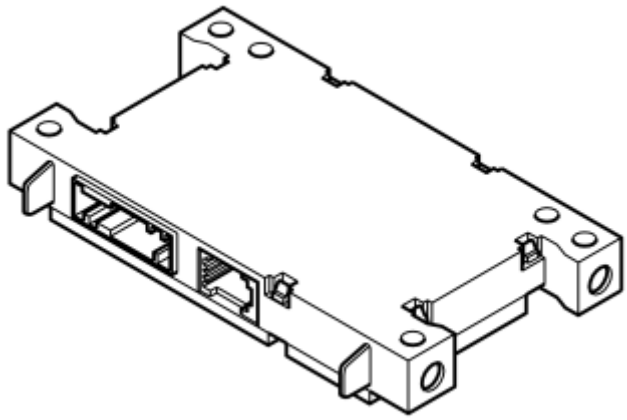

Fig. 118: Identifying Bluetooth Phone Module (BPM)
Courtesy of VOLVO CARS CORPORATION

Substitute Value

- None.

Possible Source

- Interference in communication between Bluetooth phone module (BPM) and Central electronic module (CEM).
- Incorrect configuration ID (the control module is not intended for this vehicle, for example it is a used control module with different software/hardware).

Fault symptom[s]

- Bluetooth Telephone: No Functionality

FAULT-TRACING

see **FAULT-TRACING**

BPM-B101: CONTROL MODULE CONFIGURATION FAULT (2011)

DIAGNOSTIC TROUBLE CODE (DTC) INFORMATION BPM-B101

Condition

The control module compares its configuration ID with the signal configuration transmitted on the control area network (CAN) by the central electronic module (CEM).

The diagnostic trouble code (DTC) is stored if the control module detects that:

- At least one parameter in the vehicle configuration file is incorrect.

The control module's test for the diagnostic trouble code (DTC) starts in the event of:

- Ignition on and battery voltage between 9 and 16 V.
- Ignition on for at least 60 seconds.

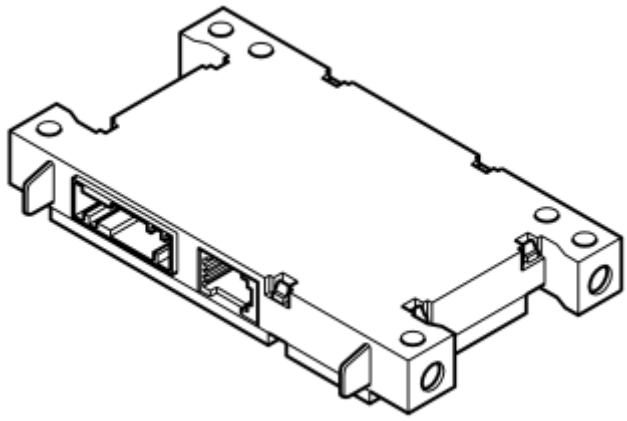

Fig. 119: Identifying Bluetooth Phone Module (BPM)
Courtesy of VOLVO CARS CORPORATION

Substitute Value

- None.

Possible Source

- Interference in communication between Bluetooth phone module (BPM) and Central electronic module (CEM).
- Incorrect configuration ID (the control module is not intended for this vehicle, for example it is a used control module with different software/hardware).

Fault symptom[s]

- Bluetooth Telephone: No Functionality

FAULT-TRACING

FAULTY SOFTWARE

The control module has registered that invalid or incorrect data has been obtained from the vehicle configuration file.

This can be due to a fault in the Central electronic module (CEM).

Downloading new software

Remedy the fault by loading new software into the Central Electronic Module (CEM).

After downloading new software into the central electronic module (CEM), the new software must also be downloaded into the Bluetooth phone module (BPM)

Select "Continue" after programming.

- **Continue**

  Refer to **VERIFICATION**

VERIFICATION

HINT: After carrying out the repair, check that the fault has been remedied.

Fig. 120: Checking Traffic Load On CAN Cables
Courtesy of VOLVO CARS CORPORATION

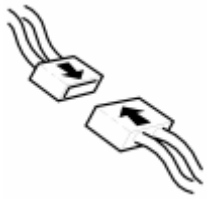

Fig. 121: Identifying Connector(s) Reinstallation
Courtesy of VOLVO CARS CORPORATION

- Ignition off.
- Reinstall the connectors, components etc.
- Ignition on.

  Check the function of the Bluetooth phone module (BPM).

Is the carphone working?

- **YES**

  OKAY: Troubleshooting has been completed.

- **NO**

  Refer to **INFORMATION**

INFORMATION

FAULT-TRACING INFORMATION

The fault should have been detected and remedied. As this is not the case fault-tracing has failed.

Exit fault-tracing for this diagnostic trouble code (DTC) or make another attempt.

BPM-E010: BATTERY VOLTAGE FAULTY SIGNAL (2011)

DIAGNOSTIC TROUBLE CODE (DTC) INFORMATION BPM-E010

Condition

Bluetooth phone module (BPM) checks the voltage feed and compares it to the voltage over the Central electronic module (CEM).

The diagnostic trouble code (DTC) is stored if the control module detects that:

- The difference between the voltage of Bluetooth phone module (BPM) and Central electronic module (CEM) is greater than 2 V.

The control module's test for the diagnostic trouble code (DTC) starts in the event of:

- Ignition on and battery voltage between 9 and 16 V.

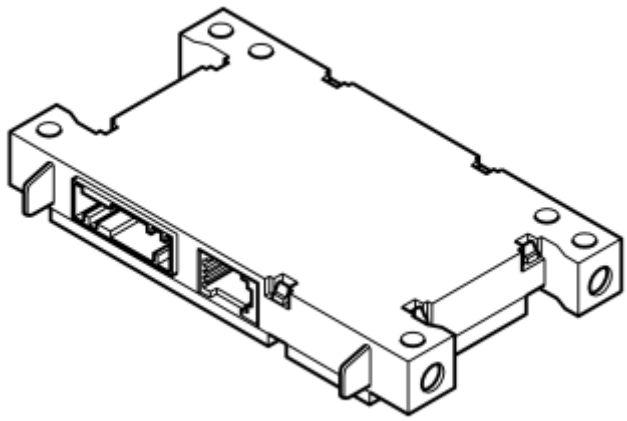

Fig. 122: Identifying Bluetooth Phone Module (BPM)
Courtesy of VOLVO CARS CORPORATION

Substitute Value

- None.

Possible Source

Signal too high:

- Short-circuit to supply voltage in the cable.

Signal too low:

- Short-circuit to ground in the cable.
- Open-circuit in the power supply cable.

Fault symptom[s]

- Bluetooth Telephone: No Functionality

FAULT-TRACING

see **FAULT-TRACING**

PHM-0001: POWER SUPPLY. FAULTY SIGNAL (2003-2005)

DIAGNOSTIC TROUBLE CODE (DTC) INFORMATION PHM-0001

Condition

Diagnostic trouble code (DTC) PHM-0001 is stored if the voltage to the phone module (PHM) deviates by more than 2.5 V from the central electronic module (CEM) voltage.

Diagnostic trouble code (DTC) PHM-0001 can be diagnosed with the ignition on (not key position 3) and when the battery voltage is 9-16 V.

Substitute Value

- None.

Possible Source

- Half-burned fuse for the phone module (PHM)
- Defective wiring
- Internal fault in the phone module (PHM).

Fault symptom[s]

- No or reduced carphone functionality.

FAULTY SIGNAL

CHECKING FUSES AND POWER SUPPLY

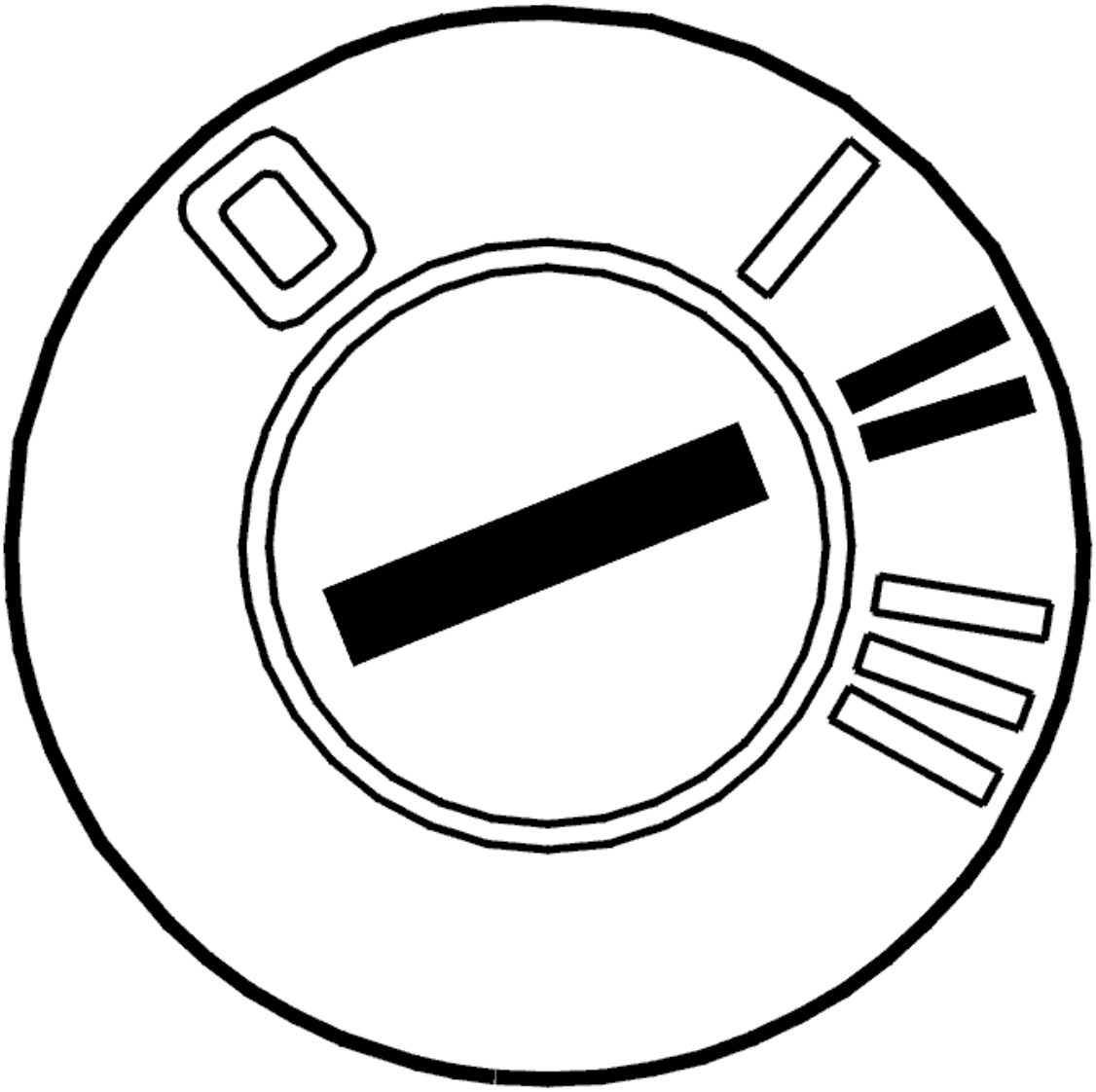

Fig. 123: Identifying Ignition ON
Courtesy of VOLVO CARS CORPORATION

- Ignition on.

  Check whether the carphone fuse in the passenger compartment fusebox is half burned by trying a new fuse.

  HINT: A half burned fuse can cause intermittent faults.

  Check the power supply to the phone module (PHM) by:

  - measuring the voltage between phone module (PHM) connector A terminals #1 (#1) and A #2 (#2)
  - measure the battery voltage.

  The fault is in the power supply cable if the difference between the power supply for the phone module

(PHM) and battery voltage is greater than 2.5 V.

There may be an internal fault in the phone module (PHM) if the difference is less than 2.5 V.

Remedy as necessary.

Other information:

- To connect the breakout box, see **CONNECTING THE BREAKOUT BOX**
- For information about signals and connectors, see **SIGNAL SPECIFICATION**
- To access or replace the phone module (PHM), see **PHONE MODULE (PHM), REPLACING**
- see **CONTENTS** .

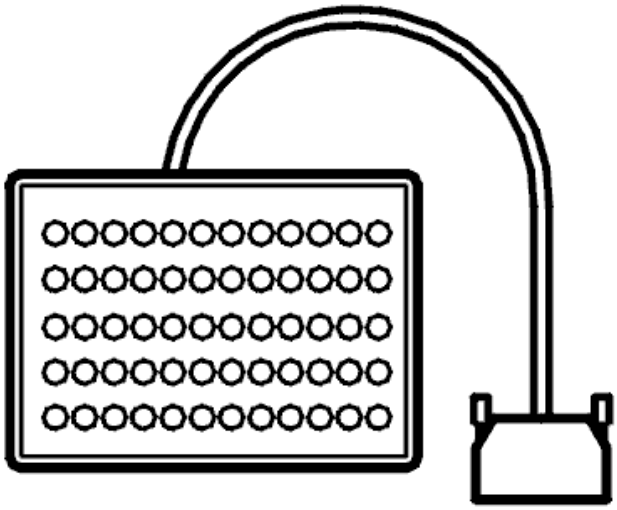

Fig. 124: Breakout Box
Courtesy of VOLVO CARS CORPORATION

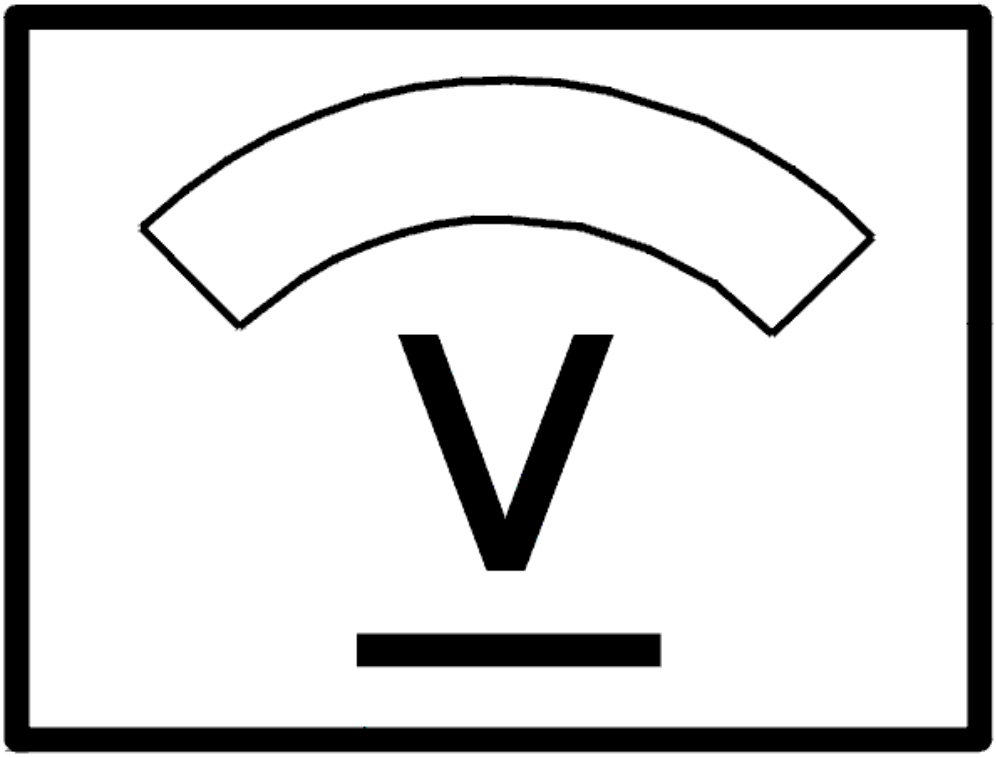

Fig. 125: Identifying Voltage Display
Courtesy of VOLVO CARS CORPORATION

- **Continue**

  Refer to **VERIFICATION**

VERIFICATION

VERIFICATION

HINT: After carrying out the repair, check that the fault has been remedied.

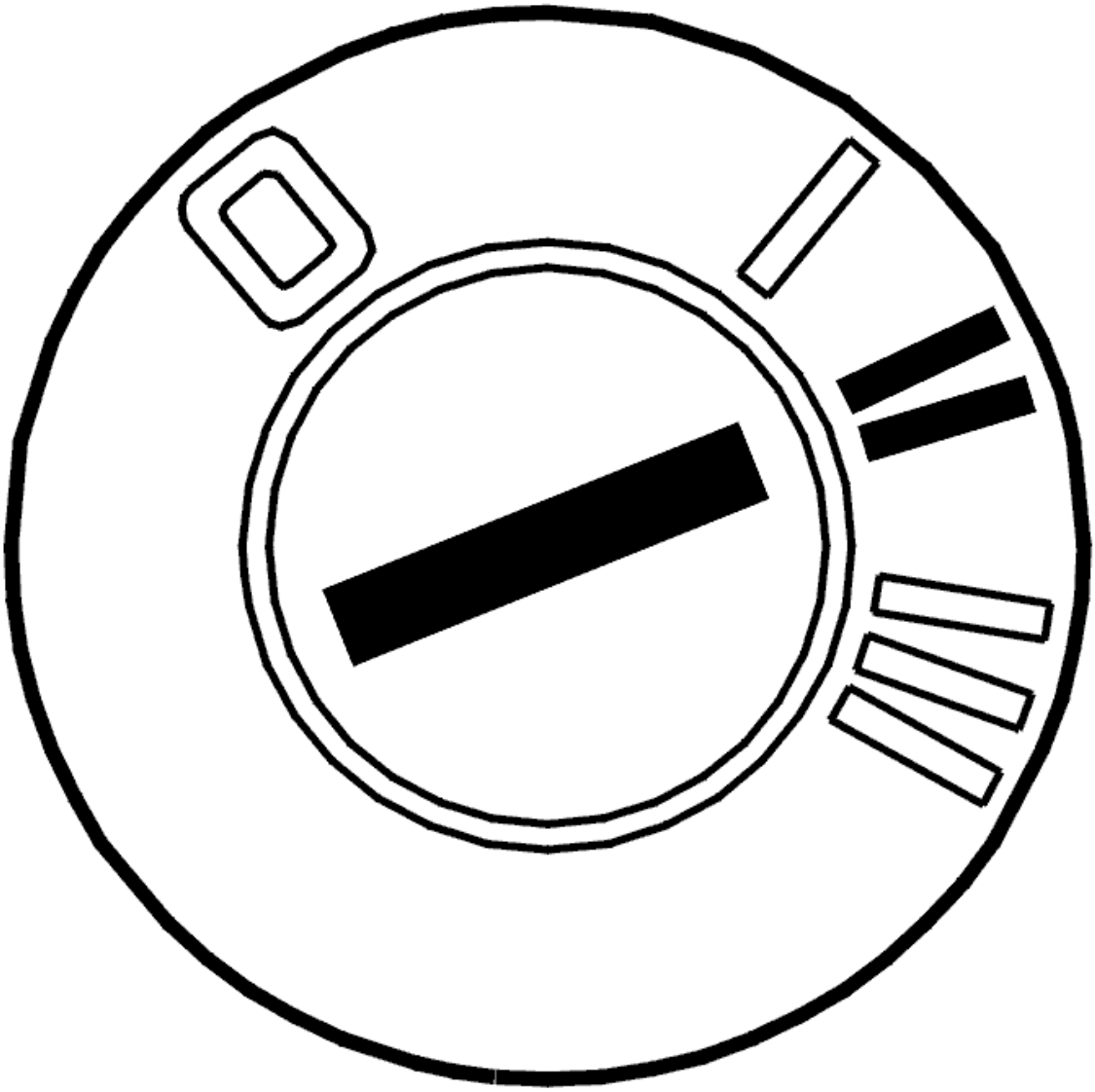

Fig. 126: Identifying Ignition ON
Courtesy of VOLVO CARS CORPORATION

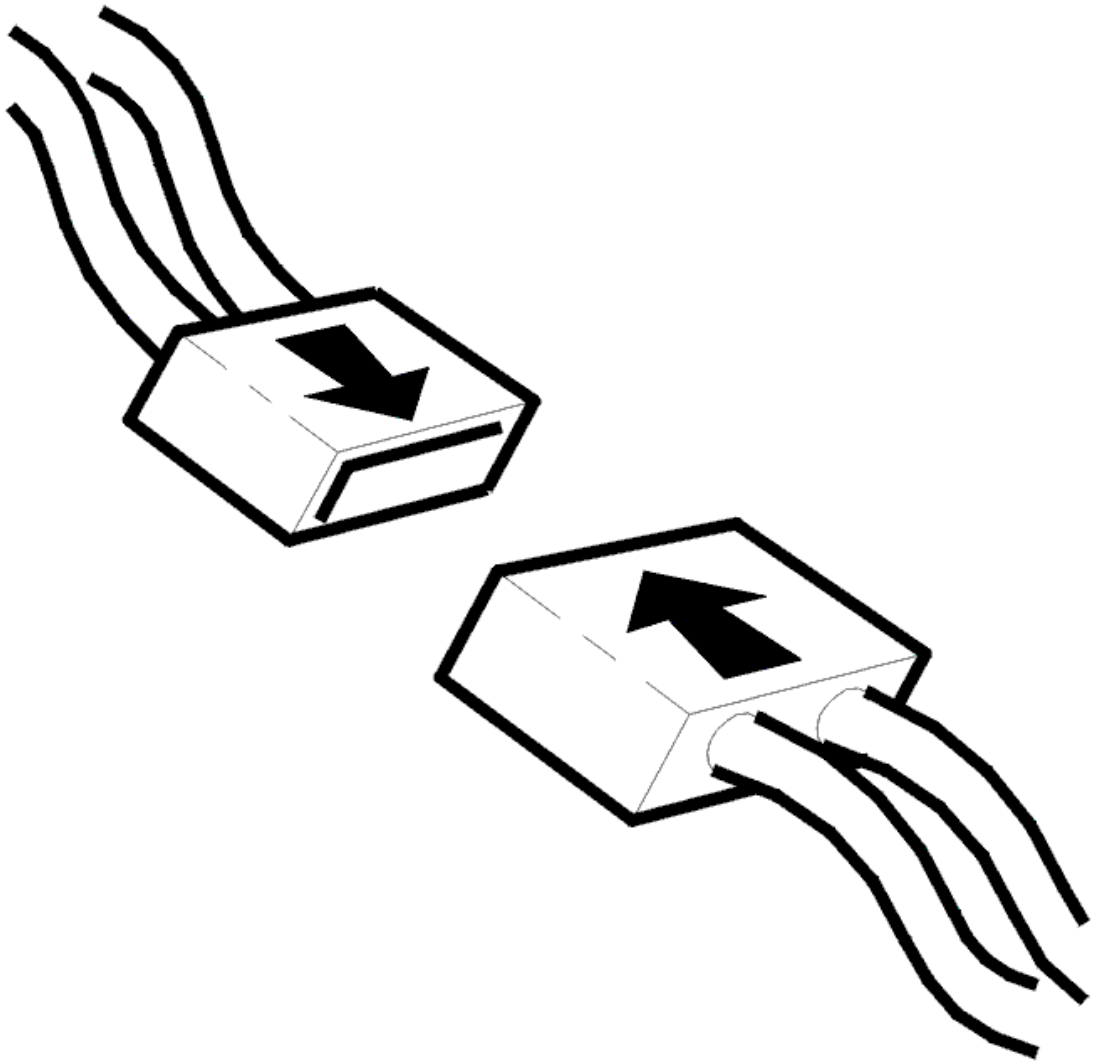

Fig. 127: Connecting Connector
Courtesy of VOLVO CARS CORPORATION

- Ignition off
- Reinstall the connectors, components etc.
- Ignition on
- Switch on the carphone.

  Make a call so that both the handset and the hands-free system are used.

  Ignition off.

  Ignition on.

  Read off the diagnostic trouble codes (DTCs).

Check that the relevant diagnostic trouble code (DTC) has switched status from permanent to intermittent fault.

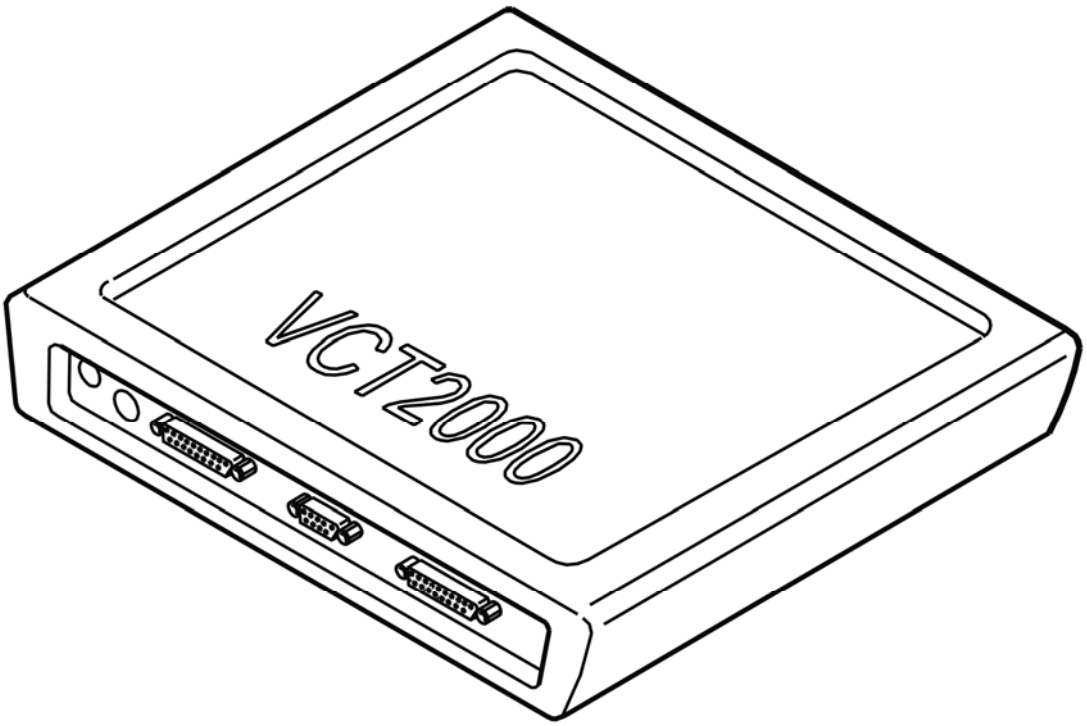

Fig. 128: Identifying VCT2000 Diagnostic Tool Symbol In VIDA
Courtesy of VOLVO CARS CORPORATION

Has the status of the diagnostic trouble code (DTC) changed?

- **YES**

  VERIFIED: Troubleshooting has been completed.

- **NO**

  Refer to **INFORMATION**

INFORMATION

FAULT-TRACING INFORMATION

The fault should have been detected and remedied. As this is not the case fault-tracing has failed.

Exit fault-tracing for this diagnostic trouble code (DTC) or make another attempt.

PHM-0008: RESERVE MICROPHONE. SIGNAL TOO HIGH / SIGNAL MISSING (2006)

DIAGNOSTIC TROUBLE CODE (DTC) INFORMATION PHM-0008

Condition

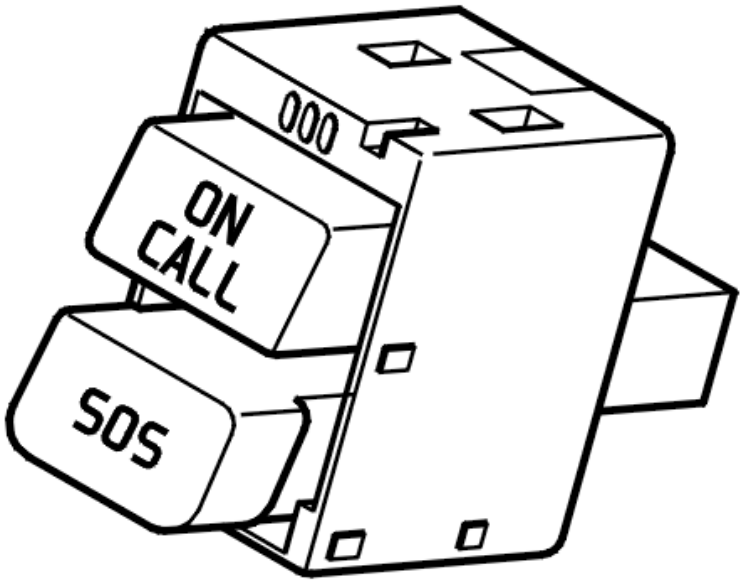

Fig. 129: Identifying Phone Module (PHM)
Courtesy of VOLVO CARS CORPORATION

The diagnostic trouble code (DTC) is stored if the phone module (PHM) registers an open-circuit in the signal from the reserve microphone or a short-circuit to supply voltage in the signal. The reserve microphone is located behind the panel containing the SOS and ON CALL switches. The reserve microphone is used when a Volvo On Call service is connected and the phone module (PHM) does not have access to the microphone for the audio module (AUD).

The diagnostic trouble code (DTC) can be diagnosed when the ignition is switched on (not key position 3) and when the battery voltage is between 9-16 V. The diagnostic trouble code (DTC) can only be diagnosed for a phone module (PHM) with Volvo On Call functionality.

Substitute Value

- None.

Possible Source

- Open-circuit in the cable between the phone module (PHM) and the reserve microphone
- Short-circuit to supply voltage in the cable between the phone module (PHM) and the reserve microphone.

Fault symptom[s]

- Messages in the display
- The microphone is not working.

SIGNAL TOO HIGH / SIGNAL MISSING

CHECKING THE COMPONENT AND WIRING

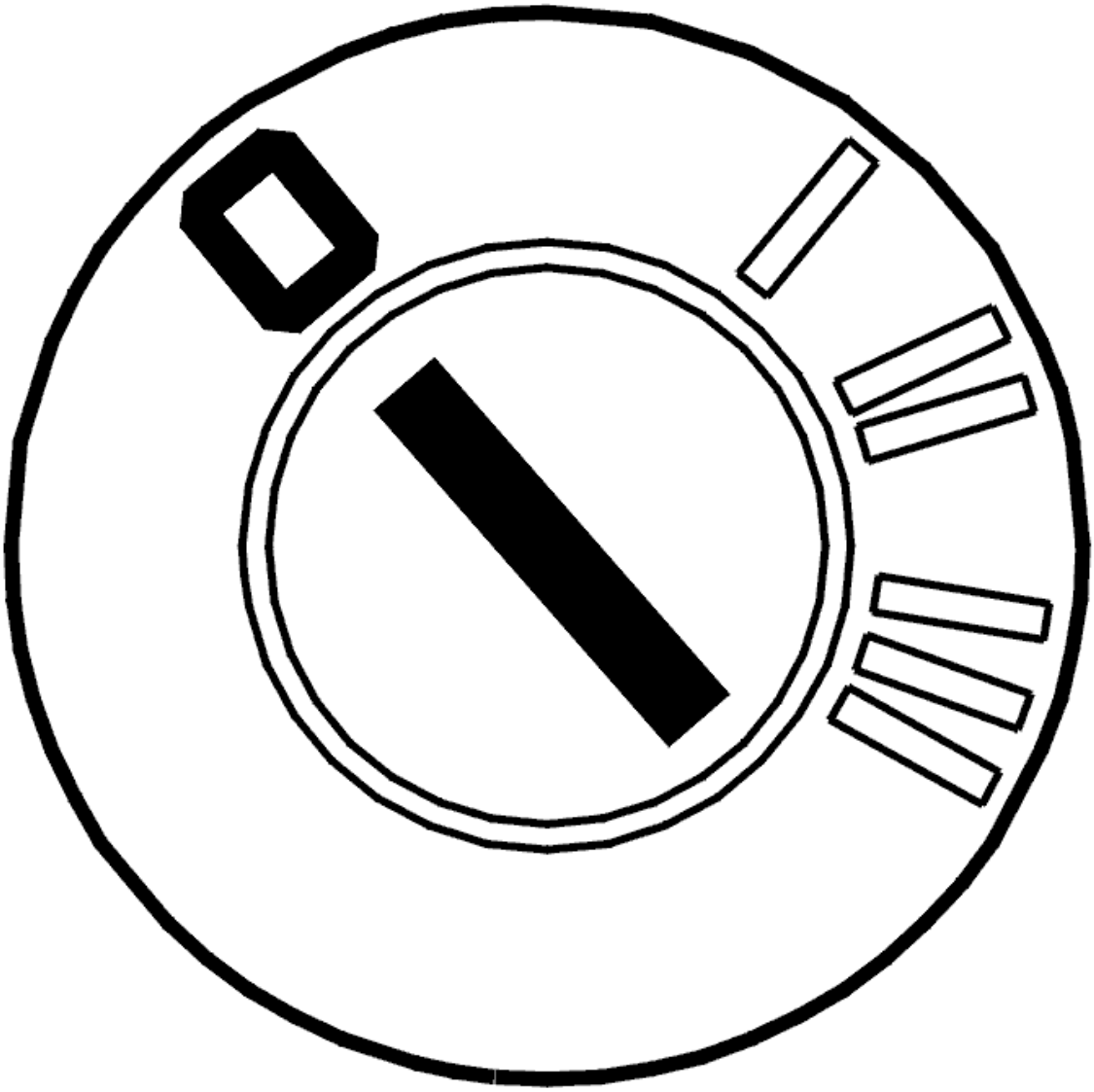

Fig. 130: Identifying Ignition OFF
Courtesy of VOLVO CARS CORPORATION

- Ignition off
- Disconnect connector A from the phone module (PHM)
- Disconnect the connector for the Volvo On Call switches.

  Check the cables for the internal microphone. Check for an open-circuit.

  Check between:

  - the connector for phone module (PHM) terminal A#15 (#15) and the connector for switch terminal #1 (#13)
  - terminals #14 (#14) and #2 (#14) on connector A for the phone module (PHM).

  Check the cables at control module connector A for the internal microphone. Check for a short-circuit to supply voltage.

  Check between:

  - terminals #15 (#15) and #3 (#3)
  - terminals #15 (#15) and #4 (#4)
  - terminals #15 (#15) and #5 (#5)
  - terminals #14 (#14) and #3 (#3)
  - terminals #14 (#14) and #4 (#4)
  - terminals #14 (#14) and #5 (#5).

  Try replacing the microphone if the cables are OK.

  Remedy as necessary.

  Other information:

  - see **SIGNAL SPECIFICATION**
  - see **CONNECTING THE BREAKOUT BOX**
  - see **LOCATION OF COMPONENTS**
  - see **PHONE MODULE (PHM), REPLACING (2006-2010)**
  - see **SWITCH VOLVO ON CALL, REPLACING (2006-2010)**
  - see **CHECKING WIRING AND TERMINALS**

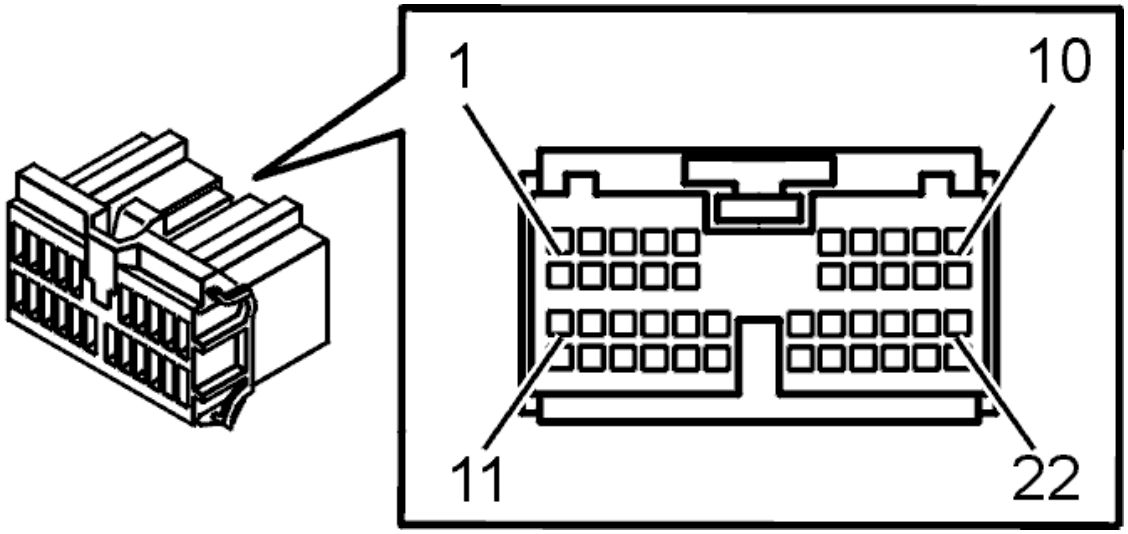

Fig. 131: Identifying Connector (F) Terminals
Courtesy of VOLVO CARS CORPORATION

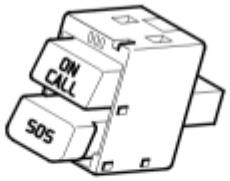

Fig. 132: View Of Connector
Courtesy of VOLVO CARS CORPORATION

- **Continue**

  Refer to **VERIFICATION**

VERIFICATION

VERIFICATION

HINT: After carrying out the repair, check that the fault has been remedied.

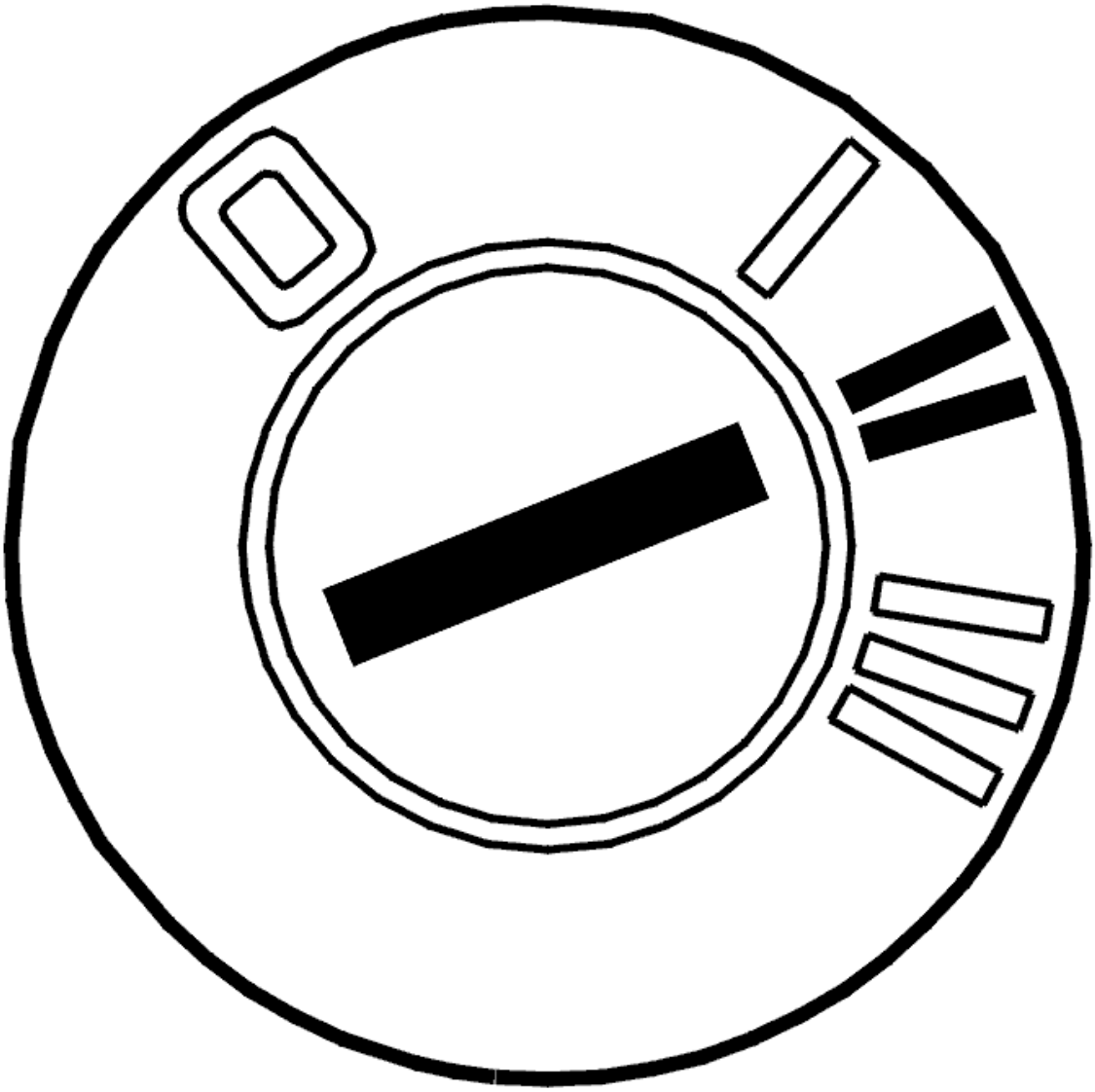

Fig. 133: Identifying Ignition ON
Courtesy of VOLVO CARS CORPORATION

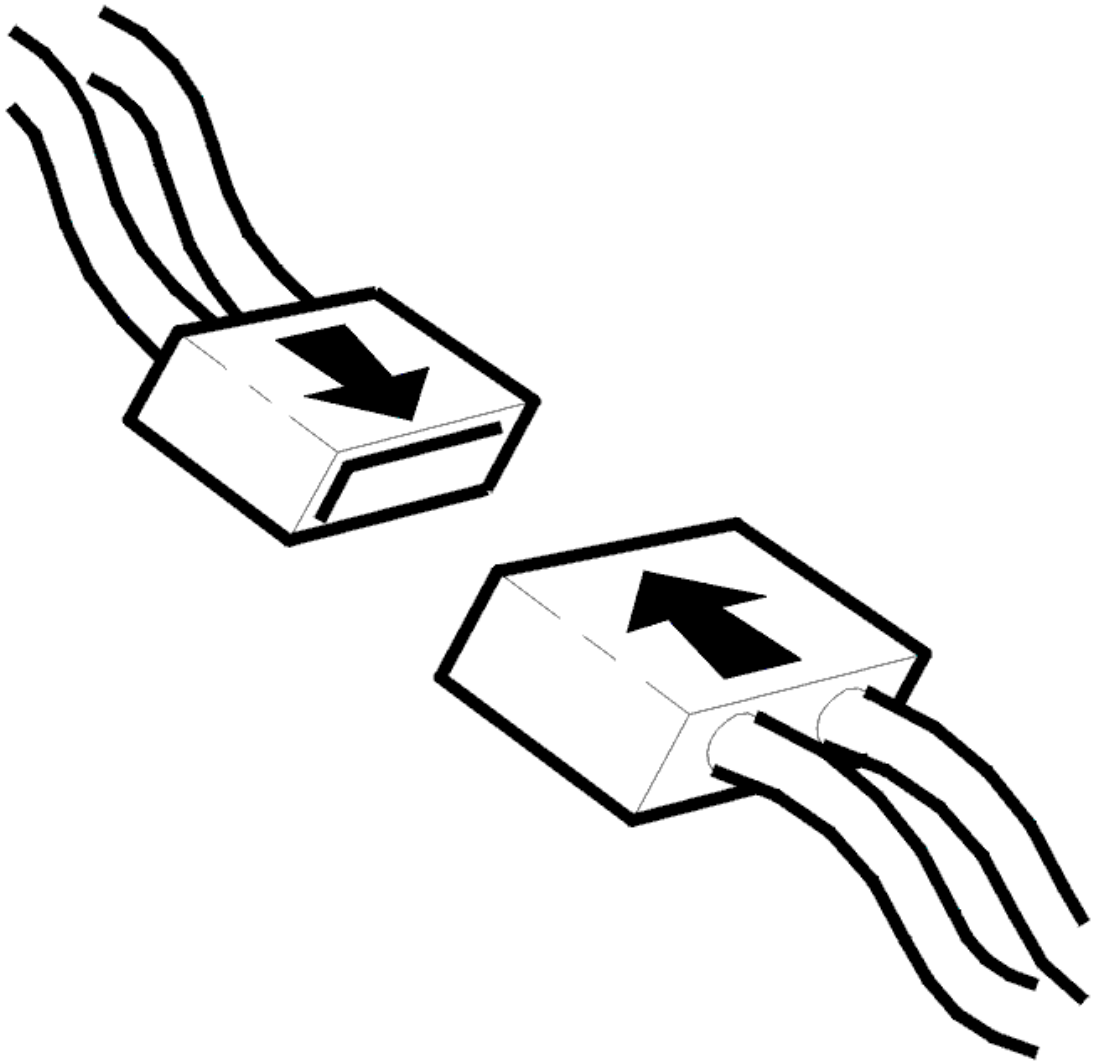

Fig. 134: Connecting Connector
Courtesy of VOLVO CARS CORPORATION

- Ignition off
- Reinstall the connectors, components etc.
- Ignition on
- Activate the carphone.

  Make a call so that both the handset and the hands-free system are used.

  - Ignition off.
  - Ignition on.
  - Read off the diagnostic trouble codes (DTCs).
  - Check that the relevant diagnostic trouble code (DTC) has switched status from permanent to

intermittent fault.

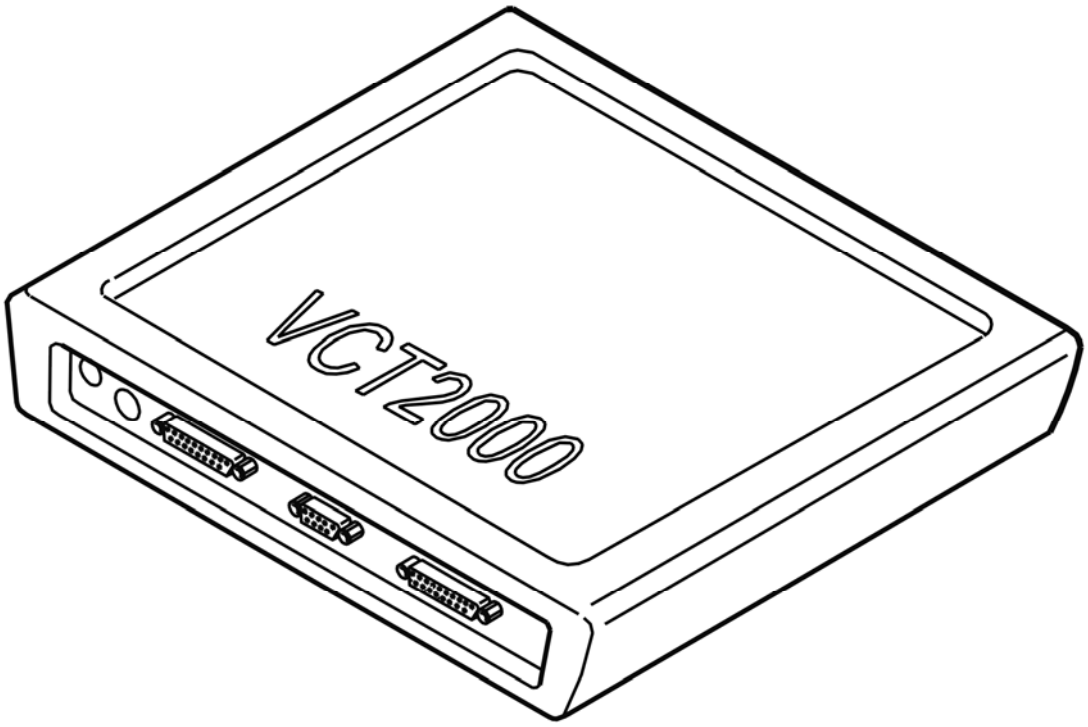

Fig. 135: Identifying VCT2000 Diagnostic Tool Symbol In VIDA
Courtesy of VOLVO CARS CORPORATION

Has the status of the diagnostic trouble code (DTC) changed?

- **YES**

  VERIFIED: Troubleshooting has been completed.

- **NO**

  Refer to **INFORMATION**

INFORMATION

FAULT-TRACING INFORMATION

The fault should have been detected and remedied. As this is not the case fault-tracing has failed.

Exit fault-tracing for this diagnostic trouble code (DTC) or make another attempt.

PHM-000A: RESERVE MICROPHONE. SIGNAL TOO LOW (2006-2011)

DIAGNOSTIC TROUBLE CODE (DTC) INFORMATION PHM-000A

Condition

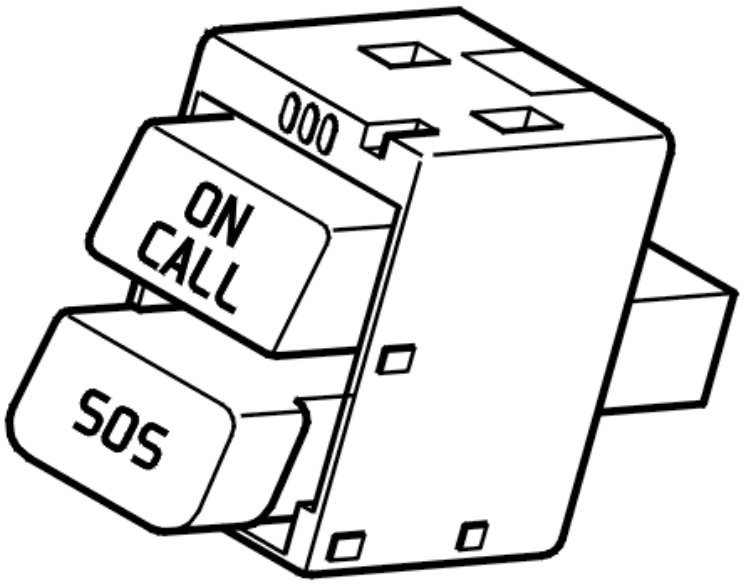

Fig. 136: Identifying Phone Module (PHM)
Courtesy of VOLVO CARS CORPORATION

The diagnostic trouble code (DTC) is stored if the phone module (PHM) detects a short-circuit to ground in the signal between the phone module (PHM) and the reserve microphone. The reserve microphone is located behind the panel containing the SOS and ON CALL switches. The reserve microphone is used when a Volvo On Call service is connected and the phone module (PHM) does not have access to the microphone for the audio module (AUD).

The diagnostic trouble code (DTC) can be diagnosed when the ignition is switched on (not key position 3) and when the battery voltage is between 9-16 V. The diagnostic trouble code (DTC) can only be diagnosed for a phone module (PHM) with Volvo On Call functionality.

Substitute Value

- None.

Possible Source

- Short-circuit to ground in the cable between the phone module (PHM) and the reserve microphone.

Fault symptom[s]

- Messages in the display
- The microphone is not working.

SIGNAL TOO LOW

CHECKING THE COMPONENT AND WIRING

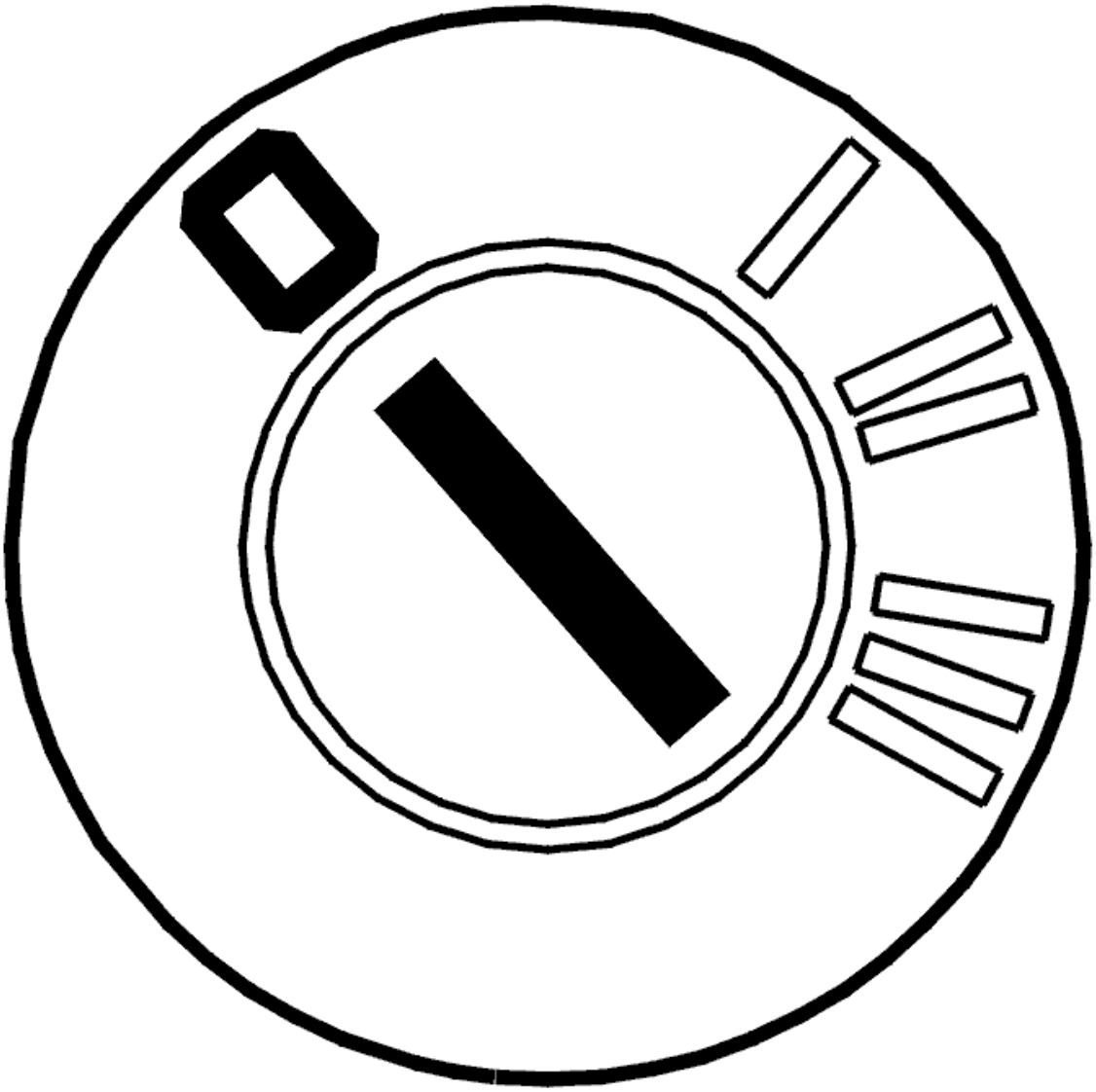

Fig. 137: Identifying Ignition OFF
Courtesy of VOLVO CARS CORPORATION

- Ignition off
- Disconnect connector A from the phone module (PHM)
- Disconnect the connector for the Volvo On Call switch.

Check the cables at control module connector A for the internal microphone. Check for a short-circuit to ground.

Check between:

- terminals #15 (#15) and #14 (#14)
- terminals #15 (#15) and #13 (#13)
- terminals #15 (#15) and #6 (#6).

Try replacing the microphone if the cables are OK.

Remedy as necessary.

Other information:

- see **SIGNAL SPECIFICATION**
- see **CONNECTING THE BREAKOUT BOX**
- see **LOCATION OF COMPONENTS**
- see **PHONE MODULE (PHM), REPLACING (2006-2010)**
- see **SWITCH VOLVO ON CALL, REPLACING (2006-2010)**
- see **CHECKING WIRING AND TERMINALS**

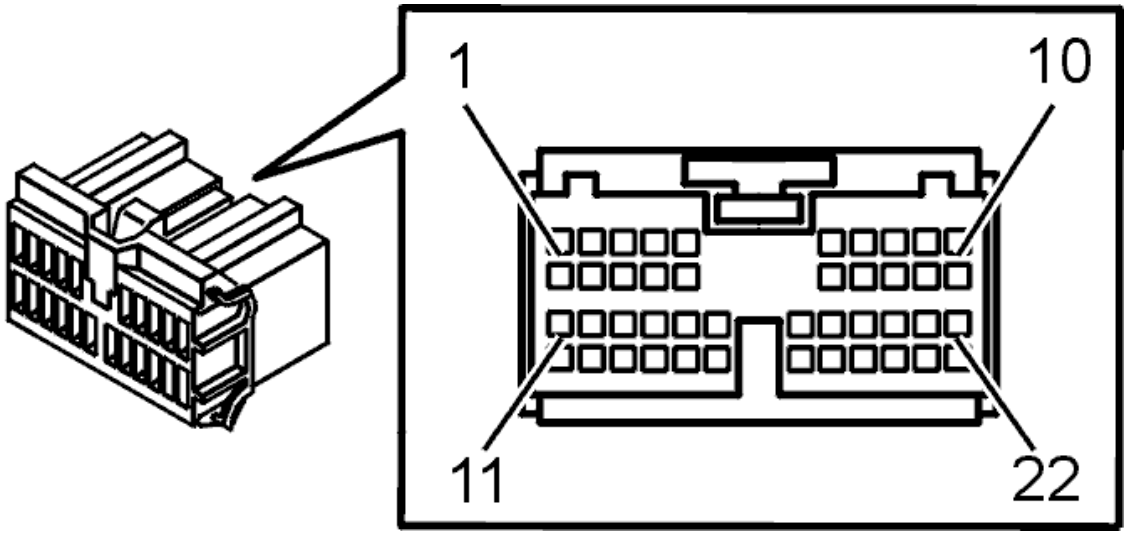

Fig. 138: Identifying Connector (F) Terminals
Courtesy of VOLVO CARS CORPORATION

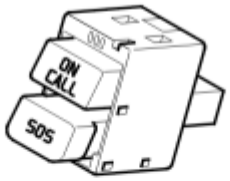

Fig. 139: View Of Connector
Courtesy of VOLVO CARS CORPORATION

- **Continue**

  Refer to **VERIFICATION**

VERIFICATION

VERIFICATION

HINT: After carrying out the repair, check that the fault has been remedied.

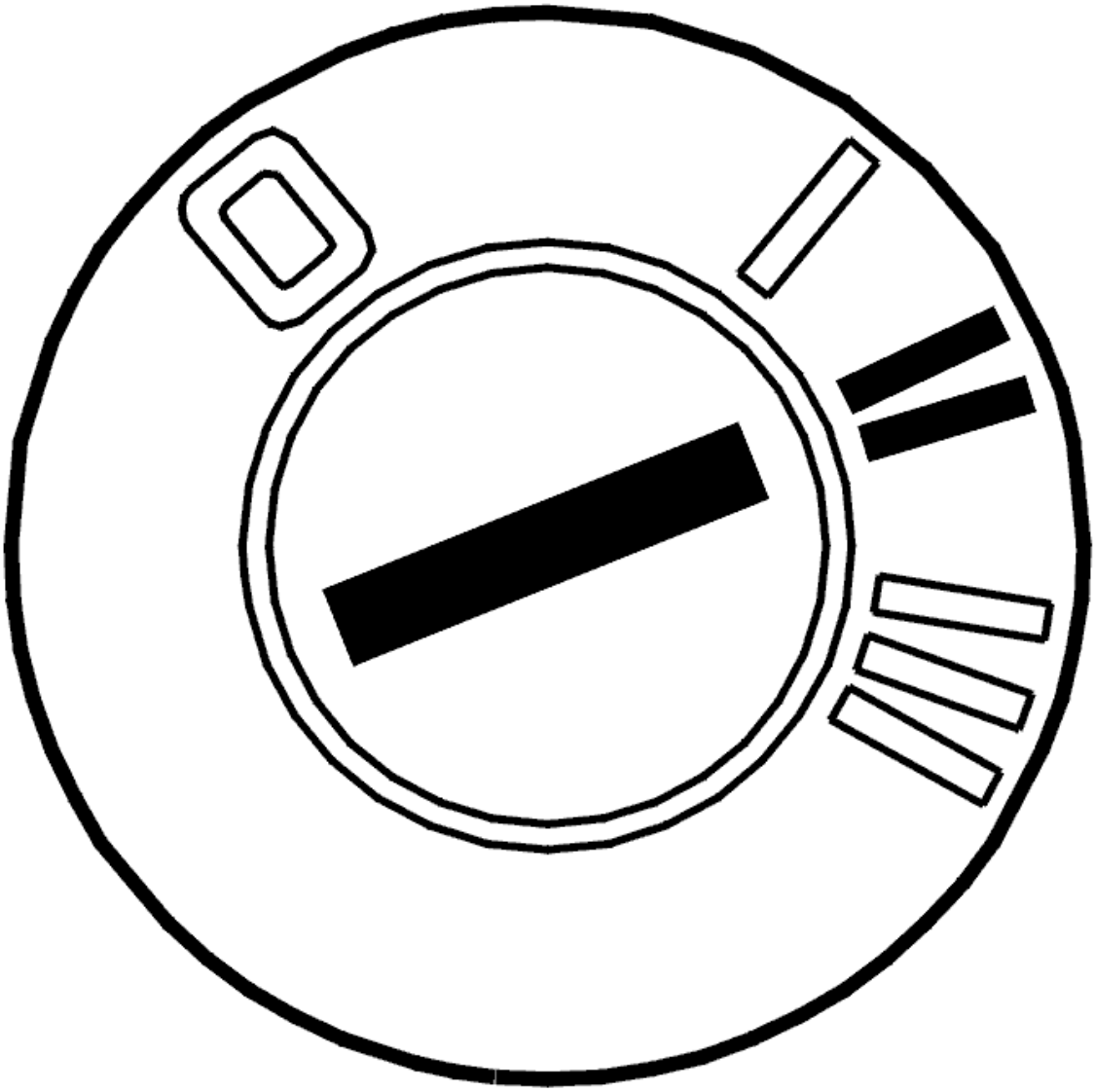

Fig. 140: Identifying Ignition ON
Courtesy of VOLVO CARS CORPORATION

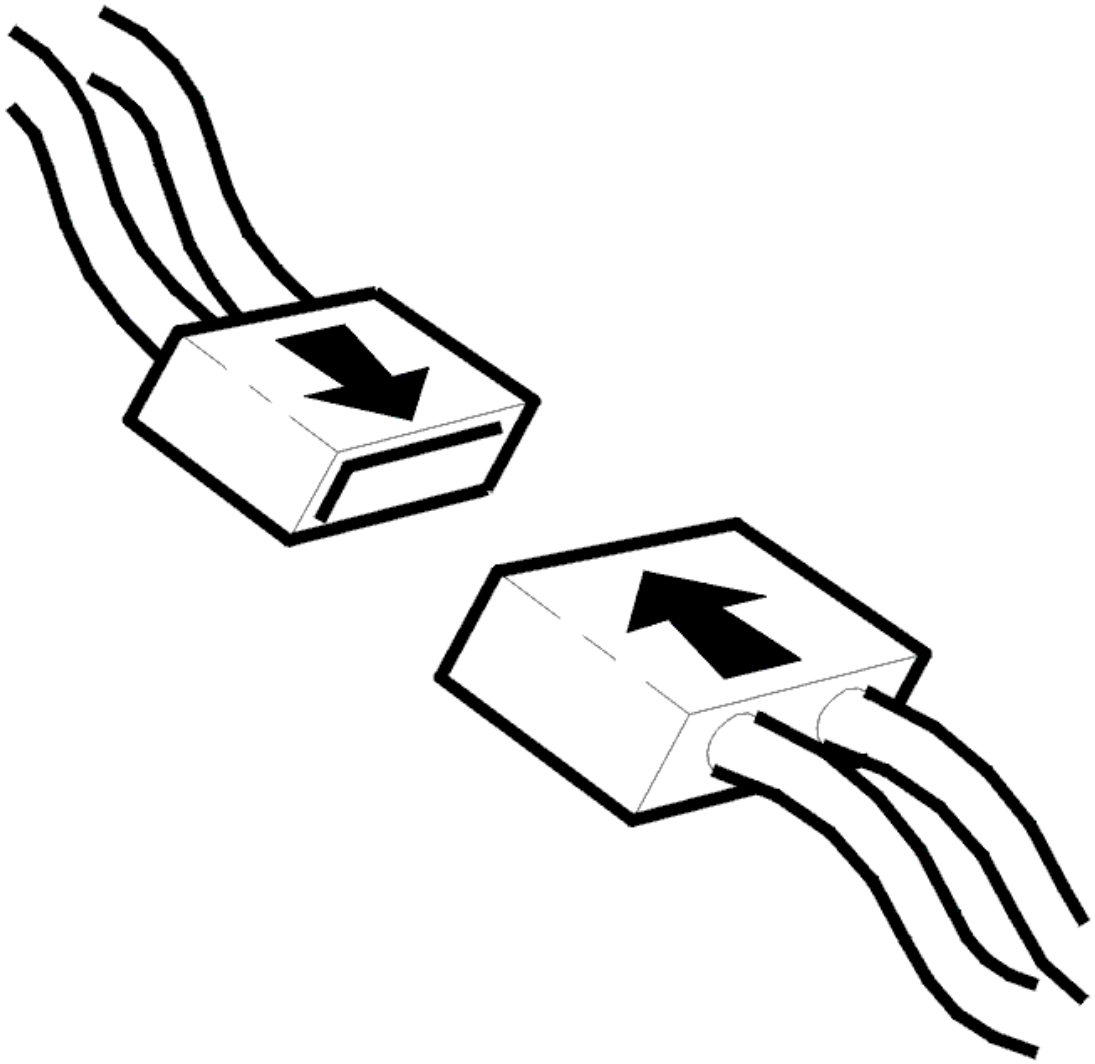

Fig. 141: Connecting Connector
Courtesy of VOLVO CARS CORPORATION

- Ignition off
- Reinstall the connectors, components etc.
- Ignition on
- Activate the carphone.

  Make a call so that both the handset and the hands-free system are used.

  - Ignition off.
  - Ignition on.
  - Read off the diagnostic trouble codes (DTCs).
  - Check that the relevant diagnostic trouble code (DTC) has switched status from permanent to

intermittent fault.

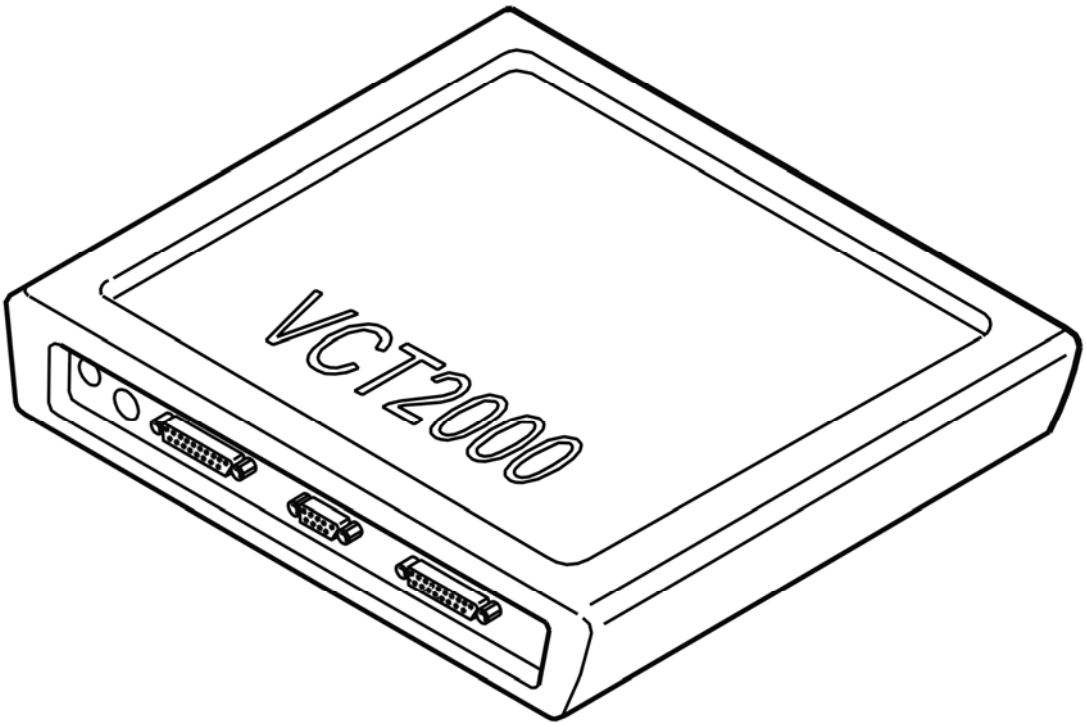

Fig. 142: Identifying VCT2000 Diagnostic Tool Symbol In VIDA
Courtesy of VOLVO CARS CORPORATION

Has the status of the diagnostic trouble code (DTC) changed?

- **YES**

  VERIFIED: Troubleshooting has been completed.

- **NO**

  Refer to **INFORMATION**

INFORMATION

FAULT-TRACING INFORMATION

The fault should have been detected and remedied. As this is not the case fault-tracing has failed.

Exit fault-tracing for this diagnostic trouble code (DTC) or make another attempt.

PHM-000B: HANDSET CRADLE. SIGNAL TOO HIGH / SIGNAL MISSING

(2006-2011)

DIAGNOSTIC TROUBLE CODE (DTC) INFORMATION PHM-000B

Condition

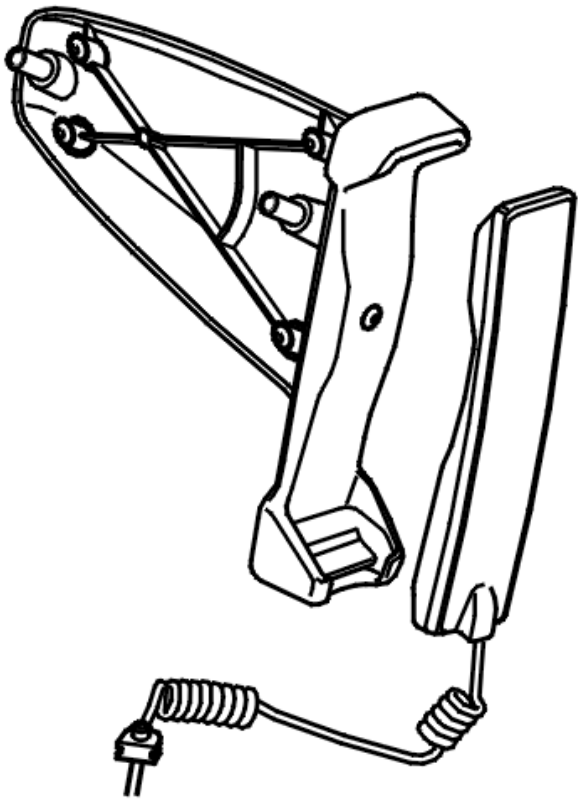

Fig. 143: Identifying Handset Cradle
Courtesy of VOLVO CARS CORPORATION

The diagnostic trouble code (DTC) is stored if the phone module (PHM) registers an open-circuit in the signal from the handset (cradle switch) or that there is a short-circuit to supply voltage in the signal.

The diagnostic trouble code (DTC) can be diagnosed when the ignition is switched on (not key position 3) and when the battery voltage is 9-16 V.

Substitute Value

- Only hands-free operates.

Possible Source

- Short-circuit to supply voltage in the cable (cradle signal) between the handset and the phone module (PHM)

- Open-circuit in the cable (cradle signal) between the handset and the phone module (PHM).

Fault symptom[s]

- The handset does not function.
- Message in the text display (applies only to phone modules (PHM) with Volvo On Call).

SIGNAL TOO HIGH / SIGNAL MISSING

CHECKING THE COMPONENT AND WIRING

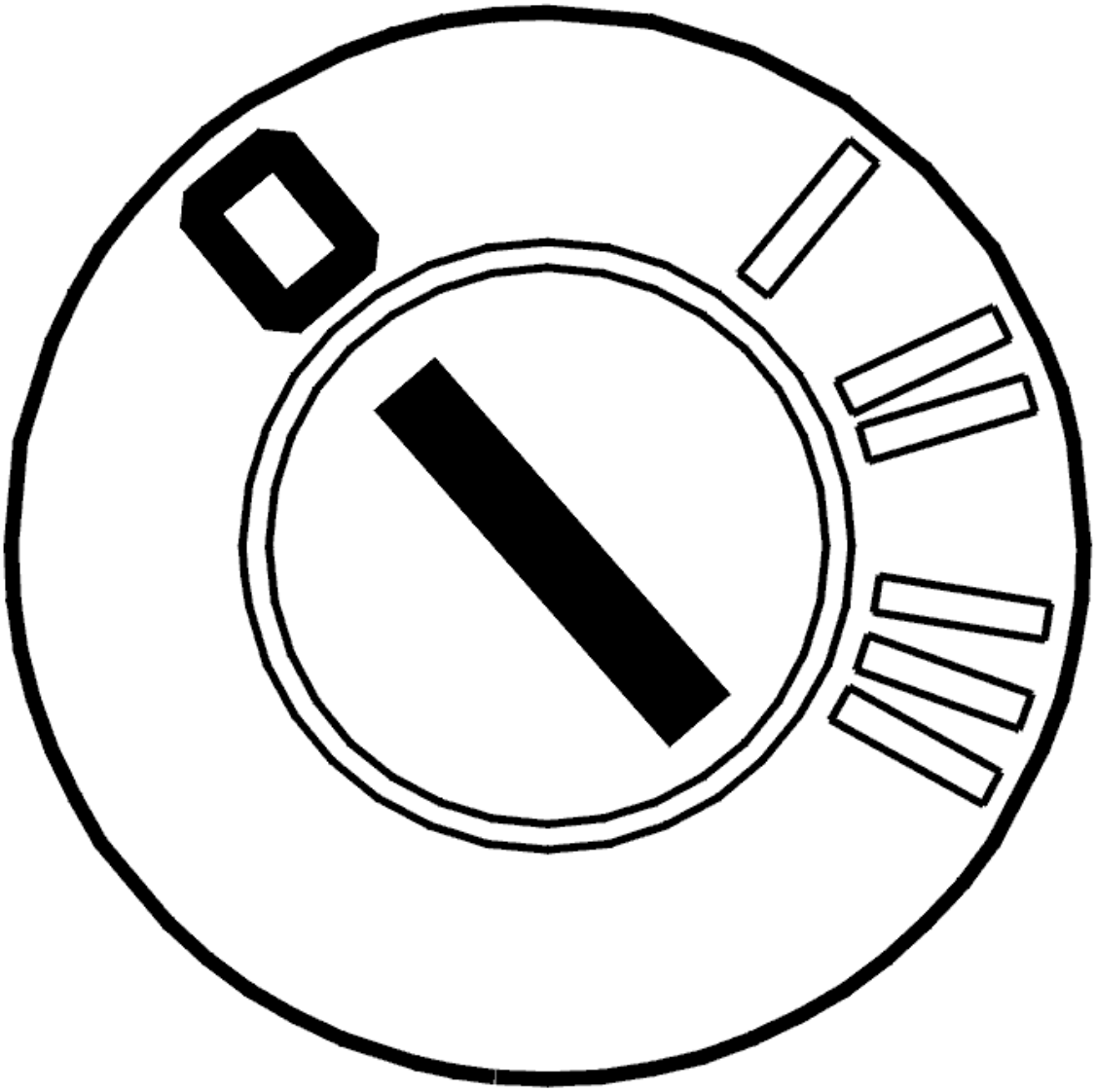

Fig. 144: Identifying Ignition OFF
Courtesy of VOLVO CARS CORPORATION

- Ignition off

- Disconnect connector A from the phone module (PHM).

  Check the cable for the cradle signal. Check for an open-circuit.

  Take a reading between control module connector A terminal #8 (#8) and handset connector terminal #4 (#24).

  Check control module connector A for the cradle signal. Check for a short-circuit to supply voltage.

  Check between:

  - terminals #8 (#8) and #7 (#7)
  - terminals #8 (8) and #5 (#5).

  Try replacing the handset or holder if the cable is OK.

  Remedy as necessary.

  Other information:

  - The cradle signal is approximately 5 V when the handset is not in the cradle
  - The cradle signal is approximately 0 V when the handset is in the cradle
  - see **SIGNAL SPECIFICATION**
  - see **CONNECTING THE BREAKOUT BOX**
  - see **LOCATION OF COMPONENTS**
  - see **PHONE MODULE (PHM), REPLACING**
  - see **HANDSET, REPLACING**
  - see **CHECKING WIRING AND TERMINALS**

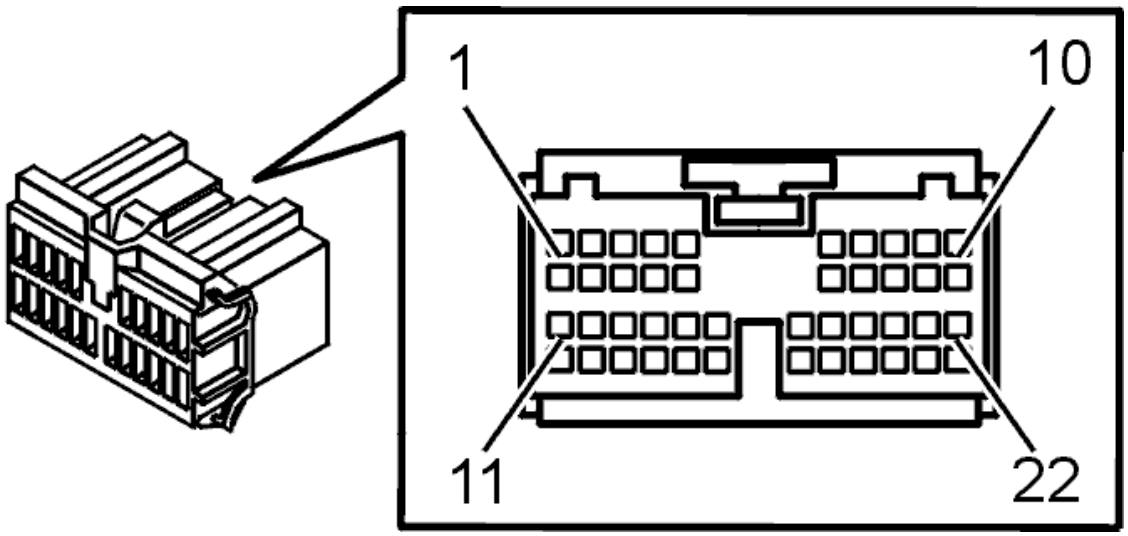

Fig. 145: Identifying Connector (F) Terminals

Courtesy of VOLVO CARS CORPORATION

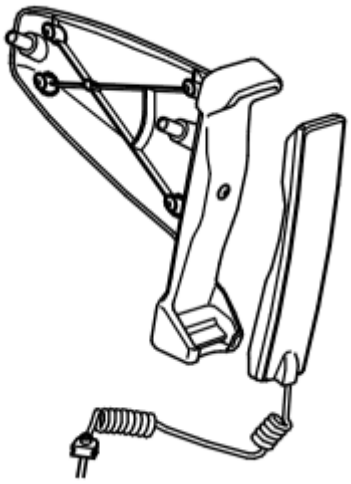

Fig. 146: Identifying Carphone Holder
Courtesy of VOLVO CARS CORPORATION

- **Continue**

  Refer to **VERIFICATION**

VERIFICATION

VERIFICATION

HINT: After carrying out the repair, check that the fault has been remedied.

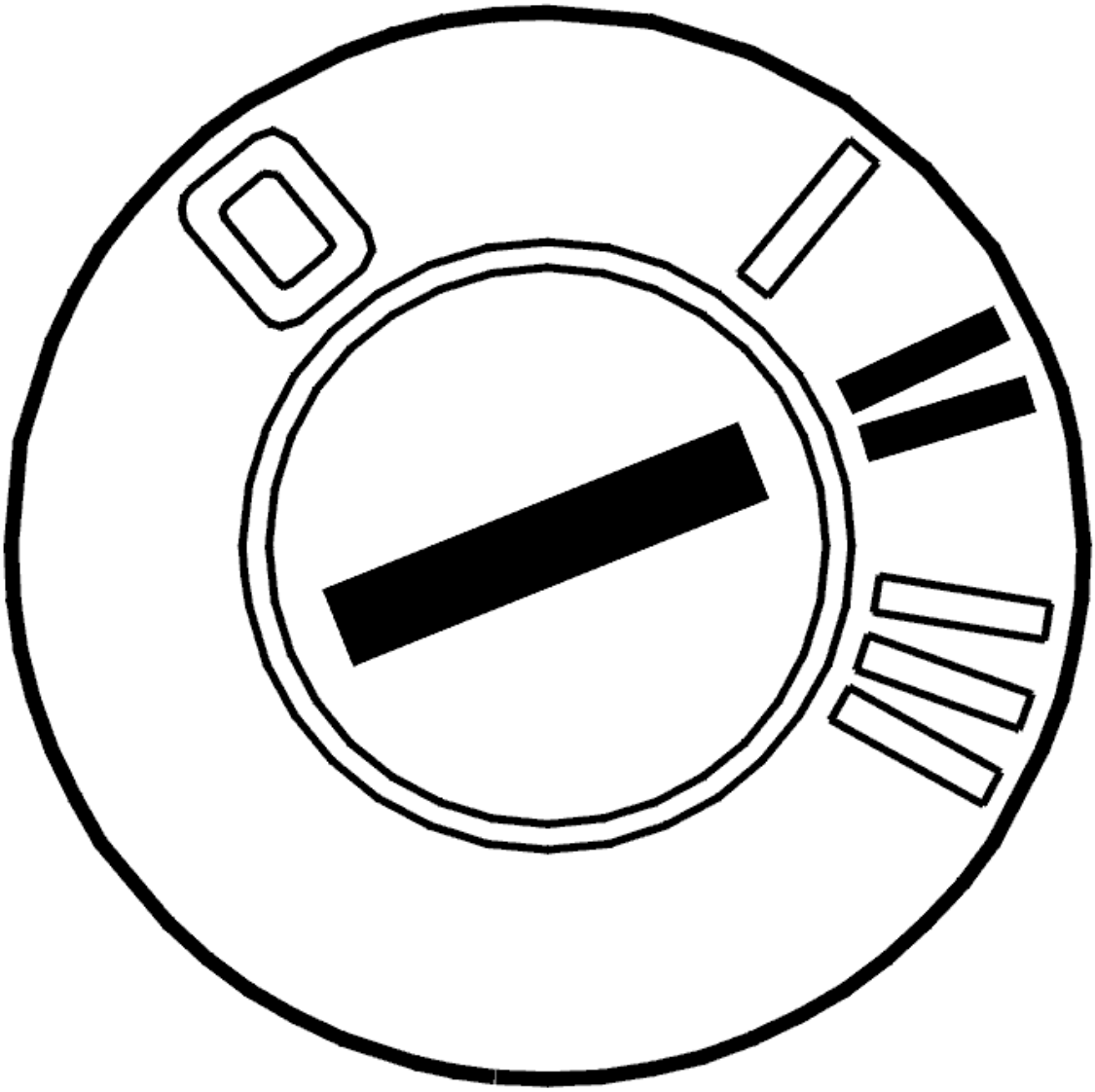

Fig. 147: Identifying Ignition ON
Courtesy of VOLVO CARS CORPORATION

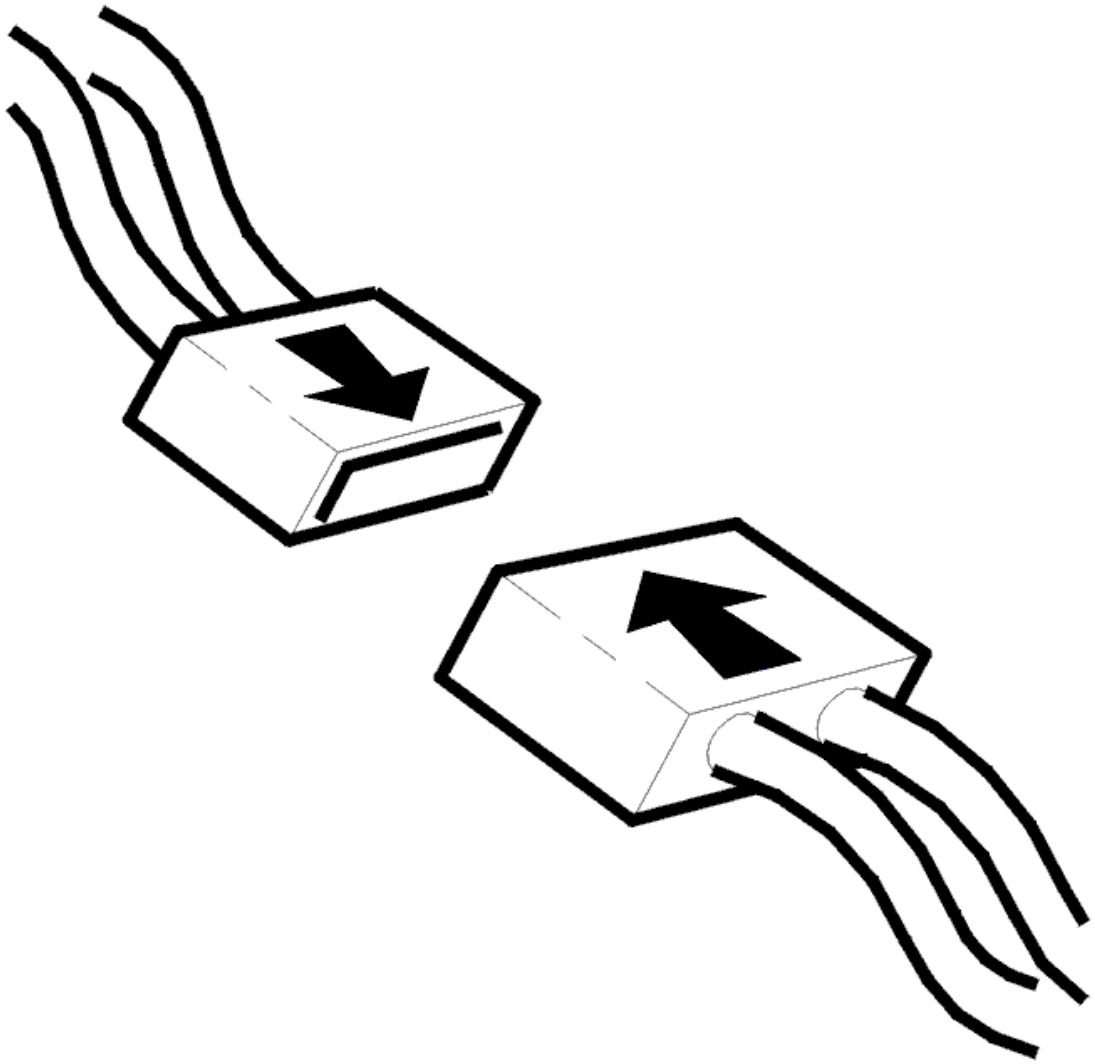

Fig. 148: Connecting Connector
Courtesy of VOLVO CARS CORPORATION

- Ignition off
- Reinstall the connectors, components etc.
- Ignition on
- Activate the carphone.

  Make a call so that both the handset and the hands-free system are used.

  - Ignition off.
  - Ignition on.
  - Read off the diagnostic trouble codes (DTCs).
  - Check that the relevant diagnostic trouble code (DTC) has switched status from permanent to

intermittent fault.

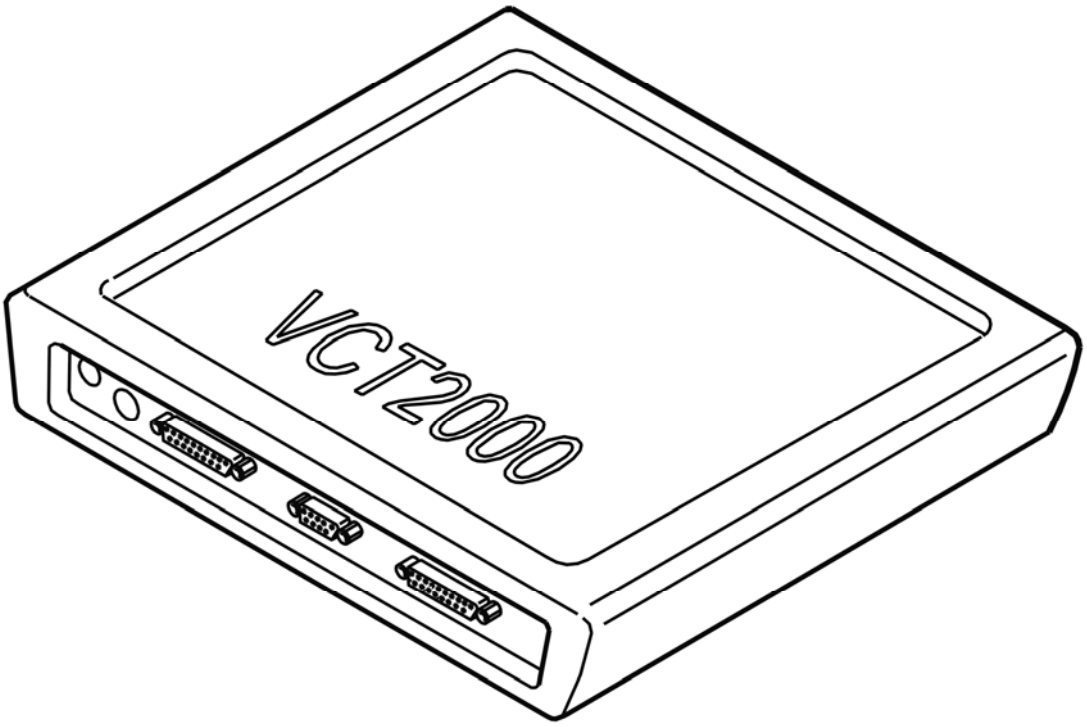

Fig. 149: Identifying VCT2000 Diagnostic Tool Symbol In VIDA
Courtesy of VOLVO CARS CORPORATION

Has the status of the diagnostic trouble code (DTC) changed?

- **YES**

  VERIFIED: Troubleshooting has been completed.

- **NO**

  Refer to **INFORMATION**

INFORMATION

FAULT-TRACING INFORMATION

The fault should have been detected and remedied. As this is not the case fault-tracing has failed.

Exit fault-tracing for this diagnostic trouble code (DTC) or make another attempt.

PHM-000B: HANDSET CRADLE. SIGNAL TOO HIGH OR SIGNAL MISSING

(2003-2004)

DIAGNOSTIC TROUBLE CODE (DTC) INFORMATION PHM-000B

Condition

Diagnostic trouble code (DTC) PHM-000B is stored if the phone module (PHM) registers an open-circuit in the signal to the handset or cradle switch or a short-circuit to supply voltage.

Diagnostic trouble code (DTC) PHM-000B can be diagnosed with the ignition on (not key position 3) and when the battery voltage is 9-16 V.

Substitute Value

- Only hands-free operates.

Possible Source

- Short-circuit to supply voltage in the wiring (cradle signal) between the handset and the control module
- Open-circuit in the wiring (cradle signal) between the handset and the control module.

Fault symptom[s]

- The handset does not function.

SIGNAL TOO HIGH OR SIGNAL MISSING

CHECKING THE COMPONENT AND WIRING

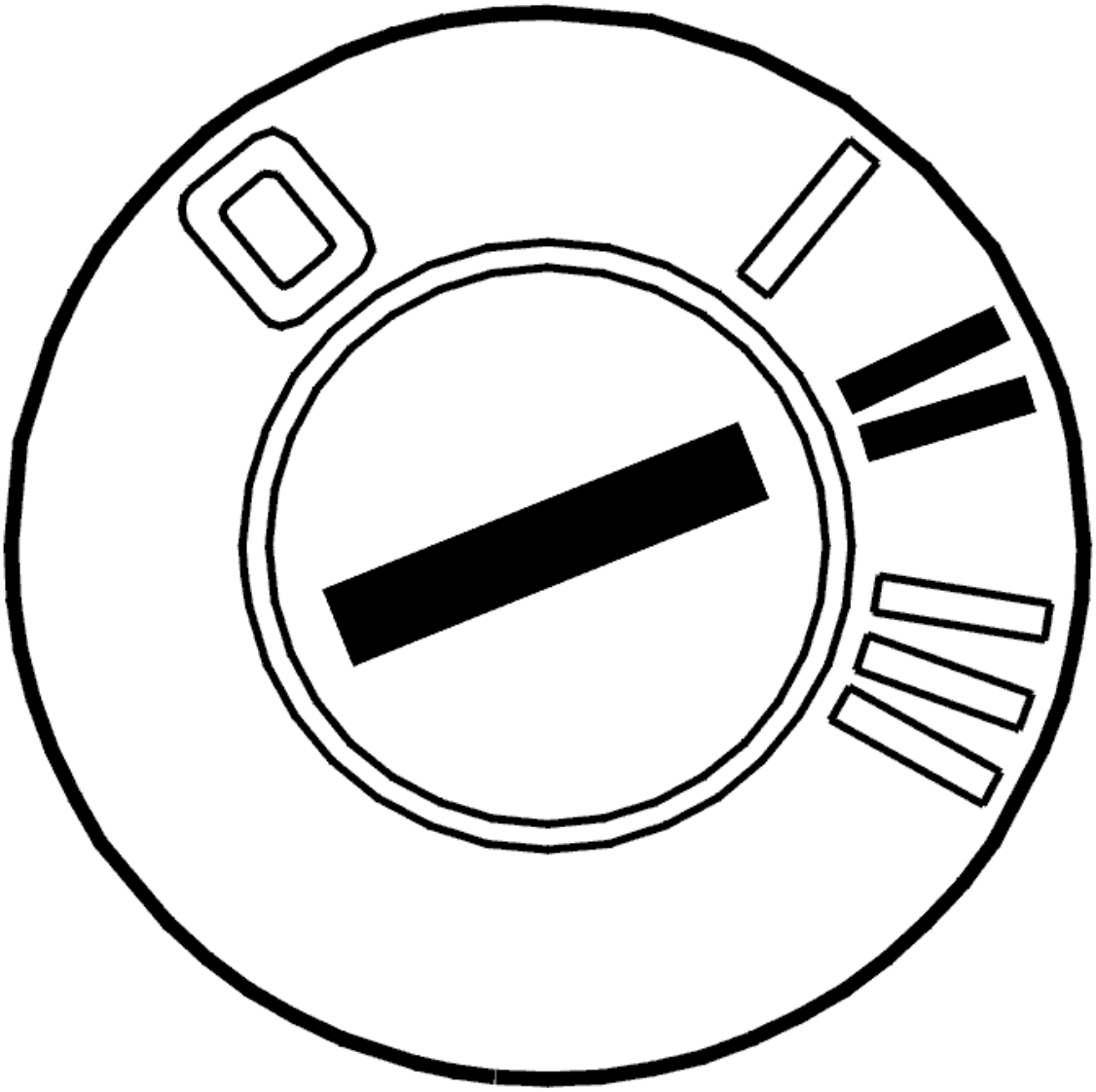

Fig. 150: Identifying Ignition ON
Courtesy of VOLVO CARS CORPORATION

- Ignition on.

  Check the signal cable for the cradle between phone module (PHM) connector B terminal #12 (#54) and handset connector terminal #4 (#24). Check for an open-circuit and for a short-circuit to supply voltage.

  Try replacing the handset if the cable is OK.

  Remedy as necessary.

  Other information:

  - The cradle signal is approximately 2.9-3.7 V when the handset is not in the cradle
  - The cradle signal is approximately 1.6-2.1 V when the handset is in the cradle

- To connect the breakout box, see **CONNECTING THE BREAKOUT BOX**
- For information about signals and connectors, see **SIGNAL SPECIFICATION**
- To access and replace the control module, see **PHONE MODULE (PHM), REPLACING**
- To access or replace the handset, see **HANDSET, REPLACING**
- see **CONTENTS** .

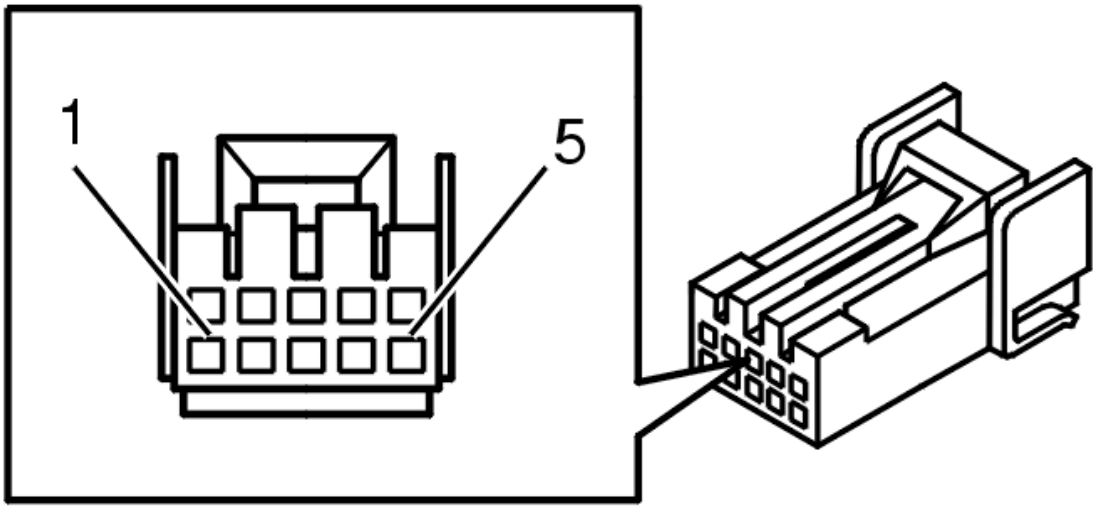

Fig. 151: 10 CD Changer Connector Terminals
Courtesy of VOLVO CARS CORPORATION

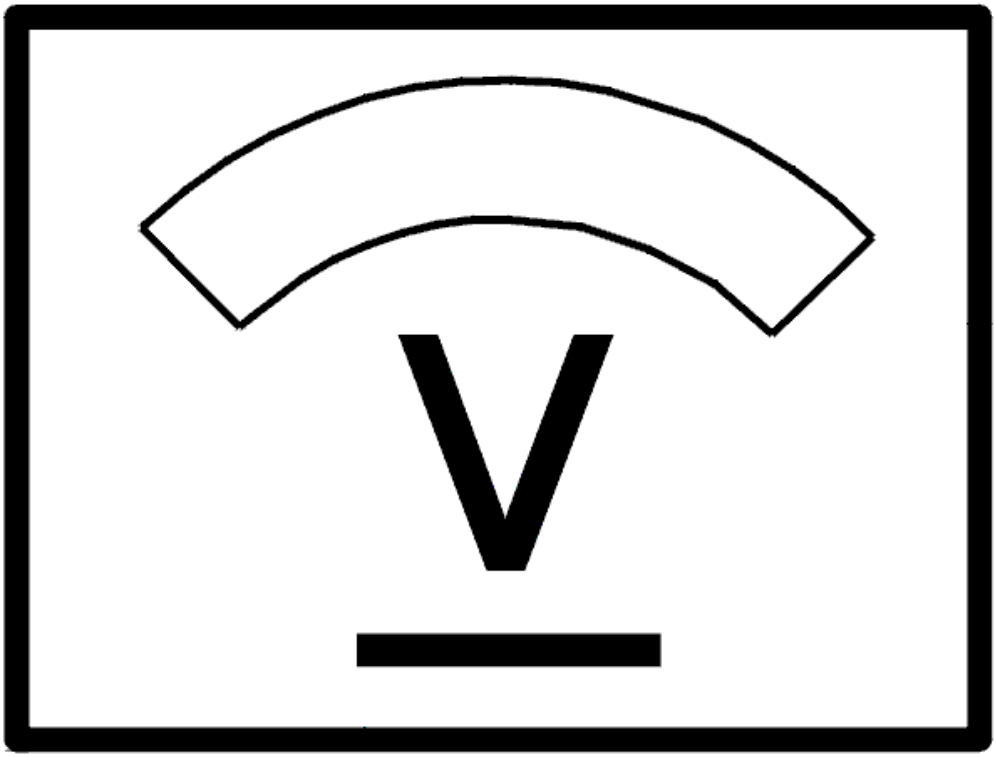

Fig. 152: Identifying Voltage Display
Courtesy of VOLVO CARS CORPORATION

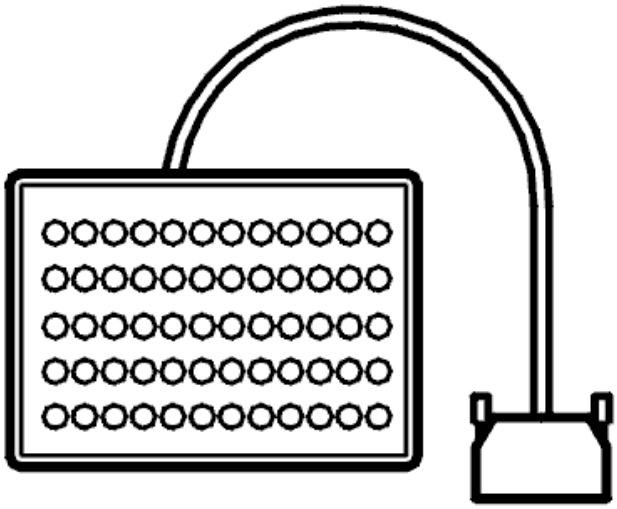

Fig. 153: Breakout Box
Courtesy of VOLVO CARS CORPORATION

- **Continue**

  Refer to **VERIFICATION**

VERIFICATION

VERIFICATION

HINT: After carrying out the repair, check that the fault has been remedied.

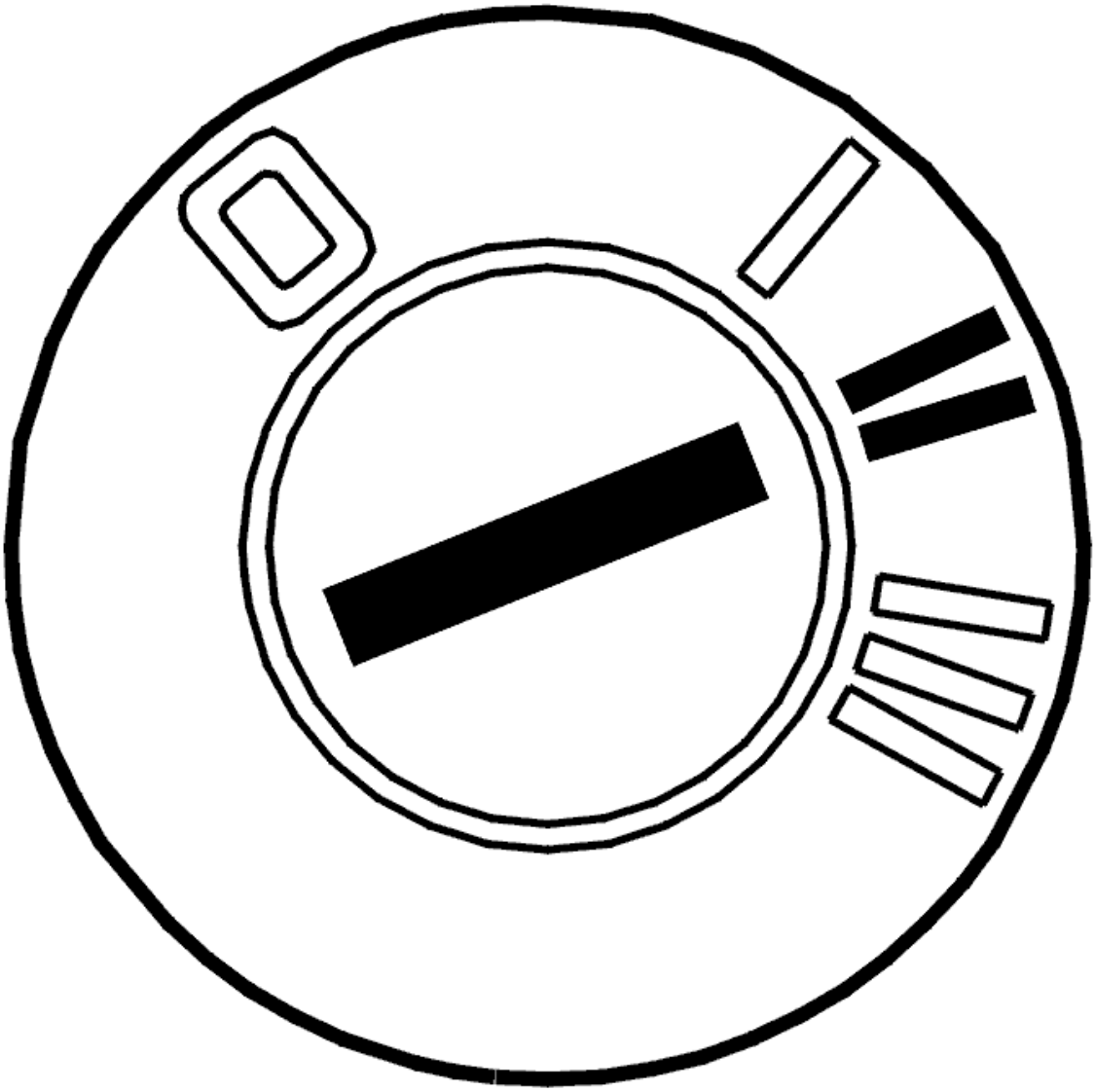

Fig. 154: Identifying Ignition ON
Courtesy of VOLVO CARS CORPORATION

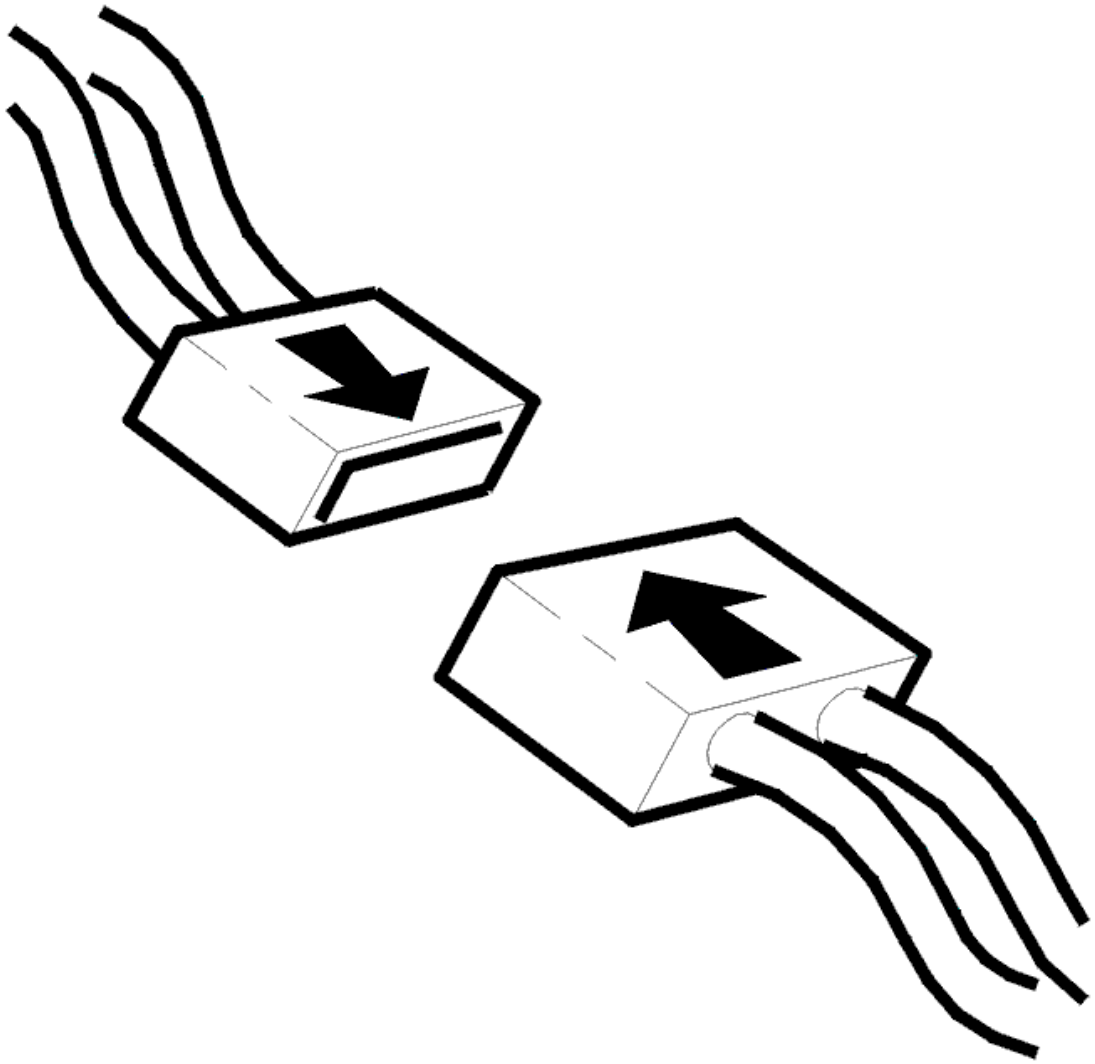

Fig. 155: Connecting Connector
Courtesy of VOLVO CARS CORPORATION

- Ignition off
- Reinstall the connectors, components etc.
- Ignition on
- Switch on the carphone.

  Make a call so that both the handset and the hands-free system are used.

  Ignition off.

  Ignition on.

  Read off the diagnostic trouble codes (DTCs).

Check that the relevant diagnostic trouble code (DTC) has switched status from permanent to intermittent fault.

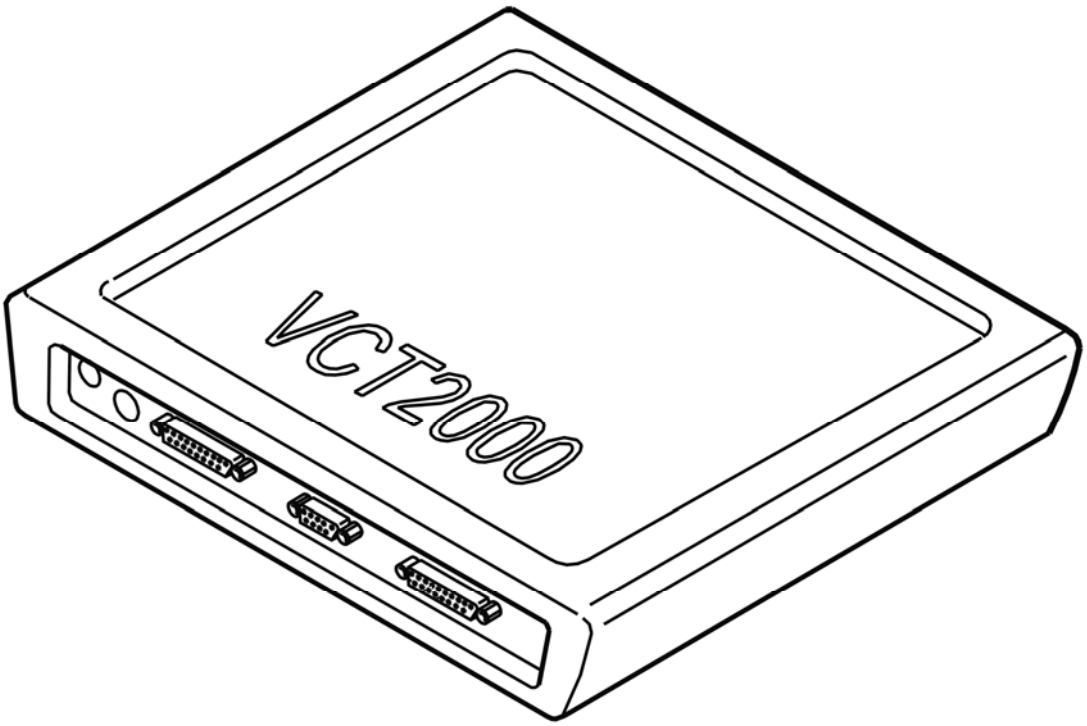

Fig. 156: Identifying VCT2000 Diagnostic Tool Symbol In VIDA
Courtesy of VOLVO CARS CORPORATION

Has the status of the diagnostic trouble code (DTC) changed?

- **YES**

  VERIFIED: Troubleshooting has been completed.

- **NO**

  Refer to **INFORMATION**

INFORMATION

FAULT-TRACING INFORMATION

The fault should have been detected and remedied. As this is not the case fault-tracing has failed.

Exit fault-tracing for this diagnostic trouble code (DTC) or make another attempt.

PHM-000B: TELEPHONE HANDSET CRADLE. SIGNAL TOO HIGH / SIGNAL MISSING (2005)

DIAGNOSTIC TROUBLE CODE (DTC) INFORMATION PHM-000B

see **DIAGNOSTIC TROUBLE CODE (DTC) INFORMATION PHM-000B**

SIGNAL TOO HIGH OR SIGNAL MISSING

CHECKING STRUCTURE WEEK

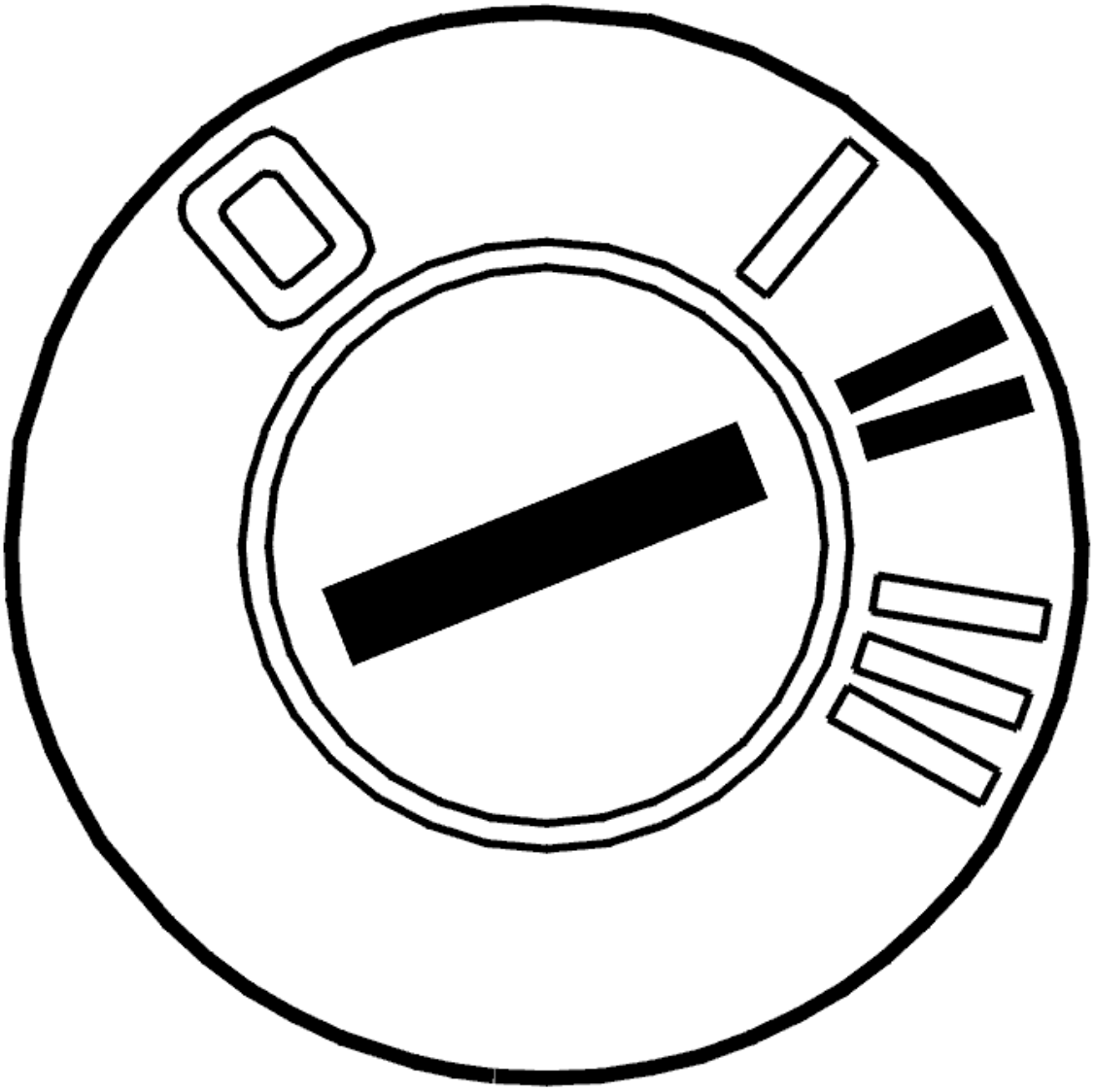

Fig. 157: Identifying Ignition ON
Courtesy of VOLVO CARS CORPORATION

- Ignition on

Read out the vehicle's structure week by clicking on the symbol for VCT2000.

1. Vehicles with structure week up to and incl. 200445, that is, year 2004 week 45. Refer to **SIGNAL TOO HIGH OR SIGNAL MISSING**
2. Vehicles with structure week from and incl. 200446, that is, year 2004 week 46. Refer to **CHECKING COMPONENTS AND WIRING**

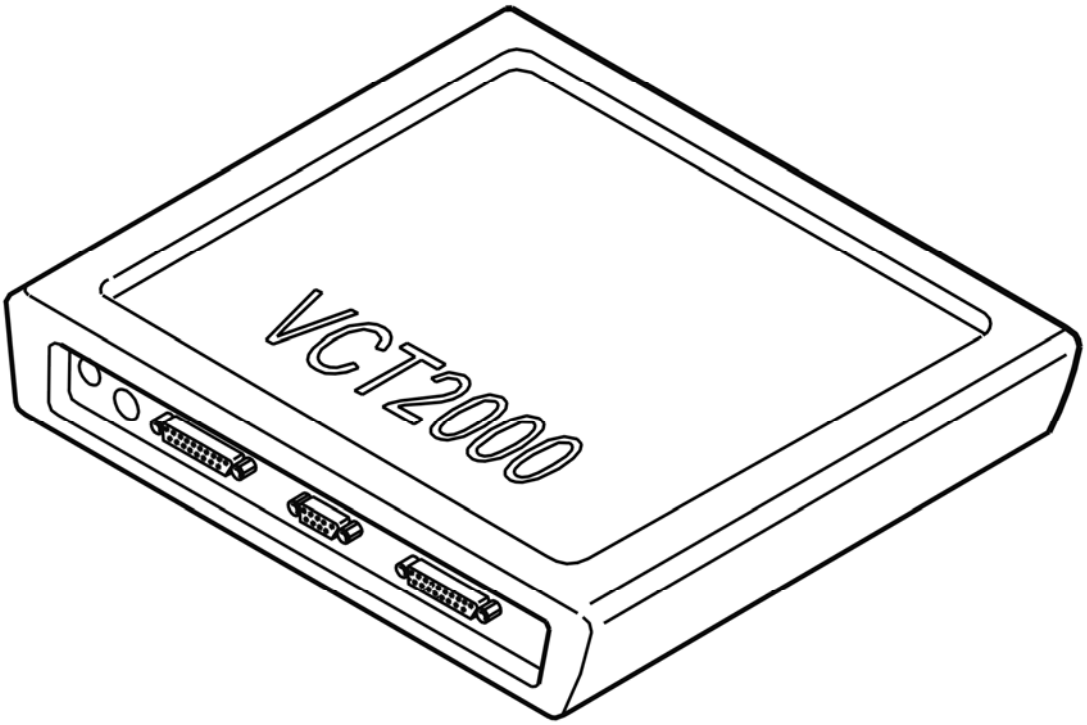

Fig. 158: Identifying VCT2000 Diagnostic Tool Symbol In VIDA
Courtesy of VOLVO CARS CORPORATION

CHECKING COMPONENTS AND WIRING

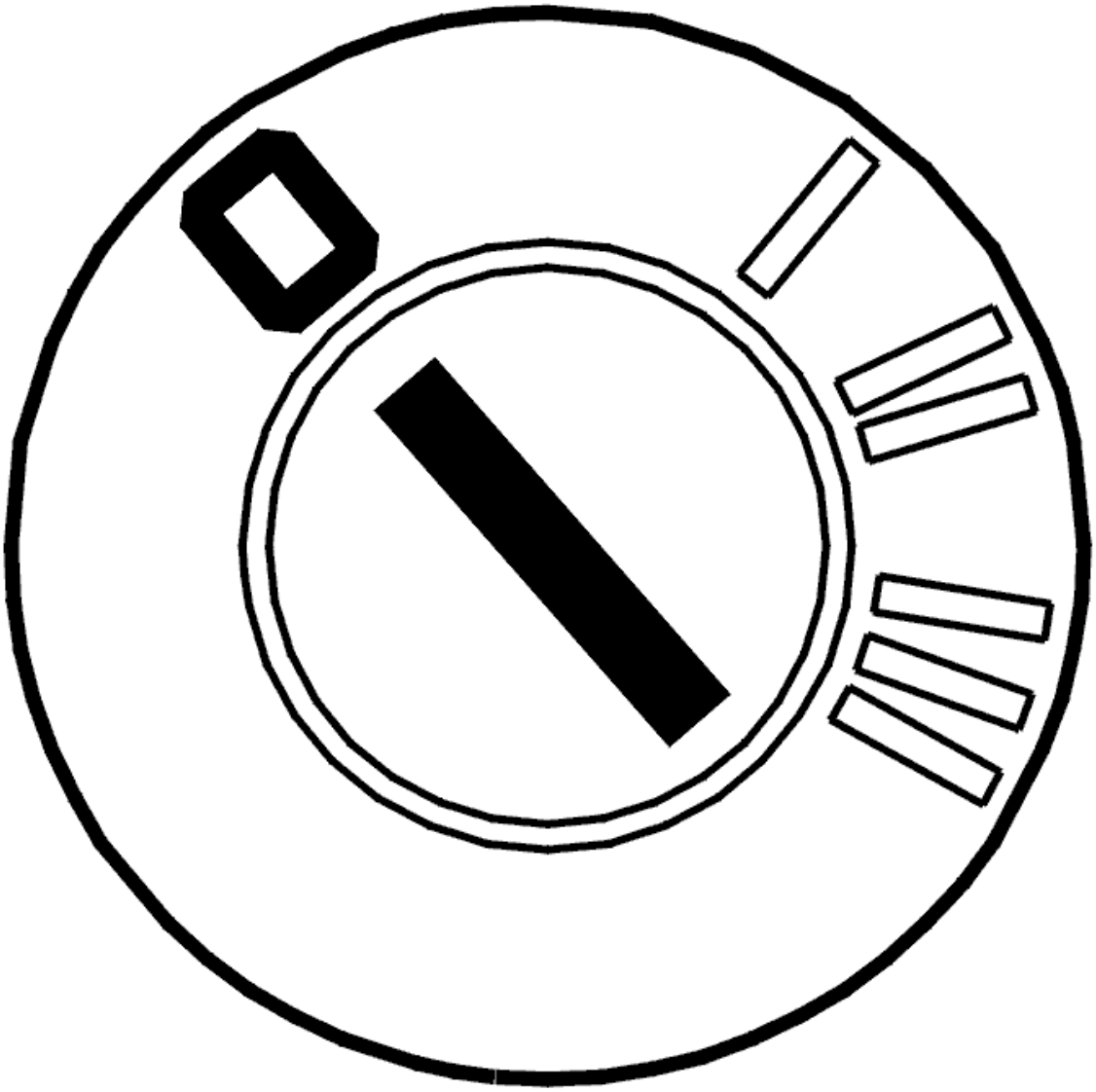

Fig. 159: Identifying Ignition OFF
Courtesy of VOLVO CARS CORPORATION

- Ignition off
- Disconnect connector A for the phone module (PHM).

  Check the cradle signal's cable for open circuit.

  Measure between the control module's connector A #8 (#8) and the handset's connector #4 (#24).

  Check the cradle signal's cable on the control module's connector A for short-circuit to voltage.

  Check between:

  - #8 (#8) and #7 (#7).

- #8 (#8) and #5 (#5).

If the cable is trouble-free, try replacing handset or holder.

Remedy as necessary.

Other information:

- see **CONNECTING THE BREAKOUT BOX**
- see **SIGNAL SPECIFICATION**
- see **LOCATION OF COMPONENTS**
- see **PHONE MODULE (PHM), REPLACING**
- see **HANDSET, REPLACING**
- see **CONTENTS**

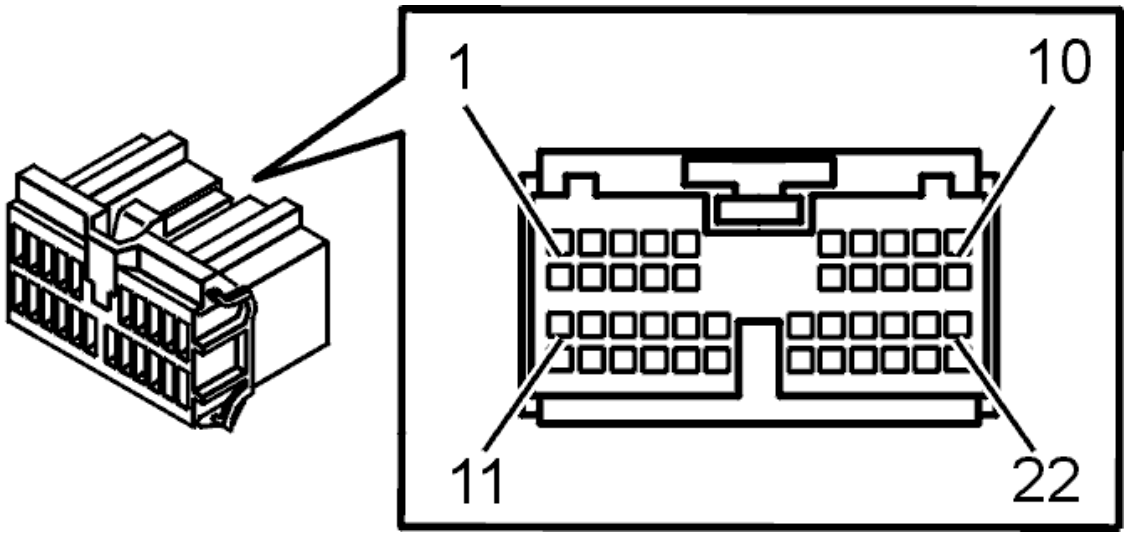

Fig. 160: Identifying Connector (F) Terminals
Courtesy of VOLVO CARS CORPORATION

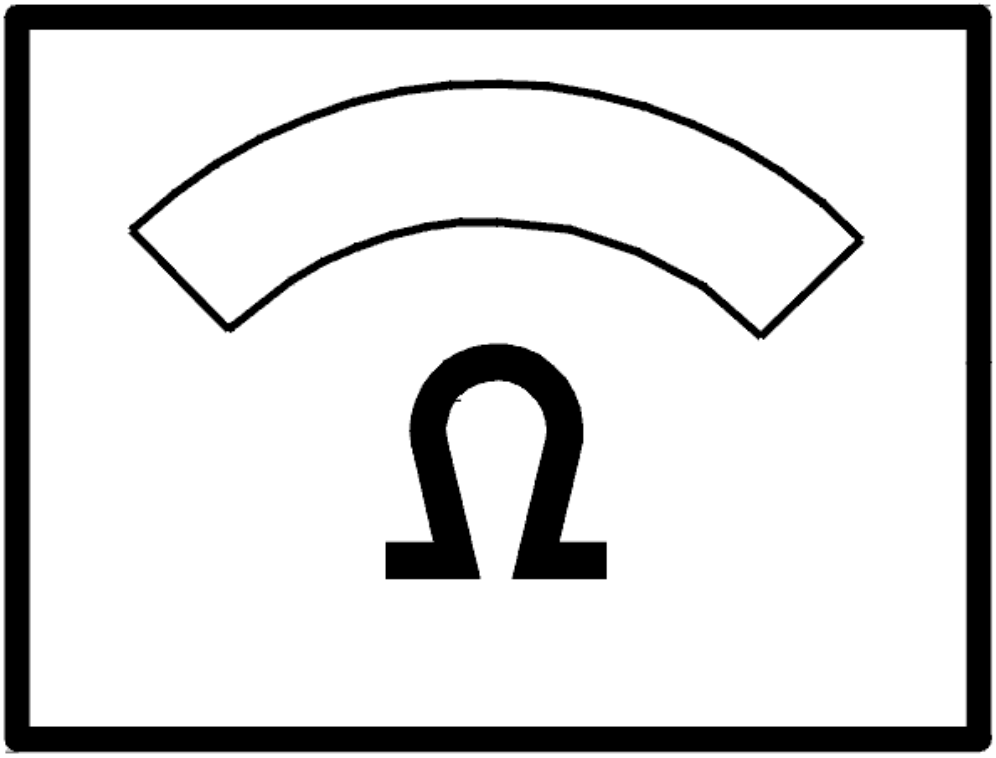

Fig. 161: Identifying Ohm Meter
Courtesy of VOLVO CARS CORPORATION

- **Continue**

  Refer to **VERIFICATION**

VERIFICATION

VERIFICATION

HINT: After carrying out the repair, check that the fault has been remedied.

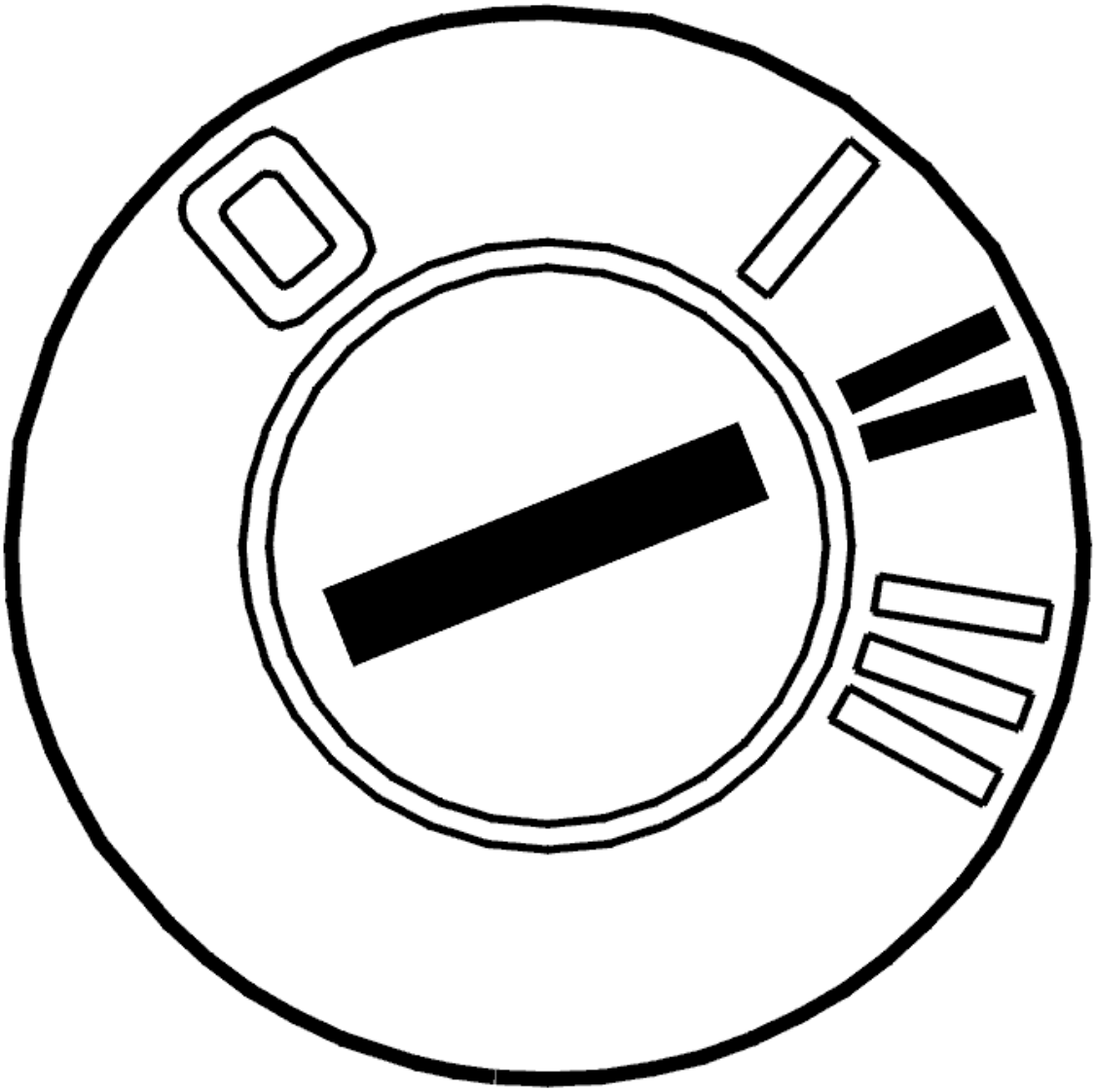

Fig. 162: Identifying Ignition ON
Courtesy of VOLVO CARS CORPORATION

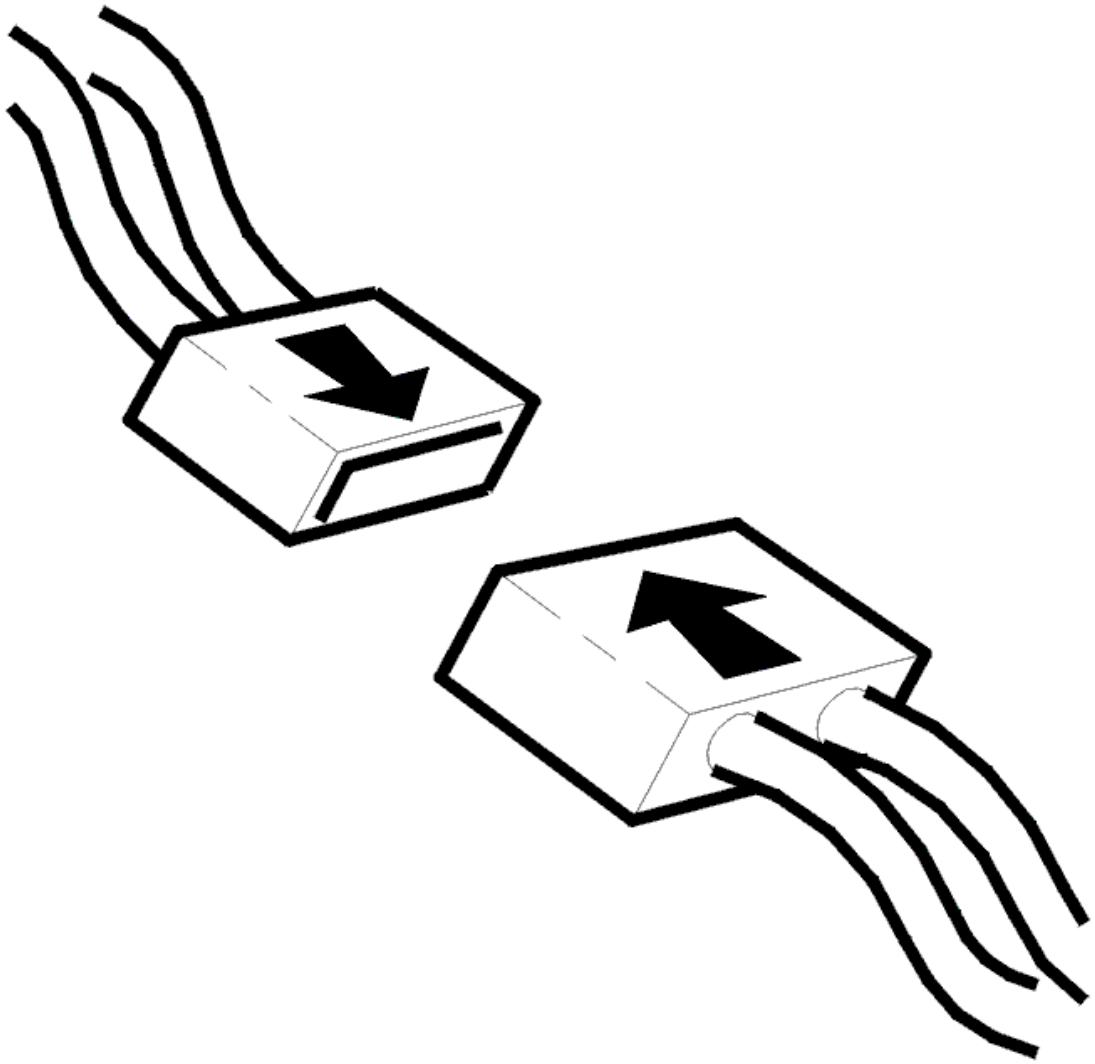

Fig. 163: Connecting Connector
Courtesy of VOLVO CARS CORPORATION

- Ignition off
- Reinstall the connectors, components etc.
- Ignition on
- Activate the carphone.

  Make a call so that both the handset and the hands-free system are used.

  Ignition off.

  Ignition on.

  Read off the diagnostic trouble codes (DTCs).

Check that the relevant diagnostic trouble code (DTC) has switched status from permanent to intermittent fault.

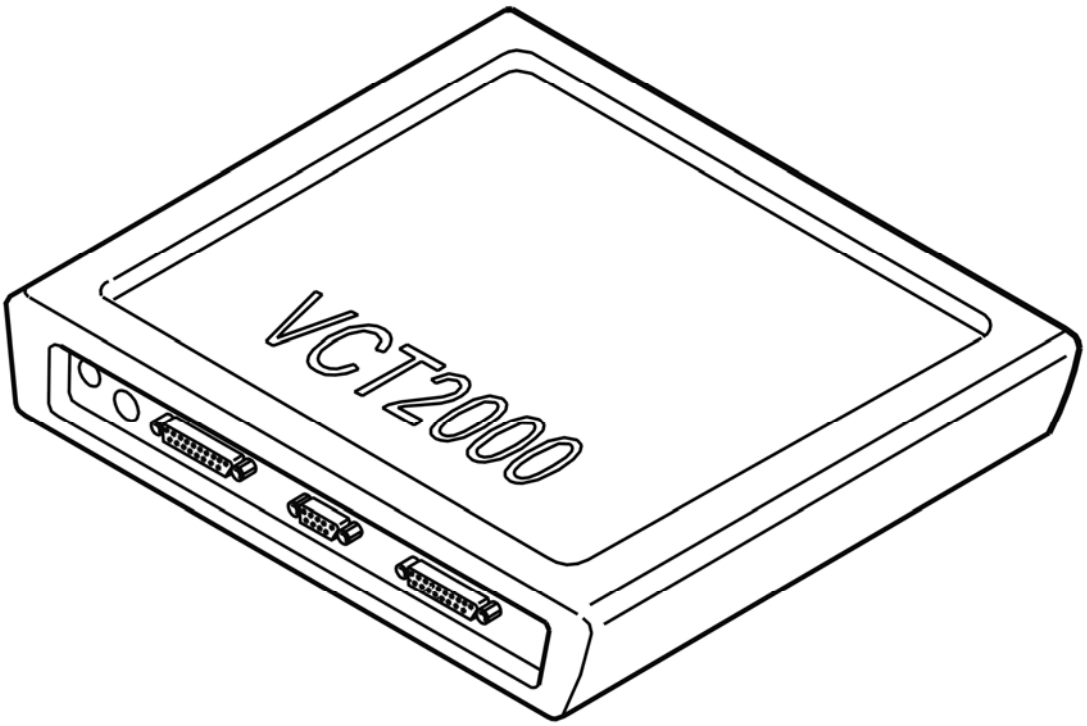

Fig. 164: Identifying VCT2000 Diagnostic Tool Symbol In VIDA
Courtesy of VOLVO CARS CORPORATION

Has the status of the diagnostic trouble code (DTC) changed?

- **YES**

  VERIFIED: Troubleshooting has been completed.

- **NO**

  Refer to **INFORMATION**

INFORMATION

FAULT-TRACING INFORMATION

The fault should have been detected and remedied. As this is not the case fault-tracing has failed.

Exit fault-tracing for this diagnostic trouble code (DTC) or make another attempt.

SIGNAL TOO HIGH OR SIGNAL MISSING

CHECKING THE COMPONENT AND WIRING

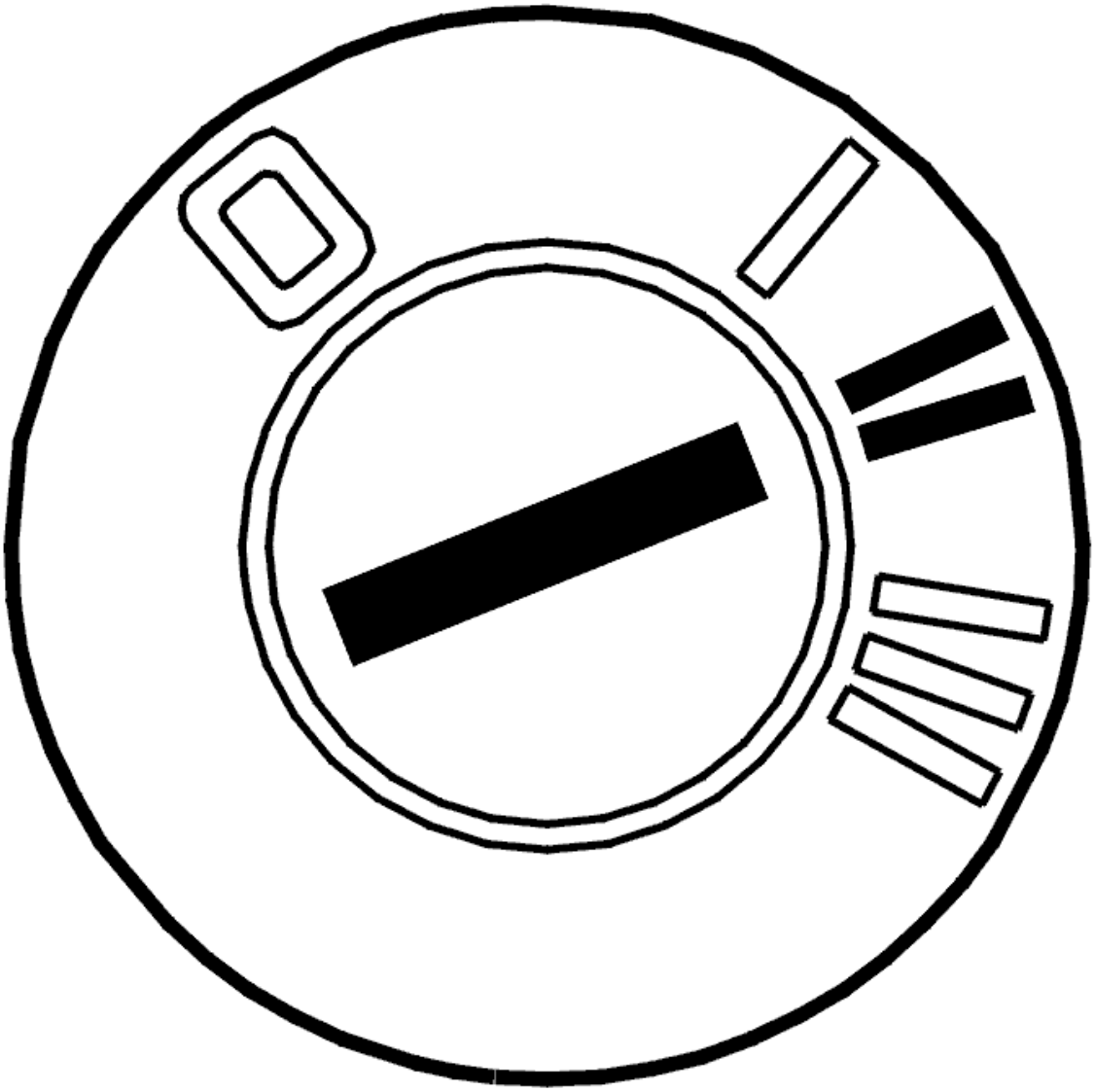

Fig. 165: Identifying Ignition ON
Courtesy of VOLVO CARS CORPORATION

- Ignition on.

  Check the signal cable for the cradle between phone module (PHM) connector B terminal #12 (#54) and handset connector terminal #4 (#24). Check for an open-circuit and for a short-circuit to supply voltage.

  Try replacing the handset if the cable is OK.

  Remedy as necessary.

Other information:

- The cradle signal is approximately 2.9-3.7 V when the handset is not in the cradle
- The cradle signal is approximately 1.6-2.1 V when the handset is in the cradle
- To connect the breakout box, see **CONNECTING THE BREAKOUT BOX**
- For information about signals and connectors, see **SIGNAL SPECIFICATION**
- To access and replace the control module, see **PHONE MODULE (PHM), REPLACING**
- To access or replace the handset, see **HANDSET, REPLACING**
- see **CONTENTS** .

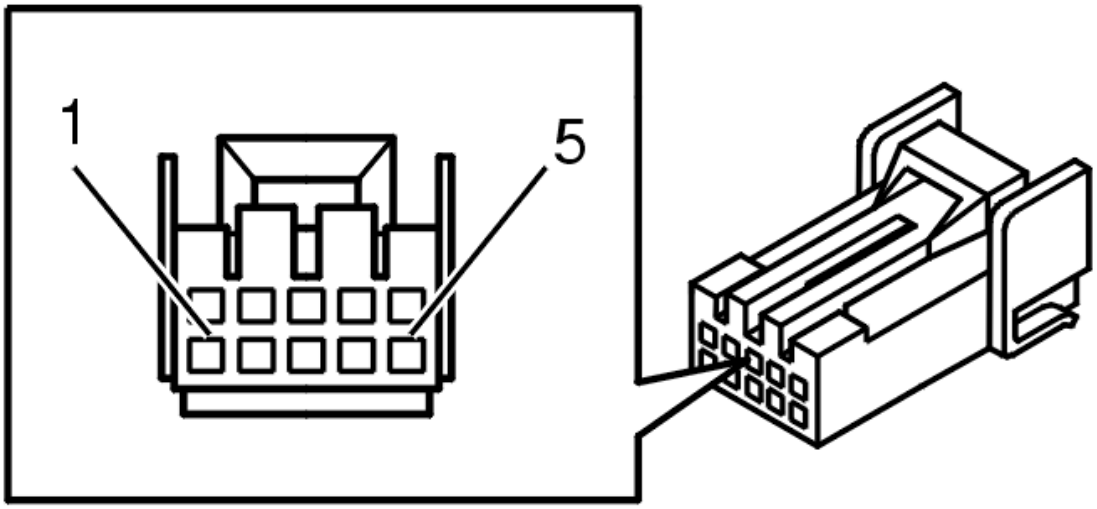

Fig. 166: 10 CD Changer Connector Terminals
Courtesy of VOLVO CARS CORPORATION

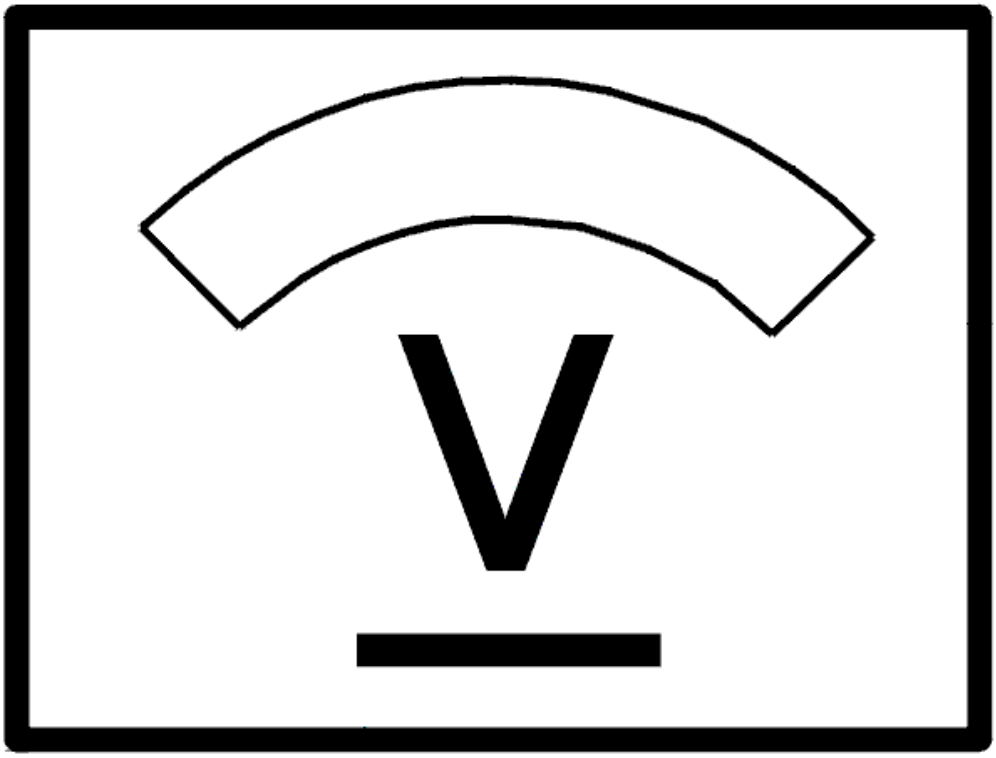

Fig. 167: Identifying Voltage Display
Courtesy of VOLVO CARS CORPORATION

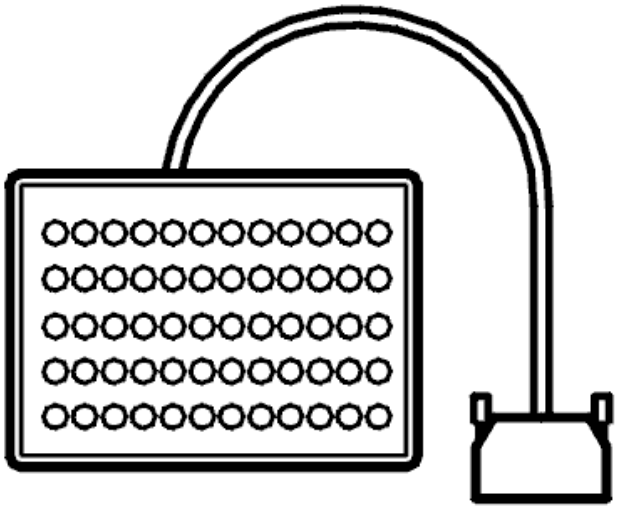

Fig. 168: Breakout Box
Courtesy of VOLVO CARS CORPORATION

- **Continue**

  Refer to **VERIFICATION**

VERIFICATION

VERIFICATION

HINT: After carrying out the repair, check that the fault has been remedied.

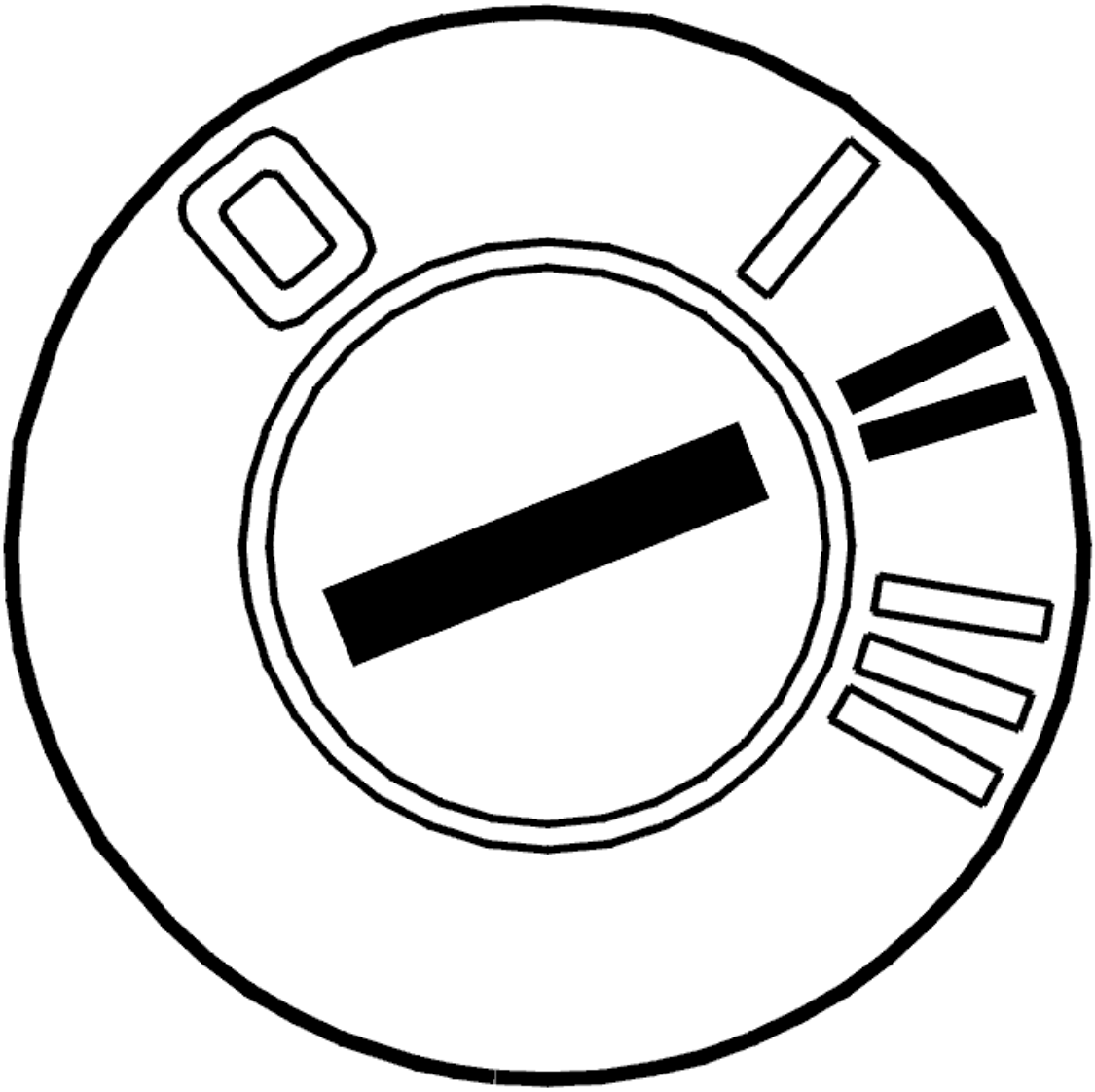

Fig. 169: Identifying Ignition ON
Courtesy of VOLVO CARS CORPORATION

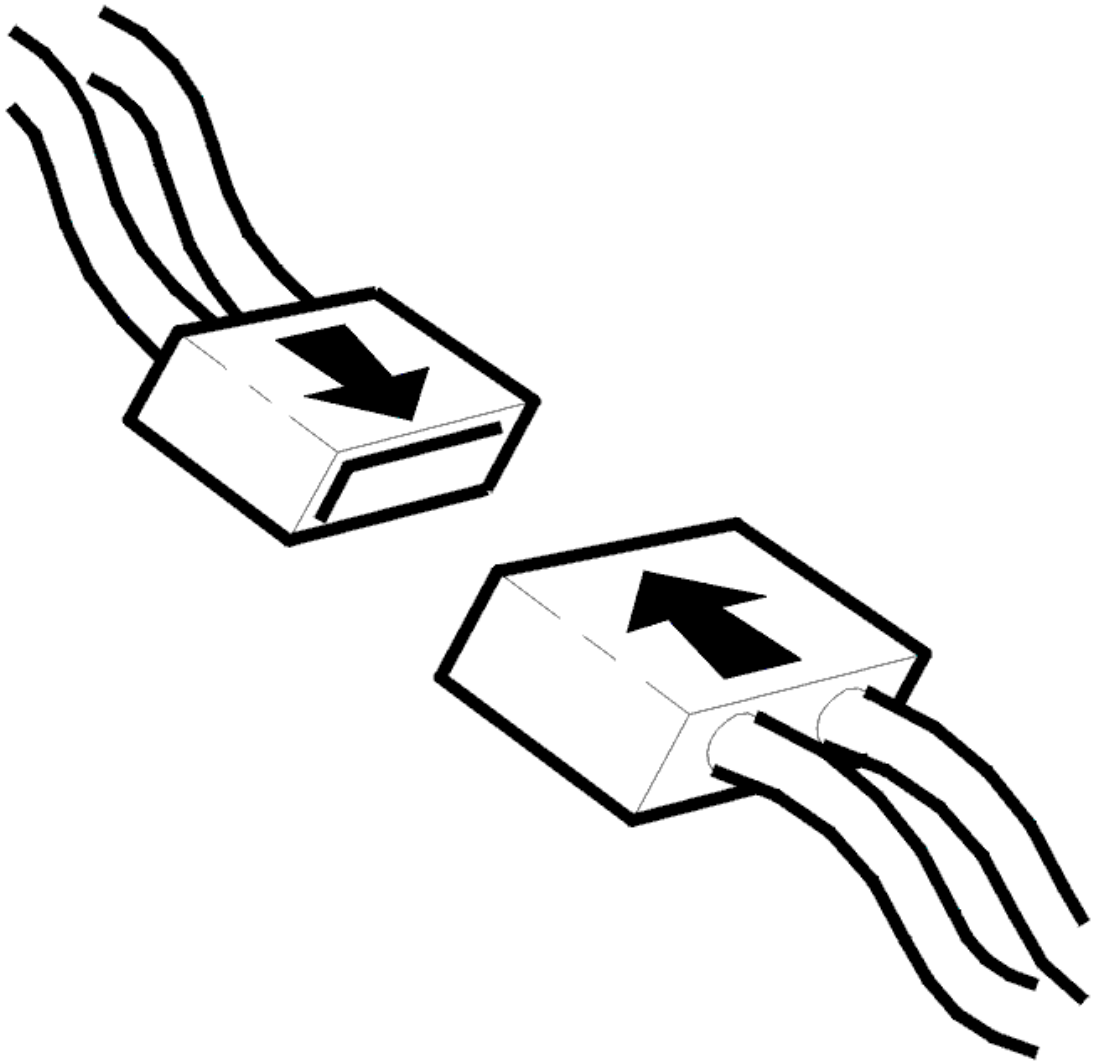

Fig. 170: Connecting Connector
Courtesy of VOLVO CARS CORPORATION

- Ignition off
- Reinstall the connectors, components etc.
- Ignition on
- Switch on the carphone.

  Make a call so that both the handset and the hands-free system are used.

  Ignition off.

  Ignition on.

  Read off the diagnostic trouble codes (DTCs).

Check that the relevant diagnostic trouble code (DTC) has switched status from permanent to intermittent fault.

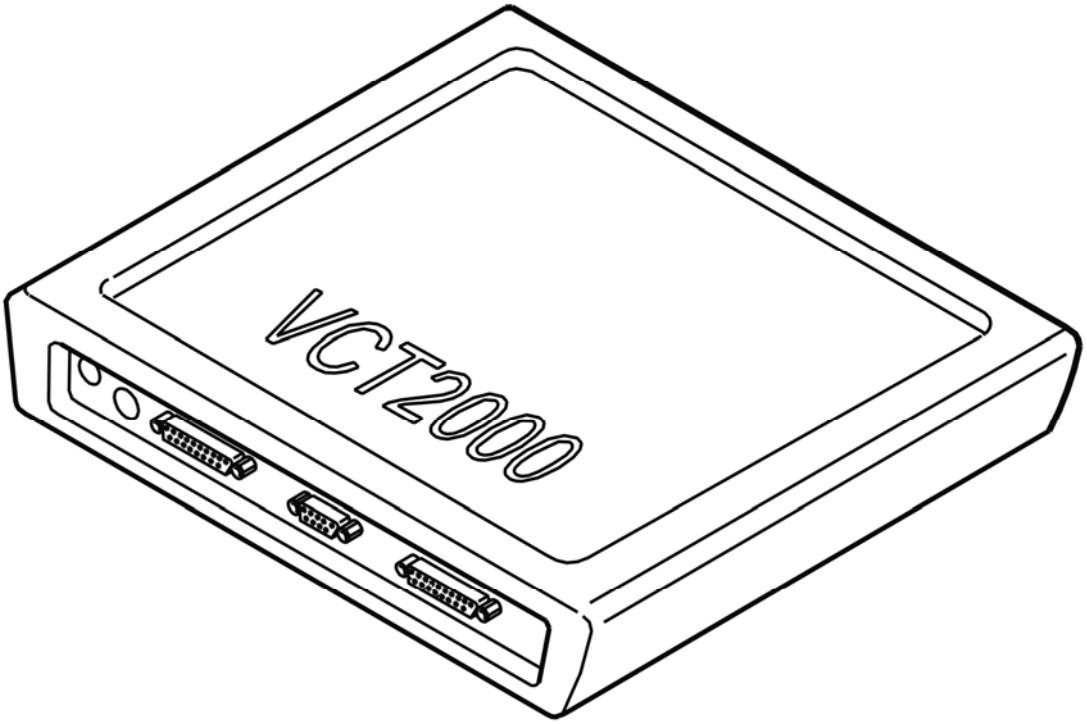

Fig. 171: Identifying VCT2000 Diagnostic Tool Symbol In VIDA
Courtesy of VOLVO CARS CORPORATION

Has the status of the diagnostic trouble code (DTC) changed?

- **YES**

  VERIFIED: Troubleshooting has been completed.

- **NO**

  Refer to **INFORMATION**

INFORMATION

FAULT-TRACING INFORMATION

The fault should have been detected and remedied. As this is not the case fault-tracing has failed.

Exit fault-tracing for this diagnostic trouble code (DTC) or make another attempt.

PHM-000D: HANDSET MICROPHONE. SIGNAL TOO LOW (2003-2004)

DIAGNOSTIC TROUBLE CODE (DTC) INFORMATION PHM-000D

Condition

Diagnostic trouble code (DTC) PHM-000D is stored if the phone module (PHM) registers that there is a short-circuit to ground in the signal to the handset microphone.

Diagnostic trouble code (DTC) PHM-000D can be diagnosed with the ignition on (not key position 3) and when the battery voltage is 9-16 V.

Substitute Value

- Only hands-free operates.

Possible Source

- Short-circuit to ground in the wiring (MIC signal) between the handset and the control module.

Fault symptom[s]

- The handset does not function.

SIGNAL TOO LOW

CHECKING COMPONENTS AND WIRING

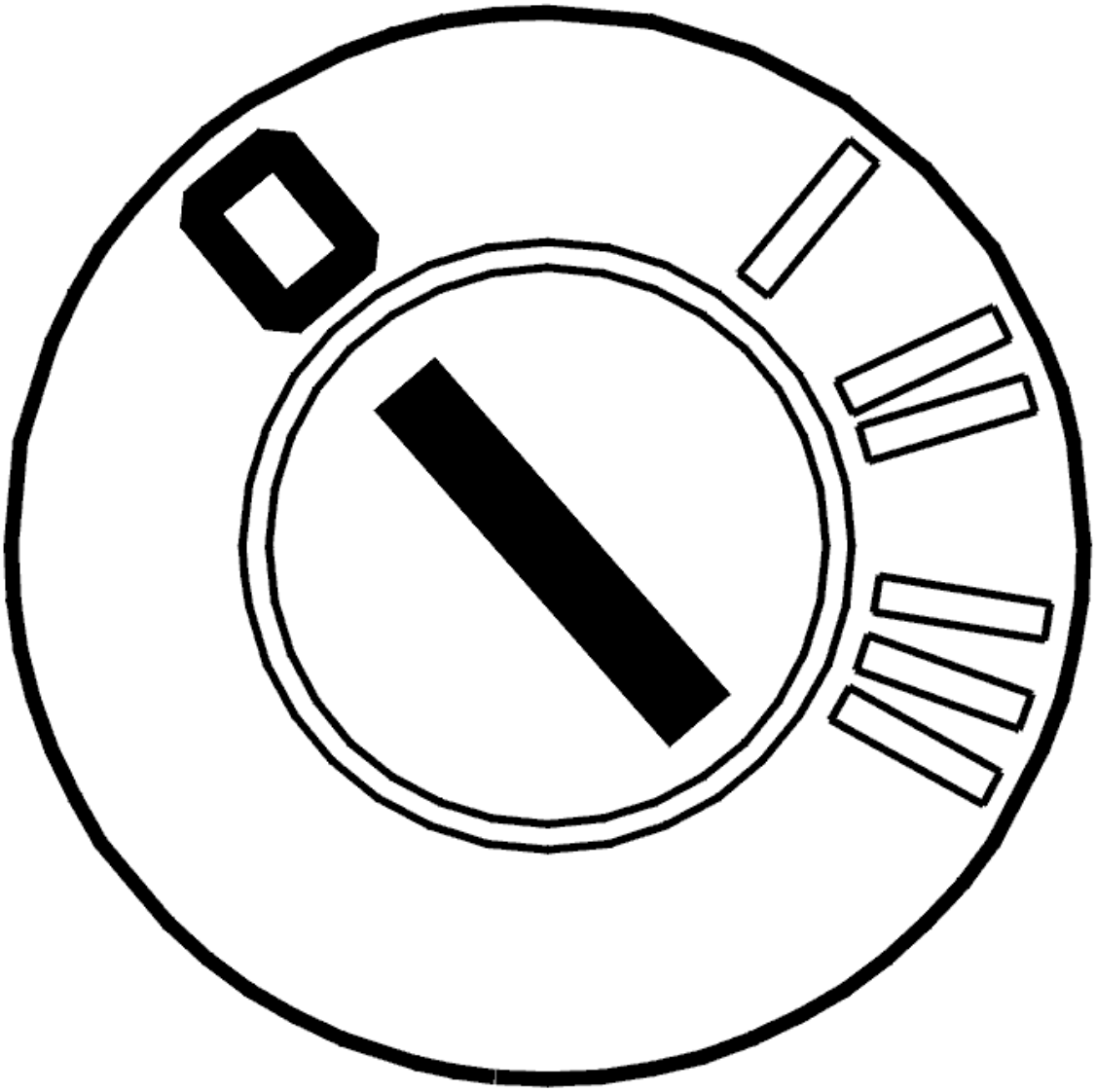

Fig. 172: Identifying Ignition OFF
Courtesy of VOLVO CARS CORPORATION

- Ignition off.

  Check the signal cable for the microphone between phone module (PHM) connector B terminal #13 (#55) and handset connector terminal #1 (#21). Check for a short-circuit to ground.

  Try replacing the carphone handset if no fault is found in the wiring.

  Remedy as necessary.

  Other information:

  - To connect the breakout box, see **CONNECTING THE BREAKOUT BOX**
  - For information about signals and connectors, see **SIGNAL SPECIFICATION**

- To access or replace the control module, see **PHONE MODULE (PHM), REPLACING**
- To access or replace the handset, see **HANDSET, REPLACING**
- see **CONTENTS** .

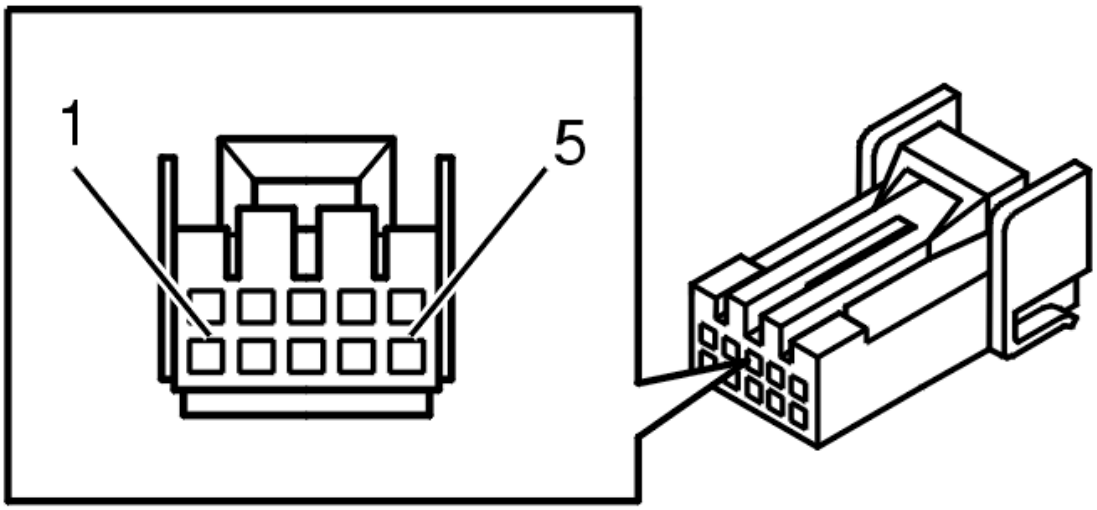

Fig. 173: 10 CD Changer Connector Terminals
Courtesy of VOLVO CARS CORPORATION

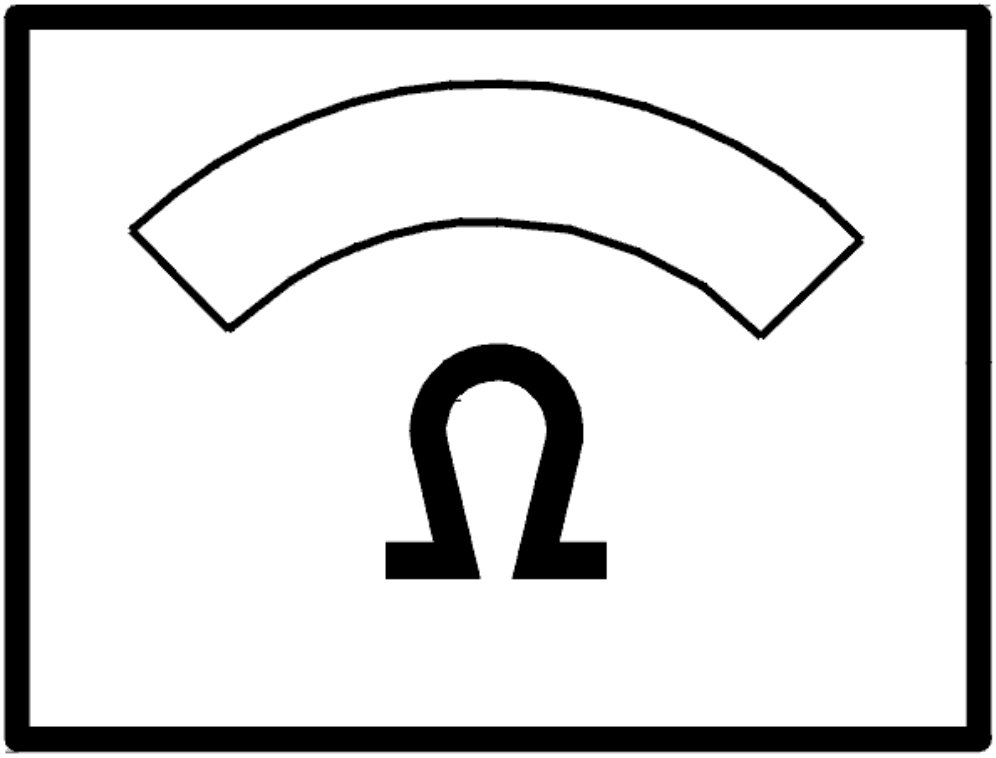

Fig. 174: Identifying Ohm Meter
Courtesy of VOLVO CARS CORPORATION

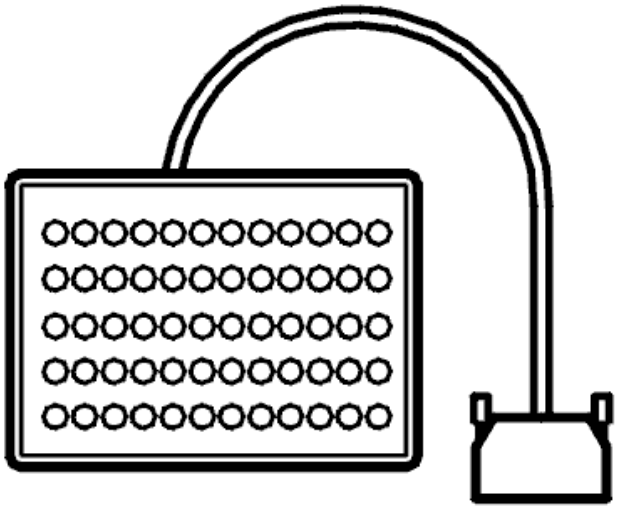

Fig. 175: Breakout Box
Courtesy of VOLVO CARS CORPORATION

- **Continue**

  Refer to **VERIFICATION**

VERIFICATION

VERIFICATION

HINT: After carrying out the repair, check that the fault has been remedied.

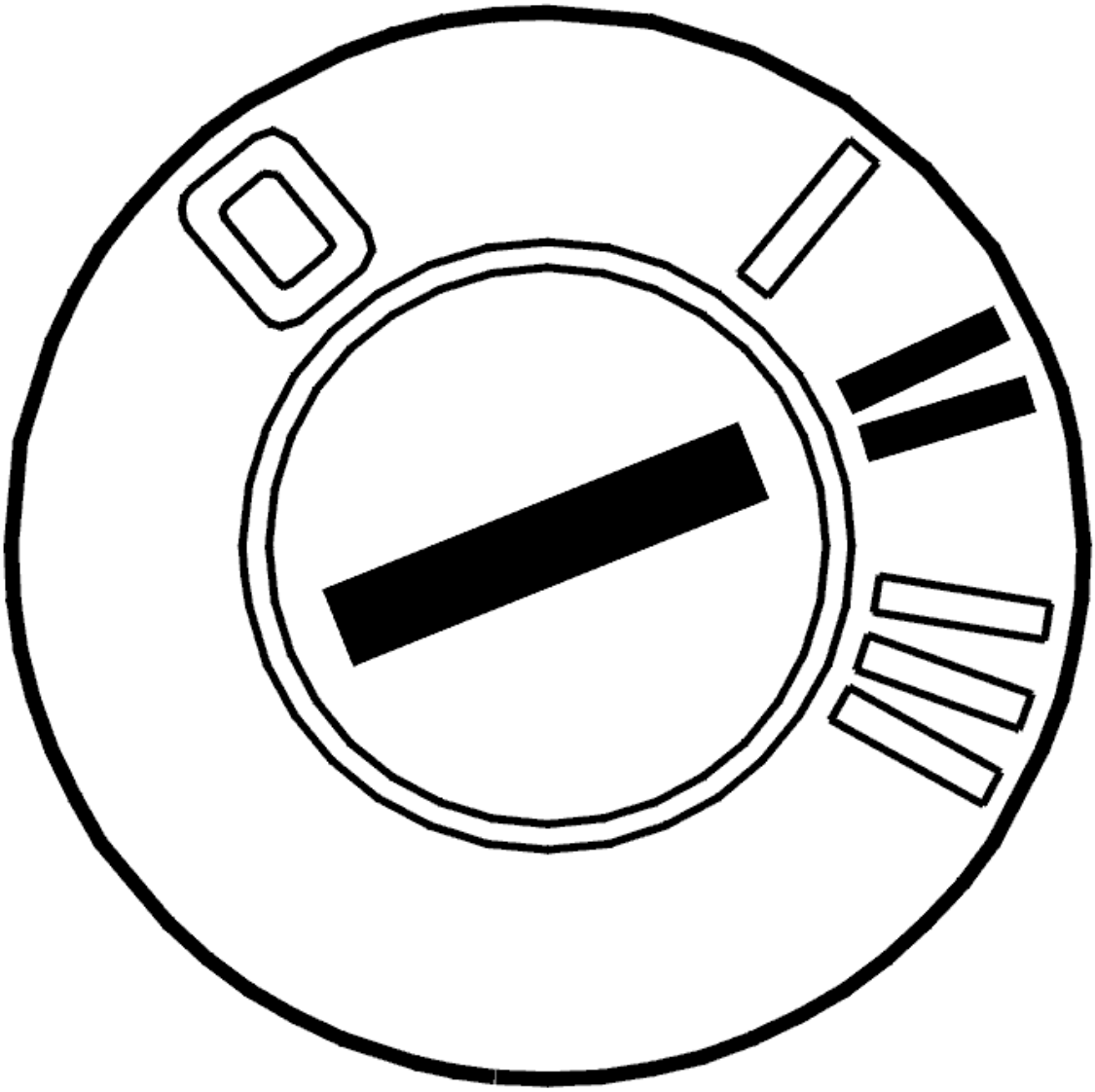

Fig. 176: Identifying Ignition ON
Courtesy of VOLVO CARS CORPORATION

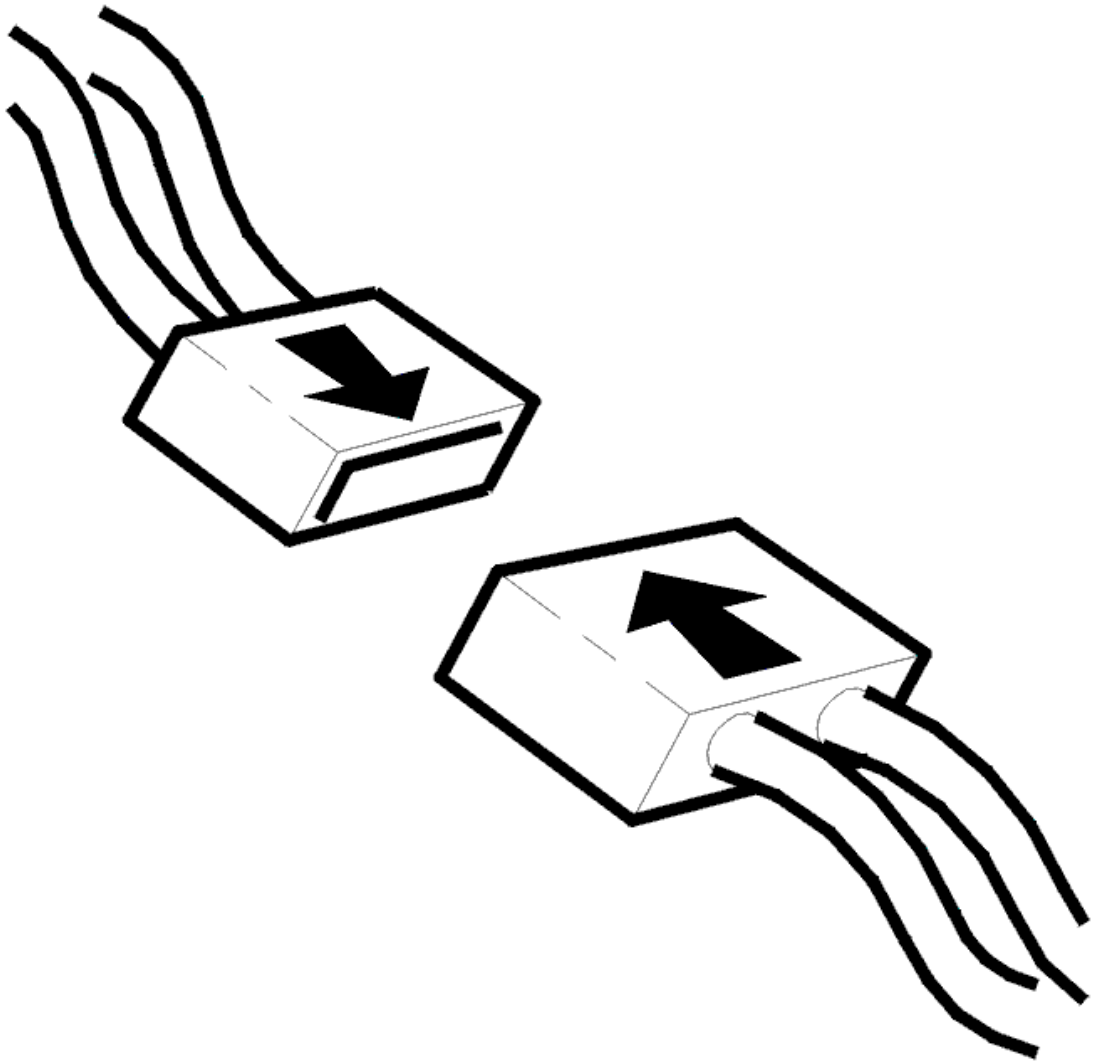

Fig. 177: Connecting Connector
Courtesy of VOLVO CARS CORPORATION

- Ignition off
- Reinstall the connectors, components etc.
- Ignition on
- Switch on the carphone.

  Make a call so that both the handset and the hands-free system are used.

  Ignition off.

  Ignition on.

  Read off the diagnostic trouble codes (DTCs).

Check that the relevant diagnostic trouble code (DTC) has switched status from permanent to intermittent fault.

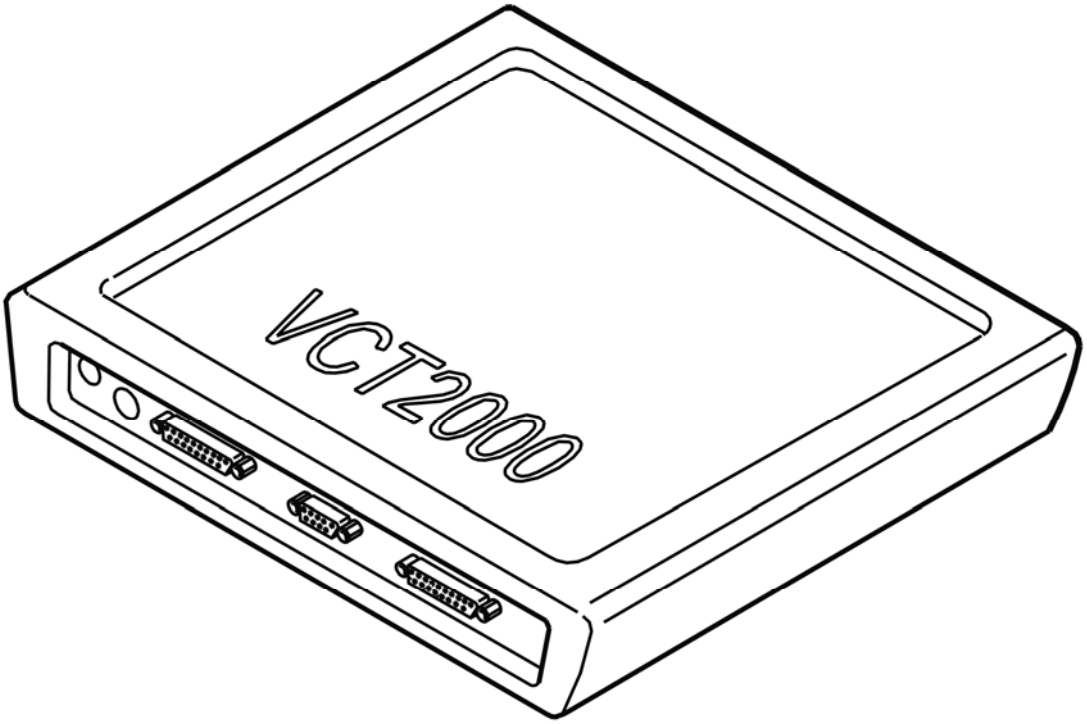

Fig. 178: Identifying VCT2000 Diagnostic Tool Symbol In VIDA
Courtesy of VOLVO CARS CORPORATION

Has the status of the diagnostic trouble code (DTC) changed?

- **YES**

  VERIFIED: Troubleshooting has been completed.

- **NO**

  Refer to **INFORMATION**

INFORMATION

FAULT-TRACING INFORMATION

The fault should have been detected and remedied. As this is not the case fault-tracing has failed.

Exit fault-tracing for this diagnostic trouble code (DTC) or make another attempt.

PHM-000D: HANDSET MICROPHONE. SIGNAL TOO LOW (2006-2011)

DIAGNOSTIC TROUBLE CODE (DTC) INFORMATION PHM-000D

Condition

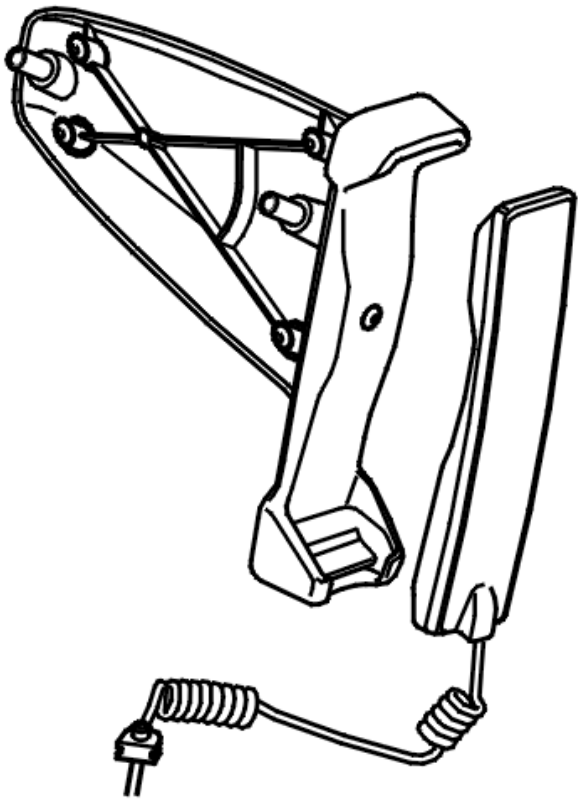

Fig. 179: Identifying Handset Cradle
Courtesy of VOLVO CARS CORPORATION

The diagnostic trouble code (DTC) is stored if the phone module (PHM) registers a short-circuit to ground in the signal to the handset microphone.

The diagnostic trouble code (DTC) can be diagnosed when the ignition is switched on (not key position 3) and when the battery voltage is 9-16 V.

Substitute Value

- Only hands-free operates.

Possible Source

- Short-circuit to ground in the cable (MIC signal) between the handset and the control module.

Fault symptom[s]

- The handset does not function.
- Message in the text display (applies only to phone modules (PHM) with Volvo On Call).

SIGNAL TOO LOW

CHECKING THE COMPONENT AND WIRING

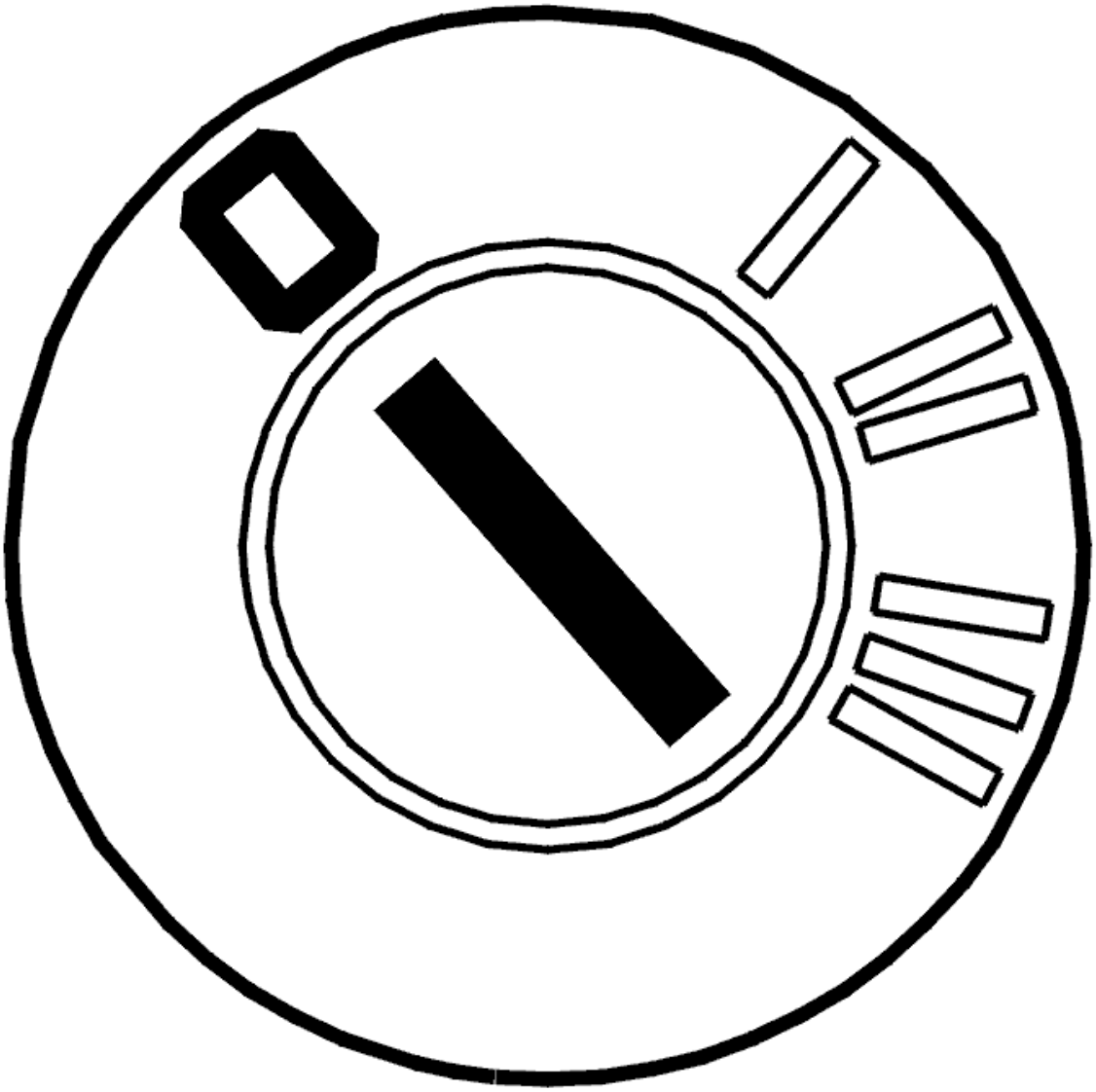

Fig. 180: Identifying Ignition OFF
Courtesy of VOLVO CARS CORPORATION

- Ignition off
- Disconnect connector A from the phone module (PHM).

Check control module connector A for the microphone signal cable. Check for a short-circuit to ground.

Check between:

- terminals #19 (#19) and #18 (#18)
- terminals #19 (#19) and #6 (#6).

Try replacing the carphone handset if no fault is found in the wiring.

Remedy as necessary.

Other information:

- see **SIGNAL SPECIFICATION**
- see **CONNECTING THE BREAKOUT BOX**
- see **LOCATION OF COMPONENTS**
- see **PHONE MODULE (PHM), REPLACING (2006-2010)**
- see **HANDSET, REPLACING**
- see **CHECKING WIRING AND TERMINALS**

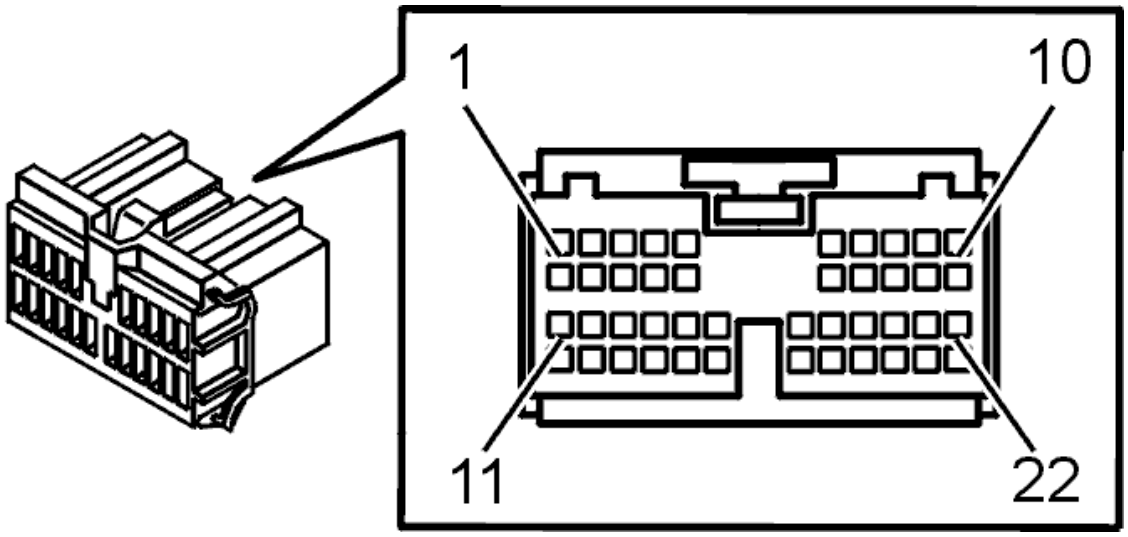

Fig. 181: Identifying Connector (F) Terminals
Courtesy of VOLVO CARS CORPORATION

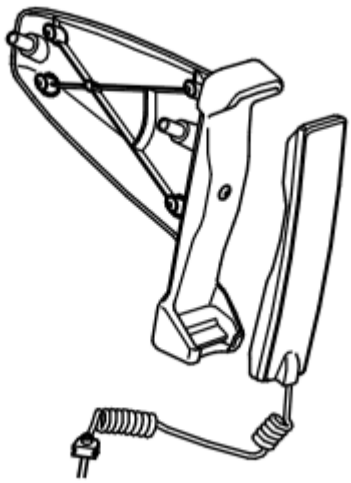

Fig. 182: Identifying Carphone Holder
Courtesy of VOLVO CARS CORPORATION

- **Continue**

  Refer to **VERIFICATION**

VERIFICATION

VERIFICATION

HINT: After carrying out the repair, check that the fault has been remedied.

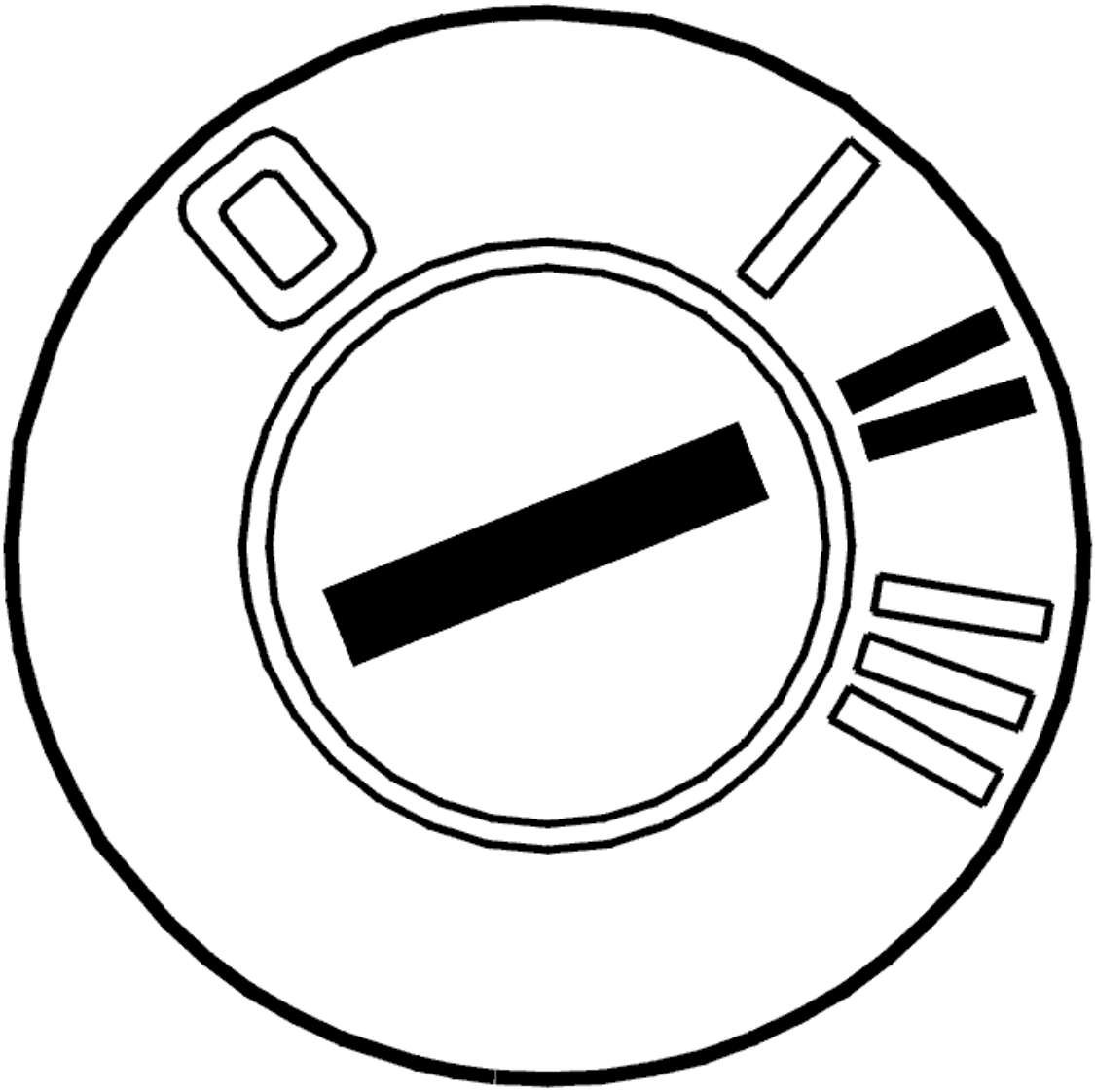

Fig. 183: Identifying Ignition ON
Courtesy of VOLVO CARS CORPORATION

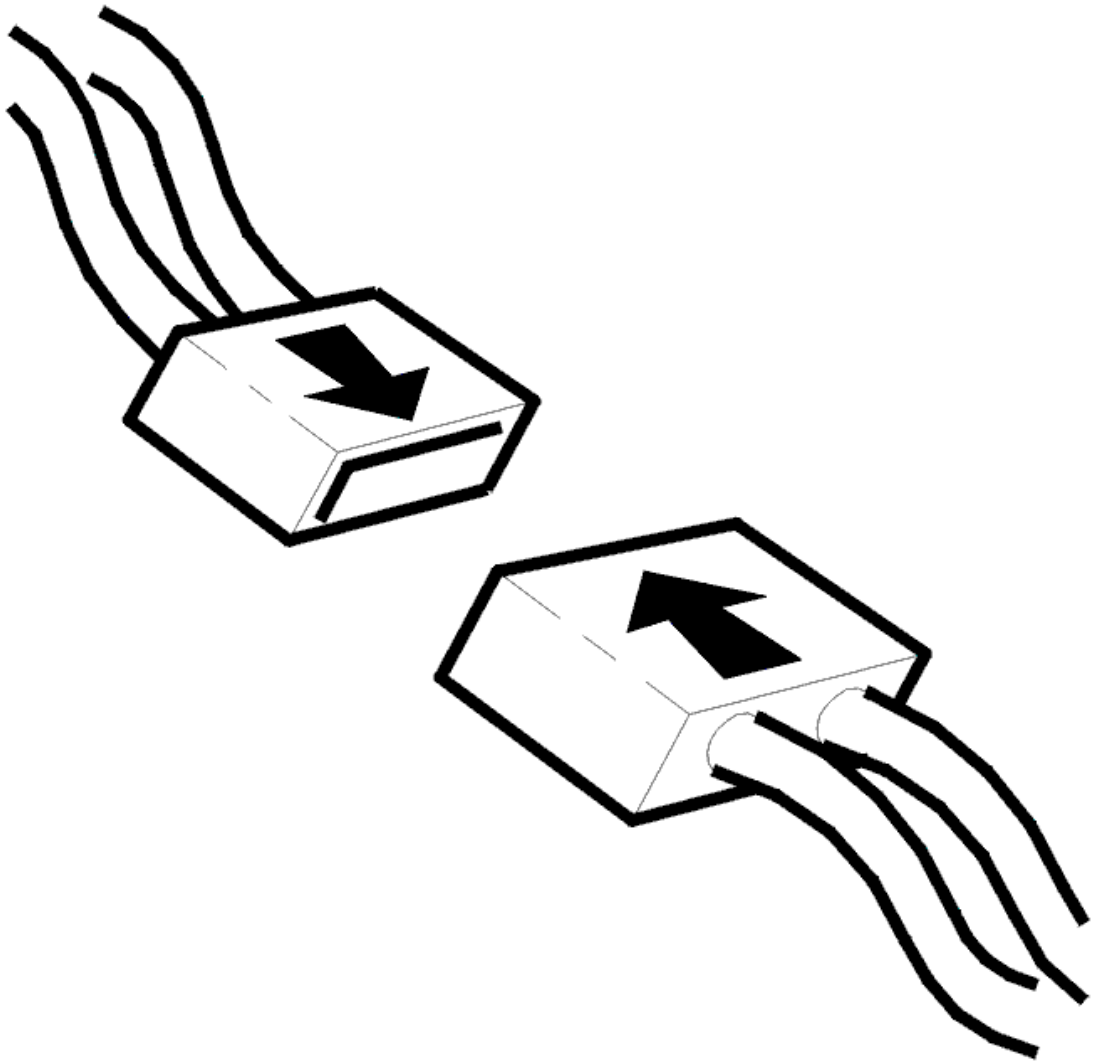

Fig. 184: Connecting Connector
Courtesy of VOLVO CARS CORPORATION

- Ignition off
- Reinstall the connectors, components etc.
- Ignition on
- Activate the carphone.

  Make a call so that both the handset and the hands-free system are used.

  - Ignition off.
  - Ignition on.
  - Read off the diagnostic trouble codes (DTCs).
  - Check that the relevant diagnostic trouble code (DTC) has switched status from permanent to

intermittent fault.

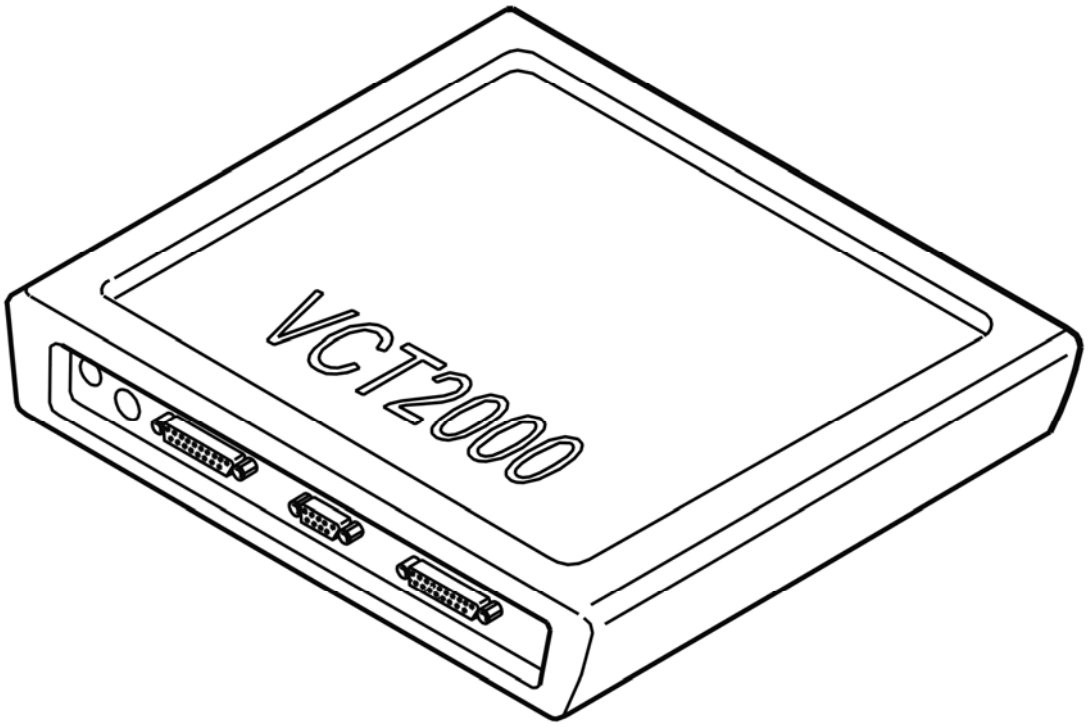

Fig. 185: Identifying VCT2000 Diagnostic Tool Symbol In VIDA
Courtesy of VOLVO CARS CORPORATION

Has the status of the diagnostic trouble code (DTC) changed?

- **YES**

  VERIFIED: Troubleshooting has been completed.

- **NO**

  Refer to **INFORMATION**

INFORMATION

FAULT-TRACING INFORMATION

The fault should have been detected and remedied. As this is not the case fault-tracing has failed.

Exit fault-tracing for this diagnostic trouble code (DTC) or make another attempt.

PHM-000D: TELEPHONE HANDSET MICROPHONE. SIGNAL TOO LOW

(2005)

DIAGNOSTIC TROUBLE CODE (DTC) INFORMATION PHM-000D

see **DIAGNOSTIC TROUBLE CODE (DTC) INFORMATION PHM-000D**

SIGNAL TOO LOW

CHECKING STRUCTURE WEEK

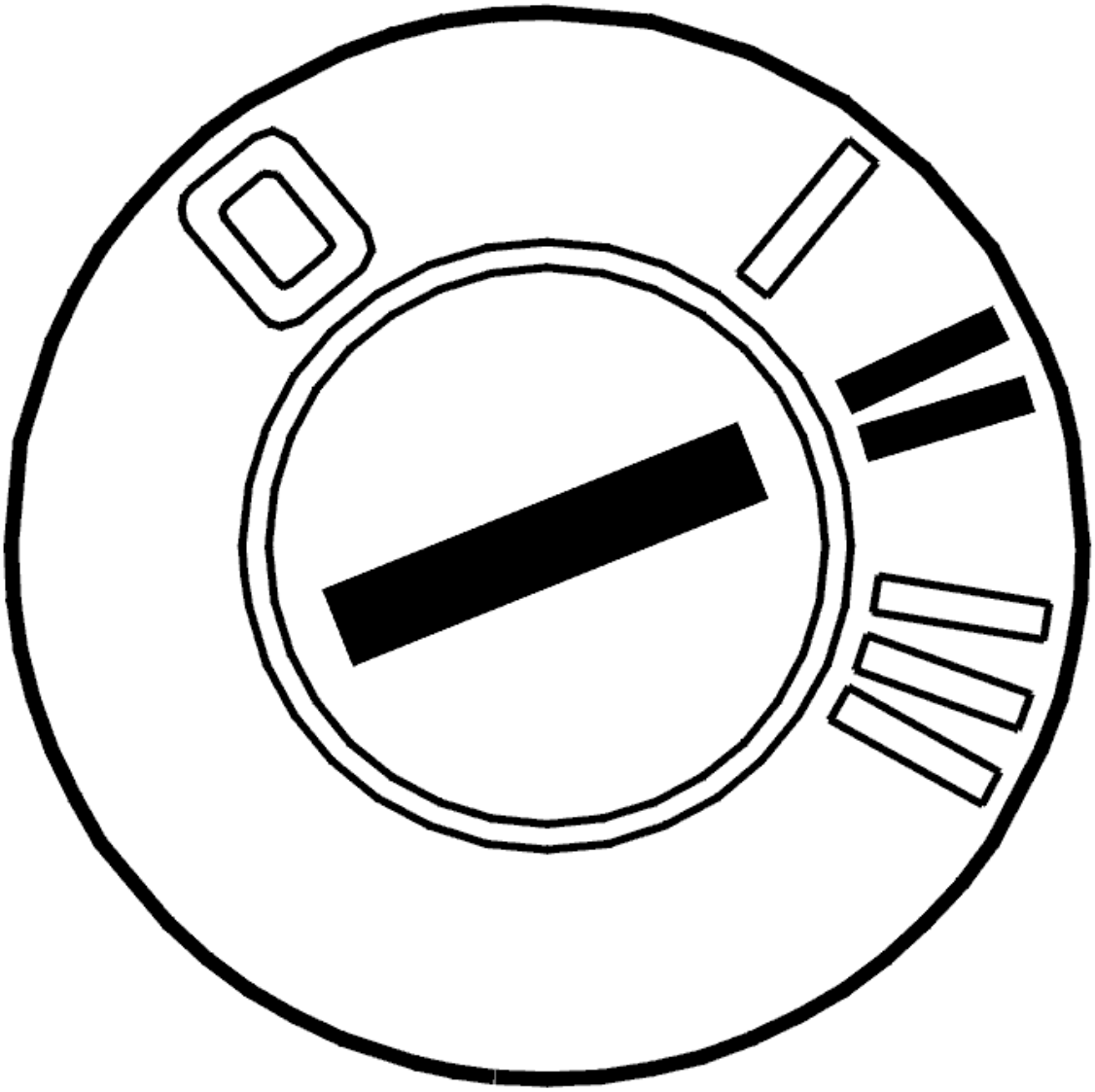

Fig. 186: Identifying Ignition ON
Courtesy of VOLVO CARS CORPORATION

- Ignition on

  Read out the vehicle's structure week by clicking on the symbol for VCT2000.

1. Vehicles with structure week up to and incl. 200445, that is, year 2004 week 45. Refer to **SIGNAL TOO LOW**
2. Vehicles with structure week from and incl. 200446, that is, year 2004 week 46. Refer to **CHECKING COMPONENTS AND WIRING**

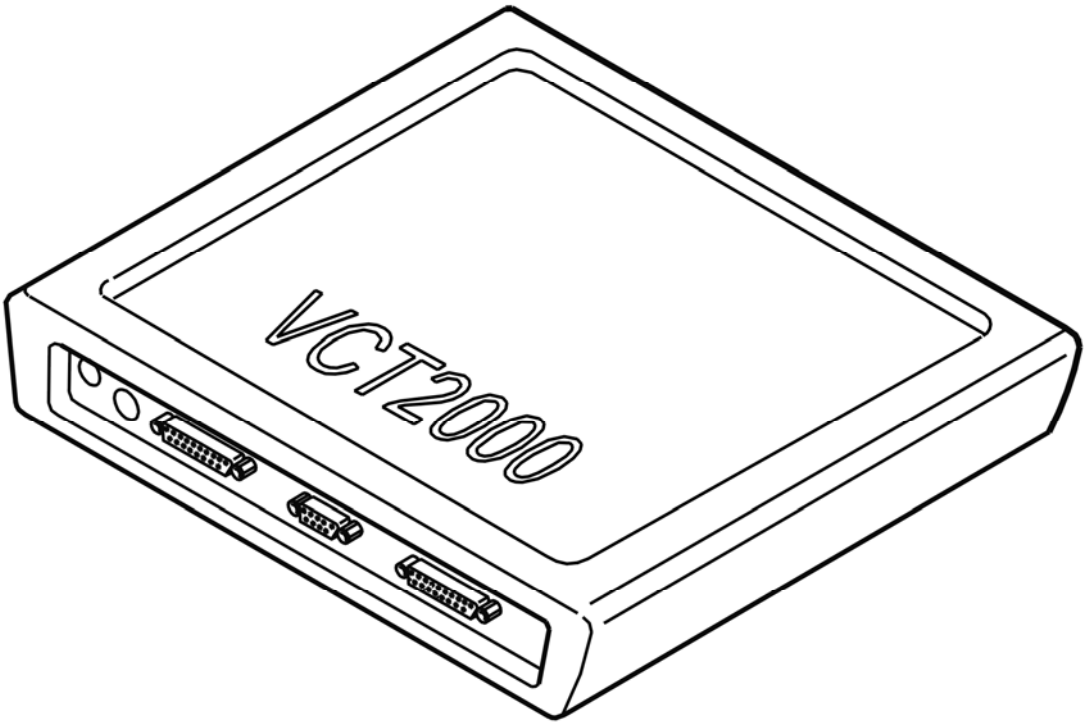

Fig. 187: Identifying VCT2000 Diagnostic Tool Symbol In VIDA
Courtesy of VOLVO CARS CORPORATION

CHECKING COMPONENTS AND WIRING

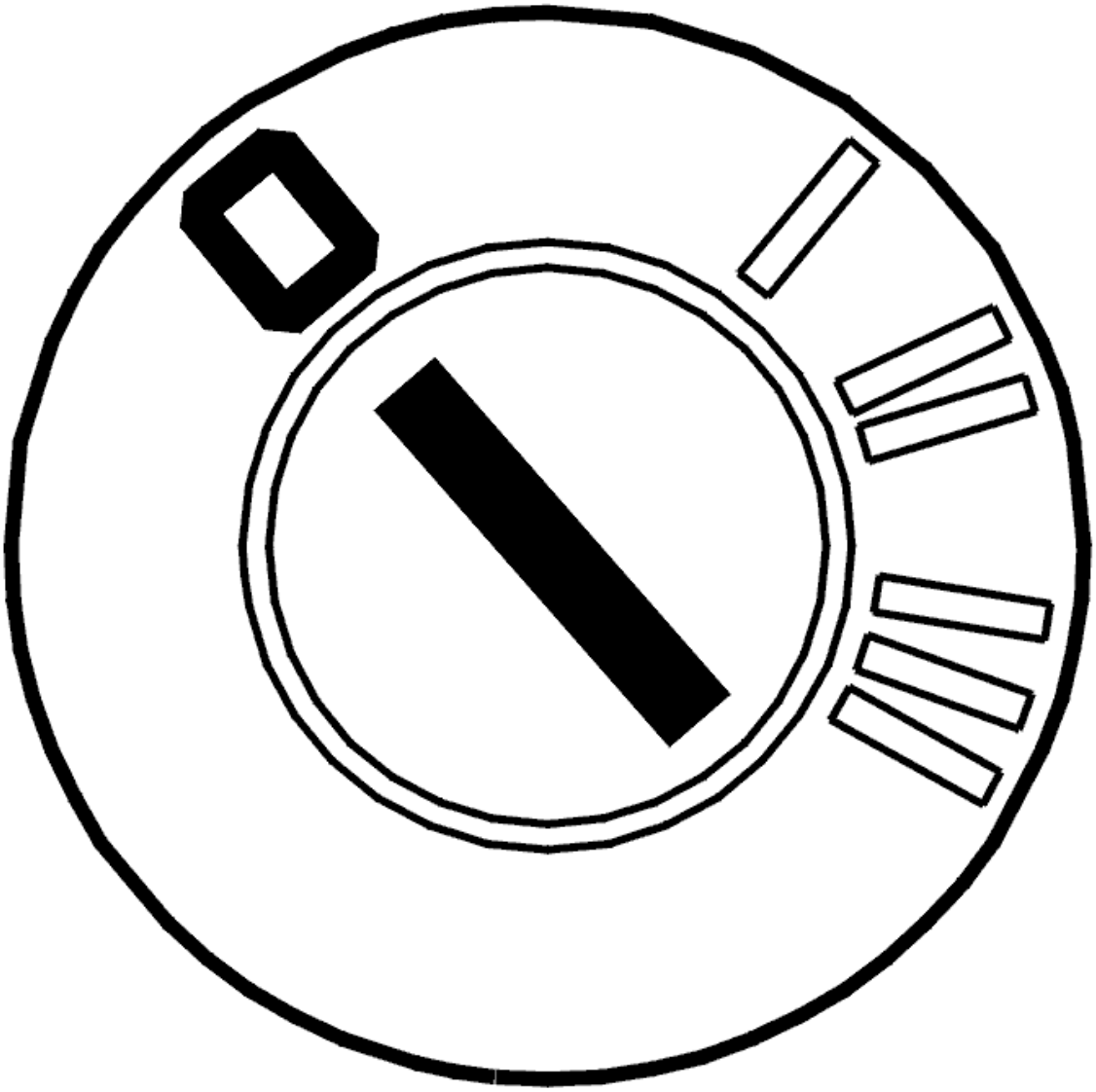

Fig. 188: Identifying Ignition OFF
Courtesy of VOLVO CARS CORPORATION

- Ignition off
- Disconnect connector A for the phone module (PHM).

  Check the microphone signal's cable on the control module's connector A for short-circuit to ground.

  Check between:

  - #19 (#19) and #18 (#18).
  - #19 (#19) and #6 (#6).

  If no malfunction was found on the cable, try replacing the handset.

Remedy as necessary.

Other information:

- see **CONNECTING THE BREAKOUT BOX**
- see **SIGNAL SPECIFICATION**
- see **LOCATION OF COMPONENTS**
- see **PHONE MODULE (PHM), REPLACING**
- see **HANDSET, REPLACING**
- see **CONTENTS**

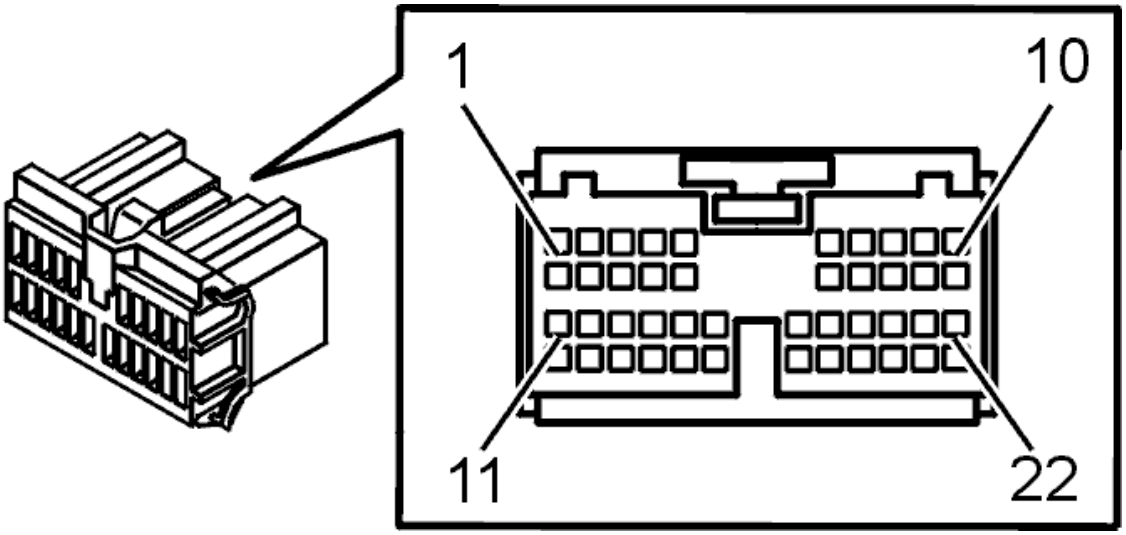

Fig. 189: Identifying Connector (F) Terminals
Courtesy of VOLVO CARS CORPORATION

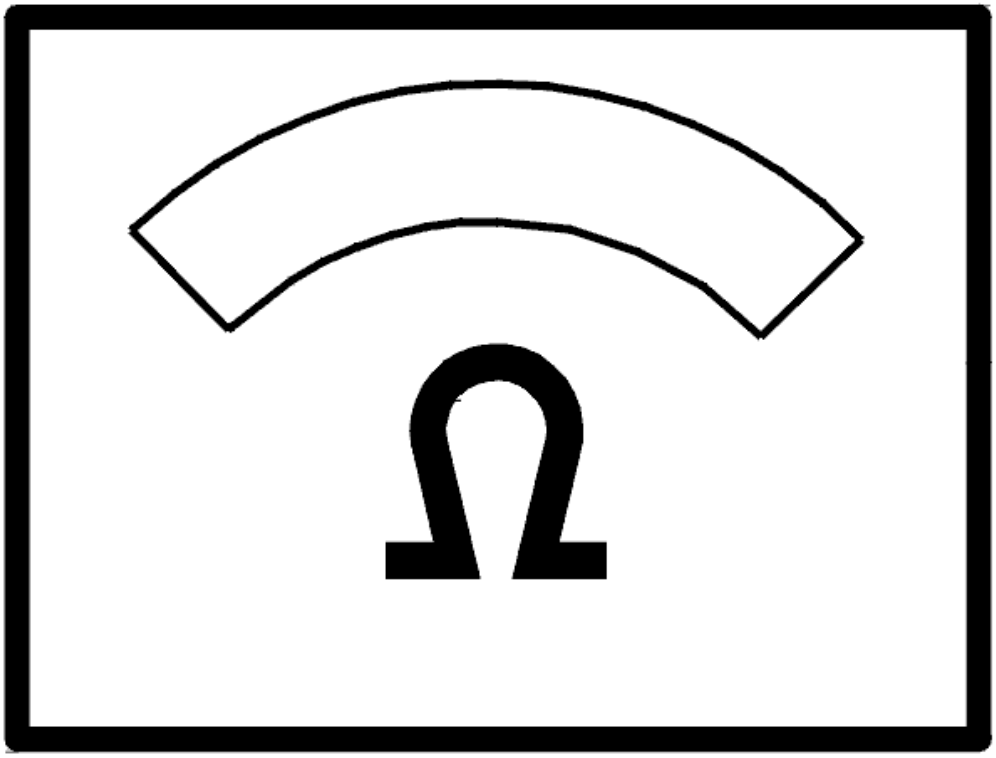

Fig. 190: Identifying Ohm Meter
Courtesy of VOLVO CARS CORPORATION

- **Continue**

  Refer to **VERIFICATION**

VERIFICATION

VERIFICATION

HINT: After carrying out the repair, check that the fault has been remedied.

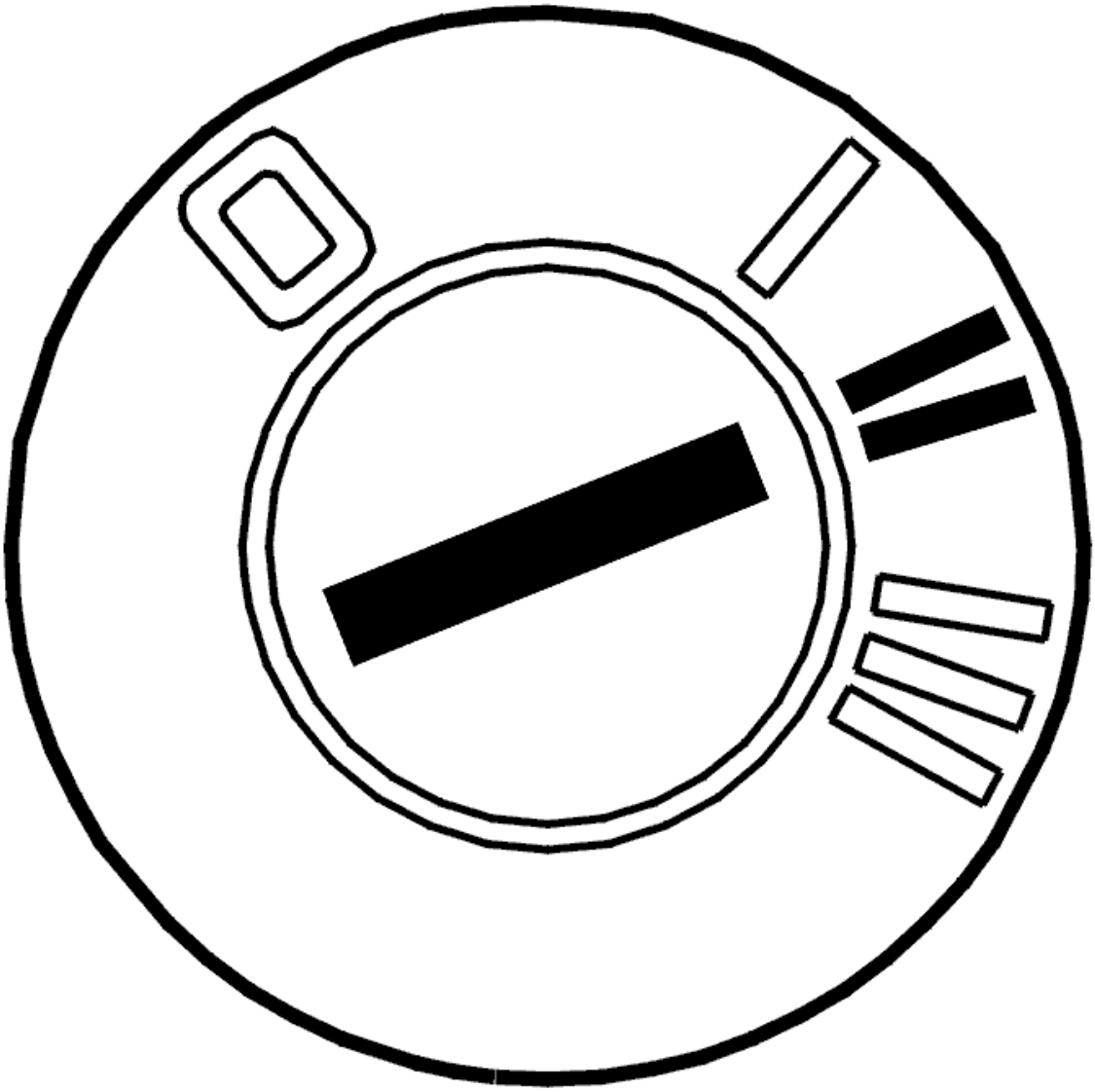

Fig. 191: Identifying Ignition ON
Courtesy of VOLVO CARS CORPORATION

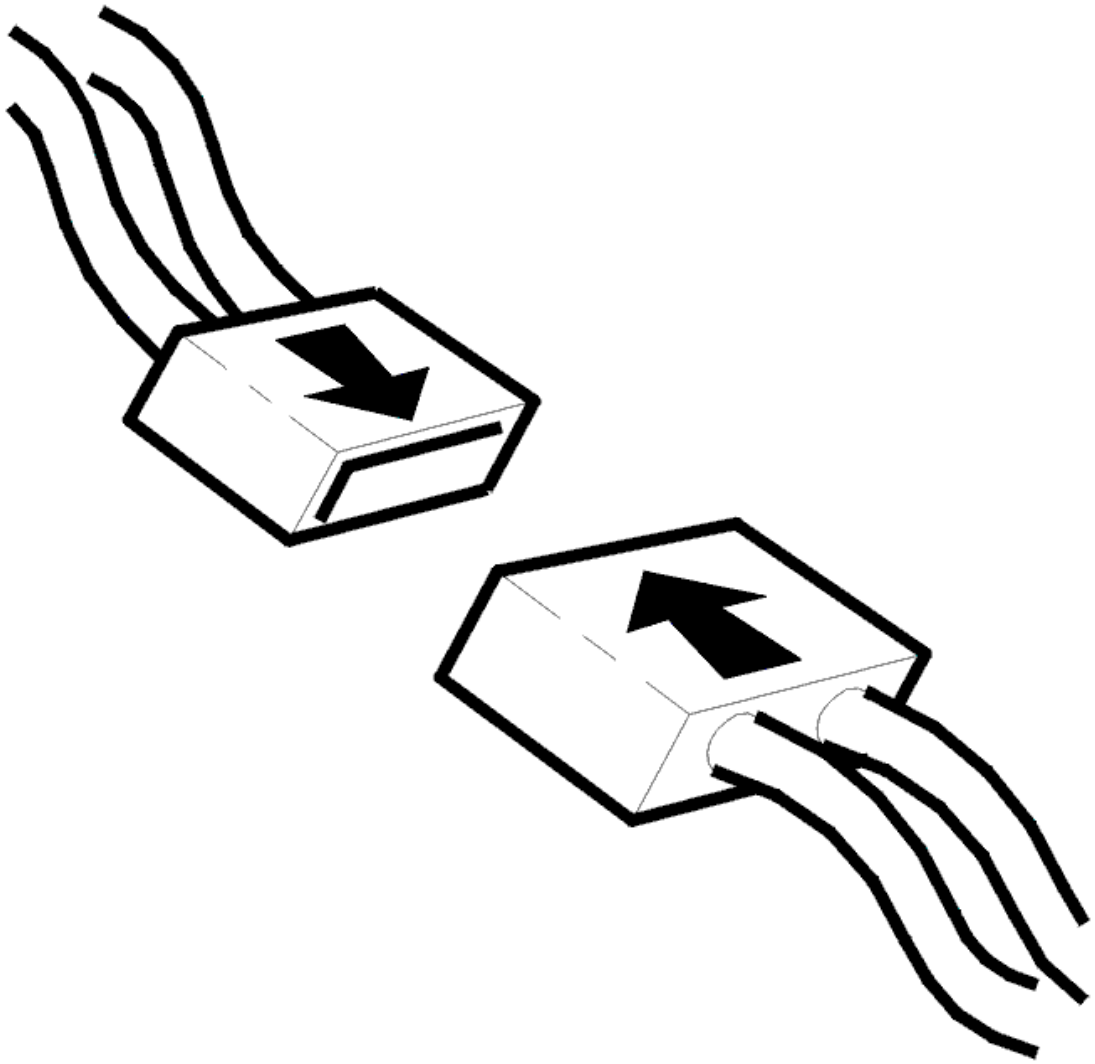

Fig. 192: Connecting Connector
Courtesy of VOLVO CARS CORPORATION

- Ignition off
- Reinstall the connectors, components etc.
- Ignition on
- Activate the carphone.

  Make a call so that both the handset and the hands-free system are used.

  Ignition off.

  Ignition on.

  Read off the diagnostic trouble codes (DTCs).

Check that the relevant diagnostic trouble code (DTC) has switched status from permanent to intermittent fault.

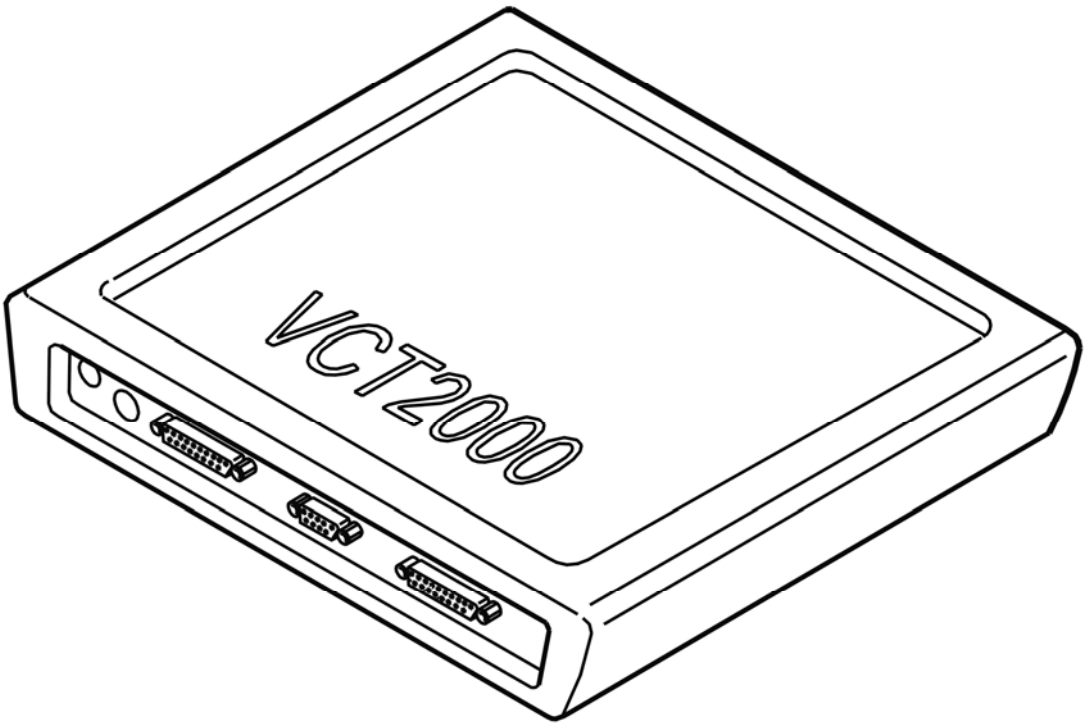

Fig. 193: Identifying VCT2000 Diagnostic Tool Symbol In VIDA
Courtesy of VOLVO CARS CORPORATION

Has the status of the diagnostic trouble code (DTC) changed?

- **YES**

  VERIFIED: Troubleshooting has been completed.

- **NO**

  Refer to **INFORMATION**

INFORMATION

FAULT-TRACING INFORMATION

The fault should have been detected and remedied. As this is not the case fault-tracing has failed.

Exit fault-tracing for this diagnostic trouble code (DTC) or make another attempt.

SIGNAL TOO LOW

CHECKING COMPONENTS AND WIRING

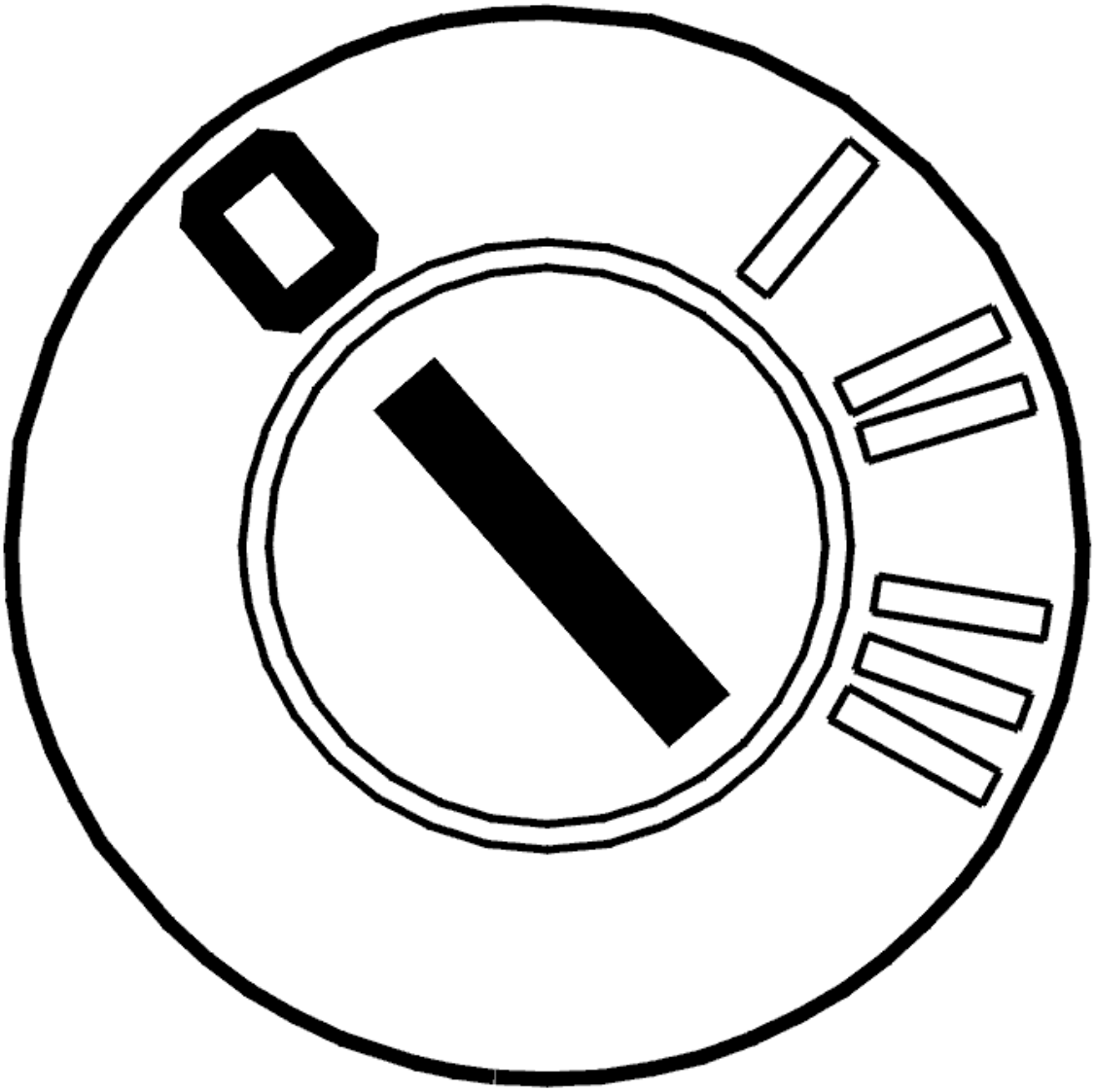

Fig. 194: Identifying Ignition OFF
Courtesy of VOLVO CARS CORPORATION

- Ignition off.

  Check the signal cable for the microphone between phone module (PHM) connector B terminal #13 (#55) and handset connector terminal #1 (#21). Check for a short-circuit to ground.

  Try replacing the carphone handset if no fault is found in the wiring.

  Remedy as necessary.

Other information:

- To connect the breakout box, see **CONNECTING THE BREAKOUT BOX**
- For information about signals and connectors, see **SIGNAL SPECIFICATION**
- To access or replace the control module, see **PHONE MODULE (PHM), REPLACING**
- To access or replace the handset, see **HANDSET, REPLACING**
- see **CONTENTS** .

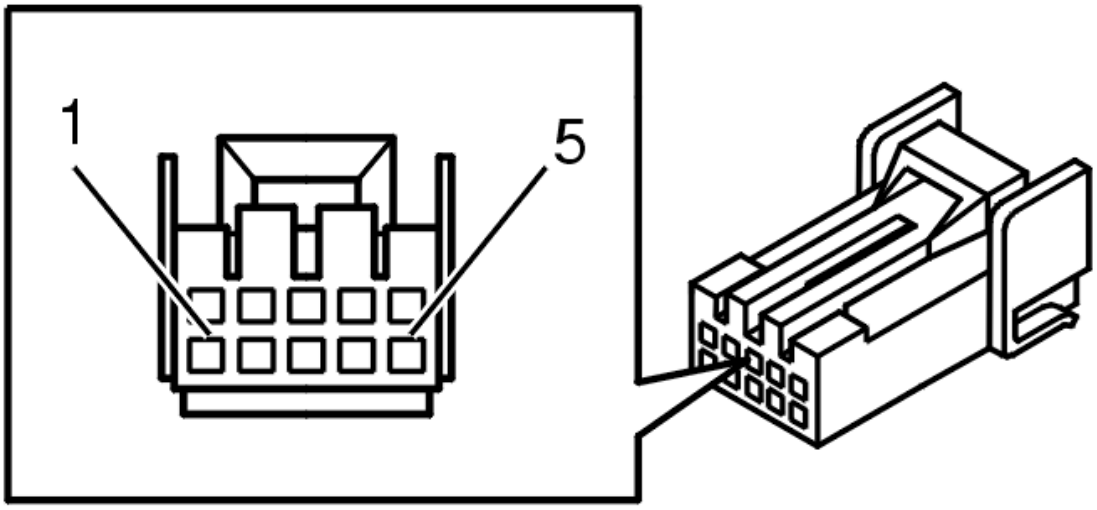

Fig. 195: 10 CD Changer Connector Terminals
Courtesy of VOLVO CARS CORPORATION

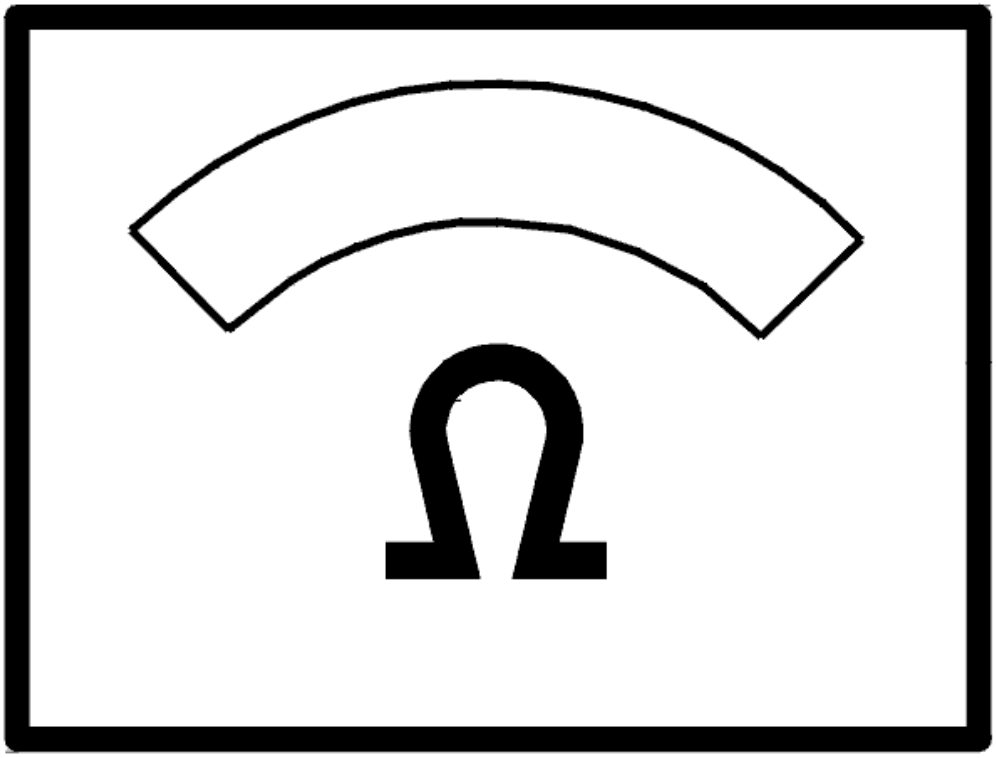

Fig. 196: Identifying Ohm Meter
Courtesy of VOLVO CARS CORPORATION

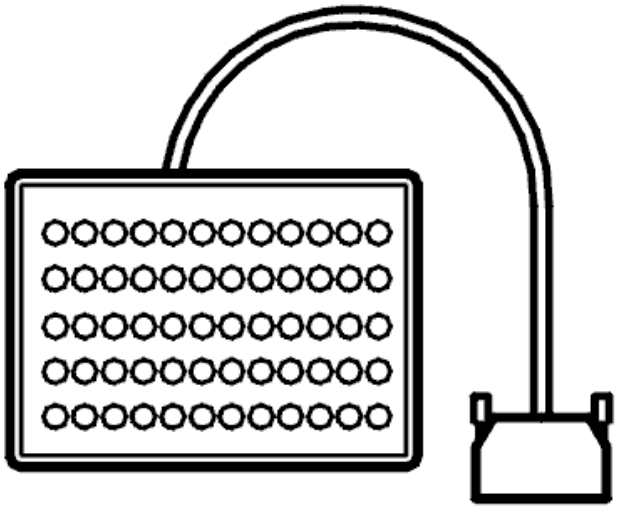

Fig. 197: Breakout Box
Courtesy of VOLVO CARS CORPORATION

- **Continue**

  Refer to **VERIFICATION**

VERIFICATION

VERIFICATION

HINT: After carrying out the repair, check that the fault has been remedied.

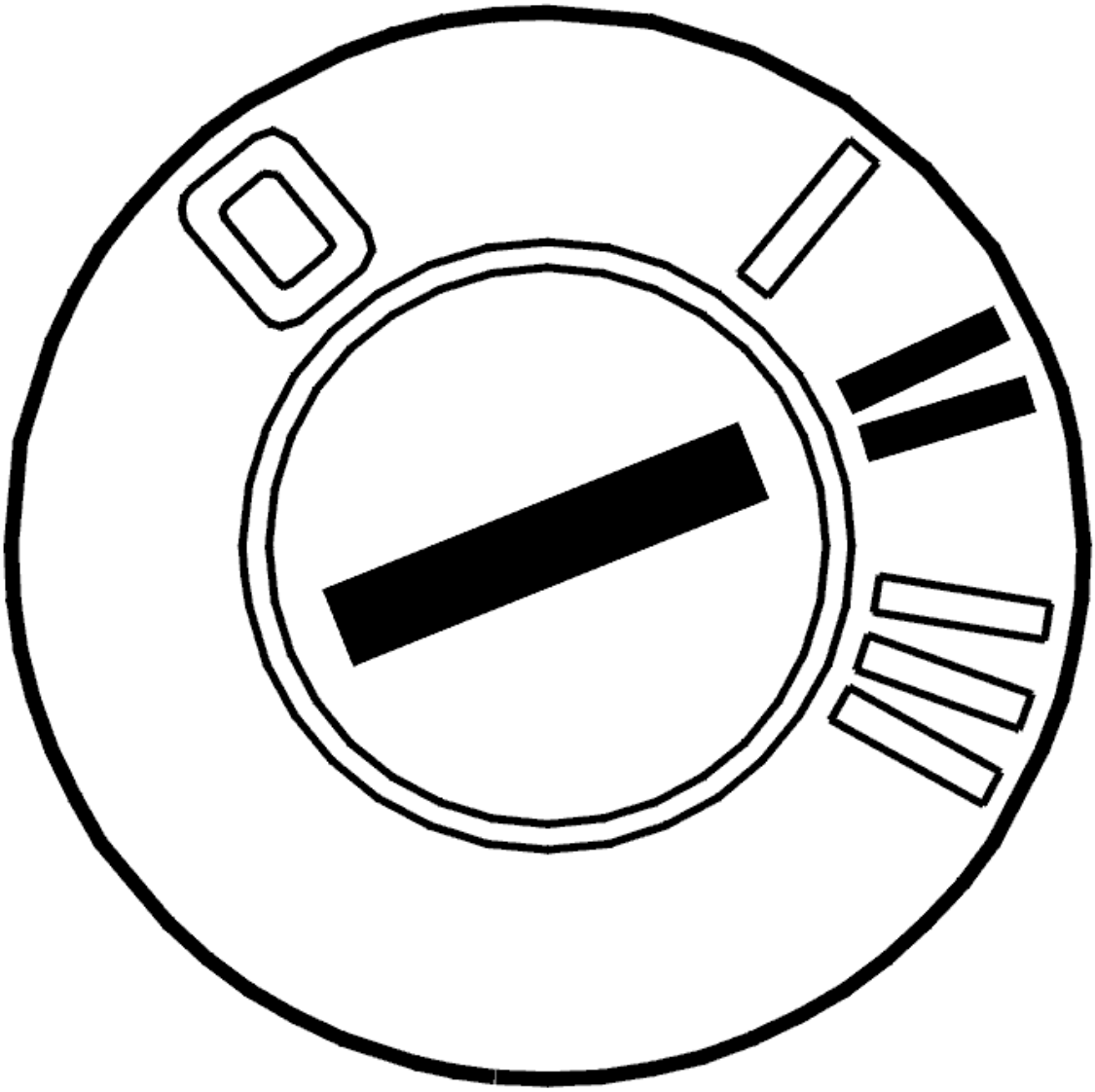

Fig. 198: Identifying Ignition ON
Courtesy of VOLVO CARS CORPORATION

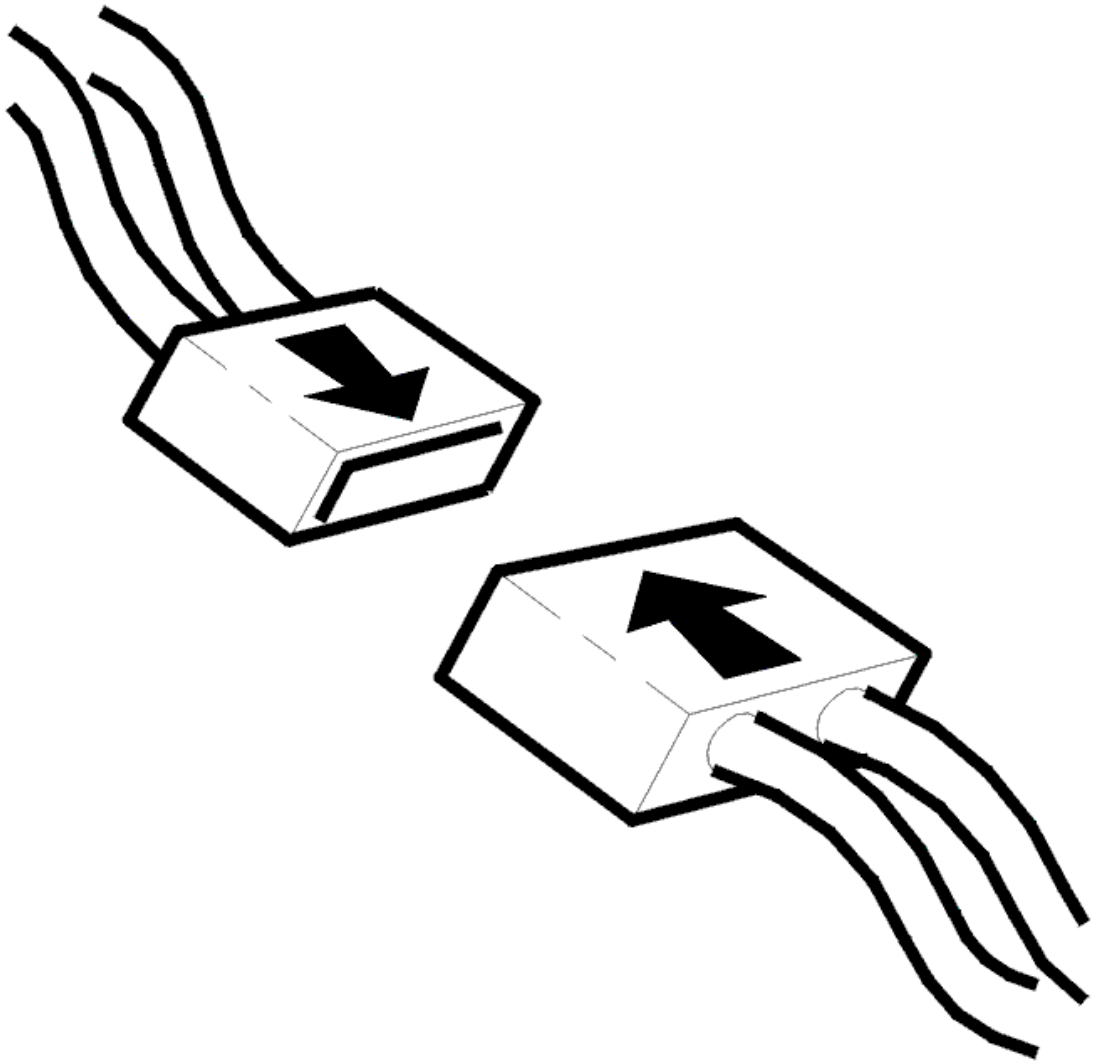

Fig. 199: Connecting Connector
Courtesy of VOLVO CARS CORPORATION

- Ignition off
- Reinstall the connectors, components etc.
- Ignition on
- Switch on the carphone.

  Make a call so that both the handset and the hands-free system are used.

  Ignition off.

  Ignition on.

  Read off the diagnostic trouble codes (DTCs).

Check that the relevant diagnostic trouble code (DTC) has switched status from permanent to intermittent fault.

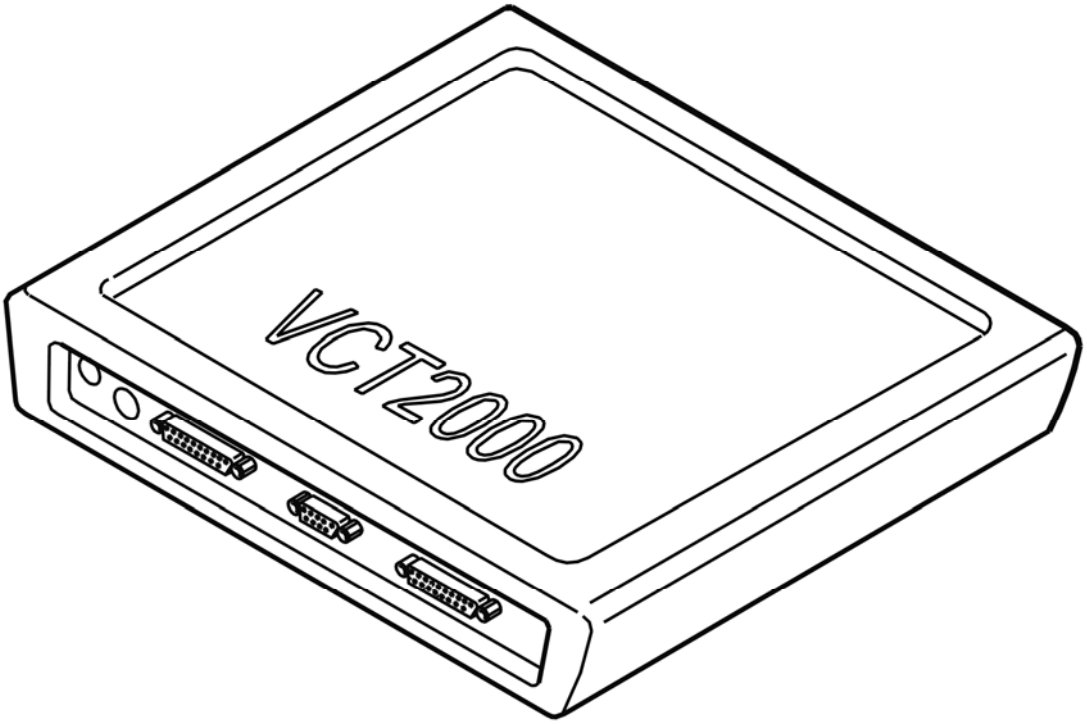

Fig. 200: Identifying VCT2000 Diagnostic Tool Symbol In VIDA
Courtesy of VOLVO CARS CORPORATION

Has the status of the diagnostic trouble code (DTC) changed?

- **YES**

  VERIFIED: Troubleshooting has been completed.

- **NO**

  Refer to **INFORMATION**

INFORMATION

FAULT-TRACING INFORMATION

The fault should have been detected and remedied. As this is not the case fault-tracing has failed.

Exit fault-tracing for this diagnostic trouble code (DTC) or make another attempt.

PHM-000F: HANDSET LOUDSPEAKER. SIGNAL TOO HIGH / SIGNAL MISSING (2006-2011)

DIAGNOSTIC TROUBLE CODE (DTC) INFORMATION PHM-000F

Condition

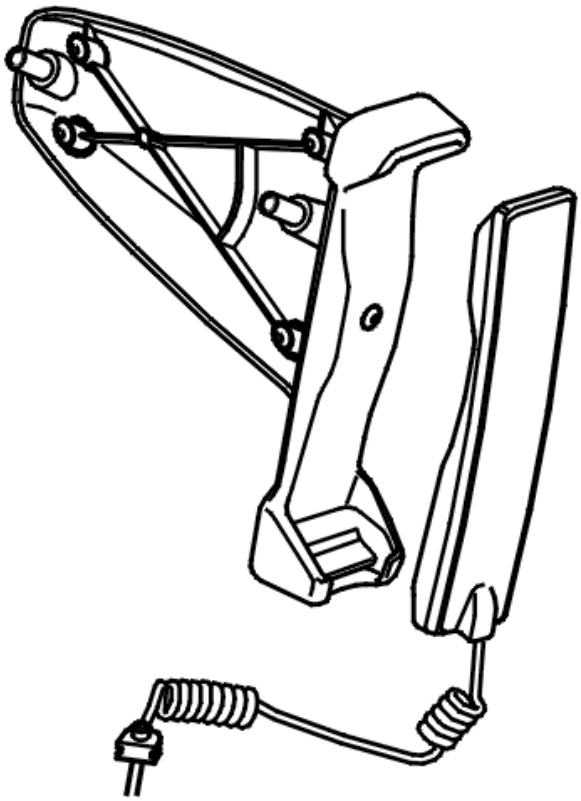

Fig. 201: Identifying Handset Cradle
Courtesy of VOLVO CARS CORPORATION

The diagnostic trouble code (DTC) is stored if the phone module (PHM) registers an open-circuit in the signal to the handset loudspeaker or a short-circuit to supply voltage in the signal.

The diagnostic trouble code (DTC) can be diagnosed when the ignition is switched on (not key position 3) and when the battery voltage is 9-16 V.

Substitute Value

- Only hands-free operates.

Possible Source

- Short-circuit to supply voltage (+12 V) in the cable (loudspeaker signal) between the handset and the

control module
- Open-circuit in the cable (loudspeaker signal) between the handset and the control module.

Fault symptom[s]

- The handset does not function.
- Message in the text display (applies only to phone modules (PHM) with Volvo On Call).

SIGNAL TOO HIGH / SIGNAL MISSING

CHECKING THE COMPONENT AND WIRING

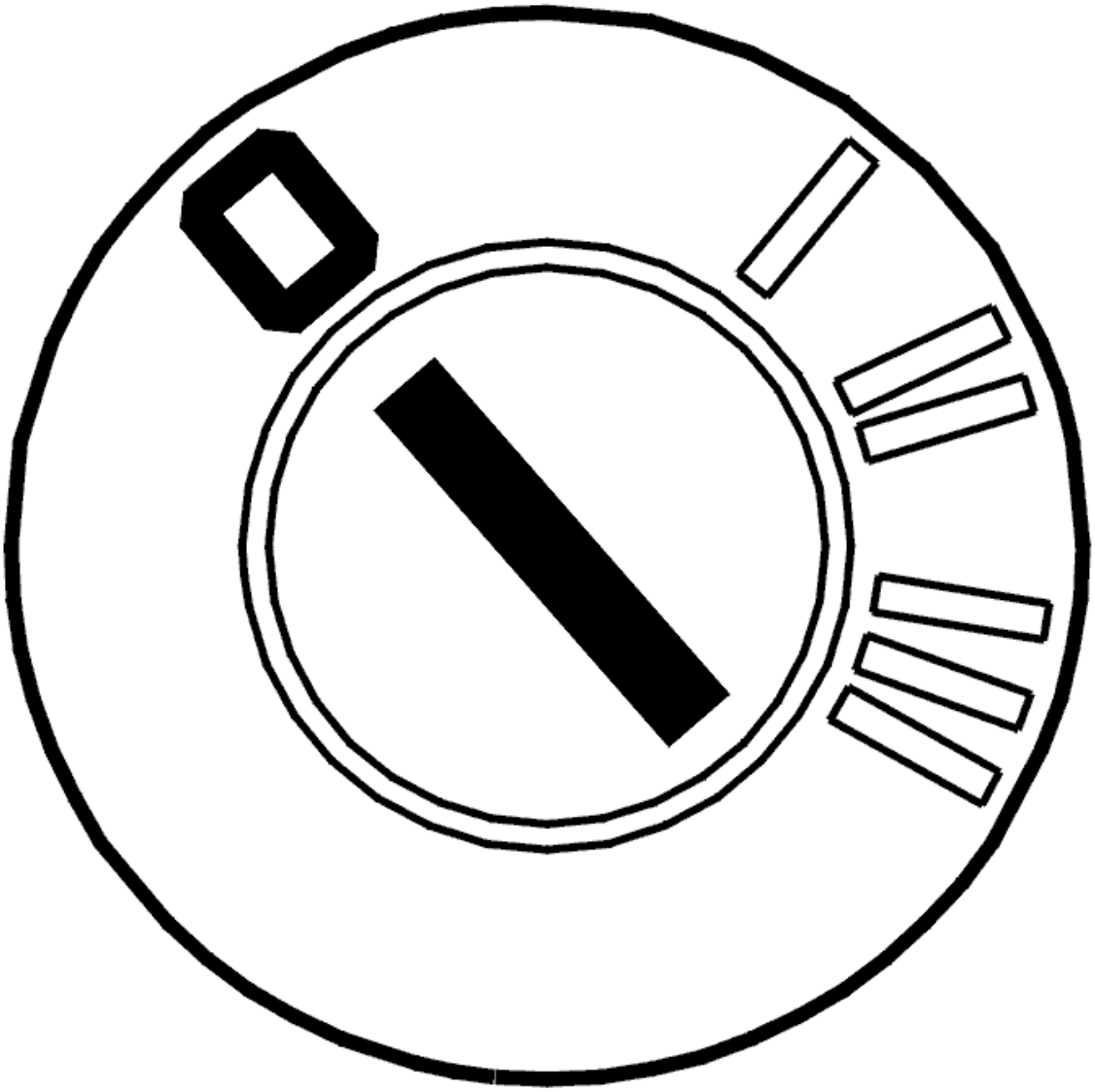

Fig. 202: Identifying Ignition OFF
Courtesy of VOLVO CARS CORPORATION

- Ignition off
- Disconnect connector A from the phone module (PHM)
- Disconnect the handset connector.

Check the loudspeaker signal cable at control module connector A. Check for a short-circuit to supply voltage.

Check between:

- terminals #20 (#20) and #7 (#7)
- terminals #20 (#20) and #5 (#5).

Check the cable for the loudspeaker signal. Check for an open-circuit.

Take a reading between control module connector A terminal #20 (#20) and handset connector terminal #2 (#22).

Check the connectors for loose connections, damaged or bent terminal pins and oxidation.

Try replacing the carphone handset if no fault is found in the wiring.

Remedy as necessary.

Other information:

- see **SIGNAL SPECIFICATION**
- see **CONNECTING THE BREAKOUT BOX**
- see **LOCATION OF COMPONENTS**
- see **PHONE MODULE (PHM), REPLACING (2006-2010)**
- see **HANDSET, REPLACING**
- see **CHECKING WIRING AND TERMINALS**

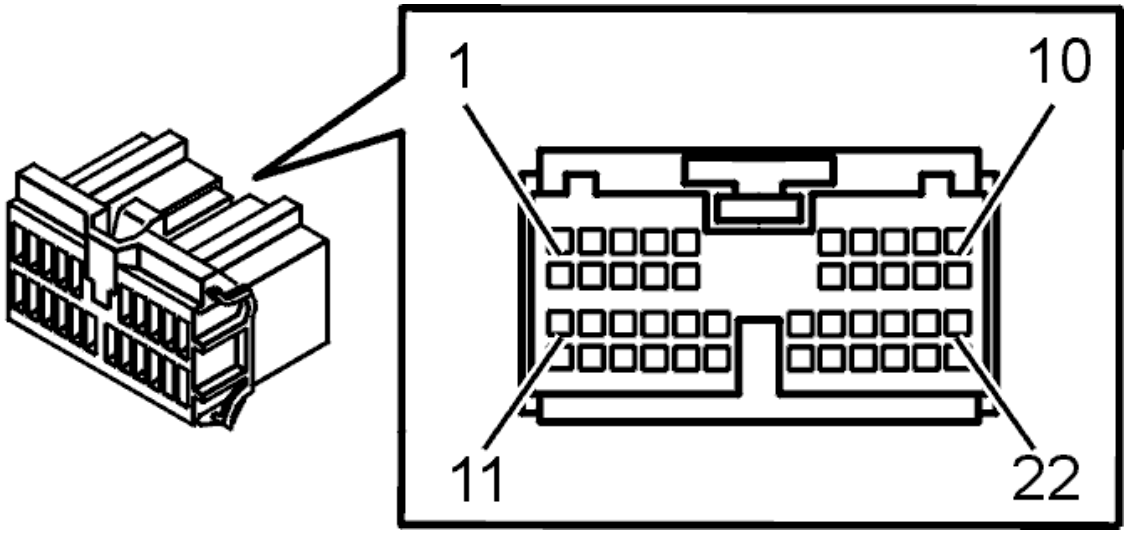

Fig. 203: Identifying Connector (F) Terminals
Courtesy of VOLVO CARS CORPORATION

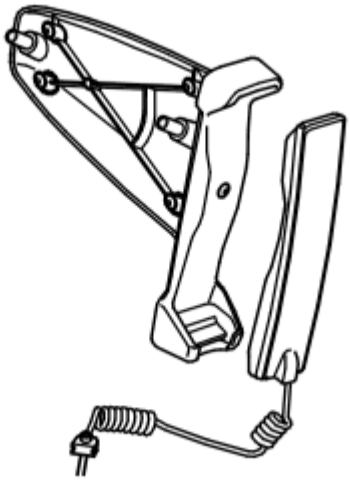

Fig. 204: Identifying Carphone Holder
Courtesy of VOLVO CARS CORPORATION

- **Continue**

  Refer to **VERIFICATION**

VERIFICATION

VERIFICATION

HINT: After carrying out the repair, check that the fault has been remedied.

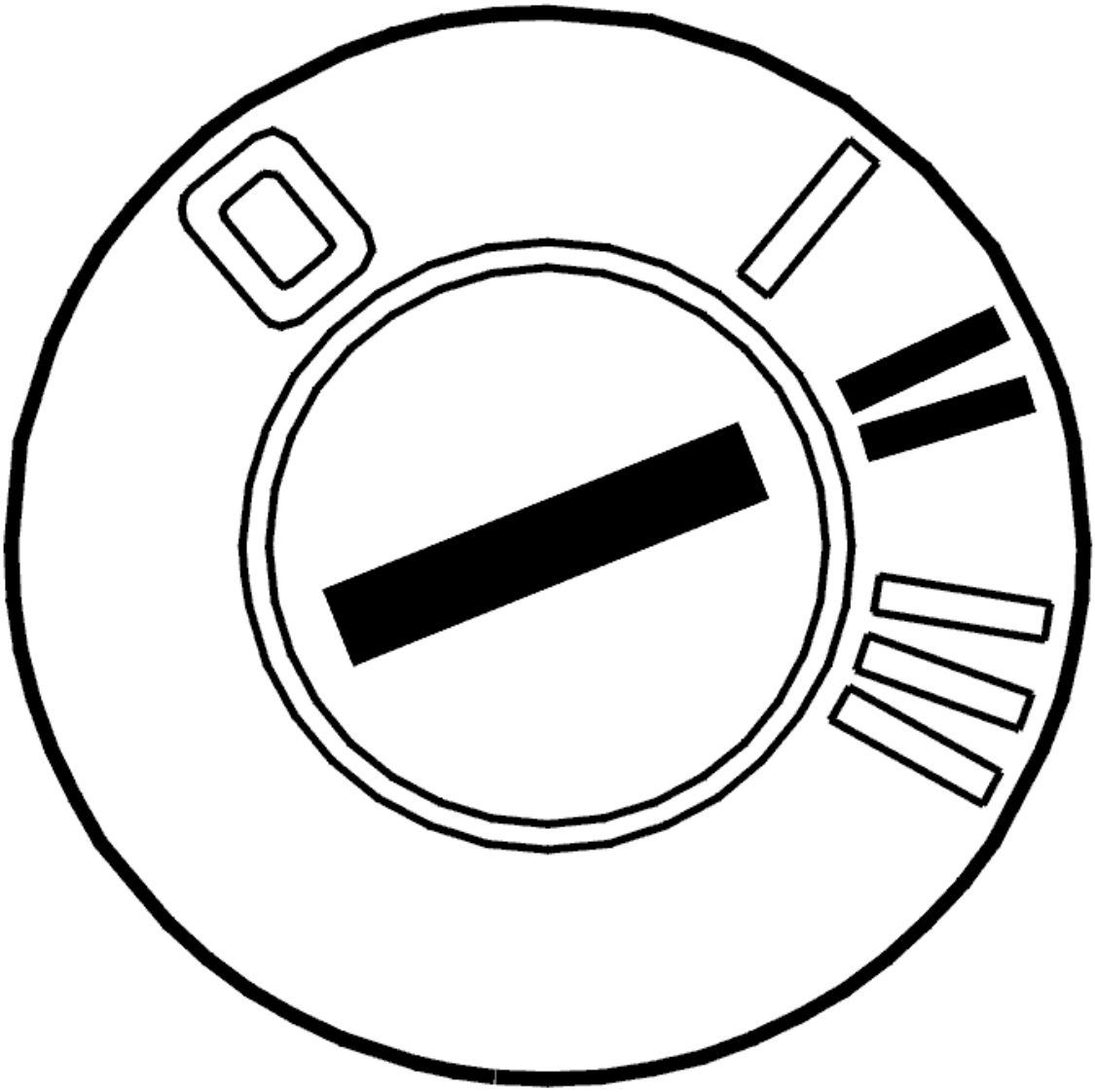

Fig. 205: Identifying Ignition ON
Courtesy of VOLVO CARS CORPORATION

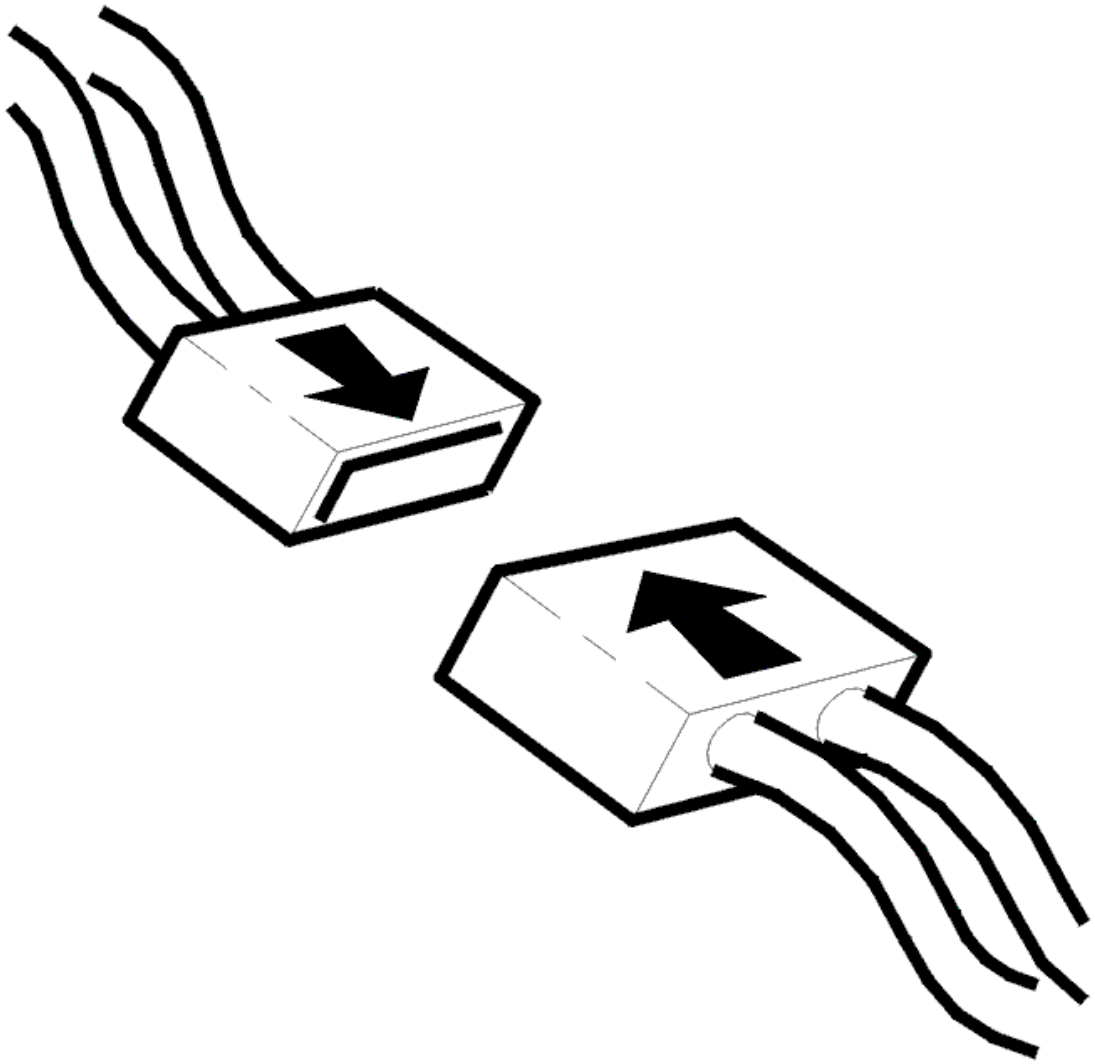

Fig. 206: Connecting Connector
Courtesy of VOLVO CARS CORPORATION

- Ignition off
- Reinstall the connectors, components etc.
- Ignition on
- Activate the carphone.

  Make a call so that both the handset and the hands-free system are used.

  - Ignition off.
  - Ignition on.
  - Read off the diagnostic trouble codes (DTCs).
  - Check that the relevant diagnostic trouble code (DTC) has switched status from permanent to

intermittent fault.

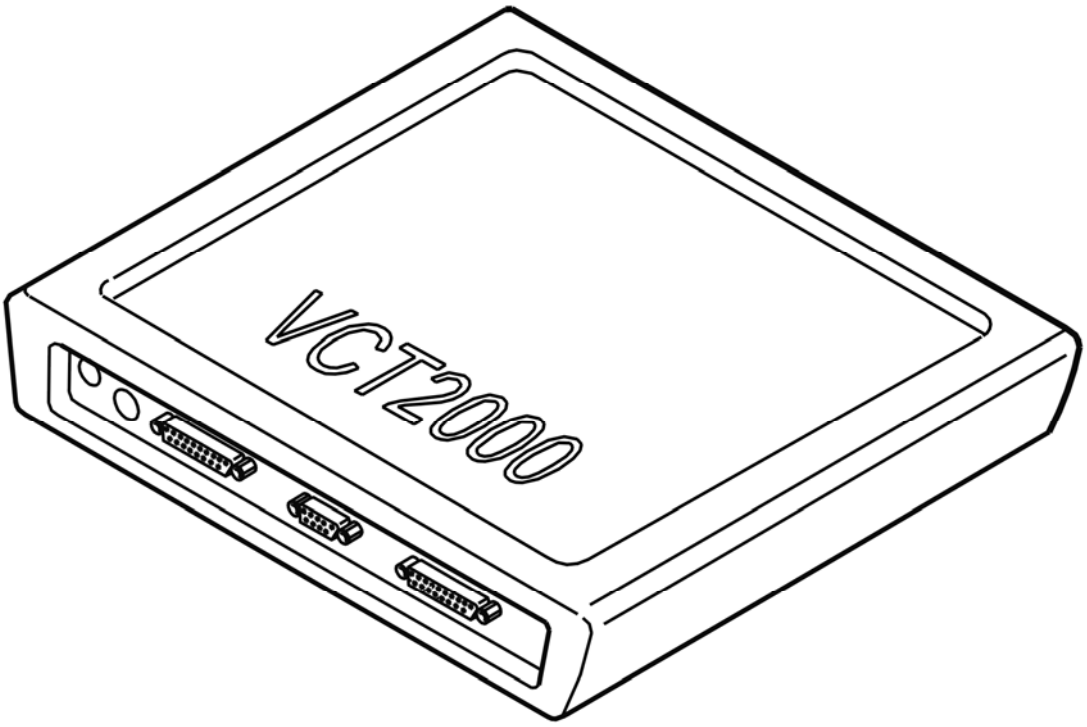

Fig. 207: Identifying VCT2000 Diagnostic Tool Symbol In VIDA
Courtesy of VOLVO CARS CORPORATION

Has the status of the diagnostic trouble code (DTC) changed?

- **YES**

  VERIFIED: Troubleshooting has been completed.

- **NO**

  Refer to **INFORMATION**

INFORMATION

FAULT-TRACING INFORMATION

The fault should have been detected and remedied. As this is not the case fault-tracing has failed.

Exit fault-tracing for this diagnostic trouble code (DTC) or make another attempt.

PHM-000F: HANDSET LOUDSPEAKER. SIGNAL TOO HIGH OR SIGNAL

MISSING (2003-2004)

DIAGNOSTIC TROUBLE CODE (DTC) INFORMATION PHM-000F

Condition

Diagnostic trouble code (DTC) PHM-000F is stored if the phone module (PHM) registers an open-circuit in the signal to the speaker in the handset or a short-circuit to supply voltage.

Diagnostic trouble code (DTC) PHM-000F can be diagnosed with the ignition on (not key position 3) and when the battery voltage is 9-16 V.

Substitute Value

- Only hands-free operates.

Possible Source

- Short-circuit to supply voltage in the wiring (loudspeaker signal) between the handset and the control module
- Open-circuit in the wiring (speaker signal) between the handset and the control module.

Fault symptom[s]

- The handset does not function.

SIGNAL TOO HIGH OR SIGNAL MISSING

CHECKING COMPONENTS AND WIRING

Check the signal cable for the microphone between phone module (PHM) connector B terminal #14 (#56) and handset connector terminal #2 (#22). Check for a short-circuit to supply voltage.

Check the signal cable for the microphone between phone module (PHM) connector B terminal #14 (#56) and handset connector terminal #2 (#22). Check for an open-circuit.

Check the connectors for loose connections, damaged or bent terminal pins and oxidation.

Try replacing the carphone handset if no fault is found in the wiring.

Remedy as necessary.

Other information:

- To connect the breakout box, see **CONNECTING THE BREAKOUT BOX**
- For information about signals and connectors, see **SIGNAL SPECIFICATION**

- To access or replace the control module, see **PHONE MODULE (PHM), REPLACING**
- To access or replace the handset, see **HANDSET, REPLACING**
- see **CONTENTS** .

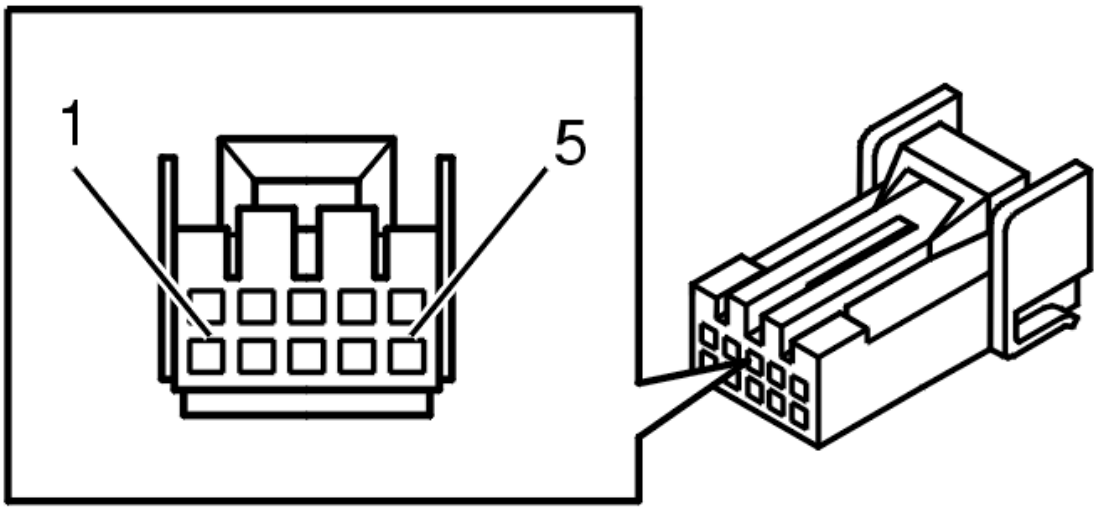

Fig. 208: 10 CD Changer Connector Terminals
Courtesy of VOLVO CARS CORPORATION

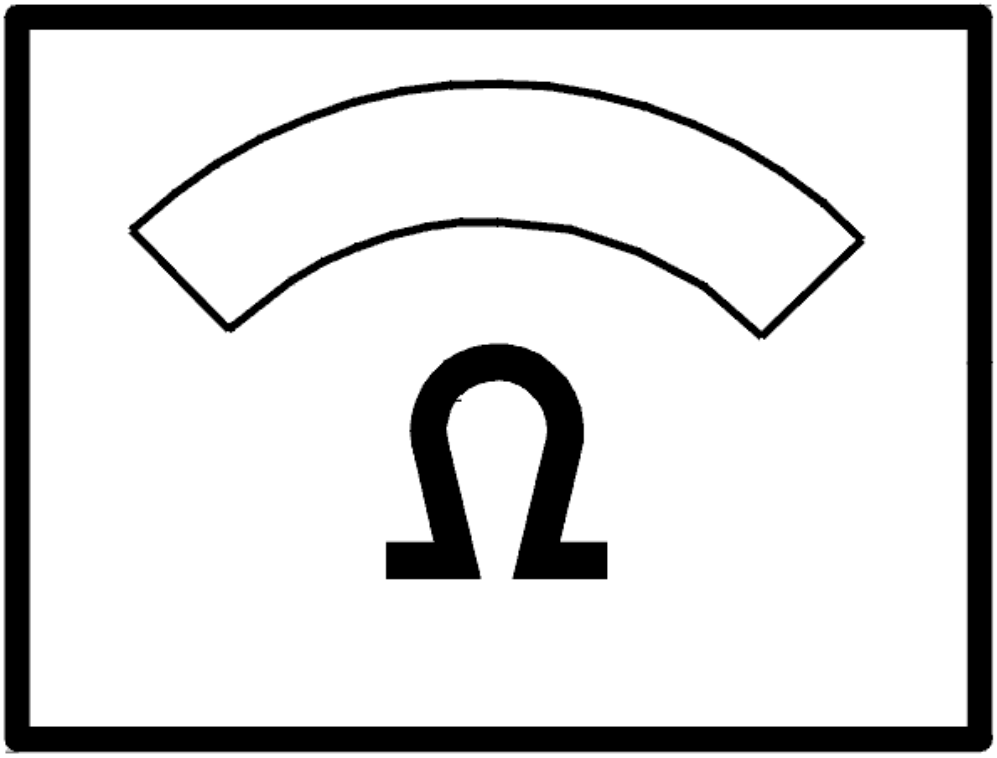

Fig. 209: Identifying Ohm Meter
Courtesy of VOLVO CARS CORPORATION

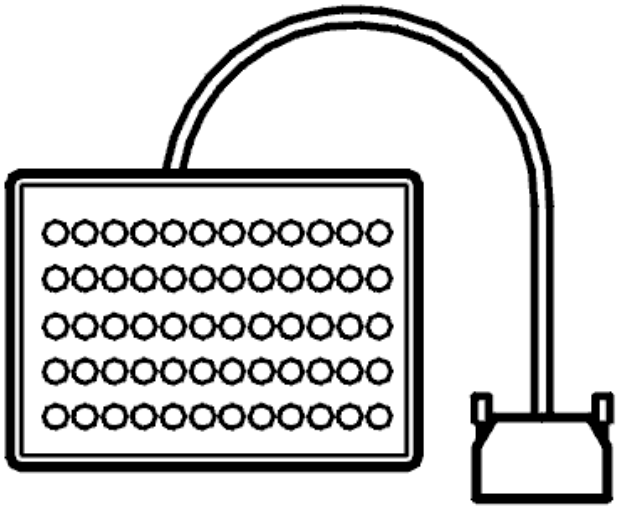

Fig. 210: Breakout Box
Courtesy of VOLVO CARS CORPORATION

- **Continue**

  Refer to **VERIFICATION**

VERIFICATION

VERIFICATION

HINT: After carrying out the repair, check that the fault has been remedied.

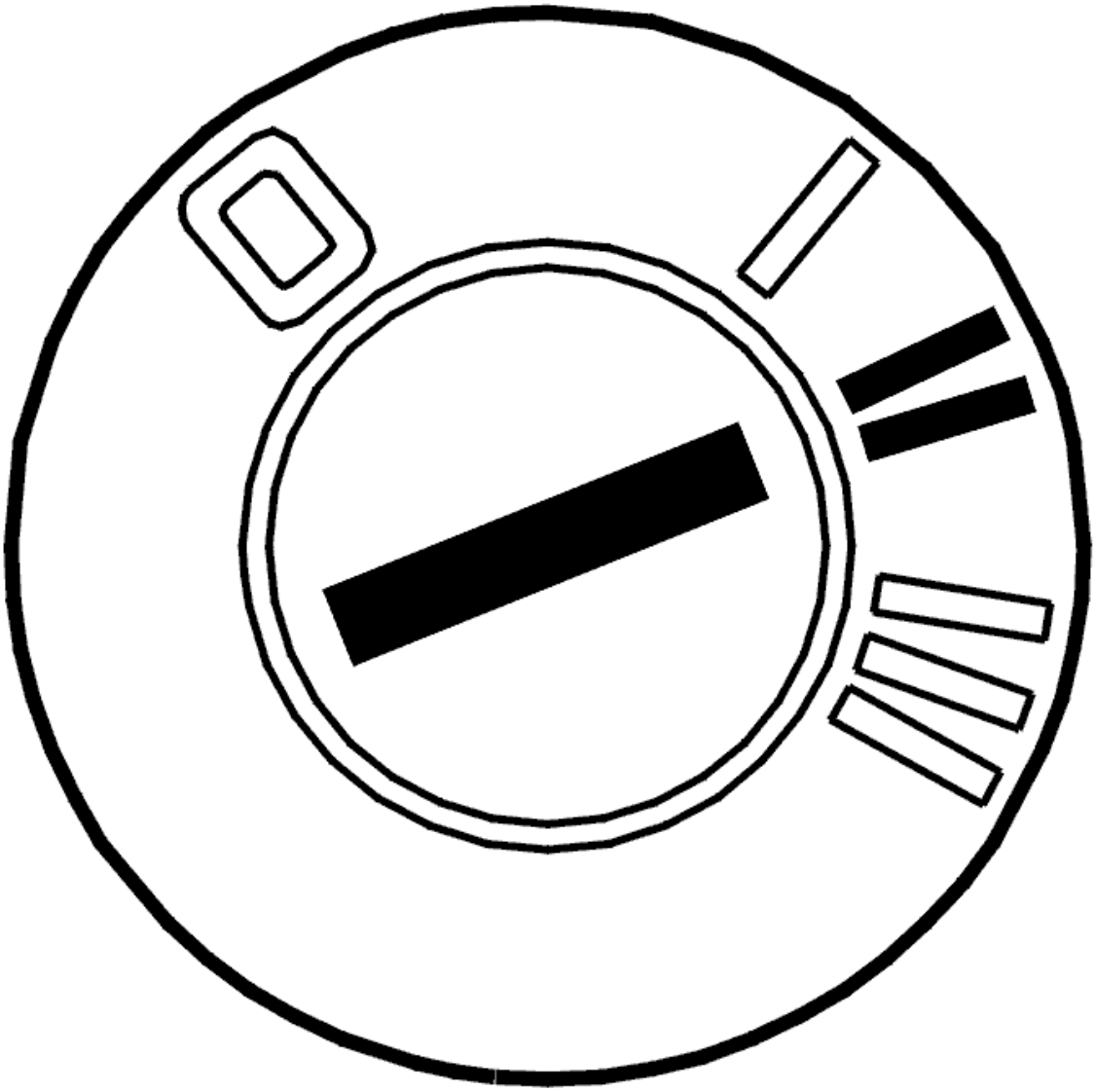

Fig. 211: Identifying Ignition ON
Courtesy of VOLVO CARS CORPORATION

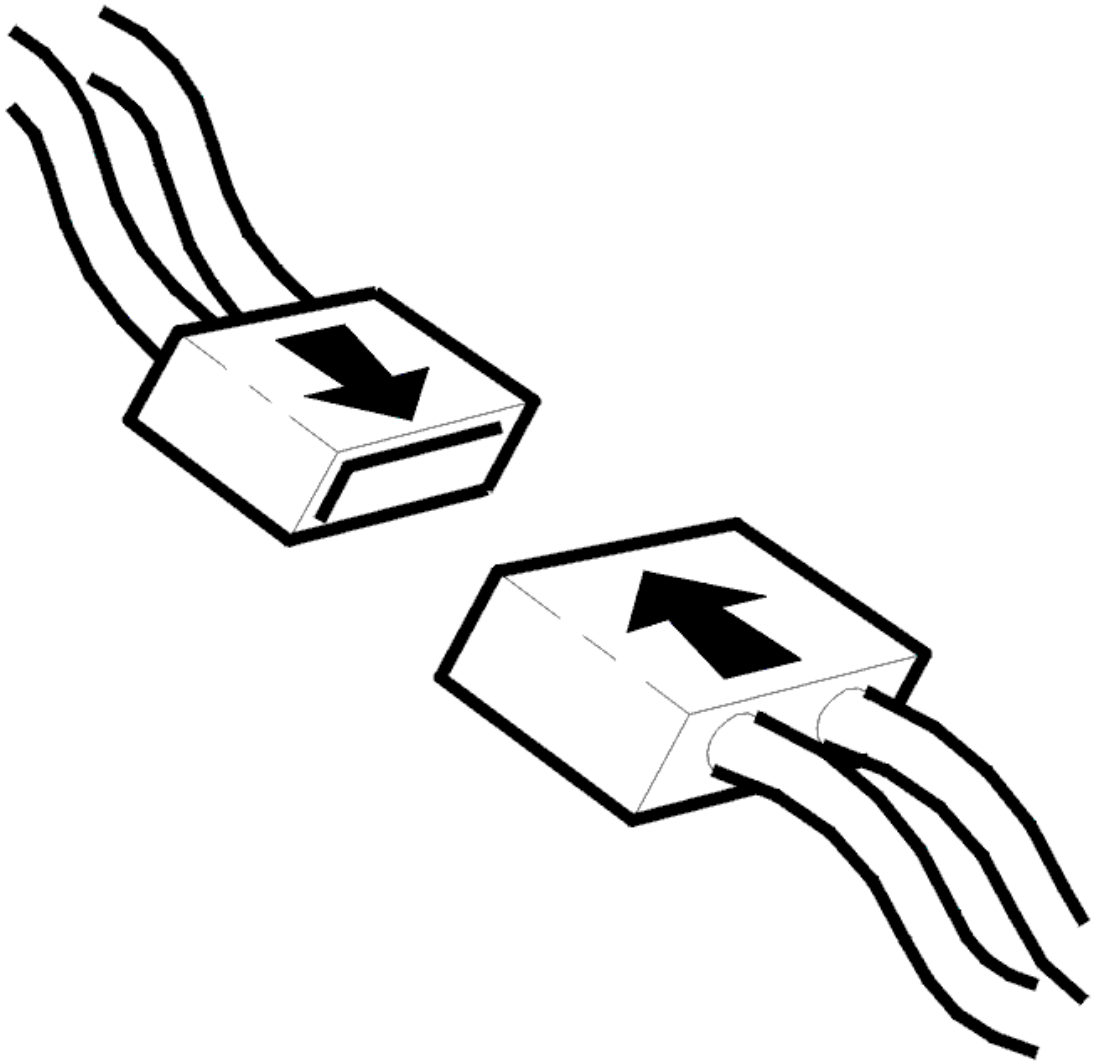

Fig. 212: Connecting Connector
Courtesy of VOLVO CARS CORPORATION

- Ignition off
- Reinstall the connectors, components etc.
- Ignition on
- Switch on the carphone.

  Make a call so that both the handset and the hands-free system are used.

  Ignition off.

  Ignition on.

  Read off the diagnostic trouble codes (DTCs).

Check that the relevant diagnostic trouble code (DTC) has switched status from permanent to intermittent fault.

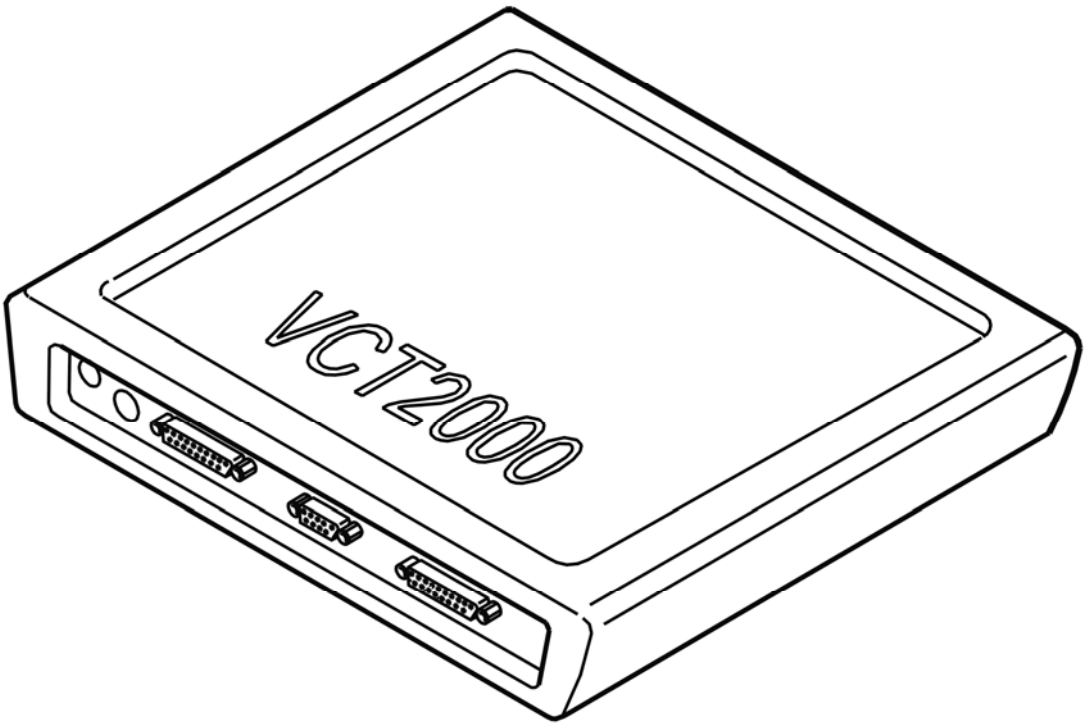

Fig. 213: Identifying VCT2000 Diagnostic Tool Symbol In VIDA
Courtesy of VOLVO CARS CORPORATION

Has the status of the diagnostic trouble code (DTC) changed?

- **YES**

  VERIFIED: Troubleshooting has been completed.

- **NO**

  Refer to **INFORMATION**

INFORMATION

FAULT-TRACING INFORMATION

The fault should have been detected and remedied. As this is not the case fault-tracing has failed.

Exit fault-tracing for this diagnostic trouble code (DTC) or make another attempt.

PHM-000F: TELEPHONE HANDSET SPEAKER. SIGNAL TOO HIGH / SIGNAL MISSING (2005)

DIAGNOSTIC TROUBLE CODE (DTC) INFORMATION PHM-000F

see **DIAGNOSTIC TROUBLE CODE (DTC) INFORMATION PHM-000F**

SIGNAL TOO HIGH / SIGNAL MISSING

CHECKING STRUCTURE WEEK

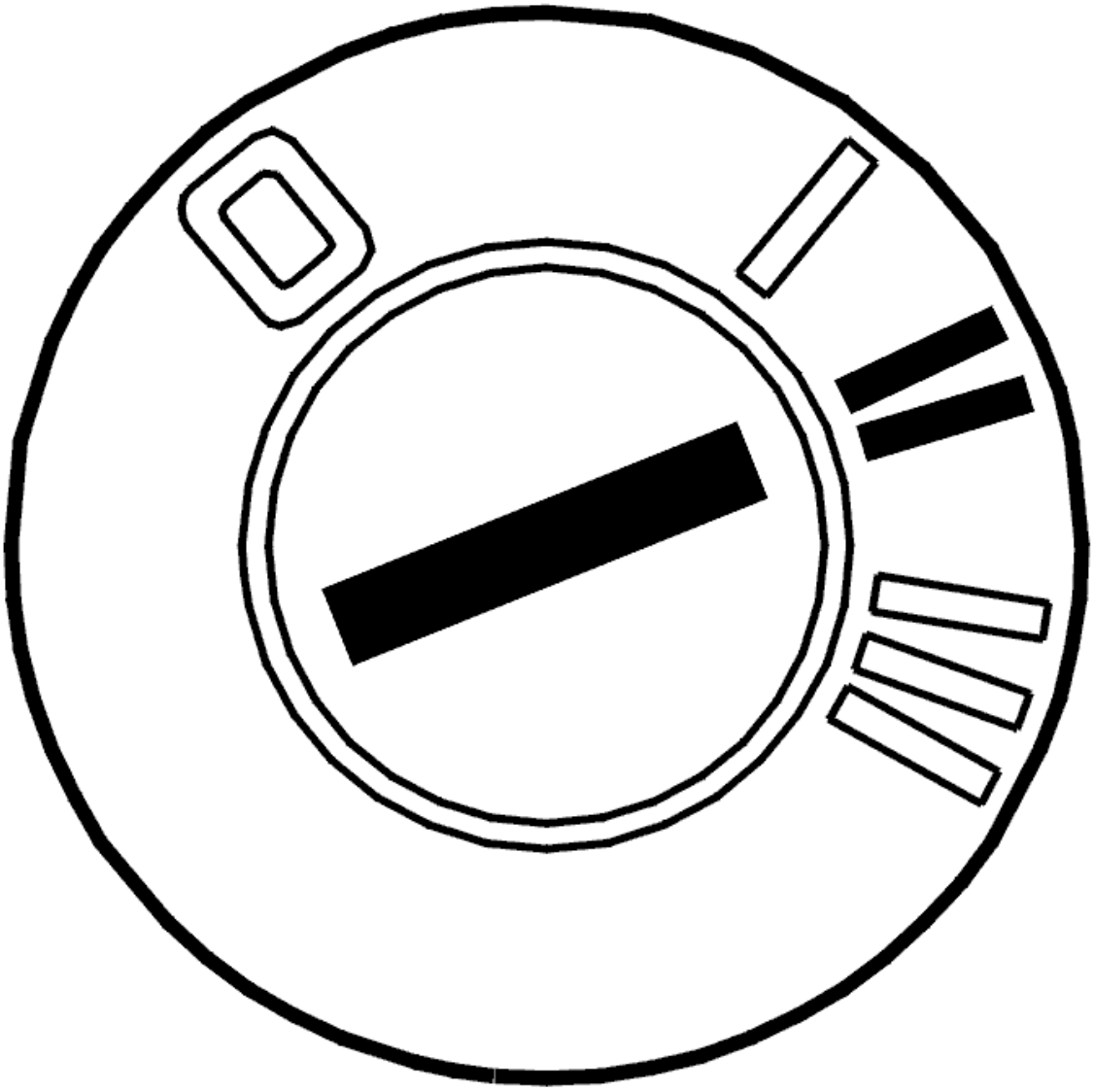

Fig. 214: Identifying Ignition ON
Courtesy of VOLVO CARS CORPORATION

- Ignition on

Read out the vehicle's structure week by clicking on the symbol for VCT2000.

1. Vehicles with structure week up to and incl. 200445, that is, year 2004 week 45. Refer to **SIGNAL TOO HIGH OR SIGNAL MISSING**
2. Vehicles with structure week from and incl. 200446, that is, year 2004 week 46. Refer to **CHECKING COMPONENTS AND WIRING**

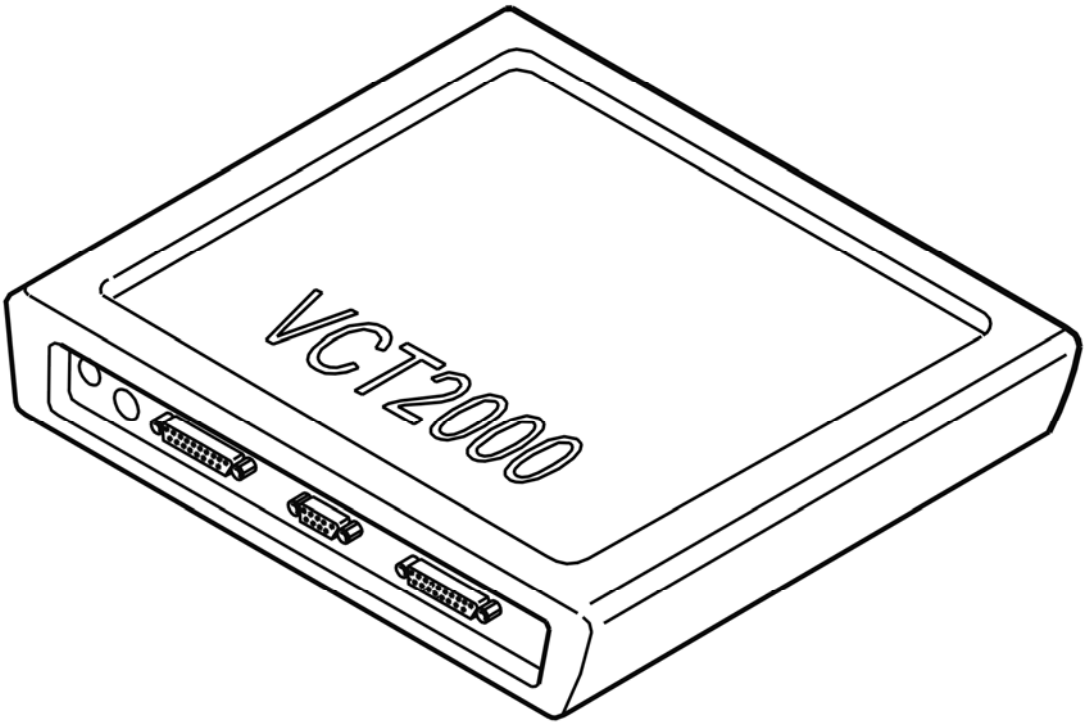

Fig. 215: Identifying VCT2000 Diagnostic Tool Symbol In VIDA
Courtesy of VOLVO CARS CORPORATION

CHECKING COMPONENTS AND WIRING

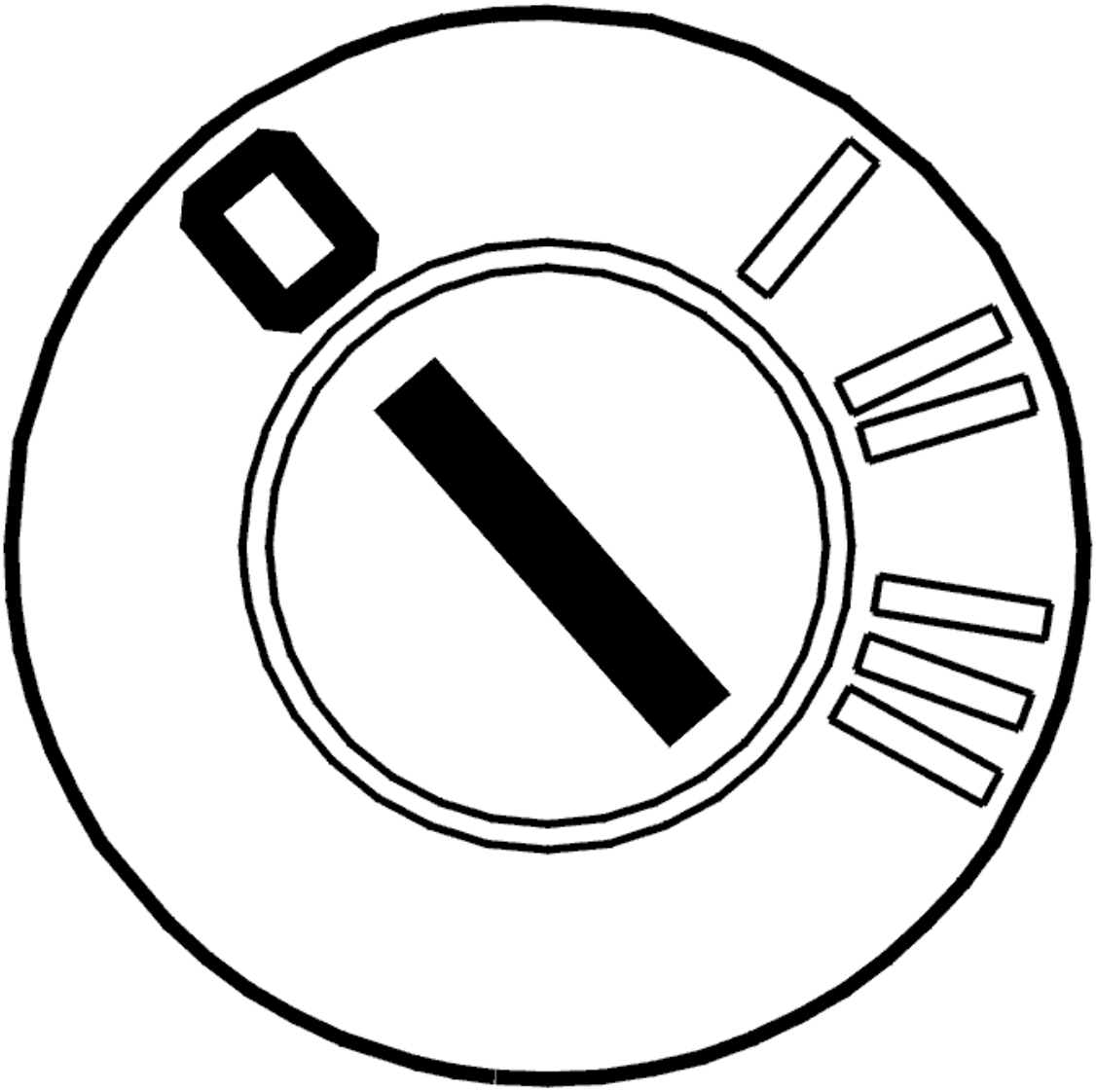

Fig. 216: Identifying Ignition OFF
Courtesy of VOLVO CARS CORPORATION

- Ignition off
- Disconnect connector A for the phone module (PHM).
- Disconnect the handset's connector.

Check the speaker signal's cable on the control module's connector A for short-circuit to voltage.

Check between:

- #20 (#20) and #7 (#7).
- #20 (#20) and #5 (#5).

Check the speaker signal's cable for open circuit.

Measure between the control module's connector A #20 (#20) and the handset's connector #2 (#22).

Check the connectors for loose connections, damaged or bent pins as well as oxidation.

If no malfunction was found on the cable, try replacing the handset.

Remedy as necessary.

Other information:

- see **CONNECTING THE BREAKOUT BOX**
- see **SIGNAL SPECIFICATION**
- see **LOCATION OF COMPONENTS**
- see **PHONE MODULE (PHM), REPLACING**
- see **HANDSET, REPLACING**
- see **CONTENTS**

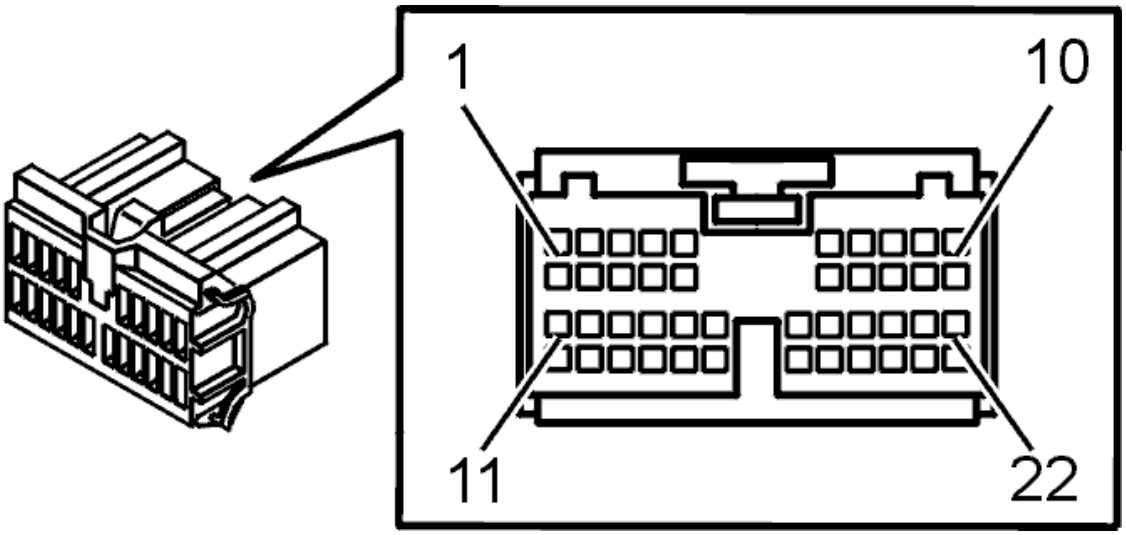

Fig. 217: Identifying Connector (F) Terminals
Courtesy of VOLVO CARS CORPORATION

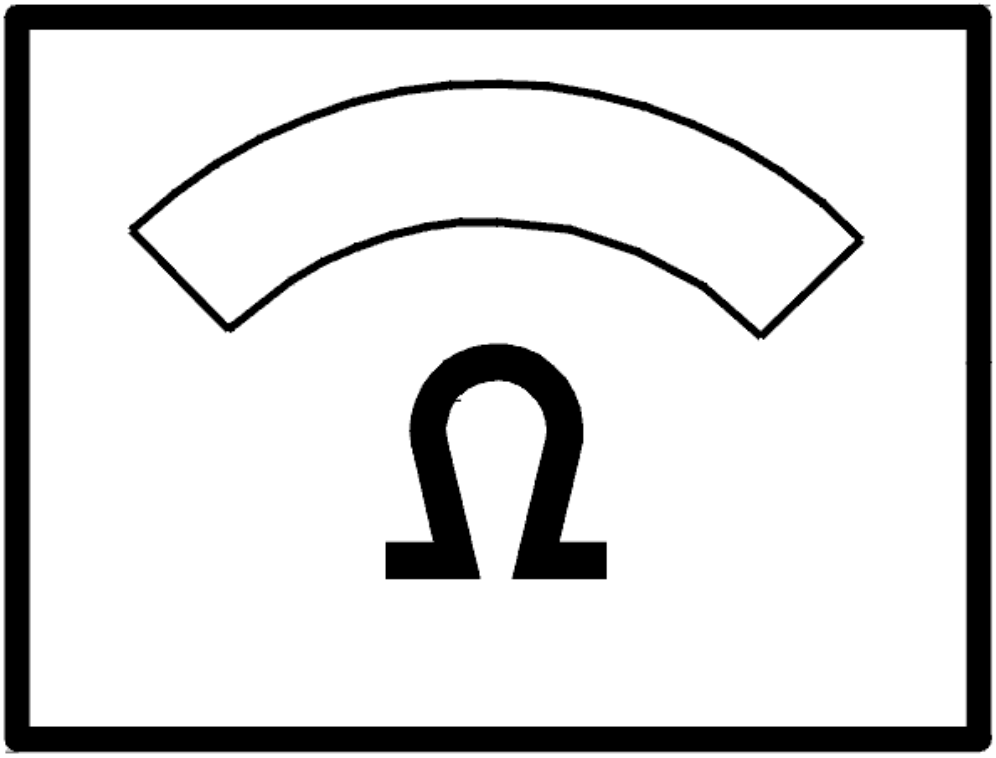

Fig. 218: Identifying Ohm Meter
Courtesy of VOLVO CARS CORPORATION

- **Continue**

  Refer to **VERIFICATION**

VERIFICATION

VERIFICATION

HINT: After carrying out the repair, check that the fault has been remedied.

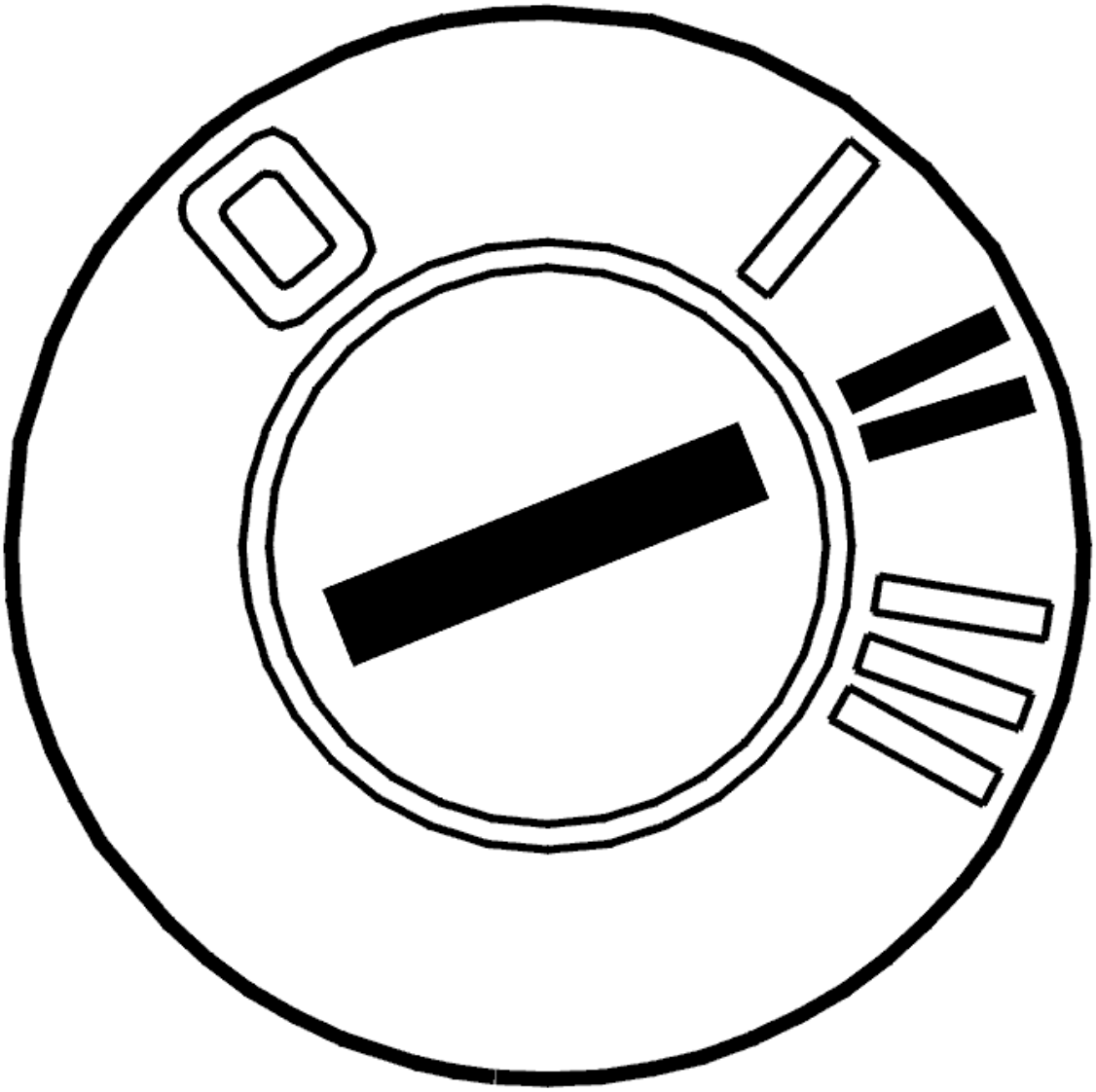

Fig. 219: Identifying Ignition ON
Courtesy of VOLVO CARS CORPORATION

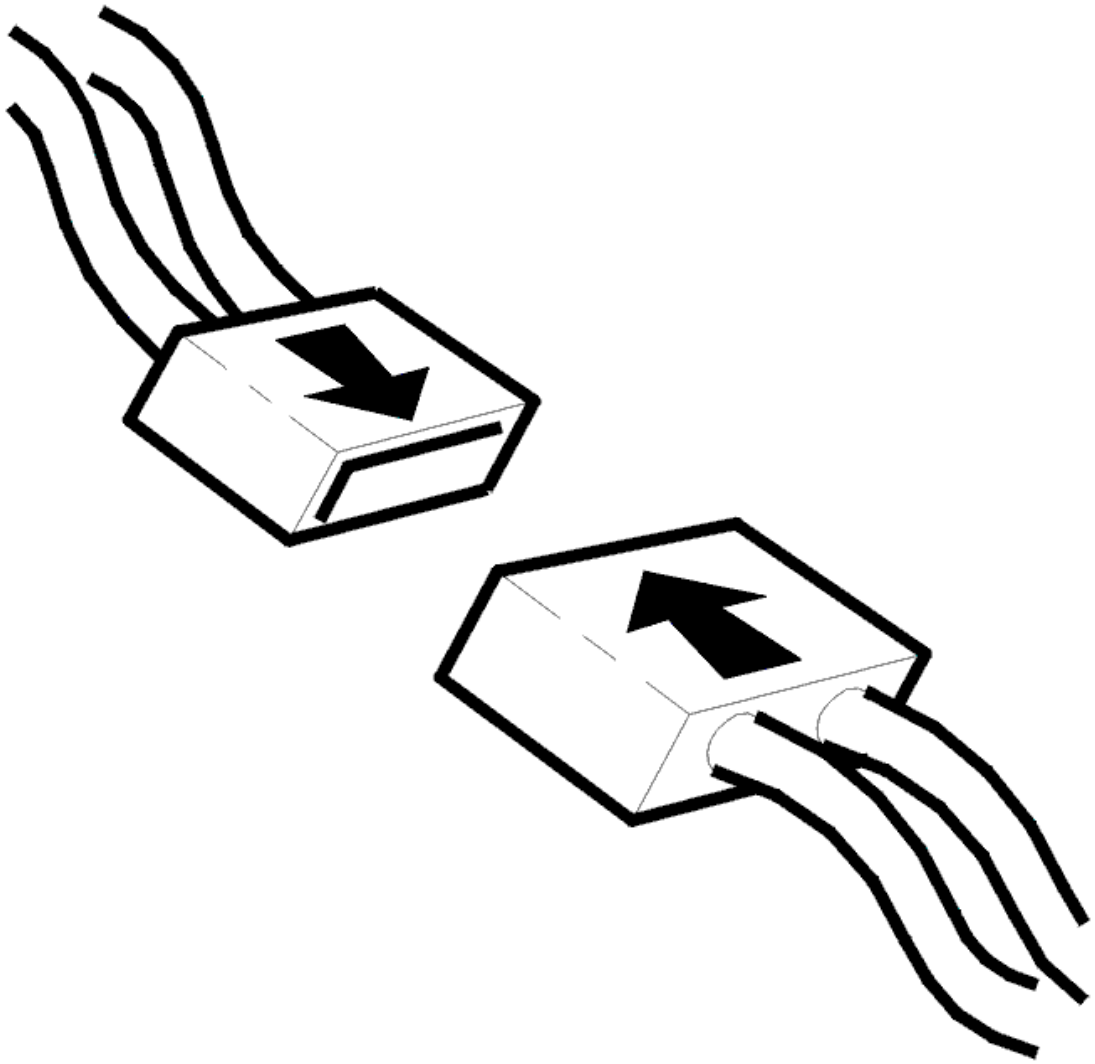

Fig. 220: Connecting Connector
Courtesy of VOLVO CARS CORPORATION

- Ignition off
- Reinstall the connectors, components etc.
- Ignition on
- Activate the carphone.

  Make a call so that both the handset and the hands-free system are used.

  Ignition off.

  Ignition on.

  Read off the diagnostic trouble codes (DTCs).

Check that the relevant diagnostic trouble code (DTC) has switched status from permanent to intermittent fault.

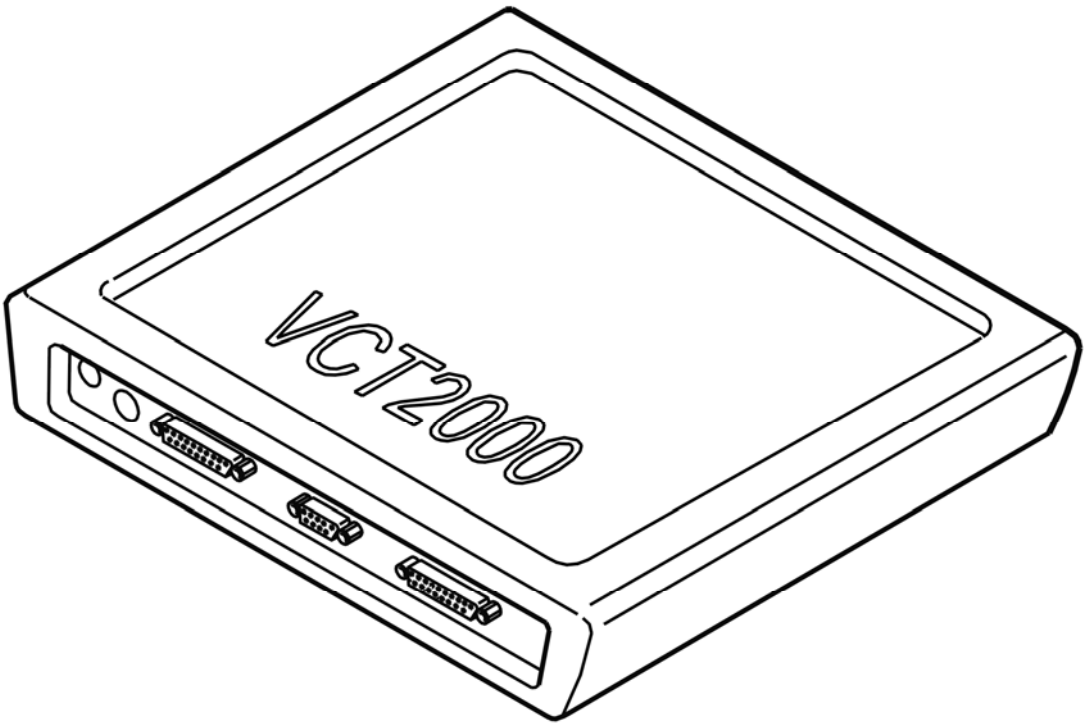

Fig. 221: Identifying VCT2000 Diagnostic Tool Symbol In VIDA
Courtesy of VOLVO CARS CORPORATION

Has the status of the diagnostic trouble code (DTC) changed?

- **YES**

  VERIFIED: Troubleshooting has been completed.

- **NO**

  Refer to **INFORMATION**

INFORMATION

FAULT-TRACING INFORMATION

The fault should have been detected and remedied. As this is not the case fault-tracing has failed.

Exit fault-tracing for this diagnostic trouble code (DTC) or make another attempt.

SIGNAL TOO HIGH OR SIGNAL MISSING

CHECKING COMPONENTS AND WIRING

Check the signal cable for the microphone between phone module (PHM) connector B terminal #14 (#56) and handset connector terminal #2 (#22). Check for a short-circuit to supply voltage.

Check the signal cable for the microphone between phone module (PHM) connector B terminal #14 (#56) and handset connector terminal #2 (#22). Check for an open-circuit.

Check the connectors for loose connections, damaged or bent terminal pins and oxidation.

Try replacing the carphone handset if no fault is found in the wiring.

Remedy as necessary.

Other information:

- To connect the breakout box, see **CONNECTING THE BREAKOUT BOX**
- For information about signals and connectors, see **SIGNAL SPECIFICATION**
- To access or replace the control module, see **PHONE MODULE (PHM), REPLACING**
- To access or replace the handset, see **HANDSET, REPLACING**
- see **CONTENTS** .

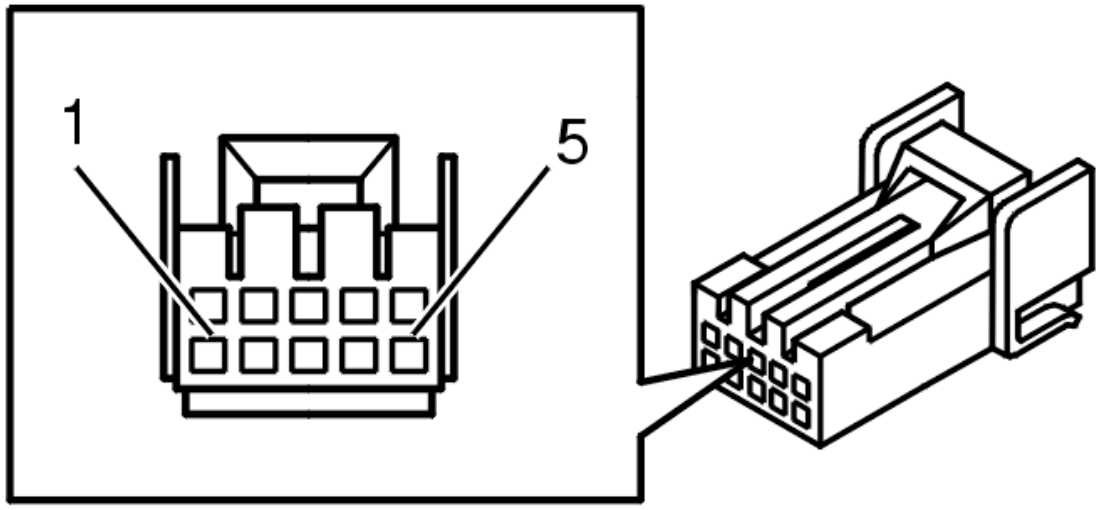

Fig. 222: 10 CD Changer Connector Terminals
Courtesy of VOLVO CARS CORPORATION

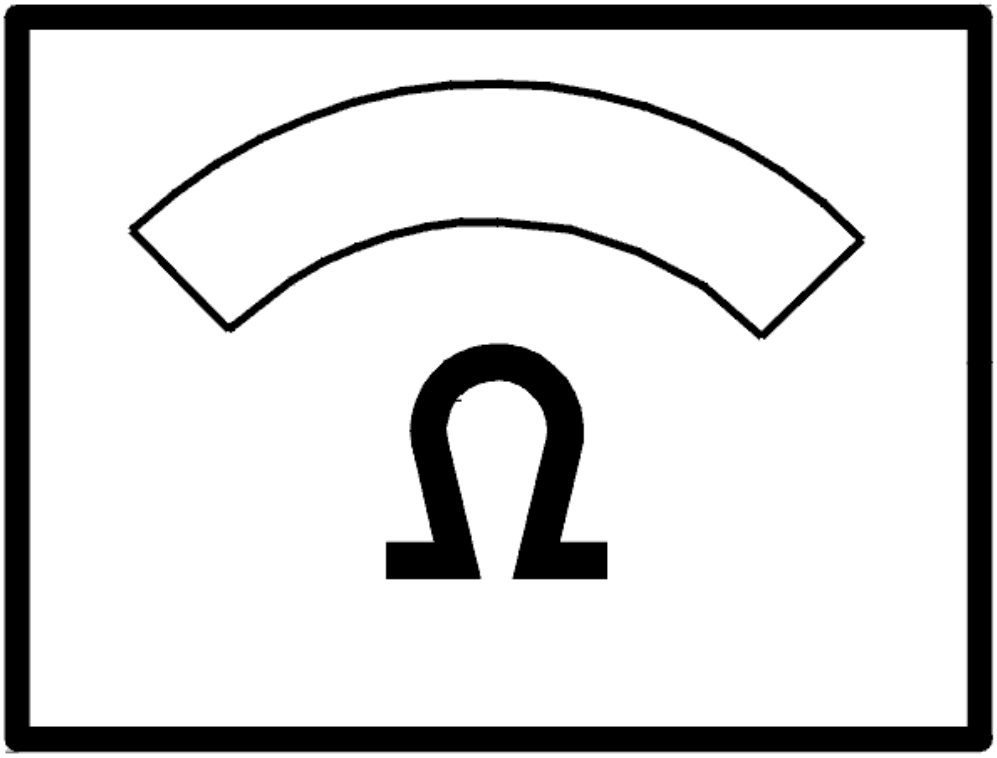

Fig. 223: Identifying Ohm Meter
Courtesy of VOLVO CARS CORPORATION

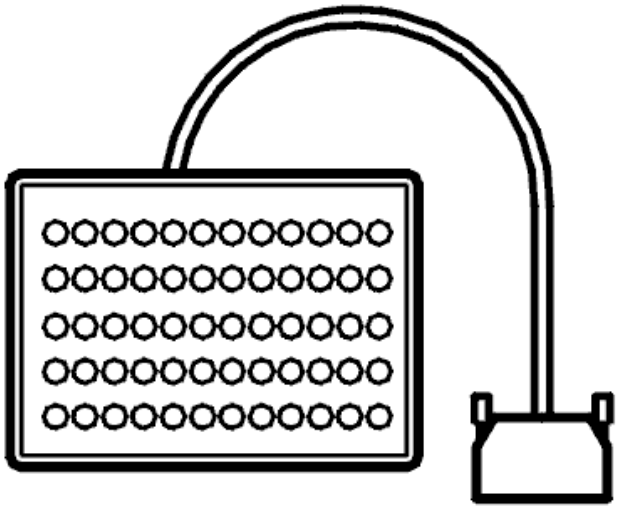

Fig. 224: Breakout Box
Courtesy of VOLVO CARS CORPORATION

- **Continue**

  Refer to **VERIFICATION**

VERIFICATION

VERIFICATION

HINT: After carrying out the repair, check that the fault has been remedied.

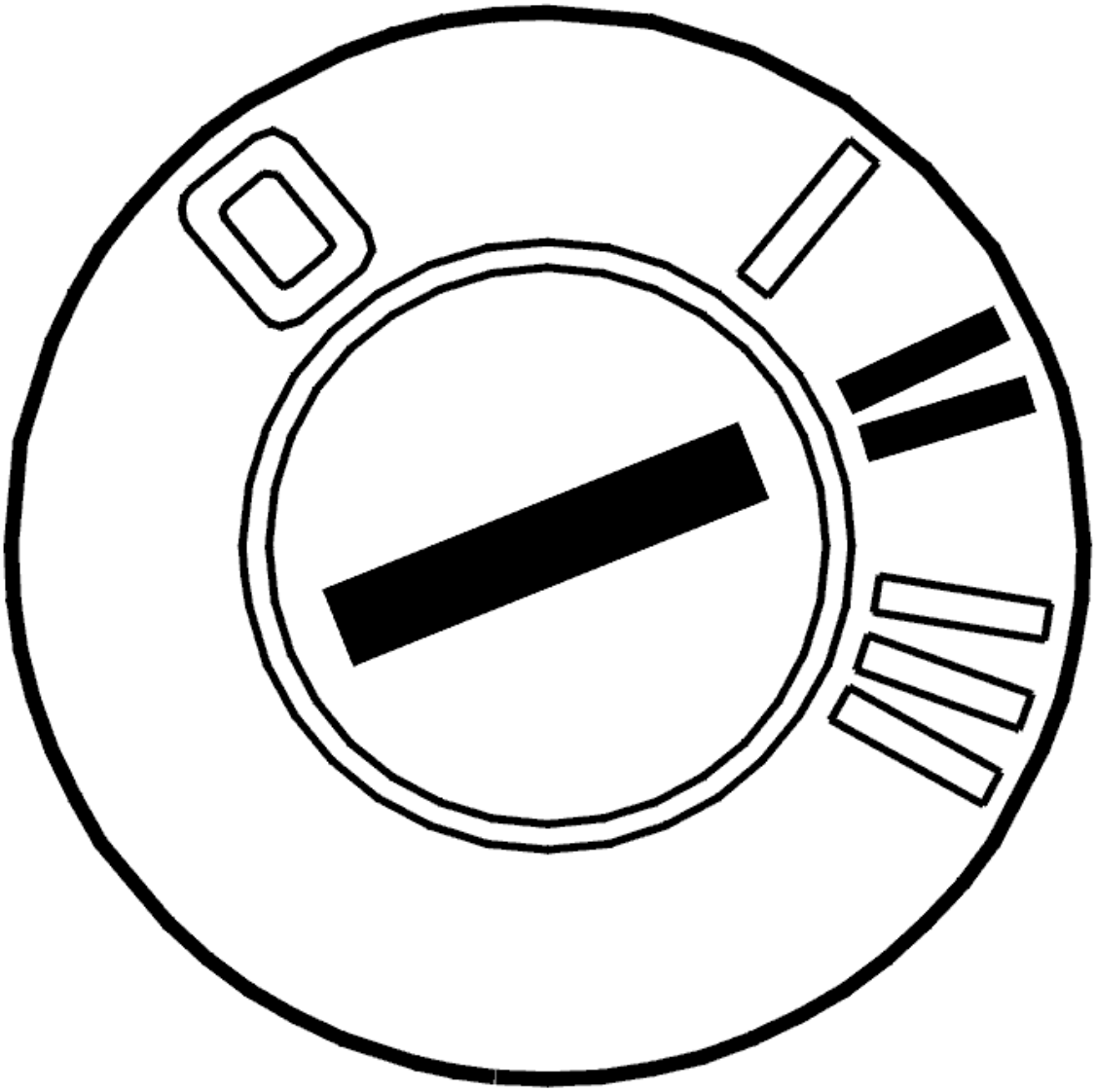

Fig. 225: Identifying Ignition ON
Courtesy of VOLVO CARS CORPORATION

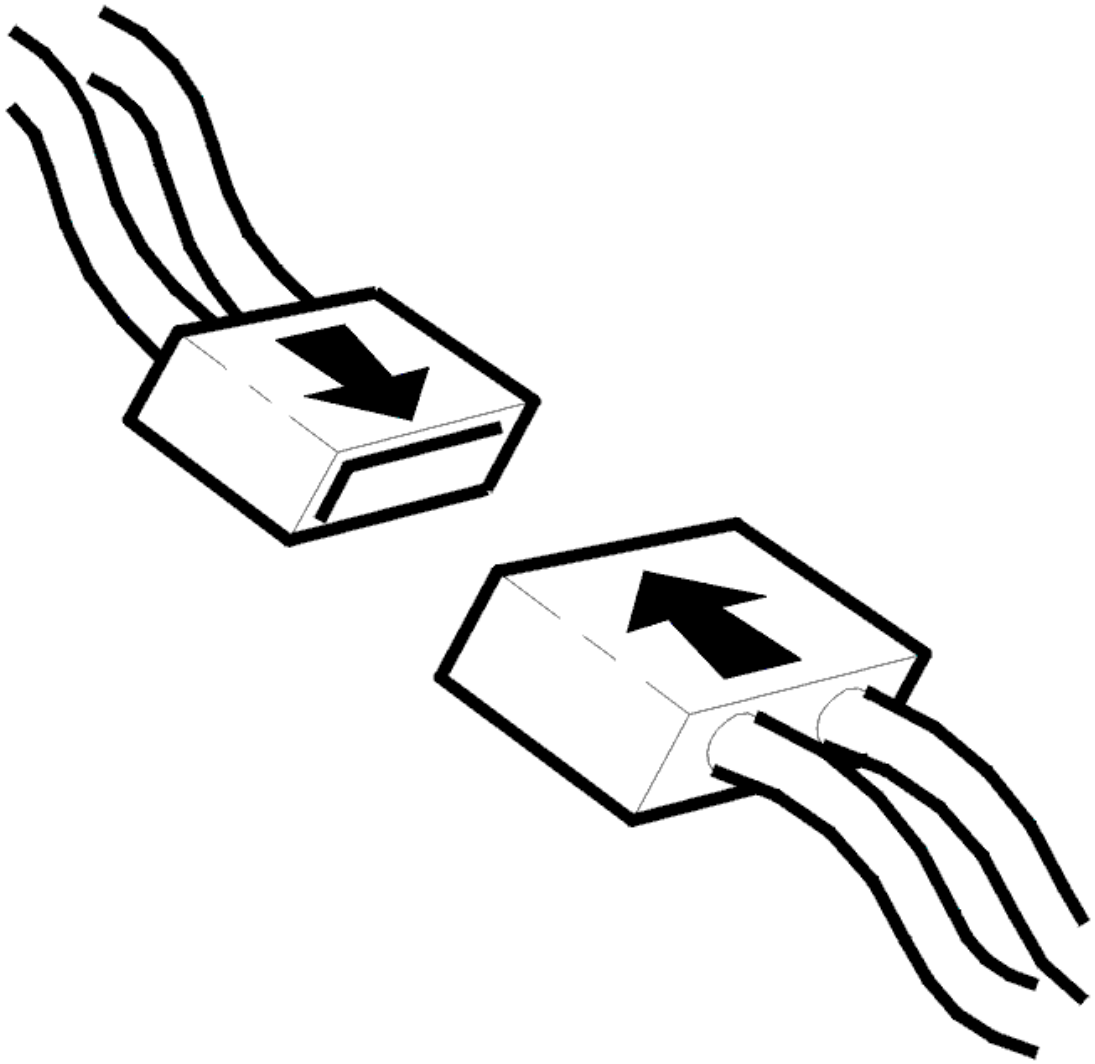

Fig. 226: Connecting Connector
Courtesy of VOLVO CARS CORPORATION

- Ignition off
- Reinstall the connectors, components etc.
- Ignition on
- Switch on the carphone.

  Make a call so that both the handset and the hands-free system are used.

  Ignition off.

  Ignition on.

  Read off the diagnostic trouble codes (DTCs).

Check that the relevant diagnostic trouble code (DTC) has switched status from permanent to intermittent fault.

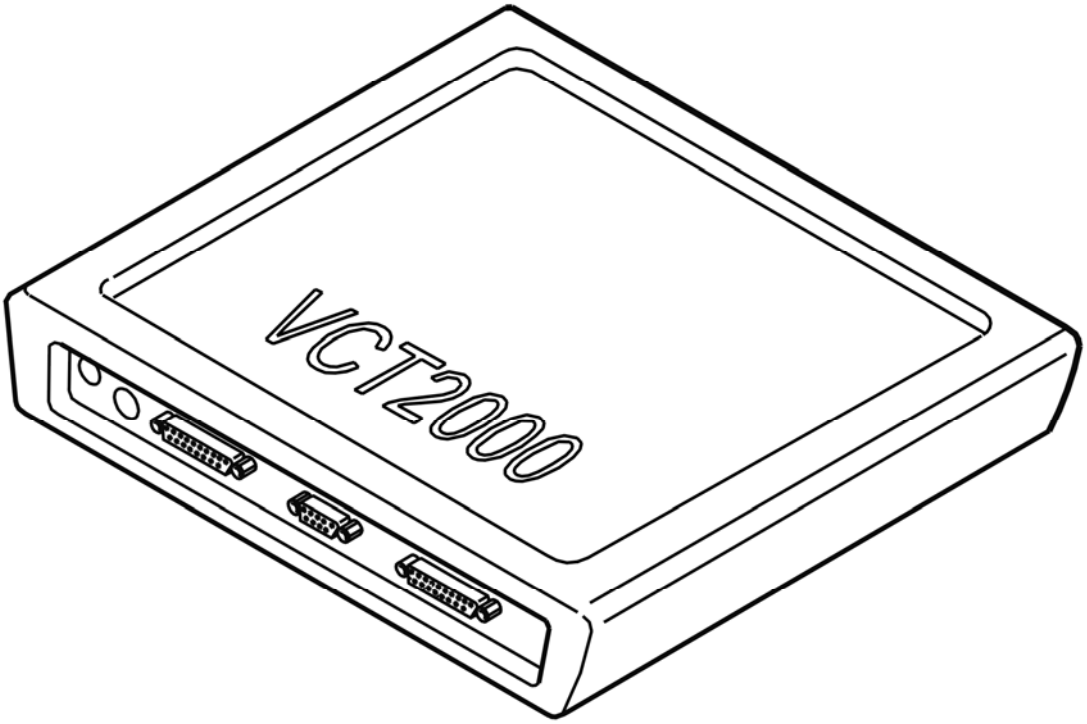

Fig. 227: Identifying VCT2000 Diagnostic Tool Symbol In VIDA
Courtesy of VOLVO CARS CORPORATION

Has the status of the diagnostic trouble code (DTC) changed?

- **YES**

  VERIFIED: Troubleshooting has been completed.

- **NO**

  Refer to **INFORMATION**

INFORMATION

FAULT-TRACING INFORMATION

The fault should have been detected and remedied. As this is not the case fault-tracing has failed.

Exit fault-tracing for this diagnostic trouble code (DTC) or make another attempt.

PHM-0010: HANDSET LOUDSPEAKER. SIGNAL TOO LOW (2003-2004)

DIAGNOSTIC TROUBLE CODE (DTC) INFORMATION PHM-0010

Condition

Diagnostic trouble code (DTC) PHM-0010 is stored if the phone module (PHM) registers that there is a short-circuit to ground in the signal to the handset speaker.

Diagnostic trouble code (DTC) PHM-0010 can be diagnosed with the ignition on (not key position 3) and when the battery voltage is 9-16 V.

Substitute Value

- Only hands-free operates.

Possible Source

- Short-circuit to ground in the wiring (loudspeaker signal) between the handset and the control module.

Fault symptom[s]

- The carphone handset is not working.

SIGNAL TOO LOW

CHECKING COMPONENTS AND WIRING

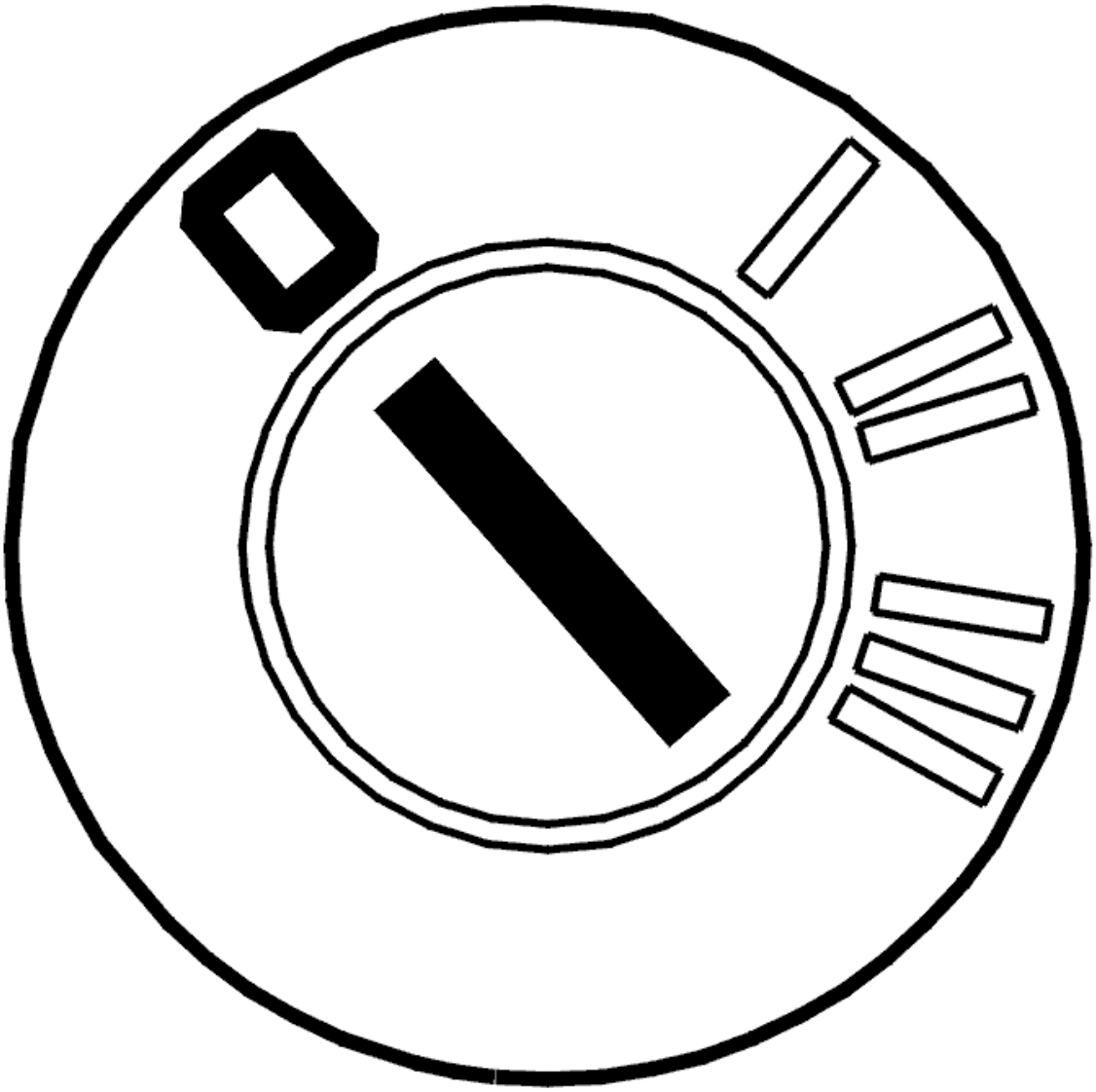

Fig. 228: Identifying Ignition OFF
Courtesy of VOLVO CARS CORPORATION

- Ignition off.

  Check the signal cable for the microphone between phone module (PHM) connector B terminal #14 (#56) and handset connector terminal #2 (#22). Check for a short-circuit to ground.

  Try replacing the carphone handset if no fault is found in the wiring.

  Remedy as necessary.

  Other information:

  - To connect the breakout box, see **CONNECTING THE BREAKOUT BOX**
  - For information about signals and connectors, see **SIGNAL SPECIFICATION**

- To access or replace the control module, see **PHONE MODULE (PHM), REPLACING**
- To access or replace the handset, see **HANDSET, REPLACING**
- see **CONTENTS** .

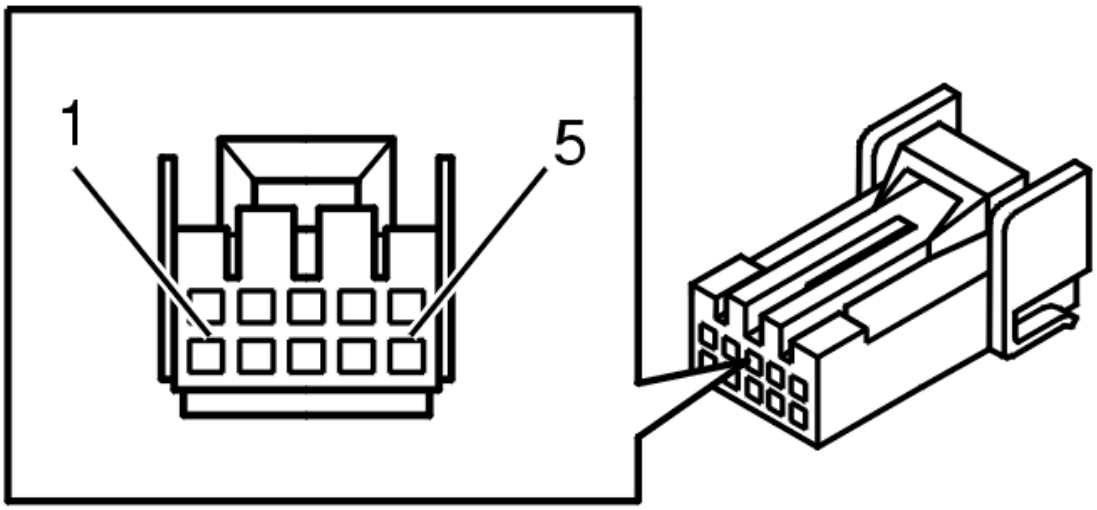

Fig. 229: 10 CD Changer Connector Terminals
Courtesy of VOLVO CARS CORPORATION

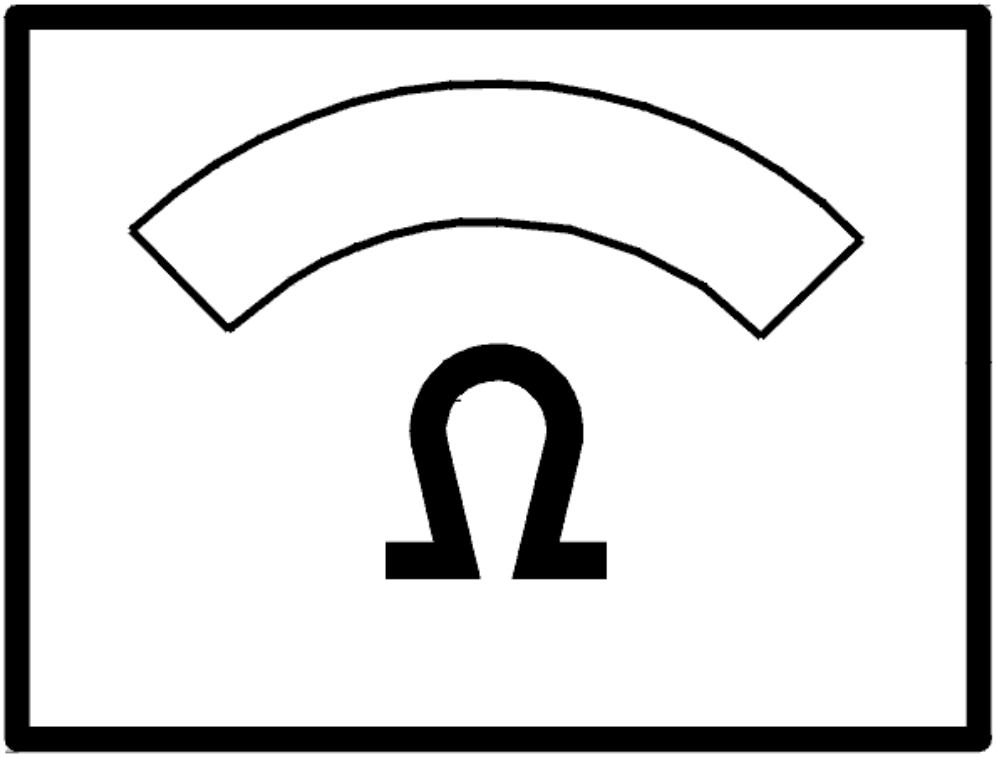

Fig. 230: Identifying Ohm Meter
Courtesy of VOLVO CARS CORPORATION

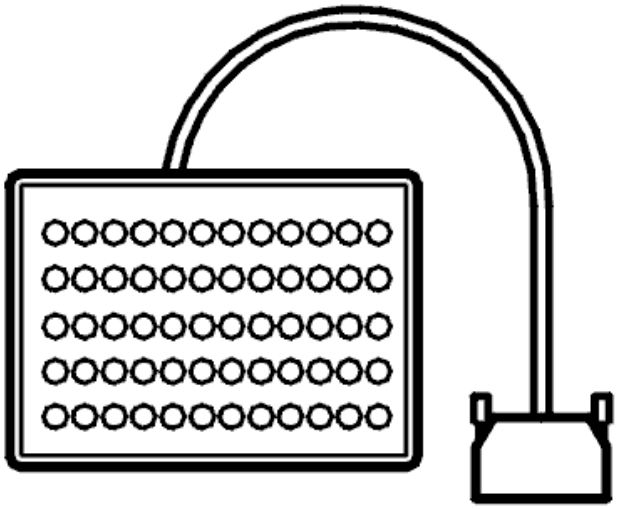

Fig. 231: Breakout Box
Courtesy of VOLVO CARS CORPORATION

- **Continue**

  Refer to **VERIFICATION**

VERIFICATION

VERIFICATION

HINT: After carrying out the repair, check that the fault has been remedied.

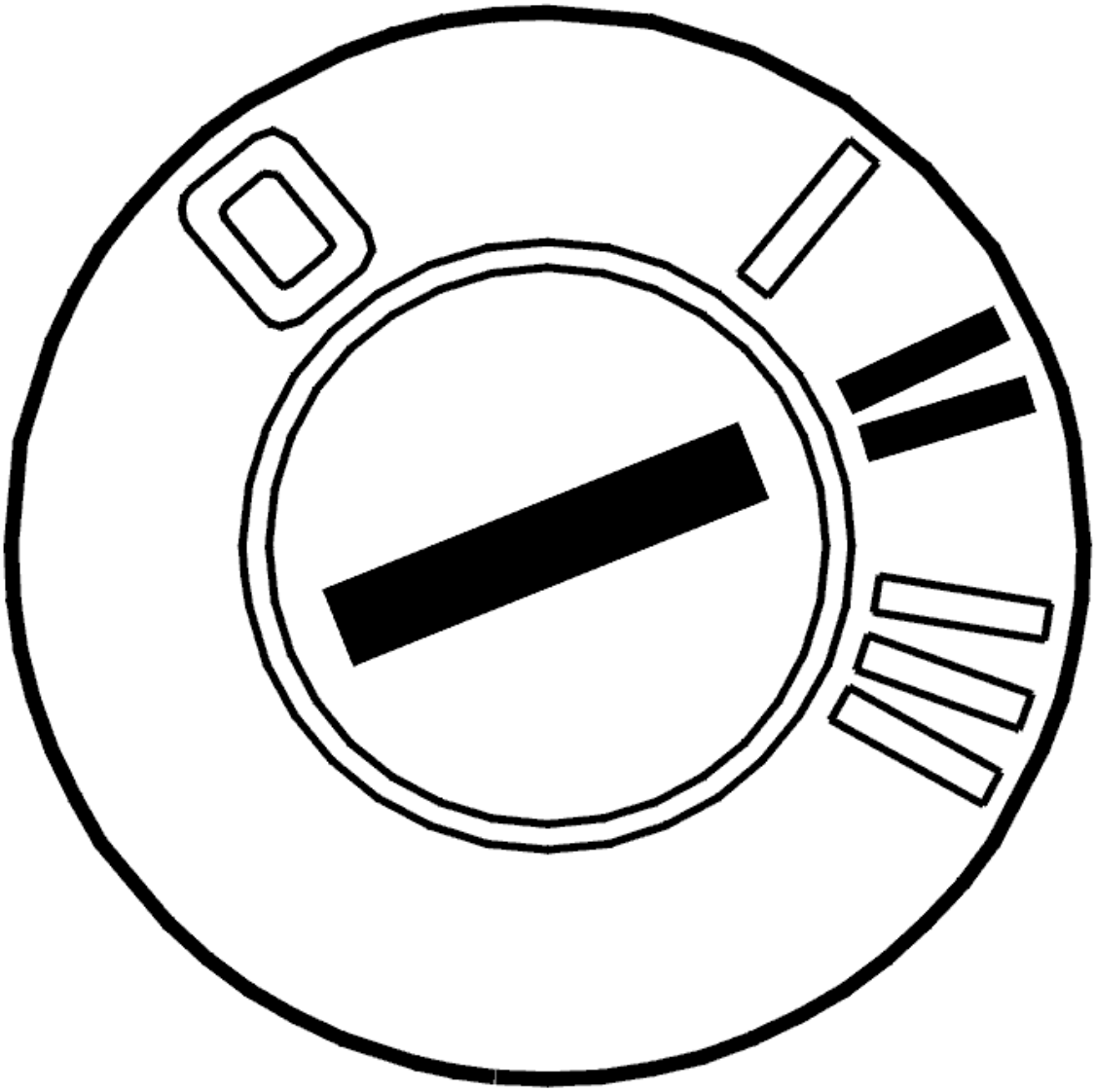

Fig. 232: Identifying Ignition ON
Courtesy of VOLVO CARS CORPORATION

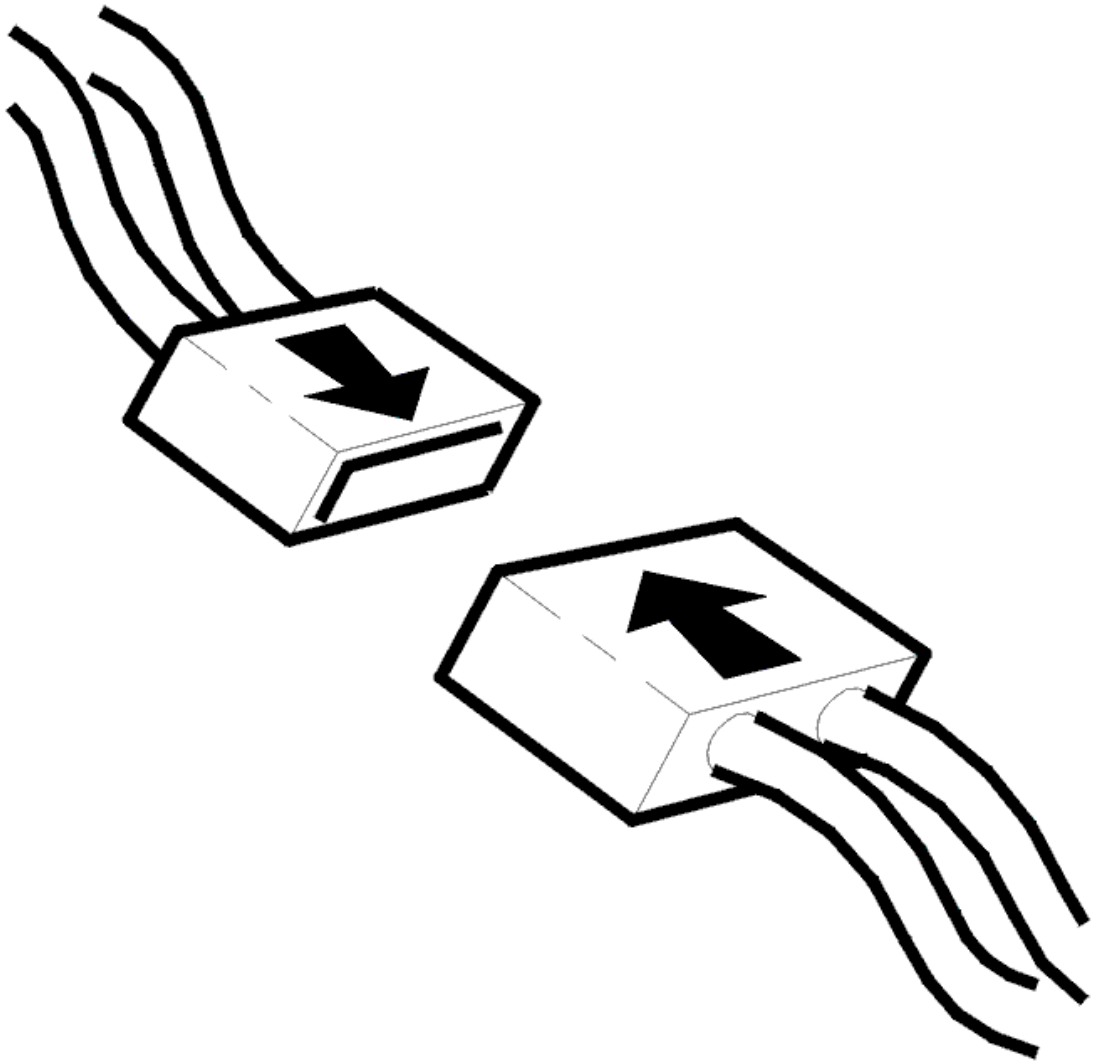

Fig. 233: Connecting Connector
Courtesy of VOLVO CARS CORPORATION

- Ignition off
- Reinstall the connectors, components etc.
- Ignition on
- Switch on the carphone.

  Make a call so that both the handset and the hands-free system are used.

  Ignition off.

  Ignition on.

  Read off the diagnostic trouble codes (DTCs).

Check that the relevant diagnostic trouble code (DTC) has switched status from permanent to intermittent fault.

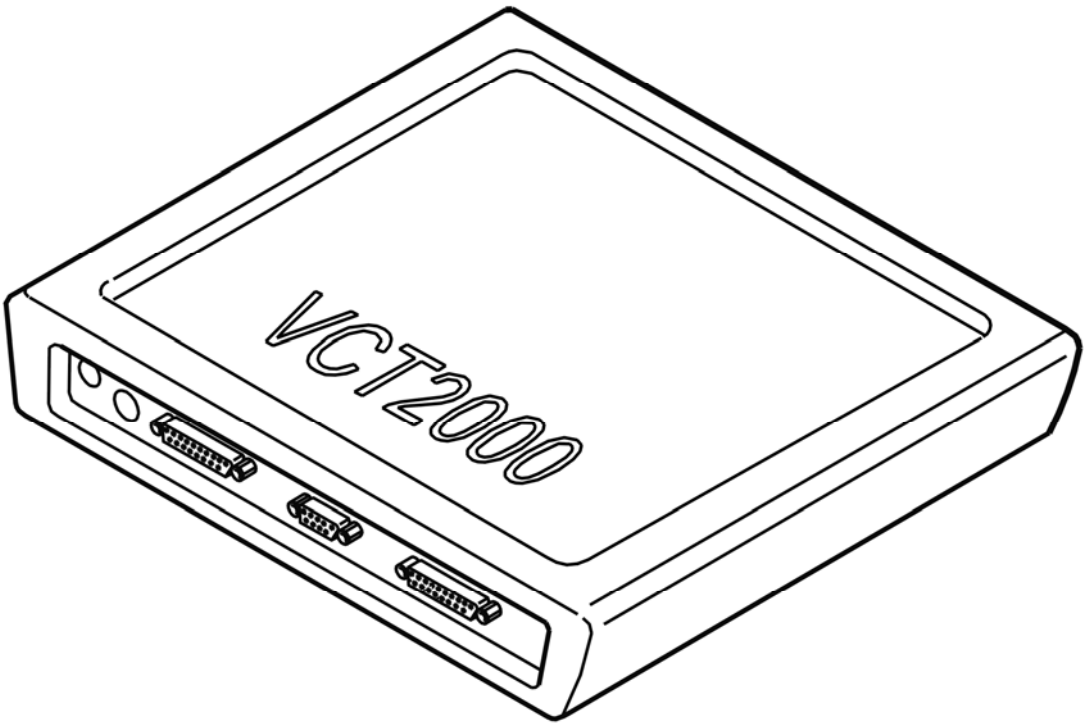

Fig. 234: Identifying VCT2000 Diagnostic Tool Symbol In VIDA
Courtesy of VOLVO CARS CORPORATION

Has the status of the diagnostic trouble code (DTC) changed?

- **YES**

  VERIFIED: Troubleshooting has been completed.

- **NO**

  Refer to **INFORMATION**

INFORMATION

FAULT-TRACING INFORMATION

The fault should have been detected and remedied. As this is not the case fault-tracing has failed.

Exit fault-tracing for this diagnostic trouble code (DTC) or make another attempt.

PHM-0010: HANDSET LOUDSPEAKER. SIGNAL TOO LOW (2006-2011)

DIAGNOSTIC TROUBLE CODE (DTC) INFORMATION PHM-0010

Condition

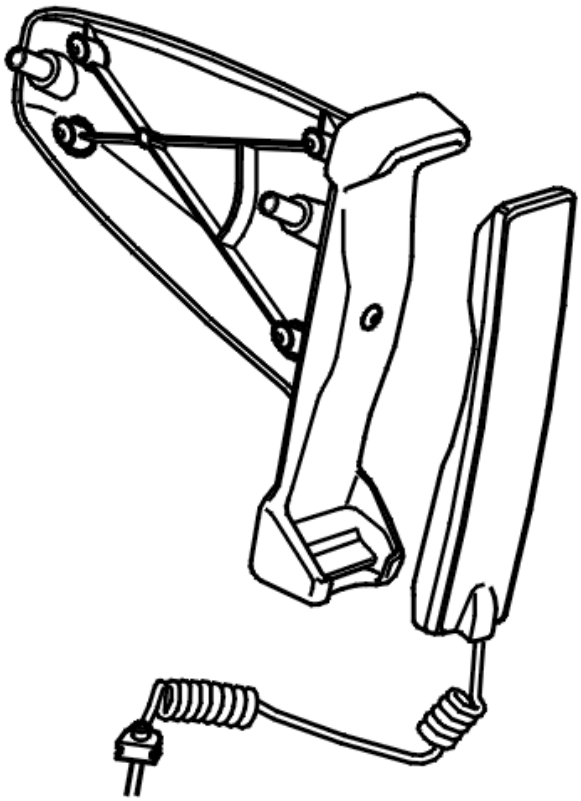

Fig. 235: Identifying Handset Cradle
Courtesy of VOLVO CARS CORPORATION

The diagnostic trouble code (DTC) is stored if the phone module (PHM) registers a short-circuit to ground in the signal to the handset loudspeaker.

The diagnostic trouble code (DTC) can be diagnosed when the ignition is switched on (not key position 3) and when the battery voltage is 9-16 V.

Substitute Value

- Only hands-free operates.

Possible Source

- Short-circuit to ground in the cable (loudspeaker signal) between the handset and the control module.

Fault symptom[s]

- The carphone handset is not working.
- Message in the text display (applies only to phone modules (PHM) with Volvo On Call).

SIGNAL TOO LOW

CHECKING THE COMPONENT AND WIRING

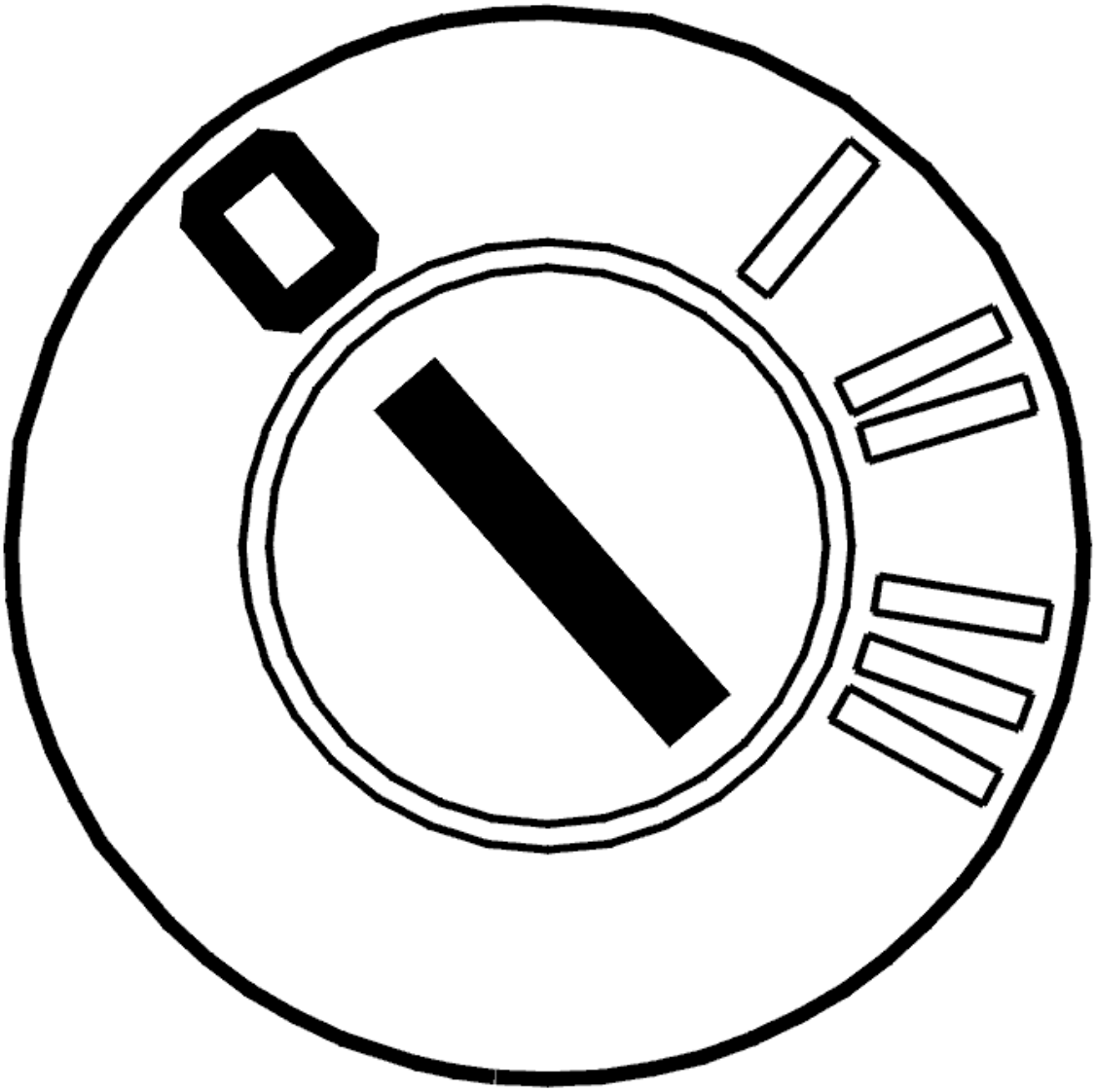

Fig. 236: Identifying Ignition OFF
Courtesy of VOLVO CARS CORPORATION

- Ignition off
- Disconnect connector A from the phone module (PHM).

Check the loudspeaker signal cable at control module connector A. Check for a short-circuit to ground.

Check between:

- terminals #20 (#20) and #18 (#18)
- terminals #20 (#20) and #6 (#6).

Try replacing the carphone handset if no fault is found in the wiring.

Remedy as necessary.

Other information:

- see **SIGNAL SPECIFICATION**
- see **CONNECTING THE BREAKOUT BOX**
- see **LOCATION OF COMPONENTS**
- see **PHONE MODULE (PHM), REPLACING (2006-2010)**
- see **HANDSET, REPLACING**
- see **CHECKING WIRING AND TERMINALS**

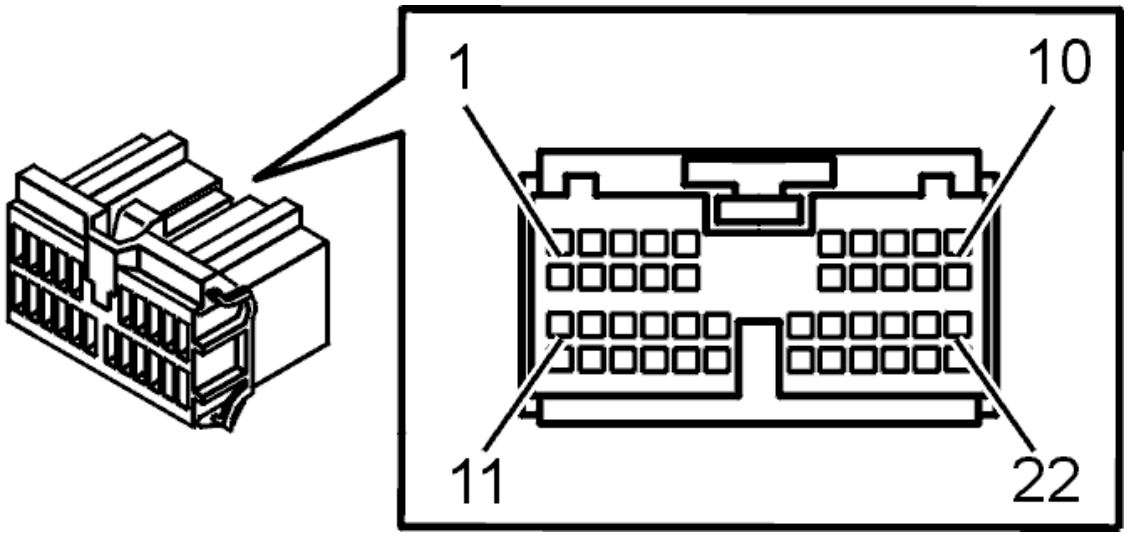

Fig. 237: Identifying Connector (F) Terminals
Courtesy of VOLVO CARS CORPORATION

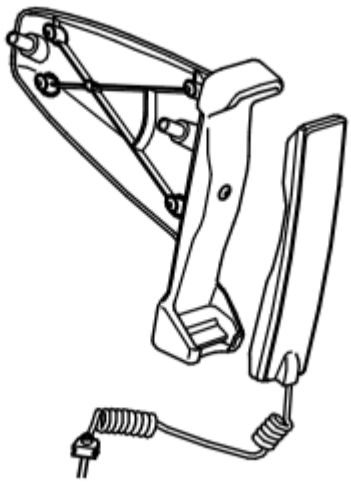

Fig. 238: Identifying Carphone Holder
Courtesy of VOLVO CARS CORPORATION

- **Continue**

  Refer to **VERIFICATION**

VERIFICATION

VERIFICATION

HINT: After carrying out the repair, check that the fault has been remedied.

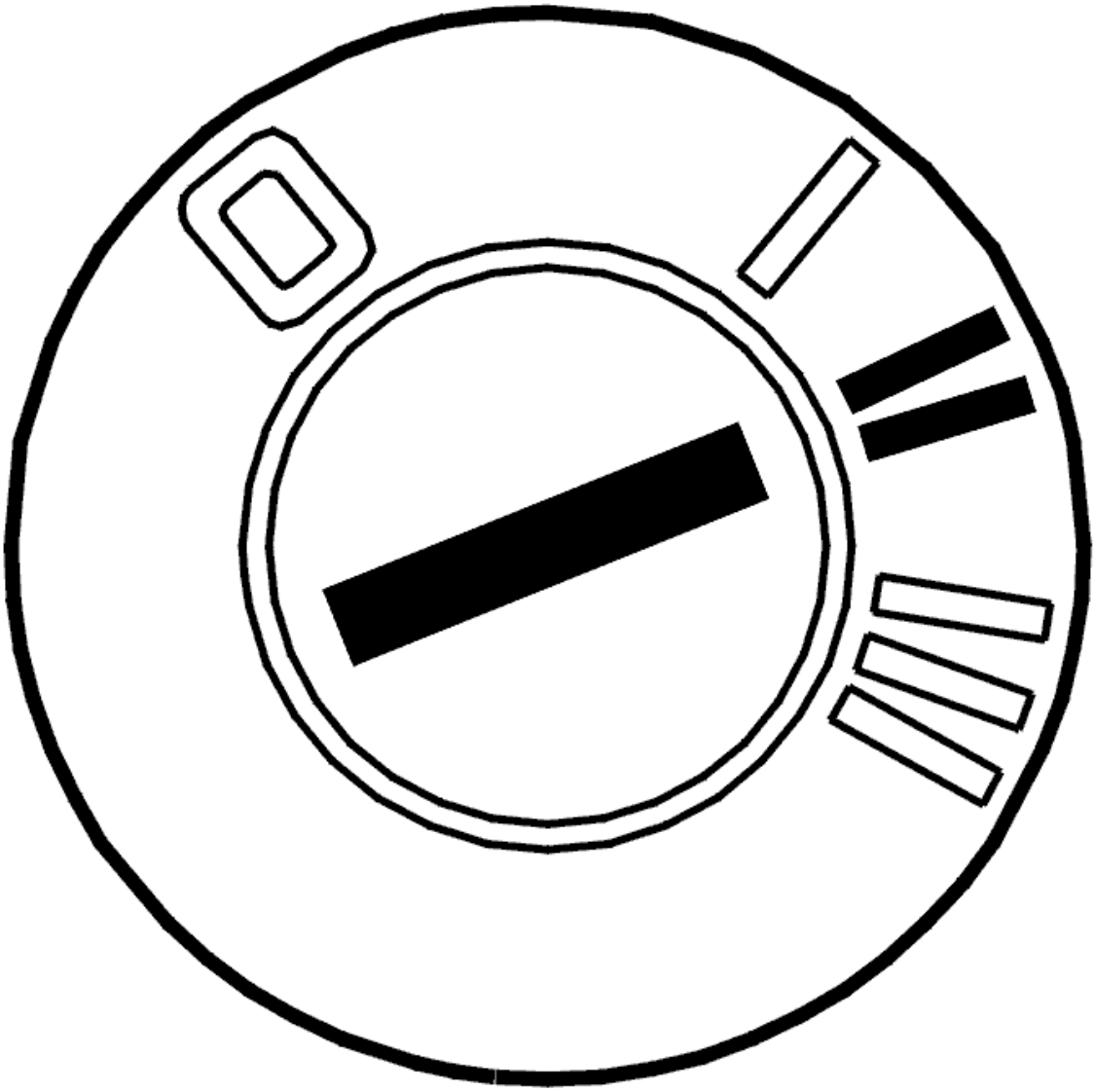

Fig. 239: Identifying Ignition ON
Courtesy of VOLVO CARS CORPORATION

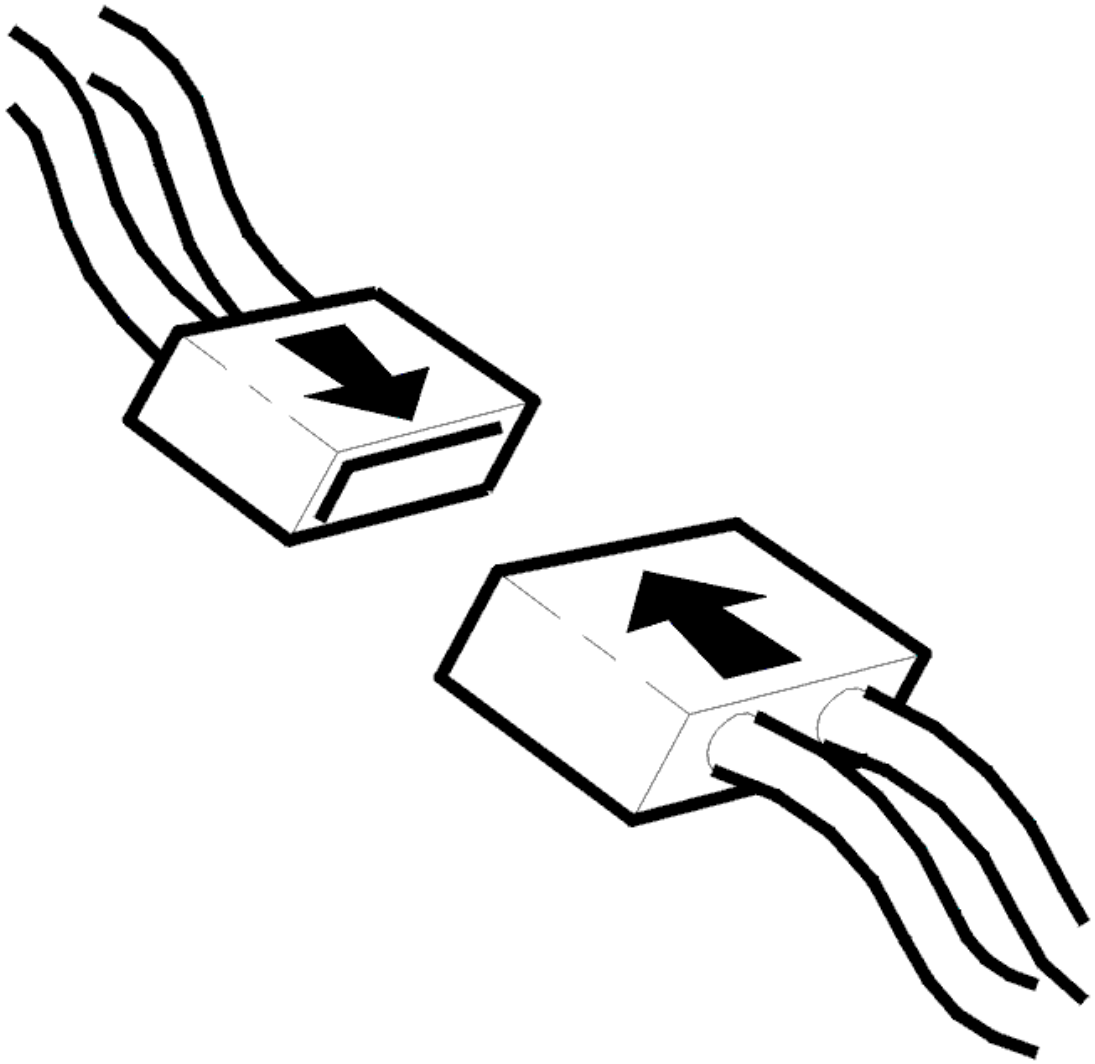

Fig. 240: Connecting Connector
Courtesy of VOLVO CARS CORPORATION

- Ignition off
- Reinstall the connectors, components etc.
- Ignition on
- Activate the carphone.

  Make a call so that both the handset and the hands-free system are used.

  - Ignition off.
  - Ignition on.
  - Read off the diagnostic trouble codes (DTCs).
  - Check that the relevant diagnostic trouble code (DTC) has switched status from permanent to

intermittent fault.

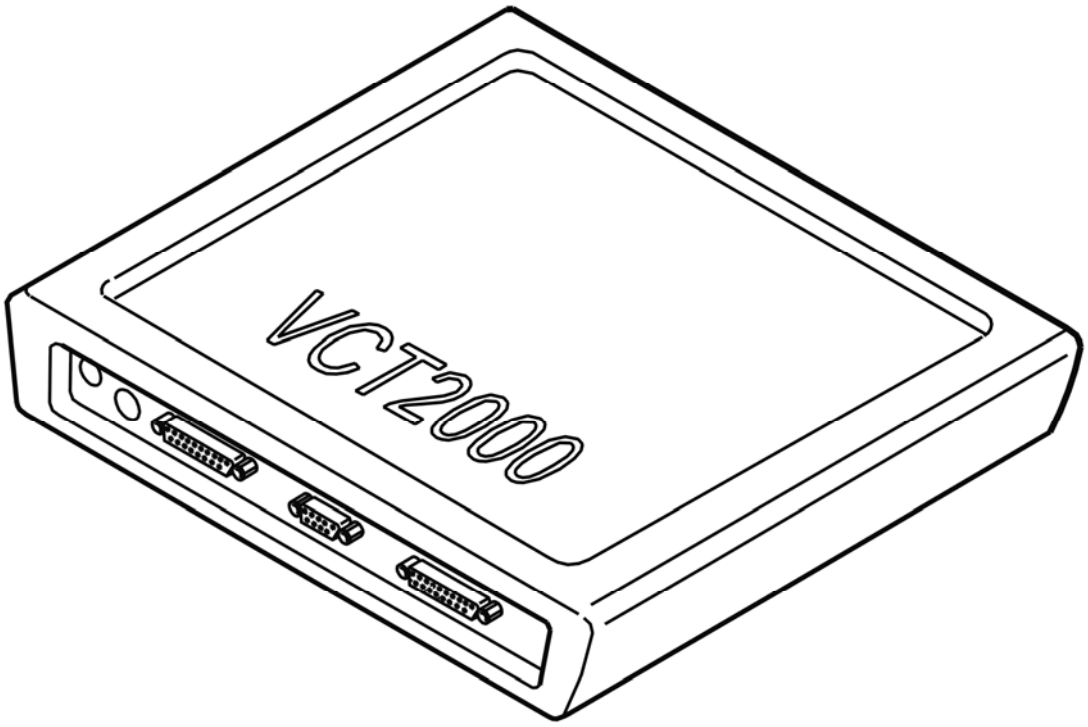

Fig. 241: Identifying VCT2000 Diagnostic Tool Symbol In VIDA
Courtesy of VOLVO CARS CORPORATION

Has the status of the diagnostic trouble code (DTC) changed?

- **YES**

  VERIFIED: Troubleshooting has been completed.

- **NO**

  Refer to **INFORMATION**

INFORMATION

FAULT-TRACING INFORMATION

The fault should have been detected and remedied. As this is not the case fault-tracing has failed.

Exit fault-tracing for this diagnostic trouble code (DTC) or make another attempt.

PHM-0010: TELEPHONE HANDSET SPEAKER. SIGNAL TOO LOW (2005)

DIAGNOSTIC TROUBLE CODE (DTC) INFORMATION PHM-0010

see **DIAGNOSTIC TROUBLE CODE (DTC) INFORMATION PHM-0010**

SIGNAL TOO LOW

CHECKING STRUCTURE WEEK

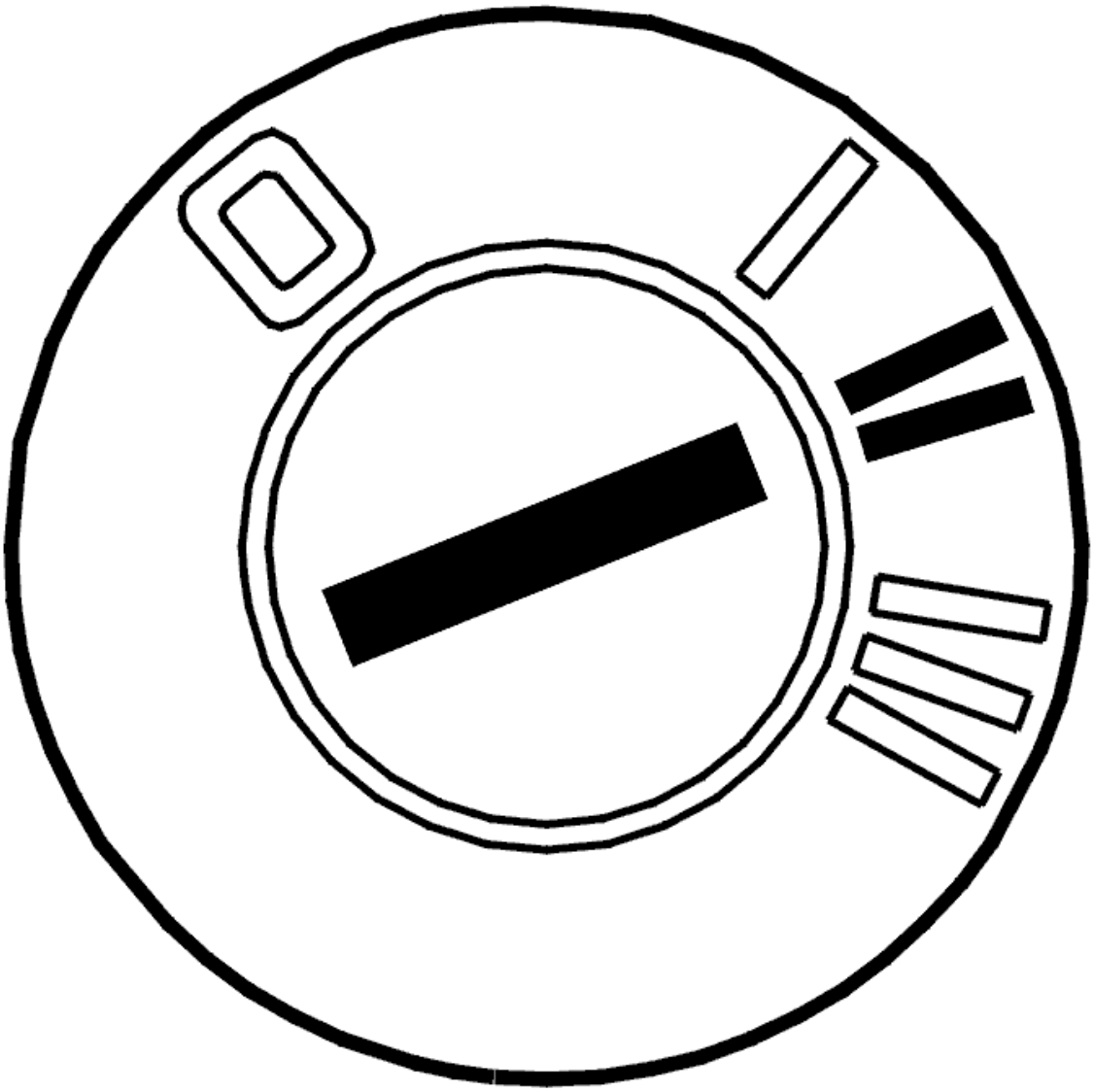

Fig. 242: Identifying Ignition ON
Courtesy of VOLVO CARS CORPORATION

- Ignition on

  Read out the vehicle's structure week by clicking on the symbol for VCT2000.

  1. Vehicles with structure week up to and incl. 200445, that is, year 2004 week 45. Refer to **SIGNAL**

TOO LOW

2. Vehicles with structure week from and incl. 200446, that is, year 2004 week 46. Refer to **CHECKING COMPONENTS AND WIRING**

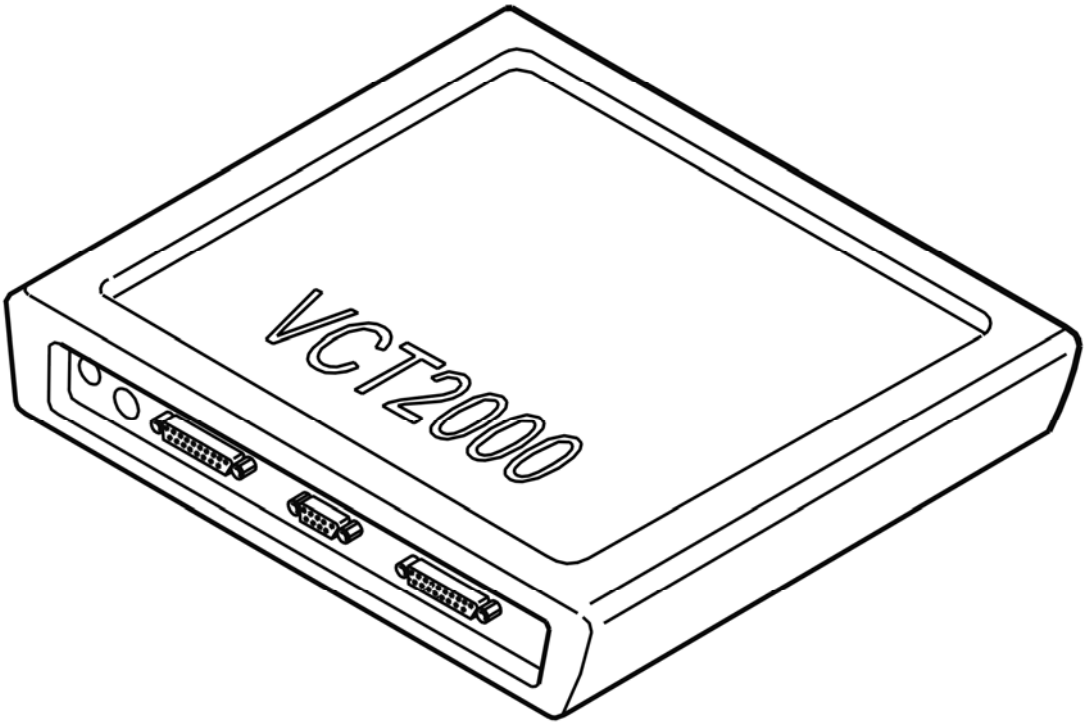

Fig. 243: Identifying VCT2000 Diagnostic Tool Symbol In VIDA
Courtesy of VOLVO CARS CORPORATION

CHECKING COMPONENTS AND WIRING

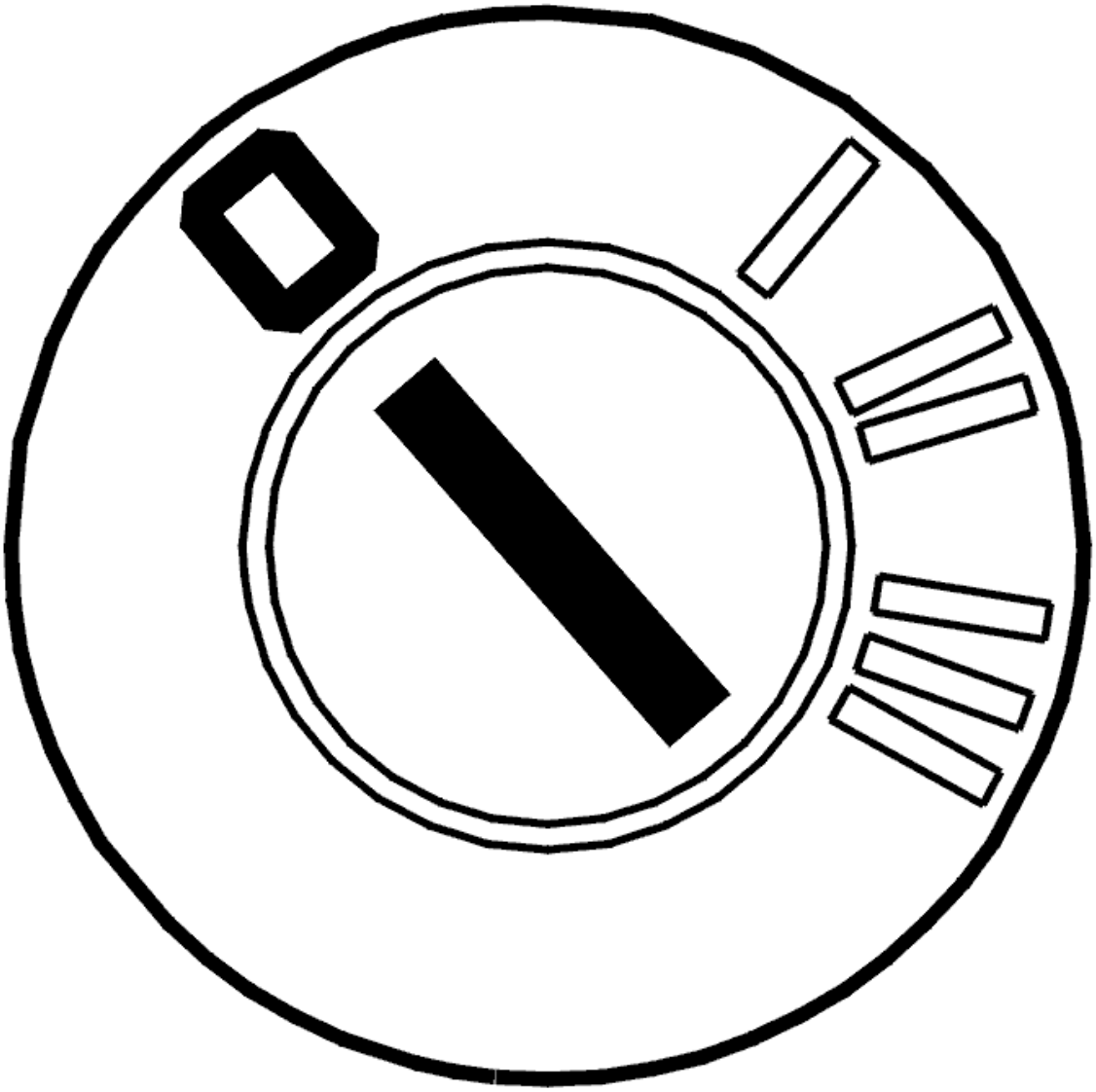

Fig. 244: Identifying Ignition OFF
Courtesy of VOLVO CARS CORPORATION

- Ignition off
- Disconnect connector A for the phone module (PHM).

  Check the speaker signal's cable on the control module's connector A for short-circuit to ground.

  Check between:

  - #20 (#20) and #18 (#18).
  - #20 (#20) and #6 (#6).

  If no malfunction was found on the cable, try replacing the handset.

Remedy as necessary.

Other information:

- see **CONNECTING THE BREAKOUT BOX**
- see **SIGNAL SPECIFICATION**
- see **LOCATION OF COMPONENTS**
- see **PHONE MODULE (PHM), REPLACING**
- see **HANDSET, REPLACING**
- see **CONTENTS**

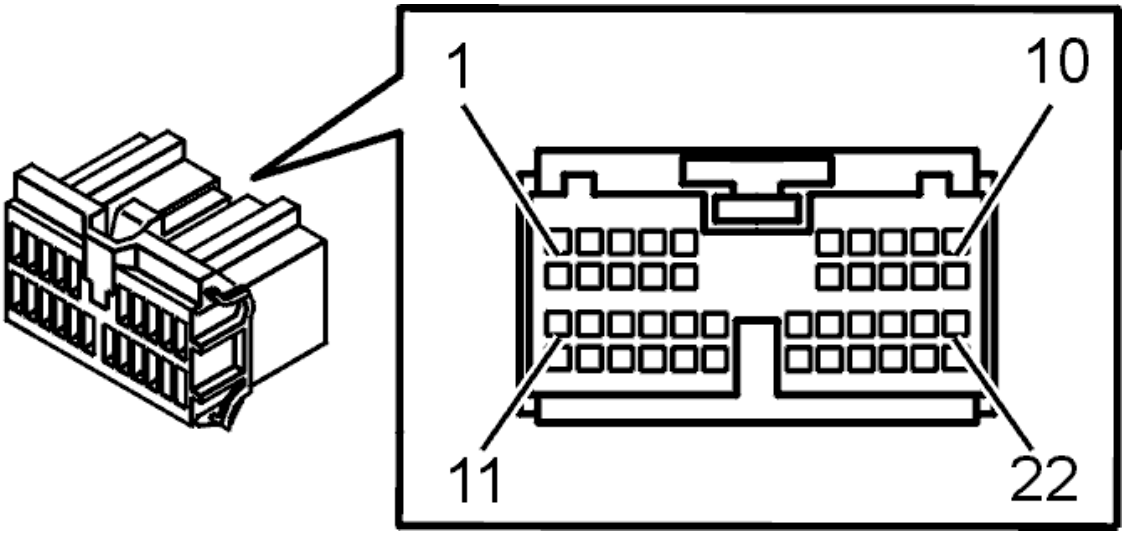

Fig. 245: Identifying Connector (F) Terminals
Courtesy of VOLVO CARS CORPORATION

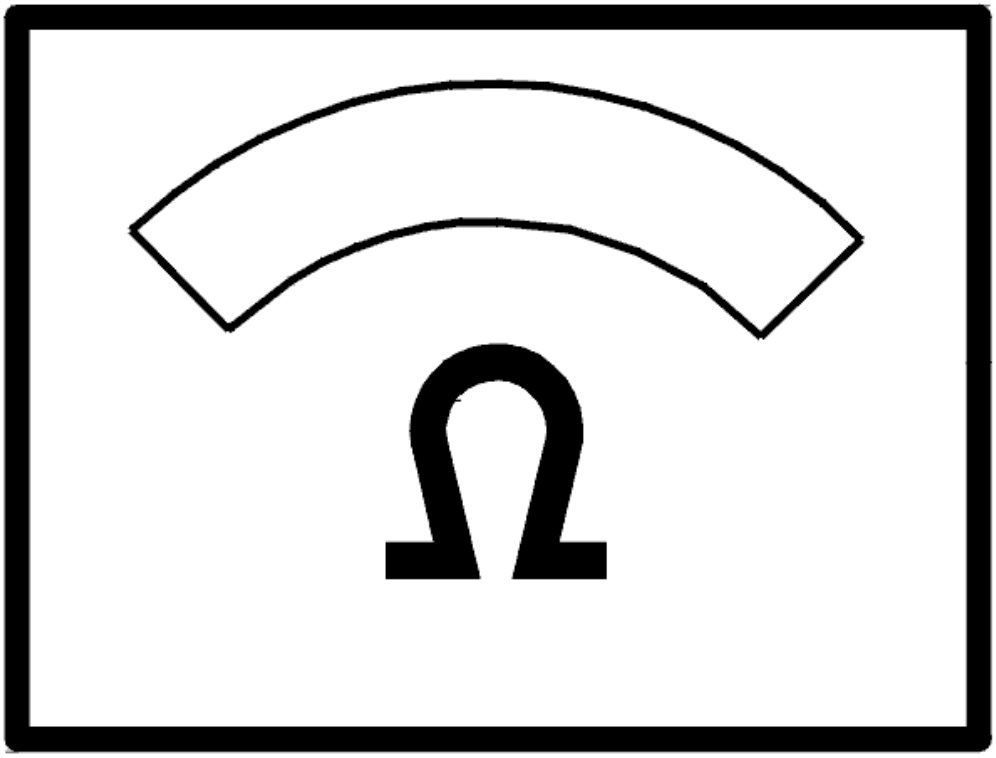

Fig. 246: Identifying Ohm Meter
Courtesy of VOLVO CARS CORPORATION

- **Continue**

  Refer to **VERIFICATION**

VERIFICATION

VERIFICATION

HINT: After carrying out the repair, check that the fault has been remedied.

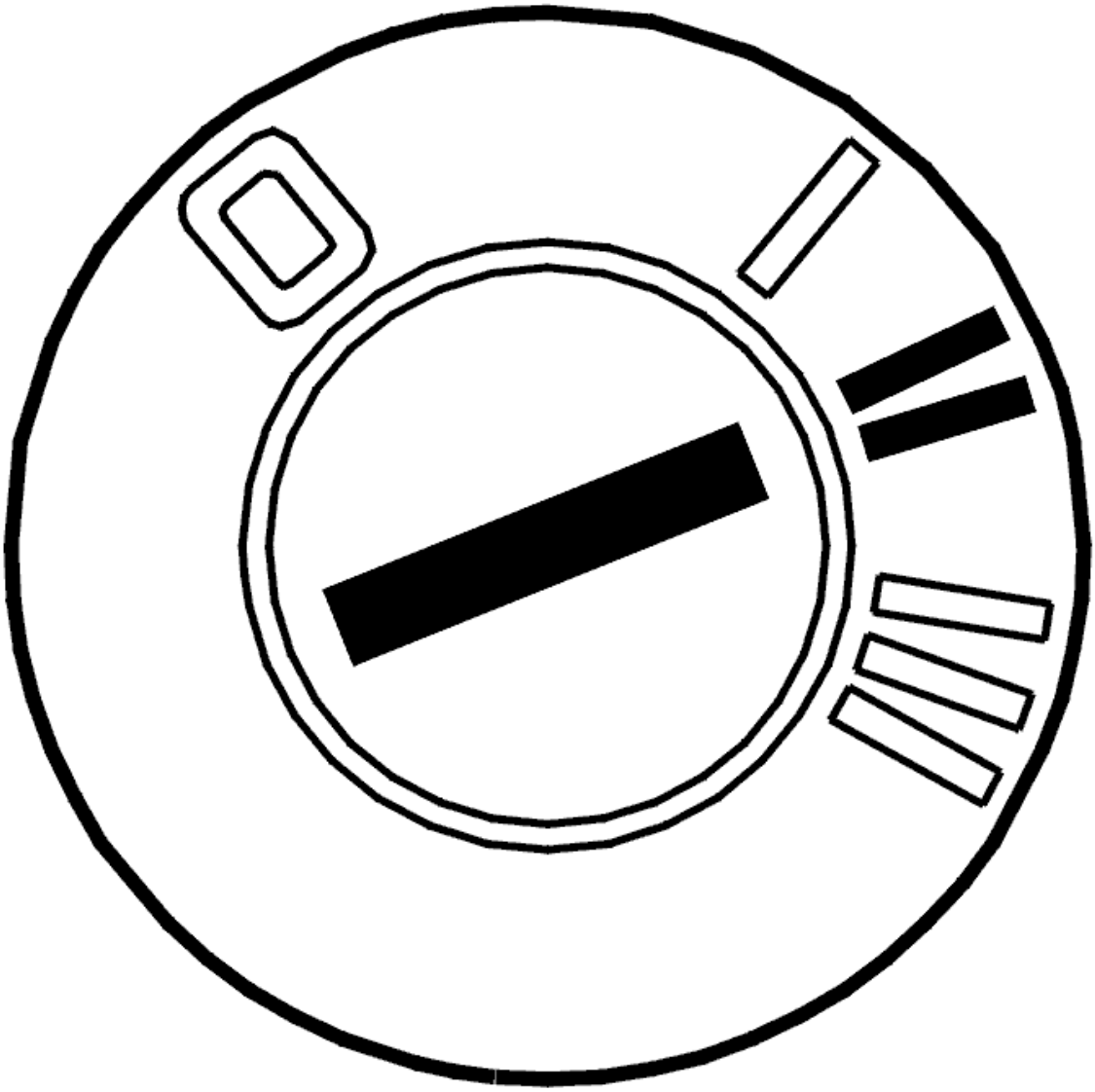

Fig. 247: Identifying Ignition ON
Courtesy of VOLVO CARS CORPORATION

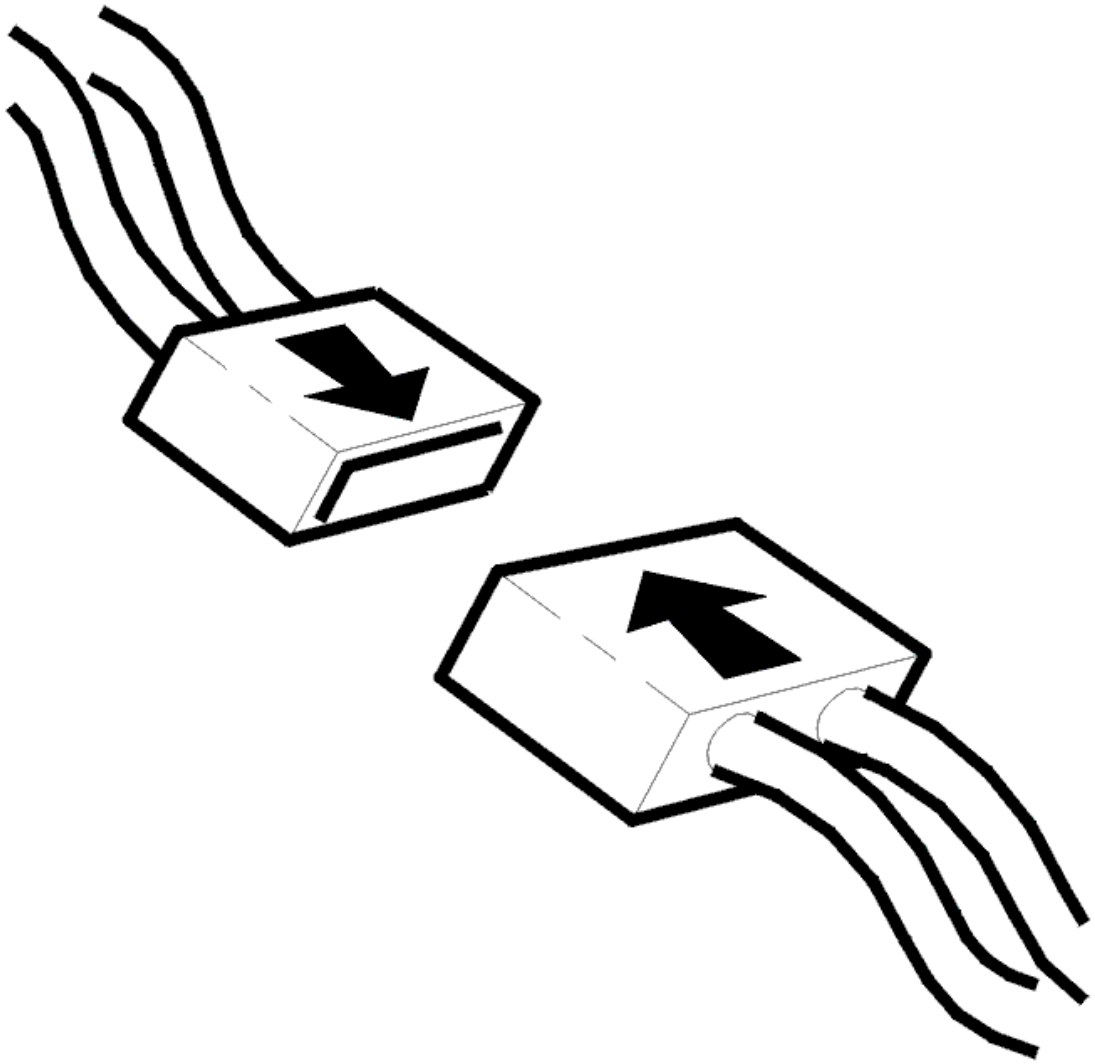

Fig. 248: Connecting Connector
Courtesy of VOLVO CARS CORPORATION

- Ignition off
- Reinstall the connectors, components etc.
- Ignition on
- Activate the carphone.

  Make a call so that both the handset and the hands-free system are used.

  Ignition off.

  Ignition on.

  Read off the diagnostic trouble codes (DTCs).

Check that the relevant diagnostic trouble code (DTC) has switched status from permanent to intermittent fault.

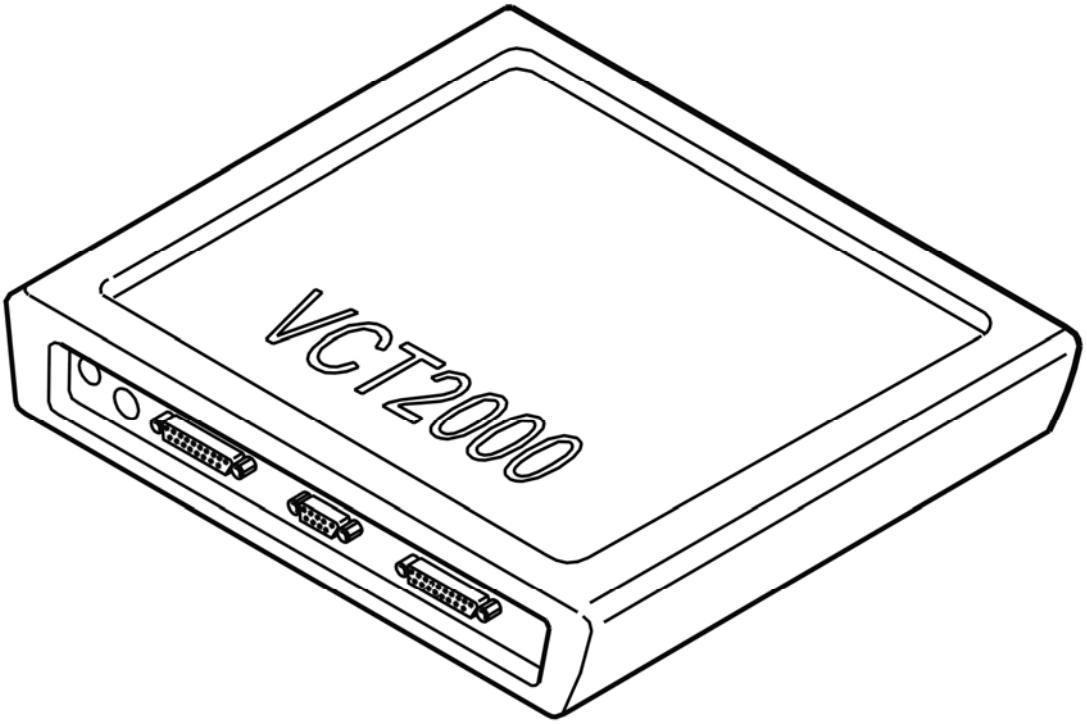

Fig. 249: Identifying VCT2000 Diagnostic Tool Symbol In VIDA
Courtesy of VOLVO CARS CORPORATION

Has the status of the diagnostic trouble code (DTC) changed?

- **YES**

  VERIFIED: Troubleshooting has been completed.

- **NO**

  Refer to **INFORMATION**

INFORMATION

FAULT-TRACING INFORMATION

The fault should have been detected and remedied. As this is not the case fault-tracing has failed.

Exit fault-tracing for this diagnostic trouble code (DTC) or make another attempt.

SIGNAL TOO LOW

CHECKING COMPONENTS AND WIRING

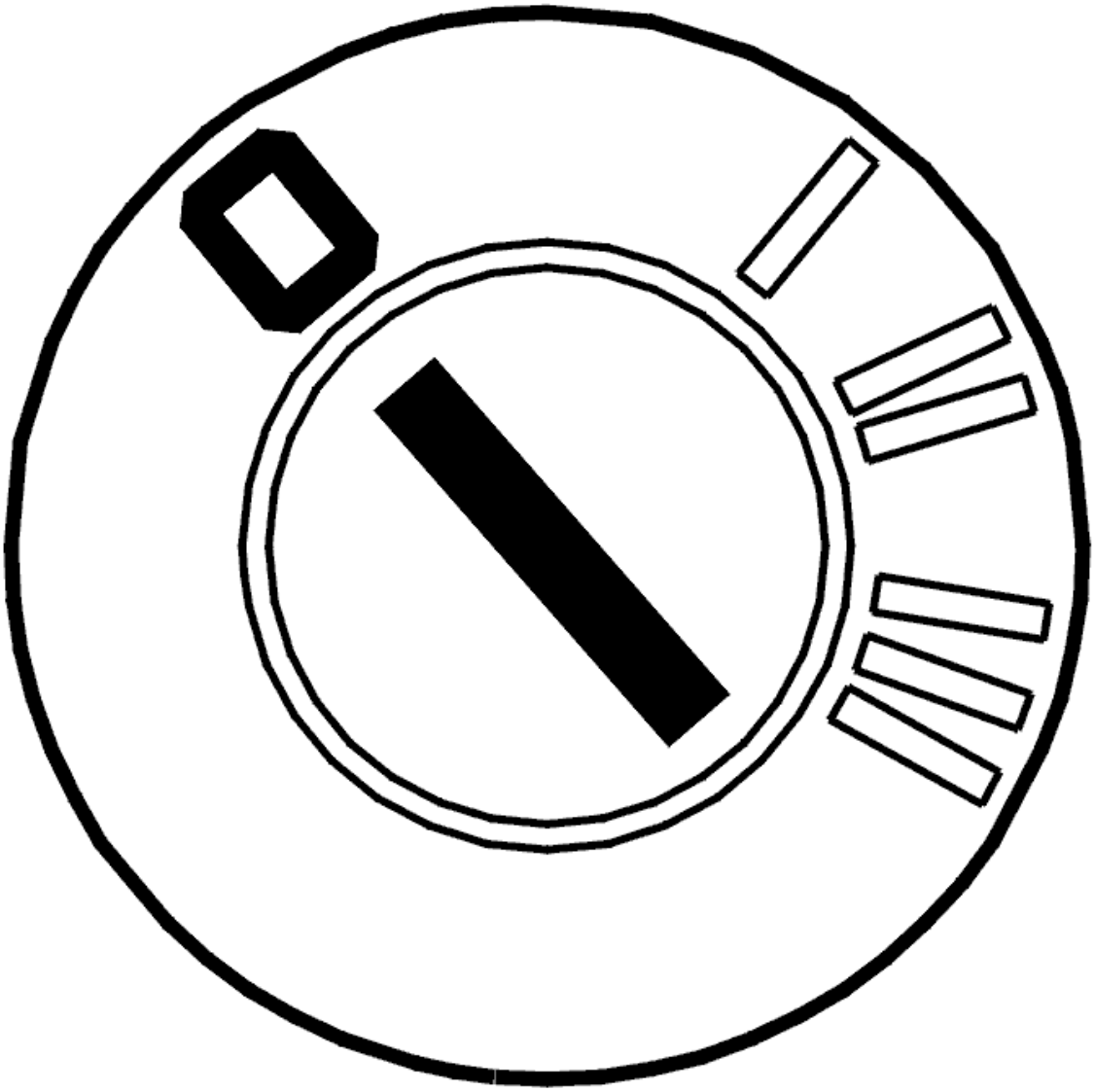

Fig. 250: Identifying Ignition OFF
Courtesy of VOLVO CARS CORPORATION

- Ignition off.

  Check the signal cable for the microphone between phone module (PHM) connector B terminal #14 (#56) and handset connector terminal #2 (#22). Check for a short-circuit to ground.

  Try replacing the carphone handset if no fault is found in the wiring.

  Remedy as necessary.

Other information:

- To connect the breakout box, see **CONNECTING THE BREAKOUT BOX**
- For information about signals and connectors, see **SIGNAL SPECIFICATION**
- To access or replace the control module, see **PHONE MODULE (PHM), REPLACING**
- To access or replace the handset, see **HANDSET, REPLACING**
- see **CONTENTS** .

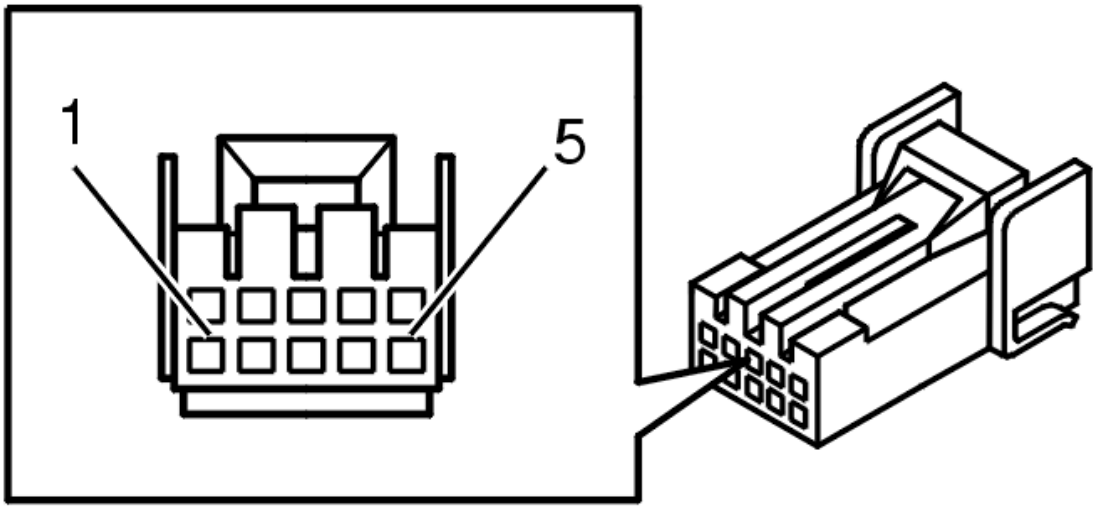

Fig. 251: 10 CD Changer Connector Terminals
Courtesy of VOLVO CARS CORPORATION

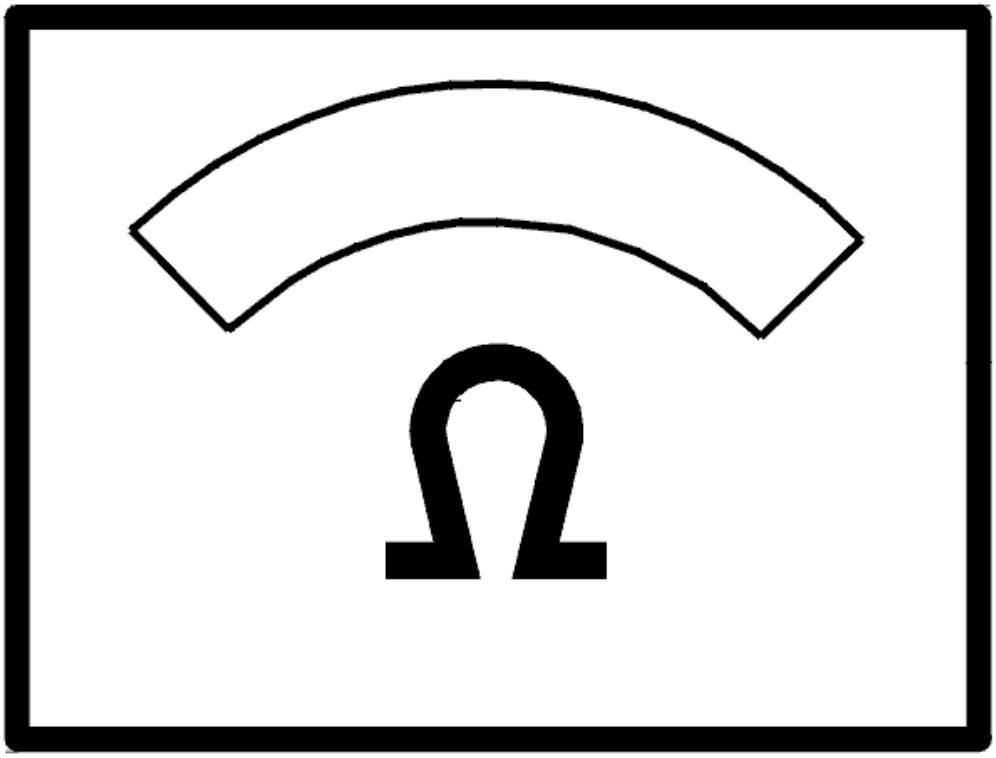

Fig. 252: Identifying Ohm Meter
Courtesy of VOLVO CARS CORPORATION

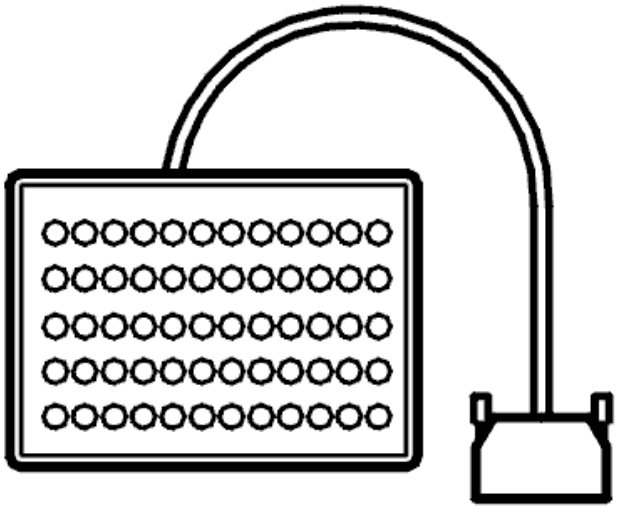

Fig. 253: Breakout Box
Courtesy of VOLVO CARS CORPORATION

- **Continue**

  Refer to **VERIFICATION**

VERIFICATION

VERIFICATION

HINT: After carrying out the repair, check that the fault has been remedied.

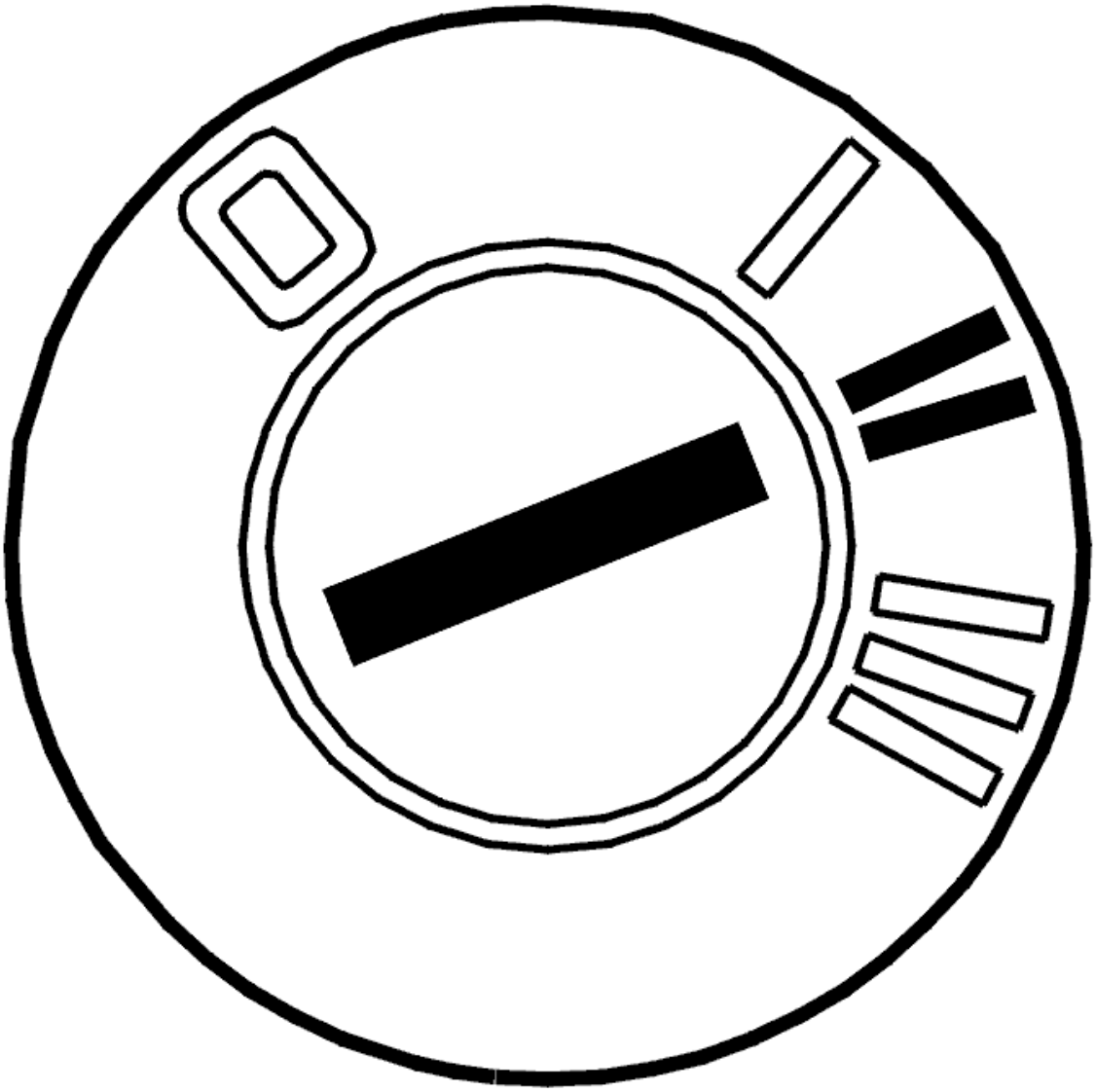

Fig. 254: Identifying Ignition ON
Courtesy of VOLVO CARS CORPORATION

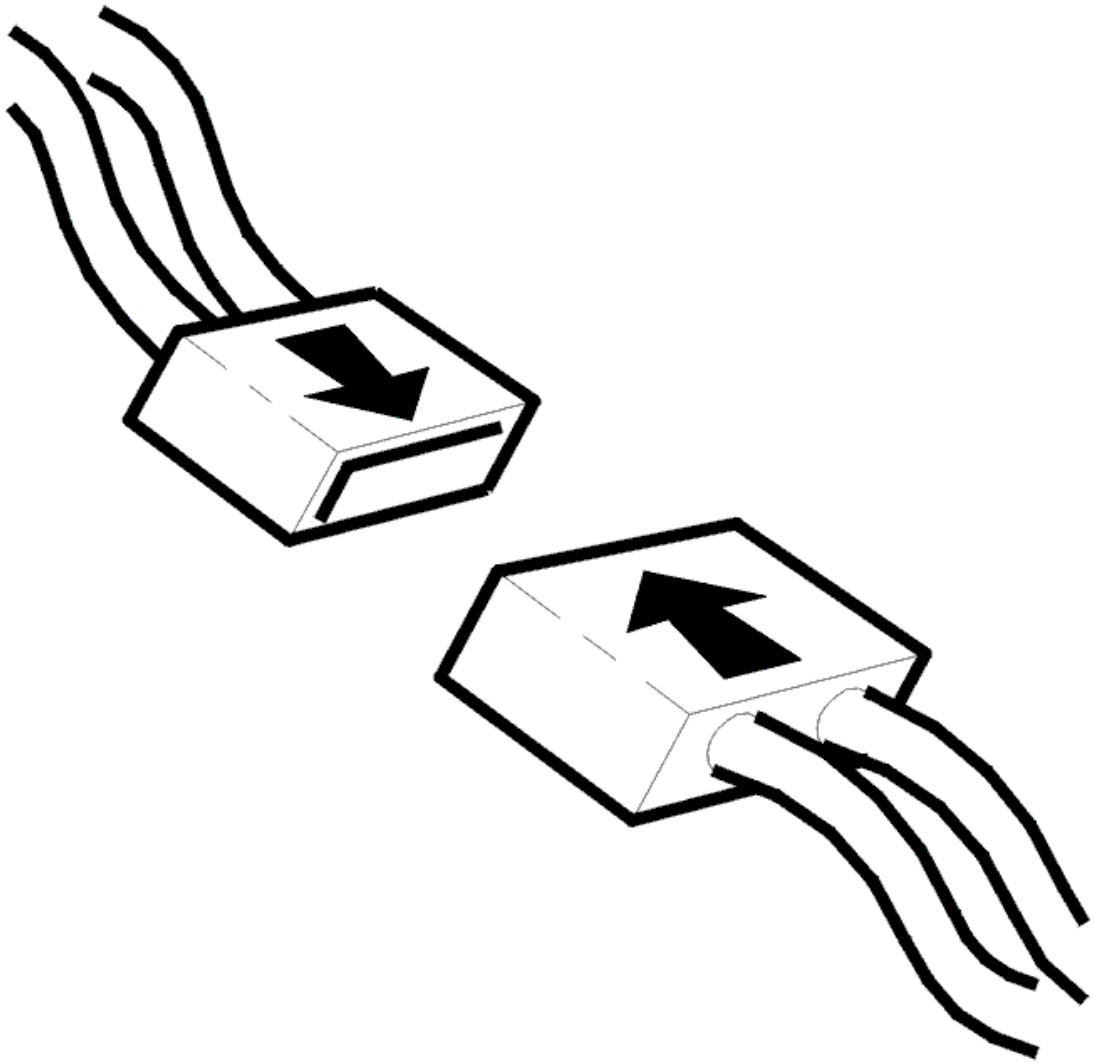

Fig. 255: Connecting Connector
Courtesy of VOLVO CARS CORPORATION

- Ignition off
- Reinstall the connectors, components etc.
- Ignition on
- Switch on the carphone.

  Make a call so that both the handset and the hands-free system are used.

  Ignition off.

  Ignition on.

  Read off the diagnostic trouble codes (DTCs).

Check that the relevant diagnostic trouble code (DTC) has switched status from permanent to intermittent fault.

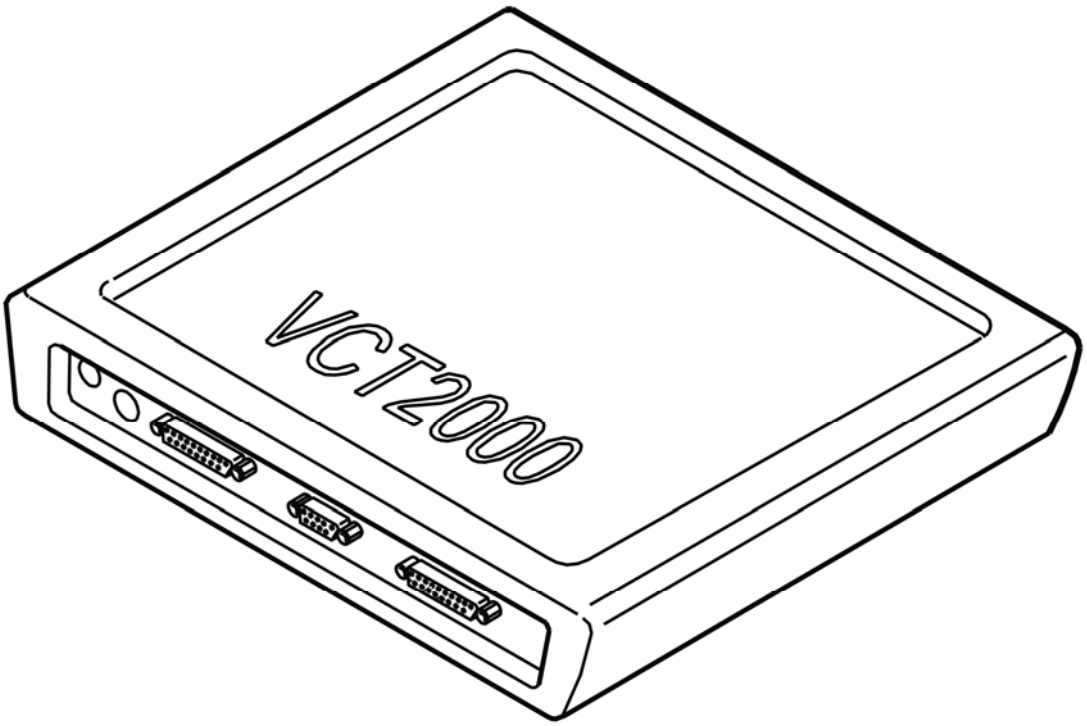

Fig. 256: Identifying VCT2000 Diagnostic Tool Symbol In VIDA
Courtesy of VOLVO CARS CORPORATION

Has the status of the diagnostic trouble code (DTC) changed?

- **YES**

  VERIFIED: Troubleshooting has been completed.

- **NO**

  Refer to **INFORMATION**

INFORMATION

FAULT-TRACING INFORMATION

The fault should have been detected and remedied. As this is not the case fault-tracing has failed.

Exit fault-tracing for this diagnostic trouble code (DTC) or make another attempt.

PHM-0012: HANDSET SUPPLY. SIGNAL TOO LOW (2003-2004)

DIAGNOSTIC TROUBLE CODE (DTC) INFORMATION PHM-0012

Condition

Diagnostic trouble code (DTC) PHM-0012 is stored if the phone module (PHM) registers that there is a short-circuit to ground in the power supply to the handset.

Diagnostic trouble code (DTC) PHM-0012 can be diagnosed with the ignition on (not key position 3) and when the battery voltage is 9-16 V.

Substitute Value

- Only hands-free operates.

Possible Source

- Short-circuit to ground in the wiring (power supply) to the handset from the control module.

Fault symptom[s]

- The handset does not function.

SIGNAL TOO LOW

CHECKING COMPONENTS AND WIRING

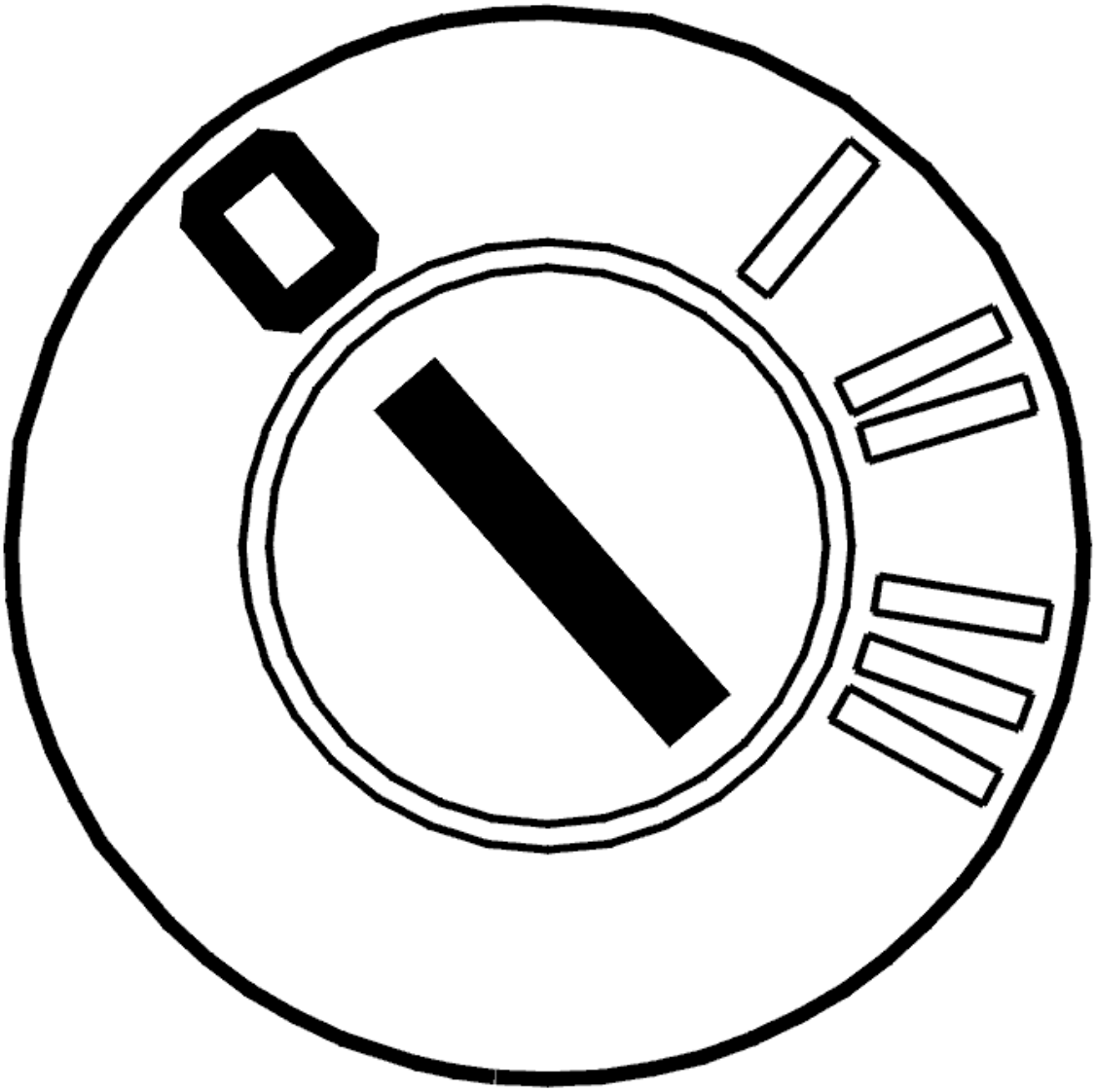

Fig. 257: Identifying Ignition OFF
Courtesy of VOLVO CARS CORPORATION

- Ignition off.

  Check the supply cable between phone module (PHM) connector B terminal #11 (#53) and handset connector terminal #5 (#25). Check for a short-circuit to ground.

  Try replacing the carphone handset if no fault is found in the wiring.

  Remedy as necessary.

  Other information:

  - To connect the breakout box, see **CONNECTING THE BREAKOUT BOX**
  - For information about signals and connectors, see **SIGNAL SPECIFICATION**

- To access or replace the control module, see **PHONE MODULE (PHM), REPLACING**
- To access or replace the handset, see **HANDSET, REPLACING**
- see **CONTENTS** .

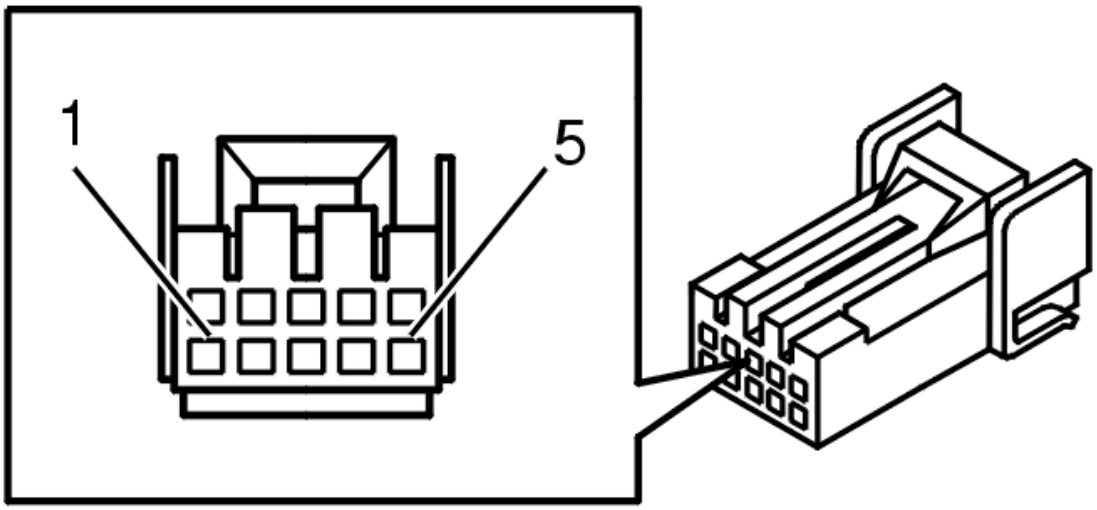

Fig. 258: 10 CD Changer Connector Terminals
Courtesy of VOLVO CARS CORPORATION

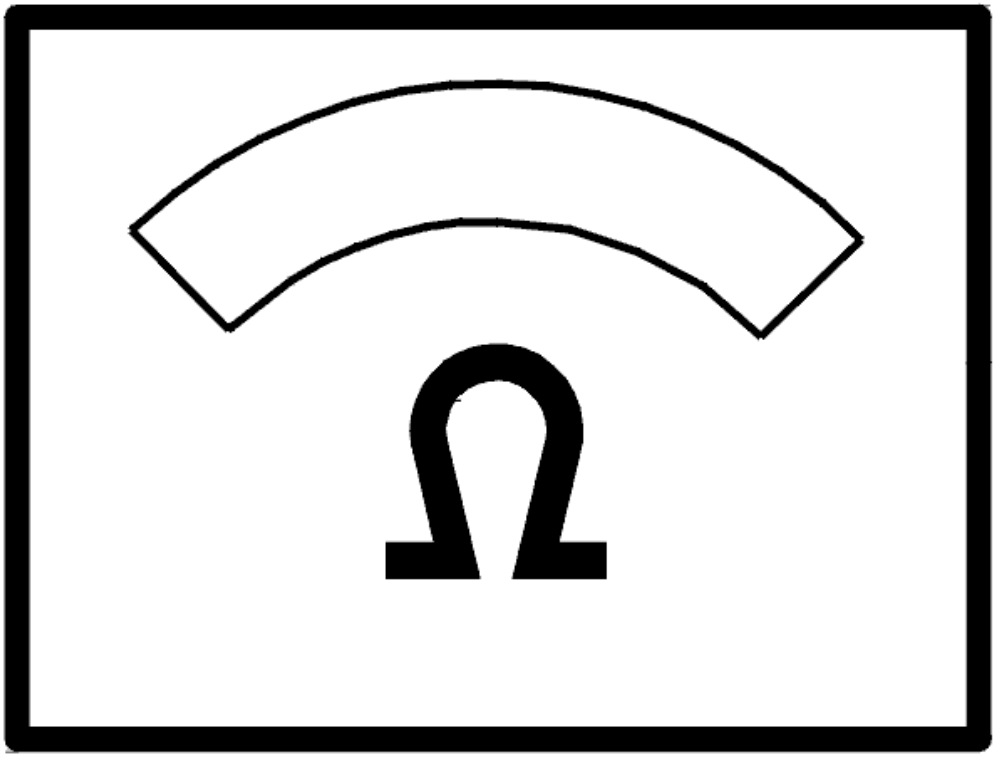

Fig. 259: Identifying Ohm Meter
Courtesy of VOLVO CARS CORPORATION

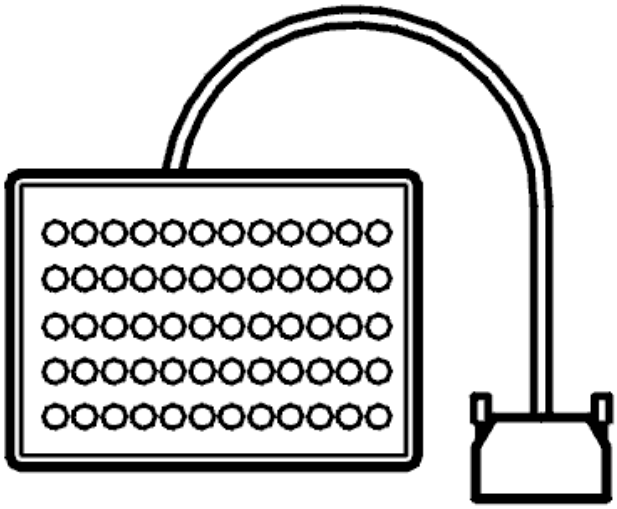

Fig. 260: Breakout Box
Courtesy of VOLVO CARS CORPORATION

- **Continue**

  Refer to **VERIFICATION**

VERIFICATION

VERIFICATION

HINT: After carrying out the repair, check that the fault has been remedied.

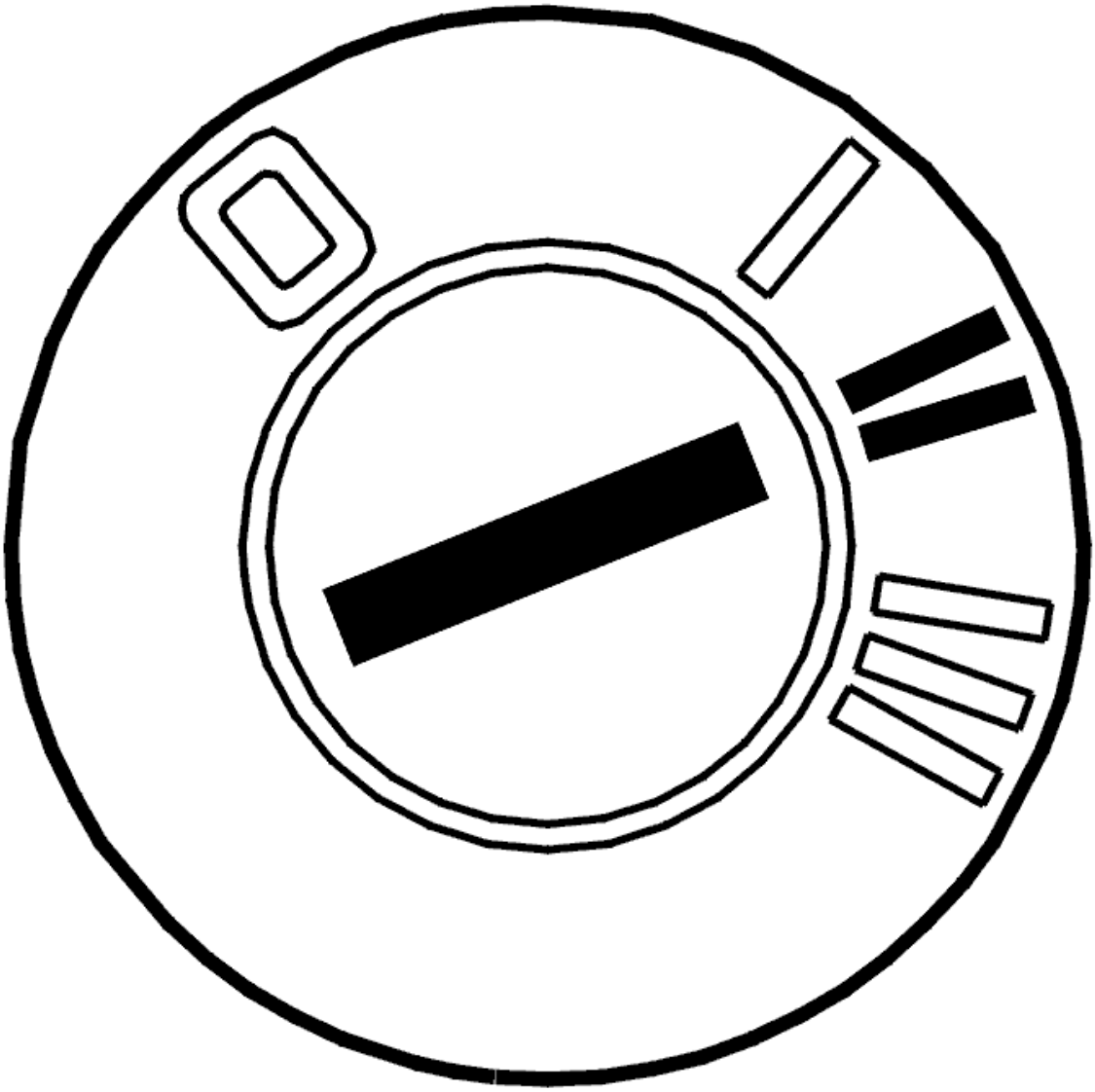

Fig. 261: Identifying Ignition ON
Courtesy of VOLVO CARS CORPORATION

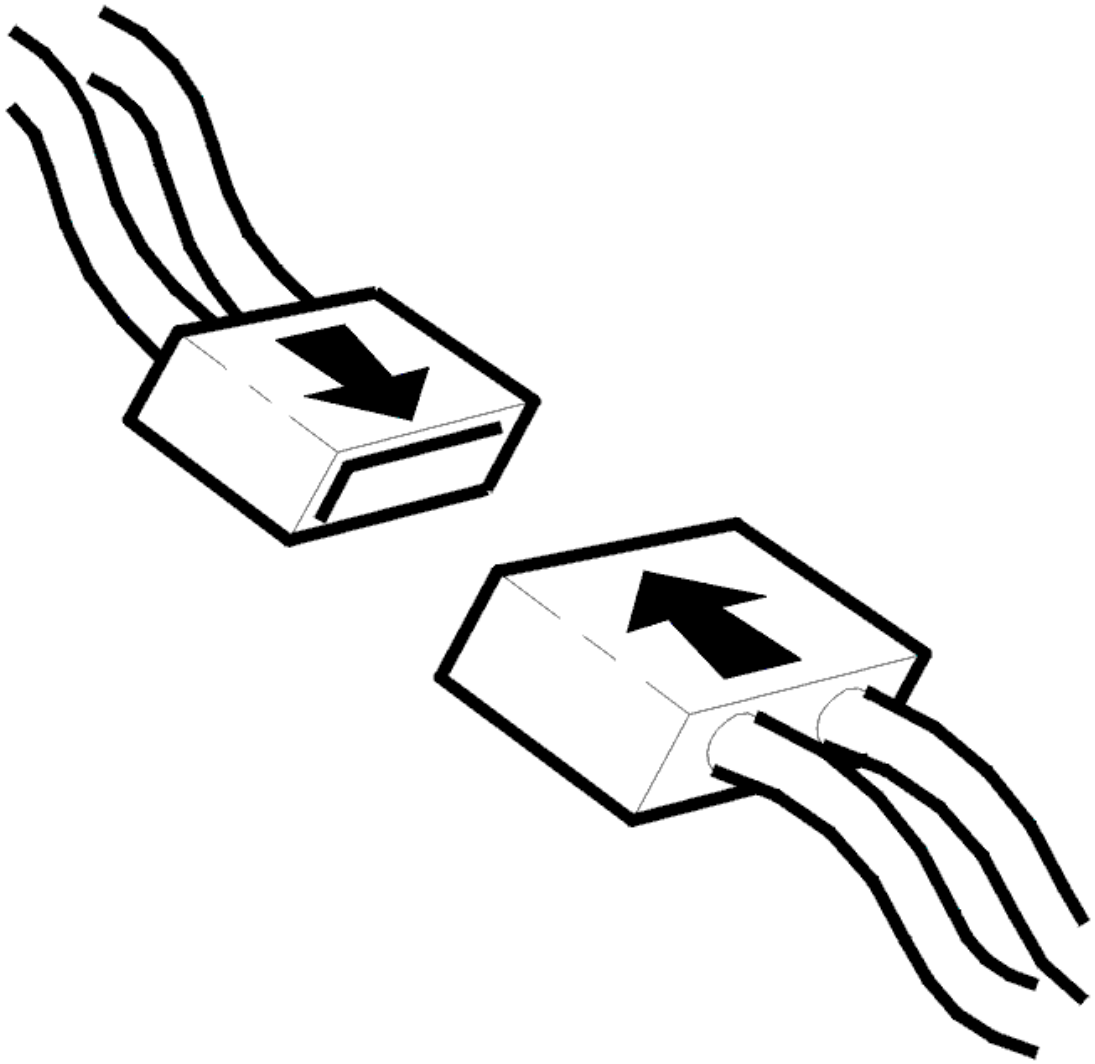

Fig. 262: Connecting Connector
Courtesy of VOLVO CARS CORPORATION

- Ignition off
- Reinstall the connectors, components etc.
- Ignition on
- Switch on the carphone.

  Make a call so that both the handset and the hands-free system are used.

  Ignition off.

  Ignition on.

  Read off the diagnostic trouble codes (DTCs).

Check that the relevant diagnostic trouble code (DTC) has switched status from permanent to intermittent fault.

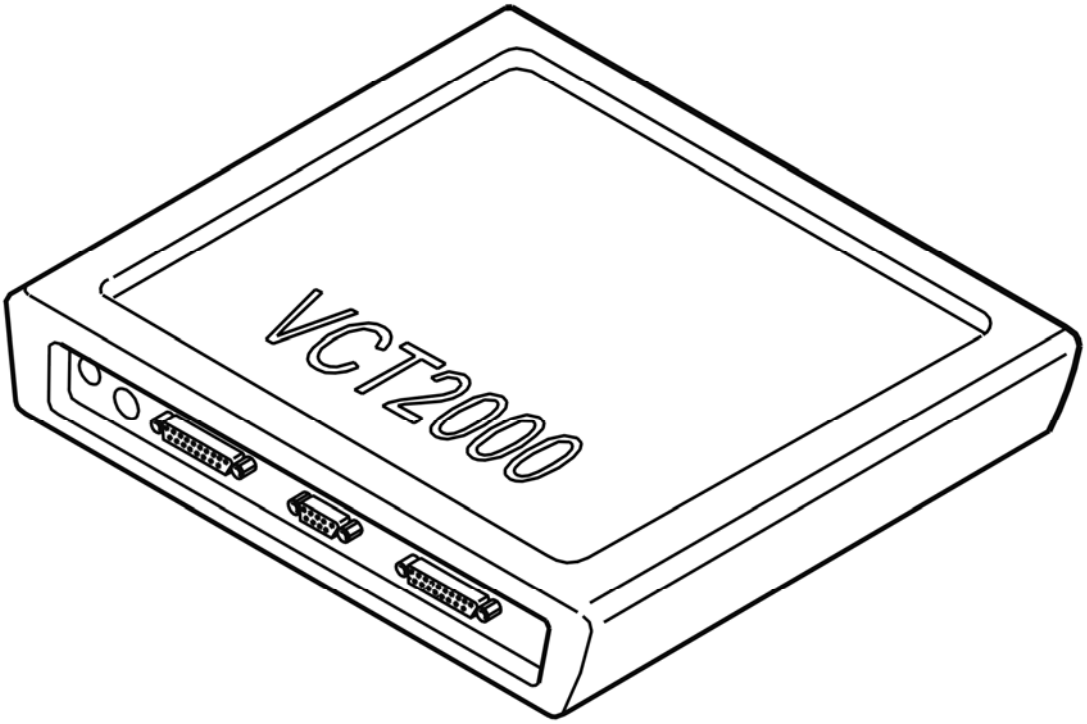

Fig. 263: Identifying VCT2000 Diagnostic Tool Symbol In VIDA
Courtesy of VOLVO CARS CORPORATION

Has the status of the diagnostic trouble code (DTC) changed?

- **YES**

  VERIFIED: Troubleshooting has been completed.

- **NO**

  Refer to **INFORMATION**

INFORMATION

FAULT-TRACING INFORMATION

The fault should have been detected and remedied. As this is not the case fault-tracing has failed.

Exit fault-tracing for this diagnostic trouble code (DTC) or make another attempt.

PHM-0012: HANDSET SUPPLY. SIGNAL TOO LOW (2006-2011)

DIAGNOSTIC TROUBLE CODE (DTC) INFORMATION PHM-0012

Condition

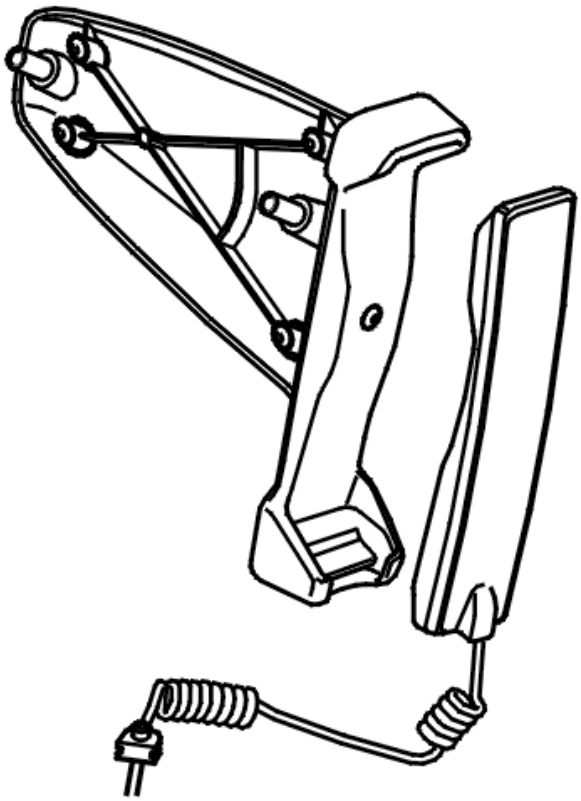

Fig. 264: Identifying Handset Cradle
Courtesy of VOLVO CARS CORPORATION

The diagnostic trouble code (DTC) is stored if the phone module (PHM) registers a short-circuit to ground in the power supply to the handset.

The diagnostic trouble code (DTC) can be diagnosed when the ignition is switched on (not key position 3) and when the battery voltage is 9-16 V.

Substitute Value

- Only hands-free operates.

Possible Source

- Short-circuit to ground in the cable (power supply) to the handset from the control module.

Fault symptom[s]

- The handset does not function.
- Message in the text display (applies only to phone modules (PHM) with Volvo On Call)

SIGNAL TOO LOW

CHECKING THE COMPONENT AND WIRING

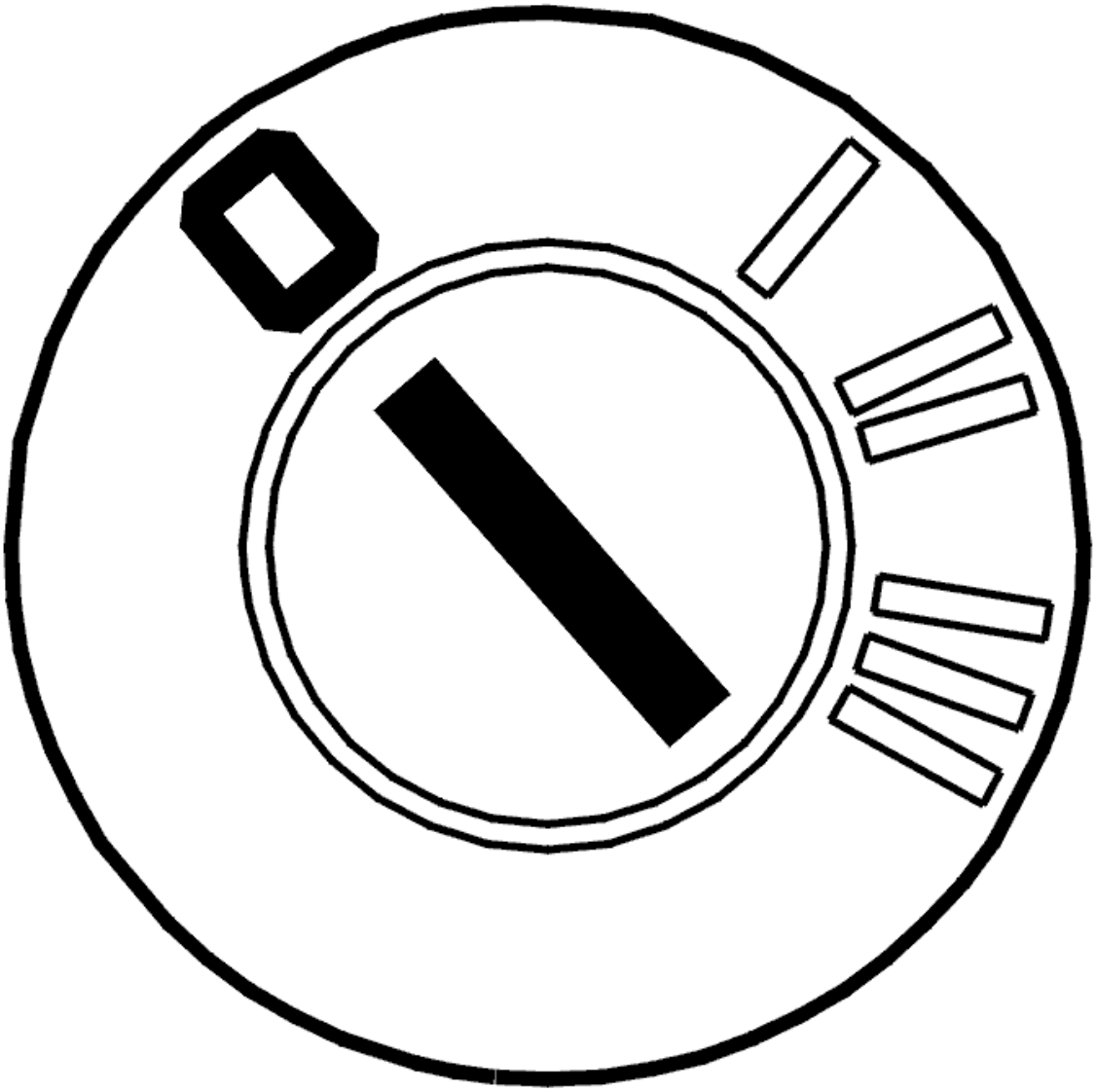

Fig. 265: Identifying Ignition OFF
Courtesy of VOLVO CARS CORPORATION

- Ignition off
- Disconnect connector A from the phone module (PHM).

Check for the power supply cable at control module connector A. Check for a short-circuit to ground.

Check between:

- terminals #7 (#7) and #18 (#18)
- terminals #7 (#7) and #6 (#6).

Try replacing the carphone handset if no fault is found in the wiring.

Remedy as necessary.

Other information:

- see **SIGNAL SPECIFICATION**
- see **CONNECTING THE BREAKOUT BOX**
- see **LOCATION OF COMPONENTS**
- see **PHONE MODULE (PHM), REPLACING (2006-2010)**
- see **HANDSET, REPLACING**
- see **CHECKING WIRING AND TERMINALS**

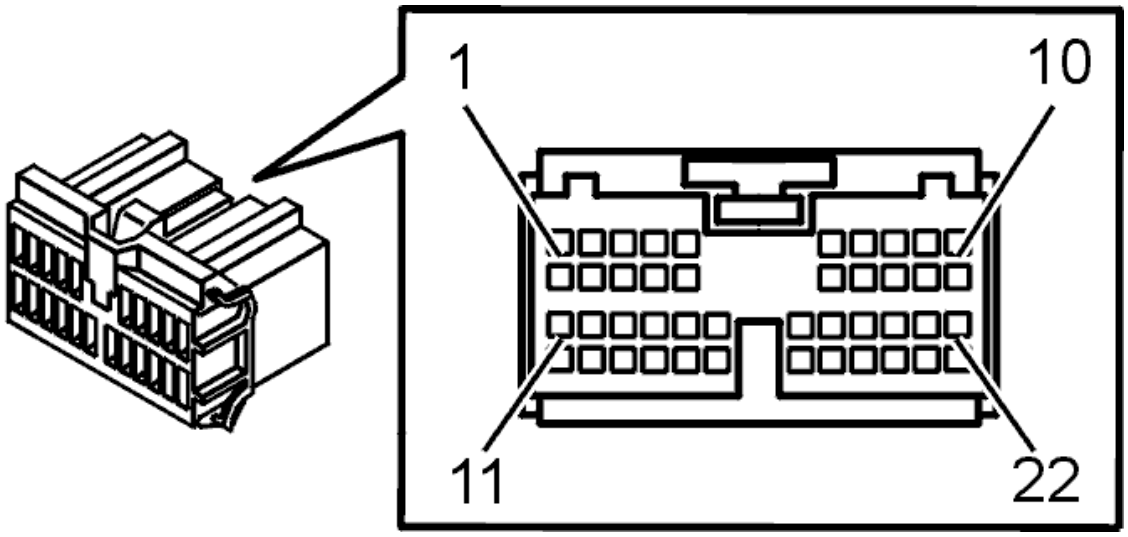

Fig. 266: Identifying Connector (F) Terminals
Courtesy of VOLVO CARS CORPORATION

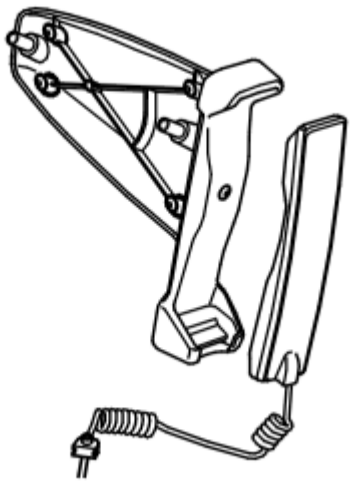

Fig. 267: Identifying Carphone Holder
Courtesy of VOLVO CARS CORPORATION

- **Continue**

  Refer to **VERIFICATION**

VERIFICATION

VERIFICATION

HINT: After carrying out the repair, check that the fault has been remedied.

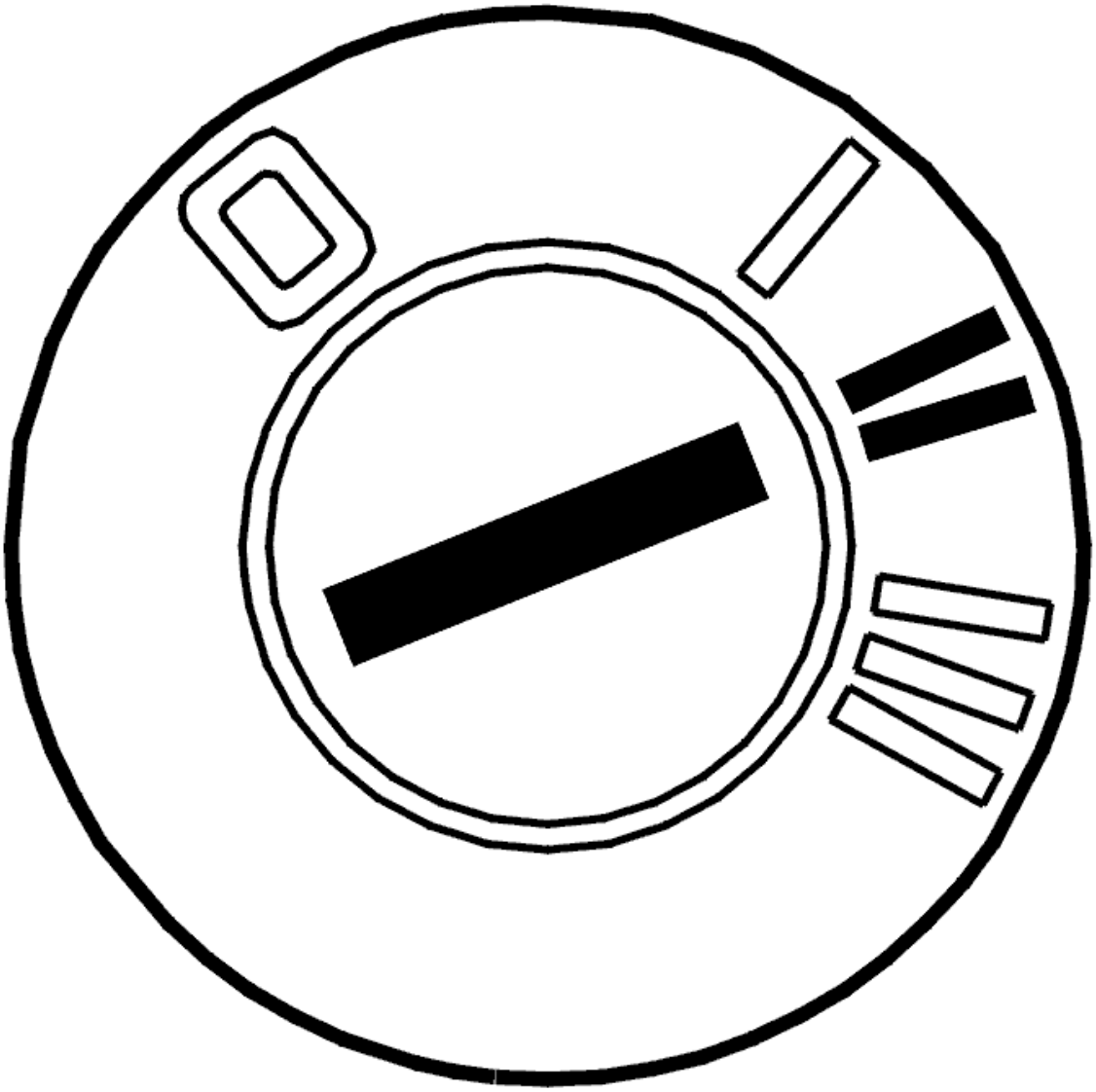

Fig. 268: Identifying Ignition ON
Courtesy of VOLVO CARS CORPORATION

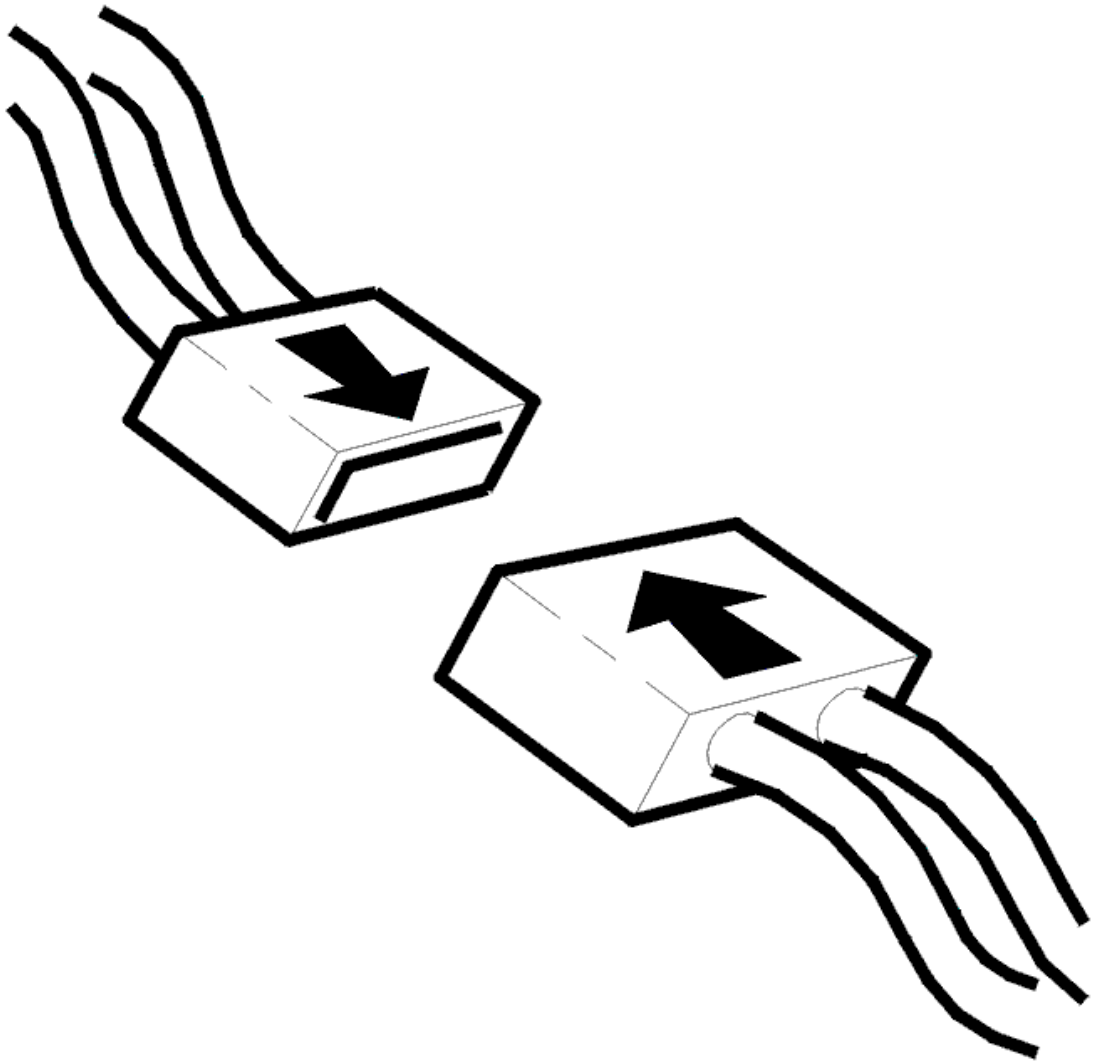

Fig. 269: Connecting Connector
Courtesy of VOLVO CARS CORPORATION

- Ignition off
- Reinstall the connectors, components etc.
- Ignition on
- Activate the carphone.

  Make a call so that both the handset and the hands-free system are used.

  - Ignition off.
  - Ignition on.
  - Read off the diagnostic trouble codes (DTCs).
  - Check that the relevant diagnostic trouble code (DTC) has switched status from permanent to

intermittent fault.

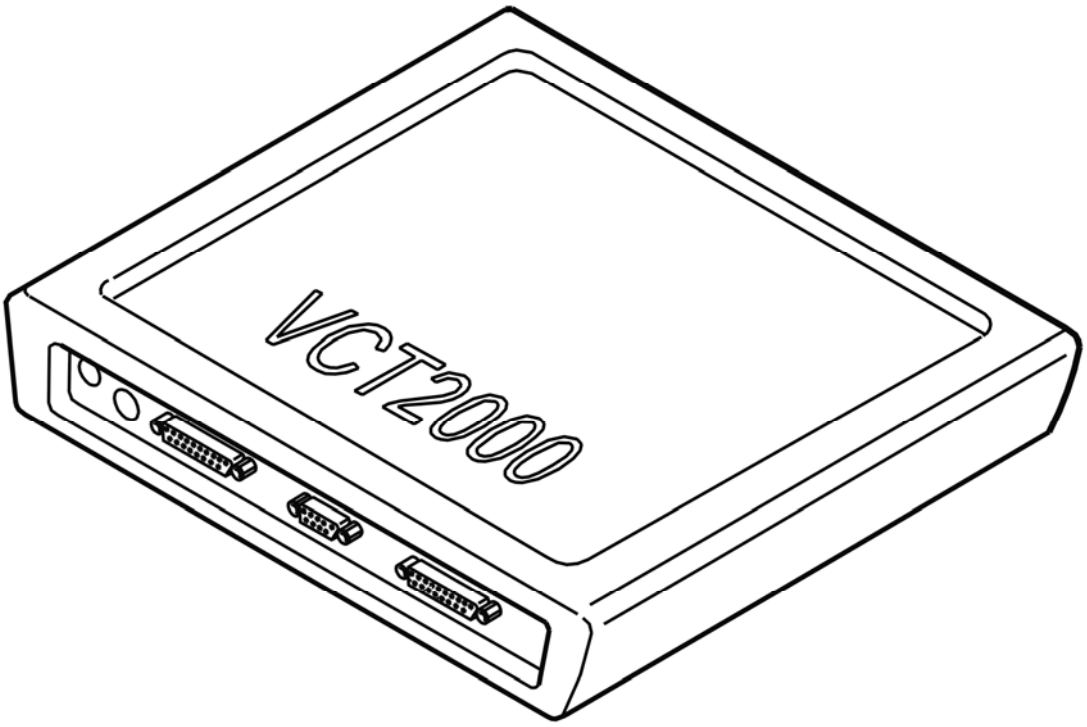

Fig. 270: Identifying VCT2000 Diagnostic Tool Symbol In VIDA
Courtesy of VOLVO CARS CORPORATION

Has the status of the diagnostic trouble code (DTC) changed?

- **YES**

  VERIFIED: Troubleshooting has been completed.

- **NO**

  Refer to **INFORMATION**

INFORMATION

FAULT-TRACING INFORMATION

The fault should have been detected and remedied. As this is not the case fault-tracing has failed.

Exit fault-tracing for this diagnostic trouble code (DTC) or make another attempt.

PHM-0012: TELEPHONE HANDSET VOLTAGE FEED. SIGNAL TOO LOW

(2005)

DIAGNOSTIC TROUBLE CODE (DTC) INFORMATION PHM-0012

see **DIAGNOSTIC TROUBLE CODE (DTC) INFORMATION PHM-0012**

SIGNAL TOO LOW

CHECKING STRUCTURE WEEK

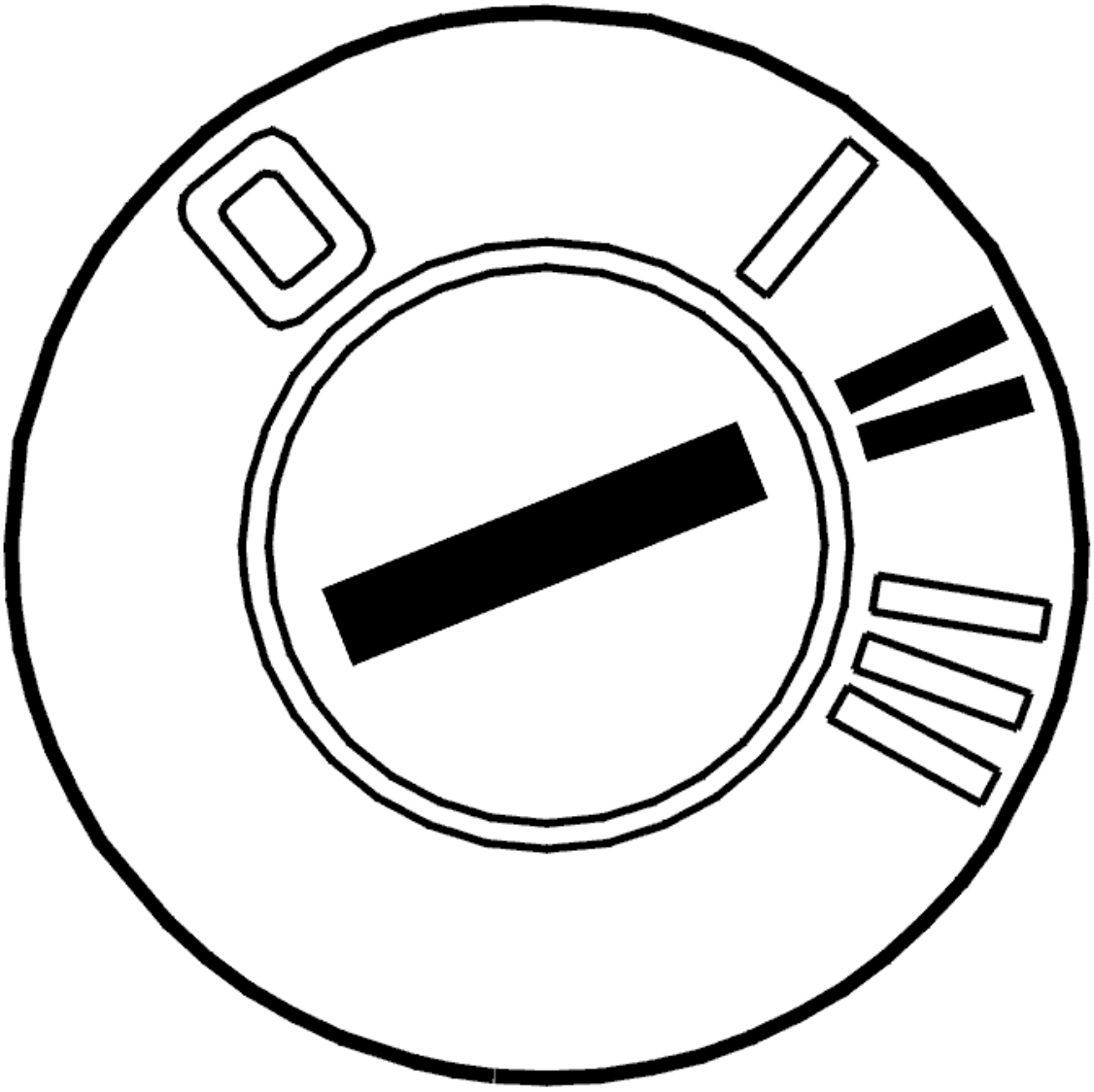

Fig. 271: Identifying Ignition ON
Courtesy of VOLVO CARS CORPORATION

- Ignition on

  Read out the vehicle's structure week by clicking on the symbol for VCT2000.

1. Vehicles with structure week up to and incl. 200445, that is, year 2004 week 45. Refer to **SIGNAL TOO LOW**
2. Vehicles with structure week from and incl. 200446, that is, year 2004 week 46. Refer to **CHECKING COMPONENTS AND WIRING**

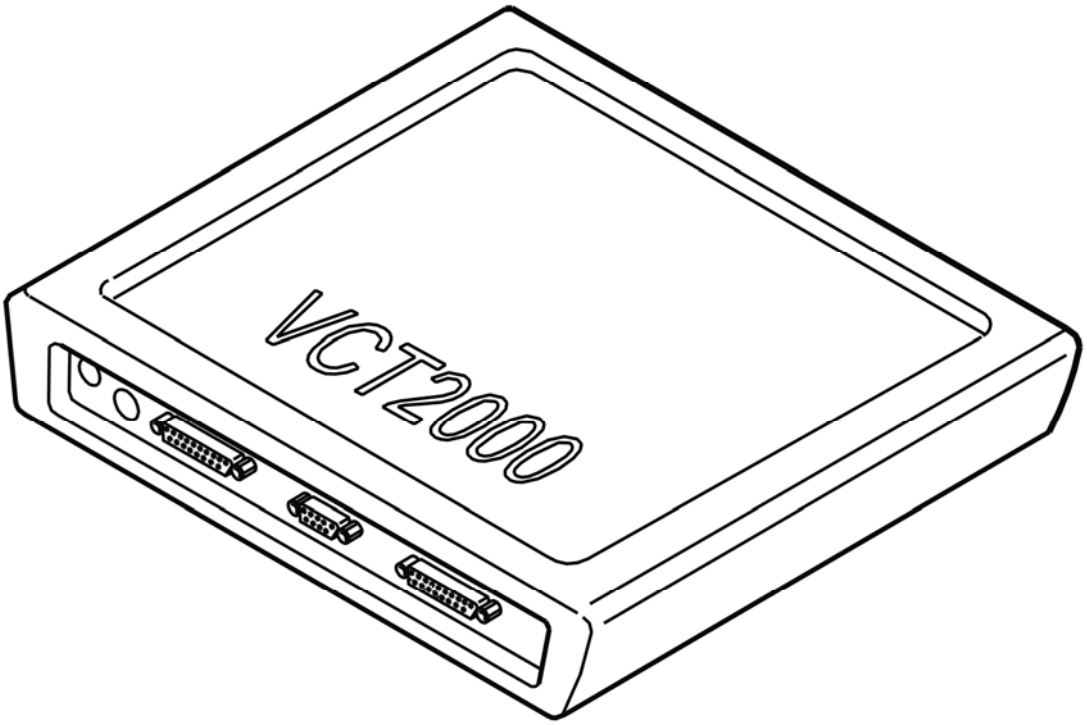

Fig. 272: Identifying VCT2000 Diagnostic Tool Symbol In VIDA
Courtesy of VOLVO CARS CORPORATION

CHECKING COMPONENTS AND WIRING

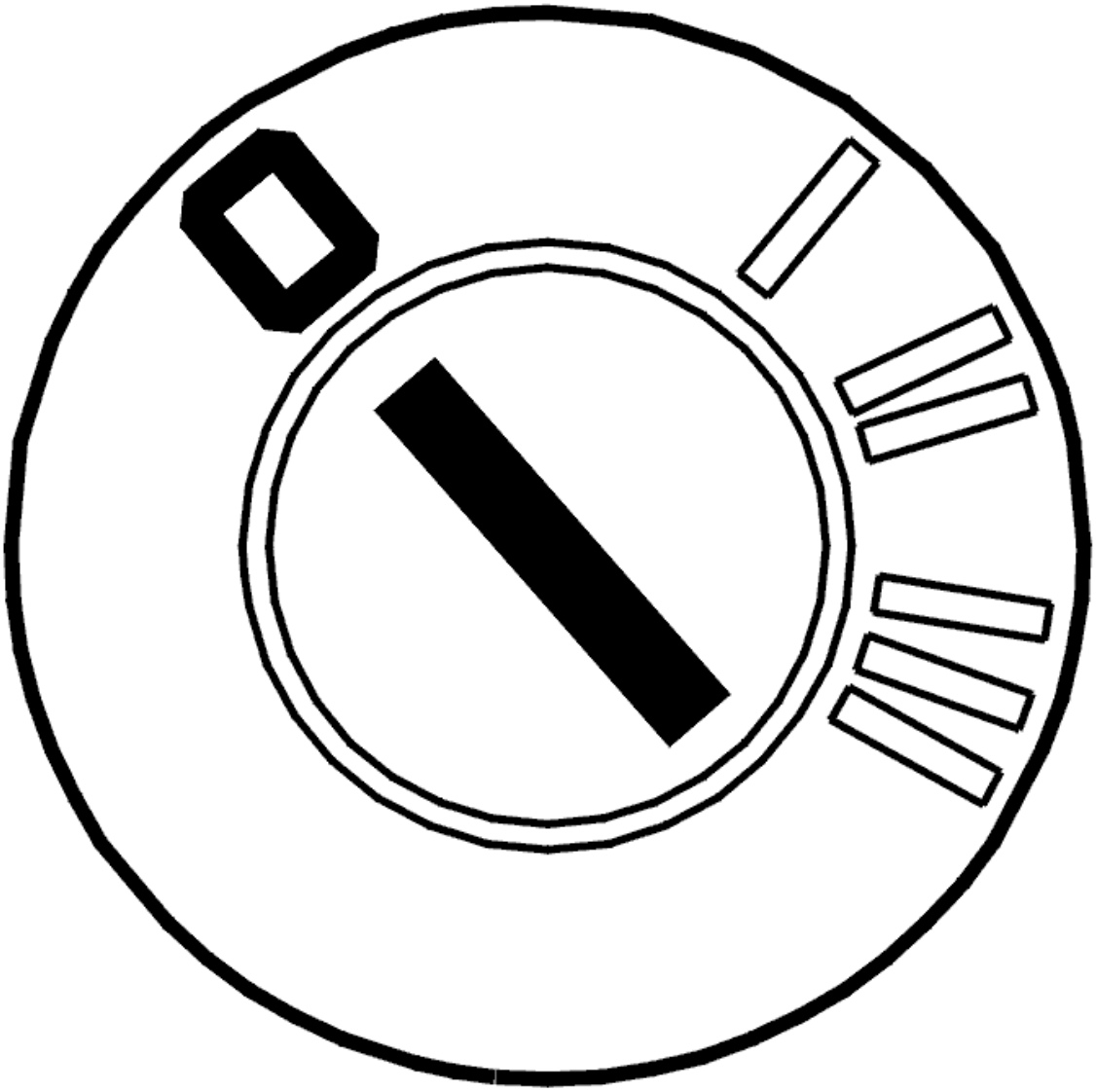

Fig. 273: Identifying Ignition OFF
Courtesy of VOLVO CARS CORPORATION

- Ignition off
- Disconnect connector A for the phone module (PHM).

  Check the feed voltage cable on the control module's connector A for short-circuit to ground.

  Check between:

  - #7 (#7) and #18 (#18).
  - #7 (#7) and #6 (#6).

  If no malfunction was found on the cable, try replacing the handset.

Remedy as necessary.

Other information:

- see **CONNECTING THE BREAKOUT BOX**
- see **SIGNAL SPECIFICATION**
- see **LOCATION OF COMPONENTS**
- see **PHONE MODULE (PHM), REPLACING**
- see **HANDSET, REPLACING**
- see **CONTENTS**

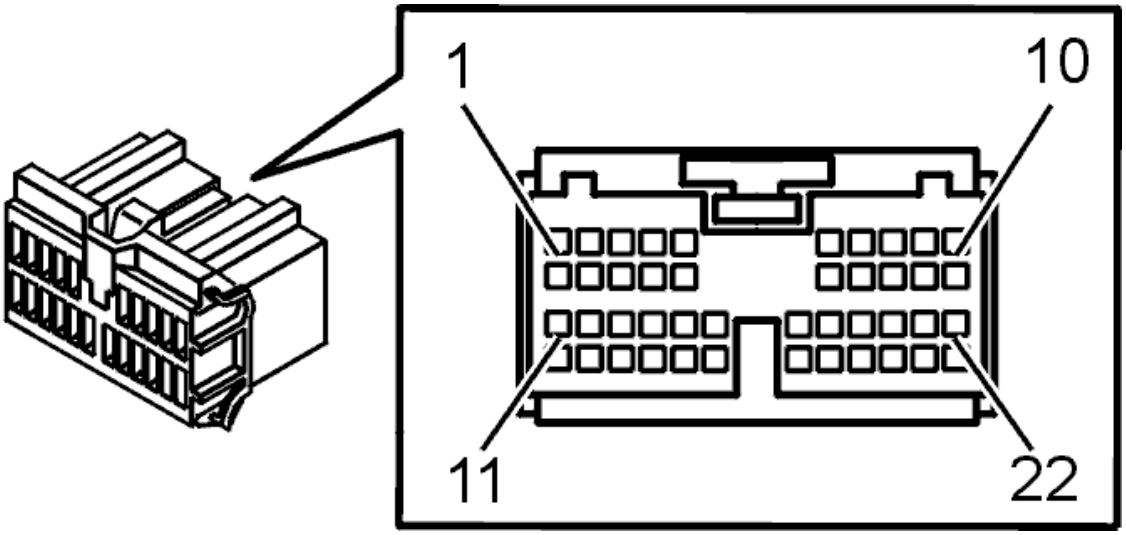

Fig. 274: Identifying Connector (F) Terminals
Courtesy of VOLVO CARS CORPORATION

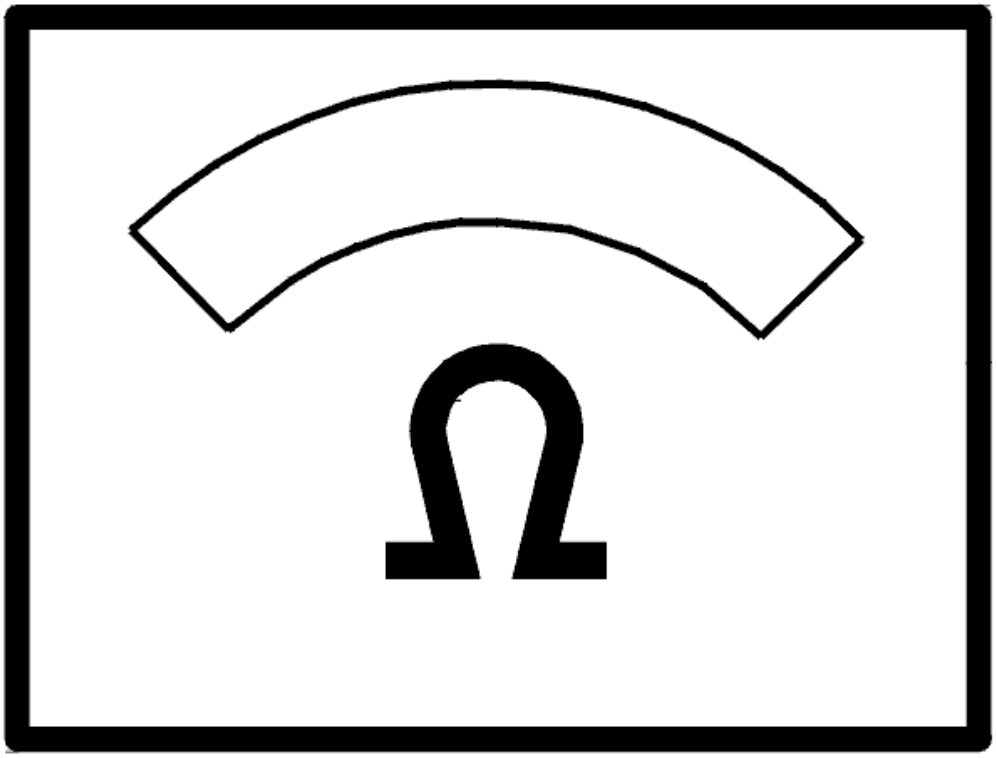

Fig. 275: Identifying Ohm Meter
Courtesy of VOLVO CARS CORPORATION

- **Continue**

  Refer to **VERIFICATION**

VERIFICATION

VERIFICATION

HINT: After carrying out the repair, check that the fault has been remedied.

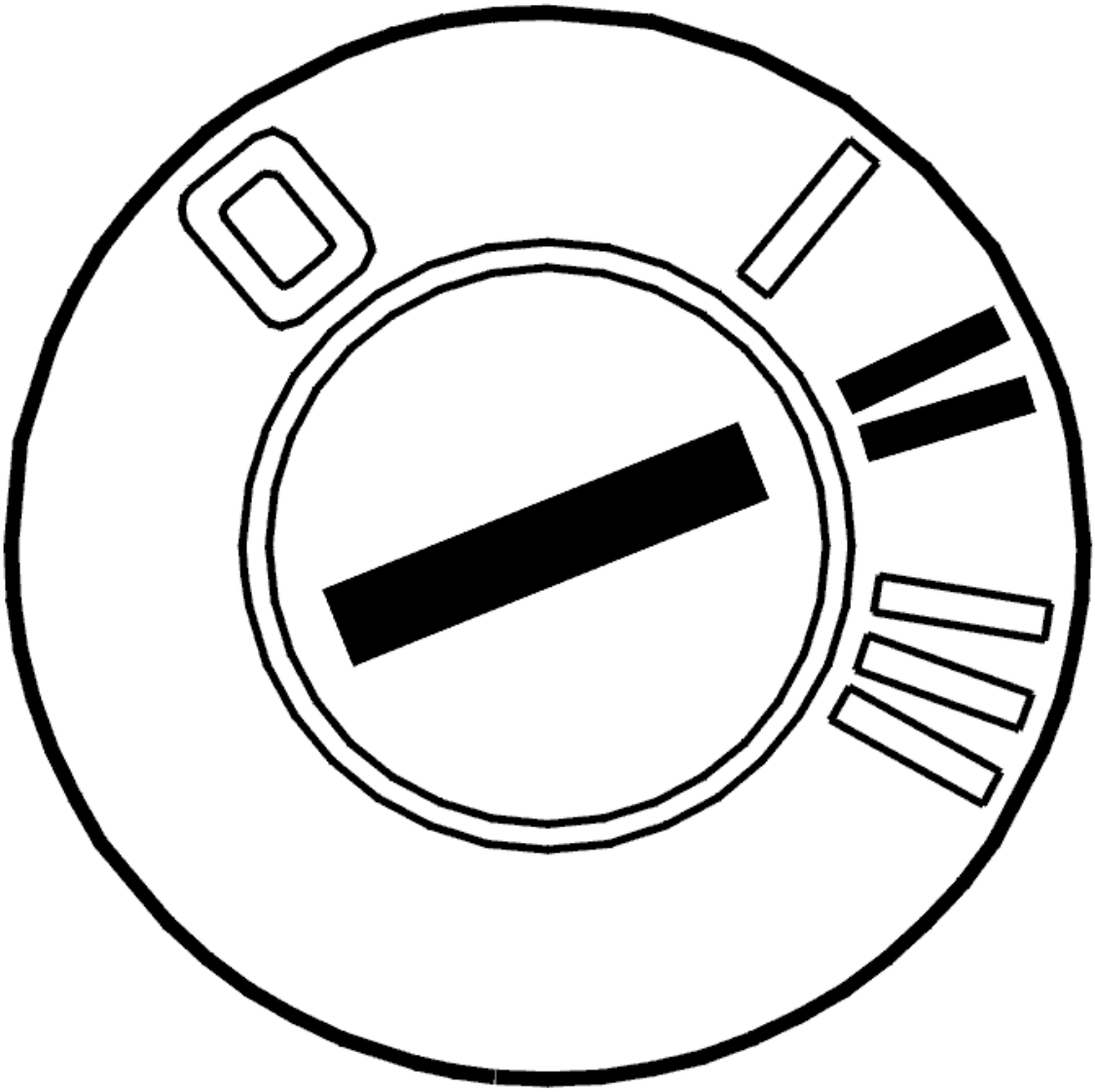

Fig. 276: Identifying Ignition ON
Courtesy of VOLVO CARS CORPORATION

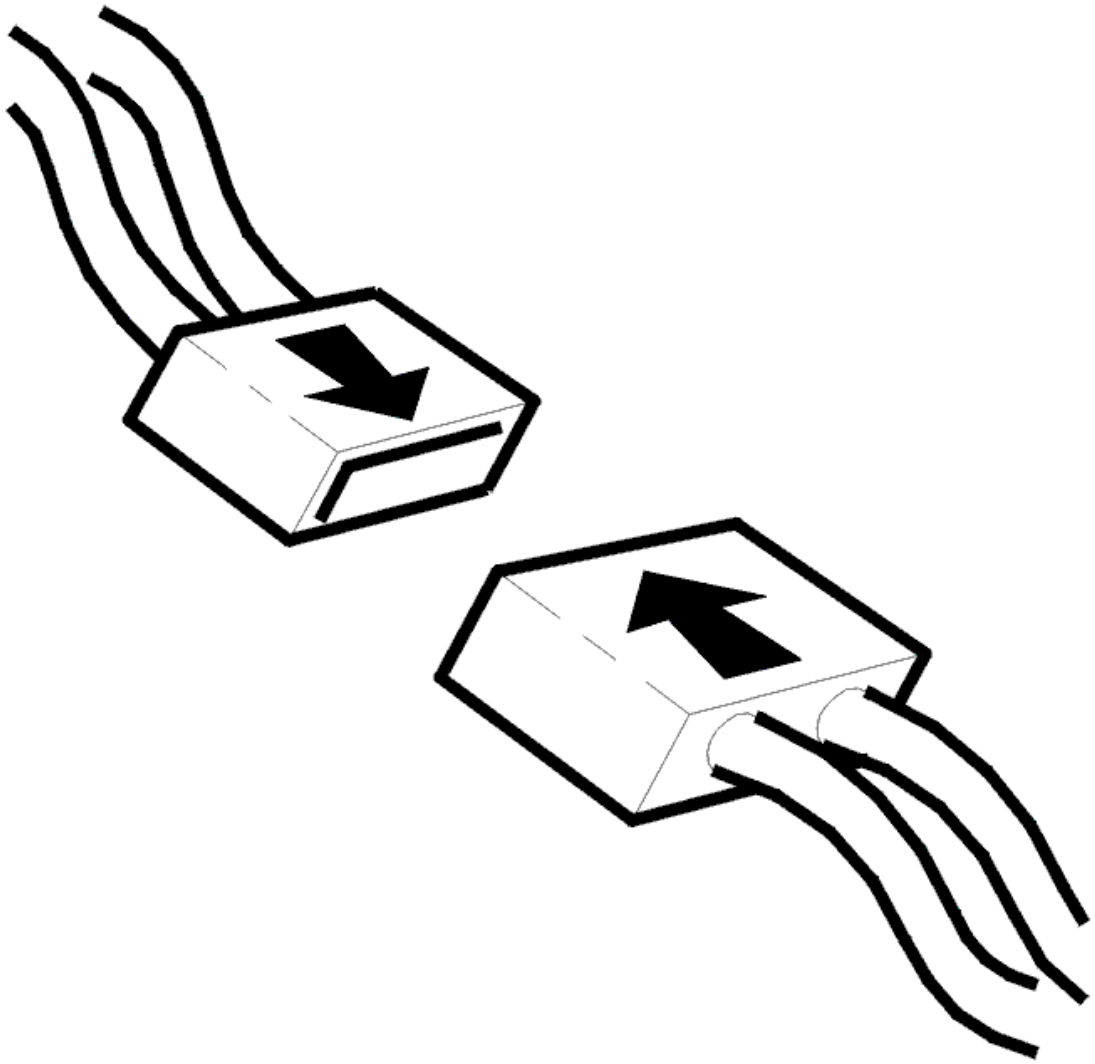

Fig. 277: Connecting Connector
Courtesy of VOLVO CARS CORPORATION

- Ignition off
- Reinstall the connectors, components etc.
- Ignition on
- Activate the carphone.

  Make a call so that both the handset and the hands-free system are used.

  Ignition off.

  Ignition on.

  Read off the diagnostic trouble codes (DTCs).

Check that the relevant diagnostic trouble code (DTC) has switched status from permanent to intermittent fault.

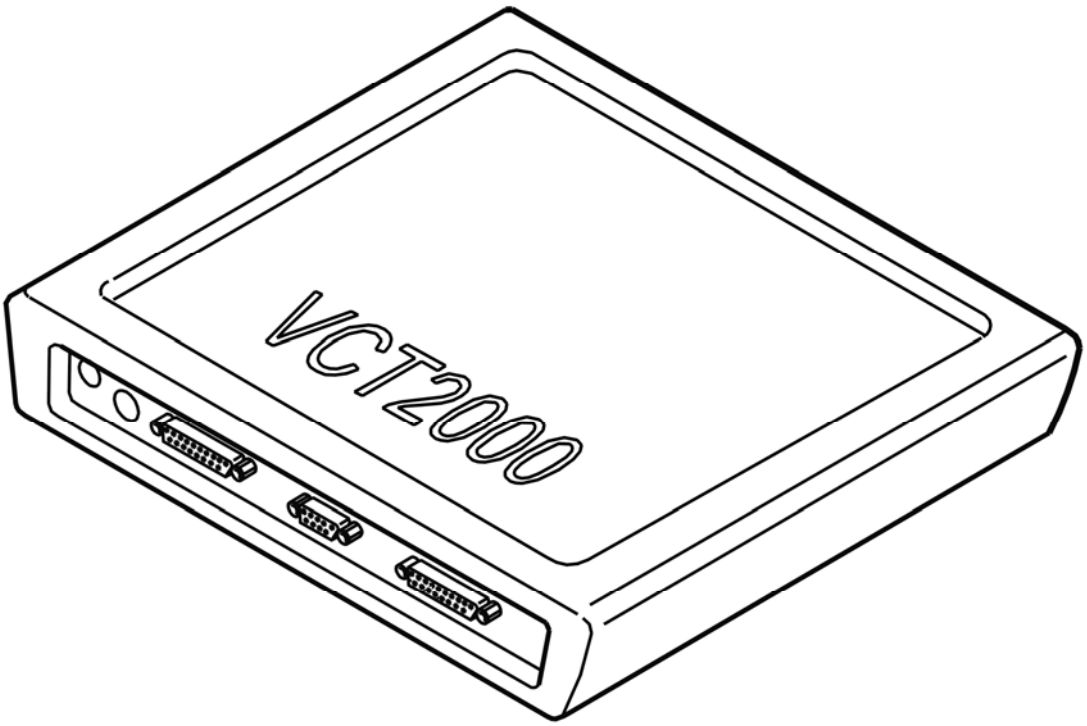

Fig. 278: Identifying VCT2000 Diagnostic Tool Symbol In VIDA
Courtesy of VOLVO CARS CORPORATION

Has the status of the diagnostic trouble code (DTC) changed?

- **YES**

  VERIFIED: Troubleshooting has been completed.

- **NO**

  Refer to **INFORMATION**

INFORMATION

FAULT-TRACING INFORMATION

The fault should have been detected and remedied. As this is not the case fault-tracing has failed.

Exit fault-tracing for this diagnostic trouble code (DTC) or make another attempt.

SIGNAL TOO LOW

CHECKING COMPONENTS AND WIRING

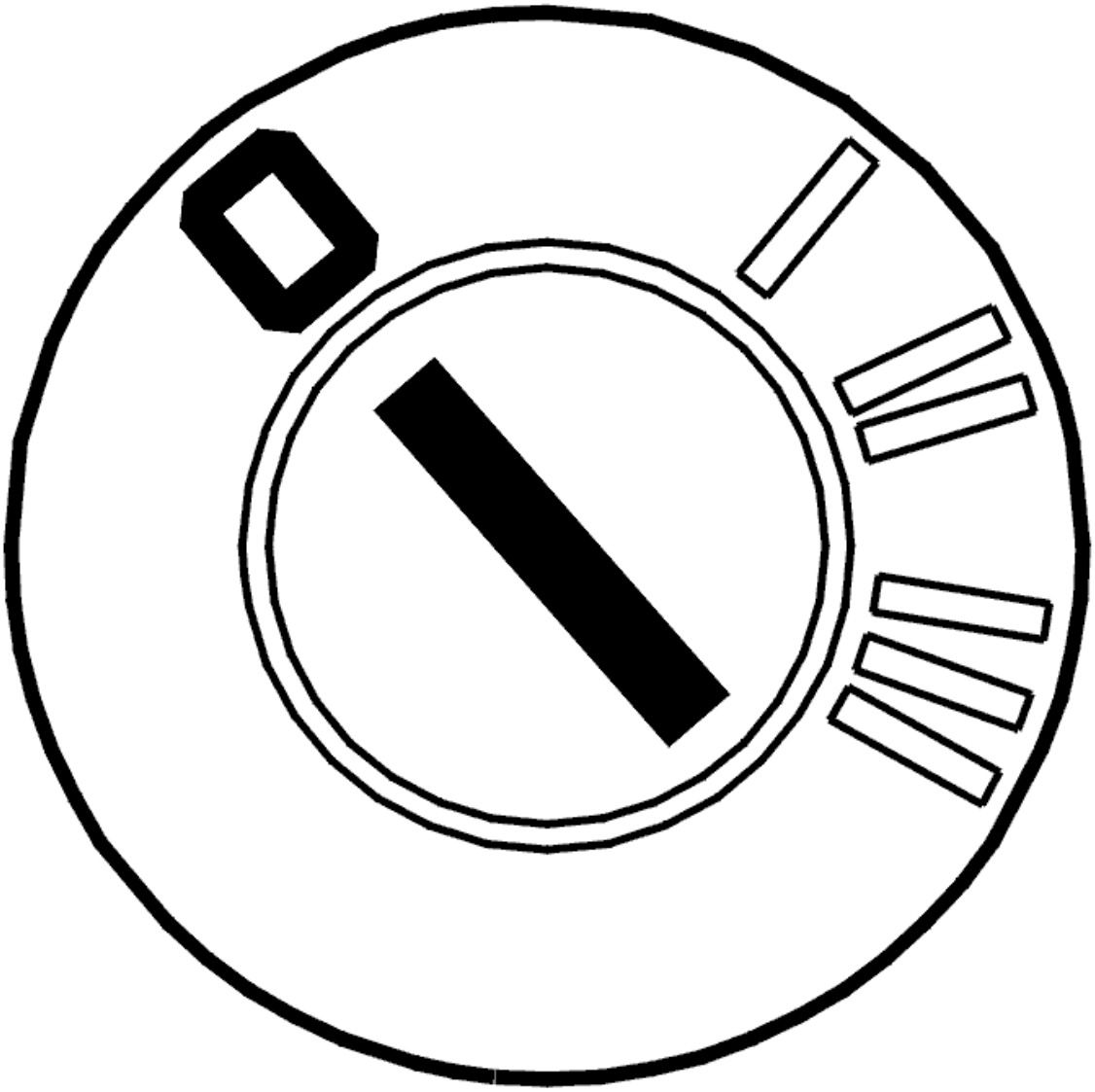

Fig. 279: Identifying Ignition OFF
Courtesy of VOLVO CARS CORPORATION

- Ignition off.

  Check the supply cable between phone module (PHM) connector B terminal #11 (#53) and handset connector terminal #5 (#25). Check for a short-circuit to ground.

  Try replacing the carphone handset if no fault is found in the wiring.

  Remedy as necessary.

Other information:

- To connect the breakout box, see **CONNECTING THE BREAKOUT BOX**
- For information about signals and connectors, see **SIGNAL SPECIFICATION**
- To access or replace the control module, see **PHONE MODULE (PHM), REPLACING**
- To access or replace the handset, see **HANDSET, REPLACING**
- see **CONTENTS** .

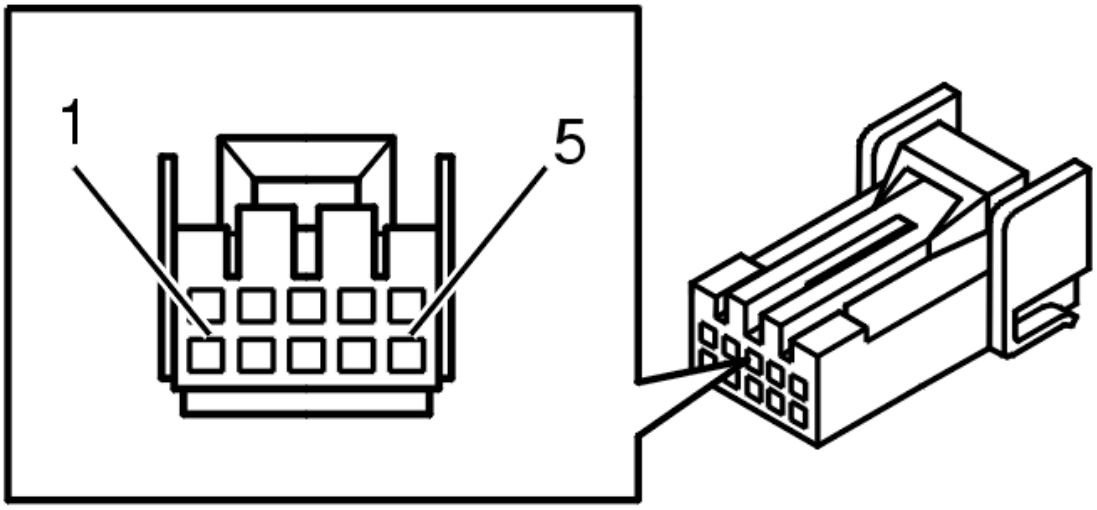

Fig. 280: 10 CD Changer Connector Terminals
Courtesy of VOLVO CARS CORPORATION

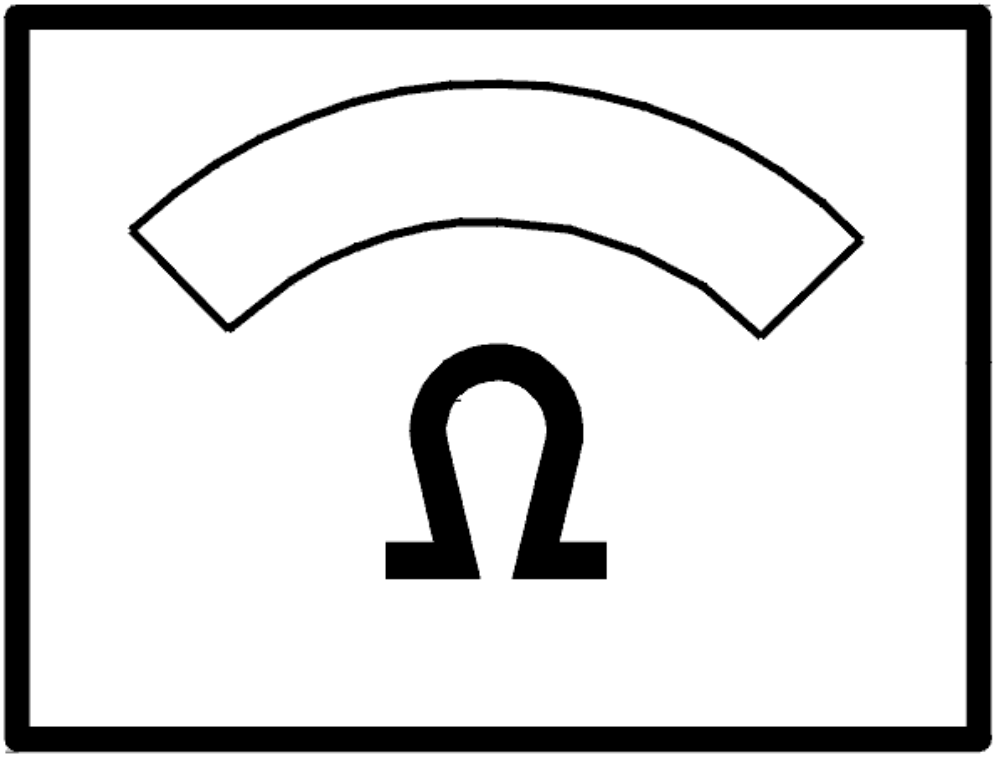

Fig. 281: Identifying Ohm Meter
Courtesy of VOLVO CARS CORPORATION

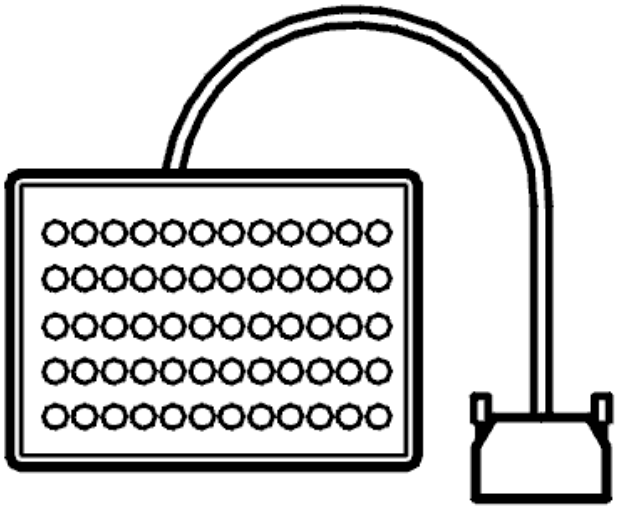

Fig. 282: Breakout Box
Courtesy of VOLVO CARS CORPORATION

- **Continue**

  Refer to **VERIFICATION**

VERIFICATION

VERIFICATION

HINT: After carrying out the repair, check that the fault has been remedied.

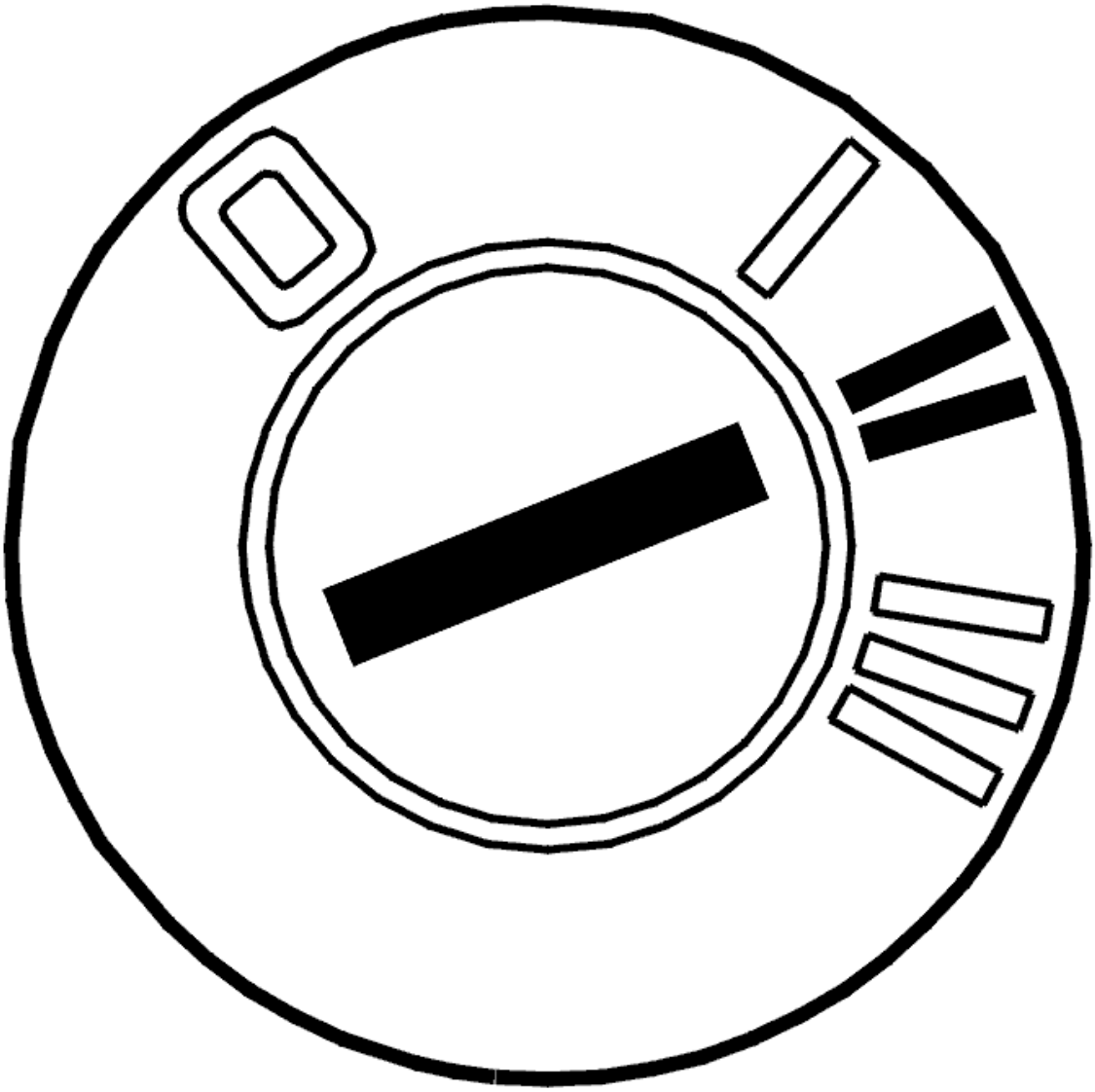

Fig. 283: Identifying Ignition ON
Courtesy of VOLVO CARS CORPORATION

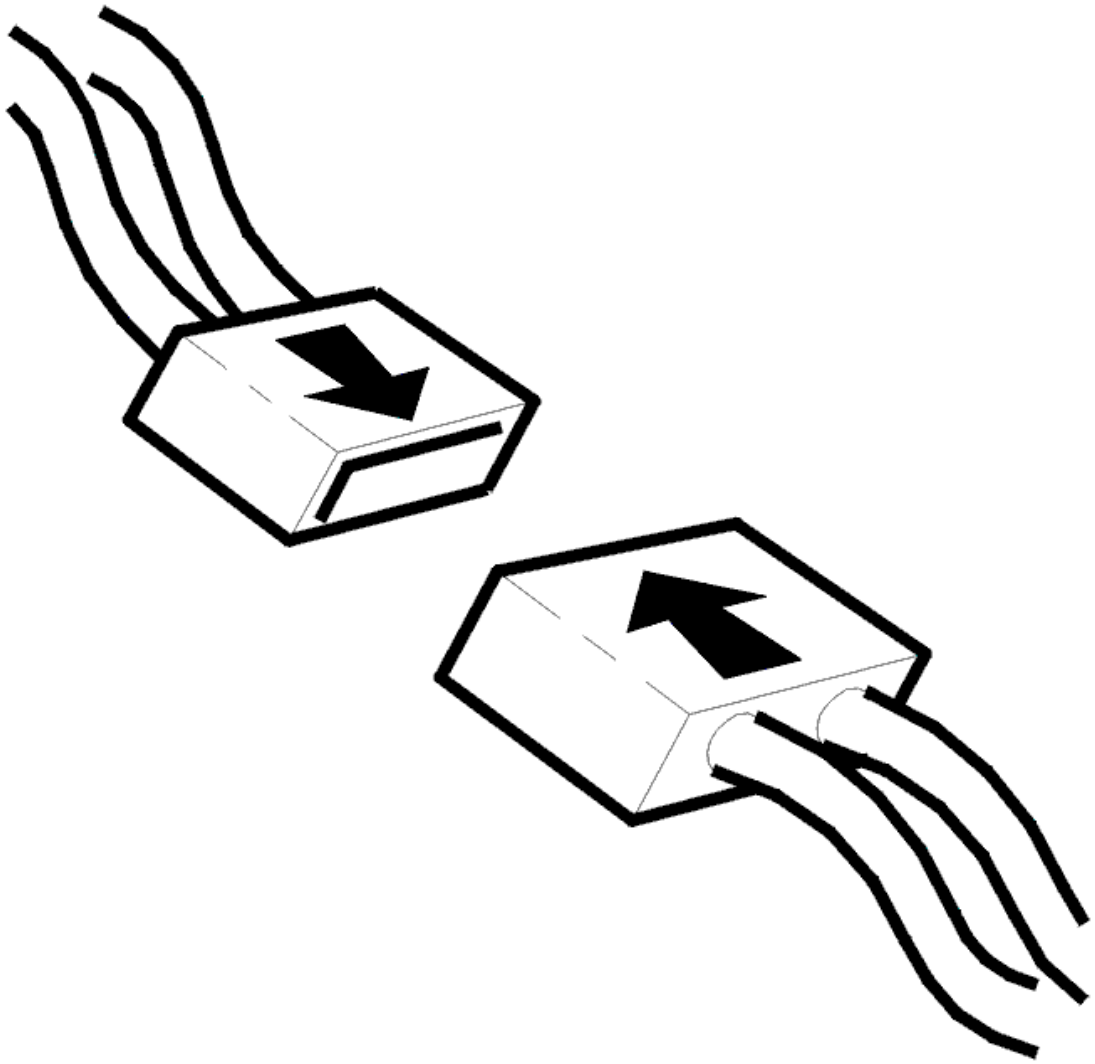

Fig. 284: Connecting Connector
Courtesy of VOLVO CARS CORPORATION

- Ignition off
- Reinstall the connectors, components etc.
- Ignition on
- Switch on the carphone.

  Make a call so that both the handset and the hands-free system are used.

  Ignition off.

  Ignition on.

  Read off the diagnostic trouble codes (DTCs).

Check that the relevant diagnostic trouble code (DTC) has switched status from permanent to intermittent fault.

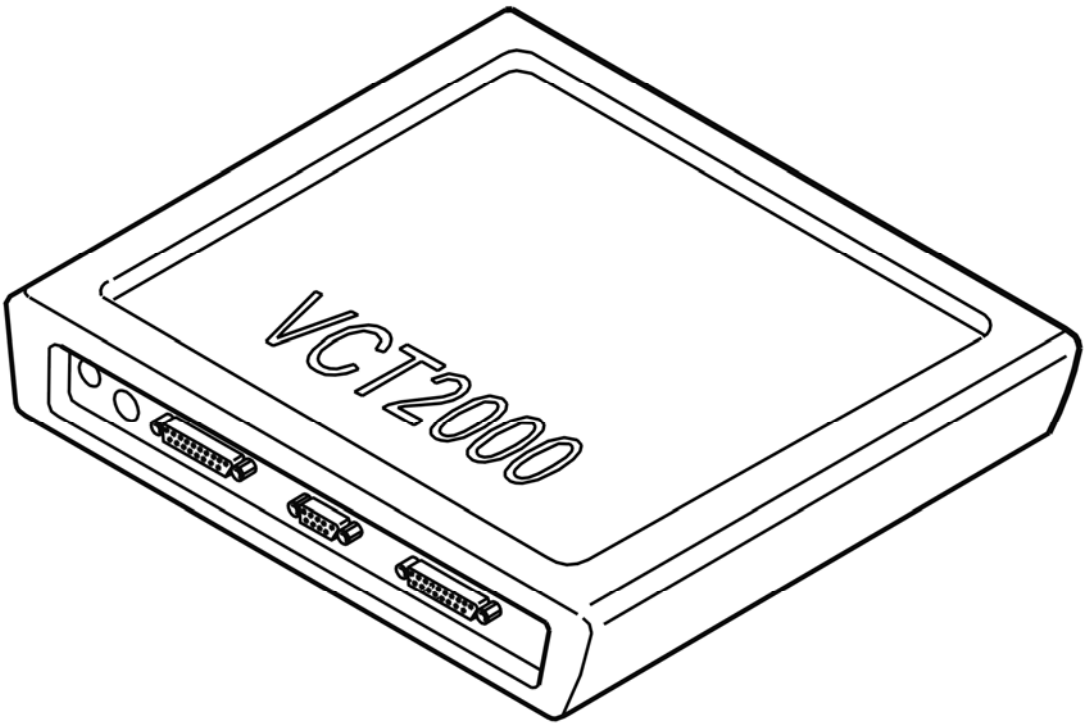

Fig. 285: Identifying VCT2000 Diagnostic Tool Symbol In VIDA
Courtesy of VOLVO CARS CORPORATION

Has the status of the diagnostic trouble code (DTC) changed?

- **YES**

  VERIFIED: Troubleshooting has been completed.

- **NO**

  Refer to **INFORMATION**

INFORMATION

FAULT-TRACING INFORMATION

The fault should have been detected and remedied. As this is not the case fault-tracing has failed.

Exit fault-tracing for this diagnostic trouble code (DTC) or make another attempt.

ACCESSORIES AND BODY, CAB

Media, Communication And Navigation - Diagnostic Trouble Codes and Associated Procedures

IAM-2002: CONTROL MODULE. INTERNAL FAULT (2007-2012)

DIAGNOSTIC TROUBLE CODE (DTC) INFORMATION IAM-2002

Condition

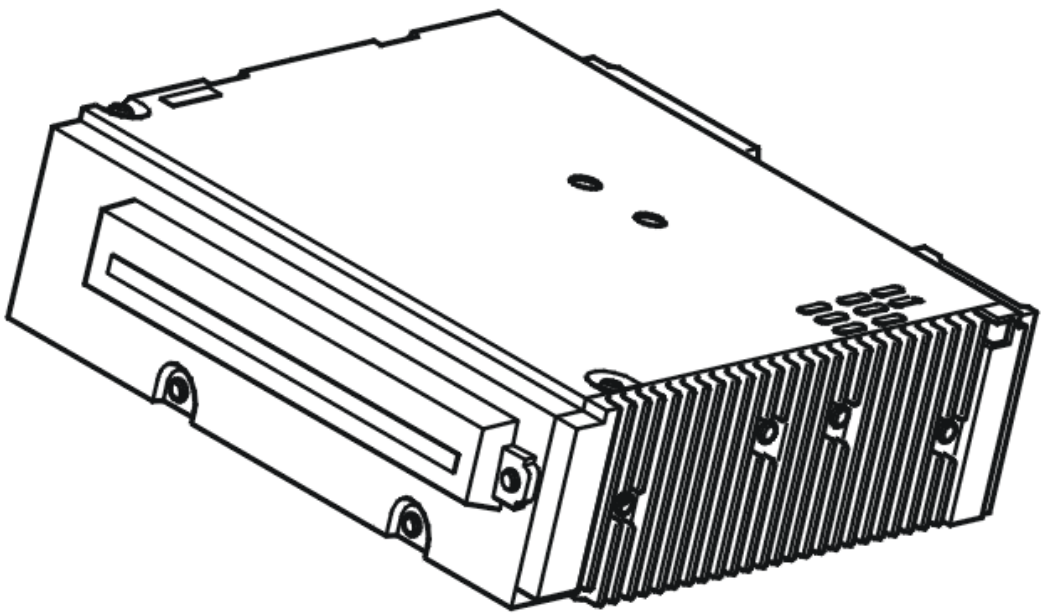

Fig. 1: Identifying Integrated Audio Module (IAM)
Courtesy of VOLVO CARS CORPORATION

If the Integrated Audio Module (IAM) detects an internal fault in the CD changer, then the Diagnostic Trouble Code (DTC) is generated.

The diagnostic trouble code can be diagnosed when the ignition is on.

Substitute Value

- Nothing.

Possible Source

- Internal fault.

Fault symptom[s]

- CD changer inoperative.

INTERNAL FAULT

see **INTERNAL FAULT**

IAM-2003: CONTROL MODULE. INTERNAL FAULT (2007-2012)

DIAGNOSTIC TROUBLE CODE (DTC) INFORMATION IAM-2003

Condition

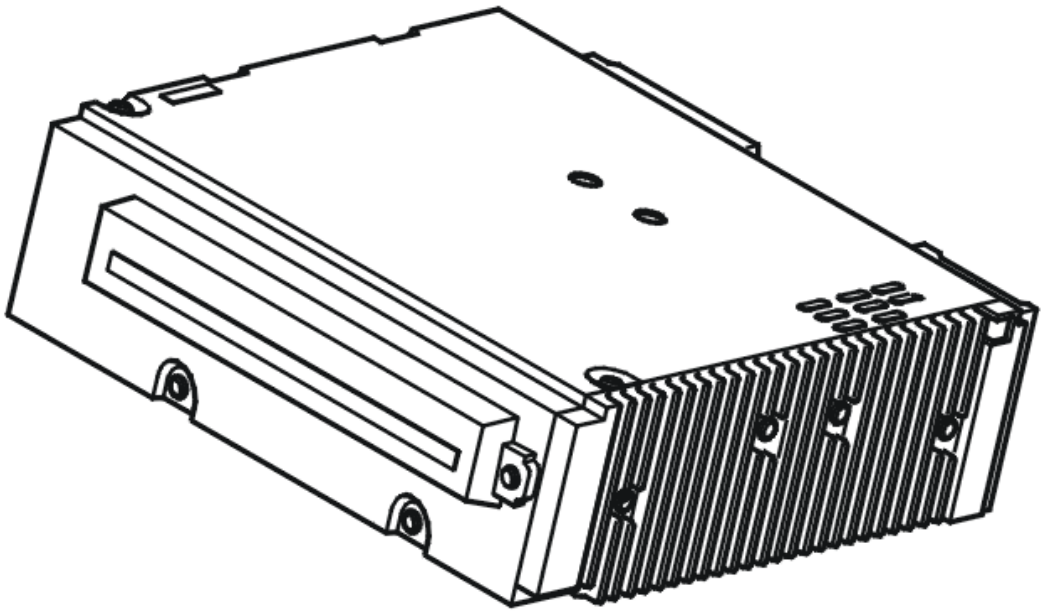

Fig. 2: Identifying Integrated Audio Module (IAM)
Courtesy of VOLVO CARS CORPORATION

If the Integrated Audio Module (IAM) detects an internal fault in the CD changer, then the Diagnostic Trouble Code (DTC) is generated.

The diagnostic trouble code can be diagnosed when the ignition is on.

Substitute Value

- Nothing.

Possible Source

- Internal fault.

Fault symptom[s]

- CD changer inoperative.

INTERNAL FAULT

see **INTERNAL FAULT**

IAM-2004: CONTROL MODULE. INTERNAL FAULT (2007-2012)

DIAGNOSTIC TROUBLE CODE (DTC) INFORMATION IAM-2004

Condition

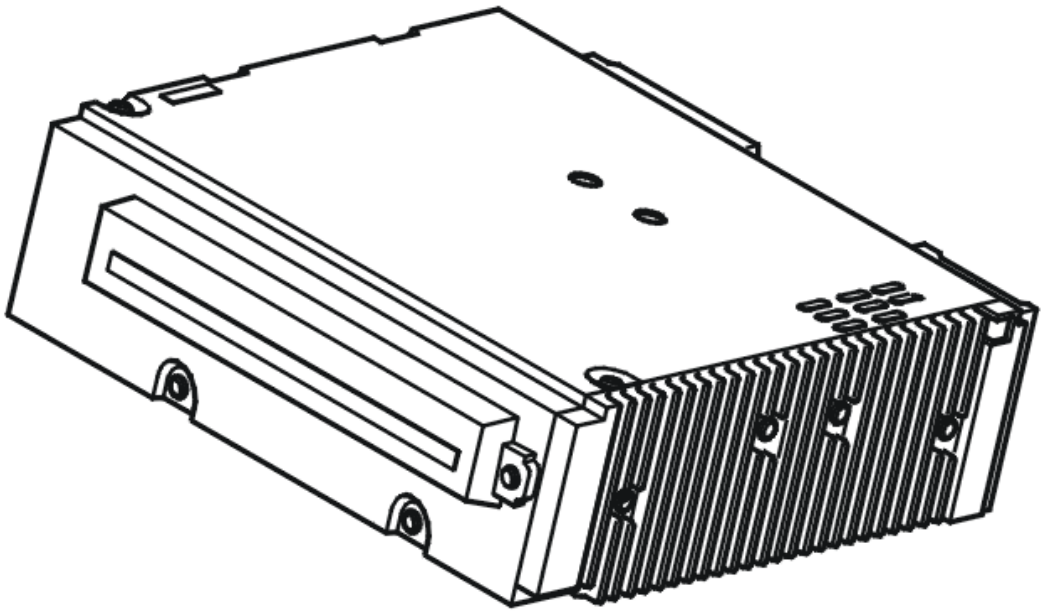

Fig. 3: Identifying Integrated Audio Module (IAM)
Courtesy of VOLVO CARS CORPORATION

If the Integrated Audio Module (IAM) detects an internal fault in the CD changer, then the Diagnostic Trouble Code (DTC) is generated.

The diagnostic trouble code can be diagnosed when the ignition is on.

Substitute Value

- Nothing.

Possible Source

- Internal fault.

Fault symptom[s]

- CD changer inoperative.

INTERNAL FAULT

see **INTERNAL FAULT**

IAM-2005: CONTROL MODULE. INTERNAL FAULT (2007-2012)

DIAGNOSTIC TROUBLE CODE (DTC) INFORMATION IAM-2005

Condition

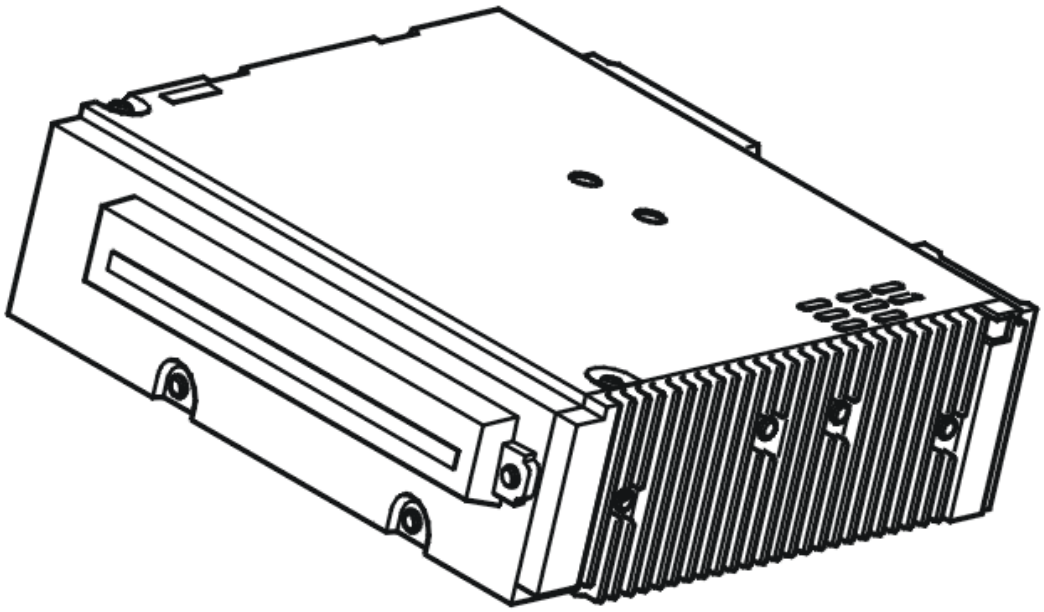

Fig. 4: Identifying Integrated Audio Module (IAM)
Courtesy of VOLVO CARS CORPORATION

If the Integrated Audio Module (IAM) detects an internal fault in the CD player, then the Diagnostic Trouble Code (DTC) is generated.

The diagnostic trouble code can be diagnosed when the ignition is on.

Substitute Value

- Nothing.

Possible Source

- Internal fault.

Fault symptom[s]

- CD player inoperative.

INTERNAL FAULT

see **INTERNAL FAULT**

IAM-3001: FRONT LEFT SPEAKER. SIGNAL TOO LOW (2007-2012)

DIAGNOSTIC TROUBLE CODE (DTC) INFORMATION IAM-3001

Condition

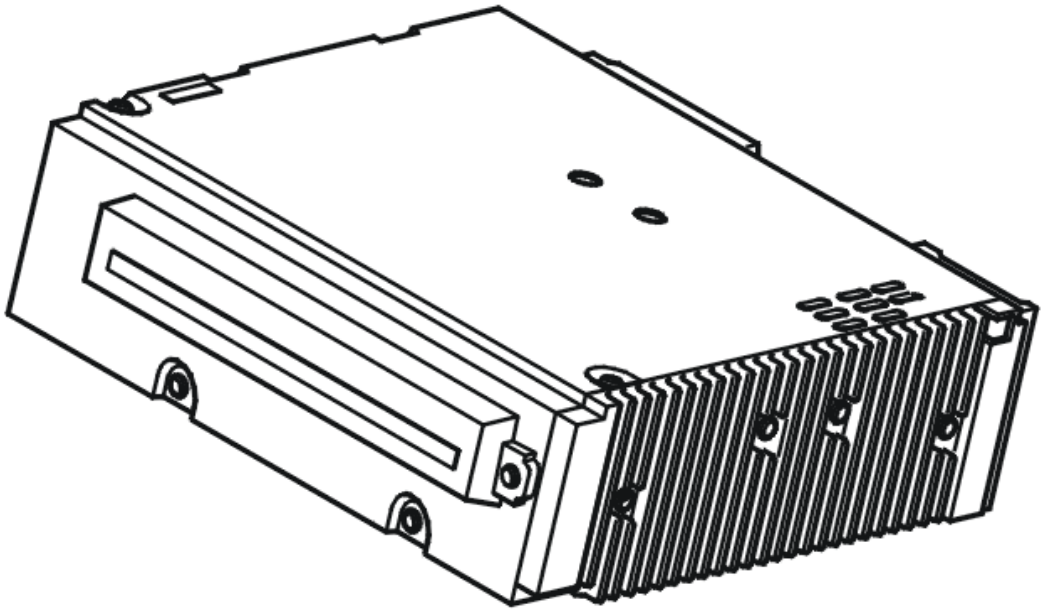

Fig. 5: Identifying Integrated Audio Module (IAM)
Courtesy of VOLVO CARS CORPORATION

If the Integrated Audio Module (IAM) registers that the signal is too low on the signal cable from the speaker in the left-hand front door, then the Diagnostic Trouble Code (DTC) is generated.

The diagnostic trouble code can be diagnosed when the ignition is on.

Substitute Value

- Nothing.

Possible Source

- Short circuit to ground on the signal cable between the control module and speaker in the left-hand front door.

Fault symptom[s]

- CD player inoperative.
- No sound from speakers.

SIGNAL TOO LOW

CHECKING THE WIRING

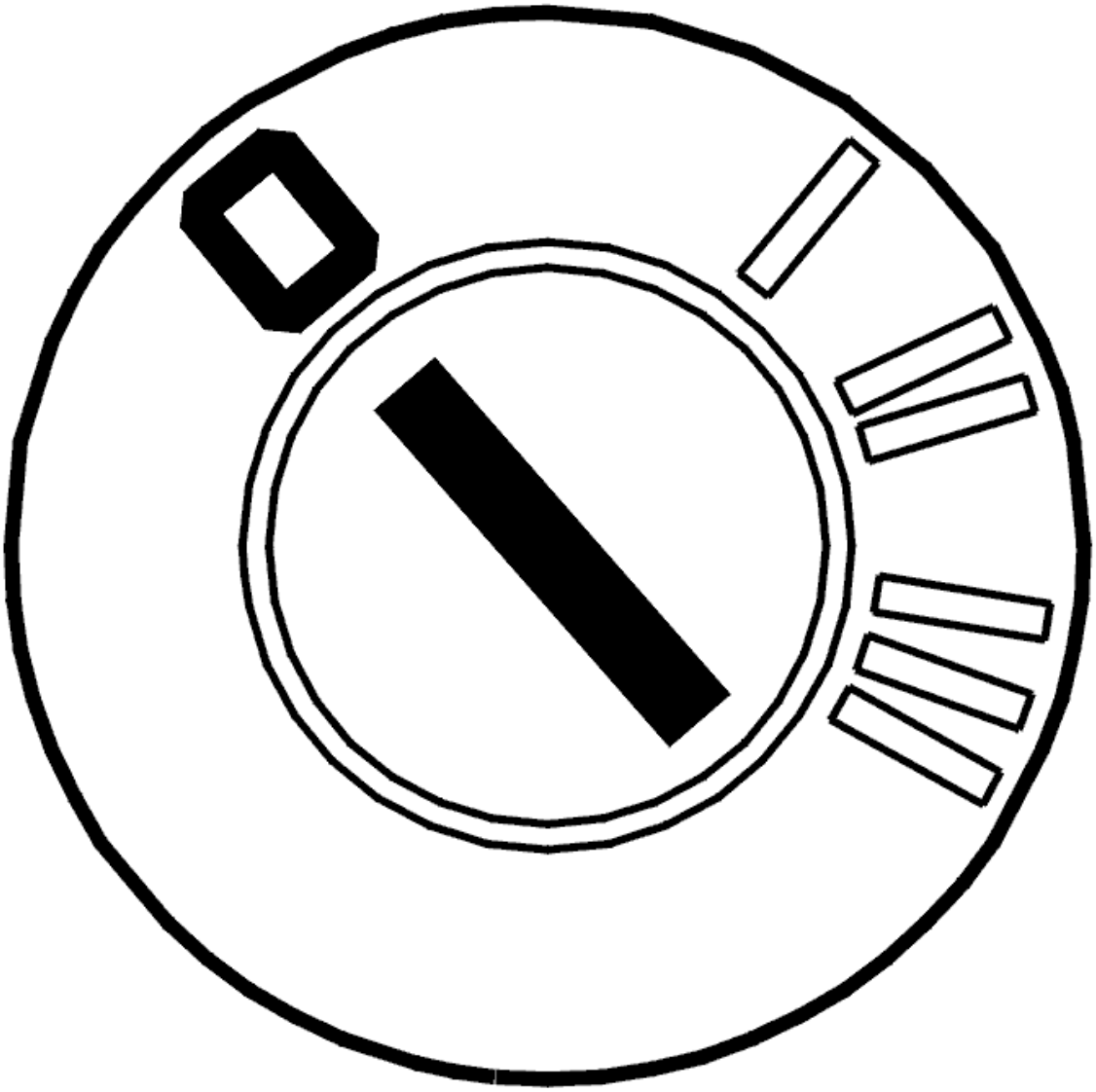

Fig. 6: Identifying Ignition OFF
Courtesy of VOLVO CARS CORPORATION

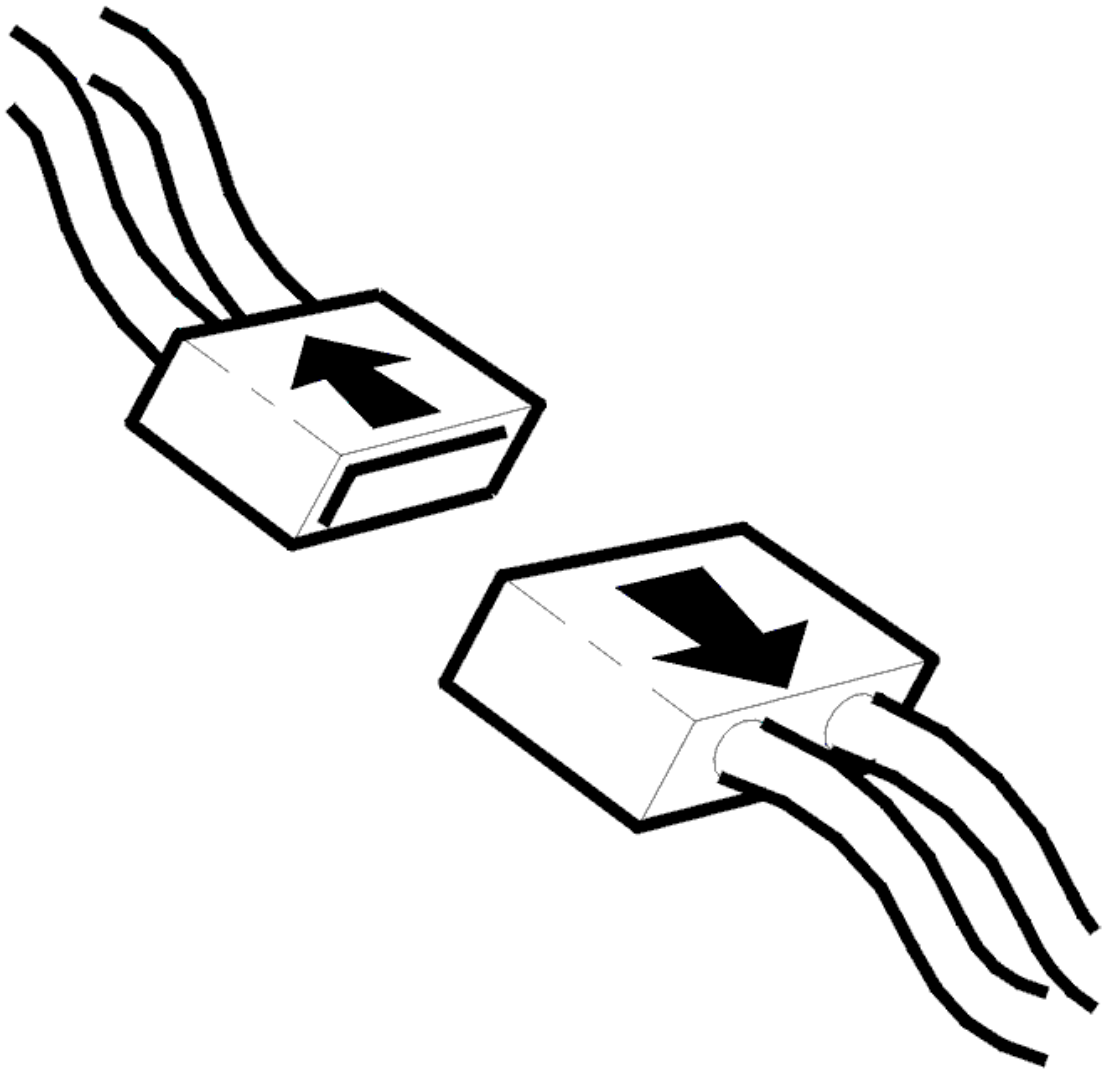

Fig. 7: Disconnecting Connector
Courtesy of VOLVO CARS CORPORATION

- Ignition off
- Disconnect the connector to the Integrated Audio Module (IAM).

  Check the connections with regard to contact resistance, play and oxidation.

  Check the antenna cable between the Integrated Audio Module (IAM) and the speaker in the left-hand front door with regard to short circuits to ground.

  Measure between:

  - Integrated audio module (IAM) terminal #A5 and speaker terminal #1 in the left front door.
  - Integrated audio module (IAM) terminal #A12 and speaker terminal #2 in the left front door.

Remedy as necessary.

Other information

- see **SIGNAL SPECIFICATION**
- see **LOCATION OF COMPONENTS**
- see **CONTROL MODULE GENERAL SOUND PLAYER**
- see **LOUDSPEAKER, FRONT SIDE DOOR, REPLACING**
- see **CONTENTS**

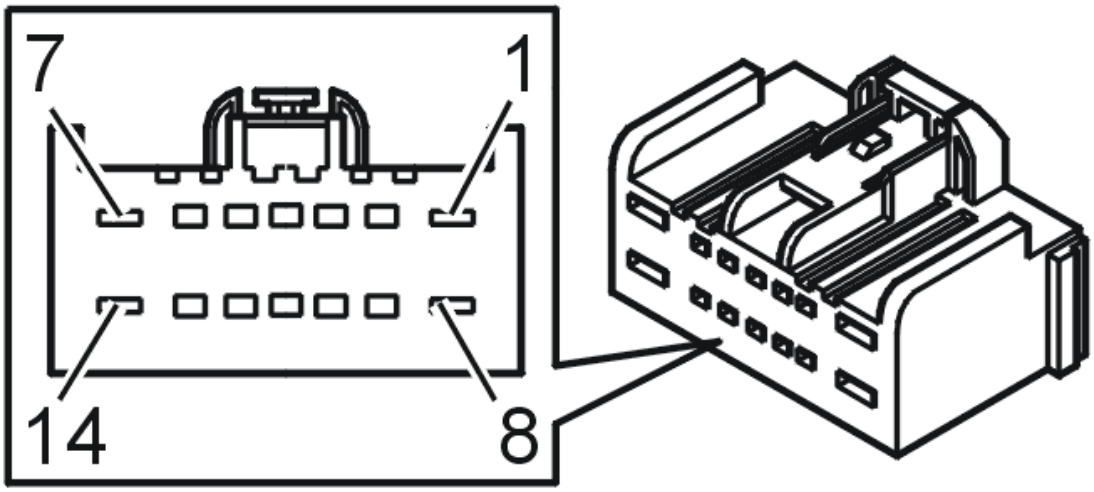

Fig. 8: Identifying 14-Bit Connector
Courtesy of VOLVO CARS CORPORATION

- **Continue**

  See: **VERIFICATION**

VERIFICATION

VERIFICATION

HINT: After carrying out the repair, check that the fault has been remedied.

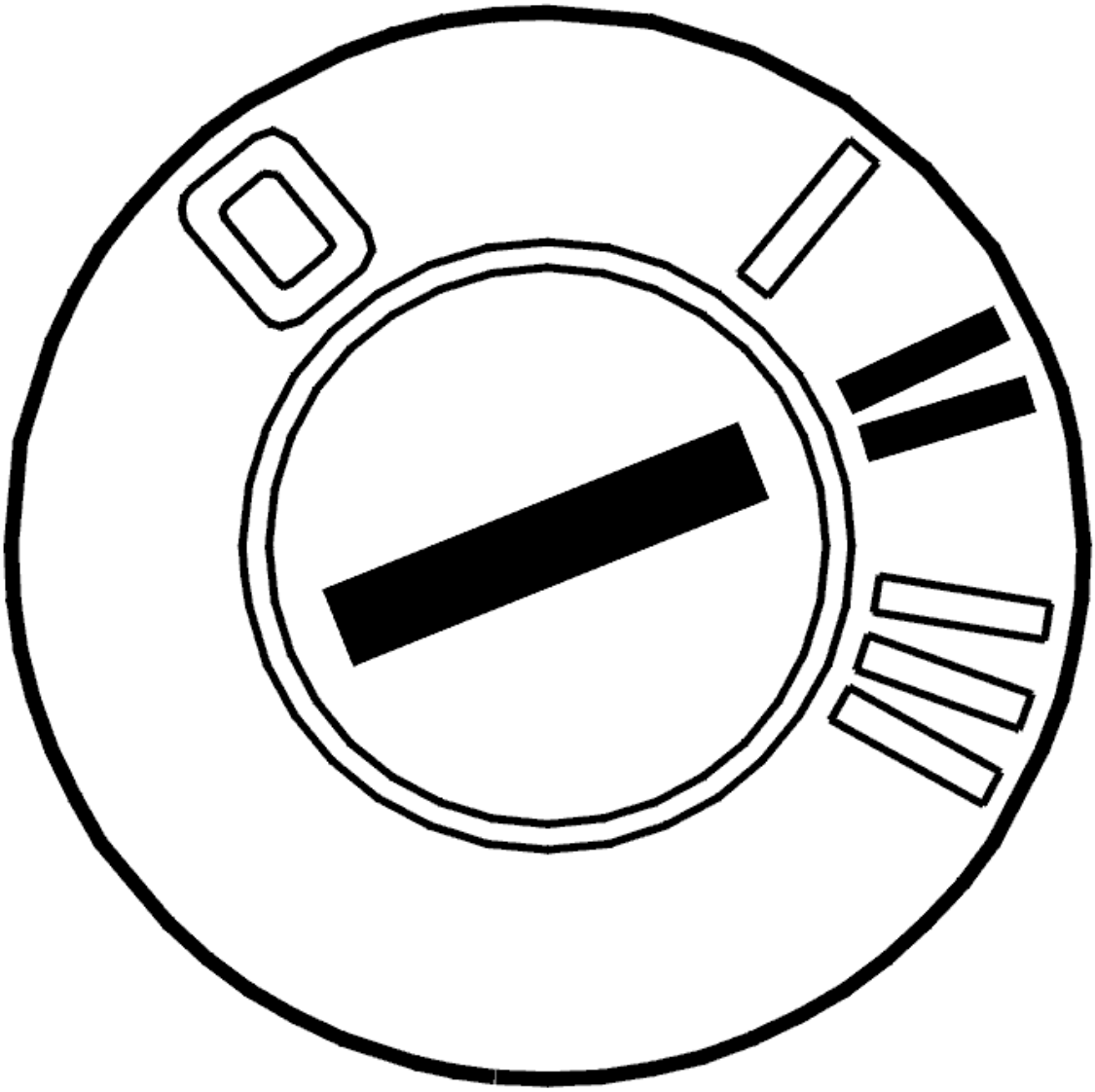

Fig. 9: Identifying Ignition ON
Courtesy of VOLVO CARS CORPORATION

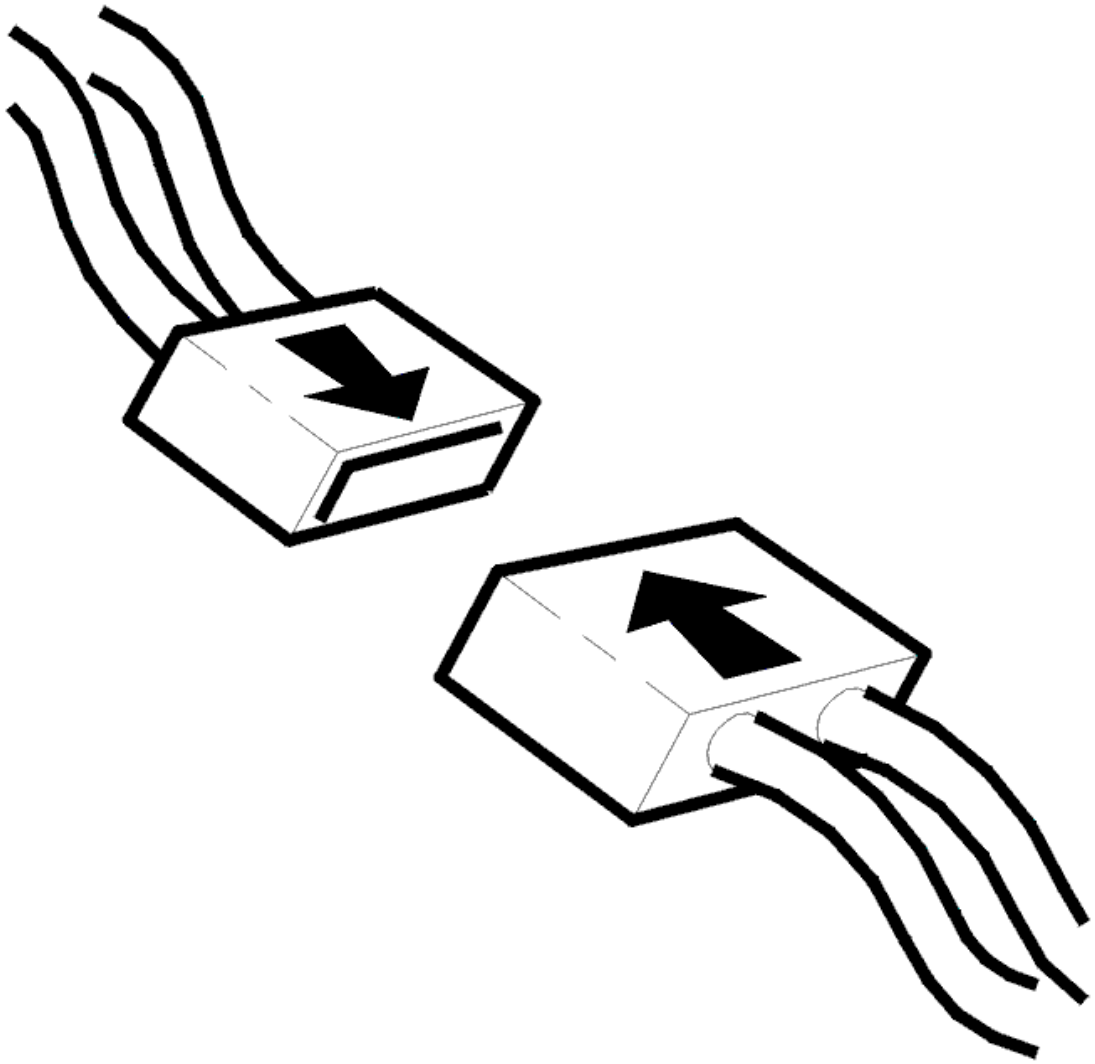

Fig. 10: Connecting Connector
Courtesy of VOLVO CARS CORPORATION

- Ignition off
- Reinstall the connectors, components etc.
- Ignition on

  Check that the sound is heard from the speakers by testing the CD player.

Are the speakers working?

- **YES**

  VERIFIED: Troubleshooting has been completed.

- **NO**

  See: **INFORMATION**

INFORMATION

FAULT-TRACING INFORMATION

The fault should have been detected and remedied. As this is not the case fault-tracing has failed.

Exit fault-tracing for this diagnostic trouble code (DTC) or make another attempt.

IAM-3002: FRONT LEFT SPEAKER. SIGNAL TOO HIGH (2007-2012)

DIAGNOSTIC TROUBLE CODE (DTC) INFORMATION IAM-3002

Condition

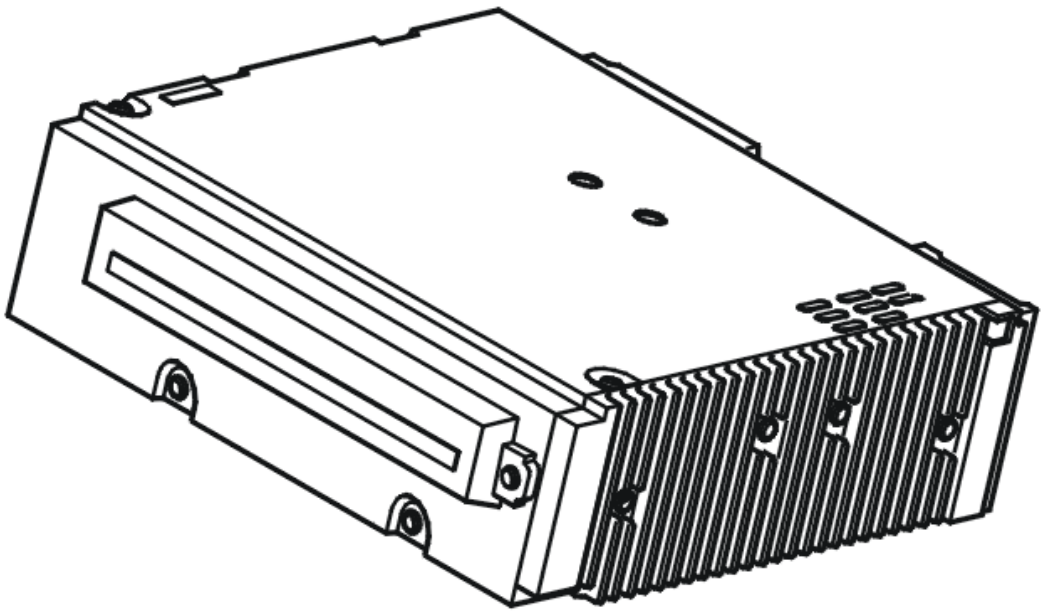

Fig. 11: Identifying Integrated Audio Module (IAM)
Courtesy of VOLVO CARS CORPORATION

If the Integrated Audio Module (IAM) registers that the signal is too high on the signal cable from the speaker in the left-hand front door, then the Diagnostic Trouble Code (DTC) is generated.

The diagnostic trouble code can be diagnosed when the ignition is on.

Substitute Value

- Nothing.

Possible Source

- Short circuit to supply voltage on the signal cable between the control module and speaker in the left-hand front door.

Fault symptom[s]

- CD player inoperative.
- No sound from speakers.

SIGNAL TOO HIGH

CHECKING THE WIRING

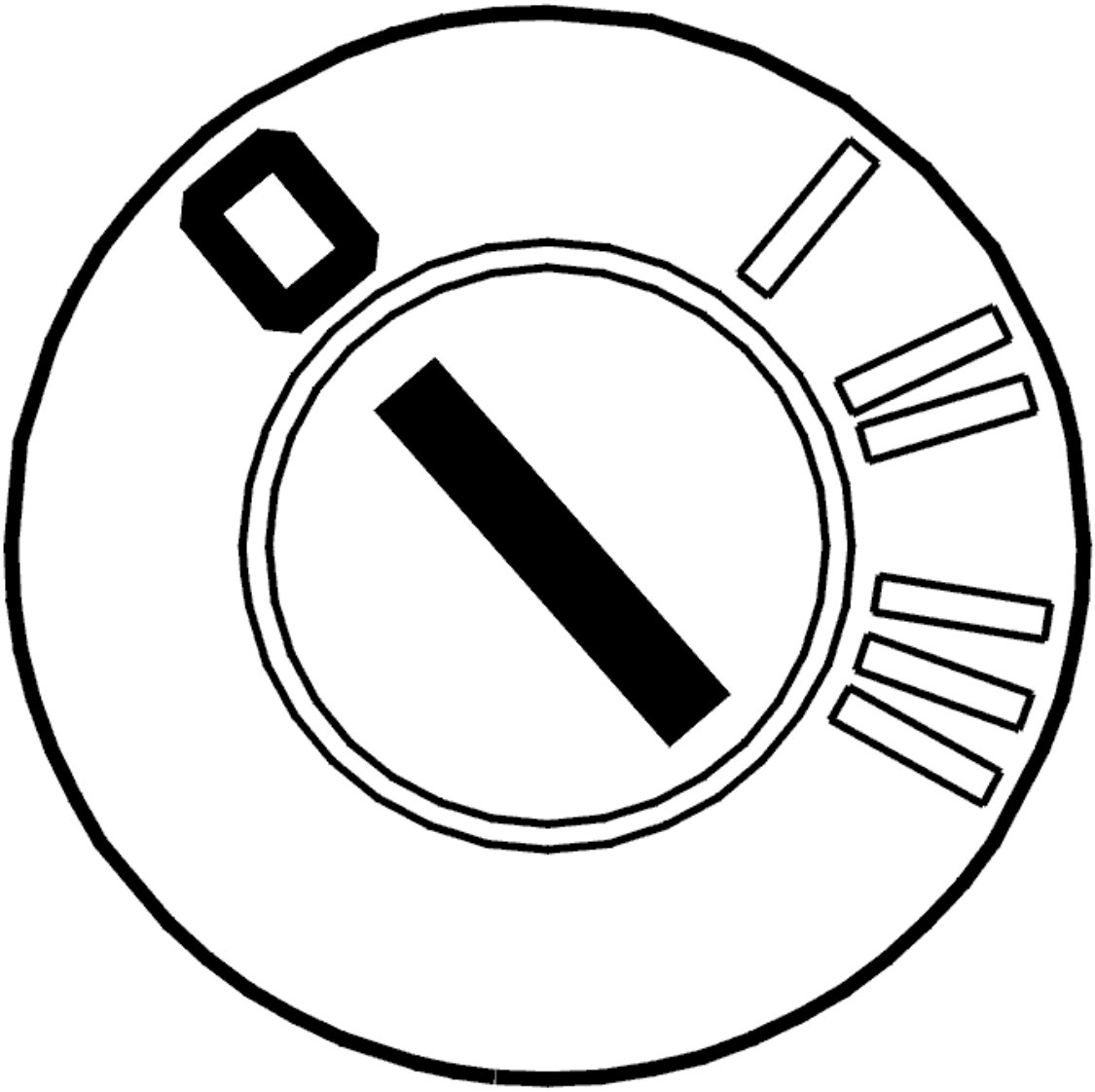

Fig. 12: Identifying Ignition OFF
Courtesy of VOLVO CARS CORPORATION

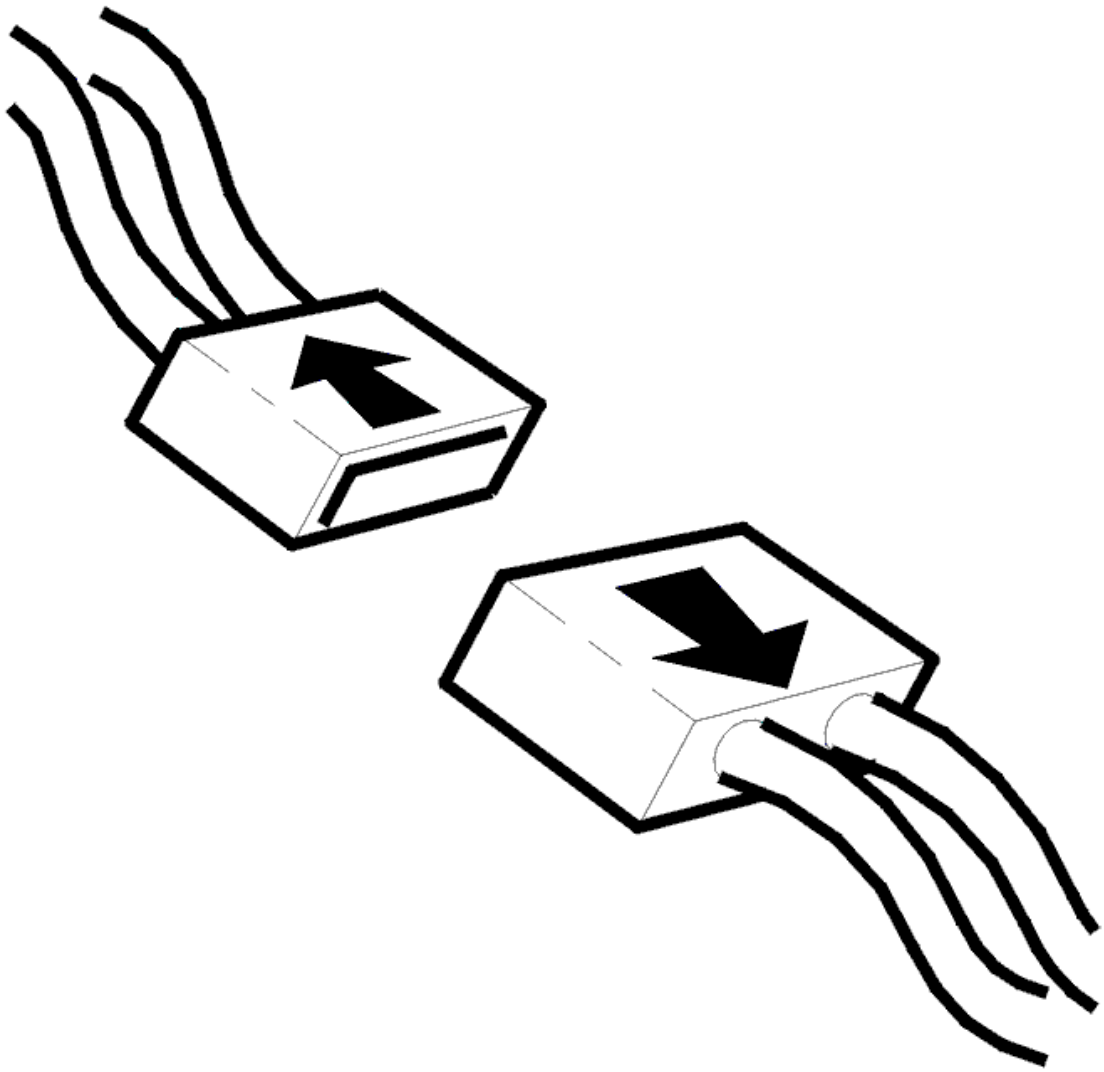

Fig. 13: Disconnecting Connector
Courtesy of VOLVO CARS CORPORATION

- Ignition off
- Disconnect the connector to the Integrated Audio Module (IAM).

  Check the connections with regard to contact resistance, play and oxidation.

  Check the antenna cable between the Integrated Audio Module (IAM) and the speaker in the left-hand front door with regard to short circuits to supply voltage.

  Measure between:

  - Integrated audio module (IAM) terminal #A5 and speaker terminal #1 in the left front door.
  - Integrated audio module (IAM) terminal #A12 and speaker terminal #2 in the left front door.

Remedy as necessary.

Other information

- see **SIGNAL SPECIFICATION**
- see **LOCATION OF COMPONENTS**
- see **CONTROL MODULE GENERAL SOUND PLAYER**
- see **LOUDSPEAKER, FRONT SIDE DOOR, REPLACING**
- see **CONTENTS**

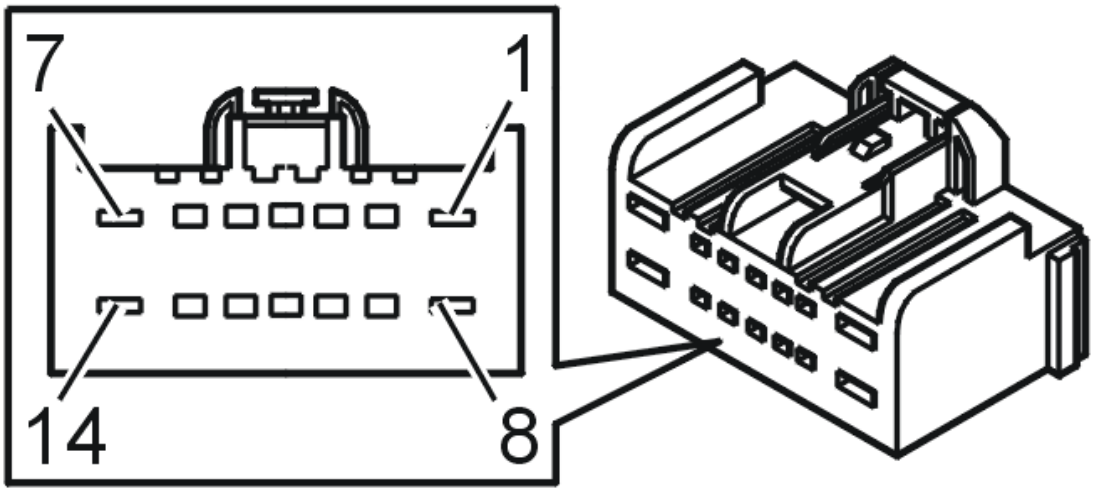

Fig. 14: Identifying 14-Bit Connector
Courtesy of VOLVO CARS CORPORATION

- **Continue**

  See: **VERIFICATION**

VERIFICATION

VERIFICATION

HINT: After carrying out the repair, check that the fault has been remedied.

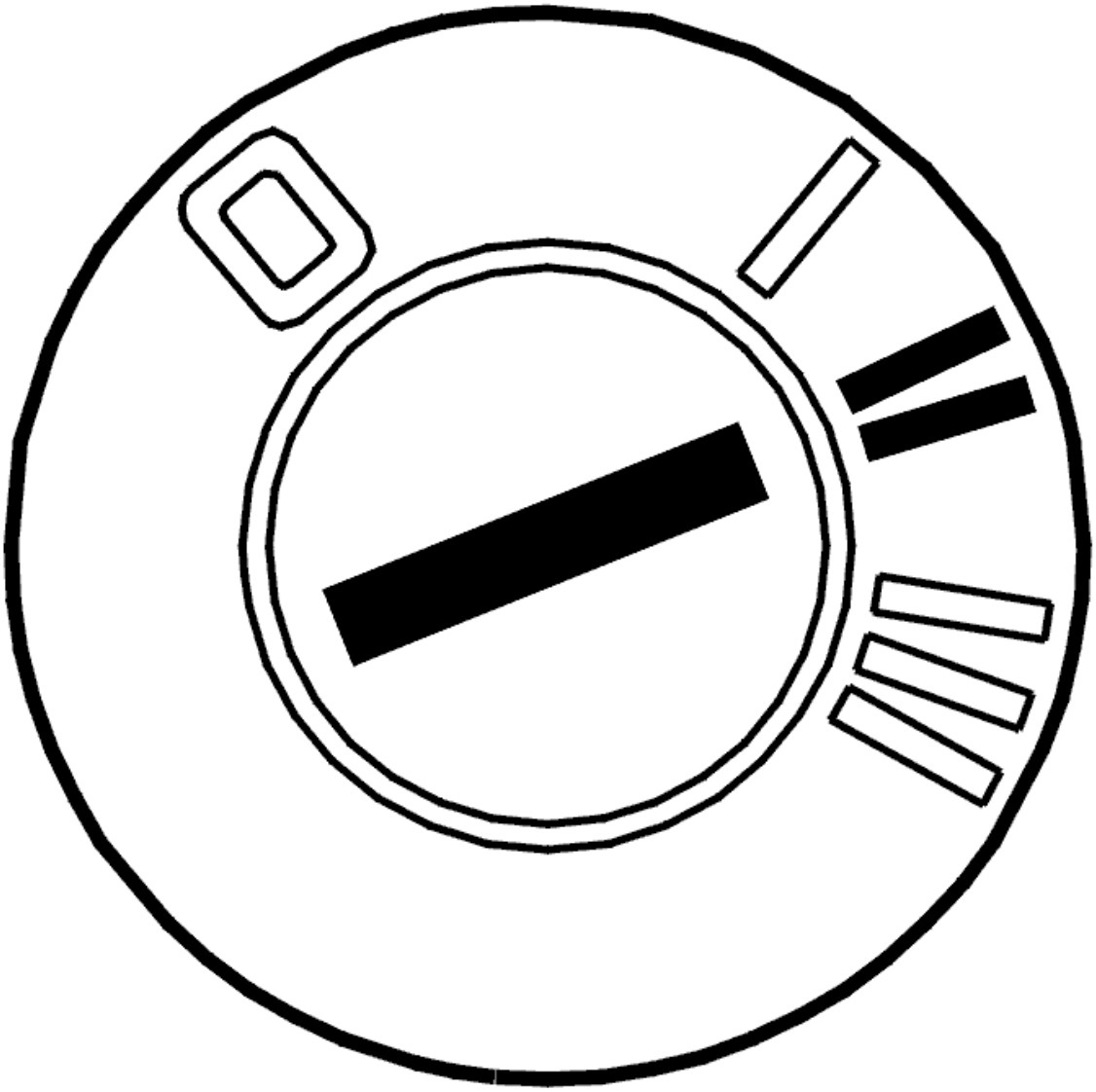

Fig. 15: Identifying Ignition ON
Courtesy of VOLVO CARS CORPORATION

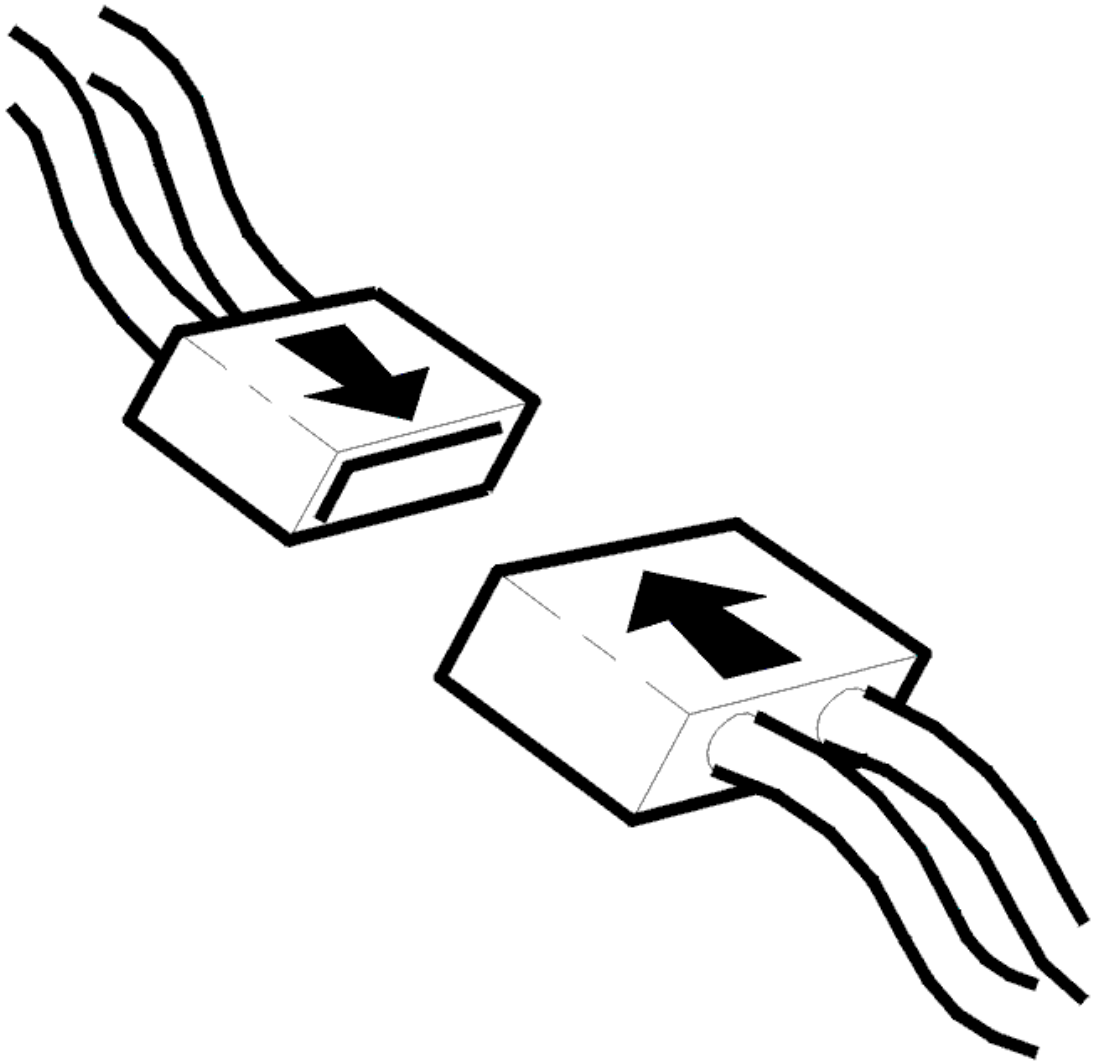

Fig. 16: Connecting Connector
Courtesy of VOLVO CARS CORPORATION

- Ignition off
- Reinstall the connectors, components etc.
- Ignition on

  Check that the sound is heard from the speakers by testing the CD player.

Are the speakers working?

- **YES**

  VERIFIED: Troubleshooting has been completed.

- **NO**

  See: **INFORMATION**

INFORMATION

FAULT-TRACING INFORMATION

The fault should have been detected and remedied. As this is not the case fault-tracing has failed.

Exit fault-tracing for this diagnostic trouble code (DTC) or make another attempt.

IAM-3003: FRONT LEFT SPEAKER. FAULTY SIGNAL (2007-2012)

DIAGNOSTIC TROUBLE CODE (DTC) INFORMATION IAM-3003

Condition

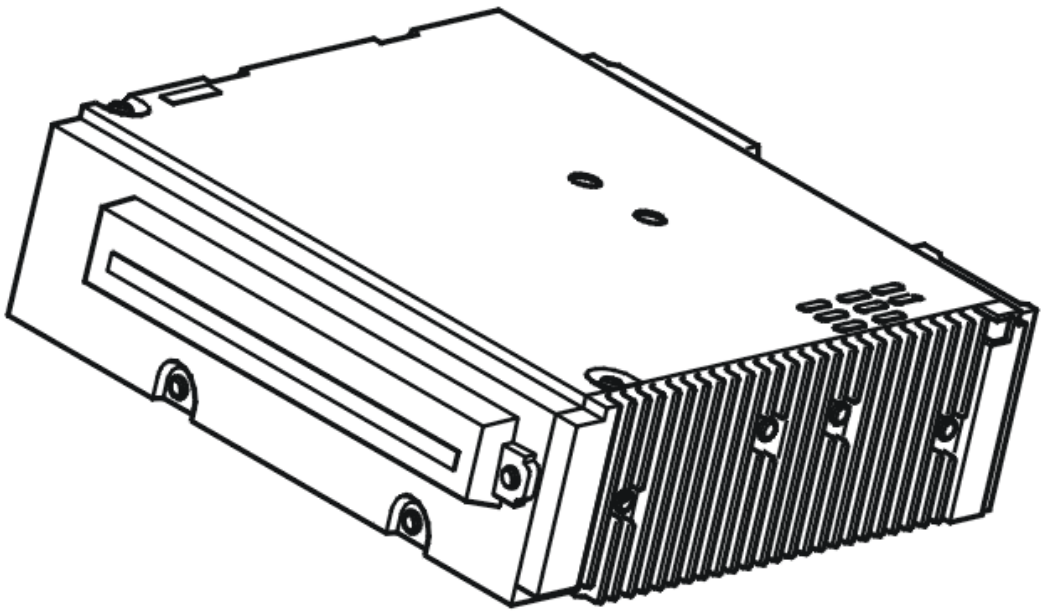

Fig. 17: Identifying Integrated Audio Module (IAM)
Courtesy of VOLVO CARS CORPORATION

If the Integrated Audio Module (IAM) registers that the impedance is too low in the speaker in the left-hand front door, then the Diagnostic Trouble Code (DTC) is generated.

The diagnostic trouble code can be diagnosed when the ignition is on.

Substitute Value

- Nothing.

Possible Source

- Short circuit between the signal cables to the speaker in the left-hand front door.
- Internal fault in the speaker in the left-hand front door.

Fault symptom[s]

- CD player inoperative.
- No sound from speakers.

FAULTY SIGNAL

CHECKING THE WIRING

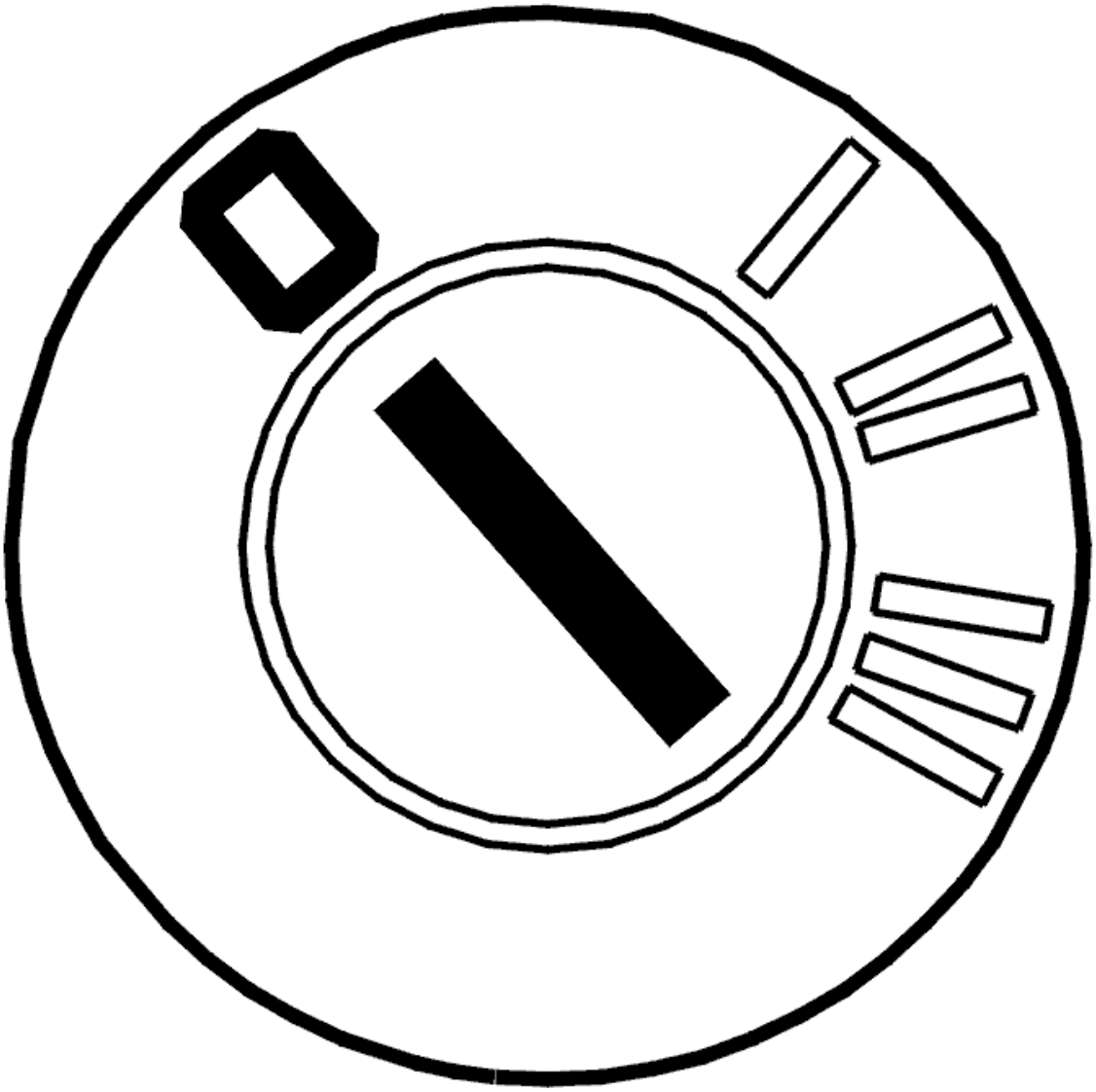

Fig. 18: Identifying Ignition OFF
Courtesy of VOLVO CARS CORPORATION

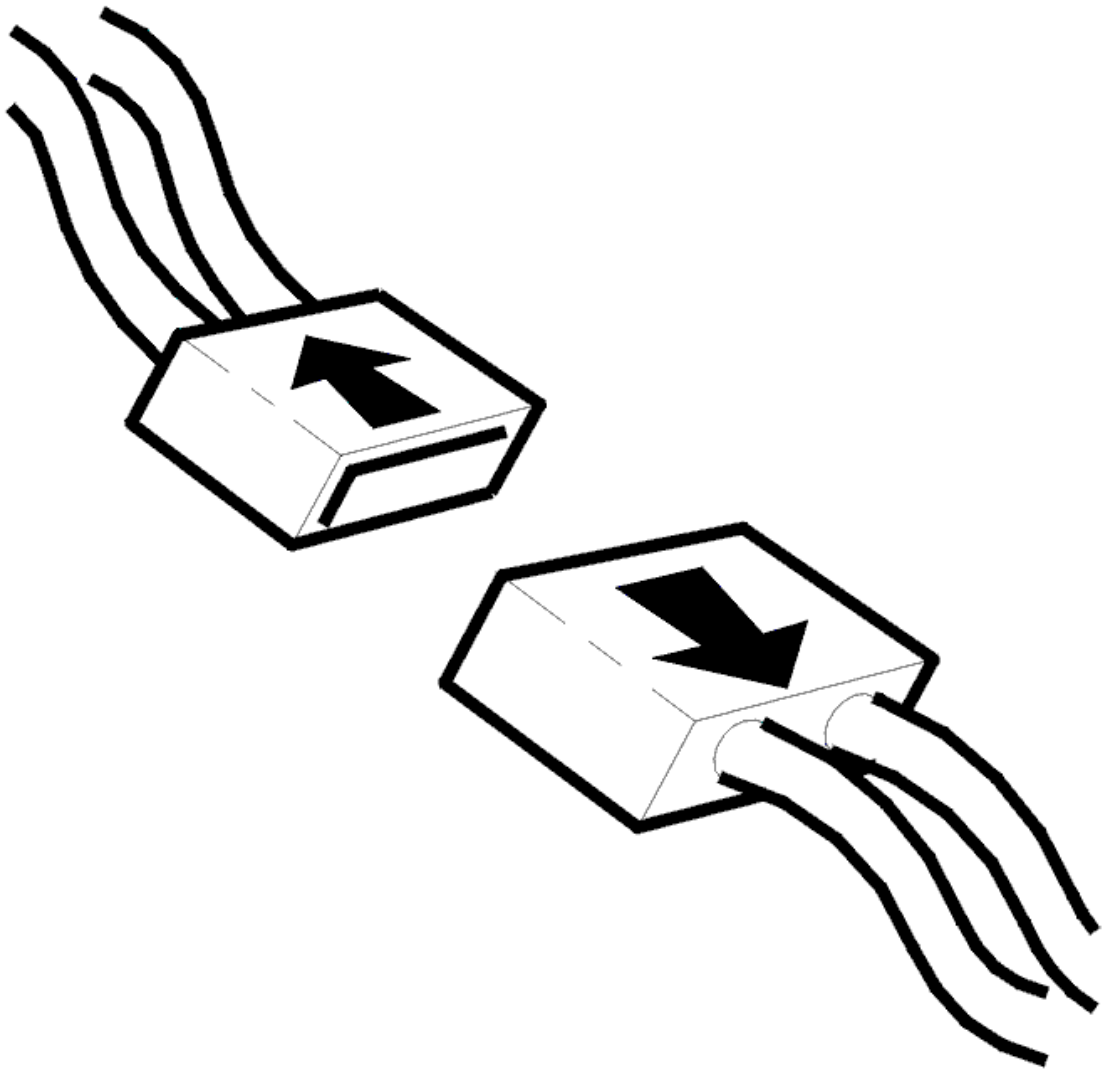

Fig. 19: Disconnecting Connector
Courtesy of VOLVO CARS CORPORATION

- Ignition off
- Disconnect the connector to the Integrated Audio Module (IAM).

  Check the connections with regard to contact resistance, play and oxidation.

  Check the signal cables between the Integrated Audio Module (IAM) and the speaker in the left-hand front door with regard to short circuits between the signal cables.

  Measure between:

  - Integrated Audio Module (IAM) #A4 and speaker #1 in left-hand front door.
  - Integrated Audio Module (IAM) #A11 and speaker #2 in left-hand front door.

If no fault was detected, replace the speaker.

Remedy as necessary.

Other information

- see **SIGNAL SPECIFICATION**
- see **LOCATION OF COMPONENTS**
- see **CONTROL MODULE GENERAL SOUND PLAYER**
- see **LOUDSPEAKER, FRONT SIDE DOOR, REPLACING**
- see **CONTENTS**

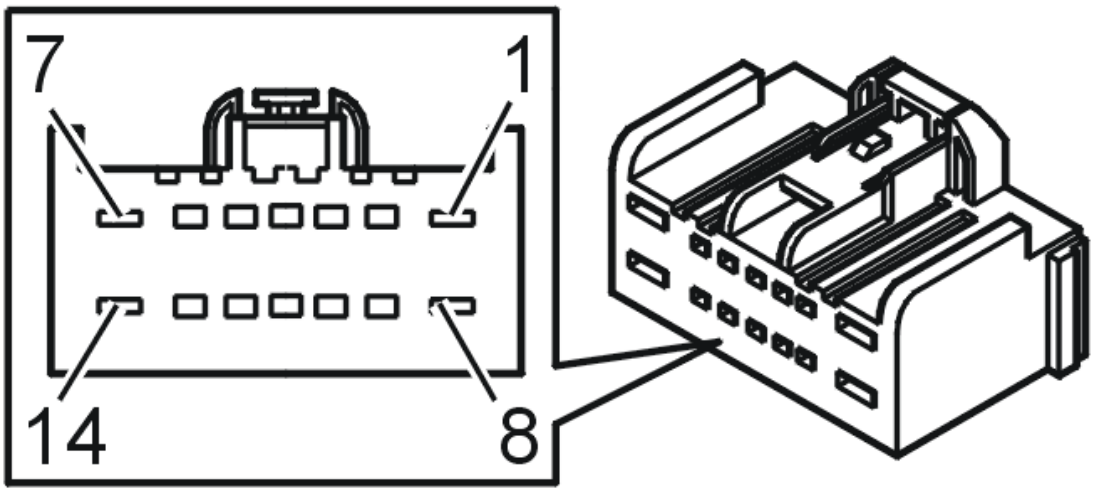

Fig. 20: Identifying 14-Bit Connector
Courtesy of VOLVO CARS CORPORATION

- **Continue**

  See: **VERIFICATION**

VERIFICATION

VERIFICATION

HINT: After carrying out the repair, check that the fault has been remedied.

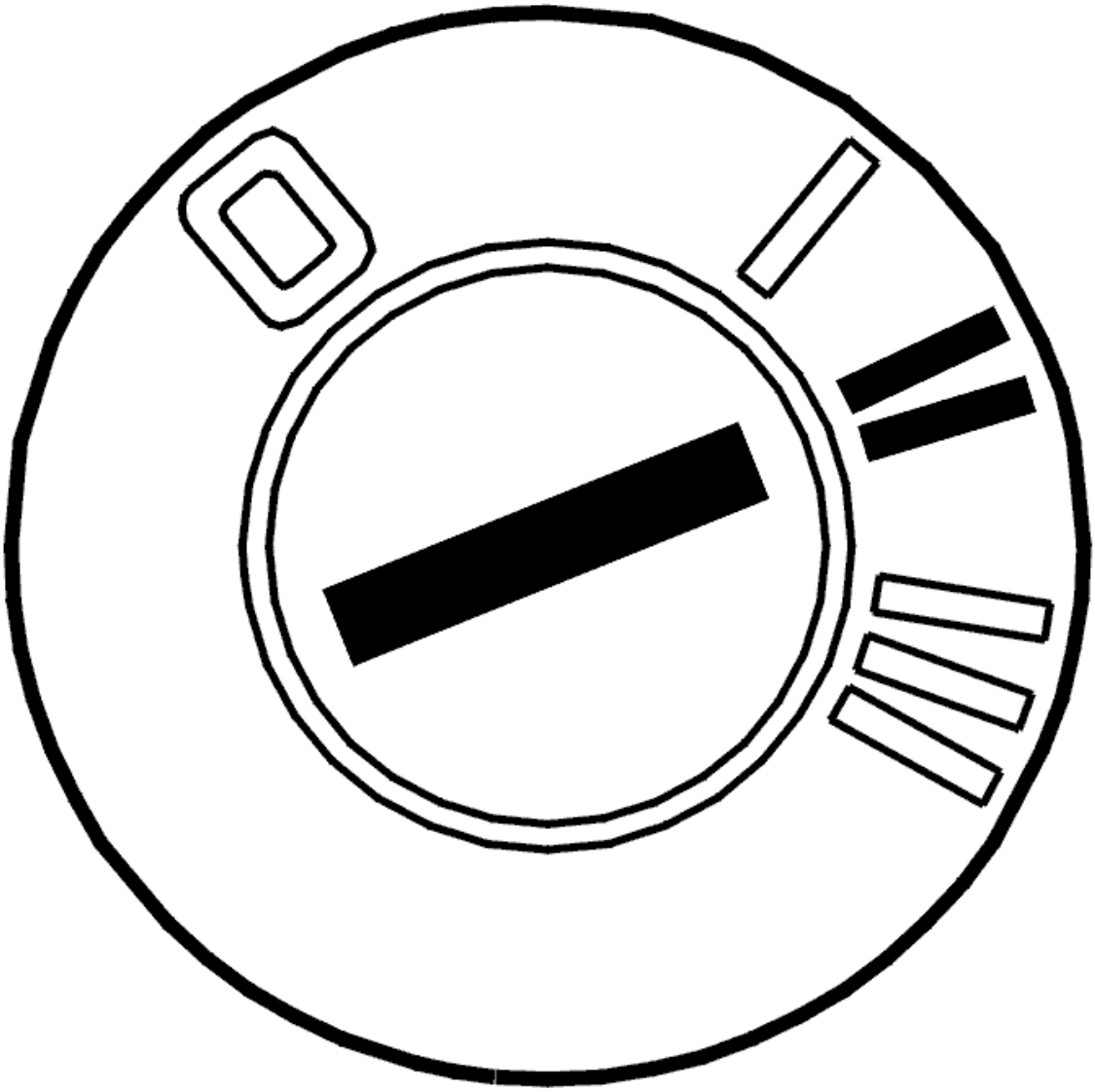

Fig. 21: Identifying Ignition ON
Courtesy of VOLVO CARS CORPORATION

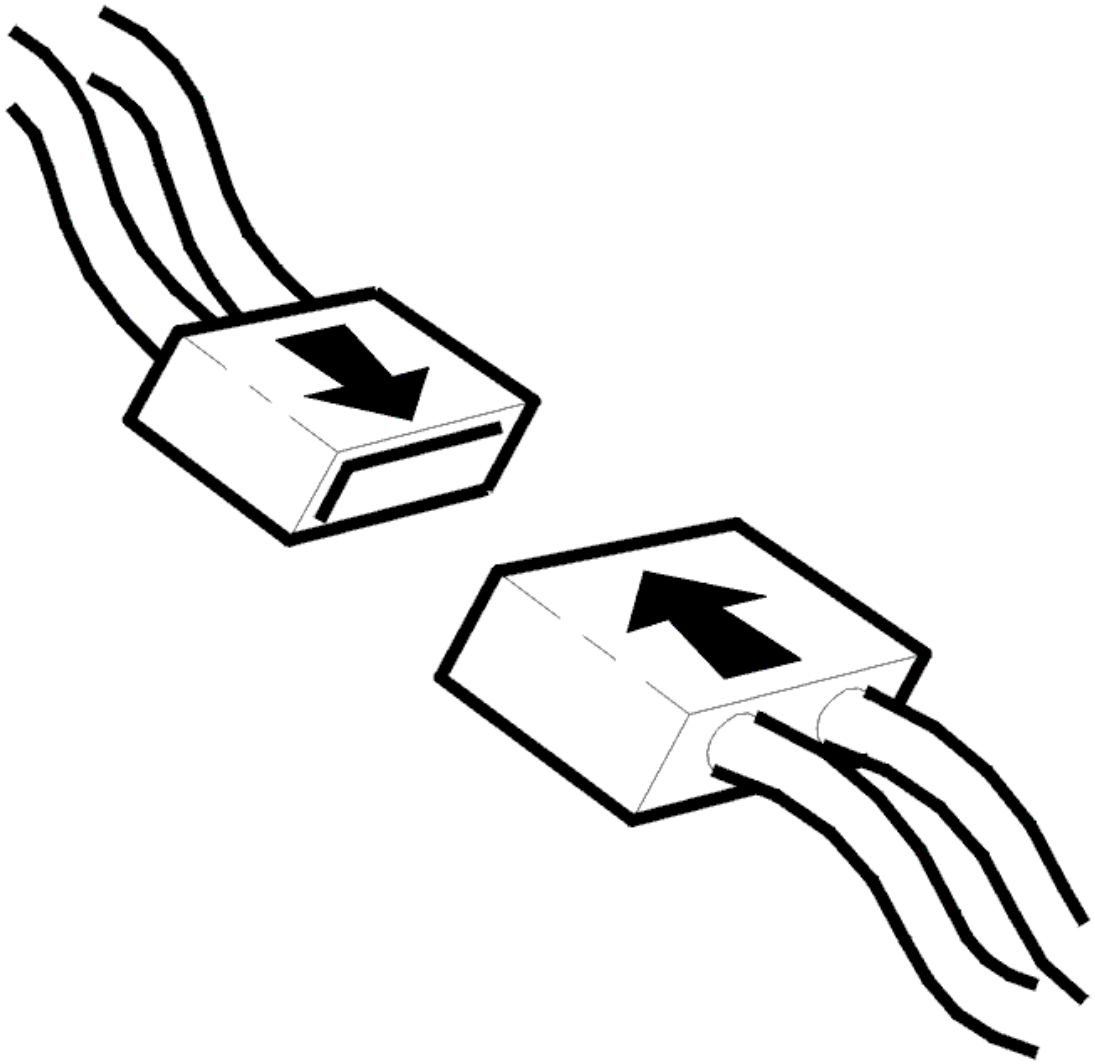

Fig. 22: Connecting Connector
Courtesy of VOLVO CARS CORPORATION

- Ignition off
- Reinstall the connectors, components etc.
- Ignition on

  Check that the sound is heard from the speakers by testing the CD player.

Are the speakers working?

- **YES**

  VERIFIED: Troubleshooting has been completed.

- **NO**

  See: **INFORMATION**

INFORMATION

FAULT-TRACING INFORMATION

The fault should have been detected and remedied. As this is not the case fault-tracing has failed.

Exit fault-tracing for this diagnostic trouble code (DTC) or make another attempt.

IAM-3004: FRONT LEFT SPEAKER. NO SIGNAL (2007-2012)

DIAGNOSTIC TROUBLE CODE (DTC) INFORMATION IAM-3004

Condition

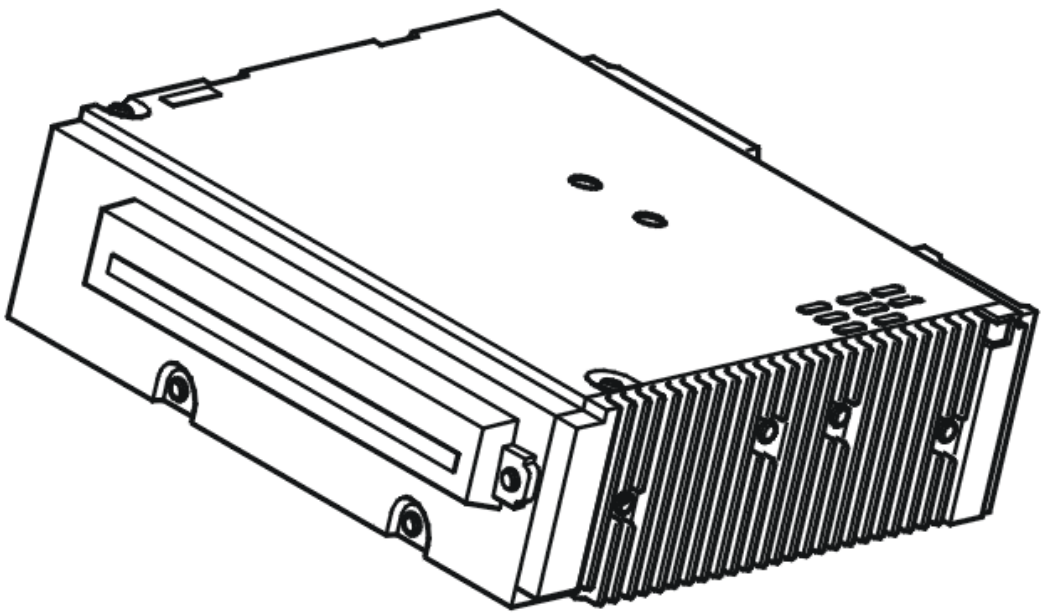

Fig. 23: Identifying Integrated Audio Module (IAM)
Courtesy of VOLVO CARS CORPORATION

If the Integrated Audio Module (IAM) registers that there is no signal in the signal cable from the speaker in the left-hand front door, then the Diagnostic Trouble Code (DTC) is generated.

The diagnostic trouble code can be diagnosed when the ignition is on.

Substitute Value

- Nothing.

Possible Source

- Open circuit on the signal cable between the control module and speaker in the left-hand front door.
- Damaged speaker in left-hand front door.

Fault symptom[s]

- CD player inoperative.
- No sound from speakers.

SIGNAL MISSING

CHECKING THE WIRING

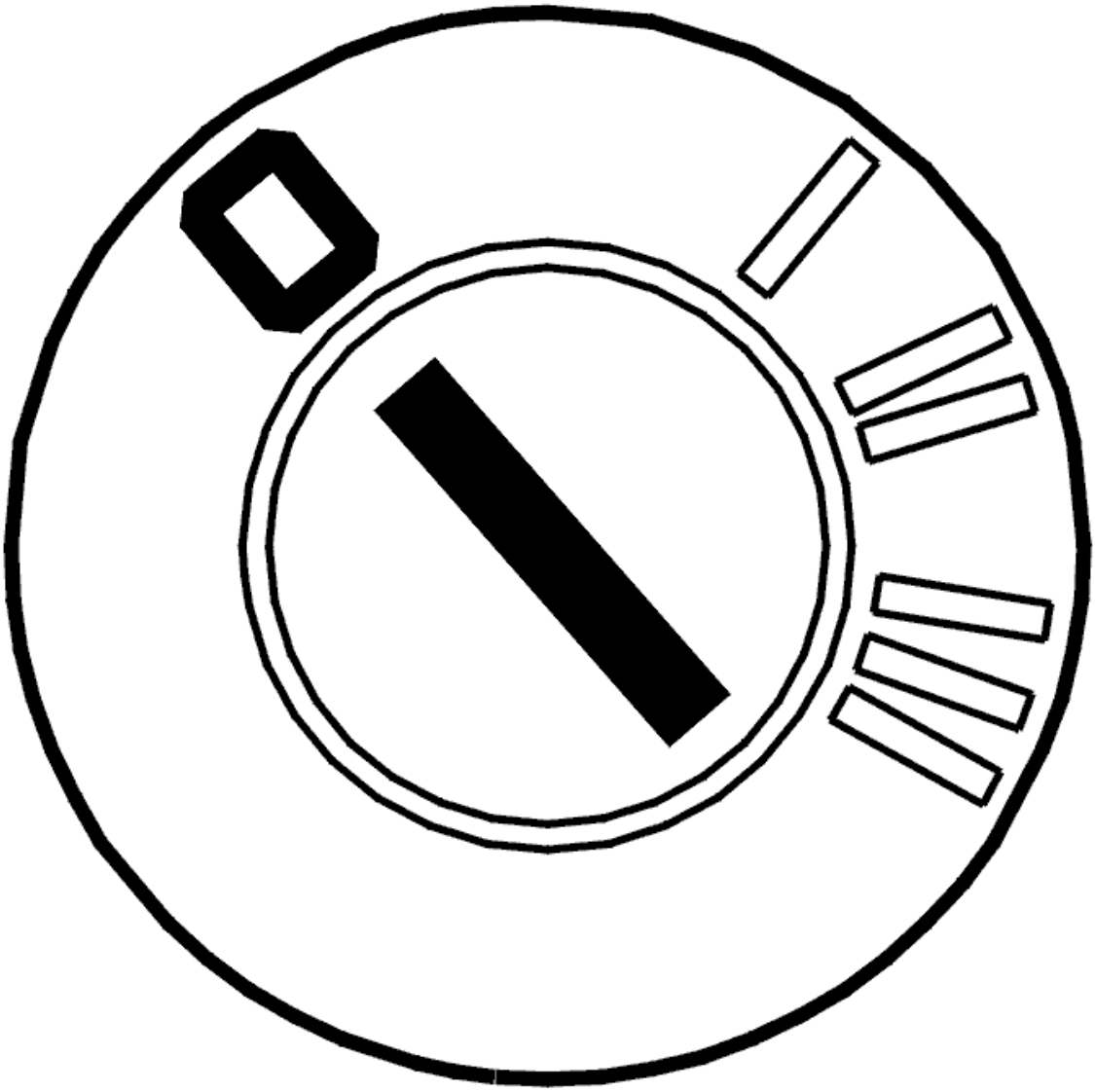

Fig. 24: Identifying Ignition OFF
Courtesy of VOLVO CARS CORPORATION

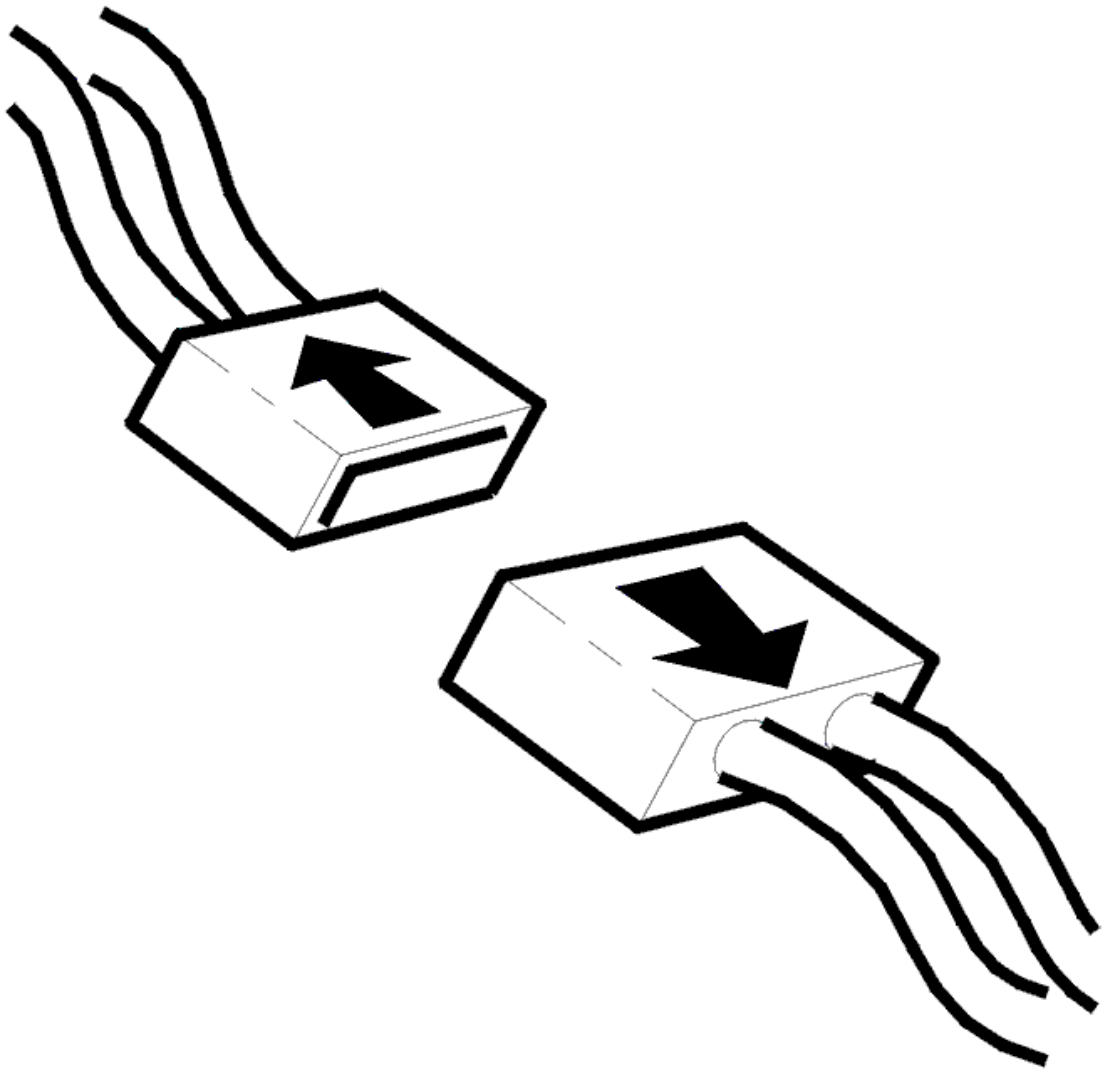

Fig. 25: Disconnecting Connector
Courtesy of VOLVO CARS CORPORATION

- Ignition off
- Disconnect the connector to the Integrated Audio Module (IAM).

  Check the connections with regard to contact resistance, play and oxidation.

  Check the signal cable between the Integrated Audio Module (IAM) and the speaker in the left-hand front door with regard to open circuits.

  Measure between:

  - Integrated audio module (IAM) terminal #A5 and speaker terminal #1 in the left front door.
  - Integrated audio module (IAM) terminal #A12 and speaker terminal #2 in the left front door.

If no fault was detected, replace the speaker.

Remedy as necessary.

Other information

- see **SIGNAL SPECIFICATION**
- see **LOCATION OF COMPONENTS**
- see **CONTROL MODULE GENERAL SOUND PLAYER**
- see **LOUDSPEAKER, FRONT SIDE DOOR, REPLACING**
- see **CONTENTS**

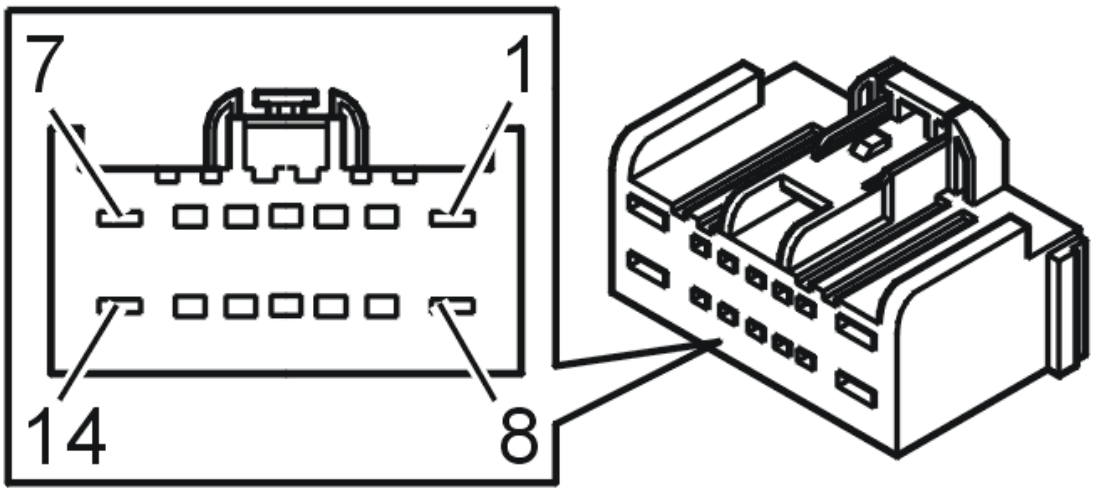

Fig. 26: Identifying 14-Bit Connector
Courtesy of VOLVO CARS CORPORATION

- **Continue**

  See: **VERIFICATION**

VERIFICATION

VERIFICATION

HINT: After carrying out the repair, check that the fault has been remedied.

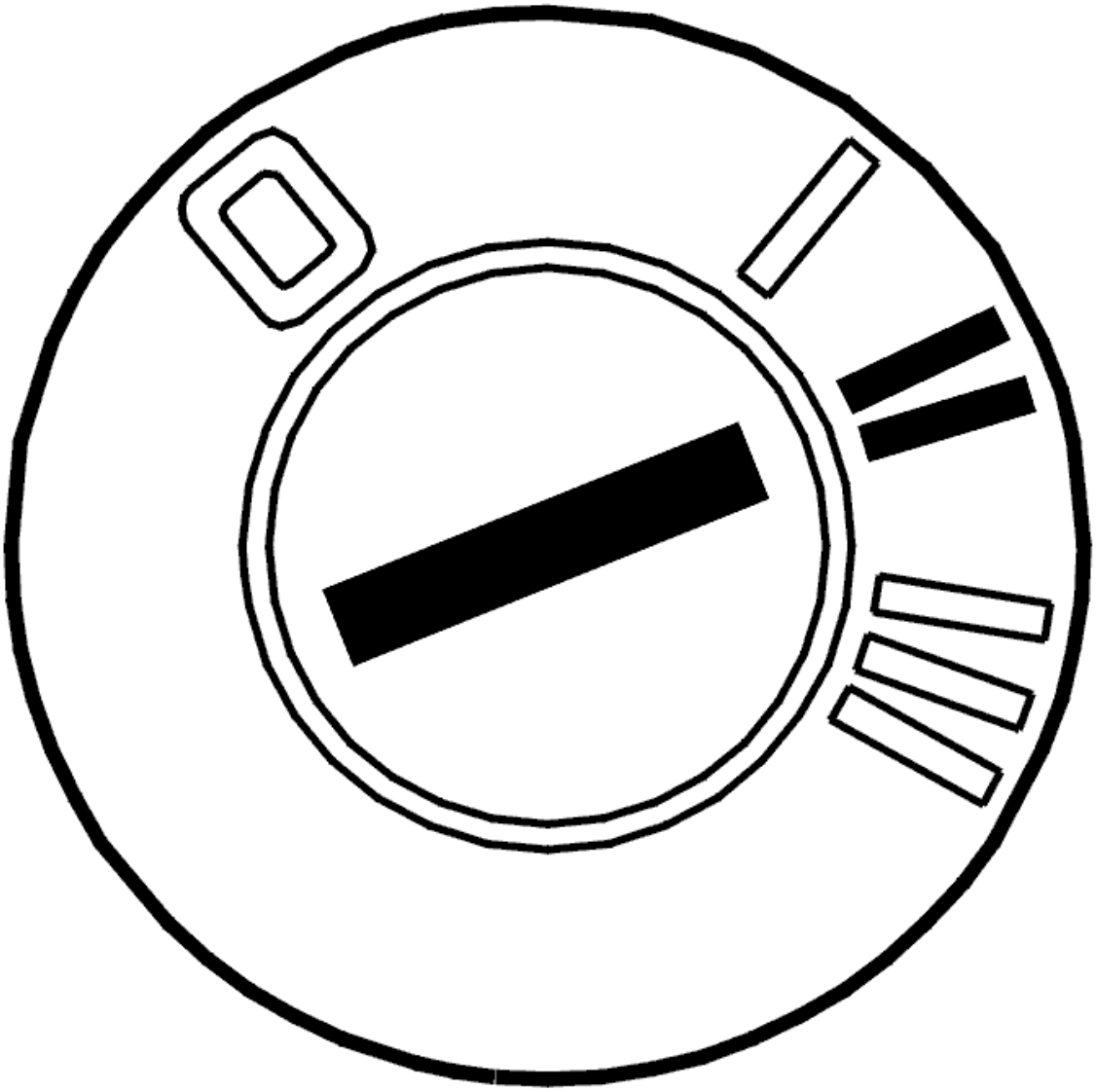

Fig. 27: Identifying Ignition ON
Courtesy of VOLVO CARS CORPORATION

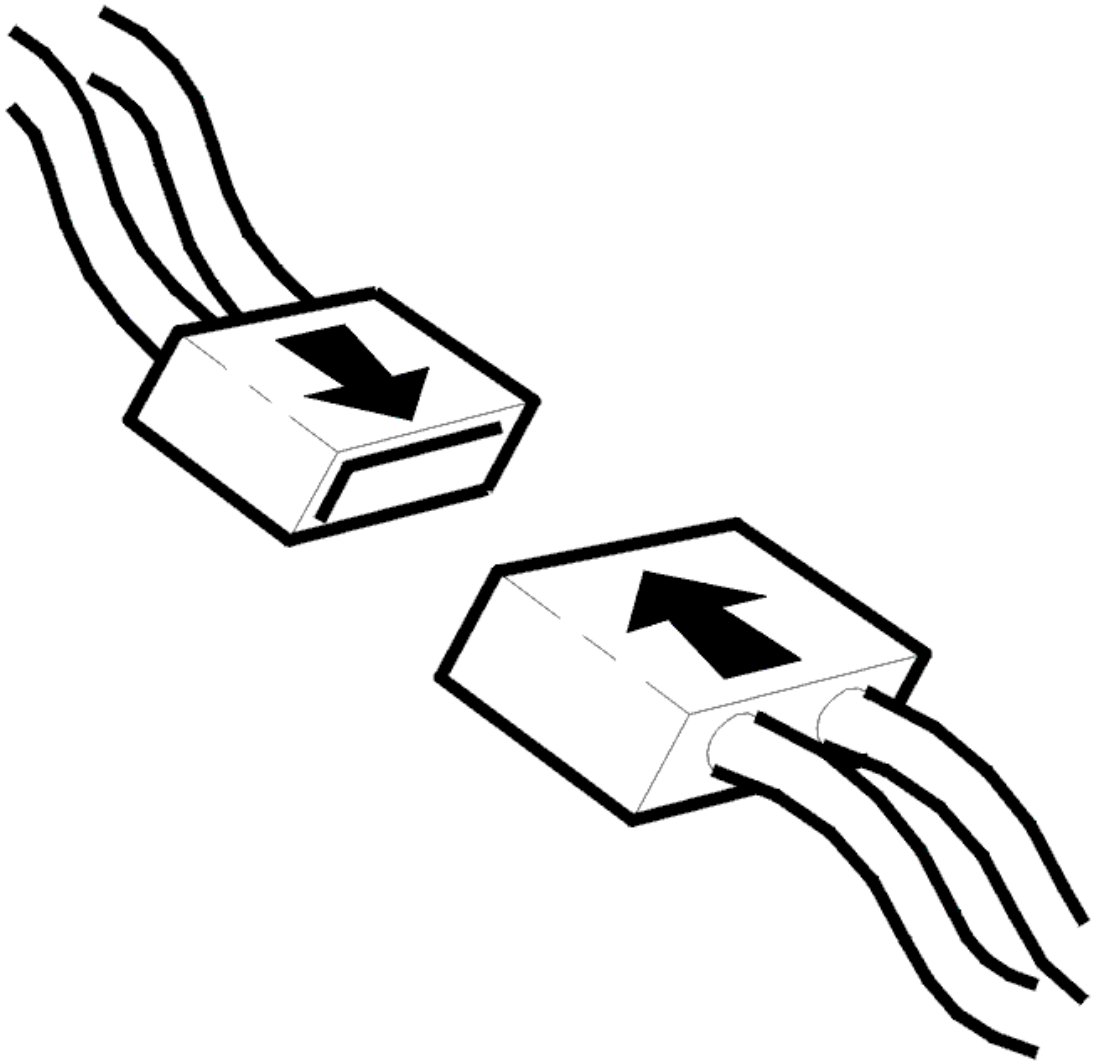

Fig. 28: Connecting Connector
Courtesy of VOLVO CARS CORPORATION

- Ignition off
- Reinstall the connectors, components etc.
- Ignition on

  Check that the sound is heard from the speakers by testing the CD player.

Are the speakers working?

- **YES**

  VERIFIED: Troubleshooting has been completed.

- **NO**

  See: **INFORMATION**

INFORMATION

FAULT-TRACING INFORMATION

The fault should have been detected and remedied. As this is not the case fault-tracing has failed.

Exit fault-tracing for this diagnostic trouble code (DTC) or make another attempt.

IAM-3005: FRONT LEFT SPEAKER. FAULTY SIGNAL (2007-2012)

DIAGNOSTIC TROUBLE CODE (DTC) INFORMATION IAM-3005

Condition

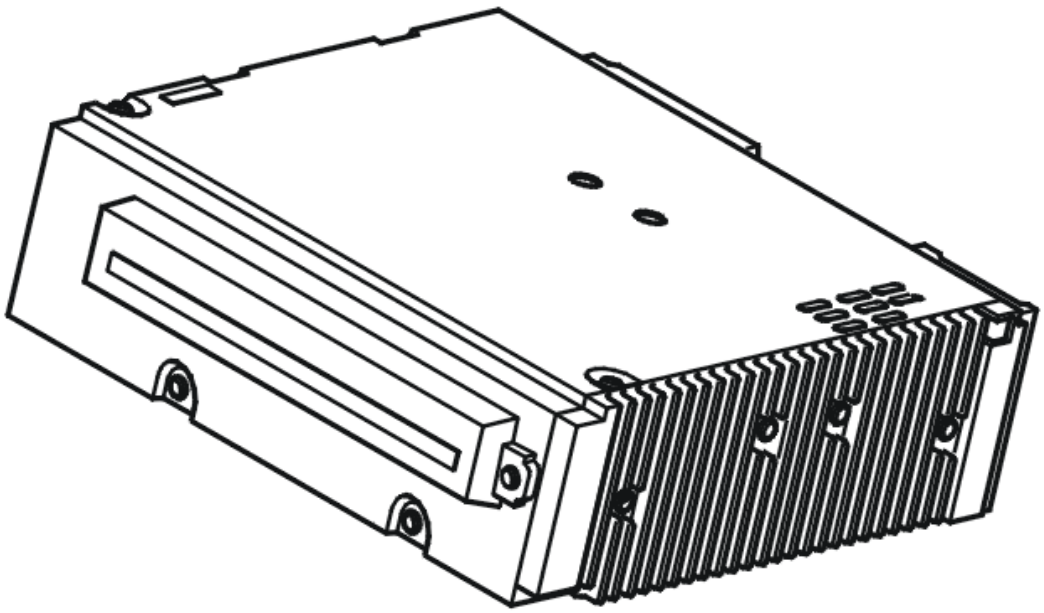

Fig. 29: Identifying Integrated Audio Module (IAM)
Courtesy of VOLVO CARS CORPORATION

If the Integrated Audio Module (IAM) registers an erroneous signal to the speaker in the left-hand front door, then the Diagnostic Trouble Code (DTC) is generated.

The diagnostic trouble code can be diagnosed when the ignition is on.

Substitute Value

- Nothing.

Possible Source

- Internal fault in integrated audio module (IAM).
- Damaged signal cables to the speaker in the left-hand front door.
- Internal fault in the speaker in the left-hand front door.

Fault symptom[s]

- CD player inoperative.
- No sound from speakers.

FAULTY SIGNAL

CHECKING THE WIRING

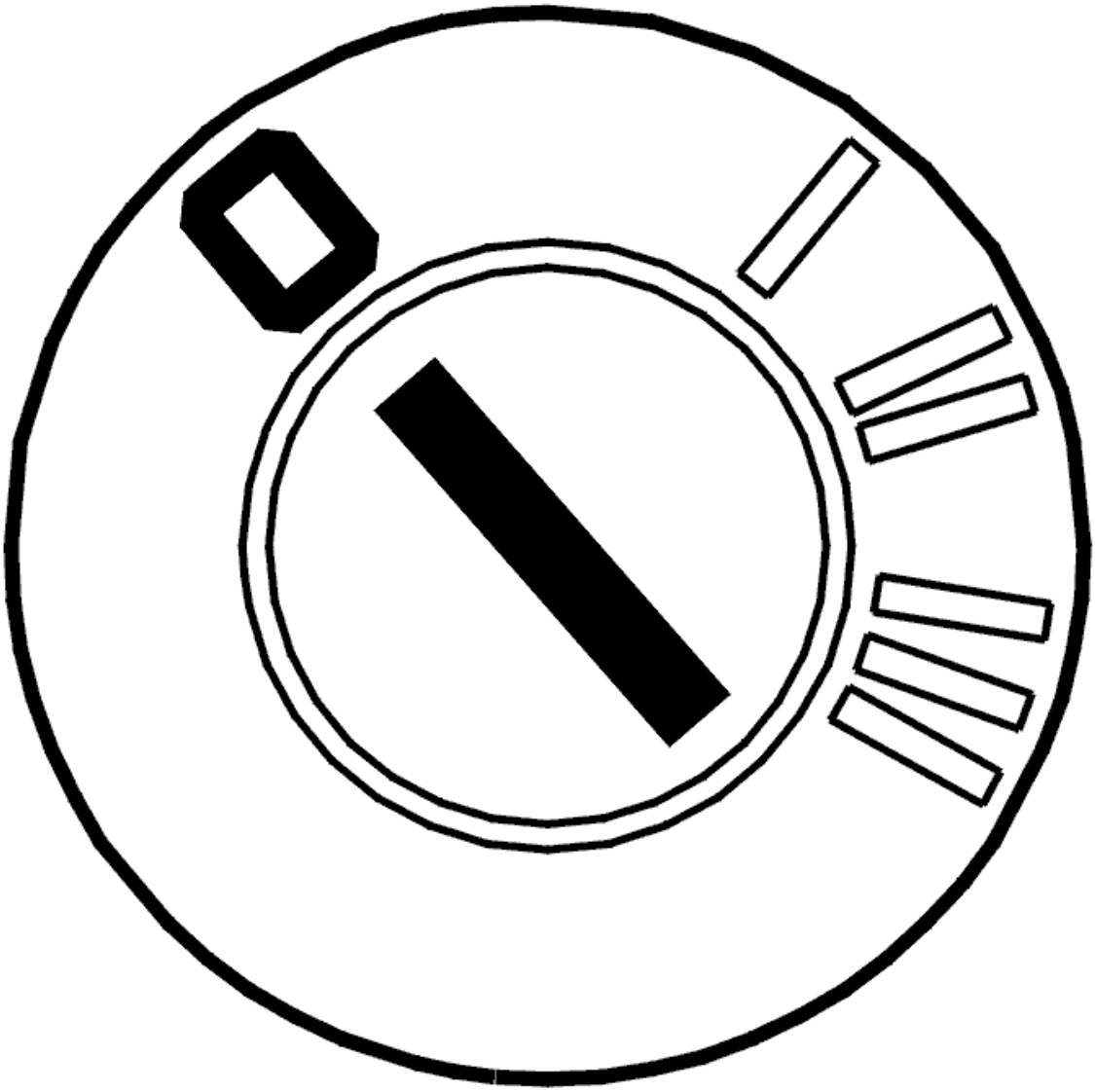

Fig. 30: Identifying Ignition OFF
Courtesy of VOLVO CARS CORPORATION

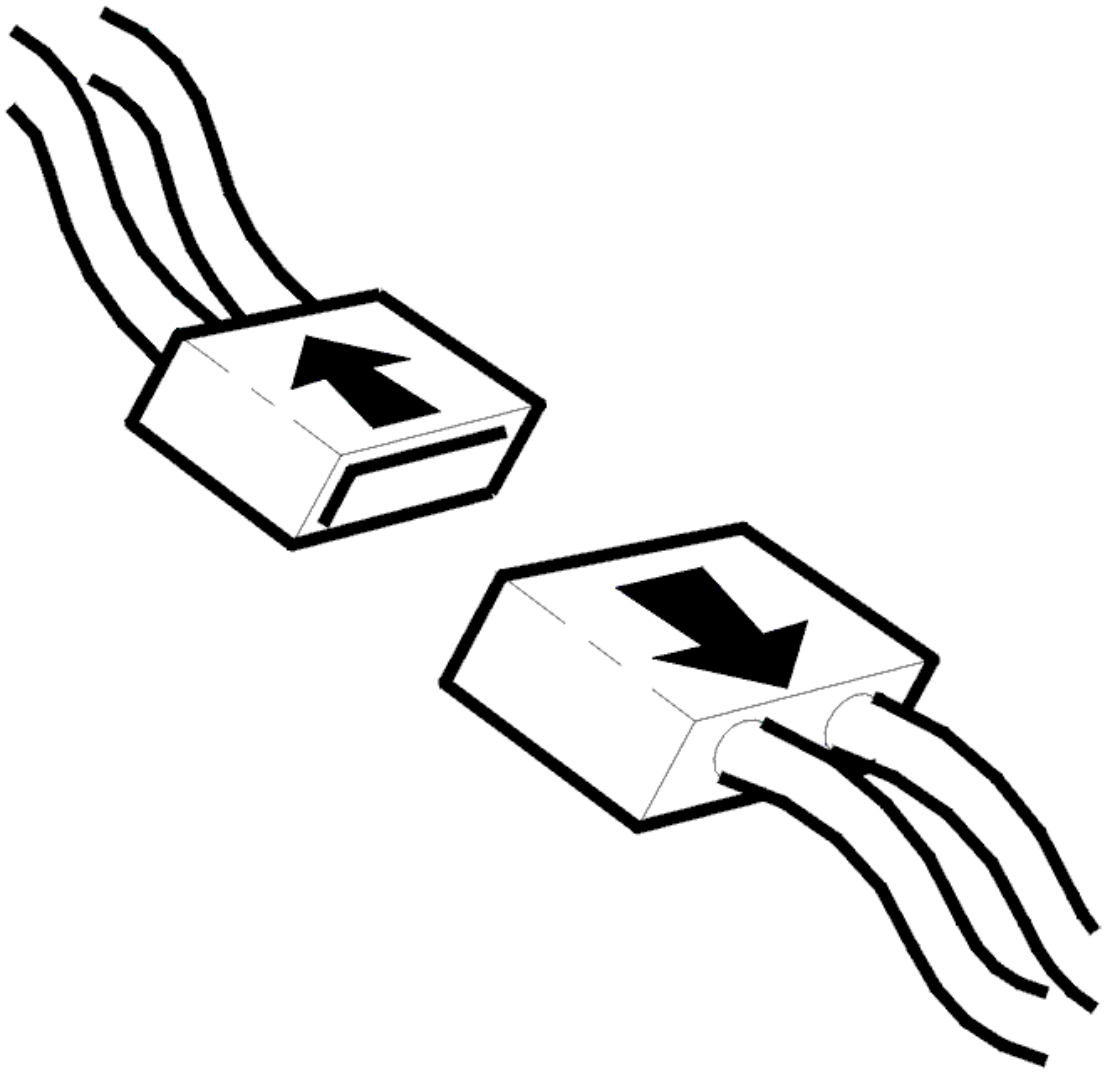

Fig. 31: Disconnecting Connector
Courtesy of VOLVO CARS CORPORATION

- Ignition off
- Disconnect the connector to the Integrated Audio Module (IAM).

  Check the connections with regard to contact resistance, play and oxidation.

  Check the signal wiring between the integrated audio module (IAM) and the speaker in the left-hand front door. Check for a short-circuit. Check for an open-circuit.

  Measure between:

  - Integrated audio module (IAM) terminal #A5 and speaker terminal #1 in the left front door.
  - Integrated audio module (IAM) terminal #A12 and speaker terminal #2 in the left front door.

If no fault was detected, replace the Integrated Audio Module (IAM).

Remedy as necessary.

Other information

- see **SIGNAL SPECIFICATION**
- see **LOCATION OF COMPONENTS**
- see **CONTROL MODULE GENERAL SOUND PLAYER**
- see **LOUDSPEAKER, FRONT SIDE DOOR, REPLACING**
- see **CONTENTS**

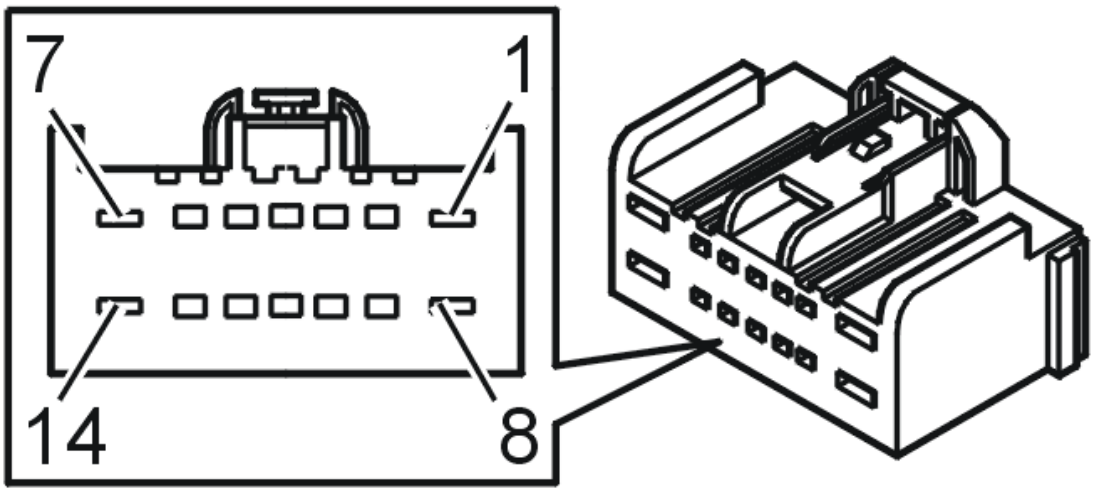

Fig. 32: Identifying 14-Bit Connector
Courtesy of VOLVO CARS CORPORATION

- **Continue**

  See: **VERIFICATION**

VERIFICATION

VERIFICATION

HINT: After carrying out the repair, check that the fault has been remedied.

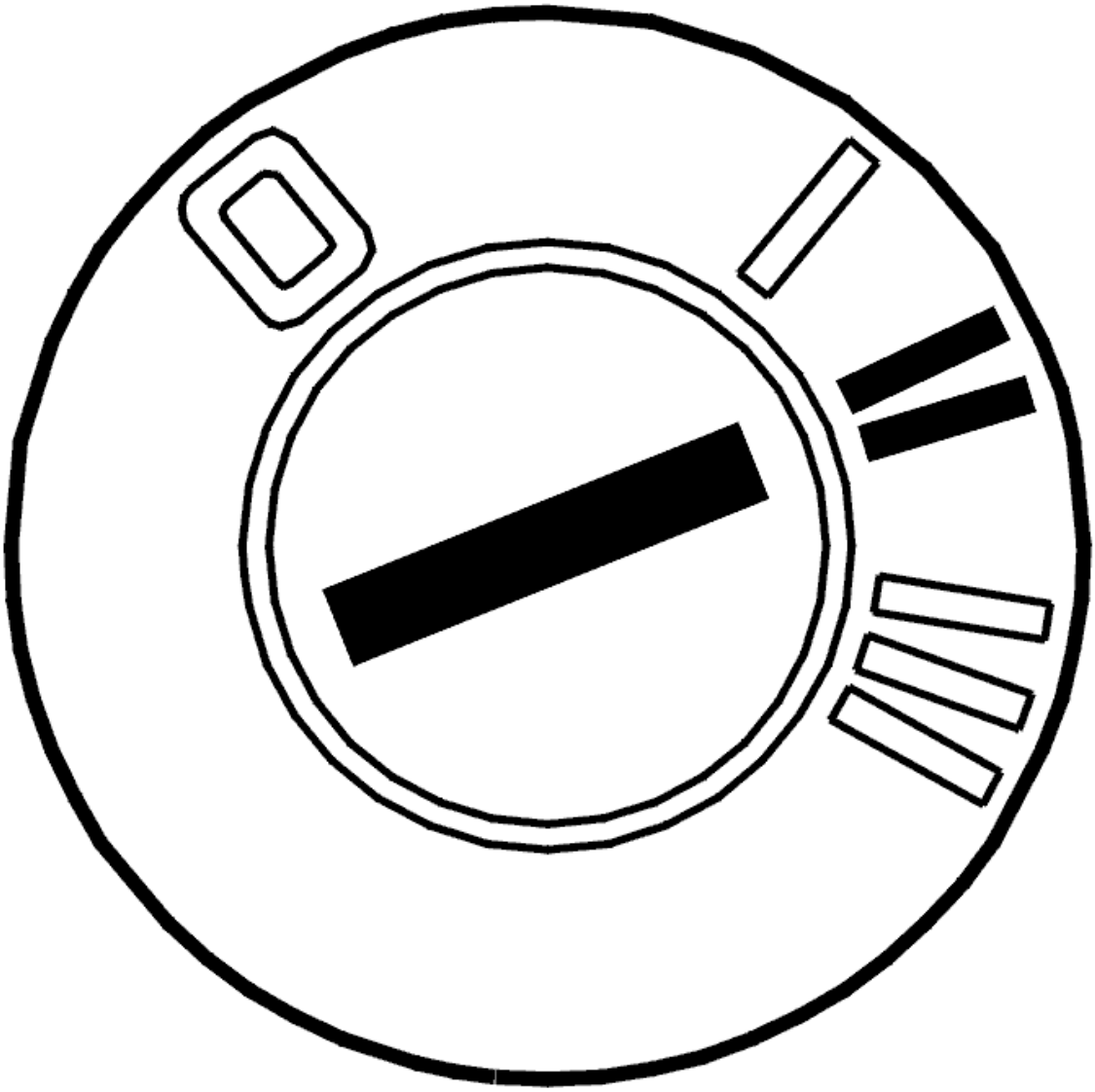

Fig. 33: Identifying Ignition ON
Courtesy of VOLVO CARS CORPORATION

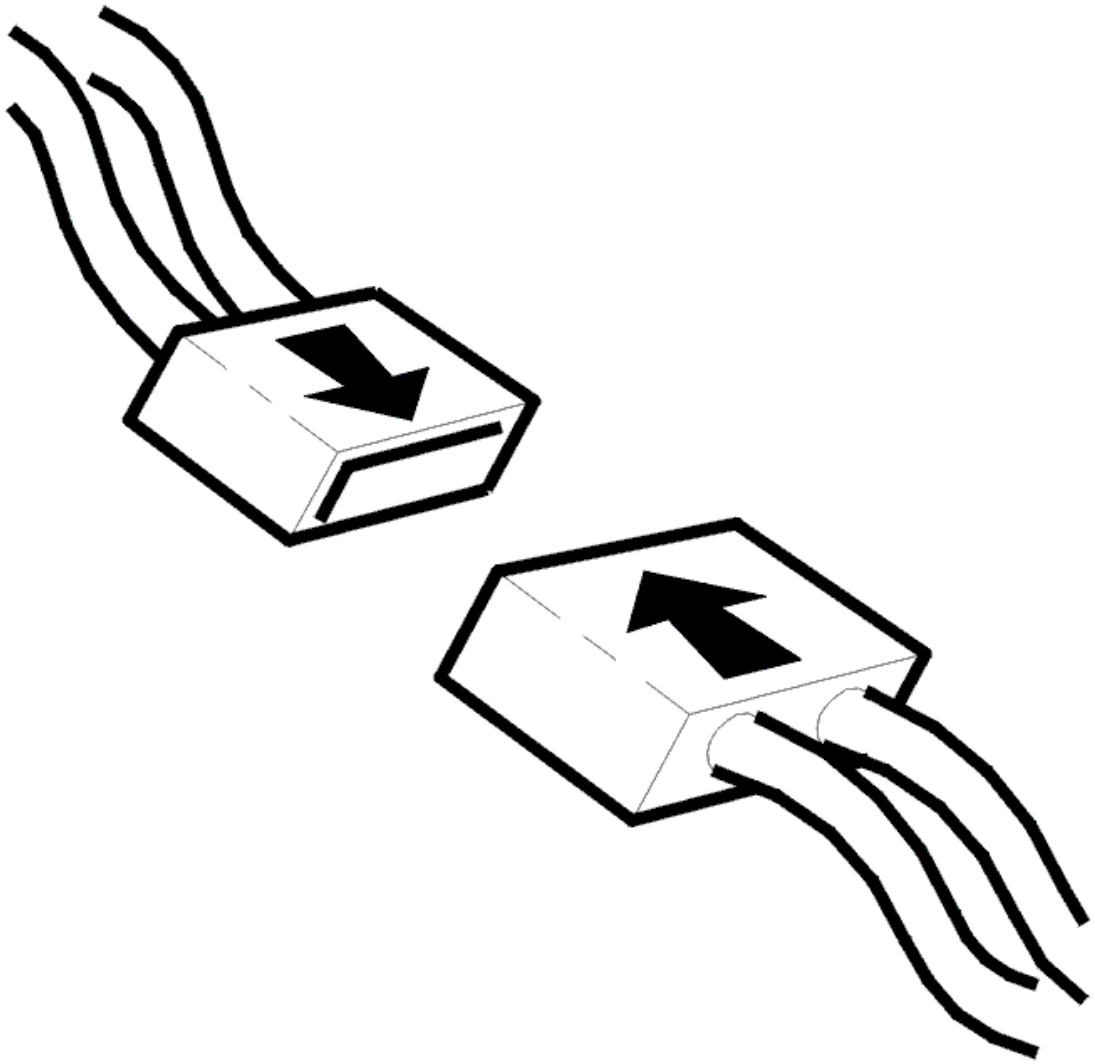

Fig. 34: Connecting Connector
Courtesy of VOLVO CARS CORPORATION

- Ignition off
- Reinstall the connectors, components etc.
- Ignition on

  Check that the sound is heard from the speakers by testing the CD player.

Are the speakers working?

- **YES**

  VERIFIED: Troubleshooting has been completed.

- **NO**

  See: **INFORMATION**

INFORMATION

FAULT-TRACING INFORMATION

The fault should have been detected and remedied. As this is not the case fault-tracing has failed.

Exit fault-tracing for this diagnostic trouble code (DTC) or make another attempt.

IAM-3011: FRONT RIGHT SPEAKER. SIGNAL TOO LOW (2007-2012)

DIAGNOSTIC TROUBLE CODE (DTC) INFORMATION IAM-3011

Condition

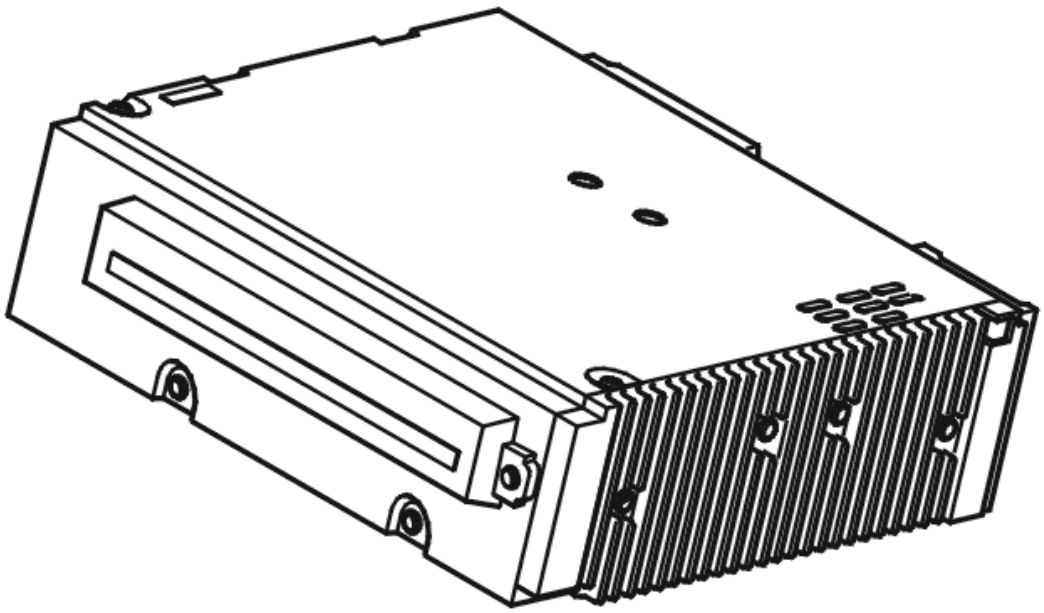

Fig. 35: Identifying Integrated Audio Module (IAM)
Courtesy of VOLVO CARS CORPORATION

If the Integrated Audio Module (IAM) registers that the signal is too low on the signal cable from the speaker in the right-hand front door, then the Diagnostic Trouble Code (DTC) is generated.

The diagnostic trouble code can be diagnosed when the ignition is on.

Substitute Value

- Nothing.

Possible Source

- Short circuit to ground on the signal cable between the control module and speaker in the right-hand front door.

Fault symptom[s]

- CD player inoperative.
- No sound from speakers.

SIGNAL TOO LOW

CHECKING THE WIRING

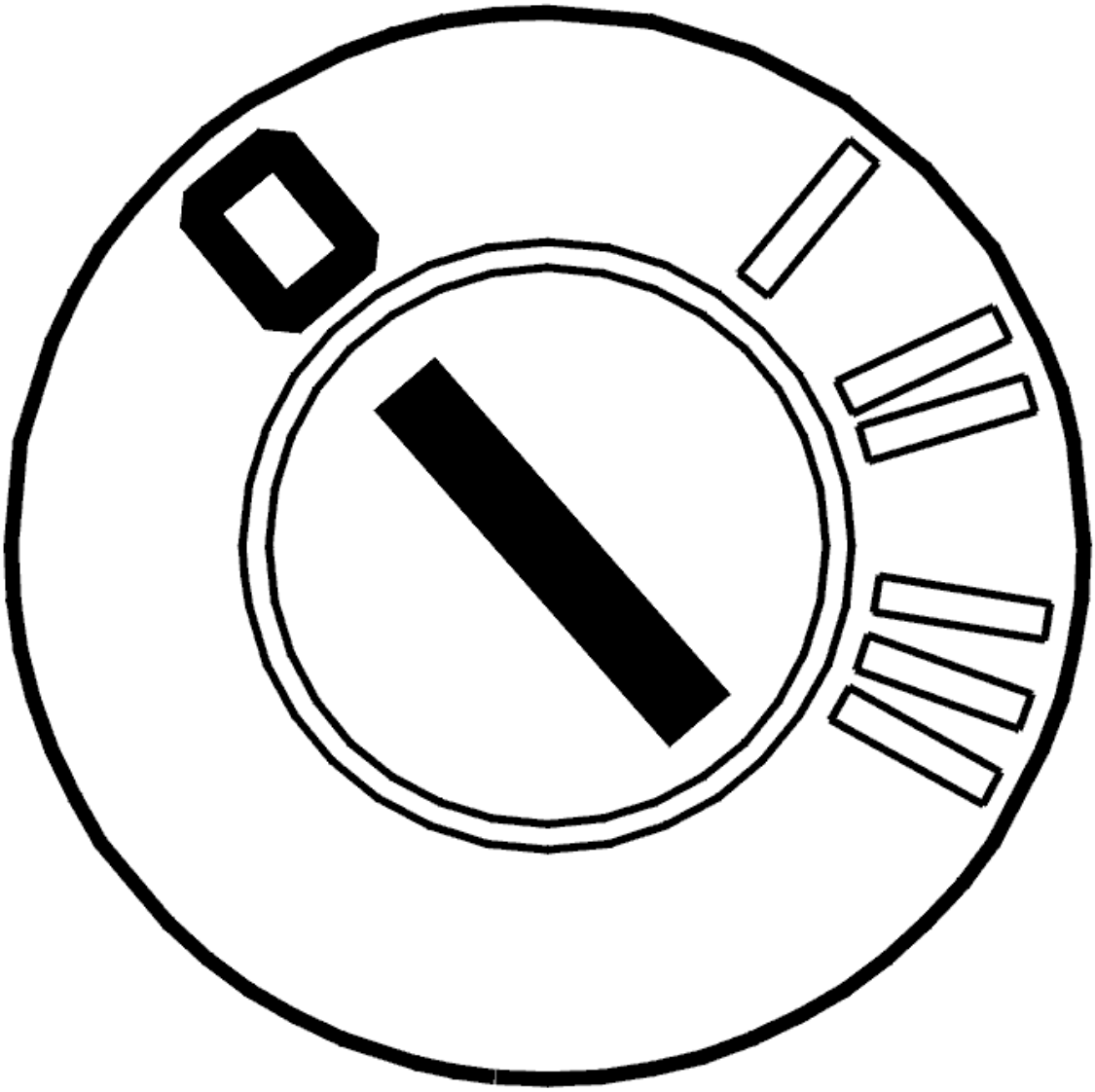

Fig. 36: Identifying Ignition OFF
Courtesy of VOLVO CARS CORPORATION

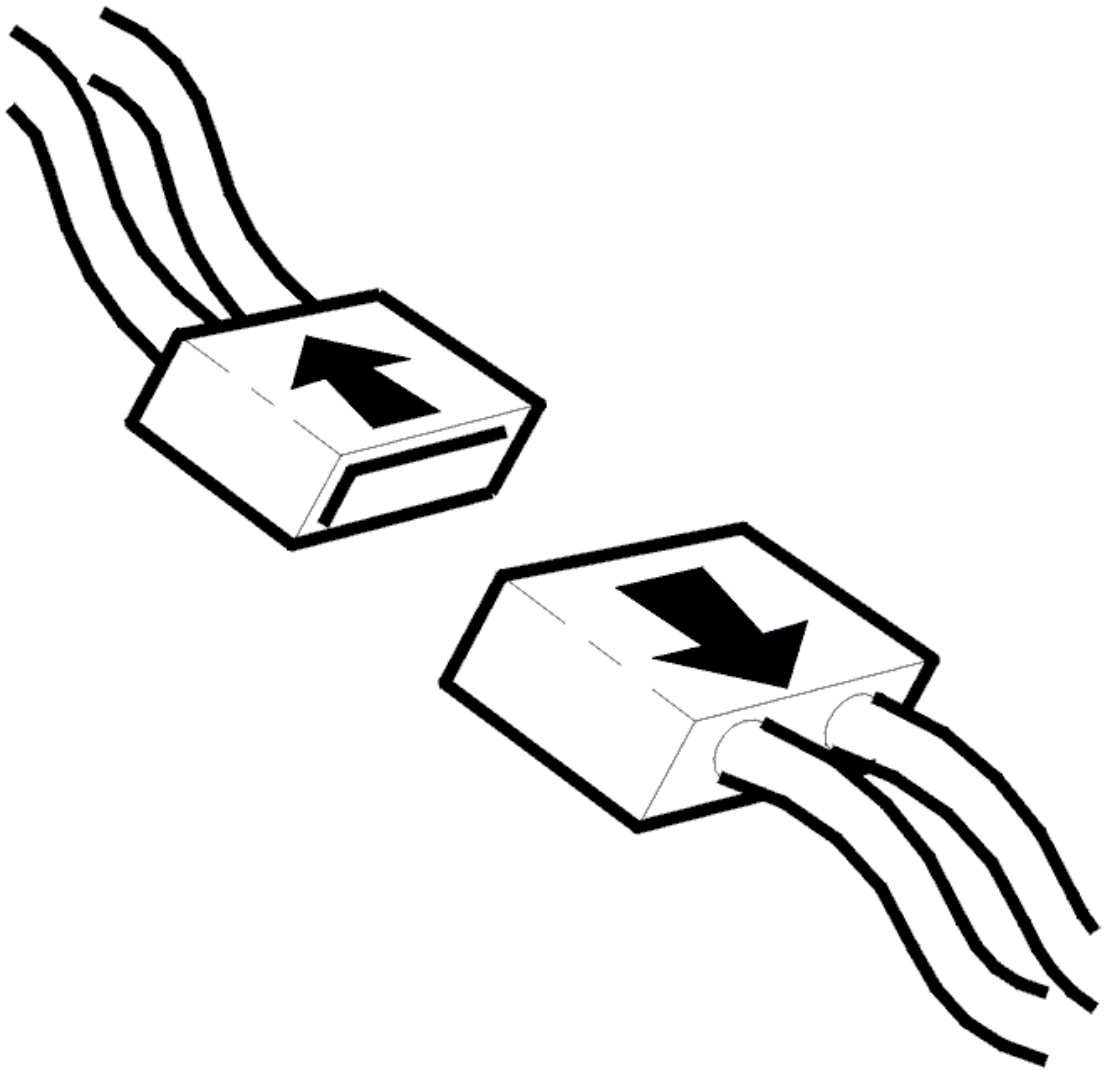

Fig. 37: Disconnecting Connector
Courtesy of VOLVO CARS CORPORATION

- Ignition off
- Disconnect the connector to the Integrated Audio Module (IAM).

  Check the connections with regard to contact resistance, play and oxidation.

  Check the antenna cable between the Integrated Audio Module (IAM) and the speaker in the right-hand front door with regard to short circuits to ground.

  Measure between:

  - Integrated audio module (IAM) terminal #A4 and speaker terminal #1 in the right front door.
  - Integrated audio module (IAM) terminal #A11 and speaker terminal #2 in the right front door.

Remedy as necessary.

Other information

- see **SIGNAL SPECIFICATION**
- see **LOCATION OF COMPONENTS**
- see **CONTROL MODULE GENERAL SOUND PLAYER**
- see **LOUDSPEAKER, FRONT SIDE DOOR, REPLACING**
- see **CONTENTS**

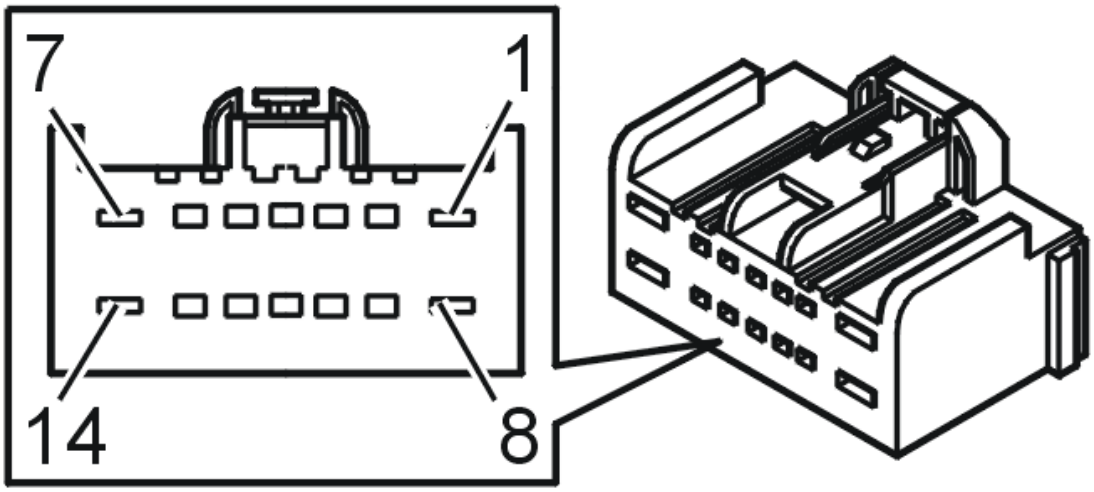

Fig. 38: Identifying 14-Bit Connector
Courtesy of VOLVO CARS CORPORATION

- **Continue**

  See: **VERIFICATION**

VERIFICATION

VERIFICATION

HINT: After carrying out the repair, check that the fault has been remedied.

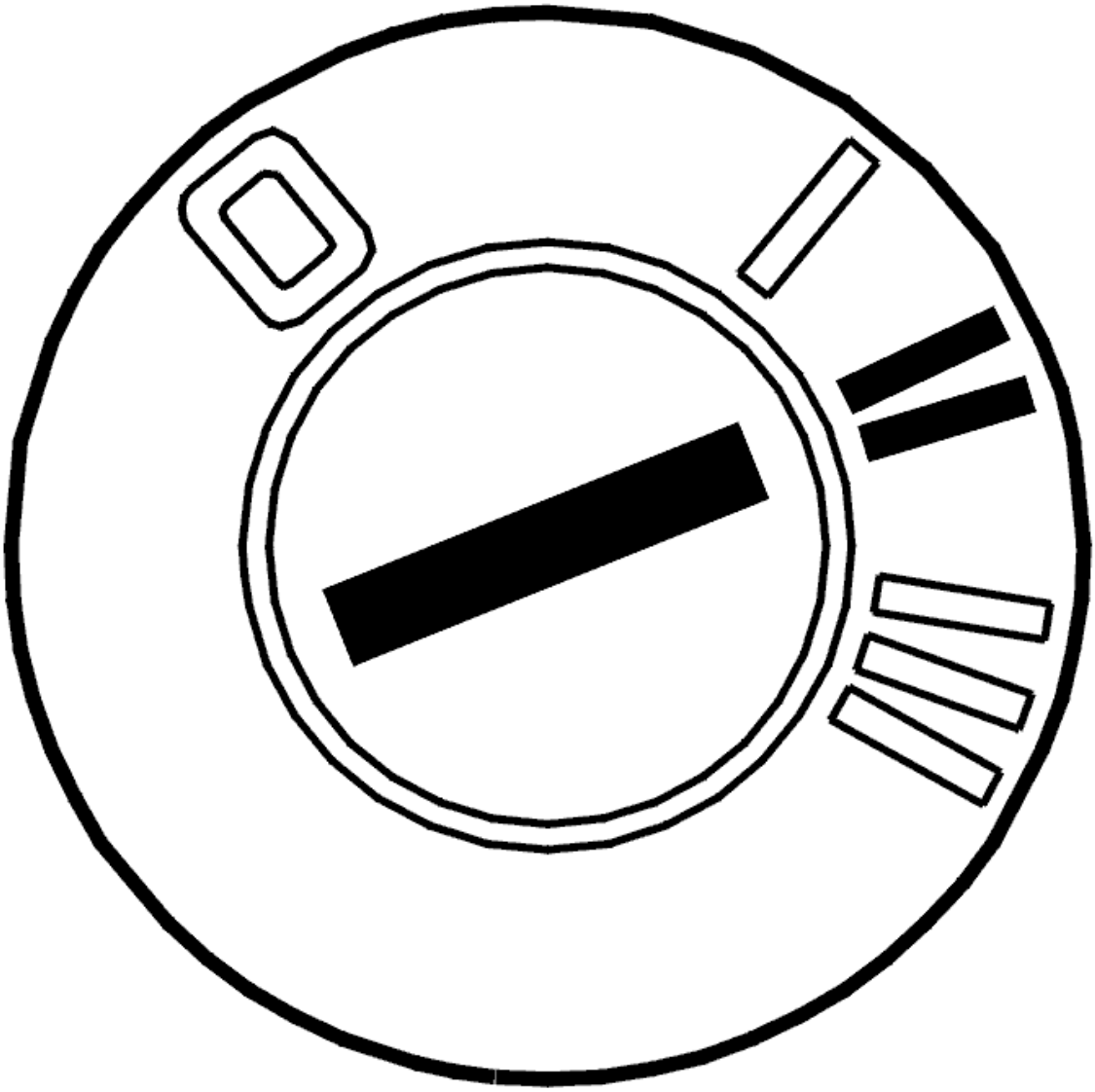

Fig. 39: Identifying Ignition ON
Courtesy of VOLVO CARS CORPORATION

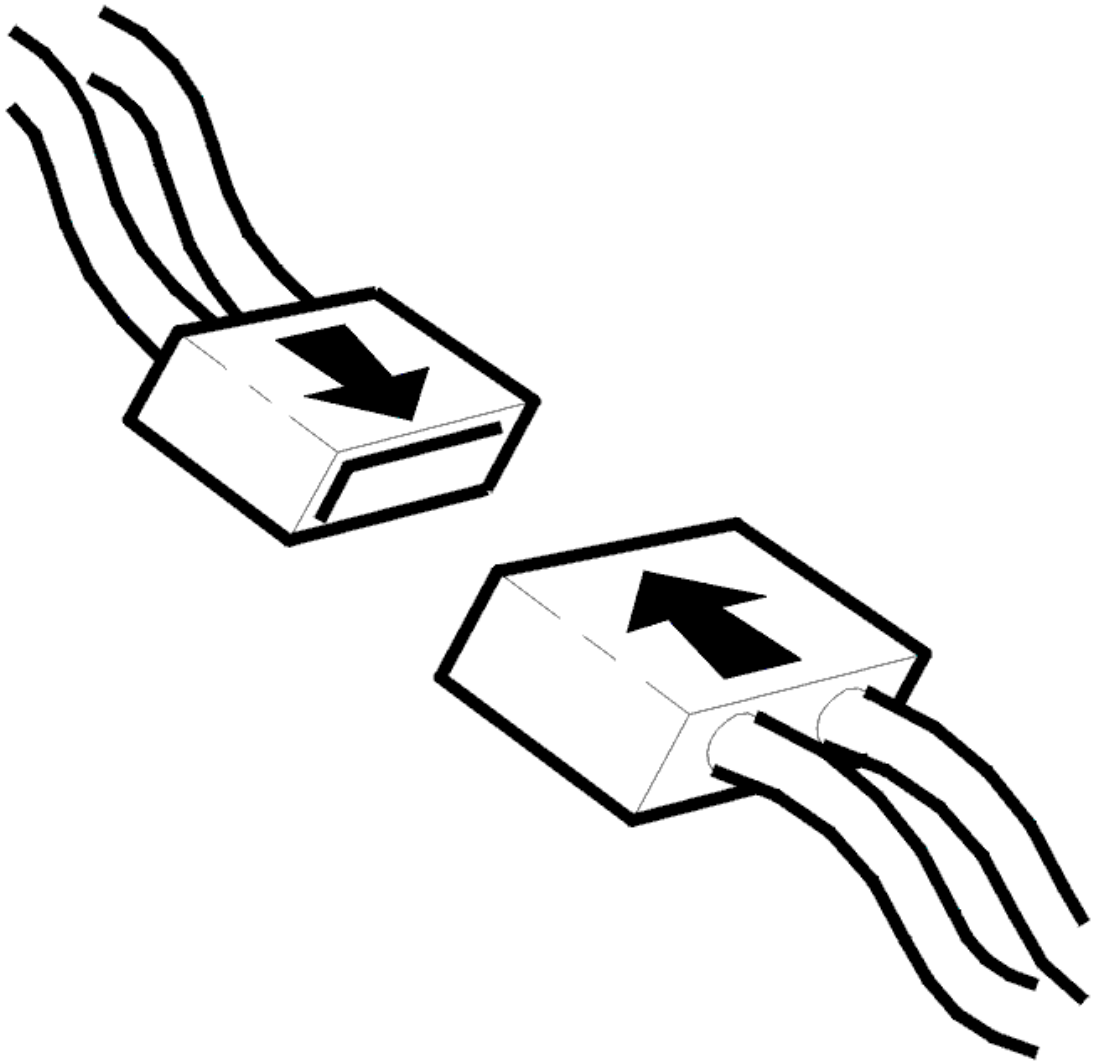

Fig. 40: Connecting Connector
Courtesy of VOLVO CARS CORPORATION

- Ignition off
- Reinstall the connectors, components etc.
- Ignition on

  Check that the sound is heard from the speakers by testing the CD player.

Are the speakers working?

- **YES**

  VERIFIED: Troubleshooting has been completed.

- **NO**

  See: **INFORMATION**

INFORMATION

FAULT-TRACING INFORMATION

The fault should have been detected and remedied. As this is not the case fault-tracing has failed.

Exit fault-tracing for this diagnostic trouble code (DTC) or make another attempt.

IAM-3012: FRONT RIGHT SPEAKER. SIGNAL TOO HIGH (2007-2012)

DIAGNOSTIC TROUBLE CODE (DTC) INFORMATION IAM-3012

Condition

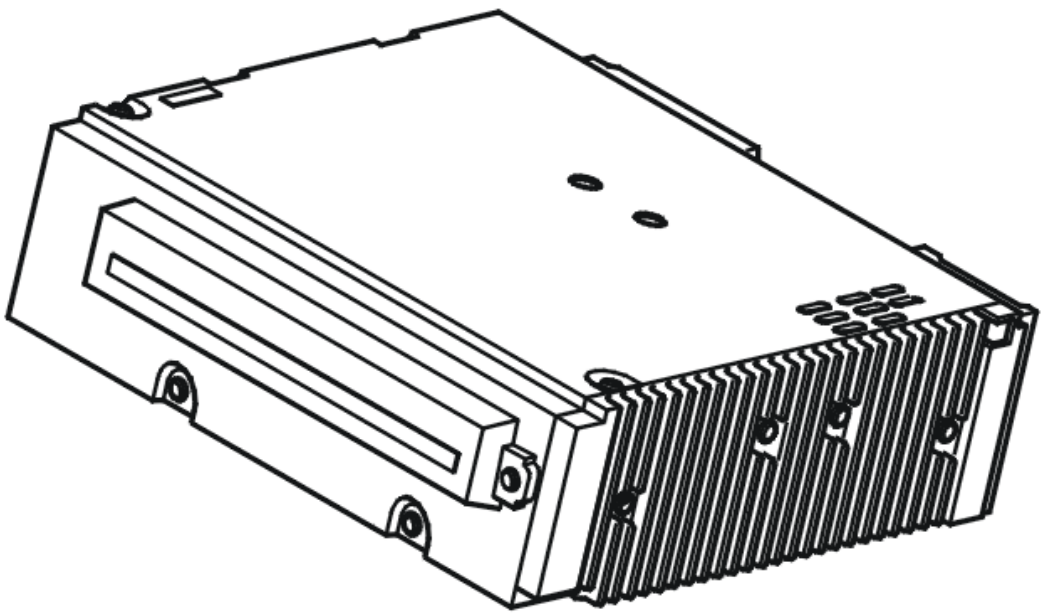

Fig. 41: Identifying Integrated Audio Module (IAM)
Courtesy of VOLVO CARS CORPORATION

If the Integrated Audio Module (IAM) registers that the signal is too high on the signal cable from the speaker in the right-hand front door, then the Diagnostic Trouble Code (DTC) is generated.

The diagnostic trouble code can be diagnosed when the ignition is on.

Substitute Value

- Nothing.

Possible Source

- Short circuit to supply voltage on the signal cable between the control module and speaker in the right-hand front door.

Fault symptom[s]

- CD player inoperative.
- No sound from speakers.

SIGNAL TOO HIGH

CHECKING THE WIRING

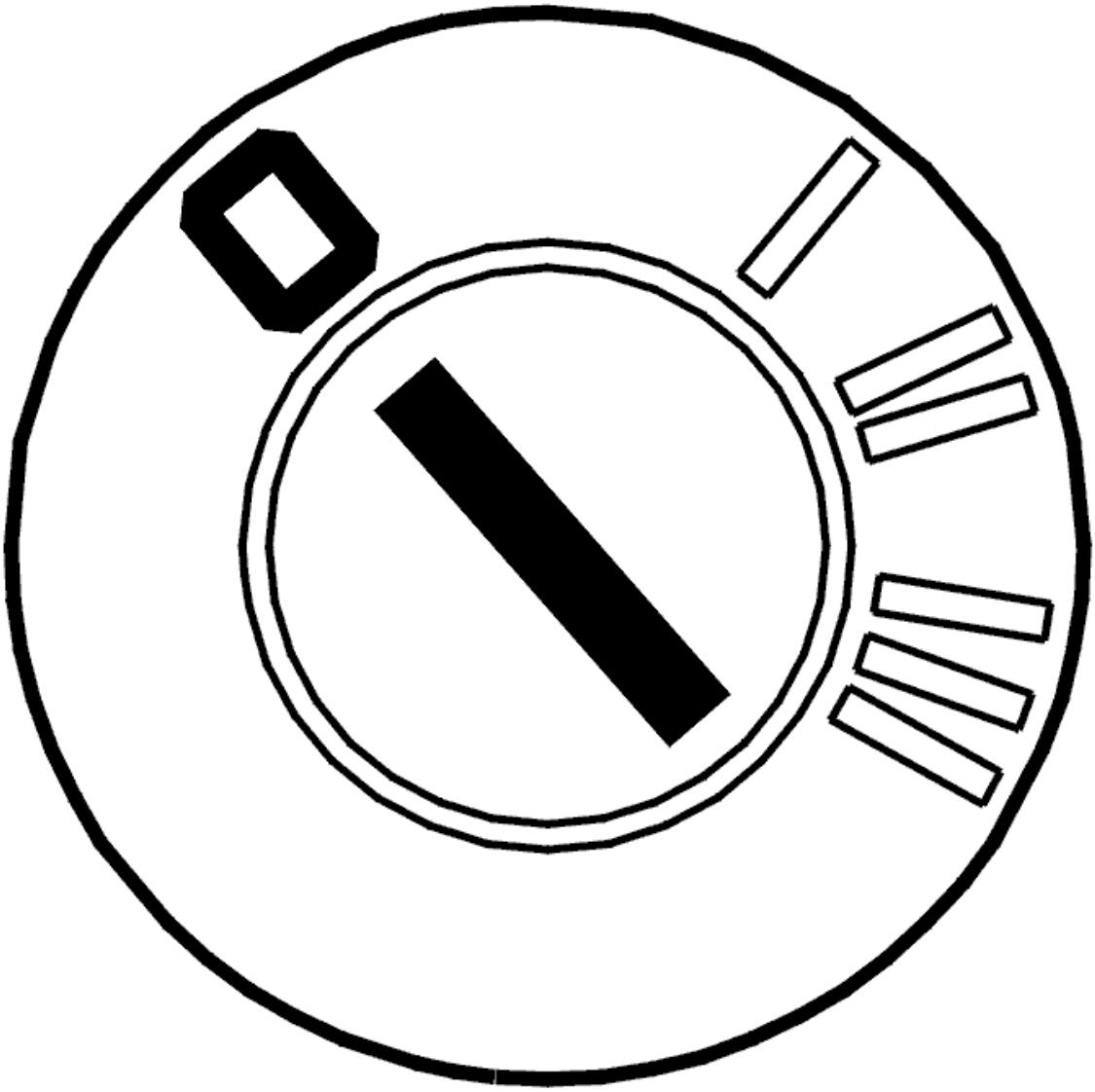

Fig. 42: Identifying Ignition OFF
Courtesy of VOLVO CARS CORPORATION

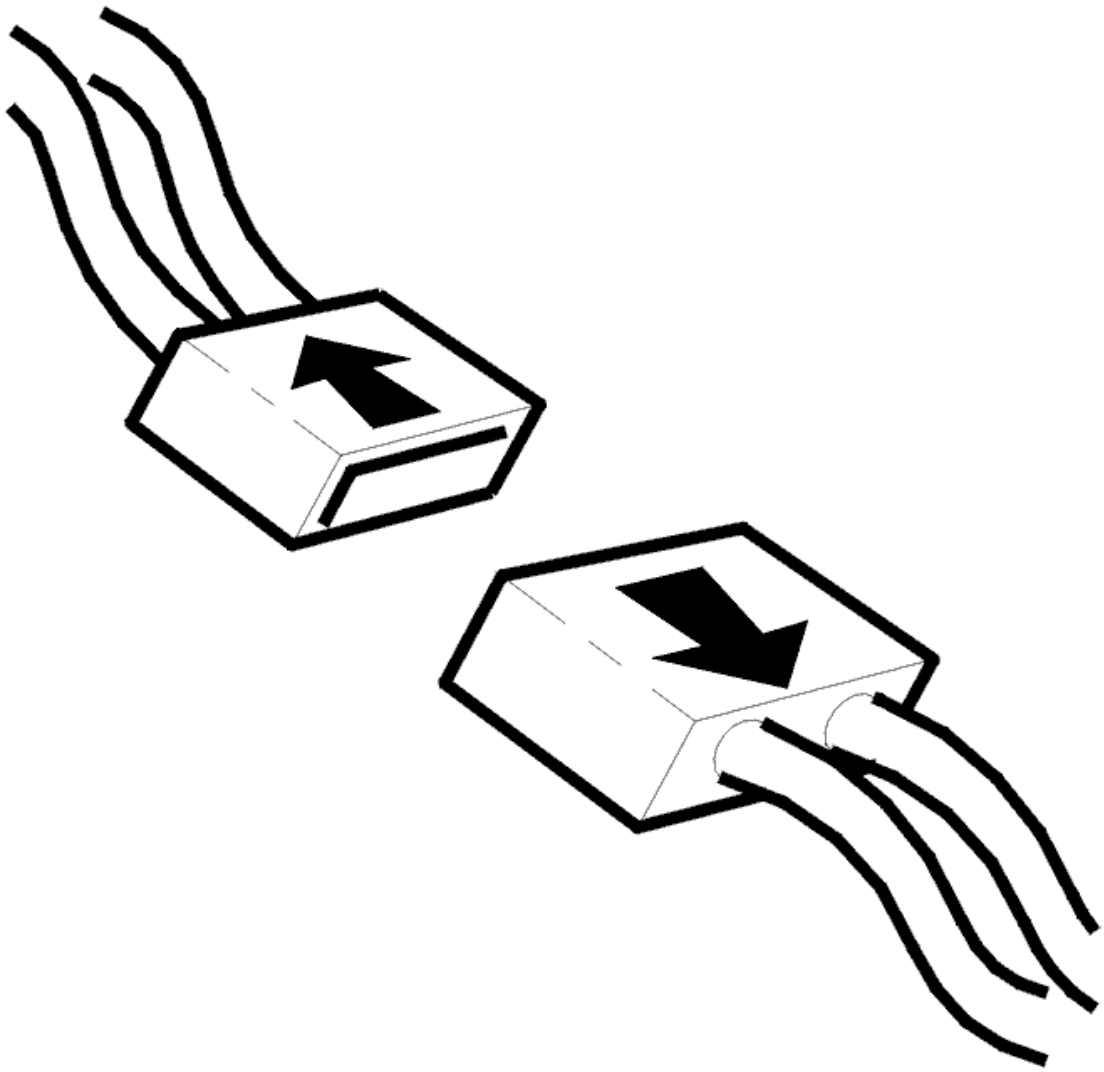

Fig. 43: Disconnecting Connector
Courtesy of VOLVO CARS CORPORATION

- Ignition off
- Disconnect the connector to the Integrated Audio Module (IAM).

  Check the connections with regard to contact resistance, play and oxidation.

  Check the antenna cable between the Integrated Audio Module (IAM) and the speaker in the right-hand front door with regard to short circuits to supply voltage.

  Measure between:

  - Integrated audio module (IAM) terminal #A4 and speaker terminal #1 in the right front door.
  - Integrated audio module (IAM) terminal #A11 and speaker terminal #2 in the right front door.

Remedy as necessary.

Other information

- see **SIGNAL SPECIFICATION**
- see **LOCATION OF COMPONENTS**
- see **CONTROL MODULE GENERAL SOUND PLAYER**
- see **LOUDSPEAKER, FRONT SIDE DOOR, REPLACING**
- see **CONTENTS**

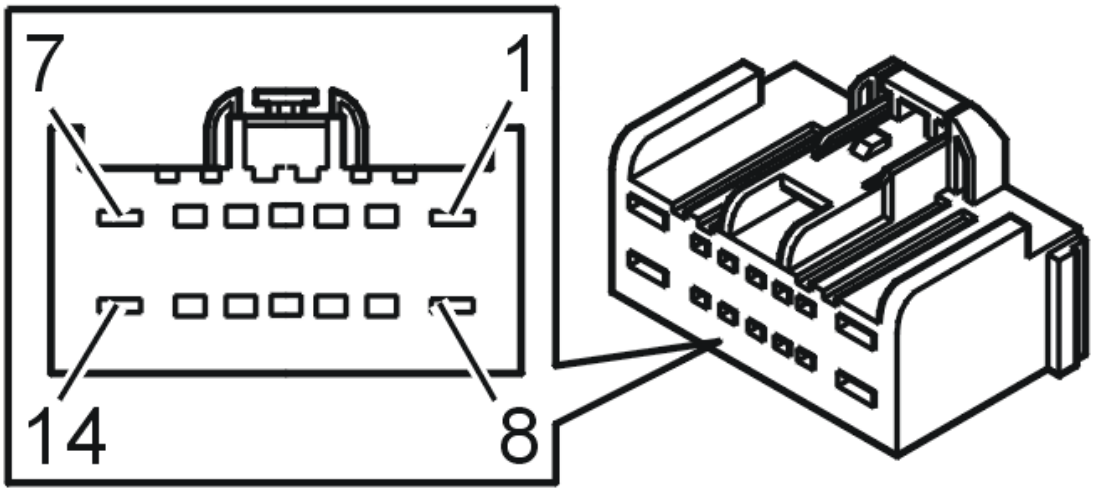

Fig. 44: Identifying 14-Bit Connector
Courtesy of VOLVO CARS CORPORATION

- **Continue**

  See: **VERIFICATION**

VERIFICATION

VERIFICATION

HINT: After carrying out the repair, check that the fault has been remedied.

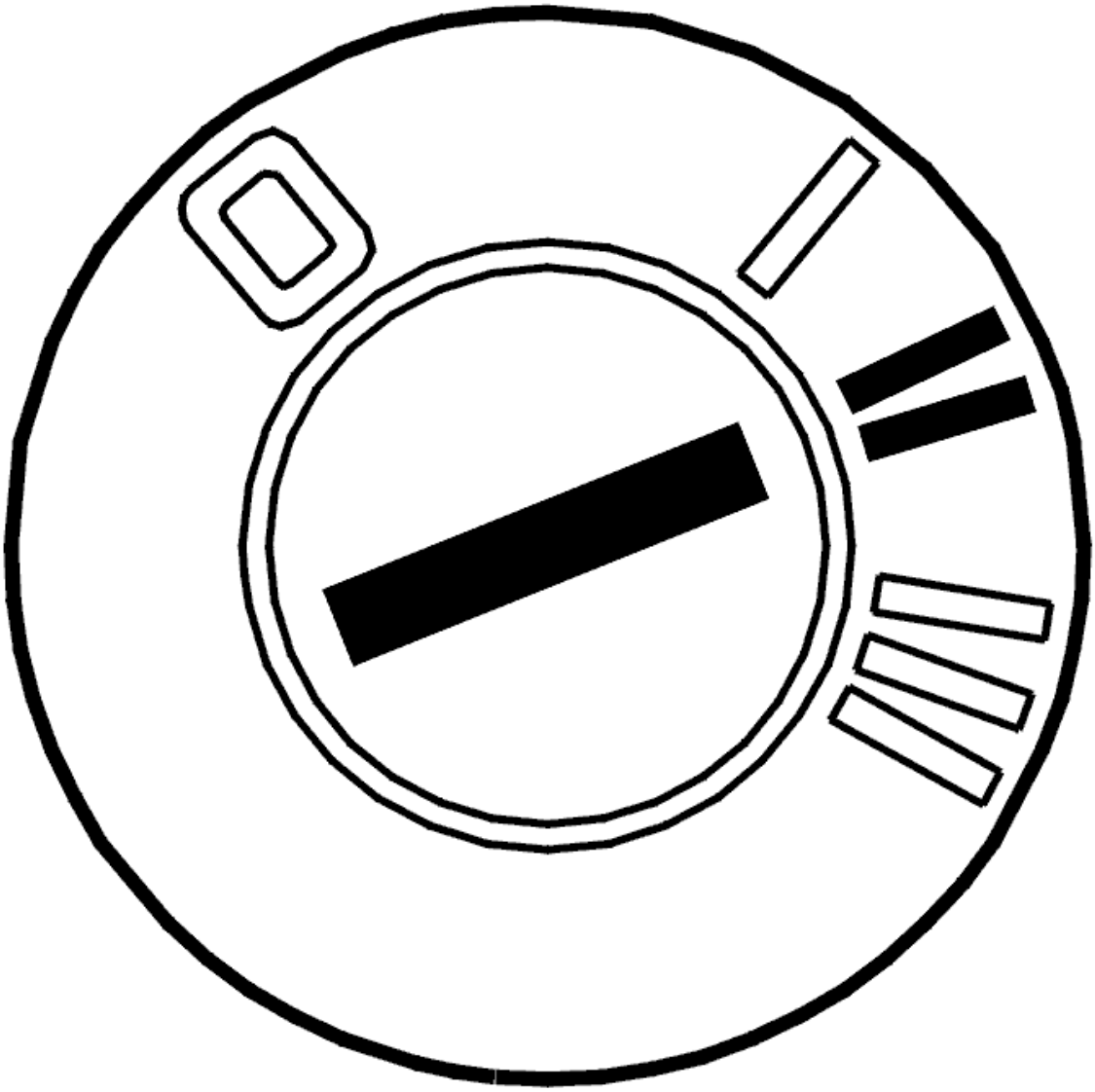

Fig. 45: Identifying Ignition ON
Courtesy of VOLVO CARS CORPORATION

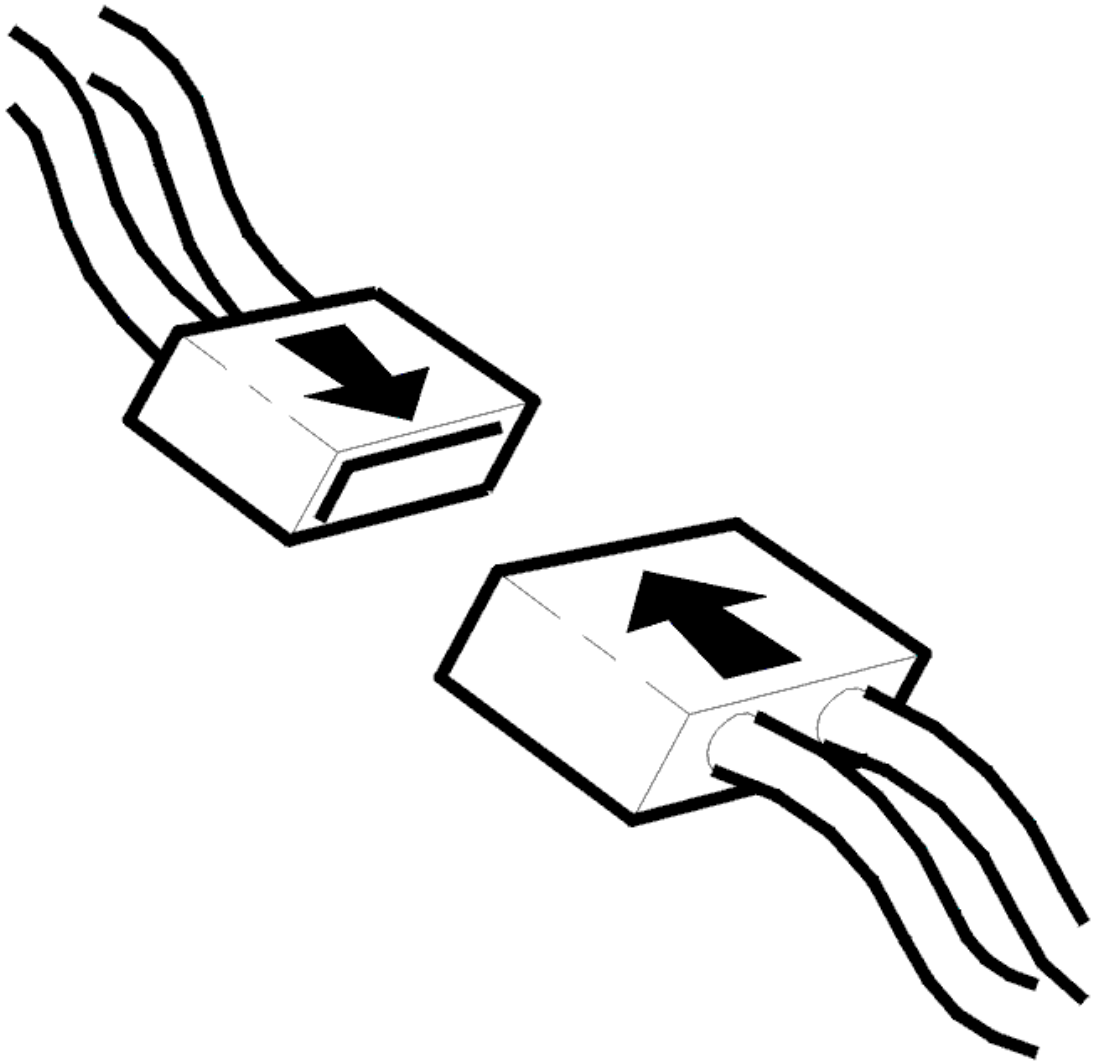

Fig. 46: Connecting Connector
Courtesy of VOLVO CARS CORPORATION

- Ignition off
- Reinstall the connectors, components etc.
- Ignition on

  Check that the sound is heard from the speakers by testing the CD player.

Are the speakers working?

- **YES**

  VERIFIED: Troubleshooting has been completed.

- **NO**

  See: **INFORMATION**

INFORMATION

FAULT-TRACING INFORMATION

The fault should have been detected and remedied. As this is not the case fault-tracing has failed.

Exit fault-tracing for this diagnostic trouble code (DTC) or make another attempt.

IAM-3013: FRONT RIGHT SPEAKER. FAULTY SIGNAL (2007-2012)

DIAGNOSTIC TROUBLE CODE (DTC) INFORMATION IAM-3013

Condition

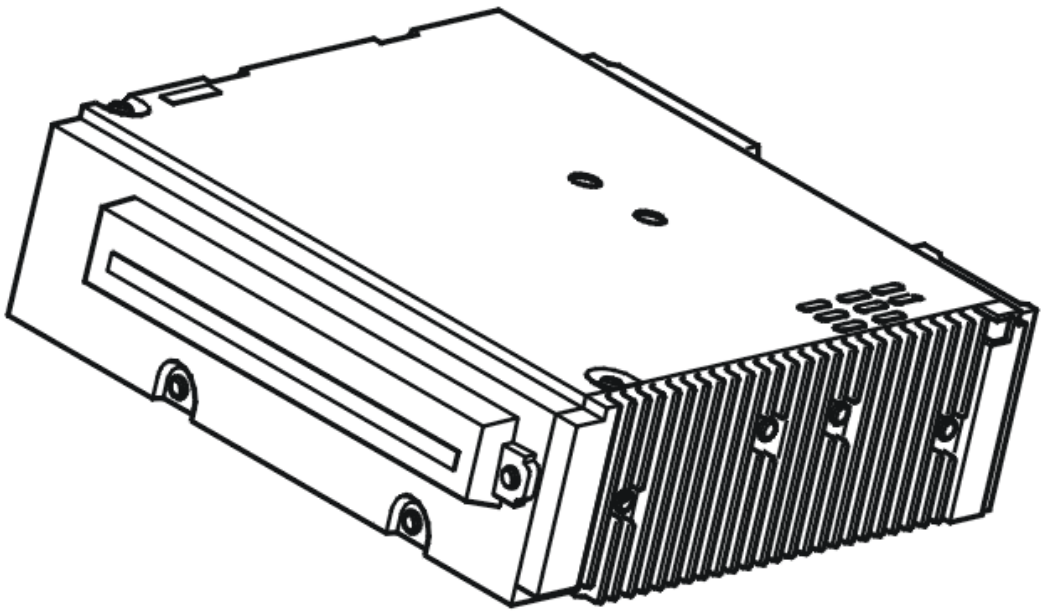

Fig. 47: Identifying Integrated Audio Module (IAM)
Courtesy of VOLVO CARS CORPORATION

If the Integrated Audio Module (IAM) registers that the impedance is too low in the speaker in the right-hand front door, then the Diagnostic Trouble Code (DTC) is generated.

The diagnostic trouble code can be diagnosed when the ignition is on.

Substitute Value

- Nothing.

Possible Source

- Short circuit between the signal cables to the speaker in the right-hand front door.
- Internal fault in the speaker in the right-hand front door.

Fault symptom[s]

- CD player inoperative.
- No sound from speakers.

FAULTY SIGNAL

CHECKING THE WIRING

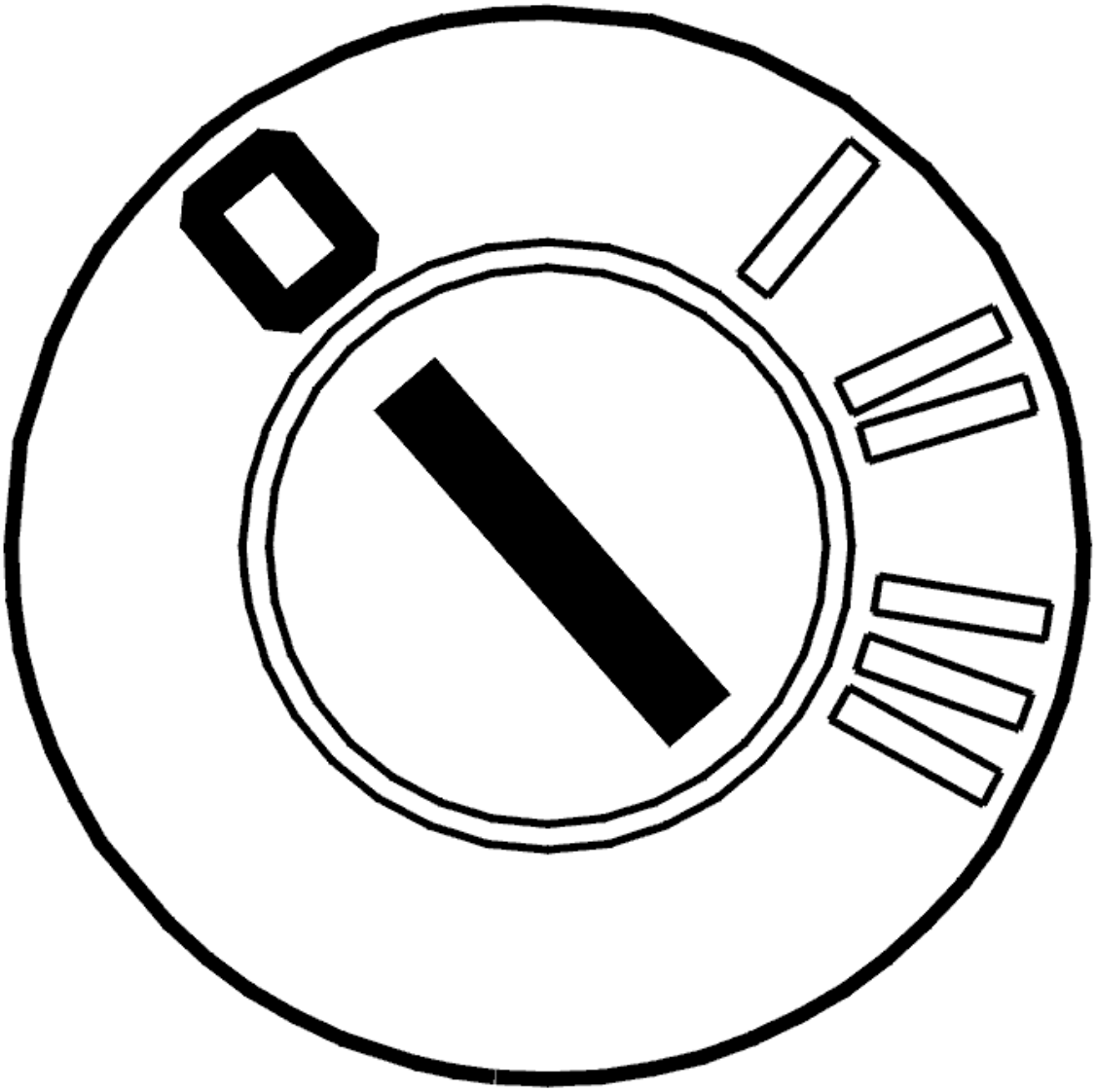

Fig. 48: Identifying Ignition OFF
Courtesy of VOLVO CARS CORPORATION

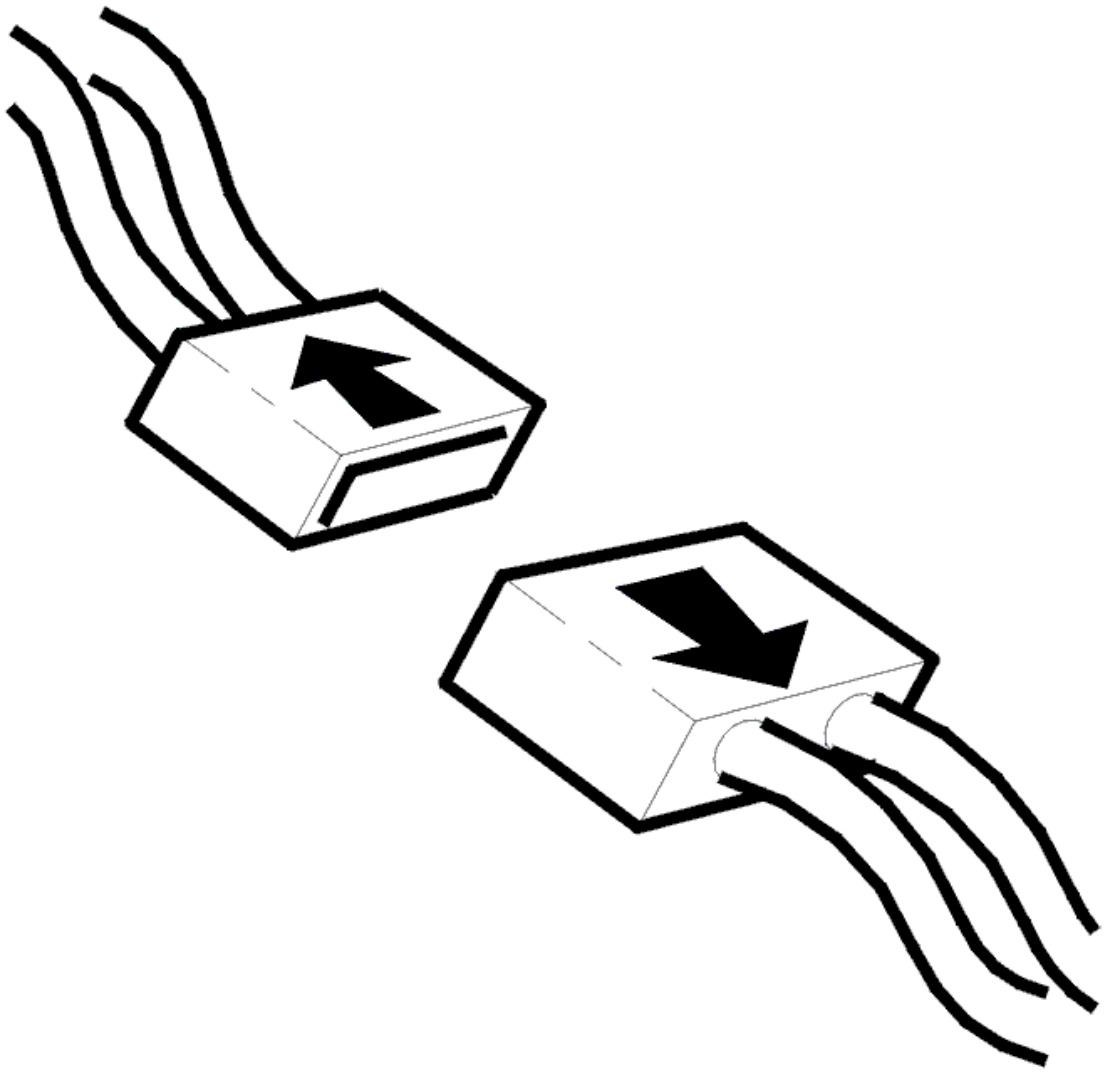

Fig. 49: Disconnecting Connector
Courtesy of VOLVO CARS CORPORATION

- Ignition off
- Disconnect the connector to the Integrated Audio Module (IAM).

  Check the connections with regard to contact resistance, play and oxidation.

  Check the signal cables between the Integrated Audio Module (IAM) and the speaker in the right-hand front door with regard to short circuits between the signal cables.

  Measure between:

  - Integrated Audio Module (IAM) #A3 and speaker #1 in right-hand front door.
  - Integrated Audio Module (IAM) #A10 and speaker #2 in right-hand front door.

If no fault was detected, replace the speaker.

Remedy as necessary.

Other information

- see **SIGNAL SPECIFICATION**
- see **LOCATION OF COMPONENTS**
- see **CONTROL MODULE GENERAL SOUND PLAYER**
- see **LOUDSPEAKER, FRONT SIDE DOOR, REPLACING**
- see **CONTENTS**

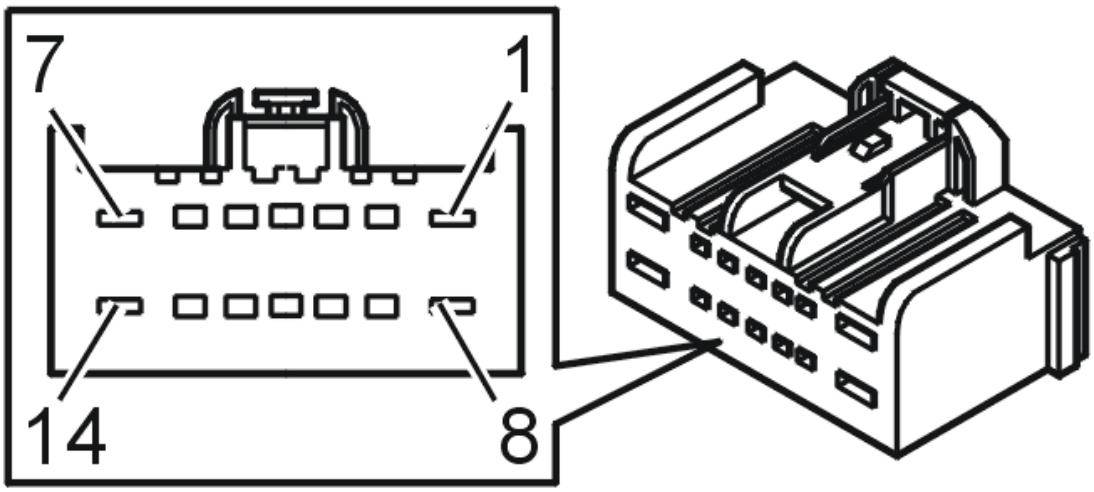

Fig. 50: Identifying 14-Bit Connector
Courtesy of VOLVO CARS CORPORATION

- **Continue**

  See: **VERIFICATION**

VERIFICATION

VERIFICATION

HINT: After carrying out the repair, check that the fault has been remedied.

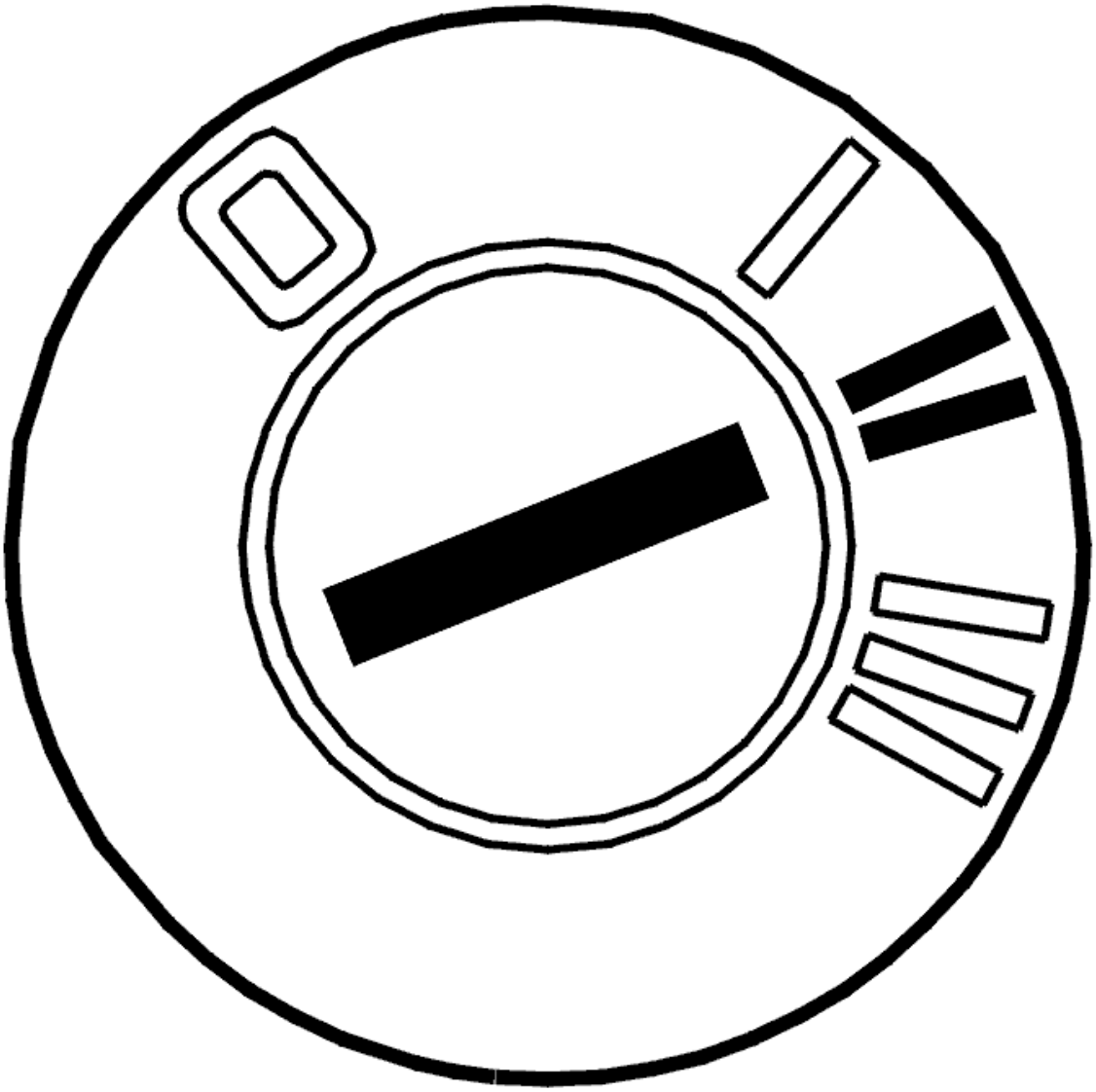

Fig. 51: Identifying Ignition ON
Courtesy of VOLVO CARS CORPORATION

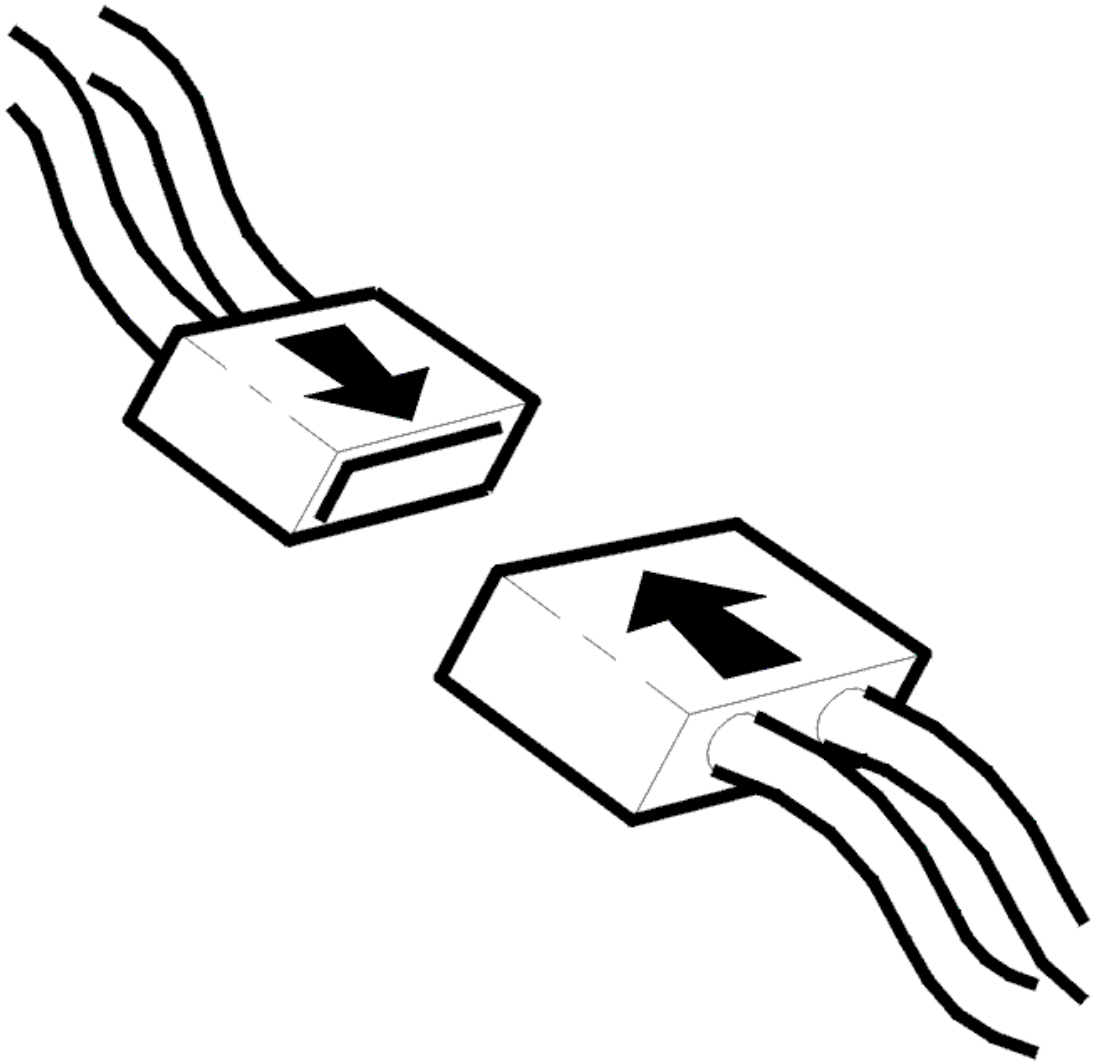

Fig. 52: Connecting Connector
Courtesy of VOLVO CARS CORPORATION

- Ignition off
- Reinstall the connectors, components etc.
- Ignition on

  Check that the sound is heard from the speakers by testing the CD player.

Are the speakers working?

- **YES**

  VERIFIED: Troubleshooting has been completed.

- **NO**

  See: **INFORMATION**

INFORMATION

FAULT-TRACING INFORMATION

The fault should have been detected and remedied. As this is not the case fault-tracing has failed.

Exit fault-tracing for this diagnostic trouble code (DTC) or make another attempt.

IAM-3014: FRONT RIGHT SPEAKER. NO SIGNAL (2007-2012)

DIAGNOSTIC TROUBLE CODE (DTC) INFORMATION IAM-3014

Condition

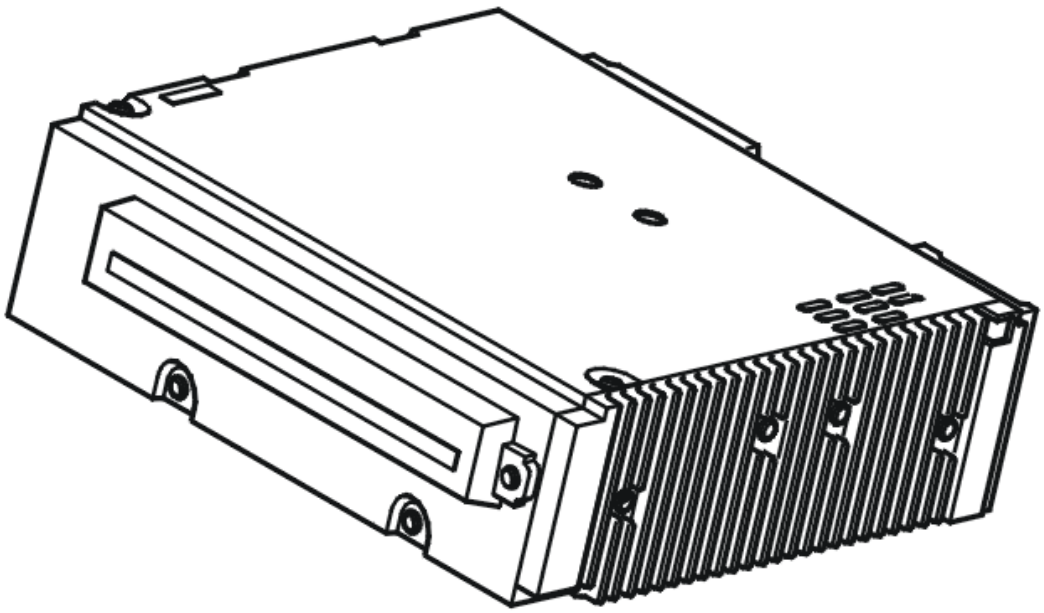

Fig. 53: Identifying Integrated Audio Module (IAM)
Courtesy of VOLVO CARS CORPORATION

If the Integrated Audio Module (IAM) registers that there is no signal in the signal cable from the speaker in the right-hand front door, then the Diagnostic Trouble Code (DTC) is generated.

The diagnostic trouble code can be diagnosed when the ignition is on.

Substitute Value

- Nothing.

Possible Source

- Open circuit on the signal cable between the control module and speaker in the right-hand front door.
- Damaged speaker in right-hand front door.

Fault symptom[s]

- CD player inoperative.
- No sound from speakers.

SIGNAL MISSING

CHECKING THE WIRING

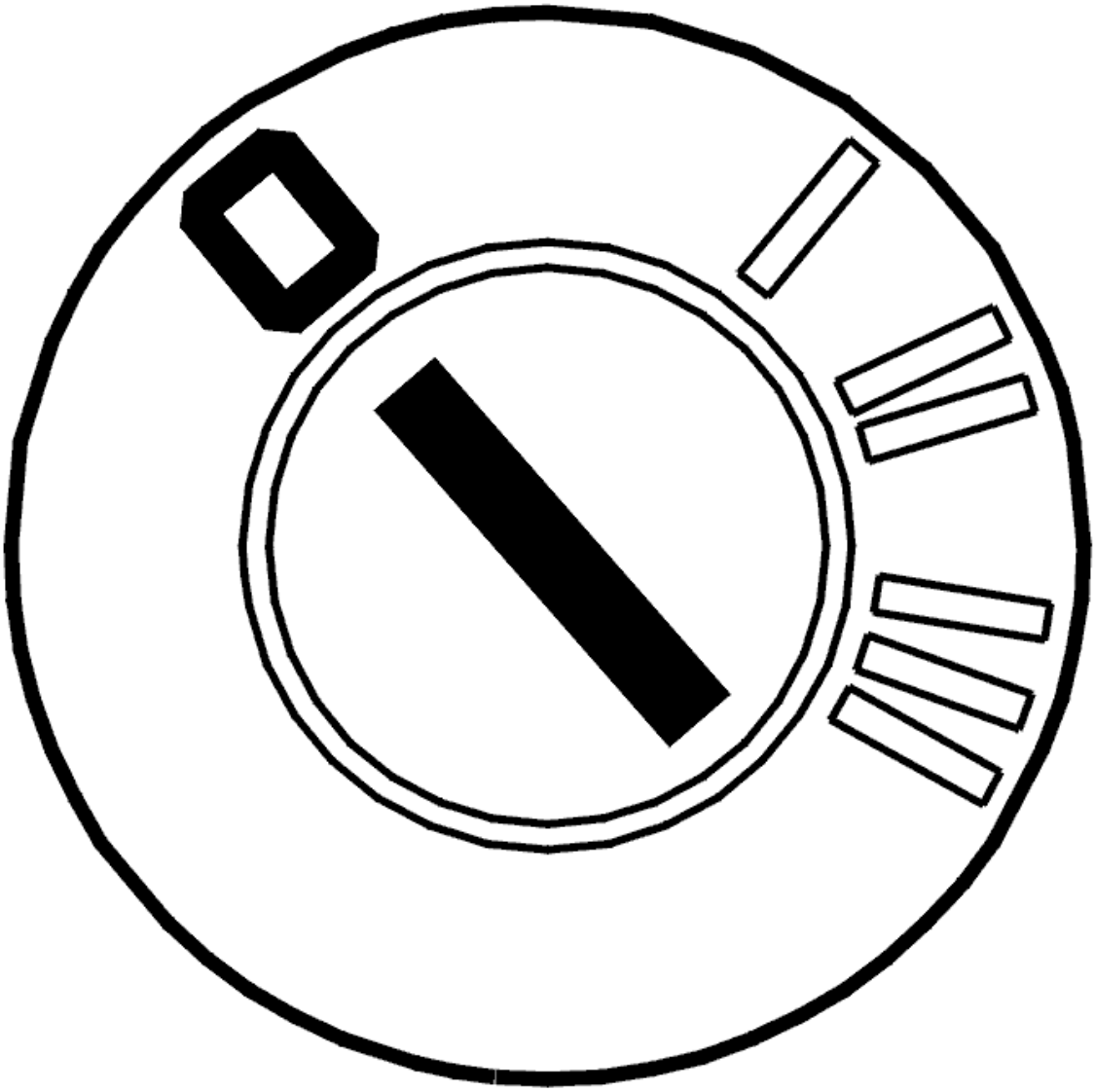

Fig. 54: Identifying Ignition OFF
Courtesy of VOLVO CARS CORPORATION

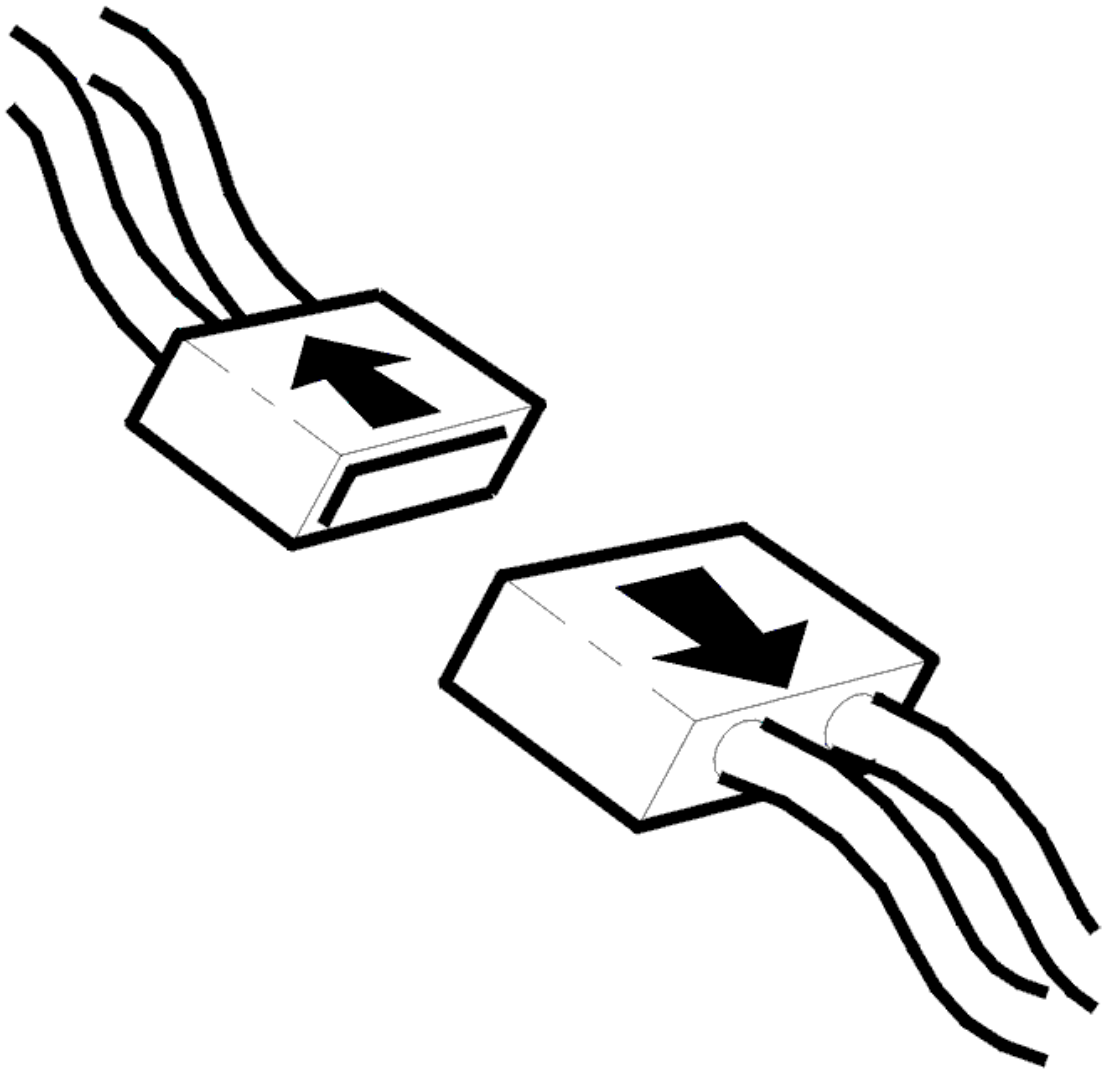

Fig. 55: Disconnecting Connector
Courtesy of VOLVO CARS CORPORATION

- Ignition off
- Disconnect the connector to the Integrated Audio Module (IAM).

  Check the connections with regard to contact resistance, play and oxidation.

  Check the signal cable between the Integrated Audio Module (IAM) and the speaker in the right-hand front door with regard to open circuits.

  Measure between:

  - Integrated audio module (IAM) terminal #A4 and speaker terminal #1 in the right front door.
  - Integrated audio module (IAM) terminal #A11 and speaker terminal #2 in the right front door.

If no fault was detected, replace the speaker.

Remedy as necessary.

Other information

- see **SIGNAL SPECIFICATION**
- see **LOCATION OF COMPONENTS**
- see **CONTROL MODULE GENERAL SOUND PLAYER**
- see **LOUDSPEAKER, FRONT SIDE DOOR, REPLACING**
- see **CONTENTS**

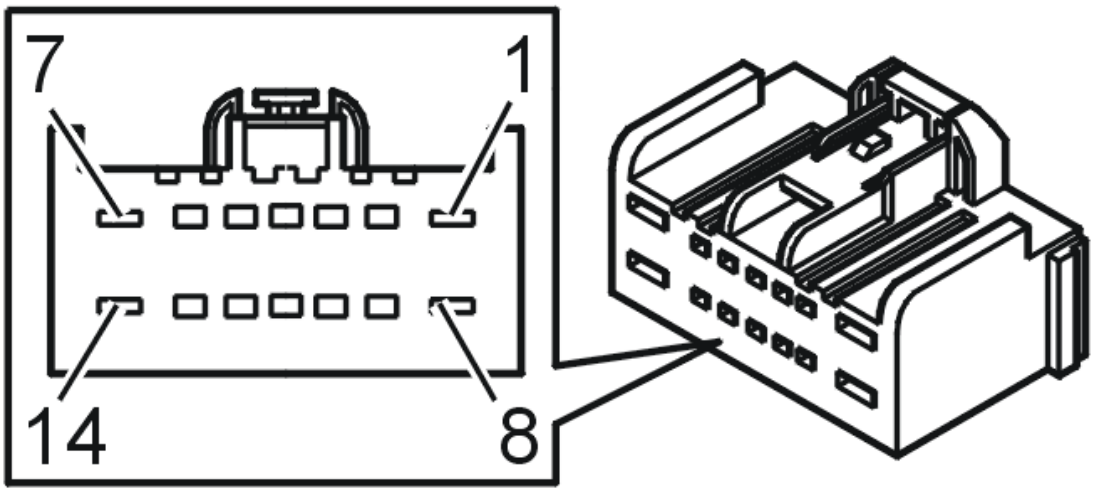

Fig. 56: Identifying 14-Bit Connector
Courtesy of VOLVO CARS CORPORATION

- **Continue**

  See: **VERIFICATION**

VERIFICATION

VERIFICATION

HINT: After carrying out the repair, check that the fault has been remedied.

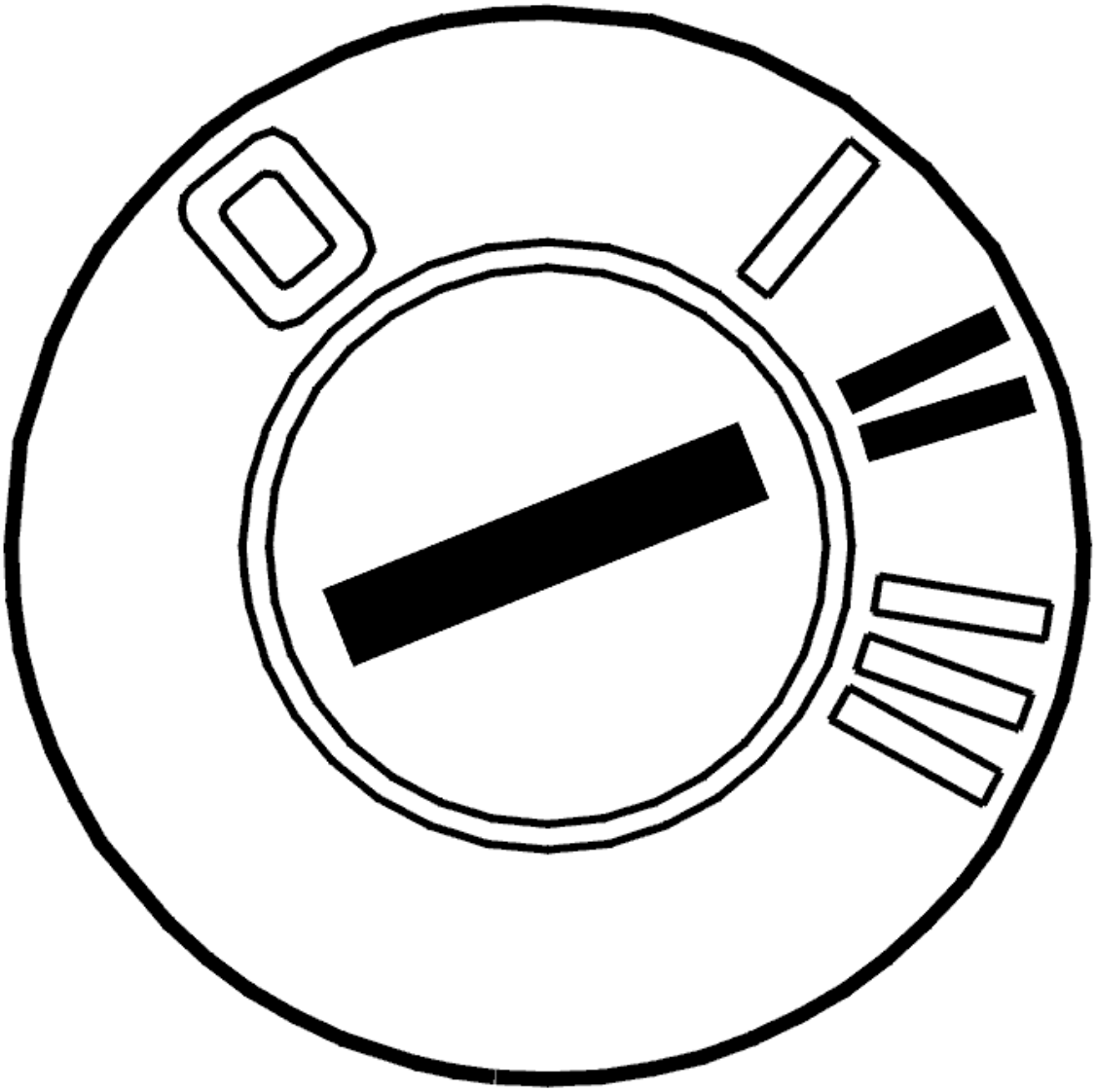

Fig. 57: Identifying Ignition ON
Courtesy of VOLVO CARS CORPORATION

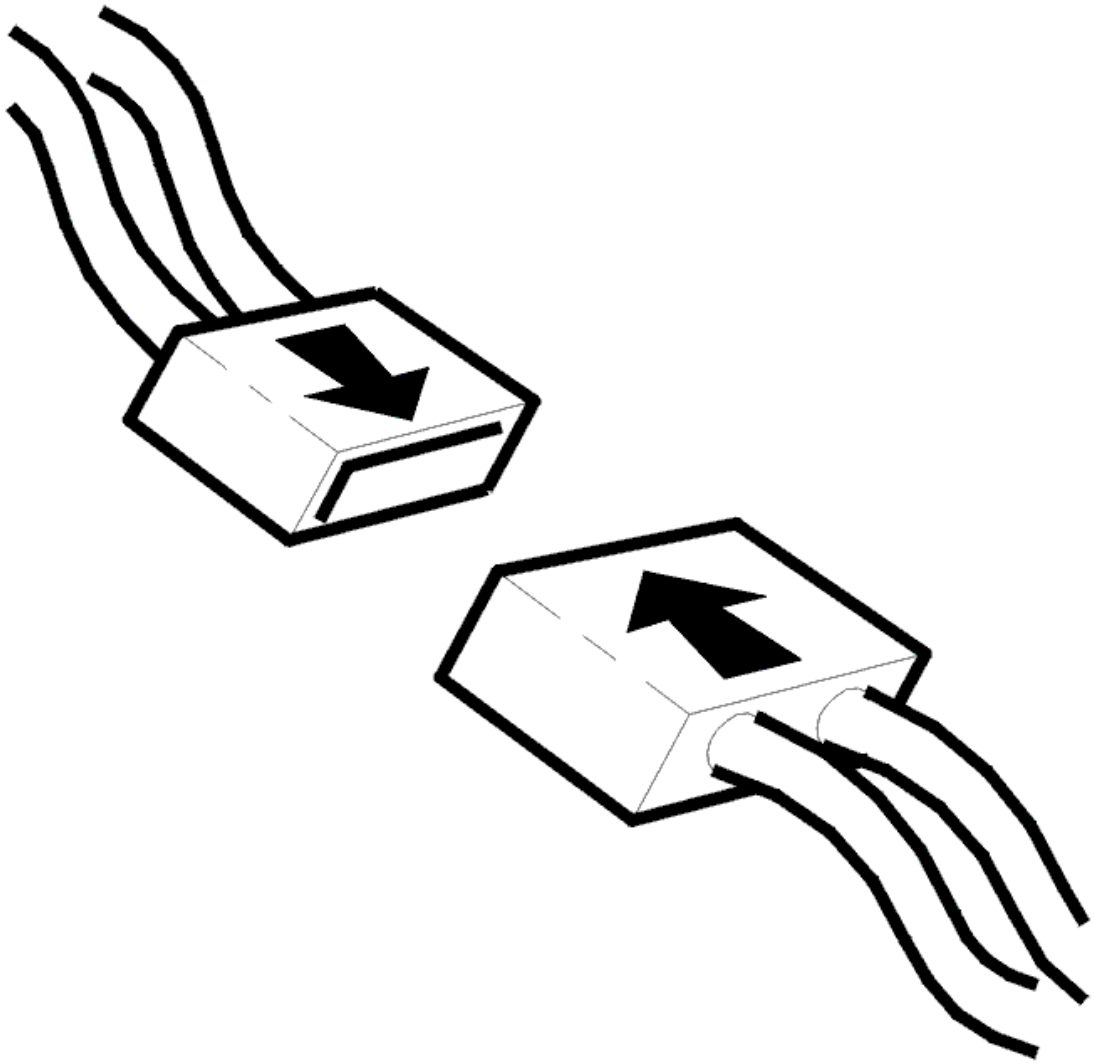

Fig. 58: Connecting Connector
Courtesy of VOLVO CARS CORPORATION

- Ignition off
- Reinstall the connectors, components etc.
- Ignition on

  Check that the sound is heard from the speakers by testing the CD player.

Are the speakers working?

- **YES**

  VERIFIED: Troubleshooting has been completed.

- **NO**

  See: **INFORMATION**

INFORMATION

FAULT-TRACING INFORMATION

The fault should have been detected and remedied. As this is not the case fault-tracing has failed.

Exit fault-tracing for this diagnostic trouble code (DTC) or make another attempt.

IAM-3015: FRONT RIGHT SPEAKER. FAULTY SIGNAL (2007-2012)

DIAGNOSTIC TROUBLE CODE (DTC) INFORMATION IAM-3015

Condition

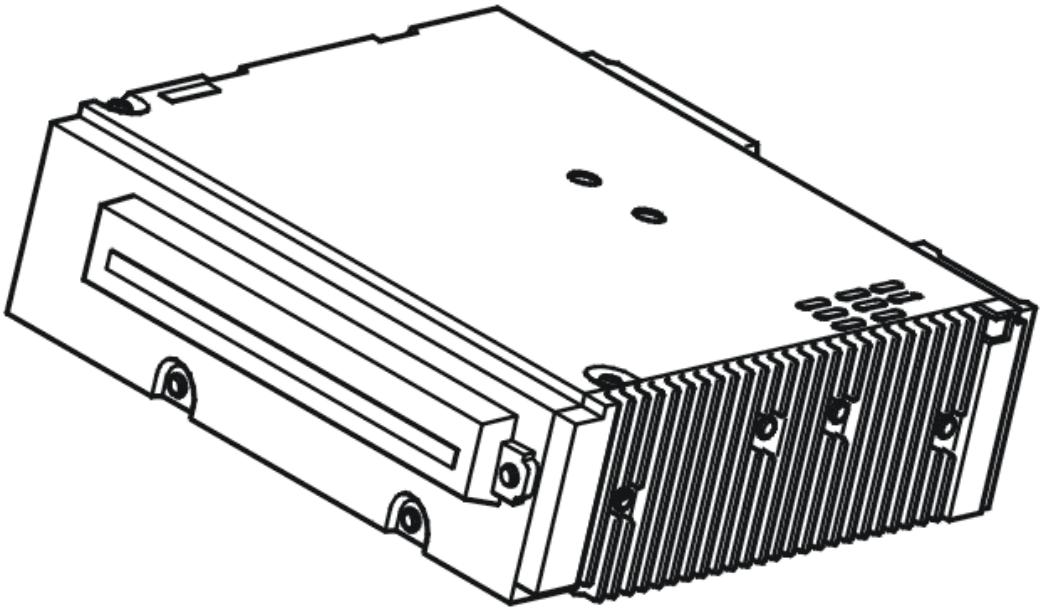

Fig. 59: Identifying Integrated Audio Module (IAM)
Courtesy of VOLVO CARS CORPORATION

If the Integrated Audio Module (IAM) registers an erroneous signal to the speaker in the right-hand front door, then the Diagnostic Trouble Code (DTC) is generated.

The diagnostic trouble code can be diagnosed when the ignition is on.

Substitute Value

- Nothing.

Possible Source

- Internal fault in integrated audio module (IAM).
- Damaged signal cables to the speaker in the right-hand front door.
- Internal fault in the speaker in the right-hand front door.

Fault symptom[s]

- CD player inoperative.
- No sound from speakers.

FAULTY SIGNAL

CHECKING THE WIRING

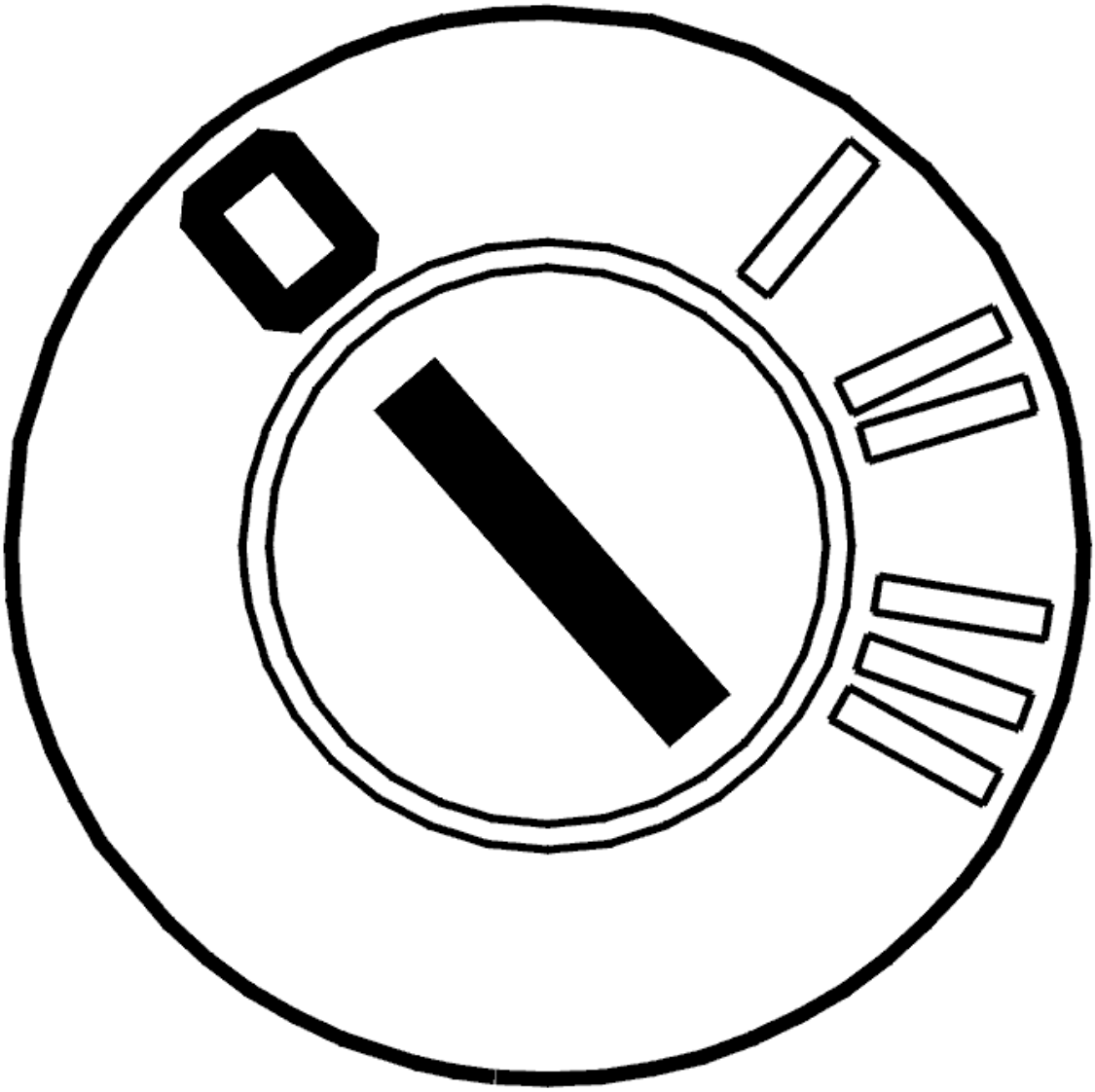

Fig. 60: Identifying Ignition OFF
Courtesy of VOLVO CARS CORPORATION

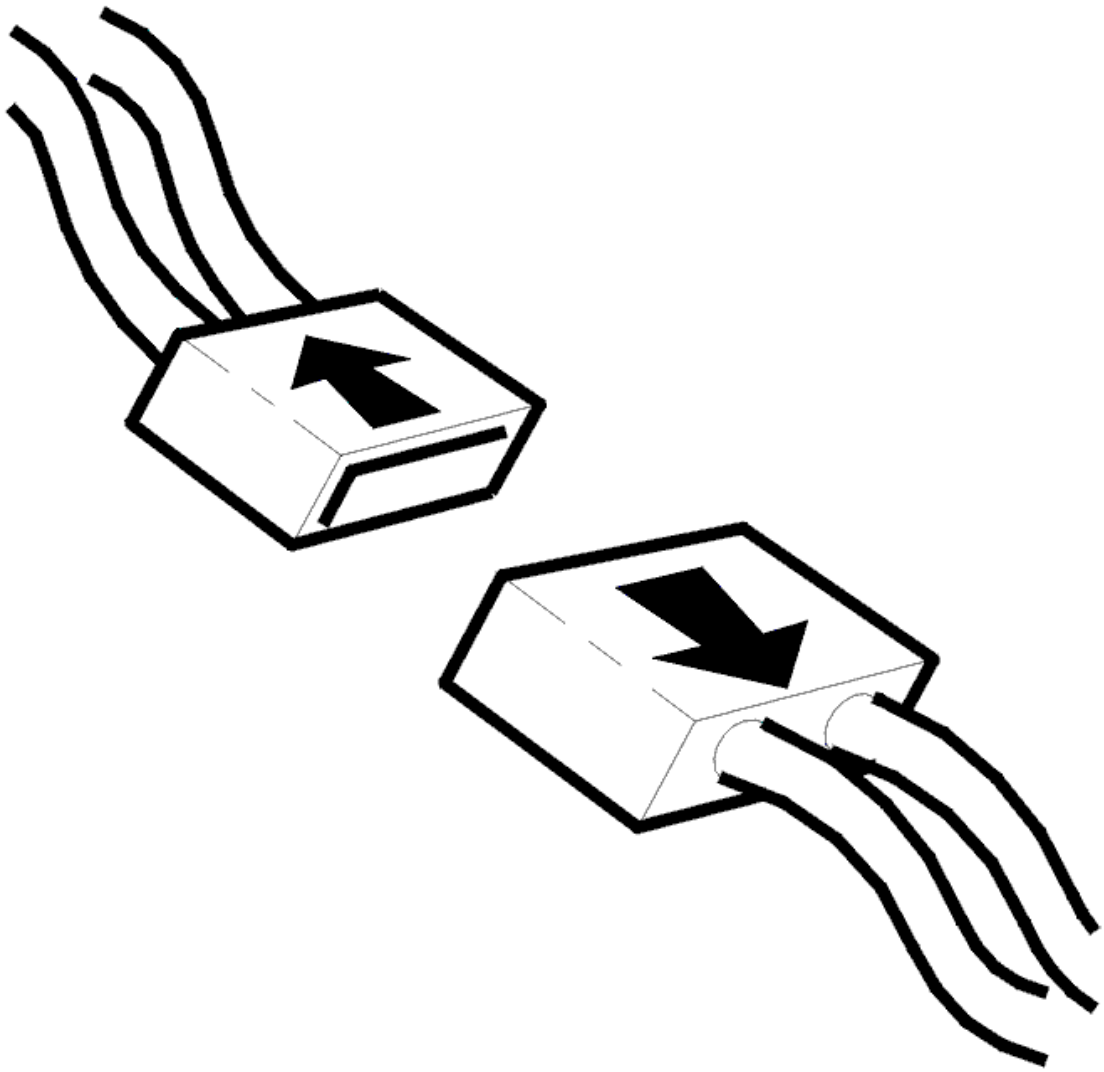

Fig. 61: Disconnecting Connector
Courtesy of VOLVO CARS CORPORATION

- Ignition off
- Disconnect the connector to the Integrated Audio Module (IAM).

  Check the connections with regard to contact resistance, play and oxidation.

  Check the signal cable between the Integrated Audio Module (IAM) and the speaker in the right-hand front door with regard to short circuits and open circuits.

  Measure between:

  - Integrated audio module (IAM) terminal #A4 and speaker terminal #1 in the right front door.
  - Integrated audio module (IAM) terminal #A11 and speaker terminal #2 in the right front door.

If no fault was detected, replace the Integrated Audio Module (IAM).

Remedy as necessary.

Other information

- see **SIGNAL SPECIFICATION**
- see **LOCATION OF COMPONENTS**
- see **CONTROL MODULE GENERAL SOUND PLAYER**
- see **LOUDSPEAKER, FRONT SIDE DOOR, REPLACING**
- see **CONTENTS**

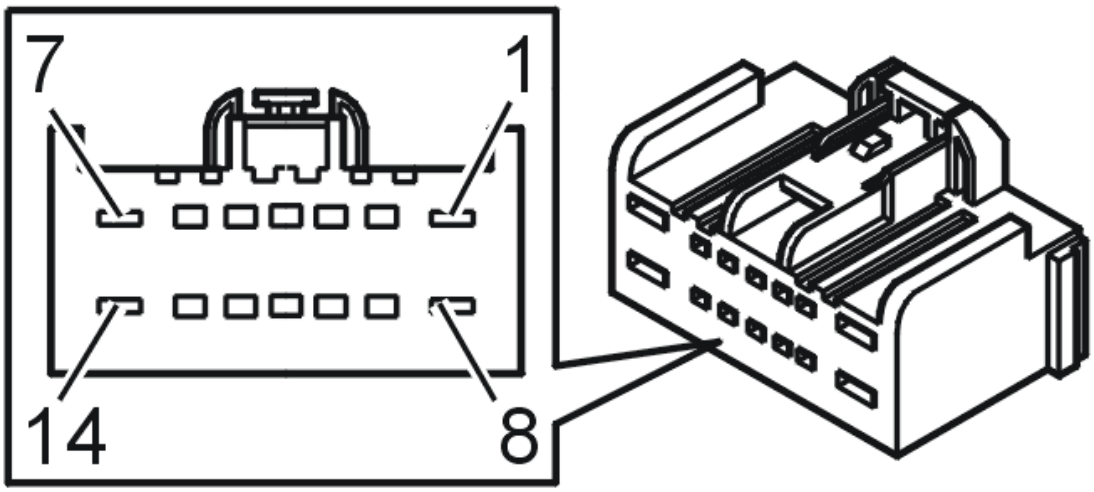

Fig. 62: Identifying 14-Bit Connector
Courtesy of VOLVO CARS CORPORATION

- **Continue**

  See: **VERIFICATION**

VERIFICATION

VERIFICATION

HINT: After carrying out the repair, check that the fault has been remedied.

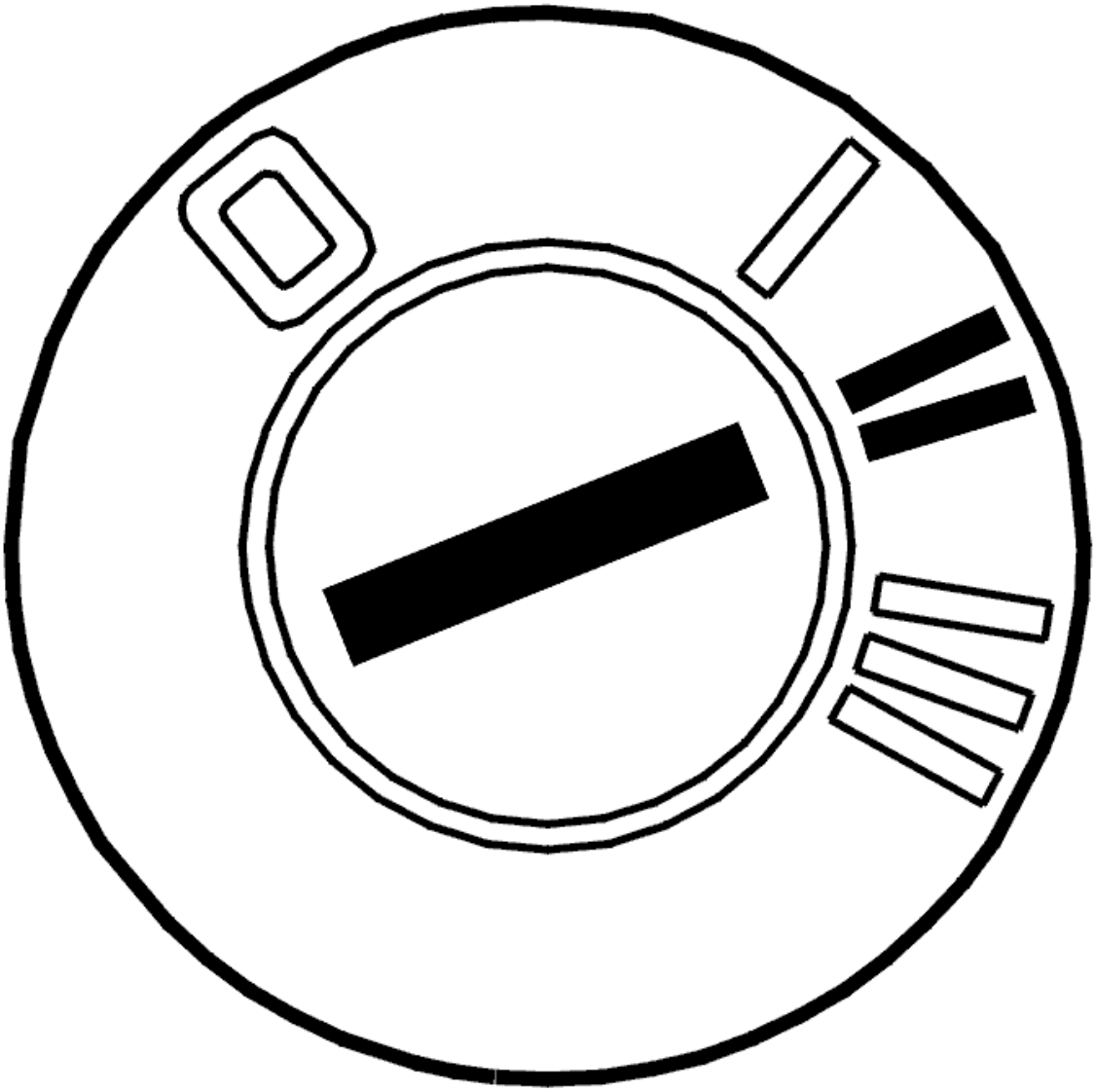

Fig. 63: Identifying Ignition ON
Courtesy of VOLVO CARS CORPORATION

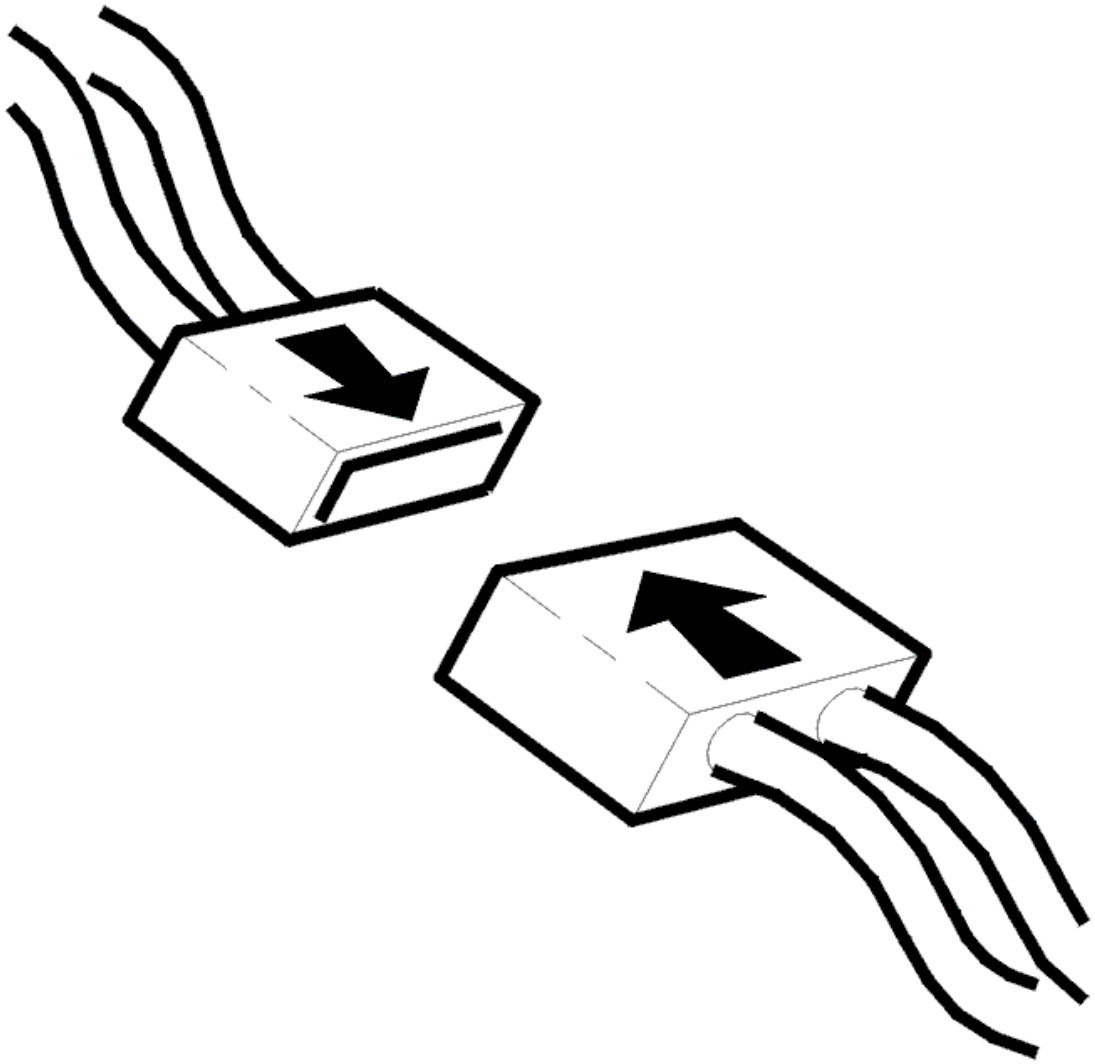

Fig. 64: Connecting Connector
Courtesy of VOLVO CARS CORPORATION

- Ignition off
- Reinstall the connectors, components etc.
- Ignition on

  Check that the sound is heard from the speakers by testing the CD player.

Are the speakers working?

- **YES**

  VERIFIED: Troubleshooting has been completed.

- **NO**

  See: **INFORMATION**

INFORMATION

FAULT-TRACING INFORMATION

The fault should have been detected and remedied. As this is not the case fault-tracing has failed.

Exit fault-tracing for this diagnostic trouble code (DTC) or make another attempt.

IAM-3021: REAR LEFT SPEAKER. SIGNAL TOO LOW (2007-2012)

DIAGNOSTIC TROUBLE CODE (DTC) INFORMATION IAM-3021

Condition

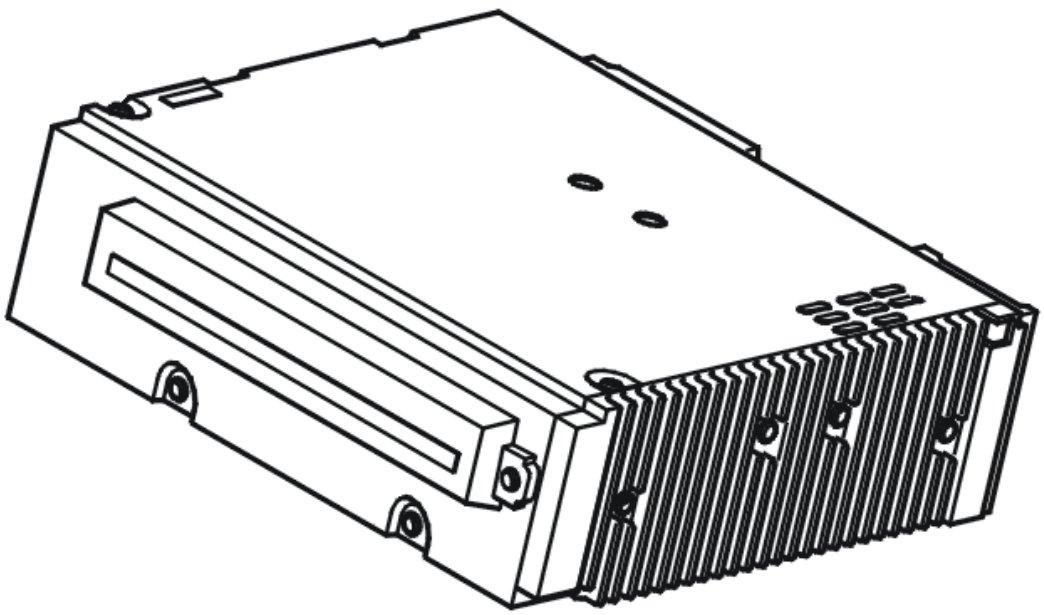

Fig. 65: Identifying Integrated Audio Module (IAM)
Courtesy of VOLVO CARS CORPORATION

If the Integrated Audio Module (IAM) registers that the signal is too low on the signal cable from the speaker in the left-hand rear door, then the Diagnostic Trouble Code (DTC) is generated.

The diagnostic trouble code can be diagnosed when the ignition is on.

Substitute Value

- Nothing.

Possible Source

- Short circuit to ground on the signal cable between the control module and speaker in the left-hand rear door.

Fault symptom[s]

- CD player inoperative.
- No sound from speakers.

SIGNAL TOO LOW

CHECKING THE WIRING

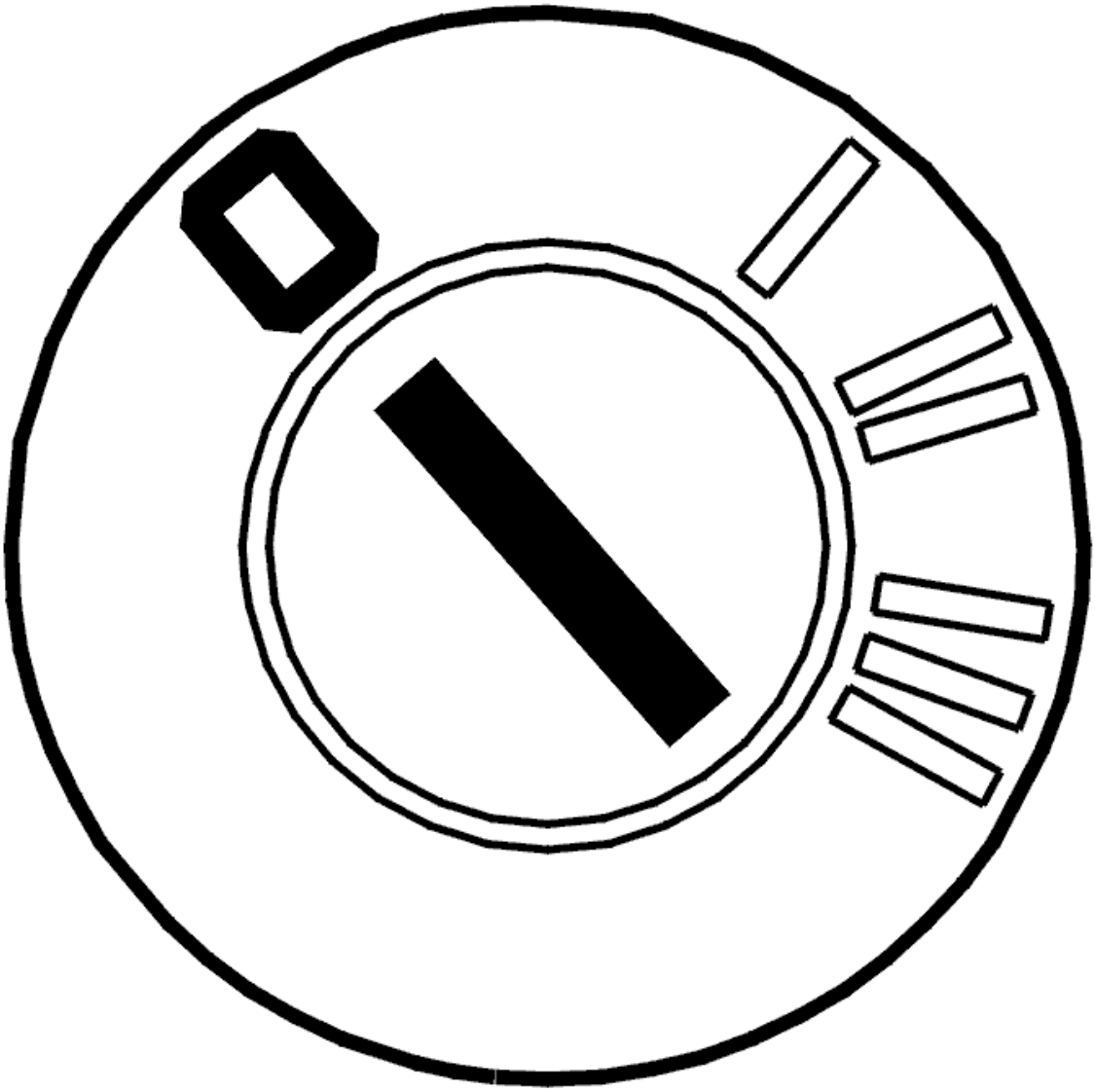

Fig. 66: Identifying Ignition OFF
Courtesy of VOLVO CARS CORPORATION

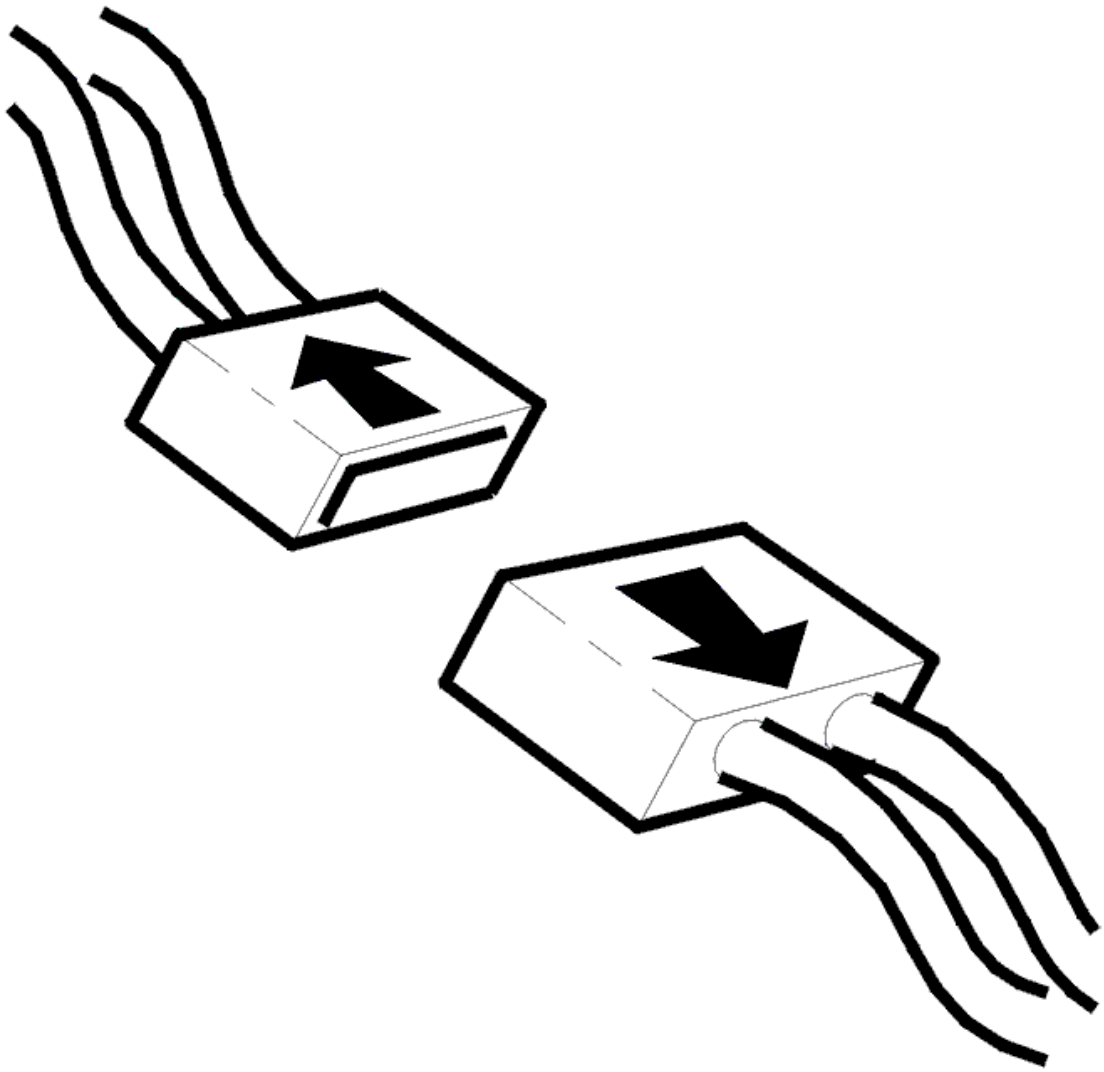

Fig. 67: Disconnecting Connector
Courtesy of VOLVO CARS CORPORATION

- Ignition off
- Disconnect the connector to the Integrated Audio Module (IAM).

  Check the connections with regard to contact resistance, play and oxidation.

  Check the antenna cable between the Integrated Audio Module (IAM) and the speaker in the left-hand rear door with regard to short circuits to ground.

  Measure between:

  - Integrated audio module (IAM) terminal #A6 and speaker terminal #1 in the left rear door.
  - Integrated audio module (IAM) terminal #A13 and speaker terminal #2 in the left rear door.

Remedy as necessary.

Other information

- see **SIGNAL SPECIFICATION**
- see **LOCATION OF COMPONENTS**
- see **CONTROL MODULE GENERAL SOUND PLAYER**
- see **LOUDSPEAKER, REAR SIDE DOOR, REPLACING**
- see **CONTENTS**

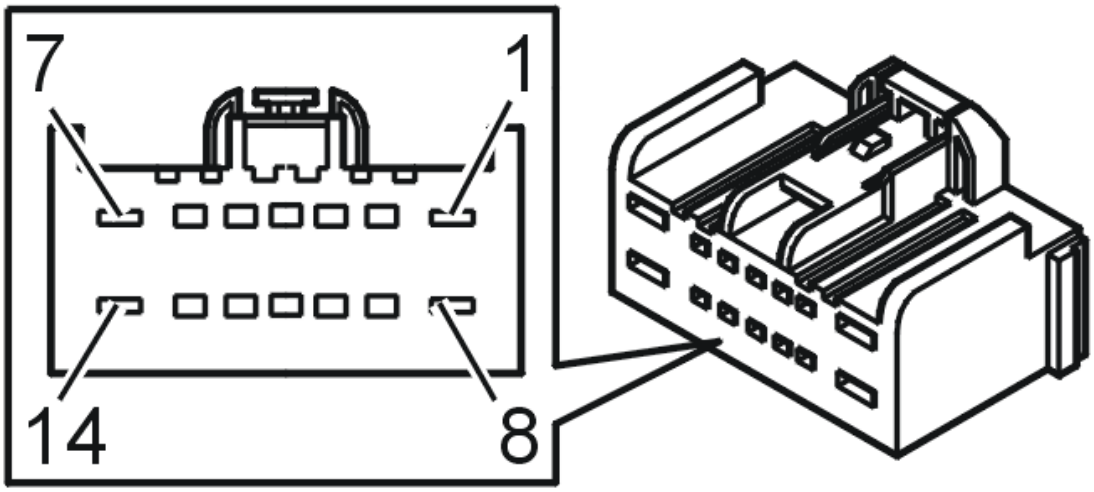

Fig. 68: Identifying 14-Bit Connector
Courtesy of VOLVO CARS CORPORATION

- **Continue**

  See: **VERIFICATION**

VERIFICATION

VERIFICATION

HINT: After carrying out the repair, check that the fault has been remedied.

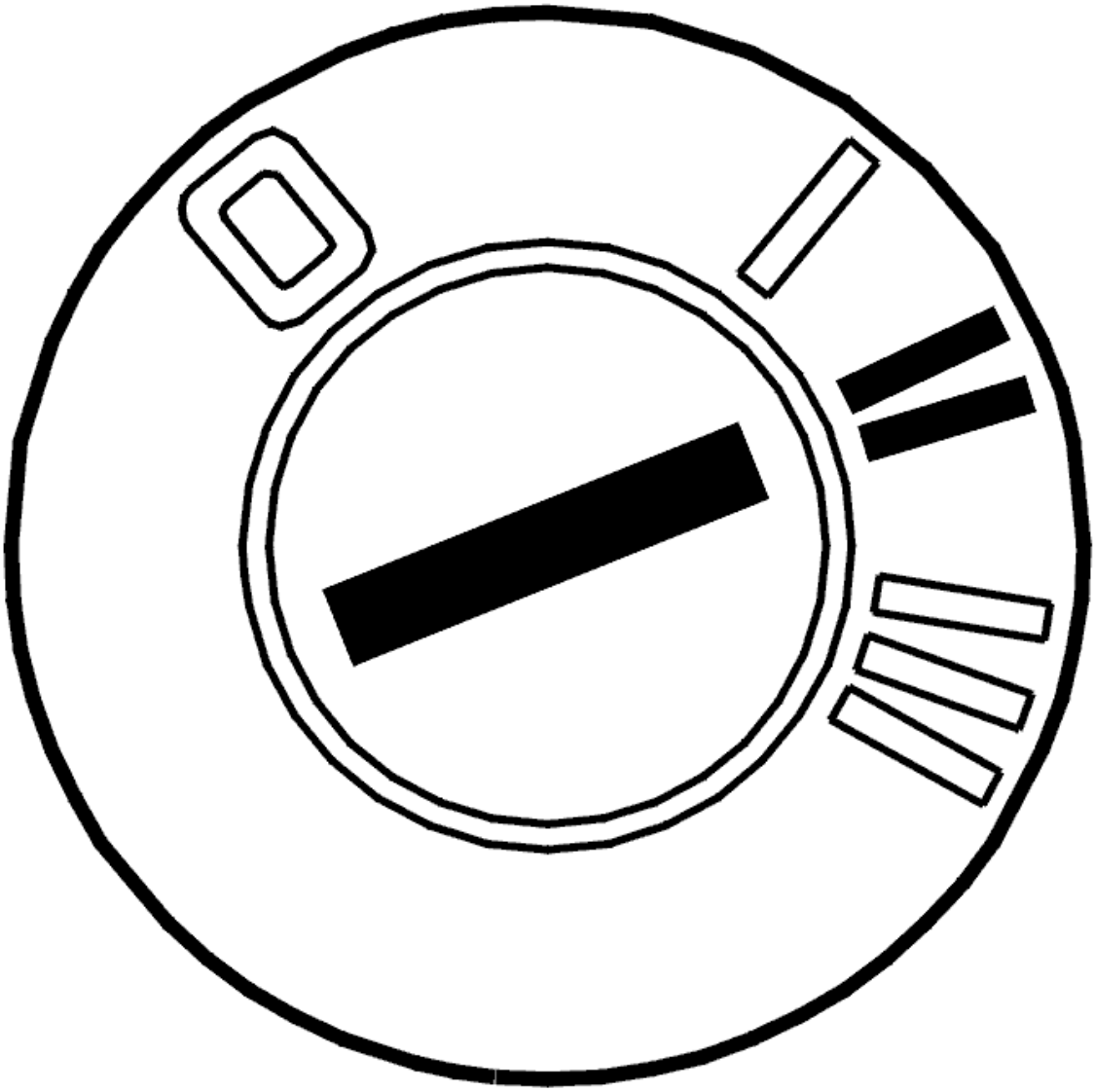

Fig. 69: Identifying Ignition ON
Courtesy of VOLVO CARS CORPORATION

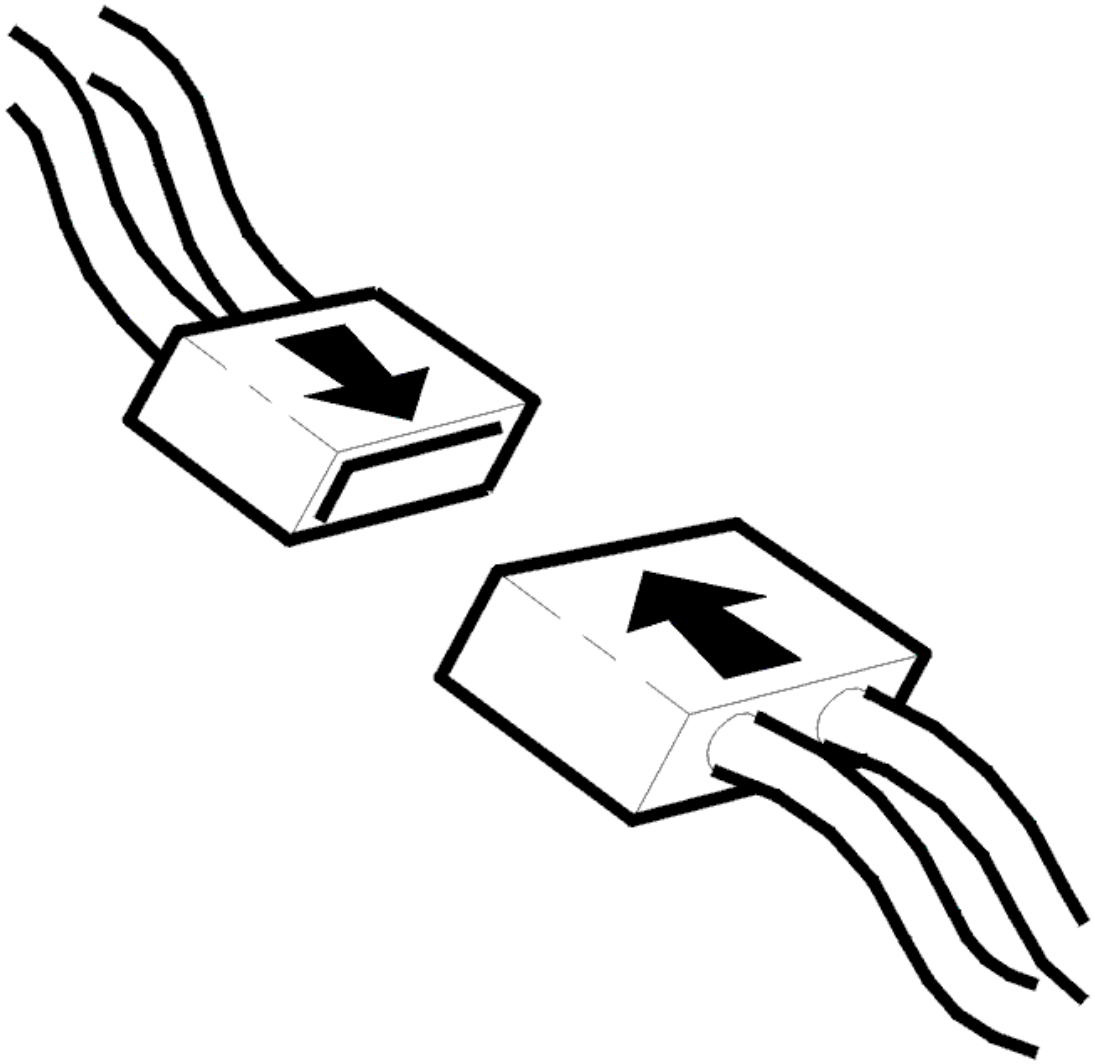

Fig. 70: Connecting Connector
Courtesy of VOLVO CARS CORPORATION

- Ignition off
- Reinstall the connectors, components etc.
- Ignition on

  Check that the sound is heard from the speakers by testing the CD player.

Are the speakers working?

- **YES**

  VERIFIED: Troubleshooting has been completed.

- **NO**

  See: **INFORMATION**

INFORMATION

FAULT-TRACING INFORMATION

The fault should have been detected and remedied. As this is not the case fault-tracing has failed.

Exit fault-tracing for this diagnostic trouble code (DTC) or make another attempt.

IAM-3022: REAR LEFT SPEAKER. SIGNAL TOO HIGH (2007-2012)

DIAGNOSTIC TROUBLE CODE (DTC) INFORMATION IAM-3022

Condition

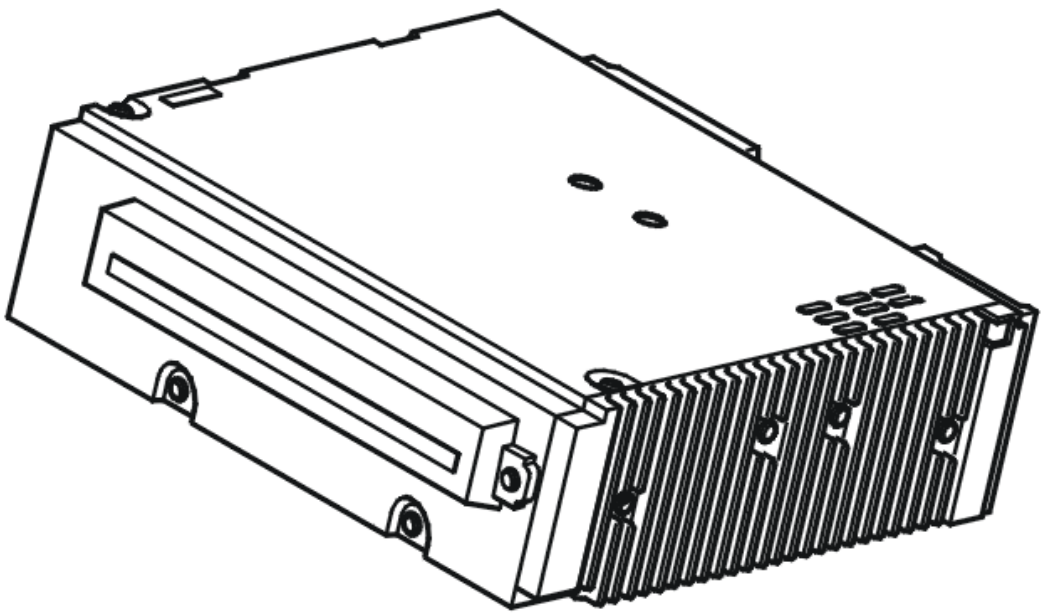

Fig. 71: Identifying Integrated Audio Module (IAM)
Courtesy of VOLVO CARS CORPORATION

If the Integrated Audio Module (IAM) registers that the signal is too high on the signal cable from the speaker in the left-hand rear door, then the Diagnostic Trouble Code (DTC) is generated.

The diagnostic trouble code can be diagnosed when the ignition is on.

Substitute Value

- Nothing.

Possible Source

- Short circuit to supply voltage on the signal cable between the control module and speaker in the left-hand rear door.

Fault symptom[s]

- CD player inoperative.
- No sound from speakers.

SIGNAL TOO HIGH

CHECKING THE WIRING

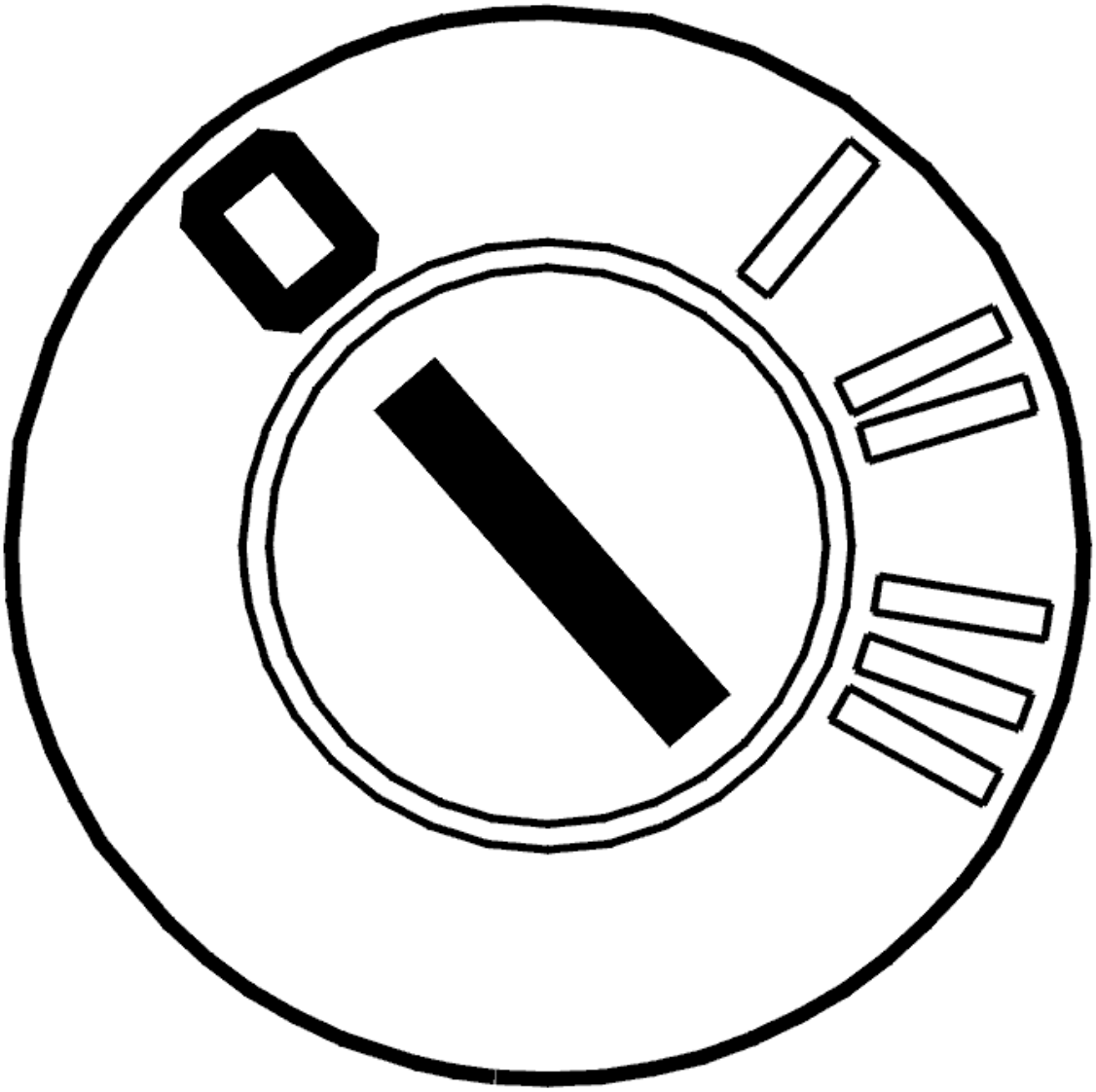

Fig. 72: Identifying Ignition OFF
Courtesy of VOLVO CARS CORPORATION

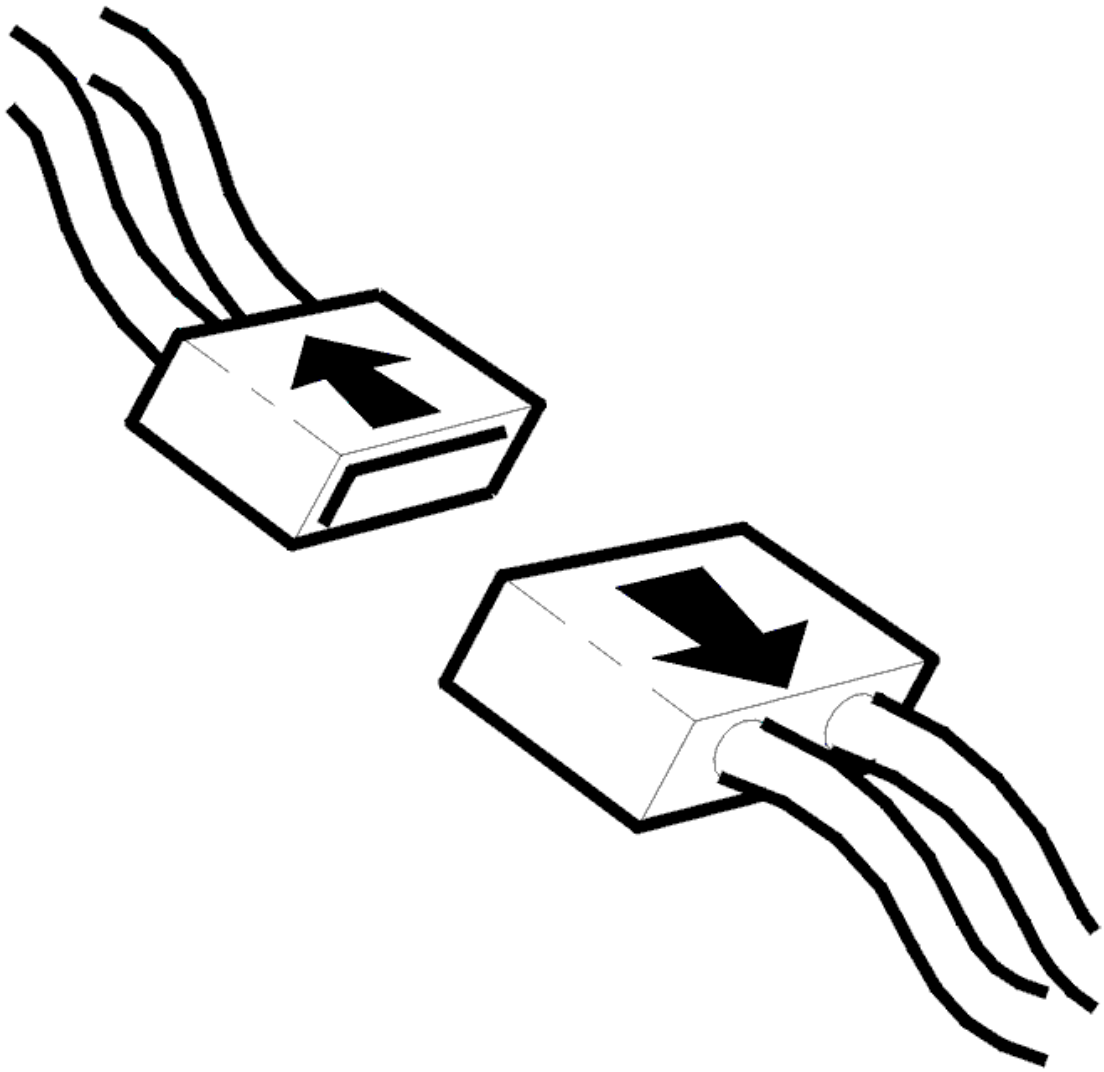

Fig. 73: Disconnecting Connector
Courtesy of VOLVO CARS CORPORATION

- Ignition off
- Disconnect the connector to the Integrated Audio Module (IAM).

  Check the connections with regard to contact resistance, play and oxidation.

  Check the antenna cable between the Integrated Audio Module (IAM) and the speaker in the left-hand rear door with regard to short circuits to supply voltage.

  Measure between:

  - Integrated audio module (IAM) terminal #A6 and speaker terminal #1 in the left rear door.
  - Integrated audio module (IAM) terminal #A13 and speaker terminal #2 in the left rear door.

Remedy as necessary.

Other information

- see **SIGNAL SPECIFICATION**
- see **LOCATION OF COMPONENTS**
- see **CONTROL MODULE GENERAL SOUND PLAYER**
- see **LOUDSPEAKER, REAR SIDE DOOR, REPLACING**
- see **CHECKING WIRING AND TERMINALS**

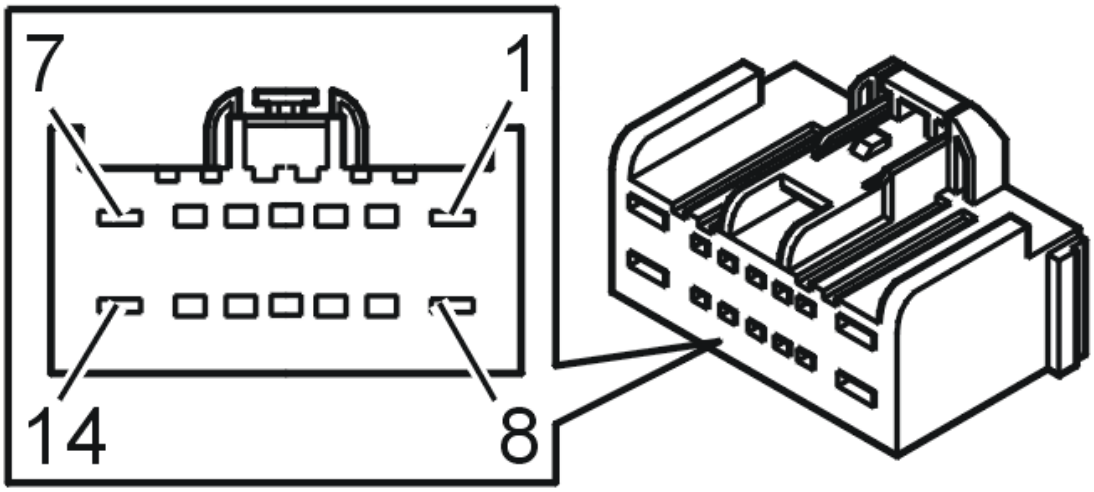

Fig. 74: Identifying 14-Bit Connector
Courtesy of VOLVO CARS CORPORATION

- **Continue**

  See: **VERIFICATION**

VERIFICATION

VERIFICATION

HINT: After carrying out the repair, check that the fault has been remedied.

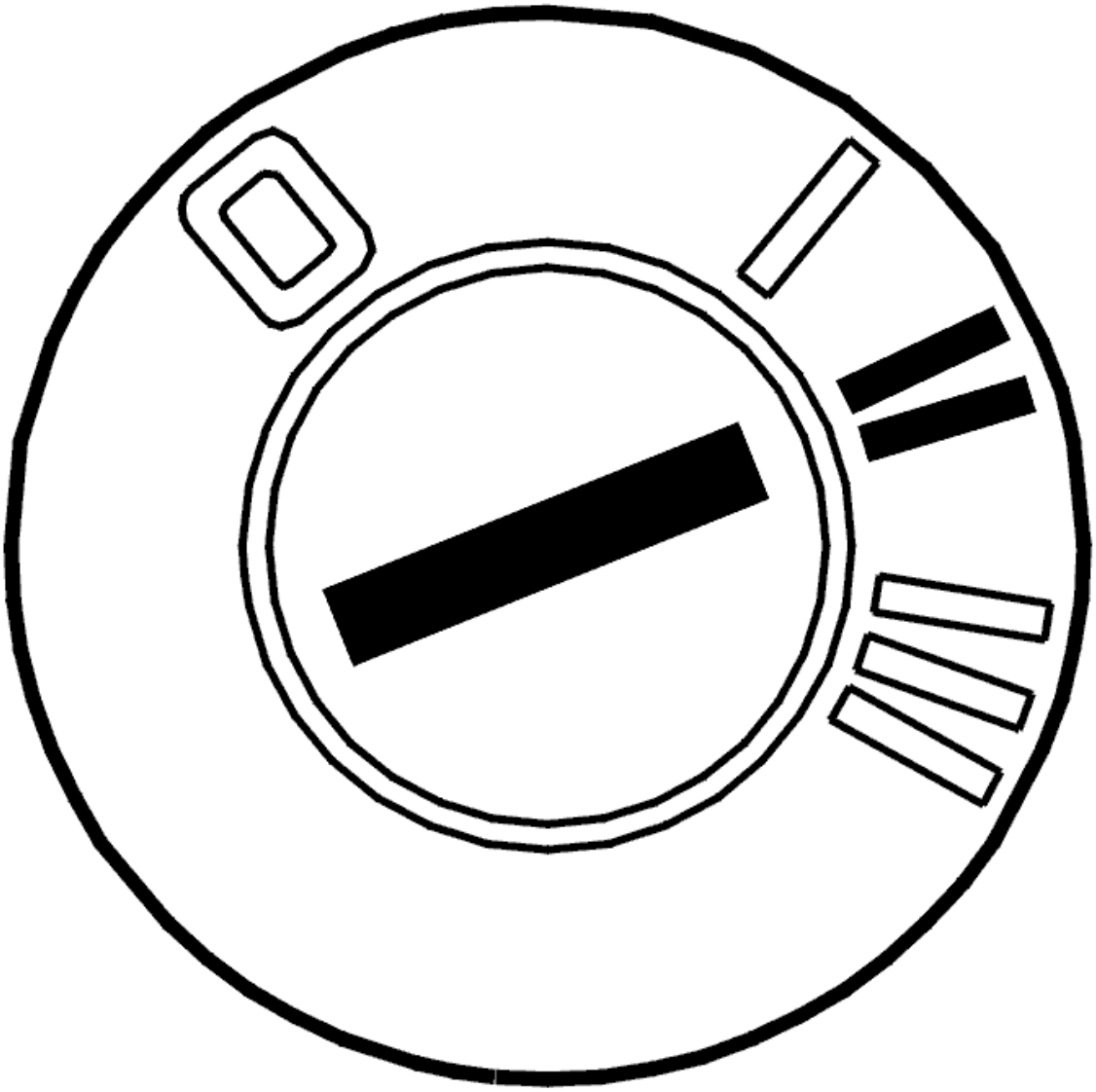

Fig. 75: Identifying Ignition ON
Courtesy of VOLVO CARS CORPORATION

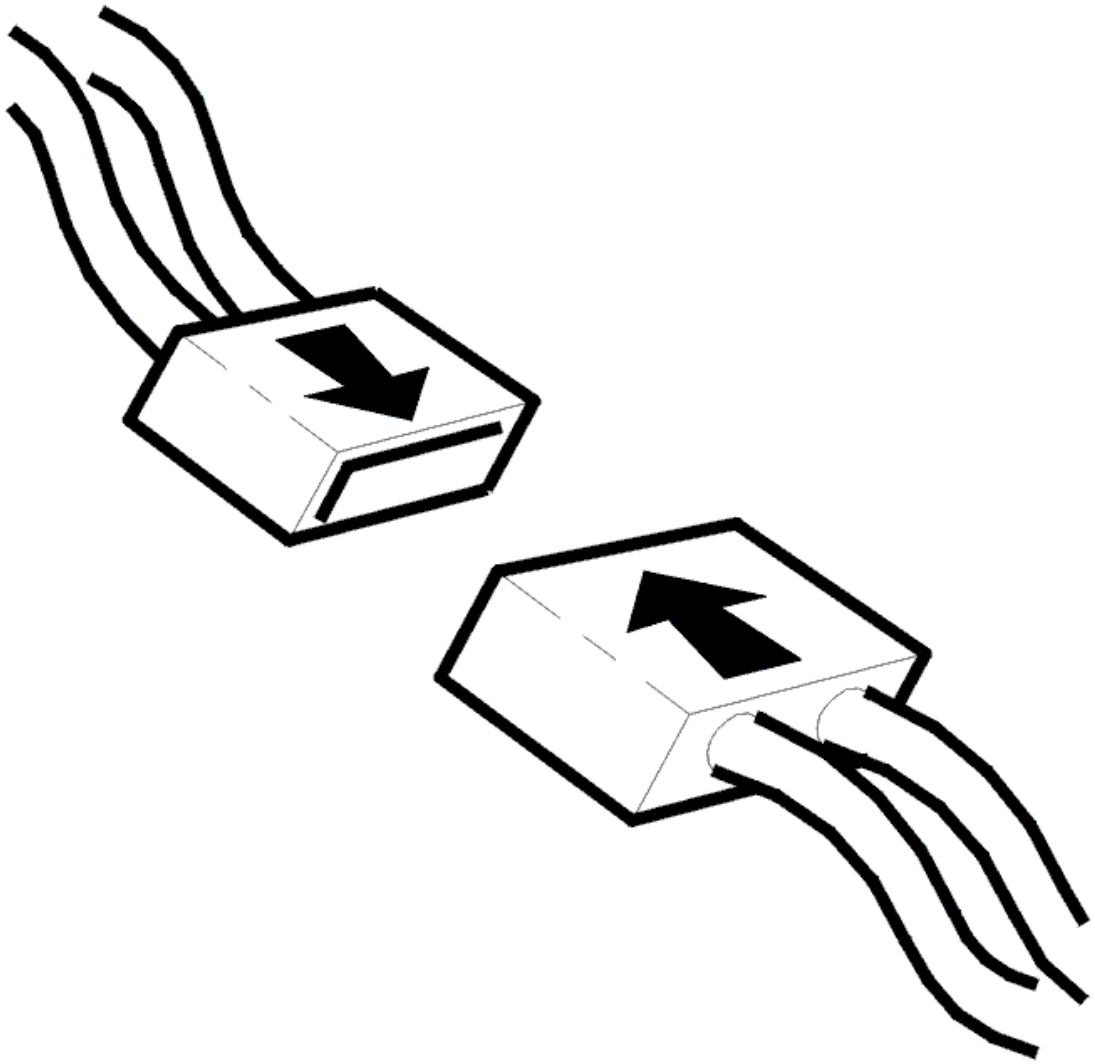

Fig. 76: Connecting Connector
Courtesy of VOLVO CARS CORPORATION

- Ignition off
- Reinstall the connectors, components etc.
- Ignition on

  Check that the sound is heard from the speakers by testing the CD player.

Are the speakers working?

- **YES**

  VERIFIED: Troubleshooting has been completed.

- **NO**

  See: **INFORMATION**

INFORMATION

FAULT-TRACING INFORMATION

The fault should have been detected and remedied. As this is not the case fault-tracing has failed.

Exit fault-tracing for this diagnostic trouble code (DTC) or make another attempt.

IAM-3023: REAR LEFT SPEAKER. FAULTY SIGNAL (2007-2012)

DIAGNOSTIC TROUBLE CODE (DTC) INFORMATION IAM-3023

Condition

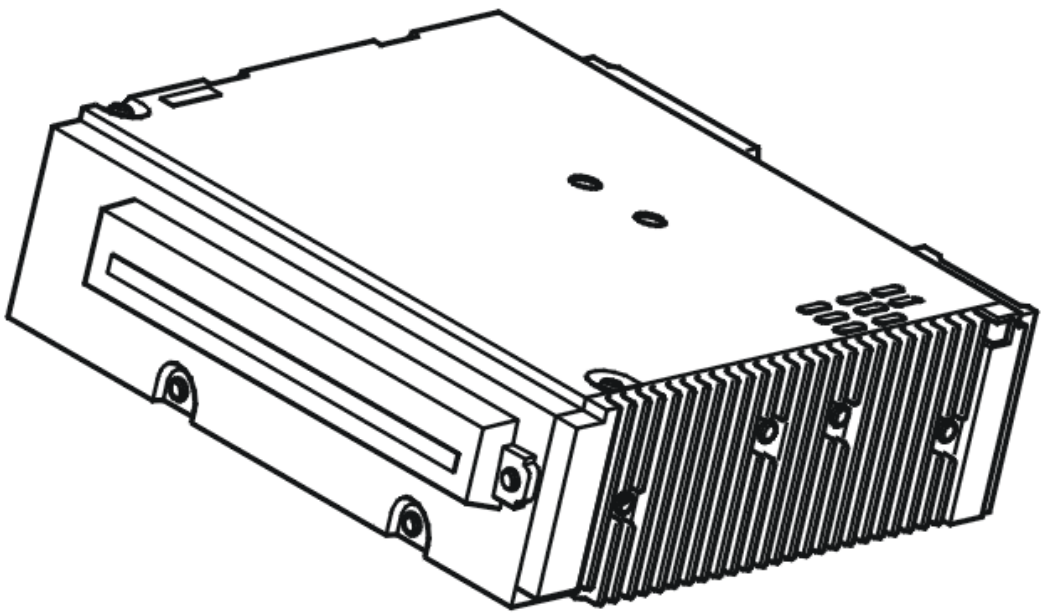

Fig. 77: Identifying Integrated Audio Module (IAM)
Courtesy of VOLVO CARS CORPORATION

If the Integrated Audio Module (IAM) registers that the impedance is too low in the speaker in the left-hand rear door, then the Diagnostic Trouble Code (DTC) is generated.

The diagnostic trouble code can be diagnosed when the ignition is on.

Substitute Value

- Nothing.

Possible Source

- Short circuit between the signal cables to the speaker in the left-hand rear door.
- Internal fault in the speaker in the left-hand rear door.

Fault symptom[s]

- CD player inoperative.
- No sound from speakers.

FAULTY SIGNAL

CHECKING THE WIRING

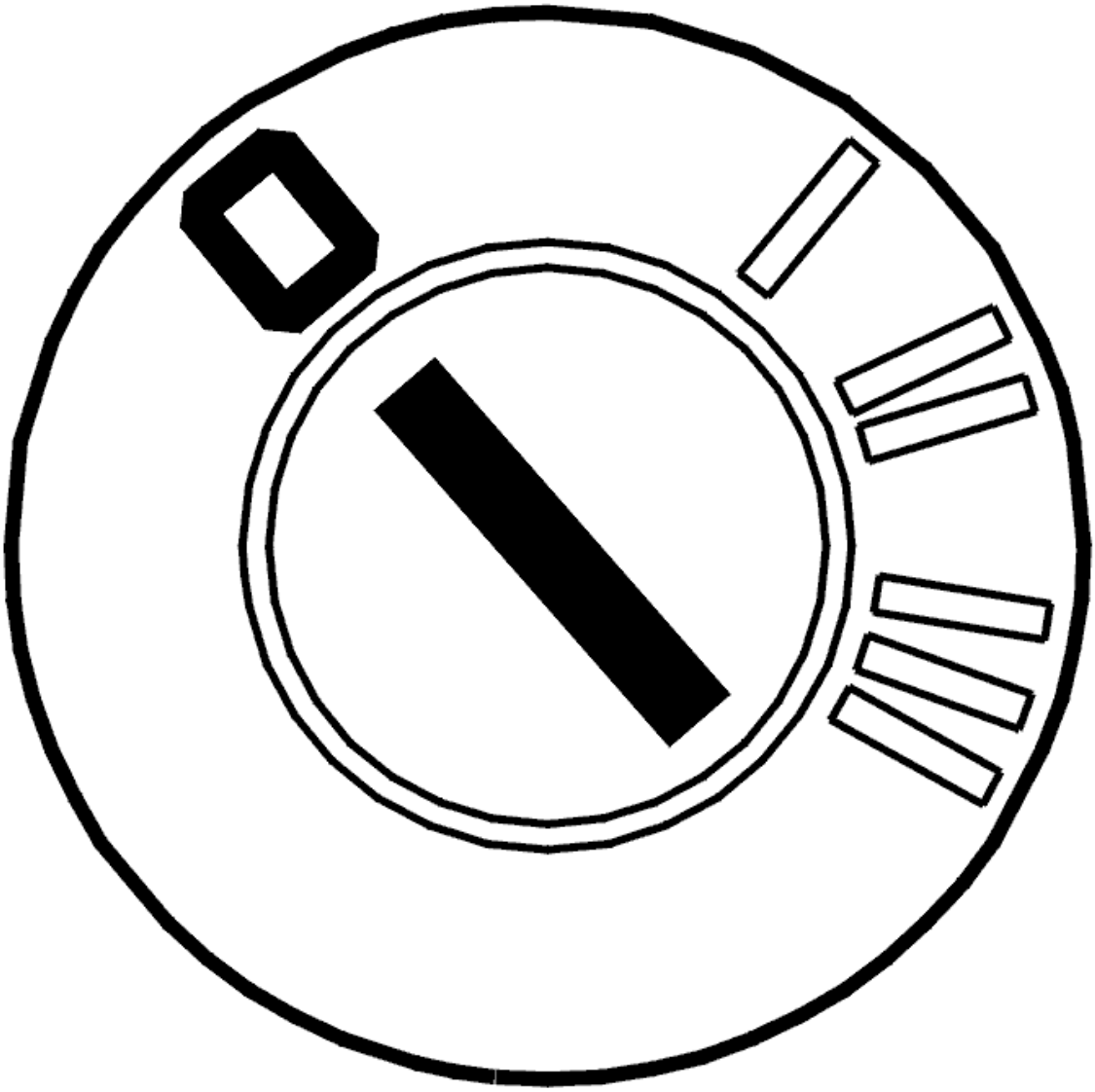

Fig. 78: Identifying Ignition OFF
Courtesy of VOLVO CARS CORPORATION

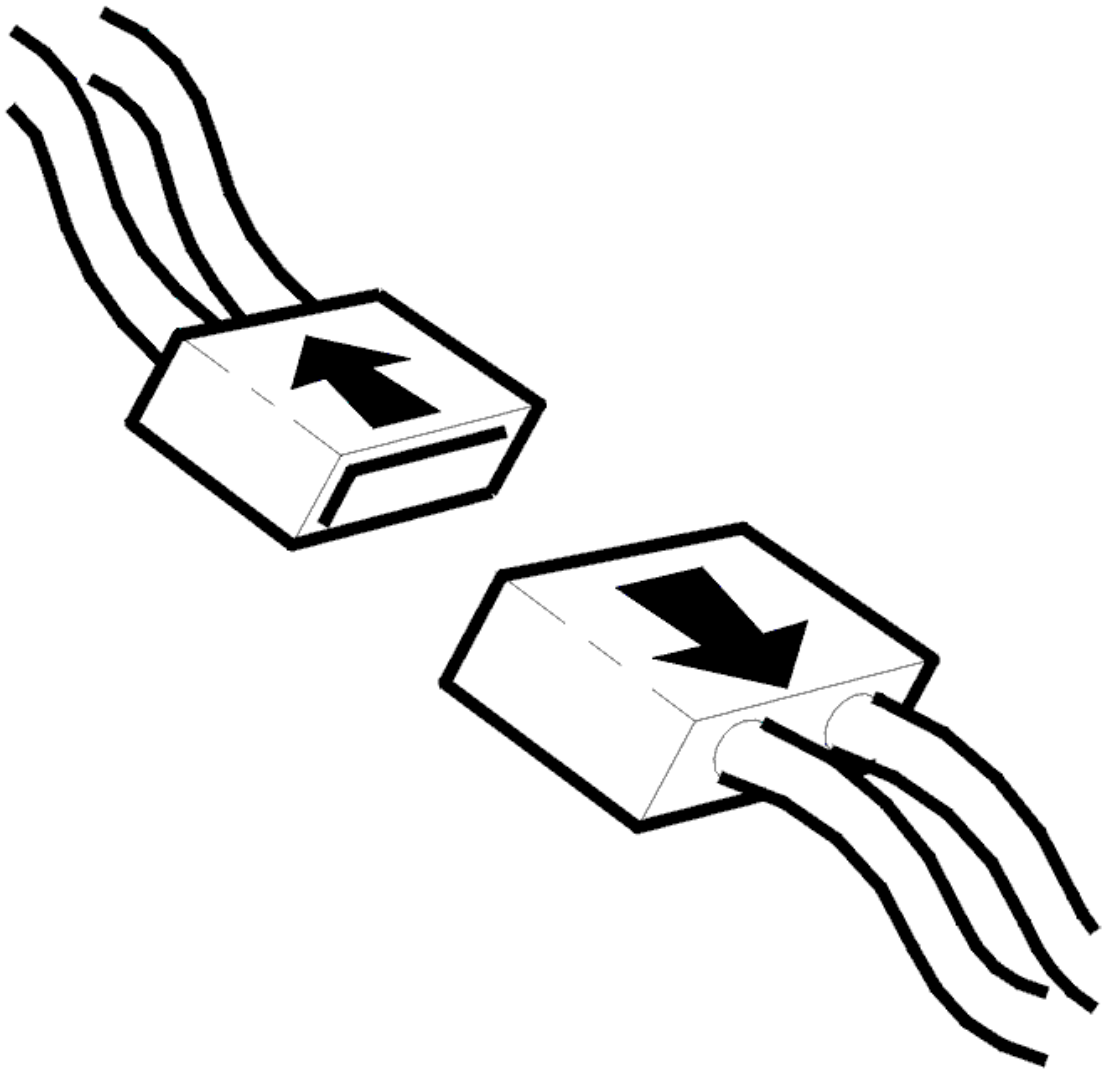

Fig. 79: Disconnecting Connector
Courtesy of VOLVO CARS CORPORATION

- Ignition off
- Disconnect the connector to the Integrated Audio Module (IAM).

  Check the connections with regard to contact resistance, play and oxidation.

  Check the signal cables between the Integrated Audio Module (IAM) and the speaker in the left-hand rear door with regard to short circuits between the signal cables.

  Measure between:

  - Integrated Audio Module (IAM) #A5 and speaker #1 in left-hand rear door.
  - Integrated Audio Module (IAM) #A12 and speaker #2 in left-hand rear door.

If no fault was detected, replace the speaker.

Remedy as necessary.

Other information

- see **SIGNAL SPECIFICATION**
- see **LOCATION OF COMPONENTS**
- see **CONTROL MODULE GENERAL SOUND PLAYER**
- see **LOUDSPEAKER, REAR SIDE DOOR, REPLACING**
- see **CHECKING WIRING AND TERMINALS**

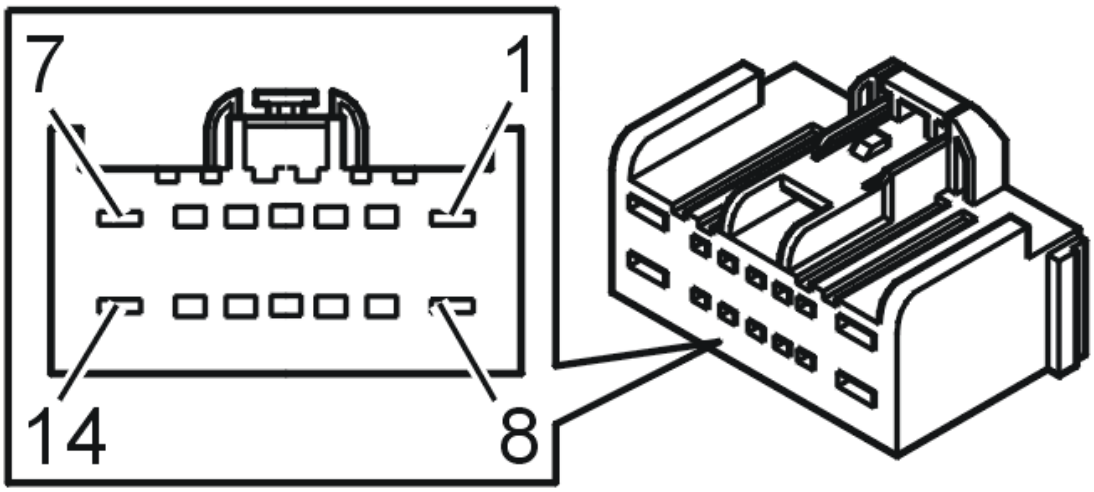

Fig. 80: Identifying 14-Bit Connector
Courtesy of VOLVO CARS CORPORATION

- **Continue**

See: **VERIFICATION**

VERIFICATION

VERIFICATION

HINT: After carrying out the repair, check that the fault has been remedied.

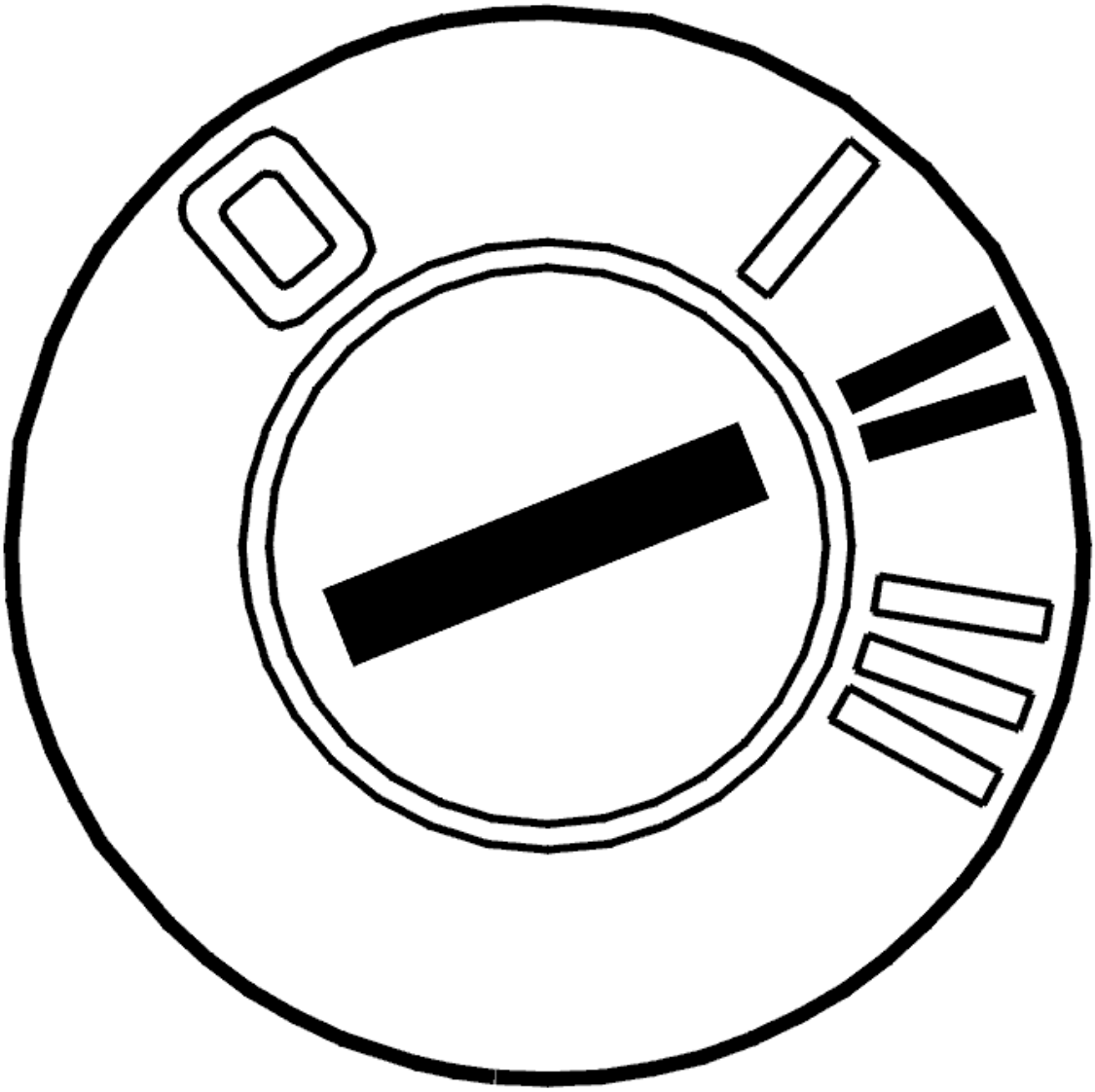

Fig. 81: Identifying Ignition ON
Courtesy of VOLVO CARS CORPORATION

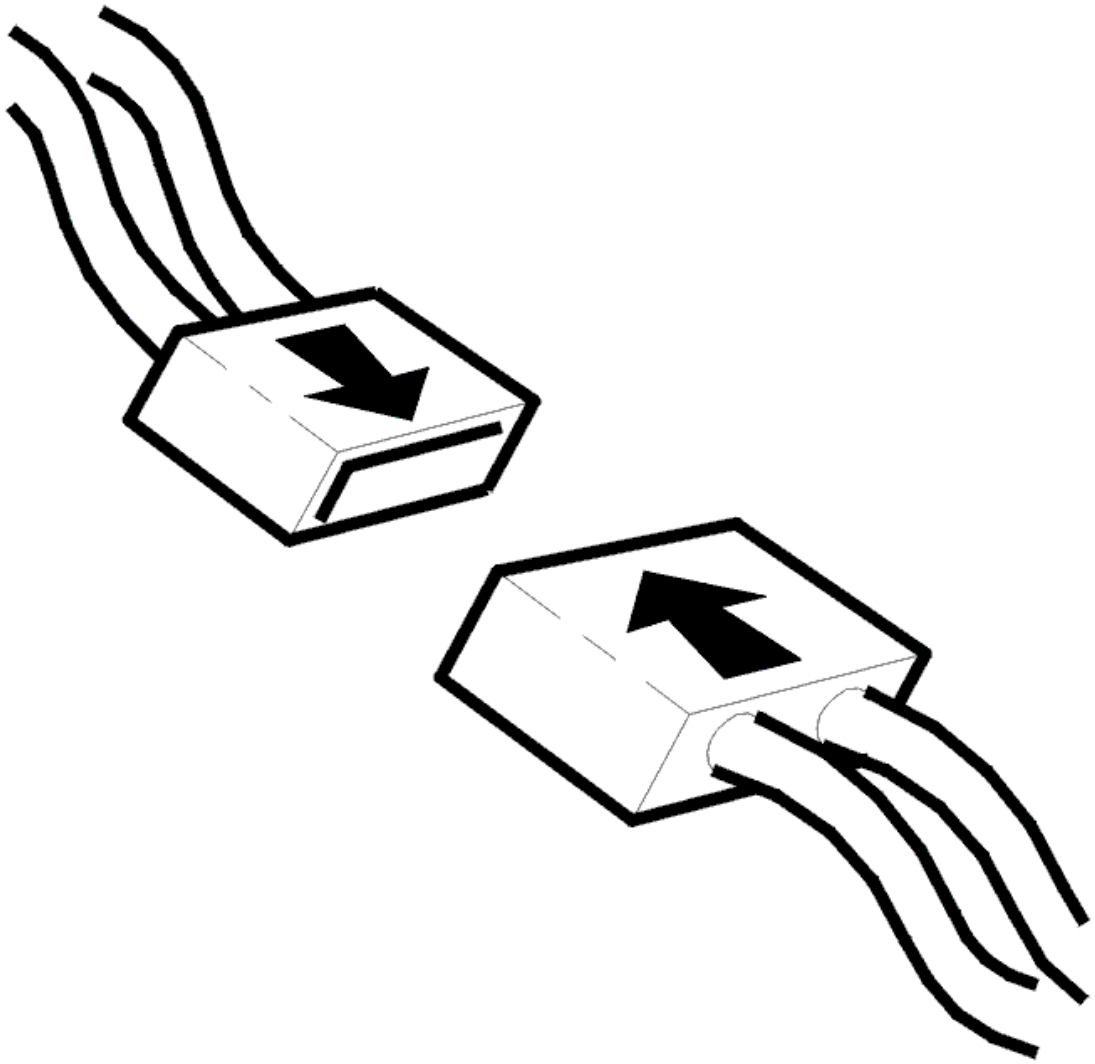

Fig. 82: Connecting Connector
Courtesy of VOLVO CARS CORPORATION

- Ignition off
- Reinstall the connectors, components etc.
- Ignition on

  Check that the sound is heard from the speakers by testing the CD player.

Are the speakers working?

- **YES**

  VERIFIED: Troubleshooting has been completed.

- **NO**

  See: **INFORMATION**

INFORMATION

FAULT-TRACING INFORMATION

The fault should have been detected and remedied. As this is not the case fault-tracing has failed.

Exit fault-tracing for this diagnostic trouble code (DTC) or make another attempt.

IAM-3024: REAR LEFT SPEAKER. NO SIGNAL (2007-2012)

DIAGNOSTIC TROUBLE CODE (DTC) INFORMATION IAM-3024

Condition

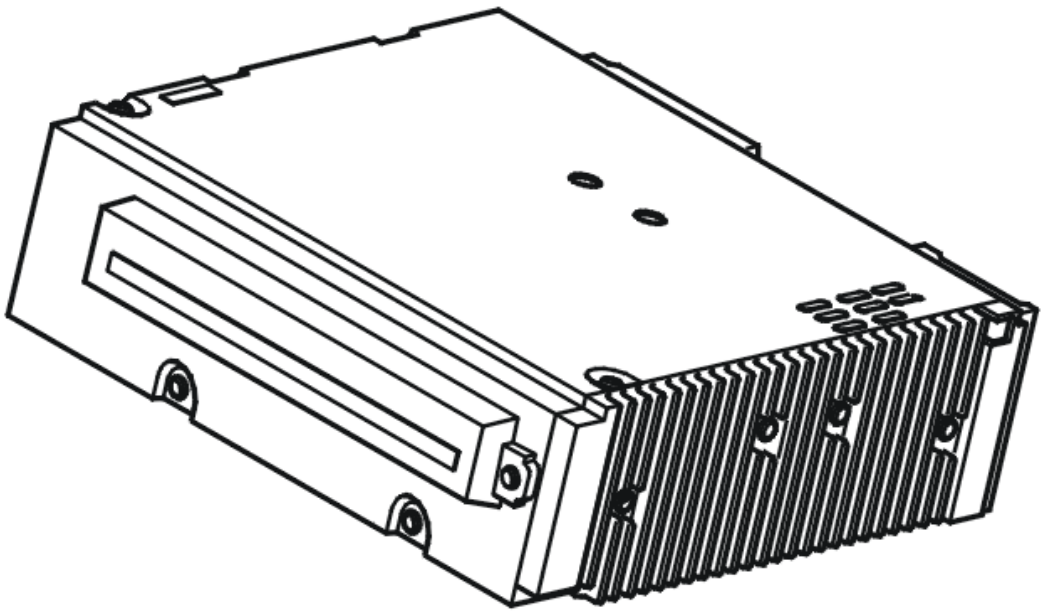

Fig. 83: Identifying Integrated Audio Module (IAM)
Courtesy of VOLVO CARS CORPORATION

If the Integrated Audio Module (IAM) registers that there is no signal in the signal cable from the speaker in the left-hand rear door, then the Diagnostic Trouble Code (DTC) is generated.

The diagnostic trouble code can be diagnosed when the ignition is on.

Substitute Value

- Nothing.

Possible Source

- Open circuit on the signal cable between the control module and speaker in the left-hand rear door.
- Damaged speaker in left-hand rear door.

Fault symptom[s]

- CD player inoperative.
- No sound from speakers.

SIGNAL MISSING

CHECKING THE WIRING

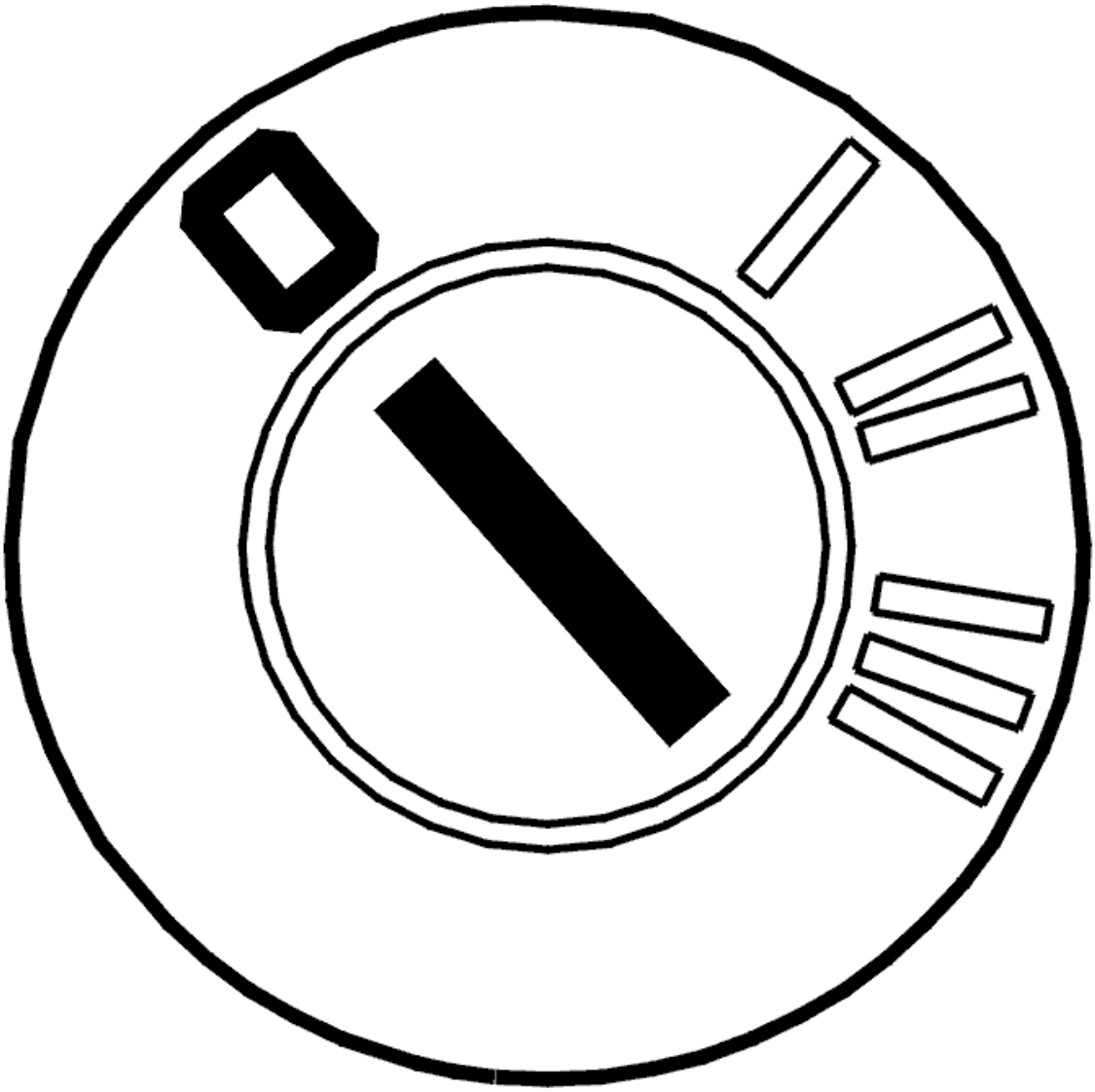

Fig. 84: Identifying Ignition OFF
Courtesy of VOLVO CARS CORPORATION

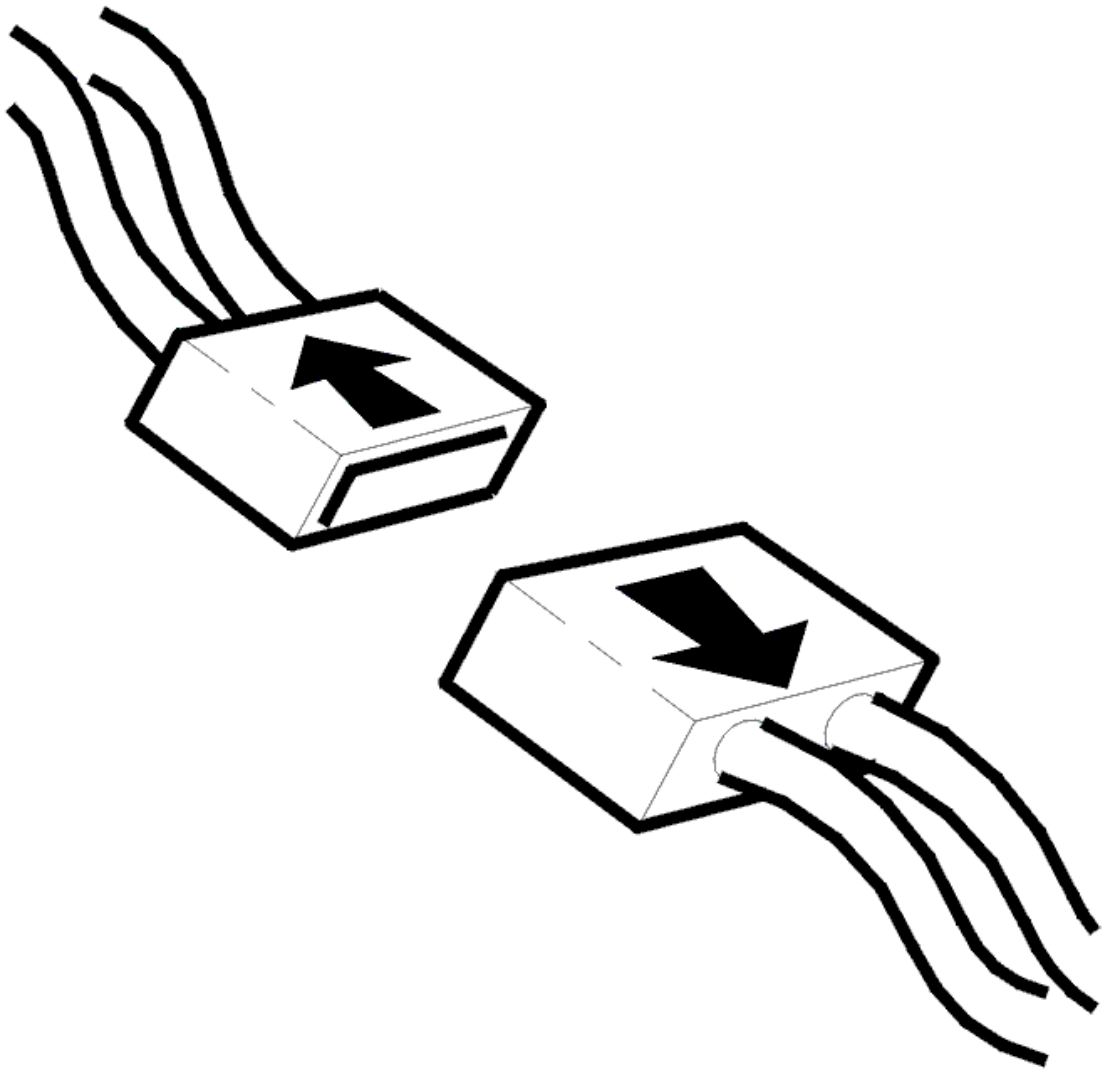

Fig. 85: Disconnecting Connector
Courtesy of VOLVO CARS CORPORATION

- Ignition off
- Disconnect the connector to the Integrated Audio Module (IAM).

  Check the connections with regard to contact resistance, play and oxidation.

  Check the signal cable between the Integrated Audio Module (IAM) and the speaker in the left-hand rear door with regard to open circuits.

  Measure between:

  - Integrated audio module (IAM) terminal #A6 and speaker terminal #1 in the left rear door.
  - Integrated audio module (IAM) terminal #A13 and speaker terminal #2 in the left rear door.

If no fault was detected, replace the speaker.

Remedy as necessary.

Other information

- see **SIGNAL SPECIFICATION**
- see **LOCATION OF COMPONENTS**
- see **CONTROL MODULE GENERAL SOUND PLAYER**
- see **LOUDSPEAKER, REAR SIDE DOOR, REPLACING**
- see **CHECKING WIRING AND TERMINALS**

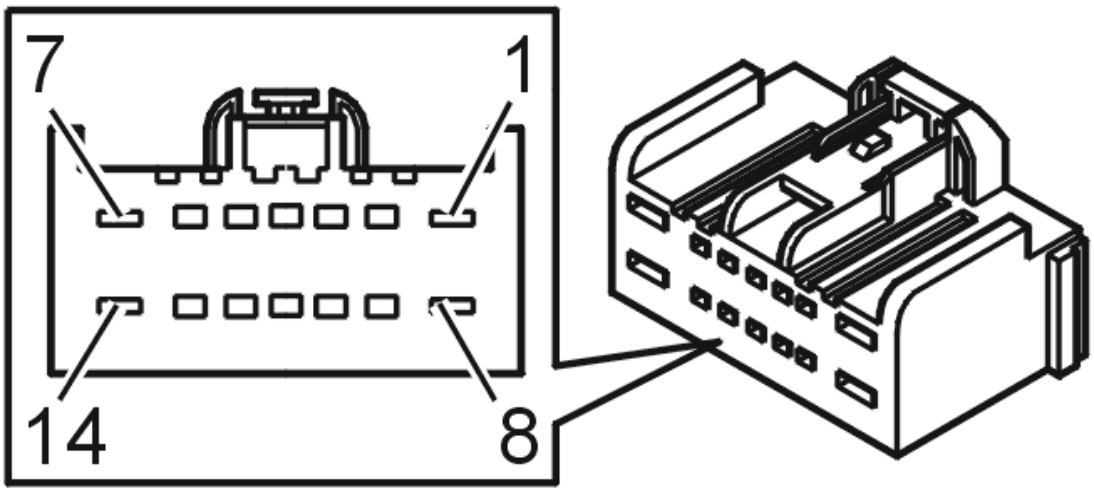

Fig. 86: Identifying 14-Bit Connector
Courtesy of VOLVO CARS CORPORATION

- **Continue**

  See: **VERIFICATION**

VERIFICATION

VERIFICATION

HINT: After carrying out the repair, check that the fault has been remedied.

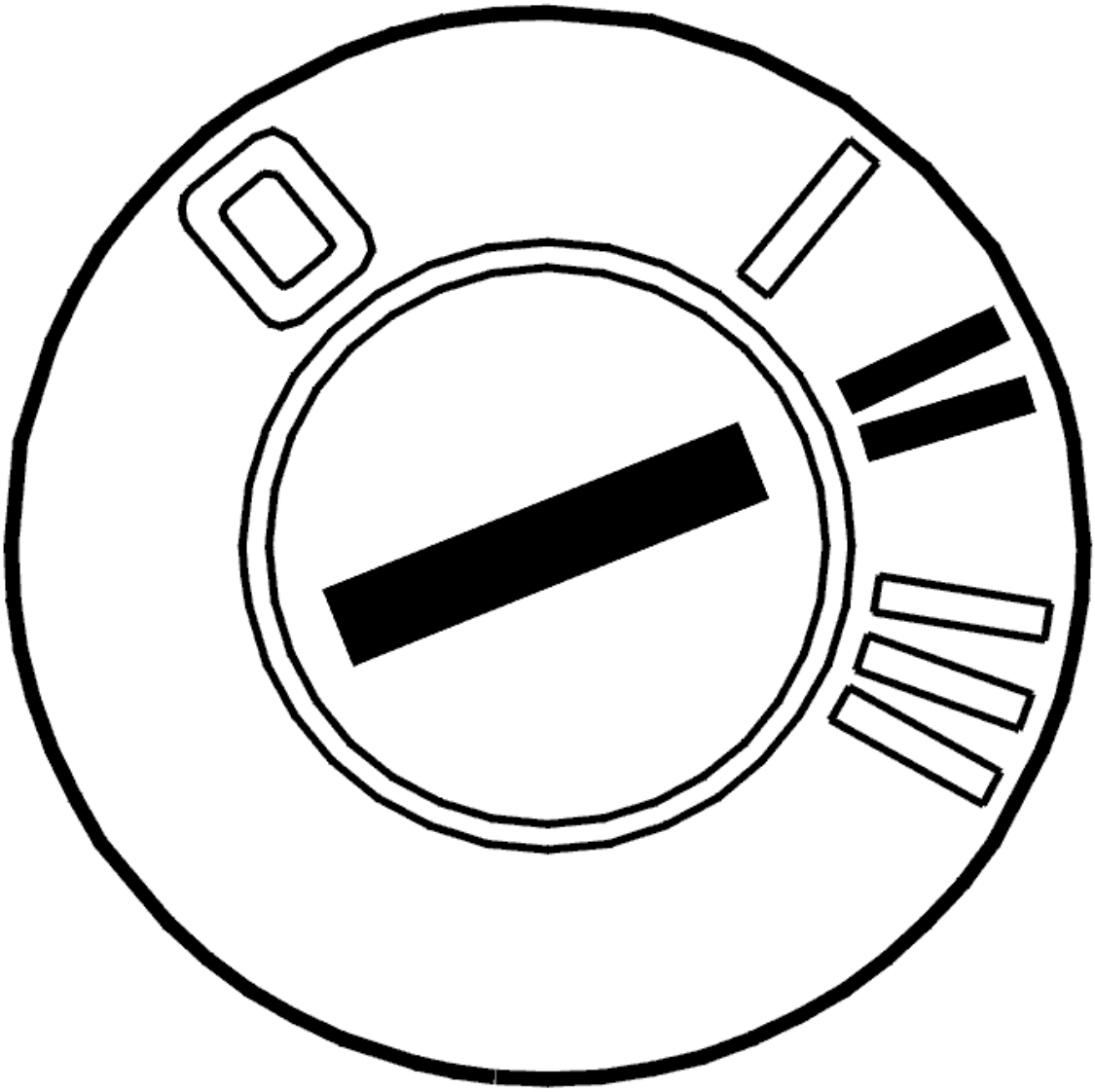

Fig. 87: Identifying Ignition ON
Courtesy of VOLVO CARS CORPORATION

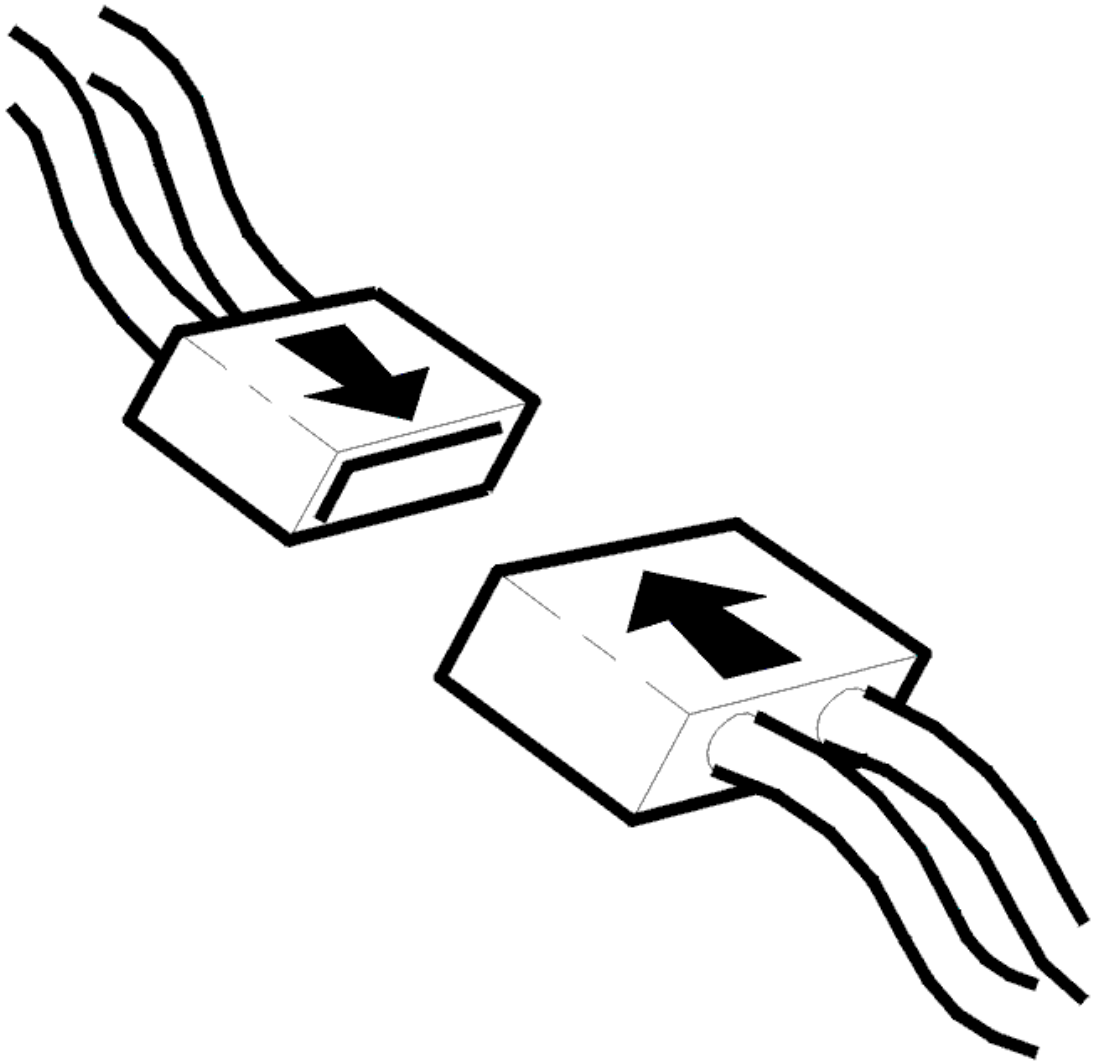

Fig. 88: Connecting Connector
Courtesy of VOLVO CARS CORPORATION

- Ignition off
- Reinstall the connectors, components etc.
- Ignition on

  Check that the sound is heard from the speakers by testing the CD player.

Are the speakers working?

- **YES**

  VERIFIED: Troubleshooting has been completed.

- **NO**

  See: **INFORMATION**

INFORMATION

FAULT-TRACING INFORMATION

The fault should have been detected and remedied. As this is not the case fault-tracing has failed.

Exit fault-tracing for this diagnostic trouble code (DTC) or make another attempt.

IAM-3025: REAR LEFT SPEAKER. FAULTY SIGNAL (2007-2012)

DIAGNOSTIC TROUBLE CODE (DTC) INFORMATION IAM-3025

Condition

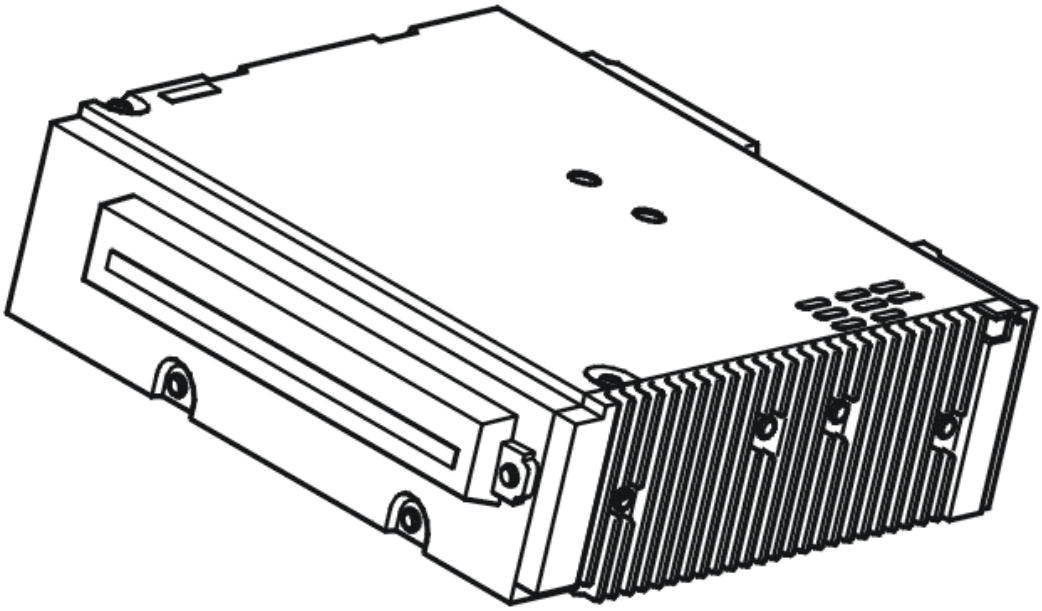

Fig. 89: Identifying Integrated Audio Module (IAM)
Courtesy of VOLVO CARS CORPORATION

If the Integrated Audio Module (IAM) registers an erroneous signal to the speaker in the left-hand rear door, then the Diagnostic Trouble Code (DTC) is generated.

The diagnostic trouble code can be diagnosed when the ignition is on.

Substitute Value

- Nothing.

Possible Source

- Internal fault in integrated audio module (IAM).
- Damaged signal cables to the speaker in the left-hand rear door.
- Internal fault in the speaker in the left-hand rear door.

Fault symptom[s]

- CD player inoperative.
- No sound from speakers.

FAULTY SIGNAL

CHECKING THE WIRING

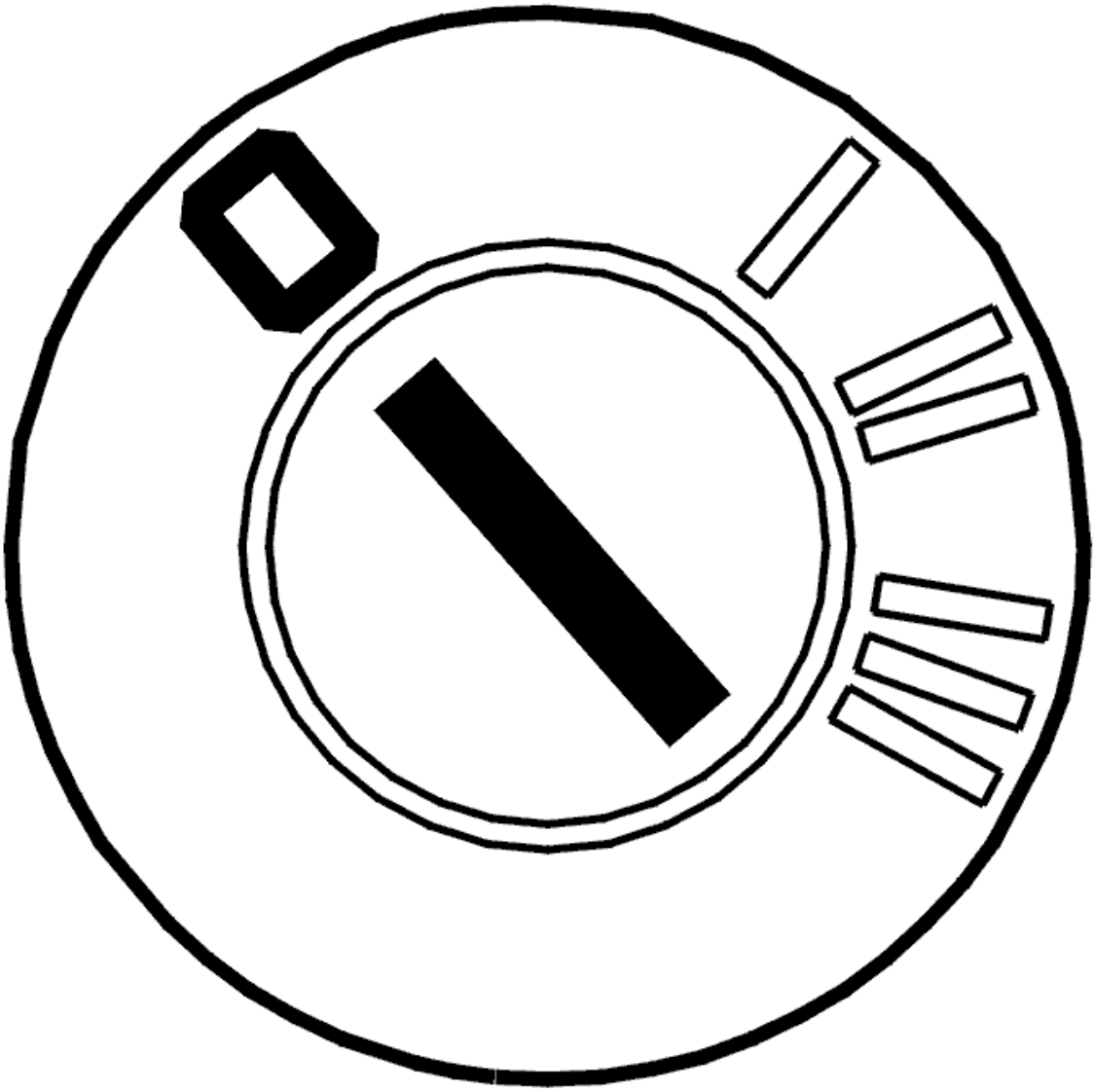

Fig. 90: Identifying Ignition OFF
Courtesy of VOLVO CARS CORPORATION

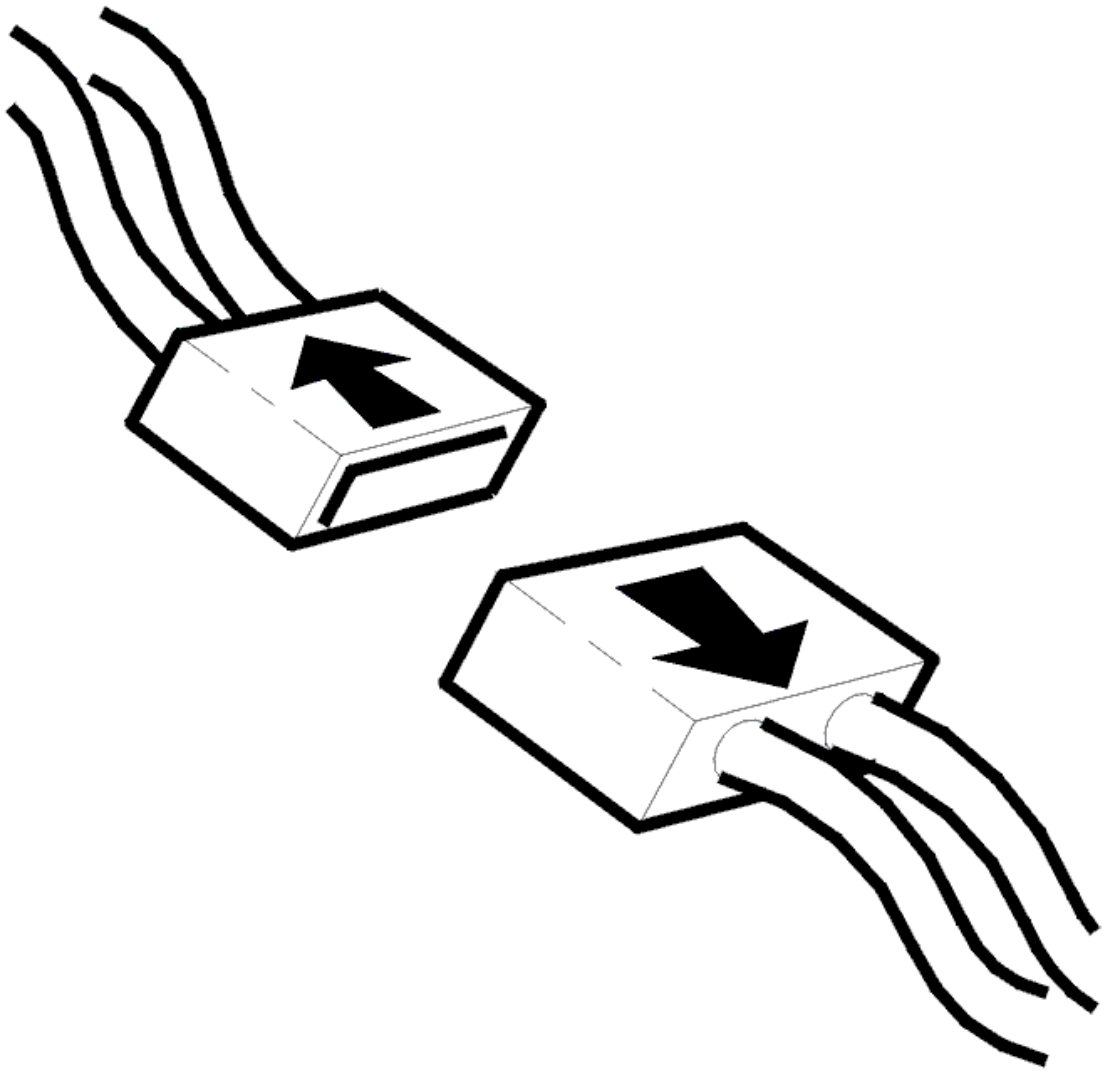

Fig. 91: Disconnecting Connector
Courtesy of VOLVO CARS CORPORATION

- Ignition off
- Disconnect the connector to the Integrated Audio Module (IAM).

  Check the connections with regard to contact resistance, play and oxidation.

  Check the signal cable between the Integrated Audio Module (IAM) and the speaker in the left-hand rear door with regard to short circuits and open circuits.

  Measure between:

  - Integrated audio module (IAM) terminal #A6 and speaker terminal #1 in the left rear door.
  - Integrated audio module (IAM) terminal #A13 and speaker terminal #2 in the left rear door.

If no fault was detected, replace the Integrated Audio Module (IAM).

Remedy as necessary.

Other information

- see **SIGNAL SPECIFICATION**
- see **LOCATION OF COMPONENTS**
- see **CONTROL MODULE GENERAL SOUND PLAYER**
- see **LOUDSPEAKER, REAR SIDE DOOR, REPLACING**
- see **CHECKING WIRING AND TERMINALS**

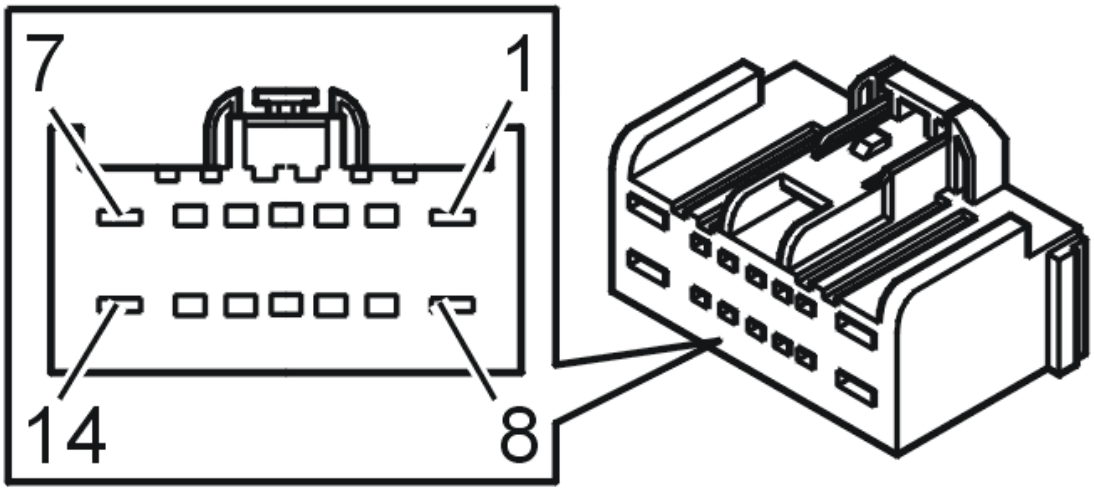

Fig. 92: Identifying 14-Bit Connector
Courtesy of VOLVO CARS CORPORATION

- **Continue**

See: **VERIFICATION**

VERIFICATION

VERIFICATION

HINT: After carrying out the repair, check that the fault has been remedied.

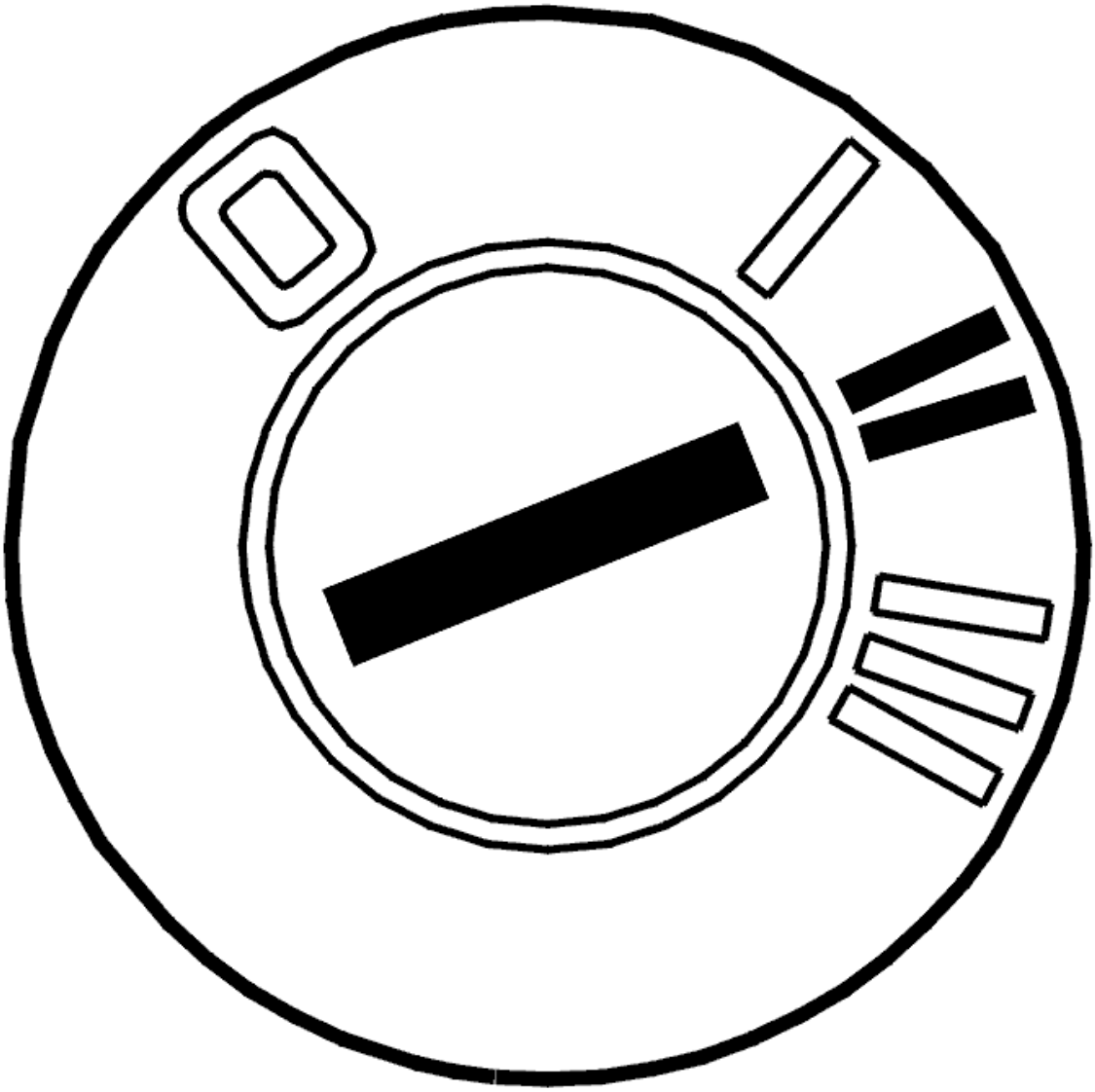

Fig. 93: Identifying Ignition ON
Courtesy of VOLVO CARS CORPORATION

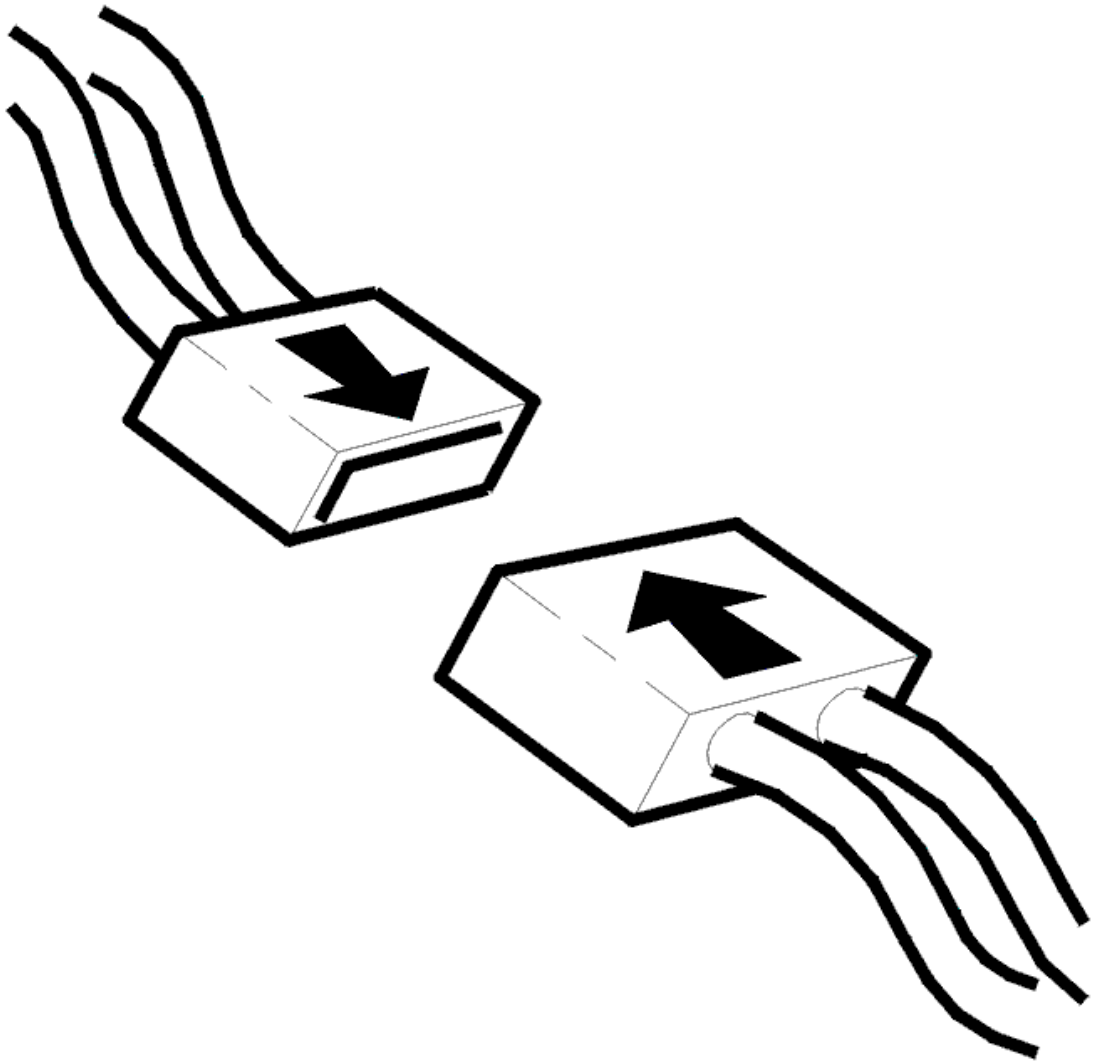

Fig. 94: Connecting Connector
Courtesy of VOLVO CARS CORPORATION

- Ignition off
- Reinstall the connectors, components etc.
- Ignition on

  Check that the sound is heard from the speakers by testing the CD player.

Are the speakers working?

- **YES**

  VERIFIED: Troubleshooting has been completed.

- **NO**

  See: **INFORMATION**

INFORMATION

FAULT-TRACING INFORMATION

The fault should have been detected and remedied. As this is not the case fault-tracing has failed.

Exit fault-tracing for this diagnostic trouble code (DTC) or make another attempt.

IAM-3031: REAR RIGHT SPEAKER. SIGNAL TOO LOW (2007-2012)

DIAGNOSTIC TROUBLE CODE (DTC) INFORMATION IAM-3031

Condition

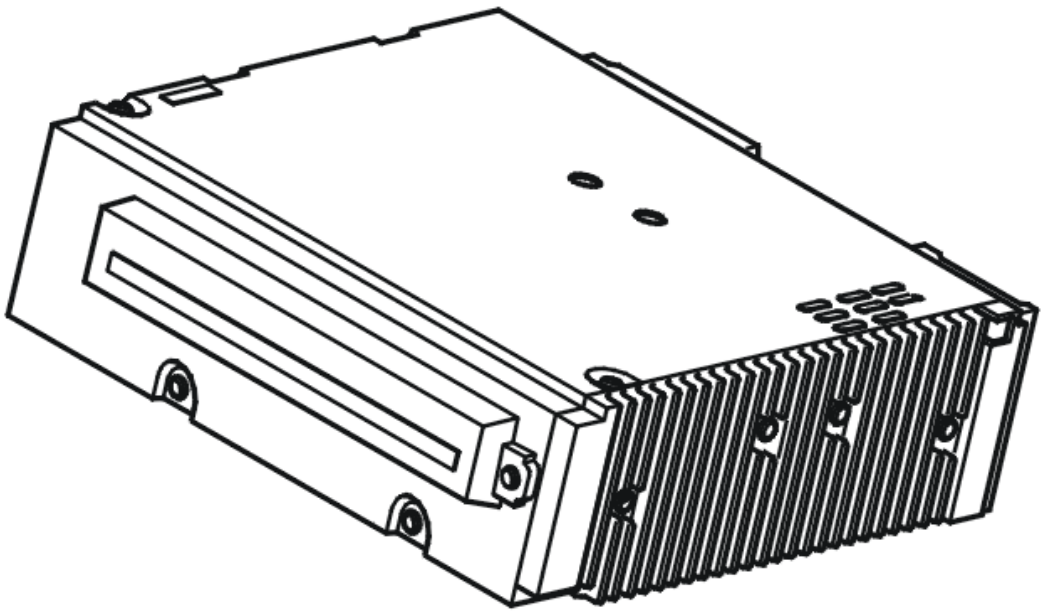

Fig. 95: Identifying Integrated Audio Module (IAM)
Courtesy of VOLVO CARS CORPORATION

If the Integrated Audio Module (IAM) registers that the signal is too low on the signal cable from the speaker in the right-hand rear door, then the Diagnostic Trouble Code (DTC) is generated.

The diagnostic trouble code can be diagnosed when the ignition is on.

Substitute Value

- Nothing.

Possible Source

- Short circuit to ground on the signal cable between the control module and speaker in the right-hand rear door.

Fault symptom[s]

- CD player inoperative.
- No sound from speakers.

SIGNAL TOO LOW

CHECKING THE WIRING

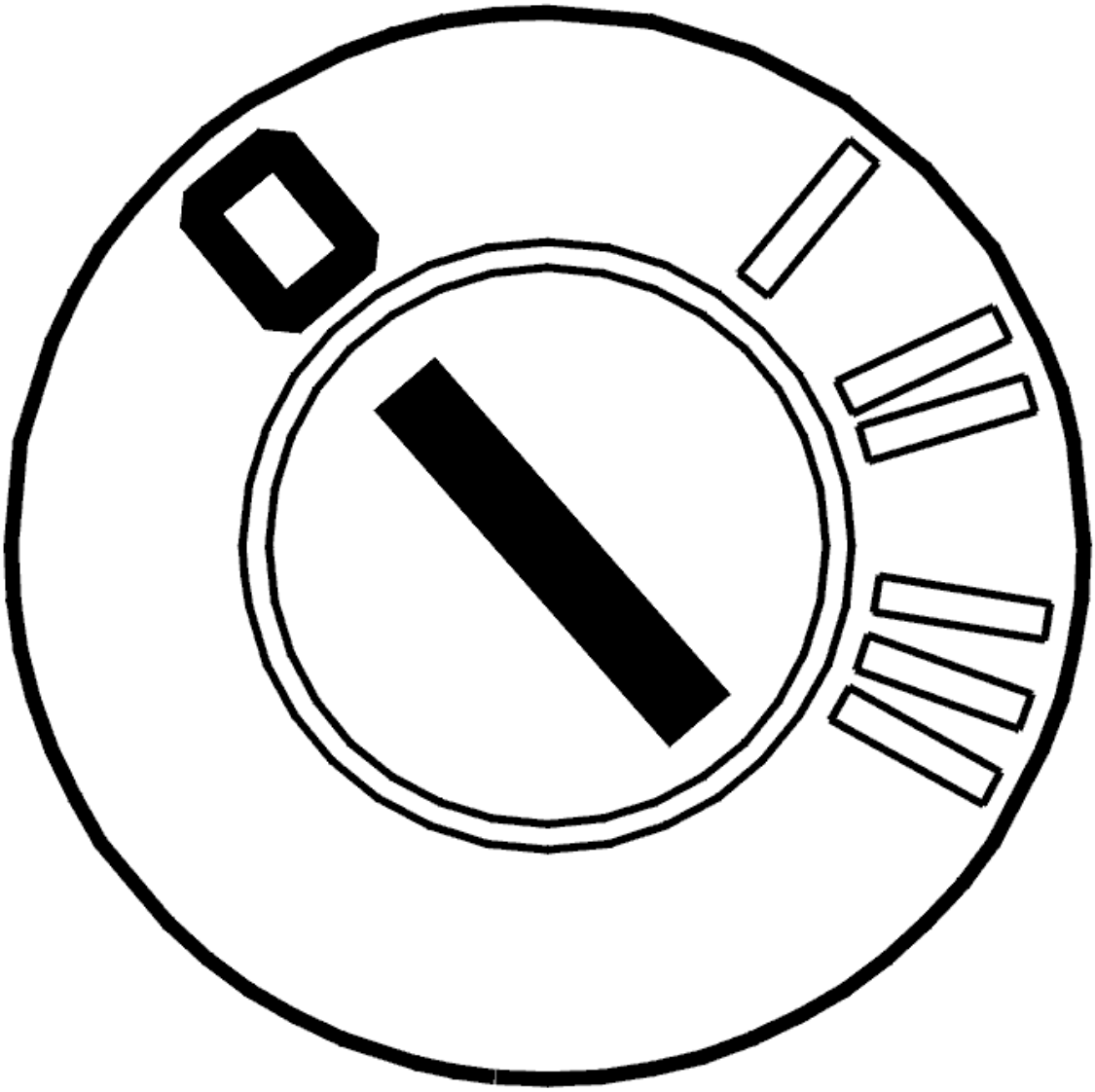

Fig. 96: Identifying Ignition OFF
Courtesy of VOLVO CARS CORPORATION

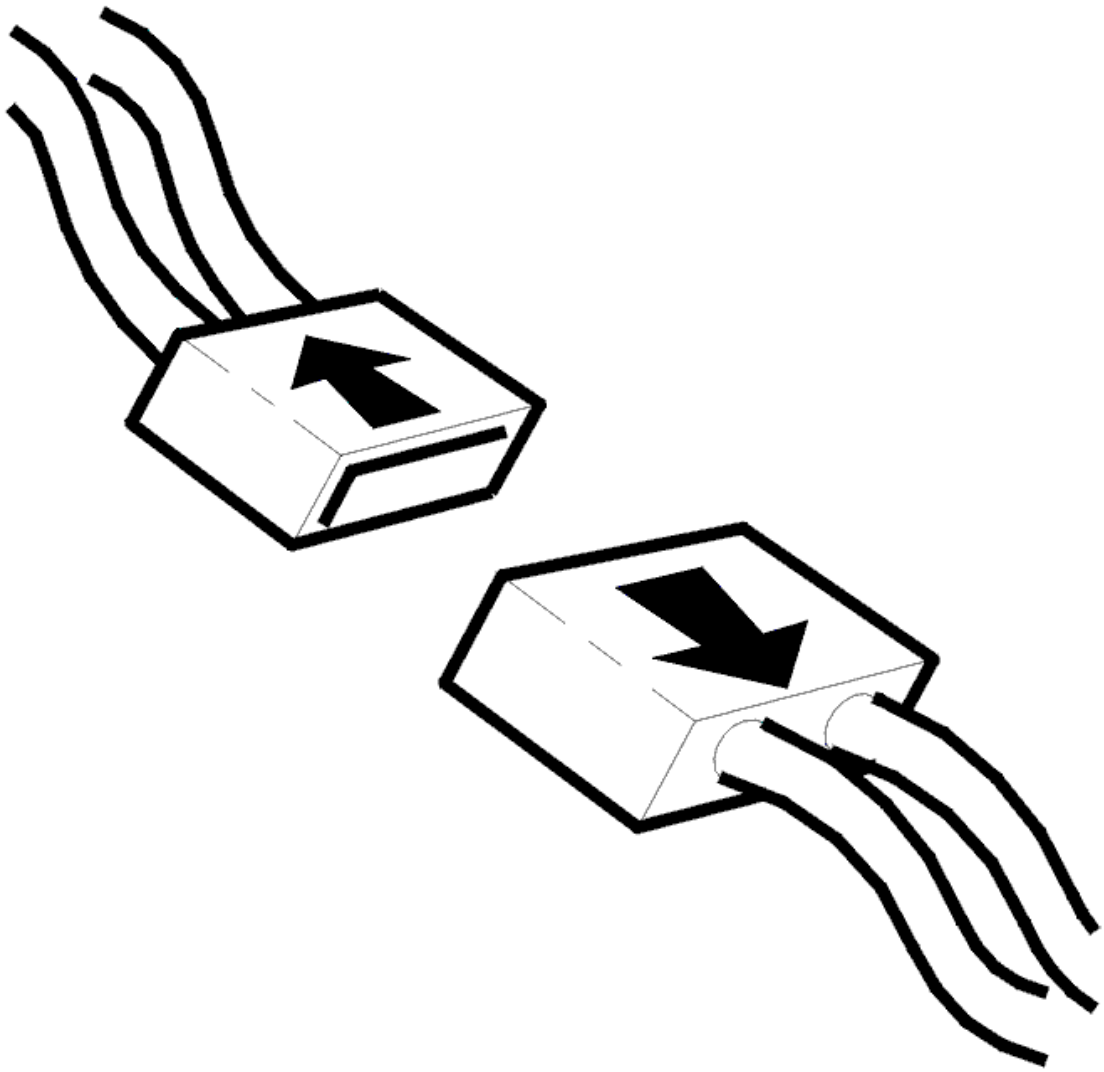

Fig. 97: Disconnecting Connector
Courtesy of VOLVO CARS CORPORATION

- Ignition off
- Disconnect the connector to the Integrated Audio Module (IAM).

  Check the connections with regard to contact resistance, play and oxidation.

  Check the antenna cable between the Integrated Audio Module (IAM) and the speaker in the right-hand rear door with regard to short circuits to ground.

  Measure between:

  - Integrated audio module (IAM) terminal #A3 and speaker terminal #1 in the right rear door.
  - Integrated audio module (IAM) terminal #A10 and speaker terminal #2 in the right rear door.

Remedy as necessary.

Other information

- see **SIGNAL SPECIFICATION**
- see **LOCATION OF COMPONENTS**
- see **CONTROL MODULE GENERAL SOUND PLAYER**
- see **LOUDSPEAKER, REAR SIDE DOOR, REPLACING**
- see **CHECKING WIRING AND TERMINALS**

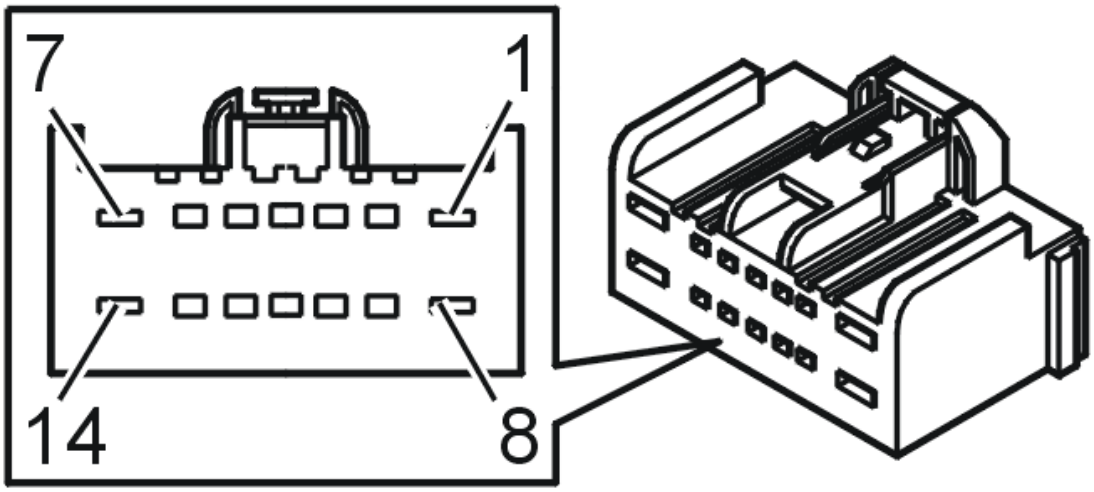

Fig. 98: Identifying 14-Bit Connector
Courtesy of VOLVO CARS CORPORATION

- **Continue**

  See: **VERIFICATION**

VERIFICATION

VERIFICATION

HINT: After carrying out the repair, check that the fault has been remedied.

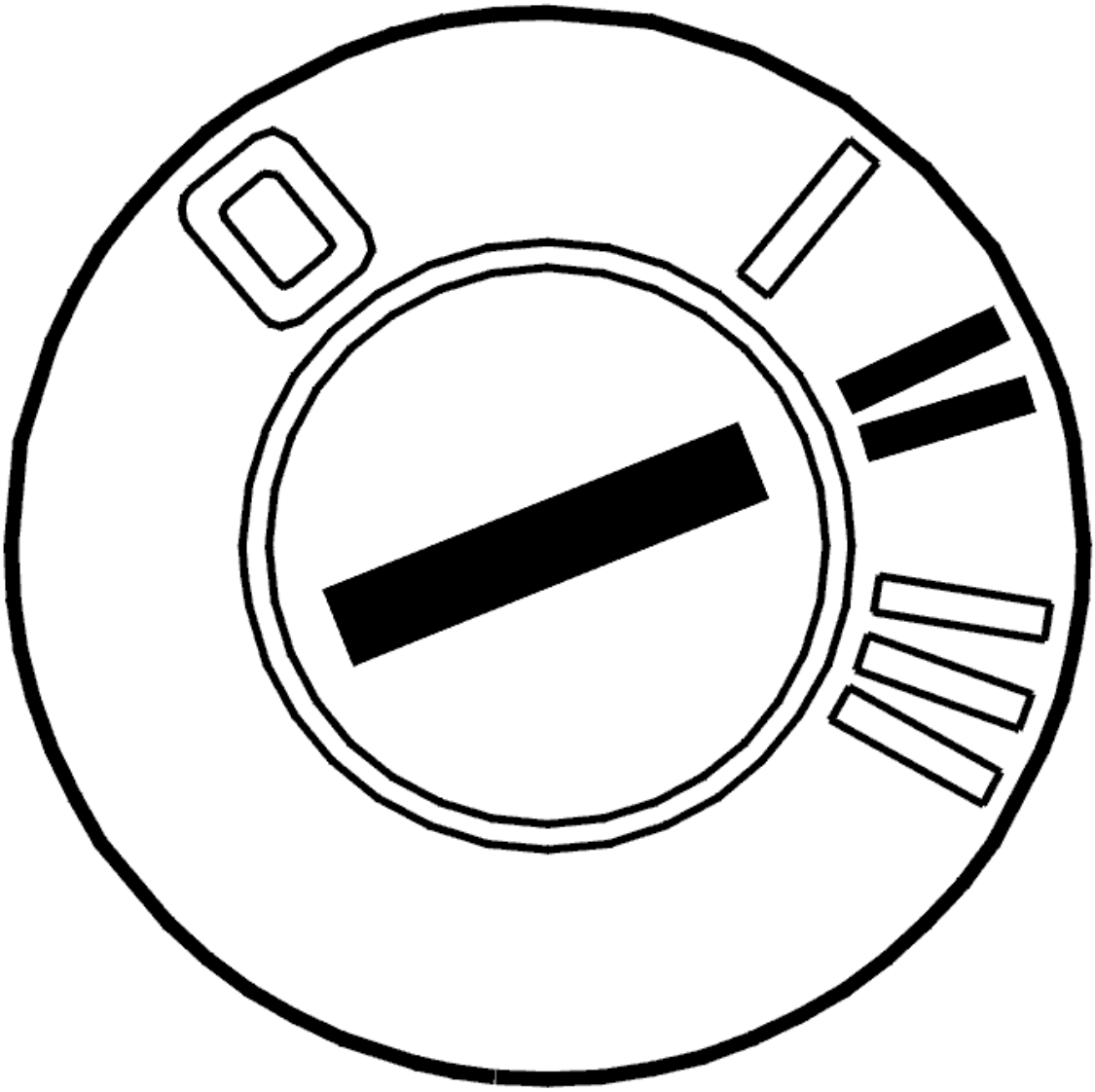

Fig. 99: Identifying Ignition ON
Courtesy of VOLVO CARS CORPORATION

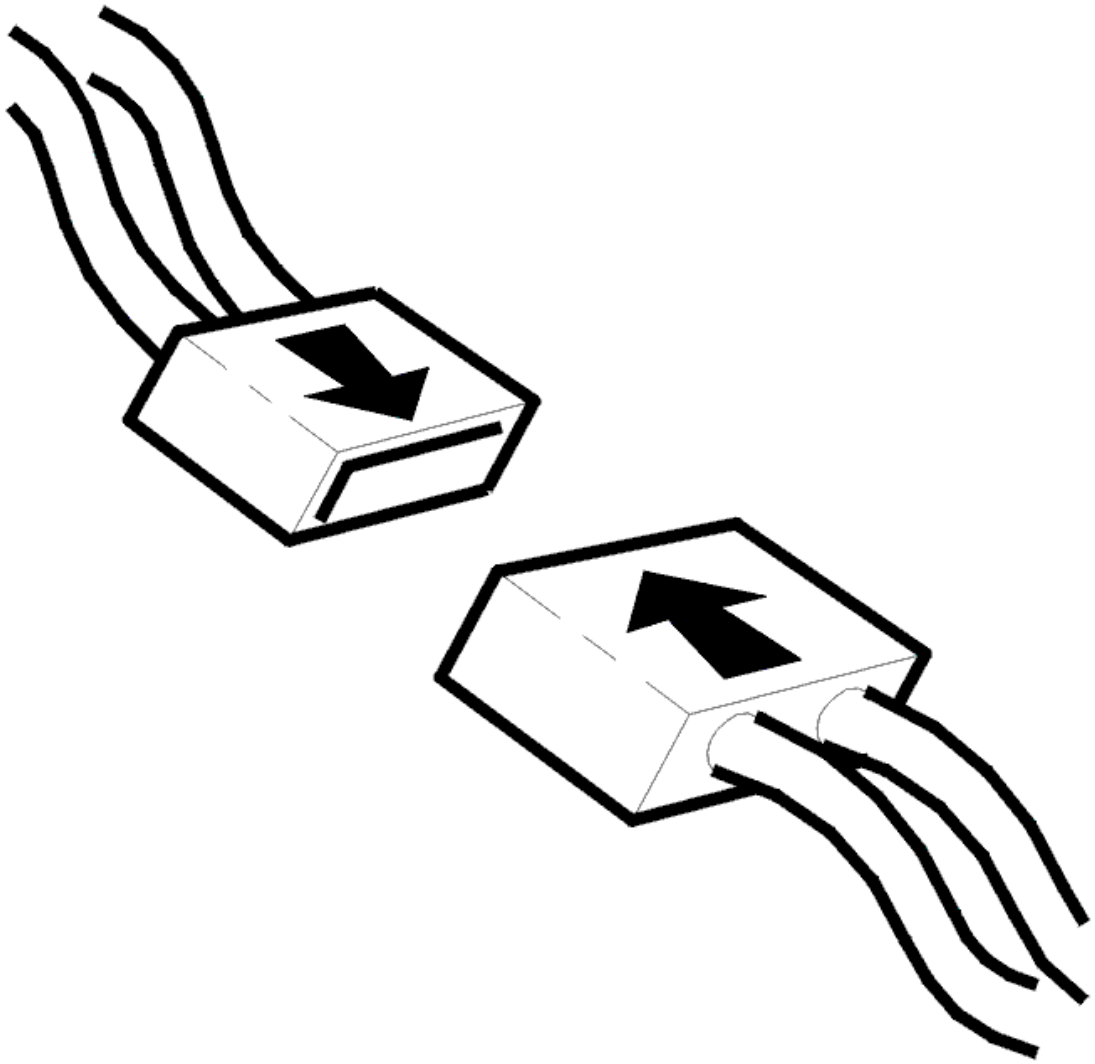

Fig. 100: Connecting Connector
Courtesy of VOLVO CARS CORPORATION

- Ignition off
- Reinstall the connectors, components etc.
- Ignition on

  Check that the sound is heard from the speakers by testing the CD player.

Are the speakers working?

- **YES**

  VERIFIED: Troubleshooting has been completed.

- **NO**

  See: **INFORMATION**

INFORMATION

FAULT-TRACING INFORMATION

The fault should have been detected and remedied. As this is not the case fault-tracing has failed.

Exit fault-tracing for this diagnostic trouble code (DTC) or make another attempt.

IAM-3032: REAR RIGHT SPEAKER. SIGNAL TOO HIGH (2007-2012)

DIAGNOSTIC TROUBLE CODE (DTC) INFORMATION IAM-3032

Condition

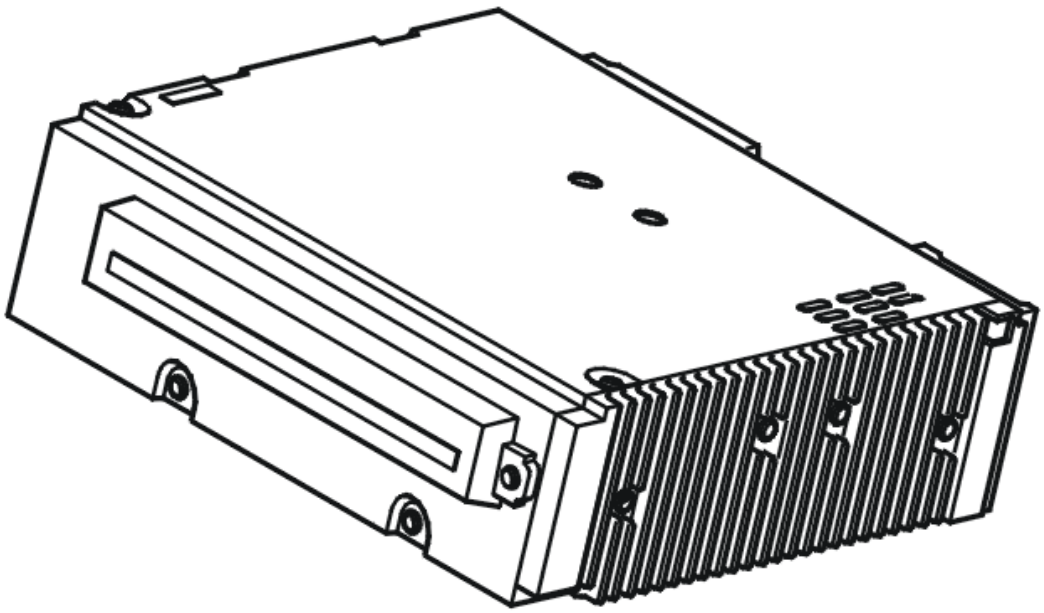

Fig. 101: Identifying Integrated Audio Module (IAM)
Courtesy of VOLVO CARS CORPORATION

If the Integrated Audio Module (IAM) registers that the signal is too high on the signal cable from the speaker in the right-hand rear door, then the Diagnostic Trouble Code (DTC) is generated.

The diagnostic trouble code can be diagnosed when the ignition is on.

Substitute Value

- Nothing.

Possible Source

- Short circuit to supply voltage on the signal cable between the control module and speaker in the right-hand rear door.

Fault symptom[s]

- CD player inoperative.
- No sound from speakers.

SIGNAL TOO HIGH

CHECKING THE WIRING

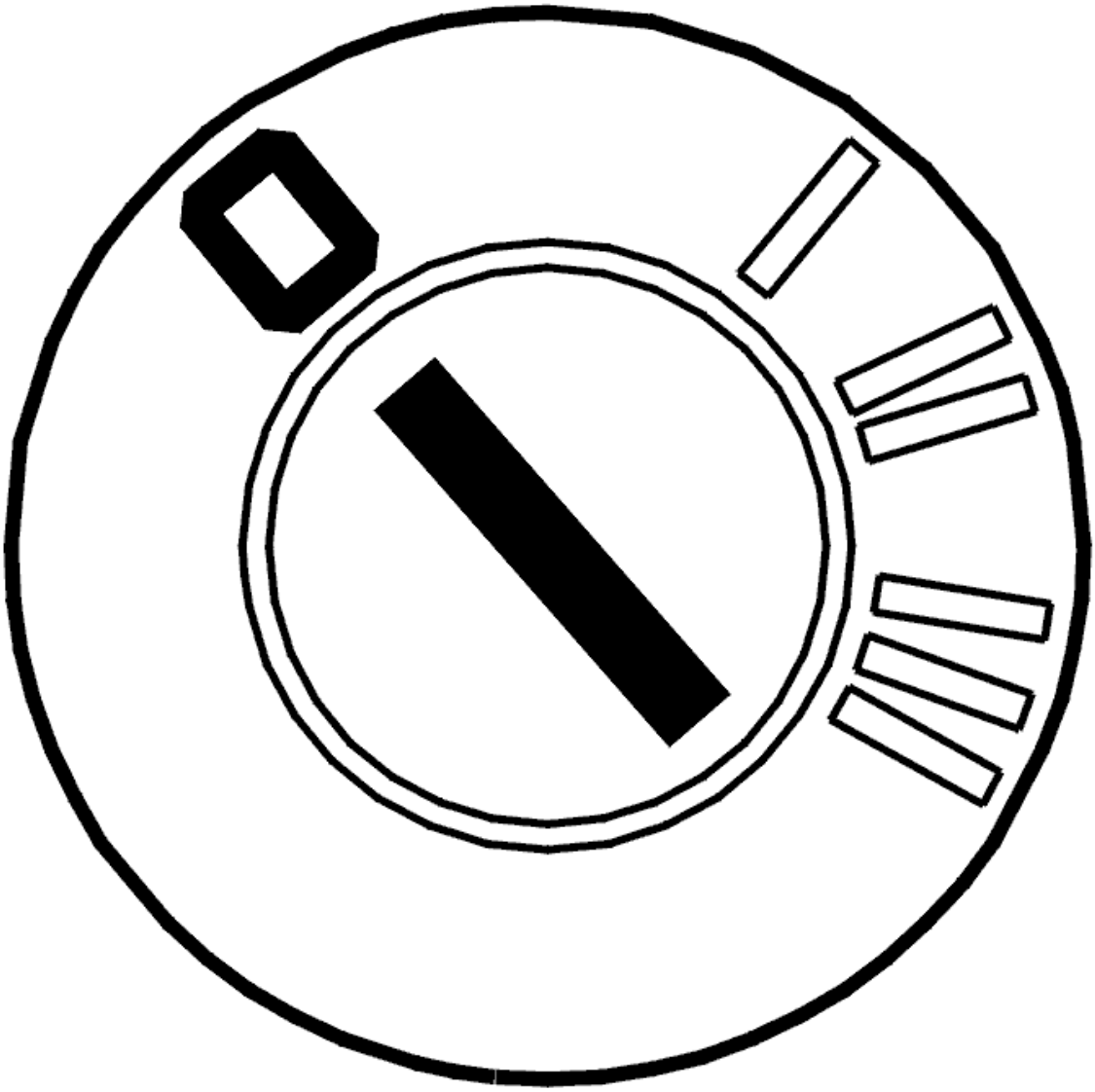

Fig. 102: Identifying Ignition OFF
Courtesy of VOLVO CARS CORPORATION

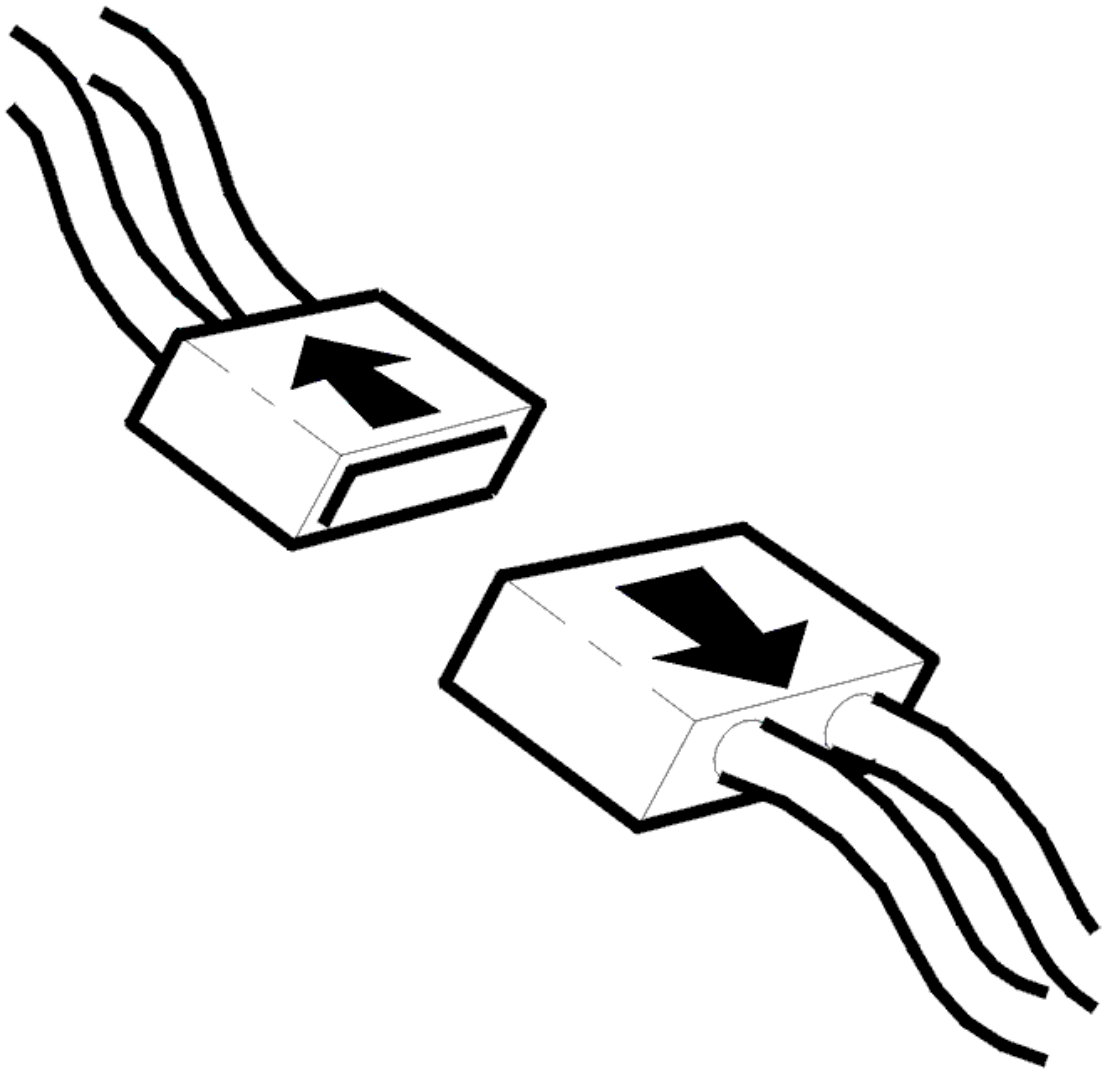

Fig. 103: Disconnecting Connector
Courtesy of VOLVO CARS CORPORATION

- Ignition off
- Disconnect the connector to the Integrated Audio Module (IAM).

  Check the connections with regard to contact resistance, play and oxidation.

  Check the antenna cable between the Integrated Audio Module (IAM) and the speaker in the right-hand rear door with regard to short circuits to supply voltage.

  Measure between:

  - Integrated audio module (IAM) terminal #A3 and speaker terminal #1 in the right rear door.
  - Integrated audio module (IAM) terminal #A10 and speaker terminal #2 in the right rear door.

Remedy as necessary.

Other information

- see **SIGNAL SPECIFICATION**
- see **LOCATION OF COMPONENTS**
- see **CONTROL MODULE GENERAL SOUND PLAYER**
- see **LOUDSPEAKER, REAR SIDE DOOR, REPLACING**
- see **CHECKING WIRING AND TERMINALS**

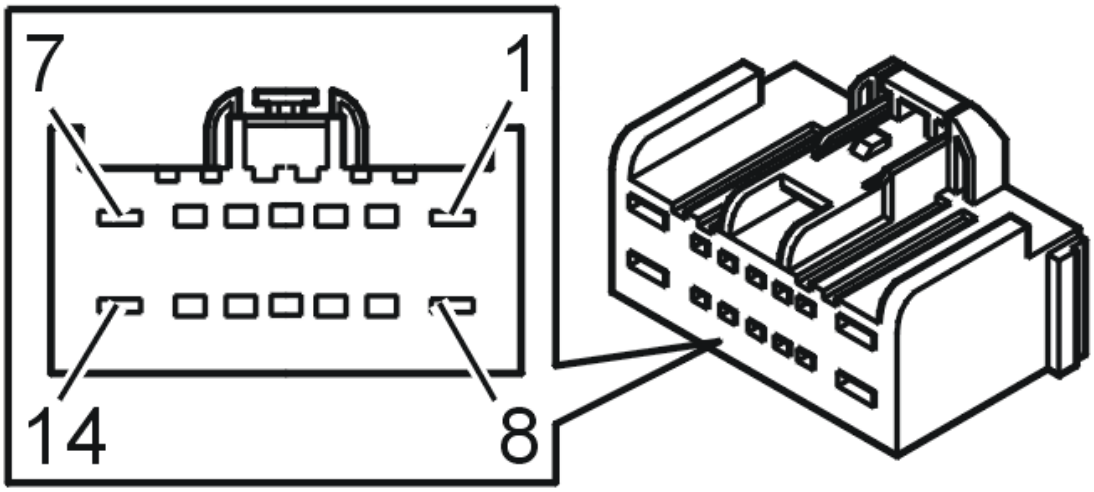

Fig. 104: Identifying 14-Bit Connector
Courtesy of VOLVO CARS CORPORATION

- **Continue**

  See: **VERIFICATION**

VERIFICATION

VERIFICATION

HINT: After carrying out the repair, check that the fault has been remedied.

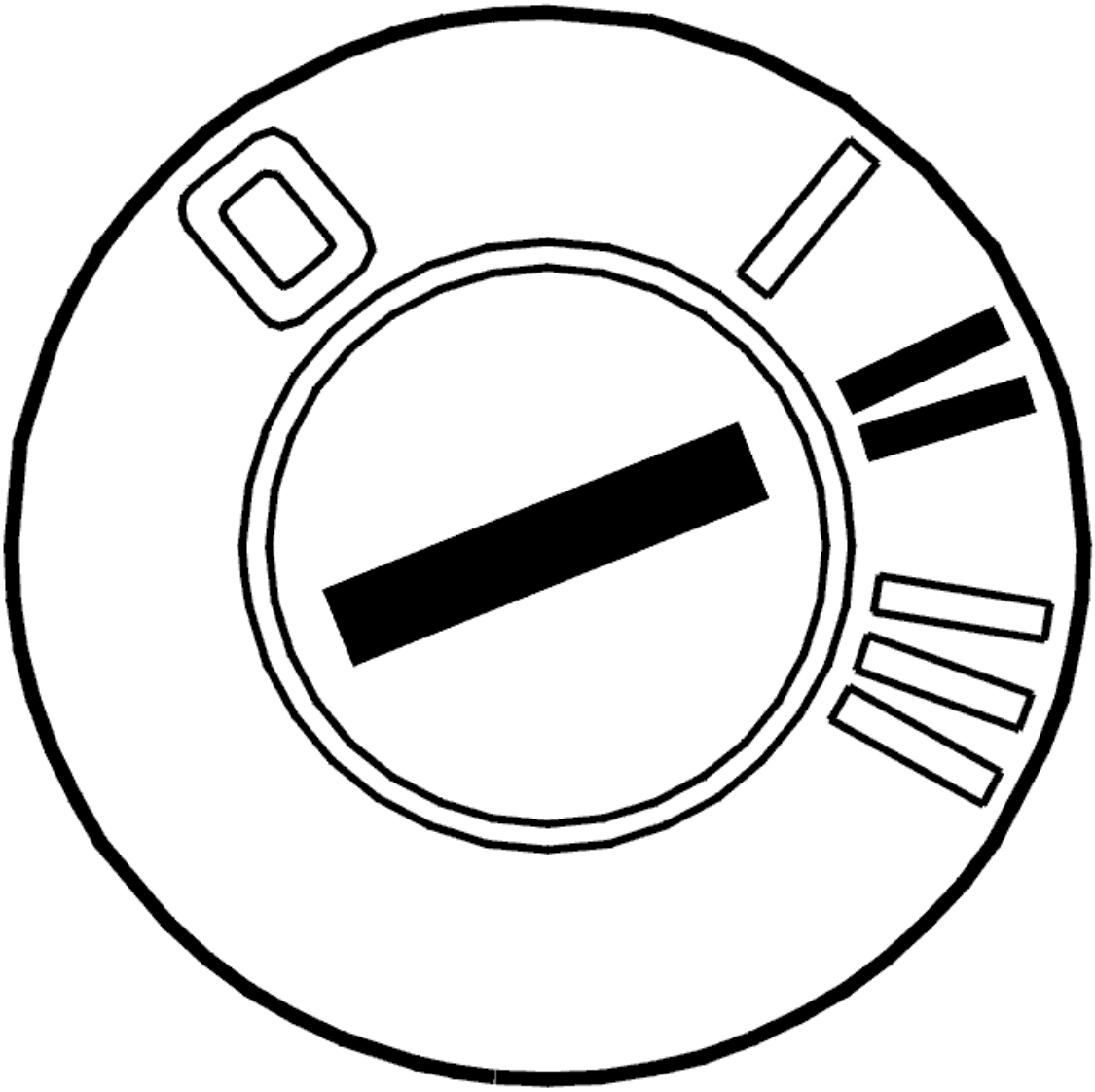

Fig. 105: Identifying Ignition ON
Courtesy of VOLVO CARS CORPORATION

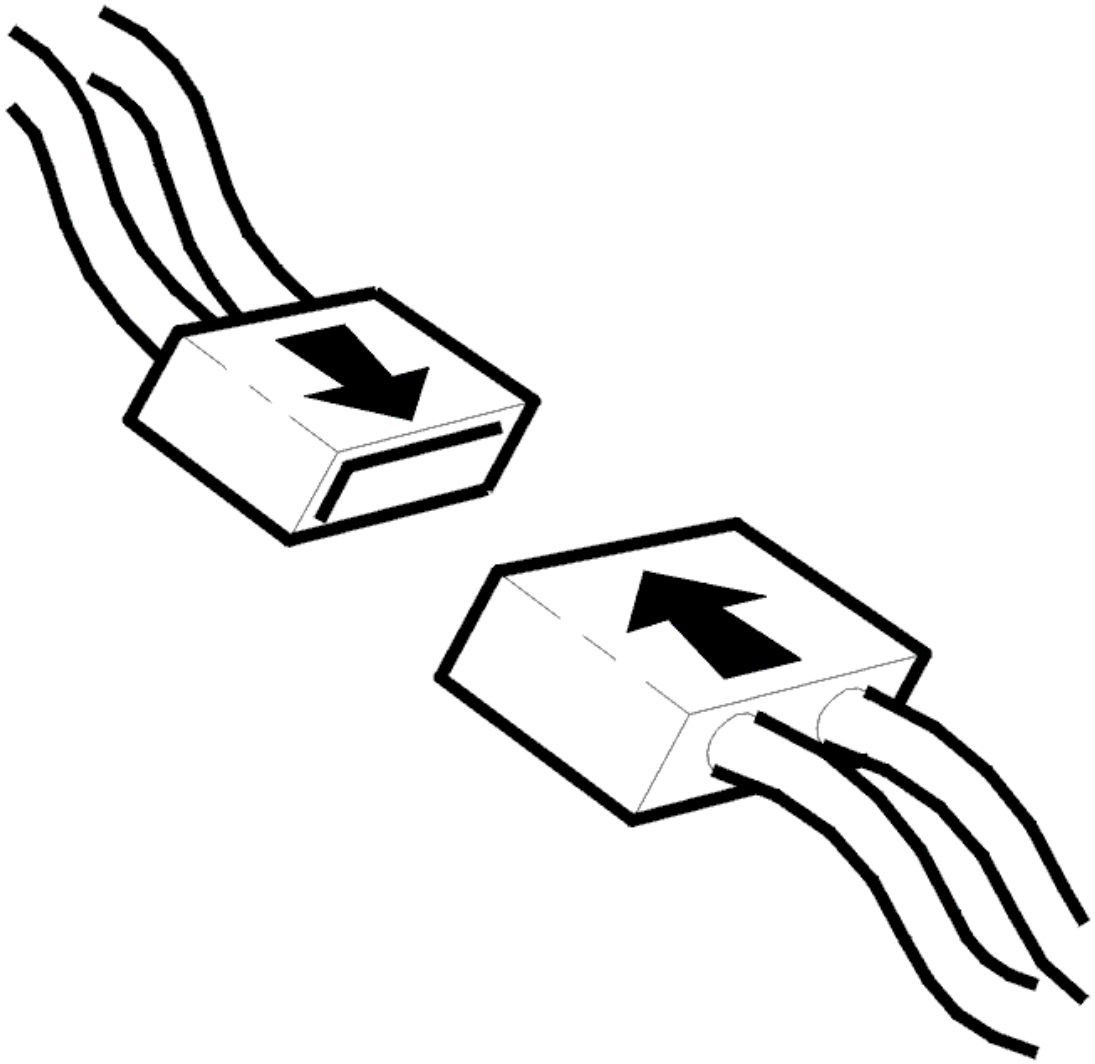

Fig. 106: Connecting Connector
Courtesy of VOLVO CARS CORPORATION

- Ignition off
- Reinstall the connectors, components etc.
- Ignition on

  Check that the sound is heard from the speakers by testing the CD player.

Are the speakers working?

- **YES**

  VERIFIED: Troubleshooting has been completed.

- **NO**

  See: **INFORMATION**

INFORMATION

FAULT-TRACING INFORMATION

The fault should have been detected and remedied. As this is not the case fault-tracing has failed.

Exit fault-tracing for this diagnostic trouble code (DTC) or make another attempt.

IAM-3033: REAR RIGHT SPEAKER. FAULTY SIGNAL (2007-2012)

DIAGNOSTIC TROUBLE CODE (DTC) INFORMATION IAM-3033

Condition

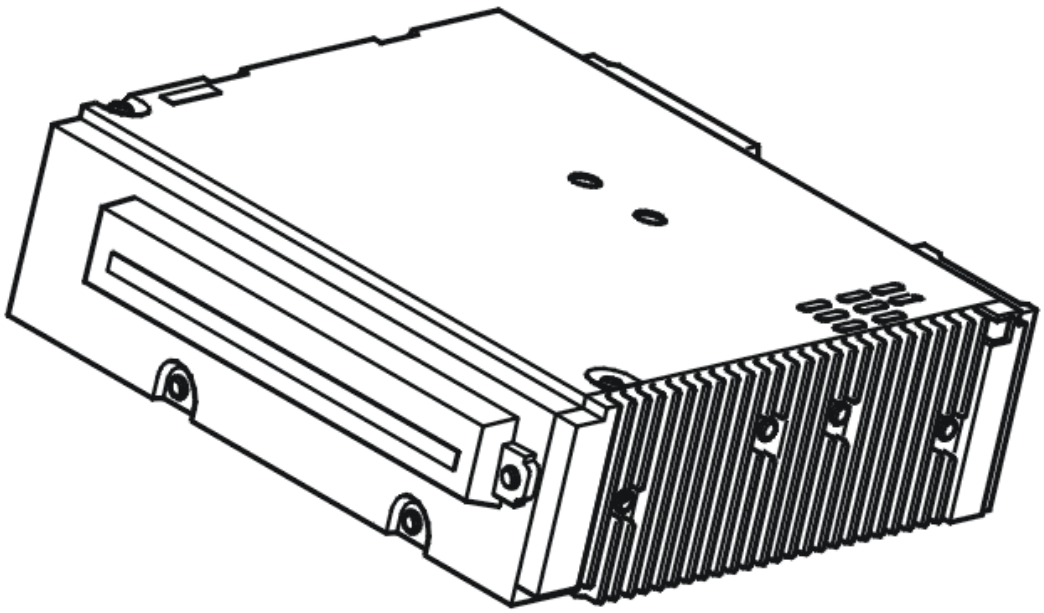

Fig. 107: Identifying Integrated Audio Module (IAM)
Courtesy of VOLVO CARS CORPORATION

If the Integrated Audio Module (IAM) registers that the impedance is too low in the speaker in the right-hand rear door, then the Diagnostic Trouble Code (DTC) is generated.

The diagnostic trouble code can be diagnosed when the ignition is on.

Substitute Value

- Nothing.

Possible Source

- Short circuit between the signal cables to the speaker in the right-hand rear door.
- Internal fault in the speaker in the right-hand rear door.

Fault symptom[s]

- CD player inoperative.
- No sound from speakers.

FAULTY SIGNAL

CHECKING THE WIRING

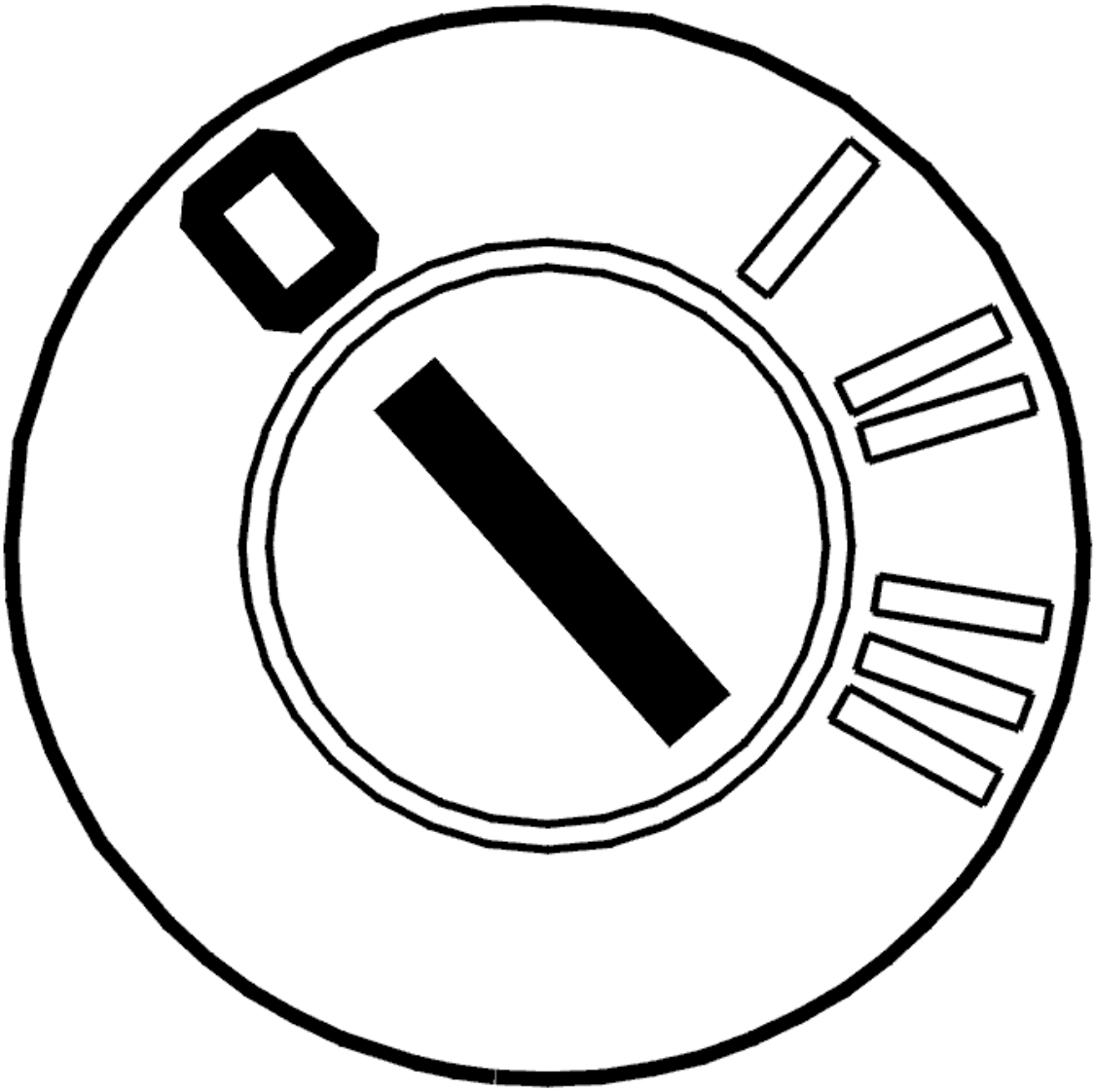

Fig. 108: Identifying Ignition OFF
Courtesy of VOLVO CARS CORPORATION

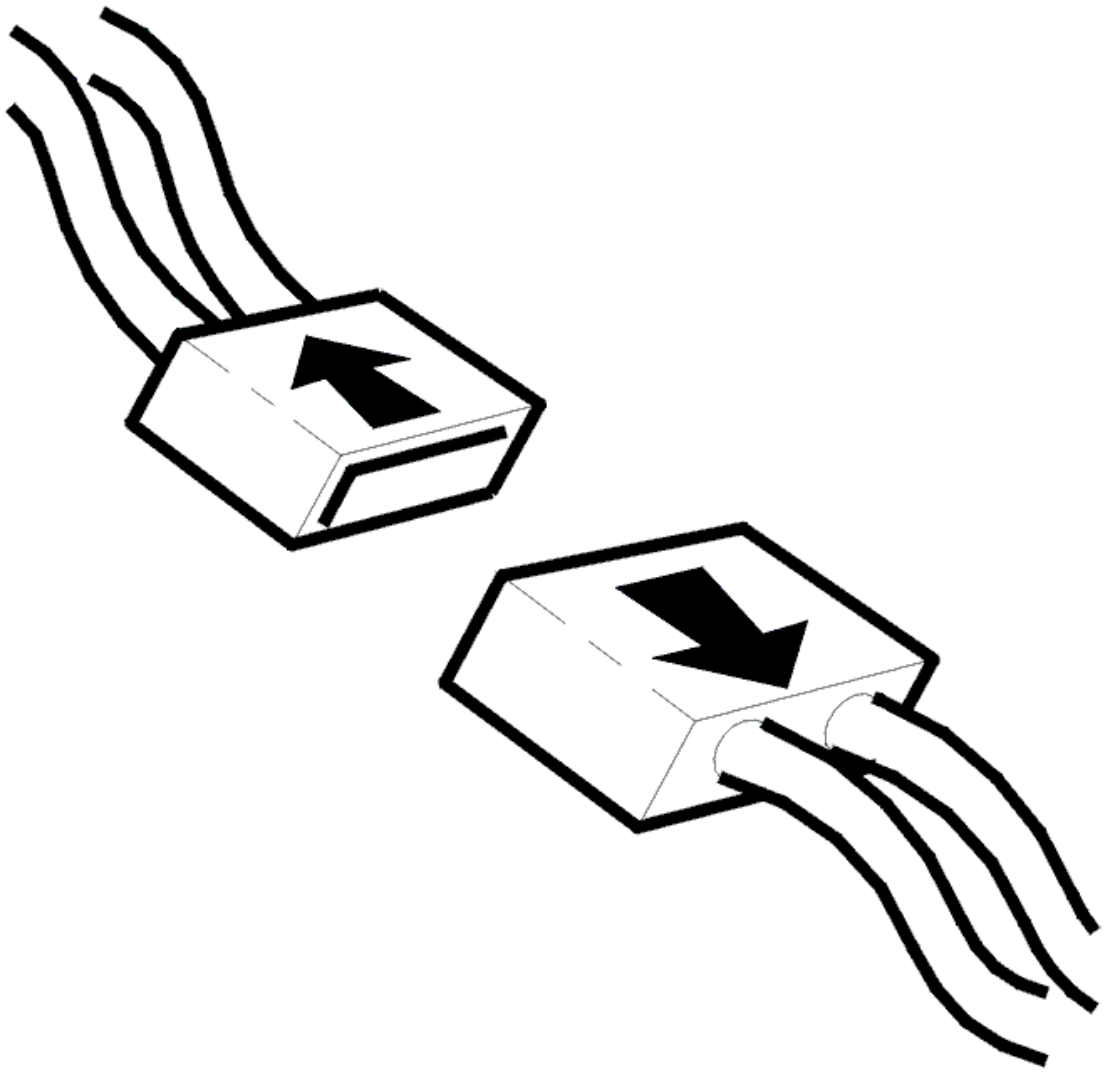

Fig. 109: Disconnecting Connector
Courtesy of VOLVO CARS CORPORATION

- Ignition off
- Disconnect the connector to the Integrated Audio Module (IAM).

  Check the connections with regard to contact resistance, play and oxidation.

  Check the signal cables between the Integrated Audio Module (IAM) and the speaker in the right-hand rear door with regard to short circuits between the signal cables.

  Measure between:

  - Integrated Audio Module (IAM) #A2 and speaker #1 in right-hand rear door.
  - Integrated Audio Module (IAM) #A9 and speaker #2 in right-hand rear door.

If no fault was detected, replace the speaker.

Remedy as necessary.

Other information

- see **SIGNAL SPECIFICATION**
- see **LOCATION OF COMPONENTS**
- see **CONTROL MODULE GENERAL SOUND PLAYER**
- see **LOUDSPEAKER, REAR SIDE DOOR, REPLACING**
- see **CHECKING WIRING AND TERMINALS**

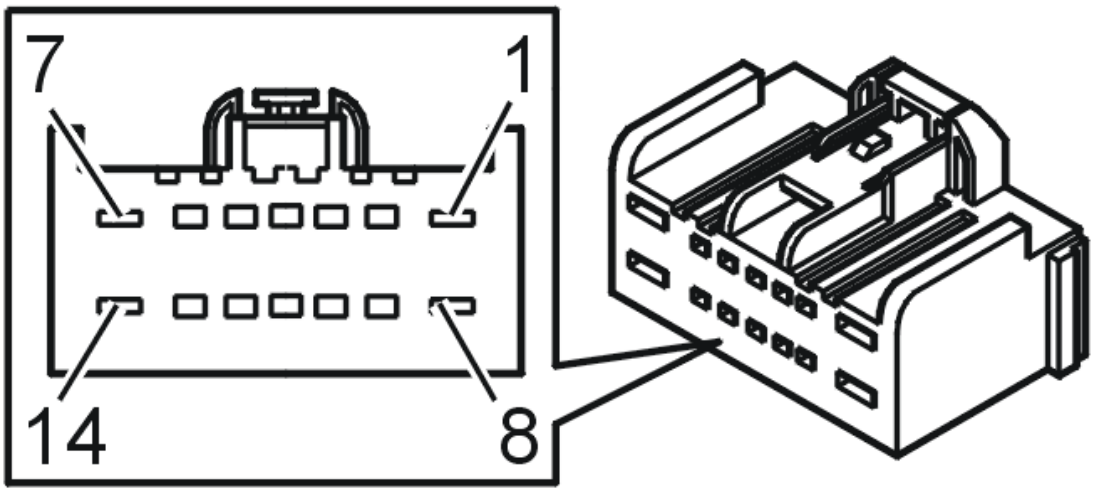

Fig. 110: Identifying 14-Bit Connector
Courtesy of VOLVO CARS CORPORATION

- **Continue**

See: **VERIFICATION**

VERIFICATION

VERIFICATION

HINT: After carrying out the repair, check that the fault has been remedied.

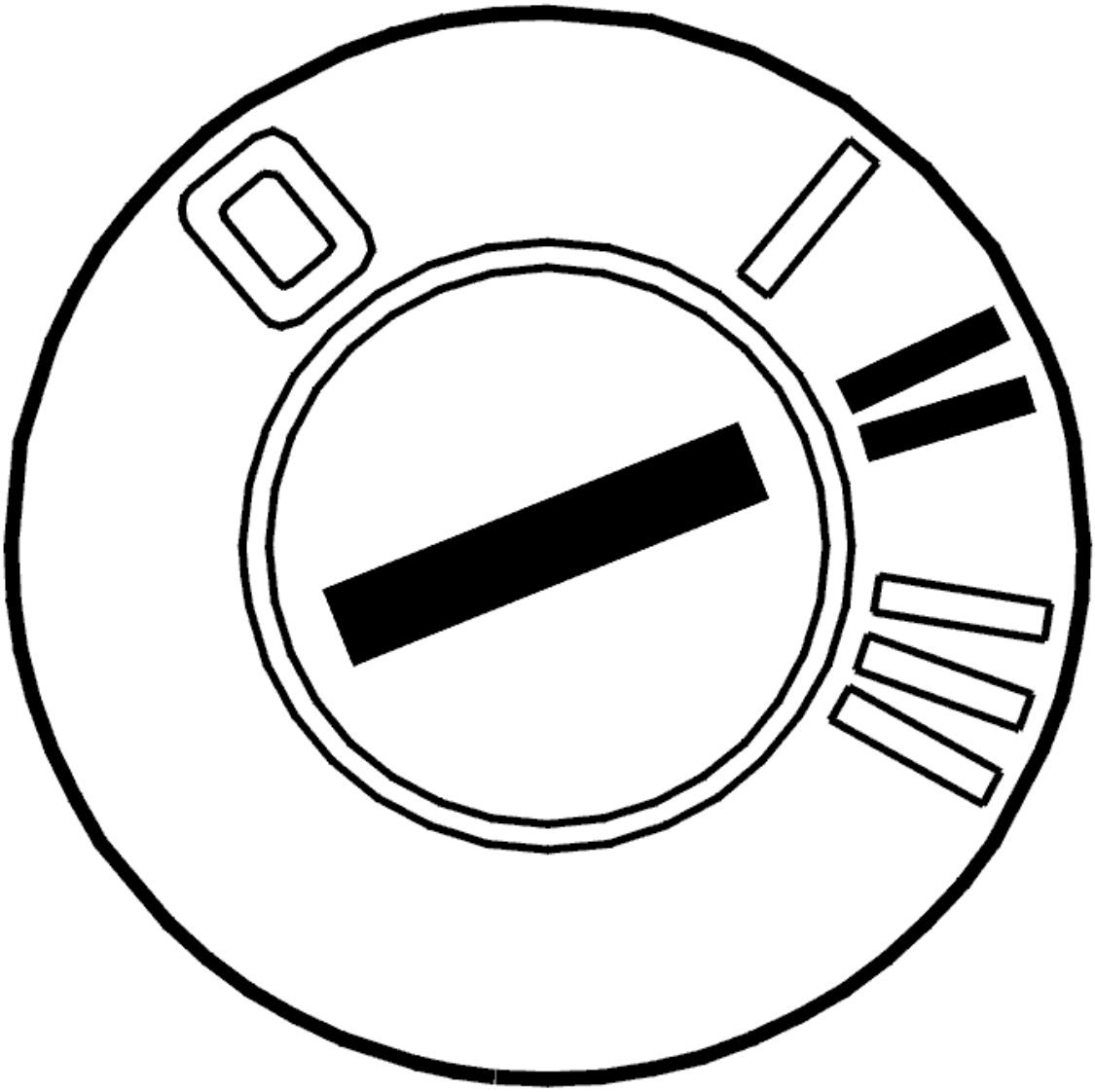

Fig. 111: Identifying Ignition ON
Courtesy of VOLVO CARS CORPORATION

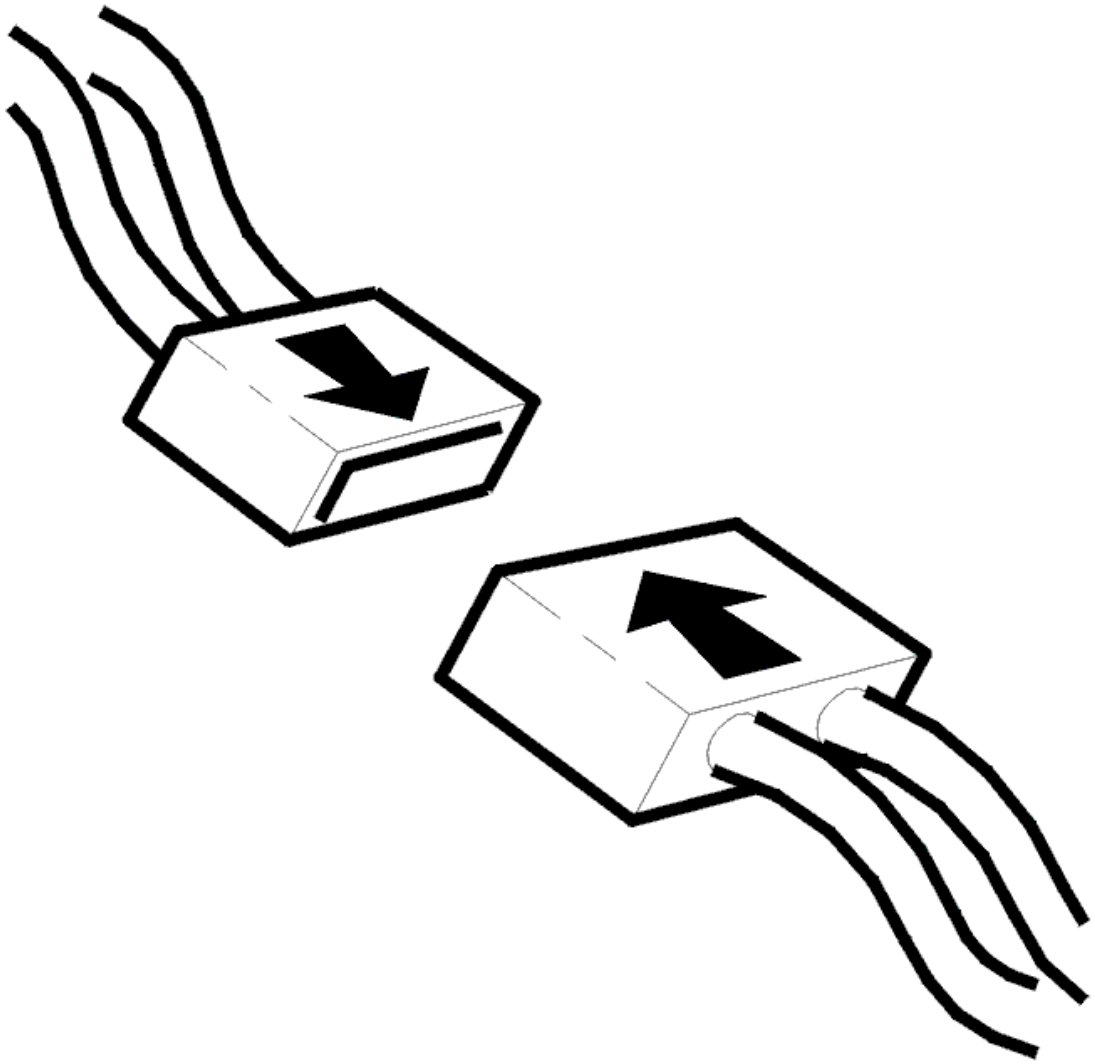

Fig. 112: Connecting Connector
Courtesy of VOLVO CARS CORPORATION

- Ignition off
- Reinstall the connectors, components etc.
- Ignition on

  Check that the sound is heard from the speakers by testing the CD player.

Are the speakers working?

- **YES**

  VERIFIED: Troubleshooting has been completed.

- **NO**

  See: **INFORMATION**

INFORMATION

FAULT-TRACING INFORMATION

The fault should have been detected and remedied. As this is not the case fault-tracing has failed.

Exit fault-tracing for this diagnostic trouble code (DTC) or make another attempt.

IAM-3034: REAR RIGHT SPEAKER. NO SIGNAL (2007-2012)

DIAGNOSTIC TROUBLE CODE (DTC) INFORMATION IAM-3034

Condition

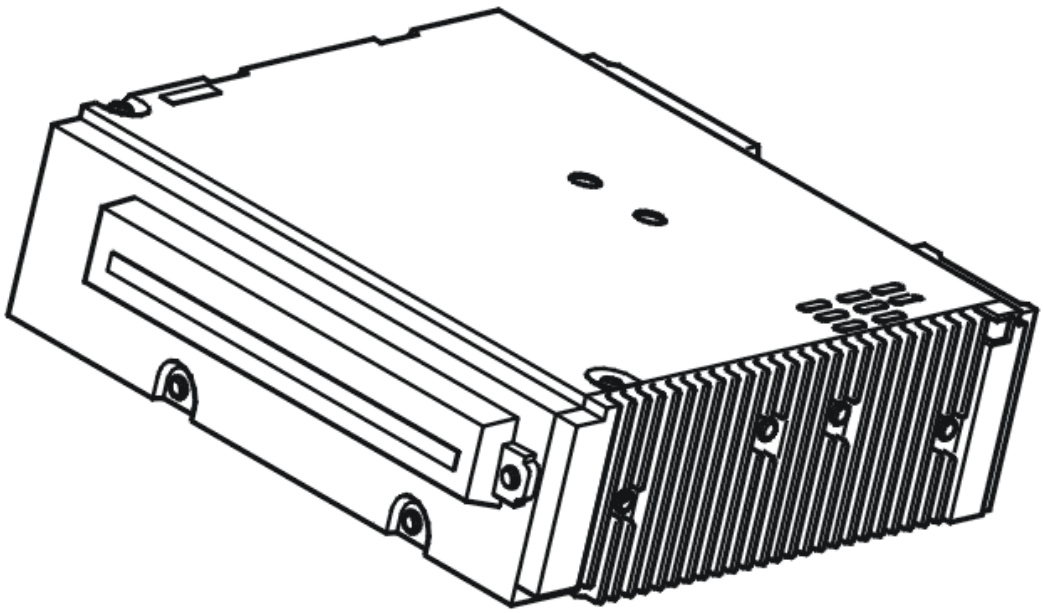

Fig. 113: Identifying Integrated Audio Module (IAM)
Courtesy of VOLVO CARS CORPORATION

If the Integrated Audio Module (IAM) registers that there is no signal in the signal cable from the speaker in the right-hand rear door, then the Diagnostic Trouble Code (DTC) is generated.

The diagnostic trouble code can be diagnosed when the ignition is on.

Substitute Value

- Nothing.

Possible Source

- Open circuit on the signal cable between the control module and speaker in the right-hand rear door.
- Damaged speaker in right-hand rear door.

Fault symptom[s]

- CD player inoperative.
- No sound from speakers.

SIGNAL MISSING

CHECKING THE WIRING

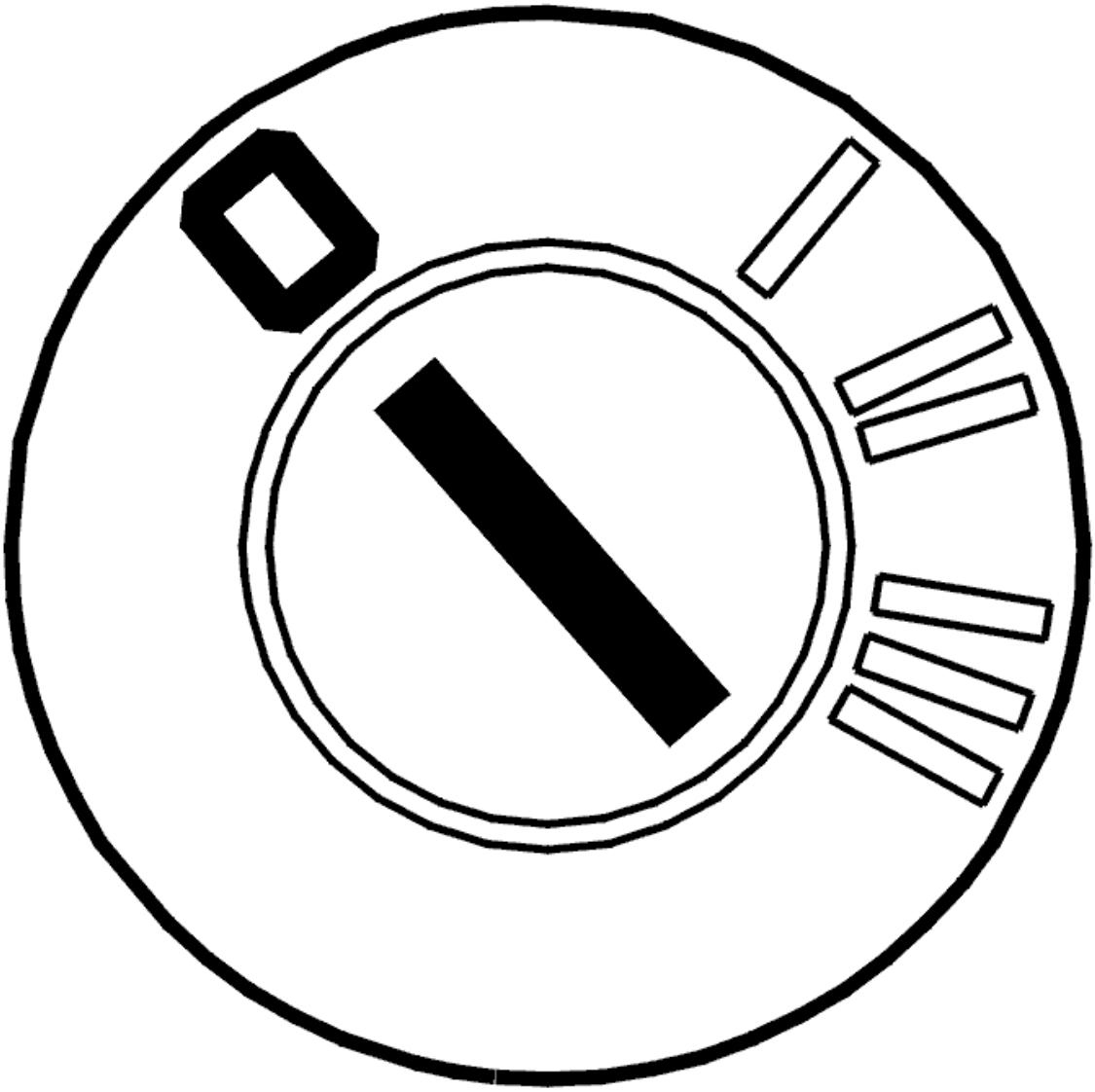

Fig. 114: Identifying Ignition OFF
Courtesy of VOLVO CARS CORPORATION

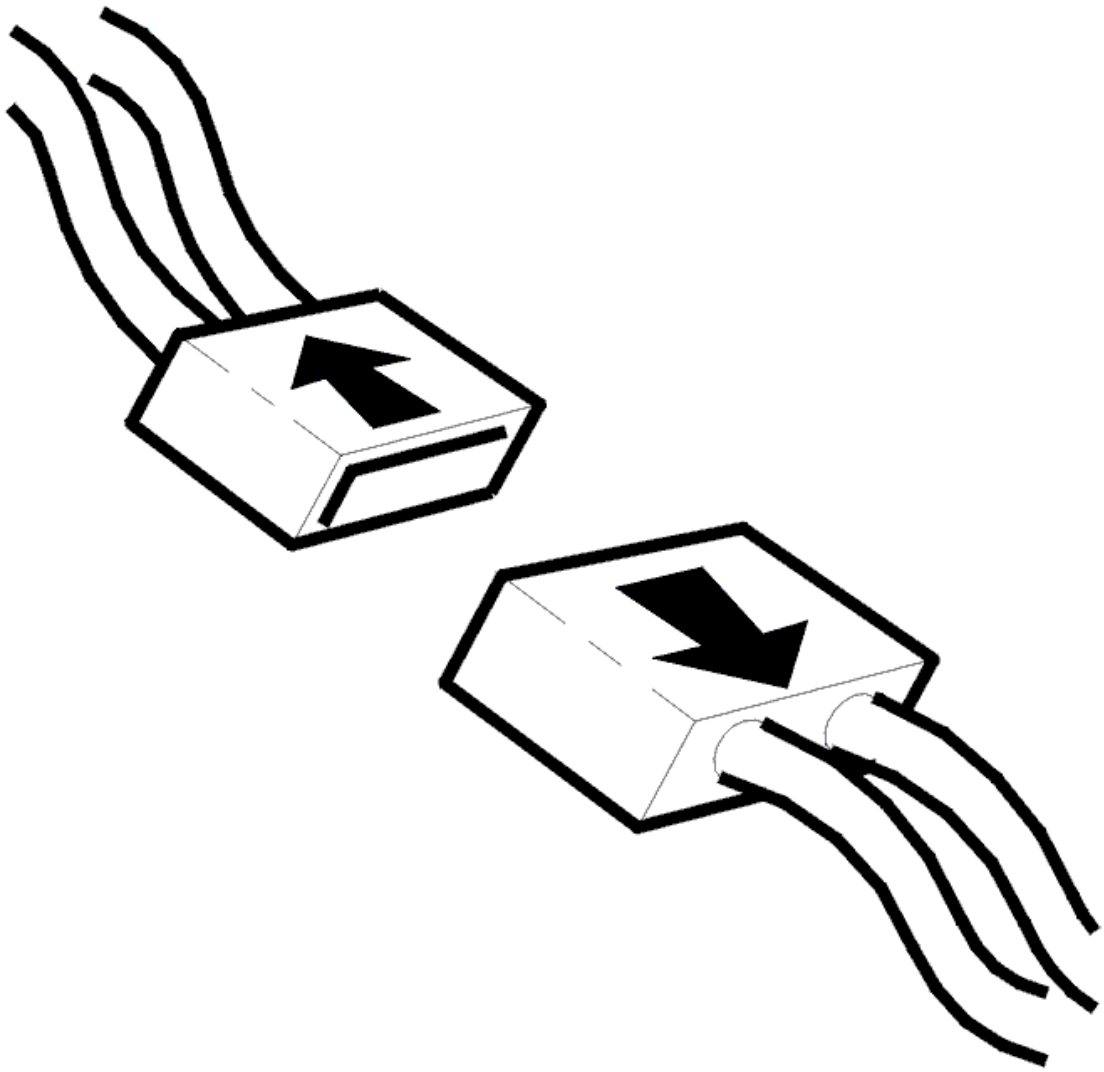

Fig. 115: Disconnecting Connector
Courtesy of VOLVO CARS CORPORATION

- Ignition off
- Disconnect the connector to the Integrated Audio Module (IAM).

  Check the connections with regard to contact resistance, play and oxidation.

  Check the signal cable between the Integrated Audio Module (IAM) and the speaker in the right-hand rear door with regard to open circuits.

  Measure between:

  - Integrated audio module (IAM) terminal #A3 and speaker terminal #1 in the right rear door.
  - Integrated audio module (IAM) terminal #A10 and speaker terminal #2 in the right rear door.

If no fault was detected, replace the speaker.

Remedy as necessary.

Other information

- see **SIGNAL SPECIFICATION**
- see **LOCATION OF COMPONENTS**
- see **CONTROL MODULE GENERAL SOUND PLAYER**
- see **LOUDSPEAKER, REAR SIDE DOOR, REPLACING**
- see **CHECKING WIRING AND TERMINALS**

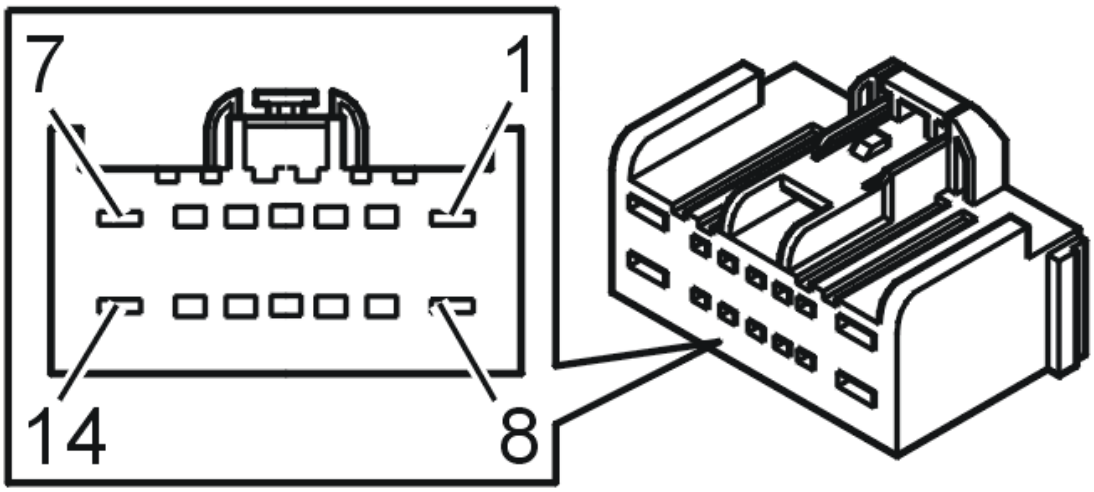

Fig. 116: Identifying 14-Bit Connector
Courtesy of VOLVO CARS CORPORATION

- **Continue**

See: **VERIFICATION**

VERIFICATION

VERIFICATION

HINT: After carrying out the repair, check that the fault has been remedied.

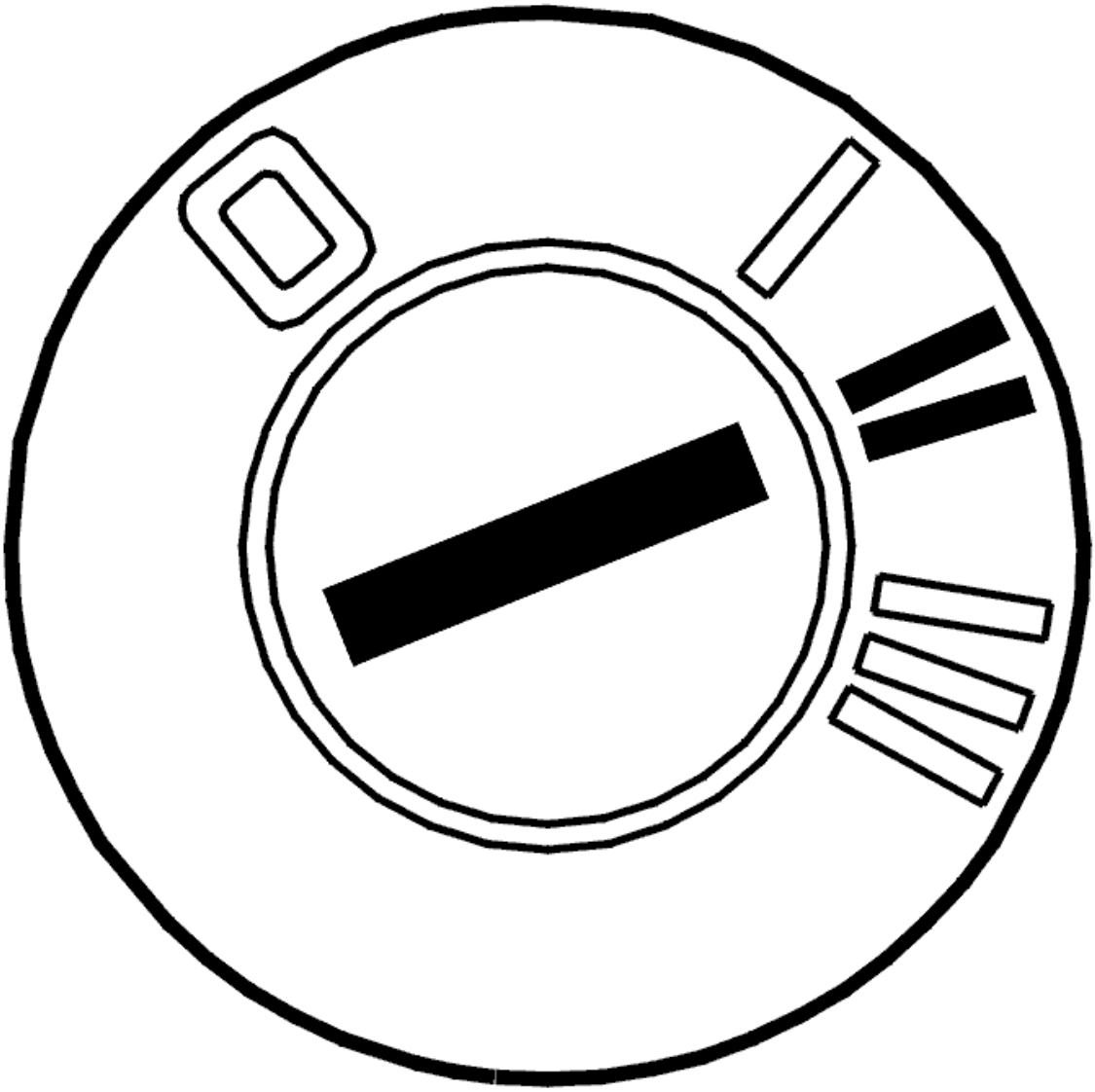

Fig. 117: Identifying Ignition ON
Courtesy of VOLVO CARS CORPORATION

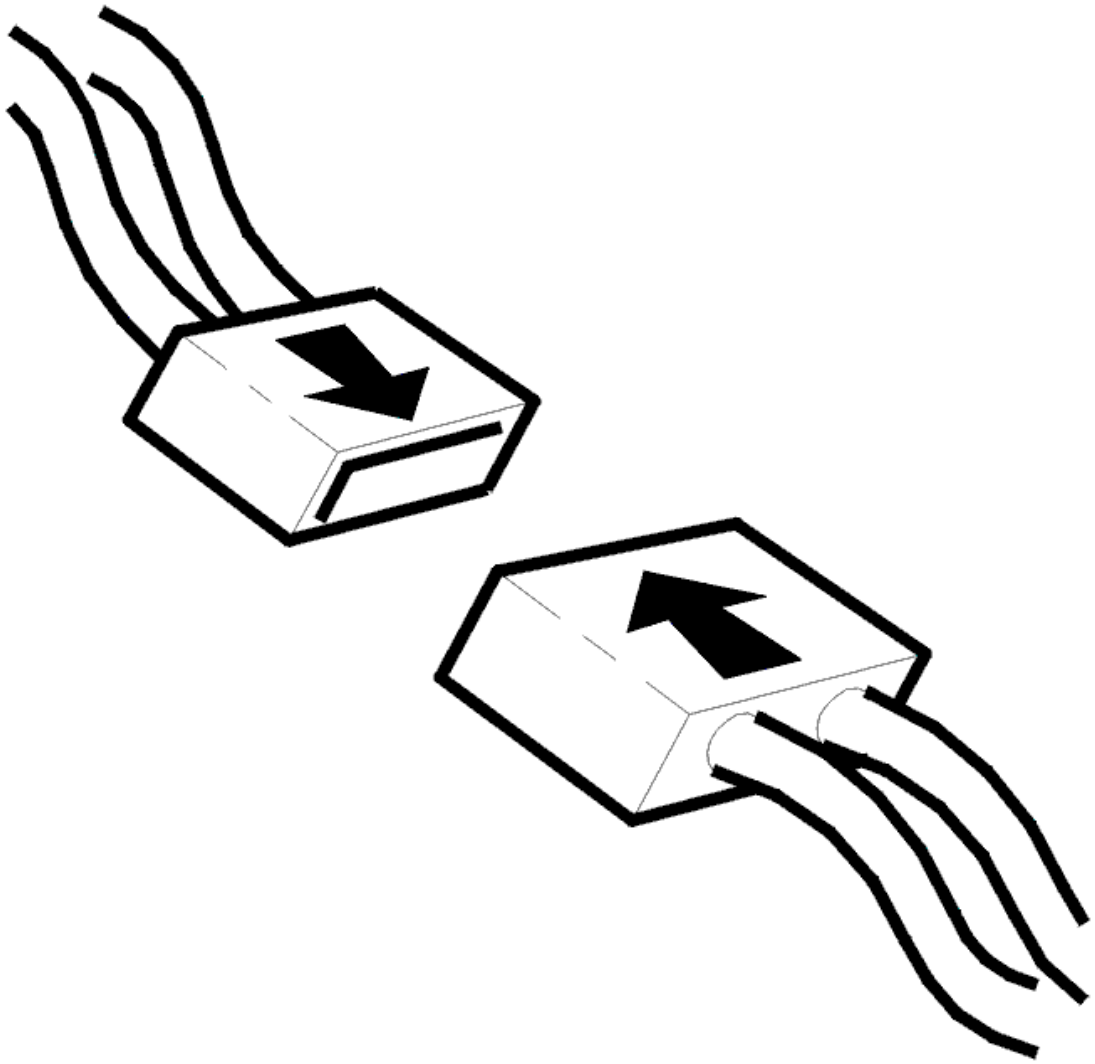

Fig. 118: Connecting Connector
Courtesy of VOLVO CARS CORPORATION

- Ignition off
- Reinstall the connectors, components etc.
- Ignition on

  Check that the sound is heard from the speakers by testing the CD player.

Are the speakers working?

- **YES**

  VERIFIED: Troubleshooting has been completed.

- **NO**

  See: **INFORMATION**

INFORMATION

FAULT-TRACING INFORMATION

The fault should have been detected and remedied. As this is not the case fault-tracing has failed.

Exit fault-tracing for this diagnostic trouble code (DTC) or make another attempt.

IAM-3035: REAR RIGHT SPEAKER. FAULTY SIGNAL (2007-2012)

DIAGNOSTIC TROUBLE CODE (DTC) INFORMATION IAM-3035

Condition

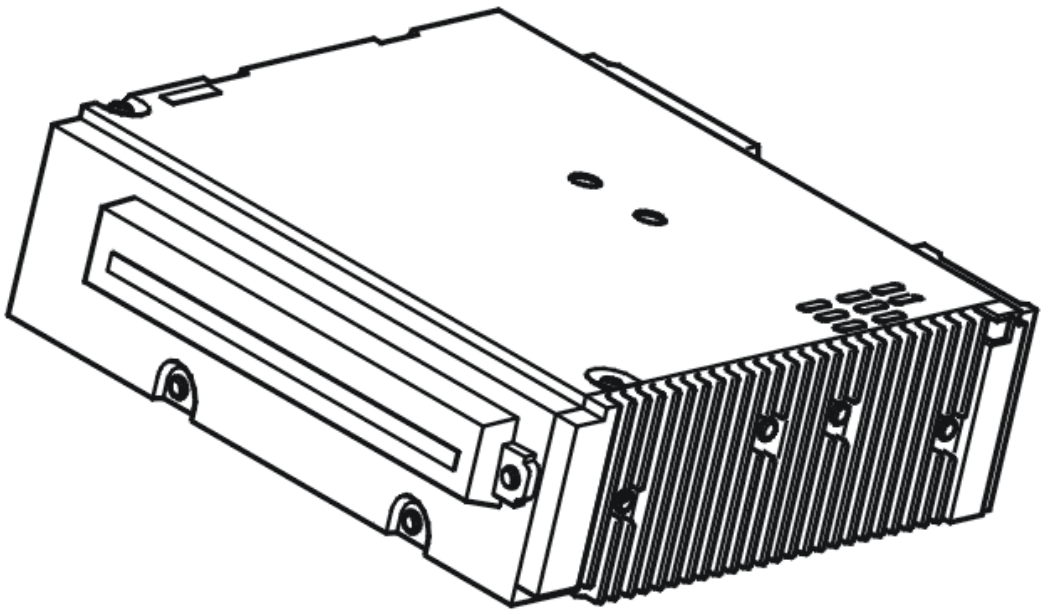

Fig. 119: Identifying Integrated Audio Module (IAM)
Courtesy of VOLVO CARS CORPORATION

If the Integrated Audio Module (IAM) registers an erroneous signal to the speaker in the right-hand rear door, then the Diagnostic Trouble Code (DTC) is generated.

The diagnostic trouble code can be diagnosed when the ignition is on.

Substitute Value

- Nothing.

Possible Source

- Internal fault in integrated audio module (IAM).
- Damaged signal cables to the speaker in the right-hand rear door.
- Internal fault in the speaker in the right-hand rear door.

Fault symptom[s]

- CD player inoperative.
- No sound from speakers.

FAULTY SIGNAL

CHECKING THE WIRING

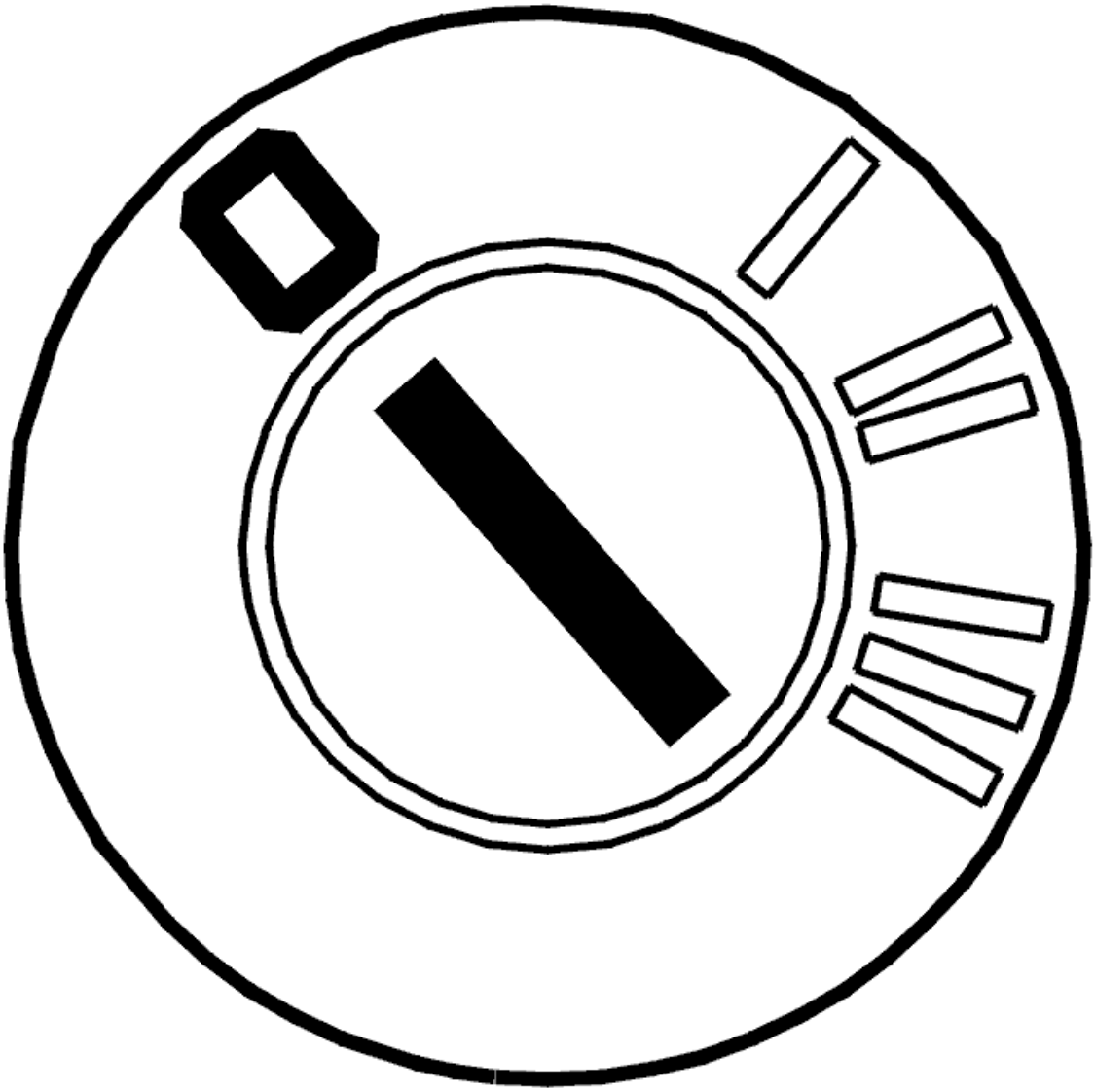

Fig. 120: Identifying Ignition OFF
Courtesy of VOLVO CARS CORPORATION

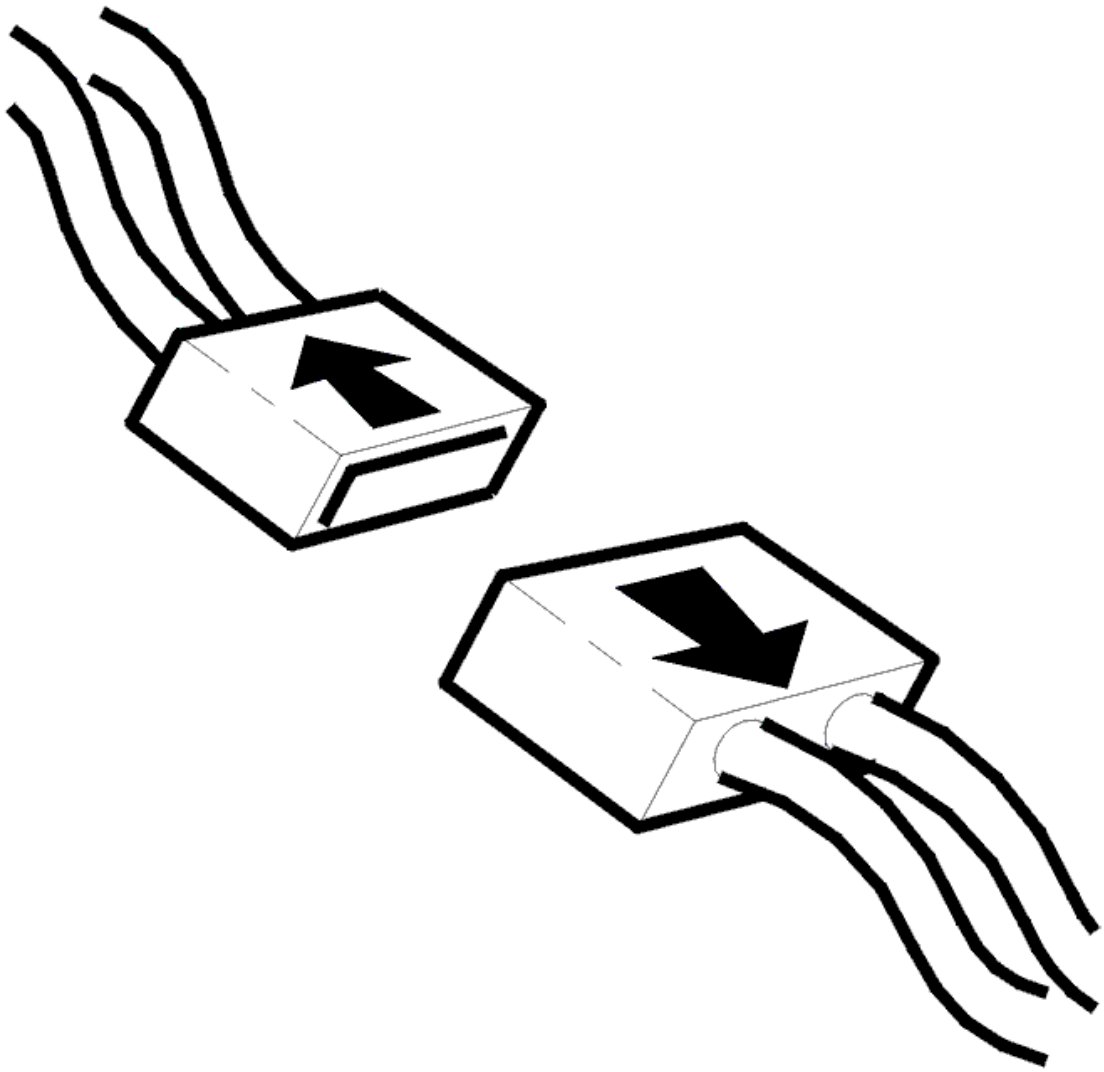

Fig. 121: Disconnecting Connector
Courtesy of VOLVO CARS CORPORATION

- Ignition off
- Disconnect the connector to the Integrated Audio Module (IAM).

  Check the connections with regard to contact resistance, play and oxidation.

  Check the signal cables between the Integrated Audio Module (IAM) and the speaker in the right-hand rear door with regard to short circuits and open circuits.

  Measure between:

  - Integrated audio module (IAM) terminal #A3 and speaker terminal #1 in the right rear door.
  - Integrated audio module (IAM) terminal #A10 and speaker terminal #2 in the right rear door.

If no fault was detected, replace the Integrated Audio Module (IAM).

Remedy as necessary.

Other information

- see **SIGNAL SPECIFICATION**
- see **LOCATION OF COMPONENTS**
- see **CONTROL MODULE GENERAL SOUND PLAYER**
- see **LOUDSPEAKER, REAR SIDE DOOR, REPLACING**
- see **CHECKING WIRING AND TERMINALS**

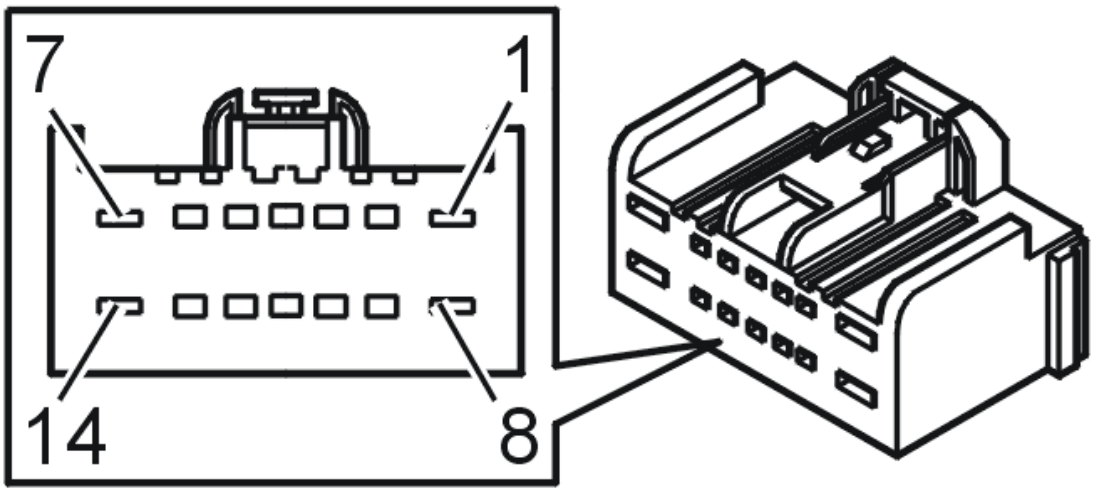

Fig. 122: Identifying 14-Bit Connector
Courtesy of VOLVO CARS CORPORATION

- **Continue**

See: **VERIFICATION**

VERIFICATION

VERIFICATION

HINT: After carrying out the repair, check that the fault has been remedied.

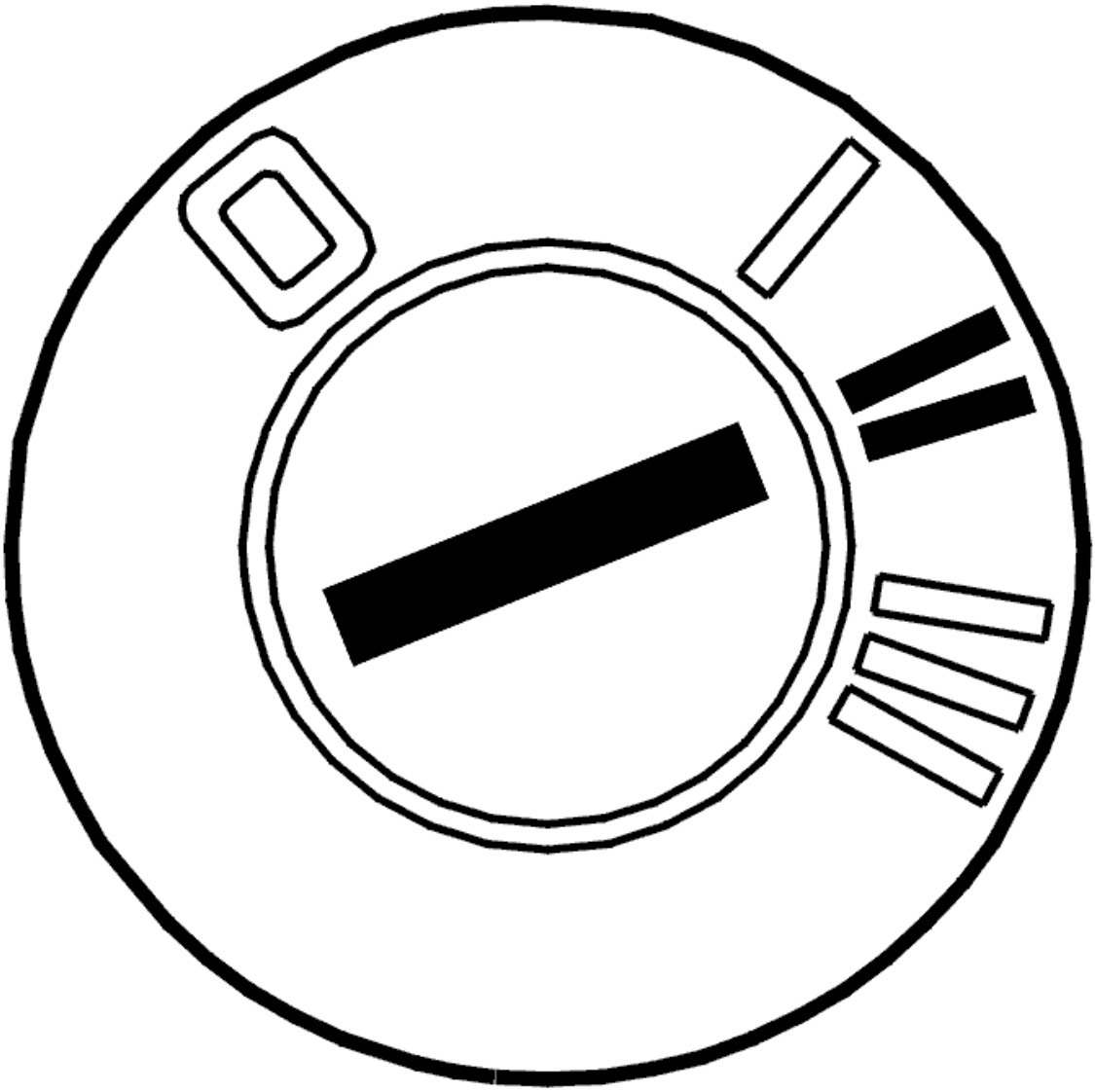

Fig. 123: Identifying Ignition ON
Courtesy of VOLVO CARS CORPORATION

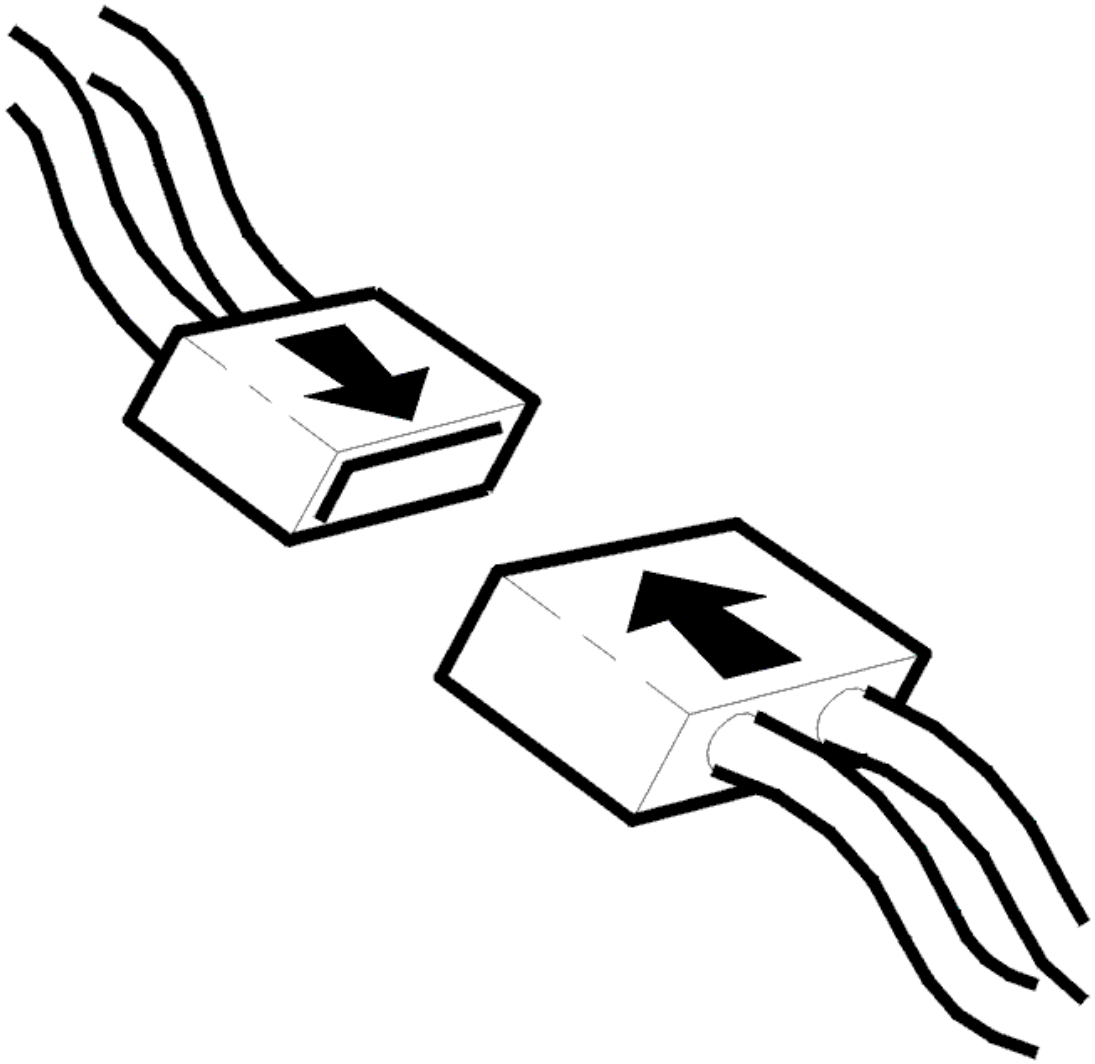

Fig. 124: Connecting Connector
Courtesy of VOLVO CARS CORPORATION

- Ignition off
- Reinstall the connectors, components etc.
- Ignition on

  Check that the sound is heard from the speakers by testing the CD player.

Are the speakers working?

- **YES**

  VERIFIED: Troubleshooting has been completed.

- **NO**

  See: **INFORMATION**

INFORMATION

FAULT-TRACING INFORMATION

The fault should have been detected and remedied. As this is not the case fault-tracing has failed.

Exit fault-tracing for this diagnostic trouble code (DTC) or make another attempt.

IAM-5001: USB PORT. SIGNAL TOO LOW (2009-2012)

SIGNAL TOO LOW

CHECKING THE COMPONENT AND WIRING

Fig. 125: Identifying Ignition In Off Position
Courtesy of VOLVO CARS CORPORATION

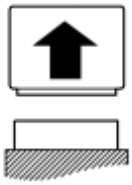

Fig. 126: Identifying Microphone Connectors
Courtesy of VOLVO CARS CORPORATION

- Ignition off.
- Unplug the connector for the USB-connection.

  Check the cable terminals. Check for contact resistance, loose connections and oxidation.

  Check the cable terminals in the female and male sections of the connector. The cable terminals must not be damaged or pressed back.

  Check the voltage supply cables between the Integrated Audio Module (IAM) #D1 and the USB connection #1 with regard to short-circuit to ground.

Remedy as necessary.

Other information

- see **CHECKING WIRING AND TERMINALS**
- see **SIGNAL SPECIFICATION**

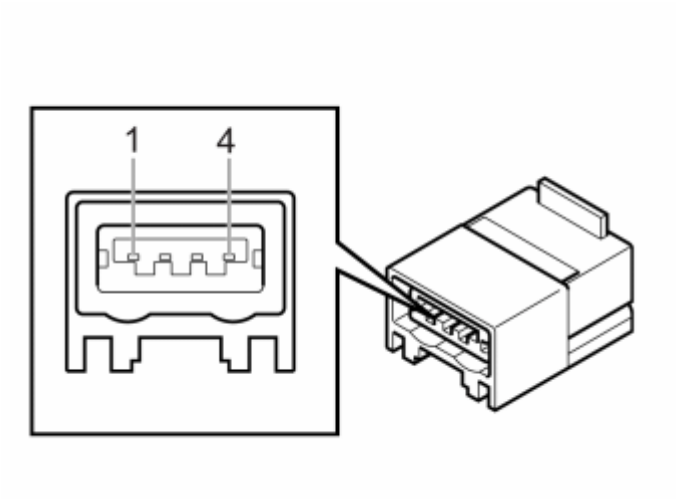

Fig. 127: Identifying 4-Pin Connector
Courtesy of VOLVO CARS CORPORATION

- **Continue**

  See: **VERIFICATION**

INFORMATION

FAULT-TRACING INFORMATION

The fault should have been detected and remedied. As this is not the case fault-tracing has failed.

Exit fault-tracing for this diagnostic trouble code (DTC) or make another attempt.

VERIFICATION

VERIFICATION

HINT: After carrying out the repair, check that the fault has been remedied.

Fig. 128: Checking Traffic Load On CAN Cables
Courtesy of VOLVO CARS CORPORATION

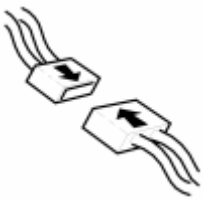

Fig. 129: Identifying Connector(s) Reinstallation
Courtesy of VOLVO CARS CORPORATION

- Ignition off.
- Reinstall the connectors, components etc.
- Ignition on.

  Connect a USB memory to the USB connection. Check that the USB connection works.

Does the USB connection work?

- **YES**

  VERIFIED: Troubleshooting has been completed.

- **NO**

  See: **INFORMATION**

DIAGNOSTIC TROUBLE CODE (DTC) INFORMATION IAM-5001

Condition

The Integrated Audio Module (IAM) checks the direct current on the power supply cable for the USB connection.

The diagnostic trouble code (DTC) is stored if the control module detects that:

- Direct current (DC) is too low.

The control module's test for the diagnostic trouble code (DTC) starts in the event of:

- Activated control module.

NOTE: **The control module can only detect the fault once the test has been started and the diagnostic trouble code (DTC) is stored when the conditions are met.**

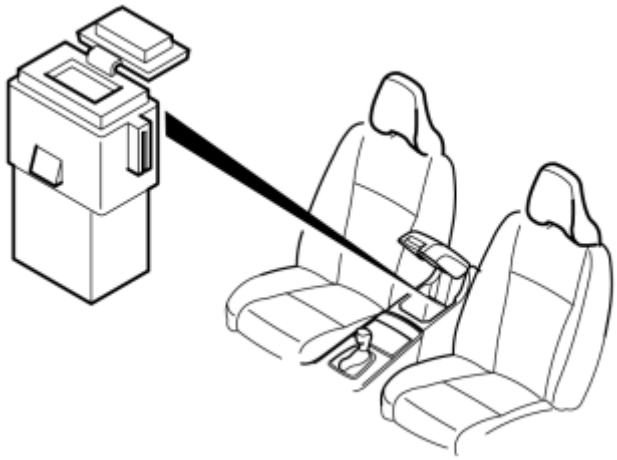

Fig. 130: Identifying USB Connection
Courtesy of VOLVO CARS CORPORATION

Substitute Value

- None.

Possible Source

- Short-circuit to ground in the power supply cable.

Fault symptom[s]

- USB unit/Does not work

IAM-5002: USB PORT. SIGNAL TOO HIGH (2009-2012)

DIAGNOSTIC TROUBLE CODE (DTC) INFORMATION IAM-5002

Condition

The Integrated Audio Module (IAM) checks the direct current on the power supply cable for the USB connection.

The diagnostic trouble code (DTC) is stored if the control module detects that:

- Direct current (DC) is too high.

The control module's test for the diagnostic trouble code (DTC) starts in the event of:

- Activated control module.

NOTE: **The control module can only detect the fault once the test has been started and the diagnostic trouble code (DTC) is stored when the conditions are met.**

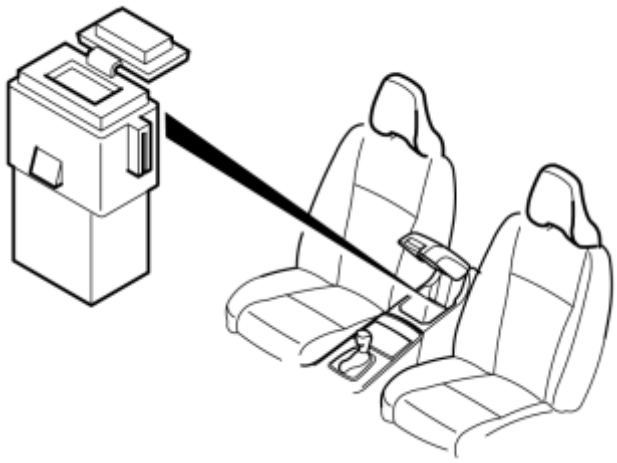

Fig. 131: Identifying USB Connection
Courtesy of VOLVO CARS CORPORATION

Substitute Value

- None.

Possible Source

- The voltage feed cable is short-circuited to voltage.

Fault symptom[s]

- USB unit/Does not work

SIGNAL TOO HIGH

CHECKING THE COMPONENT AND WIRING

Fig. 132: Identifying Ignition In Off Position
Courtesy of VOLVO CARS CORPORATION

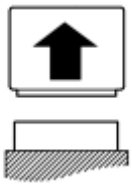

Fig. 133: Identifying Microphone Connectors
Courtesy of VOLVO CARS CORPORATION

- Ignition off.
- Unplug the connector for the USB-connection.

  Check the cable terminals. Check for contact resistance, loose connections and oxidation.

  Check the cable terminals in the female and male sections of the connector. The cable terminals must not be damaged or pressed back.

  Check the voltage supply cables between the Integrated Audio Module (IAM) #D1 and the USB connection #1 with regard to short-circuit to voltage.

  Remedy as necessary.

  Other information

  - see **CHECKING WIRING AND TERMINALS**
  - see **SIGNAL SPECIFICATION**

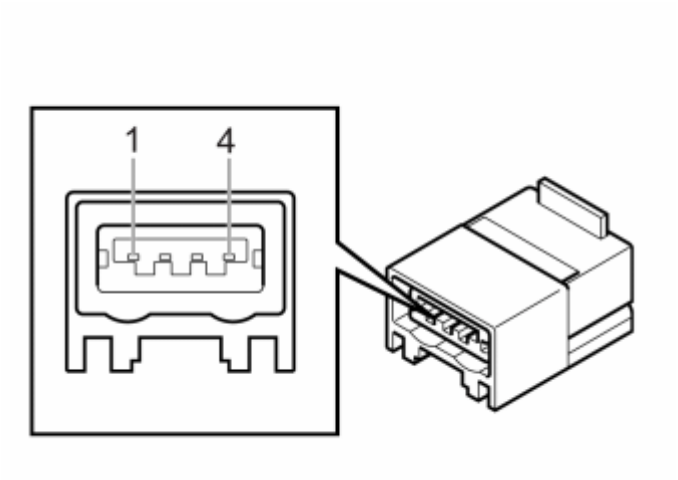

Fig. 134: Identifying 4-Pin Connector
Courtesy of VOLVO CARS CORPORATION

- **Continue**

  See: **VERIFICATION**

INFORMATION

FAULT-TRACING INFORMATION

The fault should have been detected and remedied. As this is not the case fault-tracing has failed.

Exit fault-tracing for this diagnostic trouble code (DTC) or make another attempt.

VERIFICATION

VERIFICATION

HINT: After carrying out the repair, check that the fault has been remedied.

Fig. 135: Checking Traffic Load On CAN Cables
Courtesy of VOLVO CARS CORPORATION

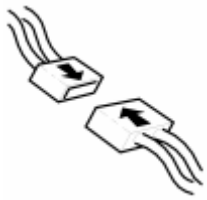

Fig. 136: Identifying Connector(s) Reinstallation
Courtesy of VOLVO CARS CORPORATION

- Ignition off.
- Reinstall the connectors, components etc.
- Ignition on.

  Connect a USB memory to the USB connection. Check that the USB connection works.

Does the USB connection work?

- **YES**

  VERIFIED: Troubleshooting has been completed.

- **NO**

  See: **INFORMATION**

IAM-9001: CONTROL MODULE. CONFIGURATION FAULT (2007-2012)

DIAGNOSTIC TROUBLE CODE (DTC) INFORMATION IAM-9001

Condition

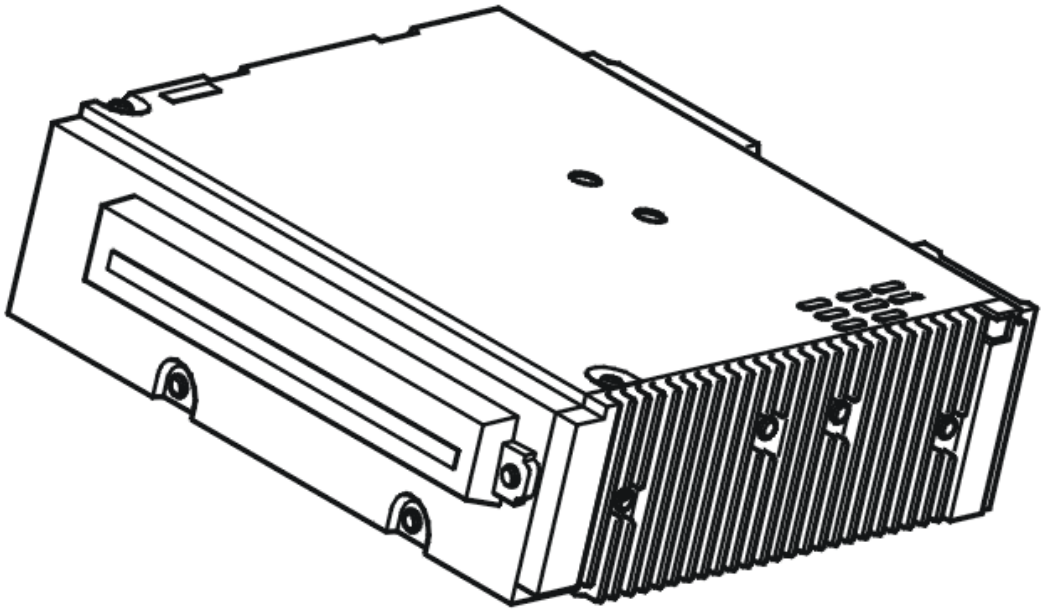

Fig. 137: Identifying Integrated Audio Module (IAM)
Courtesy of VOLVO CARS CORPORATION

If the Integrated Audio Module (IAM) registers a configuration error, then the Diagnostic Trouble Code (DTC) is generated.

The diagnostic trouble code can be diagnosed when the ignition is on.

Substitute Value

- Nothing.

Possible Source

- The control module is not configured.

Fault symptom[s]

- Audio system inoperative.

CONFIGURATION FAULT

CHECKING THE COMPONENT

The Integrated Audio Module (IAM) has registered a configuration error.

Try to reload the software in the Integrated Audio Module (IAM).

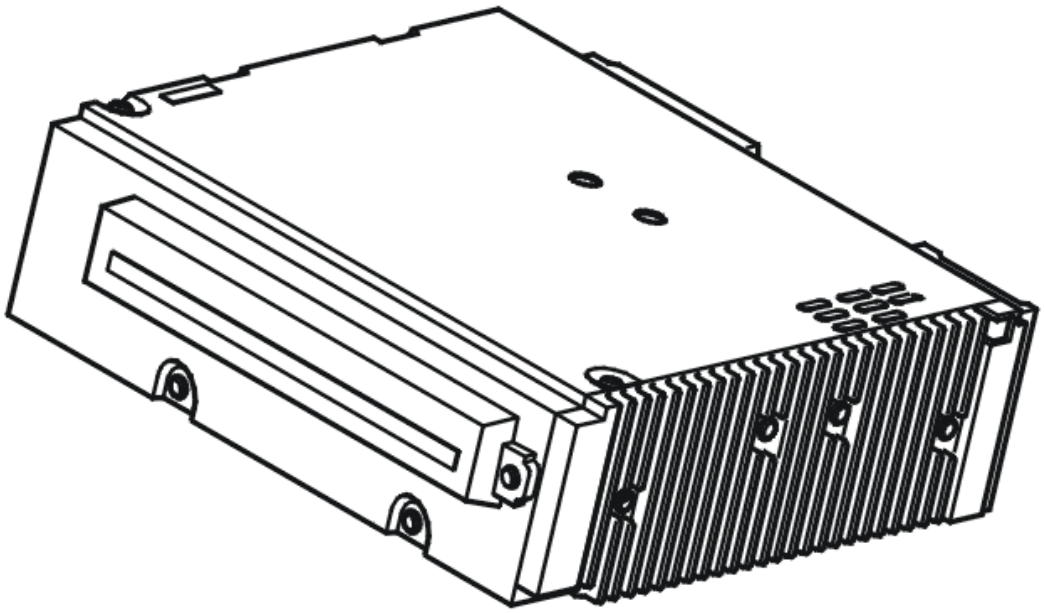

Fig. 138: Identifying Integrated Audio Module (IAM)
Courtesy of VOLVO CARS CORPORATION

- **Continue**

  See: **VERIFICATION**

VERIFICATION

VERIFICATION

HINT: After carrying out the repair, check that the fault has been remedied.

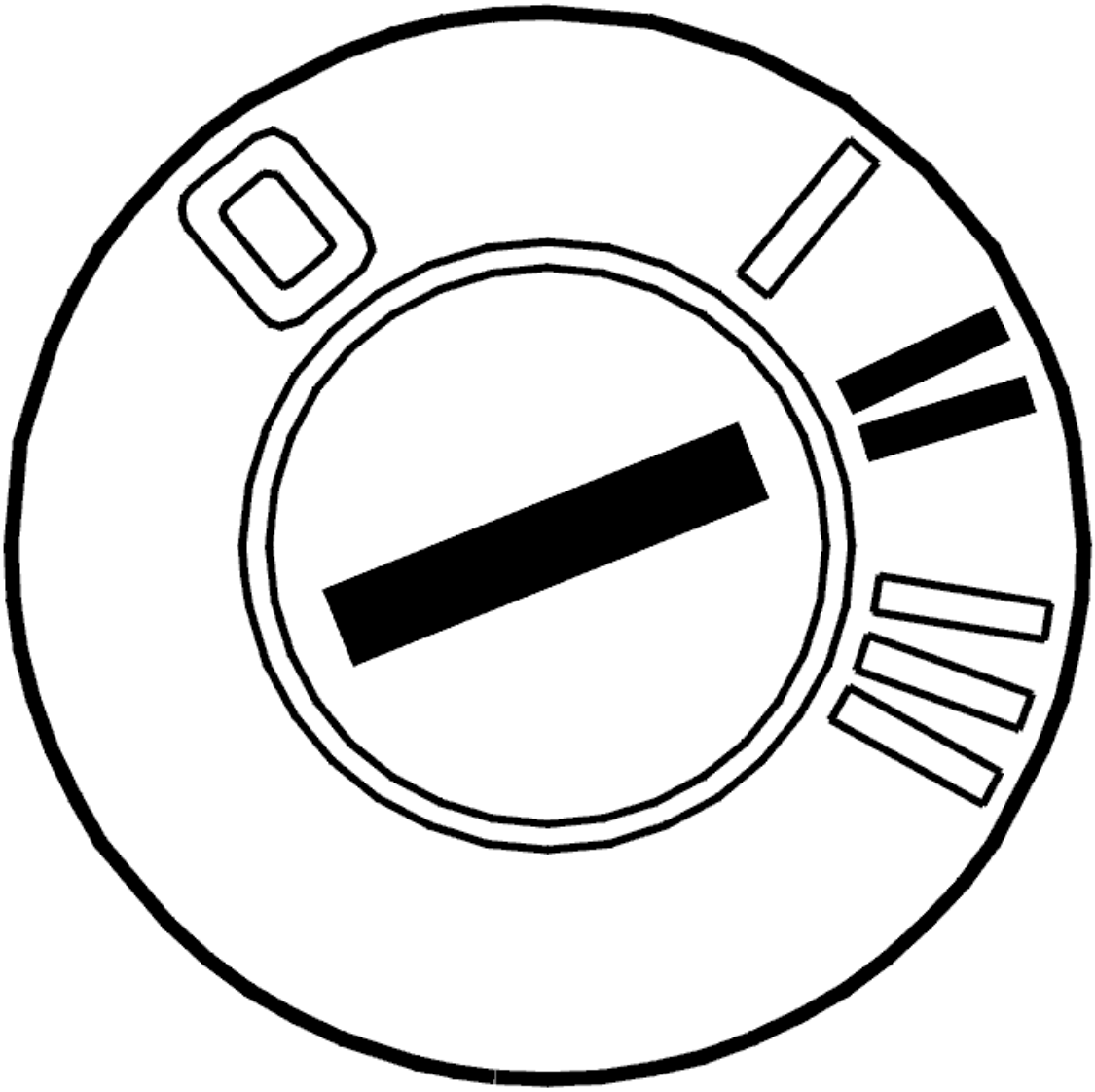

Fig. 139: Identifying Ignition ON
Courtesy of VOLVO CARS CORPORATION

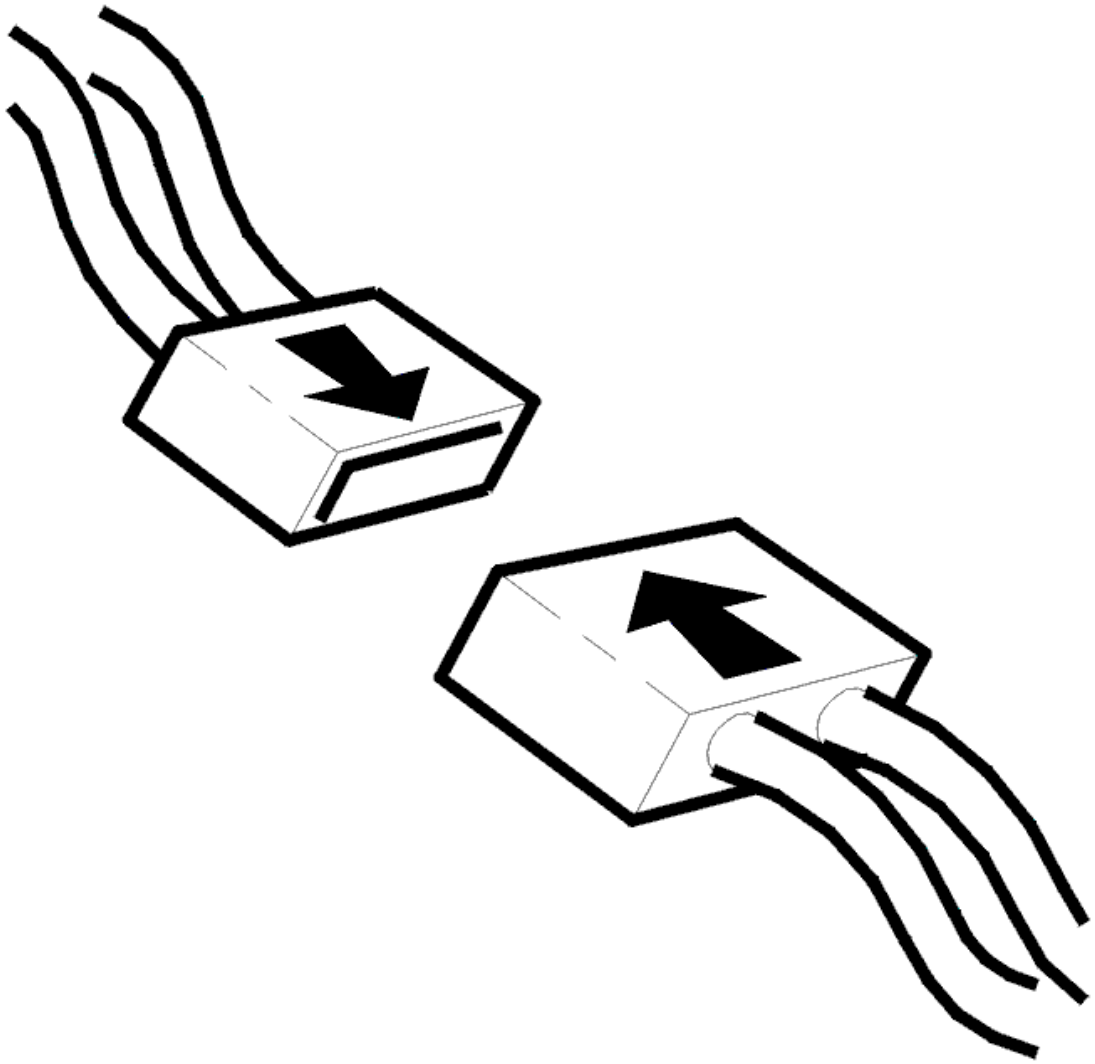

Fig. 140: Connecting Connector
Courtesy of VOLVO CARS CORPORATION

- Ignition off
- Reinstall the connectors, components etc.
- Ignition on

  Load a CD disc and check that the media player is working.

Is the media player working?

- **YES**

  VERIFIED: Troubleshooting has been completed.

- **NO**

  See: **INFORMATION**

INFORMATION

FAULT-TRACING INFORMATION

The fault should have been detected and remedied. As this is not the case fault-tracing has failed.

Exit fault-tracing for this diagnostic trouble code (DTC) or make another attempt.

IAM-9002: CONTROL MODULE. OVERHEATED (2007-2012)

DIAGNOSTIC TROUBLE CODE (DTC) INFORMATION IAM-9002

Condition

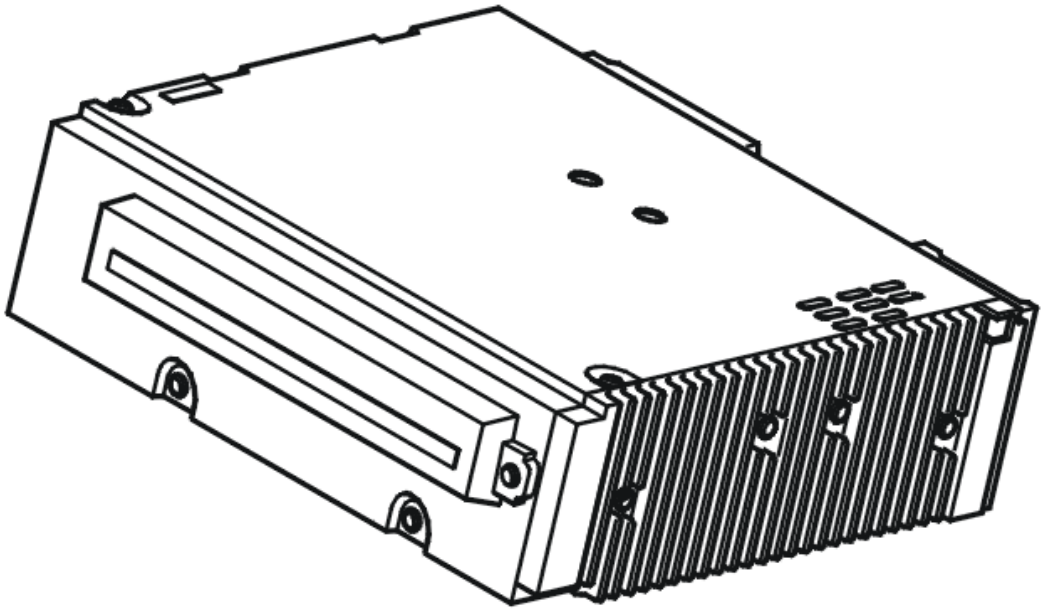

Fig. 141: Identifying Integrated Audio Module (IAM)
Courtesy of VOLVO CARS CORPORATION

If the Integrated Audio Module (IAM) registers internal overheating in the control module, then the Diagnostic Trouble Code (DTC) is generated.

The diagnostic trouble code can be diagnosed when the ignition is on.

Substitute Value

- Nothing.

Possible Source

- Ambient temperature too high.
- Power consumption in control module too high.

Fault symptom[s]

- Audio system inoperative.

OVER HEATED

REPLACING THE COMPONENT

The Integrated Audio Module (IAM) has registered internal overheating in the control module.

If the fault is intermittent then this means that the fault has been registered earlier but is no longer present. Intermittent faults can be due to interference when starting up or can be another type of fault which can return on different occasions. Evaluation of the fault is made from case to case. If the fault returns, replace the Integrated Audio Module (IAM).

In the case of a permanent fault, change the integrated audio module (IAM).

Remedy as necessary.

Other information

- see **CONTROL MODULE GENERAL SOUND PLAYER**

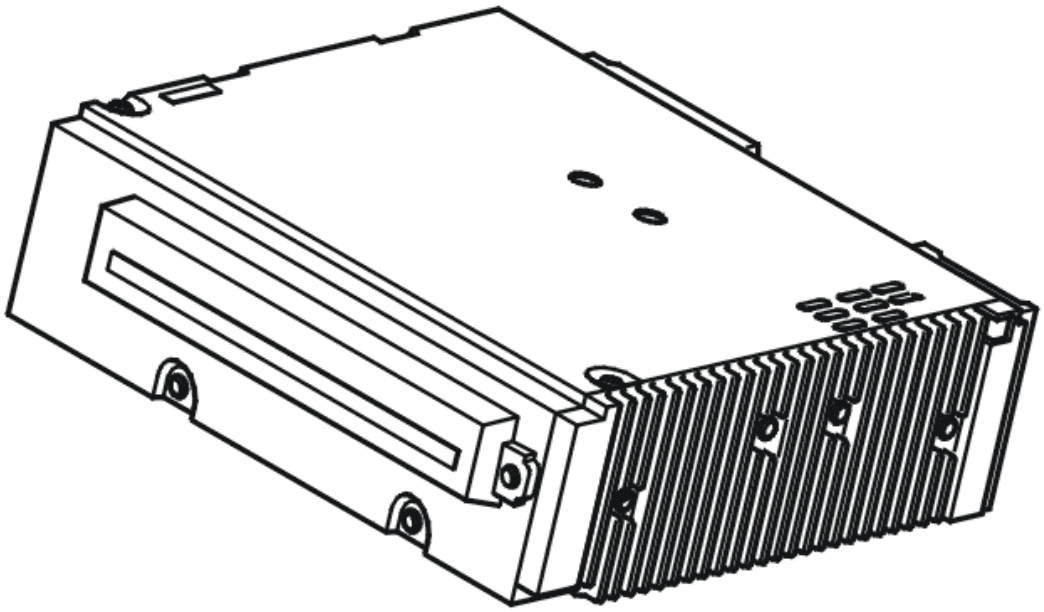

Fig. 142: Identifying Integrated Audio Module (IAM)
Courtesy of VOLVO CARS CORPORATION

- **Continue**

  See: **VERIFICATION**

VERIFICATION

VERIFICATION

HINT: After carrying out the repair, check that the fault has been remedied.

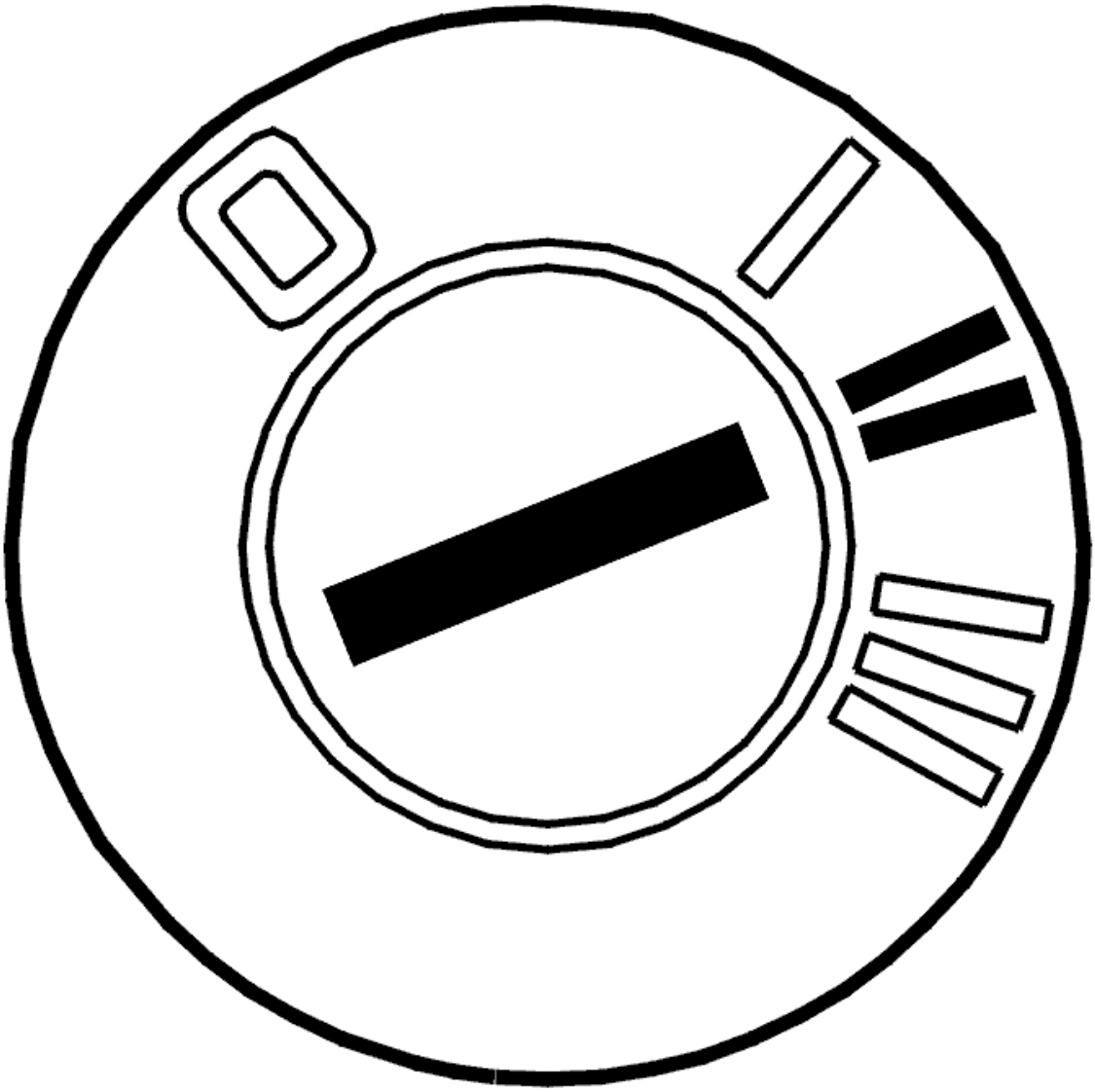

Fig. 143: Identifying Ignition ON
Courtesy of VOLVO CARS CORPORATION

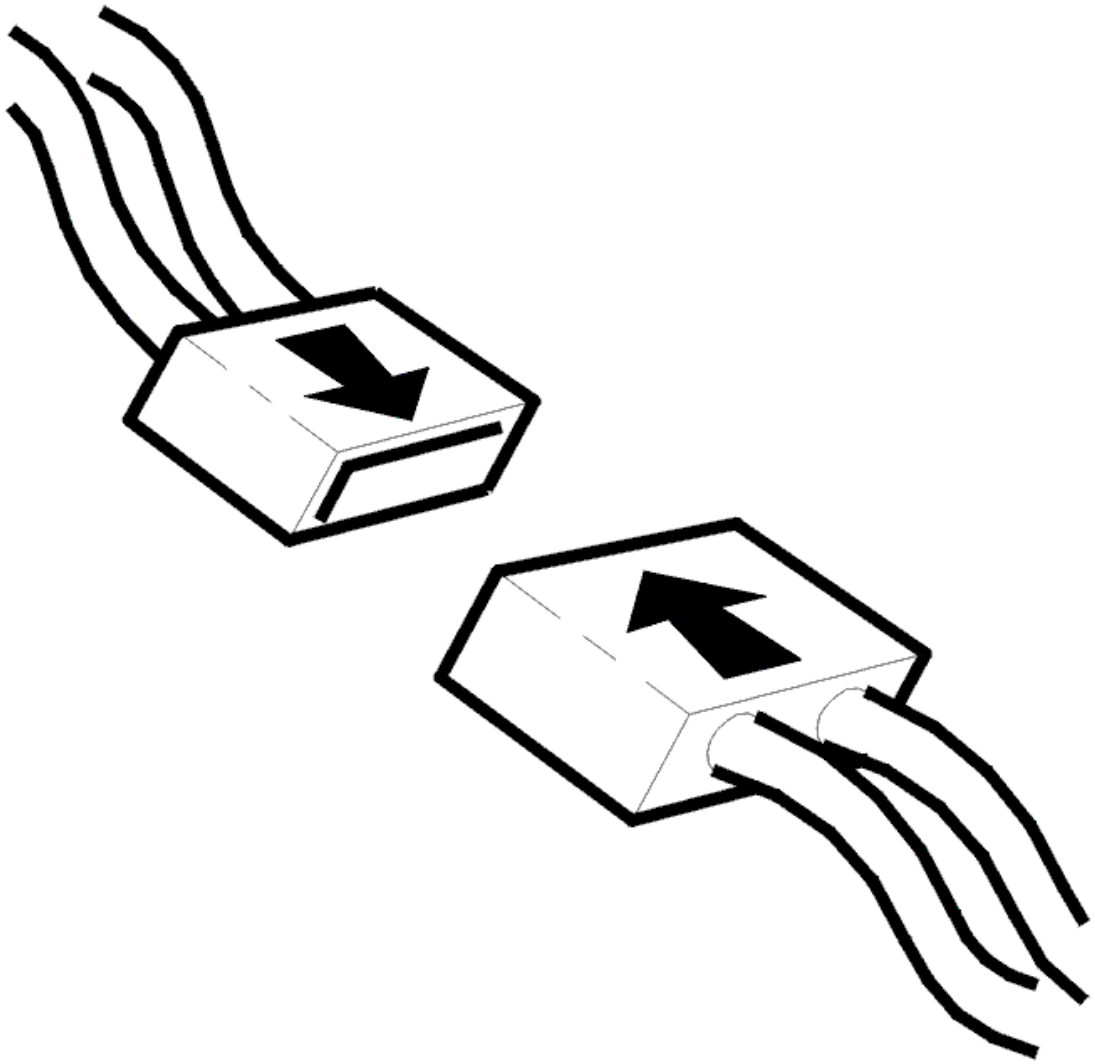

Fig. 144: Connecting Connector
Courtesy of VOLVO CARS CORPORATION

- Ignition off
- Reinstall the connectors, components etc.
- Ignition on

  Load a CD disc and check that the media player is working.

Is the media player working?

- **YES**

  VERIFIED: Troubleshooting has been completed.

- **NO**

  See: **INFORMATION**

INFORMATION

FAULT-TRACING INFORMATION

The fault should have been detected and remedied. As this is not the case fault-tracing has failed.

Exit fault-tracing for this diagnostic trouble code (DTC) or make another attempt.

IAM-XXXX: UNSPECIFIED DIAGNOSTIC TROUBLE CODE (DTC) FOR CURRENT CONTROL MODULE VERSION (2007-2012)

UNKNOWN DIAGNOSTIC TROUBLE CODE (DTC) FOR THE CURRENT CONTROL MODULE VERSION

READING OFF DIAGNOSTIC TROUBLE CODES (DTC)

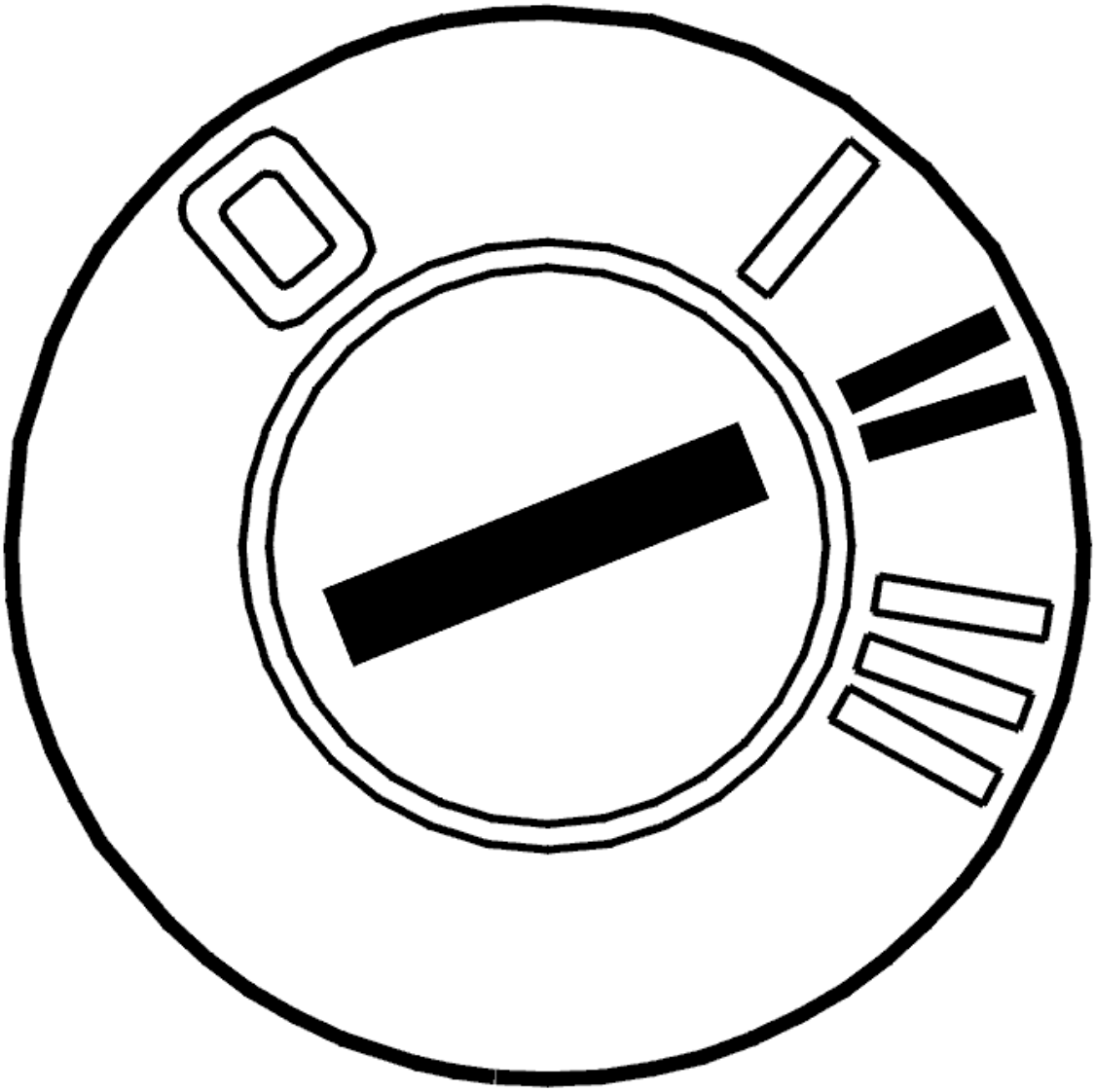

Fig. 145: Identifying Ignition ON
Courtesy of VOLVO CARS CORPORATION

- Ignition on

  Read the diagnostic trouble codes (DTCs) stored in the vehicle.

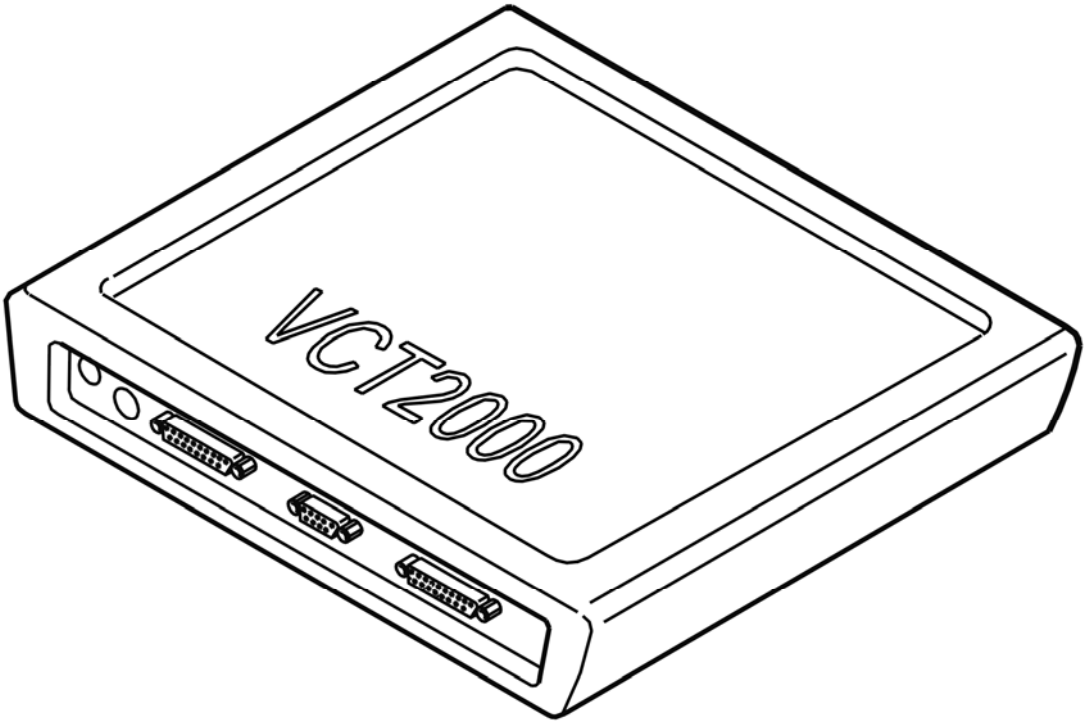

Fig. 146: Identifying VCT2000 Diagnostic Tool Symbol In VIDA
Courtesy of VOLVO CARS CORPORATION

ICM-1A02: CONTROL MODULE. FAULTY VOLTAGE (2003-2012)

DIAGNOSTIC TROUBLE CODE (DTC) INFORMATION ICM-1A02

Condition

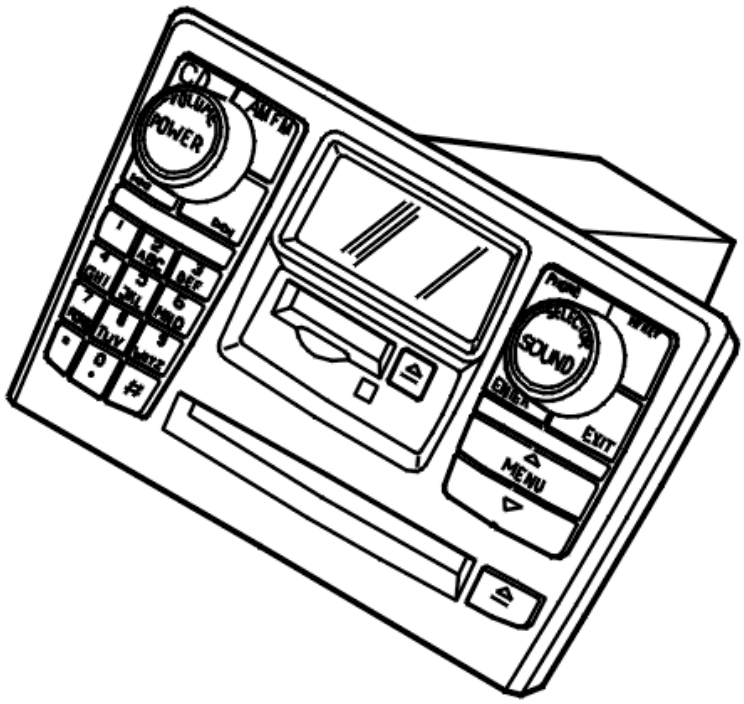

Fig. 147: Identifying Infotainment Control Module (ICM)
Courtesy of VOLVO CARS CORPORATION

The infotainment control module (ICM) checks the 5 volt supply in the control module.

Diagnostic trouble code (DTC) ICM-1A02 is stored if the infotainment control module (ICM) registers that the 5 volt supply is higher than 5.5 V or lower than 4.5 V.

Diagnostic trouble code (DTC) ICM-1A02 can be detected when the ignition is in position I or II for at least 10 seconds and the battery voltage is > 9 V.

Substitute Value

- None.

Possible Source

- Defective control module.

Fault symptom[s]

- Audio unit not operating.

FAULTY VOLTAGE

CHECKING THE COMPONENT

The infotainment control module (ICM) has registered a fault in the internal voltage in the control module.

If the fault is intermittent, it has been registered previously but is no longer present. Intermittent faults can occur for a number of different reasons. The fault is evaluated depending on how it occurs.

- Download the latest software to the Infotainment control module (ICM).
- Check that the control module works.
- If the control module does not work, replace control module.

Other information:

- To replace the infotainment control module (ICM), see **INFOTAINMENT CONTROL MODULE (ICM), REPLACING** .

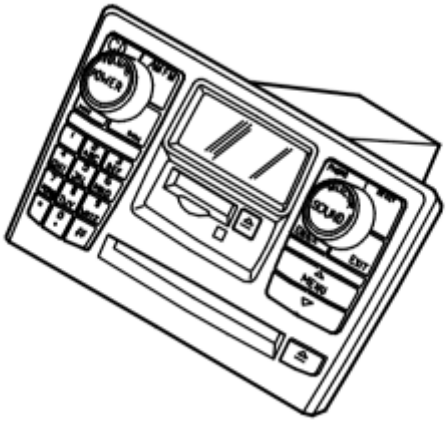

Fig. 148: Identifying Infotainment Control Module (ICM)
Courtesy of VOLVO CARS CORPORATION

- **Continue**

  See: **VERIFICATION**

VERIFICATION

VERIFICATION

HINT: After carrying out the repair, check that the fault has been remedied.

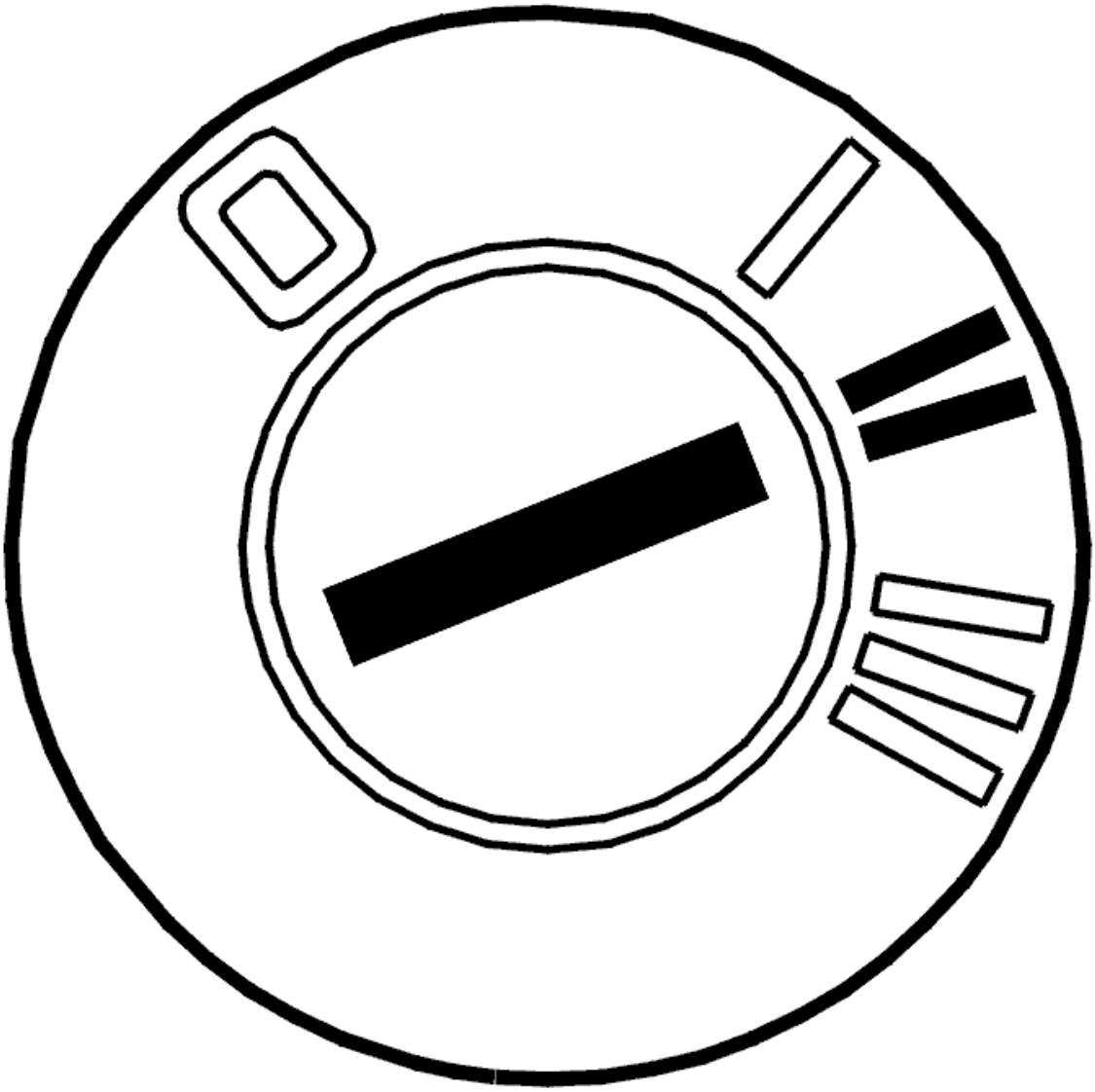

Fig. 149: Identifying Ignition ON
Courtesy of VOLVO CARS CORPORATION

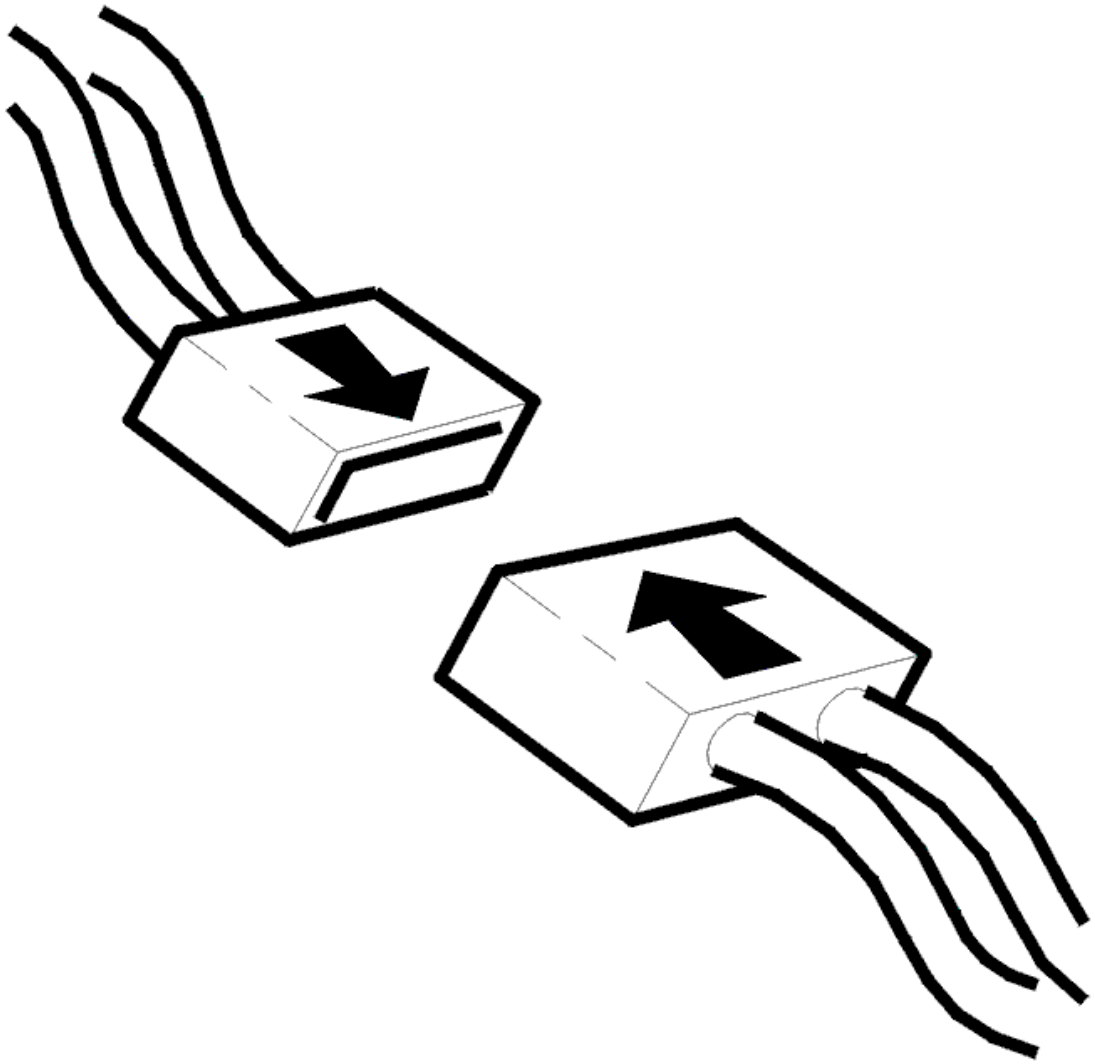

Fig. 150: Connecting Connector
Courtesy of VOLVO CARS CORPORATION

- Ignition off
- Reinstall the connectors, components etc.
- Ignition on.

  Activate the infotainment unit by pressing the POWER button.

  Check that the sound source can be selected and that playback is working.

Is playback working?

- **YES**

VERIFIED: Troubleshooting has been completed.

- **NO**

  See: **INFORMATION**

INFORMATION

FAULT-TRACING INFORMATION

The fault should have been detected and remedied. As this is not the case fault-tracing has failed.

Exit fault-tracing for this diagnostic trouble code (DTC) or make another attempt.

ICM-1A03: CONTROL MODULE. FAULTY VOLTAGE (2003-2006)

DIAGNOSTIC TROUBLE CODE (DTC) INFORMATION ICM-1A03

Condition

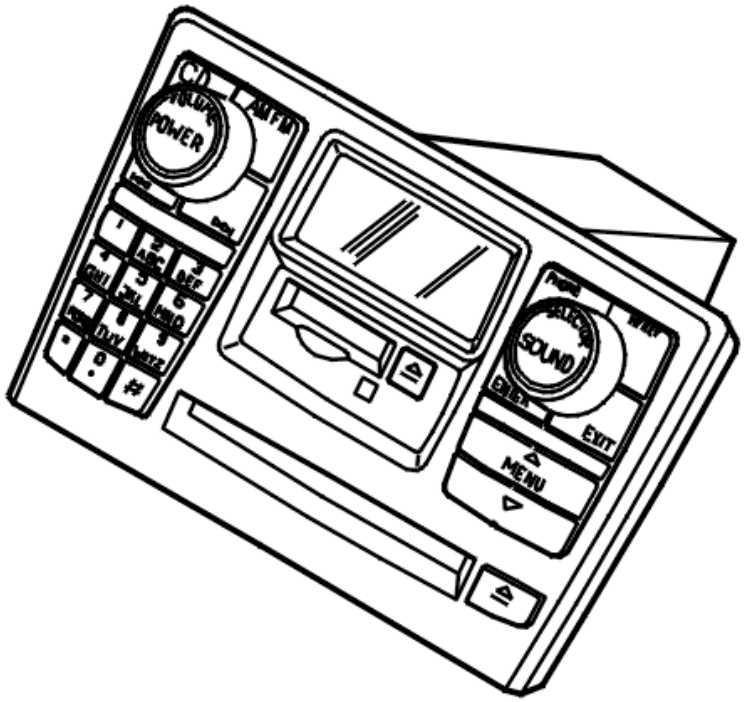

Fig. 151: Identifying Infotainment Control Module (ICM)
Courtesy of VOLVO CARS CORPORATION

The infotainment control module (ICM) checks the 3.3 volt supply in the control module.

Diagnostic trouble code (DTC) ICM-1A03 is stored if the infotainment control module (ICM) registers that the 3.3 volt supply is higher than 3.5 V or lower than 2.9 V.

Diagnostic trouble code (DTC) ICM-1A03 can be detected when the ignition is in position I or II for at least 10 seconds and the battery voltage is > 9 V.

Substitute Value

- None.

Possible Source

- Defective control module.

Fault symptom[s]

- Audio unit not operating.

FAULTY VOLTAGE

CHECKING THE COMPONENT

The infotainment control module (ICM) has registered an internal voltage fault in the control module.

If the fault is intermittent, it has been registered previously but is no longer present. Intermittent faults can occur for a number of different reasons. The fault is evaluated depending on how it occurs.

Check the voltage in the infotainment control module (ICM) by clicking on the VCT2000 symbol.

Replace the infotainment control module (ICM) if the voltage is not with the range of 2.9 -3.5 V.

Remedy as necessary.

Other information:

- To replace the infotainment control module (ICM), see **INFOTAINMENT CONTROL MODULE (ICM), REPLACING** .

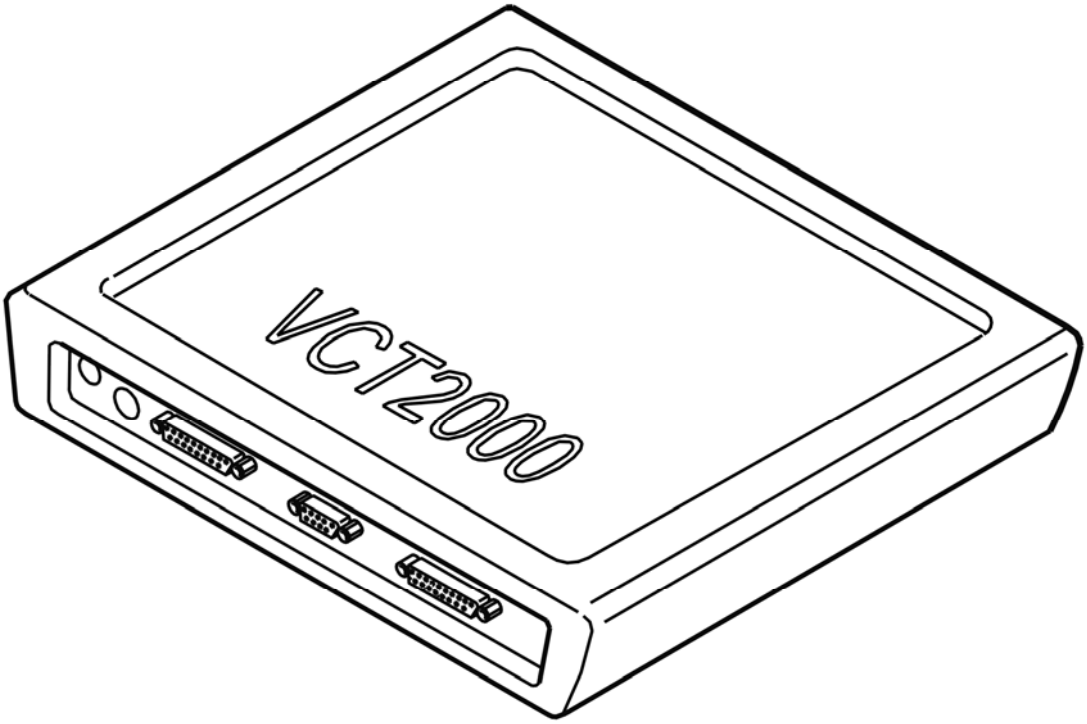

Fig. 152: Identifying VCT2000 Diagnostic Tool Symbol In VIDA
Courtesy of VOLVO CARS CORPORATION

- **Continue**

  See: **VERIFICATION**

VERIFICATION

VERIFICATION

HINT: After carrying out the repair, check that the fault has been remedied.

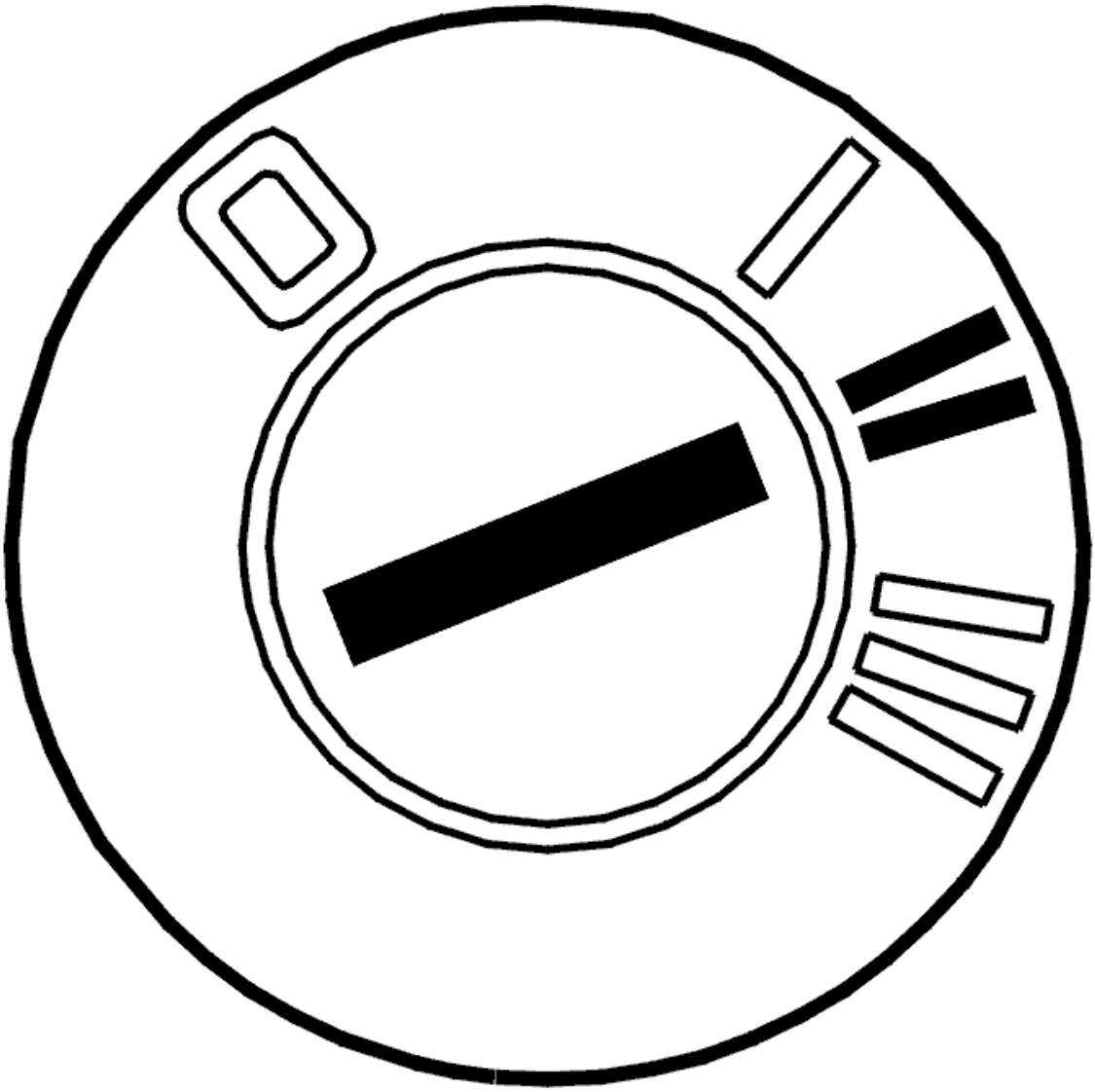

Fig. 153: Identifying Ignition ON
Courtesy of VOLVO CARS CORPORATION

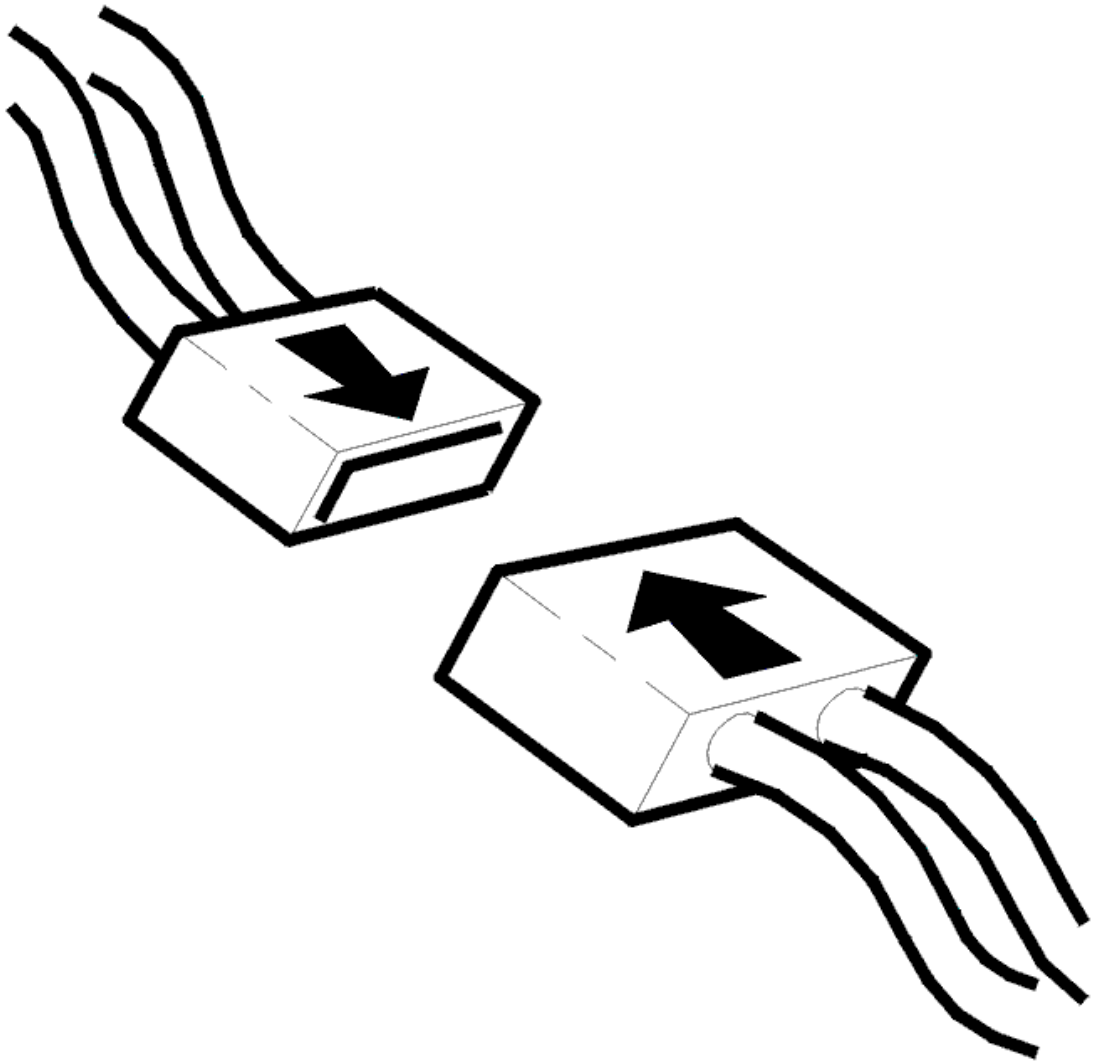

Fig. 154: Connecting Connector
Courtesy of VOLVO CARS CORPORATION

- Ignition off
- Reinstall the connectors, components etc.
- Ignition on.

  Activate the infotainment unit by pressing the POWER button.

  Check that the sound source can be selected and that playback is working.

Is playback working?

- **YES**

VERIFIED: Troubleshooting has been completed.

- **NO**

  See: **INFORMATION**

INFORMATION

FAULT-TRACING INFORMATION

The fault should have been detected and remedied. As this is not the case fault-tracing has failed.

Exit fault-tracing for this diagnostic trouble code (DTC) or make another attempt.

ICM-1A05: CONTROL MODULE. FAULTY VOLTAGE (2003-2006)

DIAGNOSTIC TROUBLE CODE (DTC) INFORMATION ICM-1A05

Condition

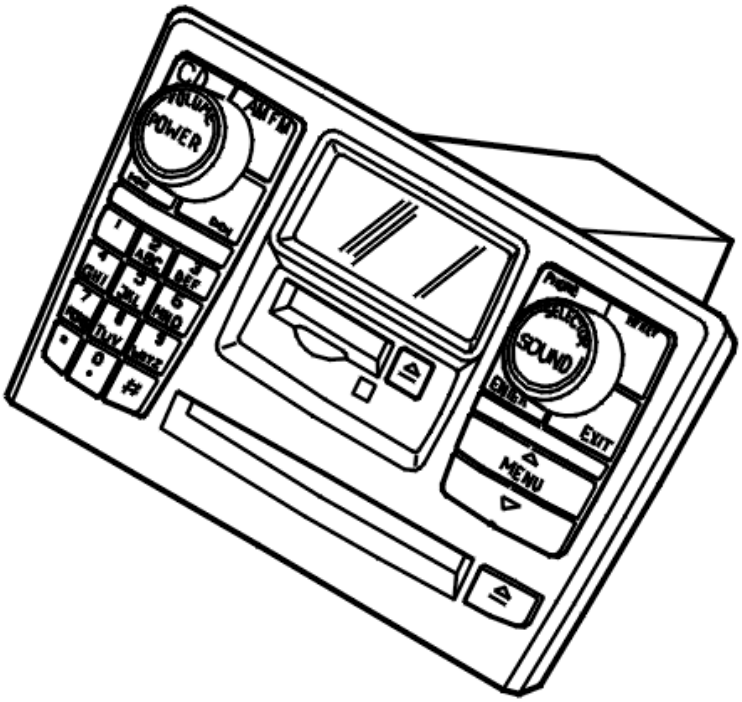

Fig. 155: Identifying Infotainment Control Module (ICM)
Courtesy of VOLVO CARS CORPORATION

The infotainment control module (ICM) checks the voltage to the display screen.

Diagnostic trouble code (DTC) ICM-1A05 is stored if the infotainment control module (ICM) registers that the voltage supply to the display is higher than 80 V or lower than 40 V.

Diagnostic trouble code (DTC) ICM-1A05 can be detected when the ignition is in position I or II for at least 10 seconds, the battery voltage is > 9 V and the display is activated

Substitute Value

- None.

Possible Source

- Defective control module.

Fault symptom[s]

- Display does not light.

FAULTY VOLTAGE

CHECKING THE COMPONENT

The infotainment control module (ICM) has registered a fault in the voltage for the display.

If the fault is intermittent, it has been registered previously but is no longer present. Intermittent faults can occur for a number of different reasons. The fault is evaluated depending on how it occurs.

Check the voltage for the display by clicking on the VCT2000 symbol.

Replace the infotainment control module (ICM) if the voltage is not with the range of 40 - 80 V.

Remedy as necessary.

Other information:

- To replace the infotainment control module (ICM), see **INFOTAINMENT CONTROL MODULE (ICM), REPLACING** .

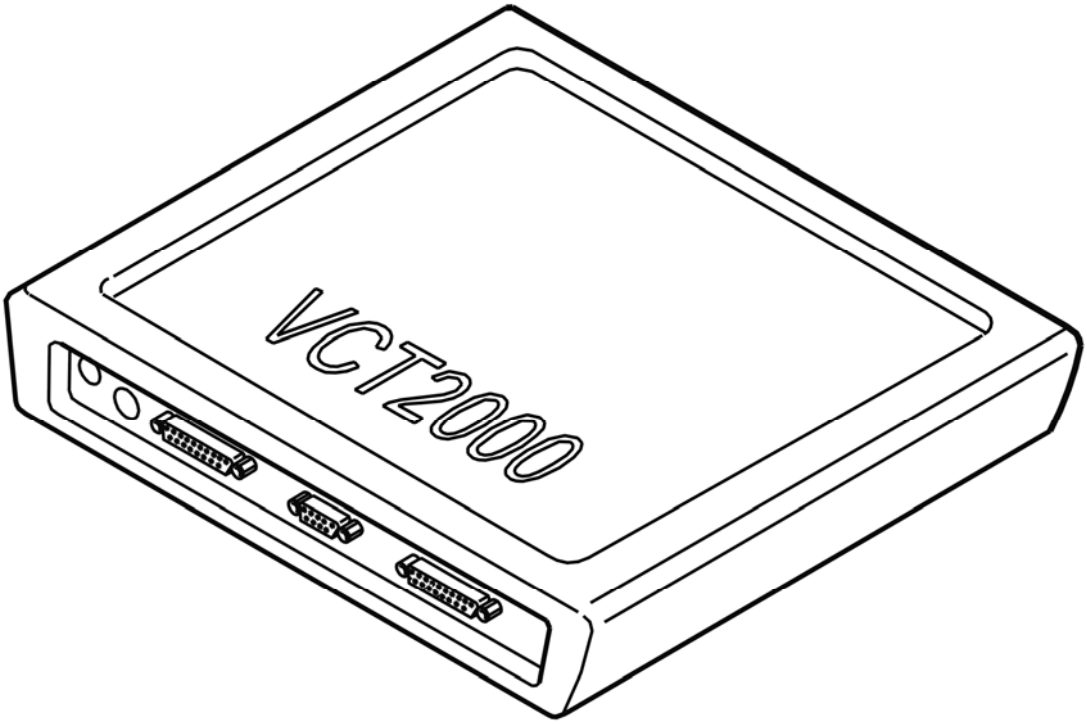

Fig. 156: Identifying VCT2000 Diagnostic Tool Symbol In VIDA
Courtesy of VOLVO CARS CORPORATION

- **Continue**

  See: **VERIFICATION**

VERIFICATION

VERIFICATION

HINT: After carrying out the repair, check that the fault has been remedied.

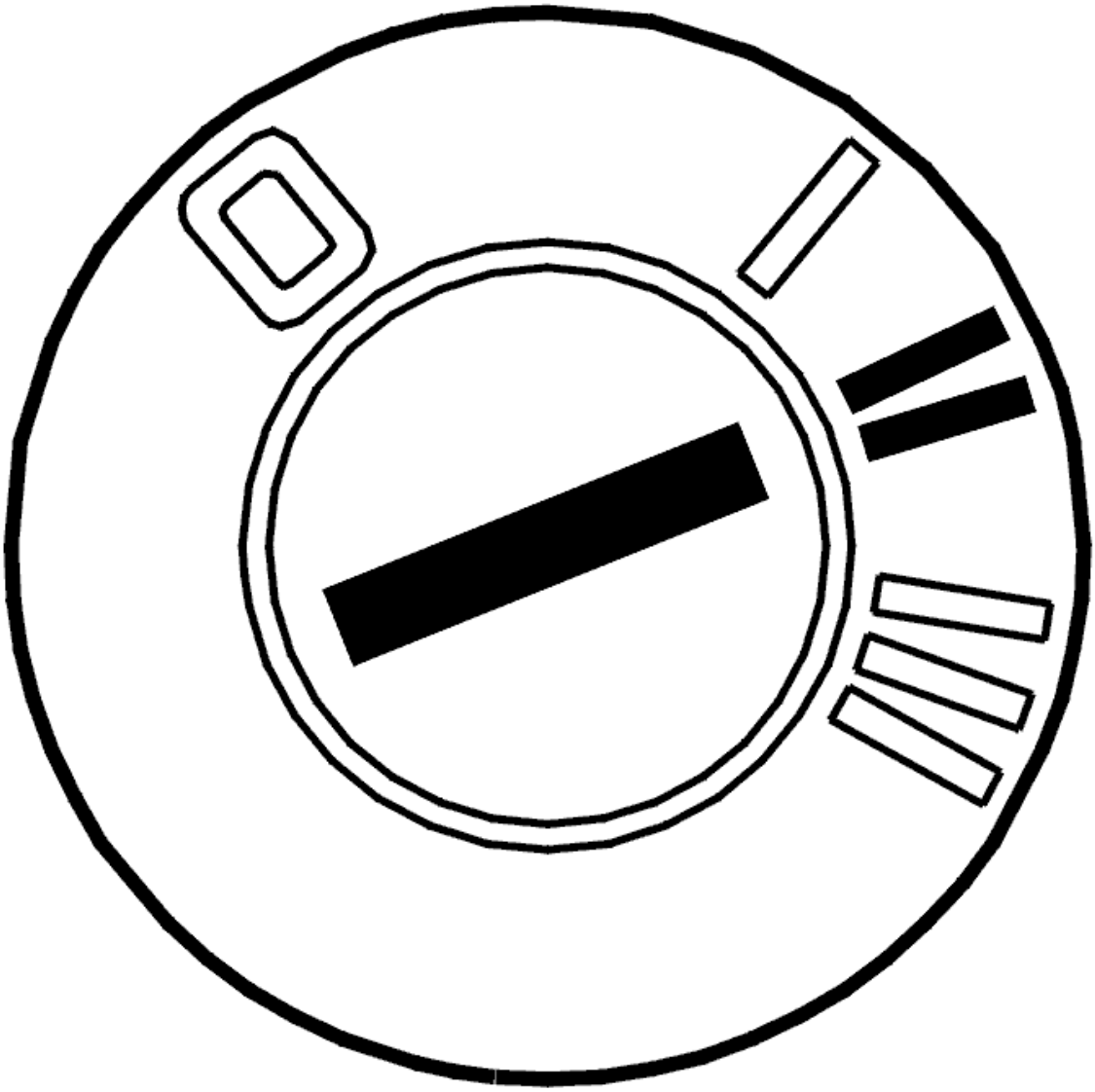

Fig. 157: Identifying Ignition ON
Courtesy of VOLVO CARS CORPORATION

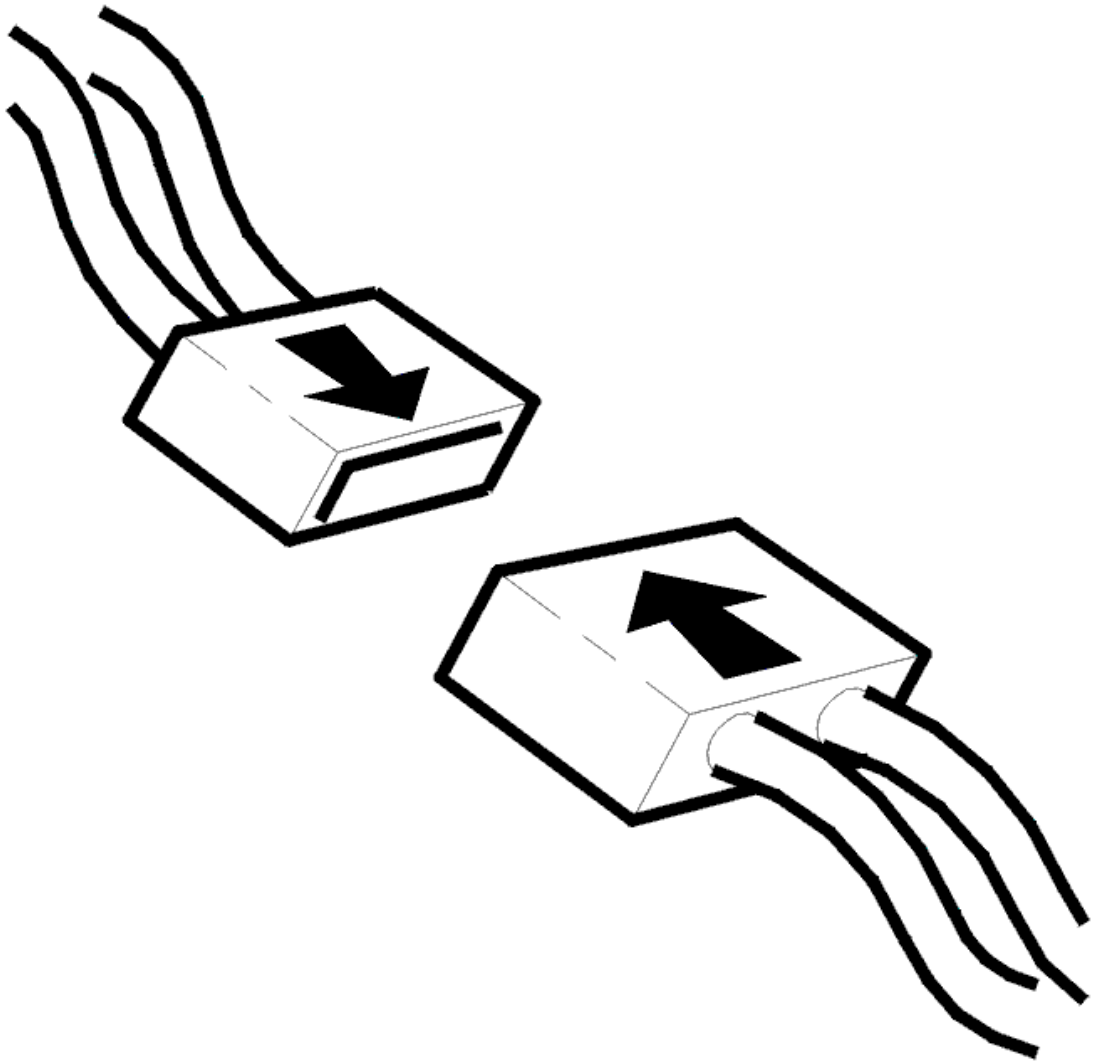

Fig. 158: Connecting Connector
Courtesy of VOLVO CARS CORPORATION

- Ignition off
- Reinstall the connectors, components etc.
- Ignition on.

  Activate the infotainment unit by pressing the POWER button.

  Check that the display lights.

Does the display light?

- **YES**

VERIFIED: Troubleshooting has been completed.

- **NO**

  See: **INFORMATION**

INFORMATION

FAULT-TRACING INFORMATION

The fault should have been detected and remedied. As this is not the case fault-tracing has failed.

Exit fault-tracing for this diagnostic trouble code (DTC) or make another attempt.

ICM-1A51: COMMUNICATION WITH THE AUDIO MODULE (AUD). SIGNAL MISSING (2003-2012)

DIAGNOSTIC TROUBLE CODE (DTC) INFORMATION ICM-1A51

Condition

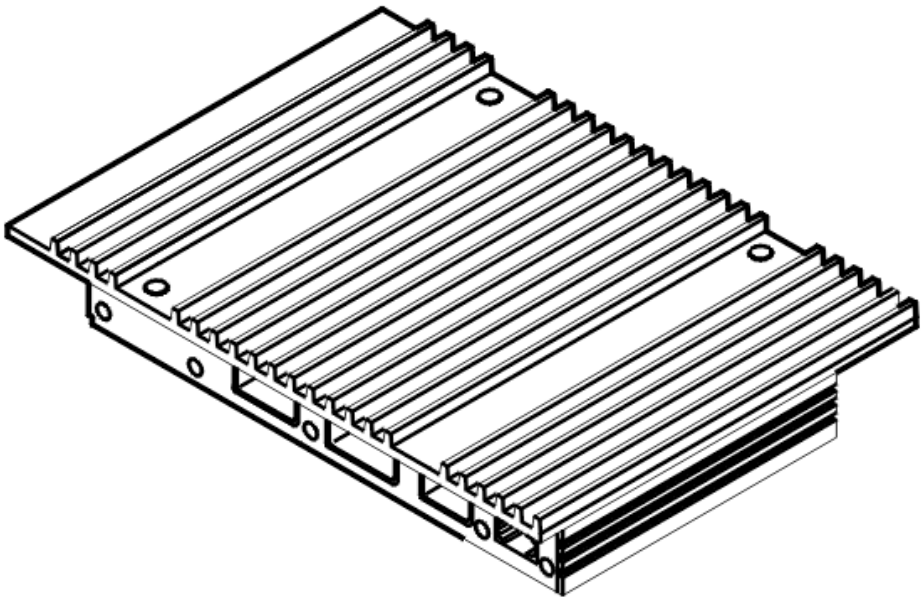

Fig. 159: Identifying Audio Control Module
Courtesy of VOLVO CARS CORPORATION

The infotainment control module (ICM) checks the communication with the audio module (AUD).

Diagnostic trouble code (DTC) ICM-1A51 is stored in the infotainment control module (ICM) if it registers a fault in the communication with the audio module (AUD).

Diagnostic trouble code (DTC) ICM-1A51 can be detected when the ignition is on for at least 20 seconds and the battery voltage is > 11 V.

Substitute Value

- None.

Possible Source

- Internal fault in the audio module (AUD)
- No Audio module (AUD).

Fault symptom[s]

- Audio unit not operating.

SIGNAL MISSING

CHECKING THE COMPONENT

The infotainment control module (ICM) has registered that there is no communication with the audio module (AUD).

If the fault is intermittent, it has been registered previously but is no longer present. Intermittent faults can be caused by interference at start up of the audio module (AUD) or may be a different type of fault which occurs on different occasions. The fault is evaluated depending on how it occurs. If the fault recurs, replace the Audio module (AUD).

In the event of a permanent fault, replace the audio module (AUD).

Remedy as necessary.

Other information:

- To replace the audio module (AUD), see **AUDIO MODULE (AUD), REPLACING** .

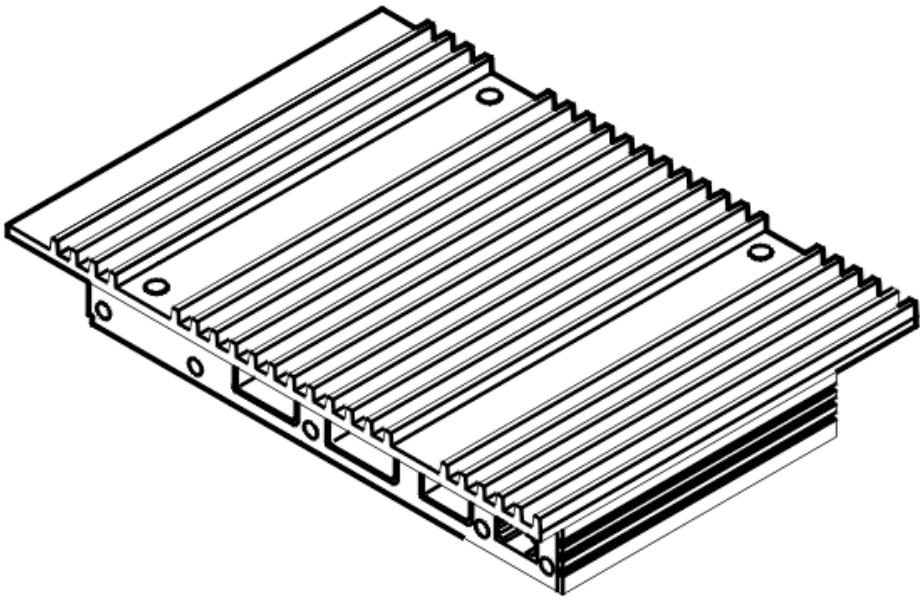

Fig. 160: Identifying Audio Control Module
Courtesy of VOLVO CARS CORPORATION

- **Continue**

  See: **VERIFICATION**

VERIFICATION

VERIFICATION

HINT: After carrying out the repair, check that the fault has been remedied.

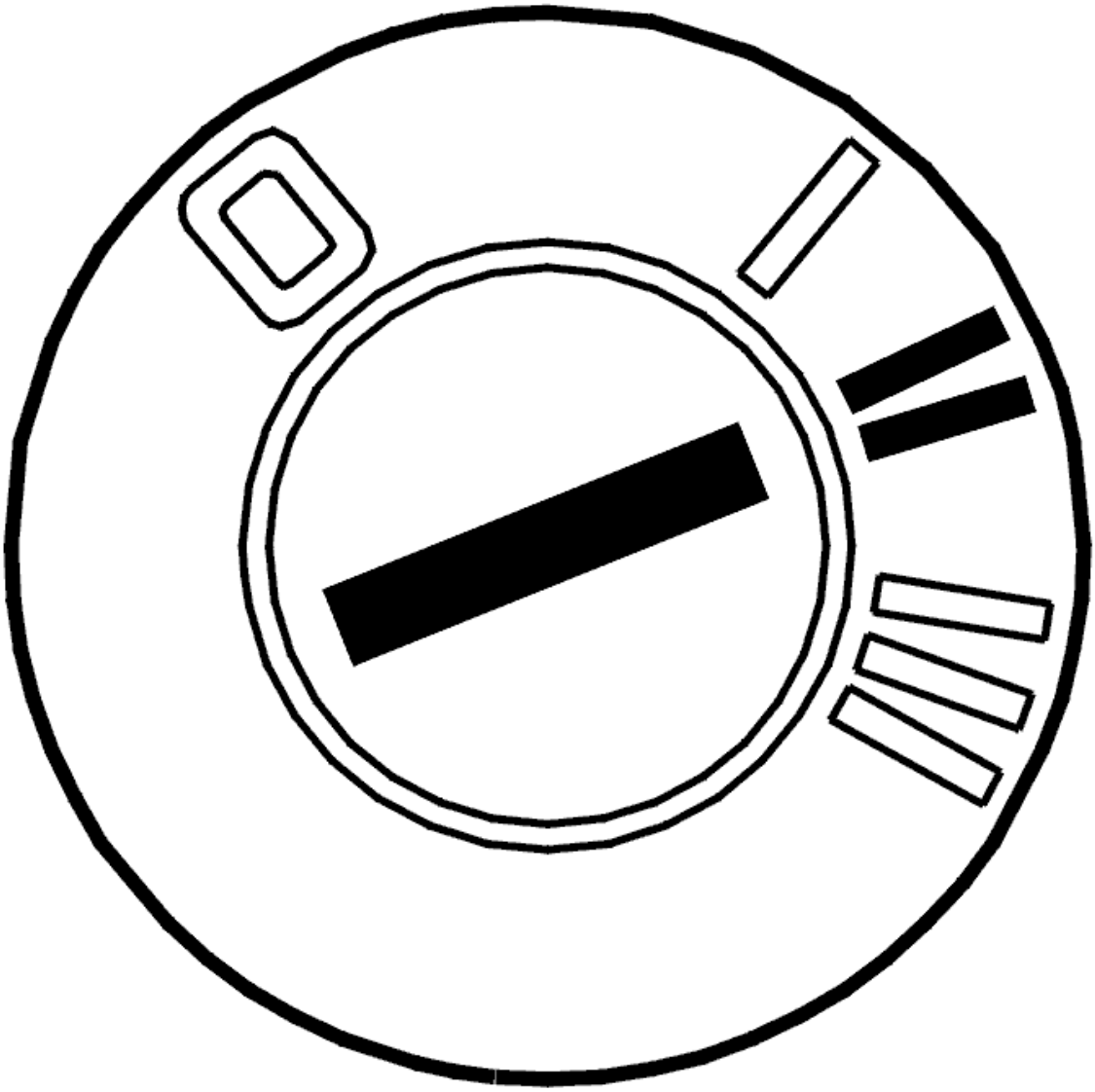

Fig. 161: Identifying Ignition ON
Courtesy of VOLVO CARS CORPORATION

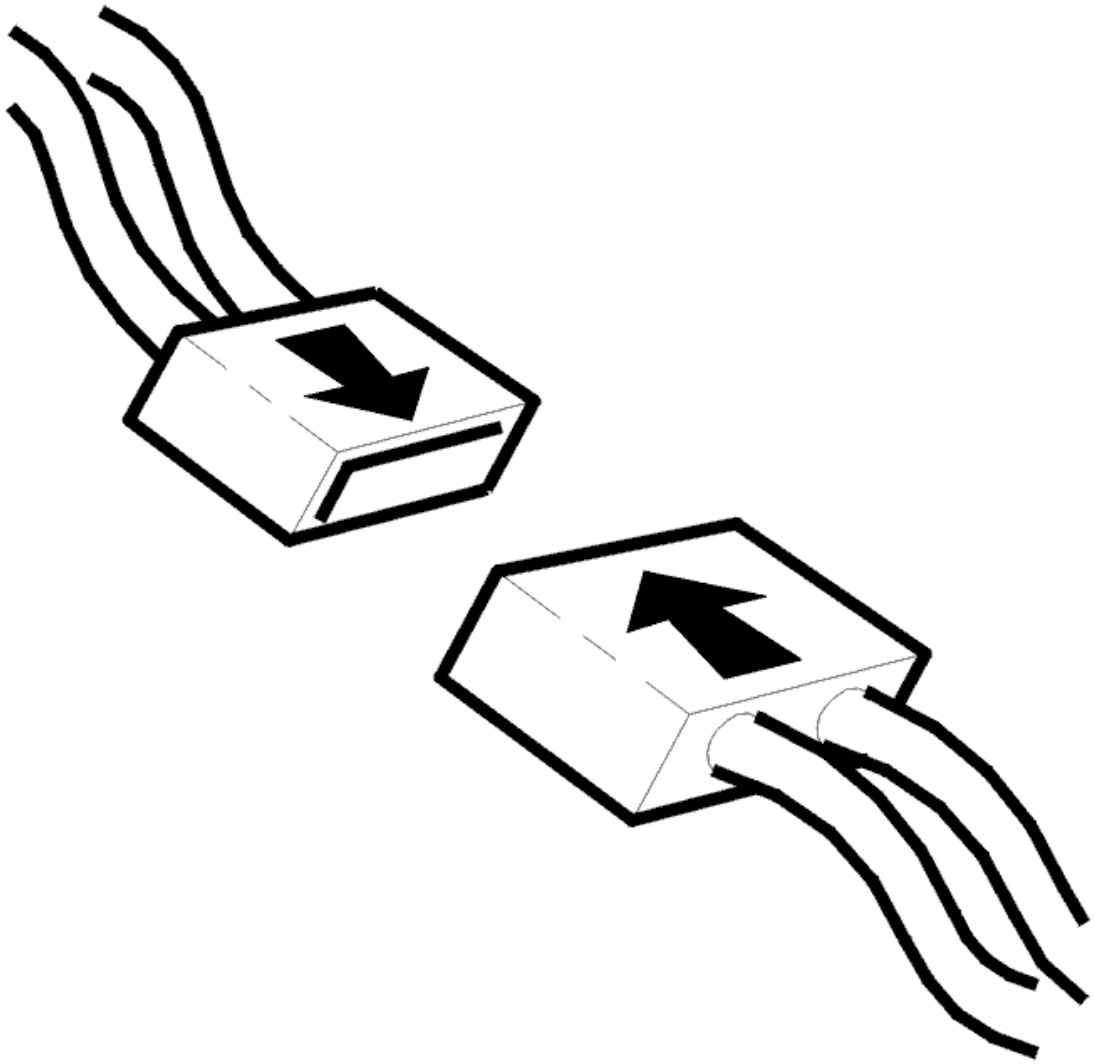

Fig. 162: Connecting Connector
Courtesy of VOLVO CARS CORPORATION

- Ignition off
- Reinstall the connectors, components etc.
- Ignition on for at least 12 seconds.

Read off the control module ID from the audio module (AUD) by clicking on the VCT2000 symbol.

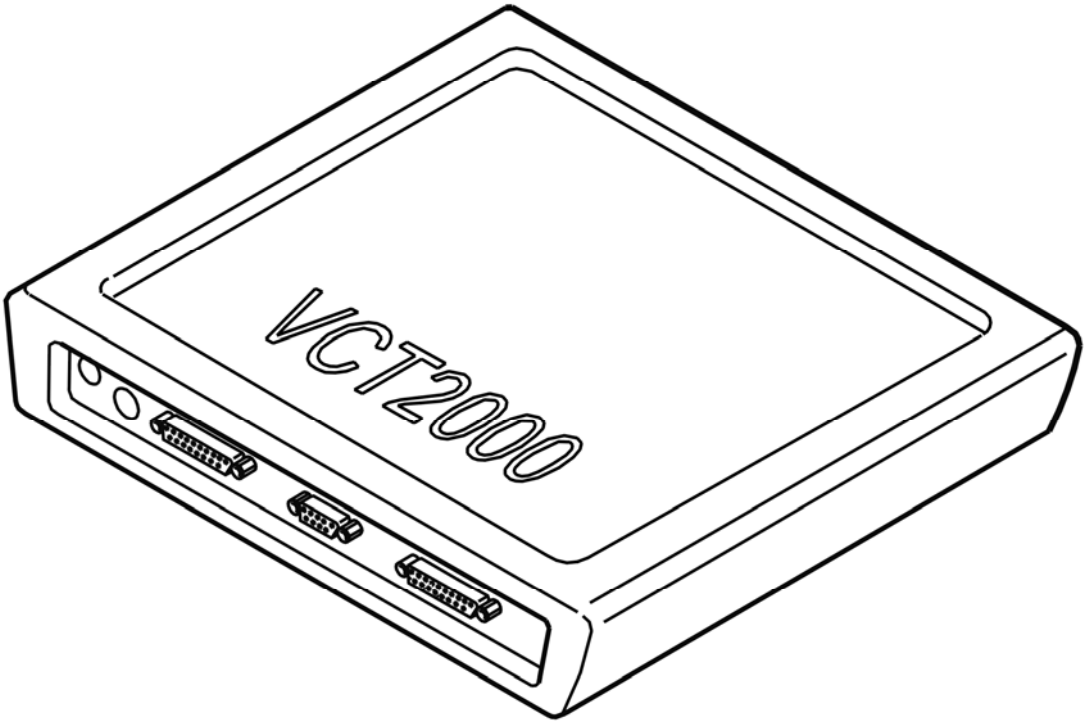

Fig. 163: Identifying VCT2000 Diagnostic Tool Symbol In VIDA
Courtesy of VOLVO CARS CORPORATION

Can the control module ID be read off?

- **YES**

  VERIFIED: Troubleshooting has been completed.

- **NO**

  See: **INFORMATION**

INFORMATION

FAULT-TRACING INFORMATION

The fault should have been detected and remedied. As this is not the case fault-tracing has failed.

Exit fault-tracing for this diagnostic trouble code (DTC) or make another attempt.

ICM-1A52: COMMUNICATION WITH THE ANTENNA MODULE (ATM). SIGNAL MISSING (2003-2006)

DIAGNOSTIC TROUBLE CODE (DTC) INFORMATION ICM-1A52

Condition

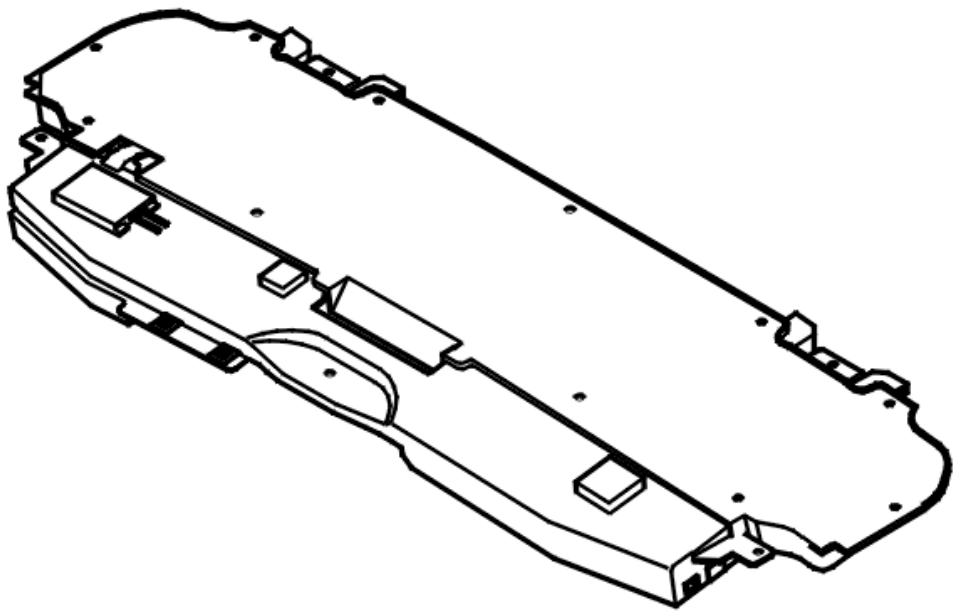

Fig. 164: Identifying Antenna Module (ATM)
Courtesy of VOLVO CARS CORPORATION

The infotainment control module (ICM) checks the communication with the antenna module (ATM).

Diagnostic trouble code (DTC) ICM-1A52 is stored in the infotainment control module (ICM) if it registers a fault in the communication with the antenna module (ATM).

Diagnostic trouble code (DTC) ICM-1A52 can be detected when the ignition is on for at least 20 seconds and the battery voltage is > 11 V.

Substitute Value

- None.

Possible Source

- Internal fault in the antenna module (ATM)
- No antenna module (ATM).

Fault symptom[s]

- The radio is not working.

SIGNAL MISSING

CHECKING THE COMPONENT

The infotainment control module (ICM) has registered that there is no communication with the antenna module (ATM).

If the fault is intermittent, it has been registered previously but is no longer present. Intermittent faults can be caused by interference at start up of the antenna module (ATM) or may be a different type of fault which occurs on different occasions. The fault is evaluated depending on how it occurs. If the fault recurs, replace the antenna module (ATM).

If the fault is permanent, replace the antenna module (ATM).

Remedy as necessary.

Other information:

- To replace the antenna module (ATM), see **RECEIVER AM/FM (ATM), REPLACING** .

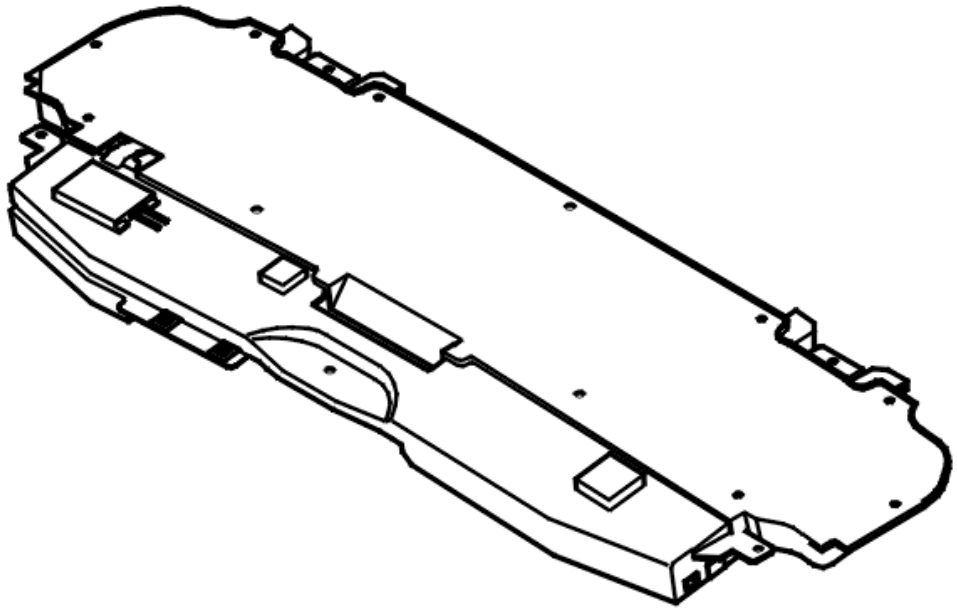

Fig. 165: Identifying Antenna Module (ATM)
Courtesy of VOLVO CARS CORPORATION

- **Continue**

  See: **VERIFICATION**

VERIFICATION

VERIFICATION

HINT: After carrying out the repair, check that the fault has been remedied.

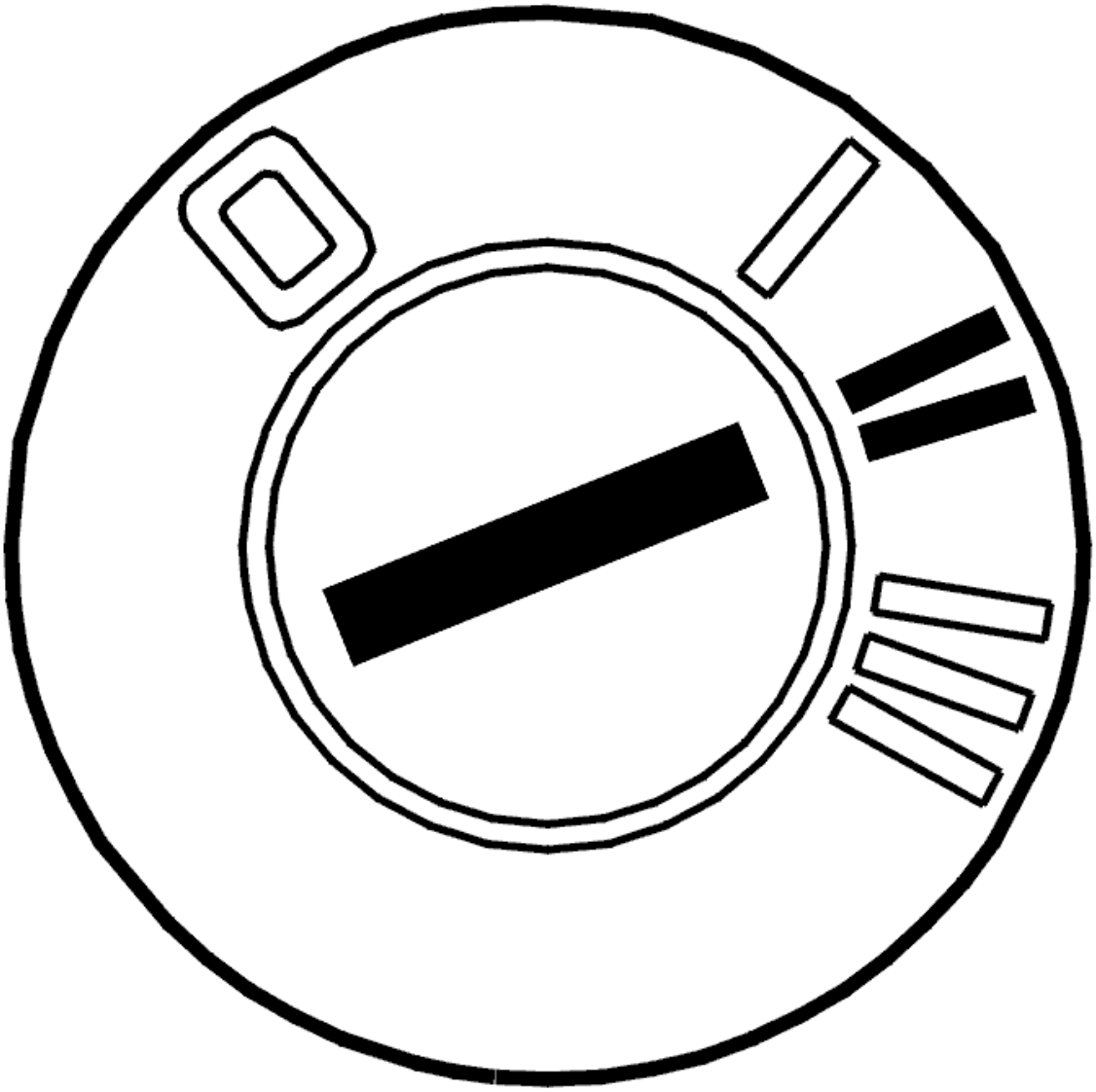

Fig. 166: Identifying Ignition ON
Courtesy of VOLVO CARS CORPORATION

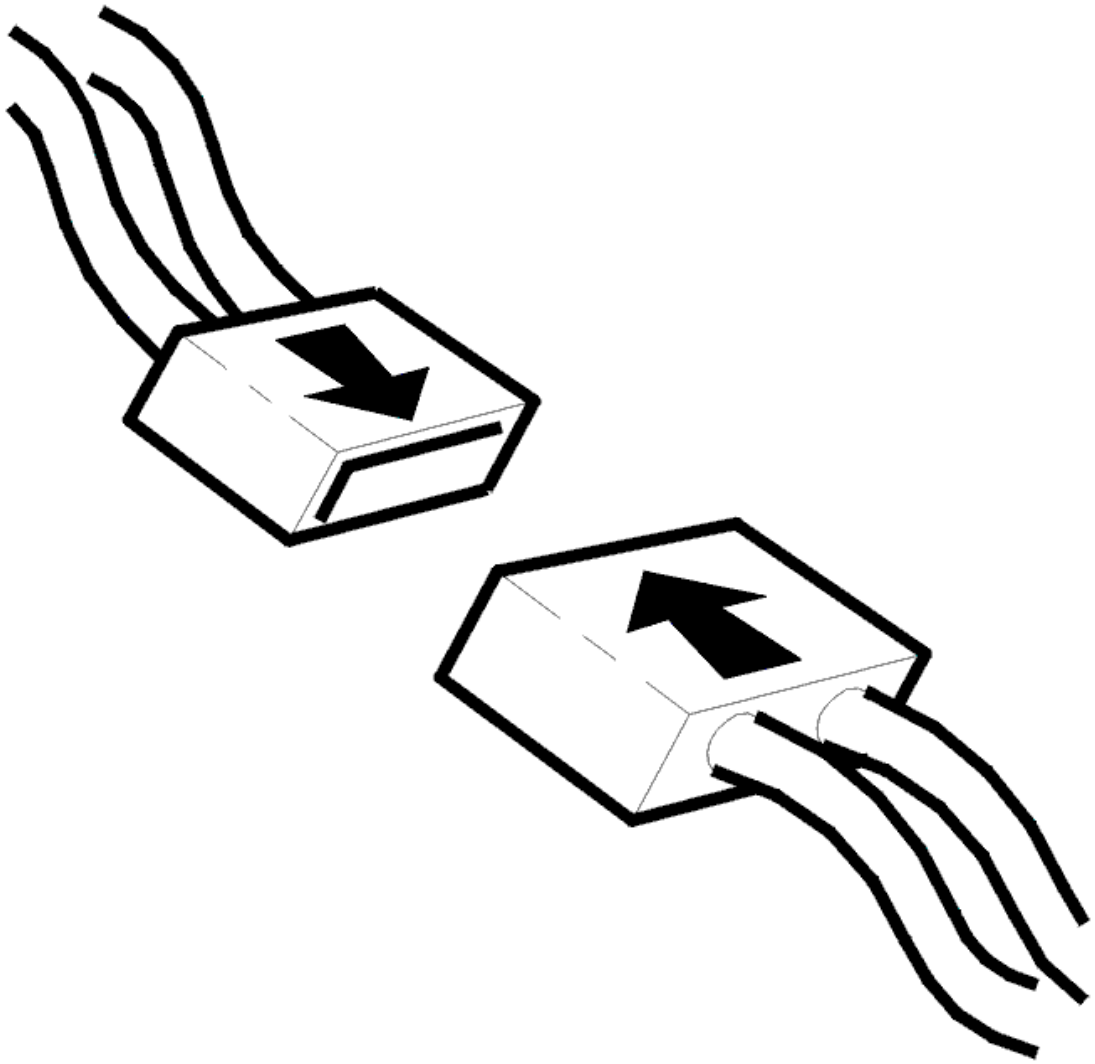

Fig. 167: Connecting Connector
Courtesy of VOLVO CARS CORPORATION

- Ignition off
- Reinstall the connectors, components etc.
- Ignition on for at least 12 seconds.

Read off the control module ID from the antenna module (ATM) by clicking on the VCT2000 symbol.

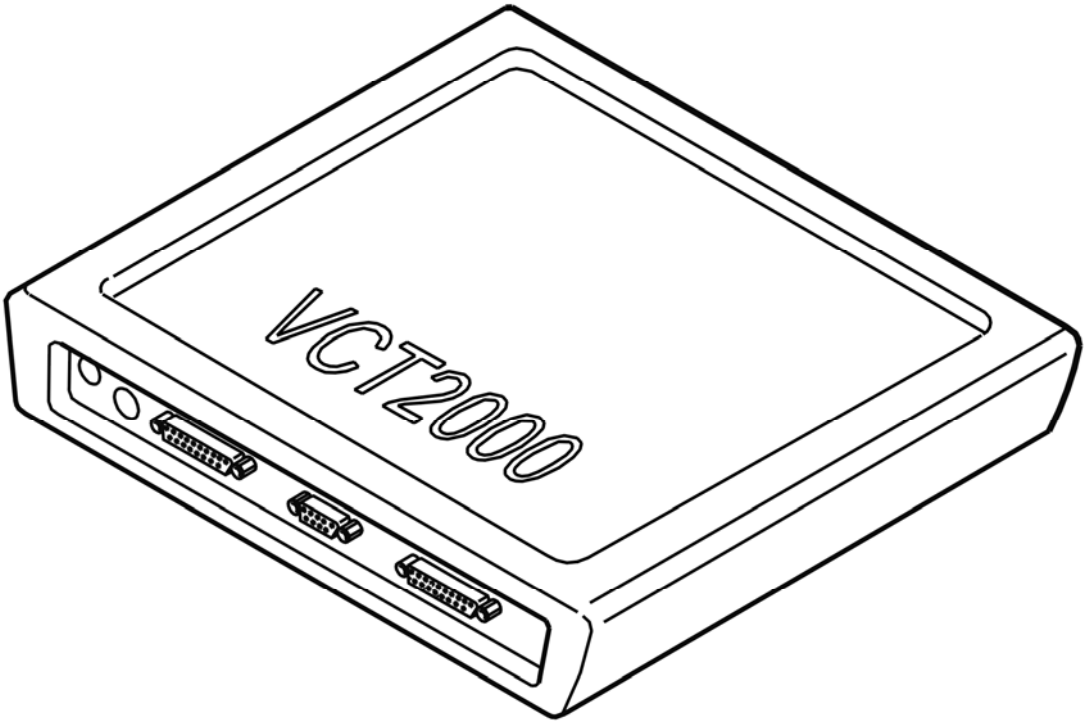

Fig. 168: Identifying VCT2000 Diagnostic Tool Symbol In VIDA
Courtesy of VOLVO CARS CORPORATION

Can the control module ID be read off?

- **YES**

  VERIFIED: Troubleshooting has been completed.

- **NO**

  See: **INFORMATION**

INFORMATION

FAULT-TRACING INFORMATION

The fault should have been detected and remedied. As this is not the case fault-tracing has failed.

Exit fault-tracing for this diagnostic trouble code (DTC) or make another attempt.

ICM-1A53: COMMUNICATION WITH THE MULTIMEDIA MODULE (MMM). SIGNAL MISSING (2003-2012)

DIAGNOSTIC TROUBLE CODE (DTC) INFORMATION ICM-1A53

Condition

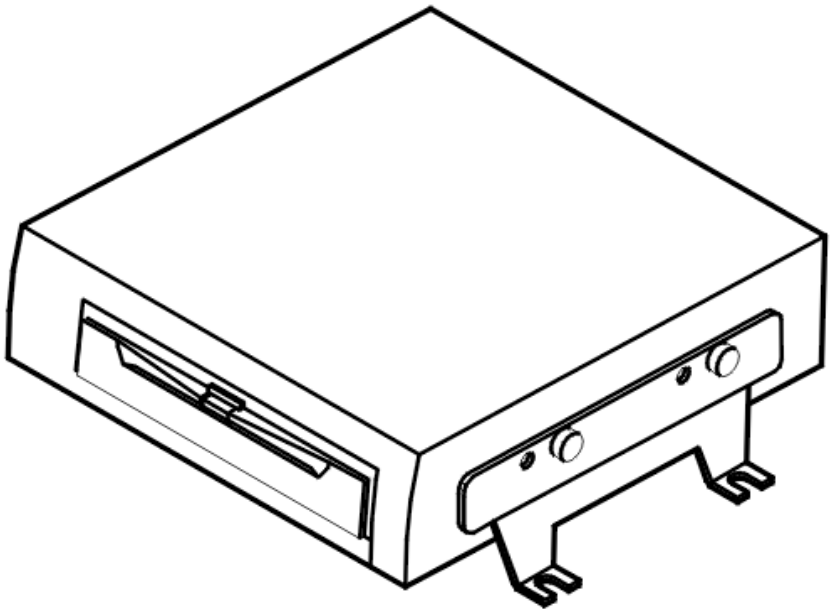

Fig. 169: Identifying Multimedia Module (MMM)
Courtesy of VOLVO CARS CORPORATION

The infotainment control module (ICM) checks the communication with the multimedia module (MMM).

Diagnostic trouble code (DTC) ICM-1A53 is stored in the infotainment control module (ICM) if it registers a fault in the communication with the multimedia module (MMM).

Diagnostic trouble code (DTC) ICM-1A53 can be detected when the ignition is on for at least 20 seconds and the battery voltage is > 11 V.

Substitute Value

- None.

Possible Source

- Internal fault in the multimedia module (MMM)
- No multimedia module (MMM).

Fault symptom[s]

- The navigation buttons on the steering wheel do not function
- No voice message.

SIGNAL MISSING

CHECKING THE COMPONENT

The infotainment control module (ICM) has registered that there is no communication with the multimedia module (MMM).

If the fault is intermittent, it has been registered previously but is no longer present. Intermittent faults can be caused by interference at start up of the multimedia module (MMM) or may be a different type of fault which occurs on different occasions. The fault is evaluated depending on how it occurs. If the fault recurs, replace the Multimedia Module (MMM).

In the event of a permanent fault, replace the multimedia module (MMM).

Remedy as necessary.

Other information:

- To replace the multimedia module (MMM), see **MULTIMEDIA MODULE (MMM), REPLACING** .

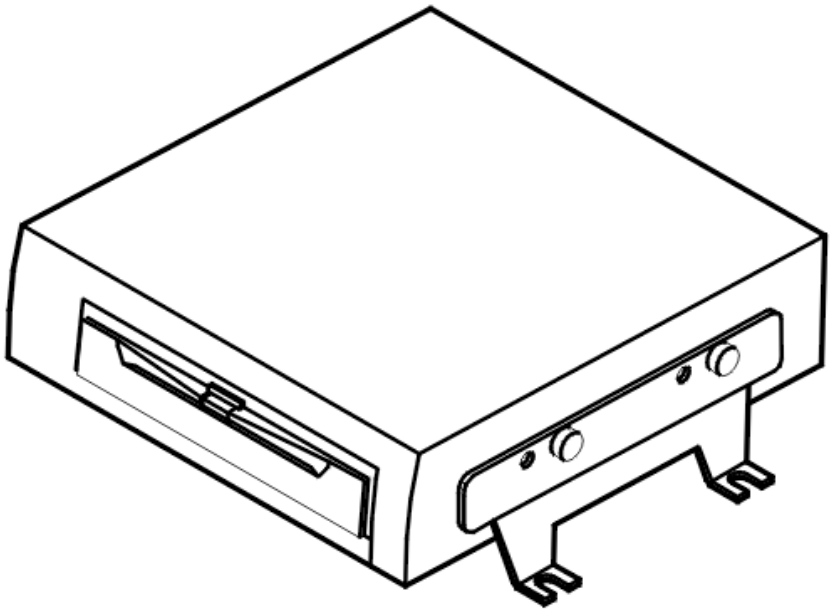

Fig. 170: Identifying Multimedia Module (MMM)
Courtesy of VOLVO CARS CORPORATION

- **Continue**

  See: **VERIFICATION**

VERIFICATION

VERIFICATION

HINT: After carrying out the repair, check that the fault has been remedied.

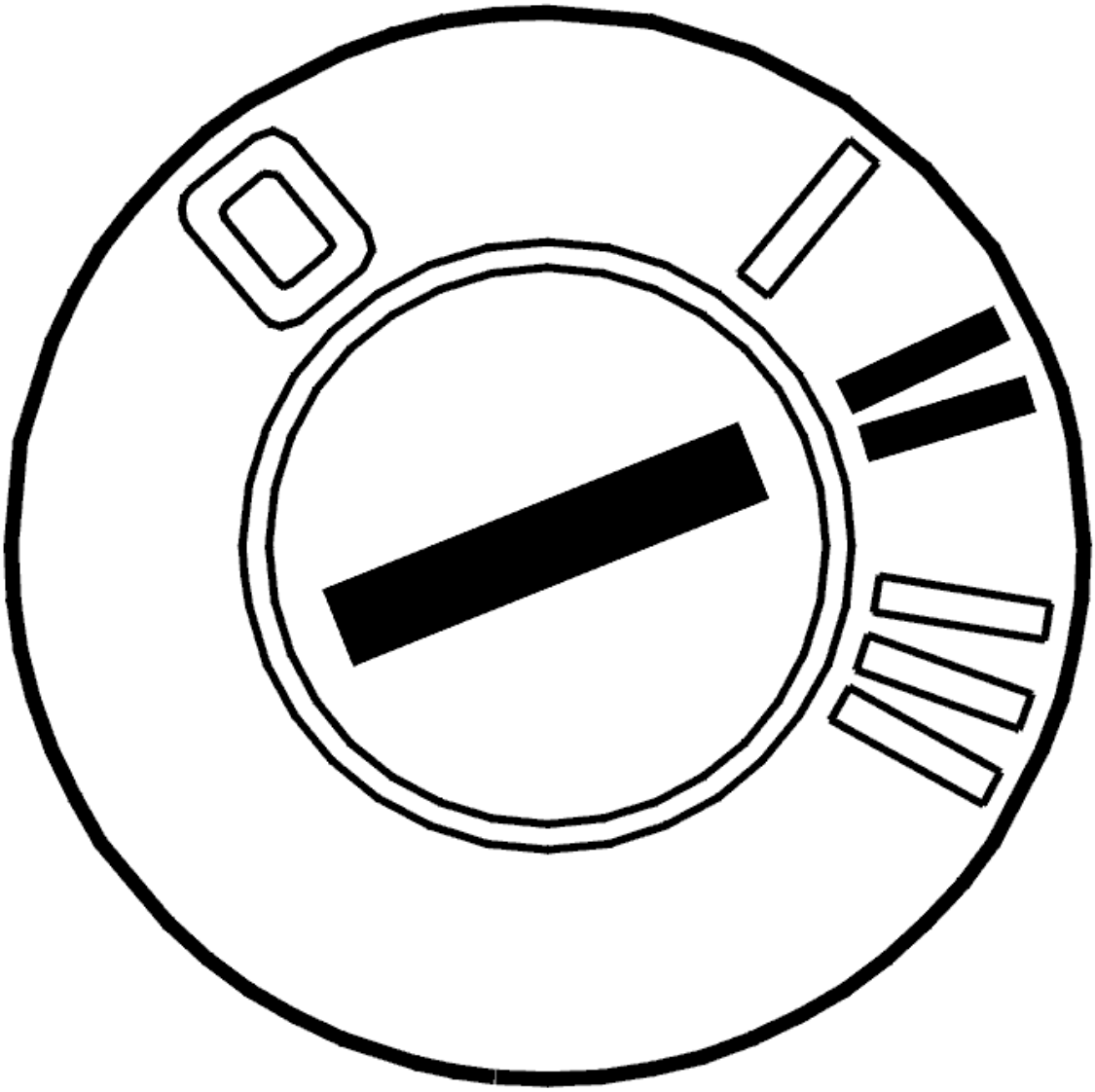

Fig. 171: Identifying Ignition ON
Courtesy of VOLVO CARS CORPORATION

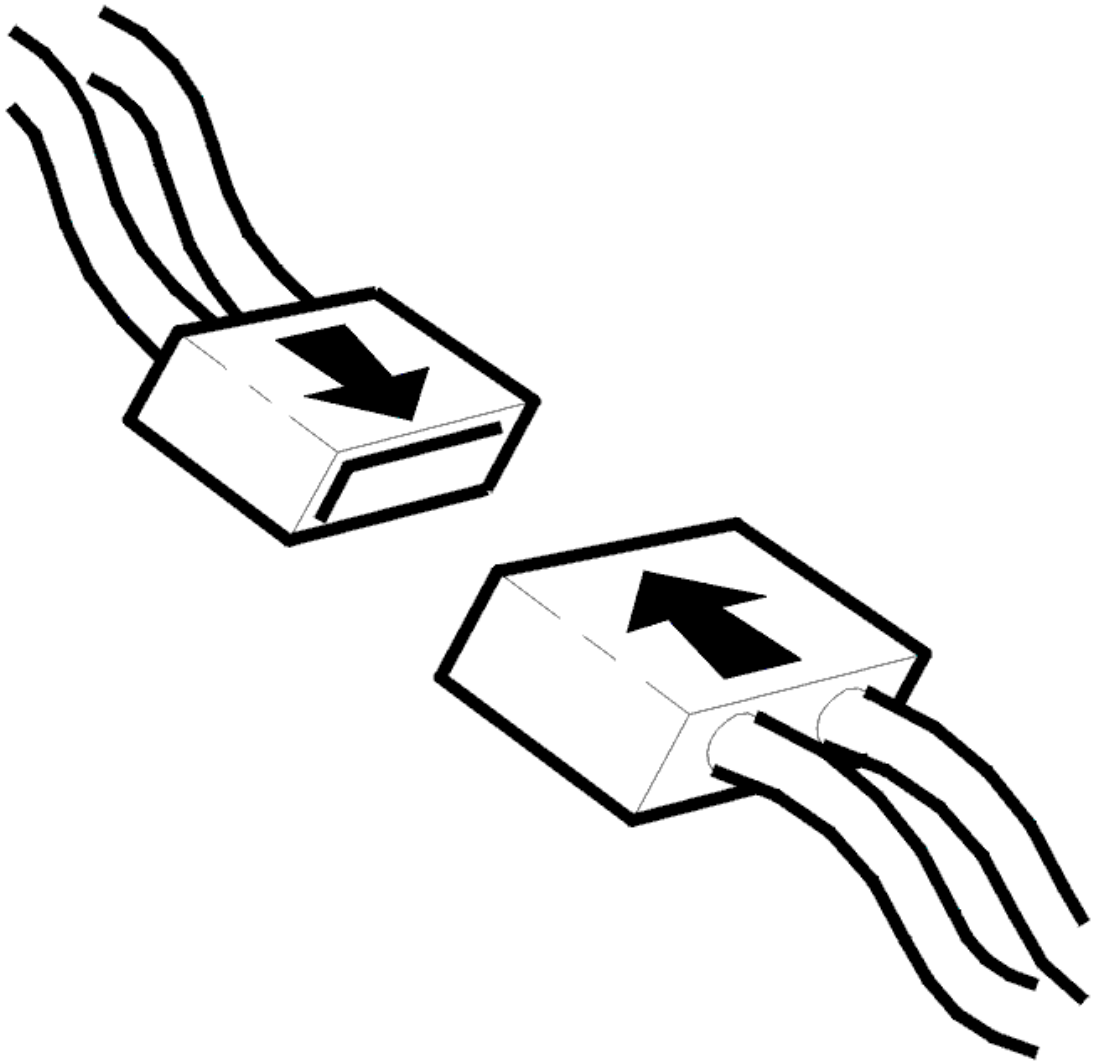

Fig. 172: Connecting Connector
Courtesy of VOLVO CARS CORPORATION

- Ignition off
- Reinstall the connectors, components etc.
- Ignition on for at least 12 seconds.

  Read off the control module ID from the multimedia module (MMM) by clicking on the VCT2000 symbol.

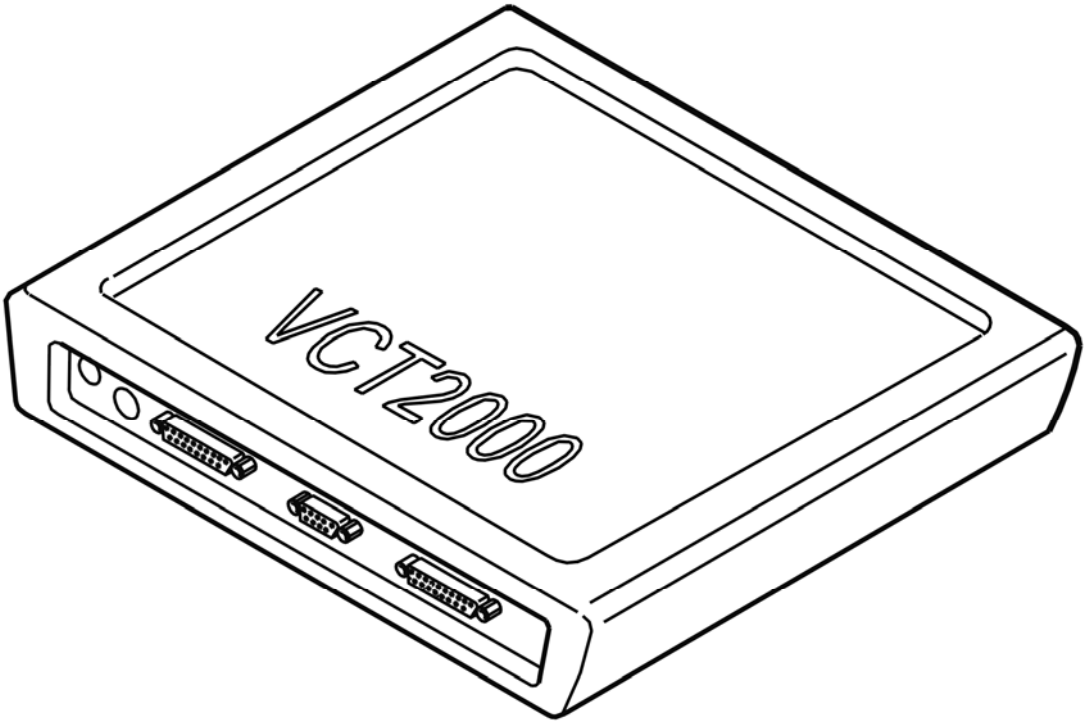

Fig. 173: Identifying VCT2000 Diagnostic Tool Symbol In VIDA
Courtesy of VOLVO CARS CORPORATION

Can the control module ID be read off?

- **YES**

  VERIFIED: Troubleshooting has been completed.

- **NO**

  See: **INFORMATION**

INFORMATION

FAULT-TRACING INFORMATION

The fault should have been detected and remedied. As this is not the case fault-tracing has failed.

Exit fault-tracing for this diagnostic trouble code (DTC) or make another attempt.

ICM-1A54: COMMUNICATION WITH THE SUBWOOFER MODULE (SUB). SIGNAL MISSING (2003-2012)

DIAGNOSTIC TROUBLE CODE (DTC) INFORMATION ICM-1A54

Condition

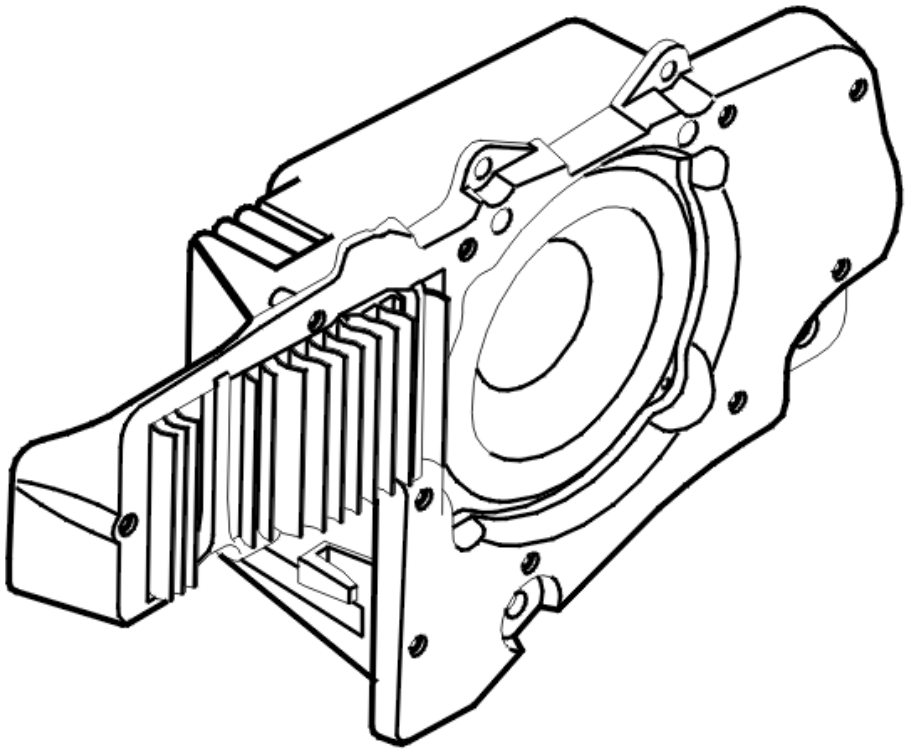

Fig. 174: Identifying Subwoofer Module (SUB)
Courtesy of VOLVO CARS CORPORATION

The infotainment control module (ICM) checks the communication with the Subwoofer module (SUB).

Diagnostic trouble code (DTC) ICM-1A54 is stored in the infotainment control module (ICM) if it registers a fault in the communication with the Subwoofer module (SUB).

Diagnostic trouble code (DTC) ICM-1A54 can be detected when the ignition is on for at least 20 seconds and the battery voltage is > 11 V.

Substitute Value

- None.

Possible Source

- Internal fault in the subwoofer module (SUB)
- No subwoofer module (SUB).

Fault symptom[s]

- No sound from the bass speaker.

SIGNAL MISSING

CHECKING THE COMPONENT

The infotainment control module (ICM) has registered that there is no communication with the Subwoofer module (SUB).

If the fault is intermittent, it has been registered previously but is no longer present. Intermittent faults can be caused by interference at start up of the subwoofer module (SUB) or may be a different type of fault which occurs on different occasions. The fault is evaluated depending on how it occurs. If the fault recurs, replace the Subwoofer module (SUB).

In the event of a permanent fault, replace the Subwoofer module (SUB).

Remedy as necessary.

Other information:

- To replace the Subwoofer module (SUB), see **SUBWOOFER MODULE (SUB), REPLACING** .

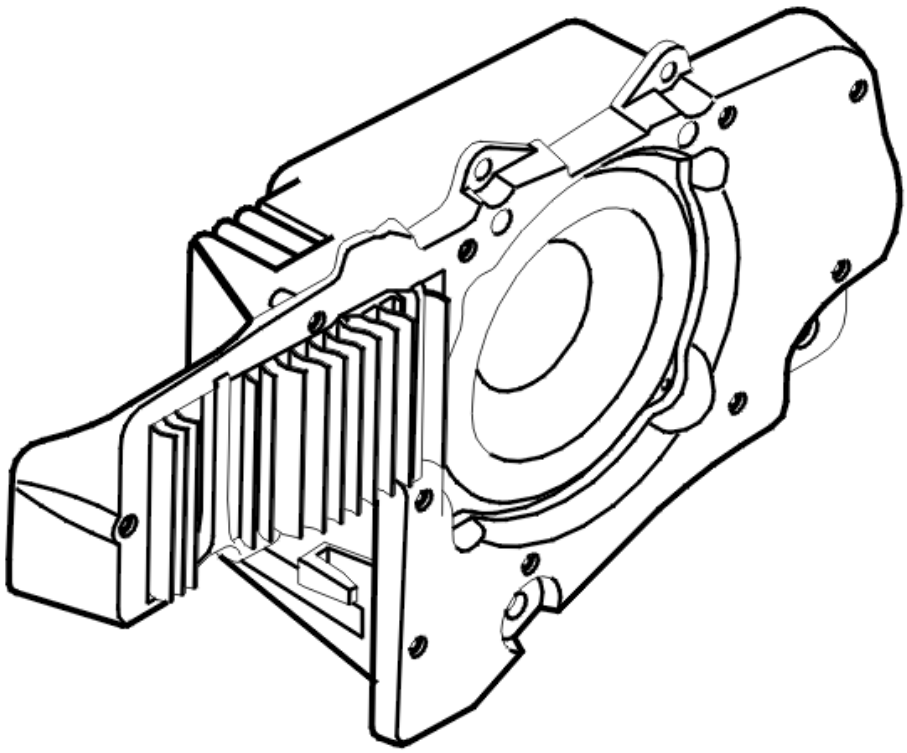

Fig. 175: Identifying Subwoofer Module (SUB)
Courtesy of VOLVO CARS CORPORATION

- **Continue**

  See: **VERIFICATION**

VERIFICATION

VERIFICATION

HINT: After carrying out the repair, check that the fault has been remedied.

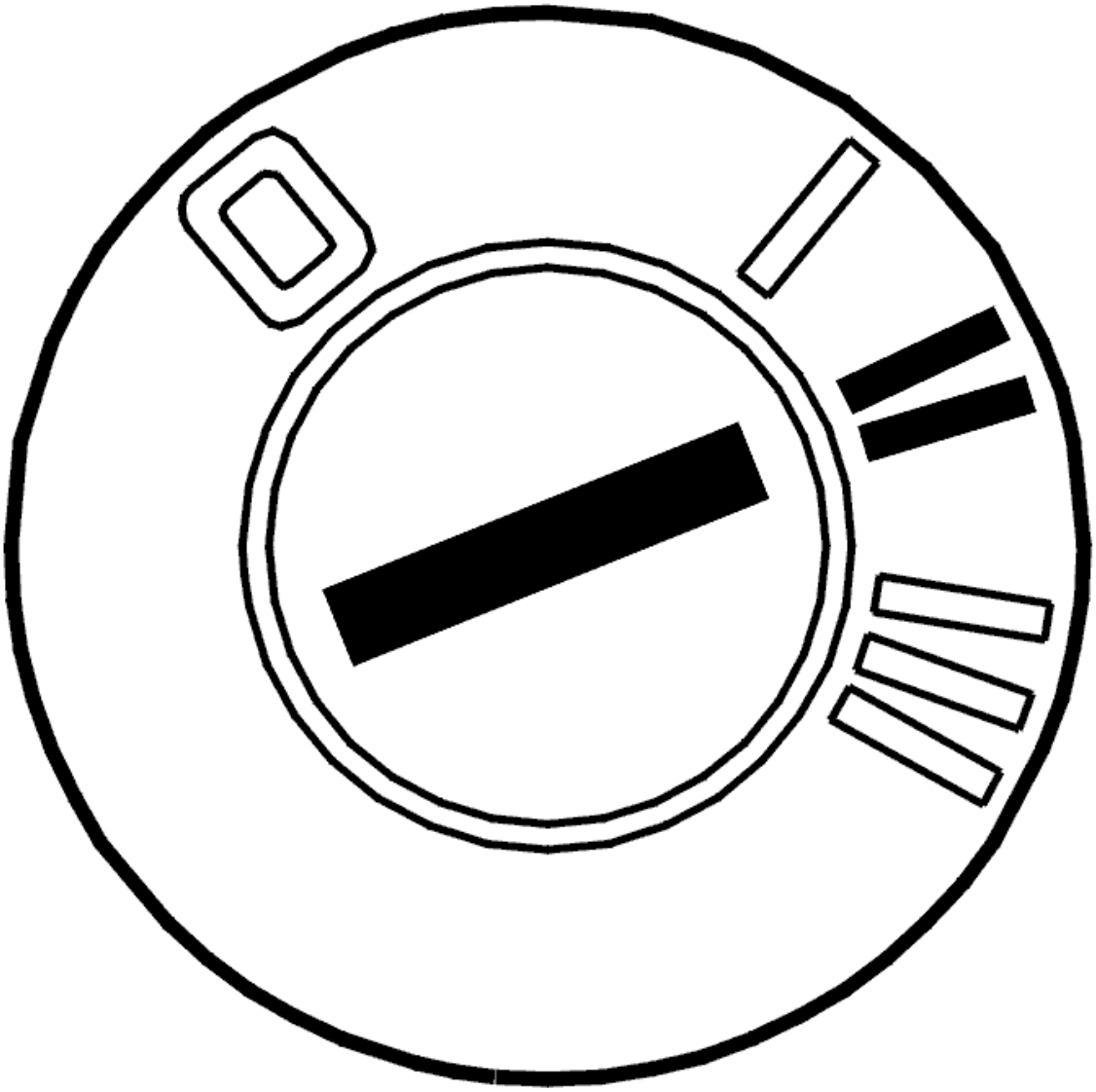

Fig. 176: Identifying Ignition ON
Courtesy of VOLVO CARS CORPORATION

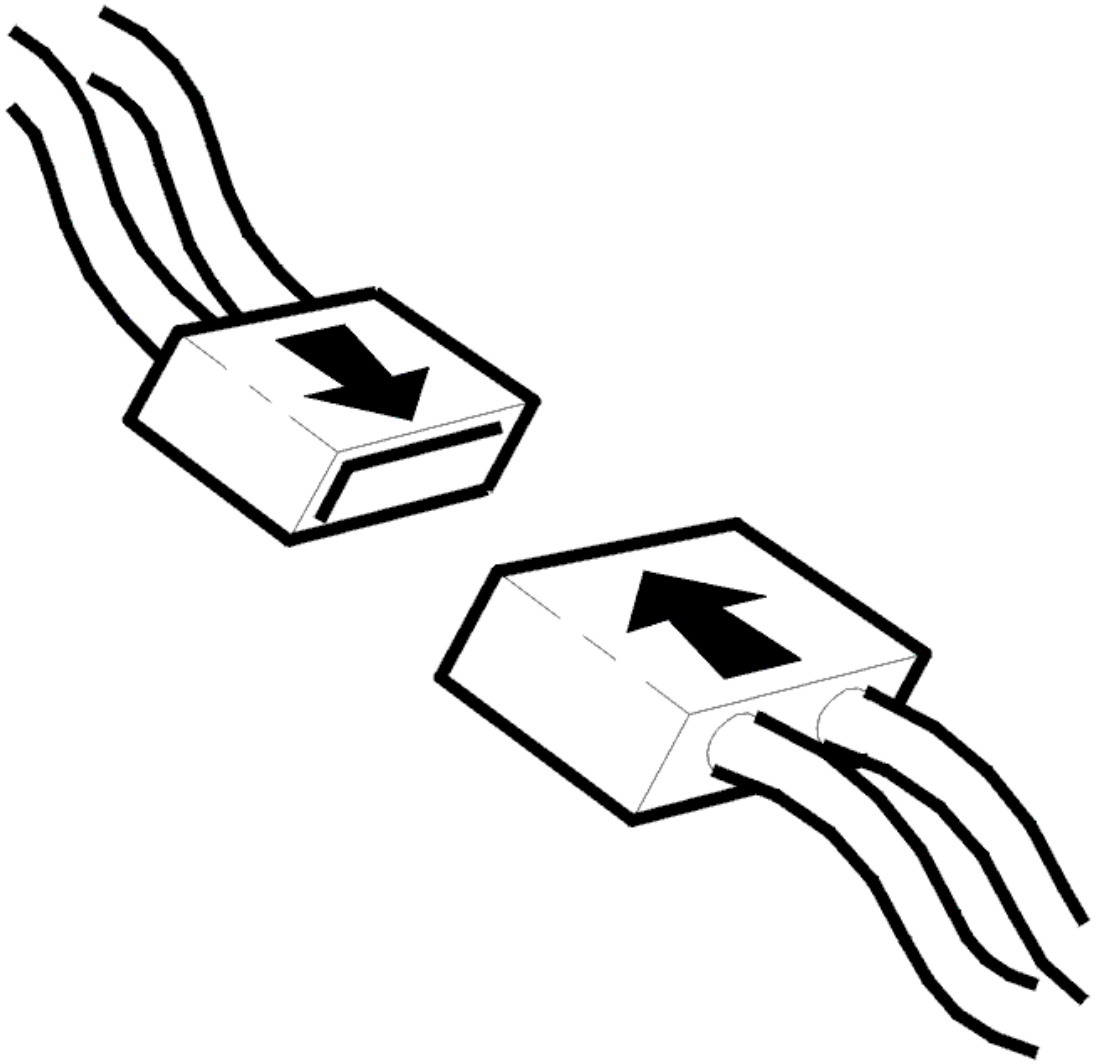

Fig. 177: Connecting Connector
Courtesy of VOLVO CARS CORPORATION

- Ignition off
- Reinstall the connectors, components etc.
- Ignition on for at least 12 seconds.

Read off the control module ID from the subwoofer module (SUB) by clicking on the VCT2000 symbol.

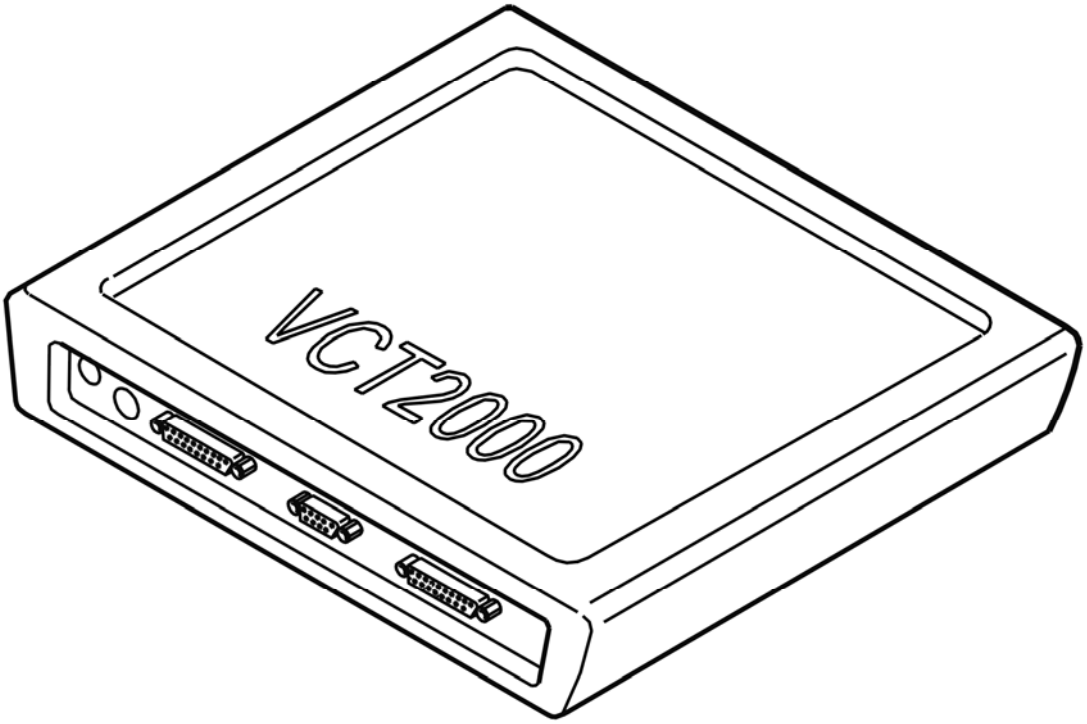

Fig. 178: Identifying VCT2000 Diagnostic Tool Symbol In VIDA
Courtesy of VOLVO CARS CORPORATION

Can the control module ID be read off?

- **YES**

  VERIFIED: Troubleshooting has been completed.

- **NO**

  See: **INFORMATION**

INFORMATION

FAULT-TRACING INFORMATION

The fault should have been detected and remedied. As this is not the case fault-tracing has failed.

Exit fault-tracing for this diagnostic trouble code (DTC) or make another attempt.

ICM-1A55: COMMUNICATION WITH THE MD MODULE (MP1). SIGNAL MISSING (2003-2006)

DIAGNOSTIC TROUBLE CODE (DTC) INFORMATION ICM-1A55

Condition

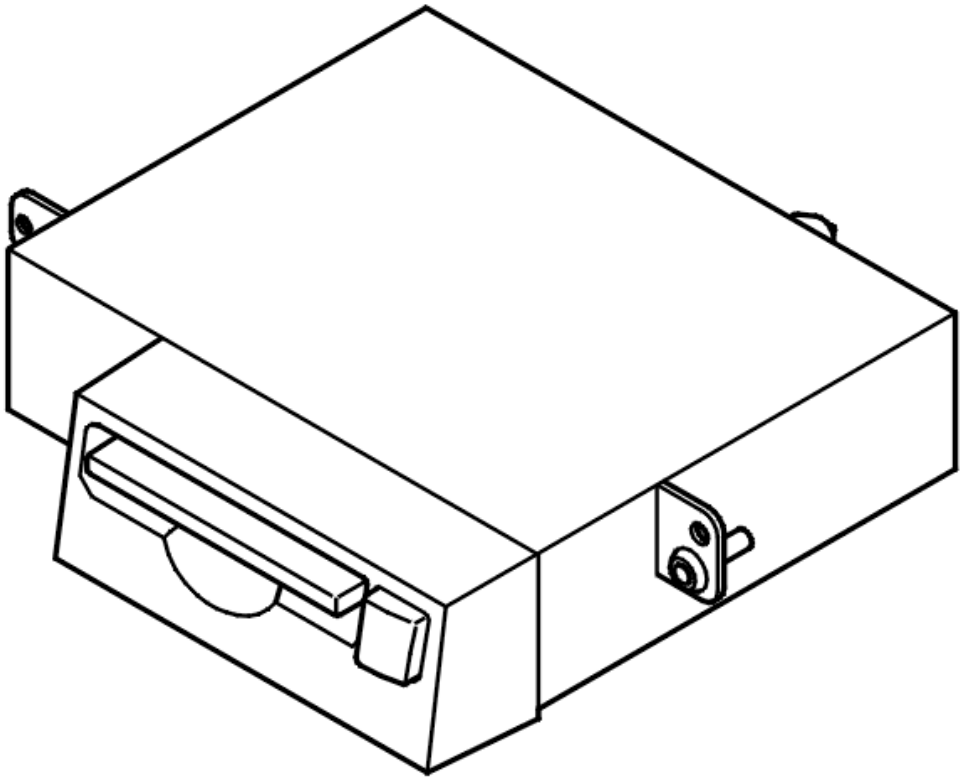

Fig. 179: Identifying MD Module (MP1)
Courtesy of VOLVO CARS CORPORATION

The infotainment control module (ICM) checks the communication with the MD module (MP1).

Diagnostic trouble code (DTC) ICM-1A55 is stored in the infotainment control module (ICM) if it registers a fault in the communication with the MD module (MP1).

Diagnostic trouble code (DTC) ICM-1A55 can be detected when the ignition is on for at least 20 seconds and the battery voltage is > 11 V.

Substitute Value

- None.

Possible Source

- Internal fault in the MD module (MP1)
- No MD module (MP1).

Fault symptom[s]

- No sound reproduction from the MiniDisc player.

SIGNAL MISSING

CHECKING THE COMPONENT

The infotainment control module (ICM) has registered that there is no communication with the MD module (MP1).

If the fault is intermittent, it has been registered previously but is no longer present. Intermittent faults can be caused by interference at start up of the MD player or may be a different type of fault which occurs on different occasions. The fault is evaluated depending on how it occurs. If the fault recurs, replace the MD player.

In the event of a permanent fault, replace the MD player.

Remedy as necessary.

Other information:

- To replace the MD player, see **MINIDISC / CD CONTROL MODULE, REPLACING** .

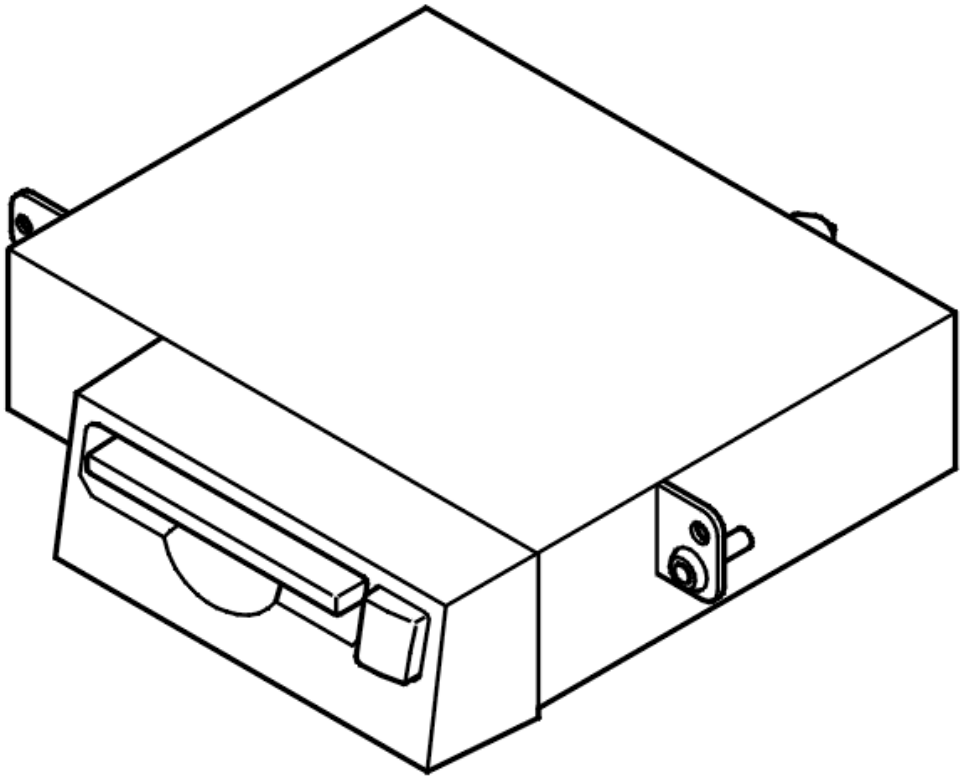

Fig. 180: Identifying MD Module (MP1)

Courtesy of VOLVO CARS CORPORATION

- **Continue**

  See: **VERIFICATION**

VERIFICATION

VERIFICATION

HINT: After carrying out the repair, check that the fault has been remedied.

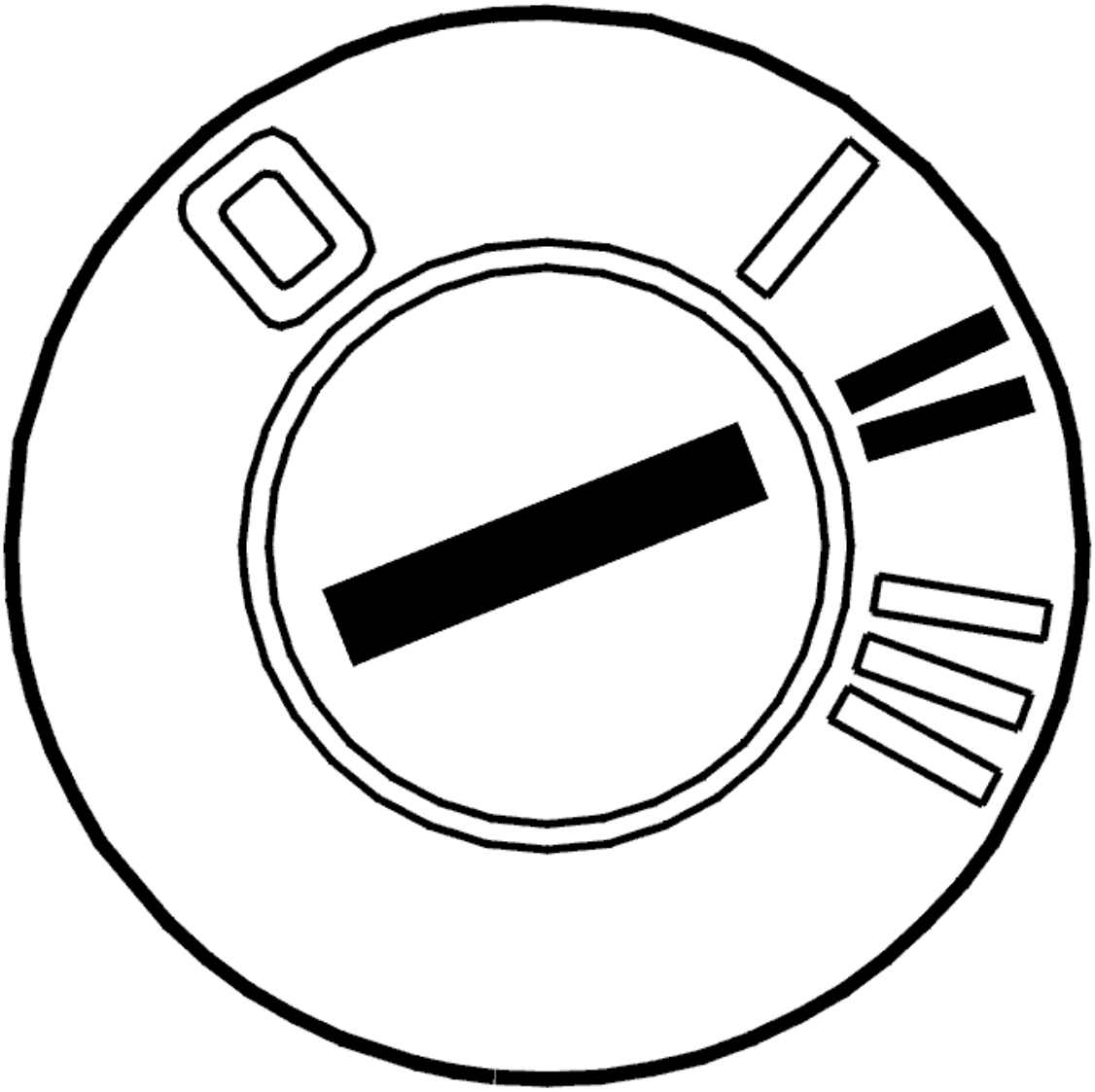

Fig. 181: Identifying Ignition ON
Courtesy of VOLVO CARS CORPORATION

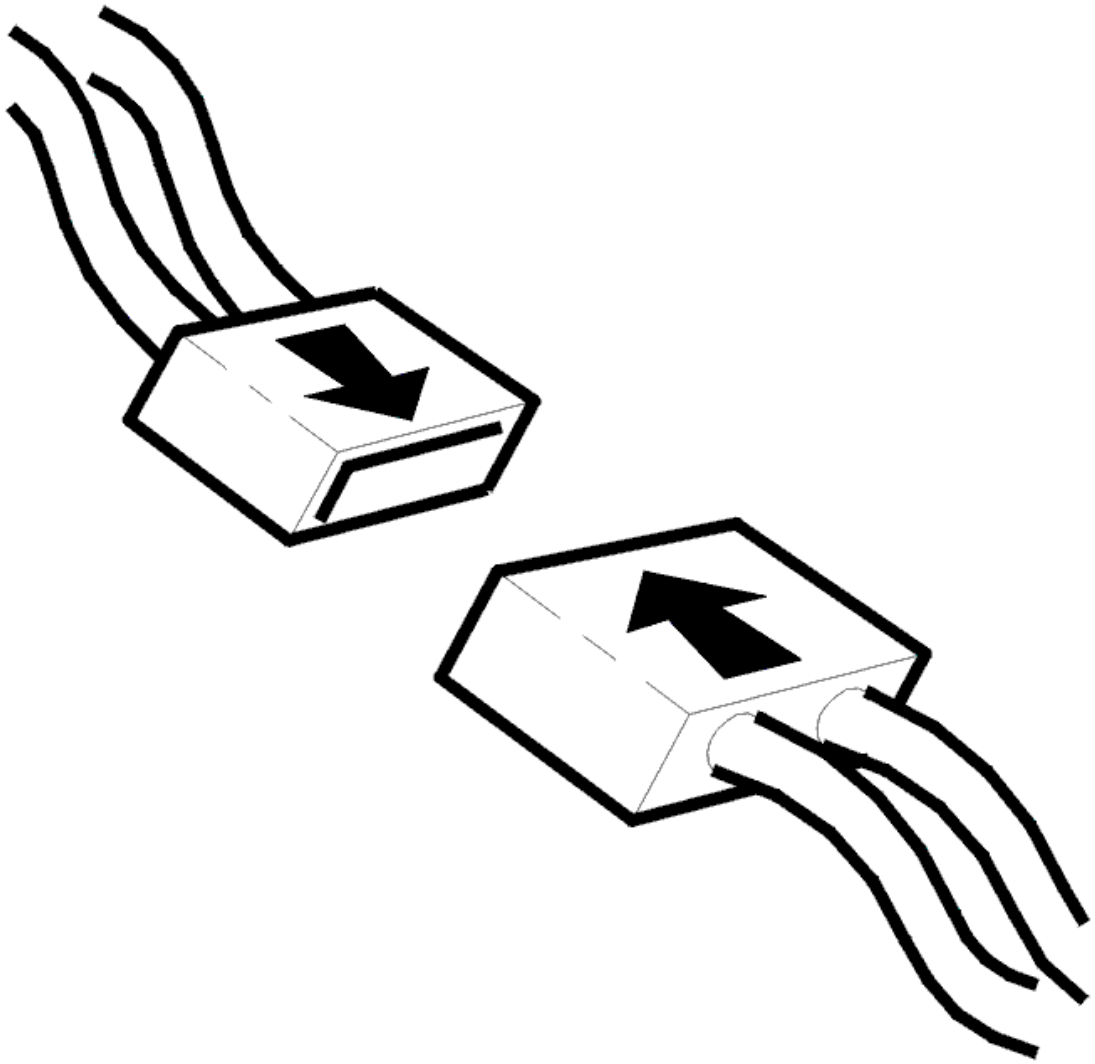

Fig. 182: Connecting Connector
Courtesy of VOLVO CARS CORPORATION

- Ignition off
- Reinstall the connectors, components etc.
- Ignition on for at least 12 seconds.

Read off the control module ID from the MD player by clicking on the VCT2000 symbol.

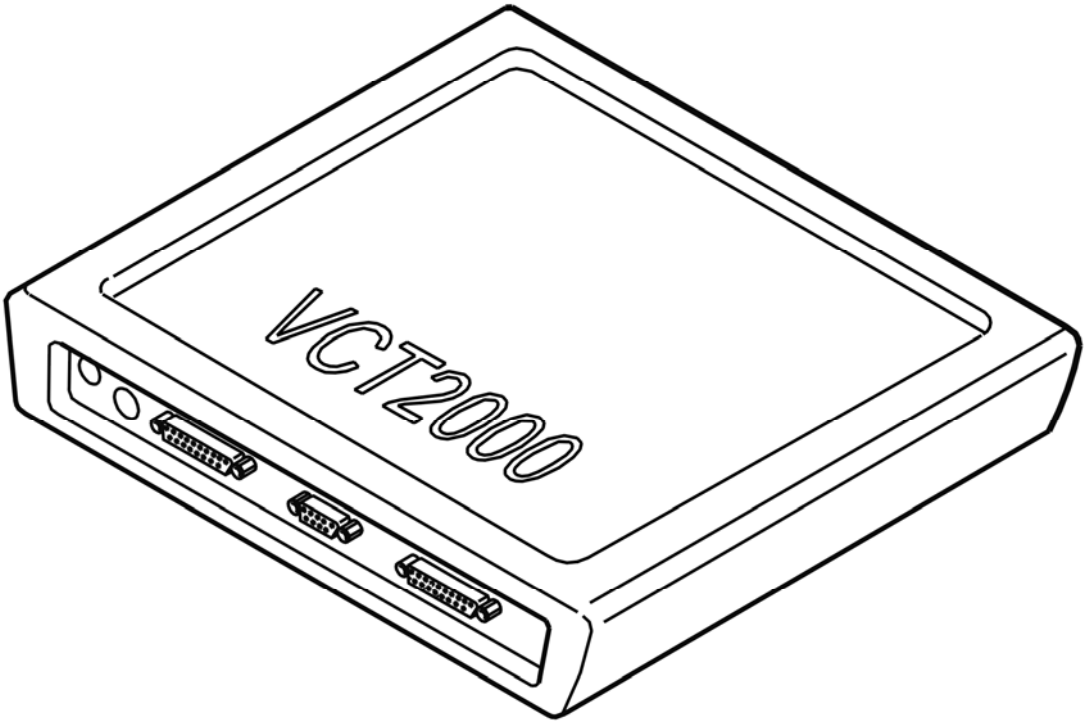

Fig. 183: Identifying VCT2000 Diagnostic Tool Symbol In VIDA
Courtesy of VOLVO CARS CORPORATION

Can the control module ID be read off?

- **YES**

  VERIFIED: Troubleshooting has been completed.

- **NO**

  See: **INFORMATION**

INFORMATION

FAULT-TRACING INFORMATION

The fault should have been detected and remedied. As this is not the case fault-tracing has failed.

Exit fault-tracing for this diagnostic trouble code (DTC) or make another attempt.

ICM-1A56: COMMUNICATION WITH THE CD MODULE (MP2). SIGNAL MISSING (2003-2006)

DIAGNOSTIC TROUBLE CODE (DTC) INFORMATION ICM-1A56

Condition

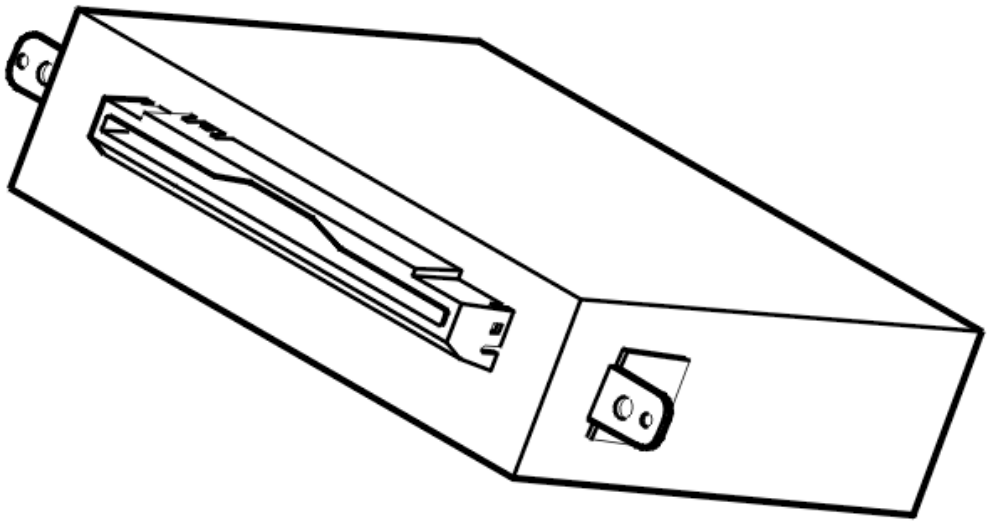

Fig. 184: Identifying CD Module (MP2)
Courtesy of VOLVO CARS CORPORATION

The infotainment control module (ICM) checks the communication with the CD module (MP2).

Diagnostic trouble code (DTC) ICM-1A56 is stored in the infotainment control module (ICM) if it registers a fault in the communication with the CD module (MP2).

Diagnostic trouble code (DTC) ICM-1A56 can be detected when the ignition is on for at least 20 seconds and the battery voltage is > 11 V.

Substitute Value

- None.

Possible Source

- Internal fault in the CD module (MP2)
- No CD module (MP2).

Fault symptom[s]

- No sound reproduction from the CD player.

SIGNAL MISSING

CHECKING THE COMPONENT

The infotainment control module (ICM) has registered that there is no communication with the CD module (MP2).

If the fault is intermittent, it has been registered previously but is no longer present. Intermittent faults can be caused by interference at start up of the CD player or may be a different type of fault which occurs on different occasions. The fault is evaluated depending on how it occurs. If the fault recurs, replace the CD player.

In the event of a permanent fault, replace the CD player.

Remedy as necessary.

Other information:

- To replace the CD player, see **MINIDISC / CD CONTROL MODULE, REPLACING** .

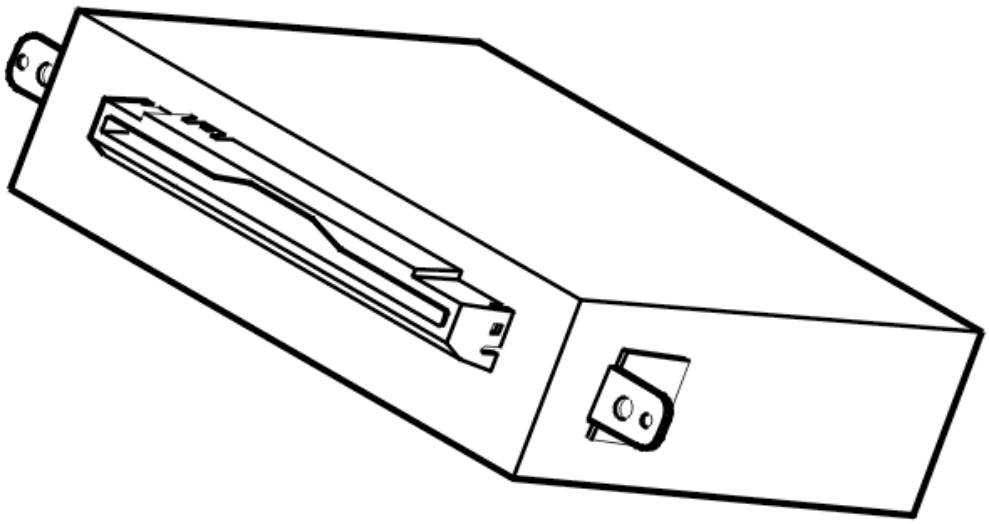

Fig. 185: Identifying CD Module (MP2)

Courtesy of VOLVO CARS CORPORATION

- **Continue**

  See: **VERIFICATION**

VERIFICATION

VERIFICATION

HINT: After carrying out the repair, check that the fault has been remedied.

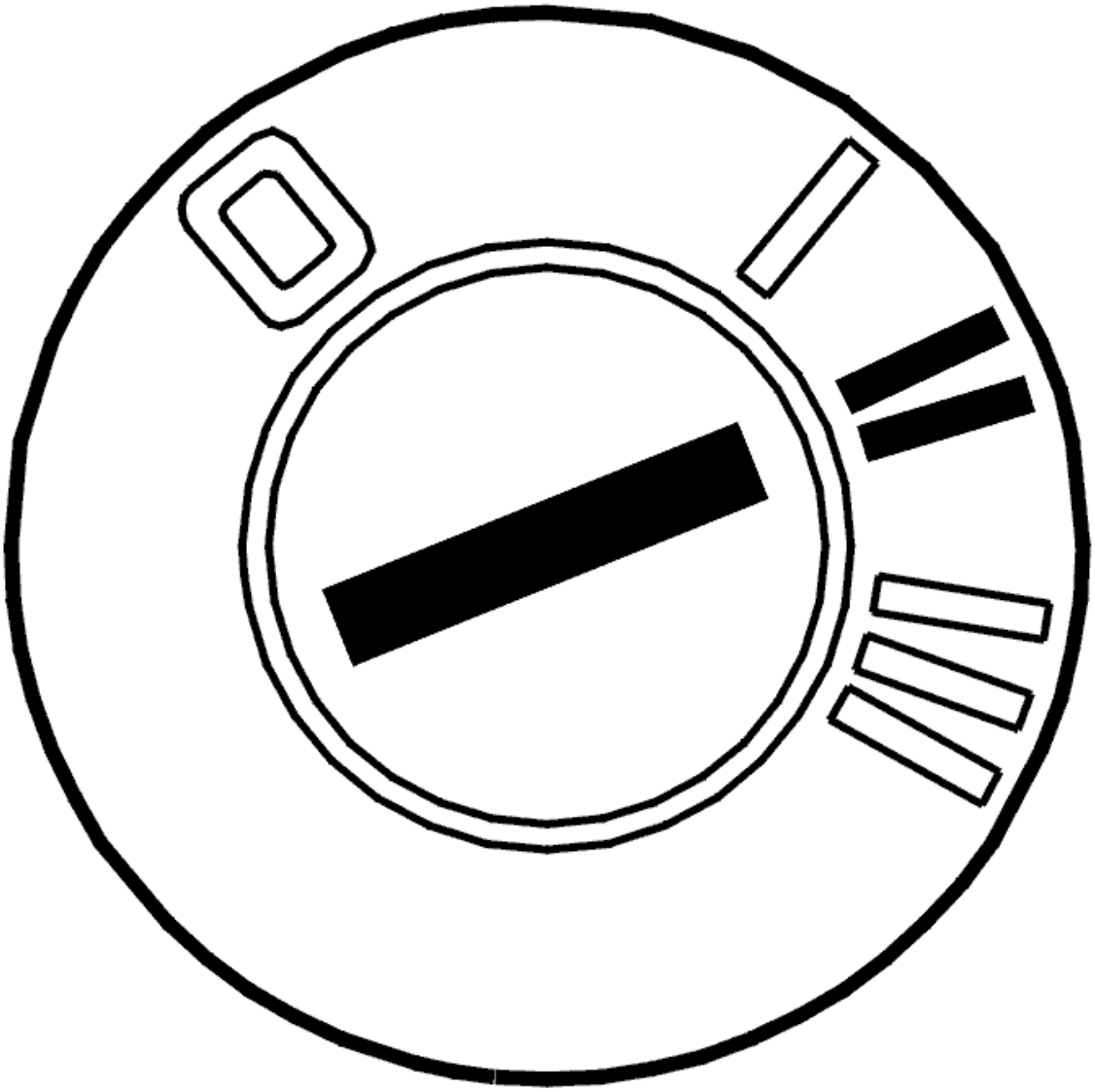

Fig. 186: Identifying Ignition ON
Courtesy of VOLVO CARS CORPORATION

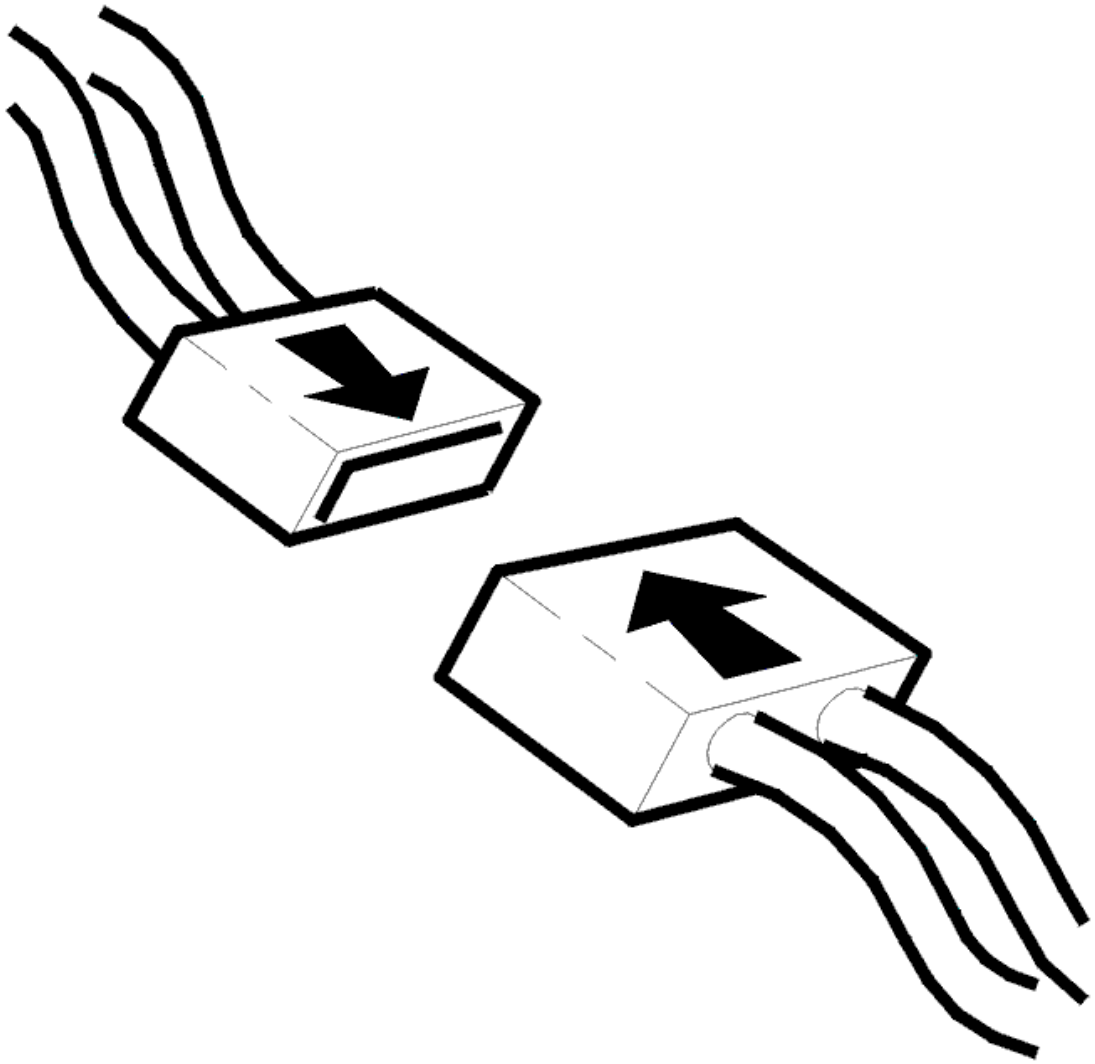

Fig. 187: Connecting Connector
Courtesy of VOLVO CARS CORPORATION

- Ignition off
- Reinstall the connectors, components etc.
- Ignition on for at least 12 seconds.

Read off the control module ID from the CD player by clicking on the VCT2000 symbol.

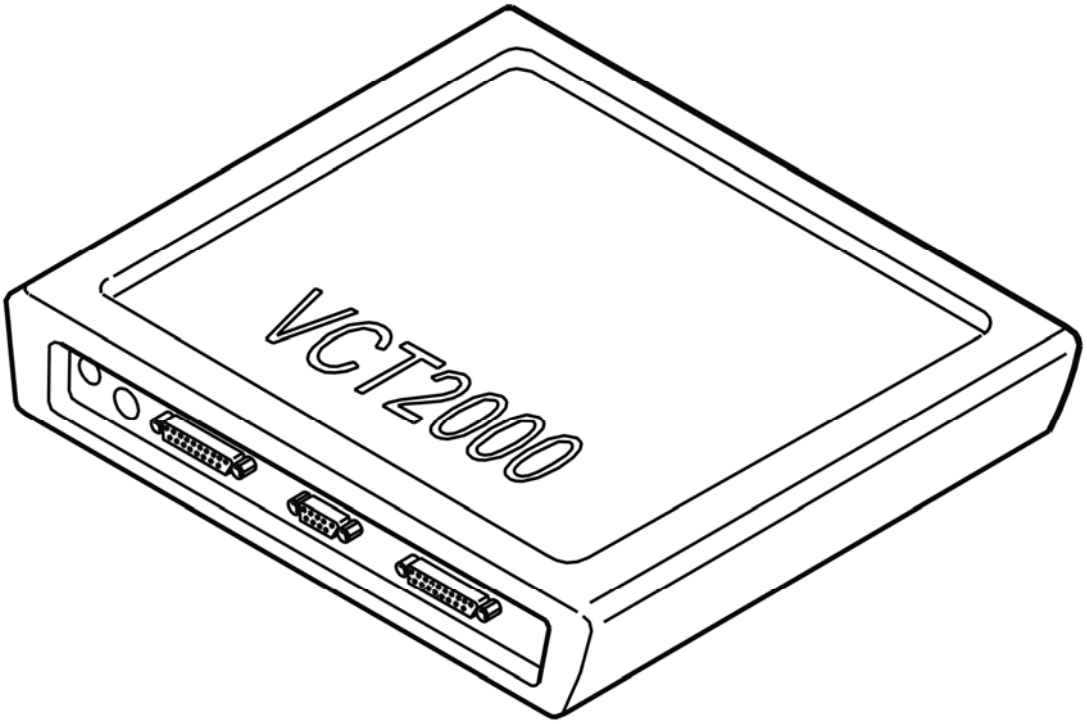

Fig. 188: Identifying VCT2000 Diagnostic Tool Symbol In VIDA
Courtesy of VOLVO CARS CORPORATION

Can the control module ID be read off?

- **YES**

  VERIFIED: Troubleshooting has been completed.

- **NO**

  See: **INFORMATION**

INFORMATION

FAULT-TRACING INFORMATION

The fault should have been detected and remedied. As this is not the case fault-tracing has failed.

Exit fault-tracing for this diagnostic trouble code (DTC) or make another attempt.

ICM-1A57: COMMUNICATION WITH THE PHONE MODULE (PHM). SIGNAL MISSING (2003-2012)

DIAGNOSTIC TROUBLE CODE (DTC) INFORMATION ICM-1A57

Condition

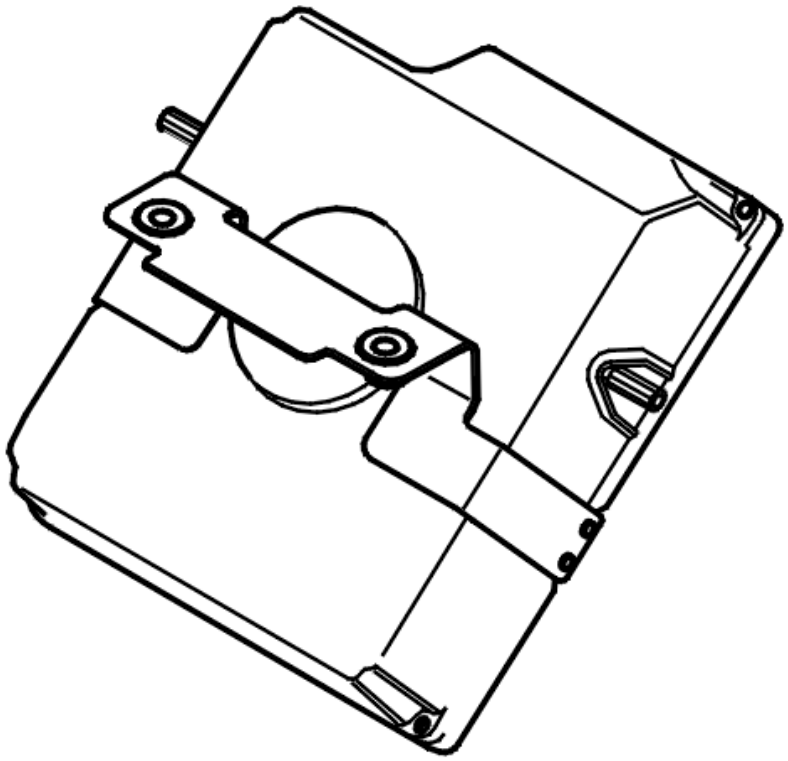

Fig. 189: Identifying Phone Module (PHM)
Courtesy of VOLVO CARS CORPORATION

The infotainment control module (ICM) checks the communication with the phone module (PHM).

Diagnostic trouble code (DTC) ICM-1A57 is stored in the infotainment control module (ICM) if it registers a fault in the communication with the phone module (PHM).

Diagnostic trouble code (DTC) ICM-1A57 can be detected when the ignition is on for at least 20 seconds and the battery voltage is > 11 V.

Substitute Value

- None.

Possible Source

- Internal fault in the phone module (PHM)
- No phone module (PHM).

Fault symptom[s]

- The carphone is not working.

SIGNAL MISSING (2003-2005)

CHECKING THE COMPONENT

The infotainment control module (ICM) has registered that there is no communication with the phone module (PHM).

If the fault is intermittent, it has been registered previously but is no longer present. Intermittent faults can be caused by interference at start up of the phone module (PHM) or may be a different type of fault which occurs on different occasions. The fault is evaluated depending on how it occurs. If the fault recurs, replace the phone module (PHM).

In the event of a permanent fault, replace the phone module (PHM).

Remedy as necessary.

Other information:

- see **PHONE MODULE (PHM), REPLACING**

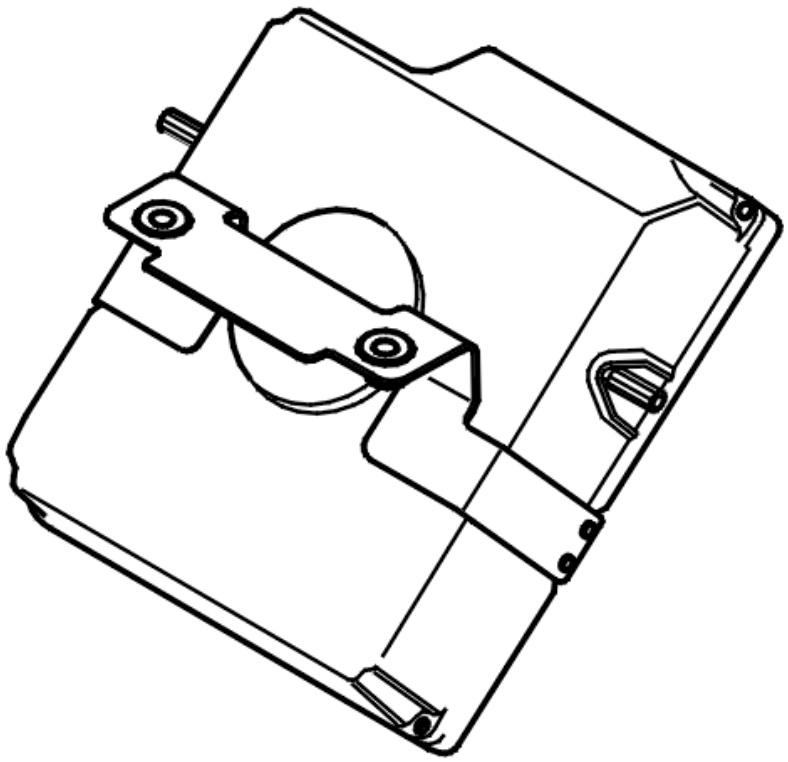

Fig. 190: Identifying Phone Module (PHM)
Courtesy of VOLVO CARS CORPORATION

- **Continue**

  See: **VERIFICATION**

VERIFICATION

VERIFICATION

HINT: After carrying out the repair, check that the fault has been remedied.

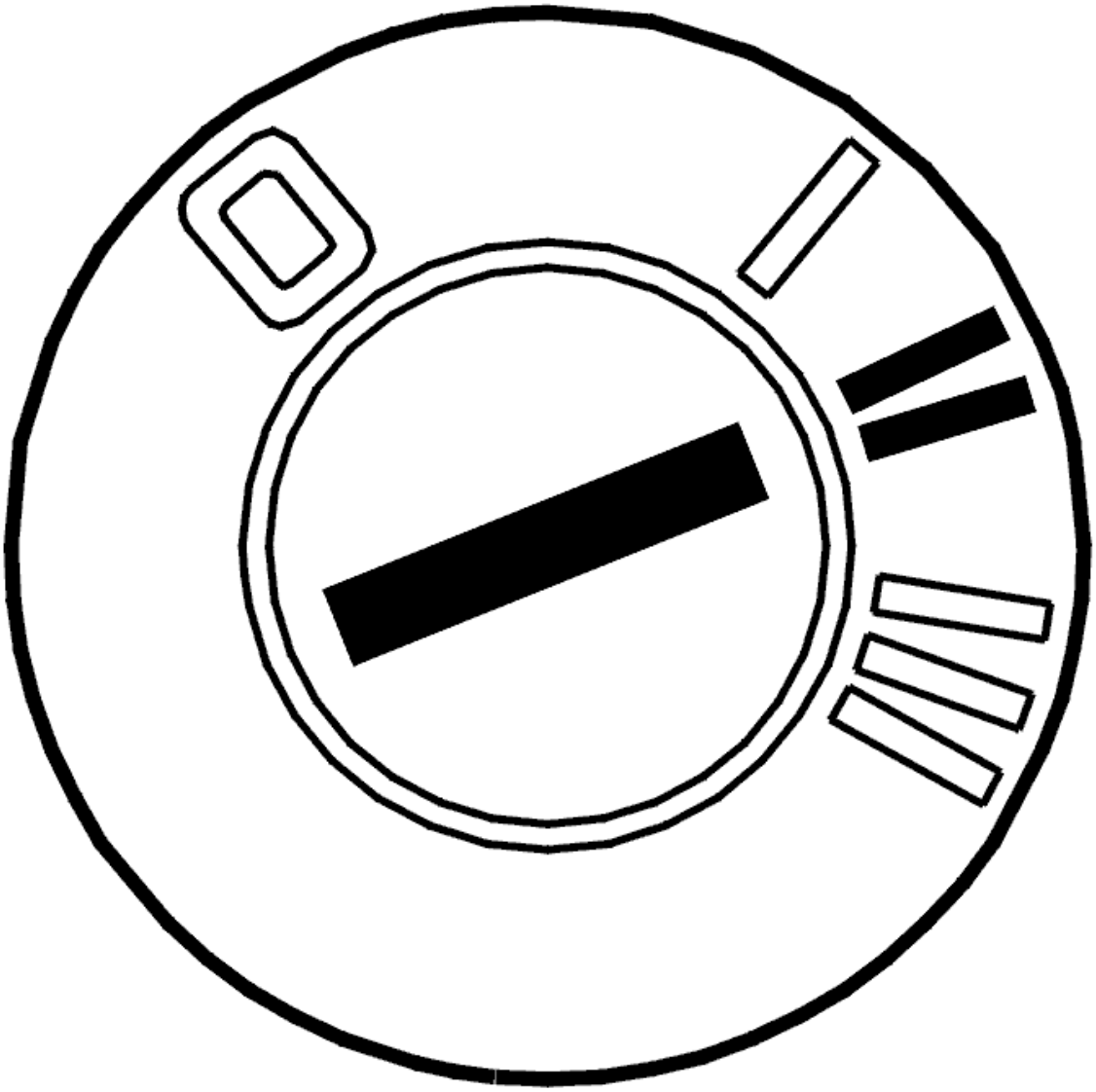

Fig. 191: Identifying Ignition ON
Courtesy of VOLVO CARS CORPORATION

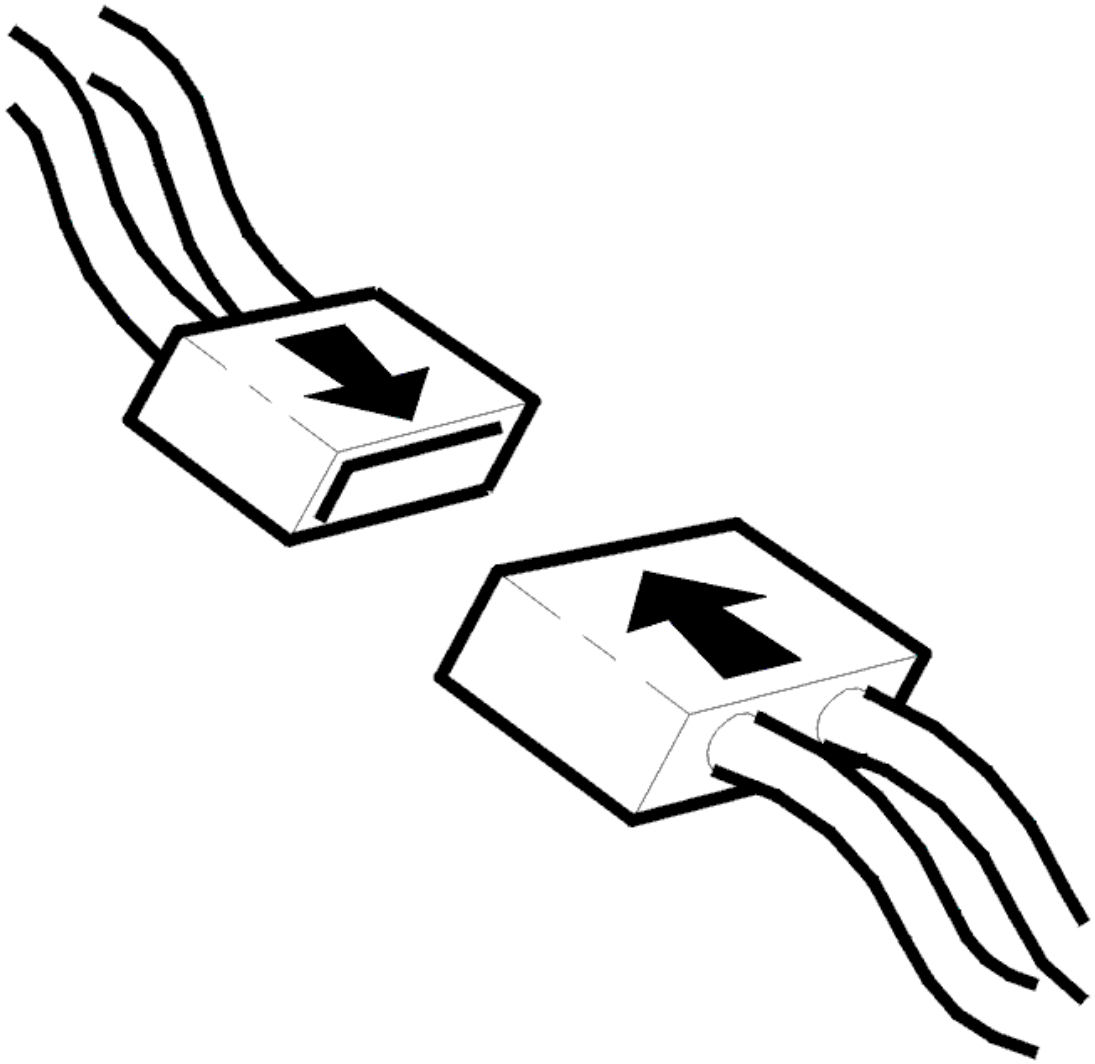

Fig. 192: Connecting Connector
Courtesy of VOLVO CARS CORPORATION

- Ignition off
- Reinstall the connectors, components etc.
- Ignition on for at least 12 seconds.

  Make a call so that both the handset and the hands-free system are used.

Is the carphone working?

- **YES**

  VERIFIED: Troubleshooting has been completed.

- **NO**

  See: **INFORMATION**

INFORMATION

FAULT-TRACING INFORMATION

The fault should have been detected and remedied. As this is not the case fault-tracing has failed.

Exit fault-tracing for this diagnostic trouble code (DTC) or make another attempt.

SIGNAL MISSING (2006-2012)

CHECKING THE COMPONENT

The infotainment control module (ICM) has registered that there is no communication with the phone module (PHM).

If the fault is intermittent, it has been registered previously but is no longer present. Intermittent faults can be caused by interference at start up of the phone module (PHM) or may be a different type of fault which occurs on different occasions. The fault is evaluated depending on how it occurs. If the fault recurs, replace the phone module (PHM).

In the event of a permanent fault, replace the phone module (PHM).

Remedy as necessary.

Other information:

- see **PHONE MODULE (PHM), REPLACING (2006-2010)**

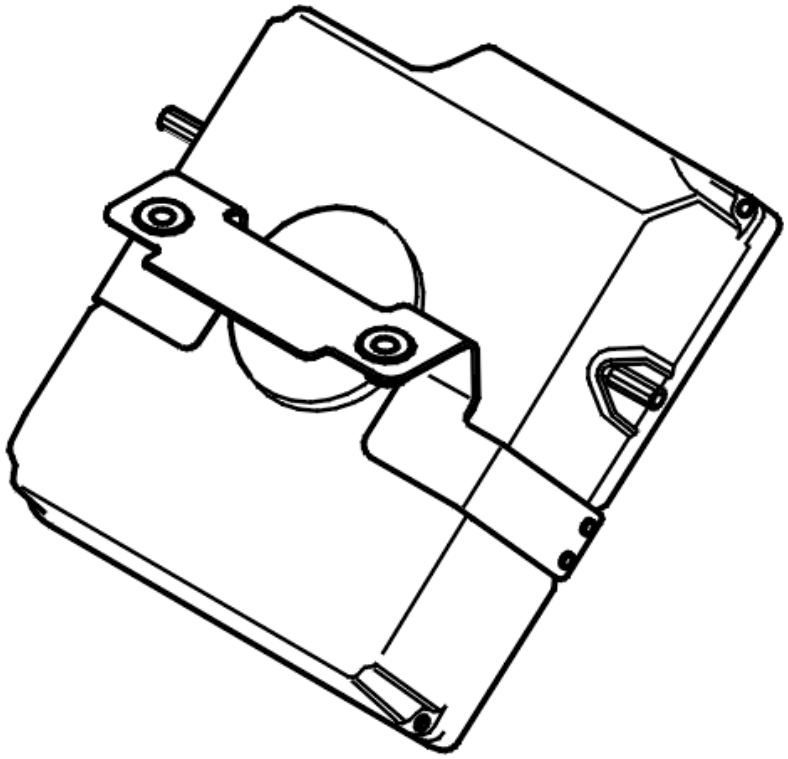

Fig. 193: Identifying Phone Module (PHM)
Courtesy of VOLVO CARS CORPORATION

- **Continue**

  See: **VERIFICATION**

VERIFICATION

VERIFICATION

HINT: After carrying out the repair, check that the fault has been remedied.

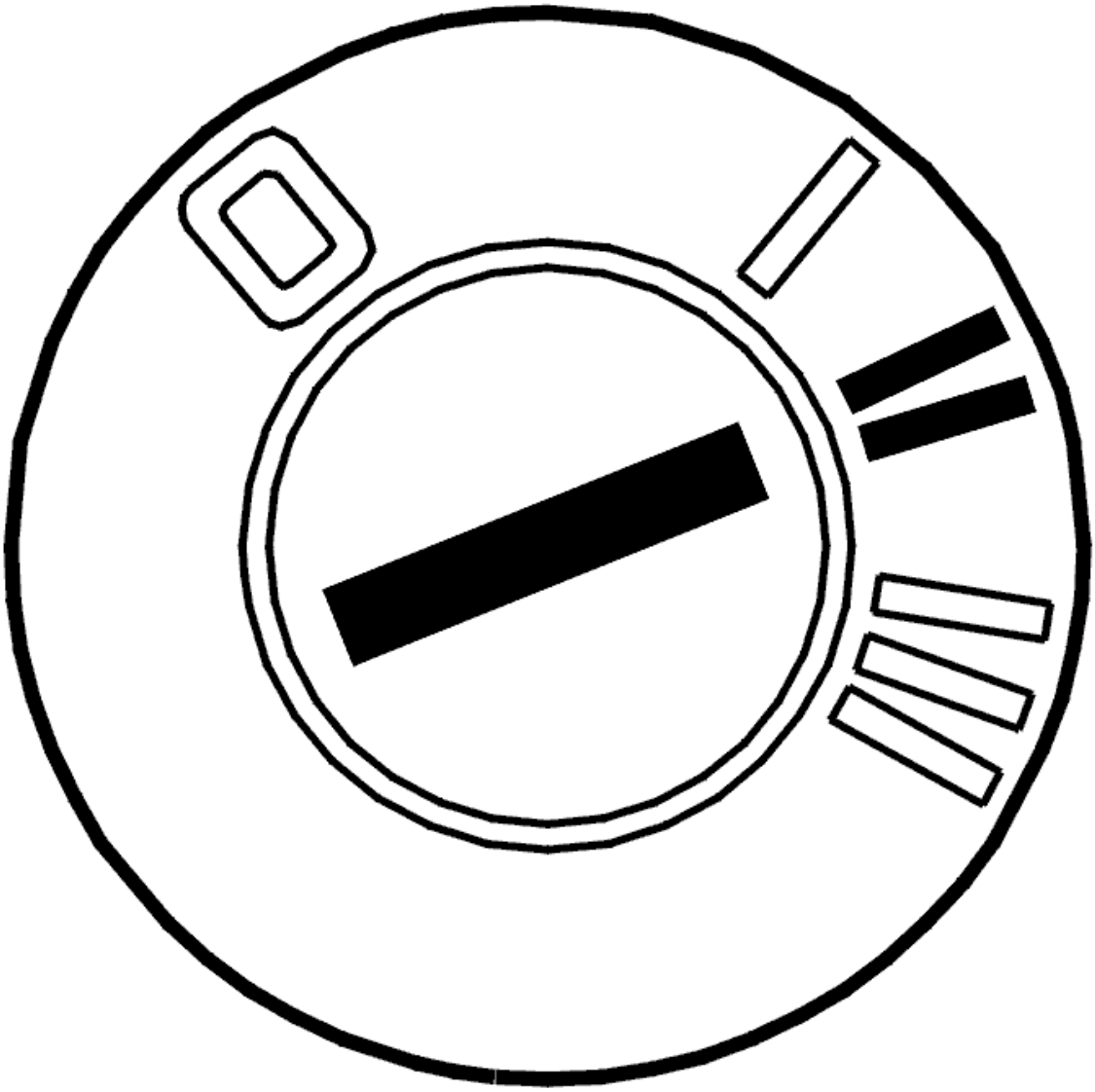

Fig. 194: Identifying Ignition ON
Courtesy of VOLVO CARS CORPORATION

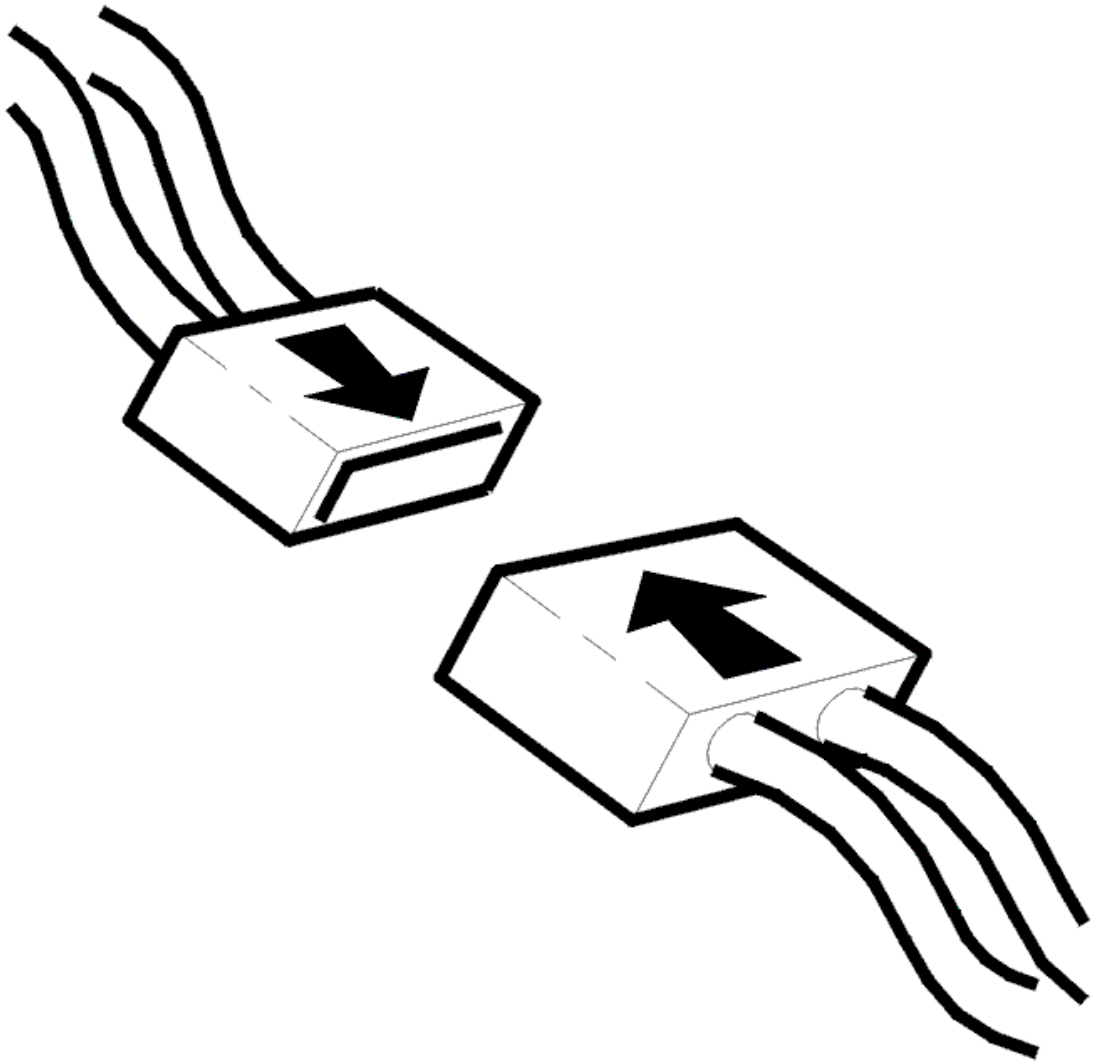

Fig. 195: Connecting Connector
Courtesy of VOLVO CARS CORPORATION

- Ignition off
- Reinstall the connectors, components etc.
- Ignition on for at least 12 seconds.

  Make a call so that both the handset and the hands-free system are used.

Is the carphone working?

- **YES**

  VERIFIED: Troubleshooting has been completed.

- **NO**

  See: **INFORMATION**

INFORMATION

FAULT-TRACING INFORMATION

The fault should have been detected and remedied. As this is not the case fault-tracing has failed.

Exit fault-tracing for this diagnostic trouble code (DTC) or make another attempt.

ICM-1A58: COMMUNICATION WITH THE GLOBAL POSITIONING SYSTEM MODULE (GPS). SIGNAL MISSING (2007-2012)

DIAGNOSTIC TROUBLE CODE (DTC) INFORMATION ICM-1A58

Condition

The infotainment control module (ICM) checks the communication with the global positioning system module (GPS).

The diagnostic trouble code is generated in the infotainment control module (ICM) if the ICM registers a communication error with the remote global positioning system module (GPS).

The diagnostic trouble code can be detected when the ignition is on at least 75 seconds and battery voltage is greater than 11 V.

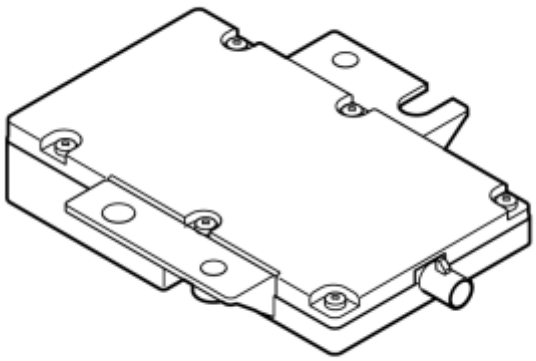

Fig. 196: Identifying Global Positioning System Module (GPS)
Courtesy of VOLVO CARS CORPORATION

Substitute Value

- None.

Possible Source

- Internal fault in the global positioning system module (GPS).
- No global positioning system module (GPS)

Fault symptom[s]

- Navigation; No Functionality

SIGNAL MISSING

CHECKING THE COMPONENT

The infotainment module (ICM) has registered loss of communication with the global positioning system module (GPS).

If the malfunction is intermittent, it means that the malfunction has been registered at an earlier time but the malfunction no longer remains. Intermittent faults can be caused by interference upon start-up of the global positioning system module (GPS) or may be a different type of fault that can recur at different times. If the problem recurs, replace the global positioning system module (GPS).

In the event of a permanent fault, replace the global positioning system module (GPS).

Remedy as necessary.

Other information:

- see **GLOBAL POSITIONING SYSTEM MODULE (GPS)**

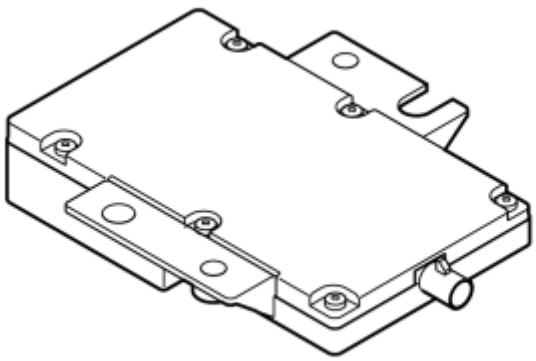

Fig. 197: Identifying Global Positioning System Module (GPS)
Courtesy of VOLVO CARS CORPORATION

- **Continue**

  See: **VERIFICATION**

VERIFICATION

VERIFICATION

HINT: After carrying out the repair, check that the fault has been remedied.

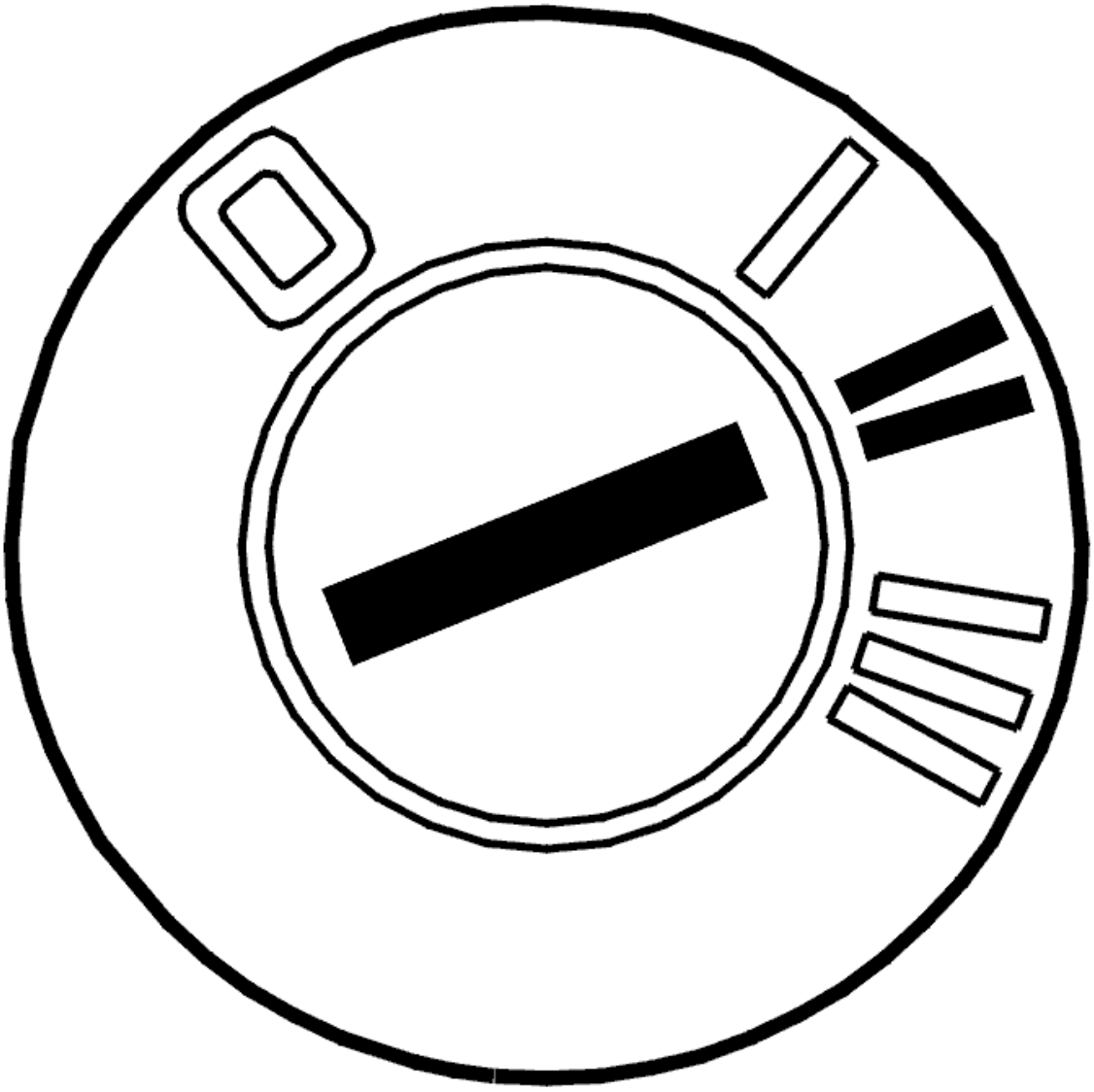

Fig. 198: Identifying Ignition ON
Courtesy of VOLVO CARS CORPORATION

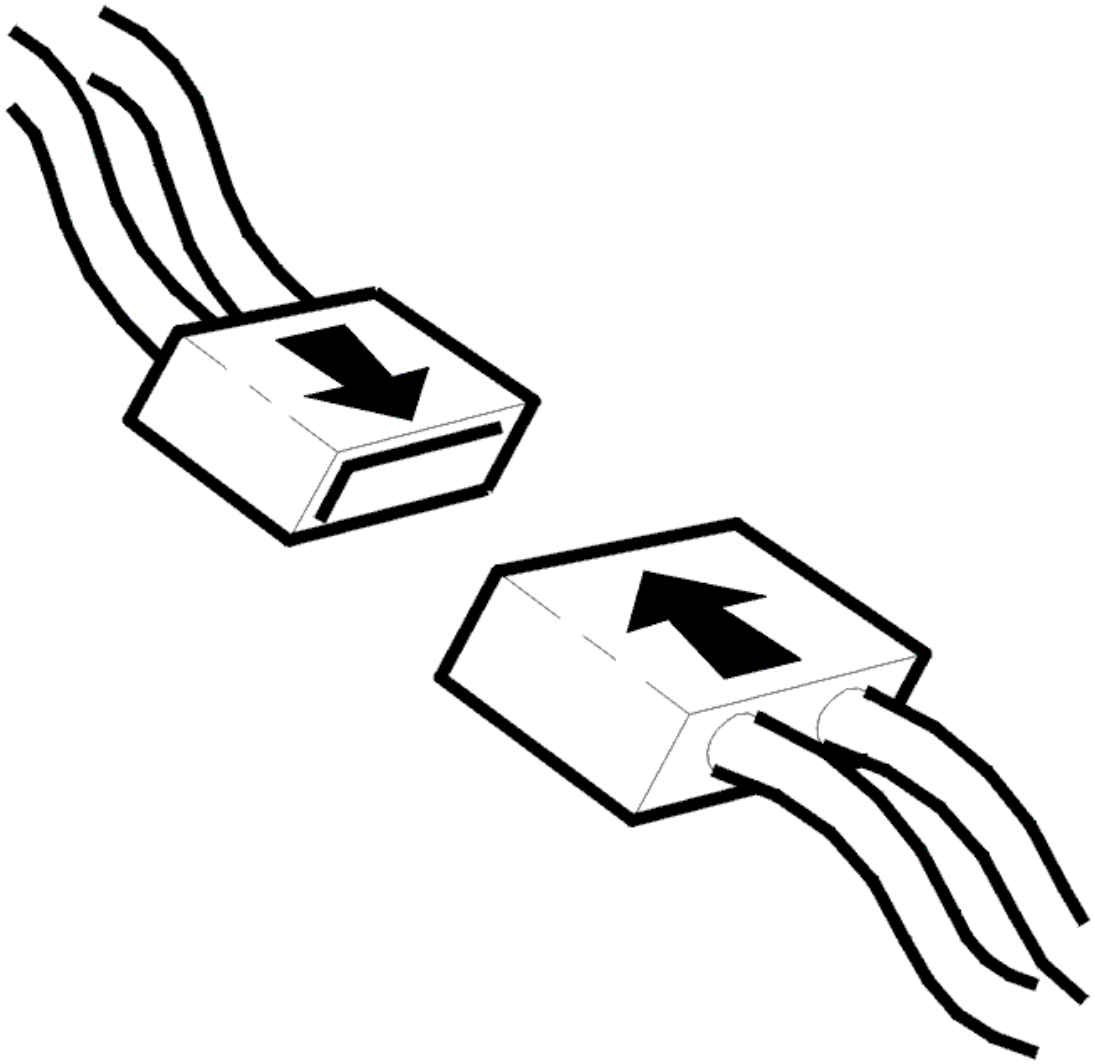

Fig. 199: Connecting Connector
Courtesy of VOLVO CARS CORPORATION

- Ignition off
- Reinstall the connectors, components etc.
- Ignition on for at least 12 seconds.

  Start up the GPS system. Check that the position of the vehicle on the map is correct. Also check that the current diagnostic trouble code (DTC) is not detected again after the Infotainment control module (ICM) has been active for at least 75 seconds.

Is the position of the car correct on the map?

- **YES**

VERIFIED: Troubleshooting has been completed.

- **NO**

  See: **INFORMATION**

INFORMATION

FAULT-TRACING INFORMATION

The fault should have been detected and remedied. As this is not the case fault-tracing has failed.

Exit fault-tracing for this diagnostic trouble code (DTC) or make another attempt.

ICM-1A5A: COMMUNICATION WITH INTEGRATED AUDIO MODULE (IAM). SIGNAL MISSING (2007-2012)

DIAGNOSTIC TROUBLE CODE (DTC) INFORMATION ICM-1A5A

Condition

The infotainment module (ICM) controls communication with the integrated audio module (IAM).

The diagnostic trouble code is generated in the infotainment control module (ICM) if the ICM registers a communication error with the integrated audio module (IAM).

The diagnostic trouble code can be detected when the ignition is on at least 75 seconds and battery voltage is greater than 11 V.

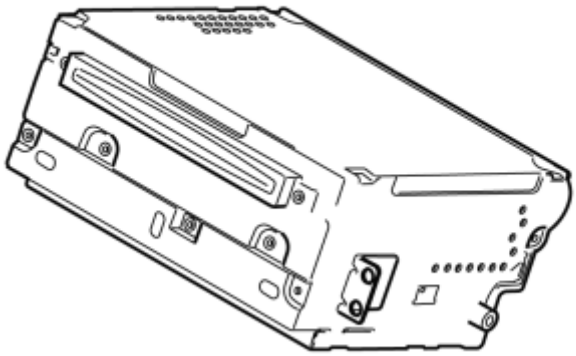

Fig. 200: Identifying Integrated Audio Module (IAM)
Courtesy of VOLVO CARS CORPORATION

Substitute Value

- None.

Possible Source

- Internal fault in integrated audio module (IAM).
- No integrated audio module (IAM).

Fault symptom[s]

- Audio system does not function

SIGNAL MISSING

CHECKING THE COMPONENT

The infotainment module (ICM) has registered loss of communication with the integrated audio module (IAM).

If the malfunction is intermittent, it means that the malfunction has been registered at an earlier time but the malfunction no longer remains. Intermittent faults can be caused by interference upon start-up of the integrated audio module (IAM) or may be a different type of fault that can recur at different times. If the problem recurs, replace the integrated audio module (IAM).

In the case of a permanent fault, change the integrated audio module (IAM).

Remedy as necessary.

Other information:

- see **CONTROL MODULE GENERAL SOUND PLAYER**

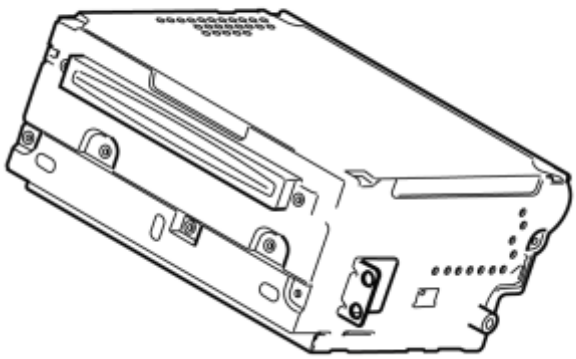

Fig. 201: Identifying Integrated Audio Module (IAM)
Courtesy of VOLVO CARS CORPORATION

- **Continue**

  See: **VERIFICATION**

VERIFICATION

VERIFICATION

HINT: After carrying out the repair, check that the fault has been remedied.

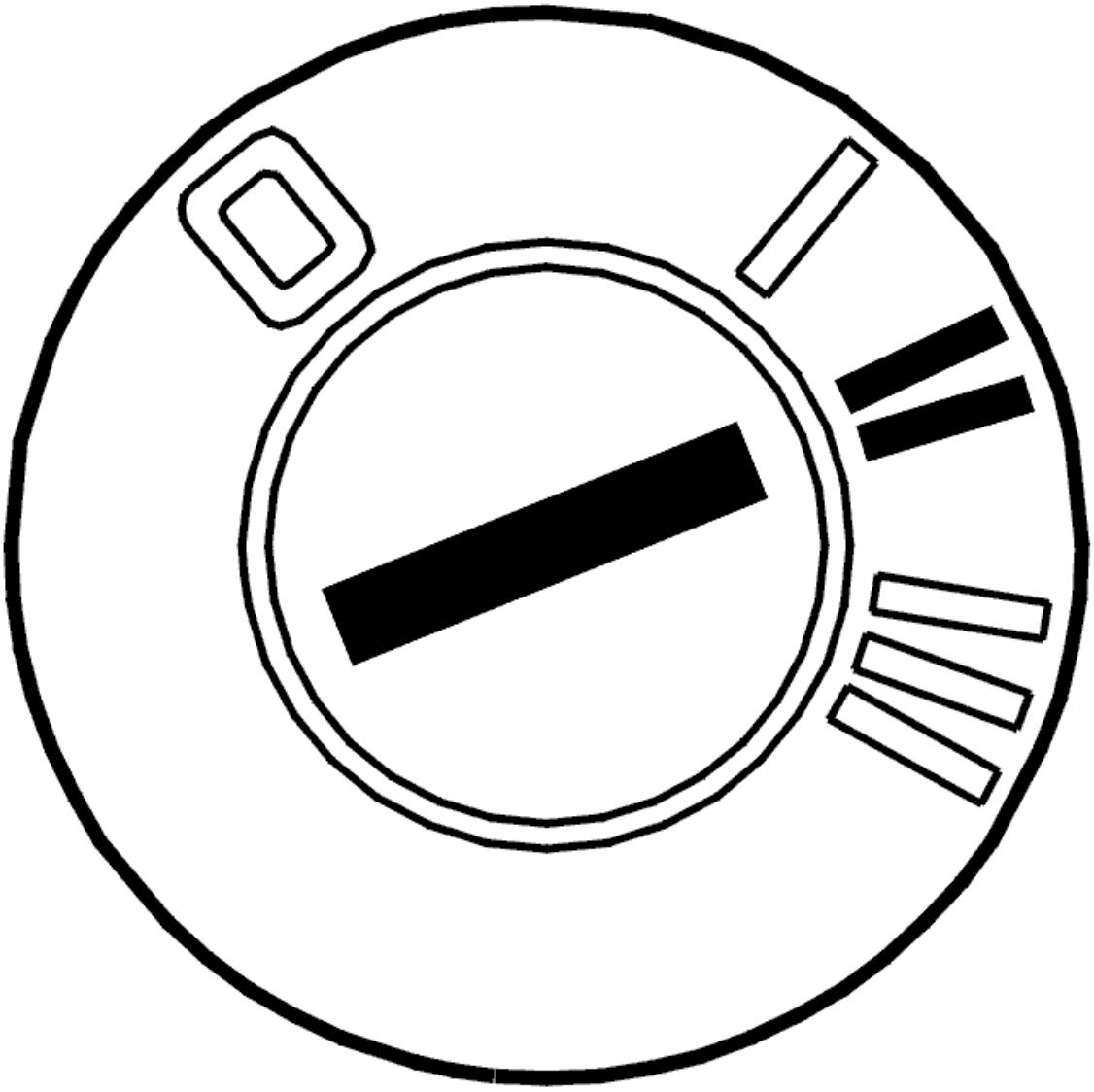

Fig. 202: Identifying Ignition ON
Courtesy of VOLVO CARS CORPORATION

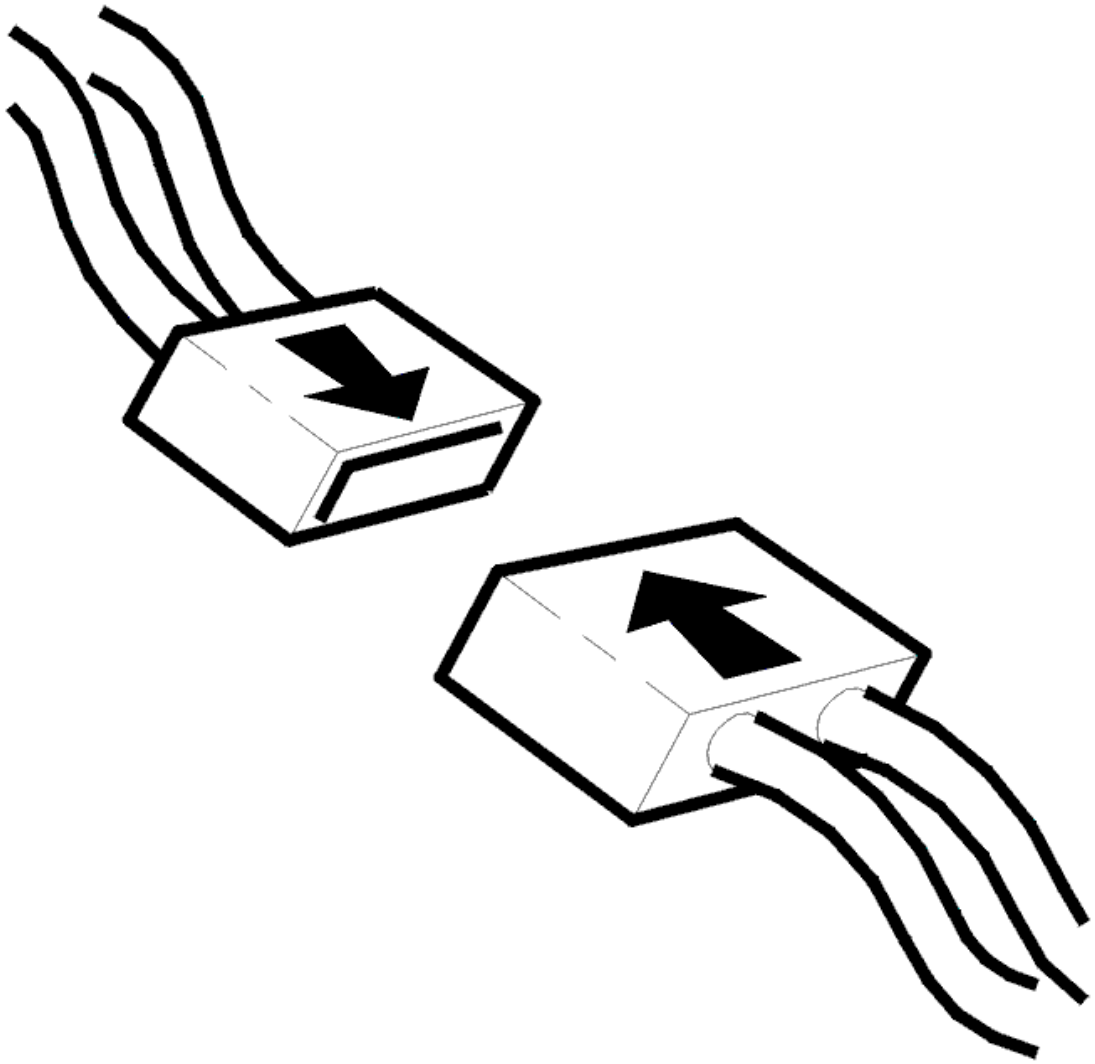

Fig. 203: Connecting Connector
Courtesy of VOLVO CARS CORPORATION

- Ignition off
- Reinstall the connectors, components etc.
- Ignition on for at least 12 seconds.

  Obtain the ID of the integrated audio module (IAM) by clicking on the VCT2000 symbol. Also check that the current diagnostic trouble code (DTC) is not detected again after the Infotainment control module (ICM) has been active for at least 75 seconds.

Fig. 204: Identifying VCT2000 Diagnostic Tool Symbol In VIDA
Courtesy of VOLVO CARS CORPORATION

Could the control module ID be read off?

- **YES**

  VERIFIED: Troubleshooting has been completed.

- **NO**

  See: **INFORMATION**

INFORMATION

FAULT-TRACING INFORMATION

The fault should have been detected and remedied. As this is not the case fault-tracing has failed.

Exit fault-tracing for this diagnostic trouble code (DTC) or make another attempt.

ICM-1A5B: COMMUNICATION WITH REMOTE DIGITAL AUDIO RECEIVER (RDAR) SIGNAL MISSING (2007-2012)

DIAGNOSTIC TROUBLE CODE (DTC) INFORMATION ICM-1A5B

Condition

The infotainment control module (ICM) checks the communication with the Remote Digital Audio Receiver (RDAR).

The diagnostic trouble code is generated in the infotainment control module (ICM) if the ICM registers a communication error with the remote digital audio receiver module (RDAR).

The diagnostic trouble code can be detected when the ignition is on at least 75 seconds and battery voltage is greater than 11 V.

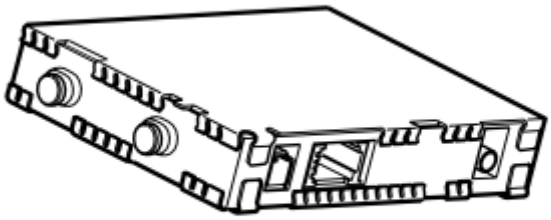

Fig. 205: Identifying Remote Digital Audio Receiver Module (RDAR)
Courtesy of VOLVO CARS CORPORATION

Substitute Value

- None.

Possible Source

- Internal fault in the Remote Digital Audio Receiver (RDAR).
- No Remote Digital Audio Receiver (RDAR).

Fault symptom[s]

- Digital Radio; No Functionality

SIGNAL MISSING

CHECKING THE COMPONENT

The infotainment module (ICM) has registered loss of communication with the Remote Digital Audio Receiver (RDAR).

If the malfunction is intermittent, it means that the malfunction has been registered at an earlier time but the malfunction no longer remains. Intermittent faults can be caused by interference upon start-up of the remote digital audio receiver (RDAR) or may be a different type of fault that can recur at different times. If the fault recurs, replace the remote digital audio module (RDAR).

In the event of a permanent fault, replace the Remote Digital Audio Receiver (RDAR).

Remedy as necessary.

Other information:

- see **SATELLITE RADIO CONTROL MODULE**

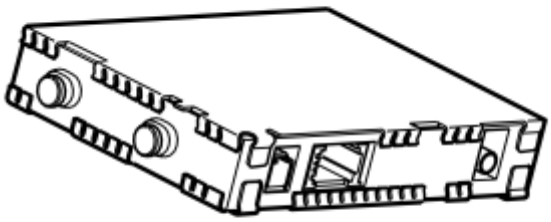

Fig. 206: Identifying Remote Digital Audio Receiver Module (RDAR)
Courtesy of VOLVO CARS CORPORATION

- **Continue**

  See: **VERIFICATION**

VERIFICATION

VERIFICATION

HINT: After carrying out the repair, check that the fault has been remedied.

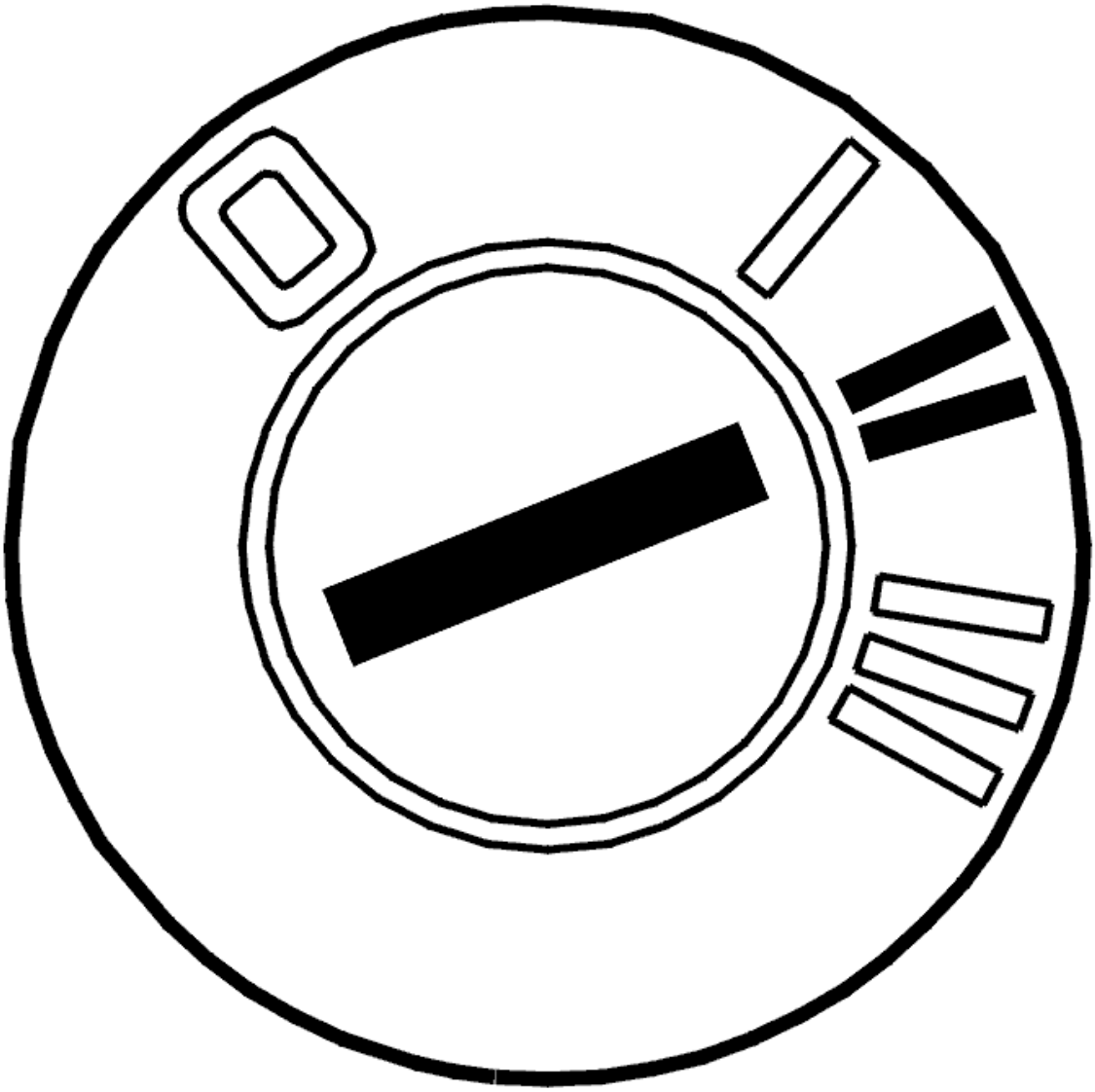

Fig. 207: Identifying Ignition ON
Courtesy of VOLVO CARS CORPORATION

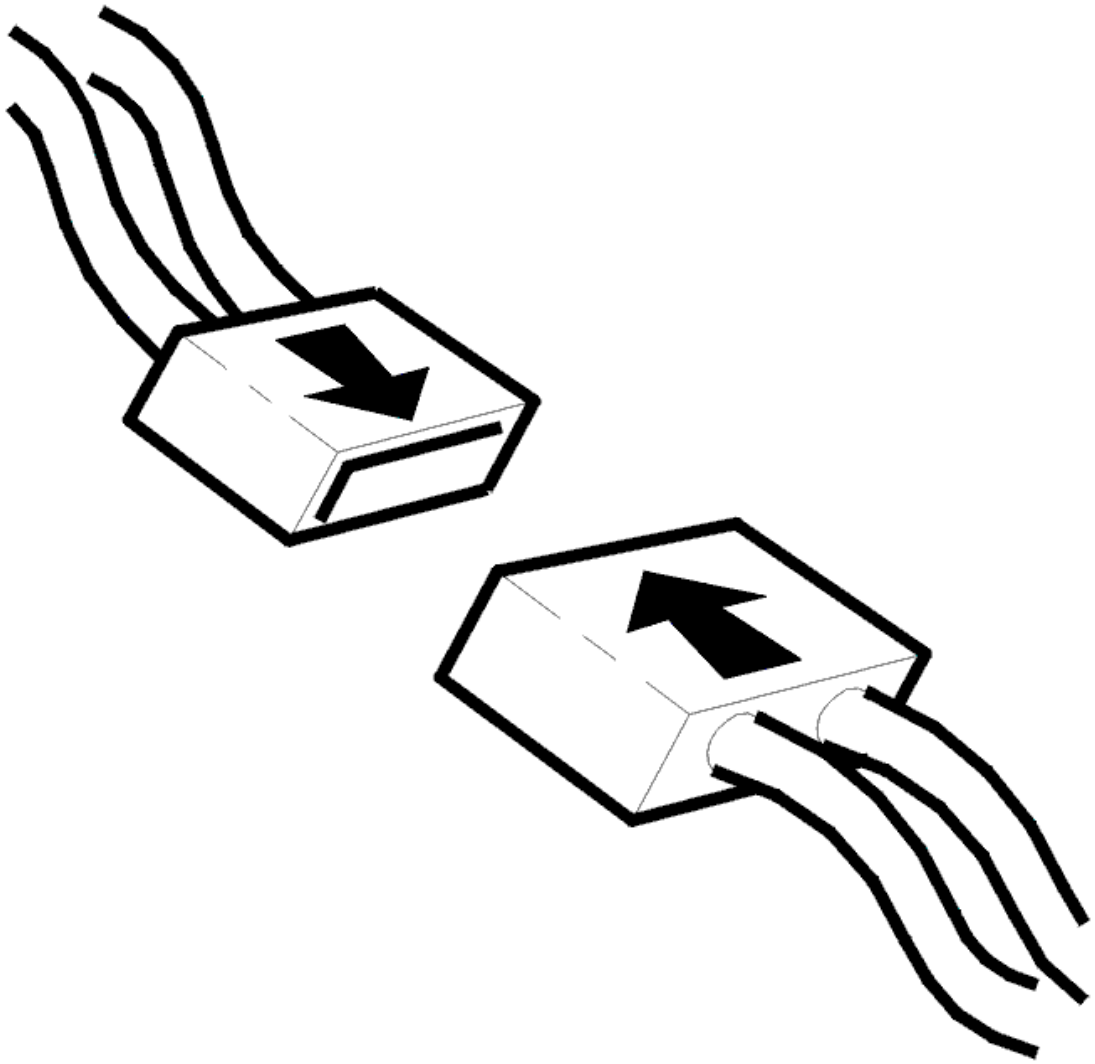

Fig. 208: Connecting Connector
Courtesy of VOLVO CARS CORPORATION

- Ignition off
- Reinstall the connectors, components etc.
- Ignition on for at least 12 seconds.

  Obtain the ID of the Remote Digital Audio Receiver (RDAR) by clicking on the VCT2000 symbol. Also check that the current diagnostic trouble code (DTC) is not detected again after the Infotainment control module (ICM) has been active for at least 75 seconds.

Fig. 209: Identifying VCT2000 Diagnostic Tool Symbol In VIDA
Courtesy of VOLVO CARS CORPORATION

Can the control module ID be read out?

- **YES**

  VERIFIED: Troubleshooting has been completed.

- **NO**

  See: **INFORMATION**

INFORMATION

FAULT-TRACING INFORMATION

The fault should have been detected and remedied. As this is not the case fault-tracing has failed.

Exit fault-tracing for this diagnostic trouble code (DTC) or make another attempt.

ICM-1A5C: COMMUNICATION WITH BLUETOOTH PHONE MODULE (BPM) SIGNAL MISSING (2011-2012)

DIAGNOSTIC TROUBLE CODE (DTC) INFORMATION ICM-1A5C

Condition

The infotainment module (ICM) checks the communication with the Bluetooth phone module (BPM).

The diagnostic trouble code is stored if the control module detects:

- Fault in the communication with the Bluetooth phone module (BPM).

The control module's test for the diagnostic trouble code (DTC) starts in the event of:

- When the ignition has been on for at least 75 seconds and the battery voltage is above 11 V.

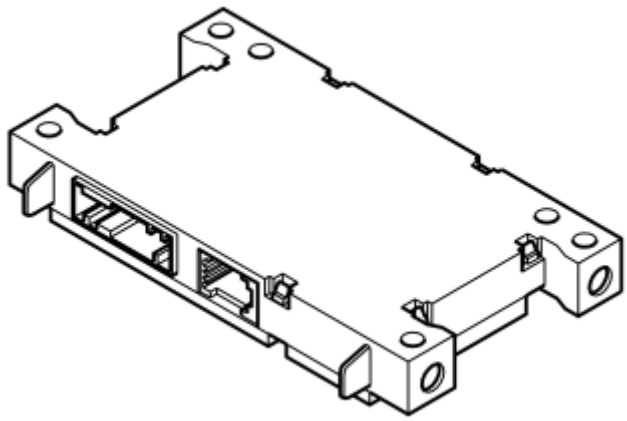

Fig. 210: Identifying Bluetooth Phone Module (BPM)
Courtesy of VOLVO CARS CORPORATION

Substitute Value

- None.

Possible Source

- Internal fault in the Bluetooth phone module (BPM).
- Bluetooth phone module (BPM) missing.

Fault symptom[s]

- Bluetooth Telephone: No Functionality

SIGNAL MISSING

CHECKING THE COMPONENT

The infotainment module (ICM) has registered loss of communication with the Bluetooth phone module (BPM).

If the fault is intermittent, it has been registered previously but is no longer present. Intermittent faults may occur at start up of the Bluetooth phone module (BPM) or may be a different type of fault that occurs on different occasions. The fault is evaluated depending on how it occurs.

In the event of a permanent fault, replace the Bluetooth phone module (BPM).

Remedy as necessary.

Other information

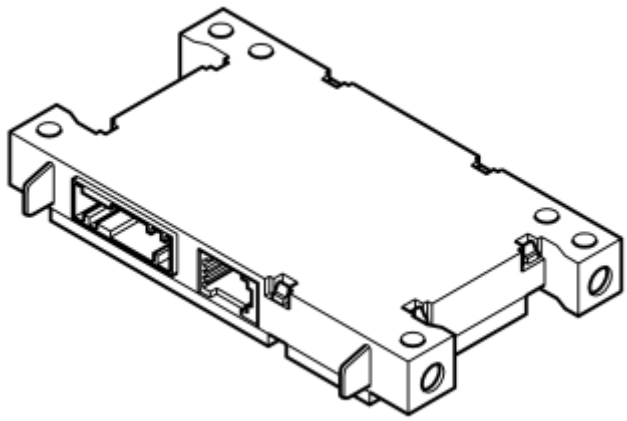

Fig. 211: Identifying Bluetooth Phone Module (BPM)
Courtesy of VOLVO CARS CORPORATION

- **Continue**

  See: **VERIFICATION**

VERIFICATION

HINT: After carrying out the repair, check that the fault has been remedied.

- Ignition off.
- Reinstall the connectors, components etc.
- Ignition on.

Check the function of the Bluetooth phone module (BPM).

Is the carphone working?

- **YES**

  OKAY: Troubleshooting has been completed.

- **NO**

  See: **INFORMATION**

INFORMATION

FAULT-TRACING INFORMATION

The fault should have been detected and remedied. As this is not the case fault-tracing has failed.

Exit fault-tracing for this diagnostic trouble code (DTC) or make another attempt.

ICM-1A5D: COMMUNICATION WITH ACCESSORY USB UNIT (AUU) SIGNAL MISSING (2007-2012)

DIAGNOSTIC TROUBLE CODE (DTC) INFORMATION ICM-1A5D

Condition

The infotainment module (ICM) checks the communication with the Accessory USB unit (AUU).

The diagnostic trouble code is stored if the control module detects:

- Fault in the communication with the Accessory USB unit (AUU).

The control module's test for the diagnostic trouble code (DTC) starts in the event of:

- When the ignition has been on for at least 75 seconds and the battery voltage is above 11 V.

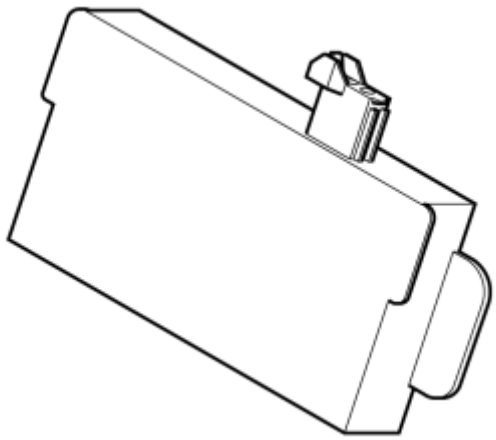

Fig. 212: Identifying Accessory USB Unit (AUU)
Courtesy of VOLVO CARS CORPORATION

Substitute Value

- None.

Possible Source

- Internal fault in the Accessory USB unit (AUU).
- No Accessory USB unit (AUU).

Fault symptom[s]

- USB unit/Does not work

SIGNAL MISSING

CHECKING THE COMPONENT

The infotainment module (ICM) has registered loss of communication with the Accessory USB unit (AUU).

If the fault is intermittent, it has been registered previously but is no longer present. Intermittent faults may occur at start up of the Accessory USB unit (AUU) or may be a different type of fault that occurs on different occasions. The fault is evaluated depending on how it occurs.

In the event of a permanent fault, replace the Accessory USB unit (AUU).

Remedy as necessary.

Other information

- see **UNIVERSAL BUS MODULE (USB)**

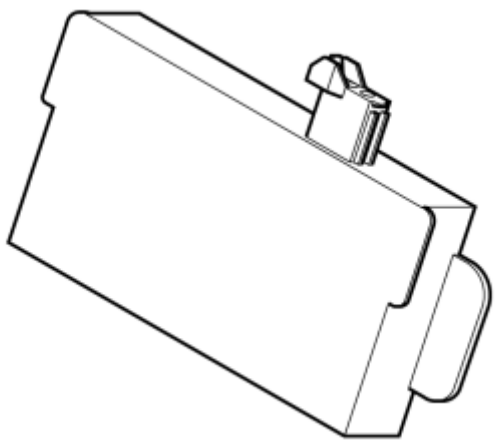

Fig. 213: Identifying Accessory USB Unit (AUU)
Courtesy of VOLVO CARS CORPORATION

- **Continue**

  See: **VERIFICATION**

VERIFICATION

HINT: After carrying out the repair, check that the fault has been remedied.

- Ignition off.
- Reinstall the connectors, components etc.

- Ignition on.

Check function of the Accessory USB Unit (AUU).

Is the system working?

- **YES**

  OKAY: Troubleshooting has been completed.

- **NO**

  See: **INFORMATION**

INFORMATION

FAULT-TRACING INFORMATION

The fault should have been detected and remedied. As this is not the case fault-tracing has failed.

Exit fault-tracing for this diagnostic trouble code (DTC) or make another attempt.

ICM-1D01: CONTROL MODULE. INTERNAL FAULT (2003-2012)

DIAGNOSTIC TROUBLE CODE (DTC) INFORMATION ICM-1D01

Condition

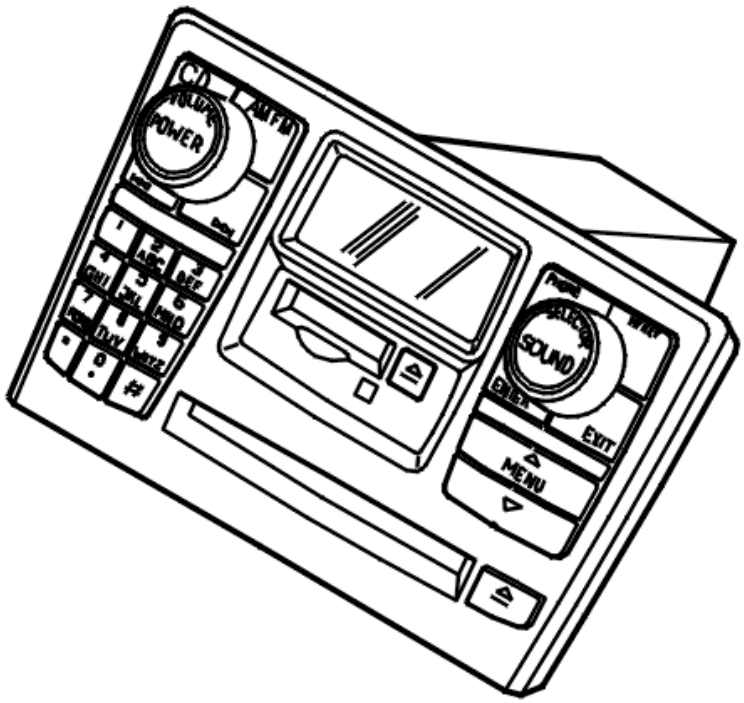

Fig. 214: Identifying Infotainment Control Module (ICM)
Courtesy of VOLVO CARS CORPORATION

Diagnostic trouble code (DTC) ICM-1D01 is stored if the infotainment control module (ICM) registers an internal fault.

Substitute Value

- None.

Possible Source

- Internal fault in the control module.

Fault symptom[s]

- Functions in the infotainment system do not work.

INTERNAL FAULT

REPLACING THE COMPONENT

The infotainment control module (ICM) has registered an internal fault.

If the fault is intermittent, it has been registered previously but is no longer present. Intermittent faults can be caused by interference at start up of the infotainment control module (ICM) or may be a different type of fault which occurs on different occasions. The fault is evaluated depending on how it occurs. If the fault recurs, replace the infotainment control module (ICM).

If the fault is permanent, replace the infotainment control module (ICM).

Remedy as necessary.

Other information:

- To replace the infotainment control module (ICM), see **INFOTAINMENT CONTROL MODULE (ICM), REPLACING** .

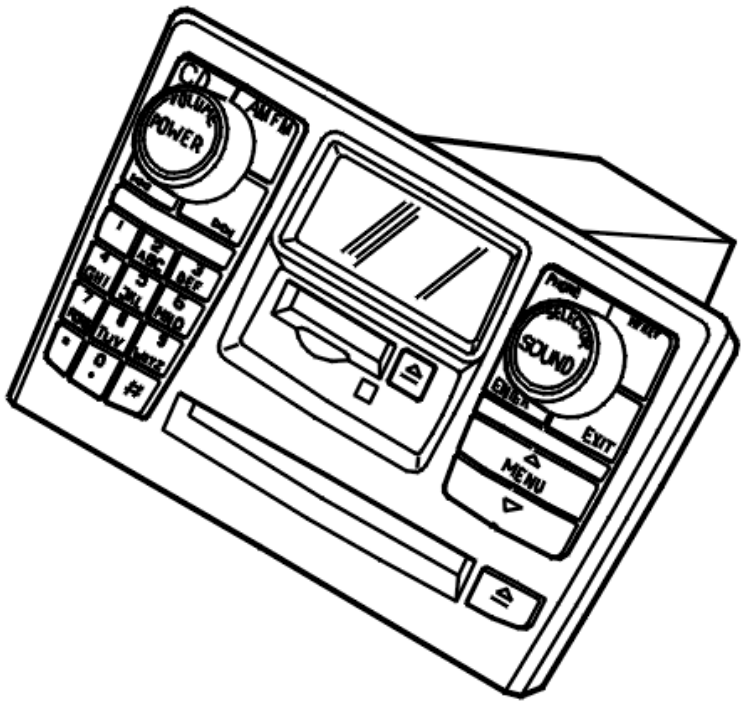

Fig. 215: Identifying Infotainment Control Module (ICM)
Courtesy of VOLVO CARS CORPORATION

ICM-1D03: CONTROL MODULE, NOT FULLY PROGRAMMED. INTERNAL FAULT (2003-2012)

DIAGNOSTIC TROUBLE CODE (DTC) INFORMATION ICM-1D03

Condition

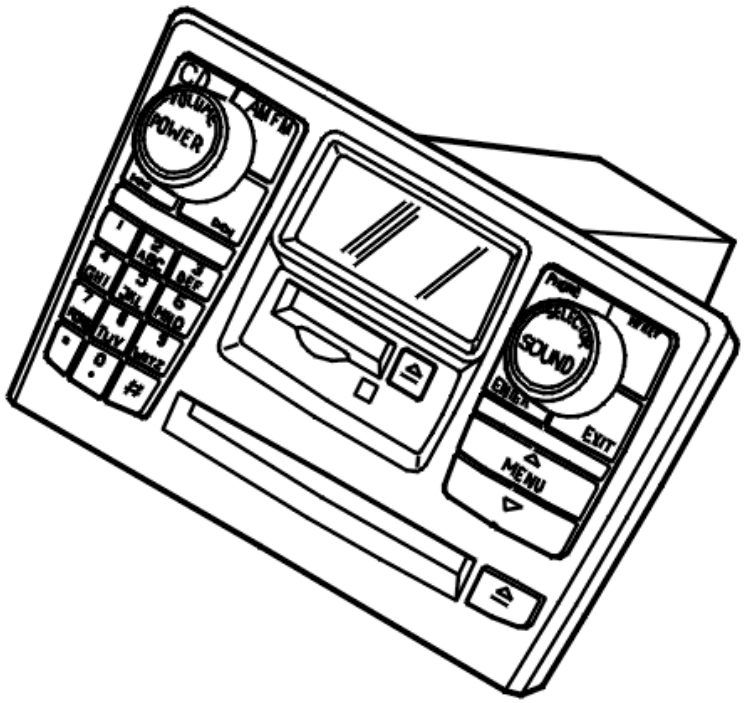

Fig. 216: Identifying Infotainment Control Module (ICM)
Courtesy of VOLVO CARS CORPORATION

Diagnostic trouble code (DTC) ICM-1D03 is stored if the infotainment control module (ICM) registers that the software download is not complete. Diagnostic trouble code (DTC) ICM-1D03 is stored even if the downloaded software is not compatible with the actual display/control module.

Substitute Value

- None.

Possible Source

- Software download not complete
- The software and display/control module are not compatible.

Fault symptom[s]

- Functions in the infotainment system are not working
- The display does not light.

INTERNAL FAULT

CHECKING THE COMPONENT

Diagnostic trouble code (DTC) ICM-1D03 indicates that the software download has failed. This may be because the software for an infotainment control module (ICM) with alphanumeric display has been downloaded into a module with a graphic display or vice-versa.

Check the software and display/control module by clicking on the VCT2000 symbol. Is the correct software installed for the display that is installed?

- If not, try programming the display/control module with the correct software. See 8691181
- If the display/control module and software are correct, try reloading the same software using 8691181 .

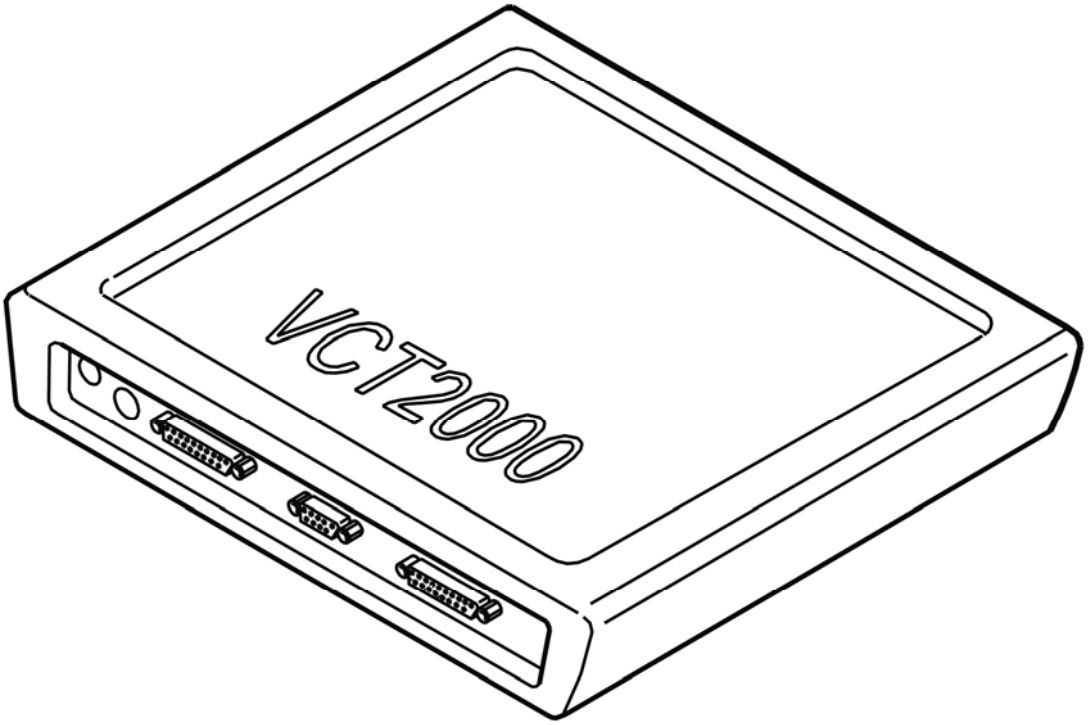

Fig. 217: Identifying VCT2000 Diagnostic Tool Symbol In VIDA
Courtesy of VOLVO CARS CORPORATION

- **Continue**

  See: **PROGRAMMING THE CONTROL MODULE**

PROGRAMMING THE CONTROL MODULE

Programming can be carried out when the software has been delivered.

Program the control module. See 8691181 .

ICM-1D07: CONTROL MODULE. INTERNAL FAULT (2003-2012)

DIAGNOSTIC TROUBLE CODE (DTC) INFORMATION ICM-1D07

Condition

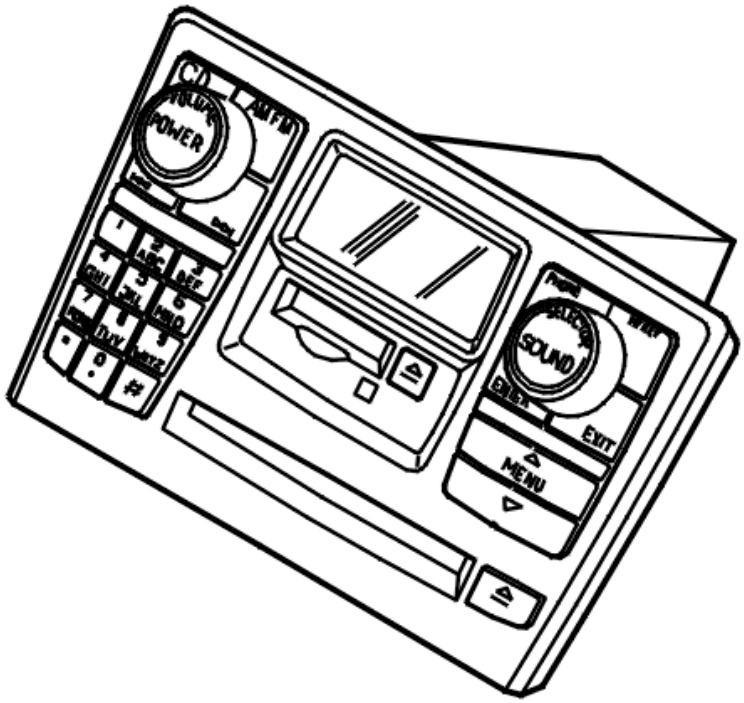

Fig. 218: Identifying Infotainment Control Module (ICM)
Courtesy of VOLVO CARS CORPORATION

Diagnostic trouble code (DTC) ICM-1D07 is stored if the infotainment control module (ICM) registers an internal fault.

Substitute Value

- None.

Possible Source

- Internal fault in the control module.

Fault symptom[s]

- Functions in the infotainment system do not work.

INTERNAL FAULT

see **INTERNAL FAULT**

ICM-1D08: CONTROL MODULE. INTERNAL FAULT (2003-2012)

DIAGNOSTIC TROUBLE CODE (DTC) INFORMATION ICM-1D08

Condition

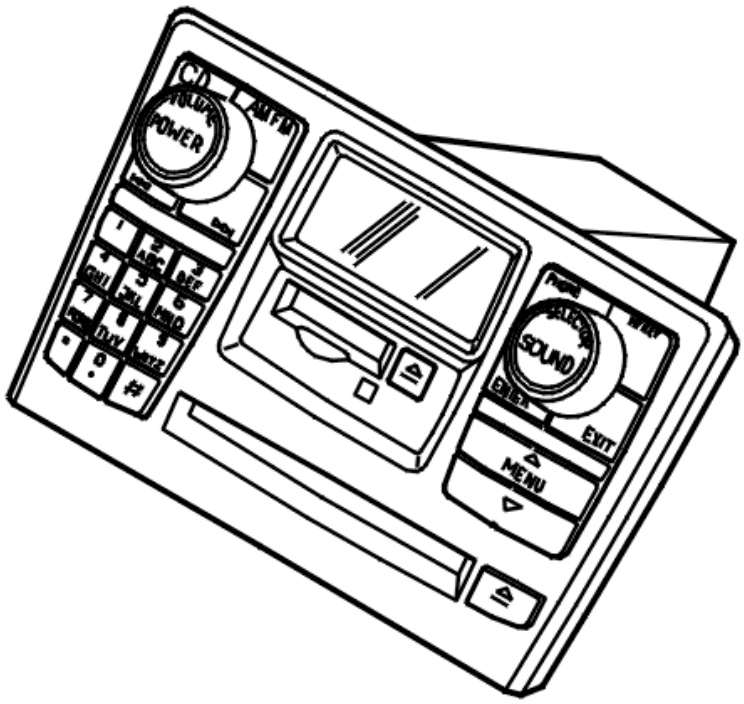

Fig. 219: Identifying Infotainment Control Module (ICM)
Courtesy of VOLVO CARS CORPORATION

Diagnostic trouble code (DTC) ICM-1D08 is stored if the infotainment control module (ICM) registers an internal fault.

Substitute Value

- None.

Possible Source

- Internal fault in the control module.

Fault symptom[s]

- The infotainment system flashes
- Functions in the infotainment system do not work.

INTERNAL FAULT

see **INTERNAL FAULT**

ICM-1D09: CONTROL MODULE. INTERNAL FAULT (2003-2006)

DIAGNOSTIC TROUBLE CODE (DTC) INFORMATION ICM-1D09

Condition

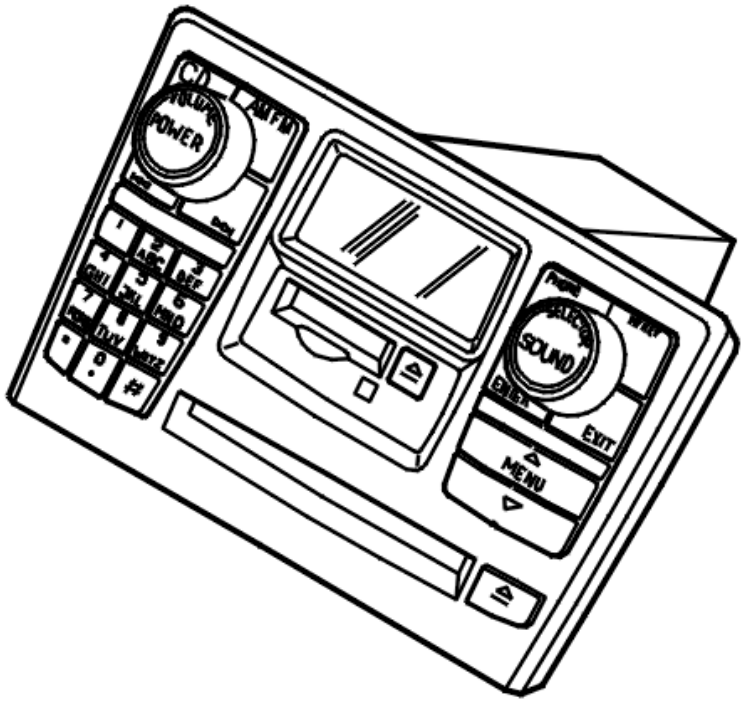

Fig. 220: Identifying Infotainment Control Module (ICM)
Courtesy of VOLVO CARS CORPORATION

Diagnostic trouble code (DTC) ICM-1D09 is stored if the infotainment control module (ICM) registers an internal fault.

Substitute Value

- None.

Possible Source

- Internal fault in the control module.

Fault symptom[s]

- The customer settings for the infotainment system disappear.

INTERNAL FAULT

see **INTERNAL FAULT**

ICM-1F20: LEFT KEYPAD. ACTIVATED TOO LONG (2003-2012)

DIAGNOSTIC TROUBLE CODE (DTC) INFORMATION ICM-1F20

Condition

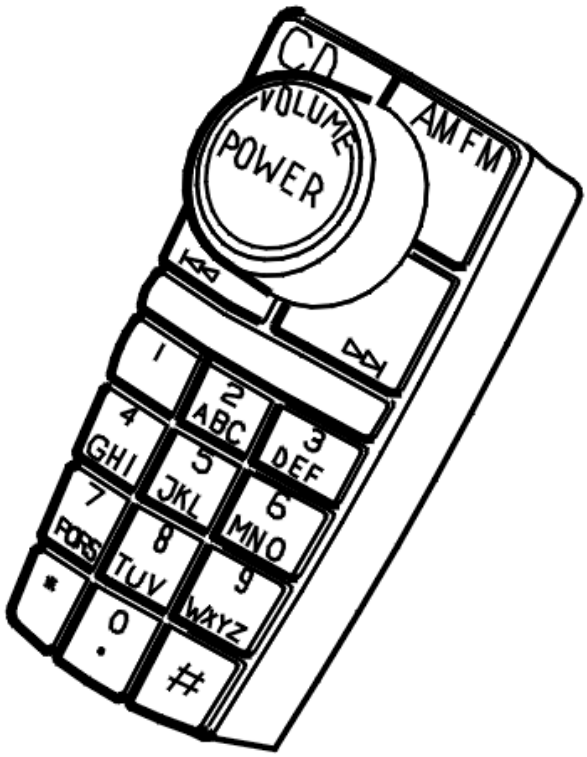

Fig. 221: Identifying Left-Hand Keypad
Courtesy of VOLVO CARS CORPORATION

The infotainment control module (ICM) checks whether any buttons on the left-hand keypad have stuck.

Diagnostic trouble code (DTC) ICM-1F20 is stored if the control module registers that the button has been pressed in for longer than 3 minutes.

Substitute Value

- None.

Possible Source

- A button on the left-hand keypad has been active for more than 3 minutes
- A button has jammed in the pressed in position
- Short-circuit in the keypad unit.

Fault symptom[s]

- Buttons on the keypad unit are not working.

ACTIVATED TOO LONG

CHECKING THE COMPONENT

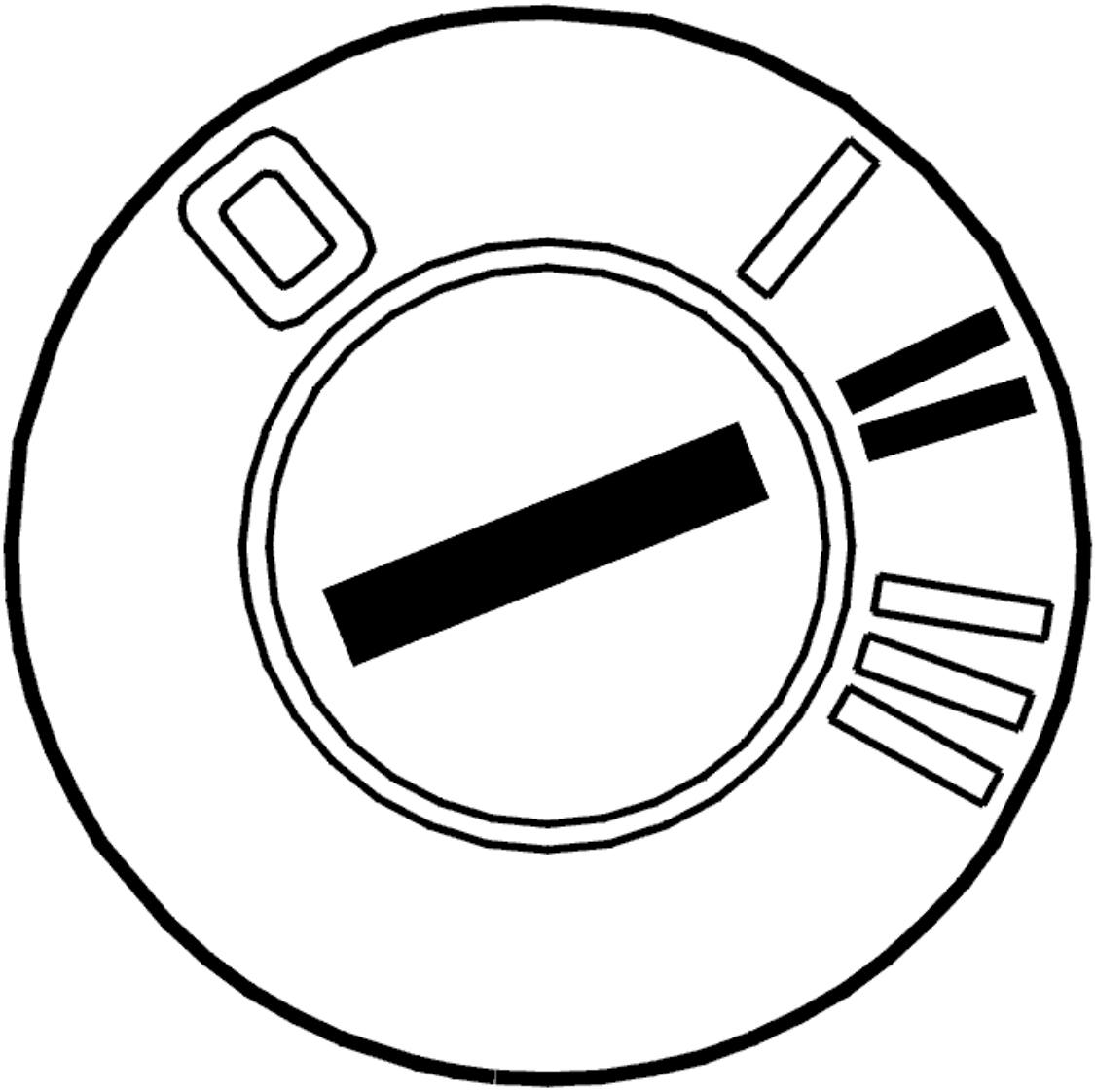

Fig. 222: Identifying Ignition ON
Courtesy of VOLVO CARS CORPORATION

- Ignition on.

  Read off which button was activated when the diagnostic trouble codes (DTCs) was set by clicking on the VCT2000 symbol.

  Check if the button is jammed due to dirt or some object preventing the button from returning.

  If the button does not spring back into place the keypad must be replaced.

  Remedy as necessary.

  Other information:

- To replace the left-hand keypad, see **INFOTAINMENT CONTROL MODULE (ICM), REPLACING**

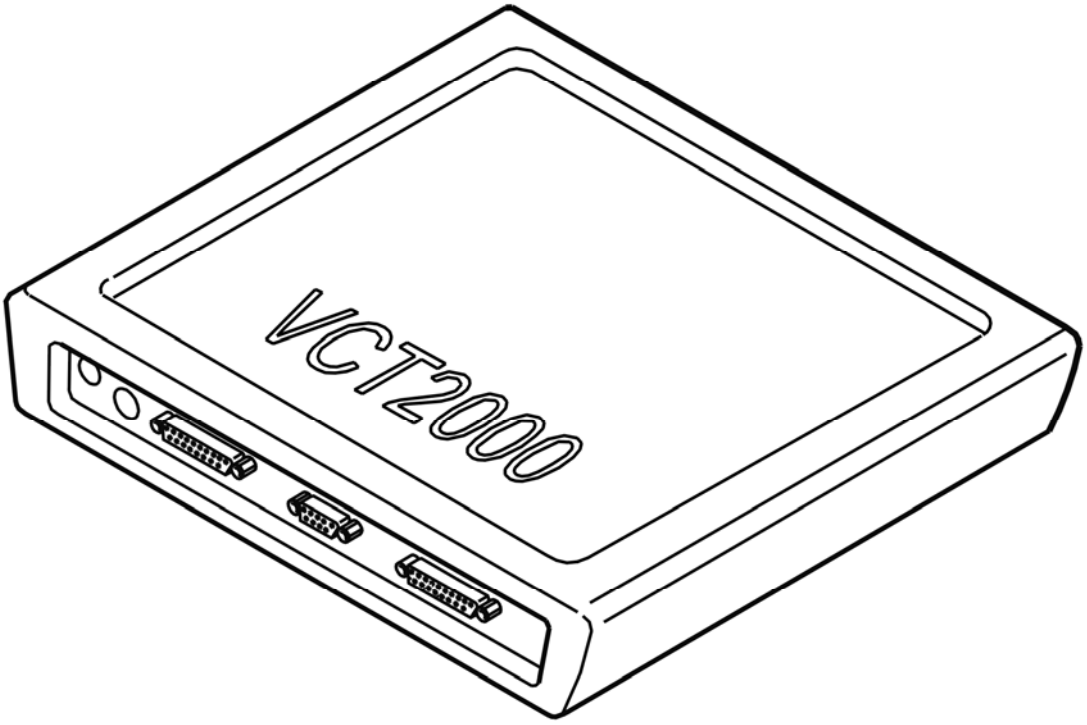

Fig. 223: Identifying VCT2000 Diagnostic Tool Symbol In VIDA
Courtesy of VOLVO CARS CORPORATION

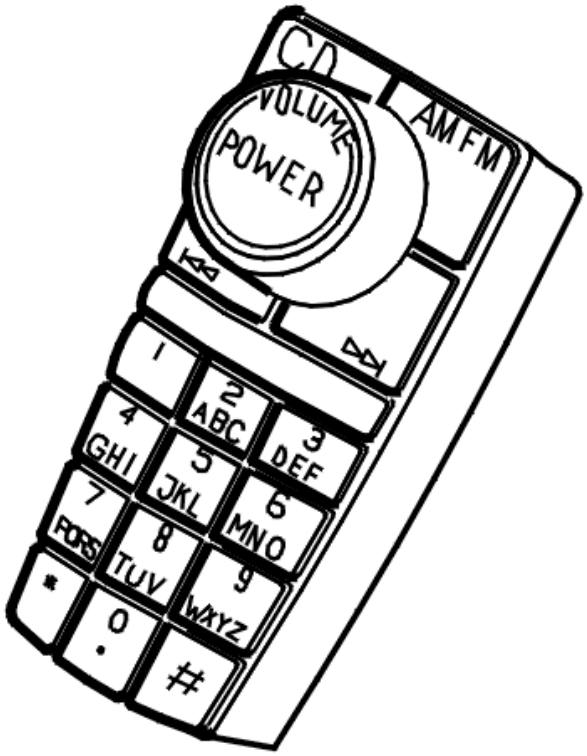

Fig. 224: Identifying Left-Hand Keypad
Courtesy of VOLVO CARS CORPORATION

- **Continue**

  See: **VERIFICATION**

VERIFICATION

VERIFICATION

HINT: After carrying out the repair, check that the fault has been remedied.

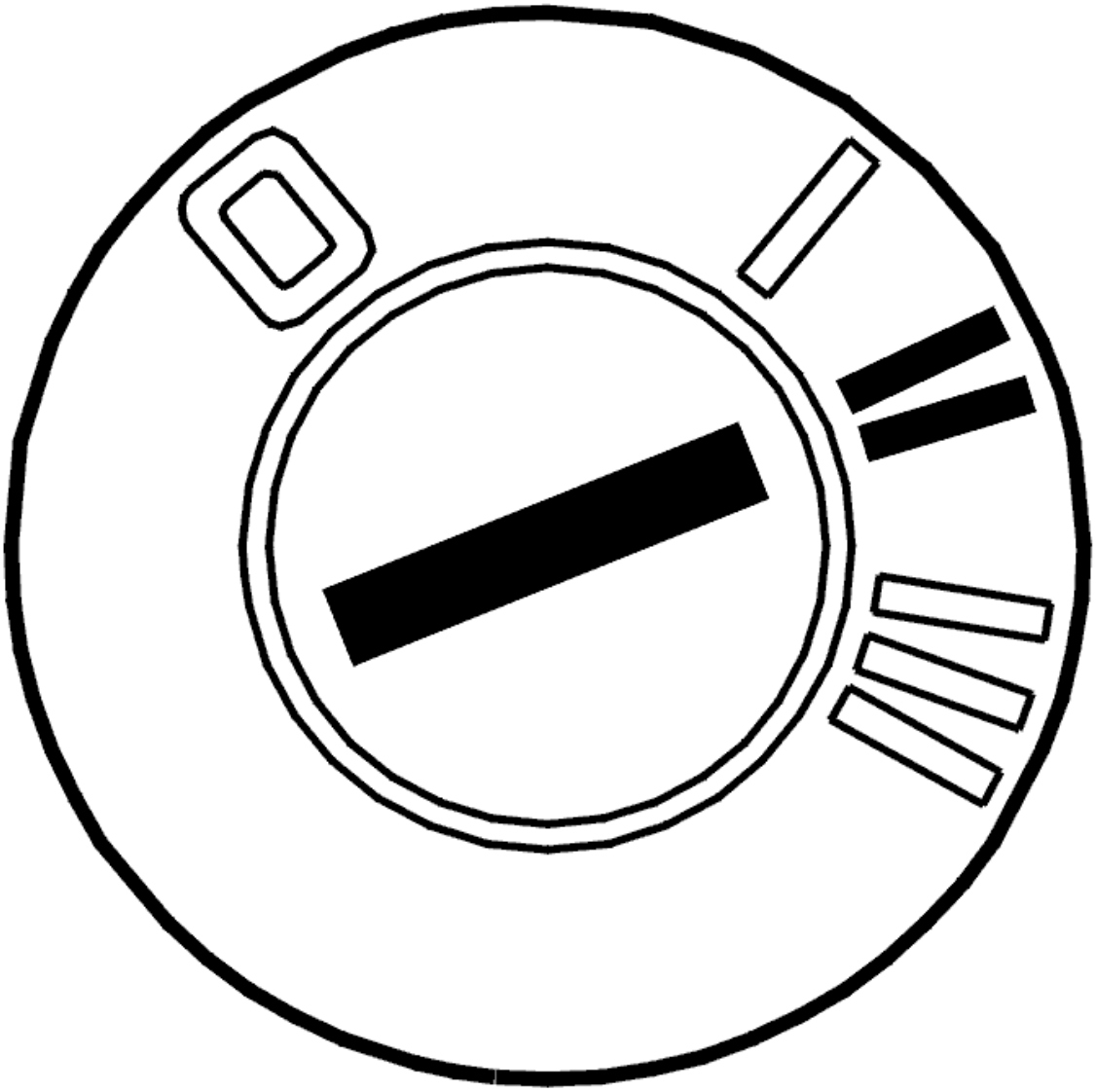

Fig. 225: Identifying Ignition ON
Courtesy of VOLVO CARS CORPORATION

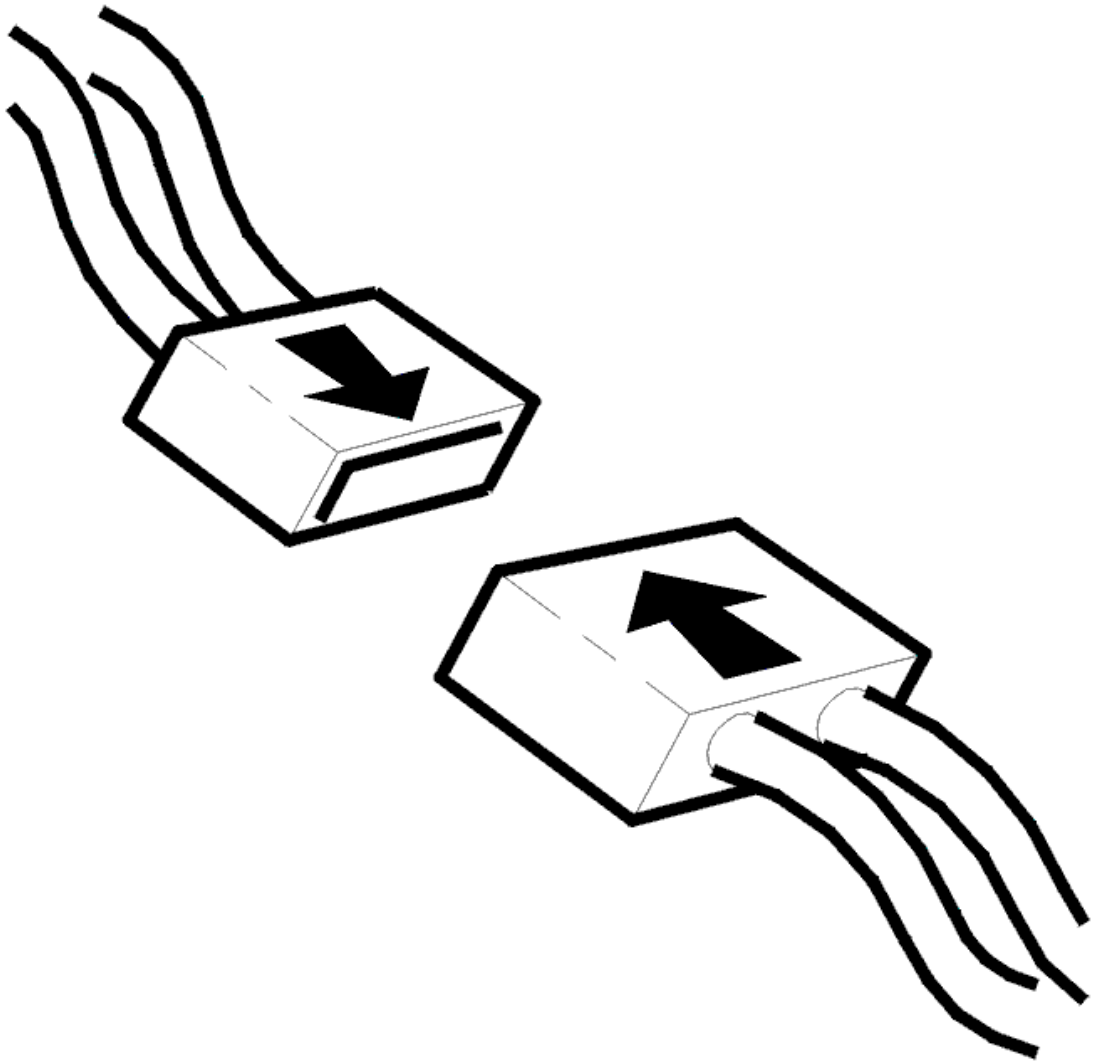

Fig. 226: Connecting Connector
Courtesy of VOLVO CARS CORPORATION

- Ignition off
- Reinstall the connectors, components etc.
- Ignition on.

  Check the button on the left-hand keypad by clicking on the VCT2000 symbol.

  Check that the status changes when the relevant button is affected.

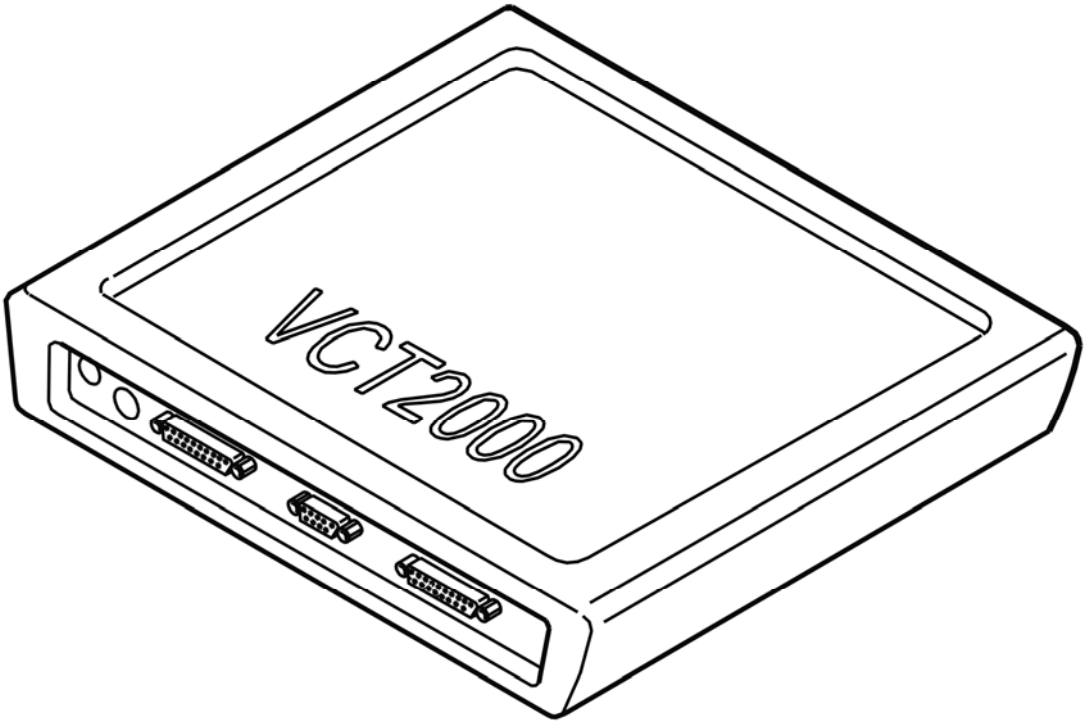

Fig. 227: Identifying VCT2000 Diagnostic Tool Symbol In VIDA
Courtesy of VOLVO CARS CORPORATION

Does the status of the button change?

- **YES**

  VERIFIED: Troubleshooting has been completed.

- **NO**

  See: **INFORMATION**

INFORMATION

FAULT-TRACING INFORMATION

The fault should have been detected and remedied. As this is not the case fault-tracing has failed.

Exit fault-tracing for this diagnostic trouble code (DTC) or make another attempt.

ICM-1F21: LEFT-HAND KEYPAD CIRCUIT 1. SIGNAL TOO HIGH / TOO LOW (2003-2012)

DIAGNOSTIC TROUBLE CODE (DTC) INFORMATION ICM-1F21

Condition

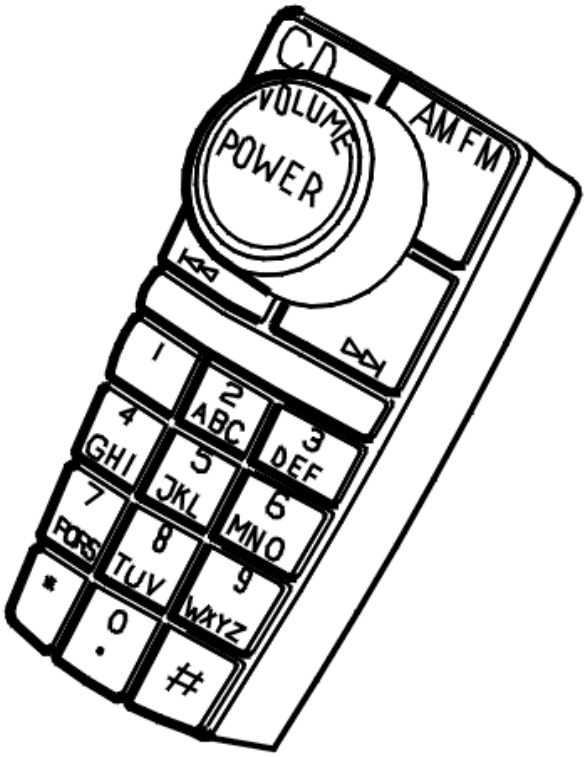

Fig. 228: Identifying Left-Hand Keypad
Courtesy of VOLVO CARS CORPORATION

The infotainment control module (ICM) checks the circuit for the CD, AM/FM buttons |<< and >|.

Diagnostic trouble code (DTC) ICM-1F21 is stored if the control module registers that the signal in the keypad circuit is too high or too low.

Substitute Value

- None.

Possible Source

- Short-circuit to ground or an open-circuit in the left-hand keypad unit
- Short-circuit to ground or an open-circuit in the cable for the keypad unit.

Fault symptom[s]

- Buttons on the keypad unit are not working.

SIGNAL TOO HIGH / LOW

CHECKING THE WIRING AND COMPONENT

Check the connections between the left-hand keypad and the infotainment control module (ICM). Check for contact resistance and oxidation. Check for loose connections. Check for damage in particular.

Visually check the cable between the keypad and the control module for damage.

If no faults were found, try a new keypad.

Remedy as necessary.

Other information:

- To replace the left-hand keypad, see **INFOTAINMENT CONTROL MODULE (ICM), REPLACING**

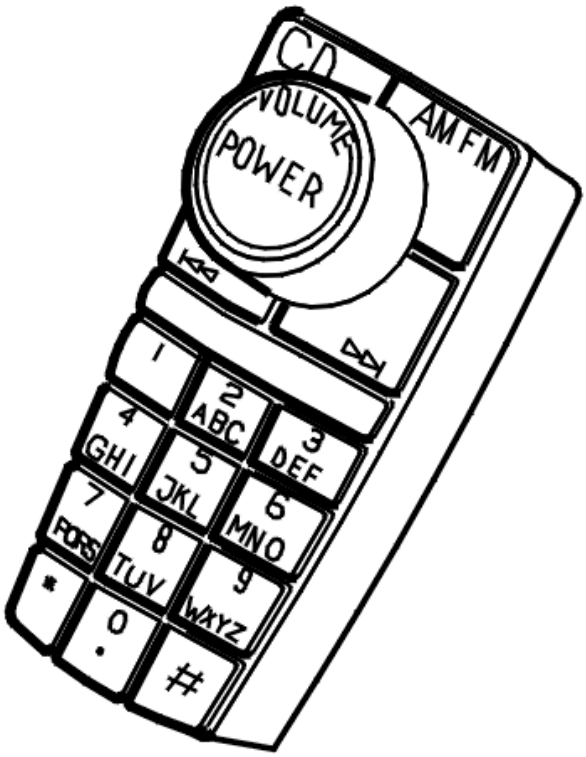

Fig. 229: Identifying Left-Hand Keypad
Courtesy of VOLVO CARS CORPORATION

- **Continue**

See: **VERIFICATION**

VERIFICATION

VERIFICATION

HINT: After carrying out the repair, check that the fault has been remedied.

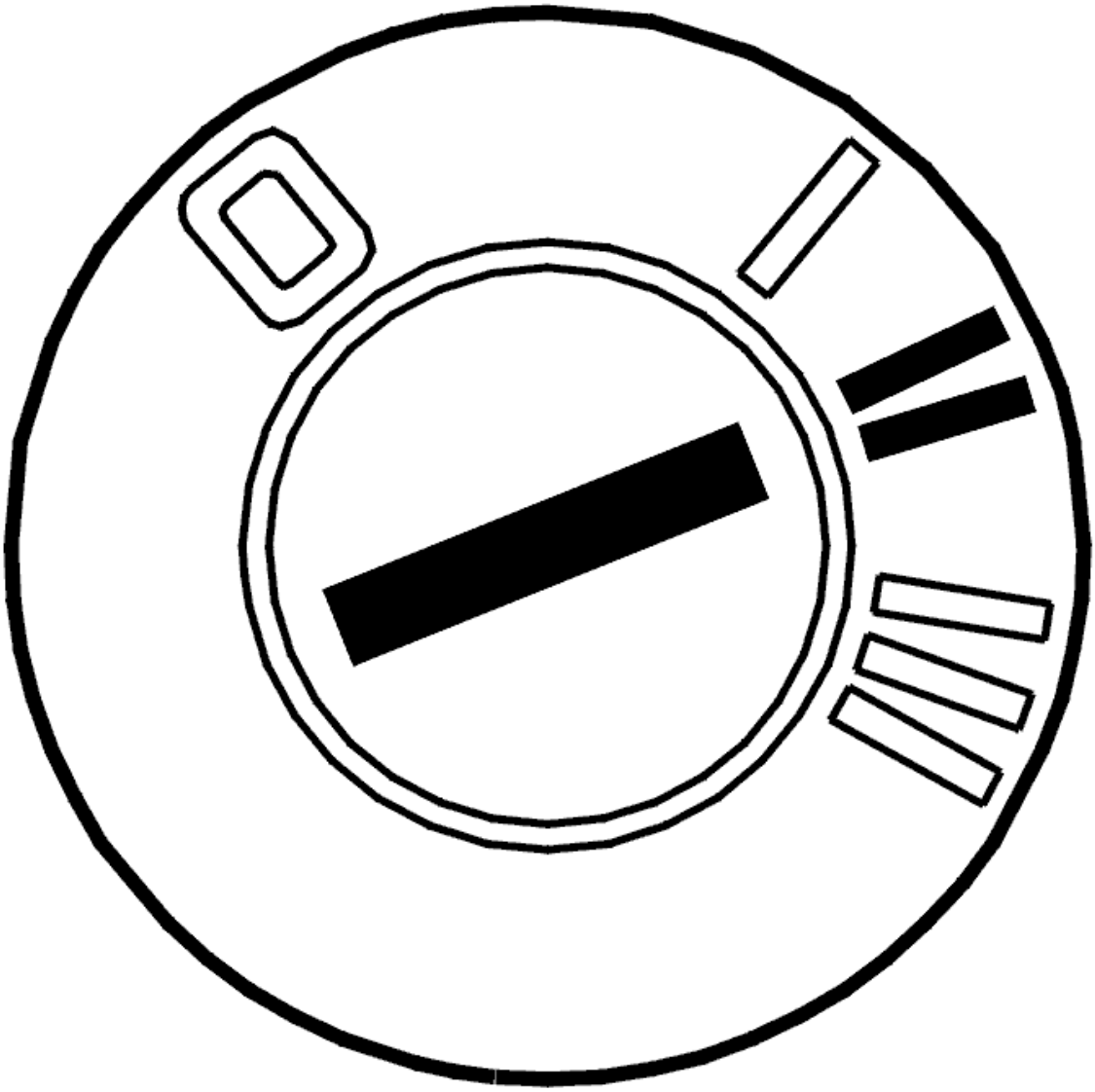

Fig. 230: Identifying Ignition ON
Courtesy of VOLVO CARS CORPORATION

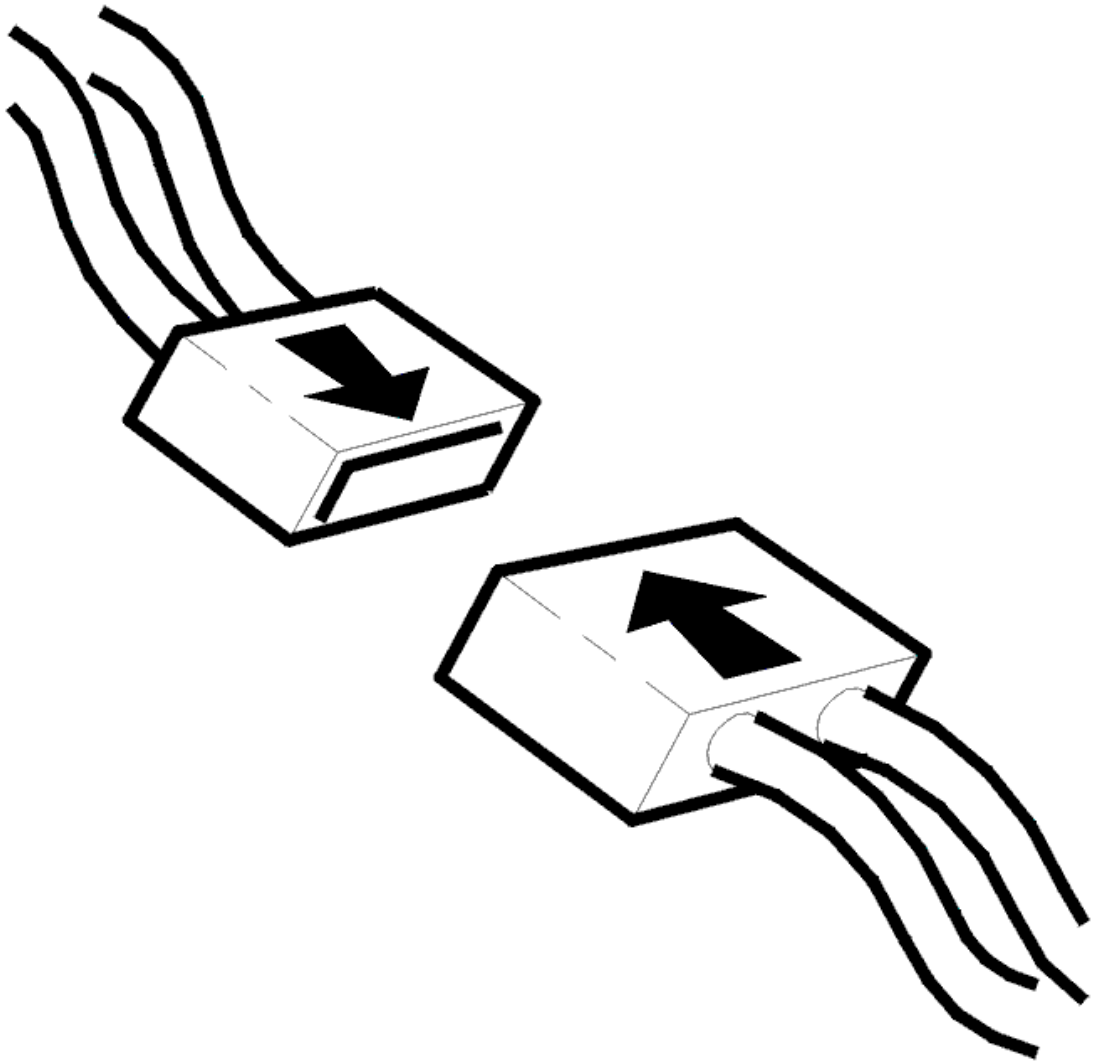

Fig. 231: Connecting Connector
Courtesy of VOLVO CARS CORPORATION

- Ignition off
- Reinstall the connectors, components etc.
- Ignition on.

Activate the infotainment unit and check that all the buttons in the relevant keypad function.

Click on the VCT2000 symbol to check the buttons by reading off the status of the relevant button.

Button circuit	Button			
Button circuit 1	>>|	AM/FM	|<<	CD

Button circuit 2	*	7	4	1
Button circuit 3	0	8	5	2
Button circuit 4	#	9	6	3
POWER button	POWER			

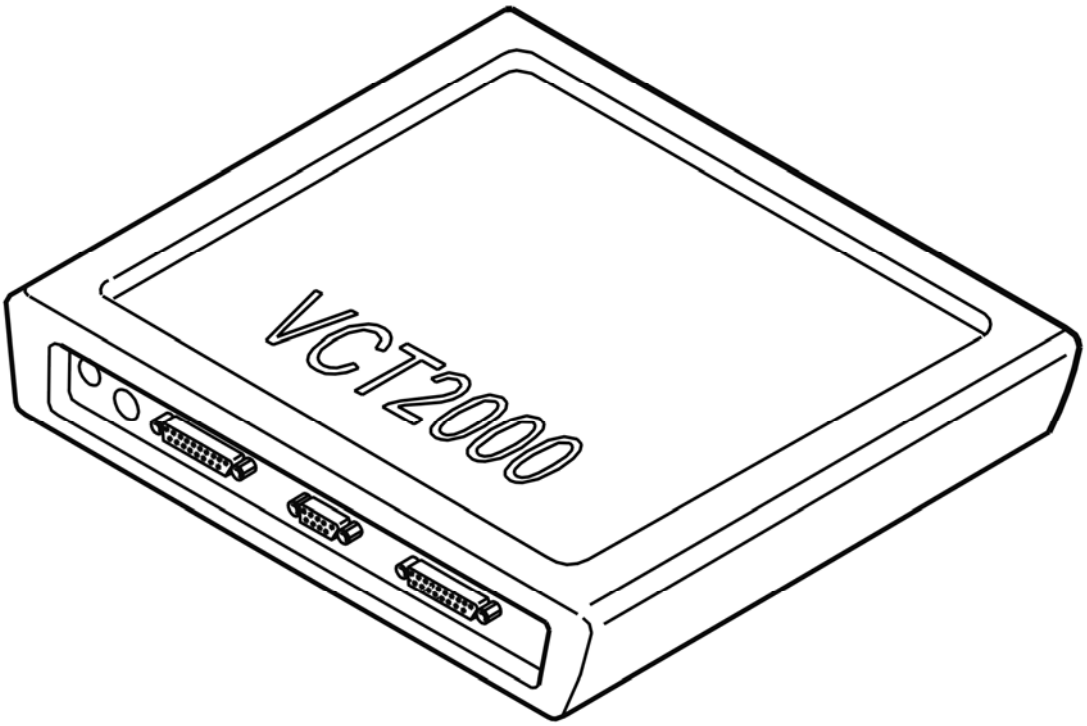

Fig. 232: Identifying VCT2000 Diagnostic Tool Symbol In VIDA
Courtesy of VOLVO CARS CORPORATION

Do all the buttons operate normally?

- **YES**

  VERIFIED: Troubleshooting has been completed.

- **NO**

  See: **INFORMATION**

INFORMATION

FAULT-TRACING INFORMATION

The fault should have been detected and remedied. As this is not the case fault-tracing has failed.

Exit fault-tracing for this diagnostic trouble code (DTC) or make another attempt.

ICM-1F22: LEFT-HAND KEYPAD CIRCUIT 2. SIGNAL TOO HIGH / TOO LOW (2003-2012)

DIAGNOSTIC TROUBLE CODE (DTC) INFORMATION ICM-1F22

Condition

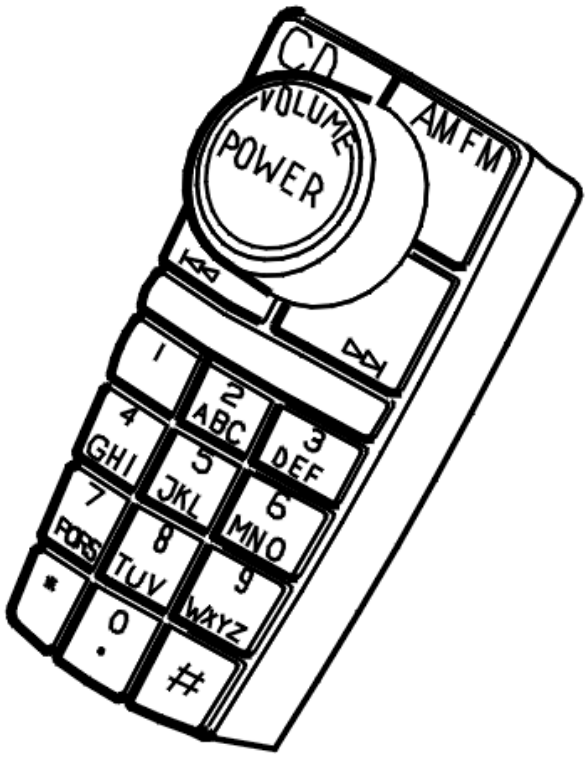

Fig. 233: Identifying Left-Hand Keypad
Courtesy of VOLVO CARS CORPORATION

The infotainment control module (ICM) checks the circuit for the buttons 1, 4, 7 and *.

Diagnostic trouble code (DTC) ICM-1F22 is stored if the control module registers that the signal in the keypad circuit is too high or too low.

Substitute Value

- None.

Possible Source

- Short-circuit to ground or an open-circuit in the left-hand keypad unit
- Short-circuit to ground or an open-circuit in the cable for the keypad unit.

Fault symptom[s]

- Buttons on the keypad unit are not working.

SIGNAL TOO HIGH / LOW

see **SIGNAL TOO HIGH / LOW**

ICM-1F23: LEFT-HAND KEYPAD CIRCUIT 3. SIGNAL TOO HIGH / TOO LOW (2003-2012)

DIAGNOSTIC TROUBLE CODE (DTC) INFORMATION ICM-1F23

Condition

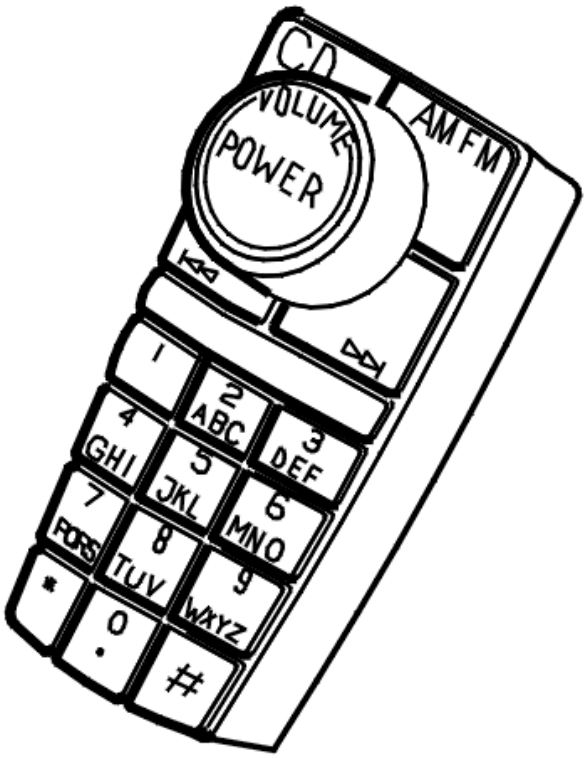

Fig. 234: Identifying Left-Hand Keypad

Courtesy of VOLVO CARS CORPORATION

The infotainment control module (ICM) checks the circuit for the buttons 2, 5, 8 and 0.

Diagnostic trouble code (DTC) ICM-1F23 is stored if the control module registers that the signal in the keypad circuit is too high or too low.

Substitute Value

- None.

Possible Source

- Short-circuit to ground or an open-circuit in the left-hand keypad unit
- Short-circuit to ground or an open-circuit in the cable for the keypad unit.

Fault symptom[s]

- Buttons on the keypad unit are not working.

SIGNAL TOO HIGH / LOW

see **SIGNAL TOO HIGH / LOW**

ICM-1F24: LEFT-HAND KEYPAD CIRCUIT 4. SIGNAL TOO HIGH / TOO LOW (2003-2012)

DIAGNOSTIC TROUBLE CODE (DTC) INFORMATION ICM-1F24

Condition

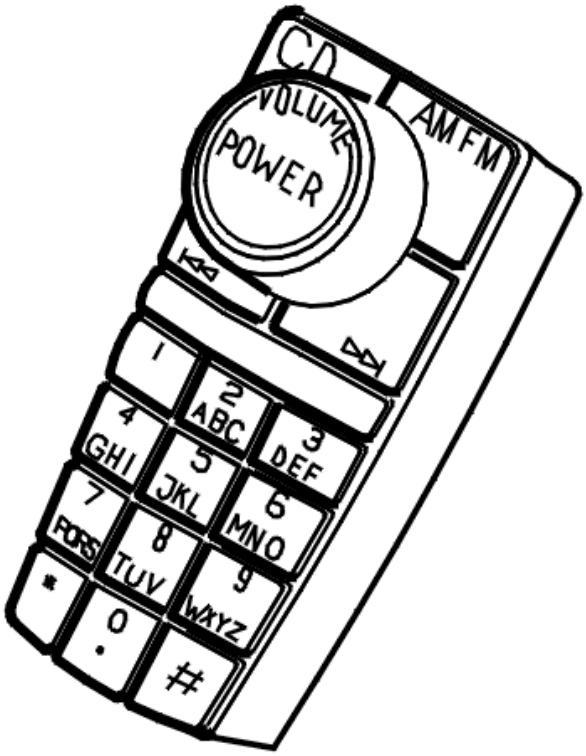

Fig. 235: Identifying Left-Hand Keypad
Courtesy of VOLVO CARS CORPORATION

The infotainment control module (ICM) checks the circuit for the buttons 3, 6, 9 and #.

Diagnostic trouble code (DTC) ICM-1F24 is stored if the control module registers that the signal in the keypad circuit is too high or too low.

Substitute Value

- None.

Possible Source

- Short-circuit to ground or an open-circuit in the left-hand keypad unit
- Short-circuit to ground or an open-circuit in the cable for the keypad unit.

Fault symptom[s]

- Buttons on the keypad unit are not working.

SIGNAL TOO HIGH / LOW

see **SIGNAL TOO HIGH / LOW**

ICM-1F25: RIGHT-HAND KEYPAD CIRCUIT 5. SIGNAL TOO HIGH / TOO LOW (2003-2012)

DIAGNOSTIC TROUBLE CODE (DTC) INFORMATION ICM-1F25

Condition

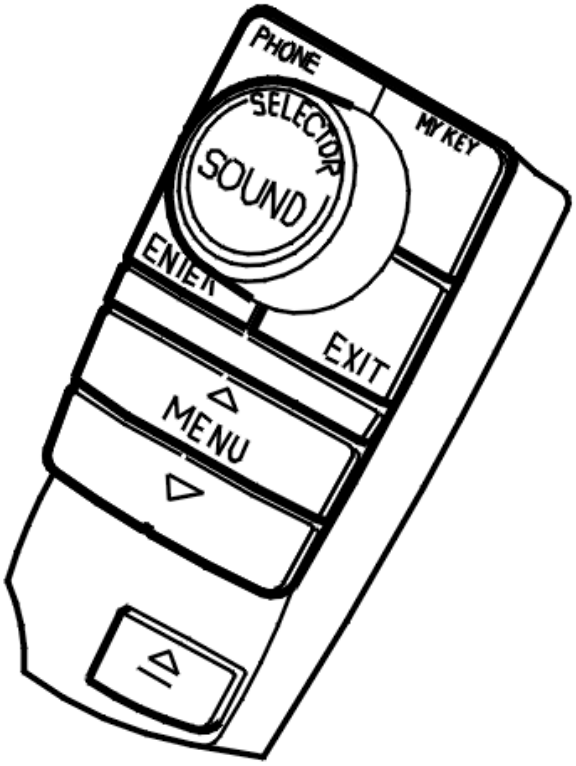

Fig. 236: Identifying Right-Hand Keypad
Courtesy of VOLVO CARS CORPORATION

The infotainment control module (ICM) checks the circuit for the SOUND button.

Diagnostic trouble code (DTC) ICM-1F25 is stored if the control module registers that the signal in the keypad circuit is too high or too low.

Substitute Value

- None.

Possible Source

- Short-circuit to ground or an open-circuit in the right-hand keypad unit
- Short-circuit to ground or an open-circuit in the cable for the keypad unit.

Fault symptom[s]

- Buttons on the keypad unit are not working.

SIGNAL TOO HIGH / LOW

CHECKING THE WIRING AND COMPONENT

Check the connections between the right-hand keypad and the infotainment control module (ICM). Check for contact resistance and oxidation. Check for loose connections. Check for damage in particular.

Visually check the cable between the keypad and the control module for damage.

If no faults were found, try a new keypad.

Remedy as necessary.

Other information:

- To replace the right-hand keypad, see **INFOTAINMENT CONTROL MODULE (ICM), REPLACING**

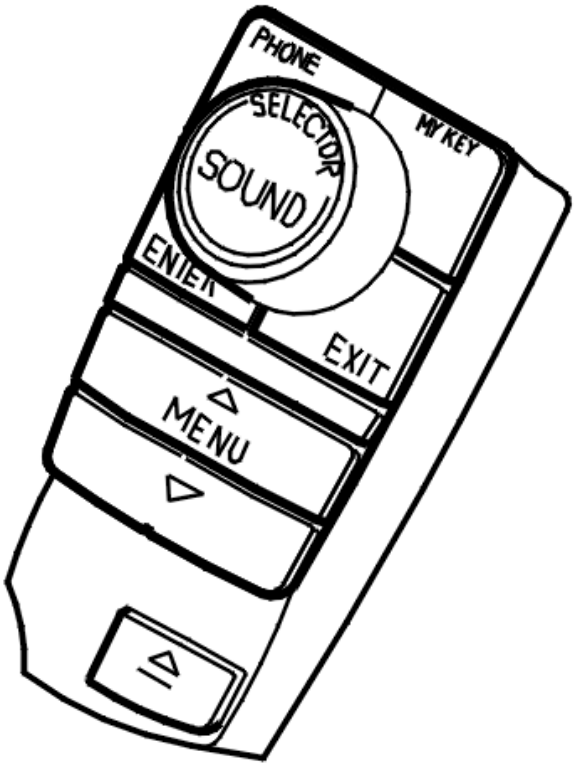

Fig. 237: Identifying Right-Hand Keypad
Courtesy of VOLVO CARS CORPORATION

- **Continue**

  See: **VERIFICATION**

VERIFICATION

VERIFICATION

HINT: After carrying out the repair, check that the fault has been remedied.

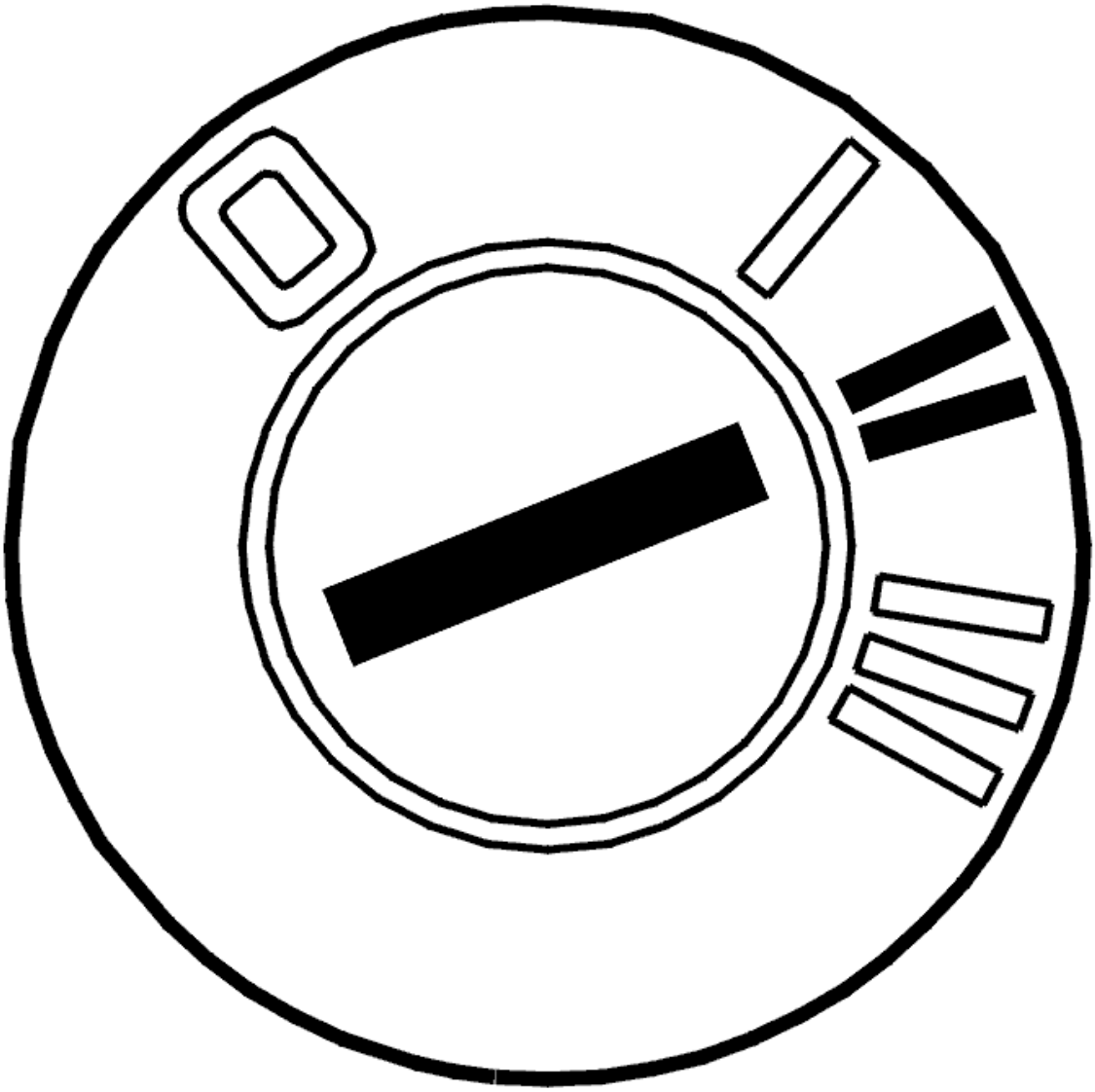

Fig. 238: Identifying Ignition ON
Courtesy of VOLVO CARS CORPORATION

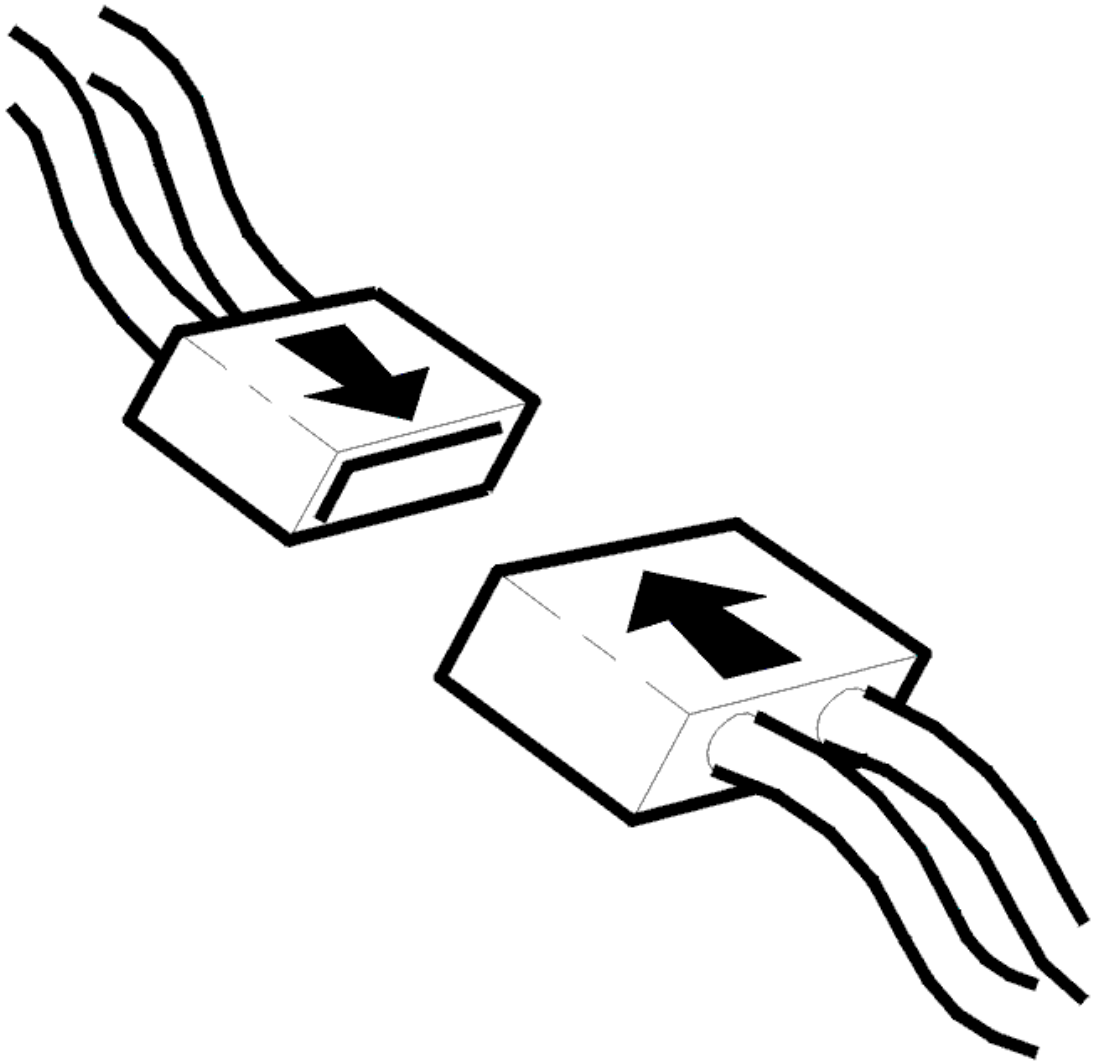

Fig. 239: Connecting Connector
Courtesy of VOLVO CARS CORPORATION

- Ignition off
- Reinstall the connectors, components etc.
- Ignition on.

Activate the infotainment unit and check that all the buttons in the relevant keypad function.

Click on the VCT2000 symbol to check the buttons by reading off the status of the relevant button.

Button circuit	**Button**			
Button circuit 1	EXIT	PHONE	ENTER	MY KEY

Button circuit 2	CD eject	Down	Up	
SOUND button	SOUND			

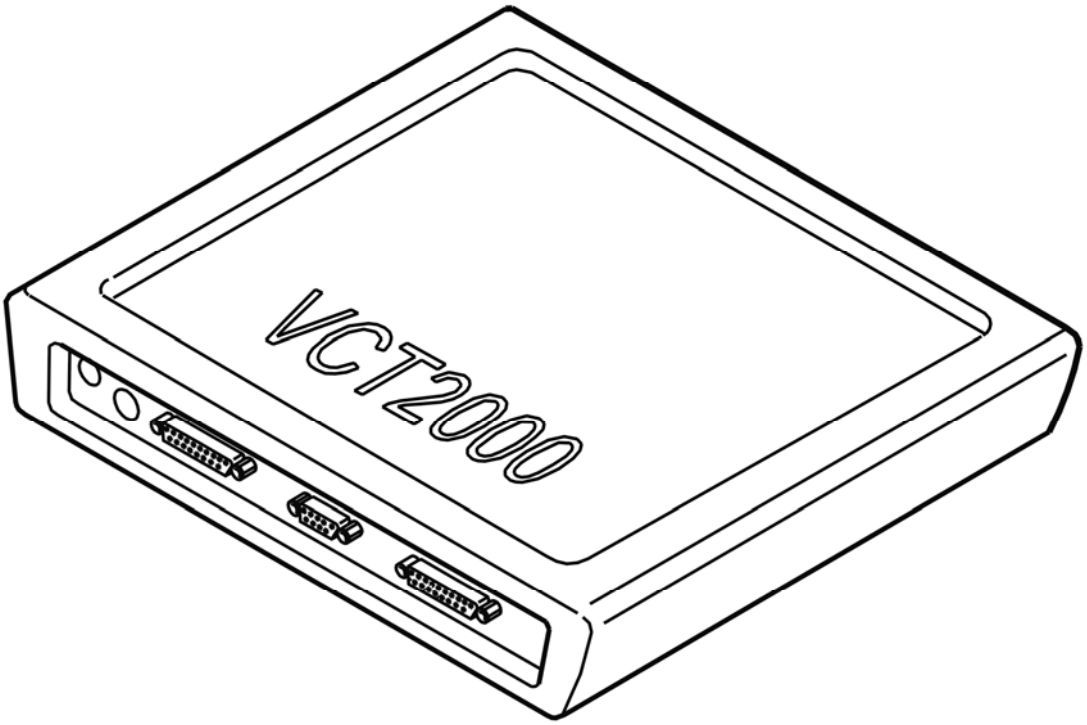

Fig. 240: Identifying VCT2000 Diagnostic Tool Symbol In VIDA
Courtesy of VOLVO CARS CORPORATION

Do all the buttons operate normally?

- **YES**

  VERIFIED: Troubleshooting has been completed.

- **NO**

  See: **INFORMATION**

INFORMATION

FAULT-TRACING INFORMATION

The fault should have been detected and remedied. As this is not the case fault-tracing has failed.

Exit fault-tracing for this diagnostic trouble code (DTC) or make another attempt.

ICM-1F26: RIGHT KEYPAD. ACTIVATED TOO LONG (2003-2012)

DIAGNOSTIC TROUBLE CODE (DTC) INFORMATION ICM-1F26

Condition

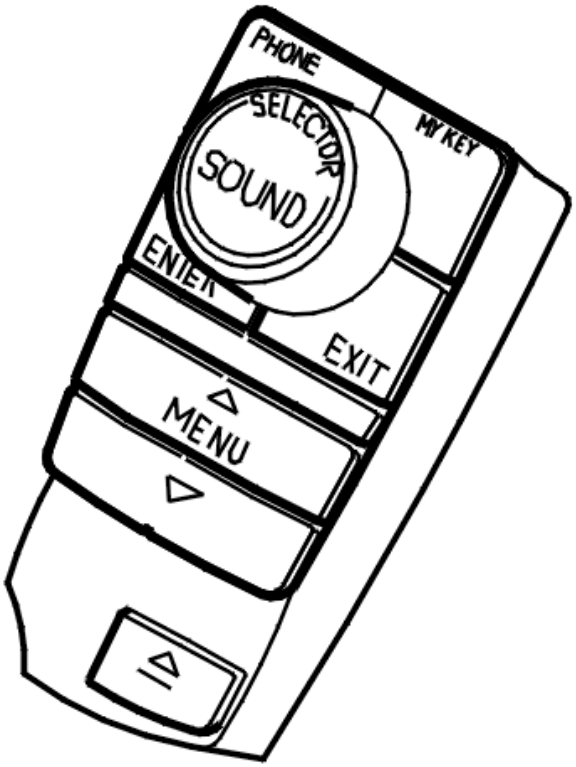

Fig. 241: Identifying Right-Hand Keypad
Courtesy of VOLVO CARS CORPORATION

The infotainment control module (ICM) checks whether any buttons on the right-hand keypad have stuck.

Diagnostic trouble code (DTC) ICM-1F26 is stored if the control module registers that the button has been pressed in for longer than 3 minutes.

Substitute Value

- None.

Possible Source

- A button on the right-hand keypad has been active for more than 3 minutes

- A button has jammed in the pressed in position
- Short-circuit in the keypad unit.

Fault symptom[s]

- Buttons on the keypad unit are not working.

ACTIVATED TOO LONG

CHECKING THE COMPONENT

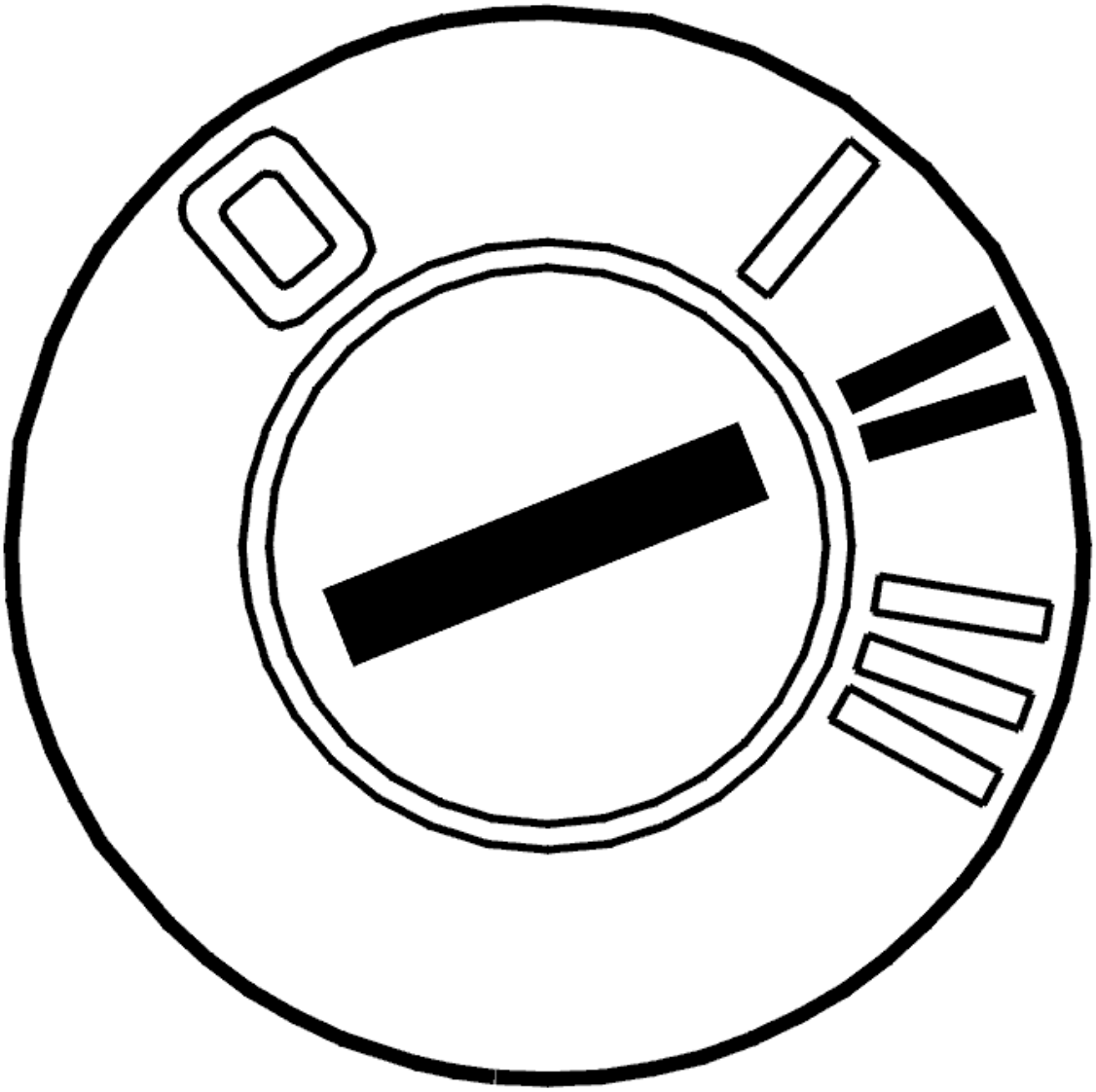

Fig. 242: Identifying Ignition ON
Courtesy of VOLVO CARS CORPORATION

- Ignition on.

Read off which button was activated when the diagnostic trouble codes (DTCs) was set by clicking on the VCT2000 symbol.

Check if the button is jammed due to dirt or some object preventing the button from returning.

If the button does not spring back into place the keypad must be replaced.

Remedy as necessary.

Other information:

- To replace the right-hand keypad, see **INFOTAINMENT CONTROL MODULE (ICM), REPLACING**

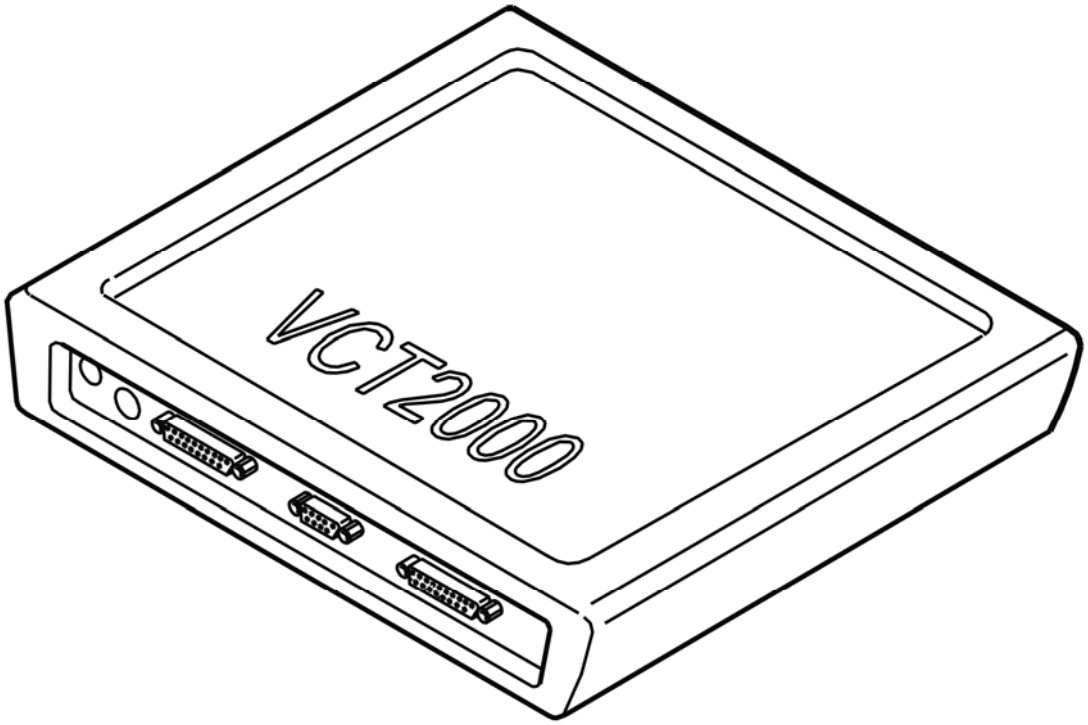

Fig. 243: Identifying VCT2000 Diagnostic Tool Symbol In VIDA
Courtesy of VOLVO CARS CORPORATION

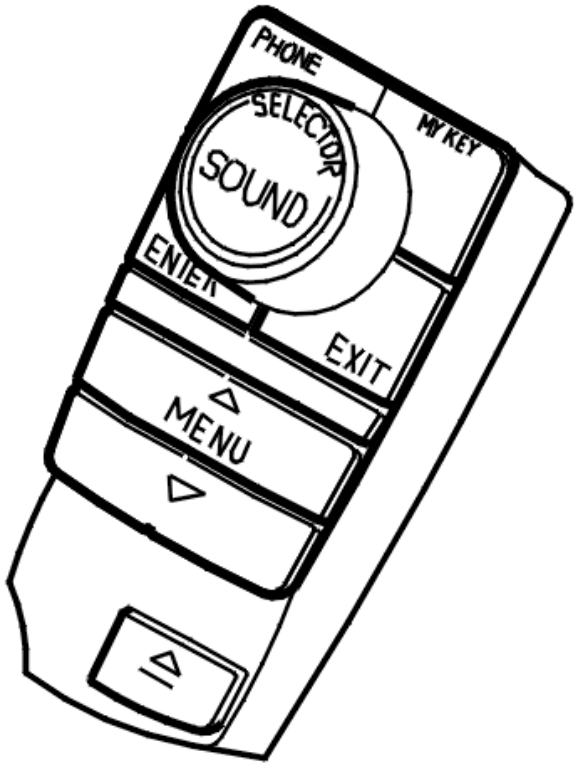

Fig. 244: Identifying Right-Hand Keypad
Courtesy of VOLVO CARS CORPORATION

- **Continue**

  See: **VERIFICATION**

VERIFICATION

VERIFICATION

HINT: After carrying out the repair, check that the fault has been remedied.

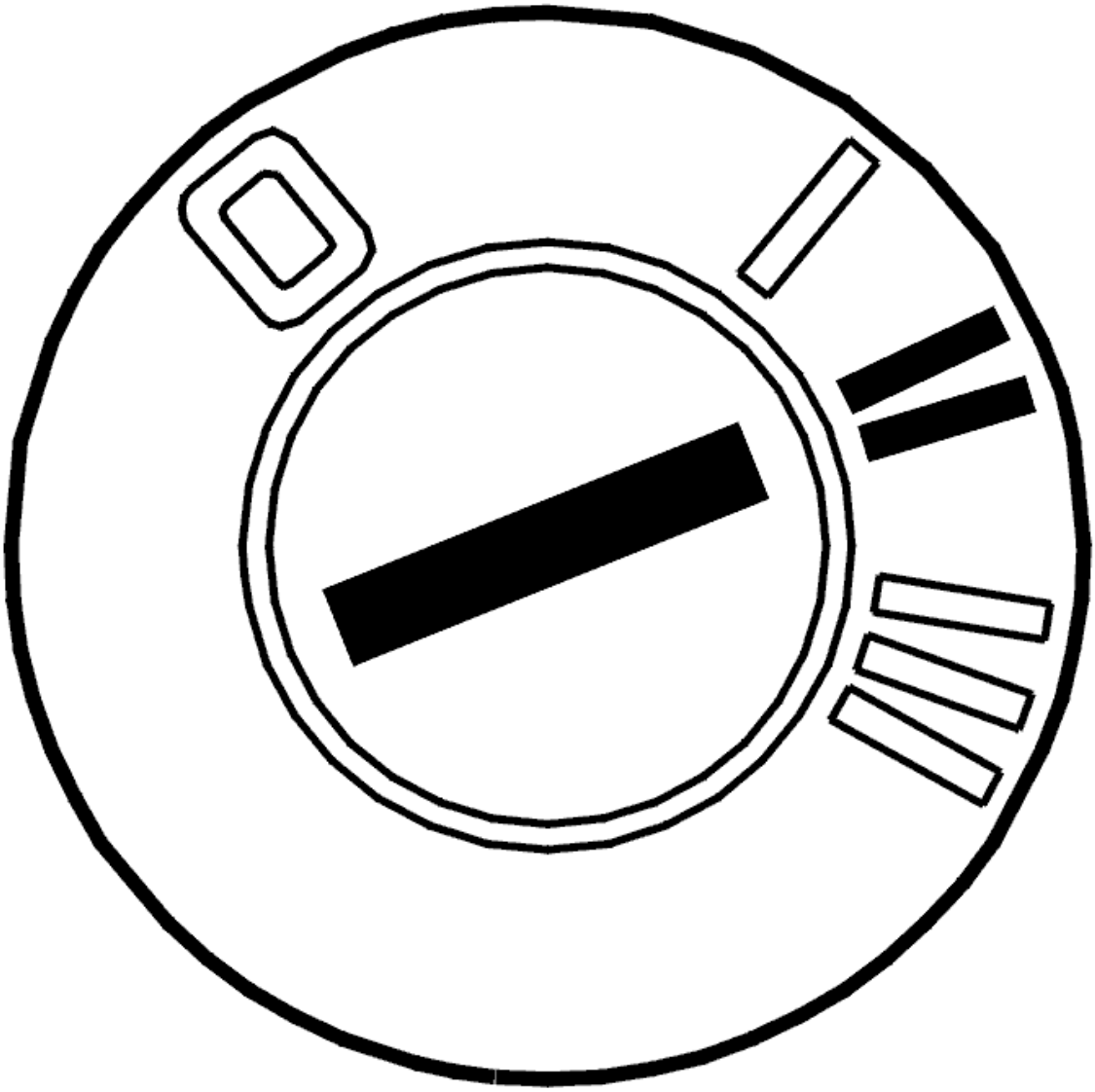

Fig. 245: Identifying Ignition ON
Courtesy of VOLVO CARS CORPORATION

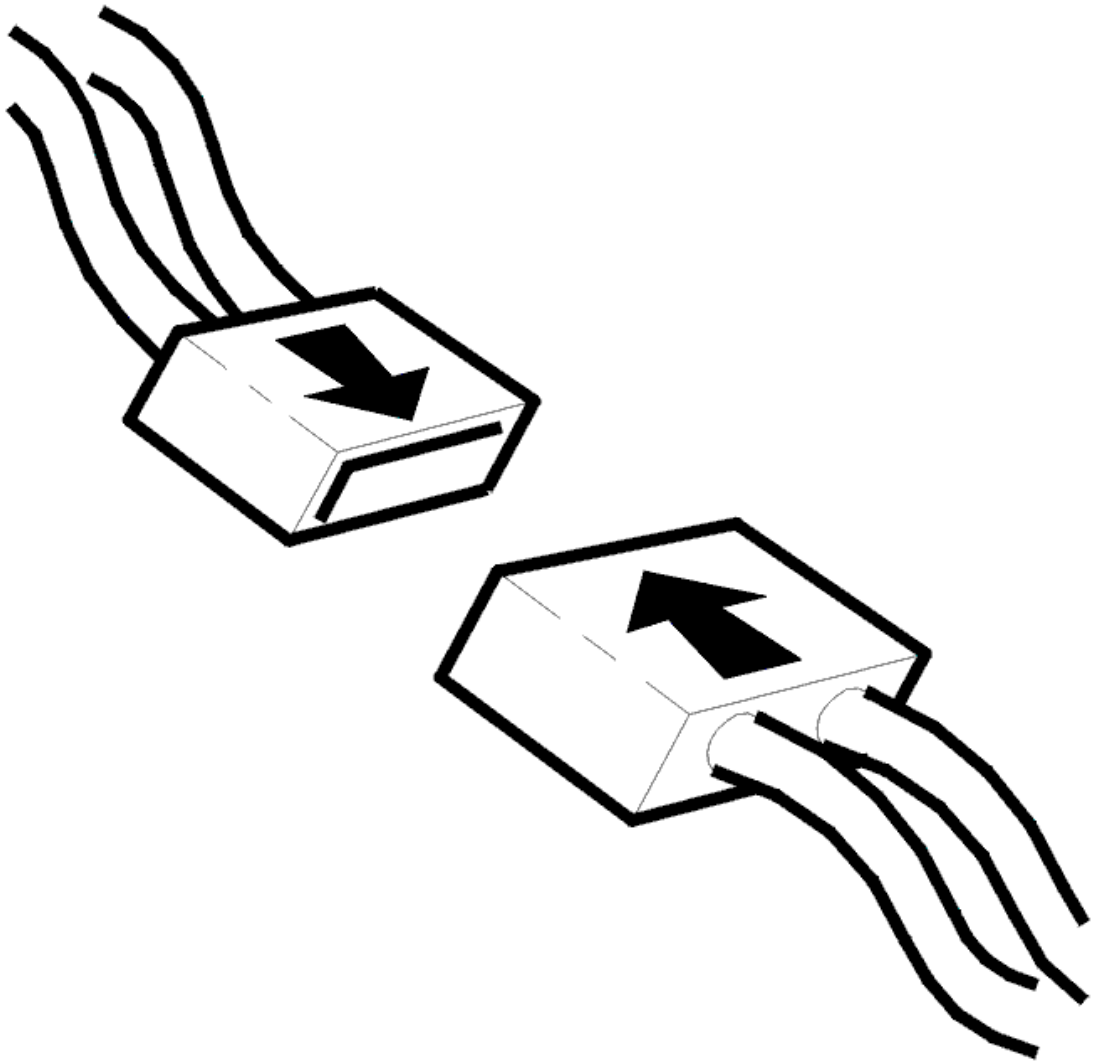

Fig. 246: Connecting Connector
Courtesy of VOLVO CARS CORPORATION

- Ignition off
- Reinstall the connectors, components etc.
- Ignition on.

  Check the button on the right-hand keypad by clicking on the VCT2000 symbol.

  Check that the status changes when the relevant button is affected.

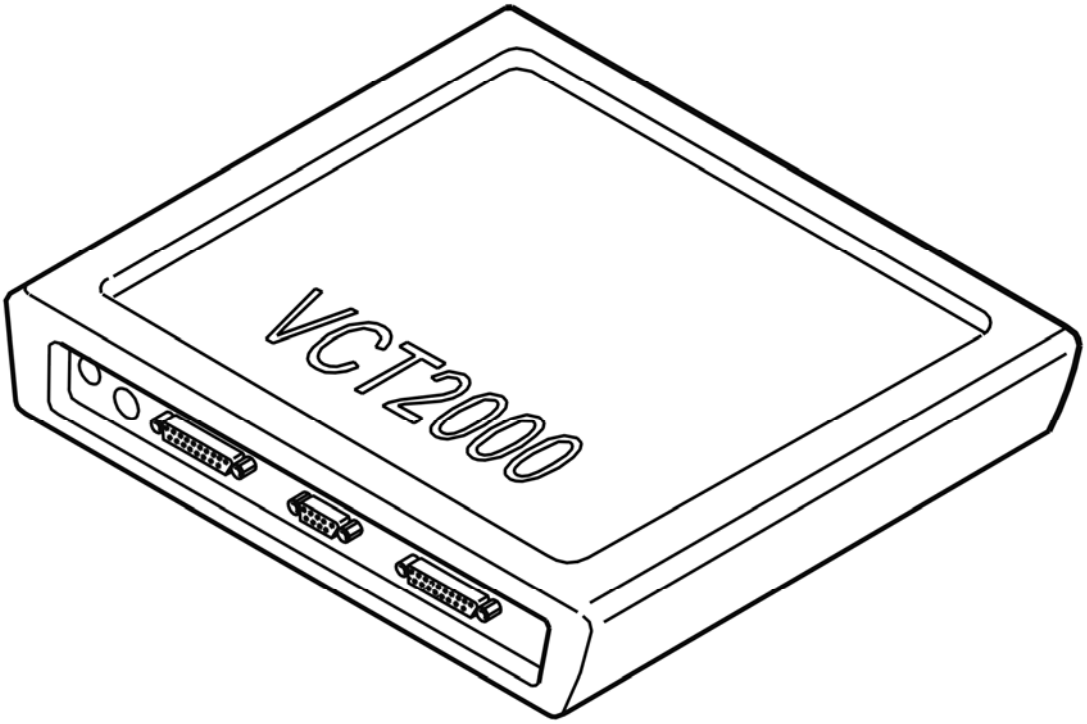

Fig. 247: Identifying VCT2000 Diagnostic Tool Symbol In VIDA
Courtesy of VOLVO CARS CORPORATION

Does the status of the button change?

- **YES**

  VERIFIED: Troubleshooting has been completed.

- **NO**

  See: **INFORMATION**

INFORMATION

FAULT-TRACING INFORMATION

The fault should have been detected and remedied. As this is not the case fault-tracing has failed.

Exit fault-tracing for this diagnostic trouble code (DTC) or make another attempt.

ICM-1F27: RIGHT-HAND KEYPAD CIRCUIT 1. SIGNAL TOO HIGH / TOO LOW (2003-2012)

DIAGNOSTIC TROUBLE CODE (DTC) INFORMATION ICM-1F27

Condition

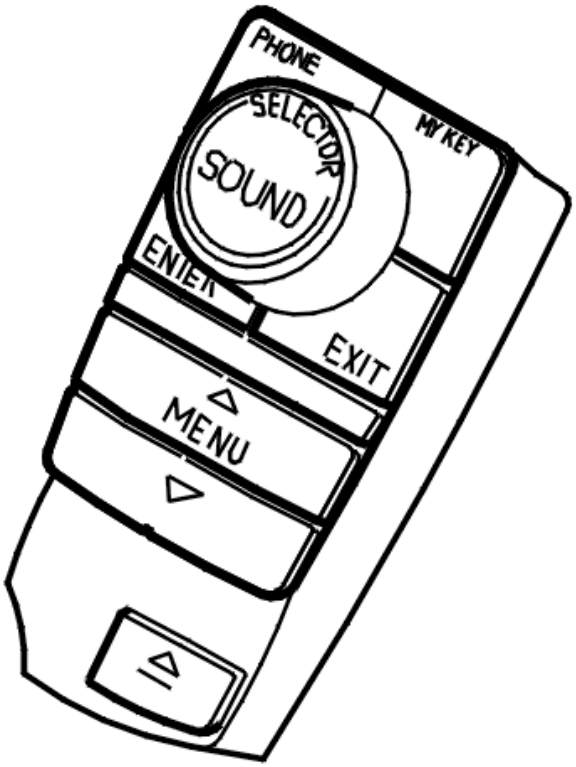

Fig. 248: Identifying Right-Hand Keypad
Courtesy of VOLVO CARS CORPORATION

The infotainment control module (ICM) checks the circuit for the buttons PHONE, MY KEY, ENTER and EXIT.

Diagnostic trouble code (DTC) ICM-1F27 is stored if the control module registers that the signal in the keypad circuit is too high or too low.

Substitute Value

- None.

Possible Source

- Short-circuit to ground or an open-circuit in the right-hand keypad unit
- Short-circuit to ground or an open-circuit in the cable for the keypad unit.

Fault symptom[s]

- Buttons on the keypad unit are not working.

SIGNAL TOO HIGH / LOW

see **SIGNAL TOO HIGH / LOW**

ICM-1F28: RIGHT-HAND KEYPAD CIRCUIT 2. SIGNAL TOO HIGH / TOO LOW (2003-2012)

DIAGNOSTIC TROUBLE CODE (DTC) INFORMATION ICM-1F28

Condition

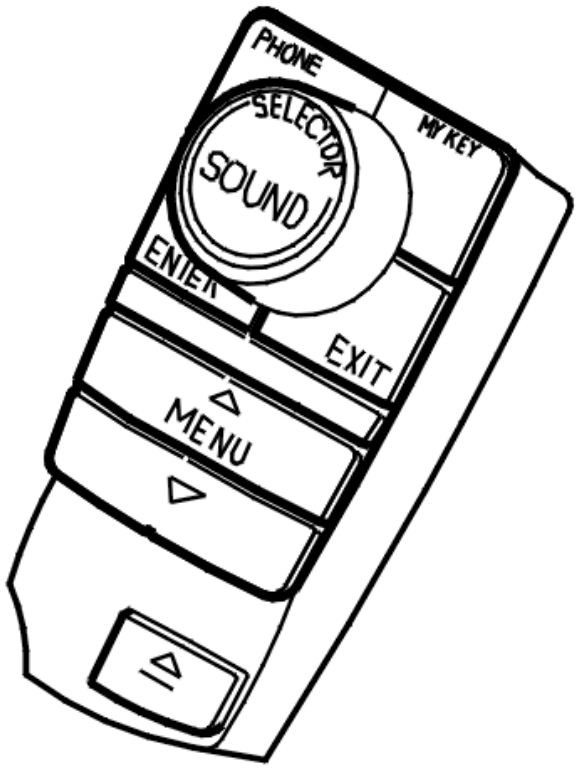

Fig. 249: Identifying Right-Hand Keypad
Courtesy of VOLVO CARS CORPORATION

The infotainment control module (ICM) checks the circuit for the buttons up, down and CD eject.

Diagnostic trouble code (DTC) ICM-1F28 is stored if the control module registers that the signal in the keypad circuit is too high or too low.

Substitute Value

- None.

Possible Source

- Short-circuit to ground or an open-circuit in the right-hand keypad unit
- Short-circuit to ground or an open-circuit in the cable for the keypad unit.

Fault symptom[s]

- Buttons on the keypad unit are not working.

SIGNAL TOO HIGH / LOW

see **SIGNAL TOO HIGH / LOW**

ICM-1F29: POWER BUTTON. SIGNAL TOO HIGH / LOW (2003-2012)

DIAGNOSTIC TROUBLE CODE (DTC) INFORMATION ICM-1F29

Condition

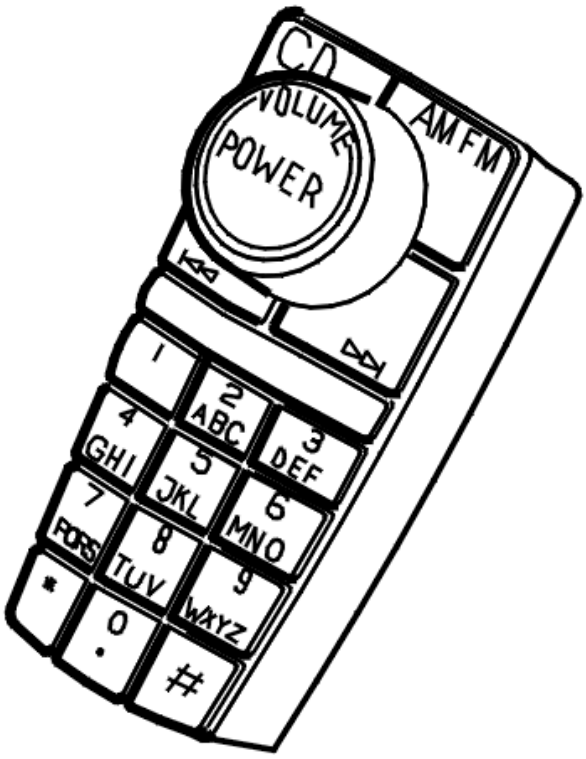

Fig. 250: Identifying Left-Hand Keypad
Courtesy of VOLVO CARS CORPORATION

The infotainment control module (ICM) checks the circuit for the POWER button.

Diagnostic trouble code (DTC) ICM-1F29 is stored if the control module registers that the signal in the keypad circuit is too high or too low.

Substitute Value

- None.

Possible Source

- Short-circuit to ground or an open-circuit in the left-hand keypad unit
- Short-circuit to ground or an open-circuit in the cable for the keypad unit.

Fault symptom[s]

- Buttons on the keypad unit are not working.

SIGNAL TOO HIGH / LOW

see **SIGNAL TOO HIGH / LOW**

ICM-1F30: POWER BUTTON. ACTIVATED TOO LONG (2003-2012)

DIAGNOSTIC TROUBLE CODE (DTC) INFORMATION ICM-1F30

Condition

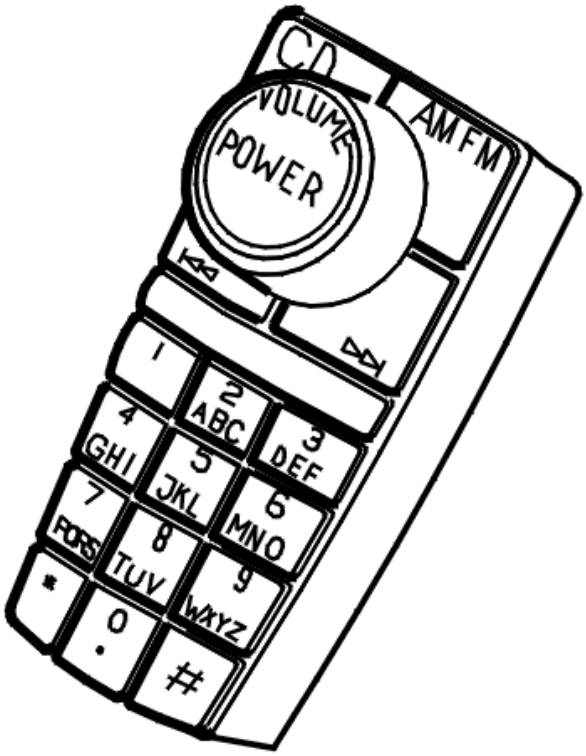

Fig. 251: Identifying Left-Hand Keypad
Courtesy of VOLVO CARS CORPORATION

The infotainment control module (ICM) checks if the POWER button has jammed.

Diagnostic trouble code (DTC) ICM-1F30 is stored if the control module registers that the POWER button has been pressed in for longer than 3 minutes.

Substitute Value

- None.

Possible Source

- The POWER button has been activated for more than 3 minutes
- POWER button is jammed in the depressed position.

Fault symptom[s]

- Buttons on the keypad unit are not working.

ACTIVATED TOO LONG

CHECKING THE COMPONENT

Check if the POWER button is jammed due to dirt or some object preventing the button from returning.

If the POWER button does not spring back into place the keypad must be replaced.

Remedy as necessary.

Other information:

- To replace the left-hand keypad, see **INFOTAINMENT CONTROL MODULE (ICM), REPLACING**

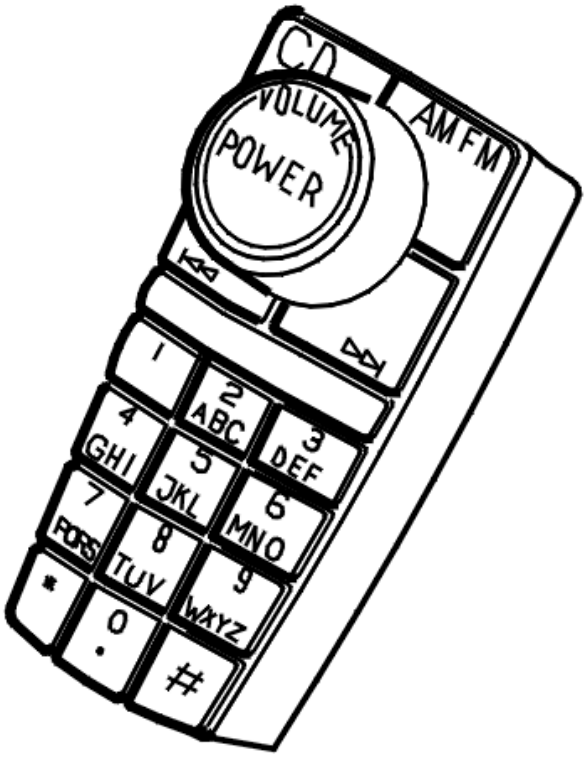

Fig. 252: Identifying Left-Hand Keypad
Courtesy of VOLVO CARS CORPORATION

- **Continue**

  See: **VERIFICATION**

VERIFICATION

VERIFICATION

HINT: After carrying out the repair, check that the fault has been remedied.

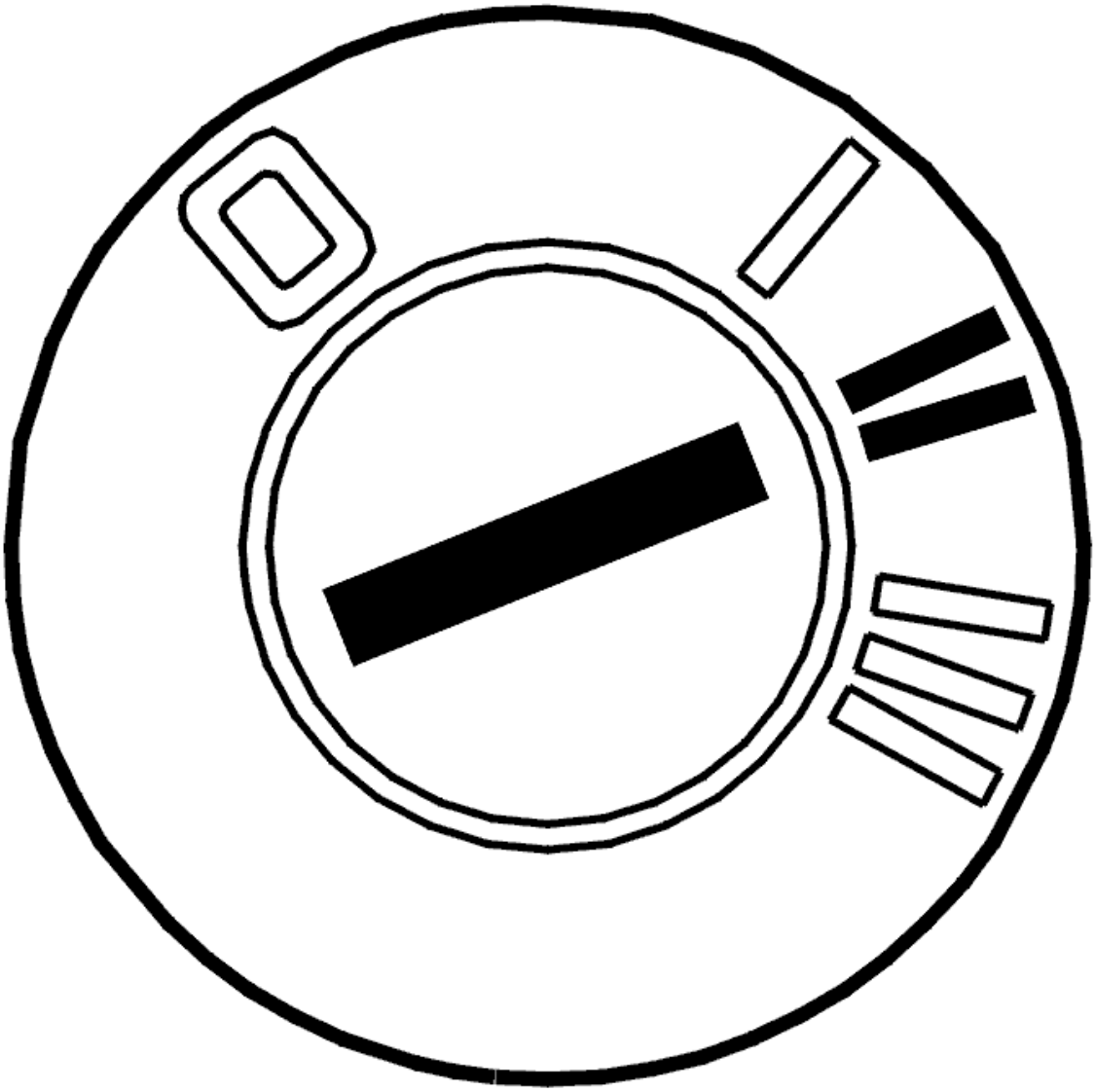

Fig. 253: Identifying Ignition ON
Courtesy of VOLVO CARS CORPORATION

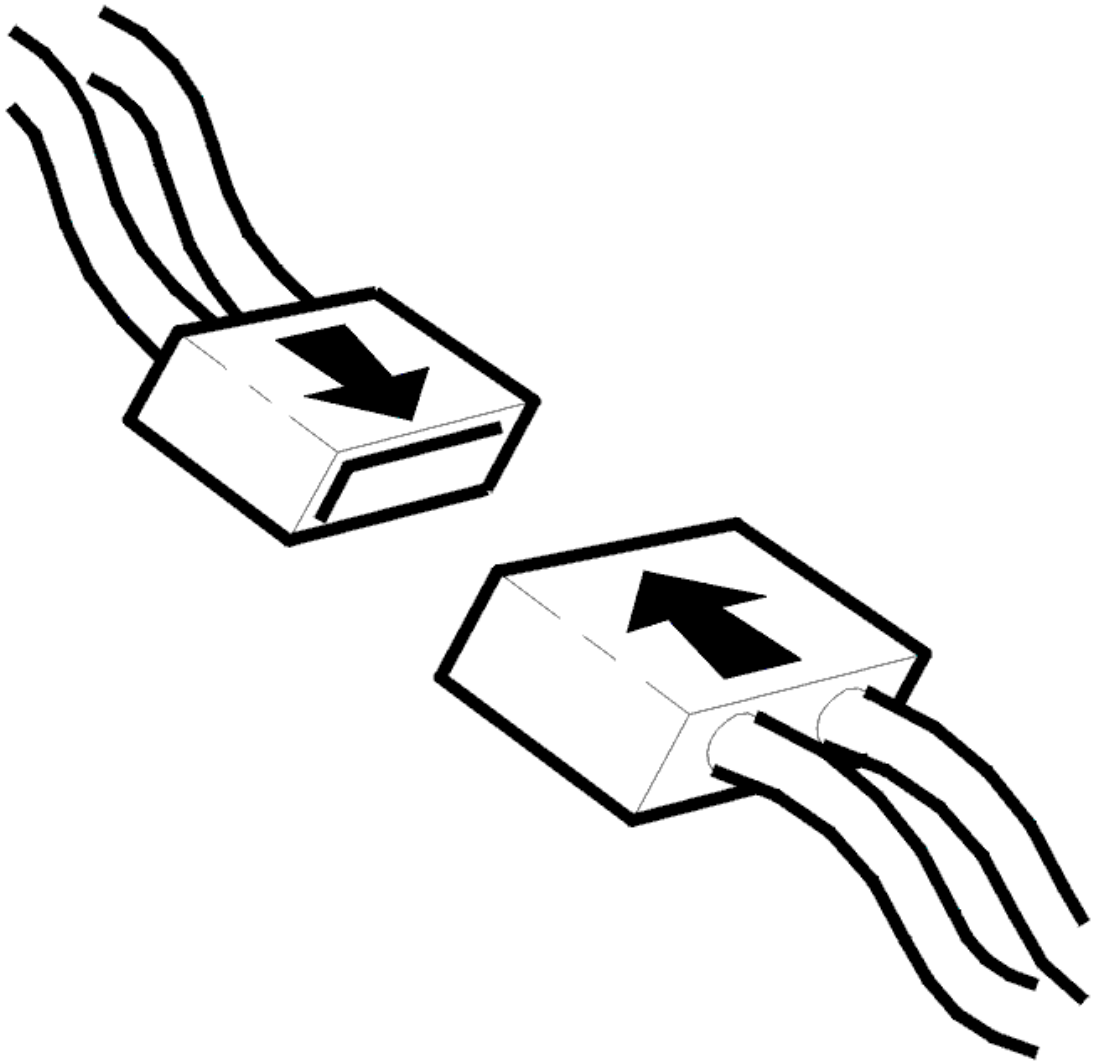

Fig. 254: Connecting Connector
Courtesy of VOLVO CARS CORPORATION

- Ignition off
- Reinstall the connectors, components etc.
- Ignition on.

  Activate and deactivate the infotainment unit by pressing the POWER button.

  Check that the infotainment unit activates and deactivates.

Is the function OK?

- **YES**

VERIFIED: Troubleshooting has been completed.

- **NO**

  See: **INFORMATION**

INFORMATION

FAULT-TRACING INFORMATION

The fault should have been detected and remedied. As this is not the case fault-tracing has failed.

Exit fault-tracing for this diagnostic trouble code (DTC) or make another attempt.

ICM-1F31: SOUND BUTTON. ACTIVATED TOO LONG (2003-2012)

DIAGNOSTIC TROUBLE CODE (DTC) INFORMATION ICM-1F31

Condition

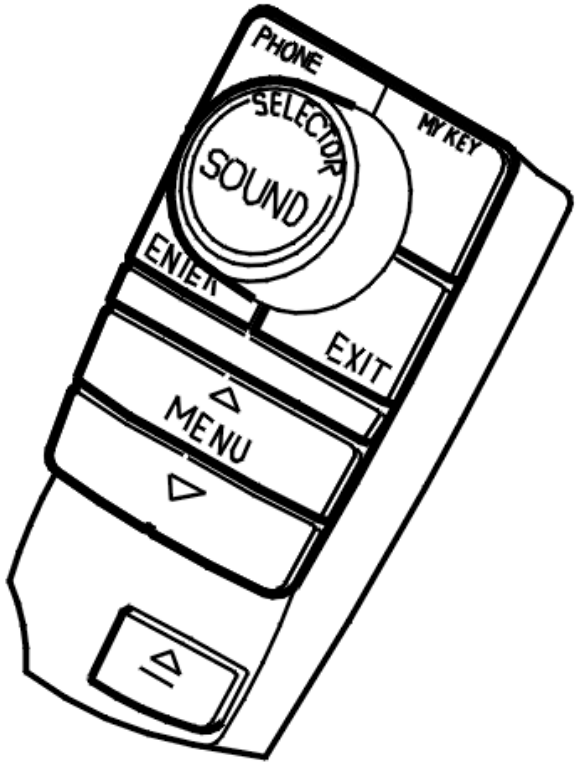

Fig. 255: Identifying Right-Hand Keypad
Courtesy of VOLVO CARS CORPORATION

The infotainment control module (ICM) checks if the SOUND button has jammed.

Diagnostic trouble code (DTC) ICM-1F31 is stored if the control module registers that the SOUND button has been pressed in for longer than 3 minutes.

Substitute Value

- None.

Possible Source

- The SOUND button has been activated for more than 3 minutes
- SOUND button is jammed in the depressed position.

Fault symptom[s]

- Buttons on the keypad unit are not working.

ACTIVATED TOO LONG

CHECKING THE COMPONENT

Check if the SOUND button is jammed due to dirt or some object preventing the button from returning.

If the SOUND button does not spring back into place the keypad must be replaced.

Remedy as necessary.

Other information:

- To replace the right-hand keypad, see **INFOTAINMENT CONTROL MODULE (ICM), REPLACING**

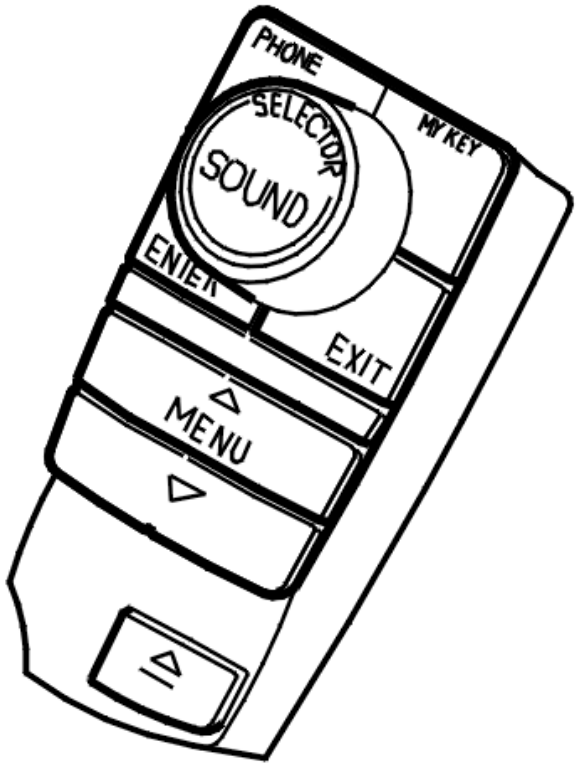

Fig. 256: Identifying Right-Hand Keypad
Courtesy of VOLVO CARS CORPORATION

- **Continue**

  See: **VERIFICATION**

VERIFICATION

VERIFICATION

HINT: After carrying out the repair, check that the fault has been remedied.

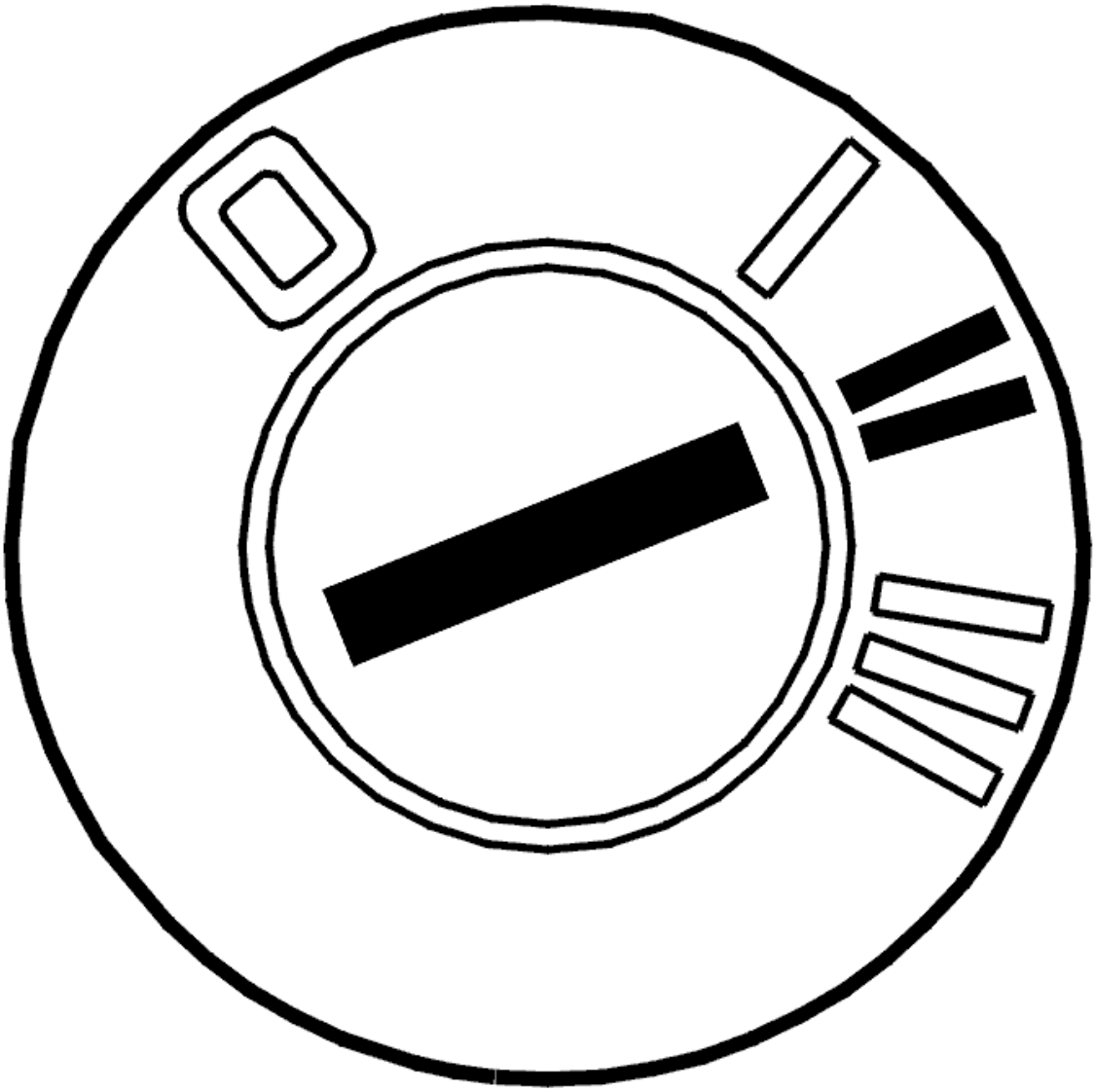

Fig. 257: Identifying Ignition ON
Courtesy of VOLVO CARS CORPORATION

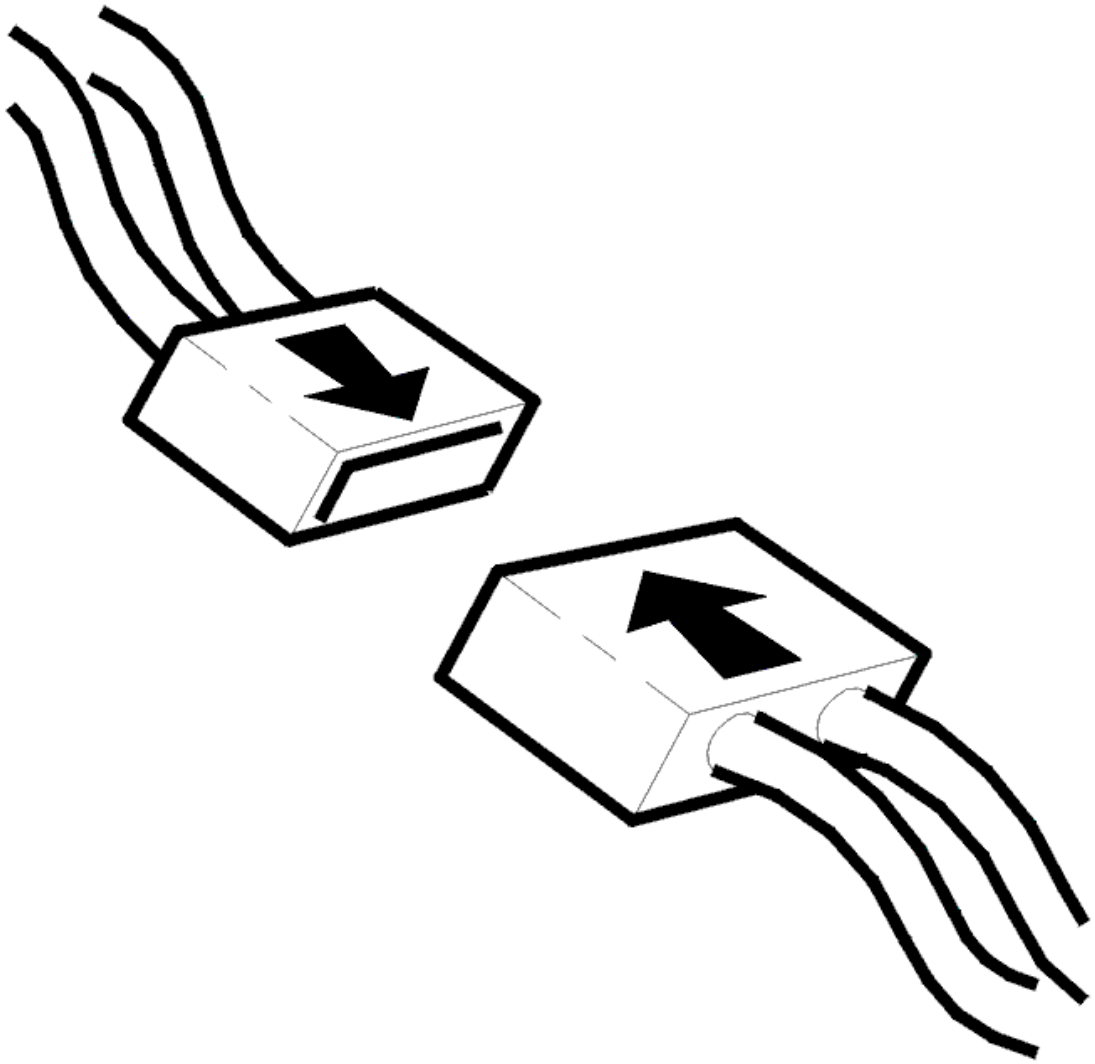

Fig. 258: Connecting Connector
Courtesy of VOLVO CARS CORPORATION

- Ignition off
- Reinstall the connectors, components etc.
- Ignition on.

  Activate the infotainment unit and scroll through the sound settings by pressing the POWER button.

  Check that the sound setting alternatives are changed.

Is the function OK?

- **YES**

VERIFIED: Troubleshooting has been completed.

- **NO**

  See: **INFORMATION**

INFORMATION

FAULT-TRACING INFORMATION

The fault should have been detected and remedied. As this is not the case fault-tracing has failed.

Exit fault-tracing for this diagnostic trouble code (DTC) or make another attempt.

ICM-1F32: VOLUME KNOB. SIGNAL MISSING (2003-2012)

DIAGNOSTIC TROUBLE CODE (DTC) INFORMATION ICM-1F32

Condition

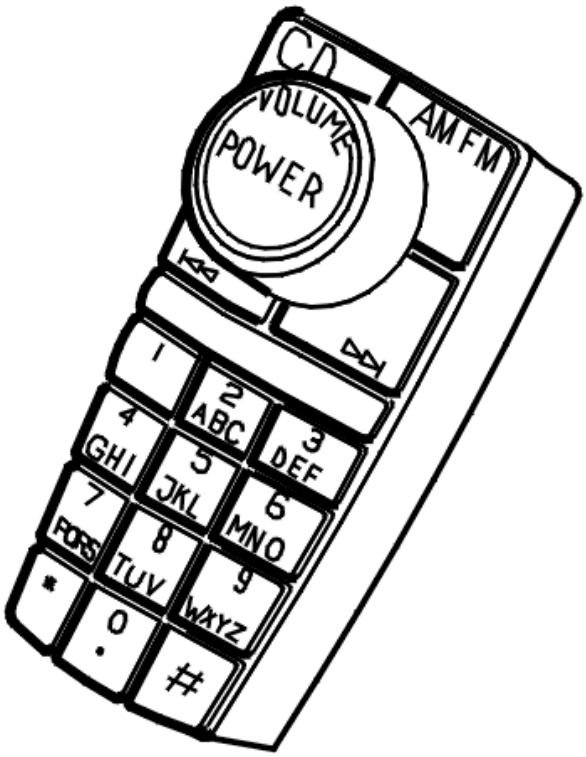

Fig. 259: Identifying Left-Hand Keypad
Courtesy of VOLVO CARS CORPORATION

The infotainment control module (ICM) checks the signals from the switches in the VOLUME button.

Diagnostic trouble code (DTC) ICM-1F32 is stored if the control module registers that the signal from any of the switches is missing.

Substitute Value

- None.

Possible Source

- Short-circuit to ground or open-circuit in one of the switches in the VOLUME knob
- The switches have jammed.

Fault symptom[s]

- The VOLUME knob does not function.

SIGNAL MISSING

CHECKING THE COMPONENT

Check the connections between the left-hand keypad and the infotainment control module (ICM). Check for contact resistance and oxidation. Check for loose connections. Check for damage in particular.

Visually check the cable between the keypad and the control module for damage.

If no faults were found, try a new keypad.

Remedy as necessary.

Other information:

- To replace the cable / left-hand keypad, see **INFOTAINMENT CONTROL MODULE (ICM), REPLACING**

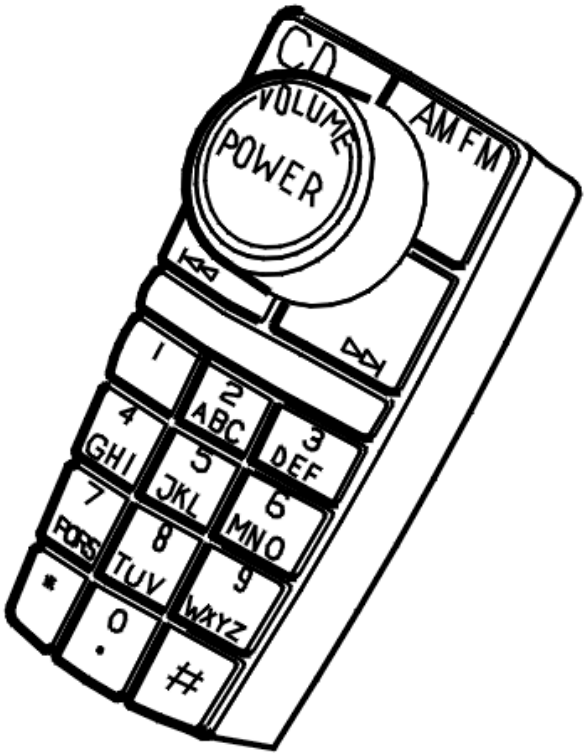

Fig. 260: Identifying Left-Hand Keypad
Courtesy of VOLVO CARS CORPORATION

- **Continue**

  See: **VERIFICATION**

VERIFICATION

VERIFICATION

HINT: After carrying out the repair, check that the fault has been remedied.

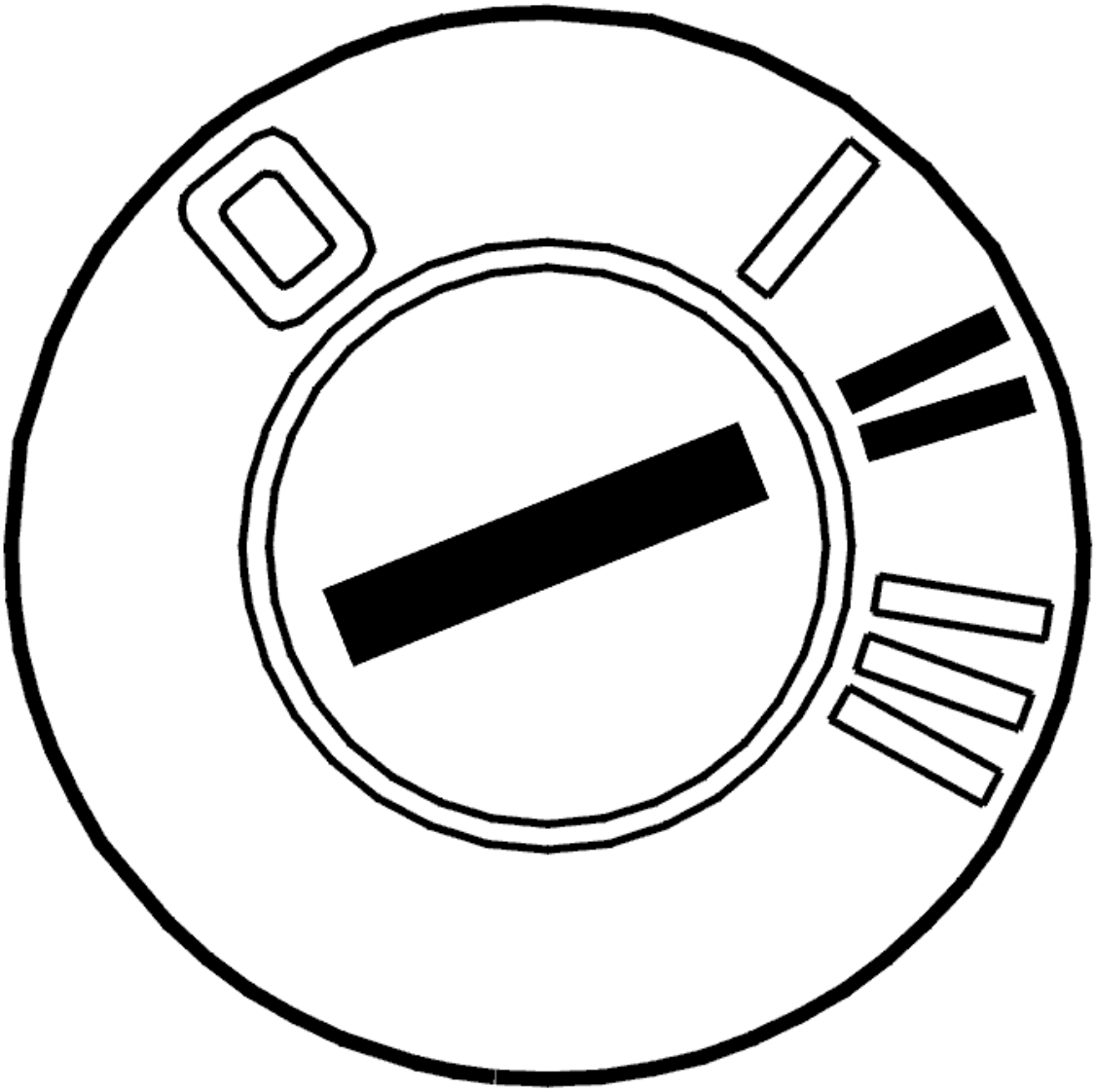

Fig. 261: Identifying Ignition ON
Courtesy of VOLVO CARS CORPORATION

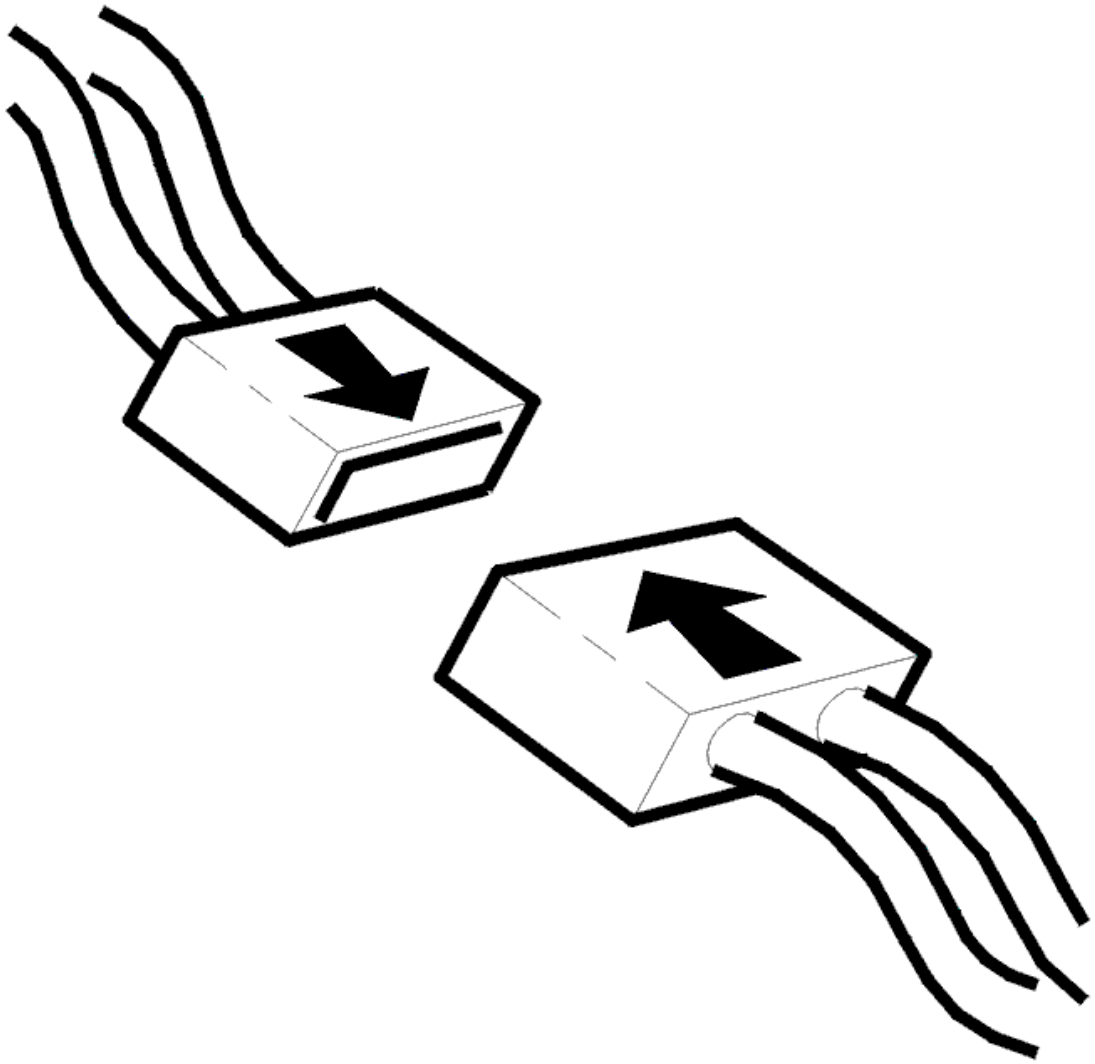

Fig. 262: Connecting Connector
Courtesy of VOLVO CARS CORPORATION

- Ignition off
- Reinstall the connectors, components etc.
- Ignition on.

  Activate the immobilizer control module (ICM) and turn the VOLUME knob.

  Check that volume increases and decreases.

Is the function OK?

- **YES**

VERIFIED: Troubleshooting has been completed.

- **NO**

  See: **INFORMATION**

INFORMATION

FAULT-TRACING INFORMATION

The fault should have been detected and remedied. As this is not the case fault-tracing has failed.

Exit fault-tracing for this diagnostic trouble code (DTC) or make another attempt.

ICM-1F33: SELECTOR KNOB. SIGNAL MISSING (2003-2012)

DIAGNOSTIC TROUBLE CODE (DTC) INFORMATION ICM-1F33

Condition

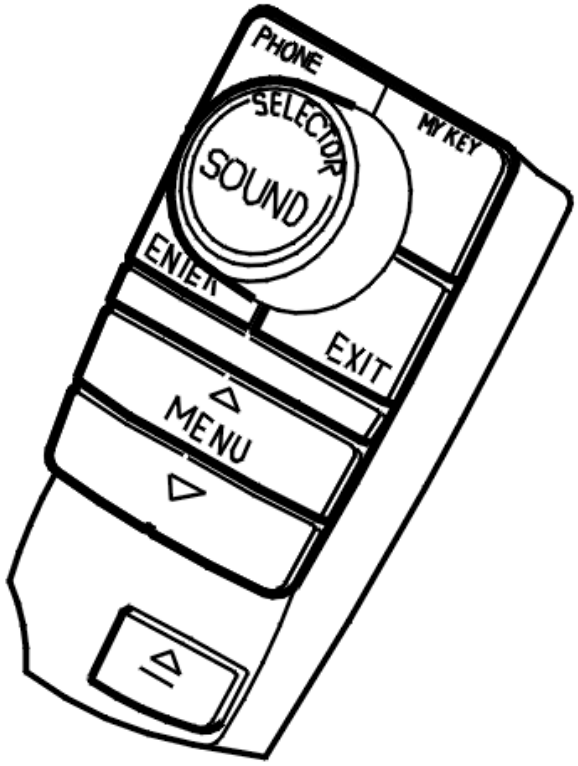

Fig. 263: Identifying Right-Hand Keypad
Courtesy of VOLVO CARS CORPORATION

The infotainment control module (ICM) checks the signals from the switches in the SELECTOR button.

Diagnostic trouble code (DTC) ICM-1F33 is stored if the control module registers that the signal from any of the switches is missing.

Substitute Value

- None.

Possible Source

- Short-circuit to ground or open-circuit in one of the switches in the SELECTOR knob
- The switches have jammed.

Fault symptom[s]

- The SELECTOR knob does not function.

SIGNAL MISSING

CHECKING THE COMPONENT

Check the connections between the right-hand keypad and the infotainment control module (ICM). Check for contact resistance and oxidation. Check for loose connections. Check for damage in particular.

Visually check the cable between the keypad and the control module for damage.

If no faults were found, try a new keypad.

Remedy as necessary.

Other information:

- To replace the cable / left-hand keypad, see **INFOTAINMENT CONTROL MODULE (ICM), REPLACING**

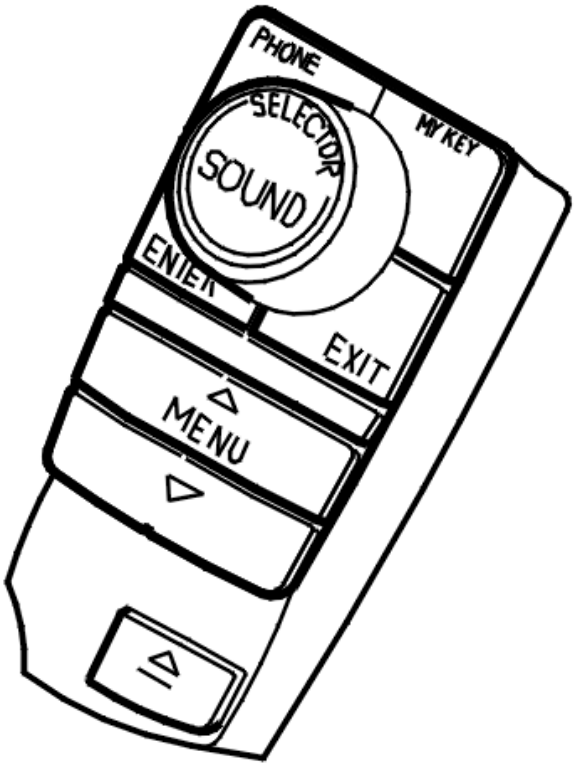

Fig. 264: Identifying Right-Hand Keypad
Courtesy of VOLVO CARS CORPORATION

- **Continue**

  See: **VERIFICATION**

VERIFICATION

VERIFICATION

HINT: After carrying out the repair, check that the fault has been remedied.

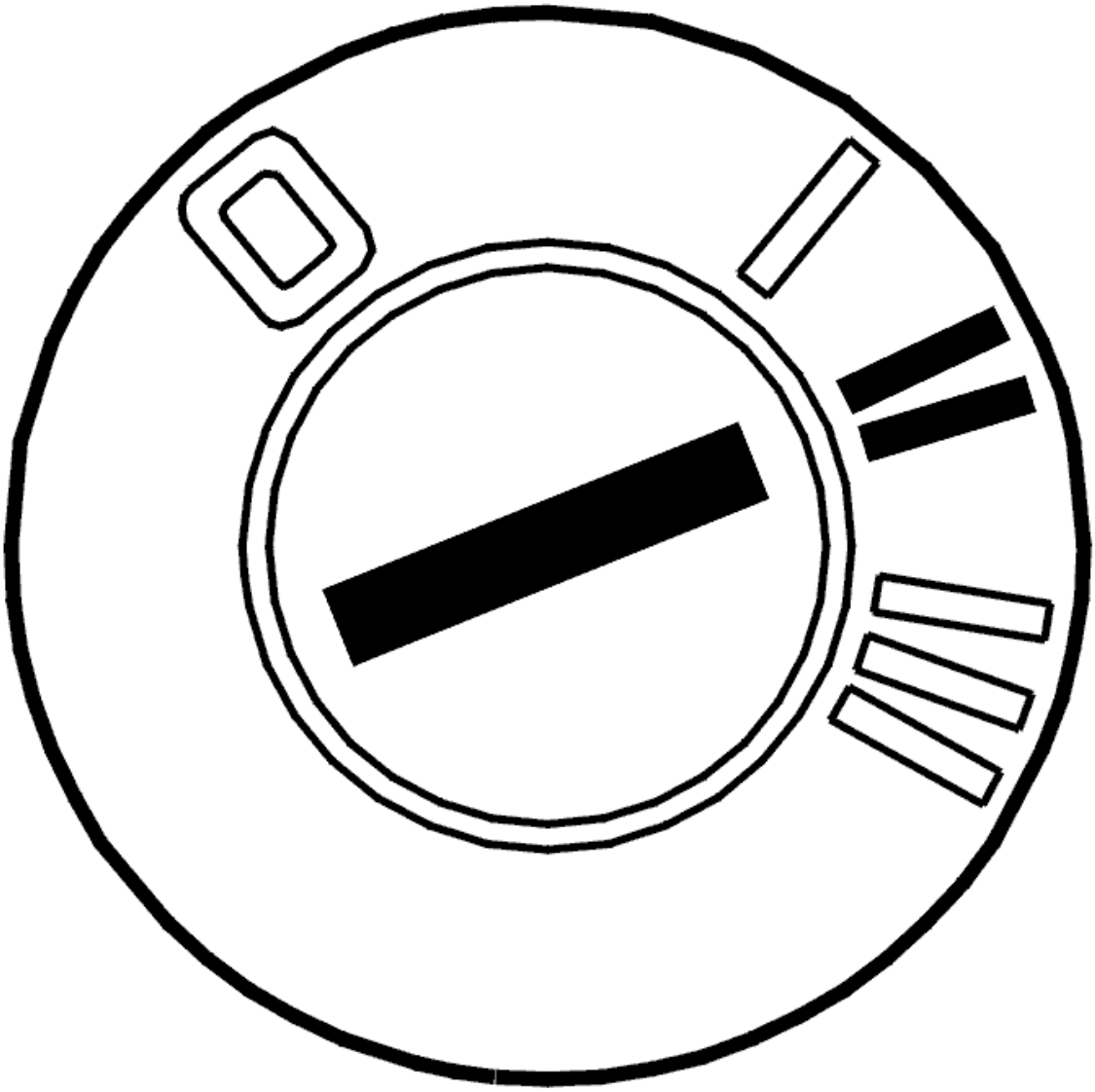

Fig. 265: Identifying Ignition ON
Courtesy of VOLVO CARS CORPORATION

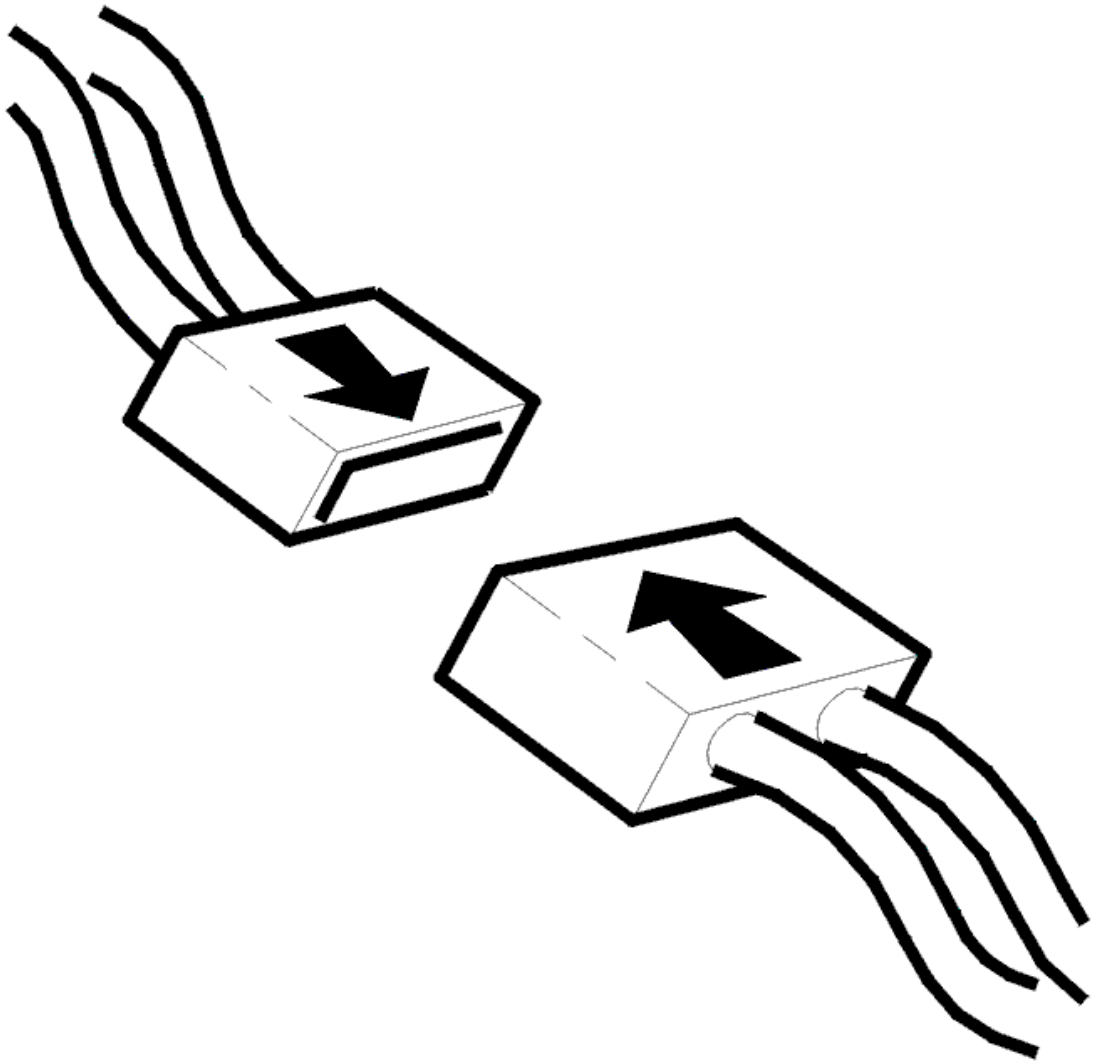

Fig. 266: Connecting Connector
Courtesy of VOLVO CARS CORPORATION

- Ignition off
- Reinstall the connectors, components etc.
- Ignition on.

  Activate the immobilizer control module (ICM) and turn the SELECTOR knob.

  Check that the Infotainment Control Module (ICM) changes sound source.

Is the function OK?

- **YES**

VERIFIED: Troubleshooting has been completed.

- **NO**

  See: **INFORMATION**

INFORMATION

FAULT-TRACING INFORMATION

The fault should have been detected and remedied. As this is not the case fault-tracing has failed.

Exit fault-tracing for this diagnostic trouble code (DTC) or make another attempt.

ICM-1F34: VOLUME KNOB. FAULTY SIGNAL (2003-2012)

DIAGNOSTIC TROUBLE CODE (DTC) INFORMATION ICM-1F34

Condition

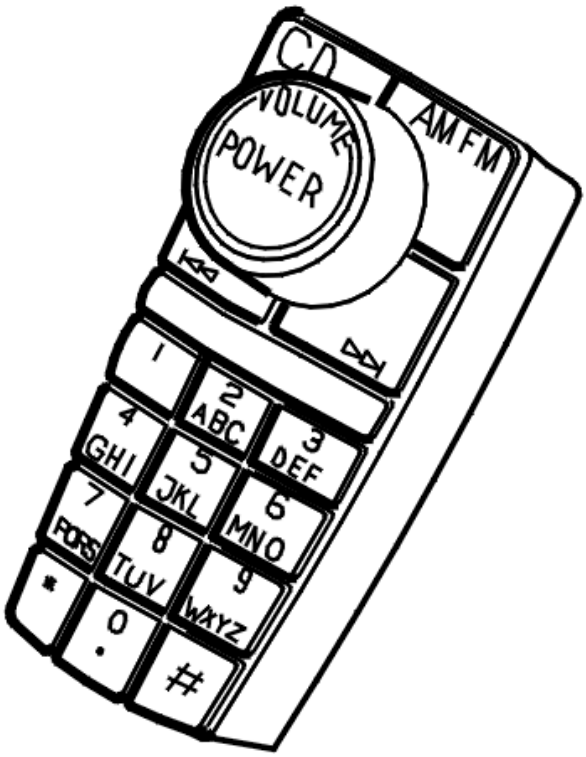

Fig. 267: Identifying Left-Hand Keypad
Courtesy of VOLVO CARS CORPORATION

The infotainment control module (ICM) checks the signals from the switches in the VOLUME button.

Diagnostic trouble code (DTC) ICM-1F34 is stored if the control module registers the same signal from the switches.

Substitute Value

- None.

Possible Source

- Short-circuit between the switches in the VOLUME knob.

Fault symptom[s]

- The VOLUME knob does not function.

FAULTY SIGNAL

CHECKING THE WIRING AND COMPONENT

Check the connections between the left-hand keypad and the infotainment control module (ICM). Check for contact resistance and oxidation. Check for loose connections. Check for damage in particular.

Visually check the cable between the keypad and the control module for damage.

If no faults were found, try a new keypad.

Remedy as necessary.

Other information:

- To replace the left-hand keypad, see **INFOTAINMENT CONTROL MODULE (ICM), REPLACING**

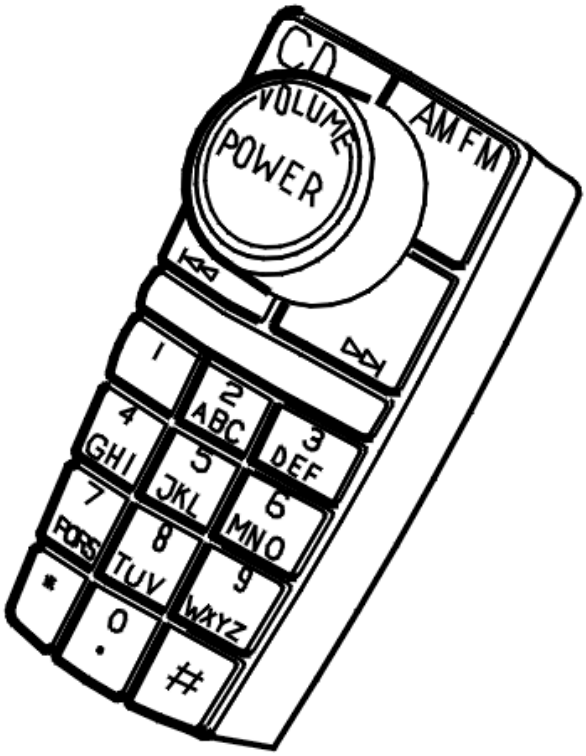

Fig. 268: Identifying Left-Hand Keypad
Courtesy of VOLVO CARS CORPORATION

- **Continue**

  See: **VERIFICATION**

VERIFICATION

VERIFICATION

HINT: After carrying out the repair, check that the fault has been remedied.

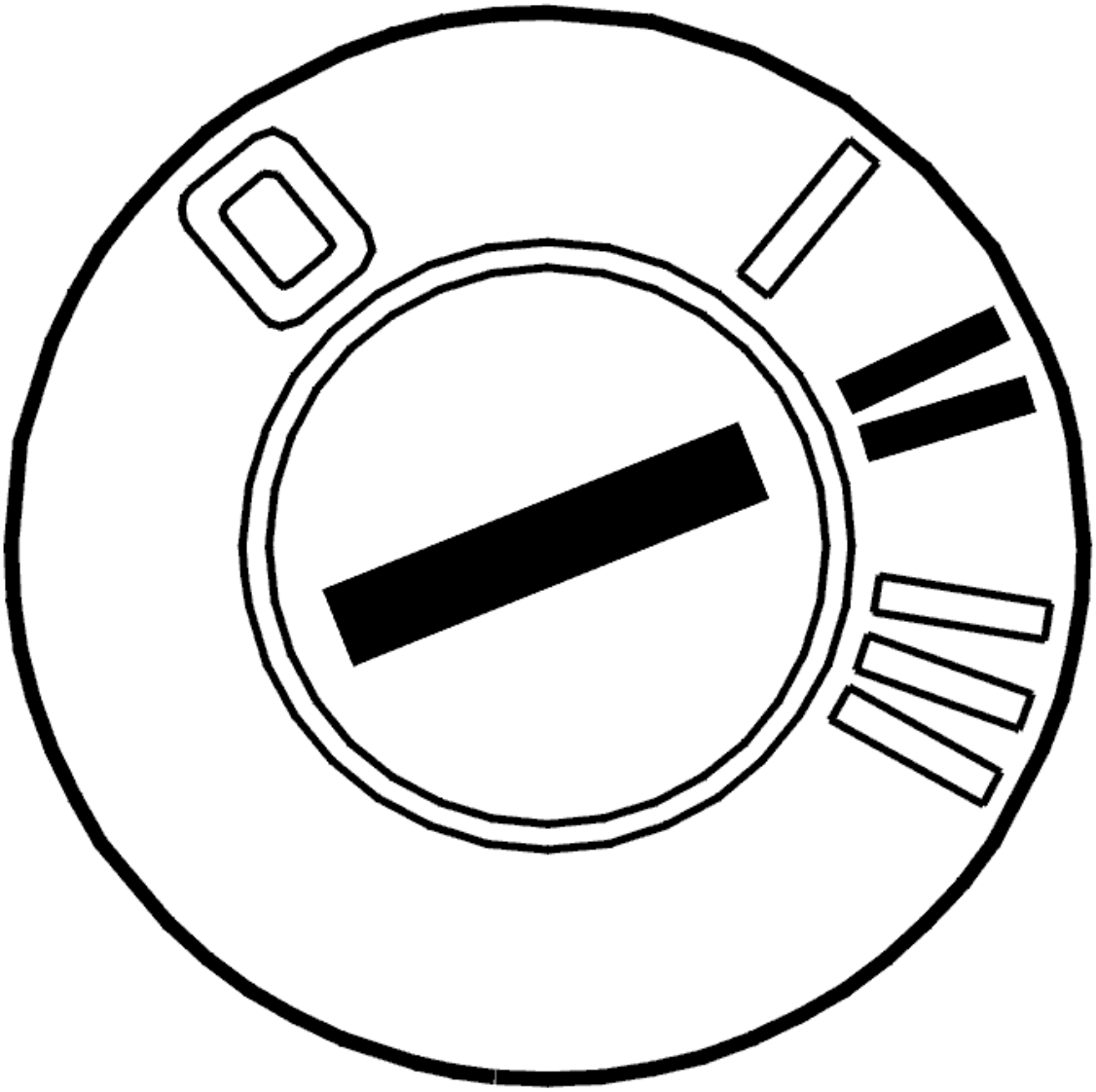

Fig. 269: Identifying Ignition ON
Courtesy of VOLVO CARS CORPORATION

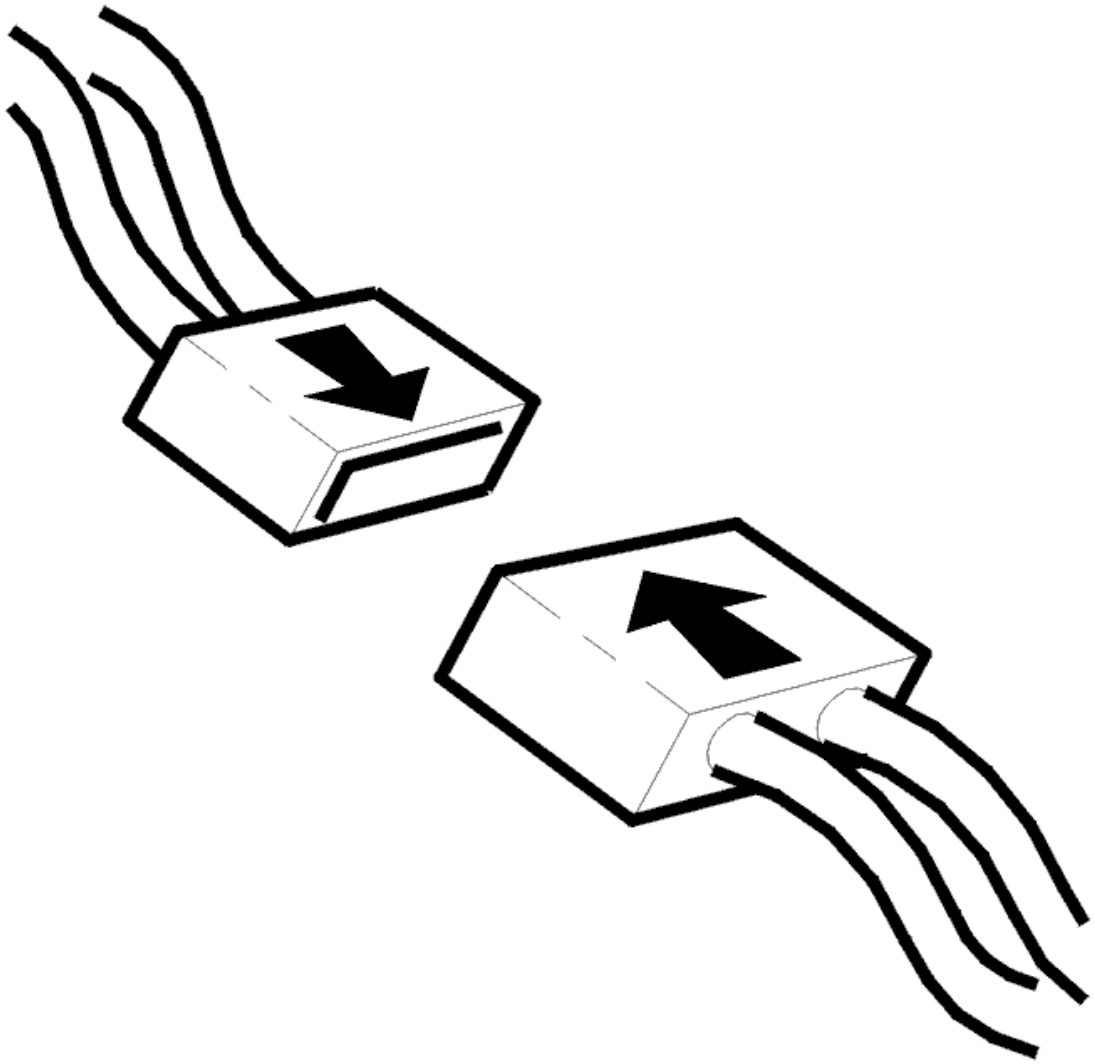

Fig. 270: Connecting Connector
Courtesy of VOLVO CARS CORPORATION

- Ignition off
- Reinstall the connectors, components etc.
- Ignition on.

  Activate the immobilizer control module (ICM) and turn the VOLUME knob.

  Check that the sound volume increases with clockwise movement and decreases with counter-clockwise movement.

Is the function OK?

- **YES**

VERIFIED: Troubleshooting has been completed.

- **NO**

  See: **INFORMATION**

INFORMATION

FAULT-TRACING INFORMATION

The fault should have been detected and remedied. As this is not the case fault-tracing has failed.

Exit fault-tracing for this diagnostic trouble code (DTC) or make another attempt.

ICM-1F35: SELECTOR KNOB. FAULTY SIGNAL (2003-2012)

DIAGNOSTIC TROUBLE CODE (DTC) INFORMATION ICM-1F35

Condition

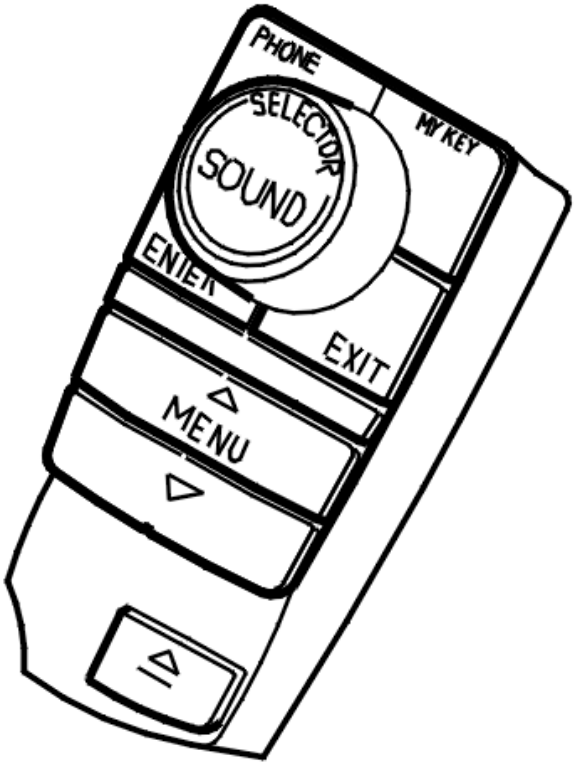

Fig. 271: Identifying Right-Hand Keypad
Courtesy of VOLVO CARS CORPORATION

The infotainment control module (ICM) checks the signals from the switches in the SELECTOR button.

Diagnostic trouble code (DTC) ICM-1F35 is stored if the control signal registers the same signal from the switches.

Substitute Value

- None.

Possible Source

- Short-circuit between the switches in the SELECTOR knob.

Fault symptom[s]

- The SELECTOR knob does not function.

FAULTY SIGNAL

CHECKING THE WIRING AND COMPONENT

Check the connections between the right-hand keypad and the infotainment control module (ICM). Check for contact resistance and oxidation. Check for loose connections. Check for damage in particular.

Visually check the cable between the keypad and the control module for damage.

If no faults were found, try a new keypad.

Remedy as necessary.

Other information:

- To replace the right-hand keypad, see **INFOTAINMENT CONTROL MODULE (ICM), REPLACING**

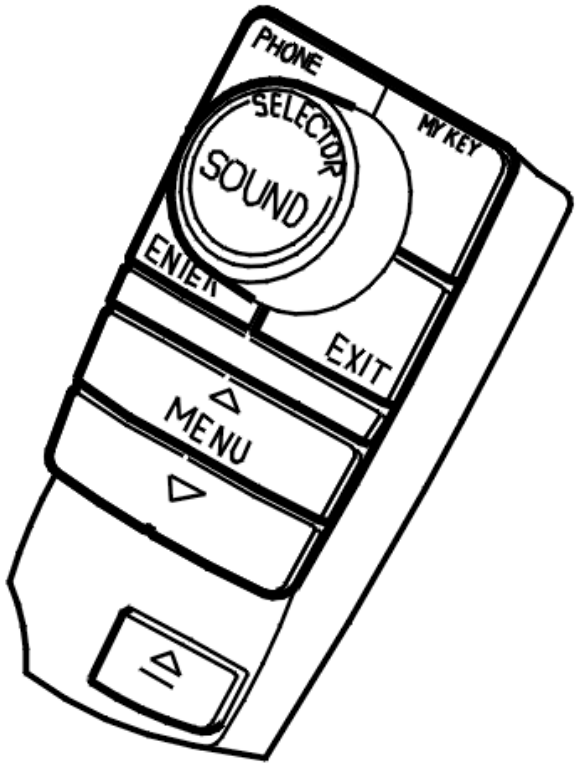

Fig. 272: Identifying Right-Hand Keypad
Courtesy of VOLVO CARS CORPORATION

- **Continue**

  See: **VERIFICATION**

VERIFICATION

VERIFICATION

HINT: After carrying out the repair, check that the fault has been remedied.

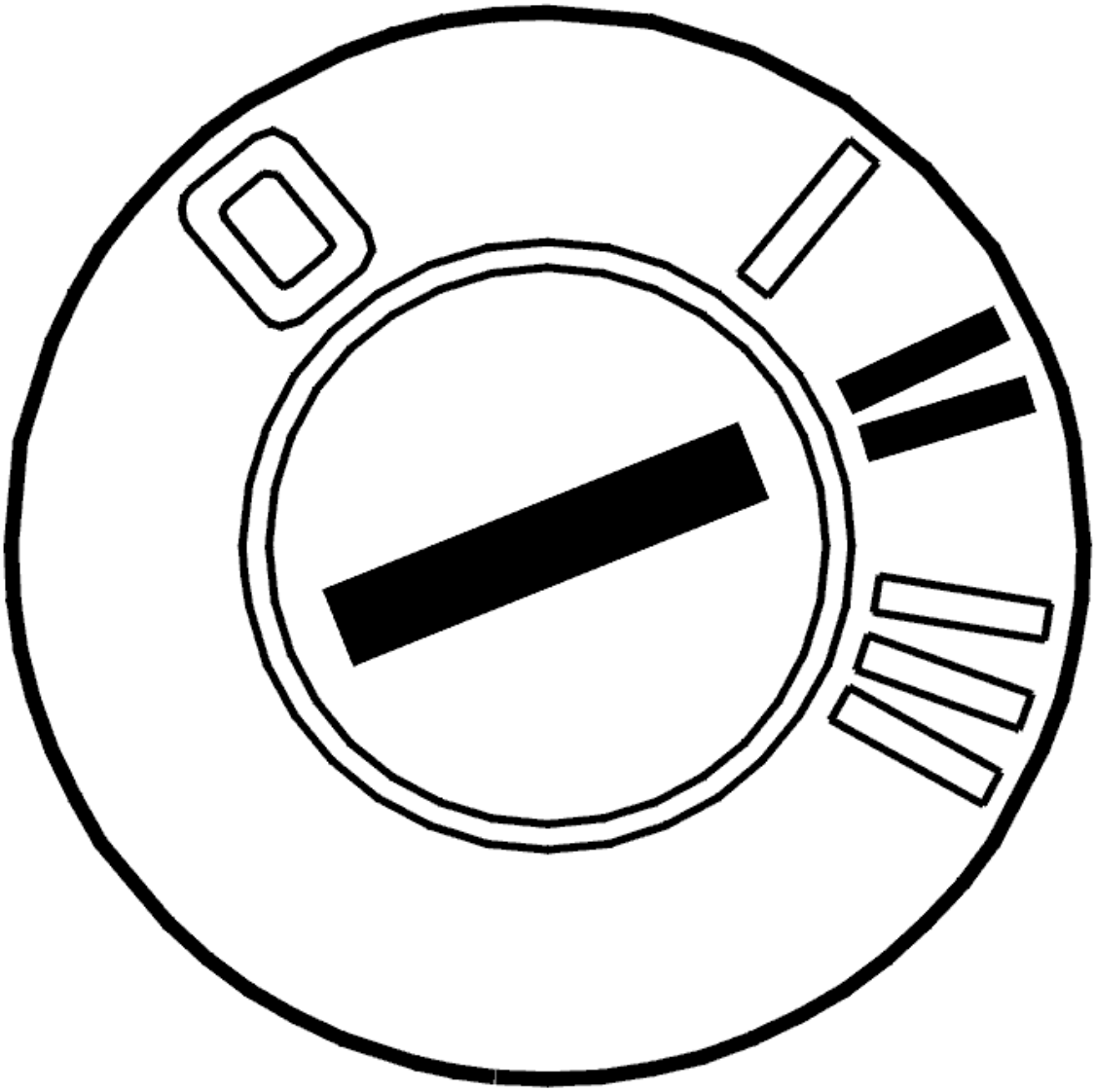

Fig. 273: Identifying Ignition ON
Courtesy of VOLVO CARS CORPORATION

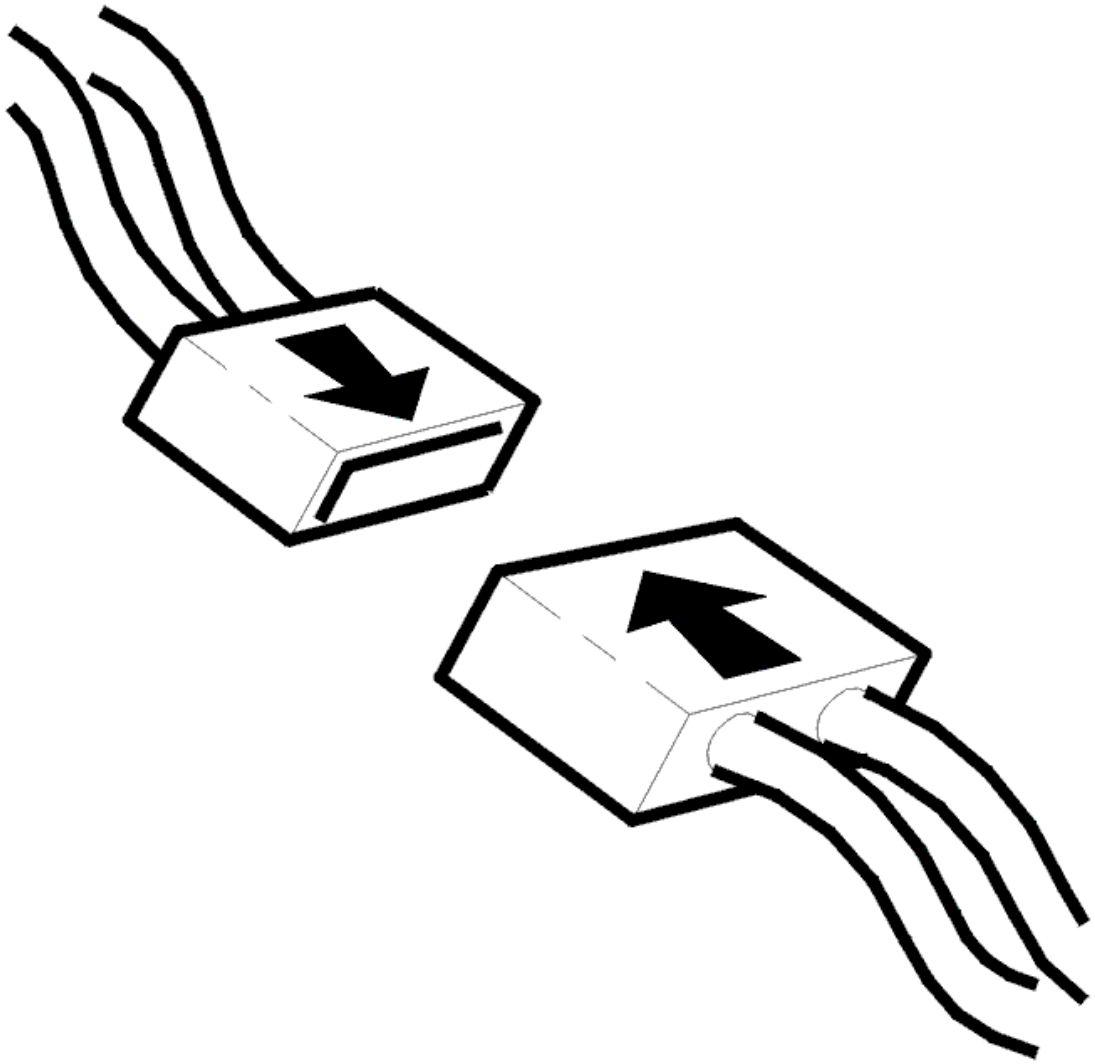

Fig. 274: Connecting Connector
Courtesy of VOLVO CARS CORPORATION

- Ignition off
- Reinstall the connectors, components etc.
- Ignition on.

  Activate the immobilizer control module (ICM) and turn the SELECTOR knob.

  Check that the sound source changes with the clockwise and counter-clockwise movement.

Is the function OK?

- **YES**

VERIFIED: Troubleshooting has been completed.

- **NO**

  See: **INFORMATION**

INFORMATION

FAULT-TRACING INFORMATION

The fault should have been detected and remedied. As this is not the case fault-tracing has failed.

Exit fault-tracing for this diagnostic trouble code (DTC) or make another attempt.

ICM-1F36: DISPLAY HEATER. FAULTY VOLTAGE (2007-2012)

DIAGNOSTIC TROUBLE CODE (DTC) INFORMATION ICM-1F36

Condition

The infotainment control module (ICM) checks the voltage to display heating.

The diagnostic trouble code (DTC) is stored if the control module detects that:

- The signal is outside its normal range.

The control module's test for the diagnostic trouble code (DTC) starts in the event of:

- Activated display warm up.

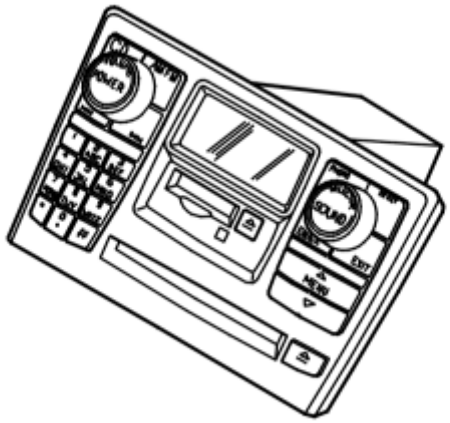

Fig. 275: Identifying Infotainment Control Module (ICM)
Courtesy of VOLVO CARS CORPORATION

Substitute Value

- None.

Possible Source

- Internal fault in the Infotainment control module (ICM).

Fault symptom[s]

- Display lights up slowly

FAULTY VOLTAGE

CHECKING THE COMPONENT

The infotainment control module (ICM) has registered incorrect voltage to display heating.

- Replace the infotainment control module (ICM)

Other information:

- see **INFOTAINMENT CONTROL MODULE (ICM), REPLACING**
- **Continue**

  See: **VERIFICATION**

VERIFICATION

VERIFICATION

HINT: After carrying out the repair, check that the fault has been remedied.

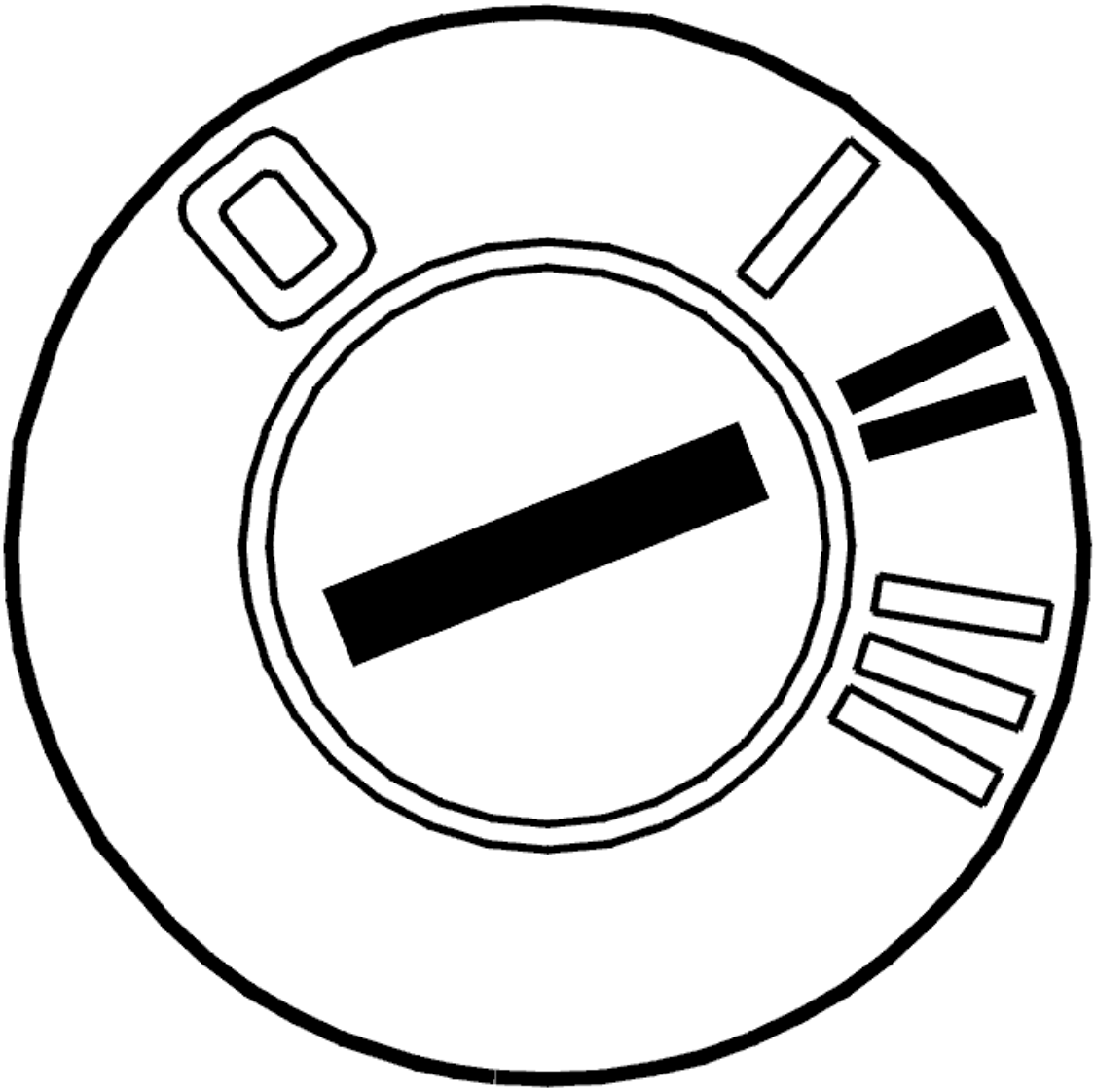

Fig. 276: Identifying Ignition ON
Courtesy of VOLVO CARS CORPORATION

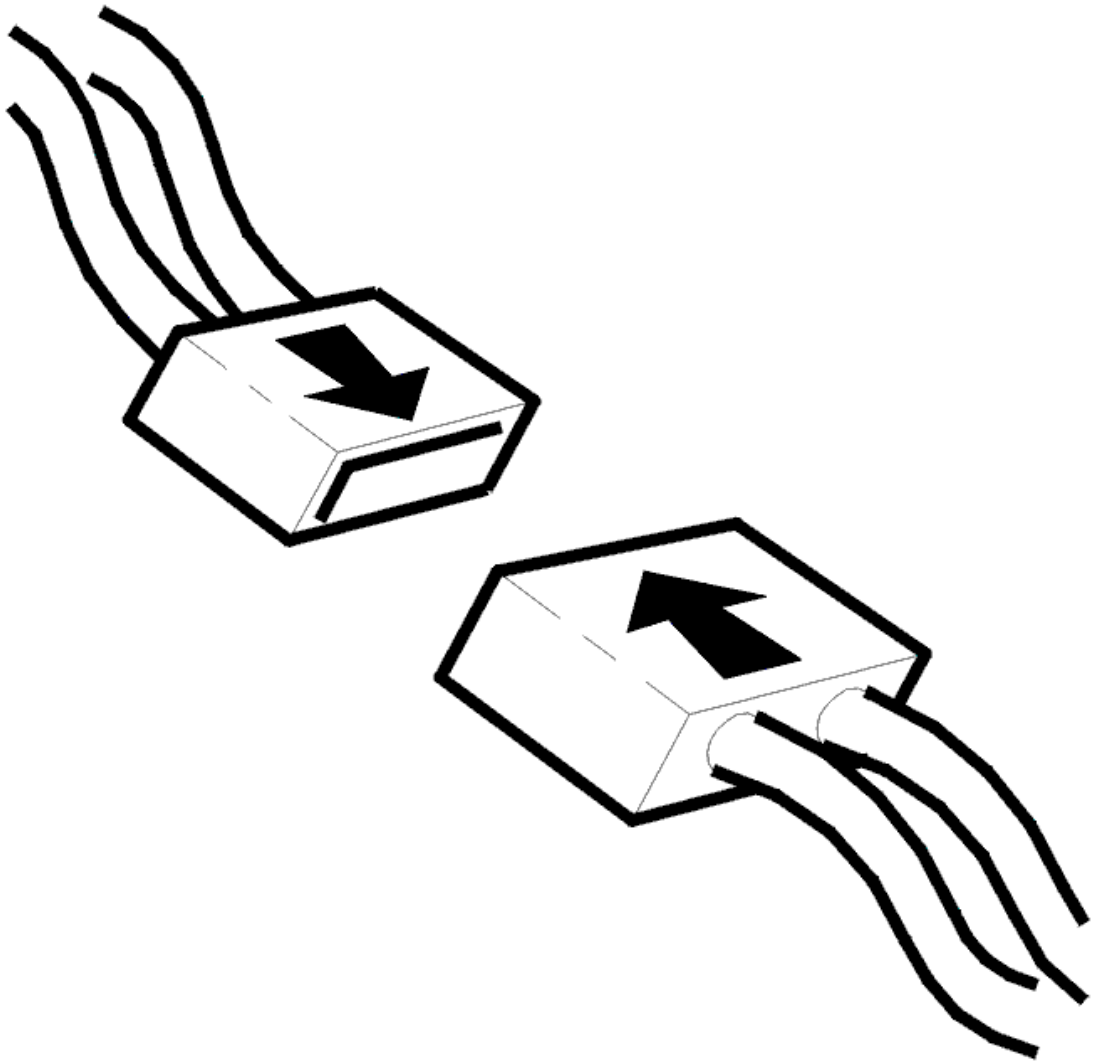

Fig. 277: Connecting Connector
Courtesy of VOLVO CARS CORPORATION

- Ignition off
- Reinstall the connectors, components etc.
- Ignition on.

  Activate the infotainment unit by pressing the POWER button.

  Check that the display lights.

Does the display light?

- **YES**

VERIFIED: Troubleshooting has been completed.

- **NO**

  See: **INFORMATION**

INFORMATION

FAULT-TRACING INFORMATION

The fault should have been detected and remedied. As this is not the case fault-tracing has failed.

Exit fault-tracing for this diagnostic trouble code (DTC) or make another attempt.

ICM-1F38: DISPLAY TEMPERATURE SENSOR FAULTY VOLTAGE (2007-2012)

DIAGNOSTIC TROUBLE CODE (DTC) INFORMATION ICM-1F38

Condition

The Infotainment control module (ICM) checks warming-up of the display.

The diagnostic trouble code (DTC) is stored if the control module detects that:

- The value from the display temperature sensor is not within the acceptable range.

The control module's test for the diagnostic trouble code (DTC) starts in the event of:

- Activated control module.

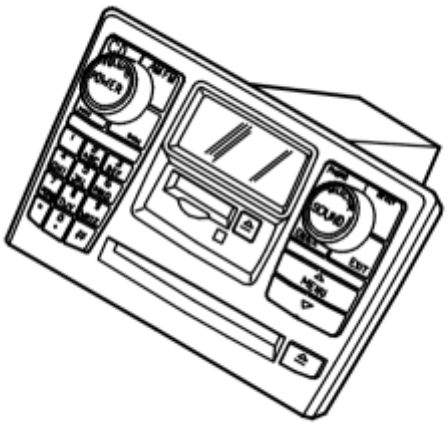

Fig. 278: Identifying Infotainment Control Module (ICM)
Courtesy of VOLVO CARS CORPORATION

Substitute Value

- None.

Possible Source

- Internal fault in the Infotainment control module (ICM).
- Temperature not within acceptable range.

Fault symptom[s]

- Display lights up slowly

FAULTY SIGNAL

CHECKING THE COMPONENT

The infotainment control module (ICM) has registered that the temperature sensor in the display is not functioning correctly.

If the fault is intermittent, it has been registered previously but is no longer present. Intermittent faults may occur at start up of the infotainment control module (ICM), or may be a different type of fault that occurs on different occasions. The fault is evaluated depending on how it occurs.

If the fault is permanent, replace the infotainment control module (ICM).

Remedy as necessary.

Other information

- see **INFOTAINMENT CONTROL MODULE (ICM), REPLACING**

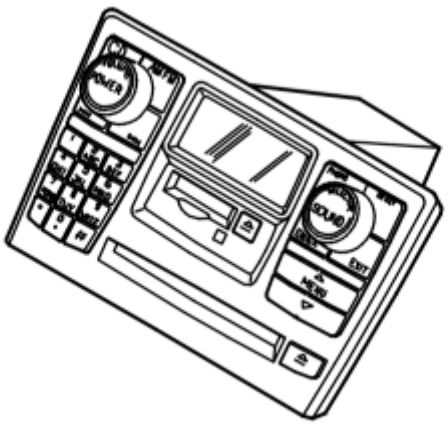

Fig. 279: Identifying Infotainment Control Module (ICM)

Courtesy of VOLVO CARS CORPORATION

- **Continue**

  See: **VERIFICATION**

VERIFICATION

VERIFICATION

HINT: After carrying out the repair, check that the fault has been remedied.

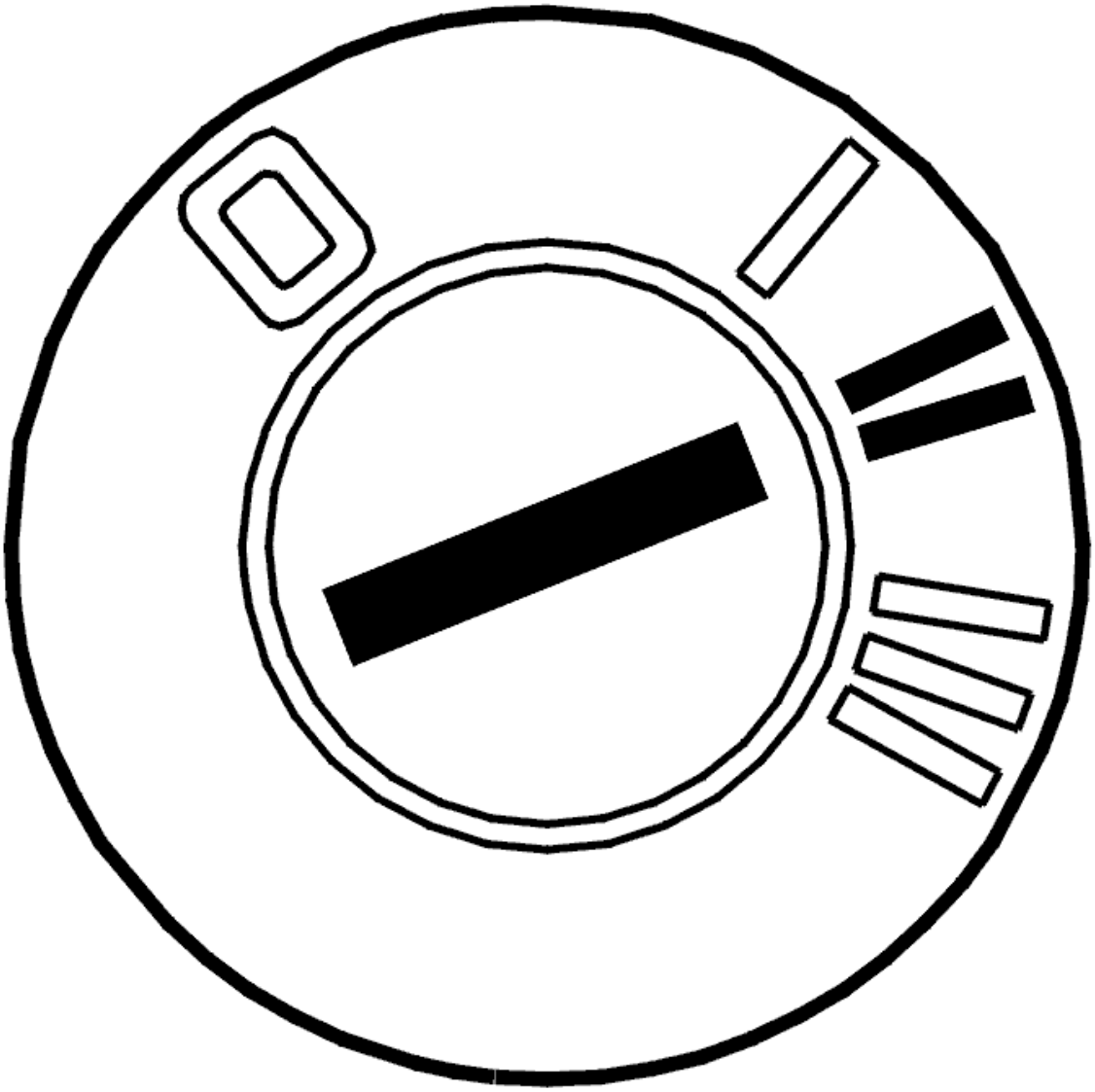

Fig. 280: Identifying Ignition ON
Courtesy of VOLVO CARS CORPORATION

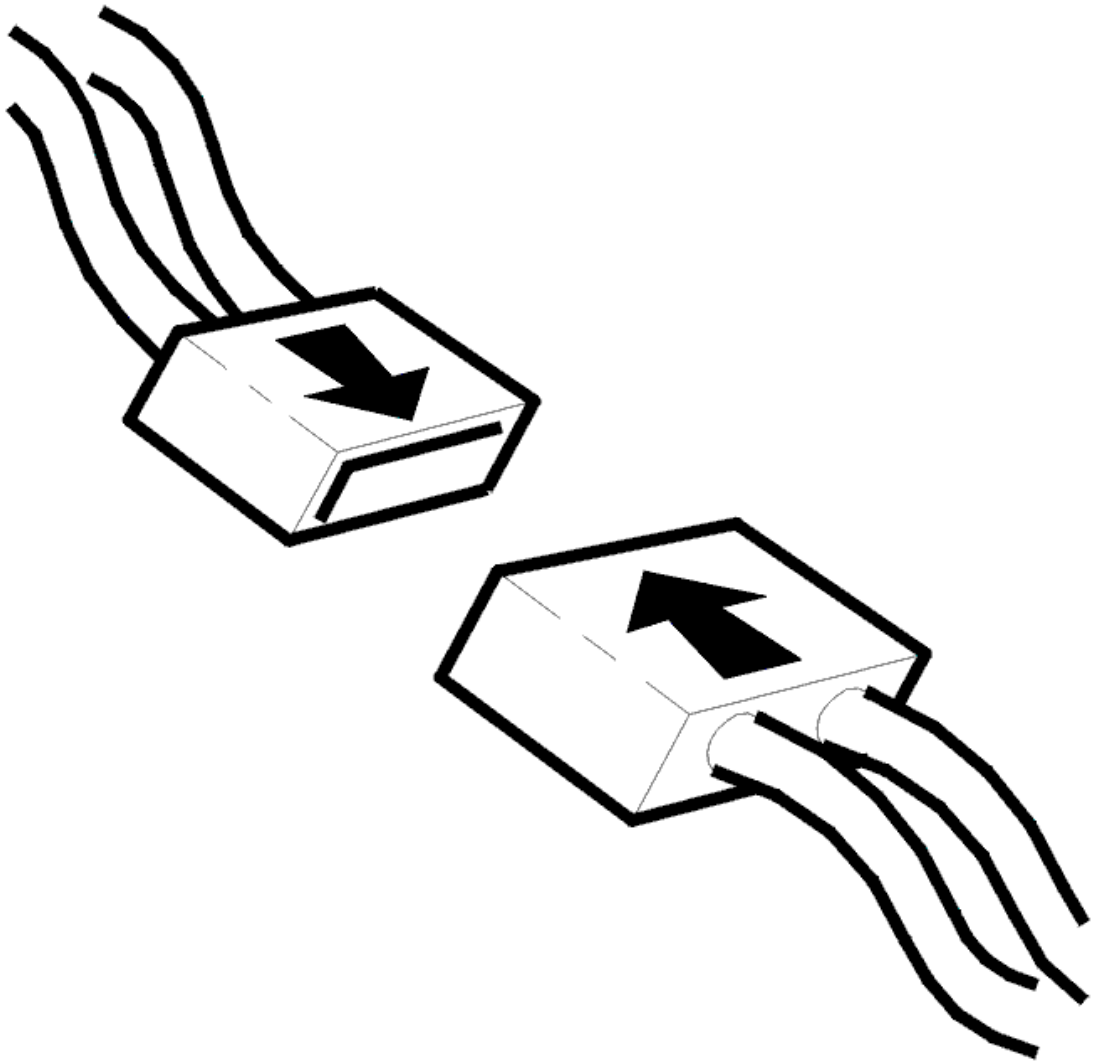

Fig. 281: Connecting Connector
Courtesy of VOLVO CARS CORPORATION

- Ignition off
- Reinstall the connectors, components etc.
- Ignition on.

  Activate the infotainment control module (ICM) by pressing the POWER button.

  Check that the display lights.

  Check that the sound source can be selected and that playback is working.

Is the infotainment control module (ICM) working?

- **YES**

  VERIFIED: Troubleshooting has been completed.

- **NO**

  See: **INFORMATION**

INFORMATION

FAULT-TRACING INFORMATION

The fault should have been detected and remedied. As this is not the case fault-tracing has failed.

Exit fault-tracing for this diagnostic trouble code (DTC) or make another attempt.

ICM-6C70: ANTENNA MODULE (ATM) NOT APPROVED. FAULTY SIGNAL (2003-2006)

DIAGNOSTIC TROUBLE CODE (DTC) INFORMATION ICM-6C70

Condition

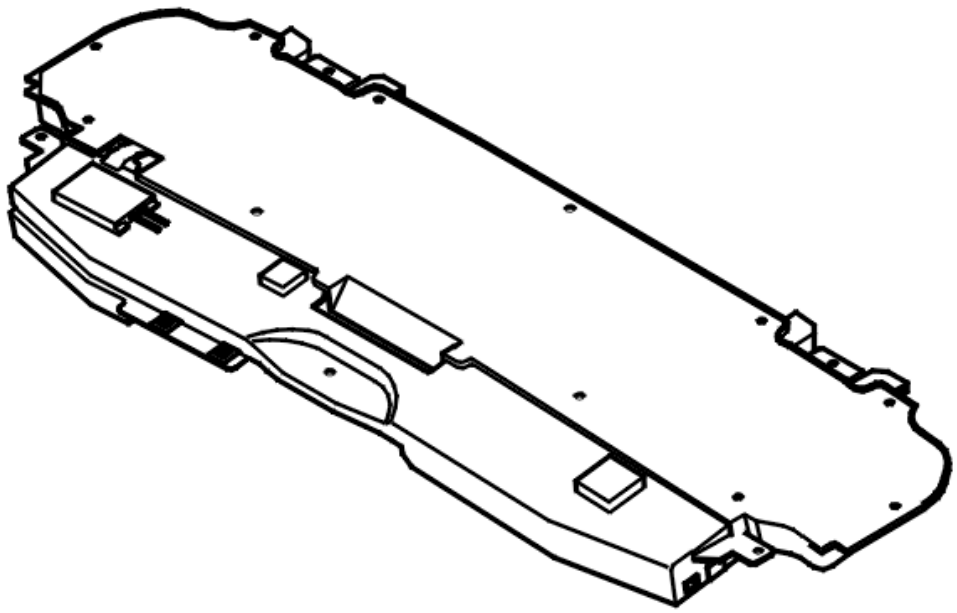

Fig. 282: Identifying Antenna Module (ATM)
Courtesy of VOLVO CARS CORPORATION

The serial number for each control module in the infotainment system is stored in the central electronic module (CEM). The stored numbers are compared with the serial numbers of the control modules at start up. If any number does not correspond, that particular control module is blocked and the function is not available. The blocking function for non-approved control modules is designated security on MOST.

The infotainment control module (ICM) checks whether the antenna module (ATM) is in the approved list stored in the central electronic module (CEM).

Diagnostic trouble code (DTC) ICM-6C70 is stored if the infotainment control module (ICM) registers that the antenna module (ATM) is not on the approved list.

Diagnostic trouble code (DTC) ICM-6C70 can be detected when the ignition is on for at least 12 seconds and the battery voltage is > 11 V and security on MOST is activated.

Substitute Value

- None.

Possible Source

- Replacing an antenna module (ATM) which is not approved in the list stored in the central electronic module (CEM)
- Software not downloaded when replacing the antenna module (ATM)
- Failed or incomplete software download for the antenna module (ATM).

Fault symptom[s]

- The radio is not working
- Traffic information is not displayed or updated.

FAULTY SIGNAL

CHECKING THE COMPONENT

The infotainment control module (ICM) has registered that the antenna module (ATM) is not approved according to the list stored in the central electronic module (CEM).

The cause of the fault is probably that software has not been downloaded or that the download failed when replacing the antenna module (ATM).

HINT: When downloading software after replacing a control module in the infotainment system, the serial number is stored in the central electronic module (CEM). This is so that the security on MOST function can approve the control module in the MOST network in the car.

If the fault remains after the software is downloaded, try replacing the antenna module (ATM).

Remedy as necessary.

Other information:

- To replace the antenna module (ATM), see **RECEIVER AM/FM (ATM), REPLACING** .

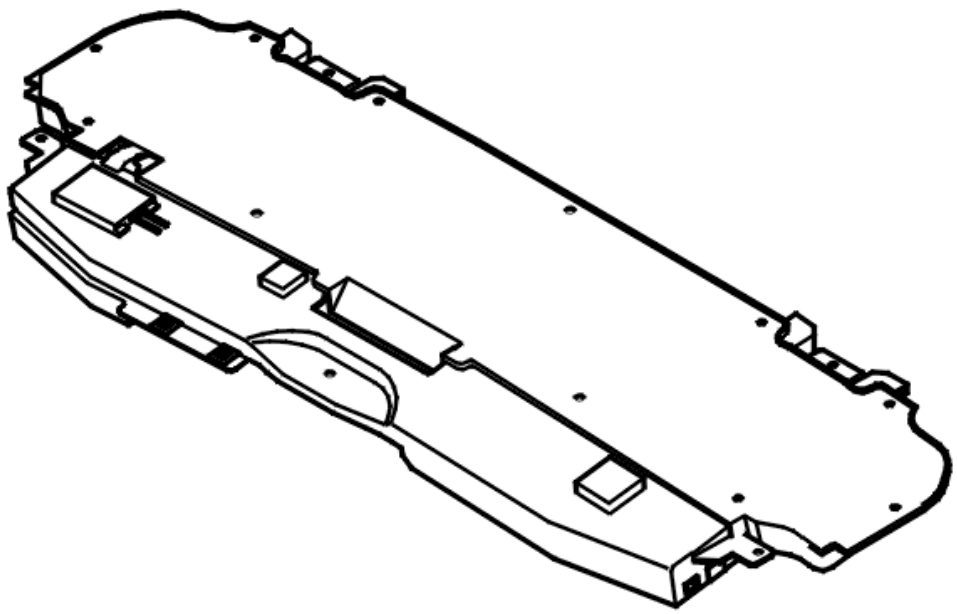

Fig. 283: Identifying Antenna Module (ATM)
Courtesy of VOLVO CARS CORPORATION

- **Continue**

  See: **VERIFICATION**

VERIFICATION

VERIFICATION

HINT: After carrying out the repair, check that the fault has been remedied.

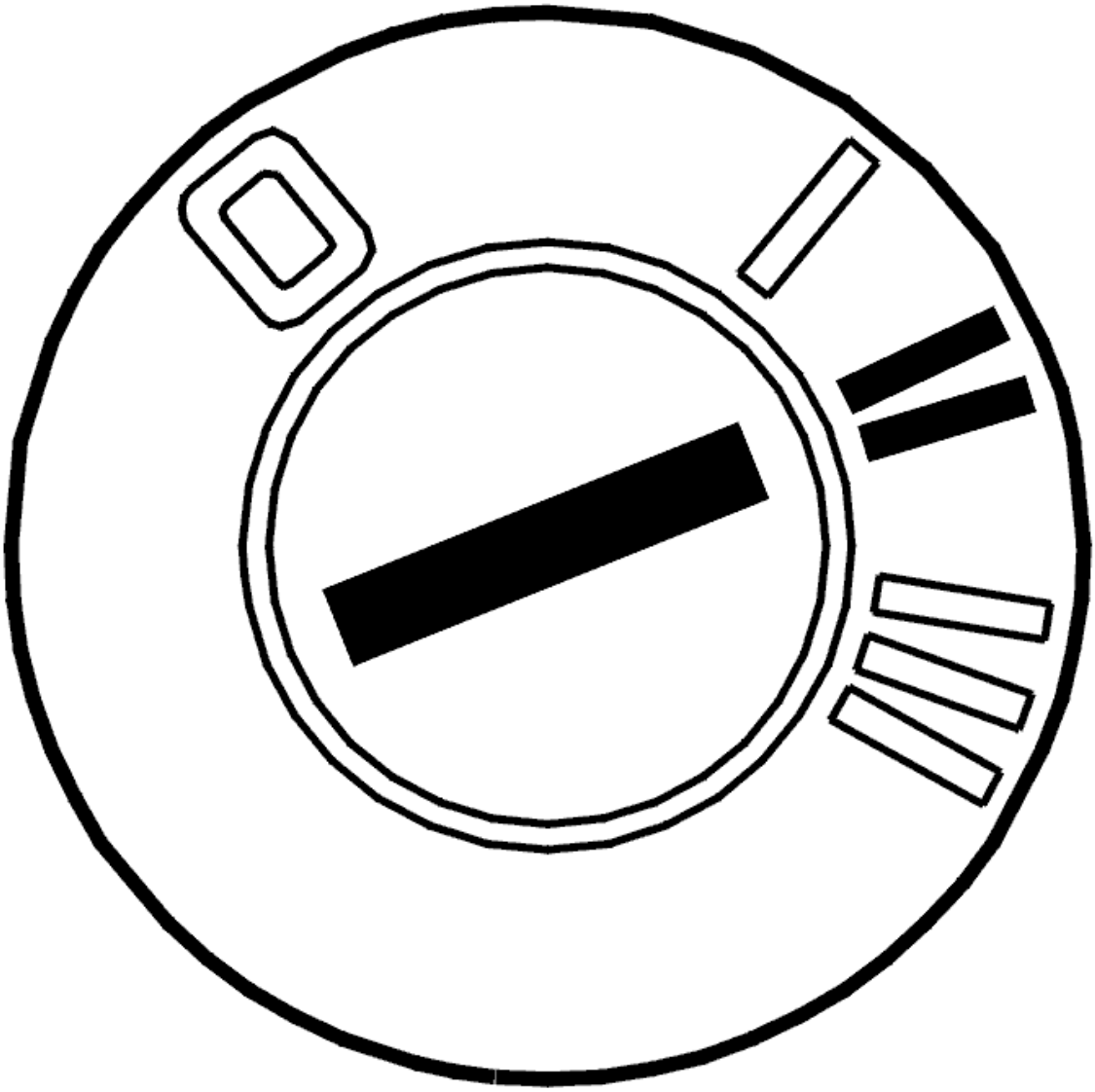

Fig. 284: Identifying Ignition ON
Courtesy of VOLVO CARS CORPORATION

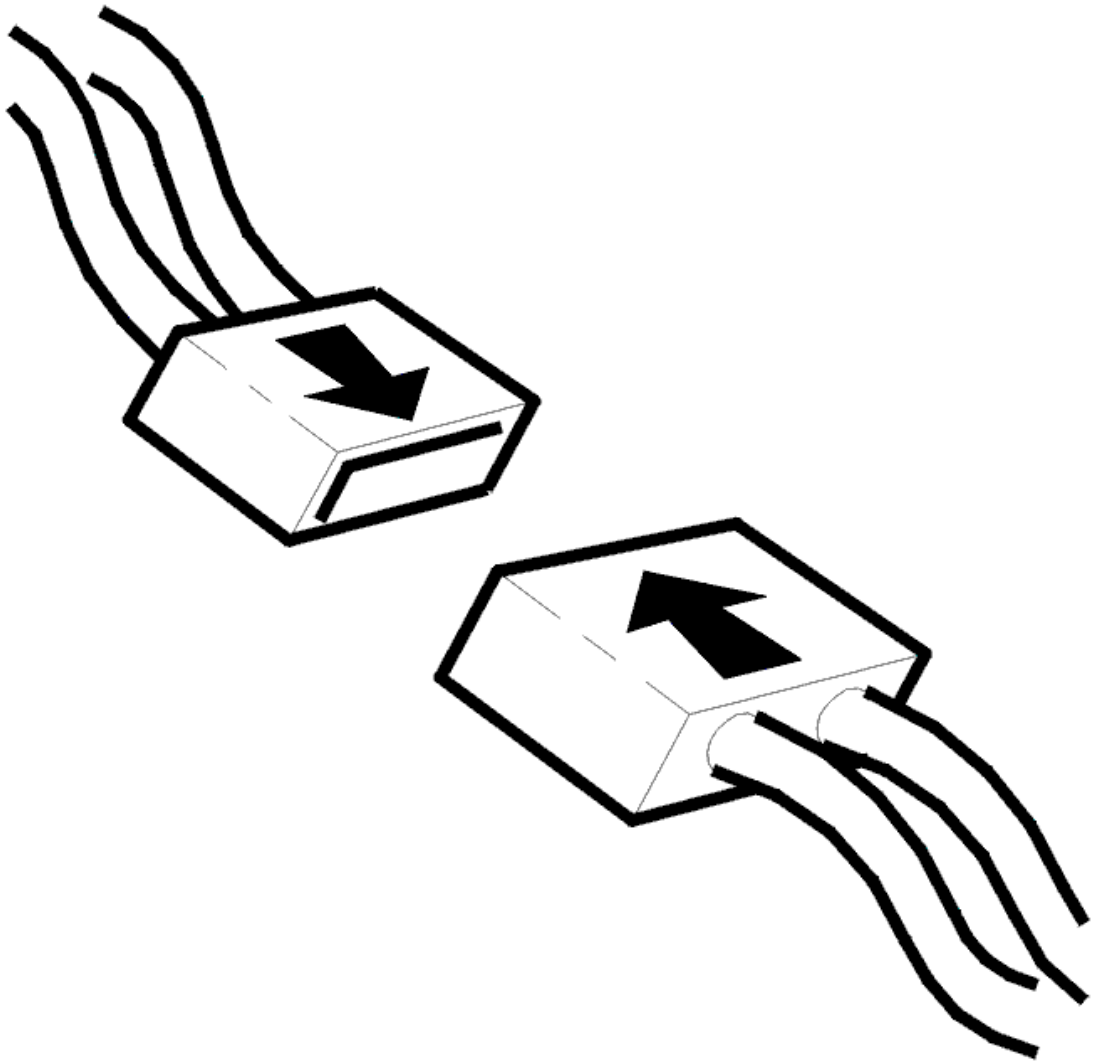

Fig. 285: Connecting Connector
Courtesy of VOLVO CARS CORPORATION

- Ignition off
- Reinstall the connectors, components etc.
- Ignition on for at least 12 seconds.

Read off the control module ID from the antenna module (ATM) by clicking on the VCT2000 symbol.

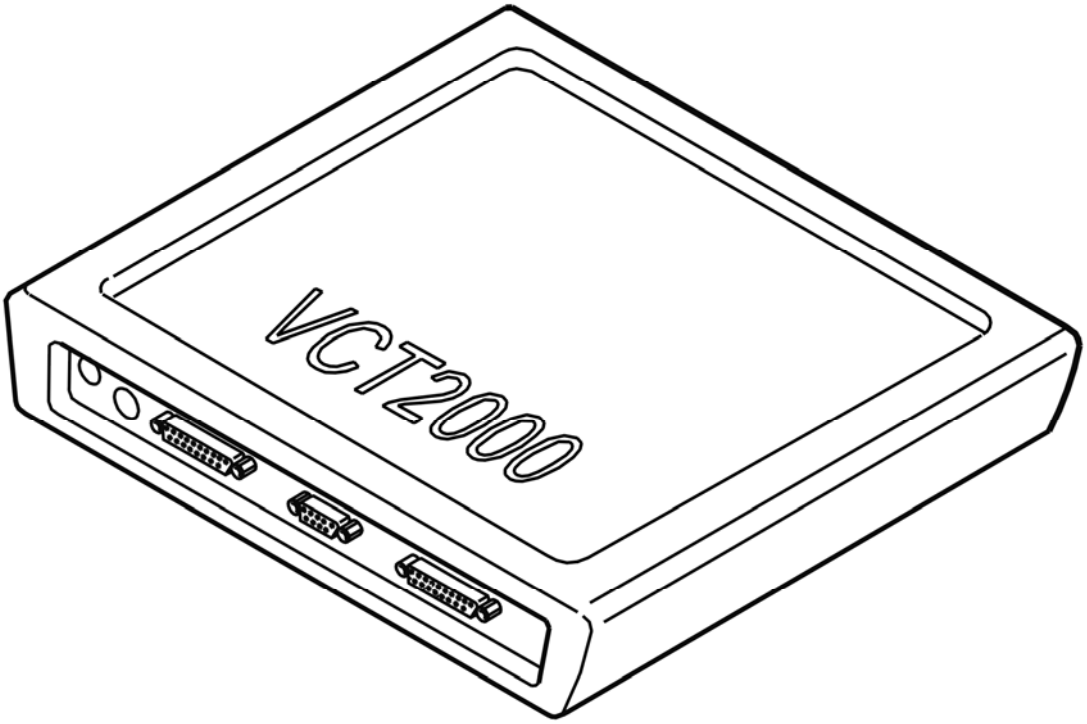

Fig. 286: Identifying VCT2000 Diagnostic Tool Symbol In VIDA
Courtesy of VOLVO CARS CORPORATION

Can the control module ID be read off?

- **YES**

  VERIFIED: Troubleshooting has been completed.

- **NO**

  See: **INFORMATION**

INFORMATION

FAULT-TRACING INFORMATION

The fault should have been detected and remedied. As this is not the case fault-tracing has failed.

Exit fault-tracing for this diagnostic trouble code (DTC) or make another attempt.

ICM-6C71: AUDIO MODULE (AUD) NOT APPROVED. FAULTY SIGNAL (2003-2012)

DIAGNOSTIC TROUBLE CODE (DTC) INFORMATION ICM-6C71

Condition

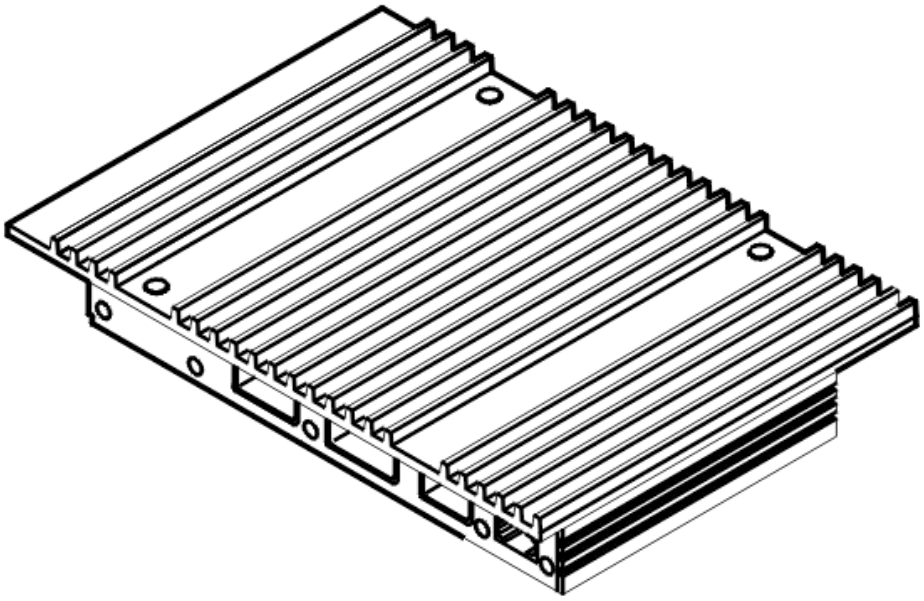

Fig. 287: Identifying Audio Control Module
Courtesy of VOLVO CARS CORPORATION

The serial number for each control module in the infotainment system is stored in the central electronic module (CEM). The stored numbers are compared with the serial numbers of the control modules at start up. If any number does not correspond, that particular control module is blocked and the function is not available. The blocking function for non-approved control modules is designated security on MOST.

The infotainment control module (ICM) checks whether the Audio module (AUD) is in the approved list stored in the central electronic module (CEM).

Diagnostic trouble code (DTC) ICM-6C71 is stored if the Infotainment Control Module (ICM) registers that the Audio module (AUD) is not on the approved list.

Diagnostic trouble code (DTC) ICM-6C71 can be detected when the ignition is on for at least 12 seconds and the battery voltage is > 11 V and security on MOST is activated.

Substitute Value

- None.

Possible Source

- Replacing an Audio module (AUD) which is not approved in the list stored in the central electronic module (CEM)
- Software not downloaded when replacing the Audio module (AUD)
- Failed or incomplete software download for the Audio module (AUD).

Fault symptom[s]

- No sound from the loudspeakers
- The headsets are not functioning.

FAULTY SIGNAL

CHECKING THE COMPONENT

The infotainment control module (ICM) has registered that the Audio module (AUD) is not approved according to the list stored in the central electronic module (CEM).

The cause of the fault is probably that software has not been downloaded or that the download failed when replacing the Audio module (AUD).

HINT: When downloading software after replacing a control module in the infotainment system, the serial number is stored in the central electronic module (CEM). This is so that the security on MOST function can approve the control module in the MOST network in the car.

If the fault remains after the software is downloaded, try replacing the Audio module (AUD).

Remedy as necessary.

Other information:

- To replace the audio module (AUD), see **AUDIO MODULE (AUD), REPLACING** .

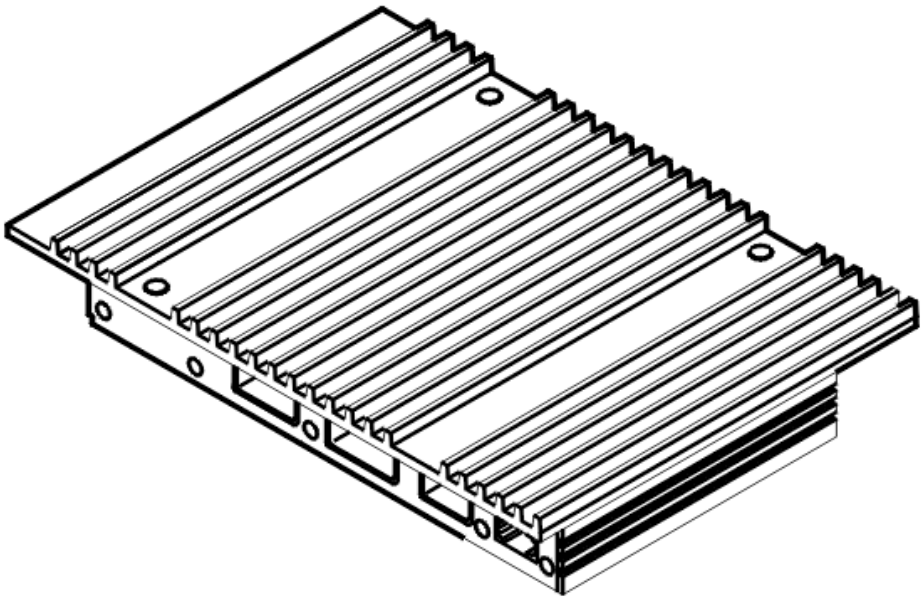

Fig. 288: Identifying Audio Control Module
Courtesy of VOLVO CARS CORPORATION

- **Continue**

  See: **VERIFICATION**

VERIFICATION

VERIFICATION

HINT: After carrying out the repair, check that the fault has been remedied.

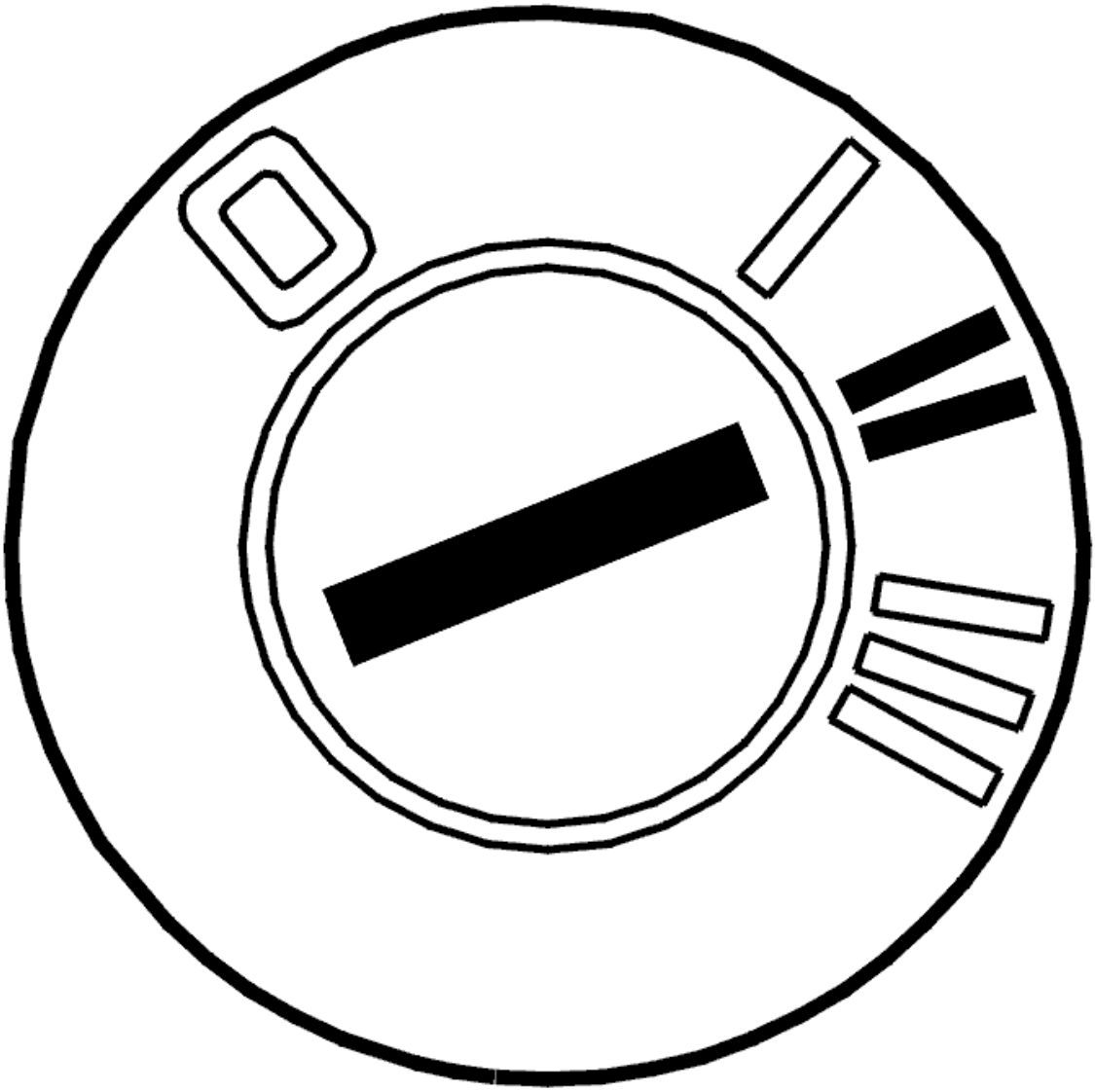

Fig. 289: Identifying Ignition ON
Courtesy of VOLVO CARS CORPORATION

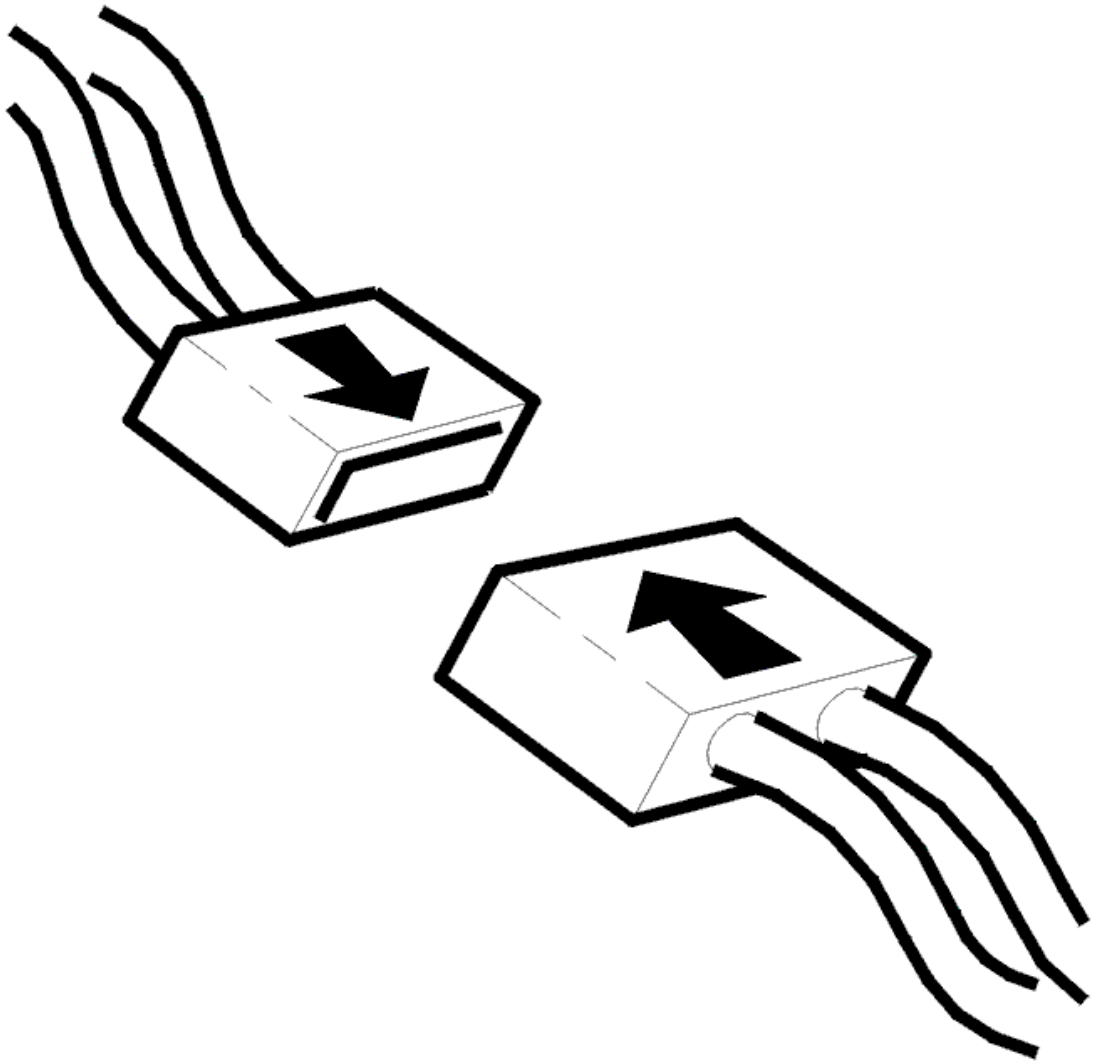

Fig. 290: Connecting Connector
Courtesy of VOLVO CARS CORPORATION

- Ignition off
- Reinstall the connectors, components etc.
- Ignition on for at least 12 seconds.

Read off the control module ID from the audio module (AUD) by clicking on the VCT2000 symbol.

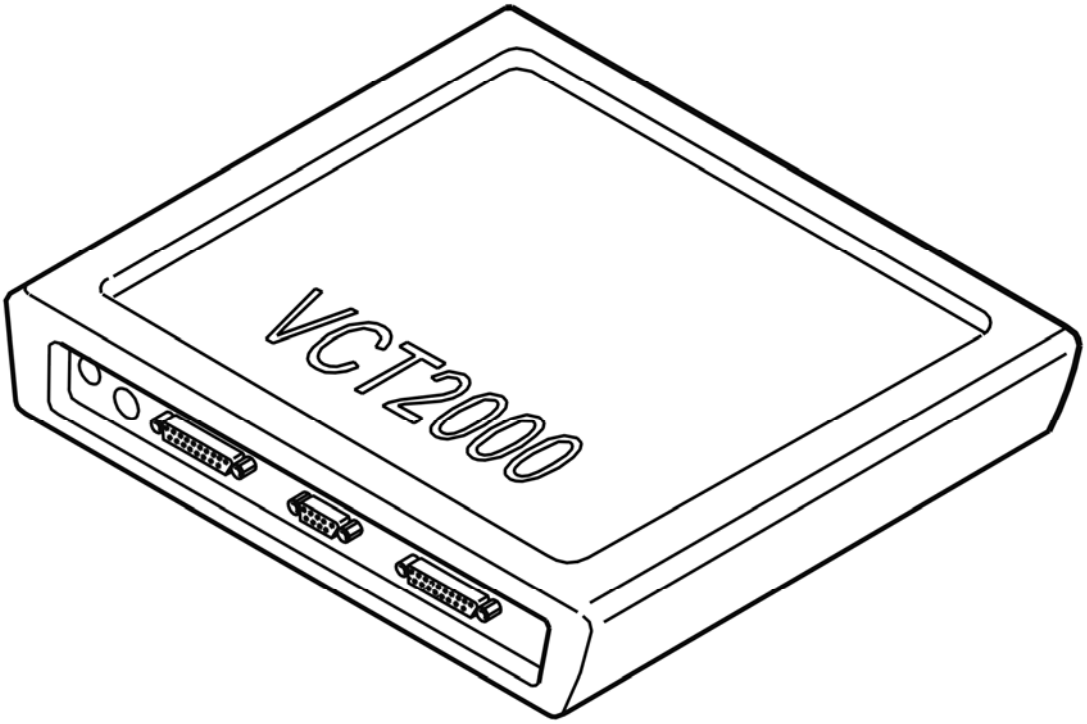

Fig. 291: Identifying VCT2000 Diagnostic Tool Symbol In VIDA
Courtesy of VOLVO CARS CORPORATION

Can the control module ID be read off?

- **YES**

  VERIFIED: Troubleshooting has been completed.

- **NO**

  See: **INFORMATION**

INFORMATION

FAULT-TRACING INFORMATION

The fault should have been detected and remedied. As this is not the case fault-tracing has failed.

Exit fault-tracing for this diagnostic trouble code (DTC) or make another attempt.

ICM-6C72: MULTIMEDIA MODULE (MMM) NOT APPROVED. FAULTY SIGNAL (2003-2012)

DIAGNOSTIC TROUBLE CODE (DTC) INFORMATION ICM-6C72

Condition

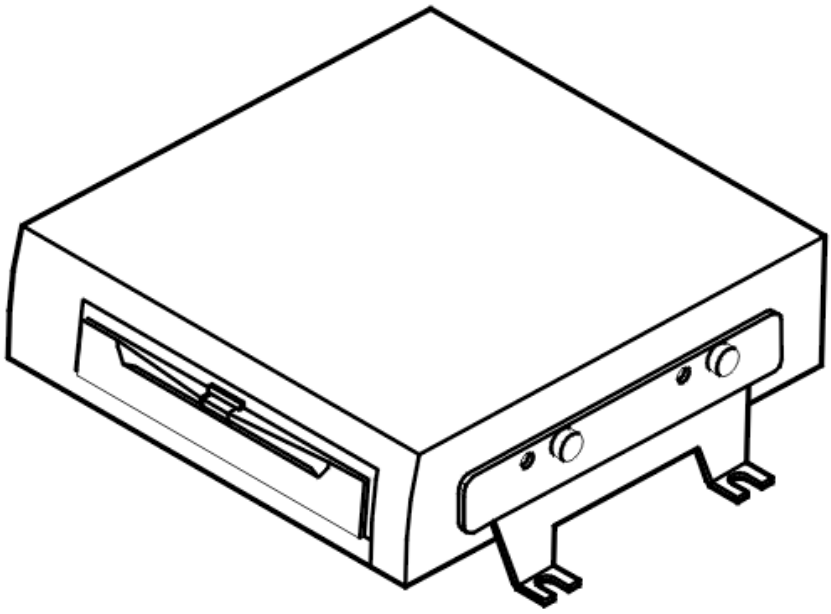

Fig. 292: Identifying Multimedia Module (MMM)
Courtesy of VOLVO CARS CORPORATION

The serial number for each control module in the infotainment system is stored in the central electronic module (CEM). The stored numbers are compared with the serial numbers of the control modules at start up. If any number does not correspond, that particular control module is blocked and the function is not available. The blocking function for non-approved control modules is designated security on MOST.

The infotainment control module (ICM) checks whether the Multimedia Module (MMM) is in the approved list stored in the central electronic module (CEM).

Diagnostic trouble code (DTC) ICM-6C72 is stored if the Infotainment Control Module (ICM) registers that the Multimedia Module (MMM) is not on the approved list.

Diagnostic trouble code (DTC) ICM-6C72 can be detected when the ignition is on for at least 12 seconds and the battery voltage is > 11 V and security on the MOST network is activated.

Substitute Value

- None.

Possible Source

- Replacing a Multimedia Module (MMM) which is not approved in the list stored in the central electronic module (CEM)
- Software not downloaded when replacing the Multimedia Module (MMM)
- Failed or incomplete software download for the multimedia module (MMM).

Fault symptom[s]

- The multimedia system is not working.

FAULTY SIGNAL

CHECKING THE COMPONENT

The infotainment control module (ICM) has registered that the Multimedia Module (MMM) is not approved according to the list stored in the central electronic module (CEM).

The cause of the fault is probably that software has not been downloaded or that the download failed when replacing the multimedia module (MMM).

HINT: When downloading software after replacing a control module in the infotainment system, the serial number is stored in the central electronic module (CEM). This is so that the security on MOST function can approve the control module in the MOST network in the car.

If the fault remains after the software is downloaded, try replacing the multimedia module (MMM).

Remedy as necessary.

Other information:

- To replace the multimedia module (MMM), see **MULTIMEDIA MODULE (MMM), REPLACING** .

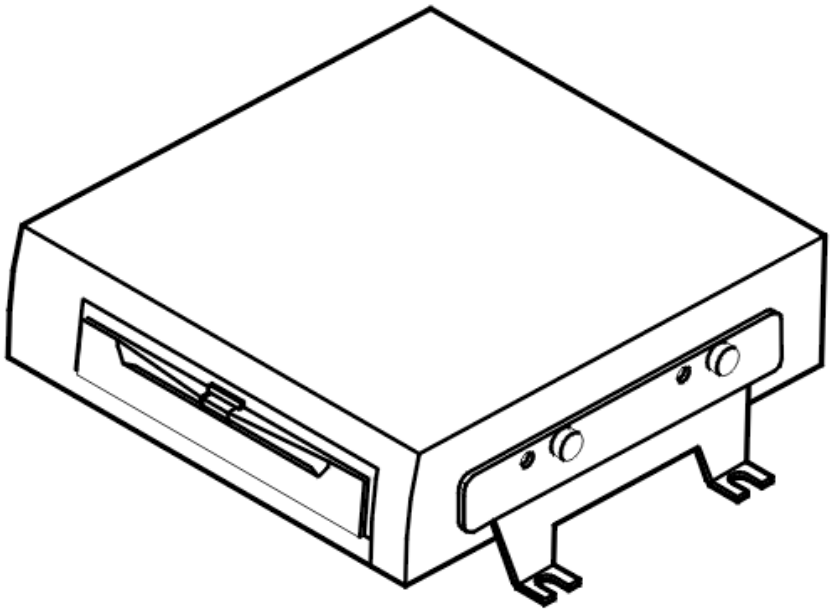

Fig. 293: Identifying Multimedia Module (MMM)
Courtesy of VOLVO CARS CORPORATION

- **Continue**

  See: **VERIFICATION**

VERIFICATION

VERIFICATION

HINT: After carrying out the repair, check that the fault has been remedied.

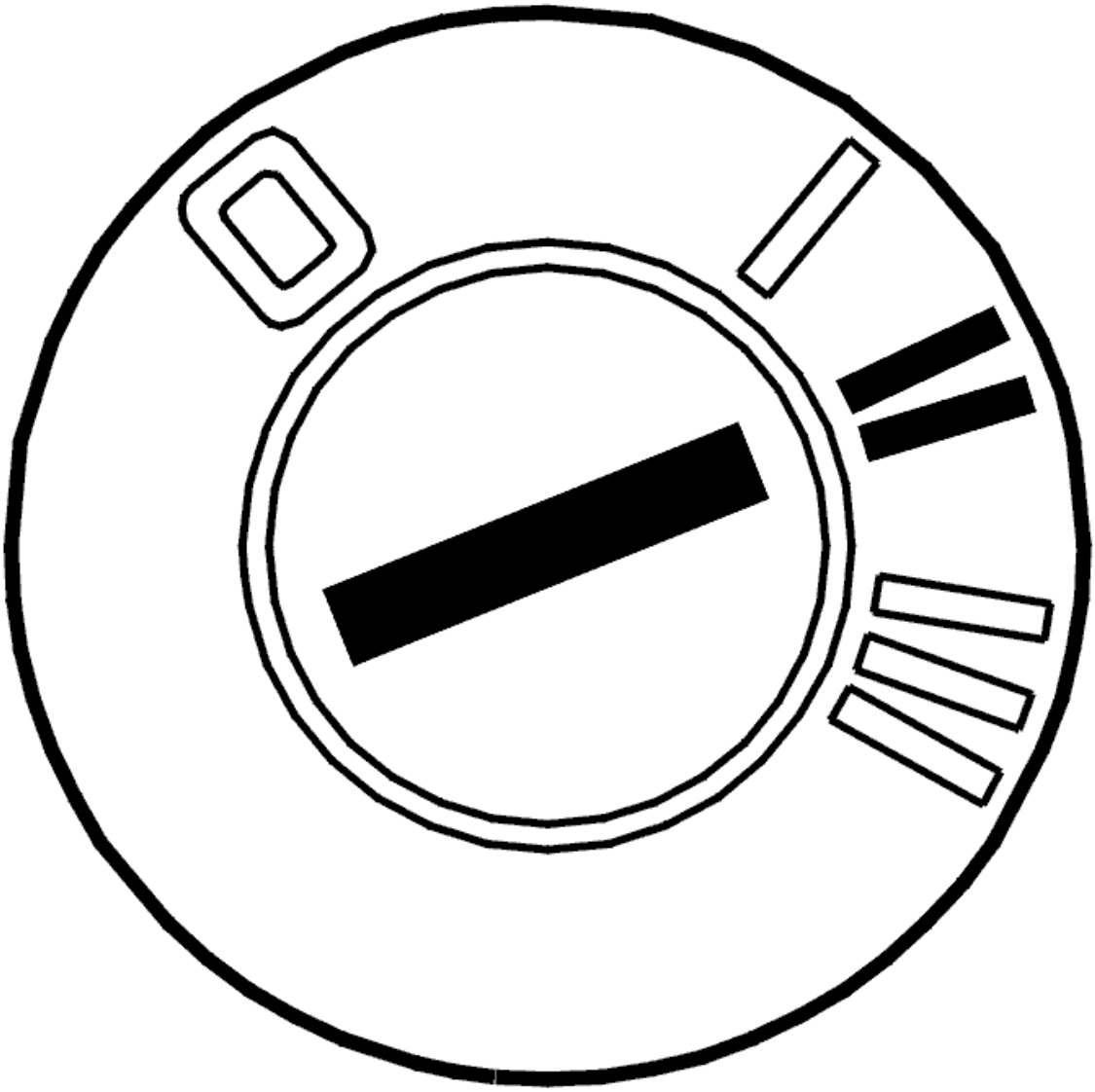

Fig. 294: Identifying Ignition ON
Courtesy of VOLVO CARS CORPORATION

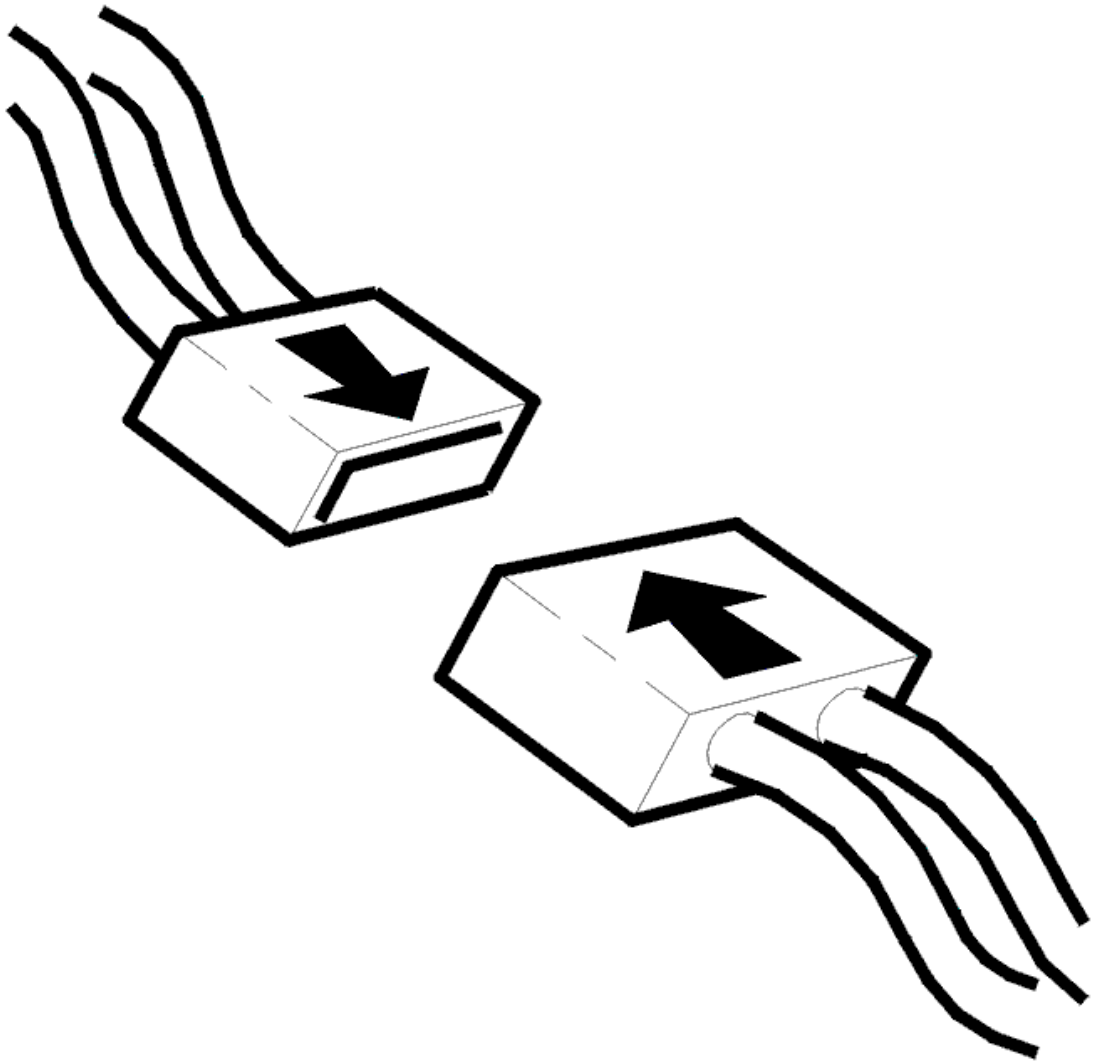

Fig. 295: Connecting Connector
Courtesy of VOLVO CARS CORPORATION

- Ignition off
- Reinstall the connectors, components etc.
- Ignition on for at least 12 seconds.

  Read off the control module ID from the multimedia module (MMM) by clicking on the VCT2000 symbol.

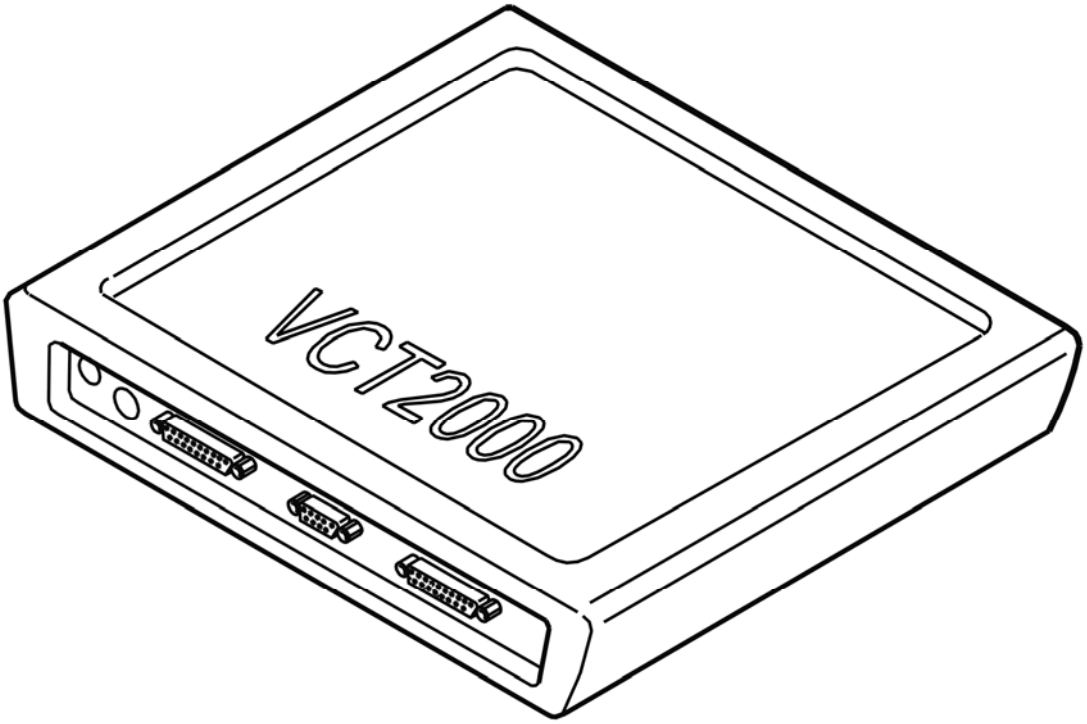

Fig. 296: Identifying VCT2000 Diagnostic Tool Symbol In VIDA
Courtesy of VOLVO CARS CORPORATION

Can the control module ID be read off?

- **YES**

  VERIFIED: Troubleshooting has been completed.

- **NO**

  See: **INFORMATION**

INFORMATION

FAULT-TRACING INFORMATION

The fault should have been detected and remedied. As this is not the case fault-tracing has failed.

Exit fault-tracing for this diagnostic trouble code (DTC) or make another attempt.

ICM-6C73: SUBWOOFER MODULE (SUB) NOT APPROVED. FAULTY SIGNAL (2003-2012)

DIAGNOSTIC TROUBLE CODE (DTC) INFORMATION ICM-6C73

Condition

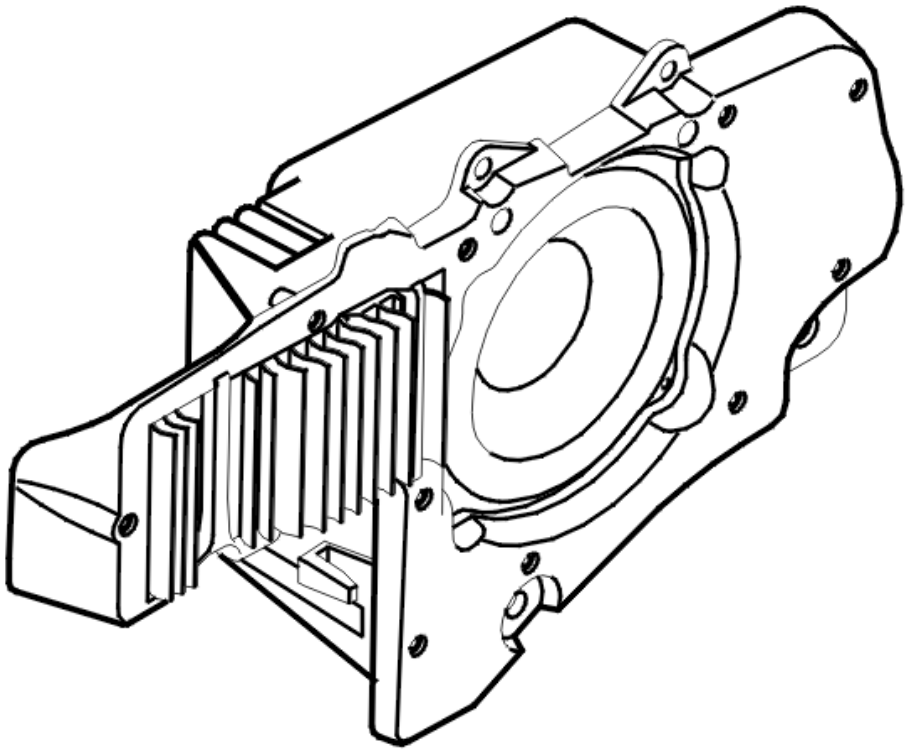

Fig. 297: Identifying Subwoofer Module (SUB)
Courtesy of VOLVO CARS CORPORATION

The serial number for each control module in the infotainment system is stored in the central electronic module (CEM). The stored numbers are compared with the serial numbers of the control modules at start up. If any number does not correspond, that particular control module is blocked and the function is not available. The blocking function for non-approved control modules is designated security on MOST.

The infotainment control module (ICM) checks whether the Subwoofer module (SUB) is in the approved list stored in the central electronic module (CEM).

Diagnostic trouble code (DTC) ICM-6C73 is stored if the Infotainment Control Module (ICM) registers that the Subwoofer module (SUB) is not on the approved list.

Diagnostic trouble code (DTC) ICM-6C73 can be detected when the ignition is on for at least 12 seconds and the battery voltage is > 11 V and security on the MOST network is activated.

Substitute Value

- None.

Possible Source

- Replacing a Subwoofer module (SUB) which is not approved in the list stored in the central electronic module (CEM)
- Software not downloaded when replacing the Subwoofer module (SUB)
- Failed or incomplete software download for the Subwoofer module (SUB).

Fault symptom[s]

- No sound from the Subwoofer module (SUB).

FAULTY SIGNAL

CHECKING THE COMPONENT

The infotainment control module (ICM) has registered that the Subwoofer module (SUB) is not approved according to the list stored in the central electronic module (CEM).

The cause of the fault is probably that software has not been downloaded or that the download failed when replacing the Subwoofer module (SUB).

HINT: When downloading software after replacing a control module in the infotainment system, the serial number is stored in the central electronic module (CEM). This is so that the security on MOST function can approve the control module in the MOST network in the car.

If the fault remains after the software is downloaded, try replacing the Subwoofer module (SUB).

Remedy as necessary.

Other information:

- To access and replace the subwoofer module (SUB), see **SUBWOOFER MODULE (SUB), REPLACING** .

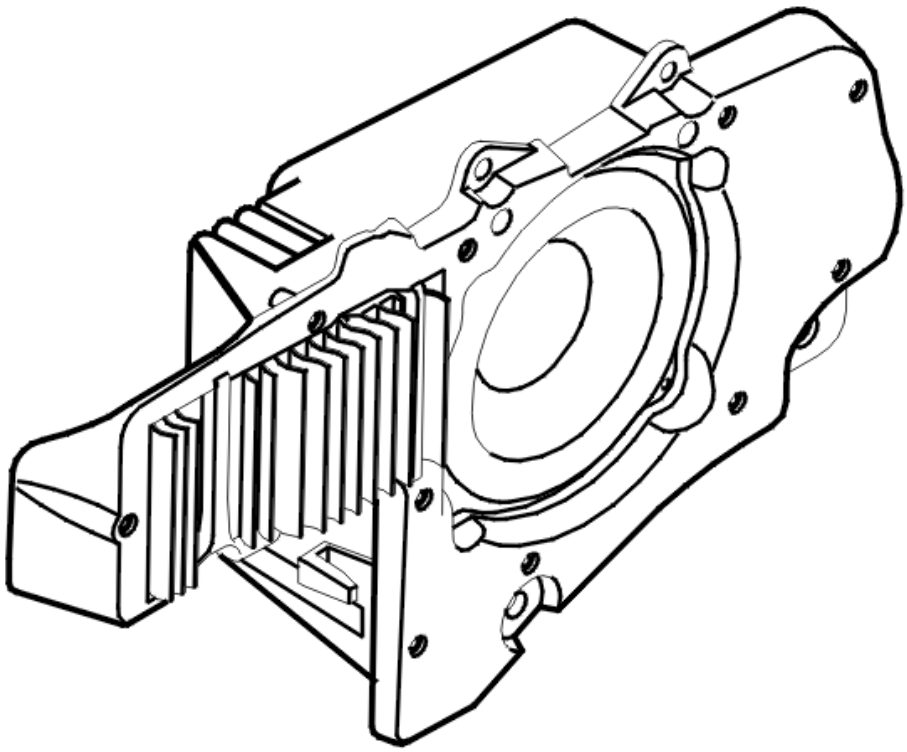

Fig. 298: Identifying Subwoofer Module (SUB)
Courtesy of VOLVO CARS CORPORATION

- **Continue**

  See: **VERIFICATION**

VERIFICATION

VERIFICATION

HINT: After carrying out the repair, check that the fault has been remedied.

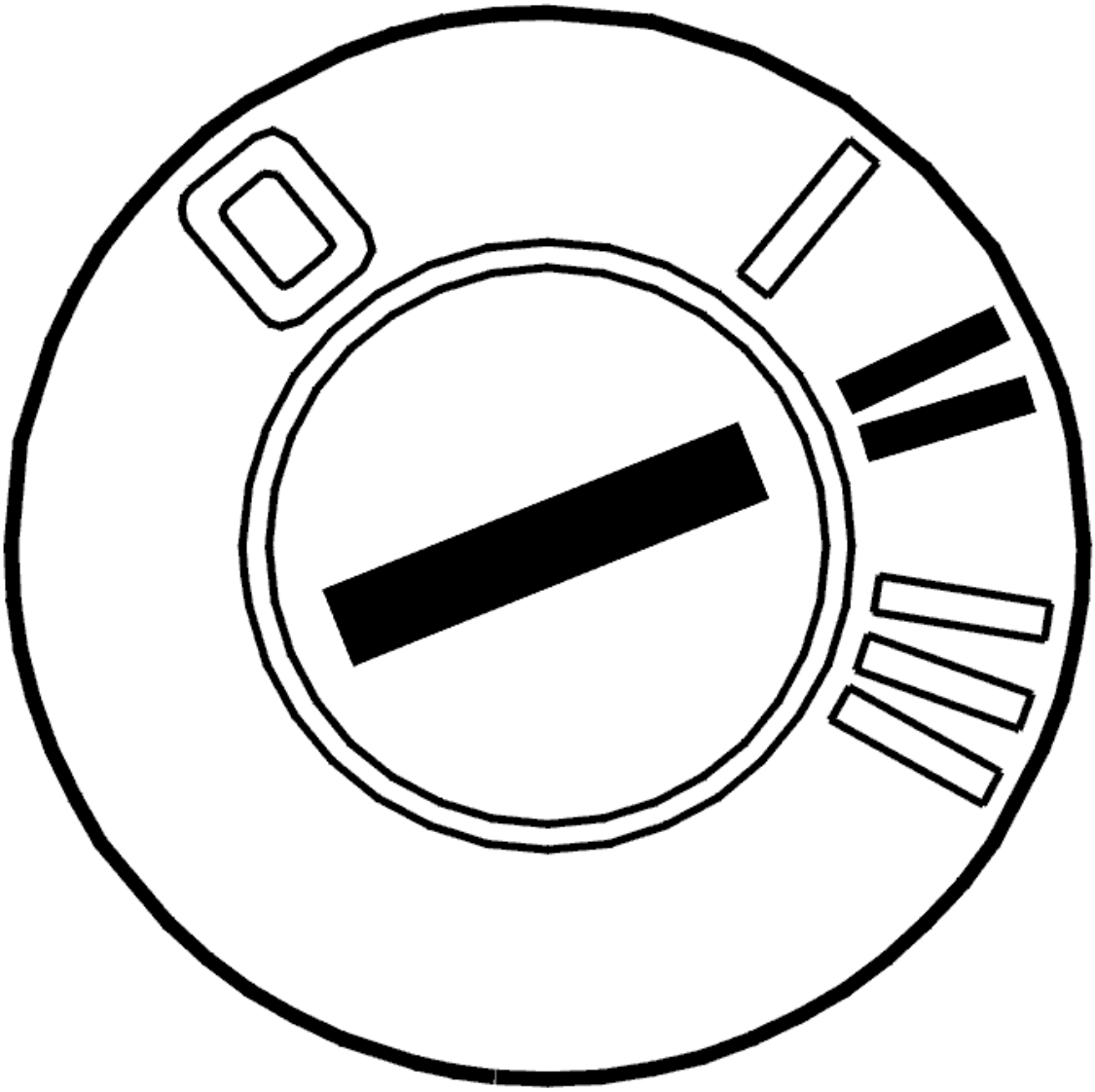

Fig. 299: Identifying Ignition ON
Courtesy of VOLVO CARS CORPORATION

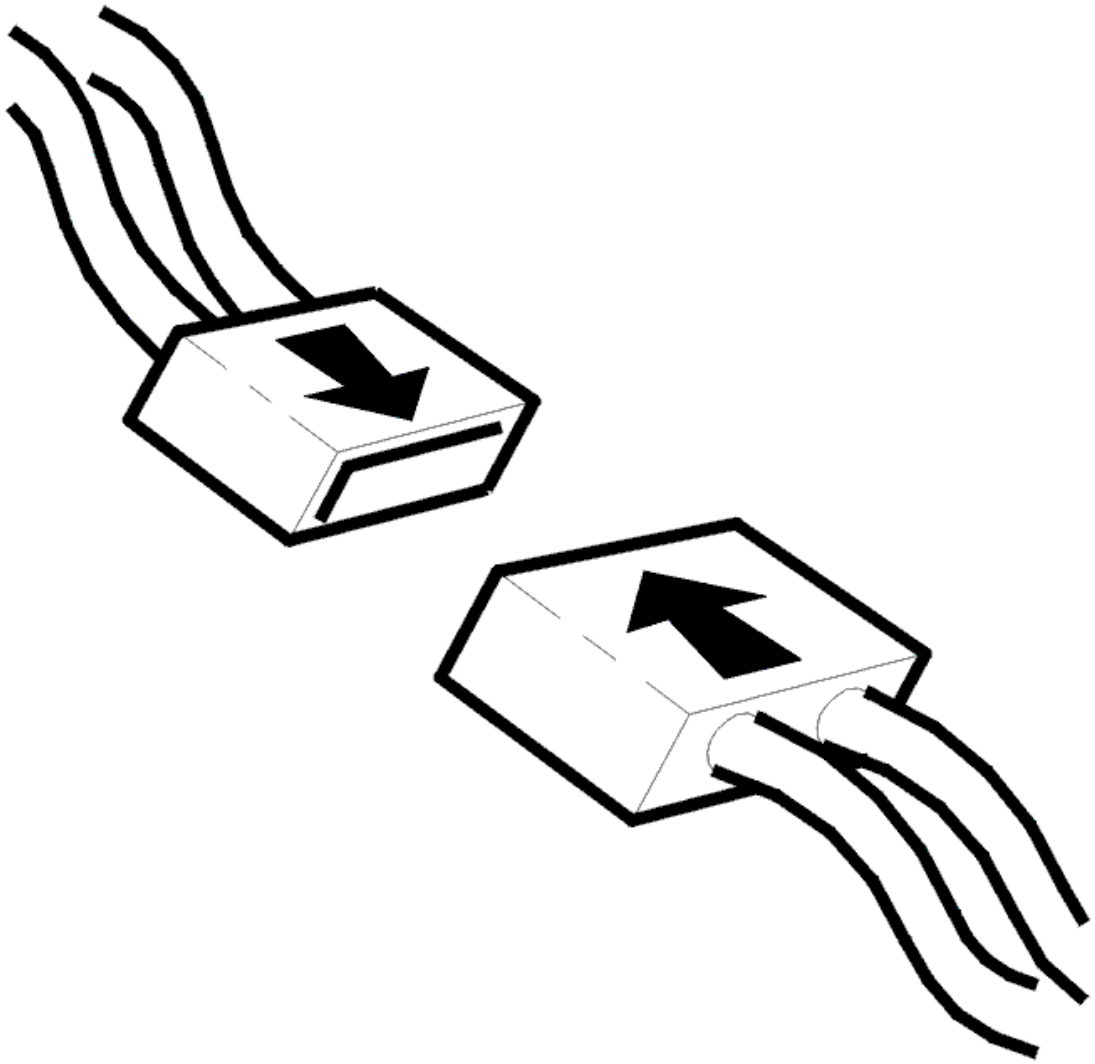

Fig. 300: Connecting Connector
Courtesy of VOLVO CARS CORPORATION

- Ignition off
- Reinstall the connectors, components etc.
- Ignition on for at least 12 seconds.

Read off the control module ID from the subwoofer module (SUB) by clicking on the VCT2000 symbol.

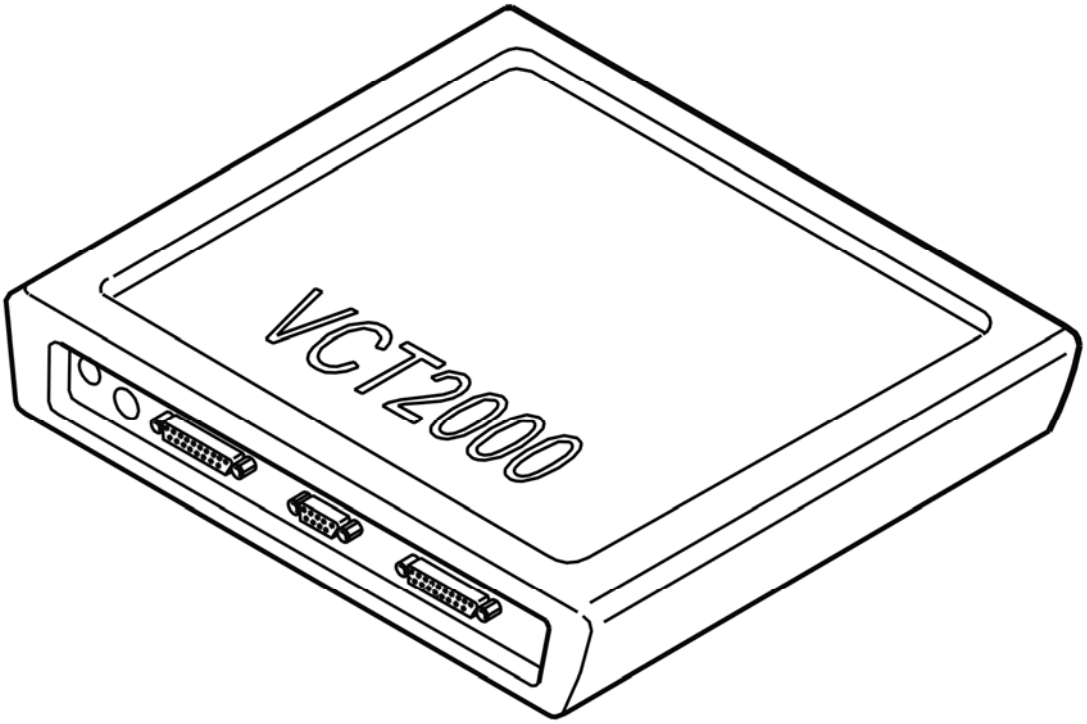

Fig. 301: Identifying VCT2000 Diagnostic Tool Symbol In VIDA
Courtesy of VOLVO CARS CORPORATION

Can the control module ID be read off?

- **YES**

  VERIFIED: Troubleshooting has been completed.

- **NO**

  See: **INFORMATION**

INFORMATION

FAULT-TRACING INFORMATION

The fault should have been detected and remedied. As this is not the case fault-tracing has failed.

Exit fault-tracing for this diagnostic trouble code (DTC) or make another attempt.

ICM-6C74: MD MODULE (MP1) NOT APPROVED. FAULTY SIGNAL (2003-2006)

DIAGNOSTIC TROUBLE CODE (DTC) INFORMATION ICM-6C74

Condition

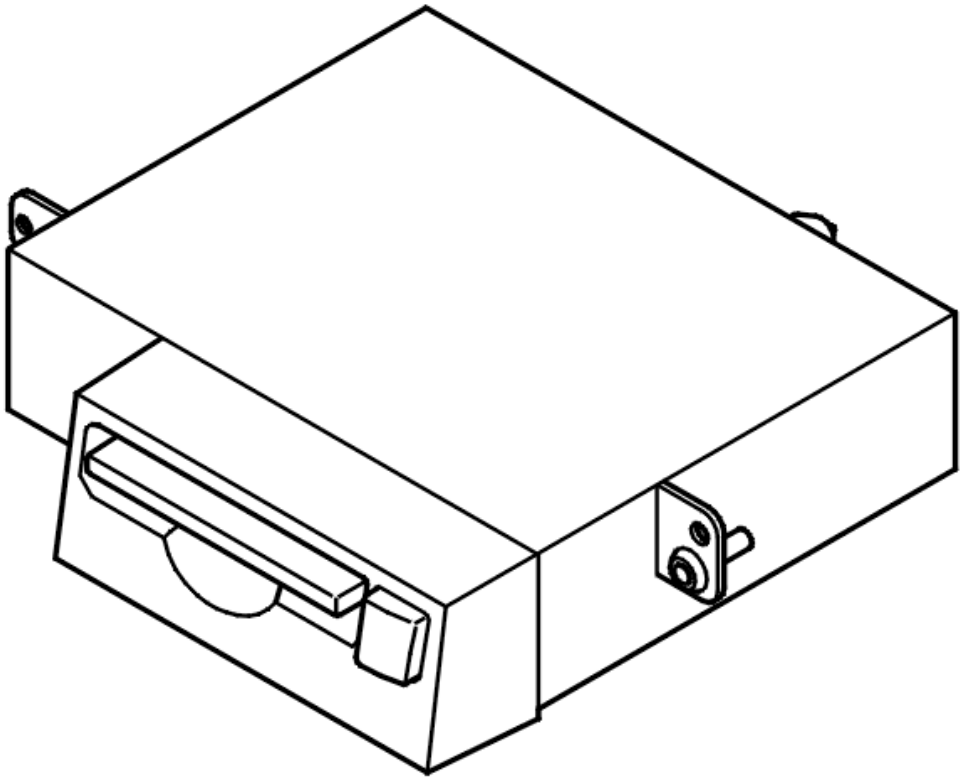

Fig. 302: Identifying MD Module (MP1)
Courtesy of VOLVO CARS CORPORATION

The serial number for each control module in the infotainment system is stored in the central electronic module (CEM). The stored numbers are compared with the serial numbers of the control modules at start up. If any number does not correspond, that particular control module is blocked and the function is not available. The blocking function for non-approved control modules is designated security on MOST.

The infotainment control module (ICM) checks whether the MD module (MP1) is in the approved list stored in the central electronic module (CEM).

Diagnostic trouble code (DTC) ICM-6C74 is stored if the infotainment control module (ICM) registers that the MD module (MP1) is not in the approved list.

Diagnostic trouble code (DTC) ICM-6C74 can be detected when the ignition is on for at least 12 seconds and the battery voltage is > 11 V and security on MOST is activated.

Substitute Value

- None.

Possible Source

- Replacing a MD module (MP1) which is not approved in the list stored in the central electronic module (CEM)
- Software not downloaded when replacing the MD control module (MP1)
- Failed or incomplete software download for the MD module (MP1).

Fault symptom[s]

- The MD player is not working.

FAULTY SIGNAL

CHECKING THE COMPONENT

The infotainment control module (ICM) has registered that the MD module (MP1) is not approved according to the list stored in the central electronic module (CEM).

The cause of the fault is probably that software has not been downloaded or that the download failed when replacing the MD module (MP1).

HINT: When downloading software after replacing a control module in the infotainment system, the serial number is stored in the central electronic module (CEM). This is so that the security on MOST function can approve the control module in the MOST network in the car.

If the fault remains after the software is downloaded, try replacing the MD module (MP1).

Remedy as necessary.

Other information:

- To replace the MD player (MP1), see **MINIDISC / CD CONTROL MODULE, REPLACING** .

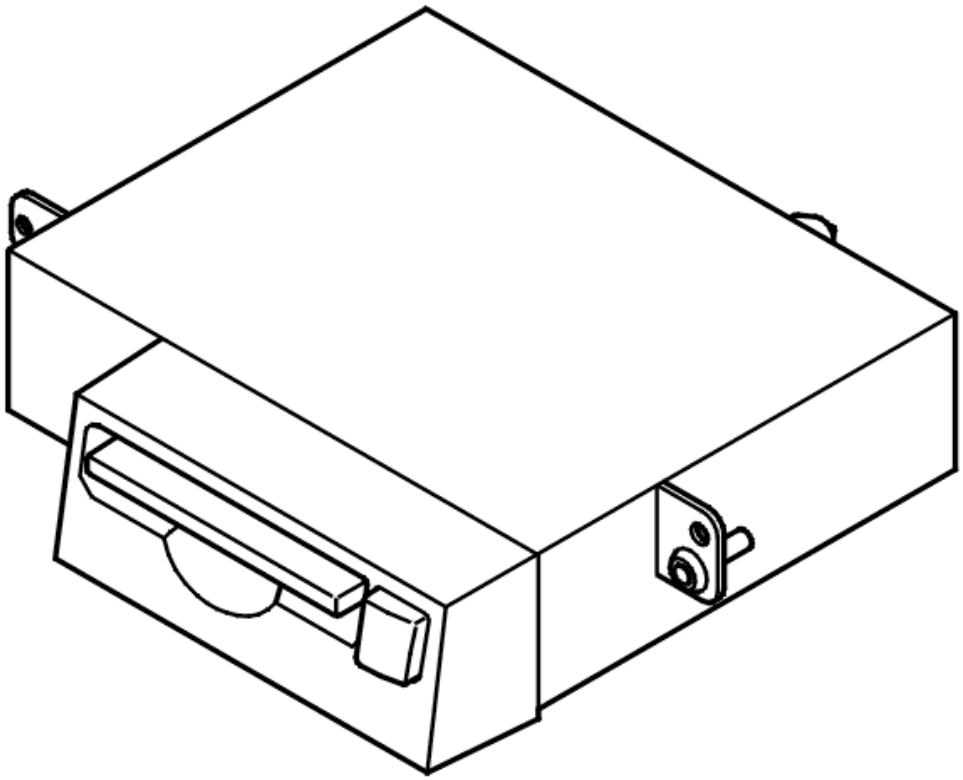

Fig. 303: Identifying MD Module (MP1)
Courtesy of VOLVO CARS CORPORATION

- **Continue**

  See: **VERIFICATION**

VERIFICATION

VERIFICATION

HINT: After carrying out the repair, check that the fault has been remedied.

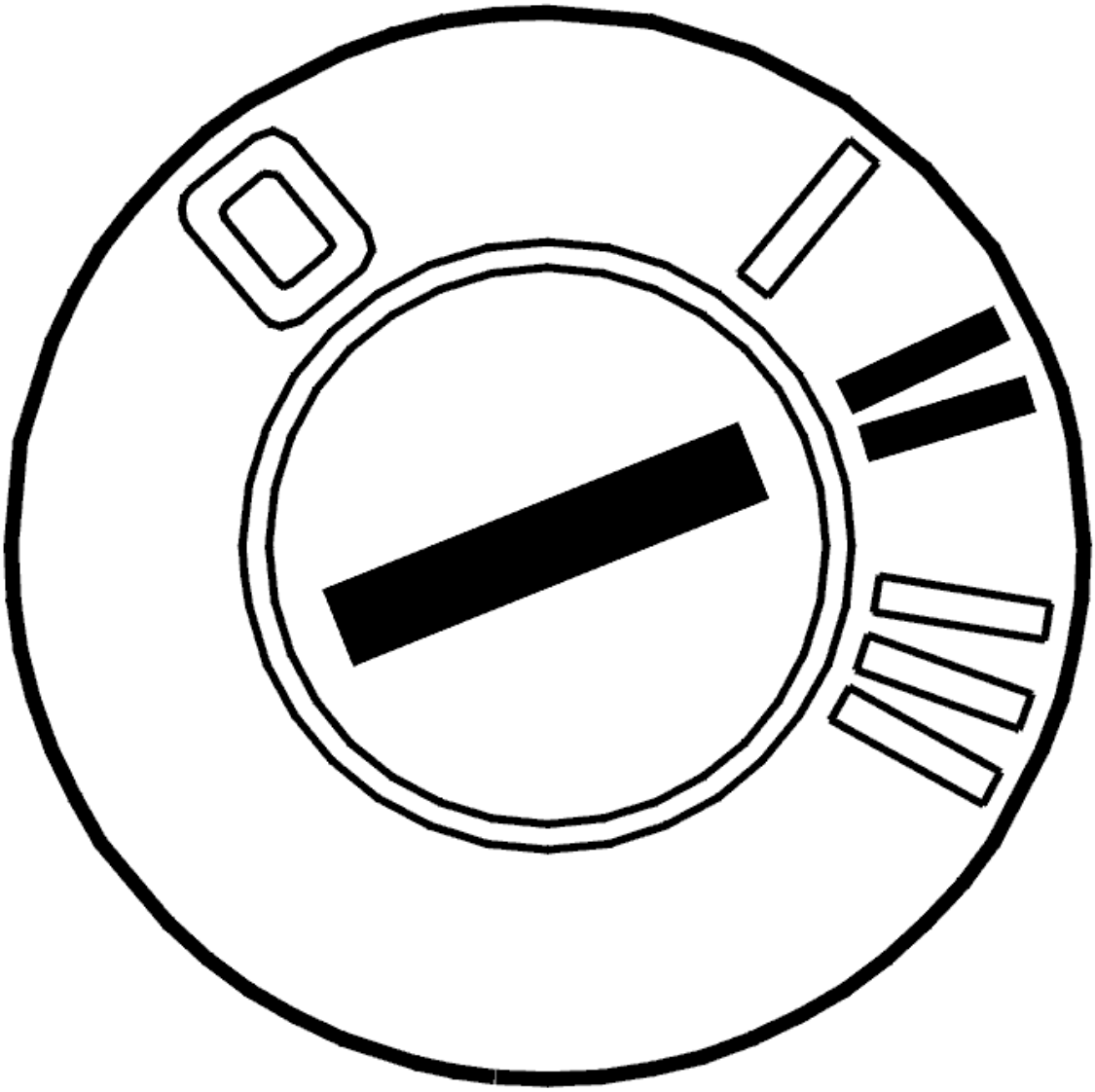

Fig. 304: Identifying Ignition ON
Courtesy of VOLVO CARS CORPORATION

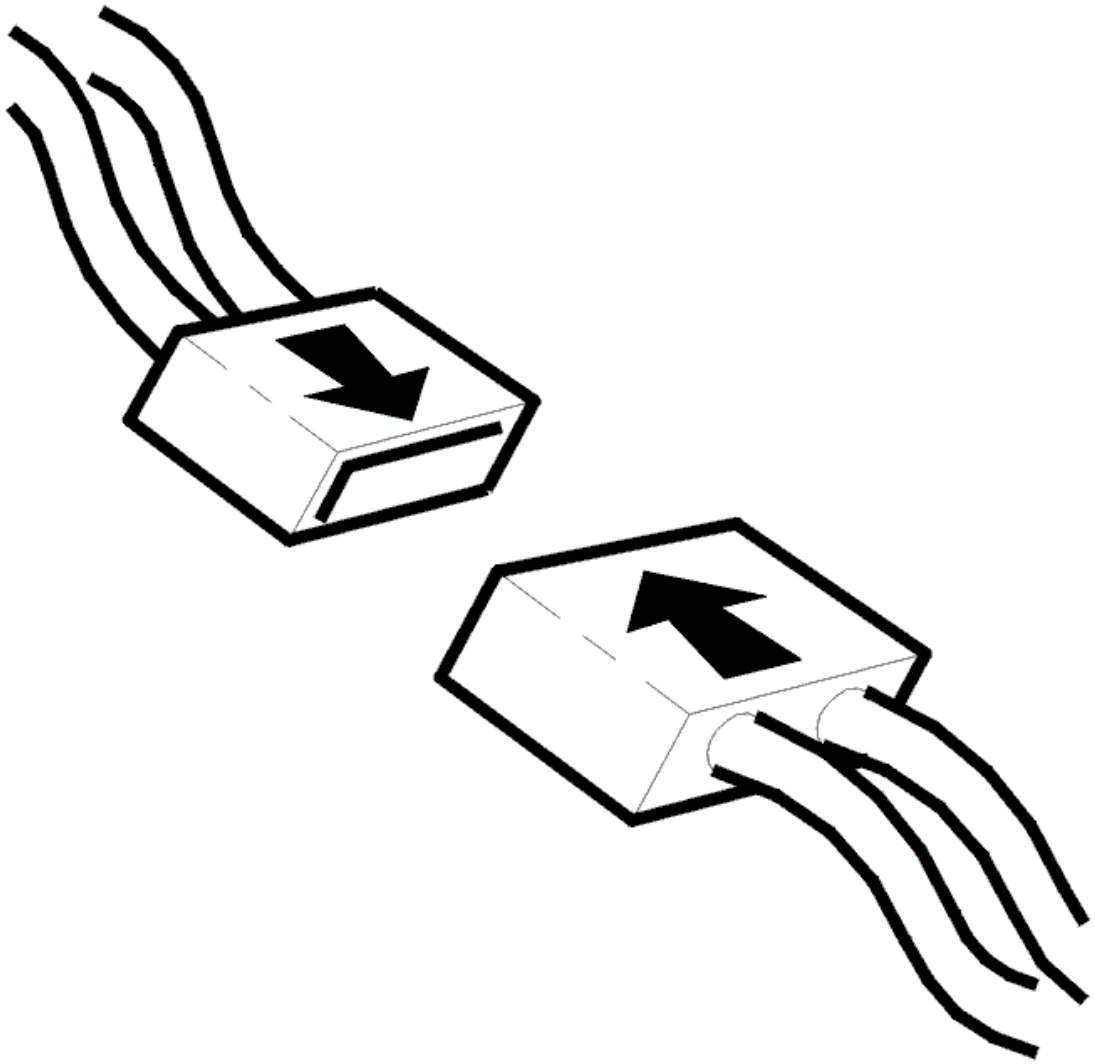

Fig. 305: Connecting Connector
Courtesy of VOLVO CARS CORPORATION

- Ignition off
- Reinstall the connectors, components etc.
- Ignition on for at least 12 seconds.

Read off the control module ID from the MD player by clicking on the VCT2000 symbol.

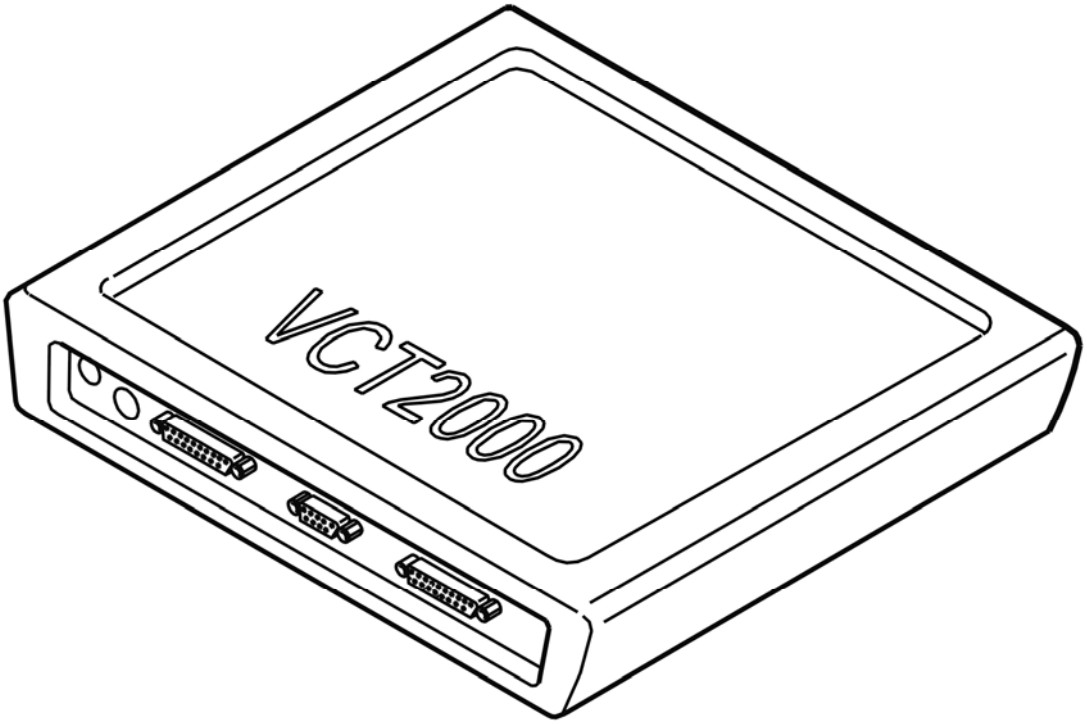

Fig. 306: Identifying VCT2000 Diagnostic Tool Symbol In VIDA
Courtesy of VOLVO CARS CORPORATION

Can the control module ID be read off?

- **YES**

  VERIFIED: Troubleshooting has been completed.

- **NO**

  See: **INFORMATION**

INFORMATION

FAULT-TRACING INFORMATION

The fault should have been detected and remedied. As this is not the case fault-tracing has failed.

Exit fault-tracing for this diagnostic trouble code (DTC) or make another attempt.

ICM-6C75: CD MODULE (MP2) NOT APPROVED. FAULTY SIGNAL (2003-2006)

DIAGNOSTIC TROUBLE CODE (DTC) INFORMATION ICM-6C75

Condition

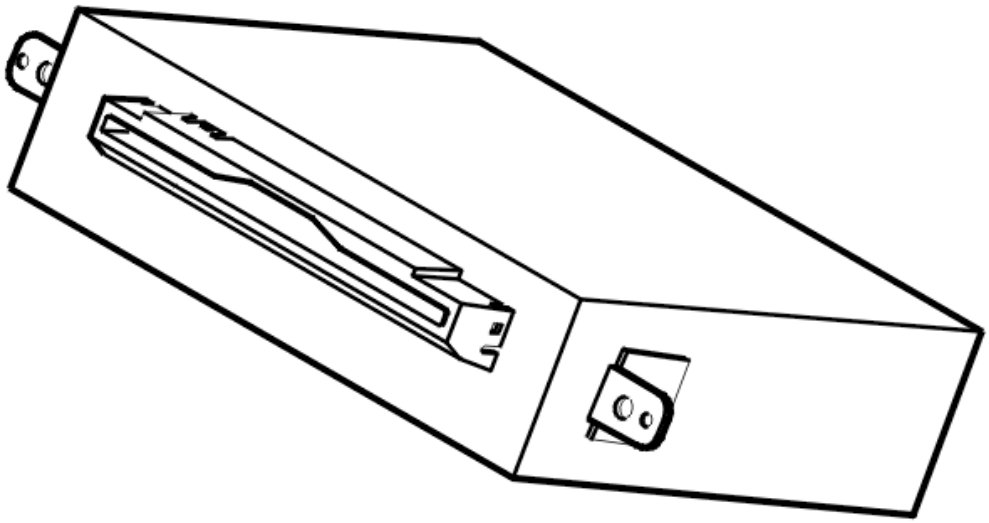

Fig. 307: Identifying CD Module (MP2)
Courtesy of VOLVO CARS CORPORATION

The serial number for each control module in the infotainment system is stored in the central electronic module (CEM). The stored numbers are compared with the serial numbers of the control modules at start up. If any number does not correspond, that particular control module is blocked and the function is not available. The blocking function for non-approved control modules is designated security on MOST.

The infotainment control module (ICM) checks whether the CD module (MP2) is in the approved list stored in the central electronic module (CEM).

Diagnostic trouble code (DTC) ICM-6C75 is stored if the infotainment control module (ICM) registers that the CD module (MP2) is not in the approved list.

Diagnostic trouble code (DTC) ICM-6C75 can be detected when the ignition is on for at least 12 seconds and the battery voltage is > 11 V and security on the MOST network is activated.

Substitute Value

- None.

Possible Source

- Replacing a CD module (MP2) which is not approved in the list stored in the central electronic module (CEM)
- Software not downloaded when replacing the CD control module (MP2)
- Failed or incomplete software download for the CD module (MP2).

Fault symptom[s]

- The CD player does not work
- The CD changer does not work.

FAULTY SIGNAL

CHECKING THE COMPONENT

The infotainment control module (ICM) has registered that the CD module (MP2) is not approved according to the list stored in the central electronic module (CEM).

The cause of the fault is probably that software has not been downloaded or that the download failed when replacing the CD module (MP2).

HINT: When downloading software after replacing a control module in the infotainment system, the serial number is stored in the central electronic module (CEM). This is so that the security on MOST function can approve the control module in the MOST network in the car.

If the fault remains after the software is downloaded, try replacing the CD module (MP2).

Remedy as necessary.

Other information:

- To replace the CD module (MP2), see **MINIDISC / CD CONTROL MODULE, REPLACING** .

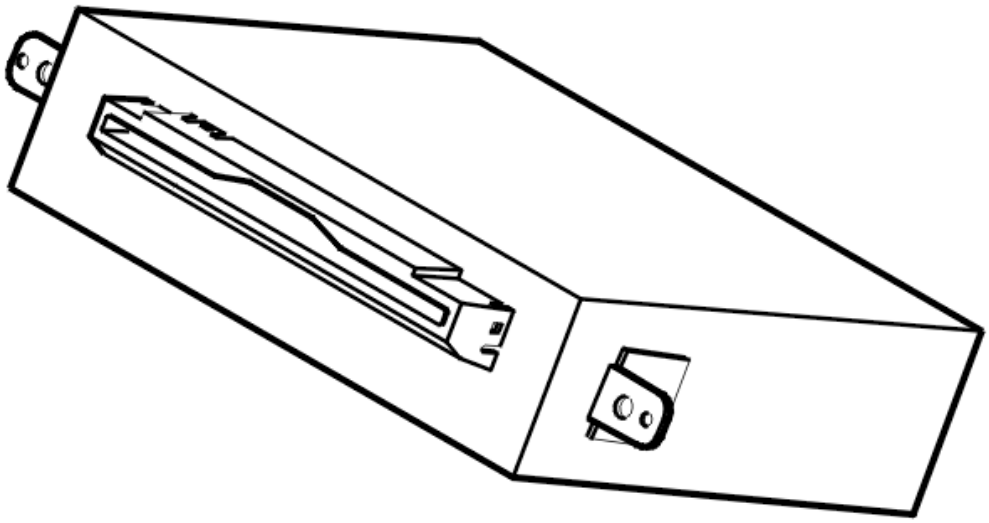

Fig. 308: Identifying CD Module (MP2)
Courtesy of VOLVO CARS CORPORATION

- **Continue**

  See: **VERIFICATION**

VERIFICATION

VERIFICATION

HINT: After carrying out the repair, check that the fault has been remedied.

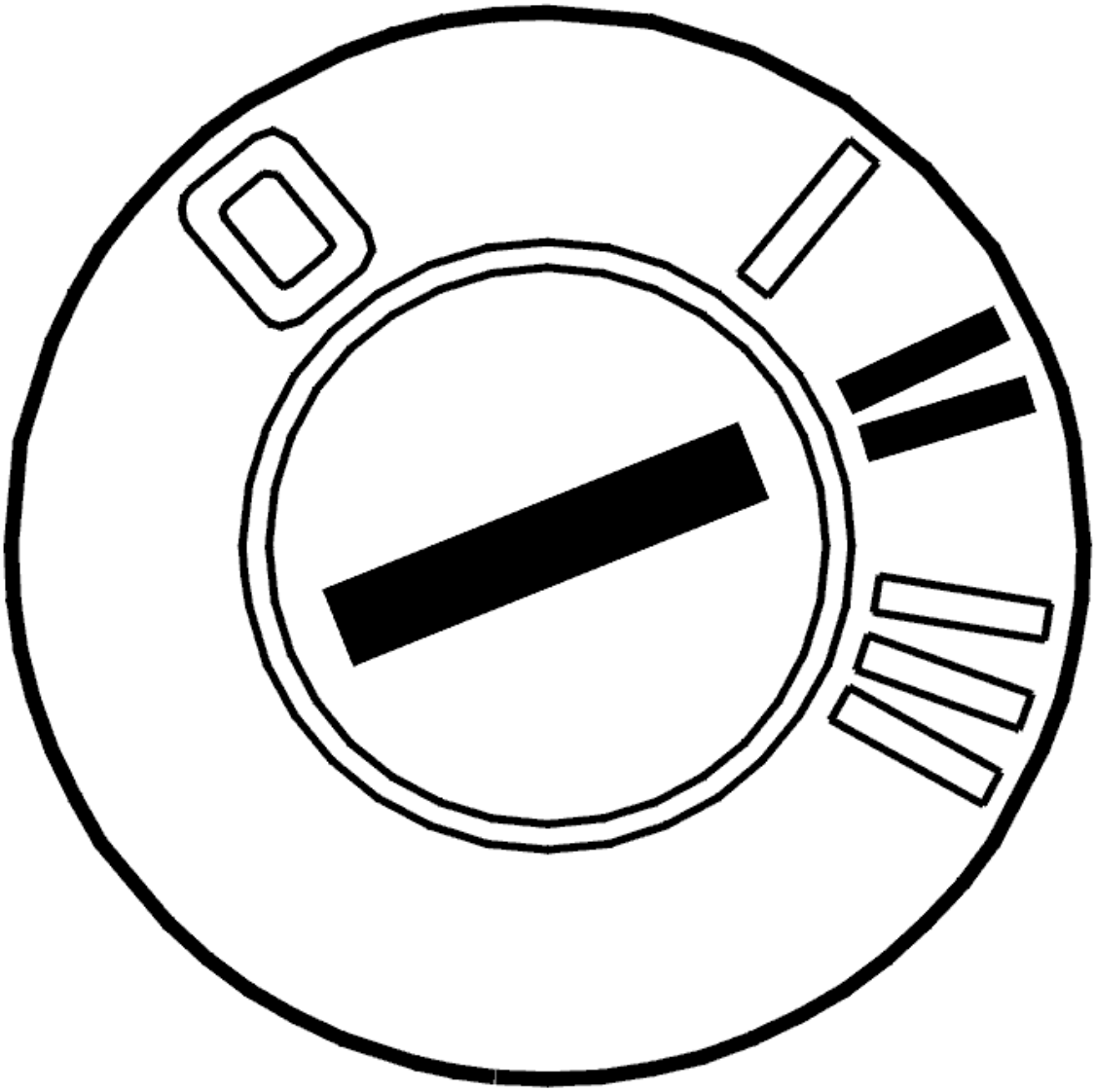

Fig. 309: Identifying Ignition ON
Courtesy of VOLVO CARS CORPORATION

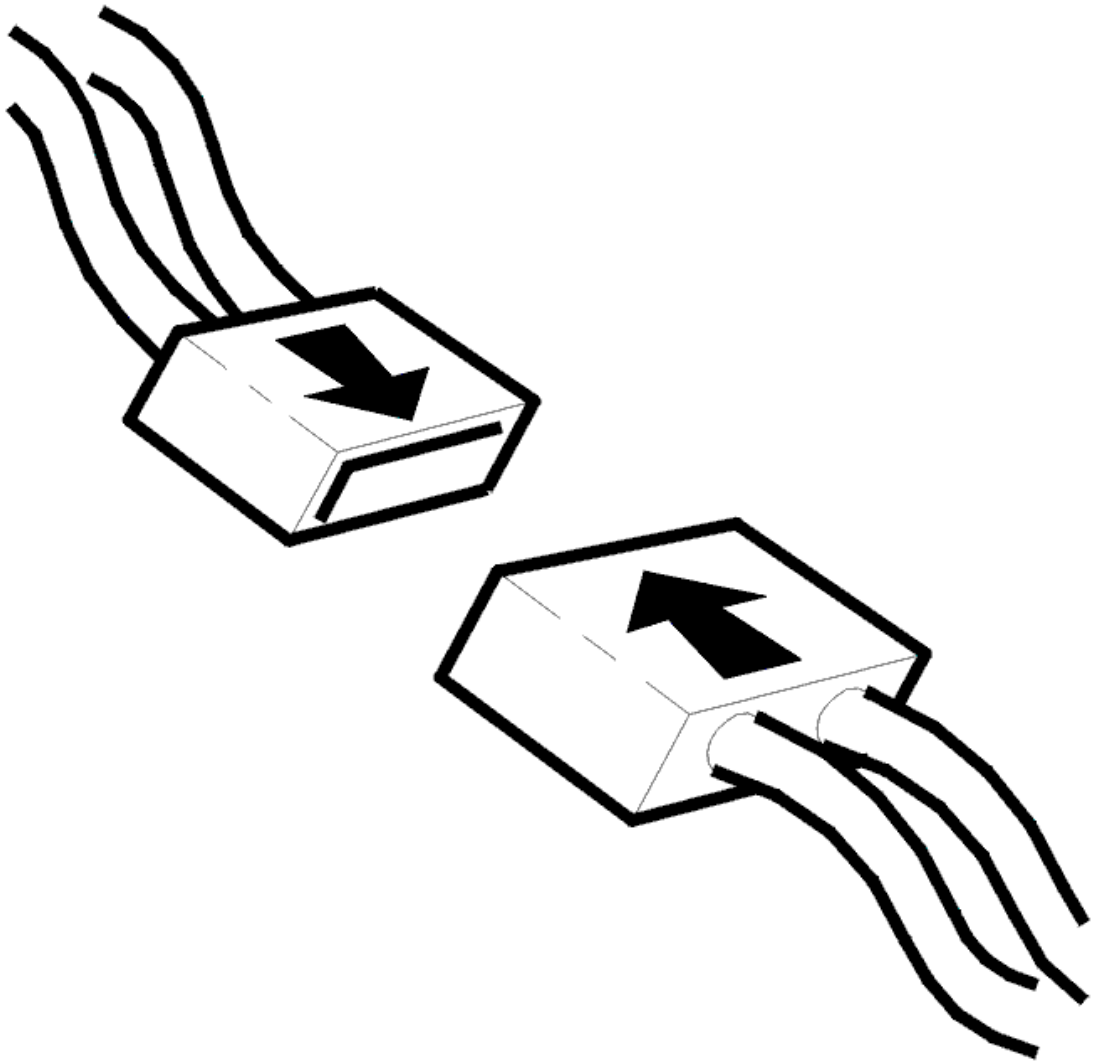

Fig. 310: Connecting Connector
Courtesy of VOLVO CARS CORPORATION

- Ignition off
- Reinstall the connectors, components etc.
- Ignition on for at least 12 seconds.

Read off the control module ID from the CD player by clicking on the VCT2000 symbol.

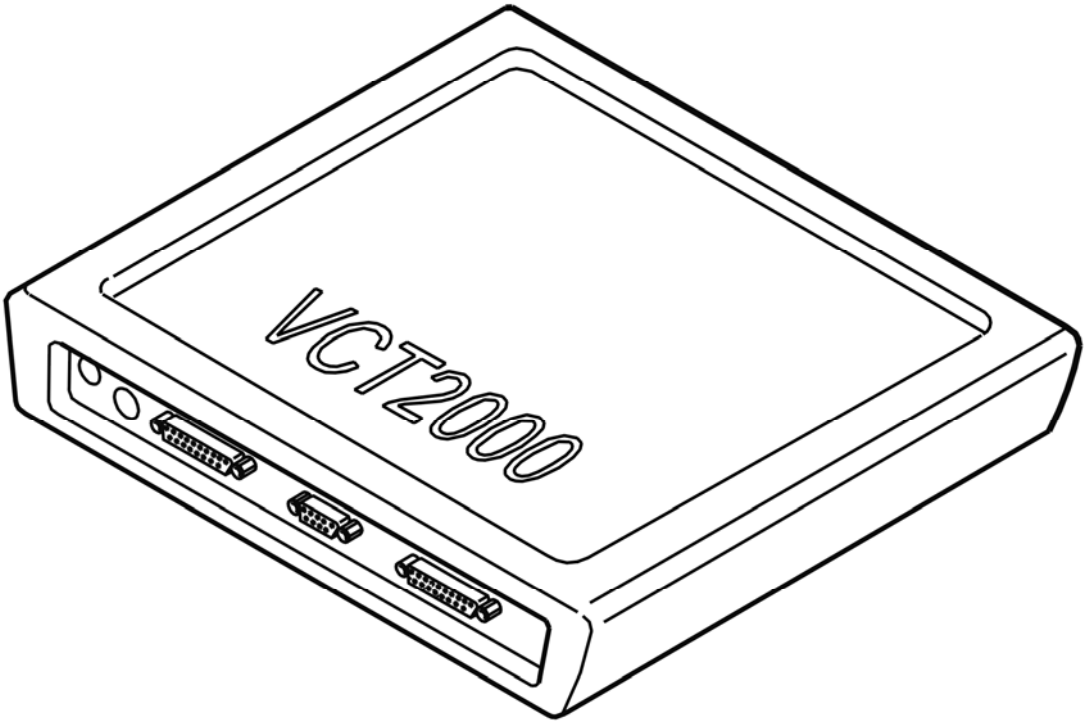

Fig. 311: Identifying VCT2000 Diagnostic Tool Symbol In VIDA
Courtesy of VOLVO CARS CORPORATION

Can the control module ID be read off?

- **YES**

  VERIFIED: Troubleshooting has been completed.

- **NO**

  See: **INFORMATION**

INFORMATION

FAULT-TRACING INFORMATION

The fault should have been detected and remedied. As this is not the case fault-tracing has failed.

Exit fault-tracing for this diagnostic trouble code (DTC) or make another attempt.

ICM-6C76: PHONE MODULE (PHM) NOT APPROVED. FAULTY SIGNAL (2003-2012)

DIAGNOSTIC TROUBLE CODE (DTC) INFORMATION ICM-6C76

Condition

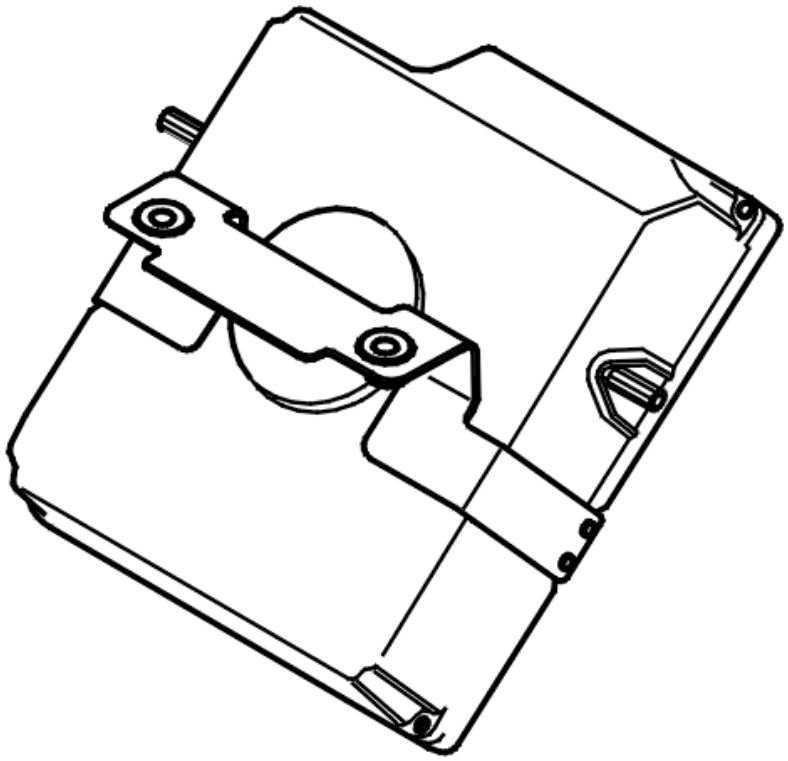

Fig. 312: Identifying Phone Module (PHM)
Courtesy of VOLVO CARS CORPORATION

The serial number for each control module in the infotainment system is stored in the central electronic module (CEM). The stored numbers are compared with the serial numbers of the control modules at start up. If any number does not correspond, that particular control module is blocked and the function is not available. The blocking function for non-approved control modules is designated security on MOST.

The infotainment control module (ICM) checks whether the phone module (PHM) is in the approved list stored in the central electronic module (CEM).

Diagnostic trouble code (DTC) ICM-6C76 is stored if the infotainment control module (ICM) registers that the phone module (PHM) is not in the approved list.

Diagnostic trouble code (DTC) ICM-6C76 can be detected when the ignition is on for at least 12 seconds and the battery voltage is > 11 V and security on MOST is activated.

Substitute Value

- None.

Possible Source

- Replacing a phone module (PHM) which is not approved in the list stored in the central electronic module (CEM)
- Software not downloaded when replacing the phone module (PHM)
- Failed or incomplete software download for the phone module (PHM).

Fault symptom[s]

- No or reduced carphone functionality.

FAULTY SIGNAL (2003-2005)

CHECKING THE COMPONENT

The infotainment control module (ICM) has registered that the phone module (PHM) is not approved according to the list stored in the central electronic module (CEM).

The cause of the fault is probably that software has not been downloaded or that the download failed when replacing the phone module (PHM).

HINT: When downloading software after replacing a control module in the infotainment system, the serial number is stored in the central electronic module (CEM). This is so that the security on MOST function can approve the control module in the MOST network in the car.

If the fault remains after the software is downloaded, try replacing the phone module (PHM).

Remedy as necessary.

Other information:

- see **PHONE MODULE (PHM), REPLACING**

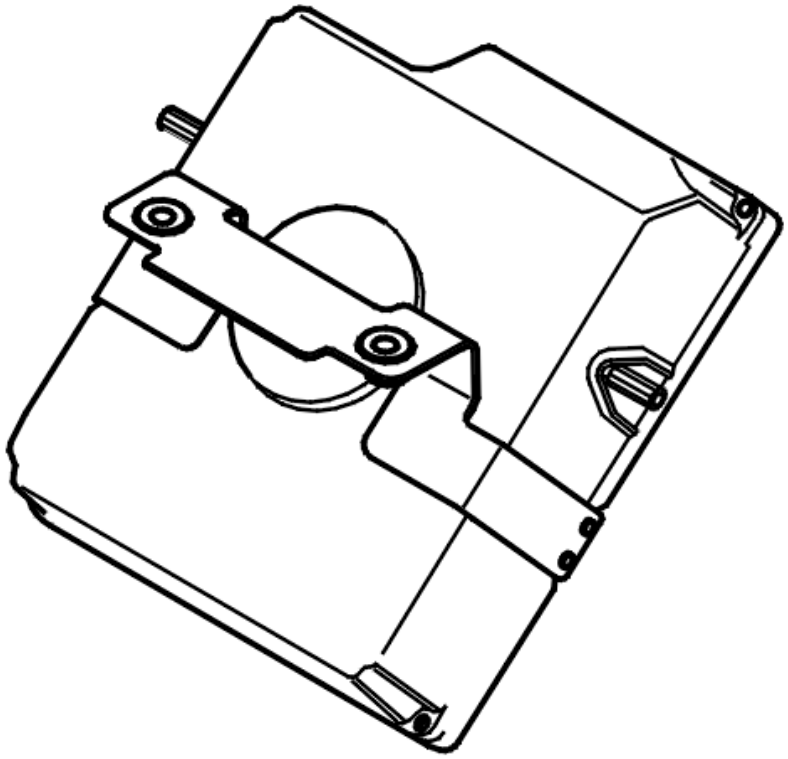

Fig. 313: Identifying Phone Module (PHM)
Courtesy of VOLVO CARS CORPORATION

- **Continue**

  See: **VERIFICATION**

VERIFICATION

VERIFICATION

HINT: After carrying out the repair, check that the fault has been remedied.

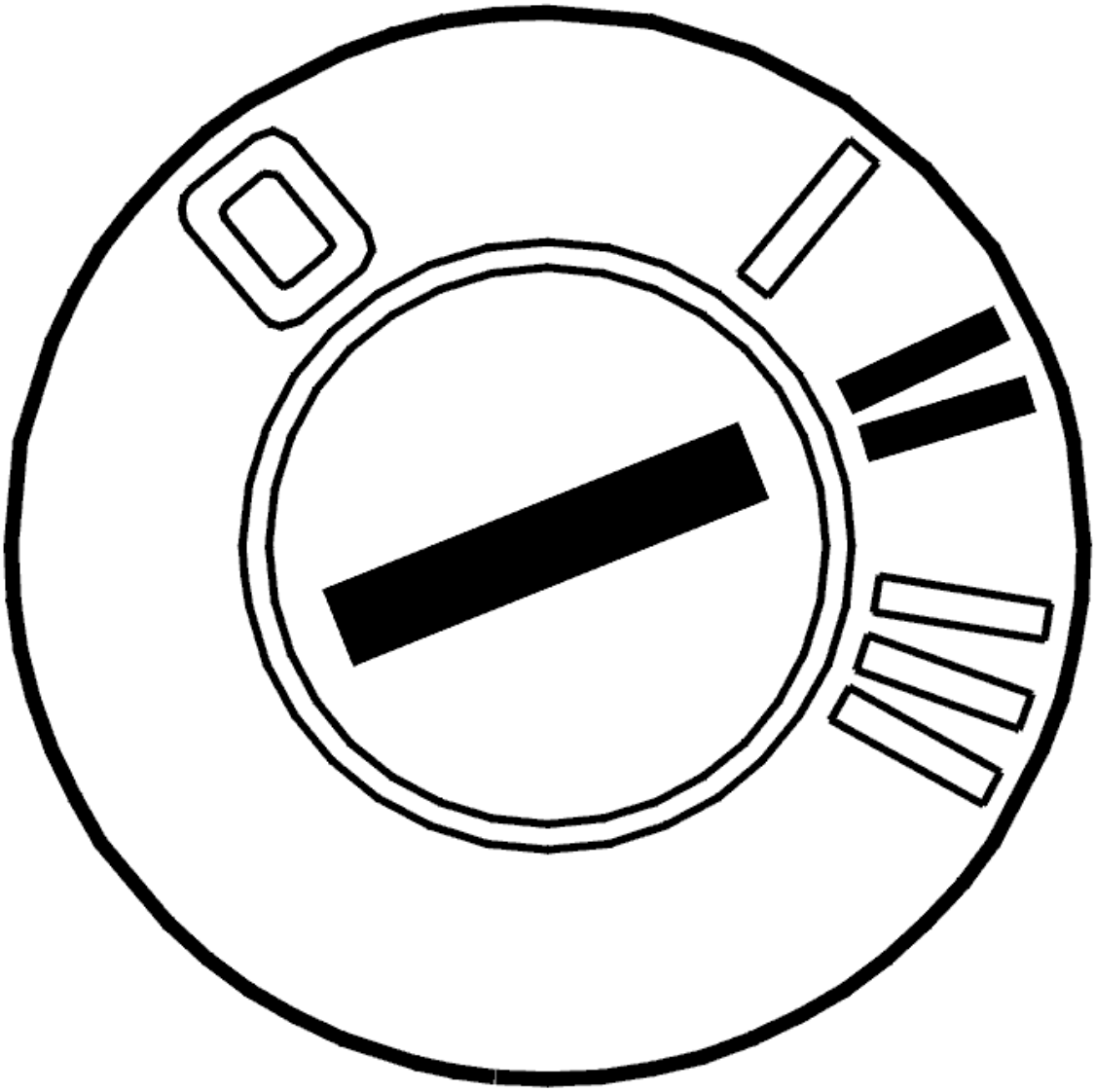

Fig. 314: Identifying Ignition ON
Courtesy of VOLVO CARS CORPORATION

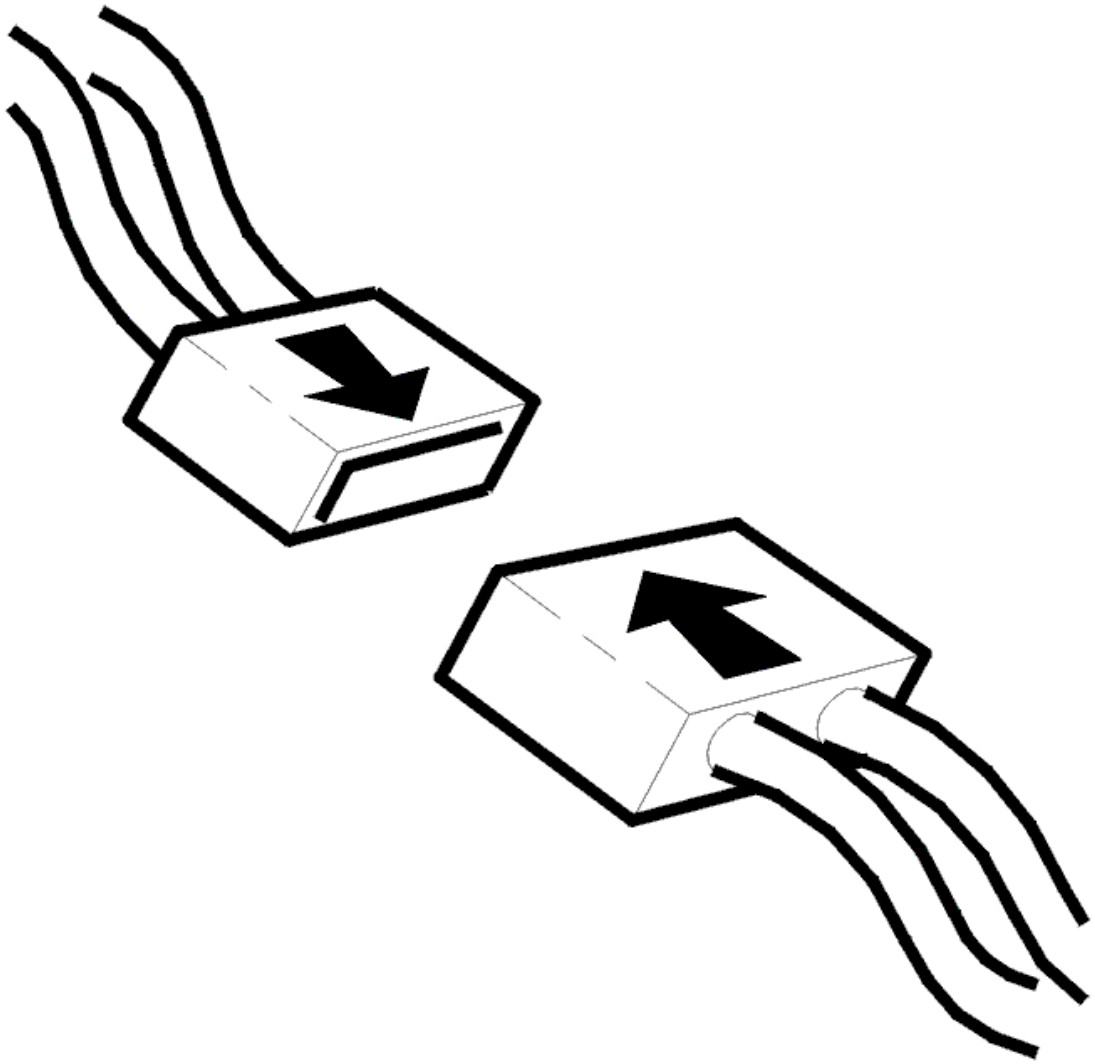

Fig. 315: Connecting Connector
Courtesy of VOLVO CARS CORPORATION

- Ignition off
- Reinstall the connectors, components etc.
- Ignition on for at least 12 seconds.

  Make a call so that both the handset and the hands-free system are used.

Is the carphone working?

- **YES**

  VERIFIED: Troubleshooting has been completed.

- **NO**

  See: **INFORMATION**

INFORMATION

FAULT-TRACING INFORMATION

The fault should have been detected and remedied. As this is not the case fault-tracing has failed.

Exit fault-tracing for this diagnostic trouble code (DTC) or make another attempt.

FAULTY SIGNAL (2006-2012)

CHECKING THE COMPONENT

The infotainment control module (ICM) has registered that the phone module (PHM) is not approved according to the list stored in the central electronic module (CEM).

The cause of the fault is probably that software has not been downloaded or that the download failed when replacing the phone module (PHM).

HINT: When downloading software after replacing a control module in the infotainment system, the serial number is stored in the central electronic module (CEM). This is so that the security on MOST function can approve the control module in the MOST network in the car.

If the fault remains after the software is downloaded, try replacing the phone module (PHM).

Remedy as necessary.

Other information:

- see **PHONE MODULE (PHM), REPLACING (2006-2010)**

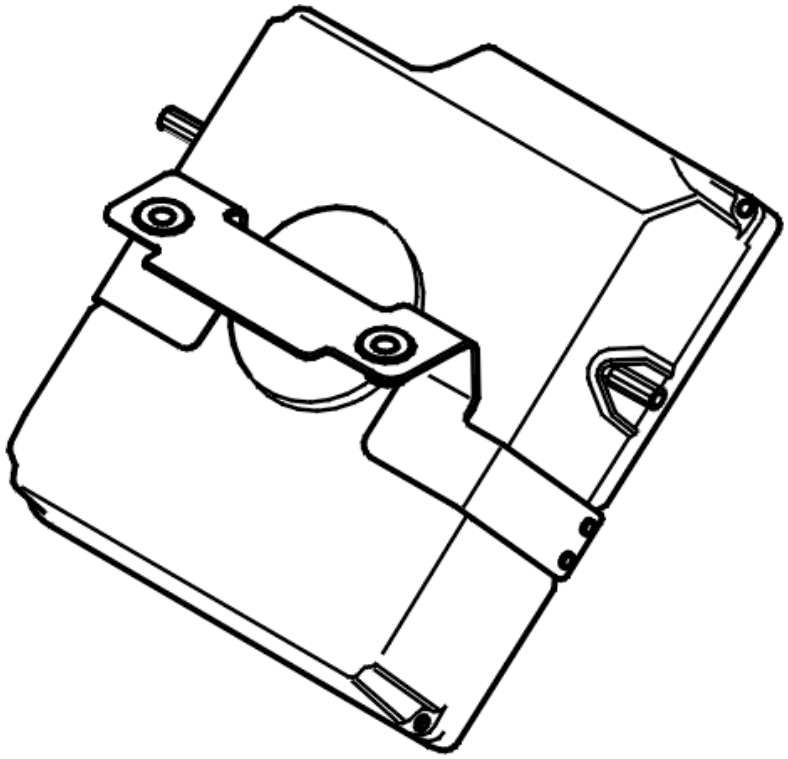

Fig. 316: Identifying Phone Module (PHM)
Courtesy of VOLVO CARS CORPORATION

- **Continue**

  See: **VERIFICATION**

VERIFICATION

VERIFICATION

HINT: After carrying out the repair, check that the fault has been remedied.

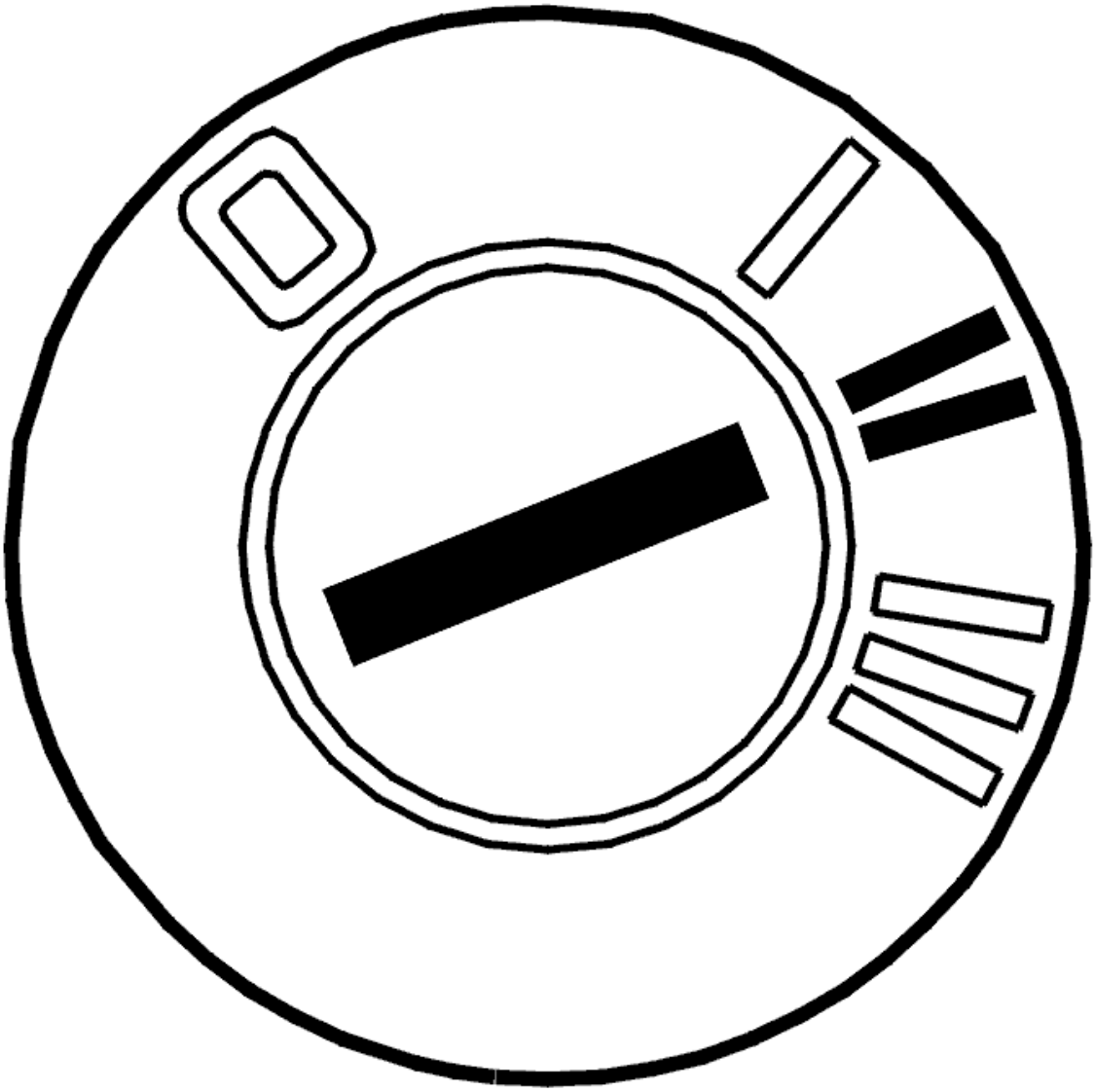

Fig. 317: Identifying Ignition ON
Courtesy of VOLVO CARS CORPORATION

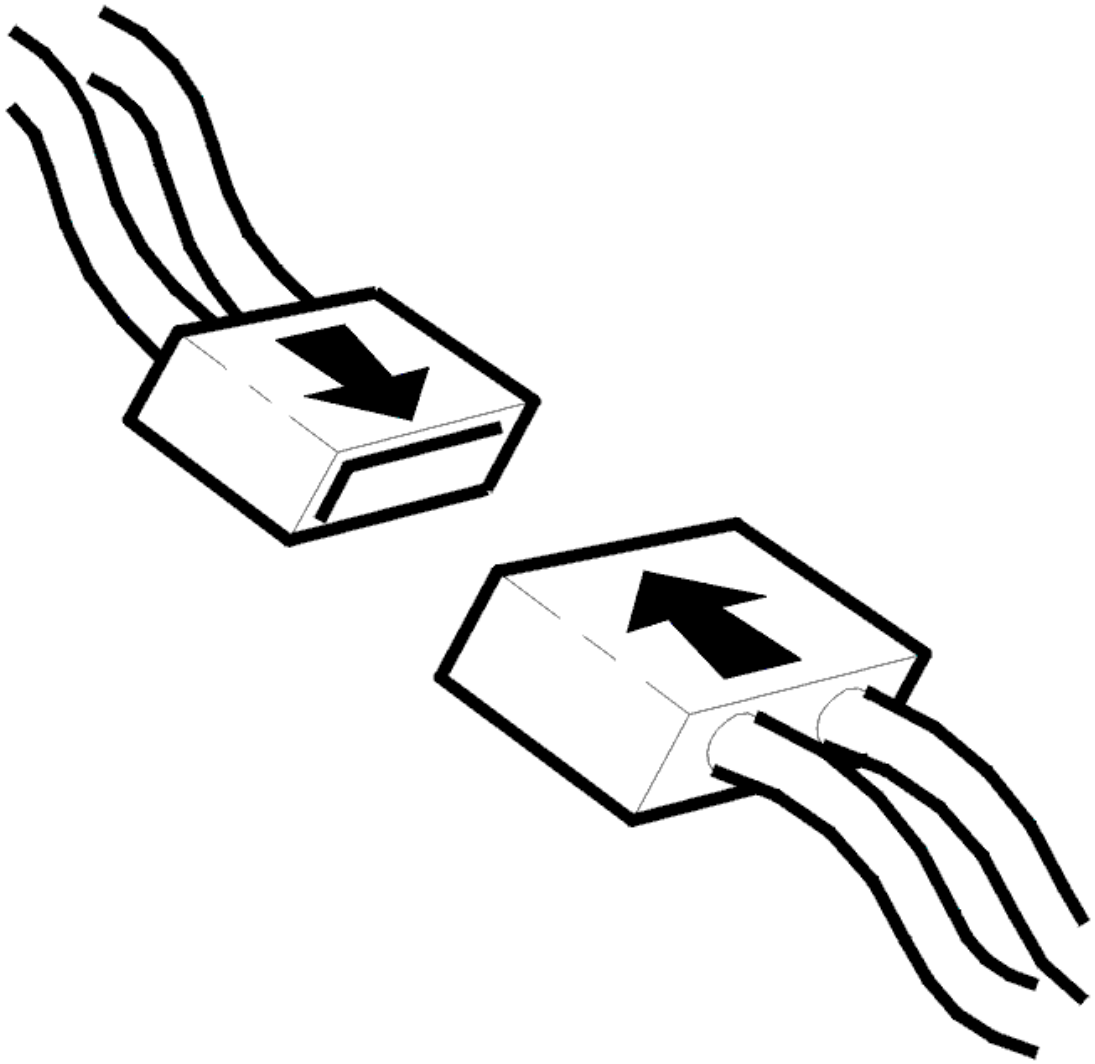

Fig. 318: Connecting Connector
Courtesy of VOLVO CARS CORPORATION

- Ignition off
- Reinstall the connectors, components etc.
- Ignition on for at least 12 seconds.

  Make a call so that both the handset and the hands-free system are used.

Is the carphone working?

- **YES**

  VERIFIED: Troubleshooting has been completed.

- **NO**

  See: **INFORMATION**

INFORMATION

FAULT-TRACING INFORMATION

The fault should have been detected and remedied. As this is not the case fault-tracing has failed.

Exit fault-tracing for this diagnostic trouble code (DTC) or make another attempt.

ICM-6C77: GLOBAL POSITIONING MODULE (GPS) NOT VALID. FAULTY SIGNAL (2007-2012)

DIAGNOSTIC TROUBLE CODE (DTC) INFORMATION ICM-6C77

Condition

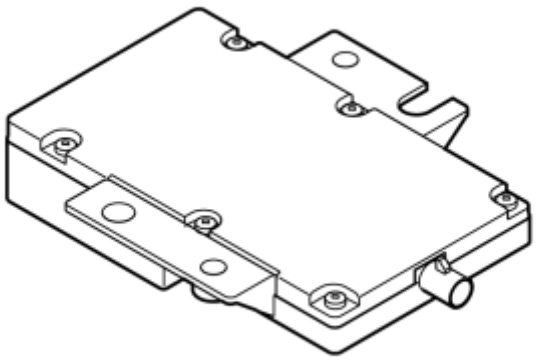

Fig. 319: Identifying Global Positioning System Module (GPS)
Courtesy of VOLVO CARS CORPORATION

The serial number for each control module in the infotainment system is stored in the central electronic module (CEM). The stored numbers are compared with the serial numbers of the control modules at start up. If any number does not correspond, that particular control module is blocked and the function is not available. The blocking function for non-approved control modules is designated security on MOST.

The infotainment control module (ICM) checks whether the global positioning system module (GPS) is on the validity list stored in the central electronic module (CEM).

The diagnostic trouble code is generated if the infotainment module (ICM) registers that the global positioning system module (GPS) is not on the valid list.

The diagnostic trouble code can be diagnosed with the ignition on for at least 12 seconds, battery voltage greater than 11 V and security on activated.

Substitute Value

- None.

Possible Source

- Replacement to a global positioning system module (GPS) that is not valid according to the list stored in the central electronic module (CEM).
- Software not downloaded at replacement of Global positioning system module (GPS).
- Failed or incomplete software download to the global positioning system module (GPS).

Fault symptom[s]

- Navigation; No Functionality

FAULTY SIGNAL

CHECKING THE COMPONENT

The infotainment module (ICM) has registered that the global positioning system module (GPS) is invalid according to the list stored in the central electronic module (CEM).

The cause of the fault is probably that no software has been downloaded or that the software download has failed after global positioning system module (GSP) replacement.

HINT: When downloading software after replacing a control module in the infotainment system, the serial number is stored in the central electronic module (CEM). This is so that the security on MOST function can approve the control module in the MOST network in the car.

If the fault persists after software download, try replacing the global positioning system module (GPS).

Remedy as necessary.

Other information:

- see **GLOBAL POSITIONING SYSTEM MODULE (GPS)**

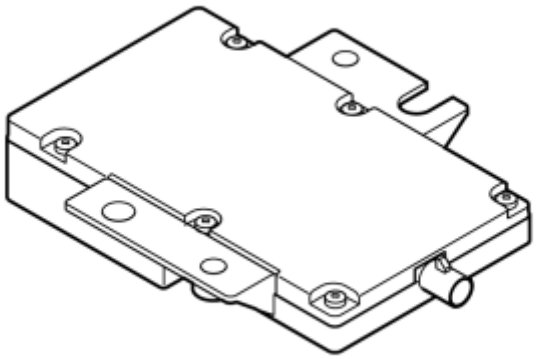

Fig. 320: Identifying Global Positioning System Module (GPS)
Courtesy of VOLVO CARS CORPORATION

- **Continue**

  See: **VERIFICATION**

VERIFICATION

VERIFICATION

HINT: After carrying out the repair, check that the fault has been remedied.

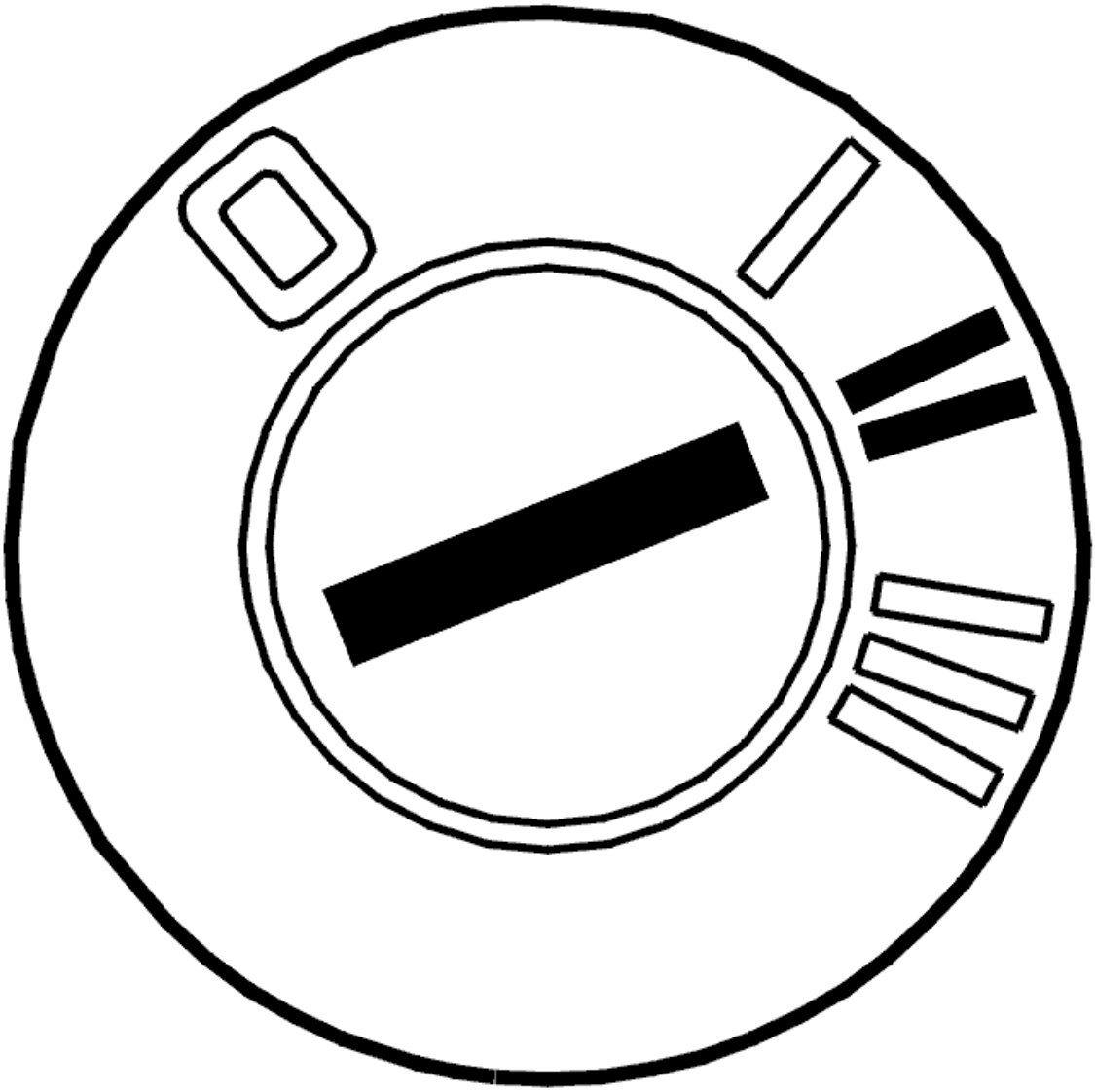

Fig. 321: Identifying Ignition ON
Courtesy of VOLVO CARS CORPORATION

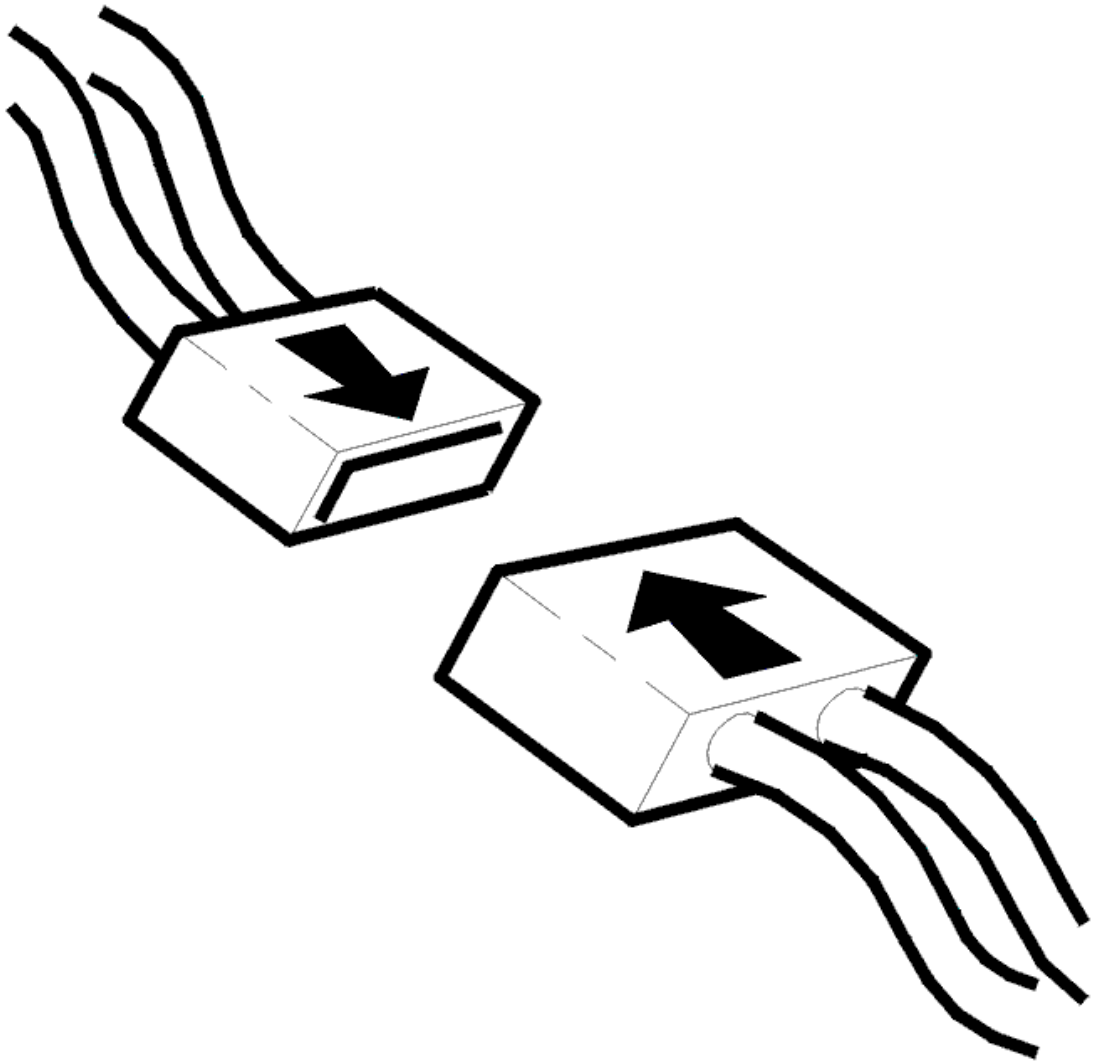

Fig. 322: Connecting Connector
Courtesy of VOLVO CARS CORPORATION

- Ignition off
- Reinstall the connectors, components etc.
- Ignition on for at least 12 seconds.

  Start up the GPS system. Check that the position of the vehicle on the map is correct. Also check that the current diagnostic trouble code (DTC) is not detected again after the Infotainment control module (ICM) has been active for at least 75 seconds.

Is the position of the car correct on the map?

- **YES**

VERIFIED: Troubleshooting has been completed.

- **NO**

  See: **INFORMATION**

INFORMATION

FAULT-TRACING INFORMATION

The fault should have been detected and remedied. As this is not the case fault-tracing has failed.

Exit fault-tracing for this diagnostic trouble code (DTC) or make another attempt.

ICM-6C79: INFOTAINMENT CONTROL MODULE (ICM) NOT VALID. FAULTY SIGNAL (2003-2012)

DIAGNOSTIC TROUBLE CODE INFORMATION ICM-6C79

Condition

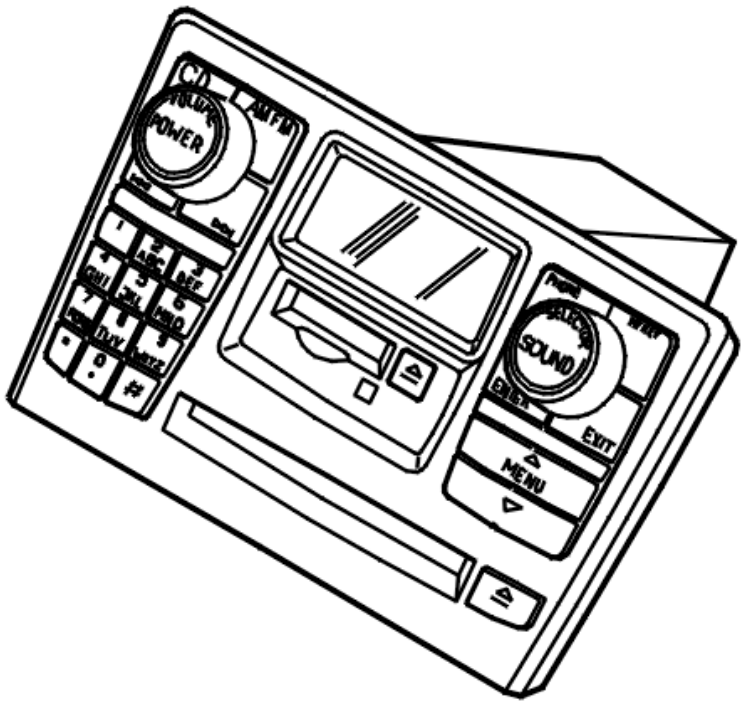

Fig. 323: Identifying Infotainment Control Module (ICM)
Courtesy of VOLVO CARS CORPORATION

The central electronic module (CEM) stores the serial number of each control module of the infotainment system. Upon start, the stored numbers are compared to the control modules' serial numbers. If the numbers do not correspond, the control module in question is blocked and the function is non-operational. The function to block non-valid control modules is called security on MOST.

The infotainment control module (ICM) checks if it is included on the validity list stored in the central electronic module (CEM).

The diagnostic trouble code (DTC) is generated if the infotainment control module (ICM) registers that it is not included on the validity list.

The diagnostic trouble code (DTC) can be diagnosed with the ignition on for at least 12 seconds, battery voltage greater than 11 V and security on MOST activated.

Substitute Value

- Nothing.

Possible Source

- Replacement using an infotainment control (ICM) that is not valid according to the validity list stored in the central electronic module (CEM).
- Software not downloaded upon replacement of infotainment control module (ICM).
- Unsuccessful or incomplete software download to infotainment control module (ICM).

Fault symptom[s]

- Infotainment functions not operational.

FAULTY SIGNAL

CHECKING THE COMPONENT

The infotainment control module (ICM) has registered that it not valid according to the list stored in the central electronic module (CEM).

The cause of the problem is probably no or unsuccessful software download after infotainment control module (ICM) replacement.

HINT: During software download after control module replacement, the control module serial number is stored in the central electronic module (CEM). This allows the Security on MOST function to approve the control module in the vehicle MOST network.

If the fault remains after software download, try replacing the infotainment control module (ICM).

Remedy as necessary.

Other information

- see **INFOTAINMENT CONTROL MODULE (ICM), REPLACING**

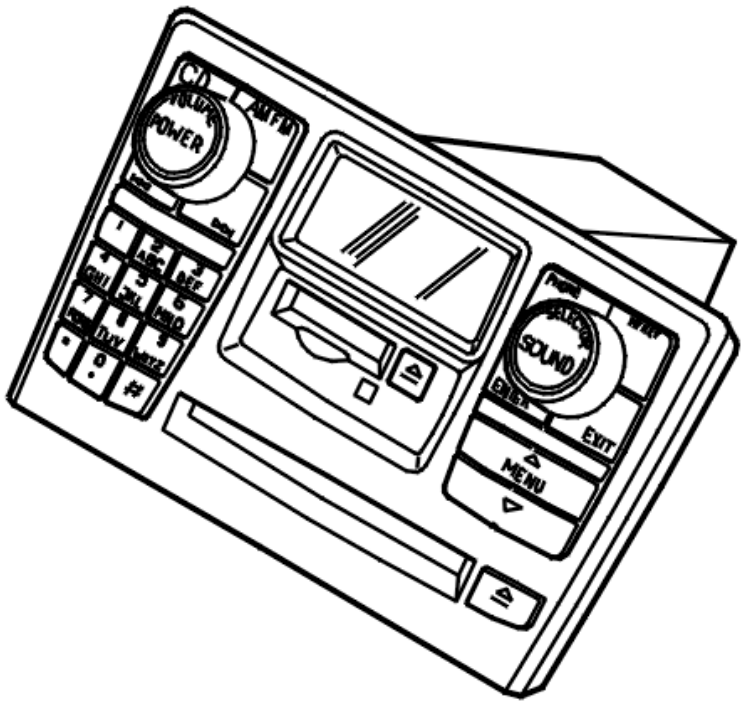

Fig. 324: Identifying Infotainment Control Module (ICM)
Courtesy of VOLVO CARS CORPORATION

- **Continue**

  See: **VERIFICATION**

VERIFICATION

VERIFICATION

HINT: After carrying out the repair, check that the fault has been remedied.

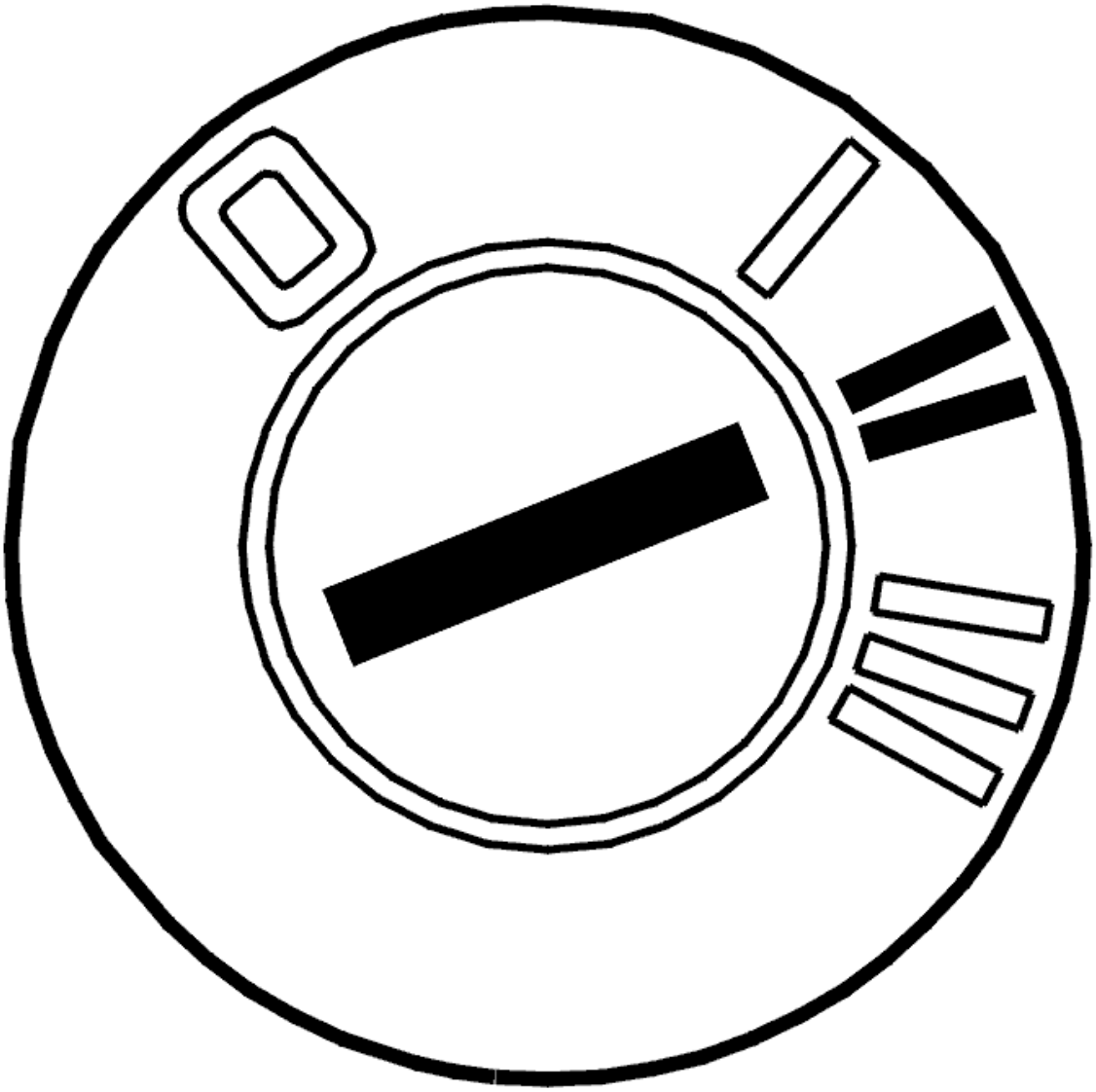

Fig. 325: Identifying Ignition ON
Courtesy of VOLVO CARS CORPORATION

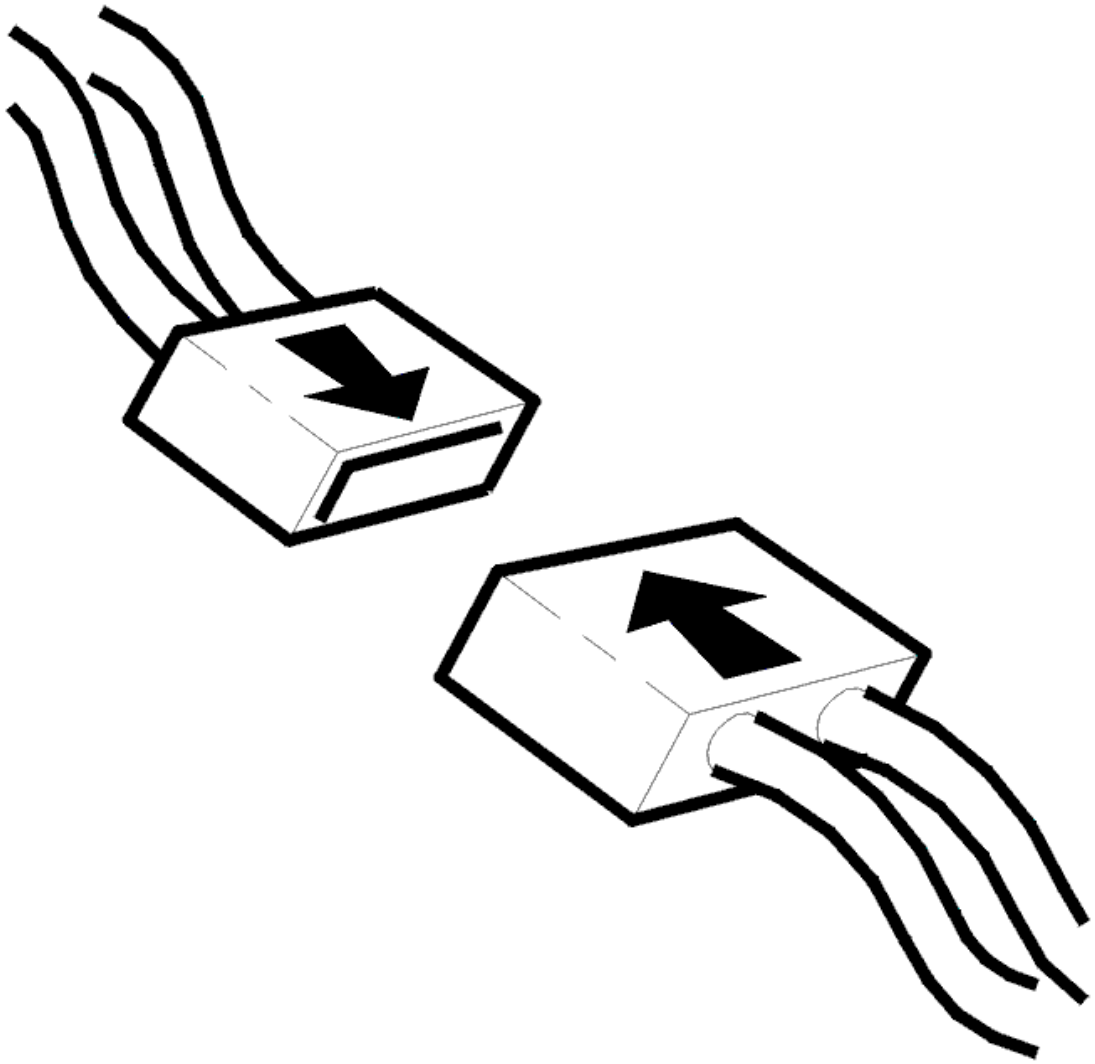

Fig. 326: Connecting Connector
Courtesy of VOLVO CARS CORPORATION

- Ignition off
- Reinstall the connectors, components etc.
- Ignition on.

  Activate the infotainment control module (ICM) by pressing the POWER button.

  Check that the display lights.

  Check that the sound source can be selected and that playback is working.

Is the infotainment control module (ICM) working?

- **YES**

  VERIFIED: Troubleshooting has been completed.

- **NO**

  See: **INFORMATION**

INFORMATION

FAULT-TRACING INFORMATION

The fault should have been detected and remedied. As this is not the case fault-tracing has failed.

Exit fault-tracing for this diagnostic trouble code (DTC) or make another attempt.

ICM-6C7A: INTEGRATED AUDIO MODULE (IAM) NOT VALID. FAULTY SIGNAL (2007-2012)

DIAGNOSTIC TROUBLE CODE (DTC) INFORMATION ICM-6C7A

Condition

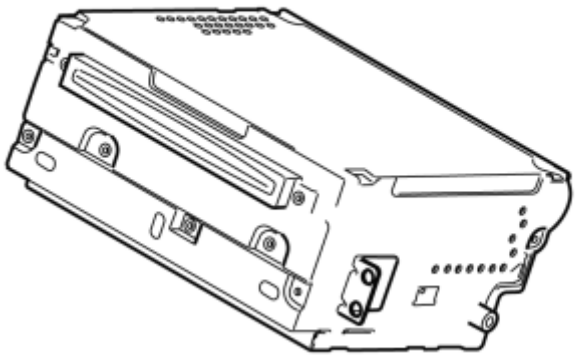

Fig. 327: Identifying Integrated Audio Module (IAM)
Courtesy of VOLVO CARS CORPORATION

The serial number for each control module in the infotainment system is stored in the central electronic module (CEM). The stored numbers are compared with the serial numbers of the control modules at start up. If any number does not correspond, that particular control module is blocked and the function is not available. The blocking function for non-approved control modules is designated security on MOST.

The infotainment module (ICM) checks whether the integrated audio module (IAM) is on the valid list stored in the central electronic module (CEM).

The diagnostic trouble code is generated if the infotainment module (ICM) registers that the integrated audio module (IAM) is not on the valid list.

The diagnostic trouble code can be diagnosed with the ignition on for at least 12 seconds, battery voltage greater than 11 V and security on activated.

Substitute Value

- None.

Possible Source

- Replacement of invalid integrated audio module (IAM) according to the valid list stored in the central electronic module (CEM).
- No software download on replacement of integrated audio module (IAM).
- Failed or incomplete software download to the integrated audio module (IAM).

Fault symptom[s]

- Audio system does not function

FAULTY SIGNAL

CHECKING THE COMPONENT

The infotainment module (ICM) has registered that the integrated audio module (IAM) is invalid according to the list stored in the central electronic module (CEM).

The cause of the fault is probably that no software has been downloaded or that software downloading has failed after integrated audio module (IAM) replacement.

HINT: When downloading software after replacing a control module in the infotainment system, the serial number is stored in the central electronic module (CEM). This is so that the security on MOST function can approve the control module in the MOST network in the car.

If the fault persists after software download, try replacing the integrated audio module (IAM).

Remedy as necessary.

Other information:

- see **CONTROL MODULE GENERAL SOUND PLAYER**

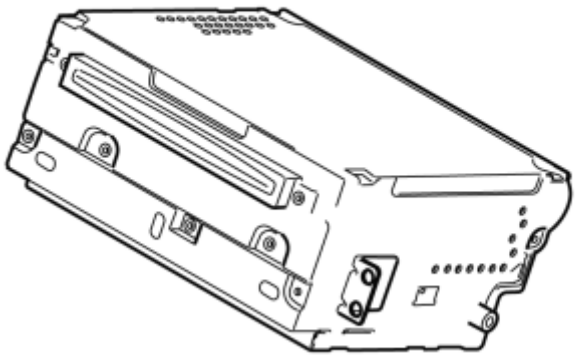

Fig. 328: Identifying Integrated Audio Module (IAM)
Courtesy of VOLVO CARS CORPORATION

- **Continue**

  See: **VERIFICATION**

VERIFICATION

VERIFICATION

HINT: After carrying out the repair, check that the fault has been remedied.

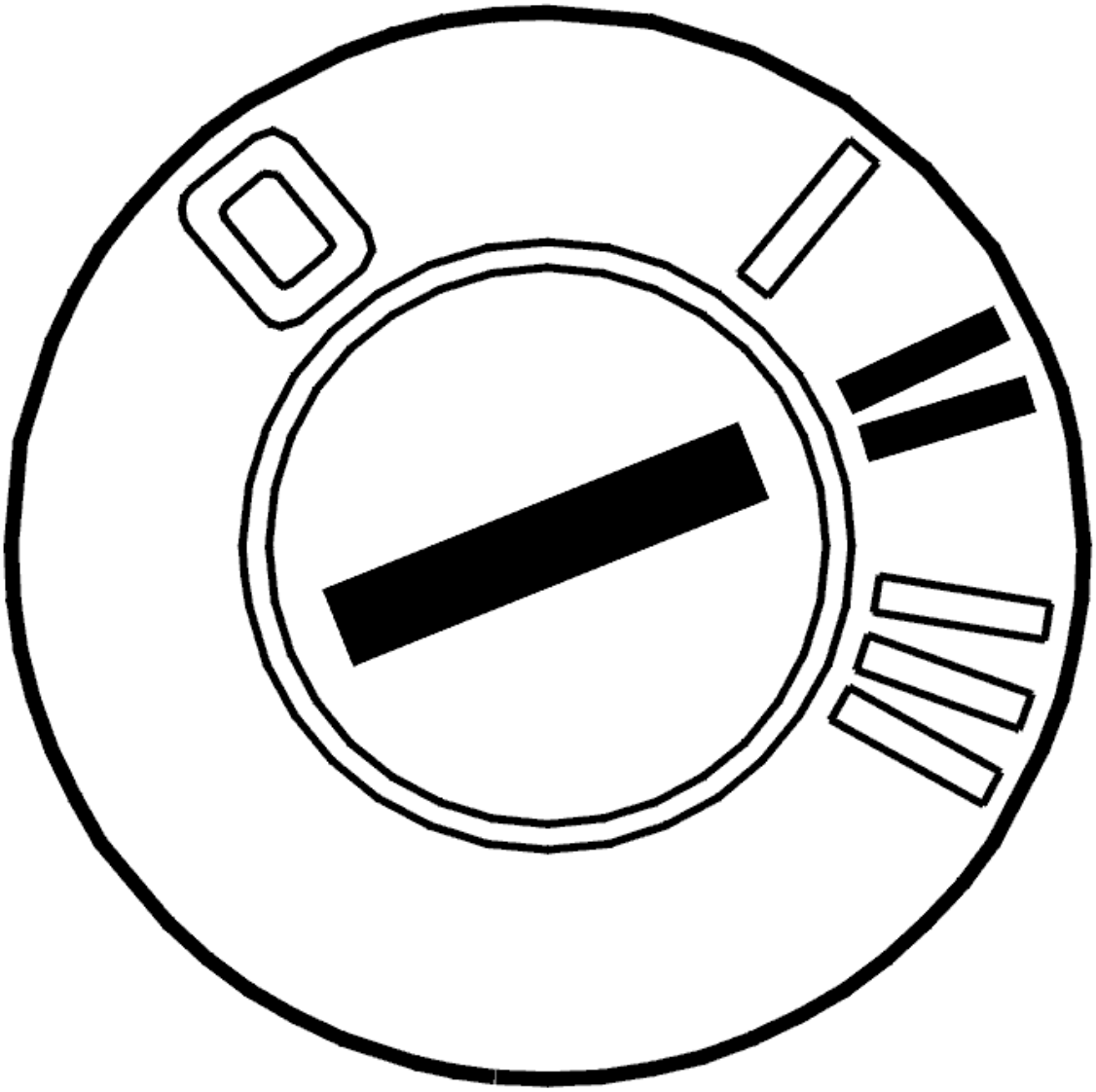

Fig. 329: Identifying Ignition ON
Courtesy of VOLVO CARS CORPORATION

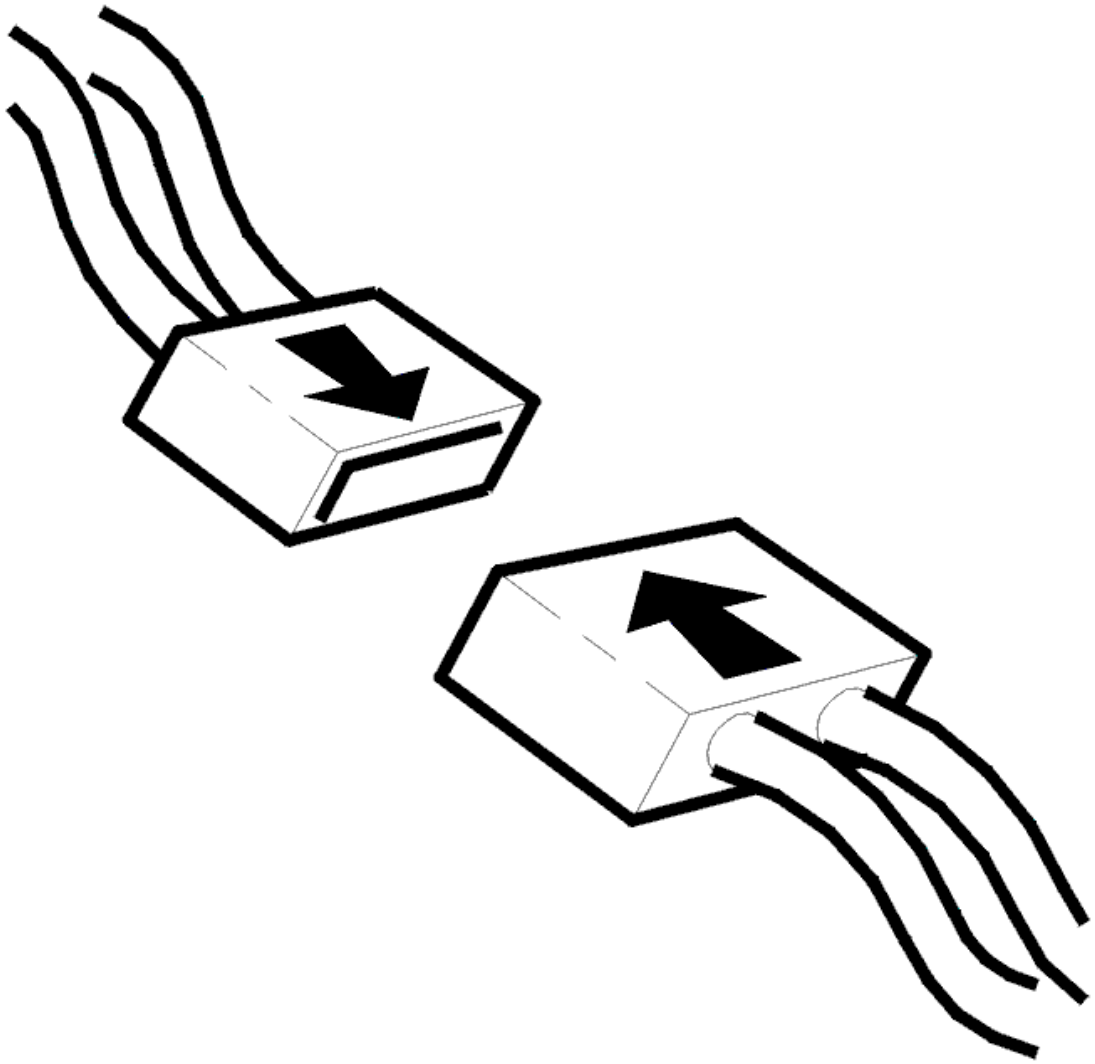

Fig. 330: Connecting Connector
Courtesy of VOLVO CARS CORPORATION

- Ignition off
- Reinstall the connectors, components etc.
- Ignition on for at least 12 seconds.

  Obtain the ID of the integrated audio module (IAM) by clicking on the VCT2000 symbol. Also check that the current diagnostic trouble code (DTC) is not detected again after the Infotainment control module (ICM) has been active for at least 75 seconds.

Fig. 331: Identifying VCT2000 Diagnostic Tool Symbol In VIDA
Courtesy of VOLVO CARS CORPORATION

Could the control module ID be read off?

- **YES**

  VERIFIED: Troubleshooting has been completed.

- **NO**

  See: **INFORMATION**

INFORMATION

FAULT-TRACING INFORMATION

The fault should have been detected and remedied. As this is not the case fault-tracing has failed.

Exit fault-tracing for this diagnostic trouble code (DTC) or make another attempt.

ICM-6C7B: REMOTE DIGITAL AUDIO RECEIVER (RDAR) NOT VALID FAULTY SIGNAL (2007-2012)

DIAGNOSTIC TROUBLE CODE (DTC) INFORMATION ICM-6C7B

Condition

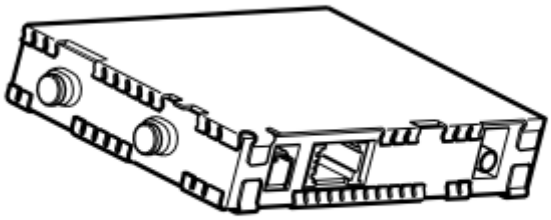

Fig. 332: Identifying Remote Digital Audio Receiver Module (RDAR)
Courtesy of VOLVO CARS CORPORATION

The serial number for each control module in the infotainment system is stored in the central electronic module (CEM). The stored numbers are compared with the serial numbers of the control modules at start up. If any number does not correspond, that particular control module is blocked and the function is not available. The blocking function for non-approved control modules is designated security on MOST.

The infotainment module (ICM) checks whether the Remote Digital Audio Receiver (RDAR) is in the valid list stored in the central electronic module (CEM).

The diagnostic trouble code (DTC) is stored if the infotainment module (ICM) registers that the Remote Digital Audio Receiver (RDAR) is not in the valid list.

The diagnostic trouble code can be diagnosed with the ignition on for at least 12 seconds, battery voltage greater than 11 V and security on activated.

Substitute Value

- None.

Possible Source

- Replacement of the Remote Digital Audio Receiver (RDAR) invalid according to the valid list stored in the central electronic module (CEM).
- Software was not downloaded upon replacement of the remote digital audio receiver (RDAR).
- Unsuccessful or incomplete software download to the remote digital audio receiver (RDAR).

Fault symptom[s]

- Digital Radio; No Functionality

FAULTY SIGNAL

CHECKING THE COMPONENT

The infotainment module (ICM) has registered that the remote digital audio receiver (RDAR) is invalid according to the list stored in the central electronic module (CEM).

The cause of the fault is probably that no software has been downloaded or that software downloading has failed after Remote Digital Audio Receiver (RDAR) replacement.

HINT: When downloading software after replacing a control module in the infotainment system, the serial number is stored in the central electronic module (CEM). This is so that the security on MOST function can approve the control module in the MOST network in the car.

If the fault persists after software download, try replacing the Remote Digital Audio Receiver (RDAR).

Remedy as necessary.

Other information:

- see **SATELLITE RADIO CONTROL MODULE**

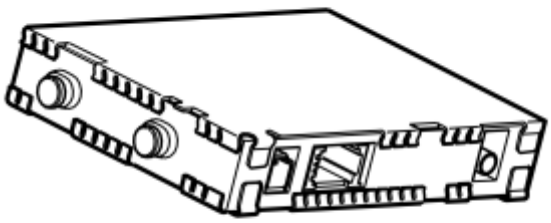

Fig. 333: Identifying Remote Digital Audio Receiver Module (RDAR)
Courtesy of VOLVO CARS CORPORATION

- **Continue**

  See: **VERIFICATION**

VERIFICATION

VERIFICATION

HINT: After carrying out the repair, check that the fault has been remedied.

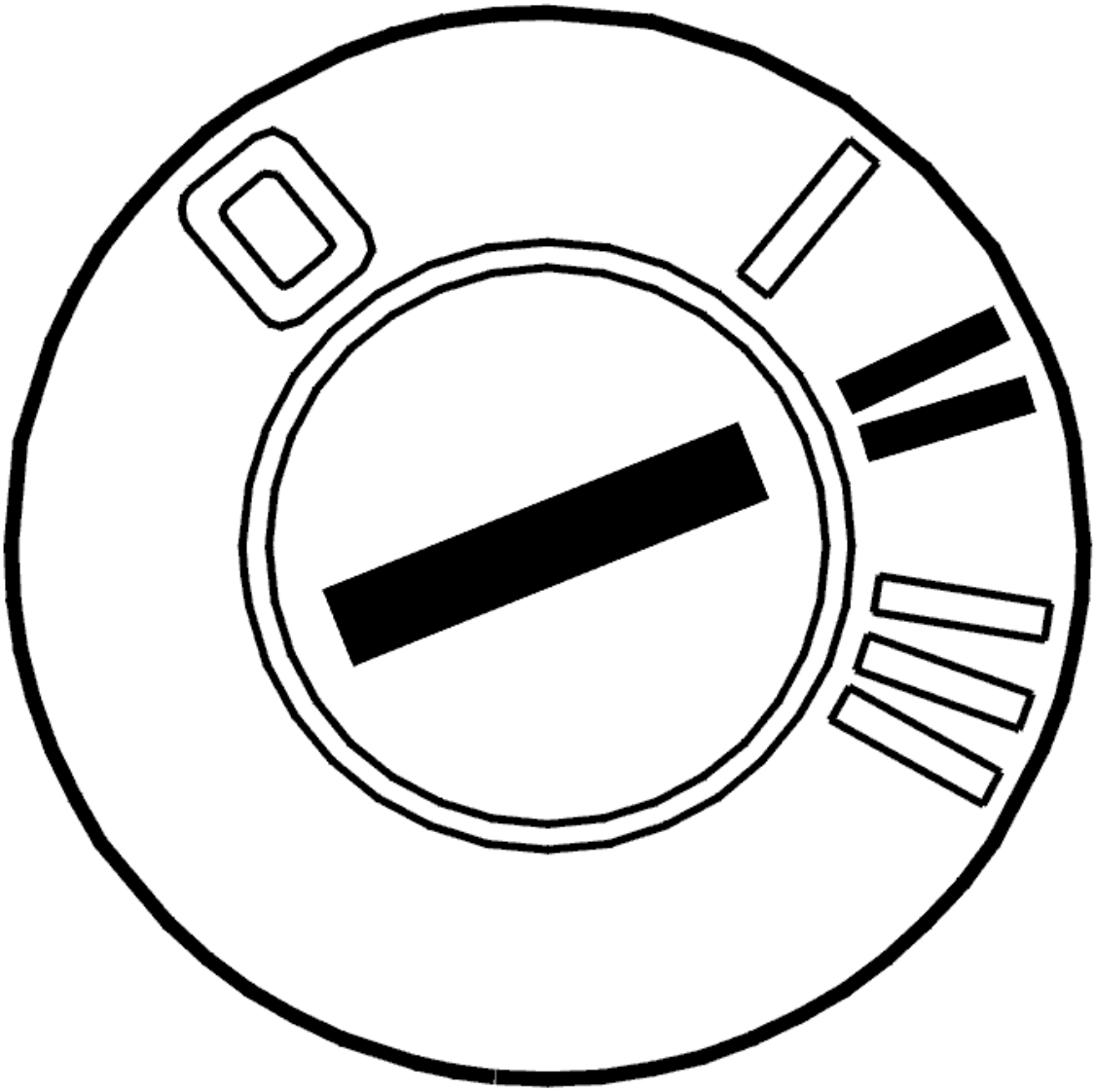

Fig. 334: Identifying Ignition ON
Courtesy of VOLVO CARS CORPORATION

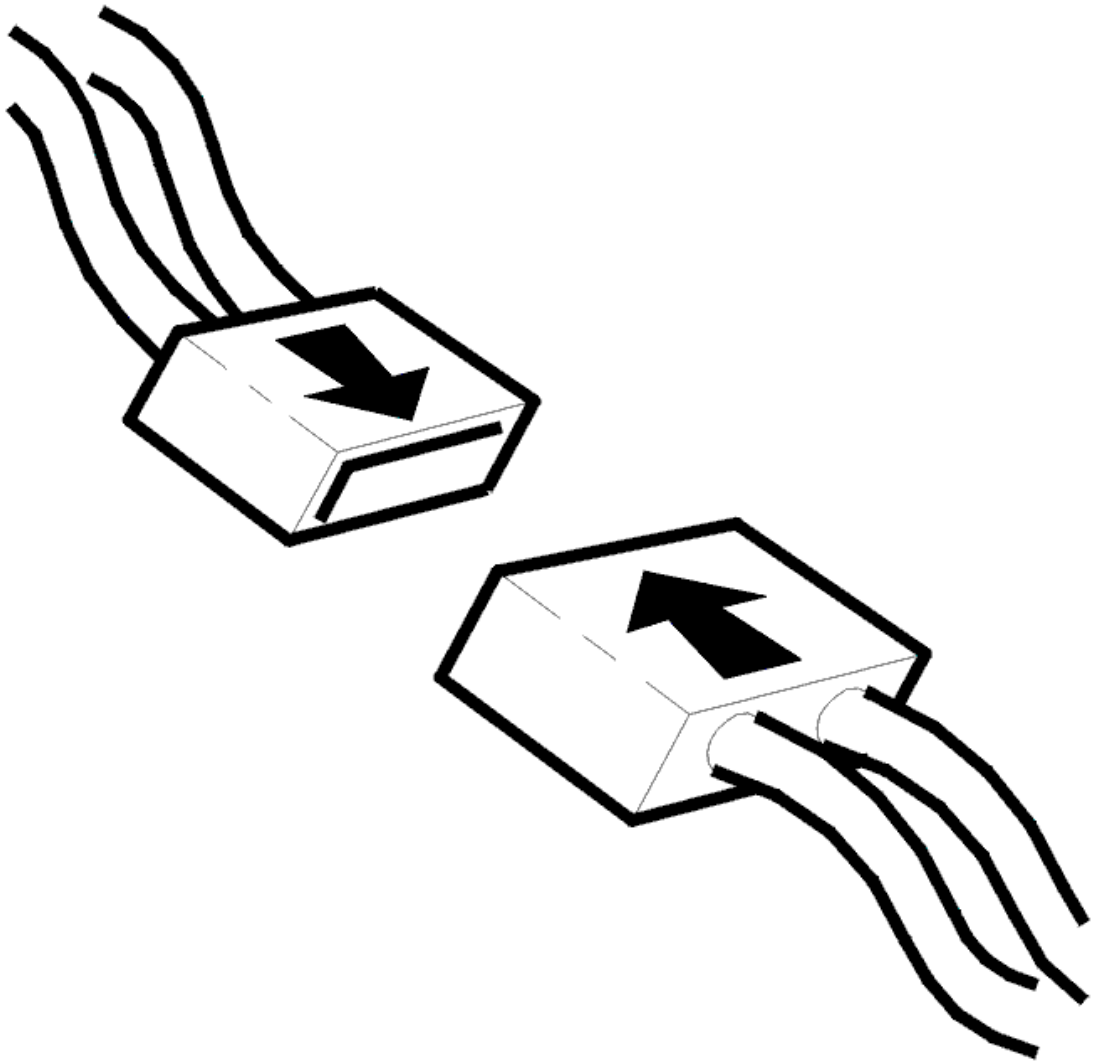

Fig. 335: Connecting Connector
Courtesy of VOLVO CARS CORPORATION

- Ignition off
- Reinstall the connectors, components etc.
- Ignition on for at least 12 seconds.

  Obtain the ID of the Remote Digital Audio Receiver (RDAR) by clicking on the VCT2000 symbol. Also check that the current diagnostic trouble code (DTC) is not detected again after the Infotainment control module (ICM) has been active for at least 75 seconds.

Fig. 336: Identifying VCT2000 Diagnostic Tool Symbol In VIDA
Courtesy of VOLVO CARS CORPORATION

Can the control module ID be read out?

- **YES**

  VERIFIED: Troubleshooting has been completed.

- **NO**

  See: **INFORMATION**

INFORMATION

FAULT-TRACING INFORMATION

The fault should have been detected and remedied. As this is not the case fault-tracing has failed.

Exit fault-tracing for this diagnostic trouble code (DTC) or make another attempt.

ACCESSORIES AND EQUIPMENT

Media, Communication And Navigation - General Diagnostics And Tests

CHECKING THE SUPPLY VOLTAGE/GROUND TERMINAL, PARKING ASSISTANCE CAMERA (PAC) (2007-12)

CHECKING THE POWER SUPPLY AND GROUND TERMINAL

POWER SUPPLY, PARKING ASSISTANCE CAMERA MODULE (PAC)

The parking assistance camera module (PAC) is supplied power via a voltage input on the control module.

When the ignition is in position II, the voltage input is supplied power.

- Voltage input terminal #A6 is supplied power via a fuse from central electronic module (CEM). This power input governs the supply of power to the parking assistance camera module (PAC). It will not be possible to activate the control module if there is an open-circuit.

Checking the power supply

Check the power supply cable from the central electronic module (CEM) to parking assistance camera module (PAC) terminal #A6 for open circuit, loose connection, contact resistance and oxidation. Check the fuse. The voltage must be approximately battery voltage.

Ground connection, parking assistance camera module (PAC)

The parking assistance camera module (PAC) has a ground input. The ground input from the control module is connected to a ground terminal in the body via a ground lead.

- Ground input #A15 is power ground and connected to the ground connection in the body.

Checking the ground terminal

Check the ground cable between parking assistance camera module (PAC) terminal #A15 and the ground connection for open circuit, loose connection, contact resistance and oxidation. When the ignition is on, the voltage drop between the parking assistance camera module (PAC) ground connection and the chassis connection may not be greater than 0.5 V.

Remedy as necessary.

Other information

- see **CHECKING WIRING AND TERMINALS**
- see **SIGNAL SPECIFICATION**

CHECKING THE SUPPLY/GROUND TERMINAL, MULTIMEDIA MODULE (MMM) (2003-12)

CHECKING THE VOLTAGE/GROUND TERMINAL (2003-06)

CHECKING THE POWER SUPPLY AND GROUND TERMINALS

Power supply multimedia module (MMM)

The multimedia module (MMM) is supplied with power via a power supply input on the control module.

When the ignition is on, the power input is powered and the multimedia module (MMM) is in active mode.

- Power input 1 (terminal #21 (#A1)) is supplied with power via a relay on the central electronic module (CEM). The relay is powered via a fuse from the battery. The relay coil can be diagnosed by the central electronic module (CEM). The multimedia module (MMM) will not be activated if there is an open-circuit.

Checking the power supply

Check the power supply cable from the battery to the relay on the central electronic module (CEM) and from the relay for the multimedia module (MMM) terminal #21 (#A1). Check for an open-circuit. Check for loose connections. Check for contact resistance and oxidation. Check the fuse. The voltage must be approximately battery voltage when the ignition is on.

Ground terminal multimedia module (MMM)

The multimedia module (MMM) has a ground input. The ground input from the control module is connected via a ground lead to the ground terminal in the car body.

- Ground input 1 (terminal #25 (#A5) is power ground and is connected to the ground terminal in the car body.

Checking ground terminal

Check the ground lead between multimedia module (MMM) terminal #25 (#A5) and the ground terminal. Check for an open-circuit. Check for loose connections. Check for contact resistance and oxidation. With the ignition on, the drop in voltage between the ground connection for the multimedia module (MMM) and the ground terminal must not be greater than 0.5 V.

Remedy as necessary.

Other information:

- see **CONTENTS**
- To connect the breakout box, see **CONNECTING THE BREAKOUT BOX (2003-06)**

- For information about signals, see **SIGNAL SPECIFICATION**

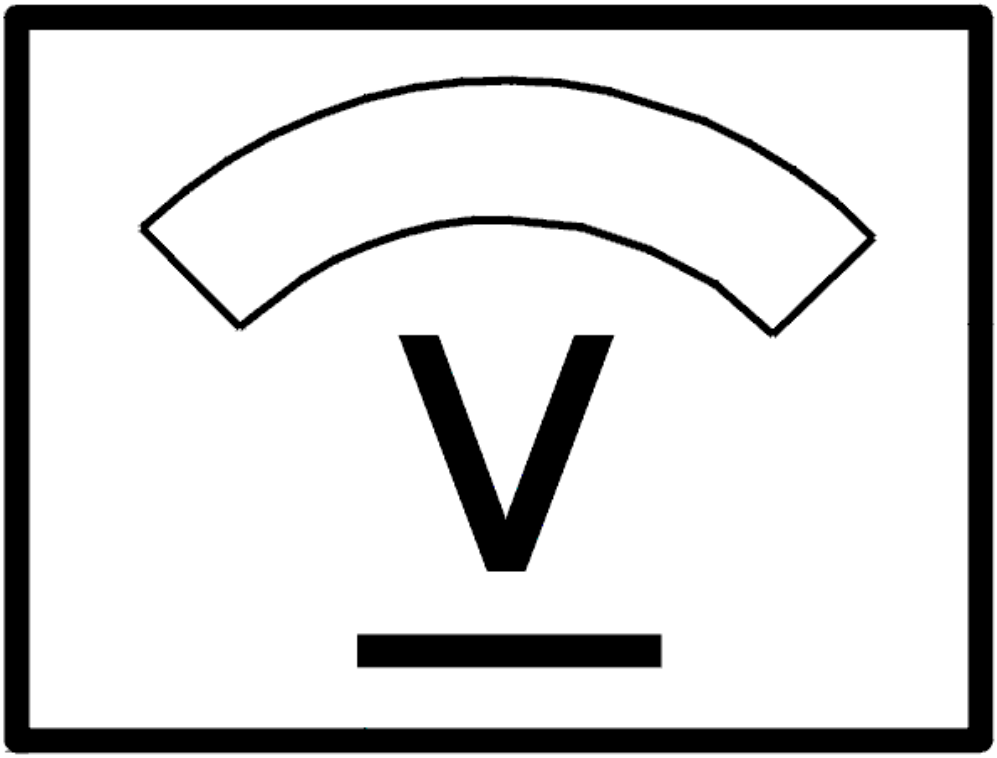

Fig. 1: Identifying Voltage Display
Courtesy of VOLVO CARS CORPORATION

CHECKING THE VOLTAGE/GROUND TERMINAL (2007-12)

CHECKING THE POWER SUPPLY AND GROUND TERMINALS

Power supply multimedia module (MMM)

The multimedia module (MMM) is supplied with power via a power supply input on the control module.

When the ignition is on, the power input is powered and the multimedia module (MMM) is in active mode.

- Power input 1 (terminal #21 (#A1)) is supplied with power via a relay on the central electronic module

(CEM). The relay is powered via a fuse from the battery. The relay coil can be diagnosed by the central electronic module (CEM). The multimedia module (MMM) will not be activated if there is an open-circuit.

Checking the power supply

Check the power supply cable from the battery to the relay on the central electronic module (CEM) and from the relay for the multimedia module (MMM) terminal #21 (#A1). Check for an open-circuit. Check for loose connections. Check for contact resistance and oxidation. Check the fuse. The voltage must be approximately battery voltage when the ignition is on.

Ground terminal multimedia module (MMM)

The multimedia module (MMM) has a ground input. The ground input from the control module is connected via a ground lead to the ground terminal in the car body.

- Ground input 1 (terminal #25 (#A5) is power ground and is connected to the ground terminal in the car body.

Checking ground terminal

Check the ground lead between multimedia module (MMM) terminal #25 (#A5) and the ground terminal. Check for an open-circuit. Check for loose connections. Check for contact resistance and oxidation. With the ignition on, the drop in voltage between the ground connection for the multimedia module (MMM) and the ground terminal must not be greater than 0.5 V.

Remedy as necessary.

Other information:

- see **CONTENTS**
- To connect the breakout box, see **CONNECTING THE BREAKOUT BOX (2003-06)**
- For information about signals, see **SIGNAL SPECIFICATION**

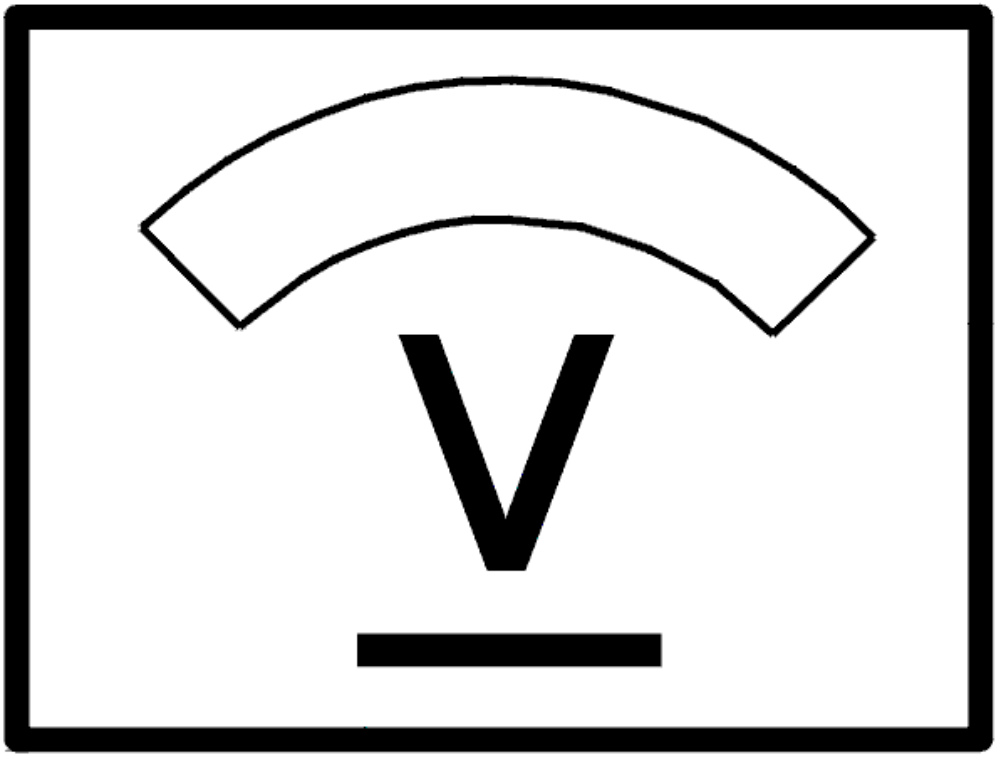

Fig. 2: Identifying Voltage Display
Courtesy of VOLVO CARS CORPORATION

CHECKING THE SUPPLY VOLTAGE/GROUND TERMINAL, INTEGRATED AUDIO MODULE (IAM) (2007-12)

CHECKING THE SUPPLY VOLTAGE/GROUND TERMINAL

CHECKING THE POWER SUPPLY AND GROUND TERMINALS

Power supply, Integrated Audio Module (IAM)

The Integrated Audio Module (IAM) is supplied with voltage via a voltage input on the control module.

With ignition on the voltage input is supplied with voltage and the Integrated Audio Module (IAM) is in active

mode.

- Voltage input 1 (#A1) is supplied with voltage via a fuse from the Central Electronic Module (CEM). The Integrated Audio Module (IAM) will not be activated in the event of open circuits.

Checking the power supply

Check the power supply cable from the battery to the Central Electronic Module (CEM) and from the Central Electronic Module (CEM) to the Integrated Audio Module (IAM) (#A1) with regard to open circuits, loose connections, contact resistance and corrosion. Check the fuse too. The voltage should be approximate battery voltage with the ignition on.

Ground terminal, Integrated Audio Module (IAM)

The Integrated Audio Module (IAM) has a ground input. The ground input from the control module is connected via a ground cable to the ground terminal in the body.

- Ground input 1 (#A8) is power ground and connected to the ground connection in the body.

Checking the ground terminal

Check the ground cable between Integrated Audio Module (IAM) terminal (#A8) and the ground terminal. Check for an open-circuit. Check for loose connections. Check for contact resistance and oxidation. With the ignition on, the drop in voltage between the ground connection for the Integrated Audio Module (IAM) and the ground terminal must not be greater than 0.5 V.

Remedy as necessary.

Other information

- see **SIGNAL SPECIFICATION**
- see **CONTENTS**

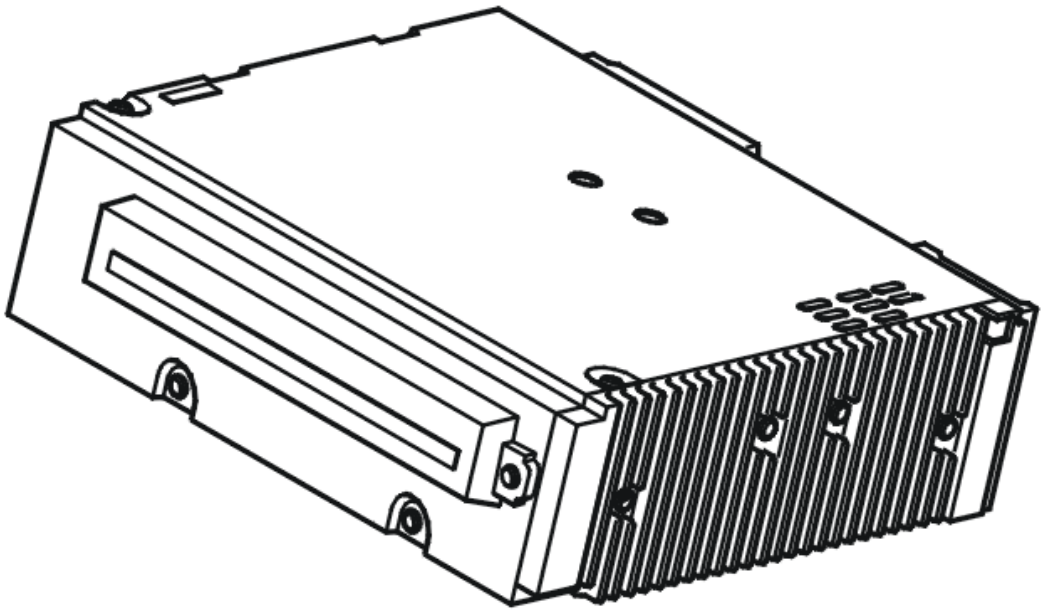

Fig. 3: Identifying Integrated Audio Module (IAM)
Courtesy of VOLVO CARS CORPORATION

CHECKING THE VOLTAGE/GROUND TERMINAL, AUDIO MODULE (AUD) (2003-06)

CHECKING THE VOLTAGE/GROUND TERMINAL

CHECKING THE POWER SUPPLY AND GROUND TERMINALS

Power supply audio module (AUD)

The power supply to the audio module (AUD) is via two power inputs on the control module.

When the ignition is on, both power inputs are powered and the audio module (AUD) is in active mode.

- Power input 1 (terminal #45 (#A1)) is supplied with power via a fuse from the battery. The audio module (AUD) will not be activated if there is an open-circuit
- Power input 2 (terminal #6 (#B6)) is supplied with power via a relay on the central electronic module (CEM). The relay is powered via a fuse from the battery. The relay coil can be diagnosed by the central electronic module (CEM). The audio module (AUD) will be activated when the power input is supplied with power. The audio module (AUD) will not be activated if there is an open-circuit.

Checking the power supply

Check the power supply cable from the battery to the relay on the central electronic module (CEM) and from the relay for the audio module (AUD) terminal #6 (#B6). Check for an open-circuit. Check for loose connections. Check for contact resistance and oxidation. Check the fuse. The voltage must be approximately battery voltage when the ignition is on.

Check the power supply cable from the battery to audio module (AUD) terminal #45 (#A1). Check for an open-circuit. Check for loose connections. Check for contact resistance and oxidation. Check the fuse. The voltage must be approximately battery voltage when the ignition is on.

Ground terminal audio module (AUD)

The audio module (AUD) has a ground input. The ground input from the control module is connected via a ground lead to the ground terminal in the car body.

- Ground input 1 (terminal #46 (#A2) is power ground and is connected to the ground terminal in the car body.

Checking ground terminal

Check the ground lead between audio module (AUD) terminal #46 (#A2) and the ground terminal. Check for an open-circuit. Check for loose connections. Check for contact resistance and oxidation. With the ignition on, the drop in voltage between the ground connection for the audio module (AUD) and the ground terminal must not be greater than 0.5 V.

Remedy as necessary.

Other information:

- see **CONTENTS**
- To connect the breakout box, see **CONNECTING THE BREAKOUT BOX**
- For information about signals, see **SIGNAL SPECIFICATION**

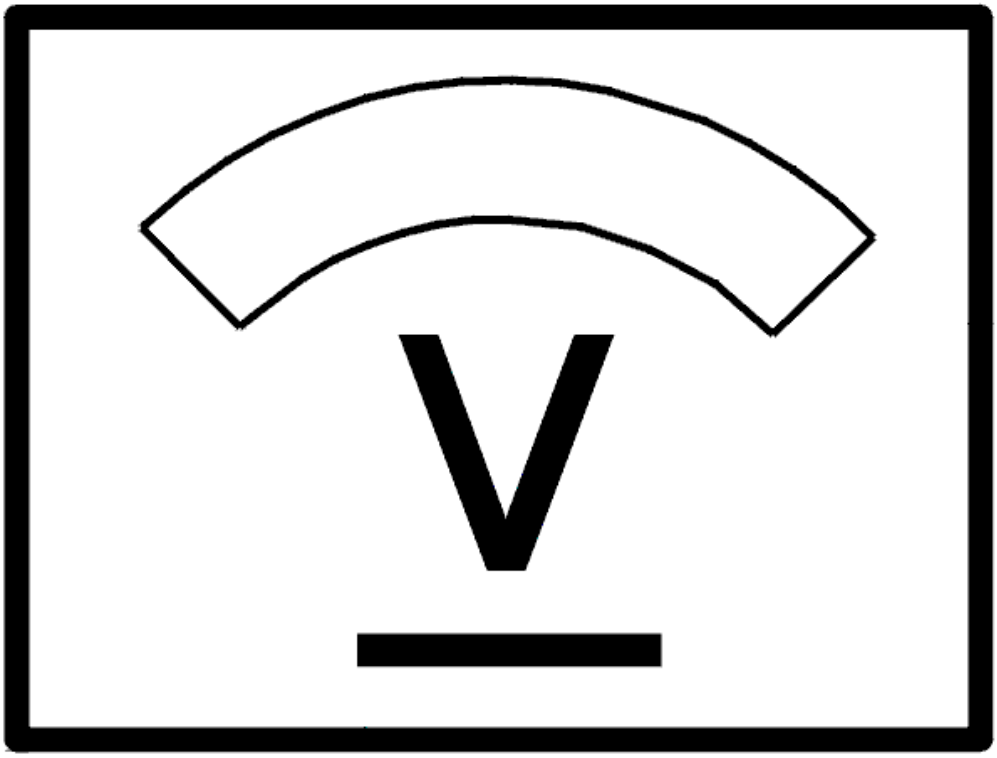

Fig. 4: Identifying Voltage Display
Courtesy of VOLVO CARS CORPORATION

CHECKING THE VOLTAGE/GROUND TERMINAL, INFOTAINMENT CONTROL MODULE (ICM) (2003-12)

CHECKING THE VOLTAGE/GROUND TERMINAL

CHECKING THE POWER SUPPLY AND GROUND TERMINALS

Voltage reading infotainment control module (ICM)

The infotainment control module (ICM) is supplied with power via a power supply input on the control module.

When the ignition is on, the voltage input is supplied with power and the infotainment control module (ICM)

can be activated using the POWER button.

1. Power input terminal #1 (#A1) is supplied with power via a relay on the central electronic module (CEM). The relay is powered via a fuse from the battery. The relay coil can be diagnosed by the central electronic module (CEM). The infotainment control module (ICM) will not be activated if there is an open-circuit.

Checking the power supply

Check the power supply cable from the battery to the relay on the central electronic module (CEM) and from the relay for the infotainment control module (ICM) terminal #1 (#A1). Check for an open-circuit. Check for loose connections. Check for contact resistance and oxidation. Check the fuse. The voltage must be approximately battery voltage when the ignition is on.

Ground terminal infotainment control module (ICM)

The control module has a ground input. The ground input from the control module is connected via a ground lead to the ground terminal in the car body.

1. Ground input terminal #10 (#A10) is power ground and is connected to the ground terminal in the car body.

Checking ground terminal

Check the ground lead between control module terminal #10 (#A10) and the ground terminal. Check for an open-circuit. Check for loose connections. Check for contact resistance and oxidation. With the ignition on, the drop in voltage between the ground connection for the control module and the ground terminal must not be greater than 0.5 V.

Remedy as necessary.

Other information:

- see **CONTENTS**
- To connect the breakout box, see **CONNECTING THE BREAKOUT BOX**
- For information about signals, see **SIGNAL SPECIFICATION**

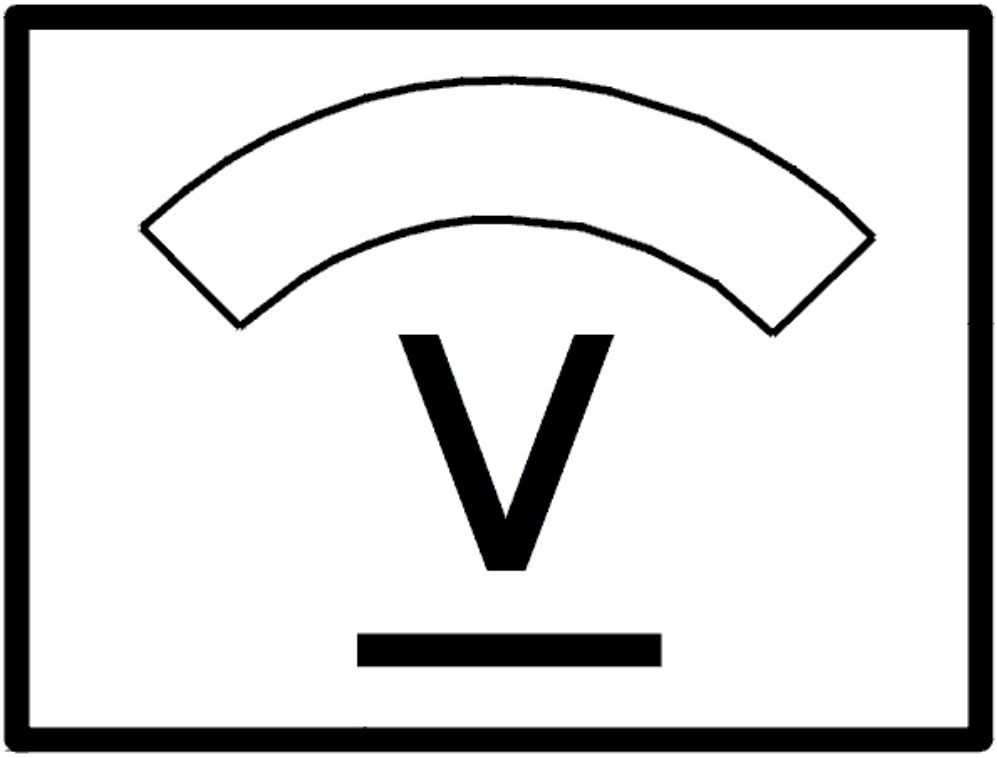

Fig. 5: Identifying Voltage Display
Courtesy of VOLVO CARS CORPORATION

CHECKING THE VOLTAGE/GROUND TERMINAL, MD/CD MODULE (MP1/MP2) (2003-06)

CHECKING THE POWER SUPPLY AND GROUND TERMINALS

Power supply Media player Module (MP)

The power supply to the Media player Module (MP) is via two power inputs on the control module.

When the ignition is on, both power inputs are powered and the Media player Module (MP) is in active mode.

- Power input 1 (#A1) is supplied with power via a fuse from the battery. The Media player Module (MP)

will not be activated if there is an open-circuit

- Power input 2 (#A2) is supplied with power via a relay on the central electronic module (CEM). The relay is powered via a fuse from the battery. The relay coil can be diagnosed by the central electronic module (CEM). The Media player Module (MP) will be activated when the power input is supplied with power. The Media player Module (MP) will not be activated if there is an open-circuit.

Checking the power supply

Check the power supply cable from the battery to the relay on the central electronic module (CEM) and from the relay for the media player module (MP) terminal (#A2). Check for an open-circuit. Check for loose connections. Check for contact resistance and oxidation. Check the fuse. The voltage must be approximately battery voltage when the ignition is on.

Check the power supply cable from the battery to media player module (MP) (#A1). Check for an open-circuit. Check for loose connections. Check for contact resistance and oxidation. Check the fuse. The voltage must be approximately battery voltage when the ignition is on.

Ground terminal Media player Module (MP)

The Media player Module (MP) has a ground input. The ground input from the control module is connected via a ground lead to the ground terminal in the car body.

- Ground input terminal #1 (#A4) is power ground and is connected to the ground terminal in the car body.

Checking ground terminal

Check the ground lead between media player (MP) (#A4) and the ground terminal. Check for an open-circuit. Check for loose connections. Check for contact resistance and oxidation. With the ignition on, the drop in voltage between the ground connection for the media player module (MP) and the ground terminal must not exceed 0.5 V.

Remedy as necessary.

Other information:

- see **CONTENTS**
- For information about signals, see **SIGNAL SPECIFICATION**

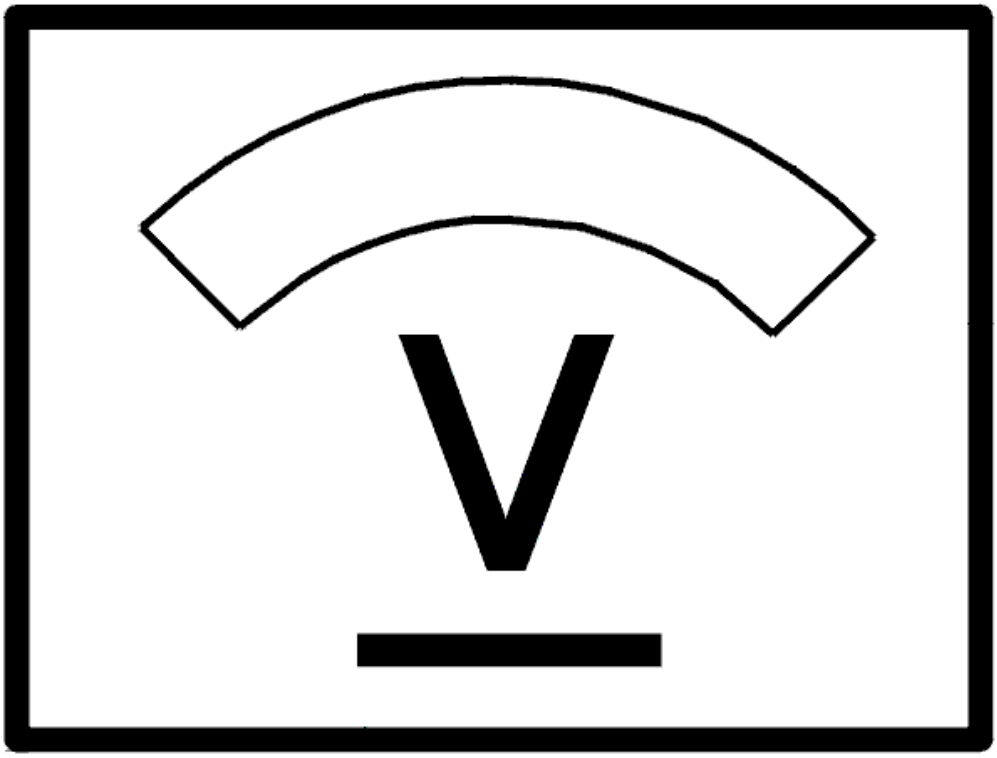

Fig. 6: Identifying Voltage Display
Courtesy of VOLVO CARS CORPORATION

CHECKING THE VOLTAGE/GROUND TERMINAL, REMOTE DIGITAL AUDIO RECEIVER (RDAR) (2007-12)

CHECKING THE SUPPLY VOLTAGE/GROUND TERMINAL

CHECKING THE POWER SUPPLY AND GROUND TERMINALS

Voltage supply, Remote Digital Audio Receiver (RDAR)

Remote Digital Audio Receiver (RDAR) is supplied with voltage via a voltage input on the control module.

Power input terminal #A-1 is directly supplied from the battery via a fuse.

Checking the power supply

Also check the power supply cable from the battery to the fuse in the fuse box, in the engine compartment and from the fuse for the Remote Digital Audio Receiver (RDAR). Check for an open-circuit. Check for loose connections. Check for contact resistance and oxidation. Check the fuse. Voltage should be about equal to battery voltage.

Ground terminal, Remote Digital Audio Receiver (RDAR)

The control module has a ground input. The ground input from the control module is connected via a ground lead to the ground terminal in the car body.

Ground input terminal #A-2 is power ground and connected to the ground connection in the body.

Checking ground terminal

Check the ground cable between control module terminal #A-2 and the ground connection for open circuit, loose connection, contact resistance and oxidation. With the ignition on, the drop in voltage between the ground connection for the control module and the ground terminal must not be greater than 0.5 V.

Remedy as necessary.

Other information:

- see **CHECKING WIRING AND TERMINALS**
- see **SIGNAL SPECIFICATION**

CONNECTING THE BREAKOUT BOX, AUDIO MODULE (AUD) (2003-12)

CONNECTING THE BREAKOUT BOX

Special tools:

see **9511463**

see **9511428**

see **9511507**

see **9512888**

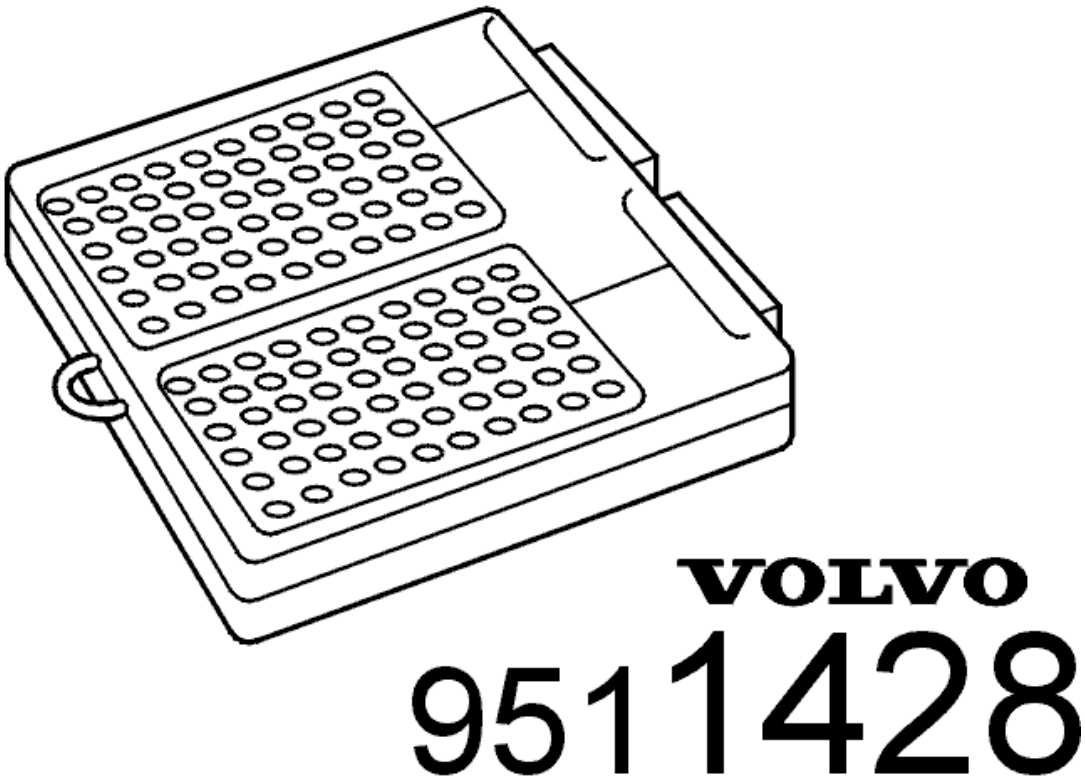

Fig. 7: Breakout Box. Accessory Electronic Module
Courtesy of VOLVO CARS CORPORATION

- Ignition off
- Expose the audio module (AUD)
- Remove the fuse for the audio module (AUD).

Connect adapter see **9511463** to the control module connector (wiring side). Connect breakout box see **9511428** to the adapter. Audio module (AUD) terminals #C1-#C22 correspond to terminals #1-#22 on the breakout box. Connect adapter see **9511507** to the control module connector (wiring side). Connect breakout box see **9511428** to the adapter. Audio module (AUD) terminals #A1-#A2 correspond to terminals #45-#46 on the breakout box. Connect adapter see **9512888** to the control module connector. Connect breakout box see **9511428** to the adapter. Audio module (AUD) terminals #B1-#B16 correspond to terminals #1-#16 on the breakout box.

The breakout box is designed to facilitate reading off the control module input and output signals when the control module is connected and cable and component resistance when the control module is disconnected. The use of a breakout box reduces the risk of accidental short-circuited cables and damage to the connector pins

Disconnecting breakout box

In reverse order.

NOTE: Before the control module can be checked and readings taken, the removed fuses must first be installed.

Other information:

- For information about signals, see **SIGNAL SPECIFICATION**

CONNECTING THE BREAKOUT BOX, INFOTAINMENT CONTROL MODULE (ICM) (2003-12)

CONNECTING THE BREAKOUT BOX

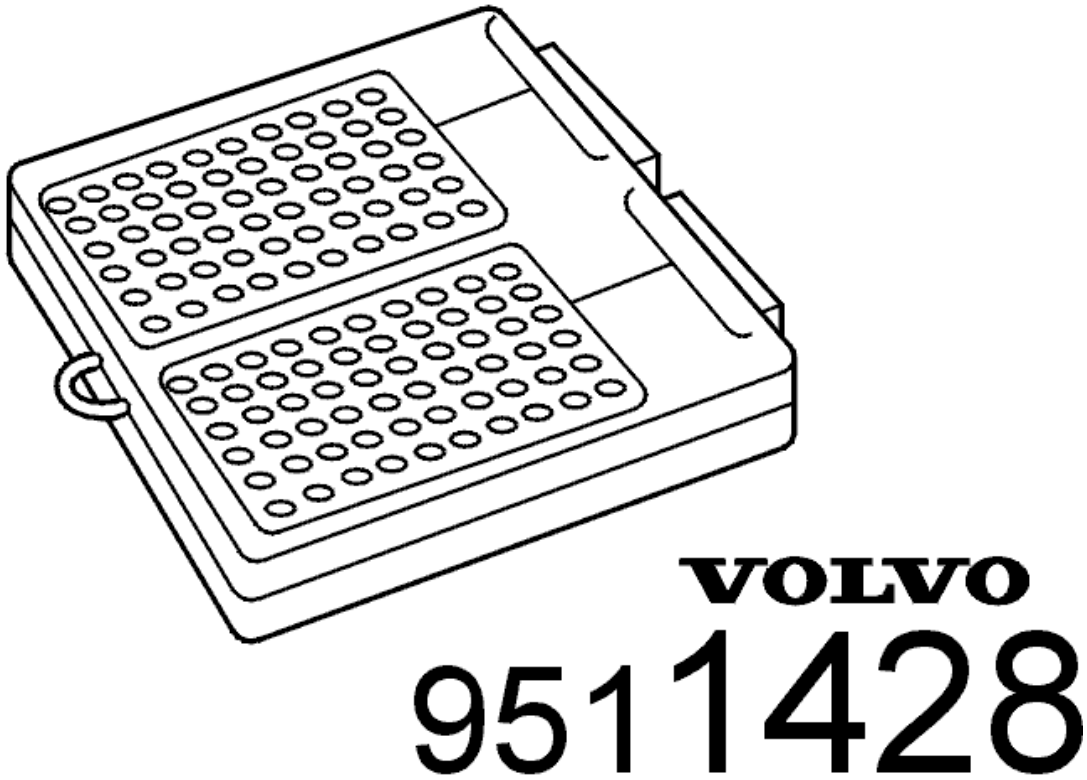

Fig. 8: Breakout Box. Accessory Electronic Module
Courtesy of VOLVO CARS CORPORATION

- Ignition off
- Remove the fuse for the infotainment control module (ICM) from the fusebox in the passenger compartment
- Expose the infotainment control module (ICM).

Connect adapter see **9511508** to the control module connector. Connect breakout box see **9511428** to the adapter.

Disconnect the breakout box in reverse order.

NOTE: Before the control module can be checked and readings taken, the removed

fuses must first be re-installed.

Other information

- To access and remove the infotainment control module (ICM), see **INFOTAINMENT CONTROL MODULE (ICM), REPLACING**
- For further information about signals and other values, see **SIGNAL SPECIFICATION**

CONNECTING THE BREAKOUT BOX, MULTIMEDIA MODULE (MMM) (2003-12)

CONNECTING THE BREAKOUT BOX (2003-06)

Special tools:

see **9512882**

see **9511428**

see **9511508**

CONNECTING THE BREAKOUT BOX

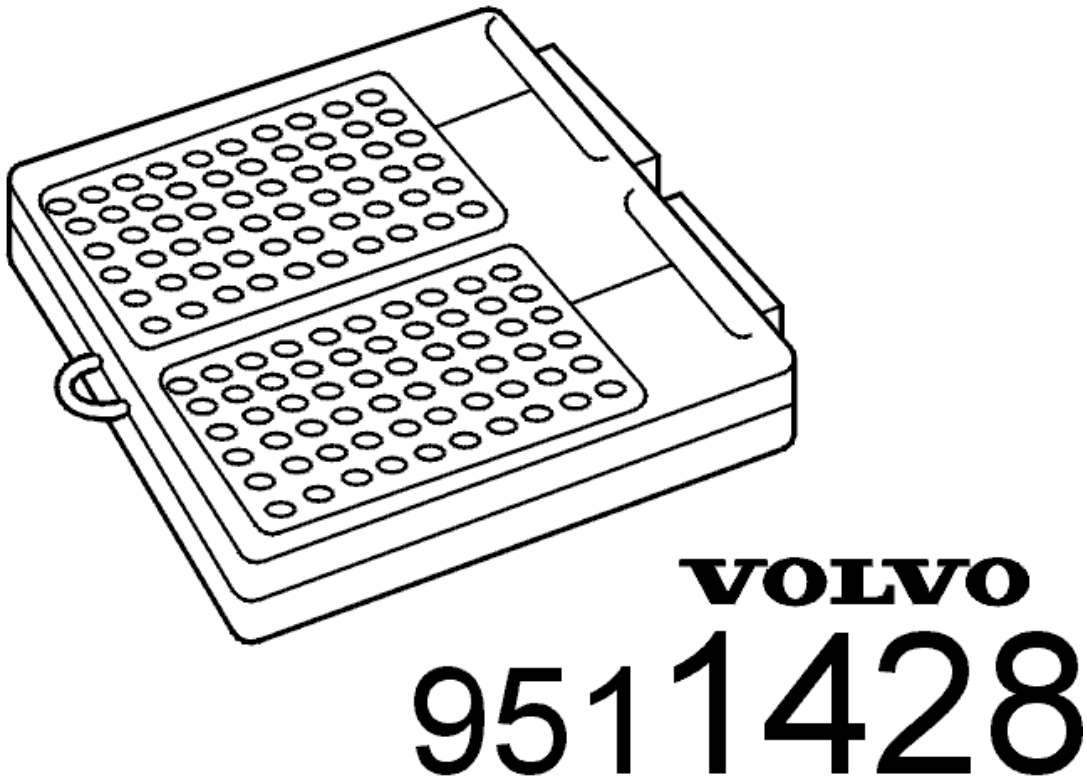

Fig. 9: Breakout Box. Accessory Electronic Module

Courtesy of VOLVO CARS CORPORATION

- Ignition off
- Expose the multimedia module (MMM).

Connect adapter see **9512882** to the control module connector (wiring side). Connect breakout box see **9511428** to the adapter. Multimedia module (MMM) terminals #B1-#B10 correspond to terminals #1-#10 on the breakout box. Connect adapter see **9511508** to the control module connector (wiring side). Connect breakout box see **9511428** to the adapter. Multimedia module (MMM) terminals #A1-#A5 correspond to terminals #21-#25 on the breakout box.

The breakout box is designed to facilitate reading off the control module input and output signals when the control module is connected and cable and component resistance when the control module is disconnected. The use of a breakout box reduces the risk of accidentally short-circuited cables and damage to the connectors

Disconnecting breakout box

In reverse order.

NOTE: Before the control module can be checked and readings taken, the removed fuses must first be installed.

Other information

- For information about signals, see **SIGNAL SPECIFICATION** .

CONNECTING THE BREAKOUT BOX (2007-12)

Special tools:

see **9512882**

see **9511428**

see **9511508**

CONNECTING THE BREAKOUT BOX

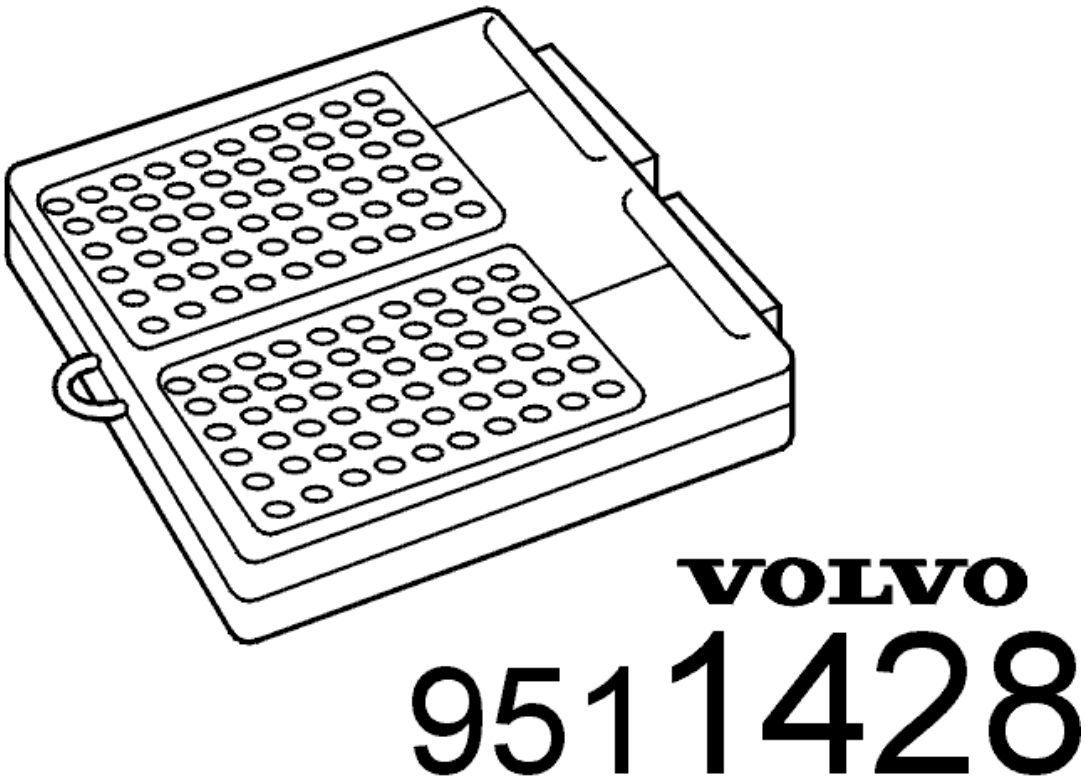

Fig. 10: Breakout Box. Accessory Electronic Module
Courtesy of VOLVO CARS CORPORATION

- Ignition off
- Expose the multimedia module (MMM).

Connect adapter see **9512882** to the control module connector (wiring side). Connect breakout box see **9511428** to the adapter. Multimedia module (MMM) terminals #B1-#B10 correspond to terminals #1-#10 on the breakout box. Connect adapter see **9511508** to the control module connector (wiring side). Connect breakout box see **9511428** to the adapter. Multimedia module (MMM) terminals #A1-#A5 correspond to terminals #21-#25 on the breakout box.

The breakout box is designed to facilitate reading off the control module input and output signals when the control module is connected and cable and component resistance when the control module is disconnected. The use of a breakout box reduces the risk of accidentally short-circuited cables and damage to the connectors

Disconnecting breakout box

In reverse order.

NOTE: Before the control module can be checked and readings taken, the removed fuses must first be installed.

Other information

- For information about signals, see **SIGNAL SPECIFICATION** .

CONNECTION OF BREAKOUT BOX, INTEGRATED AUDIO MODULE (IAM) (2007-12)

CONNECTING THE BREAKOUT BOX

Special tools:

see **9512977**

see **9511428**

see **9511499**

see **9813190**

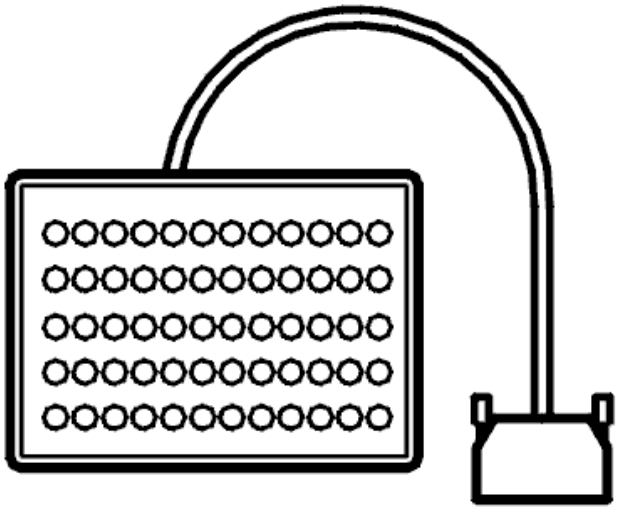

Fig. 11: Breakout Box
Courtesy of VOLVO CARS CORPORATION

- Ignition off
- Remove the fuse.
- Remove the infotainment control module (ICM).
- Unplug the control module connector.

Plug adapter see **9512977** into the control module connector and connect breakout box see **9511428** and cable harness see **9511499** to the adapter.

Alternatively, breakout box see **9813190** can be connected to the adapter.

Disconnect the breakout box in reverse order.

Other information

- see **SIGNAL SPECIFICATION**
- see **CONTROL MODULE GENERAL SOUND PLAYER**

CHECKING THE VOLTAGE/GROUND TERMINAL, PHONE MODULE (PHM) (2003-04)

CHECKING THE VOLTAGE/GROUND TERMINAL

CHECKING THE POWER SUPPLY AND GROUND TERMINALS

Power supply, phone module (PHM)

The phone module (PHM) is powered via a power input on the control module.

Power input #A1 (#1) is supplied with +30 from the battery via a fuse. It will not be possible to activate the carphone if there is an open-circuit.

Checking the power supply

Check the power supply cable from the battery to phone module (PHM) terminal #A2 (#2). Check for an open-circuit. Check for loose connections. Check for contact resistance. Check for oxidation. Check the fuse. The voltage must be approximately battery voltage.

Ground terminal, phone module (PHM)

The phone module (PHM) has a ground input. The ground input from the control module is power ground and is connected to the ground terminal in the car body.

Checking the ground terminal

Check the ground lead between phone module (PHM) terminal #A1 (#1) and the ground terminal. Check for an open-circuit. Check for loose connections. Check for contact resistance and oxidation. With the ignition on, the drop in voltage between the ground connection for the control module and the ground terminal must not be greater than 0.5 V.

Remedy as necessary.

Other information:

- see **CONTENTS**
- To connect the breakout box, see **CONNECTING THE BREAKOUT BOX**
- For information about signals, see **SIGNAL SPECIFICATION**

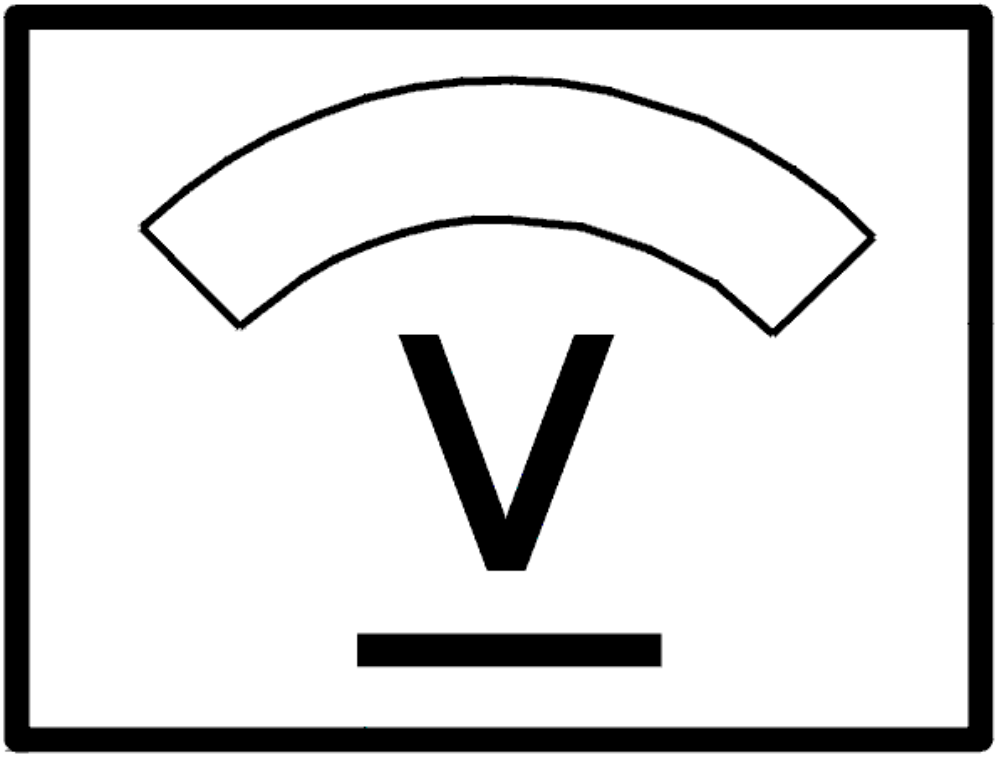

Fig. 12: Identifying Voltage Display
Courtesy of VOLVO CARS CORPORATION

CHECKING THE VOLTAGE/GROUND TERMINAL, BLUETOOTH PHONE MODULE (BPM) (2011-12)

CHECKING THE SUPPLY VOLTAGE/GROUND TERMINAL

POWER SUPPLY BLUETOOTH PHONE MODULE (BPM)

The Bluetooth phone module (BPM) is powered via two power inputs on the control module. When the ignition is on, the power input is powered and the control module is in active mode.

1. The power inputs 1 (#C1-31) and 2 (#C1-32) are powered via one an the same fuse from the battery. This power input is used to power the memory in the control module. In the event of an open-circuit, the control module will be reset and adaptation values and diagnostic trouble codes (DTCs) will disappear.

Checking the power supply

Check the power supply cable from the battery to infotainment control module (ICM) terminal #C1-1 (#1). Check for an open-circuit. Check for loose connections. Check for contact resistance. Check for oxidation. Check the power supply cables from the ignition switch to Bluetooth phone module (BPM) terminals #C1-31 and #C1-32. Check for an open-circuit. Check for loose connections. Check for contact resistance. Check for oxidation. Check the fuse. The voltage should be approx. the same as the battery voltage.

Ground terminal Bluetooth phone module (BPM)

The Bluetooth phone module (BPM) has two ground terminals.

- Ground inputs (#C1-15 and #C1-16) are both power ground and connected to the ground terminal in the car body.

Checking the ground terminal

Check the ground cable. Check for loose connections, contact resistance and oxidation. Check for an open-circuit. With the ignition on, the drop in voltage between the ground connection for the control module and the ground terminal must not be greater than 0.5 V.

Remedy as necessary.

Other information

- see **SIGNAL SPECIFICATION**
- see **CHECKING WIRING AND TERMINALS**

CHECKING THE VOLTAGE/GROUND TERMINAL, PHONE MODULE (PHM) (2006-12)

CHECKING THE SUPPLY VOLTAGE/GROUND TERMINAL

CHECKING THE POWER SUPPLY AND GROUND TERMINALS

Power supply, phone module (PHM)

The phone module (PHM) is powered via a power input on the control module.

Power input #A5 (#5) is supplied with +30 from the battery via a fuse. It will not be possible to activate the carphone if there is an open-circuit.

Checking the power supply

Check the power supply cable from the battery to phone module (PHM) terminal #A5 (#5). Check for an open-circuit. Check for loose connections. Check for contact resistance. Check for oxidation. Check the fuse. The voltage must be approximately battery voltage.

Ground terminal, phone module (PHM)

The phone module (PHM) has a ground input. The ground input from the control module is power ground and is connected to the ground terminal in the car body.

Checking the ground terminal

Check the ground lead between phone module (PHM) terminal #A6 (#6) and the ground terminal. Check for an open-circuit. Check for loose connections. Check for contact resistance. Check for oxidation. With the ignition on, the drop in voltage between the ground connection and the ground terminal must not be greater than 0.5 V.

Remedy as necessary.

Other information

- see **CONNECTING THE BREAKOUT BOX**
- see **SIGNAL SPECIFICATION**
- see **CHECKING WIRING AND TERMINALS**

CHECKING VOLTAGE/GROUND CONNECTION, PHONE MODULE (PHM) (2005)

CHECKING VOLTAGE/GROUND CONNECTION

From week 46 year 2004, a new diagnosis system was introduced for phone module (PHM) on XC90.

Vehicles built up to and incl. week 45 year 2004: **CHECKING THE VOLTAGE/GROUND TERMINAL**

Vehicles built from and incl. week 46 year 2004: **CHECKING VOLTAGE/GROUND CONNECTION**

CONNECTING THE BREAKOUT BOX, PHONE MODULE (PHM) (2003-04)

CONNECTING THE BREAKOUT BOX

Special tools:

see **9511463**

see **9511508**

see **9813190**

see **9512888**

GENERAL INFORMATION

Check that the male and female terminals on the connectors are undamaged and secure (cannot be pressed in). Check that the cables to the female terminals are secured to the terminal pins.

The breakout box is designed to facilitate reading off the control module input and output signals when the control module is connected, and the cable and component resistance when the control module is disconnected. The use of a breakout box reduces the risk of accidental short-circuited cables and damage to the connector pins.

CONNECTING THE BREAKOUT BOX

- Ignition off
- To expose the phone module (PHM) connectors, see **PHONE MODULE (PHM), REPLACING**
- To expose the handset connectors, see **HANDSET, REPLACING**
- To expose the connector for the SIM card reader, see **INFOTAINMENT CONTROL MODULE (ICM), REPLACING** .

Connect breakout box see **9813190** to the adapter.

Phone module (PHM)

- Connect adapter see **9511463** to control module connectors A and B
- For connector A, terminals #A1-#A22 correspond to terminals #1-#22 on the breakout box
- For connector B, terminals #B1-#B14 correspond to terminals #43-#56 on the breakout box.

Handset

- Connect adapter see **9511508** to the handset connector
- Terminals #1-#5 on the connector correspond to terminals #21-#25 on the breakout box.

SIM card holder

- Connect adapter see **9512888** to the SIM card holder connector
- Terminals #1-#6 on the connector correspond to terminals #21-#26 on the breakout box.

CONNECTING THE BREAKOUT BOX, PHONE MODULE (PHM) (2005)

CONNECTING THE BREAKOUT BOX

See **CONNECTING THE BREAKOUT BOX**

CONNECTING THE BREAKOUT BOX, PHONE MODULE (PHM) (2006-12)

CONNECTING THE BREAKOUT BOX

Special tools:

see **9511463**

see **9511508**

see **9511428**

see **9512888**

GENERAL INFORMATION

Check that the male and female terminals on the connectors are undamaged and secure (cannot be pressed in). Check that the cables to the female terminals are secured to the terminal pins.

The breakout box is designed to facilitate reading off the control module input and output signals when the control module is connected, and the cable and component resistance when the control module is disconnected. The use of a breakout box reduces the risk of accidentally short-circuiting cables and damaging the connector pins.

CONNECTING THE BREAKOUT BOX

- Ignition off
- For releasing the connectors from the Phone module (PHM), see

Connect breakout box see **9511428** to the adapter.

Phone module (PHM)

- Connect adapter see **9511463** to the control module connector A.
- Connect adapter see **9512888** to control module connector B.
- For connector A, terminals #A1-#A22 correspond to terminals #1-#22 on the breakout box
- For connector B, terminals #B1-#B6 correspond to terminals #21-#26 on the breakout box.

Handset

- Connect adapter see **9511508** to the handset connector.
- Terminals #1-#5 on the connector correspond to terminals #21-#25 on the breakout box.

SIM card holder

- Connect adapter see **9512888** to the SIM card holder connector.
- Terminals #1-#6 on the connector correspond to terminals #21-#26 on the breakout box.

Switch Volvo On Call

- Connect adapter see **9511508** to the connector for the switches.
- Terminals #1-#7 on the connector correspond to terminals #13-#19 on the breakout box.

Other information

- see **SIGNAL SPECIFICATION**
- see **HANDSET, REPLACING**
- see **SWITCH VOLVO ON CALL, REPLACING (2006-10)**

CHECKING THE VOLTAGE/GROUND TERMINAL, ANTENNA MODULE (ATM) (2003-06)

CHECKING THE POWER SUPPLY AND GROUND TERMINALS

Power supply, antenna module (ATM)

The antenna module (ATM) is powered via a power input on the control module.

Power input terminal #A1 is supplied with +30 from the battery via a fuse. It will not be possible to activate the antenna module (ATM) if there is an open-circuit.

Checking the power supply

Check the power supply cable from the battery to antenna module (ATM) terminal #A1. Check for an open-circuit. Check for loose connections. Check for contact resistance and oxidation. Check the fuse. The voltage should be approximately battery voltage.

Ground terminal, antenna module (ATM)

The antenna module (ATM) is connected to the chassis ground at fixed points in the body.

Checking ground terminal

Check that the casing on the antenna module (ATM) is properly connected to the body. Check for loose connections. Check for contact resistance and oxidation. With the ignition on, the drop in voltage between the mounting points for the control module and the body must not be greater than 0.5 V.

Remedy as necessary.

Other information:

- see **CONTENTS**
- For information about signals, see **SIGNAL SPECIFICATION**

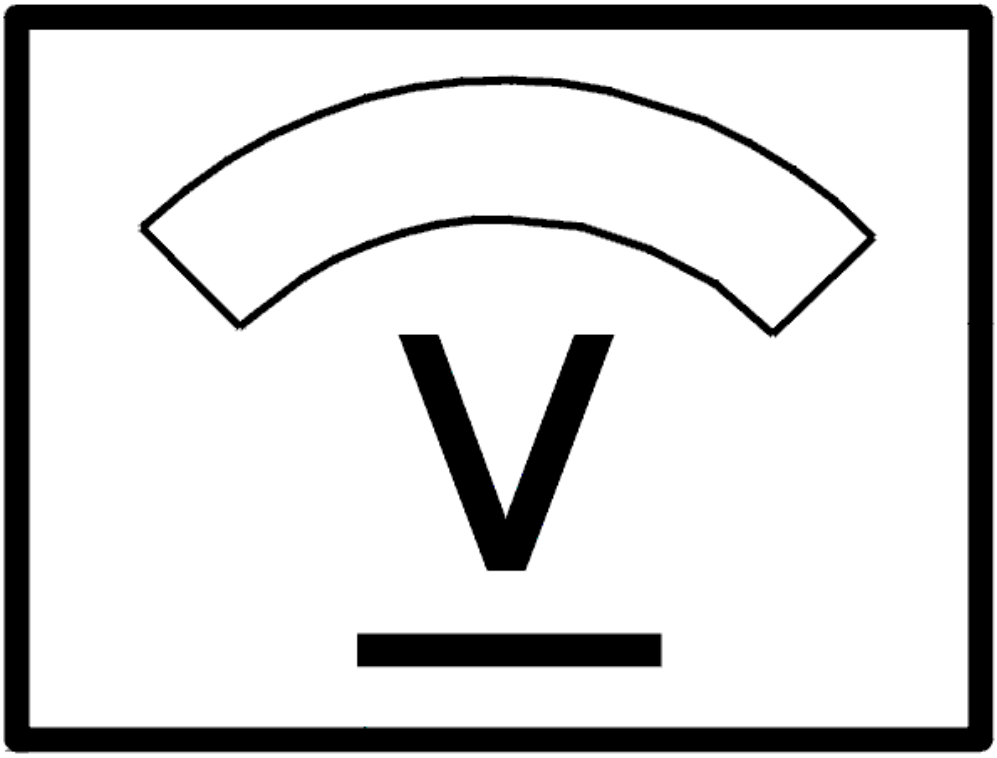

Fig. 13: Identifying Voltage Display
Courtesy of VOLVO CARS CORPORATION

CHECKING THE VOLTAGE/GROUND TERMINAL, SUBWOOFER MODULE (SUB) (2003-08)

CHECKING THE VOLTAGE/GROUND TERMINAL

CHECKING THE POWER SUPPLY AND GROUND TERMINALS

Power supply, Subwoofer module (SUB)

The Subwoofer module (SUB) is supplied with power via a power supply input on the control module.

When the ignition is on, the power input is powered and the Subwoofer module (SUB) is in active mode.

- Power input 1 (terminal #53 (#A3)) is supplied with power via a relay on the rear electronic module (REM). The relay is activated via a relay connected to the central electronic module (CEM). The relay on the rear electronic module (REM) is supplied with power from the battery via a fuse. The relay coil on the central electronic module (CEM) can be diagnosed and is supplied with power from the battery via a fuse. The Subwoofer module (SUB) will not be activated in the event of an open-circuit in any of the connections.

Checking the power supply

Check the power supply cable from the battery to the relay on the rear electronic module (REM) and from the relay for the Subwoofer module (SUB) terminal #53 (#A3). Check for an open-circuit. Check for loose connections. Check for contact resistance and oxidation. Check the fuse. The voltage must be approximately battery voltage when the ignition is on.

Check the cable from the relay on the central electronic module (CEM) to the relay on the rear electrical module (REM). Check for an open-circuit. Check for loose connections. Check for contact resistance and oxidation. Also check the fuse for the relay. The voltage must be approximately battery voltage when the ignition is on

Ground terminal Subwoofer module (SUB)

The Subwoofer module (SUB) has a ground input. The ground input from the control module is connected via a ground lead to the ground terminal in the car body.

- Ground input 1 (terminal #51 (#A1) is power ground and is connected to the ground terminal in the car body.

Checking ground terminal

Check the ground lead between subwoofer module (SUB) terminal #53 (#A3) and the ground terminal. Check for an open-circuit. Check for loose connections. Check for contact resistance and oxidation. With the ignition on, the drop in voltage between the ground connection for the subwoofer module (SUB) and the ground terminal must not be greater than 0.5 V.

Remedy as necessary.

Other information:

- see **CONTENTS**
- To connect the breakout box, see **CONNECTING THE BREAKOUT BOX**
- For information about signals, see **SIGNAL SPECIFICATION**

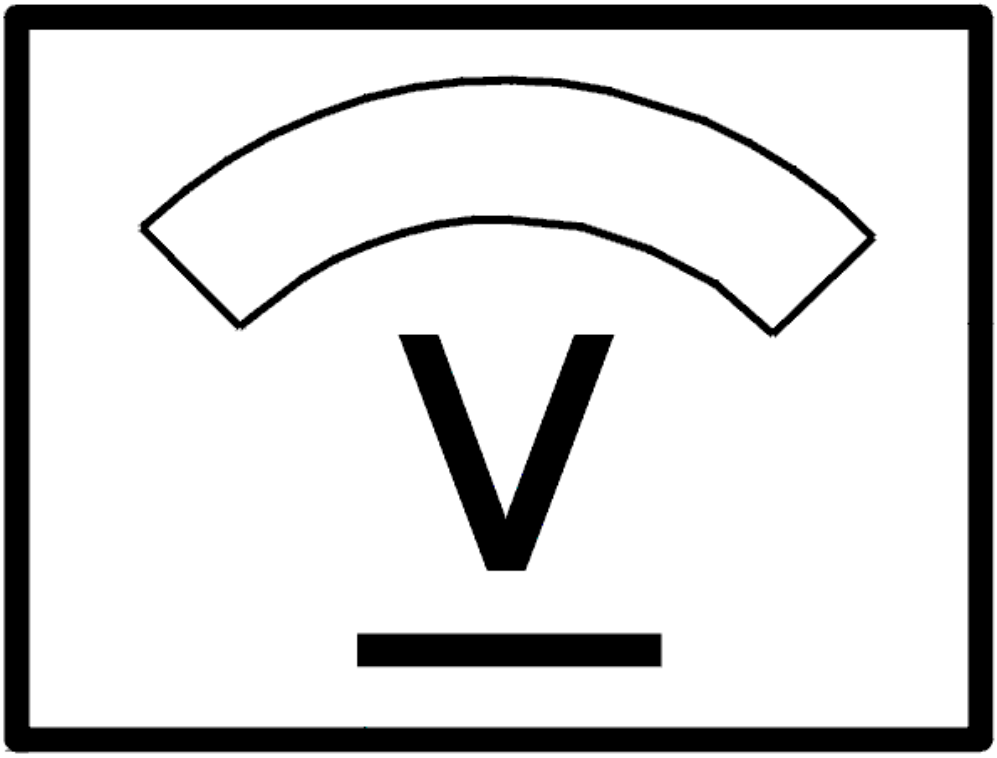

Fig. 14: Identifying Voltage Display
Courtesy of VOLVO CARS CORPORATION

CONNECTING THE BREAKOUT BOX, SUBWOOFER MODULE (SUB) (2003-08)

CONNECTING THE BREAKOUT BOX

Special tools:

see **9512843**

see **9511428**

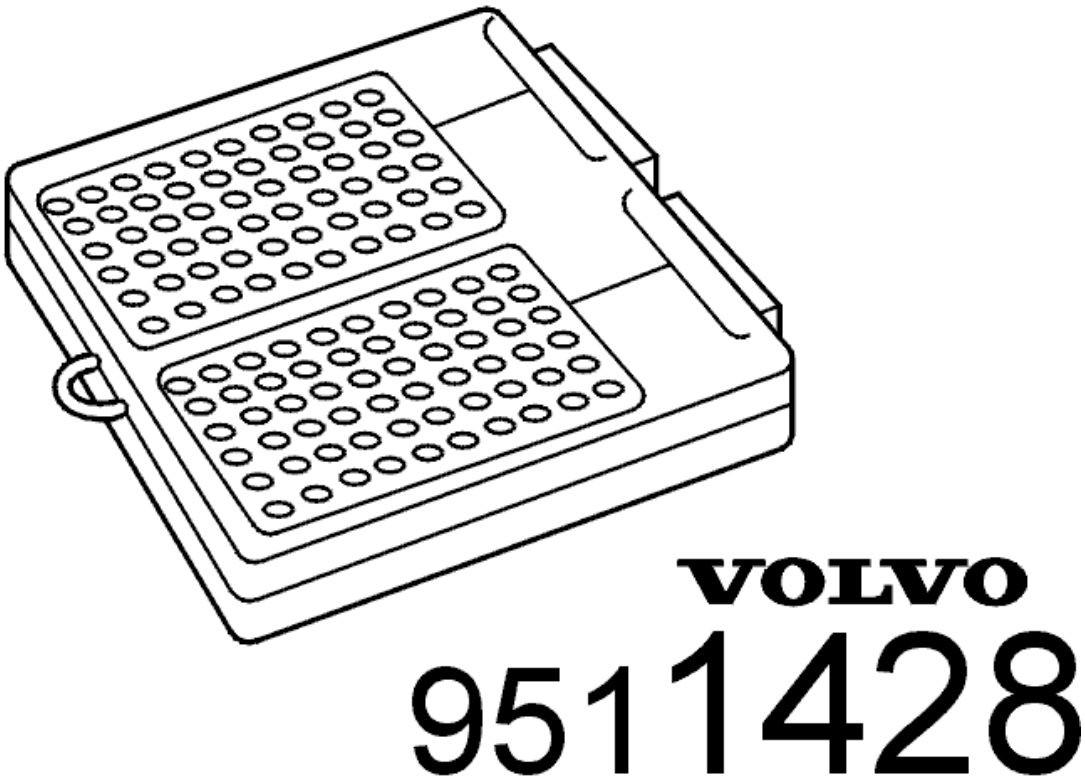

Fig. 15: Breakout Box. Accessory Electronic Module
Courtesy of VOLVO CARS CORPORATION

- Ignition off
- Expose the Subwoofer module (SUB).

Connect adapter see **9512843** to the control module connector (wiring side). Connect breakout box see **9511428** to the adapter. Subwoofer module (SUB) terminals #A1-#A4 correspond to terminals #51-#54 on the breakout box.

The breakout box is designed to facilitate reading off the control module input and output signals when the control module is connected and cable and component resistance when the control module is disconnected. The use of a breakout box reduces the risk of accidental short-circuited cables and damage to the connector pins

Disconnecting breakout box

In reverse order.

NOTE: **Before the control module can be checked and readings taken, the removed fuses must first be installed.**

Other information

- For information about signals, see **SIGNAL SPECIFICATION**

CHECKING THE SUPPLY VOLTAGE/GROUND TERMINAL, GLOBAL POSITIONING SYSTEM MODULE (GPS) (2007-12)

CHECKING THE SUPPLY VOLTAGE/GROUND TERMINAL

CHECKING THE POWER SUPPLY AND GROUND TERMINALS

Power supply, global positioning system module (GPS)

The global positioning system module (GPS) is powered via a power input on the control module.

1. The power input terminal #1 (#B1) is powered via a fuse from the central electronic module (CEM). It will not be possible to activate the global positioning system module (GPS) if there is an open-circuit.

Checking the power supply

Check the power supply cable from the battery to the central electronic module (CEM) and from the central electronic module (CEM) to global positioning system module (GPS) terminal #1 (#B1). Check for an open-circuit. Check for loose connections. Check for contact resistance. Check for oxidation. Check the fuse. The voltage must be approximately battery voltage when the ignition is on.

Ground terminal, global positioning system module (GPS)

The global positioning system module (GPS) has a ground input. The ground input from the control module is connected via a ground lead to the ground terminal in the car body.

- Ground input 1 (#B5) is power ground and connected to the ground connection in the body.

Checking the ground terminal

Check the ground cable between Global positioning system module (GPS) terminal (#B5) and the ground terminal. Check for an open-circuit. Check for loose connections. Check for contact resistance and oxidation. With the ignition on, the voltage drop between the global positioning system module (GPS) ground connection and chassis connection may not be greater than 0.5 V.

Remedy as necessary.

Other information

- see **LOCATION OF COMPONENTS**
- see **SIGNAL SPECIFICATION**
- see **CONTENTS**

ACCESSORIES AND BODY, CAB

Media, Communication And Navigation - General Information

GENERAL INFORMATION (2003-2012)

CONTROL MODULES

see **CONTROL MODULES**

ACCESSORIES AND BODY, CAB

Media, Communication And Navigation - General Safety Information

GENERAL SAFETY INFORMATION

BATTERY, CHARGING

see **BATTERY, CHARGING**

CLEANLINESS

see **CLEANLINESS**

IGNITION AND HIGH VOLTAGE COMPONENTS

see **IGNITION AND HIGH VOLTAGE COMPONENTS**

WHEN COMPRESSION TESTING

see **WHEN COMPRESSION TESTING**

ACCESSORIES AND BODY, CAB

Media, Communication And Navigation - Installation Instructions, Accessories

MULTIMEDIA MONITOR WITH DVD, DUAL SCREEN (2009-2012)

MULTIMEDIA MONITOR WITH DVD, DUAL SCREEN

NOTE: **There are two versions of cable harness for the tunnel console, with or without preparations for Digital TV receivers.**

The images in the installation instructions show cable harness without Digital TV receiver.

INSTALLATION

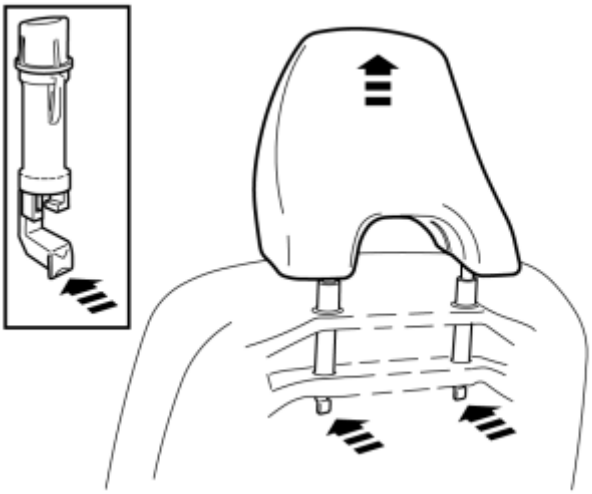

Fig. 1: Pressing In Catches And Pulling Headrest Upwards
Courtesy of VOLVO CARS CORPORATION

- Slide both the front seats all the way back and upwards all the way at the front and rear edge.
- Press the headrest downwards.
- Find the headrest's two locks on the back of the seat. Press in the catches and pull the headrest upwards at the same time.
- The seats may require lowering slightly at the rear edge again so that the headrest can be pulled out of the backrest completely. Therefore lower the seat as much as possible so that the headrest can be released and removed. Remove the headrest on both front seats and allow the seats to remain in the same position.

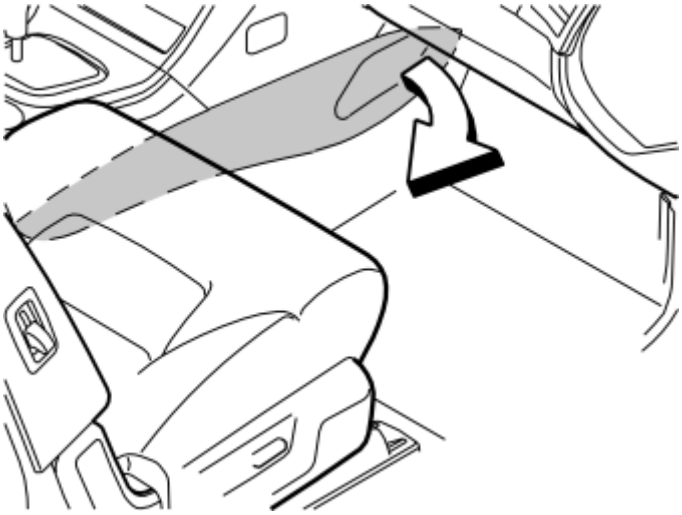

Fig. 2: Removing Tunnel Console Side Panels
Courtesy of VOLVO CARS CORPORATION

- Remove both the side panels from the tunnel console.

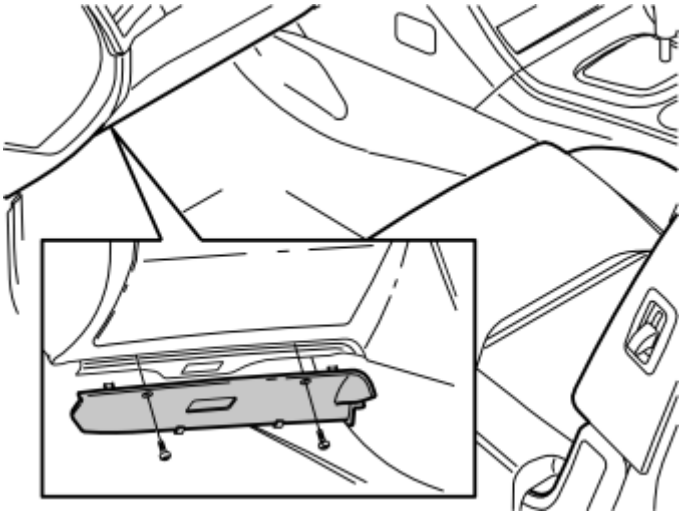

Fig. 3: Identifying Removal Of Soundproofing Panel
Courtesy of VOLVO CARS CORPORATION

- Remove the sound barrier on the driver's side by first removing the two screws and then prizing it away at the top edge.

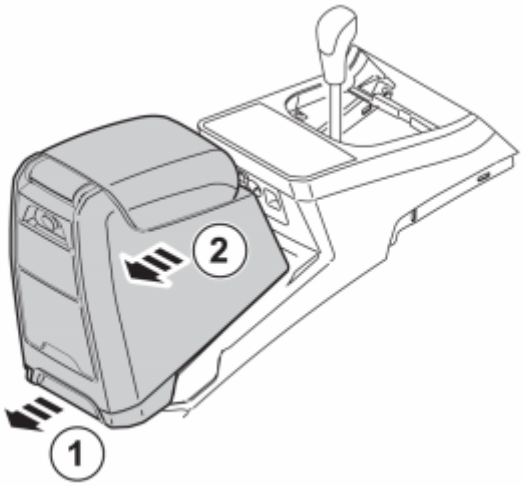

Fig. 4: Removing The Tunnel Compartment
Courtesy of VOLVO CARS CORPORATION

- Pull the handle (1), move the tunnel compartment backward and lift it away (2).

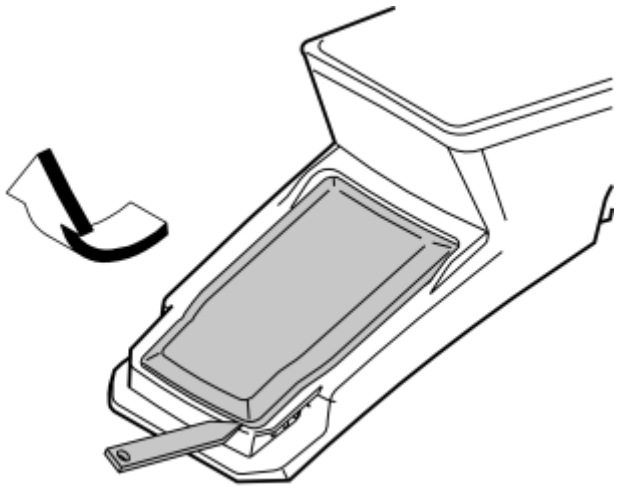

Fig. 5: Removing Cover
Courtesy of VOLVO CARS CORPORATION

- Remove the cover. It shall not be re-used.

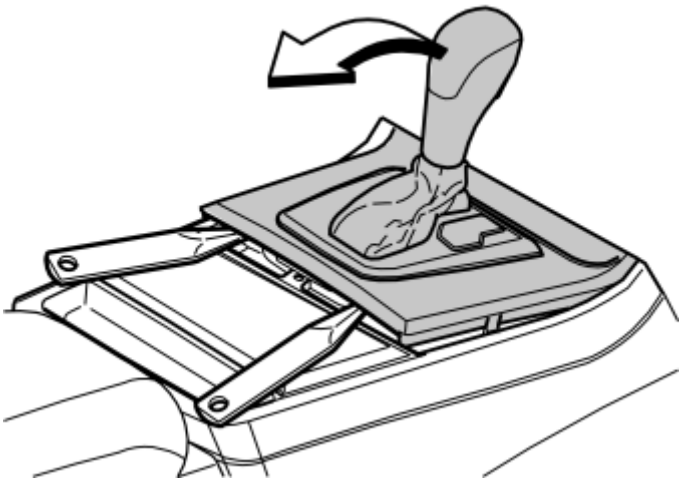

Fig. 6: Prying Off Gear Selector Panel At Rear Edge
Courtesy of VOLVO CARS CORPORATION

Applies to cars with automatic gearbox

- Turn the ignition key to position II.
- Move the gear selector lever to its rearmost position.
- Use a weatherstrip and pry off the gear selector panel at the rear edge.

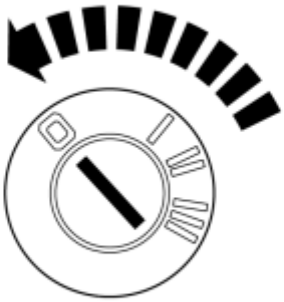

Fig. 7: Identifying Ignition Switch Turned To Position 0
Courtesy of VOLVO CARS CORPORATION

- Turn the ignition key to position 0.

NOTE: **Wait at least three minutes before unplugging the connectors or removing other electrical equipment.**

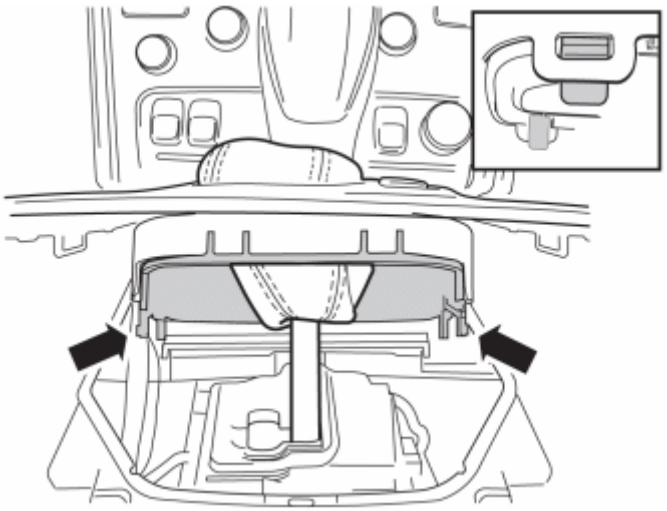

Fig. 8: Pressing In Catches And Removing Panel
Courtesy of VOLVO CARS CORPORATION

- Press in the catches underneath and remove the panel.

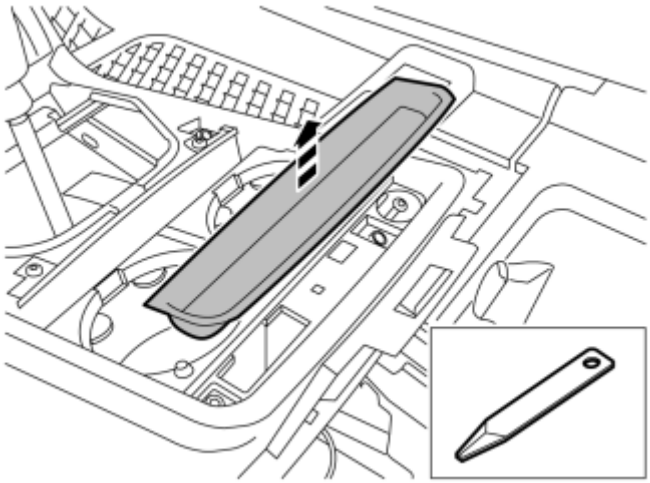

Fig. 9: Removing Small Storage Compartment
Courtesy of VOLVO CARS CORPORATION

- Remove the small storage compartment.

APPLIES TO CARS WITH TELEPHONE

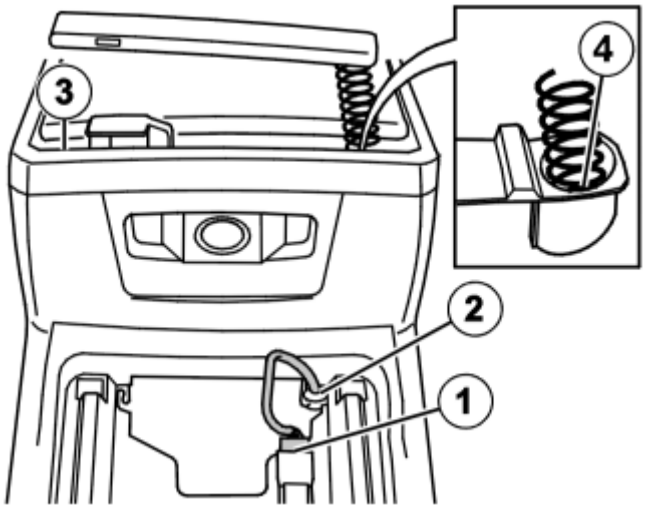

Fig. 10: Disconnecting Telephone Cable
Courtesy of VOLVO CARS CORPORATION

- Unhook and disconnect the connector (1).
- Disconnect the telephone cable from the load-removing grommet (2).
- Release the telephone cable.
- Remove the handset.
- Remove the screw (3).
- Push the catch to one side (4).
- Remove the telephone cradle.

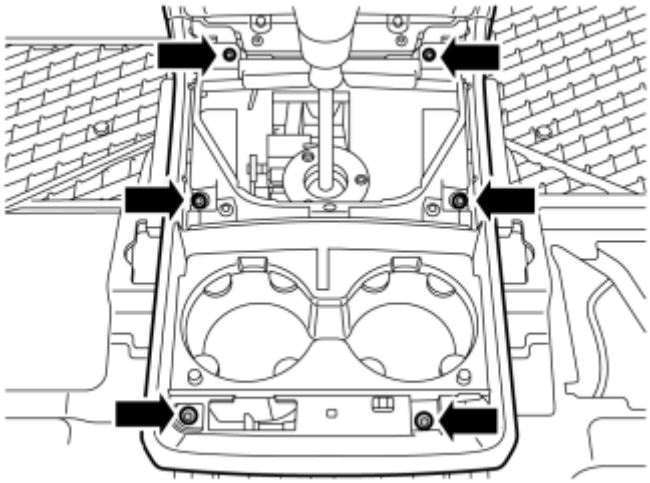

Fig. 11: Removing Tunnel Console Upper Section Screws
Courtesy of VOLVO CARS CORPORATION

- Remove the six screws.

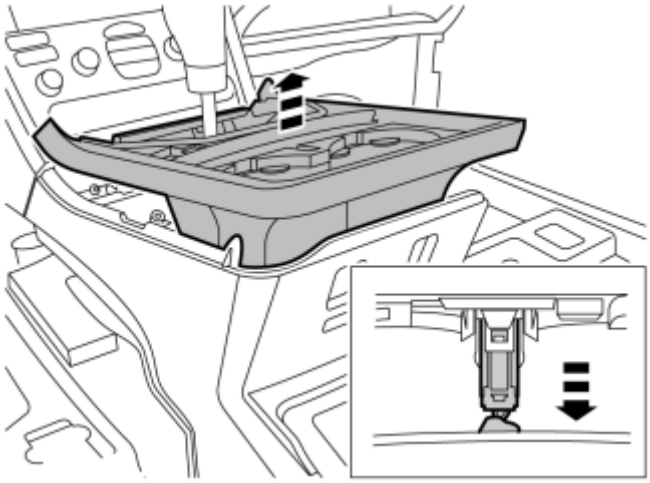

Fig. 12: Removing Tunnel Console Upper Section
Courtesy of VOLVO CARS CORPORATION

- Lift up and remove the upper section.
- At the same time disconnect the connector to the AUX socket.

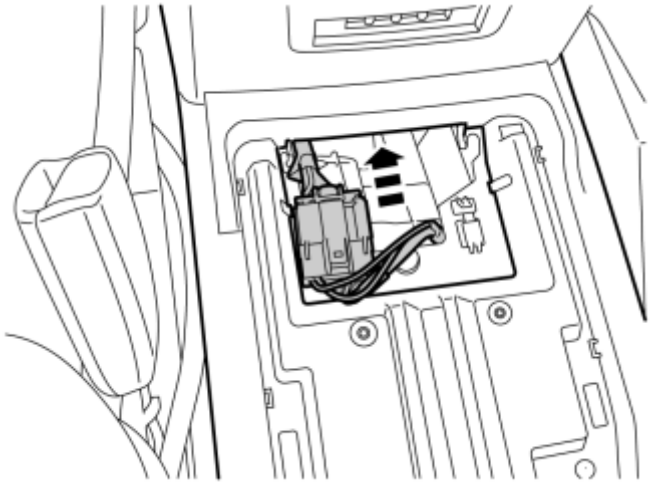

Fig. 13: Removing Connector
Courtesy of VOLVO CARS CORPORATION

- Disconnect the connector. Press in the catches and unhook it from the tunnel console.

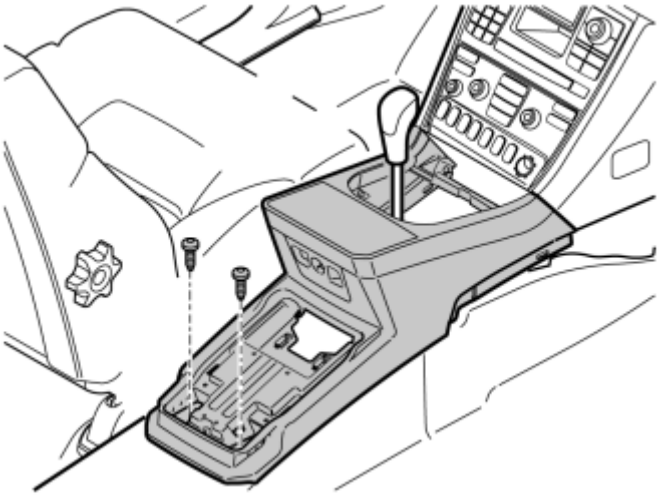

Fig. 14: Removing Tunnel Console
Courtesy of VOLVO CARS CORPORATION

- Remove the two screws and lift out the tunnel console.

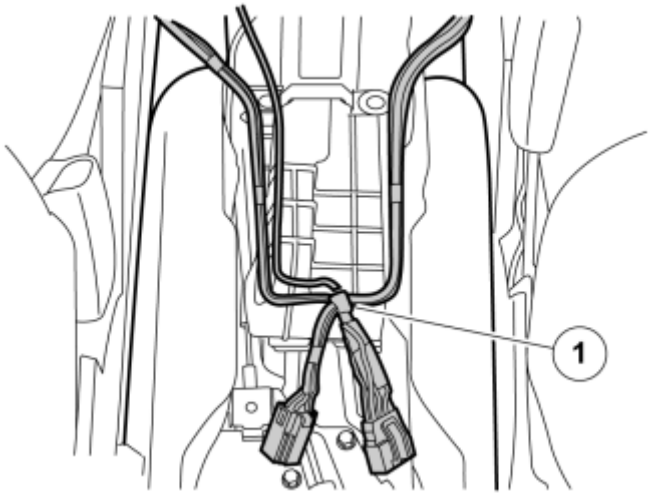

Fig. 15: Positioning Cable Harness
Courtesy of VOLVO CARS CORPORATION

- Take the cable harness (C) from the kit and position it as illustrated.
- The junction (1) must be at the rear edge of the SRS control module. The cable marked with blue tape must go to the right seat and the other to the left seat. The cable with 2 x 4 pin connectors must be routed forward on the driver's side.

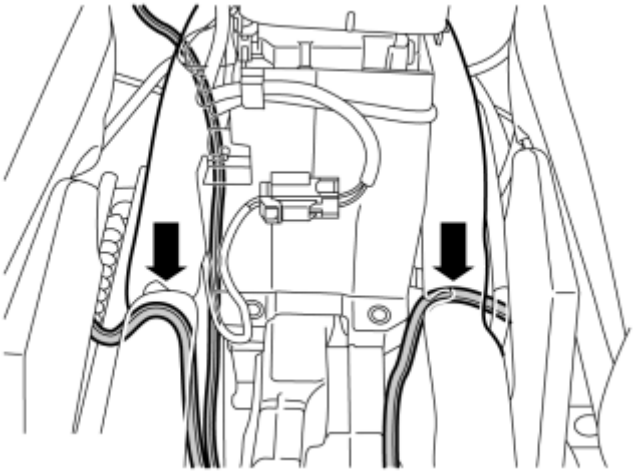

Fig. 16: Routing Cable
Courtesy of VOLVO CARS CORPORATION

- Route the cables in the join for the floor mats further along the seat rail.
- Position the cable in a loop under the seat.

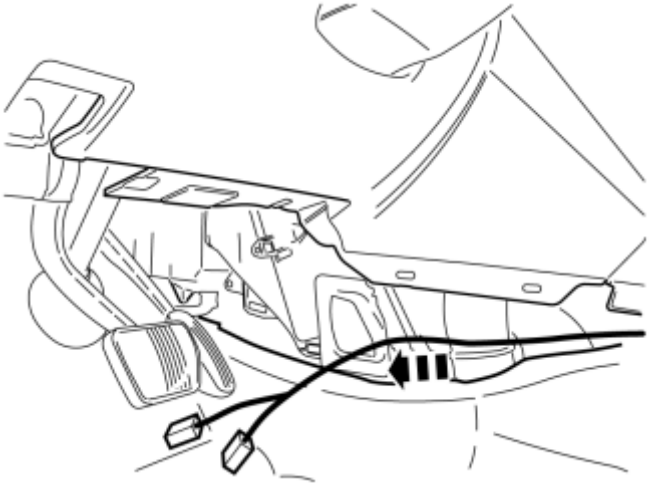

Fig. 17: Routing Cable
Courtesy of VOLVO CARS CORPORATION

- Take the cable with the two 4 pin connectors and route forward on the driver's side.

CARRY OUT ON BOTH SIDES OF THE SEATS

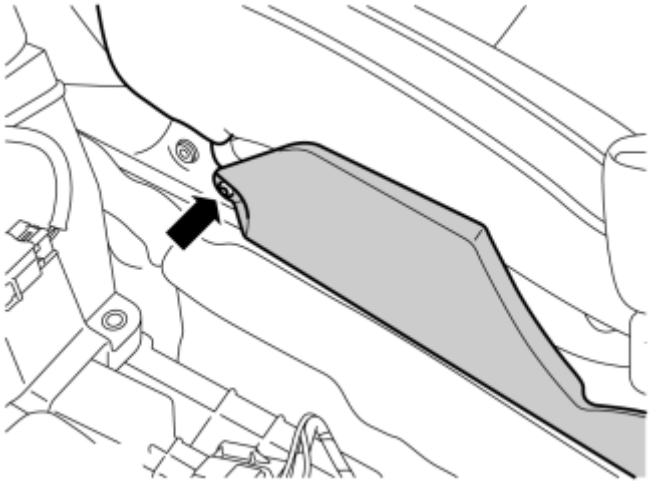

Fig. 18: Removing Seat Side Panel
Courtesy of VOLVO CARS CORPORATION

- Remove the screw for the seat's side panel.

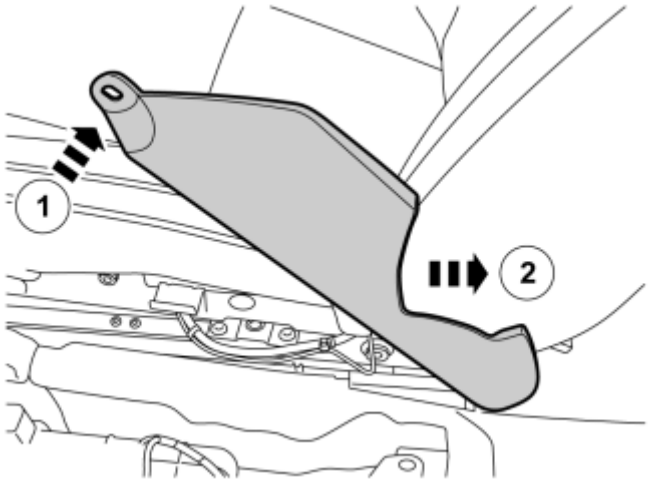

Fig. 19: Removing Panel
Courtesy of VOLVO CARS CORPORATION

- Turn the panel upwards at the front edge.
- Unhook it from the seat at the rear edge.

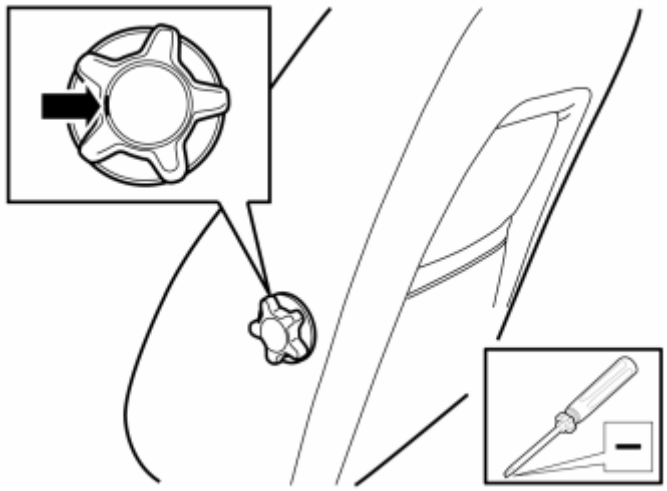

Fig. 20: Removing Lumbar Support Adjustment Knob
Courtesy of VOLVO CARS CORPORATION

- Remove the knob for the lumbar support adjustment by removing the cover using a small screwdriver and pull the knob straight off.

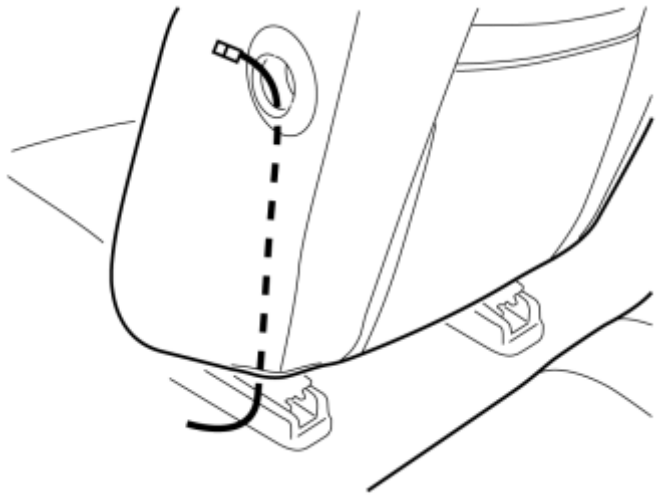

Fig. 21: Inserting Long Cable Tie For Adjusting Lumbar Support
Courtesy of VOLVO CARS CORPORATION

- Take a long cable tie from the kit and insert it through the hole for adjusting the lumbar support and inside the upholstery. The cable tie must be routed between the thin foam of the upholstery and the support pad.

Illustrations A and B

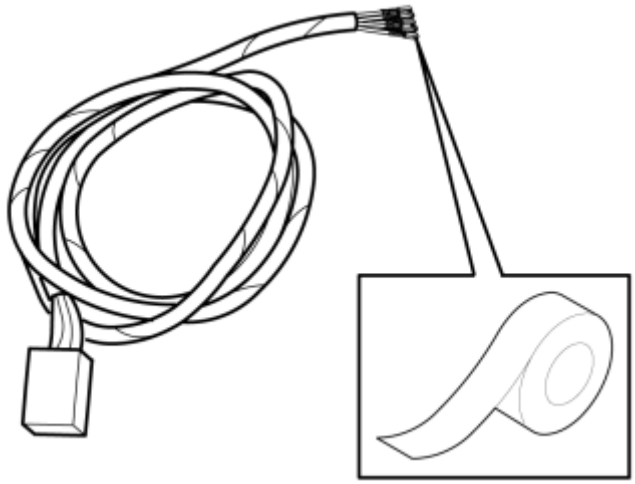

Fig. 22: Taping Cable Terminal Ends
Courtesy of VOLVO CARS CORPORATION

- Remove cable harness (A) from the kit.
- Tape the cable terminals on the cable tie. Tape together as flat as possible. (Image B) Route the cable harness through and out at the headrest hole.
- Remove the cable tie from the cable harness.

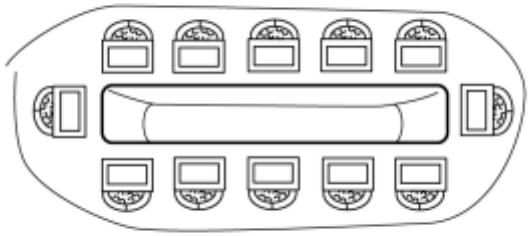

Fig. 23: Headrest Hole
Courtesy of VOLVO CARS CORPORATION

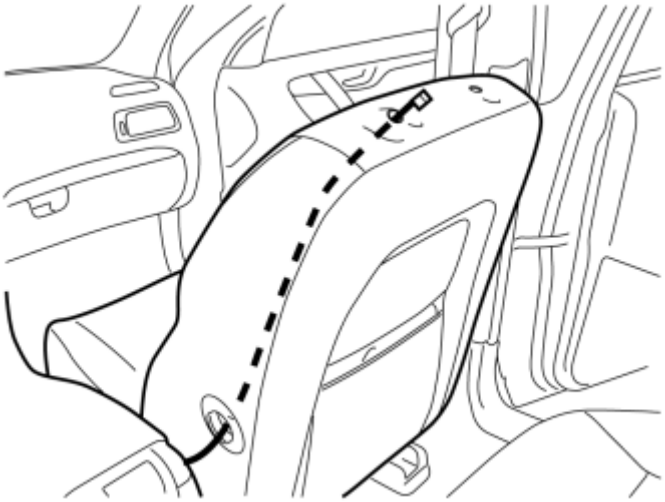

Fig. 24: Routing Cable
Courtesy of VOLVO CARS CORPORATION

Applies to the right-hand front seat

- Thread the cable tie from the headrest's inner mounting down to the hole for lumbar adjustment. The cable tie must be routed between the upholstery's thin foam and the protective pad (also, see image 29).

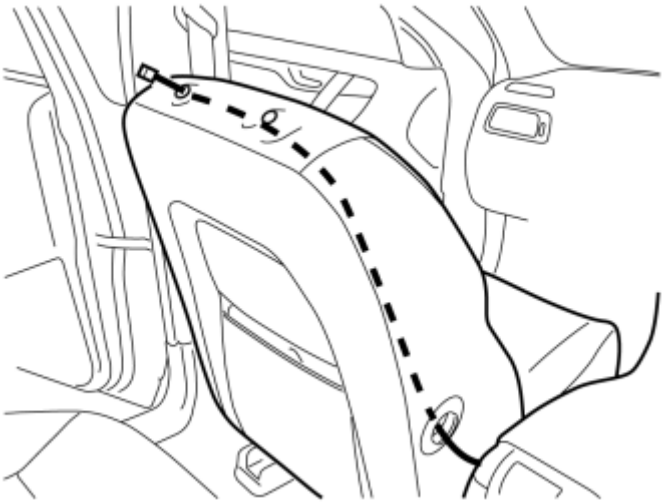

Fig. 25: Routing Cable
Courtesy of VOLVO CARS CORPORATION

Applies to the left-hand front seat.

- Thread the cable tie from the headrest's outer mounting down to the hole for lumbar adjustment. The cable tie must be routed between the upholstery's thin foam and the protective pad.

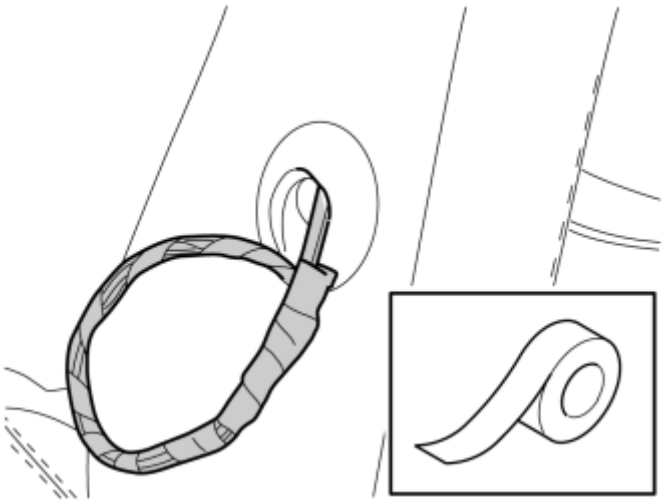

Fig. 26: Taping And Routing Cable
Courtesy of VOLVO CARS CORPORATION

Applies to both seats

- Tape the cable harness on the cable tie. Tape as flat as possible.
- Pull it up towards the upper edge of the seat and out through the hole for the headrest.
- Remove the cable tie and tape from the cable harness.

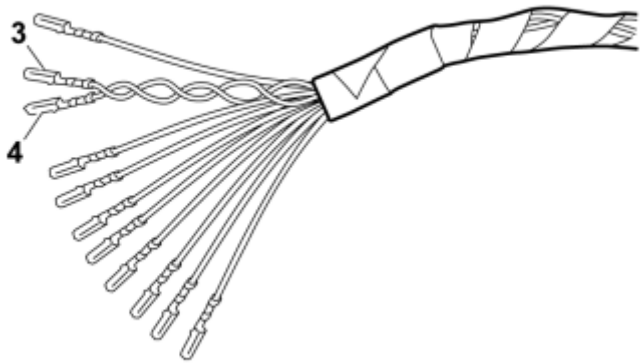

Fig. 27: Cable Harness Terminal Identification
Courtesy of VOLVO CARS CORPORATION

CAUTION: There are two brown cables in the cable harness.

The brown cable to terminal 4 is twinned with the blue cable to terminal 3.

Position:

1. Not connected.
2. White (W)
3. Blue (BL)
4. Brown (BN)
5. Red/White (R/W)
6. Red (R)
7. Black (SB)
8. Brown (BN)
9. Yellow (Y)
10. Green (GN)
11. Gray (GR)
12. Pink (P)

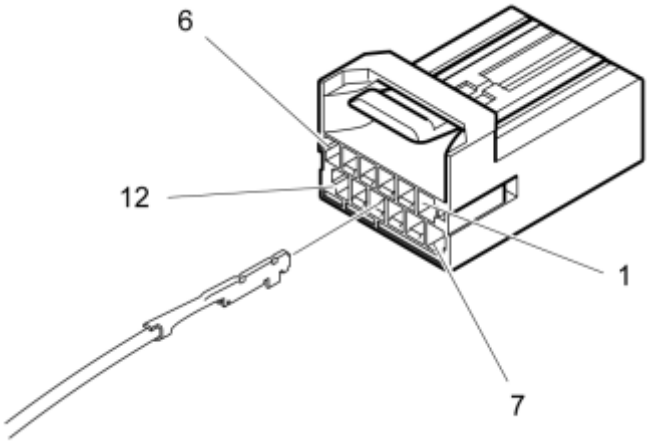

Fig. 28: Connecting Cable Harness Terminals
Courtesy of VOLVO CARS CORPORATION

- Take the grey connector from the kit. Connect the cable harness terminals.
- Press in the connector's catch.

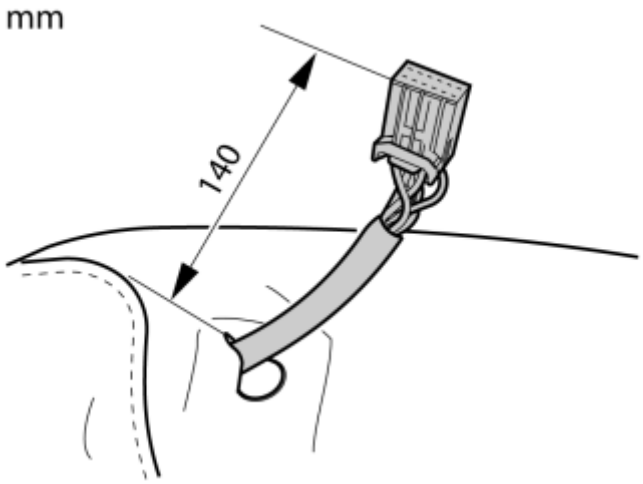

Fig. 29: Adjusting Cable Harness Length
Courtesy of VOLVO CARS CORPORATION

- Adjust the length on the cable harness so that the connector protrudes **140mm** . The cable harness must be positioned in front of the hole for the headrest.

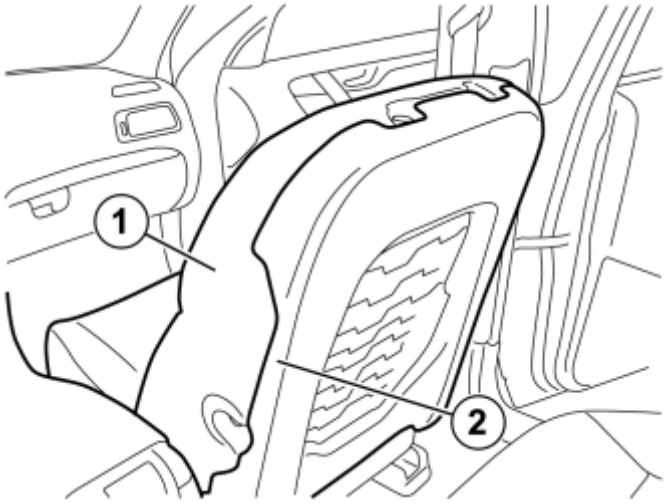

Fig. 30: Installing Cable Harness Under Protective Pad
Courtesy of VOLVO CARS CORPORATION

- Using your fingers, press the cable harness under the protective pad, the cable harness must not press out the upholstery after installation.
    1. 1. Padding
    2. 2. Protective pad

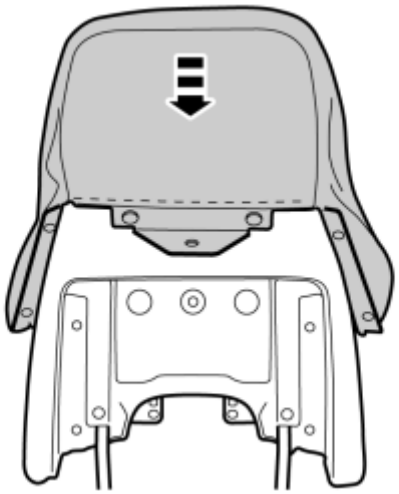

Fig. 31: Pulling Upholstery Over Headrest
Courtesy of VOLVO CARS CORPORATION

- Take the headrest and the upholstery from the kit. Pull the upholstery over the headrest.

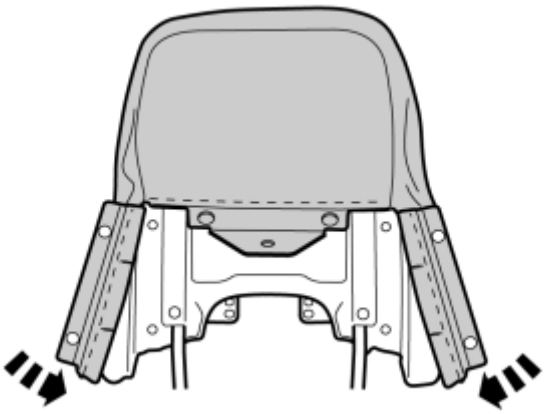

Fig. 32: Pulling Upholstery Corners Over
Courtesy of VOLVO CARS CORPORATION

- Pull the two corners of the upholstery over.

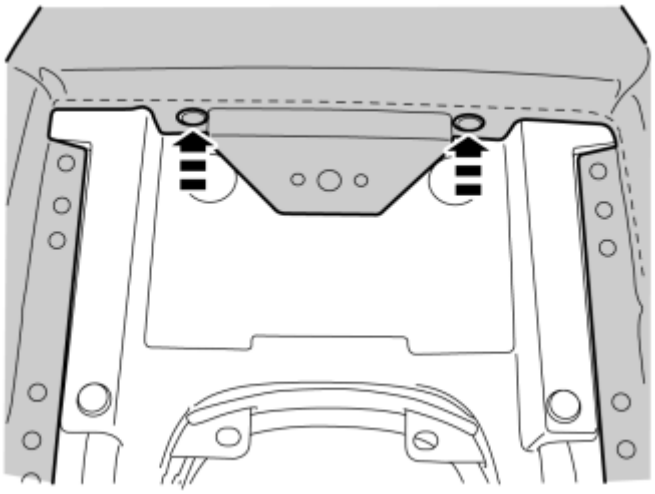

Fig. 33: Installing Upholstery Onto Cutouts
Courtesy of VOLVO CARS CORPORATION

- Hook the upholstery onto the two cutouts.

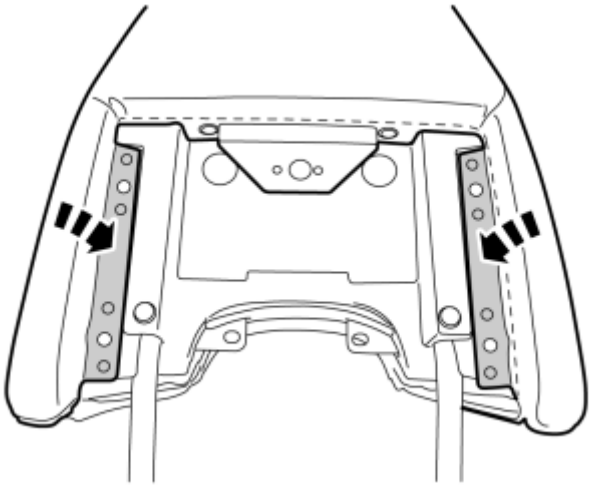

Fig. 34: Upholstery Reinforcements
Courtesy of VOLVO CARS CORPORATION

- Fold in the upholstery's two reinforcements.

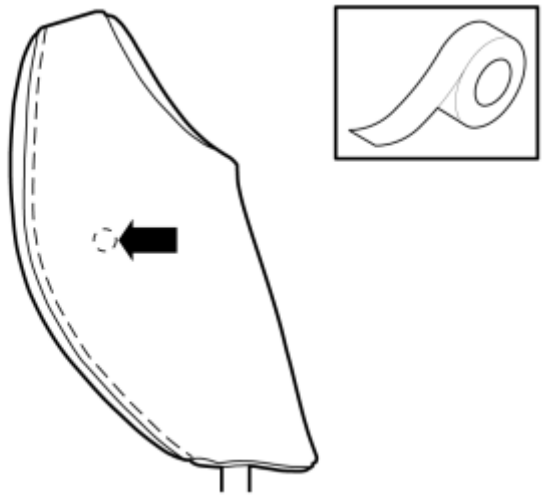

Fig. 35: Identifying Hole Under Upholstery
Courtesy of VOLVO CARS CORPORATION

- Fold up the upholstery's reinforcement.
- Locate the hole under the upholstery on the side of the headrest.

NOTE: The inward facing side in the car.

- Make a mark for making a hole using a piece of tape.
- Fold back the upholstery's reinforcement.

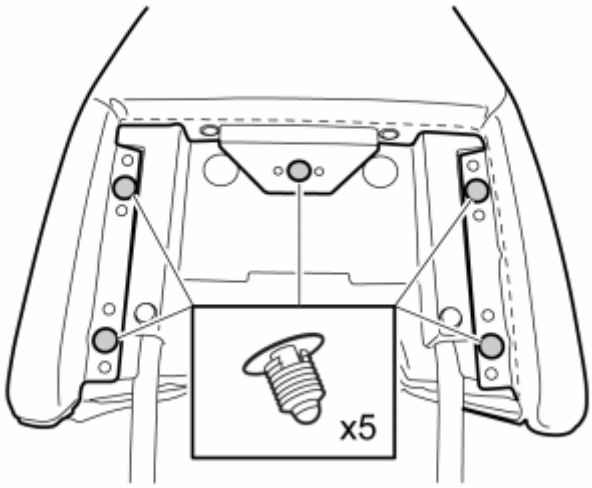

Fig. 36: Installing Clips
Courtesy of VOLVO CARS CORPORATION

- Install the 5 clips.

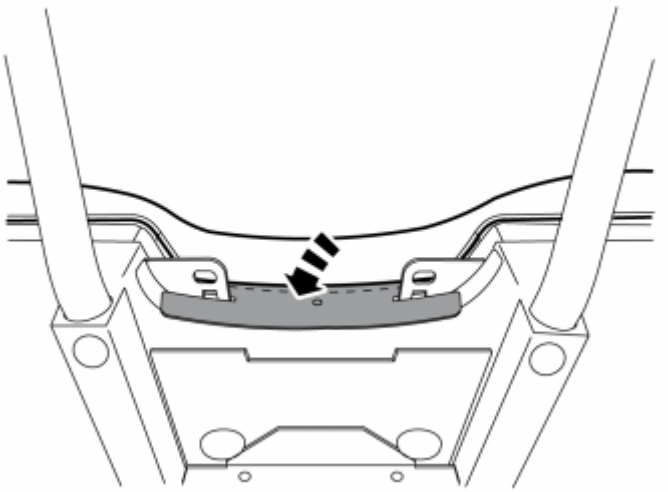

Fig. 37: Folding In Upholstery's Mounting
Courtesy of VOLVO CARS CORPORATION

- Fold in the upholstery's mounting.

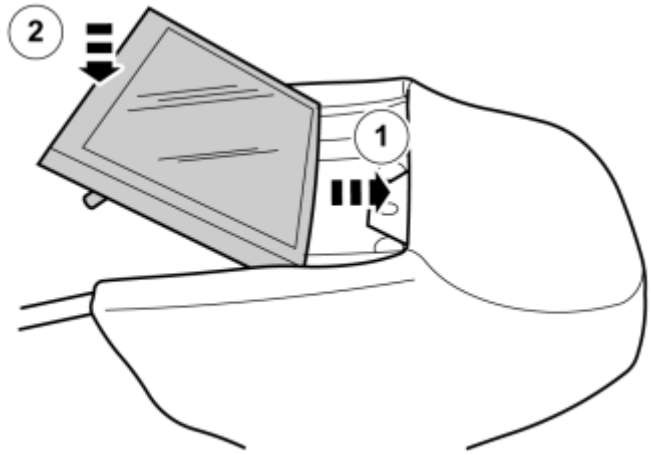

Fig. 38: Installing Display In Headrest
Courtesy of VOLVO CARS CORPORATION

- Take the display from the kit.
- Install on the headrest.

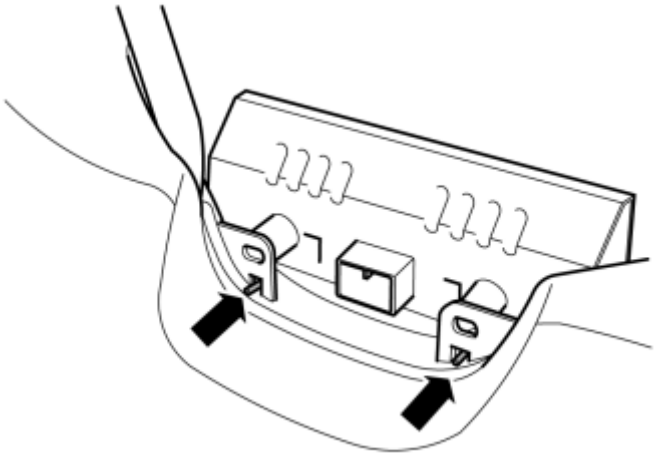

Fig. 39: Aligning Display In Headrest's Cutouts
Courtesy of VOLVO CARS CORPORATION

- Align the display in the headrest's two cutouts.

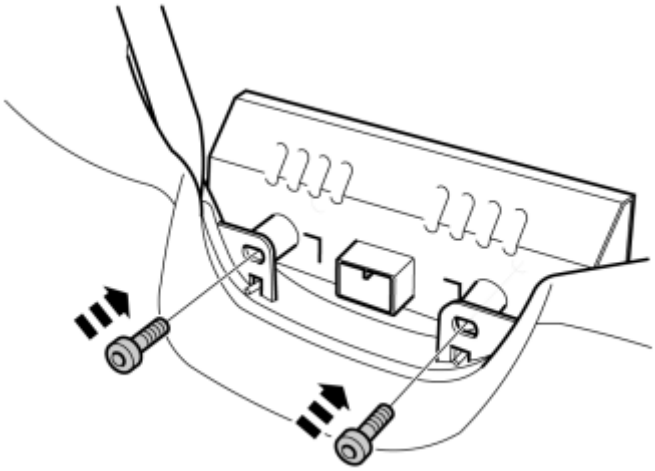

Fig. 40: Installing Headrest Display
Courtesy of VOLVO CARS CORPORATION

- Install the two screws.

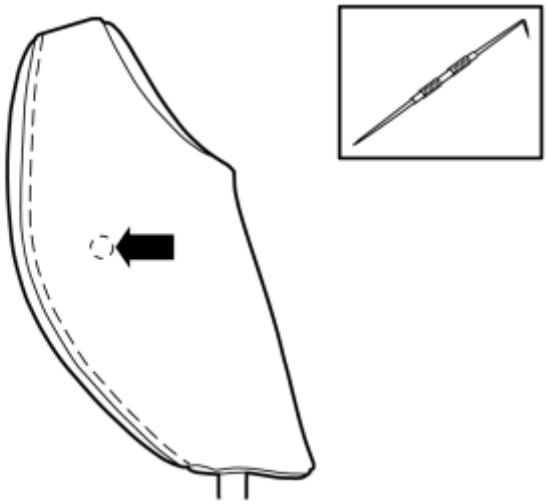

Fig. 41: Identifying Hole Under Upholstery
Courtesy of VOLVO CARS CORPORATION

- Locate the hole under the upholstery on the headrest side, marked with tape.
- Make a hole in the upholstery using a scriber or an awl.

NOTE: The inward facing side in the car.

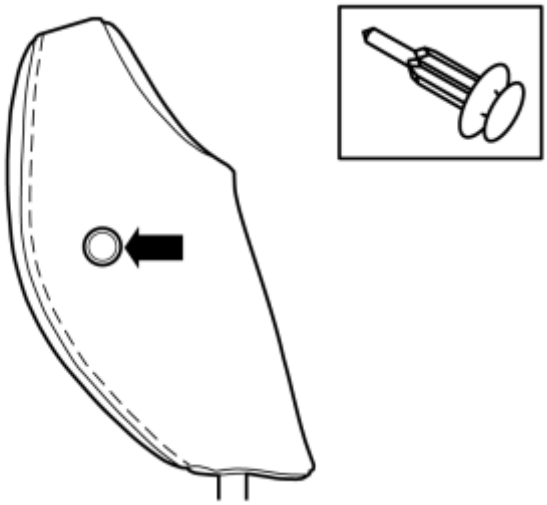

Fig. 42: Installing Coat Hook
Courtesy of VOLVO CARS CORPORATION

- Take the coat hook from the kit.
- Press into the hole.
- Tap it in lightly using a plastic hammer so that it secures properly.

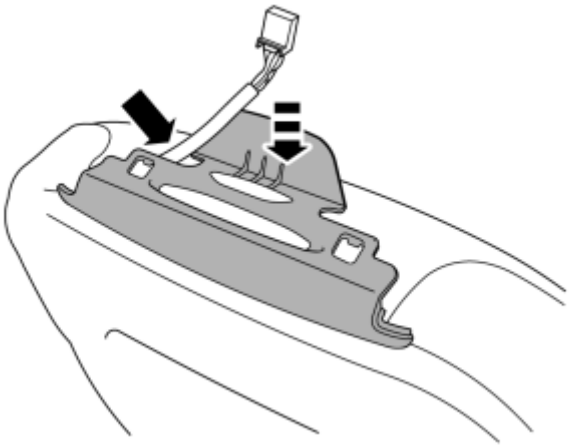

Fig. 43: Positioning Cable Harness In The Panel Cutout
Courtesy of VOLVO CARS CORPORATION

- Position the panel on the seat.
- Position the cable harness in the panel's cutout.

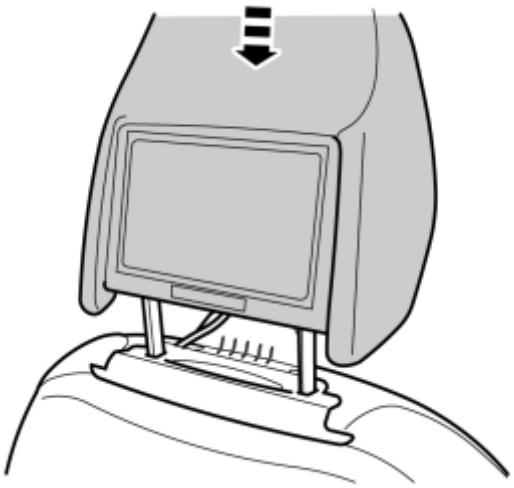

Fig. 44: Installing Headrest
Courtesy of VOLVO CARS CORPORATION

- Install the headrest on the seat.
- Only slide it down so that the distance between the seat and lower edge of the headrest is approximately **50mm** .

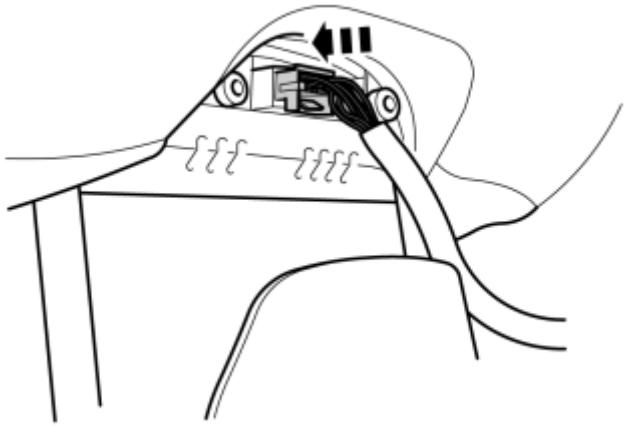

Fig. 45: Connecting Headrest Connector
Courtesy of VOLVO CARS CORPORATION

- Connect the connector and push the headrest down to the locked position.
- Check that the head restraint has locked into place by pulling it upwards.

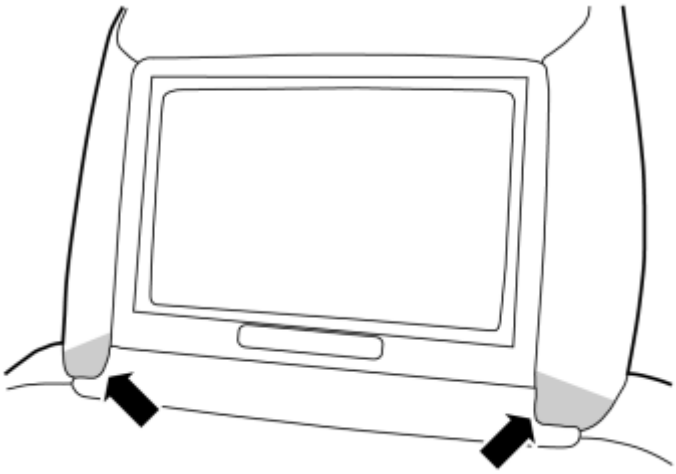

Fig. 46: Checking Headrest For Correct Alignment
Courtesy of VOLVO CARS CORPORATION

- Check that the headrest upholstery is correctly aligned against the panel.
- Repeat steps 18-45 for the other side.

APPLIES TO THE RIGHT-HAND FRONT SEAT AND CARS WITHOUT HEATED SEATS

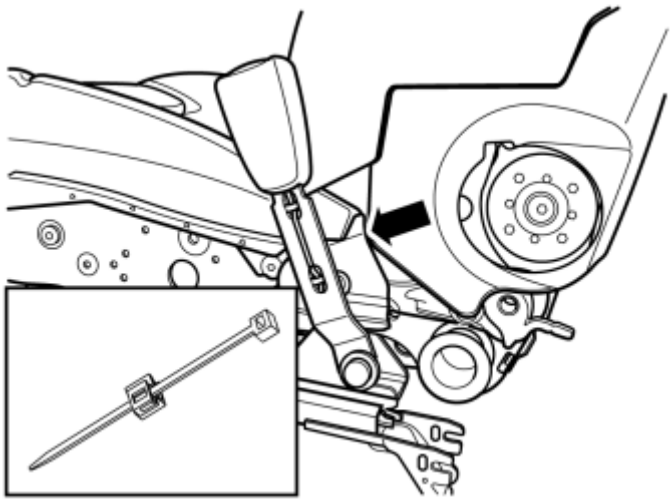

Fig. 47: Installing Clip With Cable Tie On The Plate Edge
Courtesy of VOLVO CARS CORPORATION

- Take a clip with cable tie from the kit and install it on the plate edge on the left-hand side of the right-hand seat.

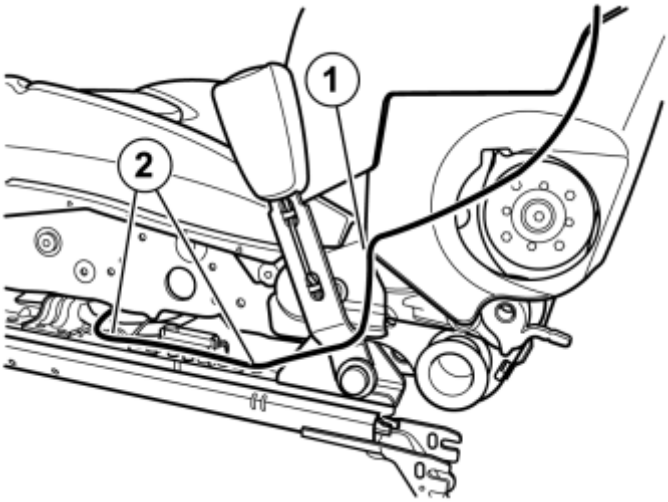

Fig. 48: Route And Secure Cable Under Seat
Courtesy of VOLVO CARS CORPORATION

- Take the cable harness from the headrest and pull forward, in underneath the seat. Follow the cable harness for the seat belt buckle.
- Tighten the cable tie (1).
- Secure the cable using two cable ties (2).

APPLIES TO THE RIGHT-HAND FRONT SEAT AND CARS WITH HEATED SEATS

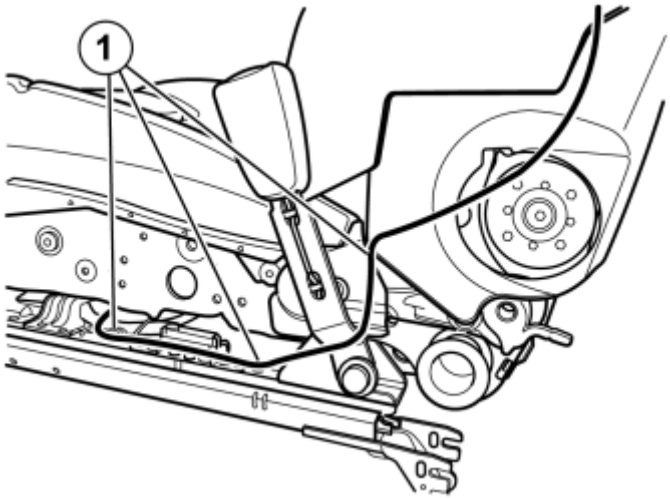

Fig. 49: Route And Secure Cable Under Seat
Courtesy of VOLVO CARS CORPORATION

- Take the cable harness from the headrest and pull forward, in underneath the seat. Follow the cable harness for the heating element.
- Secure the cable using three cable ties (1).

APPLIES TO THE RIGHT-HAND FRONT SEAT

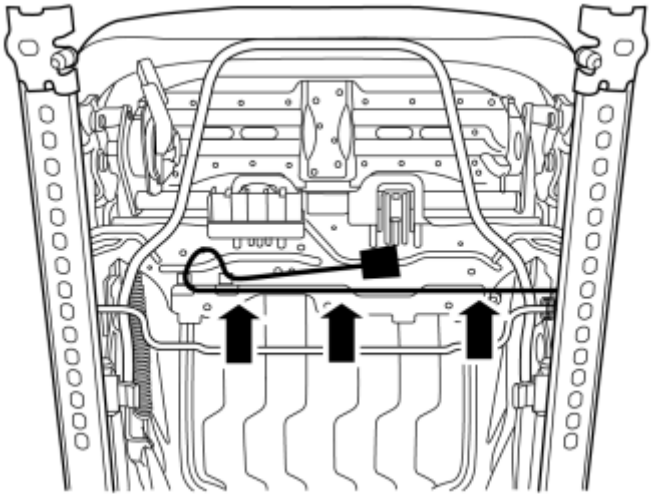

Fig. 50: Route And Secure Cable Under Seat
Courtesy of VOLVO CARS CORPORATION

- Route the cable harness in an arc under the seat.
- Secure it using three cable ties in the existing cable harness.

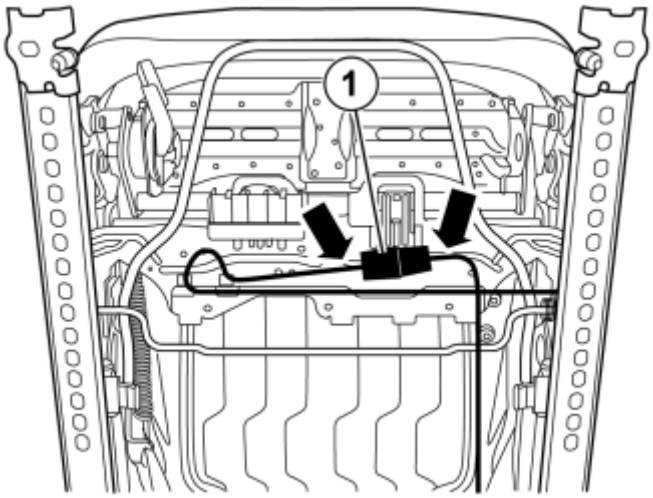

Fig. 51: Route And Secure Cable Under Seat
Courtesy of VOLVO CARS CORPORATION

- Take a piece of foam tape from the kit and cut it in the center.
- Fold the seat forward slightly and connect the cable harness from the floor to the connector (1).
- Tape one cut piece of foam tape around the connectors.
- Place a cable tie on each side of the connectors and tighten.
- Check that the cable harness is not trapped when the seat is slid forwards and backwards.

The right-hand seat means the passenger seat

- Fold the backrest forward and backwards and check that the cable harness is not trapped when folding the backrest.

APPLIES TO THE LEFT-HAND SEAT AND CARS WITHOUT HEATED SEATS

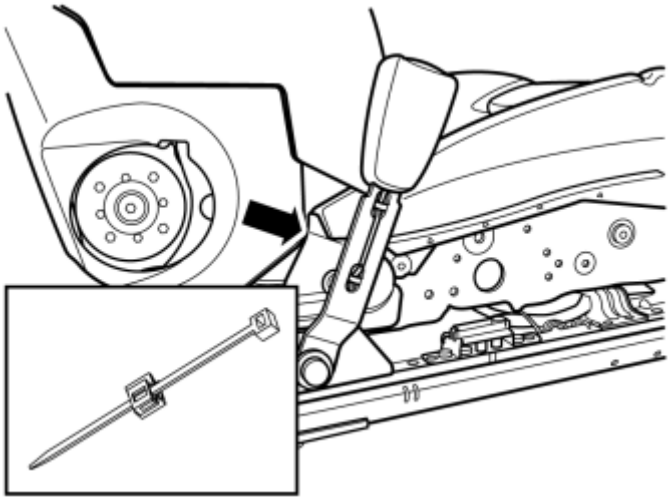

Fig. 52: Installing Clip With Cable Tie On The Plate Edge
Courtesy of VOLVO CARS CORPORATION

- Take a clip with cable tie from the kit and install it on the plate edge on the right-hand side of the left-hand seat.

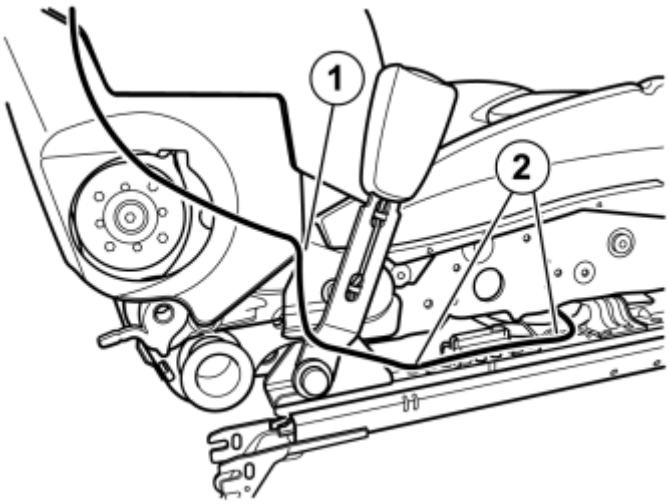

Fig. 53: Route And Secure Cable Under Seat
Courtesy of VOLVO CARS CORPORATION

- Take the cable harness from the headrest and pull forward, underneath the seat. Follow the cable harness for the seat belt buckle.
- Tighten the cable tie (1).
- Secure the cable using two cable ties (2).

APPLIES TO THE LEFT-HAND FRONT SEAT AND CARS WITH HEATED SEATS

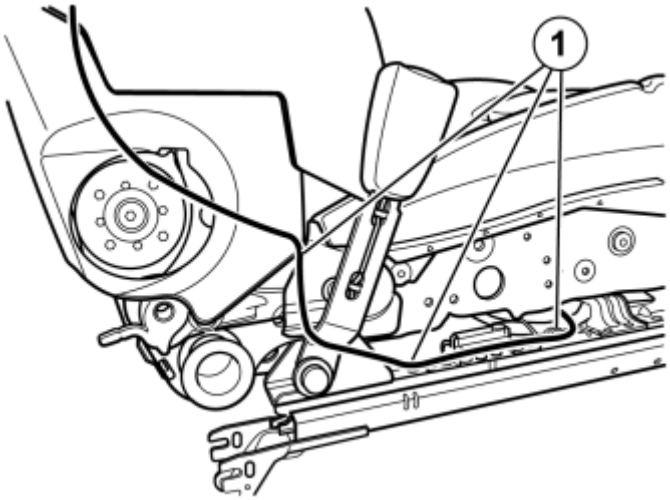

Fig. 54: Route And Secure Cable Under Seat
Courtesy of VOLVO CARS CORPORATION

- Take the cable harness from the headrest and pull forward, in underneath the seat. Follow the cable harness for the heating element.

- Secure the cable using three cable ties (1).

APPLIES TO THE LEFT-HAND FRONT SEAT.

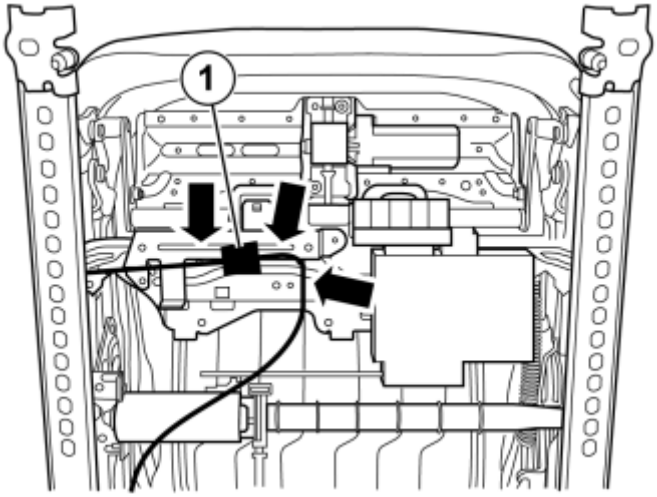

Fig. 55: Route And Secure Cable Under Seat
Courtesy of VOLVO CARS CORPORATION

- Route the cable harness under the seat.
- Connect the cable harness from the floor to the connector (1).
- Secure it using a cable tie in the existing cable harness or in a bracket.
- Tape one cut piece of foam tape around the connectors.
- Place a cable tie on each side of the connectors and tighten.
- Check that the cable harness is not trapped when the seat is slid forwards and backwards.

The left-hand seat means the passenger seat

- Fold the backrest forward and backwards and check that the cable harness is not trapped when folding the backrest.

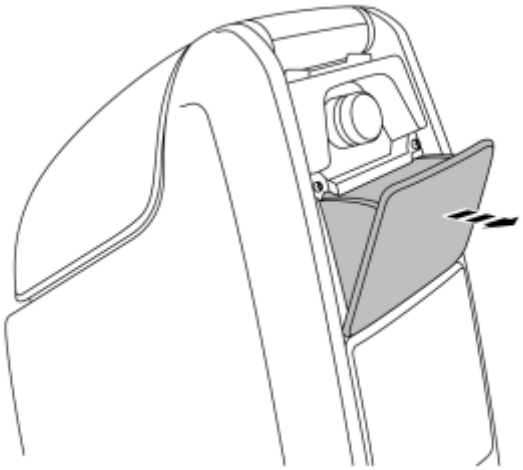

Fig. 56: Removing Ashtray
Courtesy of VOLVO CARS CORPORATION

- Fold the ashtray out, press it down and remove

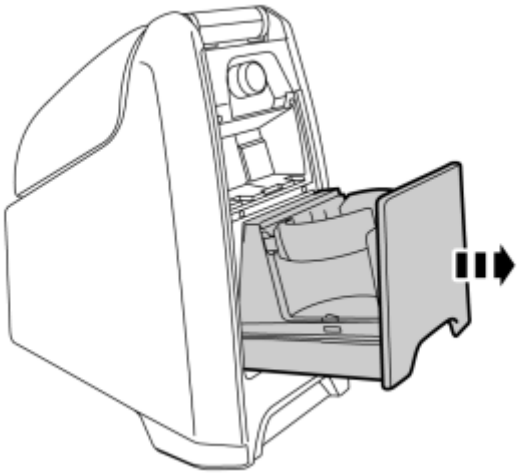

Fig. 57: Pulling Out Cup Holder To It's Position Limit
Courtesy of VOLVO CARS CORPORATION

- Pull out the cup holder to its limit position.

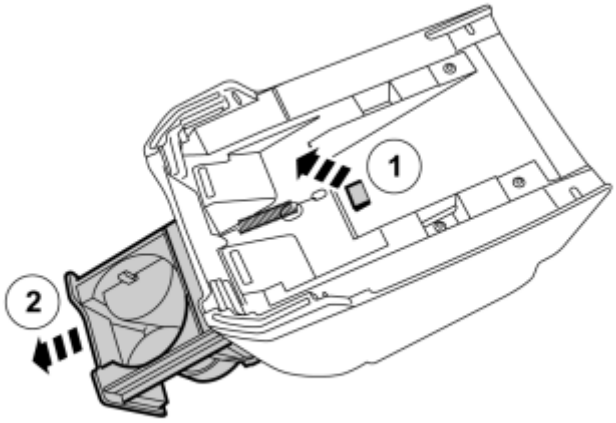

Fig. 58: Removing The Cup Holder
Courtesy of VOLVO CARS CORPORATION

- Turn the tunnel console.
- Lift up the catch and remove the cup holder.

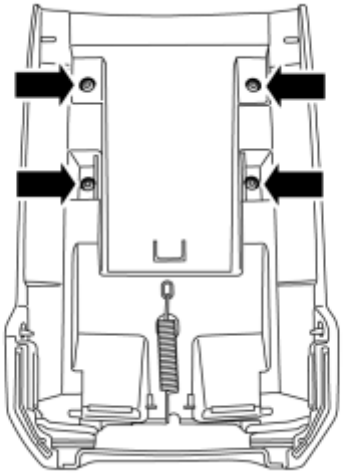

Fig. 59: Removing The Lower Section's Four Screws
Courtesy of VOLVO CARS CORPORATION

- Remove the four screws.

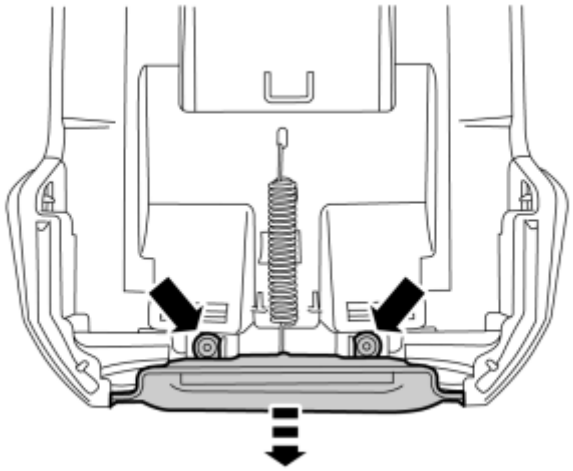

Fig. 60: Removing The Lower Section
Courtesy of VOLVO CARS CORPORATION

- Pull the opening handle.
- Remove the two screws and lift off the lower section.

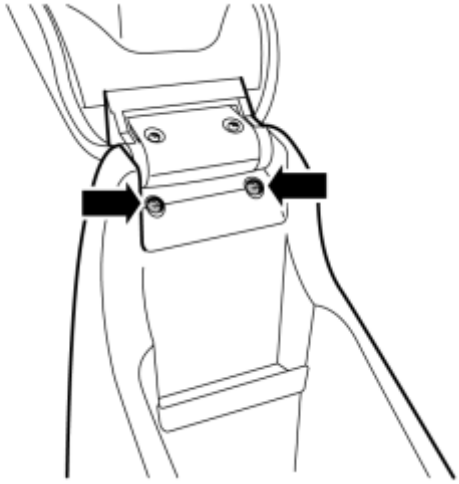

Fig. 61: Removing Console Cover
Courtesy of VOLVO CARS CORPORATION

- Fold the cover up and remove the two screws.
- Remove the cover by sliding it forward. The cover will not be reused.

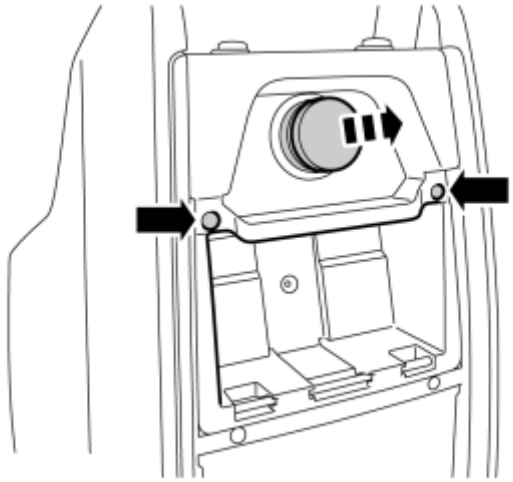

Fig. 62: Removing 12V Socket Plug
Courtesy of VOLVO CARS CORPORATION

- Remove the plug for the 12 V socket.
- Remove the two rubber supports.

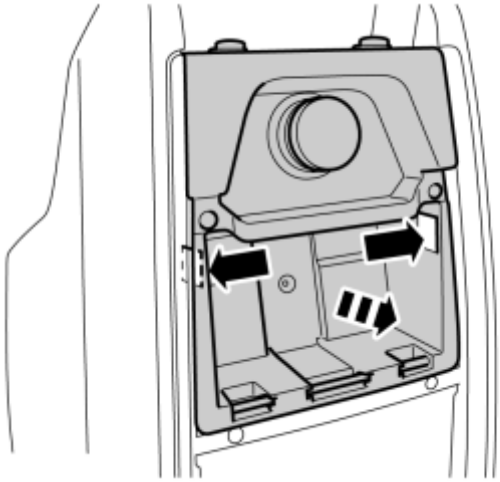

Fig. 63: Removing Inner Section Of Ashtray
Courtesy of VOLVO CARS CORPORATION

- Lift up the two catches and remove the inner section of the ashtray. It will not be reused.

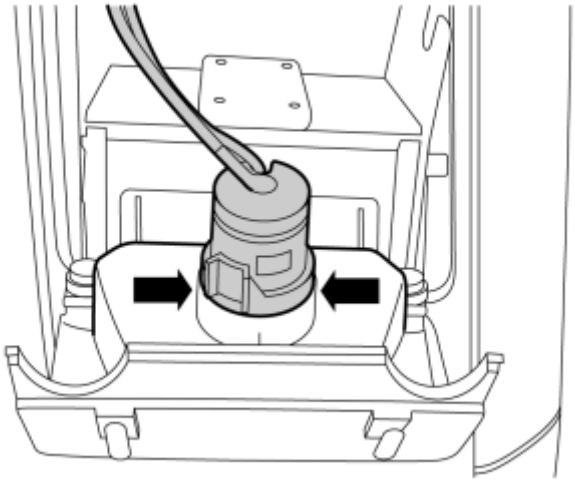

Fig. 64: Removing 12V Socket
Courtesy of VOLVO CARS CORPORATION

- Release the two catches and remove the 12 V socket.

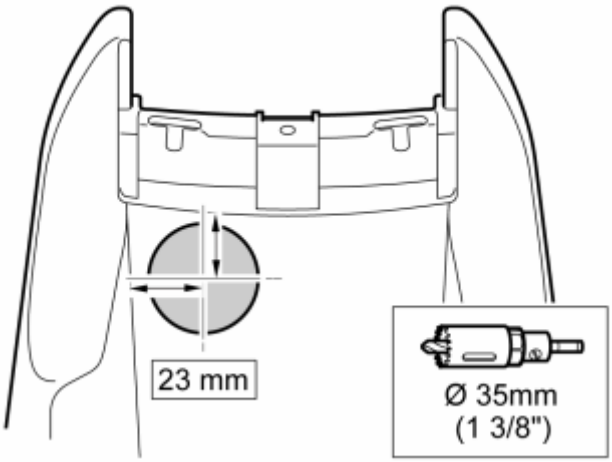

Fig. 65: Marking Tunnel Console's Storage Compartment For Drilling
Courtesy of VOLVO CARS CORPORATION

- Mark as illustrated on the tunnel console's storage compartment.
- Pre-drill using a **2.5 mm (3/32")** bit.
- Drill out the hole. Use a **35 mm (1 3/8")** diameter hole saw.
- Smooth off the hole edges.

APPLIES WHEN THE TUNNEL CONSOLE IS NOT PREPARED FOR THE RSE SYSTEM

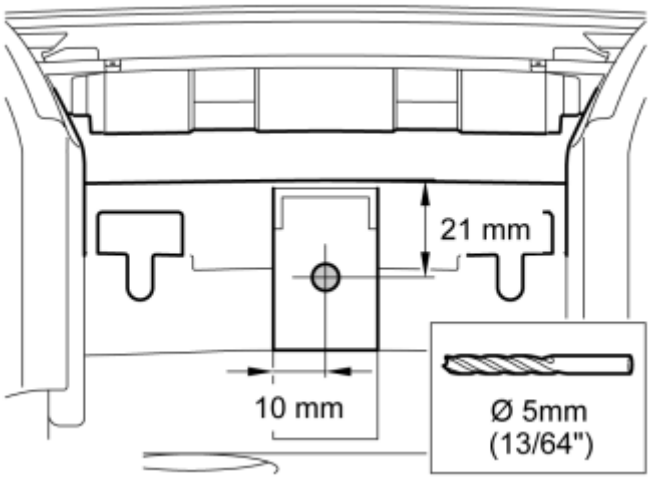

Fig. 66: Marking Tunnel Console's Upper Section For Drilling
Courtesy of VOLVO CARS CORPORATION

- Mark as illustrated on the tunnel console's upper section.
- Drill using a **5mm (13/64")** bit.

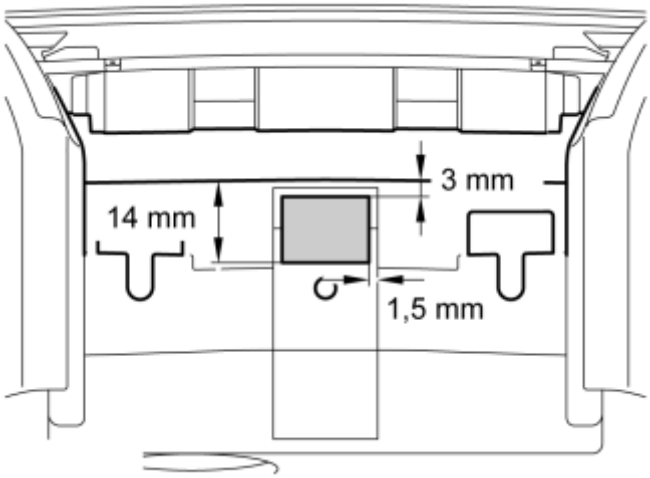

Fig. 67: Marking Tunnel Console's Upper Section For Cutting
Courtesy of VOLVO CARS CORPORATION

- Mark as illustrated on the tunnel console's upper section.
- Saw and cut out the hole according to the markings.

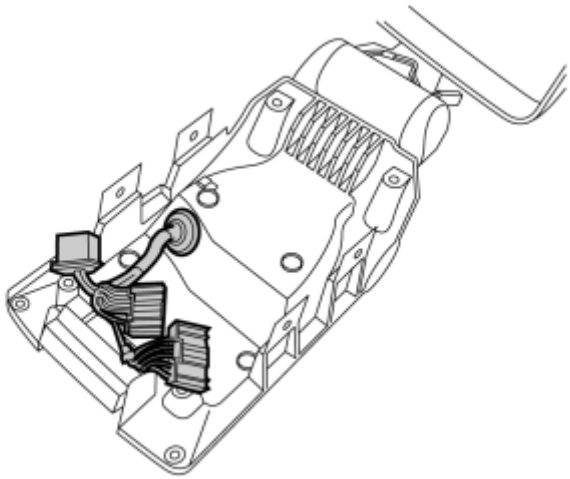

Fig. 68: Routing Cable Harness
Courtesy of VOLVO CARS CORPORATION

- Take the lower section of the cover and cable harness (B) from the kit.
- Insert the end with the three (4 x with Digital TV receiver) connectors through the hole.
- Install the rubber grommet.

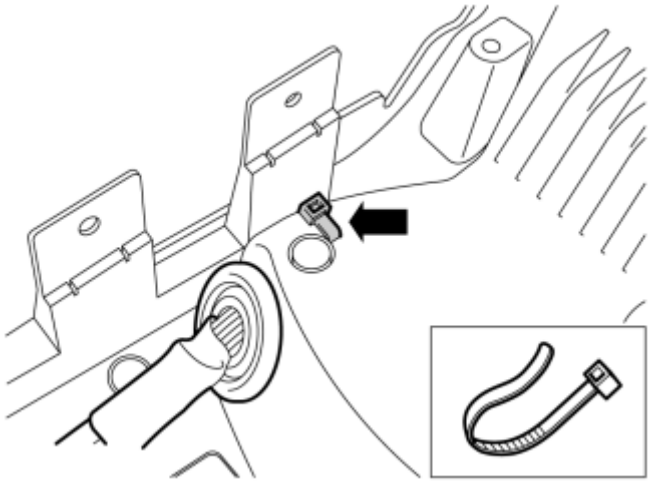

Fig. 69: Securing Cable Harness With Tie Strap
Courtesy of VOLVO CARS CORPORATION

- Secure the cable harness with a tie strap.

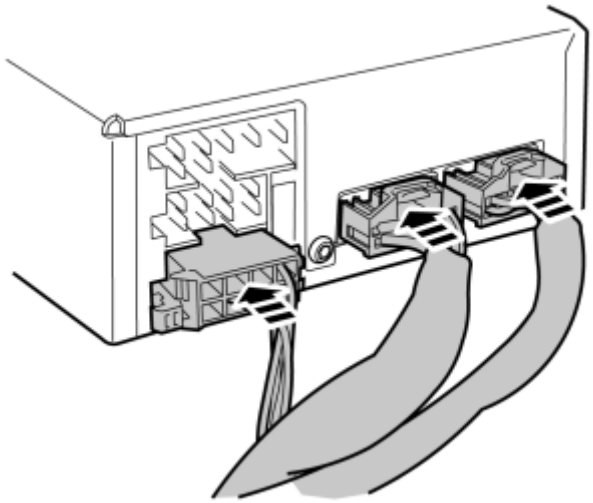

Fig. 70: Connecting DVD Unit
Courtesy of VOLVO CARS CORPORATION

- Take the DVD unit and 4 M4x6 screws from the kit.
- Connect the three (4 x with Digital TV receiver) connectors to the DVD unit.

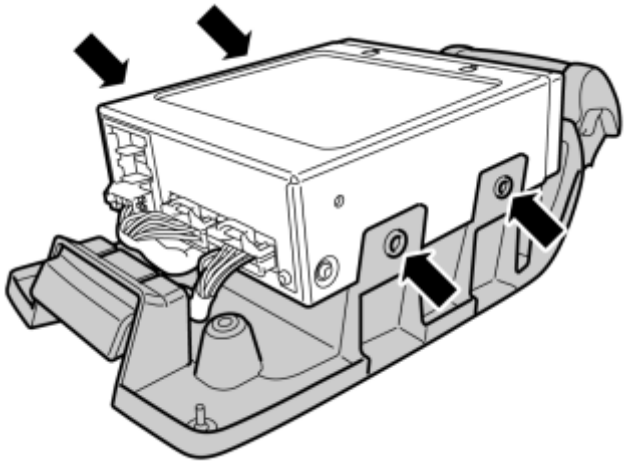

Fig. 71: Install DVD Unit In The Lower Section Of The Cover
Courtesy of VOLVO CARS CORPORATION

- Place the DVD unit in the lower section of the cover as illustrated. Ensure that the cable harness goes under the DVD unit and does not protrude towards the open button or screw tower.
- Install the four screws and tighten.

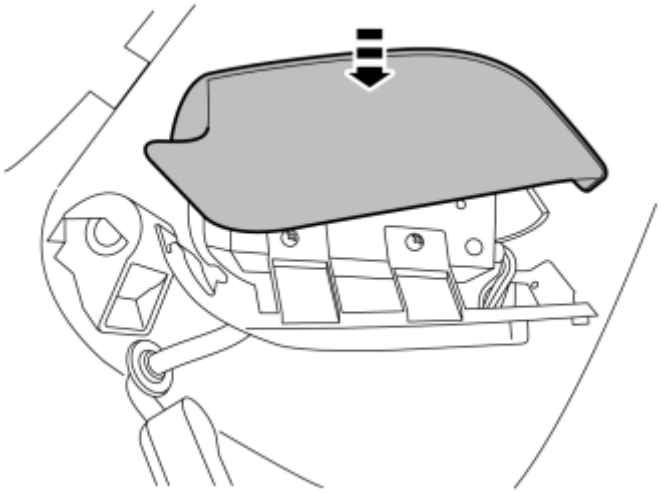

Fig. 72: Installing Cover
Courtesy of VOLVO CARS CORPORATION

- Take the cover's upper section and 4 screws, PF5x16, from the kit.
- Install the cover.

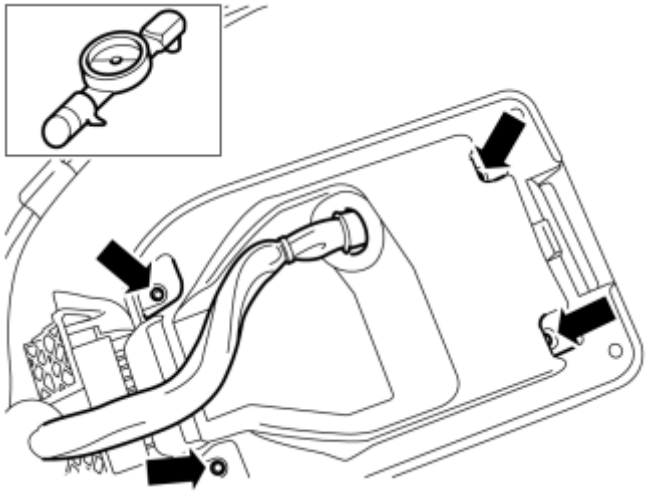

Fig. 73: Installing Cover Screws
Courtesy of VOLVO CARS CORPORATION

- Turn the cover, install the four screws and tighten to **3 Nm (2.2 lbf. ft.)** .

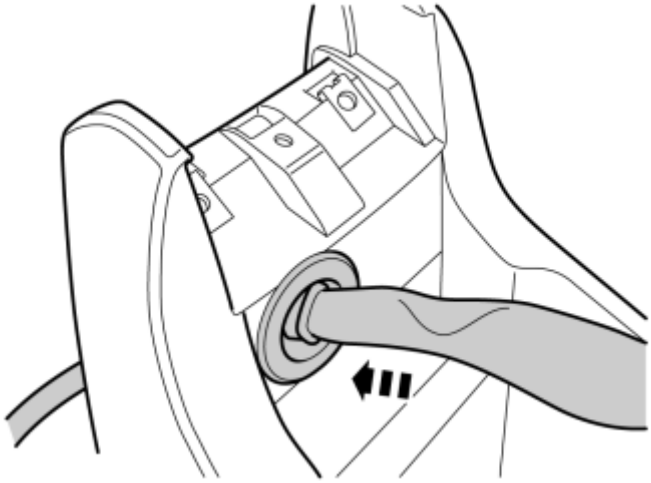

Fig. 74: Routing Cable
Courtesy of VOLVO CARS CORPORATION

- Route the cable harness in from the DVD unit through the drilled hole and down on the right-hand side of the tunnel console.
- Install the rubber grommet.
- Check that the rubber grommet's flanges are against the console.

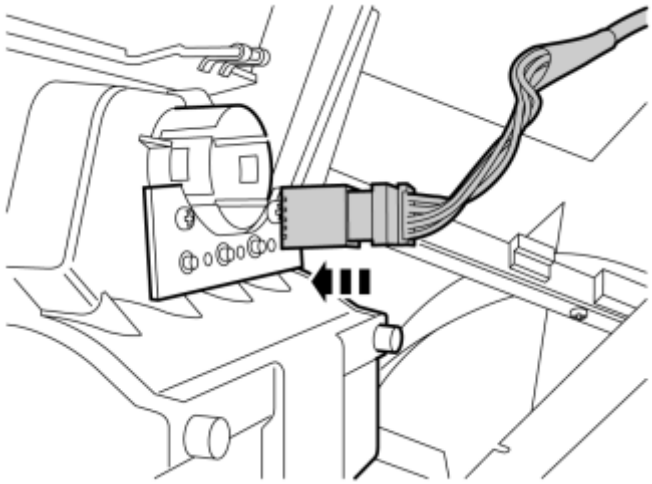

Fig. 75: Connecting Green Connector To AV Panel
Courtesy of VOLVO CARS CORPORATION

- Take the AV panel from the kit.
- Connect the green connector to it.

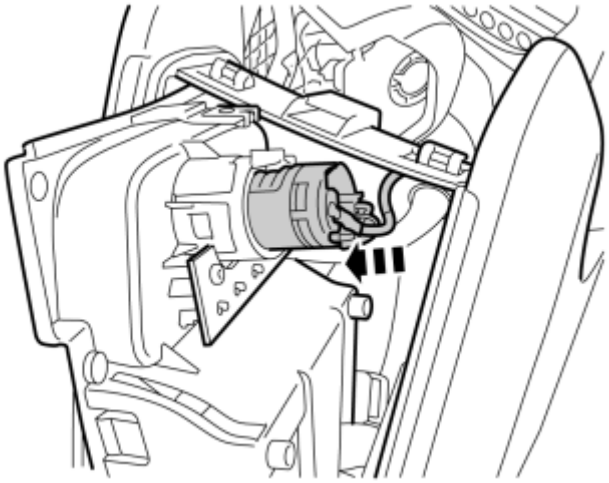

Fig. 76: Installing 12V Socket
Courtesy of VOLVO CARS CORPORATION

- Install the 12 V socket to the panel.

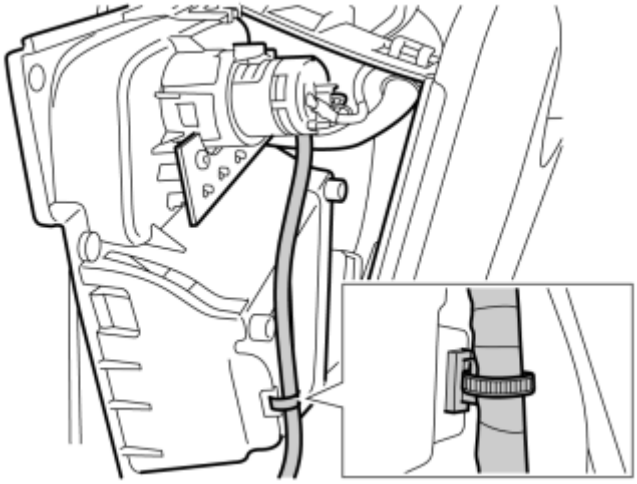

Fig. 77: Securing Cable Harness Clips On AV Panel Flange
Courtesy of VOLVO CARS CORPORATION

- Secure the cable harness clips on the flange of the AV panel.

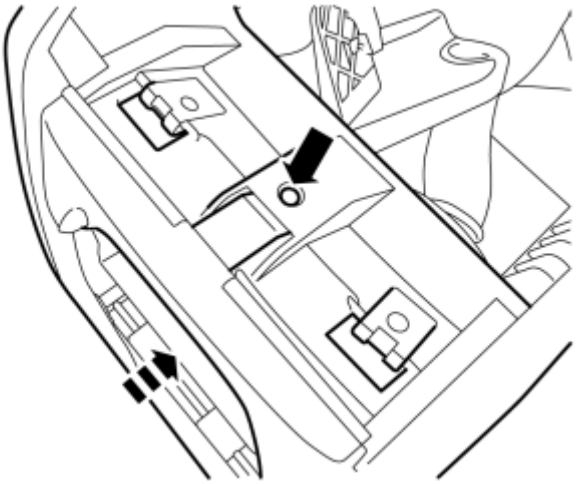

Fig. 78: Installing Panel
Courtesy of VOLVO CARS CORPORATION

- Press the panel into place.
- Secure the panel with one screw (ST 3.5x13) from the kit.

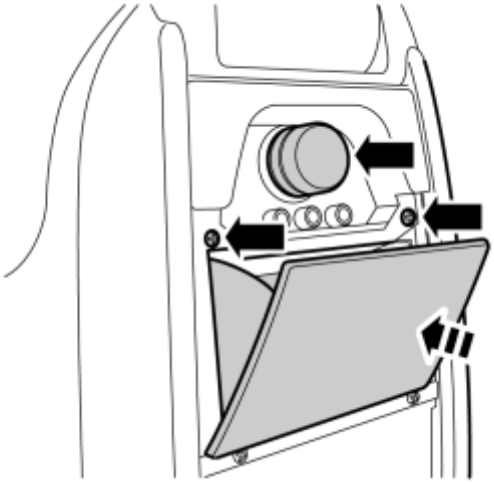

Fig. 79: Installing Tunnel Console Components
Courtesy of VOLVO CARS CORPORATION

- Reinstall the rubber support, the ashtray and the plug for the 12 V socket.

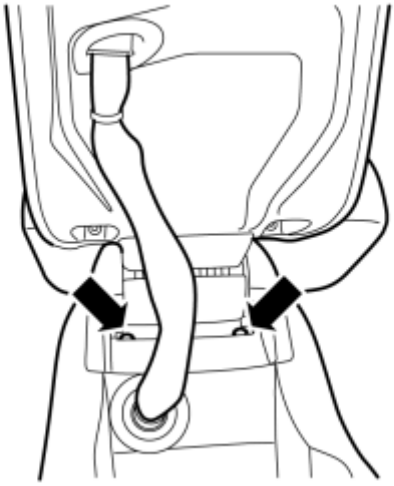

Fig. 80: Installing Tunnel Console Cover
Courtesy of VOLVO CARS CORPORATION

- Install the cover on the tunnel console and tighten with the two screws.

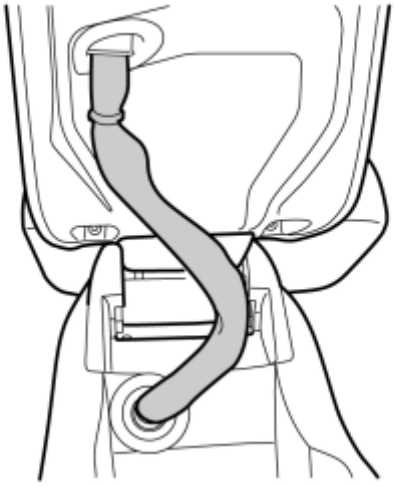

Fig. 81: Checking Tunnel Console Cover Operation With New Components Installed
Courtesy of VOLVO CARS CORPORATION

- Open and close the cover three times.
- Check that the lock at the front edge works and that the rubber bushings are in place.
- The cable harness should be in a loop as illustrated.

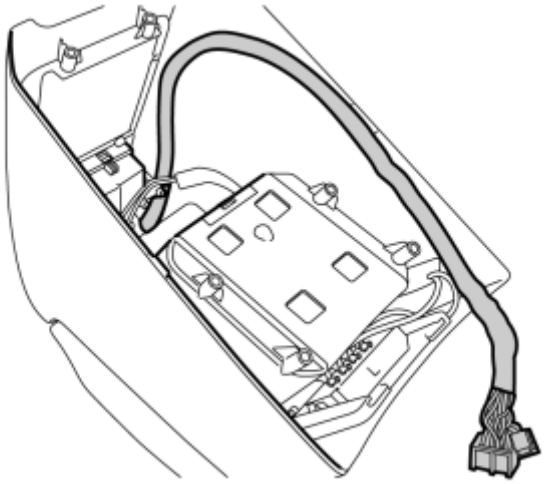

Fig. 82: Turning Console And Routing Cable
Courtesy of VOLVO CARS CORPORATION

- Turn the console and route the cable harness as illustrated.

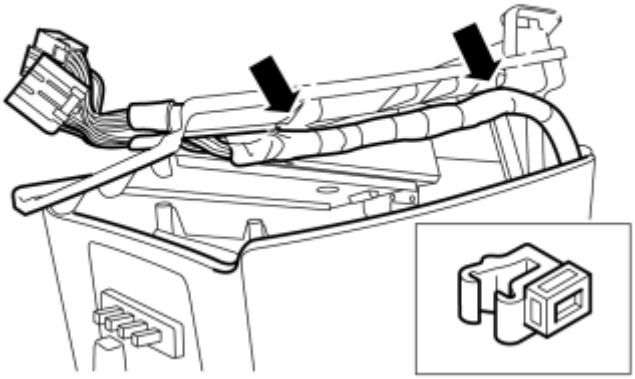

Fig. 83: Routing Cable Through Lower Section Of The tunnel Console
Courtesy of VOLVO CARS CORPORATION

- Thread the cable harness out through the square cut out on the lower section of the tunnel console.
- Secure the two clips of the cable harness on the plastic flanges.
- Tighten the lower section using the 6 screws.

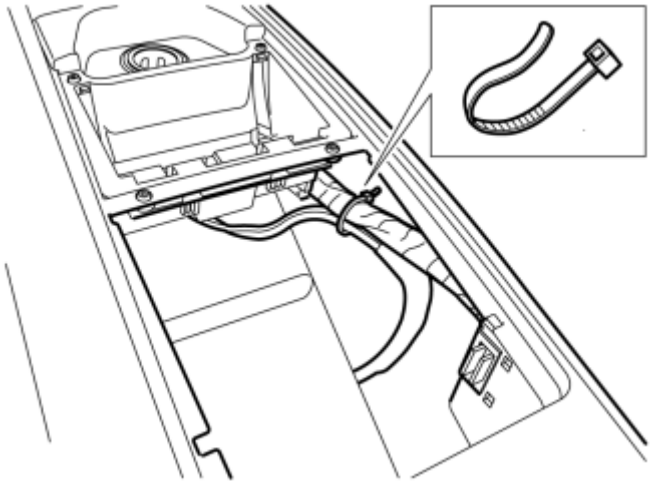

Fig. 84: Securing Cable With Cable Tie
Courtesy of VOLVO CARS CORPORATION

- Take a cable tie and secure the 12V socket's cable by the clip on the cable harness from the DVD unit.
- The cable tie catch should point towards the outer side of the tunnel console.
- Reinstall the cup holder.

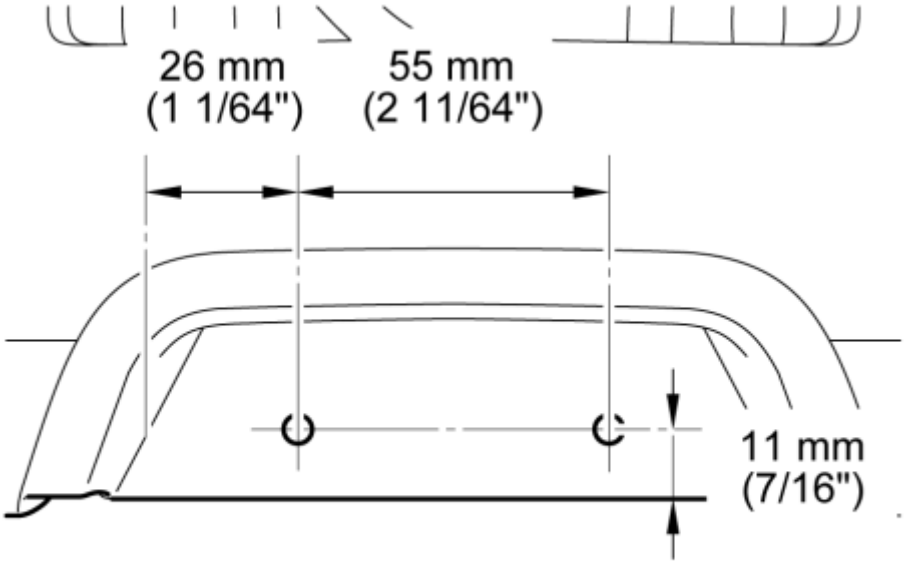

Fig. 85: Marking Opening Handle Of Tunnel Console For Drill Holes
Courtesy of VOLVO CARS CORPORATION

- Make marks for drill holes on the opening handle for the tunnel console as illustrated.
- Pre-drill using a **2.5 mm (3/32")** bit.

- Drill out the hole using a **6 mm (15/64")** drill bit.

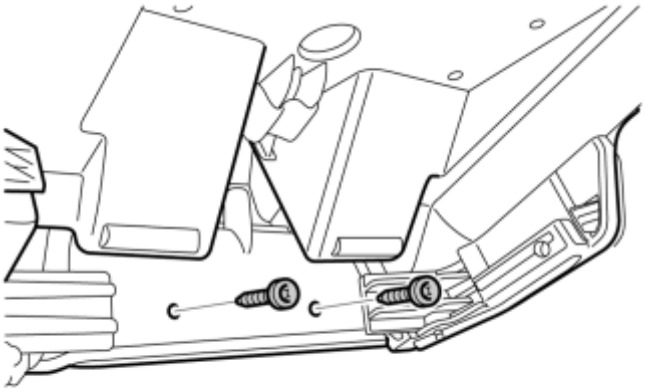

Fig. 86: Installing Cover
Courtesy of VOLVO CARS CORPORATION

- Take the cover and 2 x PF5x12 screws from the kit.
- Install the cover on the opening handle.

Digital TV receivers must then be installed:

Continue with the installation instructions: TV receiver, digital.

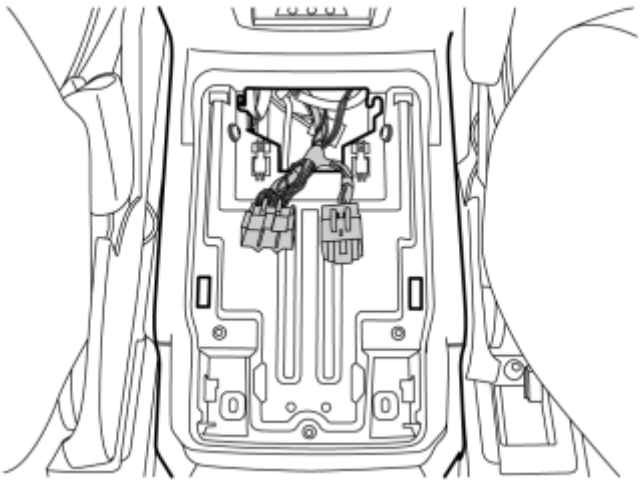

Fig. 87: Installing Front Tunnel Console And Connectors For RSE System
Courtesy of VOLVO CARS CORPORATION

- Reinstall the front tunnel console and at the same time pull up the connectors for the RSE system, 12 V socket and telephone if applicable.

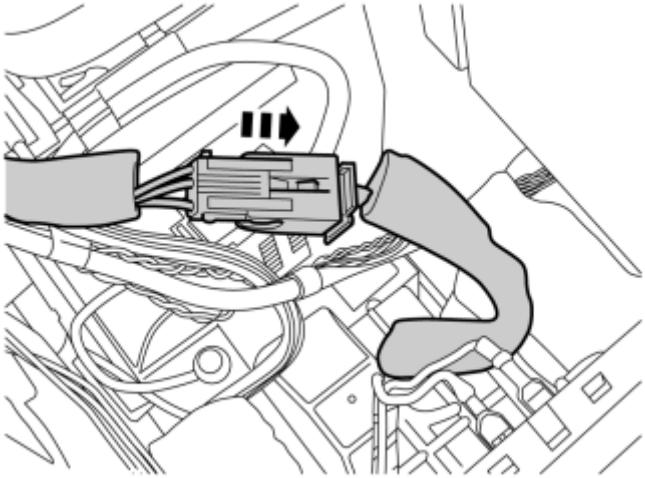

Fig. 88: Connecting The 4 Pin Black Connector
Courtesy of VOLVO CARS CORPORATION

- Connect the 4 pin black connector from the cable harness (B) to the one disconnected from the AUX socket.

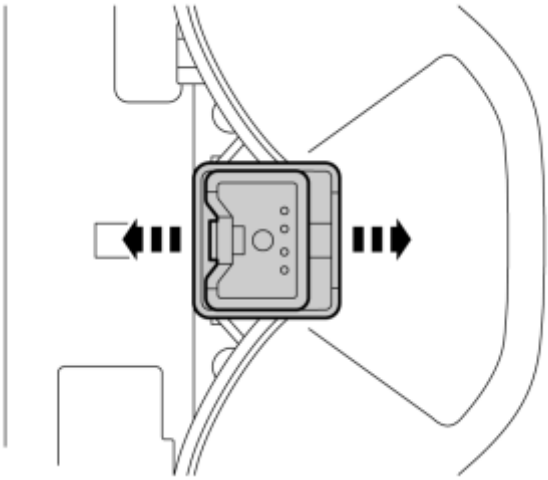

Fig. 89: Removing The AUX Socket
Courtesy of VOLVO CARS CORPORATION

- Take the upper panel for the front tunnel console.
- Remove the AUX socket by releasing the catches at the front and rear edge.

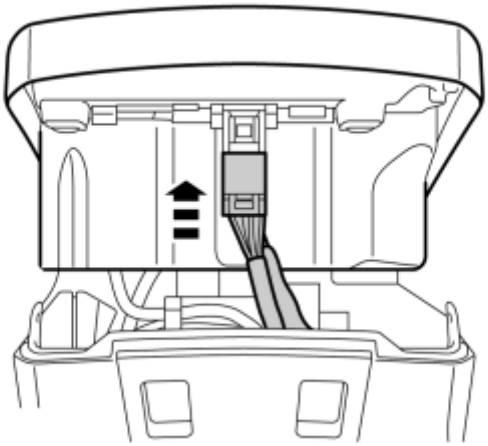

Fig. 90: Connecting AUX Socket
Courtesy of VOLVO CARS CORPORATION

- Take the new AUX socket from the kit and connect it to the 7 pin connector from cable harness (B).
- Install the socket in the panel with the connector's catch backwards.

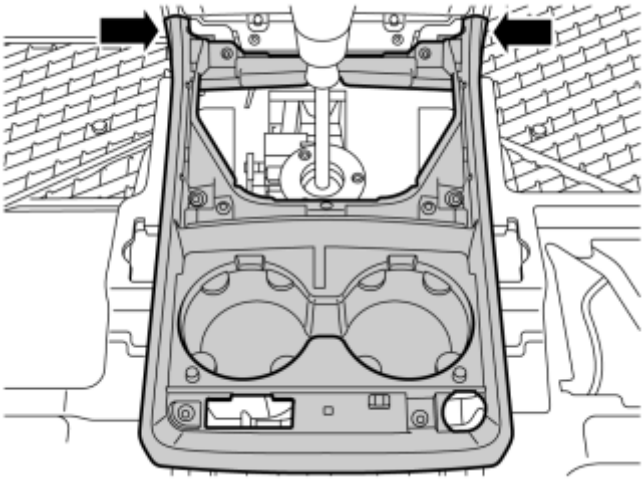

Fig. 91: Installing Tunnel Console Upper Panel
Courtesy of VOLVO CARS CORPORATION

- Install the tunnel console's upper panel.
- Check that the panel hooks securely at the front edge.
- Reinstall the tunnel console's 8 screws and tighten them.

APPLIES TO CARS WITH TELEPHONE

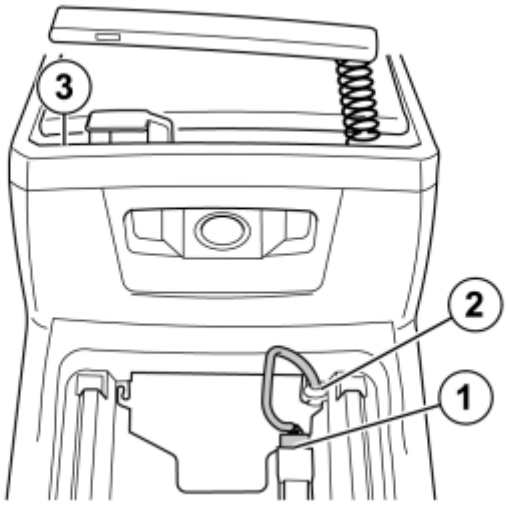

Fig. 92: Installing Telephone Cable
Courtesy of VOLVO CARS CORPORATION

- Reinstall the telephone cradle with the screws (3).
- Route the telephone cable.
- Install the telephone cable in the load-removing grommet (2).
- Connect the connector (1).

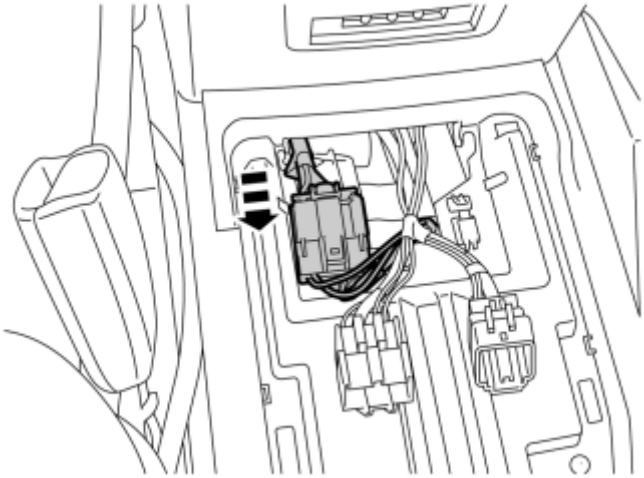

Fig. 93: Connecting 12V Socket
Courtesy of VOLVO CARS CORPORATION

- Connect the connector for the 12V socket.

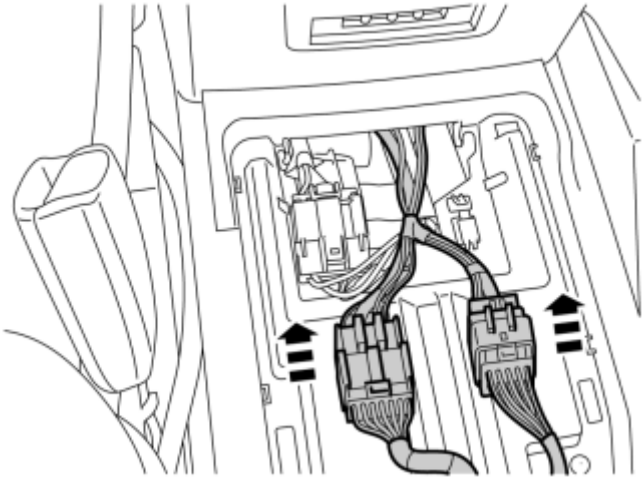

Fig. 94: Connecting RSE System Connectors
Courtesy of VOLVO CARS CORPORATION

- Take the rear tunnel console.
- Connect the two connectors for the RSE system (3 x with Digital TV-receiver.)
- Take two pieces of foam tape from the kit and wrap them around the connectors. Cut off the foam tape excess.

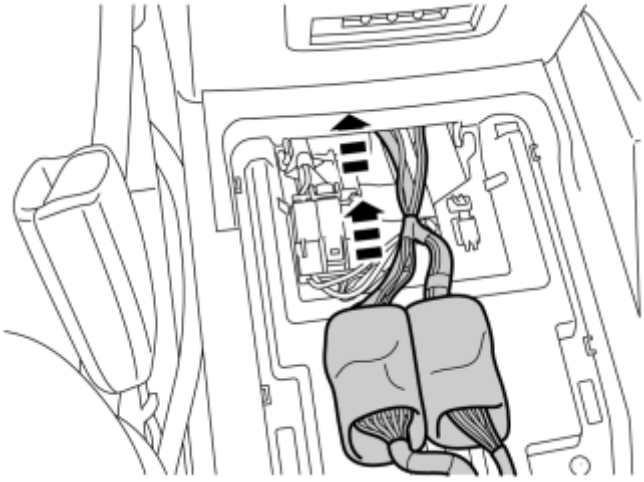

Fig. 95: Installing Connectors
Courtesy of VOLVO CARS CORPORATION

- Insert the connectors into the tunnel console.
- Hook the connector on for the 12 V socket.
- Slide the rear tunnel console forwards in its grooves until it locks and check that the cable harness is not trapped.

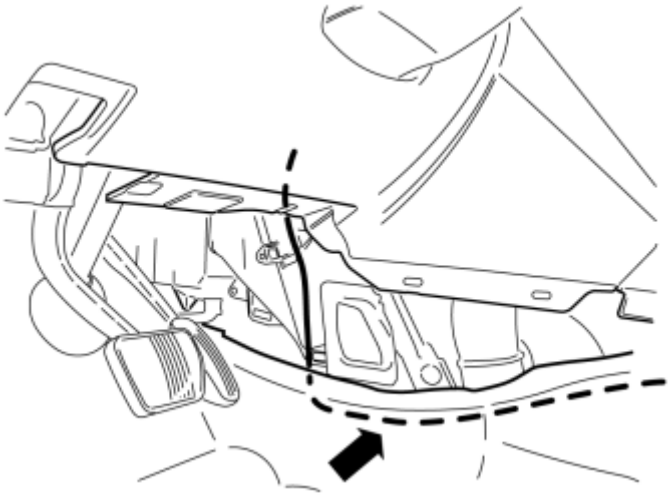

Fig. 96: Routing Cable
Courtesy of VOLVO CARS CORPORATION

- Take the cable with the 2 x 4 pin connector and route forward on the driver's side.
- Fold the carpet to one side and place the cable underneath.

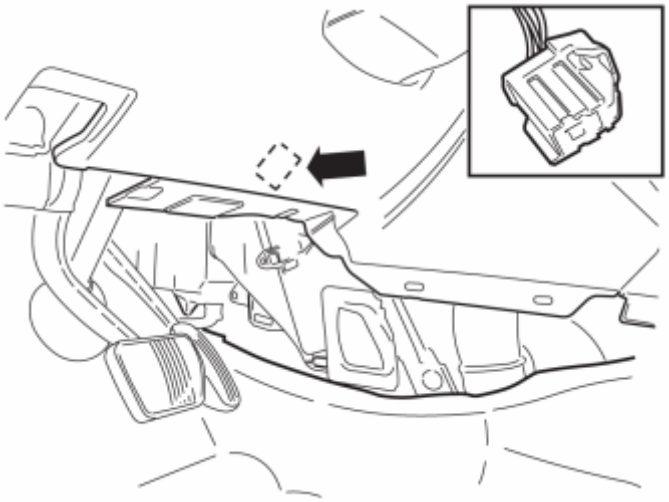

Fig. 97: Identifying Location Of Grey, 4 Pin, Power Supply Connector
Courtesy of VOLVO CARS CORPORATION

- Locate the 4 pin, grey connector for the power supply. It is secured on the thick cable harness under the dashboard on the driver's side.

NOTE: The pre-routed connector is already connected on certain versions.

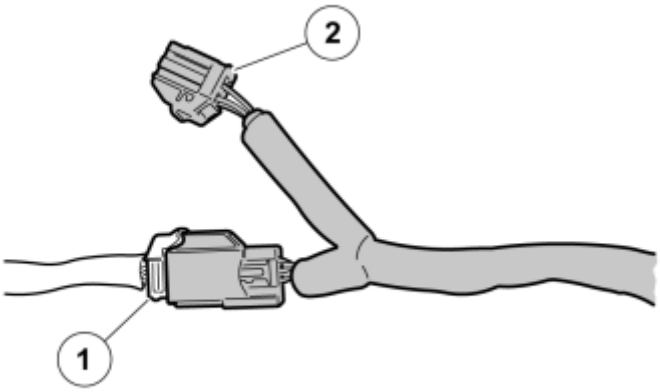

Fig. 98: Connecting Cable Harness Connector
Courtesy of VOLVO CARS CORPORATION

- Connect the cable harness to the existing connector (1).
- Wrap a piece of foam tape around the connected connectors and cut off the excess.
- Install the connector (2) on the car's existing cable harness using a cable tie.

NOTE: **The pre-routed connector is already connected on certain versions. In such a case, disconnect it and connect both connectors from the new cable harness. Wrap a piece of foam tape around the connectors.**

Reinstall:

- the small storage compartment
- the panel at the gear selector
- side panels
- the sound barrier

Fig. 99: VIDA Logo
Courtesy of VOLVO CARS CORPORATION

- Install the batteries in the remote control and headsets.
  - Product specifications
  - Design and Function
  - 39 Media, communication and navigation
  - 393 Equipment for entertainment
  - Rear seat entertainment system
  - Design
- Region code the DVD player. Information is in VIDA under:
  - Product specifications
  - Design and Function
  - 39 Media, communication and navigation
  - 393 Equipment for entertainment
  - Rear seat entertainment system
  - Design

To activate the TV function

1. Aim the remote control at the screen and press DAY/NIGHT ("on/off") for approx. 5 seconds until SERVICE MENU is displayed.
2. Enter code 1971, press OK.
3. Select SET TV, press OK.
4. Select TV connected, press OK.
5. Exit.

INSTALLING DECALS

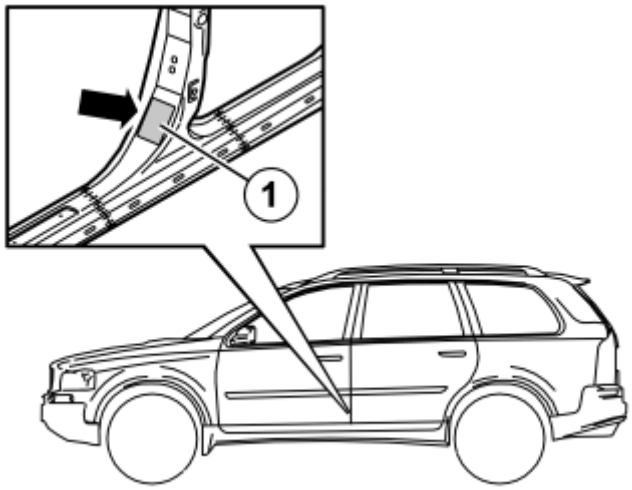

Fig. 100: Installing Decals
Courtesy of VOLVO CARS CORPORATION

- Take the black decal from the kit.
- Clean the area (1) where the decal will be located. Use a mixture of 30% windscreen washer fluid and 70% water. Wipe dry.
- Remove the backing paper from the adhesive side of the decal. Secure the decal as illustrated.
- Press the decal into place properly.

MULTIMEDIA MONITOR WITH DVD. RSE (2007-2009)

MULTIMEDIA MONITOR WITH DVD. RSE

INSTALLATION

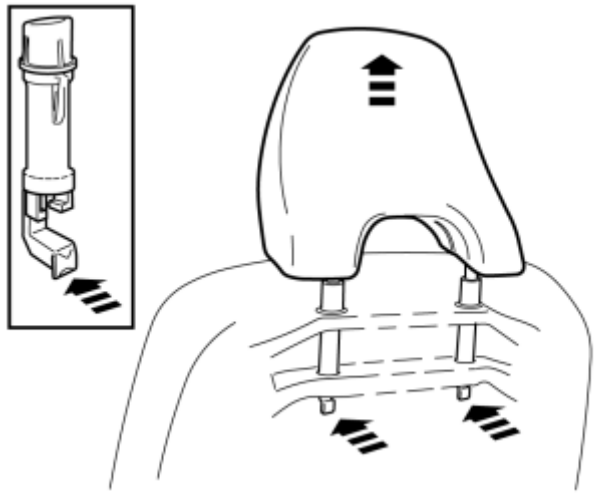

Fig. 101: Pressing In Catches And Pulling Headrest Upwards
Courtesy of VOLVO CARS CORPORATION

- Slide both the front seats all the way back and upwards all the way at the front and rear edge.
- Press the headrest downwards.
- Find the headrest's two locks on the back of the seat. Press in the catches and pull the headrest upwards at the same time.
- The seats may require lowering slightly at the rear edge again so that the headrest can be pulled out of the backrest completely. Therefore lower the seat as much as possible so that the headrest can be released and removed. Remove the headrest on both front seats and allow the seats to remain in the same position.

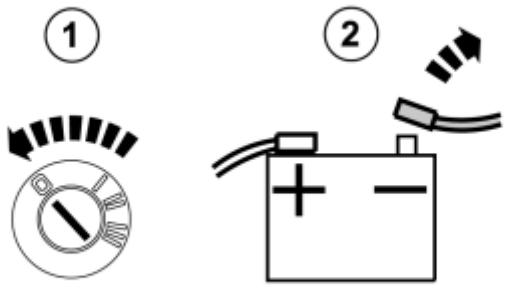

Fig. 102: Identifying Ignition Switch OFF & Disconnected Negative Battery Lead
Courtesy of VOLVO CARS CORPORATION

- Turn the ignition key to position 0.
- Disconnect the battery negative lead.

NOTE: **Wait at least three minutes before unplugging the connectors or removing other electrical equipment.**

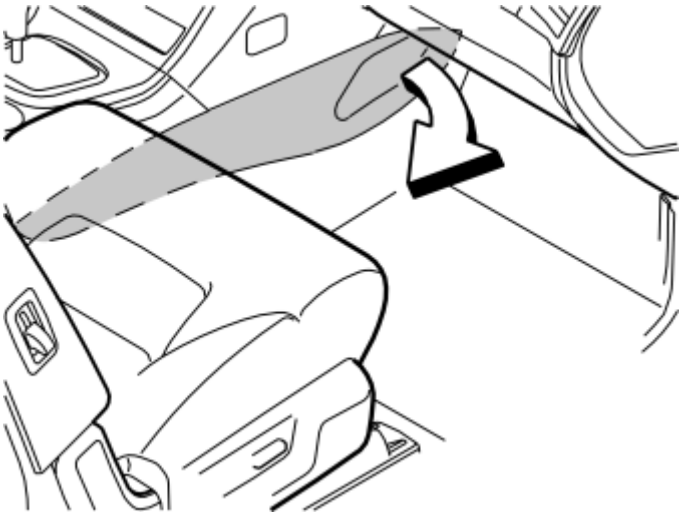

Fig. 103: Removing Tunnel Console Side Panels
Courtesy of VOLVO CARS CORPORATION

- Remove both the side panels from the tunnel console.

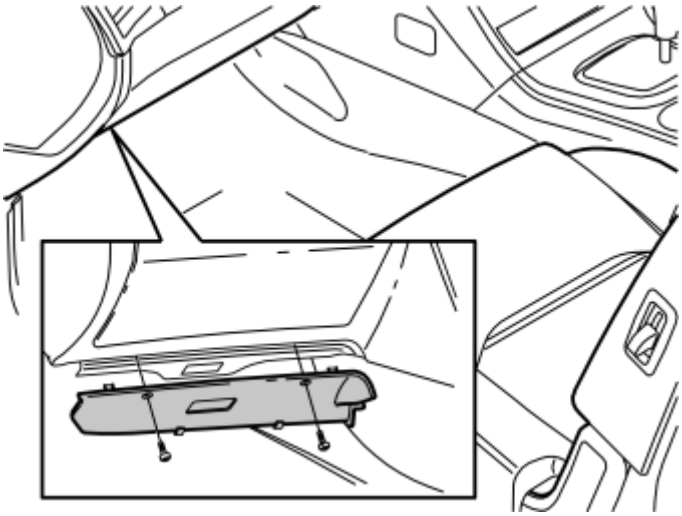

Fig. 104: Identifying Removal Of Screws And Soundproofing Panel
Courtesy of VOLVO CARS CORPORATION

- Remove the sound barrier on the driver's side by first removing the two screws and then prizing it away at the top edge.

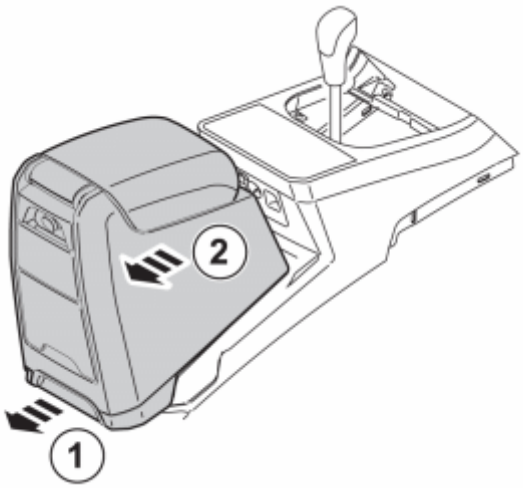

Fig. 105: Removing Tunnel Compartment
Courtesy of VOLVO CARS CORPORATION

- Pull the handle (1), move the tunnel compartment backward and lift it away (2).

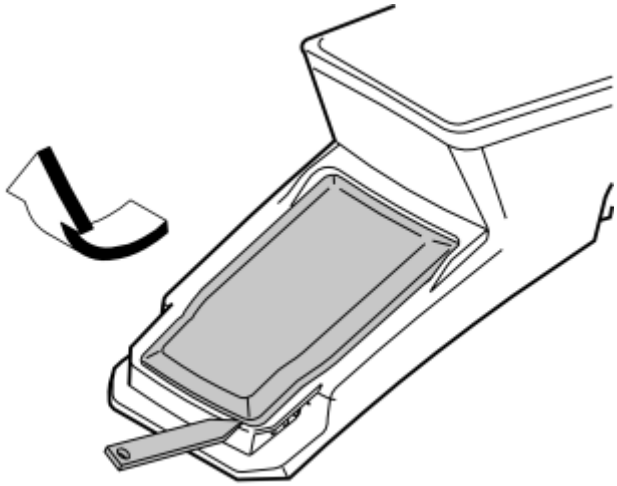

Fig. 106: Removing Cover
Courtesy of VOLVO CARS CORPORATION

- Remove the cover. It shall not be re-used.

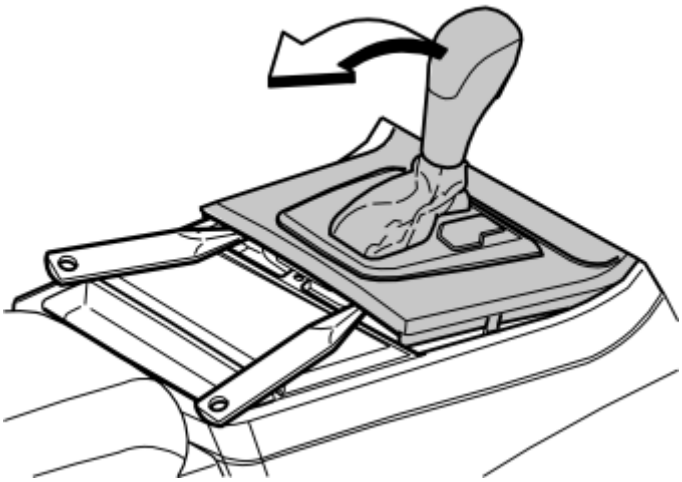

Fig. 107: Prying Off Gear Selector Panel At Rear Edge
Courtesy of VOLVO CARS CORPORATION

Applies to cars with automatic gearbox

- Turn the ignition key to position II.
- Move the gear selector lever to its rearmost position.
- Use a weatherstrip and pry off the gear selector panel at the rear edge.

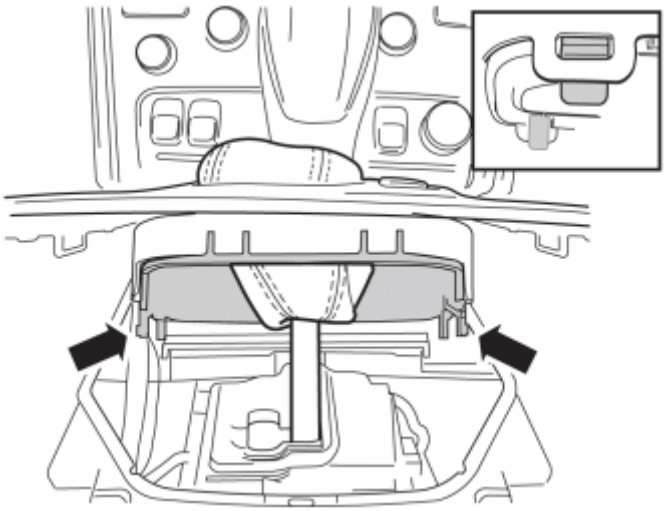

Fig. 108: Pressing In Catches And Removing Panel
Courtesy of VOLVO CARS CORPORATION

- Press in the catches underneath and remove the panel.

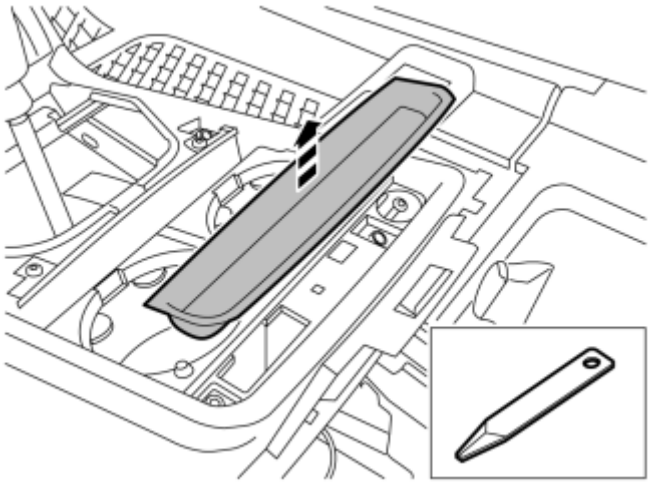

Fig. 109: Removing Small Storage Compartment
Courtesy of VOLVO CARS CORPORATION

- Remove the small storage compartment.

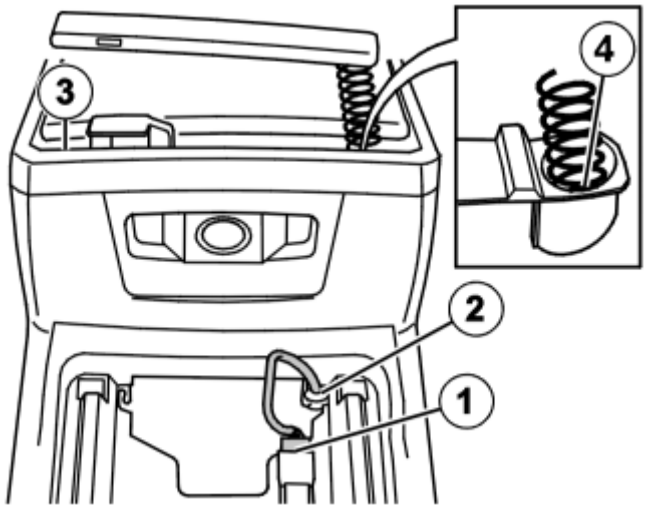

Fig. 110: Removing The Telephone Cable
Courtesy of VOLVO CARS CORPORATION

Applies to cars with telephone

- Unhook and disconnect the connector (1).
- Disconnect the telephone cable from the load-removing grommet (2).
- Release the telephone cable.
- Remove the handset.
- Remove the screw (3).
- Push the catch to one side (4).
- Remove the telephone cradle.

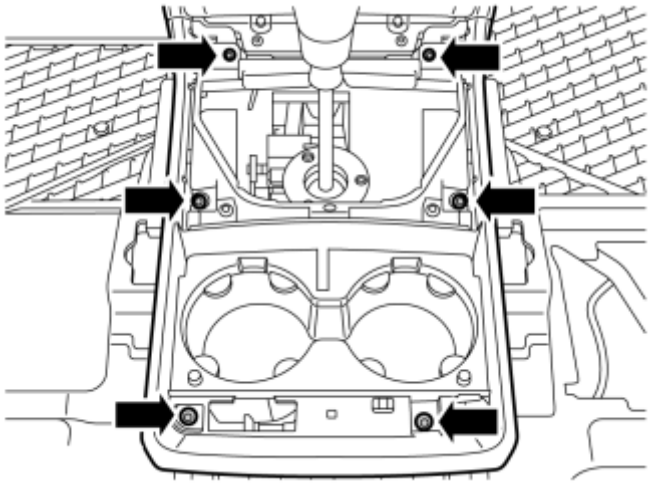

Fig. 111: Removing Upper Section Screws
Courtesy of VOLVO CARS CORPORATION

- Remove the 6 screws.

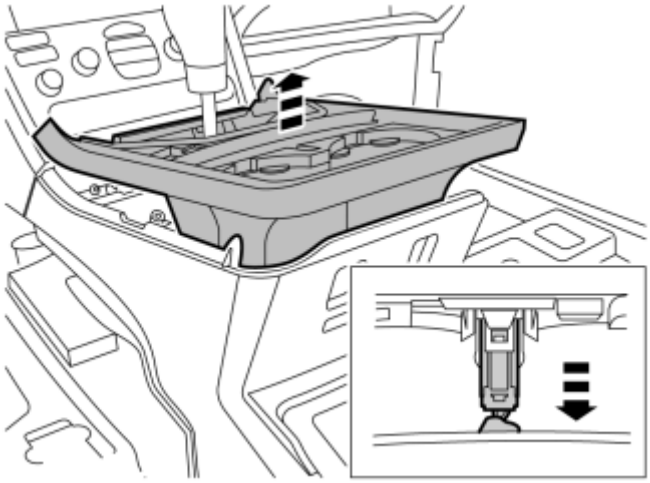

Fig. 112: Removing Upper Section
Courtesy of VOLVO CARS CORPORATION

- Lift up and remove the upper section.
- At the same time disconnect the connector to the AUX socket.

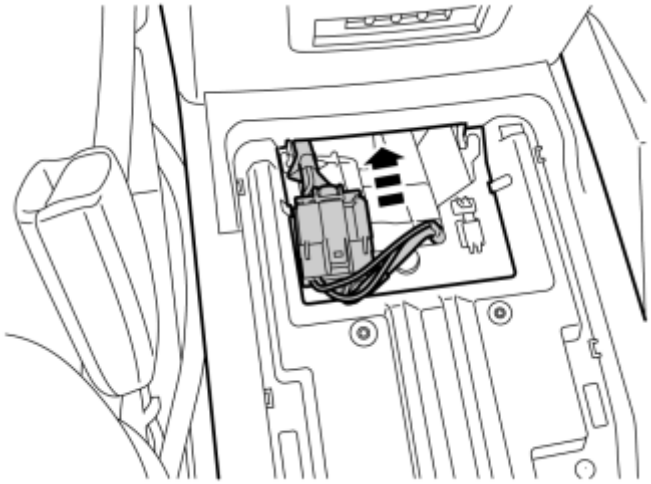

Fig. 113: Disconnect The Connector
Courtesy of VOLVO CARS CORPORATION

- Disconnect the connector. Press in the catches and unhook it from the tunnel console.

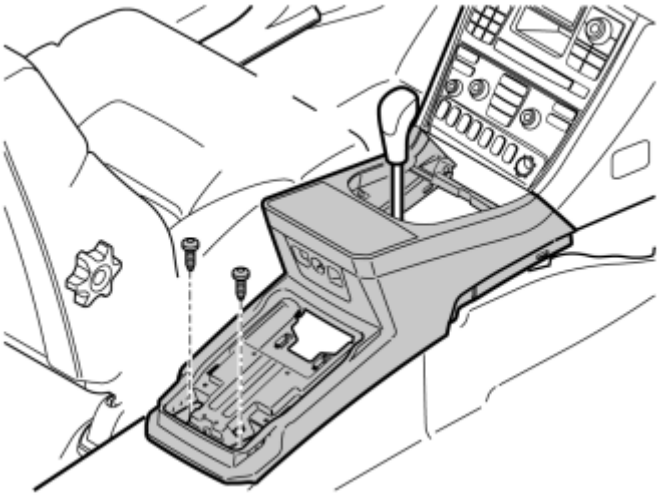

Fig. 114: Removing Tunnel Console
Courtesy of VOLVO CARS CORPORATION

- Remove the 2 screws and lift out the tunnel console.

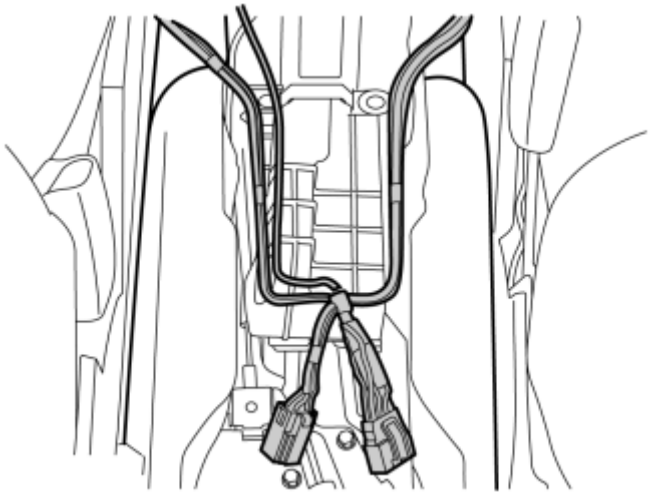

Fig. 115: Positioning The Cable Harness
Courtesy of VOLVO CARS CORPORATION

- Take the cable harness (B) from the kit and position it as illustrated.
- The junction (1) must be at the rear edge of the SRS control module. The cable marked with blue tape must go to the right seat and the other to the left seat. The cable with 2 x 4 pin connectors must be routed forward.

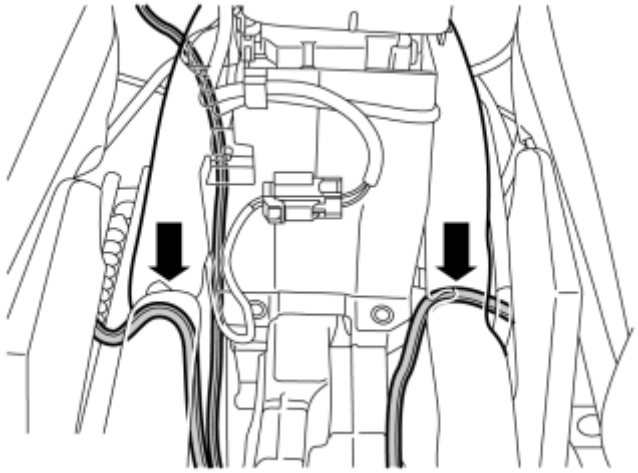

Fig. 116: Routing Cable
Courtesy of VOLVO CARS CORPORATION

- Route the cables in the join for the floor mats further along the seat rail.
- Position the cable in a loop under the seat.

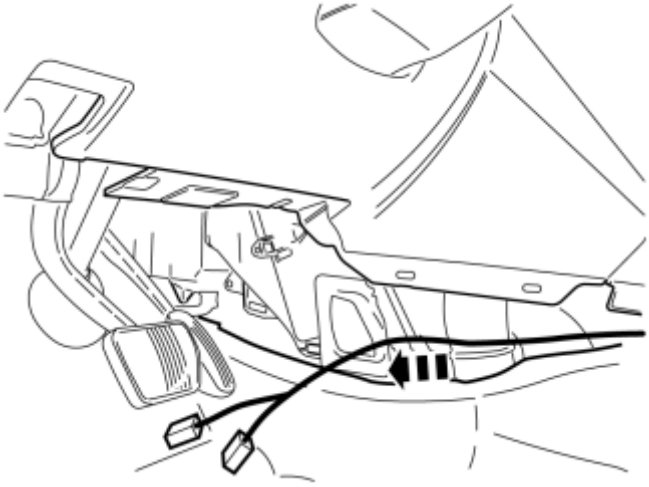

Fig. 117: Routing Cable
Courtesy of VOLVO CARS CORPORATION

- Take the cable with the 2 x 4 pin connector and route forward on the driver's side.

CARRY OUT ON BOTH SIDES OF THE SEATS

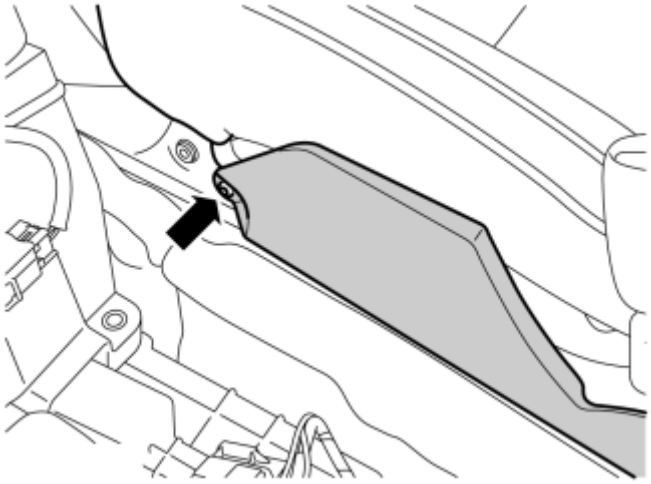

Fig. 118: Removing Seats Side Panel Screw
Courtesy of VOLVO CARS CORPORATION

- Remove the screw for the seat's side panel.

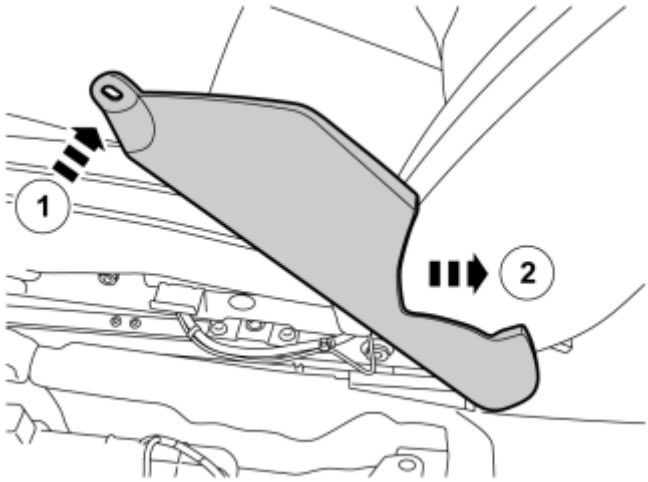

Fig. 119: Turning Panel Upwards
Courtesy of VOLVO CARS CORPORATION

- Turn the panel upwards at the front edge.
- Unhook it from the seat at the rear edge.

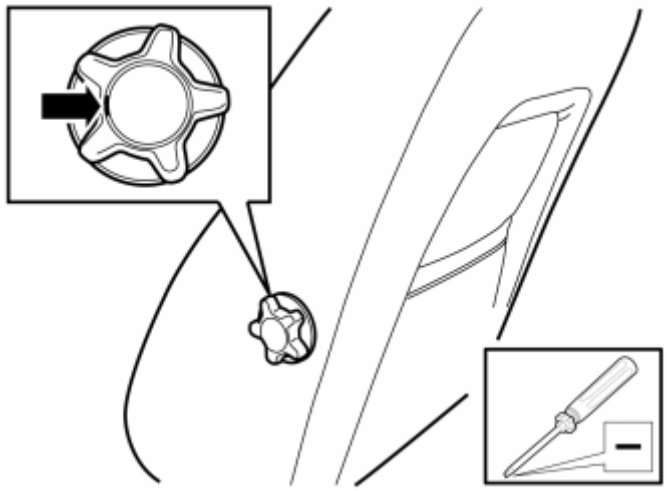

Fig. 120: Removing Lumbar Support Adjustment Knob
Courtesy of VOLVO CARS CORPORATION

- Remove the knob for the lumbar support adjustment by removing the cover using a small screwdriver and pull the knob straight off.

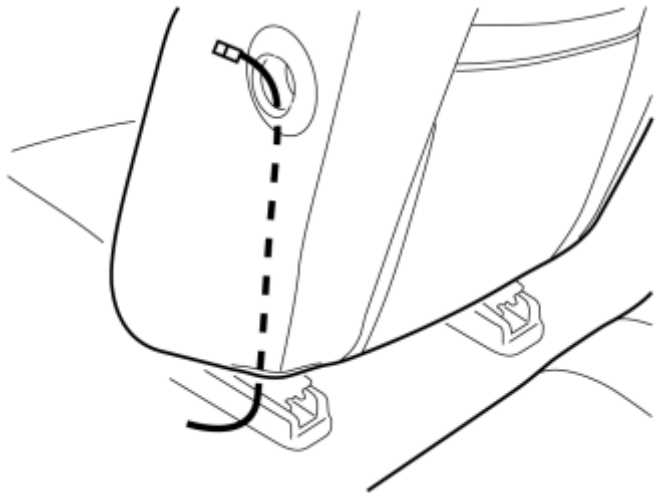

Fig. 121: Installing Cable Tie
Courtesy of VOLVO CARS CORPORATION

- Take a long cable tie from the kit and insert it through the hole for adjusting the lumbar support and inside the upholstery. The cable tie must be routed between the thin foam of the upholstery and the support pad.

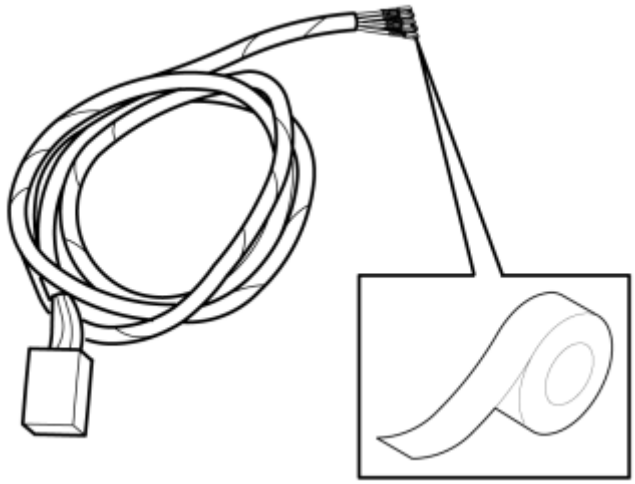

Fig. 122: Taping Cable Terminals Together
Courtesy of VOLVO CARS CORPORATION

- Remove cable harness (A) from the kit.
- Tape the cable terminals together on the cable tie. Tape as flat as possible.
- Remove the cable tie from the cable harness.

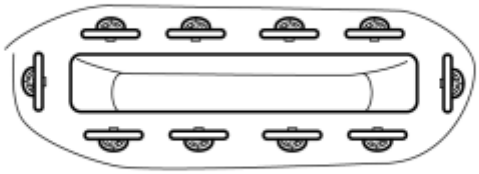

Fig. 123: Remove Cable From Cable Harness
Courtesy of VOLVO CARS CORPORATION

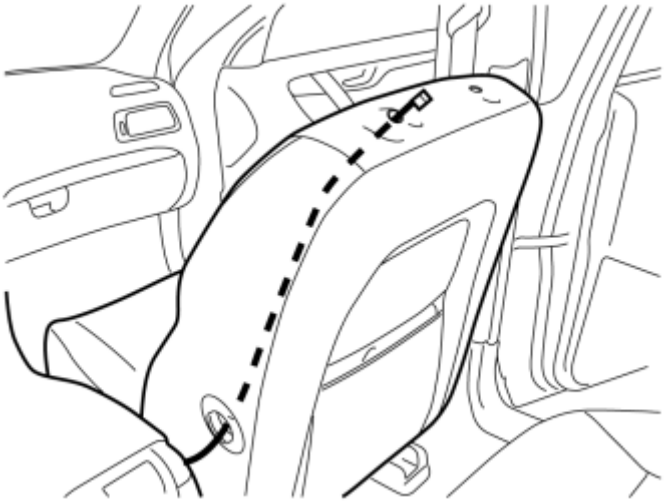

Fig. 124: Routing Cable
Courtesy of VOLVO CARS CORPORATION

Applies to the right-hand front seat

- Thread the cable tie from the headrest's inner mounting down to the hole for lumbar adjustment. The cable tie must be routed between the upholstery's thin foam and the protective pad (also, see image 30).

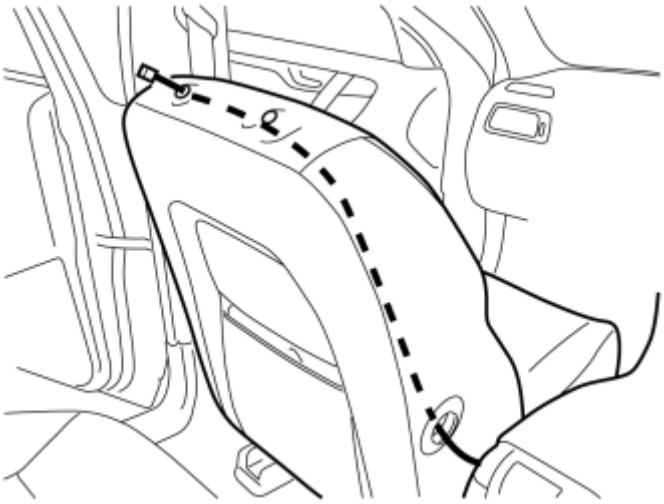

Fig. 125: Routing Cable
Courtesy of VOLVO CARS CORPORATION

Applies to the left-hand front seat.

- Thread the cable tie from the headrest's outer mounting down to the hole for lumbar adjustment. The cable tie must be routed between the upholstery's thin foam and the protective pad (also, see image 30).

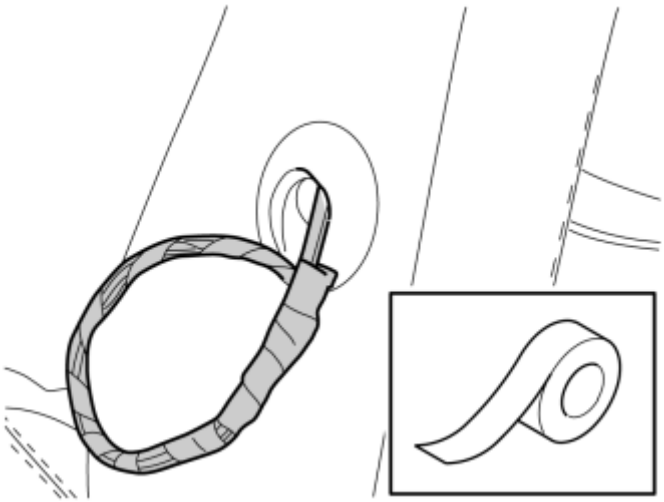

Fig. 126: Tape Cable Harness On The Cable Tie
Courtesy of VOLVO CARS CORPORATION

Applies to both seats

- Tape the cable harness on the cable tie. Tape as flat as possible.
- Pull it up towards the upper edge of the seat and out through the hole for the headrest.
- Remove the cable tie and tape from the cable harness.

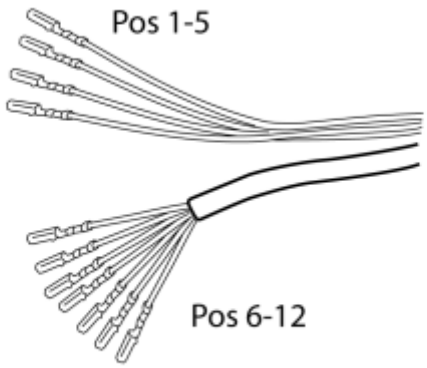

Fig. 127: Pin Color Identification
Courtesy of VOLVO CARS CORPORATION

- Terminal 1-5 - Color
- 1 - Black (SB)
- 2 - Red/White (R/W)
- 3 - Violet/Grey (VO/GR)
- 4 - Green (GN)

- 5 - White (W)

- Terminal 6-12 - Color (grey cable harness)
- 6 - Orange (OR) Shield, braided
- 7 - Pink (P)
- 8 - Grey (GR)
- 9 - Yellow (Y)
- 10 - Green (GN)
- 11 - Brown (BN)
- 12 - White (W)

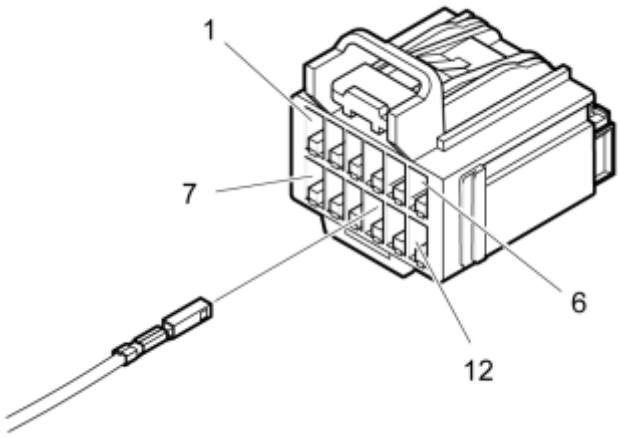

Fig. 128: Installing Grey Connector
Courtesy of VOLVO CARS CORPORATION

- Take the grey connector from the kit. Connect the cable harness terminals.

- Slide the connector's catch in.

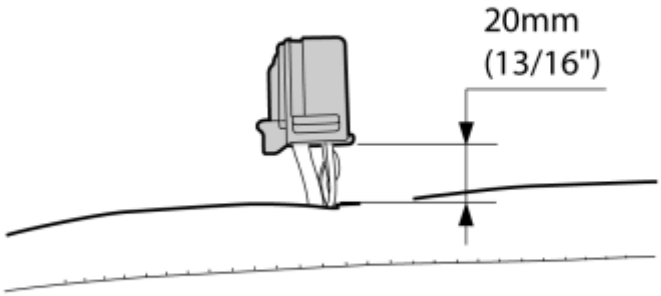

Fig. 129: Adjusting Length Of Cable
Courtesy of VOLVO CARS CORPORATION

- Adjust the length of the cable harness so that the connector protrudes approximately **20mm (13/16")** .

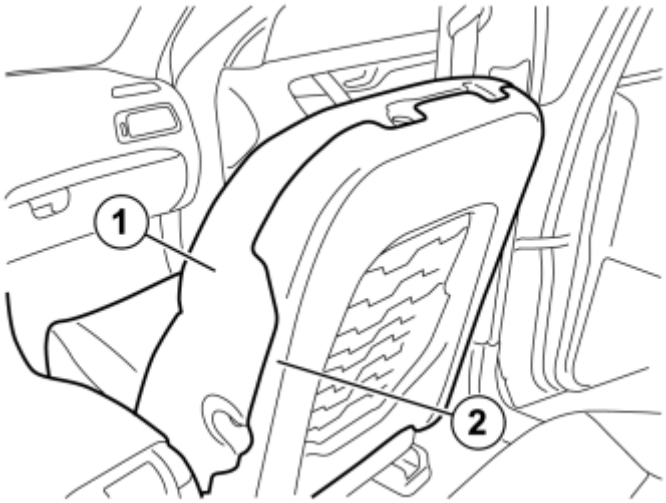

Fig. 130: Installing Cable Harness Under Protective Pad
Courtesy of VOLVO CARS CORPORATION

- Using your fingers, press the cable harness under the protective pad, the cable harness must not press out the upholstery after installation.

1. 1. Padding
2. 2. Protective pad

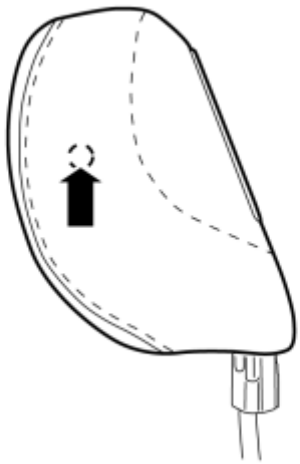

Fig. 131: Identifying Hole Under Upholstery
Courtesy of VOLVO CARS CORPORATION

- Take the headrest from the kit.
- Locate the hole under the upholstery on the side of the headrest.

NOTE: the inward facing side in the car.

- Make a hole in the upholstery using a scriber or an awl.

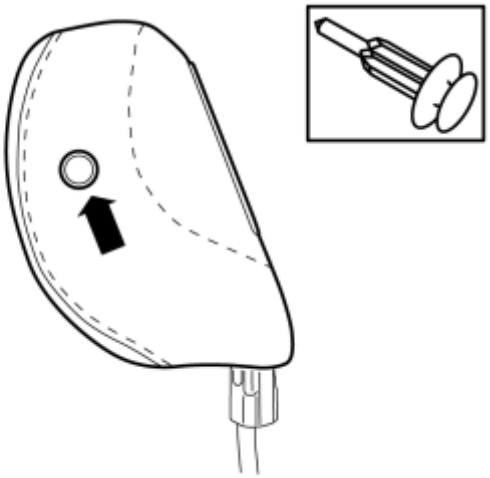

Fig. 132: Installing Coat Hook
Courtesy of VOLVO CARS CORPORATION

- Take the coat hook from the kit.
- Press into the hole.
- Tap it in lightly using a plastic hammer so that it secures properly.

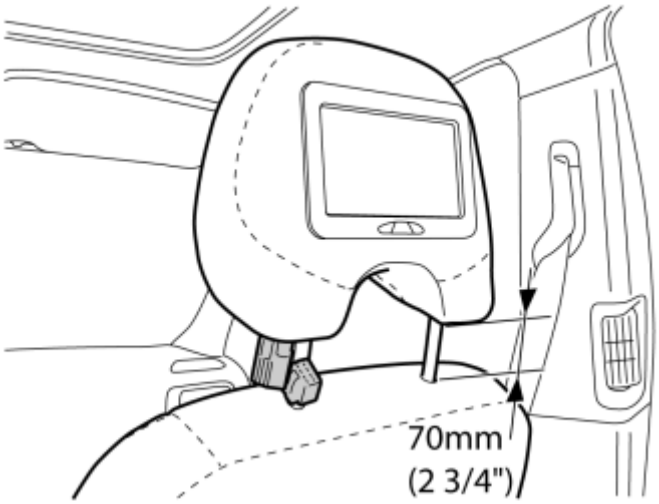

Fig. 133: Connecting Headrest Connectors
Courtesy of VOLVO CARS CORPORATION

- Install the headrest on the seat.
- Only slide it down so that the distance between the seat and lower edge of the headrest is approximately **70mm (2 3/4 ")** .
- Connect the connector to the headrest.

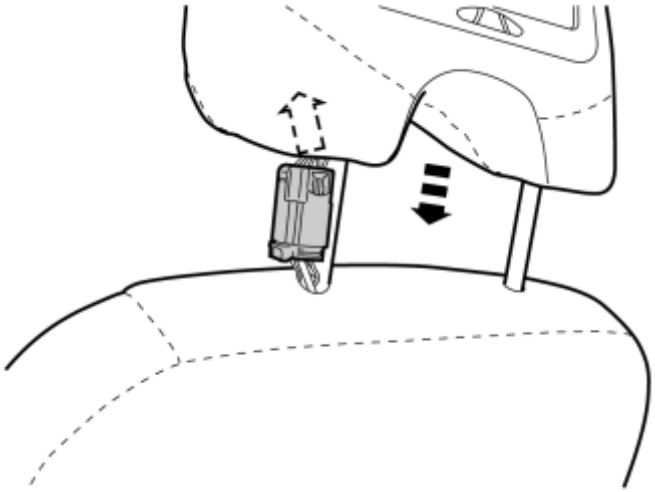

Fig. 134: Installing Connector
Courtesy of VOLVO CARS CORPORATION

- Insert the connector diagonally forwards through the hole in the headrest, at the same as moving the headrest down on the seat to the locked position.
- Check that the headrest is secure by pulling it upwards.

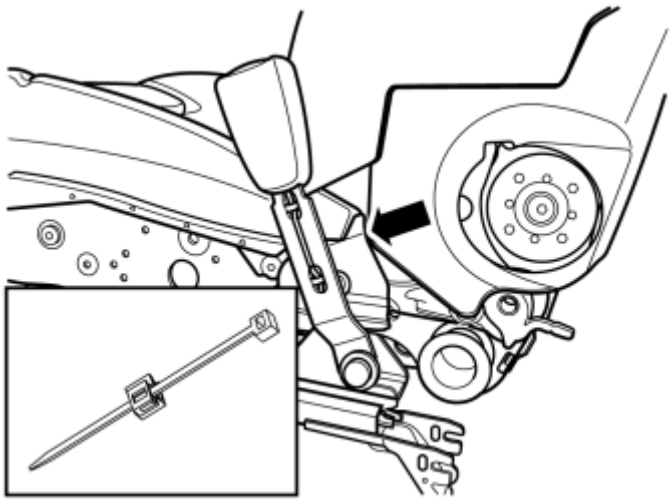

Fig. 135: Securing Cable To Plate Edge On Left Hand Side
Courtesy of VOLVO CARS CORPORATION

Applies to cars without electrically heated seats

- Take a clip with cable tie from the kit and install it on the plate edge on the left-hand side of the right-hand seat.

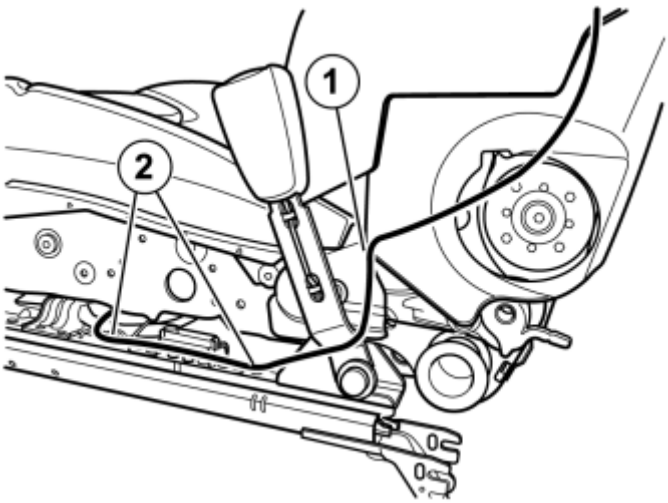

Fig. 136: Routing And Securing Cable Under The Seat
Courtesy of VOLVO CARS CORPORATION

Applies to cars without electrically heated seats

- Take the cable harness from the headrest and pull forward, in underneath the seat. Follow the cable harness for the seat belt buckle.
- Tighten the cable tie (1).
- Secure the cable using two cable ties (2).

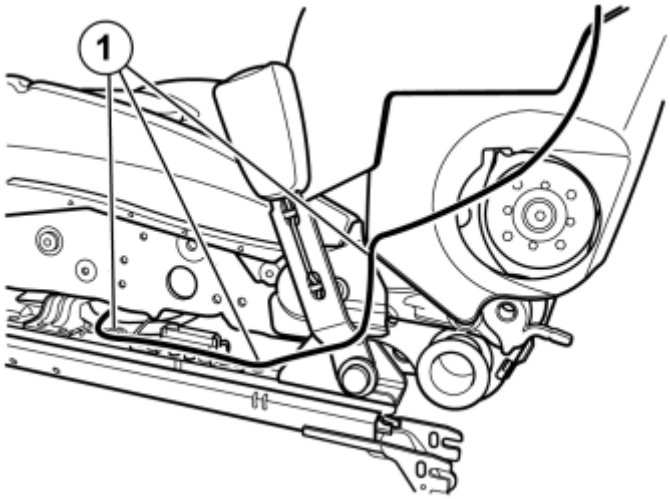

Fig. 137: Routing And Securing Cable Under The Seat
Courtesy of VOLVO CARS CORPORATION

Applies to cars with electrically heated seats

- Take the cable harness from the headrest and pull forward, in underneath the seat. Follow the cable harness for the heating element.
- Secure the cable using three cable ties (1).

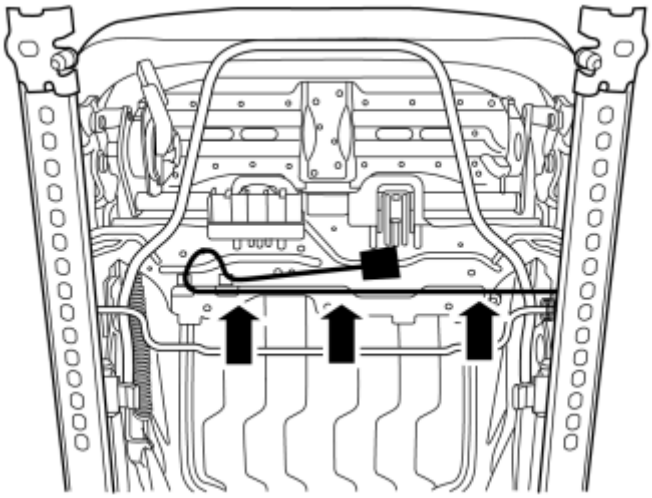

Fig. 138: Routing And Securing Cable Under The Seat
Courtesy of VOLVO CARS CORPORATION

Applies to the right-hand front seat

- Route the cable harness in an arc under the seat.
- Secure it using three cable ties in the existing cable harness.

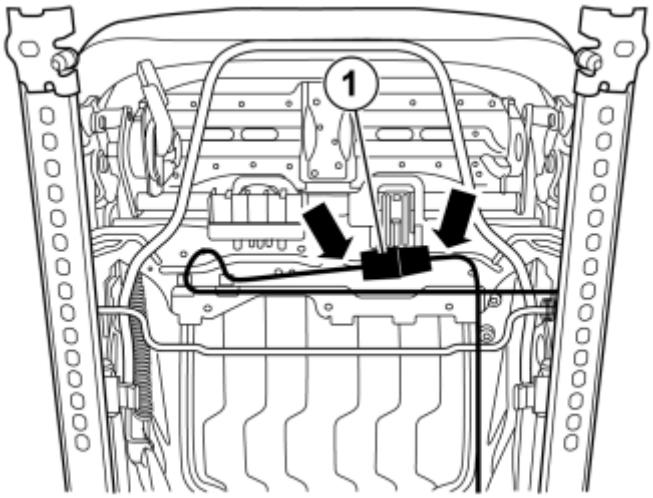

Fig. 139: Routing And Securing Cable Under The Seat
Courtesy of VOLVO CARS CORPORATION

Applies to the right-hand front seat

- Take a piece of foam tape from the kit and cut it in the center.
- Fold the seat forward slightly and connect the cable harness from the floor to the connector (1).
- Tape one cut piece of foam tape around the connectors.
- Place a cable tie on each side of the connectors and tighten.
- Check that the cable harness is not trapped when the seat is slid forwards and backwards.

The right-hand seat means the passenger seat

- Fold the backrest forward and backwards and check that the cable harness is not trapped when folding the backrest.

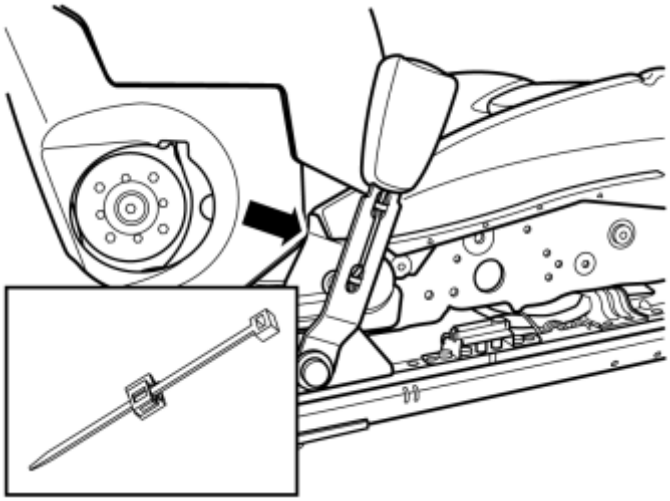

Fig. 140: Securing Cable To Plate Edge On Right Hand Side
Courtesy of VOLVO CARS CORPORATION

Applies to cars without electrically heated seats

- Take a clip with cable tie from the kit and install it on the plate edge on the right-hand side of the left-hand seat.

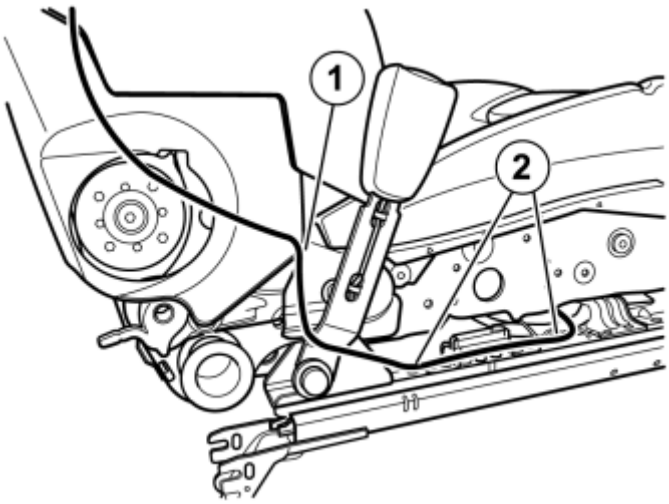

Fig. 141: Routing And Securing Cable Under The Seat
Courtesy of VOLVO CARS CORPORATION

Applies to cars without electrically heated seats

- Take the cable harness from the headrest and pull forward, in underneath the seat. Follow the cable harness for the seat belt buckle.
- Tighten the cable tie (1).
- Secure the cable using two cable ties (2).

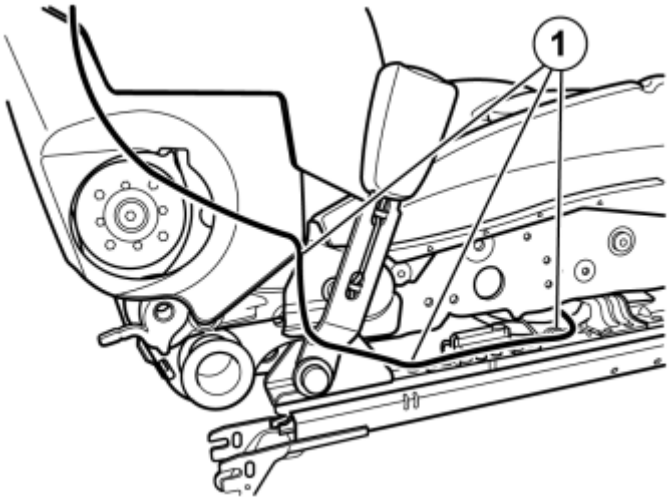

Fig. 142: Routing And Securing Cable Under The Seat
Courtesy of VOLVO CARS CORPORATION

Applies to cars with electrically heated seats

- Take the cable harness from the headrest and pull forward, in underneath the seat. Follow the cable harness for the heating element.
- Secure the cable using three cable ties (1).

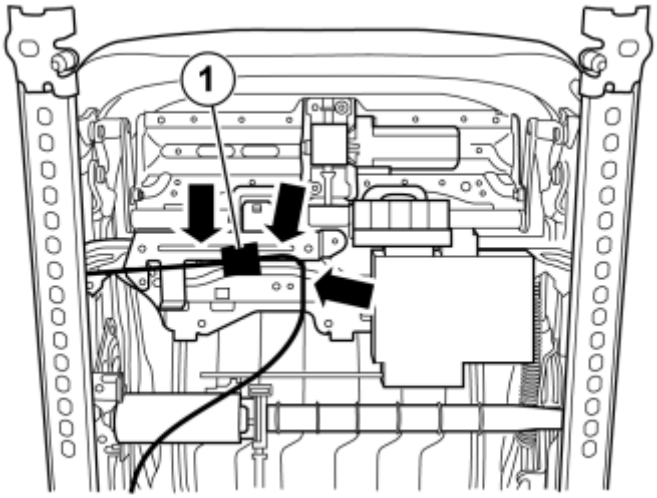

Fig. 143: Routing And Securing Cable Under The Seat
Courtesy of VOLVO CARS CORPORATION

Applies to the left-hand front seat.

- Route the cable harness under the seat.
- Connect the cable harness from the floor to the connector (1).
- Secure it using a cable tie in the existing cable harness or in a bracket.
- Tape one cut piece of foam tape around the connectors.
- Place a cable tie on each side of the connectors and tighten.
- Check that the cable harness is not trapped when the seat is slid forwards and backwards.

The left-hand seat means the passenger seat

- Fold the backrest forward and backwards and check that the cable harness is not trapped when folding the backrest.

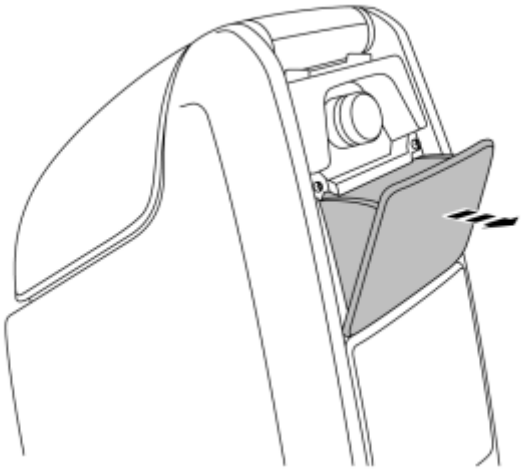

Fig. 144: Removing Ashtray
Courtesy of VOLVO CARS CORPORATION

- Fold the ashtray out, press it down and remove.

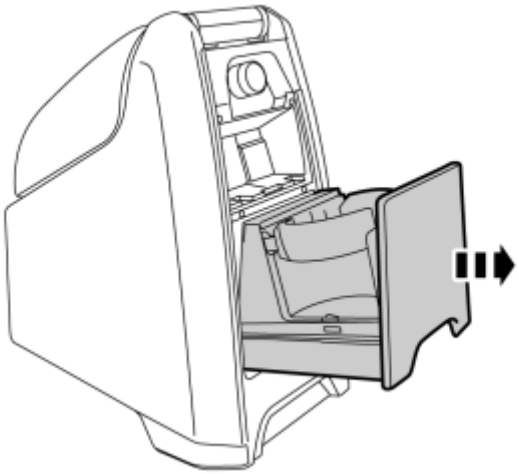

Fig. 145: Pulling Out Cup Holder To Its Limit Position
Courtesy of VOLVO CARS CORPORATION

- Pull out the cup holder to its limit position.

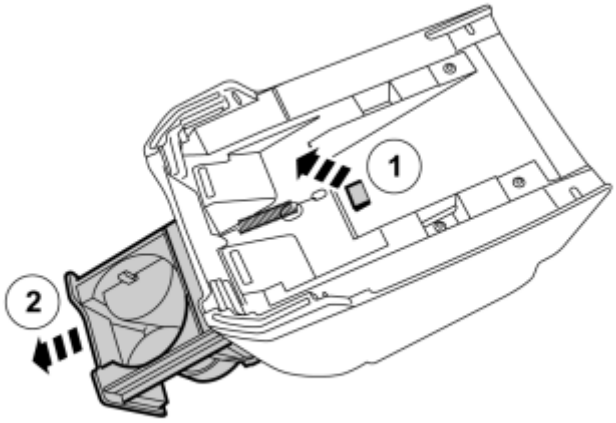

Fig. 146: Removing Cup Holder
Courtesy of VOLVO CARS CORPORATION

- Turn the tunnel console.
- Lift up the catch and remove the cup holder.

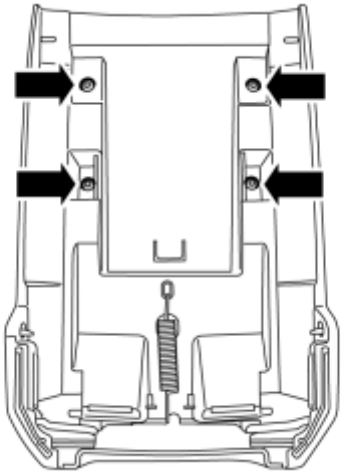

Fig. 147: Removing Console Screws
Courtesy of VOLVO CARS CORPORATION

- Remove the 4 screws.

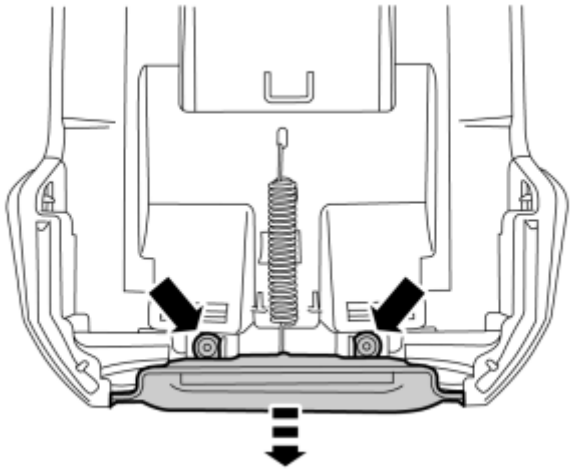

Fig. 148: Removing The Lower Section
Courtesy of VOLVO CARS CORPORATION

- Pull the opening handle.
- Remove the 2 screws and lift off the lower section.

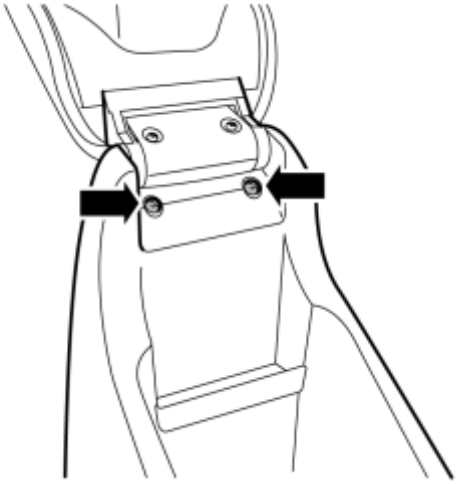

Fig. 149: Removing Console Cover Hinge Screws
Courtesy of VOLVO CARS CORPORATION

- Fold the cover up and remove the 2 screws.
- Remove the cover by sliding it forward. The cover will not be reused.

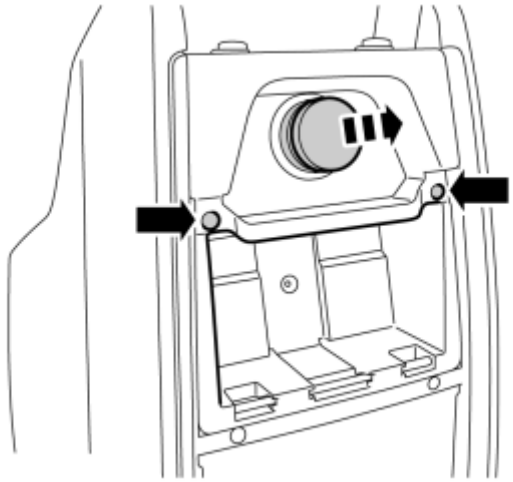

Fig. 150: Removing 12V Socket Plug
Courtesy of VOLVO CARS CORPORATION

- Remove the plug for the 12 V socket.
- Remove the 2 rubber supports.

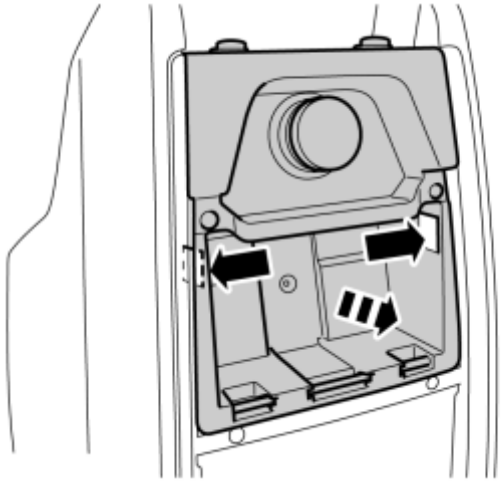

Fig. 151: Identifying Catches
Courtesy of VOLVO CARS CORPORATION

- Lift up the 2 catches and remove the inner section of the ashtray. It will not be reused.

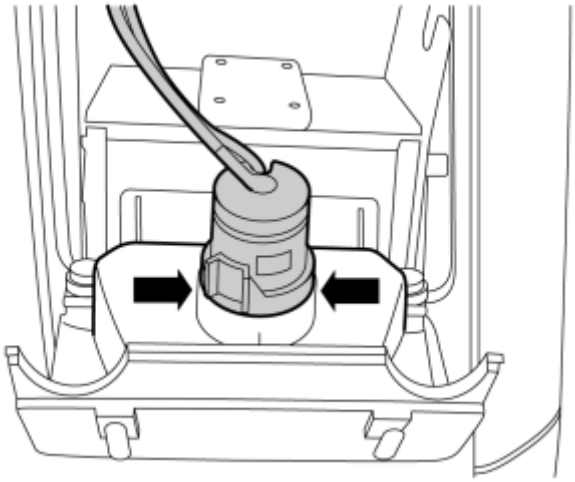

Fig. 152: Removing The 12V Socket
Courtesy of VOLVO CARS CORPORATION

- Release the 2 catches and remove the 12 V socket.

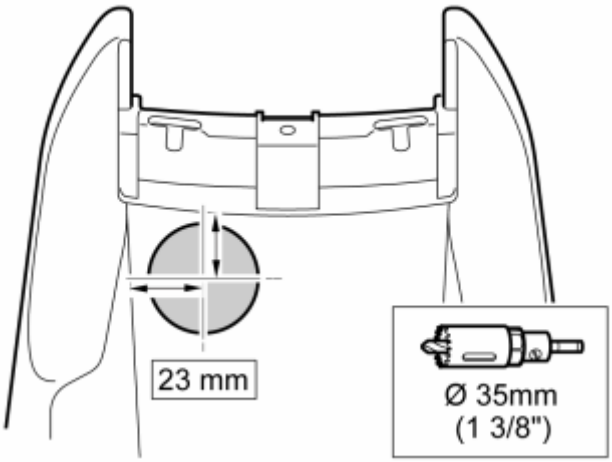

Fig. 153: Marking Tunnel Console's Storage Compartment
Courtesy of VOLVO CARS CORPORATION

- Mark as illustrated on the tunnel console's storage compartment.
- Pre-drill using a **2.5 mm (3/32")** bit.
- Drill out the hole. Use a **35 mm (1 3/8")** diameter hole saw.
- Smooth off the hole edges.

APPLY WHEN THE TUNNEL CONSOLE IS NOT PREPARED FOR THE RSE SYSTEM

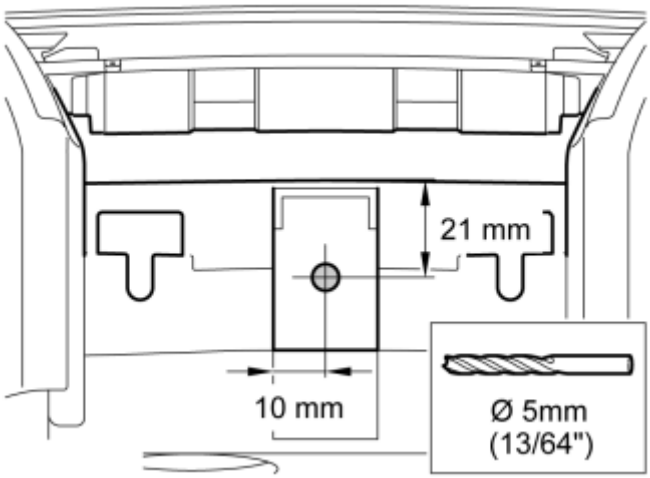

Fig. 154: Marking Tunnel Console's Upper Section
Courtesy of VOLVO CARS CORPORATION

- Mark as illustrated on the tunnel console's upper section.
- Drill using a **5mm (13/64")** bit.

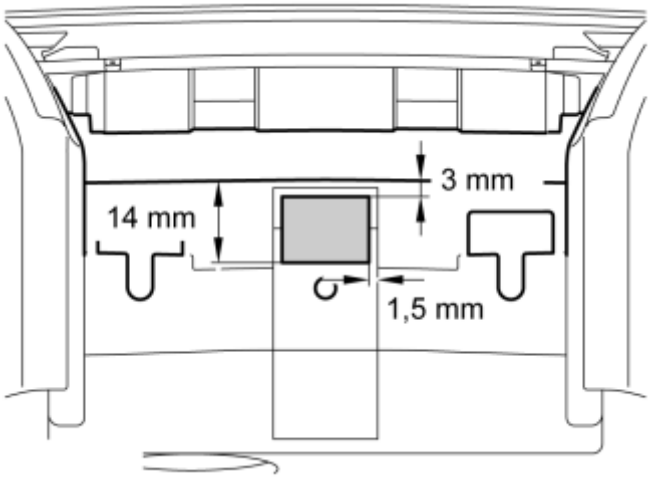

Fig. 155: Marking Tunnel Console's Upper Section
Courtesy of VOLVO CARS CORPORATION

- Mark as illustrated on the tunnel console's upper section.
- Saw and cut out the hole according to the markings.

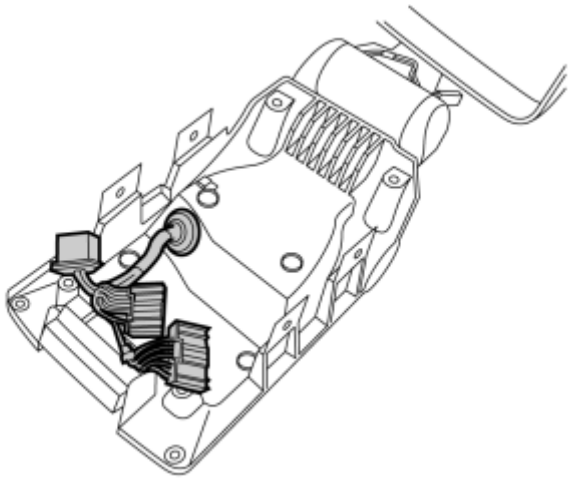

Fig. 156: Inserting Cable Harness Through Hole
Courtesy of VOLVO CARS CORPORATION

- Take the lower section of the cover and cable harness (C) from the kit.
- Insert the end with the 3 connectors through the hole.
- Install the rubber grommet.

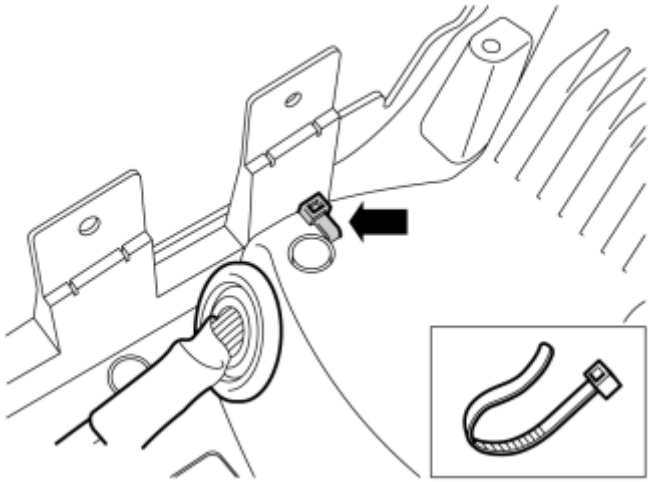

Fig. 157: Securing With Tie Strap
Courtesy of VOLVO CARS CORPORATION

- Secure the cable harness with a tie strap.

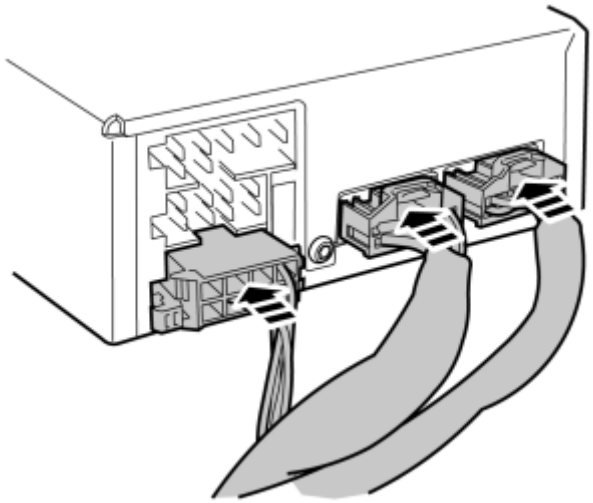

Fig. 158: Installing DVD Unit
Courtesy of VOLVO CARS CORPORATION

- Take the DVD unit and 4 M4x6 screws from the kit.
- Connect the 3 connectors to the DVD unit.

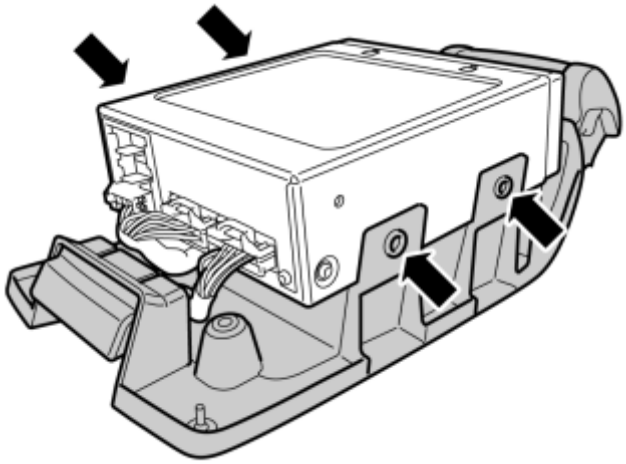

Fig. 159: Place DVD Unit In The Lower Section Of The Cover
Courtesy of VOLVO CARS CORPORATION

- Place the DVD unit in the lower section of the cover as illustrated. Ensure that the cable harness goes under the DVD unit and does not protrude towards the open button or screw tower.
- Install the 4 screws and tighten.

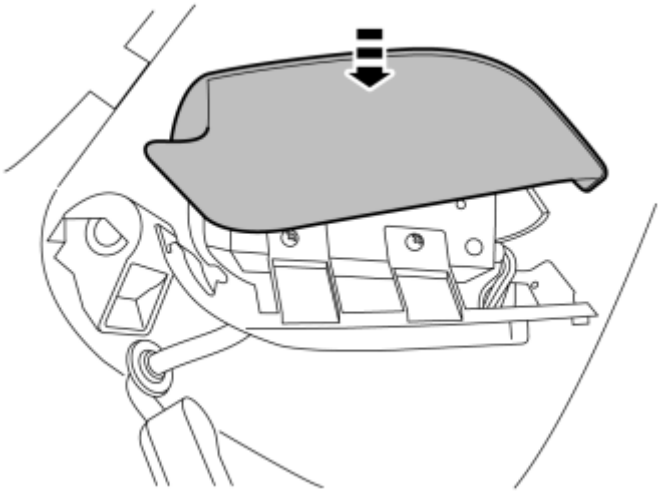

Fig. 160: Installing Cover
Courtesy of VOLVO CARS CORPORATION

- Take the cover's upper section and 4 screws, PF5x16, from the kit.
- Install the cover.

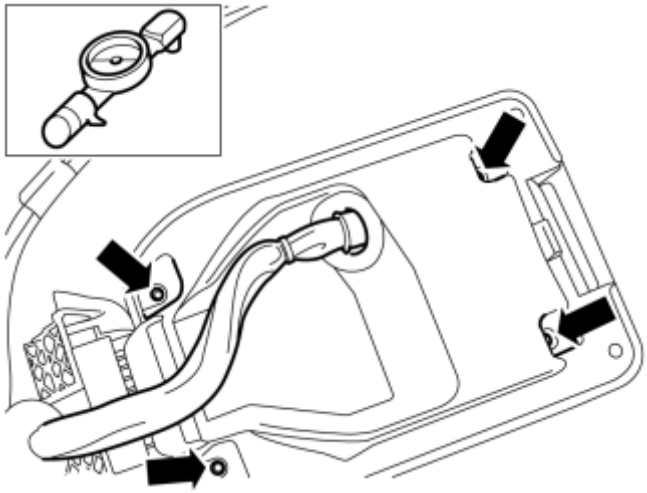

Fig. 161: Installing Cover
Courtesy of VOLVO CARS CORPORATION

- Turn the cover, install the 4 screws and tighten to **3 Nm (2.2 lbf. ft.)** .

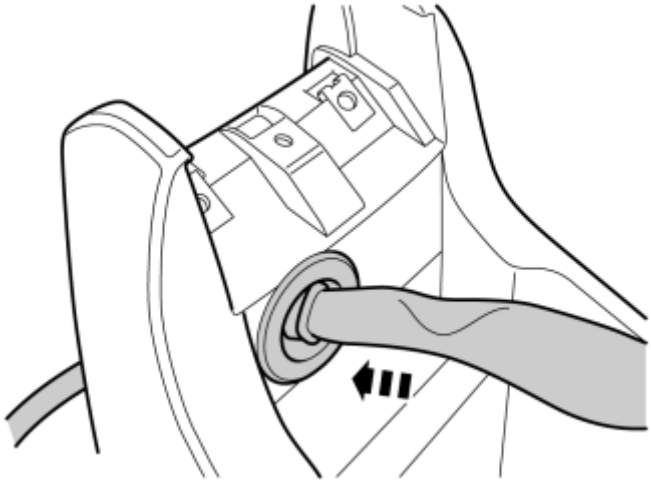

Fig. 162: Routing Cable Harness
Courtesy of VOLVO CARS CORPORATION

- Route the cable harness in from the DVD unit through the drilled hole and down on the right-hand side of the tunnel console.
- Install the rubber grommet.
- Check that the rubber grommet's flanges are against the console.

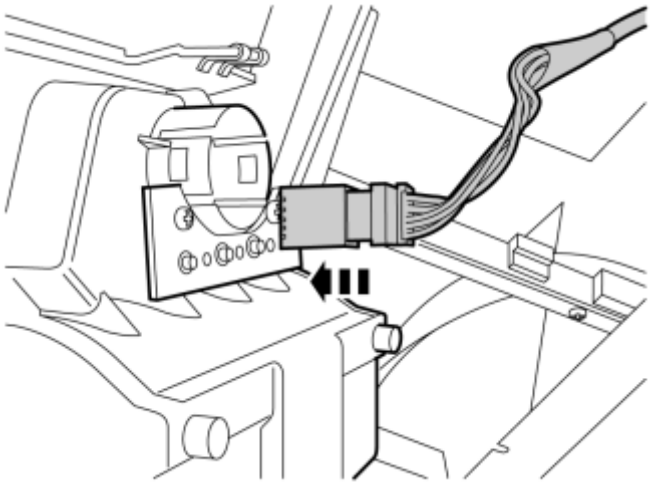

Fig. 163: Connecting Green Connector To AUX Panel
Courtesy of VOLVO CARS CORPORATION

- Take the AUX panel from the kit.
- Connect the green connector to it.

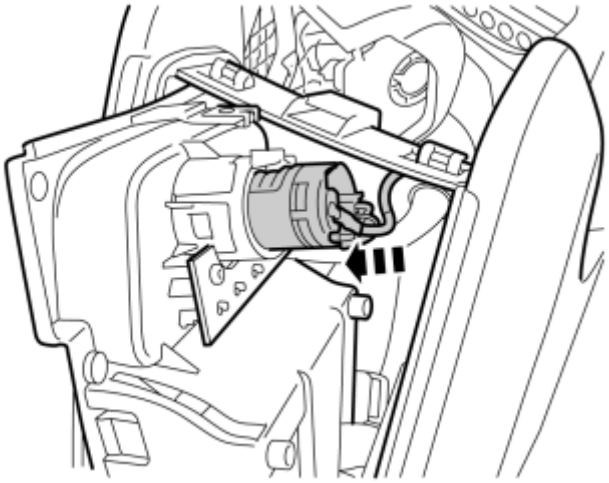

Fig. 164: Installing Socket To Panel
Courtesy of VOLVO CARS CORPORATION

- Install the 12 V socket to the panel.

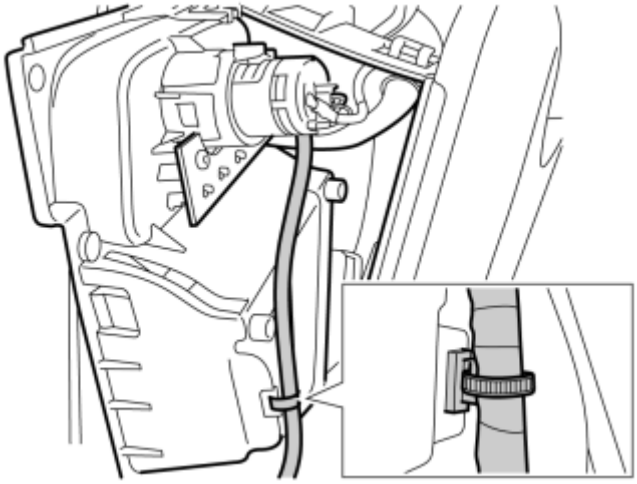

Fig. 165: Securing Cable To Flange
Courtesy of VOLVO CARS CORPORATION

- Secure the cable harness clips on the flange of the AUX panel.

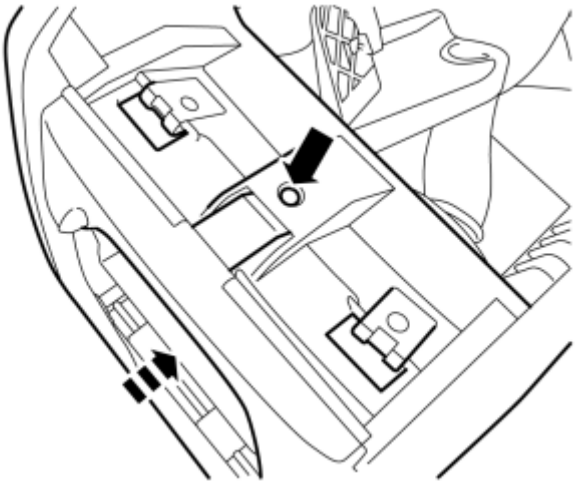

Fig. 166: Installing Panel
Courtesy of VOLVO CARS CORPORATION

- Press the panel into place.
- Secure the panel with one screw (ST 3.5x13) from the kit.

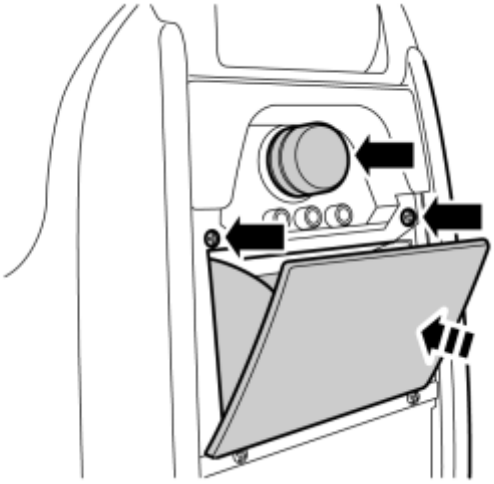

Fig. 167: Installing Console Components
Courtesy of VOLVO CARS CORPORATION

- Reinstall the rubber support, the ashtray and the plug for the 12 V socket.

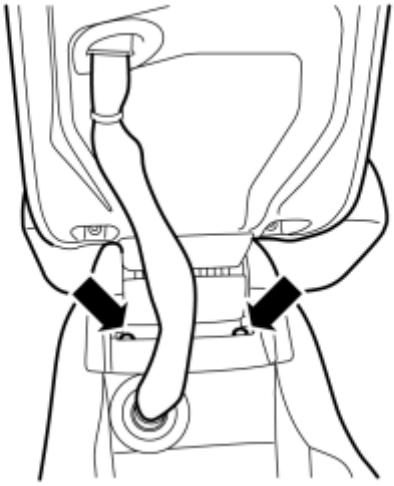

Fig. 168: Installing Center Console Cover
Courtesy of VOLVO CARS CORPORATION

- Install the cover on the center console and tighten with the 2 screws

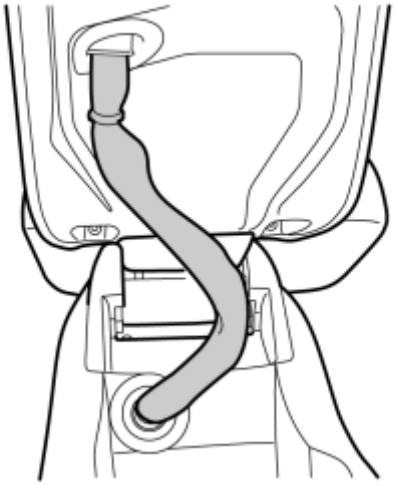

Fig. 169: Checking Center Console Cover Operation With New Components Installed
Courtesy of VOLVO CARS CORPORATION

- Open and close the cover three times.
- Check that the lock at the front edge works and that the rubber bushings are in place.
- The cable harness should be in a loop as illustrated.

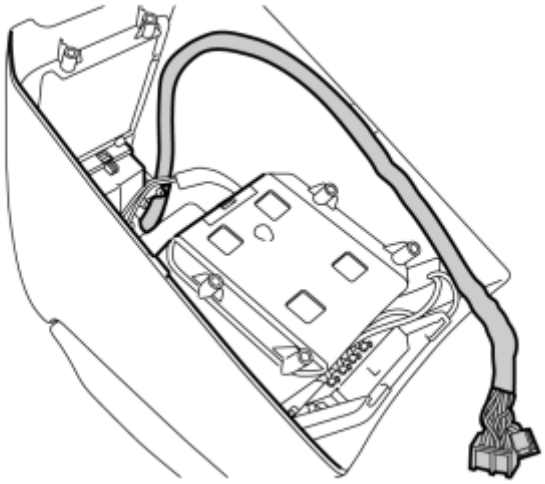

Fig. 170: Routing Cable Harness
Courtesy of VOLVO CARS CORPORATION

- Turn the console and route the cable harness as illustrated.

APPLY WHEN THE TUNNEL CONSOLE IS NOT PREPARED FOR THE RSE SYSTEM.

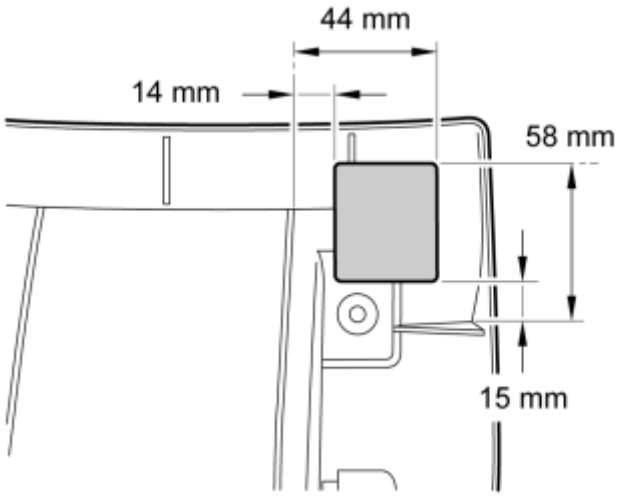

Fig. 171: Identifying Markings On Tunnel Console's Lower Section
Courtesy of VOLVO CARS CORPORATION

- Mark as illustrated on the tunnel console's lower section.
- Saw and cut out according to the markings.
- File down the edges.

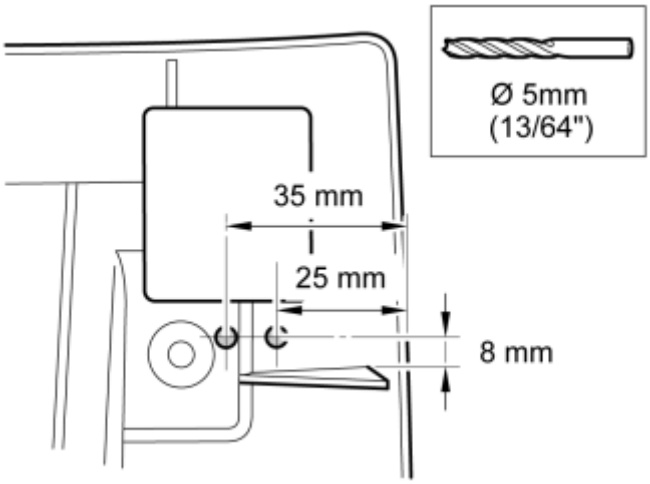

Fig. 172: Drilling Location And Dimensions
Courtesy of VOLVO CARS CORPORATION

- Mark as illustrated.
- Drill out the markings using a **5 mm (13/64")** diameter drill bit.

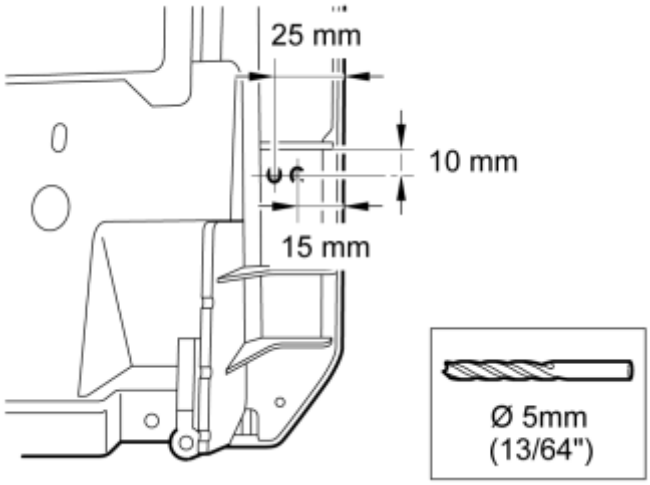

Fig. 173: Drilling Location And Dimensions
Courtesy of VOLVO CARS CORPORATION

- Mark out further drill holes as illustrated
- Drill out the markings using a **5 mm (13/64")** diameter drill bit.

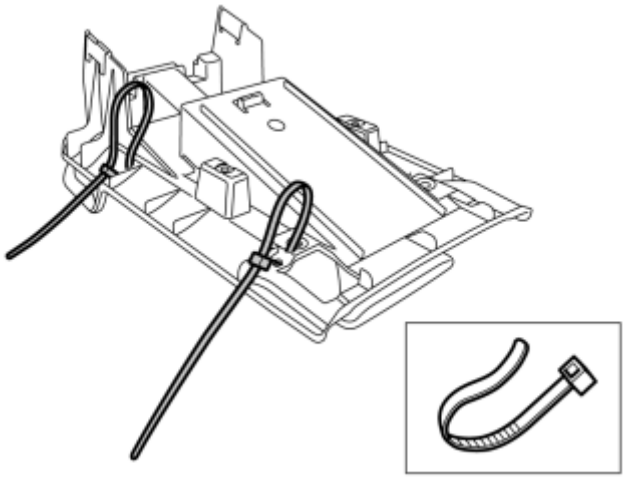

Fig. 174: Inserting Cable Ties
Courtesy of VOLVO CARS CORPORATION

- Insert 2 cable ties through the drilled holes.
- Tighten the cable ties so that the create an eyelet.

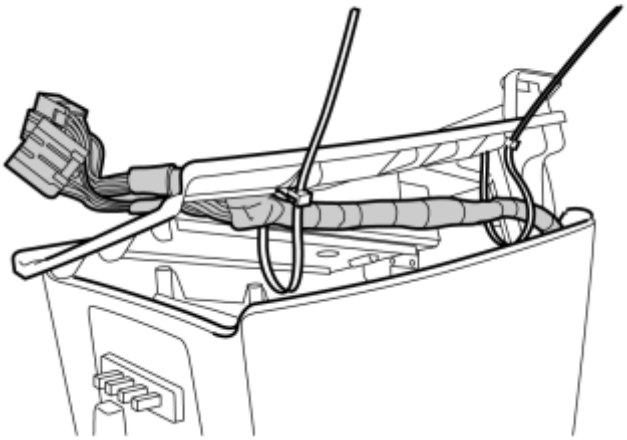

Fig. 175: Installing Cable Harness
Courtesy of VOLVO CARS CORPORATION

- Insert the cable harness through the eyelets and out through the newly created cut out.

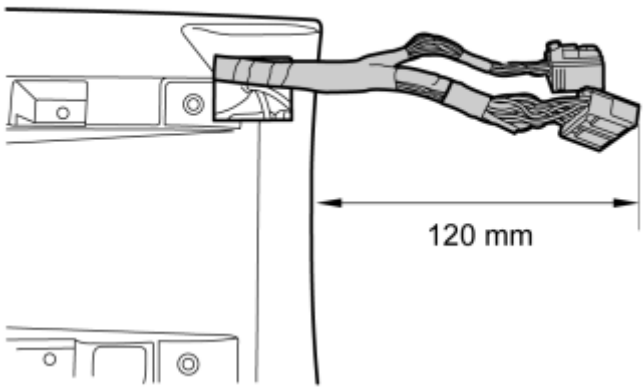

Fig. 176: Positioning Cable Harness
Courtesy of VOLVO CARS CORPORATION

- Position the cable harness correctly and ensure that it protrudes approx. 120 mm (4 23/32").

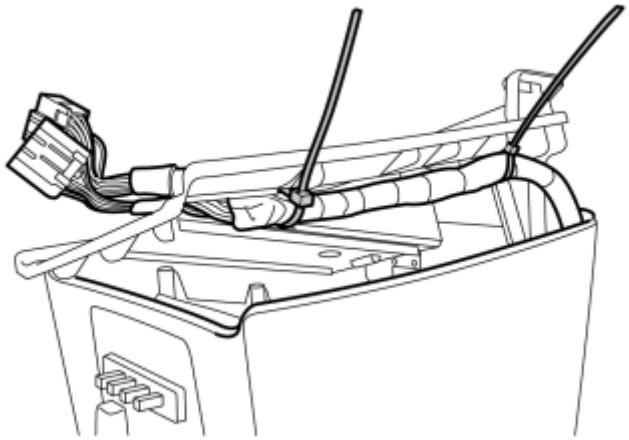

Fig. 177: Securing Cable With Cable Ties
Courtesy of VOLVO CARS CORPORATION

- Tighten the cable ties and cut off the protruding part.
- Install the lower section of the console using the 6 screws.

APPLIES WHEN THE TUNNEL CONSOLE IS PREPARED FOR THE RSE SYSTEM.

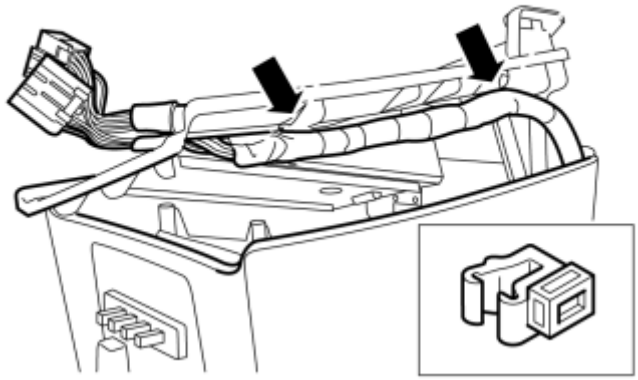

Fig. 178: Installing Cable Harness
Courtesy of VOLVO CARS CORPORATION

- Thread the cable harness out through the square cut out on the lower section of the tunnel console.
- Secure the 2 clips of the cable harness on the plastic flanges.
- Tighten the lower section using the 6 screws.

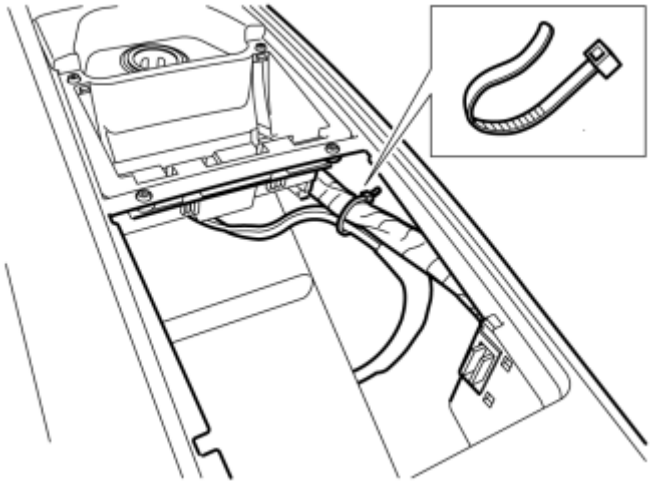

Fig. 179: Securing Cable With Cable Ties
Courtesy of VOLVO CARS CORPORATION

- Take a cable tie and secure the 12V socket's cable by the clip on the cable harness from the DVD unit.
- The cable tie catch should point towards the outer side of the tunnel console.
- Reinstall the cup holder.

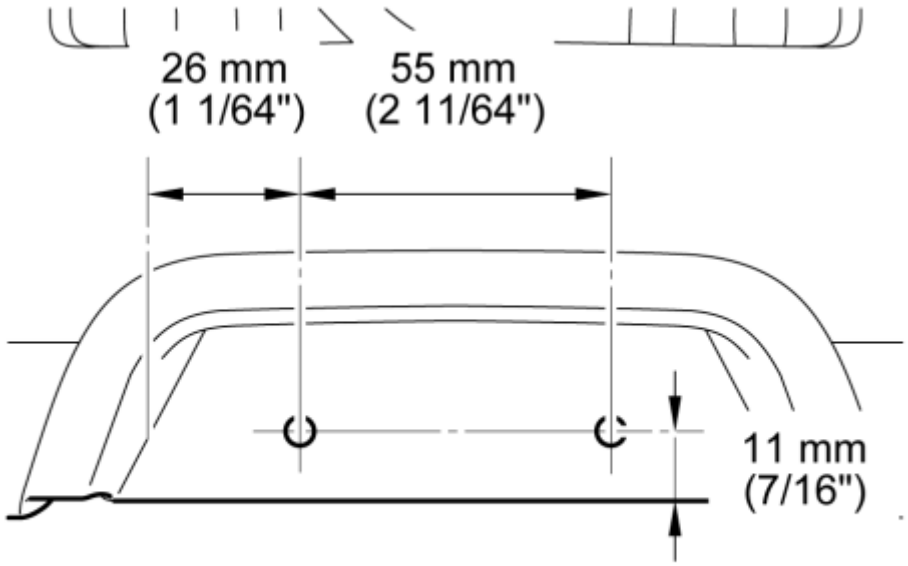

Fig. 180: Drill Holes On Opening Handle For Tunnel Console
Courtesy of VOLVO CARS CORPORATION

- Make marks for drill holes on the opening handle for the tunnel console as illustrated.
- Pre-drill using a **2.5 mm (3/32")** bit.
- Drill out the hole using a **6 mm (15/64 ")** drill bit.

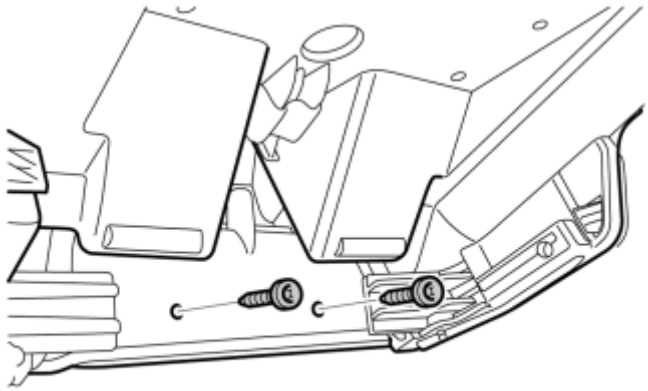

Fig. 181: Installing Cover
Courtesy of VOLVO CARS CORPORATION

- Take the cover and 2 PF5*12 screws from the kit.
- Install the cover on the opening handle.

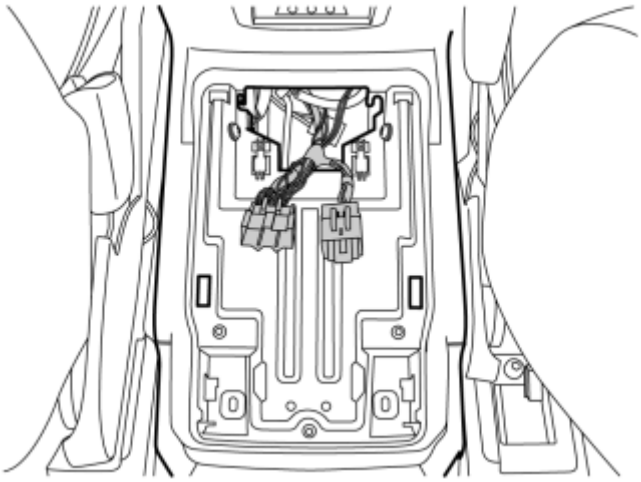

Fig. 182: Installing Front Center Console
Courtesy of VOLVO CARS CORPORATION

- Reinstall the front center console and at the same time pull up the connectors for the RSE system, 12 V socket and telephone if applicable.

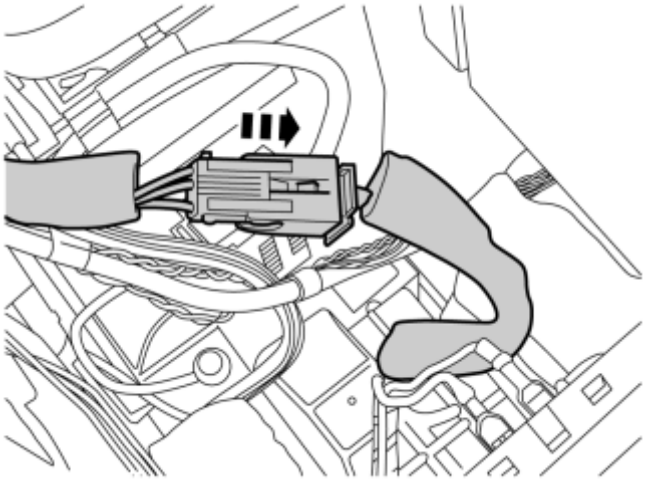

Fig. 183: Connecting 4 Pin Black Connector
Courtesy of VOLVO CARS CORPORATION

- Connect the 4 pin black connector from the cable harness (B) to the one disconnected from the AUX socket.
- Take foam tape from the kit and wrap it around the connector. Cut off the foam tape excess.

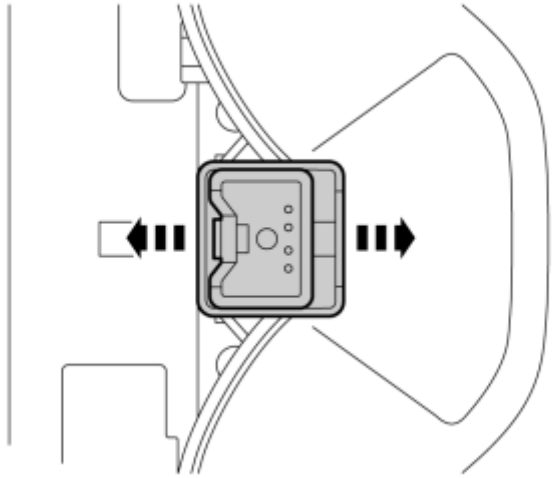

Fig. 184: Remove The AUX Socket
Courtesy of VOLVO CARS CORPORATION

- Take the upper panel for the front center console.
- Remove the AUX socket by releasing the catches at the front and rear edge.

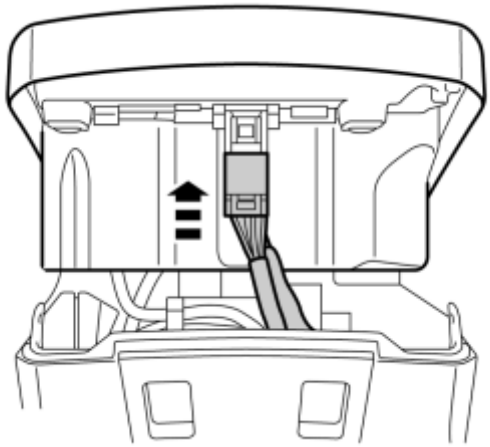

Fig. 185: Connecting The AUX Socket
Courtesy of VOLVO CARS CORPORATION

- Take the new AUX socket from the kit and connect it to the 7 pin connector from cable harness (B).
- Install the socket in the panel with the connector's catch backwards.

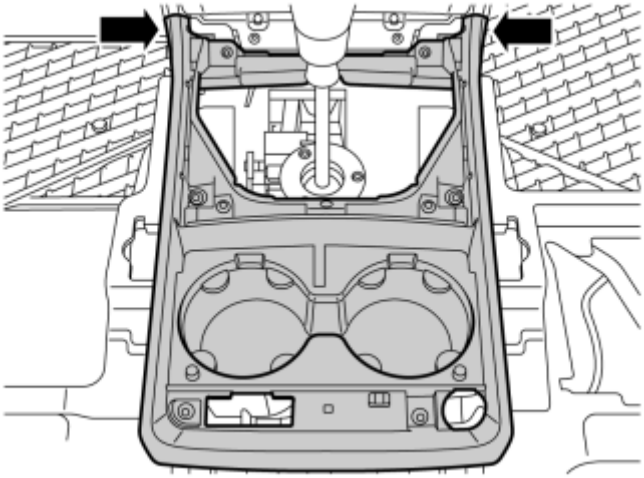

Fig. 186: Installing Tunnel Console's Upper Panel
Courtesy of VOLVO CARS CORPORATION

- Install the tunnel console's upper panel.
- Check that the panel hooks securely at the front edge.
- Reinstall the tunnel console's 8 screws and tighten.

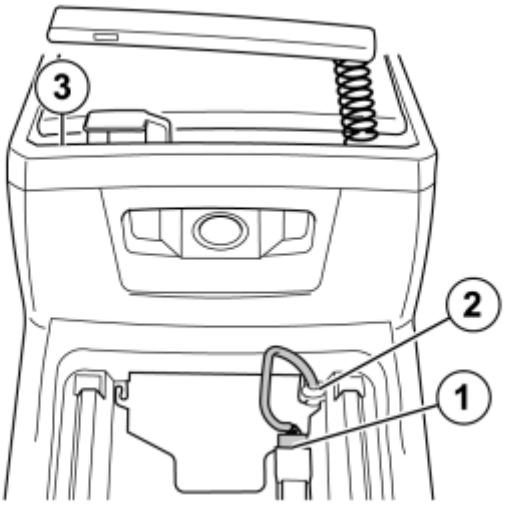

Fig. 187: Installing Telephone Cable
Courtesy of VOLVO CARS CORPORATION

Applies to cars with telephone

- Reinstall the telephone cradle with the screws (3).
- Route the telephone cable.
- Install the telephone cable in the load-removing grommet (2).
- Connect the connector (1).

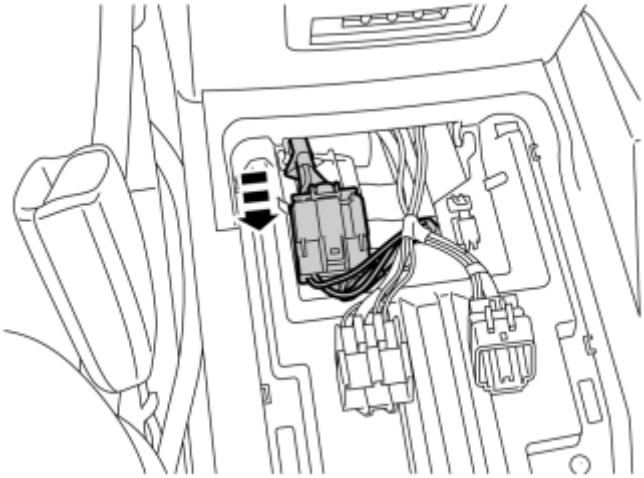

Fig. 188: Connecting 12V Socket Connector
Courtesy of VOLVO CARS CORPORATION

- Connect the connector for the 12V socket.

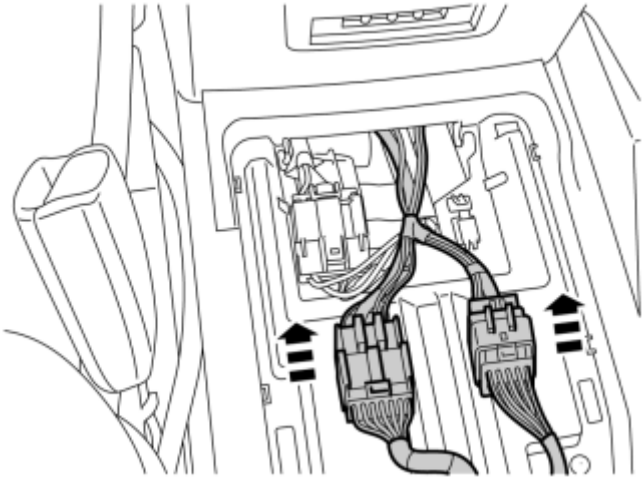

Fig. 189: Connecting DVD System Connectors
Courtesy of VOLVO CARS CORPORATION

- Take the rear tunnel console.
- Connect the 2 connectors from the DVD system.
- Take two pieces of foam tape from the kit and wrap them around the connectors. Cut off the foam tape excess.

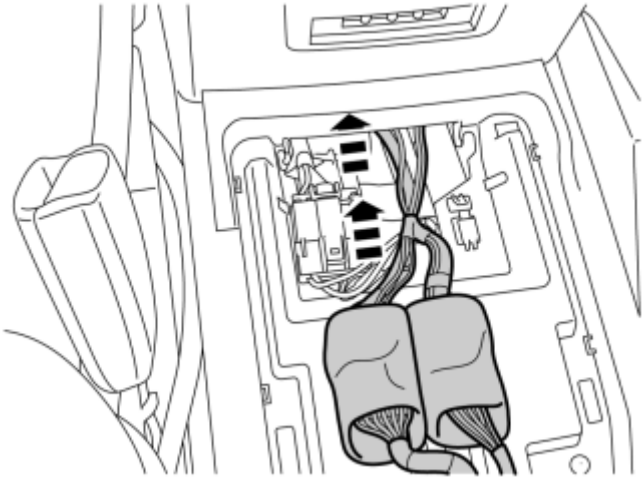

Fig. 190: Installing Connectors Into Tunnel Console
Courtesy of VOLVO CARS CORPORATION

- Insert the connectors into the tunnel console.
- Hook the connector on for the 12 V socket.
- Slide the rear tunnel console forwards in its grooves until it locks and check that the cable harness is not trapped.

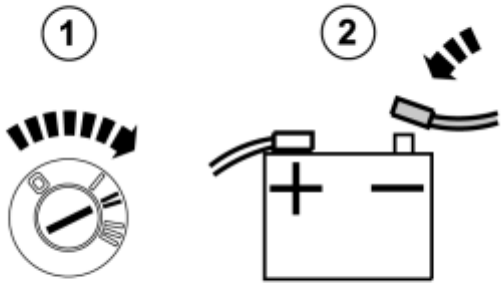

Fig. 191: Identifying Ignition In ON Position and Connecting Negative Battery Lead
Courtesy of VOLVO CARS CORPORATION

- Turn the ignition key to position II.
- Reconnect the battery negative lead.
- Turn the ignition key to position 0.

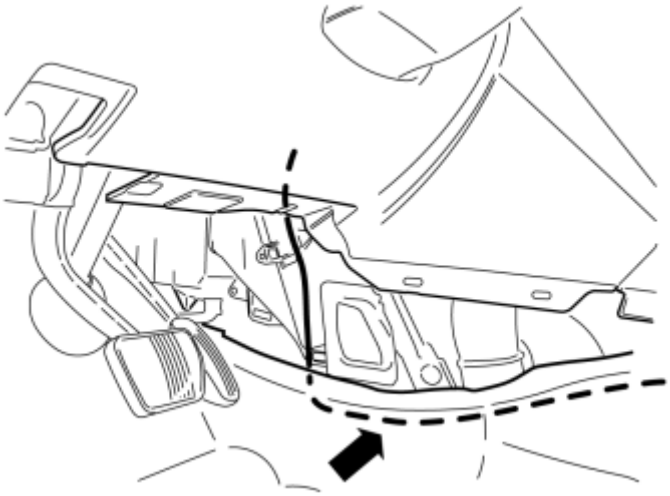

Fig. 192: Routing Cable
Courtesy of VOLVO CARS CORPORATION

- Take the cable with the 2 x 4 pin connector and route forward on the driver's side.
- Fold the carpet to one side and place the cable under the carpet.

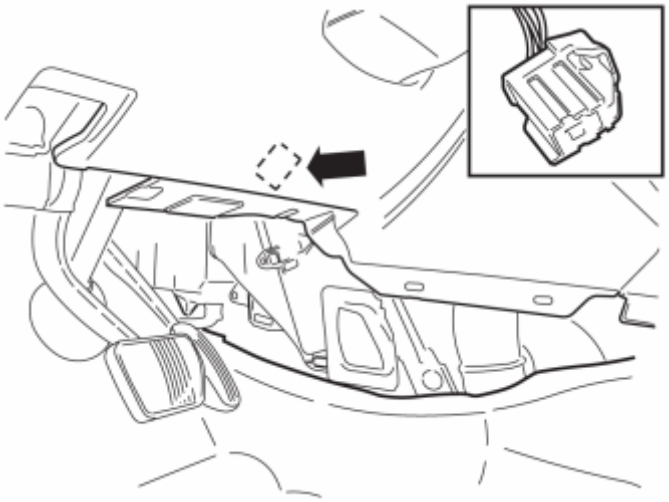

Fig. 193: Identifying Location Of Grey, 4 Pin, Power Supply Connector
Courtesy of VOLVO CARS CORPORATION

- Locate the 4 pin, grey connector for the power supply. It is secured on the thick cable harness under the dashboard on the driver's side.

NOTE: The pre-routed connector is already connected on certain versions.

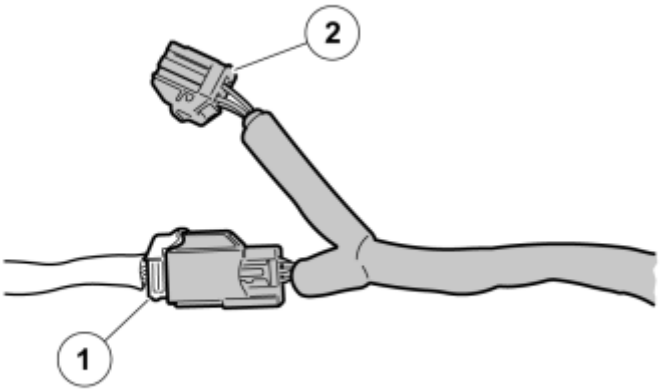

Fig. 194: Identifying Cable Harness Connectors
Courtesy of VOLVO CARS CORPORATION

- Connect the cable harness to the existing connector (1).
- Wrap a piece of foam tape around the connected connectors and cut off the excess.
- Install the connector (2) on the car's existing cable harness using a cable tie.

NOTE: **The pre-routed connector is already connected on certain versions. In such a case, disconnect it and connect both connectors from the new cable harness. Wrap a piece of foam tape around the connectors.**

Reinstall:

- the small storage compartment.
- the panel at the gear selector.
- side panels.
- the sound proofing.

- Install batteries in the remote control and headsets.
- Carry out region coding of the DVD player. Information is available in VIDA under: " Product specifications/Design and Function /39 Media, communication and navigation/393 equipment for entertainment/Rear seat entertainment system/Design".

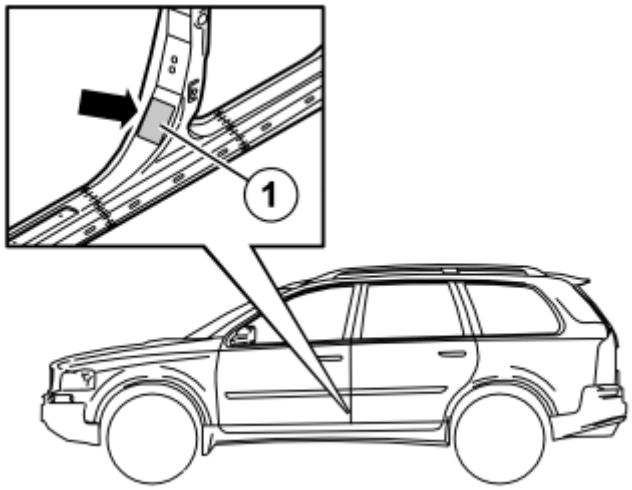

Fig. 195: Installing Decal
Courtesy of VOLVO CARS CORPORATION

Installing decals

- Take the black decal from the kit.
- Clean the area (1) where the decal will be located. Use a mixture of 30% windscreen washer fluid and 70% water. Wipe dry.
- Remove the backing paper from the adhesive side of the decal. Secure the decal as illustrated.
- Press the decal into place properly.

NAVIGATION SYSTEM, RTI (2007-2012)

CARS EQUIPPED WITH SRS/SIPS (AIRBAG)

see **CARS EQUIPPED WITH SRS/SIPS (AIRBAG)**

CAUTION

see **CAUTION**

NAVIGATION SYSTEM, RTI

NOTE: This accessory requires software unique to the car.

NOTE: For European users, the TMC unit, part number 6849907, can be purchased separately.

PREPARATIONS

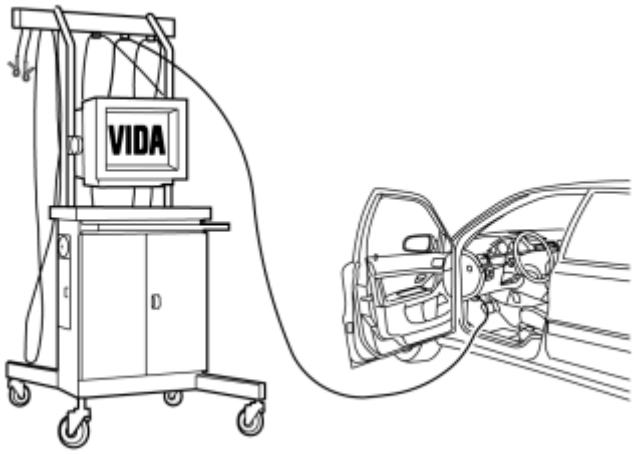

Fig. 196: Identifying VIDA (Service Information) To Program Software
Courtesy of VOLVO CARS CORPORATION

- Download the software for the accessory's function following the service information in VIDA (Volvo scan tool).

NOTE: The software must be loaded before installing the accessory.

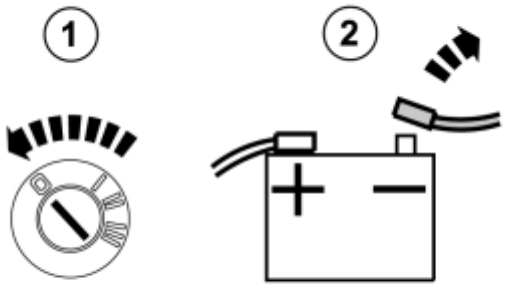

Fig. 197: Identifying Ignition Switch OFF & Disconnected Negative Battery Lead
Courtesy of VOLVO CARS CORPORATION

- Place the driver's seat in its rearmost position.
- Turn the ignition switch to position 0.
- Disconnect the battery negative lead

NOTE: Wait at least three minutes before unplugging the connectors or removing other electrical equipment.

Illustration A

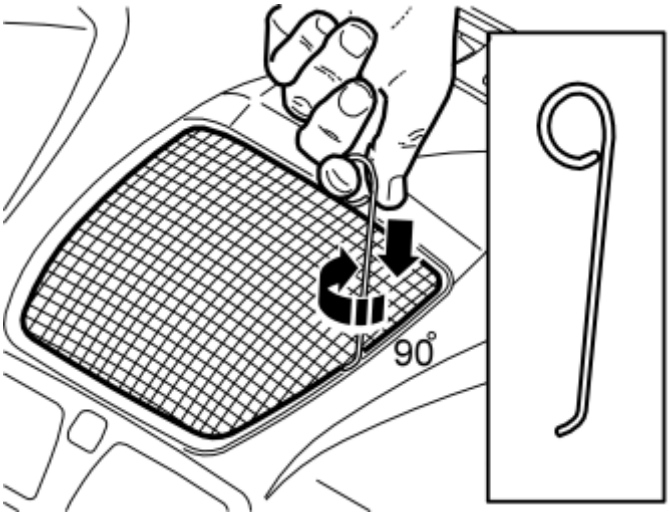

Fig. 198: Removing Loudspeaker Grille From Dashboard
Courtesy of VOLVO CARS CORPORATION

Remove the loudspeaker grille as follows:

- Take a piece of welding rod **1.5 mm (1/16")** . Bend it 90° at one end, **L=5 mm (13/64")** . The other end is bent to create a handle.
- First insert the bent end in the joint between the loudspeaker grille and the dashboard approximately as illustrated, until it engages.
- Turn the welding rod 90°so that the bent section catches the underneath of the loudspeaker grille. The welding rod may need moving along the joint to be turned.

Illustration B

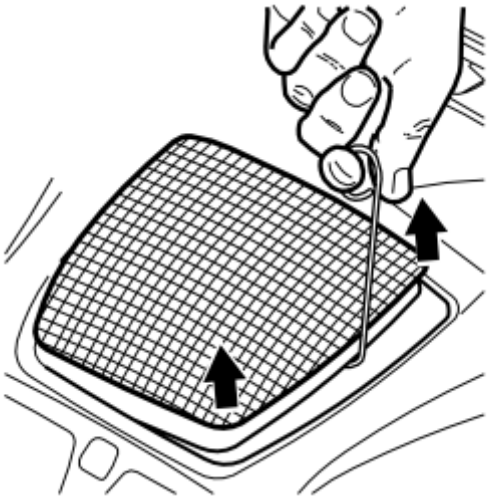

Fig. 199: Removing Loudspeaker Grille From Dashboard
Courtesy of VOLVO CARS CORPORATION

- Pull upwards until the loudspeaker grille detaches, it is securely fastened by four clips.

NOTE: Do not damage the dashboard.

- Place the loudspeaker grille to one side.

Illustration C

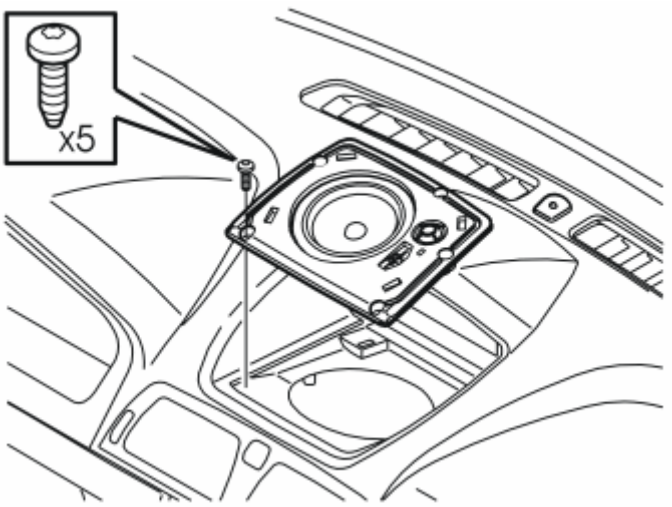

Fig. 200: Removing Loudspeaker
Courtesy of VOLVO CARS CORPORATION

Applies to cars without center loudspeakers

- Remove the bracket for the loudspeaker grille by removing the five screws and pulling the grille up from the dashboard.

Illustration D

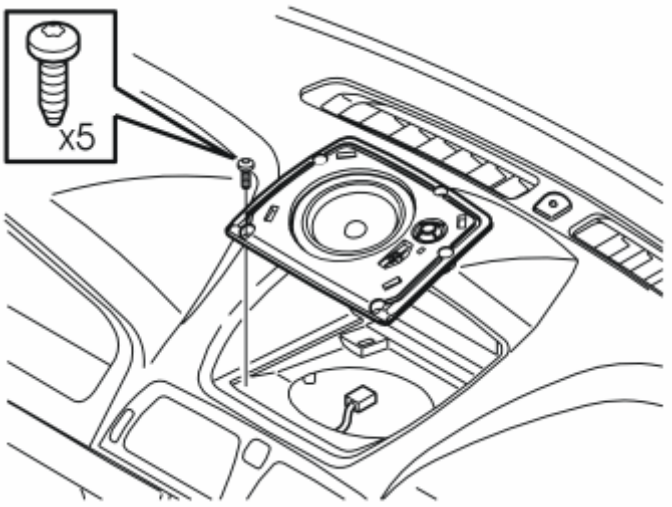

Fig. 201: Removing Loudspeaker
Courtesy of VOLVO CARS CORPORATION

Applies to cars with a centrally mounted loudspeaker

- Remove the five screws in the loudspeaker. Pull the loudspeaker up slightly from the dashboard and disconnect the connector.

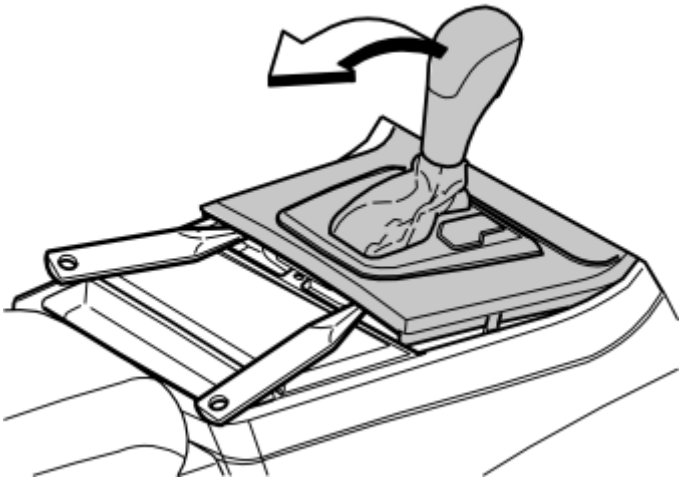

Fig. 202: Prying Off Gear Selector Panel At Rear Edge
Courtesy of VOLVO CARS CORPORATION

Applies to cars with automatic gearbox

- Turn the ignition key to position II.
- Move the gear selector lever to its rearmost position.
- Carefully pry off the gear level panel at the rear edge using a weatherstrip tool. Pull the panel backwards to access the screws for the climate control panel.

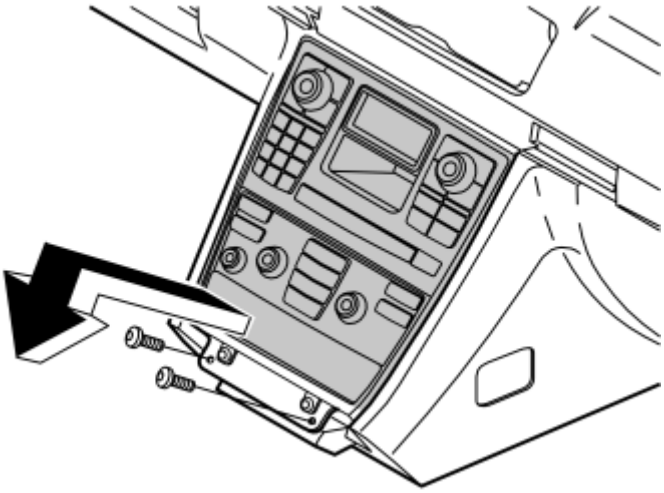

Fig. 203: Removing Screws And Radio/AC Unit From Center Console
Courtesy of VOLVO CARS CORPORATION

- Remove the two screws holding the bracket to the climate control panel and the control module.
- Pull out the bracket at the lower edge and pull it downwards away from the top edge.
- Disconnect the connectors from the climate control panel, control module and CD player and/or Minidisc player connectors, if applicable.

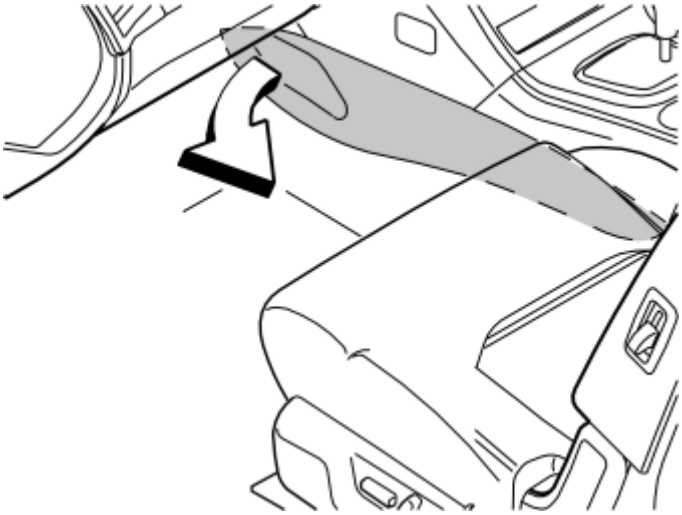

Fig. 204: Removing Center Console Left-Hand Side Panel
Courtesy of VOLVO CARS CORPORATION

- Remove the center console's left-hand side panel by first pulling it away starting at the front edge and then backwards until all the clips have released.

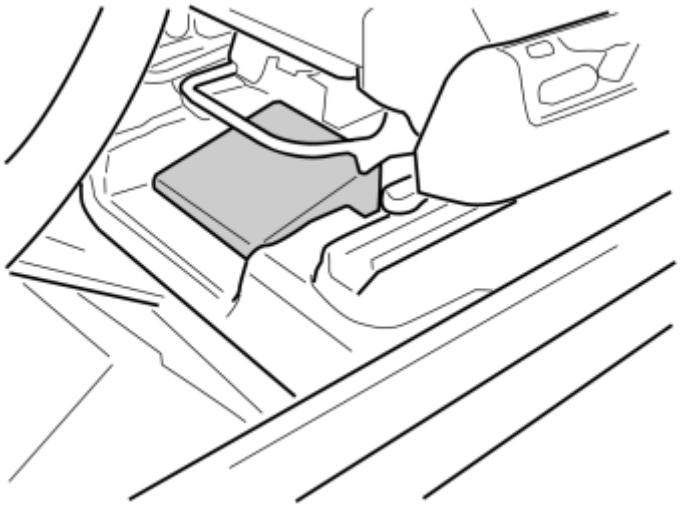

Fig. 205: Identifying GPS Unit
Courtesy of VOLVO CARS CORPORATION

Image A. Applies to cars with Volvo on call (VOC)

- Remove the 4 VOC GPS tuner screws, the tuner will not be reused.

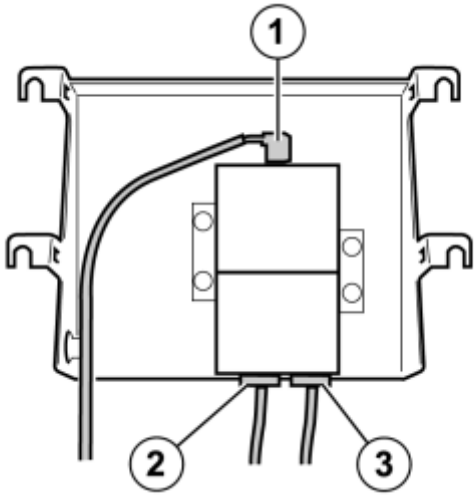

Fig. 206: Removing GPS Component Connections
Courtesy of VOLVO CARS CORPORATION

Image B. Applies to cars with Volvo on call (VOC)

- Remove:
  1. 1- connection to the Global Positioning System (GPS) antenna.
  2. 2- connection to MOST.
  3. 3- existing power supply to GPS tuner.

NOTE: Cable connection (3) will no longer be used, clamp the connector in a suitable location.

DO NOT APPLY TO CARS WITH VOLVO ON CALL (VOC)

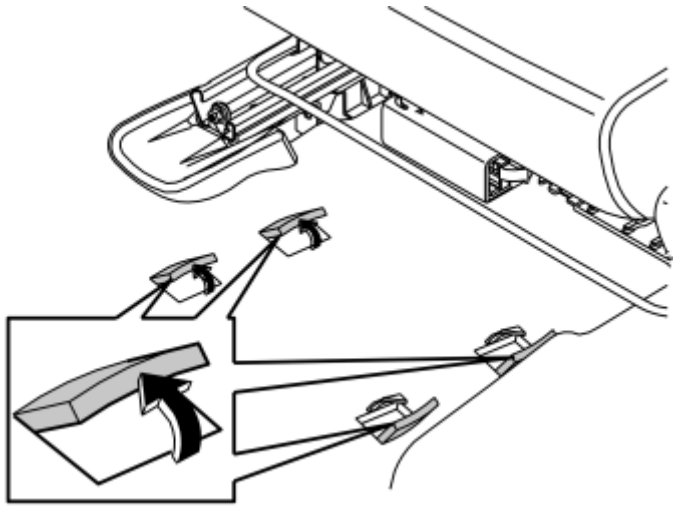

Fig. 207: Bending Out Carpet Tabs

Courtesy of VOLVO CARS CORPORATION

- Bend up the four punched out carpet tabs under the left-hand front seat.

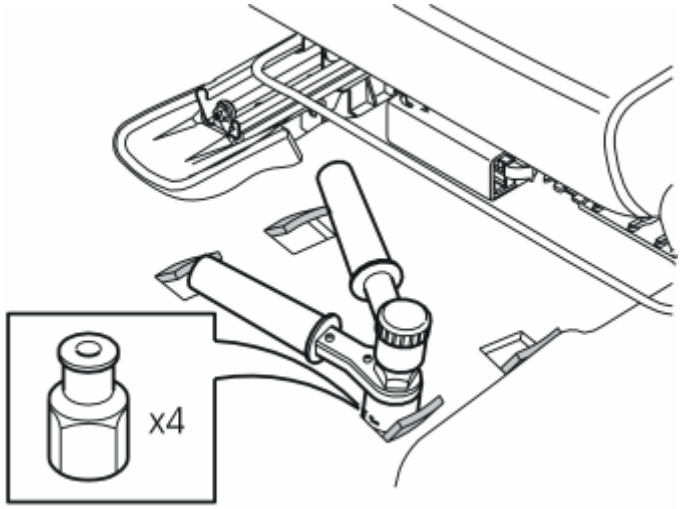

Fig. 208: Removing Rivets
Courtesy of VOLVO CARS CORPORATION

- Take the four rivet nuts from the kit and install them in the pre-punched holes under the carpet tabs.
- Take rivet tool **P/N 9512782** and tighten the rivet nuts. If necessary: Remove the mounting bracket for front-rear seat adjustment (applies to cars with manual seats).

INSTALLING THE ANTENNA CABLE

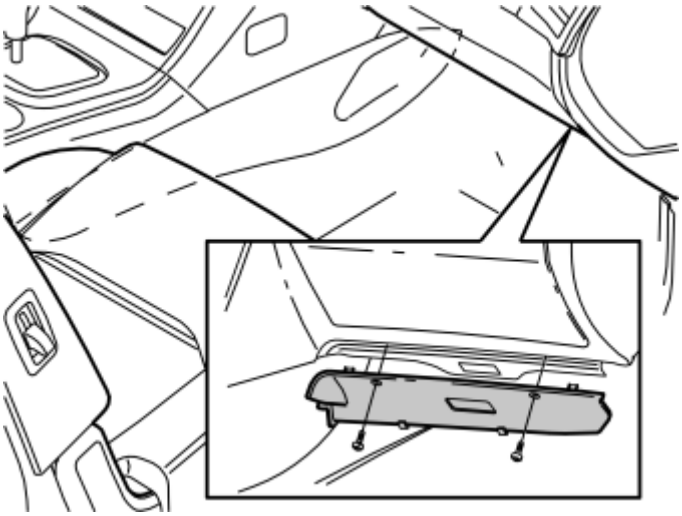

Fig. 209: Removing Passenger Side Sound Barrier
Courtesy of VOLVO CARS CORPORATION

- Remove the sound barrier on the right-hand side by first removing the two screws and then prizing it away at the top edge.

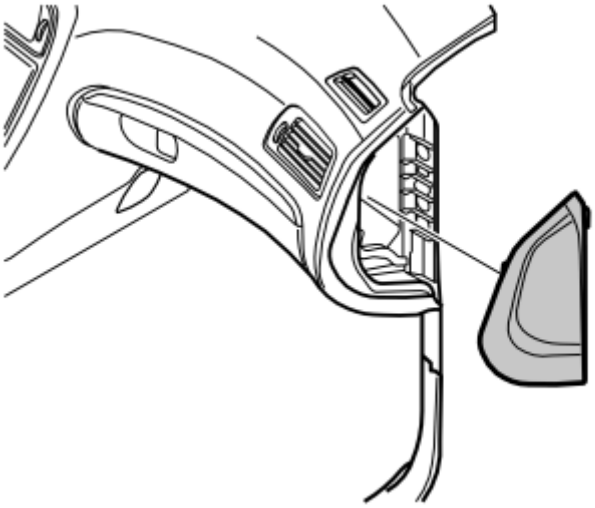

Fig. 210: Dashboard End Panel
Courtesy of VOLVO CARS CORPORATION

- Remove the panel on the right-hand end of the dashboard.

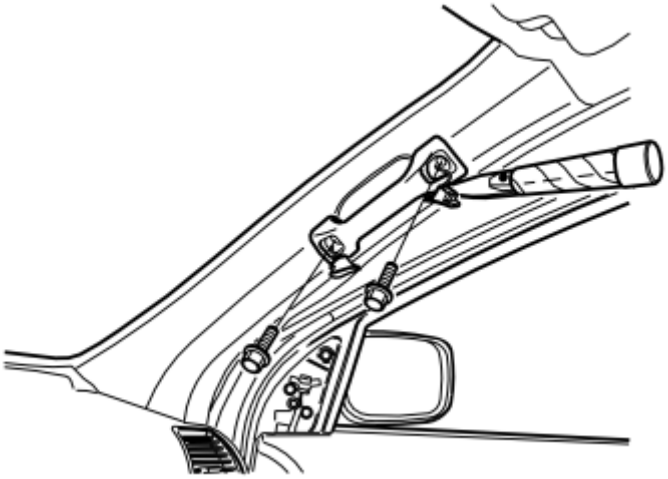

Fig. 211: Removing Grab Handle Tabs
Courtesy of VOLVO CARS CORPORATION

- Pry off the covers on the grab handle in the right-hand front door and remove the screws under them.

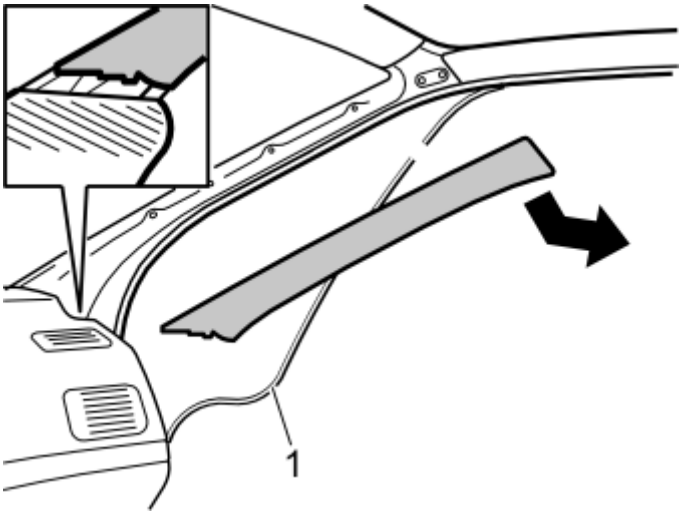

Fig. 212: Removing Weatherstrip
Courtesy of VOLVO CARS CORPORATION

- Pull of the weatherstrip (1) for the door at the A-pillar.
- Remove the right-hand A-post panel by carefully pulling it out by the upper edge until the clips inside release. Pull it up from the mounting in the dashboard.

NOTE: Do not damage the headlining.

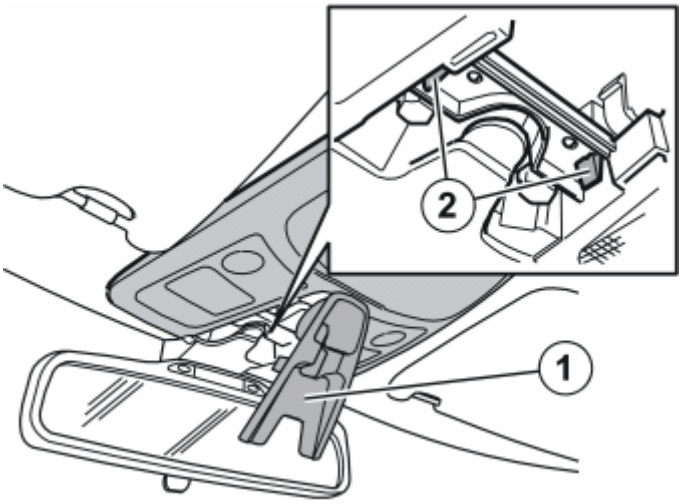

Fig. 213: Folding Down Cover And Squeezing Catches Together
Courtesy of VOLVO CARS CORPORATION

- Fold down the cover (1) by carefully pulling the front edge of the cover down.
- Press the catches (2) together. Pull the front edge of the panel down and then pull off at the rear edge.

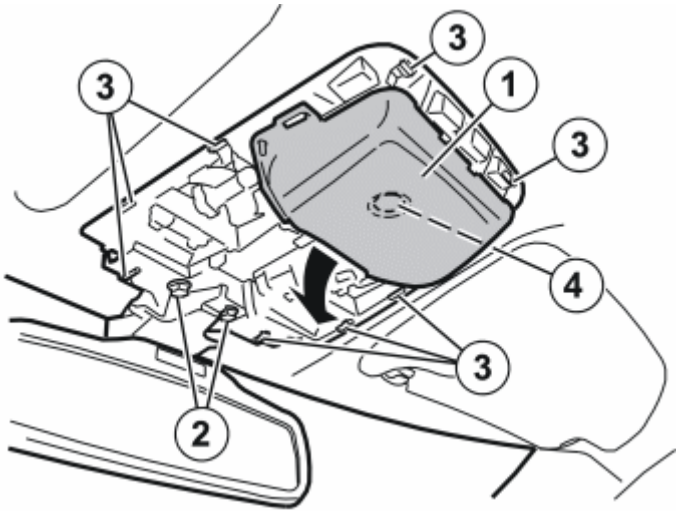

Fig. 214: Removing Front Interior Lighting Console
Courtesy of VOLVO CARS CORPORATION

- Detach the rear-view mirror and front interior lighting (1) by first removing the two screws (2) and then pressing in the eight catches (3) around the interior lighting.
- Carefully pull the components downwards and allow them to hang from their cables. The interior lighting is secured in the roof by clips (4).
- Remove the connector for the rain sensor (if applicable).

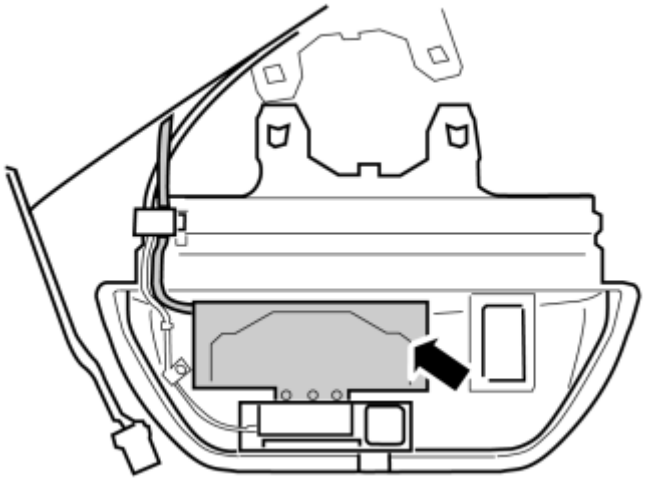

Fig. 215: Installing GPS Antenna
Courtesy of VOLVO CARS CORPORATION

- **NOTE When installing the GPS antenna where there is already a GSM antenna, move the GSM section to the GPS antenna supplied with the kit. Make sure that the earth for the screen is correctly positioned when installing.**

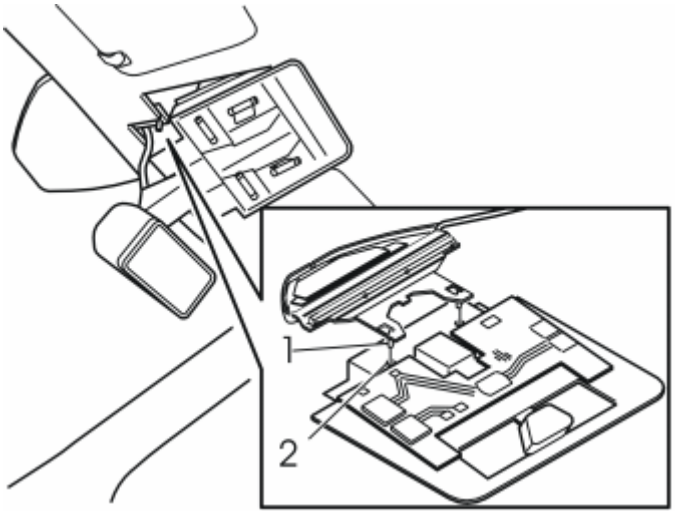

Fig. 216: Aligning Antenna Lugs With Grooves In Bracket
Courtesy of VOLVO CARS CORPORATION

- Wrap foam tape around the entire cable before installing.
- Install the new antenna. Carefully bend the headlining downward and slide the antenna backward and inwards. Align the antenna lugs (1) with the grooves in the bracket (2)
- Insert the cable on the top of the roof panel's front edge. Pull it further along, out towards the right-hand A-post so that it is concealed at the top the headlining.
- Reinstall the bracket with rear-view mirror. Tighten the screws to **10 Nm (7.5 lbf. ft.)** .
- Reinstall the panel and lock using the cover.
- If there is a rain sensor, route the cable so that it lies underneath the antenna. Reinstall the connector.

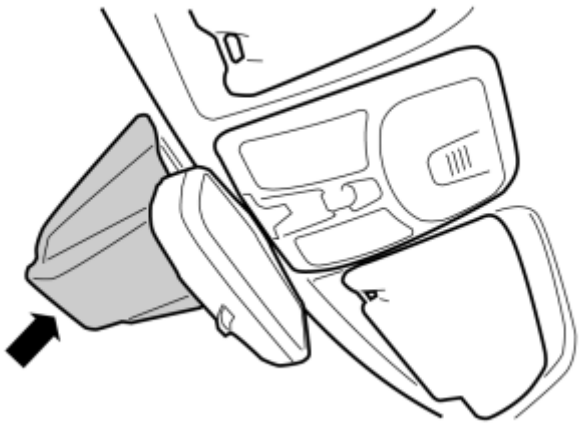

Fig. 217: Antenna Cover
Courtesy of VOLVO CARS CORPORATION

- Install the cover over the antenna.
    1. For cars with a rain sensor, use the larger cover from the kit.

2. For cars without a rain sensor, use the smaller cover from the kit.

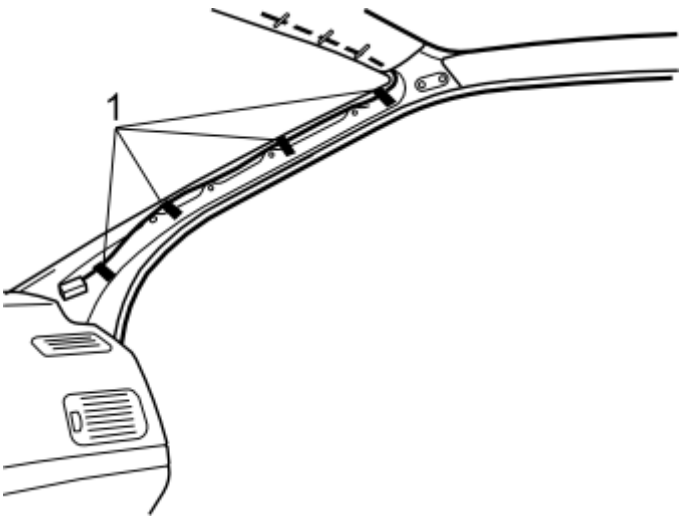

Fig. 218: Routing Cables Above Headlining
Courtesy of VOLVO CARS CORPORATION

- Route the cable above the headlining, all the way to the A-post.
- Route the cable down from the headlining and along the right-hand A-post
- Tape the cable onto the existing cable harness at points (1).

WARNING: Do not route over the inflatable curtain as this may affect the function in the event of a collision.

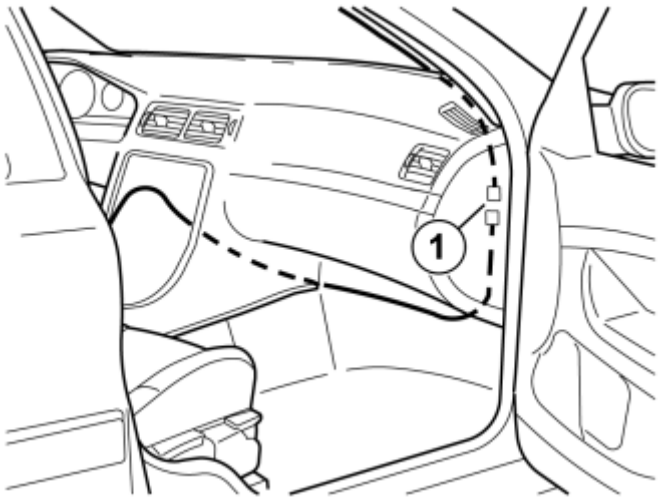

Fig. 219: Connecting And Routing The Cables
Courtesy of VOLVO CARS CORPORATION

- Wrap foam tape around the entire cable before installing
- Take the extension cable from the kit. Insert it down between the A-post and the right-hand side of the

dashboard, continue along the right-hand end of the dashboard and pull out at the front edge of the floor.

- Pull the cable to the left, along the front edge of the floor and up to the inside of the center console.
- Connect both connectors (1) at the A-post to each other.
- Wrap foam tape around the connectors to prevent rattling.

INSTALLING CABLE HARNESS AND ANTENNA CABLE

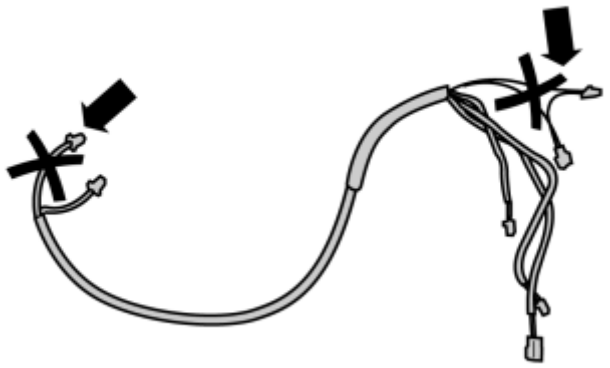

Fig. 220: Identifying Fiber Optic Cables
Courtesy of VOLVO CARS CORPORATION

Applies to cars with Volvo on call (VOC)

- Take the cable harness from the kit. The fiber optic cable connections on the cable harness will not be used.
- Wrap foam tape around the connectors for the fiber optic cables to prevent rattling.

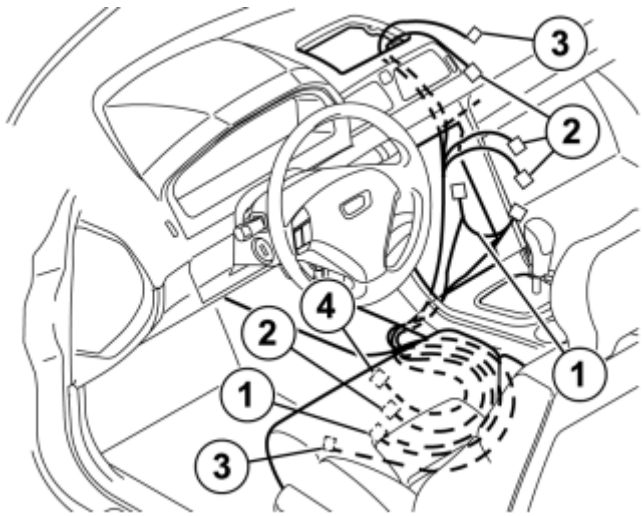

Fig. 221: Routing Cables Along Air Duct
Courtesy of VOLVO CARS CORPORATION

- Take the two cable harnesses, fiber optic cable harness (1) with the cable harness for the power supply (2), and the cable harness for the display screen (3), from the kit. Route them up along the air duct on the left-hand side of the center console.

NOTE: Do not damage the fiber optic cables. They must not be bent to a radius less than 30mm (1 11/64") as they can damage and affect the function of the Multimedia Module (MMM).

- The fiber optic cable harness (1) with the cable harness for the power supply (2), are placed inside the center console.

NOTE: In cases where the TMC cable (Europe) requires to be routed in the same way as cable harness (1). The double connection must be connected to IAM.

- The blue connector in cable harness (2) and cable harness (3) is routed up to the outlet in the dashboard.
- Pull the cable harnesses backwards, in front of the carpet on the center console's left-hand side, under the left-hand seat's seat rail, and out through the carpet join under the seat.

Does not apply to cars with (VOC)

- Route the antenna cable (4) in the same direction as cable harness (1) to Multimedia Module (MMM).

- Reinstall the A post panel.
- Tighten the grab handle to **10 Nm (7.5 lbf. ft.)** and reinstall the covers.
- Reinstall the rubber trim in the right-hand front door.
- Reinstall the panel on the dashboard end face.
- Reinstall the soundproofing panel on the right-hand side.

INSTALLING AND CONNECTING THE DISPLAY SCREEN.

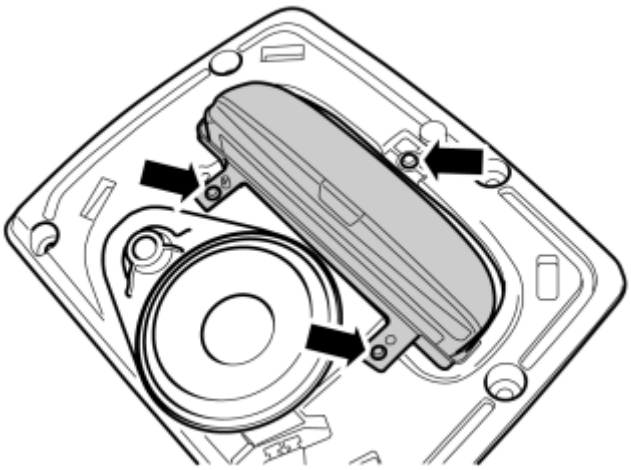

Fig. 222: Installing Bracket For Display Screen
Courtesy of VOLVO CARS CORPORATION

- Install the bracket for the display screen by moving the screen unit up in the bracket from underneath.
- Tighten the display screen unit by the bracket using screws from the kit.

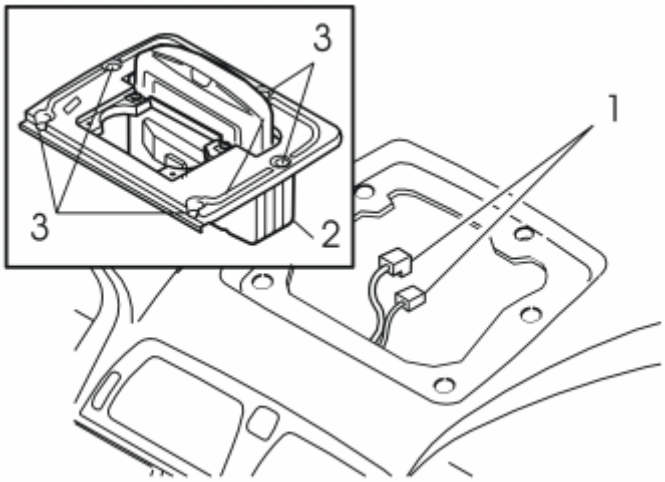

Fig. 223: Connecting Multimedia Module Cables
Courtesy of VOLVO CARS CORPORATION

Applies to cars without center loudspeakers

- Connect the cables from the Multimedia Module (MMM) (1) to the display screen (2).
- Install the display screen with the bracket in the dashboard. Use the existing screws (3).
- Take the new loudspeaker grille from the kit and press it into the dashboard.

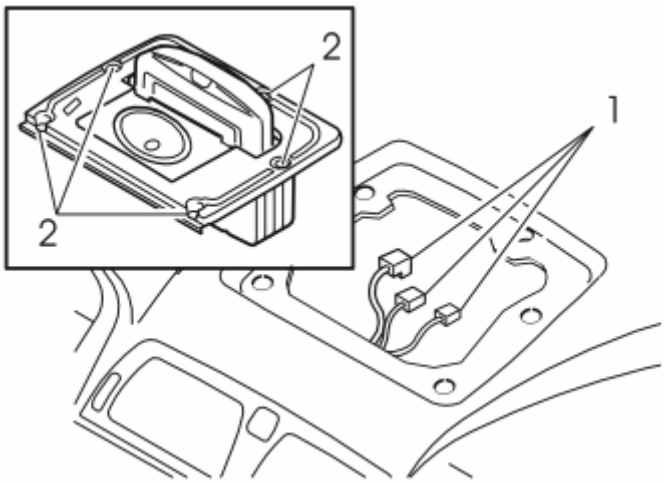

Fig. 224: Connecting The Three Cables
Courtesy of VOLVO CARS CORPORATION

Applies to cars with a centrally mounted loudspeaker

- Connect the three cables (1) to the display screen and the centrally mounted loudspeaker.
- Press the display screen and bracket into the dashboard. Tighten using the five existing screws (2).
- Press the new loudspeaker grille, from the kit, into place on the dashboard.

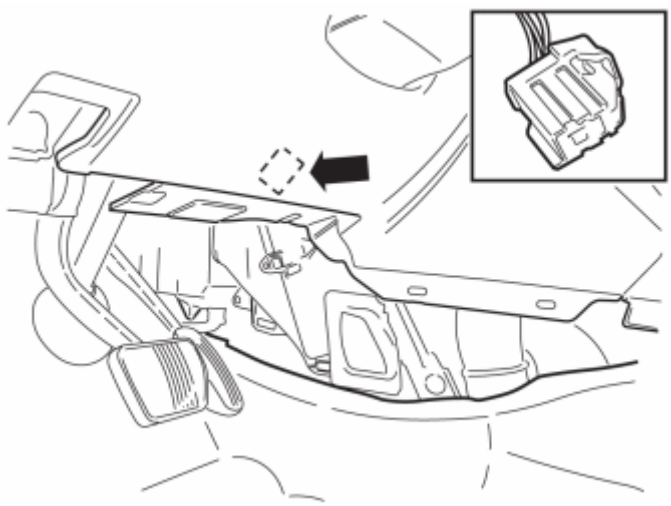

Fig. 225: Identifying Power Supply Cable Harness (Gray) Connector Location
Courtesy of VOLVO CARS CORPORATION

- Connect the gray connector from the power supply cable harness to the existing connector.
- Secure the excess gray connector.

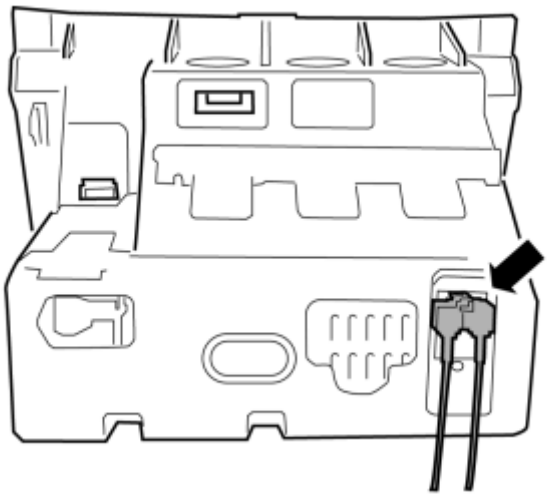

Fig. 226: Connecting The TMC Wiring
Courtesy of VOLVO CARS CORPORATION

- Connect the TMC cable (Europe) as illustrated.
- Connect the TMC wiring between IAM and the existing connector in the car's cable harness.

DO NOT APPLY TO CARS WITH VOLVO ON CALL (VOC)

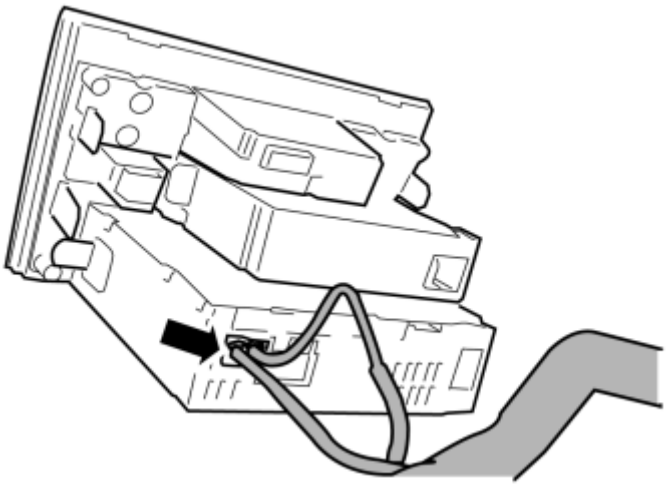

Fig. 227: Connecting Wiring To IAM
Courtesy of VOLVO CARS CORPORATION

- NOTE: It is important that the wiring is connected to the IAM and not the ICM. Do not mix up the fiber optic connections in the existing cable network.

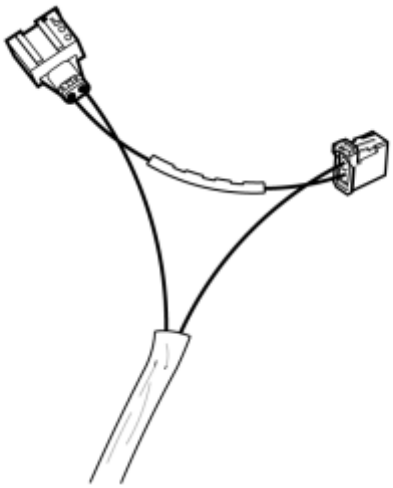

Fig. 228: MOST Cable
Courtesy of VOLVO CARS CORPORATION

- Take the MOST cable from the kit and connect it between IAM and existing MOST cable.

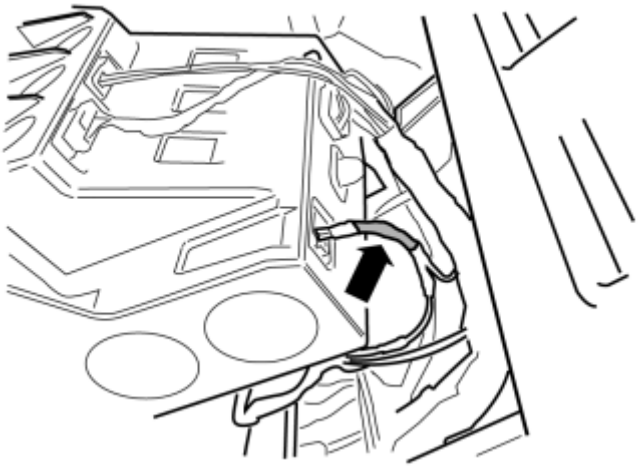

Fig. 229: Identifying Bend Protection
Courtesy of VOLVO CARS CORPORATION

- Take the bend protection from the kit and attach it with tape as illustrated. The bend protection is to prevent the fiber optic cable from bending too much, being damaged and risking malfunction of the accessory.
- When reinstalling the center console, the fiber optic cable to MOST must be positioned so that it does not get trapped when the center console is reinstalled.

CONNECTING AND INSTALLING THE MULTIMEDIA MODULE (MMM)

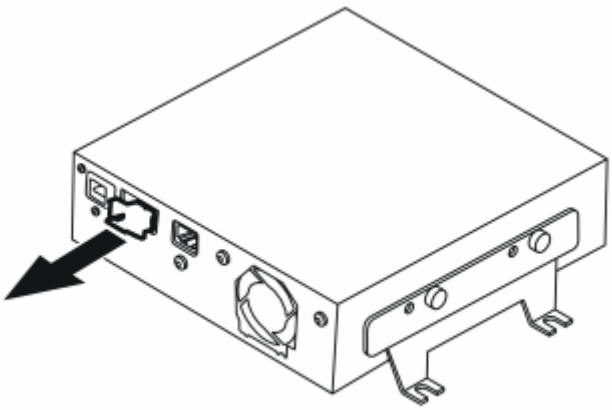

Fig. 230: Multimedia Module
Courtesy of VOLVO CARS CORPORATION

- Take the Multimedia Module (MMM) from the kit and remove the protective plug from the connector to the fiber optic cable connection.

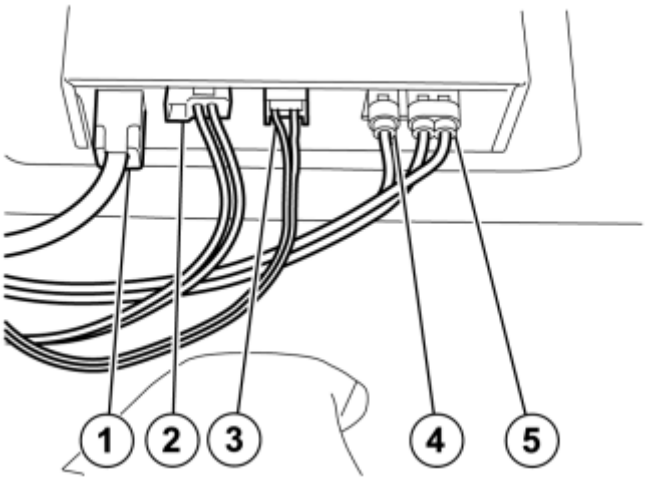

Fig. 231: Identifying Terminal Identification For Multimedia Module
Courtesy of VOLVO CARS CORPORATION

Connect the pre-routed cables to the Multimedia Module (MMM)

- the cable (1) for the display screen.
- cable (2) to the car's fiber optic cable system.
- cable (3) to the power supply.
- cable (4) to the Global Positioning System (GPS) antenna.
- cable (5) to TMC (Europe).

Applies to cars with Volvo On Call (VOC)

- Secure the cable excess for the GPS antenna in a suitable location.
- When connecting cable (2), existing cables must be used, not those supplied in the kit.

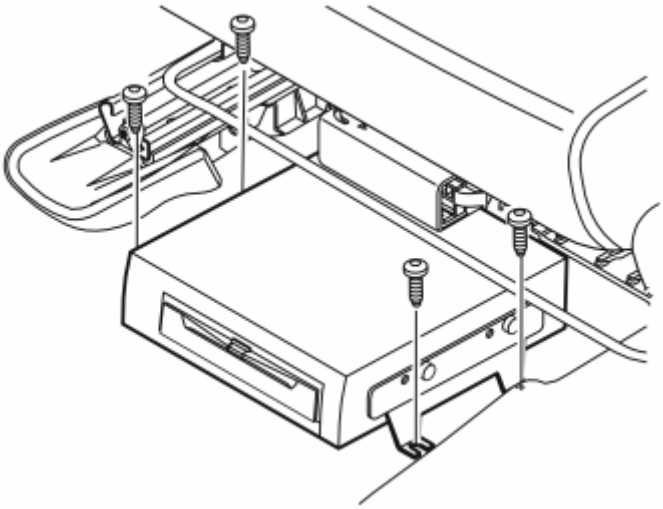

Fig. 232: Installing Multimedia Module
Courtesy of VOLVO CARS CORPORATION

- Take four screws from the kit, place the Multimedia Module (MMM) mounting brackets above the rivet nuts and tighten the unit.
- Conceal the cables under the carpet at the rear of the Multimedia Module (MMM).
- Bend the carpet tabs back over the screws.

NOTE: Do not damage the fiber optic cables. They must not be bent to a radius less than 30mm (1 11/64") as they may become damaged and affect the function of the Multimedia Module (MMM).

INSTALLING THE KEYPAD IN THE STEERING WHEEL

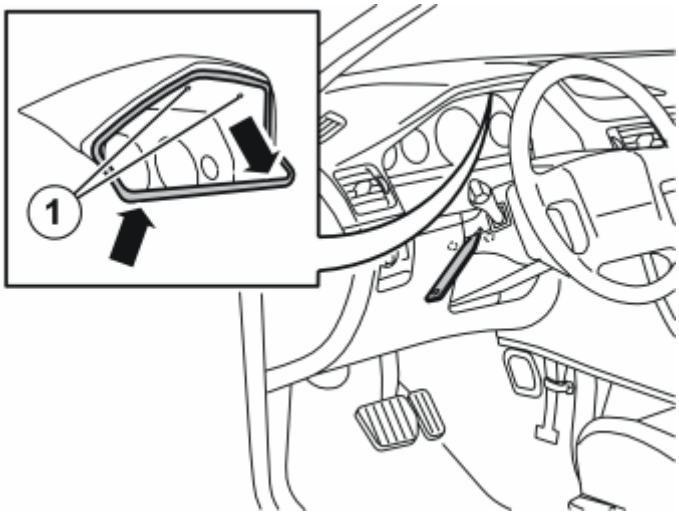

Fig. 233: Removing Instrument Panel Cover
Courtesy of VOLVO CARS CORPORATION

- Position the steering wheel in its lowest and rearmost position.
- Remove the surround for the combined instrument panel and the upper steering wheel cover by first removing the screws (1) and then pull the surround off backwards, it is attached by two clips at the rear edge.
- Then carefully pry off the upper steering wheel cover using a plastic weatherstrip tool, it is secured by two clips on the inside of each long side.
- Remove and place the modules to one side.

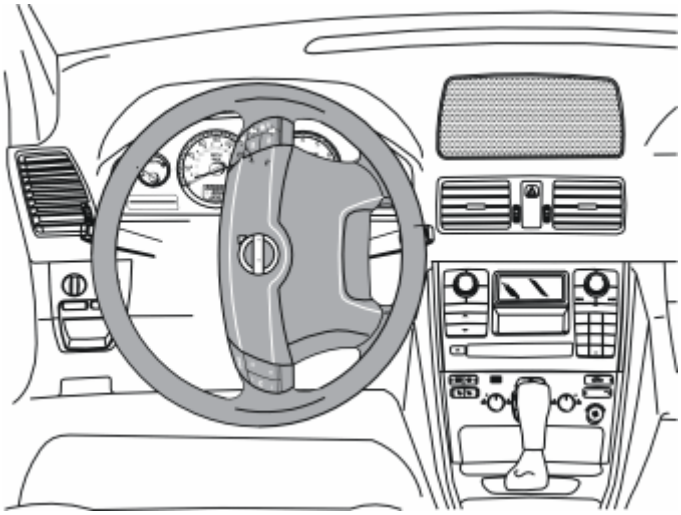

Fig. 234: Steering Wheel Turned 90°
Courtesy of VOLVO CARS CORPORATION

- Turn the steering wheel 90° to the position shown in the illustration and so that the two holes on the back side are accessible.

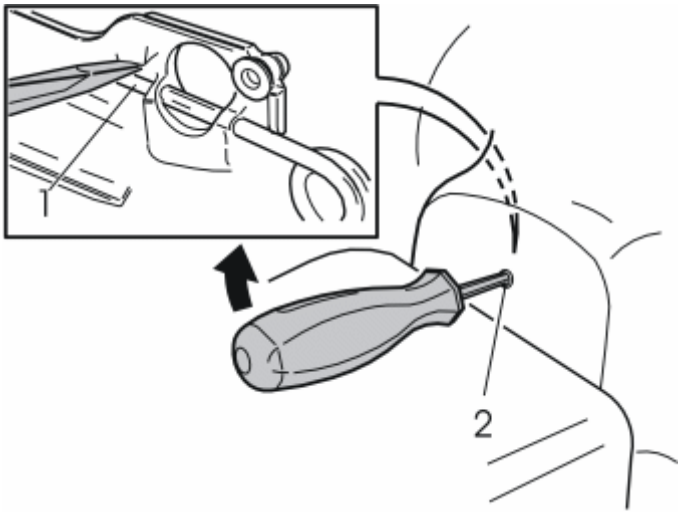

Fig. 235: Identifying Screwdriver Inserted In Back Of Steering Wheel & Locating End Of Locking Spring
Courtesy of VOLVO CARS CORPORATION

- Insert a screwdriver in the hole along the rear edge of the steering wheel perpendicular to the rear surface of the steering wheel.
- Insert the screwdriver as far as possible to find the end of the locking spring (1).
- Place the end of the screwdriver on the top of the locking spring.
- Move the screwdriver upwards towards the upper edge of the hole (2) until the spring releases and one side of the steering wheel module detaches from the mounting.
- Turn the steering wheel 180° and repeat the operation on the other side.
- Turn the steering wheel to a neutral position.

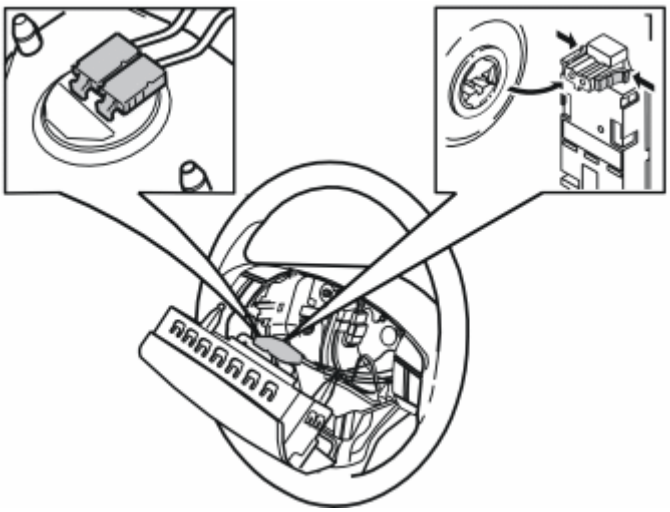

Fig. 236: Identifying Airbag Removal
Courtesy of VOLVO CARS CORPORATION

- Fold the steering wheel module out
- Unplug the two connectors (1) to the airbag transmitter cables.

NOTE: The connectors are tightly secured. However, tools must not be used when removing.

- Place the steering wheel module to one side.

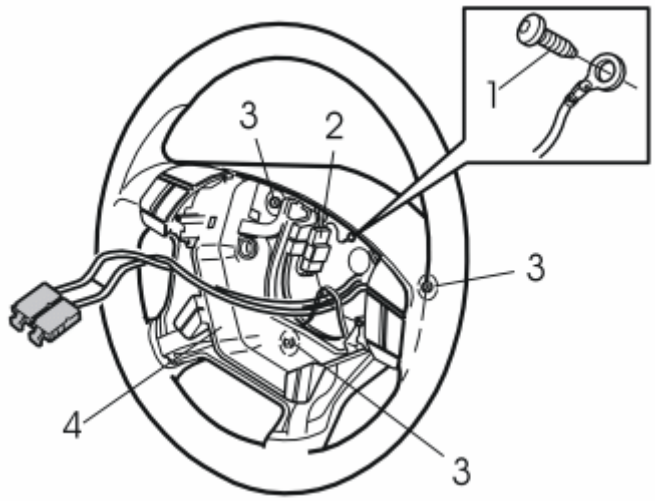

Fig. 237: Removing Steering Wheel Components
Courtesy of VOLVO CARS CORPORATION

Remove:

- the screw (1) and detach the ground lead.
- the horn connector (2) and keypads.

- the three screws (3) and lift out the horn ring (4).

Fig. 238: Attaching Template Using Tie Strap
Courtesy of VOLVO CARS CORPORATION

- Turn the steering wheel to the left so that the right-hand side of the steering wheel points to the left.
- Take the cutting template from the kit and secure it to the right-hand side of the steering wheel as illustrated.
- Attach the template using a tie strap.

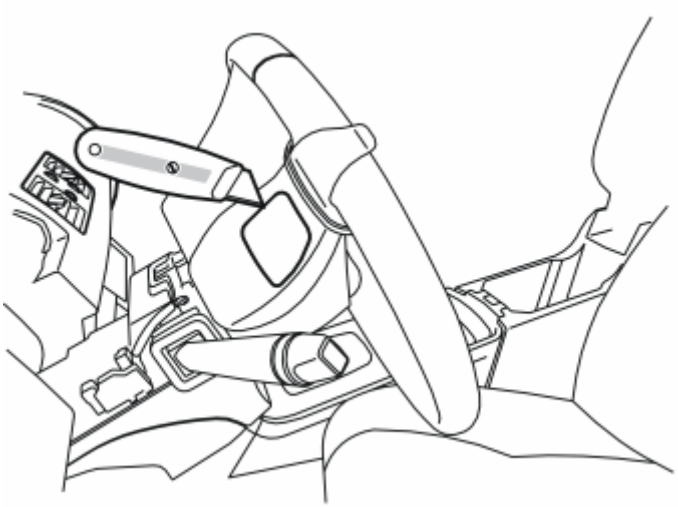

Fig. 239: Cutting Steering Wheel Template For Keypad
Courtesy of VOLVO CARS CORPORATION

- Set the steering wheel in a suitable position and cut-out following the template. Use a small knife.

NOTE: **When cutting, make sure to hold the knife so that the cuts are perpendicular to the back side of the steering wheel. This will reduce the risk of cutting a hole that is too large since the edge around the keypad is**

only a few millimeters larger than the keypad itself.

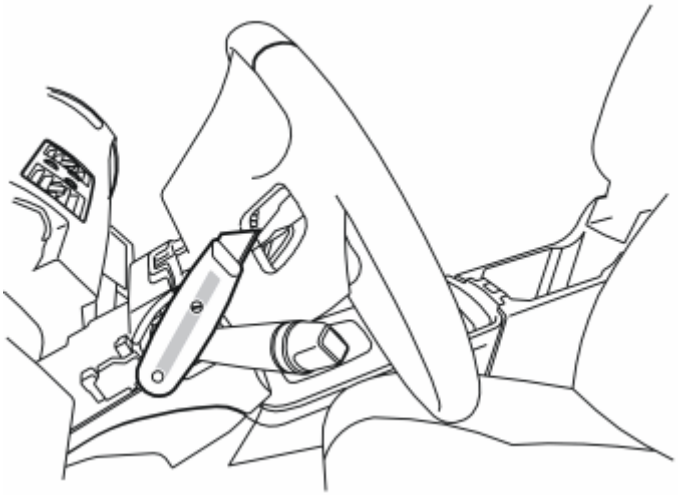

Fig. 240: Cutting For Proper Fitting
Courtesy of VOLVO CARS CORPORATION

- Cut away some of the material on the back side of the steering wheel spoke.
- Test and cut until the keypad fits properly.

Fig. 241: Installing Keypad
Courtesy of VOLVO CARS CORPORATION

- Remove the keypad, two screws and clamp from the kit.
- Ensure that the cable is underneath the steering wheel spoke (When the steering wheel is straight).
- Insert the keypad into the hole in the steering wheel with the text on the keypad facing up. Press until it connects securely against the steering column cover.

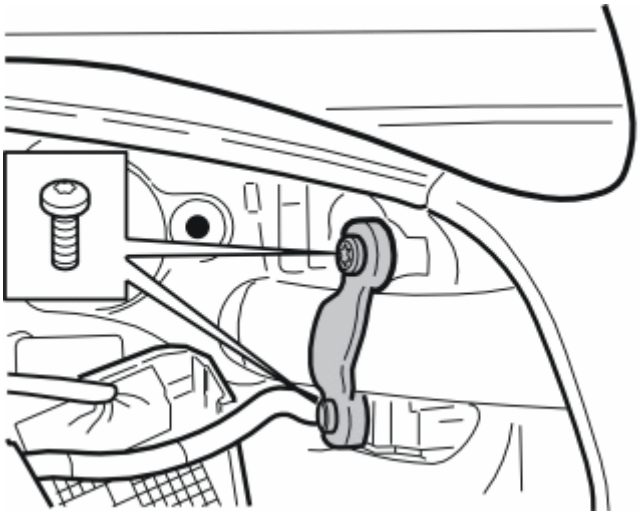

Fig. 242: Identifying Screws & Keypad Clamp
Courtesy of VOLVO CARS CORPORATION

- Install the screws and attach the keypad with the clamp around the steering wheel spoke.

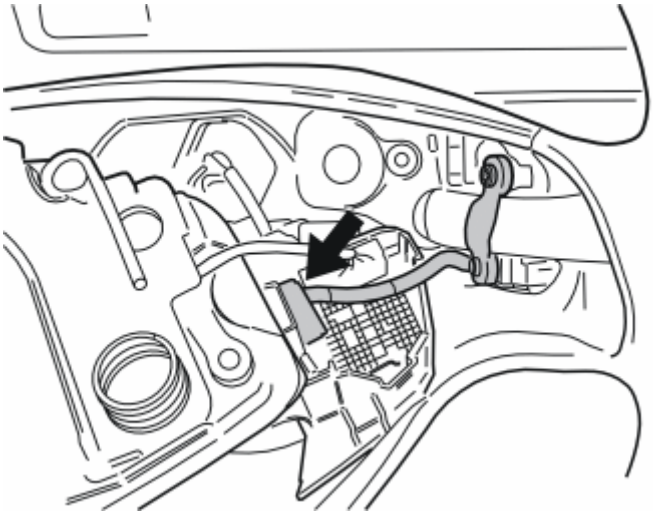

Fig. 243: Identifying Horn Ring Position
Courtesy of VOLVO CARS CORPORATION

- Position the horn ring and position it as illustrated.
- Plug in the installed keypad connector to the terminal on the back side of the keypad on the right-hand side of the horn ring. The cable from the installed keypad is very short and it is not easy to plug into the connector.

- Reinstall the horn. Ensure that the three springs are in place and check that the ground lead is not trapped.
- Tighten the screws alternately to **6.5 Nm (5 lbf. ft.)** .
- Reinstall the ground lead. Tighten.
- Plug in the horn connector and keypads.
- Check the function of the horn ring by pressing around the entire edge.

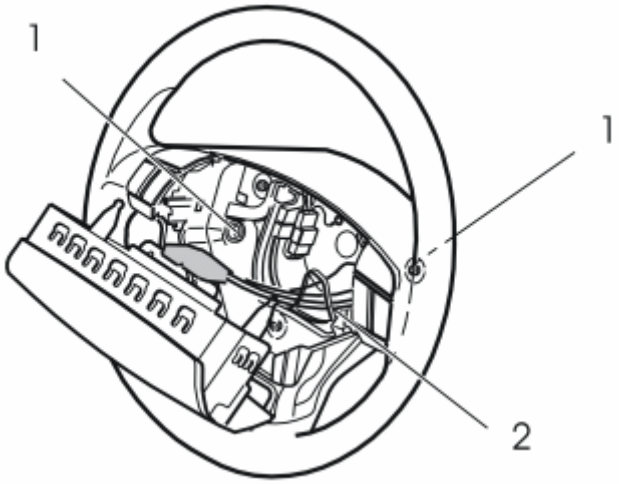

Fig. 244: Checking Springs And Routing Cable
Courtesy of VOLVO CARS CORPORATION

- Check that the two springs (1) are in position
- Position the steering wheel module and press the two airbag transmitter cable connectors firmly in place.

NOTE: The cables must be routed through the existing holder (2).

- Insert the two lugs on the back side of the steering wheel module into the two springs and make sure the transmitter cables are not obstructed.
- Press the steering wheel module firmly into its mountings. Two clearly audible clicks should be heard.
- Reinstall the surround for the combined instrument panel and the steering wheel cover.

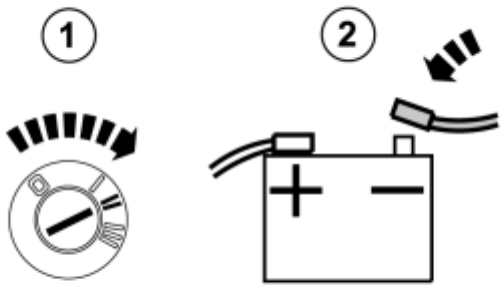

Fig. 245: Identifying Ignition In ON Position and Connecting Negative Battery Lead
Courtesy of VOLVO CARS CORPORATION

- Turn the ignition key to position II.
- Connect the battery negative lead.

XC90

see **XC90**

TV RECEIVER, DIGITAL (2008-2012)

TV-RECEIVER, DIGITAL

NOTE: When installing Digital TV-receiver on car with existing RSE-system, start by changing the cable harness for the tunnel console. See installation instructions Multimedia monitor with DVD, Dual screen .

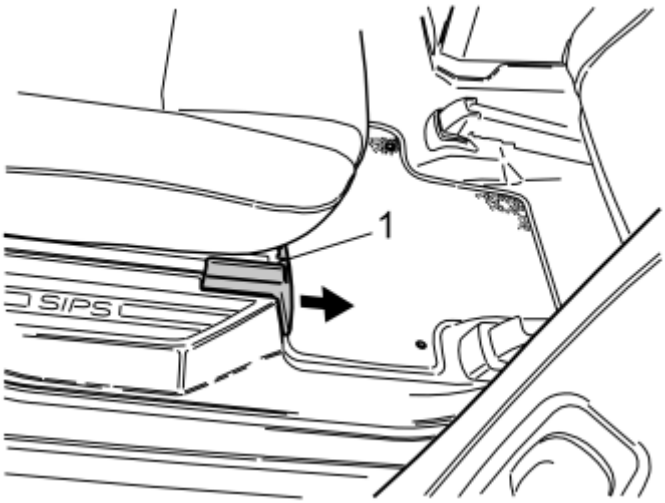

Fig. 246: Pushing Up Catch On Top Side
Courtesy of VOLVO CARS CORPORATION

- Remove the right front seat mounting's panel of the second row's right seat by pressing down the pawl (1) on top and pulling it forward. Remove the screw underneath.

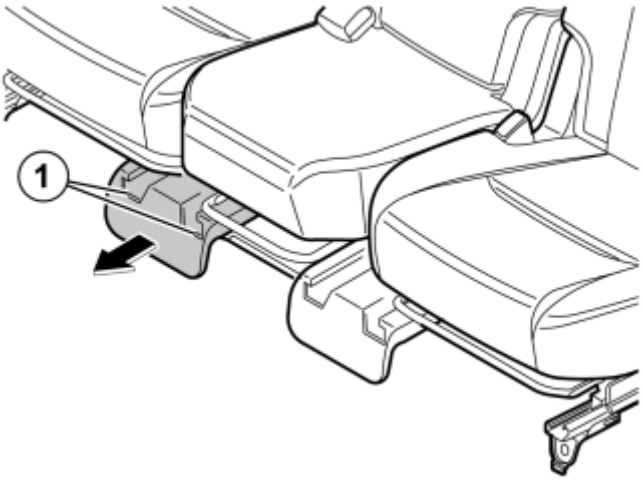

Fig. 247: Removing Front Seat Mountings
Courtesy of VOLVO CARS CORPORATION

- Remove the panel for the front seat mountings of the second row's right seat/center seat by pressing down the pawls (1) on top and pulling the panel forward. Remove the screw for the right seat.

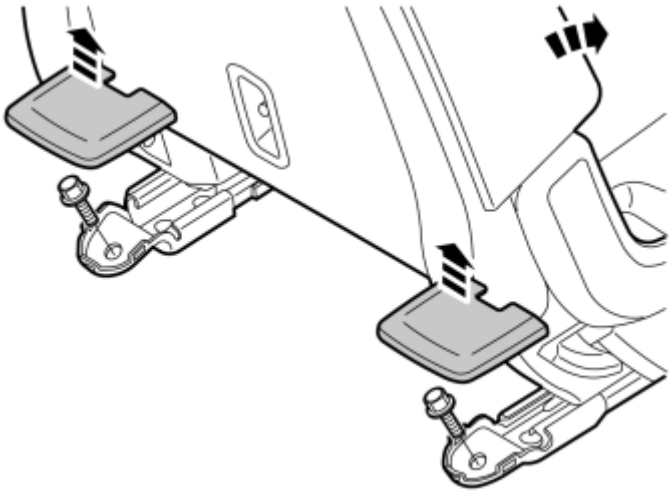

Fig. 248: Removing Seat
Courtesy of VOLVO CARS CORPORATION

- Fold down the backrest.
- Remove the seat links and bolts.
- Lift out the seat.

NOTE: This step should be performed carefully to avoid damaging interior or door panel.

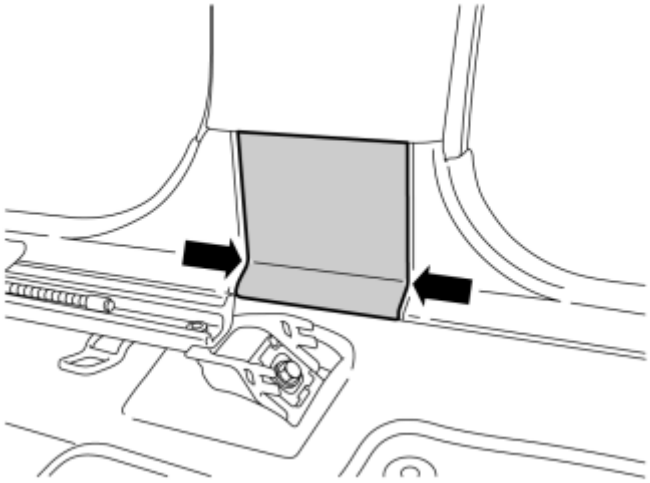

Fig. 249: Removing Panel Between Door Seals
Courtesy of VOLVO CARS CORPORATION

- Carefully pry loose and remove the panel located over the joint between the door sills on the right side.

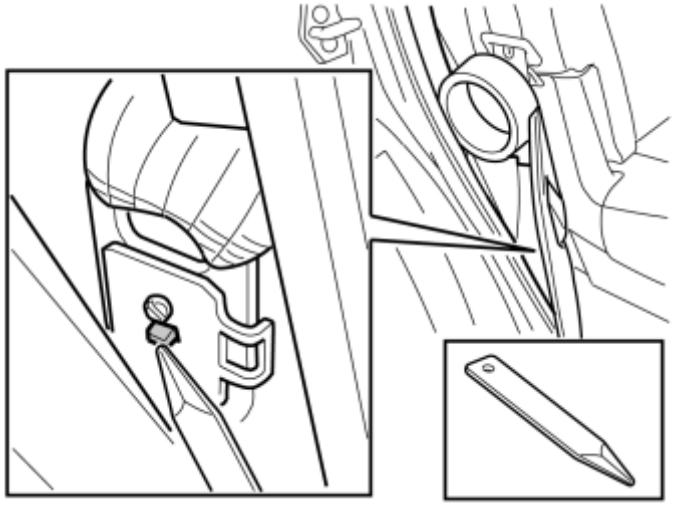

Fig. 250: Pressing Lock Lug With Weather Strip Tool
Courtesy of VOLVO CARS CORPORATION

- Loosen the upper part of the sill molding at the rear edge and loosen the seat belt from the end-fitting. The belt is loosened by carefully pressing with a weatherstrip tool on the lock lug so that it releases from the end-fitting.

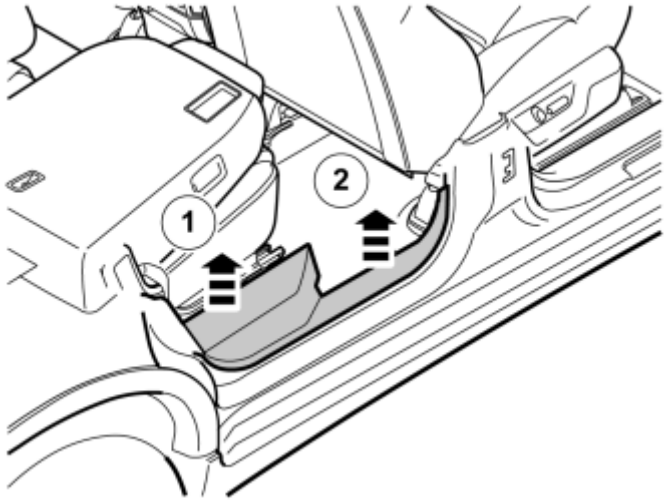

Fig. 251: Removing Seal Protection
Courtesy of VOLVO CARS CORPORATION

- Pull the sill protection upward until the three clips release. Angle out the sill protection from the B-pillar panel.

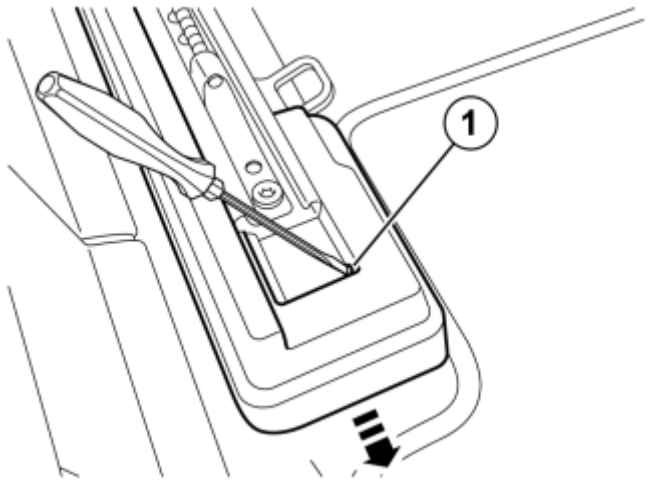

Fig. 252: Moving Link Backwards
Courtesy of VOLVO CARS CORPORATION

- Insert a screwdriver through the hole (1) on the right seat's left rear seat link and press in the pawl. Move the link backwards by prying with a screwdriver between the seat rail and the link.

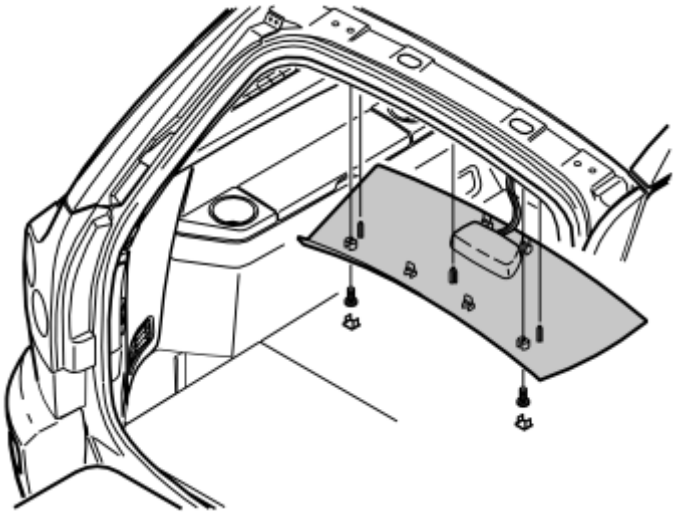

Fig. 253: Identifying Cover And Screws Underneath Rear Headlining
Courtesy of VOLVO CARS CORPORATION

- Remove the rear roof panel covers and the screws beneath them.
- Carefully pry away the panel at the rear edge with a plastic weatherstrip tool.
- Pull the rear edge of the panel downwards until the four clips on the top have released.
- Unplug the connector for the lighting.
- Pull the panel backwards to release it.

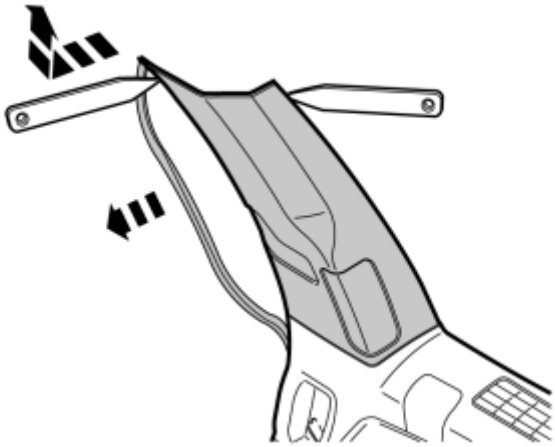

Fig. 254: Removing Left Door Rubber Strip
Courtesy of VOLVO CARS CORPORATION

- Pull loose the rubber strip at the trailing edge of the left door opening, directly opposite the C-pillar panel.
- Carefully pry off the left C-post panel by the sides at the top with a plastic weatherstrip tool. Then pull until the three clips on the inside release. Do not damage the headlining or the panel.
- If a headphone socket is mounted, disconnect the connector to such.
- Remove the panel by pulling upwards slightly and unhooking it from the side panel.

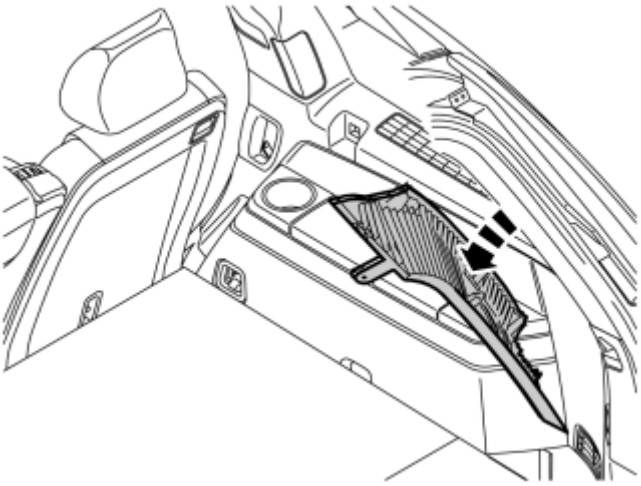

Fig. 255: Loosening Pillar Panel
Courtesy of VOLVO CARS CORPORATION

- Carefully loosen the pillar panel. Start at the top and continue downwards until the three clips on the inside have released.
- Remove the connector on the D-pillar panel. Cars with D-pillar speakers have the connector located on the speaker.
- Remove the panel by pulling upwards slightly and unhooking it from the side panel.

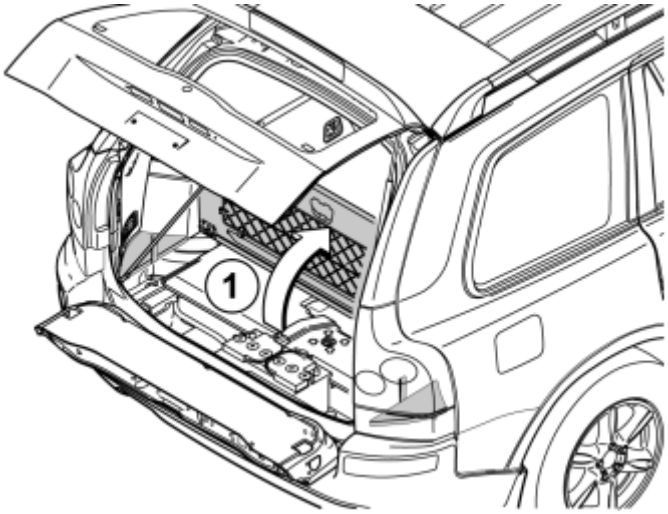

Fig. 256: Opening Floor Hatch
Courtesy of VOLVO CARS CORPORATION

Applies to cars with two rows of seats

- Open up the floor hatch (1). If the floor hatch is equipped with a grocery bag holder on the underside, then it is fastened with a strap on both sides of the storage box. Then these shall be loosened by first removing the storage box under the floor hatch and then removing the floor hatch by almost closing it and pulling it backwards out of its attachments.

Applies to cars with three rows of seats and integrated carrier bag holder on the underside of the floor hatch.

- Fold up the floor hatch (1).
- Loosen the two straps on the underlying panel. Lift up the trailing edge of the panel, fold the floor hatch back towards the panel and lift out the floor hatch and panel.

Applies to cars with three rows of seats without an integrated carrier bag holder.

- Open the floor hatch (1) at the trailing edge and lift it out.

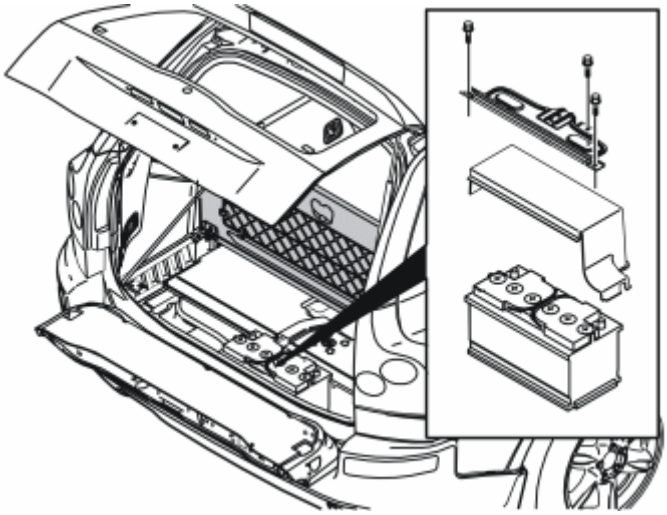

Fig. 257: Removing Three Screws In Battery Holder
Courtesy of VOLVO CARS CORPORATION

- Remove the three screws on the battery holder and lift it out.
- Remove the battery cover.

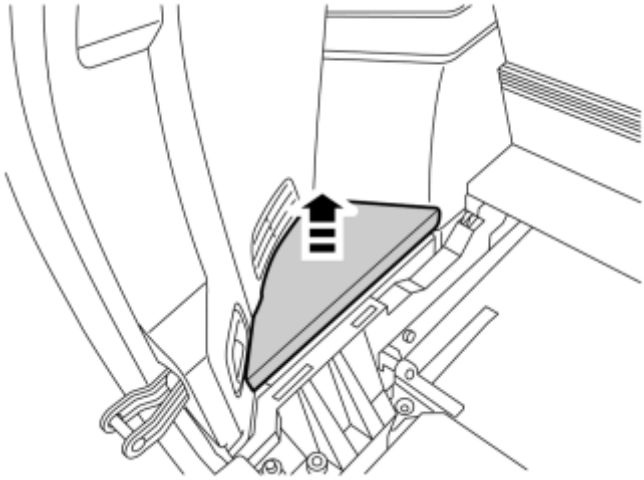

Fig. 258: Removing Floor Covers
Courtesy of VOLVO CARS CORPORATION

- Remove both covers on the floor.

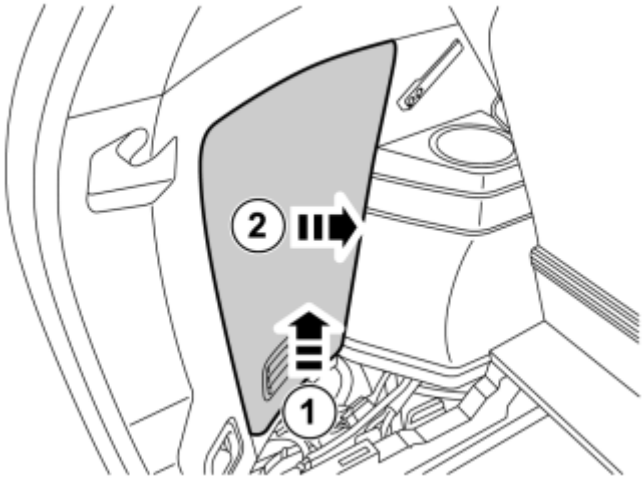

Fig. 259: Removing Panels
Courtesy of VOLVO CARS CORPORATION

- Remove both panels.

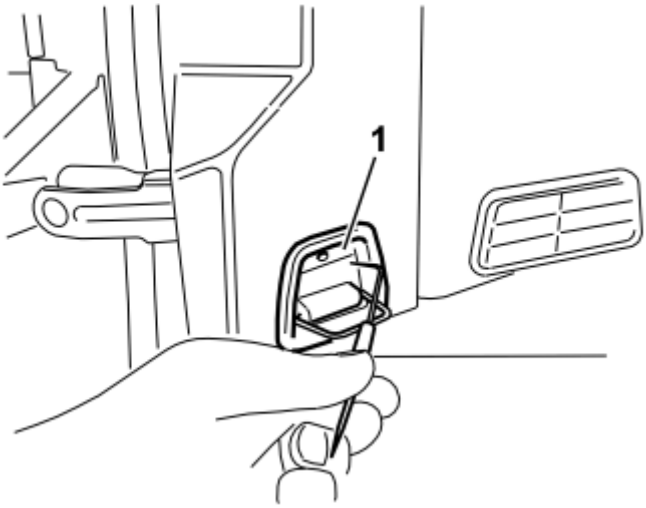

Fig. 260: Identifying Load Securing Eyelet
Courtesy of VOLVO CARS CORPORATION

- Fold out the load lashing eye on the right side.
- Take a scriber or special tool part no.**9995919** and insert the angled point in the hole in the top edge of the cover.
- Twist the scriber so it grips the rear of the cover (1) and pull it loose. This should be performed on both the front and rear load lashing eyes.

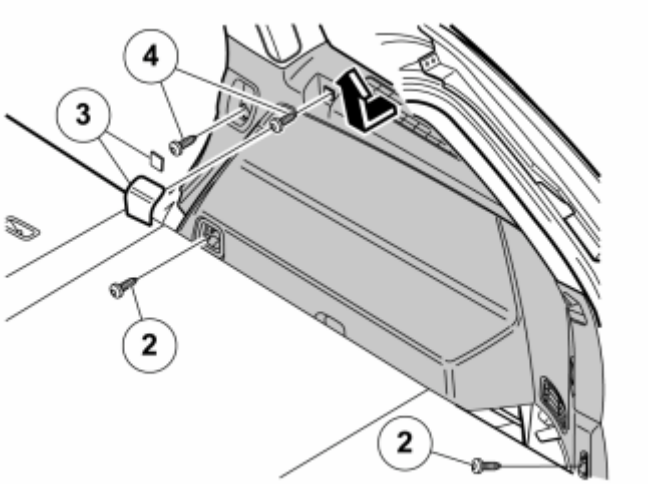

Fig. 261: Removing Rear Interior Side Paneling
Courtesy of VOLVO CARS CORPORATION

Applies to cars with two rows of seats

- Remove the screws (2) on the load securing eyelets.
- Remove the cover (3), by prying off using a weatherstrip tool or a small screw driver.
- Remove the screws (4).
- Remove the panel by pulling it out slightly at the top edge so that the clips on the inside release. Then pull it straight up.
- Unplug the connector for the 12V socket.

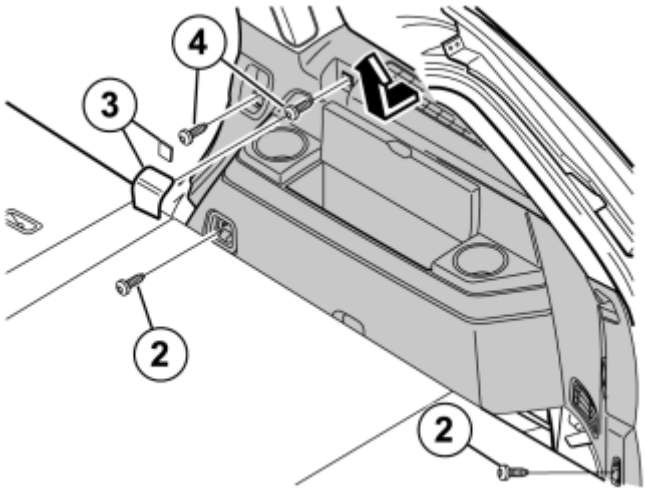

Fig. 262: Removing Rear Interior Side Paneling
Courtesy of VOLVO CARS CORPORATION

Applies to cars with three rows of seats

- Fold up the left-hand seat in the third row of seats.

- Remove the screws (2) on the load securing eyelets.
- Remove the covers (3) by prying with a weatherstrip tool or a small screwdriver.
- Remove the screws (4).
- Remove the panel by pulling it out slightly at the top edge so that the clips on the inside release. Then pull it straight up.
- Unplug the connector for the 12V socket.

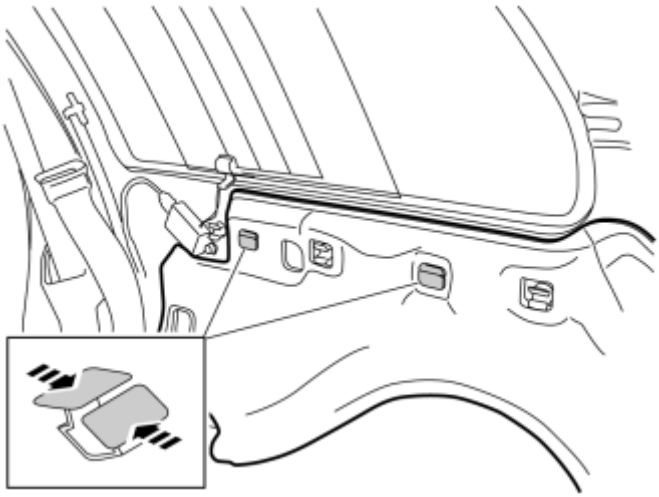

Fig. 263: Removing Clips
Courtesy of VOLVO CARS CORPORATION

- Remove the two clips.

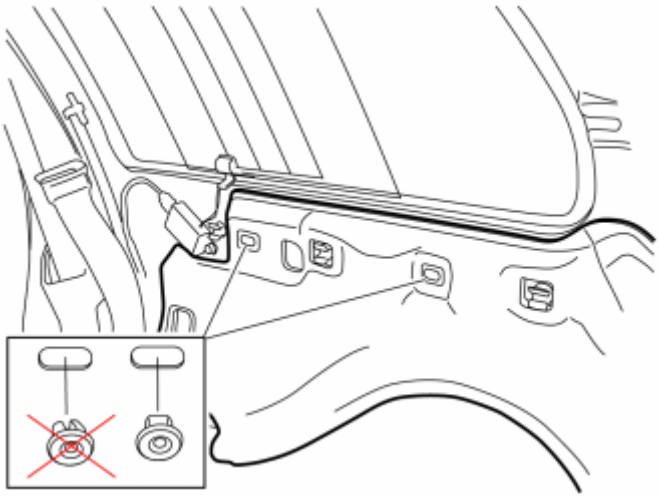

Fig. 264: Installing Plastic Nuts
Courtesy of VOLVO CARS CORPORATION

- Install plastic nuts in the holes where the clips were located, as shown.

NOTE: Turn the plastic nut so that it faces the right way.

Fig. 265: Removing Cover Panel Under Tail Lamps
Courtesy of VOLVO CARS CORPORATION

- Remove the cover panel under the tail lamps on the right and left sides by carefully prying them loose using a weatherstrip tool.

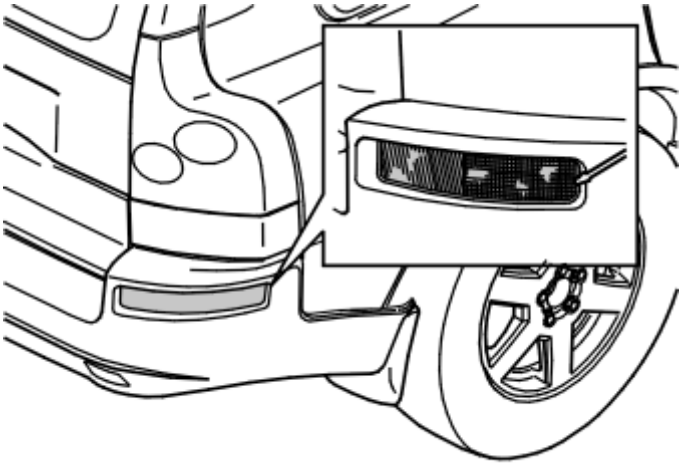

Fig. 266: Loosen Rear Fog Light
Courtesy of VOLVO CARS CORPORATION

- Loosen the rear fog light at the front with a weatherstrip tool. Done on both sides.

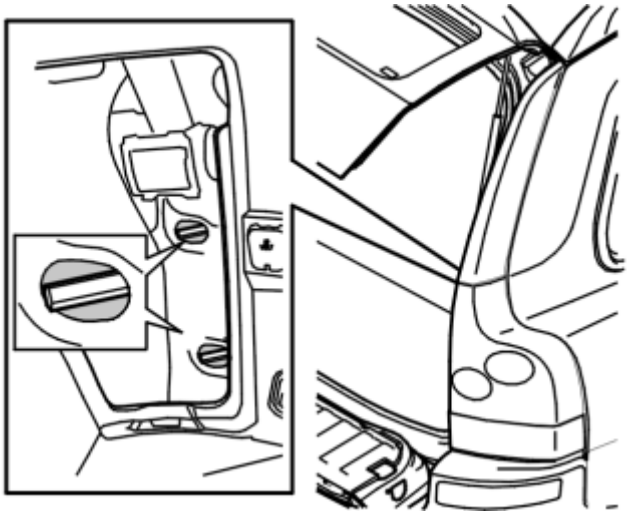

Fig. 267: Removing Tail Light
Courtesy of VOLVO CARS CORPORATION

- Remove the tail light by removing the two nuts and pulling them back. Done on both sides.

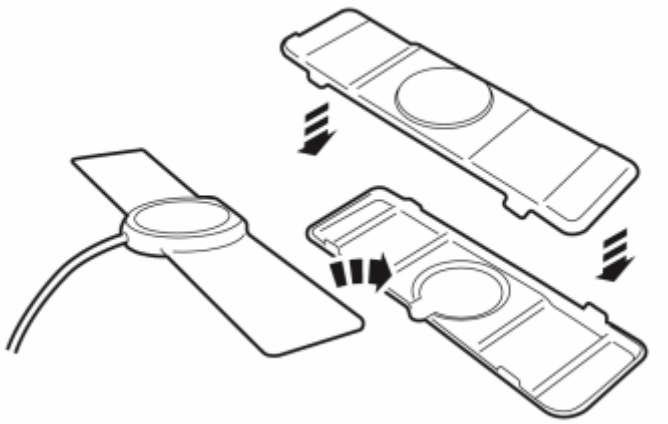

Fig. 268: Installing Antenna Into Casing
Courtesy of VOLVO CARS CORPORATION

- Take antenna and holder from the kit.
- Place the antenna in the casing and the cable in the slot.
- Snap together the casing's top and bottom parts. Done twice.

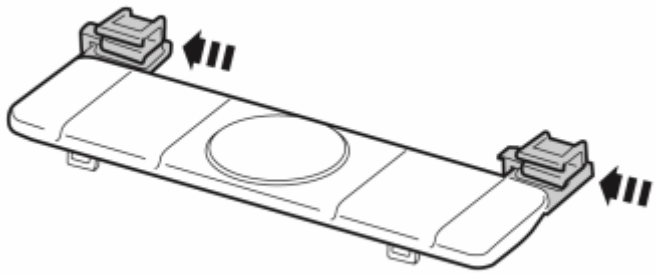

Fig. 269: Installing The Holders On The Casing
Courtesy of VOLVO CARS CORPORATION

- Install the holders on the casing.
- Repeat the on the other casing.

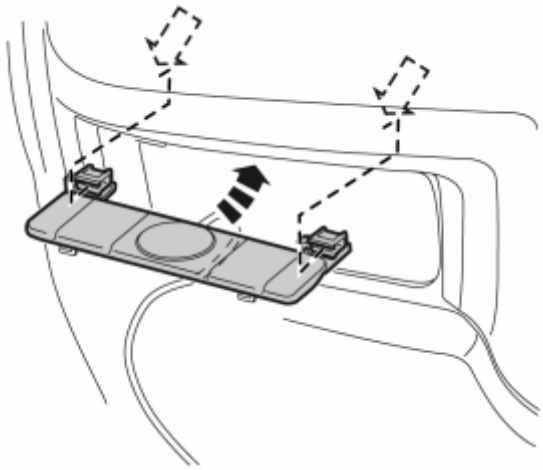

Fig. 270: Pressing On Casing's Holders At Bottom Edge Of Plastic Console
Courtesy of VOLVO CARS CORPORATION

- Get antenna for left side (long cable) and unplug the grey connector.
- Insert casing with antenna in the outlet for fog lights.
- Press on the casing's holder on the plastic flange at the bottom edge of the plastic console.

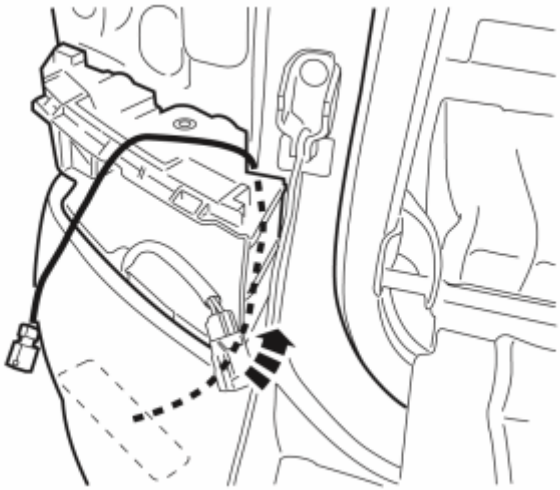

Fig. 271: Routing Cable Through Bumper
Courtesy of VOLVO CARS CORPORATION

- Route the cable up through the bumper so that it comes out at the top of the plastic console.

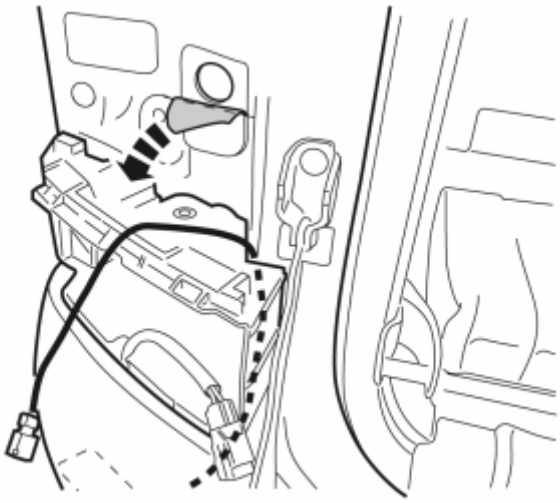

Fig. 272: Removing Tape
Courtesy of VOLVO CARS CORPORATION

- Remove the top part of the foam tape that covers the hole.

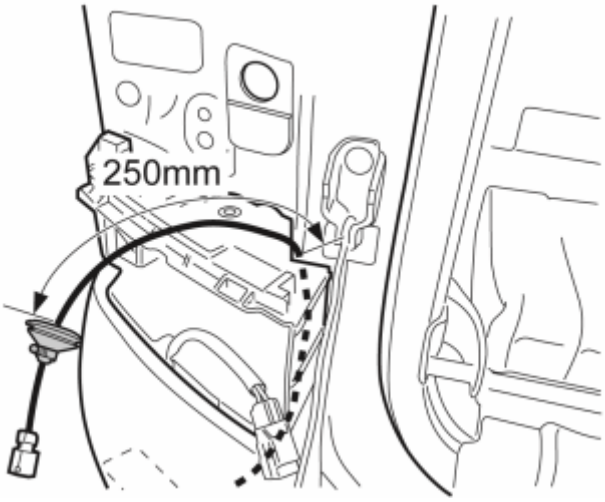

Fig. 273: Routing Cable And Installing Strip Clamp
Courtesy of VOLVO CARS CORPORATION

- Get the rubber bushing from the kit and open it up with expander pliers.
- Insert the antenna cable. Route the cable so that the length of the cable between the bushing and the top of the plastic console is **250 mm** .
- Install a strip clamp around the collar on the rubber bushing so that it closes tightly around the cable.
- Cut off excess strip clamp.

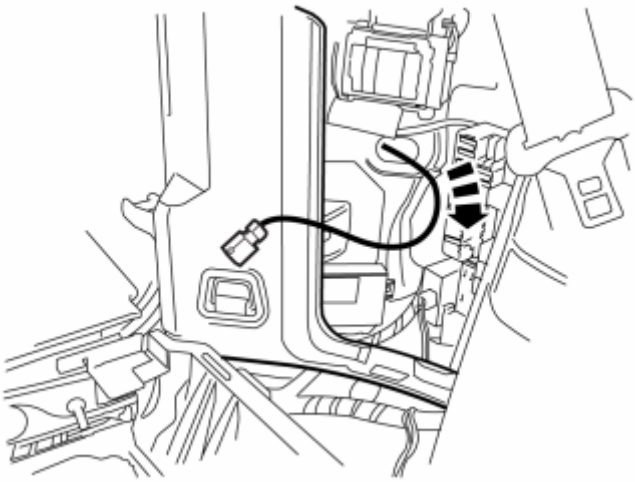

Fig. 274: Routing Antenna Cable
Courtesy of VOLVO CARS CORPORATION

- Insert the antenna cable through the hole in the body so that it comes out in the passenger compartment.

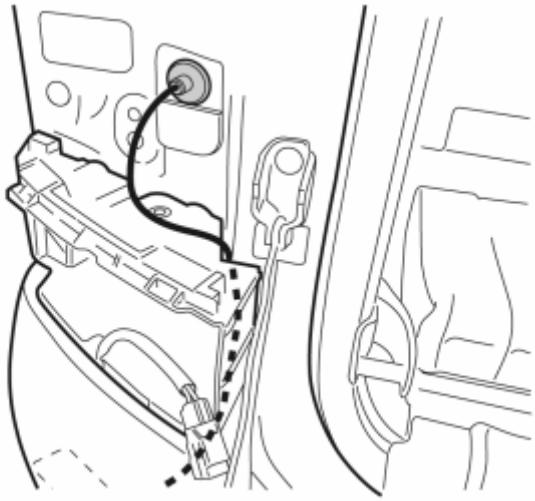

Fig. 275: Checking Rubber Bushing Flange's Fit Appropriately
Courtesy of VOLVO CARS CORPORATION

- Check that the rubber bushing's flanges close tight against the body hole.

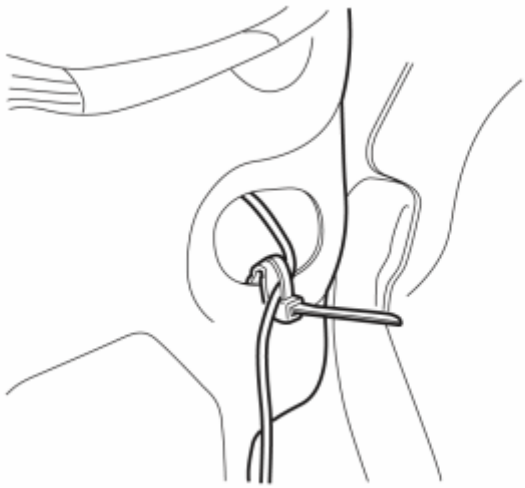

Fig. 276: Installing Strip Clamp To Metal Flange
Courtesy of VOLVO CARS CORPORATION

- Install the strip clamp on the sheet metal flange.
- Clamp down the antenna cable in the clamp.
- Cut off any excess strip clamp.
- Carry out on both sides.

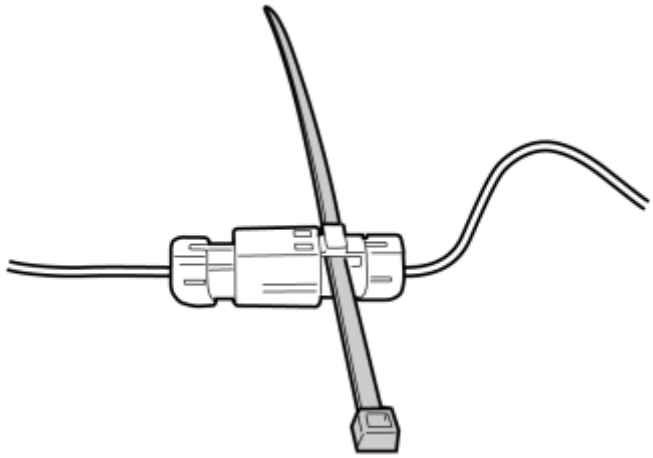

Fig. 277: Inserting Strip Clamp Through Connector
Courtesy of VOLVO CARS CORPORATION

- Connect the removed antenna cable.
- Insert a strip clamp though the connector.
- Carry out on both sides.

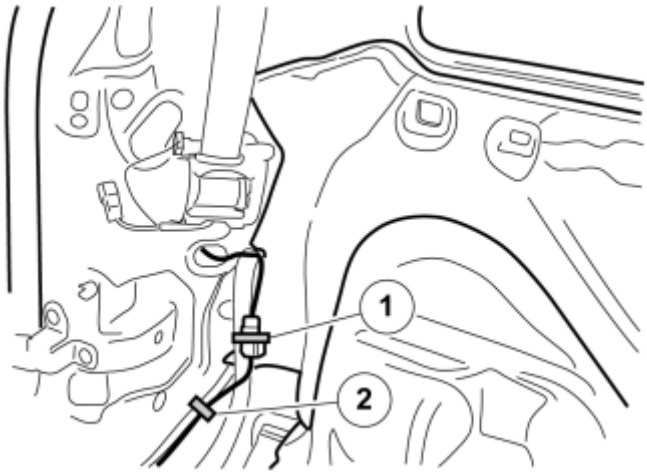

Fig. 278: Clamping Down Connector And Cable
Courtesy of VOLVO CARS CORPORATION

- Clamp down the connector in existing cable harness (1).
- Clamp down the cable in existing cable harness with the strip clamp (2).
- Carry out on both sides.

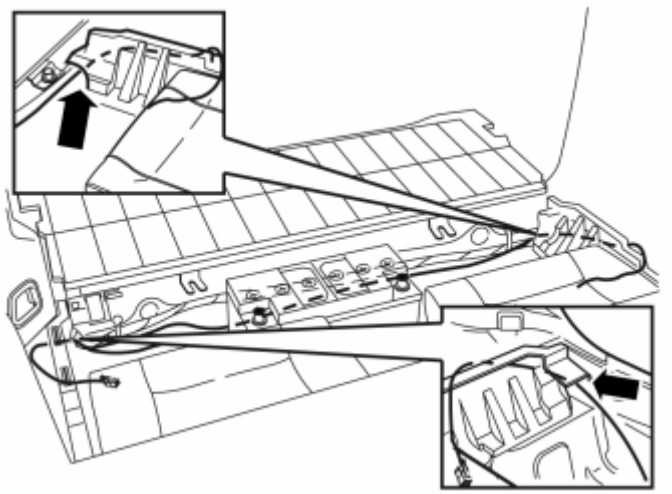

Fig. 279: Routing The Cable
Courtesy of VOLVO CARS CORPORATION

- Route the antenna cable along existing cable harness over to the right side through the hole in the polystyrene plastic under the right member.

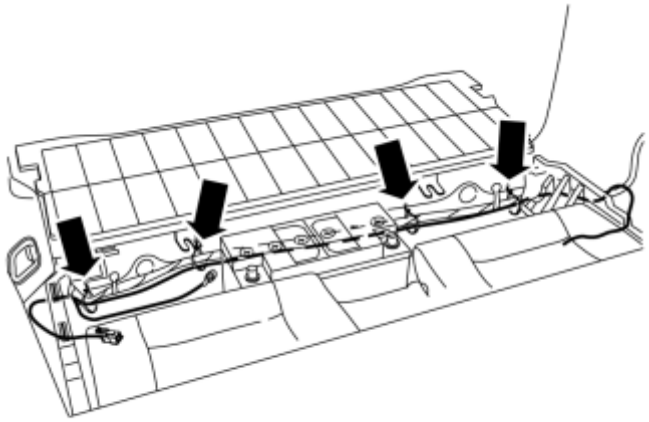

Fig. 280: Fastening Cable With Strip Clamps
Courtesy of VOLVO CARS CORPORATION

- Fasten the cable with strip clamps.

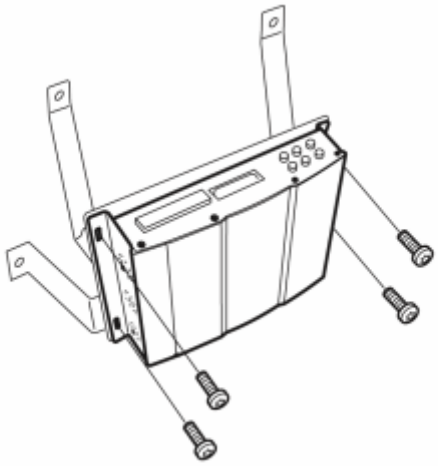

Fig. 281: Installing TV-Tuner Console
Courtesy of VOLVO CARS CORPORATION

- Get TV-tuner, console, as well as four screws from the kit.
- Tighten down the tuner on the console.

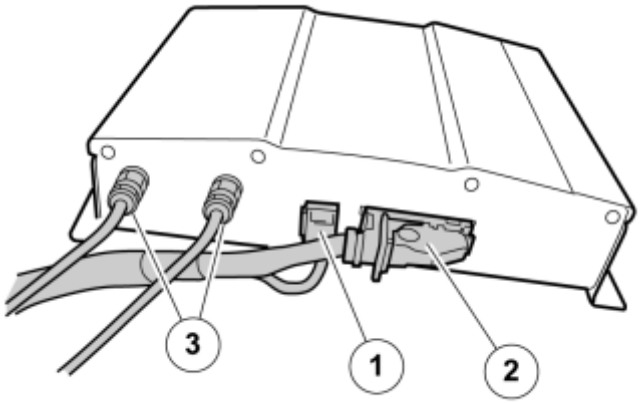

Fig. 282: Installing Connectors
Courtesy of VOLVO CARS CORPORATION

- Take the cable harness from the kit.
- Plug in the connectors in the order as shown.

NOTE: **Tighten the nuts on the antenna cables' contacts as much as possible with your fingers while the black part of the contact is held down. Then tighten the nuts (3) one complete turn with a wrench.**

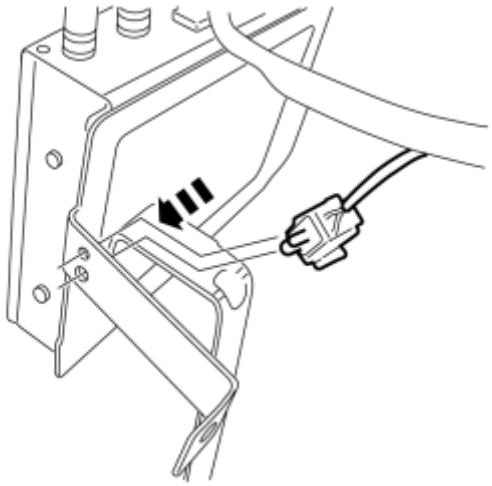

Fig. 283: Installing Fuse Holder
Courtesy of VOLVO CARS CORPORATION

- Install fuse holders in the holes on the inside of the console.

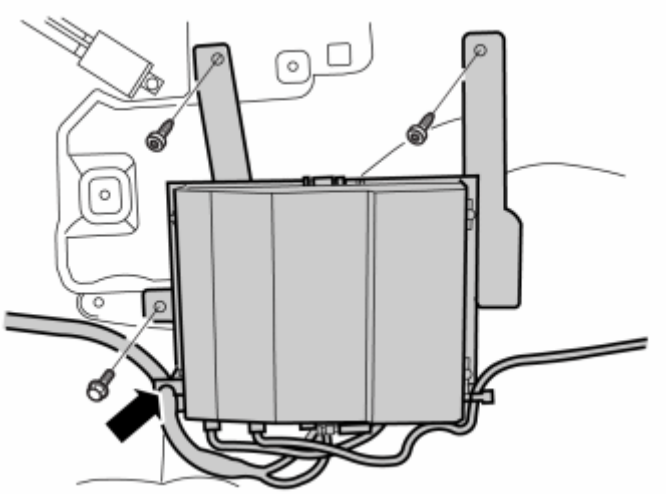

Fig. 284: Fasten Console Screws From Kit
Courtesy of VOLVO CARS CORPORATION

- Fasten the console with screws from the kit.

NOTE: Cut away a piece of insulation for the lower attachment.

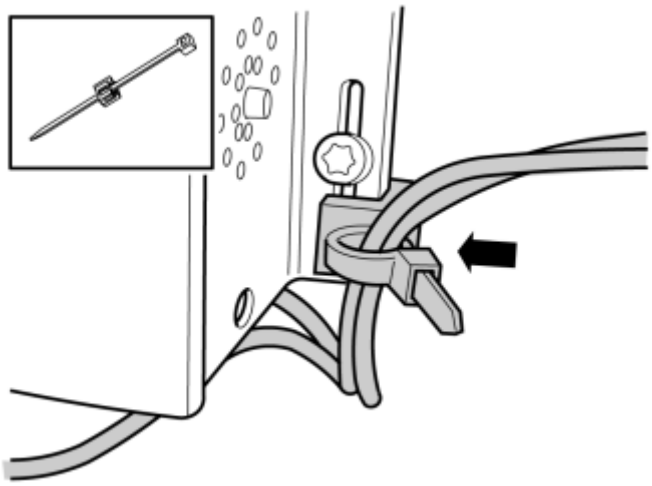

Fig. 285: Installing Strip Clamp On Tuner's Sheet Metal Flange
Courtesy of VOLVO CARS CORPORATION

- Install the strip clamp on the tuner's sheet metal flange.
- Clamp down the antenna cables.

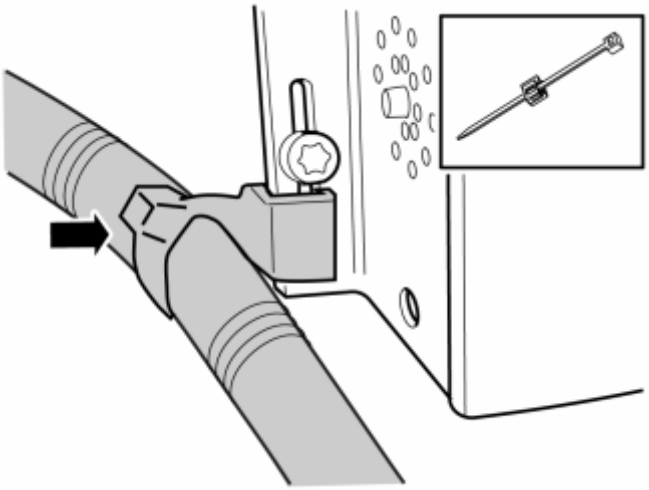

Fig. 286: Installing Strip Clamp On Tuner's Sheet Metal Flange
Courtesy of VOLVO CARS CORPORATION

- Install the strip clamp on the tuner's sheet metal flange.
- Clamp down the cable harness.

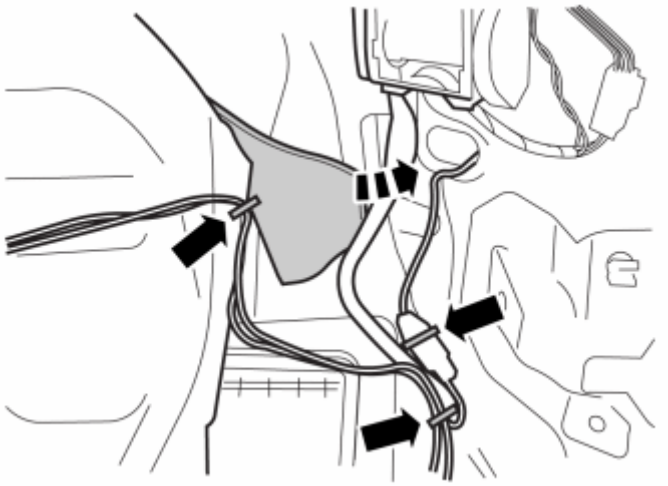

Fig. 287: Installing Cable
Courtesy of VOLVO CARS CORPORATION

- Fold aside the noise absorbent so that the sheet metal flange is visible.
- Install the strip clamp on the sheet metal flange.
- Clamp down both cables (1).
- Fold back the noise absorbent.
- Clamp down both antenna cables and excess cable in existing cable harness.

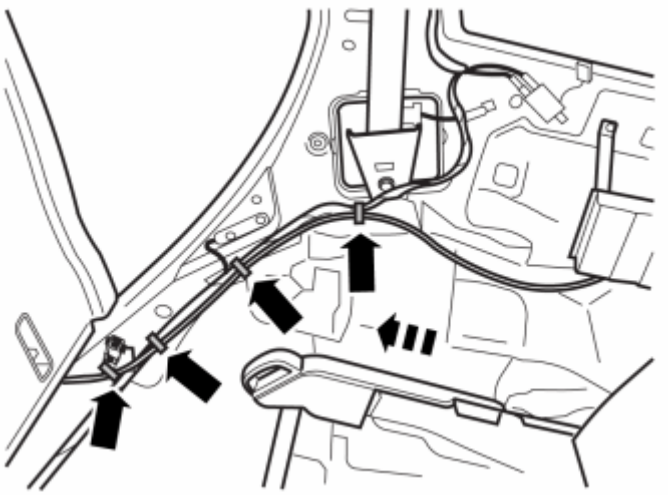

Fig. 288: Routing The Cable
Courtesy of VOLVO CARS CORPORATION

- Route the cable harness along the wheel housing down to the belt anchor.
- Fasten with strip clamps.

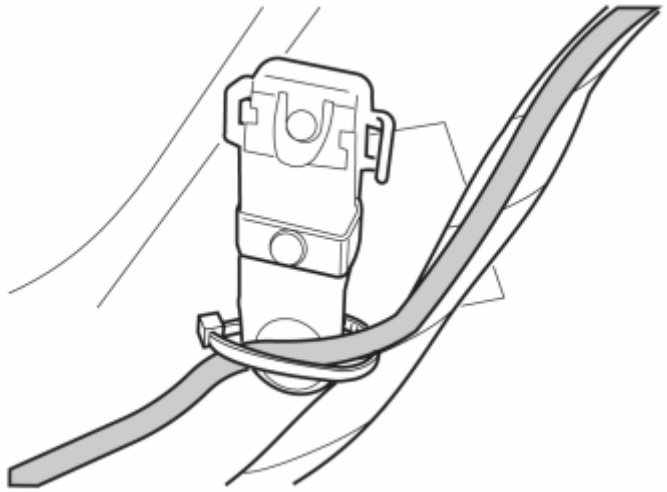

Fig. 289: Securing The Cable Harness
Courtesy of VOLVO CARS CORPORATION

- Fasten the cable harness in the belt anchor with strip clamp.

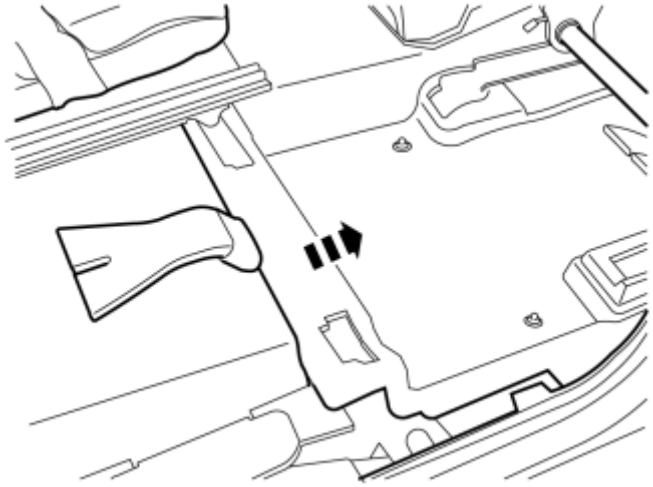

Fig. 290: Fold Up Floor Mat
Courtesy of VOLVO CARS CORPORATION

- Fold up the floor mat.

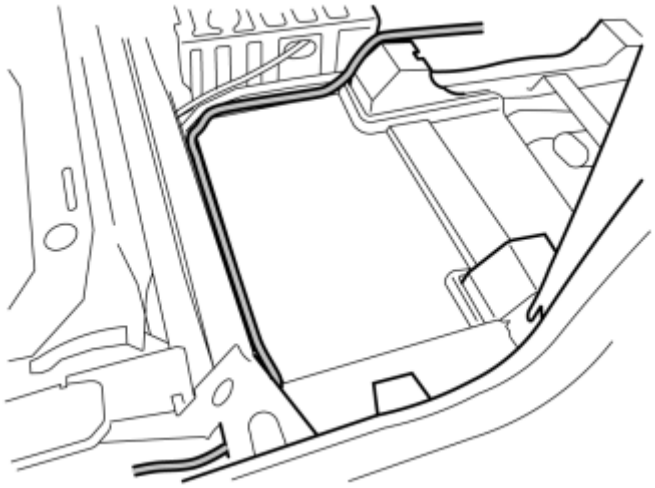

Fig. 291: Routing The Cable
Courtesy of VOLVO CARS CORPORATION

- Place the cable harness between polystyrene plastic and body under the floor mat so that it runs along the floor sides on to the tunnel.
- Make sure that the yellow marking on the cable harness is placed on the cable harness by the mat's edge at the tunnel.

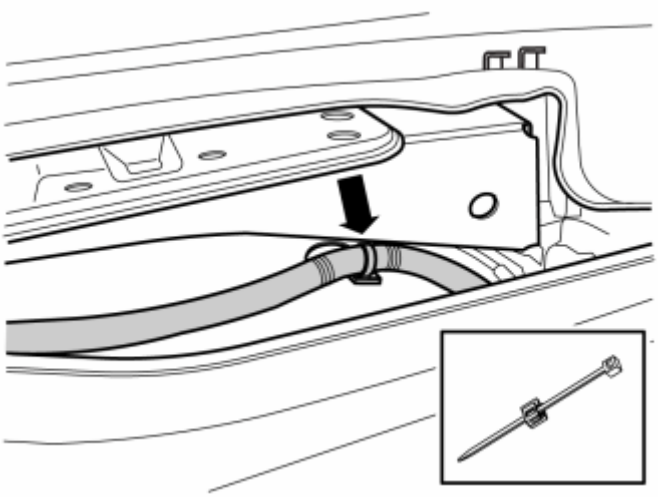

Fig. 292: Installing Strip Clamp On Sheet Metal Flange
Courtesy of VOLVO CARS CORPORATION

- Install the strip clamp on the sheet metal flange.
- Fasten the cable harness.

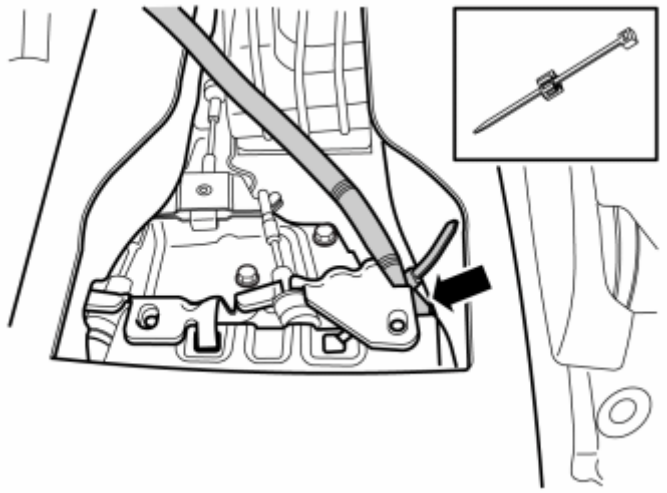

Fig. 293: Installing Strip Clamp Around Cable By Yellow Marking
Courtesy of VOLVO CARS CORPORATION

- Install the strip clamp around the cable harness by the yellow marking and press to fasten the clamp on the parking brake console's flange.

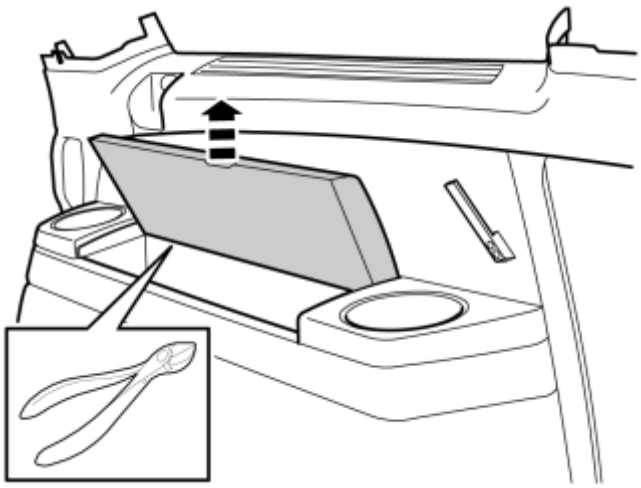

Fig. 294: Cutting Strip Clamp And Removing Cover
Courtesy of VOLVO CARS CORPORATION

- Get the side panel.
- Cut away the strip clamp and remove the cover.

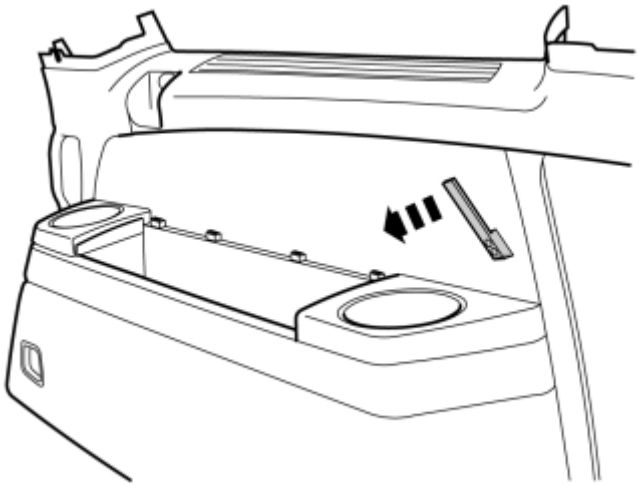

Fig. 295: Identifying Belt Holder
Courtesy of VOLVO CARS CORPORATION

- Remove the belt holder and rough up the fabric where the holder has been installed.

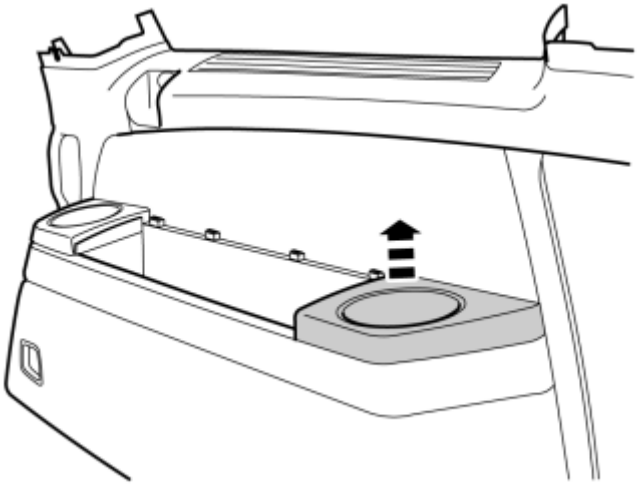

Fig. 296: Removing Rear Cup Holder
Courtesy of VOLVO CARS CORPORATION

- Remove the rear cup holder.

Illustrations A and B

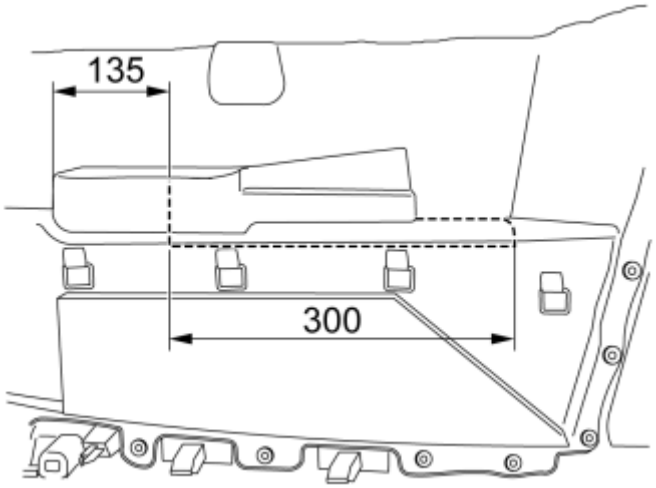

Fig. 297: Measuring And Marking Panel
Courtesy of VOLVO CARS CORPORATION

- Measure and mark out on the inside of the side panel as shown.
- Saw according to markings.

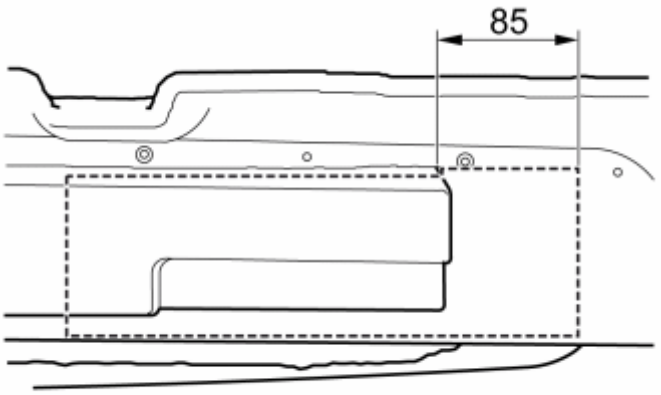

Fig. 298: Saw Markings
Courtesy of VOLVO CARS CORPORATION

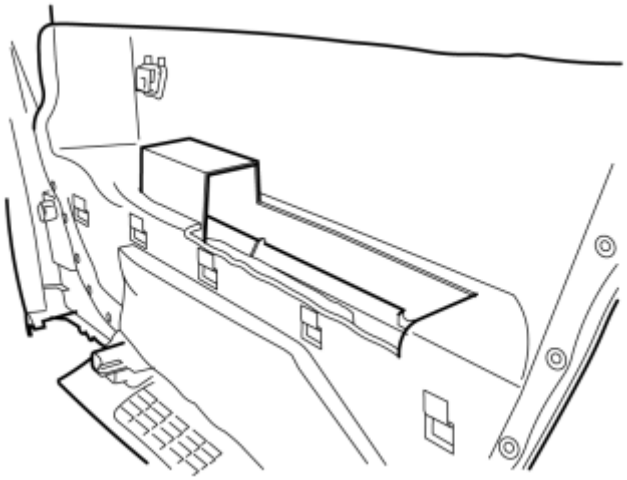

Fig. 299: Fill Edges
Courtesy of VOLVO CARS CORPORATION

- File down the edges.

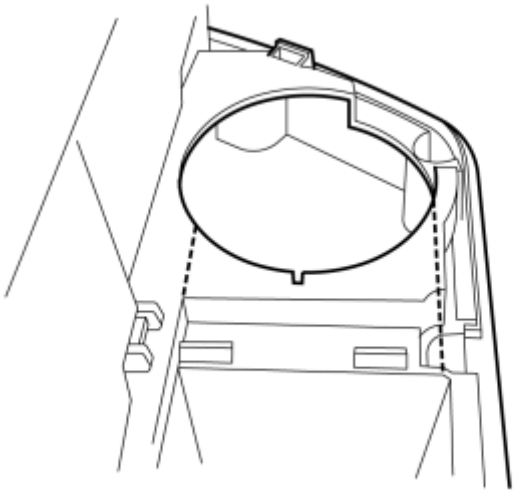

Fig. 300: Sawing By Side Panel's Rear Cup Holder
Courtesy of VOLVO CARS CORPORATION

- Saw by the side panel's rear cup holder as shown.

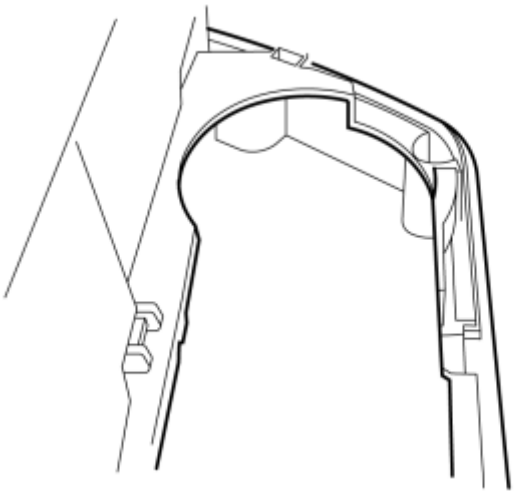

Fig. 301: Fill Edges
Courtesy of VOLVO CARS CORPORATION

- File down the edges.

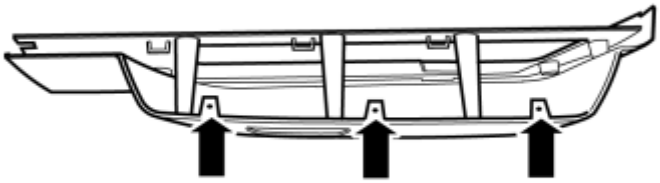

Fig. 302: Mark Middle Flanges
Courtesy of VOLVO CARS CORPORATION

- Take the casing from the kit.
- Mark out the middle on the three flanges with a scribe.
- Drill using a **3.5 mm** bit.

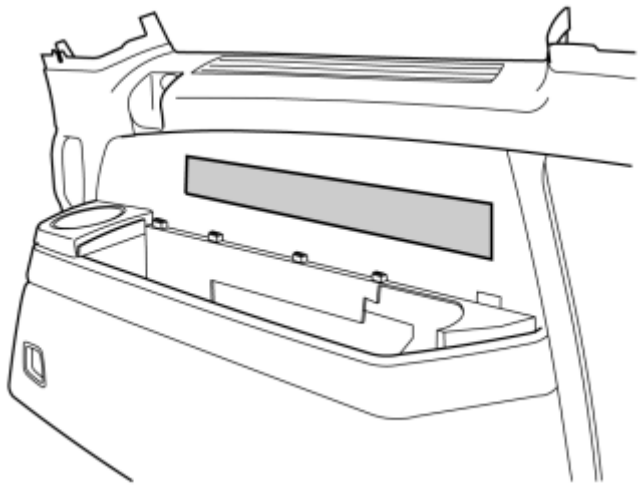

Fig. 303: Applying Tape
Courtesy of VOLVO CARS CORPORATION

- Fasten tape as shown.

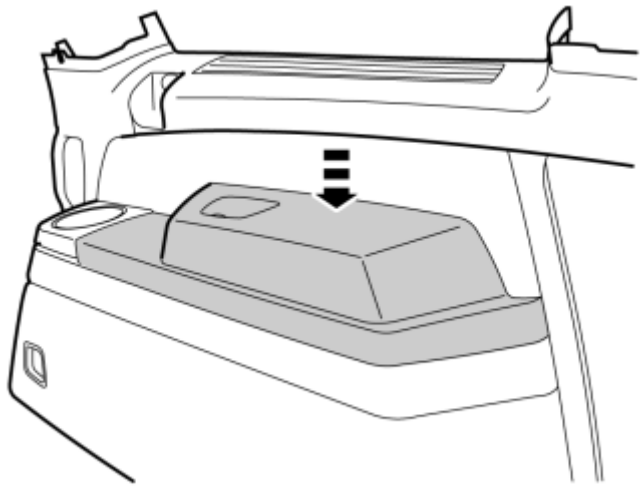

Fig. 304: Temporarily Install Casing
Courtesy of VOLVO CARS CORPORATION

- Temporarily install the casing.

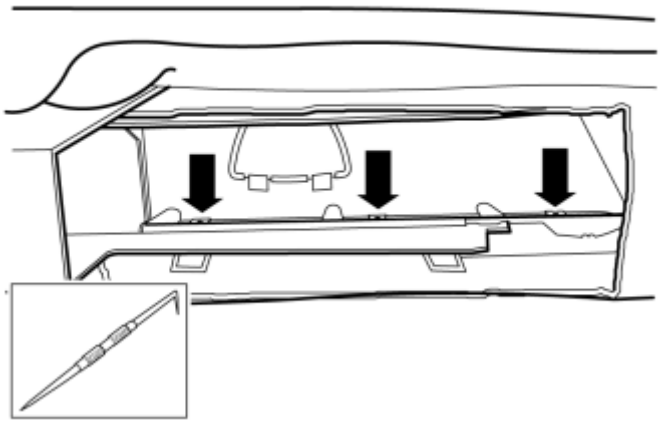

Fig. 305: Marking Drilled Holes
Courtesy of VOLVO CARS CORPORATION

- Mark the casing's three drilled holes on the tape.
- Remove the cover.

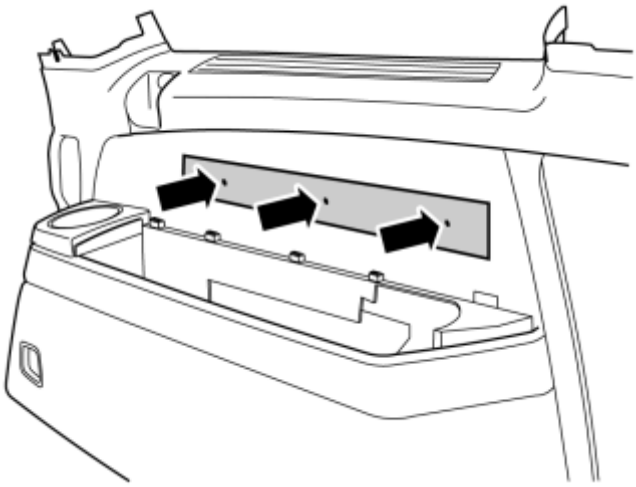

Fig. 306: Pre-Drilling Holes
Courtesy of VOLVO CARS CORPORATION

- Punch holes in the markings and through the panel with an awl or scribe. Remove the tape.
- Drill holes using a **7 mm** bit.

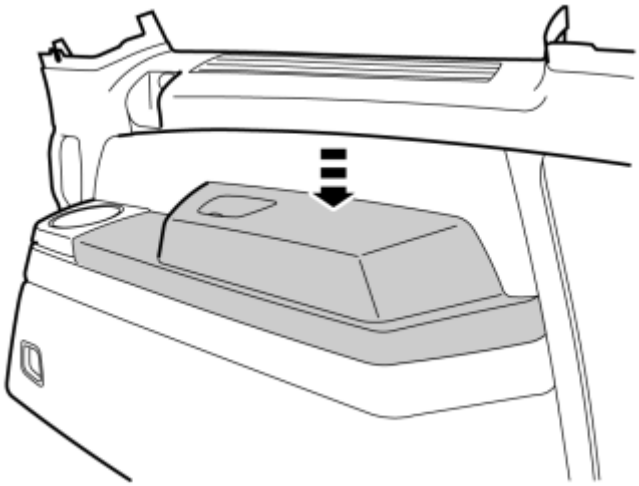

Fig. 307: Installing Casing
Courtesy of VOLVO CARS CORPORATION

- Install the casing. Check from the rear that the four catches have engaged.

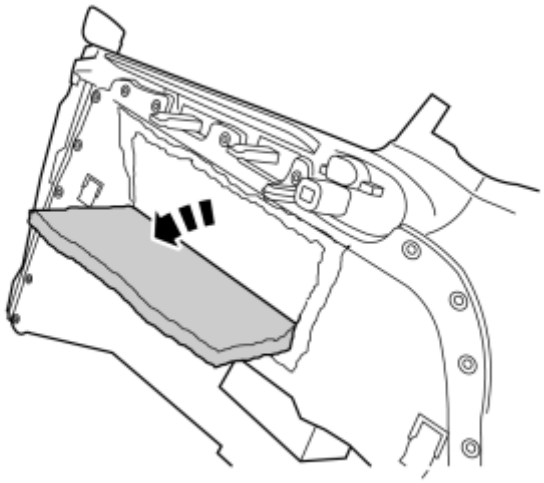

Fig. 308: Loosening Insulation
Courtesy of VOLVO CARS CORPORATION

- Loosen the insulation at the top and on the sides.

NOTE: The insulation shall be left in place at the bottom.

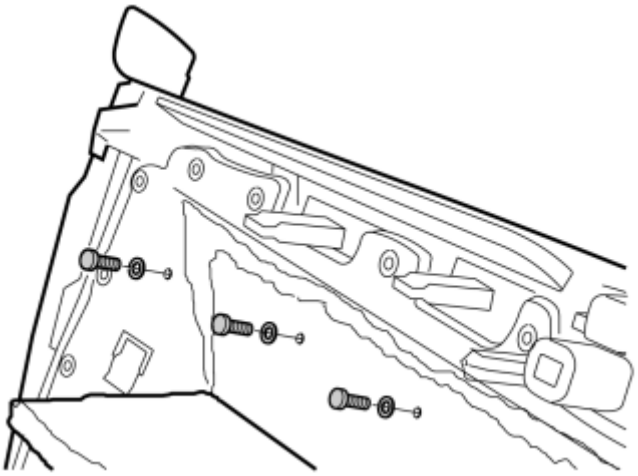

Fig. 309: Tightening Casing
Courtesy of VOLVO CARS CORPORATION

- Tighten down the casing with three screws **PF5x14** and three washers.

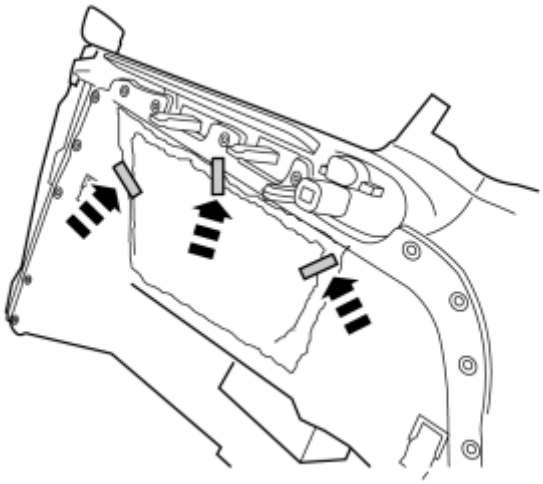

Fig. 310: Installing Insulation
Courtesy of VOLVO CARS CORPORATION

- Fold back the insulation and fasten it with three pieces of tape.
- Reinstall the side panel.
- Reinstall removed parts in reverse order. Tightening torque seat screws **40 Nm** and load lashing eyes **25 Nm** .
- Continue according to installation instruction **Multimedia monitor with DVD, Dual Screen.**

USB/IPOD MUSIC INTERFACE (2007-2012)

USB/IPOD MUSIC INTERFACE

NOTE:

- **Cable harness A for USB**
- **Cable harness B for iPod**
- **Cable harness C for USB and iPod**

Fig. 311: Identifying Ignition Switch Turned To Position 0
Courtesy of VOLVO CARS CORPORATION

Applies to cars with external amplifier

- Slide the front seats back and upwards at the front edge.
- Turn the ignition key to position 0.

NOTE: **Wait at least three minutes before unplugging the connectors or removing other electrical equipment.**

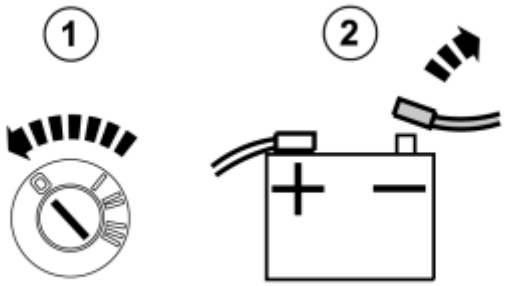

Fig. 312: Identifying Ignition Switch OFF & Disconnected Negative Battery Lead
Courtesy of VOLVO CARS CORPORATION

Applies to cars with internal amplifier

- Slide the front seats back and upwards at the front edge.
- Turn the ignition key to position 0.
- Disconnect the battery negative lead.

NOTE: Wait at least three minutes before unplugging the connectors or removing other electrical equipment.

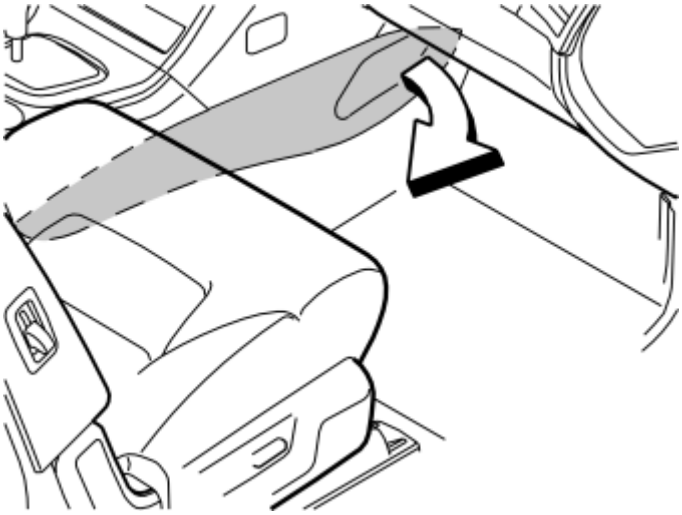

Fig. 313: Removing Tunnel Console Side Panels
Courtesy of VOLVO CARS CORPORATION

- Remove both the side panels from the tunnel console.

INSTALLING

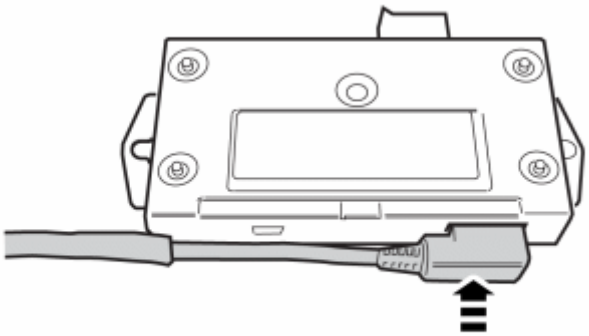

Fig. 314: Connecting Control Module
Courtesy of VOLVO CARS CORPORATION

- Take the cable harness and control module from the kit. Connect the cable harness to the control module.

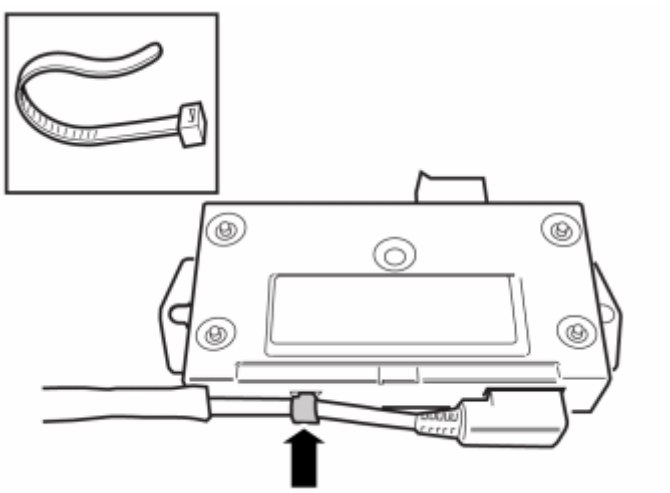

Fig. 315: Securing Cable With Cable Ties
Courtesy of VOLVO CARS CORPORATION

- Secure the cable harness to the control module using a cable tie.

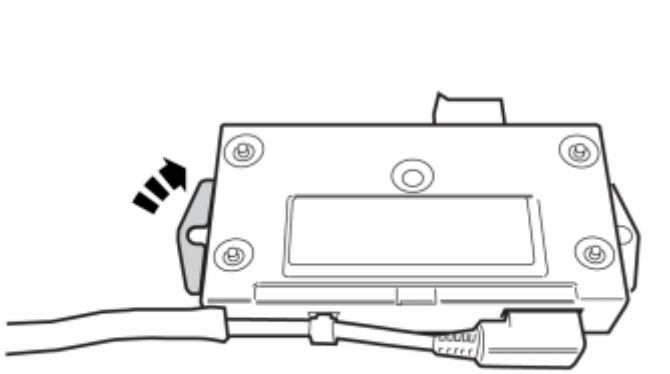

Fig. 316: Folding Up Left Mounting Of Control Module
Courtesy of VOLVO CARS CORPORATION

- Fold up the left mounting of the control module.

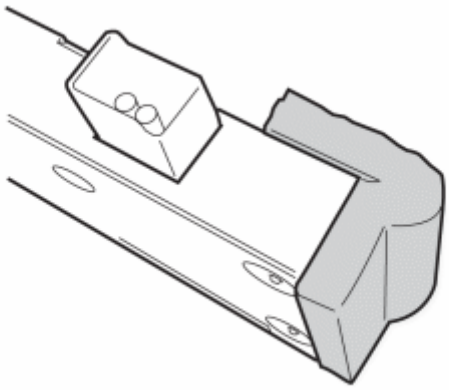

Fig. 317: Applying Foam Tape
Courtesy of VOLVO CARS CORPORATION

- Take a piece of foam tape from the kit and cut in the middle. Place a piece on the right-hand mounting of the control module.

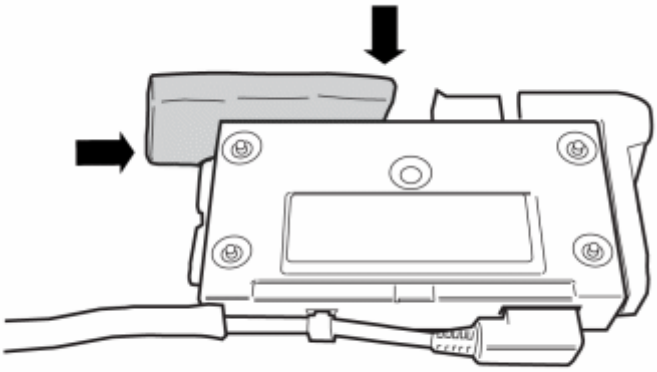

Fig. 318: Applying Foam Tape
Courtesy of VOLVO CARS CORPORATION

- Apply a piece of foam tape so that it covers half the upper edge and half the side edge.

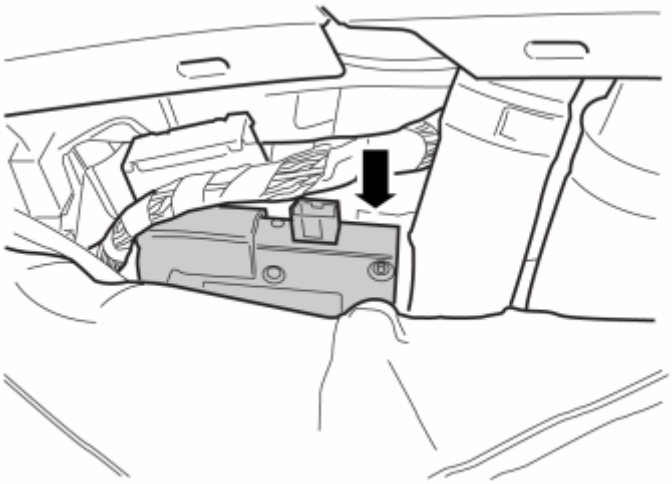

Fig. 319: Control Module Location
Courtesy of VOLVO CARS CORPORATION

- Push the carpet on the right-hand side of the tunnel console to one side.
- Place the control module between the carpet and insulation. The right-hand mounting of the control module should be below the air duct.

APPLIES TO VEHICLES WITH EXTERNAL AMPLIFIER

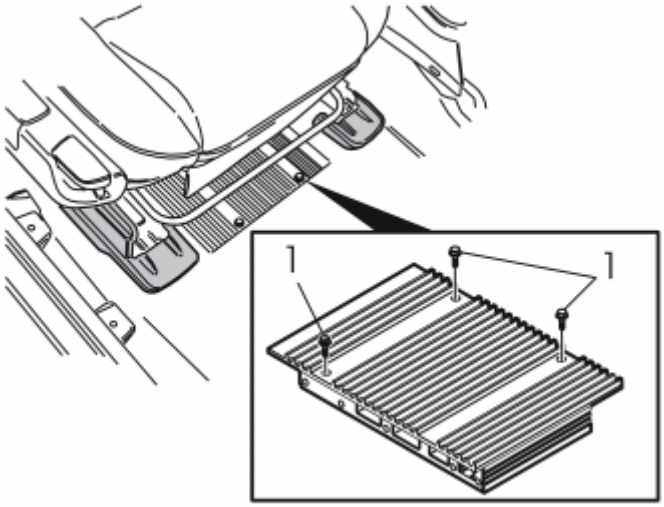

Fig. 320: Removing Amplifier Screws
Courtesy of VOLVO CARS CORPORATION

- Slacken off the amplifier screws (1) under the right-hand front seat.

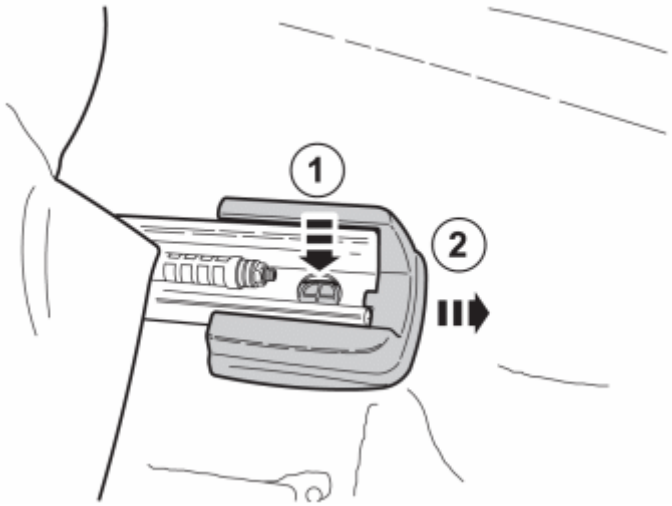

Fig. 321: Removing Left Hand Seat Piece
Courtesy of VOLVO CARS CORPORATION

- Remove the left-hand seat piece.

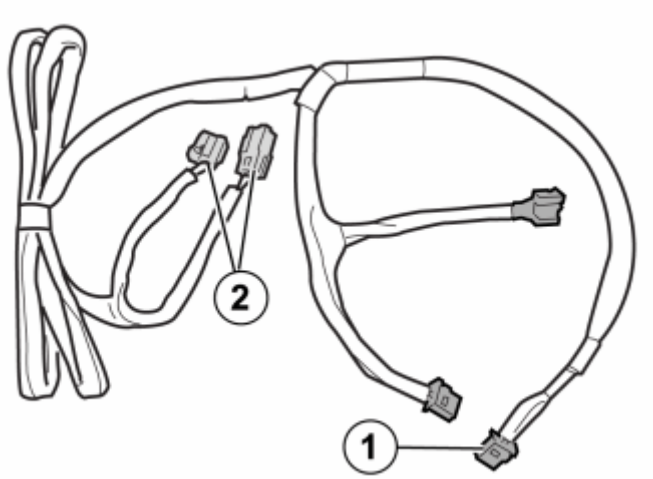

Fig. 322: Identifying Cable Harness Connectors
Courtesy of VOLVO CARS CORPORATION

- Take cable harness (D) from the kit. Route the end of the cable harness with connectors 1 and 2 under the carpet, from the amplifier to the tunnel console.

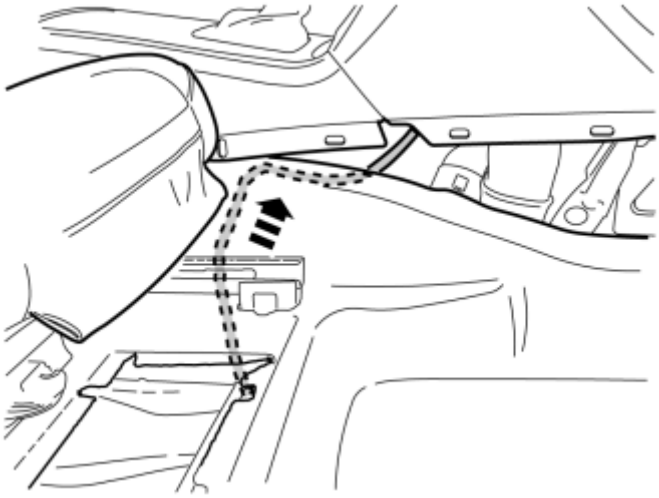

Fig. 323: Routing Cable
Courtesy of VOLVO CARS CORPORATION

- Follow the existing cable harness.

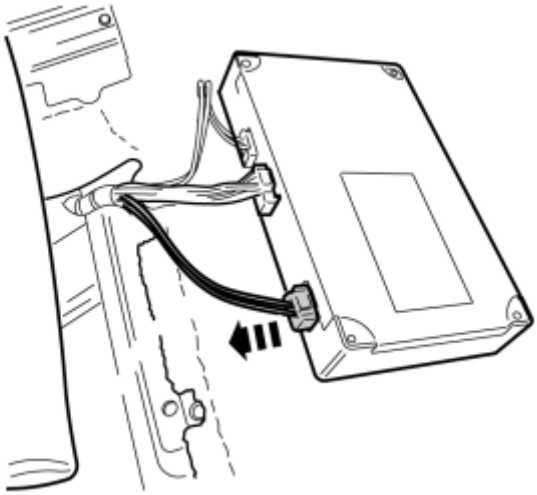

Fig. 324: Disconnecting Amplifier Connection
Courtesy of VOLVO CARS CORPORATION

- Disconnect the connector on the amplifier.

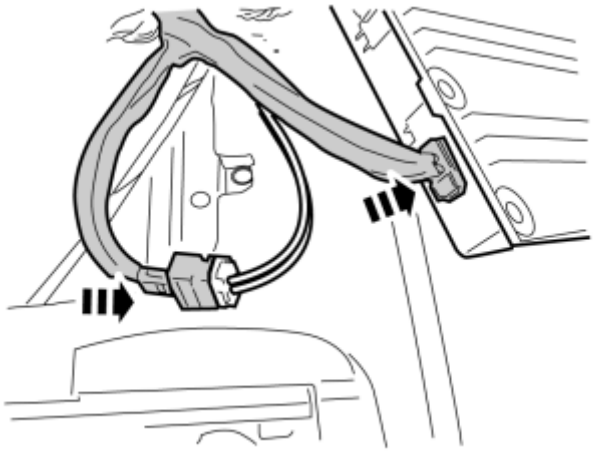

Fig. 325: Connecting Cable Harness's
Courtesy of VOLVO CARS CORPORATION

- Connect the connector that was disconnected from the amplifier to the connector on the new cable harness.
- Take a piece of foam tape from the kit and cut in the middle. Place a cut off piece of foam tape around the connectors.
- Connect the other connector to the amplifier.
- Reinstall the amplifier and the seat side piece.

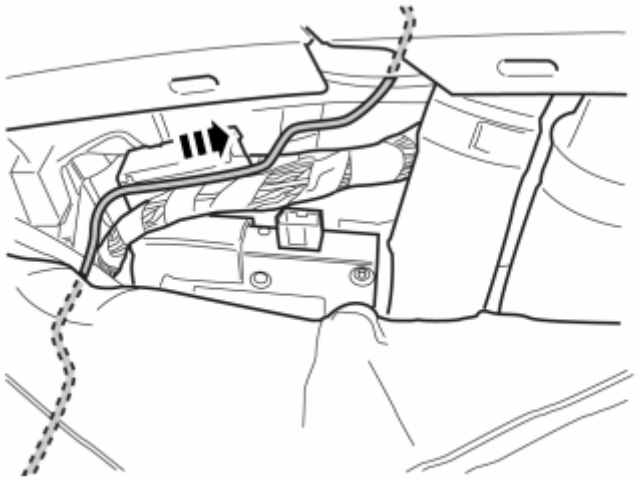

Fig. 326: Removing Two 4 Pin Connectors
Courtesy of VOLVO CARS CORPORATION

- Route the two 4-pin connectors straight through the tunnel console.

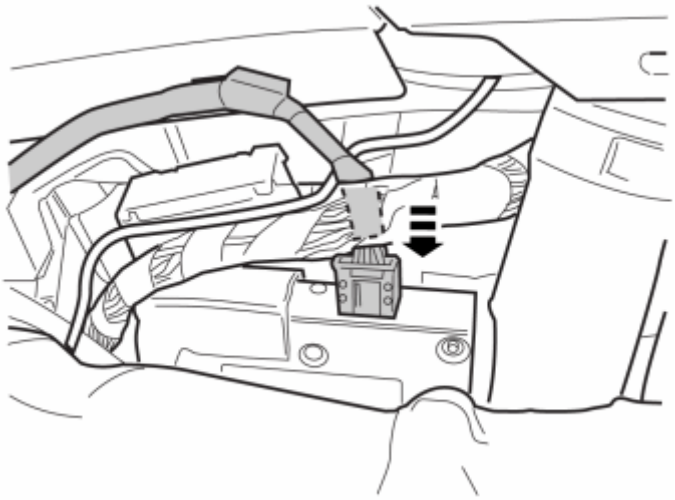

Fig. 327: Connecting Control Module
Courtesy of VOLVO CARS CORPORATION

- Connect the connector to the control module.

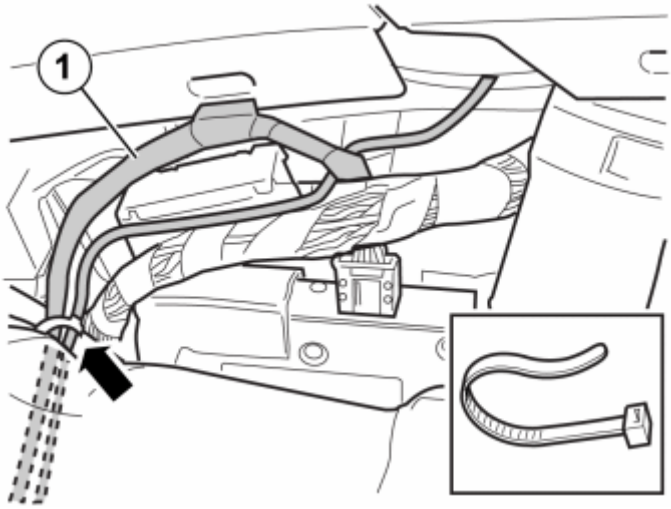

Fig. 328: Securing Cables With Cable Ties
Courtesy of VOLVO CARS CORPORATION

- Secure the three cables (fiber optic, power and USB/iPod cables) in the existing cable harness using a cable tie.

NOTE: Observe caution, the fiber optic cable (1) is sensitive to bending and trapping. The bend radius must not be less than 25 mm.

APPLIES TO CARS WITH INTERNAL AMPLIFIER

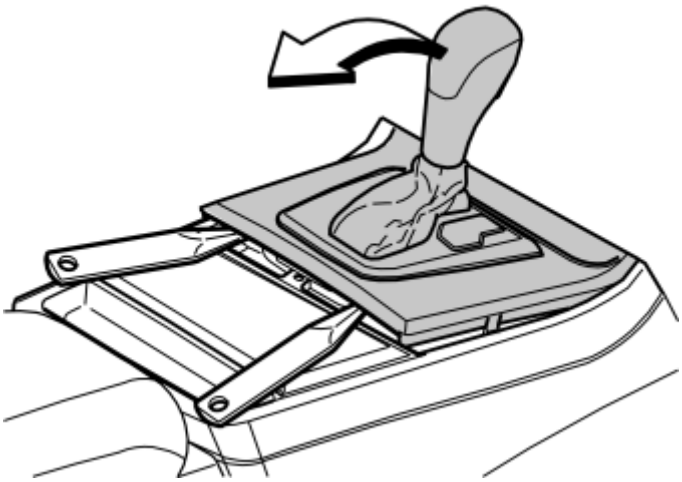

Fig. 329: Prying Off Gear Selector Panel At Rear Edge
Courtesy of VOLVO CARS CORPORATION

Applies to cars with automatic gearbox

- Turn the ignition key to position II.
- Move the gear selector lever to its rearmost position.
- Use a weatherstrip and pry off the gear selector panel at the rear edge.

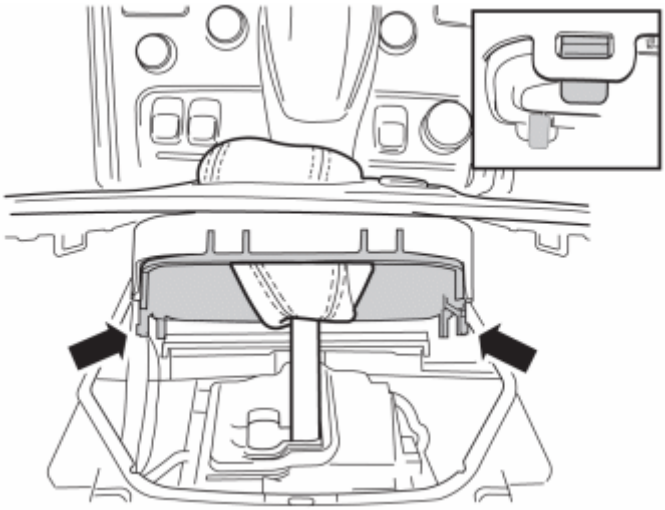

Fig. 330: Pressing In Catches And Removing Panel
Courtesy of VOLVO CARS CORPORATION

- Press in the catches and remove the panel.

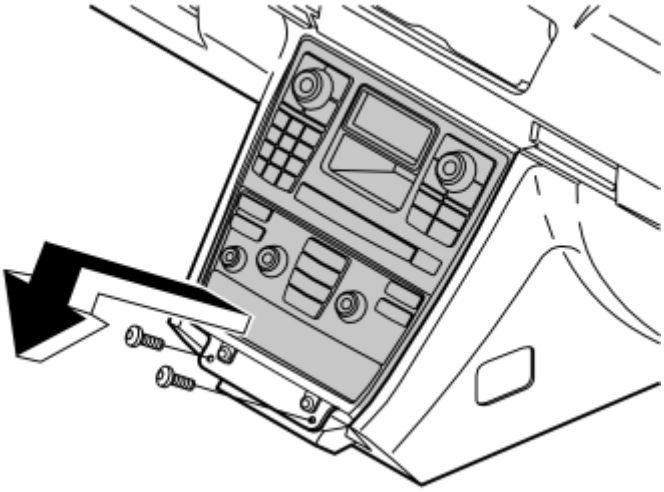

Fig. 331: Removing Screws And Radio/AC Unit From Center Console
Courtesy of VOLVO CARS CORPORATION

- Remove the two screws.
- Remove the audio/ ACC panel from the center console. Pull at the lower edge and then downwards until it releases from the mounting at the upper edge.

NOTE: Do not damage the removed components or the surrounding panels.

INSTALLATION, CONTINUED

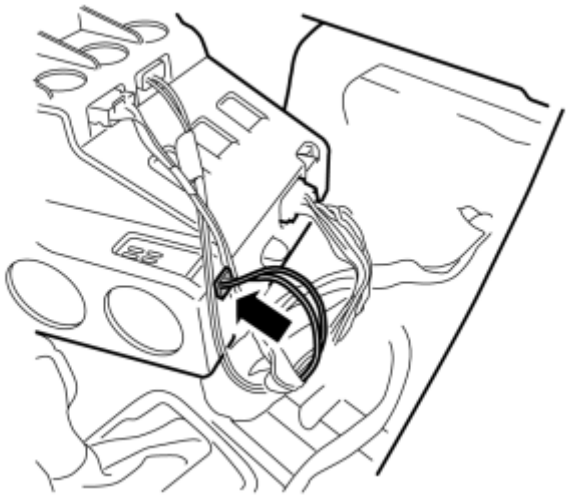

Fig. 332: Disconnecting Media Player Fiber Optic Cable
Courtesy of VOLVO CARS CORPORATION

- Disconnect the connector for the fiber optic cable from the media player (IAM)

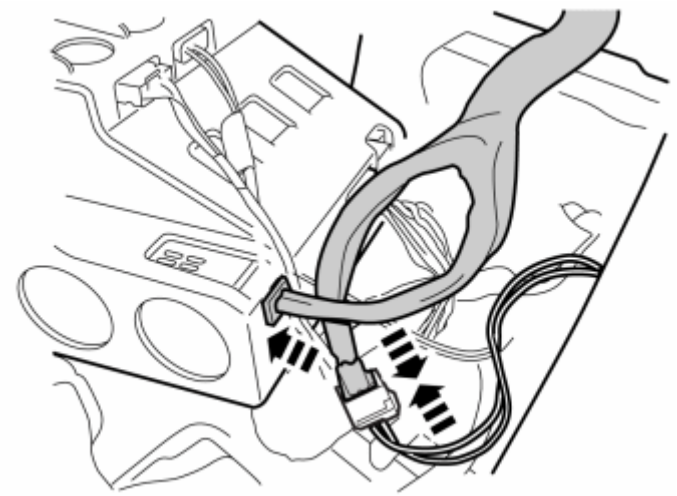

Fig. 333: Reconnecting Harness And Media Player
Courtesy of VOLVO CARS CORPORATION

- Take cable harness (D) and a piece of foam tape from the kit. Cut off the foam tape in the middle.
- Connect the connector that was disconnected from the media player to the connector on the new cable harness.
- Tape one cut piece of foam tape around the connectors.
- Connect the other connector to the media player.

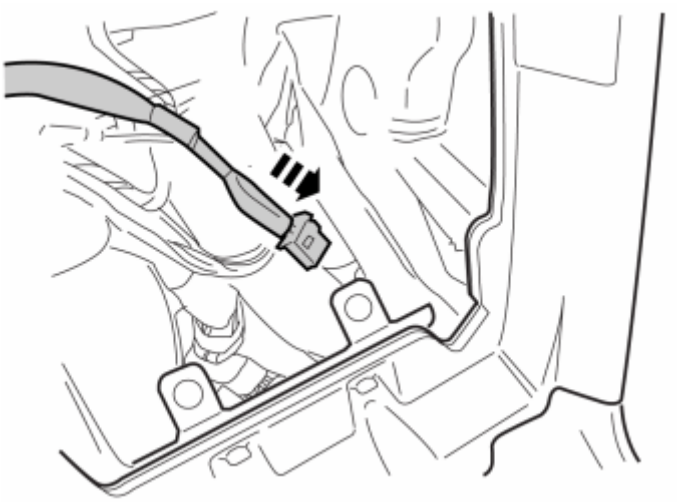

Fig. 334: Routing Cable
Courtesy of VOLVO CARS CORPORATION

- Route the remaining connector down to the control module. Reinstall the audio/ACC panel.

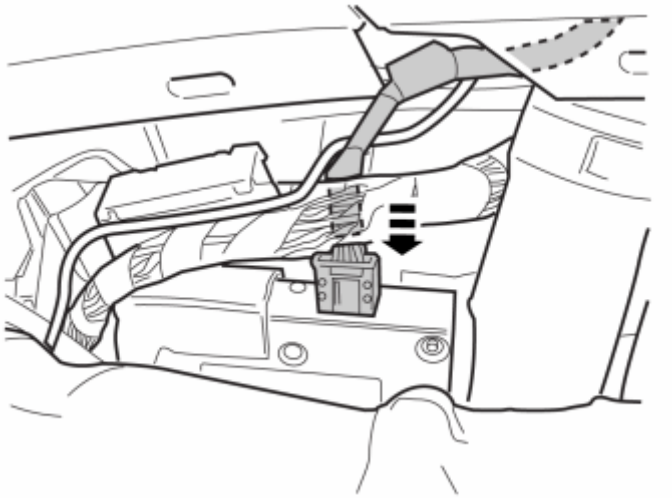

Fig. 335: Connecting Control Module
Courtesy of VOLVO CARS CORPORATION

- Connect the connector to the control module.

INSTALLATION, CONTINUED

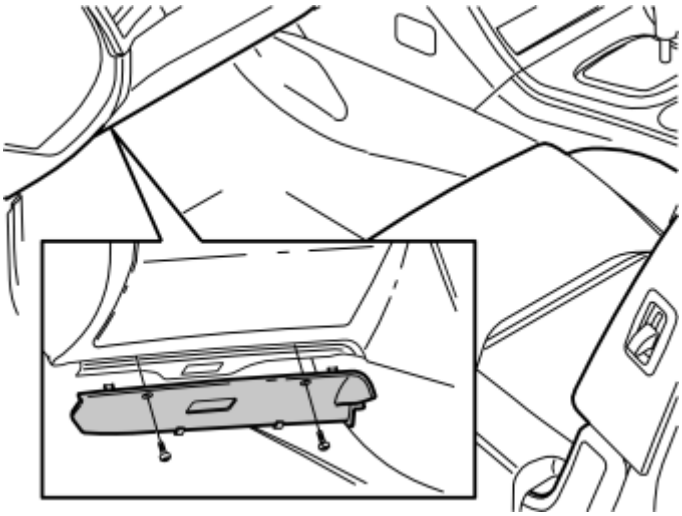

Fig. 336: Identifying Removal Of Screws And Soundproofing Panel
Courtesy of VOLVO CARS CORPORATION

- Remove the sound barrier on the driver's side by first removing the two screws and then prizing it away at the top edge.

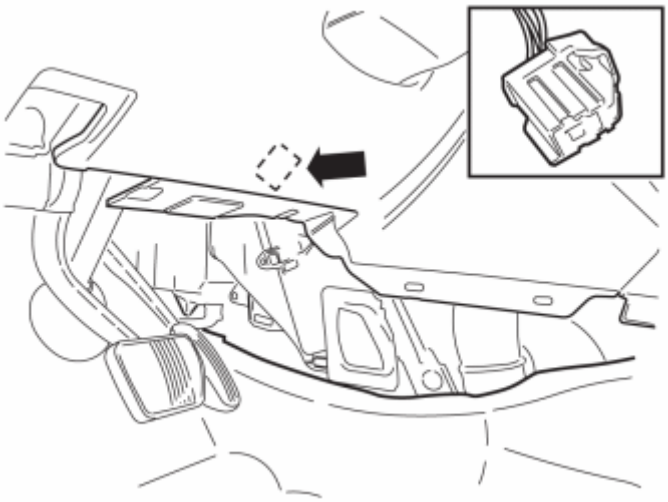

Fig. 337: Identifying 4 Pin (Grey) Pre-Routed Connector Location
Courtesy of VOLVO CARS CORPORATION

- Locate the 4-pin gray, pre-routed connector for the power supply. It is taped to the thick cable harness under the dashboard.

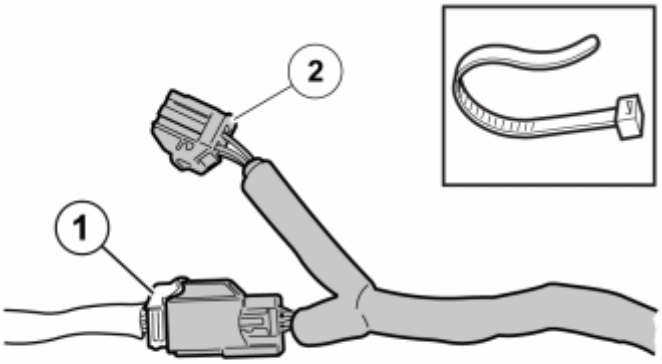

Fig. 338: Connecting Harness To Pre-Routed Connector
Courtesy of VOLVO CARS CORPORATION

- Connect the cable harness to the pre-routed connector (1).
- Tape one cut piece of foam tape around the connectors.

  The pre-routed connector is already connected on certain versions. Disconnect it and then connect both the connectors from the new cable harness in-between. Secure the connector (2) on the car's existing cable harness using a cable tie.

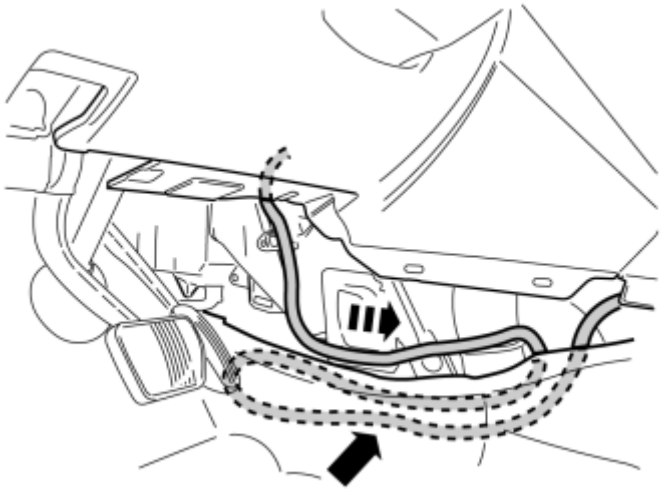

Fig. 339: Securing Excess Cable
Courtesy of VOLVO CARS CORPORATION

- Place any excess under the carpet.

APPLIES WHEN CONNECTING TO THE USB/IPOD PLAYER LOCATED IN THE GLOVE COMPARTMENT.

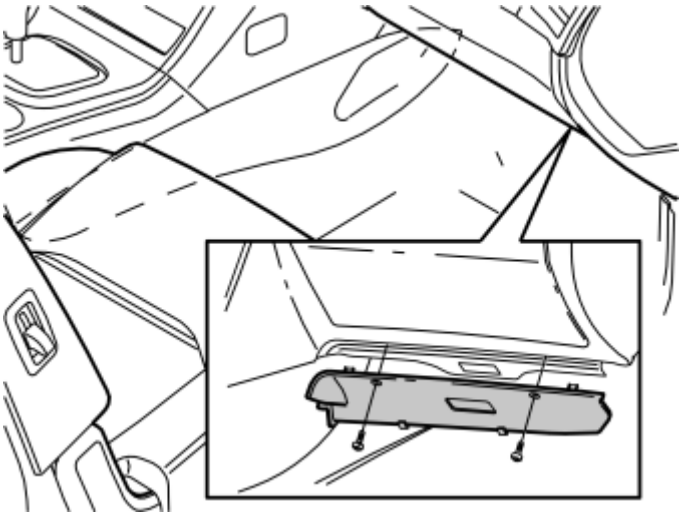

Fig. 340: Passenger Side Sound Barrier Panel
Courtesy of VOLVO CARS CORPORATION

- Remove the sound barrier on the passenger side by first removing the two screws and then prizing it away at the top edge.

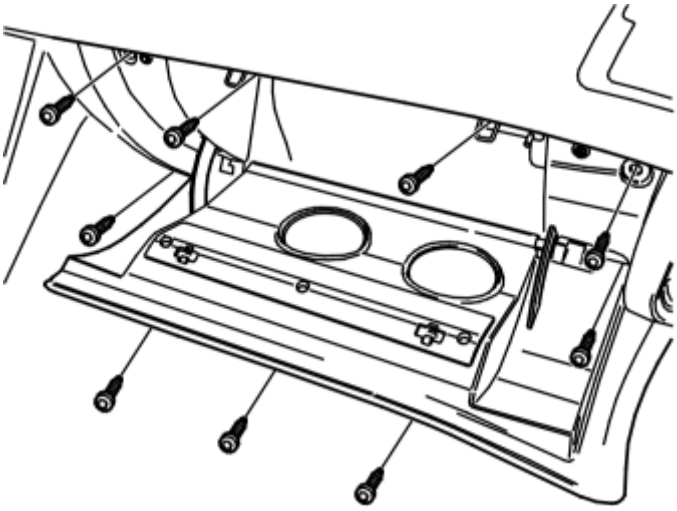

Fig. 341: Removing Glove Compartment
Courtesy of VOLVO CARS CORPORATION

- Remove the nine screws, route the glove compartment straight out and disconnect the connector.

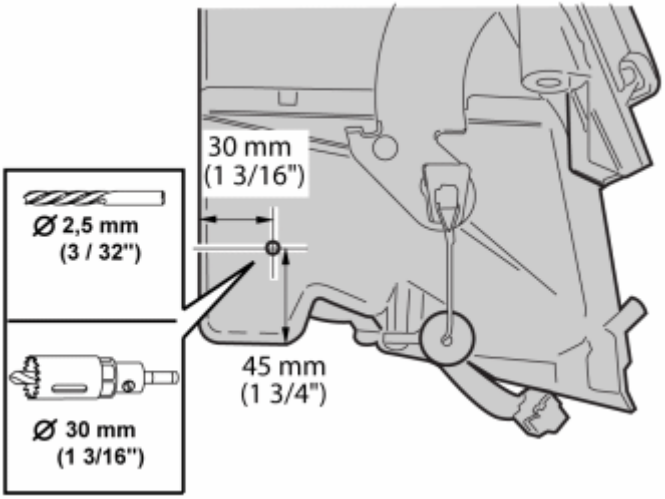

Fig. 342: Drilling Location And Dimensions
Courtesy of VOLVO CARS CORPORATION

- Mark as illustrated on the outside of the glove compartment's end.
- Pre-drill using a **2.5 mm (3/32")** bit.
- Drill using a **30 mm (1 3/16")** hole saw.
- Smooth off the hole edges.

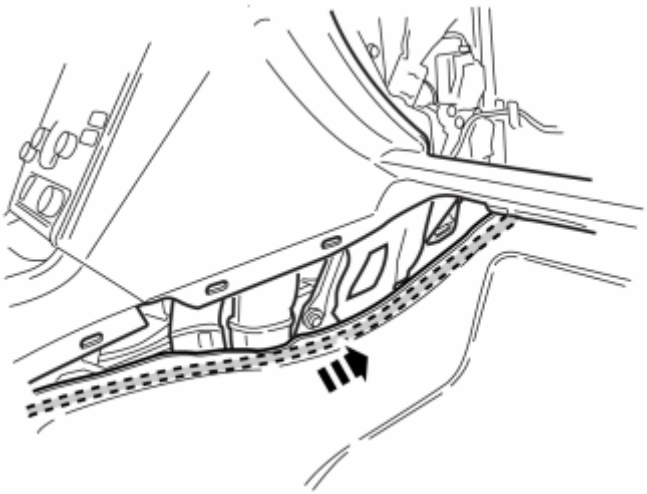

Fig. 343: Routing Cable
Courtesy of VOLVO CARS CORPORATION

- Route the cable for the USB/iPod under the carpet along the side of the tunnel console.

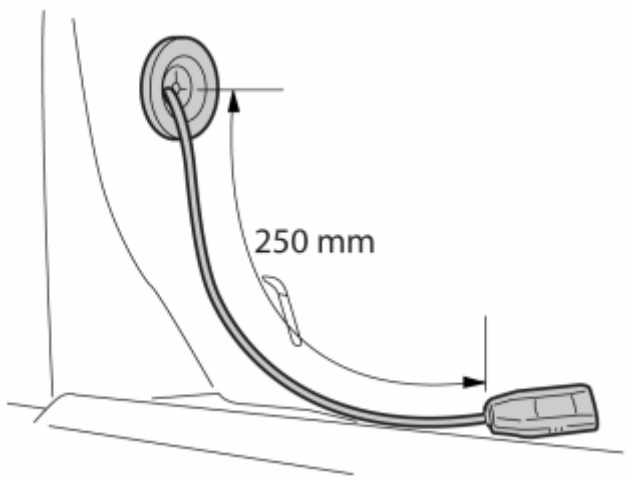

Fig. 344: Routing Cable Through Drilled Hole
Courtesy of VOLVO CARS CORPORATION

- Route the cable through the drilled hole.
- Thread the rubber grommet on to the cable and secure in the hole. The cable must protrude about 250 mm.

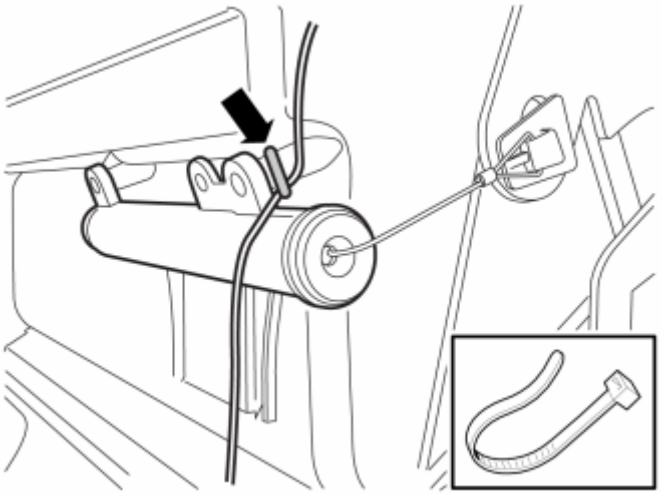

Fig. 345: Securing Table Using Cable Ties
Courtesy of VOLVO CARS CORPORATION

- Secure the cable using a cable tie on the damper spring's eyelets.
- Reinstall the glove compartment.

APPLIES WHEN CONNECTING TO THE USB/IPOD PLAYER LOCATED IN THE CD COMPARTMENT UNDER THE ARMREST.

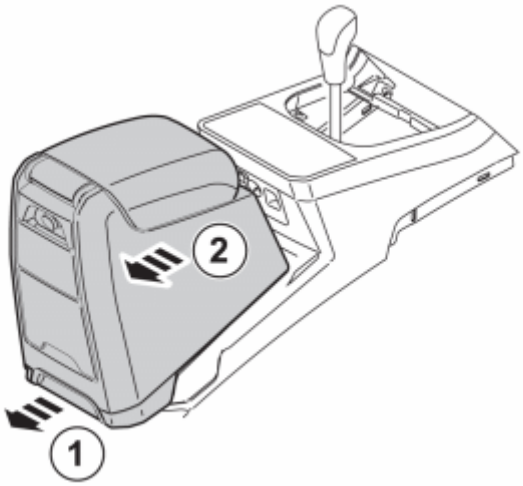

Fig. 346: Removing Tunnel Compartment
Courtesy of VOLVO CARS CORPORATION

- Pull the handle, move the tunnel compartment backward and lift it away.

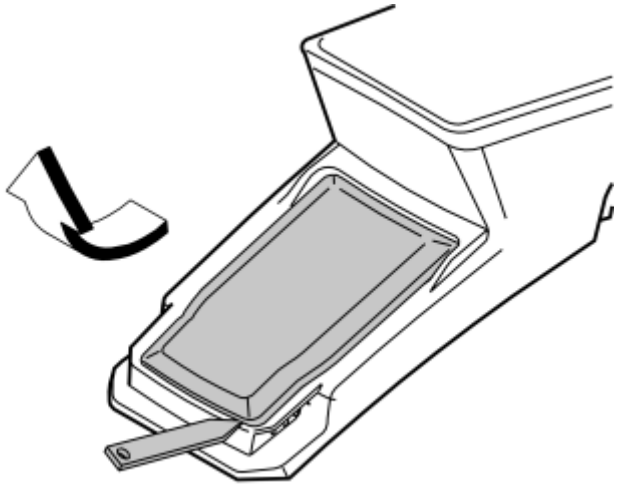

Fig. 347: Removing Cover
Courtesy of VOLVO CARS CORPORATION

- Remove the cover. It shall not be re-used.

Fig. 348: Removing Cover Panel
Courtesy of VOLVO CARS CORPORATION

- Remove the two screws and the cover panel.

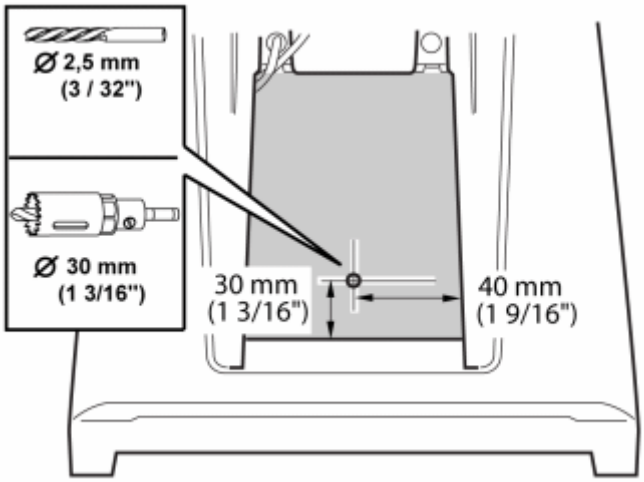

Fig. 349: Drilling Location And Dimensions
Courtesy of VOLVO CARS CORPORATION

- Measure the front of the CD compartment as illustrated.
- Pre-drill using a **2.5 mm (3/32")** bit.
- Drill using a **30 mm (1 3/16")** hole saw.
- Smooth off the hole edges.

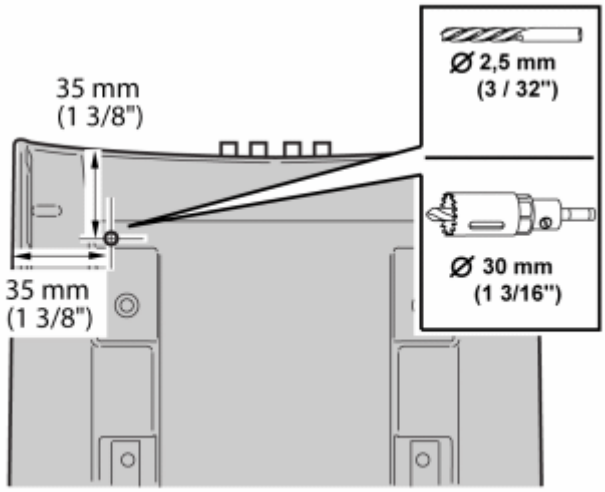

Fig. 350: Drilling Location And Dimensions
Courtesy of VOLVO CARS CORPORATION

Applies to cars without holes in the tunnel compartment.

- Measure the bottom of the tunnel console as illustrated.
- Pre-drill using a **2.5 mm (3/32")** bit.
- Drill using a **30 mm (1 3/16")** hole saw.
- Smooth off the hole edges.

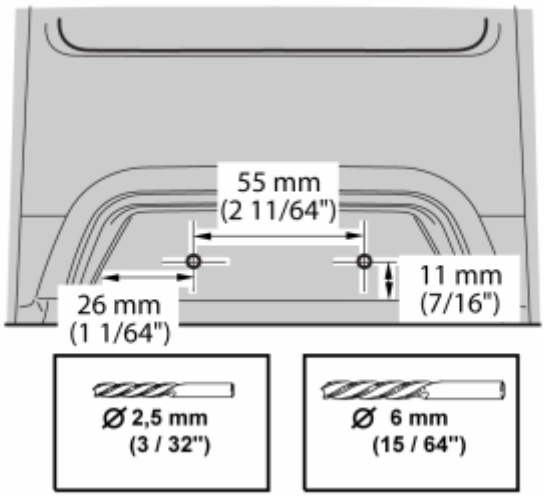

Fig. 351: Drilling Dimensions
Courtesy of VOLVO CARS CORPORATION

- Measure the opening handle of the tunnel console as illustrated.
- Pre-drill using a **2.5 mm (3/32")** bit.
- Drill out the holes. Use a **6 mm (15/64")** diameter drill bit.

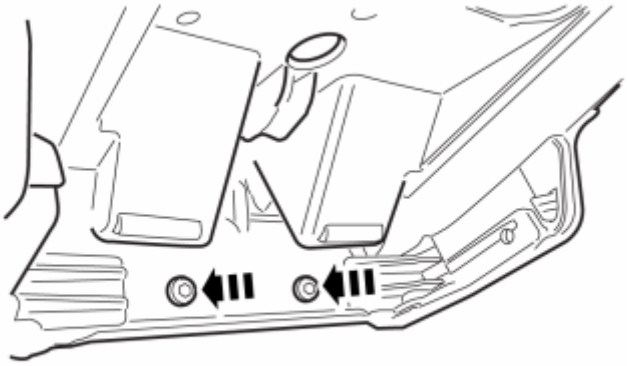

Fig. 352: Identifying Blind Cover Plug And Screws
Courtesy of VOLVO CARS CORPORATION

- Take the blind cover plug and two screws from the kit. Install the blind cover plug on the opening handle.

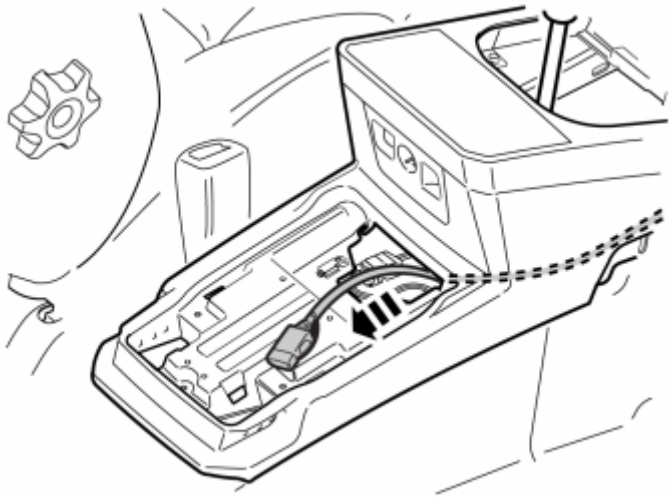

Fig. 353: Cable Routing
Courtesy of VOLVO CARS CORPORATION

- Route the USB/iPod cable from the control module up out of the rear section of the tunnel console.

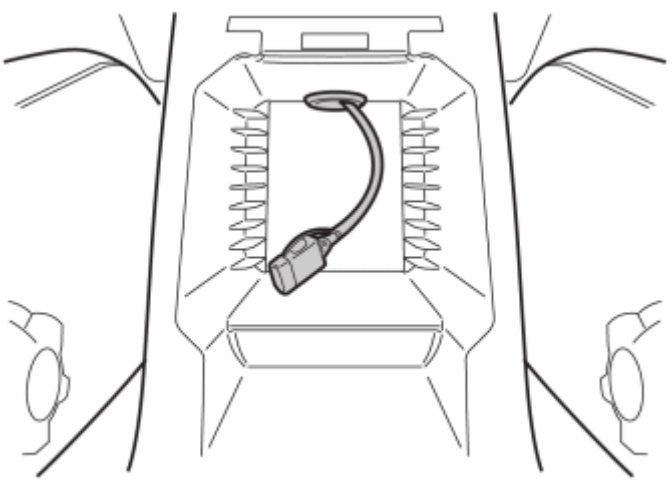

Fig. 354: Identifying Cable Connector Routing
Courtesy of VOLVO CARS CORPORATION

- Route the cable through the drilled holes.
- Insert the rubber grommet onto the cable and secure in the hole. The cable protrusion should be approx. 200 mm.
- Reinstall the contact plate.
- Reinstall the tunnel compartment and at the same time place the excess cable under the tunnel compartment.

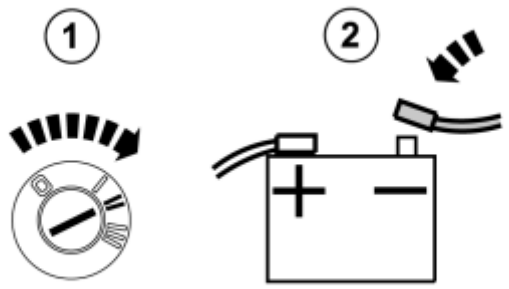

Fig. 355: Identifying Ignition In ON Position and Connecting Negative Battery Lead
Courtesy of VOLVO CARS CORPORATION

Applies to cars with Internal amplifier

- Turn the ignition key to position II.
- Reconnect the battery negative lead.

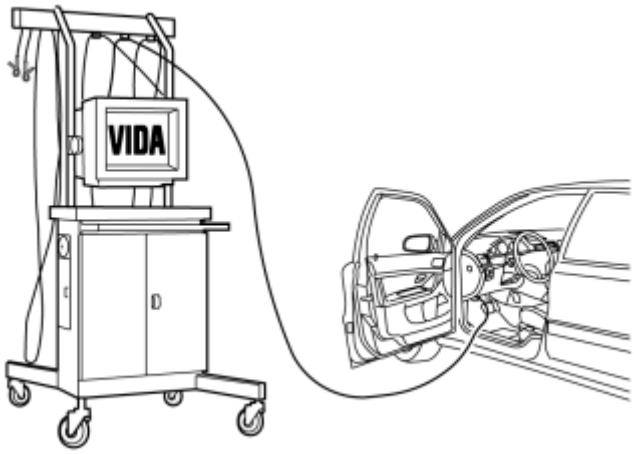

Fig. 356: Identifying VIDA (Service Information) To Program Software
Courtesy of VOLVO CARS CORPORATION

Reinstall:

- the panel to the gear selector
- sound proofing panels
- side panels
- Download the software for the accessory's function following the service information in VIDA (Volvo Scan Tool).

USB/IPOD MUSIC PLAYER (2009-2012)

USB/IPOD MUSIC PLAYER

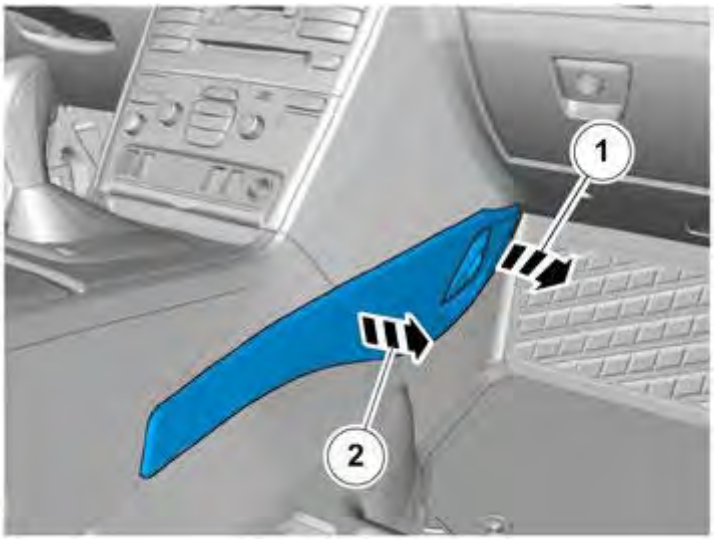

Fig. 357: Removing Side Panel
Courtesy of VOLVO CARS CORPORATION

Fig. 358: Removing Panel
Courtesy of VOLVO CARS CORPORATION

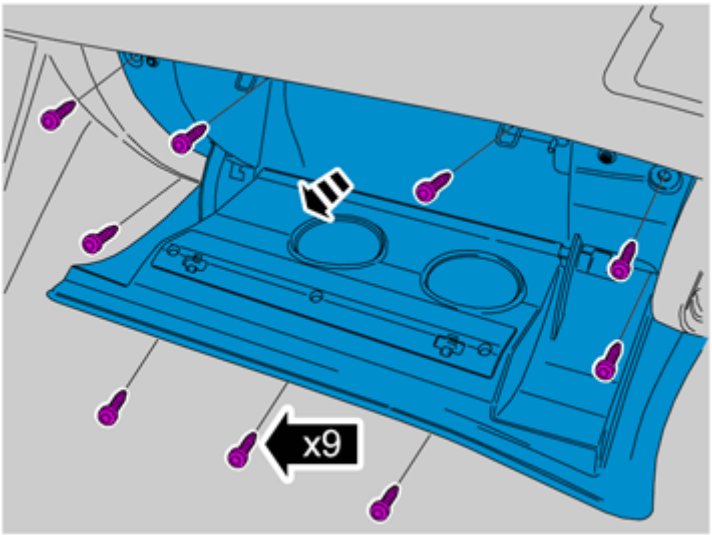

Fig. 359: Removing Glove Compartment
Courtesy of VOLVO CARS CORPORATION

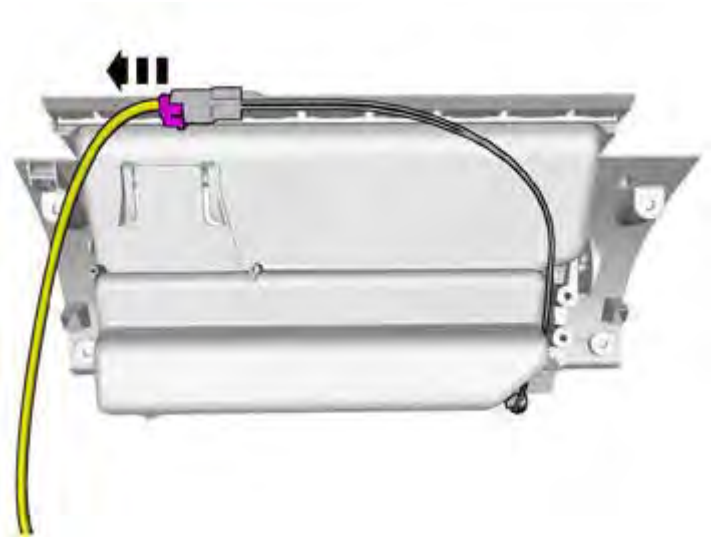

Fig. 360: Connecting Connectors
Courtesy of VOLVO CARS CORPORATION

Fig. 361: Stabilizing Clip Installation Location
Courtesy of VOLVO CARS CORPORATION

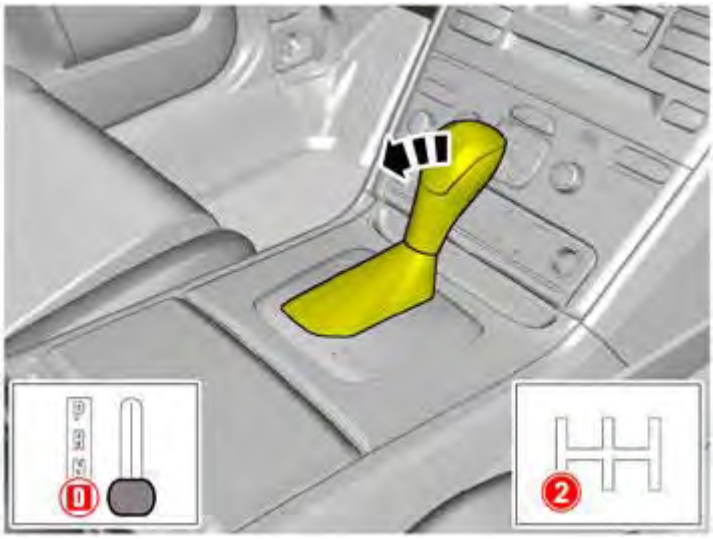

Fig. 362: Positioning Shift Knob
Courtesy of VOLVO CARS CORPORATION

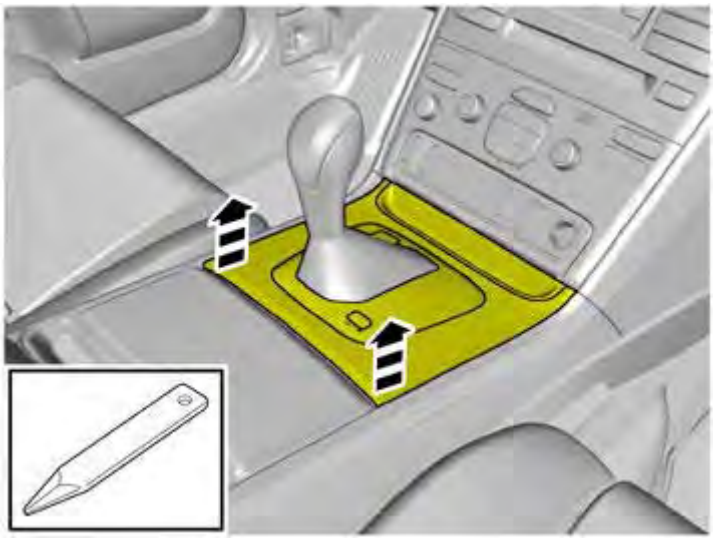

Fig. 363: Removing Gear Shift Selector Cover (1 of 2)
Courtesy of VOLVO CARS CORPORATION

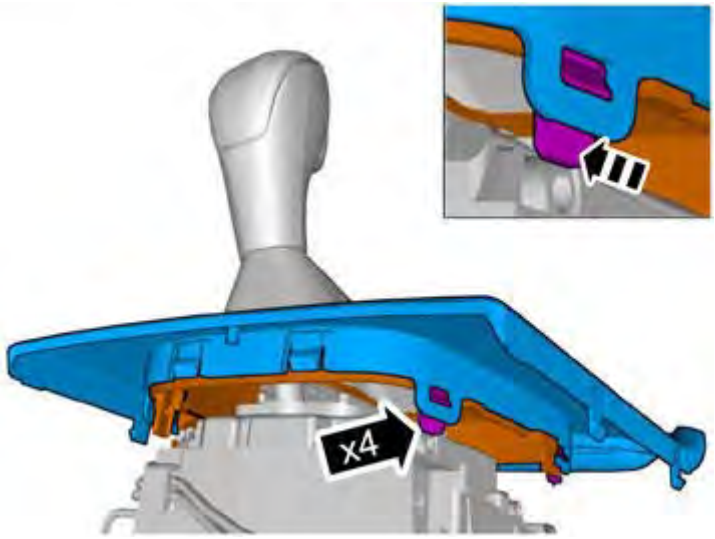

Fig. 364: Removing Gear Shift Selector Cover (2 of 2)
Courtesy of VOLVO CARS CORPORATION

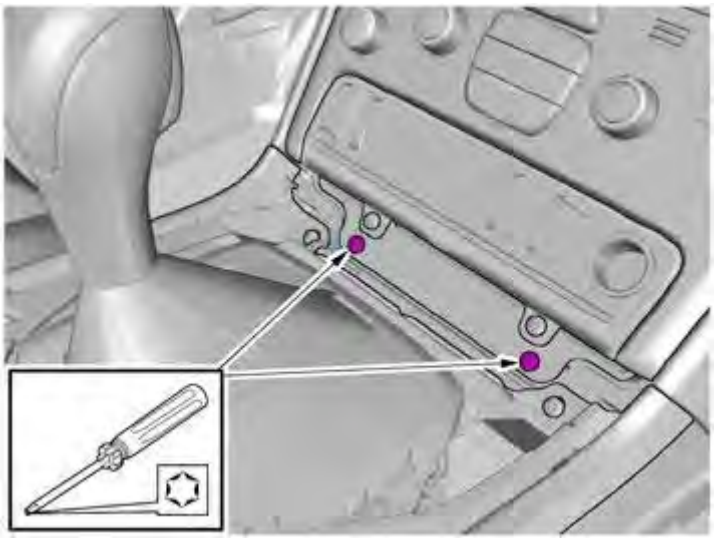

Fig. 365: Identifying Screws
Courtesy of VOLVO CARS CORPORATION

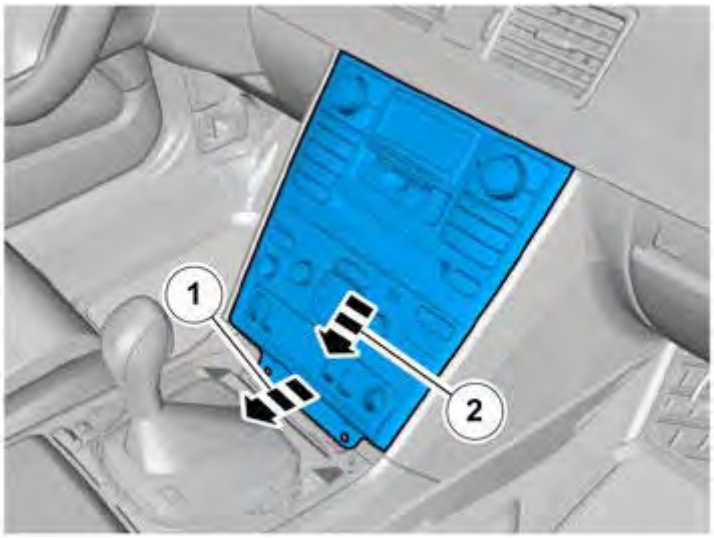

Fig. 366: Removing Dashboard Center Console Unit
Courtesy of VOLVO CARS CORPORATION

NOTE: **Take care not to damage removed and surrounding parts.**

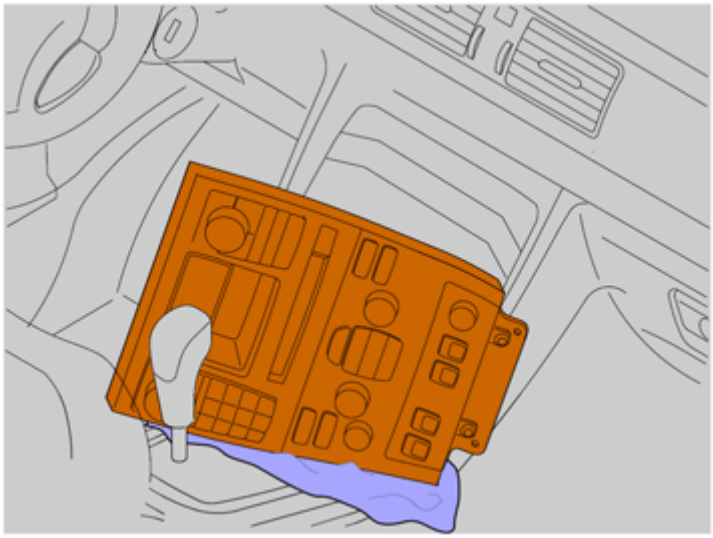

Fig. 367: Protecting Tunnel Console And Radio/Climate Unit
Courtesy of VOLVO CARS CORPORATION

- Lay a cloth or similar down to protect the tunnel console and the radio/climate unit.

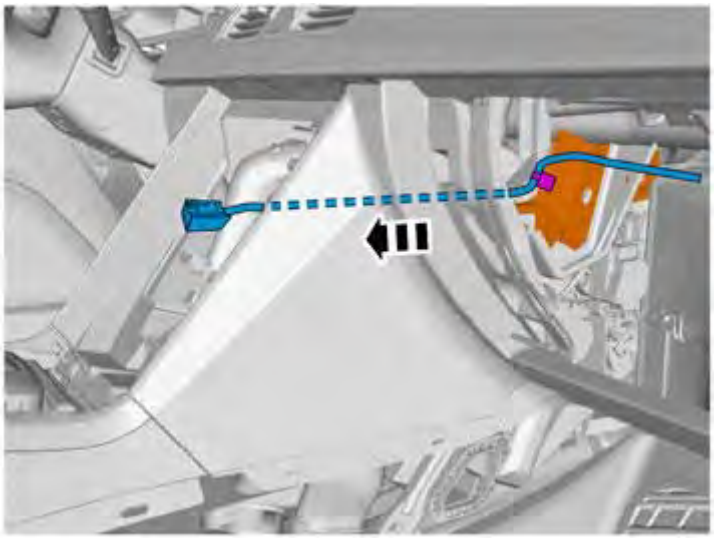

Fig. 368: Cable Routing
Courtesy of VOLVO CARS CORPORATION

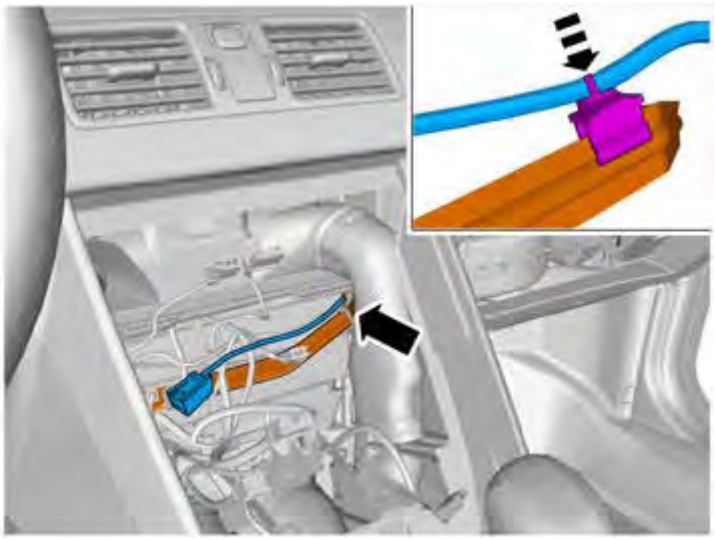

Fig. 369: Cable Stabilizing Clip
Courtesy of VOLVO CARS CORPORATION

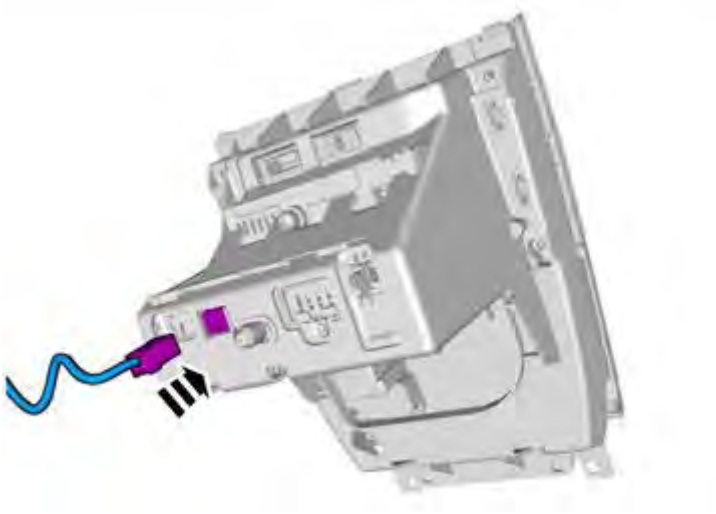

Fig. 370: Connector/Terminal View
Courtesy of VOLVO CARS CORPORATION

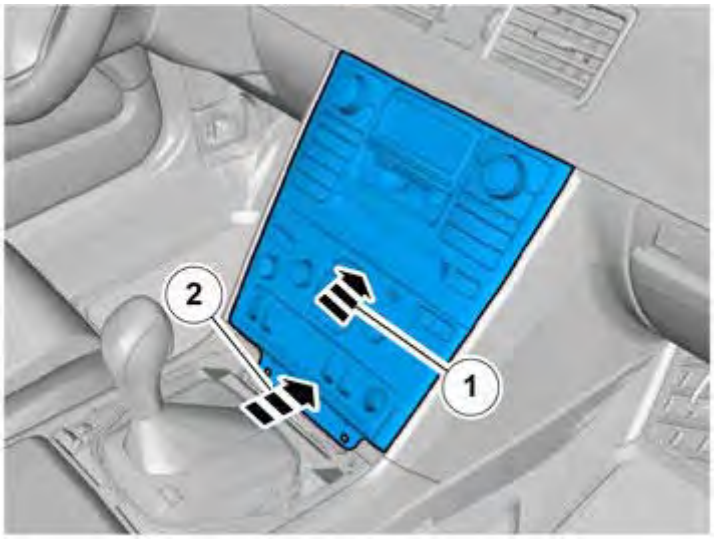

Fig. 371: Installing Center Console Dashboard Unit
Courtesy of VOLVO CARS CORPORATION

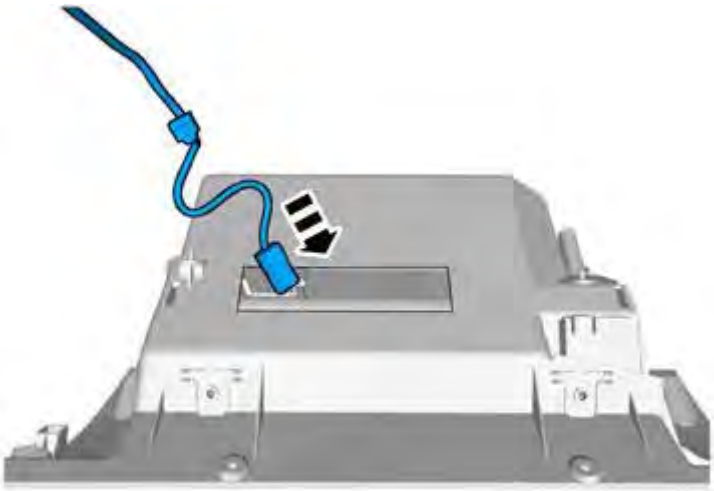

Fig. 372: Installing Cable
Courtesy of VOLVO CARS CORPORATION

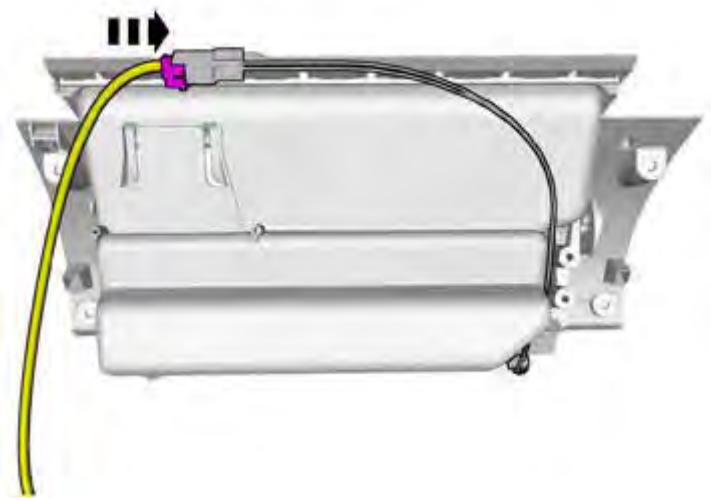

Fig. 373: Installing Cable
Courtesy of VOLVO CARS CORPORATION

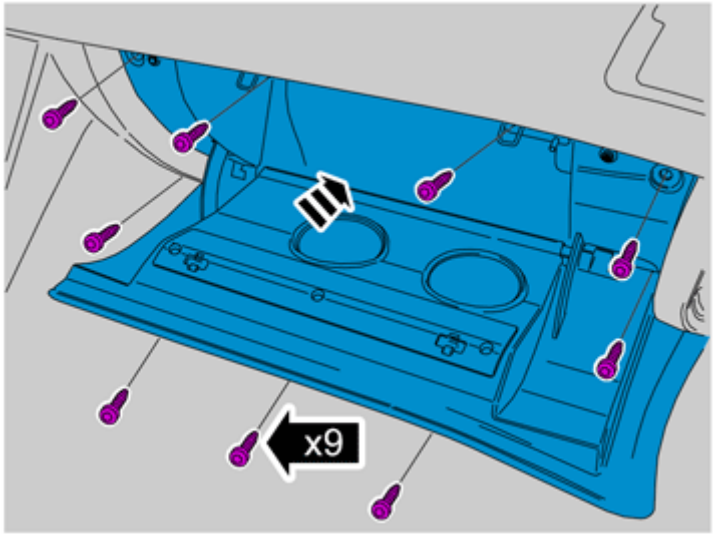

Fig. 374: Removing Glove Box
Courtesy of VOLVO CARS CORPORATION

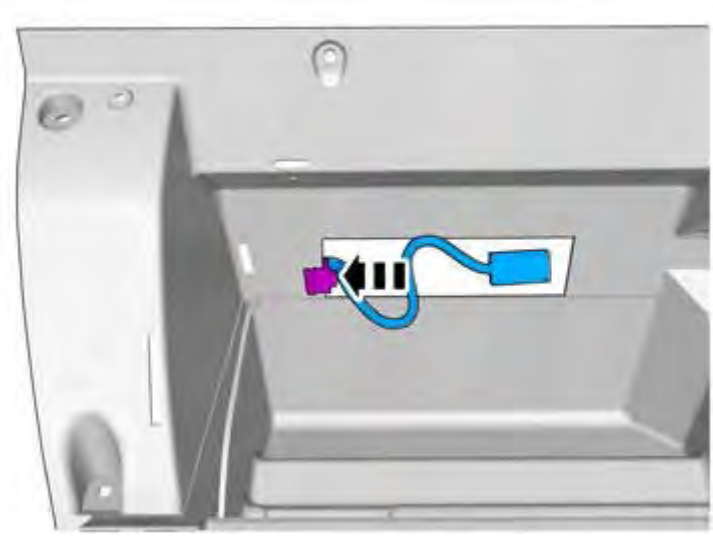

Fig. 375: Installing Clip
Courtesy of VOLVO CARS CORPORATION

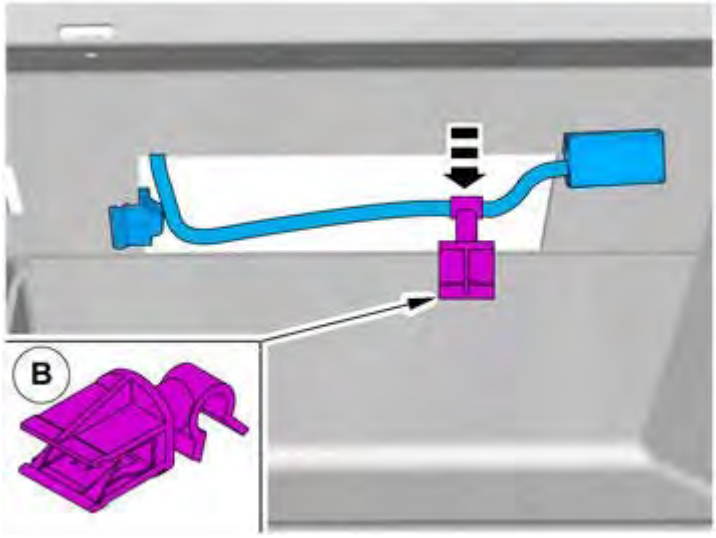

Fig. 376: Cable Holder Installation Clip
Courtesy of VOLVO CARS CORPORATION

NOTE: **The opening on the cable holder must point upwards.**

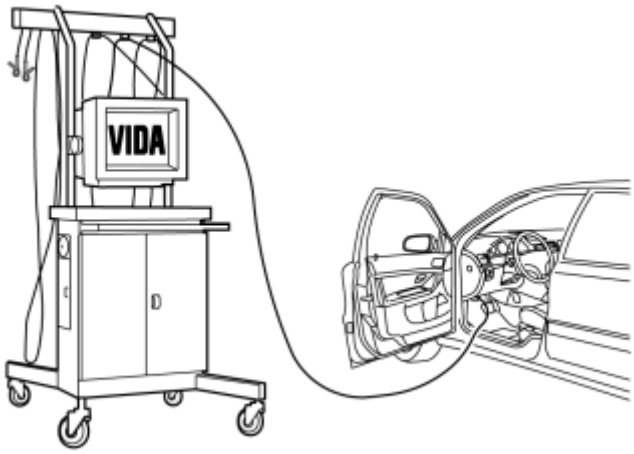

Fig. 377: Identifying VIDA (Service Information) To Program Software
Courtesy of VOLVO CARS CORPORATION

- Reinstall the detached components in reverse order.
- Download software (application) for the accessory's function according to service information in VIDA (Volvo Scan Tool). See VIDA or accessories catalogue for article number on software.

USB/IPOD MUSIC PLAYER, INTERFACE, CRADLE (2008-2012)

USB/IPOD MUSIC PLAYER, INTERFACE, CRADLE

INSTALLATION

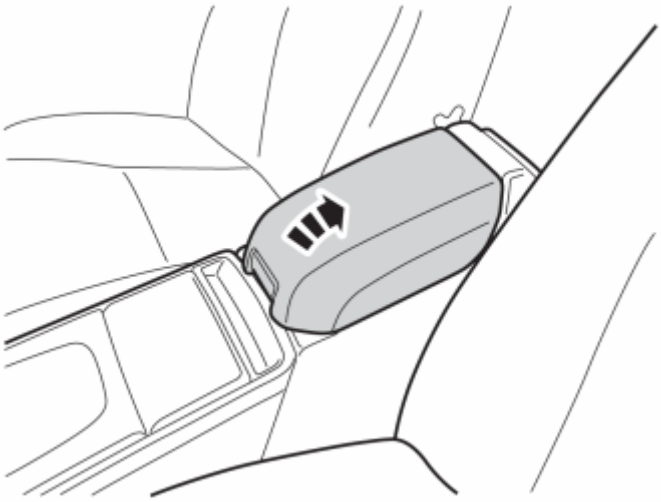

Fig. 378: Identifying Arm Rest Positioning
Courtesy of VOLVO CARS CORPORATION

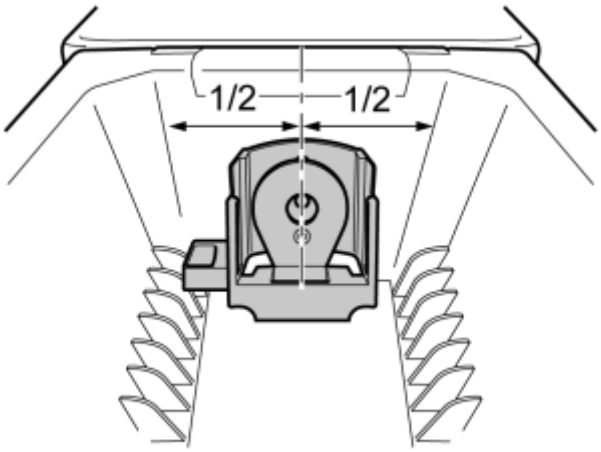

Fig. 379: Identifying Position Cradle In Front Tunnel Compartment End
Courtesy of VOLVO CARS CORPORATION

- Position the cradle in the tunnel compartment's front end.

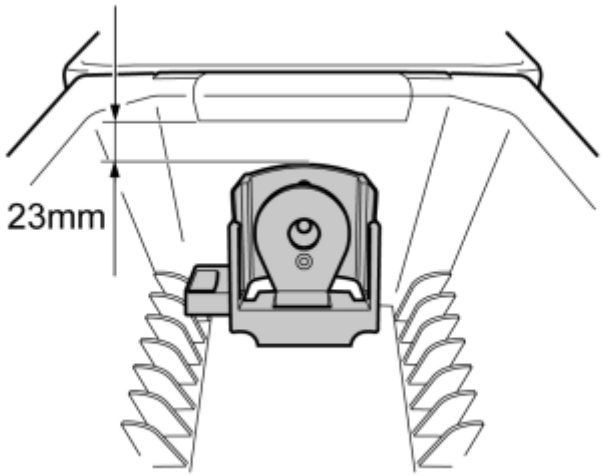

Fig. 380: Identifying Cradle In Front Tunnel Compartment Measurement
Courtesy of VOLVO CARS CORPORATION

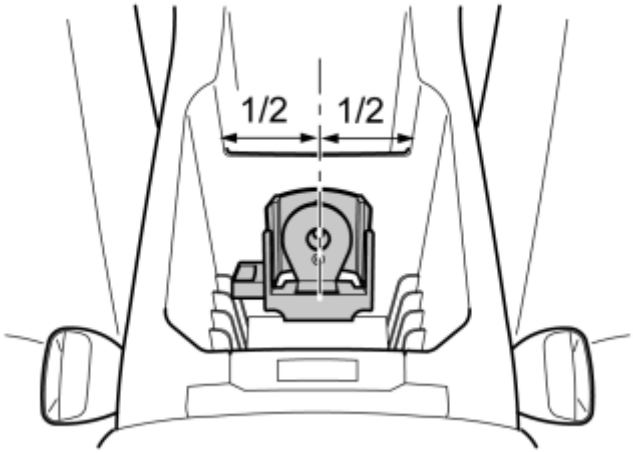

Fig. 381: Positioning Cradle In Rear End Of Tunnel Console
Courtesy of VOLVO CARS CORPORATION

Applies to cars with DVD player (RSE)

- Position the cradle on the rear end in the tunnel console.

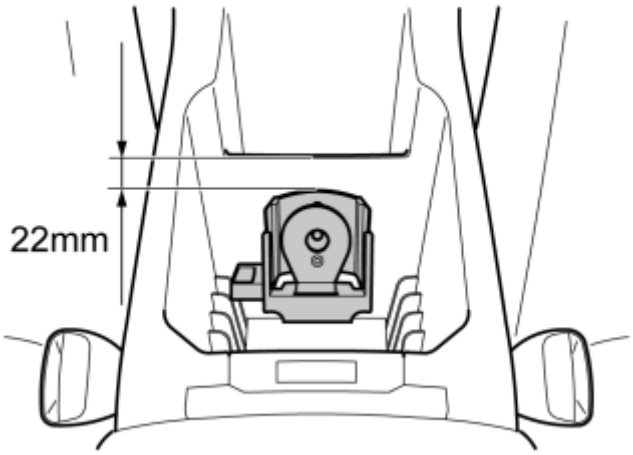

Fig. 382: Identifying Cradle In Rear End Of Tunnel Console Measurement
Courtesy of VOLVO CARS CORPORATION

Applies to cars with DVD player (RSE)

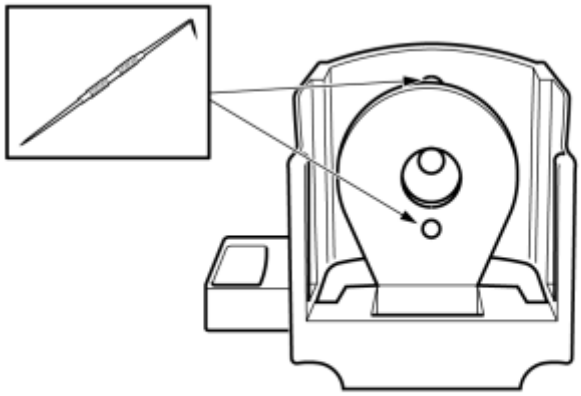

Fig. 383: Identifying Scriber Mark
Courtesy of VOLVO CARS CORPORATION

- Mark and make holes using a scriber or similar.

CAUTION: The hole must not be larger than 2 mm.

INSTALLATION, CONTINUED

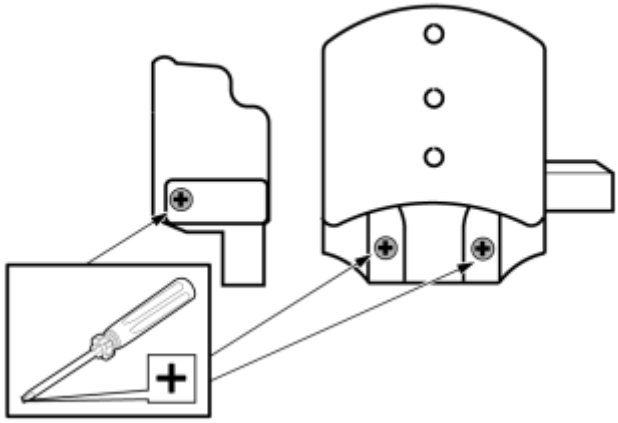

Fig. 384: View Of Cradle Screws
Courtesy of VOLVO CARS CORPORATION

- Slacken off the screws.

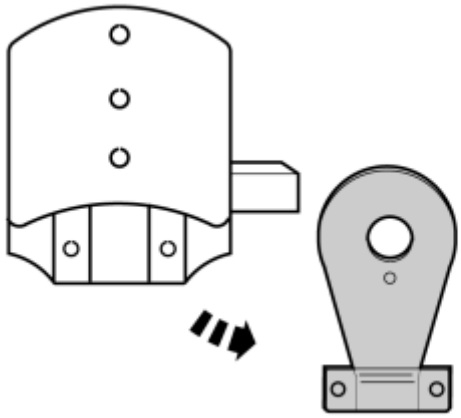

Fig. 385: Identifying Cradle End Section
Courtesy of VOLVO CARS CORPORATION

- Remove the end section.

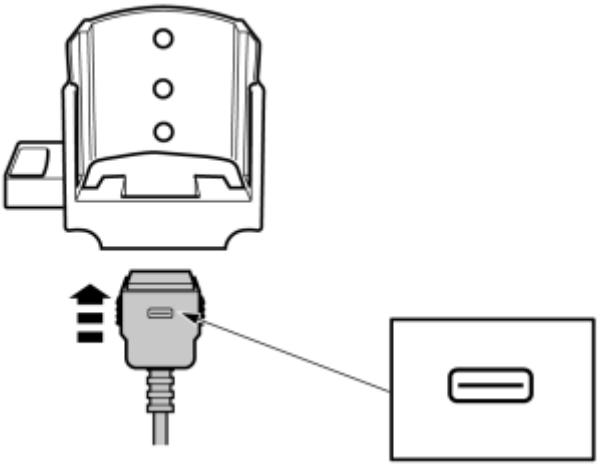

Fig. 386: Identifying Cradle Connector
Courtesy of VOLVO CARS CORPORATION

- The marking on the connector must be pointing outwards.

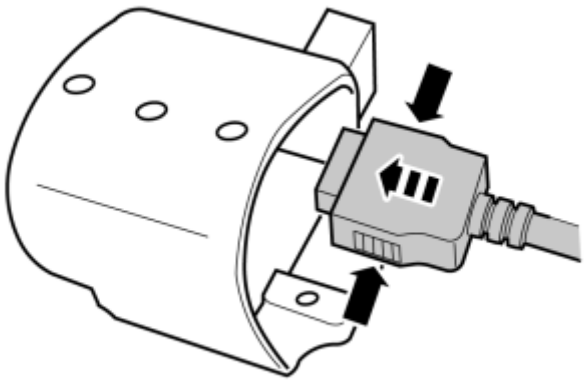

Fig. 387: View Of Connector Catches
Courtesy of VOLVO CARS CORPORATION

- Press in the catches and connect the connector.

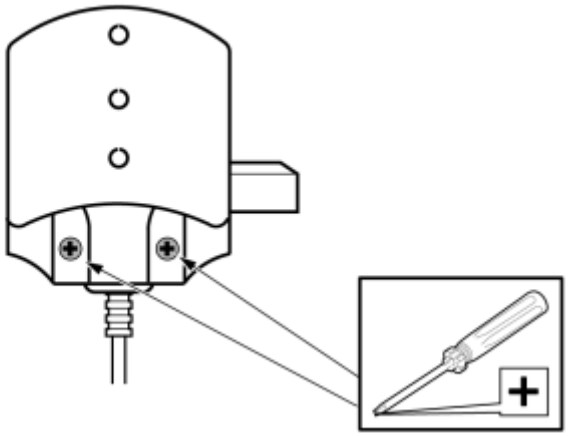

Fig. 388: Identifying Rear Section Screws
Courtesy of VOLVO CARS CORPORATION

- Install the rear section and the screws.

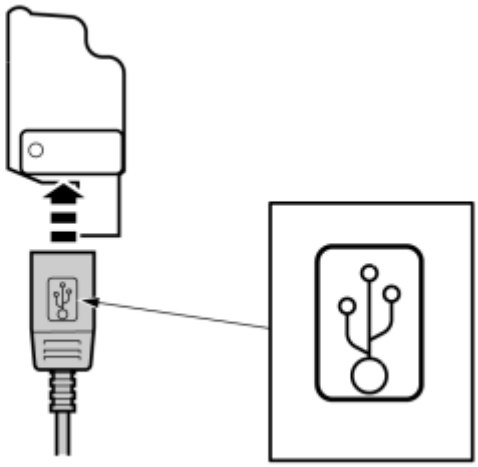

Fig. 389: Identifying Connector Markings
Courtesy of VOLVO CARS CORPORATION

- Connect the connector with the marking pointing outwards.

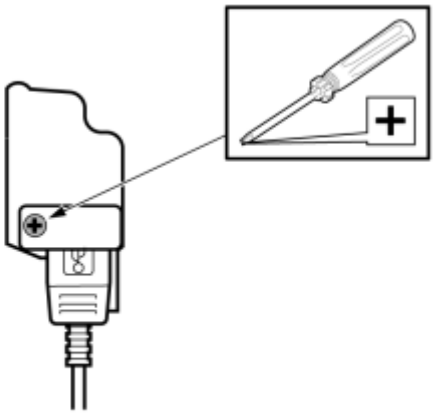

Fig. 390: Identifying Connector Screw
Courtesy of VOLVO CARS CORPORATION

- Install the screw.

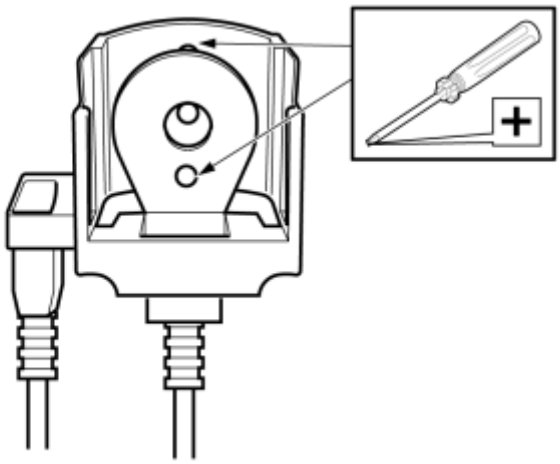

Fig. 391: Identifying Cradle Screws
Courtesy of VOLVO CARS CORPORATION

- Screw the cradle in the tunnel compartment.
- Try to feed in any excess wiring.

HANDSFREE, BLUETOOTH (2003-2012)

HANDSFREE, BLUETOOTH

NOTE: **There may be components in the accessories kit that are not used for this installation.**

NOTE: **When installing Velcro fasteners/tape the underlying surface must be kept at a temperature of at least +20° C (68°F).**

Wiring A is for vehicles with an internal amplifier that is located in the media player.

Wiring B and C is for vehicles with an external amplifier that is located under the right-hand front seat.

Vehicles from and including model year 07- with audio system Performance Sound have an internal amplifier.

Vehicles up to and including model year -06 with audio system Performance Sound have an external amplifier.

Cars with the High Performance and Premium Sound audio systems have external amplifier.

Place the manual for this accessory in a suitable place in the vehicle.

PREPARATIONS

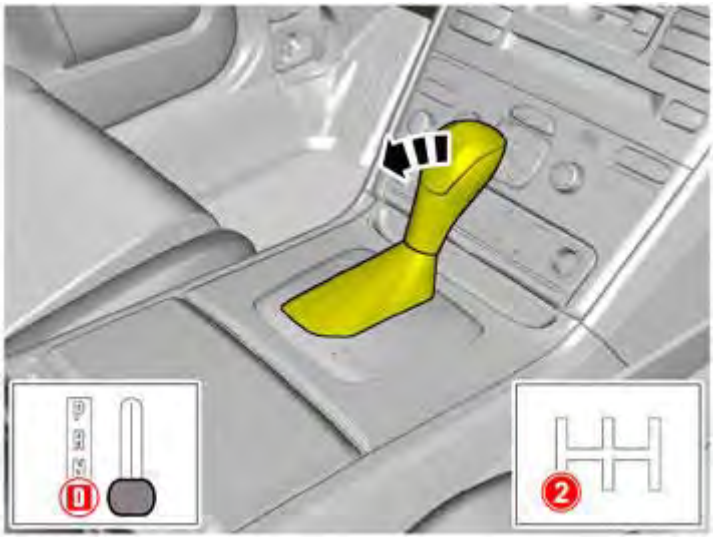

Fig. 392: Positioning Shift Knob
Courtesy of VOLVO CARS CORPORATION

Applies to cars with automatic gearbox

- Turn the ignition key to position II.
- Move the gear selector lever to its rearmost position.

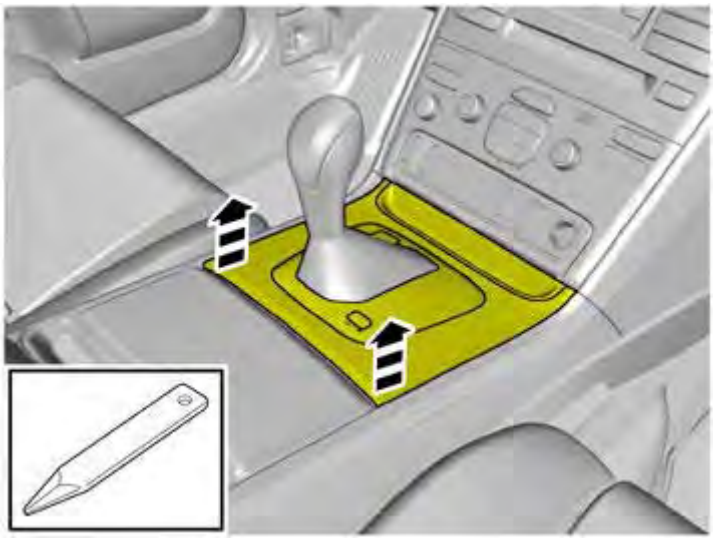

Fig. 393: Removing Gear Shift Selector Cover
Courtesy of VOLVO CARS CORPORATION

- Use a weatherstrip and pry off the gear selector panel at the rear edge.

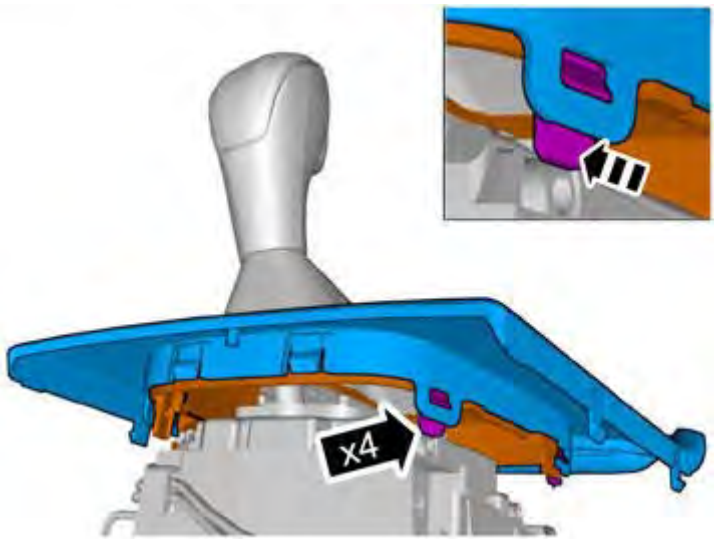

Fig. 394: Removing Gear Shift Selector Cover
Courtesy of VOLVO CARS CORPORATION

- Press in the catches and remove the panel.

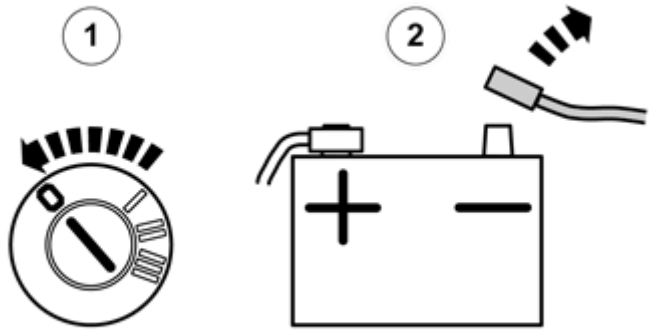

Fig. 395: Identifying Ignition Switch OFF And Disconnected Negative Battery Lead
Courtesy of VOLVO CARS CORPORATION

- Slide the right-hand front seat fully backwards and then fully upwards at the front edge.
- Turn the ignition switch to position 0.
- Disconnect the battery negative lead.

NOTE: **Wait at least three minutes before unplugging the connectors or removing other electrical equipment.**

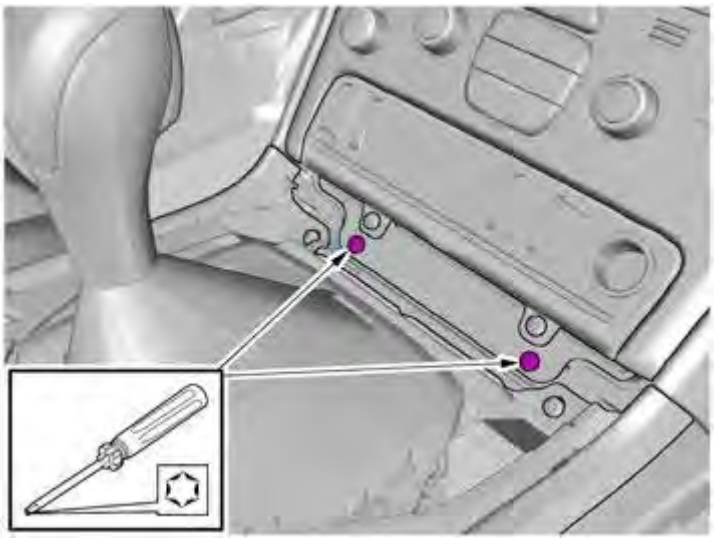

Fig. 396: Identifying Removal Screws
Courtesy of VOLVO CARS CORPORATION

- Remove the two screws.

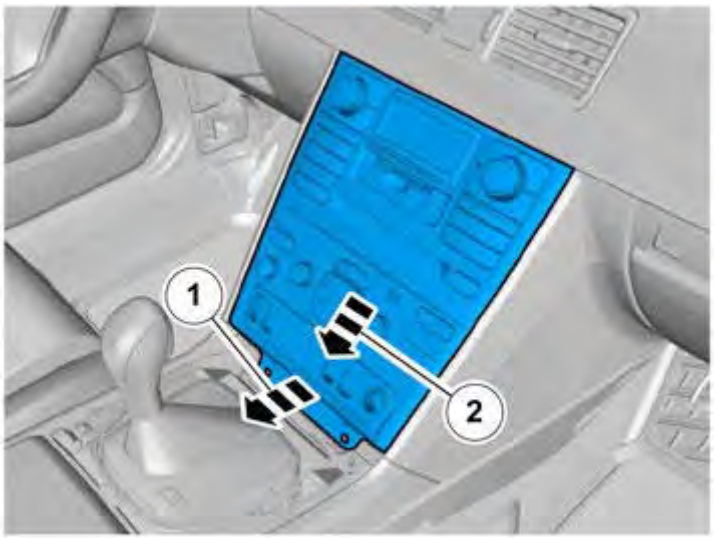

Fig. 397: Removing Center Console Unit
Courtesy of VOLVO CARS CORPORATION

- Remove the bracket with the A/C panel and radio from the center console. Pull from the lower edge and then downwards until it releases from the mounting at the upper edge.

NOTE: Do not damage the removed components or the surrounding panels.

- Unplug the connectors.

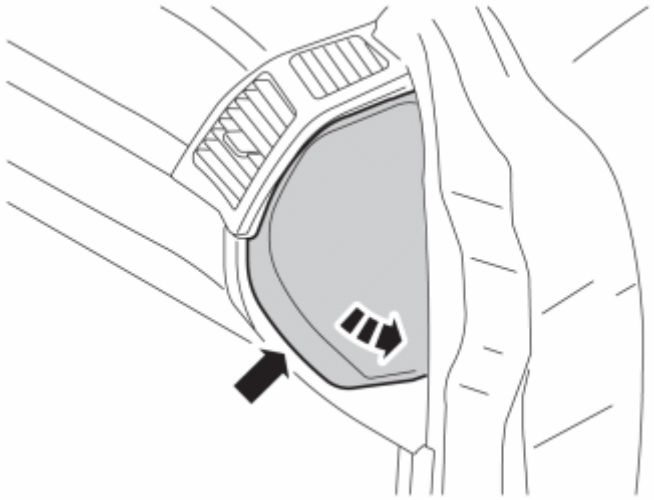

Fig. 398: Removing End Face Panel Form Dashboard
Courtesy of VOLVO CARS CORPORATION

- Remove the end face panel from the dashboard.

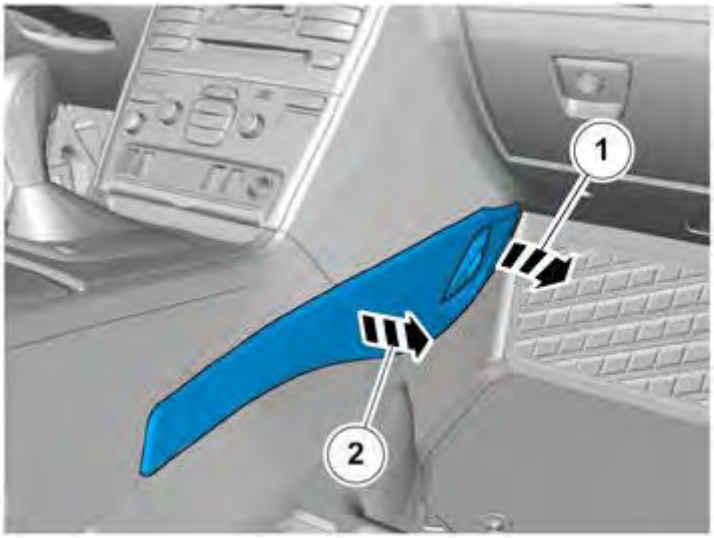

Fig. 399: Removing Center Console's Right-Hand Side Panel
Courtesy of VOLVO CARS CORPORATION

- Remove the center console's right-hand side panel by pulling it away starting at the front edge and then backwards until all the clips have released.

Fig. 400: Removing Sound Proofing Panel
Courtesy of VOLVO CARS CORPORATION

- Remove the screws and soundproofing panel.

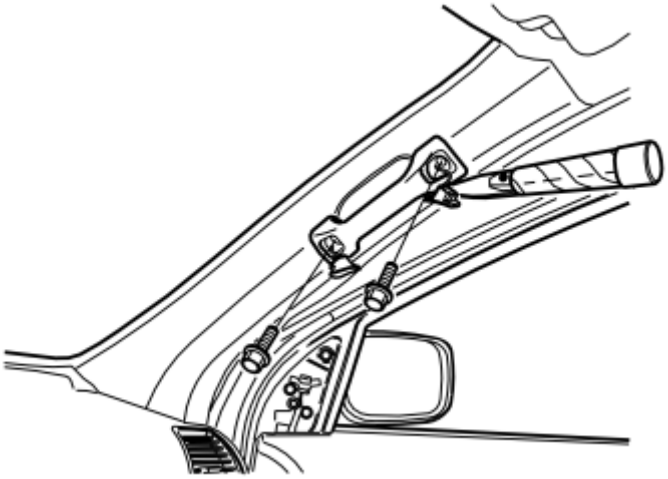

Fig. 401: Removing Safety Handle
Courtesy of VOLVO CARS CORPORATION

- Remove the covers and screws for the grab handle on the A-pillar.

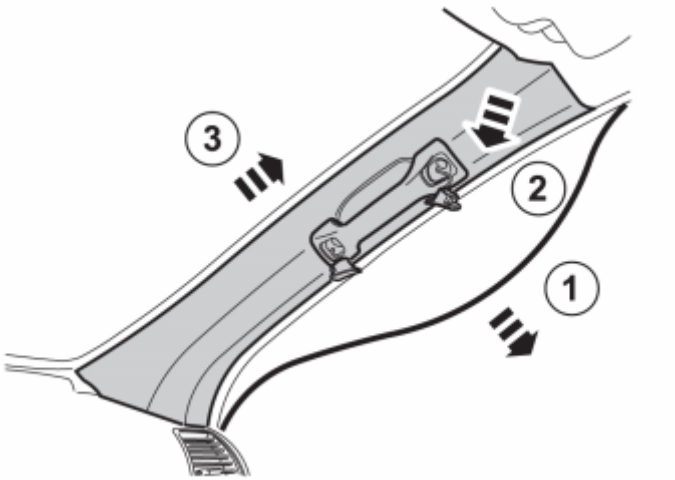

Fig. 402: Removing Weatherstrip And Panel
Courtesy of VOLVO CARS CORPORATION

- Pull of the weatherstrip (1) for the door at the A-pillar.
- Pull off the A-pillar panel at the upper edge and then straight upwards to remove it.

INSTALLING THE MICROPHONE

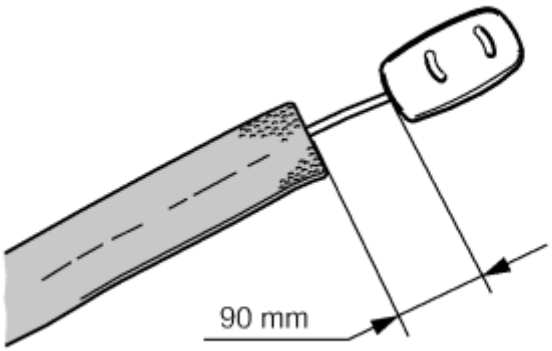

Fig. 403: Applying Foam Tape To Microphone Cable
Courtesy of VOLVO CARS CORPORATION

- Tape a 700 mm length piece of foam tape on the microphone cable starting 90 mm from the microphone.

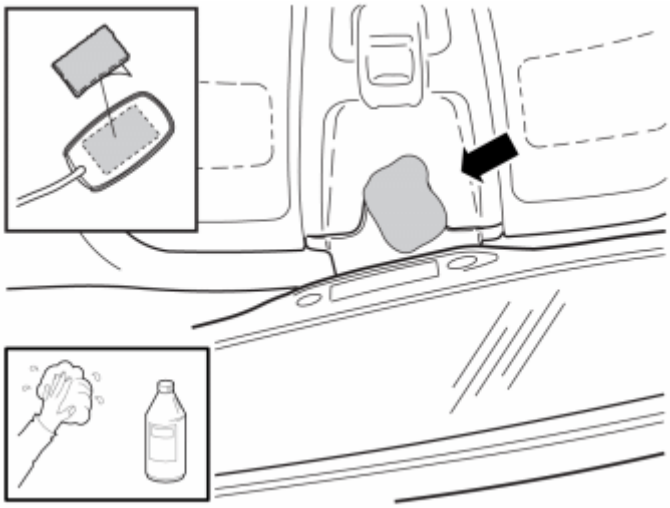

Fig. 404: Cleaning Microphone And Headliner and Applying Velcro Strip
Courtesy of VOLVO CARS CORPORATION

- Clean the microphone and the headlining in the area illustrated, which corresponds to the size of the double-sided adhesive tape. Use a solution of 25% isoproanol and 75% water, as well as a lint free cloth.

  Dry with care, do not rub.

- Allow to dry.

NOTE: In cases where the area is heavily soiled or treated with cockpit shine. First clean using a washing up detergent (FAIRY or similar).

- Remove the backing tape from one side of the Velcro strip and press it onto the microphone.

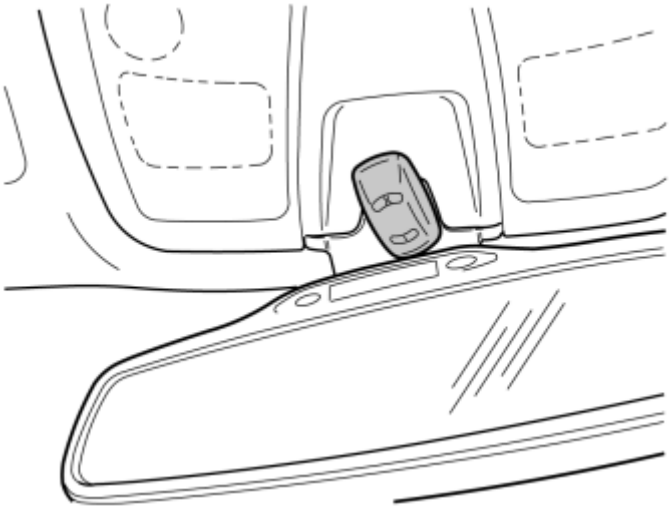

Fig. 405: Installing Microphone
Courtesy of VOLVO CARS CORPORATION

- Remove the remaining protective film from the Velcro strip. Press the microphone securely into place.

NOTE: **The microphone must be pointing towards the driver. Make sure that it does not obstruct adjustment of the rear view mirror.**

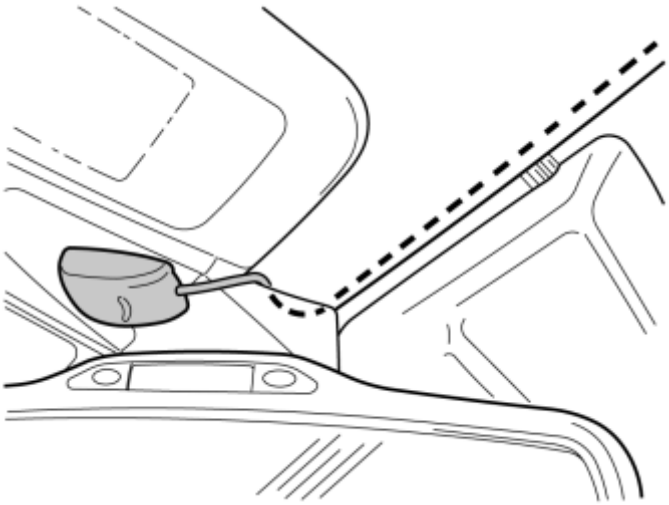

Fig. 406: Routing Microphone Cable
Courtesy of VOLVO CARS CORPORATION

- Route the microphone cable under the rear view mirror's mounting and inside the headlining. Insert the cable using a weatherstrip tool.

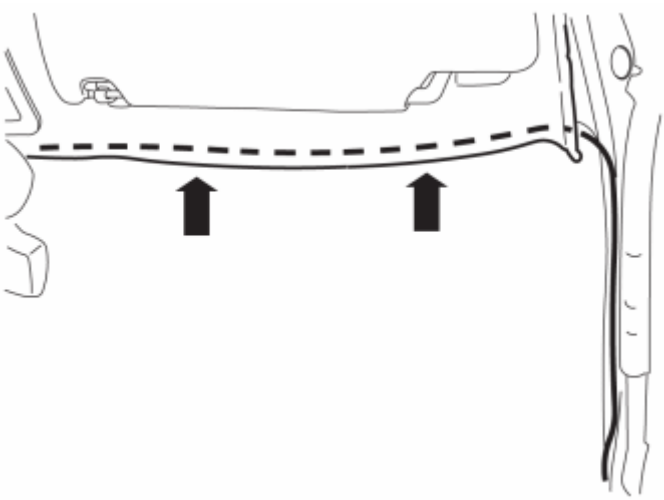

Fig. 407: Identifying Headlining, Routed Cable And A-Pillar
Courtesy of VOLVO CARS CORPORATION

- Carefully pull down the headlining and route the cable above it, to the A-pillar.

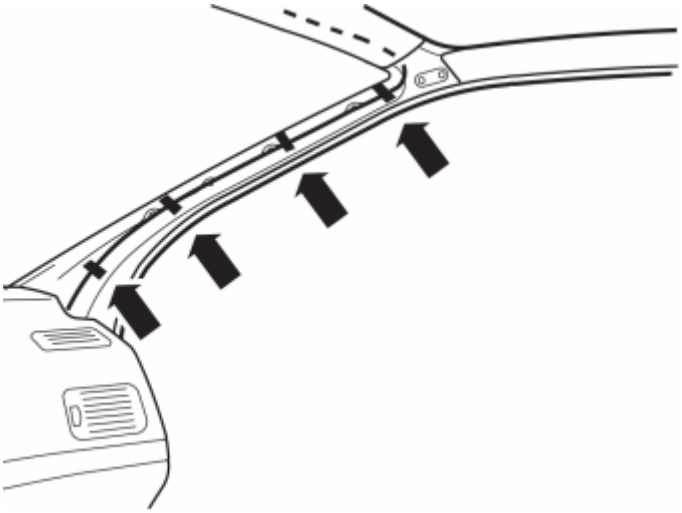

Fig. 408: Identifying Cable Secured To A-Pillar With Foam Tape
Courtesy of VOLVO CARS CORPORATION

- Pull the cable down along the A-pillar to the dashboard.
- Cut off two 100x50mm pieces of foam tape in the middle.
- Secure the cable to the A-pillar using foam tape.

CAUTION: The inflatable curtain (IC) is located inside the A-pillar panel, it is important that the cable is not positioned on it.

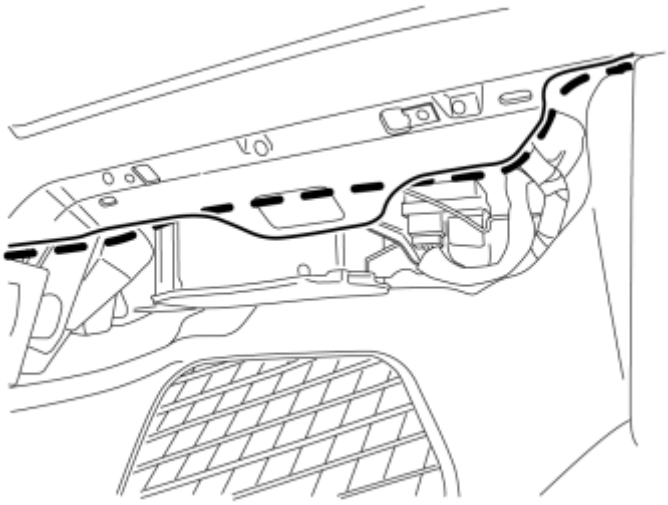

Fig. 409: Routing Cable
Courtesy of VOLVO CARS CORPORATION

- Cut off one 100x50mm strip of foam tape in the middle.
- Secure the cable on the heater unit using the pieces of tape.
- Route the cable further in towards the center console.

CONNECTING THE EXTERNAL AMPLIFIER

APPLIES TO CARS WITH EXTERNAL AMPLIFIER.

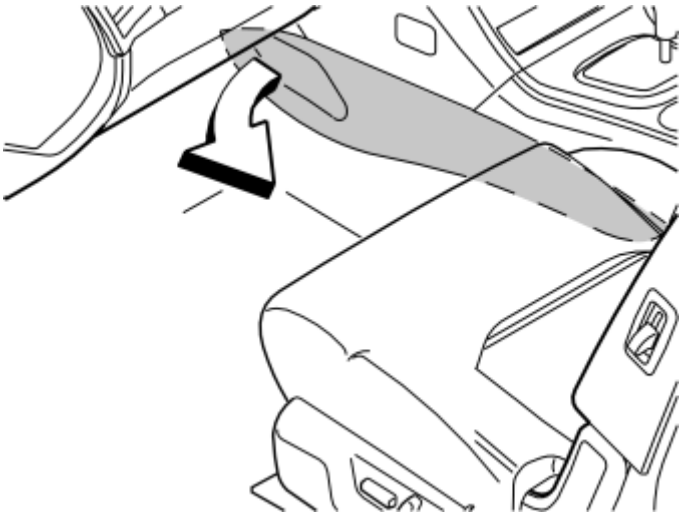

Fig. 410: Removing Center Console's Left-Hand Side Panel
Courtesy of VOLVO CARS CORPORATION

- Remove the center console's left-hand side panel by pulling it away starting at the front edge and then backwards until all the clips have released.

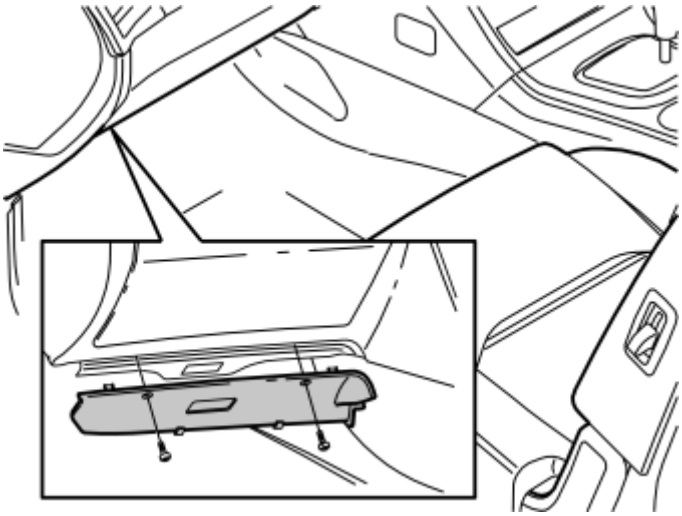

Fig. 411: Identifying Removal Of Screws And Soundproofing Panel
Courtesy of VOLVO CARS CORPORATION

- Remove the sound proofing panel by first removing the two screws and then prying off the sound proofing panel at the top edge.

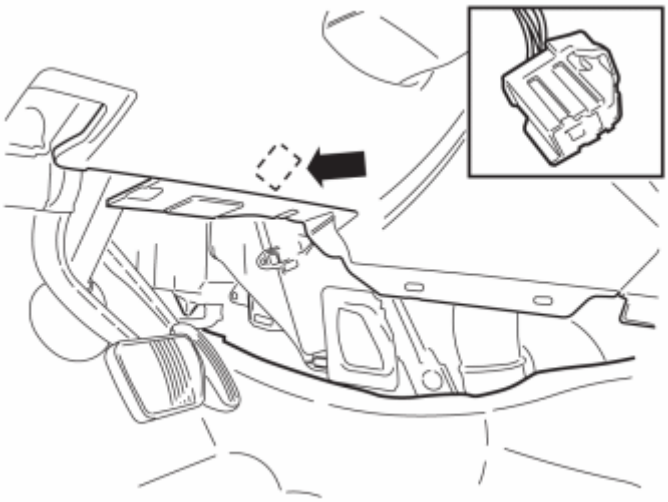

Fig. 412: Locating 4 Pin (Gray) Pre-Routed Connector
Courtesy of VOLVO CARS CORPORATION

- Locate the 4 pin, gray, pre-routed connector for the power supply. It comes from the thick cable harness under the dashboard on the right-hand side of the steering wheel

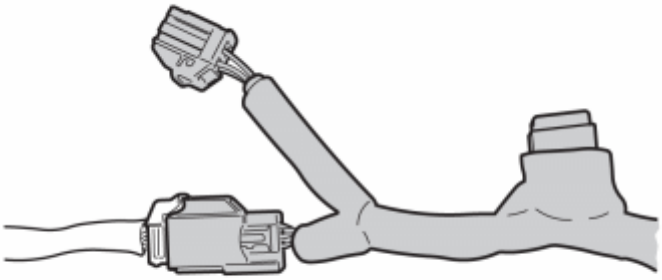

Fig. 413: Connecting Cable Harness C
Courtesy of VOLVO CARS CORPORATION

- Take cable harness C from the kit. Connect it to the existing connector.

  The pre-routed connector is already connected on certain versions. Disconnect the connector and connect both connectors from the new cable harness.

- Cut a 700 mm piece of foam tape into three pieces of the same length. Tape one piece around the connectors on the car's existing cable harness.

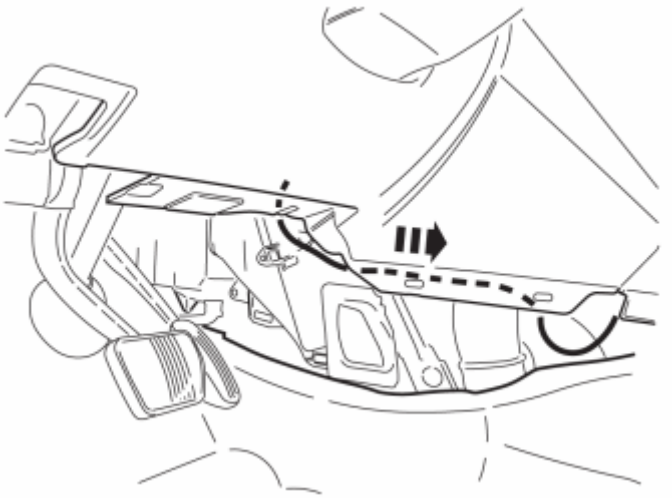

Fig. 414: Routing Cable Harness
Courtesy of VOLVO CARS CORPORATION

- Route the cable harness backwards and across through the center console.

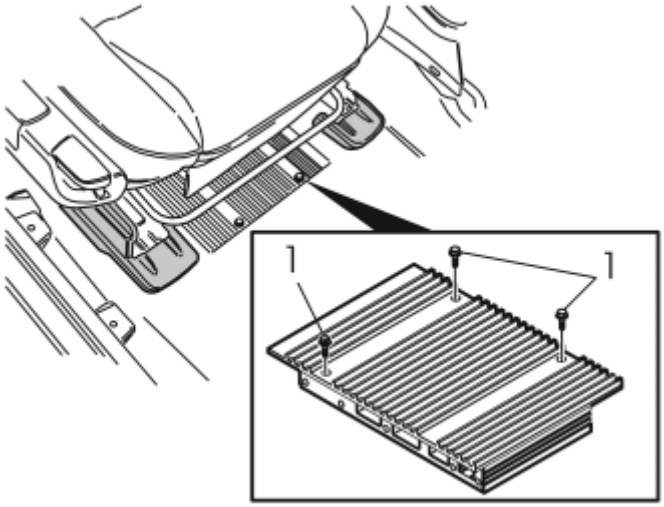

Fig. 415: Removing Amplifier Screws
Courtesy of VOLVO CARS CORPORATION

- Slacken off the amplifier screws (1) under the right-hand front seat.

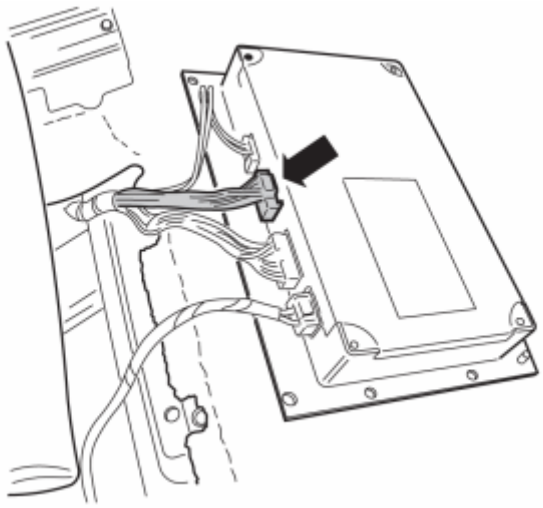

Fig. 416: Removing Amplifier
Courtesy of VOLVO CARS CORPORATION

- Lift out the amplifier. Use a weatherstrip to raise it from its recessed position.
- Place it upside down as illustrated.
- Disconnect the connector.

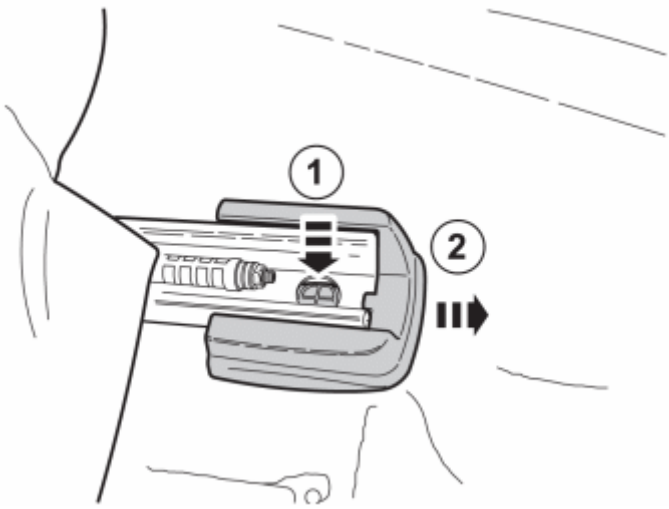

Fig. 417: Removing Left Hand Seat Piece
Courtesy of VOLVO CARS CORPORATION

- Remove the left-hand seat piece.

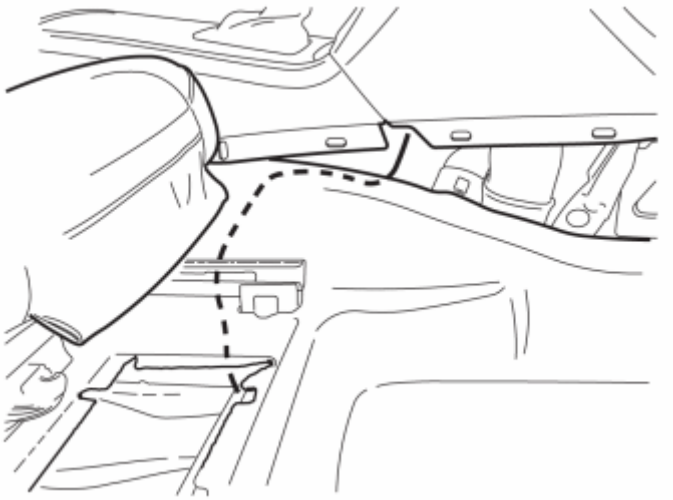

Fig. 418: Routing Cable
Courtesy of VOLVO CARS CORPORATION

- Route the cable that was connected to the 4-pin connector from the center console to the amplifier under the carpet.

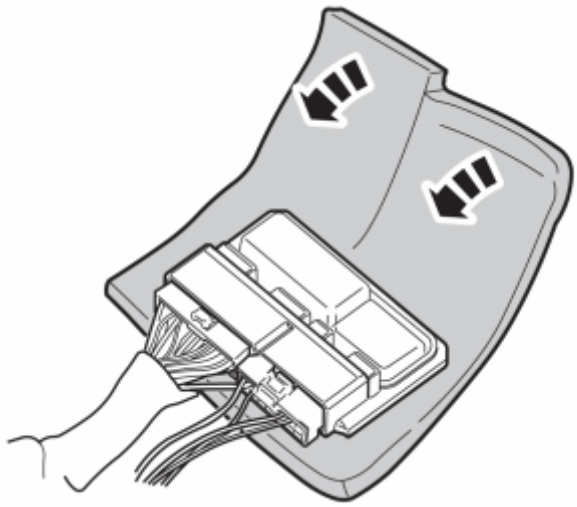

Fig. 419: View Of Foam Tape Pieces To Relay
Courtesy of VOLVO CARS CORPORATION

- Take the mute relay, two foam tape pieces and cable harness B from the kit.
- Connect the pre-routed cable harness and cable harness B to the relay.
- Tape the foam tape pieces around the relay.

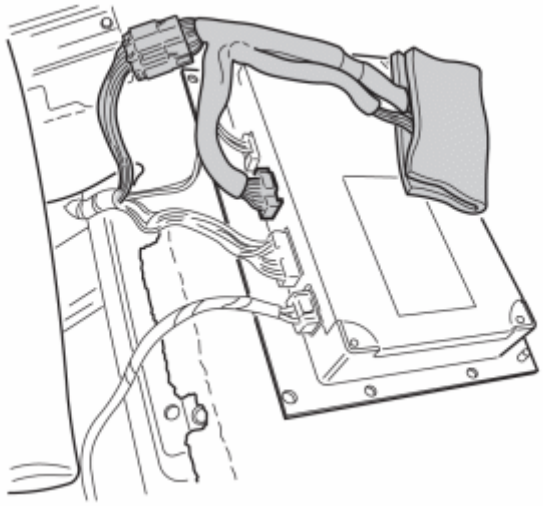

Fig. 420: Connecting Connector
Courtesy of VOLVO CARS CORPORATION

- Connect the connector that was disconnected from the amplifier to the connector from the mute relay.
- Tape one cut piece of foam tape around the connectors.
- Connect the other connector from the relay to the amplifier.

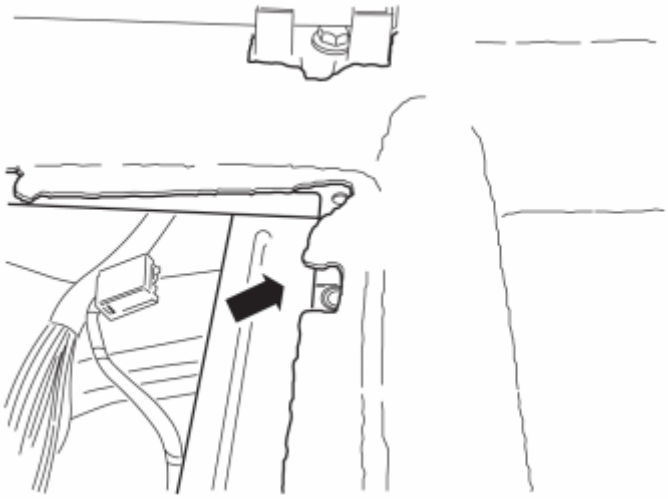

Fig. 421: Installing The Mute Relay
Courtesy of VOLVO CARS CORPORATION

- Place the mute-relay under the front left corner in the recess.
- Reinstall the amplifier and tighten it with the screws.

INSTALLING THE CONTROL PANEL

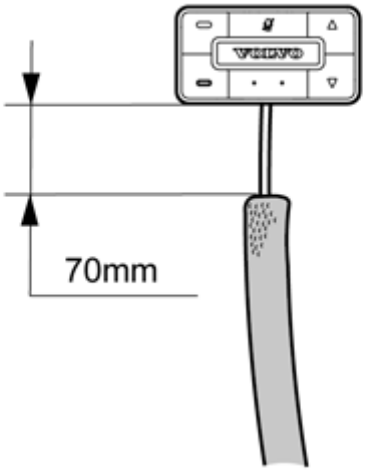

Fig. 422: Foam Tape Measurement On Cable
Courtesy of VOLVO CARS CORPORATION

- Tape a 700 mm length piece of foam tape on the cable starting 70 mm from the control panel.

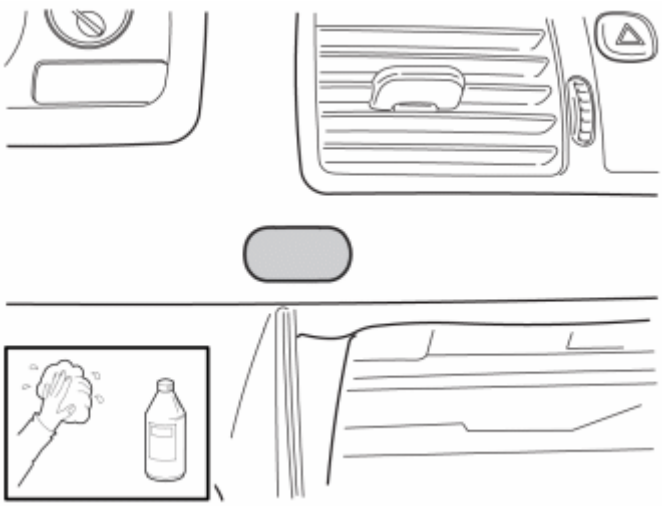

Fig. 423: Cleaning Dashboard
Courtesy of VOLVO CARS CORPORATION

- Clean the area on the dashboard as illustrated, which corresponds to the size of the double-sided adhesive tape. Use a solution of 25% isoproanol and 75% water, as well as a lint free cloth.

  Dry with care, do not rub.

- Allow to dry.

NOTE: **In cases where the area is heavily soiled or treated with cockpit shine. First clean using a washing up detergent (FAIRY or similar).**

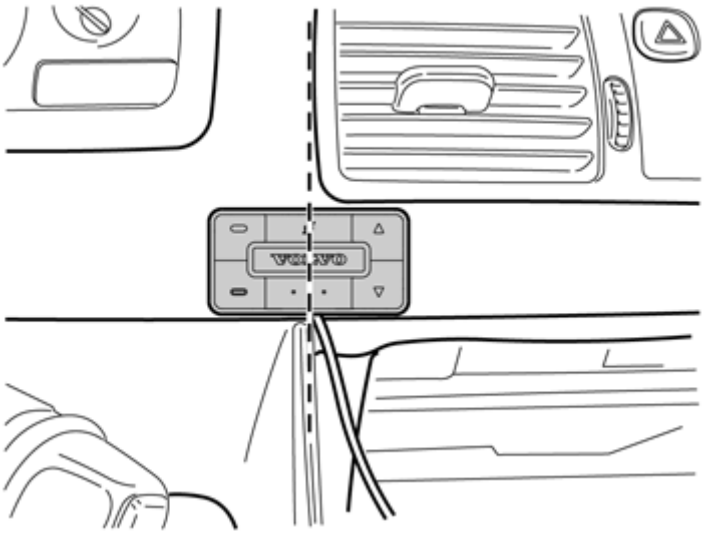

Fig. 424: Aligning Control Panel On Dashboard
Courtesy of VOLVO CARS CORPORATION

- Remove the protective film from the tape on the reverse of the control panel.
- Align and secure the control panel on the dashboard.

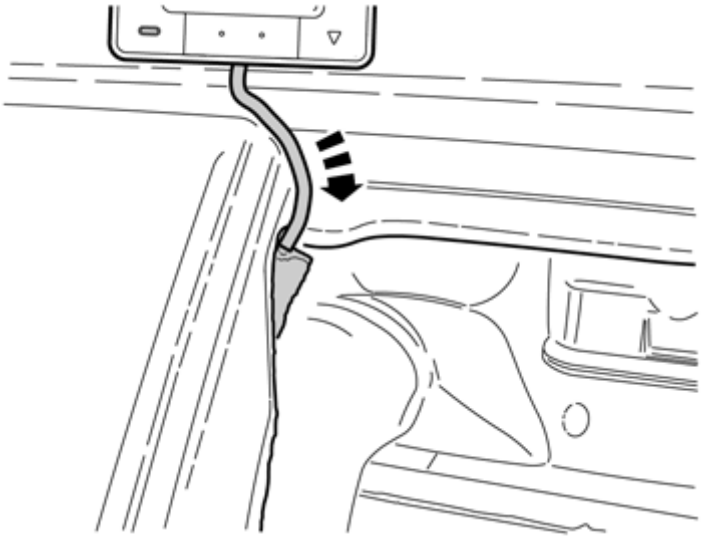

Fig. 425: Positioning The Cable
Courtesy of VOLVO CARS CORPORATION

- Pull the cable down to the opening in the center console. The cable must be positioned in the upper edge of the opening, approximately 10 mm from the corner.

INSTALLING THE CONTROL MODULE

INSTALLING

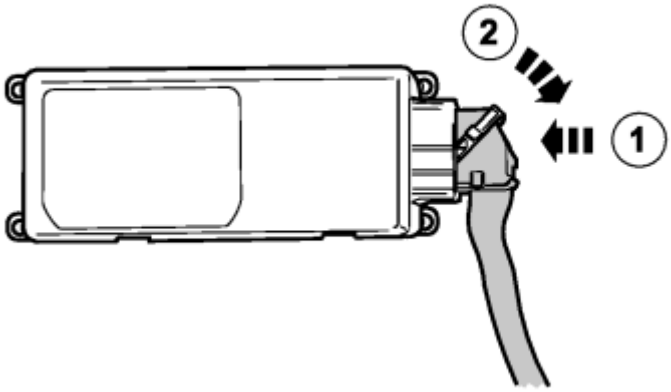

Fig. 426: Identifying Control Module Cable Harness
Courtesy of VOLVO CARS CORPORATION

- Connect the cable harness (1) to the control module.
- Lock the catch (2).

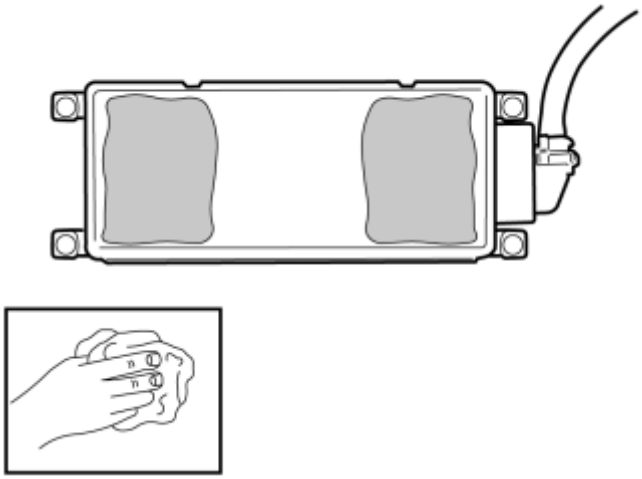

Fig. 427: Cleaning Control Module
Courtesy of VOLVO CARS CORPORATION

- Clean the control module as illustrated. Use isopropanol.

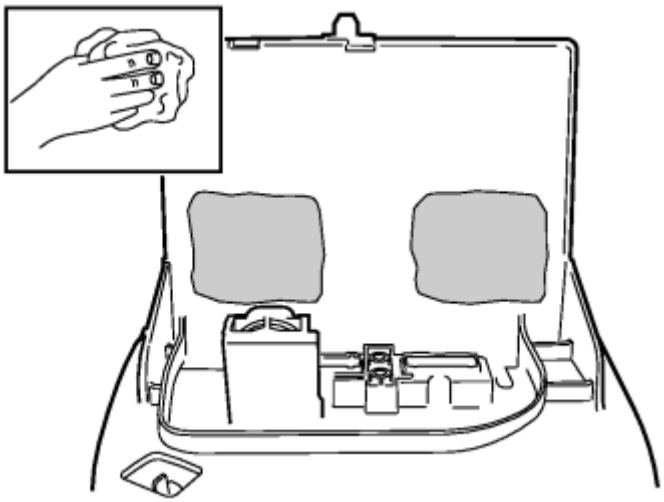

Fig. 428: Cleaning Underneath Detached A/C Unit/Radio Bracket
Courtesy of VOLVO CARS CORPORATION

- Clean the surrounding areas, as illustrated, underneath the detached A/C unit/radio bracket. Use isopropanol.

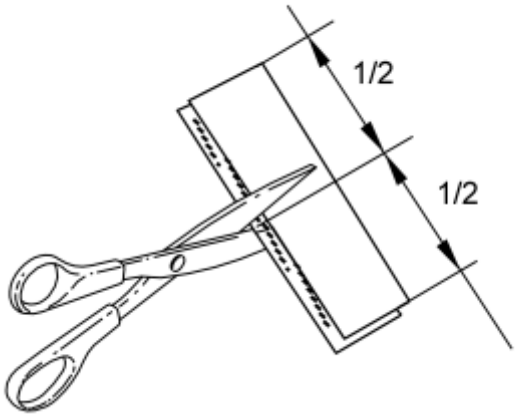

Fig. 429: Identifying Velcro Fasteners
Courtesy of VOLVO CARS CORPORATION

- Take a Velcro strip and cut off two pieces of the same length
- Press the pieces together.
- Cut off two pieces of the same length again at the center.

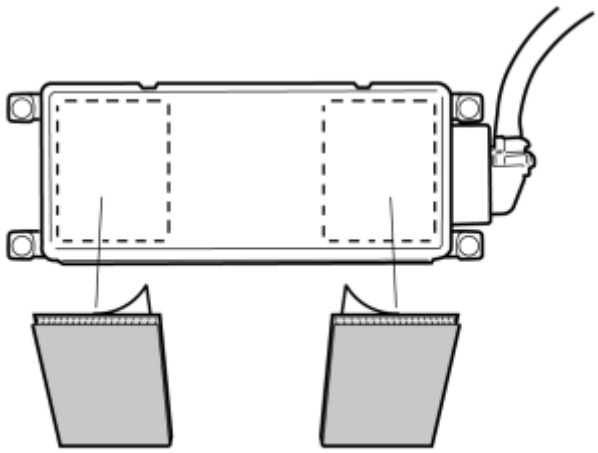

Fig. 430: Removing Protective Film
Courtesy of VOLVO CARS CORPORATION

- Remove the protective film from one side of the Velcro strips, which were pressed together.
- Apply the Velcro strips on the control module and press.

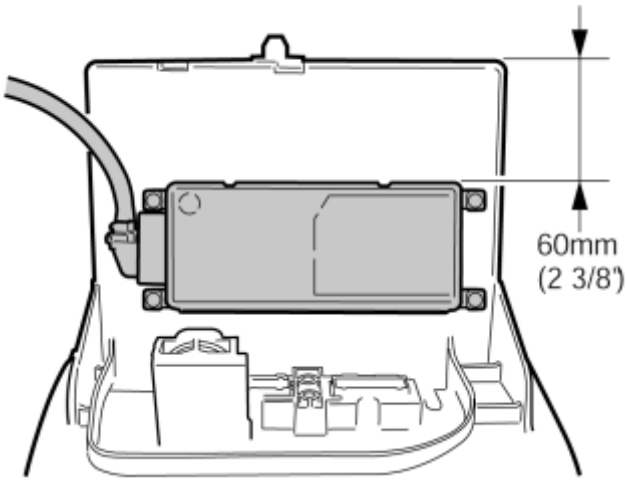

Fig. 431: Installing Control Module
Courtesy of VOLVO CARS CORPORATION

- Remove the remaining protective file on the Velcro strips, align and install the control module as illustrated. Press onto the control module so that the tape adheres.

CONNECTING

APPLY TO CARS WITH INTERNAL AMPLIFIER.

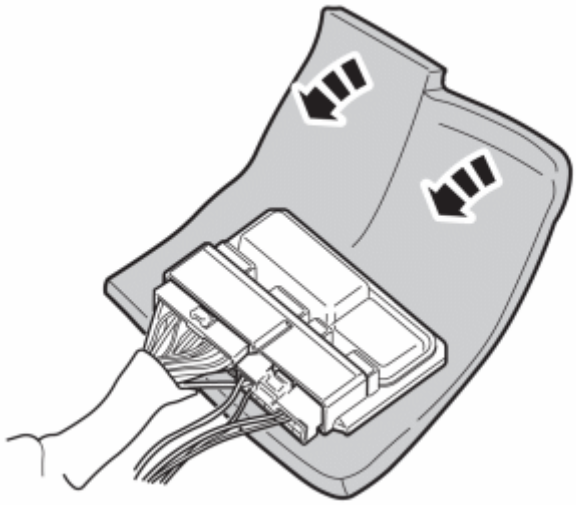

Fig. 432: View Of Foam Tape Pieces To Relay
Courtesy of VOLVO CARS CORPORATION

- Take the mute relay, two foam tape pieces and cable harness A from the kit.
- Connect the connectors from the cable harness to the relay.
- Tape the foam tape pieces around the relay.

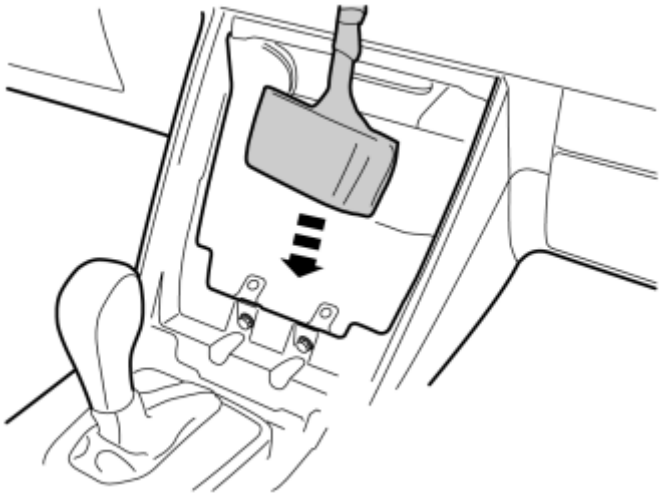

Fig. 433: Placing Relay With Cable Harness At Rear Edge Of Center Console
Courtesy of VOLVO CARS CORPORATION

- Place the relay with the cable harness at the rear edge of the opening on the center console.

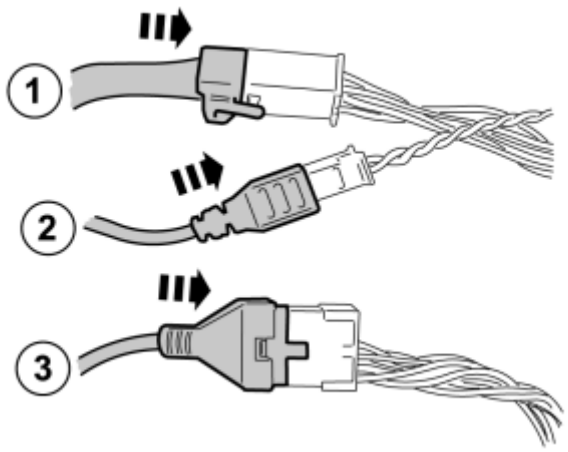

Fig. 434: Connecting Connectors
Courtesy of VOLVO CARS CORPORATION

Applies to cars with internal amplifier

1. Connect cable harness A to the cable harness from the control module.

Applies to cars with external amplifier

1. Connect cable harness C to the cable harness from the control module.
2. Connect the microphone
3. Connect the control panel

- Take one of the cut pieces of thin foam tape and tape around the connectors.

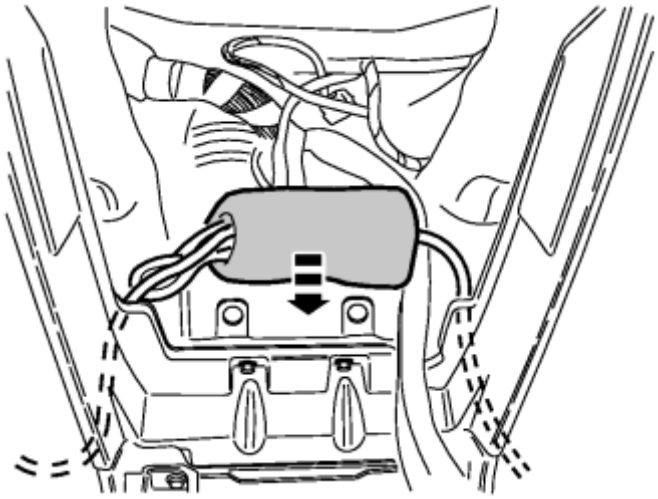

Fig. 435: Applying Foam Around Connectors
Courtesy of VOLVO CARS CORPORATION

- Tape one cut piece of foam tape around the connectors.
- Place the connectors and excess cables in the bottom of the center console. Check that they do not rub against the bracket edges.

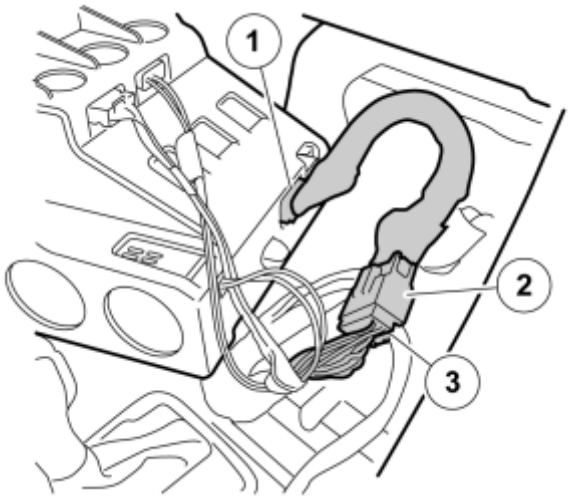

Fig. 436: Connecting Connectors
Courtesy of VOLVO CARS CORPORATION

Applies to cars with internal amplifier

- Connect the gray connector (1) in the new cable harness to the corresponding socket in the media player.
- Connect the gray connector (2) in the new cable harness to the gray connector (3) which was detached from the media player.
- Take one of the cut pieces of foam tape and tape around connectors (2) and (3).

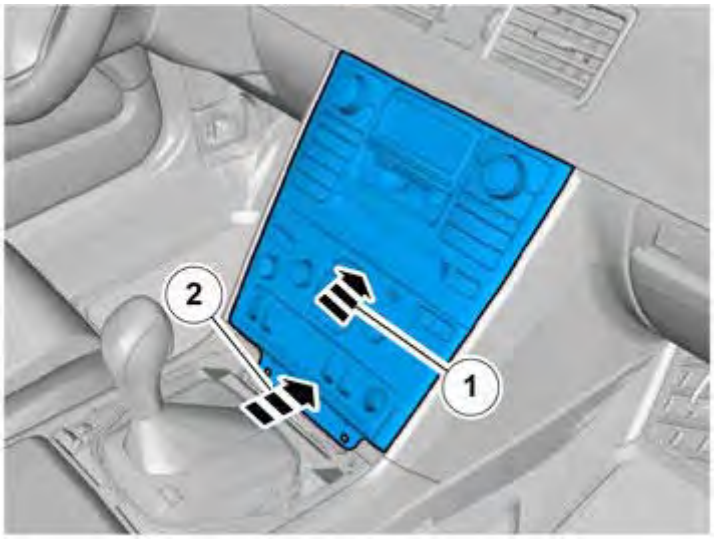

Fig. 437: Installing Radio/A/C Unit
Courtesy of VOLVO CARS CORPORATION

- Plug in the connectors.
- Reinstall the radio/A/C unit by first hooking the upper edge into place. Then press upwards and angle in the lower section.

  At the same time check that the cable to the control panel is correctly positioned (see image 34).

- If the radio/A/C unit does not fit at the rear edge, check for trapped wiring.
- Reinstall the screws.

INSTALLATION, CONTINUED

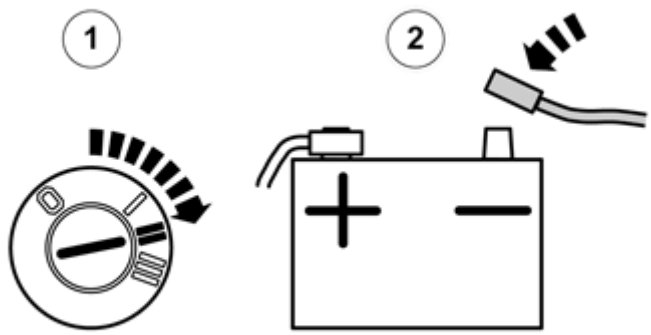

Fig. 438: Identifying Ignition Switch ON And Connected Negative Battery Lead
Courtesy of VOLVO CARS CORPORATION

- Reinstall the detached components in reverse order.
- Turn the ignition key to position II.
- Reconnect the battery negative lead

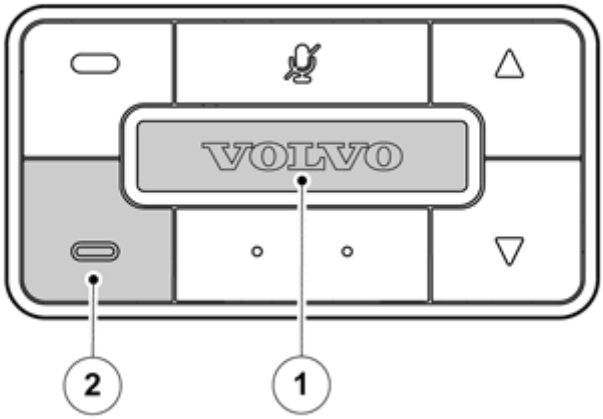

Fig. 439: Control Panel Buttons
Courtesy of VOLVO CARS CORPORATION

Carry out a function test as follows:

- Turn the ignition key to position I.
- Turn on the radio.
- Check that the control panel for Bluetooth lights up.
- Press the button (1) in the middle of the control panel. The radio should mute and a voice should be heard.
- Press the button (2). The voice should stop and the radio sound should return.

HANDSFREE, MICROPHONE, SWAN NECK (2003-2008)

HANDSFREE, MICROPHONE, SWAN NECK

REMOVING

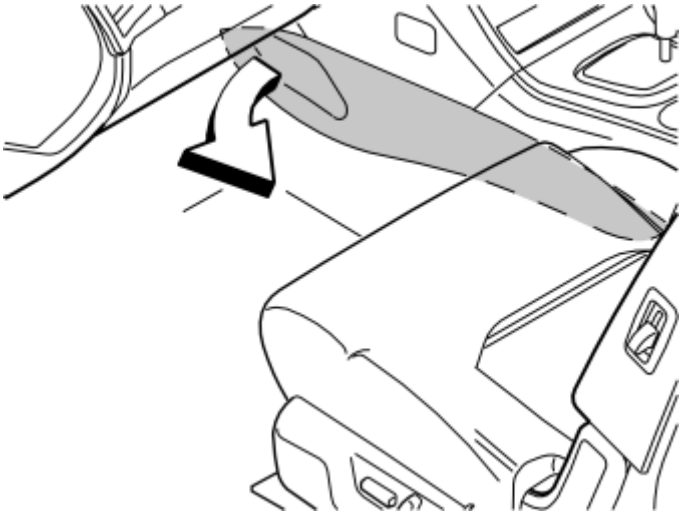

Fig. 440: Removing Center Console Left Side Panel
Courtesy of VOLVO CARS CORPORATION

- Remove the center console's left side panel by first pulling it away at the front edge and continuing backwards until all the clips have released.

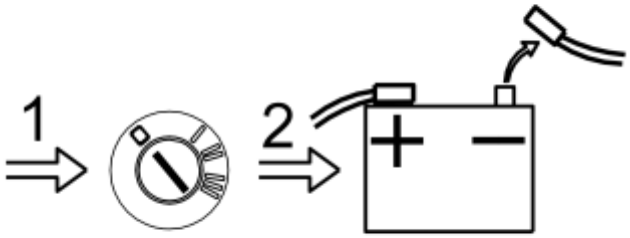

Fig. 441: Disconnect Battery Negative Lead
Courtesy of VOLVO CARS CORPORATION

- Slide the driver's seat fully forwards and then fully upwards from the rear edge.
- Turn the ignition switch to position 0.
- Disconnect the battery negative lead.

NOTE: **Wait at least three minutes before unplugging the connectors or removing other electrical equipment.**

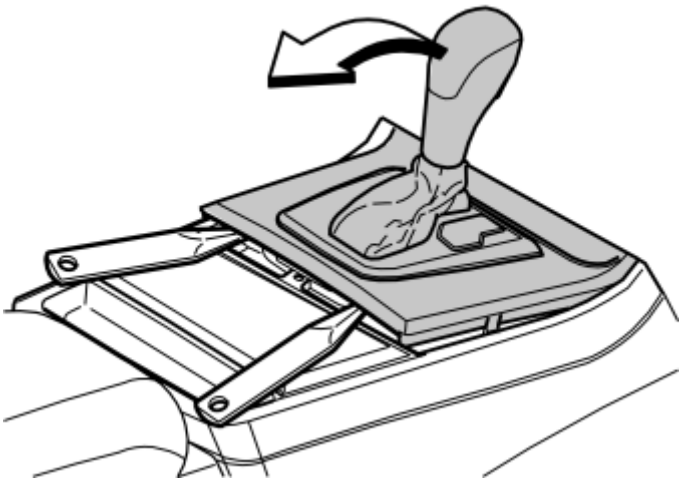

Fig. 442: Prying Off Gear Selector Panel At Rear Edge
Courtesy of VOLVO CARS CORPORATION

- Turn the ignition key to position II.
- Move the gear selector lever to its rearmost position.
- Use a weatherstrip and pry off the gear selector panel at the rear edge.

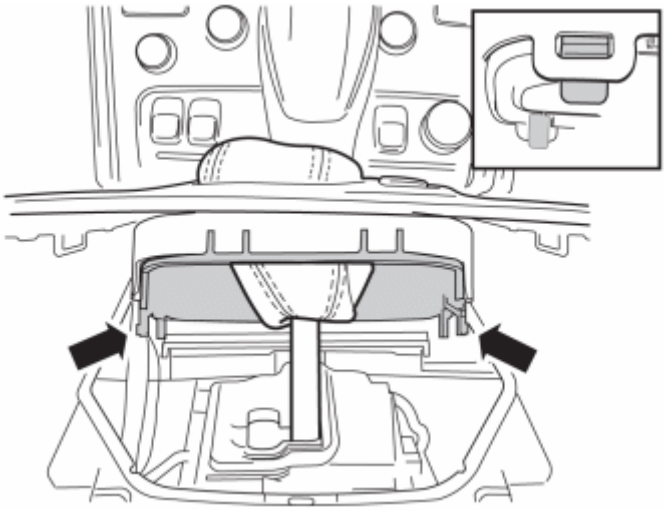

Fig. 443: Pressing In Catches And Removing Panel
Courtesy of VOLVO CARS CORPORATION

- Press in the catches and remove the panel.

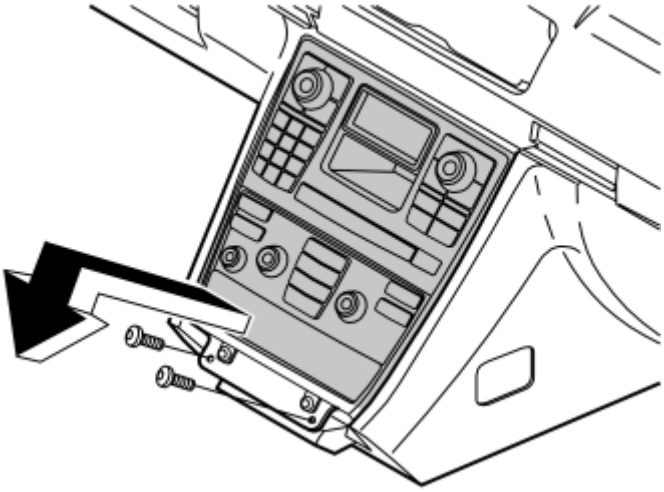

Fig. 444: Removing Screws And Radio/AC Unit From Center Console
Courtesy of VOLVO CARS CORPORATION

- Remove the two screws.
- Remove the radio/AC unit from the center console. Pull from the lower edge and then downwards until it releases from the mounting at the upper edge.

NOTE: Do not damage the removed components or the surrounding panels.

- Unplug the connectors.

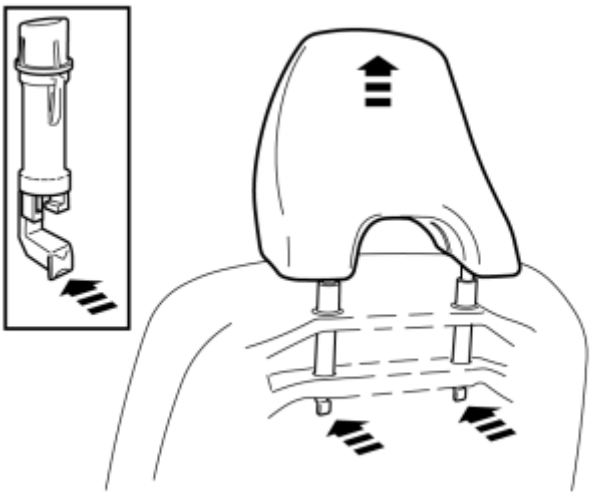

Fig. 445: Pressing In Catches And Pulling Headrest Upwards
Courtesy of VOLVO CARS CORPORATION

- Find the headrest's two locks on the back of the driver's seat. Press in the catches and pull the headrest upwards at the same time.

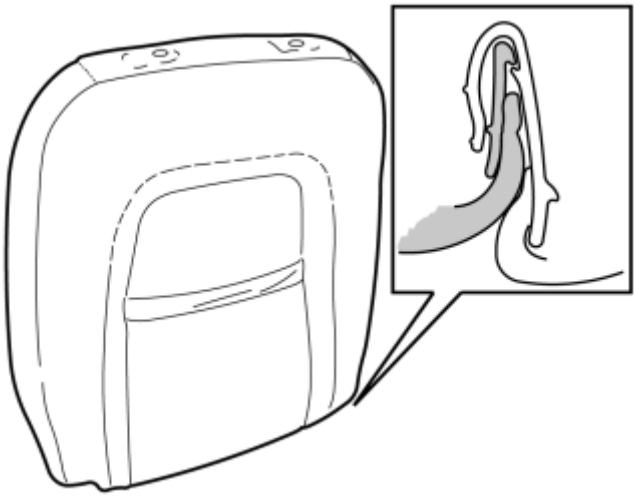

Fig. 446: Finding Grip Strip In Bottom Edge Of Upholstery
Courtesy of VOLVO CARS CORPORATION

- Find the grip strip (consists of two different strip profiles that are hooked into each other) in the bottom edge on the upholstery.

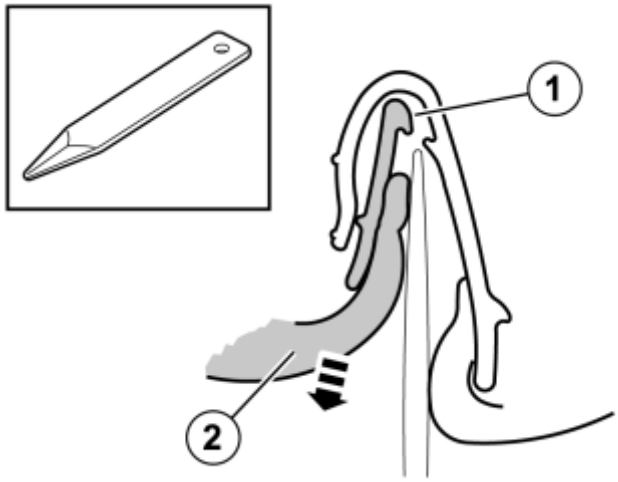

Fig. 447: Prying Apart Strips To Release Catch And Pulling Out Rear Part Of Upholstery With Strip
Courtesy of VOLVO CARS CORPORATION

- Get a weatherstrip tool and pry apart the strips so that the catch (1) releases.
- Pull out the rear part of the upholstery with strip (2).

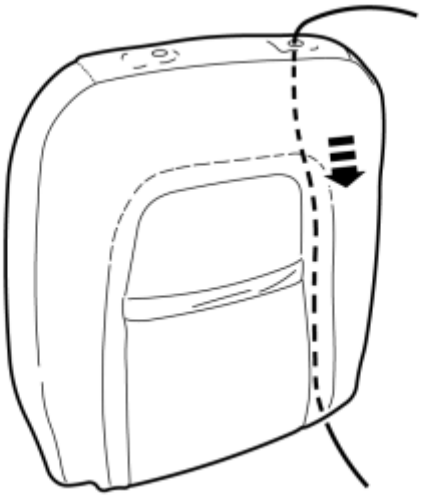

Fig. 448: Inserting Curtain Wire Between Upholstery And Padding
Courtesy of VOLVO CARS CORPORATION

- Insert a curtain wire or similar from above and down on the back of the seat back, between the upholstery and padding.

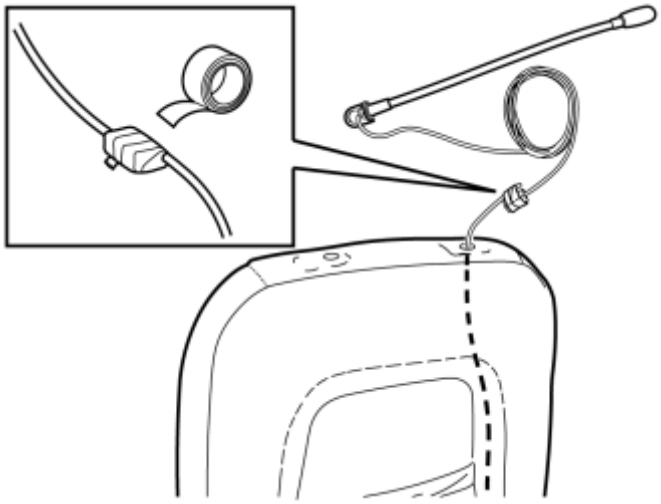

Fig. 449: Taping Connector From Microphone Cable To End Of Wire
Courtesy of VOLVO CARS CORPORATION

- Tape the connector from the microphone cable to the end of the wire.
- Pull through the cable.
- Disconnect the cable from the wire.

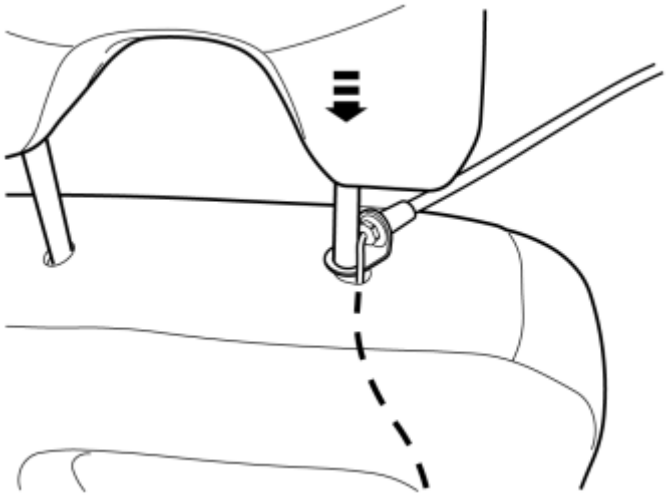

Fig. 450: Placing Microphones Bracket Over Hole In Backrest And Press Down Headrest To Lock In Place
Courtesy of VOLVO CARS CORPORATION

- Place the microphone's bracket over the hole on the backrest.
- Point the microphone arm 45° forward. Press down the headrest so that it locks into place.
- Check that the headrest has locked into place by pulling it upwards.

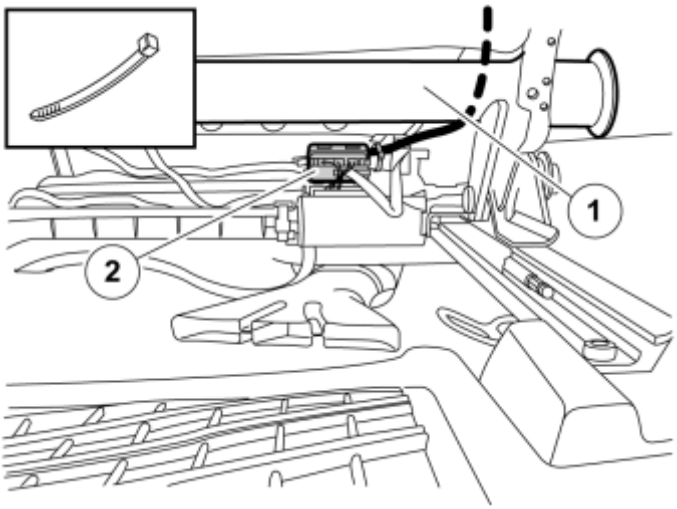

Fig. 451: Routing Cable In Front Of Tube And Securing With Cable Tie To Large Connector
Courtesy of VOLVO CARS CORPORATION

- Route the cable in front of the tube (1).
- Secure the cable with a cable tie to the large connector (2).
- Reinstall the upholstery for the backrest.

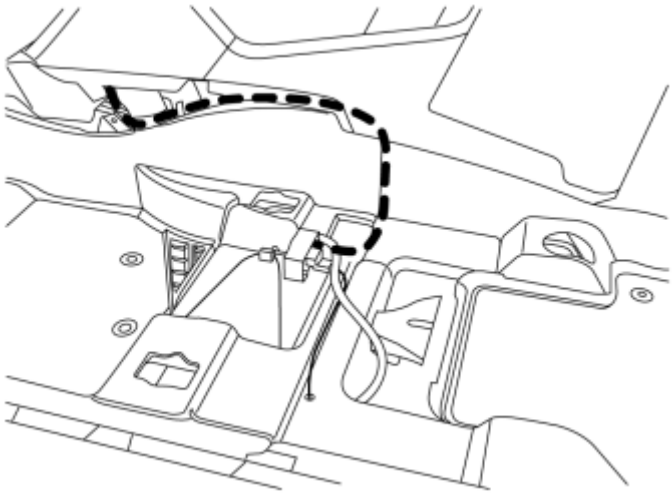

Fig. 452: Laying Cable In Carpet Joint And Routing Cable Forward And Up In Center Console
Courtesy of VOLVO CARS CORPORATION

- Lay the cable in the carpet joint. Route the cable forward and up in the center console.

NOTE: **It is important that the cable has the right length so that the seat can move back and forth freely.**

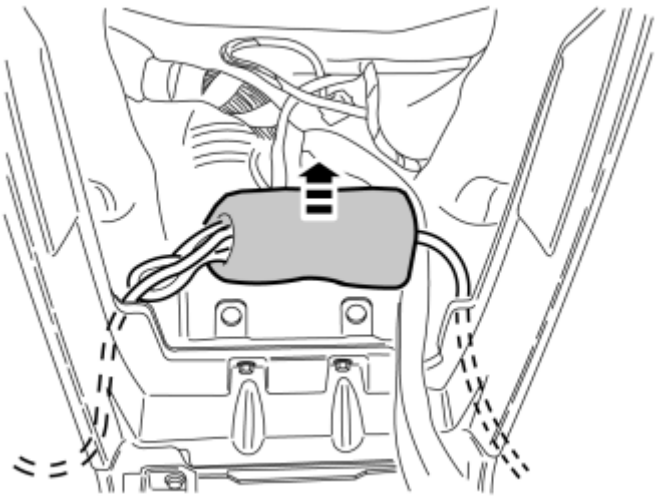

Fig. 453: Finding Foam Tape With Connections For Bluetooth System In Bottom Of Center Consoles Opening
Courtesy of VOLVO CARS CORPORATION

- Find the foam tape with connections for the Bluetooth system in the bottom of the center console's opening. Open the foam tape.

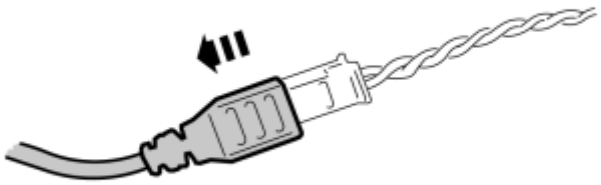

Fig. 454: Connecting Microphone Cable
Courtesy of VOLVO CARS CORPORATION

- Loosen existing connection to the microphone.
- Connect the new microphone cable and reinstall the foam tape.

NOTE: Also secure the extra length of the microphone cable with the foam tape.

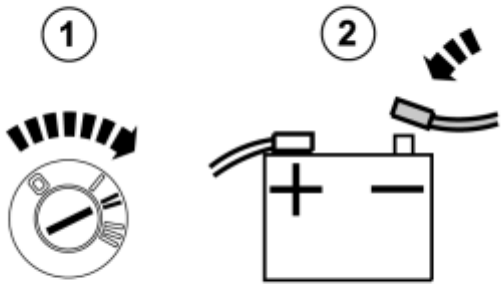

Fig. 455: Identifying Ignition In ON Position and Connecting Negative Battery Lead
Courtesy of VOLVO CARS CORPORATION

- Connect the connectors to the radio/AC unit.
- Reinstall the radio/AC unit by first hooking it on at the upper edge. Then press it upwards and angle in the lower part. At the same time, check that the cable to the control panel for Bluetooth ends up in the right position.
- If the radio/A/C unit does not fit at the rear edge, check that no cables have been trapped.
- Reinstall the screws.

- Reinstall the side panel.
- Turn the ignition key to position II.
- Reconnect the battery negative lead

TRACKER, VOLVO ON CALL (2005-2010)

TRACKER, VOLVO ON CALL

NOTE: This accessory requires software unique to the car.

REMOVAL/INSTALLATION

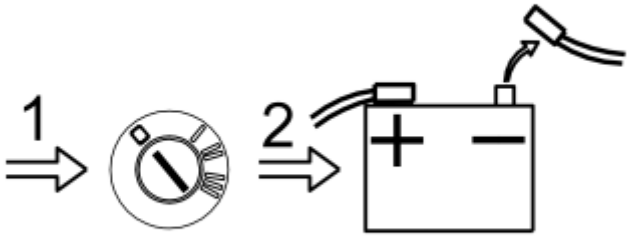

Fig. 456: Disconnect Battery Negative Lead
Courtesy of VOLVO CARS CORPORATION

- Turn the ignition switch to position 0.
- Disconnect the battery negative lead.

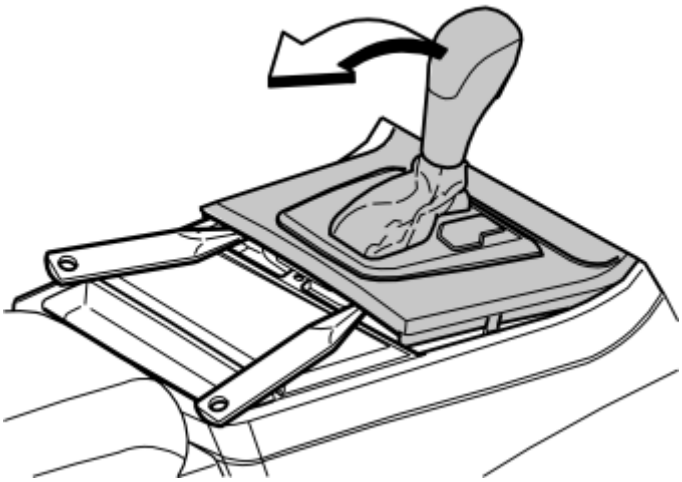

Fig. 457: Prying Off Gear Selector Panel At Rear Edge
Courtesy of VOLVO CARS CORPORATION

Applies to cars with automatic gearbox

- Turn the ignition key to position II.
- Move the gear selector lever to its rearmost position.
- Carefully prize away the gear lever panel at the rear edge using a weatherstrip tool.

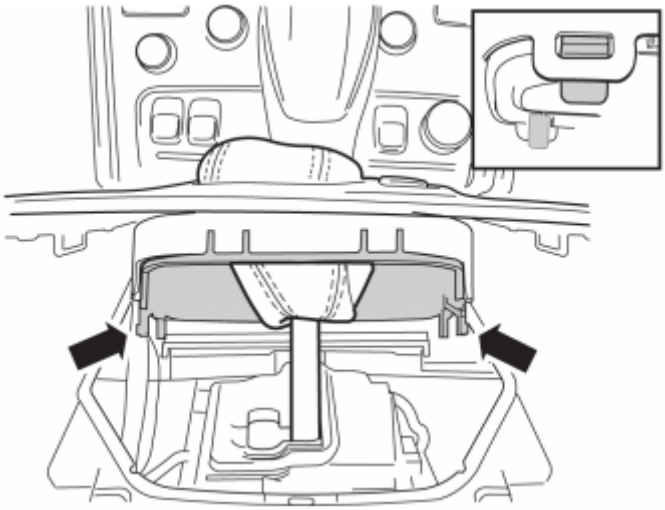

Fig. 458: Pressing In Catches And Removing Panel
Courtesy of VOLVO CARS CORPORATION

- Press in the catches and remove the panel.

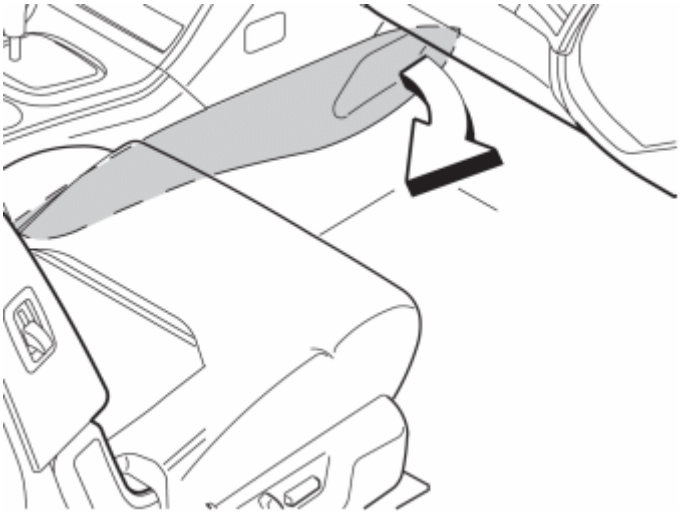

Fig. 459: Removing Tunnel Console Panels
Courtesy of VOLVO CARS CORPORATION

- Remove the left and right-hand side panels from the tunnel console. Pull them away at the front edge and continue backwards until all clips have released.

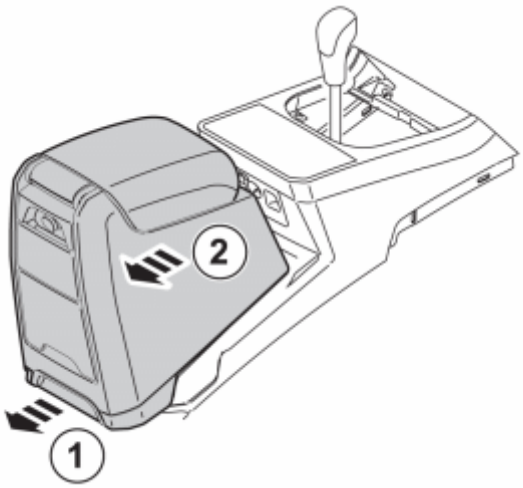

Fig. 460: Removing Tunnel Compartment
Courtesy of VOLVO CARS CORPORATION

- Pull the handle, move the tunnel compartment backward and lift it away.

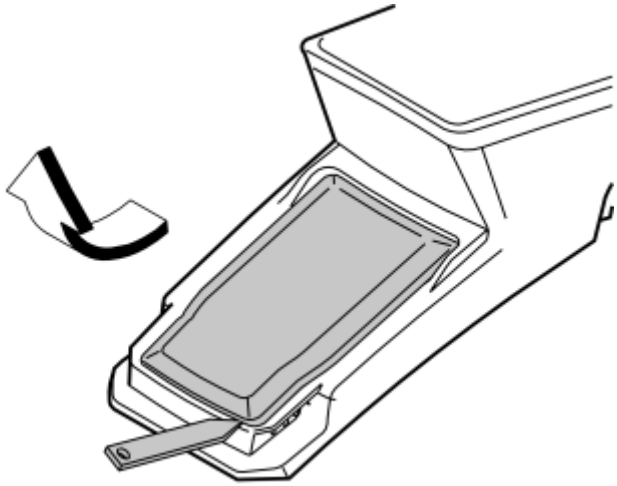

Fig. 461: Removing Cover
Courtesy of VOLVO CARS CORPORATION

- Remove the cover.

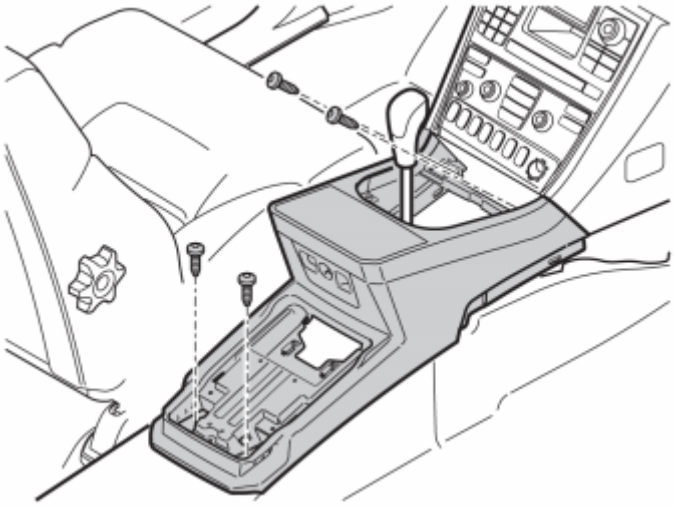

Fig. 462: Removing Tunnel Console
Courtesy of VOLVO CARS CORPORATION

- Remove the screws and unplug the connectors.
- Lift away the tunnel console.

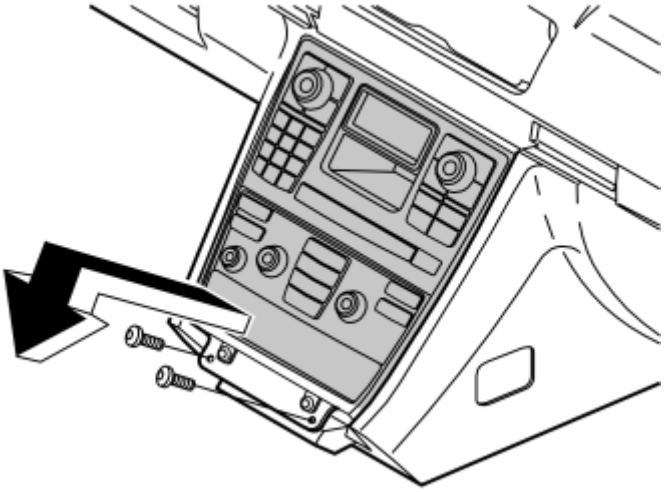

Fig. 463: Removing Screws And Radio/AC Unit From Center Console
Courtesy of VOLVO CARS CORPORATION

- Remove the two screws holding the center console to the climate control panel and the control module.
- Pull out the center console at the lower edge and pull it away from the top edge.
- Unplug the connectors from the climate control panel and the control module.

NOTE: Do not damage the gear lever knob.

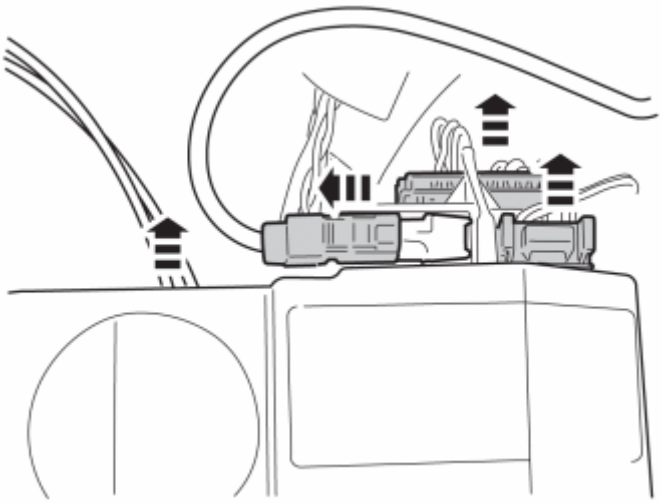

Fig. 464: Unplugging Connectors
Courtesy of VOLVO CARS CORPORATION

- Unplug the four connectors from the phone module (PHM). The larger connector has its catch underneath.

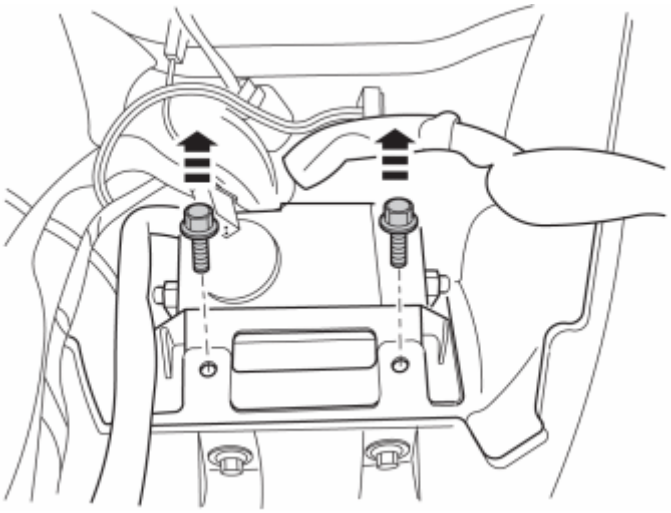

Fig. 465: Removing Screws
Courtesy of VOLVO CARS CORPORATION

- Remove the screws.

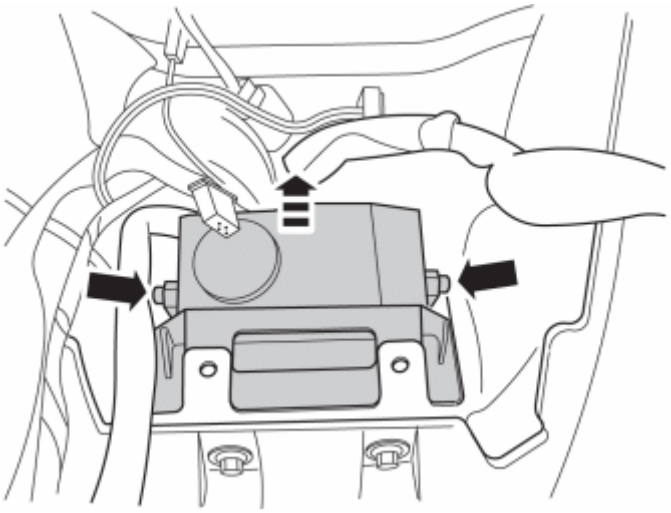

Fig. 466: Removing Control Module
Courtesy of VOLVO CARS CORPORATION

- Place the cables and connectors beside the control module. Remove the control module by moving it forward until the guide pins release.

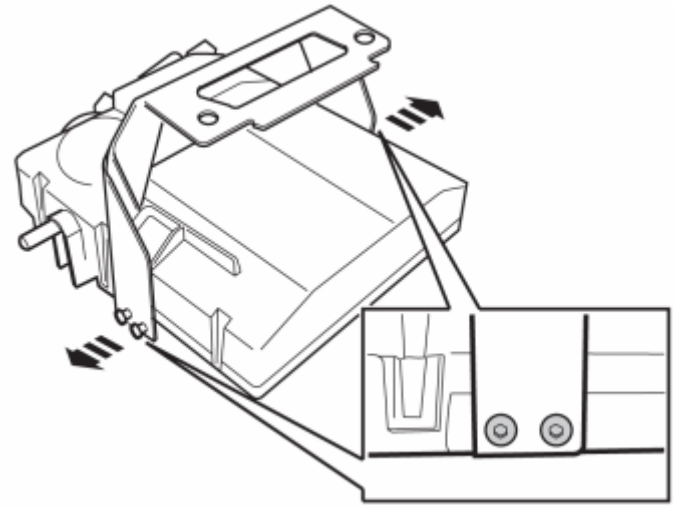

Fig. 467: Identifying Unit Screws
Courtesy of VOLVO CARS CORPORATION

- Remove the four screws. Allow the console to remain.

NOTE: The console has different appearances depending on model year.

INSTALLATION, CONTINUED

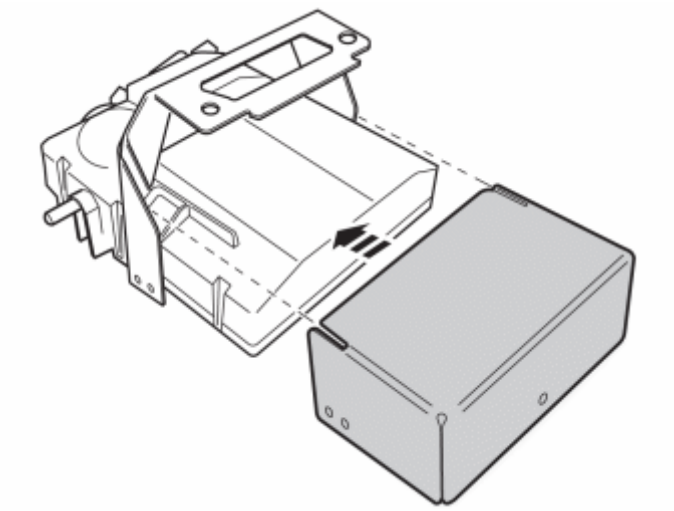

Fig. 468: Installing Protective Metal Cover
Courtesy of VOLVO CARS CORPORATION

- Install the protective metal cover from the kit. It must be located on the outside of the existing console.

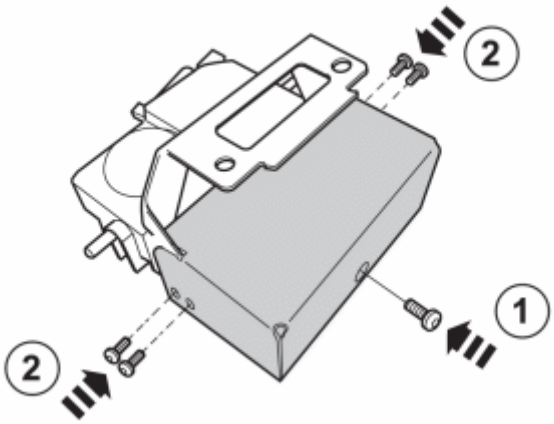

Fig. 469: Installing Kit Screws
Courtesy of VOLVO CARS CORPORATION

- Install the screw from the kit and tighten it three turns.
- Reinstall the four screws.
- Tighten all screws.

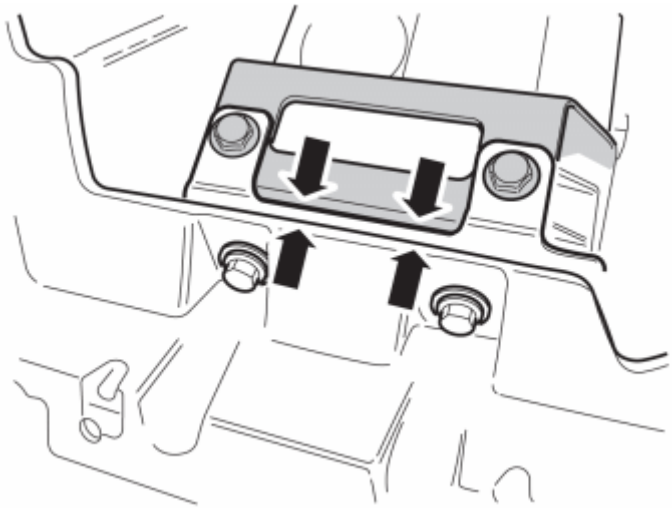

Fig. 470: Installing Control Module
Courtesy of VOLVO CARS CORPORATION

Reinstall:

- the control module with console

NOTE: **The protruding section of the console for the control module must be located above the existing console.**

- the screws

- the connectors.

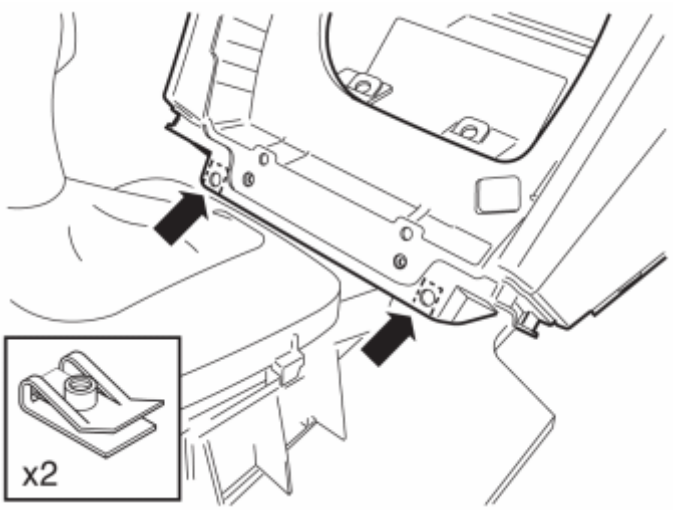

Fig. 471: Identifying Screw Clips
Courtesy of VOLVO CARS CORPORATION

- Remove the existing screw clips.
- Install the new larger screw clips. Centre them against the existing holes.

Reinstall:

- the tunnel console with screws and connectors
- the side panels.

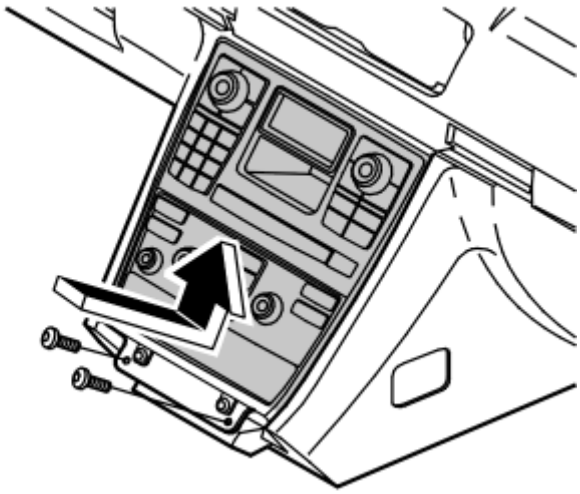

Fig. 472: Installing Center Console
Courtesy of VOLVO CARS CORPORATION

- Reinstall the center console by first hooking it in at the top edge and pressing it up, and then angling in the lower section.

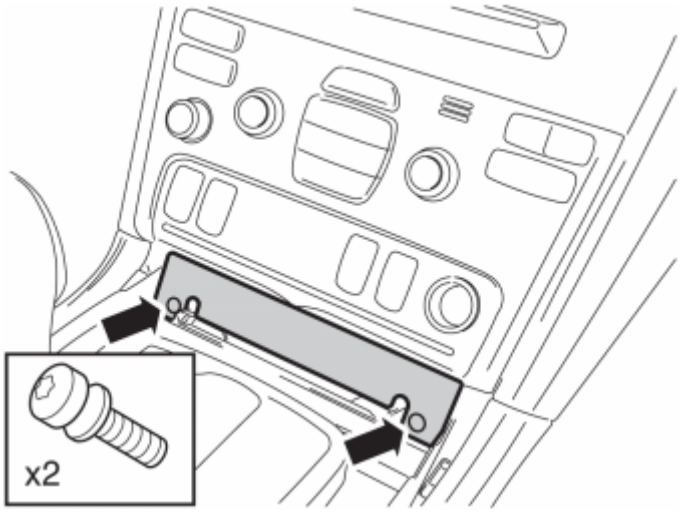

Fig. 473: Installing Protective Metal Cover With Shear Screws
Courtesy of VOLVO CARS CORPORATION

- Install the protective metal cover with the shear screw.

NOTE: The bend on the upper section must point inward.

- Tighten the screws until the top is broken off.
- Reinstall the gear lever panel.

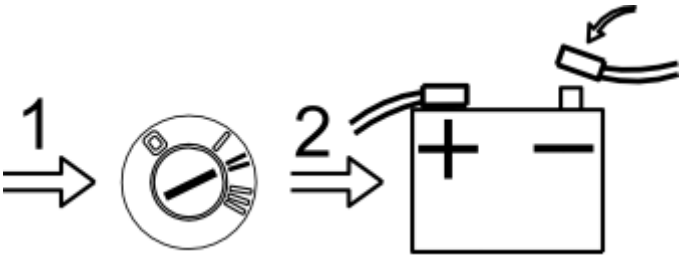

Fig. 474: Connecting Negative Battery Lead
Courtesy of VOLVO CARS CORPORATION

- Turn the ignition key to position II.
- Reconnect the battery negative lead.
- Download the software for the accessory's function following the service information in VIDA (Volvo scan tool).

First download software P/N 30775679. Then download software P/N 30677028.

CAUTION: It is extremely important that the software is downloaded in the correct order.

Functionality check:

1. Start the phone module (PHM) by pressing the telephone's On button.

   The phone module starts and requests a telephone code.

2. Enter telephone code, 1234.

   The phone module approves the telephone code and requests a PIN code.

TRACKER, VOLVO ON CALL, ANTENNA (2007-2010)

TRACKER, VOLVO ON CALL, ANTENNA

PREPARATIONS

NOTE: When affixing the velcro tape, the surface and tape must be at a temperature of at least +20° C (68° F).

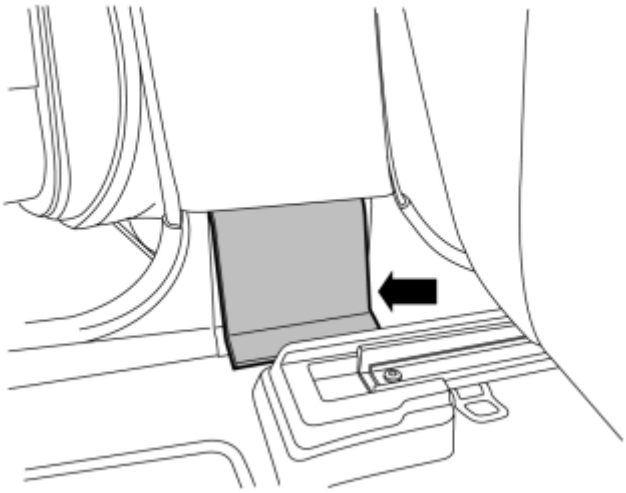

Fig. 475: Removing Cover Panel
Courtesy of VOLVO CARS CORPORATION

- Carefully pry off the cover panel at the bottom edge of the B-post panel so that it releases from the sill trim panel.

Fig. 476: Ignition Position To Zero
Courtesy of VOLVO CARS CORPORATION

- Slide the driver's seat all the way back and then move the front edge all the way up.
- Turn the ignition key to position 0.

NOTE: Wait at least three minutes before unplugging the connectors or removing other electrical equipment.

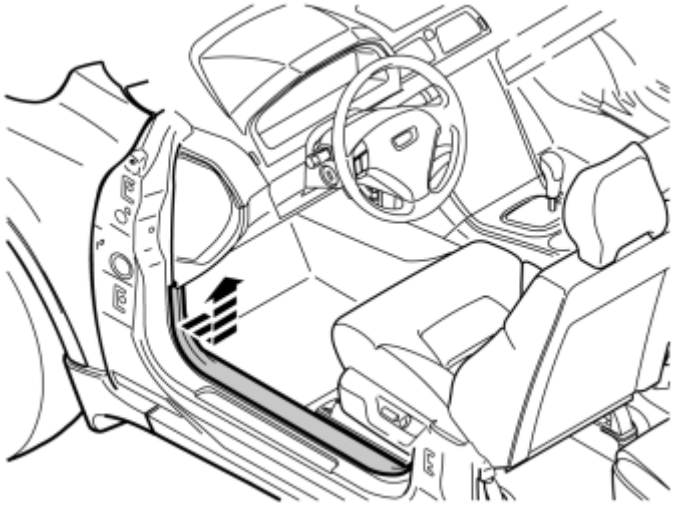

Fig. 477: Removing Sill Molding
Courtesy of VOLVO CARS CORPORATION

- Pry loose the sill molding at the front edge and then pull straight up.
- Angle the sill molding out from the B-post panel.

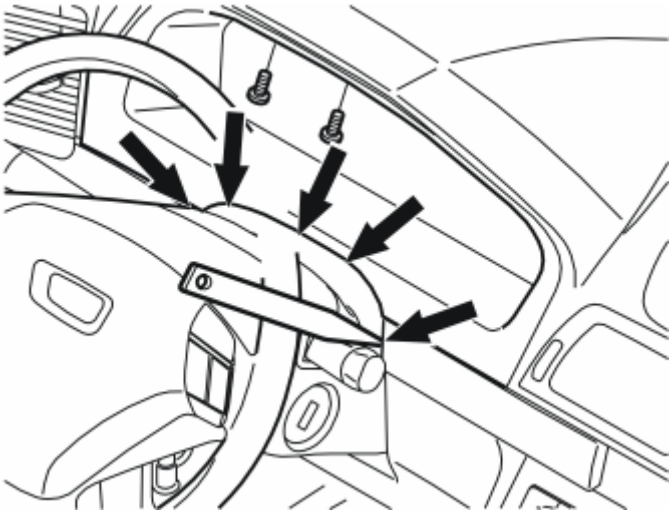

Fig. 478: Removing Rubber Seal
Courtesy of VOLVO CARS CORPORATION

- Lower the steering wheel to its lowest position and then move it rearward to its rearmost position.
- Remove the two screws at the top edge of the combined instrument panel border.
- Carefully use a weatherstrip tool to pry loose the rubber seal from the upper steering wheel cover. It is held in place with five clips.
- Remove the border by carefully pulling it rearward - first at the bottom edge and then at the top edge - until all clips have released.

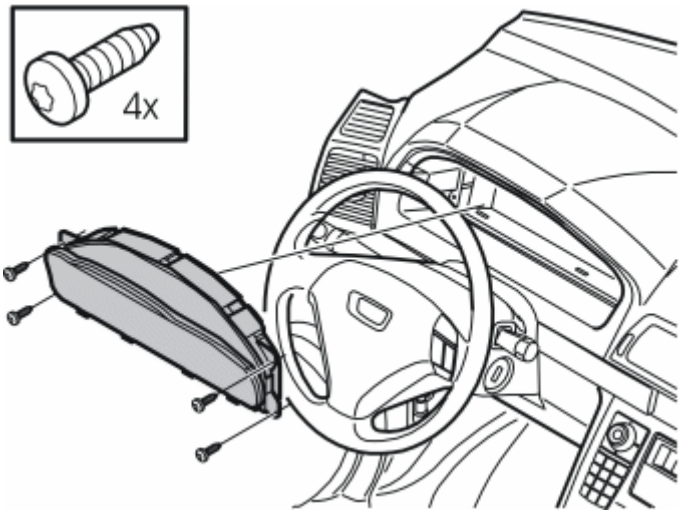

Fig. 479: Removing Instrument Panel
Courtesy of VOLVO CARS CORPORATION

- Remove the four screws for the combined instrument panel.
- Pull out the combined instrument panel. Disconnect the connector on the reverse of the combined instrument panel.

INSTALLING THE ANTENNA

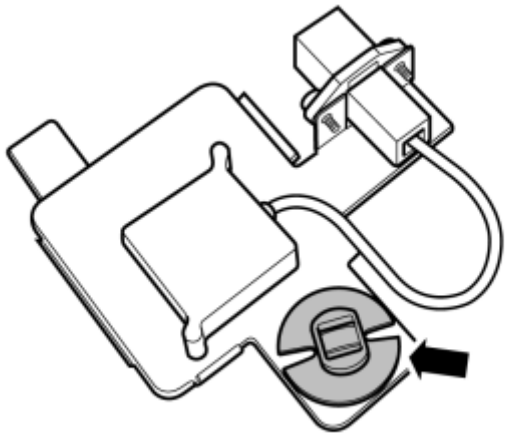

Fig. 480: Remove Clip
Courtesy of VOLVO CARS CORPORATION

- Remove the antenna from the kit. Remove the clip.

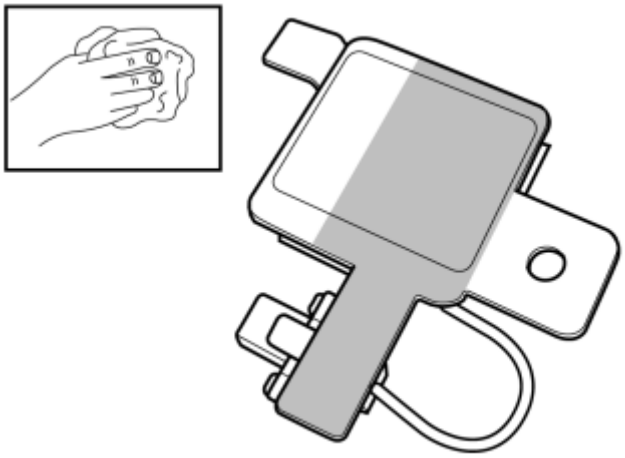

Fig. 481: Cleaning Area For Application
Courtesy of VOLVO CARS CORPORATION

- Clean the smooth side of the antenna with isopropanol.

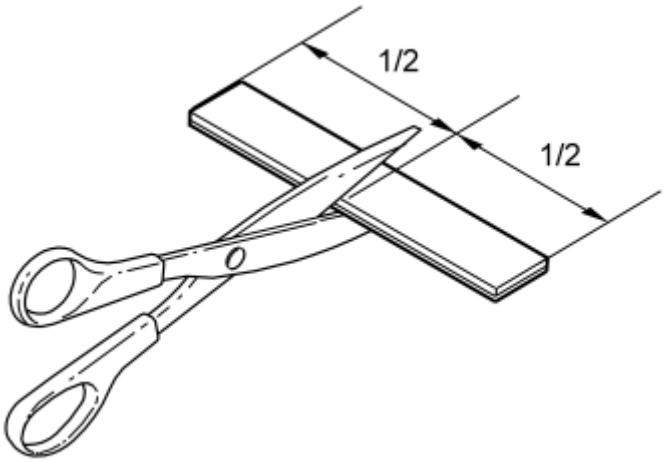

Fig. 482: Identifying Velcro Strip
Courtesy of VOLVO CARS CORPORATION

- Take the velcro tape and cut it in the middle.
- Press the cut pieces into one another.

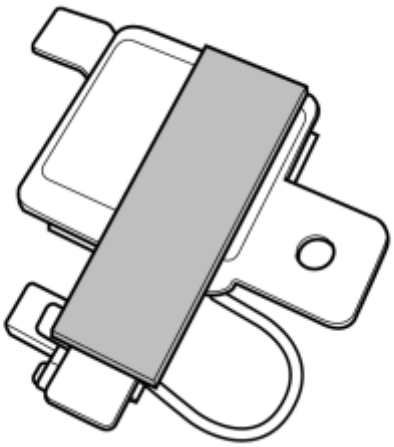

Fig. 483: Installing Adhesive Tape On Antenna
Courtesy of VOLVO CARS CORPORATION

- Remove the backing film and press the tape into place on the antenna.

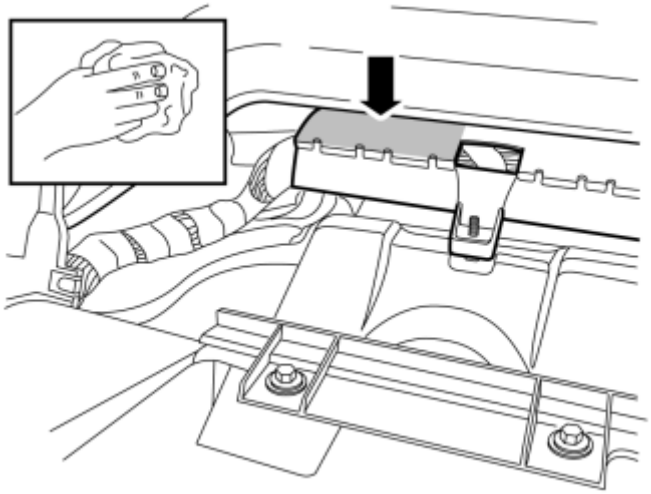

Fig. 484: Cleaning Top Of Harness
Courtesy of VOLVO CARS CORPORATION

- Clean the top of the cable harness duct with isopropanol.

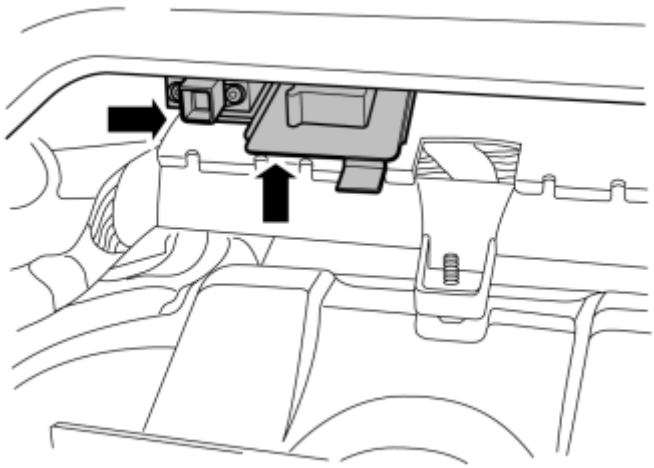

Fig. 485: Fitting Antenna
Courtesy of VOLVO CARS CORPORATION

- Raise up the air duct slightly so that the antenna can be fitted. Remove the backing film and position the antenna. Press hard so that the tape fastens. The antenna is to be positioned edge to edge against the cable harness duct.

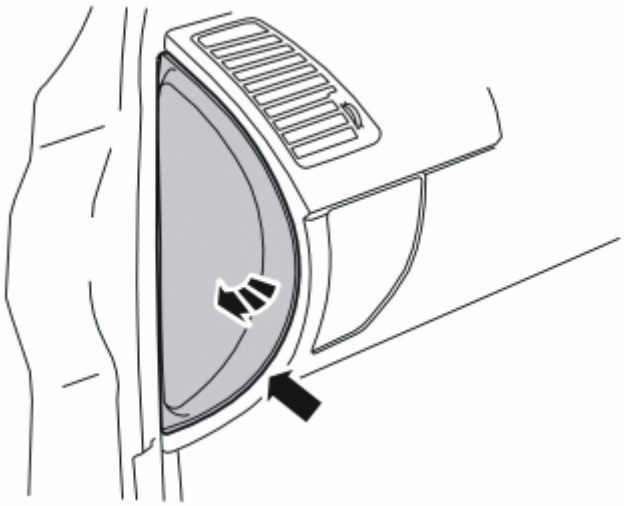

Fig. 486: Removing Panel
Courtesy of VOLVO CARS CORPORATION

- Pry off the rear edge of the panel on the left-hand end of the dashboard. Twist out the panel. Remove the panel.

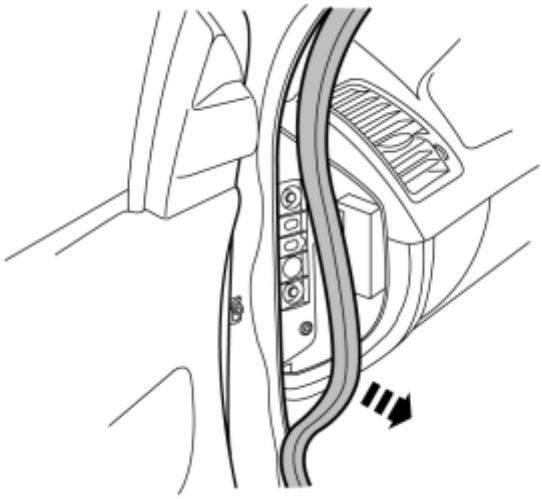

Fig. 487: Removing Sealing
Courtesy of VOLVO CARS CORPORATION

- Remove the sealing strip at the dashboard.

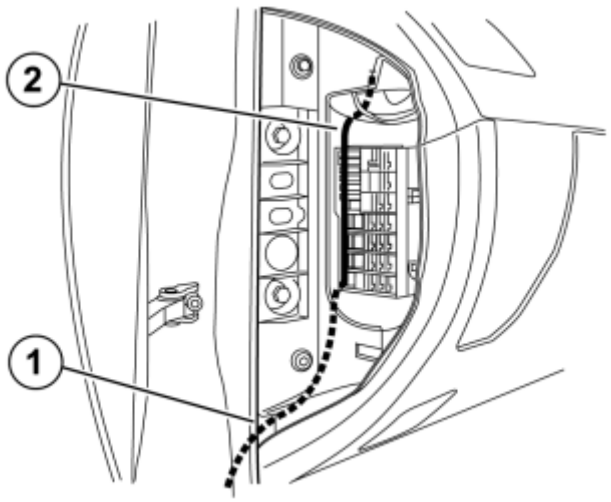

Fig. 488: Routing Cable
Courtesy of VOLVO CARS CORPORATION

- Take the antenna cable and the end with the gray connector. Insert the cable through the opening (1) and route it along the bottom edge of the fuse holder. Route the cable through the top edge of the fuse holder (2) and on up to the installed antenna. Hide the cable behind the fuse holder.

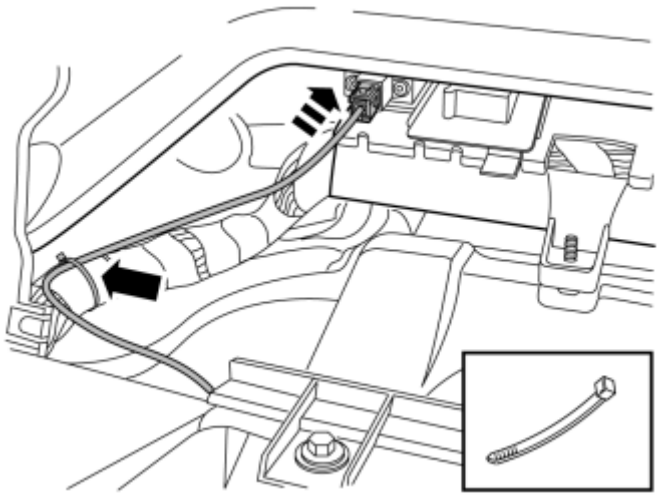

Fig. 489: Securing Cable Using Cable Ties
Courtesy of VOLVO CARS CORPORATION

- Plug the connector into the antenna.
- Fasten the antenna cable to the existing cable harness using a cable tie.

INSTALLATION

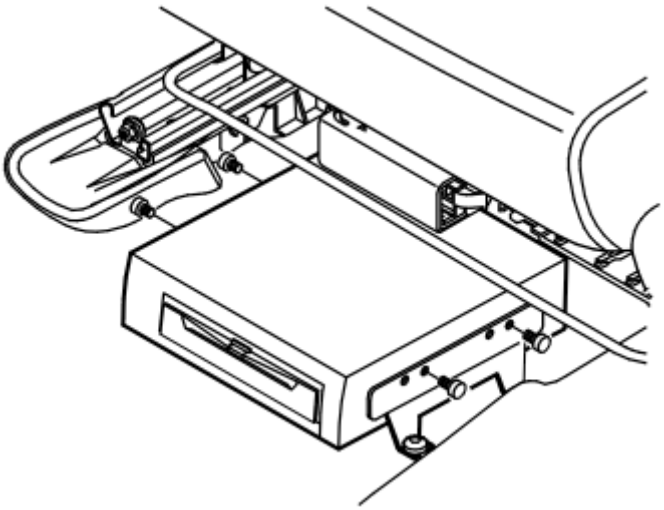

Fig. 490: Removing Multimedia Module
Courtesy of VOLVO CARS CORPORATION

- Remove the four screws and lift forward the multimedia module (MMM).

NOTE: **Cars that do not have a navigation system have a global positioning system (GPS) instead. It is installed under a protective plate.**

Remove the protective plate and carry out the corresponding procedure on the GPS unit as for the multimedia module (MMM) in steps 16-18.

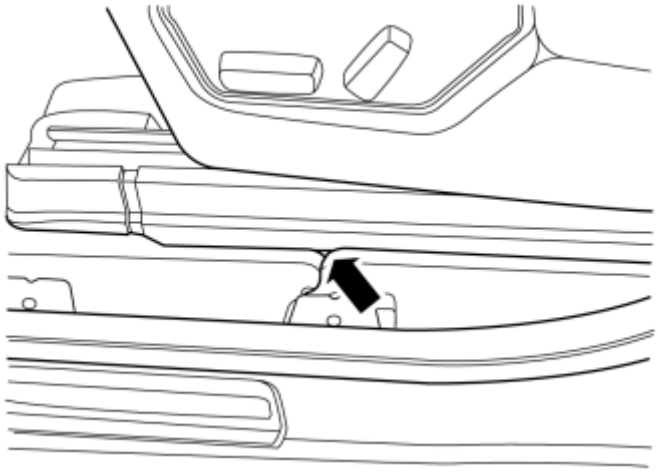

Fig. 491: Routing Cable
Courtesy of VOLVO CARS CORPORATION

- Guide the antenna cable in under the seat at the seam of the floor carpeting.

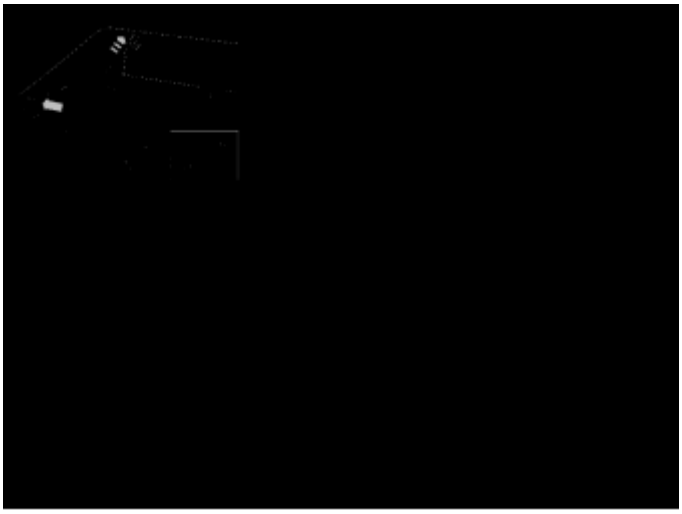

Fig. 492: Unplugging Antenna Cable From Module
Courtesy of VOLVO CARS CORPORATION

- Unplug the antenna cable's blue connector from the module (MMM).
- Plug in the routed cable.
- Fasten the unplugged connector to the routed cable using a cable tie. Reposition the control module.

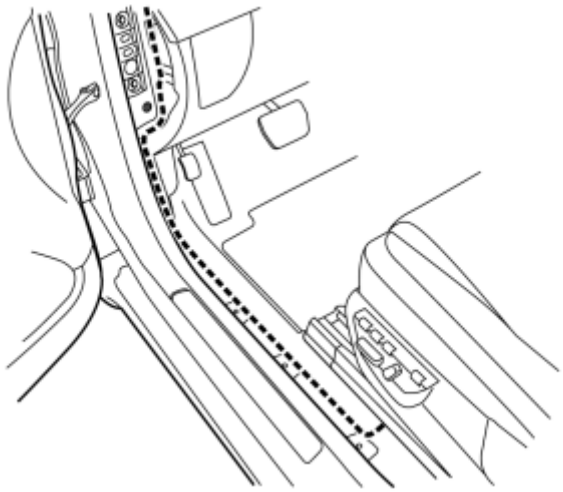

Fig. 493: Routing Cable
Courtesy of VOLVO CARS CORPORATION

- Position the antenna cable between the sill and the floor carpeting.

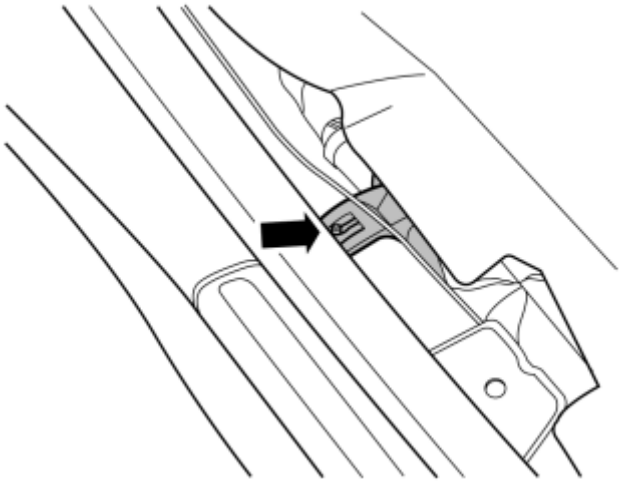

Fig. 494: Installing Cable To Duct Holders
Courtesy of VOLVO CARS CORPORATION

- Fasten the antenna cable and any excess length at the two cable duct holders.

Reinstall:

- multimedia module (MMM)
- the sealing strip
- the sill trim panel
- the cover panel at the B-post
- the end face panel
- the combined instrument panel and its border.

MOBILE COMPUTING SERVICES (2003-2012)

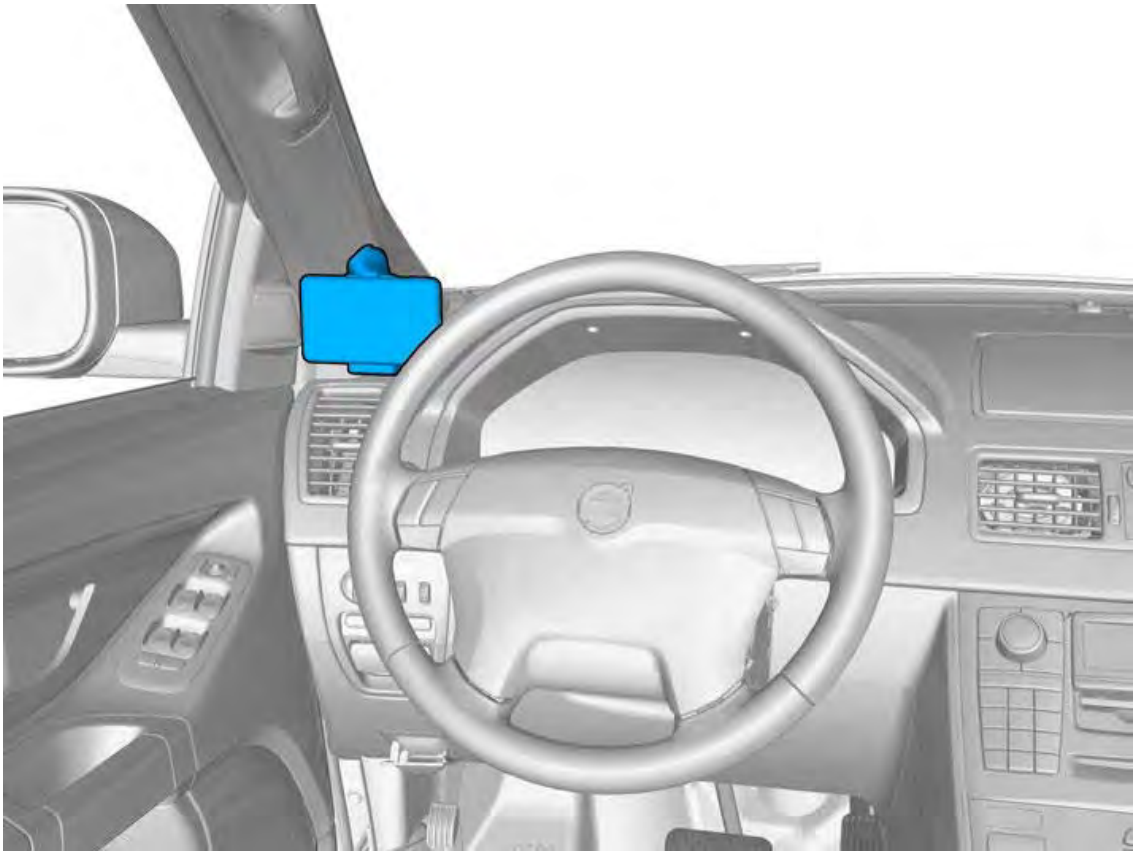

Fig. 495: Portable Navigation System
Courtesy of VOLVO CARS CORPORATION

Navigation system, portable

Equipment

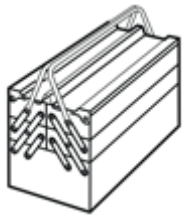

Fig. 496: Snow Chain Tool Box
Courtesy of VOLVO CARS CORPORATION

Fig. 497: Drill

Courtesy of VOLVO CARS CORPORATION

Fig. 498: Drill Bit
Courtesy of VOLVO CARS CORPORATION

Fig. 499: Hole Saw
Courtesy of VOLVO CARS CORPORATION

Fig. 500: Identifying Special Tool 9512932
Courtesy of VOLVO CARS CORPORATION

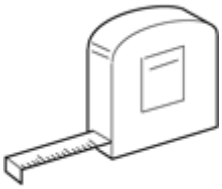

Fig. 501: Identifying Measuring Tape
Courtesy of VOLVO CARS CORPORATION

Fig. 502: Weatherstrip Tool
Courtesy of VOLVO CARS CORPORATION

Fig. 503: Identifying Removal Tool
Courtesy of VOLVO CARS CORPORATION

Kit contents

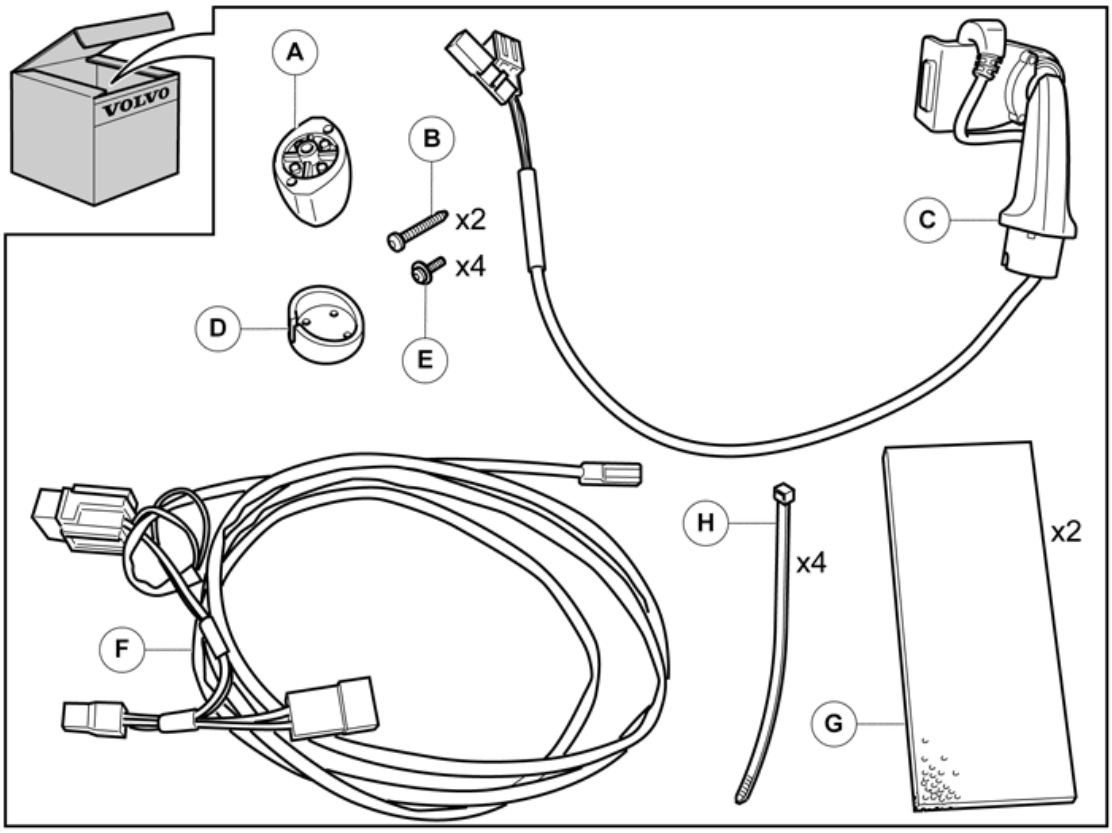

Fig. 504: Identifying Kit Contents
Courtesy of VOLVO CARS CORPORATION

SPECIAL TOOLS

Operation Number(s): 39730

Special tools	
	951 2932 Tension spring **Tool number:** 951 2932 **Tool description:** Tension spring **Tool boards:** 80

INFORMATION

- Read through all of the instructions before starting installation.
- Notifications and warning texts are for your safety and to minimize the risk of something breaking during installation.
- Ensure that all tools stated in the instructions are available before starting installation.
- Certain steps in the instructions are only presented in the form of images. Explanatory text is also given for more complicated steps.
- In the event of any problems with the instructions or the accessory, contact your local Volvo dealer.

CONDITIONS

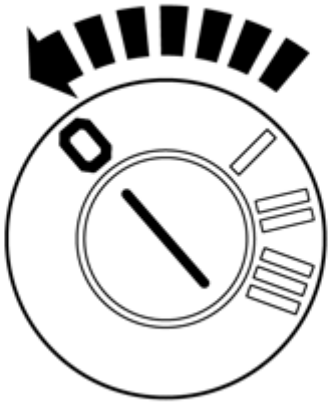

Fig. 505: Identifying Ignition Key In 0 Position
Courtesy of VOLVO CARS CORPORATION

Set the ignition key to position 0.

REMOVAL

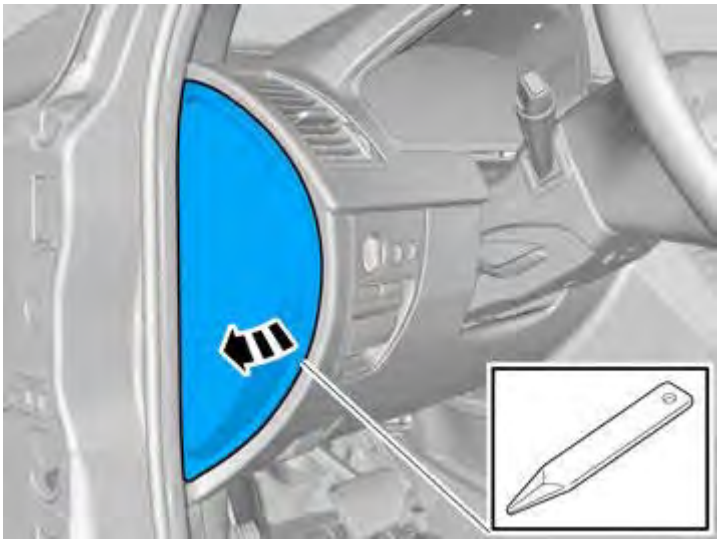

Fig. 506: Removing Panel
Courtesy of VOLVO CARS CORPORATION

Remove the panel.

Fig. 507: Releasing Steering Wheel Adjustment Lever
Courtesy of VOLVO CARS CORPORATION

Release the lock.

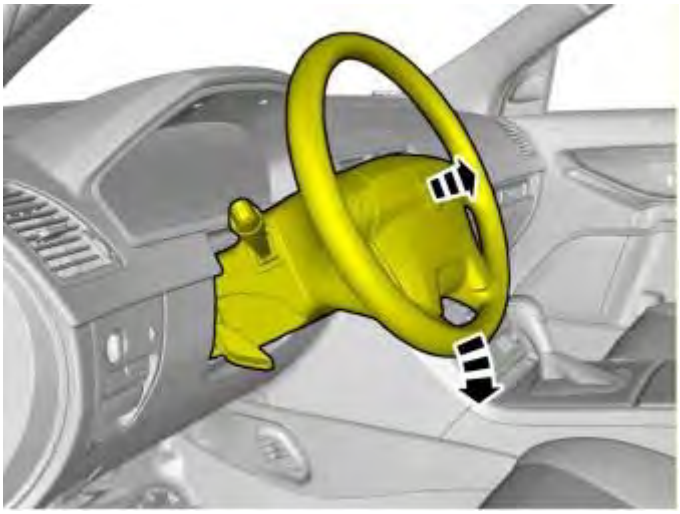

Fig. 508: Adjusting Steering Wheel
Courtesy of VOLVO CARS CORPORATION

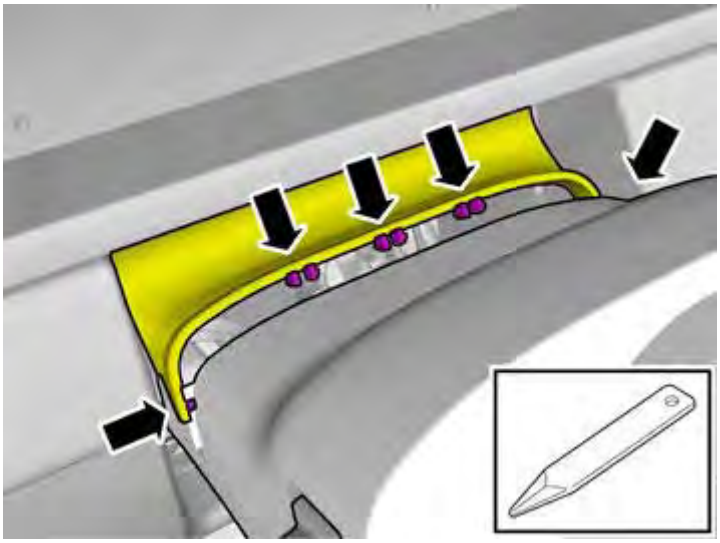

Fig. 509: Removing Panel
Courtesy of VOLVO CARS CORPORATION

Detach the panel.

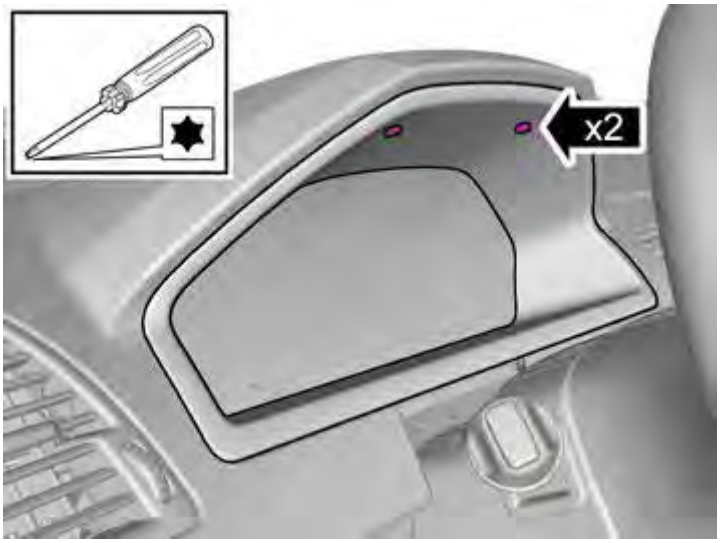

Fig. 510: Identifying Screws
Courtesy of VOLVO CARS CORPORATION

Remove the screws.

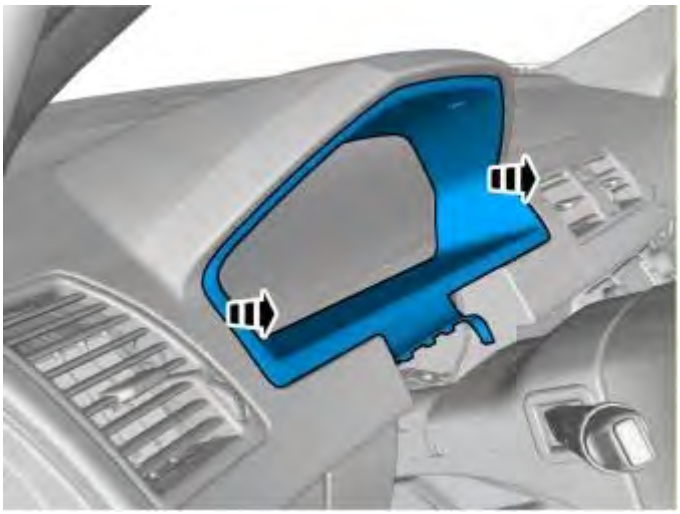

Fig. 511: Removing Instrument Panel Front Cover
Courtesy of VOLVO CARS CORPORATION

Remove the panel.

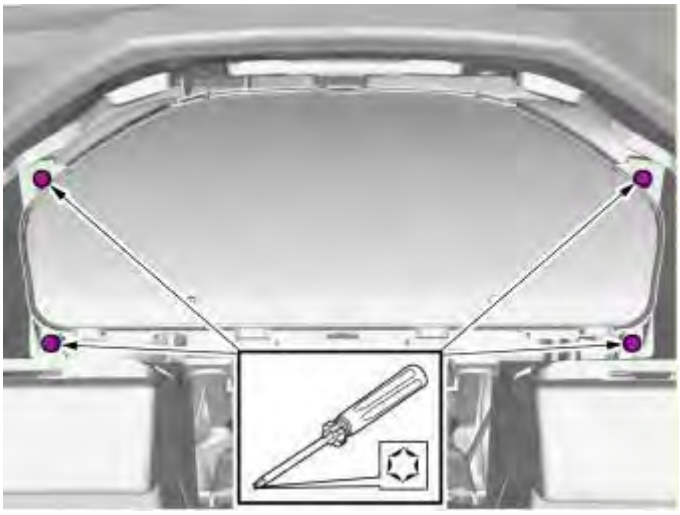

Fig. 512: Identifying Screws
Courtesy of VOLVO CARS CORPORATION

Remove the screws.

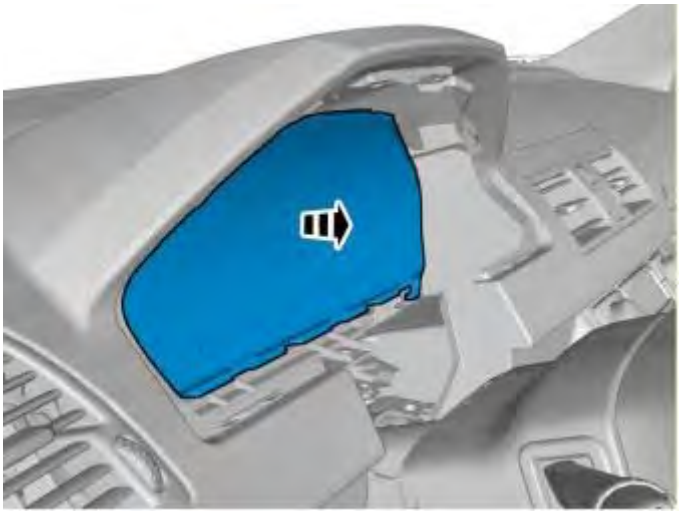

Fig. 513: Removing Instrument Panel
Courtesy of VOLVO CARS CORPORATION

Fig. 514: Removing Connector
Courtesy of VOLVO CARS CORPORATION

Disconnect the connector.

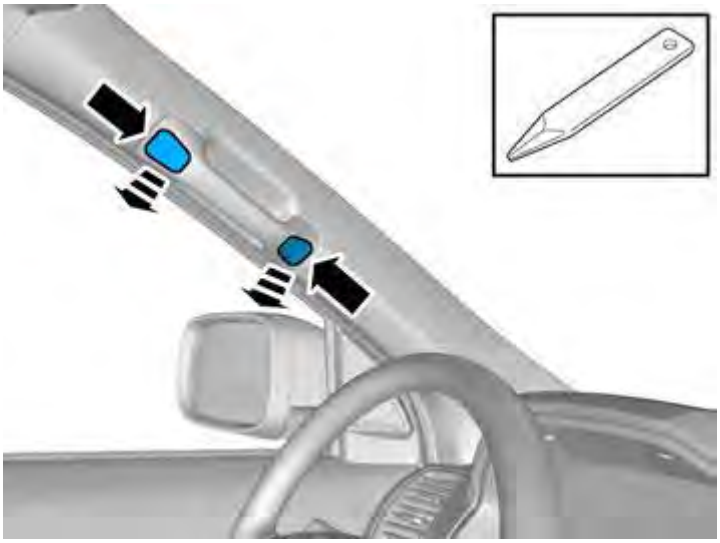

Fig. 515: Removing Handle Tabs
Courtesy of VOLVO CARS CORPORATION

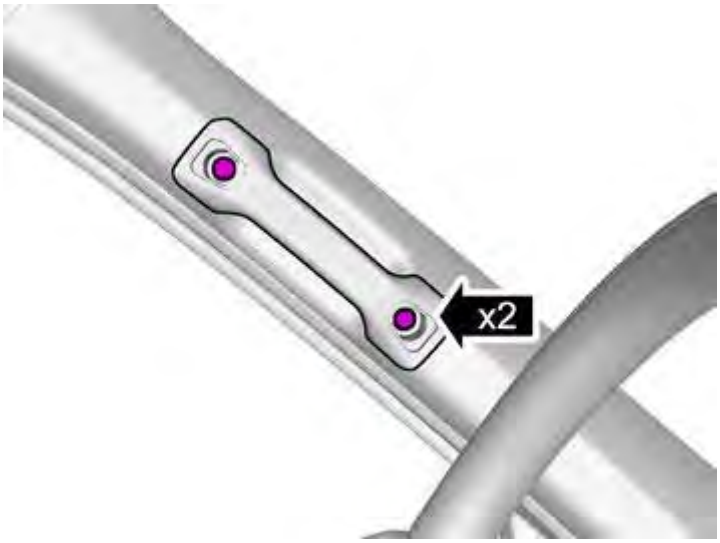

Fig. 516: Identifying Screws
Courtesy of VOLVO CARS CORPORATION

Remove the screws.

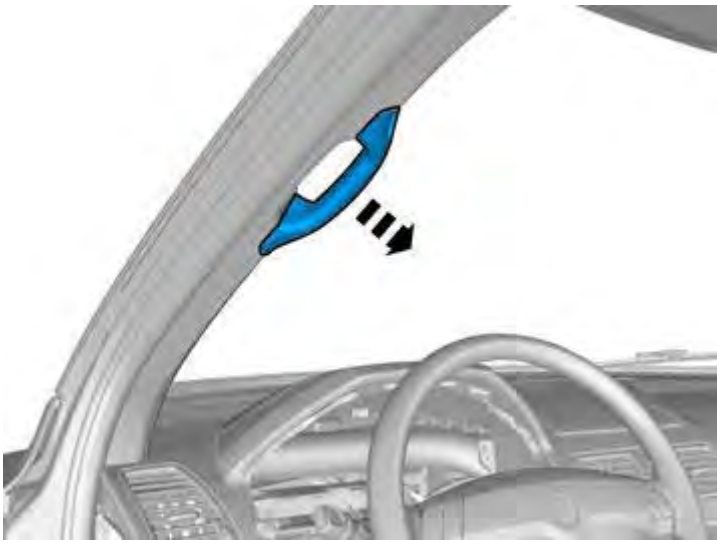

Fig. 517: Removing Safety Handle
Courtesy of VOLVO CARS CORPORATION

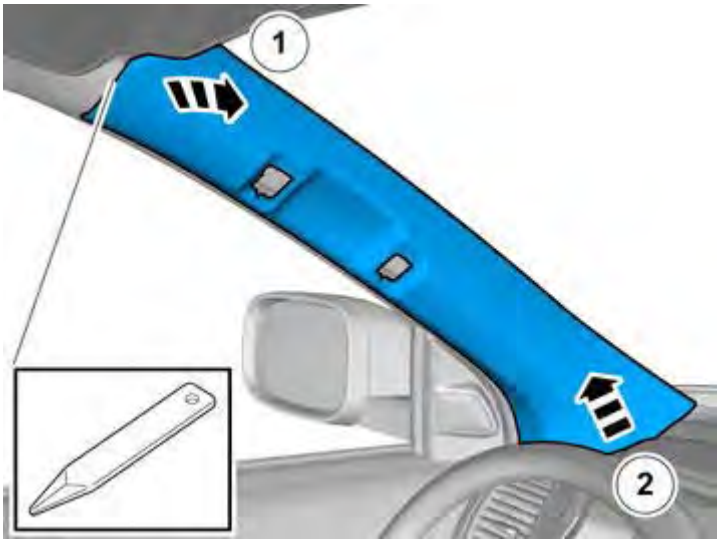

Fig. 518: Removing Panel
Courtesy of VOLVO CARS CORPORATION

Remove the panel.

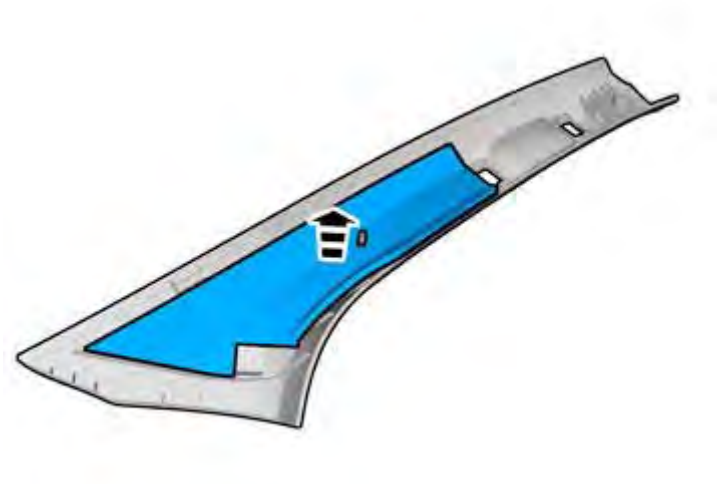

Fig. 519: Removing Cover
Courtesy of VOLVO CARS CORPORATION

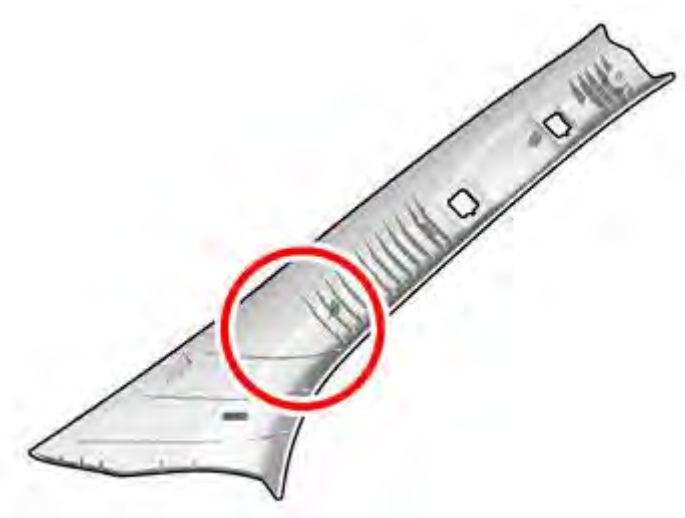

Fig. 520: Drilling Area
Courtesy of VOLVO CARS CORPORATION

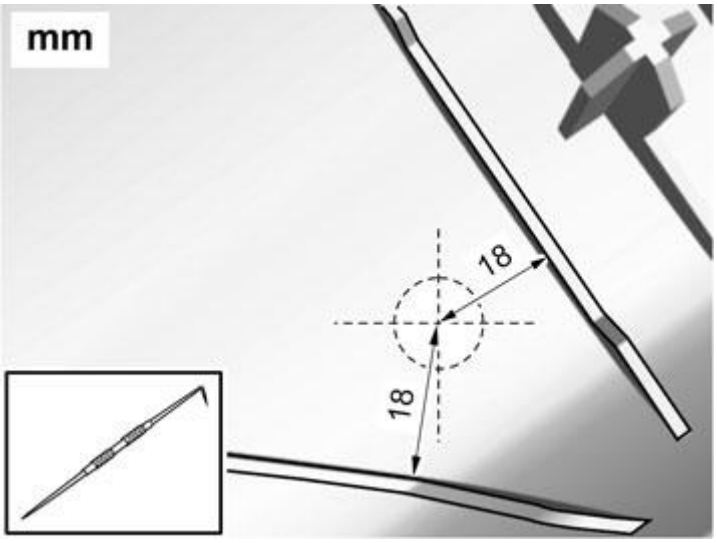

Fig. 521: Measuring Drill Hole
Courtesy of VOLVO CARS CORPORATION

Measure and mark as illustrated.

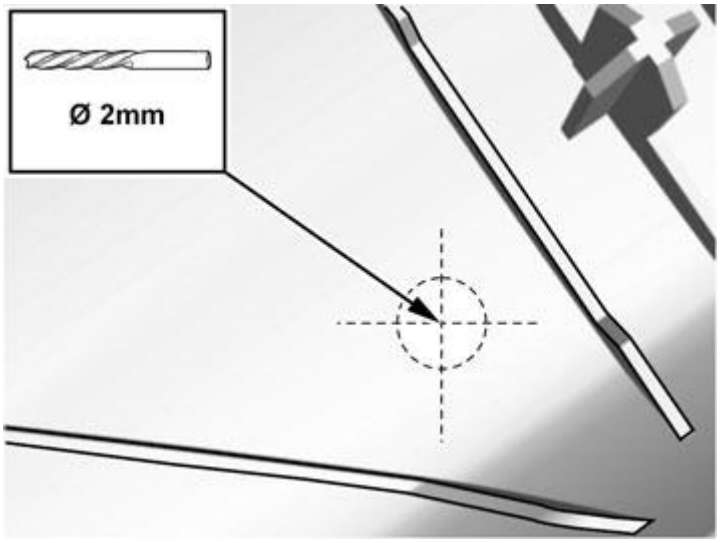

Fig. 522: Identifying Drill Hole Diameter
Courtesy of VOLVO CARS CORPORATION

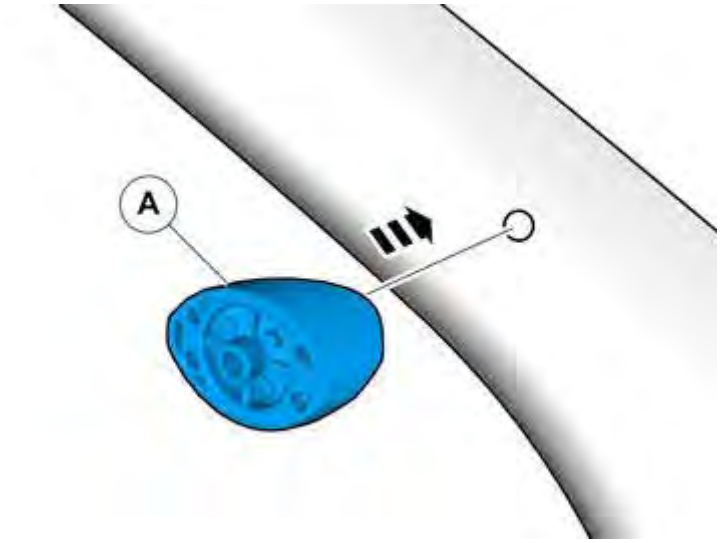

Fig. 523: Identifying Clip
Courtesy of VOLVO CARS CORPORATION

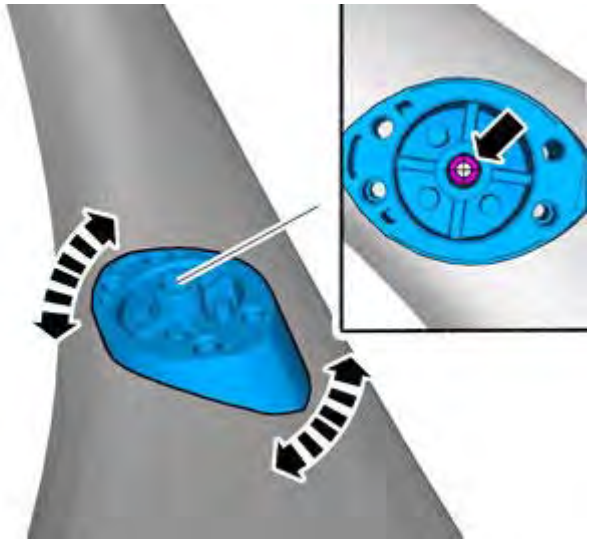

Fig. 524: Centering Holes
Courtesy of VOLVO CARS CORPORATION

Center the holes against each other.

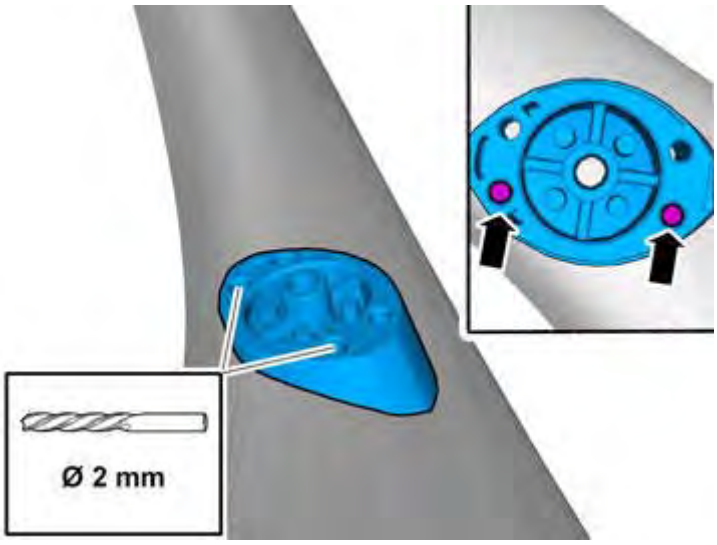

Fig. 525: Drilling Holes
Courtesy of VOLVO CARS CORPORATION

NOTE: Ensure that the part is correctly positioned against the panel's surface.

Drill the holes.

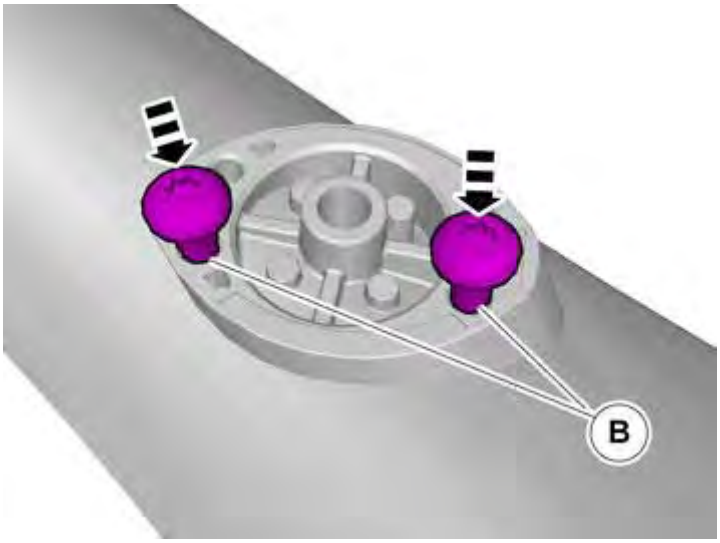

Fig. 526: Installing Screws
Courtesy of VOLVO CARS CORPORATION

Install the screws.

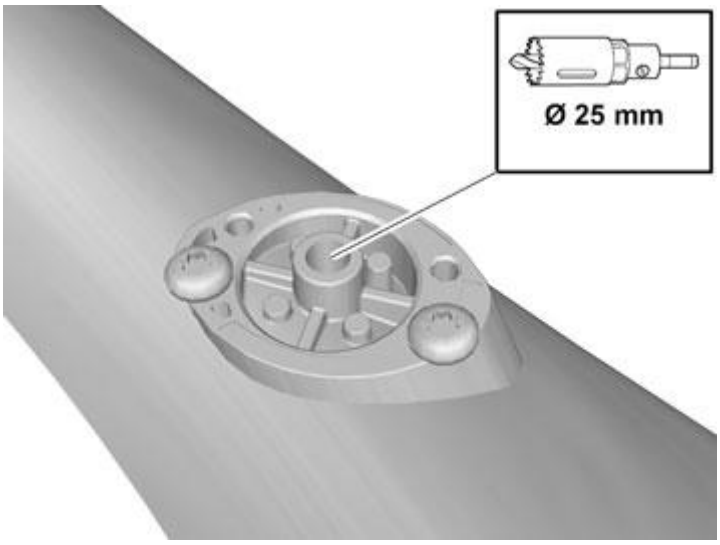

Fig. 527: Drilling Hole In Specified Area
Courtesy of VOLVO CARS CORPORATION

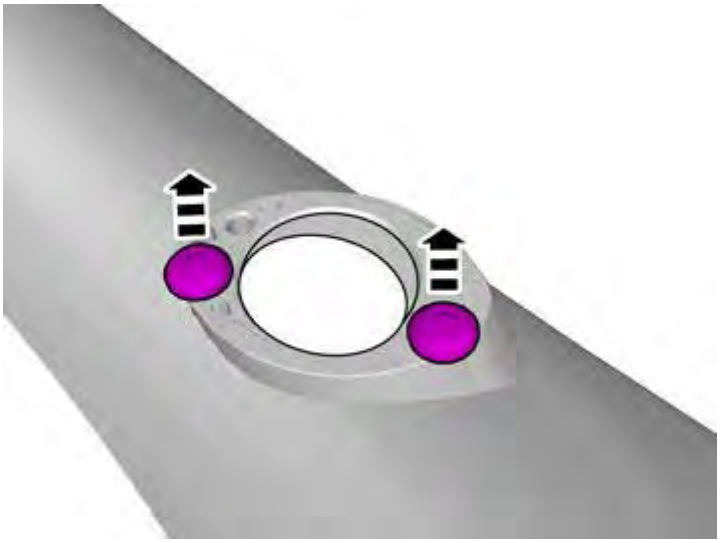

Fig. 528: Removing Screws
Courtesy of VOLVO CARS CORPORATION

Remove the screws.

Fig. 529: Adjusting Cable Length
Courtesy of VOLVO CARS CORPORATION

Adjust the cable length so that the marking ends up as displayed in the image.

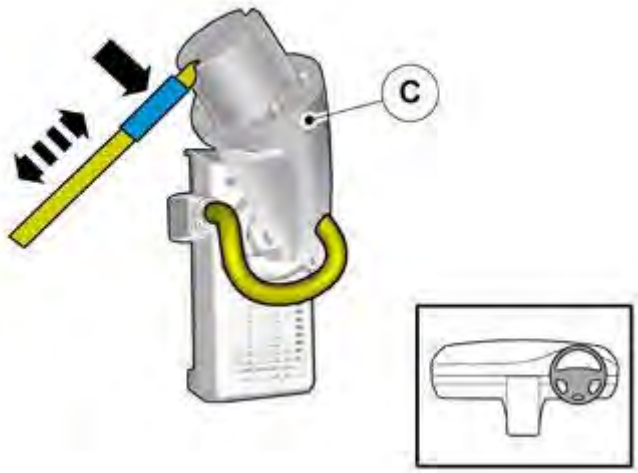

Fig. 530: Adjusting Cable Length
Courtesy of VOLVO CARS CORPORATION

Adjust the cable length so that the marking ends up as displayed in the image.

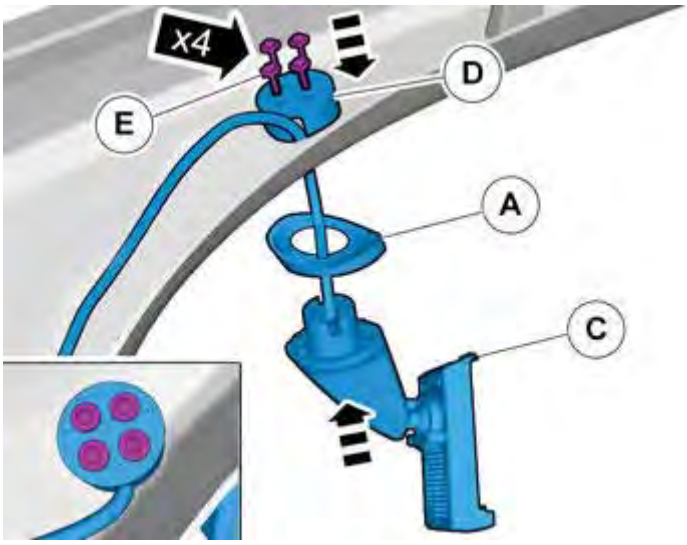

Fig. 531: Installing Screws
Courtesy of VOLVO CARS CORPORATION

Install the screws.

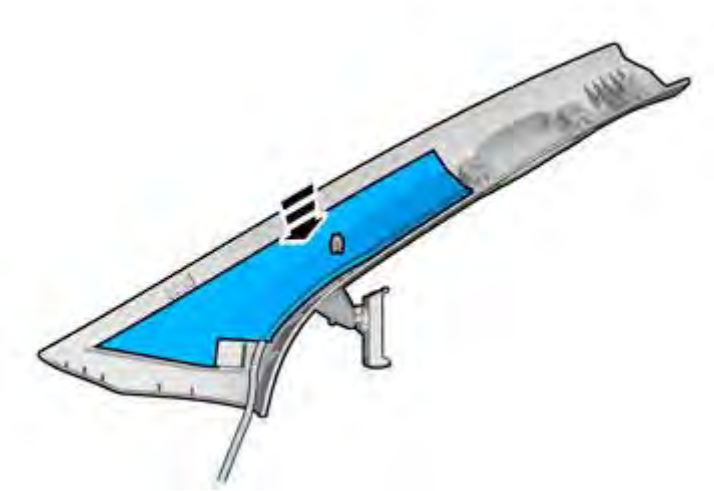

Fig. 532: Identifying Protective Cover
Courtesy of VOLVO CARS CORPORATION

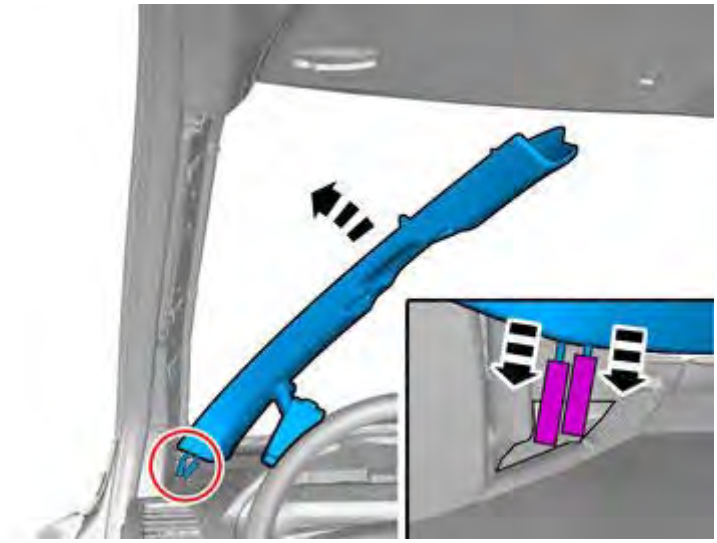

Fig. 533: Installing Panel
Courtesy of VOLVO CARS CORPORATION

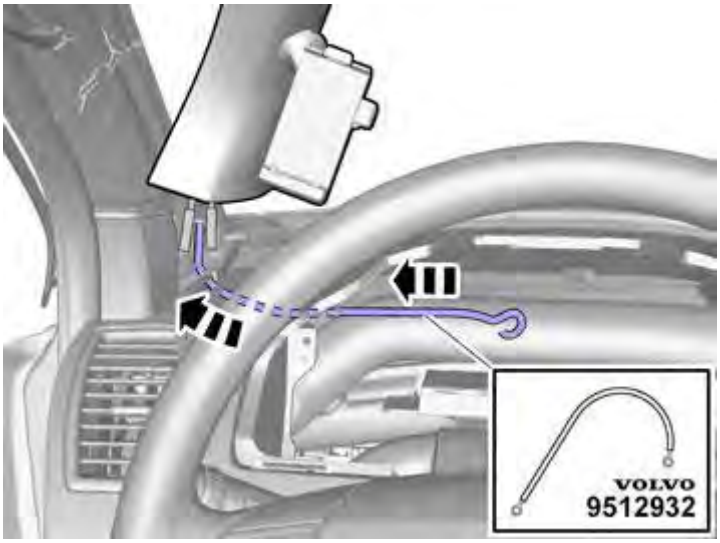

Fig. 534: Identifying Special Service Tool
Courtesy of VOLVO CARS CORPORATION

see **9512932** **9512932**

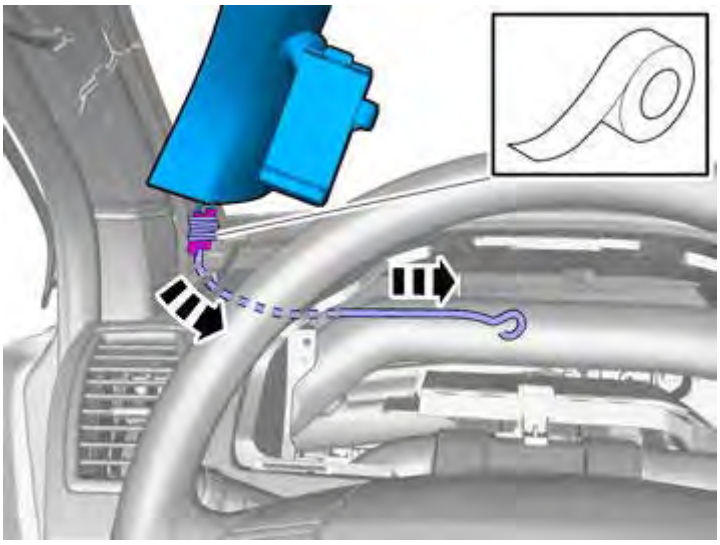

Fig. 535: Securing With Tape
Courtesy of VOLVO CARS CORPORATION

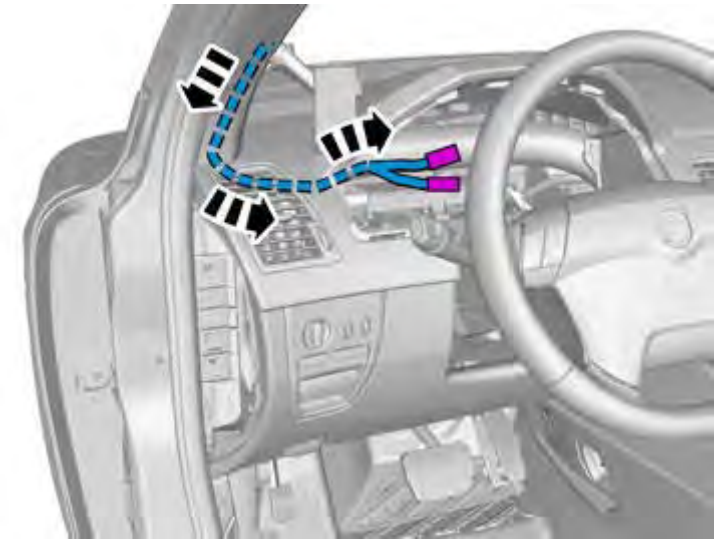

Fig. 536: Routing Cable
Courtesy of VOLVO CARS CORPORATION

Pull the wiring through.

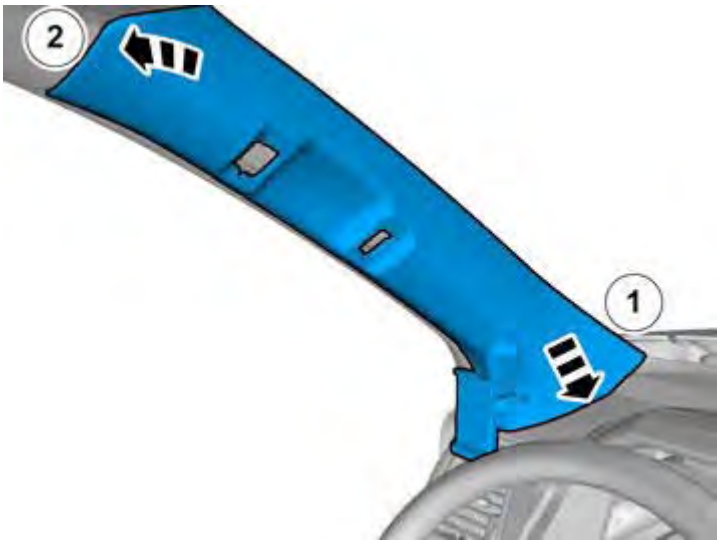

Fig. 537: Installing Panel
Courtesy of VOLVO CARS CORPORATION

Install the panel.

Fig. 538: Identifying Safety Handle
Courtesy of VOLVO CARS CORPORATION

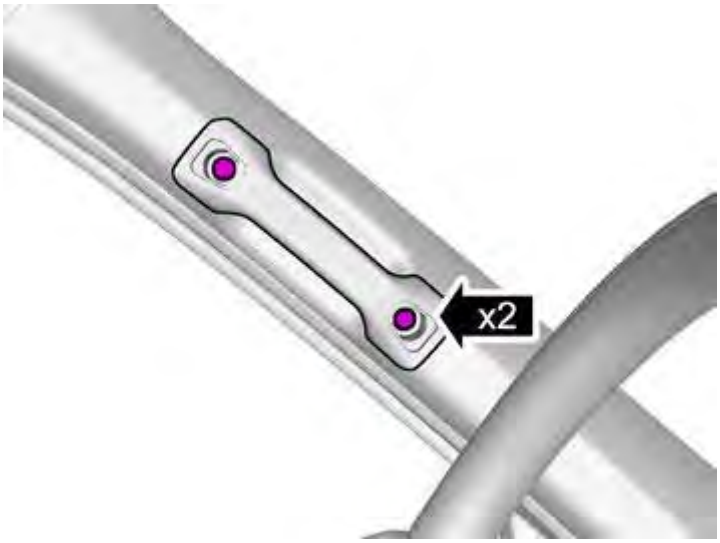

Fig. 539: Identifying Screws
Courtesy of VOLVO CARS CORPORATION

Reinstall the screws.

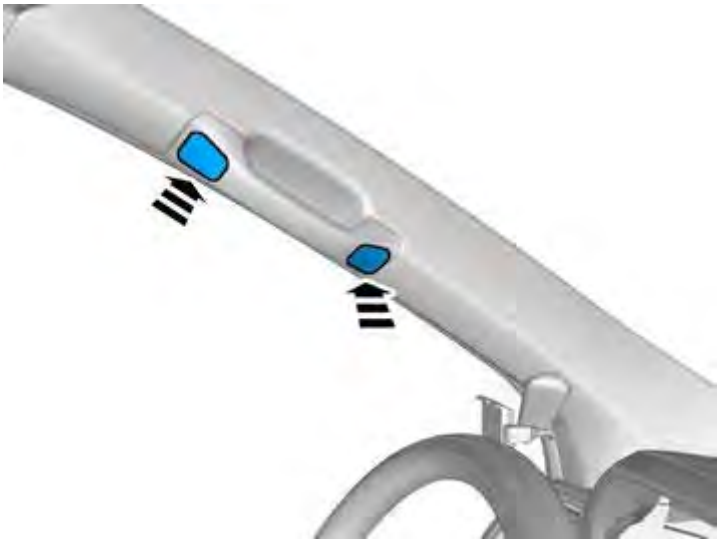

Fig. 540: Safety Handle Tabs
Courtesy of VOLVO CARS CORPORATION

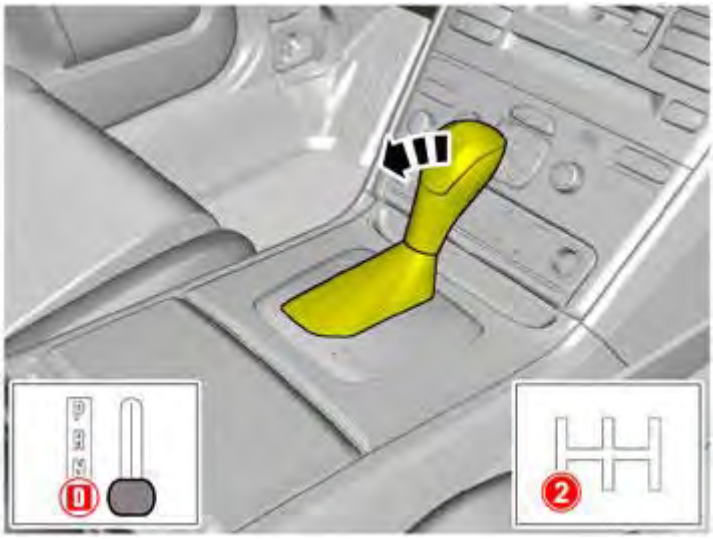

Fig. 541: Positioning Shift Knob
Courtesy of VOLVO CARS CORPORATION

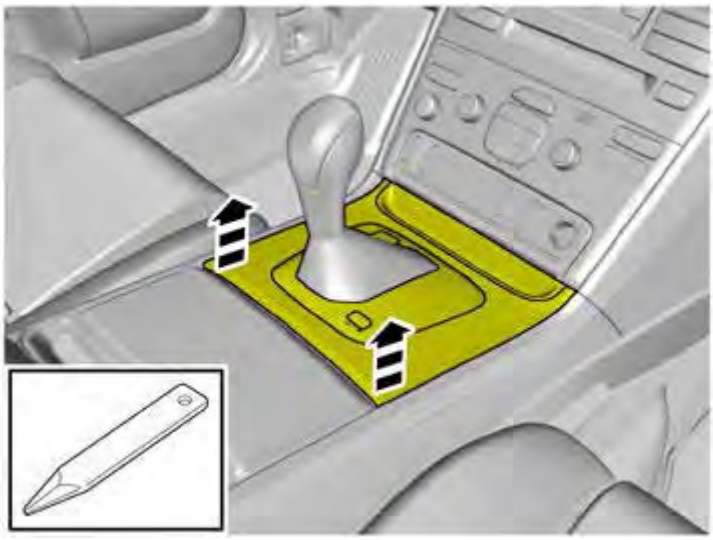

Fig. 542: Removing Gear Selector Cover
Courtesy of VOLVO CARS CORPORATION

Detach the panel.

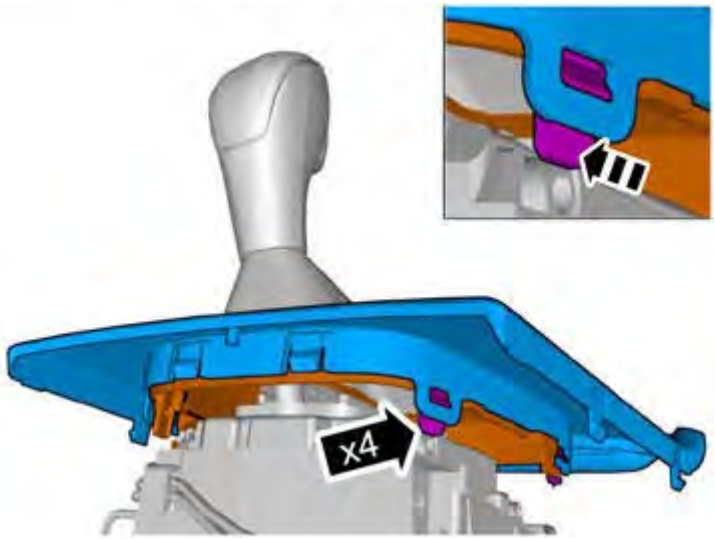

Fig. 543: Removing Gear Selector Cover
Courtesy of VOLVO CARS CORPORATION

Release the lock.

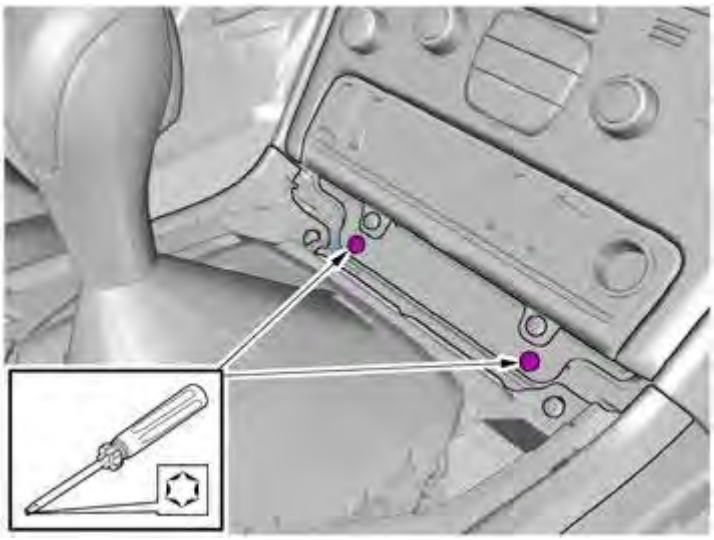

Fig. 544: Identifying Screws
Courtesy of VOLVO CARS CORPORATION

Remove the screws.

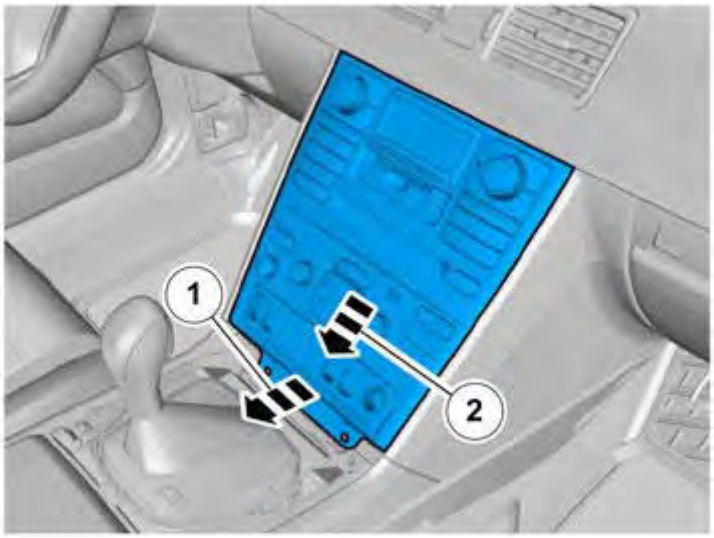

Fig. 545: Removing Front Face Plate
Courtesy of VOLVO CARS CORPORATION

CAUTION: Be extra careful when removing or installing this component.

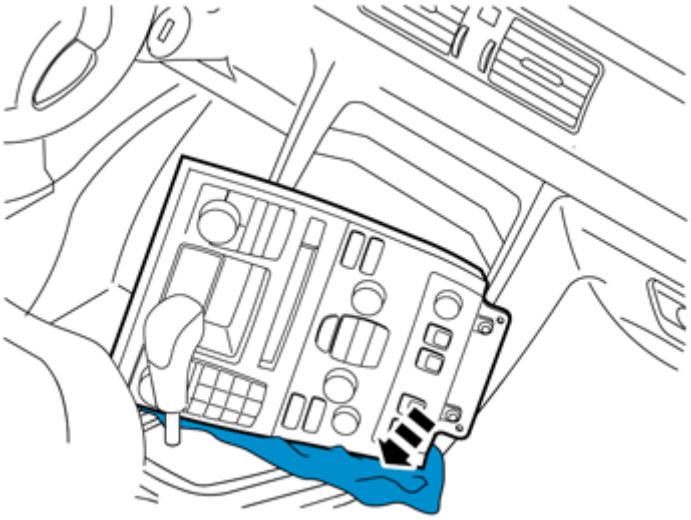

Fig. 546: Protecting Front Console Plate
Courtesy of VOLVO CARS CORPORATION

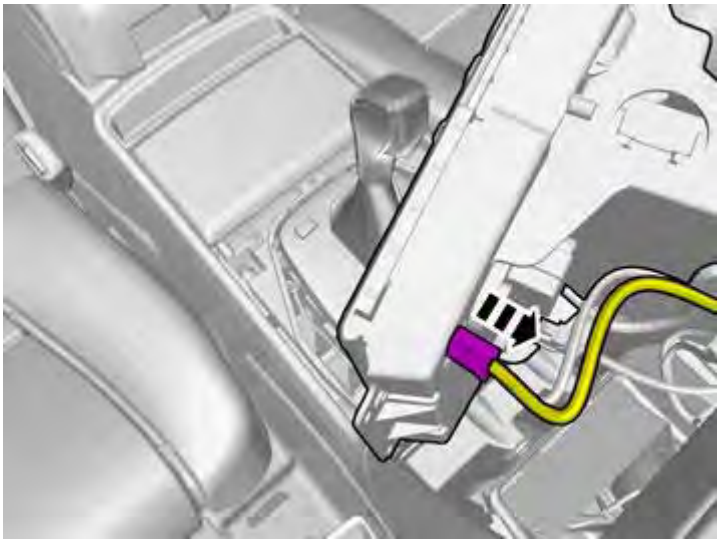

Fig. 547: Disconnecting Connector
Courtesy of VOLVO CARS CORPORATION

Disconnect the connector.

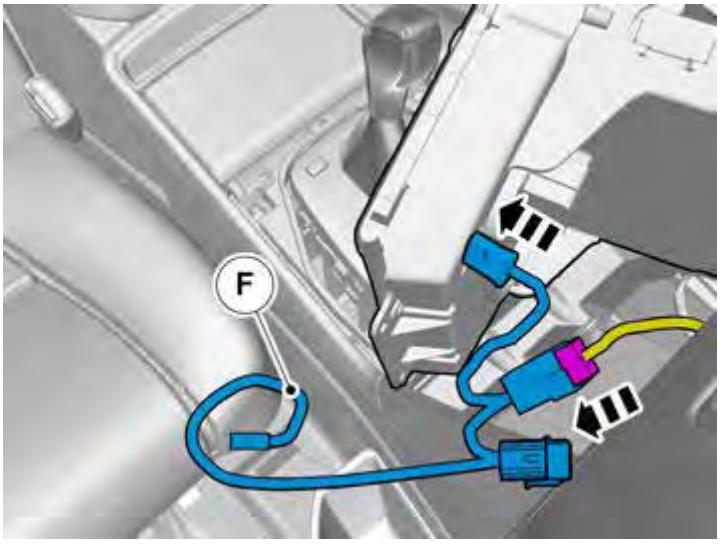

Fig. 548: Connecting Connectors
Courtesy of VOLVO CARS CORPORATION

Connect the connectors.

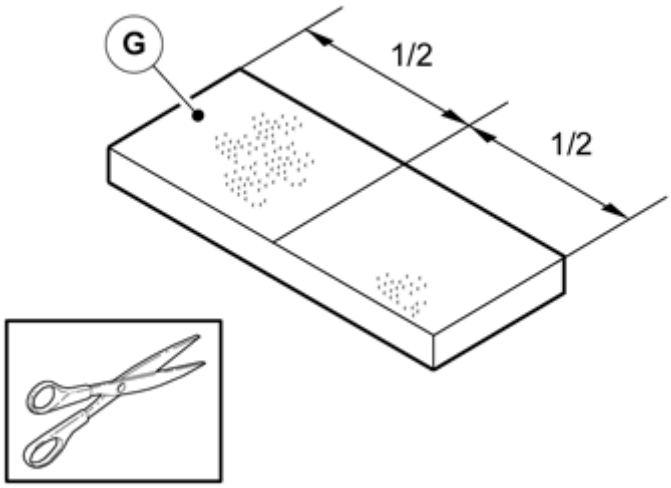

Fig. 549: Cutting Tape To Specification
Courtesy of VOLVO CARS CORPORATION

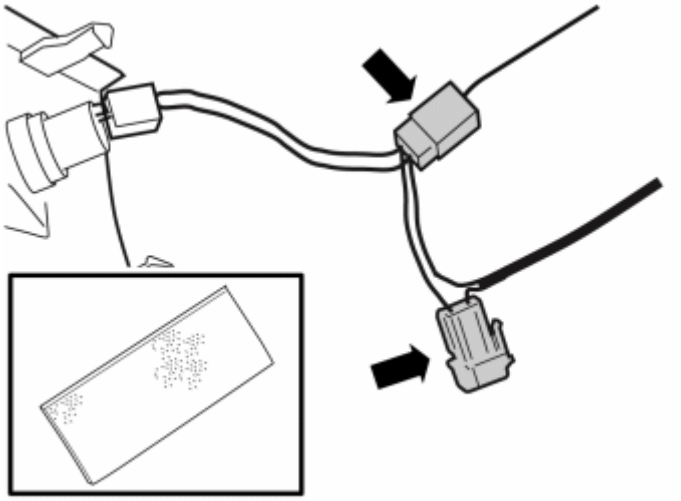

Fig. 550: View Of Foam Tape To Fuse Holder
Courtesy of VOLVO CARS CORPORATION

Tear off the excess foam tape.

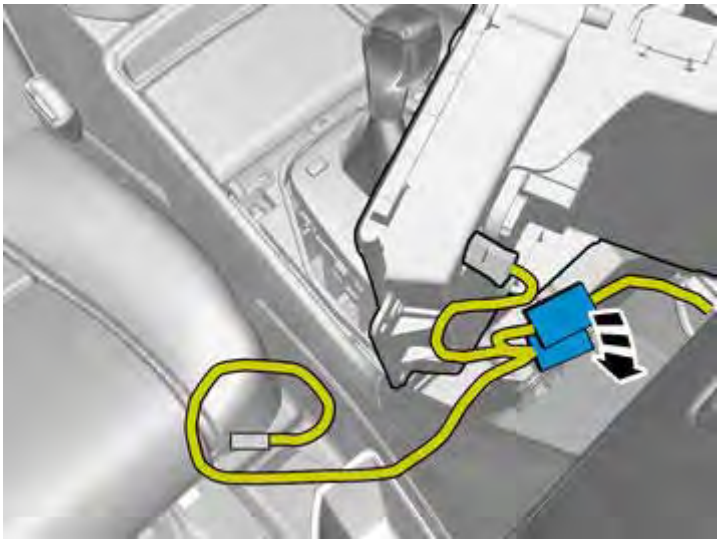

Fig. 551: Removing Connectors
Courtesy of VOLVO CARS CORPORATION

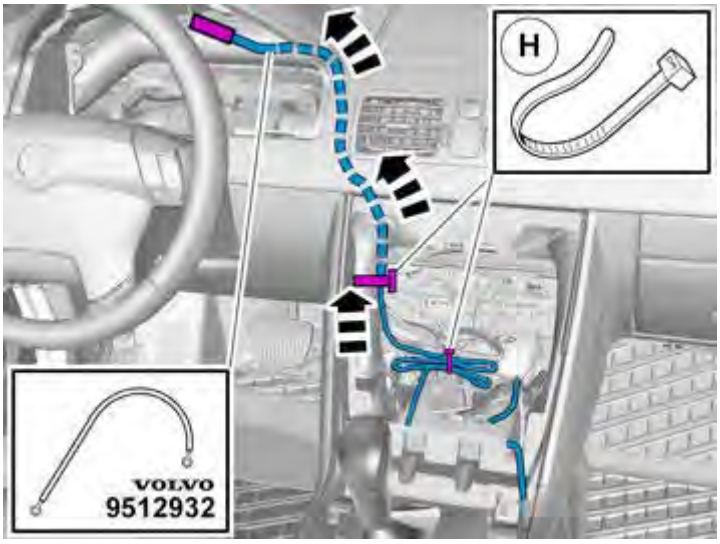

Fig. 552: Securing And Routing Cable
Courtesy of VOLVO CARS CORPORATION

see **9512932** **9512932**

Attach the wiring, using clips.

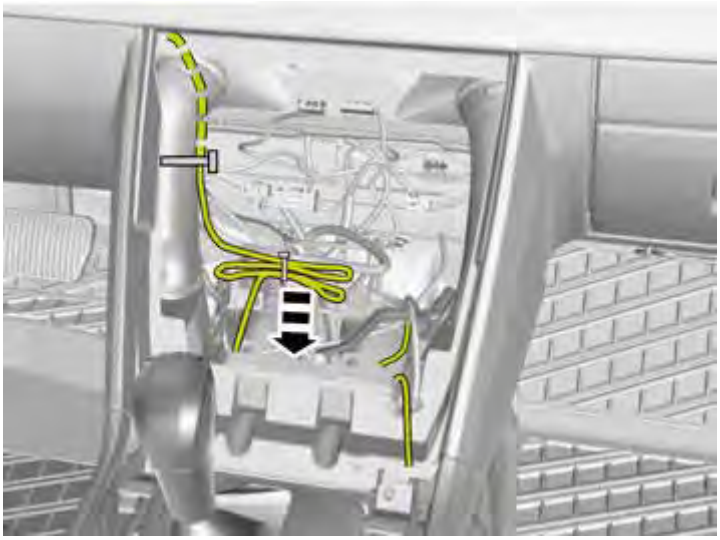

Fig. 553: Securing Cable With Clips
Courtesy of VOLVO CARS CORPORATION

SPECIAL TOOLS

Operation Number(s): 39732

Special tools	
	951 2932 Tension spring **Tool number:** 951 2932

Tool description: Tension spring
Tool boards: 80

Materials	
Designation	**Part number**
Melting adhesive	1161656

INFORMATION

- Read through all of the instructions before starting installation.
- Notifications and warning texts are for your safety and to minimize the risk of something breaking during installation.
- Ensure that all tools stated in the instructions are available before starting installation.
- Certain steps in the instructions are only presented in the form of images. Explanatory text is also given for more complicated steps.
- In the event of any problems with the instructions or the accessory, contact your local Volvo dealer.

CONDITIONS

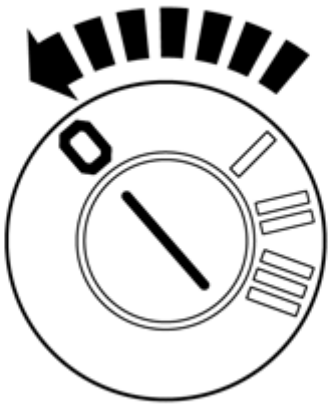

Fig. 554: Identifying Ignition Key In 0 Position
Courtesy of VOLVO CARS CORPORATION

Set the ignition key to position 0.

REMOVAL

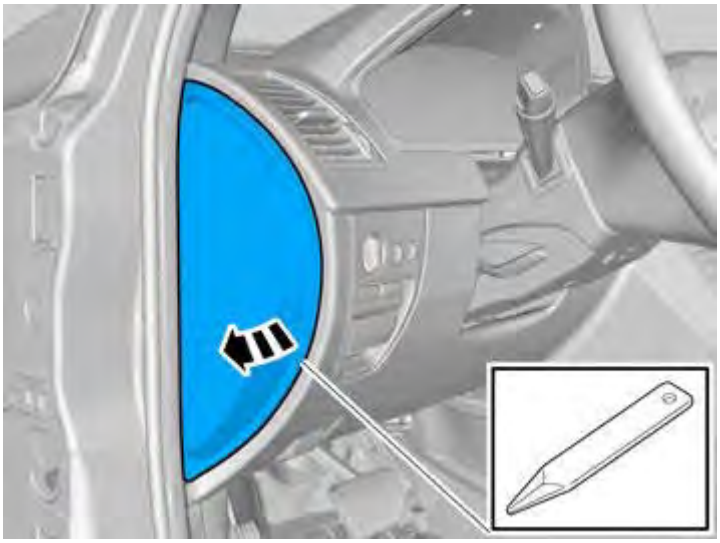

Fig. 555: Removing Panel
Courtesy of VOLVO CARS CORPORATION

Remove the panel.

Fig. 556: Releasing Steering Wheel Adjustment Lever
Courtesy of VOLVO CARS CORPORATION

Release the lock.

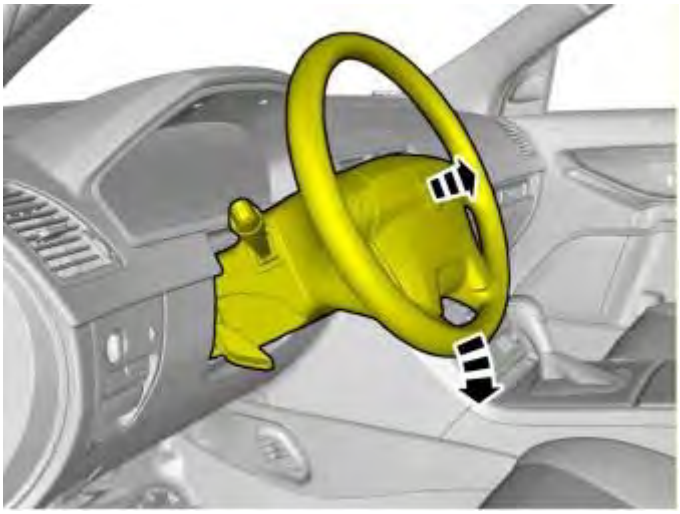

Fig. 557: Adjusting Steering Wheel Position
Courtesy of VOLVO CARS CORPORATION

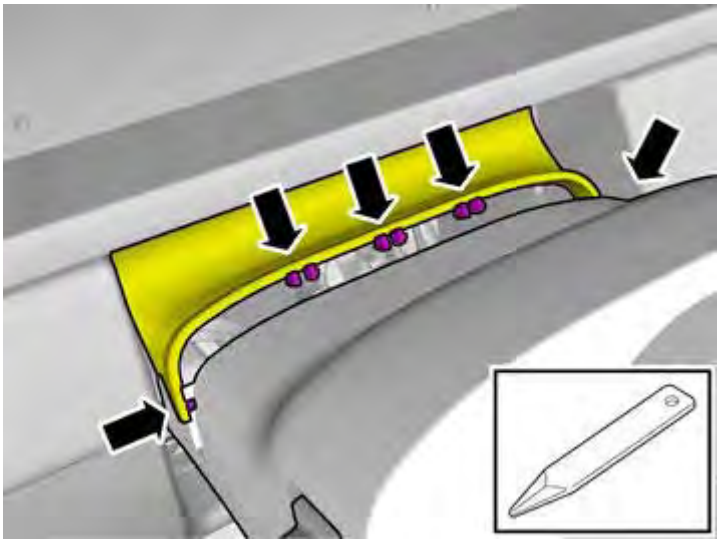

Fig. 558: Detaching Panel
Courtesy of VOLVO CARS CORPORATION

Detach the panel.

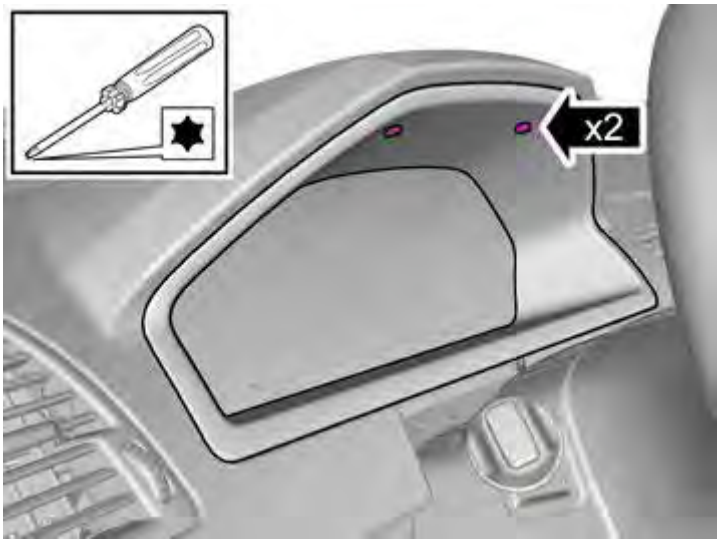

Fig. 559: Identifying Screws
Courtesy of VOLVO CARS CORPORATION

Remove the screws.

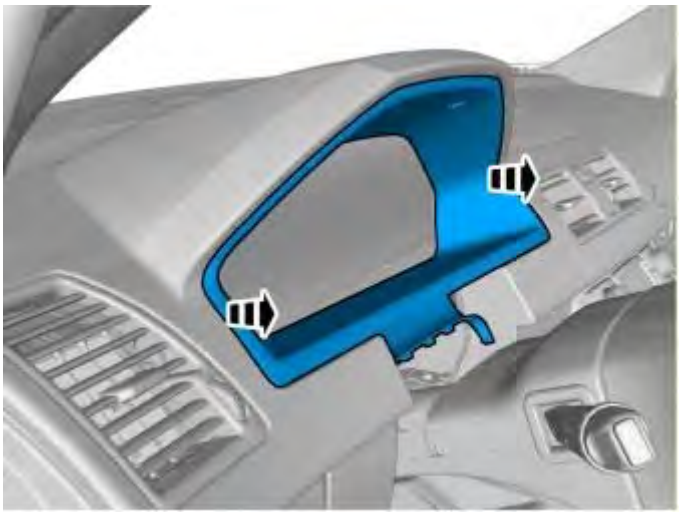

Fig. 560: Removing Instrument Panel Front Panel Casing
Courtesy of VOLVO CARS CORPORATION

Remove the panel.

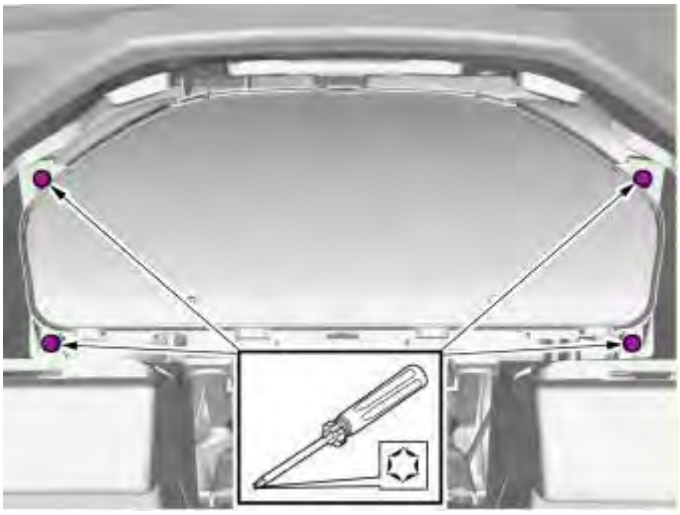

Fig. 561: Removing Instrument Panel
Courtesy of VOLVO CARS CORPORATION

Remove the screws.

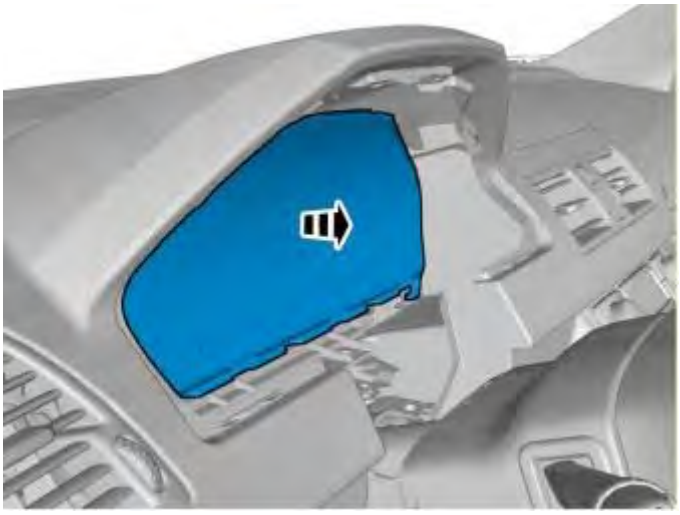

Fig. 562: Removing Instrument Panel
Courtesy of VOLVO CARS CORPORATION

Fig. 563: Removing Connector
Courtesy of VOLVO CARS CORPORATION

Disconnect the connector.

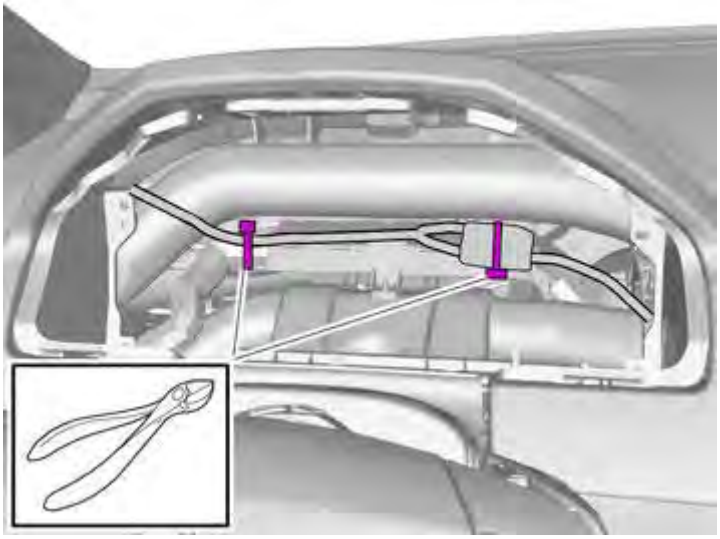

Fig. 564: Removing Cable Ties
Courtesy of VOLVO CARS CORPORATION

Remove the cable tie(s).

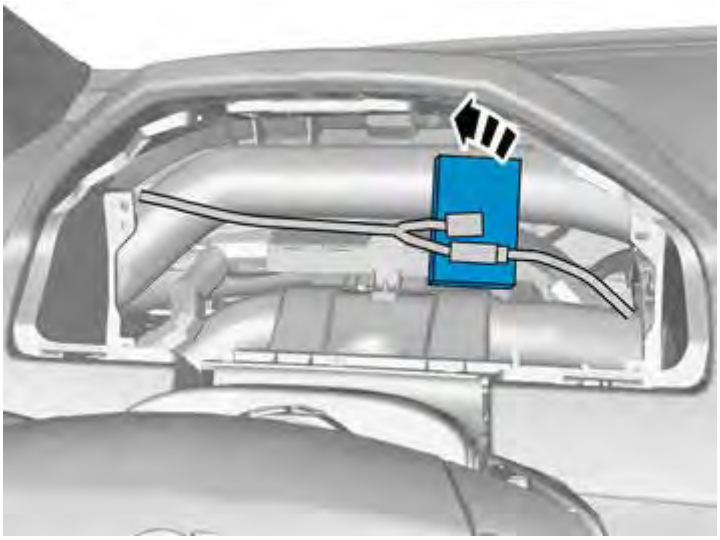

Fig. 565: Removing Unit
Courtesy of VOLVO CARS CORPORATION

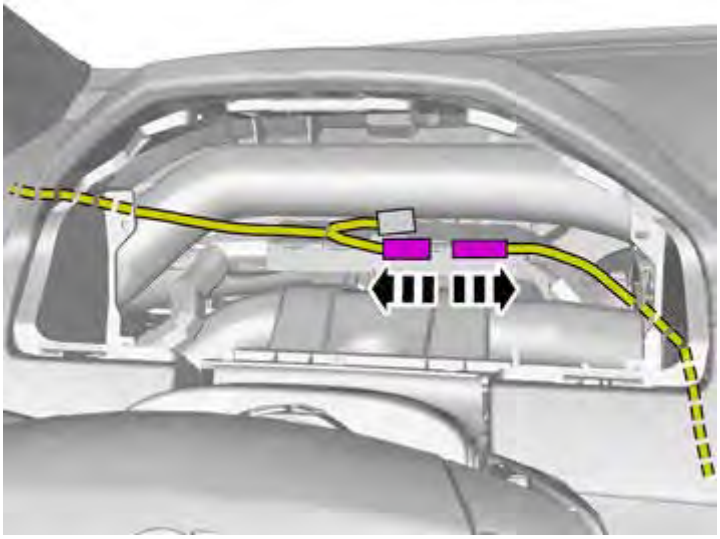

Fig. 566: Removing Connectors
Courtesy of VOLVO CARS CORPORATION

Disconnect the connectors.

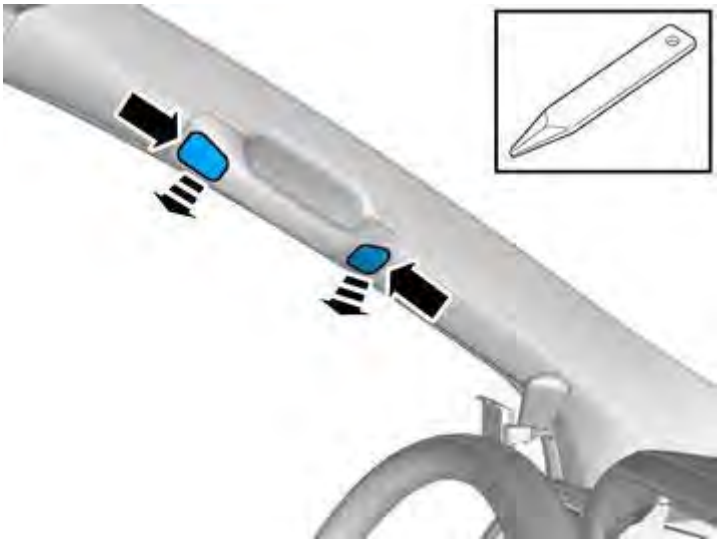

Fig. 567: Removal Tabs
Courtesy of VOLVO CARS CORPORATION

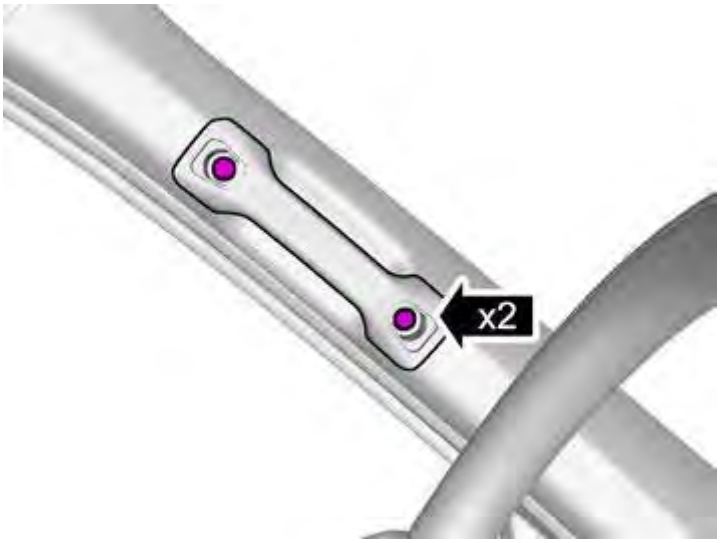

Fig. 568: Identifying Screws
Courtesy of VOLVO CARS CORPORATION

Remove the screws.

Fig. 569: Removing Safety Handle
Courtesy of VOLVO CARS CORPORATION

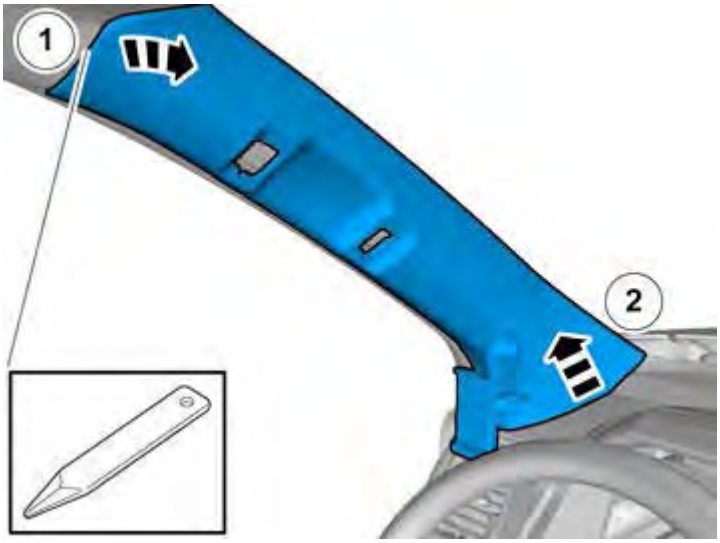

Fig. 570: Removing Panel
Courtesy of VOLVO CARS CORPORATION

Detach the panel.

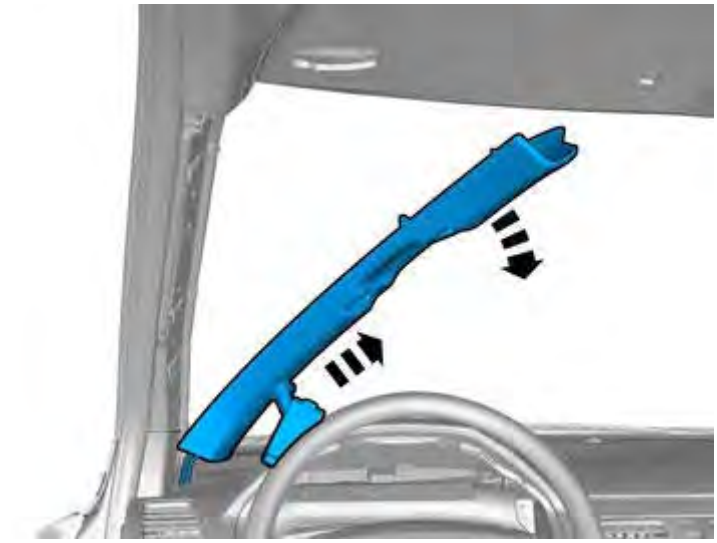

Fig. 571: Removing Panel
Courtesy of VOLVO CARS CORPORATION

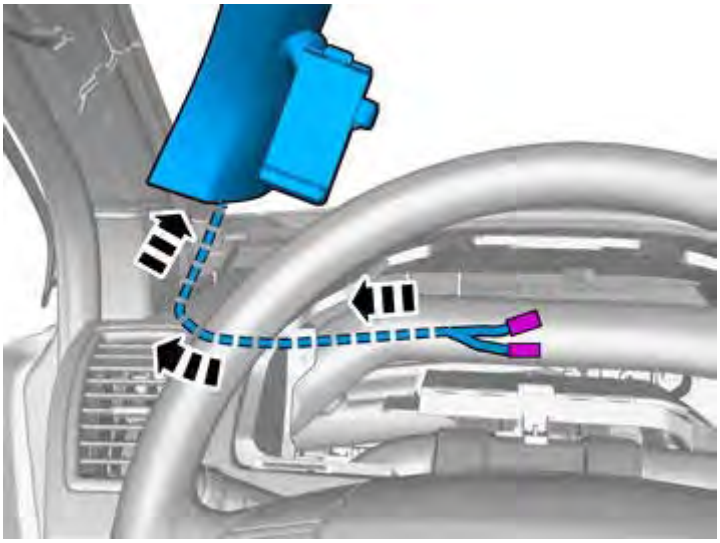

Fig. 572: Pulling Wiring Through
Courtesy of VOLVO CARS CORPORATION

Pull the wiring through.

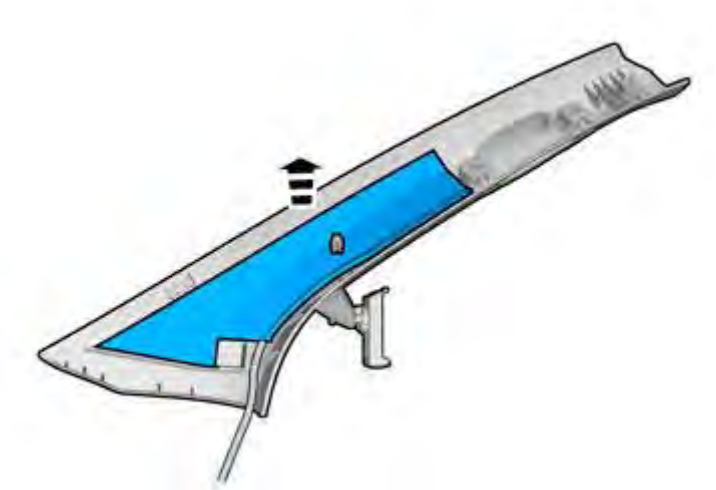

Fig. 573: Removing Protective Cover
Courtesy of VOLVO CARS CORPORATION

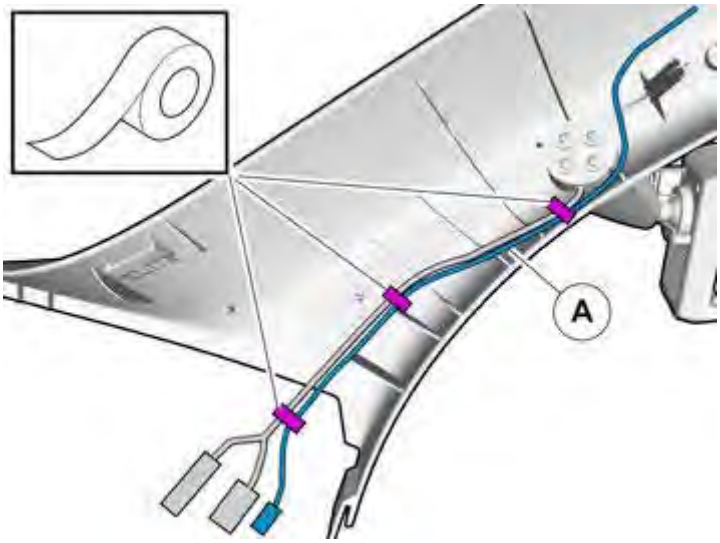

Fig. 574: Taping Cable
Courtesy of VOLVO CARS CORPORATION

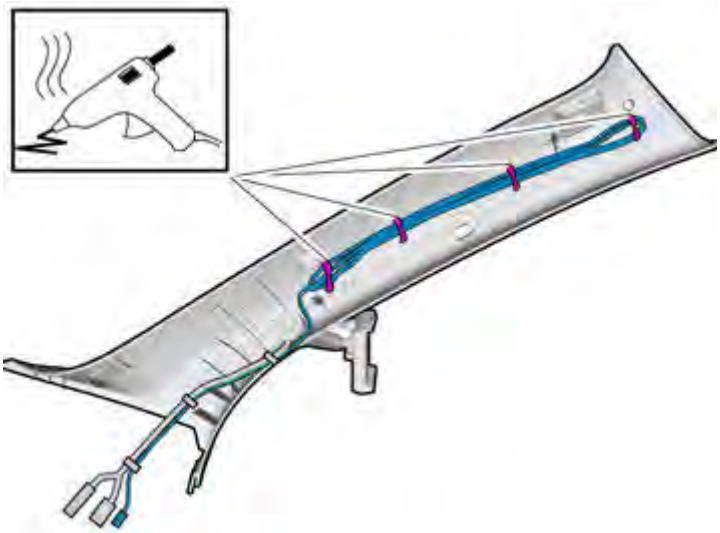

Fig. 575: Melting adhesive, 1161656
Courtesy of VOLVO CARS CORPORATION

Use: Melting adhesive, 1161656

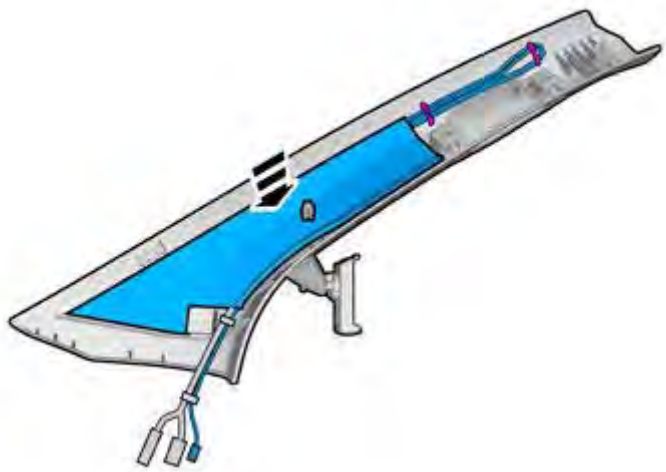

Fig. 576: Protective Covering
Courtesy of VOLVO CARS CORPORATION

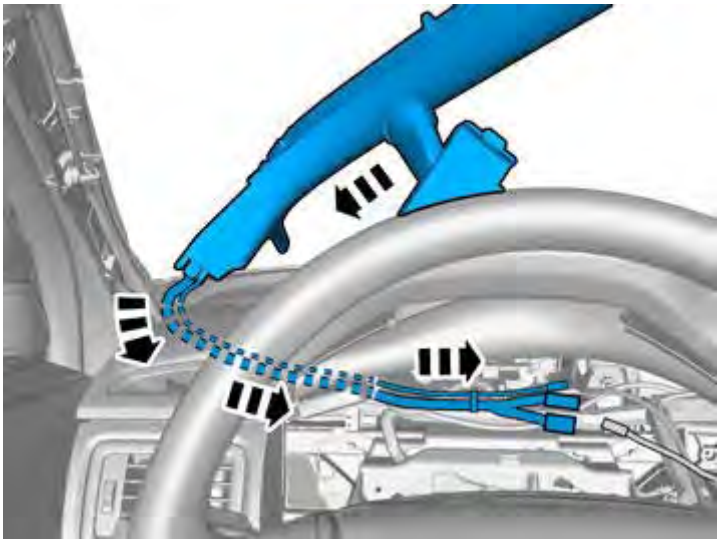

Fig. 577: Pulling Wiring Through
Courtesy of VOLVO CARS CORPORATION

Pull the wiring through.

see **9512932** **9512932** **9512932**

Fig. 578: Installing Panel
Courtesy of VOLVO CARS CORPORATION

Install the panel.

Fig. 579: Identifying Safety Handle
Courtesy of VOLVO CARS CORPORATION

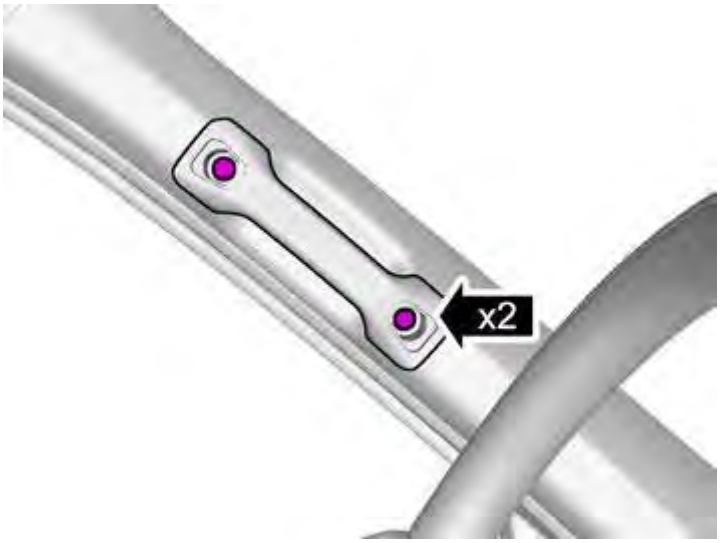

Fig. 580: Screws For Safety Handle
Courtesy of VOLVO CARS CORPORATION

Reinstall the screws.

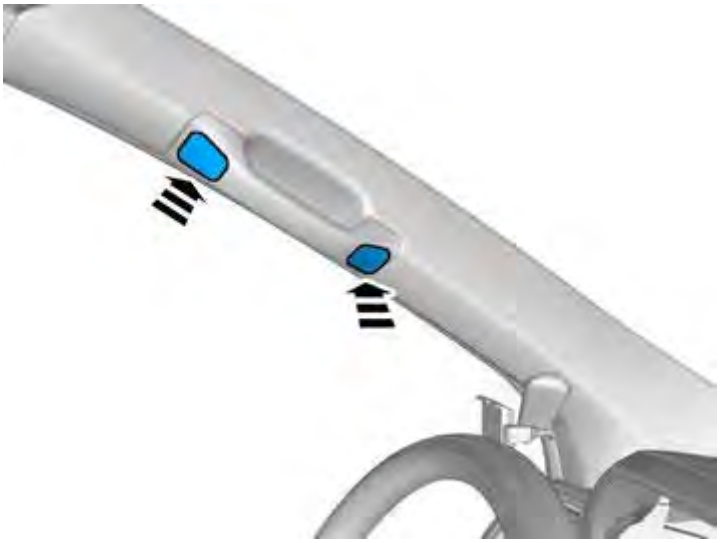

Fig. 581: Assembly Tabs
Courtesy of VOLVO CARS CORPORATION

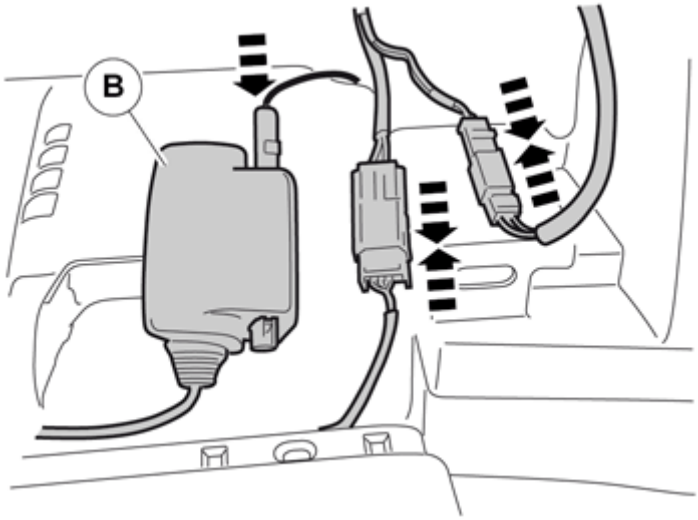

Fig. 582: Installing Connectors
Courtesy of VOLVO CARS CORPORATION

Connect the connectors.

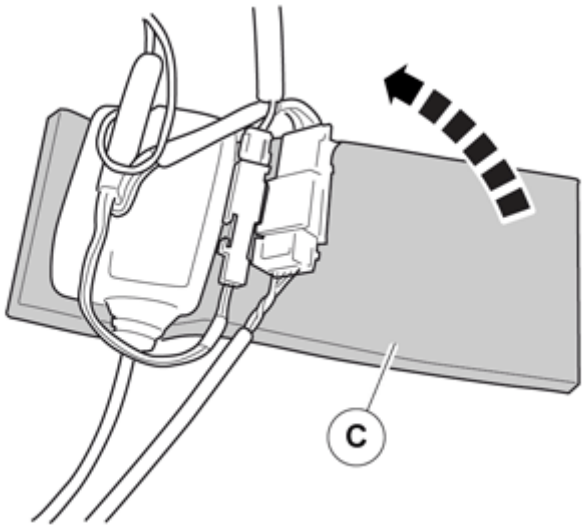

Fig. 583: Identifying Excess Foam Tape
Courtesy of VOLVO CARS CORPORATION

Tear off the excess foam tape.

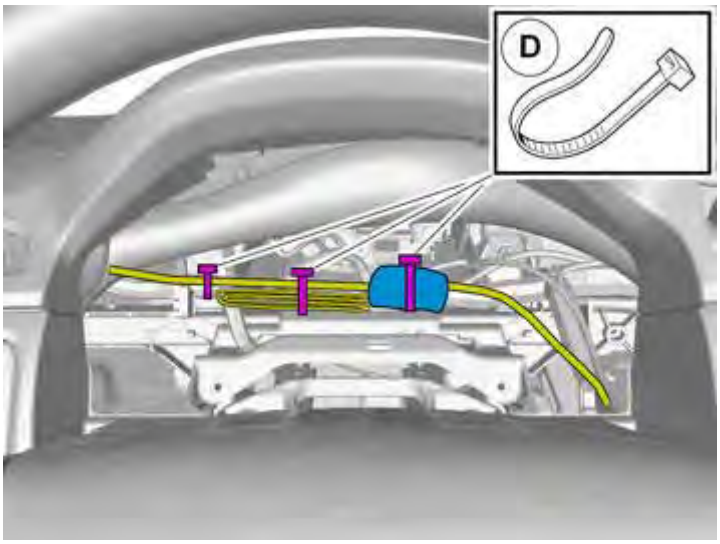

Fig. 584: Securing Cable With Cable Ties
Courtesy of VOLVO CARS CORPORATION

Clamp the cables and connectors to the existing cables to prevent noise.

Reinstall the removed parts in reverse order.

NAVIGATION SYSTEM, PORTABLE (2003-2012)

NAVIGATION SYSTEM, PORTABLE

NOTE: For information regarding the GARMIN device, see www. garmin. com.

NOTE: **Some steps in these installation instructions are presented with illustration only.**

ASSEMBLING THE HOLDER

NOTE: **Take care when handling the components, they are fragile and are easily damaged.**

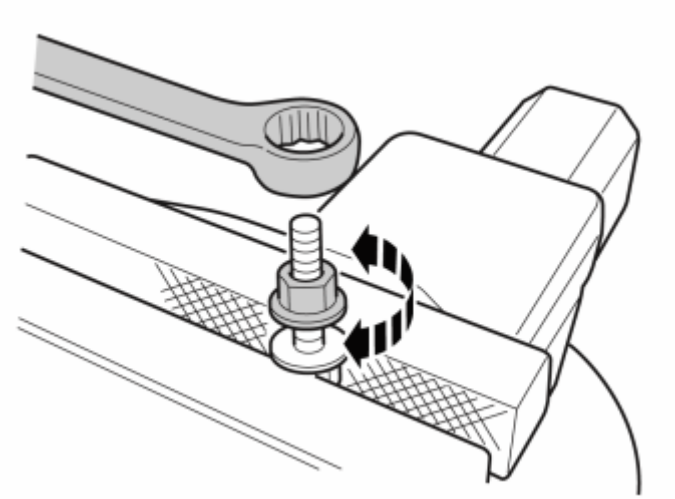

Fig. 585: Identifying Wrench, Screws And Nuts
Courtesy of VOLVO CARS CORPORATION

- Take the three screws **M5x20 part no. 986956** and nuts from the kit.
- To prevent too great resistance when the nut for the holder is tightened, hold the screw and screw the nut on and off the threaded part of the screw. Carry this out on all screws and nuts.

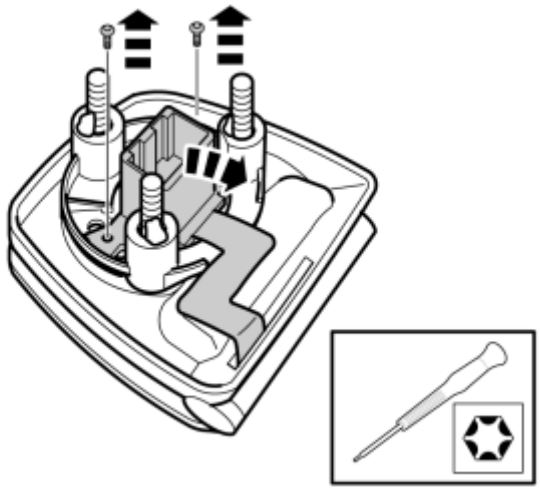

Fig. 586: Identifying Removal Screws Holding Connector In Holder
Courtesy of VOLVO CARS CORPORATION

- Take special tool **9814104** (torx driver, torx 6), and unscrew the two screws holding the connector in the holder.
- Carefully push the connector to one side with the cable to expose the bottom of the holder.

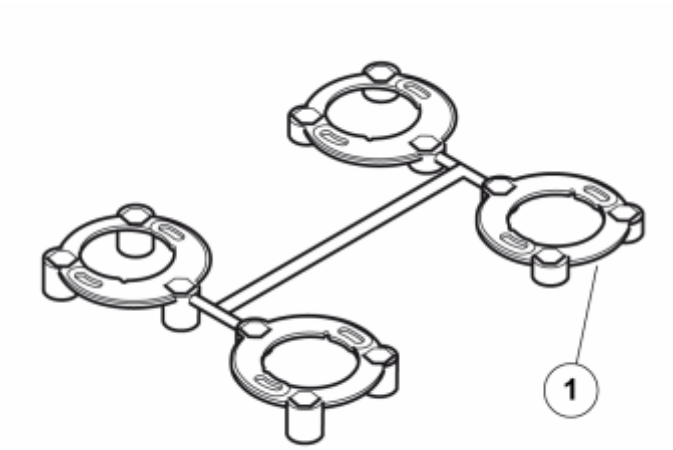

Fig. 587: Identifying Spacers
Courtesy of VOLVO CARS CORPORATION

- Take the kit with the four spacers from the installation kit.

  Carefully pry off the spacer using **P/N 31212525** . The part number (1) is on the bottom of the spacer.

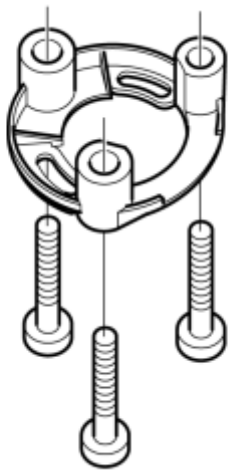

Fig. 588: Identifying Screws Inserted In Spacer
Courtesy of VOLVO CARS CORPORATION

- Take the three screws and insert them in the spacer fully.

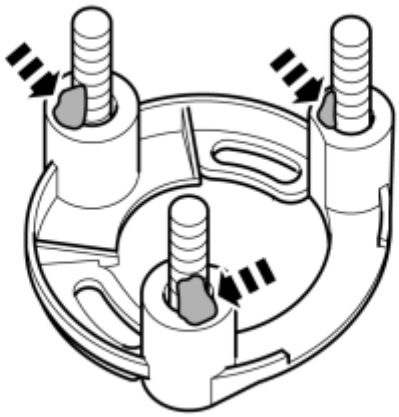

Fig. 589: Applying Pieces Of Butyl Tape To Screws
Courtesy of VOLVO CARS CORPORATION

- Apply pieces of butyl tape to the screws so that the screw heads do not protrude outside the spacer when installing it.

Illustration A

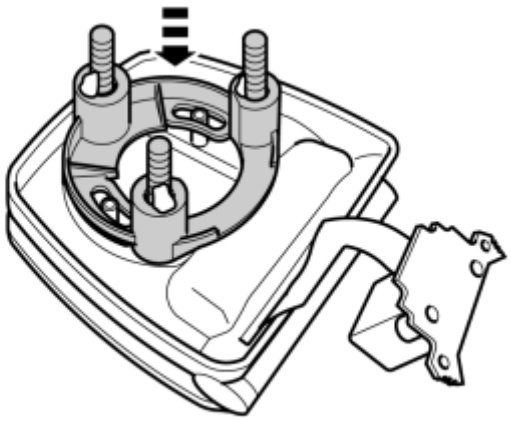

Fig. 590: Identifying Spacer In Bottom Of Holder
Courtesy of VOLVO CARS CORPORATION

- Install the spacer in the bottom of the holder.

Illustration B

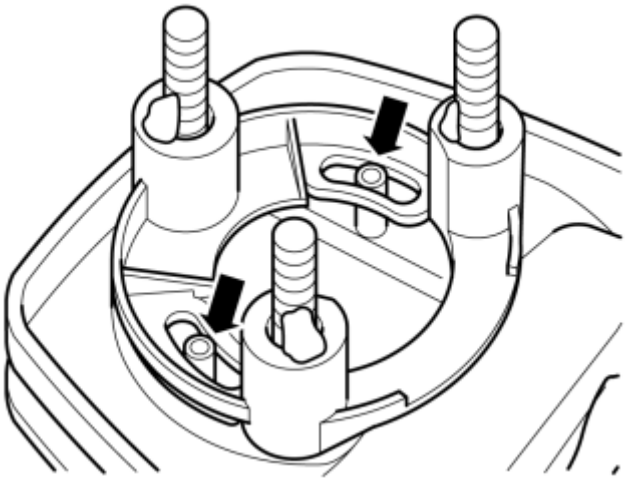

Fig. 591: Identifying Spacer Secured In Position
Courtesy of VOLVO CARS CORPORATION

- Ensure that the holder's two screw turrets align between the small pins in the oblong holes in the spacer. A click should be heard when the spacer is securely in position.

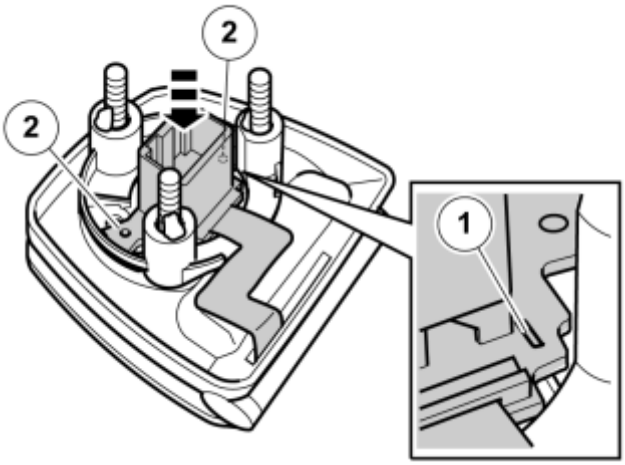

Fig. 592: Aligning Guide Hole With Pin
Courtesy of VOLVO CARS CORPORATION

- Place the connector in the bottom of the hole. The guide hole (1) in the connector's circuit board must align in the corresponding pin at the bottom of the holder and the holes (2) in the circuit board must be over the holder's screw turret.

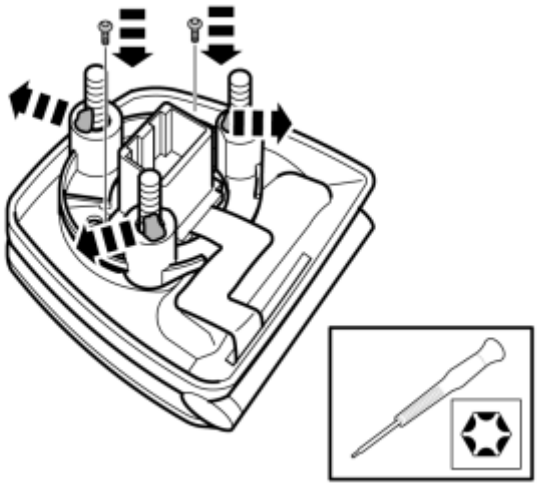

Fig. 593: Identifying Connector Tightened To Holder With Torx Screws
Courtesy of VOLVO CARS CORPORATION

- Take the small torx screws and carefully tighten the connector to the holder. Ensure that the connector's circuit board is properly against the screw turret and that there is no play.
- Remove the butyl tape from the screws.

PREPARATIONS

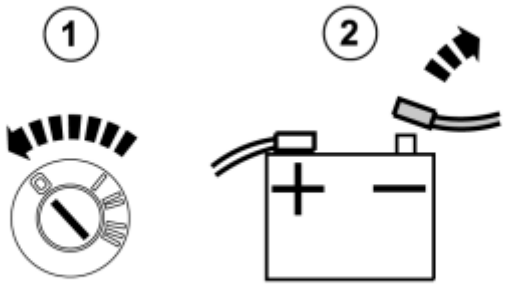

Fig. 594: Identifying Ignition Switch OFF & Disconnected Negative Battery Lead
Courtesy of VOLVO CARS CORPORATION

- Turn the ignition key to position 0.
- Disconnect the battery negative lead.

NOTE: **Wait at least three minutes before unplugging the connectors or removing other electrical equipment.**

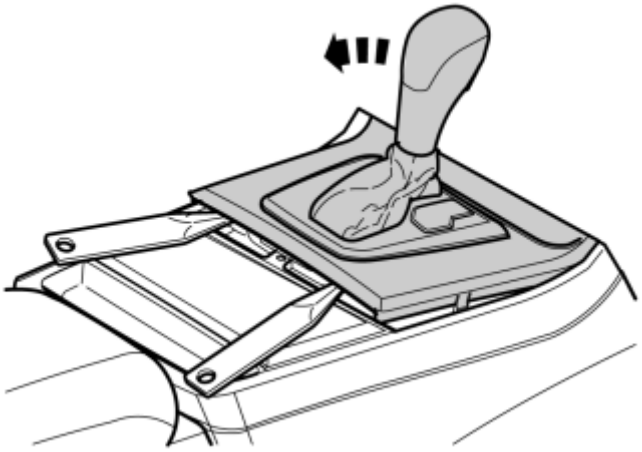

Fig. 595: Removing Gear Selector Cover
Courtesy of VOLVO CARS CORPORATION

Applies to cars with automatic gearbox

- Turn the ignition key to position II.
- Move the gear selector lever to its rearmost position.
- Use a weatherstrip and pry off the gear selector panel at the rear edge.

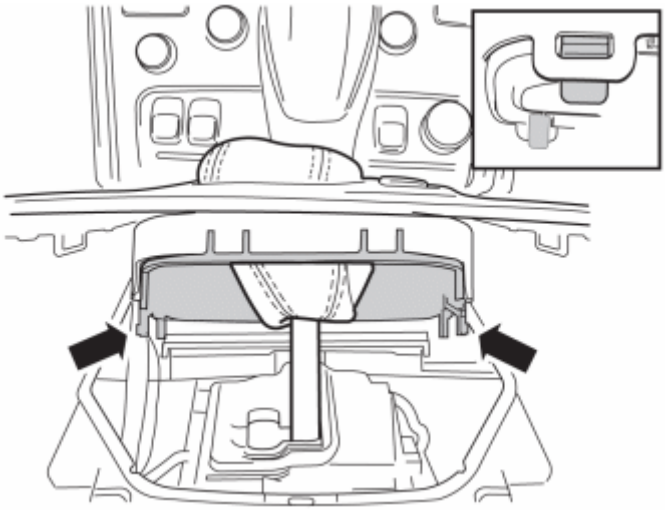

Fig. 596: Pressing In Catches And Removing Panel
Courtesy of VOLVO CARS CORPORATION

- Press in the catches and remove the panel.

Illustration A

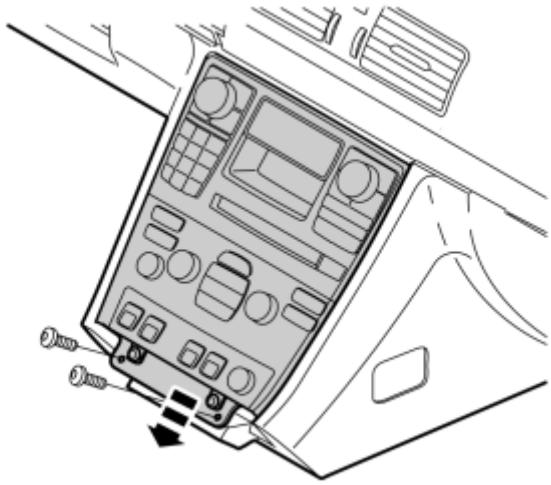

Fig. 597: Removing Center Console
Courtesy of VOLVO CARS CORPORATION

- Remove the two screws.
- Remove the bracket with the A/C panel and radio from the center console. Pull from the lower edge and then downwards until it releases from the mounting at the upper edge.

NOTE: Do not damage the removed components or the surrounding panels.

Illustration B

Fig. 598: Protecting Tunnel Console And Unit
Courtesy of VOLVO CARS CORPORATION

- Lay out a cloth to protect the tunnel console and unit. Place as illustrated. Depending on the design the cable may need to be disconnected and the unit placed to one side.

Illustration A

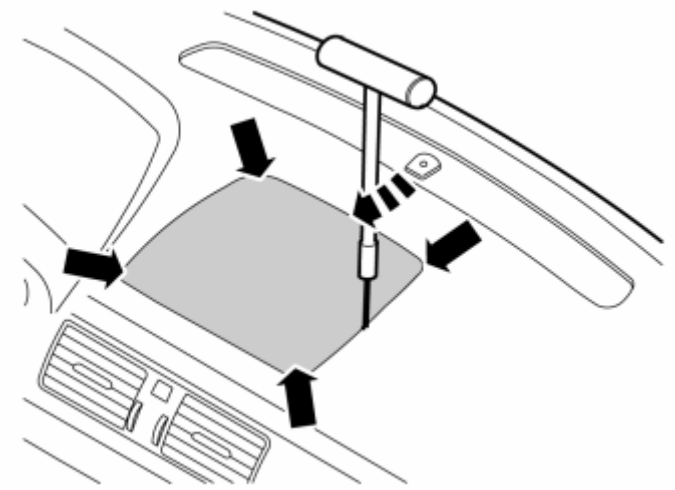

Fig. 599: Removing Loudspeaker Grille (1 of 2)
Courtesy of VOLVO CARS CORPORATION

- Remove the loudspeaker grille as follows: Insert the special tool, **9995919** into the joint between the loudspeaker grille and the dashboard approximately as illustrated, until it engages.
- Twist the tool 90° so that the bent section engages with the underneath of the loudspeaker grille.

Illustration B

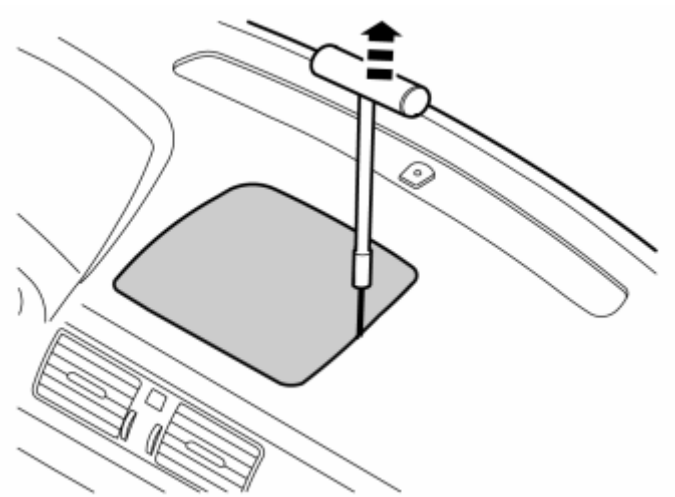

Fig. 600: Removing Loudspeaker Grille (2 of 2)
Courtesy of VOLVO CARS CORPORATION

- Pull upwards until the loudspeaker grille detaches. The loudspeaker grille is securely fastened by four clips. Move the tool closer to the clip to facilitate removal.

NOTE: Do not damage the dashboard.

- Lift out the loudspeaker grille

Fig. 601: Cutting Template
Courtesy of VOLVO CARS CORPORATION

- Take the template from the kit and cut it along the outer lines.

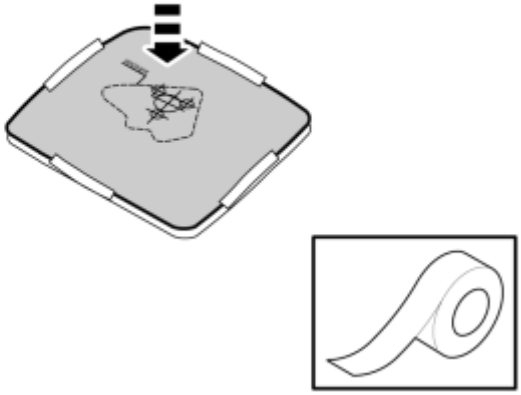

Fig. 602: Tape Template To Loudspeaker
Courtesy of VOLVO CARS CORPORATION

- Tape the template to the loudspeaker grille.

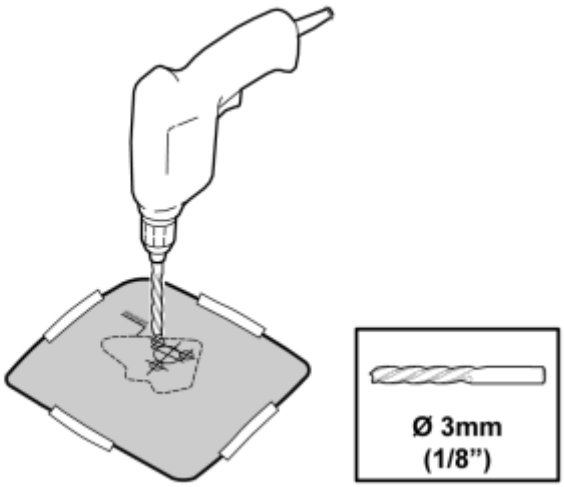

Fig. 603: Drilling Loudspeaker Grille
Courtesy of VOLVO CARS CORPORATION

Drill square to the loud speaker grille.

- Pre-drill the holes according to the template using a **3 mm (1/8")** drill bit.
- Remove the template.

Illustrations A and B

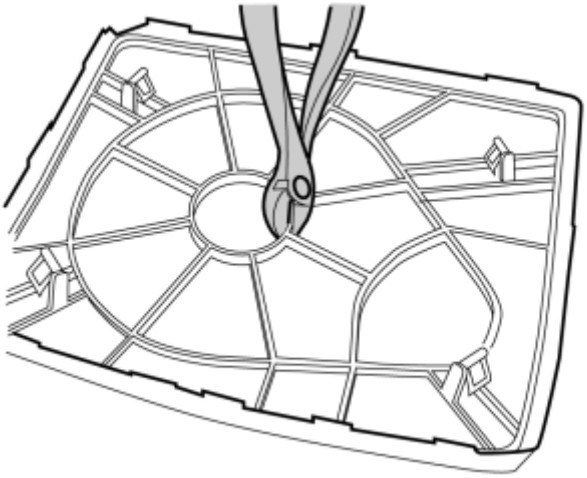

Fig. 604: Cutting Loudspeaker Grille
Courtesy of VOLVO CARS CORPORATION

- Turn over the loudspeaker grille and cut away some of the ribs on the underside so that the result corresponds with figure B.

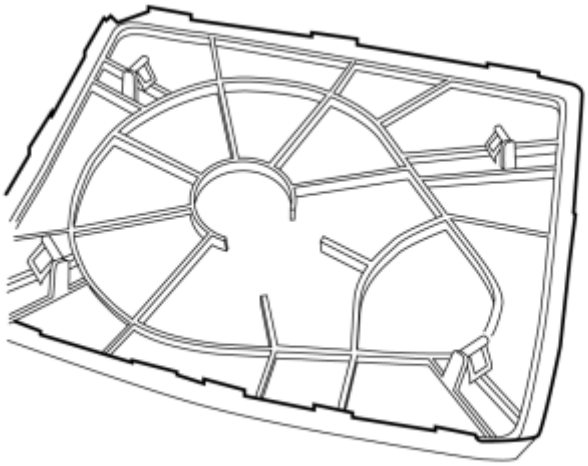

Fig. 605: Loudspeaker Grille
Courtesy of VOLVO CARS CORPORATION

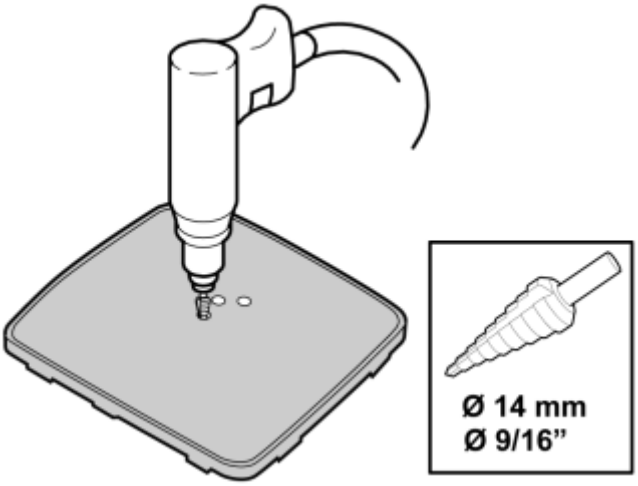

Fig. 606: Drilling Hole For Connection
Courtesy of VOLVO CARS CORPORATION

- Drill up the three holes for the cradle's feet using a **14 mm (9/16")** step drill.

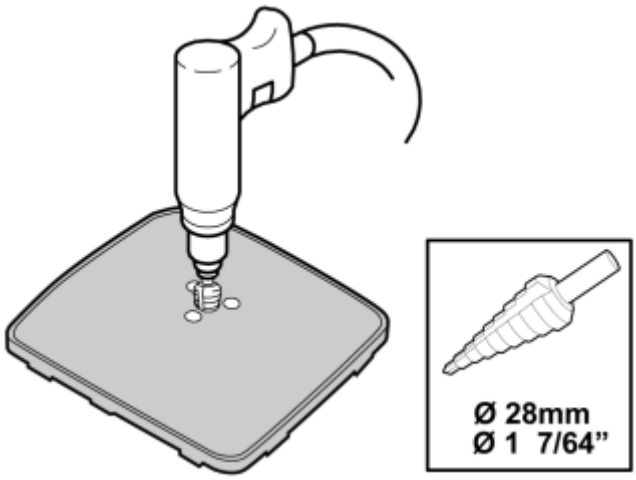

Fig. 607: Drilling Hole For Connection
Courtesy of VOLVO CARS CORPORATION

- Take the step drill and drill out the hole for the connection in the holder using a **28 mm (1 7/64") drill bit** .

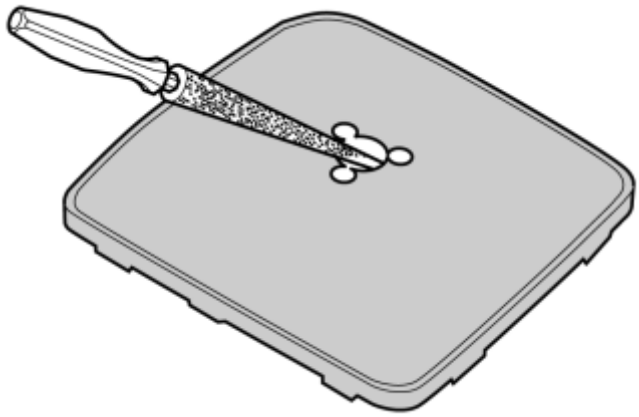

Fig. 608: Deburr And Bend Edges
Courtesy of VOLVO CARS CORPORATION

- Deburr and bend in the edges using a round file.

INSTALLATION

Illustration A

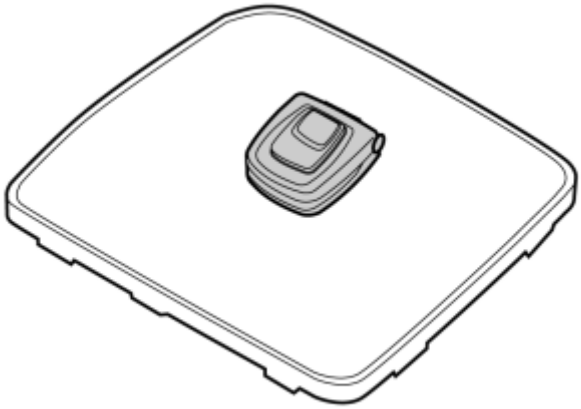

Fig. 609: Loudspeaker Grille
Courtesy of VOLVO CARS CORPORATION

- Take three nuts, washers and the cradle from the kit and secure on the loudspeaker grille.

Illustration B

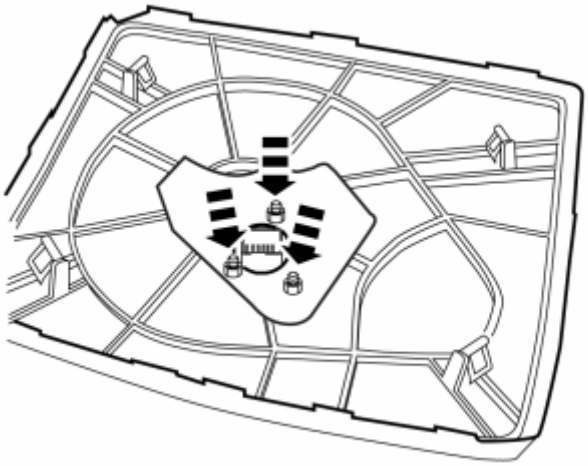

Fig. 610: Retaining Nuts
Courtesy of VOLVO CARS CORPORATION

- Tighten the cradle.

Illustration A applies to cars up to and including model year -05

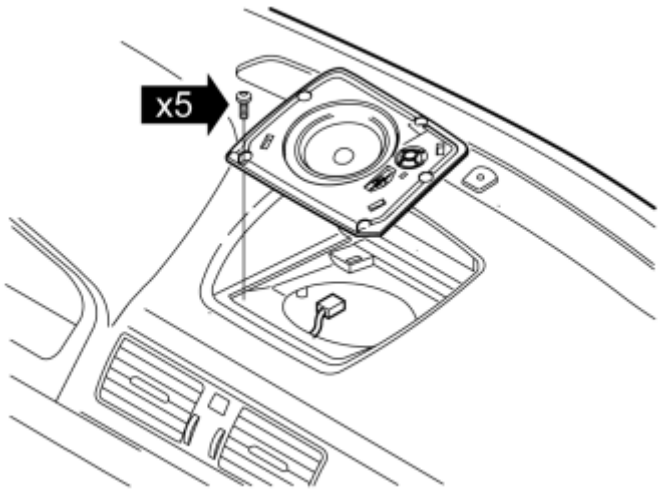

Fig. 611: Removing Loudspeaker
Courtesy of VOLVO CARS CORPORATION

Illustration B applies to cars from and including model year 06-

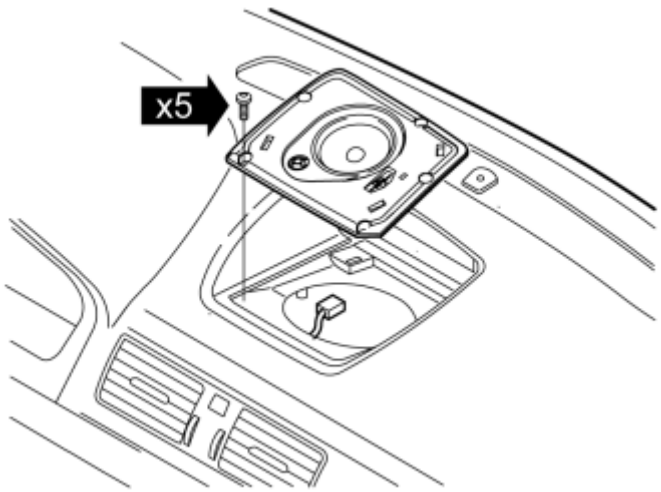

Fig. 612: Removing Loudspeaker
Courtesy of VOLVO CARS CORPORATION

- Remove the five screws. Lift up the loudspeaker and remove the connector.
- Put the loudspeaker to one side. New loudspeaker and console in the kit.

Illustration C

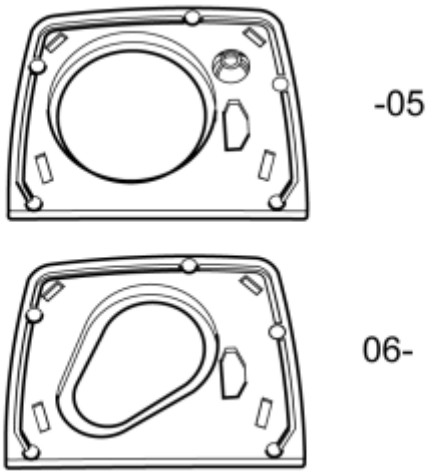

Fig. 613: Console Loudspeaker Grille Holding
Courtesy of VOLVO CARS CORPORATION

- On vehicles without a center loudspeaker there is a console holding the loudspeaker grille. On these vehicles the console remains in place and the cable is routed through the hole.

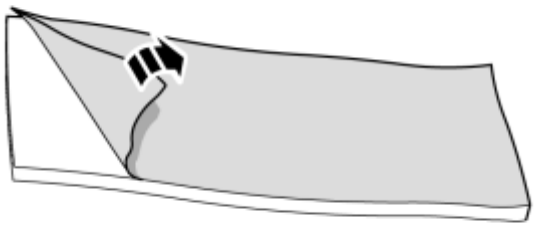

Fig. 614: Identifying Foam Tape
Courtesy of VOLVO CARS CORPORATION

- Take the cable harness and foam tape out of the kit. Remove the protective tape.

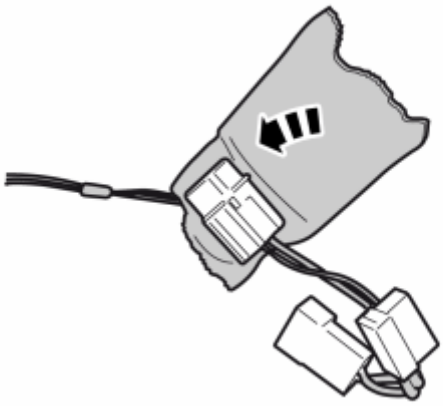

Fig. 615: Wrapping Fuse Holder With Foam Tape
Courtesy of VOLVO CARS CORPORATION

- Wrap the foam tape around the fuse holder to prevent rattling.

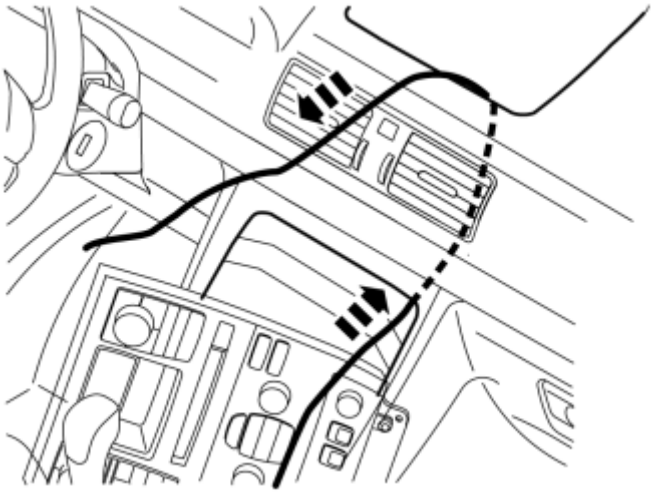

Fig. 616: Routing Cable
Courtesy of VOLVO CARS CORPORATION

NOTE: The cable harness is always routed on the right-hand side in the tunnel console and the center console up to the hole for the loudspeaker grille.

- Take hold of the long cable harness. Route the end with the small connector on the right-hand side in the center console, up and out through the hole for the loudspeaker grille/console loudspeaker grille.

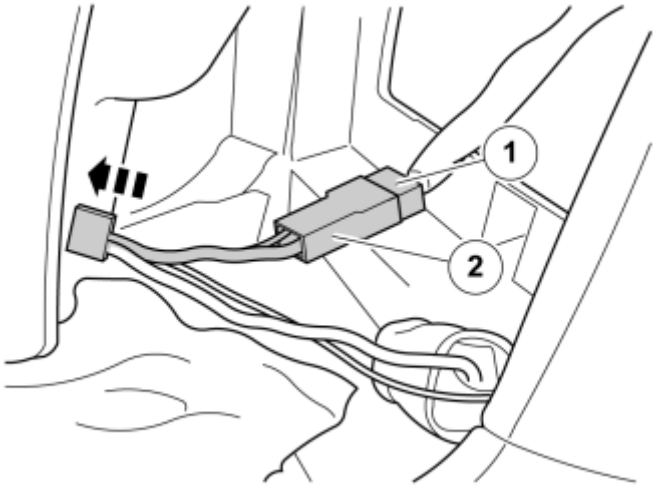

Fig. 617: Climate Panel Unit Connector
Courtesy of VOLVO CARS CORPORATION

- Take out the unit with the climate panel and connect connector (1) removed from the 12V outlet on the female connector (2) on the routed cable.
- Connect the remaining connector to the 12V outlet.

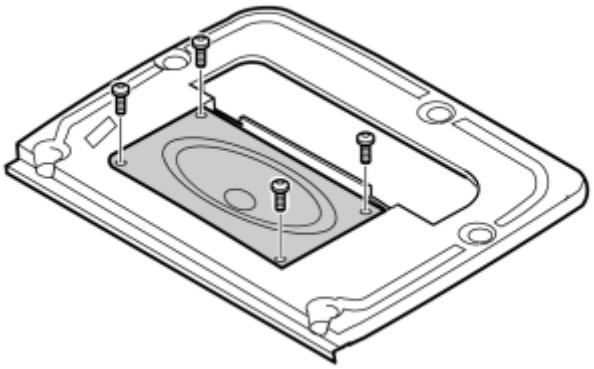

Fig. 618: Removing Loudspeaker Grille
Courtesy of VOLVO CARS CORPORATION

Applies to cars up to and including model year 05

- Remove the loudspeaker grille and loudspeaker from the kit. Secure the loudspeaker using the supplied screws. The connections on the speakers should face right.

Illustration A applies to cars up to and including model year -05

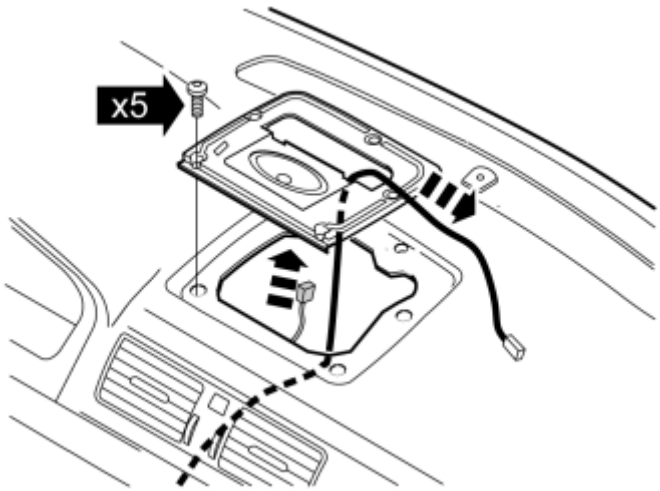

Fig. 619: Removing Loudspeaker
Courtesy of VOLVO CARS CORPORATION

Illustration B applies to cars from and including model year 06-

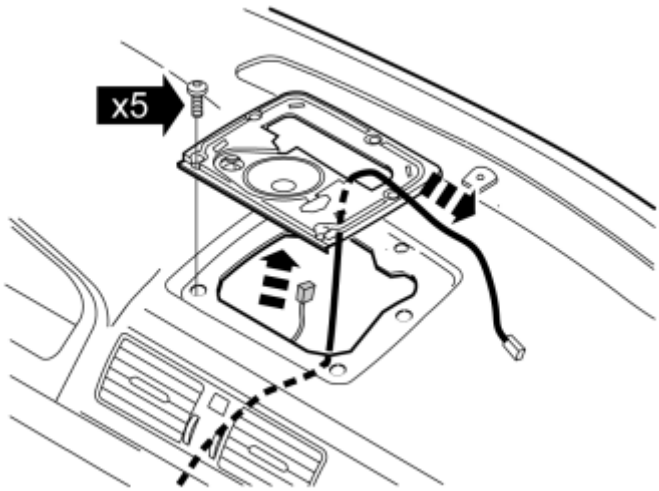

Fig. 620: Removing Loudspeaker
Courtesy of VOLVO CARS CORPORATION

- Connect the connector to the loudspeaker. Route the cable to the cradle through the large hole in the speaker console.
- Tighten the console using the five existing screws.

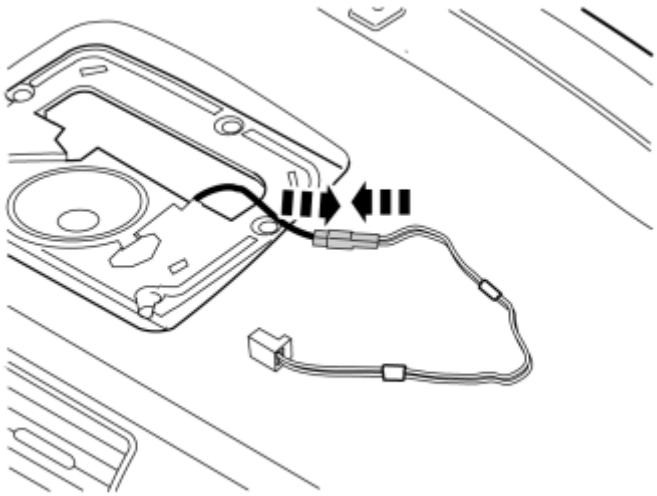

Fig. 621: Connecting Cable Harness
Courtesy of VOLVO CARS CORPORATION

- Take out the small cable from the kit and connect it to the recently routed cable harness.

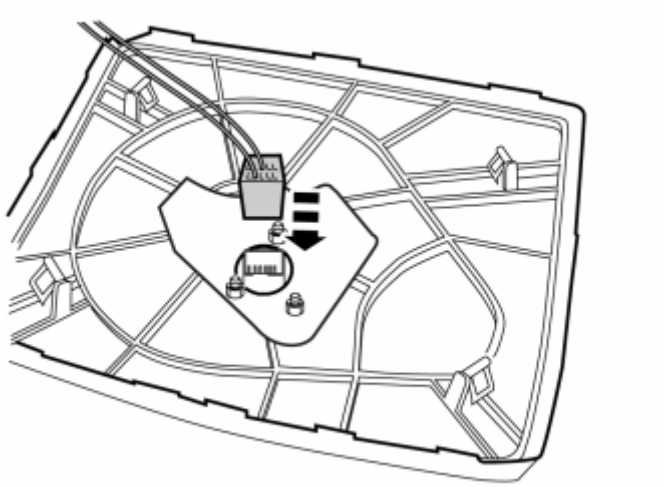

Fig. 622: Loudspeaker And Cradle
Courtesy of VOLVO CARS CORPORATION

- Take the loudspeaker and cradle. Connect the connector on the small cable to the cradle.

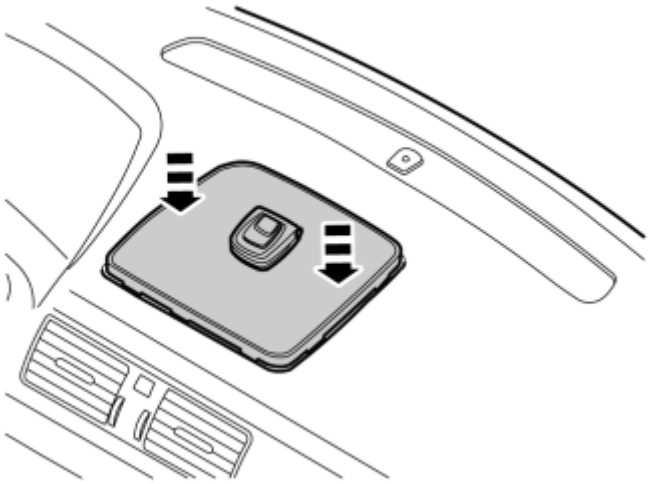

Fig. 623: Installing Loudspeaker
Courtesy of VOLVO CARS CORPORATION

- Insert the cable in the hole for the loudspeaker/console and push on the loudspeaker grille.

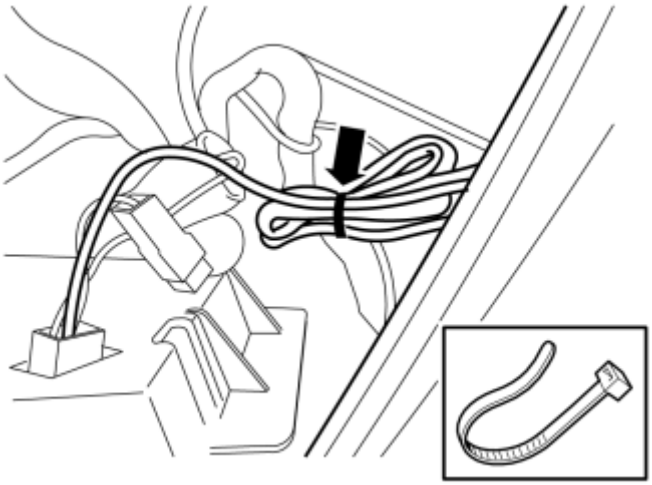

Fig. 624: Securing Cable
Courtesy of VOLVO CARS CORPORATION

- Secure the two green connectors using a piece of butyl tape in a suitable place to prevent rattling.
- Tuck away the surplus cable in the bottom of the center console.
- Tie together with a cable tie.

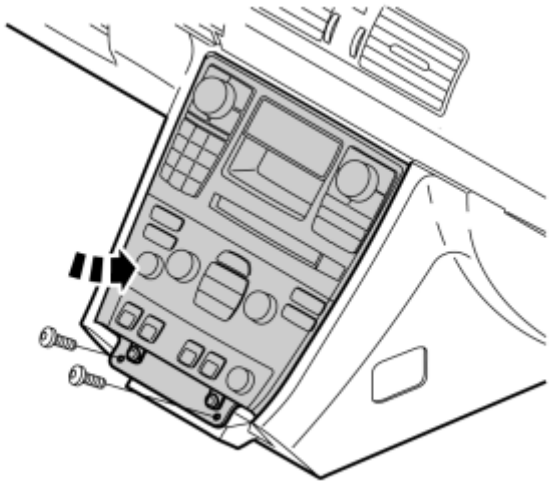

Fig. 625: Installing Face Plate
Courtesy of VOLVO CARS CORPORATION

- Refit the unit. Ensure the cables and relay are positioned so that they are not crushed or rub.
- Tighten using the existing screws.

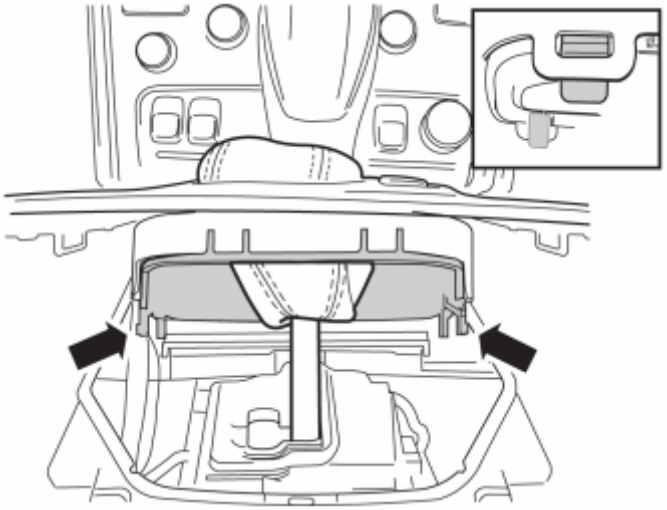

Fig. 626: Pressing In Catches And Removing Panel
Courtesy of VOLVO CARS CORPORATION

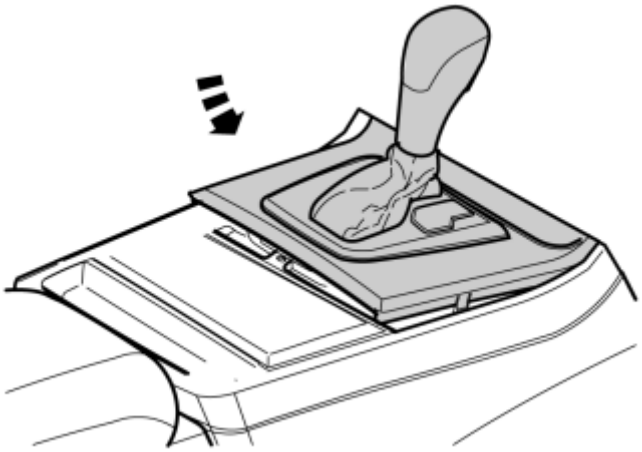

Fig. 627: Removing Gear Selector Cover
Courtesy of VOLVO CARS CORPORATION

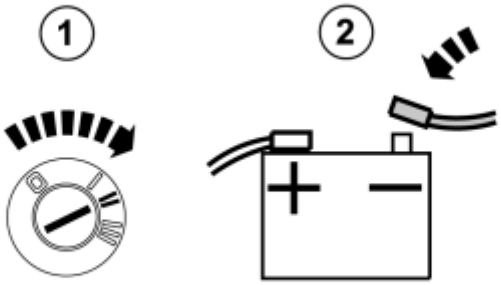

Fig. 628: Identifying Ignition In ON Position and Connecting Negative Battery Lead
Courtesy of VOLVO CARS CORPORATION

- Turn the ignition key to position II.
- Reconnect the battery negative lead.

ACCESSORIES AND BODY, CAB

Media, Communication And Navigation - Installation Instructions, Accessories

ADAPTER CABLE, RSE (REAR SEAT ENTERTAINMENT) (2003-2008)

ADAPTER CABLE, RSE (REAR SEAT ENTERTAINMENT)

REMOVAL

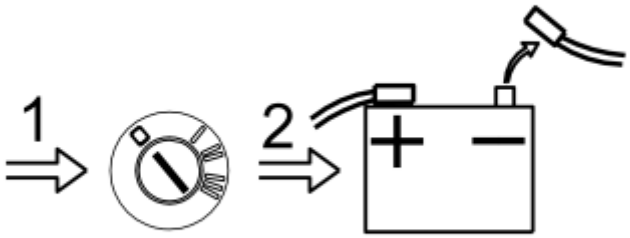

Fig. 1: Disconnect Battery Negative Lead
Courtesy of VOLVO CARS CORPORATION

- Turn the ignition key to position 0
- Disconnect the battery negative lead.

NOTE: **Wait at least five minutes before disconnecting the connectors or removing other electrical equipment.**

REMOVAL

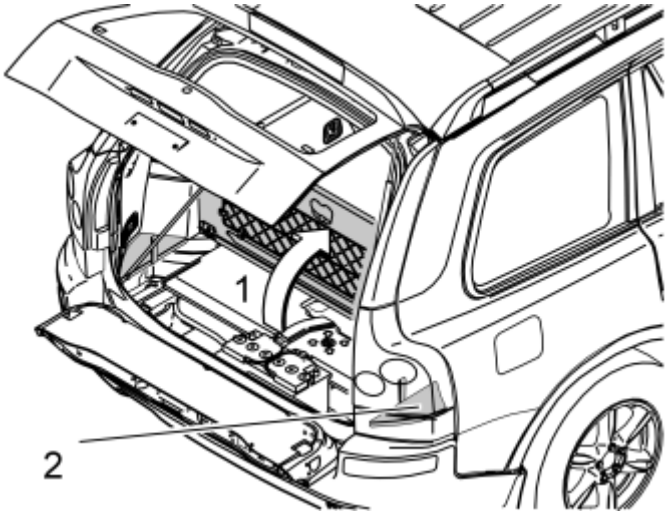

Fig. 2: Applies To Two-Wheel Drive Cars With Two Rows Of Seats
Courtesy of VOLVO CARS CORPORATION

Applies to two-wheel drive cars with two rows of seats

- Remove the rear floor hatch (1) by folding it back slightly and pulling it backwards out of its mountings.

Applies to other cars with two rows of seats

- Fold up the rear floor hatch (1)
- If the floor hatch has a carrier bag holder on the lower side, it is secured in the car by two straps either side of the bottom of the carrier bag holder. Pull both straps away from the protruding mountings
- Remove the storage box from under the floor hatch. Lift out the storage box.

Applies to cars with three rows of seats and integrated carrier bag holder on the underside of the floor hatch

- Fold up the rear floor hatch (1)
- Disconnect the two straps on either side of the bottom of the carrier bag holder from the protruding mountings. Lift up the rear edge of the carrier bag holder, fold the floor hatch back towards the bottom and lift out the carrier bag holder.

Applies to cars with three rows of seats without an integrated carrier bag holder

- Fold up the rear floor hatch (1) at the rear edge and lift it out.

Applies to all models

- Lift out the right-hand side floor hatch (2). Lift the floor hatch straight up.

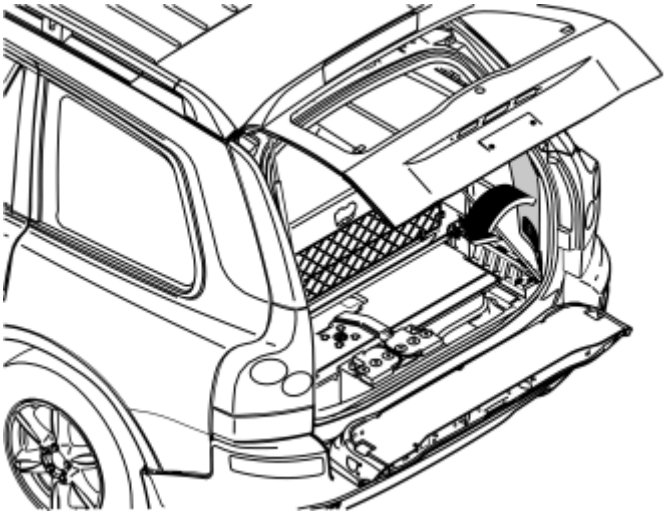

Fig. 3: Remove Right And Left-Hand Sides Rear Side Panels
Courtesy of VOLVO CARS CORPORATION

- Remove the rear side panels on the right and left-hand sides.

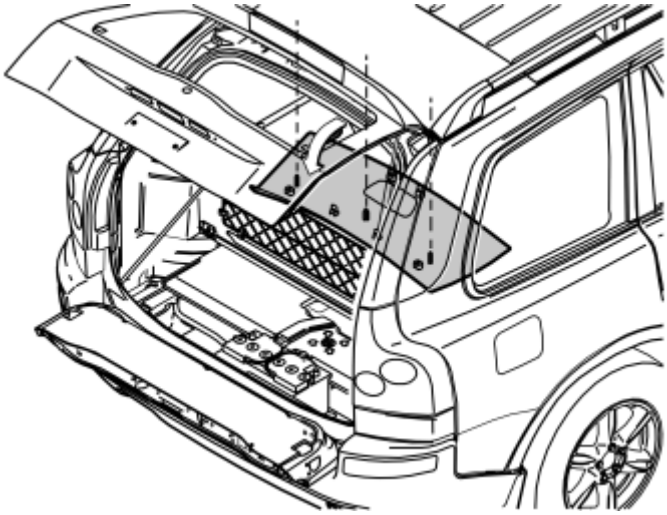

Fig. 4: Remove Rear Headlining Panel Cover
Courtesy of VOLVO CARS CORPORATION

- Remove the covers from the rear headlining panel. Remove the screws from inside the panels
- Carefully pry off the headlining panel at the rear edge using a plastic weatherstrip tool
- Grip the rear edge of the headlining panel. Pull the headlining panel down until all the clips on the inside release.

Applies to cars with three rows of seats

- Disconnect the connector for the rear roof lighting. Pull the panel backwards.

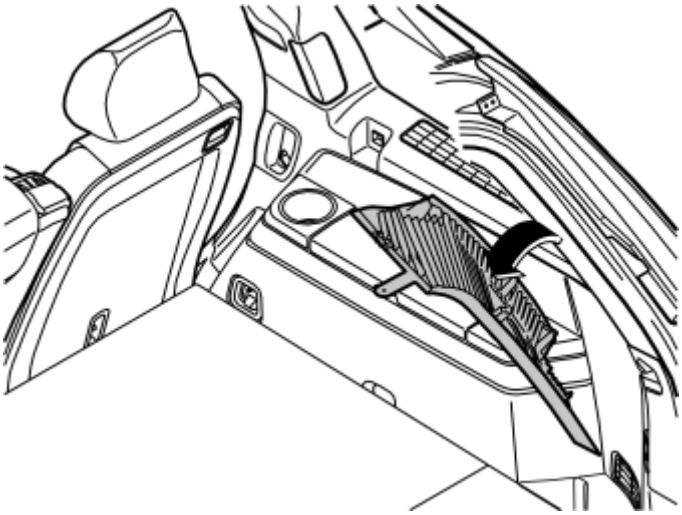

Fig. 5: Pull Off Top Edge Of Right-Hand D Pillar Panel
Courtesy of VOLVO CARS CORPORATION

- Carefully detach the D-post panels on the right and left-hand sides. Start at the top edge then pull down until the three clips release
- If the car has D-post loudspeakers: disconnect the connectors for the loudspeakers.

Illustration A

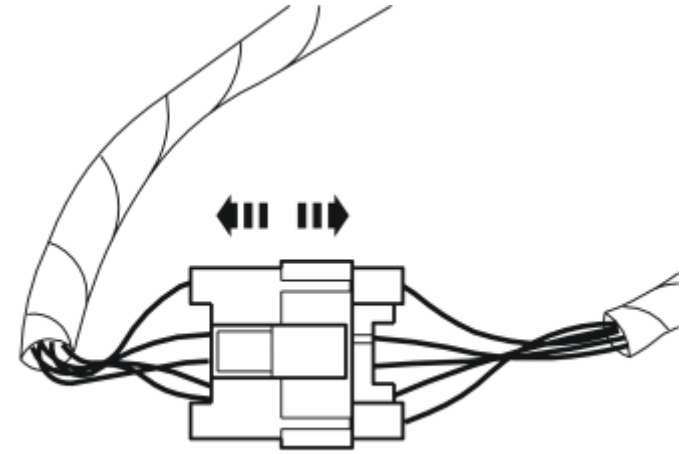

Fig. 6: Identifying Right-Hand Tail Lamp 13-Pin Connector
Courtesy of VOLVO CARS CORPORATION

- Locate the 13-pin connector at the right-hand tail lamp
- If the 13-pin connector is connected to the towbar wiring connector: disconnect the connectors from each other.

Illustration B

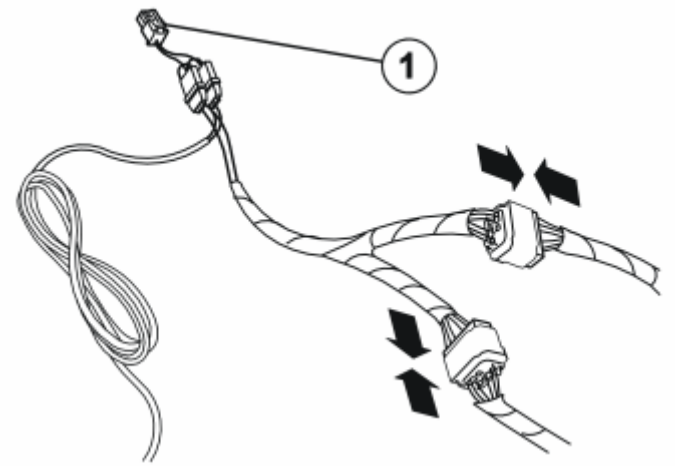

Fig. 7: View Of Green Connector (1) To The RSE System
Courtesy of VOLVO CARS CORPORATION

- Take the cable harness from the kit
- Connect the 13-pin connector for the cable harness to the existing connector at the right-hand tail lamp. Connect the other connector to the towbar wiring (if applicable)
- Connect the green connector (1) to the RSE system if this is installed in the car.

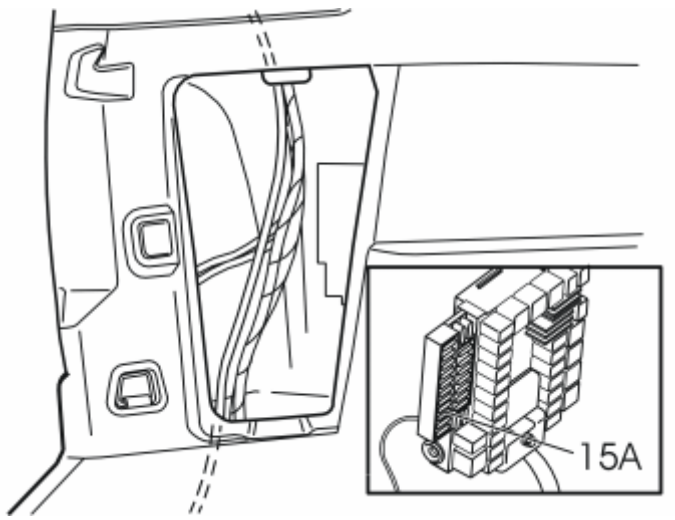

Fig. 8: Locating 15A Fuse In Position 9 In REM
Courtesy of VOLVO CARS CORPORATION

- Route the long single cable through the hole under the foam rubber to the battery
- Continue to route the cable along the existing cable harness behind the battery and on through the hole under the foam rubber, into the left-hand tail lamp
- Continue to route the cable together with the existing cable harness along the left-hand D-post up to the roof
- Install a 15A fuse in position 9 in REM.

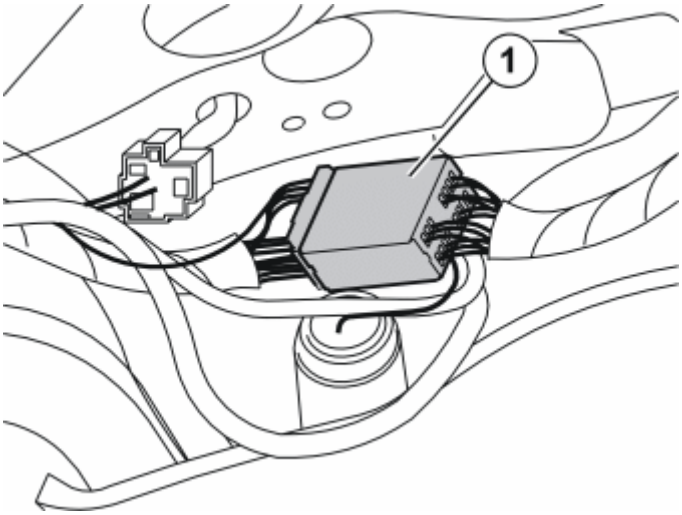

Fig. 9: Identifying 14-Pin Connector
Courtesy of VOLVO CARS CORPORATION

- Locate the 14-pin connector (1) in the left-hand corner of the roof above the D-post
- Disconnect the clip for the connector from the roof by pulling the connector straight down from the roof
- Separate the connector.

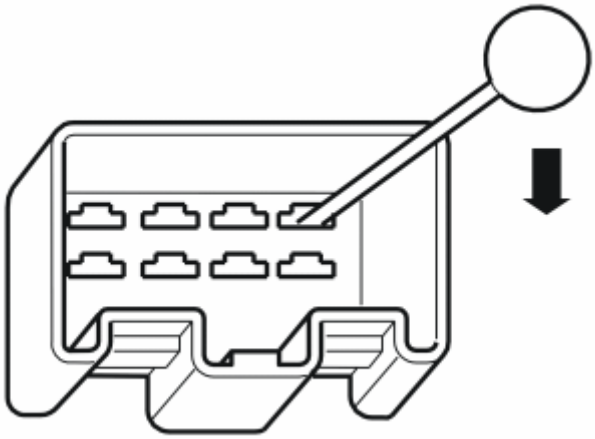

Fig. 10: View Of Pressing The Catch
Courtesy of VOLVO CARS CORPORATION

- Disconnect the cable pin (1) in position 8 in the female terminal. Lift the red catches on the connector and press out the entire red plastic insert
- Using a thin, pointed object, press the catch holding the cable pin to one side. Pull out the cable at the same time.

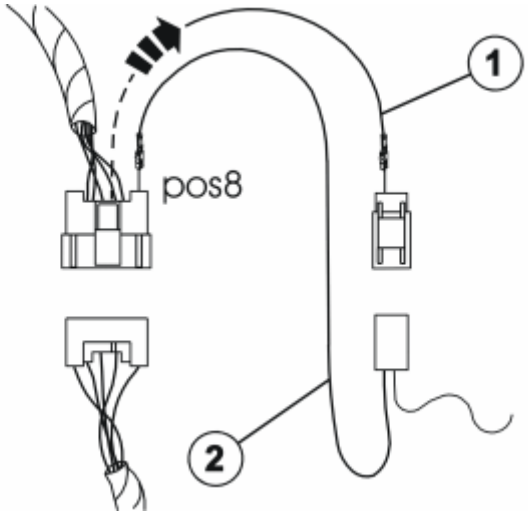

Fig. 11: View Of Connecting Pin (1)
Courtesy of VOLVO CARS CORPORATION

- Connect the pin (1) that has just been disconnected to the 2-pin connector from the kit in position 1. (Use the same method as for the 14-pin connector)
- Connect the remaining cable (2) from the 2-pin connector for the adapter cable to position 8 in the 14-pin female terminal from the car. This final connection reconnects the power to the position from where the pin was previously removed
- Reinstall the plastic catches on the connectors
- Connect both connectors to the corresponding connectors
- Reinstall the 14-pin connector at the roof using the clip.

- Clamp the adapter cable to the existing cable harness at regular intervals
- Clamp at the points where the existing cable harness is secured in the car with clips.

RECONNECT

- Reconnect the battery negative lead
- Insert the key in the ignition and turn to position I
- Check that the RSE system is powered
- Reinstall the removed panels in reverse order.

AMPLIFIER (2003-2004)

AMPLIFIER

NOTE: This accessory requires software unique to the car.

REMOVAL

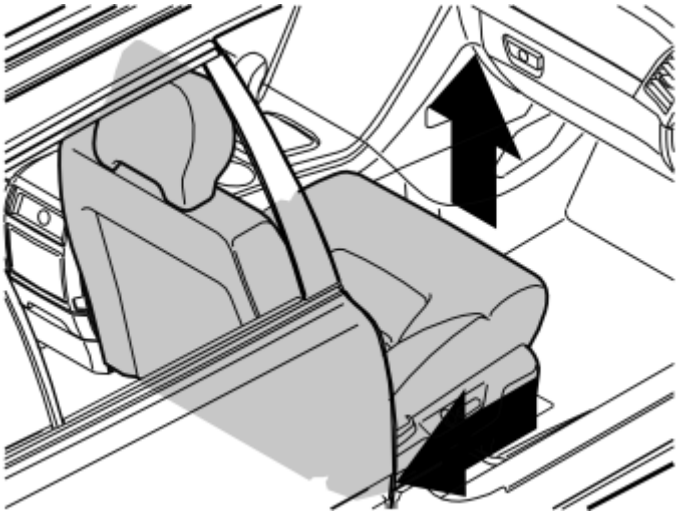

Fig. 12: View Of Right-Hand Seat Back To The Rearmost And Uppermost Position
Courtesy of VOLVO CARS CORPORATION

- Open the right-hand front door
- Slide the right-hand seat back to the rearmost and uppermost position.

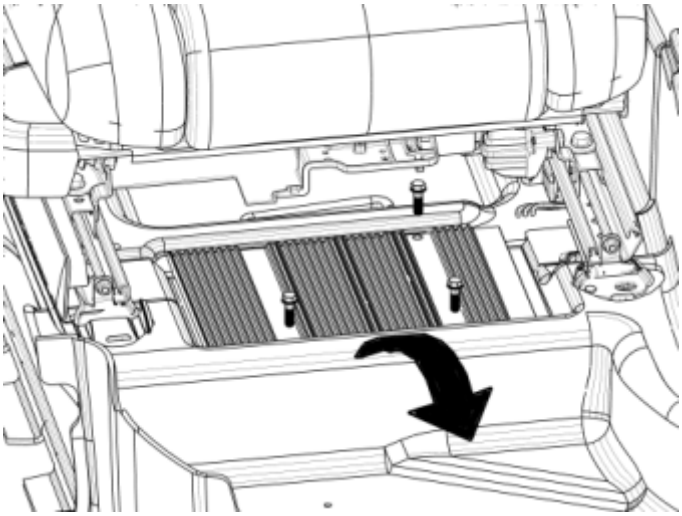

Fig. 13: Identifying Amplifier Retaining Screws
Courtesy of VOLVO CARS CORPORATION

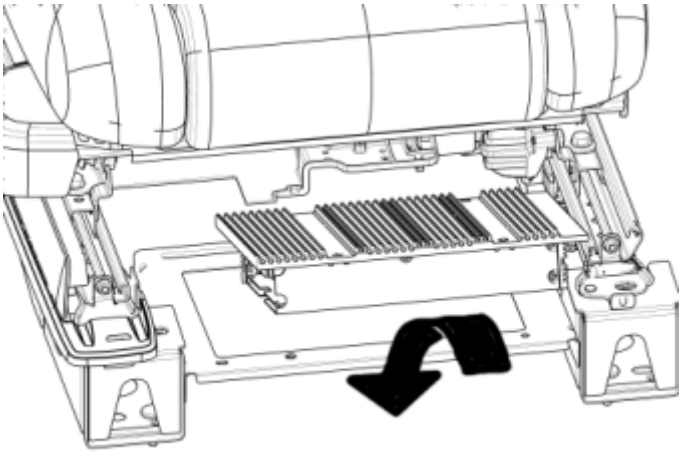

Fig. 14: View Of Front Edge Of Amplifier
Courtesy of VOLVO CARS CORPORATION

- Remove the three retaining screws holding the amplifier
- Lift up the front edge of the amplifier. Pull the amplifier upwards slightly. Disconnect the connectors on the reverse
- Place the amplifier to one side.

- Push the new amplifier down slightly in the recess and connect the connectors
- Position the amplifier. Secure the amplifier using the screws used for the existing amplifier.

FINISHING

- Program the software according to the service information in VIDA (Volvo scan tool).

CARPHONE HOLDER (2003)

CARPHONE HOLDER

PREPARATIONS

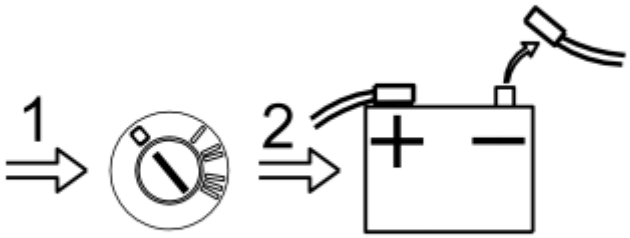

Fig. 15: Disconnect Battery Negative Lead
Courtesy of VOLVO CARS CORPORATION

- Position the driver's seat in the rearmost position
- Turn the ignition key to position 0
- Disconnect the battery negative lead.

NOTE: **Wait at least five minutes before disassembling the connectors or removing other electrical equipment.**

Illustration A

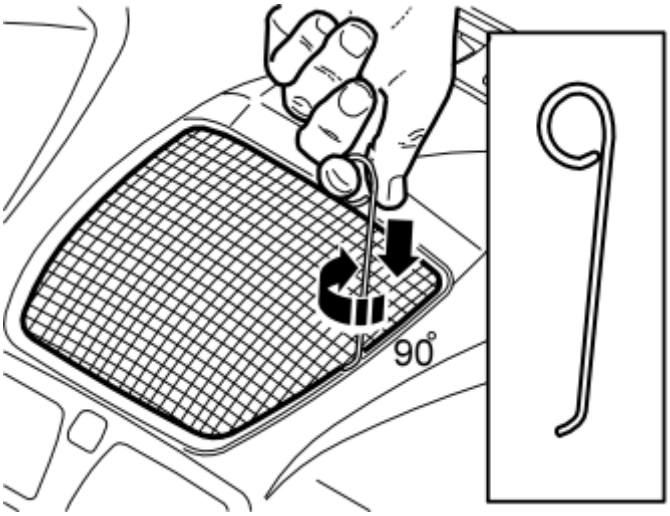

Fig. 16: Removing The Loudspeaker Grille
Courtesy of VOLVO CARS CORPORATION

Remove the loudspeaker grille as follows:

- Take a piece of 1.5 mm (1/16") diameter welding rod. Bend one end to 90° (L=5 mm (13/64")). The other

end is bent to form a handle

- Insert the first bent end down into the joint between the loudspeaker grille and the dashboard as illustrated, until it engages
- Twist the welding rod 90° so that the bent section engages with the underneath of the loudspeaker grille. It may be necessary to move the welding rod along the joint to twist the rod around.

Illustration B

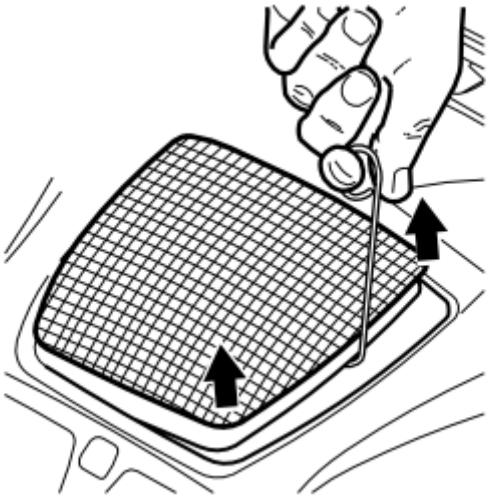

Fig. 17: View Of Detached Loudspeaker Grille
Courtesy of VOLVO CARS CORPORATION

- Pull upwards until the loudspeaker grille detaches. The loudspeaker grille is securely fastened by four clips.

NOTE: Do not damage the dashboard.

- Place the loudspeaker grille to one side.

Illustration C applies to cars without a centrally-mounted loudspeaker

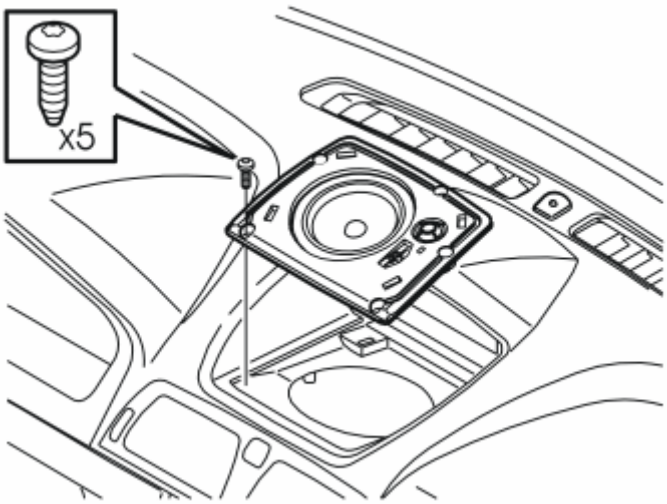

Fig. 18: Identifying Cars Without A Centrally-Mounted Loudspeaker
Courtesy of VOLVO CARS CORPORATION

- Remove the bracket for the loudspeaker grille by removing the five screws and pulling it up out of the dashboard.

Illustration D applies to cars with a centrally-mounted loudspeaker

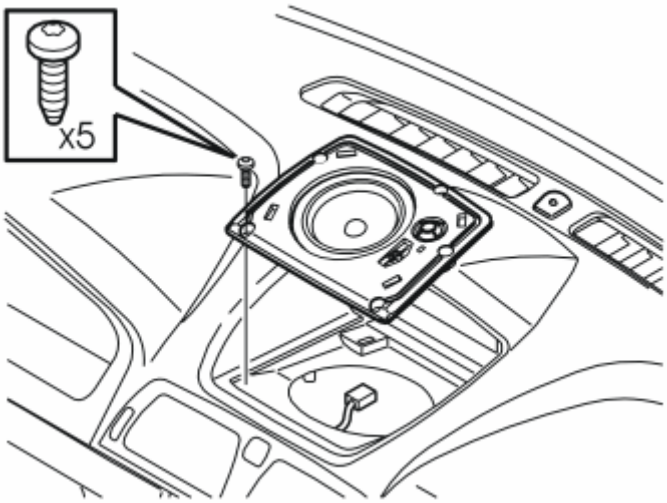

Fig. 19: Identifying Cars With A Centrally-Mounted Loudspeaker
Courtesy of VOLVO CARS CORPORATION

- Remove the five screws in the loudspeaker. Pull up the loudspeaker slightly from the dashboard. Disconnect the connector.

Illustration E applies to cars with RTI (road traffic information)

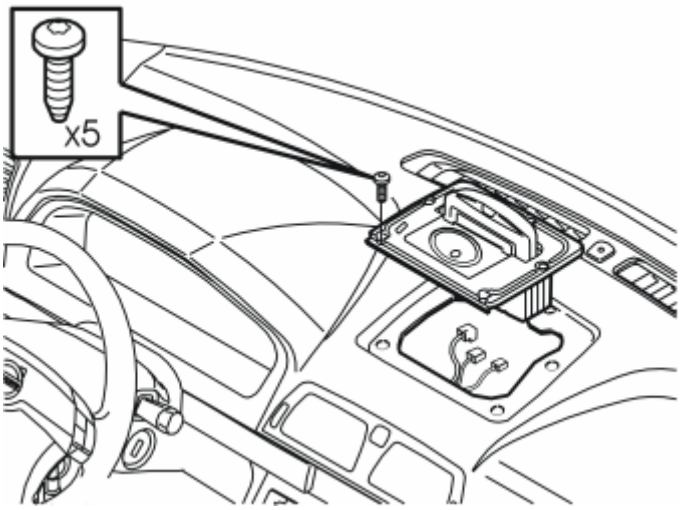

Fig. 20: Identifying Cars With RTI (road Traffic Information) Display
Courtesy of VOLVO CARS CORPORATION

- Remove the five screws in the display for RTI (road traffic information). Pull up the display slightly from the dashboard. Disconnect the connectors. Disconnect the centrally-mounted loudspeaker connector if installed.

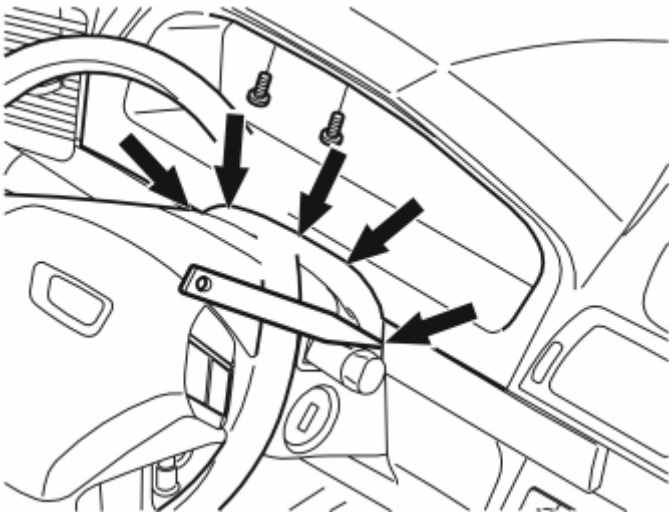

Fig. 21: Identifying Upper Steering Column Cover Removal
Courtesy of VOLVO CARS CORPORATION

- Lower the steering wheel to the lowermost position. Pull the steering wheel to the rearmost position
- Remove the two screws at the top edge of the combined instrument panel surround
- Carefully pry off the rubber seal from the upper steering column cover. Use a weatherstrip tool. It is secured with five clips
- Remove the surround by carefully pulling it backwards, first at the lower edge and then at the top edge until all the clips have released.

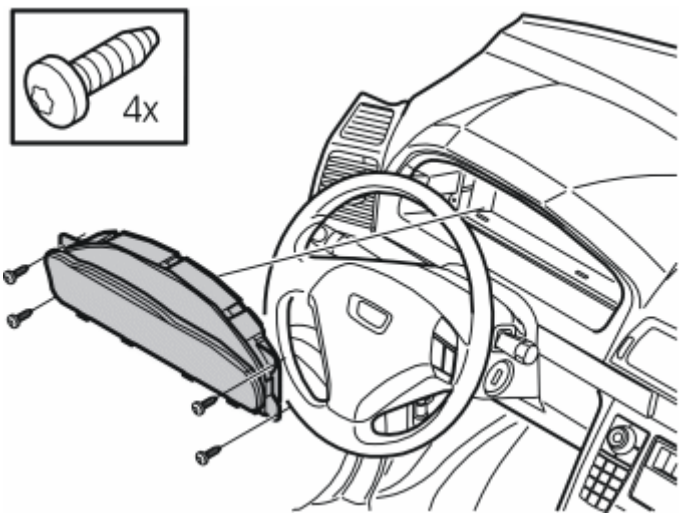

Fig. 22: View Of Combined Instrument Panel Screws
Courtesy of VOLVO CARS CORPORATION

- Remove the four screws for the combined instrument panel
- Pull out the combined instrument panel. Disconnect the connector on the reverse of the combined instrument panel.

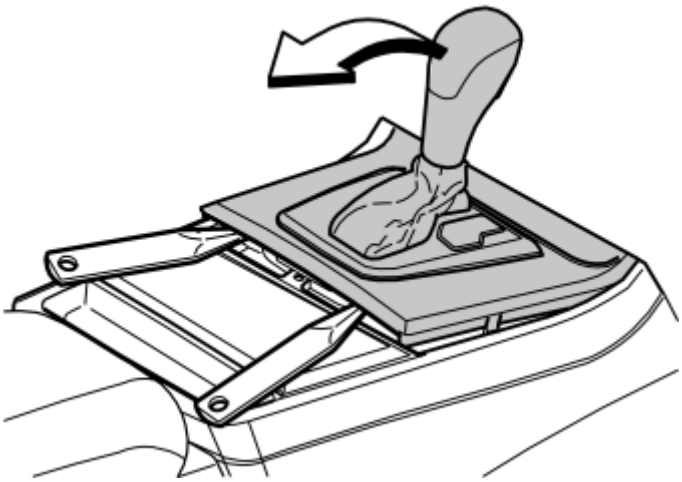

Fig. 23: Prying Off Gear Selector Panel At Rear Edge
Courtesy of VOLVO CARS CORPORATION

Applies to cars with automatic gearboxes

- Turn the ignition key to position II.

Applies to all models

- Move the gear selector lever to its rearmost position
- Carefully pry off the gear selector lever panel at the lower edge using a weatherstrip tool. Pull the panel

backwards to access the screws for the dashboard environment panel.

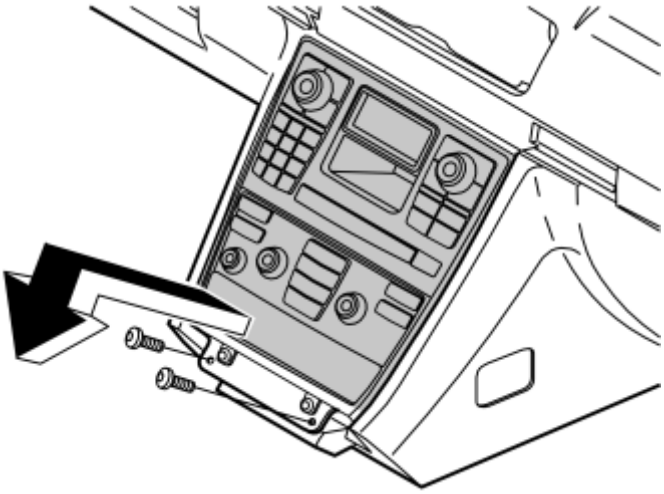

Fig. 24: Removing Screws And Radio/AC Unit From Center Console
Courtesy of VOLVO CARS CORPORATION

- Remove the screws holding the bracket for the dashboard environment panel and the control module
- Pull out the bracket at the lower edge. Pull downwards from the top edge of the center console
- Disconnect the connectors from the dashboard environment panel, control module. If applicable disconnect the CD player and/or Mini disc player connectors.

INSTALLING

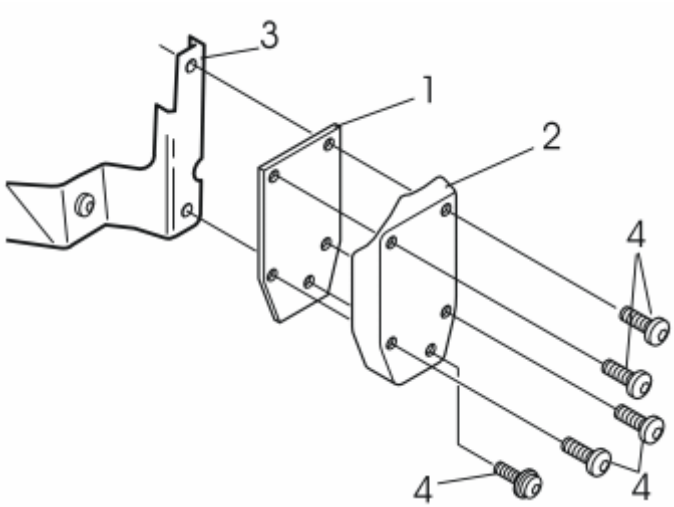

Fig. 25: Identifying Carphone Holder Bracket Components
Courtesy of VOLVO CARS CORPORATION

- Take the carphone holder bracket, the reinforcement panel, the cover and screws from the kit
- Install the reinforcement panel (1) and the cover (2) in the bracket (3) using the screws (4).

Illustration A

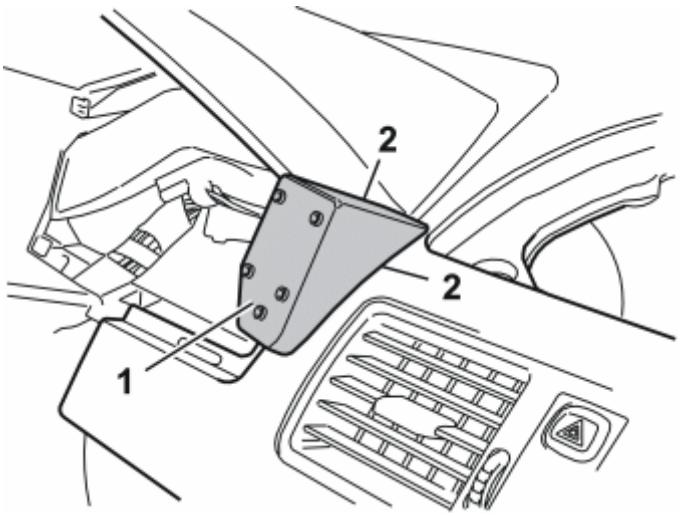

Fig. 26: View Of Bracket To Dashboard
Courtesy of VOLVO CARS CORPORATION

- Position the entire unit (1) in the dashboard to mark out holes for the bracket. Adjust to achieve the optimum position. Do not press the unit hard against the dashboard, however, ensure that there are no gaps at the sides between the panel and the dashboard (2).

Illustration B

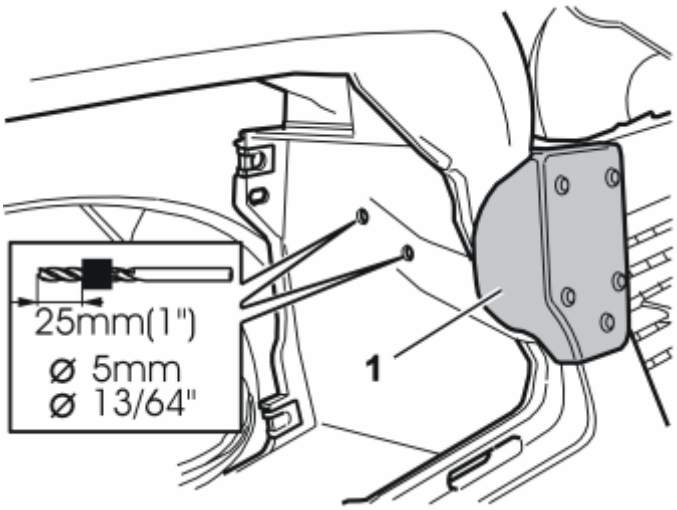

Fig. 27: View Of Bracket Hole Markings
Courtesy of VOLVO CARS CORPORATION

- Hold the unit securely and mark out the holes through the bracket
- Drill out the two holes using a 5 mm (13/64") diameter drill bit. Use a 25 mm (1") drill stop
- Remove any metal shavings
- Remove the cover and the reinforcement panel from the bracket.

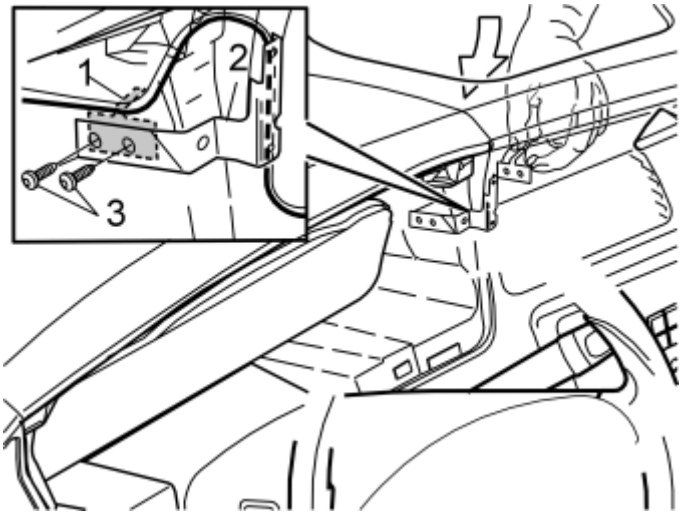

Fig. 28: View Of Reinforcement Panel Screws
Courtesy of VOLVO CARS CORPORATION

- Take the reinforcement panel (1) and the two screws from the kit
- Position the carphone holder wiring so that it is routed on the reverse of the bracket as illustrated
- Insert the reinforcement panel through the hole for the center loudspeaker
- Install the bracket (2). Use the two screws (3). Tighten the bracket against the dashboard.

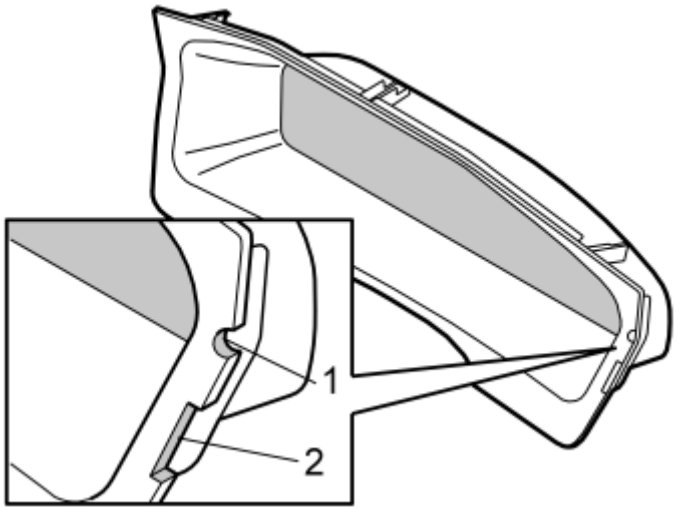

Fig. 29: Filing Out Groove For Cable To Handset Holder And For Installed Bracket
Courtesy of VOLVO CARS CORPORATION

- Mark out the hole for the wiring for the handset holder and bracket on the surround for the combined instrument panel
- File out a groove (1) in the surround for the combined instrument panel for the wiring for the handset holder
- File the hole so that it is large enough for any excess wiring to be routed through the hole and hidden on the inside of the dashboard

- File out a groove (2) for the installed bracket
- Smooth off the edges of the groove.

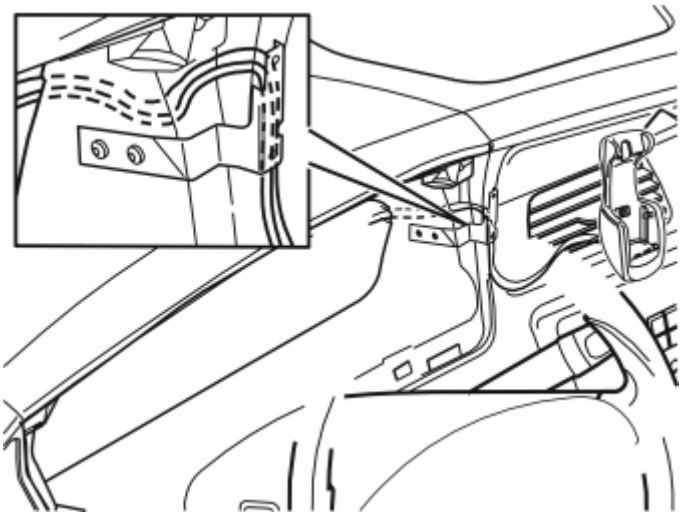

Fig. 30: Identifying Wire Routing
Courtesy of VOLVO CARS CORPORATION

- Route the wiring to the carphone holder from the hole for combined instrument panel. Position the wiring at the left air duct in the center console. Do not route more wiring than is required to secure the carphone holder
- Connect the combined instrument panel. Reinstall the combined instrument panel
- Reinstall the surround for the combined instrument panel. Tighten.

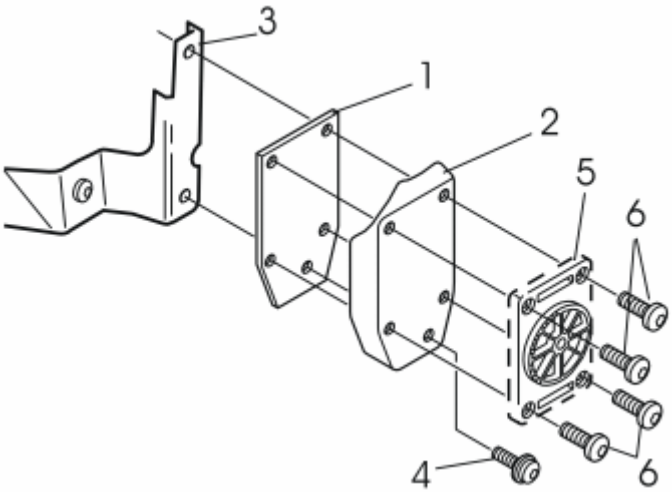

Fig. 31: Identifying Bracing Plate Components
Courtesy of VOLVO CARS CORPORATION

- Install the bracing plate (1) and the cover (2) in the bracket (3). Use the screw (4) (from the kit). Do not tighten fully yet
- Remove the mounting plate (5) for the carphone holder from the carphone holder. Tighten the mounting

plate using the screws (6) from the kit
- Tighten the screw (4).

Illustration A applies to Nokia

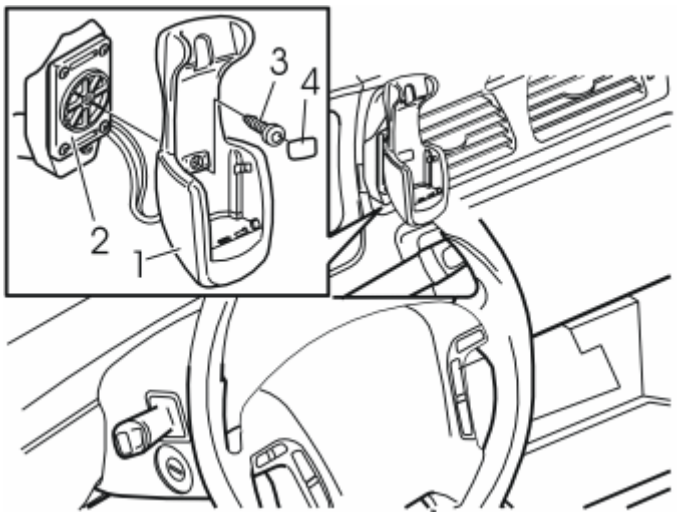

Fig. 32: Identifying Handset Holder Mounting Components
Courtesy of VOLVO CARS CORPORATION

- Tighten the carphone holder (1) onto the mounting plate (2) using the screw (3)
- Install the cover (4).

Illustration B applies to the Ericsson T28, T29, T39

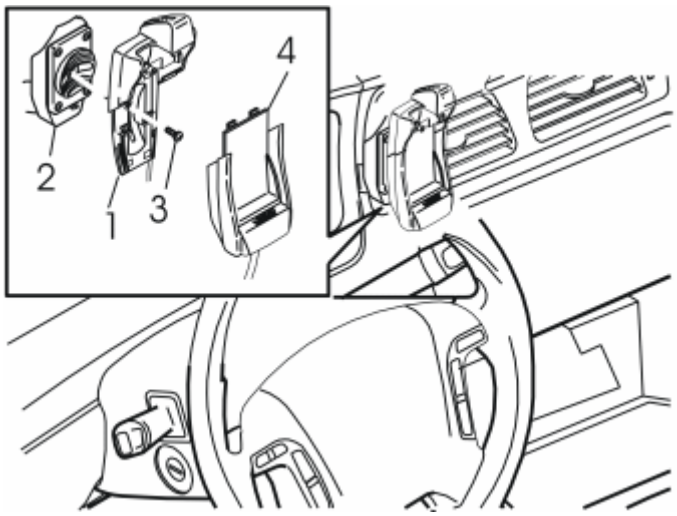

Fig. 33: Identifying Handset Holder Mounting Components
Courtesy of VOLVO CARS CORPORATION

- Tighten the upper section of the carphone holder (1) onto the mounting plate (2) using the screw and washer (3)

- Press the lower section (4) of the carphone holder onto the upper section.

Illustration C applies to the Ericsson T20

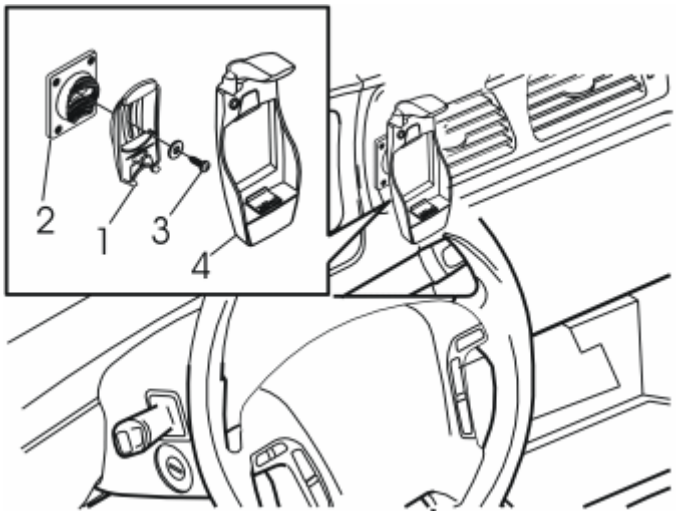

Fig. 34: Identifying Carphone Holder Mounting Components
Courtesy of VOLVO CARS CORPORATION

- Tighten the carphone holder mounting (1) onto the mounting plate (2) using the screw and washer (3)
- Press the carphone holder (4) onto the mounting.

CONNECTING

- Connect the connectors to the dashboard environment panel and control module. If applicable connect the CD player and/or Mini disc player connectors
  1. the display for the RTI and the center loudspeaker if applicable
  2. the center loudspeaker
  3. the bracket for the loudspeaker grille
  4. the loudspeaker grille.
- Position the bracket. Tighten the bracket using the two screws. Reinstall the gear selector lever panel
  1. the display for the RTI and the center loudspeaker if applicable
  2. the center loudspeaker
  3. the bracket for the loudspeaker grille
  4. the loudspeaker grille.
- Reinstall (depending on the equipment of the car):
  1. the display for the RTI and the center loudspeaker if applicable
  2. the center loudspeaker
  3. the bracket for the loudspeaker grille
  4. the loudspeaker grille.

FINISHING

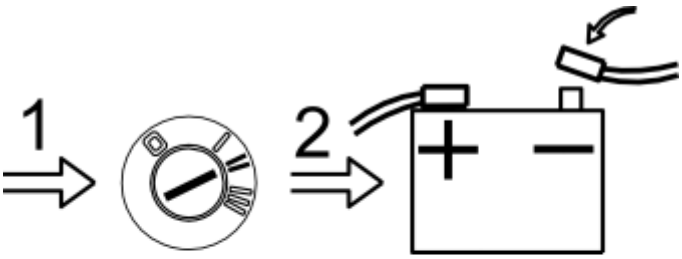

Fig. 35: Connecting Negative Battery Lead
Courtesy of VOLVO CARS CORPORATION

- Turn the ignition key to position II
- Reconnect the battery negative lead.

CARS EQUIPPED WITH SRS/SIPS (AIRBAG)

WARNING: **Extra care must be taken when working on cars equipped with SRS/SIPS air bags. This is important to prevent:**

1. Personal injury

2. Damage to or malfunction of the SRS/SIPS system.

Work on the SRS/SIPS systems or related components must always be carried out by an authorized Volvo workshop.

Is the car equipped with SRS (supplemental restraint system)?

Cars equipped with a driver's airbag have the letters "SRS" imprinted on the center panel of the steering wheel. Cars equipped with driver's and passenger airbags are marked with "SRS" on both the steering wheel center panel and also on the dashboard close to the airbag.

If the car is equipped with SIPS (side impact protection system) a "SIPS" decal is marked on both the front seats.

Cars equipped with inflatable curtains have the marking "SRS" on one of the panels along the posts on the inside of the car.

Cars equipped with SRS (supplemental restraint system) also have an "SRS" decal on the front windscreen.

Do not damage the SRS wiring.

Do not trap, chafe, pierce or damage the SRS wiring. SRS wiring has orange casing and/or is plaited.

Steering and front suspension

The contact reel in the SRS system can easily be damaged when working on the steering wheel, steering shaft or steering gear.

SRS warning lamp

If the SRS warning lamp lights after repairs have been carried out, take the car to an authorized Volvo workshop.

SRS collision sensor control module

CAUTION

The ignition must be in position "0" and the key removed from the ignition switch if any connector in the SRS system is to be unplugged. Then wait at least one minute and disconnect the battery negative lead before unplugging any of the connectors. When work is completed, the ignition key must be turned to position "II" before reconnecting the battery negative lead.

XC90

The collision sensor control module is located on the tunnel under the center console, in front of the parking brake.

CAUTION

The air bag inflation areas must not be obstructed. Never place any objects, such as upholstery or accessories, within these areas. The panels must be able to open in the correct manner at the right time, otherwise there is an increased risk of personal injury in the event of a collision.

CD PLAYER/CHANGER (6 CD) (2003)

CD PLAYER/CHANGER (6 CD)

NOTE: This accessory requires software unique to the car.

No extra wiring is required when replacing the CD player with a CD changer.

PREPARATORY WORK

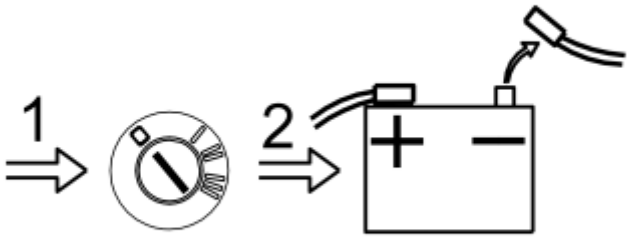

Fig. 36: Disconnect Battery Negative Lead
Courtesy of VOLVO CARS CORPORATION

- Turn the ignition switch to position 0
- Disconnect the battery negative lead.

NOTE: **Wait at least five minutes before disassembling the connectors or removing other electrical equipment.**

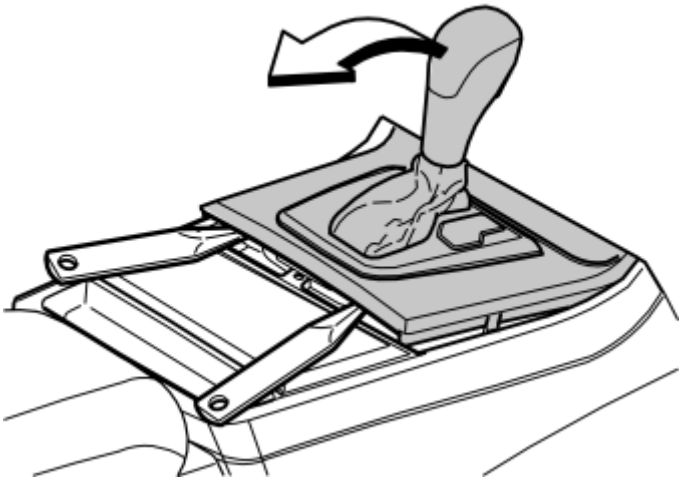

Fig. 37: Prying Off Gear Selector Panel At Rear Edge
Courtesy of VOLVO CARS CORPORATION

Applies to cars with automatic gearboxes

- Turn the ignition key to position II.

Applies to all models

- Move the gear selector lever to its rearmost position
- Carefully pry off the rear edge of the panel for the gear selector lever using a plastic weatherstrip tool. Pull the panel backwards to access the screws for the dashboard environment panel.

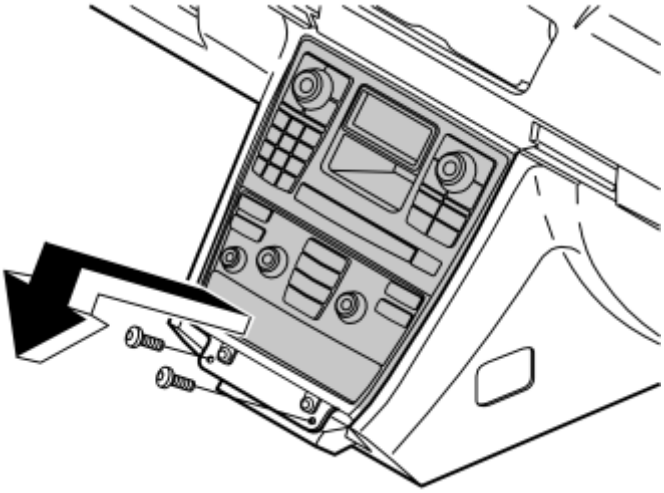

Fig. 38: Removing Screws And Radio/AC Unit From Center Console
Courtesy of VOLVO CARS CORPORATION

- Remove the two screws holding the bracket for the dashboard environment panel and the control module.

NOTE: Pull out the bracket at the lower edge. Pull from the top edge of the center console.

- Disconnect the connectors from the dashboard environment panel, control module. If applicable disconnect the MiniDisc player connector.

Applies when replacing the CD player with a CD changer

- Disconnect the connector for the CD player.

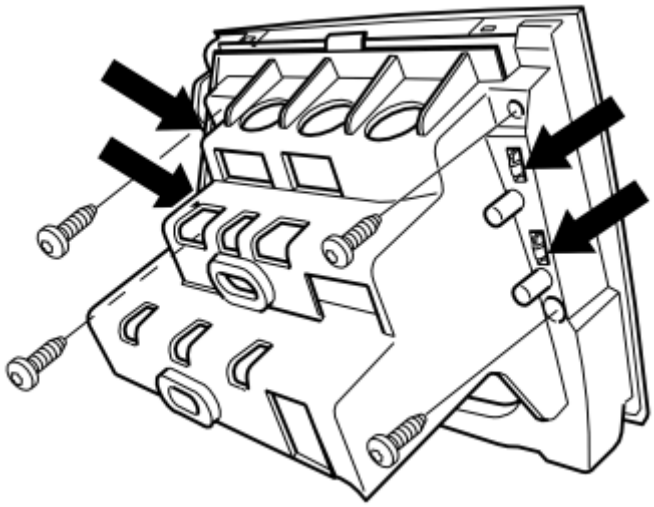

Fig. 39: View Of Control Module Screws
Courtesy of VOLVO CARS CORPORATION

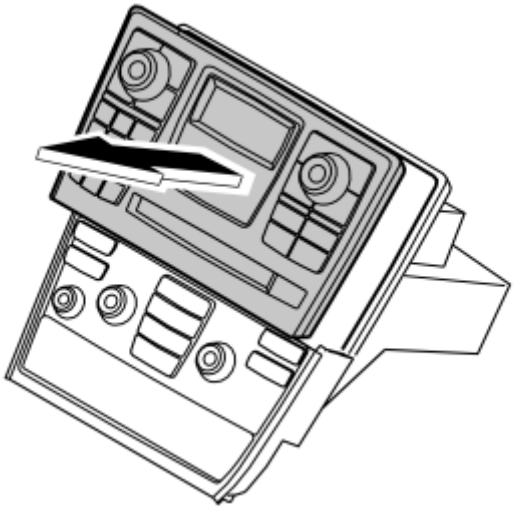

Fig. 40: Remove The Control Module
Courtesy of VOLVO CARS CORPORATION

Applies to all models

- Position the console with the control module and dashboard environment panel in a suitable position
- Remove the four screws on the reverse holding the control module at the console
- Press in the four catches in the sides of the control module so that they release. Carefully remove the control module.

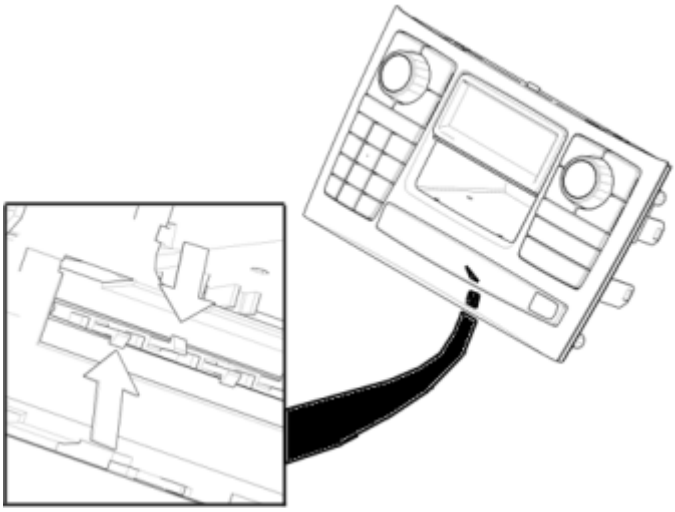

Fig. 41: View Of Control Module Panel
Courtesy of VOLVO CARS CORPORATION

Applies to cars without a CD player

- Remove the small panel at the lower edge of the control module panel by prying up the catches and detaching the panel
- Place the panel to one side. The panel will not be reused.

INSTALLING THE CD PLAYER/CHANGER

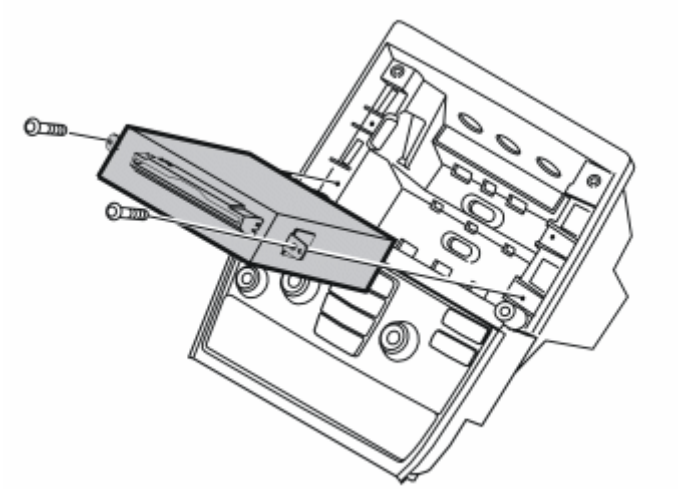

Fig. 42: Identifying CD Player/Changer Screws
Courtesy of VOLVO CARS CORPORATION

- Insert the CD player/changer in the lower cut-out in the console. Ensure that the locating pins on the sides and on the reverse and the connector locate in the corresponding holes in the console
- Tighten the two screws from the kit and tighten the CD player
- For aftermarket installation of both a MiniDisc and CD player/changer, install the MiniDisc player

according to points 5 and 6 in these installation instructions.

Applies when replacing the CD player with a CD changer

- Remove the two screws retaining the CD player. Pull out the CD player
- Take the CD changer and slide it into the same place as the CD player was positioned
- Tighten the CD changer using the screws that secured the CD player.

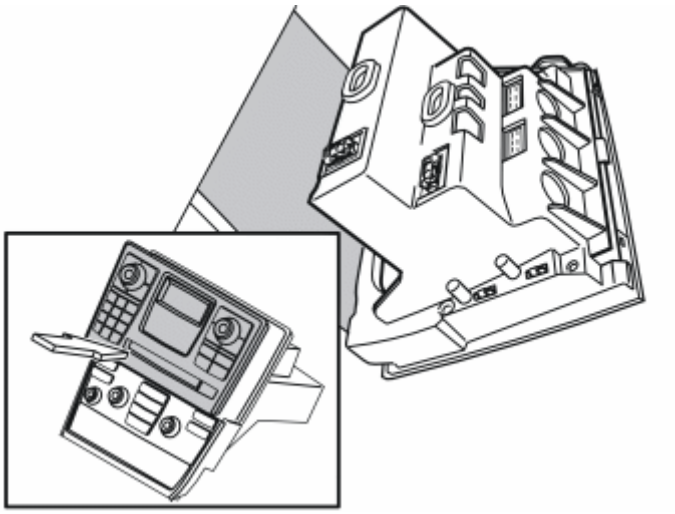

Fig. 43: Inserting Control Module To Bracket
Courtesy of VOLVO CARS CORPORATION

Applies to all models

- Insert the control module in the bracket. Ensure that its guide moldings at the bottom edge align in the corresponding channels in the top edge of the dashboard environment panel. Press all the way around so that the four catches engage
- Tighten the control unit on the reverse using the four screws
- Position the bracket in the car, in front of the cut-out in the center console, leaning backwards towards the gear selector lever as illustrated.

Applies when replacing the CD player with a CD changer

- Connect all the previously disconnected connectors to the control module, dashboard environment panel and, if applicable, the MiniDisc player
- Connect the connector from the CD player to the CD changer. Position the bracket. Tighten the bracket using the two screws
- Reinstall the gear selector lever panel
- Continue to point 16.

ROUTING AND CONNECTING WIRING

NOTE: **The small thicker and stiffer orange cables in the cable harnesses are fibre optic and must be handled and routed very carefully. These cables cannot be bent as much as normal wiring, the bend radius must not be less than 3 cm.**

APPLIES TO CARS WITHOUT A FACTORY INSTALLED PLAYER, WHEN ONLY INSTALLING A CD PLAYER/CHANGER

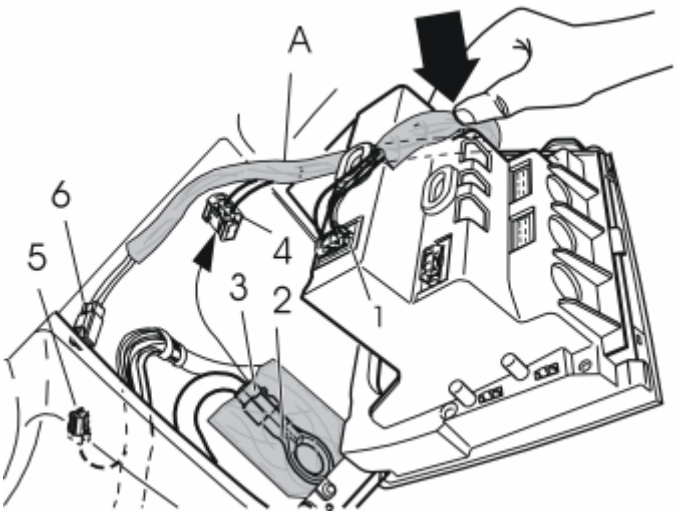

Fig. 44: View Of Junction Cable (A)
Courtesy of VOLVO CARS CORPORATION

- Take the junction cable (A) from the kit. (Purchased separately)
- Connect the connect (1) on the junction cable to the corresponding connector on the CD player/changer.

NOTE: **Be very careful when connecting the connector in the CD player/changer. The terminal pins in this connector are thin. They are easily damaged and may become pressed into the player if the connector is not installed straight.**

- Locate the pre-routed, bridge connector (2) on the fibre optic cable in the center console, wrapped in foam tape
- Disconnect the connector (3) from the bridged connector (2). Connect it to connector (4) on the junction cable.

NOTE: **If installing a CD player and an RTI system at the same time, the junction cable for the RTI system must be connected first to the connector (3). This connector will then be in use, but there is a corresponding connector on the junction cable for the RTI system. Connect this to the connector (4).**

- Find the pre-routed grey connector (5) for power supply in the thick cable harness in the center console. The connector is located either in the center console or in the space above the accelerator pedal. To remove the panel above the accelerator panel, slacken off the two Torx screws and then pull the panel free from the clips on the outer edges and unhook it

- Connect the connector (5) to the remaining connector (6) on the junction cable
- Take half of the foam tape from the wiring kit and wrap it around the grey connectors (5, 6). Use the remaining foam tape to tape around the connectors (3, 4).

NOTE: **The junction cable must be routed around the bracket as illustrated. When reinstalling the bracket in the center console in the car, the junction cable must be held against the bracket as illustrated. This is to ensure that it remains in position.**

APPLIES TO CARS WITHOUT A FACTORY INSTALLED PLAYER, WHEN INSTALLING BOTH A MINIDISC AND CD PLAYER/CHANGER

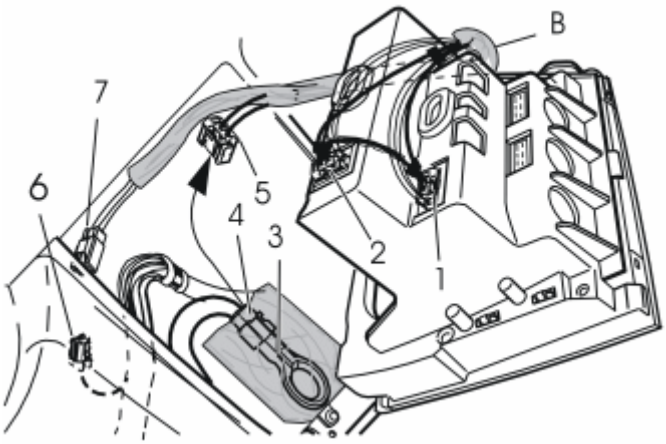

Fig. 45: View Of Junction Cable (B)
Courtesy of VOLVO CARS CORPORATION

- Take out the junction cable (B) (purchased separately) with the four connectors
- Connect the connector (1) on the junction cable to the corresponding connector on the MiniDisc player and connector (2) to the corresponding connector in the CD player/changer. The connectors (1) and (2) are identical. It does not matter which connector is connected to which unit.

NOTE: **Be very careful when connecting the connectors in the MiniDisc/CD players. The terminal pins in these connectors are thin. They are easily damaged and may become pressed into the players if the connector is not installed straight.**

- Locate the pre-routed, bridge connector (3) on the fibre optic cable in the center console, wrapped in foam tape
- Disconnect the connector (4) from the bridged connector (3). Connect it to connector (5) on the junction cable.

NOTE: **If installing a CD player and an RTI system at the same time, the junction cable for the RTI system must be connected first to the connector (4). This**

connector will then be in use, but there is a corresponding connector on the junction cable for the RTI system. Connect this to the connector (5).

- Find the pre-routed grey connector (6) for power supply in the thick cable harness in the center console. The connector is located either in the center console or in the space above the accelerator pedal. To remove the panel above the accelerator panel, slacken off the two Torx screws and then pull the panel free from the clips on the outer edges and unhook it
- Connect the connector (6) to the remaining connector (7) on the junction cable
- Take half of the foam tape from the wiring kit and wrap it around the grey connectors (6, 7). Use the remaining foam tape to tape around the connectors (4, 5).

NOTE: The junction cable must be routed around the bracket as illustrated. When reinstalling the bracket in the center console in the car, the junction cable must be held against the bracket as illustrated. This is to ensure that it remains in position.

OPERATIONS 10-14 APPLY TO CARS WITH FACTORY-INSTALLED MINIDISC PLAYERS/CHANGERS

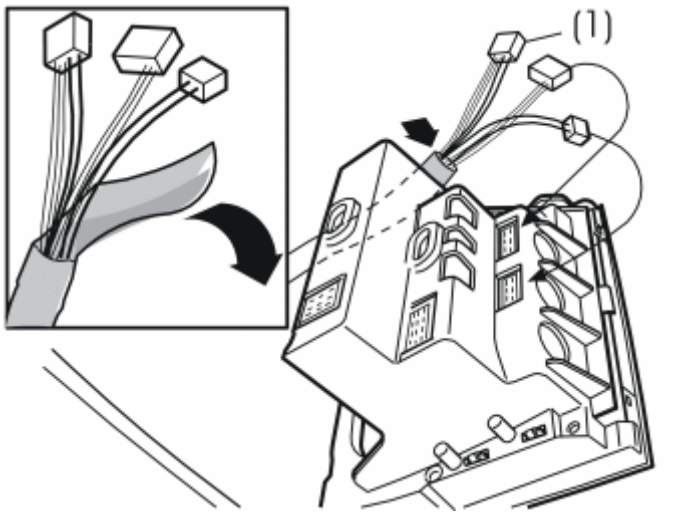

Fig. 46: Identifying Control Module And The Dashboard Environment Panel Connectors
Courtesy of VOLVO CARS CORPORATION

NOTE: If installing a CD player/changer and an RTI system at the same time, the RTI system must be connected according to the installation instructions. Then follow these installation instructions as if the RTI system was not installed. However use the connector in the MiniDisc player.

HINT: work from the right-hand seat.

- Remove approximately 20 cm of foam tape from the existing cable harness so that the wiring is unimpeded
- Reinstall the connectors for the control module and the dashboard environment panel. Do not connect the connector (1) to the MiniDisc player yet.

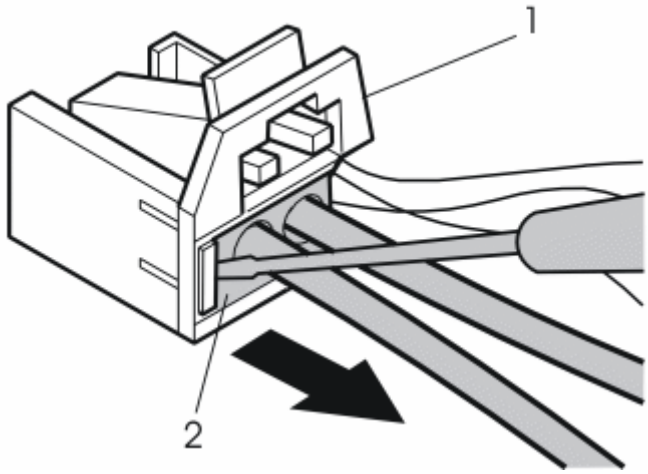

Fig. 47: Identifying MiniDisc Player Connectors
Courtesy of VOLVO CARS CORPORATION

- Take the connector (1) which was in the MiniDisc player and remove the connector (2) with the fibre optic cable from it. Use a small screwdriver or similar to lift the catch as illustrated. At the same time pull the fibre optic cable outwards to release the connector (2)
- Reinstall the connector (1) which is now without the connector (2) in the MiniDisc player.

NOTE: **Be very careful when connecting the connector in the MiniDisc player. The terminal pins in this connector are thin. They are easily damaged and may become pressed into the player if the connector is not installed straight.**

Illustration A

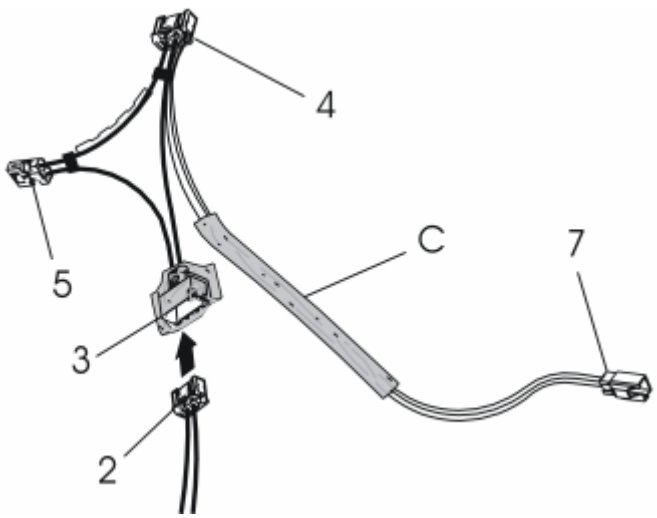

Fig. 48: Identifying Junction Cable (C)
Courtesy of VOLVO CARS CORPORATION

- Take the junction cable (C) (purchased separately) and locate its foam taped connector (3)

- Connect the small connector (2) with the fibre optic cables (disconnected in the previous step) to the connector (3) in the junction cable. There will be a click when the catch engages.

Illustration B

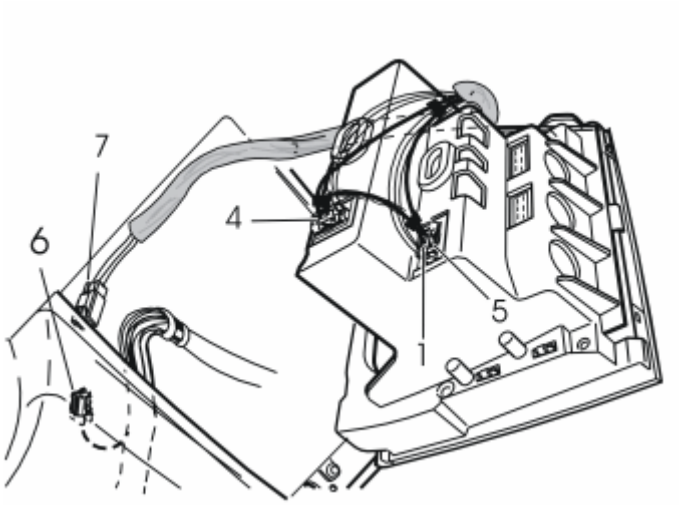

Fig. 49: Connect The Connector (4) From The Junction Cable
Courtesy of VOLVO CARS CORPORATION

- Connect the connector (4) from the junction cable to the CD player and the connector (5) from the junction cable to the connector (1) which was reinstalled in the MiniDisc player before.

NOTE: **Be very careful when connecting the connector in the CD player/changer. The terminal pins in this connector are thin. They are easily damaged and may become pressed into the player if the connector is not installed straight.**

- Find the pre-routed grey connector (6) for power supply in the thick cable harness in the center console. The connector is located either in the center console or in the space above the accelerator pedal. To remove the panel above the accelerator panel, slacken off the two Torx screws and then pull the panel free from the clips on the outer edges and unhook it
- Connect the connector (6) to the remaining connector (7) on the junction cable
- Take a small piece of the foam tape from the kit and wrap it around the grey connectors (6, 7) in the center console.

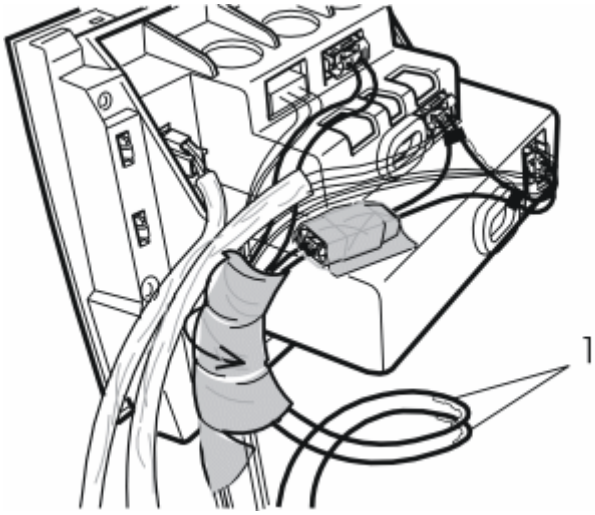

Fig. 50: View Of Load-Removing Grommets (1) Secured In The Fibre Optic Cable Loops
Courtesy of VOLVO CARS CORPORATION

HINT: work from the right-hand seat.

- Position the wiring so that it runs around the bracket as illustrated
- Take half of the remaining foam tape from the wiring kit and wrap it around the cables not already protected.

NOTE: There will be excess fibre optic wiring which should be placed in an loop as illustrated.

- Take the two load-removing grommets (1) from the wiring kit and secure it in the loops formed by the fibre optic cable as illustrated.

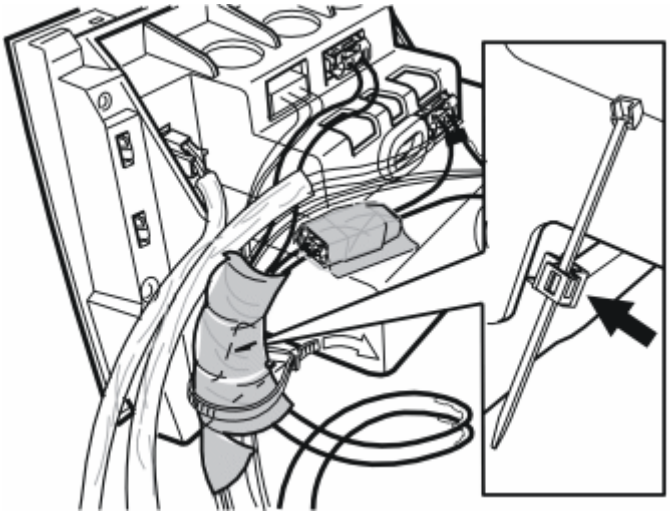

Fig. 51: Identifying Corner Clip And Tie Strap
Courtesy of VOLVO CARS CORPORATION

- Take the corner clip and tie strap from the wiring kit. Press it into place at the top of the underside of the bracket as illustrated
- Tighten the tie strap around the foam taped cable harness to secure the excess fibre optic wiring as illustrated
- Take the remaining strips of foam tape and tape the loop to prevent it from rattling.

FINISHING WORK

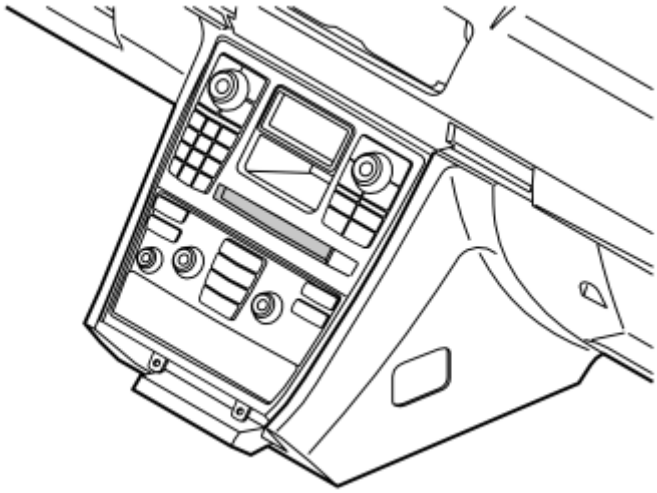

Fig. 52: Identifying Dashboard Environment Panel
Courtesy of VOLVO CARS CORPORATION

- Connect the previously disconnected connector to the control module and dashboard environment panel. Position the bracket. Tighten the bracket using the two screws
- Reinstall the gear selector lever panel
- Reinstall the panel above the accelerator pedal if removed.

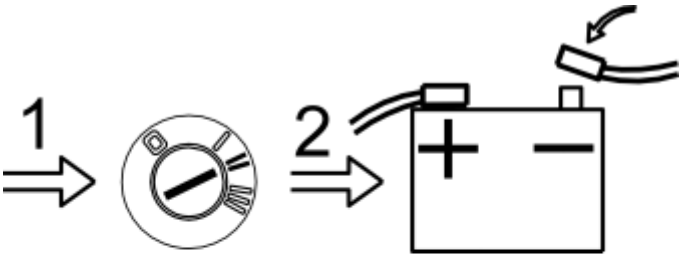

Fig. 53: Connecting Negative Battery Lead
Courtesy of VOLVO CARS CORPORATION

- Turn the ignition key to position II
- Reconnect the battery negative lead
- Program the software according to the service information in VIDA (Volvo scan tool).

CENTRE LOUDSPEAKER (2003-2011)

CENTRE LOUDSPEAKER

Illustration A

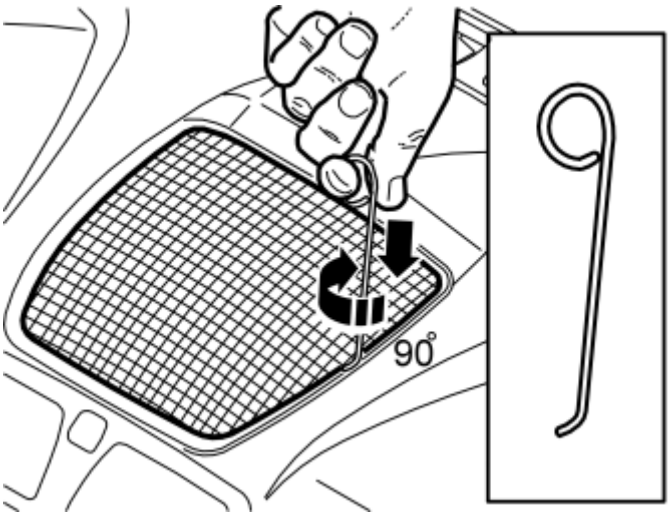

Fig. 54: Removing The Loudspeaker Grille
Courtesy of VOLVO CARS CORPORATION

Remove the loudspeaker grille as follows:

- Take a piece of 1.5 mm (1/16") diameter welding rod. Bend one end to 90° (L=5 mm (13/64")). The other end is bent to form a handle
- Insert the first bent end down into the joint between the loudspeaker grille and the dashboard as illustrated, until it engages
- Twist the welding rod 90° so that the bend section engages with the underneath of the loudspeaker grille. It may necessary to move the welding rod along the joint to twist the rod around.

Illustration B

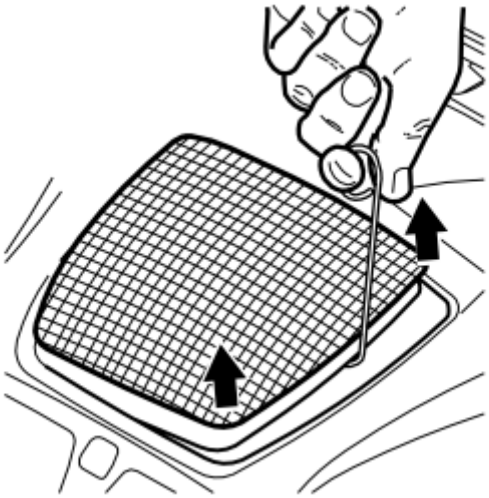

Fig. 55: View Of Detached Loudspeaker Grille
Courtesy of VOLVO CARS CORPORATION

- Pull upwards until the loudspeaker grille detaches. The loudspeaker grille is securely fastened by four clips.

NOTE: Do not damage the dashboard.

- Place the loudspeaker grille to one side.

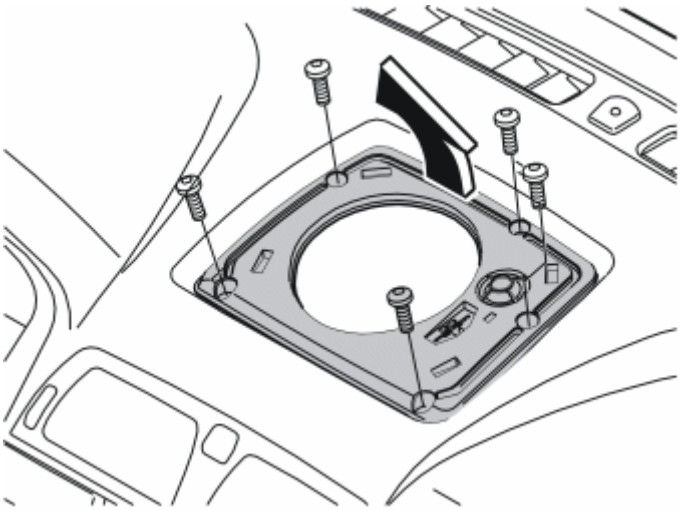

Fig. 56: Identifying Loudspeaker Cut-Out Bracket
Courtesy of VOLVO CARS CORPORATION

- Remove the five screws in the loudspeaker cut-out bracket
- Pull up the bracket and place to one side. The bracket will not be reused.

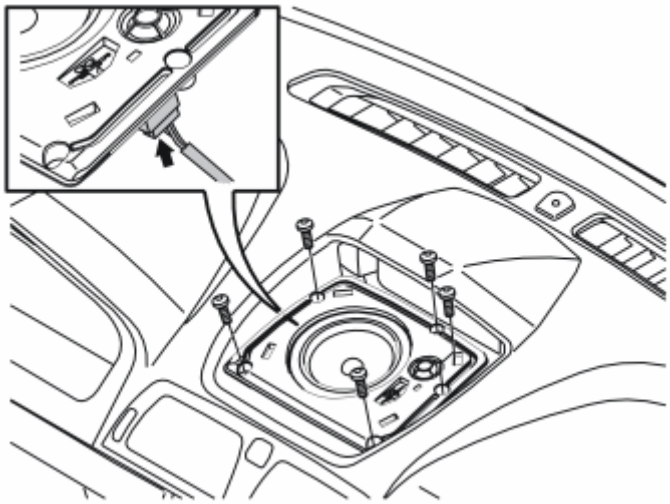

Fig. 57: View Of Pre-Routed Loudspeaker Connector
Courtesy of VOLVO CARS CORPORATION

- Take the new loudspeaker, connect the pre-routed connector in the dashboard to the loudspeaker
- Position the loudspeaker. Tighten the loudspeaker using the five screws positioned in the loudspeaker cut-out bracket
- Reinstall the loudspeaker grille.

FRONT DOOR, LOUDSPEAKERS (2003-2011)

FRONT DOOR, LOUDSPEAKERS

NOTE: **If loudspeakers without mid-range are to be mounted ignore point 4 onwards. Use the same mounting hole as for the existing loudspeaker.**

Fig. 58: Identifying Door Handle Hole
Courtesy of VOLVO CARS CORPORATION

- Remove the panel on the door handle. First insert a small screwdriver in the hole (1) in the lower section of the panel and press the catch on the inside at the same time as pulling the top edge of the panel upwards. If necessary use a plastic weatherstrip tool to pry up the top edge of the cover.

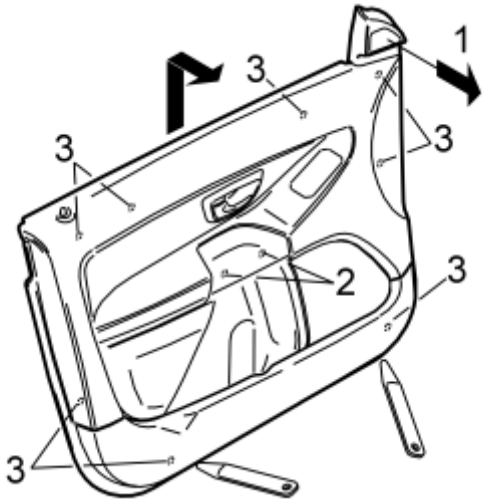

Fig. 59: Identifying Door Panel Treble Loudspeaker
Courtesy of VOLVO CARS CORPORATION

- Remove the treble loudspeaker (1) in the door panel. Pry it loose using a weatherstrip tool
- Remove the two screws (2) from under the panel
- Carefully pry off the door panel using the weatherstrip tool. Start at the lower edge and pry opposite the clips (3).

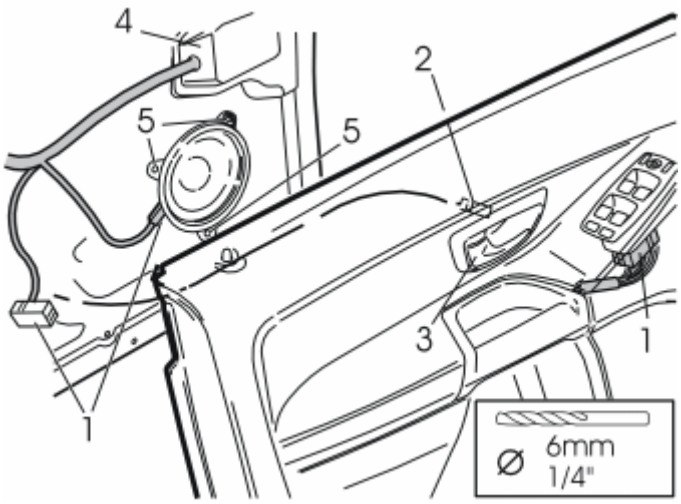

Fig. 60: Locating Loudspeaker Rivets
Courtesy of VOLVO CARS CORPORATION

- Disconnect the connectors (1) from the door control module and from the existing loudspeaker
- Remove the wire (2) from the door opener handle (3). First bend up the catches
- Remove the door panel

- Remove the panel (4) for the cable lead-in
- Drill out the rivets (5) from the existing loudspeaker. Use a **6 mm (1/4")** diameter drill bit
- Remove the loudspeakers and any rivet metal shavings from the rivet holes. Also remove any rivet metal shavings from the door.

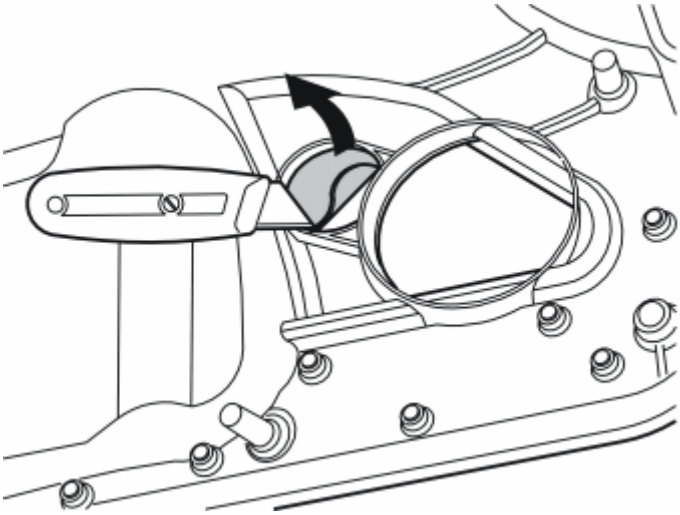

Fig. 61: Identifying Mid-Range Oil Cloth Cut Out
Courtesy of VOLVO CARS CORPORATION

- Place the door panel on a suitable underlay, on a blanket or carpet, for example
- Carefully cut the oil cloth out from the inside of the loudspeaker grille. Cut along the edges of the smaller round hole where the mid-range element is to be positioned.

NOTE: Only cut through the oil cloth. Do not damage the underlying fabric.

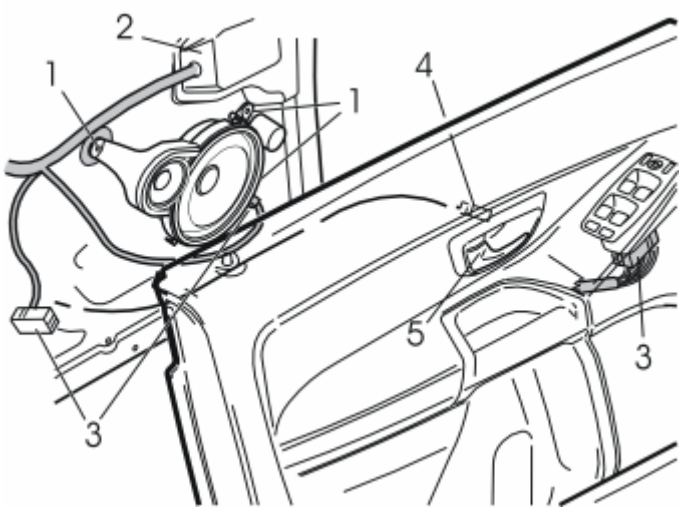

Fig. 62: View Of New Loudspeaker In Place
Courtesy of VOLVO CARS CORPORATION

- Screw the new loudspeaker into place using the screws, washers and the nuts from the kit (1). The

washers must be positioned under the screw heads. Make a hole in the round piece of tape covering the screw hole to insert the rear screw

- Reinstall the panel (2) for the cable lead-in.
- Connect the connectors (3) to the loudspeaker and the module for the door controls
- Reinstall the mechanical cable (4) on the door opener handle (5)
- Reinstall the door panel, the treble loudspeaker and the door handle panel.

GLASS MOUNTED GSM COMBINED AERIAL (2003-2011)

CARS EQUIPPED WITH SRS/SIPS (AIRBAG)

see **CARS EQUIPPED WITH SRS/SIPS (AIRBAG)**

CAUTION

see **CAUTION**

GLASS MOUNTED GSM COMBINED AERIAL

CAUTION: The aerial must be removed from the external base module if using a carwash.

NOTE: When installing the aerial the window must remain at a temperature of at least +10°C.

PREPARATIONS

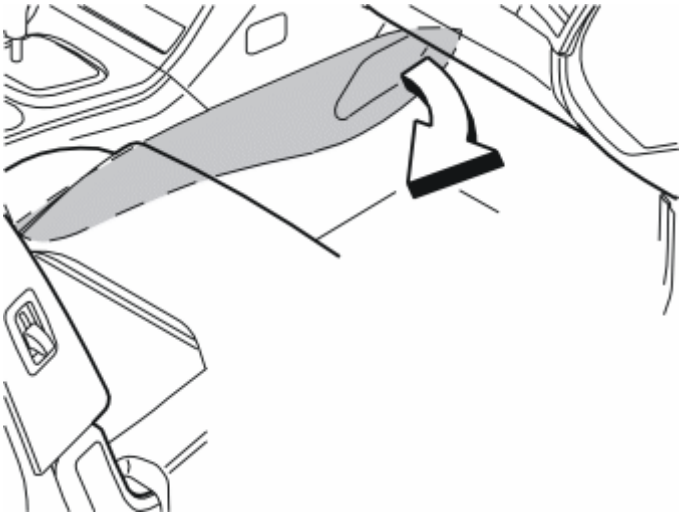

Fig. 63: View Of Centre Console Right-Hand Side Panel
Courtesy of VOLVO CARS CORPORATION

- Remove the right-hand side panel from the center console. Pull off the panel starting at the front edge.

Then pull backwards until all the clips release.

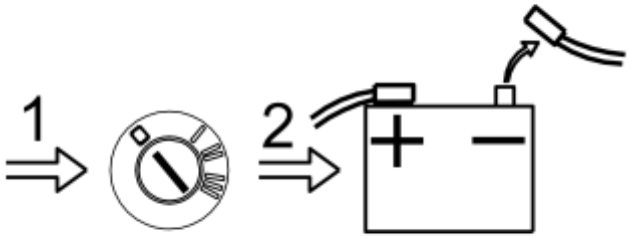

Fig. 64: Disconnect Battery Negative Lead
Courtesy of VOLVO CARS CORPORATION

Applies to cars with power front seats

- Position the right-hand front seat so that the panels over the front and right rear seat mountings, and the small panel at the lower edge of the right-hand B-post are not obstructed. They will be removed later after disconnecting the battery negative lead.

Applies to all models

- Turn the ignition key to position 0
- Disconnect the battery negative lead.

NOTE: **Wait at least five minutes before disassembling the connectors or removing other electrical equipment.**

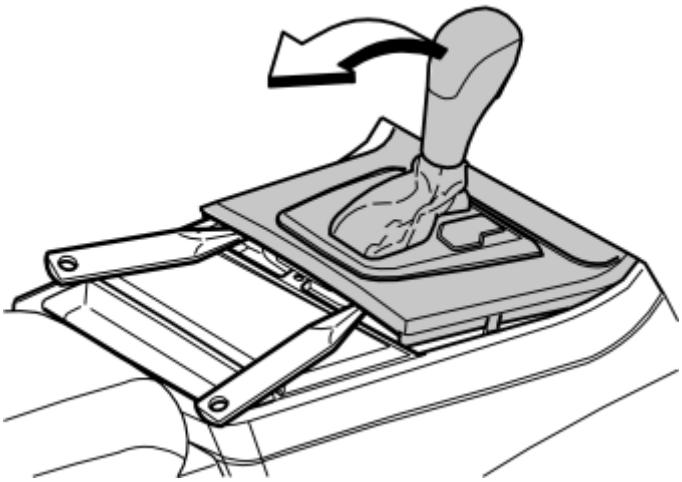

Fig. 65: Prying Off Gear Selector Panel At Rear Edge
Courtesy of VOLVO CARS CORPORATION

Applies to cars with automatic gearboxes

- Turn the ignition key to position II.

Applies to all models

- Move the gear selector lever to its rearmost position
- Carefully pry off the gear selector lever panel at the lower edge using a weatherstrip tool. Pull the panel backwards to access the screws for the dashboard environment panel.

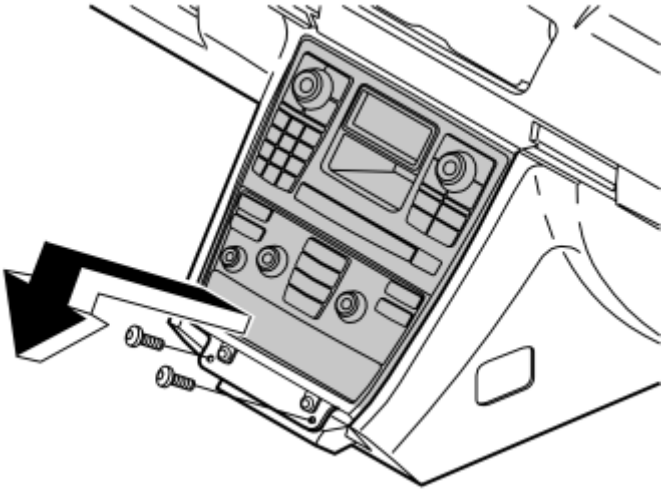

Fig. 66: Removing Screws And Radio/AC Unit From Center Console
Courtesy of VOLVO CARS CORPORATION

- Remove the screws holding the bracket for the dashboard environment panel and the control module
- Pull out the bracket at the lower edge. Pull downwards from the top edge of the center console

- Disconnect the connectors from the dashboard environment panel, control module. If applicable disconnect the CD player and/or Mini disc player connectors.

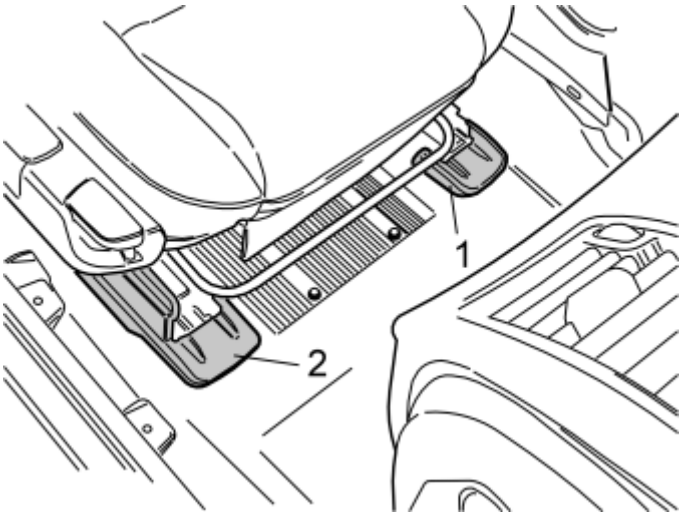

Fig. 67: View Of Front Seat Front Edge Cover
Courtesy of VOLVO CARS CORPORATION

- Remove the cover (1) on the left front mounting on the right-hand front seat by prying off the front edge
- Pry off the front edge of the right panel (2). Remove the panel.

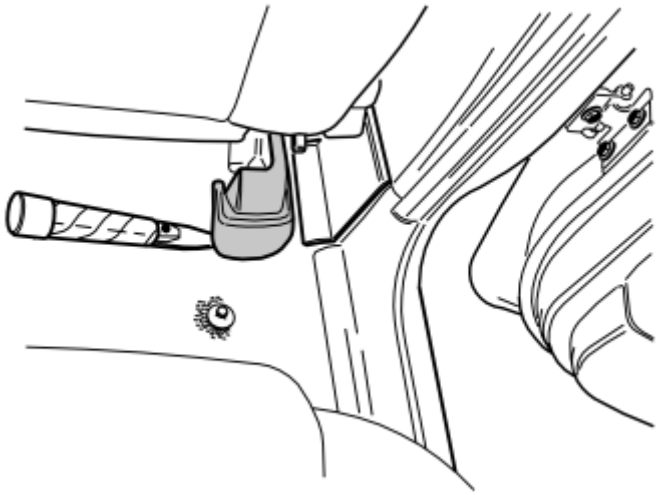

Fig. 68: Prizing Right-Hand Rear Mounting Of Cover Panel
Courtesy of VOLVO CARS CORPORATION

- Remove the panel on the right rear mounting on the right-hand front seat. Pry it up slightly at the rear edge and then pull it back / upwards.

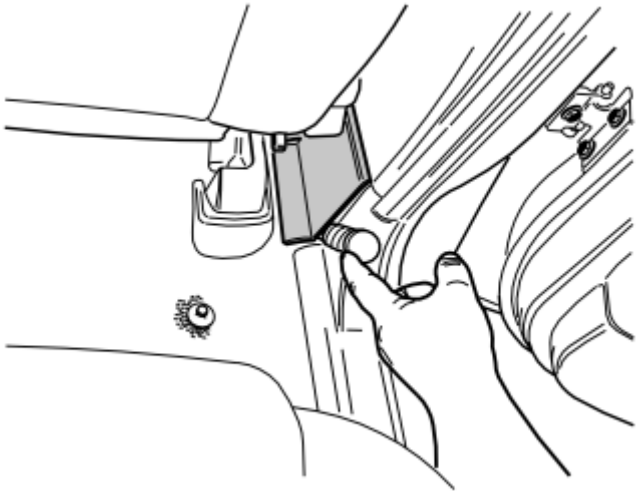

Fig. 69: Prizing Away Cover Panel Over Joint Between Door Sills On Right-Hand Side, At Lower Edge, Using A Weatherstrip Tool
Courtesy of VOLVO CARS CORPORATION

- Carefully pry off and remove the panel above the joint between the right-hand door sills, at the lower edge using a weatherstrip tool.

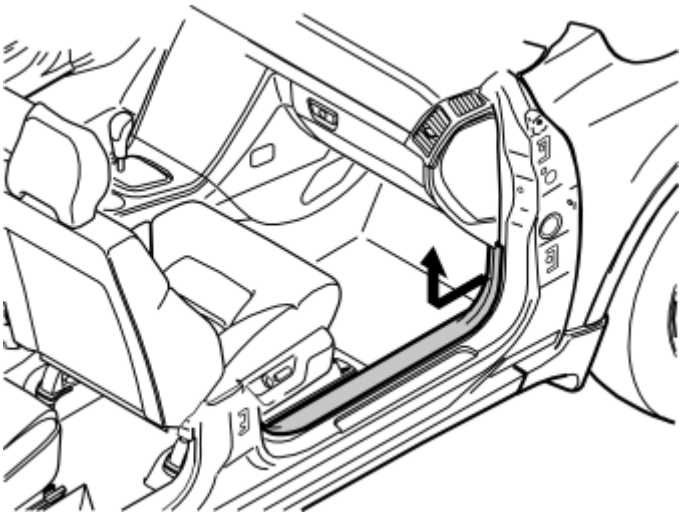

Fig. 70: Right-Hand Front Door's Sill Trim Panel
Courtesy of VOLVO CARS CORPORATION

- Detach the sill trim panel for the right-hand front door. Pull off the panel starting at the front edge until the clip releases. Continue backwards until the remaining clips have released
- Unhook the sill trim panel from the B-post panel.

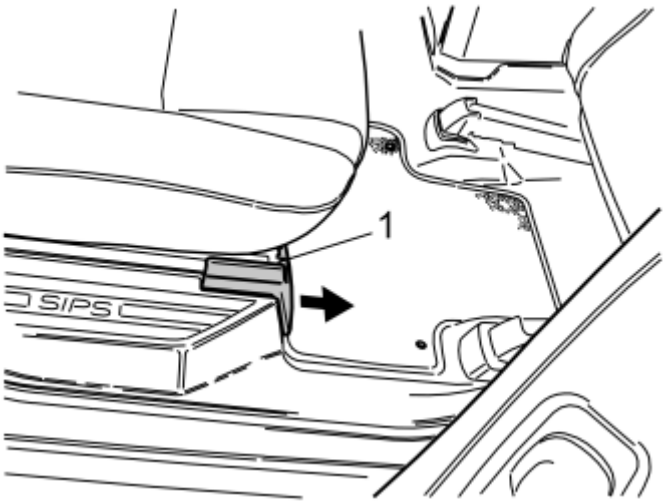

Fig. 71: Pushing Up Catch On Top Side
Courtesy of VOLVO CARS CORPORATION

- Remove the panel in the right-hand front seat mounting on the right-hand seat in the second row. Push up the catch (1) on the top. Pull the panel forward.

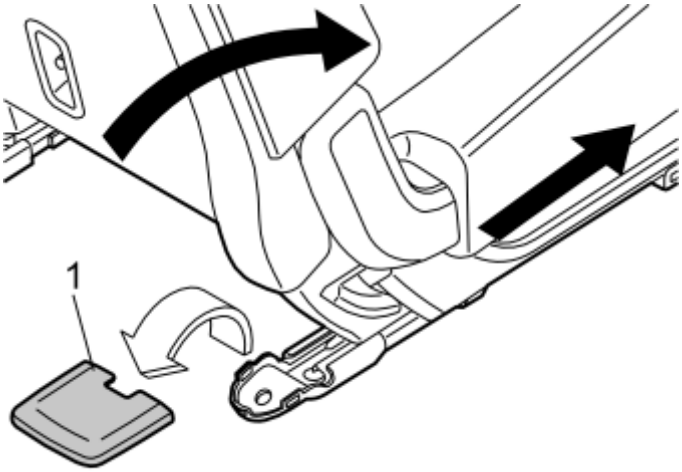

Fig. 72: Removing Cover Panel
Courtesy of VOLVO CARS CORPORATION

- Fold the backrest on the right-hand seat in the second row forward as far as possible. Slide the front seat forward as far as possible. (On cars with two rows of seats, the second row is secured.)
- Remove the cover (1) for the right rear seat mounting by prying off the rear edge.

Illustration A

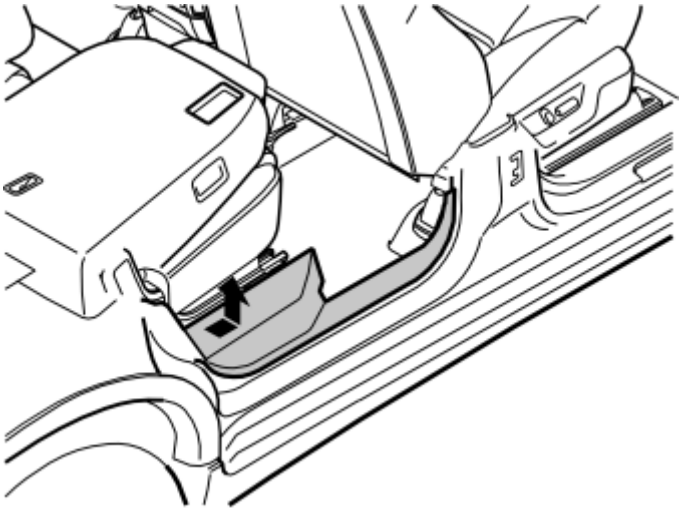

Fig. 73: Removing Sill Trim Panel
Courtesy of VOLVO CARS CORPORATION

- Remove the sill trim panel for the right-hand rear door. Pull the rear edge until the clips release. Continue forwards until the remaining clips have released.

Applies to cars with two rows of seats

- On cars with two rows of seats the seat cannot be slid forwards. To remove the sill trim panel; Start by folding the backrest forward when pulling the rear edge of sill trim panel loose. Then reposition the backrest to raise the seat cushion and provide more room for removing the sill trim panel. It is securely positioned. Do not damage the panel and surrounding components.

Illustration B

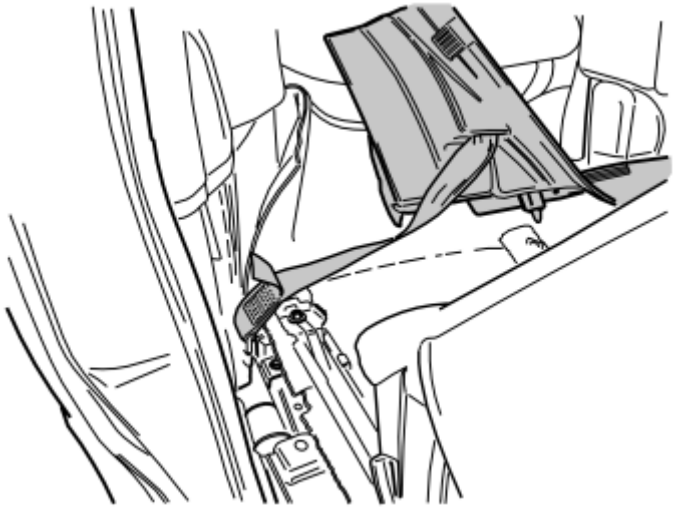

Fig. 74: Identifying Sill Trim Panel
Courtesy of VOLVO CARS CORPORATION

- Unhook from the B-post panel and place in the second/third row of seats.

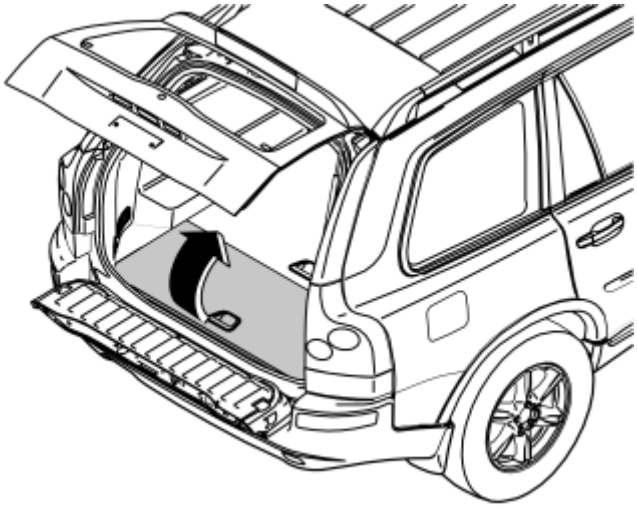

Fig. 75: Identifying Centre Floor Hatch
Courtesy of VOLVO CARS CORPORATION

Applies to cars with three rows of seats and integrated carrier bag holder on the under side of the center floor hatch

- Fold the rear center floor hatch up
- Detach the two straps from the panel underneath. Lift up the panel at the rear edge. Fold the floor hatch back towards the panel and lift out the floor hatch and the panel.

Applies to cars with three rows of seats without integrated carrier bag holders

- Lift up the center rear floor hatch at the rear edge and lift it out.

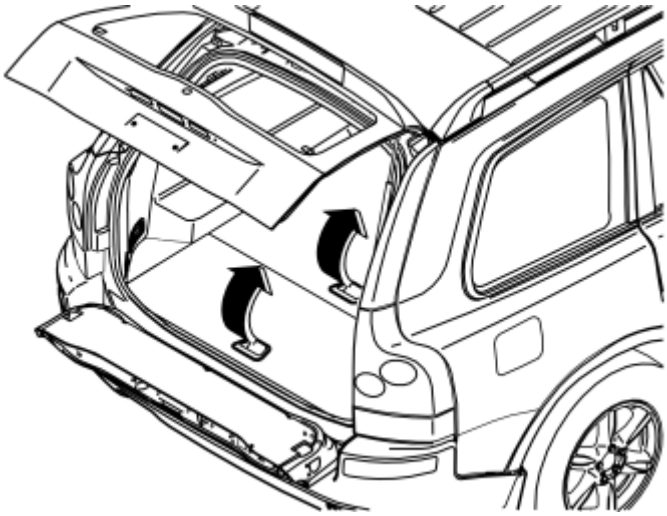

Fig. 76: Removing Two Center Floor Hatches By Lifting Them Slightly
Courtesy of VOLVO CARS CORPORATION

Applies to cars with two rows of seats

- Remove the two center floor hatches. First lift up slightly and then pull them loose from the mountings at the front edge. If the rear center floor hatch has a carrier bag holder on the lower side, the floor hatch is secured by a strap on each of the shorter sides of the storage box. These must be removed
- Remove the two storage boxes from underneath.

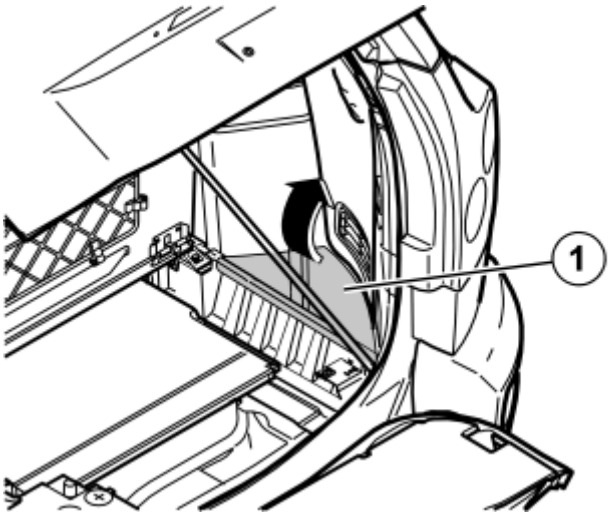

Fig. 77: Remove Right And Left Side Glove Box
Courtesy of VOLVO CARS CORPORATION

Applies to all models

- Remove the right-hand side floor hatch (1).

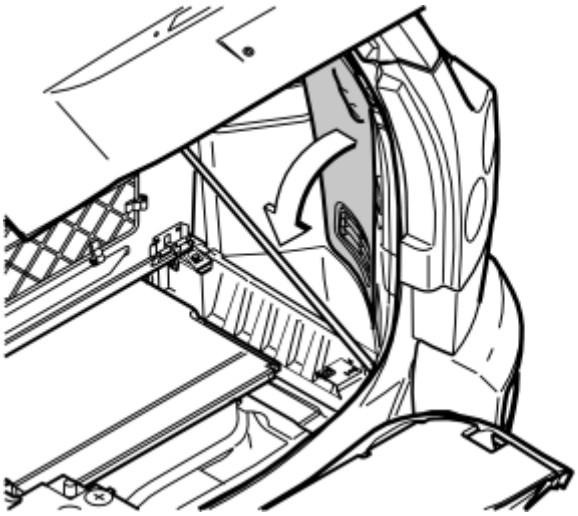

Fig. 78: Folding Side Panel From Right-Hand Side Of Cargo Compartment
Courtesy of VOLVO CARS CORPORATION

- Remove the folding side panel from the right-hand side in the cargo compartment.

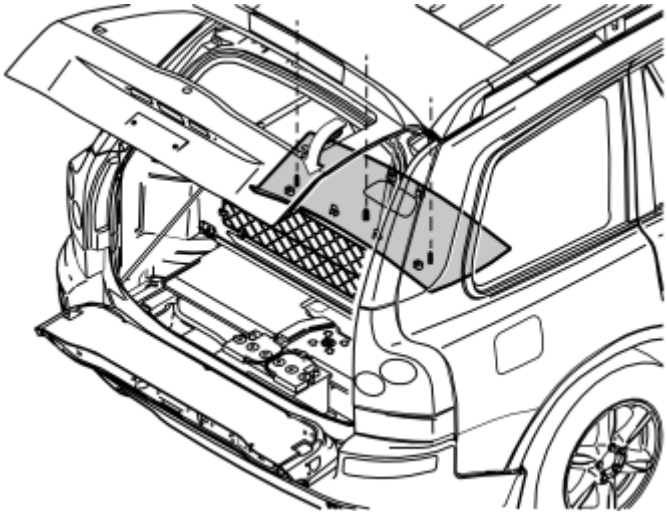

Fig. 79: Remove Rear Headlining Panel Cover
Courtesy of VOLVO CARS CORPORATION

- Remove the cover and the screws for the rear headlining
- Carefully pry off the panel at the rear edge using a weatherstrip tool
- Pull the rear edge of the panel downwards until all clips in the inside have released
- **Applies to cars with three rows of seats:** Disconnect the connector for the rear roof lighting. Pull the panel backward.

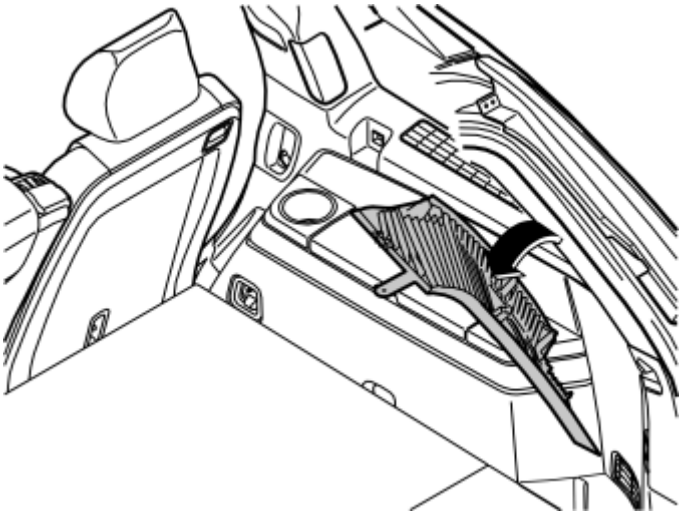

Fig. 80: Pull Off Top Edge Of Right-Hand D Pillar Panel
Courtesy of VOLVO CARS CORPORATION

- Carefully detach the D-post panels on the right and left-hand sides starting at the top edge. Continue downwards until all three clips have released
- Remove the panel by pulling upwards slightly and unhooking from the side panel. If applicable, disconnect the connector for the D-post loudspeaker.

INSTALLING THE COMBINED AERIAL

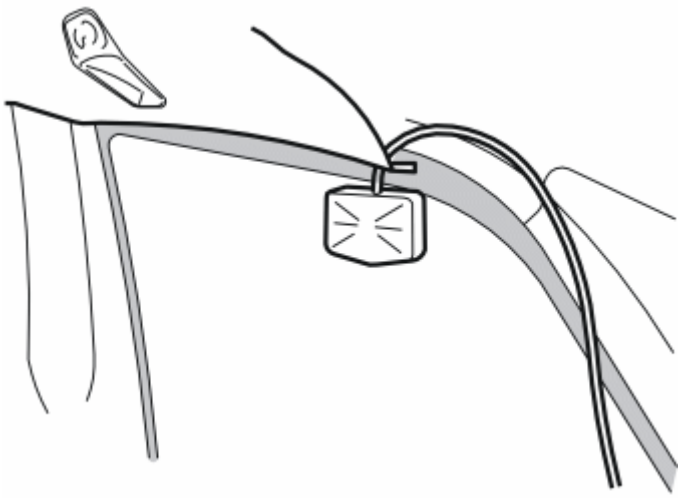

Fig. 81: View Of Inner Base Module Connector
Courtesy of VOLVO CARS CORPORATION

- Clean the surface where the inner base module is to be positioned using the cleaning cloth from the kit
- Wipe dry
- Remove the backing from the inner base module
- Position the inner base module horizontally on the side window, in line with the rear end of the headlining. The upper rear corner of the inner base module must be positioned edge to edge with the tinted area of the side widow as illustrated.

Fig. 82: Pressing Antenna Into Place On Outer Base Module
Courtesy of VOLVO CARS CORPORATION

- Install the aerial on the external base module.

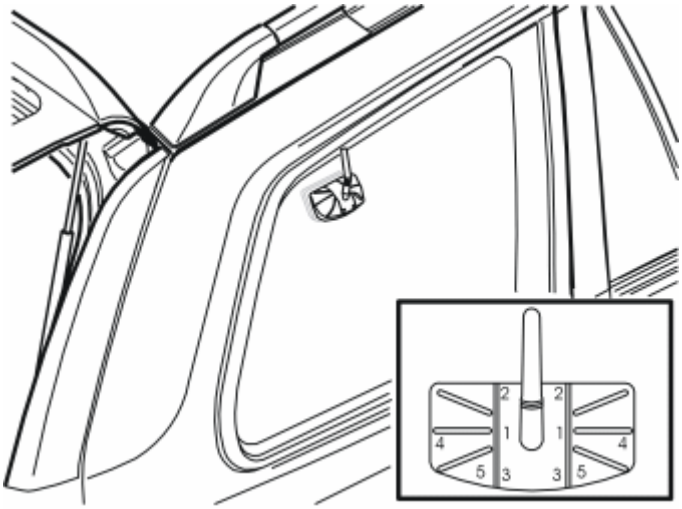

Fig. 83: Identifying External Base Module Positioning
Courtesy of VOLVO CARS CORPORATION

- Clean the surface where the external base module is to be positioned using the cleaning cloth from the kit
- Wipe dry
- Remove the backing from the external base module. Press the external base module into place on the side window opposite the inner base module
- Press hard on points 1, 2, 3, 4 and 5, in order, for 3-4 seconds
- Ensure that the tape is sealed around the external base module. For optimum adhesion, heat the glass. Use a hairdryer or similar.

CABLE ROUTING AND CONNECTING THE COMBINED AERIAL

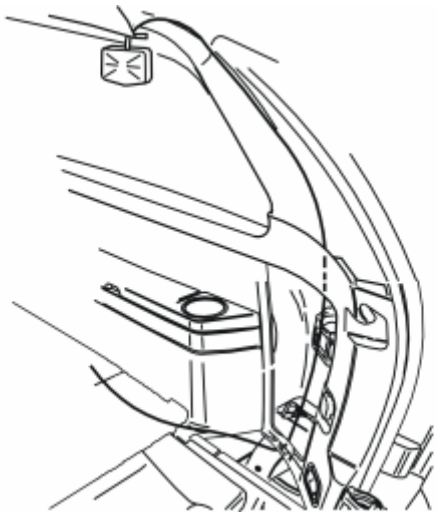

Fig. 84: View Of Aerial Cable Route Along Existing Wiring At Rear Edge Of Side Window
Courtesy of VOLVO CARS CORPORATION

- Route the aerial cable down along the existing wiring at the rear edge of the side window down to the rear edge of the wheel arch

- Clamp the aerial cable at the existing wiring using the tie straps from the kit.

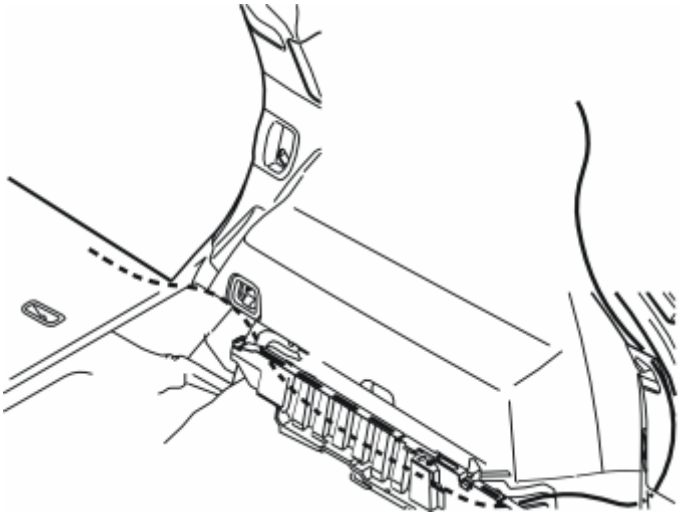

Fig. 85: View Of Routing Aerial Cable On Right-Hand Side Of Cargo Floor Support
Courtesy of VOLVO CARS CORPORATION

Applies to cars with two rows of seats

- Route the aerial cable on the right-hand side of the cargo floor support, inside the front edge of the floor carpet in the right-hand rear door opening. Continue along the right-hand side of the car.

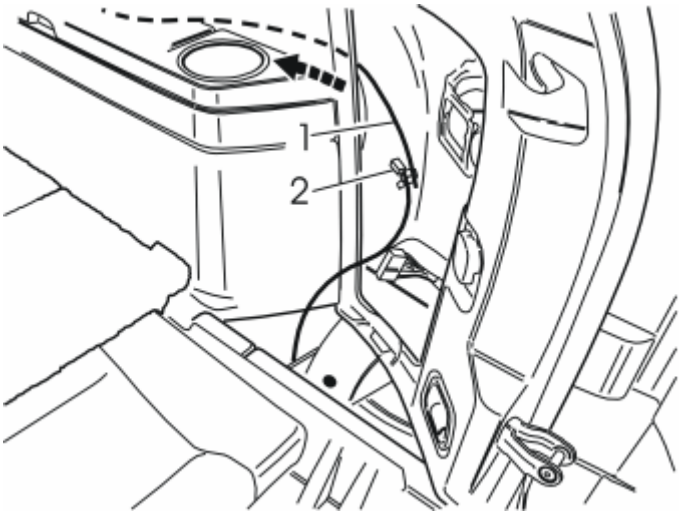

Fig. 86: View Of Inserting Cable (1) At Rear Edge Of Right-Hand Side Panel
Courtesy of VOLVO CARS CORPORATION

Applies to cars with three rows of seats

- Insert a cable (1) at the rear edge of the right-hand side panel and along the inside of the panel, above the mountings for the load securing eyelets and to the front edge of the side panel
- Tape the end to the aerial cable (2) at the cable. Pull the cable with the aerial cable from the front edge of

the side panel.

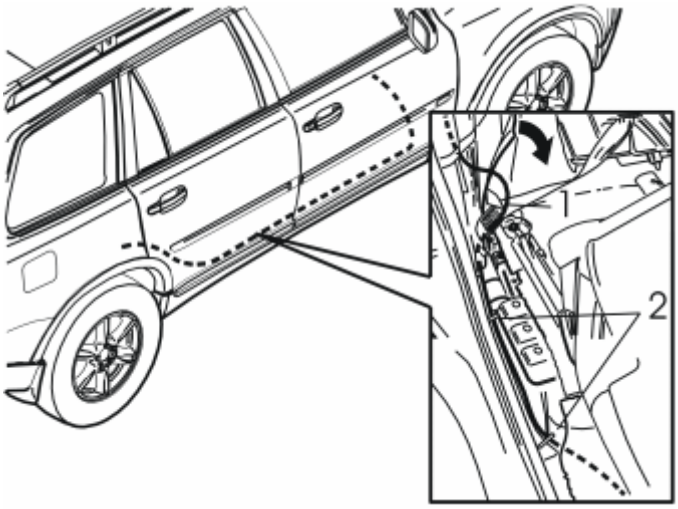

Fig. 87: Route The Pre-Routed Aerial Cable (1) On The Reverse Of The Air Duct
Courtesy of VOLVO CARS CORPORATION

- Route the pre-routed aerial cable (1) on the reverse of the air duct (at the front edge of the wheel arch) to the left-hand side of the seat belt lower mounting and along the rear door sill. Continue inside the floor carpet to the front door opening
- Clamp the cable harness in the hole in the front member for the seat mounting and in the rear hole in the horizontal panel at the right-hand side of the seat. Use the tie straps (2) (from the kit).

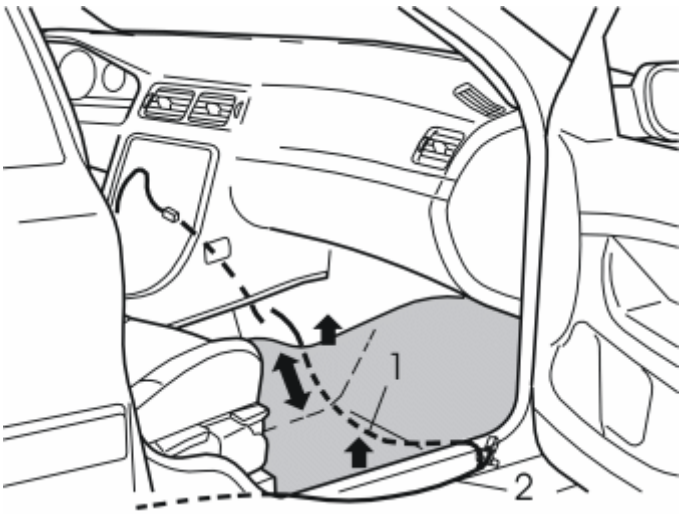

Fig. 88: Identifying Cable Routing Through Carpet
Courtesy of VOLVO CARS CORPORATION

- Pull up the left and right sides of the carpet at the right-hand front seat slightly. Insert a cable (1) underneath the carpet at the front edge of the air ducts on the right-hand side of the center console. Pull out the cable at the right-hand door sill as illustrated
- Tape the aerial cable (2) at the pre-routed cable. Route the cable to the right-hand side of the center

console
- Route the aerial cable up at the air ducts and pull along in the center console
- Connect the aerial cable to the cable from the carphone holder.

Reinstall:

- the floor carpets
- the bracket with dashboard environment panel and control module in the center console
- the gear selector lever panel
- the sill trim panels in the doors
- the panel above the joints for the sill trim panels
- the cover and panels for the seats
- the right-hand side floor hatch
- Reinstall the D-post panel and the headlining and any relevant connectors
- Reinstall the folding panel.

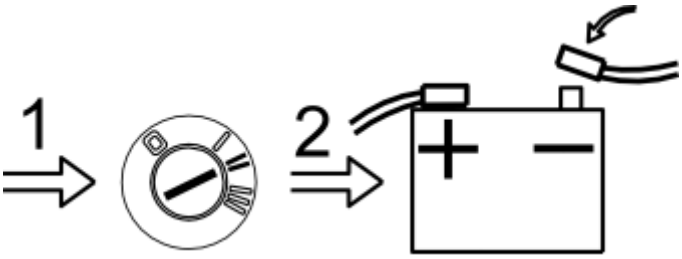

Fig. 89: Connecting Negative Battery Lead
Courtesy of VOLVO CARS CORPORATION

- Turn the ignition key to position II
- Reconnect the battery negative lead
- Reinstall the storage boxes and floor hatches
- Reinstall the right-hand side panel on the center console.

XC90

see **XC90**

GLASS MOUNTED GSM COMBINED ANTENNA (2003-2011)

GLASS MOUNTED GSM COMBINED ANTENNA

PREPARATION

NOTE: **When installing on the rear windscreen, the antenna must not be installed on the heating loops in the windscreen. However, the antenna is not affected by the area of the windscreen shaded black.**

The antenna is positioned as described below:

NOTE: **The temperature of the windscreen must not be lower than +10°C.**

Illustration A does not apply to the S40, V40, S60, V70 (00-) or S80

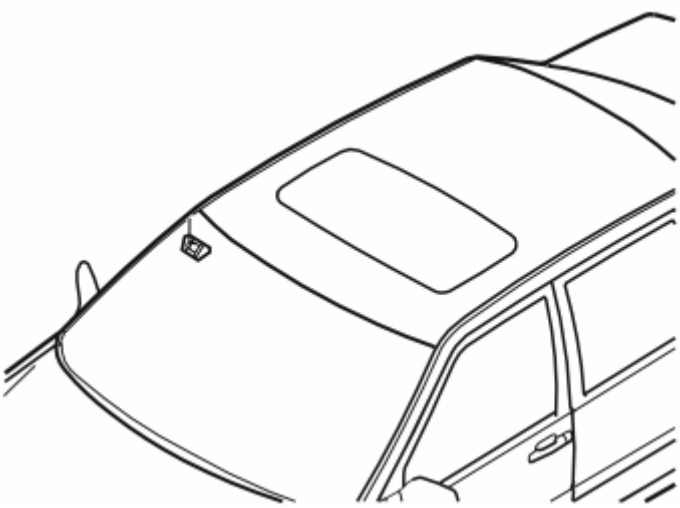

Fig. 90: Identifying Antenna Location
Courtesy of VOLVO CARS CORPORATION

Windscreen. In the top right-hand corner of the windscreen.

Illustration B does not apply to the S60 or S80

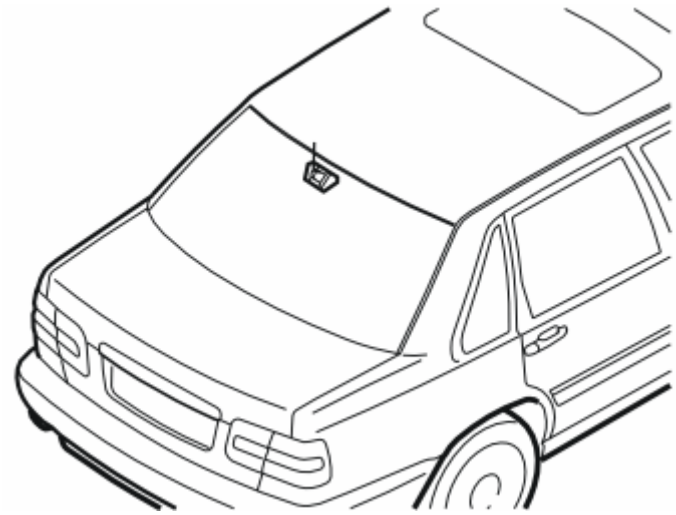

Fig. 91: Identifying Antenna Location
Courtesy of VOLVO CARS CORPORATION

Rear windscreen, 4 door. At the top center of the rear windscreen.

Illustration C does not apply to the V70 (00-)

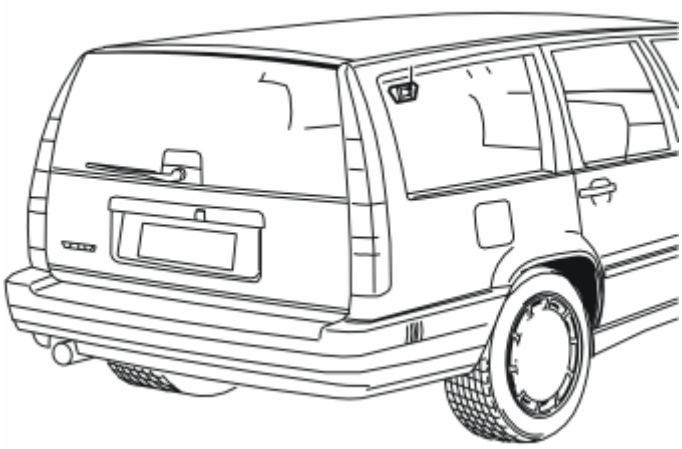

Fig. 92: Identifying Antenna Location
Courtesy of VOLVO CARS CORPORATION

Right rear side window, 5 door. At the top rearmost point of the side window.

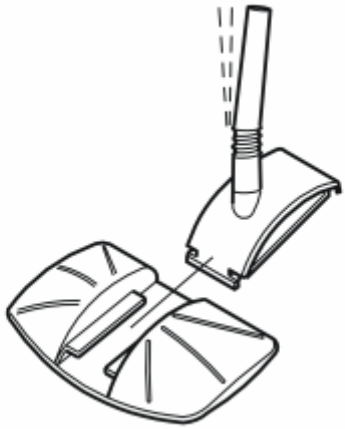

Fig. 93: Pressing Antenna Into Place On Outer Base Module
Courtesy of VOLVO CARS CORPORATION

- Press the antenna into place on the outer base module.

INSTALLING THE EXTERNAL BASE MODULE

Illustration A does not apply to the S40, V40, S60, V70 (00-) or S80

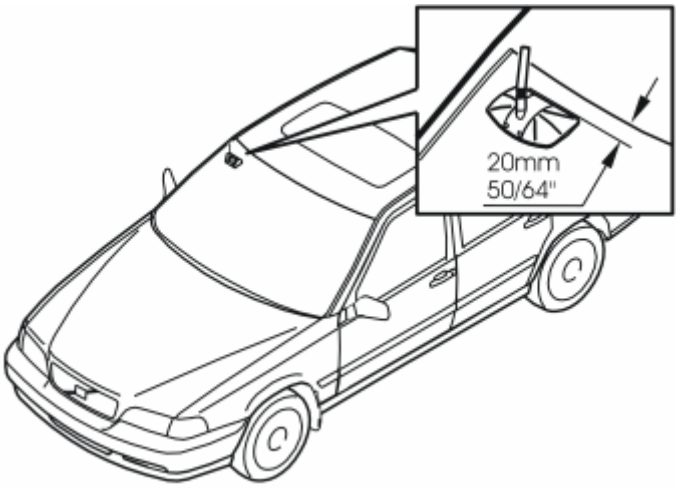

Fig. 94: Identifying Antenna Mounting Location
Courtesy of VOLVO CARS CORPORATION

Illustration B does not apply to the S60 or S80

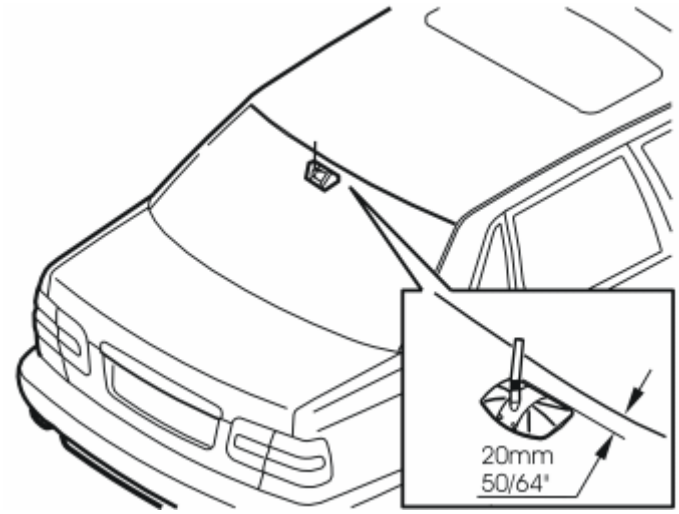

Fig. 95: Identifying Antenna Mounting Location
Courtesy of VOLVO CARS CORPORATION

Illustration C does not apply to the V70 (00-)

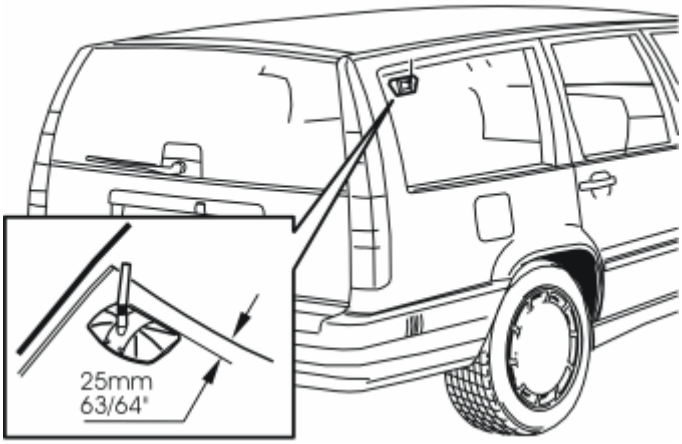

Fig. 96: Identifying Antenna Mounting Location
Courtesy of VOLVO CARS CORPORATION

- Check the location (as illustrated). Ensure that the antenna is clear of the windscreen trim and wiper blade. Ensure that the antenna can be removed from the external base module when washing the car etc.
- Carefully clean the surface of the glass. Use the cleaning cloth supplied. Wipe dry using a rag.
- For optimum adhesion, warm the glass. Use a hairdryer for example.

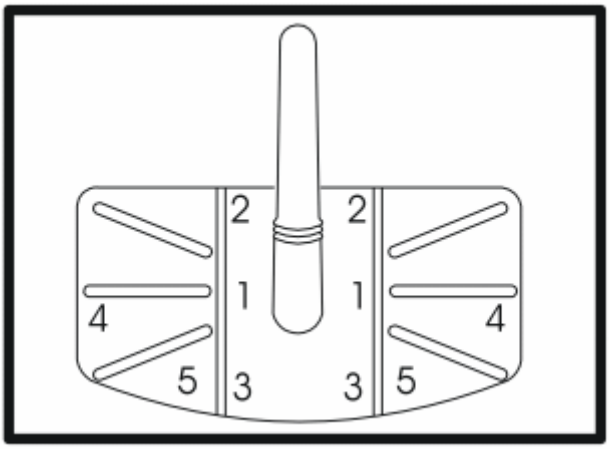

Fig. 97: Press Points For External Base Module
Courtesy of VOLVO CARS CORPORATION

- Remove the backing from the external base module. Secure the external base module on the windscreen. Press hard on points 1, 2, 3, 4 and 5, in order, for 3-4 seconds.
- Ensure that the tape is sealed around the external base module.

INSTALLING THE INTERNAL BASE MODULE

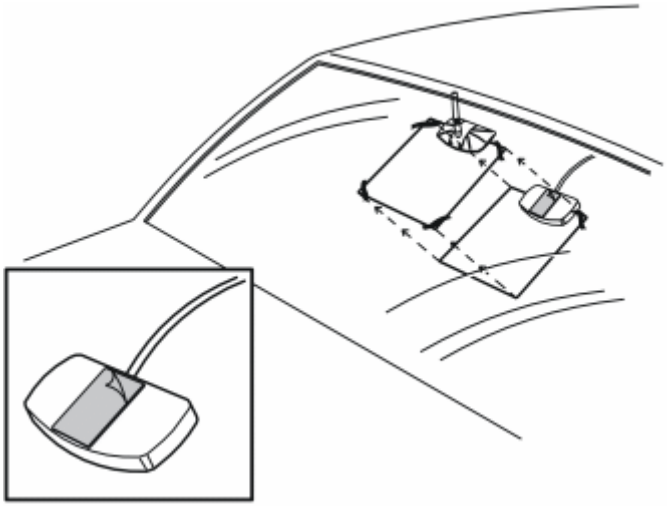

Fig. 98: Installing Internal And External Base Modules
Courtesy of VOLVO CARS CORPORATION

Templates are provided to facilitate installation of the internal base module. The templates are necessary because the black shading on the windscreen may conceal the external base module.

- Cut out the two templates provided with the illustrations.
- Align one template on the installed external base module. Secure it using tape.
- Carefully clean the interior surface of the glass. Use the cleaning cloth supplied. Wipe dry using a rag.

- Install the second template on the interior, edge to edge with the external template.

The internal and external base modules must be positioned directly opposite each other.

- Install the internal module in the cut-out of the second template. Install the internal module base in the same way as the external module base.
- Remove the templates.

ROUTING THE ANTENNA CABLE

The clips in the kit are used to secure the antenna cable, to the windscreen frame for example.

WARNING: **Do not secure the antenna cable to the inflatable curtains.**

Illustration A does not apply to the S40, V40, S60, V70 (00-) or S80

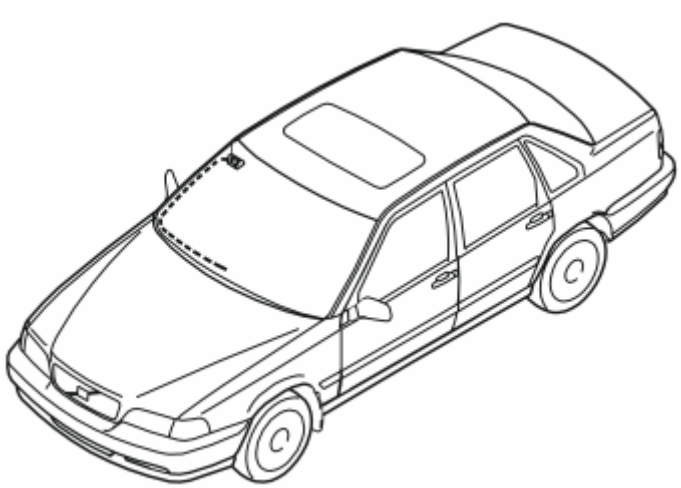

Fig. 99: Identifying Cable Routed Via A Post And Under Dashboard To Telephone
Courtesy of VOLVO CARS CORPORATION

- Windscreen. Route the cable via the A post and on under the dashboard to the telephone.

Illustration B does not apply to the S40, S60 or S80

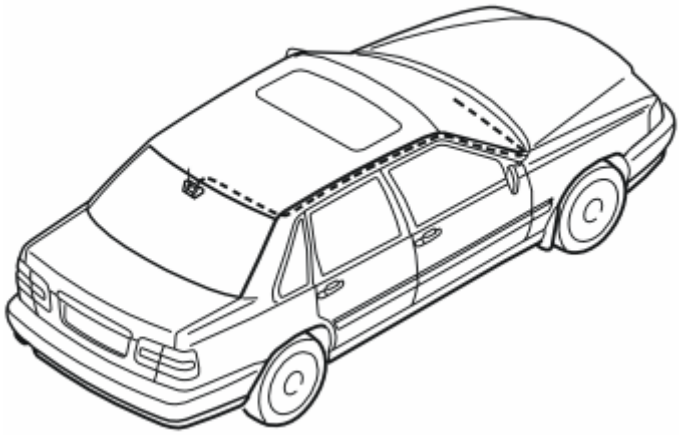

Fig. 100: Identifying Antenna Cable Routing
Courtesy of VOLVO CARS CORPORATION

- Rear windscreen 4 door. Route the cable inside the panel via roof, down at the A post and under the dashboard to the telephone.

Illustration C does not apply to the V40 or V70 (00-)

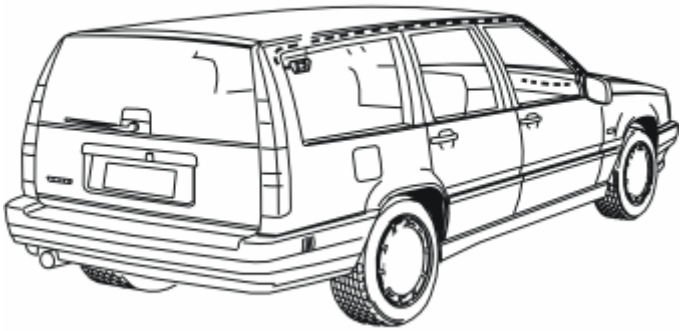

Fig. 101: Identifying Antenna Cable Routing
Courtesy of VOLVO CARS CORPORATION

- Right rear side window, 5 door. Route the cable inside the panel via the roof, down at the A post and on under the dashboard to the telephone.

NOTE: **Route the cable far enough down the bottom edge of the rear windscreen so that the cable is clear of the gas generator for the inflatable curtain.**

Illustration F does not apply to the S40, S60 or S80

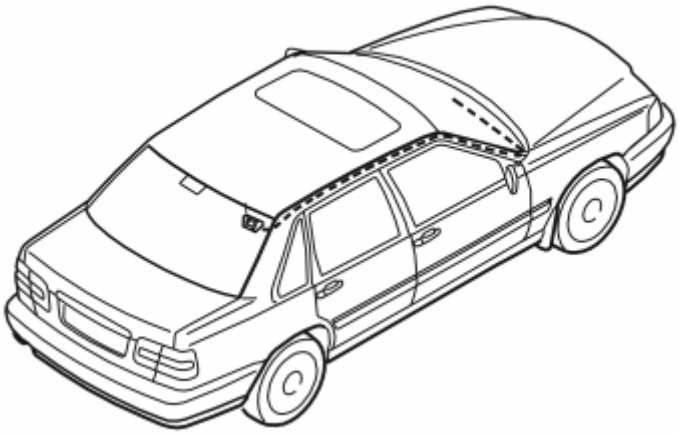

Fig. 102: Identifying Cable Routed From Side Of Rear Windscreen Via Roof To Telephone
Courtesy of VOLVO CARS CORPORATION

- Rear windscreen, 4 door with high level stop (brake) lamps. Route the cable from the side of the rear windscreen via the roof to the telephone.

FINISHING

- Align the antenna so that it is vertical to the ground.

HANDS FREE UNIT FOR CARPHONE, UNIVERSAL (2003-2004)

CARS EQUIPPED WITH SRS/SIPS (AIRBAG)

see **CARS EQUIPPED WITH SRS/SIPS (AIRBAG)**

CAUTION

see **CAUTION**

HANDS FREE UNIT FOR CARPHONE, UNIVERSAL

NOTE: This accessory is connected to the electrical system of the car. It requires software unique to the car.

PREPARATIONS

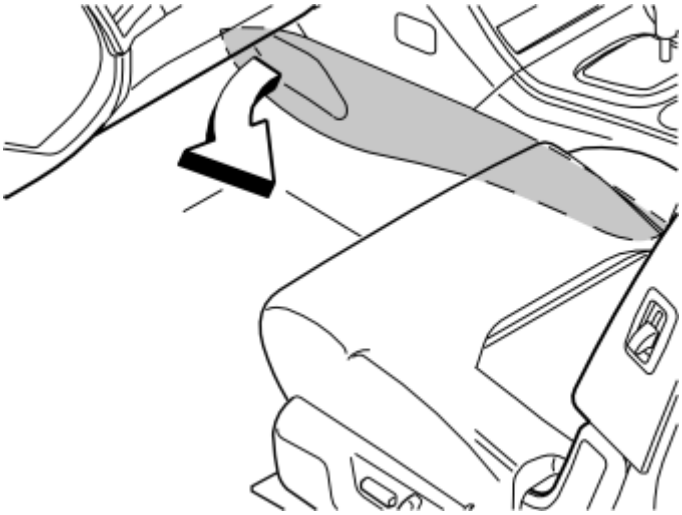

Fig. 103: Identifying Centre Console Side Panels
Courtesy of VOLVO CARS CORPORATION

- Remove the left and right-hand side panels from the center console. Pull the panels free at the front edge and continue backwards until all the clips have released.

Applies to cars with power front seats

- Position the right-hand front seat so that:
  - the covers over the right-hand rear and both front seat mountings are not blocked
  - the small panel at the lower edge of the right-hand B-post panel is not obstructed
  - the screws for amplifier under the seat can be undone.

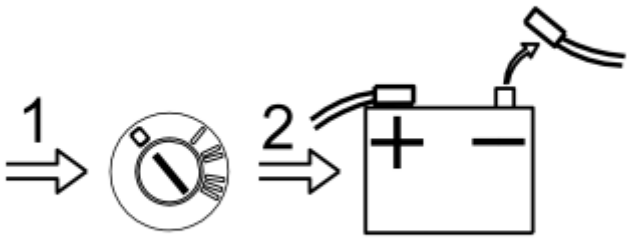

Fig. 104: Disconnect Battery Negative Lead
Courtesy of VOLVO CARS CORPORATION

- Turn the ignition key to position 0
- Disconnect the battery negative lead.

NOTE: Wait at least five minutes before disconnecting the connectors or removing other electrical equipment.

Removing the loudspeaker grille:

Illustration A

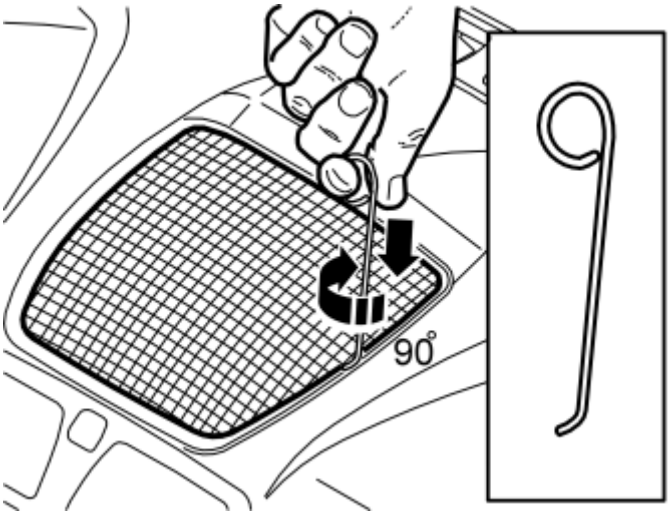

Fig. 105: Removing The Loudspeaker Grille
Courtesy of VOLVO CARS CORPORATION

- Take a length of **1.5 mm (1/16")** diameter welding rod. Bend one end to 90°, L=5 mm (13/64")
- Bend the other end to form a handle
- Insert the first bent end into the joint between the loudspeaker grille and the dashboard as illustrated, until it engages
- Twist the welding rod 90° so that the bent section engages with the underneath of the loudspeaker grille. It may be necessary to move the welding rod along the joint so that it can be twisted around.

Illustration B

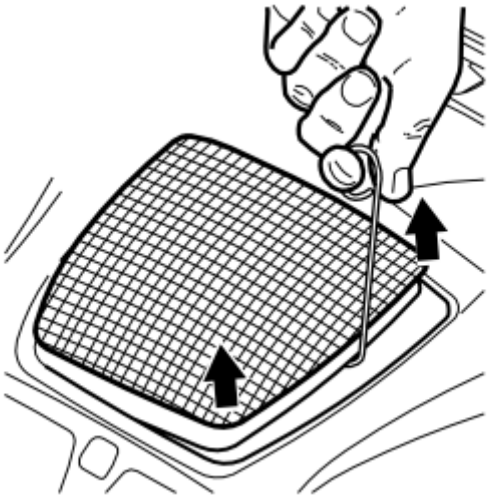

Fig. 106: View Of Detached Loudspeaker Grille
Courtesy of VOLVO CARS CORPORATION

- Pull up until the loudspeaker grille detaches. The grille is well secured using four clips.

NOTE: Do not damage the dashboard.

- Place the loudspeaker grille to one side.

Illustration A applies to cars without a centrally-mounted loudspeaker

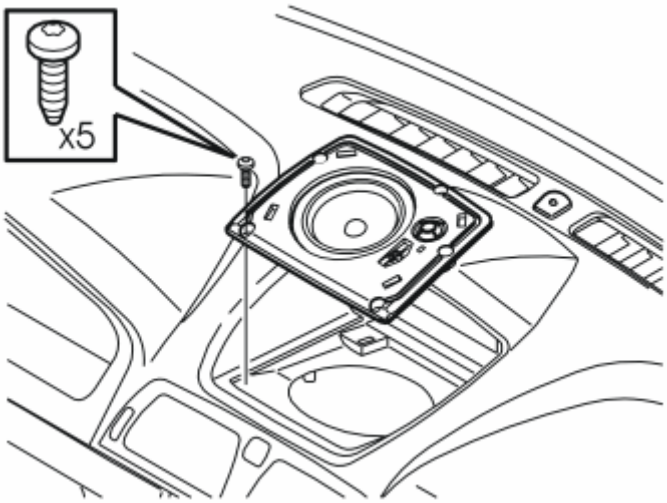

Fig. 107: Identifying Cars Without A Centrally-Mounted Loudspeaker
Courtesy of VOLVO CARS CORPORATION

- Remove the bracket for the loudspeaker grille. Remove the five screws and pulling the bracket up out of the dashboard.

Illustration B applies to cars with a centrally-mounted loudspeaker

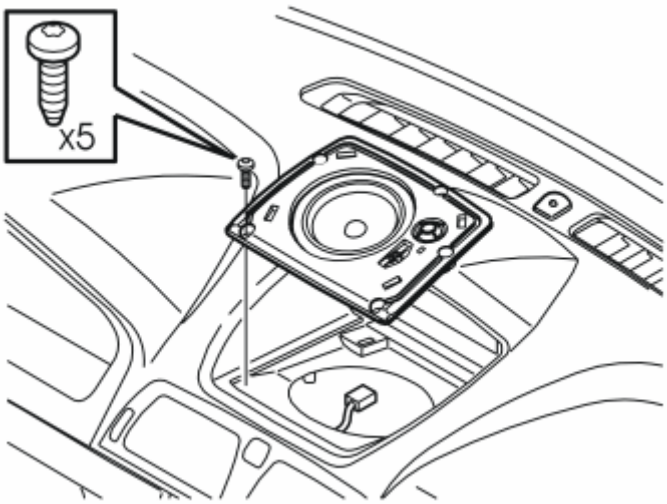

Fig. 108: Identifying Cars With A Centrally-Mounted Loudspeaker
Courtesy of VOLVO CARS CORPORATION

- Remove the five screws from the loudspeaker. Pull the loudspeaker slightly out of the dashboard. Disconnect the connector.

Illustration C applies to cars with RTI (road traffic information)

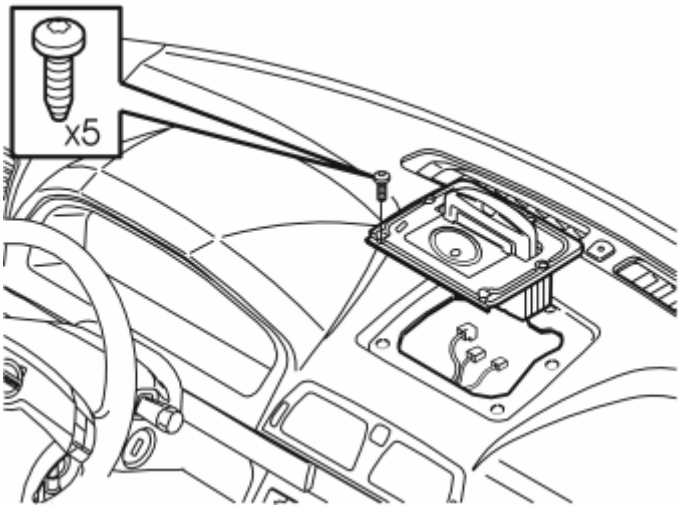

Fig. 109: Identifying Cars With RTI (road Traffic Information) Display
Courtesy of VOLVO CARS CORPORATION

- Remove the five screws in the display for RTI (road traffic information). Pull up the display slightly from the dashboard. Disconnect the connectors
- Disconnect the loudspeaker for the centrally-mounted if installed.

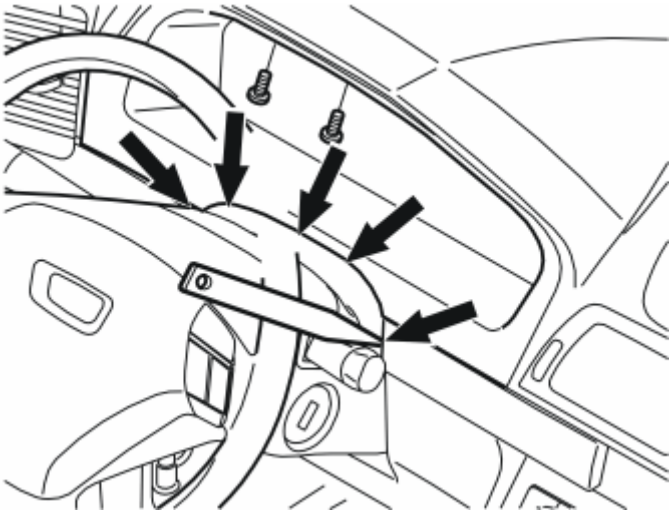

Fig. 110: Identifying Upper Steering Column Cover Removal
Courtesy of VOLVO CARS CORPORATION

- Lower the steering wheel to the lowest position. Pull the steering wheel to the rearmost position
- Remove the two screws at the top edge of the combined instrument panel surround
- Carefully pry off the rubber seal from the upper steering column cover. Use a weatherstrip tool. It is secured with five clips
- Remove the surround by carefully pulling it backwards, first at the lower edge and then at the top edge until all the clips have released.

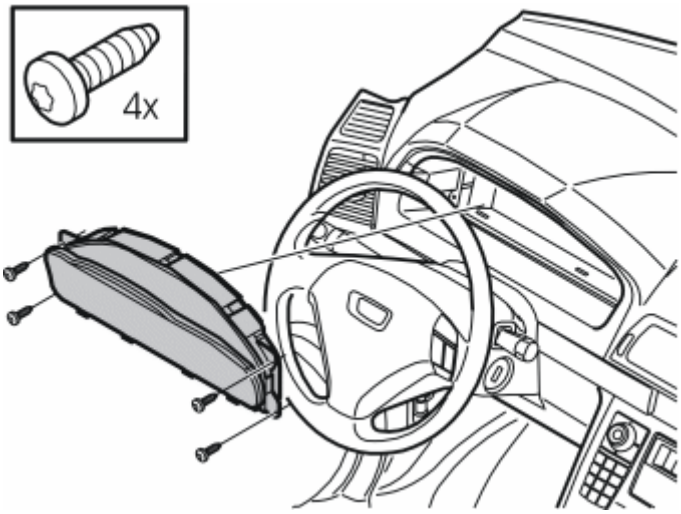

Fig. 111: View Of Combined Instrument Panel Screws
Courtesy of VOLVO CARS CORPORATION

- Remove the four screws for the combined instrument panel
- Pull out the combined instrument panel. Disconnect the connector on the reverse of the combined instrument panel.

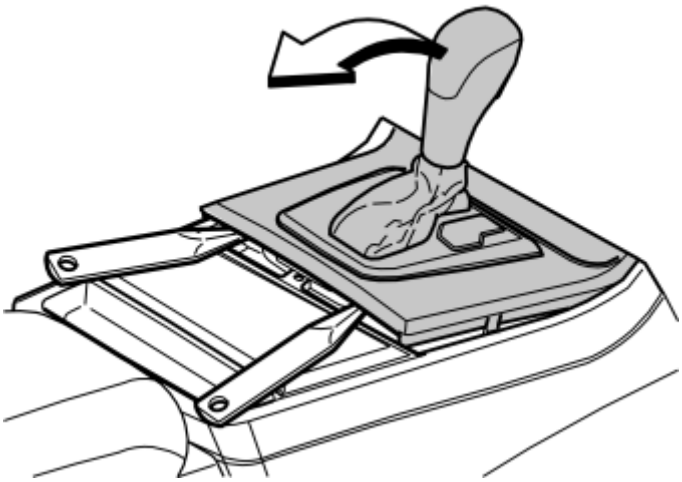

Fig. 112: Prying Off Gear Selector Panel At Rear Edge
Courtesy of VOLVO CARS CORPORATION

Applies to cars with automatic gearboxes

- Turn the ignition key to position II.

Applies to all models

- Move the gear selector lever to its rearmost position
- Carefully pry off the gear selector lever panel at the rear edge using a weatherstrip tool. Pull the panel backwards to access the screws for the dashboard environment panel.

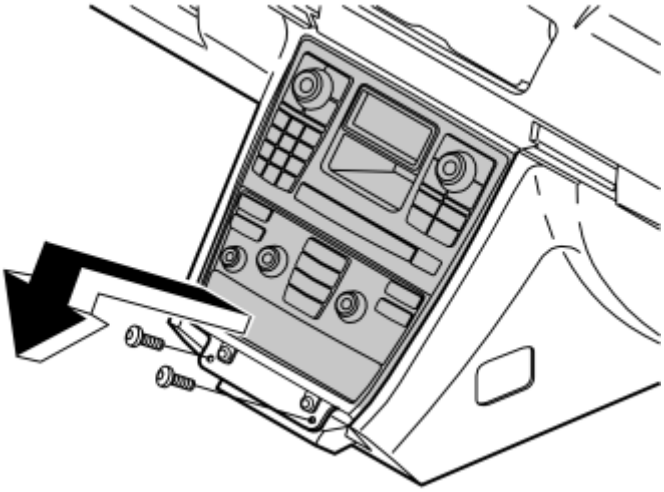

Fig. 113: Removing Screws And Radio/AC Unit From Center Console
Courtesy of VOLVO CARS CORPORATION

- Remove the two screws holding the bracket for the dashboard environment panel and the control module
- Pull out the bracket at the lower edge. Pull downwards from the top edge of the center console

- Disconnect the connectors from the dashboard environment panel and control module
- Disconnect the connectors for the CD-player and/or Mini disc player if applicable.

PREPARATIONS, CARPHONE HOLDER

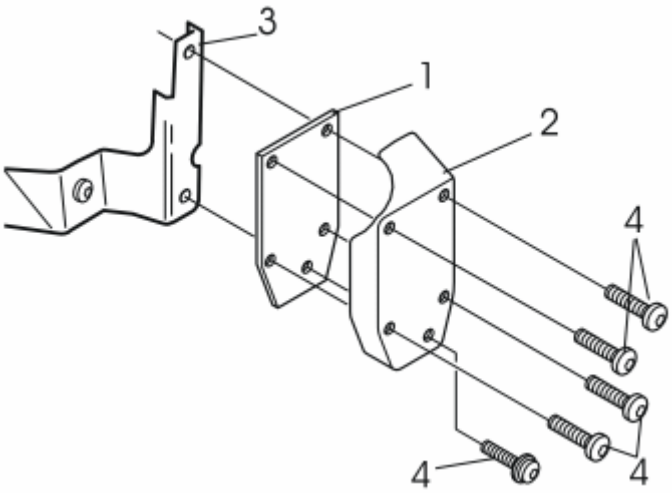

Fig. 114: Identifying Carphone Holder Bracket Components
Courtesy of VOLVO CARS CORPORATION

- Take the carphone holder bracket, the reinforcement plate, the cover and screws from the kit
- Install the reinforcement plate (1) and the cover (2) in the bracket (3) using the screws (4).

Illustration A

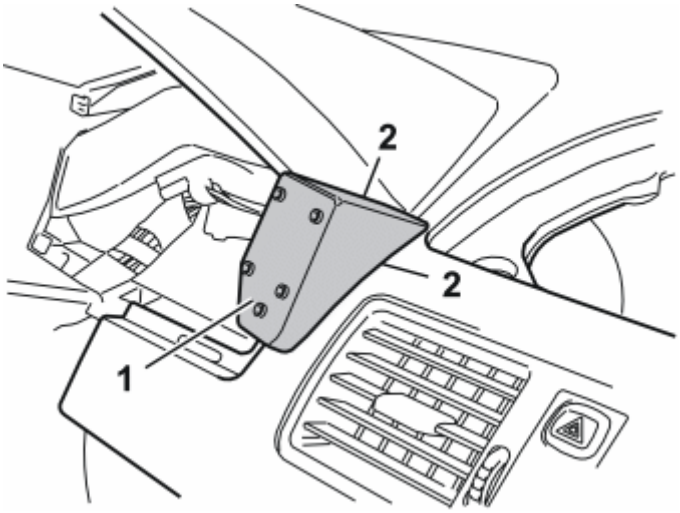

Fig. 115: View Of Bracket To Dashboard
Courtesy of VOLVO CARS CORPORATION

- Position the entire unit (1) in the dashboard to mark out the holes for the bracket. Adjust to achieve the optimum position. Do not press the unit hard against the dashboard. However, ensure that there are no

gaps at the sides between the panel and the dashboard (2).

Illustration B

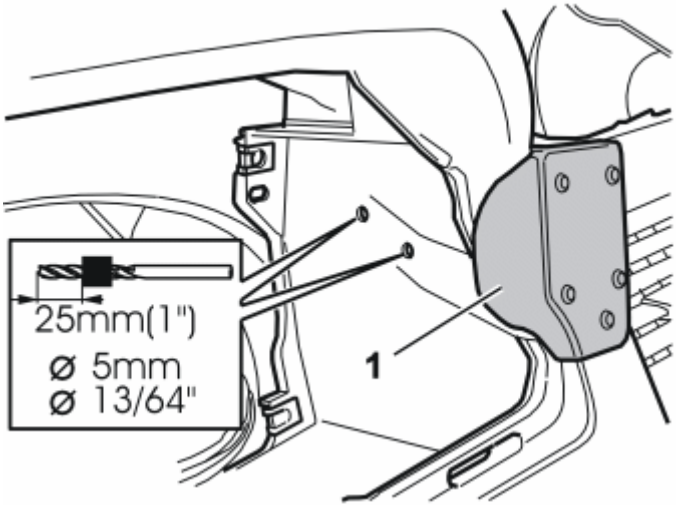

Fig. 116: View Of Bracket Hole Markings
Courtesy of VOLVO CARS CORPORATION

- Hold the unit in place and mark out the holes through the bracket
- Drill out the two holes using a **5 mm (13/64")** diameter drill bit. Use a 25 mm (1") drill stop
- Remove any metal shavings
- Remove the cover and the reinforcement plate from the bracket.

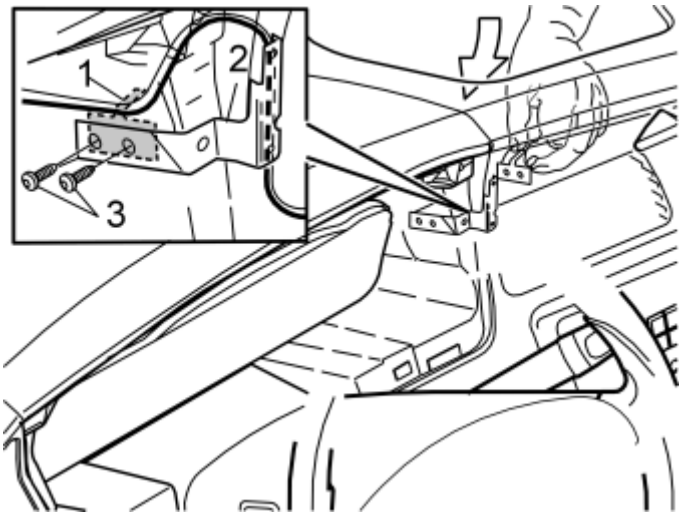

Fig. 117: View Of Reinforcement Panel Screws
Courtesy of VOLVO CARS CORPORATION

- Take the reinforcement plate (1) and the two screws from the kit
- Position the carphone holder wiring, which is routed on the reverse of the bracket, as illustrated
- Insert the reinforcement plate through the hole for the center loudspeaker

- Install the bracket (2). Use the two screws (3). Tighten the bracket to the dashboard.

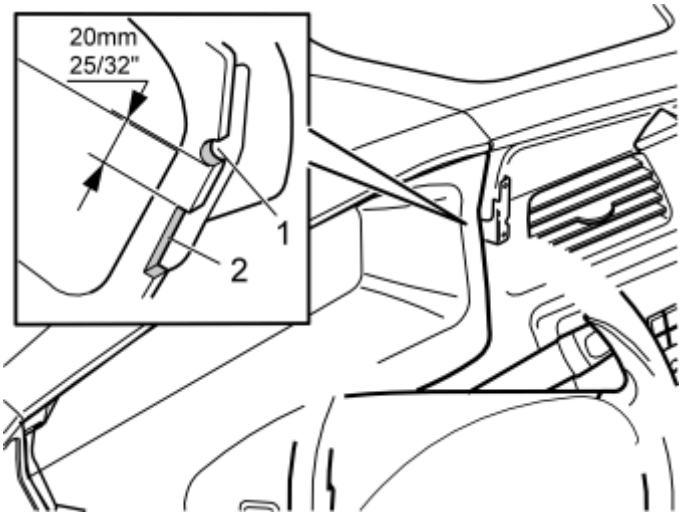

Fig. 118: Identifying The Wiring And The Bracket For The Handset Holder
Courtesy of VOLVO CARS CORPORATION

- Press the surround for the combined instrument panel into place
- Mark out the surround, as illustrated, where the cut-outs will be made for the wiring and the bracket for the handset holder
- Remove the surround. File out the groove (1) for the wiring for the handset. File the hole so that it is large enough for any excess wiring to be routed through the hole and hidden on the inside of the dashboard
- File out a groove (2) for the bracket for the handset holder
- Smooth off the edges of the groove.

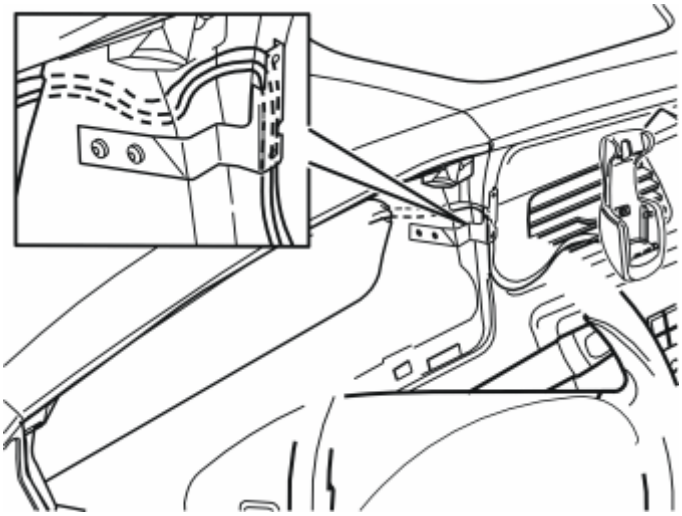

Fig. 119: Identifying Wire Routing
Courtesy of VOLVO CARS CORPORATION

- Route the wiring for the carphone holder from the hole for combined instrument panel. Position the wiring at the left air duct in the center console. Do not route more wiring than is required to secure the

carphone holder.

INSTALLING THE MICROPHONE

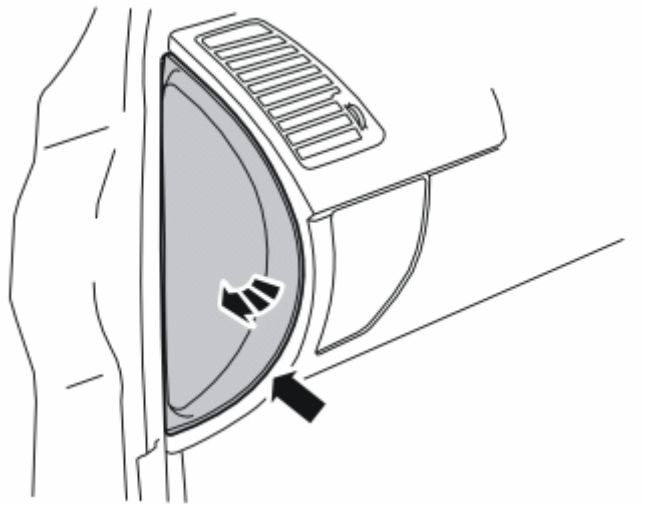

Fig. 120: View Of Left-Hand End Of The Dashboard
Courtesy of VOLVO CARS CORPORATION

- Pry off the rear edge of the panel on the left-hand end of the dashboard. Twist out the panel. Remove the panel.

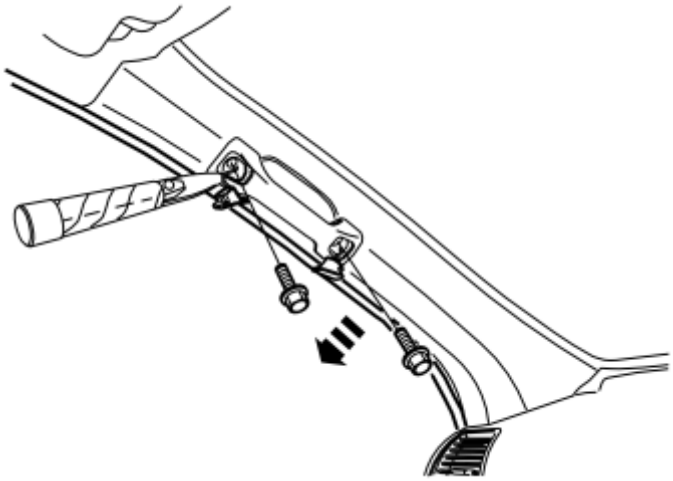

Fig. 121: Identifying Grab Handle Covers
Courtesy of VOLVO CARS CORPORATION

- Pry up the covers on the grab handle at the arrows. Remove the screws underneath
- Pull off the rubber strip from the door opening.

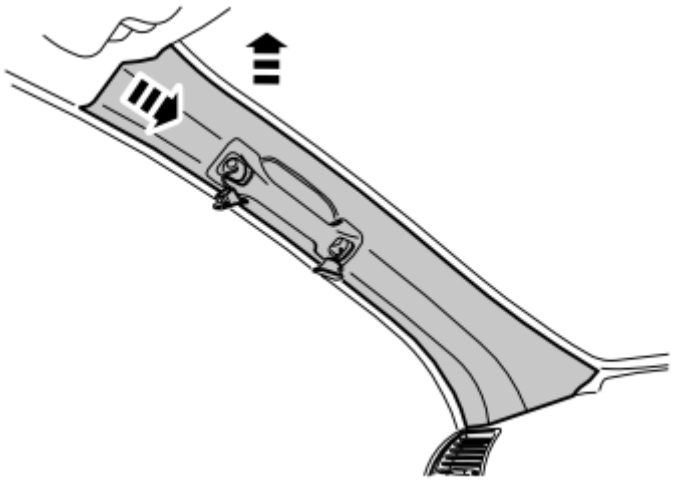

Fig. 122: Identifying Top Edge Of The A-Post Panel
Courtesy of VOLVO CARS CORPORATION

- Pull off the top edge of the A-post panel. Pull the panel straight up to remove it.

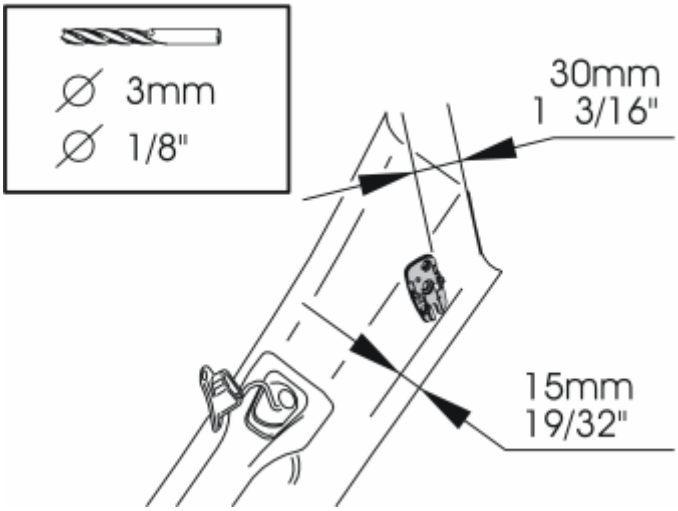

Fig. 123: View Of Mounting Plate Position
Courtesy of VOLVO CARS CORPORATION

- Take the mounting plate from the kit. Position the mounting plate on the top end of the A-post panel. If the microphone is already installed in the mounting plate, remove it. It is secured by two hooks on the long sides
- Mark out and drill the holes for the mounting plate. Use a **3 mm (1/8")** diameter drill bit
- Remove any metal shavings.

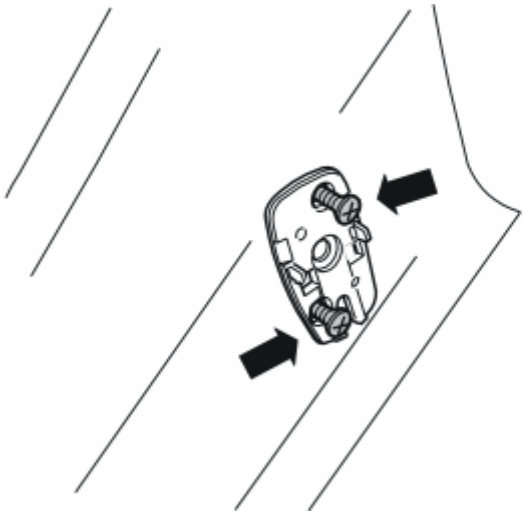

Fig. 124: Identifying A-Post Panel Mount Plate Screws
Courtesy of VOLVO CARS CORPORATION

- Install the mounting plate on the A-post panel using two screws from the kit.

CAUTION: The inflatable curtain (IC) is located inside the A-post panel. It is important to file off the screws securing the mounting plate if necessary, so that they just fit through the panel.

- **Check how much of the screws protrudes on the reverse. Unscrew the screws. File off the screws to the correct length**
- **Reinstall the screws.**

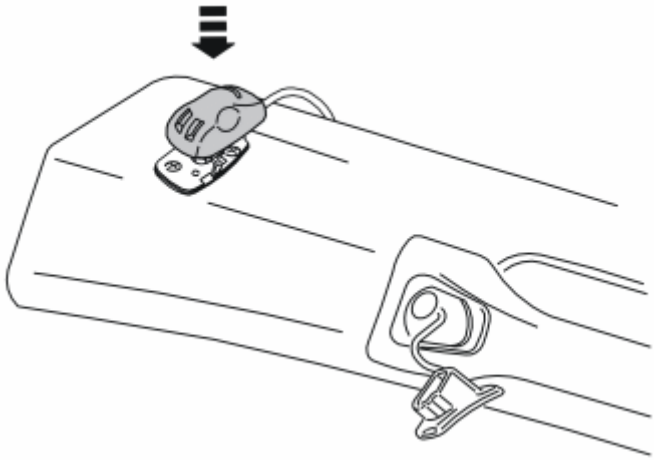

Fig. 125: Identifying Microphone Placement
Courtesy of VOLVO CARS CORPORATION

- Press the microphone from the kit into place on the mounting plate.

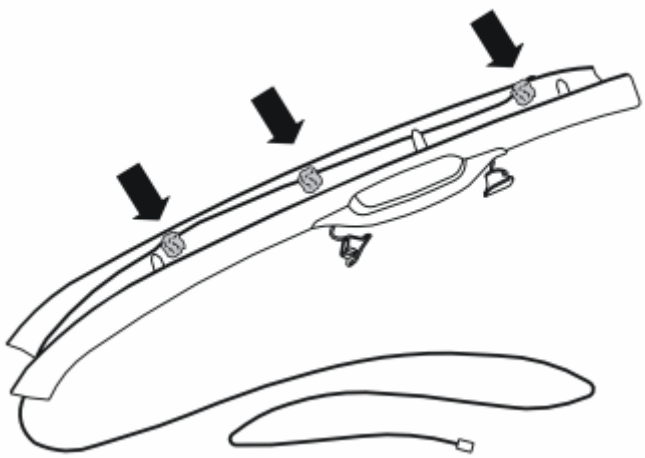

Fig. 126: View Of Microphone Cable Route On Inside Of A-Post Panel
Courtesy of VOLVO CARS CORPORATION

- Route the microphone cable on the inside of the A-post panel. Secure the cable using pieces of butyl tape.

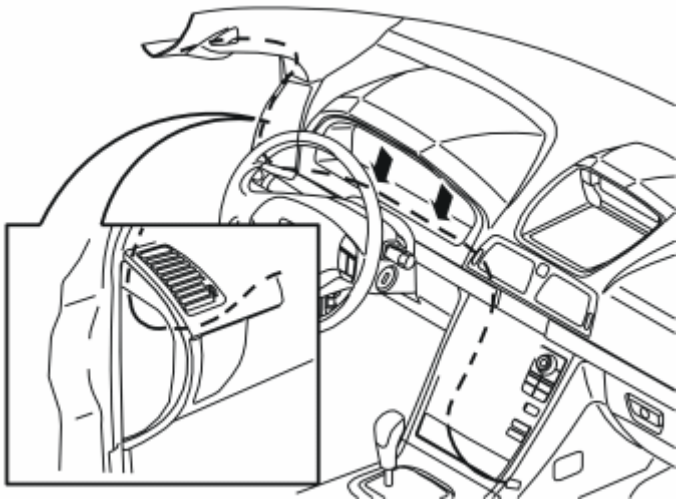

Fig. 127: View Of Microphone Cable In Through The Left-Hand End Of The Dashboard
Courtesy of VOLVO CARS CORPORATION

- Press the A-post panel into place. Install the screws. Tighten to **10 Nm (7 lbf. ft.)**
- Press the covers into place over the screws
- Route the microphone cable in through the left-hand end of the dashboard, into the space for the combined instrument panel and into the center console
- Secure the cable where it runs under the combined instrument panel using pieces of butyl tape
- Connect the combined instrument panel. Reinstall the combined instrument panel
- Reinstall the surround for the combined instrument panel. Tighten
- Reinstall the left-hand end panel on the dashboard.

INSTALLING THE CARPHONE HOLDER

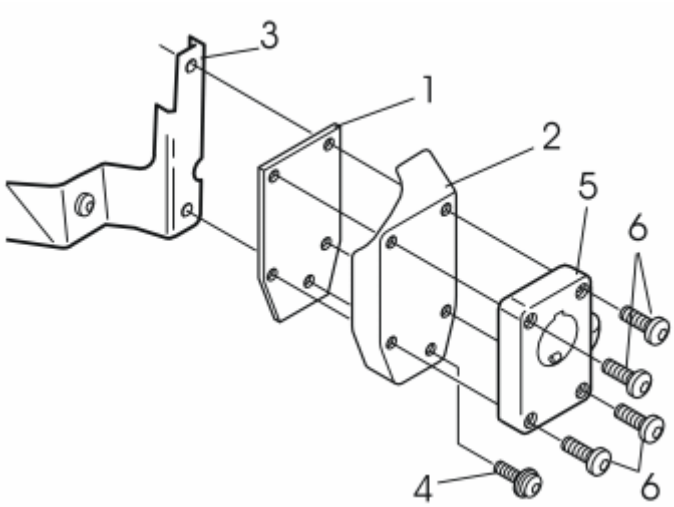

Fig. 128: Identifying Carphone Holder Bracket Components
Courtesy of VOLVO CARS CORPORATION

- Install the reinforcement plate (1) and the cover (2) in the bracket (3). Use the screw (4) from the kit. Do not tighten fully yet
- Remove the mounting plate (5) for the carphone holder from the carphone holder. Tighten the mounting plate using the screws (6) from the kit
- Tighten the screw (4)
- Install the carphone holder on the mounting plate
- Route unnecessary excess wiring into the hole for the combined instrument panel.

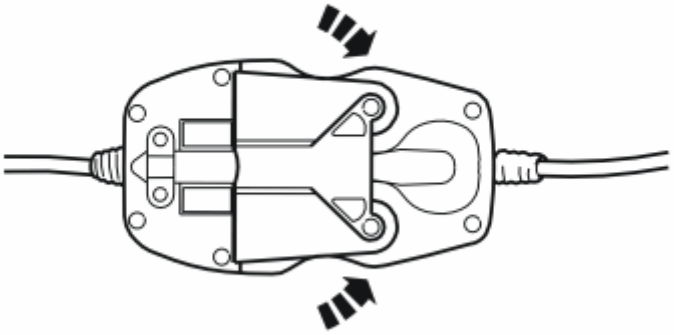

Fig. 129: Identifying Correctly Aligned Mounting Lug Connectors
Courtesy of VOLVO CARS CORPORATION

- Route the cable for the carphone holder to the center console and out to the right-hand side of the center console

- Connect the cable for the carphone holder to the cable for the hands free box.

NOTE: Ensure that the connector is correctly aligned. The two mounting lugs on the reverse must be in their grooves.

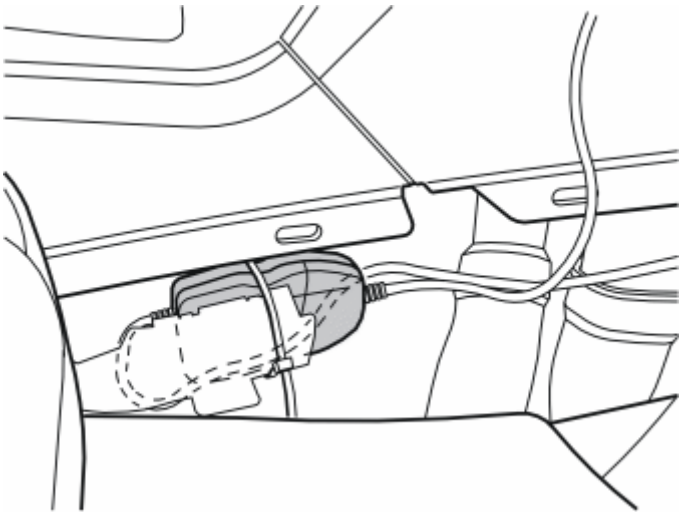

Fig. 130: View Of Clamp Connector On The Right-Hand Side Of Centre Console
Courtesy of VOLVO CARS CORPORATION

- Clamp the connector on the right-hand side of the center console, where there is no risk of it being damaged.

CONNECTION TO THE AMPLIFIER

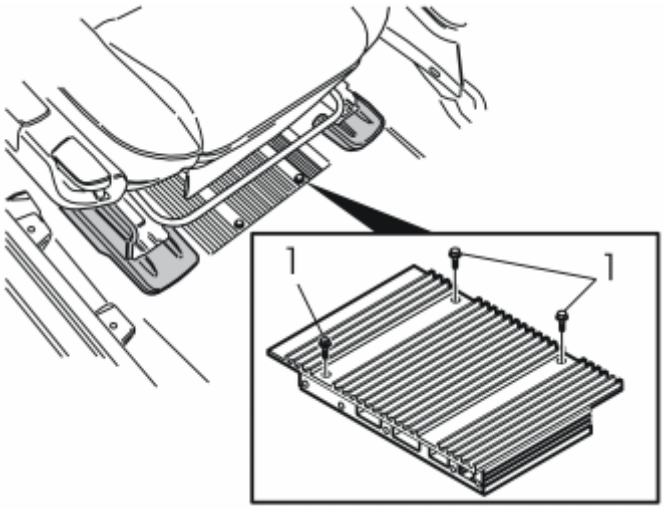

Fig. 131: Identifying Amplifier Screws
Courtesy of VOLVO CARS CORPORATION

- Slacken off the 3 screws (1) for the amplifier under the right-hand front seat.

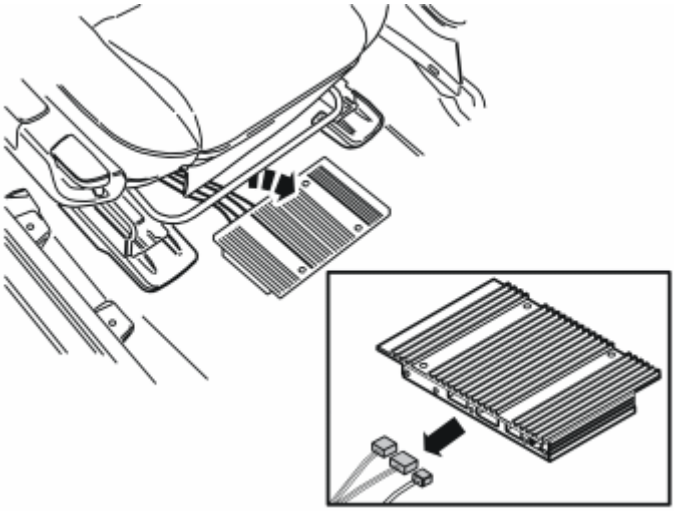

Fig. 132: Identifying Amplifier Connectors
Courtesy of VOLVO CARS CORPORATION

- Lift out the amplifier. Use a weatherstrip tool to lift it up from its sunken position
- Disconnect the connectors in the amplifier
- Take the wiring from the kit.

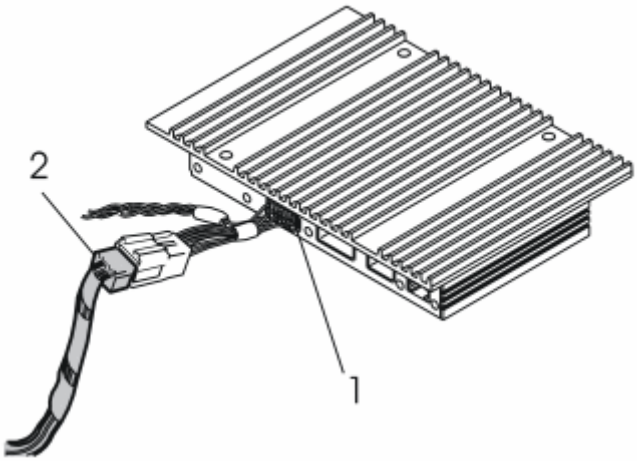

Fig. 133: Identifying Amplifier Green Connectors
Courtesy of VOLVO CARS CORPORATION

- Connect one of the green connectors (1) on the hands free cable to the amplifier and the other to the green connector that was connected to the amplifier (2)
- Reach under the floor carpet and push the insulation material to one side
- Take the end of the hands free cable with grey connectors in the other hand. Insert the connectors under the floor carpet through the hole where the amplifier was positioned
- Lift up the floor carpet and make room for your hands to meet under it
- Take the cable and carefully route it into the center console.

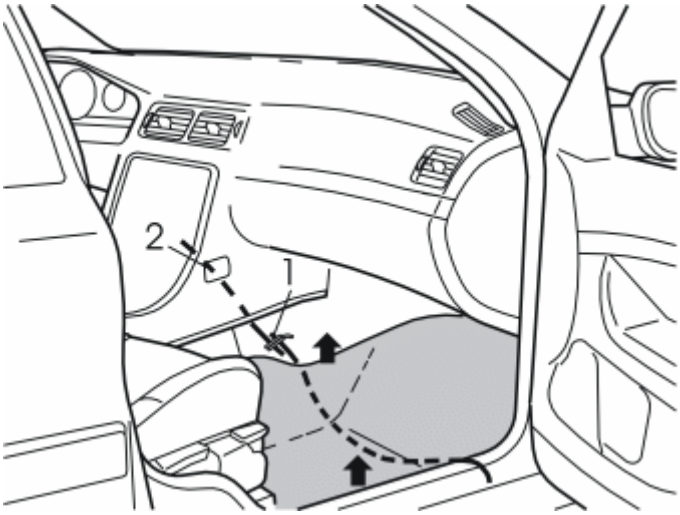

Fig. 134: Identifying Cable Guide Under Carpet
Courtesy of VOLVO CARS CORPORATION

- Pull up the left and right-hand sides of the carpet a little
- Insert a wire (1) under the carpet at the front edge of the air ducts on the right-hand side of the center console, and route it out at the right-hand door sill
- Take the single cable going to the Accessory Electronic Module (AEM). Tape the cable to the wire
- Route the cable forward from the carpet at the right-hand door sill.

INSTALLING THE HANDS FREE BOX

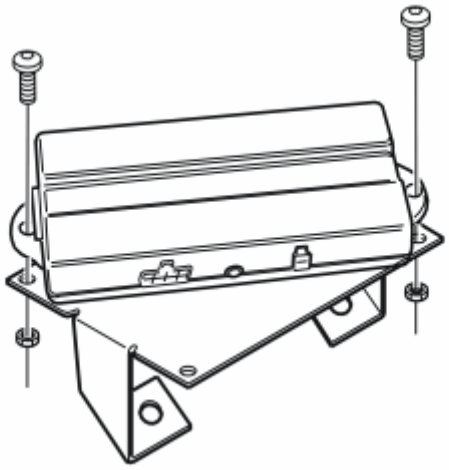

Fig. 135: Identifying Free Box To Bracket
Courtesy of VOLVO CARS CORPORATION

- Take two screws and nuts from the kit. Tighten the hands free box to the bracket.

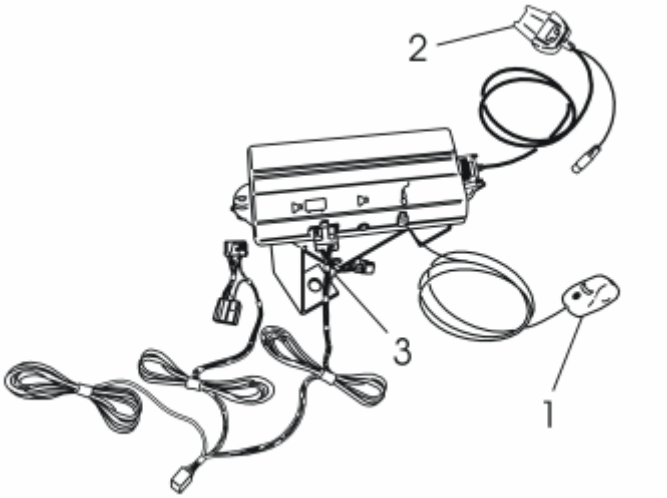

Fig. 136: Identifying Hands Free Box Components
Courtesy of VOLVO CARS CORPORATION

- Connect the wiring for the hands free box as illustrated
  - the cable to the microphone (1)
  - the cable to the carphone holder (2)
  - the large cable harness (3).

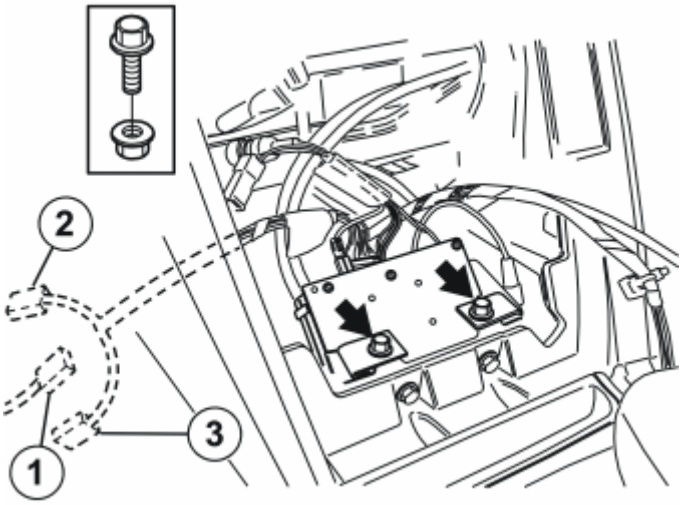

Fig. 137: Identifying Hands Free Box Bracket Bolts
Courtesy of VOLVO CARS CORPORATION

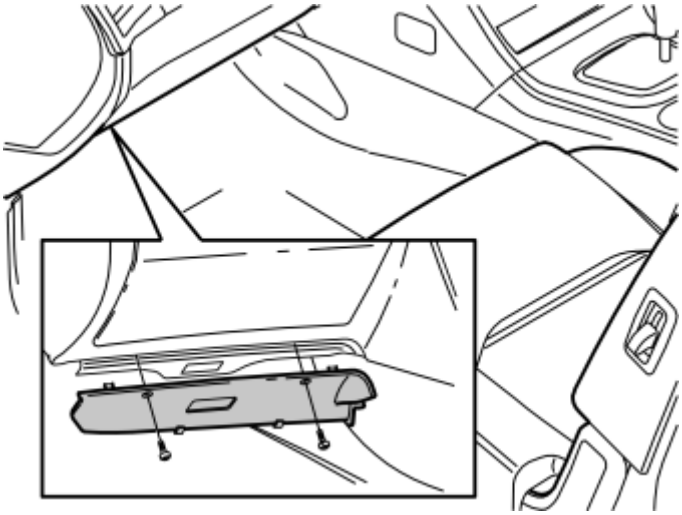

Fig. 138: Identifying Removal Of Screws And Soundproofing Panel
Courtesy of VOLVO CARS CORPORATION

- Turn down the bracket and the hands free box
- Install the hands free box in the hole for the dashboard environment panel
- Take two screws and nuts from the kit. Install the bracket with the hands free box on the existing bracket at the lower edge of the center console.

NOTE: Ensure that the none of the wiring is trapped.

- Locate the grey (GR) pre-routed connector (1) for power supply. This comes from the heavy duty cable harness, either under the dashboard on the right-hand side of the steering wheel, immediately above the accelerator pedal (AP), or if the car has a Mini disc player and/or CD-player, the connector may be on the junction cable for these components.

Cars which do not have a pre-routed connector in the cut-out for the radio

- Remove the soundproofing panel on the left-hand side. First remove the two screws, then pry off the soundproofing panel at the top edge (see illustration B).

Applies to all models

- Take the cable harness with the two grey (GR) connectors which was previously connected to the hands free box. Route it out through the left-hand side of the center console to the existing connector
- Connect the pre-routed connector to the corresponding connector (2) on the routed cable harness
- Secure the excess connector (3)
- Clamp the cable harness so that it is not in contact with any sharp edges and is not at risk of any other damage.

CABLE ROUTING TO THE ACCESSORY ELECTRONIC MODULE (AEM)

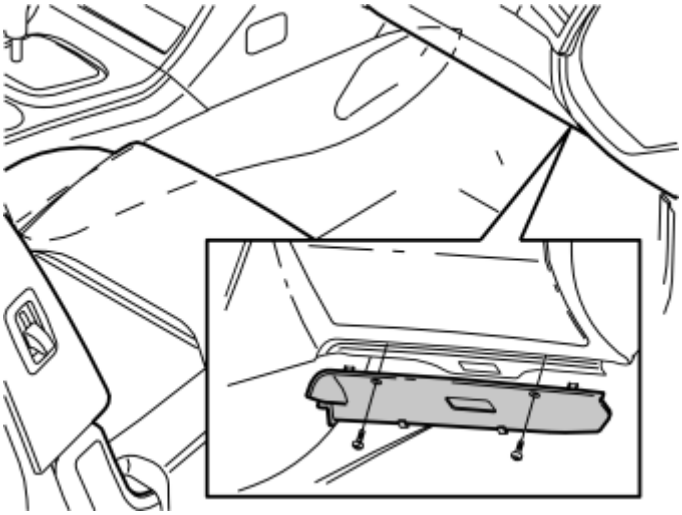

Fig. 139: Identifying Soundproofing Panel
Courtesy of VOLVO CARS CORPORATION

- Detach the soundproofing panel on the right-hand side of the center console. First remove the two screws. Then pry off the panel at the top edge.

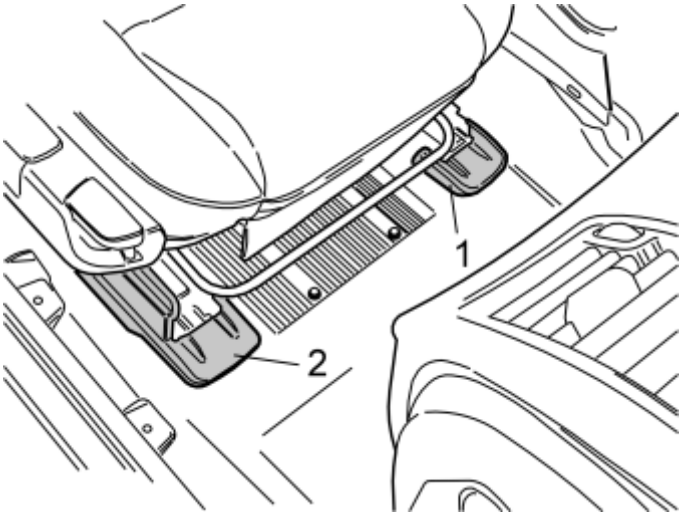

Fig. 140: View Of Front Seat Front Edge Cover
Courtesy of VOLVO CARS CORPORATION

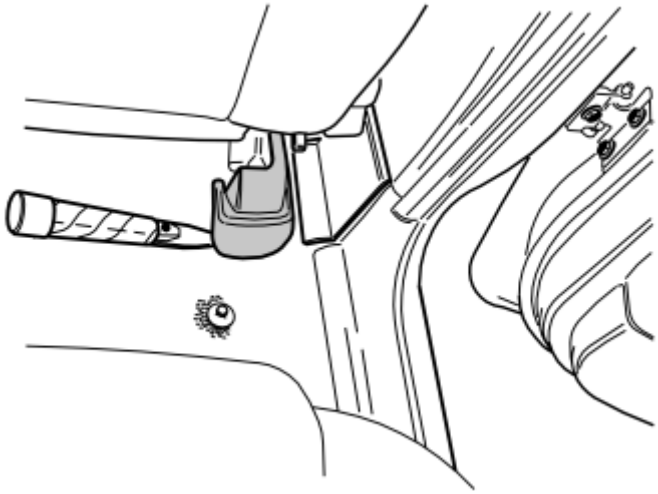

Fig. 141: Prizing Right-Hand Rear Mounting Of Cover Panel
Courtesy of VOLVO CARS CORPORATION

- Remove the panel on the right-hand rear mounting. Pry it up slightly at the rear edge and then pull it back / upwards.

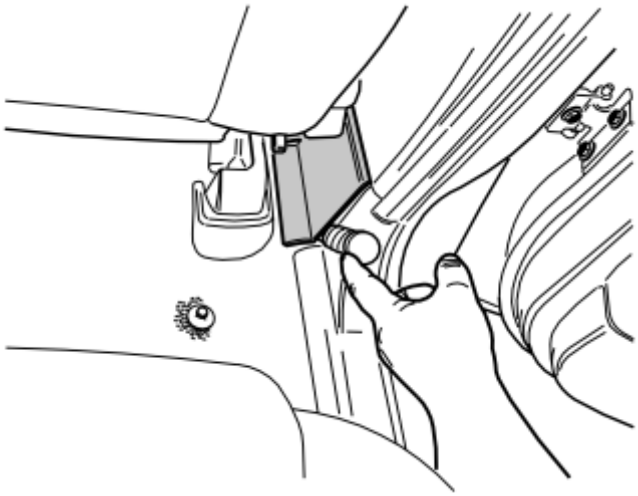

Fig. 142: Prizing Away Cover Panel Over Joint Between Door Sills On Right-Hand Side, At Lower Edge, Using A Weatherstrip Tool
Courtesy of VOLVO CARS CORPORATION

- Remove the panel over the joint between the door sills on the right-hand side. Carefully pry off the panel at the lower edge using a weatherstrip tool.

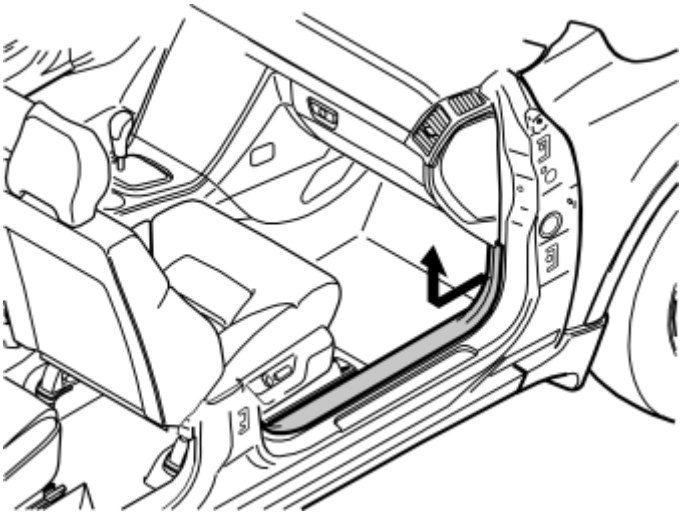

Fig. 143: Right-Hand Front Door's Sill Trim Panel
Courtesy of VOLVO CARS CORPORATION

- Remove the sill trim panel for the right-hand front door. Pull off the front edge of the sill trim panel so that the clip releases. Continue backwards until the remaining clips have released
- Unhook the sill trim panel from the B-post panel.

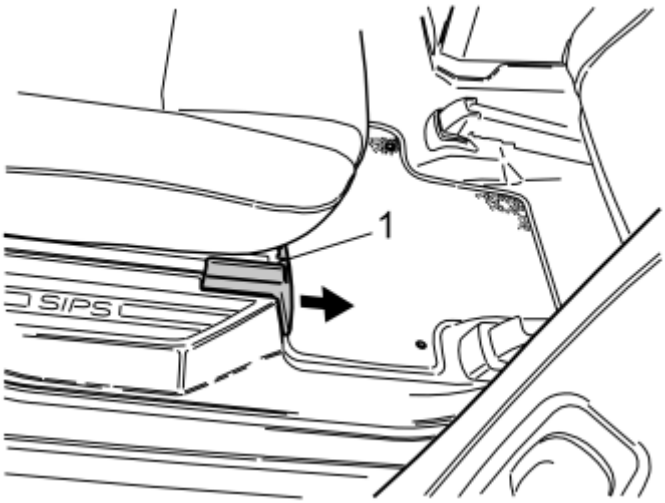

Fig. 144: Pushing Up Catch On Top Side
Courtesy of VOLVO CARS CORPORATION

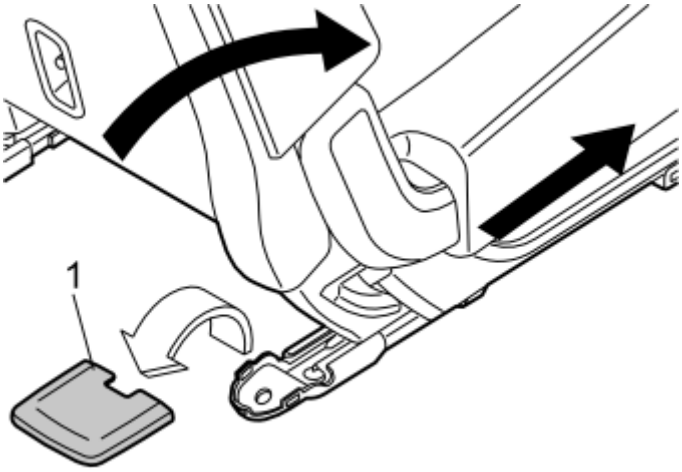

Fig. 145: Removing Cover Panel
Courtesy of VOLVO CARS CORPORATION

- Fold the backrest forward and slide the front seat forward as far as possible. (On cars with two rows of seats, the second row is fixed.)
- Remove the cover (1) for the right rear seat mounting by prying it off at the rear edge.

Illustration A

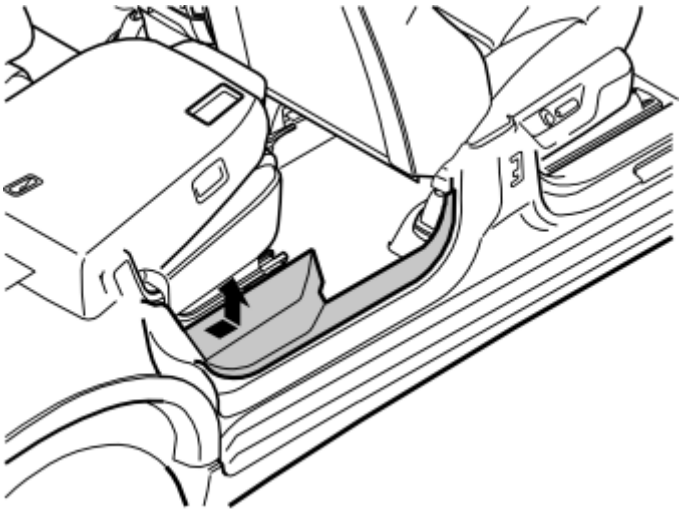

Fig. 146: Removing Sill Trim Panel
Courtesy of VOLVO CARS CORPORATION

- Remove the sill trim panel for the right-hand rear door. Pull off the rear edge so that the clips releases. Continue forwards until the remaining clips have released.

Applies to cars with two rows of seats

- On cars with two rows of seats the seat cannot be slid forwards. To remove the sill trim panel; Start by folding the backrest forward when pulling the rear edge of sill trim panel loose. Then re-position the

backrest to raise the seat cushion and provide more room for removing the sill trim panel. It is securely positioned. Do not damage the panel and surrounding components during removal.

Illustration B

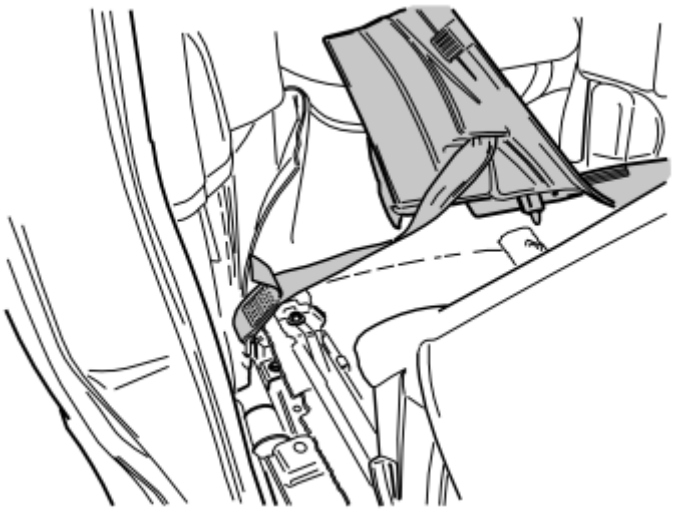

Fig. 147: Identifying Sill Trim Panel
Courtesy of VOLVO CARS CORPORATION

- Unhook the sill trim panel from the B-post panel. Position the panel in the second/third row of seats.

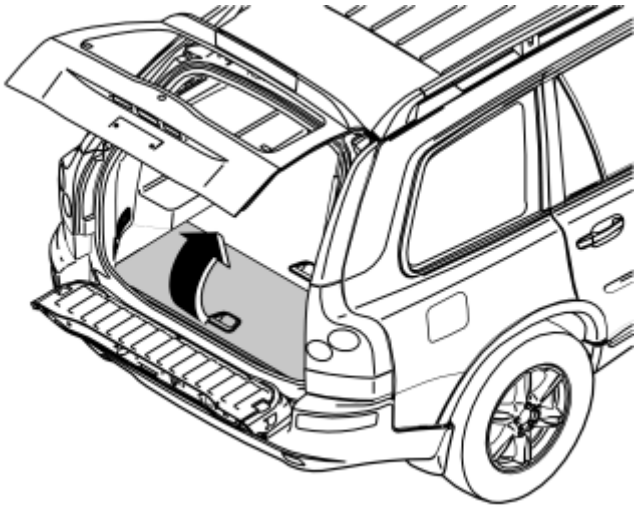

Fig. 148: Identifying Centre Floor Hatch
Courtesy of VOLVO CARS CORPORATION

Applies to cars with three rows of seats and integrated carrier bag holder on the underside of the center floor hatch

- Fold the rear center floor hatch up
- Detach the two straps from the panel below. Lift up the rear edge of the panel. Fold the floor hatch back towards the panel and lift out the floor hatch and the panel.

Applies to cars with three rows of seats without an integrated carrier bag holder

- Lift up the center rear floor hatch at the rear edge and lift it out.

Applies to cars with two rows of seats

- Remove the two center floor hatches. First lift them up slightly and then pull them loose from the mountings at the front edge
- If the rear center floor hatch has a carrier bag holder on the lower side, the floor hatch is secured by a strap on each of the shorter sides of the storage box. Undo these straps
- Remove the two storage boxes below.

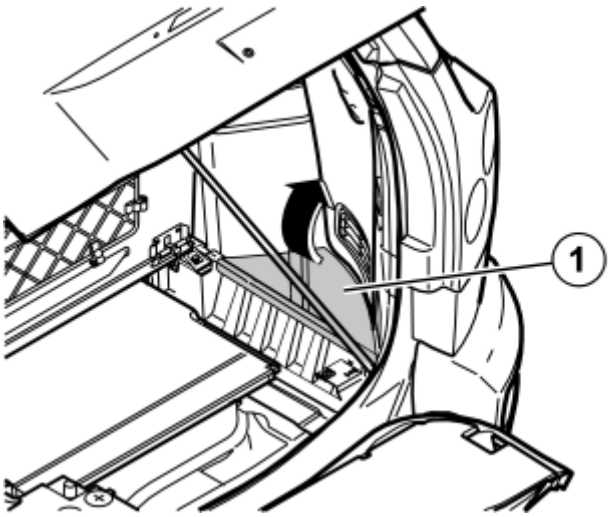

Fig. 149: Remove Right And Left Side Glove Box
Courtesy of VOLVO CARS CORPORATION

- Remove the right-hand side floor hatch (1).

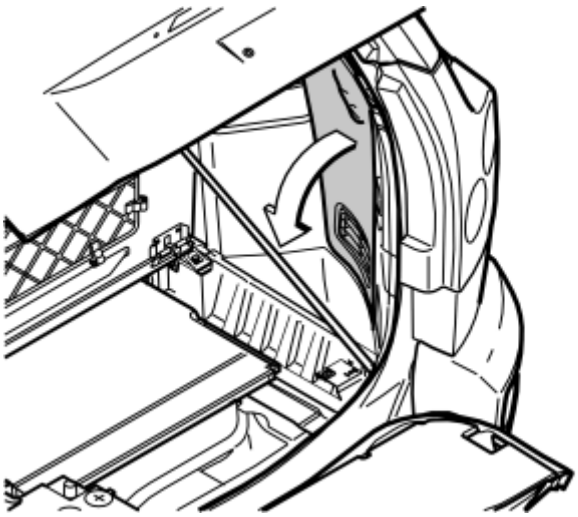

Fig. 150: Folding Side Panel From Right-Hand Side Of Cargo Compartment

Courtesy of VOLVO CARS CORPORATION

- Remove the folding side panel from the right-hand side in the cargo compartment.

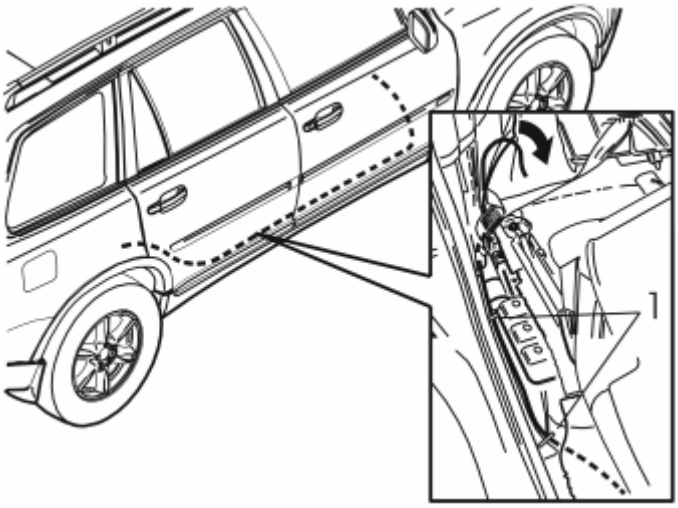

Fig. 151: Cable Clamped In At Air Duct
Courtesy of VOLVO CARS CORPORATION

- Insert the cable harness between the carpet and the door sill towards the floor as far as it will go. Route it along the right-hand side of the car up to the rear edge of the door opening for the right-hand rear door
- Pull the cable harness up to the right-hand front seat mounting on the right-hand seat in the second row of seats
- Pull away the carpet from the front edge of the right-hand side panel in the cargo compartment
- Route the cable harness along the right-hand side of the right-hand seat in the second row of seats towards the front edge of the rear wheel arch. Route it onwards on the left-hand side of the lower mounting for the seat belt, between the support bracket for the right-hand seat and wheel arch, and out at the left-hand side of the wheel arch
- Clamp the cable harness in the hole in the front member for the seat mounting and in the rear hole in the horizontal plate at the right-hand side of the seat. Use the tie straps (1) (from the kit).

Applies to cars with three rows of seats Illustration A

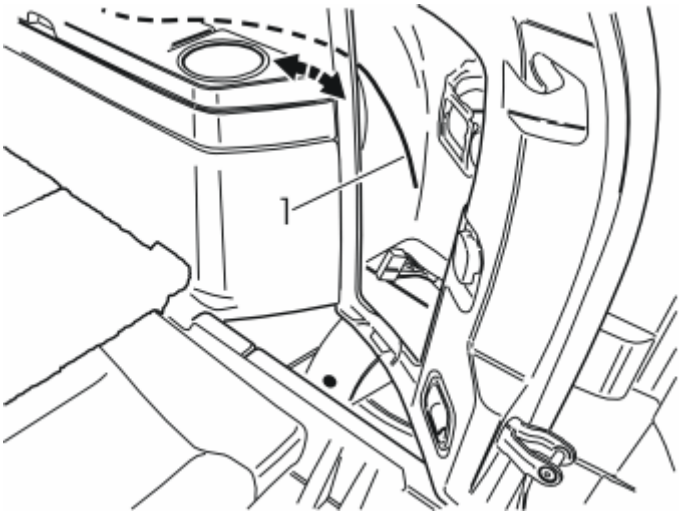

Fig. 152: Identifying Cable At Rear Edge Of Right-Hand Side Panel
Courtesy of VOLVO CARS CORPORATION

- Insert a wire (1) at the rear edge of the right-hand side panel and along the inside of the panel, above the mountings for the load securing eyelets. Route the wire to the front edge of the side panel.

Illustration B

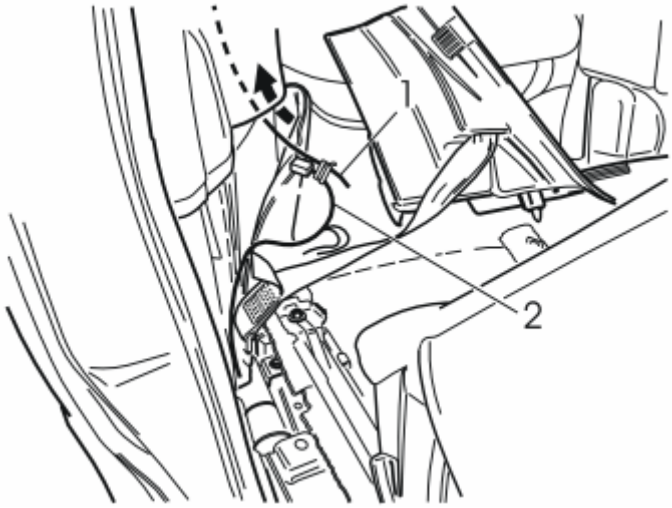

Fig. 153: Identifying Cable Harness
Courtesy of VOLVO CARS CORPORATION

- Tape the cable harness (2) to the wire and pull it out of the rear edge of the side panel.

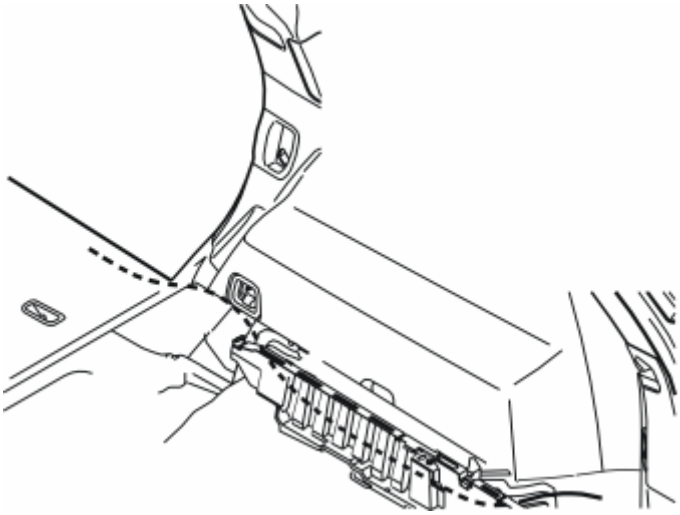

Fig. 154: Cable Routing
Courtesy of VOLVO CARS CORPORATION

Applies to cars with two rows of seats

- Route the cable on the left-hand side of the seat belt mounting at the front edge of the wheel arch, inside the carpet at the front edge of the side panel, between the side panel and the rear of the cargo floor support, to the accessory electronic module (AEM).

CONNECTING TO THE ACCESSORY ELECTRONIC MODULE (AEM)

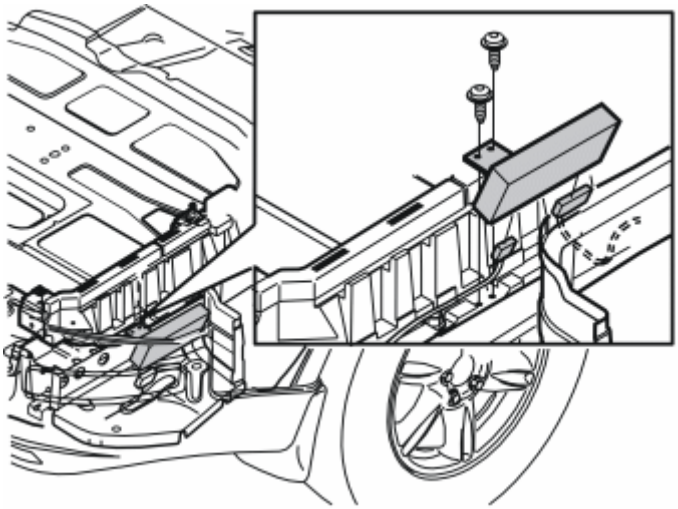

Fig. 155: Removing Panel By Pulling It Straight Up And Unhook It From Side Panel (1 Of 2)
Courtesy of VOLVO CARS CORPORATION

- Remove the two screws from the bracket for the accessory electronic module (AEM) and lift up the entire unit. Cut off the tie straps if necessary.

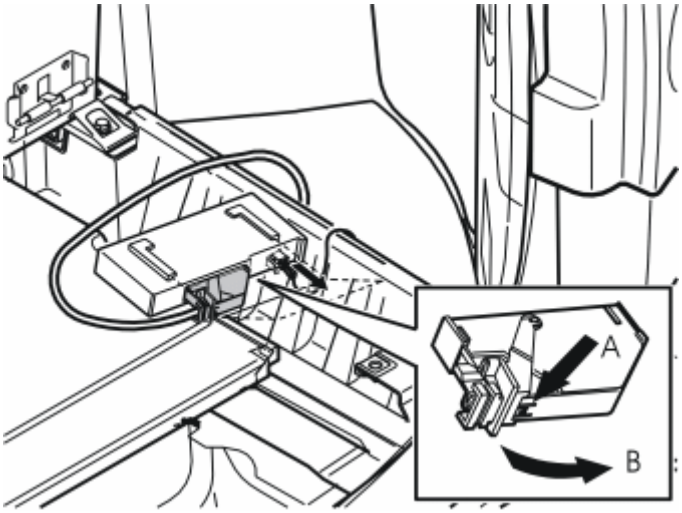

Fig. 156: Removing Panel By Pulling It Straight Up And Unhook It From Side Panel
Courtesy of VOLVO CARS CORPORATION

- Disconnect the large connector from the accessory electronic module (AEM). First press in the catch (A). Pull the black locking handle (B) in the direction of the arrow until a click is heard. Disconnect the connector
- Disconnect the connector from the accessory electronic module.

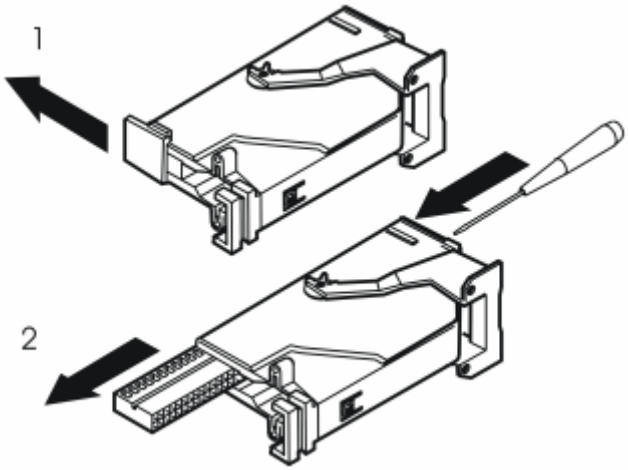

Fig. 157: Black Terminal Pin By Inserting A Pointed Object Into Hole In Other End
Courtesy of VOLVO CARS CORPORATION

- Remove the black catch holding the black switch in place in the connector by pulling in the direction of the arrow
- Remove the black switch. Insert a pointed object in the hole on the other end of the connector. Press the switch out.

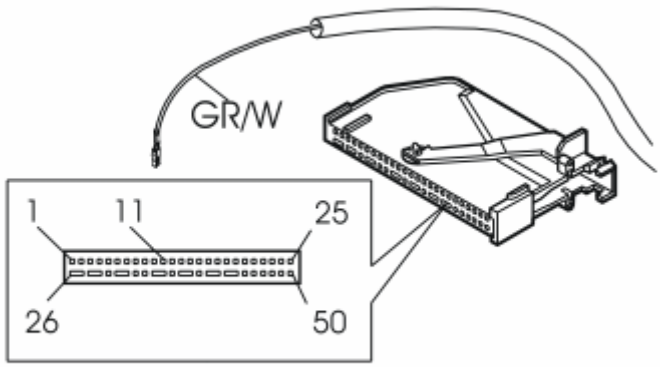

Fig. 158: Identifying Grey/White (GR/W) Cable From The Routed Cable Harness
Courtesy of VOLVO CARS CORPORATION

- Connect the Grey/White (GR/W) cable from the routed cable harness to terminal 11 (tele-mute) in the black connector for the accessory electronic module (AEM).

NOTE: **The numerical markings are on the top and bottom of the black switch. However, the markings are extremely small so be careful when installing the two cables.**

- Reinstall the black switch in the connector. Lock into place using the catch
- Press the connector into the accessory electronic module (AEM). Secure using the black locking handle
- Reinstall the accessory electronic module (AEM) with the bracket and clamp the wiring using the tie strap from the kit.

NOTE: **If the car is to be equipped with the accessory windscreen aerial, it should be installed at this stage before the components on the right-hand side of the car are reinstalled.**

REINSTALL

- Reinstall the folding panel on the right-hand side in the cargo compartment
- Reinstall the right-hand side floor hatch
- Reinstall the carpet at the front edge of the right-hand side panel
- Reinstall the sill trim panel in the right-hand rear door
- Reinstall the cover(s) over the seat mountings on the second row of seats.

INSTALLING THE INTEGRAL ANTENNA

HINT: The Volvo windscreen antenna can also be used.

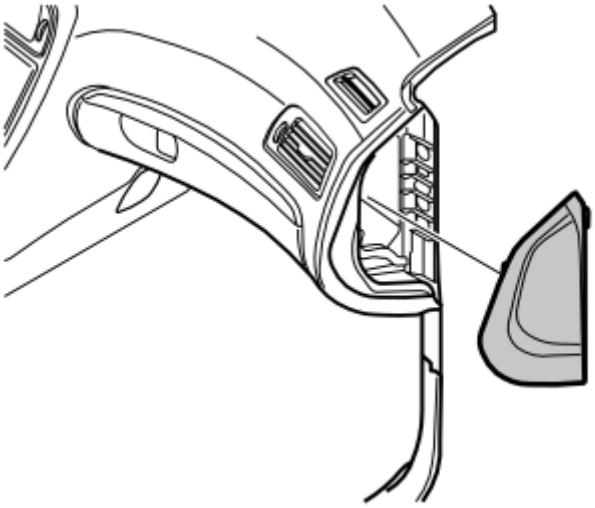

Fig. 159: Dashboard End Panel
Courtesy of VOLVO CARS CORPORATION

- Remove the panel on the right-hand end of the dashboard.

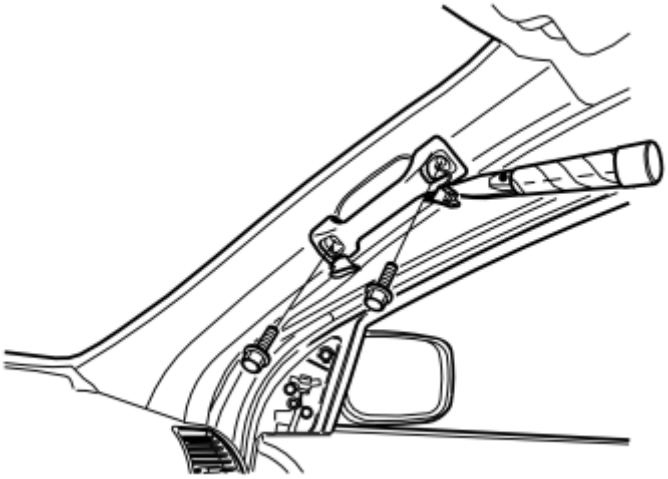

Fig. 160: Pry Off Grab Handle Cover
Courtesy of VOLVO CARS CORPORATION

- Pry off the cover on the grab handle in the right-hand front door. Remove the screws below.

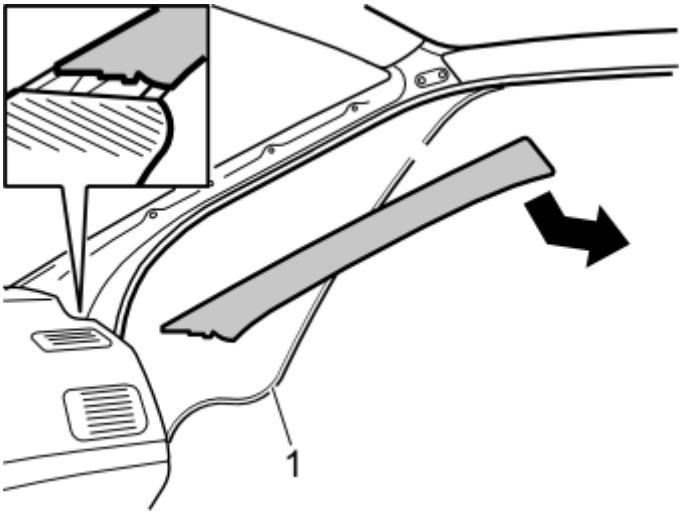

Fig. 161: Identifying Right-Hand A-Post Panel
Courtesy of VOLVO CARS CORPORATION

- Remove the rubber strip (1) at the front edge of the right-hand front door
- Remove the right-hand A-post panel by carefully pulling the top edge of the panel outwards until the clip on the inside releases. Pull it up out of the mounting in the dashboard.

NOTE: Do not damage the headlining.

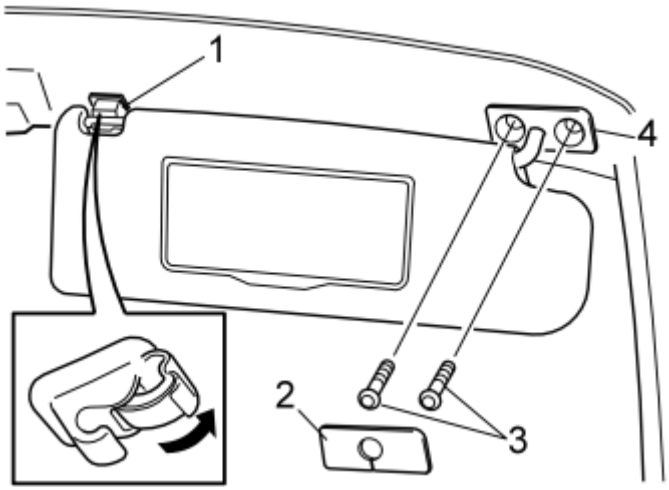

Fig. 162: Identifying Sun Visor Inner Mountings
Courtesy of VOLVO CARS CORPORATION

- Remove the sun visor from the inner mounting (1) on the right-hand side
- Carefully pry the cover (2) off. Remove the two screws (3) for the sun visor mounting
- Remove the inner mounting (1) by first prying up the catch as illustrated. Then insert a small screwdriver in the rear edge of the exposed hole and press the sprung catch forward to release it from the hole in the roof. A the same time pull the rear edge of the mounting downward/backwards so that the catch at the front edge and both catches at the sides release.

NOTE: Do not damage the headlining.

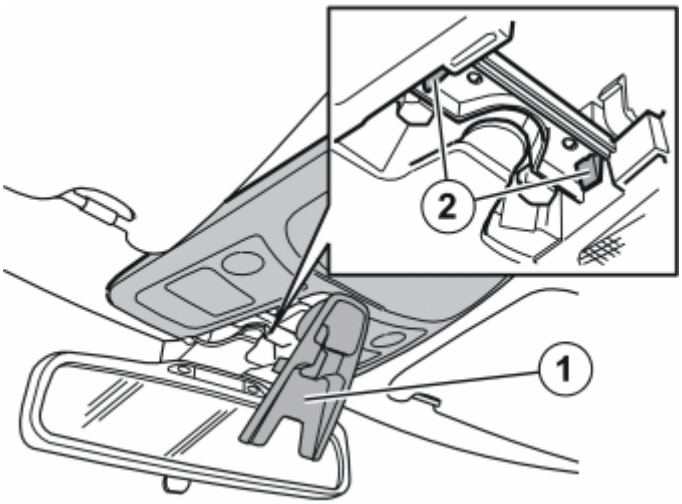

Fig. 163: Folding Down Cover And Squeezing Catches Together
Courtesy of VOLVO CARS CORPORATION

- Fold down the cover (1) by carefully pulling down the front edge of the cover
- Squeeze the catches (2). Pull the front edge of the panel downwards. Then pull the rear edge off.

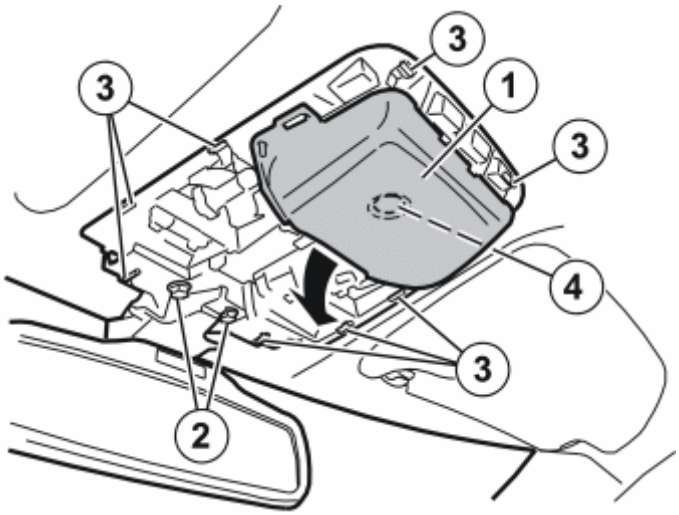

Fig. 164: View Of Front Interior Lighting
Courtesy of VOLVO CARS CORPORATION

- Remove the rear view mirror and the front interior lighting (1). First remove the two screws (2) and then press in the eight catches (3) around the interior lighting
- Carefully pull the components downwards and allow them to hang by their wiring. (The interior lighting is secured to the roof using the clip (4).).

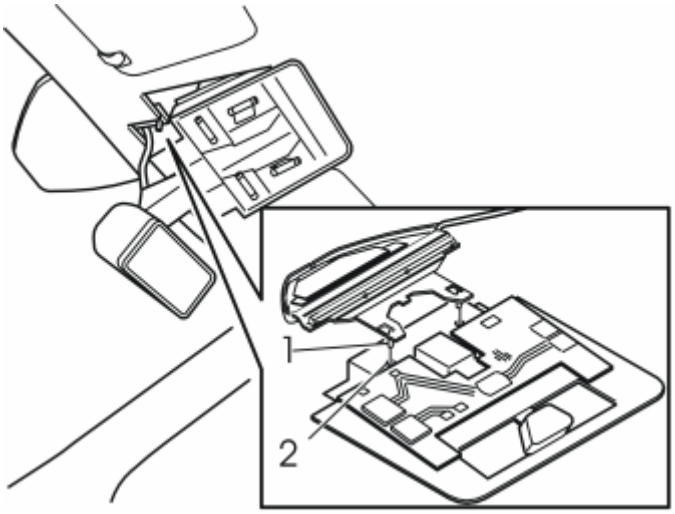

Fig. 165: Aligning Antenna Lugs With Grooves In Bracket
Courtesy of VOLVO CARS CORPORATION

- Install the new antenna. Carefully bend the headlining downward and slide the antenna backward and inwards. Align the antenna lugs (1) with the grooves in the bracket (2)
- Insert the cable at the inside of the front edge of the headlining. Route the cable out towards the right-hand A-post
- Secure the cable using butyl tape
- Reinstall the bracket and rear view mirror. Tighten the screws. Tighten to **10 Nm (7.5 lbf. ft.)**
- Reinstall the panel. Securely lock the panel using the cover.

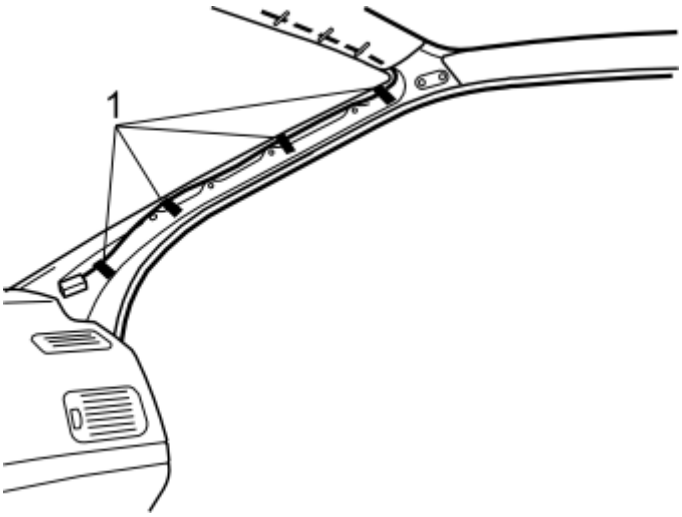

Fig. 166: Identifying Cable Taped Onto Existing Cable Harness
Courtesy of VOLVO CARS CORPORATION

- Route the cable down from the headlining along the right-hand A-post
- Tape the cable onto the existing cable harness as illustrated (1).

WARNING: Ensure that the cable is not routed over the inflatable curtain. This could compromise the function of the inflatable curtain in the event of an accident.

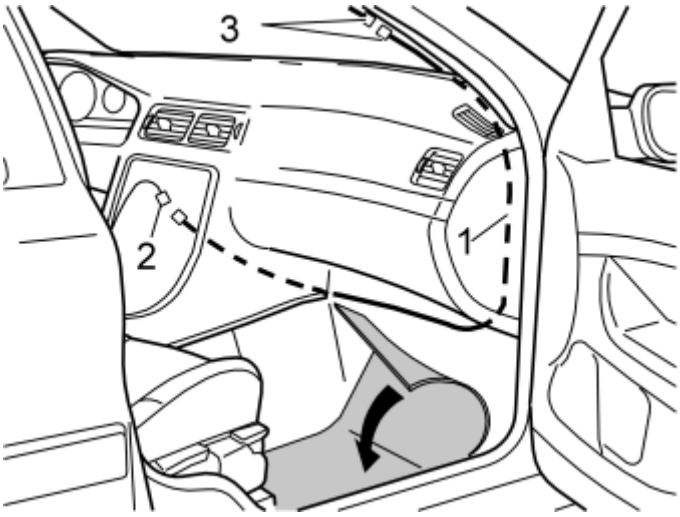

Fig. 167: Folding Back Carpet And Identifying Cable And Connectors
Courtesy of VOLVO CARS CORPORATION

- Push the carpet to one side by the right-hand front seat
- Take the extension cable (1) from the kit. Route the cable between the A-post and the right-hand side of the dashboard, continue along the right-hand end to the front edge of the floor
- Route the cable to the left along the front edge of the floor and up to the inside of the center console
- Connect the cable (1) to the corresponding cable (2) from the hands free box
- Connect both connectors (3) at the right A-post to each other
- Wrap foam tape around the connectors to prevent rattling.

REINSTALL

- Reinstall the A-post panel. Tighten the grab handle. Tighten to **10 Nm (7.5 lbf. ft.)** . Reinstall the cover
  - the display for the RTI and the center loudspeaker if applicable
  - the center loudspeaker
  - the bracket for the loudspeaker grille
  - the loudspeaker grille.
- Reinstall the rubber strip in the right-hand front door
  - the display for the RTI and the center loudspeaker if applicable
  - the center loudspeaker
  - the bracket for the loudspeaker grille
  - the loudspeaker grille.
- Reinstall the panel on the end of the dashboard
  - the display for the RTI and the center loudspeaker if applicable

  - the center loudspeaker
  - the bracket for the loudspeaker grille
  - the loudspeaker grille.
- Reinstall the sun visor. Tighten the screws. Tighten to **10 Nm (7.5 lbf. ft.)** . Also reinstall the cover and the inner mounting
  - the display for the RTI and the center loudspeaker if applicable
  - the center loudspeaker
  - the bracket for the loudspeaker grille
  - the loudspeaker grille.
- Fold the carpet on the right-hand side back into place
  - the display for the RTI and the center loudspeaker if applicable
  - the center loudspeaker
  - the bracket for the loudspeaker grille
  - the loudspeaker grille.
- Reinstall the panel on the door trim for the right-hand front door. Press the lower panel into place on the B-post
  - the display for the RTI and the center loudspeaker if applicable
  - the center loudspeaker
  - the bracket for the loudspeaker grille
  - the loudspeaker grille.
- Reinstall the soundproofing panel on the right and left-hand sides
  - the display for the RTI and the center loudspeaker if applicable
  - the center loudspeaker
  - the bracket for the loudspeaker grille
  - the loudspeaker grille.
- Reinstall the cover and panel on the right-hand front seat
  - the display for the RTI and the center loudspeaker if applicable
  - the center loudspeaker
  - the bracket for the loudspeaker grille
  - the loudspeaker grille.
- Connect the connectors to the dashboard environment panel and control module. Also connect the connectors for the CD-player and/or Mini disc player if applicable
  - the display for the RTI and the center loudspeaker if applicable
  - the center loudspeaker
  - the bracket for the loudspeaker grille
  - the loudspeaker grille.
- Position the bracket. Tighten the bracket using the two screws. Reinstall the gear selector lever panel
  - the display for the RTI and the center loudspeaker if applicable

    - the center loudspeaker
    - the bracket for the loudspeaker grille
    - the loudspeaker grille.
- Reinstall (depending on the equipment in the car):
    - the display for the RTI and the center loudspeaker if applicable
    - the center loudspeaker
    - the bracket for the loudspeaker grille
    - the loudspeaker grille.

REINSTALL

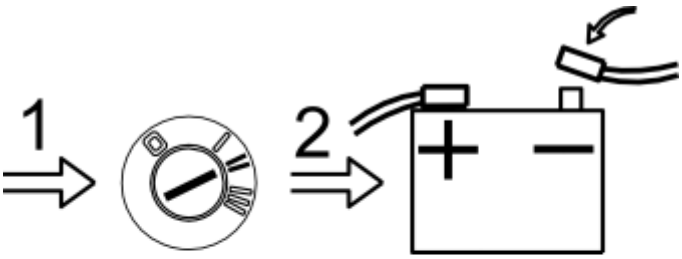

Fig. 168: Connecting Negative Battery Lead
Courtesy of VOLVO CARS CORPORATION

- Connect the connectors to the amplifier
- Reinstall the amplifier in its folded down position. Tighten the screws
- Turn the ignition key to position II
- Reconnect the battery negative lead
- Reinstall the storage boxes and floor hatch(es)
- Reinstall both the side panels on the center console
- Program the software using VCT2000 according to the service information in VIDA (Volvo scan tool).

XC90

see **XC90**

HANDS FREE UNIT FOR CARPHONE, UNIVERSAL (2003-2009)

HANDS FREE UNIT FOR CARPHONE, UNIVERSAL

NOTE: This accessory is connected to the electrical system of the car. It requires software unique to the car.

HINT: Points 30-43 apply to cars with an accessory electronic module (AEM).

PREPARATIONS

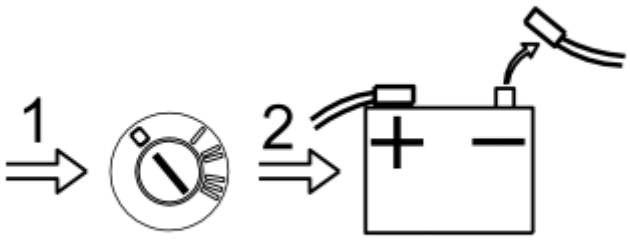

Fig. 169: Disconnect Battery Negative Lead
Courtesy of VOLVO CARS CORPORATION

- Slide back the front seats to the rearmost and uppermost positions
- Turn the ignition key to position 0
- Remove the key from the ignition switch (does not apply to cars with automatic gearboxes)
- Disconnect the battery negative lead.

NOTE: Wait at least five minutes before disconnecting the connectors or removing other electrical equipment.

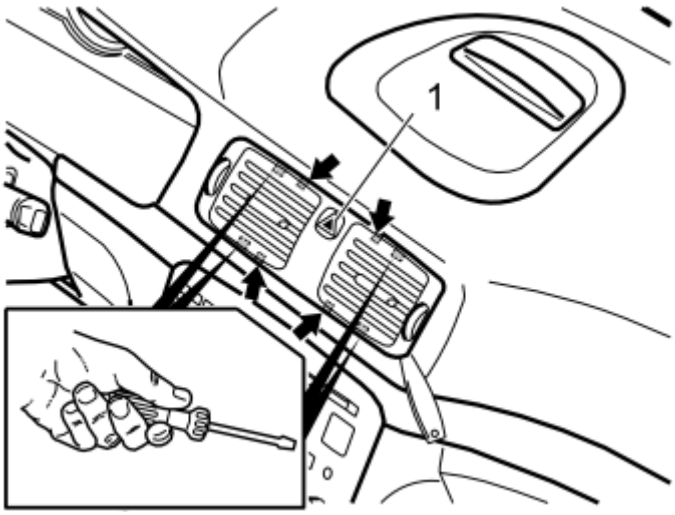

Fig. 170: Removing Central Vents
Courtesy of VOLVO CARS CORPORATION

- Press in the clips so that the ventilation grille releases
- Remove the grille. Use a weatherstrip tool
- Remove the connector (1) for the hazard warning signal flasher.

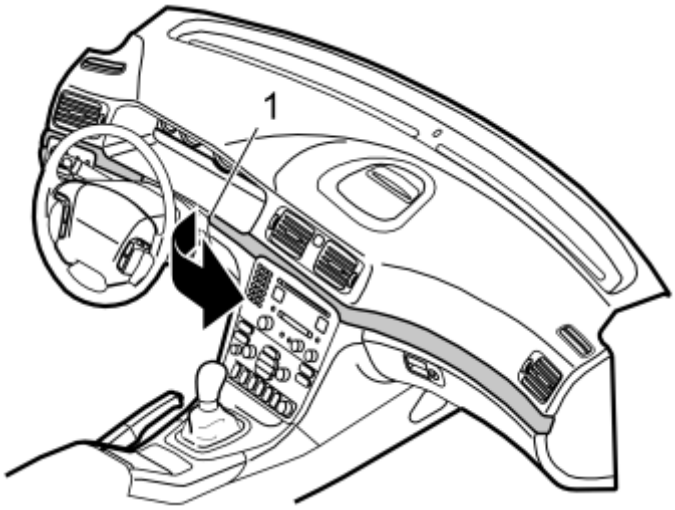

Fig. 171: Removing Trim Strip On Dashboard
Courtesy of VOLVO CARS CORPORATION

- Remove the trim strip on the dashboard. First carefully pull the trim strip straight outwards, as close to the mounting point (1) as possible.

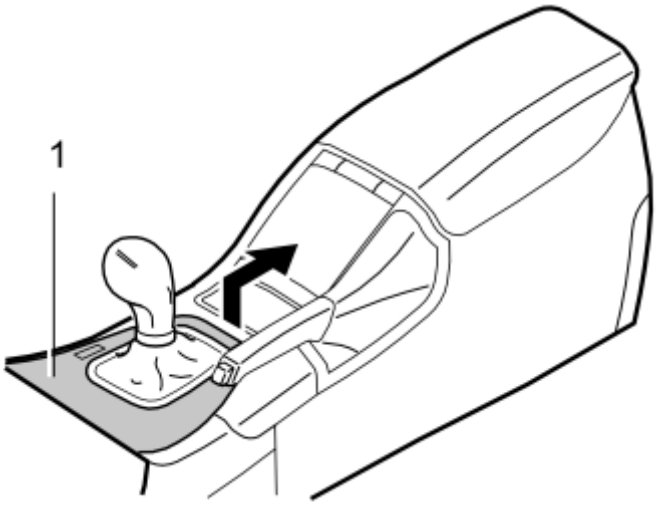

Fig. 172: Removing Gear Selector Lever Boot Panel
Courtesy of VOLVO CARS CORPORATION

- Detach the panel (1). Detach the gear selector lever boot using a weatherstrip tool.

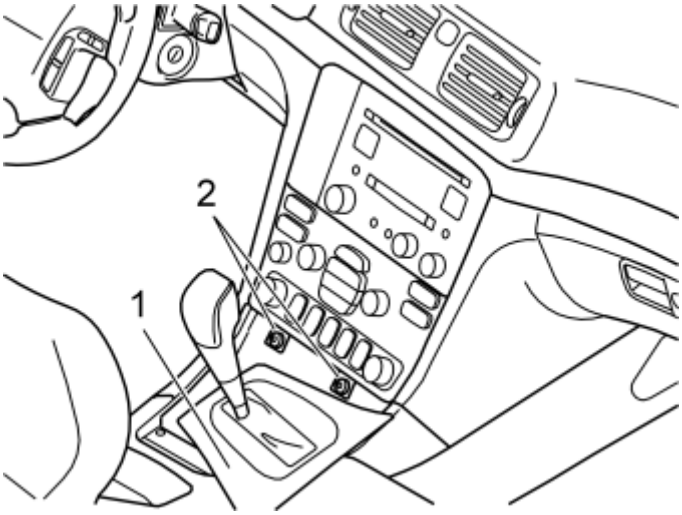

Fig. 173: Panel With Boot And Screws
Courtesy of VOLVO CARS CORPORATION

- Move the gear selector lever to the rearmost position
- Pull the panel with the boot (1) backwards. Turn the panel as illustrated
- Remove the screws (2) from the climate control assembly.

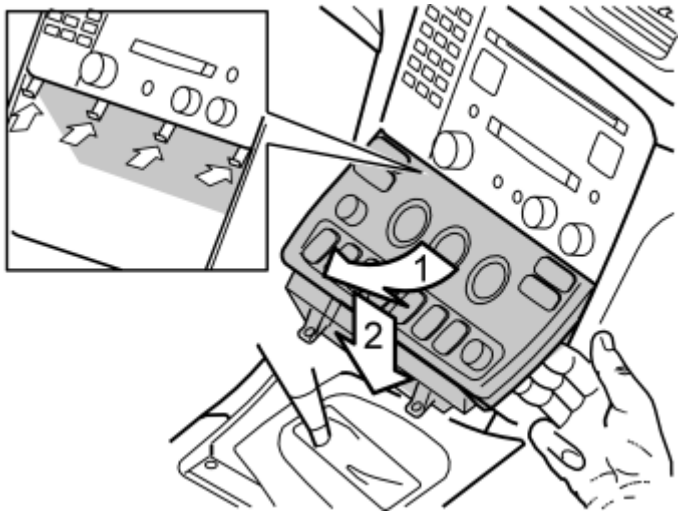

Fig. 174: Angling Dashboard Environment Panel Outwards
Courtesy of VOLVO CARS CORPORATION

- Angle the dashboard environment panel outwards so that it is possible to insert a couple of fingers between the center console and the side of the dashboard environment panel
- Detach the dashboard environment panel by pulling it downwards while maintaining the same angle. Some force is required because the panel is tightly installed. Disconnect the connectors on the reverse of the dashboard environment panel. Place the dashboard environment panel to one side.

NOTE: If any of the outer hooks break off, these must be repaired.

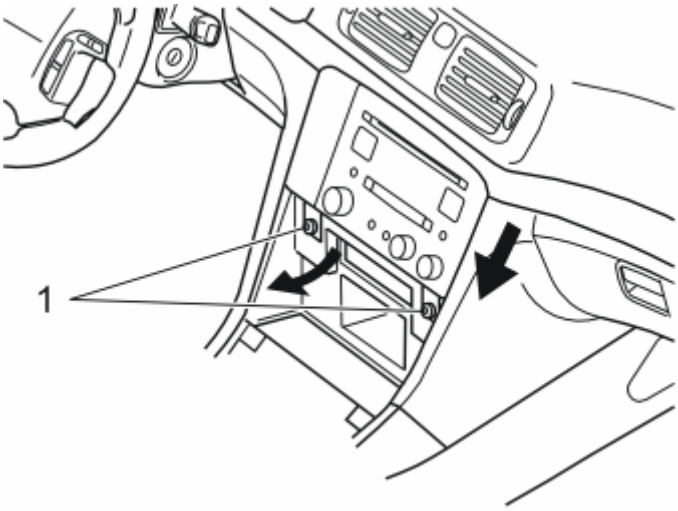

Fig. 175: Removing Screws From Bracket For Radio
Courtesy of VOLVO CARS CORPORATION

- Remove the screws (1) from the radio bracket
- Pull the bracket with the radio outwards at the lower edge. Pull the whole unit downwards
- Disconnect the connectors from the radio. Place the radio to one side.

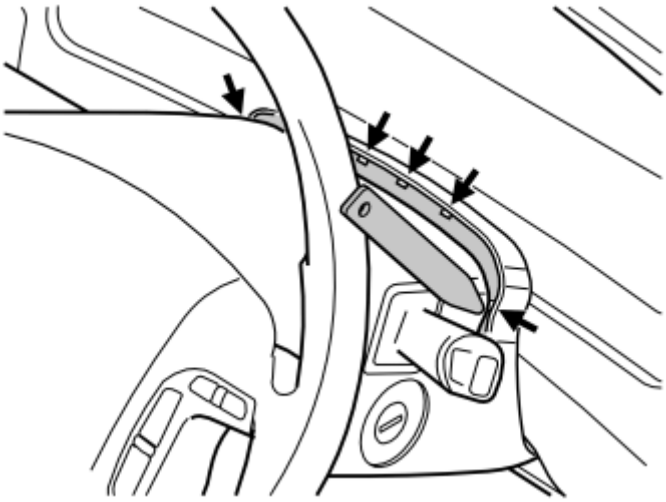

Fig. 176: Identifying Removal Of Rubber Seal From Upper Steering Column Cover
Courtesy of VOLVO CARS CORPORATION

- Lock the steering wheel in the lowest, rearmost position
- Remove the rubber seal from the upper steering column cover by carefully prying the 5 catches loose using a weatherstrip tool.

INSTALLING AND CABLE ROUTING THE HANDSET HOLDER

REMOVE

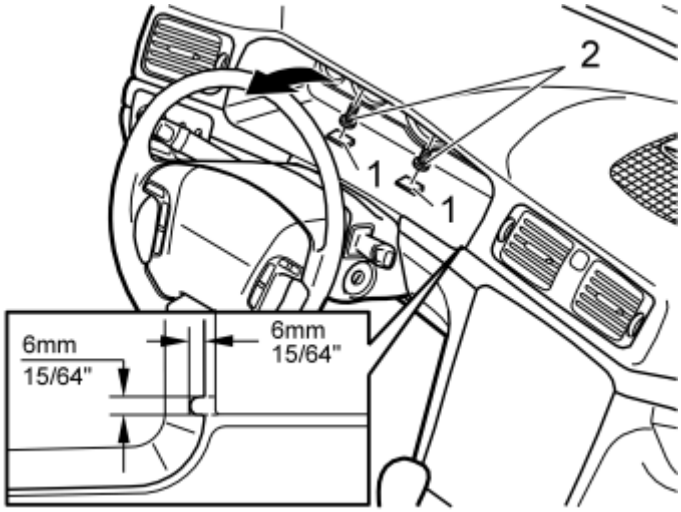

Fig. 177: Cover, Screws And Measurements
Courtesy of VOLVO CARS CORPORATION

- Mark out the cable cut-out in the panel as illustrated, 6 mm (15/64")
- Remove the cover (1). Remove the screws (2)
- Angle the upper edge of the panel outwards. Remove the panel
- File the cut out according to the markings.

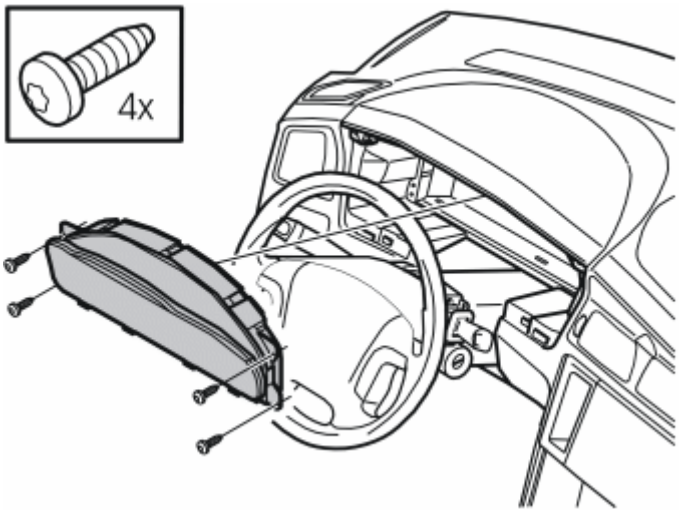

Fig. 178: Identifying Removal Of Combined Instrument Panel Screws
Courtesy of VOLVO CARS CORPORATION

- Remove the four screws for the combined instrument panel
- Pull out the combined instrument panel. Disconnect the connector on the reverse of the combined instrument panel
- Place the combined instrument panel to one side.

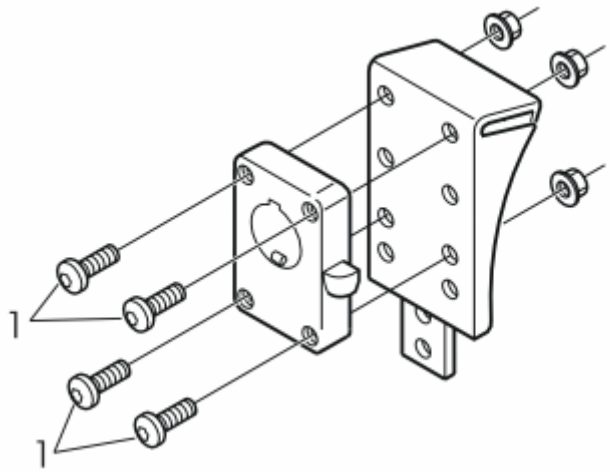

Fig. 179: Car Phone Holder Bracket And The Plate
Courtesy of VOLVO CARS CORPORATION

- Take the bracket and the mounting plate for the carphone holder from the kit
- Assemble the bracket and the mounting plate for the carphone holder. Use the screws and nuts from the kit to assemble them.

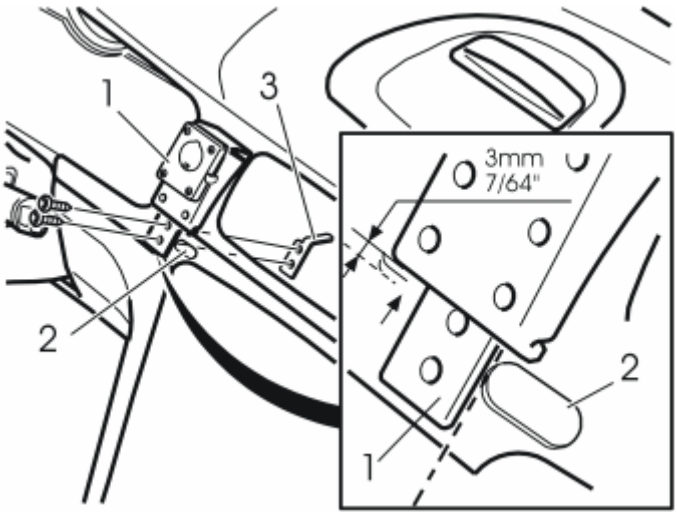

Fig. 180: Car Phone Holder And Hole Measurements
Courtesy of VOLVO CARS CORPORATION

- Mark out the holes for the carphone holder (1). First align the edge of the holder with the edge of the hole (2). Press the holder upwards by 3 mm (7/64"). Drill a hole using a **5 mm (13/64")** diameter drill bit. Use a **20 mm (3/4")** diameter drill stop
- Install the holder in the panel. Move the plate (3) through the hole for the vent. Screw the holder and the plate into place. Use the two screws from the kit.

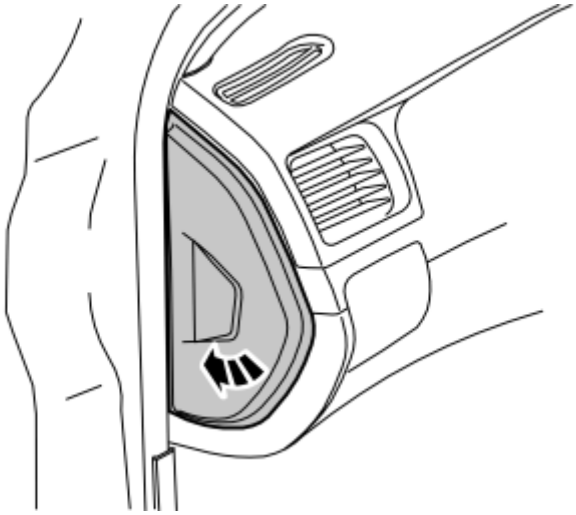

Fig. 181: Side Panel
Courtesy of VOLVO CARS CORPORATION

- Slide the panel on the left-hand end of the dashboard backwards a little. Pull the existing grip. Remove the panel.

NOTE: **There are two variants of A-post panel mounting nearest the headlining. See illustrations A or B.**

Illustration A

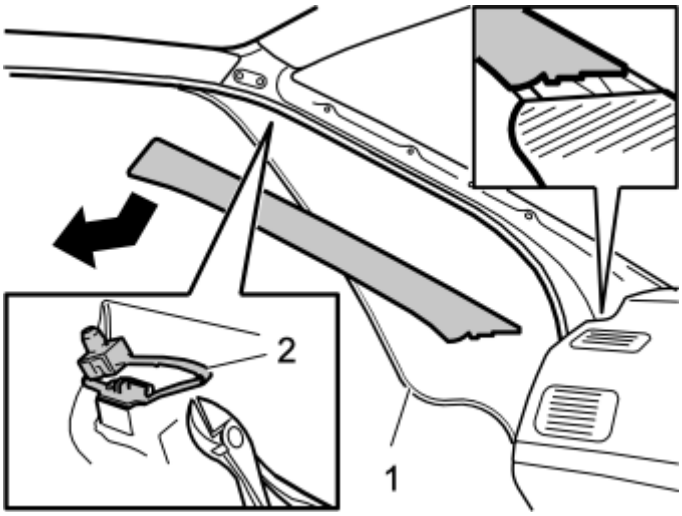

Fig. 182: Identifying Door Sealing Molding And Safety Clip
Courtesy of VOLVO CARS CORPORATION

- Detach the door sill moulding (1) at the panel
- Pull the panel straight inwards into the car
- Lift up the panel
- Cut off the safety clip (2).

NOTE: Ensure that the guide lugs on the panel do not scratch the dashboard.

- Turn the safety clip a quarter turn. Remove the safety clip.

Illustration B

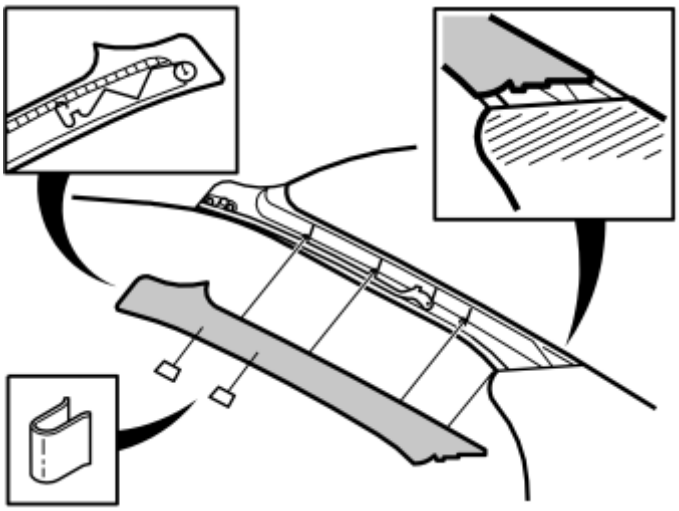

Fig. 183: Identifying Steel Clips
Courtesy of VOLVO CARS CORPORATION

- Detach the door sill moulding at the panel
- Remove the two steel clips
- Pull the panel straight inwards into the car
- Lift up the panel.

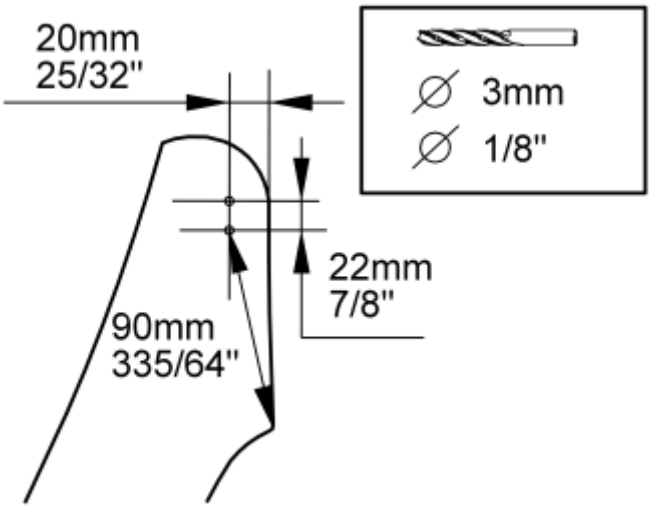

Fig. 184: Mounting Plate Hole Measurements
Courtesy of VOLVO CARS CORPORATION

- Mark out as illustrated. Drill the holes for the mounting plate. Use a **3 mm (1/8")** diameter drill bit

- Remove any metal shavings.

INSTALL

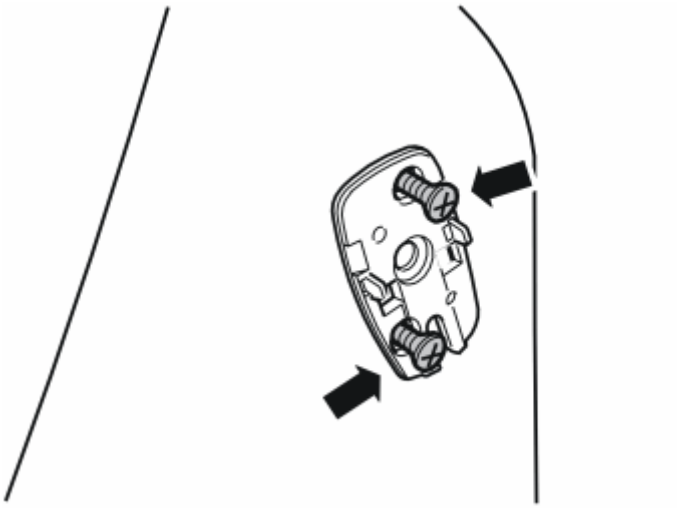

Fig. 185: Mounting Plate And Screws
Courtesy of VOLVO CARS CORPORATION

- Install the mounting plate on the A-post panel using two screws from the kit.

CAUTION: The inflatable curtain (IC) is located inside the A-post panel. It is important to file off the screws securing the mounting plate if necessary, so that they just fit through the panel.

- **Check how much of the screws protrudes on the reverse. Unscrew the screws. File off the screws to the correct length**
- **Reinstall the screws.**

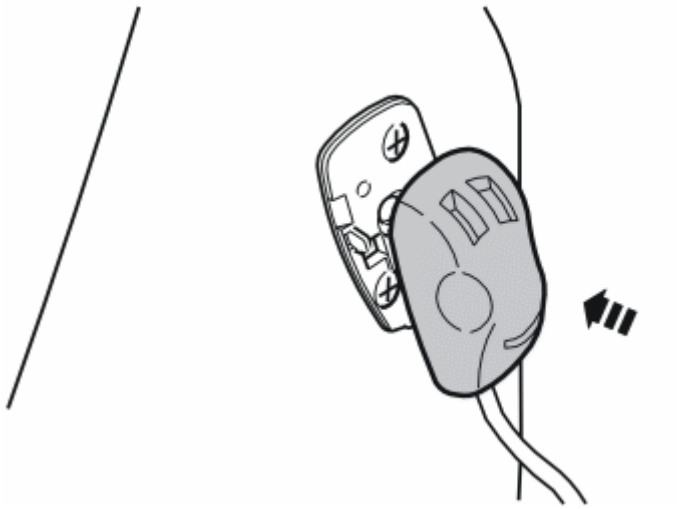

Fig. 186: Identifying Microphone On Mounting Plate

Courtesy of VOLVO CARS CORPORATION

- Press the microphone from the kit into place on the mounting plate.

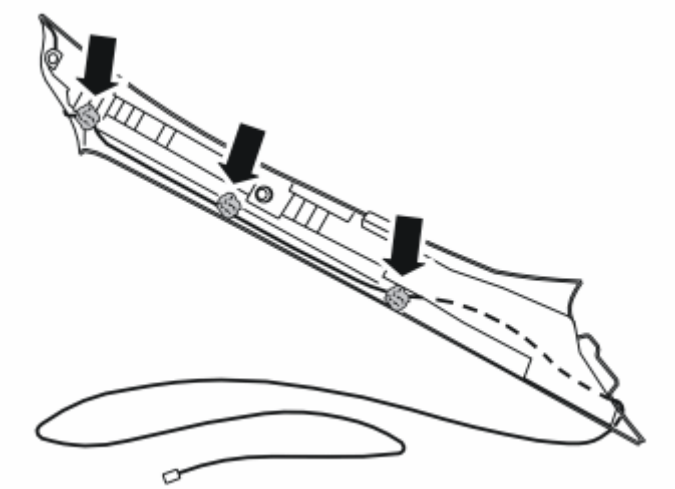

Fig. 187: Identifying Microphone Cable Routed Inside Of A-Post Panel
Courtesy of VOLVO CARS CORPORATION

- Route the microphone cable on the inside of the A-post panel. Secure the cable using pieces of butyl tape.

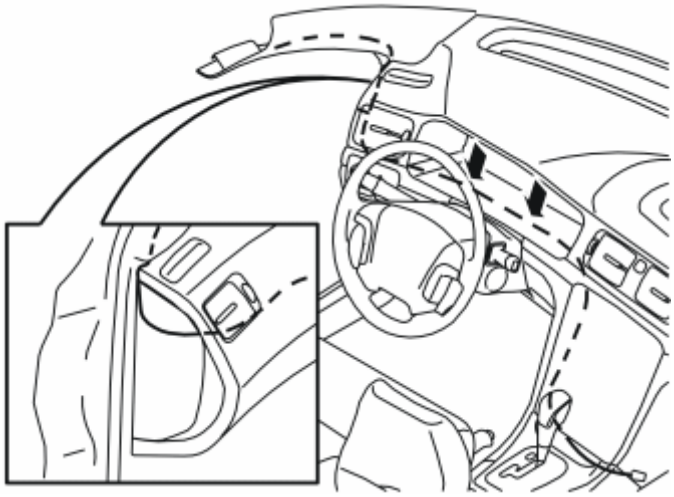

Fig. 188: Microphone Cable And Antenna Cable Routing
Courtesy of VOLVO CARS CORPORATION

- Install a new safety clip (point 14A). Alternatively ensure that the clips (point 14B) are correctly located. Check that the panel is correctly positioned so that the IC system is not affected.

NOTE: **It is important to use a new safety clip when installing in accordance with 14A.**

- Press the A-post panel into place

- Route the microphone cable in through the left-hand end of the dashboard, into the space for the combined instrument panel and into the center console
- Secure the cable where it runs under the combined instrument panel using pieces of butyl tape
- Connect the combined instrument panel. Reinstall the combined instrument panel
- Reinstall the surround for the combined instrument panel. Tighten
- Reinstall the left-hand end panel on the dashboard
- Reinstall the door sill moulding in the door opening.

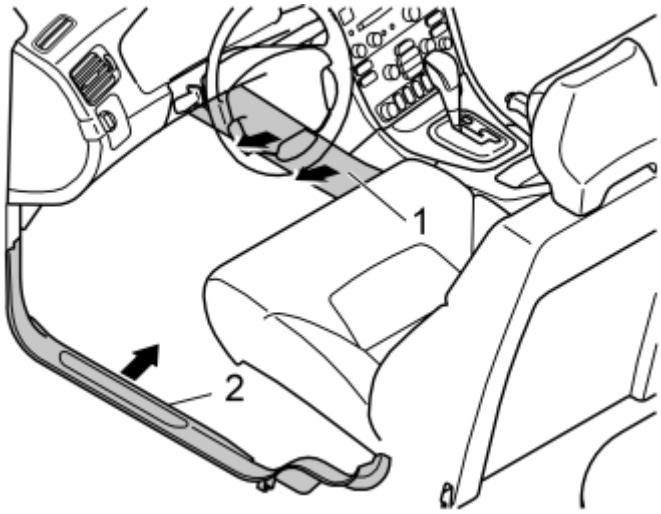

Fig. 189: Identifying Removal Of Side Panel On Center Console And Sill Trim Panel
Courtesy of VOLVO CARS CORPORATION

- Remove the side panel (1). First twist the clip at the rear edge of the panel a 1/4 turn. Pull the rear edge of the panel outwards and backwards
- Remove the door trim strip panel (2).

Illustration A

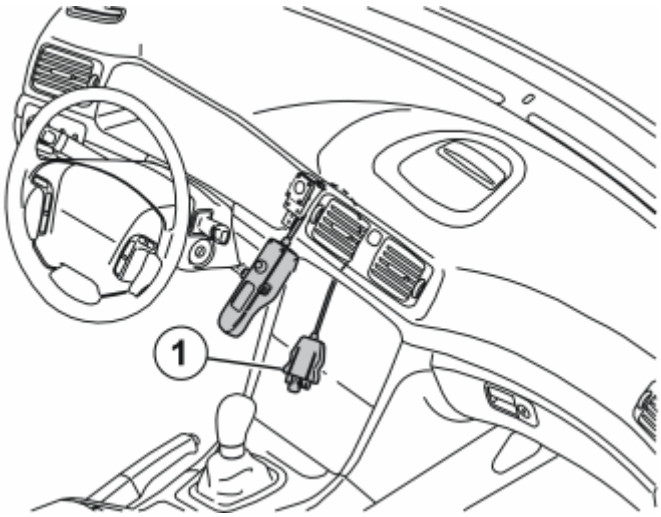

Fig. 190: Identifying Handset Holder
Courtesy of VOLVO CARS CORPORATION

- Route the cable from the handset holder (1) through the hole behind the combined instrument panel into the center console. Continue down along the left-hand air duct and out into the space where the climate control assembly was located.

Illustration B

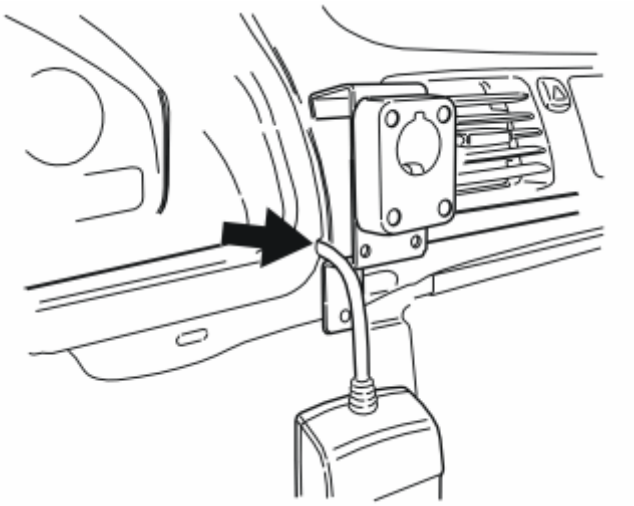

Fig. 191: Identifying Cable For Handset Holder
Courtesy of VOLVO CARS CORPORATION

- Reinstall the combined instrument panel. Ensure that the cable for the handset holder is positioned on the right-hand side underneath the combined instrument panel. Ensure that the wiring is not trapped
- Reinstall the panel for the combined instrument panel. Align the cable for the handset cradle in the filed out notch
- Pull any wiring excess into the center console
- Reinstall the rubber seal in the upper steering column cover
- Reinstall the trim strip on the dashboard.

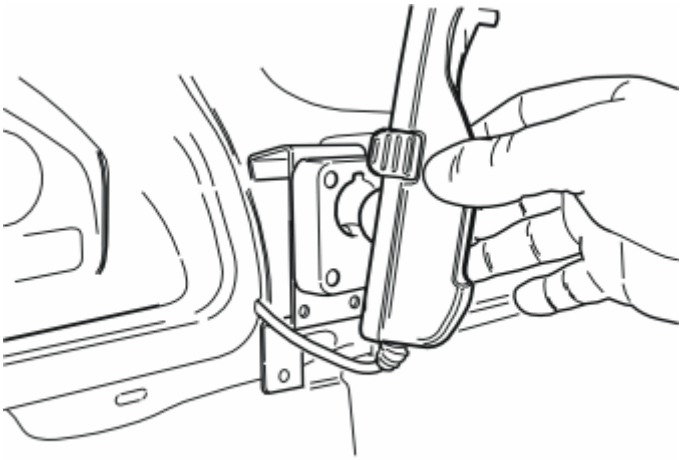

Fig. 192: Handset Cradle
Courtesy of VOLVO CARS CORPORATION

- Press the handset cradle into the mounting plate until a click is heard
- When detaching the handset cradle: press down the lever on the right-hand side of the mounting plate.

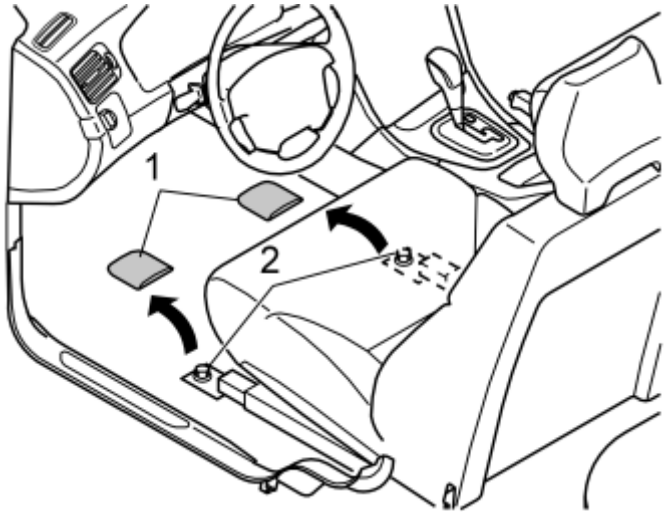

Fig. 193: Identifying Removal Of Cover And Screws For Driver's Seat Front Mountings
Courtesy of VOLVO CARS CORPORATION

- Remove both covers (1) from the front mountings on the front driver's seat. Remove the screws (2) from the front mountings. New screws can be found in the kit
- Tip the seat backward slightly to route the wiring under the carpet.

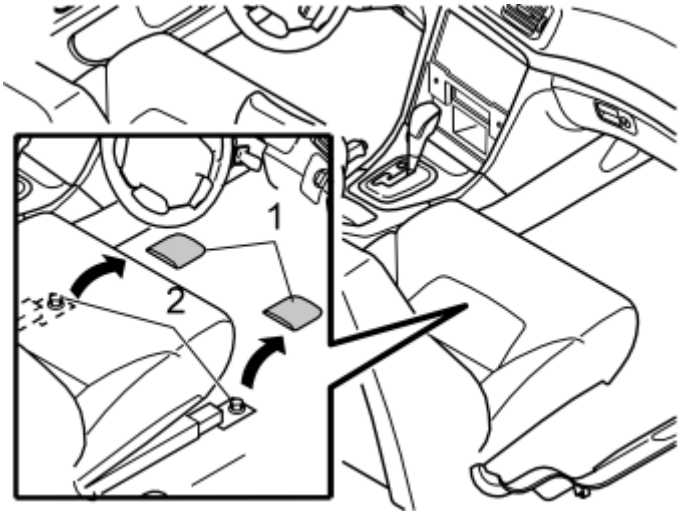

Fig. 194: Identifying Removal Of Front Mounting Covers And Seat Base Screws
Courtesy of VOLVO CARS CORPORATION

Applies to cars with an amplifier

- Remove the covers (1) from the front mounting screws for the right-hand seat
- Remove the screws (2) from the seat base
- Tip the seat back.

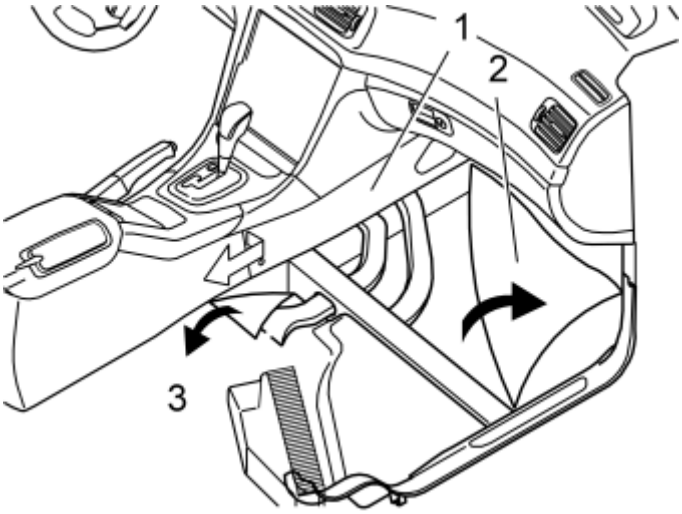

Fig. 195: Removing Carpet Panel And Mat
Courtesy of VOLVO CARS CORPORATION

Applies to cars with an amplifier

- Remove the panel (1) on the right-hand side of the center console. Turn the clip at the rear edge of the panel through 90°. Pull the rear edge of the panel outward and backward
- Detach the carpet (2) by the front left mounting for the right-hand seat. Pull the carpet forward and to the right

- Fold the rear mat (3) backwards at an angle.

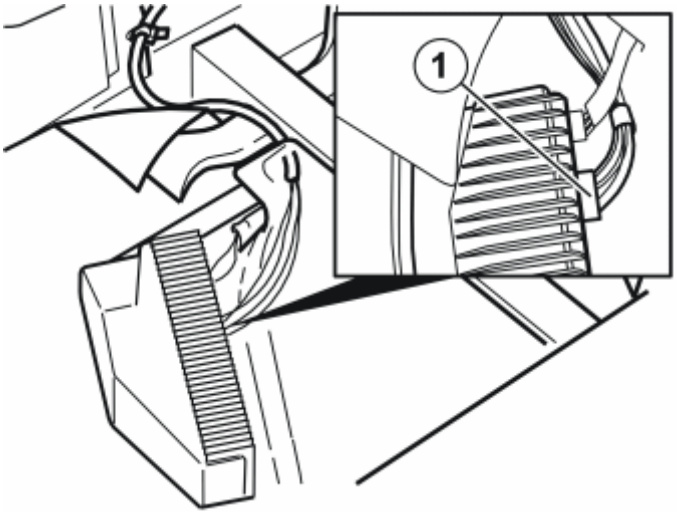

Fig. 196: Disconnecting Grey Connector From Amplifier
Courtesy of VOLVO CARS CORPORATION

Applies to cars with an amplifier

- Disconnect the grey connector (1) from the amplifier.

Applies to cars with an amplifier Illustration A

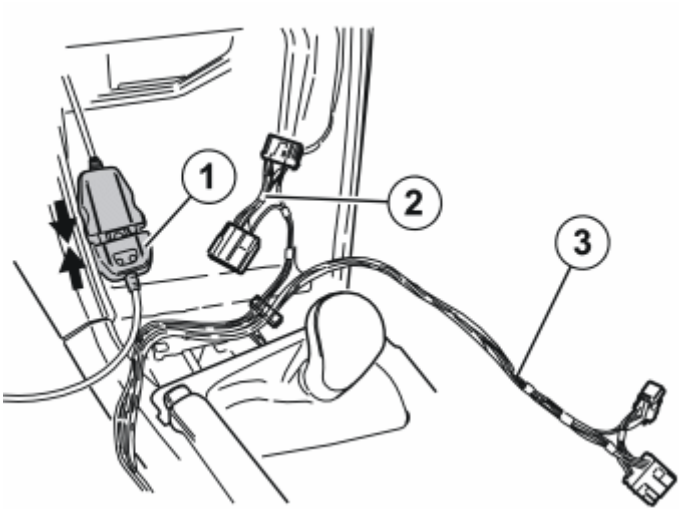

Fig. 197: Identifying Connectors
Courtesy of VOLVO CARS CORPORATION

- Take the black joint cable (from the kit) to the handset holder (1). Connect it to the cable from the handset holder that was routed down earlier
- Take the large cable harness from the kit. Position the green connectors (2) in the space where the radio will be located

- Route the cable with the grey connectors (3) on the right-hand side inside of the center console at the air ducts, alongside the cable harness for the amplifier and down to the amplifier (Illustration B).

Illustration B

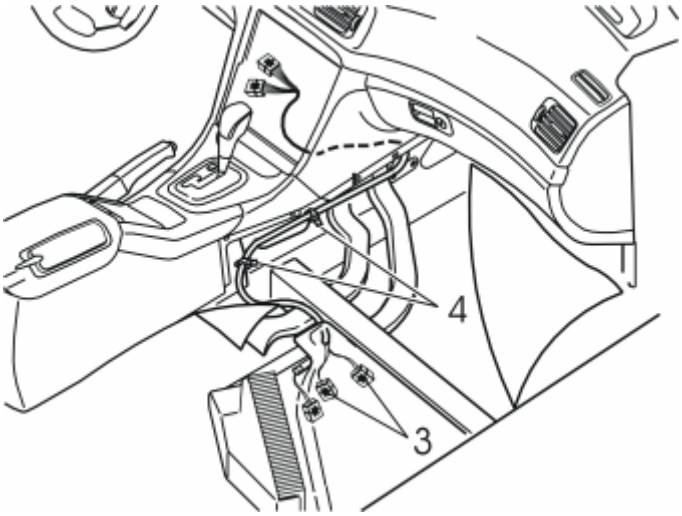

Fig. 198: Identifying Wiring Clamped At Positions
Courtesy of VOLVO CARS CORPORATION

- Clamp the wiring at the positions (4). Use tie straps from the kit.

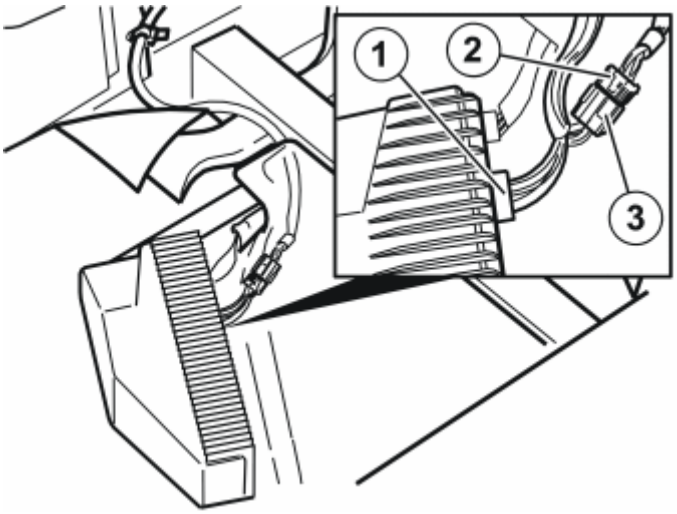

Fig. 199: Connecting Grey Male Terminal And Grey Connector To Remaining Terminal
Courtesy of VOLVO CARS CORPORATION

Applies to cars with an amplifier

- Connect the grey male terminal (1) in the pre-routed cable harness to the amplifier
- Connect the grey connector (2) that was disconnected from the amplifier to the remaining terminal (3) in the pre-routed cable harness.

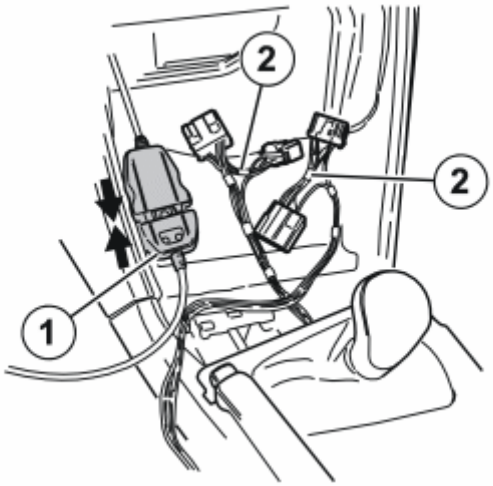

Fig. 200: Connecting Black Joint Cable To Handset Holder And Positioning Grey And Green Connectors In Space For Radio
Courtesy of VOLVO CARS CORPORATION

Applies to cars without an amplifier

- Take the black joint cable (from the kit) to the handset holder (1). Connect it to the cable from the handset holder that was routed down earlier
- Take the large cable harness from the kit. Position the grey and green connectors (2) in the space where the radio will be located.

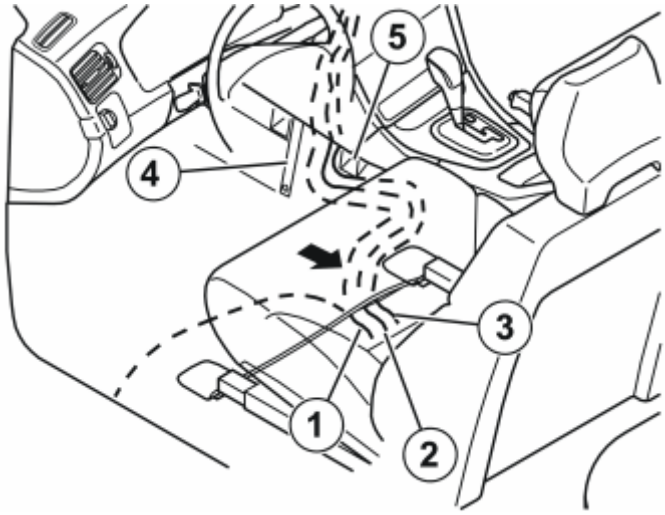

Fig. 201: Identifying Routed Cable Harnesses
Courtesy of VOLVO CARS CORPORATION

- Route the following three cable harnesses down:
  1. the cable harness with the white connector and a long single cable attached (1)
  2. the thin black cable to the microphone (2)
  3. the thick black cable from the handset holder in the space where the radio will be located (3).

- Route these cable harnesses inside the carpet, between the stay for the center console (4) and the front air duct (5). Continue backwards, then in front of the front mounting for the driver's seat and out through the carpet joint under the seat.

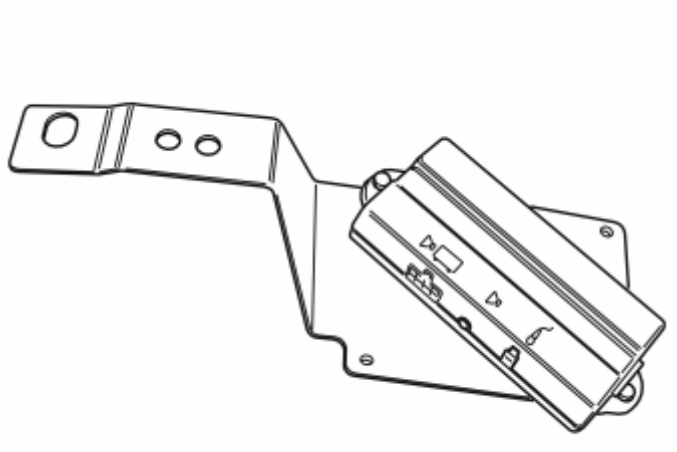

Fig. 202: Identifying Hands Free Box Tightened To Bracket
Courtesy of VOLVO CARS CORPORATION

- Take the bracket, screws and hands free box from the kit
- Tighten the hands free box to the bracket as illustrated.

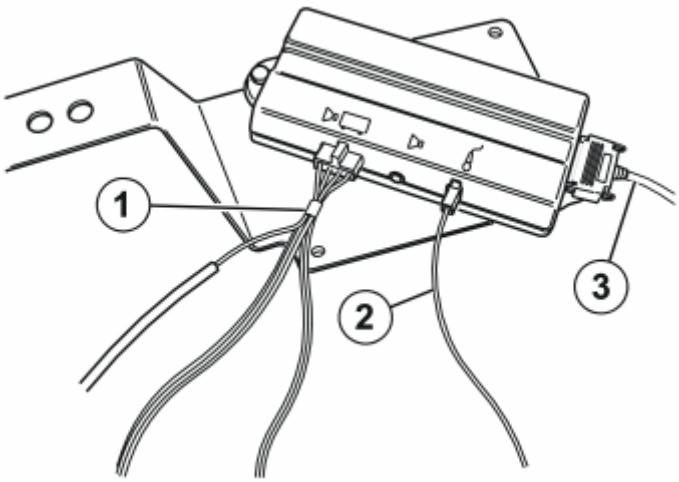

Fig. 203: Connecting Routed Cable Harnesses To Hands Free Box
Courtesy of VOLVO CARS CORPORATION

- Connect the routed cable harnesses to the hands free box:
  1. the cable harness to the radio (1)
  2. the cable to the microphone (2)
  3. the cable to the handset holder (3).

Applies to cars with accessory electronic modules (AEM)

- Route the long cable, secured at the cable harness to the radio, under the carpet on the driver's side and out to the door sill. This will be connected to the accessory electronic module (AEM) later.

Applies to cars without an accessory electronic module (AEM)

- Insulate and hide the long cable that is secured at the cable harness to the radio. It will not be used.

CABLE ROUTING AND CONNECTION TO THE ACCESSORY ELECTRONIC MODULE (AEM)

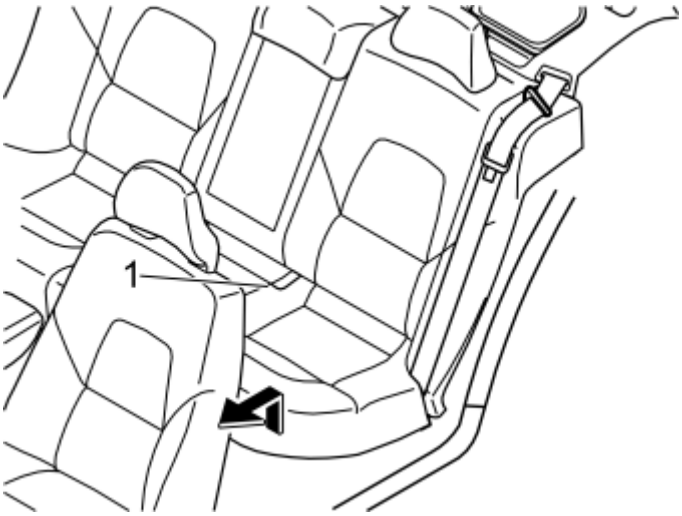

Fig. 204: Identifying Seat Cushion
Courtesy of VOLVO CARS CORPORATION

- Pull the front edge of the seat cushion (1) upwards. Pull the seat cushion forward and lift out.

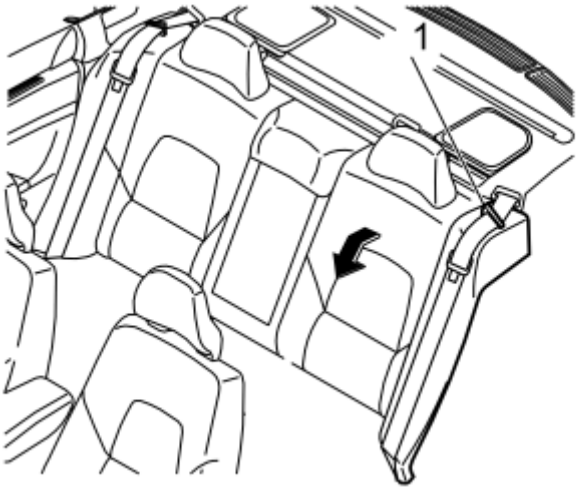

Fig. 205: Folding Left Hand Rear Backrest Forward
Courtesy of VOLVO CARS CORPORATION

- Fold the left hand rear backrest forward
- Remove the seat belt from the guide (1).

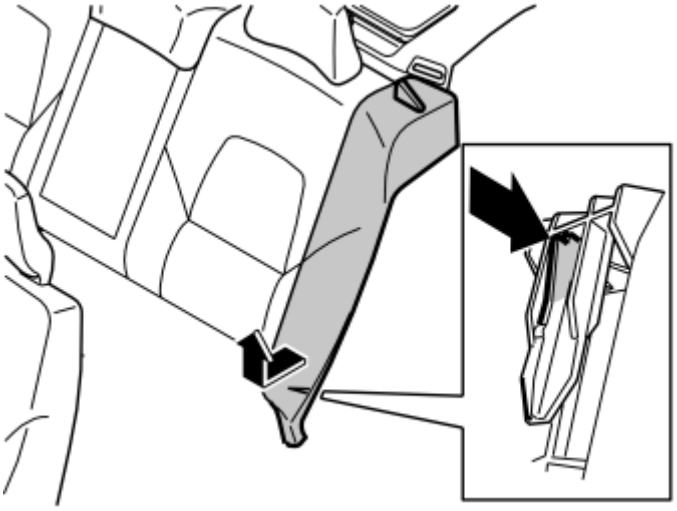

Fig. 206: Identifying Left-Hand Side Cushion
Courtesy of VOLVO CARS CORPORATION

- Insert your hand down the side of the lower section of the side cushion. Remove the left-hand side cushion
- Release the catches. At the same time lift the side cushion
- Place the cushion to one side
- Repeat the operation on the other side.

Fig. 207: Identifying Removal Of Sill Moulding For Left-Hand Rear Door
Courtesy of VOLVO CARS CORPORATION

- Remove the sill moulding from the left-hand rear door.

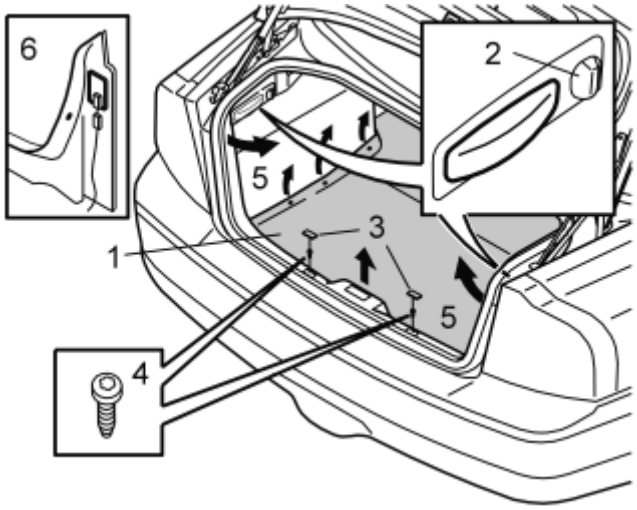

Fig. 208: Fold Cargo Compartment Carpet To One Side
Courtesy of VOLVO CARS CORPORATION

- Remove the cargo compartment carpet (1)
- Turn the clips (2) on the left and right-hand side panels
- Remove the two clips and the plastic nut at the lower edge of the panels
- Remove the panels
- Remove the two covers (3). Slacken off the two screws (4). Grasp the outer edges of the panel (5). Pull the panel inwards towards the center so that the clips release from the sides. Disconnect the connectors (6) for the cargo compartment lamps
- Remove the panel by pulling it straight upwards so that the clips release from the rear crossmember.

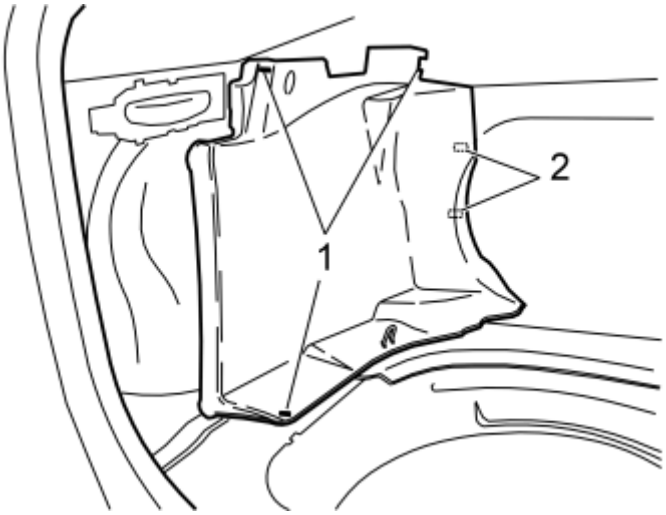

Fig. 209: Front Edge And Left Front Side Panel Clips
Courtesy of VOLVO CARS CORPORATION

- Remove the clips (1) from the left front side panel in the cargo compartment
- Remove the clips (2) from the front edge of the side panel

- Remove the panel.

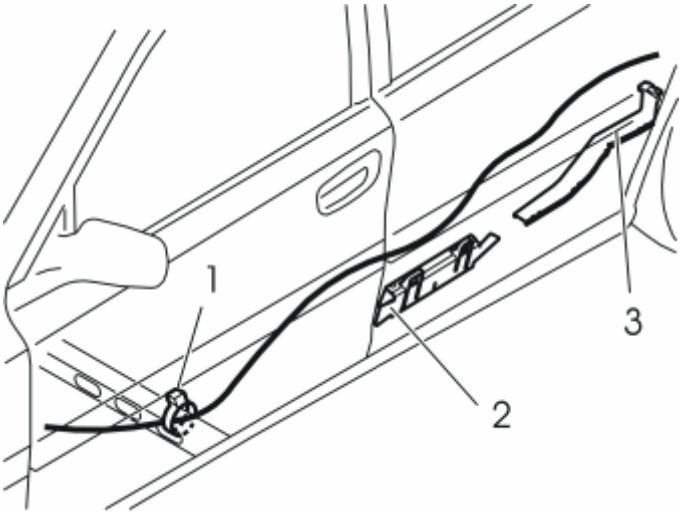

Fig. 210: Identifying Routed Cable
Courtesy of VOLVO CARS CORPORATION

- Route the long cable (previously routed with the cable harness from the radio) under the carpet. Continue out to the left-hand side of the car
- Clamp the cable at the existing cable at the left-hand side of the cross member. Use a tie strap (1) from the kit
- Route the cable inside the carpet and under the cable ducts (2) and (3) along the left-hand side of the car towards the cargo compartment. Ensure that the cable is securely pressed down between the sills and carpets
- Route the cable under the existing wiring and the connectors by the cable duct (3).

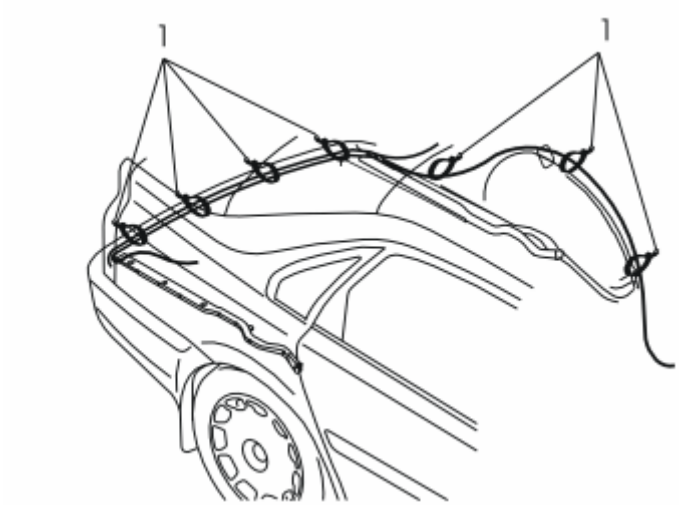

Fig. 211: Cable Harness And Straps
Courtesy of VOLVO CARS CORPORATION

- Route the cable along the left-hand rear wheel arch to the rear cross member

- Continue to route the cable along the rear crossmember over the rear edge on the right-hand rear wheel well
- Secure the cable along the existing cable harnesses. Use the tie straps (1) (from the kit).

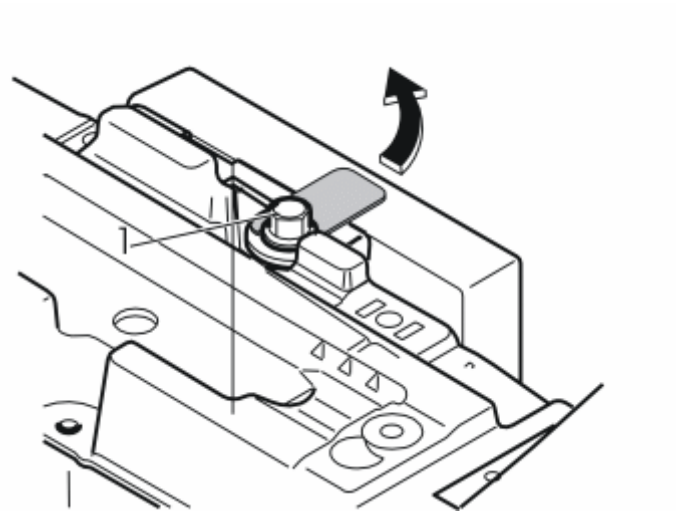

Fig. 212: AEM-Control Unit Connecting Plate Screw
Courtesy of VOLVO CARS CORPORATION

- Slacken off the screw (1) and the nut (1) a few turns in the lock facing for the rear accessory electronic module (AEM) for the right rear wheel well
- Pull the lock facing out to the right. Remove the lock facing.

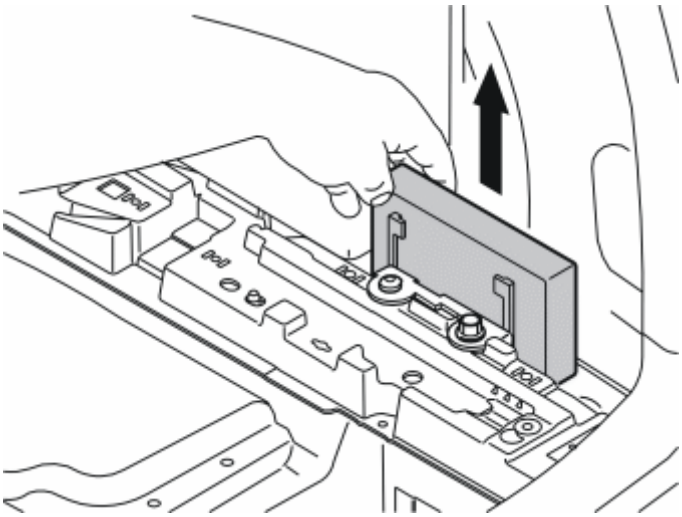

Fig. 213: Accessory Electronic Module Out Of Bracket
Courtesy of VOLVO CARS CORPORATION

- Lift the accessory electronic module (AEM) out of the bracket.

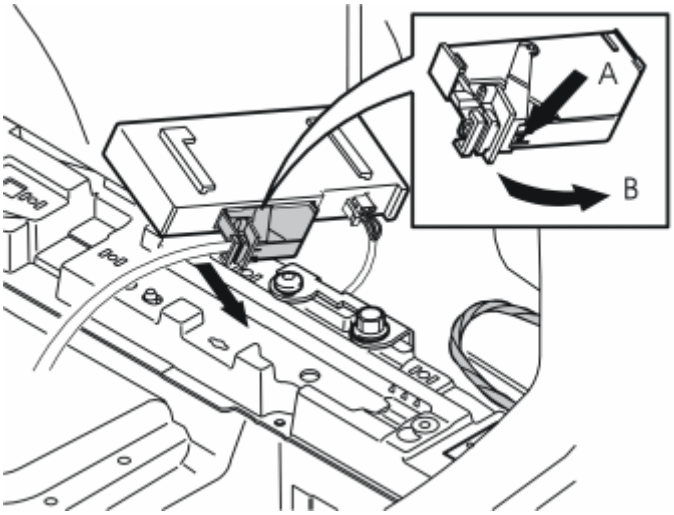

Fig. 214: AEM Controller Connector
Courtesy of VOLVO CARS CORPORATION

- Disconnect the large connector from the accessory electronic module (AEM). First press in catch A. Pull back locking handle B in the direction of the arrow until a click is heard. Disconnect the connector
- Remove the connector from the accessory electronic module (AEM).

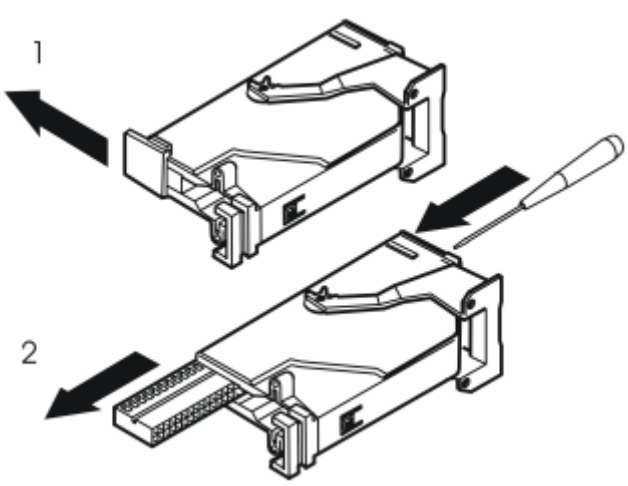

Fig. 215: Black Terminal Pin By Inserting A Pointed Object Into Hole In Other End
Courtesy of VOLVO CARS CORPORATION

- Remove the black catch holding the black switch in place in the connector by pulling in the direction of the arrow
- Remove the black switch by inserting a pointed object in the hole on the other end. Press the switch out.

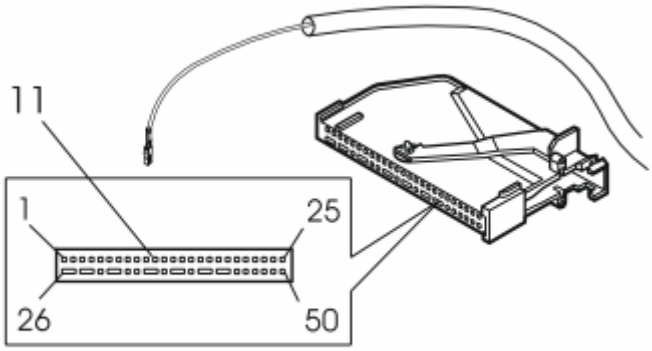

Fig. 216: Connecting Pre-Routed Cable To Terminal 11 Of AEM Connector
Courtesy of VOLVO CARS CORPORATION

- Connect the pre routed cable to terminal 11 of the accessory electronic module (AEM) connector.

NOTE: Number markings can be found on the top and bottom of the black switch. The markings are very small. Ensure accuracy when installing the cable.

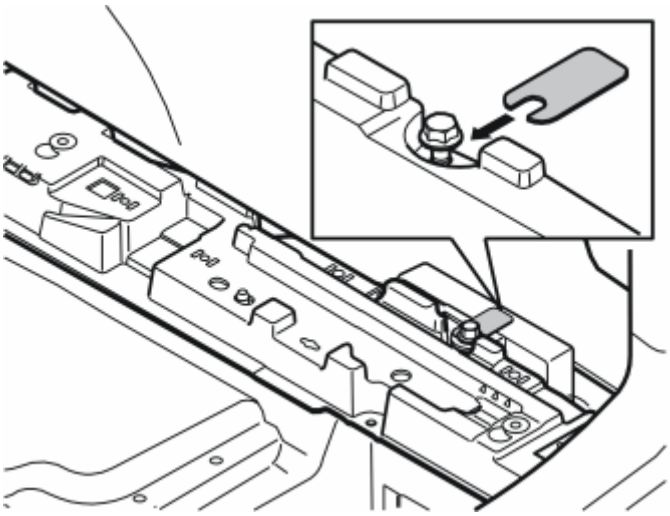

Fig. 217: Identifying AEM Controller Plate Installation
Courtesy of VOLVO CARS CORPORATION

- Reinstall the black switch in the connector. Lock into place using the catch
- Press the connector into the accessory electronic module (AEM). Secure using the black arm
- Reinstall the accessory electronic module (AEM). Secure any excess wiring
- Reinstall the lock facing above the accessory electronic module (AEM). Tighten the screw and the nut. Tighten to **10 Nm (8 lbf. ft.)** .

INSTALLING THE HANDS FREE BOX

HINT: Install the aerial according to the separate Installation Instructions.

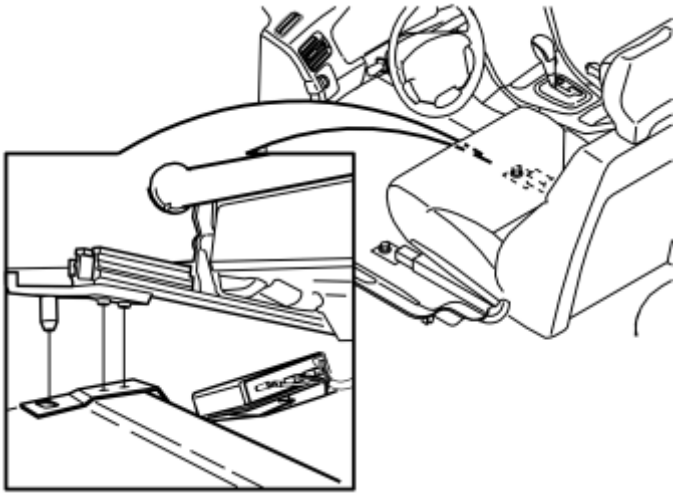

Fig. 218: Identifying Position Of Hands Free Box And Bracket Under Driver's Seat
Courtesy of VOLVO CARS CORPORATION

- Tip the driver's seat back slightly
- Position the hands free box and the bracket with the mounting over the screw hole in the right front mounting for the driver's seat
- Fold the seat down towards the mountings. Check that the hands free box bracket is positioned under the seat rail
- Route all excess cable in under the carpet.

NOTE: Ensure that the none of the wiring is trapped.

- Tighten the front edge of the seat using the two new screws. Tighten to **40 Nm (30 lbf. ft.)**
- Reinstall the covers for the screws.

FINISHING WORK

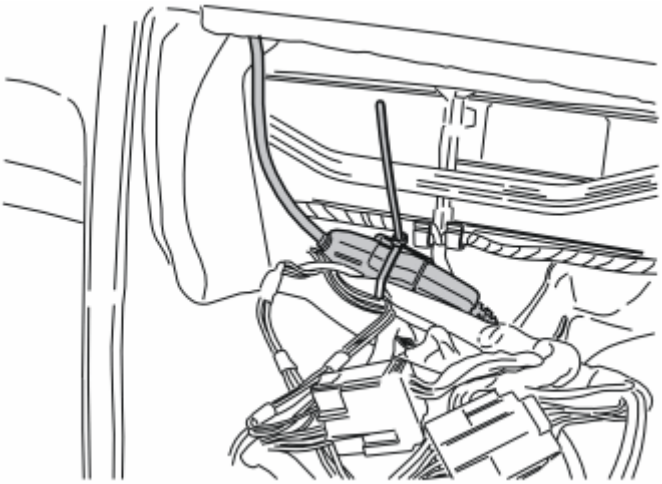

Fig. 219: Clamping Handset Holder Cables Connectors At Coarse Cable Harness For Radio
Courtesy of VOLVO CARS CORPORATION

- Take a tie strap from the kit. Clamp the connectors to the handset holder at the larger cable harness to the radio. Ensure that the connectors are properly secured and do not rattle.

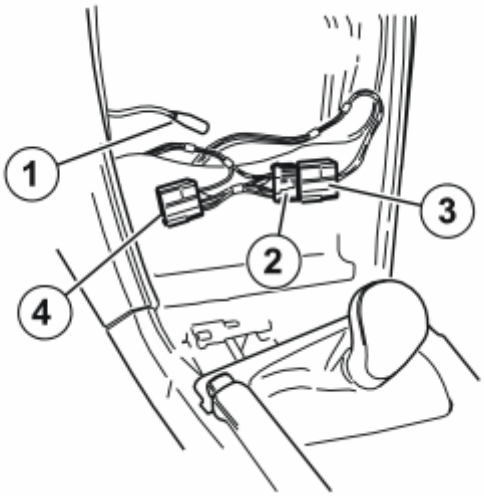

Fig. 220: Connecting Handset Holder Extension Cable Switch To Car Aerial, Cable Harness Connectors To Connectors For Radio, And Connectors To Radio
Courtesy of VOLVO CARS CORPORATION

Applies to cars with an amplifier

- Connect the switch from the handset holder extension cable (1) to the car aerial. The aerial is installed according to a separate Installation Instruction
- Connect the connector (2) for the new large cable harness to the connector (3) that was disconnected from the radio
- Connect the connector (4) to the radio
- Connect any other connectors removed from the radio

- Reinstall the radio.

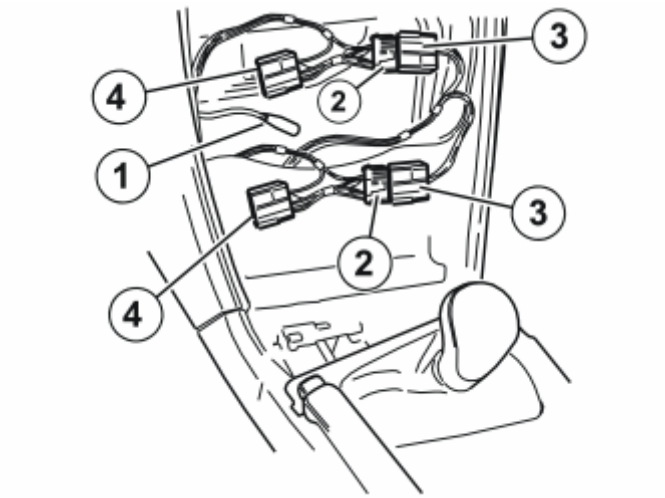

Fig. 221: Connecting Handset Holder Extension Cable Switch To Car Aerial, Cable Harness Connectors To Connectors For Radio, And Connectors To Radio
Courtesy of VOLVO CARS CORPORATION

Applies to cars without an amplifier

- Connect the switch from the handset holder extension cable (1) to the car aerial. The aerial is installed according to a separate Installation Instruction
- Connect the new, large cable harness connectors (2) to the corresponding connectors removed from the radio (3)
- Connect the connectors (4) to the radio
- Connect any other connectors removed from the radio. Reinstall the radio.

Reinstall:

- the side panels at the center console
- the ventilation grille
- the dashboard environmental panel
- the panel around the gear selector lever
- the panels for the door sills.

- Take two new screws from the kit. Tighten the right seat. Tighten to **40 Nm (30 lbf. ft.)**
- Reinstall the covers for the screws.

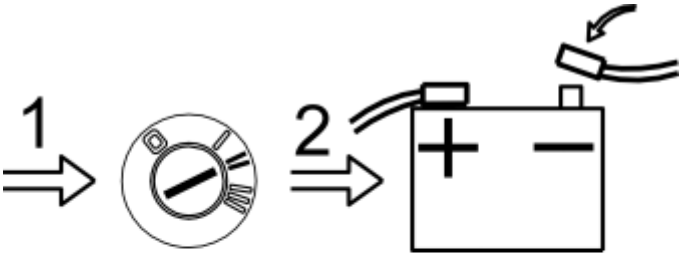

Fig. 222: Connecting Negative Battery Lead
Courtesy of VOLVO CARS CORPORATION

- Turn the ignition key to position II
- Connect the battery negative lead.

Reinstall:

- the panels in the cargo compartment
- the side cushion
- the backrest
- the seat cushion.

- Program the software according to the service information in VIDA (Volvo scan tool).

HANDSFREE (2003-2004)

CARS EQUIPPED WITH SRS/SIPS (AIRBAG)

see **CARS EQUIPPED WITH SRS/SIPS (AIRBAG)**

CAUTION

see **CAUTION**

HANDSFREE

NOTE: **This accessory is connected to the electrical system of the car. It requires software unique to the car.**

PREPARATIONS

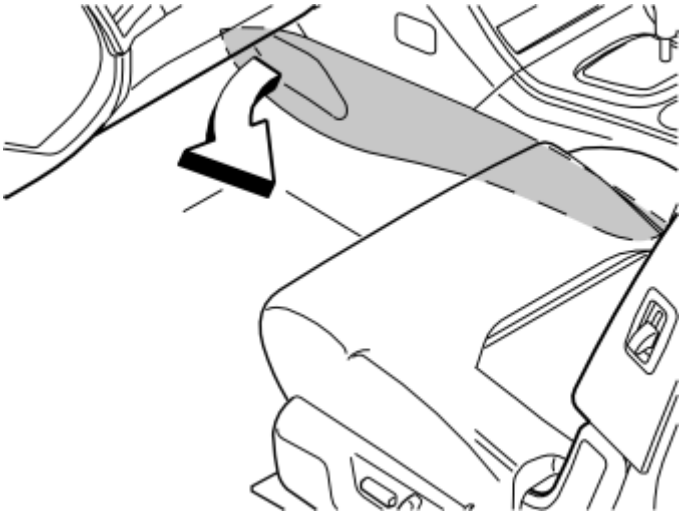

Fig. 223: Identifying Centre Console Side Panels
Courtesy of VOLVO CARS CORPORATION

- Remove the left and right-hand side panels from the center console. Pull the panels free at the front edge and then backwards until all the clips have released.

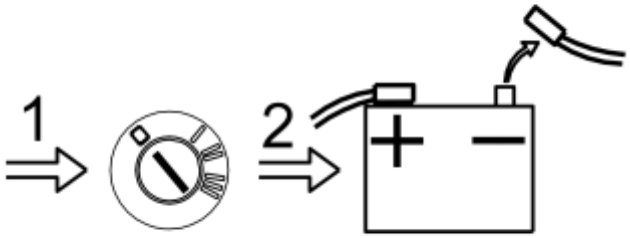

Fig. 224: Disconnect Battery Negative Lead
Courtesy of VOLVO CARS CORPORATION

Applies to cars with power front seats

- Position the right-hand front seat so that the panels over the front and right rear seat mountings, and the small panel at the lower edge of the right-hand B-post are not obstructed. They will be removed later after disconnecting the battery negative lead
- Also position the left-hand front seat in a suitable position so that the hands free kit can be installed.

Applies to all models

- Turn the ignition key to position 0

- Disconnect the battery negative lead.

NOTE: **Wait at least five minutes before disassembling the connectors or removing other electrical equipment.**

Illustration A

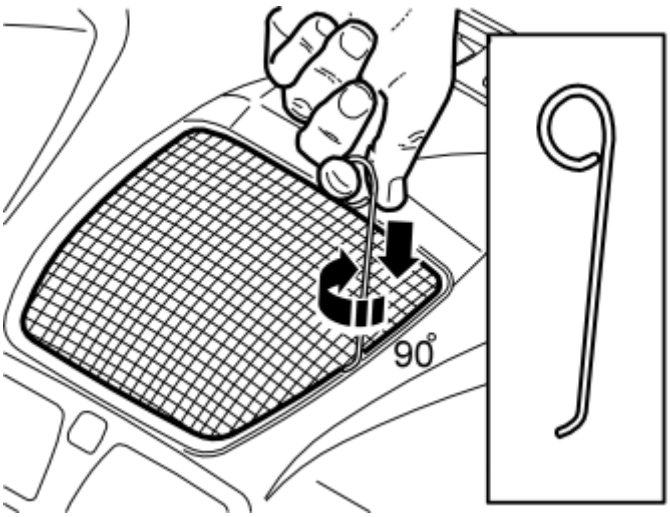

Fig. 225: Removing The Loudspeaker Grille
Courtesy of VOLVO CARS CORPORATION

Remove the loudspeaker grille as follows:

- Take a length of **1.5 mm (1/16")** diameter welding rod. Bend one end to 90° (L=5 mm (13/64")). The other end is bent to form a handle
- Insert the first bent end down into the joint between the loudspeaker grille and the dashboard as illustrated, until it engages
- Twist the welding rod 90° so that the bent section engages with the underneath of the loudspeaker grille. It may be necessary to move the welding rod along the joint to twist the rod around.

Illustration B

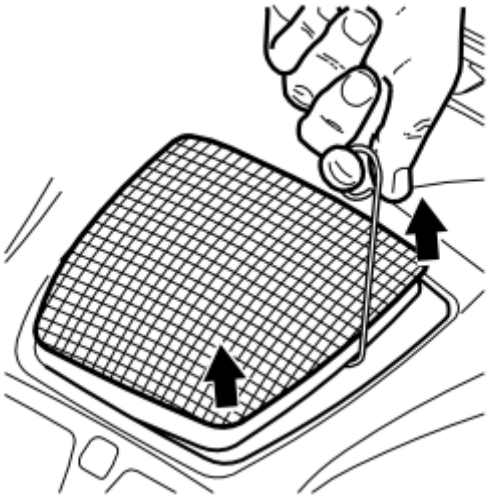

Fig. 226: View Of Detached Loudspeaker Grille
Courtesy of VOLVO CARS CORPORATION

- Pull upwards until the loudspeaker grille detaches. The loudspeaker grille is securely fastened by four clips.

NOTE: Do not damage the dashboard.

- Place the loudspeaker grille to one side.

Illustration C applies to cars without a centrally-mounted loudspeaker

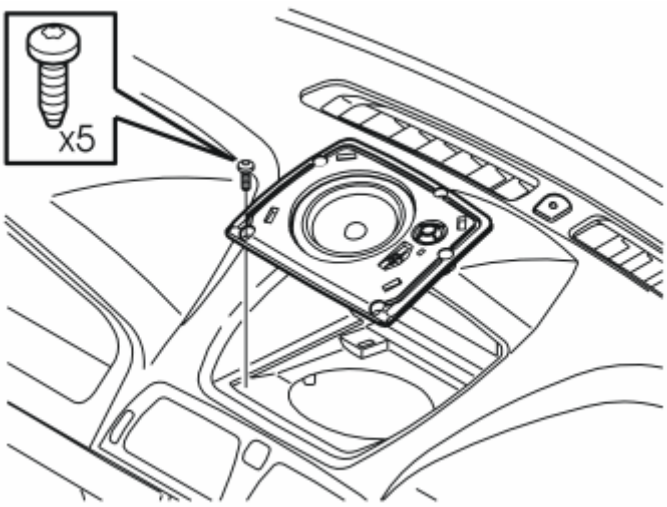

Fig. 227: Identifying Cars Without A Centrally-Mounted Loudspeaker
Courtesy of VOLVO CARS CORPORATION

- Remove the bracket for the loudspeaker grille by removing the five screws and pulling it up out of the dashboard.

Illustration D applies to cars with a centrally-mounted loudspeaker

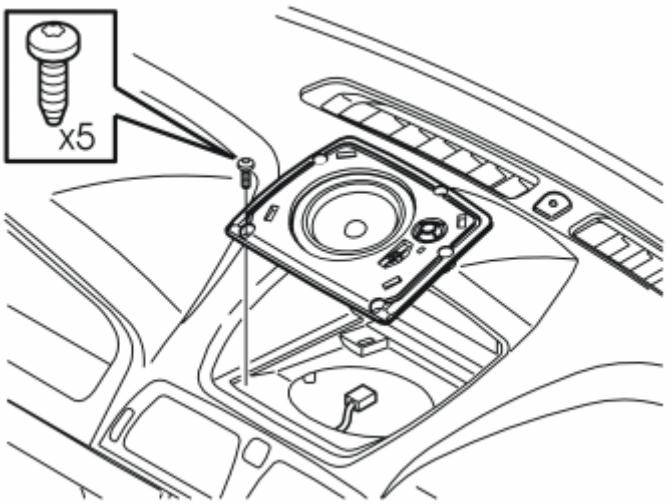

Fig. 228: Identifying Cars With A Centrally-Mounted Loudspeaker
Courtesy of VOLVO CARS CORPORATION

- Remove the five screws in the loudspeaker. Pull up the loudspeaker slightly from the dashboard. Disconnect the connector.

Illustration E applies to cars with RTI (road traffic information)

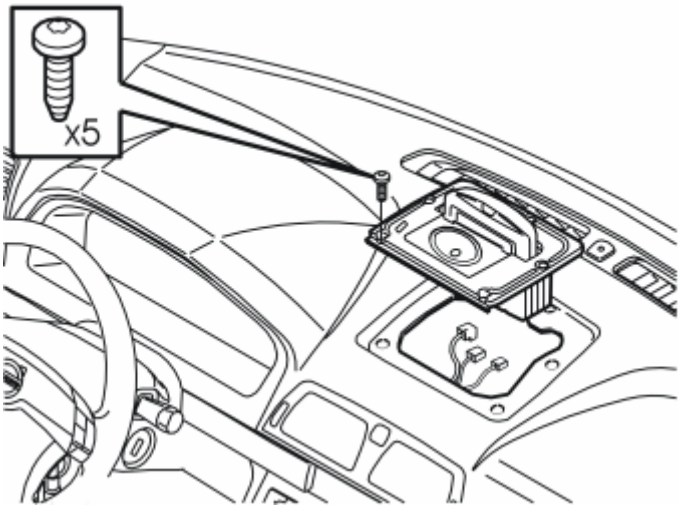

Fig. 229: Identifying Cars With RTI (road Traffic Information) Display
Courtesy of VOLVO CARS CORPORATION

- Remove the five screws in the display for RTI (road traffic information). Pull up the display slightly from the dashboard. Disconnect the connectors. Disconnect the centrally-mounted loudspeaker connector if installed.

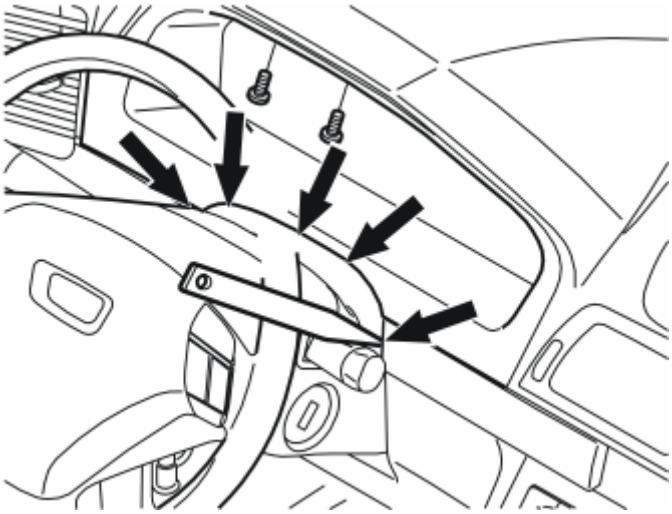

Fig. 230: Identifying Upper Steering Column Cover Removal
Courtesy of VOLVO CARS CORPORATION

- Lower the steering wheel to the lowermost position. Pull the steering wheel to the rearmost position
- Remove the two screws at the top edge of the combined instrument panel surround
- Carefully pry off the rubber seal from the upper steering column cover. Use a weatherstrip tool. It is secured with five clips
- Remove the surround by carefully pulling it backwards, first at the lower edge and then at the top edge until all the clips have released.

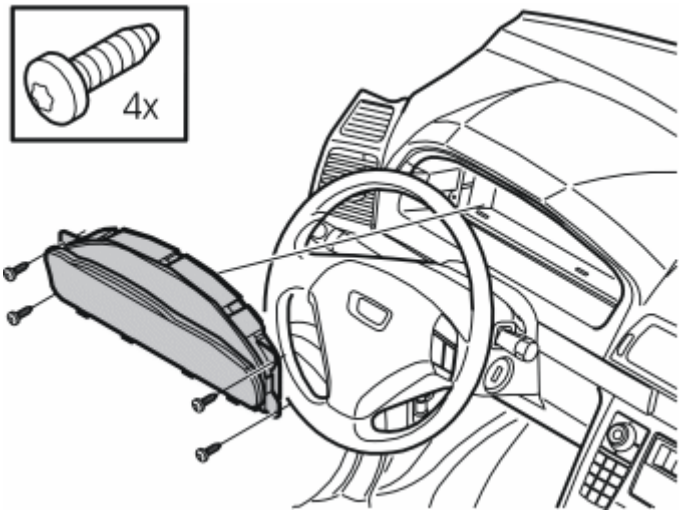

Fig. 231: View Of Combined Instrument Panel Screws
Courtesy of VOLVO CARS CORPORATION

- Remove the four screws for the combined instrument panel
- Pull out the combined instrument panel. Disconnect the connector on the reverse of the combined instrument panel.

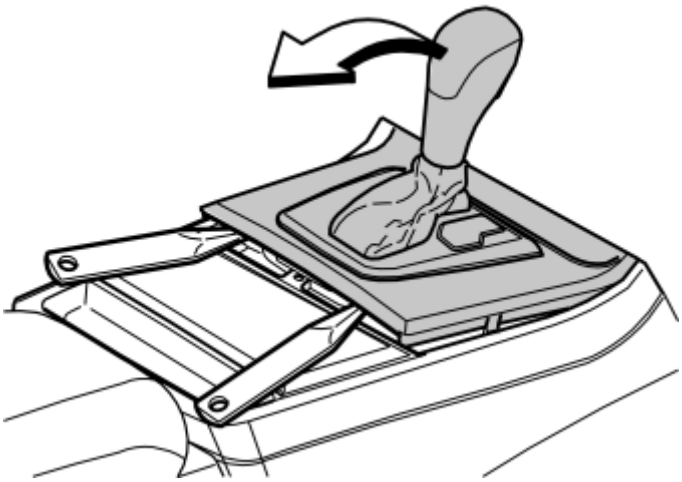

Fig. 232: Prying Off Gear Selector Panel At Rear Edge
Courtesy of VOLVO CARS CORPORATION

Applies to cars with automatic gearboxes

- Turn the ignition key to position II.

Applies to all models

- Move the gear selector lever to its rearmost position
- Carefully pry off the gear selector lever panel at the lower edge using a weatherstrip tool. Pull the panel backwards to access the screws for the dashboard environment panel.

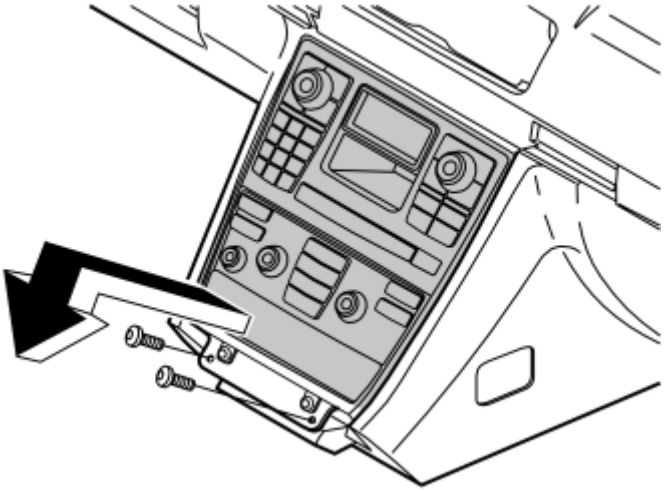

Fig. 233: Removing Screws And Radio/AC Unit From Center Console
Courtesy of VOLVO CARS CORPORATION

- Remove the screws holding the bracket for the dashboard environment panel and the control module
- Pull out the bracket at the lower edge. Pull downwards from the top edge of the center console

- Disconnect the connectors from the dashboard environment panel, control module. If applicable disconnect the CD player and/or Mini disc player connectors.

INSTALLING THE CARPHONE HOLDER

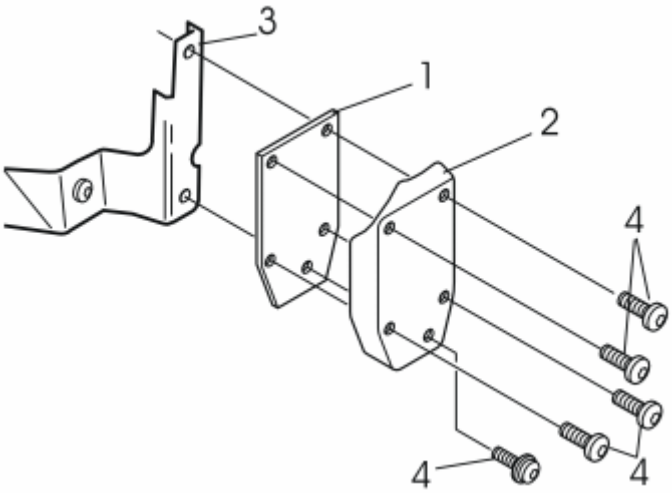

Fig. 234: Identifying Carphone Holder Bracket Components
Courtesy of VOLVO CARS CORPORATION

- Take the carphone holder bracket, the reinforcement panel, the cover and screws from the kit
- Install the reinforcement panel (1) and the cover (2) in the bracket (3) using the screws (4).

Illustration A

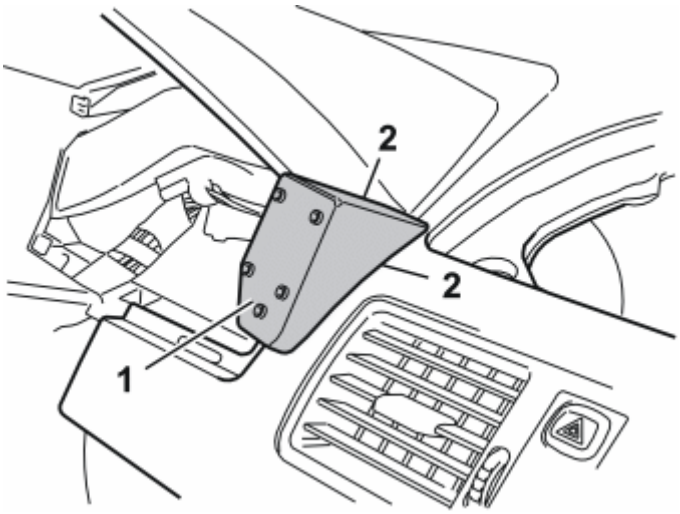

Fig. 235: View Of Bracket To Dashboard
Courtesy of VOLVO CARS CORPORATION

- Position the entire unit (1) in the dashboard to mark out holes for the bracket. Adjust to achieve the optimum position. Do not press the unit hard against the dashboard, however, ensure that there are no

gaps at the sides between the panel and the dashboard (2).

Illustration B

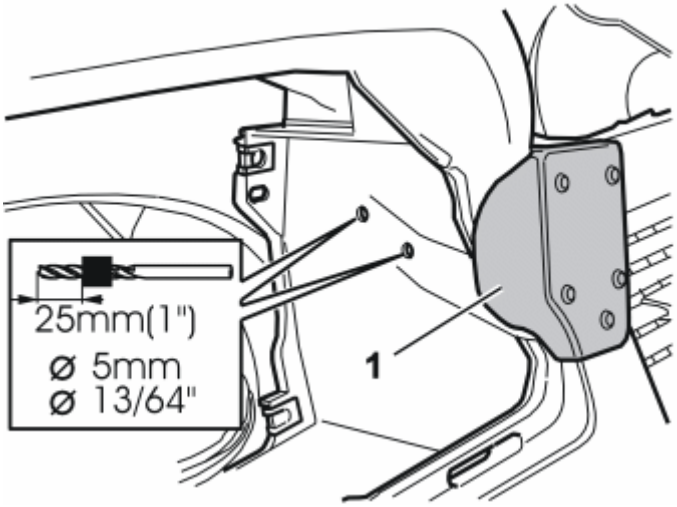

Fig. 236: View Of Bracket Hole Markings
Courtesy of VOLVO CARS CORPORATION

- Hold the unit securely and mark out the holes through the bracket
- Drill out the two holes using a **5 mm (13/64")** diameter drill bit. Use a 25 mm (1") drill stop
- Remove any metal shavings
- Remove the cover and the reinforcement panel from the bracket.

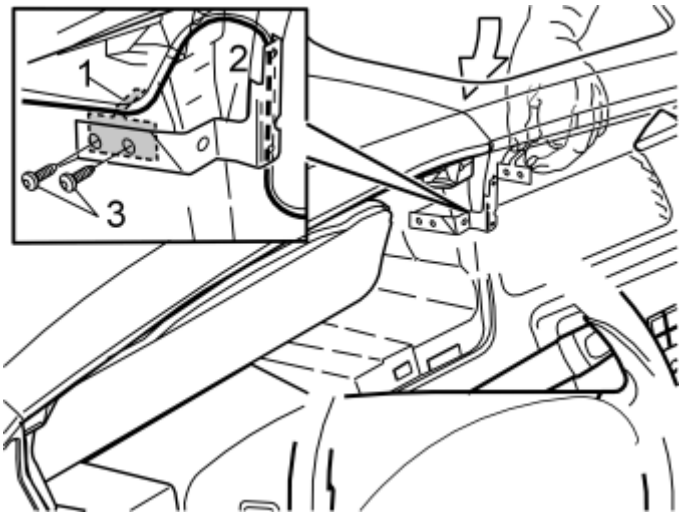

Fig. 237: View Of Reinforcement Panel Screws
Courtesy of VOLVO CARS CORPORATION

- Take the reinforcement panel (1) and the two screws from the kit
- Position the carphone holder wiring so that it is routed on the reverse of the bracket as illustrated
- Insert the reinforcement panel through the hole for the center loudspeaker

- Install the bracket (2). Use the two screws (3). Tighten the bracket against the dashboard.

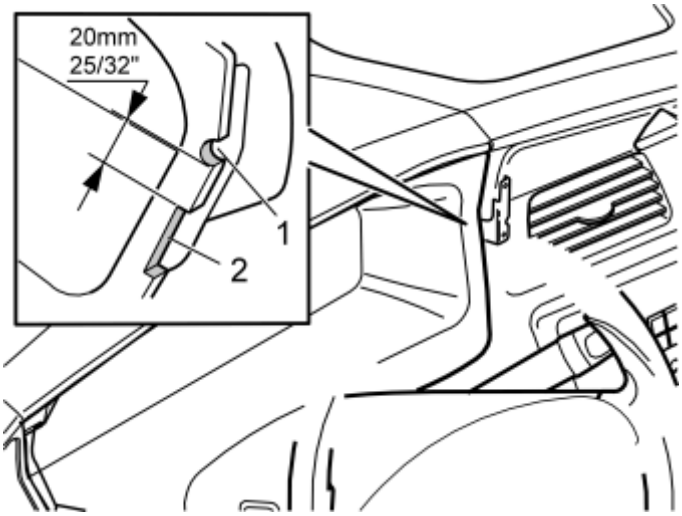

Fig. 238: Identifying The Wiring And The Bracket For The Handset Holder
Courtesy of VOLVO CARS CORPORATION

- Press the surround for the combined instrument panel into place
- Mark out the surround, following the sketch, where the cut-outs will be made for the wiring and the bracket for the handset holder
- Remove the surround. File out the groove (1) for the wiring for the handset. File the hole so that it is large enough for any excess wiring to be routed through the hole and hidden on the inside of the dashboard
- File out a groove (2) for the bracket for the handset holder
- Smooth off the edges of the groove.

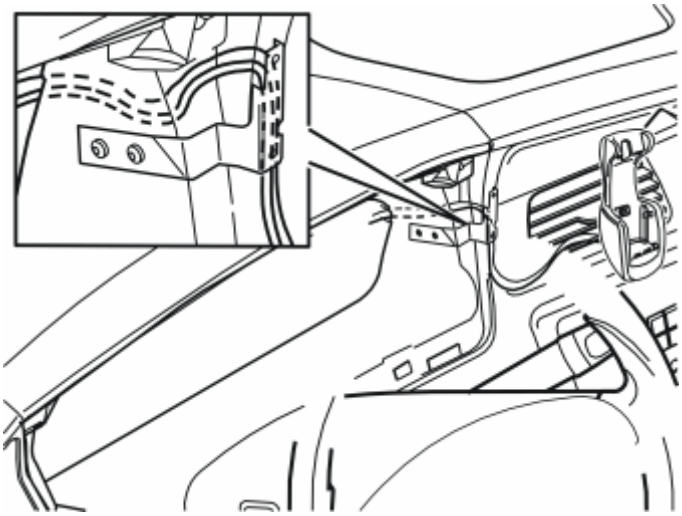

Fig. 239: Identifying Wire Routing
Courtesy of VOLVO CARS CORPORATION

- Route the wiring to the carphone holder from the hole for combined instrument panel. Position the wiring at the left air duct in the center console. Do not route more wiring than is required to secure the carphone

holder

- Connect the combined instrument panel. Reinstall the combined instrument panel
- Reinstall the surround for the combined instrument panel. Tighten.

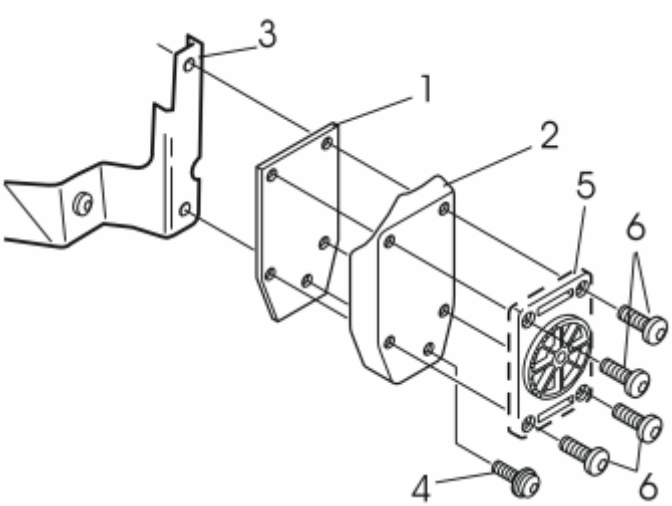

Fig. 240: Identifying Bracing Plate Components
Courtesy of VOLVO CARS CORPORATION

- Install the bracing plate (1) and the cover (2) in the bracket (3). Use the screw (4) (from the kit). Do not tighten fully yet
- Remove the mounting plate (5) for the carphone holder from the carphone holder. Tighten the mounting plate using the screws (6) from the kit
- Tighten the screw (4).

Illustration A applies to Nokia

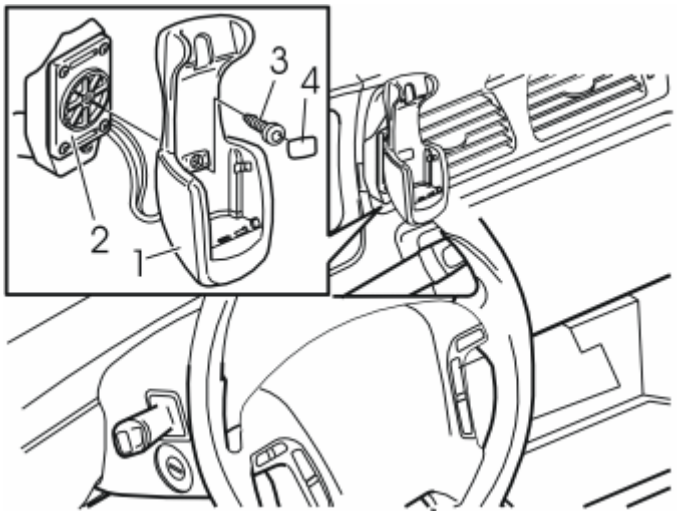

Fig. 241: Identifying Handset Holder Mounting Components
Courtesy of VOLVO CARS CORPORATION

- Tighten the carphone holder (1) onto the mounting plate (2) using the screw (3)
- Install the cover (4).

Illustration B applies to the Ericsson T28, T29 and T39

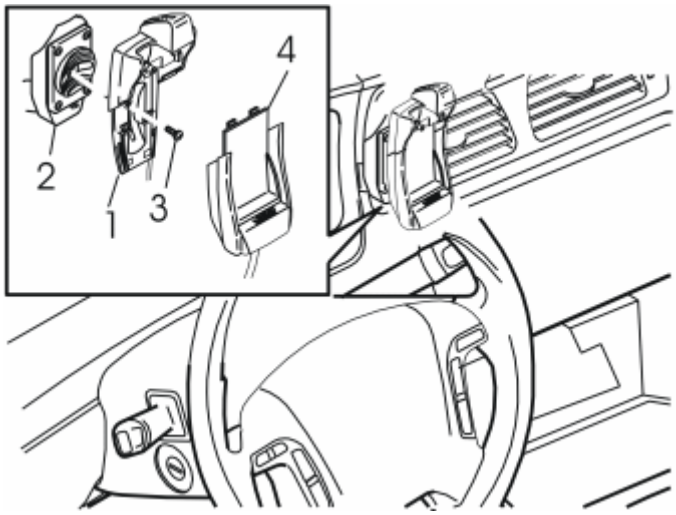

Fig. 242: Identifying Handset Holder Mounting Components
Courtesy of VOLVO CARS CORPORATION

- Tighten the upper section of the carphone holder (1) onto the mounting plate (2) using the screw and washer (3)
- Press the lower section (4) of the carphone holder onto the upper section.

Illustration C applies to the Ericsson T20

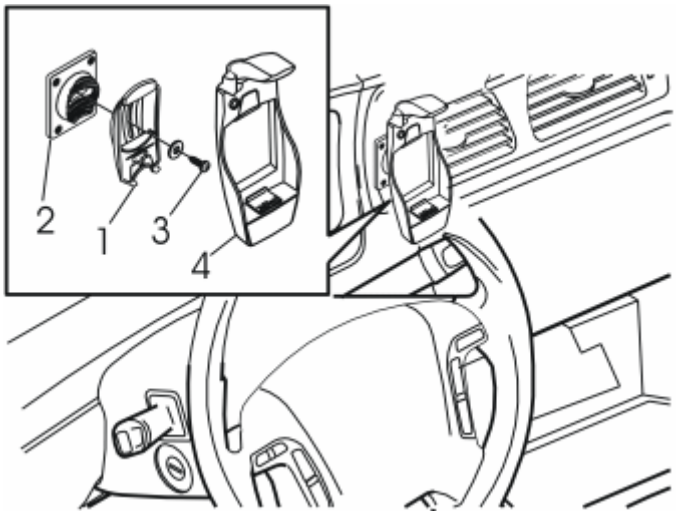

Fig. 243: Identifying Carphone Holder Mounting Components
Courtesy of VOLVO CARS CORPORATION

- Tighten the carphone holder mounting (1) onto the mounting plate (2) using the screw and washer (3)

- Press the carphone holder (4) onto the mounting.

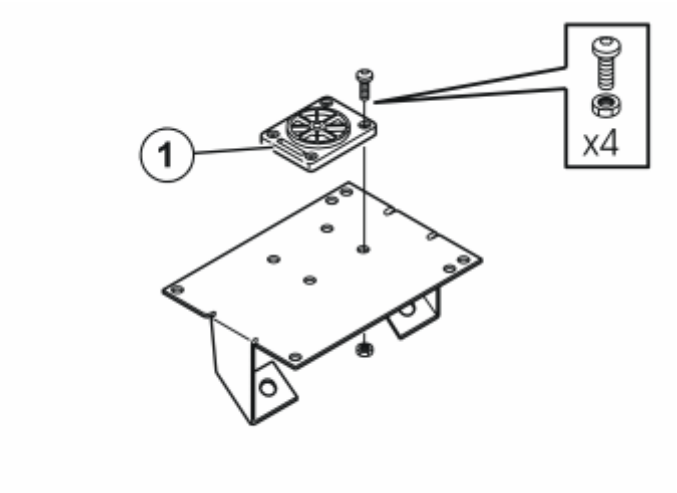

Fig. 244: Identifying Nokia Mounting Plate
Courtesy of VOLVO CARS CORPORATION

Applies to Nokia

- Install the mounting plate (1) on the bracket. Use the screws and nuts from the kit.

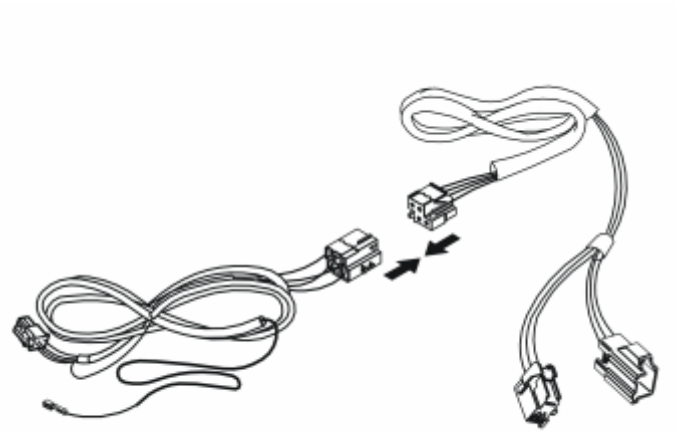

Fig. 245: Identifying Two Large Cable Harnesses From The Kit
Courtesy of VOLVO CARS CORPORATION

Applies to all models

- Take the two large cable harnesses from the kit. Connect them to each other.

INSTALLING THE HANDSFREE BOX

Illustration A applies to Ericsson

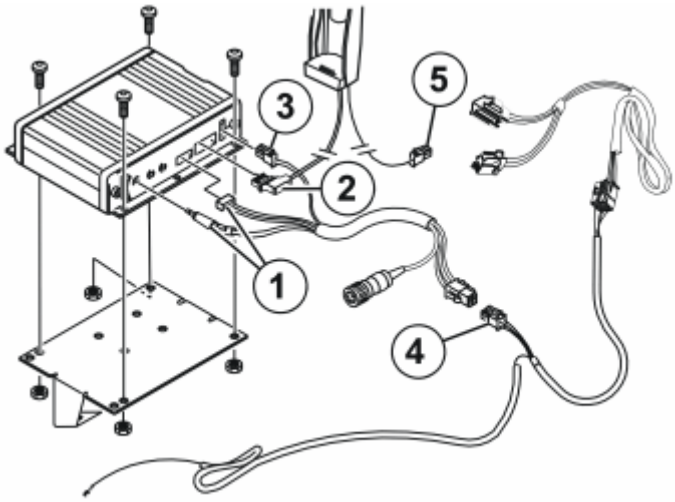

Fig. 246: Identifying Ericsson Handsfree Box Components
Courtesy of VOLVO CARS CORPORATION

- Take four screws and nuts from the kit. Tighten the handsfree box to the bracket
  - the wiring to the head restraint (1)
  - the wiring to the carphone holder (2)
  - the cable to the accessory electronic module (AEM) (3)
  - the joint cable (4) to the short cable for the handsfree box.
- Connect the wiring to the handsfree box as illustrated:
  - the wiring to the head restraint (1)
  - the wiring to the carphone holder (2)
  - the cable to the accessory electronic module (AEM) (3)
  - the joint cable (4) to the short cable for the handsfree box.

Illustration B applies to Nokia

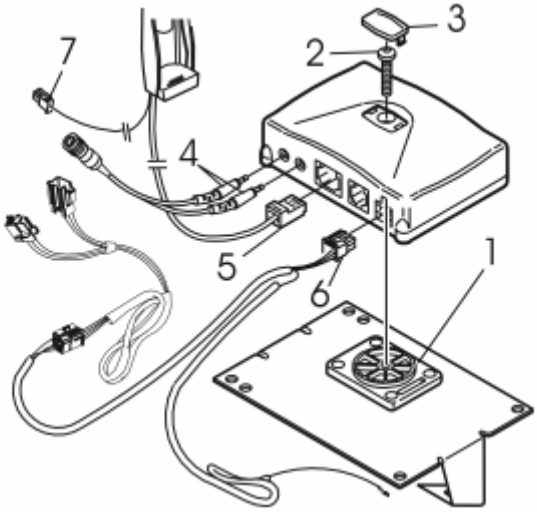

Fig. 247: View Of Nokia Handsfree Box To The Mounting Plate

Courtesy of VOLVO CARS CORPORATION

- Tighten the handsfree box to the mounting plate (1) using the screw (2) from the kit
  the wiring to the head restraint (4)
  the cable to the carphone holder (5)
  the cable to the accessory electronic module (AEM) (6).
- Install the cover (3) over the screw
  the wiring to the head restraint (4)
  the cable to the carphone holder (5)
  the cable to the accessory electronic module (AEM) (6).
- Connect the wiring to the handsfree box as illustrated:
  the wiring to the head restraint (4)
  the cable to the carphone holder (5)
  the cable to the accessory electronic module (AEM) (6).

Applies to all models

- The remaining cable from the carphone holder, (5) in illustration A and (7) in illustration (B), is connected to the car aerial.

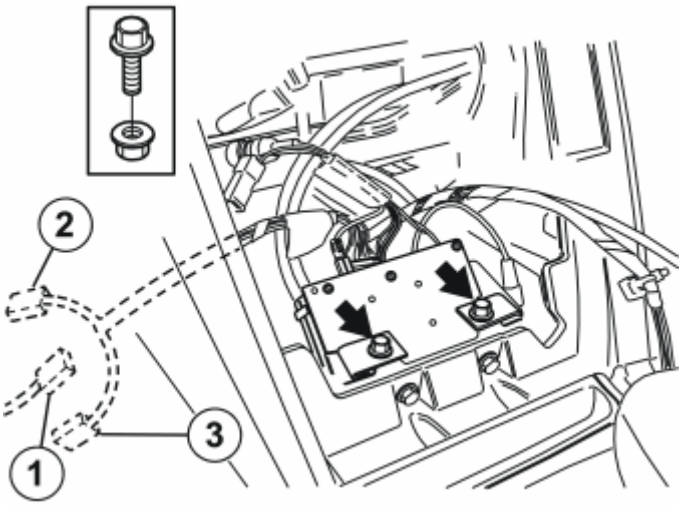

Fig. 248: Identifying Hands Free Box Bracket Bolts
Courtesy of VOLVO CARS CORPORATION

Applies to all models:

- Take two screws and nuts from the kit. Install the bracket with the handsfree box on the existing bracket at the lower edge of the center console.

NOTE: Ensure that the none of the wiring is trapped.

- Locate the grey (GR) pre-routed connector (1) for power supply. This comes from the heavy duty cable harness - either under the dashboard on the right-hand side of the steering column, immediately above the accelerator pedal (AP), or in the cut-out for the radio in the center console.

  The connector may be separate on the cable harness, or if the car has a MiniDisc player and / or CD player / changer, the connector may be on the junction cable for these components.

Cars which do not have a pre-routed connector in the cut-out for the radio:

- Remove the soundproofing panel on the left-hand side. First remove the two screws, then pry off the soundproofing panel at the top edge (see illustration B).

Applies to all models:

- Take the cable harness with the two grey (GR) connectors which was previously connected to the handsfree box. Pull it out through the left-hand side of the center console to the existing connector
- Connect the pre-routed connector to the corresponding connector (2) on the routed cable harness
- Secure the excess connector (3). Also clamp the cable harness so that it is not in contact with any sharp edges and is not at risk of any other damage.

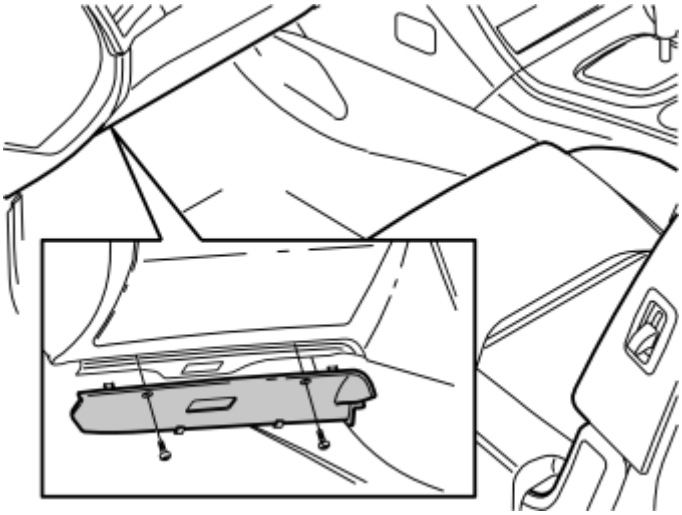

Fig. 249: Identifying Removal Of Screws And Soundproofing Panel
Courtesy of VOLVO CARS CORPORATION

HEAD RESTRAINT PREPARATIONS

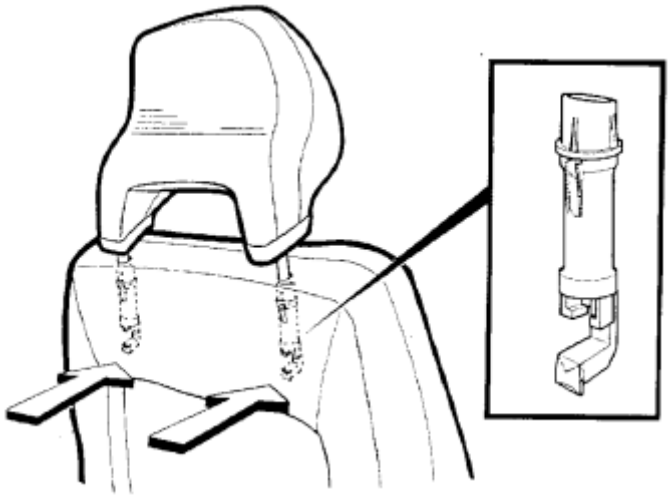

Fig. 250: Identifying Head Restraint Catches
Courtesy of VOLVO CARS CORPORATION

- Remove the driver's seat head restraint. Press in the catches while pulling the head restraint up.

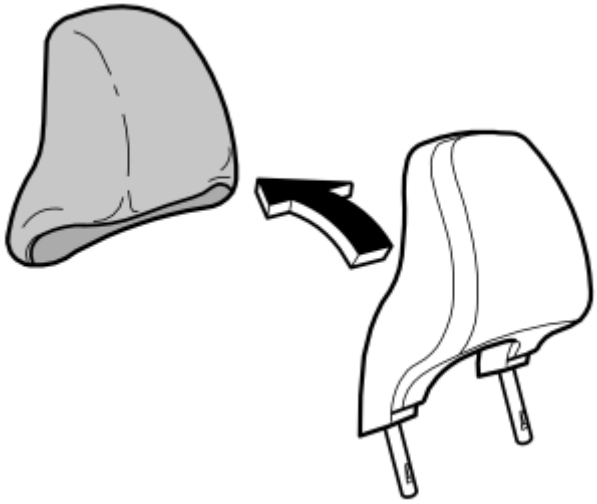

Fig. 251: Identifying Removal Of Upholstery From Head Restraint
Courtesy of VOLVO CARS CORPORATION

Does not apply to cars with leather upholstery

- Remove the upholstery from the head restraint. If the zip fastener catch is missing: Disconnect the clamps at the ends of the zip fastener. Pull the zip fastener apart.

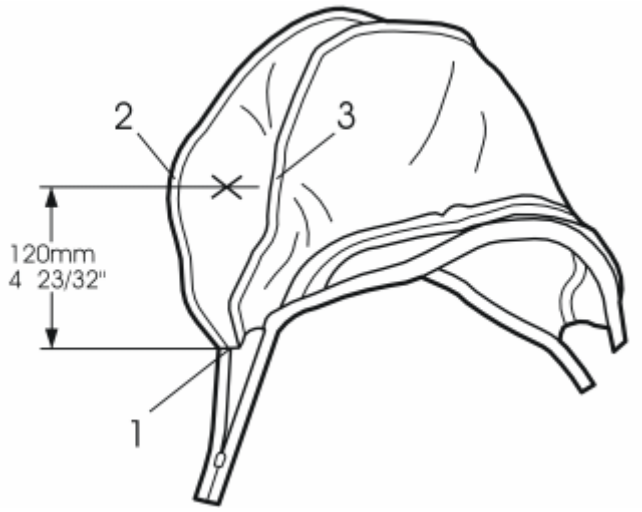

Fig. 252: Marking Up For Holes In Head Restraint Upholstery
Courtesy of VOLVO CARS CORPORATION

Does not apply to cars with leather upholstery

- Turn the head restraint upholstery inside out
- Mark up for holes on the right hand side of the head restraint. Mark from the underside (1) of the side 120 mm (4 23/32") upwards and mark out between the two seams (2) and (3).

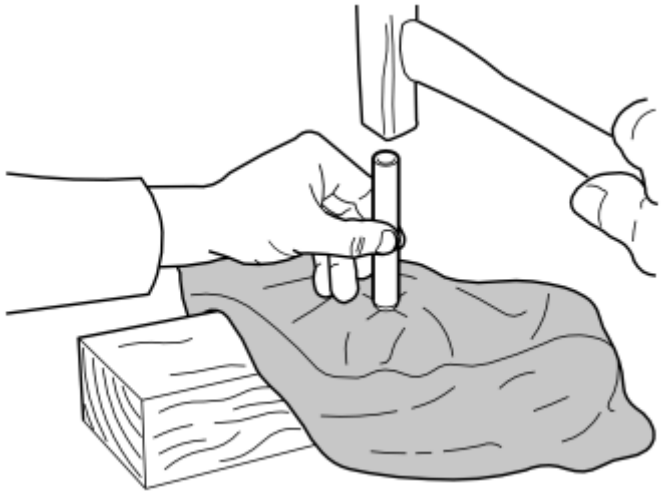

Fig. 253: Punching Out Holes In Head Restraint Upholstery
Courtesy of VOLVO CARS CORPORATION

Does not apply to cars with leather upholstery

- Punch out the hole using the hole punch from the kit. Use a wooden or cork underlay
- Turn the upholstery the correct way
- Carefully pull the upholstery over the new head restraint with the microphone.

Applies to cars with leather upholstery

- Take the new leather upholstery from the kit
- Carefully pull the upholstery over the new head restraint with the microphone.

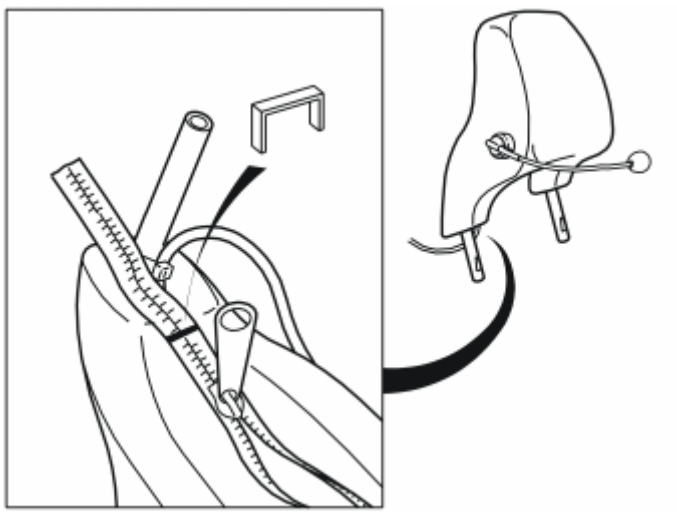

Fig. 254: Identifying Zip Fastener
Courtesy of VOLVO CARS CORPORATION

- Close the zip fastener. If the zip fastener catch is missing, use a suitable zip fastener catch from the kit. Close the zip fastener again. Lock the ends using staples for example
- Push the ends of the zip fastener inside the upholstery.

INSTALLING THE HEAD RESTRAINT

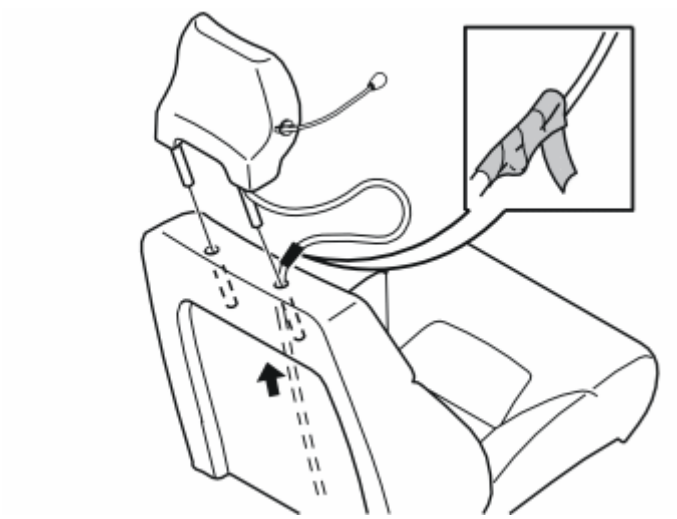

Fig. 255: Tape Switch From Microphone Cable To Curtain Wire
Courtesy of VOLVO CARS CORPORATION

- Insert a curtain wire from the bottom and upwards on the reverse of the backrest between the upholstery

and the padding

- Tape the switch from the microphone cable to the curtain wire. Pull down through the seat
- Install the new head restraint.

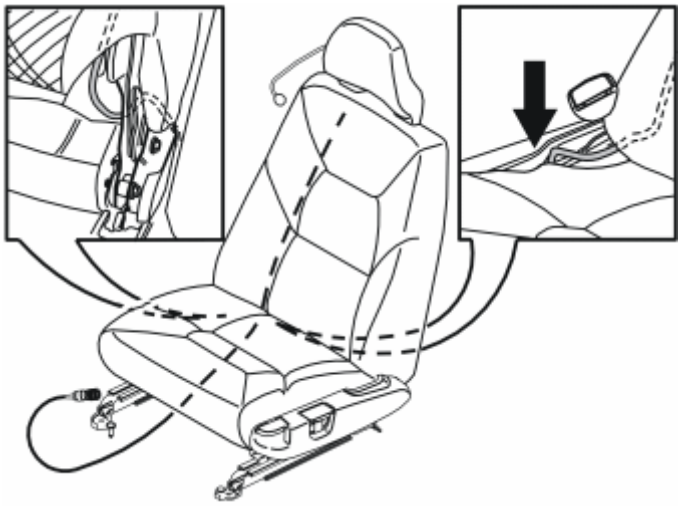

Fig. 256: View Of Cable Pulled Up The From Head Restraint
Courtesy of VOLVO CARS CORPORATION

- Pull up the cable from the head restraint. Position it under the upholstery and route it to the front of the backrest
- Lower the cable between the seat cushion and its panel and up to the joint in the carpet on the left-hand side of the center console.

NOTE: Ensure that the cable does not come into contact with loose components or sharp edges.

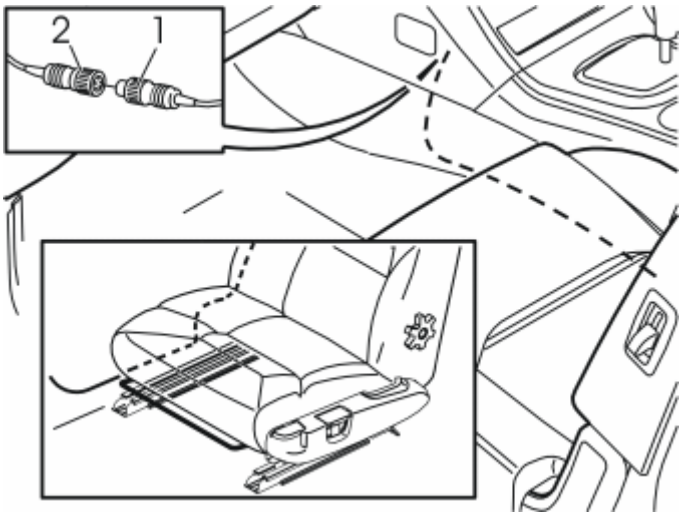

Fig. 257: View Of Handsfree Box Connector
Courtesy of VOLVO CARS CORPORATION

- Pull the cable from the head restraint into the carpet join inside the carpet. Pull it along the inside of the left-hand side of the tunnel console up to the center console, along the air duct and up to the handsfree box that was installed earlier.

NOTE: Pull enough of the cable out of the carpet join so that the seat can move between its limit positions without stretching or rubbing.

- Connect the connector (1) from the newly routed cable to the corresponding connector (2) for the handsfree box.

CABLE ROUTING TO THE ACCESSORY ELECTRONIC MODULE (AEM)

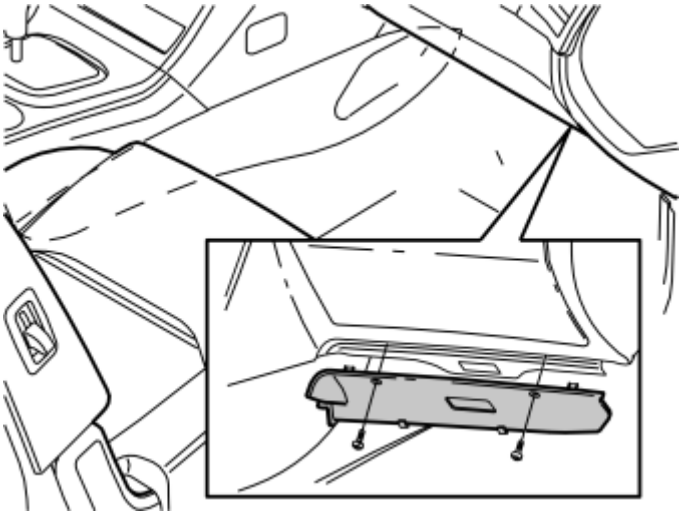

Fig. 258: Identifying Soundproofing Panel
Courtesy of VOLVO CARS CORPORATION

- Remove the right-hand side soundproofing panel. First remove the two screws. Then pry off the panel at the top edge.

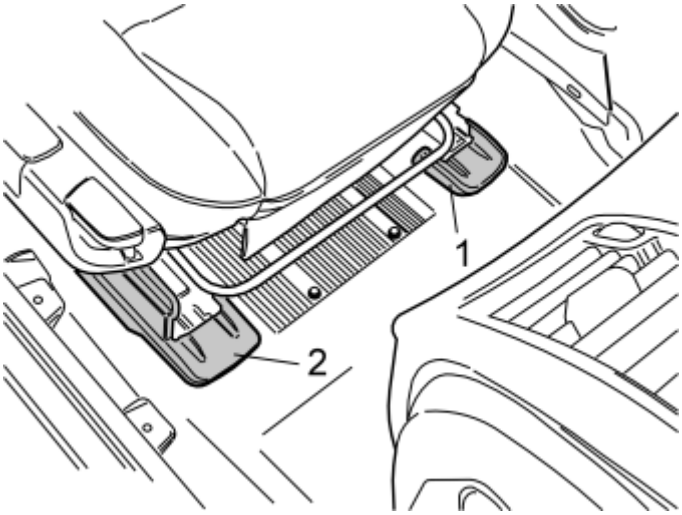

Fig. 259: View Of Front Seat Front Edge Cover
Courtesy of VOLVO CARS CORPORATION

- Remove the cover (1) on the left front mounting on the right-hand front seat by prying off the front edge
- Pry off the front edge of the right panel (2). Remove the panel.

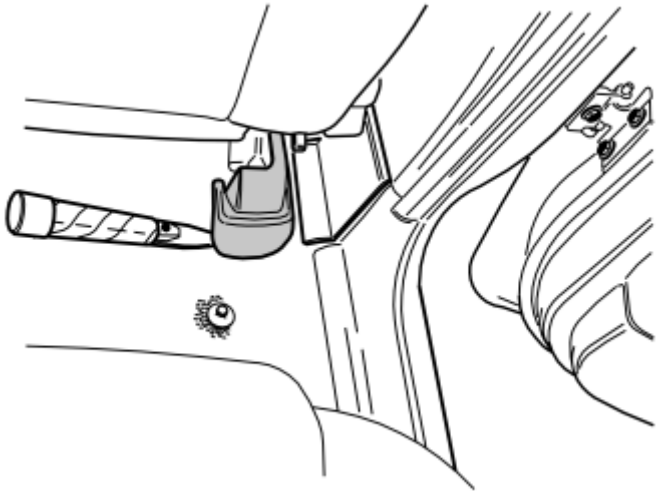

Fig. 260: Prizing Right-Hand Rear Mounting Of Cover Panel
Courtesy of VOLVO CARS CORPORATION

- Remove the panel on the right rear mounting on the right-hand front seat. Pry it up slightly at the rear edge and then pull it back / upwards.

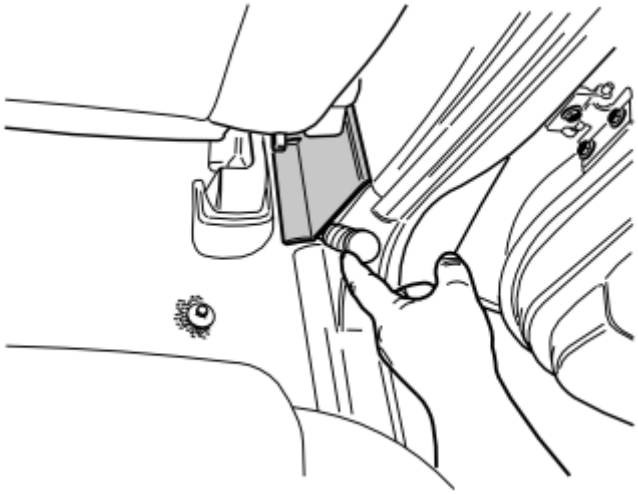

Fig. 261: Prizing Away Cover Panel Over Joint Between Door Sills On Right-Hand Side, At Lower Edge, Using A Weatherstrip Tool
Courtesy of VOLVO CARS CORPORATION

- Remove the panel over the joint between the door sills on the right-hand side. Carefully pry off the panel at the lower edge using a weatherstrip tool.

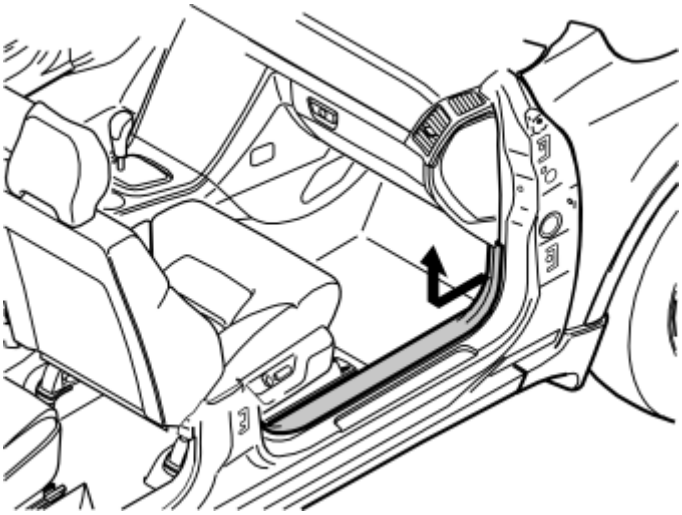

Fig. 262: Right-Hand Front Door's Sill Trim Panel
Courtesy of VOLVO CARS CORPORATION

- Detach the sill trim panel for the right-hand front door. Pull off the panel starting at the front edge until the clip releases. Continue backwards until the remaining clips have released
- Unhook the sill trim panel from the B-post panel.

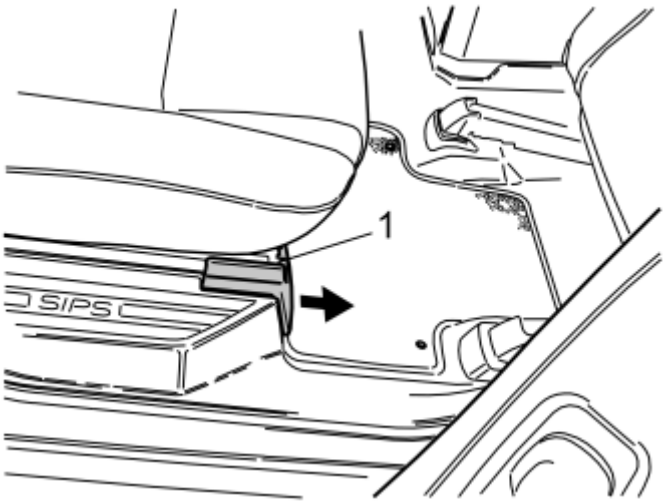

Fig. 263: Pushing Up Catch On Top Side
Courtesy of VOLVO CARS CORPORATION

- Remove the panel in the right-hand front seat mounting on the right-hand seat in the second row. Push up the catch (1) on the top. Pull the panel forward.

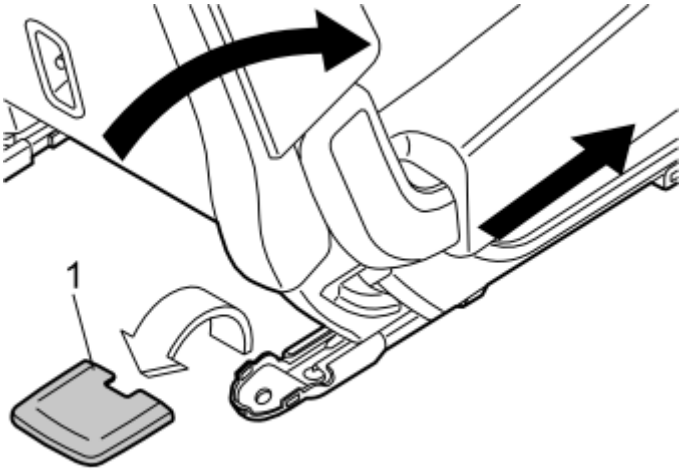

Fig. 264: Removing Cover Panel
Courtesy of VOLVO CARS CORPORATION

- Fold the backrest on the right-hand seat in the second row forward as far as possible. Slide the front seat forward as far as possible. (On cars with two rows of seats, the second row is secured.)
- Remove the cover (1) for the right rear seat mounting by prying off the rear edge.

Illustration A

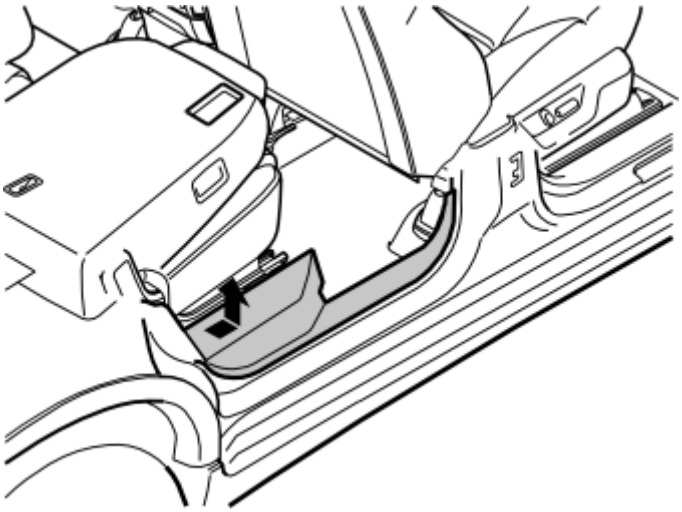

Fig. 265: Removing Sill Trim Panel
Courtesy of VOLVO CARS CORPORATION

- Remove the sill trim panel for the right-hand rear door. Pull the rear edge until the clips release. Continue forwards until the remaining clips have released.

Applies to cars with two rows of seats

- On cars with two rows of seats the seat cannot be slid forwards. To remove the sill trim panel; Start by folding the backrest forward when pulling the rear edge of sill trim panel loose. Then reposition the

backrest to raise the seat cushion and provide more room for removing the sill trim panel. It is securely positioned. Do not damage the panel and surrounding components.

Illustration B

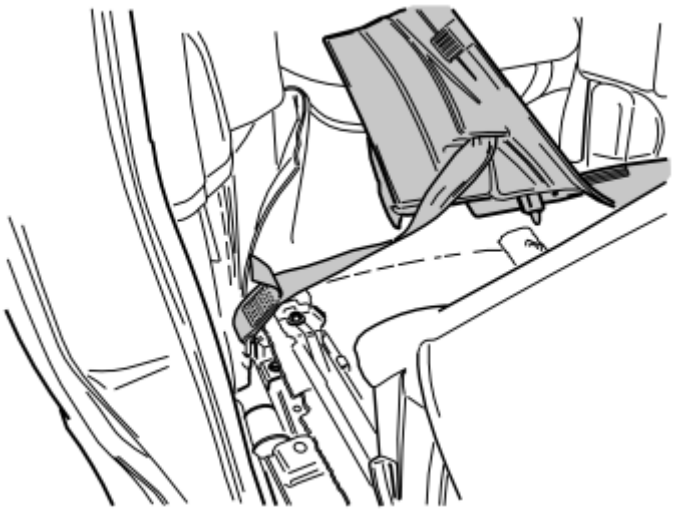

Fig. 266: Identifying Sill Trim Panel
Courtesy of VOLVO CARS CORPORATION

- Unhook the sill trim panel from the B-post panel. Position the panel in the second/third row of seats.

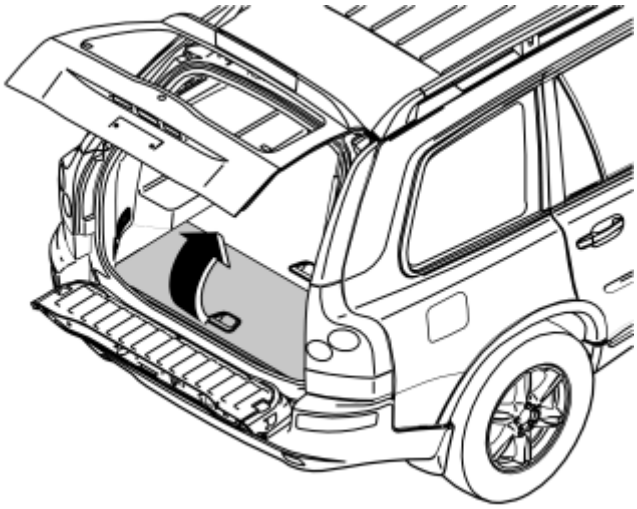

Fig. 267: Identifying Centre Floor Hatch
Courtesy of VOLVO CARS CORPORATION

Applies to cars with three rows of seats and integrated carrier bag holder on the underside of the center floor hatch

- Fold the rear center floor hatch up
- Detach the two straps from the panel underneath. Lift up the rear edge of the panel. Fold the floor hatch back towards the panel and lift out the floor hatch and the panel.

Applies to cars with three rows of seats without integrated carrier bag holders

- Lift up the center rear floor hatch at the rear edge and lift it out.

Applies to cars with two rows of seats

- Remove the two center floor hatches. First lift up slightly and then pull them loose from the mountings at the front edge. If the rear center floor hatch has a carrier bag holder on the lower side, the floor hatch is secured by a strap on each of the shorter sides of the storage box. These must be removed.

- Remove the two storage boxes from underneath.

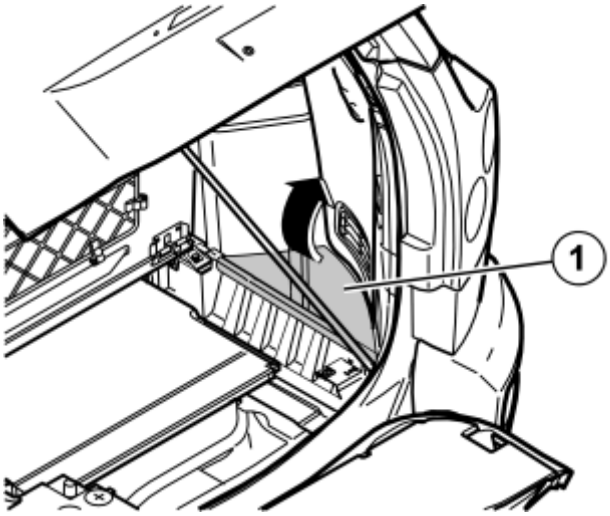

Fig. 268: Remove Right And Left Side Glove Box
Courtesy of VOLVO CARS CORPORATION

Applies to all models

- Remove the right-hand side floor hatch (1).

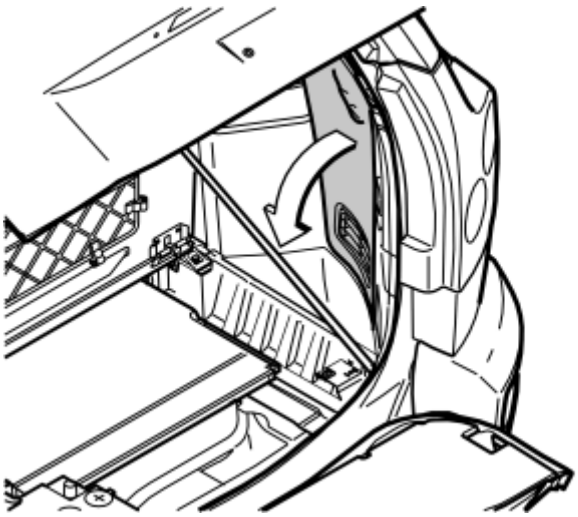

Fig. 269: Folding Side Panel From Right-Hand Side Of Cargo Compartment
Courtesy of VOLVO CARS CORPORATION

- Remove the folding side panel from the right-hand side in the cargo compartment.

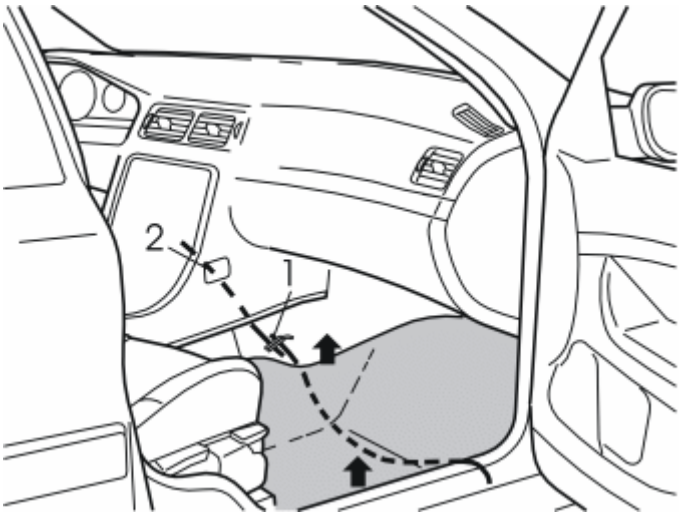

Fig. 270: Identifying Cable Guide Under Carpet
Courtesy of VOLVO CARS CORPORATION

- Pull up the left and right sides of the carpet at the right-hand front seat slightly. Insert a wire (1) under the carpet at the front edge of the air ducts on the right-hand side of the center console, and route it out at the right-hand door sill as illustrated
- Take the long cable harness (2) in the cable harness for the handsfree box. Route it up to the newly positioned wire. Tape the long cable harness to the wire
- Pull the cable harness out of the carpet at the right-hand door sill.

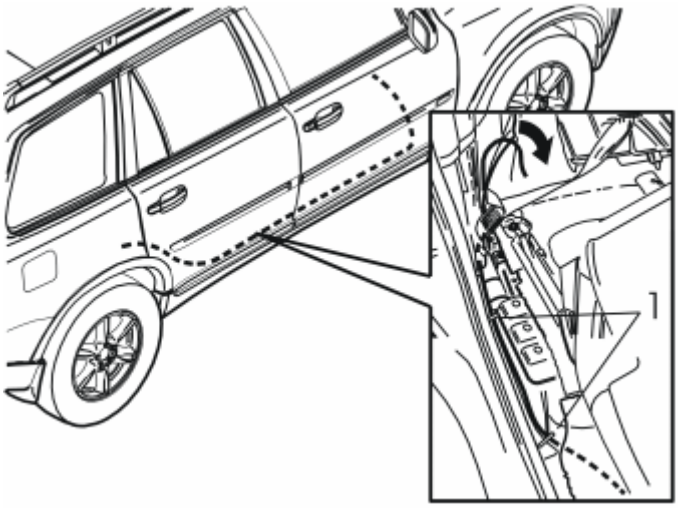

Fig. 271: Cable Clamped In At Air Duct
Courtesy of VOLVO CARS CORPORATION

- Insert the cable harness between the carpet and the door sill towards the carpet as far as it will go. Route it along the right-hand side of the car up to the rear edge of the door opening for the right-hand rear door
- Pull the cable harness up to the right-hand front seat mounting on the right-hand seat in the second row of seats
- Pull away the carpet from the front edge of the right-hand side panel in the cargo compartment
- Route the cable harness along the right-hand side of the right-hand seat in the second row of seats towards the front edge of the rear wheel arch. Route it onwards on the left-hand side of the lower mounting for the seat belt, between the support bracket for the right-hand seat and wheel arch, and out at the left-hand side of the wheel arch
- Clamp the cable harness in the hole in the front member for the seat mounting and in the rear hole in the horizontal panel at the right-hand side of the seat. Use the tie straps (1) (from the kit).

Applies to cars with three rows of seats Illustration A

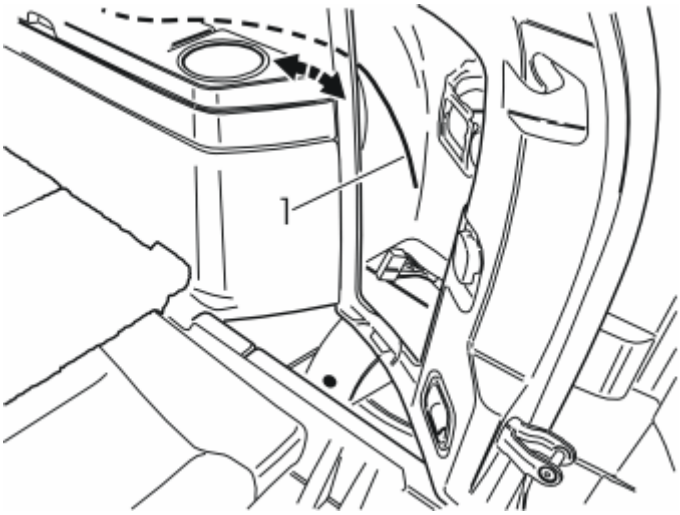

Fig. 272: Identifying Cable At Rear Edge Of Right-Hand Side Panel
Courtesy of VOLVO CARS CORPORATION

- Insert a cable (1) at the rear edge of the right-hand side panel and along the inside of the panel, above the mountings for the load securing eyelets and to the front edge of the side panel.

Illustration B

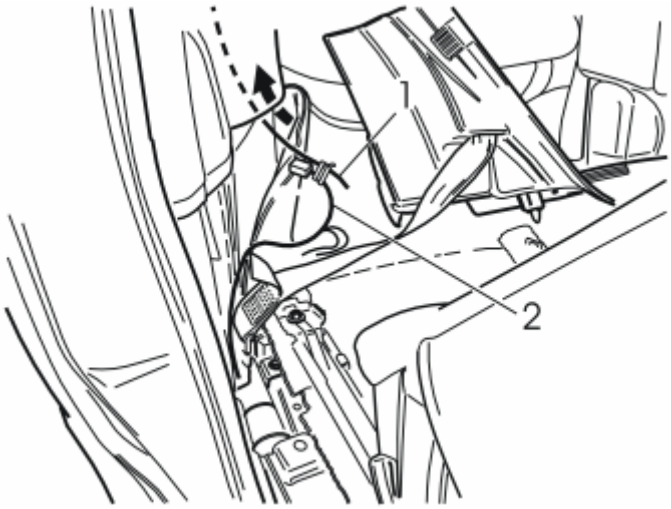

Fig. 273: Identifying Cable Harness
Courtesy of VOLVO CARS CORPORATION

- Tape the cable harness (2) to the wire and pull it out of the rear edge of the side panel.

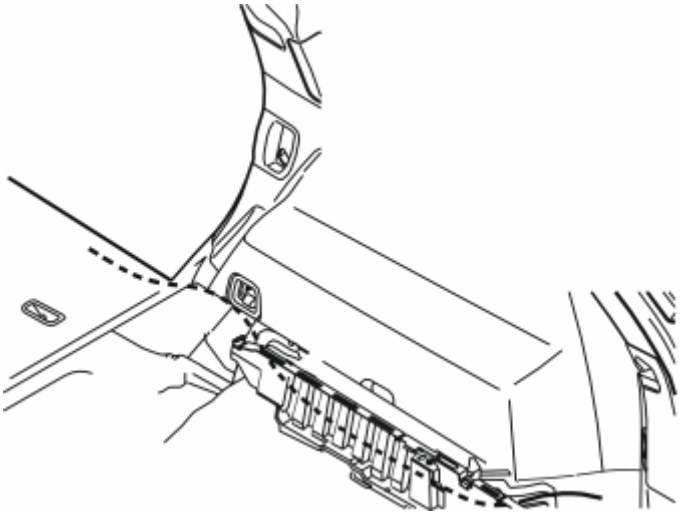

Fig. 274: Cable Routing
Courtesy of VOLVO CARS CORPORATION

Applies to cars with two rows of seats

- Route the cable on the left-hand side of the seat belt mounting at the front edge of the wheel arch, inside the carpet at the front edge of the side panel, between the side panel and the rear of the cargo floor support, to the accessory electronic module (AEM).

CONNECTING TO THE ACCESSORY ELECTRONIC MODULE (AEM)

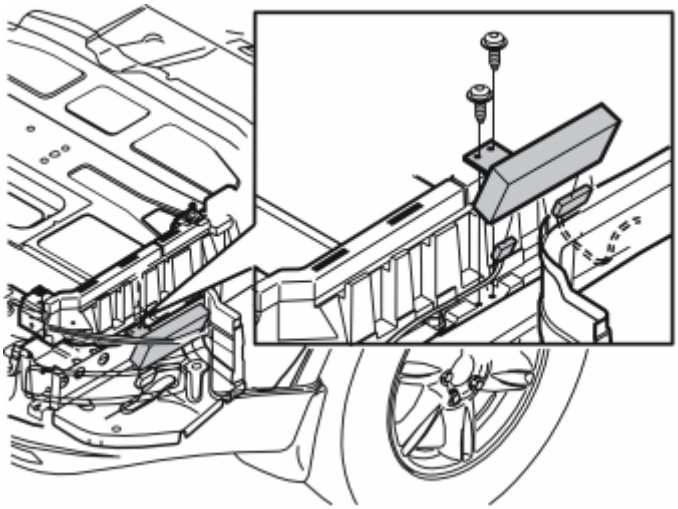

Fig. 275: Removing Panel By Pulling It Straight Up And Unhook It From Side Panel (1 Of 2)
Courtesy of VOLVO CARS CORPORATION

- Remove the two screws from the bracket for the accessory electronic module (AEM) and lift up the entire unit. Cut off the tie straps if necessary.

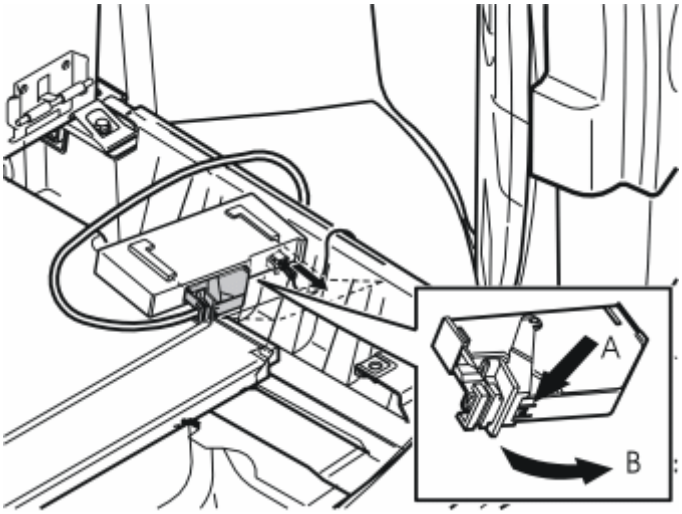

Fig. 276: Removing Panel By Pulling It Straight Up And Unhook It From Side Panel
Courtesy of VOLVO CARS CORPORATION

- Disconnect the large connector from the accessory electronic module (AEM). First press in the catch (A). Pull the black locking handle (B) in the direction of the arrow until a click is heard. Disconnect the connector
- Disconnect the connector from the accessory electronic module.

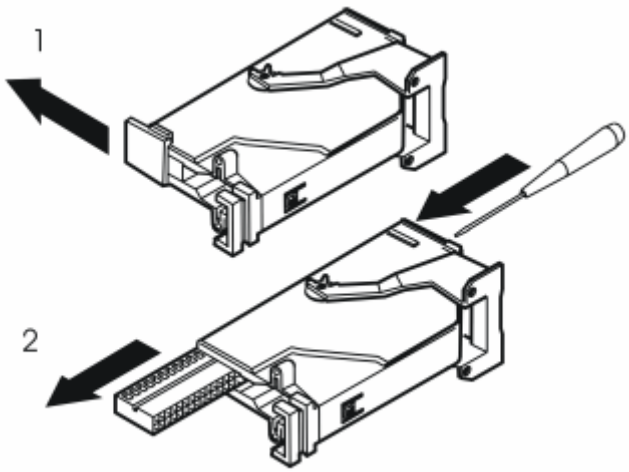

Fig. 277: Black Terminal Pin By Inserting A Pointed Object Into Hole In Other End
Courtesy of VOLVO CARS CORPORATION

- Remove the black catch holding the black switch in place in the connector by pulling in the direction of the arrow
- Remove the black switch. Insert a pointed object in the hole on the other end of the connector. Press the switch out.

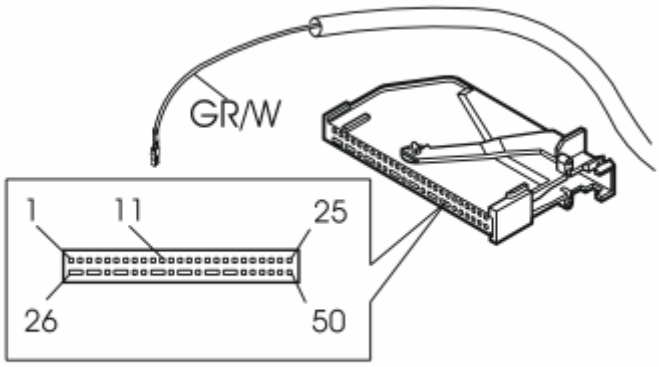

Fig. 278: Identifying Grey/White (GR/W) Cable From The Routed Cable Harness
Courtesy of VOLVO CARS CORPORATION

- Connect the Grey / White (GR/W) cable from the routed cable harness to terminal 11 (tele-mute) in the black connector for the accessory electronic module (AEM).

NOTE: **The number markings can be found on the top and bottom of the black switch. However, the markings are extremely small so be careful when installing the two cables.**

- Reinstall the black switch in the connector. Lock into place using the catch
- Press the connector into the Accessory Electronic module. Secure using the black locking handle
- Reinstall the accessory electronic module (AEM) with the bracket and clamp the wiring with the tie strap from the kit.

NOTE: If the car is equipped with the accessory windscreen aerial, it should be installed at this stage before the components on the right-hand side of the car are reinstalled.

- Reinstall the folding panel on the right-hand side in the cargo compartment
- Reinstall the right-hand side floor hatch
- Reinstall the carpet at the front edge of the right-hand side panel
- Reinstall the sill trim panel in the right-hand rear door
- Reinstall the cover(s) over the seat mountings on the second row of seats.

INSTALLING THE INTEGRAL AERIAL

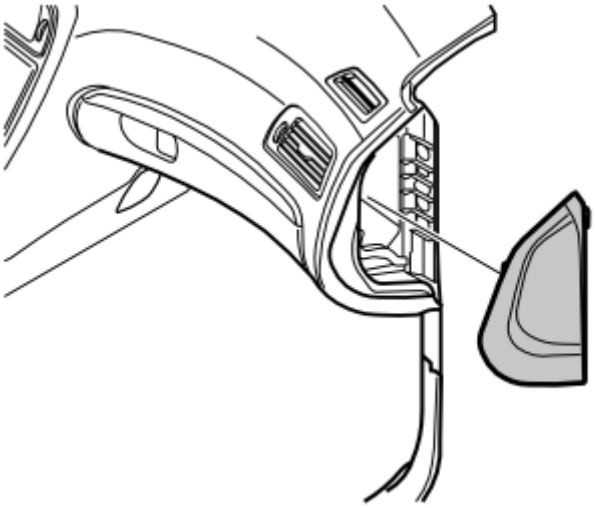

Fig. 279: Dashboard End Panel
Courtesy of VOLVO CARS CORPORATION

- Remove the panel on the right end of the dashboard.

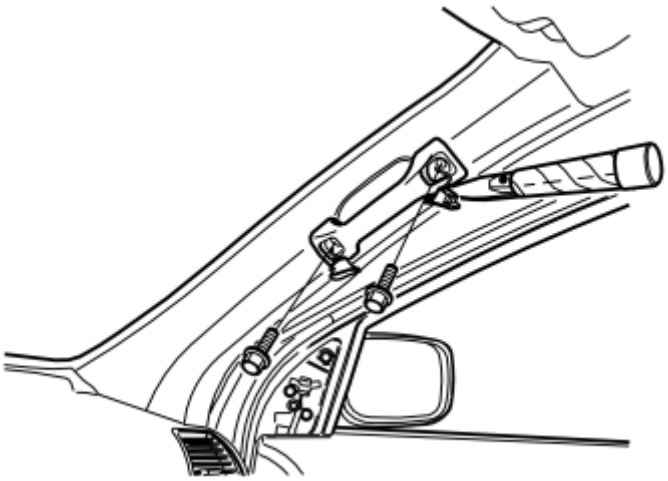

Fig. 280: Pry Off Grab Handle Cover
Courtesy of VOLVO CARS CORPORATION

- Pry off the cover on the grab handle in the right-hand front door. Remove the screws.

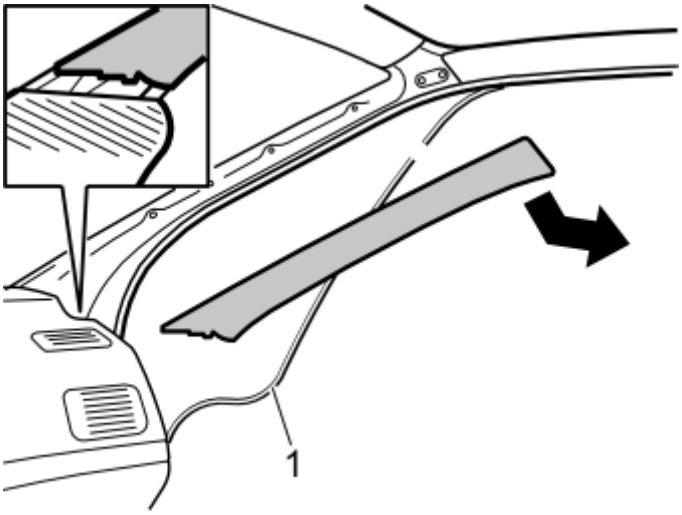

Fig. 281: Identifying Right-Hand A-Post Panel
Courtesy of VOLVO CARS CORPORATION

- Remove the rubber strip (1) at the front edge of the right-hand front door
- Remove the right-hand A-post panel by carefully pulling the top edge of the panel outwards until the clip on the inside releases. Pull up from the mounting in the dashboard.

NOTE: Do not damage the headlining.

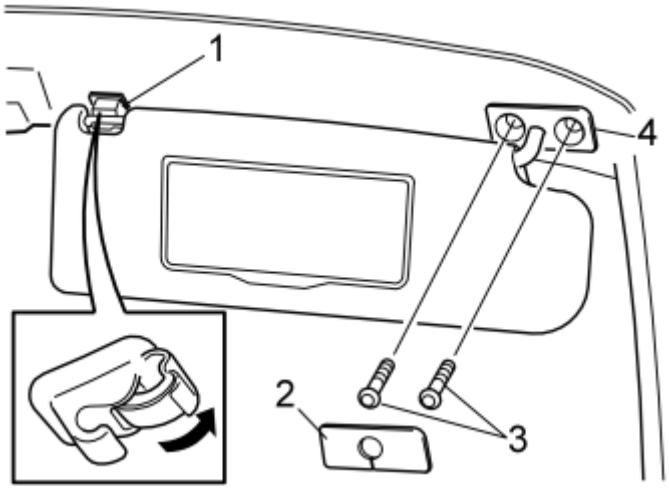

Fig. 282: Identifying Sun Visor Inner Mountings
Courtesy of VOLVO CARS CORPORATION

- Remove the sun visor from the inner mounting (1) on the right-hand side
- Carefully pry the cover (2) off. Remove the two screws (3) for the sun visor mounting
- Remove the inner mounting (1) by first prying up the catch as illustrated. Then insert a small screwdriver in the rear edge of the exposed hole and press the sprung catch forward to release it from the hole in the roof. A the same time pull the rear edge of the mounting downward/backwards so that the catch at the front edge and both catches at the sides release.

NOTE: Do not damage the headlining.

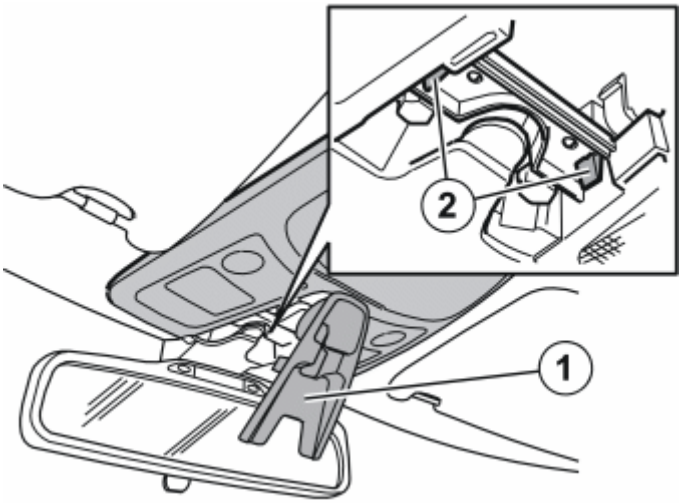

Fig. 283: Folding Down Cover And Squeezing Catches Together
Courtesy of VOLVO CARS CORPORATION

- Fold down the cover (1) by carefully pulling down the front edge of the cover
- Squeeze the catches (2). Pull the front edge of the panel downwards. Then pull the rear edge off.

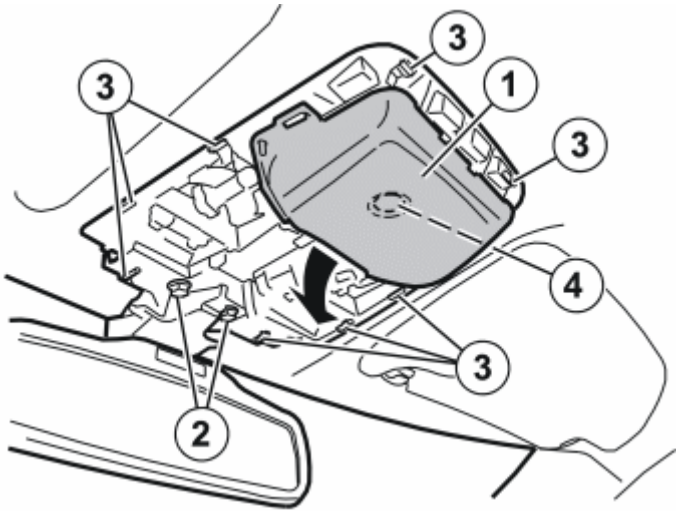

Fig. 284: View Of Front Interior Lighting
Courtesy of VOLVO CARS CORPORATION

- Remove the rear view mirror and the front interior lighting (1). First remove the two screws (2) and then press in the eight catches (3) around the interior lighting
- Carefully pull the components downwards and allow them to hang by their wiring. (The interior lighting is secured to the roof using the clip (4).).

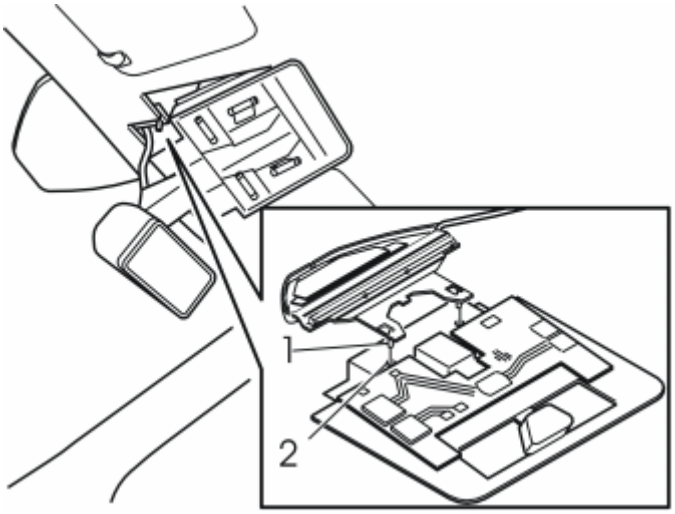

Fig. 285: Aligning Antenna Lugs With Grooves In Bracket
Courtesy of VOLVO CARS CORPORATION

- Install the new aerial. Carefully bend the headlining downward and slide the aerial backward and inwards. Align the aerial lugs (1) with the grooves in the bracket (2)
- Insert the cable at the inside of the front edge of the headlining. Route the cable out towards the right-hand A-post
- Secure the cable using butyl tape
- Reinstall the bracket and rear view mirror. Tighten the screws. Tighten to **10 Nm (7.5 lbf. ft.)**
- Reinstall the panel. Securely lock the panel using the cover.

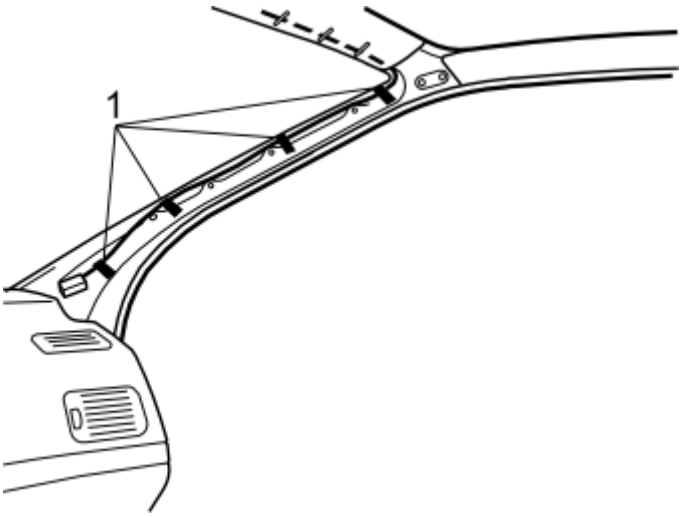

Fig. 286: Identifying Cable Taped Onto Existing Cable Harness
Courtesy of VOLVO CARS CORPORATION

- Route the cable down from the headlining along the right A-post
- Tape the cable onto the existing cable harness as illustrated (1).

WARNING: Ensure that the cable is not routed over the inflatable curtain. This could compromise the function of the inflatable curtain in the event of an accident.

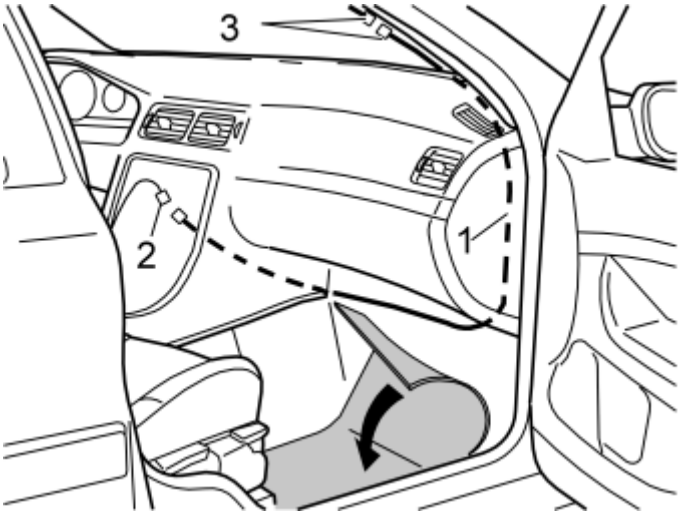

Fig. 287: Folding Back Carpet And Identifying Cable And Connectors
Courtesy of VOLVO CARS CORPORATION

- Push the carpet to one side by the right-hand front seat
- Take the extension cable (1) from the kit. Route the cable between the A-post and the right-hand side of the dashboard, continue along the right-hand end to the front edge of the floor
- Route the cable to the left along the front edge of the floor and up to the inside of the center console
- Connect the cable (1) to the corresponding cable (2) from the hands free box

- Connect both connectors (3) at the right A-post to each other
- Wrap the foam tape around the connectors to prevent rattling.

- Reinstall the A post panel. Tighten the grab handle. Tighten to **10 Nm (7.5 lbf. ft.)** . Reinstall the cover
  - the display for the RTI and the center loudspeaker if applicable
  - the center loudspeaker
  - the bracket for the loudspeaker grille
  - the loudspeaker grille.
- Reinstall the rubber strip in the right-hand front door
  - the display for the RTI and the center loudspeaker if applicable
  - the center loudspeaker
  - the bracket for the loudspeaker grille
  - the loudspeaker grille.
- Reinstall the panel on the end of the dashboard
  - the display for the RTI and the center loudspeaker if applicable
  - the center loudspeaker
  - the bracket for the loudspeaker grille
  - the loudspeaker grille.
- Reinstall the sun visor. Tighten the screws. Tighten to **10 Nm (7.5 lbf. ft)** . Reinstall the cover and the inner mounting
  - the display for the RTI and the center loudspeaker if applicable
  - the center loudspeaker
  - the bracket for the loudspeaker grille
  - the loudspeaker grille.
- Fold the carpet on the right-hand side back into place
  - the display for the RTI and the center loudspeaker if applicable
  - the center loudspeaker
  - the bracket for the loudspeaker grille
  - the loudspeaker grille.
- Reinstall the panel on the door trim for the right-hand front door. Press the B-post lower panel into place
  - the display for the RTI and the center loudspeaker if applicable
  - the center loudspeaker
  - the bracket for the loudspeaker grille
  - the loudspeaker grille.
- Reinstall the soundproofing panel on the right and left-hand sides
  - the display for the RTI and the center loudspeaker if applicable
  - the center loudspeaker
  - the bracket for the loudspeaker grille

the loudspeaker grille.

- Reinstall the cover and panel on the right-hand front seat
  - the display for the RTI and the center loudspeaker if applicable
  - the center loudspeaker
  - the bracket for the loudspeaker grille
  - the loudspeaker grille.
- Connect the connectors to the dashboard environment panel and control module. If applicable connect the CD player and/or Mini disc player connectors
  - the display for the RTI and the center loudspeaker if applicable
  - the center loudspeaker
  - the bracket for the loudspeaker grille
  - the loudspeaker grille.
- Position the bracket. Tighten the bracket using the two screws. Reinstall the gear selector lever panel
  - the display for the RTI and the center loudspeaker if applicable
  - the center loudspeaker
  - the bracket for the loudspeaker grille
  - the loudspeaker grille.
- Reinstall (depending on the equipment of the car):
  - the display for the RTI and the center loudspeaker if applicable
  - the center loudspeaker
  - the bracket for the loudspeaker grille
  - the loudspeaker grille.

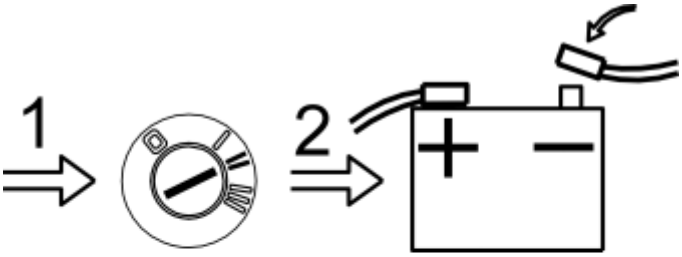

Fig. 288: Connecting Negative Battery Lead
Courtesy of VOLVO CARS CORPORATION

- Turn the ignition key to position II

- Reconnect the battery negative lead
- Reinstall the storage boxes and floor hatch(es)
- Reinstall both the side panels on the center console
- Program the software using VCT2000 according to the service information in VIDA (Volvo scan tool).

XC90

see **XC90**

HANDSFREE FOR CELLULAR PHONE, SYSTEM B, ENTRY LEVEL (2003-2004)

HANDSFREE FOR CELLULAR PHONE, SYSTEM B, ENTRY LEVEL

NOTE: **When installing antennas and Velcro tape, the underlying surface must be kept at a temperature of at least +20° C (68°F).**

Wiring A is for vehicles with an internal amplifier that is located in the media player.

Wiring B and C is for cars with an external amplifier, which is located under the right-hand front seat. Cars from and including model year -07 with audio system Performance Sound has an internal amplifier. Cars up to and including model year -06 with audio system Performance Sound has an external amplifier.

Cars with the High Performance and Premium Sound audio systems have external amplifier.

PREPARATIONS

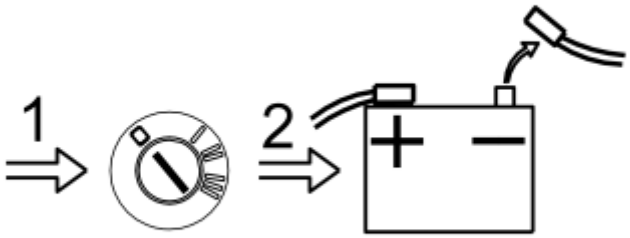

Fig. 289: Disconnect Battery Negative Lead

Courtesy of VOLVO CARS CORPORATION

- Slide the right-hand seat all the way back and then completely upright at the front edge.
- Turn the ignition switch to position 0.
- Disconnect the battery negative lead.

NOTE: Wait at least three minutes before unplugging the connectors or removing other electrical equipment.

Removing the loudspeaker grille:

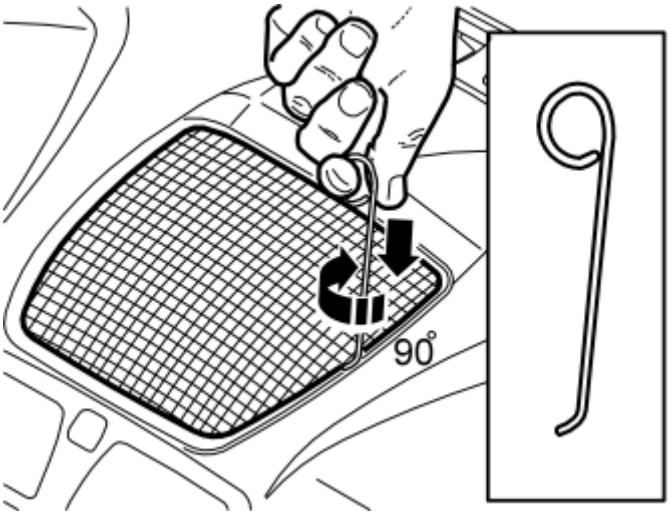

Fig. 290: Removing The Loudspeaker Grille
Courtesy of VOLVO CARS CORPORATION

- Take a piece of welding rod **1.5 mm (1/16")** . Bend it 90° at one end, **L = 5 mm (13/64")** .
- Bend the other end to make a handle.
- First insert the bent end in the joint between the loudspeaker grille and the dashboard approximately as illustrated, until it engages.
- Turn the welding rod 90°so that the bent section catches the underneath of the loudspeaker grille. The welding rod may need moving along the joint to be turned.

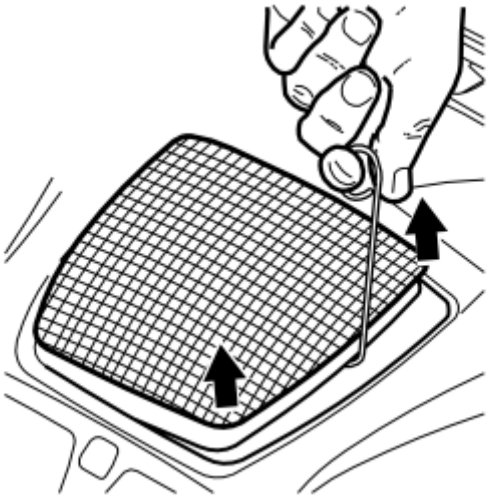

Fig. 291: View Of Detached Loudspeaker Grille
Courtesy of VOLVO CARS CORPORATION

- Pull upwards until the loudspeaker grille detaches. It is securely fastened by four clips.

NOTE: Do not damage the dashboard.

- Place the loudspeaker grille to one side.

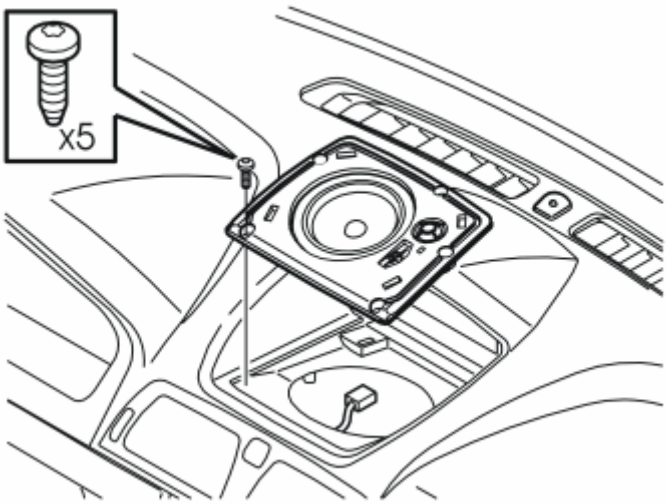

Fig. 292: Identifying Cars With A Centrally-Mounted Loudspeaker
Courtesy of VOLVO CARS CORPORATION

- Remove the bracket for the loudspeaker grille by removing the five screws and pulling the grille up from the dashboard.
- Disconnect any connectors

Applies to cars with RTI (road traffic information)

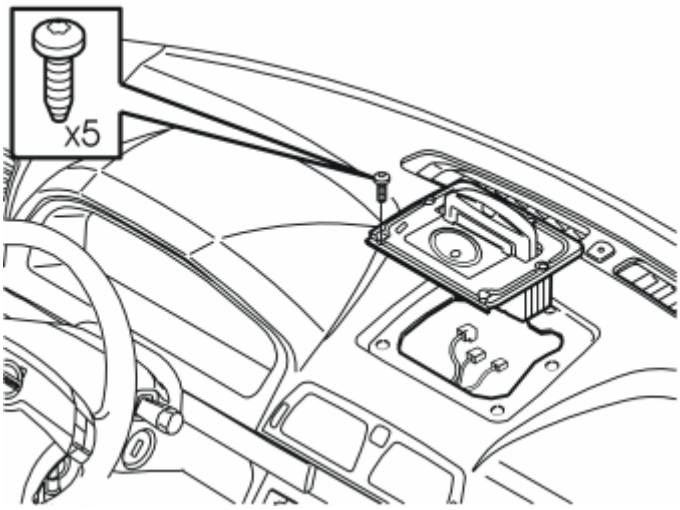

Fig. 293: Identifying Cars With RTI (road Traffic Information) Display
Courtesy of VOLVO CARS CORPORATION

- Remove the five screws for the monitor. Pull the monitor up slightly from the dashboard and disconnect the connectors.

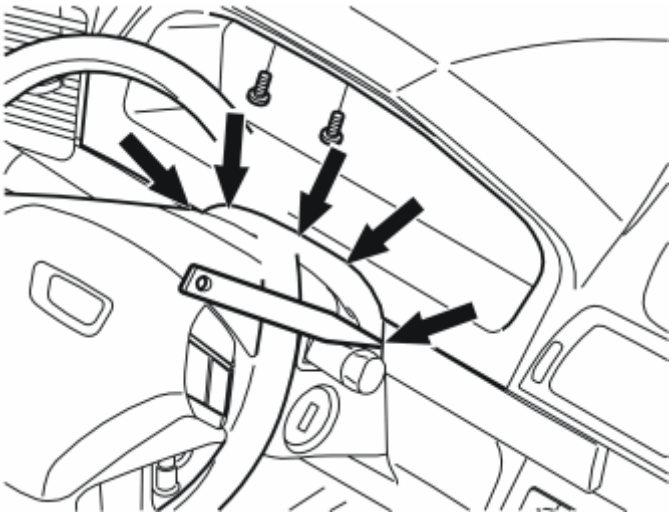

Fig. 294: Identifying Upper Steering Column Cover Removal
Courtesy of VOLVO CARS CORPORATION

- Lower the steering wheel to its lowest position and then move it rearward to its rearmost position.
- Remove the two screws at the top edge of the combined instrument panel border.
- Carefully use a weatherstrip tool to pry loose the rubber seal from the upper steering wheel cover. It is held in place with five hooks.
- Remove the border by carefully pulling it rearward - first at the bottom edge and then at the top edge - until all clips have released.

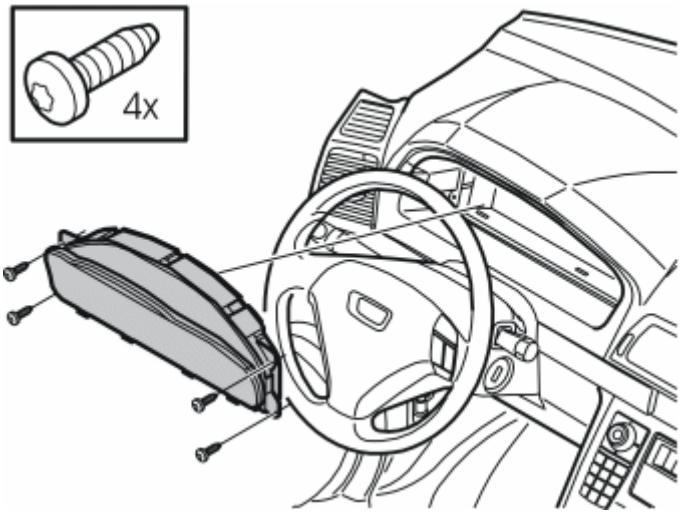

Fig. 295: View Of Combined Instrument Panel Screws
Courtesy of VOLVO CARS CORPORATION

- Remove the four screws for the combined instrument panel.
- Pull out the combined instrument panel. Disconnect the connector on the reverse of the combined instrument panel.

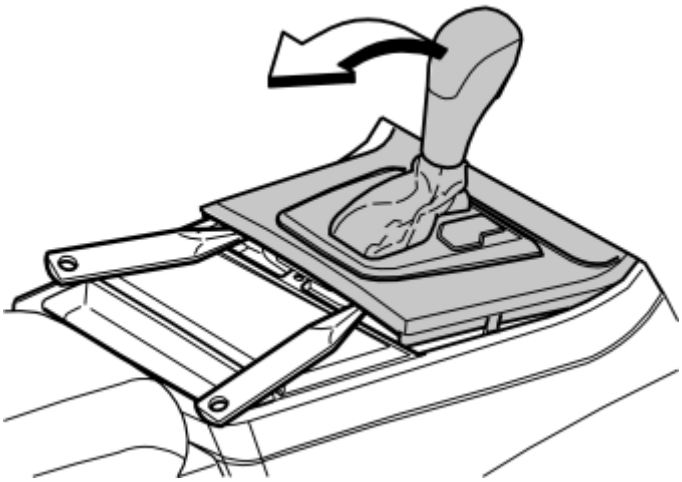

Fig. 296: Prying Off Gear Selector Panel At Rear Edge
Courtesy of VOLVO CARS CORPORATION

Applies to cars with automatic gearbox

- Turn the ignition key to position II.

Applies to all models

- Move the gear selector lever to its rearmost position.
- Carefully prize away the gear lever panel at the rear edge using a weatherstrip tool.

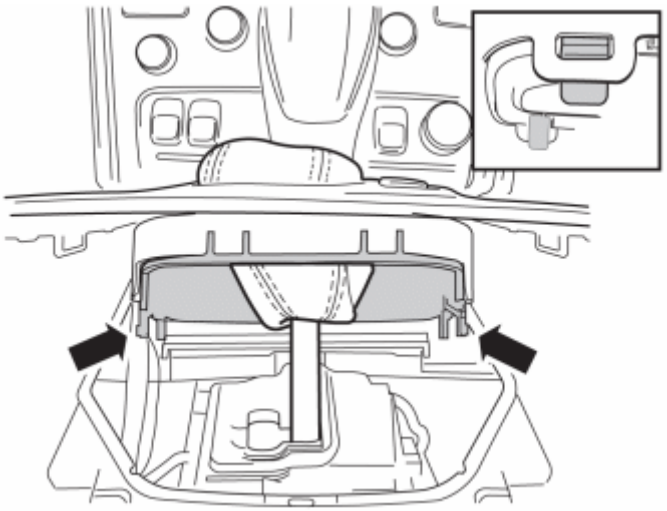

Fig. 297: Pressing In Catches And Removing Panel
Courtesy of VOLVO CARS CORPORATION

- Press in the catches and remove the panel.

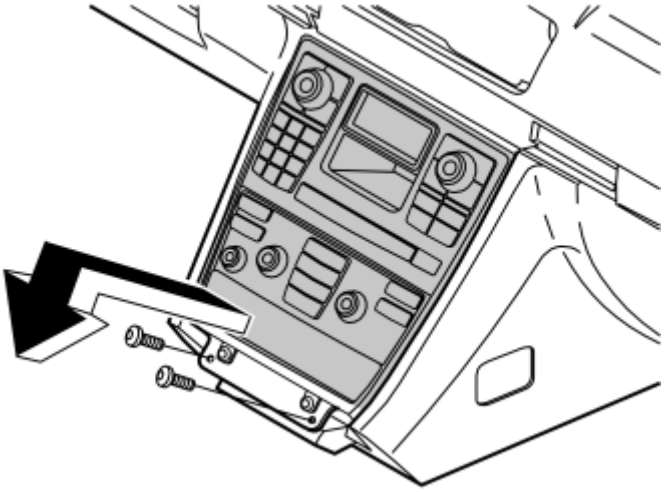

Fig. 298: Removing Screws And Radio/AC Unit From Center Console
Courtesy of VOLVO CARS CORPORATION

- Remove the two screws.
- Remove the A/C / radio unit from the center console. Pull the bracket at the lower edge and then downwards until it releases from the mounting at the upper edge.

NOTE: Do not damage the removed components or the surrounding panels.

- Unplug the connectors.

PREPARATIONS, TELEPHONE HOLDER

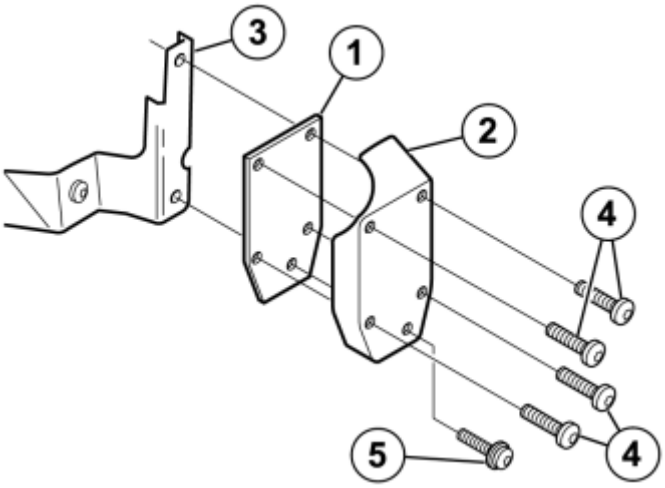

Fig. 299: Identifying Telephone Holder's Bracket With Reinforcement Plate
Courtesy of VOLVO CARS CORPORATION

- Take the telephone holders bracket with reinforcement plate, cover and screws from the kit.
- Install the reinforcement plate (1) and cover (2) in the bracket (3) with screws (4) and screw (5).

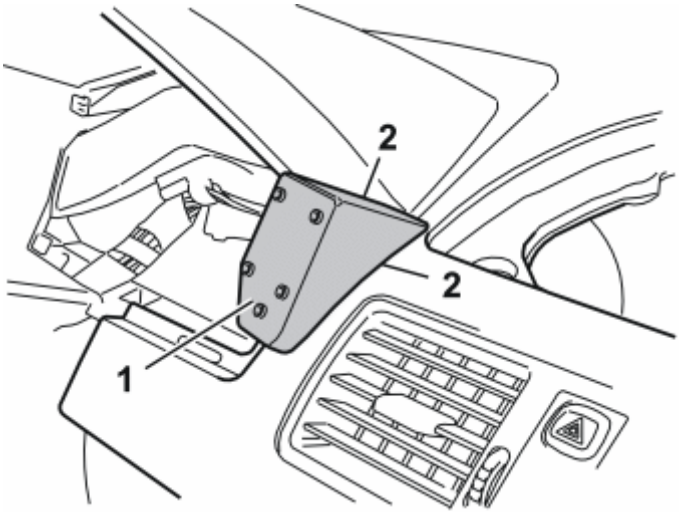

Fig. 300: View Of Bracket To Dashboard
Courtesy of VOLVO CARS CORPORATION

- Place the entire unit (1) in the dashboard for marking the holes for the bracket. Adjust to achieve the best position. Do not press the unit hard against the dashboard but ensure that there are no gaps at the sides between the panel and dashboard (2).

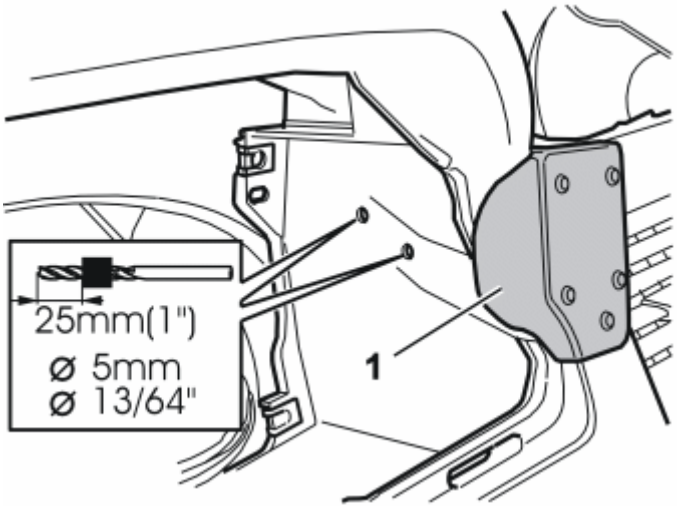

Fig. 301: View Of Bracket Hole Markings
Courtesy of VOLVO CARS CORPORATION

- Hold the unit securely and mark out the holes through the bracket.
- Drill out the two holes using a **5 mm (13/64")** drill bit. Use a **25 mm (1")** drill stop.
- Remove any metal shavings.
- Remove the cover and reinforcement plate from the bracket.

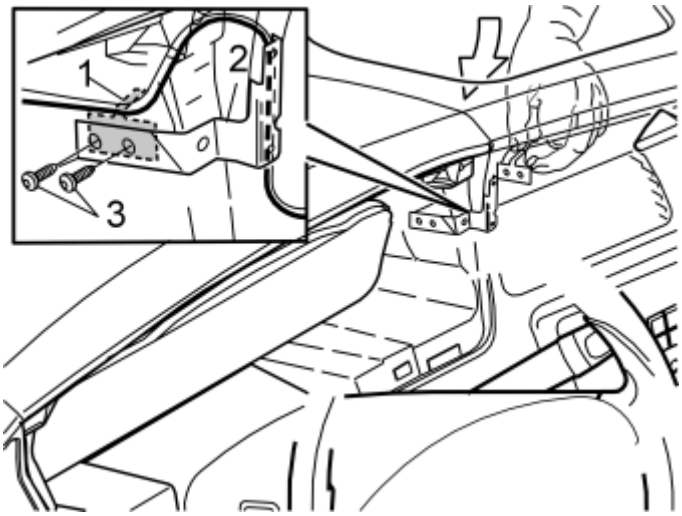

Fig. 302: View Of Reinforcement Panel Screws
Courtesy of VOLVO CARS CORPORATION

- Take the reinforcement plate (1) and two screws from the kit.
- Place the telephone holders cables that are routed on the rear side of the bracket as illustrated.
- Insert the reinforcement plate through the hole for the central loudspeaker.
- Install the bracket (2) with the two screws (3). Tighten the bracket to the end of the dashboard.

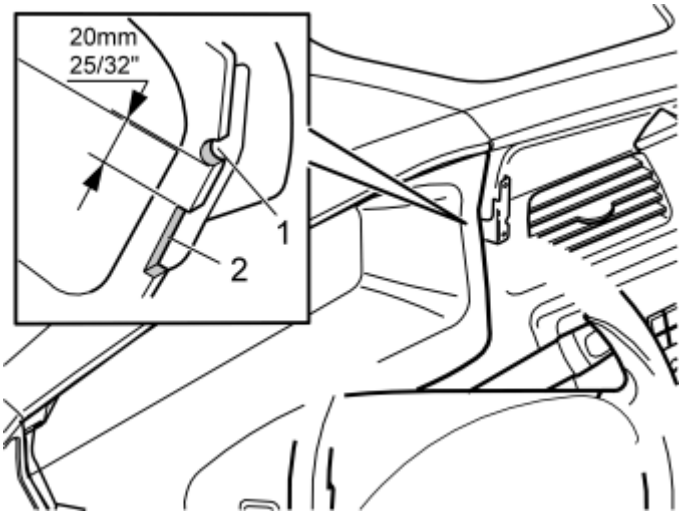

Fig. 303: Identifying The Wiring And The Bracket For The Handset Holder
Courtesy of VOLVO CARS CORPORATION

- Press the surround on to the combined instrument panel.
- Make markings on the surround as illustrated, where cut-outs are to be made for the wiring and the bracket for the handset holder.
- Remove the surround and file out the groove (1) for the cables for the handset holder. The groove must be large enough for any excess cable to be pulled through.
- File out a groove (2) for the bracket for the handset holder.
- Smooth off the filed cut-outs.

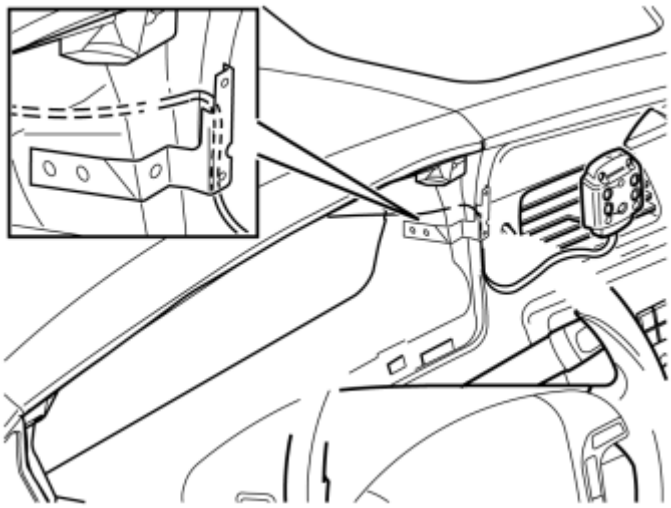

Fig. 304: View Of Cable Routing From Mounting Plate
Courtesy of VOLVO CARS CORPORATION

- Route the cables from the mounting plate in the hole behind the combined instrument panel and continue to the center console. Do not route the cables in too much so that the mounting plate cannot be installed.

INSTALLING THE MICROPHONE

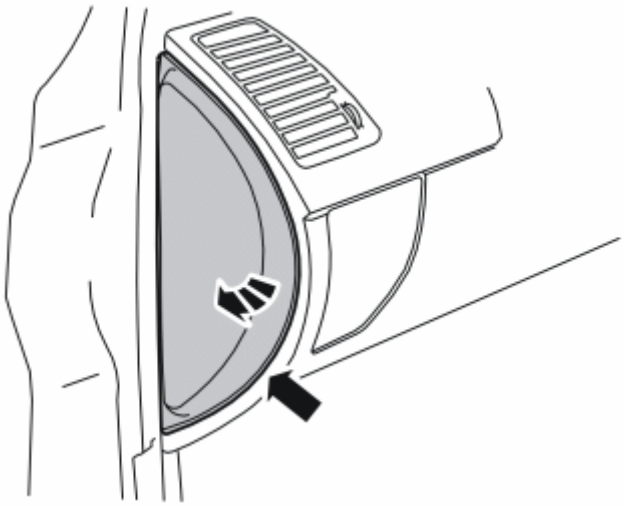

Fig. 305: View Of Left-Hand End Of The Dashboard
Courtesy of VOLVO CARS CORPORATION

- Pry off the rear edge of the panel on the left-hand end of the dashboard. Twist out the panel. Remove the panel.

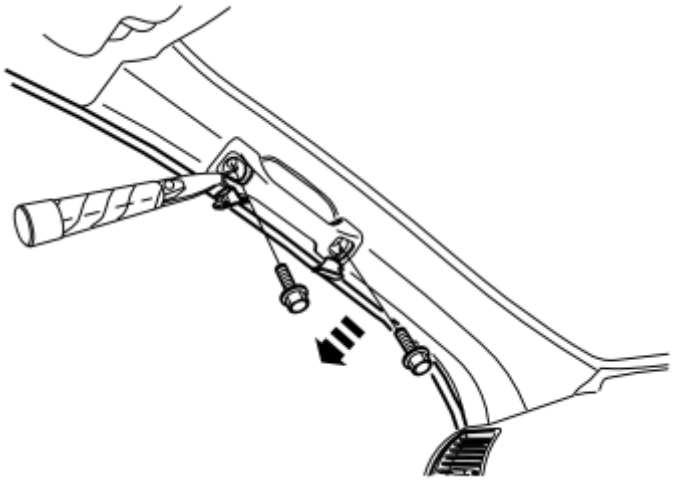

Fig. 306: Identifying Grab Handle Covers
Courtesy of VOLVO CARS CORPORATION

- Pry up the cover on the grab handle by the posts and remove the screws from underneath.
- Pull off the rubber strip in the door opening.

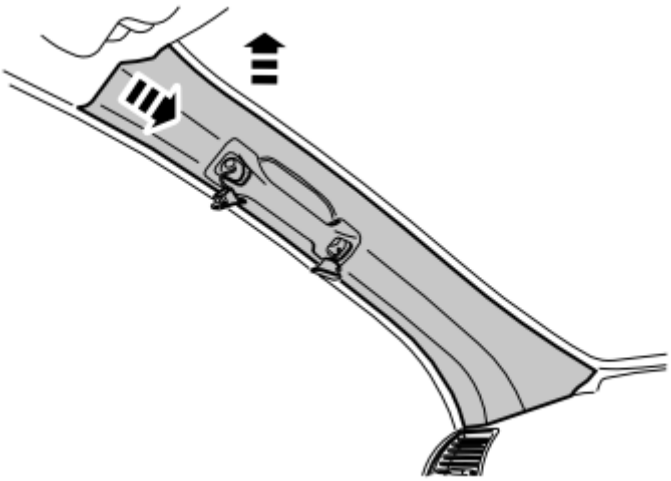

Fig. 307: Identifying Top Edge Of The A-Post Panel
Courtesy of VOLVO CARS CORPORATION

- Pull off the A-pillar panel at the upper edge and then straight upwards to remove it.

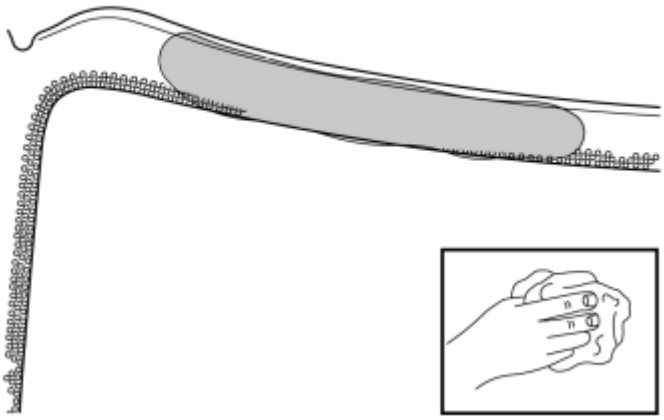

Fig. 308: Cleaning Inside Of Windshield
Courtesy of VOLVO CARS CORPORATION

- Use isopropanol to clean the inside of the windshield (as illustrated).

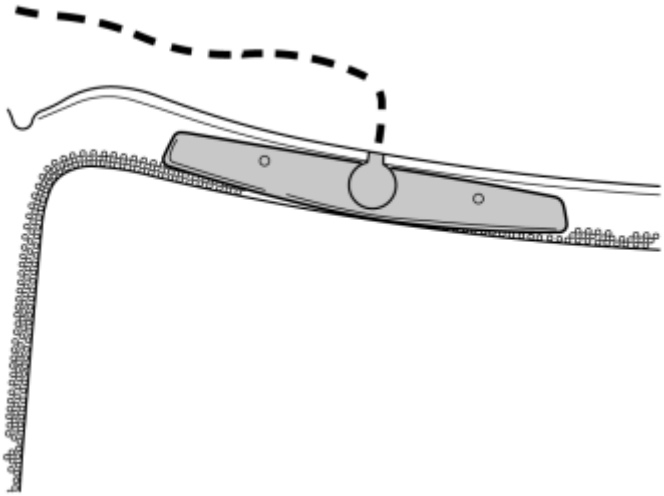

Fig. 309: Removing Protective Film From Antenna
Courtesy of VOLVO CARS CORPORATION

- Take the antenna from the kit. Remove the protective film from the rear side.
- Position the antenna as illustrated and press it onto the windshield. Press securely so that the tape adheres.

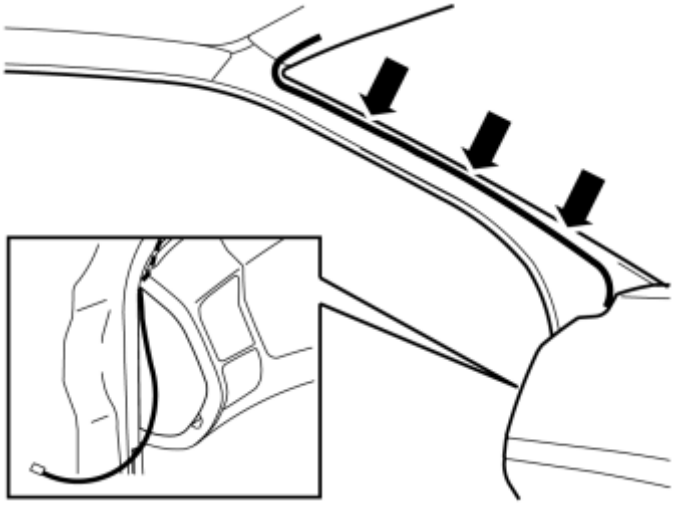

Fig. 310: View Of Antenna Cable Route Along The A-Post
Courtesy of VOLVO CARS CORPORATION

- Route the antenna cable along the A-post, down toward the dashboard and out toward the end.
- Secure the cable using three tie straps.

CAUTION: The inflatable curtain (IC) is located inside the A-pillar panel, it is important that the cable is not positioned on it.

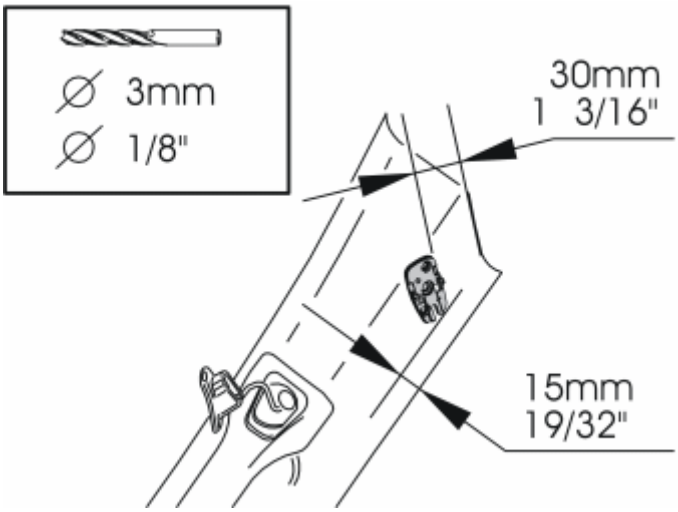

Fig. 311: View Of Mounting Plate Position
Courtesy of VOLVO CARS CORPORATION

- Take the mounting plate from the kit and position it on the A post panel's upper end as illustrated. If the microphone is already on the mounting plate, remove it. The microphone is attached by mounting hooks along the long sides.
- Mark out and drill the holes for the mounting plate. Use a **3 mm (1/8")** diameter drill bit.
- Remove any metal shavings.

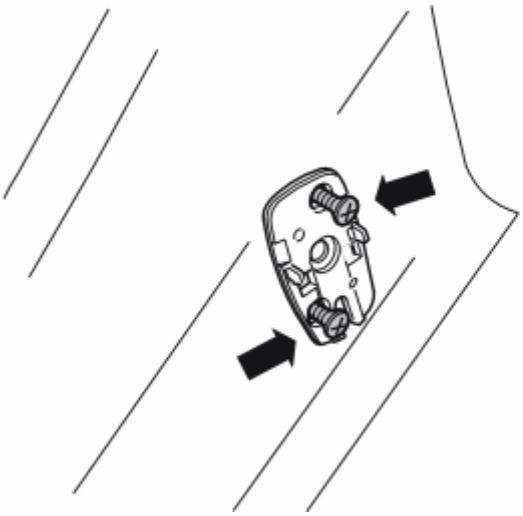

Fig. 312: Identifying A-Post Panel Mount Plate Screws
Courtesy of VOLVO CARS CORPORATION

- Install the mounting plate on the A-post panel using two screws from the kit.

CAUTION: The inflatable curtain (IC) is located inside the A-post panel. It is important to file off the screws securing the mounting plate if necessary, so that they just fit through the panel.

- Check how much of the screws protrudes on the reverse. Unscrew the screws. File off the screws to the correct length.
- Reinstall the screws.

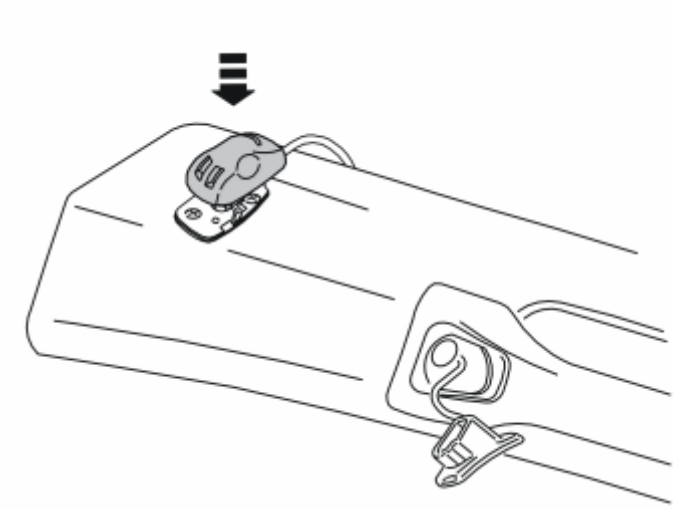

Fig. 313: Identifying Microphone Placement
Courtesy of VOLVO CARS CORPORATION

- Press the microphone from the kit into place on the mounting plate.

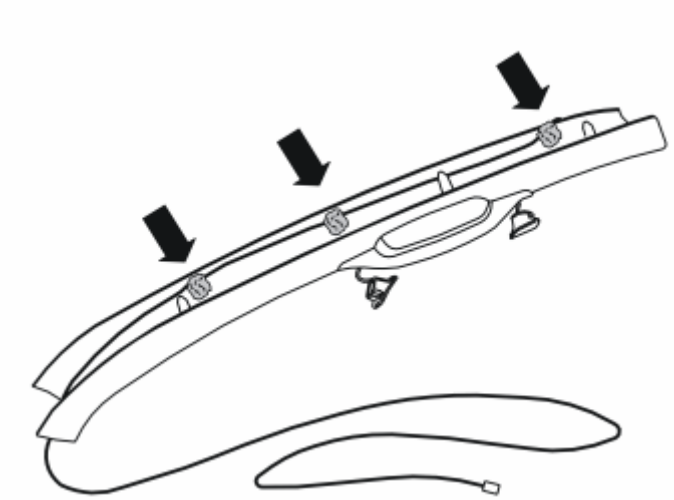

Fig. 314: View Of Microphone Cable Route On Inside Of A-Post Panel
Courtesy of VOLVO CARS CORPORATION

- Route the microphone cable on the inside of the A-post panel. Secure the cable using pieces of butyl tape.

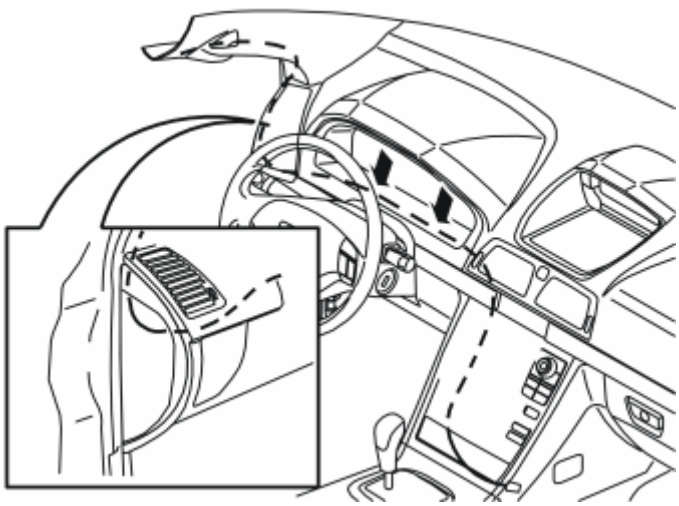

Fig. 315: View Of Microphone Cable In Through The Left-Hand End Of The Dashboard
Courtesy of VOLVO CARS CORPORATION

- Press the A post panel into place. Install the screws and tighten them to **10 Nm (7 lbf. ft.)** .
- Press the covers over the screws into place.
- Pull the microphone cable and antenna cable through the dashboard's left-hand end, into the compartment for the combined instrument panel and into the microphone bracket.
- Secure the cable using pieces of butyl tape under the combined instrument panel.
- Connect the combined instrument panel and reinstall it.
- Reinstall the surround for the combined instrument panel and tighten.

INSTALLING THE TELEPHONE HOLDER

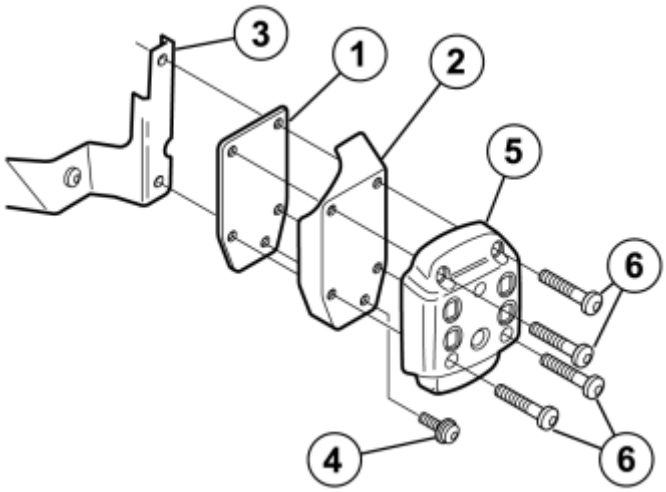

Fig. 316: Identifying Reinforcement Plate And Components
Courtesy of VOLVO CARS CORPORATION

- Install the reinforcement plate (1) and cover (2) in the bracket (3). Use screw (4).

- Check that the upper right-hand holes are opposite each other.
- Tighten the screw (4).
- Install the mounting plate (5) and tighten it with the screws (6).
- Feed the excess of the cables into the dashboard.

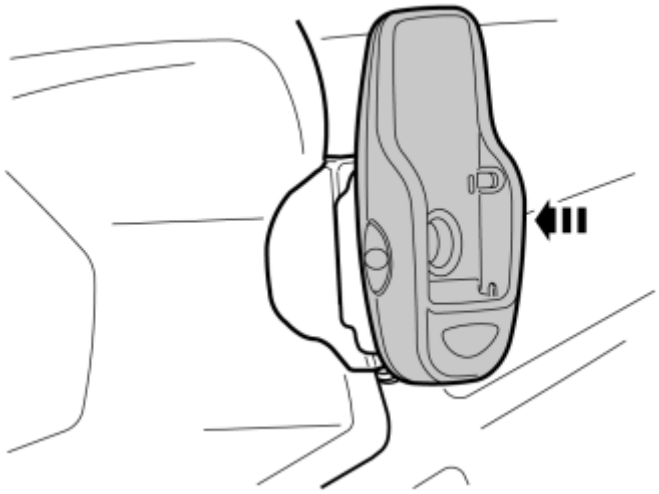

Fig. 317: View Of Telephone Holder On The Mounting Plate
Courtesy of VOLVO CARS CORPORATION

- Install the telephone holder on the mounting plate.

CONNECTION TO THE AMPLIFIER

APPLY TO CARS WITH EXTERNAL AMPLIFIER

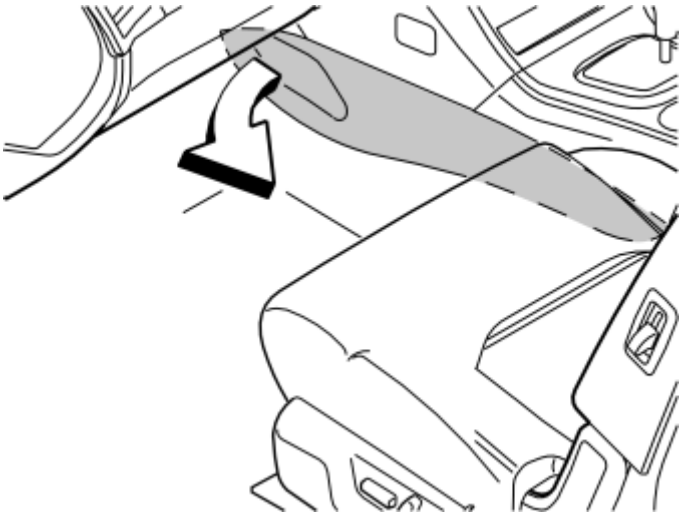

Fig. 318: Identifying Centre Console Side Panels
Courtesy of VOLVO CARS CORPORATION

- Remove the center console's left and right-hand side panel by first pulling them away at the front edge

and continue backwards until all the clips have released.

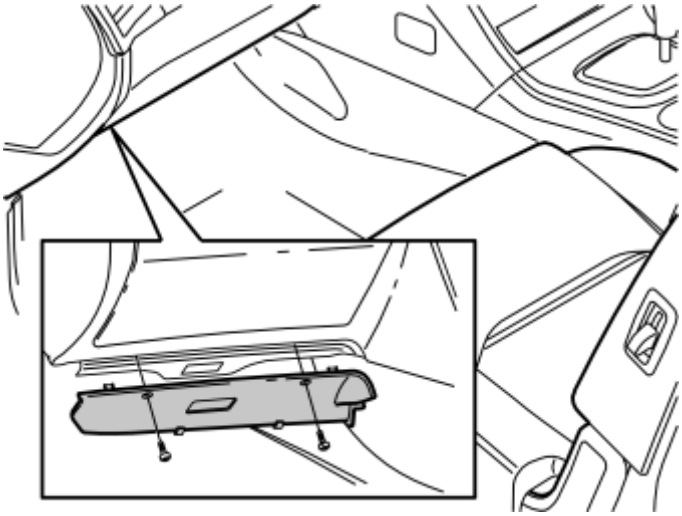

Fig. 319: Identifying Removal Of Screws And Soundproofing Panel
Courtesy of VOLVO CARS CORPORATION

- Remove the sound proofing panel by first removing the two screws and then prying off the sound proofing panel at the top edge.

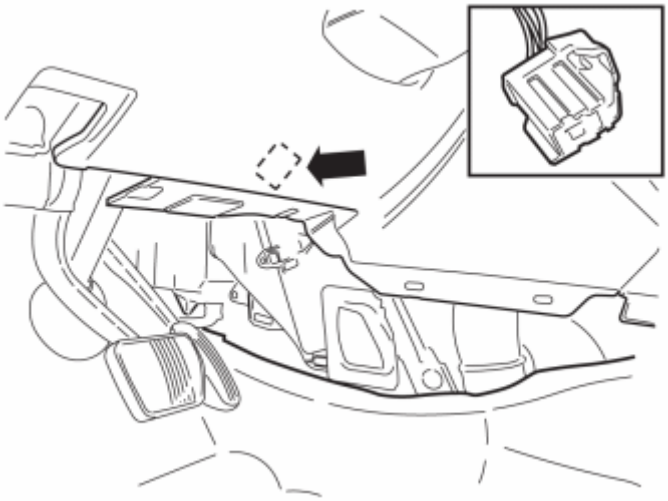

Fig. 320: Locating 4 Pin, Gray, Pre-Routed Connector For The Power Supply
Courtesy of VOLVO CARS CORPORATION

- Locate the 4 pin, gray, pre-routed connector for the power supply. It comes from the thick cable harness under the dashboard on the right-hand side of the steering wheel

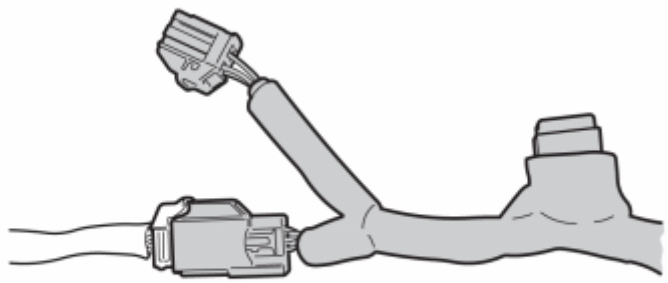

Fig. 321: Identifying Cable Harness C
Courtesy of VOLVO CARS CORPORATION

- Take cable harness C (marked C in the kit image) from the kit. Connect it to the existing connector. The pre-routed connector is already connected on certain cars.
- Disconnect this and connect both the connectors from the new cable harness.
- Install the loose connectors on the car's existing cable harness using a tie strap,

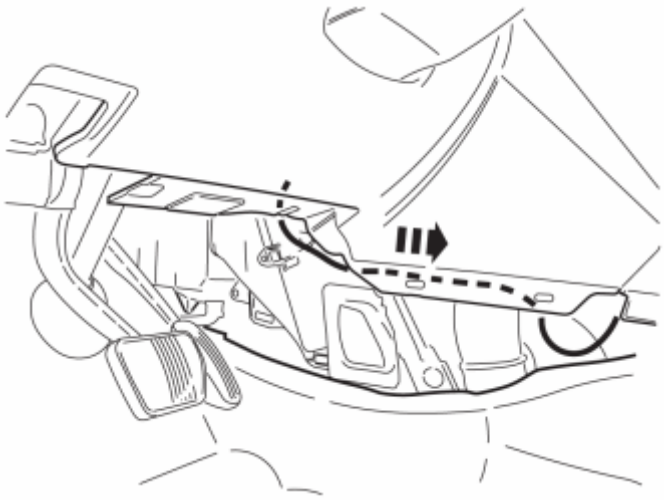

Fig. 322: View Of Cable Harness Route Backwards Through Center Console
Courtesy of VOLVO CARS CORPORATION

- Route the cable harness backwards and across through the center console.

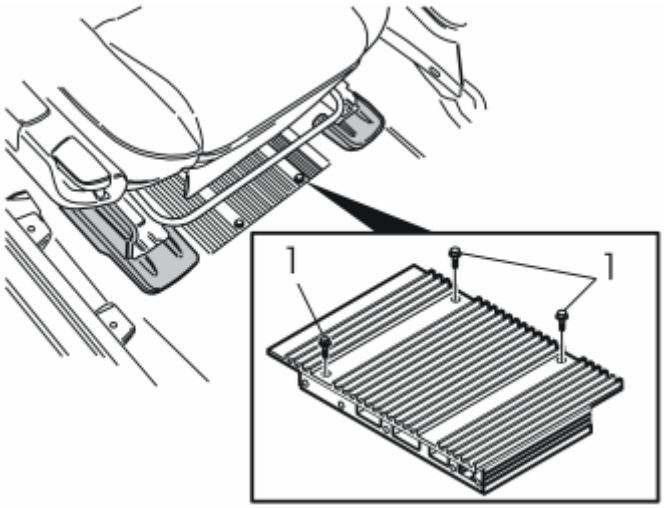

Fig. 323: Identifying Amplifier Screws
Courtesy of VOLVO CARS CORPORATION

- Slacken off the amplifier screws (1) under the right-hand front seat.

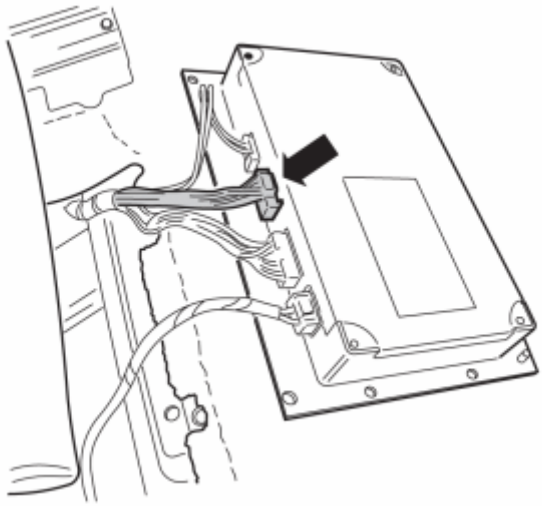

Fig. 324: Identifying Amplifier Connector
Courtesy of VOLVO CARS CORPORATION

- Lift out the amplifier. Use a weatherstrip to raise it from its recessed position.
- Place the amplifier upside down as illustrated.
- Disconnect the connector at the arrow.

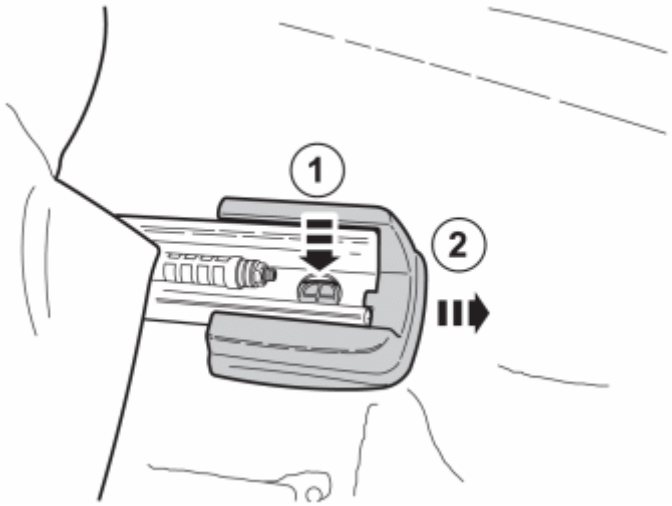

Fig. 325: Identifying Left-Hand Seat Piece
Courtesy of VOLVO CARS CORPORATION

- Remove the left-hand seat piece.

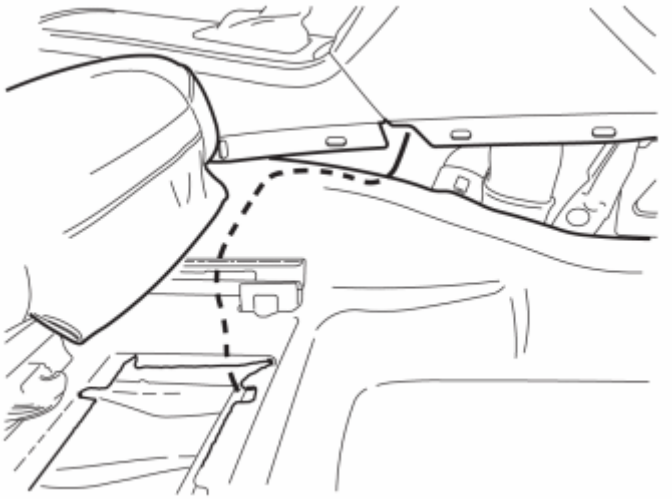

Fig. 326: View Of Amplifier Cable Under The Carpet
Courtesy of VOLVO CARS CORPORATION

- Pull the cable, that is connected to the 4 pin connector, out from the center console, under the carpet to the amplifier.

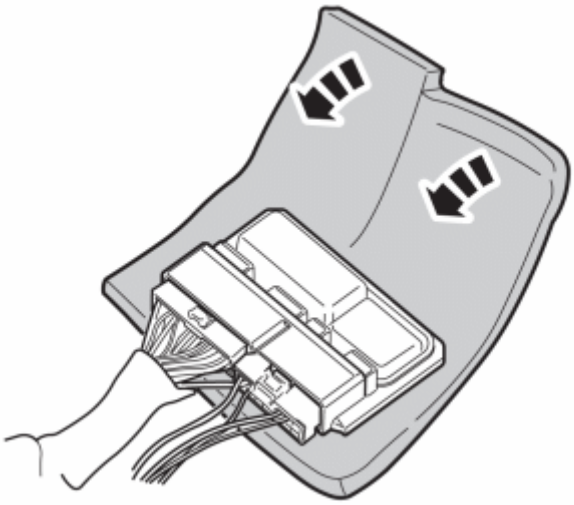

Fig. 327: View Of Foam Tape Pieces To Relay
Courtesy of VOLVO CARS CORPORATION

- Take cable harness B (marked B in the kit image), the mute relay and 2 pieces of foam tape from the kit.
- Connect cable harness B and the pre-routed cable harness C to the mute relay.
- Wrap the foam tape around the mute relay.

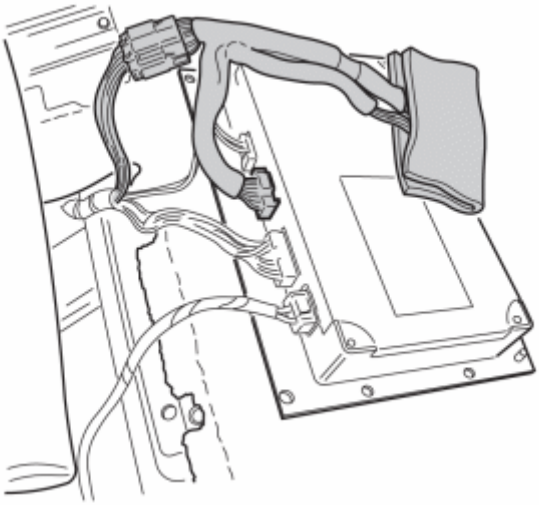

Fig. 328: Identifying Amplifier To The Connector On Cable Harness C
Courtesy of VOLVO CARS CORPORATION

- Connect the connector that was disconnected from the amplifier to the connector on cable harness C.
- Connect the connector on cable harness C to the amplifier.
- Secure the connected connectors using a tie-strap.

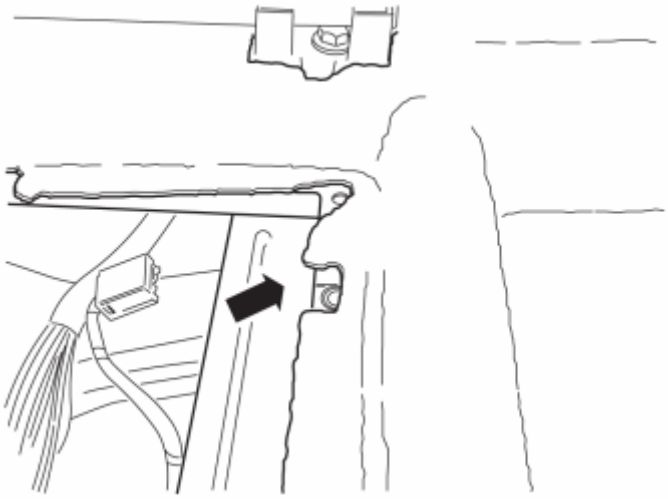

Fig. 329: Reinstalled Amplifier Screws
Courtesy of VOLVO CARS CORPORATION

- Place the mute-relay under the front left corner in the recess.
- Reinstall the amplifier and tighten it with the screws.

CARS WITH INTERNAL AMPLIFIER.

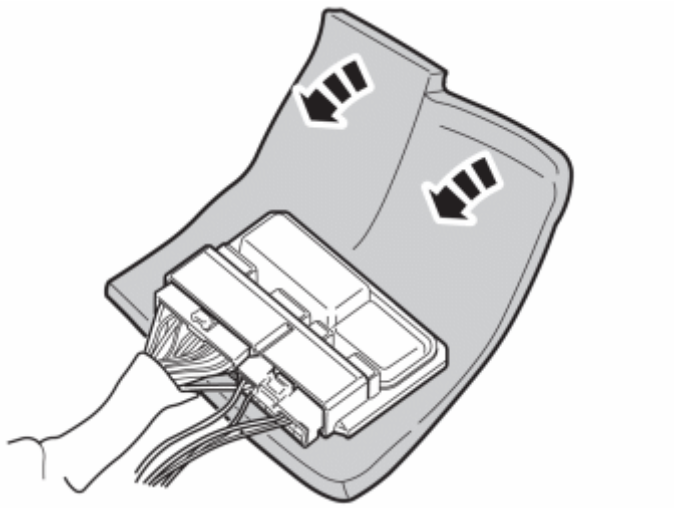

Fig. 330: View Of Foam Tape Pieces To Relay
Courtesy of VOLVO CARS CORPORATION

- Take cable harness A (marked A in the kit image), the mute relay and 2 pieces of foam tape from the kit
- Connect the connectors from the cable harness to the mute relay

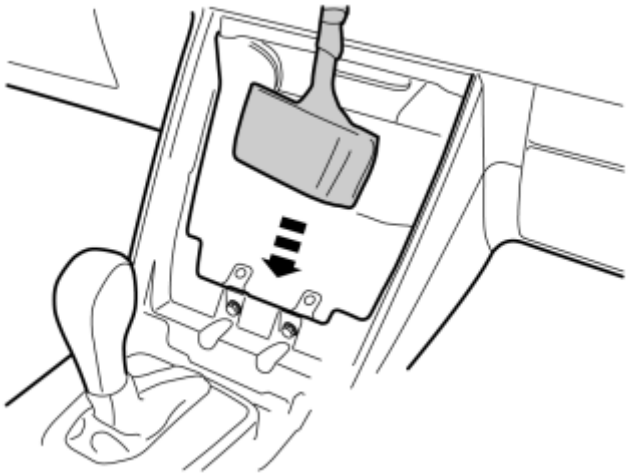

Fig. 331: Identifying Cable Harness At Rear Edge Of Opening On Center Console
Courtesy of VOLVO CARS CORPORATION

- Place the relay with the cable harness at the rear edge of the opening on the center console.

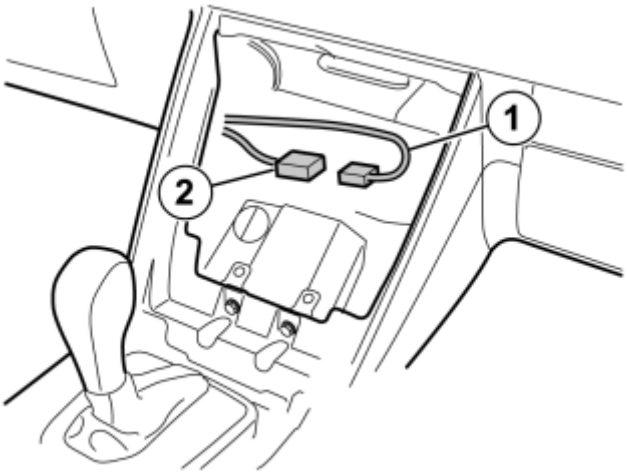

Fig. 332: View Of Antenna Cable (1) To The Short Cable (2)
Courtesy of VOLVO CARS CORPORATION

- Connect the antenna cable (1) to the short cable (2) from the telephone holder mounting plate.

INSTALLING THE HANDSFREE CONTROL MODULE

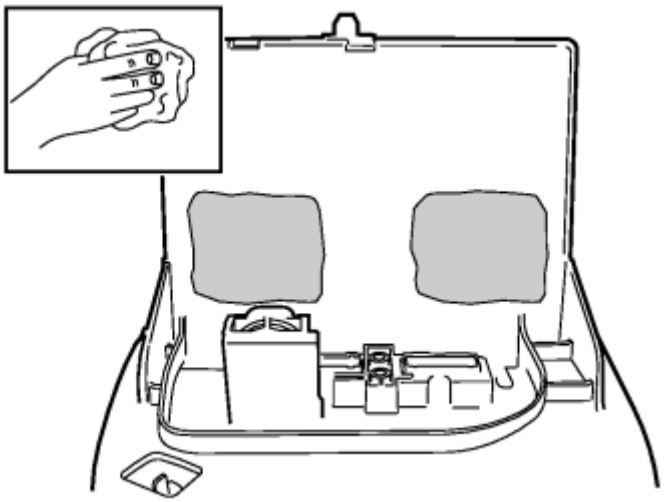

Fig. 333: Cleaning Surrounding Areas Underneath Detached A/C / Radio Unit
Courtesy of VOLVO CARS CORPORATION

- Clean the surrounding areas, as illustrated, underneath the detached A/C / radio unit. Use isopropanol.

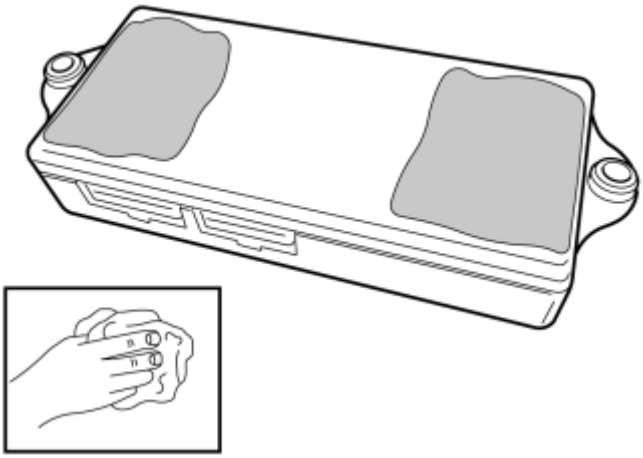

Fig. 334: Cleaning The Control Unit
Courtesy of VOLVO CARS CORPORATION

- Take the control unit from the kit and clean in the locations as shown in the image. Use isopropanol.

INSTALLING VELCRO

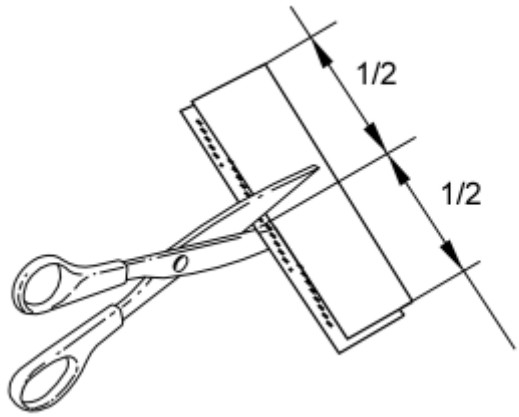

Fig. 335: Identifying Velcro Fasteners
Courtesy of VOLVO CARS CORPORATION

- Take a Velcro strip and cut off two pieces of the same length.
- Press the pieces together.
- Cut off two pieces of the same length again at the center

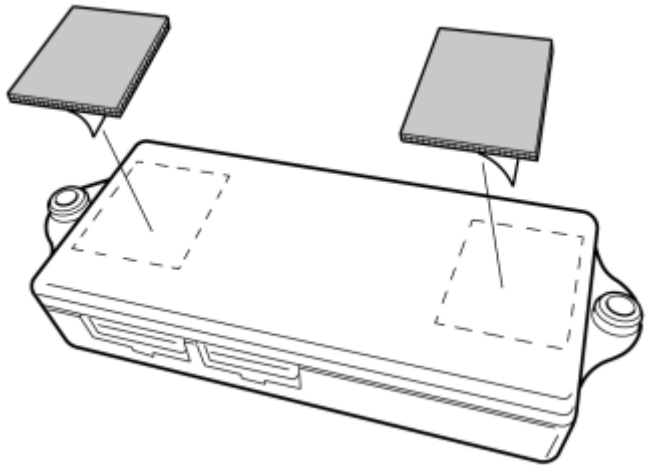

Fig. 336: Identifying Velcro Strips On The Control Module
Courtesy of VOLVO CARS CORPORATION

- Remove the protective backing tape from one side of the Velcro fasteners which were pressed together.
- Apply the Velcro strips on the control module and press.

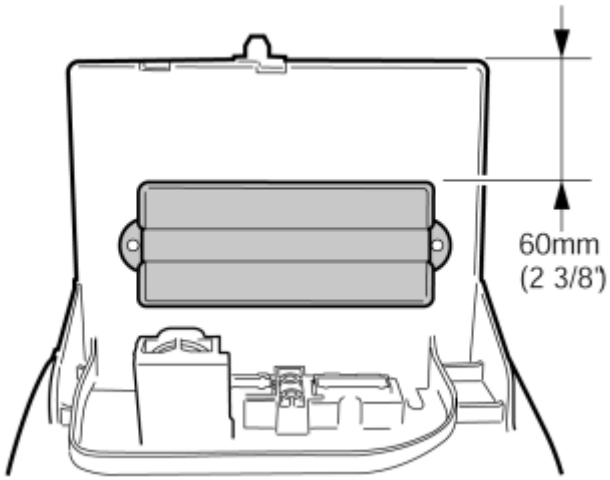

Fig. 337: View Of Control Module In Position
Courtesy of VOLVO CARS CORPORATION

- Remove the remaining protective file on the Velcro strips, align and install the control module on the A/C / radio unit as illustrated. Press onto the control module so that the tape adheres.

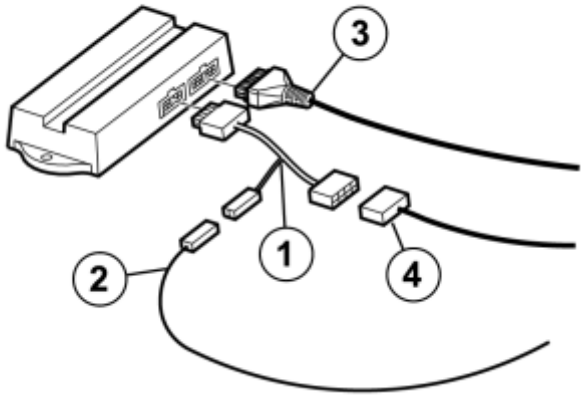

Fig. 338: Identifying Adapter Wiring From The Kit Components
Courtesy of VOLVO CARS CORPORATION

- Take the adapter wiring from the kit.
  1. Adapter wiring (1) to the control module.
  2. The cable (2) from the microphone.
  3. The cable (3) from the power supply and mute relay.
  4. The cable (4) from the telephone holder.
- Connect the connectors as illustrated.
  1. Adapter wiring (1) to the control module.
  2. The cable (2) from the microphone.

3. The cable (3) from the power supply and mute relay.
4. The cable (4) from the telephone holder.

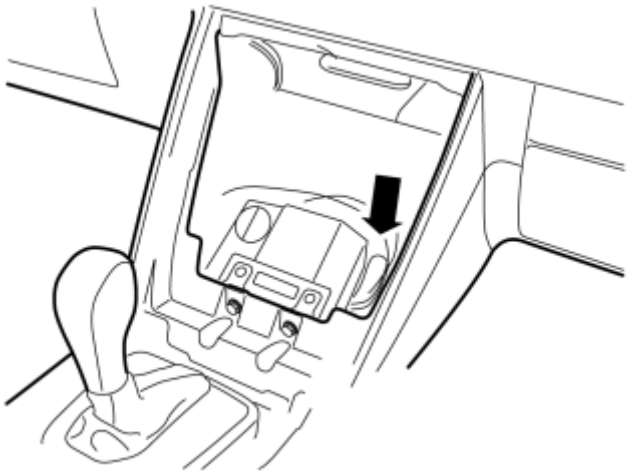

Fig. 339: View Of Secured Excess Wiring
Courtesy of VOLVO CARS CORPORATION

- Place the connectors and excess wiring at the bottom of the center console and secure them using a tie strap. Check that they do not rub against the edges of the bracket.

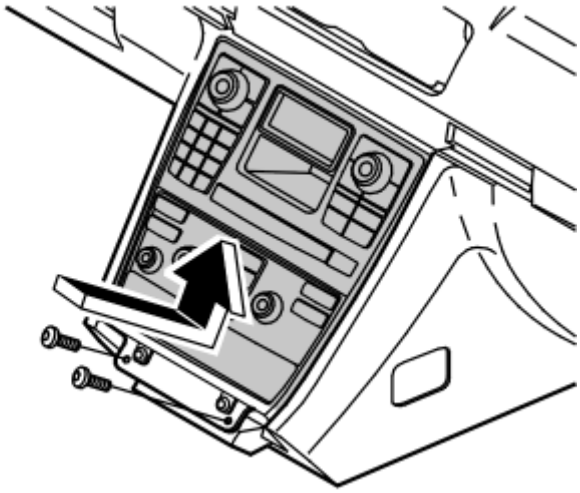

Fig. 340: Reinstall The A/C / Radio Unit
Courtesy of VOLVO CARS CORPORATION

- Reinstall the A/C / radio unit by first hooking the upper edge into place. Then press upwards and angle in the lower section.
- At the same time check that the cables are not trapped.
- Reinstall the screws.

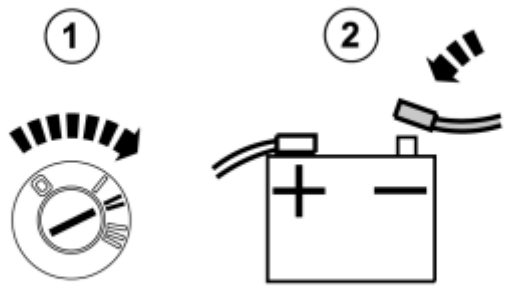

Fig. 341: Identifying Ignition In ON Position and Connecting Negative Battery Lead
Courtesy of VOLVO CARS CORPORATION

Reinstall:

- panel for gear selector.
- the end face panel for the dashboard.
- sound proofing.
- seat piece.
- the side panels on the center console.
- Turn the ignition key to position II.
- Reconnect the battery negative lead.

INTEGRAL ANTENNA (2003)

CARS EQUIPPED WITH SRS/SIPS (AIRBAG)

see **CARS EQUIPPED WITH SRS/SIPS (AIRBAG)**

CAUTION

see **CAUTION**

INTEGRAL ANTENNA

PREPARATIONS

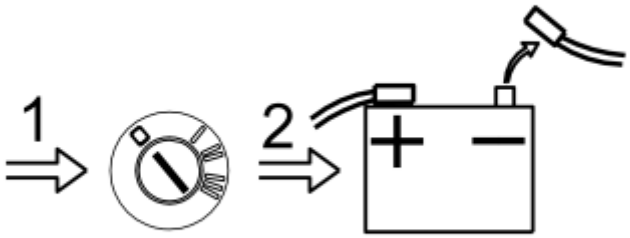

Fig. 342: Disconnect Battery Negative Lead
Courtesy of VOLVO CARS CORPORATION

- Position the driver's seat in the rearmost position
- Turn the ignition key to position 0
- Disconnect the battery negative lead.

NOTE: **Wait at least five minutes before disassembling the connectors or removing other electrical equipment.**

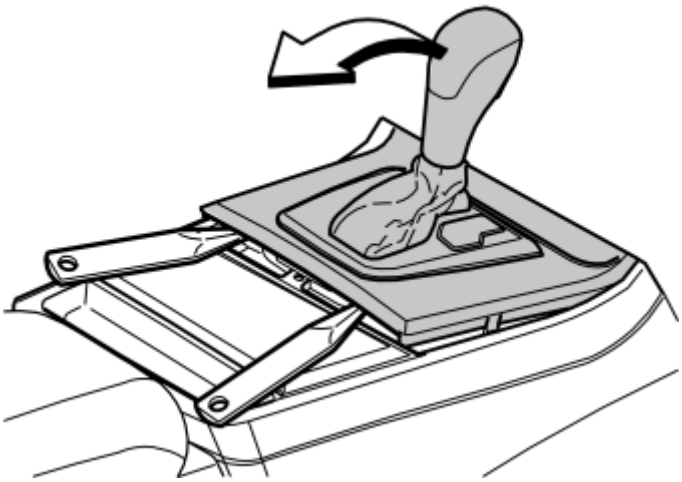

Fig. 343: Prying Off Gear Selector Panel At Rear Edge
Courtesy of VOLVO CARS CORPORATION

Applies to cars with automatic transmissions

- Turn the ignition key to position II.

Applies to all models

- Move the gear selector lever to its rearmost position
- Carefully pry off the gear selector lever panel at the lower edge using a weatherstrip tool. Pull the panel backwards to access the screws for the dashboard environment panel.

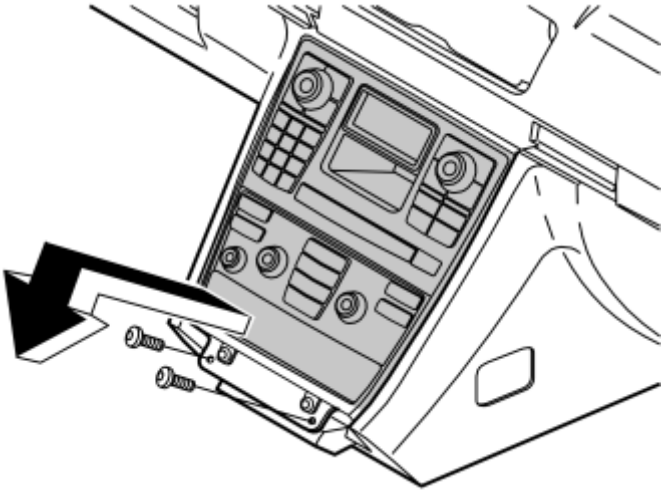

Fig. 344: Removing Screws And Radio/AC Unit From Center Console
Courtesy of VOLVO CARS CORPORATION

- Remove the screws holding the bracket for the dashboard environment panel and the control module
- Pull out the bracket at the lower edge. Pull downwards from the top edge of the center console
- Disconnect the connectors from the dashboard environment panel and control module. Disconnect the connectors for the Mini disc player and/or CD-player/changer if applicable.

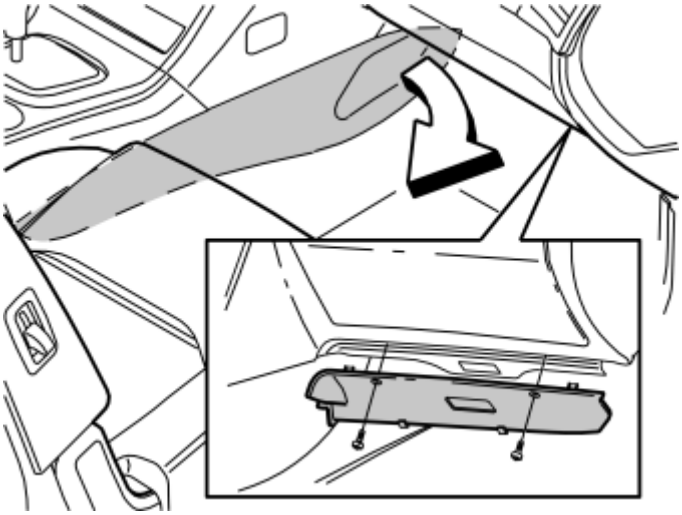

Fig. 345: Right-Hand Side Sound Barrier
Courtesy of VOLVO CARS CORPORATION

- Remove the center console right-hand side panel. Pull off the panel starting at the front edge. Then pull backwards until all the clips release
- Remove the right-hand side soundproofing panel. First remove the two screws. Then pry off the panel at

the top edge.

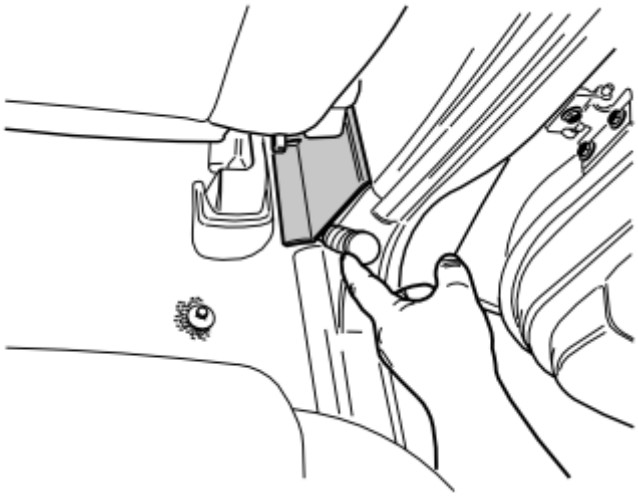

Fig. 346: Prizing Away Cover Panel Over Joint Between Door Sills On Right-Hand Side, At Lower Edge, Using A Weatherstrip Tool
Courtesy of VOLVO CARS CORPORATION

- Carefully pry off the panel above the joint between the right-hand door sills, at the lower edge using a weatherstrip tool.

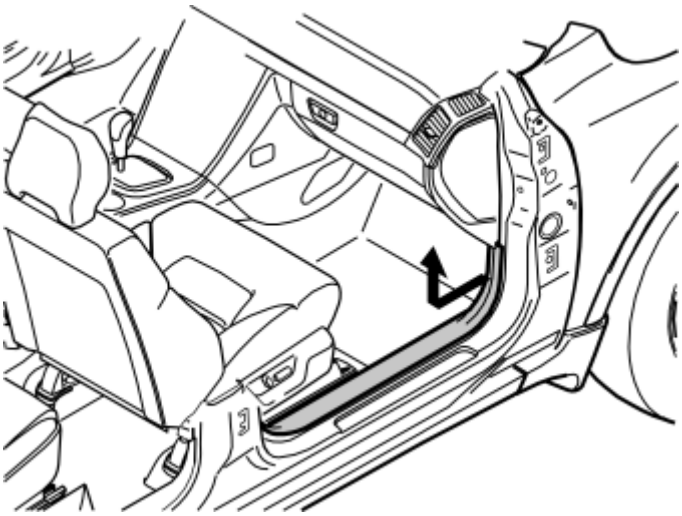

Fig. 347: Right-Hand Front Door's Sill Trim Panel
Courtesy of VOLVO CARS CORPORATION

- Remove the sill trim panel for the right-hand front door. Pull off the panel starting at the front edge until the clip releases. Continue backwards until the remaining clips have released
- Unhook the sill trim panel from the B-post panel and the panel at the lower edge of the B-post panel.

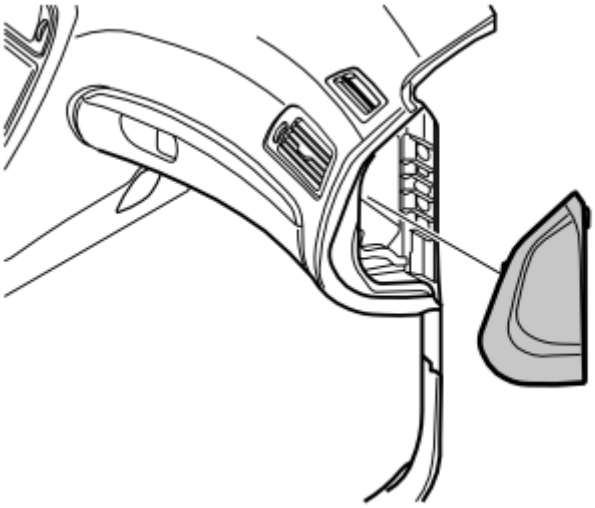

Fig. 348: Dashboard End Panel
Courtesy of VOLVO CARS CORPORATION

- Remove the panel on the right end of the dashboard.

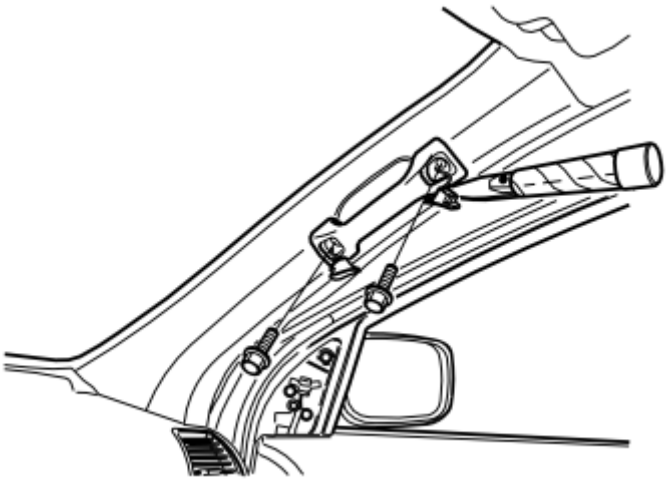

Fig. 349: Pry Off Grab Handle Cover
Courtesy of VOLVO CARS CORPORATION

- Pry off the cover on the grab handle in the right-hand front door. Remove the screws.

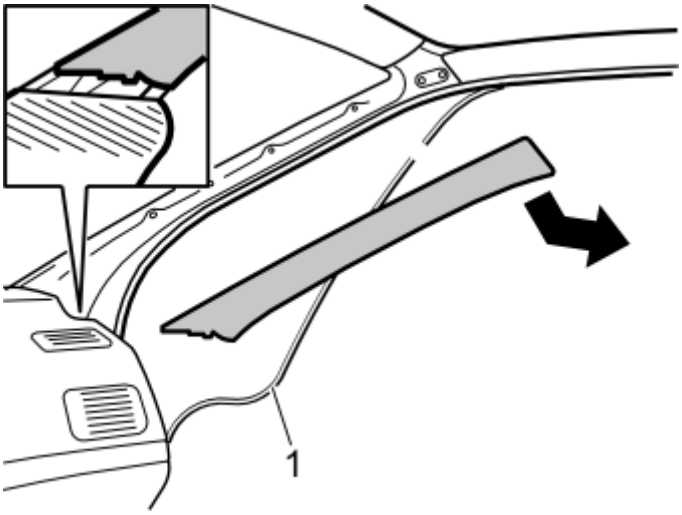

Fig. 350: Identifying Right-Hand A-Post Panel
Courtesy of VOLVO CARS CORPORATION

- Remove the rubber strip (1) at the front edge of the right-hand front door
- Remove the right-hand A-post panel by carefully pulling the top edge of the panel outwards until the clip on the inside releases. Pull up from the mounting in the dashboard.

NOTE: Do not damage the headlining.

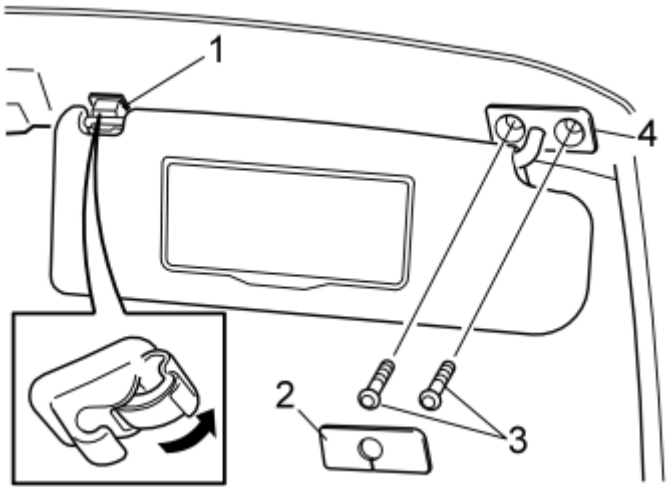

Fig. 351: Identifying Sun Visor Inner Mountings
Courtesy of VOLVO CARS CORPORATION

- Remove the sun visor from the inner mounting (1) on the right-hand side
- Carefully pry the cover (2) off. Remove the two screws (3) for the sun visor mounting
- To remove the headlining: Remove the inner mounting (1) by prying up as illustrated. Then carefully pull the mounting (secured by four catches) from the roof.

NOTE: Do not damage the headlining.

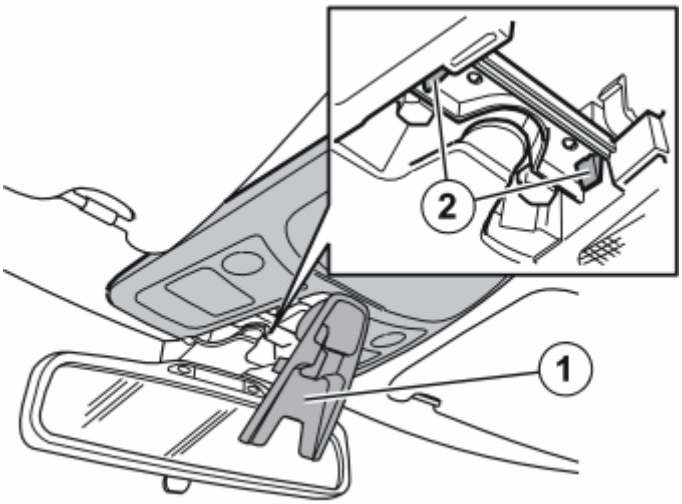

Fig. 352: Folding Down Cover And Squeezing Catches Together
Courtesy of VOLVO CARS CORPORATION

- Fold down the cover (1) by carefully pulling down the front edge of the cover
- Squeeze the catches (2). Pull the front edge of the panel downwards. Then pull the rear edge off.

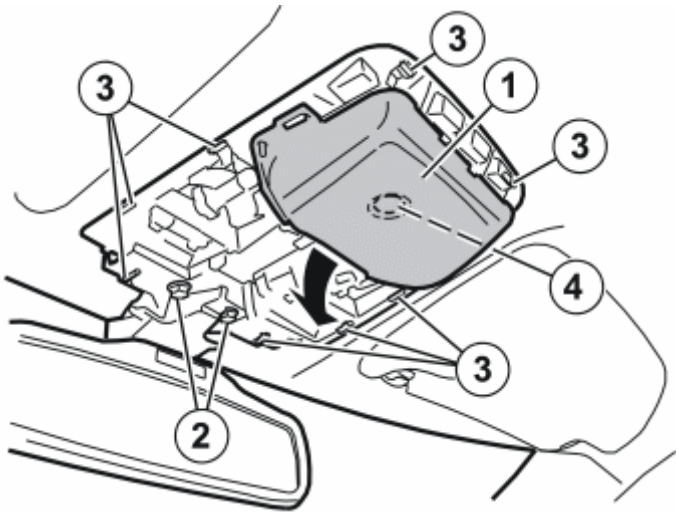

Fig. 353: View Of Front Interior Lighting
Courtesy of VOLVO CARS CORPORATION

- Remove the rear view mirror and the front interior lighting (1). First remove the two screws (2) and then press in the eight catches (3) around the interior lighting
- Carefully pull the components downwards and allow them to hang by their wiring. (The interior lighting is secured to the roof using the clip (4).).

INSTALLING THE INTEGRAL ANTENNA

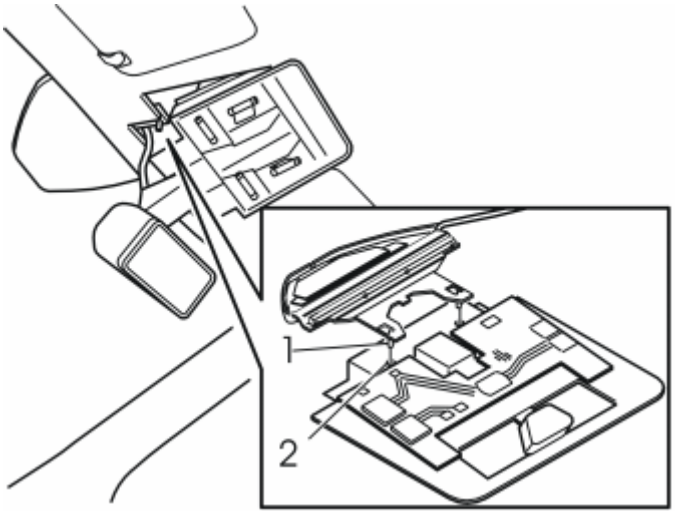

Fig. 354: Aligning Antenna Lugs With Grooves In Bracket
Courtesy of VOLVO CARS CORPORATION

- Install the new antenna. Carefully bend the headlining downward and slide the antenna backward and inwards. Align the antenna lugs (1) with the grooves in the bracket (2)
- Insert the cable at the inside of the front edge of the headlining. Route the cable out towards the right-hand A-post
- Secure the cable using butyl tape
- Reinstall the bracket and rear view mirror. Tighten the screws. Tighten to **10 Nm (7.5 lbf. ft)**
- Reinstall the panel. Securely lock the panel using the cover.

CABLE ROUTING AND CONNECTION

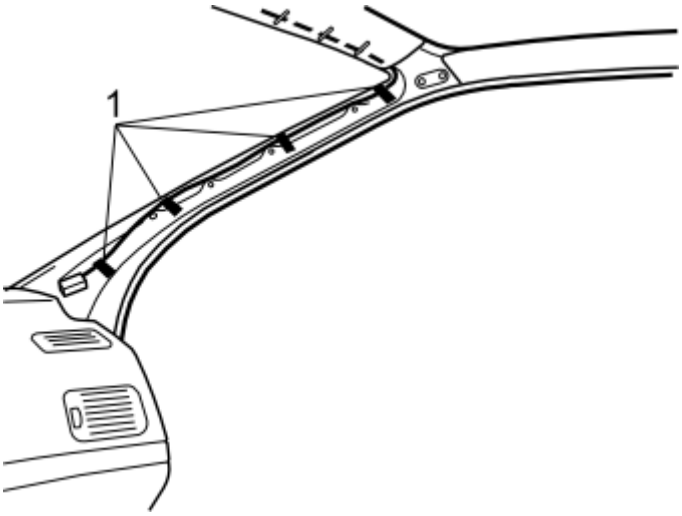

Fig. 355: Identifying Cable Taped Onto Existing Cable Harness
Courtesy of VOLVO CARS CORPORATION

- Route the cable down from the headlining along the right A-post
- Tape the cable onto the existing cable harness as illustrated (1).

WARNING: Ensure that the cable is not routed over the inflatable curtain. This could compromise the function of the inflatable curtain in the event of an accident.

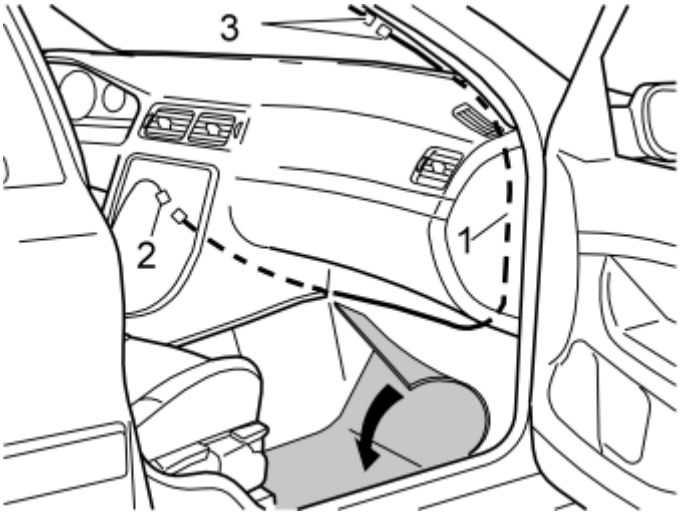

Fig. 356: Folding Back Carpet And Identifying Cable And Connectors
Courtesy of VOLVO CARS CORPORATION

- Push the carpet to one side by the right-hand front seat
- Take the extension cable (1) from the kit. Route the cable between the A-post and the right-hand side of the dashboard, continue along the right-hand end to the front edge of the floor
- Route the cable to the left along the front edge of the floor and up to the inside of the center console
- Connect the cable (1) to the corresponding cable (2) from the hands free box
- Connect both connectors (3) at the right A-post to each other
- Wrap the foam tape around the connectors to prevent rattling.

- Reinstall the A post panel. Tighten the grab handle. Tighten to **10 Nm (7.5 lbf. ft)** . Reinstall the cover
- Reinstall the rubber strip in the right-hand front door
- Reinstall the panel on the end of the dashboard
- Reinstall the sun visor. Tighten the screws. Tighten to **10 Nm (7.5 lbf. ft)** . Reinstall the cover and the inner mounting
- Fold the carpet on the right-hand side back into place
- Reinstall the panel on the door trim for the right-hand front door. Press the B-post lower panel into place
- Reinstall the soundproofing panel on the right-hand side
- Reinstall the right-hand side panel for the center console
- Connect the connectors to the dashboard environment panel. If applicable connect the CD player and/or Mini disc player connectors
- Position the bracket. Tighten the bracket using the two screws. Reinstall the gear selector lever panel.

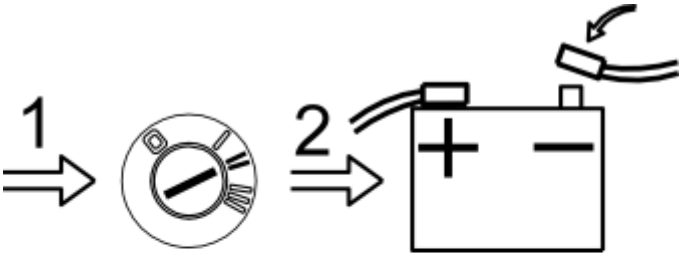

Fig. 357: Connecting Negative Battery Lead
Courtesy of VOLVO CARS CORPORATION

- Turn the ignition key to position II
- Reconnect the battery negative lead.

XC90

see **XC90**

LOUDSPEAKER, REAR DOOR (2003-2011)

LOUDSPEAKER, REAR DOOR

Illustration A

Fig. 358: Identifying Upper Panel On The Door Handle
Courtesy of VOLVO CARS CORPORATION

- Remove the upper panel on the door handle. First insert a small screwdriver in the hole (1) in the lower section of the panel and press the catch on the inside at the same time as pulling the top edge of the panel upwards. If necessary use a plastic weatherstrip tool to pry up the top edge of the cover.

Illustration B

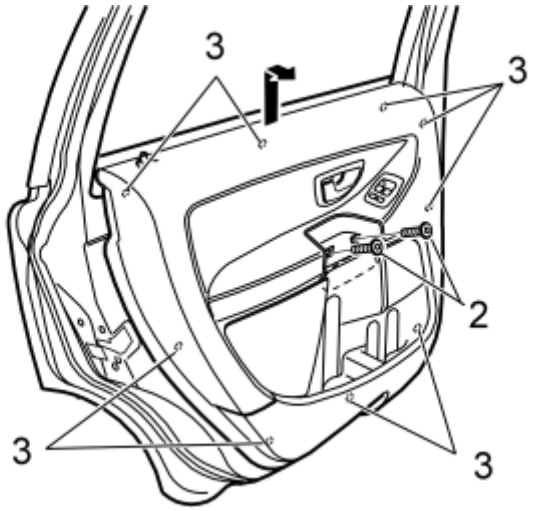

Fig. 359: Carefully Pry Off The Door Panel Using The Weatherstrip Tool
Courtesy of VOLVO CARS CORPORATION

- Remove the two screws (2) from under the panel
- Carefully pry off the door panel using the weatherstrip tool. Start at the lower edge and pry opposite the clips (3).

REMOVE

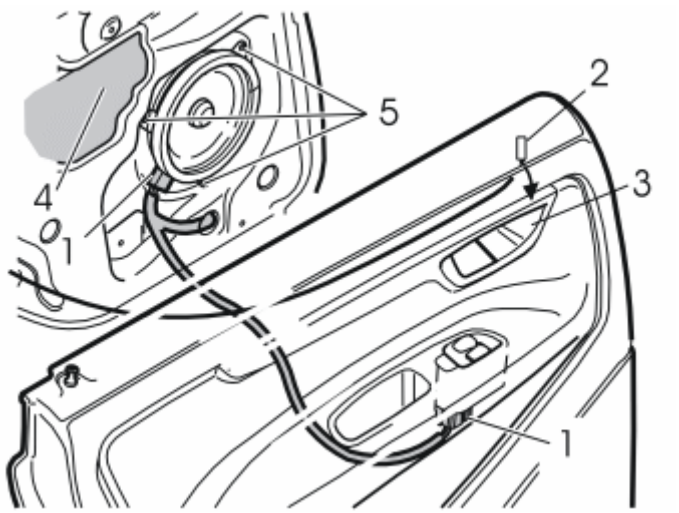

Fig. 360: Identifying Installation Of Loudspeaker, Moisture Inhibitor, Cable And Connectors
Courtesy of VOLVO CARS CORPORATION

- Disconnect the connector (1) from the door control module and from the existing loudspeaker
- Remove the wire (2) from the door opener handle (3). First bend up the catches
- Remove the panel
- Carefully remove the moisture inhibitor (4) at the front edge. This is carried out to install the nuts on the inside when installing the loudspeaker.

- Drill out the rivets (5) holding the loudspeakers. Use a **6 mm (1/4")** diameter drill bit
- Remove the loudspeakers and any rivet metal shavings from the holes. Remove the rivet sections from the door if necessary.

INSTALL

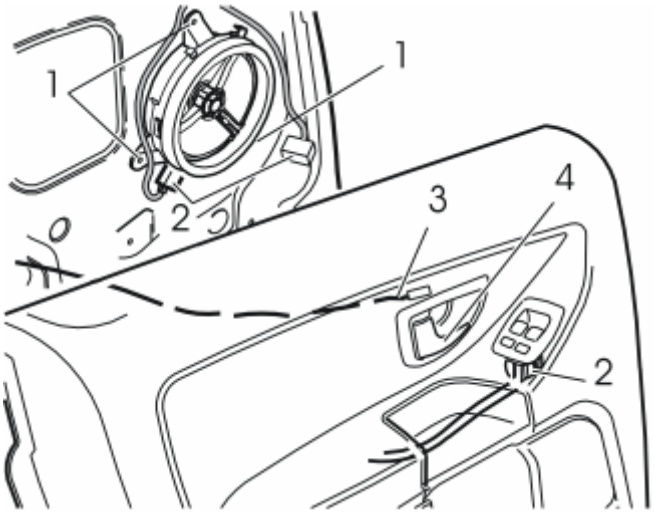

Fig. 361: Door Panel Components
Courtesy of VOLVO CARS CORPORATION

- Screw the new loudspeaker into place using the screws, washers and the nuts from the kit (1). The washers must be positioned under the screw heads
- Reinstall the moisture inhibitor
- Connect the connectors (2) to the loudspeaker and the module for the door controls
- Reinstall the mechanical cable (3) on the door opener handle (4)
- Reinstall the door panel, and the upper panel for the door handle.

MINIDISC PLAYER (2003-2010)

MINIDISC PLAYER

NOTE: This accessory requires software unique to the car.

PREPARATORY WORK

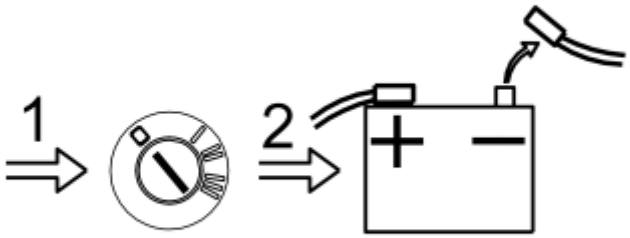

Fig. 362: Disconnect Battery Negative Lead
Courtesy of VOLVO CARS CORPORATION

- Turn the ignition key to position 0
- Disconnect the battery negative lead.

NOTE: **Wait at least five minutes before disassembling the connectors or removing other electrical equipment.**

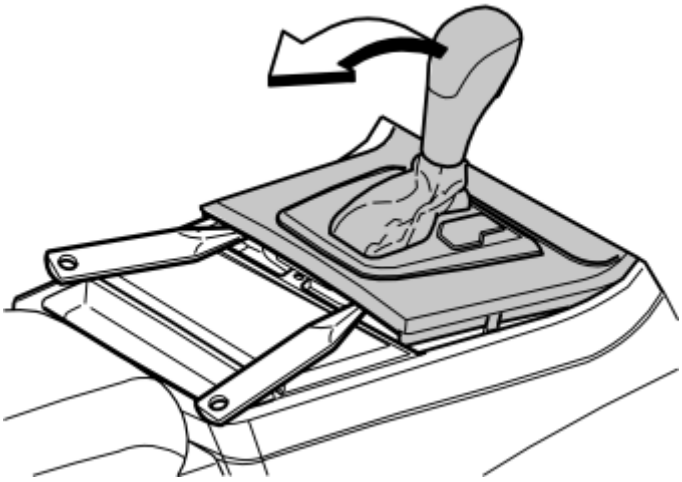

Fig. 363: Prying Off Gear Selector Panel At Rear Edge
Courtesy of VOLVO CARS CORPORATION

Applies to cars with automatic gearboxes

- Turn the ignition key to position II.

Applies to all models

- Move the gear selector lever to its rearmost position
- Carefully pry off the rear edge of the panel for the gear selector lever using a plastic weatherstrip tool. Pull the panel backwards to access the screws for the dashboard environment panel.

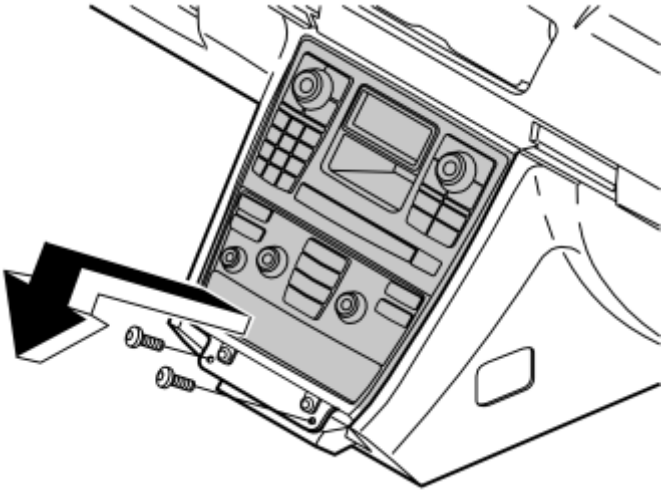

Fig. 364: Removing Screws And Radio/AC Unit From Center Console
Courtesy of VOLVO CARS CORPORATION

- Remove the two screws holding the bracket for the dashboard environment panel and the control module.

NOTE: Pull out the bracket at the lower edge. Pull from the top edge of the center console.

- Disconnect the connectors from the dashboard environment panel, control module. If applicable disconnect the CD player connector.

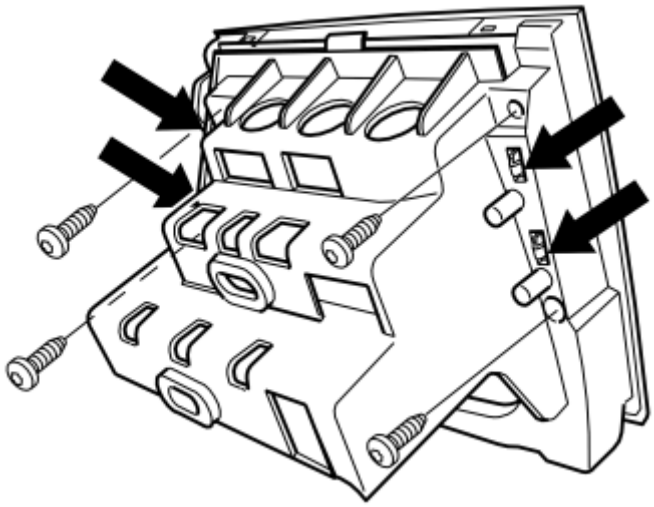

Fig. 365: View Of Control Module Screws
Courtesy of VOLVO CARS CORPORATION

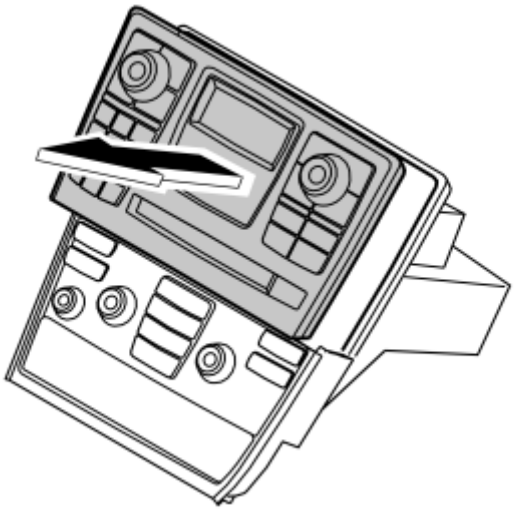

Fig. 366: Remove The Control Module
Courtesy of VOLVO CARS CORPORATION

- Position the console with the control module and dashboard environment panel in a suitable position
- Remove the four screws on the reverse holding the control module at the console
- Press in the four catches in the sides of the control module so that they release. Carefully remove the control module.

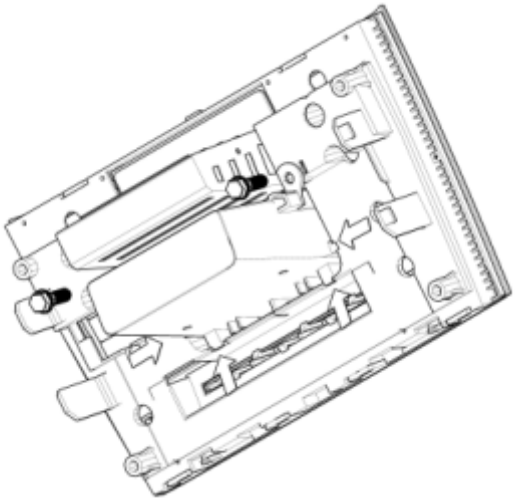

Fig. 367: Identifying Centre Console Locker From The Control Module
Courtesy of VOLVO CARS CORPORATION

- Remove the center console locker from the control module. First remove the two screws on the reverse. Then pry off the catches on the sides and underneath. Detach the center console locker
- Place the control module and center console locker to one side. The center console locker will not be reused.

INSTALLING THE MINIDISC PLAYER

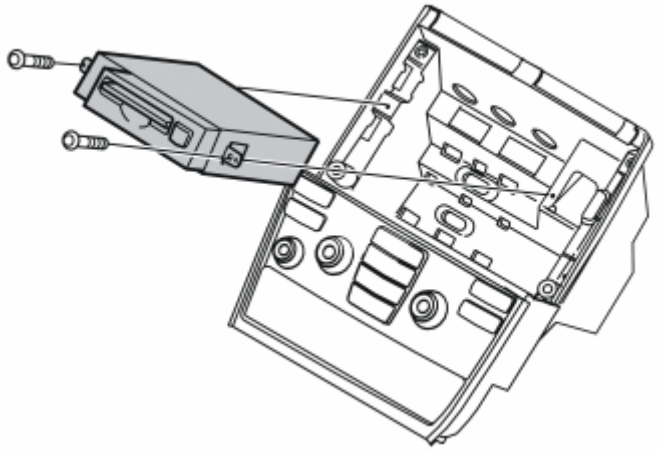

Fig. 368: Insert The MiniDisc Player In The Upper Cut-Out In The Console
Courtesy of VOLVO CARS CORPORATION

- Insert the MiniDisc player in the upper cut-out in the console. Ensure that the locating pins on the sides and on the reverse and the connector locate in the corresponding socket in the bracket
- Take the two screws which secured the center console locker. Tighten the MiniDisc player
- For aftermarket installation of both a MiniDisc and CD player/changer, install the CD player/changer according to points 5 and 6 in these installation instructions.

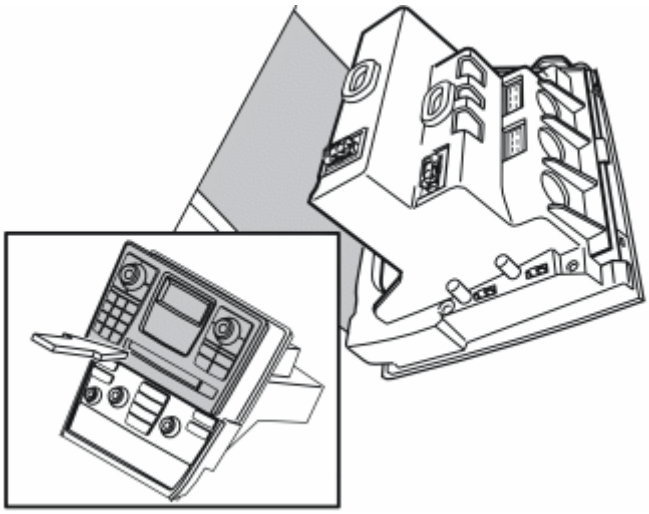

Fig. 369: Inserting Control Module To Bracket
Courtesy of VOLVO CARS CORPORATION

- Insert the control module in the bracket. Ensure that its guide moldings at the bottom edge engage in the corresponding channels at the top of the dashboard environment channel. Press all the way around so that the four catches engage
- Tighten the control unit on the reverse using the four screws
- Position the bracket in the car, in front of the cut-out in the center console, leaning backwards towards the gear selector lever as illustrated.

ROUTING AND CONNECTING WIRING

NOTE: The small thicker and stiffer orange cables in the cable harnesses are fibre optic and must be handled and routed very carefully. These cables cannot be bent as much as normal wiring, the bend radius must not be less than 3 cm.

APPLIES TO CARS WITHOUT A FACTORY INSTALLED PLAYER, WHEN ONLY INSTALLING A MINIDISC PLAYER

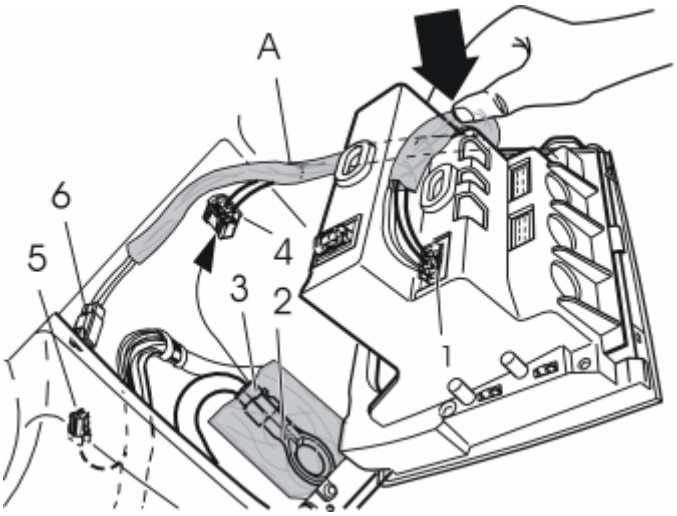

Fig. 370: View Of Junction Cable (A)
Courtesy of VOLVO CARS CORPORATION

- Take the junction cable (A) from the kit (purchased separately)
- Connect the connect (1) on the junction cable to the corresponding connector on the MiniDisc player.

NOTE: Be very careful when connecting the connector in the MiniDisc player. The terminal pins in this connector are thin. They are easily damaged and may become pressed into the player if the connector is not installed straight.

- Locate the pre-routed, bridge connector (2) on the fibre optic cable in the center console, wrapped in foam tape
- Disconnect the connector (3) from the bridged connector (2). Connect it to connector (4) on the junction cable.

NOTE: If installing a MiniDisc player and an RTI system at the same time, the junction cable for the RTI system must be connected first to the connector (3). This connector will then be in use, but there is a corresponding connector on the junction cable for the RTI system. Connect this to the connector (4).

- Find the pre-routed grey connector (5) for power supply in the thick cable harness in the center console. The connector is located either in the center console or in the space above the accelerator pedal. To remove the panel above the accelerator panel, slacken off the two Torx screws and then pull the panel free

from the clips on the outer edges and unhook it

- Connect the connector (5) to the remaining connector (6) on the junction cable
- Take half of the foam tape from the wiring kit and wrap it around the grey connectors (5, 6). Use the remaining foam tape to tape around the connectors (3, 4).

NOTE: The junction cable must be routed around the bracket as illustrated. When reinstalling the bracket in the center console in the car, the junction cable must be held against the bracket as illustrated. This is to ensure that it remains in position.

APPLIES TO CARS WITHOUT A FACTORY INSTALLED PLAYER, WHEN INSTALLING BOTH A MINIDISC AND CD PLAYER/CHANGER

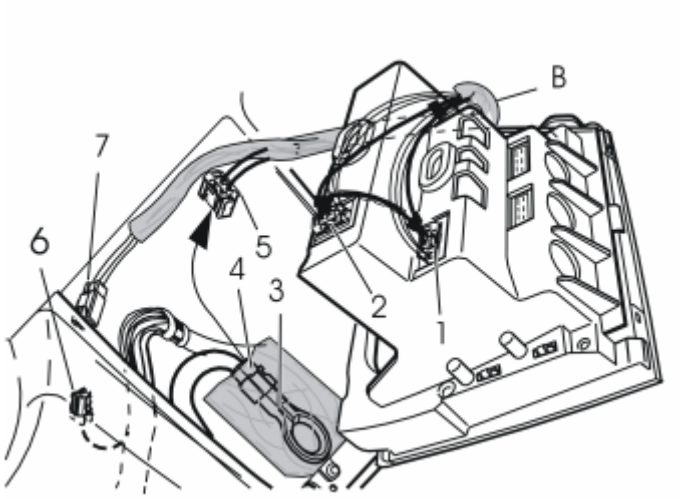

Fig. 371: Identifying Junction Cable (B)
Courtesy of VOLVO CARS CORPORATION

- Take out the junction cable (B) (purchased separately) with the four connectors
- Connect the connector (1) on the junction cable to the corresponding connector on the MiniDisc player and connector (2) to the corresponding connector in the CD player/changer. The connectors (1) and (2) are identical. It does not matter which connector is connected to which unit.

NOTE: Be very careful when connecting the connectors in the MiniDisc/CD players. The terminal pins in these connectors are thin. They are easily damaged and may become pressed into the players if the connector is not installed straight.

- Locate the pre-routed, bridge connector (3) on the fibre optic cable in the center console, wrapped in foam tape
- Disconnect the connector (4) from the bridged connector (3). Connect it to connector (5) on the junction cable.

NOTE: If installing a MiniDisc player and an RTI system at the same time, the

junction cable for the RTI system must be connected first to the connector (4). This connector will then be in use, but there is a corresponding connector on the junction cable for the RTI system. Connect this to the connector (5).

- Find the pre-routed grey connector (6) for power supply in the thick cable harness in the center console. The connector is located either in the center console or in the space above the accelerator pedal. To remove the panel above the accelerator panel, slacken off the two Torx screws and then pull the panel free from the clips on the outer edges and unhook it
- Connect the connector (6) to the remaining connector (7) on the junction cable
- Take half of the foam tape from the wiring kit and wrap it around the grey connectors (6, 7). Use the remaining foam tape to tape around the connectors (4, 5).

NOTE: The junction cable must be routed around the bracket as illustrated. When reinstalling the bracket in the center console in the car, the junction cable must be held against the bracket as illustrated. This is to ensure that it remains in position.

OPERATIONS 10-14 APPLY TO CARS WITH FACTORY-INSTALLED CD PLAYERS/CHANGERS

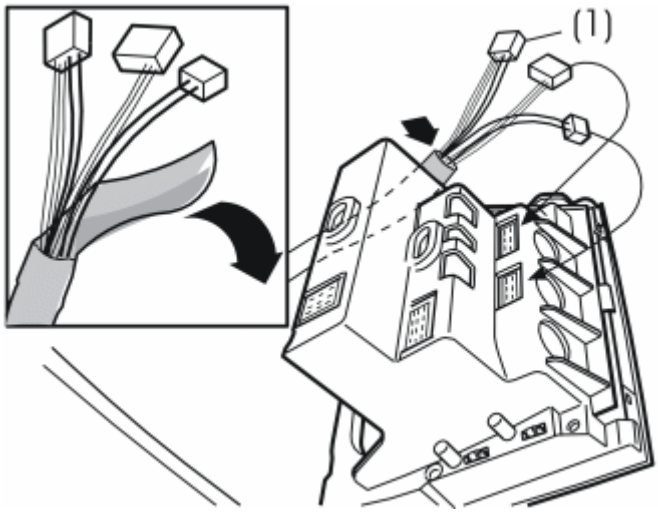

Fig. 372: Identifying Control Module And The Dashboard Environment Panel Connectors
Courtesy of VOLVO CARS CORPORATION

NOTE: If installing a MiniDisc player and an RTI system at the same time, the RTI system must be connected according to the installation instructions. Then follow these installation instructions as if the RTI system was not installed. However use the connector in the CD player/changer.

HINT: work from the right-hand seat.

- Remove approximately 20 cm of foam tape from the existing cable harness so that the wiring is unimpeded

- Reinstall the connectors for the control module and the dashboard environment panel. Do not connect the connector (1) to the CD player yet.

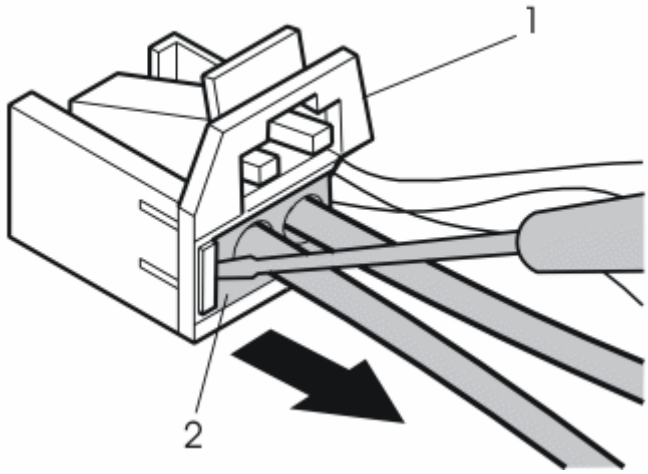

Fig. 373: Identifying MiniDisc Player Connectors
Courtesy of VOLVO CARS CORPORATION

- Take the connector (1) which was in the CD player/changer and remove the connector (2) with the fibre optic cable from it. Use a small screwdriver or similar to lift the catch as illustrated. At the same time pull the fibre optic cable outwards to release the connector (2)
- Reinstall the connector (1) which is now without the connector (2) in the CD player/changer.

NOTE: **Be very careful when connecting the connector in the CD player/changer. The terminal pins in this connector are thin. They are easily damaged and may become pressed into the player if the connector is not installed straight.**

Illustration A

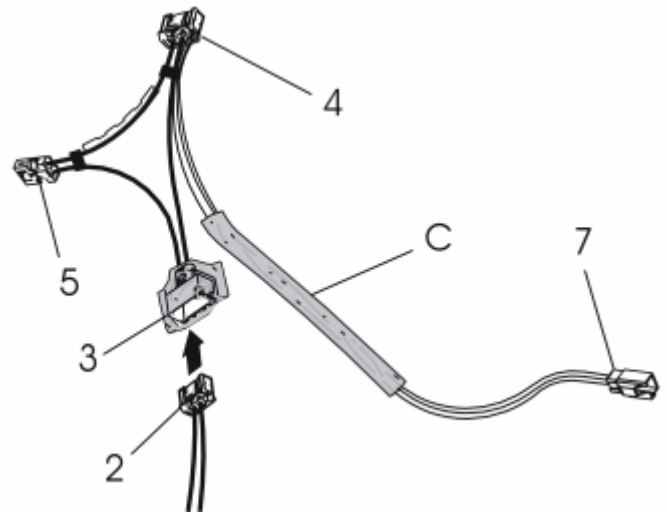

Fig. 374: Identifying Junction Cable (C)
Courtesy of VOLVO CARS CORPORATION

- Take the junction cable (C) (purchased separately) and locate its foam taped connector (3)
- Connect the small connector (2) with the fibre optic cables (disconnected in the previous step) to the connector (3) in the junction cable. There will be a click when the catch engages.

Illustration B

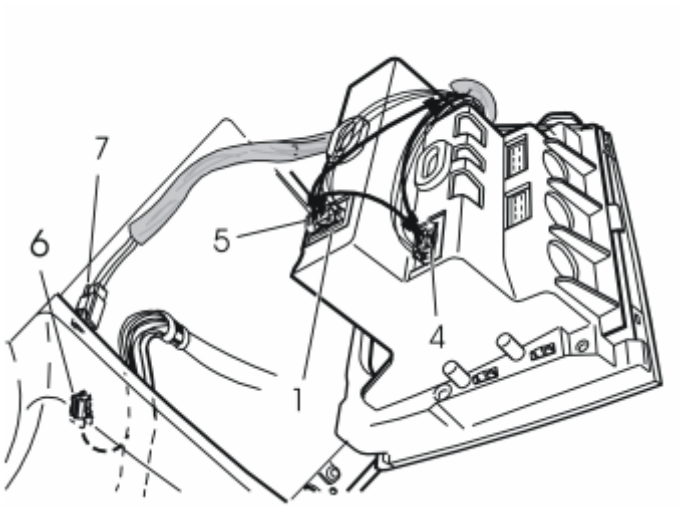

Fig. 375: Identifying Connector (4)
Courtesy of VOLVO CARS CORPORATION

- Connect the connector (4) from the junction cable to the MiniDisc player and the connector (5) from the junction cable to the connector (1) which was reinstalled in the CD player/changer before.

NOTE: **Be very careful when connecting the connector in the MiniDisc player. The terminal pins in this connector are thin. They are easily damaged and may become pressed into the player if the connector is not installed straight.**

- Find the pre-routed grey connector (6) for power supply in the thick cable harness in the center console. The connector is located either in the center console or in the space above the accelerator pedal. To remove the panel above the accelerator panel, slacken off the two Torx screws and then pull the panel free from the clips on the outer edges and unhook it
- Connect the connector (6) to the remaining connector (7) on the junction cable
- Take a small piece of the foam tape from the kit and wrap it around the grey connectors (6, 7).

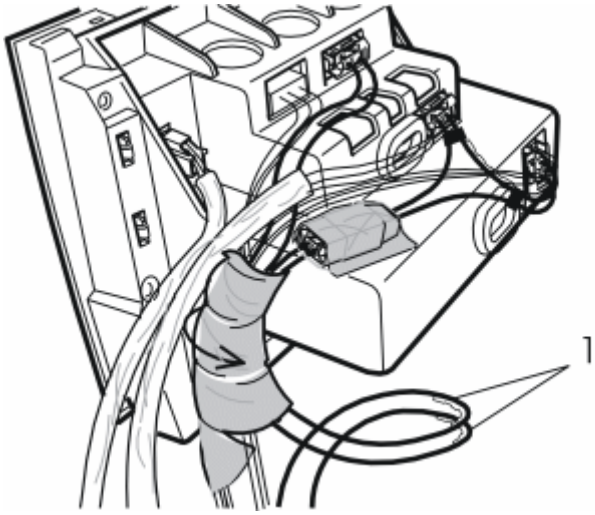

Fig. 376: View Of Load-Removing Grommets (1) Secured In The Fibre Optic Cable Loops
Courtesy of VOLVO CARS CORPORATION

HINT: work from the right-hand seat.

- Position the wiring so that it runs around the bracket as illustrated
- Take half of the remaining foam tape from the wiring kit and wrap it around the cables not already protected.

NOTE: There will be excess fibre optic wiring which should be placed in an loop as illustrated.

- Take the two load-removing grommets (1) from the wiring kit and secure it in the loops formed by the fibre optic cable as illustrated.

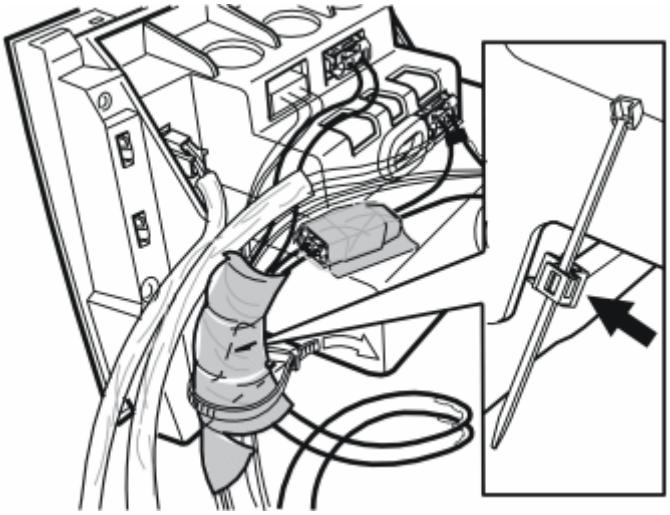

Fig. 377: Identifying Corner Clip And Tie Strap
Courtesy of VOLVO CARS CORPORATION

- Take the corner clip and tie strap from the wiring kit. Press it into place at the top of the underside of the bracket as illustrated
- Tighten the tie strap around the foam taped cable harness to secure the excess fibre optic wiring as illustrated
- Take the remaining strips of foam tape and tape the loop to prevent it from rattling.

FINISHING WORK

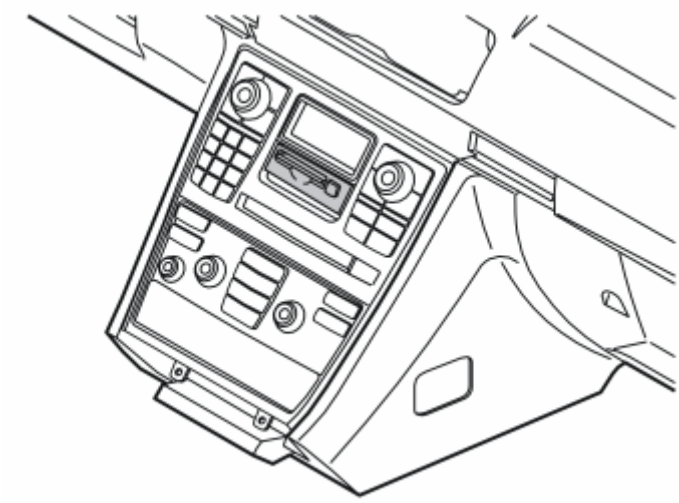

Fig. 378: Identifying CD Player/Changer
Courtesy of VOLVO CARS CORPORATION

- Connect all the previously disconnected connectors to the control module and the climate control panel if not already done. If the car has a CD player/changer, connect its connector.

NOTE: Be very careful when connecting the connector in the CD player/changer. The terminal pins in this connector are thin. They are easily damaged and may become pressed into the player if the connector is not installed straight.

- Position the bracket. Tighten the bracket using the two screws
- Reinstall the gear selector lever panel
- Reinstall the panel above the accelerator pedal if removed.

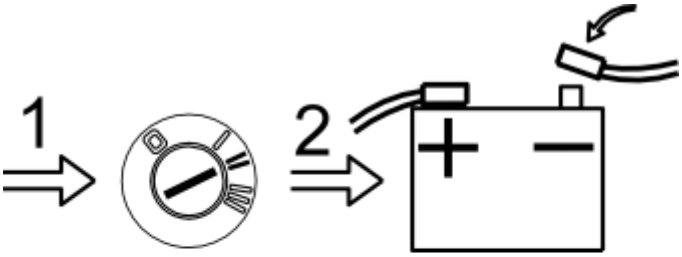

Fig. 379: Connecting Negative Battery Lead
Courtesy of VOLVO CARS CORPORATION

- Turn the ignition key to position II
- Reconnect the battery negative lead
- Program the software according to the service information in VIDA (Volvo scan tool).

NEW MICROPHONE POSITION IN A-PILLAR FOR UNIVERSAL HANDSFREE (2004-2006)

POWER SUPPLY UNIT, RSE (REAR SEAT ENTERTAINMENT) (2004-2008)

POWER SUPPLY UNIT, RSE (REAR SEAT ENTERTAINMENT)

REMOVE

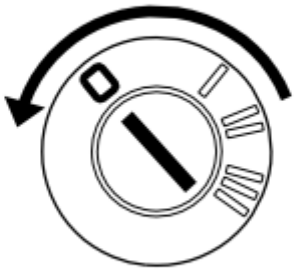

Fig. 380: Identifying Turning Ignition To Position 0
Courtesy of VOLVO CARS CORPORATION

- Turn the ignition key to position 0.

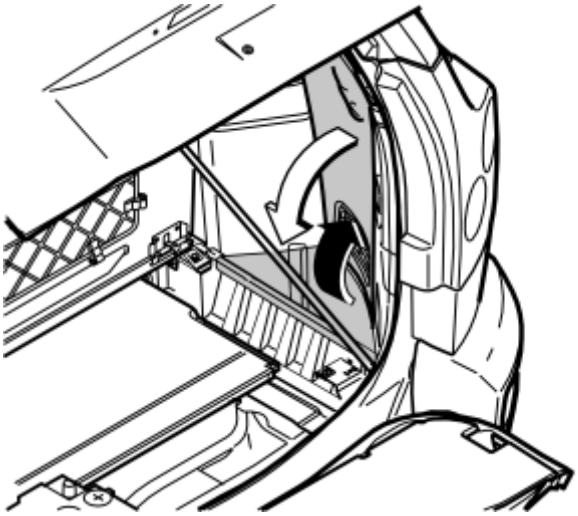

Fig. 381: Removing Rear Side Panel
Courtesy of VOLVO CARS CORPORATION

- Fold up and remove the floor hatch.
- Remove the side floor hatch.
- Remove the rear side panel.

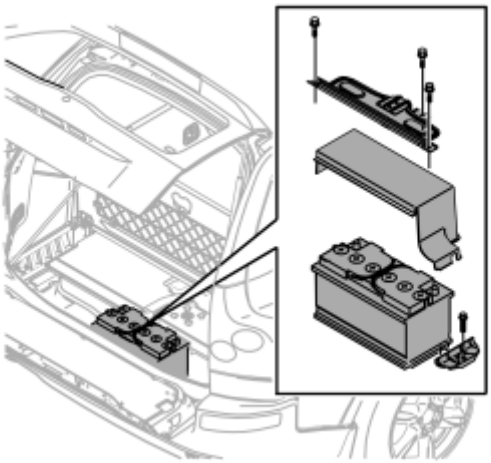

Fig. 382: Battery And Protective Cover
Courtesy of VOLVO CARS CORPORATION

- Remove the bracket over the protective cover for the battery. The bracket is secured with three screws.
- Remove the protective cover for the battery.
- Remove the screw and detach the holder on the right-hand side of the battery.

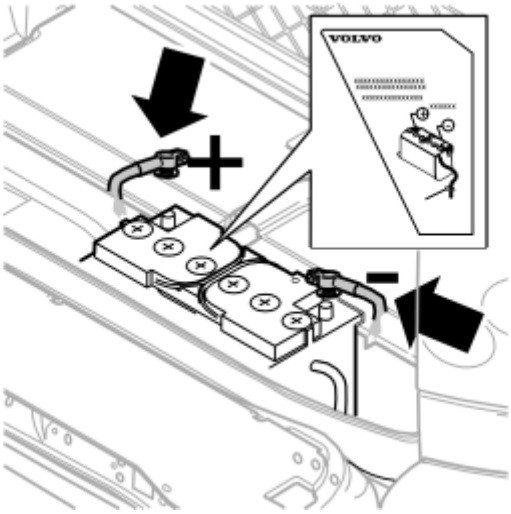

Fig. 383: Positive And Negative Cables On Battery
Courtesy of VOLVO CARS CORPORATION

- Disconnect the battery negative lead and then the positive lead.
- Lift out the battery to make space for the power supply unit.

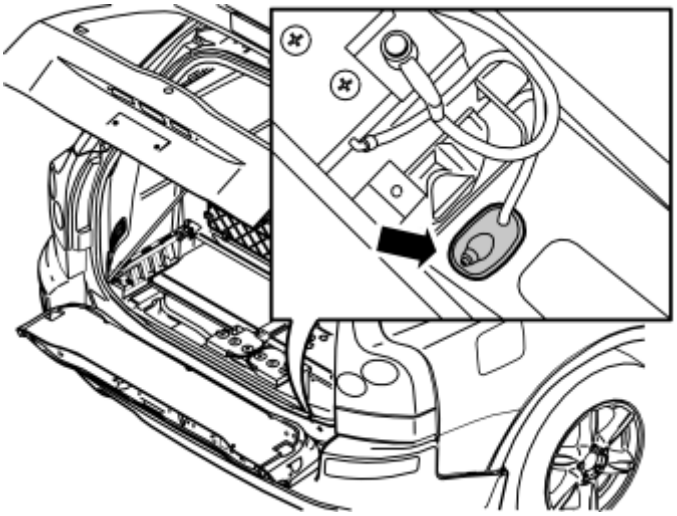

Fig. 384: Removing Rubber Grommet For Drainage Hose For Battery
Courtesy of VOLVO CARS CORPORATION

- Remove the rubber grommet for the drainage hose for the battery.

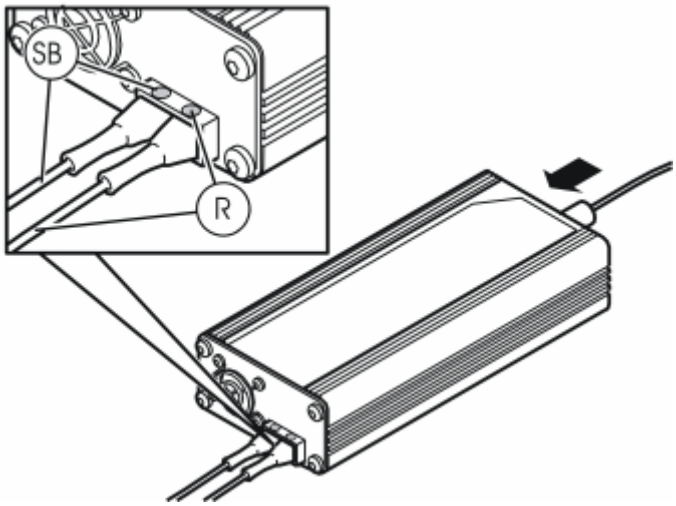

Fig. 385: Power Supply Cables
Courtesy of VOLVO CARS CORPORATION

- Connect the 12V cable harness to the power supply unit, color to color.
- Connect the power cable to the power supply unit.

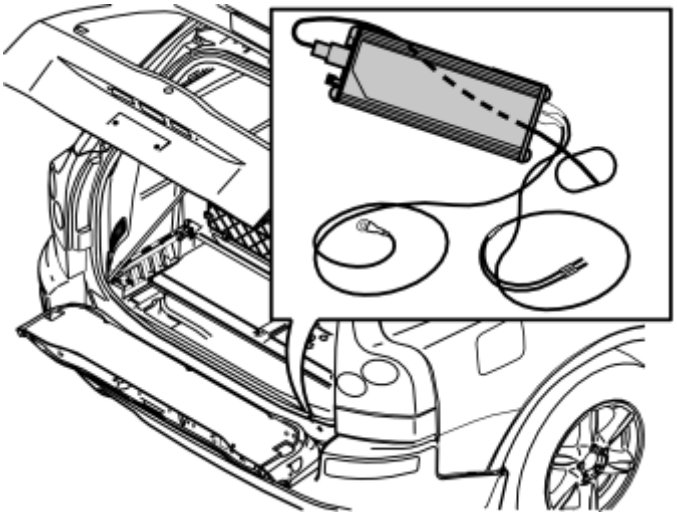

Fig. 386: Routing Power Cable Out Through Hole In Cargo Compartment Floor
Courtesy of VOLVO CARS CORPORATION

- Position the power supply unit in the battery location as illustrated.
- Route the power cable out through the hole in the cargo compartment floor.

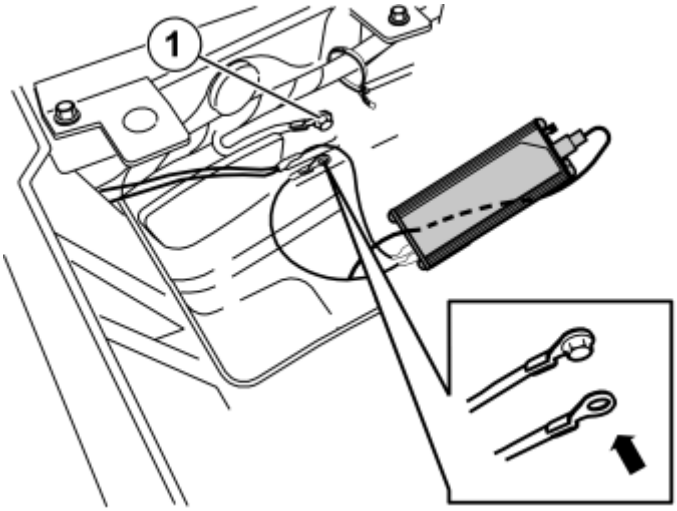

Fig. 387: Ground Screw On Right-Hand Side Of Rear Crossmember
Courtesy of VOLVO CARS CORPORATION

- Unscrew the existing ground screw (1) on the right-hand side of the rear crossmember.
- Install the routed black (SB) ground cable and tighten the ground screw firmly

Illustration A

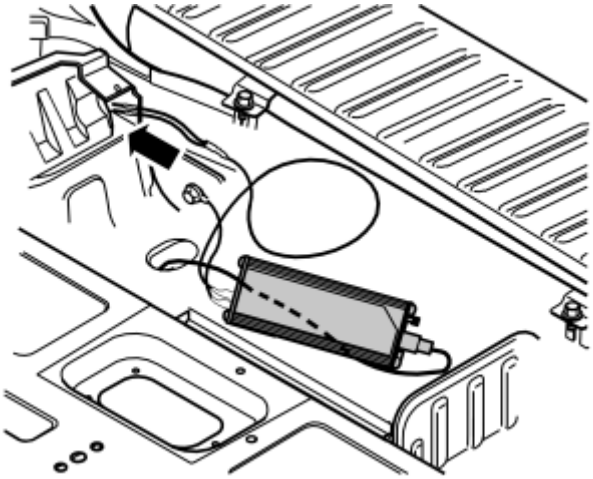

Fig. 388: Route Cable Ends To Hole At Rear Of Floor Support
Courtesy of VOLVO CARS CORPORATION

- Route the remaining cable ends to the hole at the rear of the floor support on the right-hand side.

Illustration B

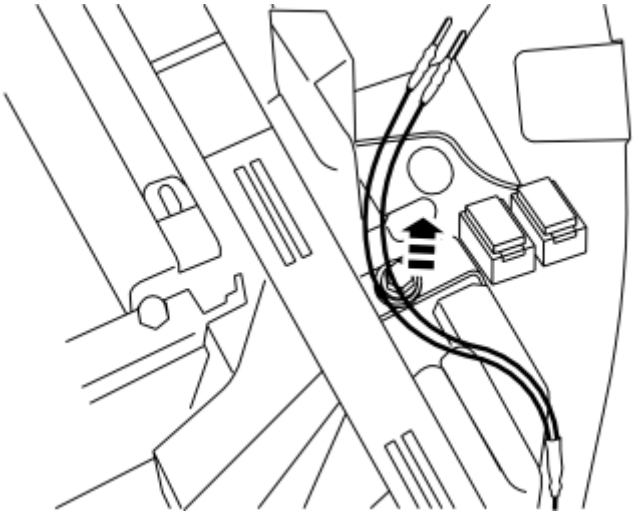

Fig. 389: Insert The Cable Ends Into The Small Fuse Holder
Courtesy of VOLVO CARS CORPORATION

- Insert the cable ends into the small fuse holder on the right-hand side of the floor support.

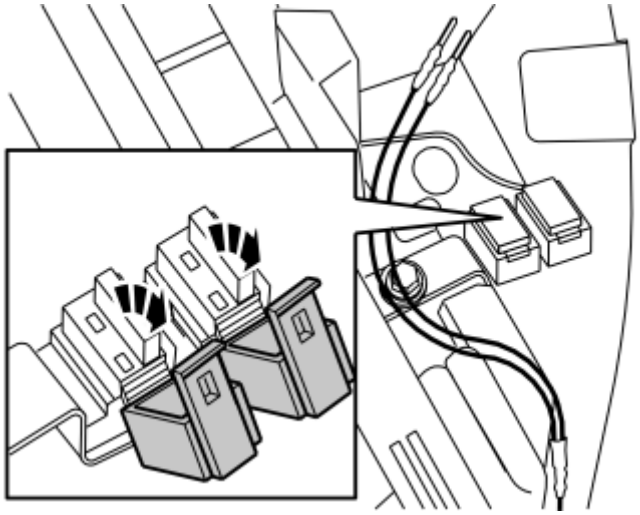

Fig. 390: Removing he Cover For RSE's Fuse Holder
Courtesy of VOLVO CARS CORPORATION

- Remove the cover for the RSE's fuse holder.

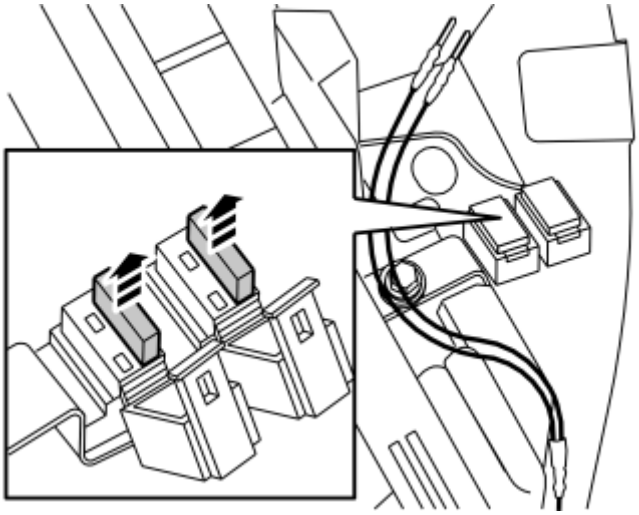

Fig. 391: Removing Fuses In Fuse Holder, 10A In Left-Hand Holder, 5A In Right-Hand Holder
Courtesy of VOLVO CARS CORPORATION

- Remove the fuses in the fuse holder, 10A in the left-hand holder, 5A in the right-hand holder.

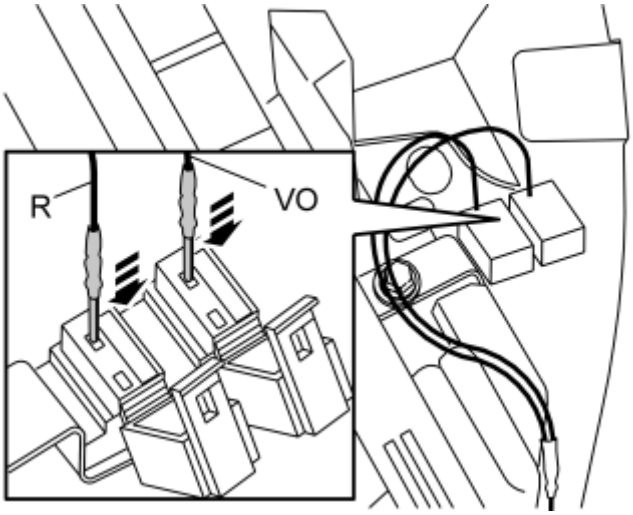

Fig. 392: Installing Red Cable In Front Of Left-Hand Fuse Holder And Violet In Right-Hand Fuse Holder
Courtesy of VOLVO CARS CORPORATION

- Install the red (R) cable in the front of the left-hand fuse holder and the violet (VO) in the right-hand fuse holder.

NOTE: The cables must only be installed in the front of the fuse holder, otherwise there is a risk that the power supply unit will be irreparably damaged.

Both cables are connected to thinner cables under the fuse holder.

- Connect the power cable to the wall socket.

NOTE: **The power supply unit automatically adjusts itself to the prevailing voltage in the wall socket.**

- Test the system.

REINSTALL

After completed demonstration:

Fig. 393: Turning Ignition Key To Position II
Courtesy of VOLVO CARS CORPORATION

- Disconnect the cables from the small fuse box.
- Reinstall the fuses in the holders
- Reinstall the cover over the fuse holders.
- Detach the black (SB) ground cable from the ground terminal and tighten the screw firmly.
- Remove the power supply unit and its cables from the cargo compartment.
- Reinstall the battery.
- Reinstall the rubber grommet in the cargo compartment floor.
- Tighten the battery with the mounting to the floor. Torque tighten the screw to **24 Nm (18 lbf. ft.)** .
- Turn the ignition key to position II.
- Reconnect the battery leads, positive lead first, then the negative lead.
- Reinstall the protective cover over the battery. Reinstall the mounting bracket over the protective cover and torque tighten the screws to **24 Nm (18 lbf. ft.)** .
- Reinstall the rear side panel and the side floor hatch.
- Reinstall the rear floor hatch.

REAR SEAT ENTERTAINMENT (2003-2008)

REAR SEAT ENTERTAINMENT

CAUTION: Take care when cutting away the headlining. There is a risk of cutting off the cable harnesses and hose for the washer fluid.

Only use a sharp utility knife or similar for cutting into the headlining. Replace the blade when it becomes blunt.

WARNING: Protect skin, eyes and respiratory tracts using appropriate protective equipment so that they are not exposed to loose roof material.

PREPARATIONS

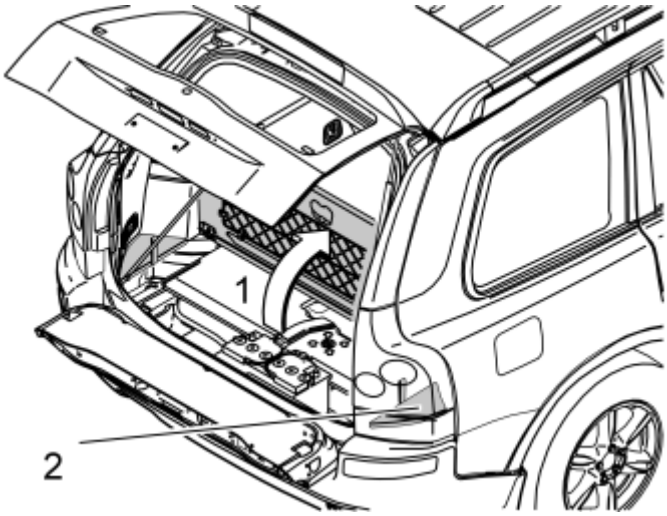

Fig. 394: Applies To Two-Wheel Drive Cars With Two Rows Of Seats
Courtesy of VOLVO CARS CORPORATION

Applies to two-wheel drive cars with two rows of seats

- Remove the rear floor hatch (1) by folding it back slightly and pulling it backwards out of its mountings.

Applies to other cars with two rows of seats

- Fold up the rear floor hatch (1).
- If the floor hatch has a carrier bag holder on the lower side, it is secured in the car by two straps either side of the bottom of the carrier bag holder. Pull both straps away from the protruding mountings.
- Remove the storage box from under the floor hatch. Lift out the storage box.

Applies to cars with three rows of seats and integrated carrier bag holder on the underside of the floor hatch

- Fold up the rear floor hatch (1).
- Disconnect the two straps on either side of the bottom of the carrier bag holder from the protruding mountings. Lift up the rear edge of the carrier bag holder, fold the floor hatch back towards the bottom

and lift out the carrier bag holder.

Applies to cars with three rows of seats without an integrated carrier bag holder

- Fold up the rear floor hatch (1) at the rear edge and lift it out.

Applies to all models

- Remove the right-hand side floor hatch (2). Lift the floor hatch straight up.

REMOVE

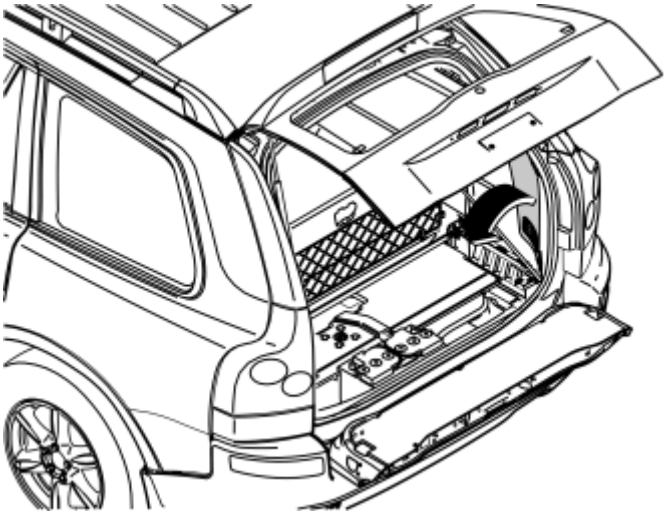

Fig. 395: Remove Right And Left-Hand Sides Rear Side Panels
Courtesy of VOLVO CARS CORPORATION

- Remove the lower side panel on the right-hand side.

Illustration A

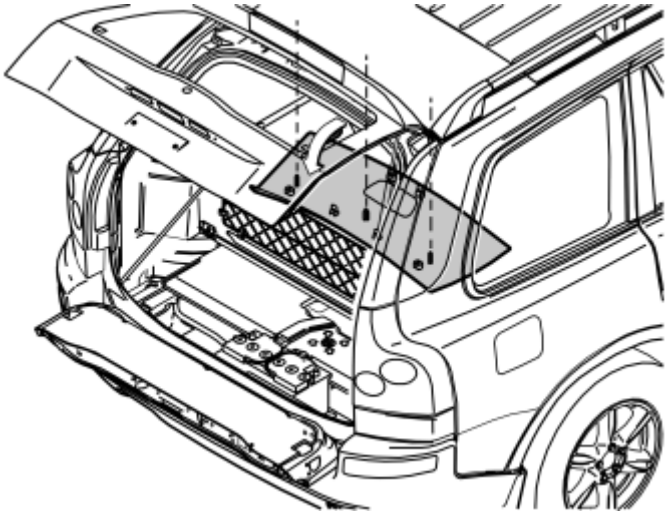

Fig. 396: Remove Rear Headlining Panel Cover
Courtesy of VOLVO CARS CORPORATION

- Remove the covers from the rear headlining panel. Unscrew the screws from inside the panels.
- Carefully pry off the headlining panel at the rear edge using a plastic weatherstrip tool.
- Grip the rear edge of the headlining panel. Pull the headlining panel down until all the clips on the inside release.

Applies to cars with three rows of seats

- Disconnect the connector for the rear roof lighting. Pull the panel backwards.

Illustration B

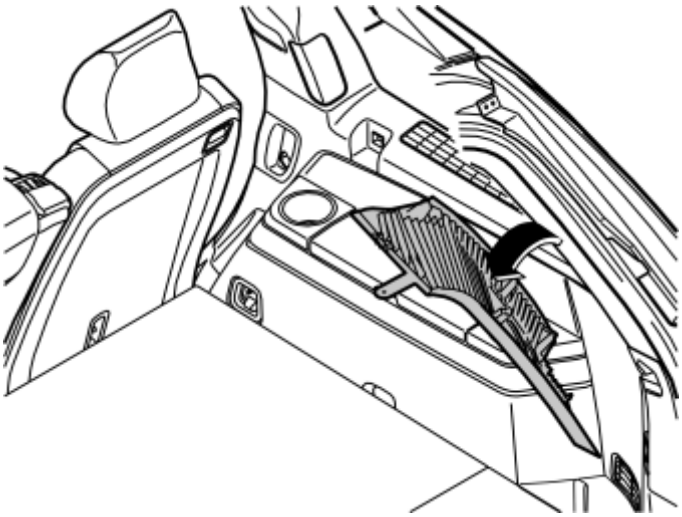

Fig. 397: Pull Off Top Edge Of Right-Hand D Pillar Panel
Courtesy of VOLVO CARS CORPORATION

- Carefully pull off the top edge of the right-hand D-post panel. Continue down until the three clips have released.
- For cars with D-post loudspeakers: disconnect the connectors for this loudspeaker.
- Remove the right-hand D-post panel by pulling upwards slightly and unhooking it from the side panel.

NOTE: Cars with Vehicle Identification Number CH -32000: Follow the instructions in the installation instructions for the adapter wiring.

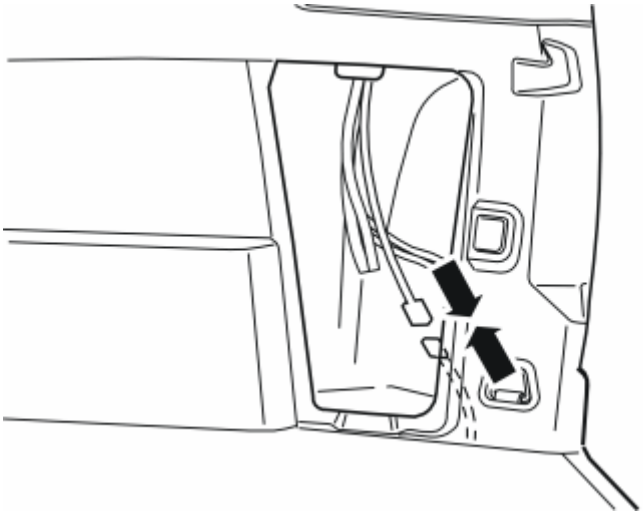

Fig. 398: Identifying RSE System Cable Harness
Courtesy of VOLVO CARS CORPORATION

- Take the RSE system cable harness from the kit. Connect the 5-pin connector to the connector beside the right-hand tail lamp.

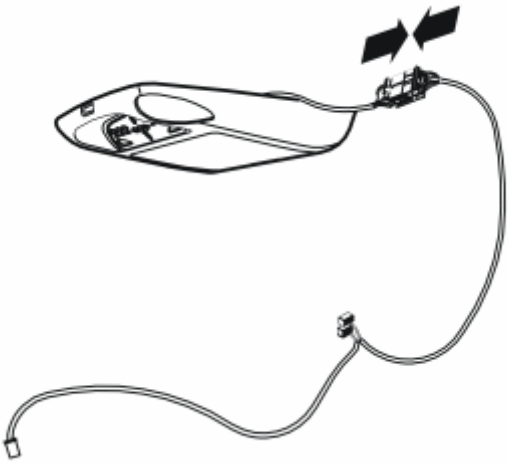

Fig. 399: Identifying LCD Display Cable Harness
Courtesy of VOLVO CARS CORPORATION

- Take the LCD display from the kit. Connect the 16-pin connector on the cable harness to the LCD display.

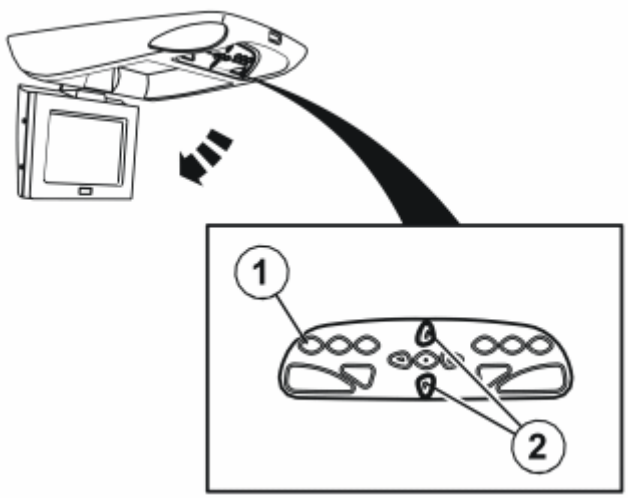

Fig. 400: View Of Display By Pressing The ON Button (1)
Courtesy of VOLVO CARS CORPORATION

- Turn the ignition key to position I.
- Hold the display unit so that the display can be folded out without hindrance.
- Fold out the display by pressing the ON button (1). Adjust the position of the display using the two buttons (2) in the middle of the control panel to achieve an opening angle of approximately 90 degrees.
- Interrupt the power supply by disconnecting the 16-pin connector from the display.
- Disconnect the 5-pin connector from the car.
- Turn the ignition key to position 0.

REAR HOLE-PUNCHING (FOR DVD UNIT)

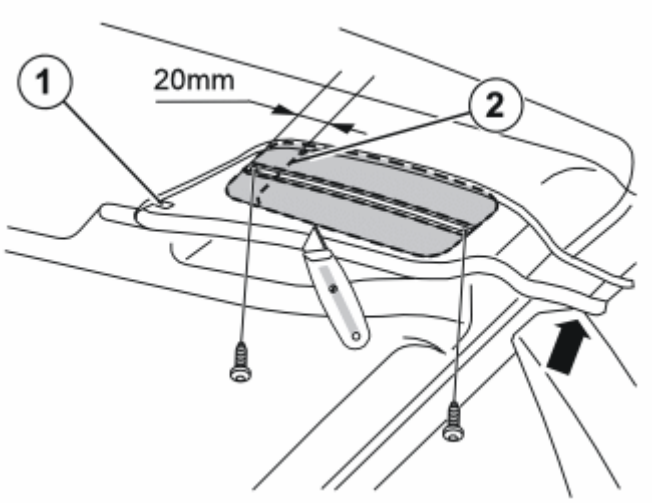

Fig. 401: Identifying Rear Hole-Punching For DVD Unit
Courtesy of VOLVO CARS CORPORATION

- Temporarily borrow two 4.8x13 mm screws from the installation kit for the DVD player.
- Release the roof clip (1) located between the C-posts. Turn the clip 90° and work it out.

- Install the hole template. Press the hole template into place with the clip (1) and guide it up against the edge of the C-post (arrow).
- Secure the hole template at two points using the screws to ensure it is securely mounted against the headlining.
- Cut out the headlining along the inner contours of the hole template. Use a utility knife or similar. If the car has a mass movement sensor (MMS): Cut approximately 20 mm further in first (see alternative dotted line (2)). This is because there is wiring in the headlining. The wiring may need to be moved. Using a weatherstrip tool, pry the wiring away from the adhesive on the headlining. Do not damage the wiring when cutting the hole.

NOTE: Use a sharp knife. Applies to all cutting of the headlining.

- Remove the template and cut away the flanges on which the screws recently rested.
- Reinstall the roof clip (1).

APPLIES TO CARS WITH SUN ROOF

FRONT HOLE-PUNCHING (FOR LCD DISPLAY)

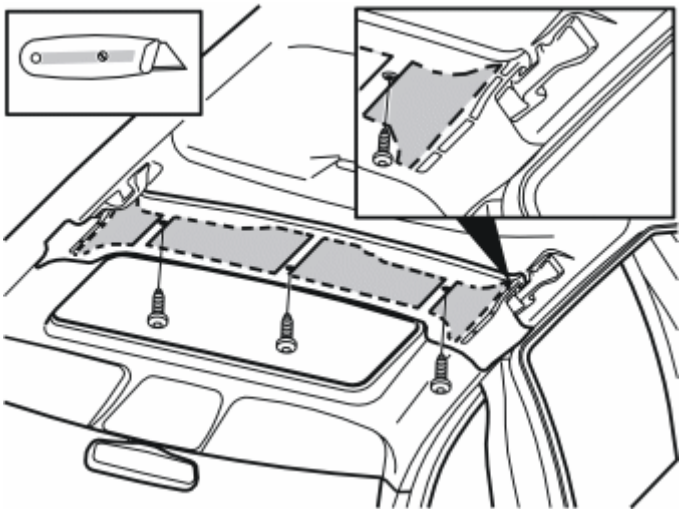

Fig. 402: Identifying Front Hole-Punching For LCD Display
Courtesy of VOLVO CARS CORPORATION

- Ensure that the headlining for the sun roof is pulled forward.
- Temporarily borrow three 4.8x13 mm screws from the installation kit for the DVD player.
- Install the hole template in position. Guide it up along the grab handles and secure it to the roof using the screws.
- Cut through the headlining according the dotted lines in the four large openings in the template. Only cut through the fabric. Alternatively use a pen to mark in the four narrow grooves as far out as possible on each side. The headlining can be cut through here once the cable harnesses and hoses found in this area have been moved.
- Remove the template and cut through the headlining at the parts between the four large openings, in order

to remove a large portion of the headlining.

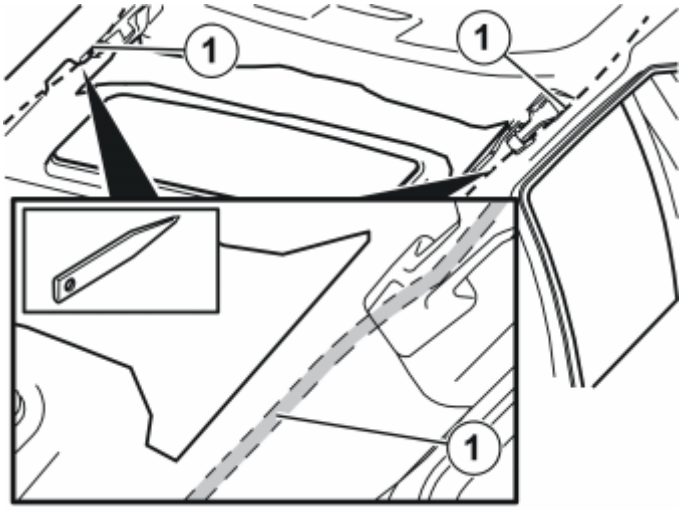

Fig. 403: Identifying The Wiring (1) That Is Bonded To The Inside Of The Headlining
Courtesy of VOLVO CARS CORPORATION

- Remove the wiring (1) that is bonded to the inside of the headlining on the right and left-hand sides of the car. Use a weatherstrip tool to pry the wiring away from the bonding.
- Press the wiring out towards the sides of the car.

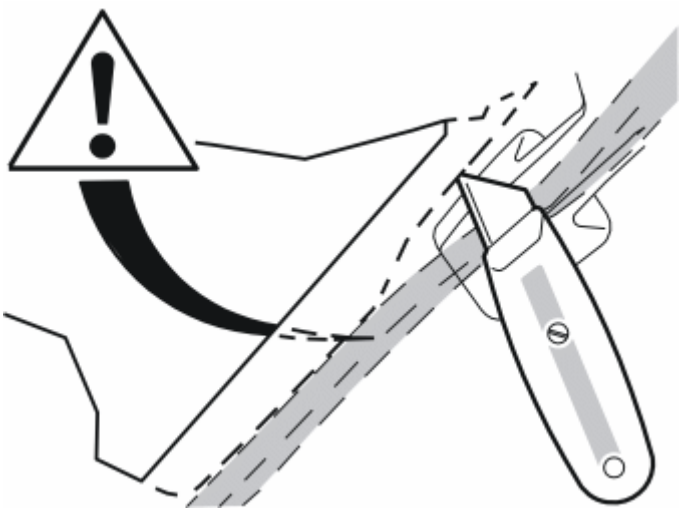

Fig. 404: Take Care When Cutting Away The Side Pieces Of The Headlining
Courtesy of VOLVO CARS CORPORATION

CAUTION: Take care when cutting away the side pieces of the headlining. There is a risk of cutting off the cable harnesses and the hose for the washer fluid.

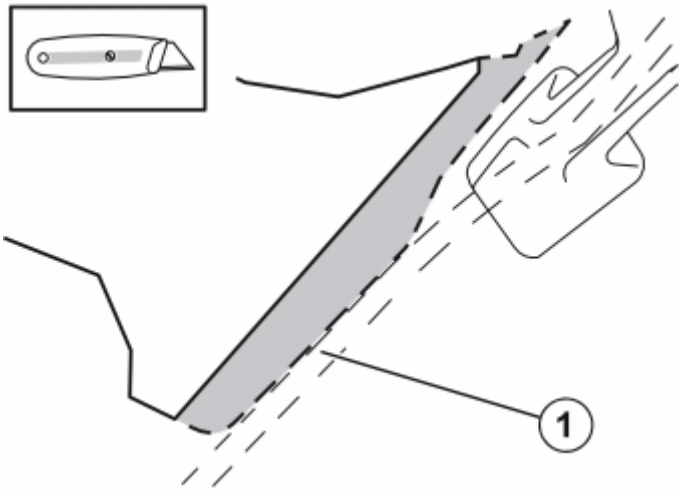

Fig. 405: Identifying Cables Pressed Into Routed Side
Courtesy of VOLVO CARS CORPORATION

- Use a suitable section of plastic and apply it as protection for the cables when cutting out at the sides of the car.

  Press in the cables (1) which are routed to the side. Protect them with the section of plastic and carefully cut away the last side piece which was marked with a pen earlier.

  NOTE: Be careful with the electrical cables and the hose for washer fluid. Constantly check that they are not damaged.

CABLE ROUTING

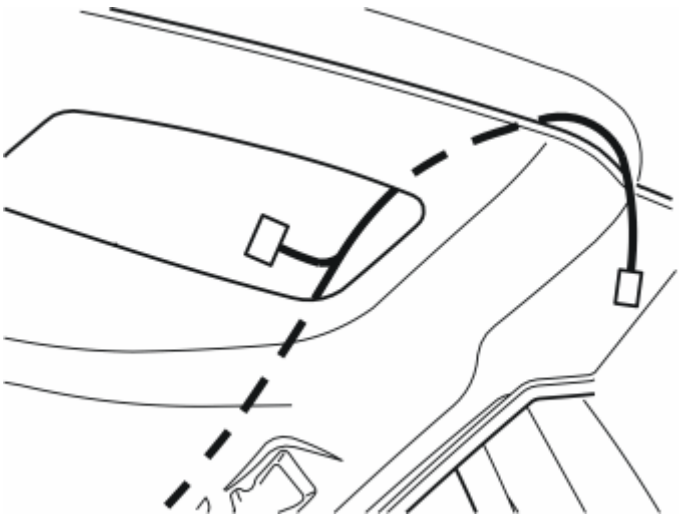

Fig. 406: View Of Cable Harness For The RSE System
Courtesy of VOLVO CARS CORPORATION

- Take out the cable harness for the RSE system.

- Thread a suitable cable or wire between the holes in the headlining. Secure the end of the cable harness with the 5-pin connector to the wire which comes out from the hole for the DVD player.
- Route the end of the cable harness through to the second hole and remove it from the wire.

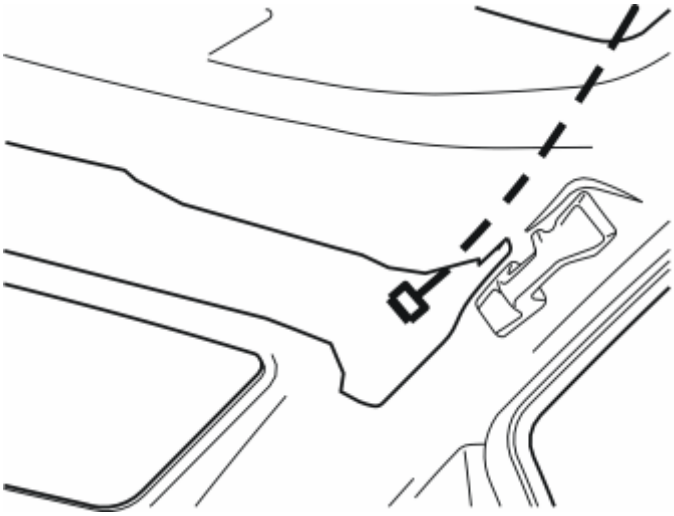

Fig. 407: Identifying The Hole For The LCD Screen's Roof Member
Courtesy of VOLVO CARS CORPORATION

- Thread a suitable cable or wire between the hole for the DVD player and the hole for the LCD screen roof member.
- Secure the cable harness' 16-pin connector to the wire. Route the cable so that the connector comes out at the LCD screen roof member. Detach the cable from the wire.

INSTALLING ROOF MEMBER BRACKETS

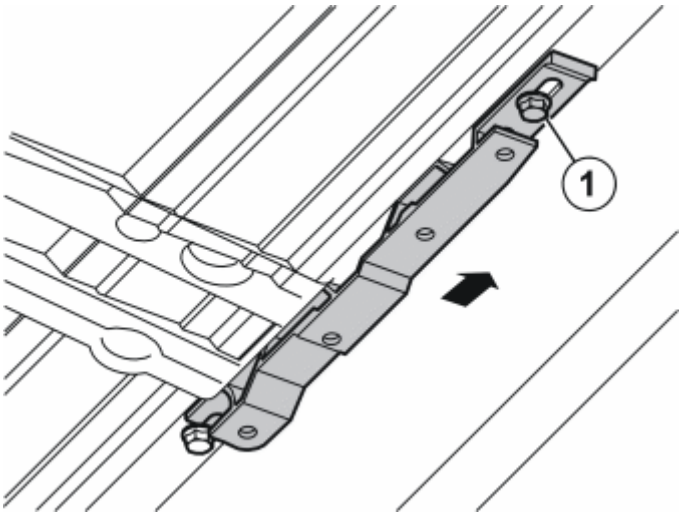

Fig. 408: Identifying Sunroof's Right-Hand Mounting Rail
Courtesy of VOLVO CARS CORPORATION

NOTE: Do not disturb the spacers located between the sun roof member and the roof.

It can be difficult to locate the spacers in position again.

- Unscrew the rear screw (1) in the sunroof right-hand mounting rail. Use a pair of pliers to pull it straight down from the hole. It is held in position by a plastic washer so significant force is required.

  Do this on the right and left-hand sides, and place the screws to one side.

- Take the bracket, the M6x40 mm screw and the washer from the kit (kit illustration A). Install the bracket loosely, with the screw through the longer hole, and slide it backwards.

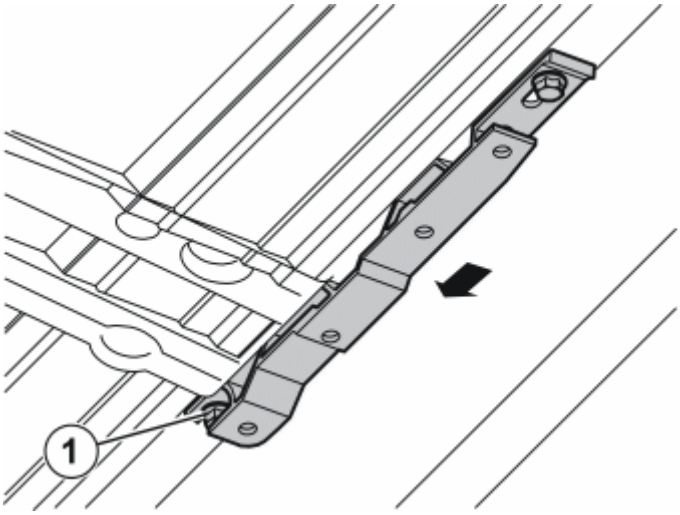

Fig. 409: Identifying Same Rail Front Screw
Courtesy of VOLVO CARS CORPORATION

- Slacken off the front screw (1) in the same rail. Slide the bracket forwards. Secure the bracket using one M6x30 mm screw and washer from the kit.
- Tighten both screws. Tighten to **10 Nm (7.5 lbf. ft.)** .

- Install the roof member bracket in the same way on the other side.

INSTALLING THE ROOF MEMBER

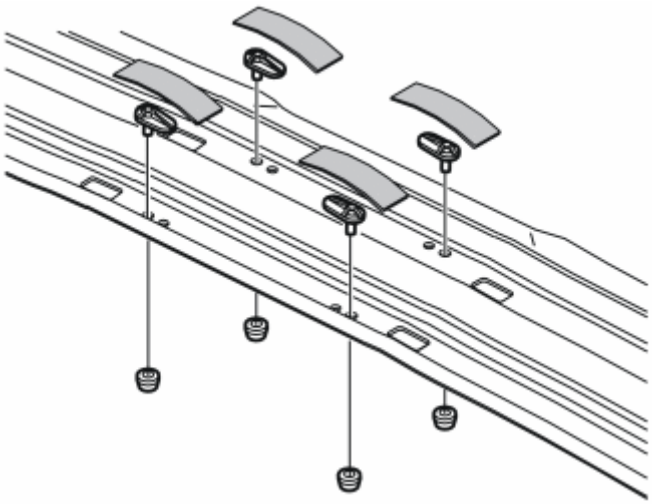

Fig. 410: Identifying Four Plastic Threaded Plates And Four Spacer Clips
Courtesy of VOLVO CARS CORPORATION

- Take the roof member, four plastic threaded plates and four spacer clips from the kit.
- Install the threaded plates as illustrated.
- Install the spacer clips from the other side, so that they are properly secured to the threaded plates.
- Take two 140x50 mm pieces of tape from the kit. Cut to make four 70x50 mm pieces.
- Tape the threaded plates in position as illustrated.

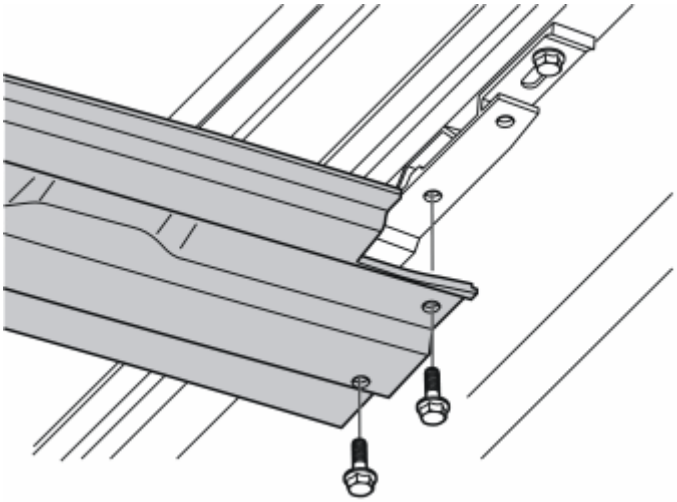

Fig. 411: Install The Roof Member In The Newly Installed Brackets
Courtesy of VOLVO CARS CORPORATION

- Thread the roof member a little way under the rear edge of the headlining. It should be possible to slide the roof member back in under the front edge. Work the roof member into place by the screw holes. Ensure that the cut-outs in the ends of the member are facing backwards.
- Take the two M6x14 mm screws from the kit. Screw the roof member into the recently installed brackets.
- Tighten the screws. Tighten to **10 Nm (7.5 lbf. ft.)** .

INSTALLING THE LCD DISPLAY

Illustration A

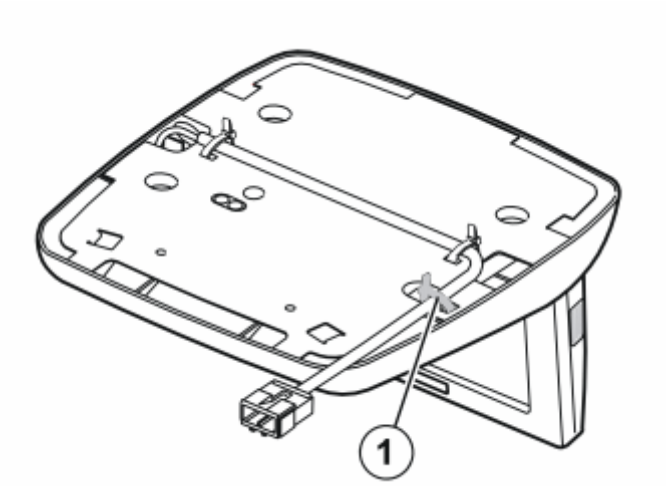

Fig. 412: Identifying LCD Display Tie Strap
Courtesy of VOLVO CARS CORPORATION

- Cut off the tie strap (1).

Illustration B

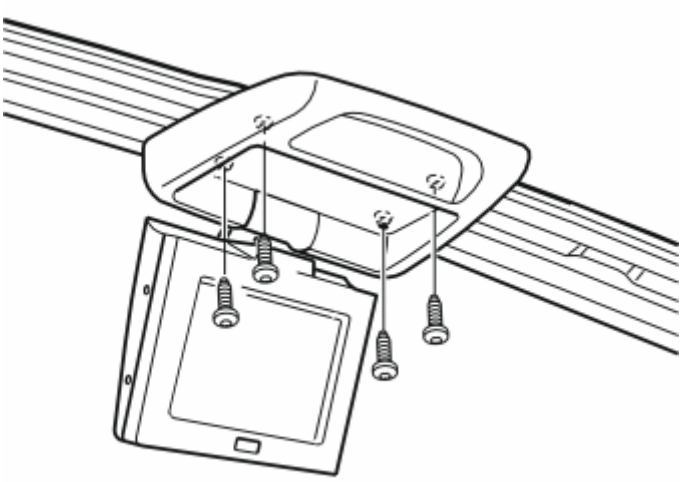

Fig. 413: View Of LCD Display Screws
Courtesy of VOLVO CARS CORPORATION

- Position the LCD display against the center of the roof member. Guide the holes in the panel for the LCD display onto the spacer clips for the threaded plates.
- Take the 4x20 mm screws from the kit. Loosely screw the LCD display into place. Approximately 7 mm is required between the display and the member in order to install the panel.

Illustration C

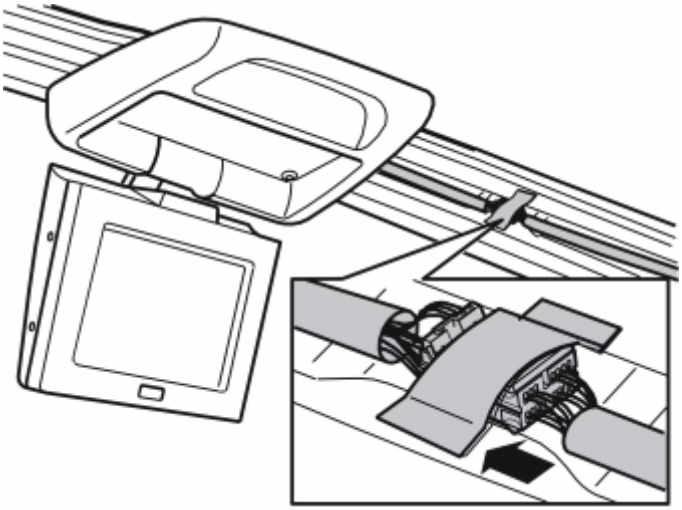

Fig. 414: View Of Cable Harness Connector To LCD Display Connector
Courtesy of VOLVO CARS CORPORATION

- Connect the cable harness connector to the LCD display connector.
- Take the foam tape from the kit. Wrap the foam tape around the connector.
- The connector must be positioned in the member recess. Fix the connector using the 140x50 mm tape from the kit.

INSTALLING THE PANELS

Illustration A

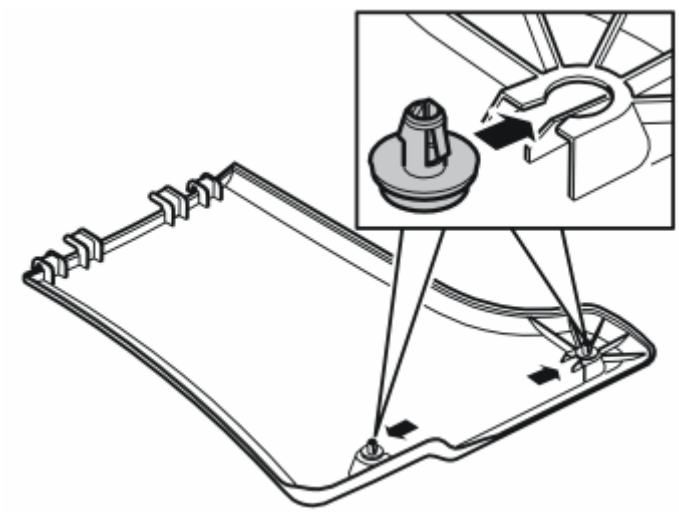

Fig. 415: Identifying Roof Member Panel Clips
Courtesy of VOLVO CARS CORPORATION

- Take the panels for the roof member and the four plastic clips from the kit.

- Install the plastic clips in the clip pockets in the panels.

Illustration B

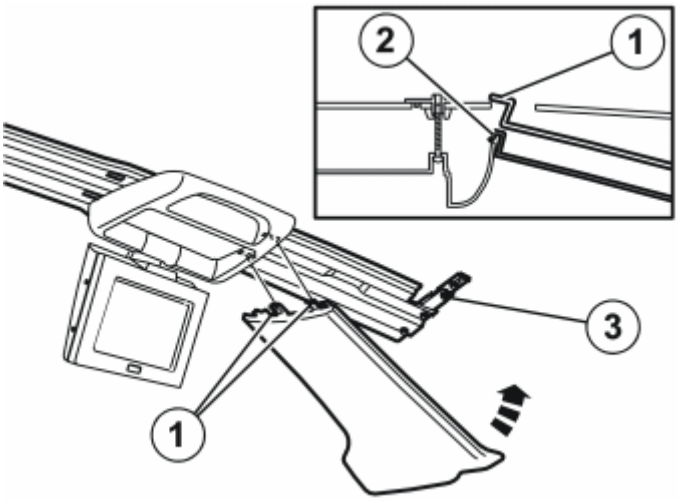

Fig. 416: View Of Roof Member Cut-Outs (1) By The LCD Display
Courtesy of VOLVO CARS CORPORATION

- Insert the panel hooks in the roof member cut-outs (1) by the LCD display and between the display and the member (2). Bend the panel down in the middle. Slide the panel up over the grab handle. Press the plastic clips for the panel into the holes (3) in the brackets.

NOTE: Do not damage the grab handle when sliding the headlining panel into position.

- Screw the display unit into place.
- Continue with point 27.

POINT - APPLIES TO CARS WITHOUT A SUN ROOF

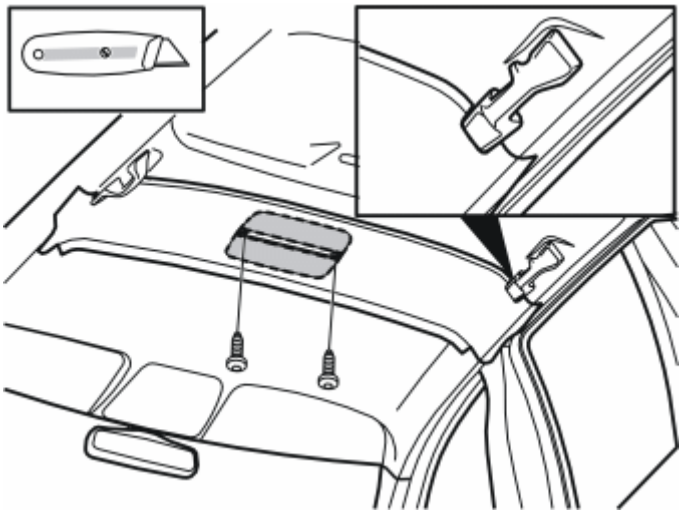

Fig. 417: Identifying The Install Hole Template In Position
Courtesy of VOLVO CARS CORPORATION

- Temporarily borrow two 4.8x13 mm screws from the installation kit for the DVD player.
- Install the hole template in position. Guide it up along the grab handles and secure it to the roof using the screws.

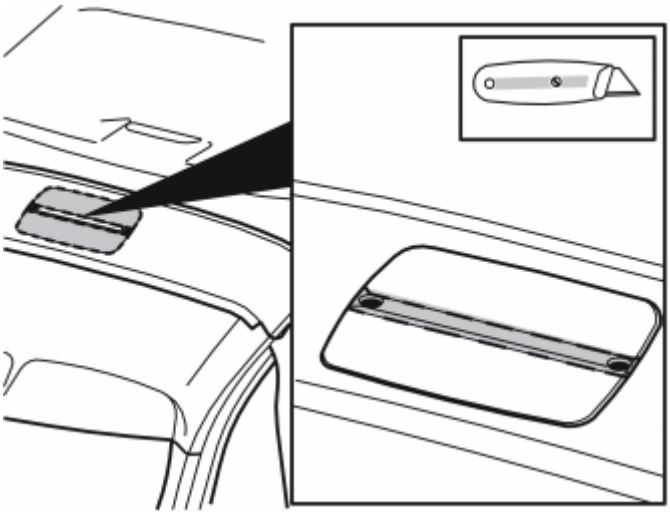

Fig. 418: Headlining Along The Inner Contours Of The Hole Template
Courtesy of VOLVO CARS CORPORATION

- Cut out the headlining along the inner contours of the hole template. Use a utility knife or similar.

NOTE: Use a sharp knife. This applies to all cutting of the headlining.

CABLE ROUTING

- Route the wiring according to points 11 and 12.

INSTALLING ROOF MEMBER BRACKETS

Illustration A

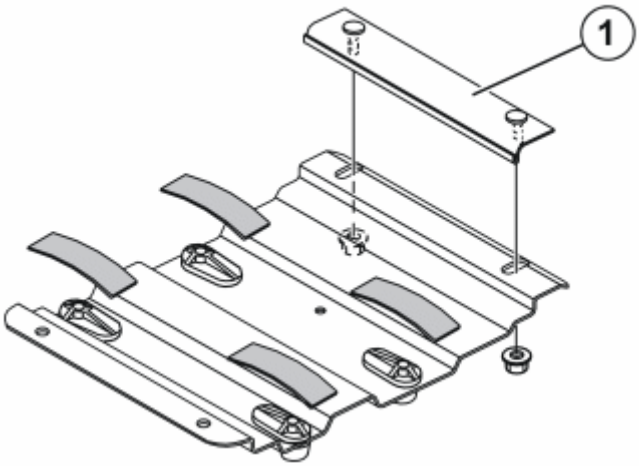

Fig. 419: Identifying Narrow Bracket Clamp And The Four Threaded Plates
Courtesy of VOLVO CARS CORPORATION

HINT: Use suitable blocks or similar to make space between roof and headlining.

- Take the bracket, the narrow bracket clamp and the four threaded plates from the kit (kit illustration B).
- Install the threaded plates as illustrated.
- Install the spacer clips from the other side, so that they are properly secured to the threaded plates.
- Take two 140x50 mm pieces of tape from the kit. Cut to make four 70x50 mm pieces.
- Tape the threaded plates in position as illustrated.
- Take two nuts from the kit. Install the narrow bracket clamp (1) on the angled side of the bracket. Screw the clamp into place using the nuts.
- Slide the narrow bracket clamp so that it is as far out as possible in the slit holes. Rest the clamp on the angled surface. Tighten the nuts by hand.

Illustration B

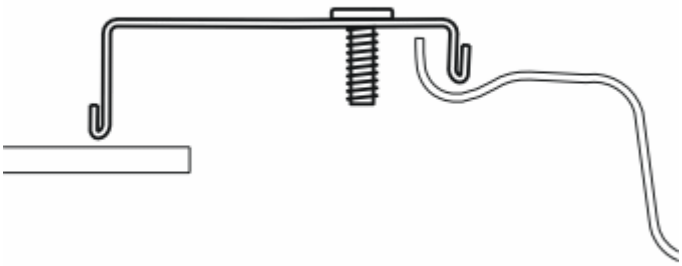

Fig. 420: Identifying Wide Bracket Clamp
Courtesy of VOLVO CARS CORPORATION

- Hold the wide bracket clamp with the less folded edge forwards. Thread the clamp into the hole in the roof, on the rear side of the roof member. Work the bracket clamp into place so that it rests above the edges of the roof member and the headlining with the screws facing downwards.

NOTE: The less folded edge must be positioned above the edge of the roof member.

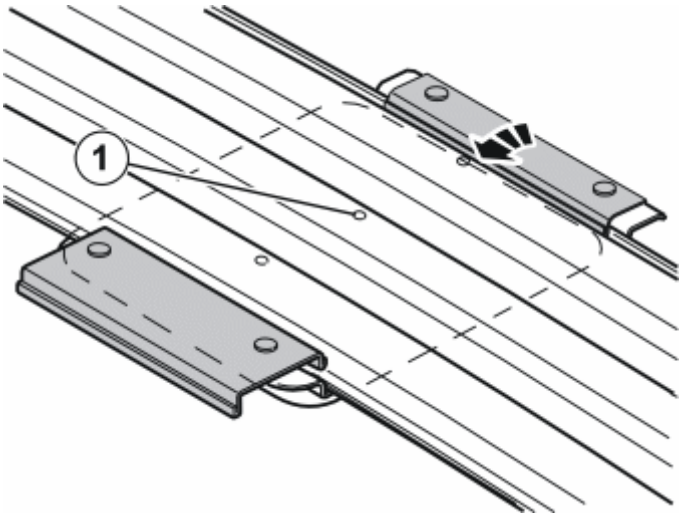

Fig. 421: Identifying Bracket Into Cut Out Hole With Narrow Bracket Clamp
Courtesy of VOLVO CARS CORPORATION

- Insert the bracket into the cut out hole with the narrow bracket clamp at the front, facing the knob.
- Unscrew the nuts holding the narrow bracket clamp. Slide the clamp over the edge of the roof member so that it hooks into place. Tighten the nuts so that the bracket remains attached.
- Lift up the rear end of the bracket. Align the screws for the suspended wide bracket clamp in the holes in the bracket. Screw in two nuts from the kit. Finger tighten.
- Check that both clamps on the bracket are correctly positioned around the roof member.
- Adjust the position of the bracket so that its hole is aligned with the hole in the roof member (1).

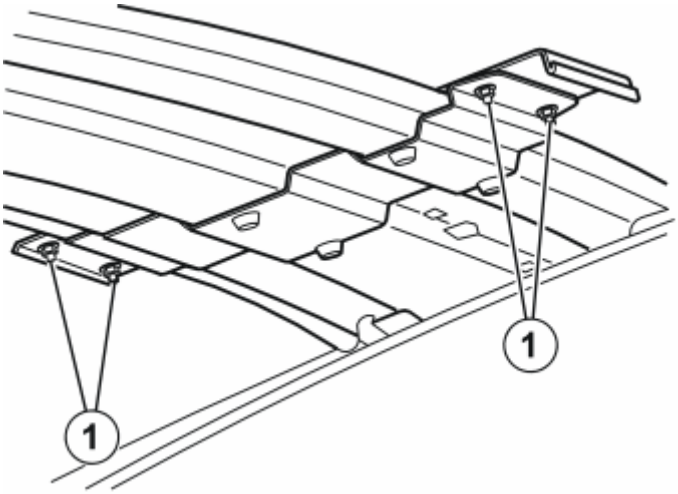

Fig. 422: Identifying Bracket Mount Screws
Courtesy of VOLVO CARS CORPORATION

- Tighten the four screws (1) for the catches so that the bracket is securely mounted. Work the bracket and further tighten if there is any play.

INSTALLING THE LCD DISPLAY

NOTE: Two people are required to connect and screw the LCD display into place.

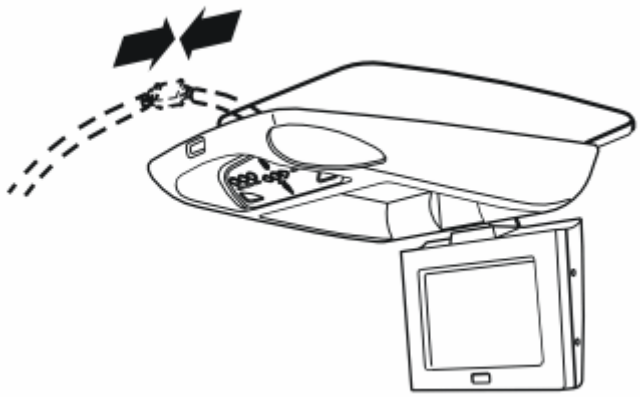

Fig. 423: Identifying LCD Display Cable Harness
Courtesy of VOLVO CARS CORPORATION

- Pull the cable harness for the LCD display out of the hole to facilitate connector connection.
- Hold up the display against the hole cut out in the roof. Connect the 16-pin connector on the cable harness to the connector from the LCD display.
- Take the foam tape from the kit. Wrap the foam tape around the cable harness.
- Lift the display towards the roof at the same time as pressing in the excess cable.

FINISHING

- Position the LCD display against the center of the bracket. Guide the holes in the panel for the LCD display onto the spacer clips for the threaded plates (see illustration 17 B).
- Take the 4x20 mm screws from the kit. Screw the display into place.

APPLIES TO ALL MODELS

INSTALLING THE DVD PLAYER IN THE BRACKET

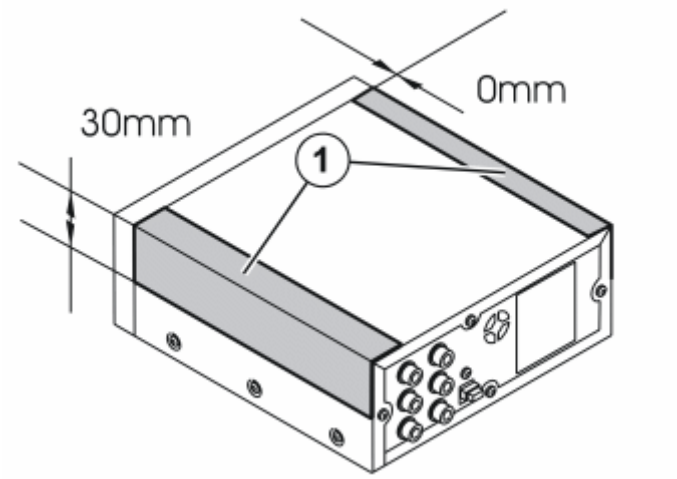

Fig. 424: Identifying DVD Player In The Bracket
Courtesy of VOLVO CARS CORPORATION

- Take the two 140x50 mm pieces of tape from the kit.
- Install the pieces of tape (1) on the sides of the DVD player.

The tape will ensure that the DVD player is insulated from the bracket.

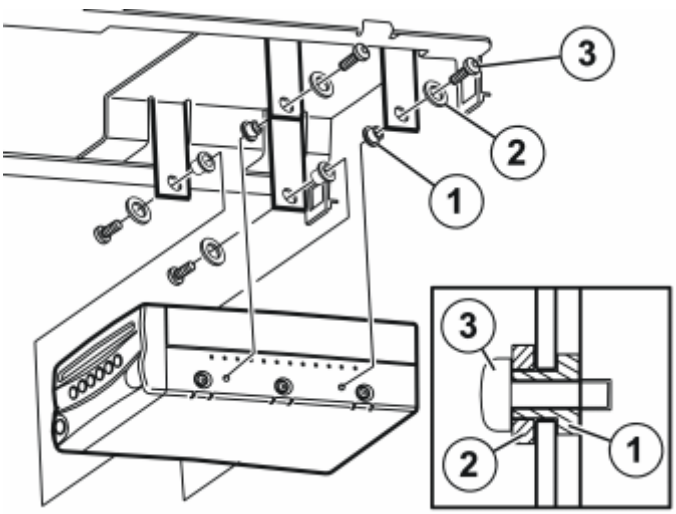

Fig. 425: Identifying DVD Player Bracket Washers

Courtesy of VOLVO CARS CORPORATION

- Install the 4 collared washers (1) from the inside in the bracket. Use butyl tape to hold them in place if necessary.
- Install the DVD player using the plastic washers (2) and the M4x8 mm screws (3).

NOTE: Longer screws can damage the DVD player and must therefore not be used.

The plastic washers on the inside and outside are there to separate the DVD player from the bracket.

INSTALLING THE DVD BRACKET TOGETHER WITH DVD

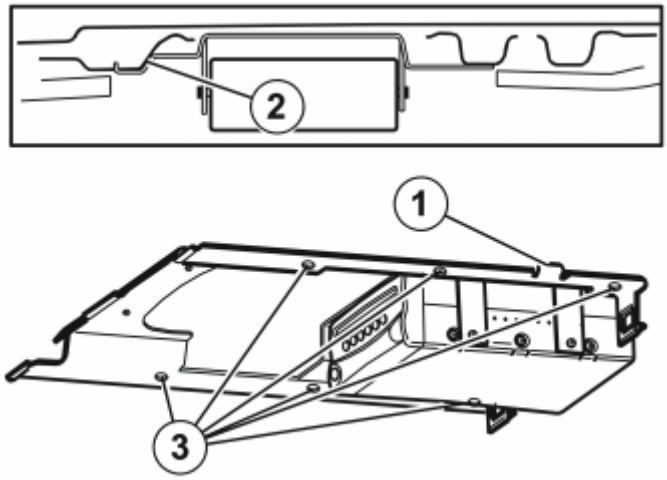

Fig. 426: View Of DVD Bracket Together With DVD
Courtesy of VOLVO CARS CORPORATION

- Take the DVD bracket together with the DVD player.
- Install it in the hole. Insert the locating pin (1) and press it backwards, towards the cargo compartment, so that the bracket is in contact with the mating surfaces (2).
- Take six 4.8x13 mm screws from the kit.
- Drill a **3.8 mm** diameter hole. Tighten a screw in one of the holes (3) in the bracket.
- Drill another **3.8 mm** diameter hole. Tighten a screw on the opposite side.
- Drill and screw the remaining holes.

FINISHING

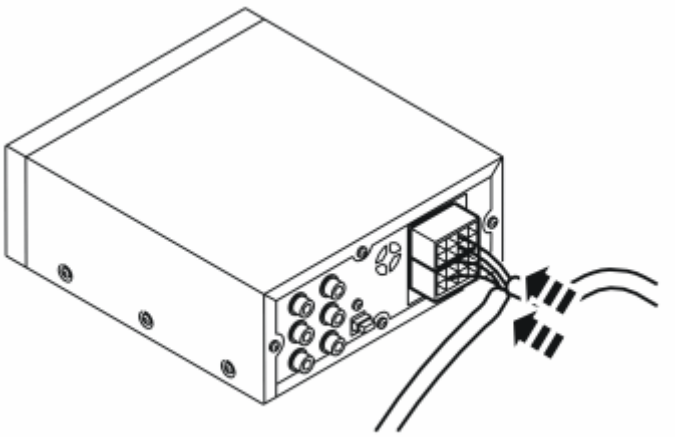

Fig. 427: View Of Connectors Into The Corresponding Connector Sockets
Courtesy of VOLVO CARS CORPORATION

- Plug the connectors into the corresponding connector sockets in the DVD player.

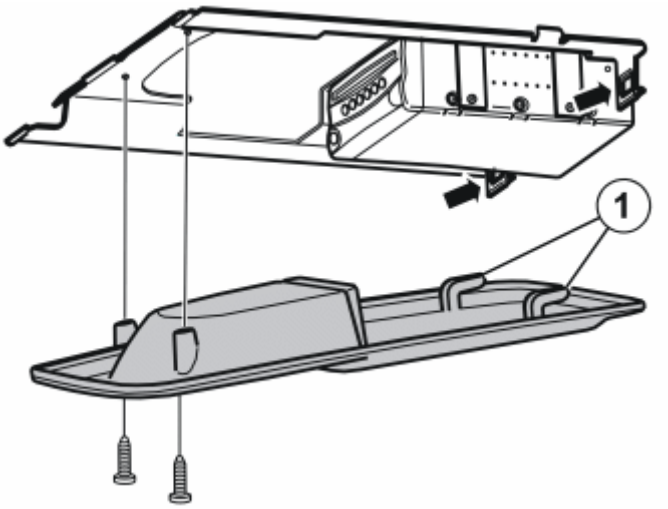

Fig. 428: View Of DVD Player Cover
Courtesy of VOLVO CARS CORPORATION

- To make installation of the DVD player cover easier: Take two 4.8x13 mm screws from the kit. Create threads in the bracket by screwing in and unscrewing the screws.
- Take the cover for the DVD player from the kit. Slide the cover upwards and forwards until the two hooks (1) catch in the bracket cut-outs and the DVD player front is positioned in the opening. Ensure that the cover does not catch in the headlining.

NOTE: The cover must not scratch the front of the DVD player.

- Screw in the cover by hand using the two 4.8x13 mm screws.

CONNECTING THE CABLE HARNESS

Illustration A

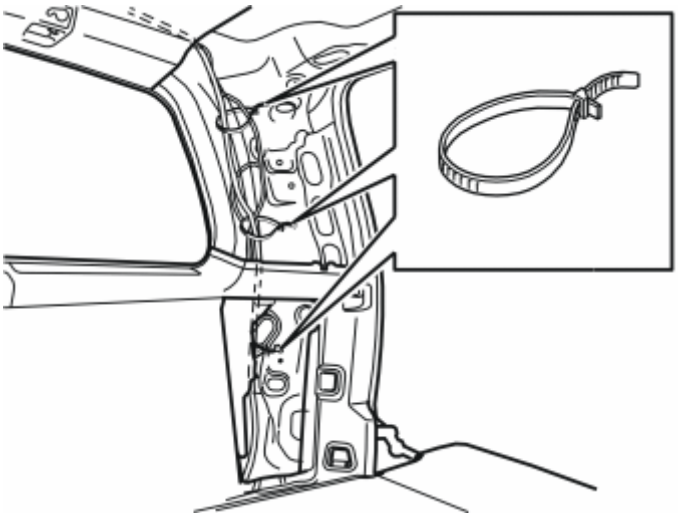

Fig. 429: View Of D-Post Tie Straps
Courtesy of VOLVO CARS CORPORATION

- Route the cable with the five-pin connector down along the D-post to the existing connector by the right-hand tail lamp.
- Secure the cable to the existing cable harness as illustrated. Use four tie straps (1) from the kit.

Illustration B

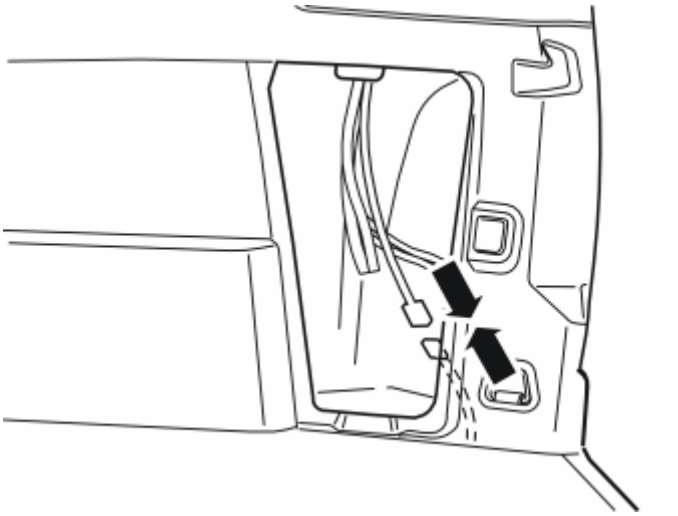

Fig. 430: Identifying RSE System Cable Harness
Courtesy of VOLVO CARS CORPORATION

- Connect the 5-pin connector to the existing connector beside the right-hand tail lamp.

INSTALLING DECALS

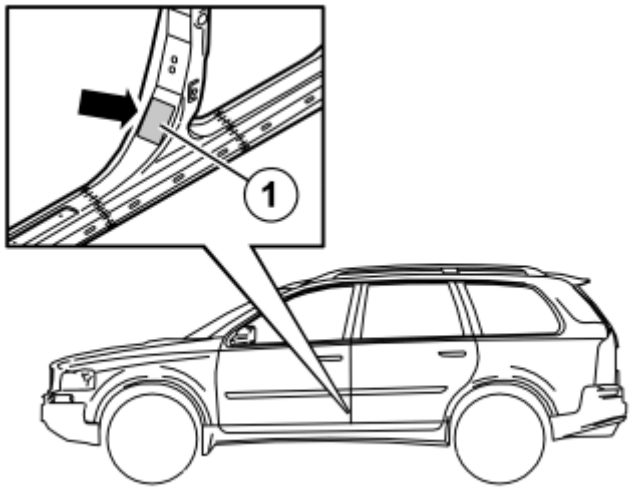

Fig. 431: Installing Decals
Courtesy of VOLVO CARS CORPORATION

- Take the yellow decal from the kit.
- Clean the area (1) where the decal will be located. Use a mixture of 30% windscreen washer fluid and 70% water. Wipe dry.
- Remove the backing paper from the adhesive side of the decal. Secure the decal as illustrated.
- Press the decal into place properly.

TEST THE SYSTEM

- Follow the instructions in the manual to test the system.
- Remove the transport protection disc from inside the DVD player.

REINSTALL

Reinstall:

- the side panels in the cargo compartment
- the headlining panel in the cargo compartment
- the floor hatch in the cargo compartment.

Vacuum clean and clean away roof material and other waste from the car.

SUBWOOFER (2003-2010)

CARS EQUIPPED WITH SRS/SIPS (AIRBAG)

see **CARS EQUIPPED WITH SRS/SIPS (AIRBAG)**

CAUTION

see **CAUTION**

XC90

see **XC90**

SUBWOOFER

NOTE: **This accessory requires software unique to the car**

NOTE:

- **Points 4 - 10, 12, 21 - 31 and 38 only apply to cars up to and including model year -2004 (CH -133999)**
- **Points 32 - 37 and 39 only apply to cars from model year 2005- (CH 134000-).**

PREPARATORY WORK

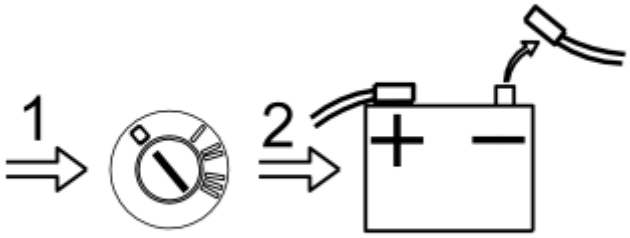

Fig. 432: Disconnect Battery Negative Lead
Courtesy of VOLVO CARS CORPORATION

- Move the left front seat as far forward as possible
- Turn the ignition key to position 0
- Disconnect the battery negative lead.

NOTE: **Wait at least five minutes before disassembling the connectors or removing other electrical equipment**

Illustration A

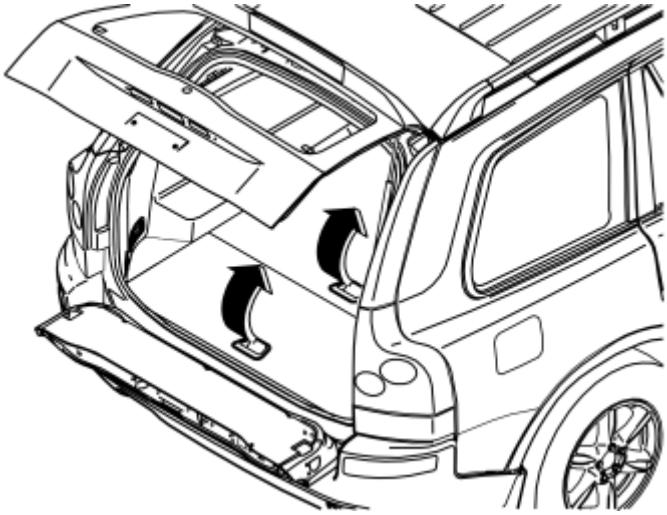

Fig. 433: Removing Two Center Floor Hatches By Lifting Them Slightly
Courtesy of VOLVO CARS CORPORATION

Applies to cars with two rows of seats

- Fold up the center rear floor hatch slightly
- Remove the hatch by pulling it off the mountings at the front edge
- Remove the storage box underneath and lift it out. If the floor hatch has a carrier bag holder on the underneath, it is secured by a strap on each of the shorter sides of the storage box. These straps must be undone
- Remove the front floor hatch in the same way. (Applies to cars up to and including model year -2004 (CH -133999)).

Illustration B

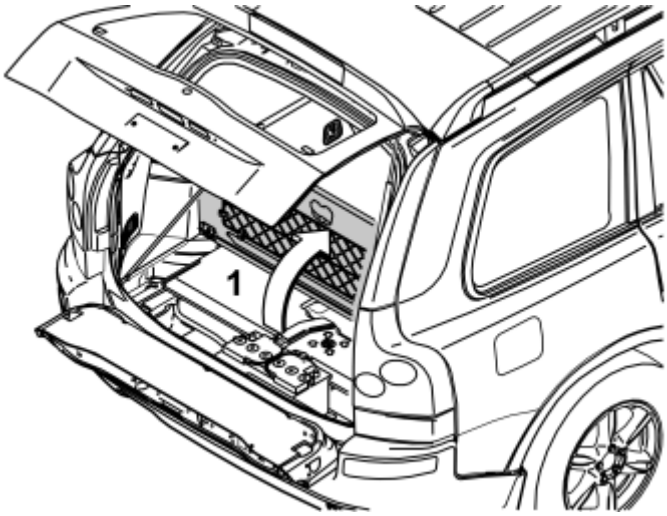

Fig. 434: Fold Up The Centre Rear Floor Hatch
Courtesy of VOLVO CARS CORPORATION

Applies to cars with three rows of seats and the integrated carrier bag holder on the underside of the center floor hatch

- Fold up the center rear floor hatch (1)
- Release the two straps on the panel underneath. Lift up the panel at the rear edge. Fold back the floor hatch towards the panel. Lift out the floor hatch and panel.

Applies to the XC90 with three rows of seats without integrated carrier bag holders

- Fold up the center rear floor hatch (1) at the rear edge and lift it out.

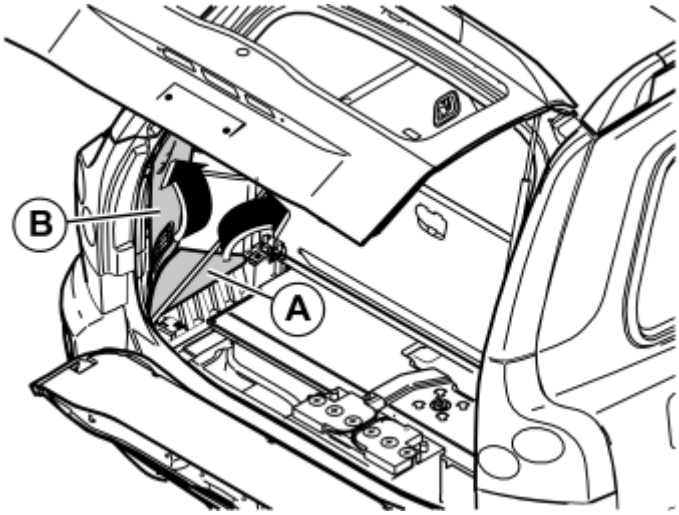

Fig. 435: Identifying Side Floor Hatch (A) And The Folding Side Panel (B)
Courtesy of VOLVO CARS CORPORATION

- Remove the side floor hatch (A) and the folding side panel (B) on the left-hand side in the cargo compartment.

APPLIES TO CARS UP TO AND INCLUDING MODEL YEAR -2004 (CH -133999)

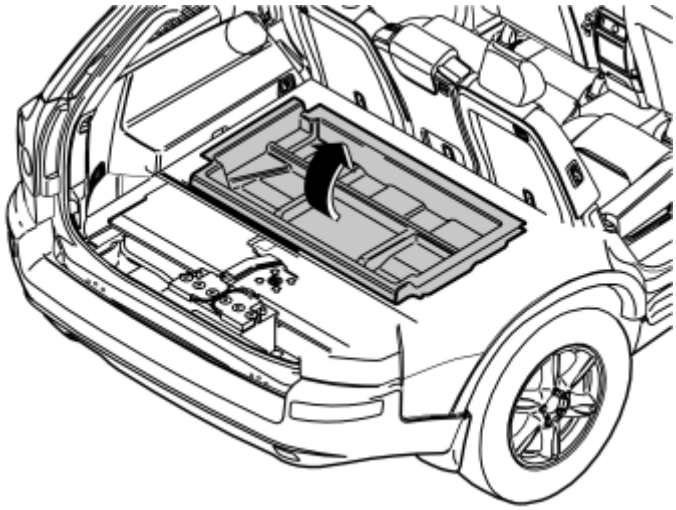

Fig. 436: Front Storage Box
Courtesy of VOLVO CARS CORPORATION

Applies to cars with two rows of seats

- Remove the front storage compartment.

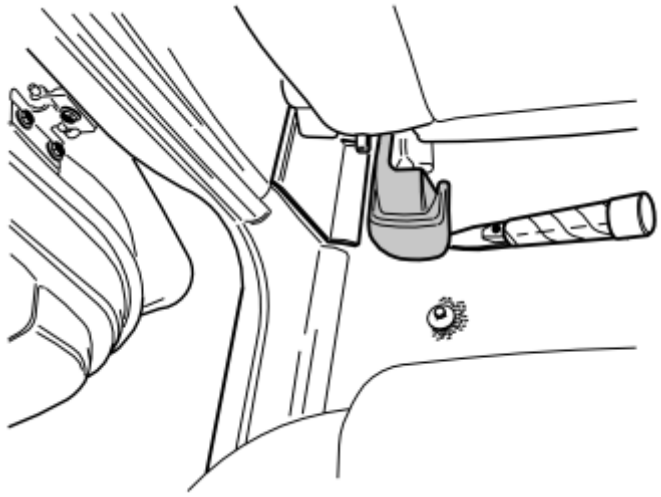

Fig. 437: Identifying Rear Panel On The Left Rear Mounting On The Left-Hand Front Seat
Courtesy of VOLVO CARS CORPORATION

- Remove the rear panel on the left rear mounting on the left-hand front seat. Pry up the rear edge of the panel slightly and then pull backwards and upwards.

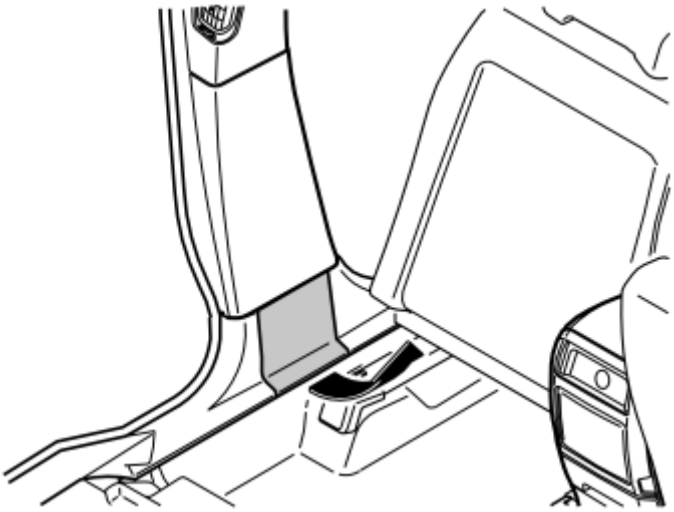

Fig. 438: View Of Panel Above The Joint Between
Courtesy of VOLVO CARS CORPORATION

- Carefully pry off the panel above the joint between the left-hand door sills, at the lower edge. Use a weatherstrip tool.

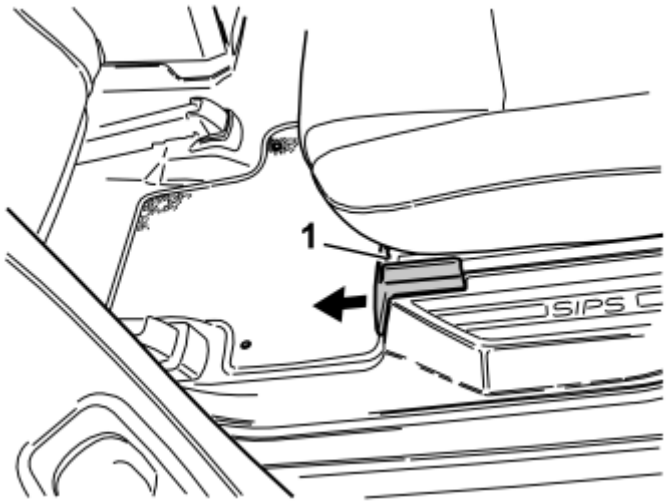

Fig. 439: View Of Second Row Of Seats Catch (1)
Courtesy of VOLVO CARS CORPORATION

- Remove the panel for the front mounting on the left-hand seat in the second row of seats by pressing down the catch (1) on top and detaching the panel by pulling it forward
- Remove the screw underneath.

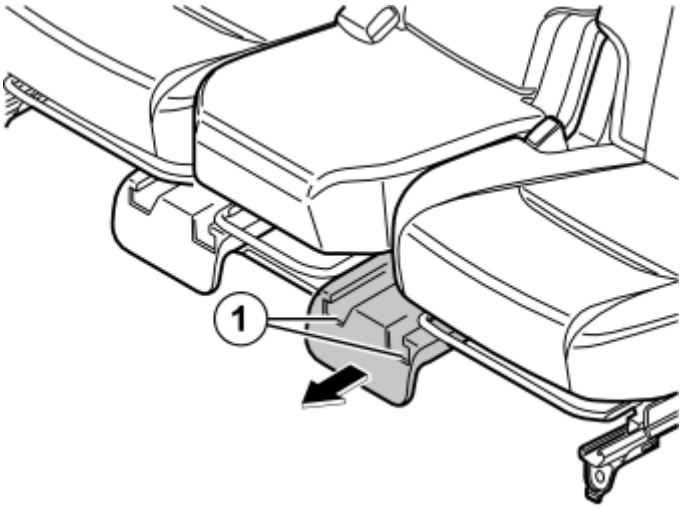

Fig. 440: Identifying Front Mountings On The Centre And Left-Hand Seat In The Second Row
Courtesy of VOLVO CARS CORPORATION

- Remove the panel for the front mountings on the center and left-hand seat in the second row. Press down the catches (1) on top and detach the panel by pulling it forward
- Remove the left-hand screw underneath.

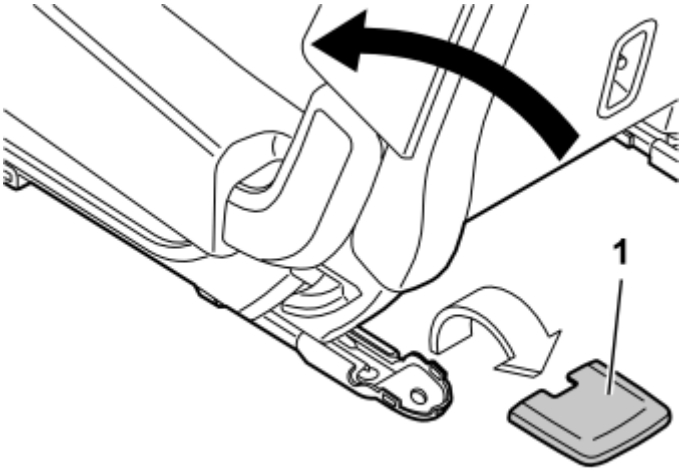

Fig. 441: Identifying Folded Backrest On The Left-Hand Seat
Courtesy of VOLVO CARS CORPORATION

Applies to cars with two rows of seats

- Fold the backrest on the left-hand seat in the second row of seats forwards.

Applies to cars with three rows of seats

- Fold the left-hand seat backrest forwards in the second row. Slide the backrest forward as far as possible.

Applies to all models

- Remove the covers for the rear mountings for the left-hand seat in the second row. Pry the covers off at the rear edge
- Remove the screws underneath.

Illustration A

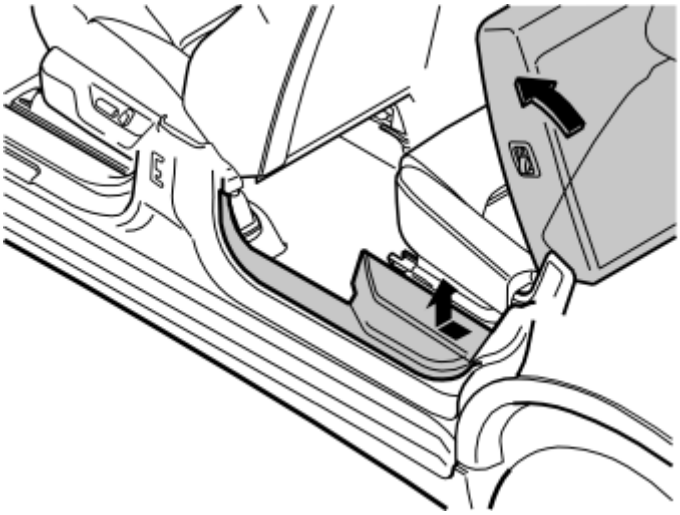

Fig. 442: View Of Top Edge Of The Sill Trim Panel
Courtesy of VOLVO CARS CORPORATION

- Detach the top edge of the sill trim panel to access the seat belt mounting in the end mounting.

Illustration B

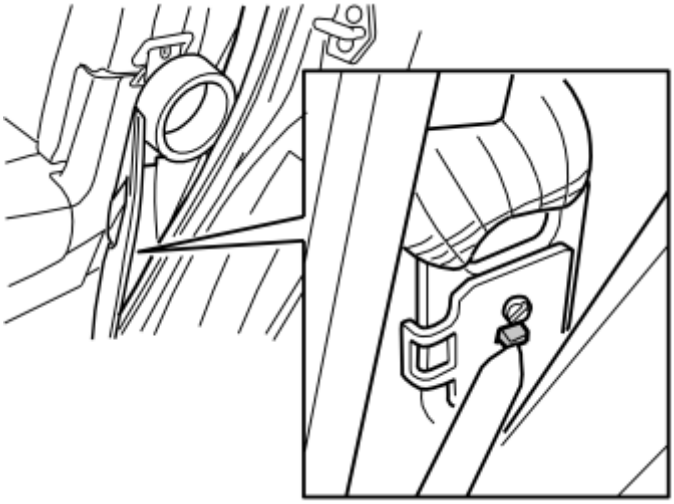

Fig. 443: Seat Belt Mounting Locking Tab
Courtesy of VOLVO CARS CORPORATION

- Remove the seat belt from the end mounting. First carefully press down the lug as illustrated in illustration B so that the seat belt releases from the end mounting. Use a weatherstrip tool.

Illustration A

- Continue to pull off the sill trim panel until the remaining clips release
- Unhook the sill trim panel from the B-post panel. Place the sill trim panel in the cargo compartment
- Remove the seat.

NOTE: Lift the seat out of the passenger compartment carefully. Ensure that the mountings do not damage the door panels.

APPLIES TO ALL MODELS

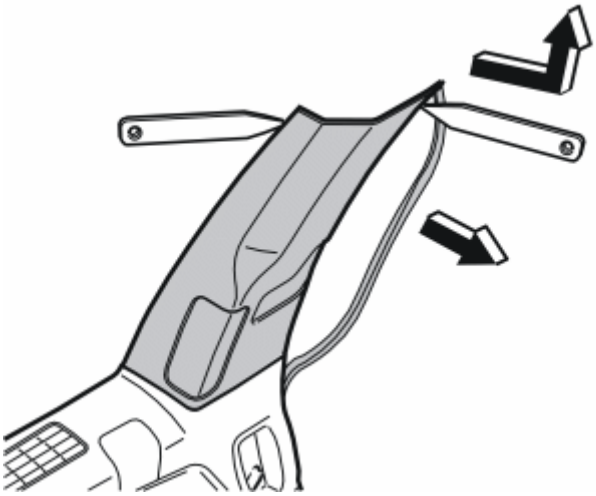

Fig. 444: Identifying Left-Hand C-Post Panel And Plastic Weatherstrip Tools
Courtesy of VOLVO CARS CORPORATION

- Pull off the rubber strip at the rear edge of the door opening for the left-hand rear door opposite the left C-post panel
- Carefully pry off the left-hand C-post panel at the sides at the top edge. Use a plastic weatherstrip tool. Pull off until the three clips on the inside release. Do not damage the headlining or the panel
- Remove the panel by pulling upwards slightly and unhooking it from the side panel.

APPLIES TO CARS UP TO AND INCLUDING MODEL YEAR -2004 (CH -133999)

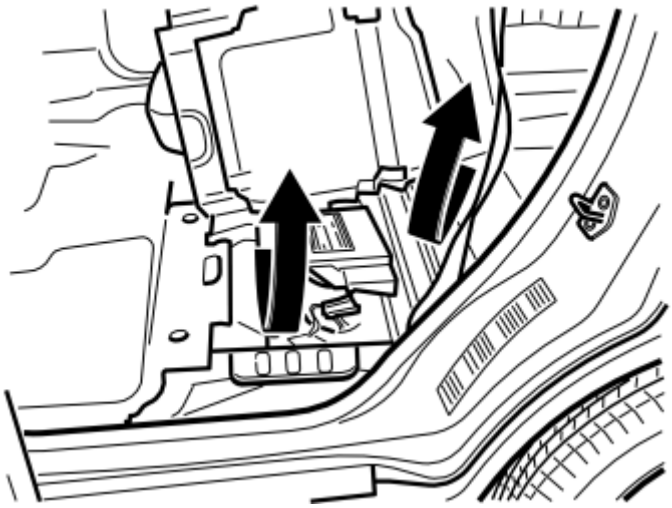

Fig. 445: Fold Up The Floor Carpet
Courtesy of VOLVO CARS CORPORATION

- Fold up the floor carpet. Secure the floor carpet using one of the seat belts
- Carefully fold up the insulation. Place a shim underneath so that the connector bridge can be exposed.

NOTE: Do not damage the insulation. It is brittle and breaks easily.

APPLIES TO ALL MODELS

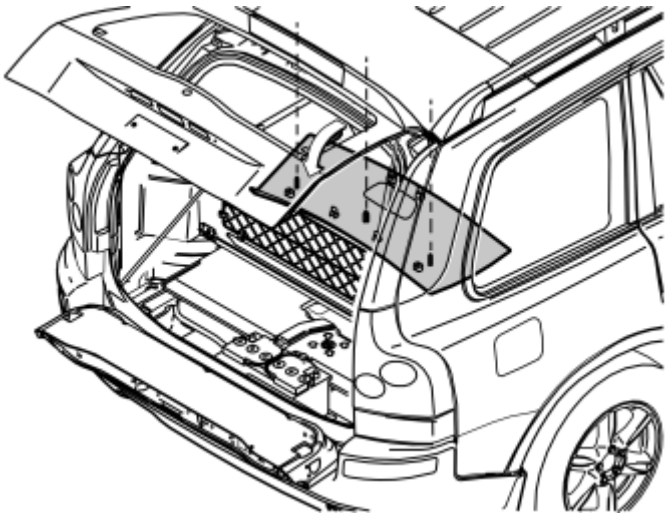

Fig. 446: Remove Rear Headlining Panel Cover
Courtesy of VOLVO CARS CORPORATION

- Remove the covers and the screws underneath for the rear headlining
- Carefully pry off the panel at the rear edge. Use a plastic weatherstrip tool
- Pull the rear edge of the panel downwards until all clips on the inside have released
- Disconnect the connector for the rear roof lighting (applies to cars with three rows of seats)
- Pull the panel backwards to release it.

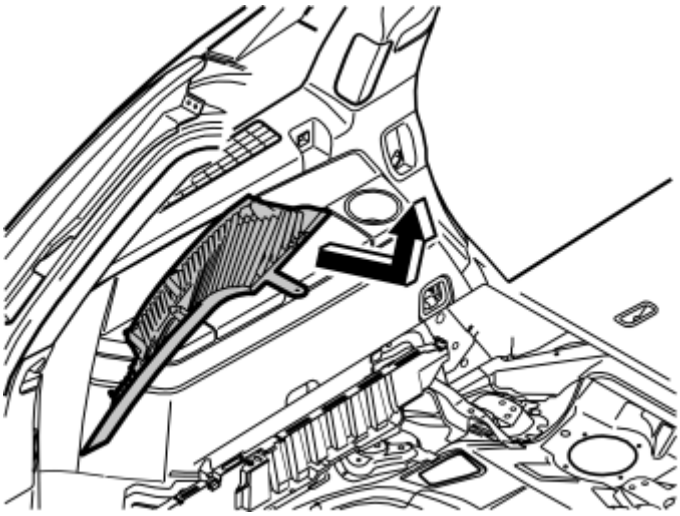

Fig. 447: Identifying D-Post Panel Removal From Side Panel
Courtesy of VOLVO CARS CORPORATION

- Pull off the left-hand D-post panel starting at the top edge. Then pull downwards until the three clips on the inside have released. Do not damage the panel
- Remove the panel by pulling upwards slightly and unhooking it from the side panel. Disconnect the connector if the car has a loudspeaker in the D-post.

Illustration A shows the removal of the cover for the load securing eyelets for all models

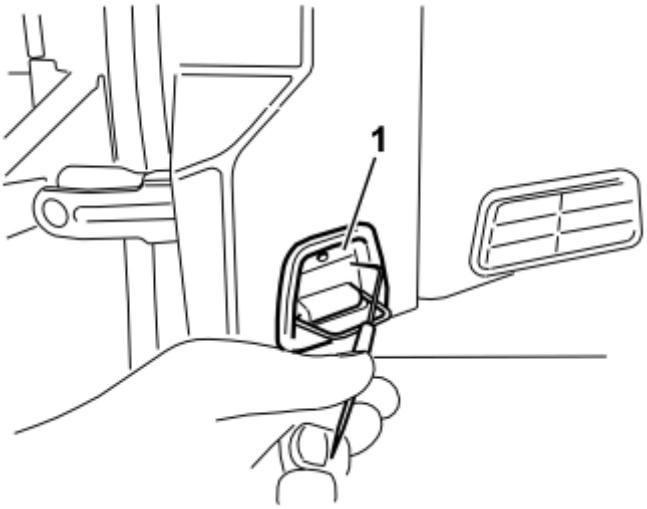

Fig. 448: Identifying Load Securing Eyelet
Courtesy of VOLVO CARS CORPORATION

- Fold out the load securing eyelet
- Insert a scriber with an angled tip into the hole in the top of the cover
- Turn the scriber so that the angled tip engages in the reverse of the cover (1). Pull the cover off.

Illustration B applies to cars with two rows of seats

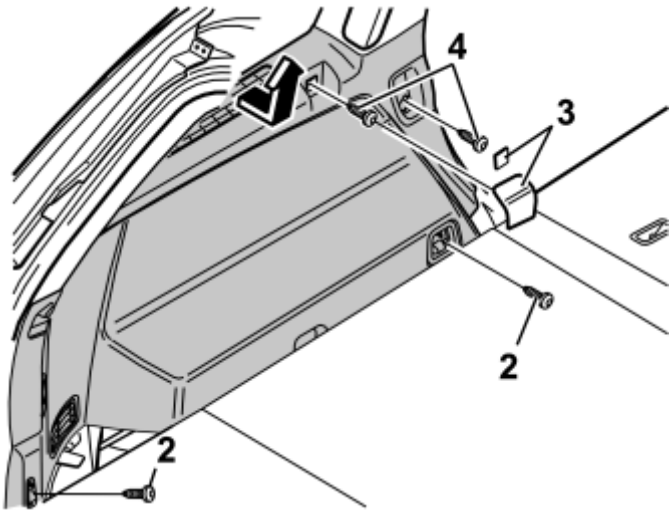

Fig. 449: Cars With Two Rows Of Seats
Courtesy of VOLVO CARS CORPORATION

Illustration C applies to cars with three rows of seats

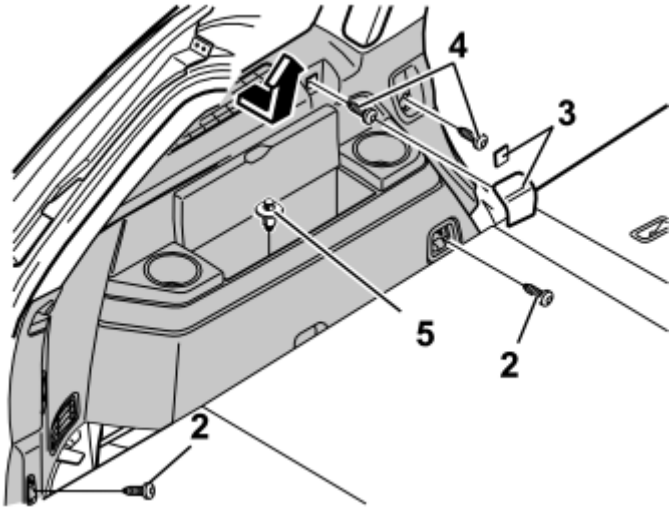

Fig. 450: Cars With Three Rows Of Seats
Courtesy of VOLVO CARS CORPORATION

- Fold up the seats in the third row (applies to cars with three rows of seats)
- Remove the screws (2) for the load securing eyelets in the left-hand side panel
- Remove the covers (3) over the front mountings for the left-hand side panel. Pry the covers off. Use a plastic weatherstrip tool or a small screwdriver
- Remove the screws (4)
- Remove the clip (5) at the bottom of the storage compartment in the panel (Applies to cars with three rows of seats)
- Pull up the panel slightly at the top edge so that the clips on the inside release. Remove the panel by pulling it straight upwards.

Illustration A

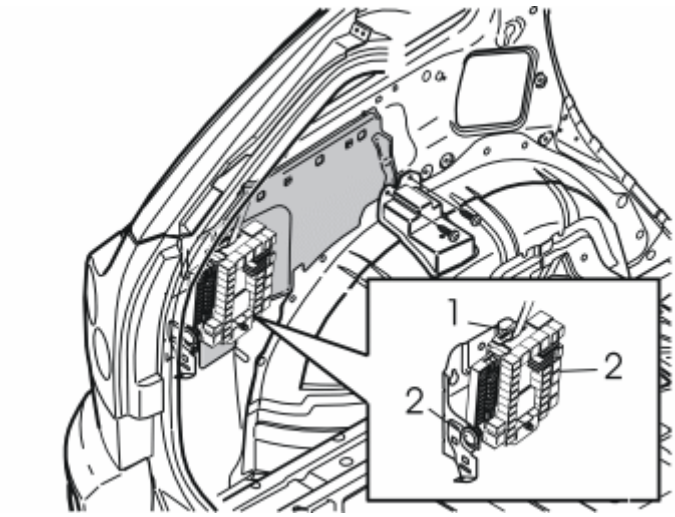

Fig. 451: Identifying Rear Electronic Module (REM)
Courtesy of VOLVO CARS CORPORATION

- Remove the rear electronic module (REM). First release the catch (1) on the top of the module
- Fold the module forwards. Lift it out of the mountings (2) and place it to one side.

Illustration B

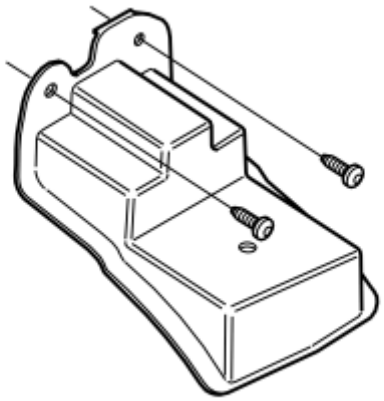

Fig. 452: Identifying Left-Hand Wheel Arch Panel Support
Courtesy of VOLVO CARS CORPORATION

Applies to cars with three rows of seats

- Remove the panel support at the top edge of the left-hand wheel arch. The panel support is secured using two screws.

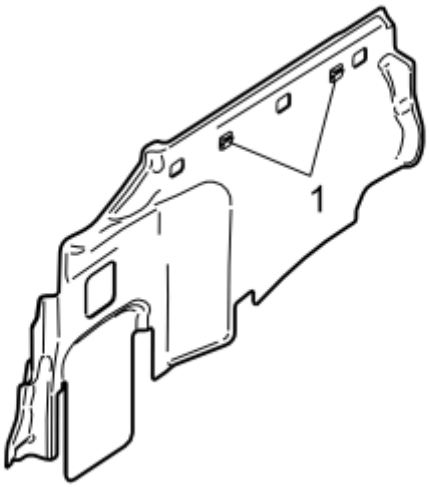

Fig. 453: View Of Insulation Panel Clips
Courtesy of VOLVO CARS CORPORATION

- Remove the insulation panel above and behind the left-hand wheel arch. The insulation panel is secured with two clips (1).

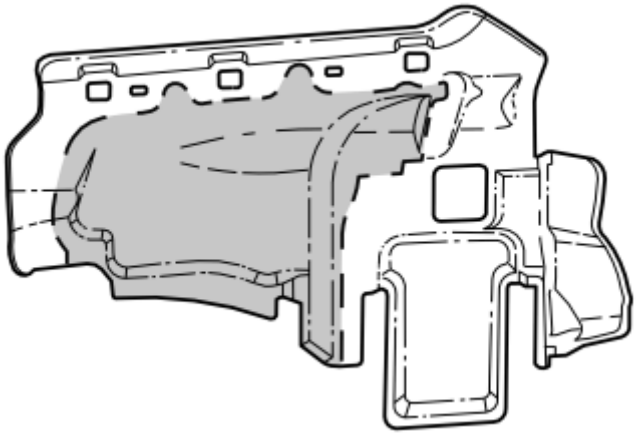

Fig. 454: Identifying Embossed Dotted Line
Courtesy of VOLVO CARS CORPORATION

- Go over the embossed dotted line on the reverse of the insulation panel using a marker pen (see the illustration)
- Cut out the insulation panel following the marking. Reinstall the insulation panel.

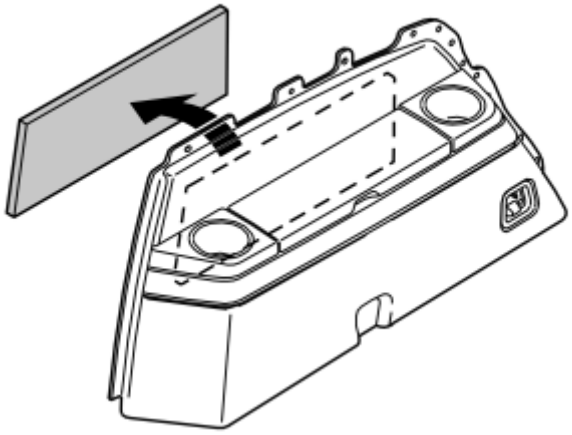

Fig. 455: View Of Cut Away Left Side Insulation Panel
Courtesy of VOLVO CARS CORPORATION

- Take the left side panel and carefully cut away the insulation on its reverse to expose an area in front of the subwoofer.

INSTALLING THE SUBWOOFER

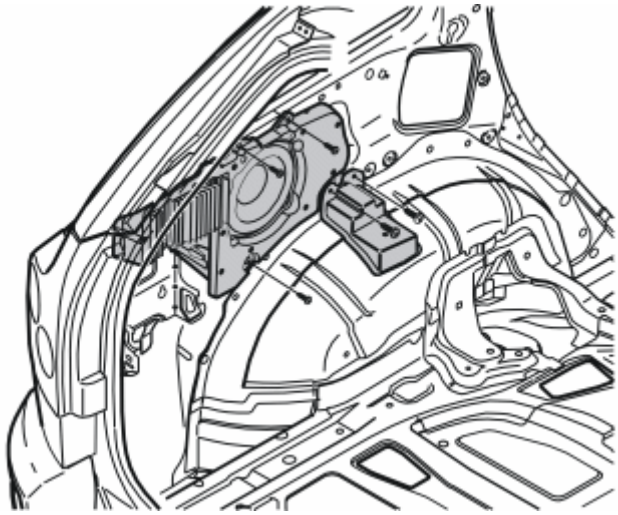

Fig. 456: Installing The Subwoofer
Courtesy of VOLVO CARS CORPORATION

Applies to cars with two rows of seats

- Take the subwoofer, the four screws and the washer from the kit
- Secure the subwoofer using the screws in the existing welded nuts above and behind the left-hand rear wheel arch. The washer must be positioned at the front/lower mounting of the subwoofer.

Applies to cars with three rows of seats

- Take the subwoofer and the four screws from the kit
- Secure the subwoofer using the two upper and the lower rear screws in the existing welded nuts. (The front/lower screw is the same as the rear screw for the panel support.)
- Reinstall and tighten the panel support. (The washer is not required).

Applies to all models

- Tighten the M6 screws. Tighten to **10 Nm (7 lbf. ft.)** . Tighten the M8 screw. Tighten to **24 Nm (18 lbf. ft.)** .

CABLE ROUTING AND CONNECTING TO THE FUSEBOX AND SUBWOOFER

APPLIES TO CARS UP TO AND INCLUDING MODEL YEAR -2004 (CH -133999)

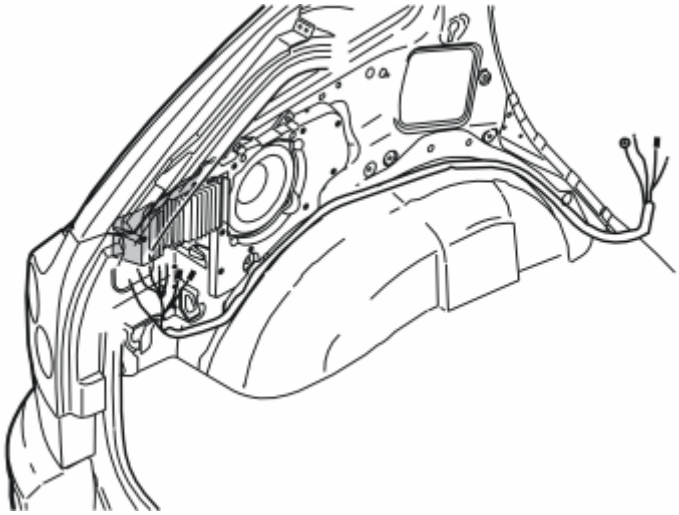

Fig. 457: View Of Cable Harness Along The Upper Edge Of The Left-Hand Rear Wheel Well
Courtesy of VOLVO CARS CORPORATION

- Take the cable harness (A in the kit illustration) from the kit. Position the end of the cable harness, with two plastic connectors, at the rear of the fuse holder
- Route the cable harness along the upper edge of the left-hand rear wheel well. Continue along the front edge of the wheel arch, under the member for the rear mounting for the second row of seats and up to connector bridge under the left-hand seat on the second row of seats.

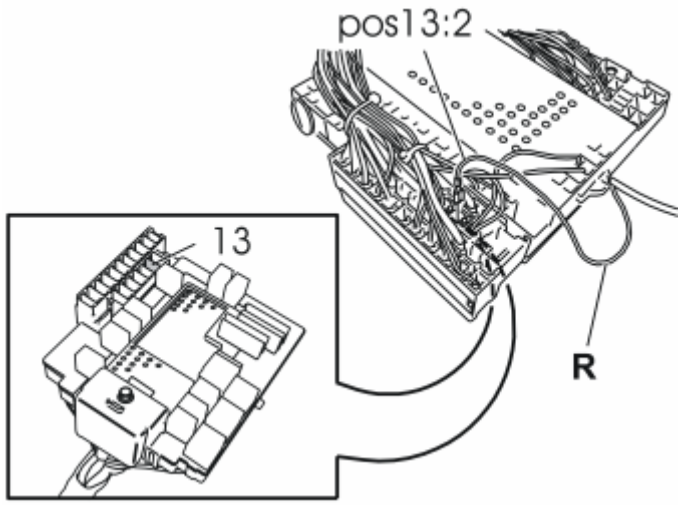

Fig. 458: Install The Cable On The Reverse Of The Fusebox In Position
Courtesy of VOLVO CARS CORPORATION

- Take the red cable from the cable harness. Install the cable on the reverse of the fusebox in position 13 and socket 2 as illustrated
- Take the 15 Amp fuse from the kit. Install the fuse in position 13 in the fusebox.

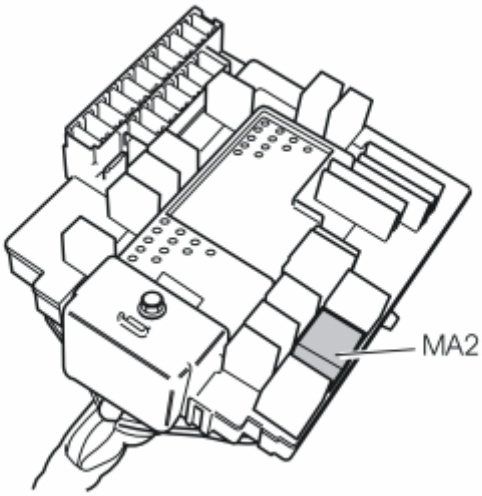

Fig. 459: Identifying Relay In Position MA2 In The Fusebox
Courtesy of VOLVO CARS CORPORATION

- Take the relay from the kit. Install the relay in position MA2 in the fusebox.

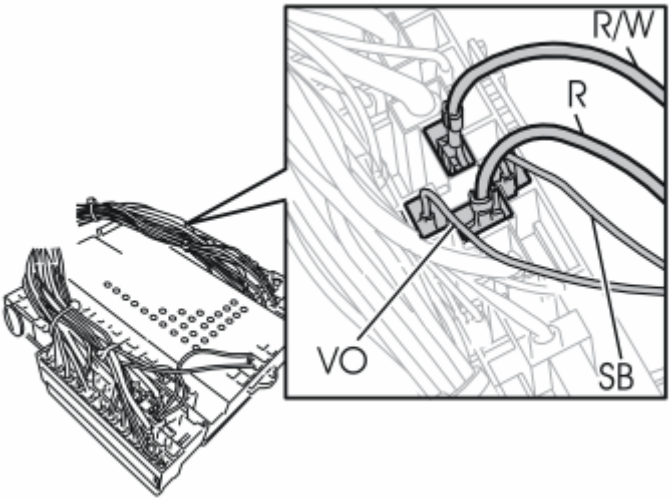

Fig. 460: View Of Red/white (R/W) Cable To Terminal 1
Courtesy of VOLVO CARS CORPORATION

- Connect the four contiguous cables on the reverse of the fusebox to relay position MA2 as follows:

  Red/white (R/W) cable to terminal 1

  Black (SB) cable to terminal 2

  Red (R) cable to terminal 3

  Violet (V) cable to terminal 4.

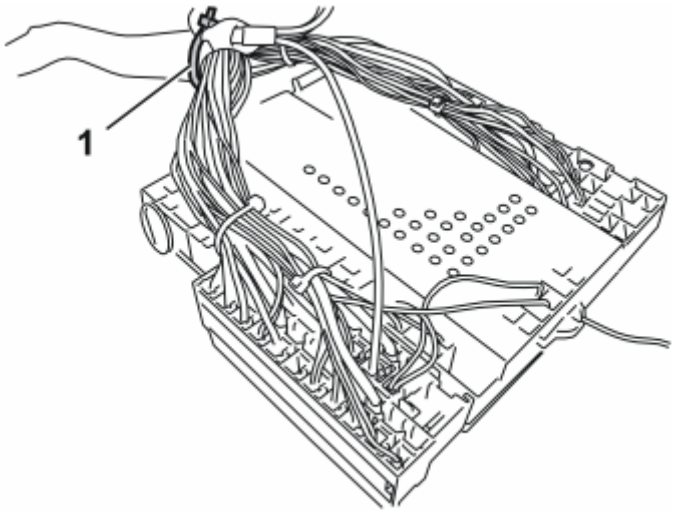

Fig. 461: View Of Clamping Cables With Tie Strap
Courtesy of VOLVO CARS CORPORATION

- Clamp the cables connected to the reverse of the fusebox at the cable harness for the fusebox. Use a tie strap (1) from the kit.

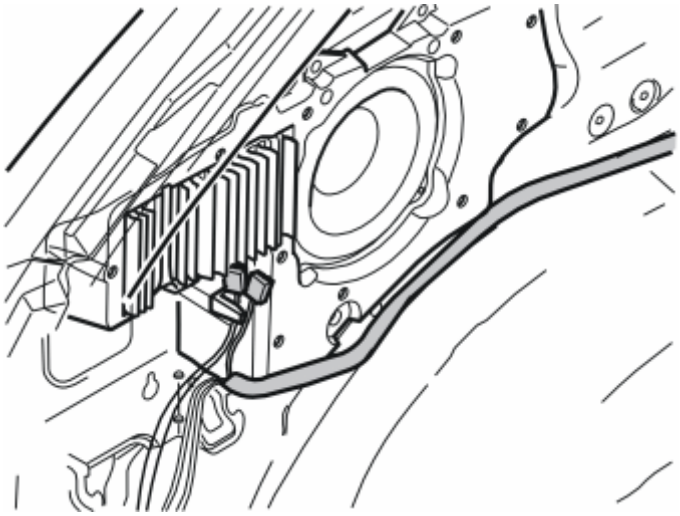

Fig. 462: Identifying The Two Connectors On Cable Harness
Courtesy of VOLVO CARS CORPORATION

- Connect the two connectors on the cable harness to the two sockets underneath the amplifier section of the subwoofer.

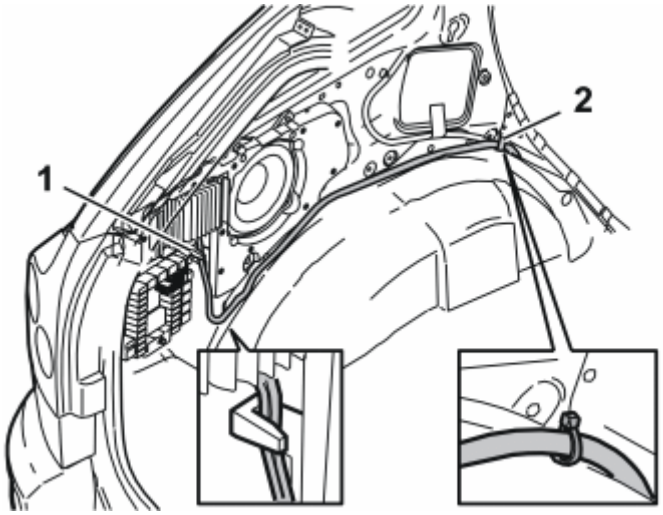

Fig. 463: View Of Cable Harnesses Into Existing Subwoofer Clamp
Courtesy of VOLVO CARS CORPORATION

- Press the cable harnesses into place on the subwoofer into the existing clamp (1)
- Reinstall the fusebox
- Now adjust the routing of the cable harnesses up to the front edge of the wheel arch so that it reaches the subwoofer Carefully press the cable harness under the lower edge of the subwoofer so that it remains in place. Clamp the cable harness at point (2) using a cable harness from the kit.

Applies to cars with three rows of seats

- Ensure that the cable harness is positioned as far to the left as possible on the panel support for the left-hand side panel. This is to prevent the cable harness from being trapped
- Tape the cable harness at the panel support.

FINISHING

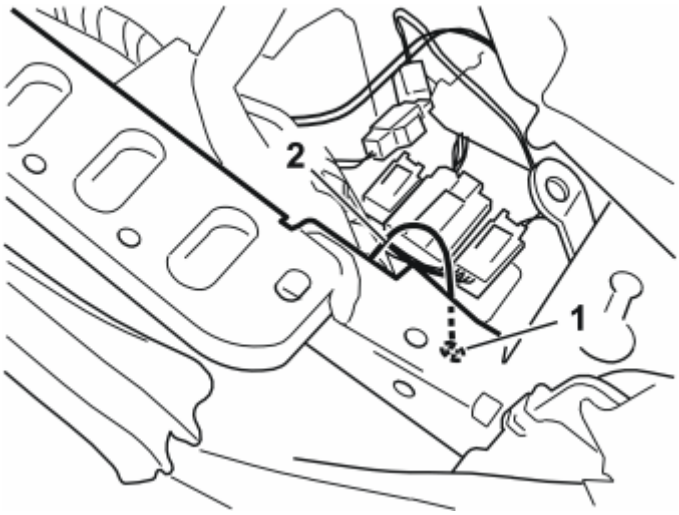

Fig. 464: Identifying Existing Ground Lead Screw

Courtesy of VOLVO CARS CORPORATION

- Slacken off the screw for the existing ground lead under the panel (1). Pull up and connect the routed ground lead (2) together with the existing ground lead. Tighten the screw.

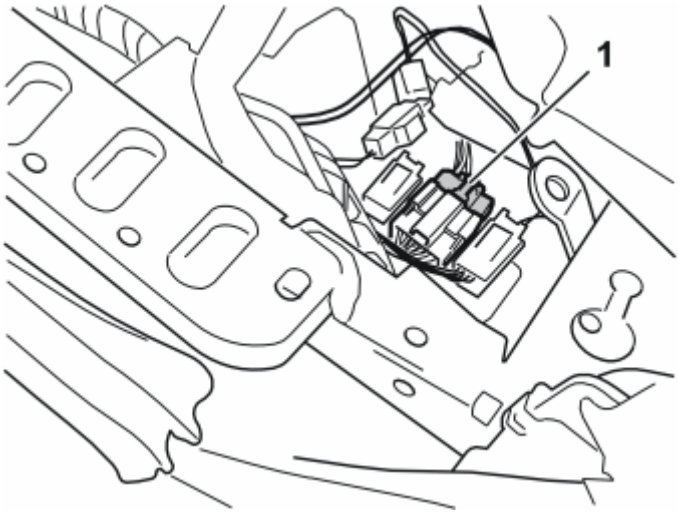

Fig. 465: Identifying The 14 Pin Connector
Courtesy of VOLVO CARS CORPORATION

- Press down the catch on top of the largest connector (1) (14-pin). Pull it off the connector in the connector bridge.

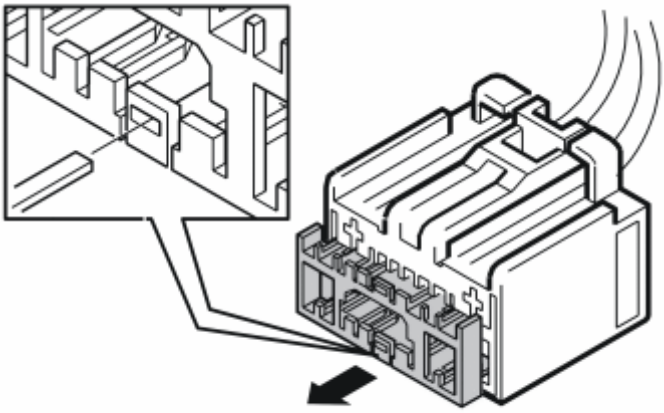

Fig. 466: Identifying The Connector Pulled Out To Its Limit Position
Courtesy of VOLVO CARS CORPORATION

- Depress the catch on the red secondary lock on the connector. Pull the connector out to its limit position.

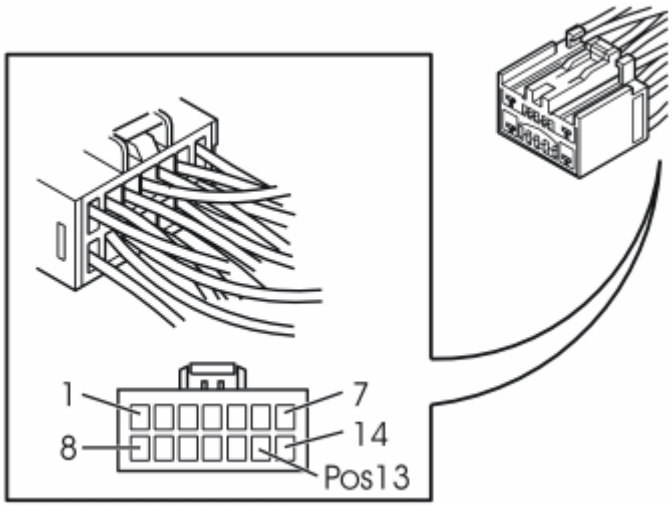

Fig. 467: View Of Terminal 13 On Reverse Of Connector
Courtesy of VOLVO CARS CORPORATION

- Take the violet cable and install it in terminal 13 on the reverse of the connector as illustrated
- Press the secondary lock into place on the connector. Reinstall the connector.

APPLIES TO CARS FROM MODEL YEAR 2005- (CH 134000-)

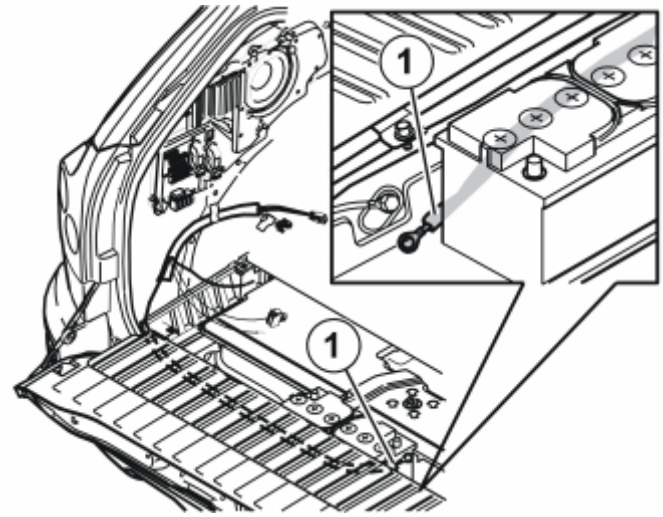

Fig. 468: Identifying Ground Lead (1) Through The Socket At The Rear Edge
Courtesy of VOLVO CARS CORPORATION

- Take the cable harness B (see the kit illustration) and position as illustrated
- Route the ground lead (1) through the socket at the rear edge of the left-hand floor support. Continue to route the cable behind the battery and up to the ground terminal at the rear crossmember on the right-hand side of the battery
- Remove the existing ground terminal. Install the routed ground lead
- Tighten the ground terminal securely.

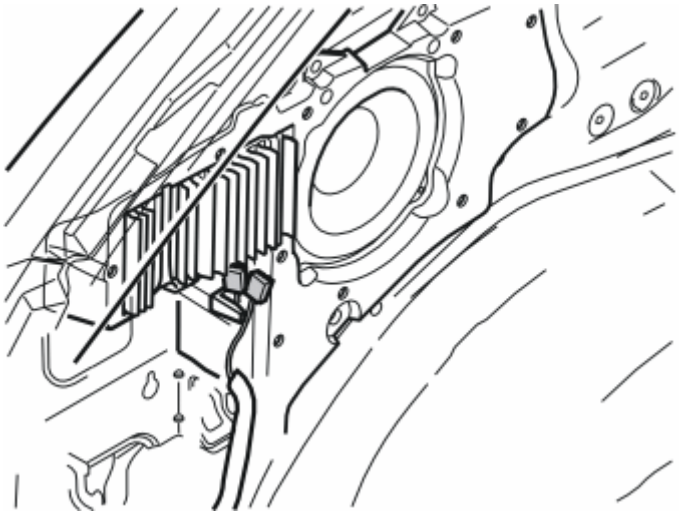

Fig. 469: Identifying Two Bound Connectors On The Cable Harness
Courtesy of VOLVO CARS CORPORATION

- Connect the two bound connectors on the cable harness to the two sockets underneath the amplifier section of the subwoofer.

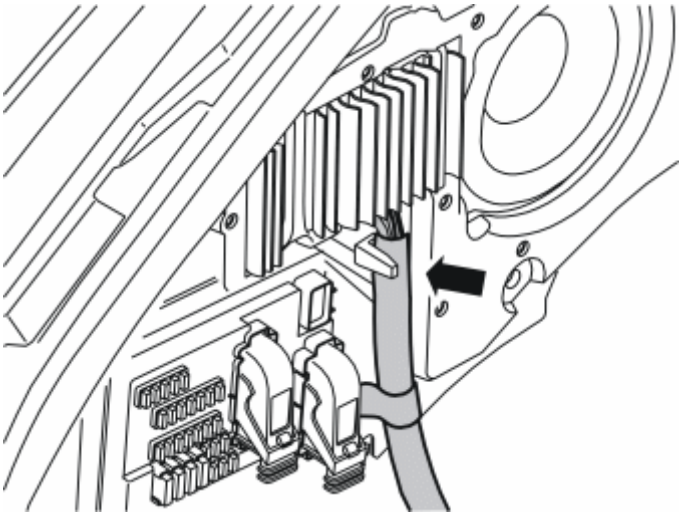

Fig. 470: View Of Harness Connected To Subwoofer Existing Clamp
Courtesy of VOLVO CARS CORPORATION

- Press the cable harness connected to the subwoofer into the existing clamp.

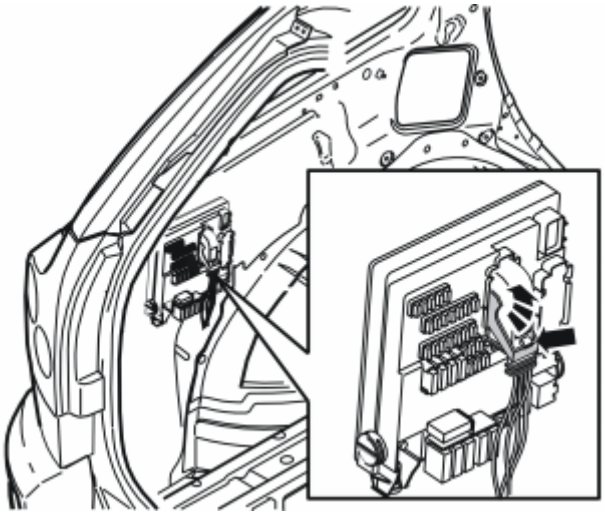

Fig. 471: View Of Pressing The Catches To Rear Brown Connector
Courtesy of VOLVO CARS CORPORATION

- Press in the catches on the rear brown connector in the fuse holder in the cargo compartment. Turn up the lock arm as far as possible. Pull out the connector.

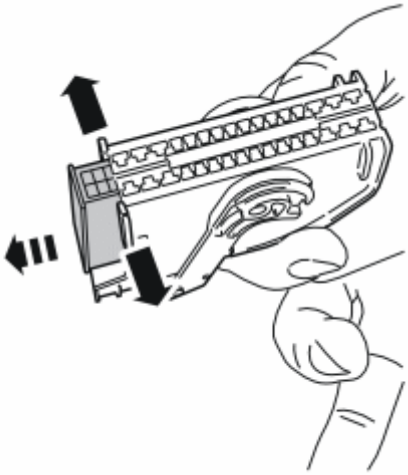

Fig. 472: Pull Apart Sides Of Holder For Connector And Pull Out Connector
Courtesy of VOLVO CARS CORPORATION

- Carefully pull apart the sides of the holder for the connector at the ends so that the connector can pass by the catches
- Pull the connector out.

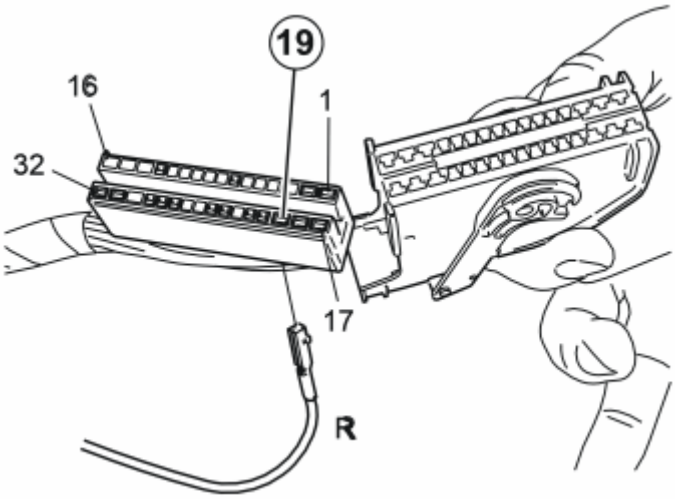

Fig. 473: Identifying New Red (R) Cable To Terminal 19 In The Connector
Courtesy of VOLVO CARS CORPORATION

NOTE: Make a note of the position number of the connector. The position numbers are located on the ends of the connector and in the bottom of the fuse holder.

- Connect the new red (R) cable to terminal 19 in the connector. If the car is prepared for rear air conditioning (A/C) there is already a cable installed in this terminal. Disconnect the cable. Insulate the cable. Secure the cable. Press in the new red (R) cable instead
- Press the connector into its holder. Reinstall the connector to the fuse holder.

APPLIES TO CARS UP TO AND INCLUDING MODEL YEAR -2004 (CH -133999)

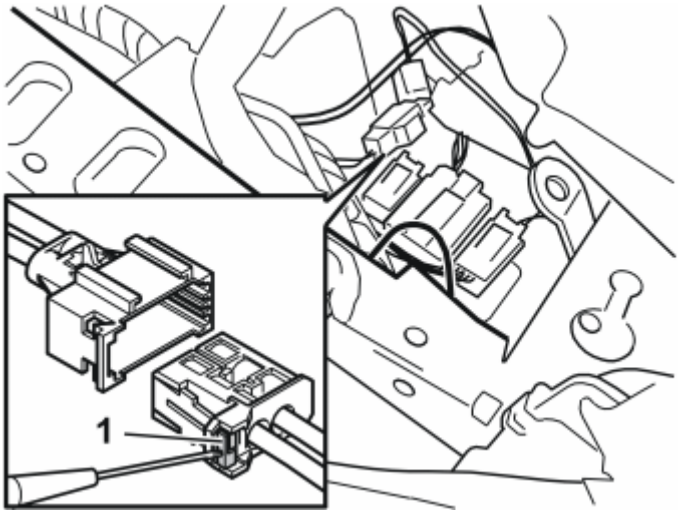

Fig. 474: Identifying Fibre Optic Cables To The Side Of The Connector Bridge
Courtesy of VOLVO CARS CORPORATION

- Carefully pull the cable splice for the existing orange fibre optic cables to the side of the connector bridge
- Disconnect the connectors from each other. First depress the catch (1) and then separate them.

APPLIES TO CARS FROM MODEL YEAR 2005- (CH 134000-)

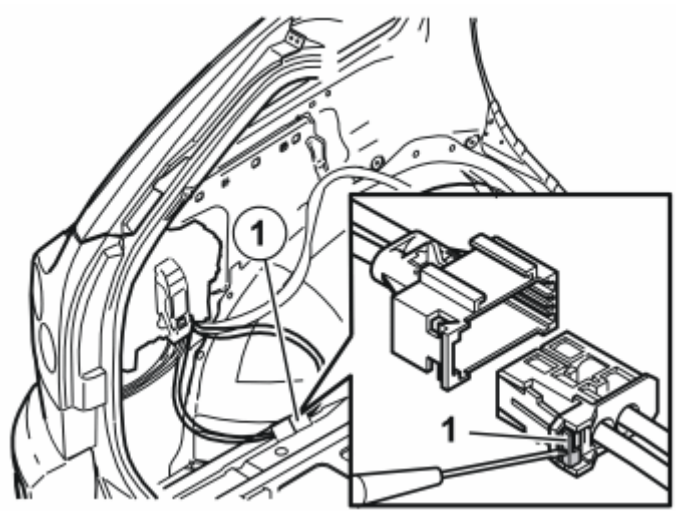

Fig. 475: View Of Existing Orange Fibre Optic Cables, Under The Rear Fuse Holder
Courtesy of VOLVO CARS CORPORATION

- Carefully pull the pipe coupling to the existing orange fibre optic cables, under the rear fuse holder
- Disconnect the connectors from each other. First depress the catch (1) and then separate them.

APPLIES TO ALL MODELS

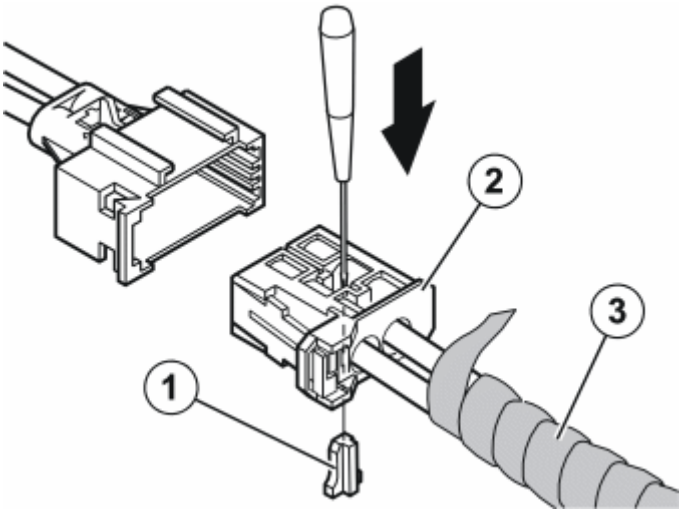

Fig. 476: View Of Blue Catch (1) In The Connector (2)
Courtesy of VOLVO CARS CORPORATION

- Detach approximately 10 cm of tape so that the wiring can move freely. Cut off the detached piece of tape
- Carefully press out the blue catch (1) in the connector (2). Do not damage the catch. It is small and falls out easily.

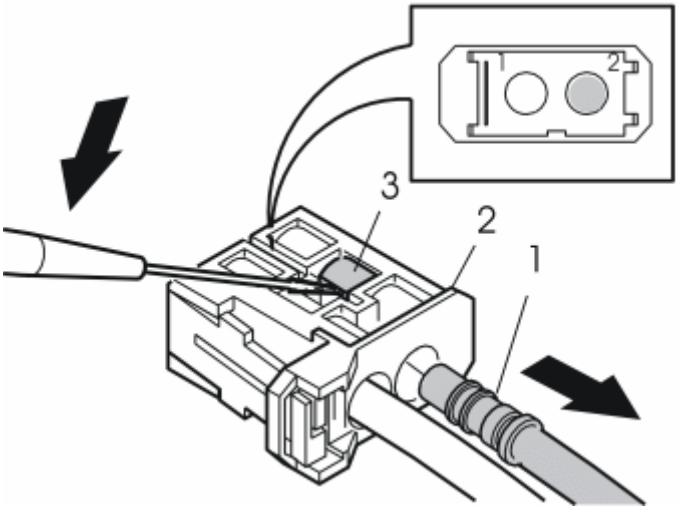

Fig. 477: Identifying Fibre Cable (1) From The Connector (2)
Courtesy of VOLVO CARS CORPORATION

- Remove the fibre cable (1) from the connector (2). First carefully pry up the locking tab (3) and at the same time pull off the fibre optic cable.

NOTE: **Do not open the locking tab more than is necessary as it is fragile and easy to break.**

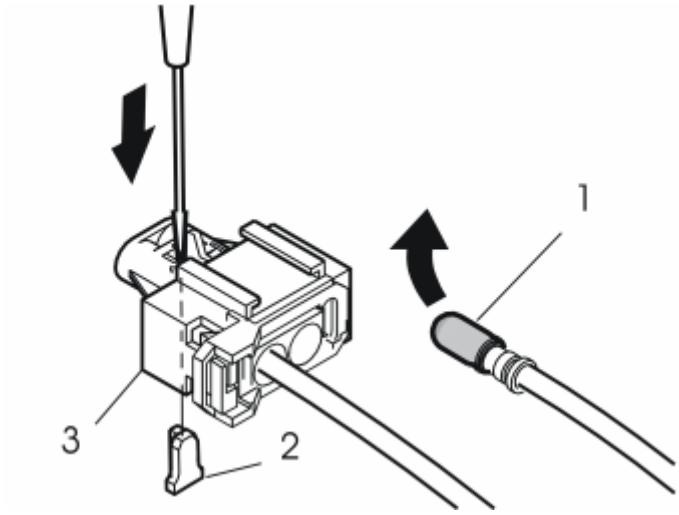

Fig. 478: Identifying The Loose Fibre Optic Cable Protective Cap (1)
Courtesy of VOLVO CARS CORPORATION

- Take the pre-routed cable harness
- Carefully press out the blue catch (2) in the connector (3). Do not damage the catch
- Remove the protective cap (1) from the loose fibre optic cable in the cable harness.

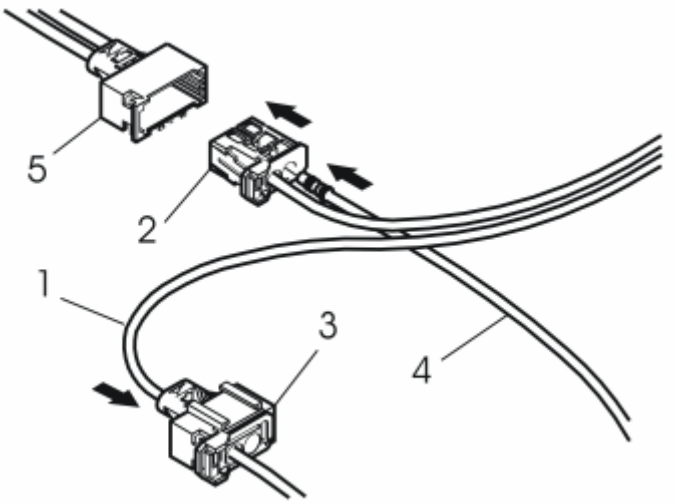

Fig. 479: Identifying Fiber Optic Cable Connectors
Courtesy of VOLVO CARS CORPORATION

- Press in the fibre optic cable (1) (previously disconnected from the existing connector in the car) into the connector (3) until there is an audible click.

NOTE: The fibre optic cables must be positioned opposite each other so that they meet in the connector.

- Reinstall the blue catch
- Press the fibre optic cable (4) (from the routed cable harness) into place in the same position in the connector (2) where the existing fibre optic cable was disconnected previously. There must be an audible click
- Reinstall the blue catch
- Connect connectors 2 and 5 to each other.

FINISHING WORK

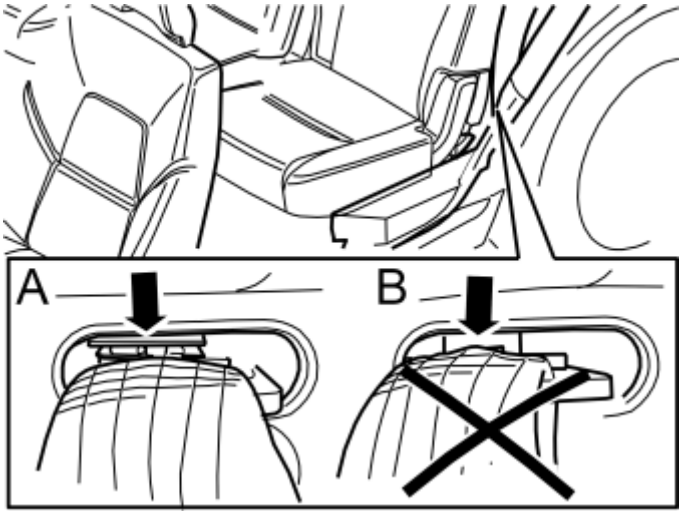

Fig. 480: Seat Belt Proper Routing
Courtesy of VOLVO CARS CORPORATION

- Reinstall the fibre optic cables and secure the two loose connectors at the existing cable harness. Use tape or tie straps from the kit.

NOTE: **Ensure that the fibre optic cables do not have a radius of more than 30 mm (1 3/16") and are not positioned so that there is a risk of being trapped or rubbed.**

- Remove the shim under the polystyrene insulation and then reinstall. (Applies to cars up to and including model year -2004 (CH -133999))
- Fold back the carpet. (Applies to cars up to and including model year -2004 (CH -133999))
- Reinstall the side panel and cover using screws. Tighten the screws for the load securing eyelets. Tighten to **24 Nm (18 lbf. ft)**
- Reinstall the D-post panel and connect the connector for the D-post loudspeaker (if applicable)
- Connect the connector for the lighting in the rear headlining (applies to cars with three rows of seats)
- Reinstall the rear headlining
- Reinstall the C-post panel. (Applies to cars up to and including model year -2004 (CH -133999))
- Reinstall the seat. Tighten the screws. Tighten to **48 Nm (35 lbf. ft)** . (Applies to cars up to and including model year -2004 (CH -133999))
- Reinstall the panel over the door sill and the panels over the seat mountings as well as the panel at the bottom edge of the B-post panel. (Applies to cars up to and including model year -2004 (CH -133999))

NOTE: **See the illustration**

NOTE: **A click should be heard when the seat belt is locked correctly into the end mounting.**

NOTE: **Check that the seat belt engages correctly in the end mounting by looking at the reverse of the mounting. The position of the lock facing against the end mounting, with the seat belt fully inserted, must be: A= Correct position. B= If the lock facing does not lock correctly against the end mounting (see A), replace the end mounting for a new one.**

NOTE: **Check that the seat belt is securely positioned by jerking the belt upwards.**

- Press the seat belt into the end mounting.

(Applies to cars up to and including model year -2004 (CH -133999))

- Re-position the seats
- Reinstall the folding panel.

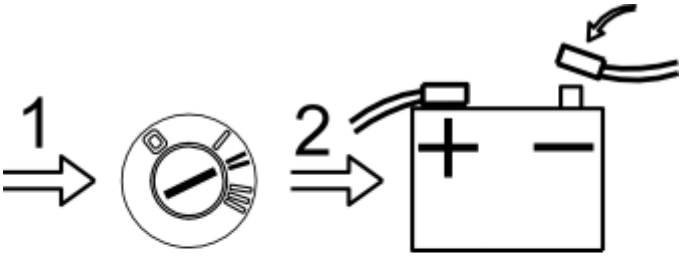

Fig. 481: Connecting Negative Battery Lead
Courtesy of VOLVO CARS CORPORATION

- Turn the ignition key to position II
- Reconnect the battery negative lead
- Reinstall the left-hand side floor hatch and the storage boxes
- Reposition the floor hatches
- Program the software according to the service information in VIDA (Volvo scan tool).

SWAN NECK MICROPHONE (2004-2008)

SWAN NECK MICROPHONE

INSTALL

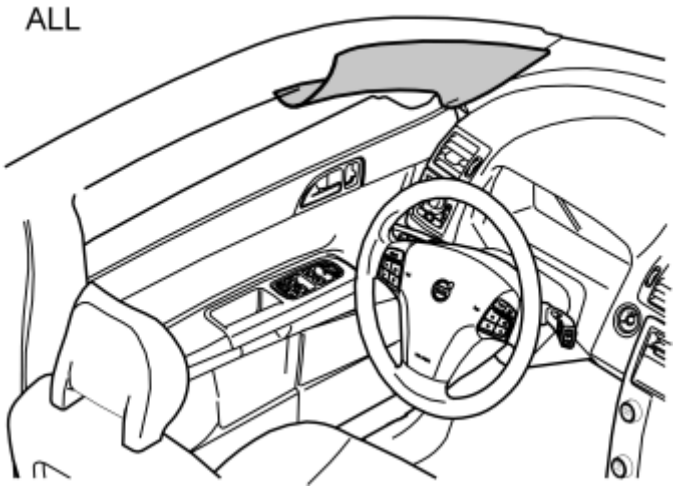

Fig. 482: Identifying A-Pillar Trim
Courtesy of VOLVO CARS CORPORATION

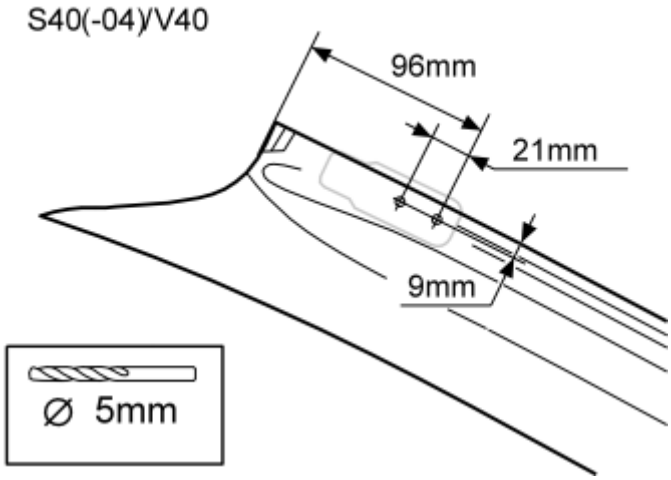

Fig. 483: Identifying Hole Dimension & Location (1 Of 5)
Courtesy of VOLVO CARS CORPORATION

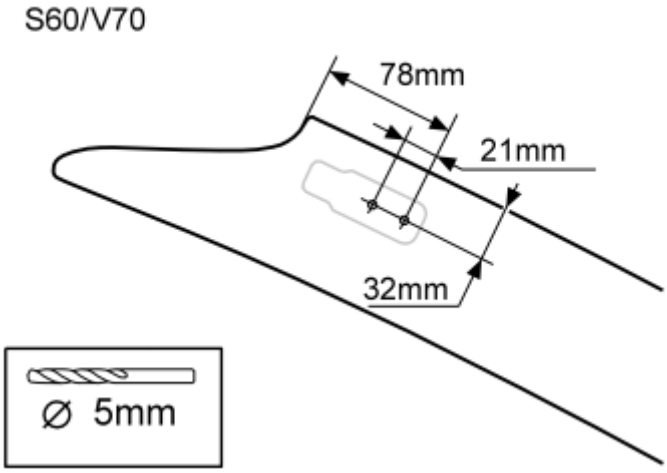

Fig. 484: Identifying Hole Dimension & Location (2 Of 5)
Courtesy of VOLVO CARS CORPORATION

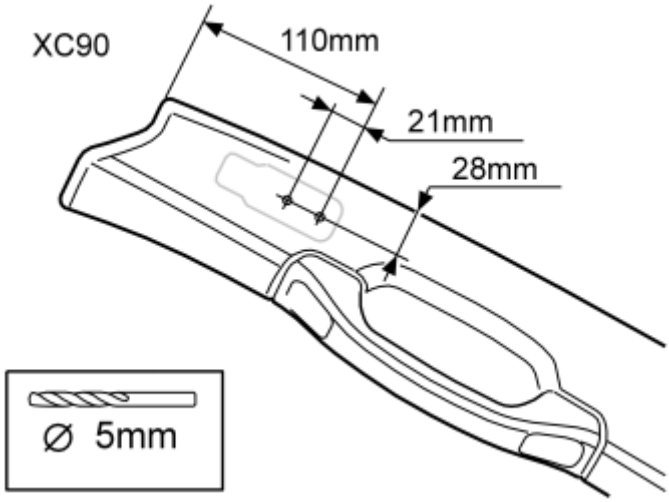

Fig. 485: Identifying Hole Dimension & Location (3 Of 5)
Courtesy of VOLVO CARS CORPORATION

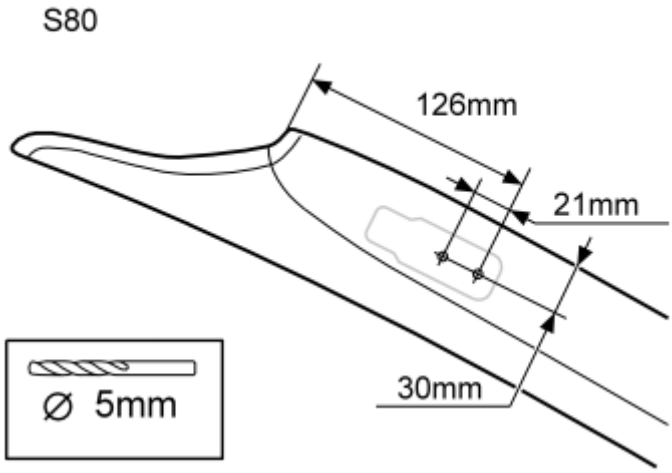

Fig. 486: Identifying Hole Dimension & Location (4 Of 5)
Courtesy of VOLVO CARS CORPORATION

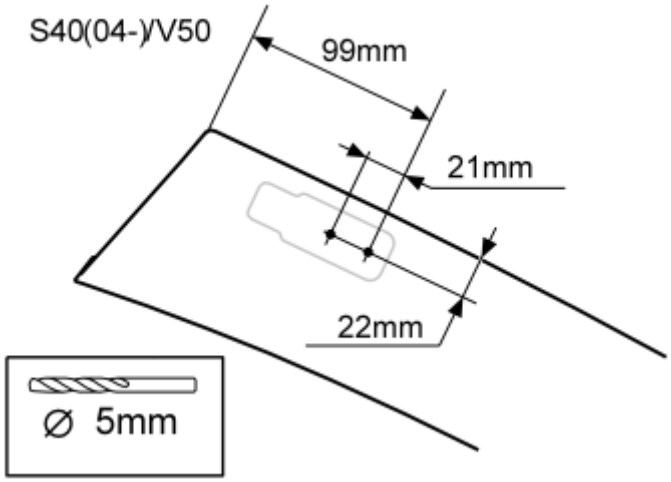

Fig. 487: Identifying Hole Dimension & Location (5 Of 5)
Courtesy of VOLVO CARS CORPORATION

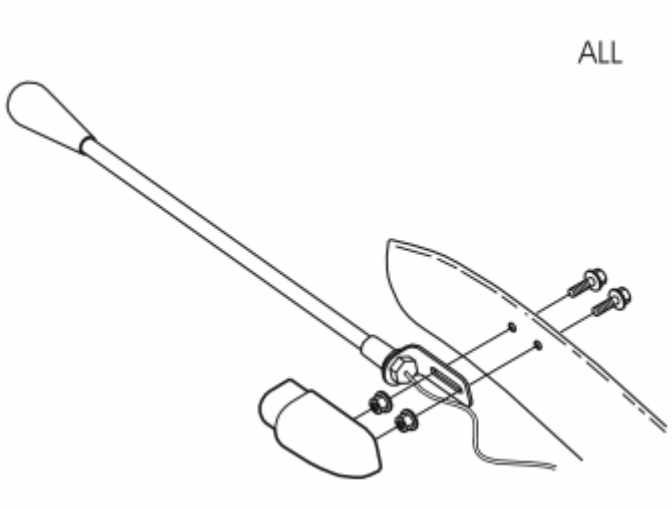

Fig. 488: Identifying Microphone
Courtesy of VOLVO CARS CORPORATION

TELEPHONE SPEAKER CUT-OUT, C-POST (2003-2011)

TELEPHONE SPEAKER CUT-OUT, C-POST

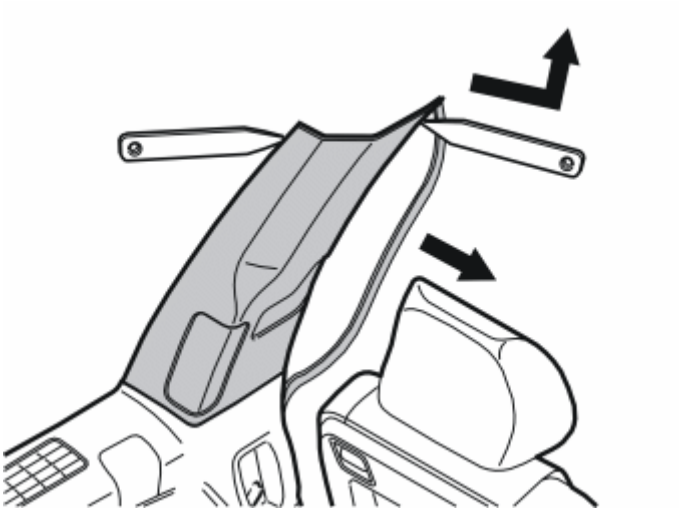

Fig. 489: Identifying Left-Hand C-Post Panel
Courtesy of VOLVO CARS CORPORATION

- Pull off the rubber strip at the rear edge of the door opening to the left-hand rear door opposite the left C-post panel
- Carefully pry off the left-hand C-post panel at the sides in the top edge using a plastic weatherstrip tool. Pull off until the three clips on the inside release. Do not damage the headlining or the panel
- Remove the panel by pulling upwards slightly and unhooking from the side panel.

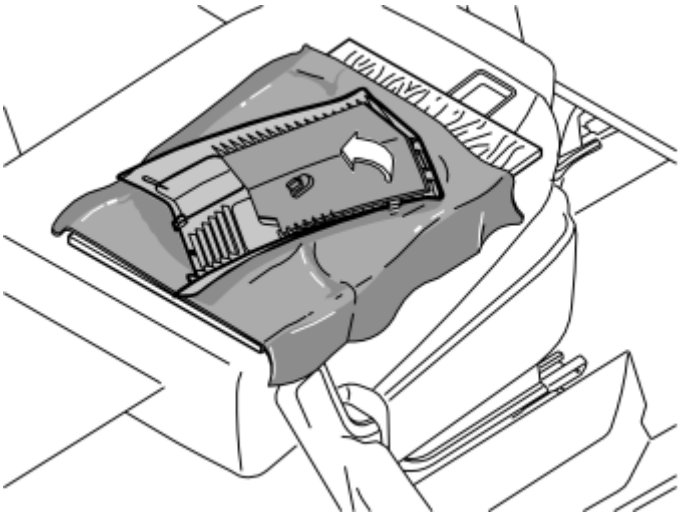

Fig. 490: View Of Position The C-Post Panel With The Front Side Facing Down
Courtesy of VOLVO CARS CORPORATION

- Fold the backrest of the second row of seats forwards. The backrest will then be used as a work surface
- Position the C-post panel with the front side facing down on, for example, a block of wood to cut out holes for the receiver
- To prevent scratching the panel place a blanket or similar over the block of wood
- Fold the foam rubber out of the way.

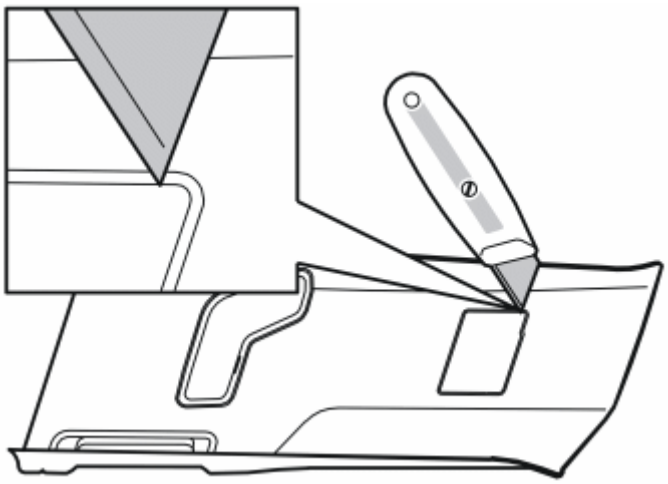

Fig. 491: Identifying The Embossed Cut Section Inside The Panel
Courtesy of VOLVO CARS CORPORATION

- Cut out a hole in the panel following the embossing on the inside. Use a utility knife or similar.

NOTE: **Do not make the hole too large. The edges of the telephone speaker are only 1 mm (1/32") larger than the dimensions of the cut-out.**

- Test and adjust using a file until the telephone speaker is seated.

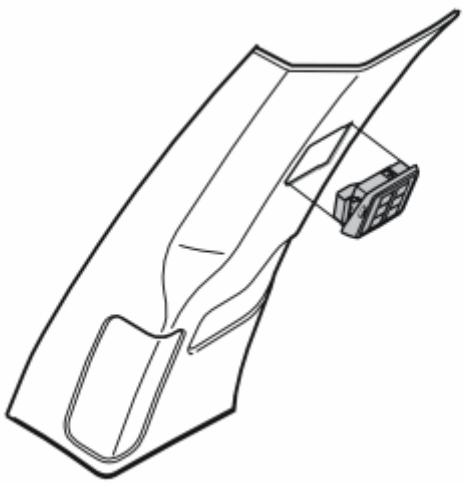

Fig. 492: Identifying Telephone Speaker Into C-Post Panel
Courtesy of VOLVO CARS CORPORATION

- Press the telephone speaker into the hole on the C-post panel
- Fold the foam rubber back into place.

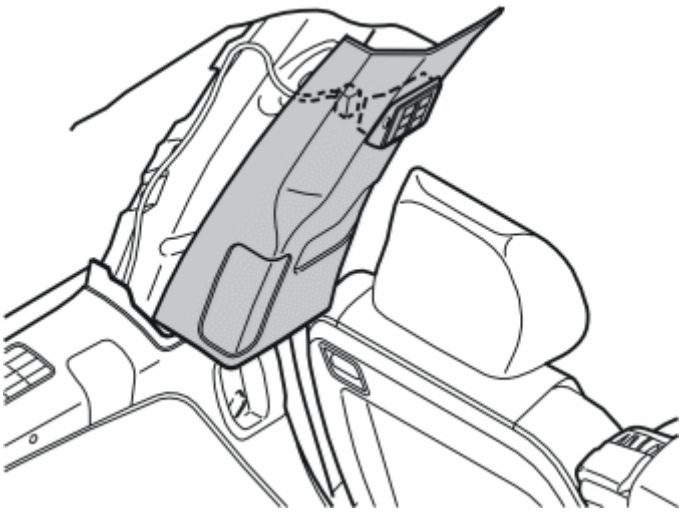

Fig. 493: Identifying C-Post Panel With Speaker
Courtesy of VOLVO CARS CORPORATION

- Disconnect the existing cable secured at the C-post
- Make a hole in the foam rubber. Thread the connector through to the receiver cut-out
- Connect the connector to the telephone speaker cut-out.

  HINT: Connect the connector before pressing the telephone speaker into the hole on the C-post panel as there is limited space.

- Reinstall the C-post panel with the cut-out for the telephone speaker.

TREBLE LOUDSPEAKER, D-POST (2003-2011)

TREBLE LOUDSPEAKER, D-POST

PREPARATION

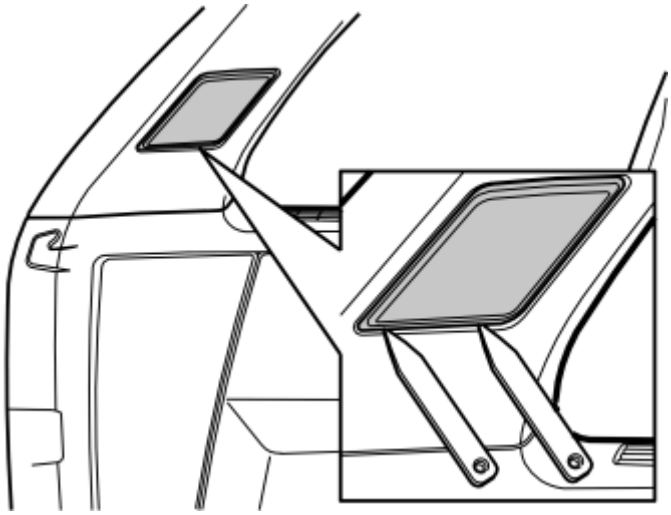

Fig. 494: Identifying Loudspeaker Grille In The D-Post
Courtesy of VOLVO CARS CORPORATION

- Remove the loudspeaker grille in the D-post (secured by two catches) by carefully prying loose at the rear edge using a weatherstrip tool.

INSTALL

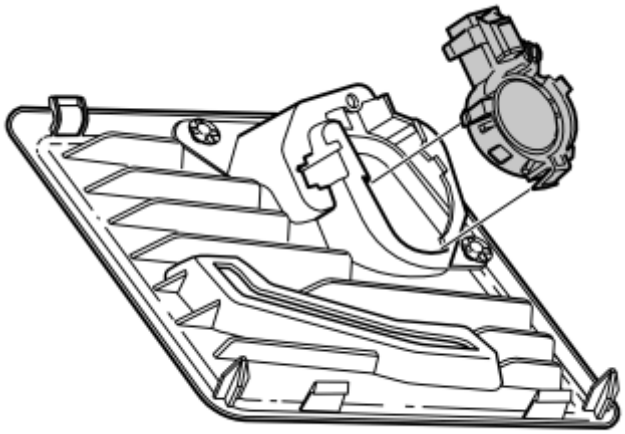

Fig. 495: View Of Install The Treble Loudspeaker
Courtesy of VOLVO CARS CORPORATION

- Install the treble loudspeaker (marked LH for the left and RH for the right) on the reverse of the loudspeaker grille. Press into position.

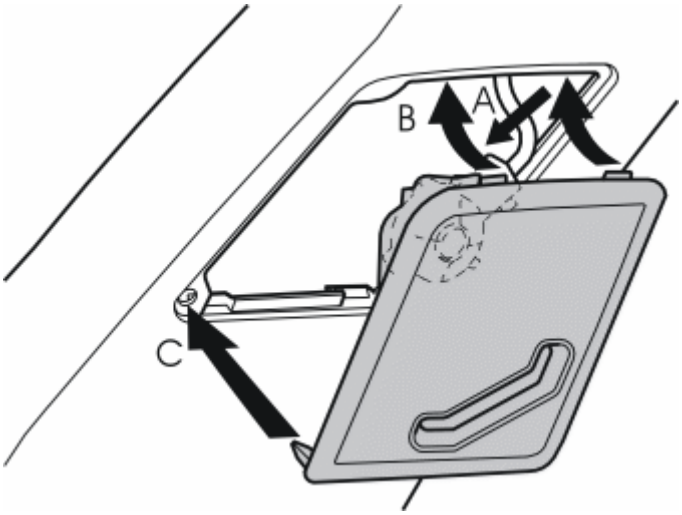

Fig. 496: Reinstall The Loudspeaker Grille With The Loudspeaker
Courtesy of VOLVO CARS CORPORATION

- Connect the pre-routed cables to the treble loudspeaker. Reinstall the loudspeaker grille with the loudspeaker

- Repeat the operation on the other side.

TREBLE LOUDSPEAKERS, FRONT DOOR (2003-2011)

TREBLE LOUDSPEAKERS, FRONT DOOR

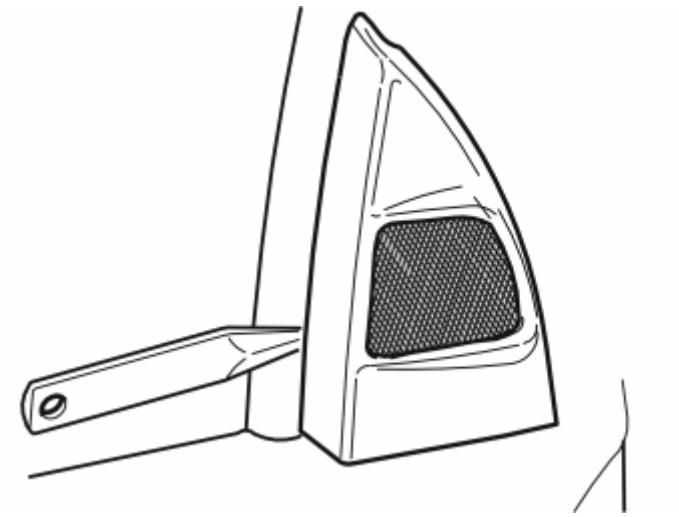

Fig. 497: Identifying The Panel At The Front Edge Of The Door
Courtesy of VOLVO CARS CORPORATION

- Remove the panel at the front edge of the door by carefully prying loose using a plastic weatherstrip tool.

NOTE: Leave the clips for the panel in the door.

- Place the panel to one side. The panel will not be reused
- Take the existing cable positioned behind the panel.

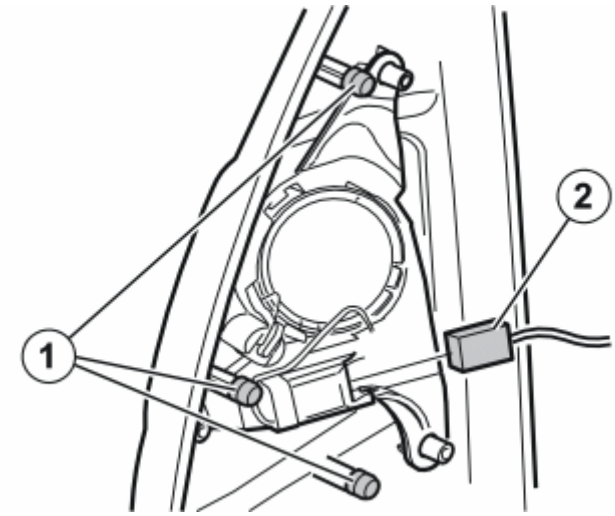

Fig. 498: Identifying Loudspeaker Connector
Courtesy of VOLVO CARS CORPORATION

- Take the panel with the loudspeakers from the kit. Pull off the pre-mounted clips (1) and place to one side. Similar clips are left in the door
- Connect the cable (2) prepared in procedure 1 to the connectors for the treble loudspeakers.

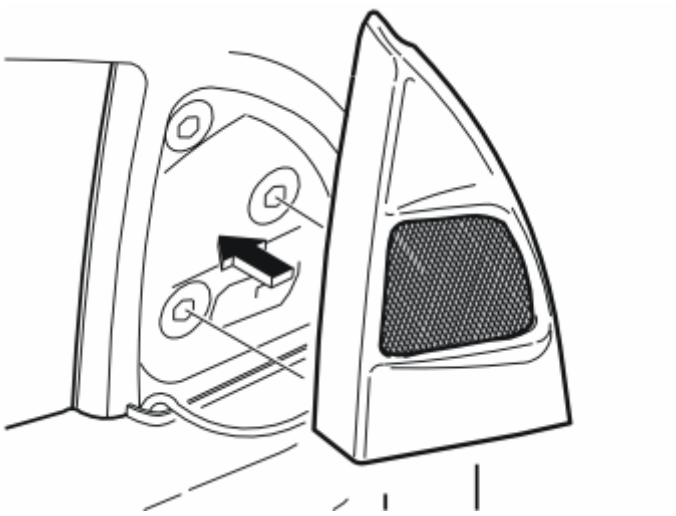

Fig. 499: Identifying Treble Loudspeakers Clips
Courtesy of VOLVO CARS CORPORATION

- Press the panel with the treble loudspeakers in the clips which are in the door
- Repeat the operation on the other side.

NAVIGATION SYSTEM, PORTABLE, INSTALLATION KIT TMC (2007-2011)

NAVIGATION SYSTEM, PORTABLE, INSTALLATION KIT TMC

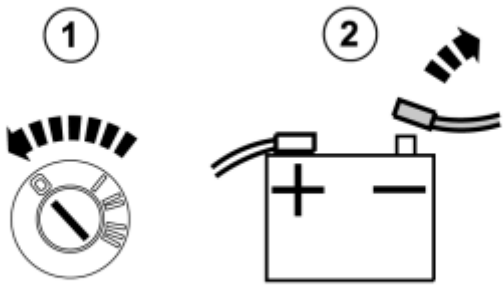

Fig. 500: Identifying Ignition Switch OFF & Disconnected Negative Battery Lead
Courtesy of VOLVO CARS CORPORATION

Applies to cars with portable Navigation system installed

- Turn the ignition key to position 0.
- Disconnect the battery negative lead.

NOTE: **Wait at least three minutes before unplugging the connectors or removing other electrical equipment.**

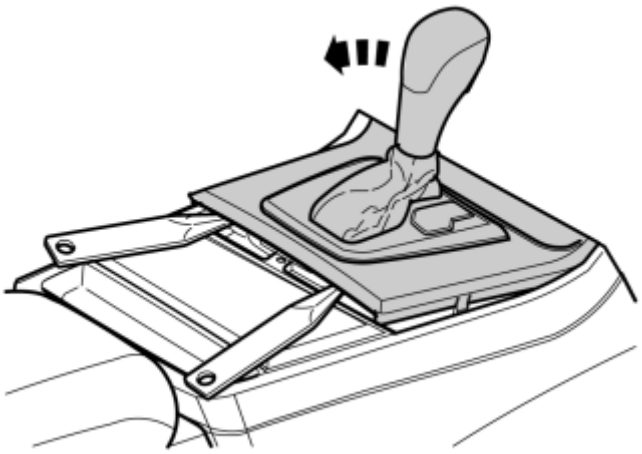

Fig. 501: View Of Pry Off The Gear Selector Panel
Courtesy of VOLVO CARS CORPORATION

Applies to cars with automatic gearbox

- Turn the ignition key to position II.

Applies to all models

- Move the gear selector lever to its rearmost position.
- Use a weatherstrip and pry off the gear selector panel at the rear edge.

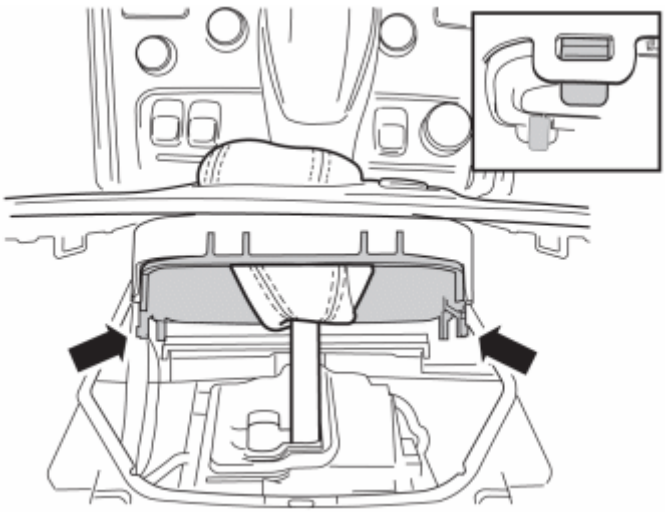

Fig. 502: Pressing In Catches And Removing Panel
Courtesy of VOLVO CARS CORPORATION

- Press in the catches and remove the panel.

Illustration A

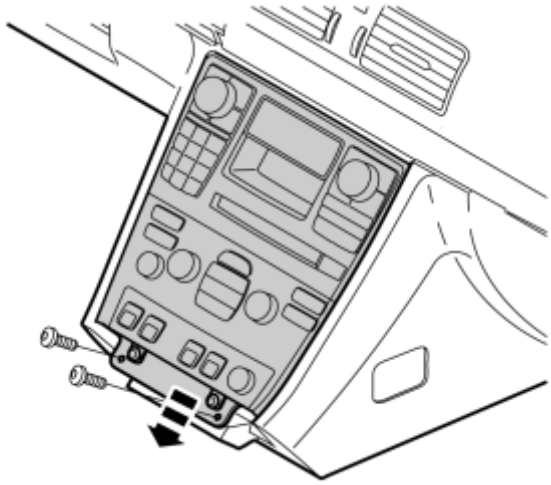

Fig. 503: Identifying The Radio And A/C Panel Center Console
Courtesy of VOLVO CARS CORPORATION

- Remove the two screws.
- Remove the bracket with the A/C panel and radio from the center console. Pull from the lower edge and then downwards until it releases from the mounting at the upper edge.

NOTE: Do not damage the removed components or the surrounding panels.

Illustration B

Fig. 504: View Of Tunnel Console
Courtesy of VOLVO CARS CORPORATION

- Lay out a cloth to protect the tunnel console and unit, as illustrated. Depending on the design the cable may need to be disconnected and the unit placed to one side.

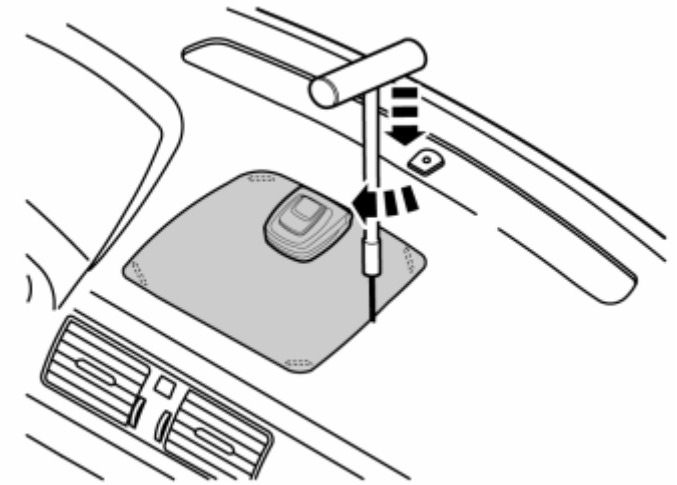

Fig. 505: View Of Loudspeaker Grille Removal (1 of 2)
Courtesy of VOLVO CARS CORPORATION

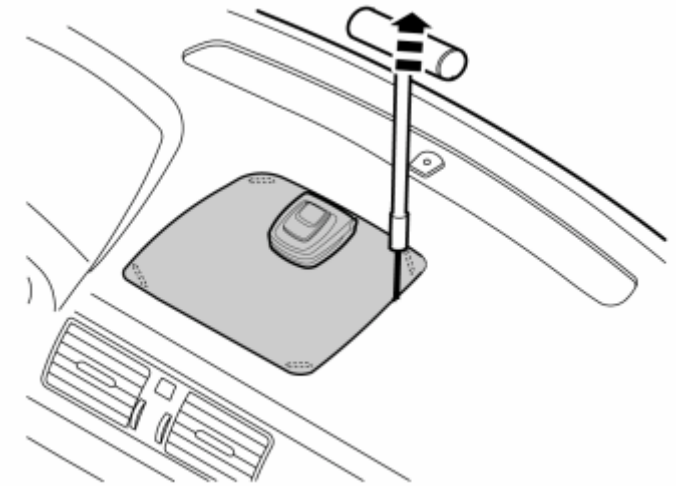

Fig. 506: View Of Loudspeaker Grille Removal (2 of 2)
Courtesy of VOLVO CARS CORPORATION

- Pull upward until the loudspeaker grille detaches. The loudspeaker grille is securely fastened by four clips. Move the tool closer to the clips to facilitate removal.
- Lift out the loudspeaker grille.

NOTE: Do not damage the dashboard.

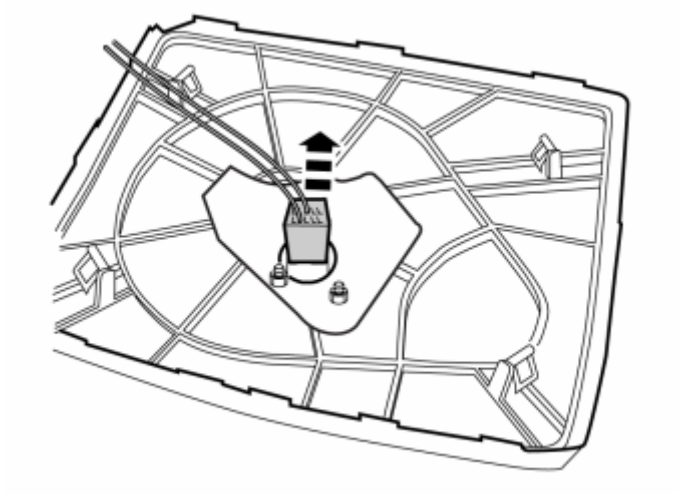

Fig. 507: Identifying GPS Cradle Connector
Courtesy of VOLVO CARS CORPORATION

- Disconnect the connector from the GPS cradle.

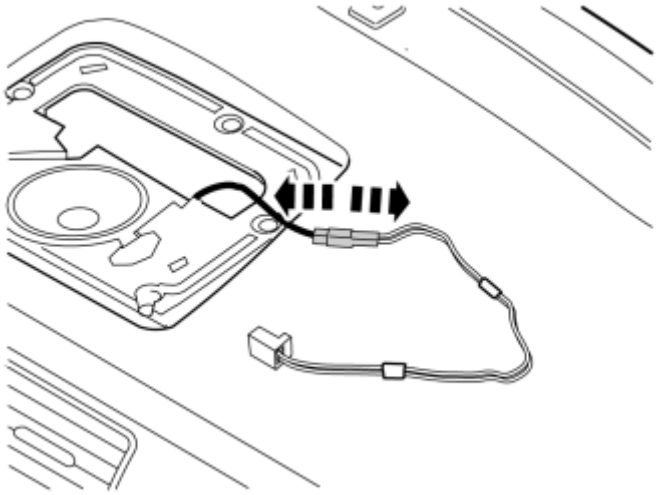

Fig. 508: View Of GPS Cable Splice
Courtesy of VOLVO CARS CORPORATION

- Carefully pull up the cable for the GPS cradle to access the cable splice.
- Separate the splice and place the shorter cable to one side. There is a new cable in the kit.

Fig. 509: Identifying Media Player Antenna Cable
Courtesy of VOLVO CARS CORPORATION

- Remove the antenna cable from the media player.

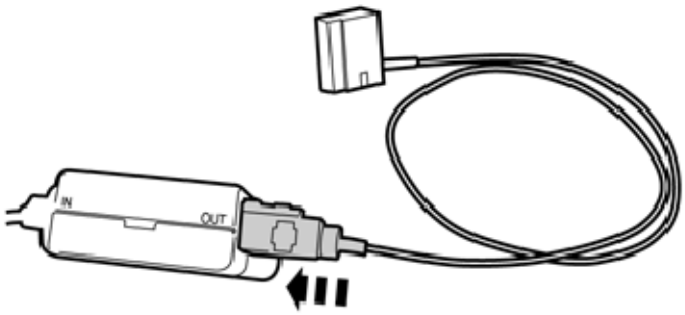

Fig. 510: View Of TMC Unit And Antenna Cable
Courtesy of VOLVO CARS CORPORATION

- Take the TMC unit and the antenna cable from the kit and connect the antenna cable to **OUT** on the TMC unit.

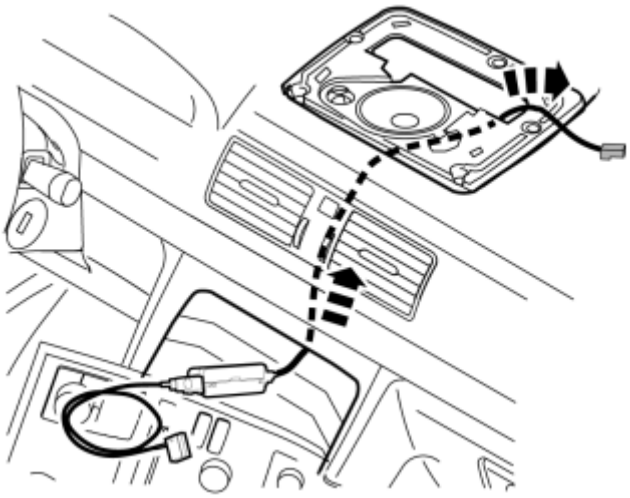

Fig. 511: View Of TMC Green Connector
Courtesy of VOLVO CARS CORPORATION

- Insert the long cable with the green connector from the TMC unit up between the air vent and through the hole in the loudspeaker grill, the same way as the previously routed cable.

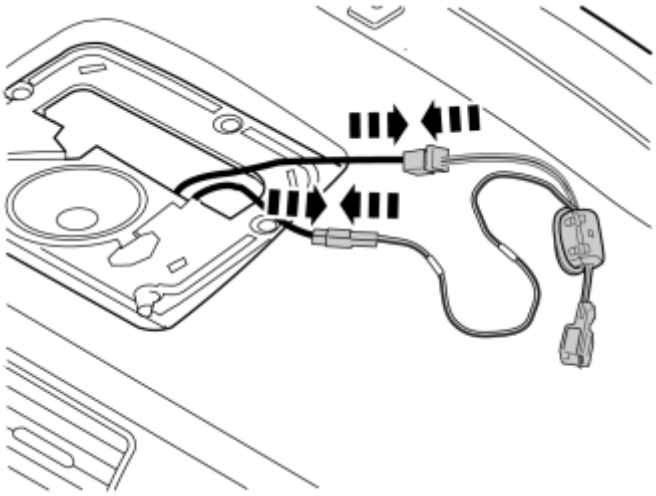

Fig. 512: Connecting Green Connectors To Existing Cables
Courtesy of VOLVO CARS CORPORATION

- Take the remaining cable harness with the three connectors from the kit and connect the two green connectors to the routed and existing cable harness.

Illustration A

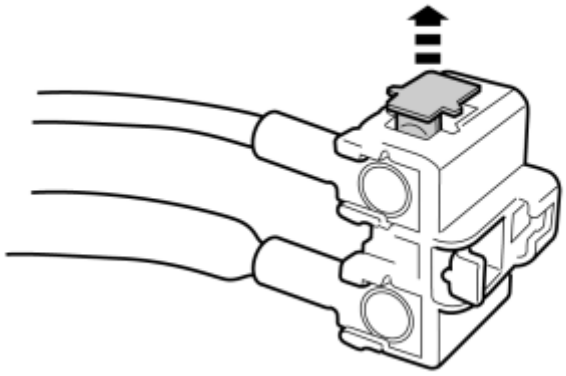

Fig. 513: Identifying Receptacle Housing Catch
Courtesy of VOLVO CARS CORPORATION

- Carefully pry up and remove the catch in the receptacle housing on the cable terminal for the socket marked **1** for the media player. Use a thin pointed object.

Illustration B

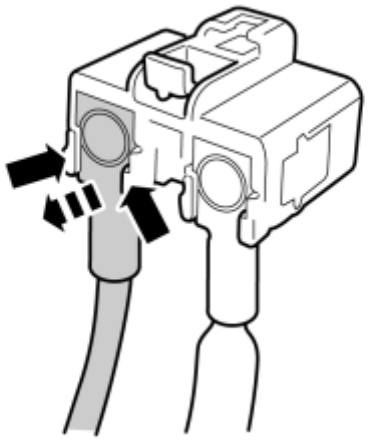

Fig. 514: Identifying Receptacle Housing Rear Edge Catch
Courtesy of VOLVO CARS CORPORATION

- Carefully pry up the two small catches at the rear edge of the receptacle housing and carefully pull out the cable terminal.

Fig. 515: Identifying Antenna Cable Receptacle Housing
Courtesy of VOLVO CARS CORPORATION

- Carefully push the catch up on the angled connector on the antenna cable, connected to the TMC unit, and pull the cable terminal out from the receptacle housing.

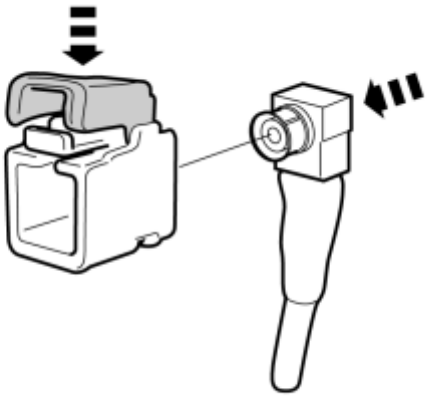

Fig. 516: Identifying Media Player Cable Housing
Courtesy of VOLVO CARS CORPORATION

- Take the newly removed receptacle housing and carefully push it into the loose cable terminal on the contact in the cable for the media player.

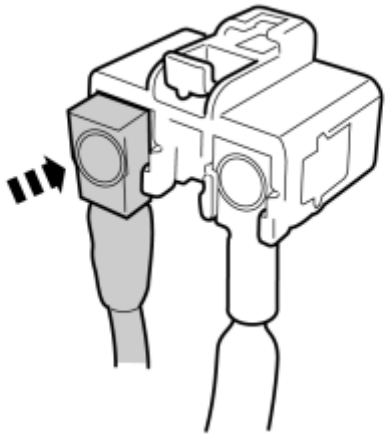

Fig. 517: Identifying Loose Cable Terminal
Courtesy of VOLVO CARS CORPORATION

- Take the loose cable terminal in the antenna cable and carefully secure it in the receptacle housing to the cables for the media player.

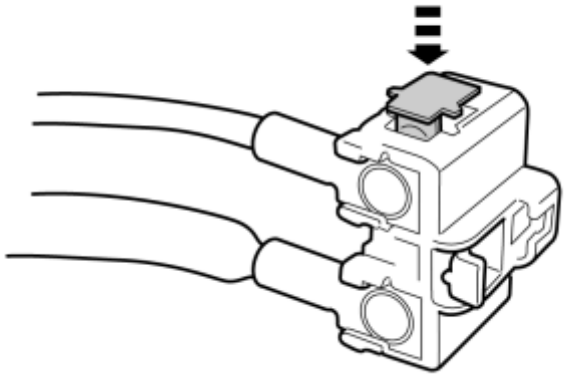

Fig. 518: Identifying Receptacle Housing Catch
Courtesy of VOLVO CARS CORPORATION

- Press the catch securely into the receptacle housing.

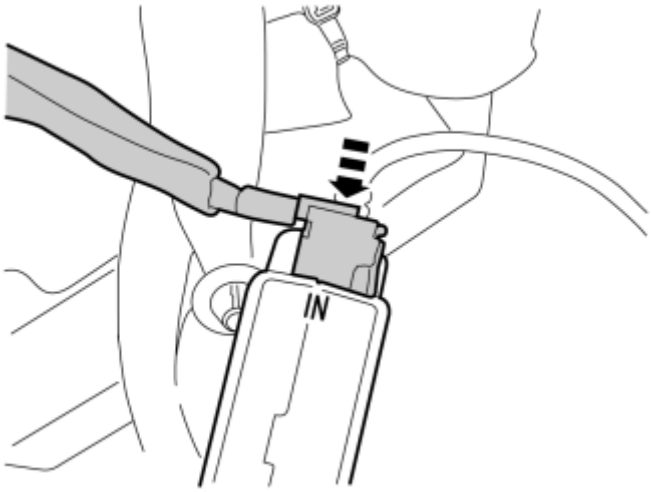

Fig. 519: Identifying Cable Terminal Connection
Courtesy of VOLVO CARS CORPORATION

- Connect the previously disconnected cable terminal on the cable from the media player's receptacle housing to **IN** on the TMC unit.

INSTALLING

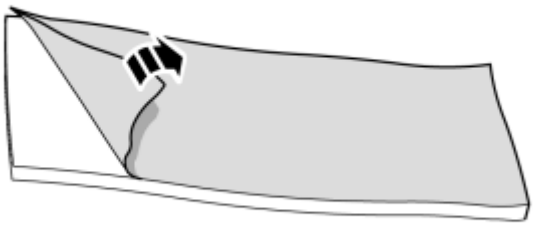

Fig. 520: Identifying Foam Tape
Courtesy of VOLVO CARS CORPORATION

- Take foam tape from the kit.
- Cut off a suitable length for ferrite and all green connectors.
- Remove the masking tape.

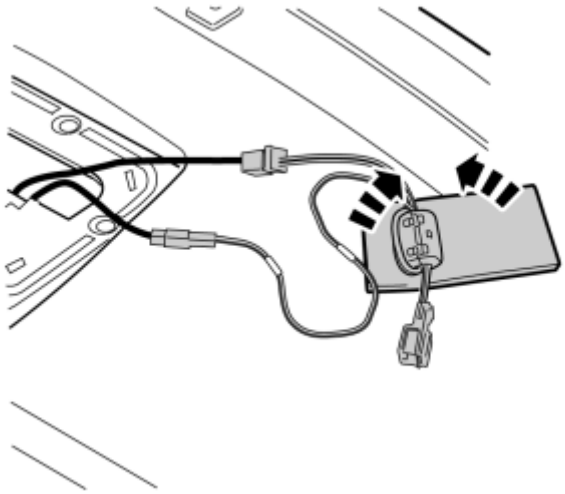

Fig. 521: Wrap The Ferrite Using Foam Tape
Courtesy of VOLVO CARS CORPORATION

- Wrap the ferrite using foam tape.

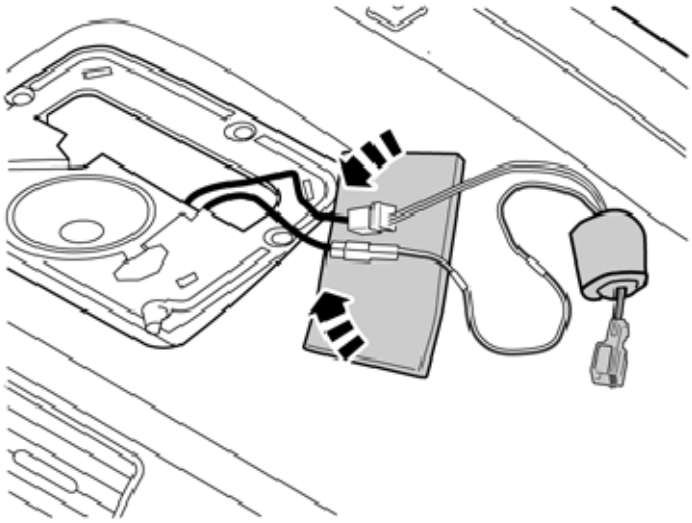

Fig. 522: Wrap The Four Connectors Together With Foam Tape
Courtesy of VOLVO CARS CORPORATION

- Wrap the four connectors together with foam tape.

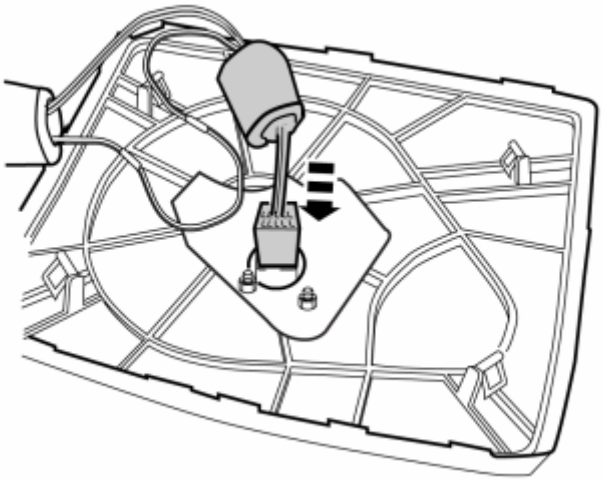

Fig. 523: Identifying Gray Connector To The GPS Cradle
Courtesy of VOLVO CARS CORPORATION

- Connect the gray connector to the GPS cradle.

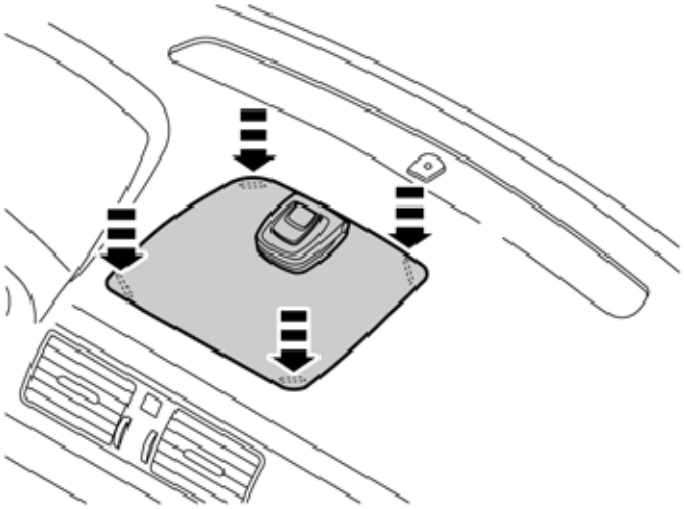

Fig. 524: Secure Loudspeaker Grille
Courtesy of VOLVO CARS CORPORATION

- Secure the loudspeaker grille.

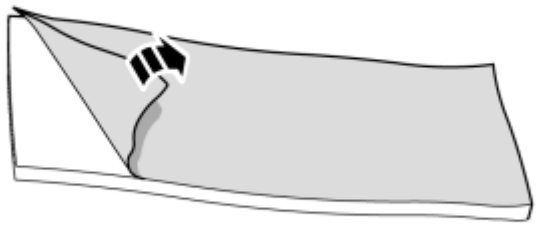

Fig. 525: Identifying Foam Tape
Courtesy of VOLVO CARS CORPORATION

- Take foam tape from the kit.
- Remove the masking tape.

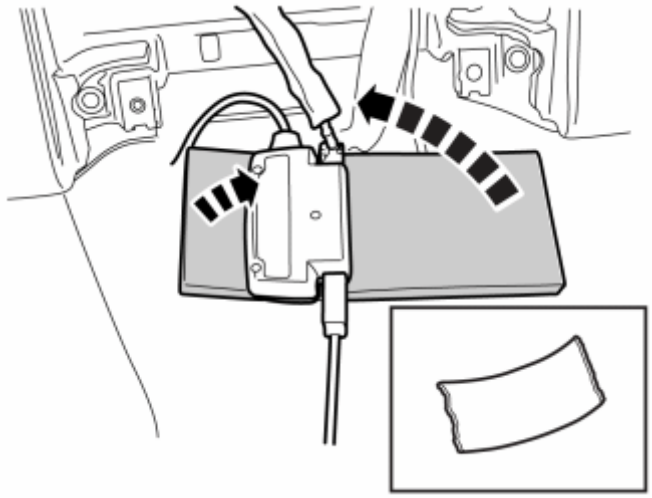

Fig. 526: View Of TMC Unit With Foam Tape
Courtesy of VOLVO CARS CORPORATION

- Wrap the TMC unit with foam tape.

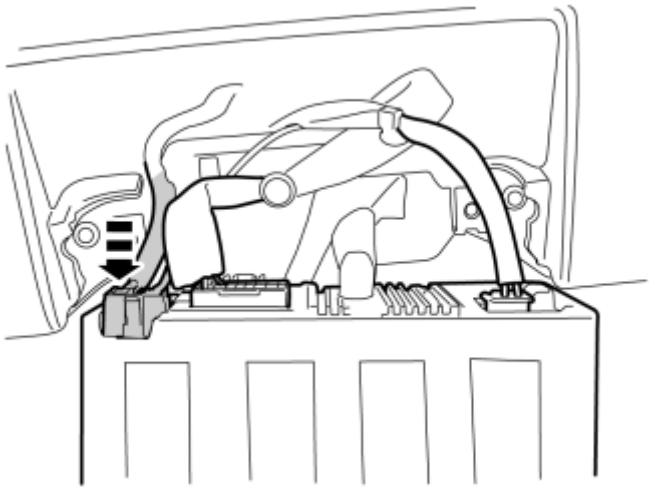

Fig. 527: Identifying Antenna Cable To Media Player
Courtesy of VOLVO CARS CORPORATION

- Connect the antenna cable to the media player.

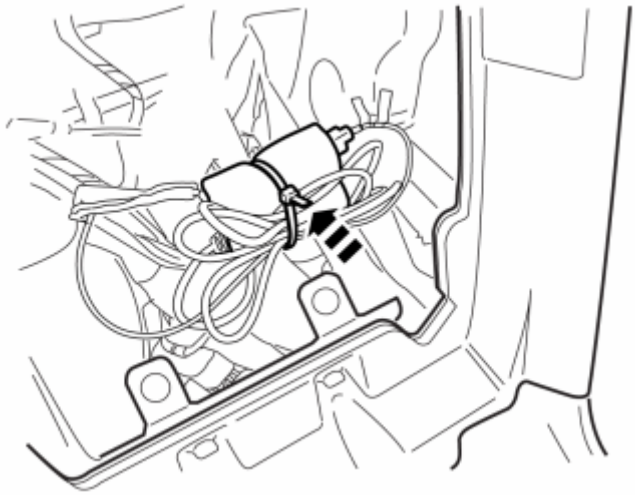

Fig. 528: View Of TMC Unit And Cable Excess
Courtesy of VOLVO CARS CORPORATION

- Place the TMC unit together with the cable excess and other cables for the navigation equipment at the bottom of the center console in a way that prevents trapping and chafing.
- If **Navigation system portable** and **Navigation system, portable, Installation kit TMC** are installed at the same time, secure all excess with the cable tie from the navigation kit.

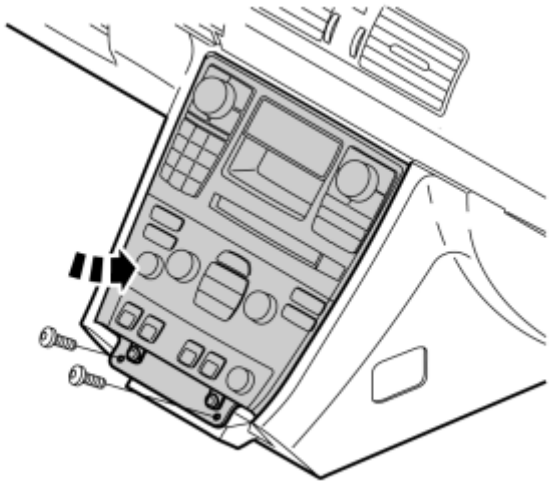

Fig. 529: Installing Media Player And Climate Panel
Courtesy of VOLVO CARS CORPORATION

- Reinstall the unit with the media player and climate panel.
- Tighten using the existing screws.

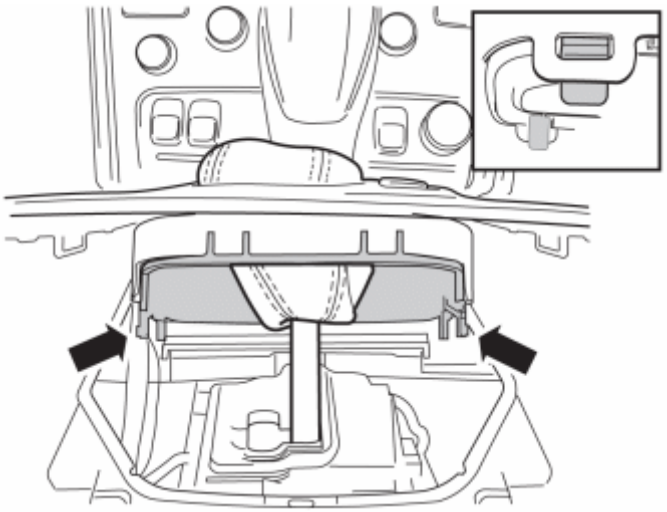

Fig. 530: Pressing In Catches And Removing Panel
Courtesy of VOLVO CARS CORPORATION

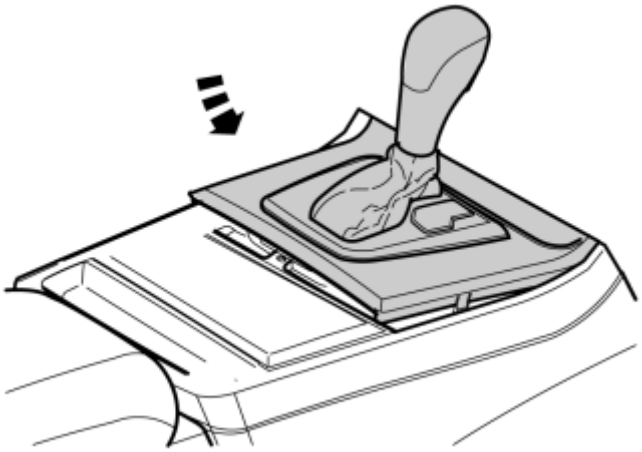

Fig. 531: Installing The Gear Selector Panel
Courtesy of VOLVO CARS CORPORATION

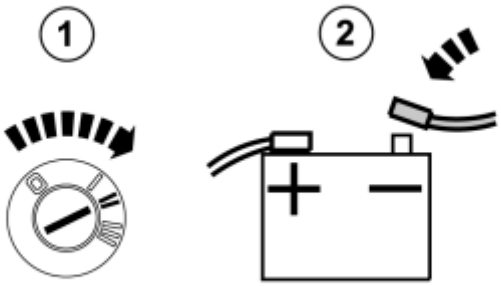

Fig. 532: Identifying Ignition In ON Position and Connecting Negative Battery Lead
Courtesy of VOLVO CARS CORPORATION

- Turn the ignition key to position II.
- Reconnect the battery negative lead.

Applies to cars where Navigation system portable and Navigation system, portable, Installation kit TMC are all installed.

- First carry out steps of the Navigation system portable installation instructions.
- Then carry out steps of the Navigation system, portable, Installation kit TMC installation instructions.

SATELLITE RADIO, SIRIUS (2007-2011)

SATELLITE RADIO, SIRIUS

NOTE: **During installation, the surface and ambient temperature should be between +18-35°C (64-95°F).**

Do not wash the car within 72 hours after installation is completed.

Leave the car indoors for at least two hours after finishing installation if the outdoor temperature falls below +18°C (64°F) and/or if weather conditions are not dry.

Make sure to have good lighting when fastening the antenna with cable to the body.

PREPARATION

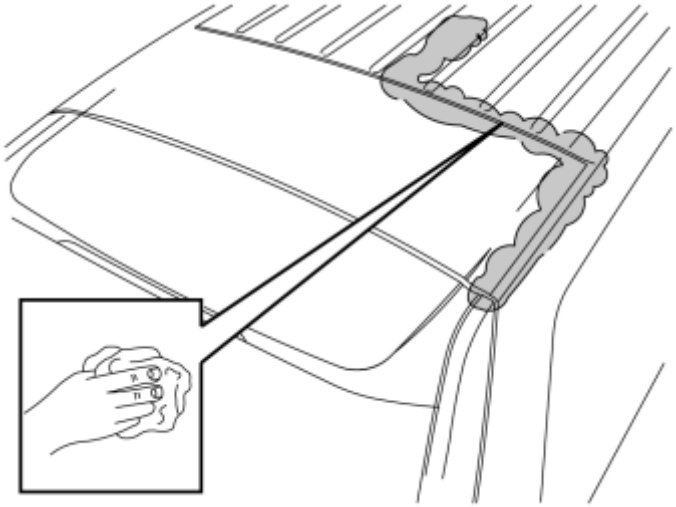

Fig. 533: Identifying "Ditch" Cleaning Areas
Courtesy of VOLVO CARS CORPORATION

- Clean the car from dirt and grease using a blend of washer fluid and water as marked. Wipe dry.
- Be particularly sure that the "ditches" around the antenna module panel are free of dirt and other contaminants.

REMOVE

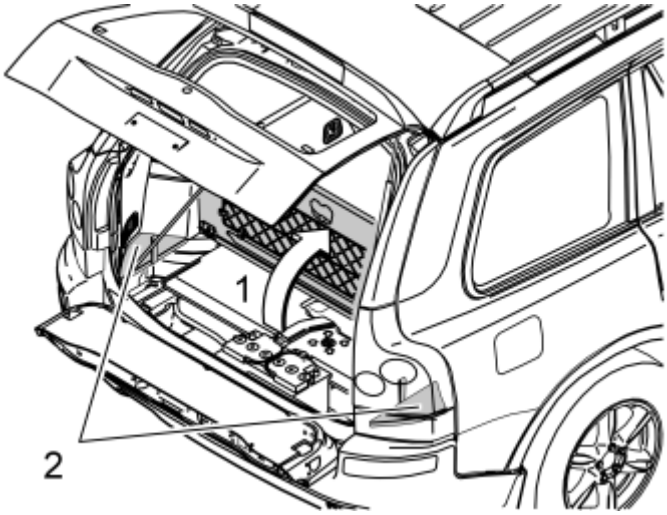

Fig. 534: Fold Up The Centre Rear Floor Hatch (1)
Courtesy of VOLVO CARS CORPORATION

Applies to cars with two rows of seats

- Fold up the center rear floor hatch (1). If the underside of the floor hatch is equipped with a grocery bag holder, the holder is secured with a strap on both ends of the storage compartment. Detach the straps.
- Remove the storage compartment under the floor hatch.
- Remove the floor hatch by folding it almost completely closed then pulling it backwards from its mountings until it releases.

Applies to cars with three rows of seats and integrated carrier bag holder on the underside of the center floor hatch

- Fold up the center rear floor hatch (1).
- Detach the two straps on the underlying panel. Lift up the rear edge of the panel, fold the floor hatch back towards the panel and lift out the floor hatch with the panel.

Applies to cars with three rows of seats without an integrated carrier bag holder

- Fold up the center rear floor hatch (1) at the rear edge and lift it out.

Applies to all models

- Remove the two side floor hatches (2).

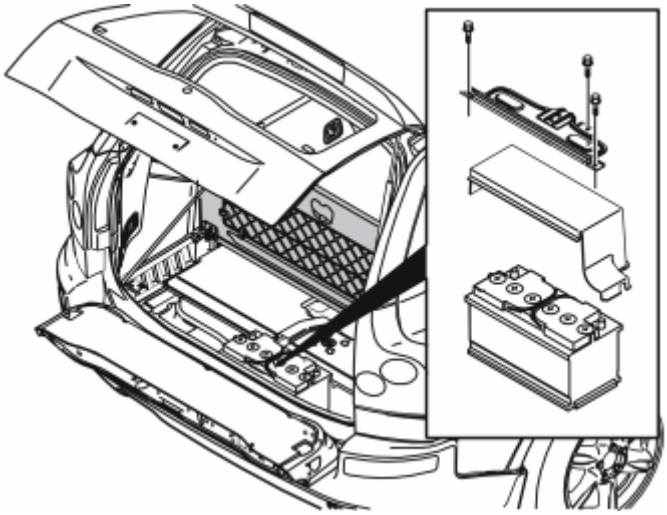

Fig. 535: Removing Three Screws In Battery Holder
Courtesy of VOLVO CARS CORPORATION

- Remove the three screws on the battery holder and lift it out.
- Remove the battery cover.

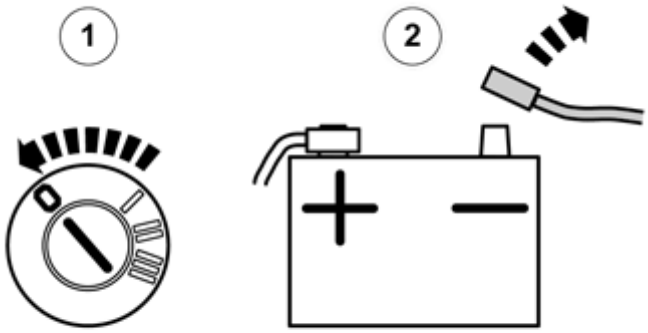

Fig. 536: Identifying Ignition Switch OFF And Disconnected Negative Battery Lead
Courtesy of VOLVO CARS CORPORATION

- Set the ignition key to position **0** .
- Disconnect the battery negative lead.

NOTE: **Wait at least one minute before unplugging the connectors or removing other electrical equipment.**

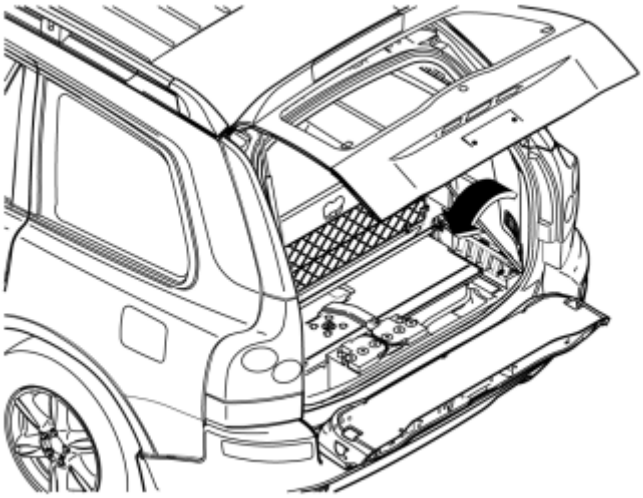

Fig. 537: Identifying Right-Hand Side Folding Side Panel Of Cargo Compartment
Courtesy of VOLVO CARS CORPORATION

- Remove the folding side panel from the right-hand side of the cargo compartment.

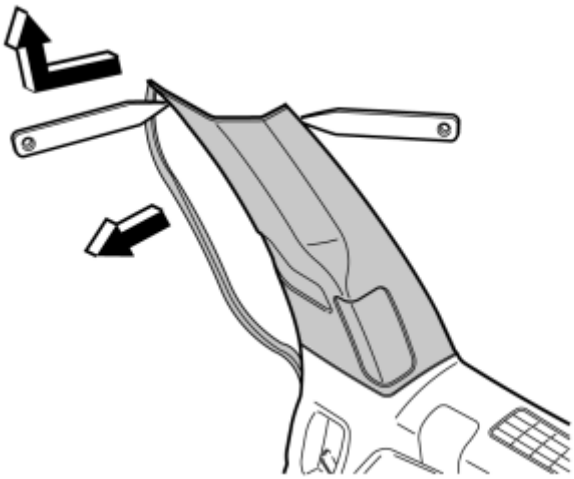

Fig. 538: Identifying C-Post Panel Removal
Courtesy of VOLVO CARS CORPORATION

- Pull off the rubber strip at the rear edge of the door opening for the right-hand rear door opposite the right C-post panel.
- Carefully pry off the C-post panel sides at the top. Use a plastic weatherstrip tool. Then pull until the three clips on the inside release. Do not damage the headlining or the panel.
- If a headphone socket is mounted, disconnect the connector to such.
- Remove the panel by pulling upwards slightly and unhooking it from the side panel.

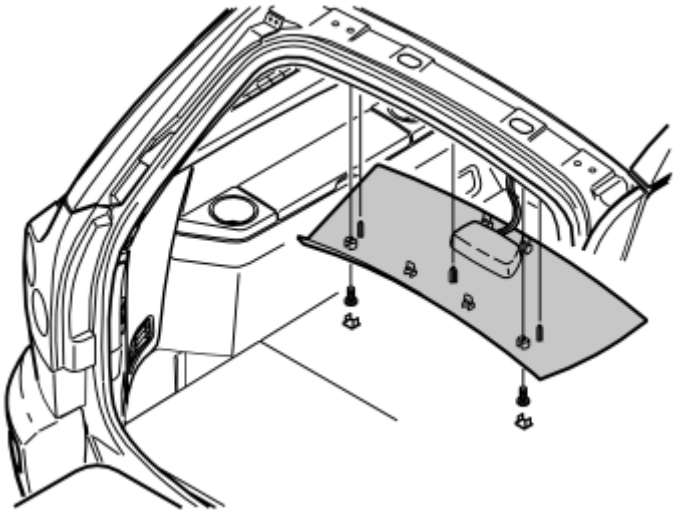

Fig. 539: Identifying Cover And Screws Underneath Rear Headlining
Courtesy of VOLVO CARS CORPORATION

- Remove the rear roof panel covers and the screws beneath them.
- Carefully pry off the panel at the rear edge. Use a plastic weatherstrip tool.
- Pull the rear edge of the panel downwards until the four clips on the top release.
- If the car is equipped with lighting in the panel, unplug the connector from the panel.
- Pull the panel backwards to release it.

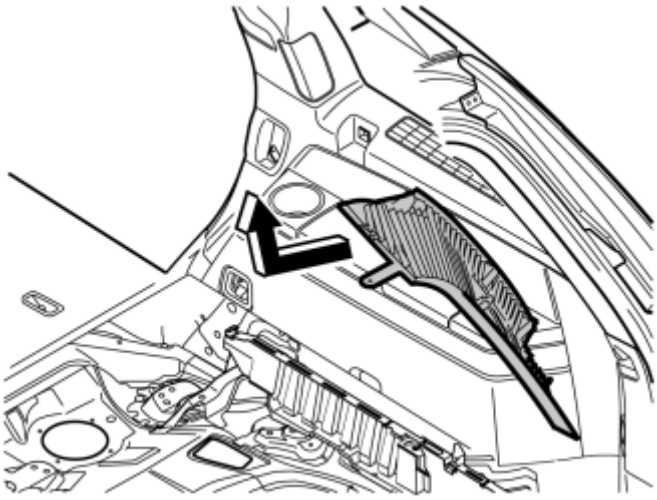

Fig. 540: View Of D-Post Panel Removal
Courtesy of VOLVO CARS CORPORATION

- Carefully pull off the D-post panel. Start at the top edge then pull down until the three clips on the inside release. Do not damage the panel.
- Disconnect the connector on the D-post panel (if the car has a speaker in the D-post, the connector is in the speaker)
- Remove the panel by pulling upwards slightly and unhooking it from the side panel.

Illustration A shows the removal of the cover for the load securing eyelets

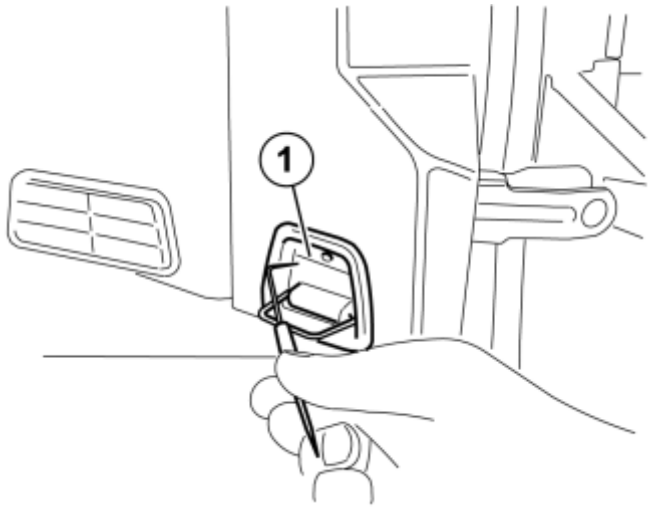

Fig. 541: Identifying Load Securing Eyelet
Courtesy of VOLVO CARS CORPORATION

- Fold out the load securing eyelet.
- Insert a scriber with an angled tip into the hole in the top of the cover.
- Turn the scriber so that the angled tip engages in the reverse of the cover (1). Pull the cover off.

Illustration B applies to cars with two rows of seats

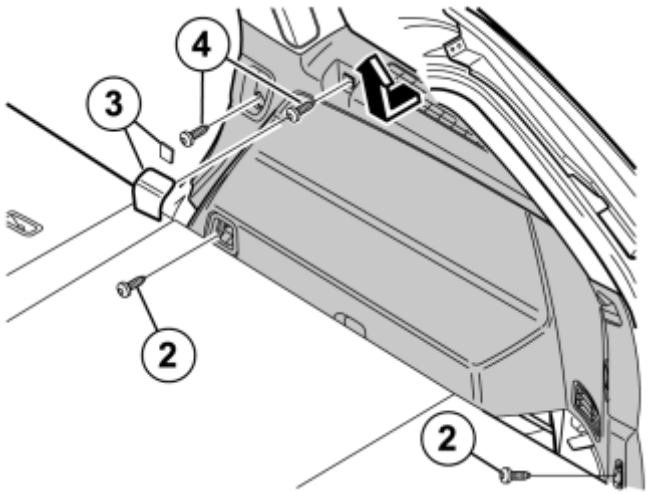

Fig. 542: If The Car Is Equipped With A 12 V Socket, Remove Its Connector
Courtesy of VOLVO CARS CORPORATION

- If the car is equipped with a 12 V socket, remove its connector.

Illustration C applies to cars with three rows of seats

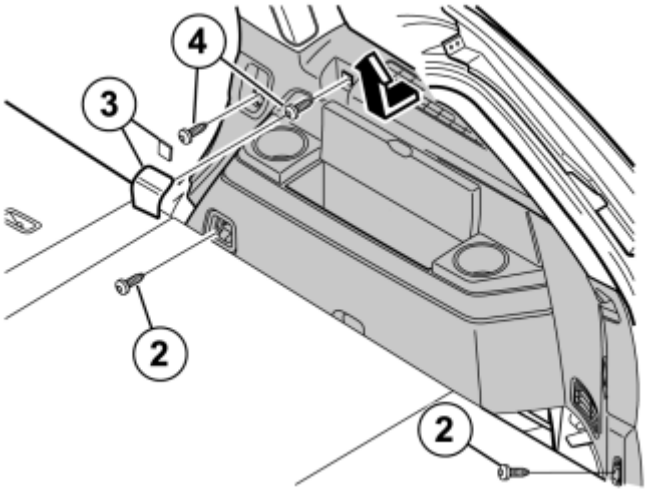

Fig. 543: Identifying Panel And Components
Courtesy of VOLVO CARS CORPORATION

- Fold up the seats in the third row (applies to cars with three rows of seats).
- Remove the screws (2) for the load securing eyelets in the right-hand side panel.
- Remove the covers (3) over the front mountings for the right-hand side panel. Pry the covers off. Use a plastic weatherstrip tool or a small screwdriver.
- Remove the screws (4).
- Remove the panel by pulling out the upper edge slightly so that the clips on the inside release. Pull the panel straight up.
- If the car is equipped with a 12 V socket, remove its connector.

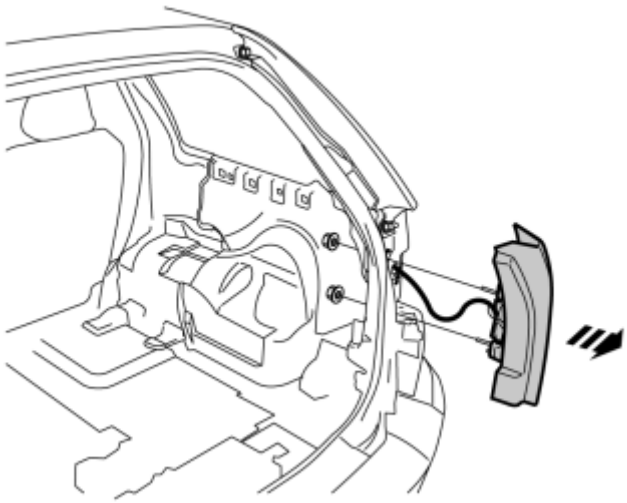

Fig. 544: View Of Taillight Nuts
Courtesy of VOLVO CARS CORPORATION

Illustrations A and B

- Remove the two nuts holding the right taillight in place.

- Pull out the taillamp and place it at the right-hand side of the tailgate opening (Illustration B).

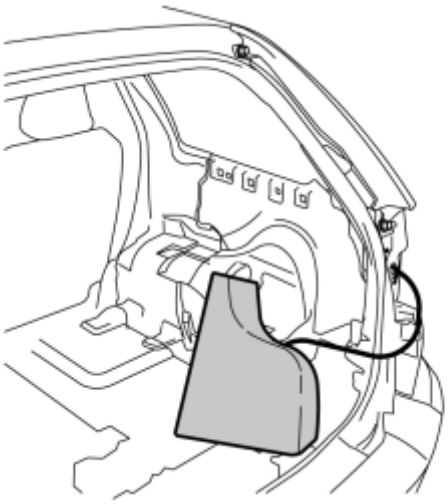

Fig. 545: View Of Stowed Taillight
Courtesy of VOLVO CARS CORPORATION

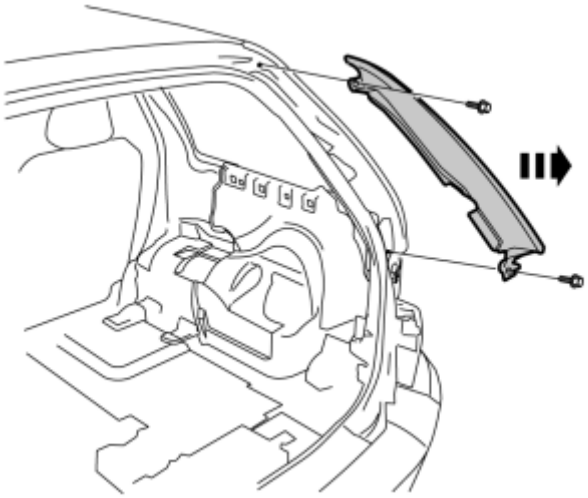

Fig. 546: View Of Upper Right-Hand Taillight
Courtesy of VOLVO CARS CORPORATION

- Remove the two screws and remove the upper part of the right-hand taillight.

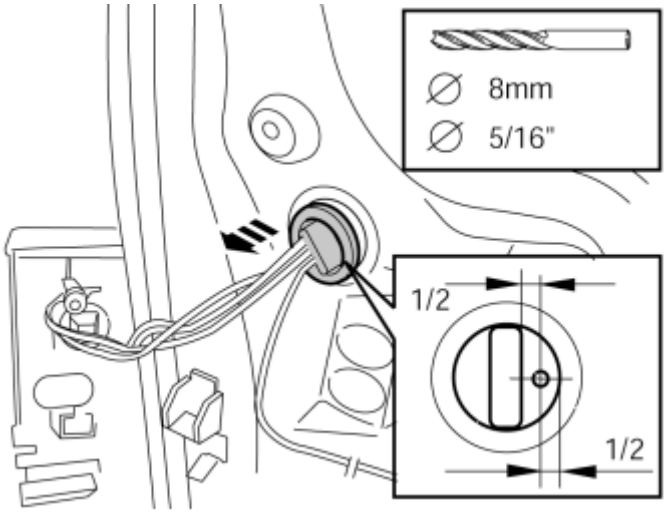

Fig. 547: Identifying Rubber Grommet And Cables
Courtesy of VOLVO CARS CORPORATION

- Remove the rubber grommet (with cables) of the right-hand taillight from the body.
- Pre-drill a **5 mm (3/16 ")** on the right-hand side of the rubber grommet.
- Drill out the hole using a **8 mm (5/16 ")** drill bit.

NOTE: Do not damage the adjacent cables.

INSTALL

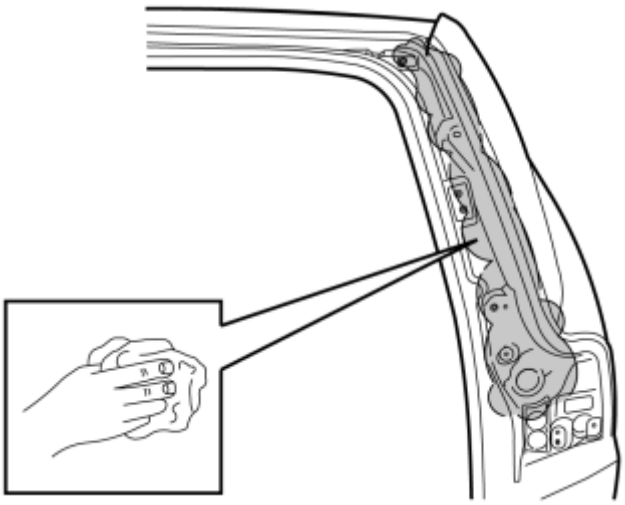

Fig. 548: Clean The Marked Surface
Courtesy of VOLVO CARS CORPORATION

- Clean the marked surface from dirt and grease using a blend of washer fluid and water as marked. Wipe dry.
- Now clean the same area with isopropanol wipes and wipe dry.

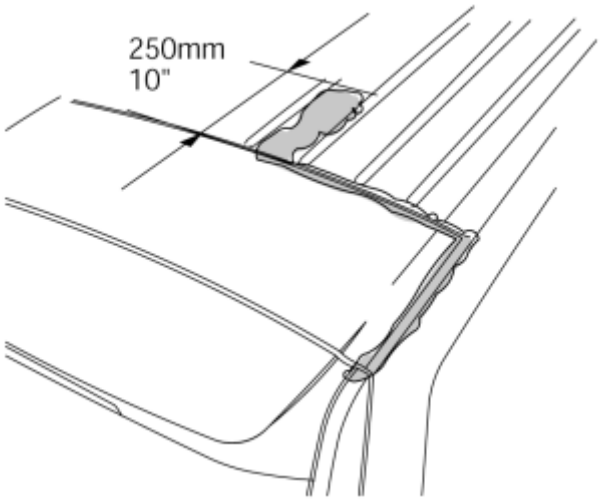

Fig. 549: Clean The Marked Surfaces On The Roof And In The "Ditch" Around The Antenna Module Panel
Courtesy of VOLVO CARS CORPORATION

The antenna will be positioned in the space between the roof's center embossing and the embossing to the right of such on the right-hand side of the roof.

- Clean the marked surfaces on the roof and in the "ditch" around the antenna module panel. Use Cleaner-H part no. 1161436. Wipe dry.

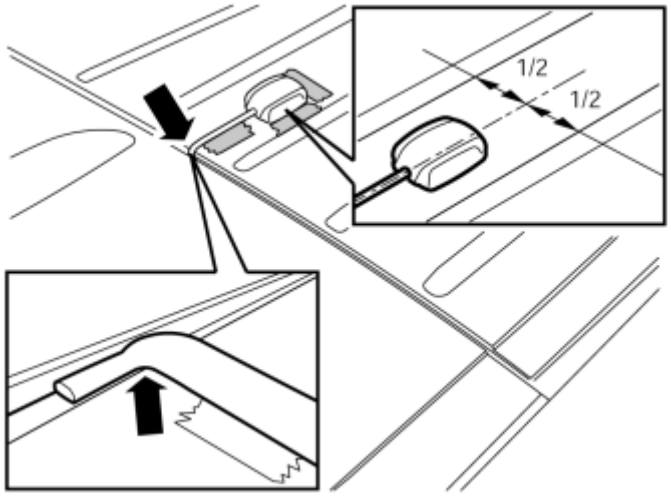

Fig. 550: Identifying Antenna Positioning
Courtesy of VOLVO CARS CORPORATION

- Position the antenna and the first part of the cable in the center of the space between two of the roof plate's embossings. Make sure that the hooked part of the antenna cable ends up at the hooking of the roof plate.
- Use pieces of tape to mark out the positions of the antenna and cable.

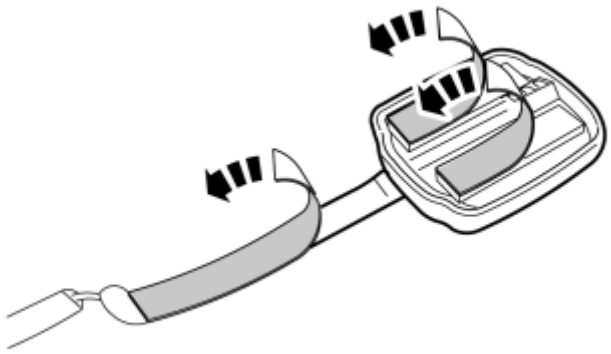

Fig. 551: Remove Attachment Tape Protective Backing For The Antenna And Antenna Cable
Courtesy of VOLVO CARS CORPORATION

- Remove the protective backing from the attachment tape of the antenna and antenna cable.

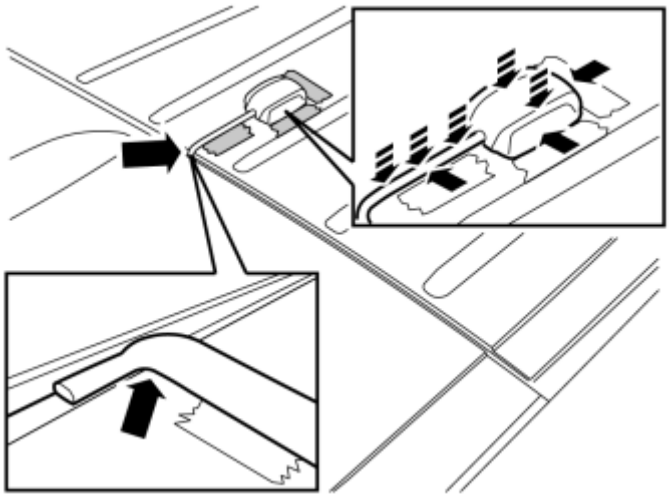

Fig. 552: Identifying Antenna Cable's Bent Part
Courtesy of VOLVO CARS CORPORATION

- First position the antenna cables bent part and then continue to secure the cable and antenna along the tape markings.

  Press securely and hold for 30 seconds so that the tape adheres properly.

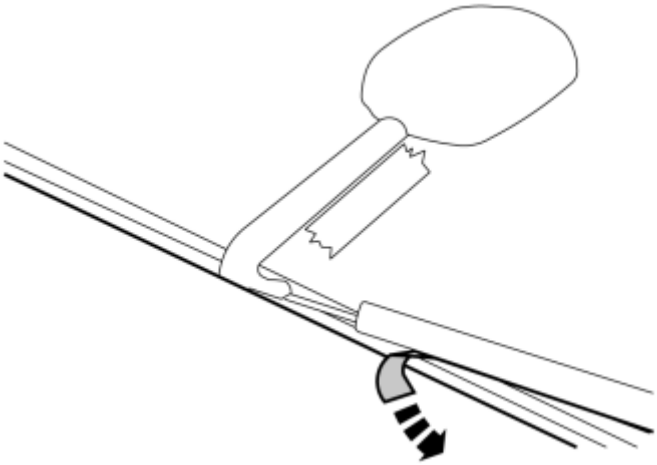

Fig. 553: Remove Some Of The Protective Backing From The Antenna Cable's Second Part
Courtesy of VOLVO CARS CORPORATION

- Remove some of the protective backing from the antenna cables second part.

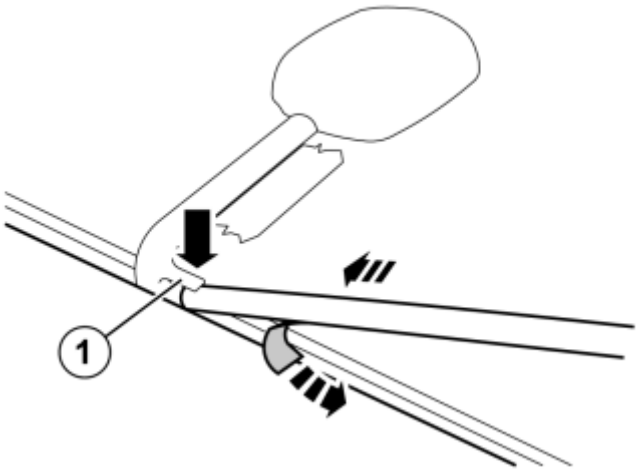

Fig. 554: View Of Pressing The Casing So That It Fastens In The Bottom Of The "Ditch"
Courtesy of VOLVO CARS CORPORATION

- Now guide the casing of the second antenna part towards the first and under its tab (1).
- Press the casing so that it fastens in the bottom of the "ditch" using the part of the tape with the backing removed.

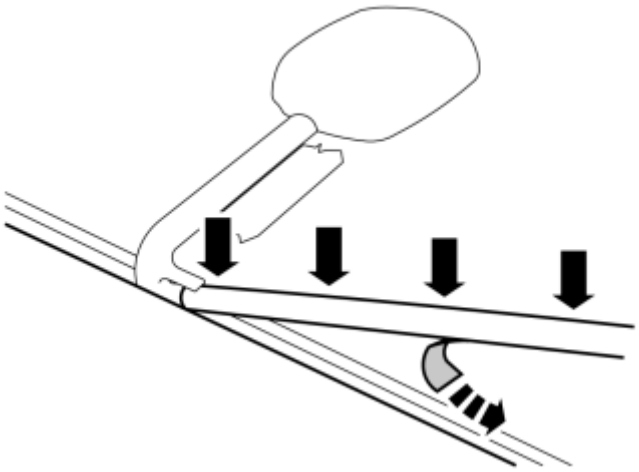

Fig. 555: Pressing Second Part Of Antenna Cable Into "Ditch"
Courtesy of VOLVO CARS CORPORATION

- Continue removing the protective backing from the second part of the antenna cable and press it into the bottom of the "ditch" while doing so.
- Continue until the antenna cable with casing has been affixed in the "ditch" around the antenna module panel. Use a weatherstrip tool to press the antenna into place in the "ditch" around the antenna module. Make sure that the antenna fastens properly around the corner of the antenna module.

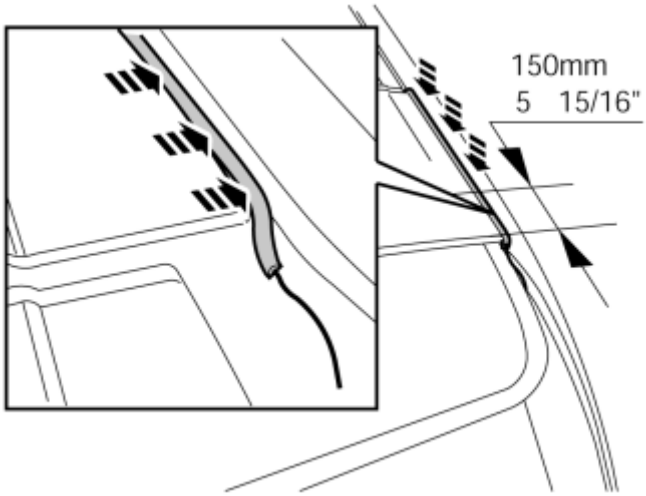

Fig. 556: View Of Cable In Vertical Part Of Roof Edge
Courtesy of VOLVO CARS CORPORATION

- Press the antenna cable into place against the vertical part of the roof edge at the last **150 mm (5 15/16 ")** of the "ditch" but as far down to the bottom of the "ditch" as possible.

NOTE: The last part of the "ditch" is narrower and may vary from car to car.

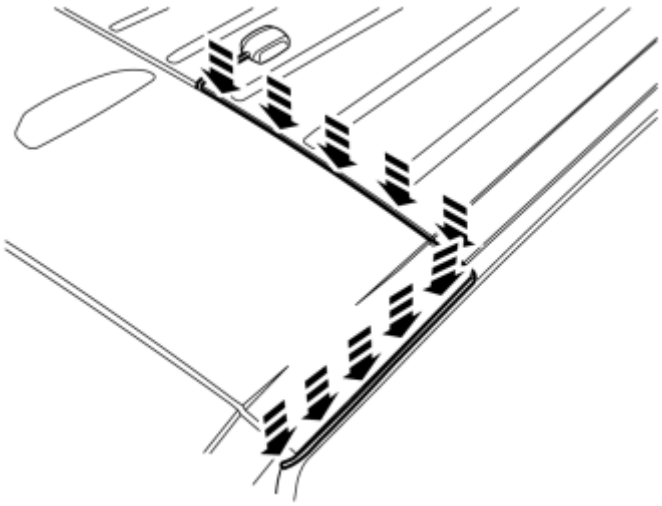

Fig. 557: View Of Pressing Antenna Cable Routing
Courtesy of VOLVO CARS CORPORATION

- Now go over the entire antenna cable routing again and press it into place more.

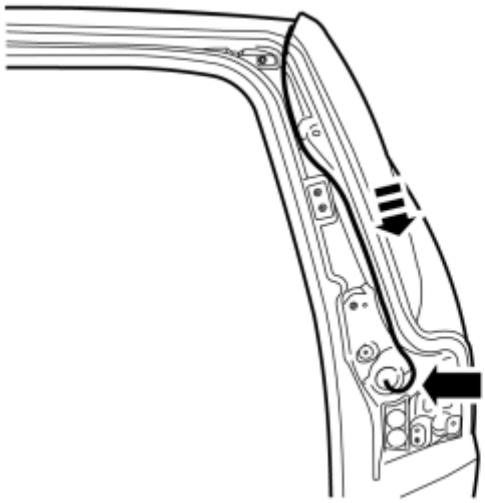

Fig. 558: Route The Antenna Cable Inside The Taillight
Courtesy of VOLVO CARS CORPORATION

- Route the antenna cable inside the taillight as illustrated.
- Guide the cable through the rubber grommet and reinstall the rubber grommet in the body.

NOTE: Do not damage the antenna cable connector.

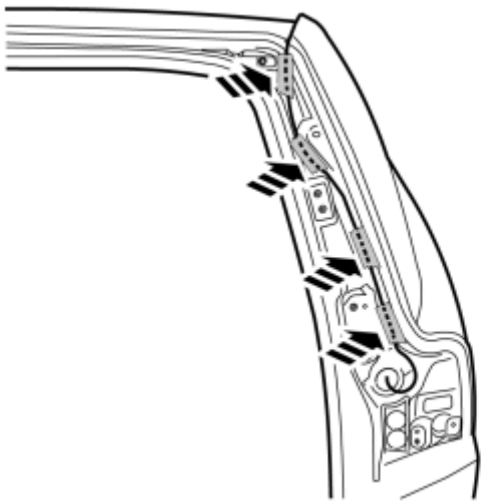

Fig. 559: Identifying Tape Pieces From The Kit To Fasten The Antenna Cable
Courtesy of VOLVO CARS CORPORATION

- Use tape pieces from the kit to fasten the antenna cable, pulling it taut as you affix each piece of tape.

NOTE: **Be sure not to tape the cable in a way that causes it to be in the way of the taillight's guides/guide pins or mounting holes.**

- Make sure that the cable makes a loop under the hole in the body, comes from underneath and goes into the rubber grommet to prevent water penetration at the rubber grommet.

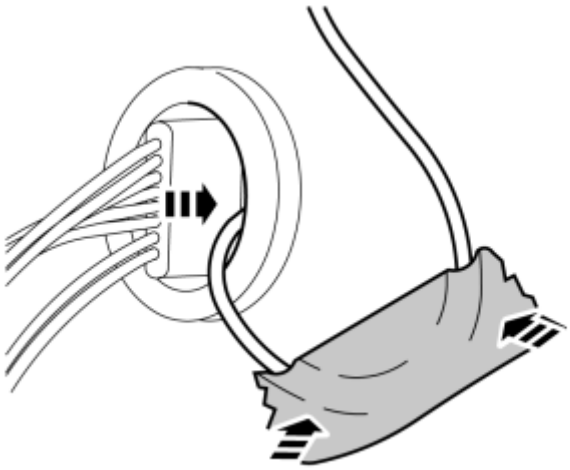

Fig. 560: Identifying Tape To Fasten The Cable Loop Beneath The Rubber Grommet
Courtesy of VOLVO CARS CORPORATION

- Use a piece of tape to fasten the cable loop beneath the rubber grommet. Pull all excess length of cable into the cargo compartment.

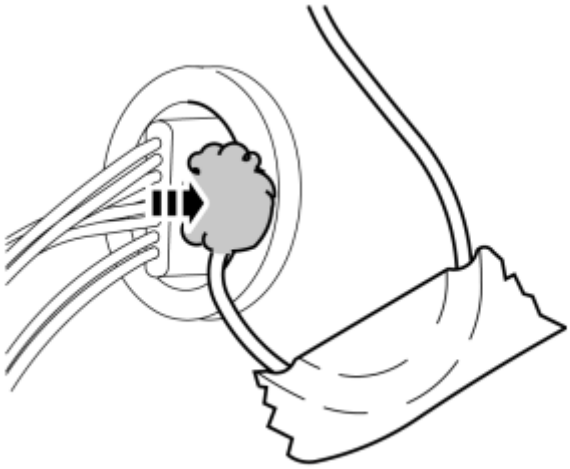

Fig. 561: View Of Butyl Tape To Seal Antenna Cable In The Rubber Grommet
Courtesy of VOLVO CARS CORPORATION

- Use butyl tape to seal around the antenna cable in the rubber grommet on both sides.

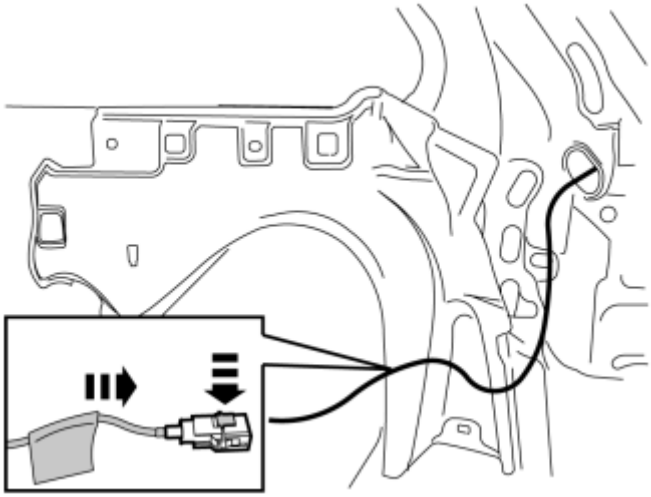

Fig. 562: Identifying Antenna Cable Connector
Courtesy of VOLVO CARS CORPORATION

- Take the connector from the kit and press the antenna cable into it.
- Press the connector's catch into place.

NOTE: **Ensure that the antenna cable is secure in the connector to prevent contact breaks.**

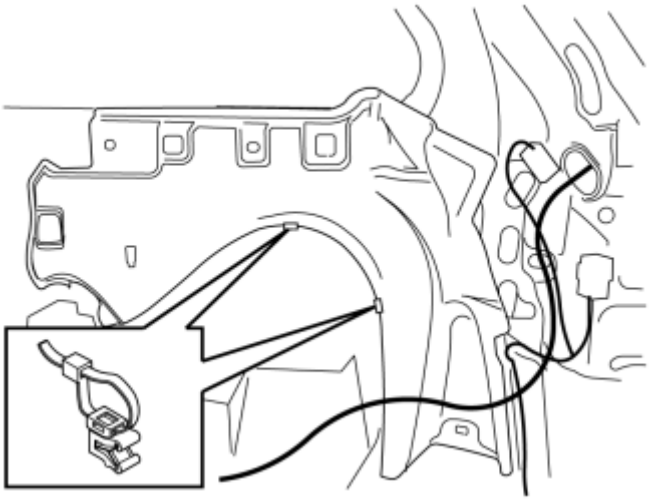

Fig. 563: Identifying Band Clamps
Courtesy of VOLVO CARS CORPORATION

- Pull the cable into the cargo compartment. Make sure that the cable loop beneath the rubber grommet does not disappear.
- Move the bottom edge of the insulating panel aside and fit two band clamps with edge clips along the edge of the wheel housing approximately in the positions illustrated.

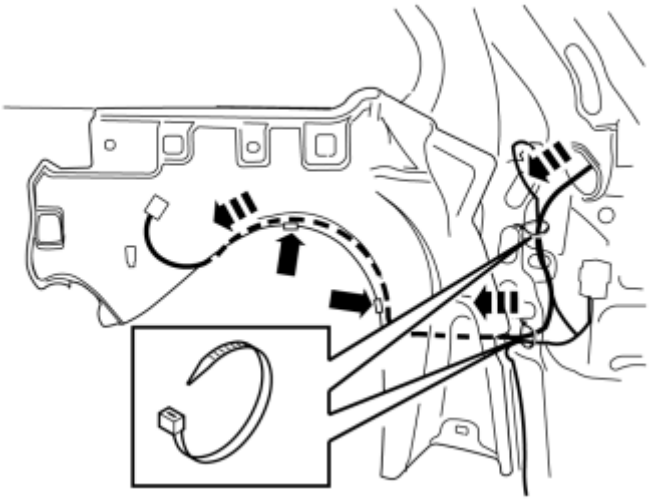

Fig. 564: Identifying Cable Harnesses Toward The First Clip In The Plate Flange
Courtesy of VOLVO CARS CORPORATION

- Pull the antenna cable down along the existing cable harnesses toward the first clip in the plate flange of the wheel housing.
- Use two clamps to clamp the cable around the wheel housing edge and two band clamps to clamp it at existing cable harnesses.

THERE ARE TWO VARIANTS OF ISOLATING PANELS.

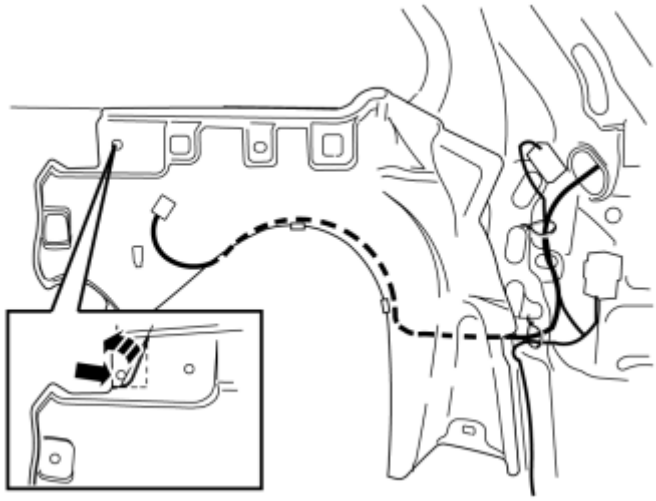

Fig. 565: Identifying Perforated Section Of The Insulating Panel
Courtesy of VOLVO CARS CORPORATION

Illustration A

- Tear away the perforated section of the insulating panel completely so that the third mounting hole for the Sirius receive bracket is accessible.

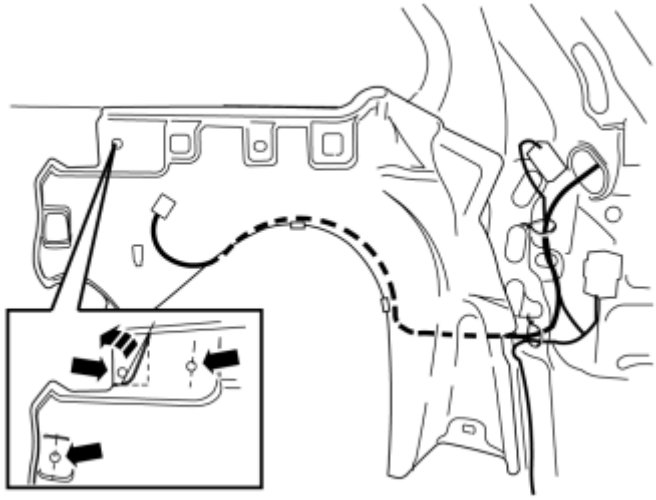

Fig. 566: View Of Tear Away The Perforated Part Of The Insulating Panel
Courtesy of VOLVO CARS CORPORATION

Illustration B

- Tear away the perforated part of the insulating panel.
- Pull apart the perforation for the front and rear hole.

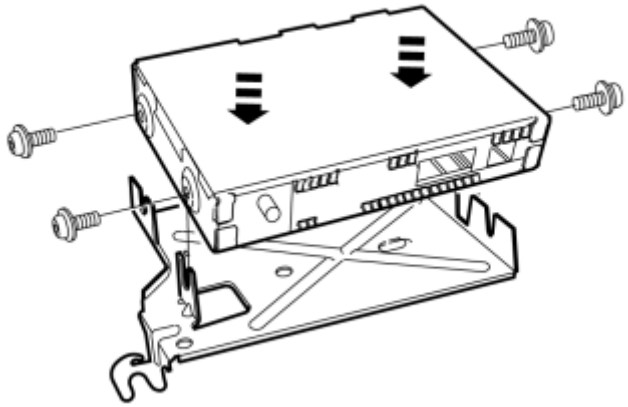

Fig. 567: Identifying Receiver In The Bracket
Courtesy of VOLVO CARS CORPORATION

- Position the receiver in the bracket and fasten with the four screws.

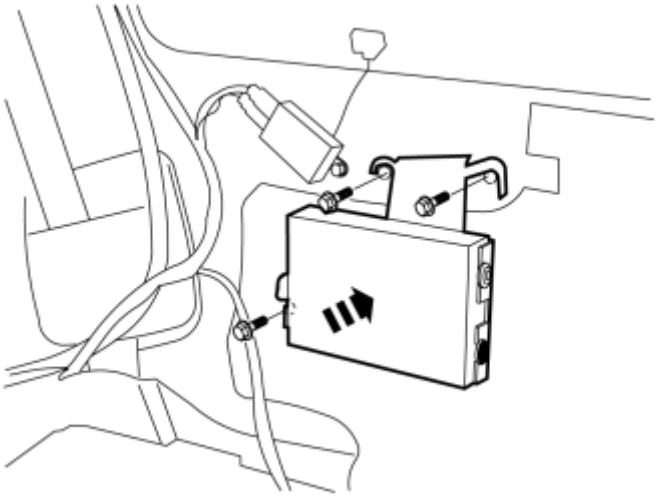

Fig. 568: View Of Fastened Sirius Receiver
Courtesy of VOLVO CARS CORPORATION

- Fasten the Sirius receiver with bracket using the three screws in the exposed holes. Tighten to **10 Nm (7.5 lbf. ft.)** .

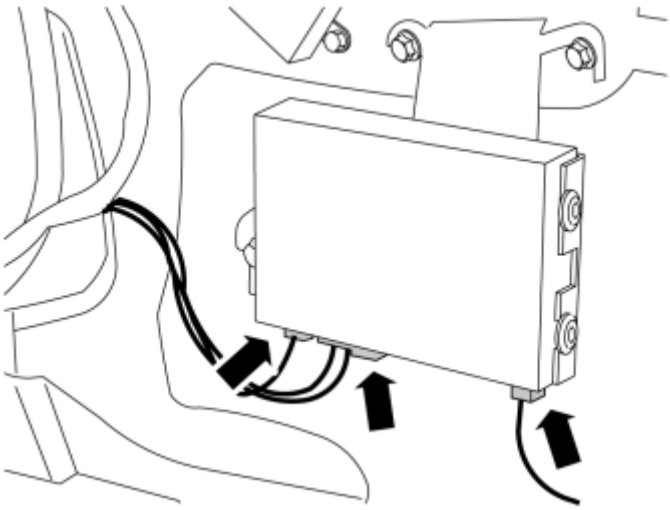

Fig. 569: Connect The Pre-Routed Cables To Sirius Receiver
Courtesy of VOLVO CARS CORPORATION

- Connect the pre-routed cables and the routed antenna cable to the connectors in the bottom edge of the Sirius receiver.

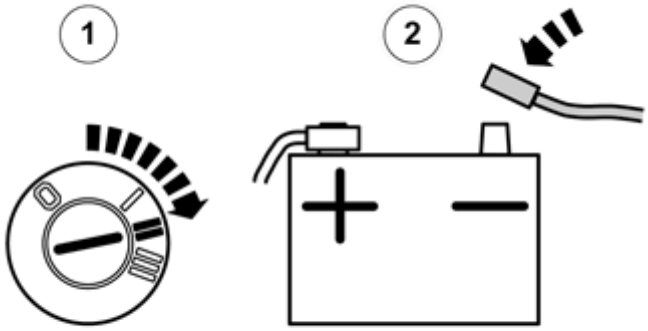

Fig. 570: Identifying Ignition Switch ON And Connected Negative Battery Lead
Courtesy of VOLVO CARS CORPORATION

- Reinstall the upper taillight. Tighten the upper screw to **6 Nm (4.5 lbf. ft.)** and the lower one to **8 Nm (6 lbf. ft.)** .
- Reinstall the lower taillight and tighten.
- Reinstall the right-hand side panel in the cargo compartment. Tighten the screws of the load securing eyelets to **24 Nm (18 lbf. ft.)** .
- If the car is equipped with a 12 V socket, connect its connector.
- Plug in the speaker connector and reinstall the D-post panel.
- Plug in the connector of the rear roof lighting and reinstall the rear roof panel.

- Plug in the connector of the headphone socket and reinstall the B-post panel.
- Reinstall the folding side panel and the side floor hatch.
- Turn the ignition switch to position II and refit the negative battery cable.
- Reinstall the battery cover with its mounting.
- Reinstall the storage compartment and floor hatches in the cargo compartment.

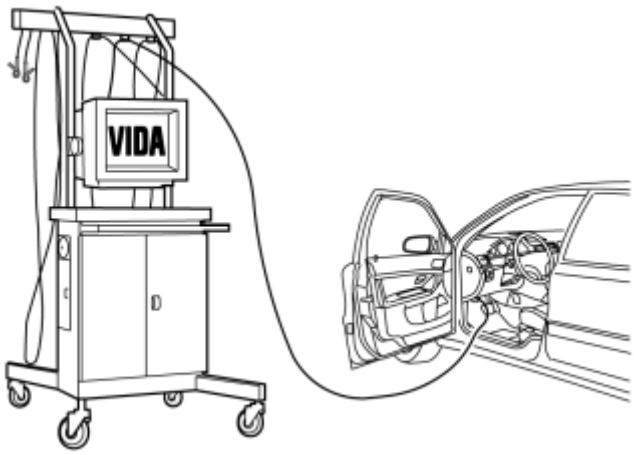

Fig. 571: Identifying VIDA (Service Information) To Program Software
Courtesy of VOLVO CARS CORPORATION

Download software (application) for the accessory's function according to service information in VIDA (Volvo scan tool).

BLUETOOTH (2003-2009)

BLUETOOTH

NOTE: **There may be components in the accessories kit that are not used for this installation.**

NOTE: **When installing Velcro fasteners/tape the underlying surface must be kept at a temperature of at least +20° C (68°F).**

Place the manual for this accessory in a suitable place in the vehicle.

REMOVING

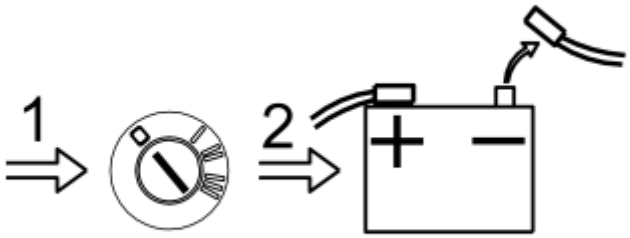

Fig. 572: Disconnect Battery Negative Lead
Courtesy of VOLVO CARS CORPORATION

- Slide the right-hand seat all the way back and then completely upright at the front edge.
- Turn the ignition switch to position 0.
- Disconnect the battery negative lead.

NOTE: **Wait at least three minutes before unplugging the connectors or removing other electrical equipment.**

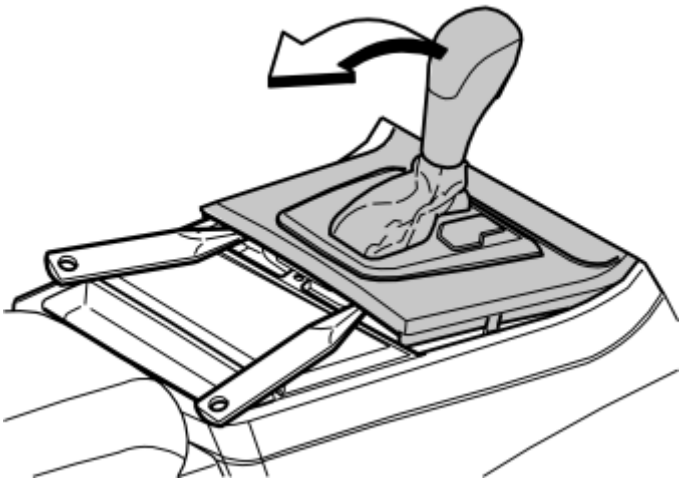

Fig. 573: Prying Off Gear Selector Panel At Rear Edge
Courtesy of VOLVO CARS CORPORATION

Applies to cars with automatic gearbox

- Turn the ignition key to position II.

Applies to all models

- Move the gear selector lever to its rearmost position.
- Use a weatherstrip and pry off the gear selector panel at the rear edge.

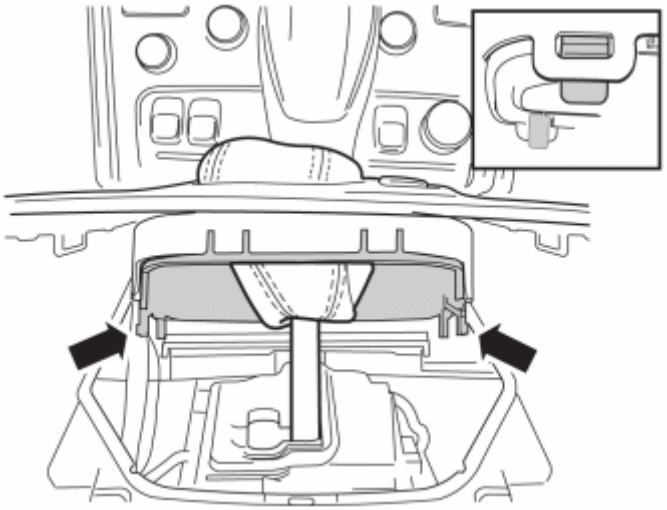

Fig. 574: Pressing In Catches And Removing Panel
Courtesy of VOLVO CARS CORPORATION

- Press in the catches and remove the panel.

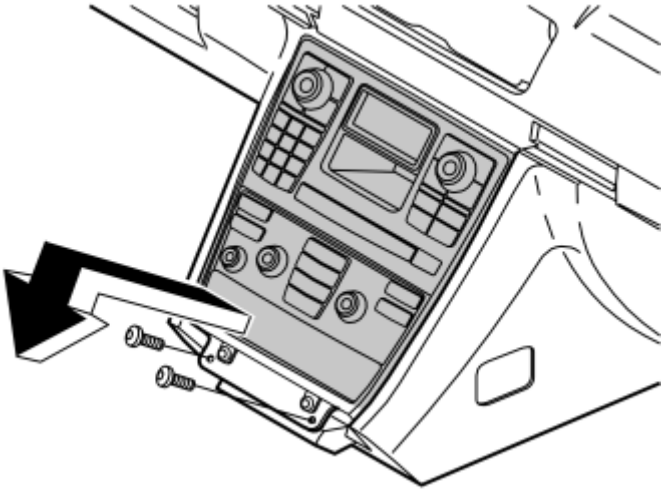

Fig. 575: Removing Screws And Radio/AC Unit From Center Console
Courtesy of VOLVO CARS CORPORATION

- Remove the two screws.
- Remove the bracket with the A/C panel and radio from the center console. Pull from the lower edge and then downwards until it releases from the mounting at the upper edge.

NOTE: Do not damage the removed components or the surrounding panels.

- Remove the connectors.

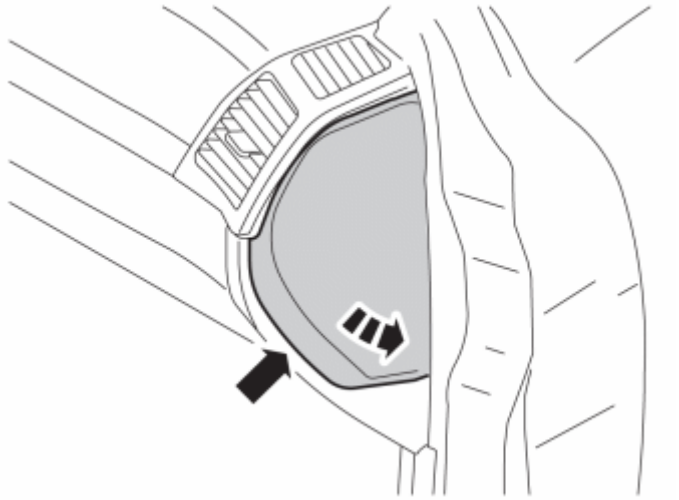

Fig. 576: View Of End Face Panel On Dashboard
Courtesy of VOLVO CARS CORPORATION

- Remove the end face panel from the dashboard.

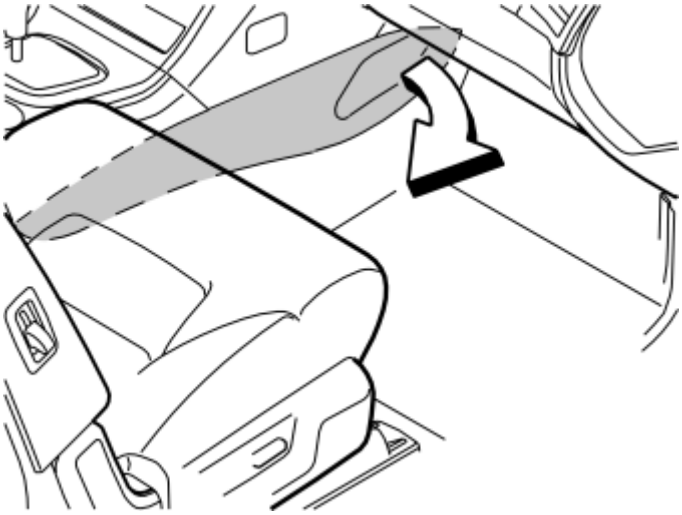

Fig. 577: Remove The Center Console's Right-Hand Side Panel
Courtesy of VOLVO CARS CORPORATION

- Remove the center console's right-hand side panel by pulling it away starting at the front edge and then backwards until all the clips have released.

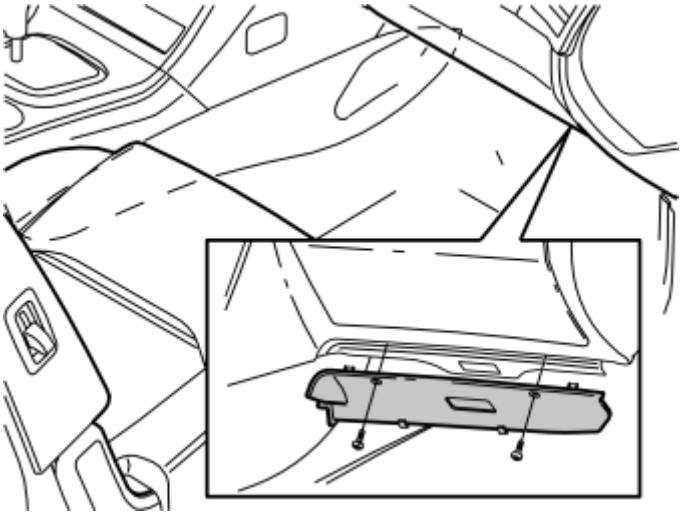

Fig. 578: Identifying Soundproofing Panel
Courtesy of VOLVO CARS CORPORATION

- Remove the screws and soundproofing panel.

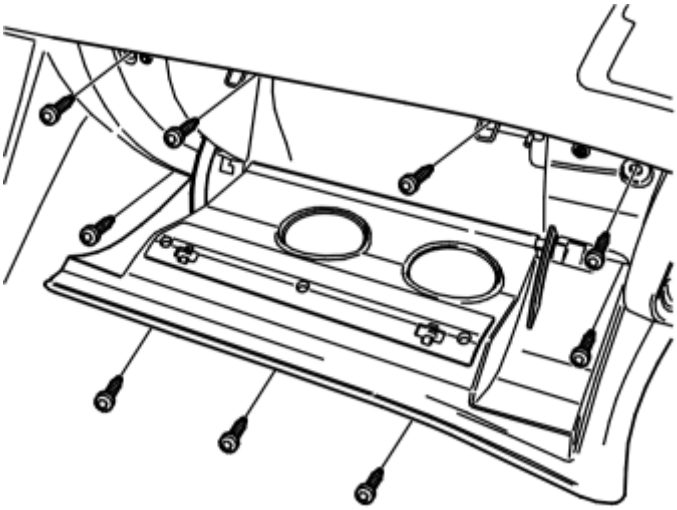

Fig. 579: Identifying Glove Compartment Screws
Courtesy of VOLVO CARS CORPORATION

- Remove the 9 x screws, the glove box and disconnect the connector.

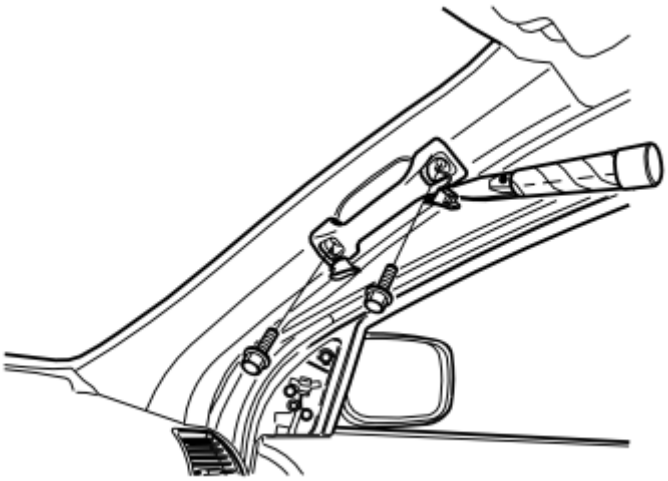

Fig. 580: Pry Off Grab Handle Cover
Courtesy of VOLVO CARS CORPORATION

- Remove the covers and screws for the grab handle on the A-pillar.

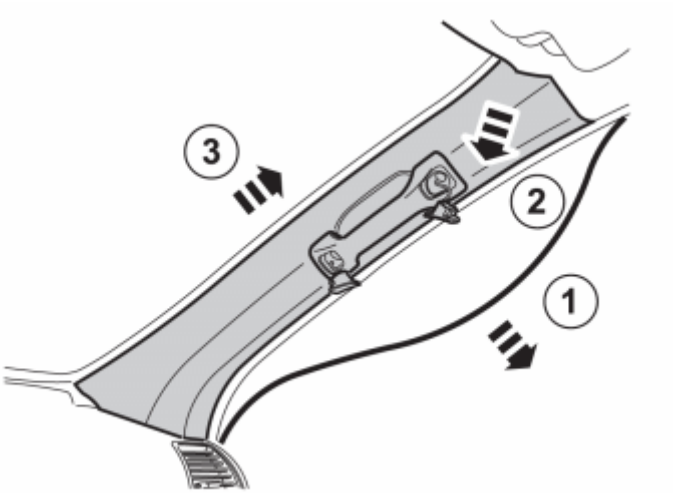

Fig. 581: Removing A-Pillar Weatherstrip
Courtesy of VOLVO CARS CORPORATION

- Pull of the weatherstrip (1) for the door at the A-pillar.
- Pull off the A-pillar panel at the upper edge and then straight upwards to remove it.

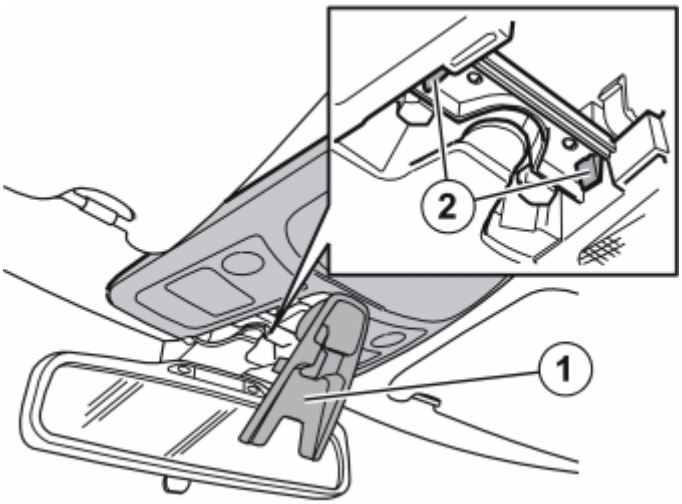

Fig. 582: Folding Down Cover And Squeezing Catches Together
Courtesy of VOLVO CARS CORPORATION

- Fold down the cover (1) by carefully pulling the front edge of the cover down.
- Press in the catches (2). At the same time pull the front edge of the panel downwards, and then unhook the rear edge.

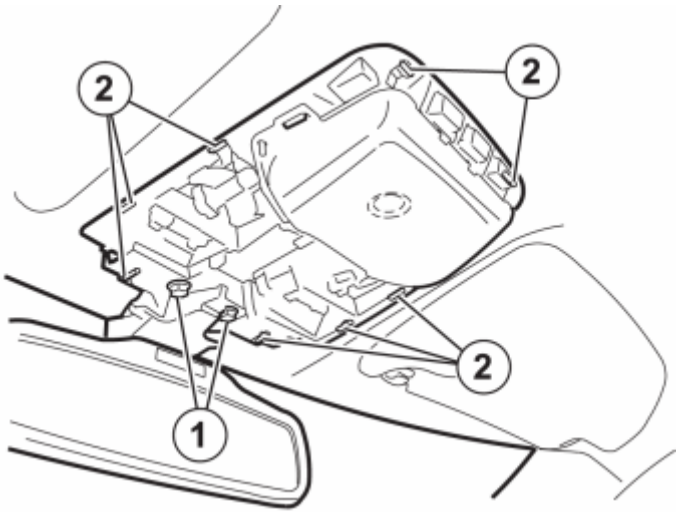

Fig. 583: Identifying Screws And Catches
Courtesy of VOLVO CARS CORPORATION

- Remove the screws (1).
- Press in the catches (2)
- Carefully pull the interior lighting downwards and allow to hang from their cables.

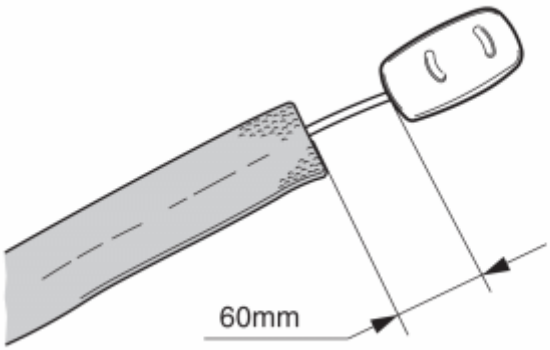

Fig. 584: Identifying Foam Tape, Microphone Cable And 60mm Gap
Courtesy of VOLVO CARS CORPORATION

- Tape a 700 mm length piece of foam tape on the microphone cable starting 60 mm from the microphone.

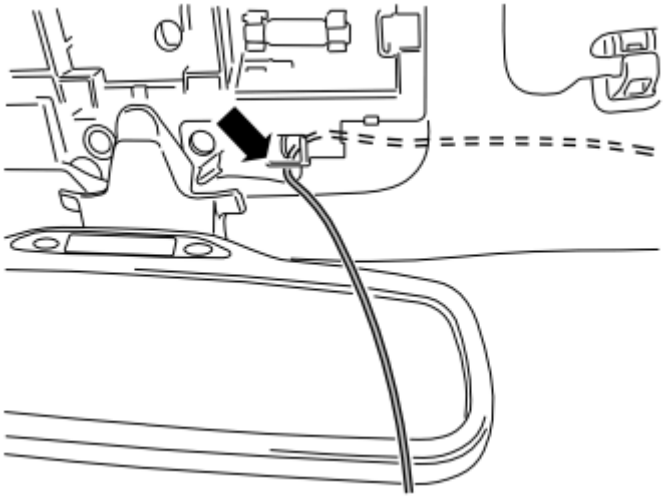

Fig. 585: Identifying Routed Cable
Courtesy of VOLVO CARS CORPORATION

- Route the cable to the microphone by the black connector.

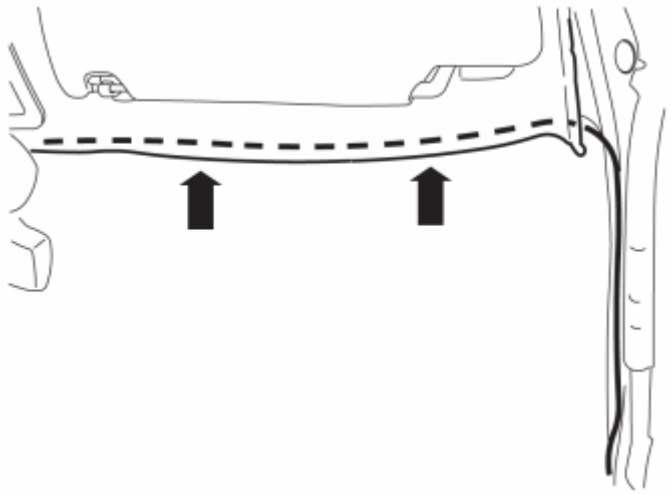

Fig. 586: Identifying Headlining, Routed Cable And A-Pillar
Courtesy of VOLVO CARS CORPORATION

- Carefully pull down the headlining and route the cable above it, to the A-pillar.

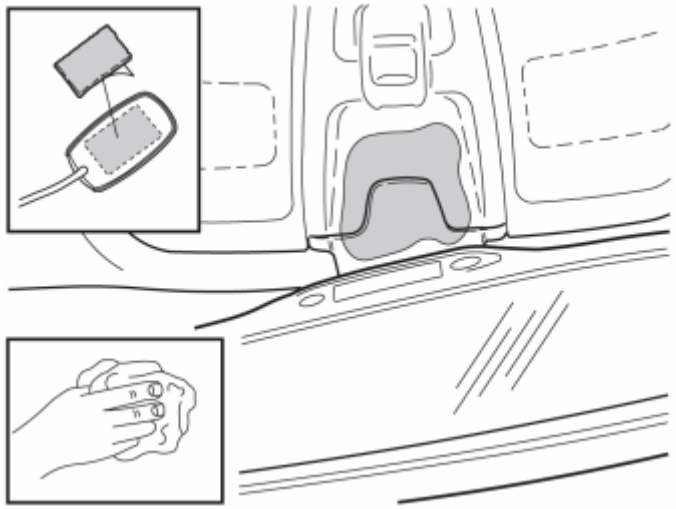

Fig. 587: Clean The Microphone And Ceiling Panel
Courtesy of VOLVO CARS CORPORATION

- Reinstall the ceiling panel and at the same time adjust the length of the cable.
- Clean the microphone and ceiling panel. Use isopropanol for example.
- Remove the protective film from one side of the Velcro strip and press onto the microphone.

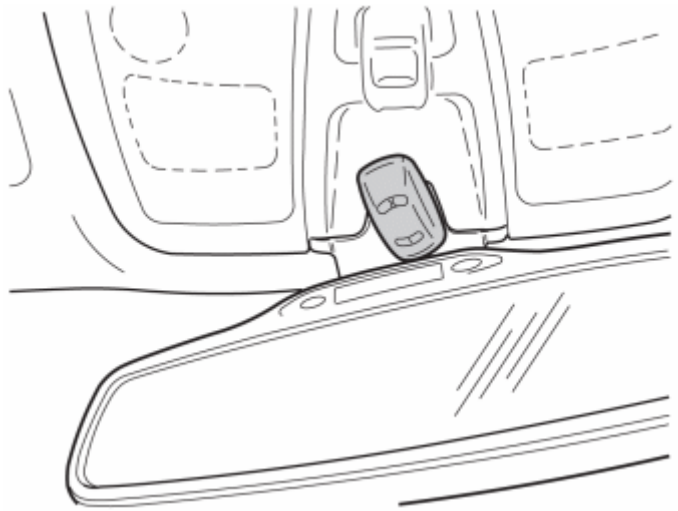

Fig. 588: Identifying Microphone Placement
Courtesy of VOLVO CARS CORPORATION

- Remove the remaining protective film from the Velcro strip. Press the microphone securely into place.

NOTE: **Direct the microphone towards the driver. Make sure that it does not obstruct adjustment of the rear view mirror and insert the excess cable under the panel.**

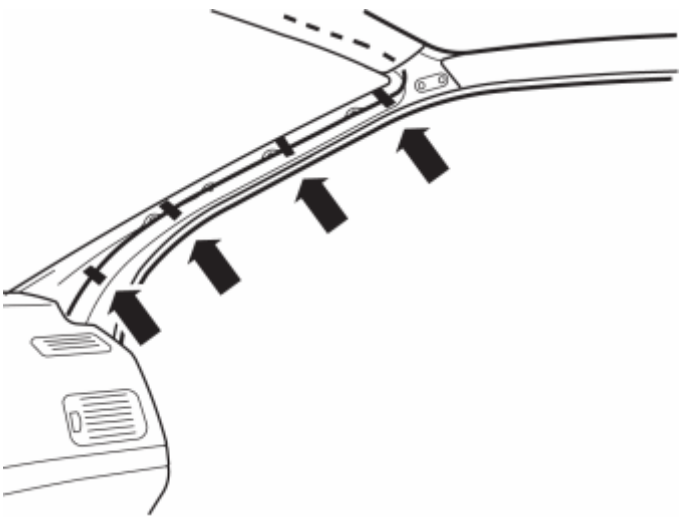

Fig. 589: Identifying Cable Secured To A-Pillar With Foam Tape
Courtesy of VOLVO CARS CORPORATION

- Pull the cable down along the A-pillar to the dashboard.
- Cut off 2 x 100x50mm pieces of foam tape in the middle.
- Secure the cable to the A-pillar using foam tape.

CAUTION: The inflatable curtain (IC) is located inside the A-pillar panel, it is important that the cable is not positioned on it.

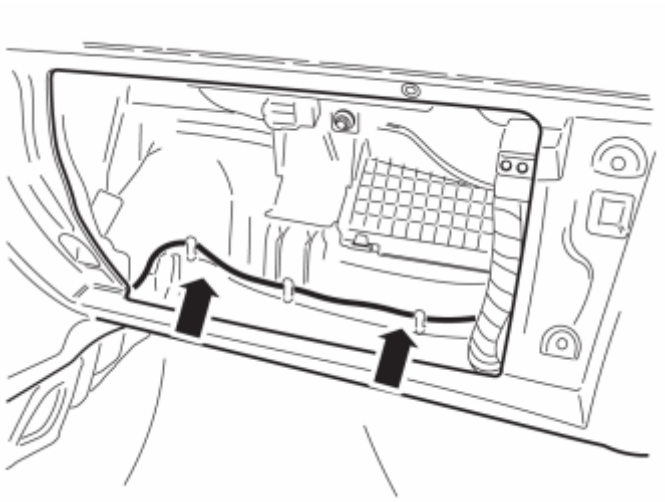

Fig. 590: View Of Securing Cable On Heater Unit With Tape
Courtesy of VOLVO CARS CORPORATION

- Cut off one 100x50mm strip of foam tape in the middle.
- Secure the cable on the heater unit using the pieces of tape.

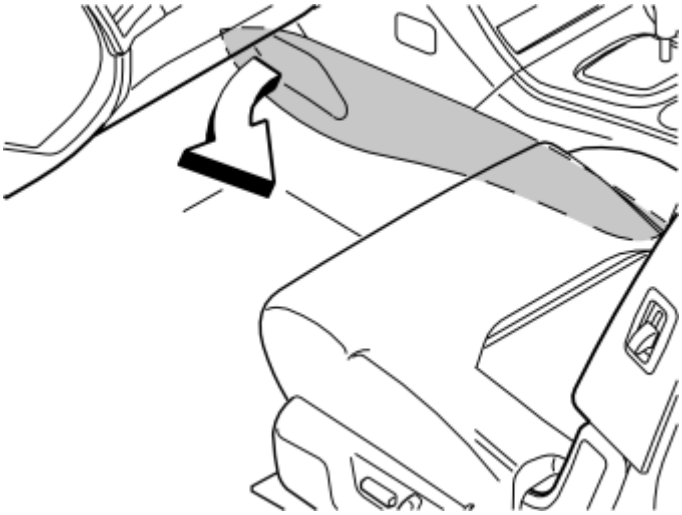

Fig. 591: Identifying Centre Console Side Panels
Courtesy of VOLVO CARS CORPORATION

- Remove the center console's left-hand side panel by pulling it away starting at the front edge and then backwards until all the clips have released.

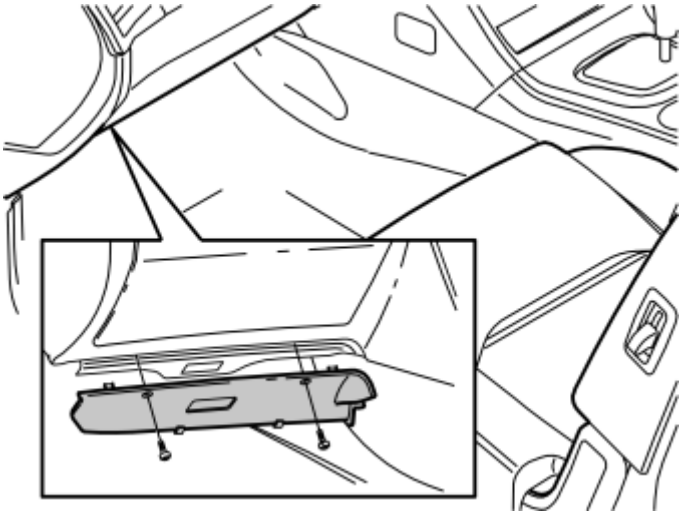

Fig. 592: Identifying Removal Of Screws And Soundproofing Panel
Courtesy of VOLVO CARS CORPORATION

- Remove the sound proofing panel by first removing the two screws and then prying off the sound proofing panel at the top edge.

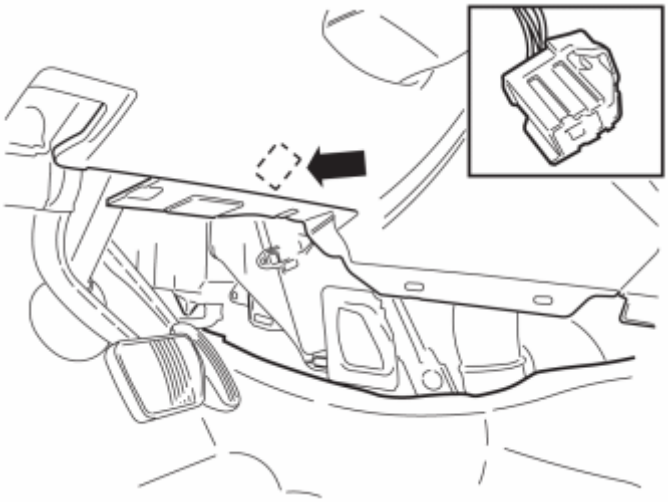

Fig. 593: Locating 4 Pin, Gray, Pre-Routed Connector For The Power Supply
Courtesy of VOLVO CARS CORPORATION

- Locate the 4 pin, gray, pre-routed connector for the power supply. It comes from the thick cable harness under the dashboard on the right-hand side of the steering wheel

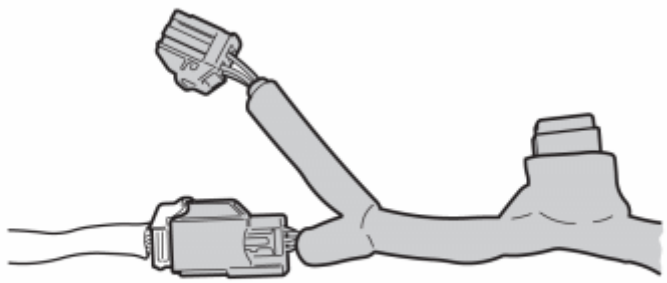

Fig. 594: Identifying Cable Harness C
Courtesy of VOLVO CARS CORPORATION

- Take the cable harness with the two gray connectors. Connect this to the existing connector. The pre-routed connector is already connected on certain versions.
- Disconnect this and connect both the connectors from the new cable harness.
- Cut a 700 mm piece of foam tape into three pieces of the same length. Tape one piece around the connectors on the car's existing cable harness.

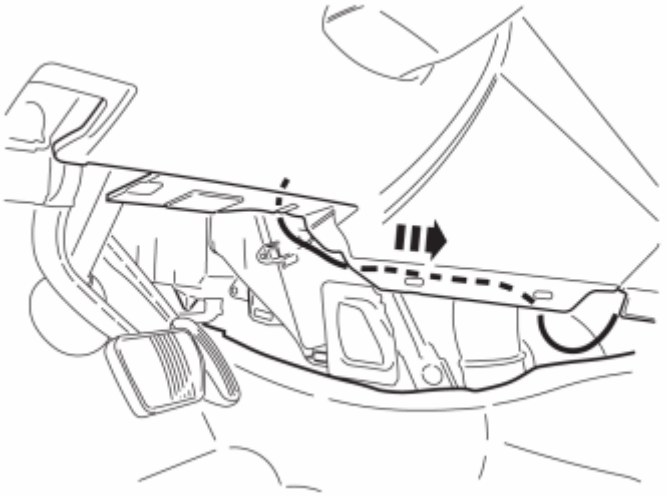

Fig. 595: View Of Cable Harness Route Backwards Through Center Console
Courtesy of VOLVO CARS CORPORATION

- Route the cable harness backwards and across through the center console.

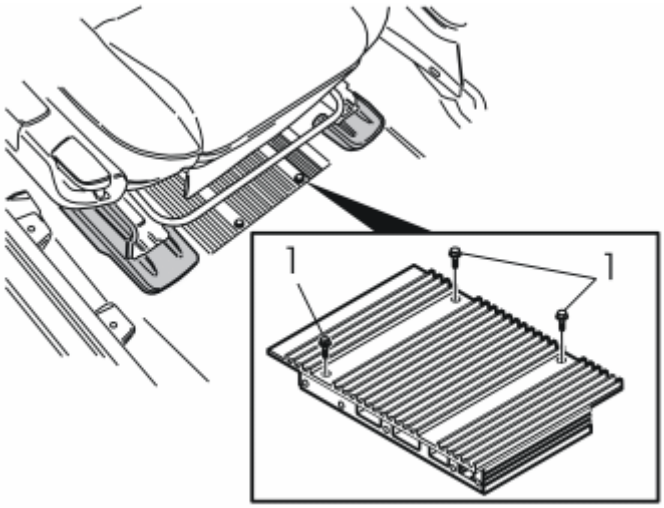

Fig. 596: Identifying Amplifier Screws
Courtesy of VOLVO CARS CORPORATION

- Slacken off the amplifier screws (1) under the right-hand front seat.

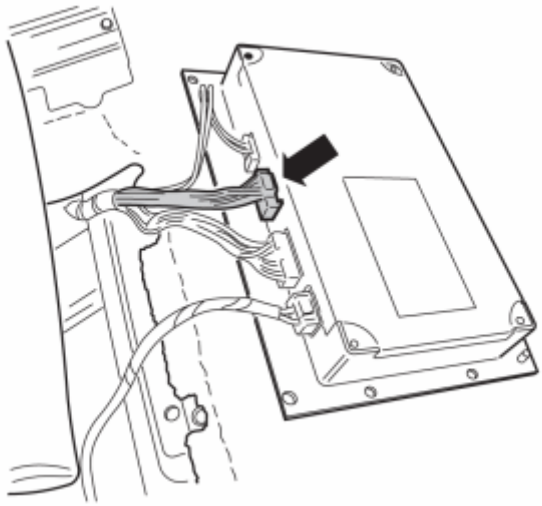

Fig. 597: Identifying Amplifier Connector
Courtesy of VOLVO CARS CORPORATION

- Lift out the amplifier. Use a weatherstrip to raise it from its recessed position.
- Place it upside down as illustrated.
- Disconnect the connector.

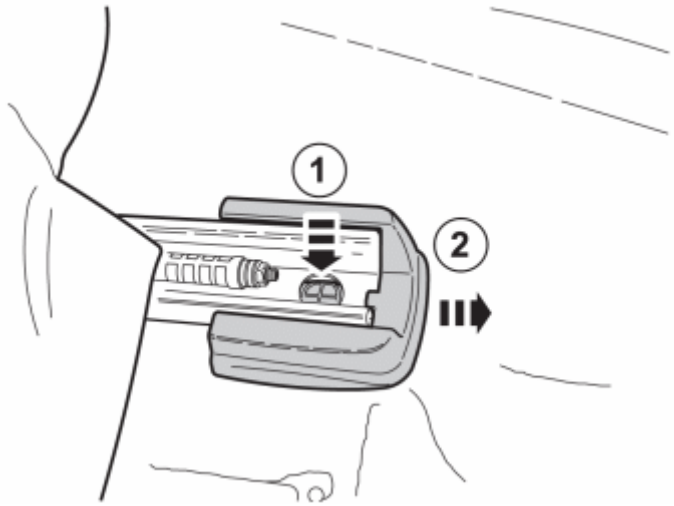

Fig. 598: Identifying Left-Hand Seat Piece
Courtesy of VOLVO CARS CORPORATION

- Remove the left-hand seat piece.

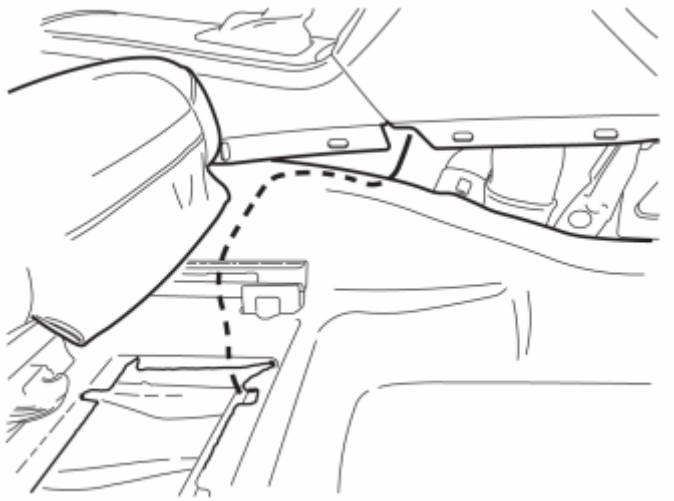

Fig. 599: View Of Amplifier Cable Under The Carpet
Courtesy of VOLVO CARS CORPORATION

- Route the cable that was connected to the 4-pin connector from the center console to the amplifier under the carpet.

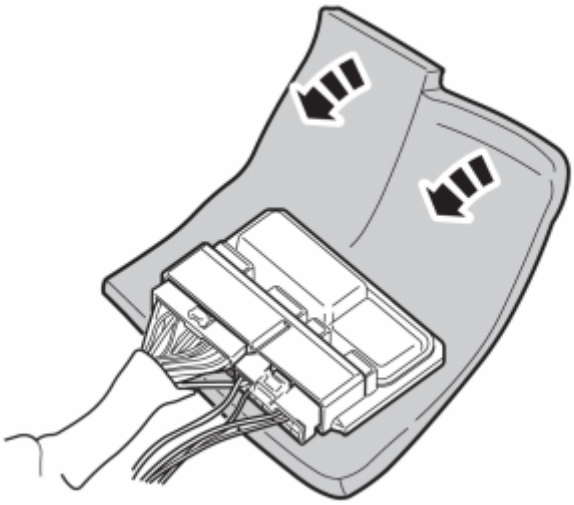

Fig. 600: View Of Foam Tape Pieces To Relay
Courtesy of VOLVO CARS CORPORATION

- Connect the pre-routed cable and T cable to the mute relay.
- Tape two thick pieces of foam tape around the mute relay.

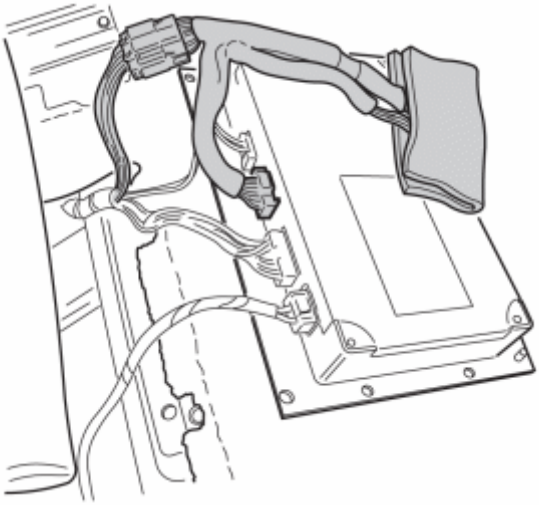

Fig. 601: Identifying Amplifier To The Connector On Cable Harness C
Courtesy of VOLVO CARS CORPORATION

- Connect the connector that was disconnected from the amplifier to the connector from the mute relay.
- Tape one cut piece of foam tape around the connectors.
- Connect the other connector from the mute-relay to the amplifier.

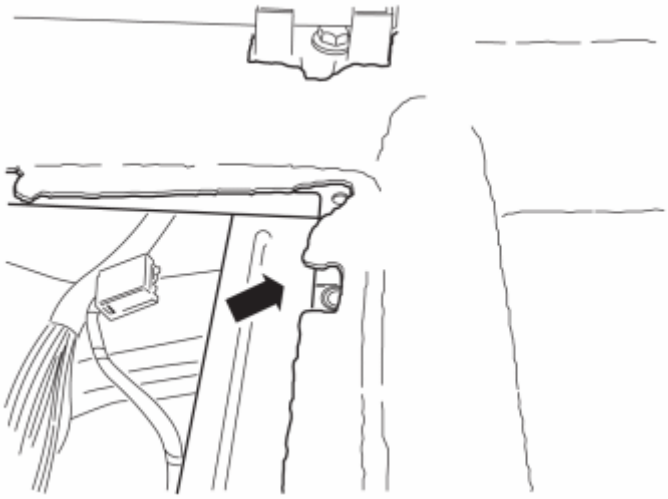

Fig. 602: Reinstalled Amplifier Screws
Courtesy of VOLVO CARS CORPORATION

- Place the mute-relay under the front left corner in the recess.
- Reinstall the amplifier and tighten it with the screws.

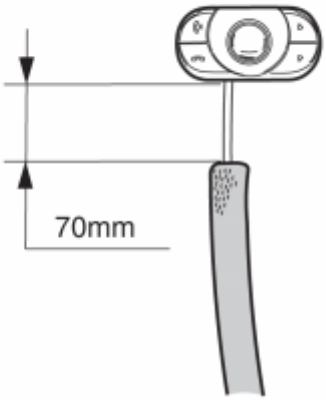

Fig. 603: Taping Piece Of Foam Tape On Cable Starting 70mm From Control Panel
Courtesy of VOLVO CARS CORPORATION

- Tape a 700 mm length piece of foam tape on the cable starting 70 mm from the control panel.

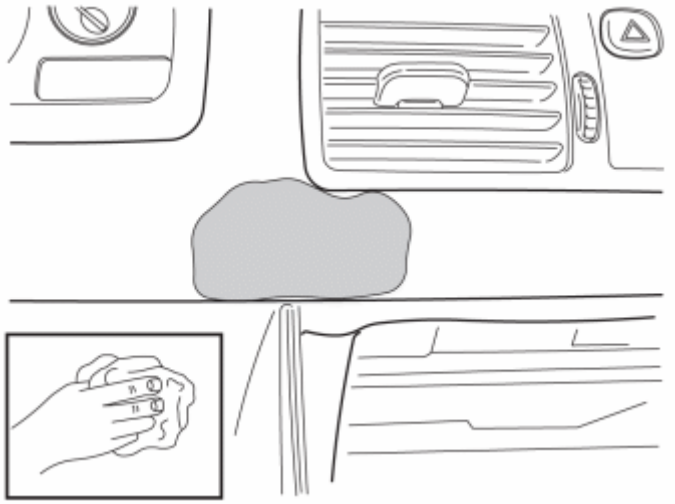

Fig. 604: Clean The Area Around The Dashboard
Courtesy of VOLVO CARS CORPORATION

- Clean the area around the dashboard where the control panel is to be positioned. Use isopropanol for example.

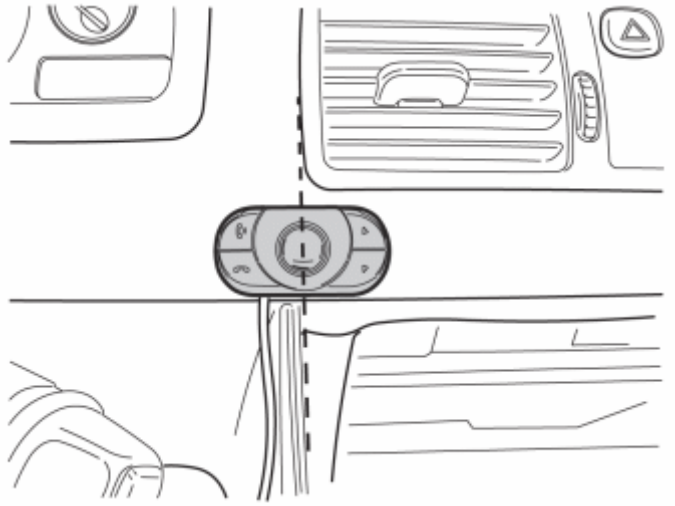

Fig. 605: View Of Control Panel Mounted On Dashboard
Courtesy of VOLVO CARS CORPORATION

- Remove the protective film from the tape on the reverse of the control panel.
- Align and secure the control panel on the dashboard.

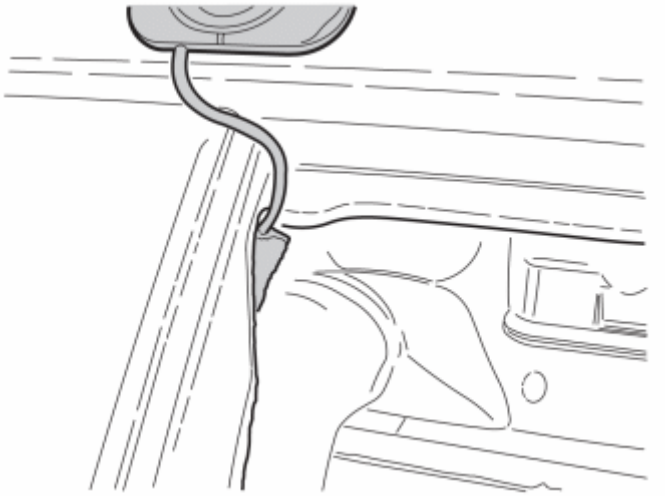

Fig. 606: View Of Cable Down To The Opening In The Center Console
Courtesy of VOLVO CARS CORPORATION

- Pull the cable down to the opening in the center console.

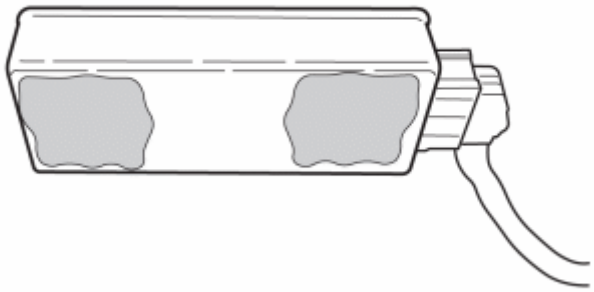

Fig. 607: View Of Control Module Clean Points
Courtesy of VOLVO CARS CORPORATION

- Clean the control module at the points illustrated, using isopropanol for example.

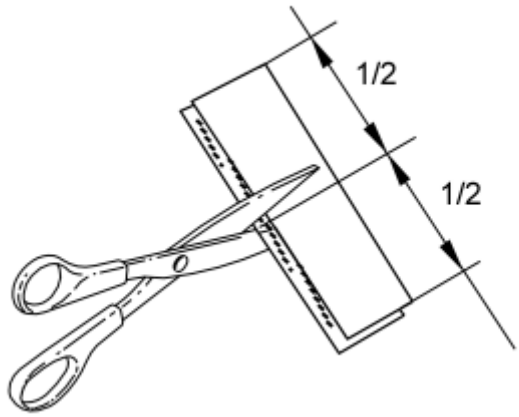

Fig. 608: Identifying Velcro Fasteners
Courtesy of VOLVO CARS CORPORATION

- Take a Velcro strip and cut off two pieces of the same length
- Press the pieces together.
- Cut off two pieces of the same length again at the center.

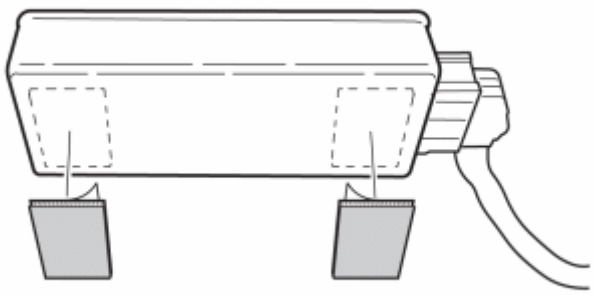

Fig. 609: View Of Velcro Strips On The Control Module
Courtesy of VOLVO CARS CORPORATION

- Remove the protective film from one side of the Velcro strips which were pressed together.
- Apply the Velcro strips on the control module and press.

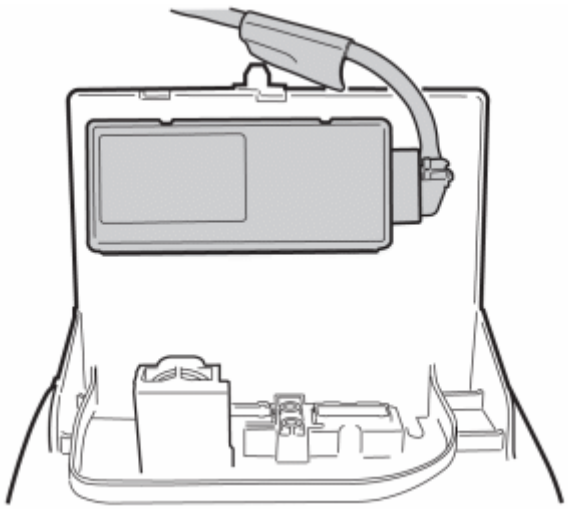

Fig. 610: View Of Aligned And Installed Control Module
Courtesy of VOLVO CARS CORPORATION

- Remove the remaining protective file on the Velcro strips, align and install the control module as illustrated. Press onto the control module so that the tape adheres.

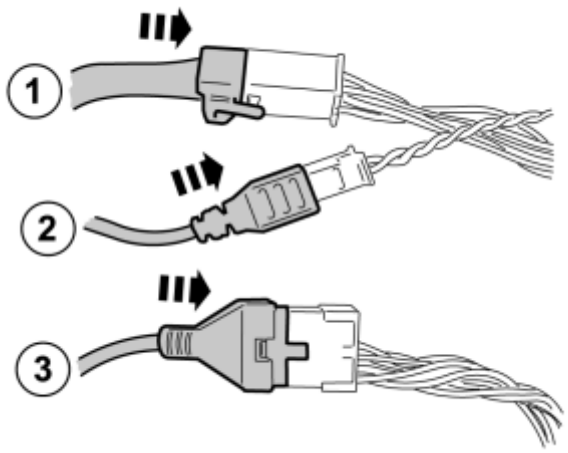

Fig. 611: Connecting Connectors
Courtesy of VOLVO CARS CORPORATION

- Connect the connectors
  1. 1. Adapter cable
  2. 2. Microphone
  3. 3. Control panel

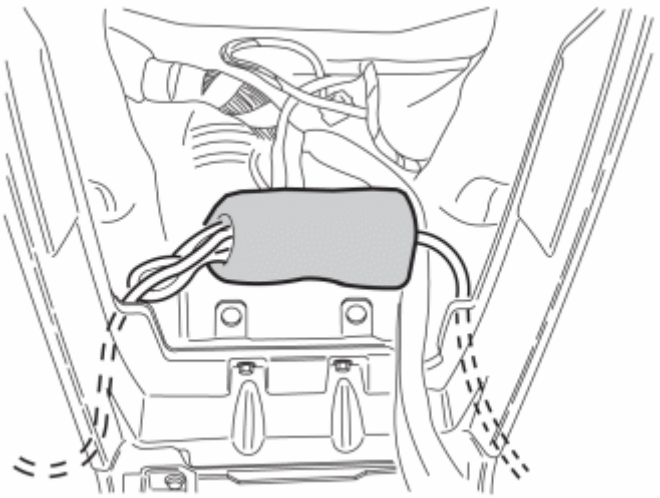

Fig. 612: View Of Foam Tape Around The Connectors
Courtesy of VOLVO CARS CORPORATION

- Tape one cut piece of foam tape around the connectors.
- Place the connectors and excess cables in the bottom of the center console. Check that they do not rub against the bracket edges.

REINSTALL

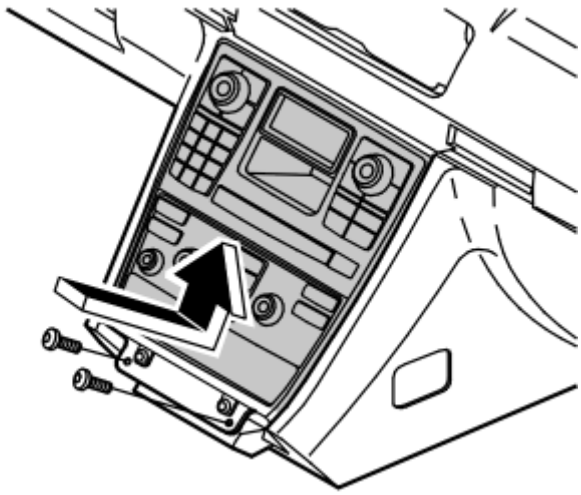

Fig. 613: Reinstall The A/C / Radio Unit
Courtesy of VOLVO CARS CORPORATION

- Reinstall the center console by first hooking the upper edge into place. Then press upwards and angle in the lower section.
- At the same time check that the cable to the control panel is correctly positioned.
- Reinstall the screws.

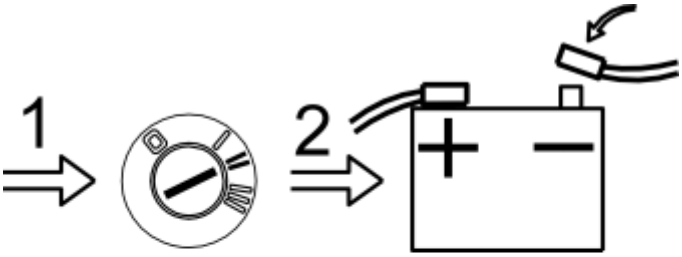

Fig. 614: Connecting Negative Battery Lead
Courtesy of VOLVO CARS CORPORATION

Reinstall:

- panel for gear selector.
- A-pillar panel and screws and cover for grab handle.
- the rubber strips in the door opening.
- the end face panel for the dashboard.
- glove box.
- sound proofing panels.
- seat piece.
- the side panels on the center console.

BLUETOOTH, MUTE KIT (2003-2011)

BLUETOOTH, MUTE KIT

REMOVE

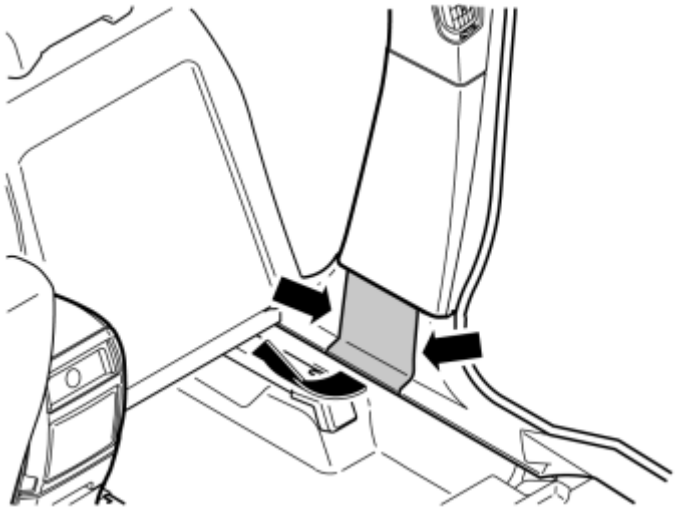

Fig. 615: View Of Panel Above The Joint Between The Sill Trim Panels
Courtesy of VOLVO CARS CORPORATION

- Carefully pry off the panel above the joint between the sill trim panels. Use a weatherstrip tool.
- Remove the cover panel.

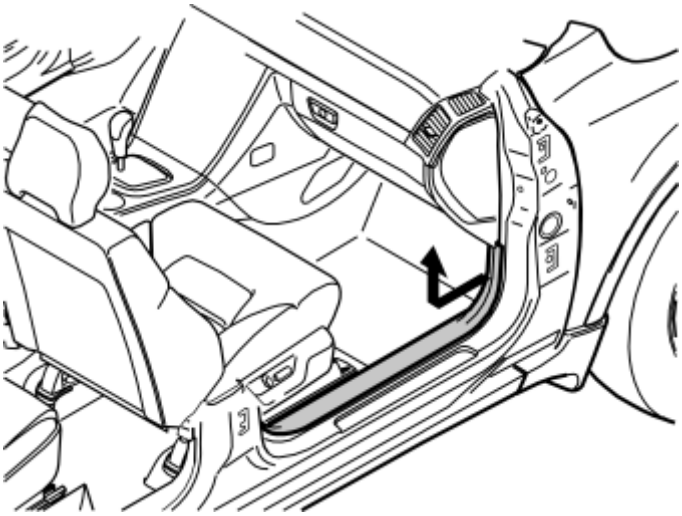

Fig. 616: Right-Hand Front Door's Sill Trim Panel
Courtesy of VOLVO CARS CORPORATION

- Detach the right-hand front doors sill trim panel. Pull it away at the front edge so that the clips release. Continue backwards until the remaining clips have released.
- Unhook the sill trim panel from the B-pillar panel.

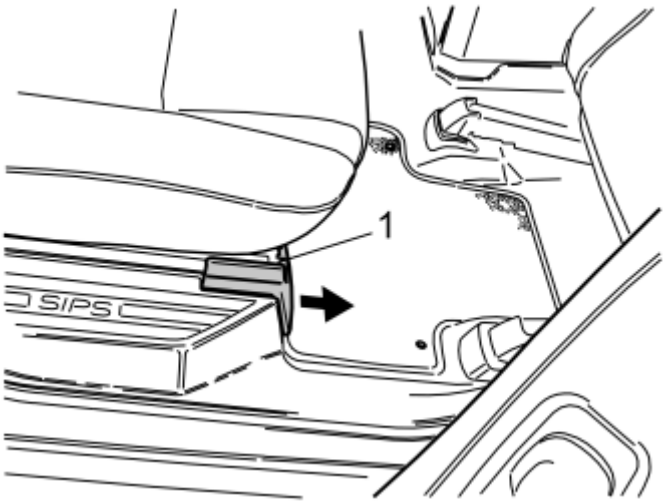

Fig. 617: Pushing Up Catch On Top Side
Courtesy of VOLVO CARS CORPORATION

- Remove the panel in the right front seat attachment on the second seat row by pressing in the lock catch (1) on the top side and pull the panel forward.
- Remove the screw.

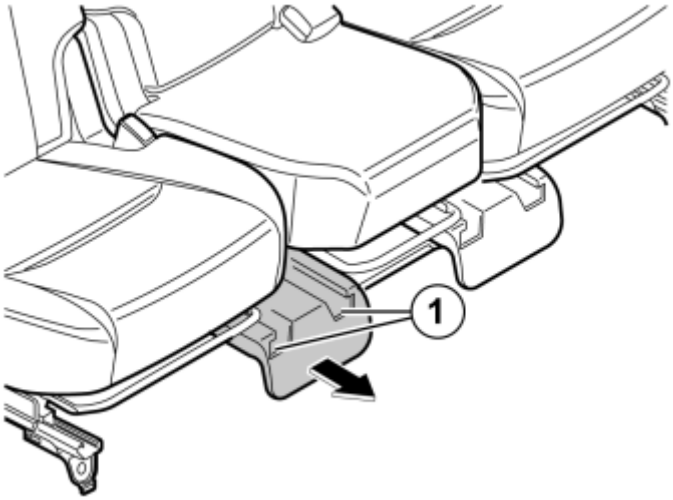

Fig. 618: View Of Seat Panel Catches
Courtesy of VOLVO CARS CORPORATION

- Press in the catches (1) and remove the seat panel.
- Remove the screw.

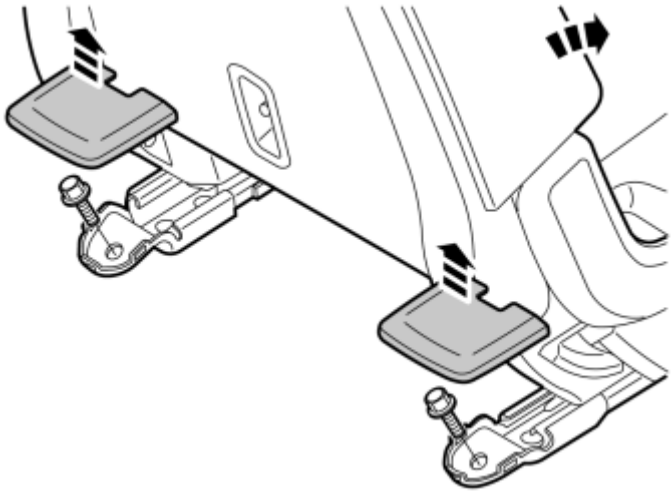

Fig. 619: View Of Rear Panel Screws
Courtesy of VOLVO CARS CORPORATION

- Fold the backrest forward and slide the seat forward as far as possible.
- On cars with two rows of seats the seat cannot be slid forwards.
- Remove both rear panels (1) by pulling them straight up.
- Remove the screws.
- Lift out the seat.

NOTE: Exercise care when doing this so that the trim or door panels are not damaged.

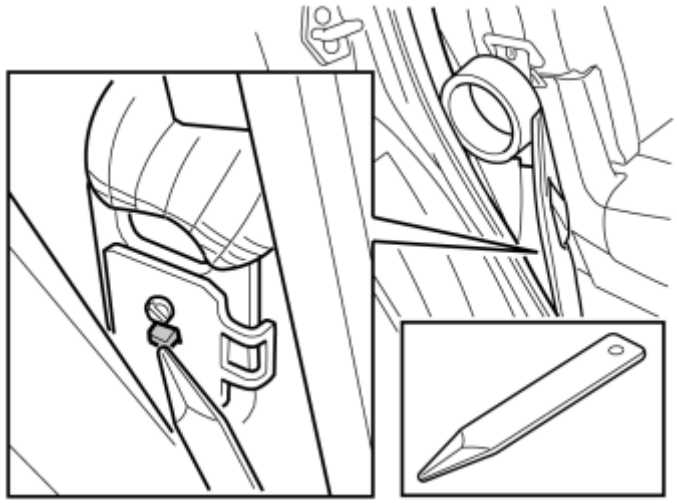

Fig. 620: Identifying Seat Belt Release With Weatherstrip Tool
Courtesy of VOLVO CARS CORPORATION

- Disconnect the upper part of the sill molding at the rear edge. Remove the seat belt from the end mounting.
- Using a weatherstrip tool, carefully press the locking tab so that the seat belt releases from the end

mounting.

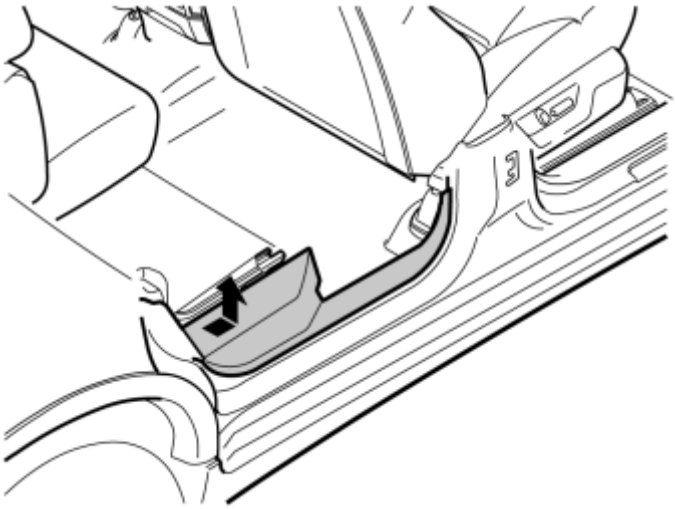

Fig. 621: View Of Sill Molding Three Clips Release
Courtesy of VOLVO CARS CORPORATION

- Pull the sill molding upwards until the three clips release.
- Angle the sill moulding out from the B-post panel.

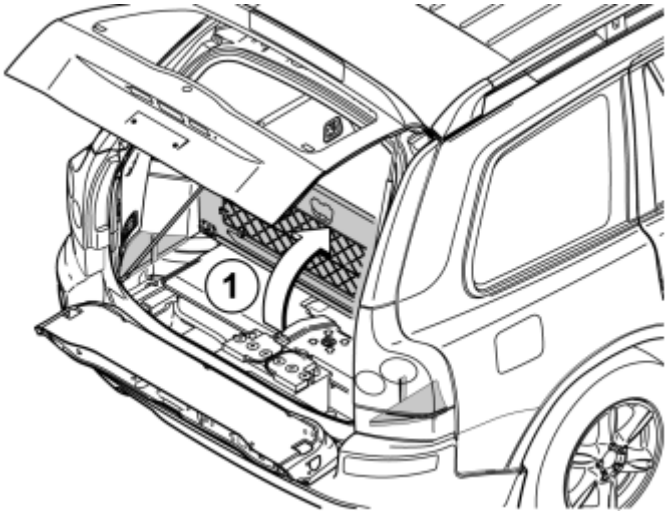

Fig. 622: View Of Folded Up The Floor Hatch
Courtesy of VOLVO CARS CORPORATION

Applies to cars with two rows of seats

- Fold up the floor hatch (1). If the floor hatch is equipped with a grocery bag holder, the holder is secured with a strap on both ends of the storage compartment. Detach the straps.
- Remove the underlying storage compartment.
- Remove the floor hatch by folding it almost completely closed and pulling it backwards from the mountings until it releases.

Applies to cars with three rows of seats and integrated carrier bag holder on the underside of the floor hatch

- Fold up the floor hatch (1).
- Detach the two straps on the underlying panel. Lift up the rear edge of the panel, fold the floor hatch back towards the panel and lift out the floor hatch with the panel.

Applies to cars with three rows of seats without an integrated carrier bag holder

- Fold up the floor hatch (1) at the rear edge and lift it out.

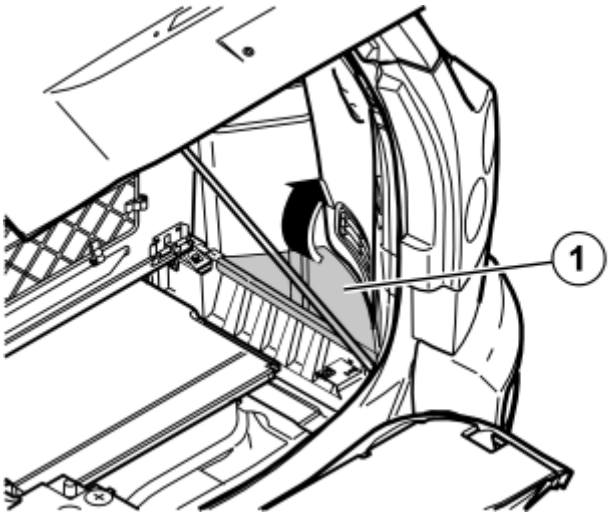

Fig. 623: Remove Right And Left Side Glove Box
Courtesy of VOLVO CARS CORPORATION

- Remove the floor hatch (1).

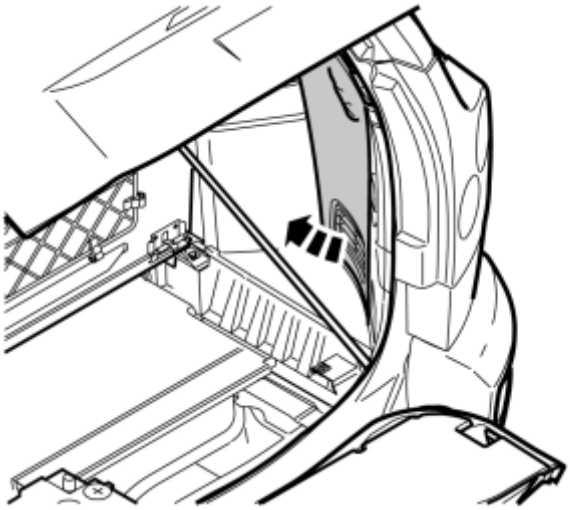

Fig. 624: View Of Side Panel On The Right-Hand Side
Courtesy of VOLVO CARS CORPORATION

- Remove the side panel on the right-hand side.

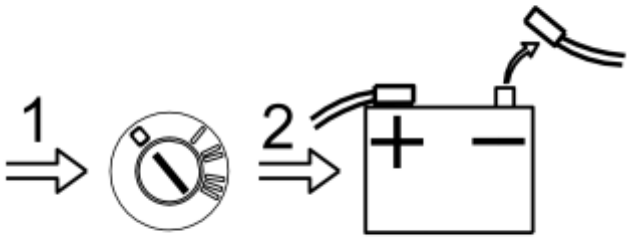

Fig. 625: Disconnect Battery Negative Lead
Courtesy of VOLVO CARS CORPORATION

Only applies to cars with external amplifier

- Slide the right-hand seat all the way back and then completely upright at the front edge.
- Turn the ignition switch to position 0.

NOTE: **Wait at least three minutes before unplugging the connectors or removing other electrical equipment.**

Only applies to cars with internal amplifier

- Turn the ignition switch to position 0.
- Disconnect the battery negative lead.

NOTE: **Wait at least three minutes before unplugging the connectors or removing other electrical equipment.**

STEPS ONLY APPLY TO CARS WITH INTERNAL AMPLIFIER

Steps only apply to cars with internal amplifier.

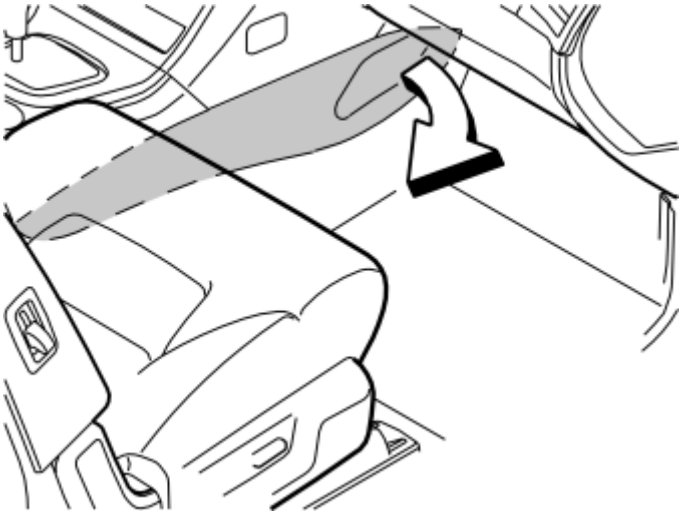

Fig. 626: Remove The Center Console's Right-Hand Side Panel
Courtesy of VOLVO CARS CORPORATION

- Remove the center console's right-hand side panel by pulling it away starting at the front edge and then backwards until all the clips have released.

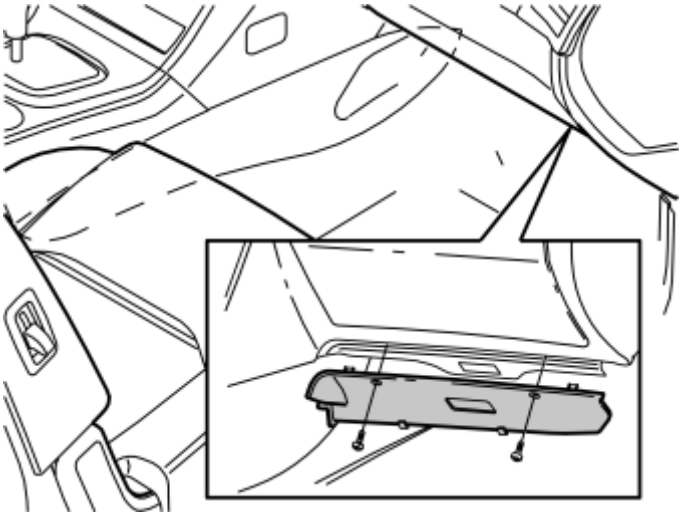

Fig. 627: Identifying Soundproofing Panel
Courtesy of VOLVO CARS CORPORATION

- Remove the screws and sound proofing bracket.

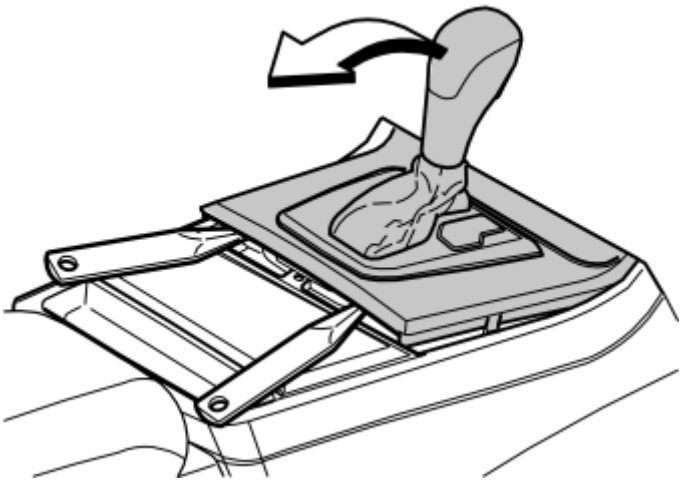

Fig. 628: Prying Off Gear Selector Panel At Rear Edge
Courtesy of VOLVO CARS CORPORATION

- Turn the ignition key to position II.
- Move the gear selector lever to its rearmost position.
- Use a weatherstrip and pry off the gear selector panel at the rear edge.

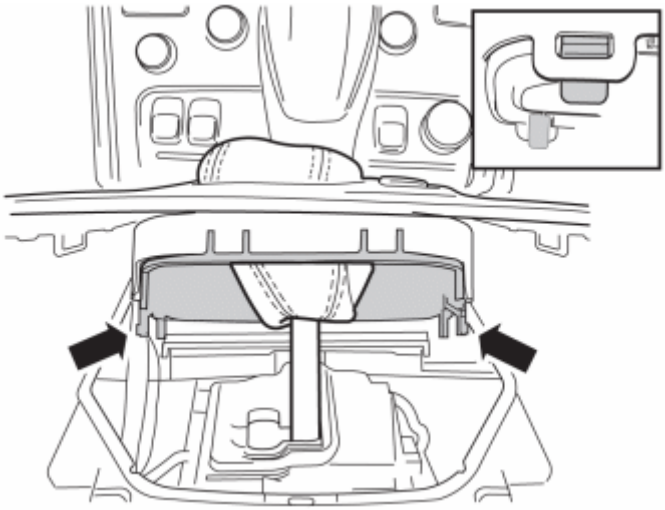

Fig. 629: Pressing In Catches And Removing Panel
Courtesy of VOLVO CARS CORPORATION

- Press in the catches and remove the panel.

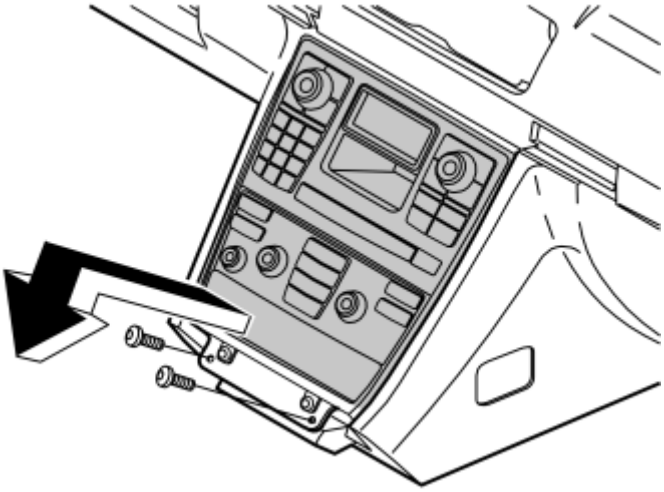

Fig. 630: Removing Screws And Radio/AC Unit From Center Console
Courtesy of VOLVO CARS CORPORATION

- Remove the two screws.
- Remove the bracket with the A/C panel and radio from the center console. Pull from the lower edge and then downwards until it releases from the mounting at the upper edge.

NOTE: Note how the cable is routed for the bluetooth system's control panel at the upper left-hand corner.

- Remove the connectors.

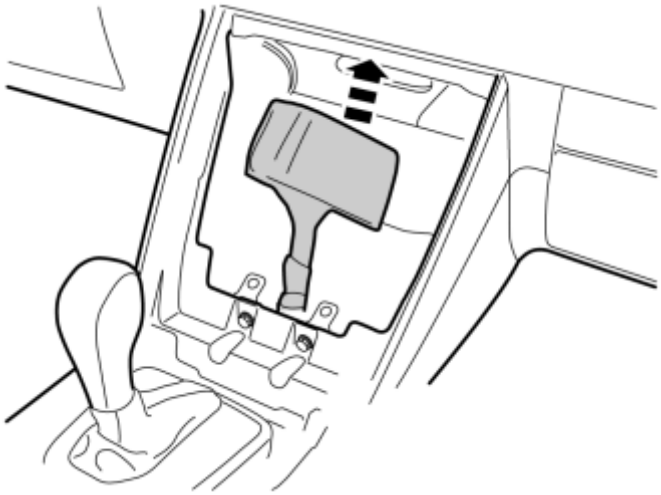

Fig. 631: View Of Front Mute Relay At The Rear Edge Of The Opening Of The Center Console
Courtesy of VOLVO CARS CORPORATION

- Lift out the front mute relay, which is positioned at the rear edge of the opening of the center console.

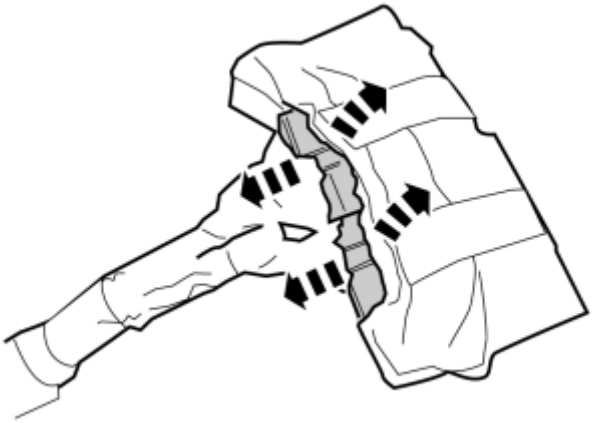

Fig. 632: Identifying Foam Tape
Courtesy of VOLVO CARS CORPORATION

- Lift up the foam tape slightly.
- Unplug the connectors.

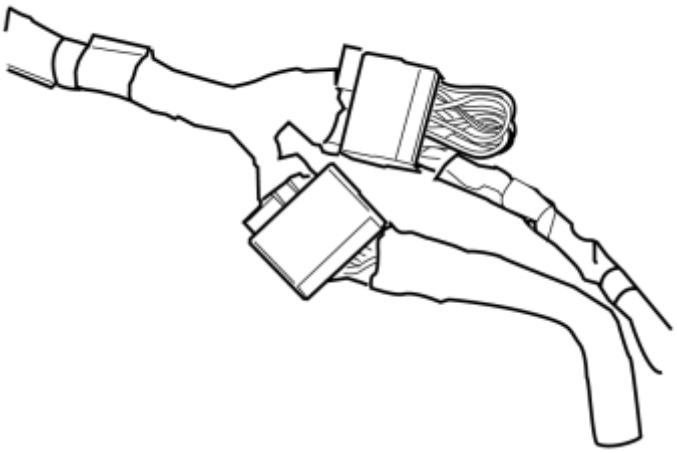

Fig. 633: Connecting Cable Harnesses To Disconnected Connectors
Courtesy of VOLVO CARS CORPORATION

- Take the two cable harnesses from the kit and connect these to the removed connectors.

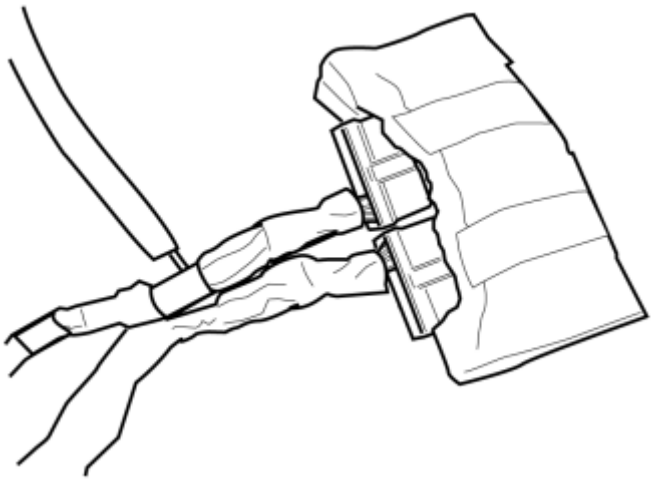

Fig. 634: Connecting New Cable Harnesses To Relay
Courtesy of VOLVO CARS CORPORATION

- Connect the new cable harnesses to the relay.
- Fold the tape back into place.

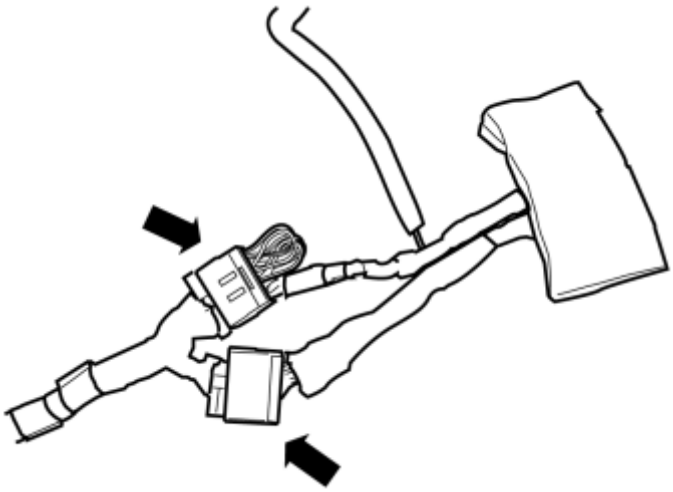

Fig. 635: Taping Foam Tape Around Connectors
Courtesy of VOLVO CARS CORPORATION

- Remove the foam tape from the kit and cut it in the center.
- Wrap some tape around each connector.
- Reinstall the relay.

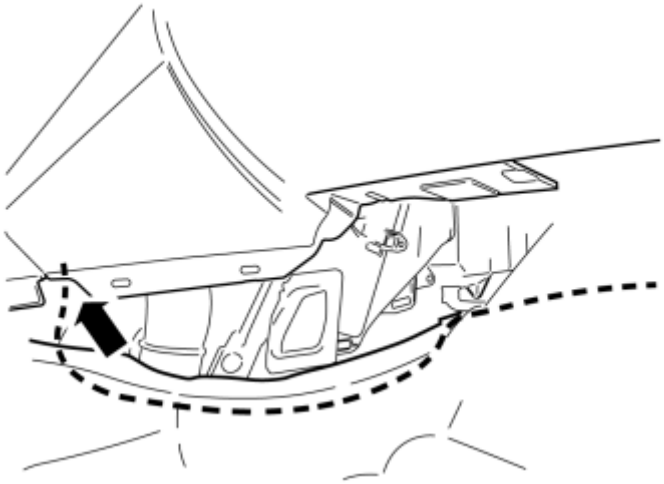

Fig. 636: Identifying Yellow Cable On The Right-Hand Side Of The Center Console
Courtesy of VOLVO CARS CORPORATION

- Pull out the yellow cable on the right-hand side of the center console.

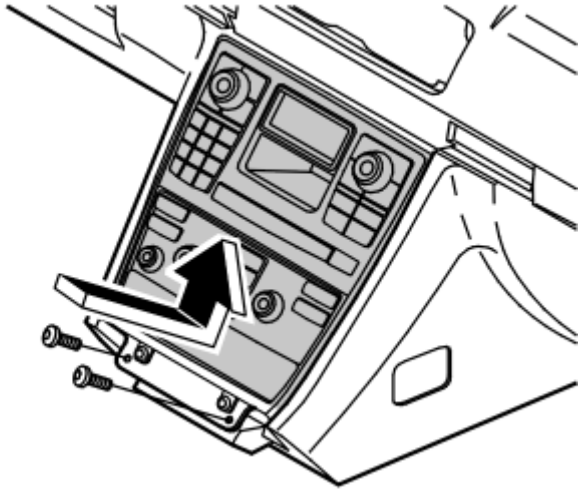

Fig. 637: Reinstall The A/C / Radio Unit
Courtesy of VOLVO CARS CORPORATION

- Plug in the connectors.
- Reinstall the radio / A/C unit by first hooking it at the upper edge. Then press upwards and angle the lower section in. At the same time, check that the cable for the control panel is correctly located.
- If the radio / A/C unit does not fit at the lower edge, check for trapped wiring.
- Reinstall the screws.

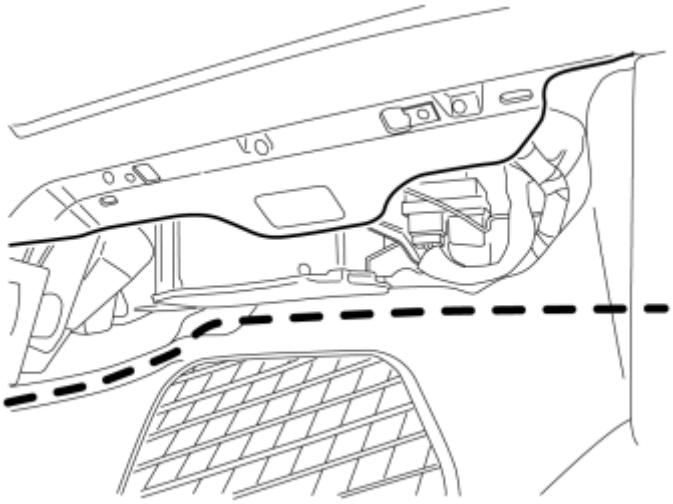

Fig. 638: View Of Cable From The Center Console To The Lower Section Of The Right-Hand A Pillar
Courtesy of VOLVO CARS CORPORATION

- Route the cable from the center console to the lower section of the right-hand A pillar under the carpet.

STEPS ONLY APPLY TO CARS WITH EXTERNAL AMPLIFIER

Steps only apply to cars with external amplifier.

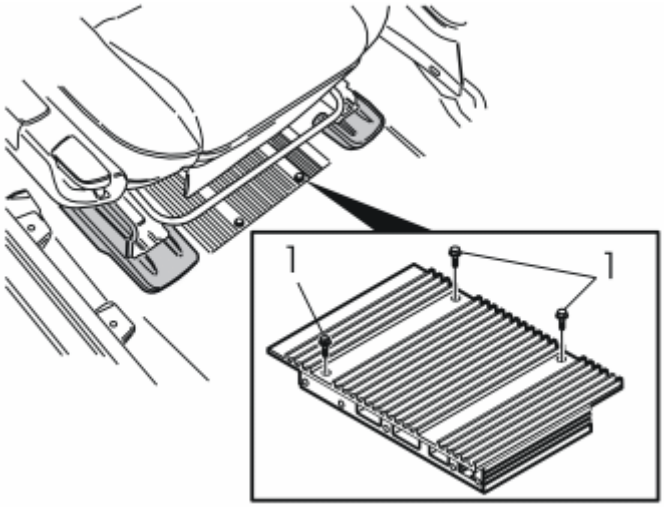

Fig. 639: Identifying Amplifier Screws
Courtesy of VOLVO CARS CORPORATION

- Slacken off the amplifier screws (1) under the right-hand front seat.

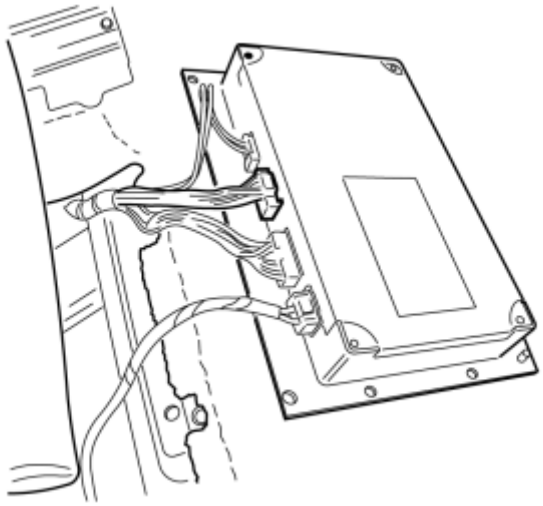

Fig. 640: View Of Amplifier Lifted Out
Courtesy of VOLVO CARS CORPORATION

- Lift the amplifier out.
- Use a weatherstrip to remove it from its recessed position.
- Place it upside down as illustrated.

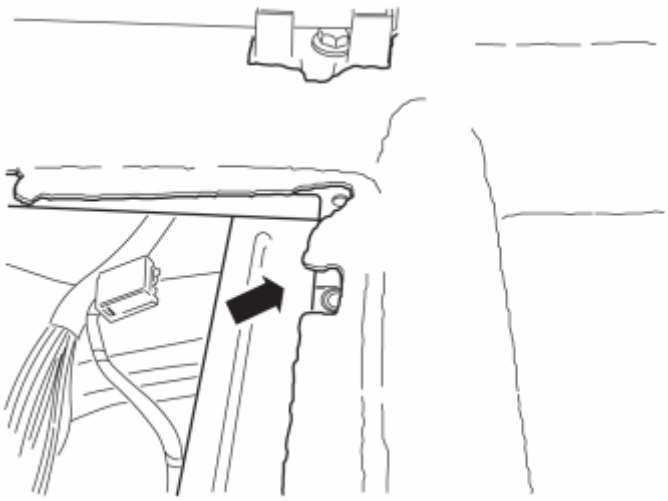

Fig. 641: Reinstalled Amplifier Screws
Courtesy of VOLVO CARS CORPORATION

- Take the mute relay that is under the front left-hand corner in the recess.

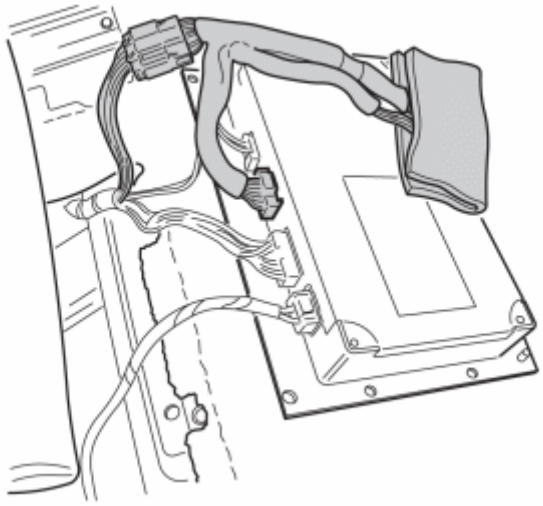

Fig. 642: Identifying Amplifier To The Connector On Cable Harness C
Courtesy of VOLVO CARS CORPORATION

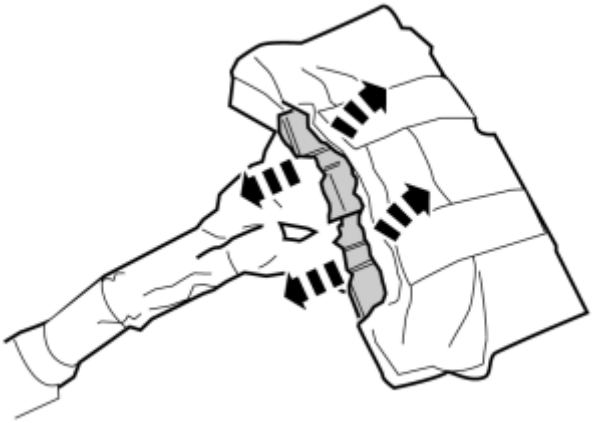

Fig. 643: Identifying Foam Tape
Courtesy of VOLVO CARS CORPORATION

- Lift up the foam tape slightly.
- Unplug the connectors.

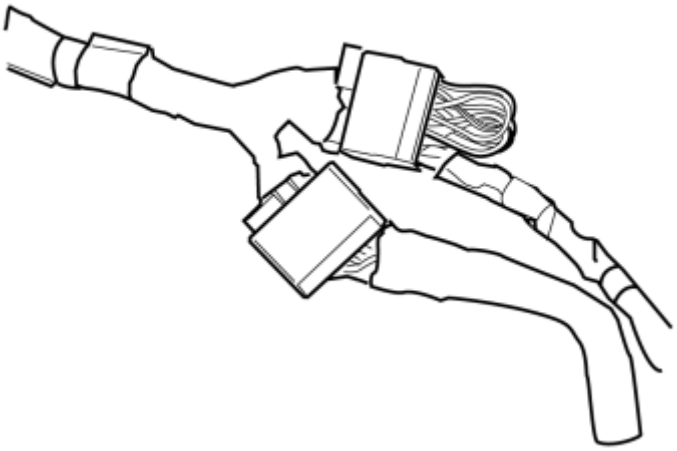

Fig. 644: Connecting Cable Harnesses To Disconnected Connectors
Courtesy of VOLVO CARS CORPORATION

- Take the two cable harnesses from the kit and connect these to the removed connectors.

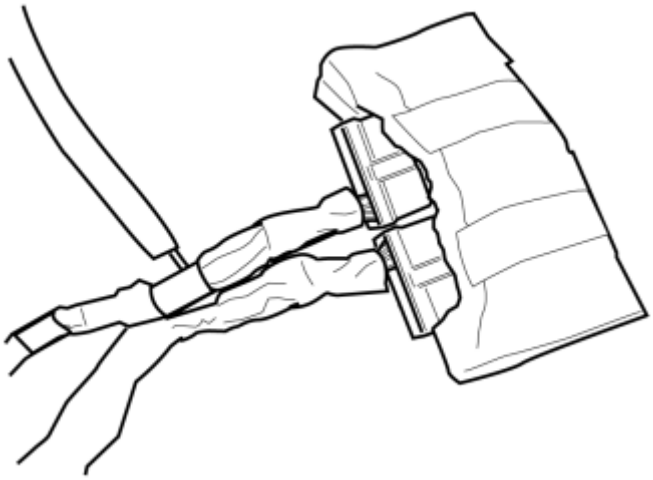

Fig. 645: Connecting New Cable Harnesses To Relay
Courtesy of VOLVO CARS CORPORATION

- Connect the new cable harnesses to the relay.
- Fold the tape back into place.

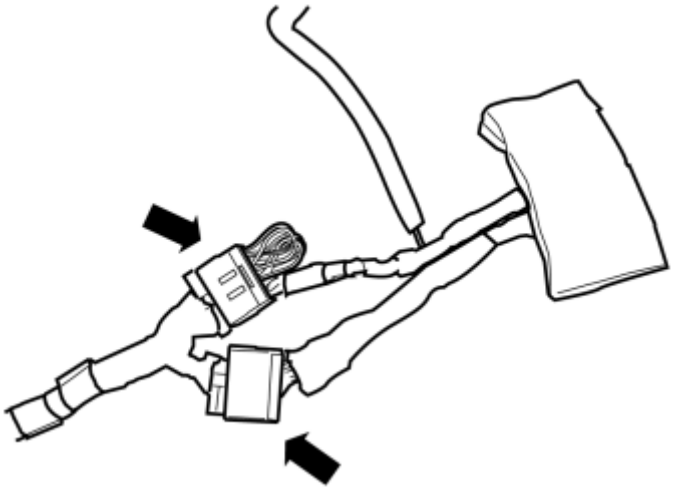

Fig. 646: Taping Foam Tape Around Connectors
Courtesy of VOLVO CARS CORPORATION

- Remove the foam tape from the kit and cut it in the center.
- Wrap some tape around each connector.
- Reinstall the relay.

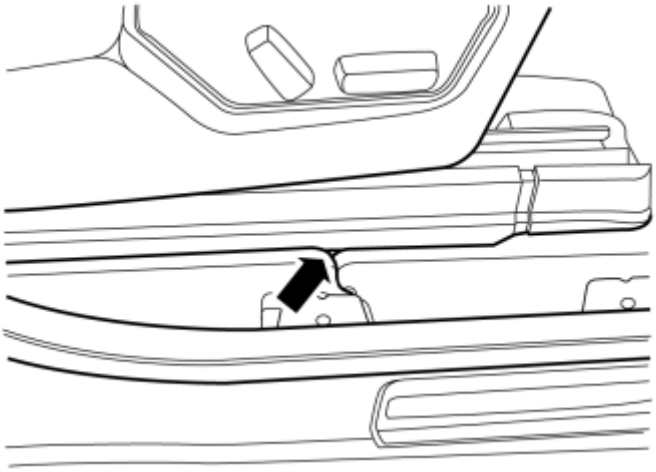

Fig. 647: View Of Cable Route From Location Of The Amplifier
Courtesy of VOLVO CARS CORPORATION

- Route the cable from the location of the amplifier, out under the seat at the joint for the floor mats and towards the sill.
- Do not damage the cable terminal when routing the cable.
- Reinstall the amplifier.

APPLIES TO ALL CARS

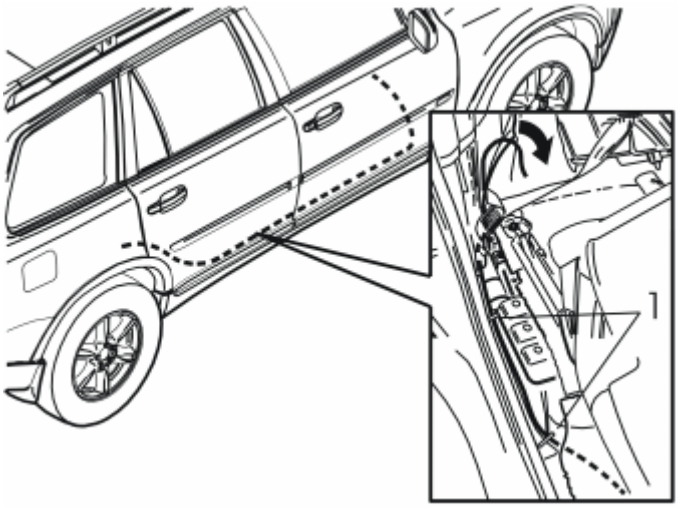

Fig. 648: Cable Clamped In At Air Duct
Courtesy of VOLVO CARS CORPORATION

Applies to all cars

- Guide the cable down between the carpet and the door sill as far as possible to the floor and route it along the right-hand side of the car on to the rear edge of the right-hand rear doors opening.
- Route the cable by the front right-hand seat mounting on the right-hand seat in the second row of seats.
- Pull away the mat from the front edge of the right-hand side panel in the cargo compartment.
- Route the cable harness along the right side of the right seat's placement in the second row of seats, towards the front edge of the rear wheel housing.
- Route it further on the left-hand side of the seat belt's lower mounting, between the support bracket for the right-hand seat and wheel housing, and out at the left-hand side of the wheel housing.

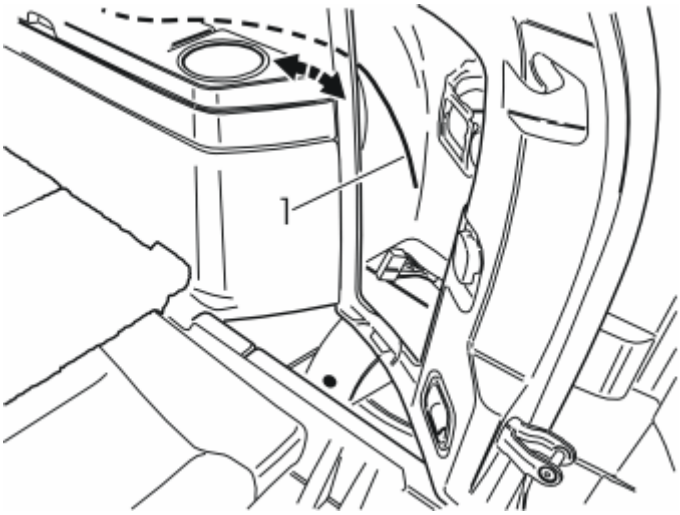

Fig. 649: Identifying Cable At Rear Edge Of Right-Hand Side Panel
Courtesy of VOLVO CARS CORPORATION

Applies to cars with three rows of seats

- Guide in a wire or cable (1) at the rear edge of the right-hand side panel and along its inside, above the load securing eyelet brackets.
- Route the wire/cable to the front edge of the side panel.

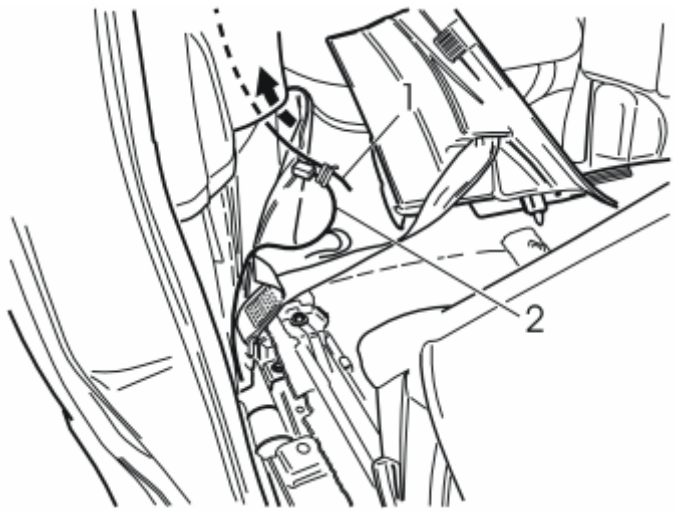

Fig. 650: Identifying Cable Harness
Courtesy of VOLVO CARS CORPORATION

Applies to cars with three rows of seats

- Tape the cable (2) to the wire (1) and pull it forward at the rear edge of the side panel.

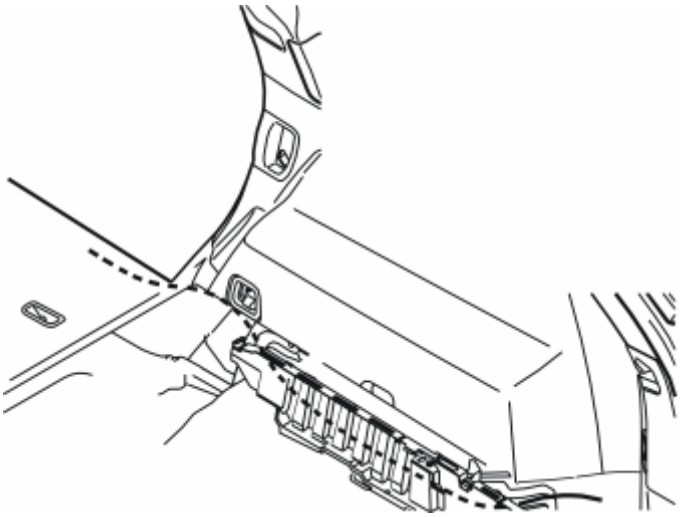

Fig. 651: Cable Routing
Courtesy of VOLVO CARS CORPORATION

Applies to cars with two rows of seats

- Route the cable on the left-hand side of the seat belt's mounting at the front edge of the wheel housing, inside the carpet at the front edge of the side panel, between the side panel and the rear cargo floor

support, to the Accessory Electronic Module (AEM).

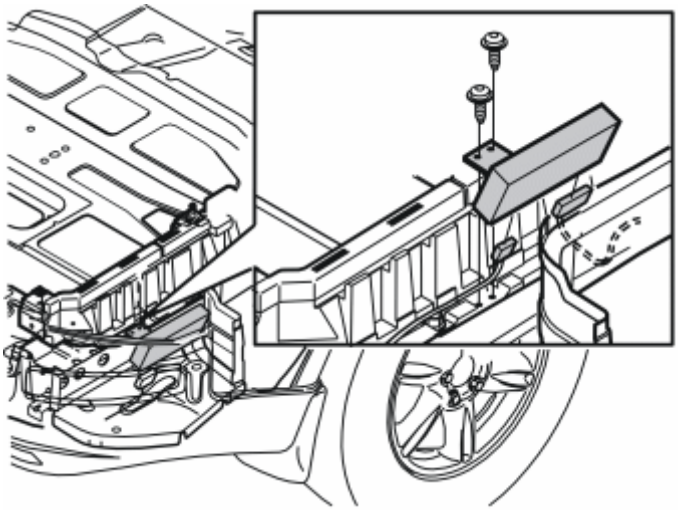

Fig. 652: Removing Panel By Pulling It Straight Up And Unhook It From Side Panel (1 Of 2)
Courtesy of VOLVO CARS CORPORATION

- Remove the two screws in the bracket for the Accessory Electronic Module (AEM) and lift up the entire unit.

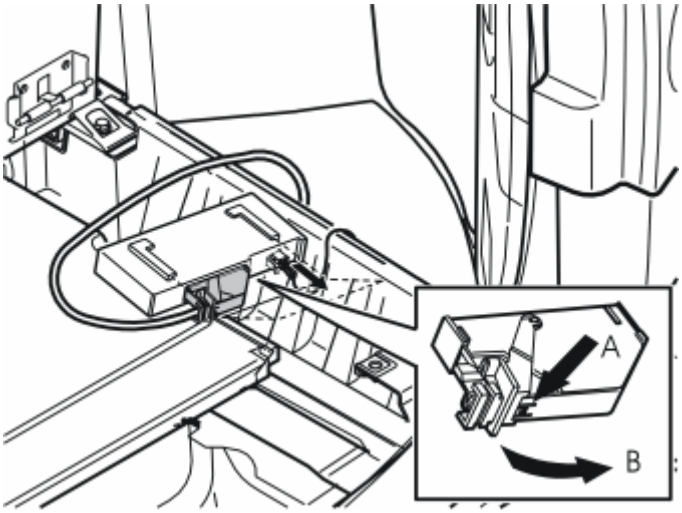

Fig. 653: Removing Panel By Pulling It Straight Up And Unhook It From Side Panel
Courtesy of VOLVO CARS CORPORATION

- Disconnect the large connector on the Accessory Electronic Module (AEM). First press in the catch (A). Pull the black locking handle (B) in the direction of the arrow until a click is heard.
- Disconnect the connector from the accessory electronic module.

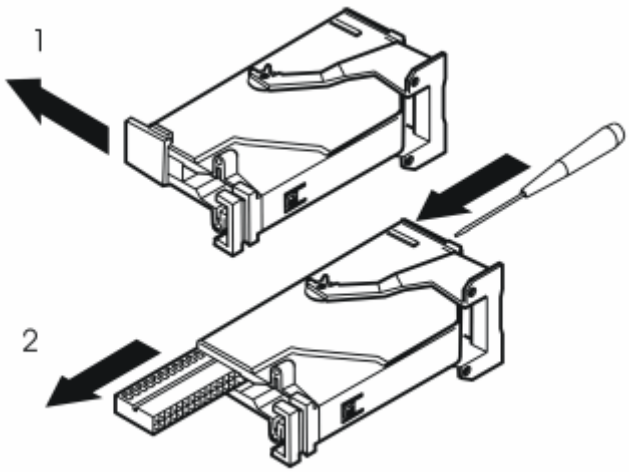

Fig. 654: Black Terminal Pin By Inserting A Pointed Object Into Hole In Other End
Courtesy of VOLVO CARS CORPORATION

- Remove the black catch holding the black connector socket in place in the connector by pulling in the direction of the arrow.
- Remove the black connector socket. Insert a pointed object in the hole on the other end of the connector. Press the connector socket out.

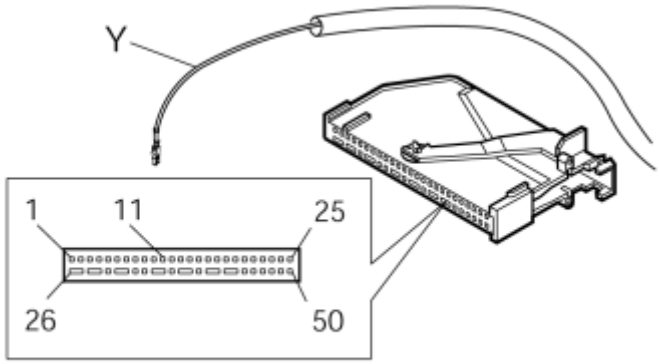

Fig. 655: View Of Yellow (Y) Cable To Terminal 11 (Telemute) In The Black Connector
Courtesy of VOLVO CARS CORPORATION

NOTE: The numerical markings on the top and bottom of the black terminal pin are extremely small, so be careful when installing the cable.

- Connect the yellow (Y) cable to terminal 11 (telemute) in the black connector for the Accessory Electronic Module (AEM).
- Reinstall the black switch in the connector. Lock into place using the catch.
- Press the connector into the Accessory Electronic module. Secure using the black locking handle.

- Reinstall the Accessory Electronic Module (AEM) with bracket.
- Secure the excess of the yellow cable using a tie strap.

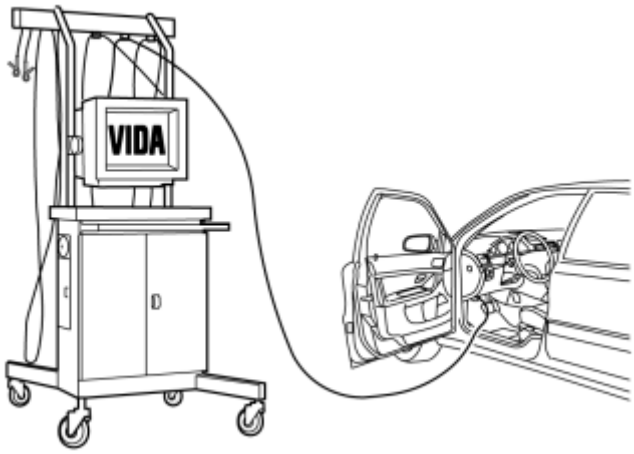

Fig. 656: Identifying VIDA (Service Information) To Program Software
Courtesy of VOLVO CARS CORPORATION

Install:

- panel for gear selector.
- the sill trim panels.
- cover splice for sill trim panels.
- sound proofing.
- the side panel for the center console.
- the seatbelt.

NOTE: Check that the seat belt is secure by jerking it hard in an upwards direction.

- the seat. Tighten the screws to **50 Nm (36.8 lbf. ft.)** .
- seat moldings.
- the side panel.
- floor hatches.
- Turn the ignition key to position II.
- Reconnect the battery negative lead
- Download the software for the accessory's function following the service information in VIDA (Volvo scan tool).

Carry out a function test as follows:

- Turn the ignition key to position II.
- Turn on the radio.
- Check that the Bluetooth system's control panel lights up.
- Press the round button in the middle of the control panel. The radio should mute and a voice should be heard.
- Press the button with the red handset symbol. The voice should stop and the radio sound.

INFOTAINMENT LEVELS UPGRADE (2009-2010)

INFOTAINMENT LEVELS UPGRADING

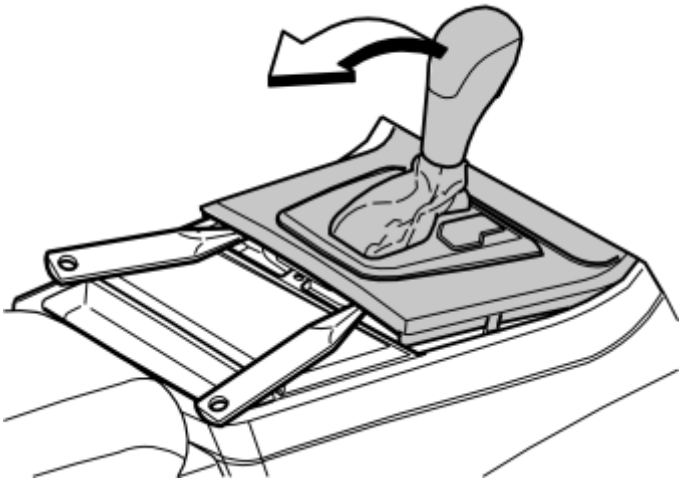

Fig. 657: Prying Off Gear Selector Panel At Rear Edge
Courtesy of VOLVO CARS CORPORATION

Applies to cars with automatic gearbox

- Turn the ignition key to position II.

Applies to all models

- Move the gear selector lever to its rearmost position.
- Carefully pry off the gear level panel at the rear edge using a plastic weatherstrip tool and pull it backwards to access the screws for the climate control panel.

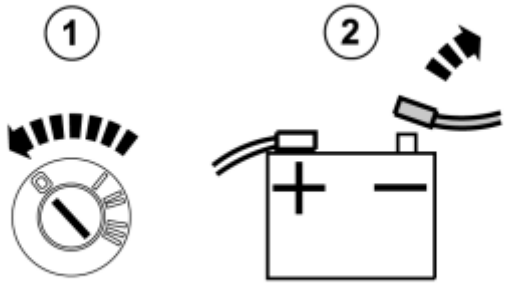

Fig. 658: Identifying Ignition Switch OFF & Disconnected Negative Battery Lead
Courtesy of VOLVO CARS CORPORATION

Applies to cars with manual gearbox

- Turn the ignition switch to position 0.

Applies to all models

- Disconnect the battery negative lead.

NOTE: Wait at least three minutes before disassembling the connectors or removing other electrical equipment.

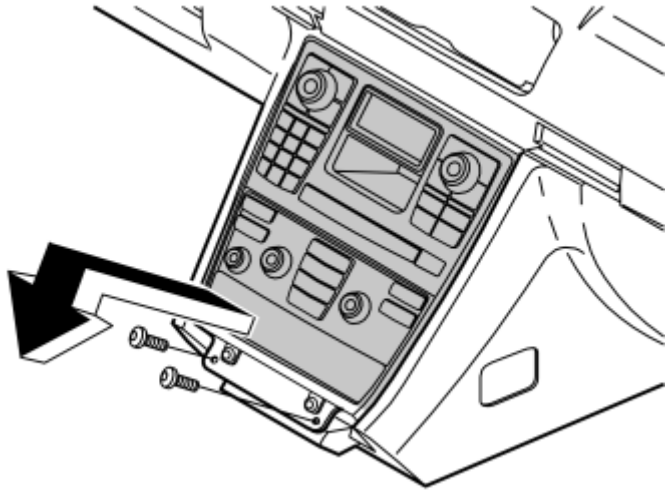

Fig. 659: Removing Screws And Radio/AC Unit From Center Console
Courtesy of VOLVO CARS CORPORATION

- Remove the two screws holding the bracket to the climate control panel and the control module.

NOTE: **Pull out the bracket at the lower edge and detach it from the top edge of the center console.**

- Disconnect the connectors from the climate control panel, control module and CD player.

Illustrations A and B

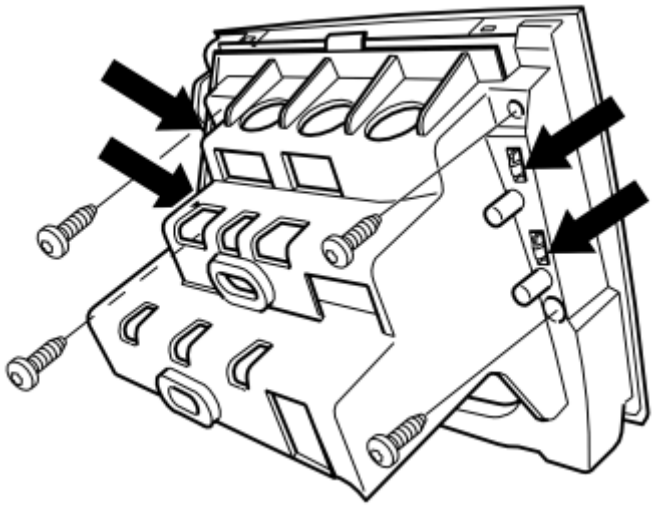

Fig. 660: View Of Control Module Screws
Courtesy of VOLVO CARS CORPORATION

- Position the bracket with control module and climate control panel appropriately.
- Remove the four screws on the reverse that hold the control module by the bracket.
- Depress the four catches in the sides of the control module so that they release and pull out the control module carefully.

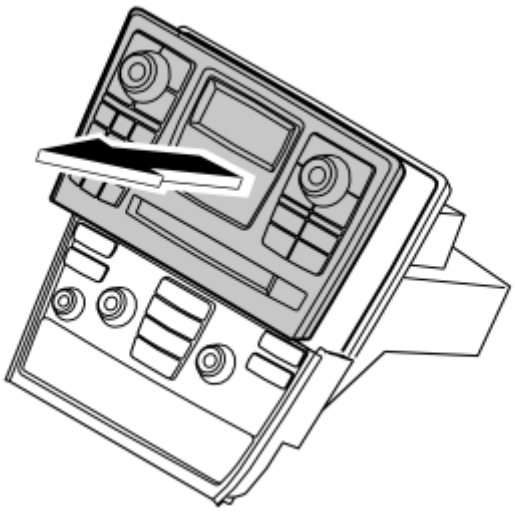

Fig. 661: Remove The Control Module
Courtesy of VOLVO CARS CORPORATION

Fig. 662: Identifying CD Player Screws
Courtesy of VOLVO CARS CORPORATION

- Remove the two screws, pull out the CD player and place to one side. It will not be reused.

INSTALL

Fig. 663: Installing New CD Player From Kit
Courtesy of VOLVO CARS CORPORATION

- Take a new CD player from the kit, install and tighten using the existing screws.

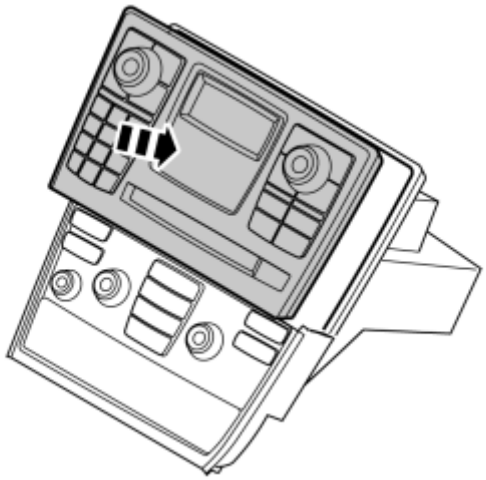

Fig. 664: View Of Control Module
Courtesy of VOLVO CARS CORPORATION

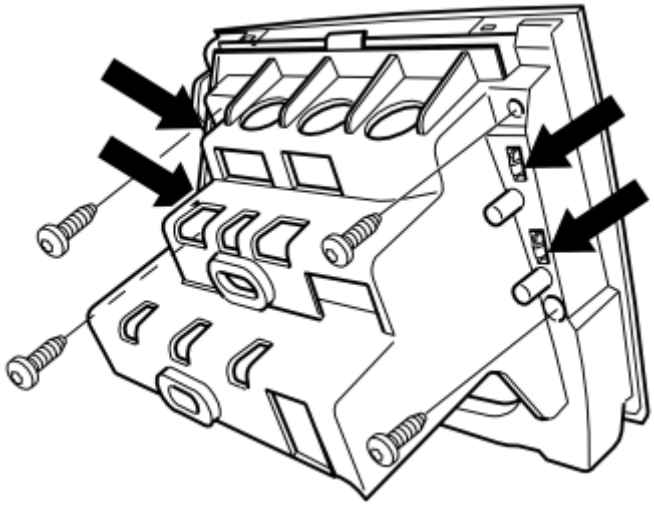

Fig. 665: View Of Control Module Screws
Courtesy of VOLVO CARS CORPORATION

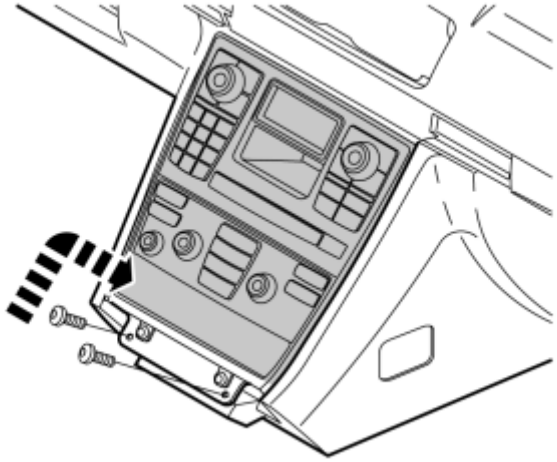

Fig. 666: Identifying Climate Control Panel And CD Player Screws
Courtesy of VOLVO CARS CORPORATION

- Connect the connectors to the control module, climate control panel and CD player and reinstall the unit in the center console. Ensure that the wiring on the reverse is correctly positioned and is not at risk of being trapped or chafed.

NOTE: Fibre-optic cables may not be bent with a radius less than 25 mm (1").

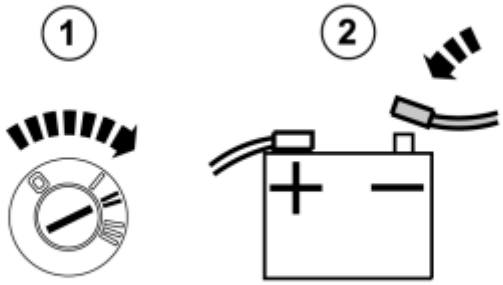

Fig. 667: Identifying Ignition In ON Position and Connecting Negative Battery Lead
Courtesy of VOLVO CARS CORPORATION

- Turn the ignition key to position II.
- Reconnect the battery negative lead.

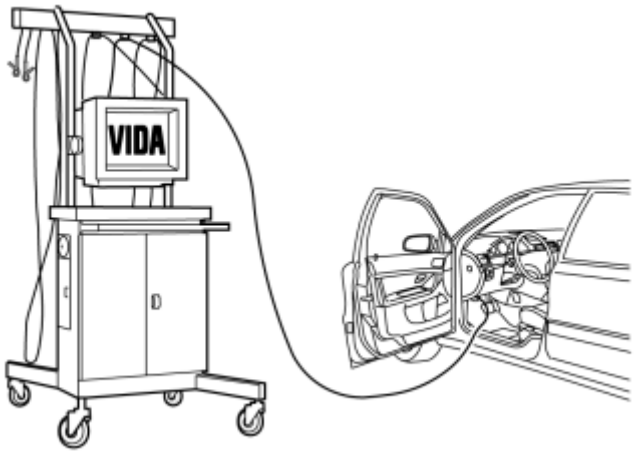

Fig. 668: Identifying VIDA (Service Information) To Program Software
Courtesy of VOLVO CARS CORPORATION

- Download the software for the accessory's function following the service information in VIDA (Volvo scan tool).

MOBILITY CONNECTION PACKAGE (2009-2011)

MOBILITY CONNECTION PACKAGE

NOTE: **When installing Velcro fasteners/tape, the underlying surface must be kept at a temperature of at least +20° C (68°F).**

Place the manual for this accessory in a suitable place in the vehicle.

PREPARATION

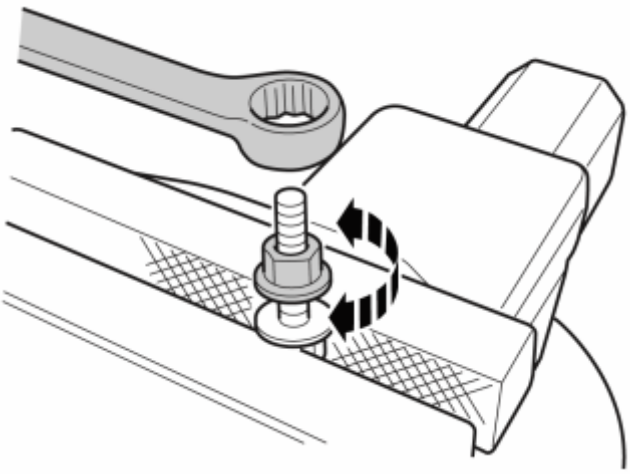

Fig. 669: Identifying Wrench, Screws And Nuts

Courtesy of VOLVO CARS CORPORATION

NOTE: Take care when handling the components, they are fragile and are easily damaged.

- Take the three screws **M5x20 part no. 986956** and nuts from the kit.
- To prevent excessive resistance when the nut for the holder is tightened, hold the screw and screw the nut on and off the threaded part of the screw. Carry this out on all screws and nuts.

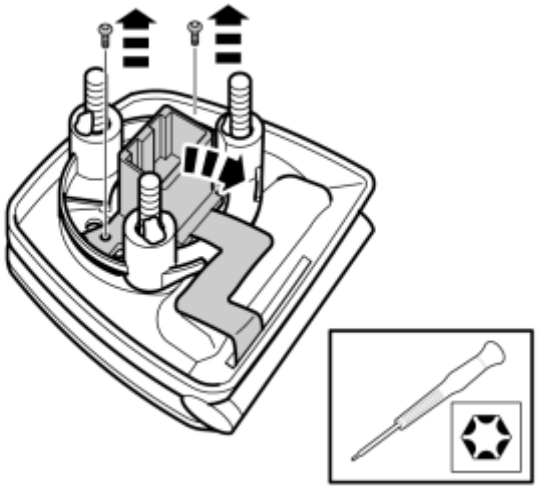

Fig. 670: Identifying Removal Screws Holding Connector In Holder
Courtesy of VOLVO CARS CORPORATION

- Take special tool **9814104** (Torx driver, Torx 6), and unscrew the two screws holding the connector in the holder.
- Carefully push the connector to one side with the cable to expose the bottom of the holder.

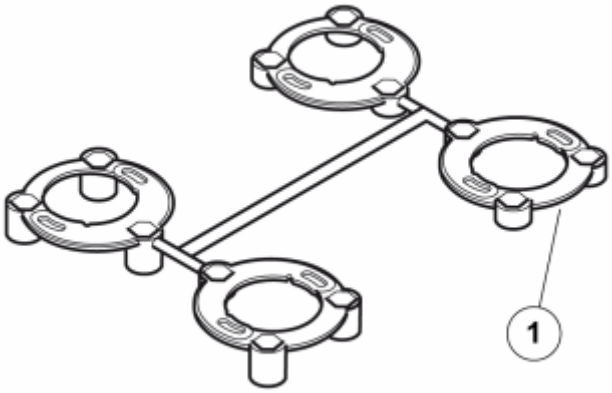

Fig. 671: Identifying Spacers
Courtesy of VOLVO CARS CORPORATION

- Take the kit with the four spacers from the installation kit.
- Carefully pry off the spacer using **P/N 31212525** . The part number (1) is on the bottom of the spacer.

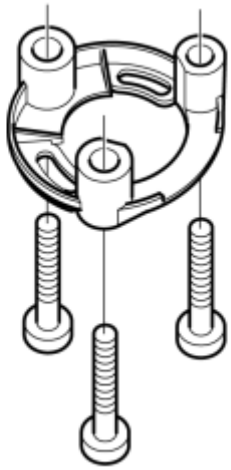

Fig. 672: Identifying Screws Inserted In Spacer
Courtesy of VOLVO CARS CORPORATION

- Take the three screws and insert them in the spacer fully.

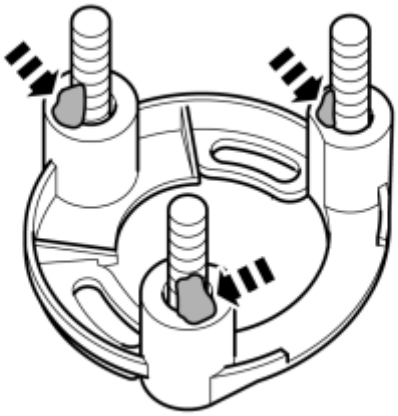

Fig. 673: Applying Pieces Of Butyl Tape To Screws
Courtesy of VOLVO CARS CORPORATION

- Apply pieces of butyl tape to the screws so that the screw heads do not protrude outside the spacer when installing it.

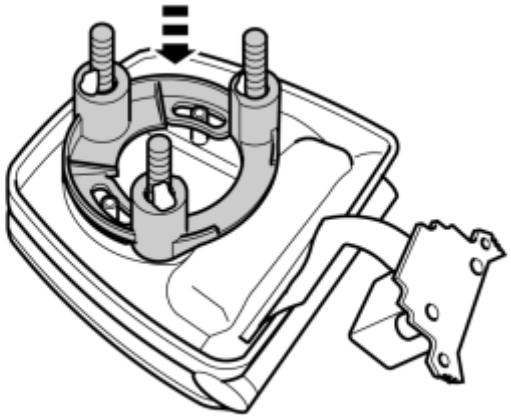

Fig. 674: Identifying Spacer In Bottom Of Holder
Courtesy of VOLVO CARS CORPORATION

- Install the spacer in the bottom of the holder.

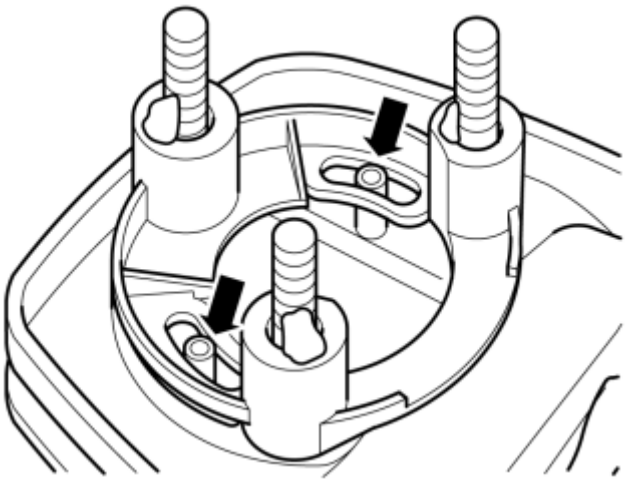

Fig. 675: Identifying Spacer Secured In Position
Courtesy of VOLVO CARS CORPORATION

- Ensure that the holders two screw turrets align between the small pins in the oblong holes in the spacer. A click should be heard when the spacer is securely in position.

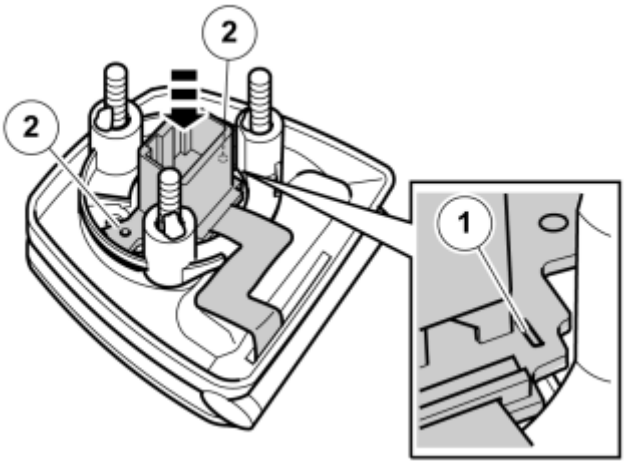

Fig. 676: Aligning Guide Hole With Pin
Courtesy of VOLVO CARS CORPORATION

- Place the connector in the bottom of the hole. The guide hole (1) in the connector's circuit board must align in the corresponding pin at the bottom of the holder and the holes (2) in the circuit board must be over the holders screw turret.

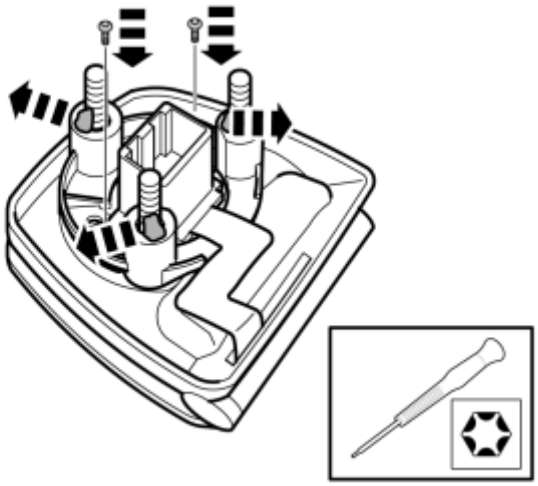

Fig. 677: Identifying Connector Tightened To Holder With Torx Screws
Courtesy of VOLVO CARS CORPORATION

- Take the small Torx screws and carefully tighten the connector to the holder. Ensure that the connector's circuit board is properly against the screw turret and that there is no play.
- Remove the butyl tape from the screws.

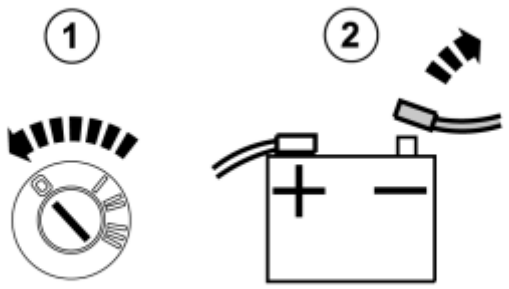

Fig. 678: Identifying Ignition Switch OFF & Disconnected Negative Battery Lead
Courtesy of VOLVO CARS CORPORATION

- Slide the front seats back and upwards at the front edge.
- Turn the ignition key to position 0.
- Disconnect the battery negative lead.

NOTE: **Wait at least three minutes before unplugging the connectors or removing other electrical equipment.**

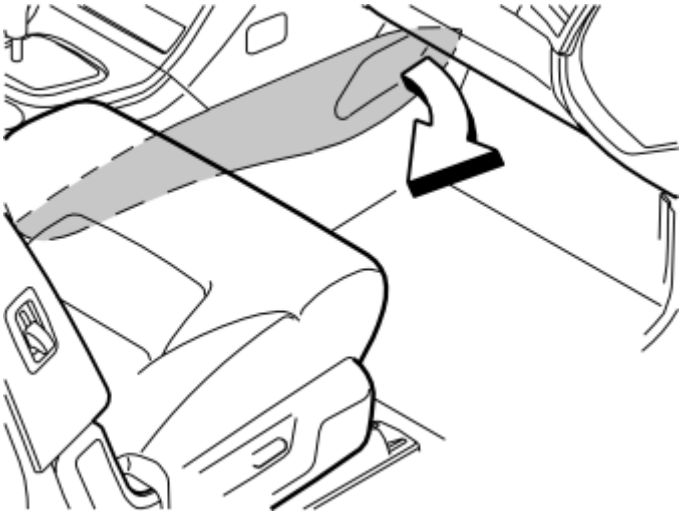

Fig. 679: Remove The Center Console's Right-Hand Side Panel
Courtesy of VOLVO CARS CORPORATION

- Remove the center console's right and left-hand side panel by pulling away starting at the front edge and then backwards until all the clips have released.

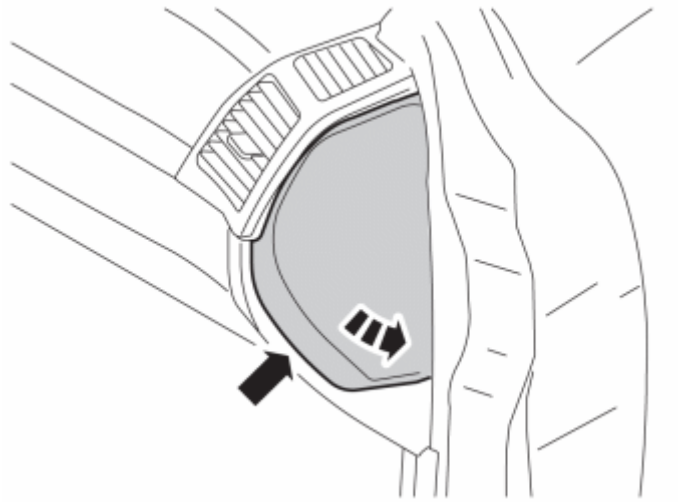

Fig. 680: View Of End Face Panel On Dashboard
Courtesy of VOLVO CARS CORPORATION

- Remove the end face panel from the dashboard.

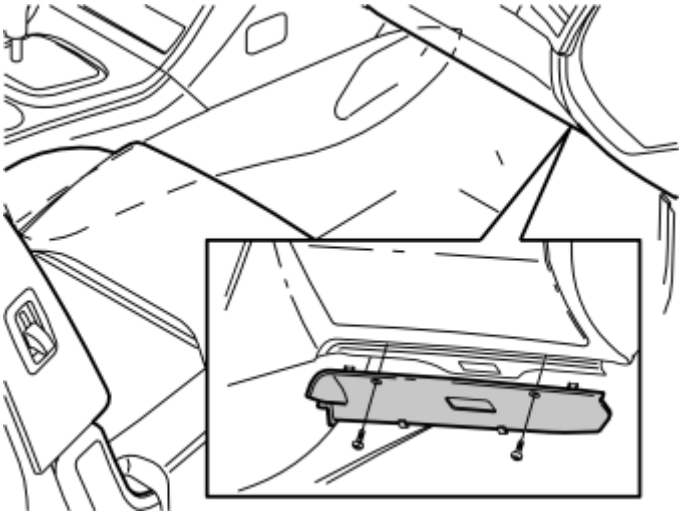

Fig. 681: Identifying Soundproofing Panel
Courtesy of VOLVO CARS CORPORATION

- Remove the sound insulation on the right and left-hand sides by first removing the two screws and then prying off the sound insulation.

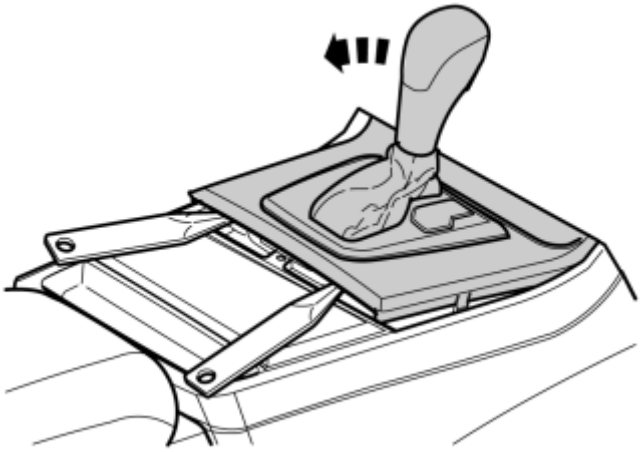

Fig. 682: View Of Pry Off The Gear Selector Panel
Courtesy of VOLVO CARS CORPORATION

Applies to cars with automatic gearbox

- Turn the ignition key to position II.

Applies to all models

- Move the gear selector lever to its rearmost position.
- Use a weatherstrip and pry off the gear selector panel at the rear edge.

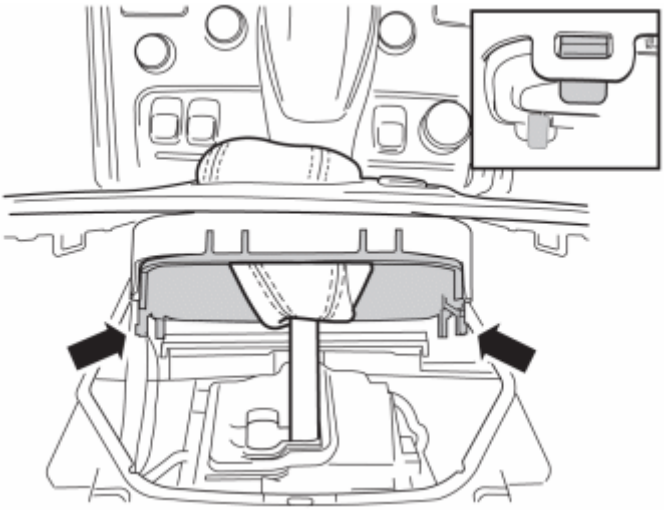

Fig. 683: Pressing In Catches And Removing Panel
Courtesy of VOLVO CARS CORPORATION

- Press in the catches and remove the panel.

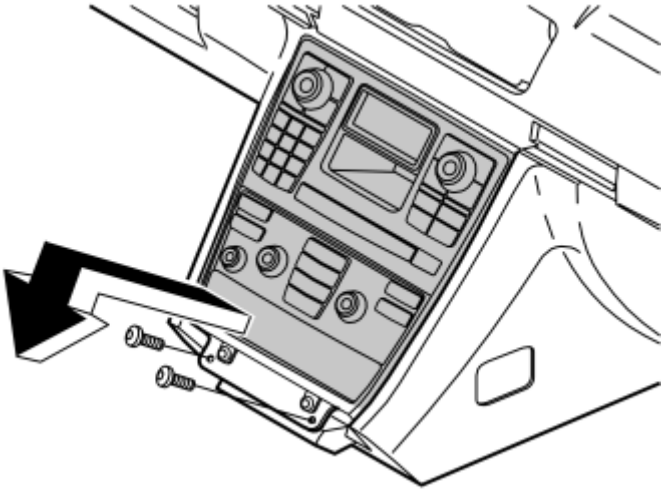

Fig. 684: Removing Screws And Radio/AC Unit From Center Console
Courtesy of VOLVO CARS CORPORATION

- Remove the two screws.
- Remove the bracket with the A/C panel and radio from the center console. Pull from the lower edge and then downwards until it releases from the mounting at the upper edge.

NOTE: Do not damage the removed components or the surrounding panels.

- Unplug the connectors.

Illustration A

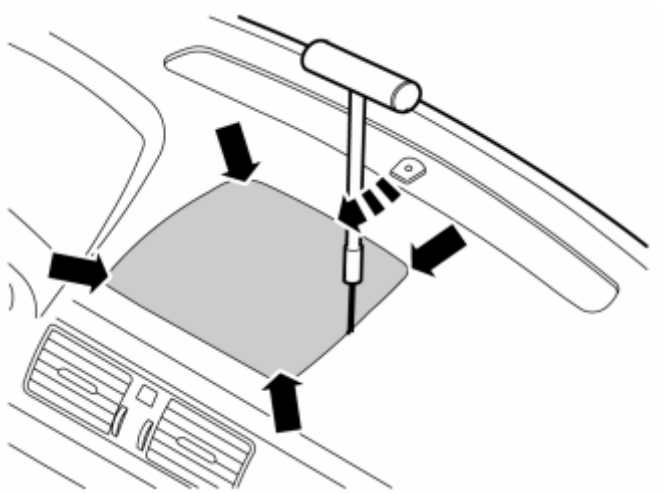

Fig. 685: View Of Removing Speaker Grille
Courtesy of VOLVO CARS CORPORATION

- Remove the loudspeaker grille as follows: Insert the special tool, **9995919** into the joint between the loudspeaker grille and the dashboard approximately as illustrated, until it engages.

- Twist the tool 90° so that the bent section engages with the underneath of the loudspeaker grille.

Illustration B

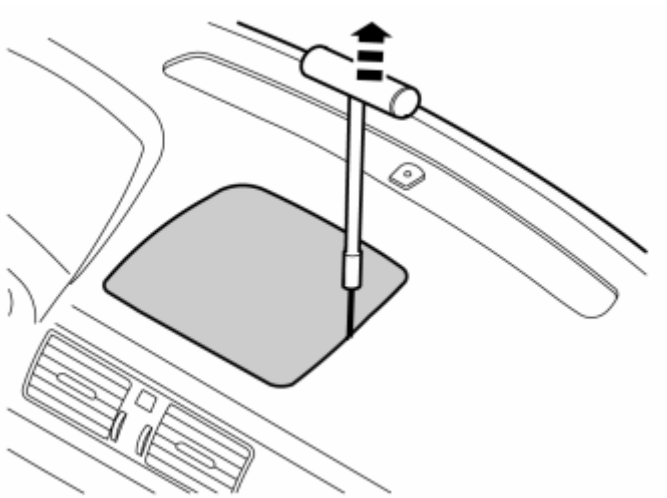

Fig. 686: Pull Upward Until The Loudspeaker Grille Detaches
Courtesy of VOLVO CARS CORPORATION

- Pull upward until the loudspeaker grille detaches, it is securely fastened by four clips. Move the tool closer to the clips to facilitate removal.

NOTE: Do not damage the dashboard.

- Lift out the loudspeaker grille.

Fig. 687: Identifying Template From The Kit And Cut It Along The Outer Lines
Courtesy of VOLVO CARS CORPORATION

- Take the template from the kit and cut it along the outer lines.

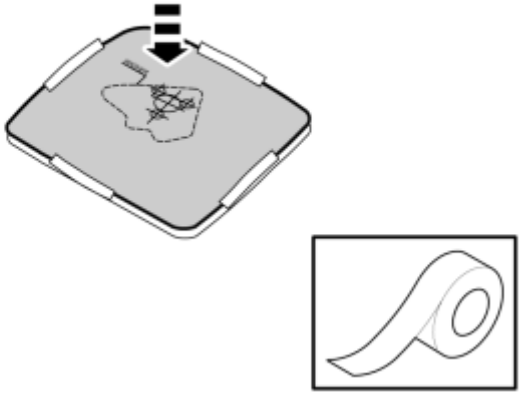

Fig. 688: Tape The Template To The Loudspeaker Grille
Courtesy of VOLVO CARS CORPORATION

- Tape the template to the loudspeaker grille.

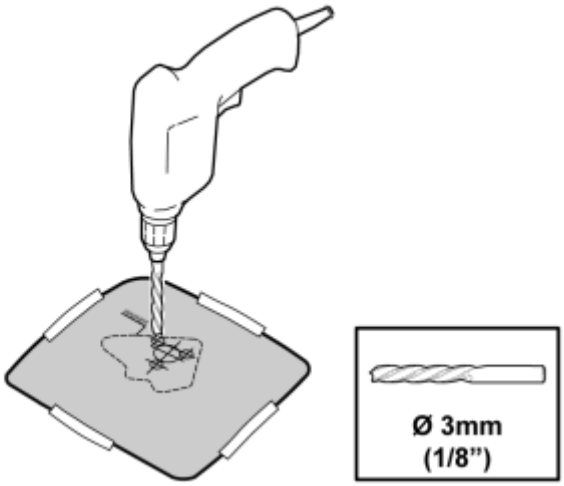

Fig. 689: View Of Predrilled The Holes According To The Template
Courtesy of VOLVO CARS CORPORATION

- Drill at right angles to the loudspeaker grille.
- Predrill the holes according to the template using a **3 mm (1/8")** drill bit.
- Remove the template.

Illustrations A and B

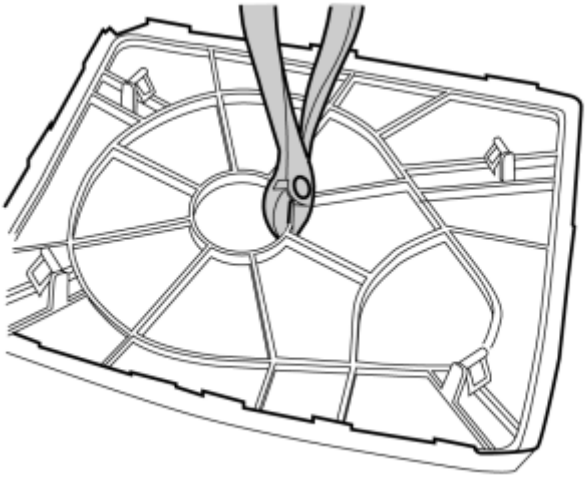

Fig. 690: Identifying Ribs On The Underside Of Loudspeaker Grille
Courtesy of VOLVO CARS CORPORATION

- Turn over the loudspeaker grille and cut away some of the ribs on the underside so that the result corresponds with figure B.

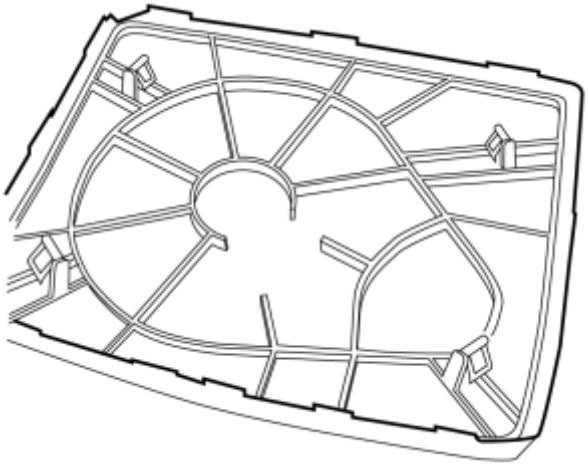

Fig. 691: View Of Ribs Cut Out Of Grille
Courtesy of VOLVO CARS CORPORATION

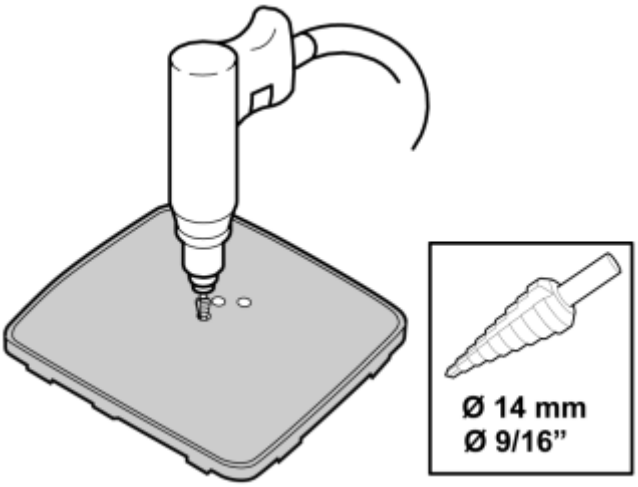

Fig. 692: View Of Step Drilling Three Holes
Courtesy of VOLVO CARS CORPORATION

- Drill the three holes for the cradle's feet using a step drill **14 mm (9/16")** .

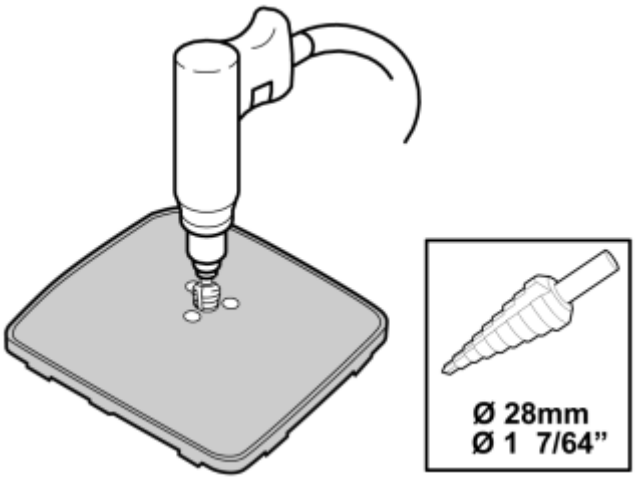

Fig. 693: View Of Drilling Out The Hole For The Connection
Courtesy of VOLVO CARS CORPORATION

- Take the step drill and drill out the hole for the connection in the holder using a **28 mm (1 7/64") drill bit** .

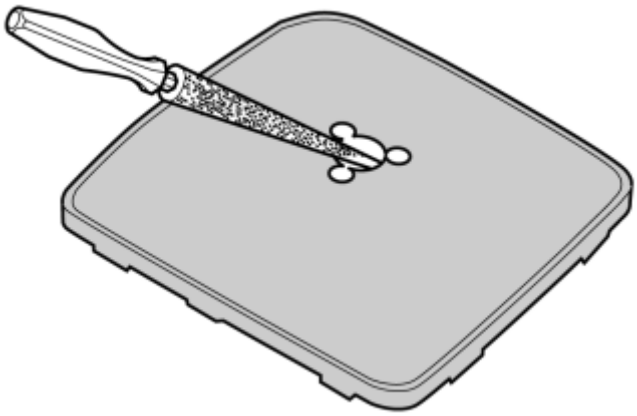

Fig. 694: Deburr And Bend In The Edges Using A Round File
Courtesy of VOLVO CARS CORPORATION

- Deburr and bend in the edges using a round file.

Illustration A

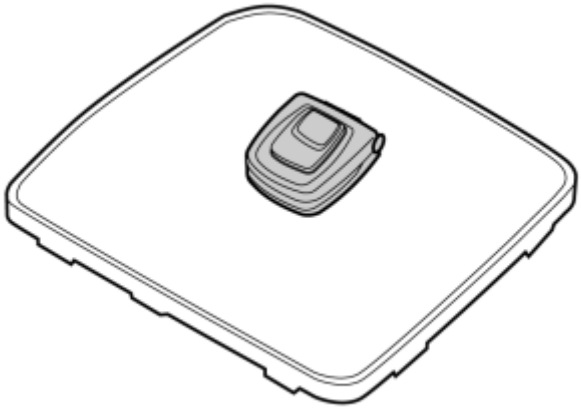

Fig. 695: Secure To The Loudspeaker Grille
Courtesy of VOLVO CARS CORPORATION

- Take three nuts, washer and the cradle out of the kit and secure to the loudspeaker grille.

Illustration B

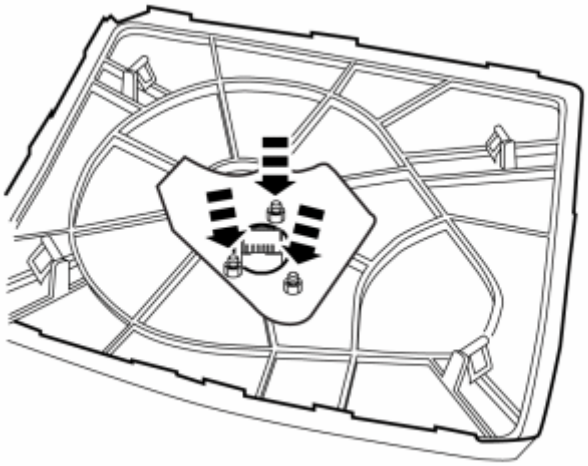

Fig. 696: Tighten The Cradle
Courtesy of VOLVO CARS CORPORATION

- Tighten the cradle.

Illustration A

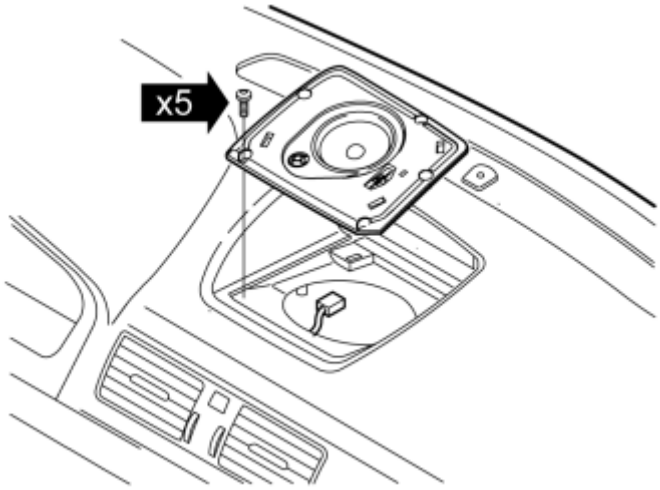

Fig. 697: Lift Up The Loudspeaker And Remove The Connector
Courtesy of VOLVO CARS CORPORATION

- Remove the five screws. Lift up the loudspeaker and remove the connector.
- Put the loudspeaker to one side. New loudspeaker and console in the kit.

Illustration B

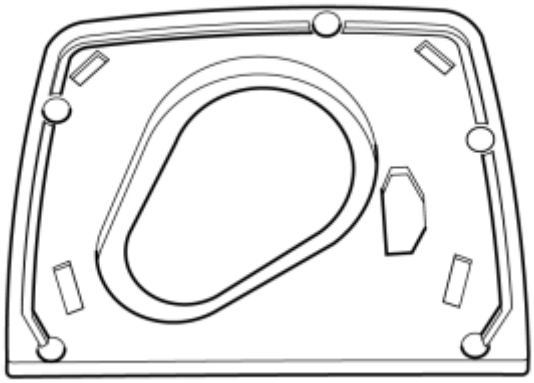

Fig. 698: View Of Vehicles Without A Center Loudspeaker
Courtesy of VOLVO CARS CORPORATION

- On vehicles without a center loudspeaker there is a console holding the loudspeaker grille. On these vehicles the console remains in place and the cable is routed through the hole.

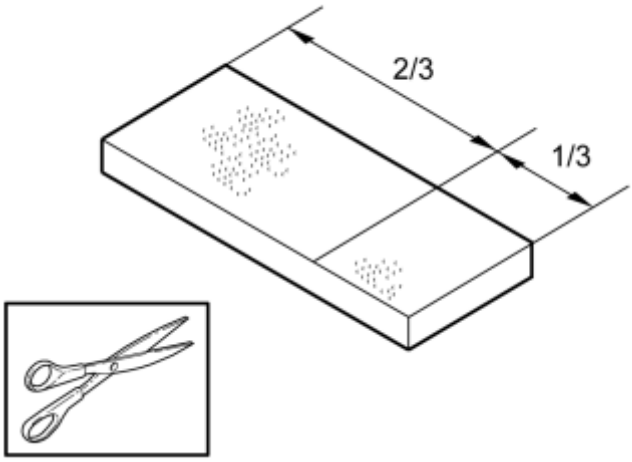

Fig. 699: View Of Piece Of Foam Tape From The Kit
Courtesy of VOLVO CARS CORPORATION

- Take a piece of foam tape from the kit and cut off as shown in the image.

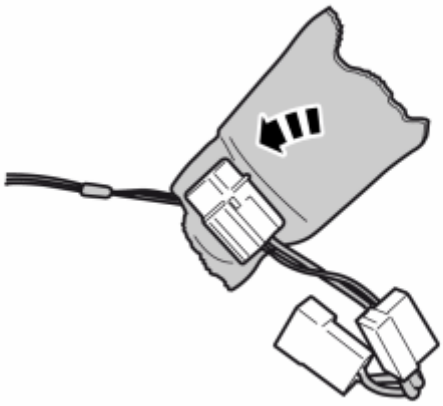

Fig. 700: View Of Long Cable Harness (A) From The Kit
Courtesy of VOLVO CARS CORPORATION

- Take the long cable harness (A) from the kit.
- Wrap the larger piece of foam tape around the fuse holder to prevent rattling.

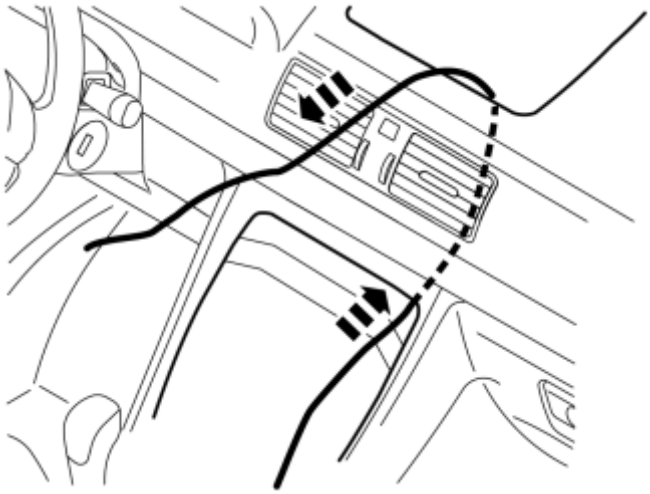

Fig. 701: Identifying Cable Harness Is Always Routed On The Right-Hand Side In The Tunnel Console
Courtesy of VOLVO CARS CORPORATION

- Take hold of the long cable harness. Route the end with the small connector on the right-hand side in the center console, up and out through the hole for the loudspeaker grille console.

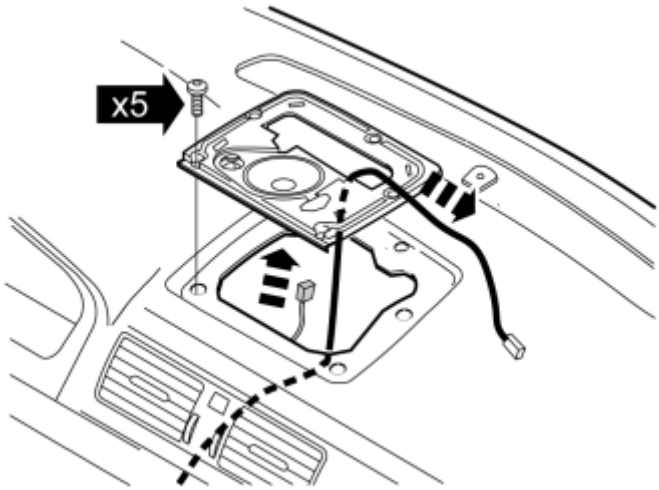

Fig. 702: Identifying Console Screws
Courtesy of VOLVO CARS CORPORATION

- Connect the connector to the loudspeaker. Route the cable to the cradle through the large hole in the speaker console.
- Tighten the console using the five existing screws.

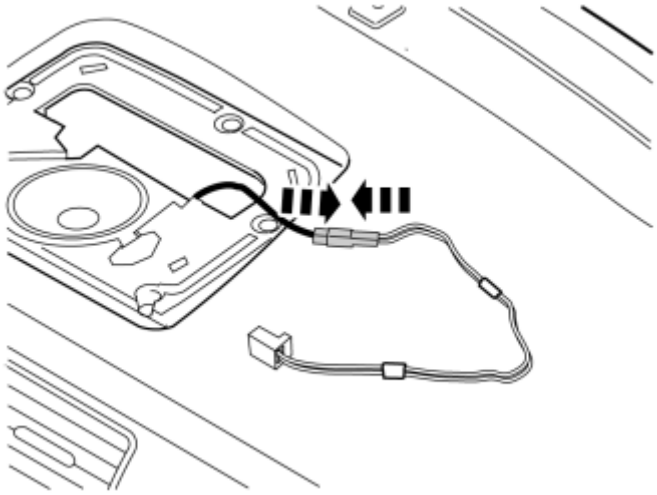

Fig. 703: View Of Small Cable (B) From The Kit And Connect To The Newly Routed Cable Harness
Courtesy of VOLVO CARS CORPORATION

- Take out the small cable (B) from the kit and connect to the newly routed cable harness.
- Wrap the smaller piece of foam tape around the connectors.

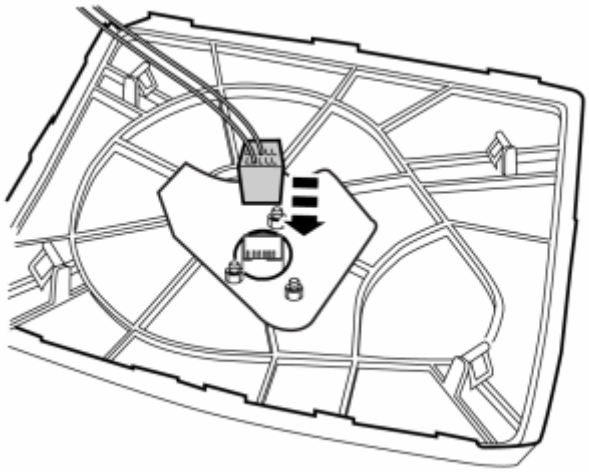

Fig. 704: View Of Connect The Connector To The Cradle
Courtesy of VOLVO CARS CORPORATION

- Take the loudspeaker grille with cradle. Connect the connector to the cradle.

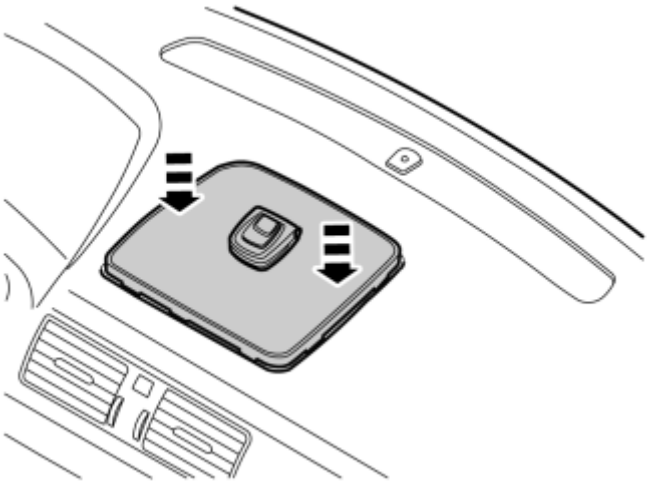

Fig. 705: View Of Pushing The Loudspeaker Grille
Courtesy of VOLVO CARS CORPORATION

- Insert the cable in the hole for the loudspeaker/console and push on the loudspeaker grille.

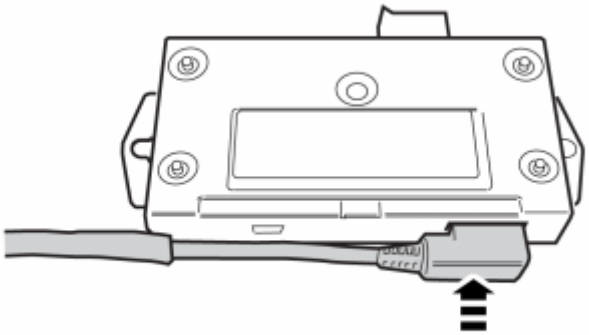

Fig. 706: View Of Connecting The Cable Harness To The Control Module
Courtesy of VOLVO CARS CORPORATION

- Take the cable harness (D) and control module from the kit. Connect the cable harness to the control module.

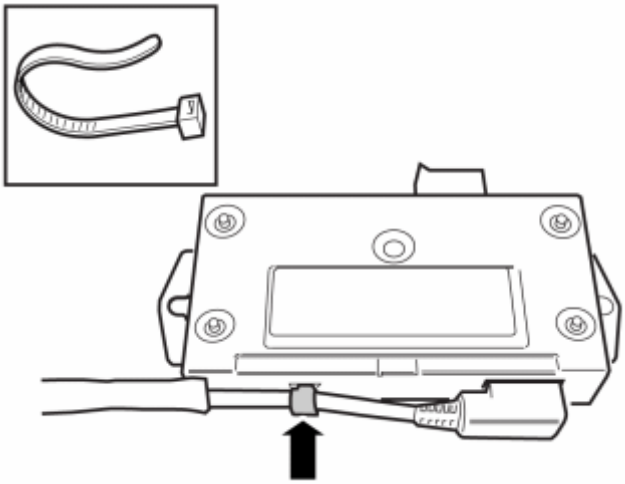

Fig. 707: Secure The Cable Harness To The Control Module Using A Cable Tie
Courtesy of VOLVO CARS CORPORATION

- Secure the cable harness to the control module using a cable tie.

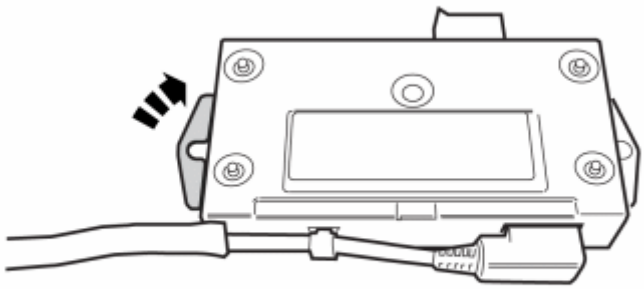

Fig. 708: Fold Up The Left Mounting Of The Control Module
Courtesy of VOLVO CARS CORPORATION

- Fold up the left mounting of the control module.

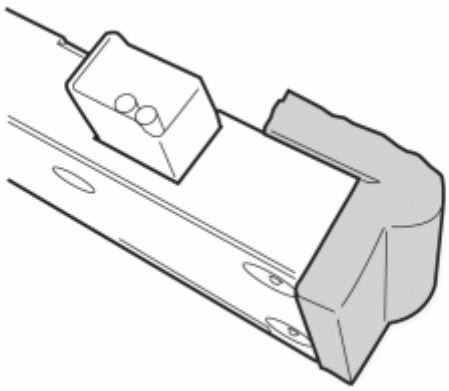

Fig. 709: View Of Foam Tape On Right-Hand Mounting Of The Control Module
Courtesy of VOLVO CARS CORPORATION

- Take a piece of foam tape from the kit and cut in the middle. Place a piece on the right-hand mounting of the control module.

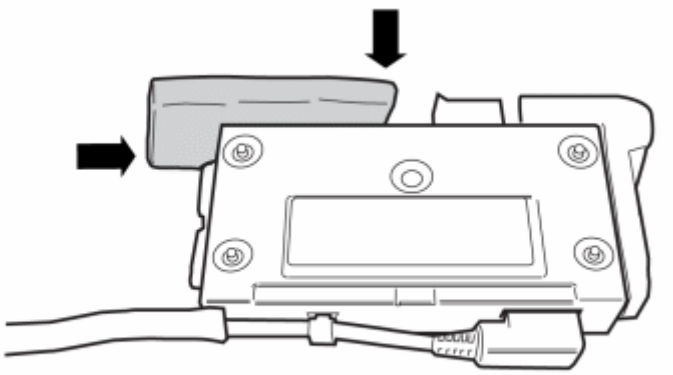

Fig. 710: View Of Foam Tape That Covers Half The Upper Edge And Half The Side Edge
Courtesy of VOLVO CARS CORPORATION

- Apply a piece of foam tape so that it covers half the upper edge and half the side edge.

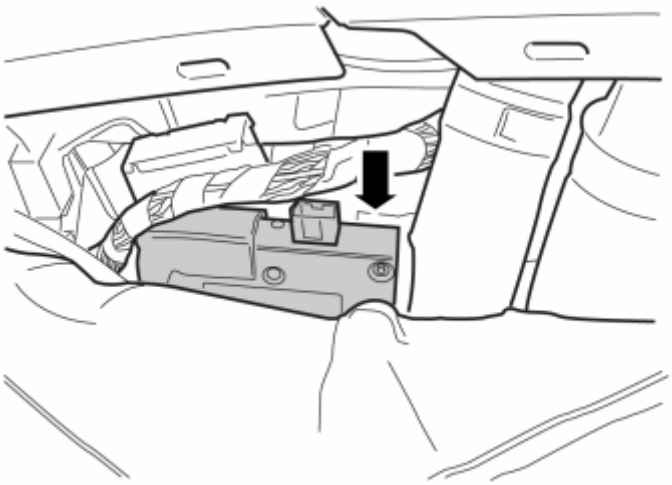

Fig. 711: Identifying Control Module Between The Carpet And Insulation
Courtesy of VOLVO CARS CORPORATION

- Push the carpet on the right-hand side of the tunnel console to one side.
- Place the control module between the carpet and insulation. The right-hand mounting of the control module should be below the air duct.

Illustration A

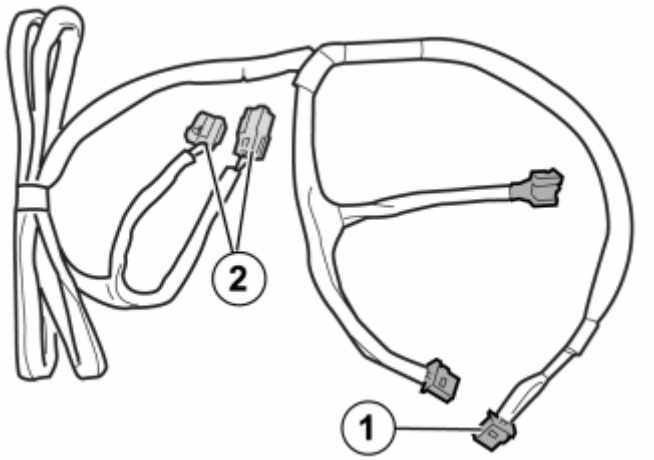

Fig. 712: Identifying Cable Harness From Kit
Courtesy of VOLVO CARS CORPORATION

- Take cable harness (D) from the kit.

Illustration B

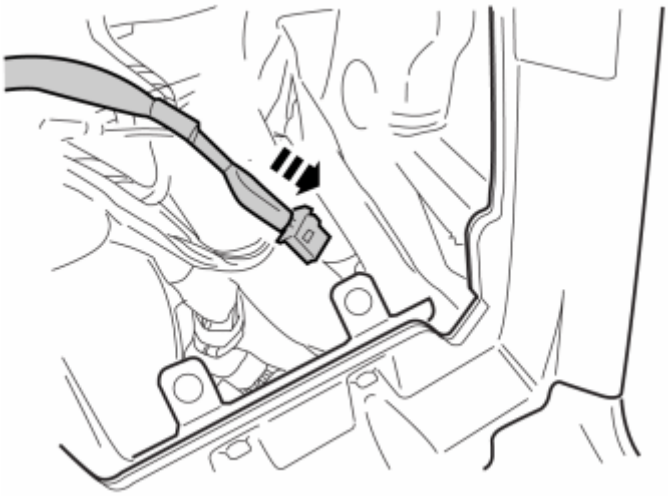

Fig. 713: View Of Connector Down To The Control Module
Courtesy of VOLVO CARS CORPORATION

- Route the connector down to the control module.

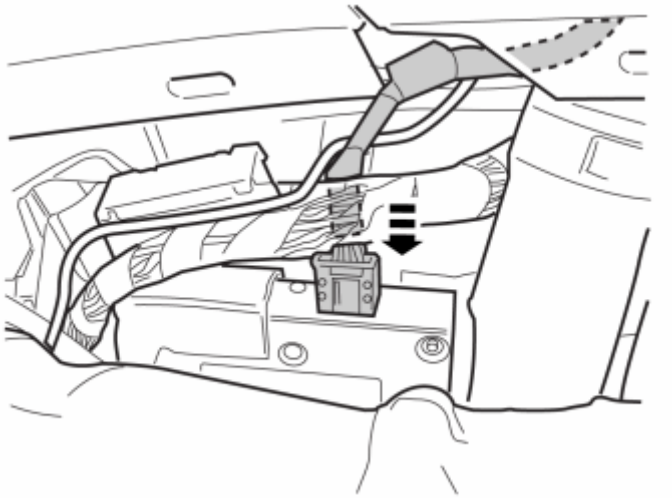

Fig. 714: View Of Connector (1) To The Control Module
Courtesy of VOLVO CARS CORPORATION

- Connect the connector (1) to the control module.

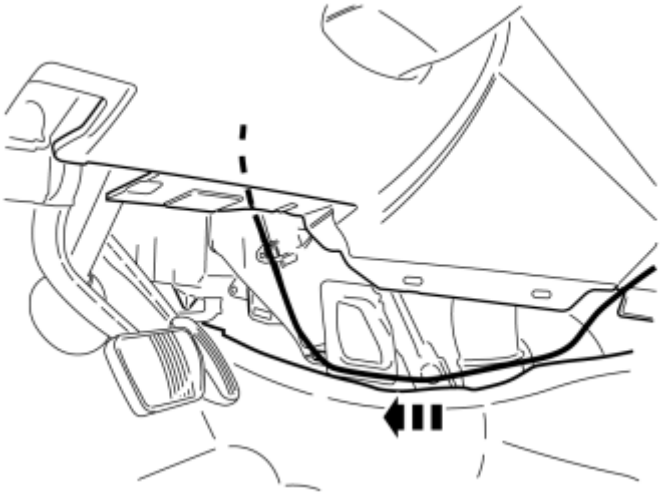

Fig. 715: View Of Connector (2) By The Side Of The Centre Console
Courtesy of VOLVO CARS CORPORATION

- Route the connector (2) by the side of the center console.

USB/IPOD PLAYER LOCATED IN THE GLOVE COMPARTMENT

NOTE: Following steps apply when connecting to the USB/iPod player located in the glove compartment.

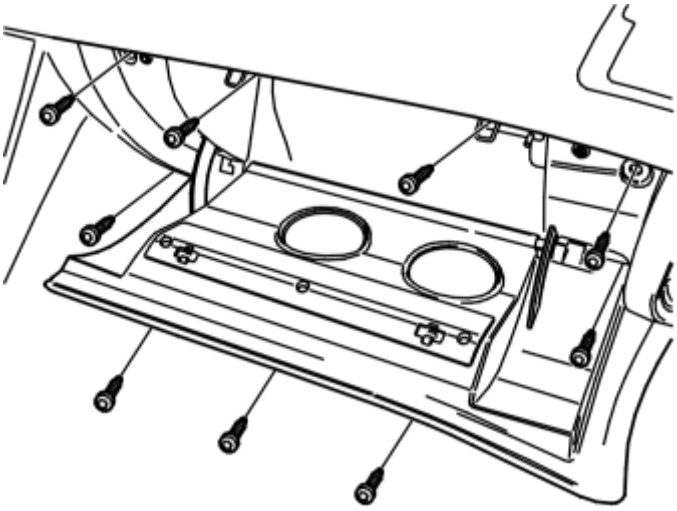

Fig. 716: Identifying Glove Compartment Screws
Courtesy of VOLVO CARS CORPORATION

- Remove the nine screws, route the glove compartment straight out and disconnect the connector.

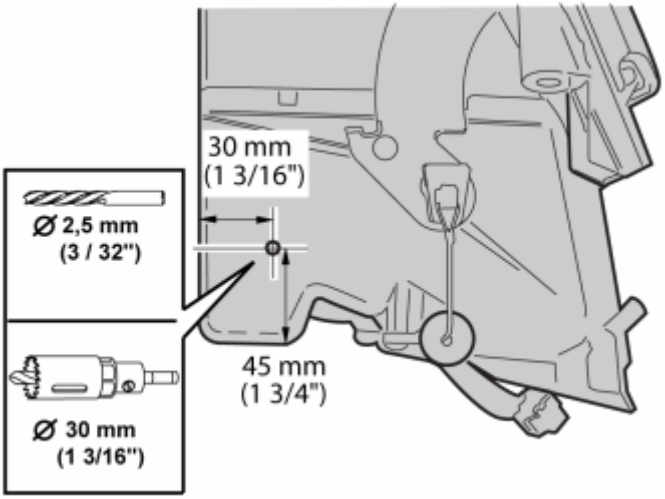

Fig. 717: Identifying Drilled Holes Outside Of The Glove Compartment's End
Courtesy of VOLVO CARS CORPORATION

- Mark as illustrated on the outside of the glove compartments end.
- Pre-drill using a **2.5 mm (3/32")** bit.
- Drill using a **30 mm (1 3/16")** hole saw.
- Smooth off the hole edges.

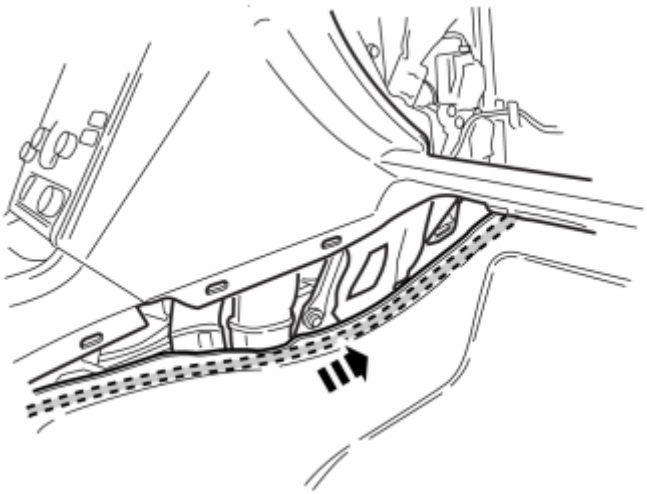

Fig. 718: View Of Carpet Cable Routing For USB/iPod
Courtesy of VOLVO CARS CORPORATION

- Route the cable for the USB/iPod under the carpet along the outside of the tunnel console.

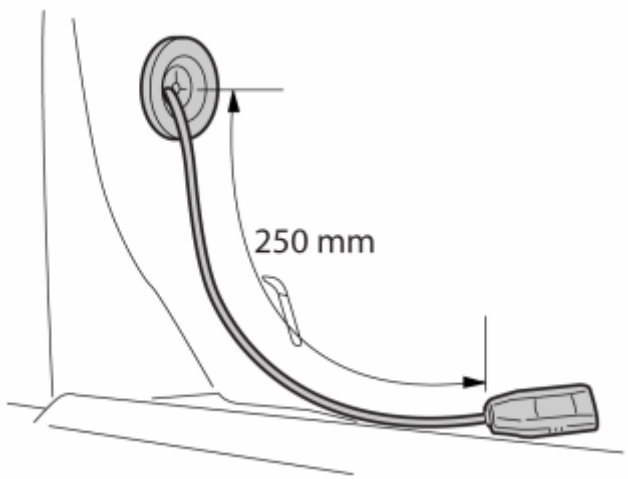

Fig. 719: Identifying Cable Through Rubber Grommet
Courtesy of VOLVO CARS CORPORATION

- Route the cable through the drilled hole.
- Thread the rubber grommet on to the cable and secure in the hole. The cable must protrude about **250 mm** .

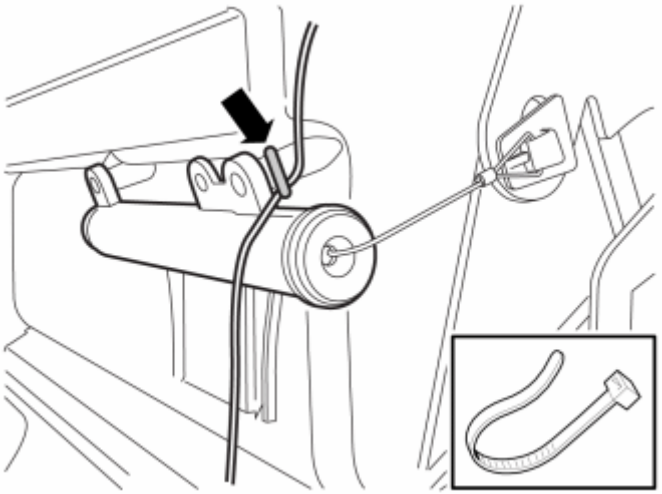

Fig. 720: Secure The Cable Using A Cable Tie On The Damper Spring's Eyelets
Courtesy of VOLVO CARS CORPORATION

- Secure the cable using a cable tie on the damper springs eyelets.
- Reinstall the glove compartment.

USB/IPOD PLAYER LOCATED IN THE CD COMPARTMENT UNDER THE ARMREST.

NOTE: Apply when connecting to the USB/iPod player located in the cd compartment under the armrest.

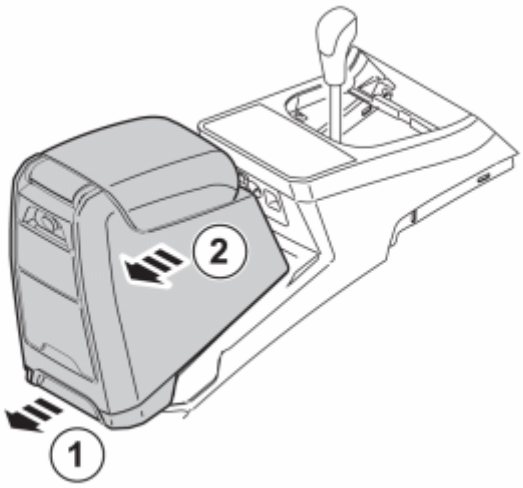

Fig. 721: View Of Moving Tunnel Compartment Backward
Courtesy of VOLVO CARS CORPORATION

- Pull the handle, move the tunnel compartment backward and lift it away.

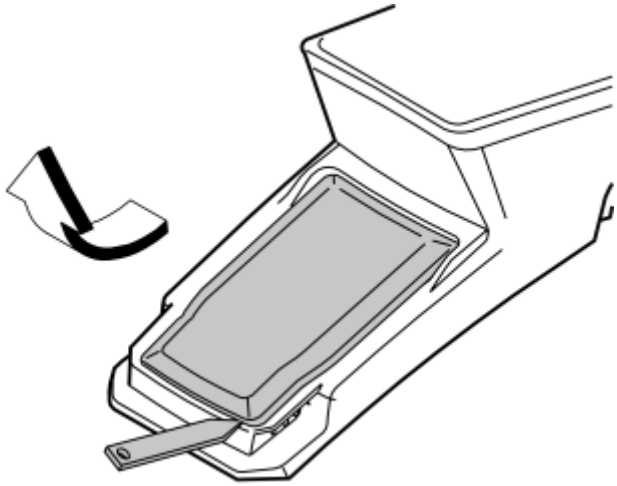

Fig. 722: View Of Cover Removed
Courtesy of VOLVO CARS CORPORATION

- Remove the cover. It shall not be re-used.

Fig. 723: View Of Contact Plate Screws
Courtesy of VOLVO CARS CORPORATION

- Remove the two screws and the contact plate.

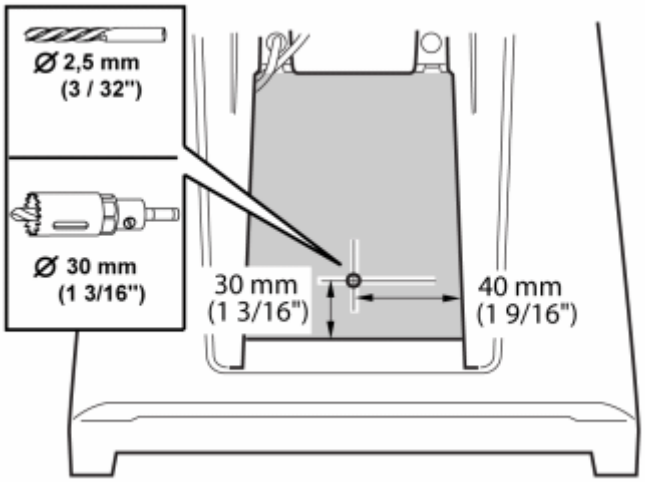

Fig. 724: View Of CD Compartment Drill Marks
Courtesy of VOLVO CARS CORPORATION

- Measure the front of the CD compartment as illustrated.
- Pre-drill using a **2.5 mm (3/32")** bit.
- Drill using a **30 mm (1 3/16")** hole saw.
- Smooth off the hole edges.

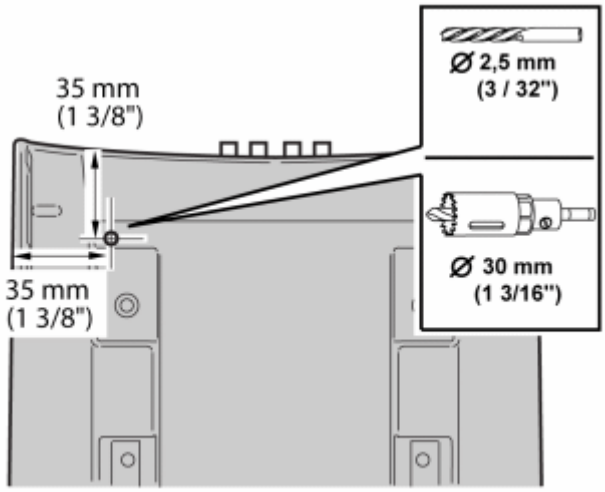

Fig. 725: Identifying Of Drilled Markings On Bottom Of The Tunnel Console
Courtesy of VOLVO CARS CORPORATION

Applies to cars without holes in the bottom of the tunnel compartment.

- Measure the bottom of the tunnel console as illustrated.
- Pre-drill using a **2.5 mm (3/32")** bit.
- Drill out the hole. Use a **30 mm (1 3/16")** diameter hole saw.
- Smooth off the hole edges.

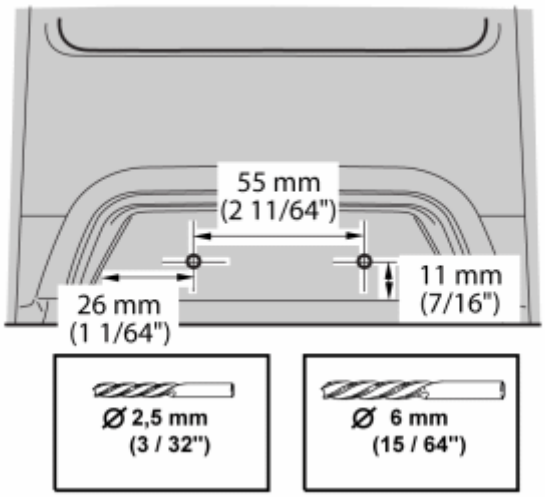

Fig. 726: Measure The Opening Handle Of The Tunnel Console
Courtesy of VOLVO CARS CORPORATION

- Measure the opening handle of the tunnel console as illustrated.
- Pre-drill using a **2.5 mm (3/32")** bit.
- Drill out the holes. Use a **6 mm (15/64")** diameter drill bit.

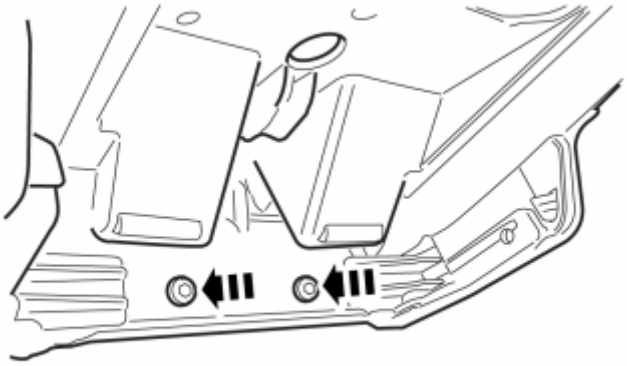

Fig. 727: Identifying Blind Cover Plug Screws
Courtesy of VOLVO CARS CORPORATION

- Take the blind cover plug and two screws from the kit. Install the blind cover plug on the opening handle.

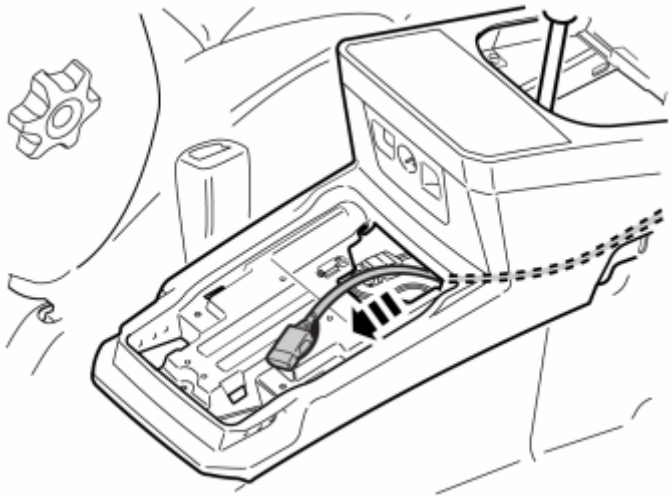

Fig. 728: View Of Routed USB/iPod Cable From The Control Module
Courtesy of VOLVO CARS CORPORATION

- Route the USB/iPod cable from the control module up out of the rear section of the tunnel console.

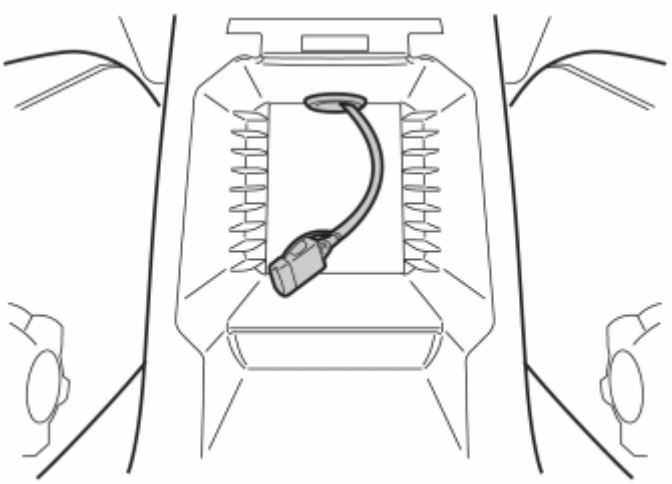

Fig. 729: View Of Cable Through Rubber Grommet
Courtesy of VOLVO CARS CORPORATION

- Route the cable through the drilled holes.
- Thread the rubber grommet on to the cable and secure in the hole. The cable must protrude about **200 mm** .
- Reinstall the contact plate.
- Reinstall the tunnel compartment and at the same time place the excess cable under the tunnel compartment.

APPLIES TO ALL MODELS

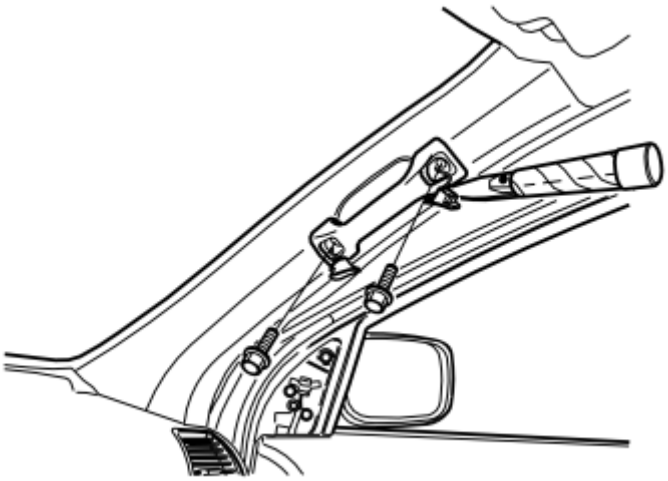

Fig. 730: Pry Off Grab Handle Cover
Courtesy of VOLVO CARS CORPORATION

- Remove the covers and screws for the grab handle on the A-pillar.

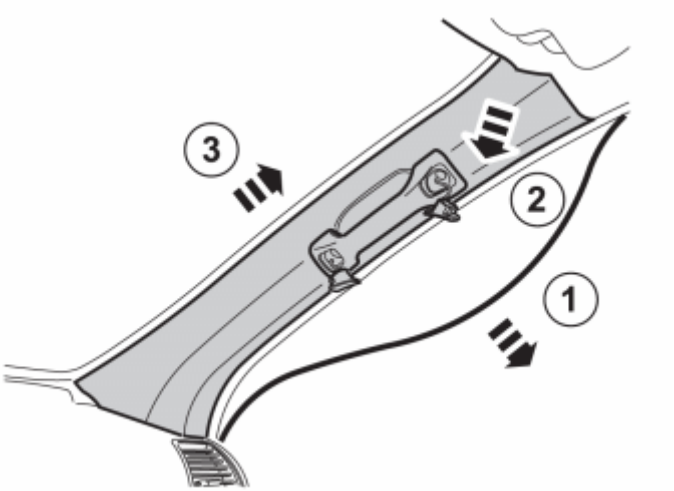

Fig. 731: Removing A-Pillar Weatherstrip
Courtesy of VOLVO CARS CORPORATION

- Pull off the weatherstrip (1) for the door at the A-pillar.
- Pull off the A-pillar panel at the upper edge and then straight upwards to remove it.

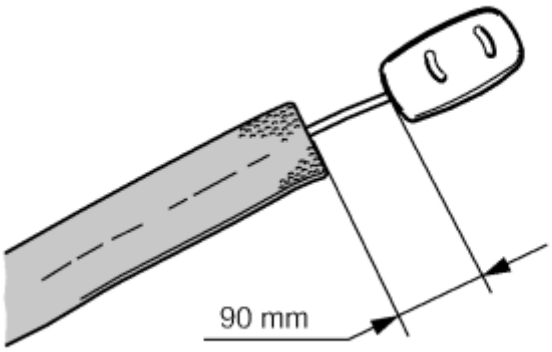

Fig. 732: Identifying 90Mm Gap Of Foam Tape
Courtesy of VOLVO CARS CORPORATION

- Take the microphone and a **700 mm** long piece of foam tape from the kit.
- Tape the piece of foam tape on the cable, starting **90 mm** from the microphone.

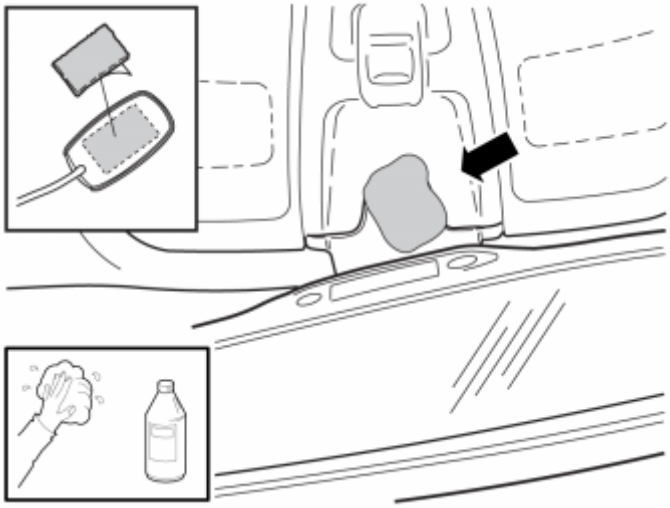

Fig. 733: Cleaning Microphone And Headliner and Applying Velcro Strip
Courtesy of VOLVO CARS CORPORATION

- Clean the microphone and roof panel in the area illustrated, which corresponds to the size of the double-sided adhesive tape. Use a solution of **25% isopropanol and 75% water** , as well as a lint free cloth. Wipe dry carefully, do not rub.
- Allow to dry.

NOTE: In cases where the area is heavily soiled or treated with cockpit shine, first clean using a washing up detergent.

- Remove the backing tape from one side of the Velcro strip and press it onto the microphone.

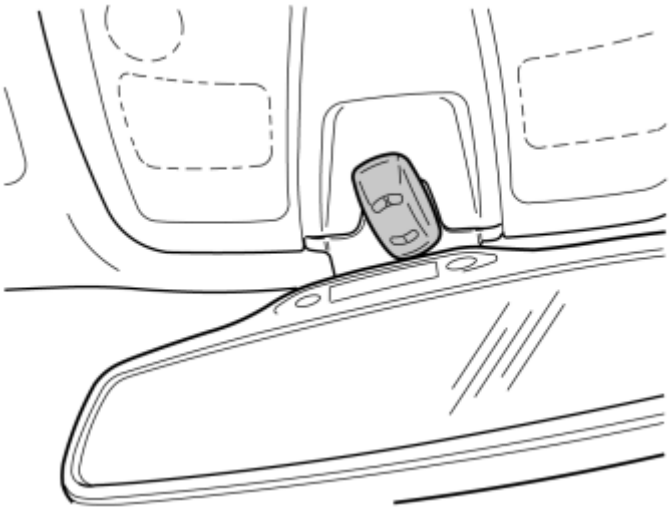

Fig. 734: Press The Microphone Securely Into Place
Courtesy of VOLVO CARS CORPORATION

- Remove the remaining protective film from the Velcro strip. Press the microphone securely into place.

NOTE: **The microphone must be pointing towards the driver. Make sure that it does not obstruct adjustment of the rear view mirror.**

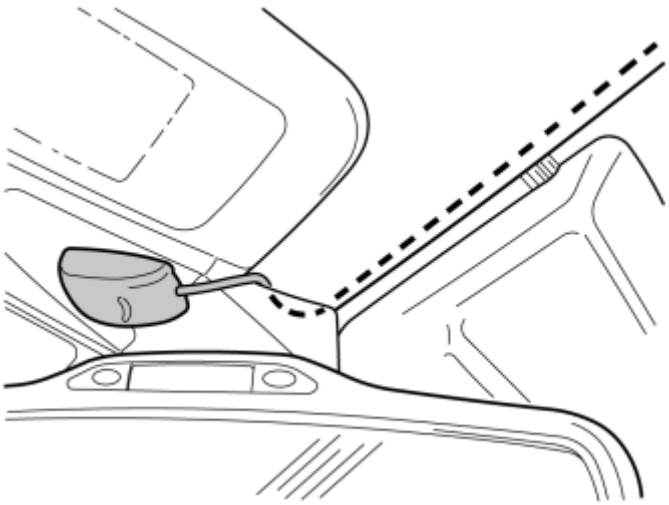

Fig. 735: View Of Cable Rear View Mirror Mounting
Courtesy of VOLVO CARS CORPORATION

- Route the microphone cable under the rear view mirror's mounting and inside the headlining. Insert the cable using a weatherstrip tool.

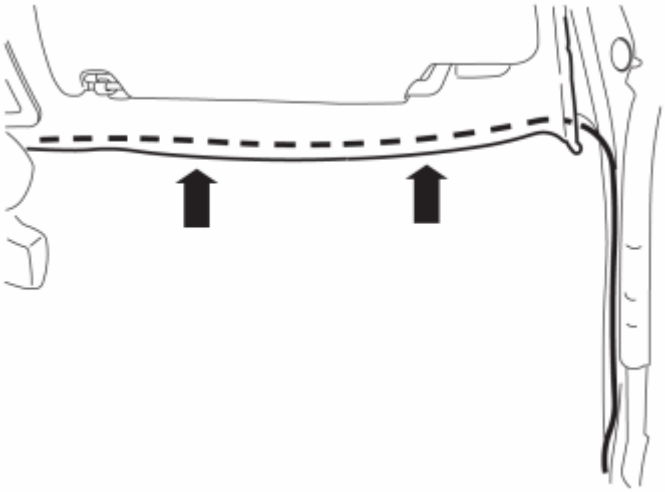

Fig. 736: Identifying Headlining, Routed Cable And A-Pillar
Courtesy of VOLVO CARS CORPORATION

- Carefully pull down the headlining and route the cable above it, to the A-pillar.

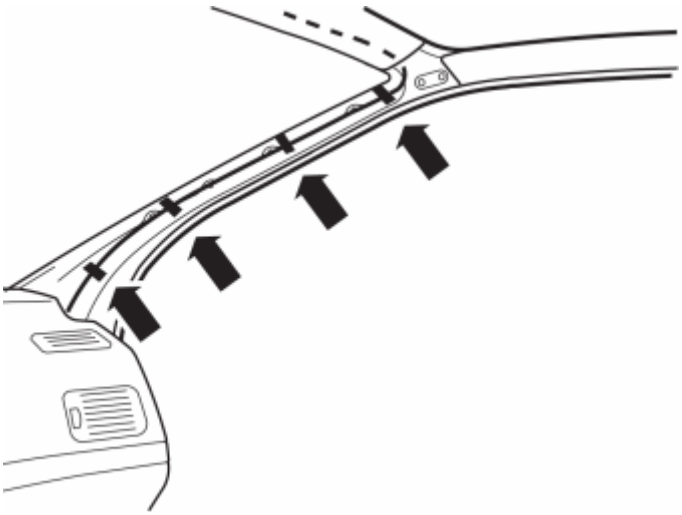

Fig. 737: Identifying Cable Secured To A-Pillar With Foam Tape
Courtesy of VOLVO CARS CORPORATION

- Pull the cable down along the A-pillar to the dashboard.
- Cut off two **100x50 mm** pieces of foam tape in the middle.
- Secure the cable to the A-pillar using foam tape.

CAUTION: The inflatable curtain (IC) is located inside the A-pillar panel, it is important that the cable is not positioned on it.

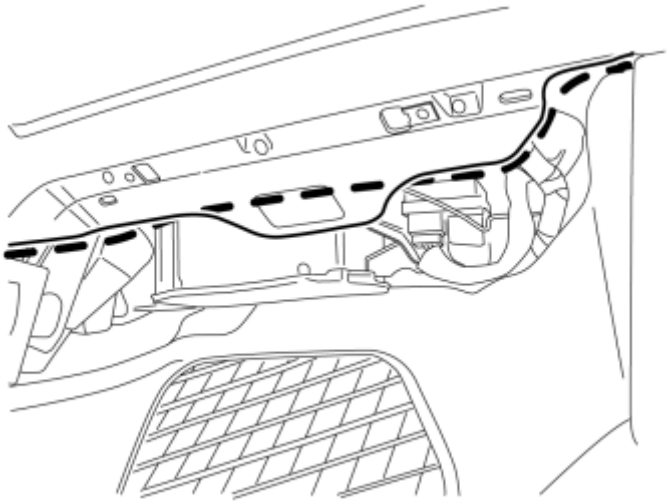

Fig. 738: View Of Cable Routed Towards The Center Console
Courtesy of VOLVO CARS CORPORATION

- Cut off one **100 x 50 mm** strip of foam tape in the middle.
- Secure the cable on the heater unit using the pieces of tape.
- Route the cable further in towards the center console.

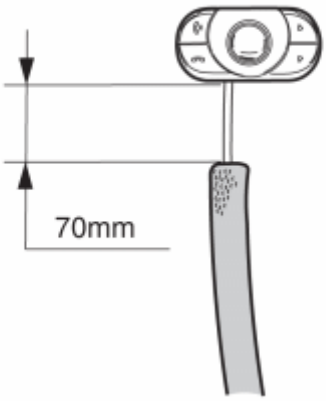

Fig. 739: Taping Piece Of Foam Tape On Cable Starting 70mm From Control Panel
Courtesy of VOLVO CARS CORPORATION

- Take the control panel and a **700 mm** long piece of foam tape from the kit.
- Tape the piece of foam tape on the cable, starting **70 mm** from the control panel.

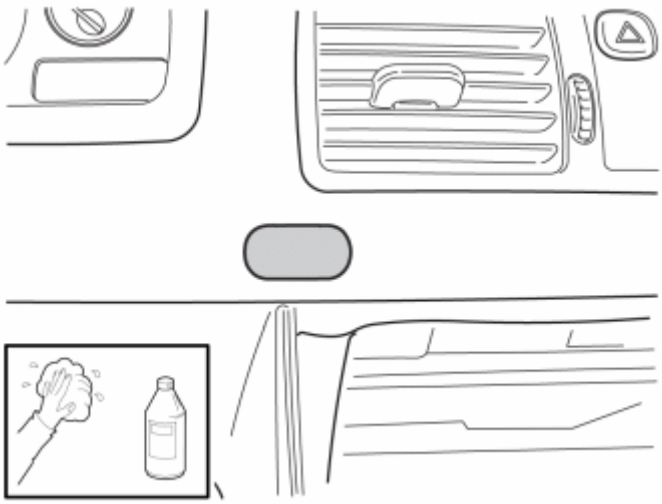

Fig. 740: Clean The Area On The Dashboard
Courtesy of VOLVO CARS CORPORATION

- Clean the area on the dashboard as illustrated, which corresponds to the size of the double-sided adhesive tape. Use a solution of **25% isopropanol and 75% water** , as well as a lint free cloth. Wipe dry carefully, do not rub.
- Allow to dry.

NOTE: **In cases where the area is heavily soiled or treated with cockpit shine, first clean using a washing up detergent.**

APPLIES TO ALL MODELS

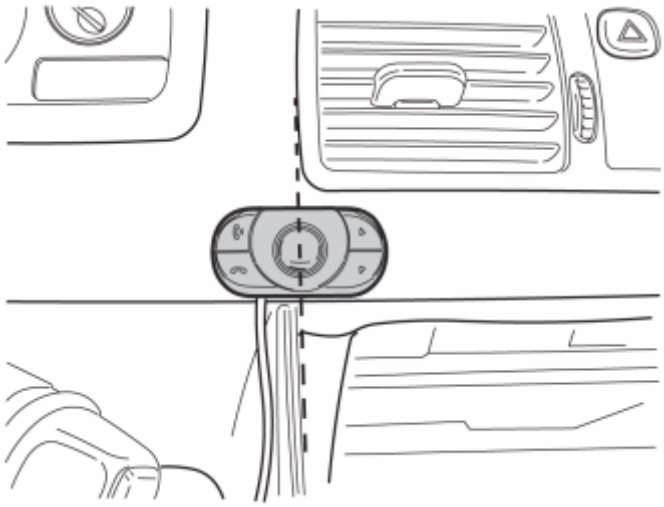

Fig. 741: View Of Control Panel Mounted On Dashboard
Courtesy of VOLVO CARS CORPORATION

- Remove the protective film from the tape on the reverse of the control panel.
- Align and secure the control panel on the dashboard.

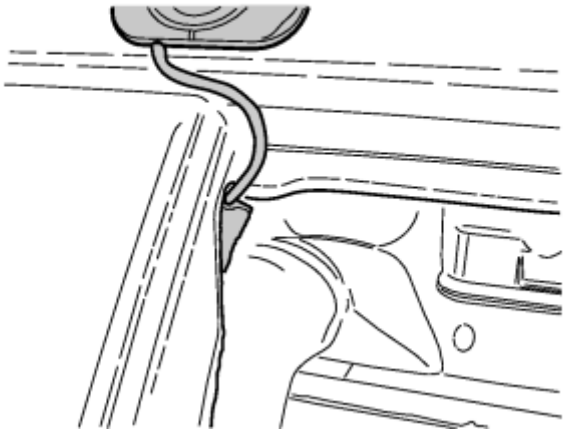

Fig. 742: View Of Cable Positioned In The Upper Edge Of The Opening
Courtesy of VOLVO CARS CORPORATION

- Pull the cable down to the opening in the center console. The cable must be positioned in the upper edge of the opening, approximately **10 mm** from the corner.

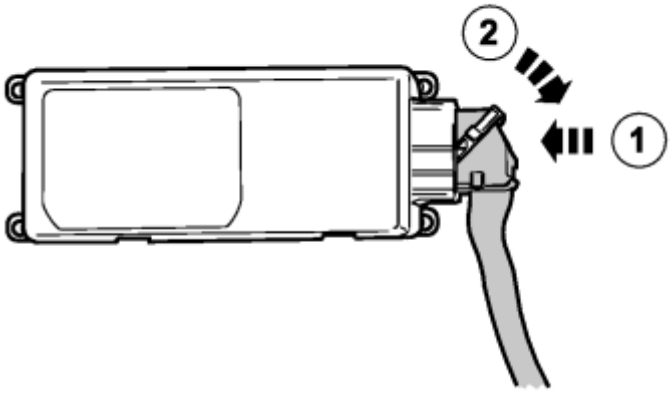

Fig. 743: Identifying Control Module Cable Harness
Courtesy of VOLVO CARS CORPORATION

- Take the control module and cable harness (E) from the kit.

1. Plug in the connector.
2. Lock the catch.

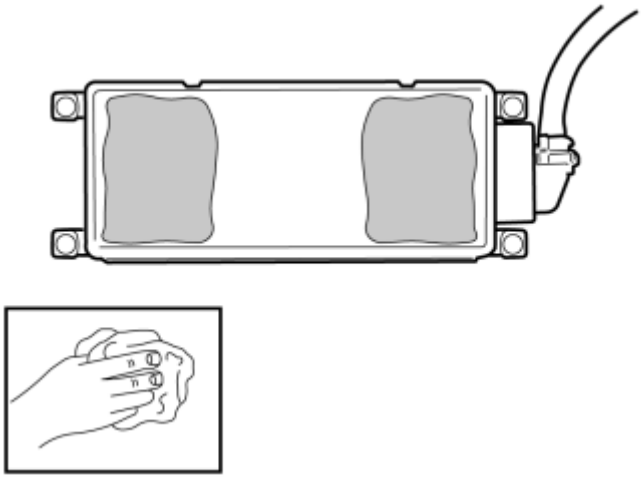

Fig. 744: Identifying Cleaned Control Module
Courtesy of VOLVO CARS CORPORATION

- Clean the control module with **isopropanol** in the areas illustrated.

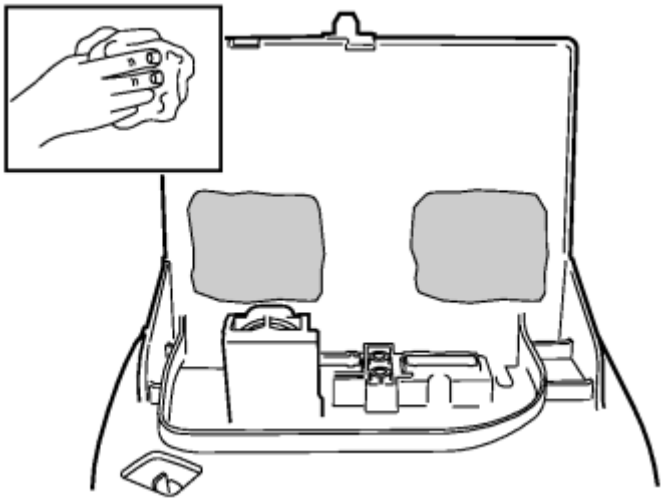

Fig. 745: Cleaning Surrounding Areas Underneath Detached A/C / Radio Unit
Courtesy of VOLVO CARS CORPORATION

- Clean the areas underneath the removed radio/A/C unit using **isopropanol** , as illustrated.

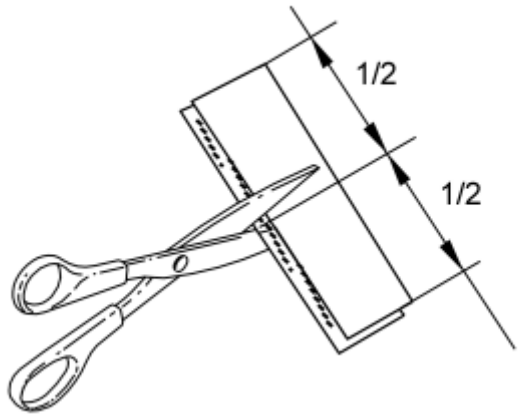

Fig. 746: Identifying Velcro Fasteners
Courtesy of VOLVO CARS CORPORATION

- Take a Velcro strip and cut off two pieces of the same length
- Press the pieces together.
- Cut off two pieces of the same length again at the center.

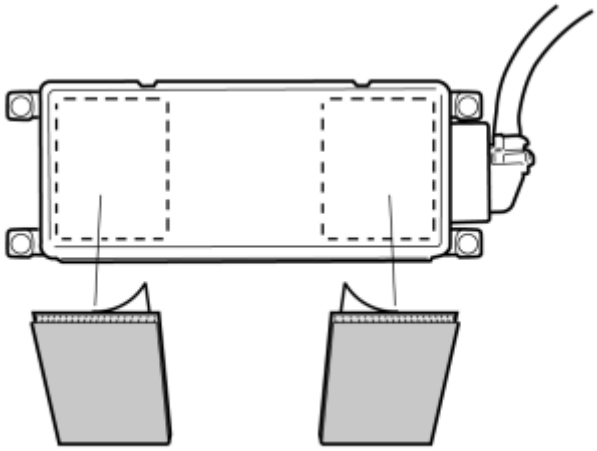

Fig. 747: View Of Velcro Strips On The Control Module
Courtesy of VOLVO CARS CORPORATION

- Remove the protective film from one side of the Velcro strips which were pressed together.
- Apply the Velcro strips on the control module and press.

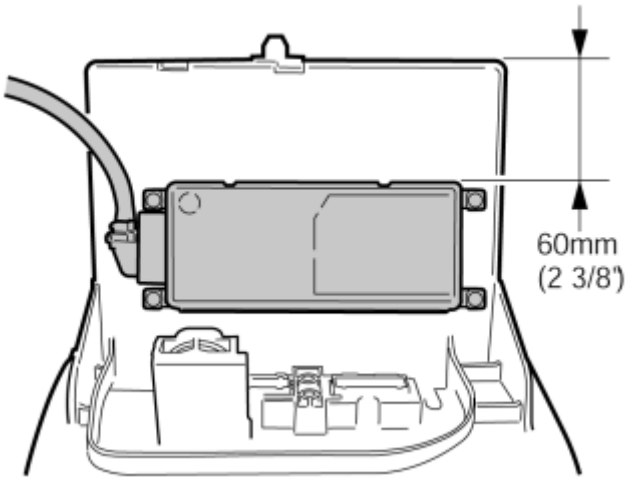

Fig. 748: View Of Aligned And Installed Control Module
Courtesy of VOLVO CARS CORPORATION

- Remove the remaining protective file on the Velcro strips, align and install the control module as illustrated. Press onto the control module so that the tape adheres.

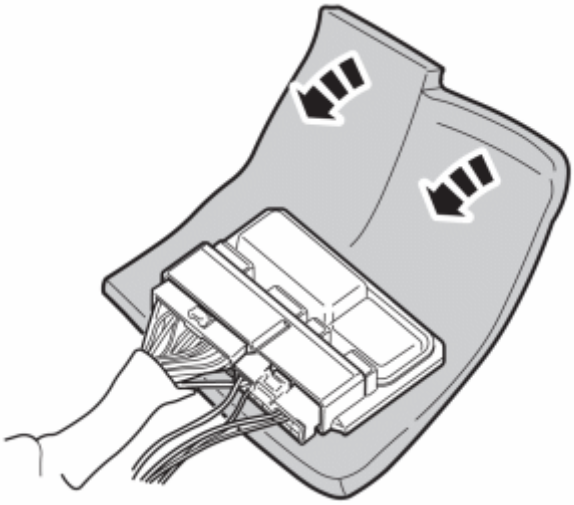

Fig. 749: View Of Foam Tape Pieces To Relay
Courtesy of VOLVO CARS CORPORATION

- Take the relay, two foam tape pieces and cable harness (F) from the kit.
- Connect the connectors from the cable harness to the relay.
- Tape the foam tape pieces around the relay.

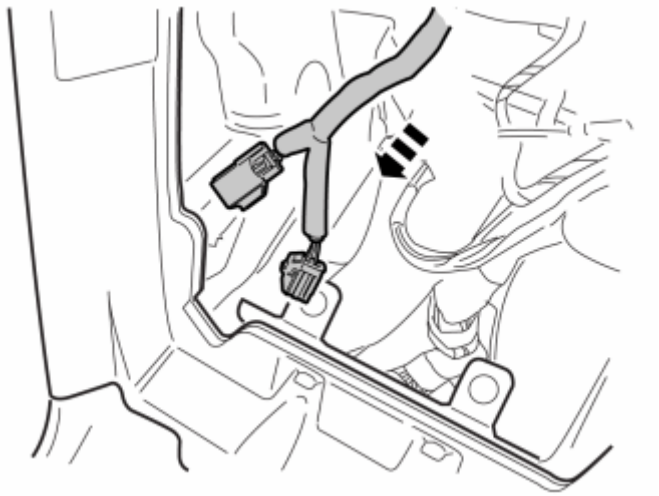

Fig. 750: View Of Two Connectors Through Center Console
Courtesy of VOLVO CARS CORPORATION

- Route the two connectors through the center console and out on the rear side.

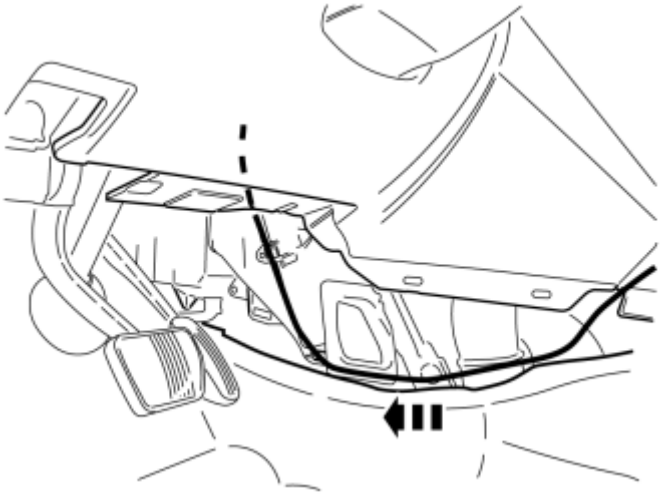

Fig. 751: Identifying Cable Harness Routing By Side Of Center Console
Courtesy of VOLVO CARS CORPORATION

- Route the cable harness by the side of the center console.

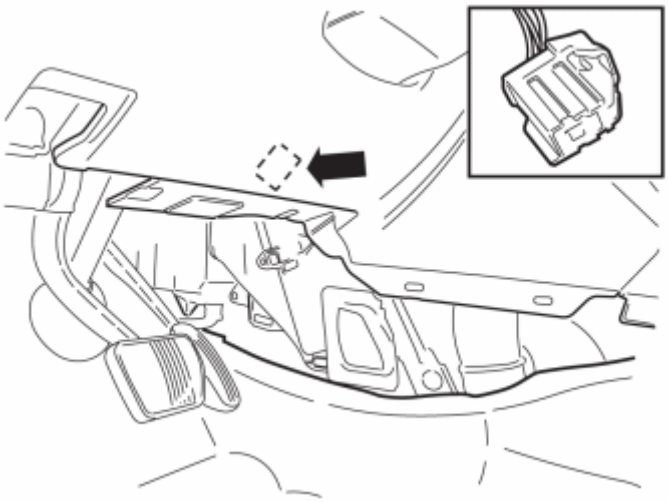

Fig. 752: Locating 4 Pin, Gray, Pre-Routed Connector For The Power Supply
Courtesy of VOLVO CARS CORPORATION

- Locate the 4 pin, grey connector for the power supply. It is secured on the thick cable harness under the dashboard.

NOTE: The pre-routed connector is already connected on certain versions.

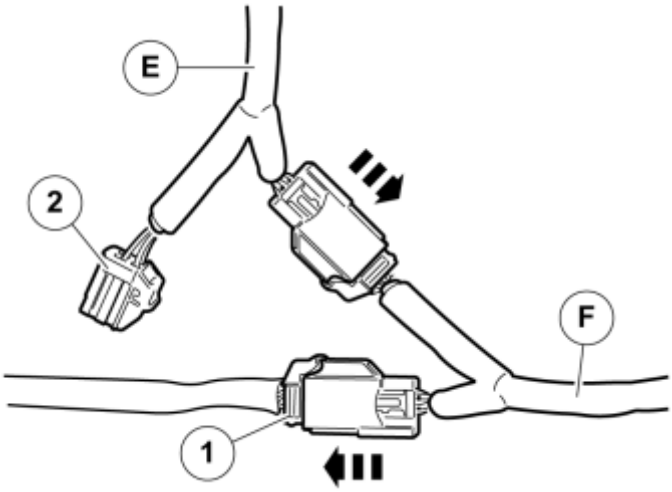

Fig. 753: View Of Cable Harnesses
Courtesy of VOLVO CARS CORPORATION

- Connect cable harness (F) to the pre-routed connector (1).
- Connect cable harness (E) to the routed cable harness (F).
- Tape one cut piece of foam tape around the connected connectors.
- Secure the connector (2) on the car's existing cable harness using a cable tie.

NOTE: When the pre-routed connector is already connected, disconnect it and then

connect both the connectors from the new cable harnesses.

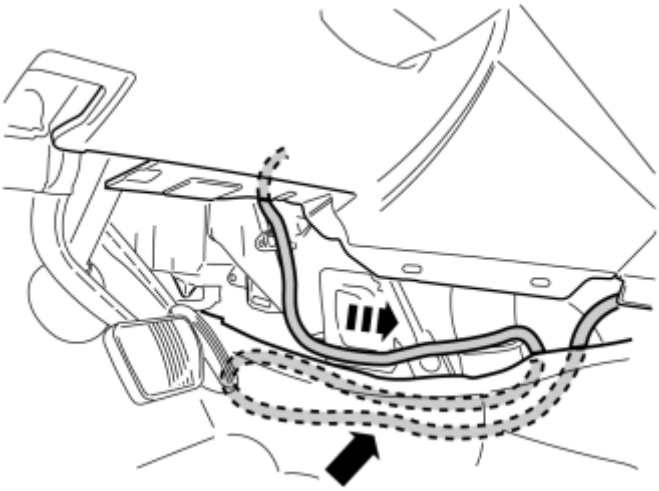

Fig. 754: View Of Excess Cable Under Carpet
Courtesy of VOLVO CARS CORPORATION

- Place any excess under the carpet.

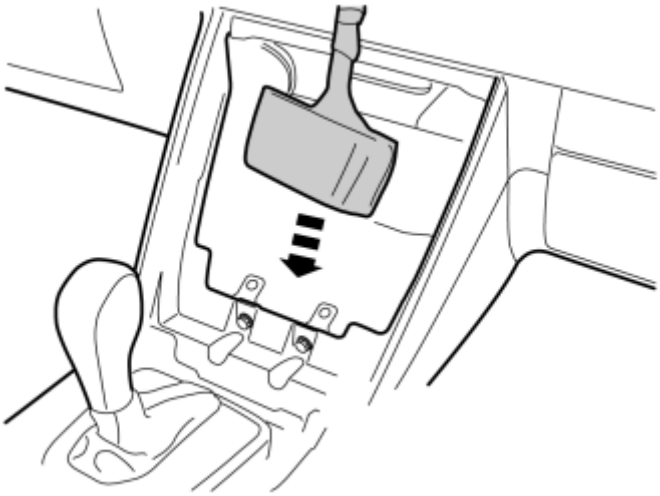

Fig. 755: View Of Cable Harness At Rear Edge Of Center Console
Courtesy of VOLVO CARS CORPORATION

- Place the relay with the cable harness at the rear edge of the opening on the center console.

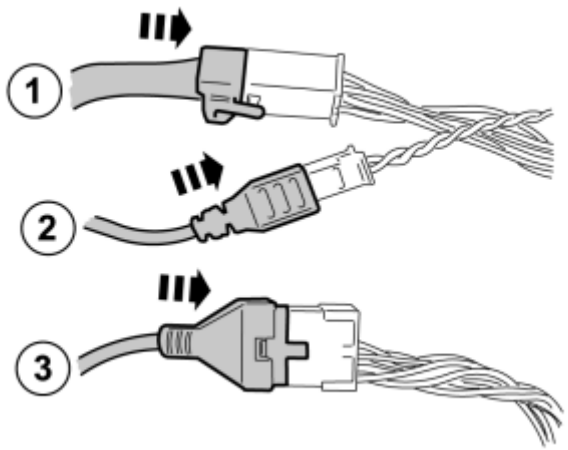

Fig. 756: Connecting Connectors
Courtesy of VOLVO CARS CORPORATION

- Connect the connectors for the Bluetooth system:

1. cable harness power supply
2. the microphone
3. the control panel

- Take one of the cut pieces of foam tape and tape around the connectors.

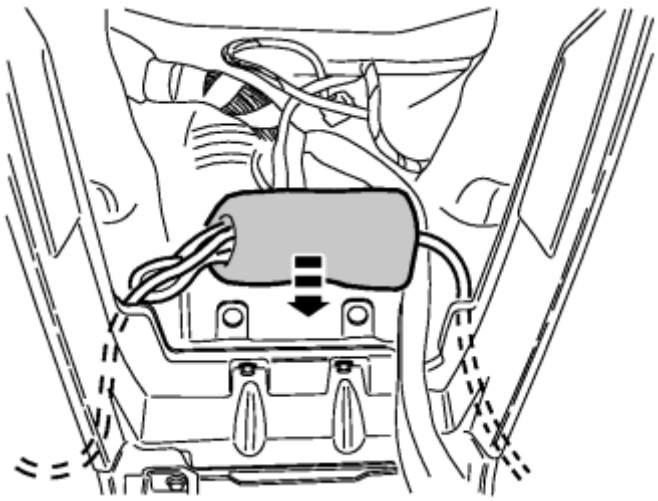

Fig. 757: View Of Connectors And Excess Cables In The Bottom Of The Center Console
Courtesy of VOLVO CARS CORPORATION

- Tape one cut piece of foam tape around the connectors.
- Place the connectors and excess cables in the bottom of the center console. Check that they do not rub against the bracket edges.

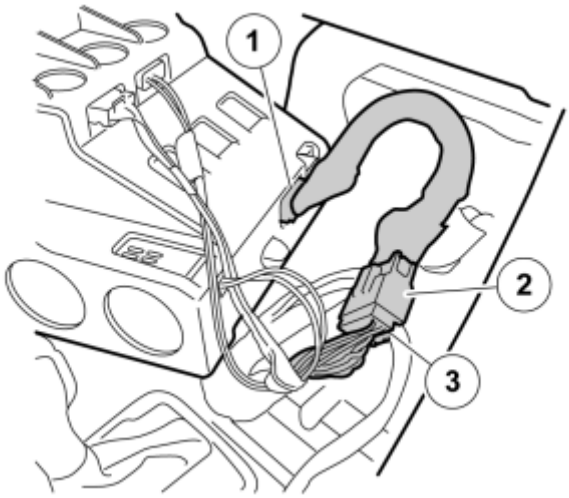

Fig. 758: View Of Gray Connector In The New Cable Harness
Courtesy of VOLVO CARS CORPORATION

- Connect the gray connector (1) in the new cable harness (F) to the corresponding socket in the media player.
- Connect the gray connector (2) in the new cable harness (F) to connector (3) which was detached from the media player.
- Take one of the cut pieces of foam tape and tape around connectors (2) and (3).

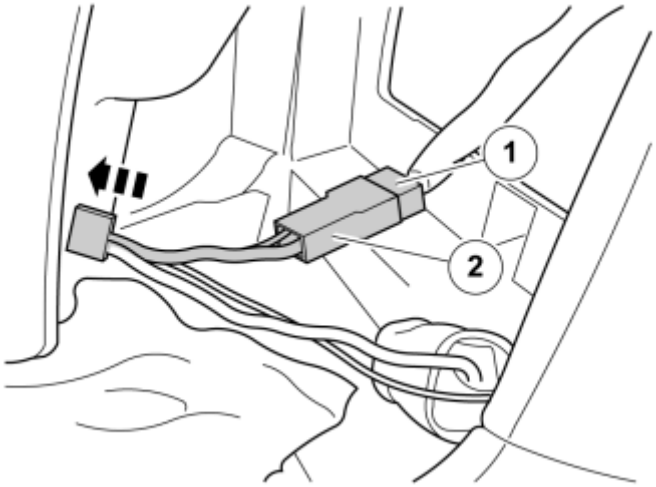

Fig. 759: Identifying Connector And 12V Outlet To Female Connector
Courtesy of VOLVO CARS CORPORATION

- Connect the connector (1) that was removed from the 12V outlet to the female connector (2) on the routed cable harness (A).
- Connect the remaining connector to the 12V socket.

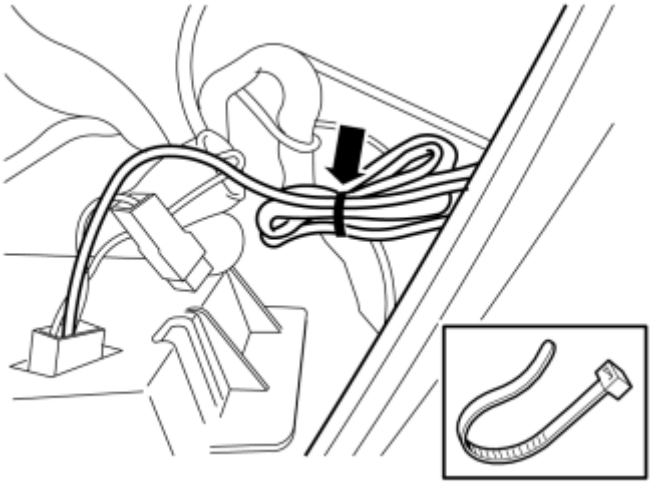

Fig. 760: View Of Cables Tied Together
Courtesy of VOLVO CARS CORPORATION

- Tuck away the surplus cable in the bottom of the center console.
- Tie together with a cable tie.

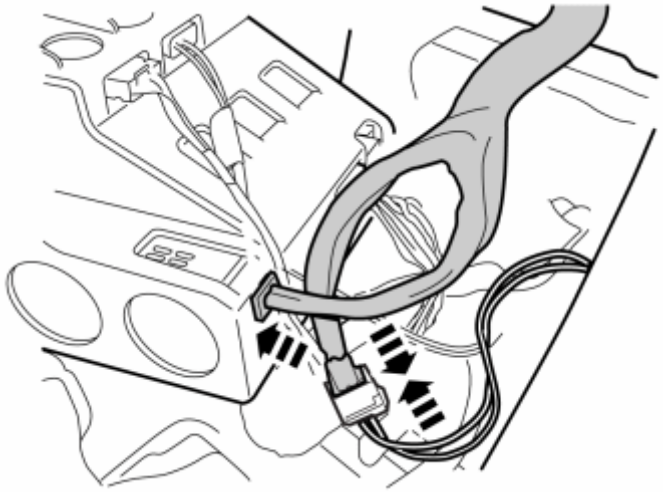

Fig. 761: View Of Media Player Connected
Courtesy of VOLVO CARS CORPORATION

- Connect the connector that was disconnected from the media player to the connector on the new cable harness (C).
- Take a piece of foam tape from the kit and cut it in the center.
- Tape one cut piece of foam tape around the connectors.
- Connect the other connector to the media player.

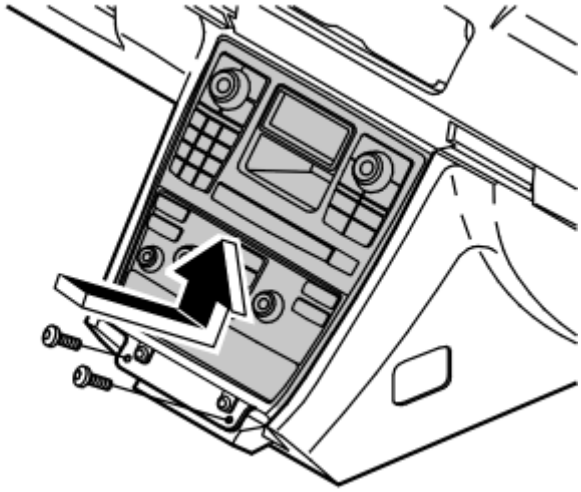

Fig. 762: Reinstall The A/C / Radio Unit
Courtesy of VOLVO CARS CORPORATION

- Connect the remaining connectors.
- Reinstall the radio / A/C unit by first hooking it at the upper edge. Then press upwards and angle the lower section in. At the same time, check that the cable for the control panel is correctly located.
- If the radio/A/C unit does not fit at the lower edge, check for trapped wiring.
- Reinstall the screws.
- Reinstall the detached components in reverse order.

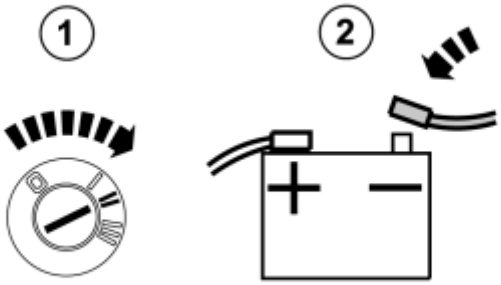

Fig. 763: Identifying Ignition In ON Position and Connecting Negative Battery Lead
Courtesy of VOLVO CARS CORPORATION

- Turn the ignition key to position II.
- Reconnect the battery negative lead.

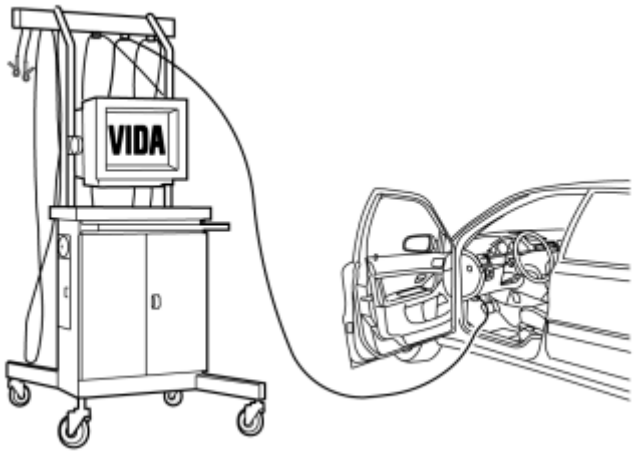

Fig. 764: Identifying VIDA (Service Information) To Program Software
Courtesy of VOLVO CARS CORPORATION

- Download software for USB and iPod® Music Interface, according to the service information in VIDA (Volvo scan tool).

CHECK THE FUNCTION OF THE BLUETOOTH SYSTEM AS FOLLOWS:

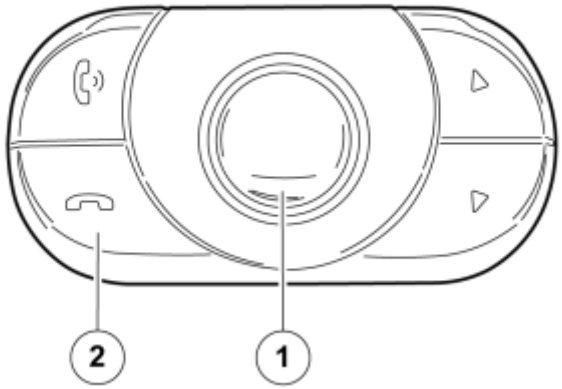

Fig. 765: Identifying Bluetooth Unit
Courtesy of VOLVO CARS CORPORATION

- Turn the ignition key to position I.
- Turn the radio on. Wait 20 seconds.
- Check that the control panel for Bluetooth illuminates. Press the round button (81) in the middle of the control panel. The radio should then mute and a voice should be heard.
- Press the red handset button (2). The voice should now stop and the audio from the radio returns.

MULTIMEDIA MONITOR WITH DVD (2008)

MULTIMEDIA MONITOR WITH DVD

NOTE: **Kits A and B apply to cars with a sunroof.**

Kits C and D apply to cars without a sunroof.

CAUTION: Take care when cutting the headlining. There is a risk of cutting off the cable harnesses and hose for the rear washer.

Only use a sharp utility knife or similar for cutting into the headlining. Replace the blade when it becomes blunt.

WARNING: Protect skin, eyes and respiratory tracts using appropriate protective equipment so that they are not exposed to loose roof material.

PREPARATIONS

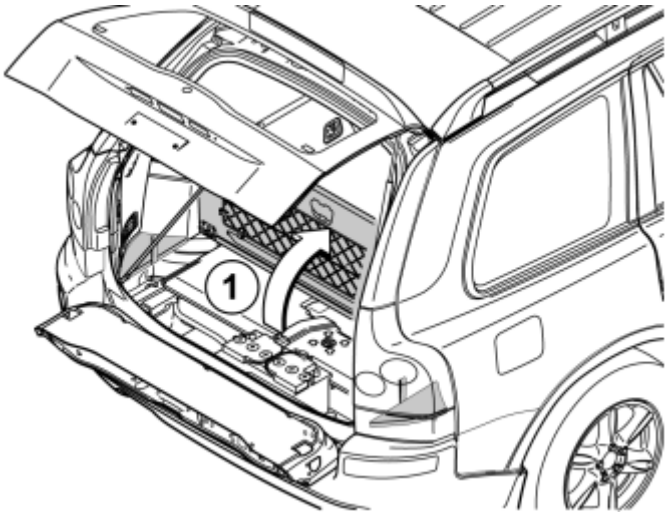

Fig. 766: View Of Folded Up The Floor Hatch
Courtesy of VOLVO CARS CORPORATION

- Fold up the floor hatch (1).

REMOVE

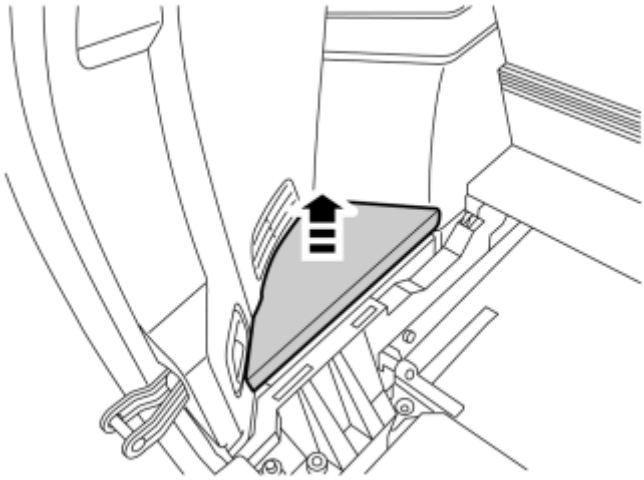

Fig. 767: View Of Floor Hatch
Courtesy of VOLVO CARS CORPORATION

- Remove the floor hatch on the right and left-hand side.

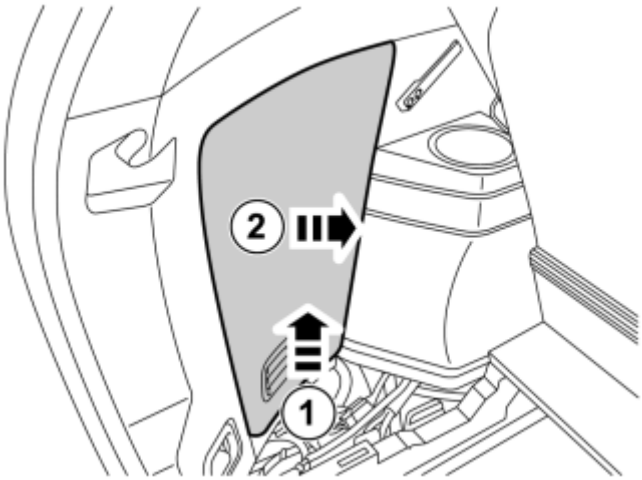

Fig. 768: View Of Panel Removal
Courtesy of VOLVO CARS CORPORATION

- Remove the panel on the right and left-hand side.

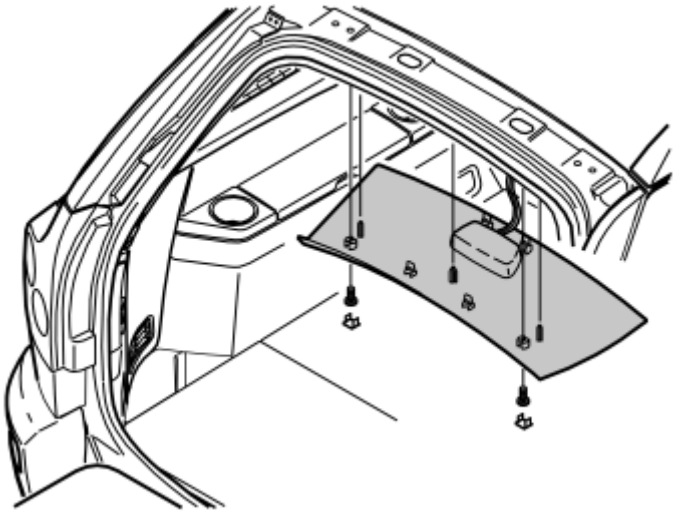

Fig. 769: Identifying Cover And Screws Underneath Rear Headlining
Courtesy of VOLVO CARS CORPORATION

- Remove the covers and the screws on the rear roof panel.
- Carefully pry off the panel at the rear edge. Use a weatherstrip tool.
- Pull the rear edge of the panel downwards until the four clips on the top release.
- Pull the panel backwards to release it.
- Unplug the connector for the lighting.

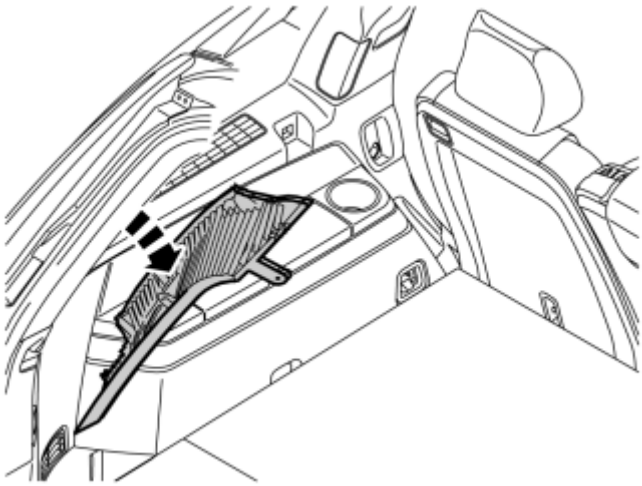

Fig. 770: View Of D-Post Panel Removal
Courtesy of VOLVO CARS CORPORATION

- Carefully pull off the top edge of the left-hand D-post panel. Continue down until the three clips have released.
- Disconnect the connectors for any loudspeakers.
- Remove the panel by pulling upwards slightly and unhooking it from the side panel.

APPLY TO CARS WITH A SUNROOF

CUTTING THE HEADLINING

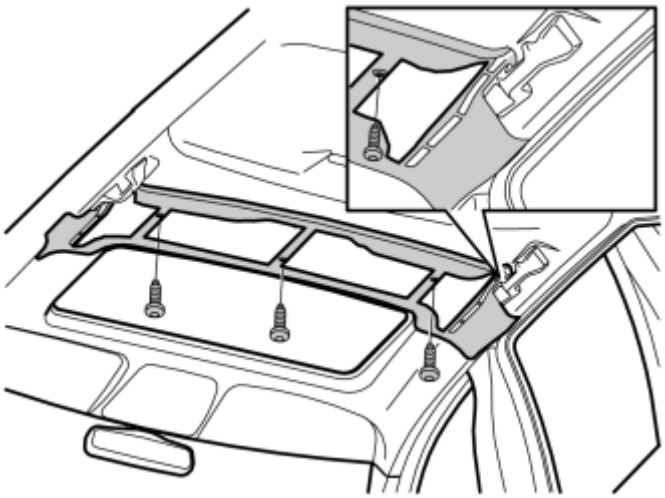

Fig. 771: Identifying Headlining Screws From The Kit
Courtesy of VOLVO CARS CORPORATION

- Take three **4.8x19mm** screws from the kit.

  Install the hole template in position. Guide it up along the grab handles and secure it to the roof using the screws.

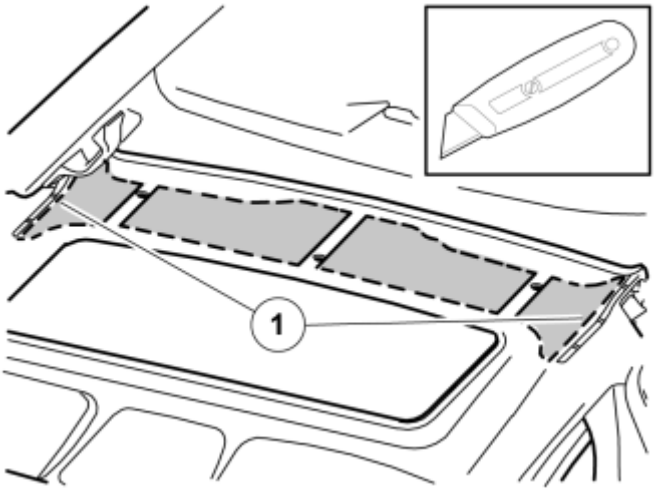

Fig. 772: View Of Outside Edges Of Template
Courtesy of VOLVO CARS CORPORATION

NOTE: Ensure that the headlining for the sunroof is pulled forward.

- Cut through the headlining according to the dotted lines in the four large openings in the template.

NOTE: When cutting the outside edges (1) of the template, the tip of the knife blade must point inwards, towards the middle of the car.

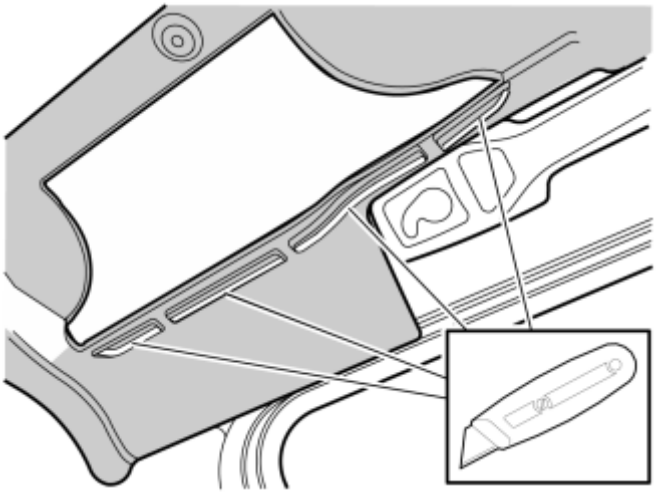

Fig. 773: Remove The Template And Cut Through The Headlining
Courtesy of VOLVO CARS CORPORATION

- Mark the headlining using a knife in the four narrow slits at the edge on each side of the template.

CAUTION: Move the cable harnesses and hoses that are in these areas, before cutting through the headlining.

Remove the template and cut through the headlining at the parts between the four large openings, in order to remove a large portion of the headlining.

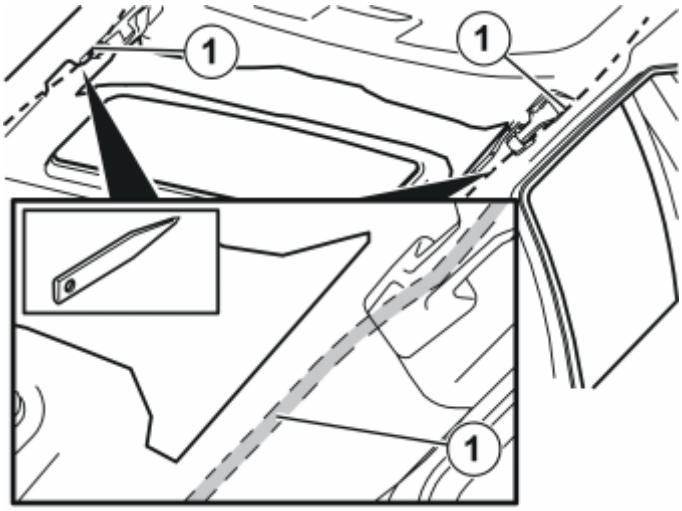

Fig. 774: Identifying The Wiring (1) That Is Bonded To The Inside Of The Headlining
Courtesy of VOLVO CARS CORPORATION

- Remove the wiring (1) that is bonded to the inside of the headlining on the right and left-hand sides of the

car. Use a weatherstrip tool to pry the wiring away from the bonding.

- Press the wiring out towards the sides of the car.

Illustration A

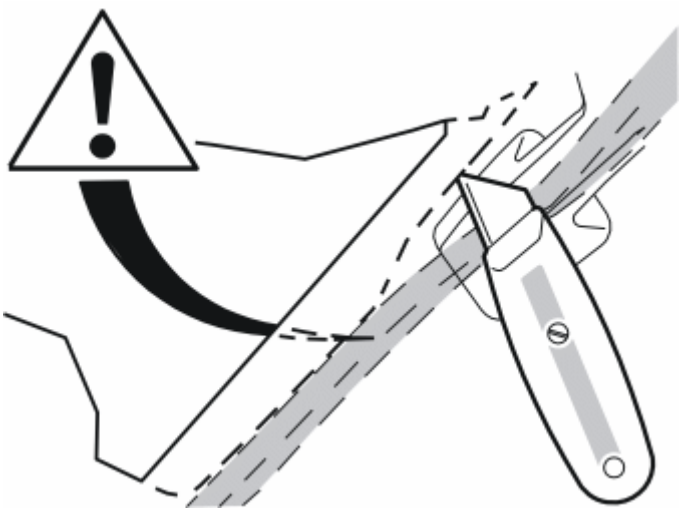

Fig. 775: Take Care When Cutting Away The Side Pieces Of The Headlining
Courtesy of VOLVO CARS CORPORATION

CAUTION: Take care when cutting away the side pieces of the headlining. There is a risk of cutting off the cable harnesses and the hose for the rear washer.

Illustration B

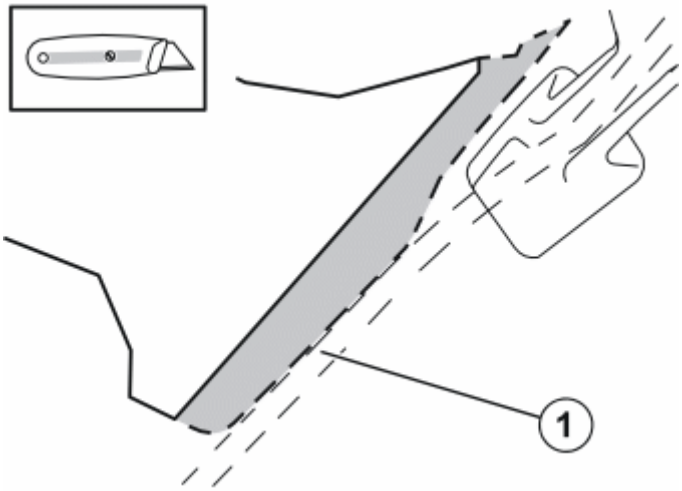

Fig. 776: Identifying Cables Pressed Into Routed Side
Courtesy of VOLVO CARS CORPORATION

- Position a suitable piece of plastic to protect the wiring when cutting along the sides of the car.

Press in the cables (1) which are routed to the side. Protect them with the section of plastic and carefully cut away the last side piece which was marked with a pen earlier.

CAUTION: Continuously check that the cable harnesses and hoses for the rear washer are not damaged.

INSTALLING ROOF MEMBER BRACKETS

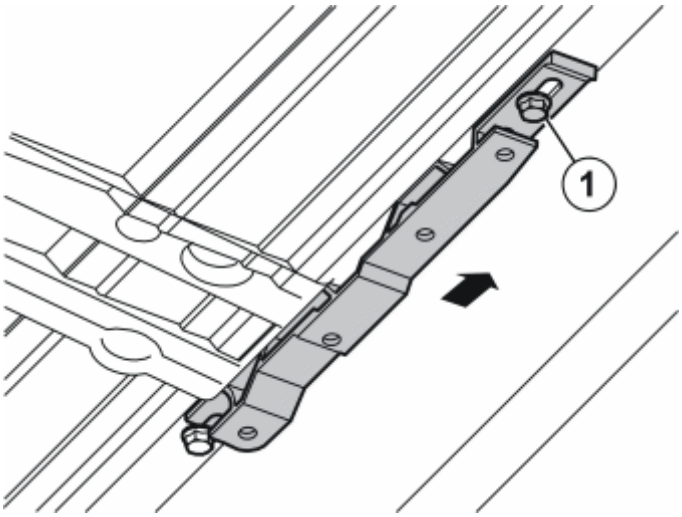

Fig. 777: Identifying Sunroof's Right-Hand Mounting Rail
Courtesy of VOLVO CARS CORPORATION

NOTE: Do not disturb the spacers located between the sun roof member and the roof. It can be difficult to locate the spacers in position again.

- Remove the rear screw (1) in the sunroof right-hand mounting rail. Use a pair of pliers to pull it straight down from the hole. It is held in position by a plastic washer so significant force is required.

NOTE: Make sure that the plastic washer and its spacer pipe do not fall out of position.

- Take the bracket, the **M6x40 mm** screw and the washer from the kit (kit illustration A). Install the bracket loosely, with the screw through the oval hole, and slide it backwards.

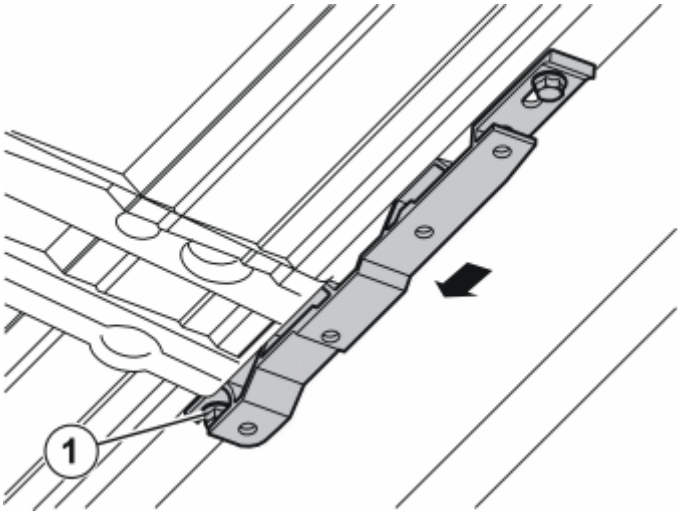

Fig. 778: Identifying Same Rail Front Screw
Courtesy of VOLVO CARS CORPORATION

- Remove the front screw (1) in the same rail. Use pliers to pull it straight down through the hole. It is held in place by a plastic washer so some force is required.

  NOTE: Make sure that the plastic washer and its spacer pipe do not fall out of position.

  Slide the bracket forwards and secure it using a **M6x30 mm** screw and washer from the kit.

- Tighten both screws, torque tighten **10 Nm (7.5 lbf. ft.)** .

- Install the roof member bracket in the same way on the other side.

INSTALLING THE ROOF MEMBER

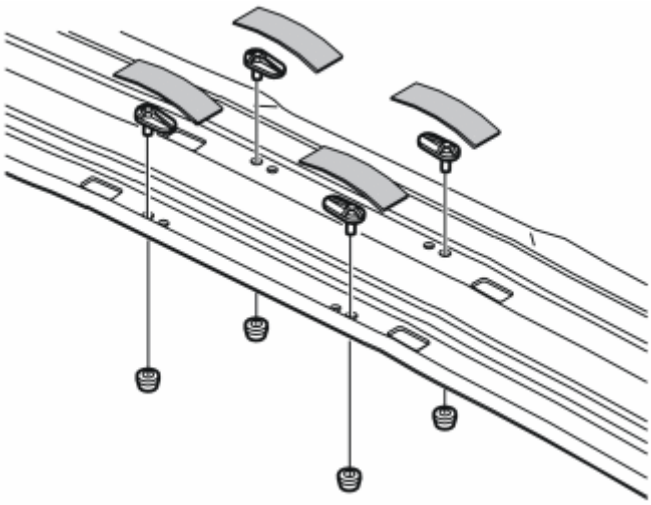

Fig. 779: Identifying Four Plastic Threaded Plates And Four Spacer Clips
Courtesy of VOLVO CARS CORPORATION

- Take the roof member, four plastic threaded plates and four spacer clips from the kit.

NOTE: Volvo's logo on the member must be facing upwards.

- Install the threaded plates as illustrated.
- Install the spacer clips from the other side. Press hard so that they are properly secured to the threaded plates.
- Take a 140x70 mm piece of tape from the kit. Cut into four 35x70 mm pieces.
- Tape the threaded plates in position as illustrated.

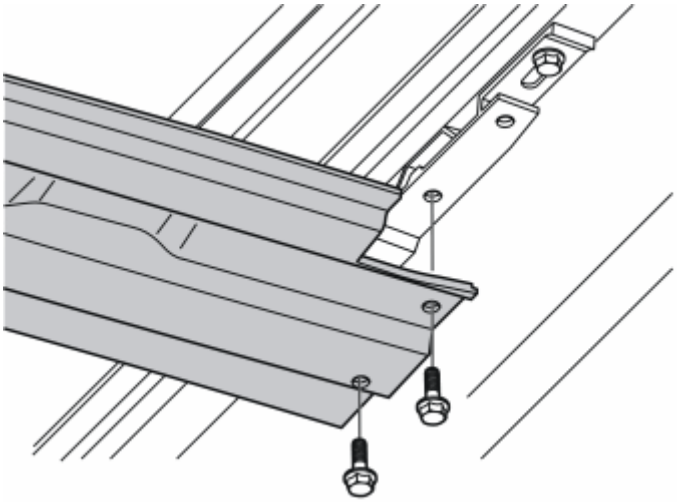

Fig. 780: Install The Roof Member In The Newly Installed Brackets
Courtesy of VOLVO CARS CORPORATION

- Insert the roof member, with the removed member ends pointing backwards, slightly under the rear headlining edge. Then slide the member forwards so that it is under the front headlining edge slightly. Work it into place at the screw holes.
- Take four **M6x14 mm** screws from the kit. Install the roof member in the newly installed brackets.
- Tighten the screws, torque tighten **10 Nm (7.5 lbf. ft.)** .

INSTALLING THE CABLE HARNESS

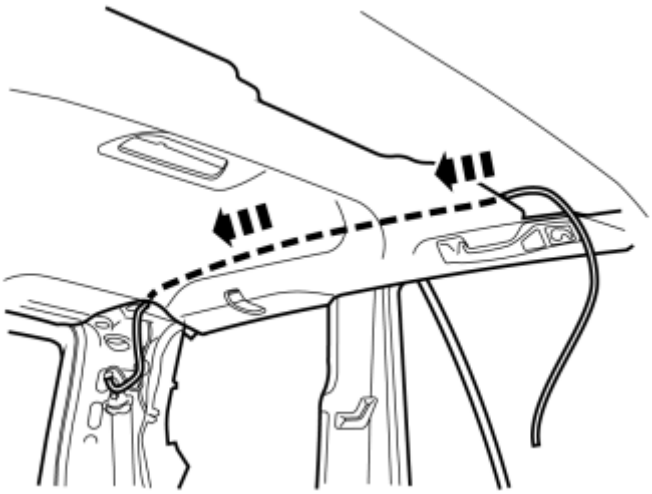

Fig. 781: Route The End Of The Cable Harness To The D-Post
Courtesy of VOLVO CARS CORPORATION

- Take the cable harness from the kit.

  Insert a suitable piece of wire or similar (1300 mm in length) into the cut-out hole in the headlining, all the way to the left-hand D-post. Secure the end of the cable harness with the loose terminals in the wire.

- Route the end of the cable harness to the D-post and remove it from the wire.

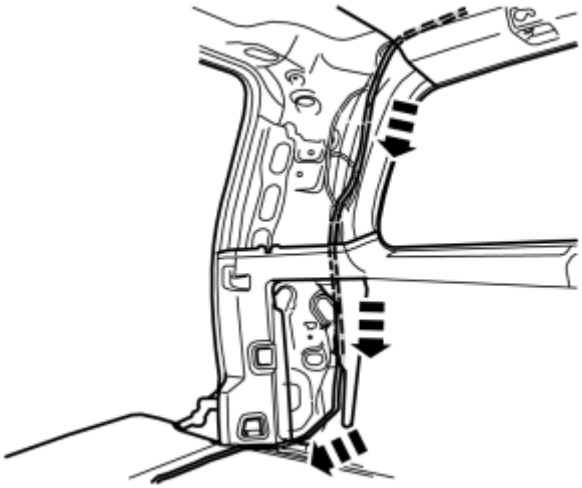

Fig. 782: Route The Cable Harness Along The D-Post Down To The Sill
Courtesy of VOLVO CARS CORPORATION

- Route the cable harness along the D-post down to the sill.

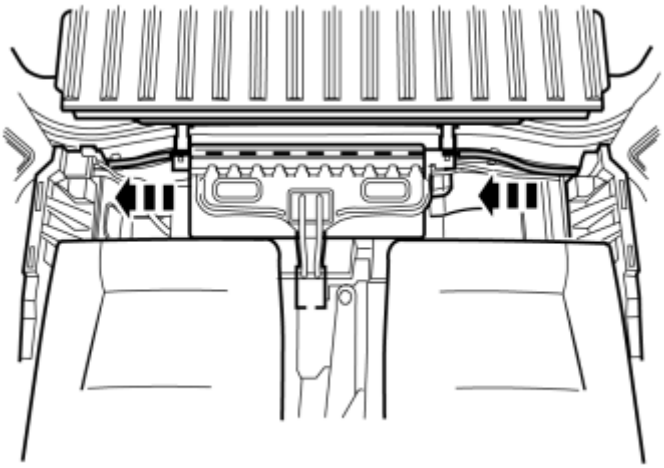

Fig. 783: Route The Cable Harness Along The Sill
Courtesy of VOLVO CARS CORPORATION

- Route the cable harness along the sill.

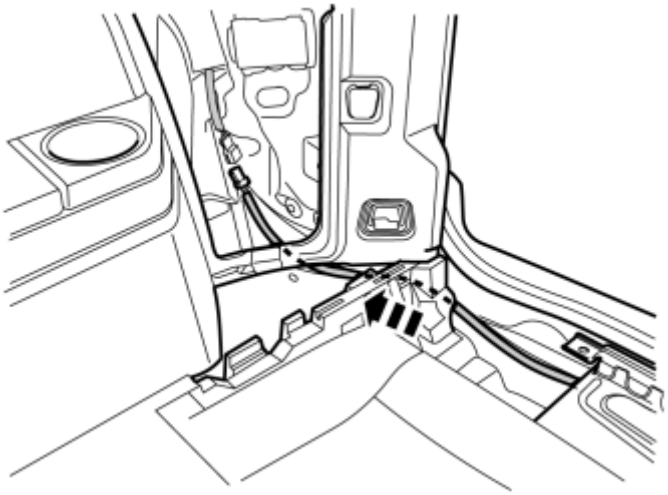

Fig. 784: Route The Cable Harness To The Right-Hand Tail Lamp
Courtesy of VOLVO CARS CORPORATION

- Route the cable harness to the right-hand tail lamp.

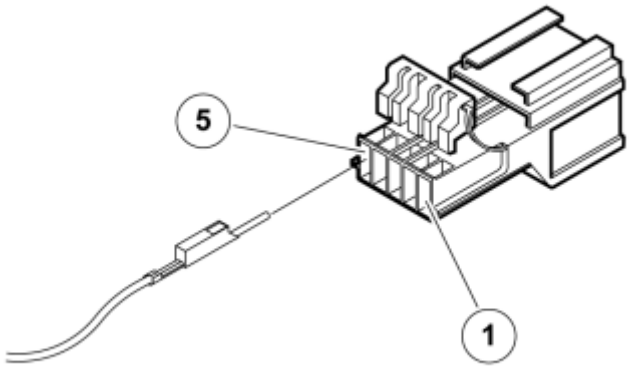

Fig. 785: Green Connector Kit
Courtesy of VOLVO CARS CORPORATION

- Take the green connector from the kit. Connect the terminals as follows:

Position	Cable
1	Red/White (R/W)
2	White (W)
3	Blue (BL)
4	
5	Black (SB)

- Close the catches.

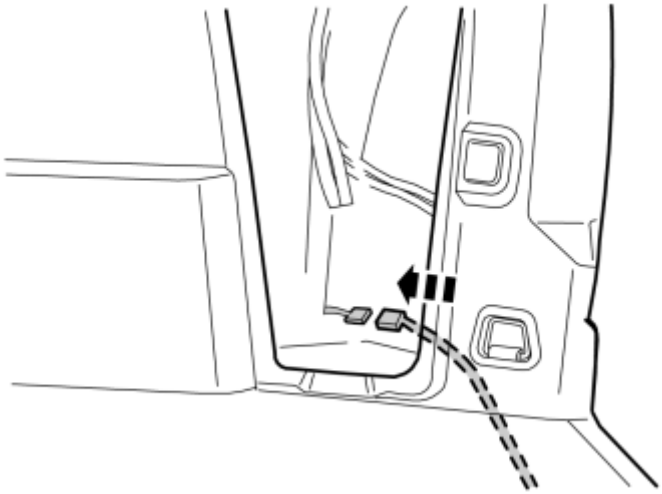

Fig. 786: Locate The Existing 5-Pin Connector
Courtesy of VOLVO CARS CORPORATION

- Locate the existing 5-pin connector which is taped to the car's cable harness. Connect the connector to the

routed cable harness.

INSTALLATION OF THE MULTIMEDIA MONITOR WITH DVD

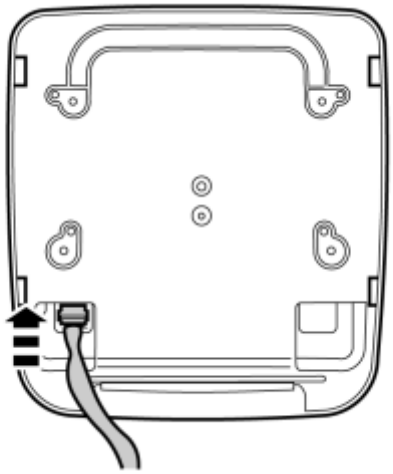

Fig. 787: Identifying DVD Unit Routed Connector
Courtesy of VOLVO CARS CORPORATION

- Turn the ignition key to position I.
- Take the DVD unit from the kit and connect the routed connector.

CAUTION: Handle the DVD unit with care and do not subject it to knocks.

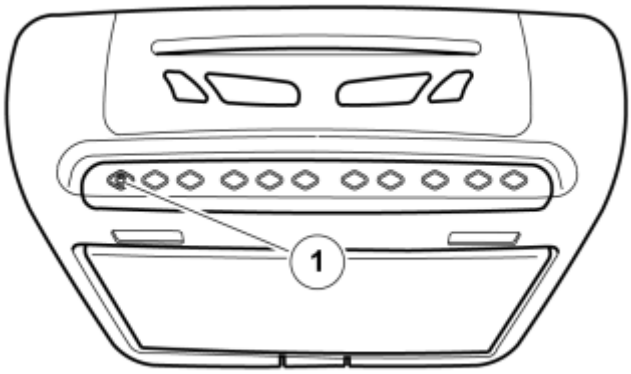

Fig. 788: Identifying DVD Unit Switch (1)
Courtesy of VOLVO CARS CORPORATION

- Hold the DVD unit so that the display can be folded out without hindrance.
- Fold out the display by pressing the switch (1).

- Cut the current again by disconnecting the connector from the unit.
- Turn the ignition key to position 0.

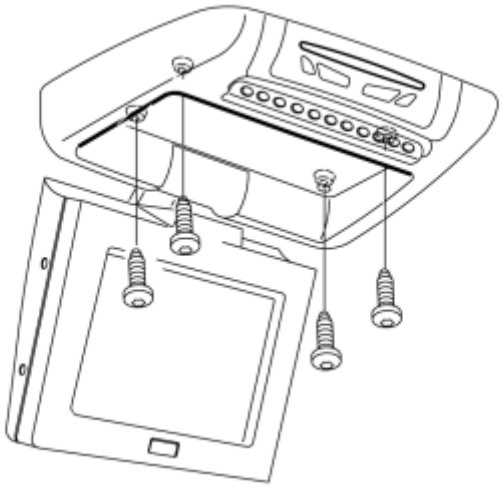

Fig. 789: Identifying DVD Unit Screws
Courtesy of VOLVO CARS CORPORATION

- Take four **PF4x25** screws from the kit.

  Connect the connector to the DVD unit. Position the unit towards the middle of the roof member, guide the cutout in the unit to the spacers of the threaded plates. Install the unit loosely using screws. Leave **7 mm** between the unit and the member so that the cover panel can be installed.

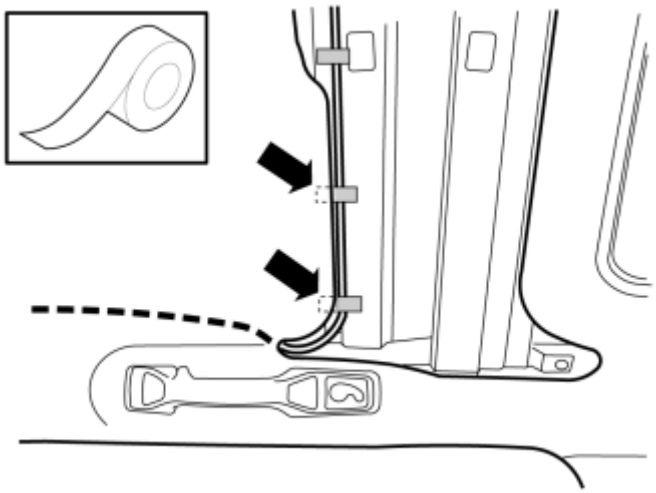

Fig. 790: View Of Tape From The Kit Cut Into Three Pieces
Courtesy of VOLVO CARS CORPORATION

- Take a 140x70 mm piece of tape from the kit. Cut into three pieces.
- Install the cable harness at the rear edge of the member using two pieces of tape.

INSTALLING THE PANELS

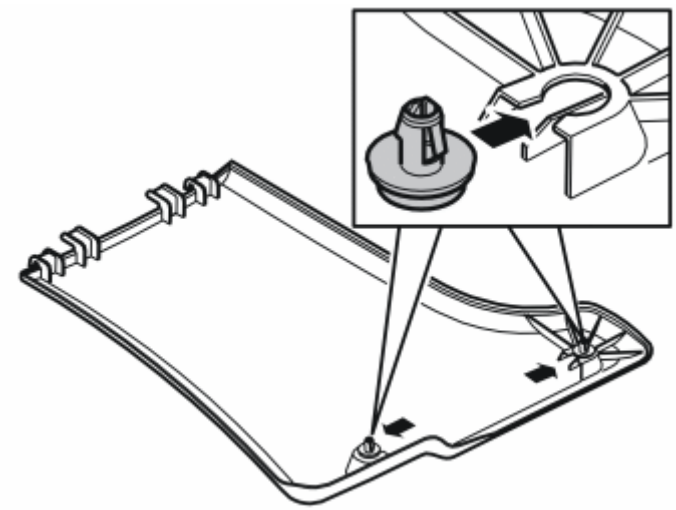

Fig. 791: Identifying Roof Member Panel Clips
Courtesy of VOLVO CARS CORPORATION

- Take the panels for the roof member and the four plastic clips from the kit.
- Install the plastic clips on the cover panels.

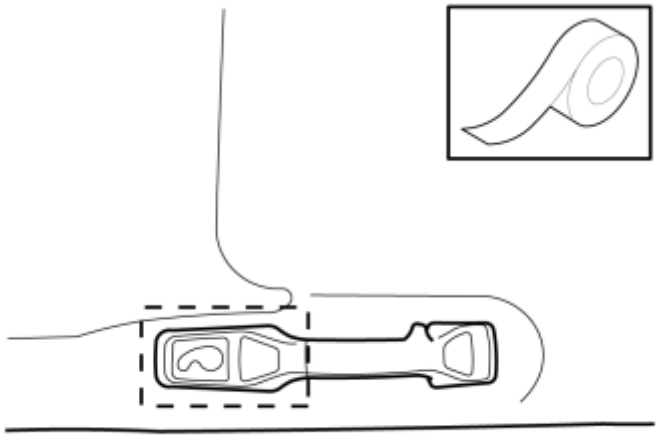

Fig. 792: Tape Both Handles To Protect Them When Installing The Cover Panels
Courtesy of VOLVO CARS CORPORATION

- Tape both handles to protect them when installing the cover panels.

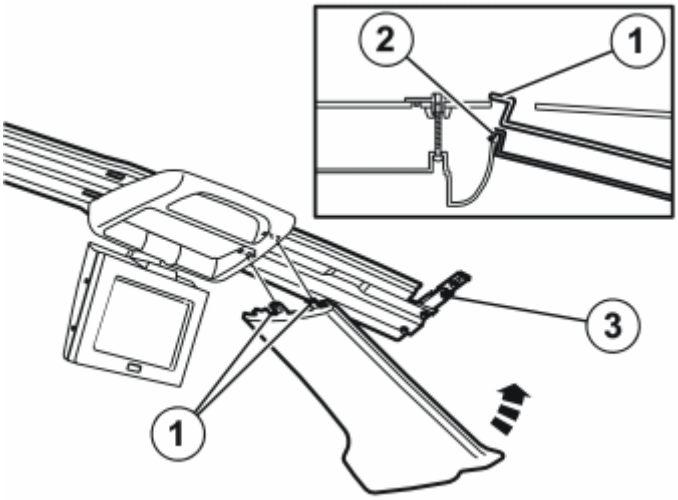

Fig. 793: View Of Roof Member Cut-Outs (1) By The LCD Display
Courtesy of VOLVO CARS CORPORATION

- Insert the cover panel hooks into the roof member's cut-out (1) and above the DVD unit (2). Bend down the panel in the middle, move it up over the handle and press the plastic clips into the holes (3) of the brackets.

NOTE: Do not damage the grab handle when sliding the headlining panel into position.

- Screw the DVD unit into place.
- Continue with point 49.

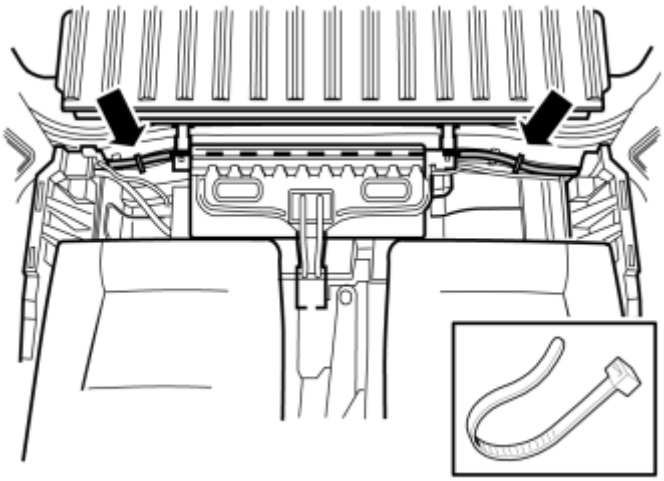

Fig. 794: View Of Cable Harness Using Two Cable Ties In The Existing Cable Harness
Courtesy of VOLVO CARS CORPORATION

- Secure the cable harness using two cable ties in the existing cable harness.

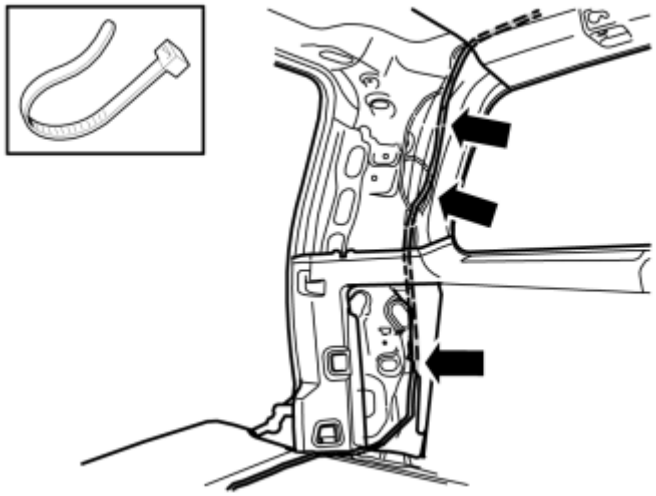

Fig. 795: View Of Three Cable Ties Along The D-Post Panel
Courtesy of VOLVO CARS CORPORATION

- Secure the cable harness using three cable ties along the D-post panel.

APPLY TO CARS WITHOUT A SUNROOF.

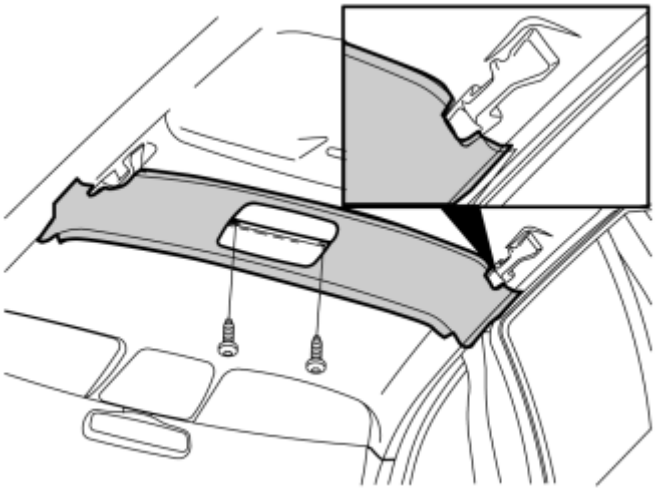

Fig. 796: Identifying Hole Template In Position
Courtesy of VOLVO CARS CORPORATION

- Take two **4.8x13 mm** screws from the kit.
- Install the hole template in position. Guide it up along the grab handles and secure it to the roof using the screws.

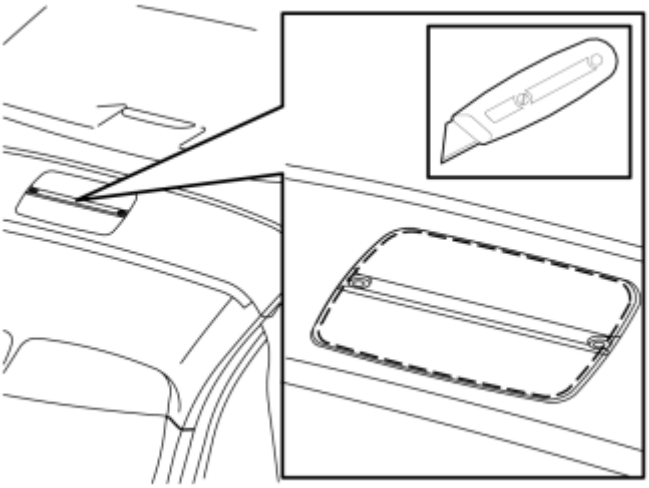

Fig. 797: View Of Headlining Along The Hole Template's Inner Contours
Courtesy of VOLVO CARS CORPORATION

- Cut out the headlining along the hole template's inner contours (dotted line) using utility knife or similar.

NOTE: Use a sharp knife. This applies to all cutting of the headlining.

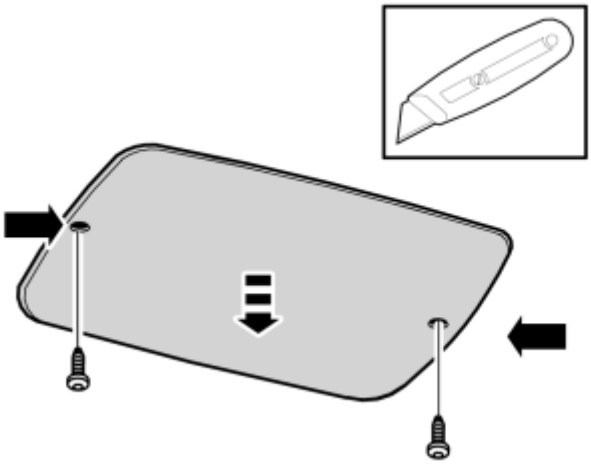

Fig. 798: View Of Screws And Template Removal
Courtesy of VOLVO CARS CORPORATION

- Remove the screws and template.
- Cut out the remains and remove the piece from the headlining.

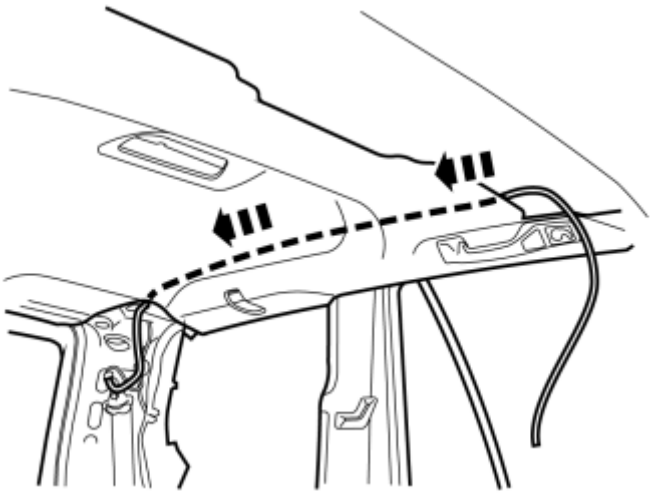

Fig. 799: Route The End Of The Cable Harness To The D-Post
Courtesy of VOLVO CARS CORPORATION

- Take the cable harness from the kit.

  Insert a suitable piece of wire or similar (1300 mm in length) into the cut-out hole in the headlining, all the way to the left-hand D-post. Secure the end of the cable harness with the loose terminals in the wire.

- Route the end of the cable harness to the D-post and remove it from the wire.

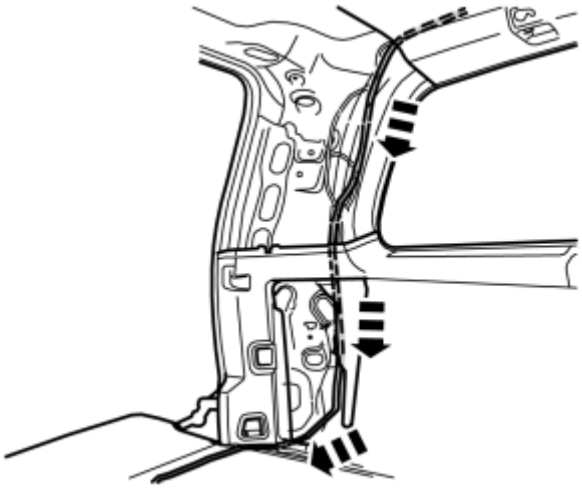

Fig. 800: Route The Cable Harness Along The D-Post Down To The Sill
Courtesy of VOLVO CARS CORPORATION

- Route the cable harness along the D-post down to the sill.

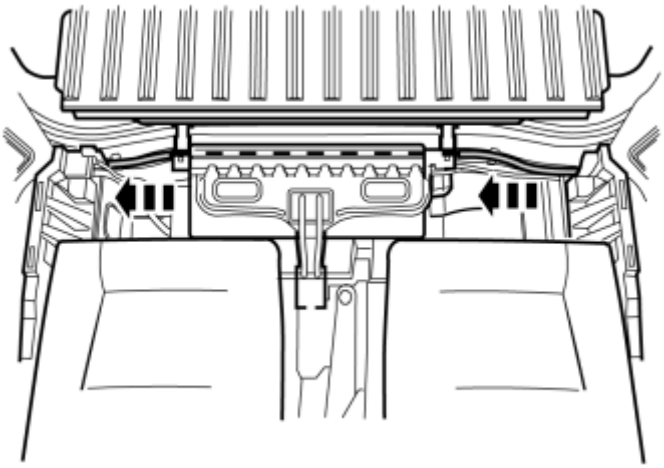

Fig. 801: Route The Cable Harness Along The Sill
Courtesy of VOLVO CARS CORPORATION

- Route the cable harness along the sill.

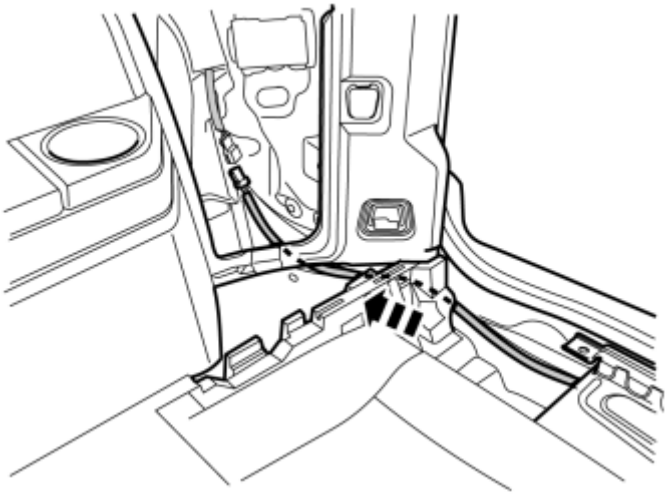

Fig. 802: Route The Cable Harness To The Right-Hand Tail Lamp
Courtesy of VOLVO CARS CORPORATION

- Route the cable harness to the right-hand tail lamp.

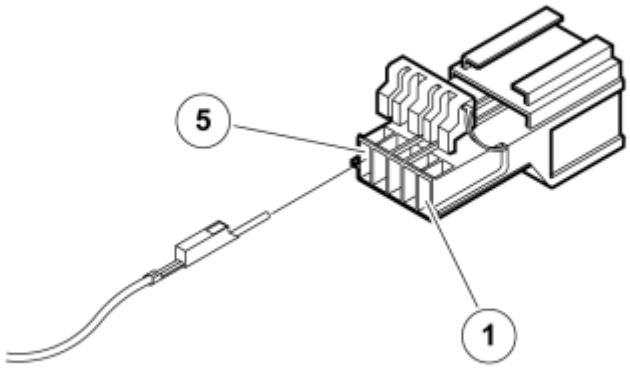

Fig. 803: Green Connector Kit
Courtesy of VOLVO CARS CORPORATION

- Take the green connector from the kit. Connect the terminals as follows:

Position	Cable
1	Red/White (R/W)
2	White (W)
3	Blue (BL)
4	
5	Black (SB)

- Close the catches.

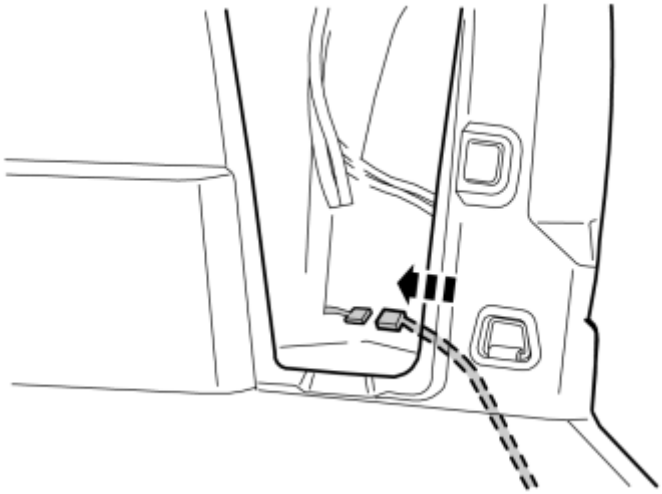

Fig. 804: View Of Existing 5-Pin Connector
Courtesy of VOLVO CARS CORPORATION

- Locate the existing 5-pin connector which is taped to the car's cable harness. Connect the connector to the

routed cable harness.

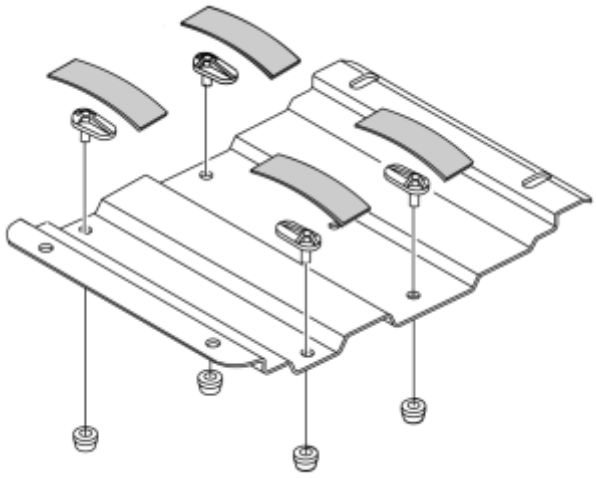

Fig. 805: Identifying Four Plastic Threaded Plates And Four Spacer Clips
Courtesy of VOLVO CARS CORPORATION

- Take the roof member, four plastic threaded plates and four spacer clips from the kit.
- Install the threaded plates as illustrated.
- Install the spacer clips from the other side, so that they are properly secured to the threaded plates.
- Take a 140x70 mm piece of tape from the kit. Cut into four 35x70 mm pieces.
- Tape the threaded plates in position as illustrated.

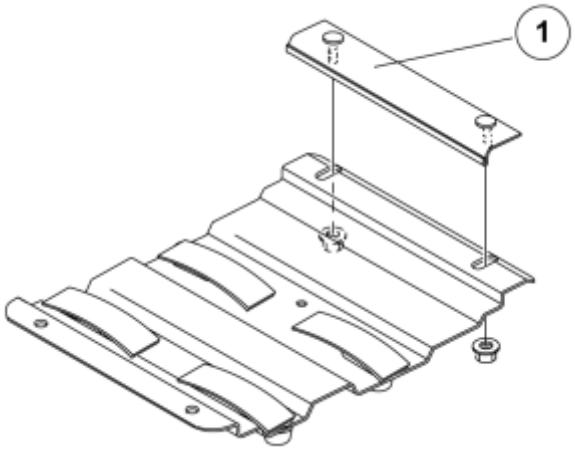

Fig. 806: Identifying Narrow Bracket Clamp And Nuts
Courtesy of VOLVO CARS CORPORATION

- Take the narrow bracket clamp and two nuts from the kit. Install the bracket clamp (1) on the angled side of the bracket and install the nuts.
- Slide the narrow bracket clamp so that it is as far out as possible in the slit holes. Rest the clamp on the angled surface. Tighten the nuts by hand.

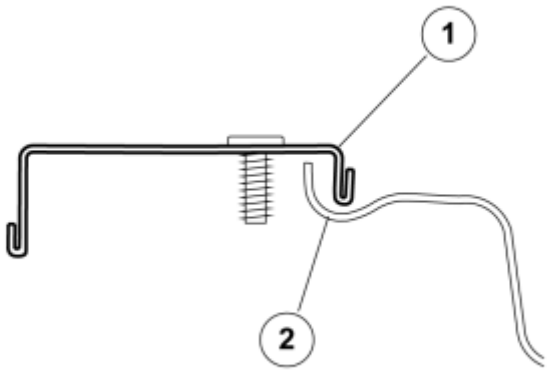

Fig. 807: View Of Bracket Clamp And Roof Member
Courtesy of VOLVO CARS CORPORATION

HINT: Use suitable blocks or similar to make space between roof and headlining.

- Take the wide bracket clamp from the kit and insert the smaller angles edge into the headlining's hole, on the rear side of the roof member. Work the bracket clamp (1) into place, so that it rests above the roof member's (2) and headlining's edges with the screws downwards.

NOTE: The less folded edge must be positioned above the edge of the roof member.

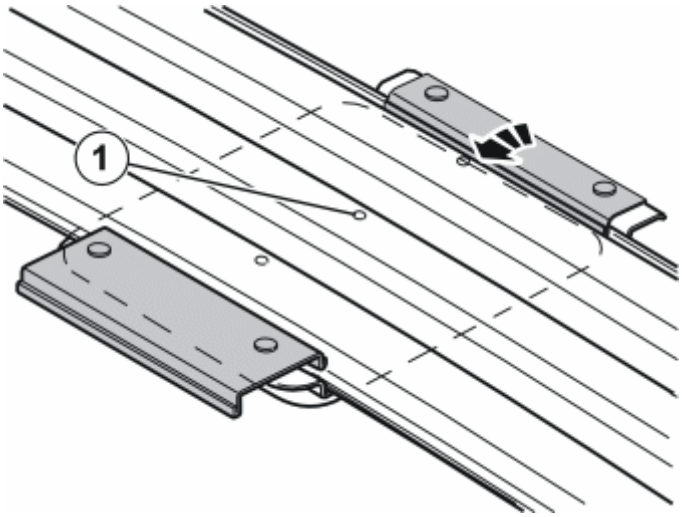

Fig. 808: Identifying Bracket Into Cut Out Hole With Narrow Bracket Clamp
Courtesy of VOLVO CARS CORPORATION

- Insert the bracket in the cut-out hole with the narrow bracket clamp pointing forwards.
- Unscrew the nuts holding the narrow bracket clamp. Slide the clamp over the edge of the roof member so that it hooks into place. Tighten the nuts so that the bracket remains attached.

- Lift up the rear end of the bracket. Align the screws for the suspended wide bracket clamp in the holes in the bracket. Screw in two nuts from the kit. Finger tighten.
- Check that both clamps on the bracket are correctly positioned around the roof member.
- Adjust the position of the bracket so that its hole is aligned with the hole in the roof member (1).

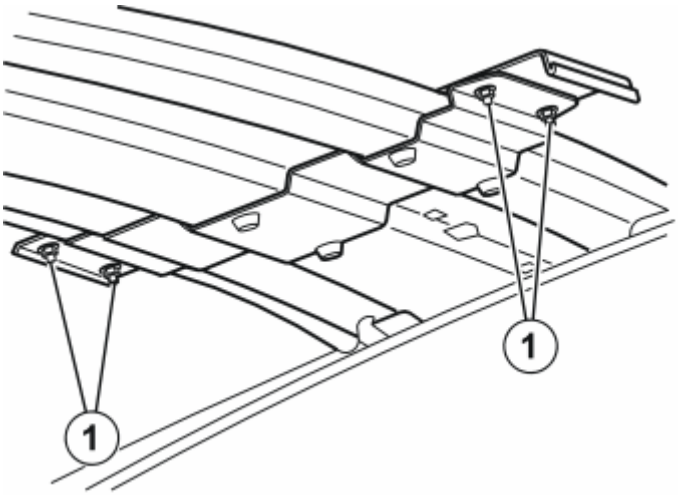

Fig. 809: Identifying Bracket Mount Screws
Courtesy of VOLVO CARS CORPORATION

- Tighten the four nuts (1) for the bracket clamps so that the bracket is securely mounted. Work the bracket and further tighten if there is any play.

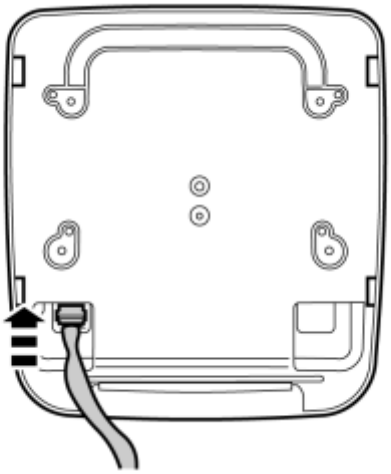

Fig. 810: Identifying DVD Unit Routed Connector
Courtesy of VOLVO CARS CORPORATION

- Turn the ignition key to position I.
- Take the DVD unit from the kit and connect the routed connector.

CAUTION: Handle the DVD unit with care and do not subject it to knocks.

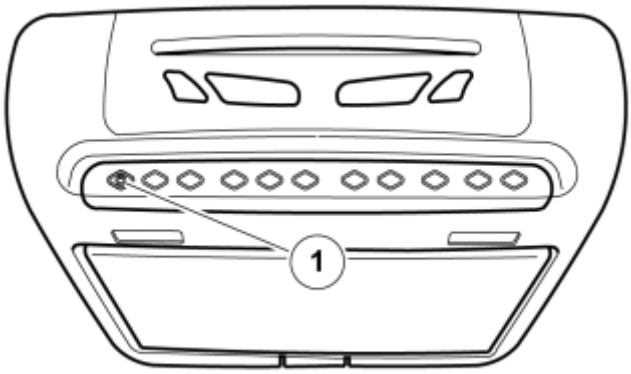

Fig. 811: Identifying DVD Unit Switch (1)
Courtesy of VOLVO CARS CORPORATION

- Hold the unit so that the display can be folded out without hindrance.
- Fold out the display by pressing the switch (1).
- Cut the current by disconnecting the connector from the unit.
- Turn the ignition key to position 0.

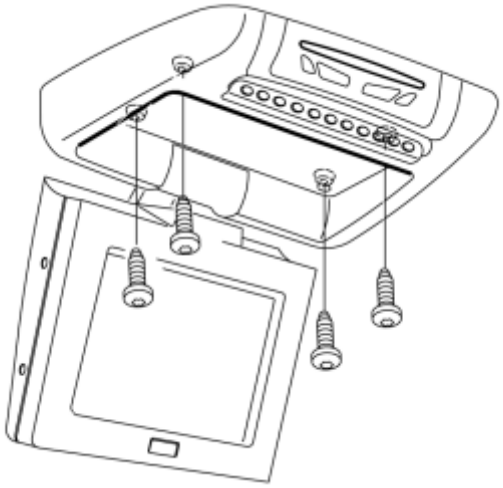

Fig. 812: Identifying DVD Unit Screws
Courtesy of VOLVO CARS CORPORATION

- Take four **PF4x25** screws from the kit.

  Connect the connector to the DVD unit. Lift the unit towards the roof and at the same time push in the cable excess. Position the unit towards the middle of the bracket, guide the cut-out in the unit to the spacers of the threaded plates. Install the unit using the screws.

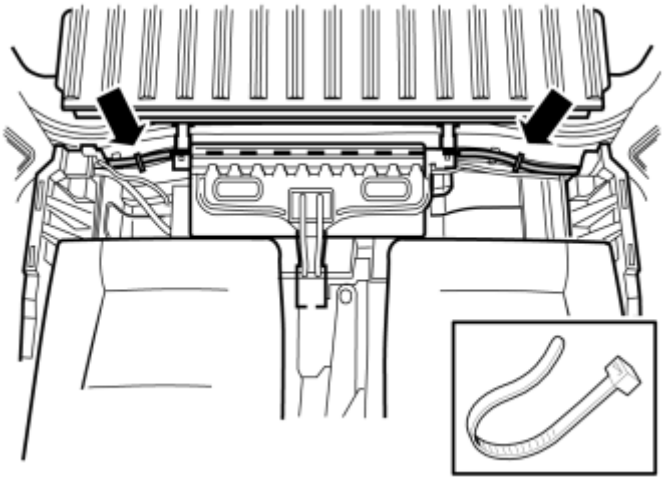

Fig. 813: View Of Cable Harness Using Two Cable Ties In The Existing Cable Harness
Courtesy of VOLVO CARS CORPORATION

- Secure the cable harness using two cable ties in the existing cable harness.

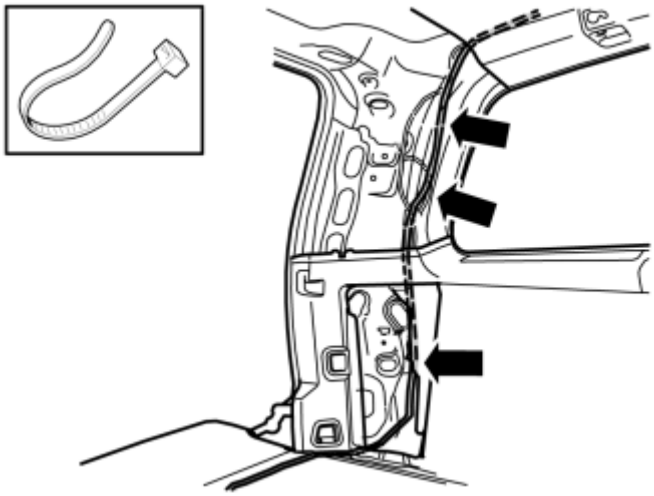

Fig. 814: View Of Three Cable Ties Along The D-Post Panel
Courtesy of VOLVO CARS CORPORATION

- Secure the cable harness using three cable ties along the D-post panel.

APPLIES TO ALL MODELS

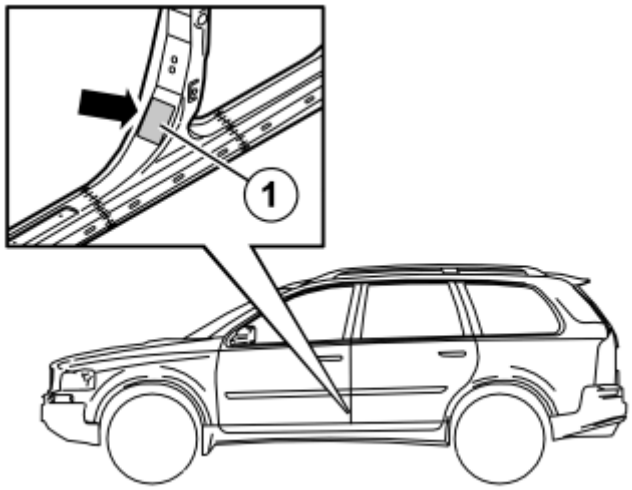

Fig. 815: Installing Decals
Courtesy of VOLVO CARS CORPORATION

- Take the decal from the kit. Clean the area (1) where the decal is to be positioned using isopropanol.
- Pull off the protective paper from the adhesive side of the label and attach the label as illustrated. Press the label securely into place.

Reinstall:

- Panels in the cargo compartment.
- the headlining panel in the cargo compartment
- floor hatches in the cargo compartment.

Vacuum clean and clean away roof material and other waste from the car.

Set the DVD player's regional code

- Information can be found in VIDA under:
  Product specifications
  39 Media, communication and navigation
  393 Equipment for entertainment (radio/TV/VCR)
  Roof mounted system for rear seat entertainment
  Design

Functionality check

- Follow the instructions in the manual to check the system.

ACCESSORIES AND BODY, CAB

Media, Communication And Navigation - Removal, Replacement And Installation

COMMUNICATION RADIO, CARPHONE (2003-2005)

ANTENNA CARPHONE, REPLACING

REMOVAL AND INSTALLATION

PREPARATORY WORK

The illustrations in this service information are used for different model years and / or models. Some variation may occur. However, the essential information in the illustrations is always correct.

REMOVING THE CARPHONE ANTENNA

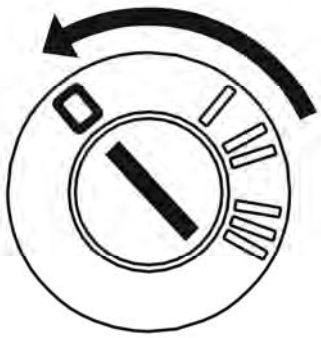

Fig. 1: Identifying Ignition In OFF Position
Courtesy of VOLVO CARS CORPORATION

Ignition off.

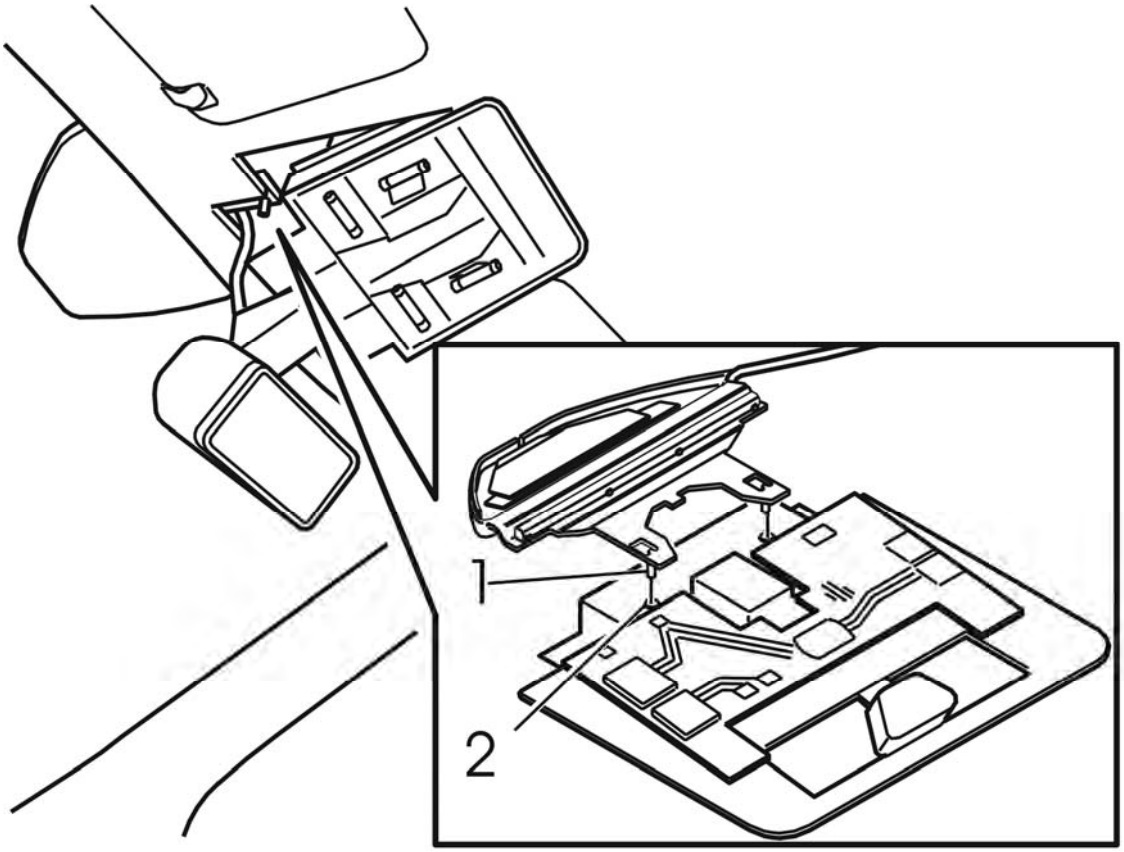

Fig. 2: Aligning Interior Lighting On Gear Selector Module Antenna Locating Pins
Courtesy of VOLVO CARS CORPORATION

- Remove the right-hand A-post panel. See **PANEL A-POST, REPLACING**
- Remove the interior lighting. See **INTERIOR LIGHTING, REPLACING**
- Remove the right-hand sun visor and both snap fasteners. See **SUN VISOR, REPLACING** .

REMOVING THE CARPHONE ANTENNA

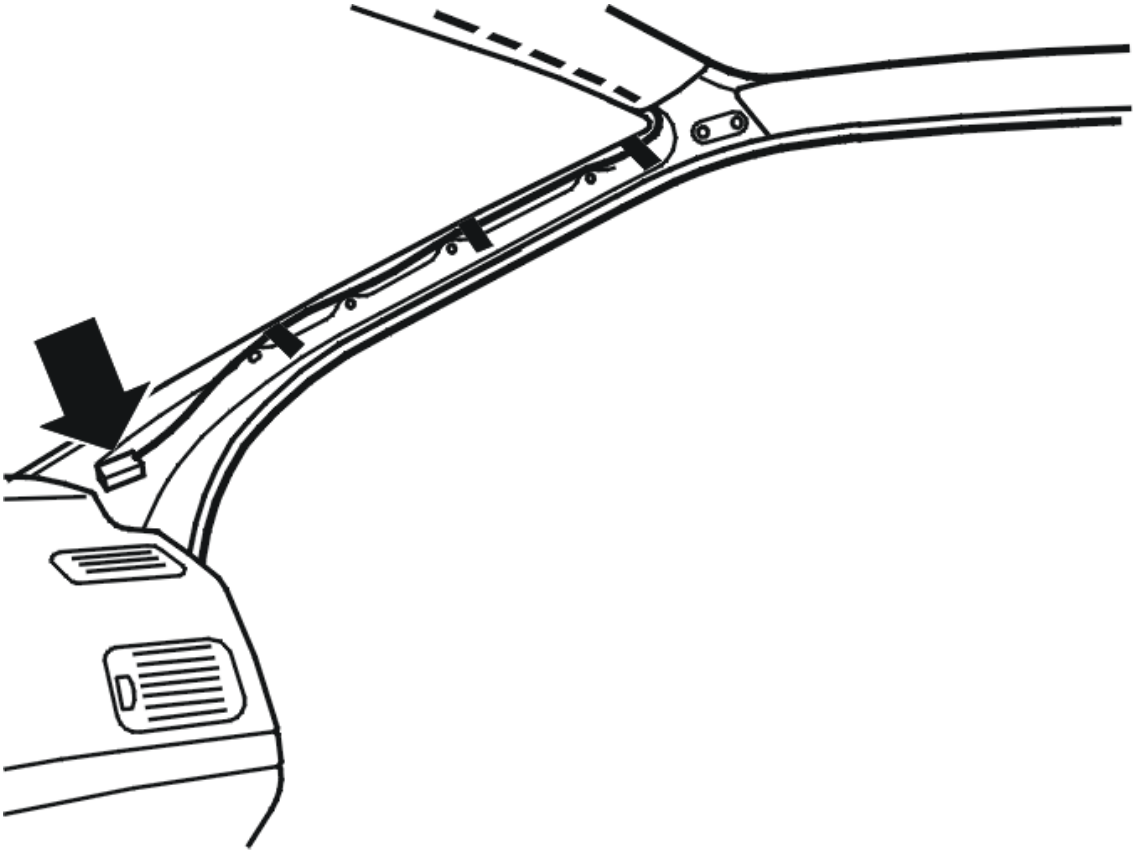

Fig. 3: Locating Antenna At Right Hand A-Post
Courtesy of VOLVO CARS CORPORATION

Carefully pry the headlining downwards at the front.

Remove the antenna from the mountings.

Expose the antenna cable and disconnect the connector positioned down by the right-hand A-post.

Remove the plastic cover.

INSTALLING THE CARPHONE ANTENNA

Install:

- the plastic cover
- the connector and antenna cable. Tape the antenna cable under the headlining
- the antenna
- the roof module. See **INTERIOR LIGHTING, REPLACING**
- the front edge of the headlining
- the sun visor and the snap fasteners. See **SUN VISOR, REPLACING**
- the right-hand A-post panel. See **PANEL A-POST, REPLACING** .

Test the function.

HANDSET, REPLACING

NOTE: **As the illustrations in this service information are used for different model years and / or models, some variation may occur. However, the essential information in the illustrations is always correct.**

REPLACING

PREPARATORY WORK

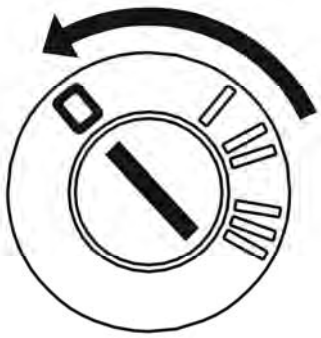

Fig. 4: Identifying Ignition In OFF Position
Courtesy of VOLVO CARS CORPORATION

Ignition off.

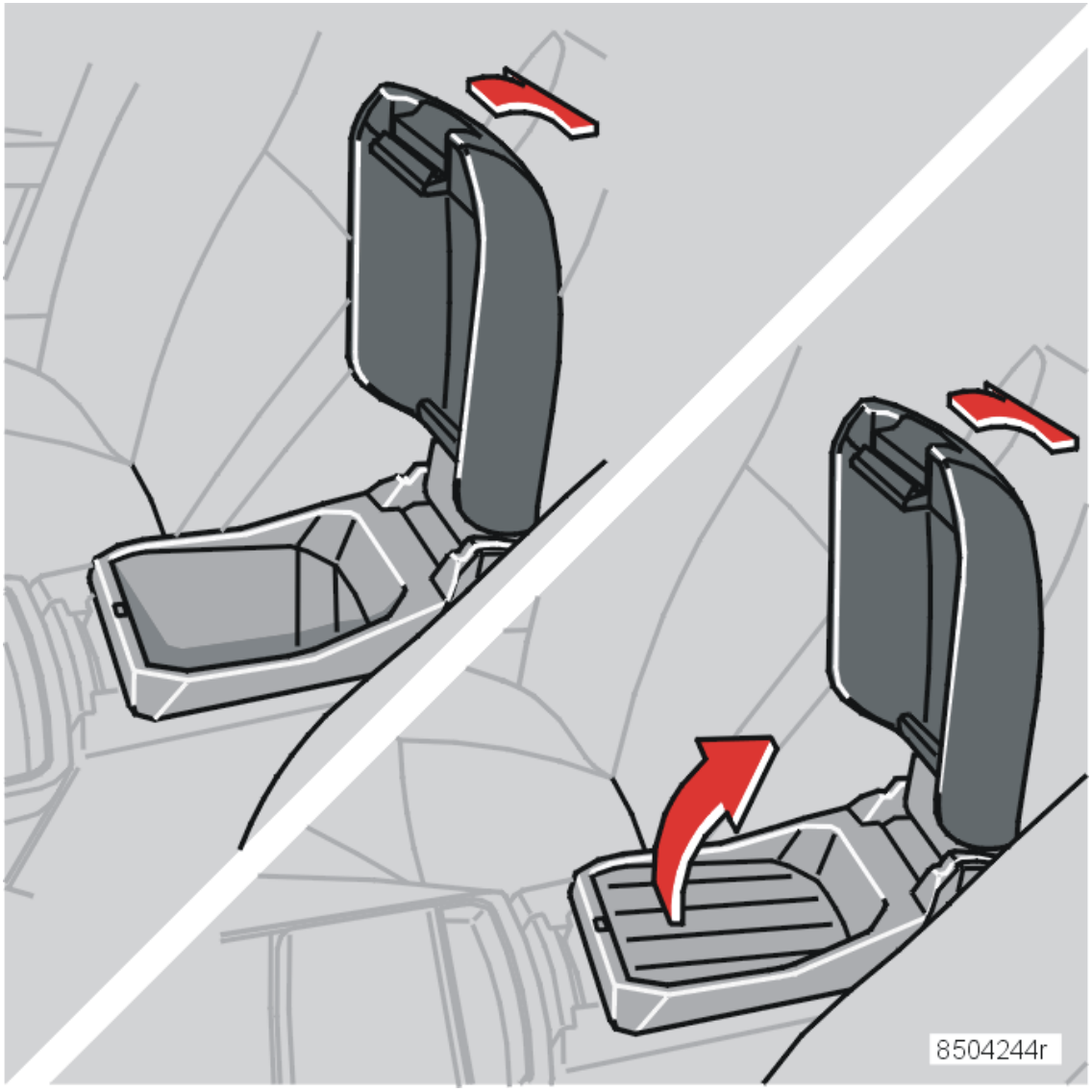

Fig. 5: Removing Storage Compartment
Courtesy of VOLVO CARS CORPORATION

Remove the storage compartment. Release the catches using the handle at the lower edge and pull backwards as illustrated.

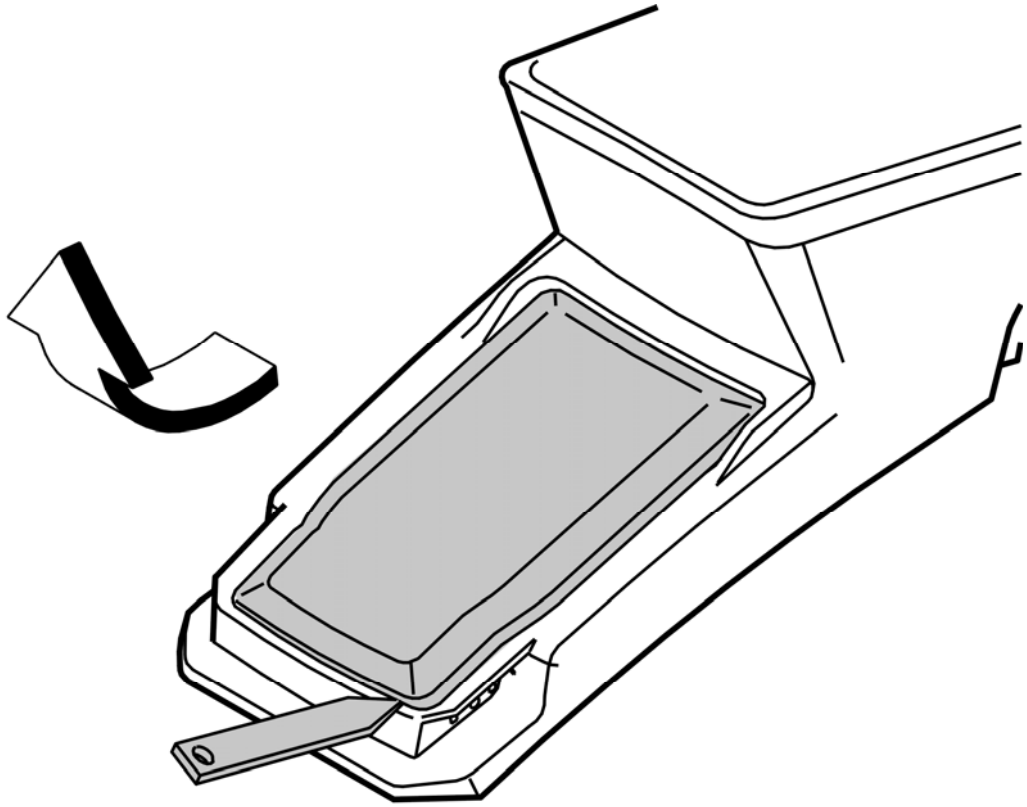

Fig. 6: Identifying Cover Removal
Courtesy of VOLVO CARS CORPORATION

Remove the carpet as illustrated.

REMOVING THE HANDSET

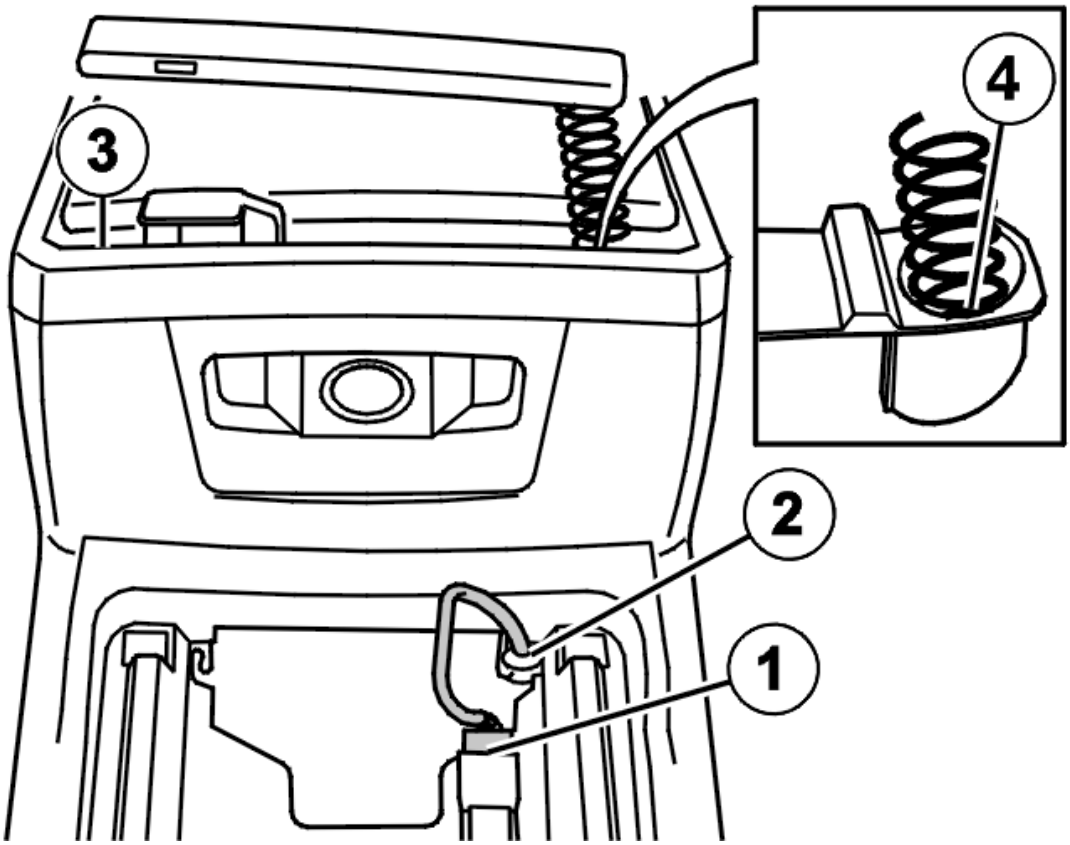

Fig. 7: Removing The Handset
Courtesy of VOLVO CARS CORPORATION

Disconnect the connector (1).

Disconnect the carphone cable from the load-removing grommet (2).

Release the carphone cable.

Remove the handset.

REMOVING THE CARPHONE HANDSET WALL

Remove screw (3).

Push the catch (4) to one side.

Remove the wall.

INSTALLING THE CARPHONE HANDSET WALL

Install the wall.

Install screw (3).

INSTALLING THE HANDSET

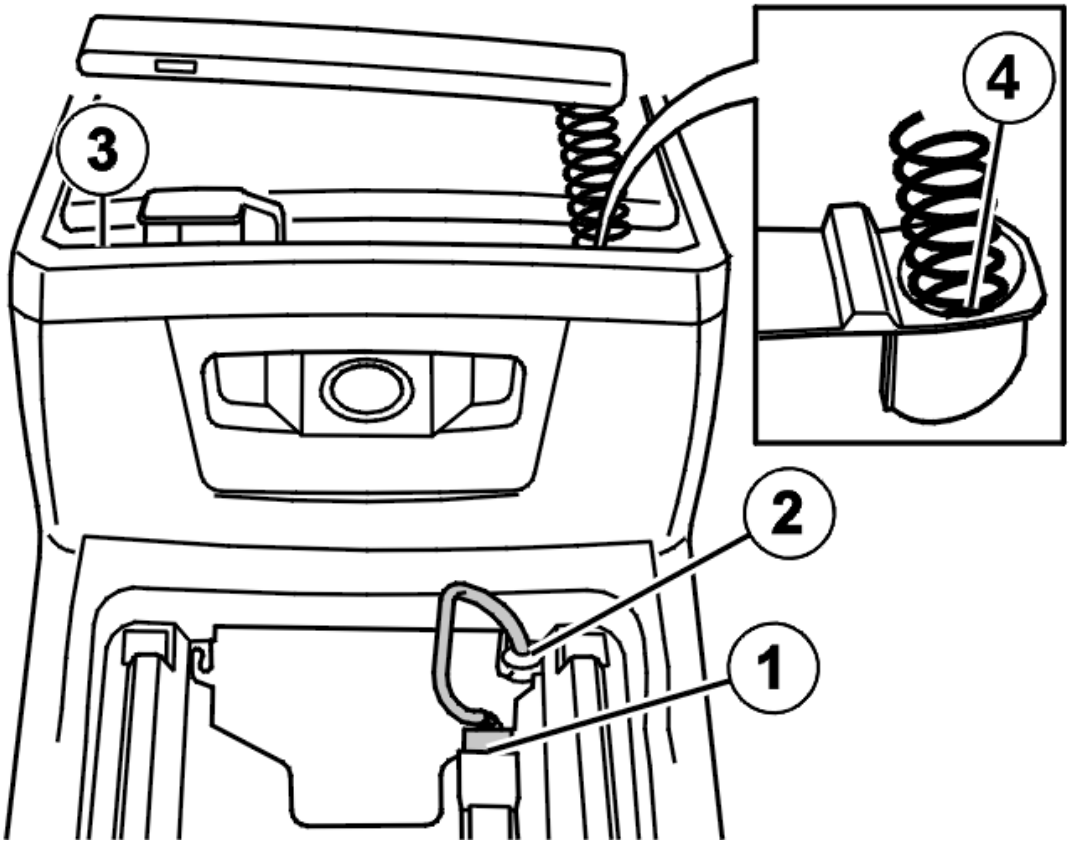

Fig. 8: Installing Carphone Cable
Courtesy of VOLVO CARS CORPORATION

Route the carphone cable.

Install the carphone cable in the load-removing grommet (2).

Connect the connector (1).

FINISHING WORK

Install the carpet.

Install the storage locker.

Test the function.

MICROPHONE, REPLACING

As the illustrations in this service information are used for different model years and / or models, some variation may occur. However, the essential information in the illustrations is always correct.

REMOVING THE MICROPHONE, REAR VIEW MIRROR

Remove:

- both the sun visors. See **SUN VISOR, REPLACING**
- the roof module
- the connector (2) on top of the headlining.

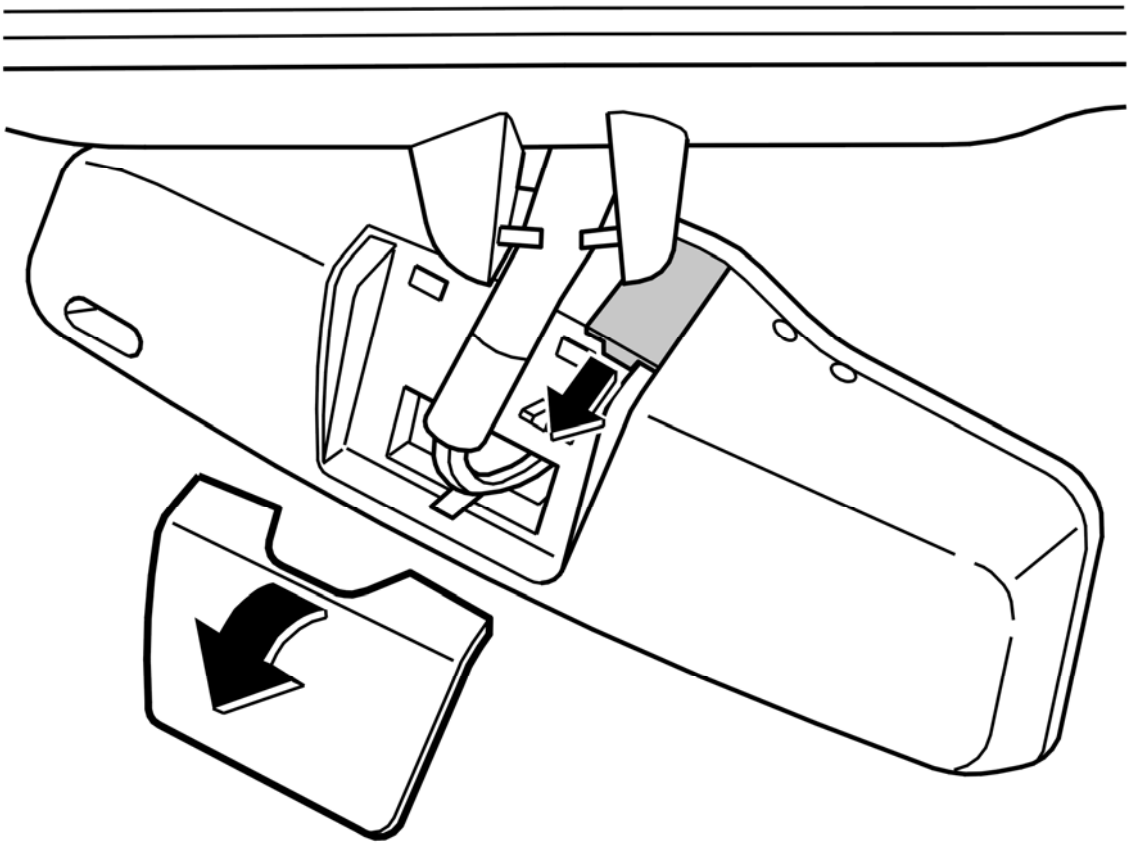

Fig. 9: Identifying Rear View Mirror Microphone Cover
Courtesy of VOLVO CARS CORPORATION

Remove:

- the cover on the reverse of the mirror
- the spring.

Pull out the microphone.

INSTALLING THE MICROPHONE, REAR VIEW MIRROR

Install:

- the microphone

- the spring
- the cover
- the connector (2)
- the microphone cable.

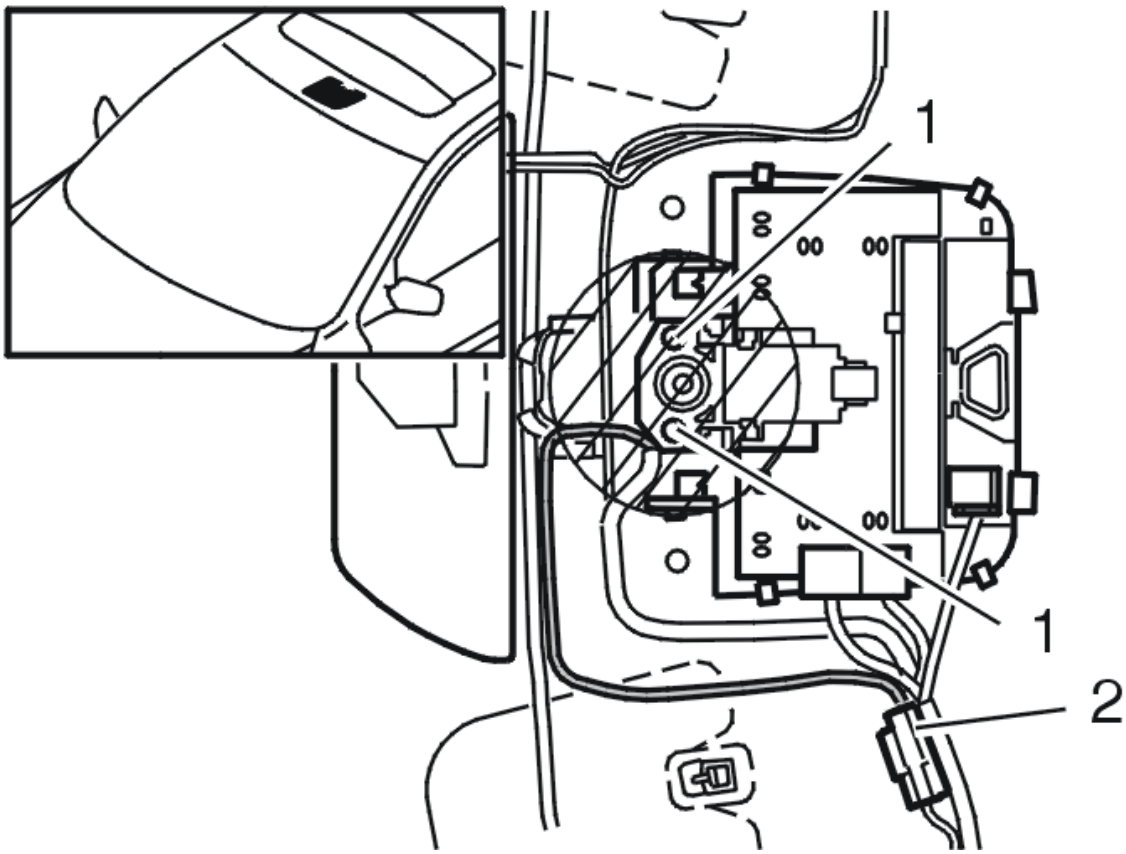

Fig. 10: Locating Microphone Areas Of Risk
Courtesy of VOLVO CARS CORPORATION

NOTE: **Ensure that the microphone cable is not trapped. The risk areas (1) are marked on the illustration.**

NOTE: **Tape the microphone cable securely.**

- the roof module
- the sun visors.

PHONE MODULE (PHM), REPLACING

NOTE: **The illustrations in this service information are used for different model years and/or models. Some variation may occur. However, the essential information in the illustrations is always correct.**

PREPARATORY WORK

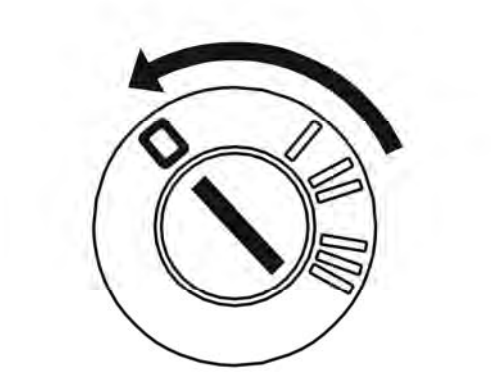

Fig. 11: Identifying Ignition In OFF Position
Courtesy of VOLVO CARS CORPORATION

Ignition off.

Remove the bracket for the dashboard environment panel/infotainment panel. See **MINIDISC / CD CONTROL MODULE, REPLACING**.

REMOVAL

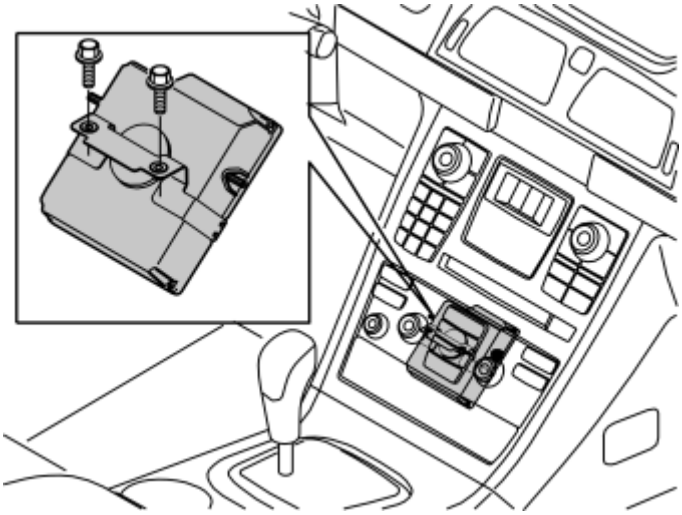

Fig. 12: Identifying Phone Module
Courtesy of VOLVO CARS CORPORATION

Remove the 2 screws.

Disconnect the connectors.

Remove the phone module (PHM) and the bracket.

INSTALLATION

NOTE: **Vehicles that are built before chassis number 167156 require an adapter cable harness between the vehicle's connector and antenna for the new phone module (PHM).**

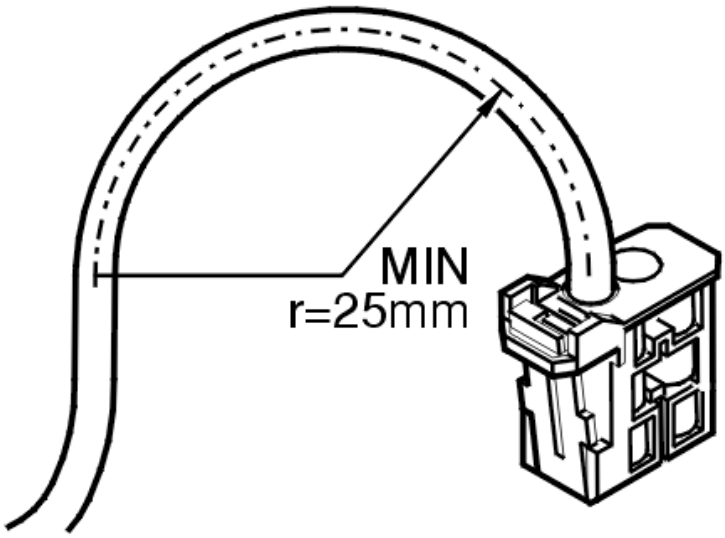

Fig. 13: Identifying Maximum Bend Radius Of Optic Cable
Courtesy of VOLVO CARS CORPORATION

NOTE: **Check that there is no dirt in the optical connectors.**

Connect the connectors

NOTE: **The bend radius of the optic cables and the antenna cables must not be less than 25 mm.**

Install the phone module (PHM) and the bracket.

Install and tighten the screws.

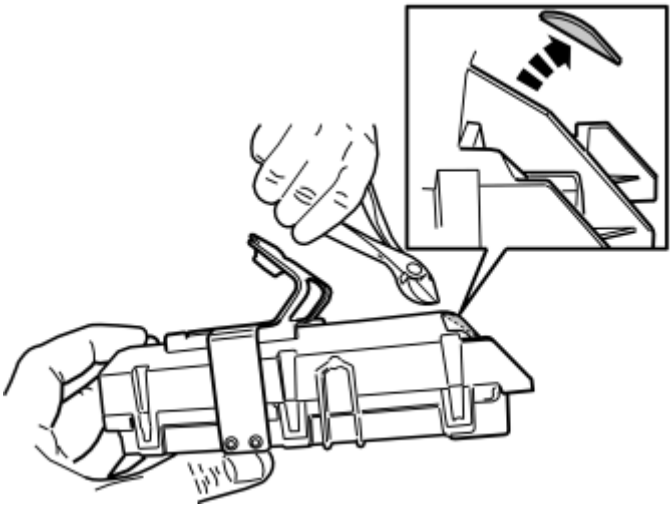

Fig. 14: Cutting Rounded Corner On Module For Installation
Courtesy of VOLVO CARS CORPORATION

HINT: To facilitate installation of the control module, the rounded corner can be cut even with the corner of the control module. See illustration.

FINISHING WORK

Install the bracket for the dashboard environment panel/infotainment panel. See **MINIDISC / CD CONTROL MODULE, REPLACING**.

NOTE: After replacing the phone module (PHM), new software must be ordered and the module programmed.

ORDERING SOFTWARE

Order the software. See 9438270 .

PROGRAMMING CONTROL MODULE

Program the new control module. See 9438270 .

CHECKING THE FUNCTION

Carry out a function test.

COMMUNICATION RADIO, MOBILE TELEPHONE (2006-2012)

ANTENNA CARPHONE, REPLACING

see **ANTENNA CARPHONE, REPLACING**

BATTERY VOLVO ON CALL (2011-2012)

REMOVAL

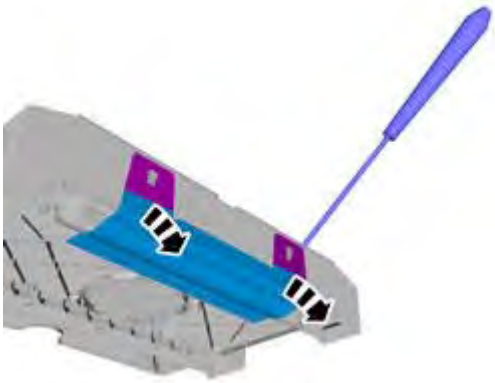

Fig. 15: Removing Backup Battery Casing
Courtesy of VOLVO CARS CORPORATION

Remove car phone module acc. to:**PHONE MODULE (PHM)**

NOTE: **Make sure that the backup battery capacity calculator is reset after installing a new backup battery.**

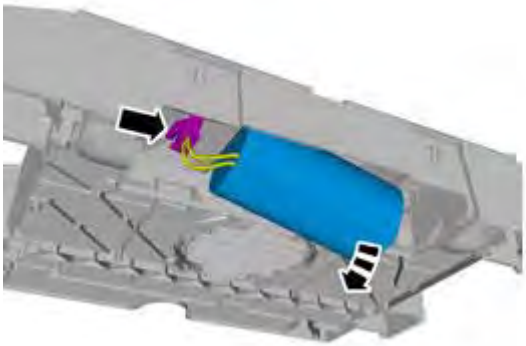

Fig. 16: Backup Battery Capacity Calculator
Courtesy of VOLVO CARS CORPORATION

INSTALLING

To install, reverse the removal procedure.

RESETTING

Reset according to: VIDA (Volvo scan tool) or equivilant.

BLUETOOTH CONTROL MODULE (2010)

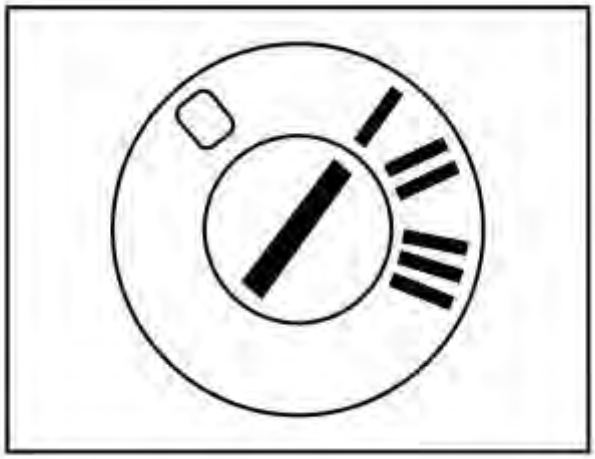

Fig. 17: Identifying Ignition In ACC Position
Courtesy of VOLVO CARS CORPORATION

Fig. 18: Removing Gear Selector Cover (1 of 3)
Courtesy of VOLVO CARS CORPORATION

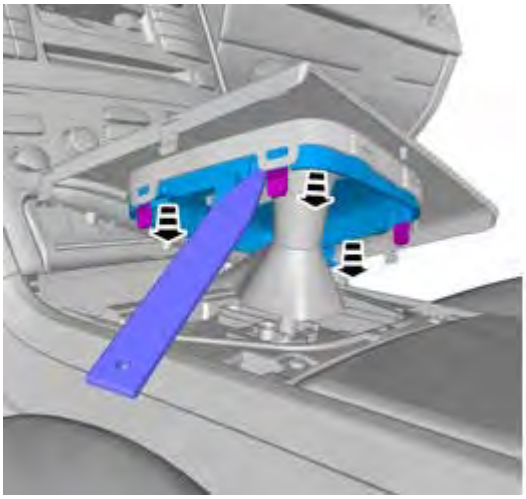

Fig. 19: Removing Gear Selector Cover (2 of 3)
Courtesy of VOLVO CARS CORPORATION

Fig. 20: Removing Gear Selector Cover (3 of 3)
Courtesy of VOLVO CARS CORPORATION

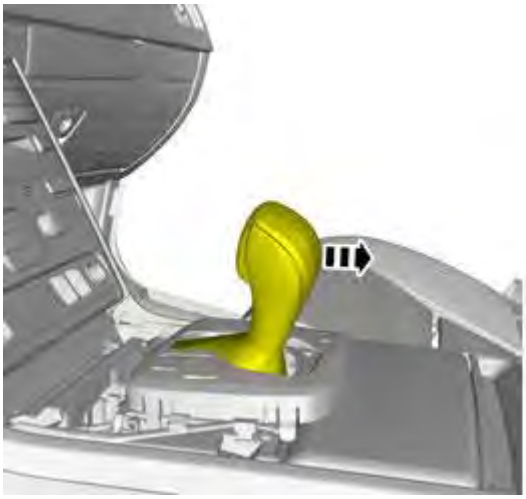

Fig. 21: Positioning Shift Knob
Courtesy of VOLVO CARS CORPORATION

VEHICLES WITH AFTER THEFT SYSTEM FOR VEHICLE RECOVERY (ATSVR)

Fig. 22: Service Tool (1 Of 3)
Courtesy of VOLVO CARS CORPORATION

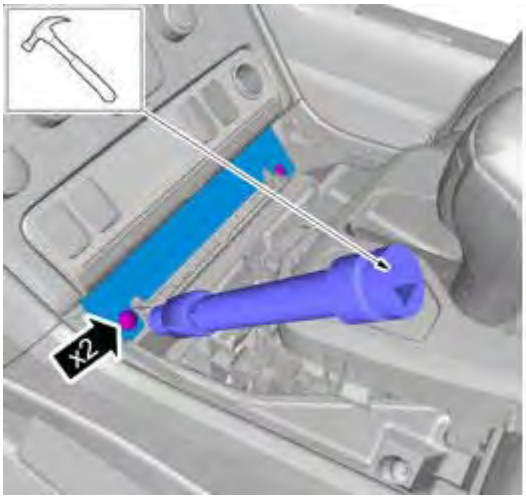

Fig. 23: Service Tool (2 Of 3)
Courtesy of VOLVO CARS CORPORATION

CAUTION: Only use moderate force.

Fig. 24: Service Tool (3 Of 3)
Courtesy of VOLVO CARS CORPORATION

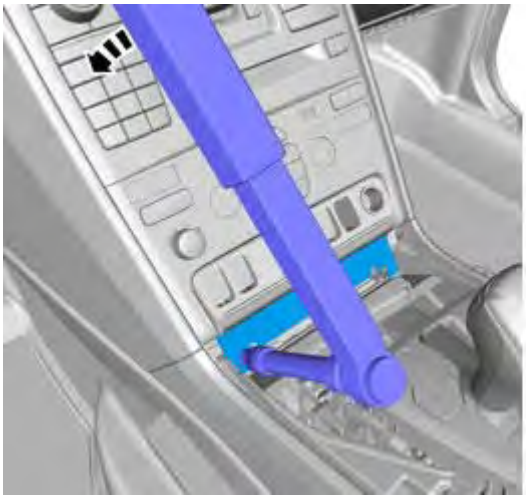

Fig. 25: Securing Component With Shear Bolts
Courtesy of VOLVO CARS CORPORATION

CAUTION: Make sure that the component is secured with shear bolt (or bolts).

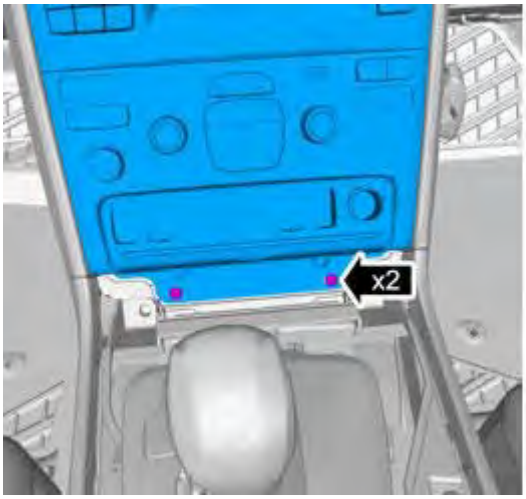

Fig. 26: Identifying Fasteners
Courtesy of VOLVO CARS CORPORATION

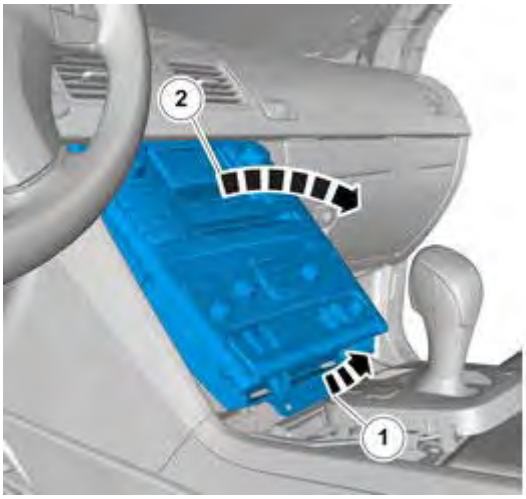

Fig. 27: Removing Main Face Plate
Courtesy of VOLVO CARS CORPORATION

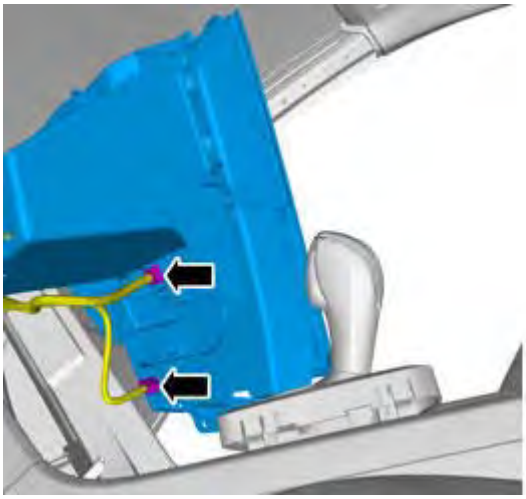

Fig. 28: Removing Cables
Courtesy of VOLVO CARS CORPORATION

CAUTION: Take extra care when handling the component.

CAUTION: Make sure that the fiber optic cables are not bent to a radius of less than 25 mm.

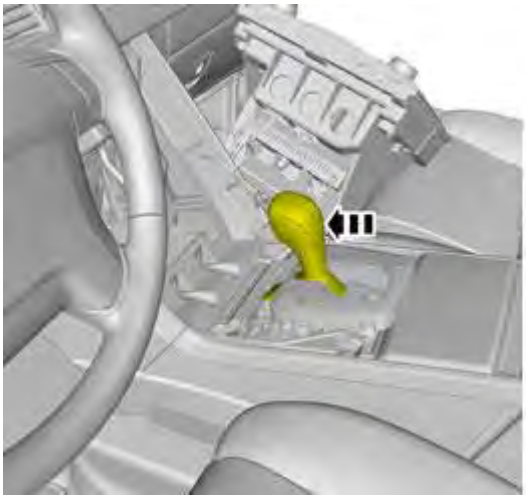

Fig. 29: Positioning Shift Knob
Courtesy of VOLVO CARS CORPORATION

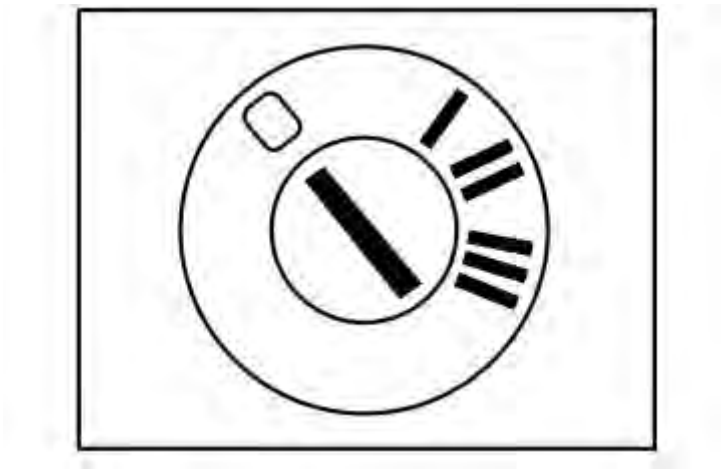

Fig. 30: Identifying Ignition In OFF Position
Courtesy of VOLVO CARS CORPORATION

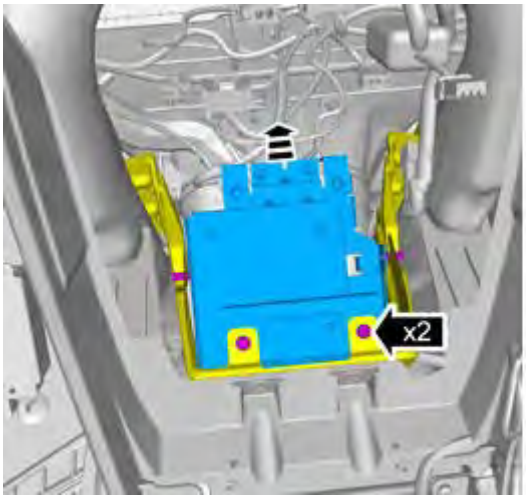

Fig. 31: Removing Control Module (1 Of 2)
Courtesy of VOLVO CARS CORPORATION

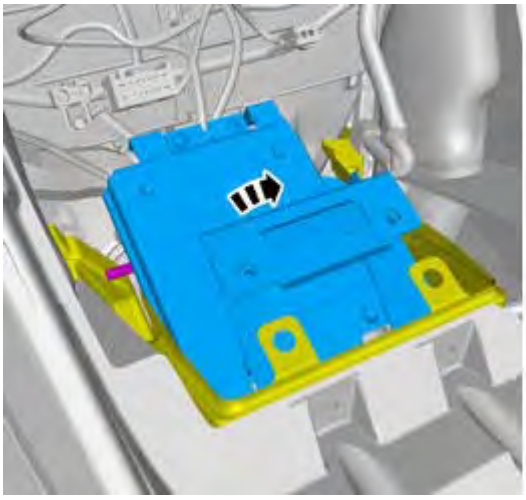

Fig. 32: Removing Control Module (2 Of 2)
Courtesy of VOLVO CARS CORPORATION

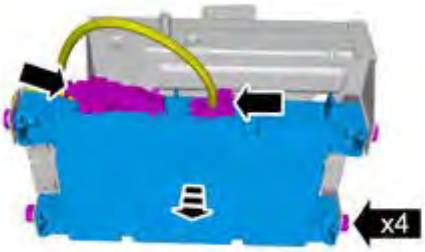

Fig. 33: Bluetooth Control Module
Courtesy of VOLVO CARS CORPORATION

NOTE: Make sure that the component terminals are not bent or damaged.

INSTALLATION

To install, reverse the removal procedure.

ORDERING SOFTWARE

Order and download software acc. to: 31328396

HANDSET, REPLACING

see **HANDSET, REPLACING**

MICROPHONE TELEPHONE (2010)

Materials	
Designation	**Part number**
Anti-squeak tape	1161842

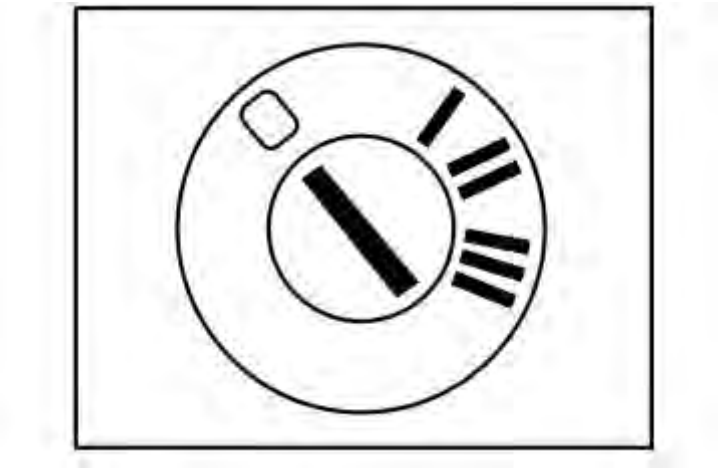

Fig. 34: Identifying Ignition In OFF Position
Courtesy of VOLVO CARS CORPORATION

Fig. 35: Removal Tab
Courtesy of VOLVO CARS CORPORATION

Fig. 36: Removing Sun Visors
Courtesy of VOLVO CARS CORPORATION

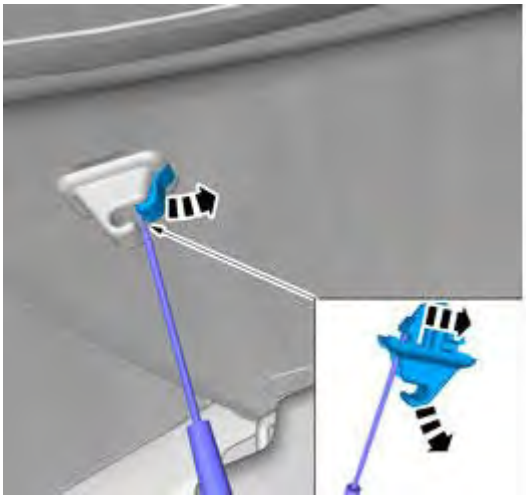

Fig. 37: Removing Sun Visor Bracket
Courtesy of VOLVO CARS CORPORATION

Fig. 38: Sun Visor Brackets
Courtesy of VOLVO CARS CORPORATION

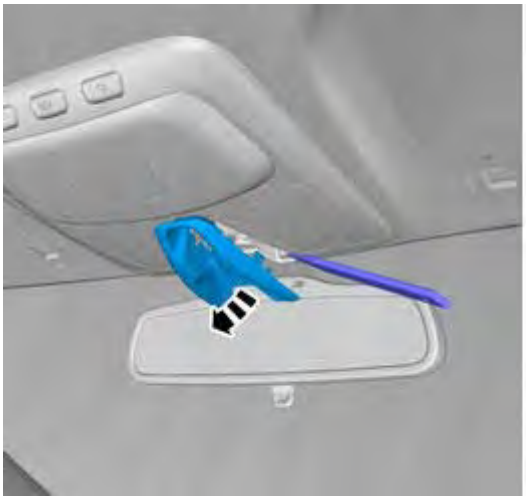

Fig. 39: Rear View Mirror Plate
Courtesy of VOLVO CARS CORPORATION

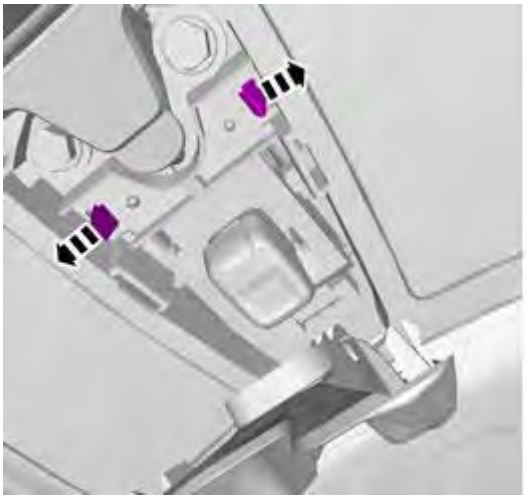

Fig. 40: Identifying Fasteners
Courtesy of VOLVO CARS CORPORATION

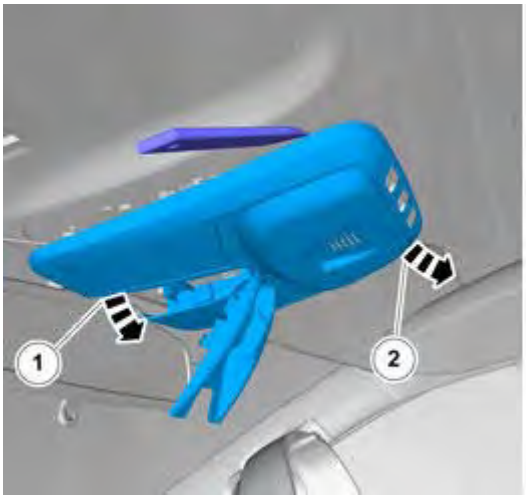

Fig. 41: Removing Ceiling Console (1 Of 2)
Courtesy of VOLVO CARS CORPORATION

Fig. 42: Removing Ceiling Console (2 Of 2)
Courtesy of VOLVO CARS CORPORATION

Torque: M6

10 Nm

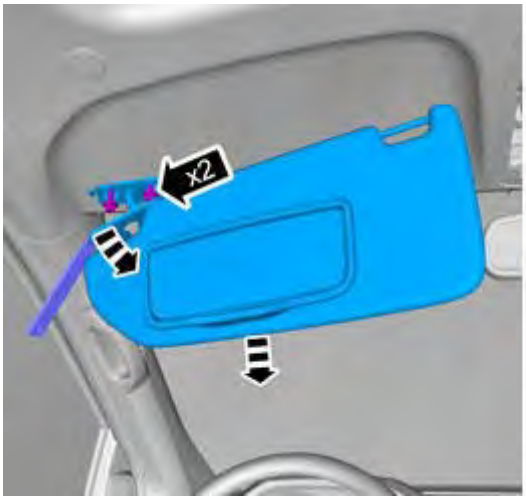

Fig. 43: Removing Sun Visor
Courtesy of VOLVO CARS CORPORATION

Torque: M6

10 Nm

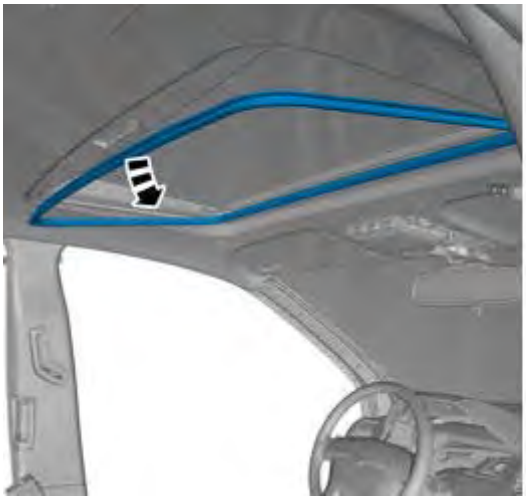

Fig. 44: Removing Sunroof Seal Trim
Courtesy of VOLVO CARS CORPORATION

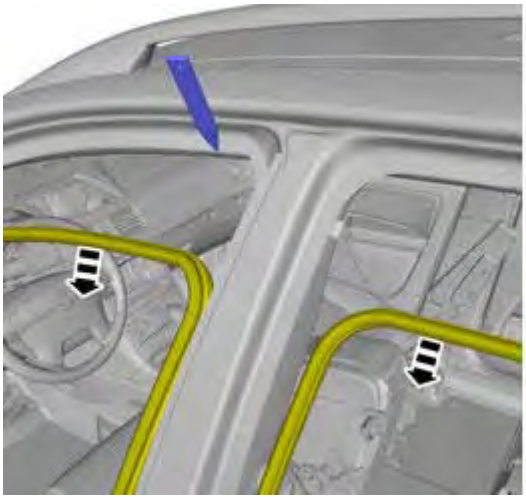

Fig. 45: Removing Seal Trim
Courtesy of VOLVO CARS CORPORATION

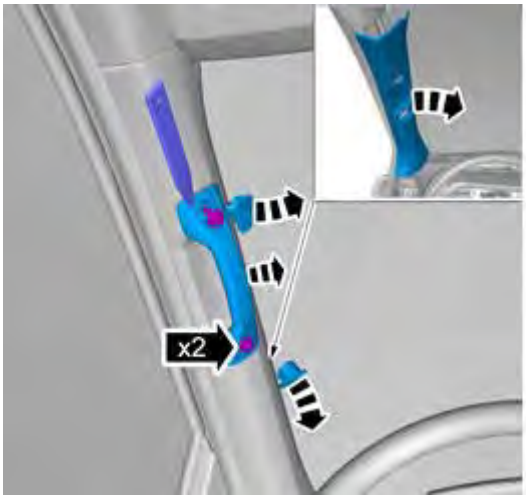

Fig. 46: Removing Passenger Compartment Handle
Courtesy of VOLVO CARS CORPORATION

Torque: M6

10 Nm

Fig. 47: Removing Fasteners
Courtesy of VOLVO CARS CORPORATION

Torque: M6

10 Nm

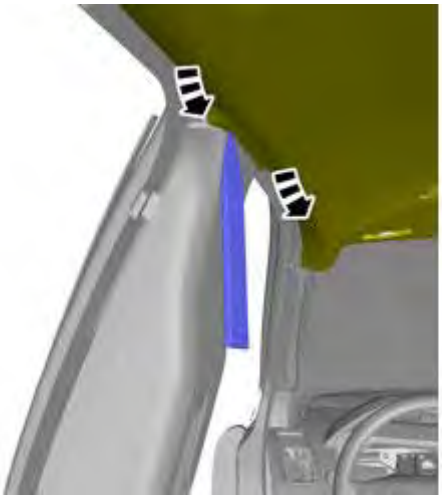

Fig. 48: Removing Headliner
Courtesy of VOLVO CARS CORPORATION

CAUTION: Take extra care not to crease the headliner.

Fig. 49: Identifying Microphone
Courtesy of VOLVO CARS CORPORATION

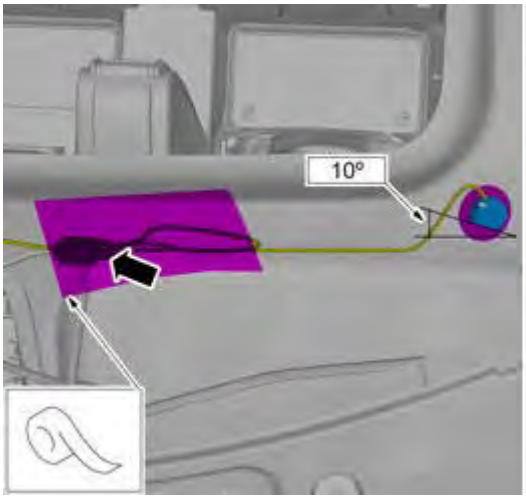

Fig. 50: Anti-squeak tape, 1161842
Courtesy of VOLVO CARS CORPORATION

Use: Anti-squeak tape, 1161842

NOTE: **Note the position of each component before removal.**

Fig. 51: Identifying Microphone Bezel Cut Points
Courtesy of VOLVO CARS CORPORATION

INSTALLATION

Fig. 52: Microphone Bezel
Courtesy of VOLVO CARS CORPORATION

To install, reverse the removal procedure.

PHONE MODULE (PHM), REPLACING (2006-2010)

NOTE: **The illustrations in this service information are used for different model years and/or models. Some variation may occur. However, the essential information in the illustrations is always correct.**

PREPARATORY WORK

REMOVING THE DASHBOARD ENVIRONMENT PANEL

Fig. 53: Identifying Ignition Off Position
Courtesy of VOLVO CARS CORPORATION

Ignition off.

Remove the bracket for the dashboard environment panel / infotainment panel. See: **MINIDISC / CD CONTROL MODULE, REPLACING**.

REMOVAL

REMOVING THE PHONE MODULE (PHM)

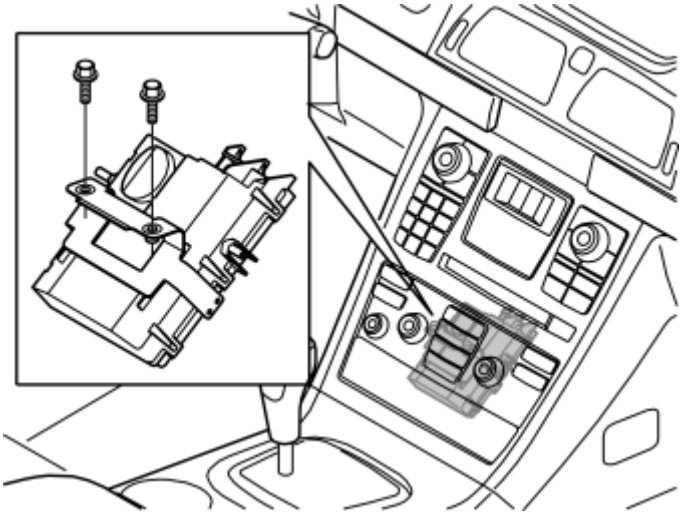

Fig. 54: Removing The Phone Module (PHM)
Courtesy of VOLVO CARS CORPORATION

Remove the 2 screws.

Disconnect the connectors.

Remove the phone module (PHM) and the bracket.

INSTALLATION

INSTALLING THE PHONE MODULE (PHM)

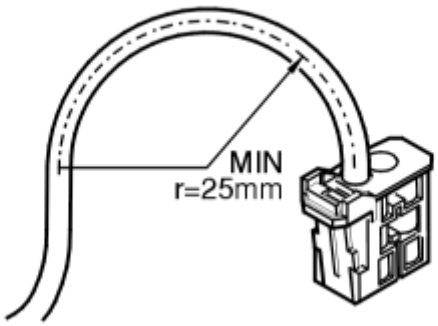

Fig. 55: Installing The Phone Module (PHM)
Courtesy of VOLVO CARS CORPORATION

NOTE: Check that there is no dirt in the optical connectors.

Connect the connectors.

NOTE: The bend radius of the optic cables and antenna cables must not be less than 25 mm.

Install:

- the phone module (PHM) and the bracket
- the 2 screws. Tighten.

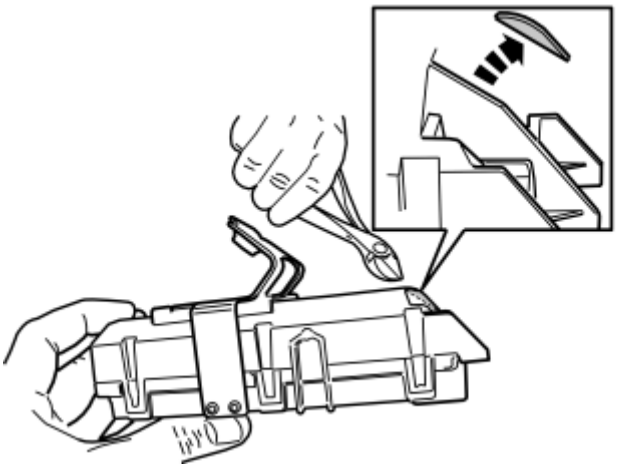

Fig. 56: Cutting Rounded Corner Of Control Module For Installation
Courtesy of VOLVO CARS CORPORATION

HINT: To facilitate installation of the control module, the rounded corner can be cut even with the corner of the control module. See illustration.

FINISHING

INSTALLING THE DASHBOARD ENVIRONMENT PANEL

Install the bracket for the dashboard environment panel / infotainment panel. See: **MINIDISC / CD CONTROL MODULE, REPLACING**.

ORDERING SOFTWARE

NOTE: After replacing the phone module (PHM), new software must be ordered and the module programmed.

Order software. See: 9438270

VOLVO ON CALL

- Activate according to: **VOLVO ON CALL, ACTIVATION** .
- Reactivate according to: **VOLVO ON CALL, RE-ACTIVATION** .
- Deactivate according to: **VOLVO ON CALL, DEACTIVATION (CANCELING)** .

FUNCTION TEST

Perform function test.

PHONE MODULE (PHM) (2011-2012)

REMOVAL

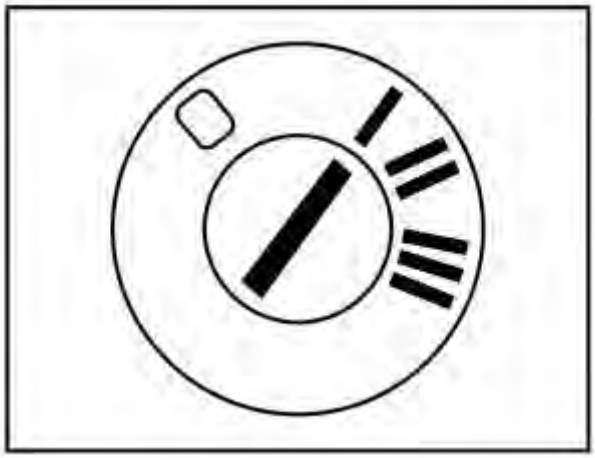

Fig. 57: Identifying Ignition In ACC Position
Courtesy of VOLVO CARS CORPORATION

Fig. 58: Removing Gear Selector Cover (1 of 3)
Courtesy of VOLVO CARS CORPORATION

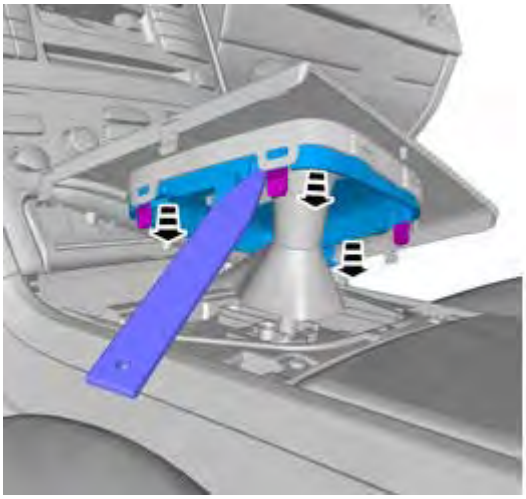

Fig. 59: Removing Gear Selector Cover (2 of 3)
Courtesy of VOLVO CARS CORPORATION

Fig. 60: Removing Gear Selector Cover (3 of 3)
Courtesy of VOLVO CARS CORPORATION

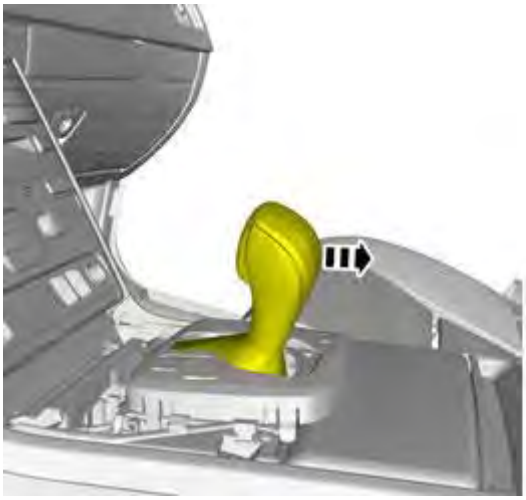

Fig. 61: Positioning Shift Knob
Courtesy of VOLVO CARS CORPORATION

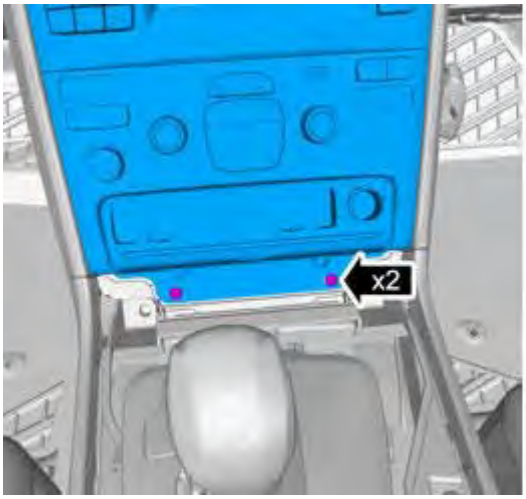

Fig. 62: Identifying Fasteners
Courtesy of VOLVO CARS CORPORATION

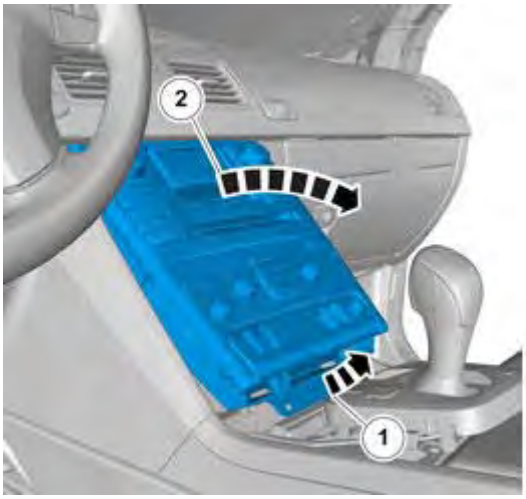

Fig. 63: Removing Face Plate
Courtesy of VOLVO CARS CORPORATION

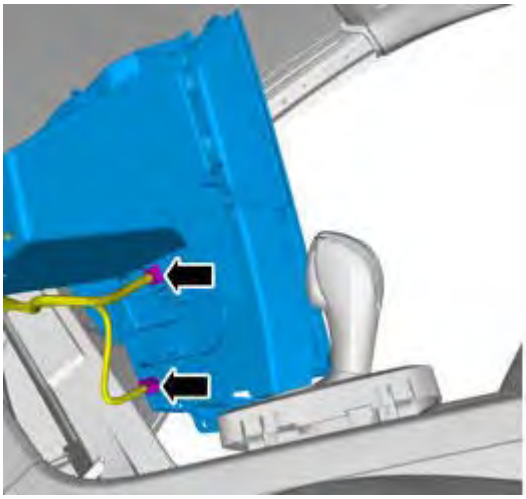

Fig. 64: Removing Cables
Courtesy of VOLVO CARS CORPORATION

CAUTION: Take extra care when handling the component.

CAUTION: Make sure that the fiber optic cables are not bent to a radius of less than 25 mm.

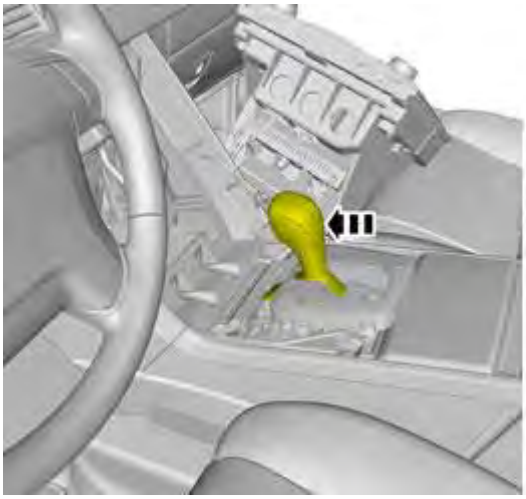

Fig. 65: Positioning Shift Knob
Courtesy of VOLVO CARS CORPORATION

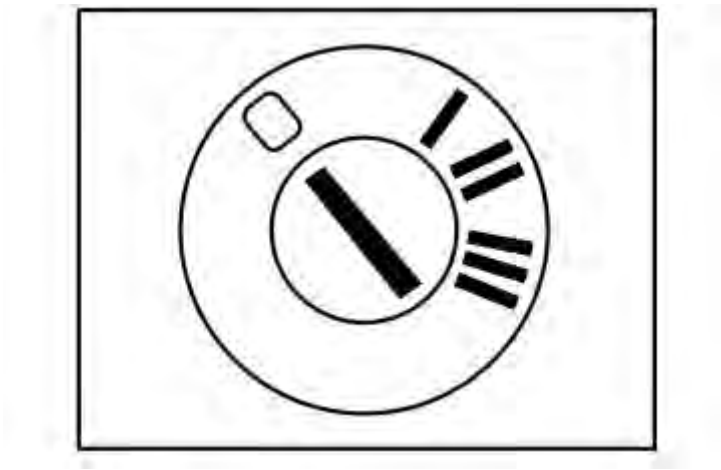

Fig. 66: Identifying Ignition In OFF Position
Courtesy of VOLVO CARS CORPORATION

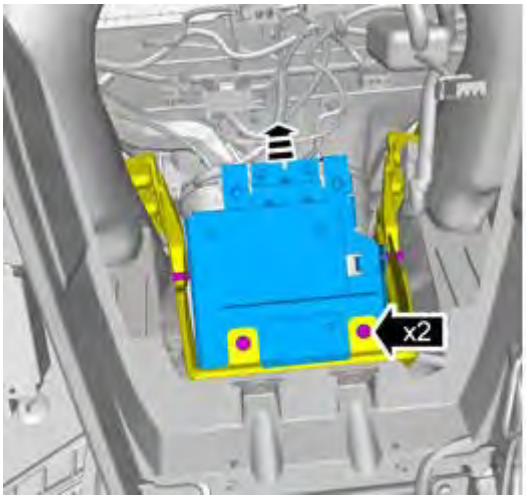

Fig. 67: Identifying Fasteners
Courtesy of VOLVO CARS CORPORATION

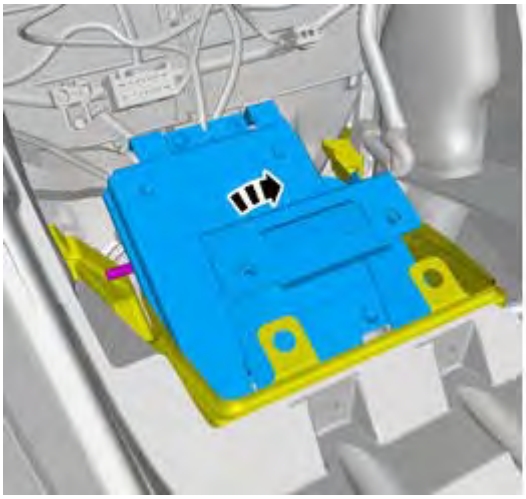

Fig. 68: Removing Phone Module
Courtesy of VOLVO CARS CORPORATION

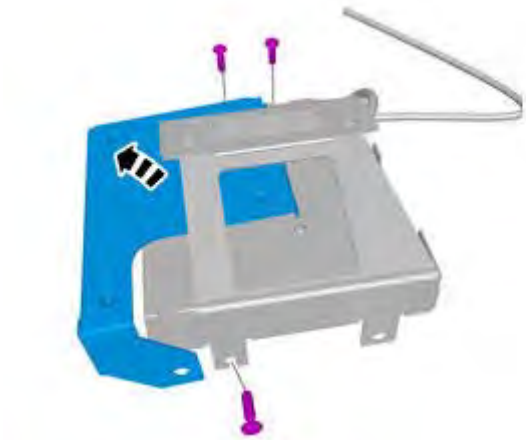

Fig. 69: Removing Assembly Fasteners
Courtesy of VOLVO CARS CORPORATION

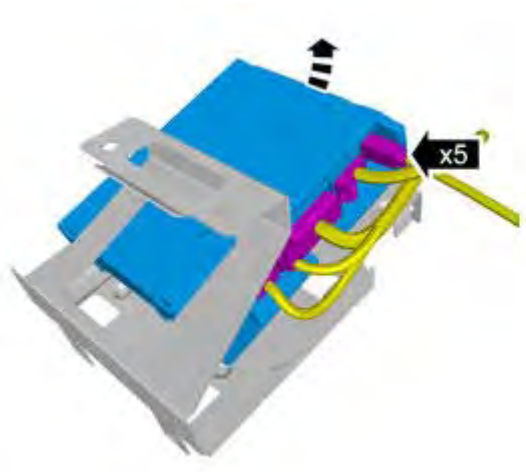

Fig. 70: Phone Modules Fiber Optic Cables
Courtesy of VOLVO CARS CORPORATION

CAUTION: Make sure that the fiber optic cables are not bent to a radius of less than 25 mm.

CAUTION: Note the position of each component before removal.

NOTE: Make sure that the component terminals are not bent or damaged.

ORDERING SOFTWARE

To install, reverse the removal procedure.

Order and download software acc. to: 9438270

VEHICLES WITH AFTER THEFT SYSTEM FOR VEHICLE RECOVERY (ATSVR):

Order and download software acc. to: 30745832

SWITCH VOLVO ON CALL, REPLACING (2006-2010)

NOTE: The illustrations in this service information are used for different model years and/or models. Some variation may occur. However, the essential information in the illustrations is always correct.

PREPARATORY WORK

REMOVING THE VENTILATION VENT

Fig. 71: Identifying Ignition Off Position
Courtesy of VOLVO CARS CORPORATION

Ignition off.

Remove the ventilation vent. See: **VENTILATION VENTS PASSENGER COMPARTMENT, REPLACING** .

REMOVAL

REMOVING THE SWITCH

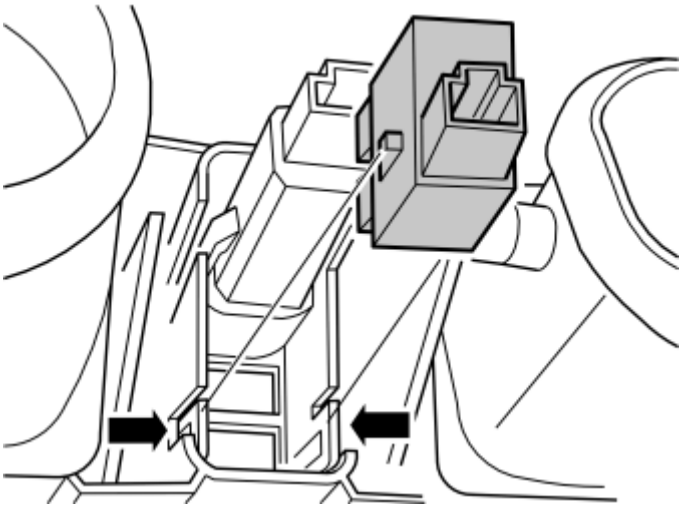

Fig. 72: Removing The Switch
Courtesy of VOLVO CARS CORPORATION

Remove the switch by prying the edges out at the catches using a electrician's screwdriver and pressing outwards.

INSTALLATION

INSTALLING THE SWITCH

Install:

- the switch
- the ventilation vent. See: **VENTILATION VENTS PASSENGER COMPARTMENT, REPLACING** .

ENTERTAINMENT EQUIPMENT (2003)

INFOTAINMENT CONTROL MODULE (ICM), REPLACING

see **INFOTAINMENT CONTROL MODULE (ICM), REPLACING**

ENTERTAINMENT EQUIPMENT (2004-2005)

CONTROL MODULE REAR SOUND SEPARATION, REPLACING

NOTE: **The illustrations in this service information are used for different model years and/or models. Some variation may occur. However, the essential information in the illustrations is always correct.**

REMOVAL

REMOVING THE CONTROL MODULE

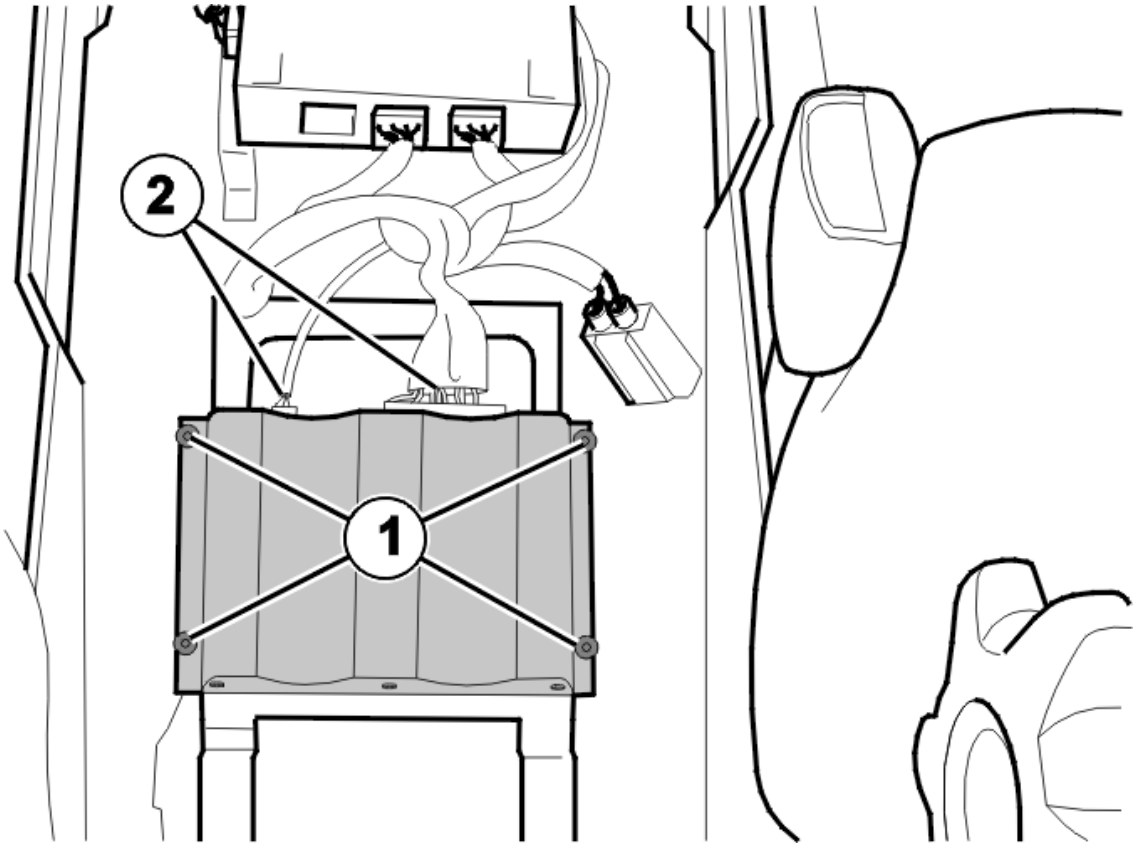

Fig. 73: Removing The Control Module
Courtesy of VOLVO CARS CORPORATION

Remove:

- the center console. See: **CENTER CONSOLE, REPLACING**
- the 4 screws (1)
- the 2 connectors (2)
- the control module.

INSTALLATION

INSTALLING THE CONTROL MODULE

Install:

- the control module
- the 4 screws
- the 2 connectors
- the center console. See: **CENTER CONSOLE, REPLACING** .

COOL BOX/ARMREST COMPONENTS, REPLACING

NOTE: **The illustrations in this service information are used for different model years and/or models. Some variation may occur. However, the essential information in the illustrations is always correct.**

PREPARATORY WORK

COOL BOX AND ARMREST VARIANTS

Cool box and armrest with DVD player. Has a new heavier duty hinge to allow for the DVD player as well as a unique cover.

Cool box and armrest without DVD player. Has a standard hinge and standard cover with an additional seal.

Ignition off.

REMOVING THE COOL BOX AND ARMREST

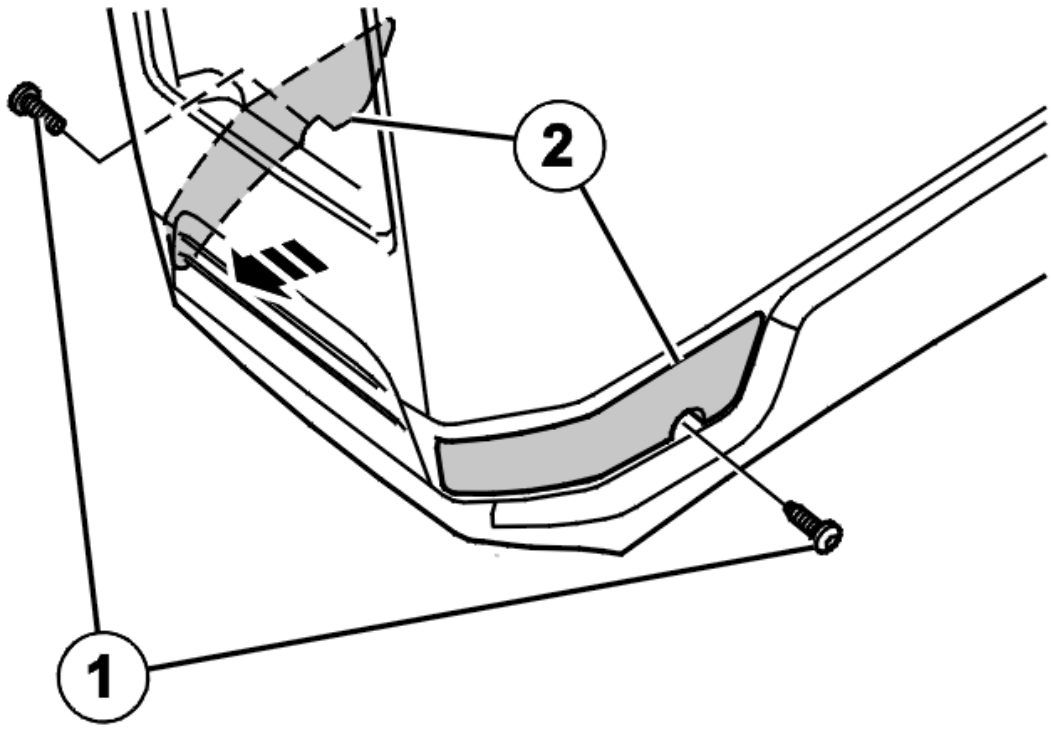

Fig. 74: Removing The Cool Box And Armrest
Courtesy of VOLVO CARS CORPORATION

NOTE: **Note the position of the connectors. Disconnect the connectors.**

Remove the 2 screws (1). Press in the catches on both sides (may be stiff). Pull the armrest backwards (2).

INSTALLING THE COOL BOX AND ARMREST

Install:

- the connectors
- slide the armrest in. Press the armrest into place
- the 2 screws. Tighten.

OUTER COVER

REMOVING THE OUTER COVER

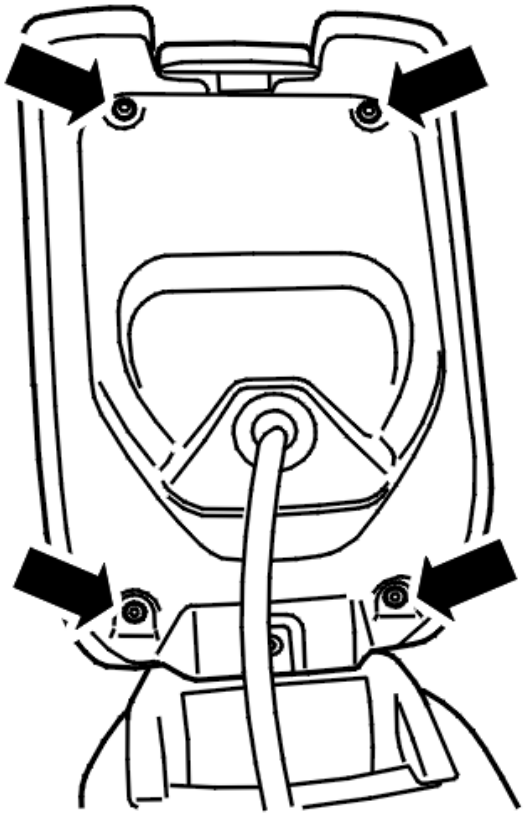

Fig. 75: Removing The Outer Cover
Courtesy of VOLVO CARS CORPORATION

Open the cover fully.

Remove:

- the 4 screws
- the cover.

INSTALLING THE OUTER COVER

Install:

- the cover
- the 4 screws. Tighten.

COVER OVER THE OPENING HANDLE

REMOVING THE COVER OVER THE OPENING HANDLE

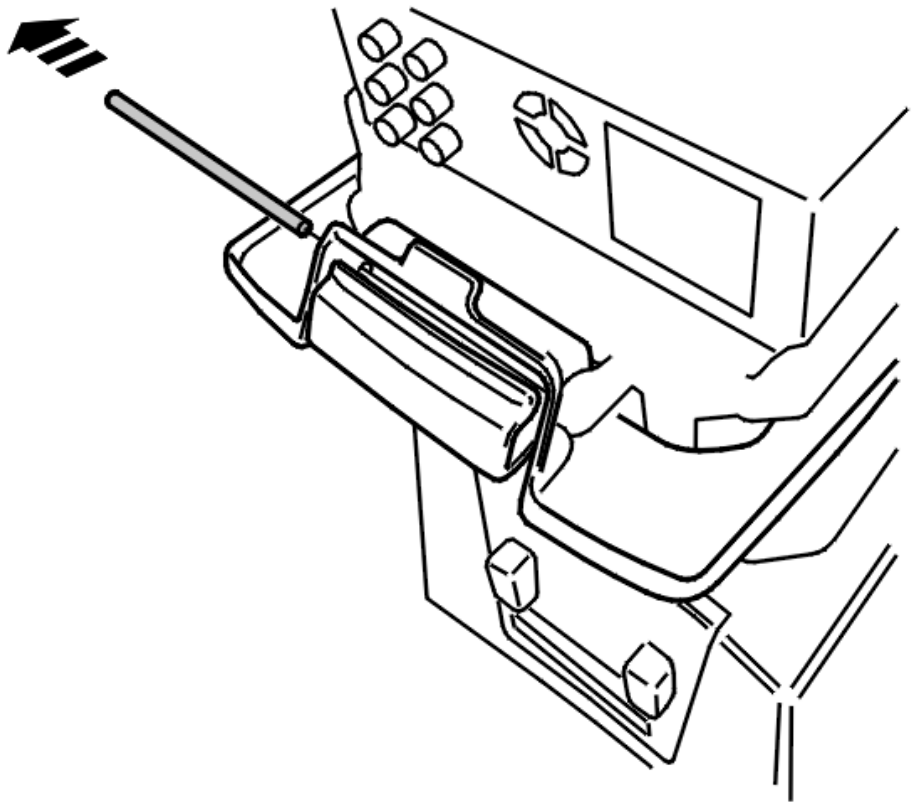

Fig. 76: Removing The Cover Over The Opening Handle
Courtesy of VOLVO CARS CORPORATION

Remove the outer cover. See: **CENTER CONSOLE, REPLACING** . Press the hinge shaft out towards the side (1). Release the handle.

INSTALLING THE COVER OVER THE OPENING HANDLE

Install the handle. Press the hinge shaft into place. Install the outer cover. See: **CENTER CONSOLE, REPLACING** .

ADAPTER PLATE

REMOVING THE ADAPTER PLATE

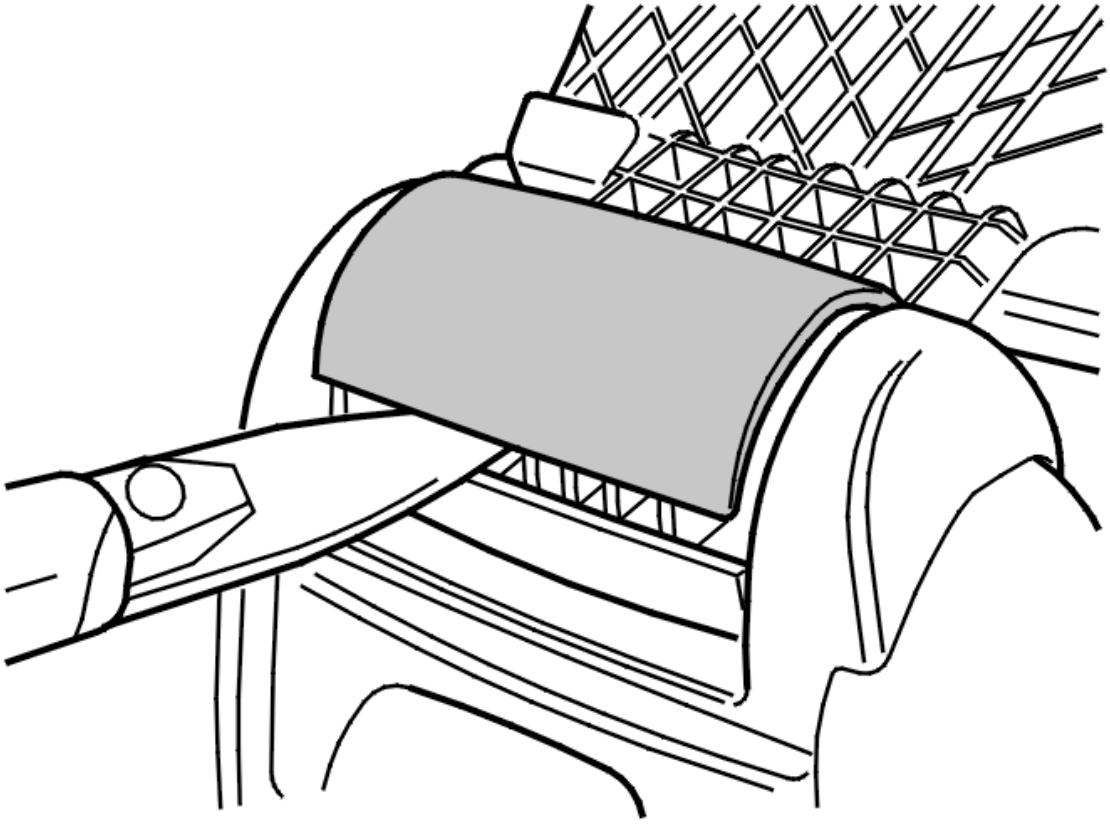

Fig. 77: Removing The Adapter Plate
Courtesy of VOLVO CARS CORPORATION

Remove:

- the outer cover. See: **CENTER CONSOLE, REPLACING**
- The DVD player. See: **DVD PLAYER, REPLACING**
- the opening handle. See: **COVER OVER THE OPENING HANDLE**
- the upper cover for the hinge. Lift the adapter plate to the upper position.

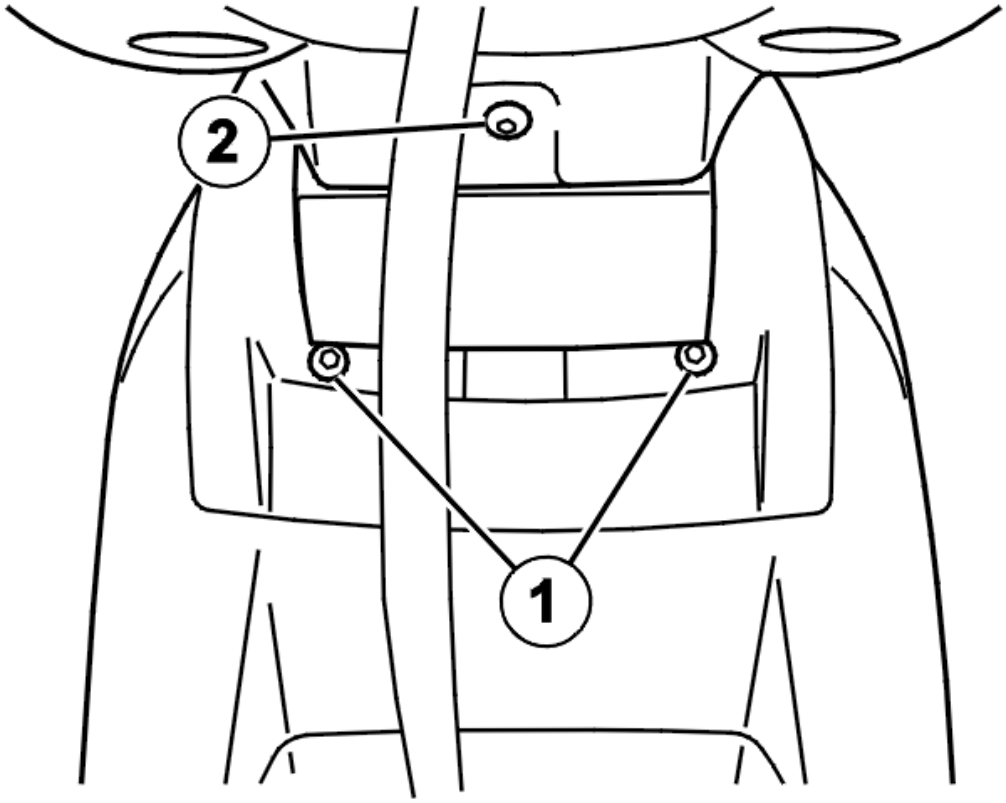

Fig. 78: Removing Inner Cover
Courtesy of VOLVO CARS CORPORATION

Remove:

- the 2 screws (1)
- the screw for the inner cover (2).

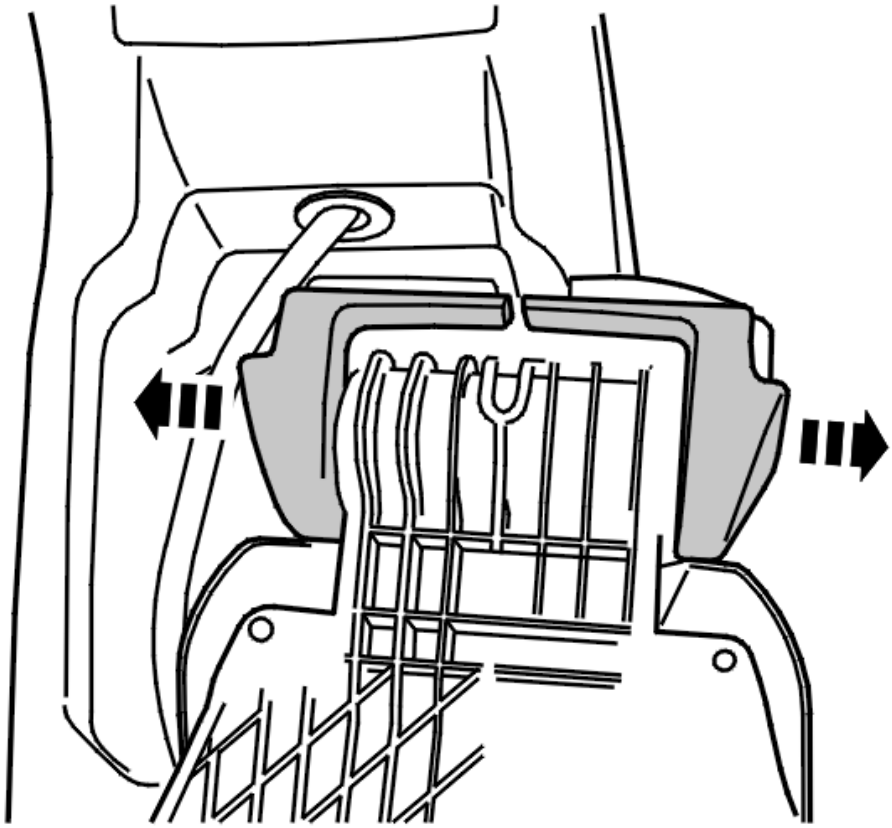

Fig. 79: Position Of Grooves
Courtesy of VOLVO CARS CORPORATION

NOTE: **Note the position for the grooves in the sides of the hinges facing the rotation shaft.**

Pull the sides off the hinges.

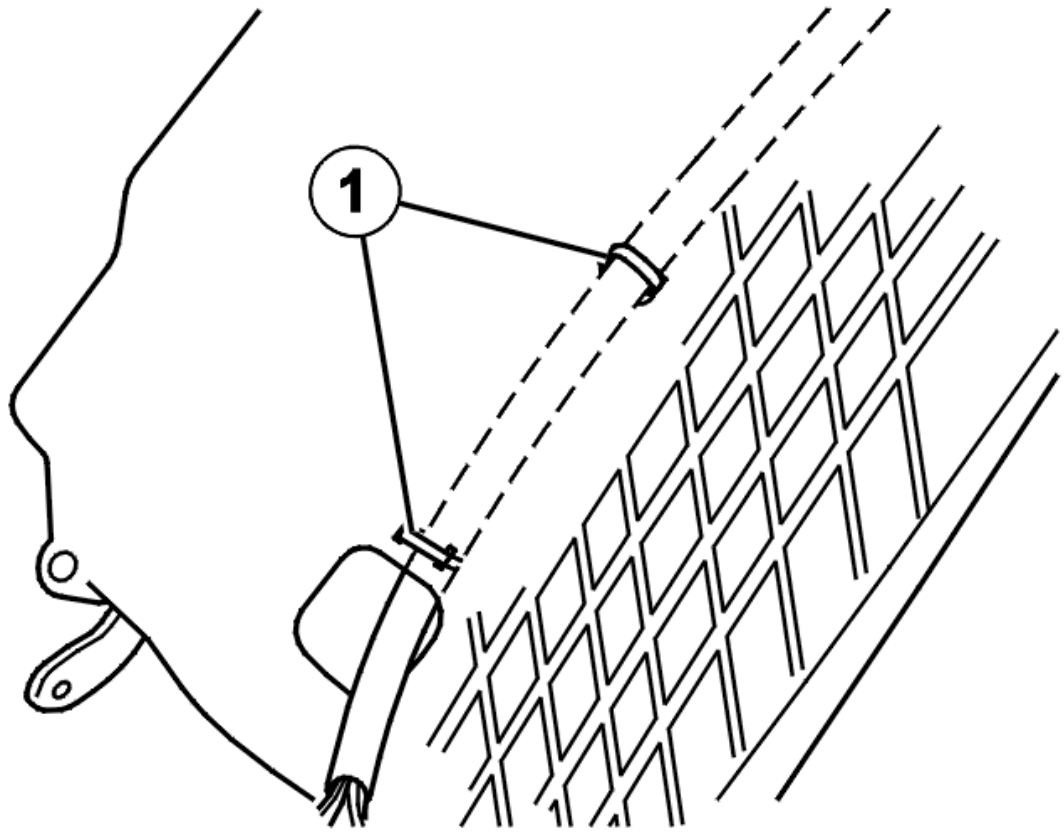

Fig. 80: Releasing Lower Cover For Hinge
Courtesy of VOLVO CARS CORPORATION

Release the lover cover for the hinge. Cut off the tie strap for the cable harness. Slide out the cable harness (1).

INSTALLING THE ADAPTER PLATE

Install:

- thread the cable harness into place
- the 2 tie straps for the cable harness
- the lower cover for the hinge

NOTE: Position of the hinge sides in relation to the rotation shaft.

- the sides of the hinges
- the screw for the inner cover
- the 2 screws for the hinge mounting
- the upper cover for the hinge. See: **COVER OVER THE OPENING HANDLE**
- The DVD player. See: **DVD PLAYER, REPLACING**
- the outer cover. See: **CENTER CONSOLE, REPLACING** .

DVD PLAYER, REPLACING

NOTE: **The illustrations in this service information are used for different model years and/or models. Some variation may occur. However, the essential information in the illustrations is always correct.**

REMOVAL

REMOVING THE DVD PLAYER

Remove the cover from the armrest. See:**COOL BOX/ARMREST COMPONENTS, REPLACING**.

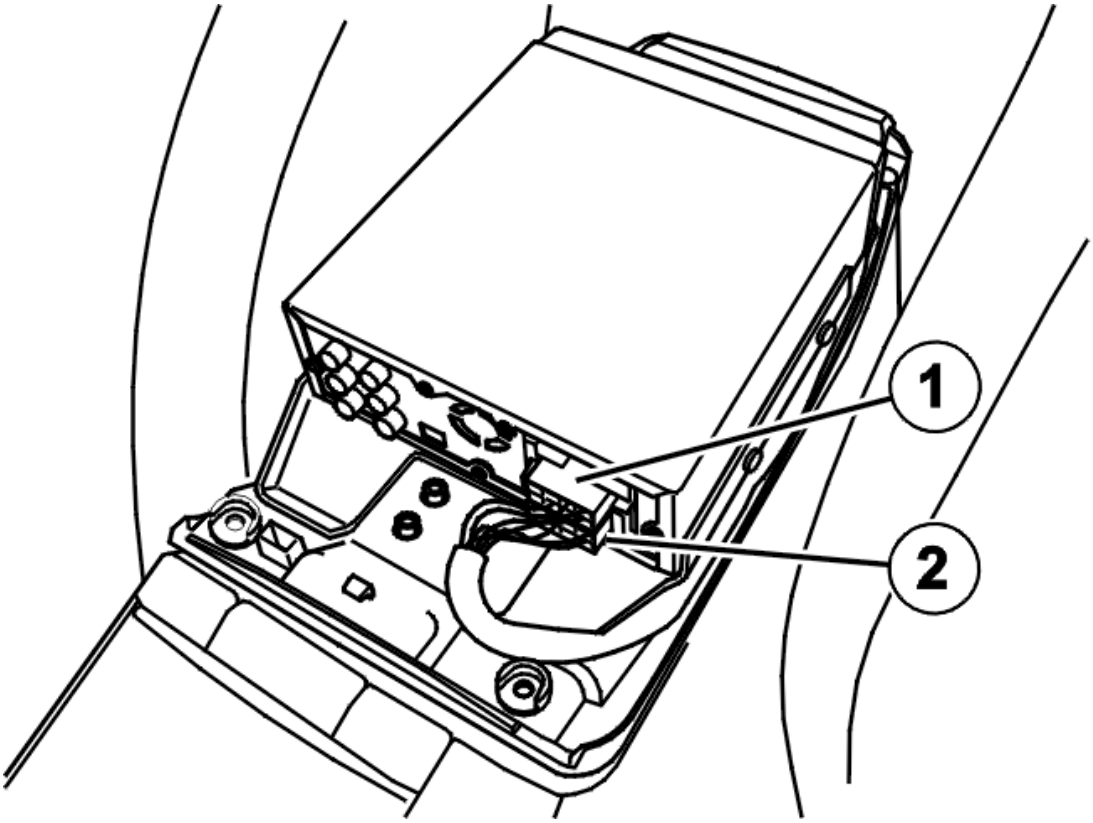

Fig. 81: DVD Player Connectors
Courtesy of VOLVO CARS CORPORATION

Disconnect the two connectors from the reverse of the DVD player.

Remove:

- the 4 screws
- The DVD player.

INSTALLATION

INSTALLING THE DVD PLAYER

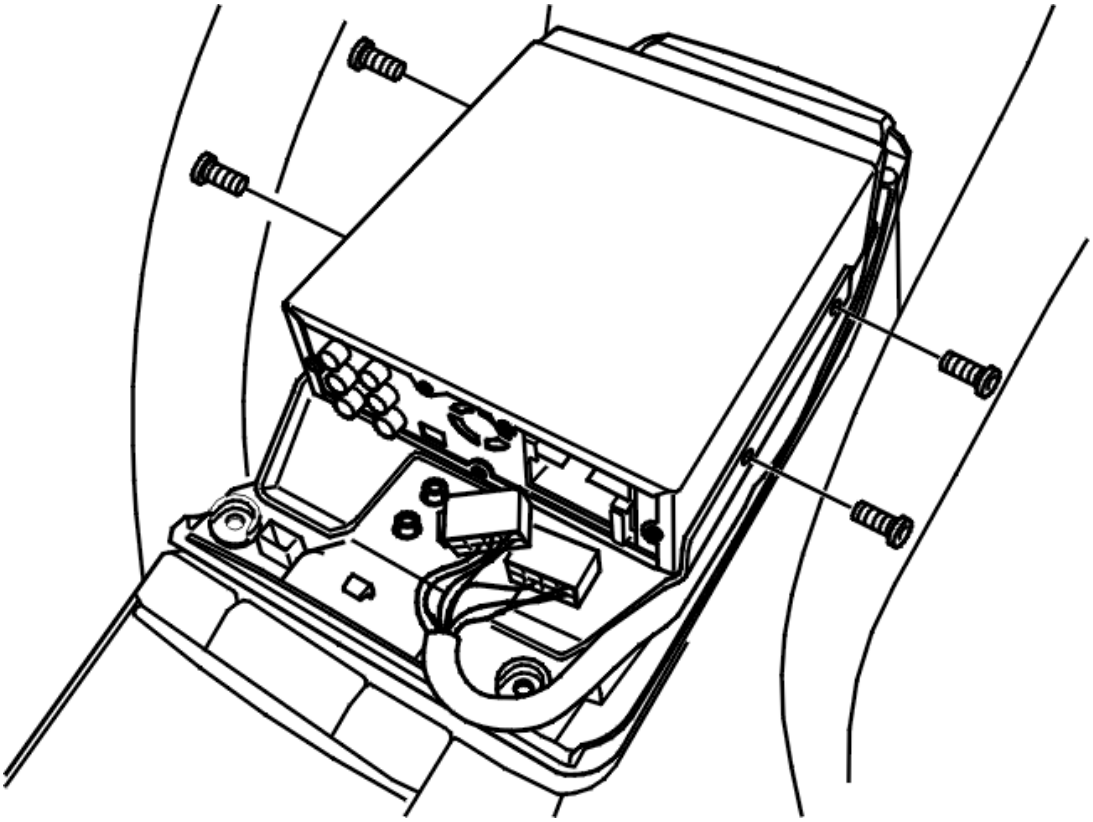

Fig. 82: DVD Player Screws
Courtesy of VOLVO CARS CORPORATION

Install the DVD player on the inner cover on the armrest.

Install the 4 mounting screws for the DVD player.

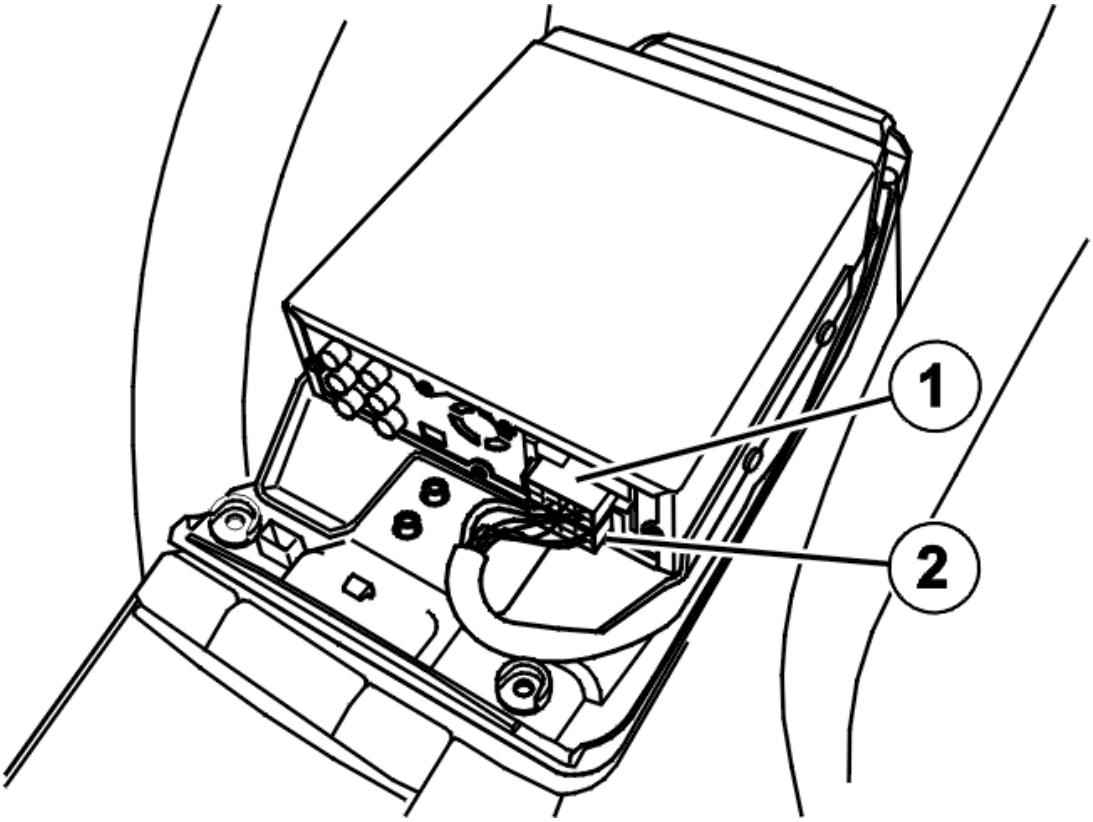

Fig. 83: DVD Player Connectors
Courtesy of VOLVO CARS CORPORATION

Connect the two connectors on the reverse of the DVD player.

Install the cover on the armrest. See:**COOL BOX/ARMREST COMPONENTS, REPLACING**.

HEAD RESTRAINT WITH TV SCREEN, REPLACING

REMOVING HEAD RESTRAINTS

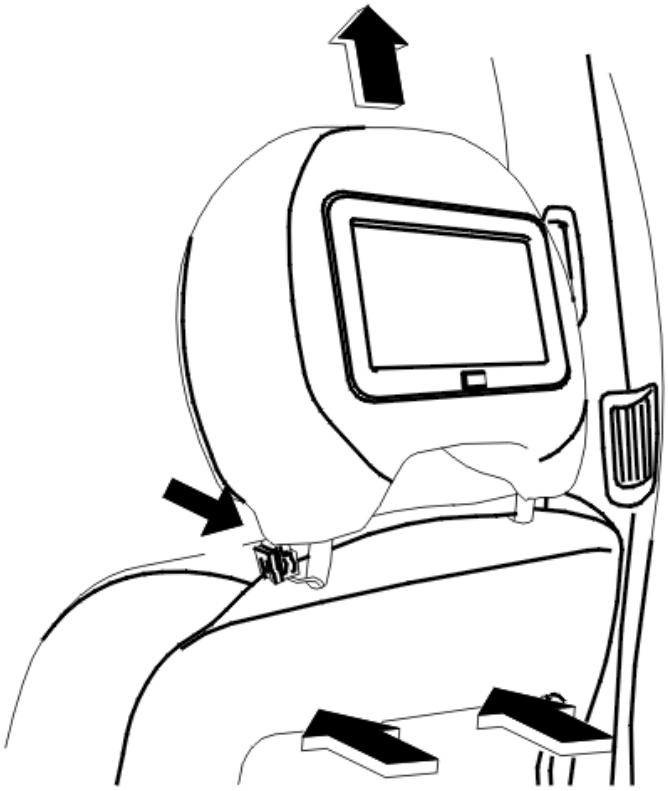

Fig. 84: Removing Head Restraints
Courtesy of VOLVO CARS CORPORATION

Press in the two catches. Press through the upholstery.

Lift up the head restraint approximately 3 cm.

Pull the connector out of the padding. Disconnect the connector.

Pull up the entire head restraint.

INSTALLING HEAD RESTRAINTS

Position the head restraint in the guide sleeves. Connect the connector and press it into place in the head restraint padding.

Press down the head restraint until the catches engage.

NOTE: **Lift the head restraint to check that the catches have engaged. It must not be possible to move the head restraint upwards.**

INFOTAINMENT CONTROL MODULE (ICM), REPLACING

NOTE: **As the illustrations in this service information are used for different model years and / or models, some variation may occur. However, the essential information in the illustrations is always correct.**

PREPARATORY WORK

HINT: To determine whether the vehicle has a numeric display or a matrix display, shine a torch onto the display. The illustrations show which type it is.

NUMERIC DISPLAY

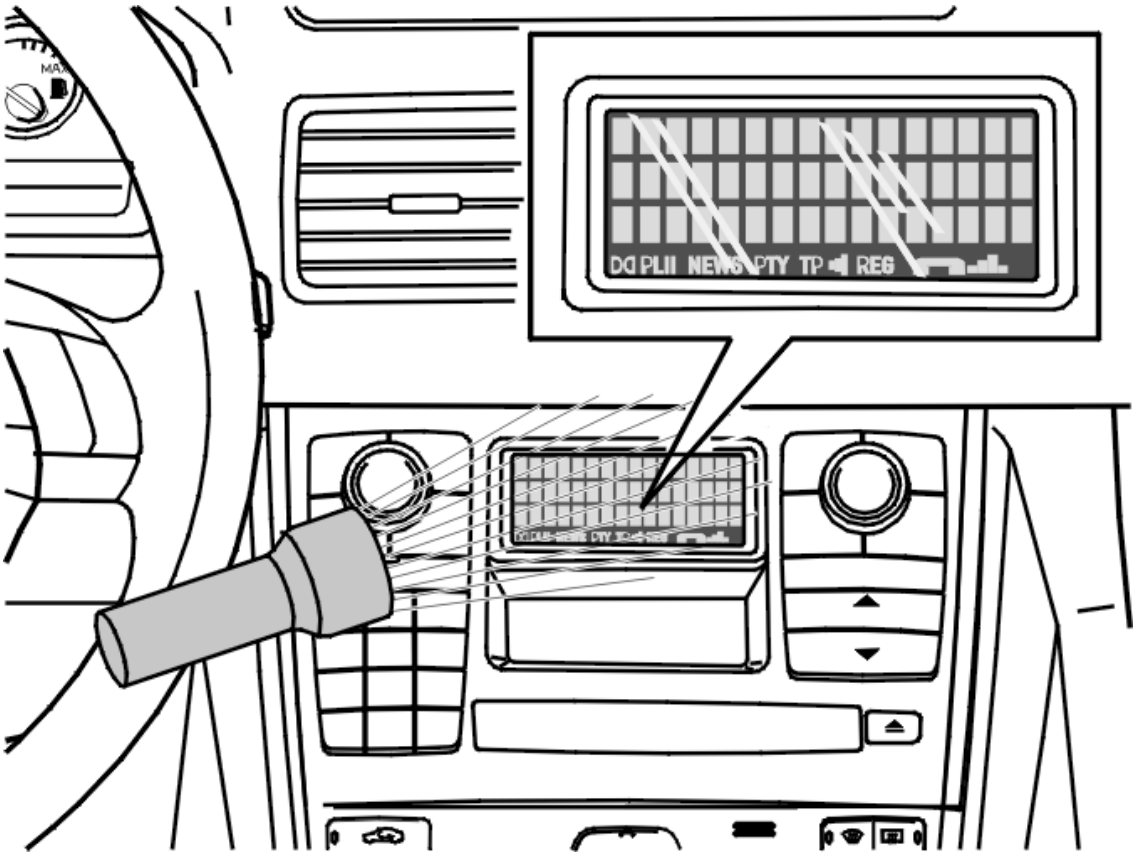

Fig. 85: Numeric Display
Courtesy of VOLVO CARS CORPORATION

MATRIX DISPLAY

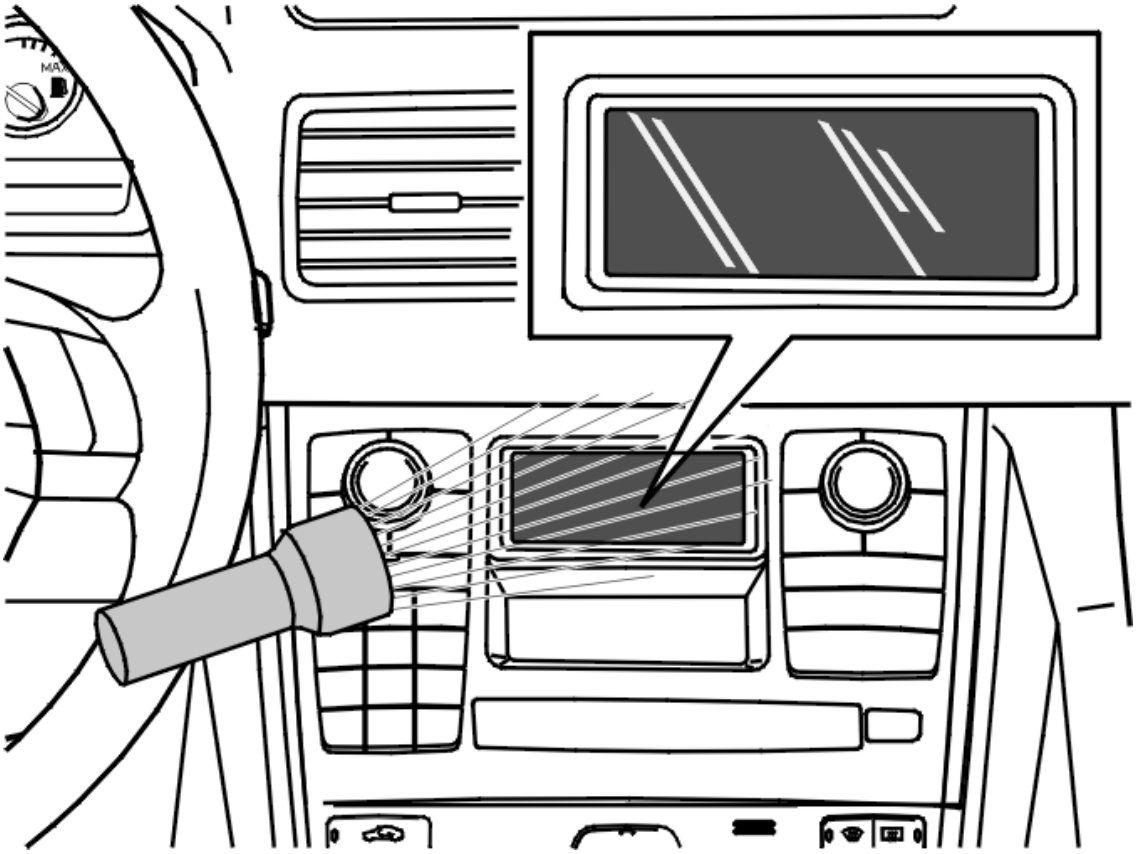

Fig. 86: Matrix Display
Courtesy of VOLVO CARS CORPORATION

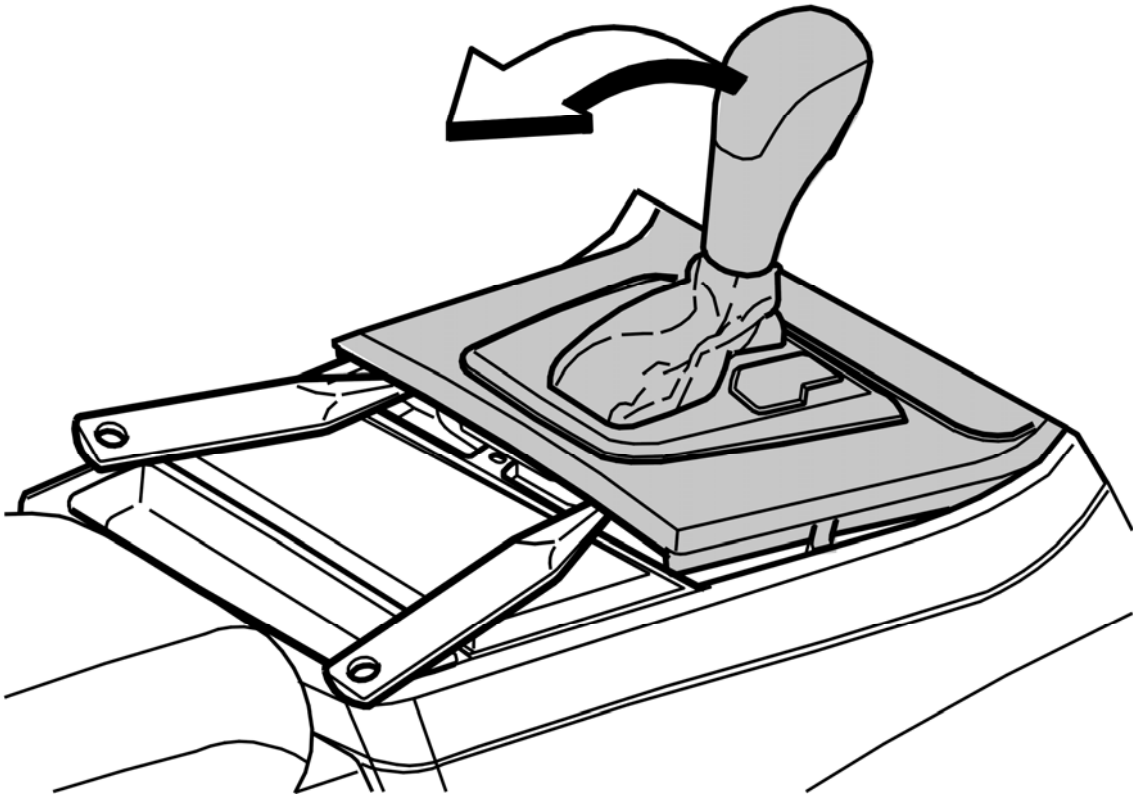

Fig. 87: Detaching Panel At Gear Selector Lever
Courtesy of VOLVO CARS CORPORATION

Move the gear selector to its rearmost position.

Detach the panel at the gear selector lever as illustrated and move it to one side.

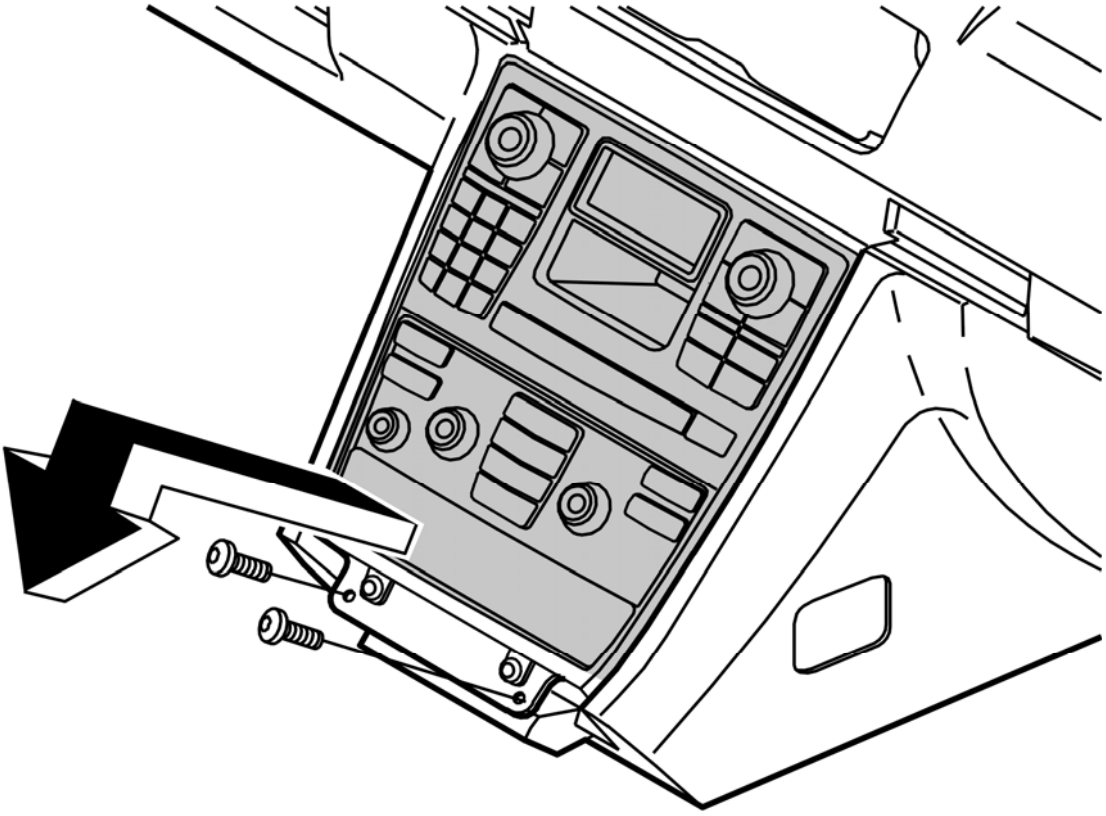

Fig. 88: Identifying Bracket Lower Screws & Infotainment Control Module (ICM)
Courtesy of VOLVO CARS CORPORATION

CAUTION: Angle the infotainment / dashboard environment panel to one side. Do not disconnect the connectors.

Remove the screws from the bracket.

Angle out the infotainment / dashboard environment panel as illustrated.

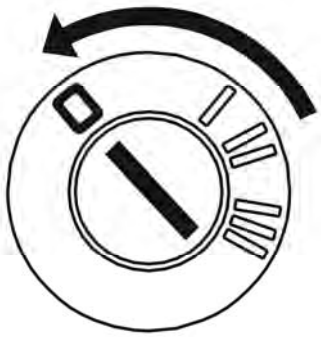

Fig. 89: Identifying Ignition In OFF Position
Courtesy of VOLVO CARS CORPORATION

Move the gear selector lever to position P.

Ignition off.

Disconnect the connectors.

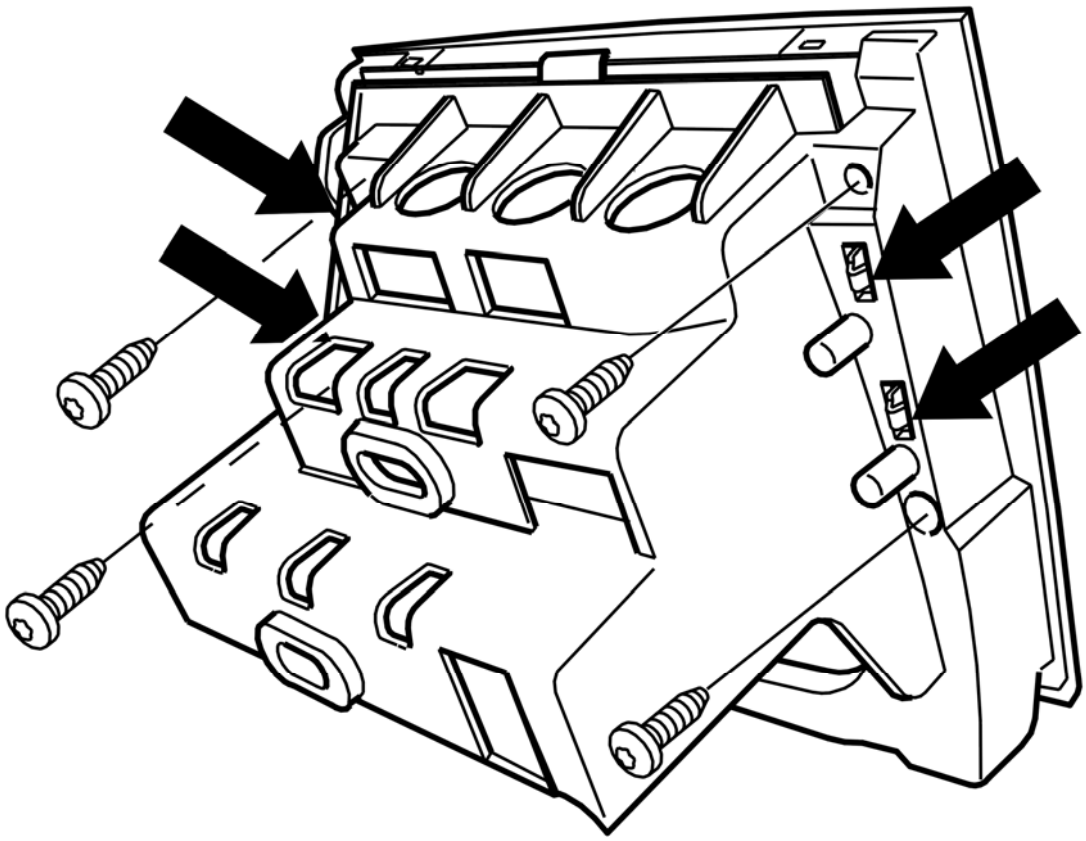

Fig. 90: Identifying Infotainment Module Connectors And Screws
Courtesy of VOLVO CARS CORPORATION

Remove the infotainment unit screws.

Release the clips and remove the infotainment unit from the bracket.

REMOVING THE INFOTAINMENT CONTROL MODULE (ICM) / DISPLAY, FRONT PANEL AND ELECTRICAL SWITCH MODULES

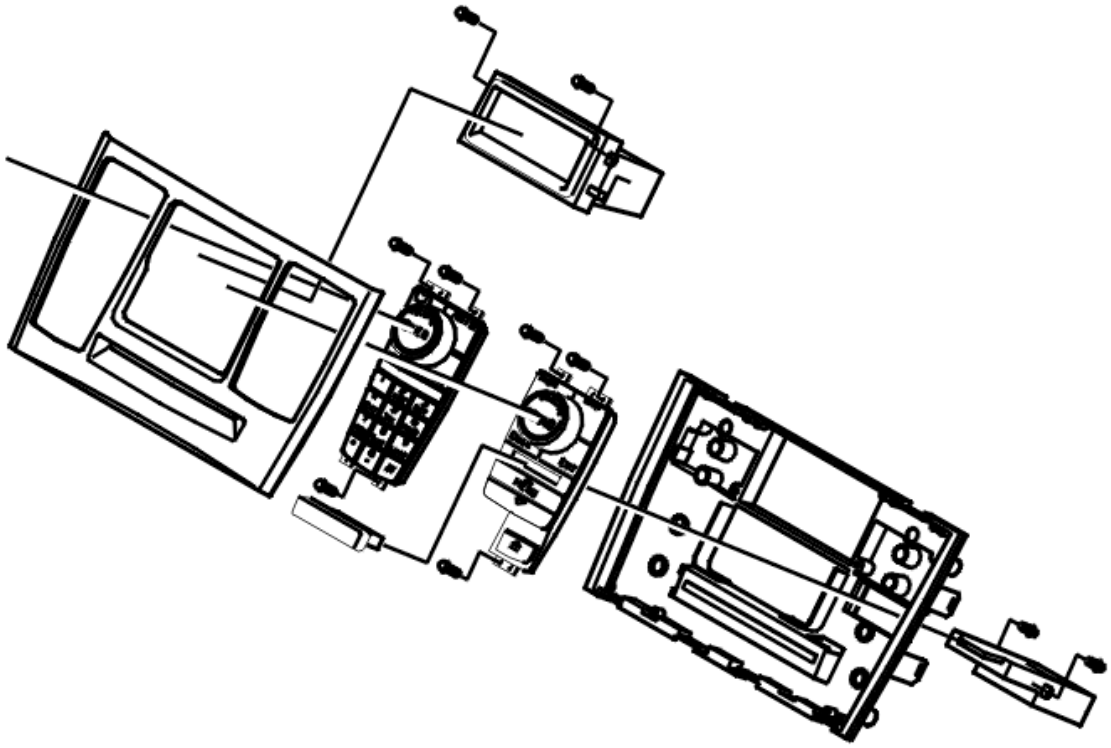

Fig. 91: Removing The Infotainment Control Module (ICM) / Display, Front Panel And Electrical Switch Modules
Courtesy of VOLVO CARS CORPORATION

Remove:

- The front panel, clips.

NOTE: **Check that both the fibre optic cables are secured in the panel by the CD tray.**

- The screws for the left and right-hand electrical switch modules.

Disconnect the connectors.

Remove:

- The electrical switch modules
- The screws for the display.

Disconnect the connectors.

INSTALLING THE INFOTAINMENT CONTROL MODULE (ICM) / DISPLAY, FRONT PANEL AND

ELECTRICAL SWITCH MODULES

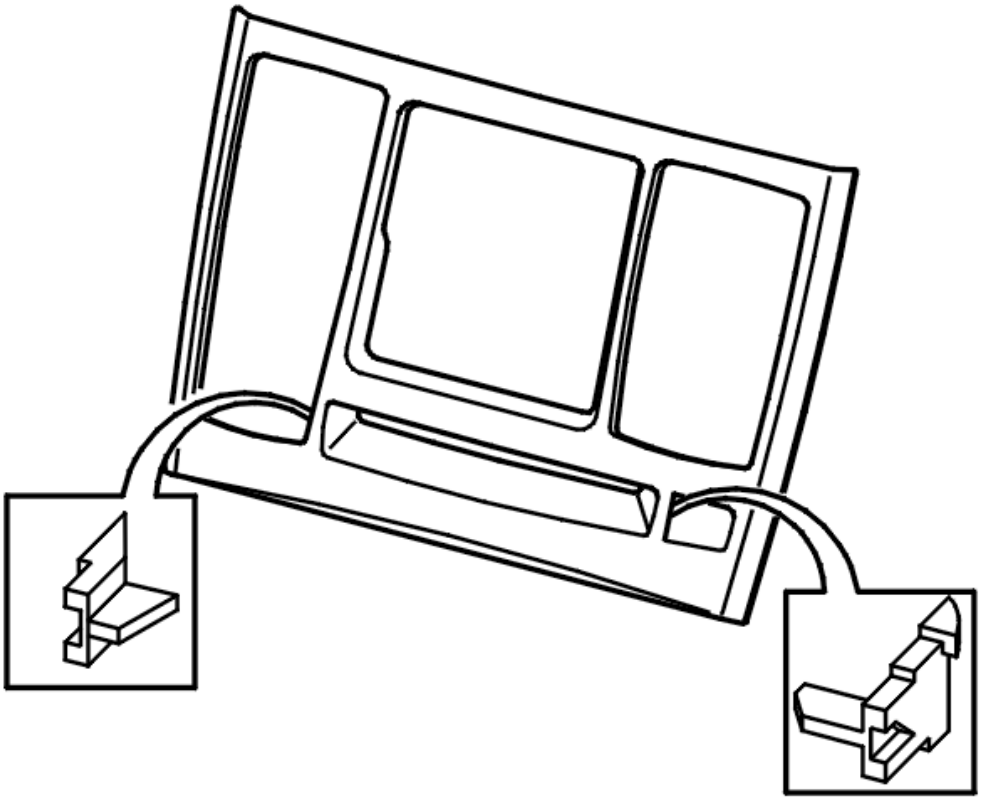

Fig. 92: Panel Connectors
Courtesy of VOLVO CARS CORPORATION

Reconnect connectors.

Position the modules, starting with the display.

NOTE: Check that the cable harnesses are not trapped.

Install and tighten the screws.

NOTE: Check that both the fibre optics are secured in the panel. See the illustration.

Press the panel into place.

FINISHING WORK

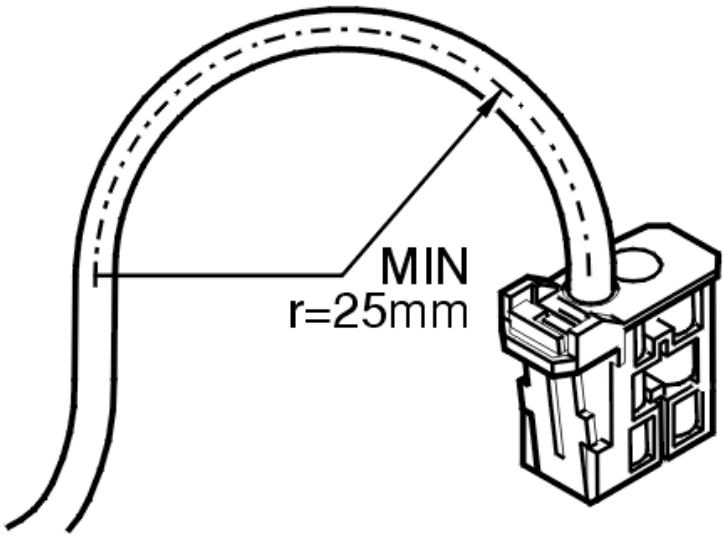

Fig. 93: Identifying Maximum Bend Radius Of Optic Cable
Courtesy of VOLVO CARS CORPORATION

Press the infotainment unit into place on the bracket.

Install and tighten the screws.

Reconnect connectors.

NOTE: **The connectors for the MiniDisc and CD control modules are identical and can be switched.**

NOTE: **Check that there is no dirt in the optical connectors.**

NOTE: **The bend radius of the optic cables must not be less than 25mm.**

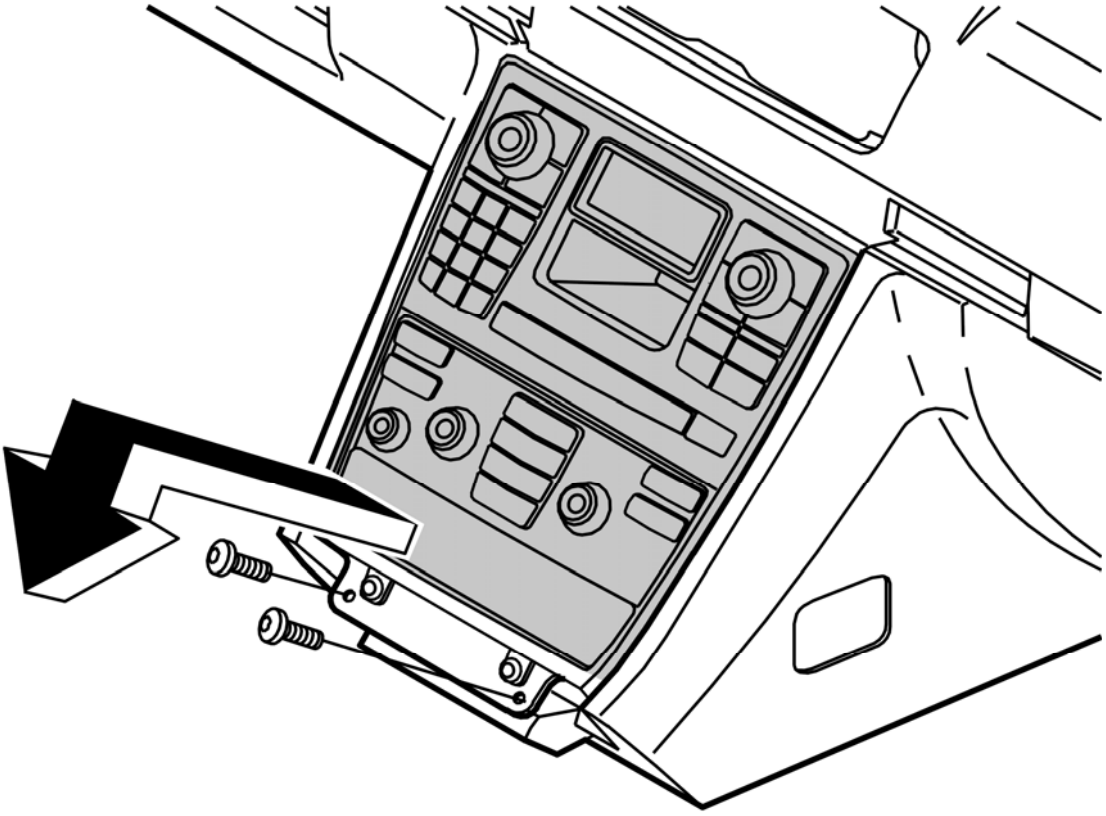

Fig. 94: Identifying Bracket Lower Screws & Infotainment Control Module (ICM)
Courtesy of VOLVO CARS CORPORATION

Angle in the infotainment / dashboard environment panel and bracket.

HINT: Align the upper section, press upwards, angle in the lower section.

Install the screws in the lower section of the bracket and tighten.

Install the panel at the gear selector lever.

NOTE: After replacing the infotainment control module (ICM) / display, new software must be ordered and programmed.

ORDERING SOFTWARE

Order the software. See 8691181 .

INFRARED TRANSMITTER HEAD RESTRAINT, REPLACING

NOTE: The illustrations in this service information are used for different model years and/or models. Some variation may occur. However, the essential information in the illustrations is always correct.

REMOVAL

REMOVING THE INFRA RED TRANSMITTER

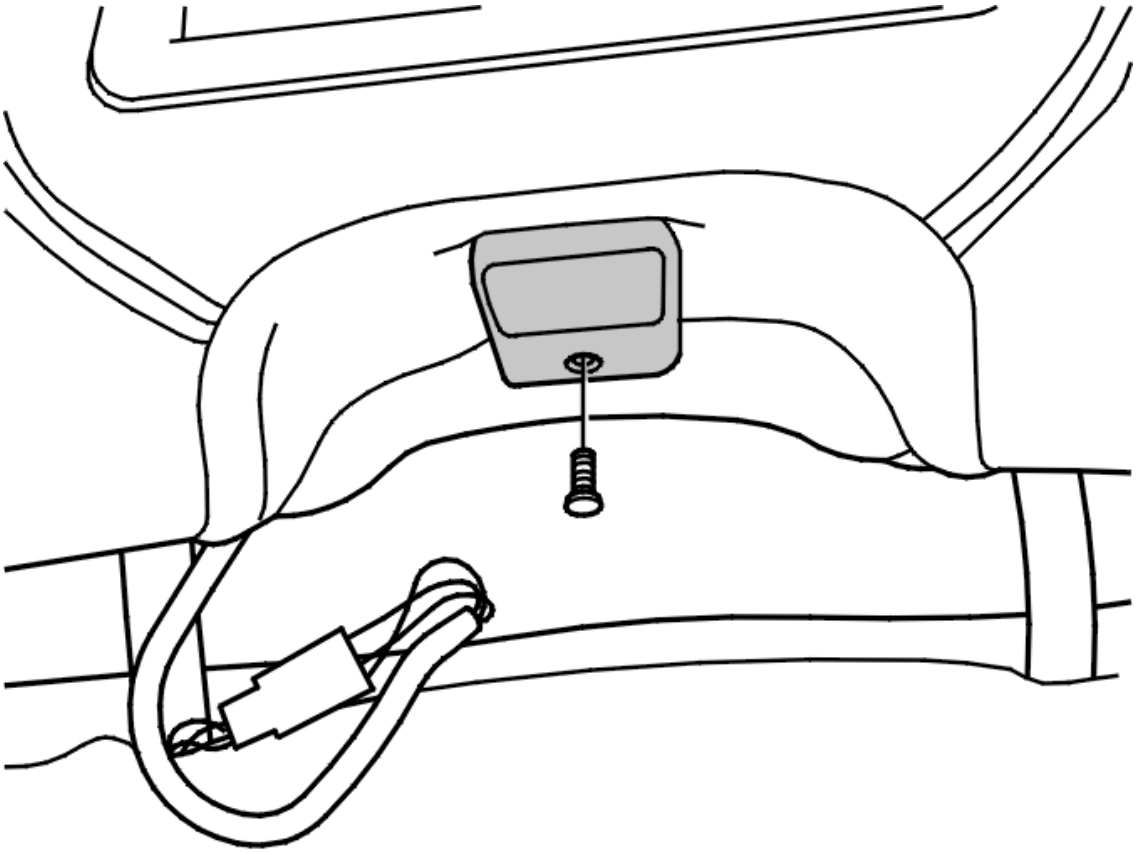

Fig. 95: Removing The Infra Red Transmitter
Courtesy of VOLVO CARS CORPORATION

Remove:

- the head restraint. See: **HEAD RESTRAINT FRONT SEAT BENCH TYPE** (2009-2012), **HEAD RESTRAINT FRONT SEAT (TYPE 1)**, **HEAD RESTRAINT FRONT SEAT (TYPE 2)** or **HEAD RESTRAINT FRONT SEAT (TYPE 3)**.
- the screw
- the infra red transmitter.

INSTALLATION

INSTALLING THE INFRA RED TRANSMITTER

Install:

- the infra red transmitter
- the screw

- the head restraint. See: **HEAD RESTRAINT FRONT SEAT BENCH TYPE** (2009-2012), **HEAD RESTRAINT FRONT SEAT (TYPE 1)**, **HEAD RESTRAINT FRONT SEAT (TYPE 2)** or **HEAD RESTRAINT FRONT SEAT (TYPE 3)**.

HEAD RESTRAINT FRONT SEAT (TYPE 1)

Materials	
Designation	**Part number**
Draw string	9459316
Draw string	3533976

REMOVAL

NOTE: Removal steps in this procedure may contain installation details.

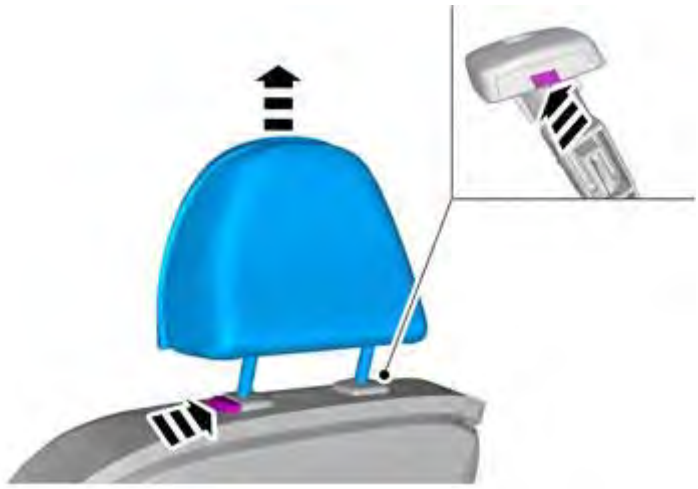

Fig. 96: Identifying Head Restraint Locking Tabs
Courtesy of VOLVO CARS CORPORATION

Fig. 97: Locating Draw String
Courtesy of VOLVO CARS CORPORATION

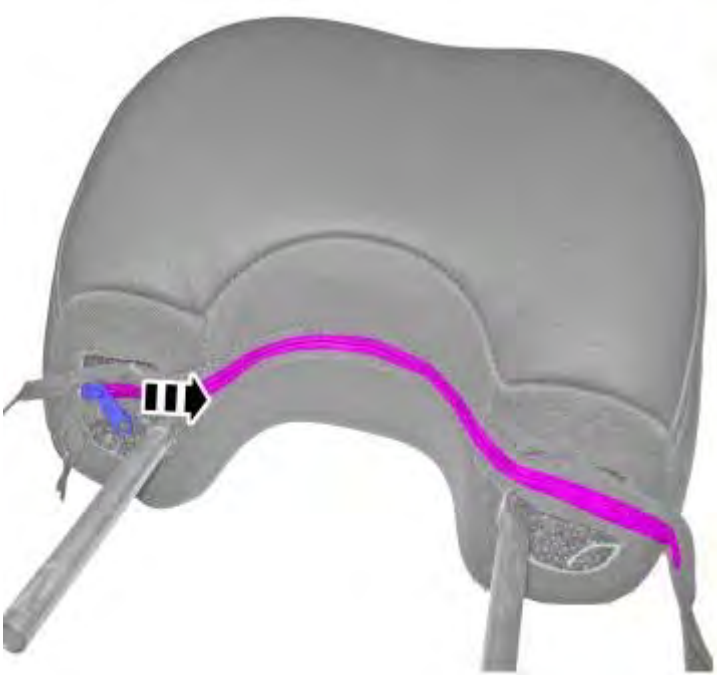

Fig. 98: Draw string, 3533976
Courtesy of VOLVO CARS CORPORATION

Use: Draw string, 9459316

Use: Draw string, 3533976

Fig. 99: Removing Head Restraint Upholstery
Courtesy of VOLVO CARS CORPORATION

INSTALLATION

To install, reverse the removal procedure.

HEAD RESTRAINT FRONT SEAT (TYPE 2)

Materials	
Designation	**Part number**
Draw string	3533976
Draw string	9459316

REMOVAL

NOTE: Removal steps in this procedure may contain installation details.

Fig. 100: Removing Head Restraint
Courtesy of VOLVO CARS CORPORATION

Fig. 101: Locating Draw String
Courtesy of VOLVO CARS CORPORATION

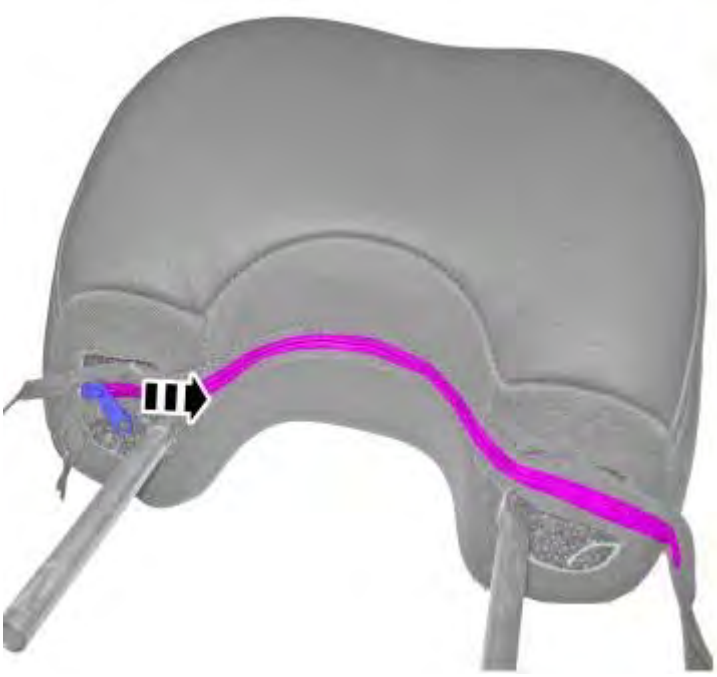

Fig. 102: Draw string, 3533976
Courtesy of VOLVO CARS CORPORATION

Use: Draw string, 3533976 **Use:** Draw string, 9459316

Fig. 103: Removing Head Restraint Upholstery
Courtesy of VOLVO CARS CORPORATION

VEHICLES WITH REAR PASSENGER ENTERTAINMENT SYSTEM (RSE)

Fig. 104: Identifying Head Restraint Release
Courtesy of VOLVO CARS CORPORATION

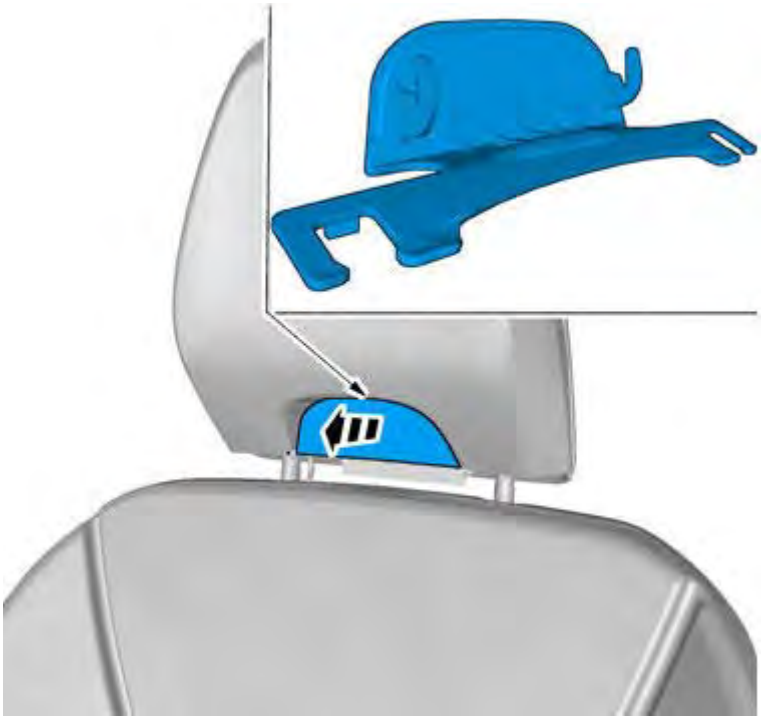

Fig. 105: Identifying Head Restraint Finisher
Courtesy of VOLVO CARS CORPORATION

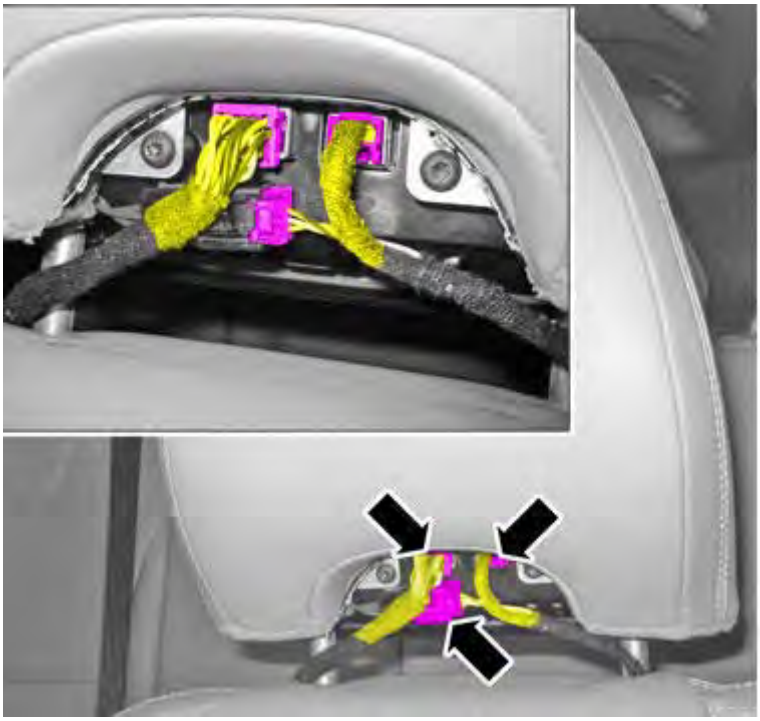

Fig. 106: Identifying Head Restraint Connectors
Courtesy of VOLVO CARS CORPORATION

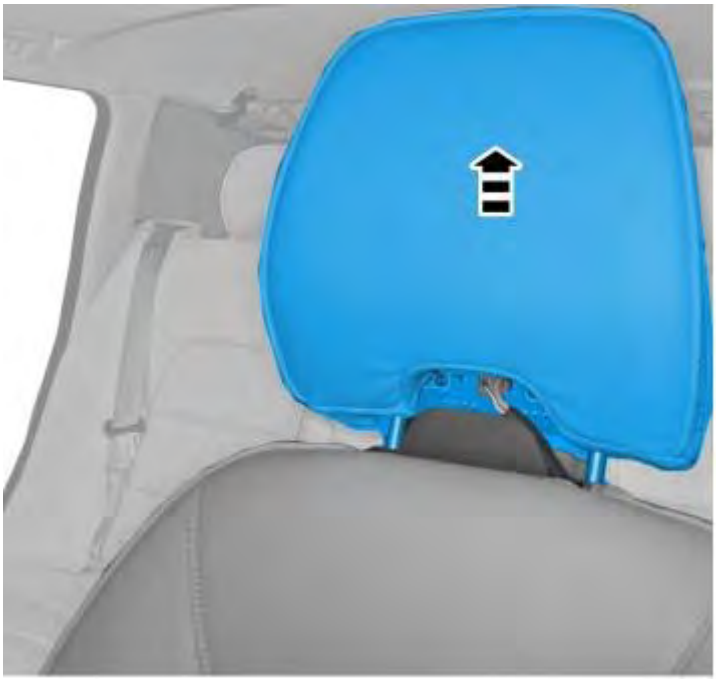

Fig. 107: Remove in Direction of Arrow
Courtesy of VOLVO CARS CORPORATION

Fig. 108: View of Screws
Courtesy of VOLVO CARS CORPORATION

Fig. 109: Removing Rear Passenger Entertainment System (RSE)
Courtesy of VOLVO CARS CORPORATION

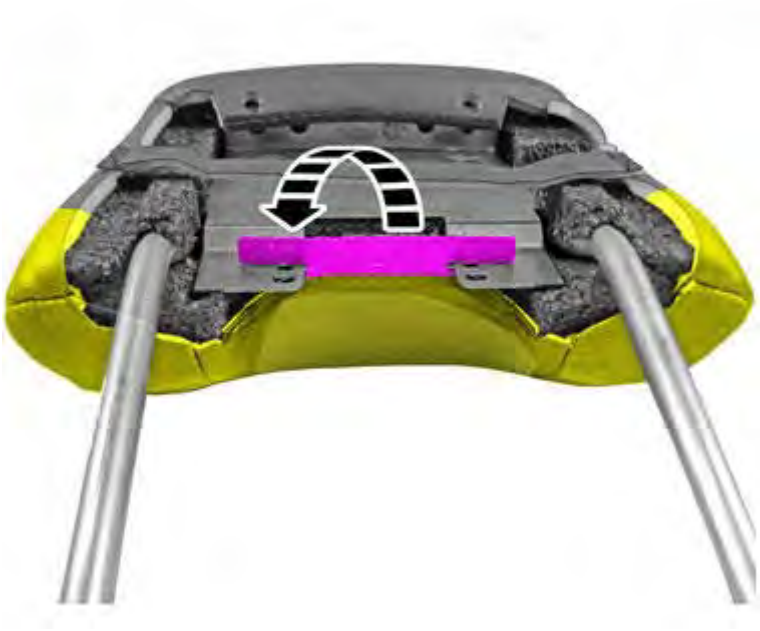

Fig. 110: Remove Tab in Direction of Arrow
Courtesy of VOLVO CARS CORPORATION

Fig. 111: Removing Head Restraint Upholstery
Courtesy of VOLVO CARS CORPORATION

INSTALLATION

To install, reverse the removal procedure.

HEAD RESTRAINT FRONT SEAT (TYPE 3)

Materials	
Designation	**Part number**
Draw string	9459316
Draw string	3533976

REMOVAL

NOTE: Removal steps in this procedure may contain installation details.

Fig. 112: Removing Head Restraint
Courtesy of VOLVO CARS CORPORATION

Fig. 113: Locating Draw String
Courtesy of VOLVO CARS CORPORATION

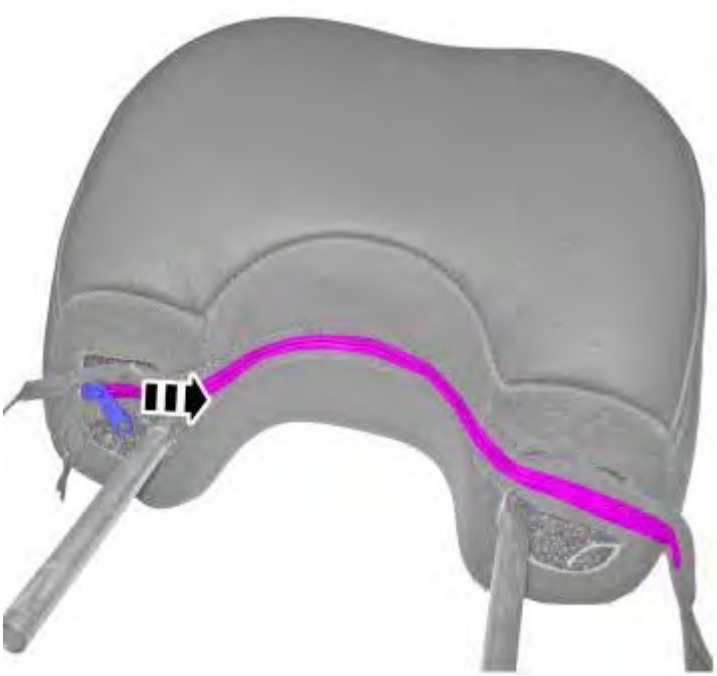

Fig. 114: Draw string, 3533976
Courtesy of VOLVO CARS CORPORATION

Use: Draw string, 9459316

Use: Draw string, 3533976

Fig. 115: Removing Head Restraint Upholstery
Courtesy of VOLVO CARS CORPORATION

INSTALLATION

To install, reverse the removal procedure.

REAR SEAT ENTERTAINMENT MODULE (RSE), REPLACING

NOTE: **The illustrations in this service information are used for different model years and/or models. Some variation may occur. However, the essential information in the illustrations is always correct.**

REMOVAL

REMOVING THE CONTROL MODULE

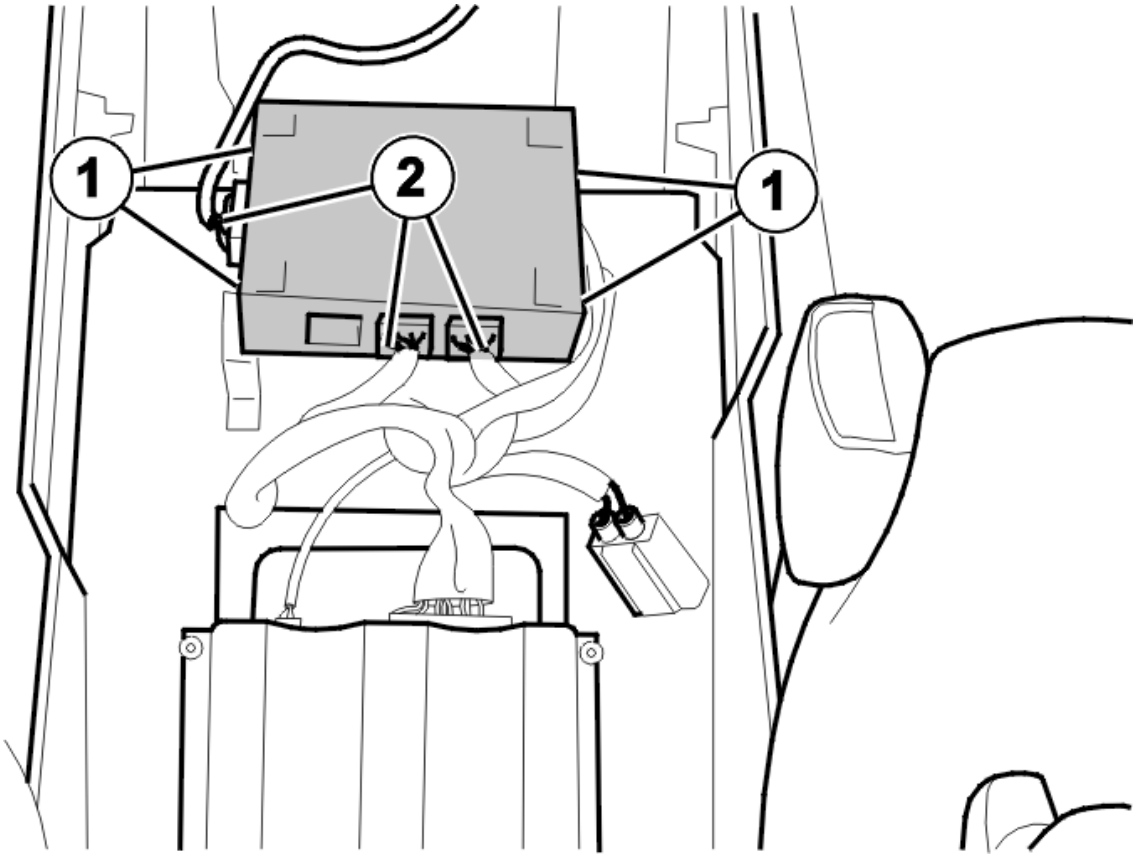

Fig. 116: Removing The Control Module
Courtesy of VOLVO CARS CORPORATION

Remove:

- the center console. See: **CENTER CONSOLE, REPLACING**
- the 4 screws (1)

NOTE: Note the position of the connectors.

- the 3 connectors (2)
- the control module.

INSTALLATION

INSTALLING THE CONTROL MODULE

Install:

- the control module
- the 4 screws
- the 3 connectors according to the note

- the center console. See: **CENTER CONSOLE, REPLACING** .

ENTERTAINMENT EQUIPMENT (2006)

CONTROL MODULE REAR SOUND SEPARATION, REPLACING

see **CONTROL MODULE REAR SOUND SEPARATION, REPLACING**

COOL BOX/ARMREST COMPONENTS, REPLACING

see **COOL BOX/ARMREST COMPONENTS, REPLACING**

DVD PLAYER, REPLACING

see **DVD PLAYER, REPLACING**

HEAD RESTRAINT WITH TV SCREEN, REPLACING

see **HEAD RESTRAINT WITH TV SCREEN, REPLACING**

INFOTAINMENT CONTROL MODULE (ICM), REPLACING

see **INFOTAINMENT CONTROL MODULE (ICM), REPLACING**

SCREEN/CIRCUIT BOARD, REPLACING

see **SCREEN/CIRCUIT BOARD, REPLACING**

ENTERTAINMENT EQUIPMENT (2007-2012)

CONTROL MODULE GENERAL SOUND PLAYER

PREPARATORY WORK

Fig. 117: Removing Disc
Courtesy of VOLVO CARS CORPORATION

CAUTION: Ensure that there is not a disc in the device.

CAUTION: Ensure that the discs are removed one at a time in order of sequence. Start with disc 6, followed by disc 5.

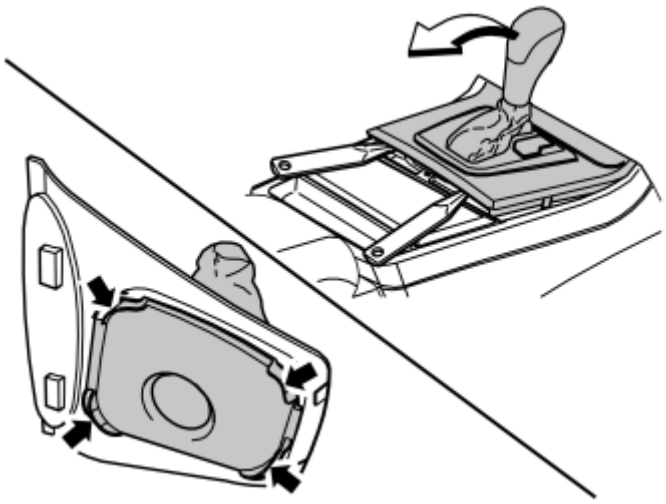

Fig. 118: Positioning Gear Selector
Courtesy of VOLVO CARS CORPORATION

Move the gear selector to its rearmost position.

Detach the panel at the gear selector lever as illustrated and move it to one side.

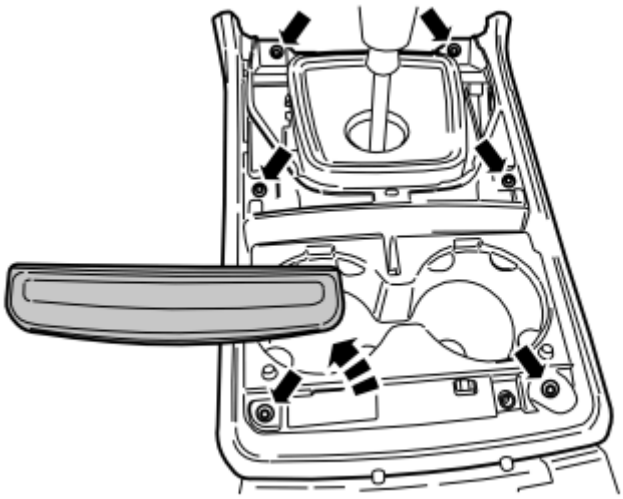

Fig. 119: Gear Selector Cover
Courtesy of VOLVO CARS CORPORATION

Remove:

- the rear cover
- the bolts, x6
- the top of the tunnel compartment.

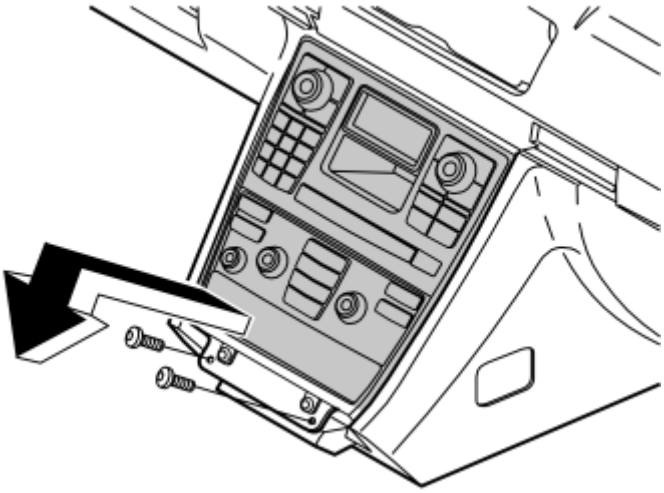

Fig. 120: Removing Screws And Radio/AC Unit From Center Console
Courtesy of VOLVO CARS CORPORATION

CAUTION: Angle the infotainment / dashboard environment panel to one side. Do not disconnect the connectors.

Remove the screws from the bracket.

Angle out the infotainment / dashboard environment panel as illustrated.

Fig. 121: Identifying Ignition Off Position
Courtesy of VOLVO CARS CORPORATION

Place the gear selector in position P.

Ignition off

Disconnect the connectors.

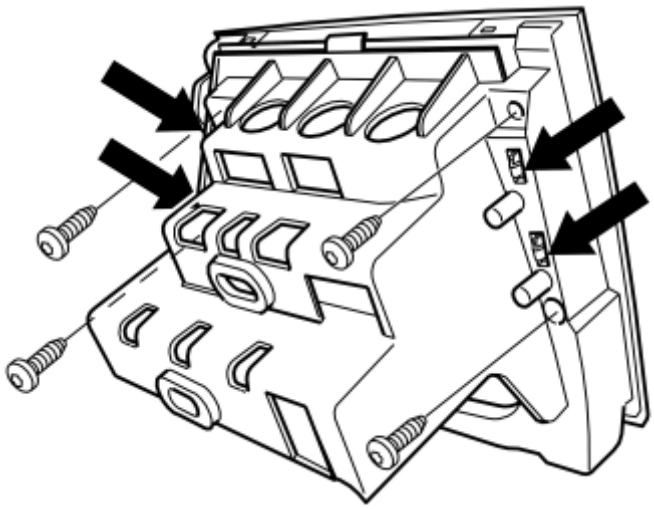

Fig. 122: Removing Infotainment Unit
Courtesy of VOLVO CARS CORPORATION

Remove the infotainment unit screws.

Release the clips and remove the infotainment unit from the bracket.

REMOVING THE CONTROL MODULE

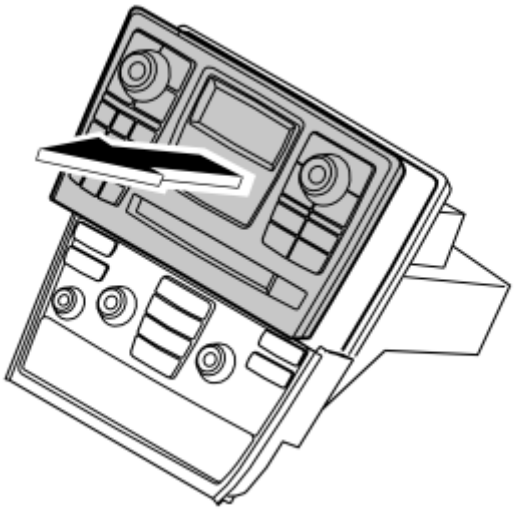

Fig. 123: Removing The Control Module
Courtesy of VOLVO CARS CORPORATION

Remove the screws.

Remove the control module.

INSTALLING THE CONTROL MODULE

NOTE: For tightening torques, see TIGHTENING TORQUE .

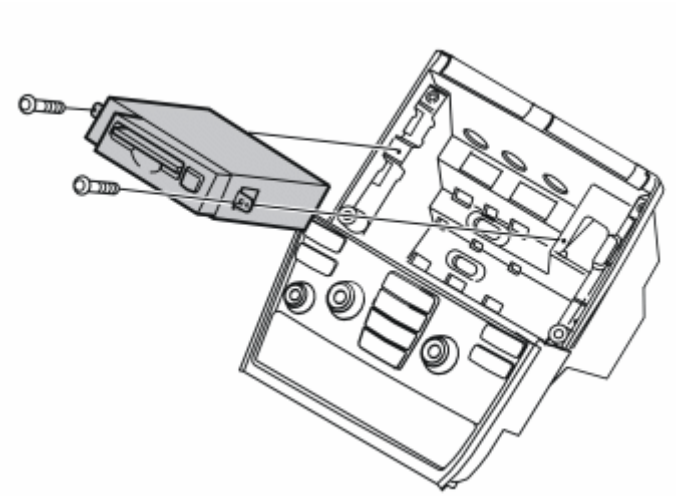

Fig. 124: Installing Control Module
Courtesy of VOLVO CARS CORPORATION

Install the control module.

Install the screws.

FINISHING WORK

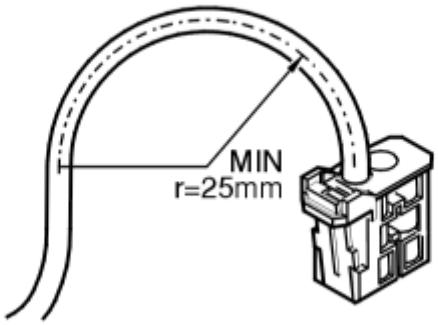

Fig. 125: Fiber Optic Cable Movement Threshold
Courtesy of VOLVO CARS CORPORATION

Press the infotainment unit into place on the bracket.

Install the screws. Tighten.

Connect the connectors.

NOTE: **The control module connectors are identical and can be shifted. Make sure that there is no dirt in the optic contacts. The optic cables must not have a bend radius below 25 mm.**

Angle in the infotainment / dashboard environment panel and bracket.

HINT: Align the upper section and press it upwards so that the lower section can be worked in.

Install:

- 2 screws in the lower edge of the bracket
- the top of the tunnel compartment
- the bolts, x6
- the rear cover
- the panel at the gear selector lever.

ORDERING SOFTWARE

Order software for the control module. See: 30775887 .

CONTROL MODULE REAR SOUND SEPARATION, REPLACING

NOTE: **The illustrations in this service information are used for different model years and/or models. Some variation may occur. However, the essential information in the illustrations is always correct.**

REMOVAL

REMOVING CENTER TUNNEL CONSOLE

Remove the rear center console acc. to: **CENTER CONSOLE, REPLACING** .

REMOVING REAR SOUND SEPARATION MODULE, VEHICLES WITHOUT COOLER

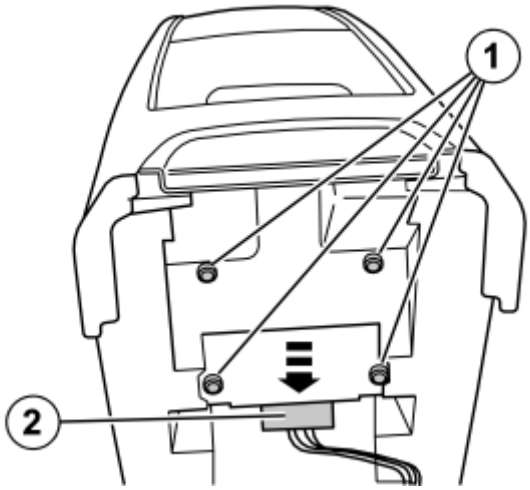

Fig. 126: Identifying Rear Sound Separation Module Screws And Connector (W/O Cooler)
Courtesy of VOLVO CARS CORPORATION

Remove:

- the 4 screws
- the connector, x1
- the control module.

REMOVING REAR SOUND SEPARATION MODULE, VEHICLES WITH COOLER

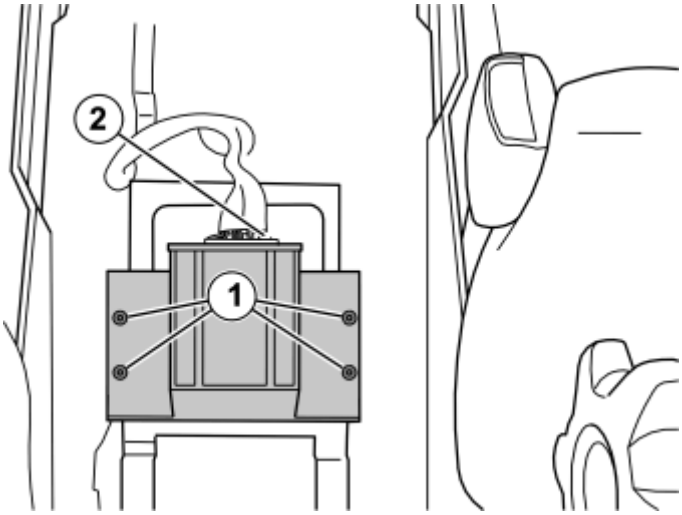

Fig. 127: Identifying Rear Sound Separation Module Screws And Connector (w/ Cooler)
Courtesy of VOLVO CARS CORPORATION

Remove:

- the 4 screws
- the connector, x1
- the control module.

INSTALLING REAR SOUND SEPARATION MODULE

Install:

- the control module
- the 4 screws
- the connector
- the center console. See: **CENTER CONSOLE, REPLACING** .

COOL BOX/ARMREST COMPONENTS, REPLACING

see **COOL BOX/ARMREST COMPONENTS, REPLACING**

DVD PLAYER, REPLACING

see **DVD PLAYER, REPLACING**

HEAD RESTRAINT WITH TV SCREEN, REPLACING

see **HEAD RESTRAINT WITH TV SCREEN, REPLACING**

INFOTAINMENT CONTROL MODULE (ICM), REPLACING

see **INFOTAINMENT CONTROL MODULE (ICM), REPLACING**

SCREEN/CIRCUIT BOARD, REPLACING

NOTE: **The illustrations in this service information are used for different model years and/or models. Some variation may occur. However, the essential information in the illustrations is always correct.**

REMOVAL

REMOVING SCREEN/CIRCUIT BOARD

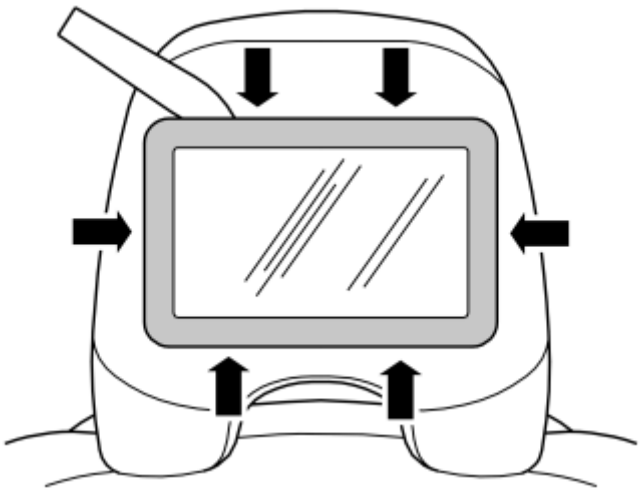

Fig. 128: Identifying Screen Removal
Courtesy of VOLVO CARS CORPORATION

Remove the screen's frame.

HINT: Begin on the side of the frame, for easier removal

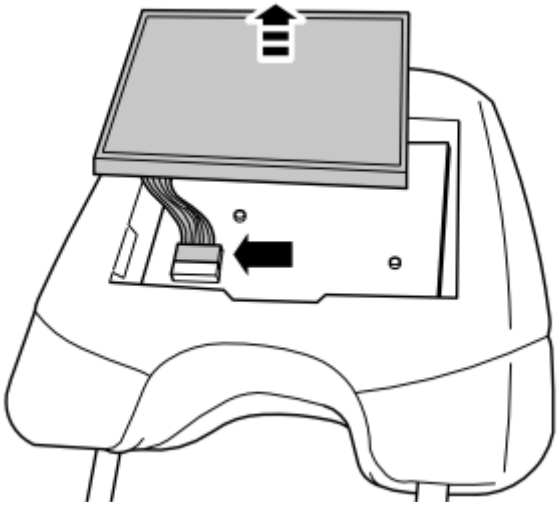

Fig. 129: Identifying Screen Connector
Courtesy of VOLVO CARS CORPORATION

CAUTION: Prevent the risk of static electricity by touching a grounded object.

Carefully lift up the screen from the head restraint.

Remove the connector.

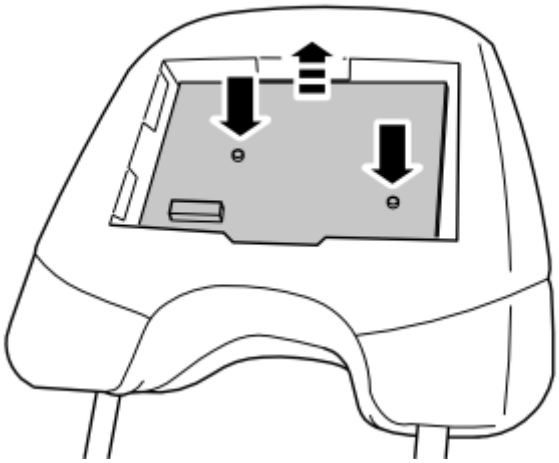

Fig. 130: Identifying Circuit Board Screws
Courtesy of VOLVO CARS CORPORATION

Remove the 2 screws.

Carefully lift up the circuit board.

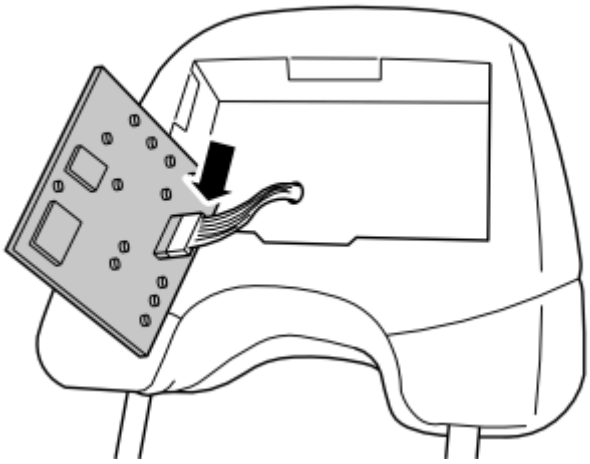

Fig. 131: Identifying Circuit Board Connector
Courtesy of VOLVO CARS CORPORATION

INSTALLATION

Fig. 132: Identifying Foam Tape
Courtesy of VOLVO CARS CORPORATION

NOTE: **Check that there are two 6 mm x 50 mm (0.25 in x 2 in) pieces of foam tape as illustrated.**

INSTALLING CIRCUIT BOARD

Install:

- the connector
- the circuit board
- the bolts, x2

INSTALLING THE SCREEN

NOTE: **Always use a new frame when installing the screen.**

Install:

- the connector
- the screen
- the frame for the screen

UNIVERSAL BUS MODULE (USB)

Materials:	
Designation	**Part number**
Foam tape	3539834

REMOVAL

NOTE: **Removal steps in this procedure may contain installation details.**

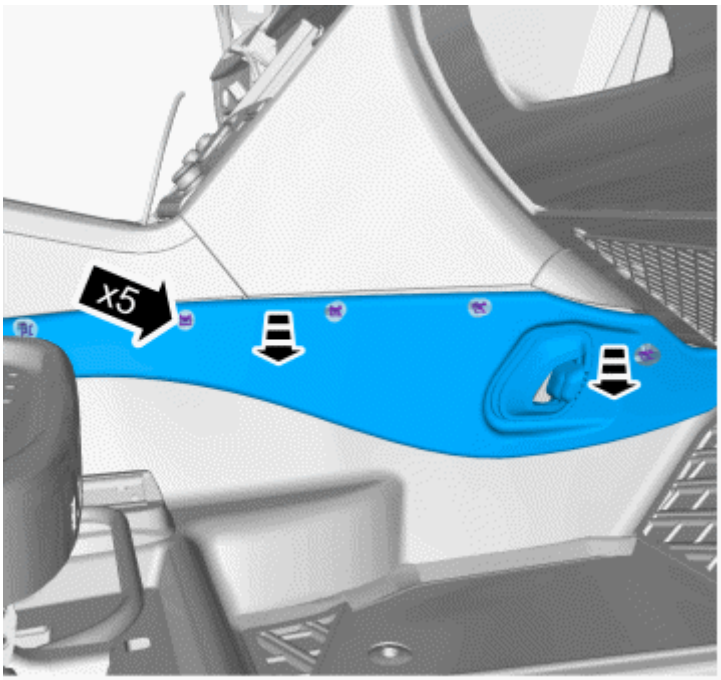

Fig. 133: Removing Side Panel
Courtesy of VOLVO CARS CORPORATION

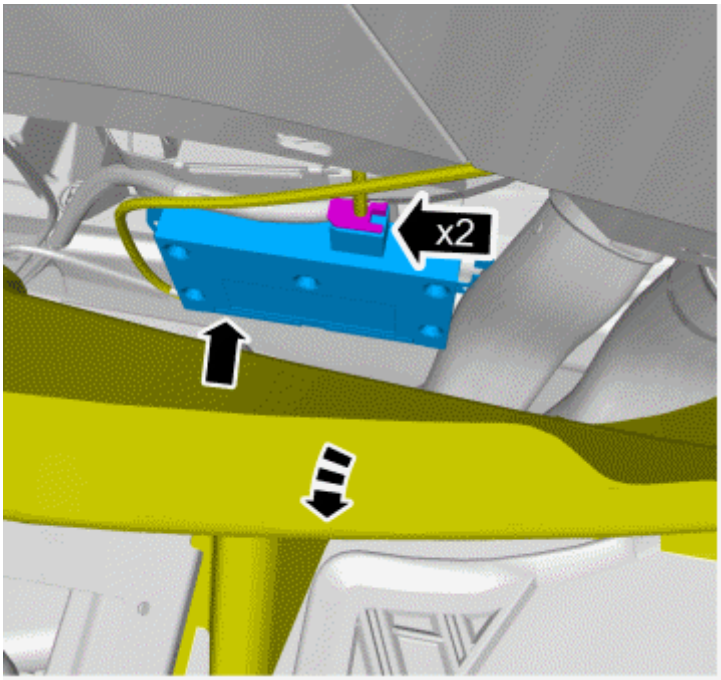

Fig. 134: Removing Component
Courtesy of VOLVO CARS CORPORATION

NOTE: **Make sure that the fiber optic cables are not bent to a radius of less than 25**

mm.

NOTE: **Make sure that the component terminals are not bent or damaged.**

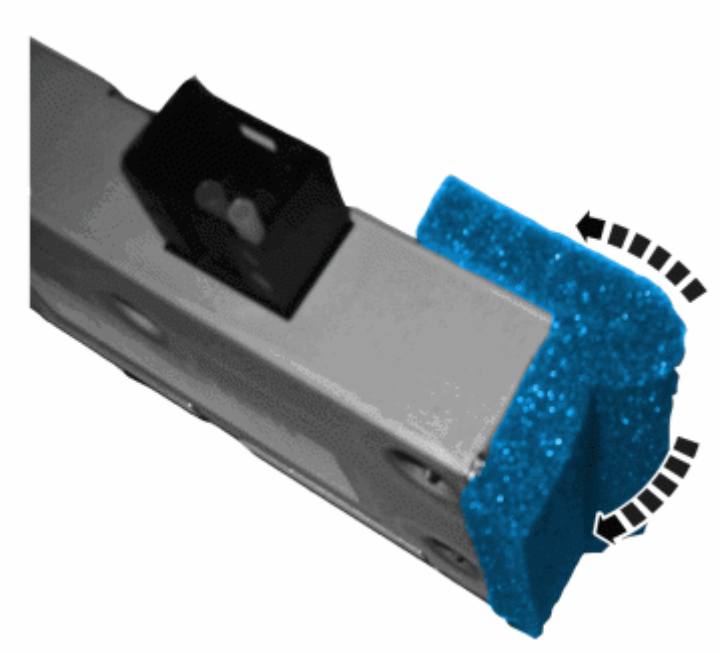

Fig. 135: Installing Foam tape, 3539834 (1 Of 2)
Courtesy of VOLVO CARS CORPORATION

Use: Foam tape, 3539834

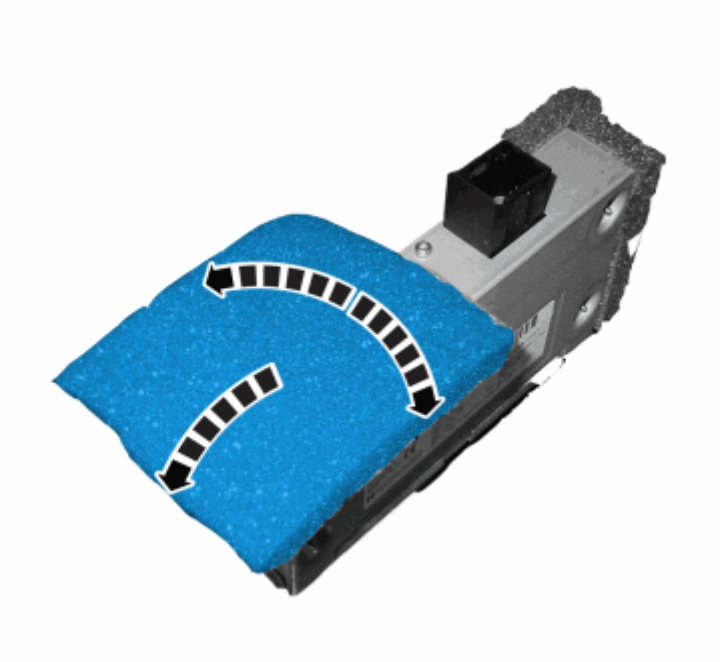

Fig. 136: Installing Foam tape, 3539834 (2 Of 2)
Courtesy of VOLVO CARS CORPORATION

Install in reverse order.

ORDERING SOFTWARE

Order software for the control module. See: 30732975 .

MOBILE COMPUTER SERVICES (2003-2006)

DISPLAY SCREEN / LOUDSPEAKER, RTI (ROAD TRAFFIC INFORMATION), REPLACING

REMOVAL AND INSTALLATION

NOTE: **As the illustrations in this service information are used for different model years and / or models, some variation may occur. However, the essential information in the illustrations is always correct.**

PREPARATORY WORK

Fig. 137: Identifying Ignition In OFF Position
Courtesy of VOLVO CARS CORPORATION

- Ignition off
- Remove the grille. Insert a weatherstrip tool through the center hole and pry loose. Use the reverse of the display screen as a lever.

REMOVING THE DISPLAY SCREEN / LOUDSPEAKER AND BRACKET

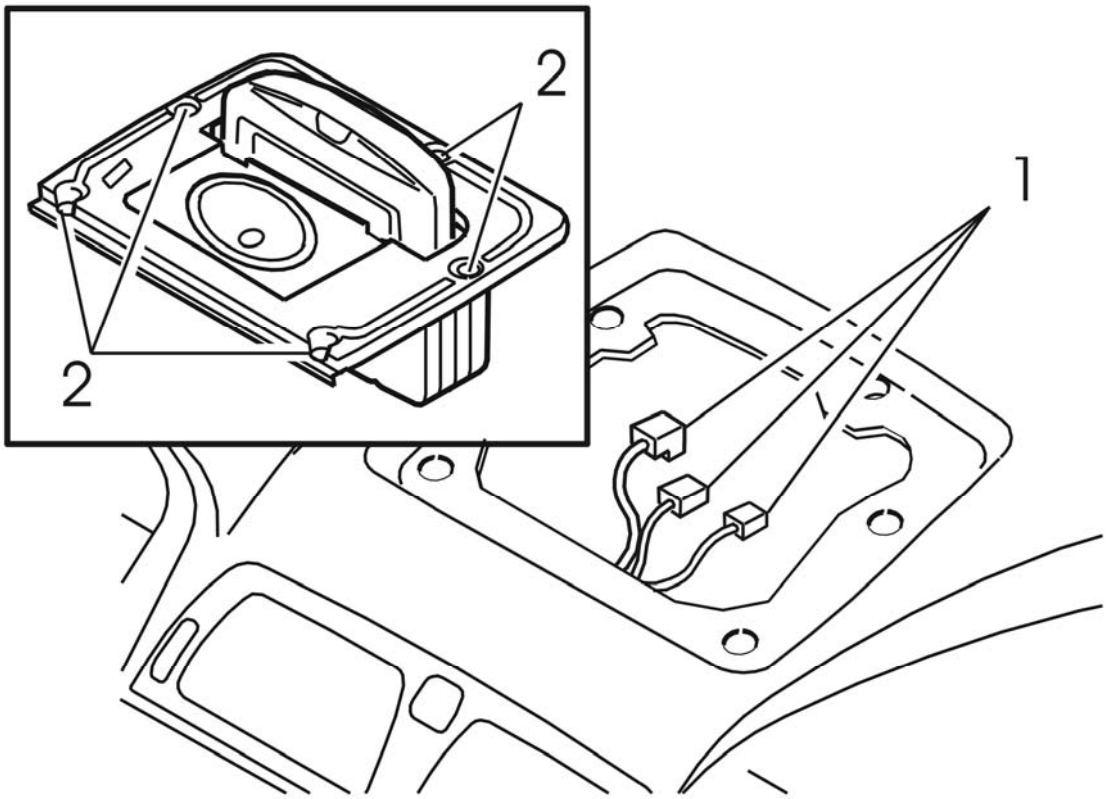

Fig. 138: Removing The Display Screen / Loudspeaker And Bracket
Courtesy of VOLVO CARS CORPORATION

Remove:

- the screws (2). Disconnect the connectors (1)
- the display screen and loudspeaker and bracket.

REMOVING THE DISPLAY

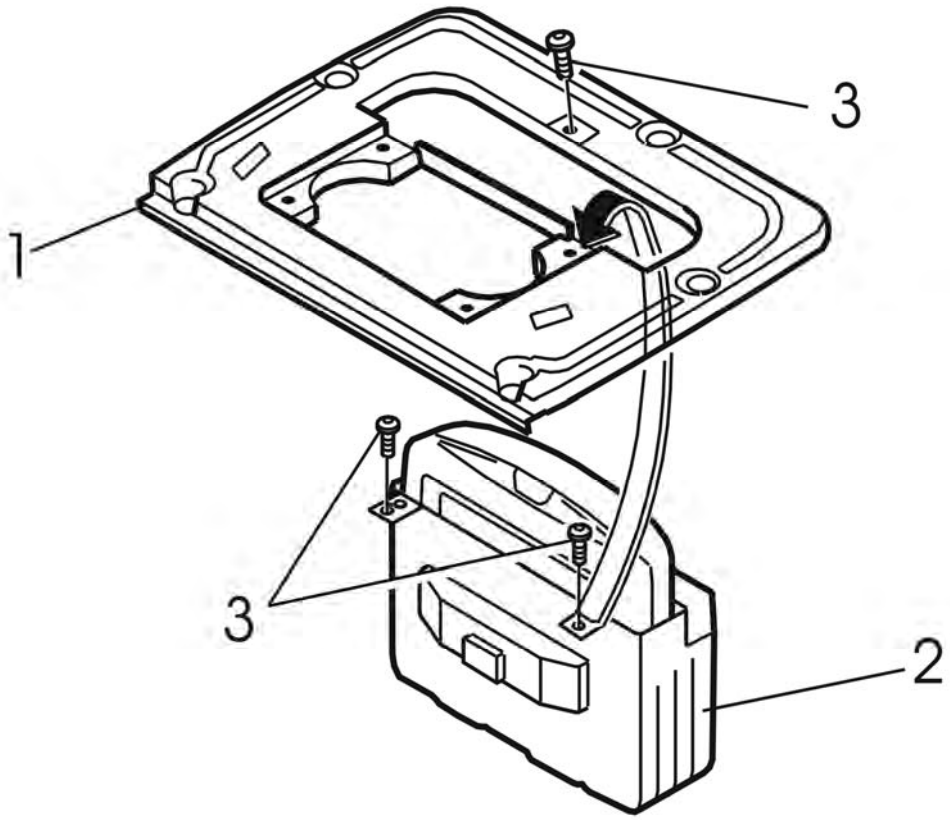

Fig. 139: Removing The Display
Courtesy of VOLVO CARS CORPORATION

Remove:

- the screws (3)
- the display screen (2) from the bracket (1).

REMOVING THE LOUDSPEAKER

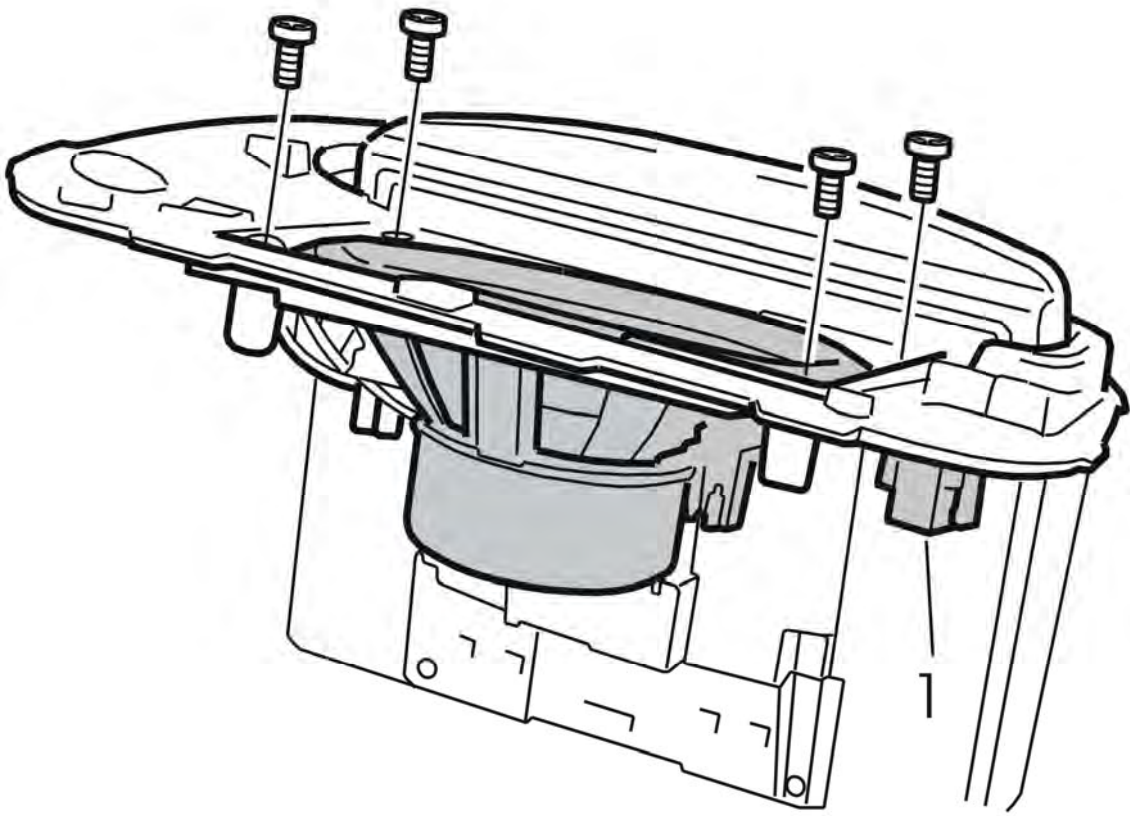

Fig. 140: Identifying Loudspeaker, Screws & Connector
Courtesy of VOLVO CARS CORPORATION

Remove:

- the screws
- the loudspeaker from the bracket.

INSTALLING THE DISPLAY SCREEN / LOUDSPEAKER AND BRACKET

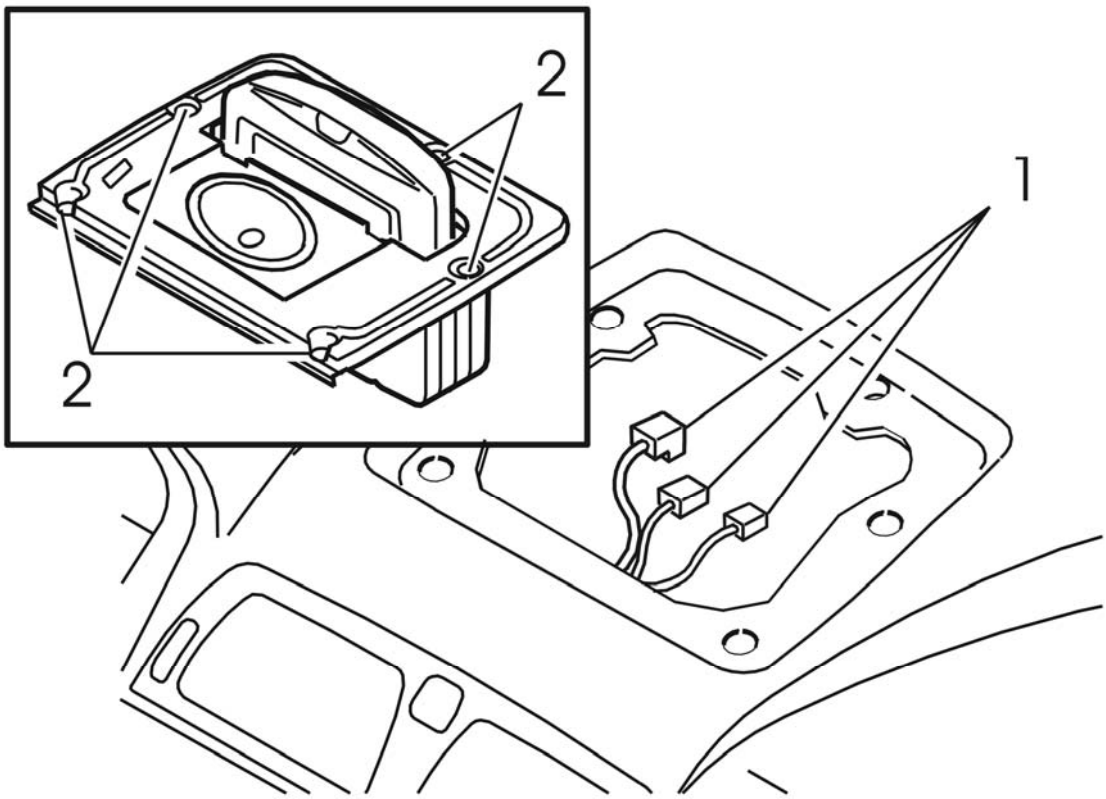

Fig. 141: Installing The Display Screen / Loudspeaker And Bracket
Courtesy of VOLVO CARS CORPORATION

Install:

- the display screen and loudspeaker in the bracket
- the screws. Connect the connectors (1)
- the display screen and/or loudspeakers and bracket in the dashboard
- the screws (2) and tighten
- the grille.

Test the function.

MULTIMEDIA MODULE (MMM), REPLACING

REMOVAL

NOTE: **As the illustrations in this service information are used for different model years and / or models, some variation may occur. However, the essential information in the illustrations is always correct.**

PREPARATORY WORK

The multimedia module (MMM) is under the left-hand front seat.

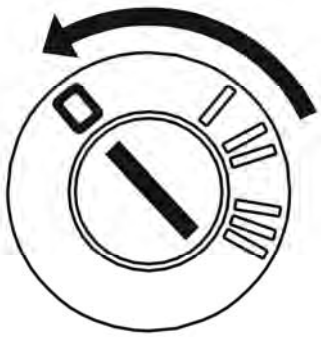

Fig. 142: Identifying Ignition In OFF Position
Courtesy of VOLVO CARS CORPORATION

Move the left-hand front seat to its rearmost position.

If there is one, remove the DVD from the DVD reader.

Ignition off.

REMOVING THE MULTIMEDIA MODULE (MMM)

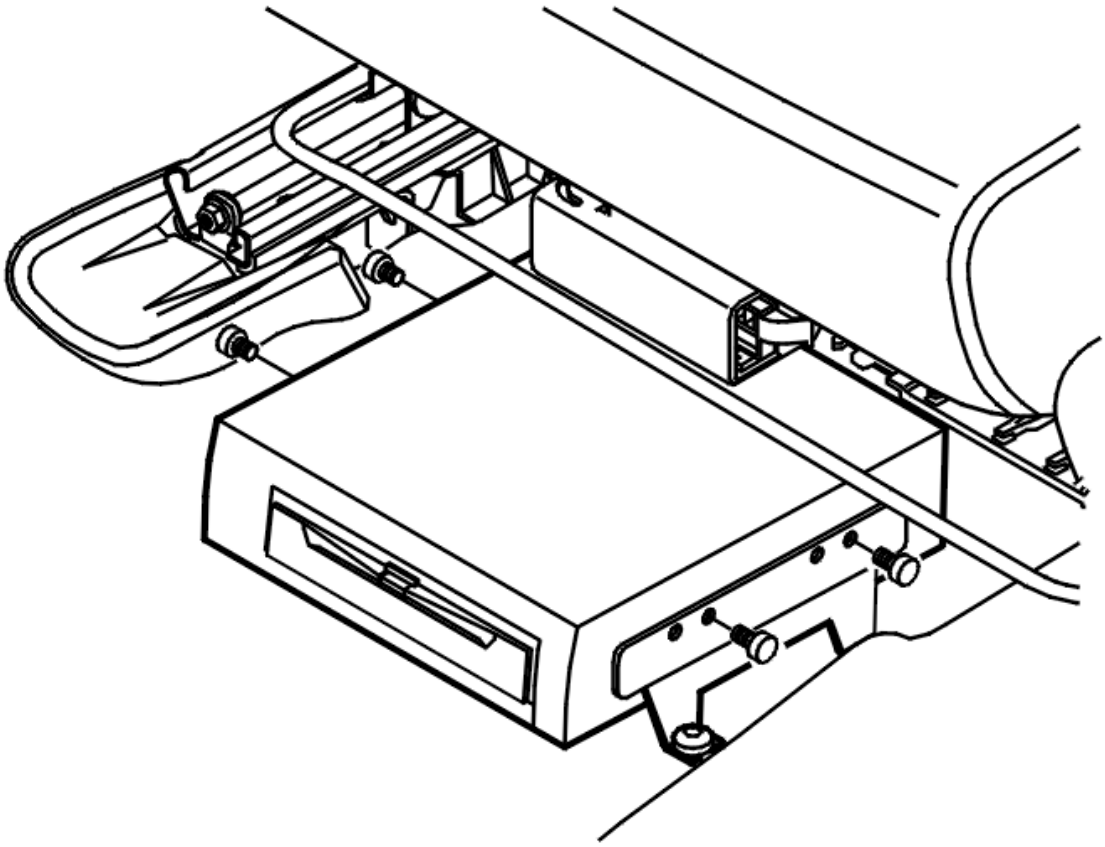

Fig. 143: Removing The Multimedia Module (MMM)
Courtesy of VOLVO CARS CORPORATION

- Remove the screws
- Disconnect the connectors
- Remove the multimedia module (MMM).

INSTALLATION

INSTALLING THE MULTIMEDIA MODULE (MMM)

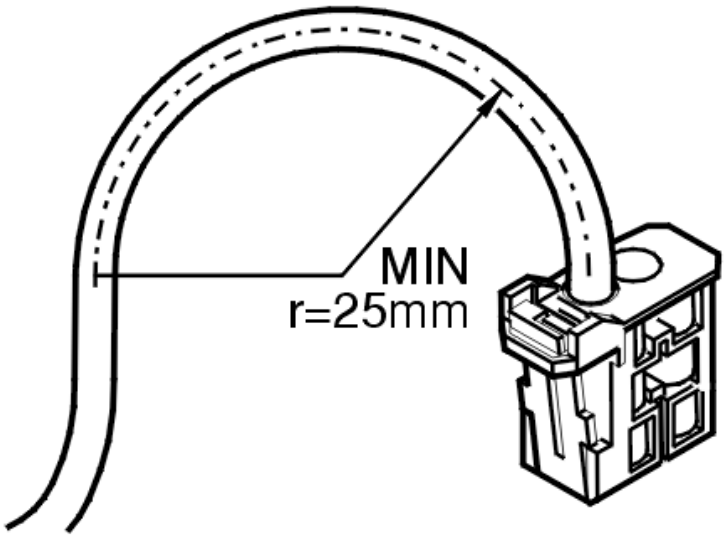

Fig. 144: Identifying Maximum Bend Radius Of Optic Cable
Courtesy of VOLVO CARS CORPORATION

- Connect the connectors.

NOTE: **Check that there is no dirt in the optic connectors. The bend radius of the optic cables must not be less than 25 mm .**

- Connect the connectors.
- Install the multimedia module (MMM) in the bracket
- Install the screws. Tighten.

ORDERING SOFTWARE

NOTE: **After replacing the multimedia module (MMM), new software must be ordered and programmed.**

Order the software. See 8696091 .

FINISHING WORK

Insert a DVD in the DVD reader.

Return the seat to its original position.

Test the function.

SWITCHES RTI (ROAD TRAFFIC INFORMATION), REPLACING

REMOVAL

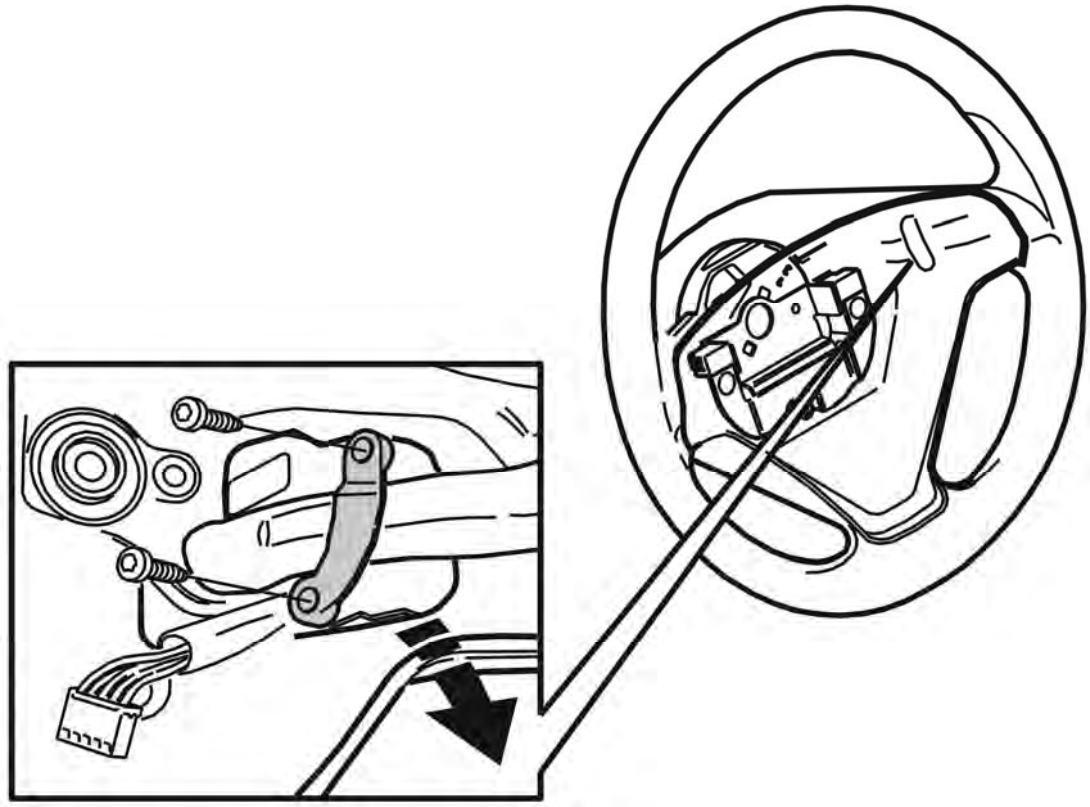

Fig. 145: Identifying Removal Of Road Traffic Information Switches
Courtesy of VOLVO CARS CORPORATION

- Remove the steering wheel module
- Remove the keypad
- Remove the two screws from the mounting bracket
- Press the keypad out of the steering wheel cover.

INSTALLATION

Install in reverse order.

MOBILE COMPUTER SERVICES (2007-2012)

DISPLAY SCREEN / LOUDSPEAKER, RTI (ROAD TRAFFIC INFORMATION), REPLACING

see **DISPLAY SCREEN / LOUDSPEAKER, RTI (ROAD TRAFFIC INFORMATION), REPLACING**

GLOBAL POSITIONING SYSTEM MODULE (GPS)

NOTE: Removal steps in this procedure may contain installation details.

For vehicles with Volvo on Call but without MMM+

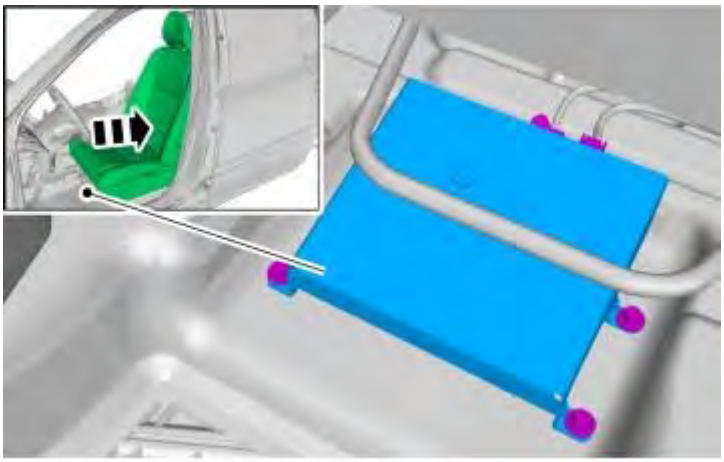

Fig. 146: GPS Module Location
Courtesy of VOLVO CARS CORPORATION

NOTE: Make sure that the component terminals are not bent or damaged.

NOTE: Make sure that the fiber optic cables are not bent to a radius of less than 25 mm.

Tighten, M6. See **TIGHTENING TORQUE**

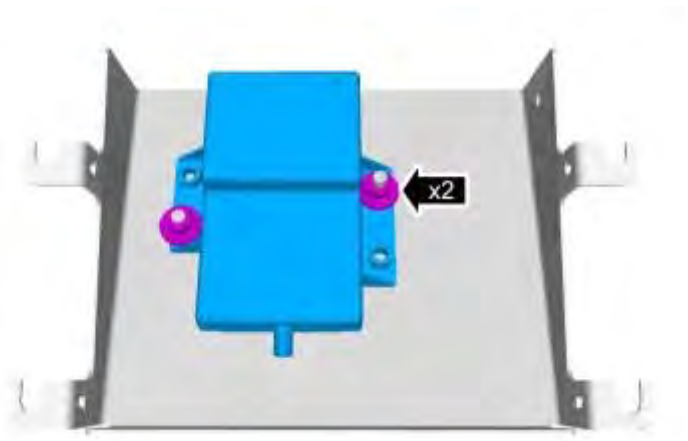

Fig. 147: Removing (GPS) Module
Courtesy of VOLVO CARS CORPORATION

Tighten, M6. See **TIGHTENING TORQUE**

INSTALLATION

To install, reverse the removal procedure

ORDERING SOFTWARE

Order software for the control module. See: 30775412 .

MULTIMEDIA MODULE (MMM), REPLACING

see **MULTIMEDIA MODULE (MMM), REPLACING**

SWITCHES RTI (ROAD TRAFFIC INFORMATION), REPLACING

see **SWITCHES RTI (ROAD TRAFFIC INFORMATION), REPLACING**

RADIO EQUIPMENT (2003-2006)

ANTENNA WITH ANTENNA MOUNTING (ATM), REPLACING

REMOVAL

NOTE: **As the illustrations in this service information are used for different model years and / or models, some variation may occur. However, the essential information in the illustrations is always correct.**

PREPARATORY WORK

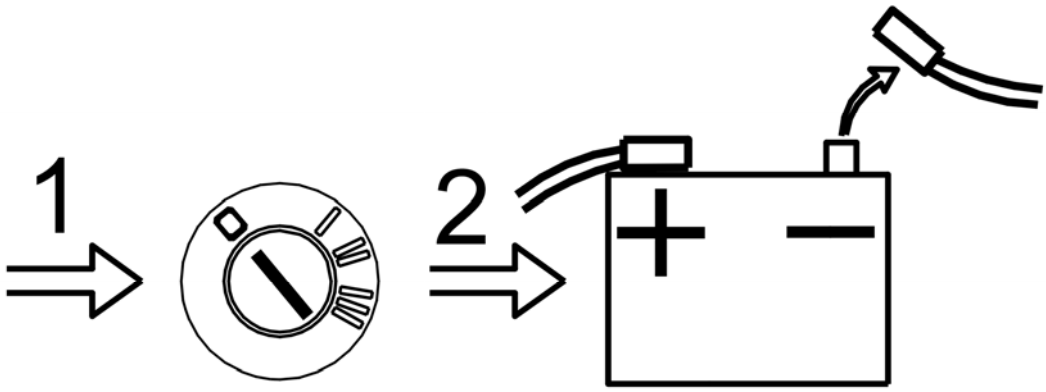

Fig. 148: Disconnecting Battery Negative Cable
Courtesy of VOLVO CARS CORPORATION

- Ignition off
- Disconnect the battery negative lead. See: **BATTERY, DISCONNECTING**
- Remove the cantrail. See **PANEL CANTRAIL, REPLACING** . Remove the D-panels. See **PANEL D-POST, REPLACING** .

REMOVING THE ANTENNA HOLDER

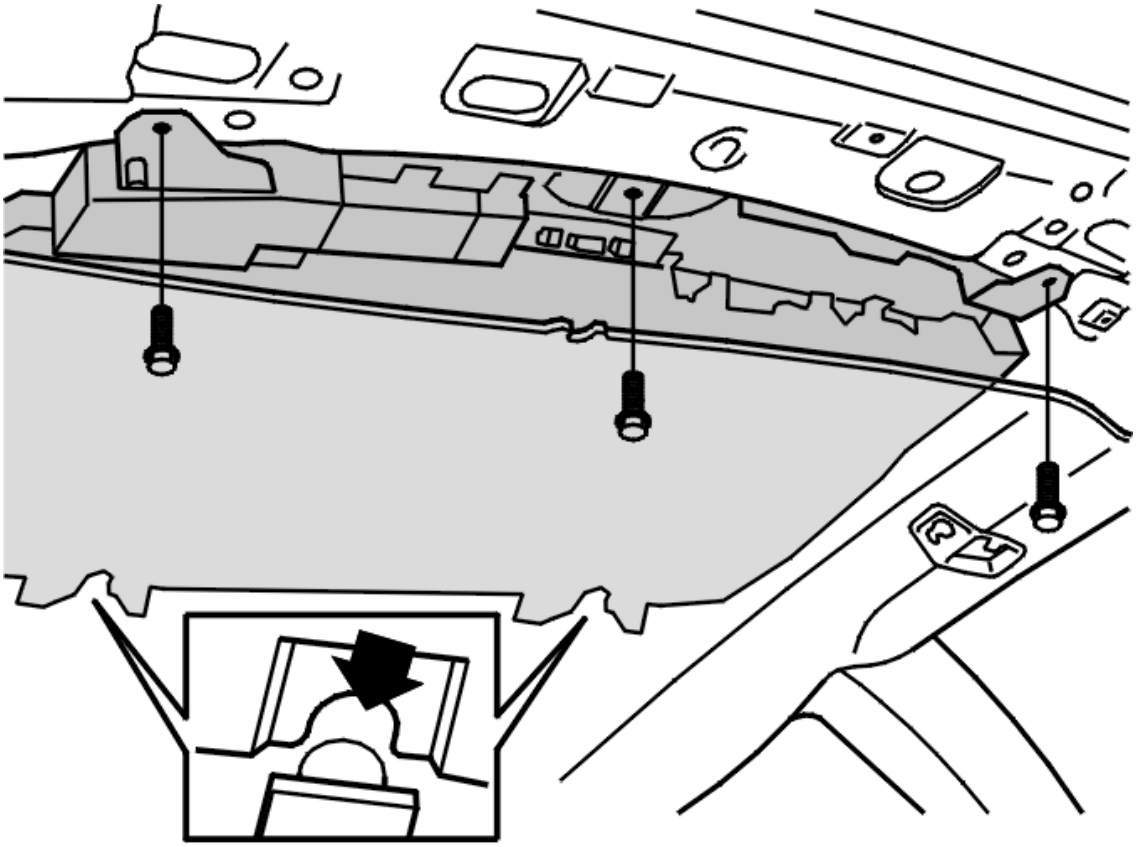

Fig. 149: Removing The Antenna Holder
Courtesy of VOLVO CARS CORPORATION

- Disconnect the connectors at the AM/FM receiver
- Disconnect the wiring secured with clips in the antenna mounting
- Remove the screws.

NOTE: The ground lead on the center screw (applies to 7 seater versions).

- Carefully lift the antenna carrier back. Remove the antenna carrier
- Remove, see **RECEIVER AM/FM (ATM), REPLACING** and **RECEIVER GPS, TMC (ATM), REPLACE**.

INSTALLATION

INSTALLING THE ANTENNA CARRIER

Install:

- the receiver. See **RECEIVER AM/FM (ATM), REPLACING** and **RECEIVER GPS, TMC (ATM), REPLACE**
- the antenna holder

NOTE: **Check that the U clip at the front edge of the antenna mounting is secured in the mountings in the roof.**

- the screws. Tighten.

NOTE: **The ground lead on the center screw (applies to 7 seater versions).**

NOTE: **Check that there is no dirt in the optical connectors.**

Connect the connectors.

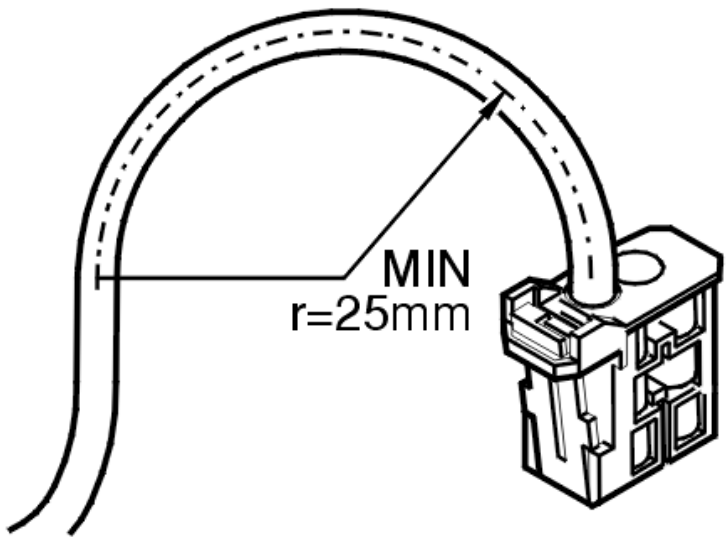

Fig. 150: Identifying Maximum Bend Radius Of Optic Cable
Courtesy of VOLVO CARS CORPORATION

NOTE: **The bend radius of the optic cables must not be less than 25 mm . Connect the connectors.**

FINISHING WORK

Install:

- see **PANEL D-POST, REPLACING** and the cantrail. See **PANEL CANTRAIL, REPLACING**

- the battery negative lead. See: **BATTERY, DISCONNECTING** .

Test the function.

AUDIO MODULE (AUD), REPLACING

see **AUDIO MODULE (AUD), REPLACING**

CENTRAL LOUDSPEAKER, REPLACING

see **CENTRAL LOUDSPEAKER, REPLACING**

LOUDSPEAKER, D-POST, REPLACING

see **LOUDSPEAKER, D-POST, REPLACING**

LOUDSPEAKER, FRONT SIDE DOOR, REPLACING

see **LOUDSPEAKER, FRONT SIDE DOOR, REPLACING**

LOUDSPEAKER, REAR SIDE DOOR, REPLACING

see **LOUDSPEAKER, REAR SIDE DOOR, REPLACING**

MINIDISC / CD CONTROL MODULE, REPLACING

REMOVAL AND INSTALLATION

NOTE: As the illustrations in this service information are used for different model years and / or models, some variation may occur. However, the essential information in the illustrations is always correct.

PREPARATORY WORK

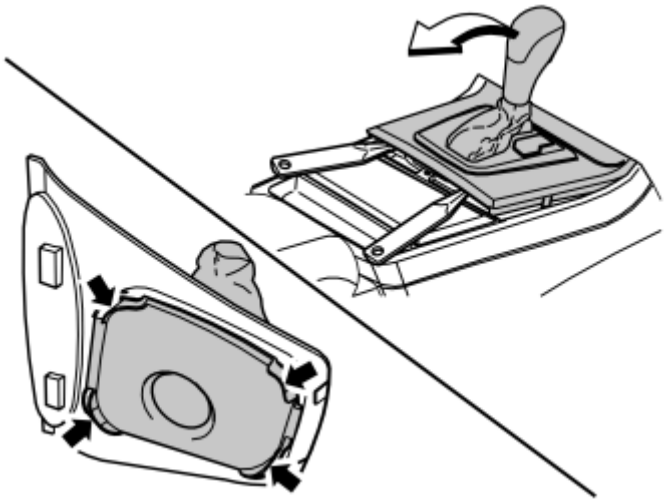

Fig. 151: Positioning Shift Knob
Courtesy of VOLVO CARS CORPORATION

Move the gear selector to its rearmost position.

Detach the panel at the gear selector lever as illustrated and move it to one side.

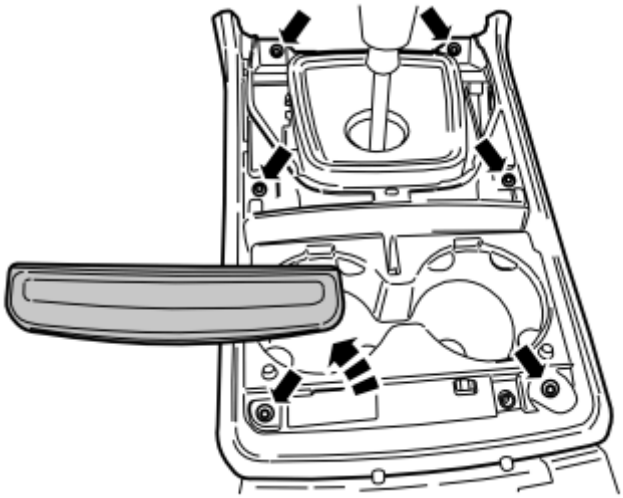

Fig. 152: Removing Gear Selector Cover
Courtesy of VOLVO CARS CORPORATION

Remove:

- the rear cover
- the 6 screws
- the top of the tunnel compartment.

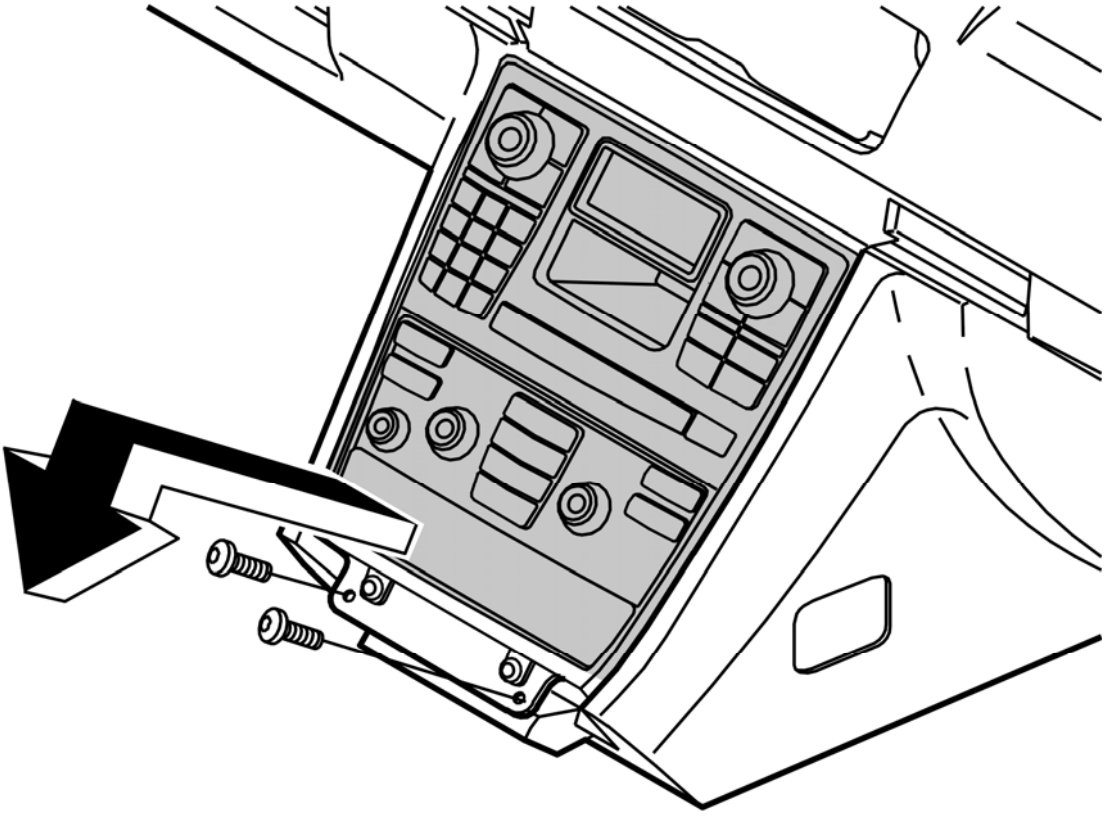

Fig. 153: Identifying Bracket Lower Screws & Infotainment Control Module (ICM)
Courtesy of VOLVO CARS CORPORATION

CAUTION: Angle the infotainment / dashboard environment panel to one side. Do not disconnect the connectors.

Remove the screws from the bracket.

Angle out the infotainment / dashboard environment panel as illustrated.

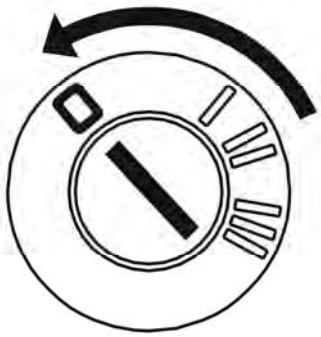

Fig. 154: Identifying Ignition In OFF Position
Courtesy of VOLVO CARS CORPORATION

Move the gear selector lever to position P.

Ignition off.

Disconnect the connectors.

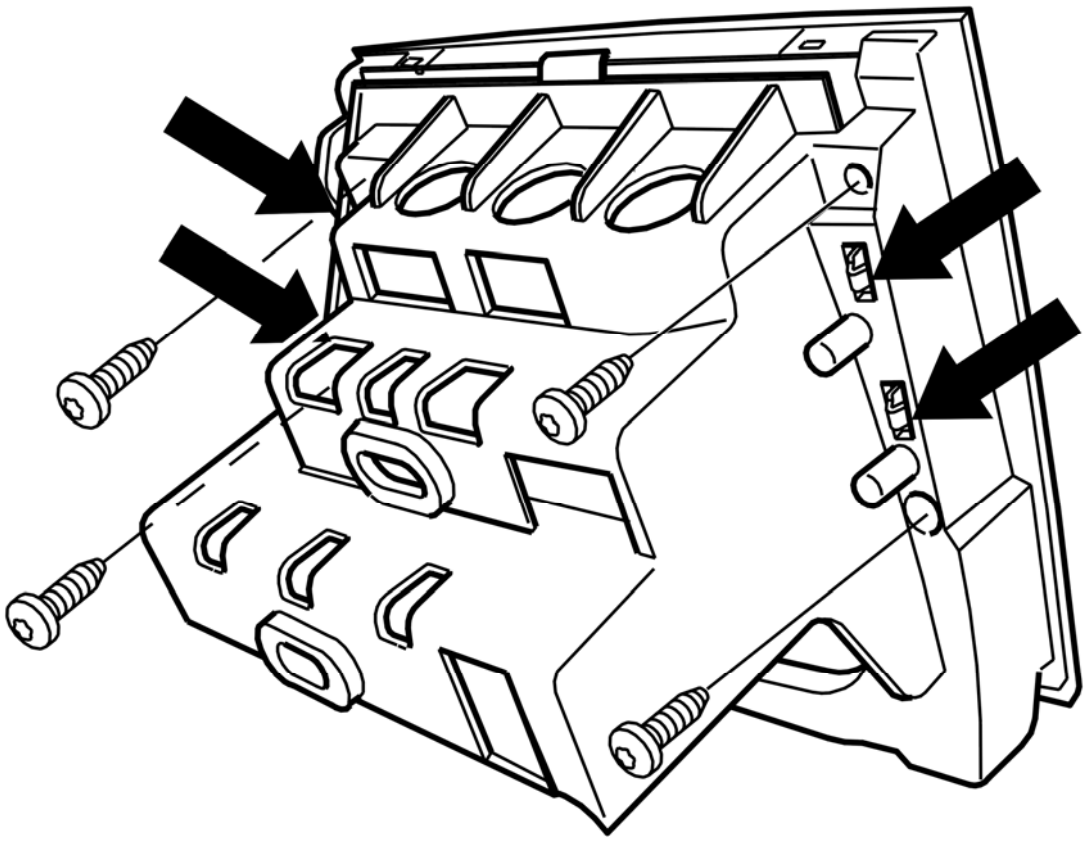

Fig. 155: Identifying Infotainment Module Connectors And Screws
Courtesy of VOLVO CARS CORPORATION

Remove the infotainment unit screws.

Release the clips and remove the infotainment unit from the bracket.

REMOVING THE MINIDISC / CD CONTROL MODULE

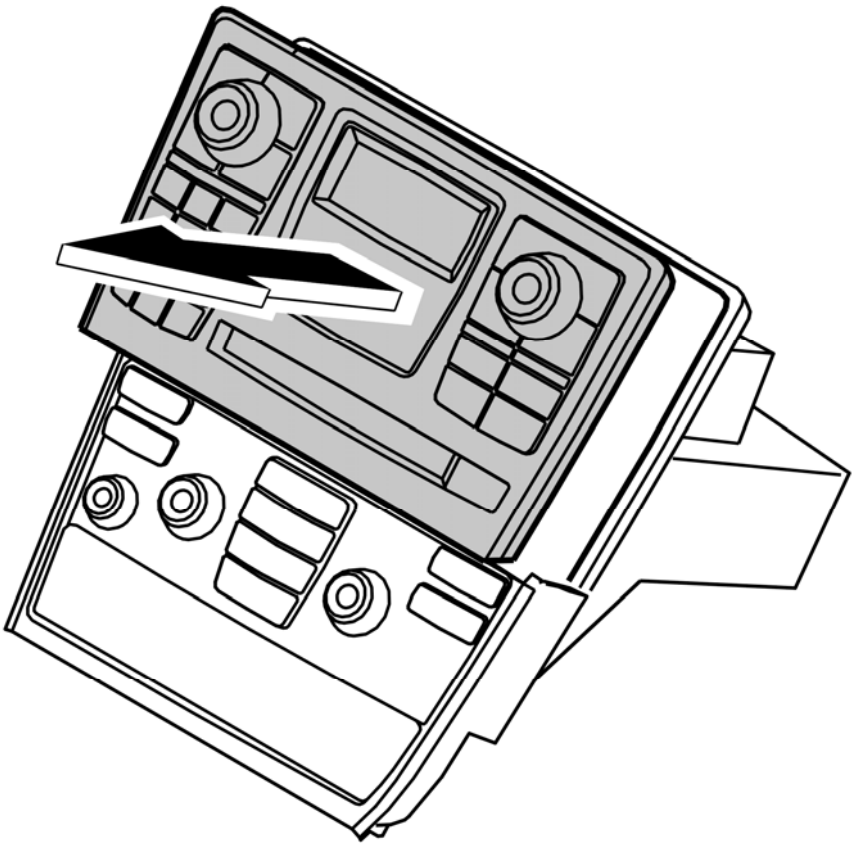

Fig. 156: Identifying Infotainment Control Module Removal
Courtesy of VOLVO CARS CORPORATION

CAUTION: If both a MiniDisc and CD control module is installed. Always remove the MiniDisc control module first.

Remove the screws.

Remove the MiniDisc and/or CD control module.

INSTALLING THE MINIDISC / CD CONTROL MODULE

NOTE: For tightening torques, see: TIGHTENING TORQUE .

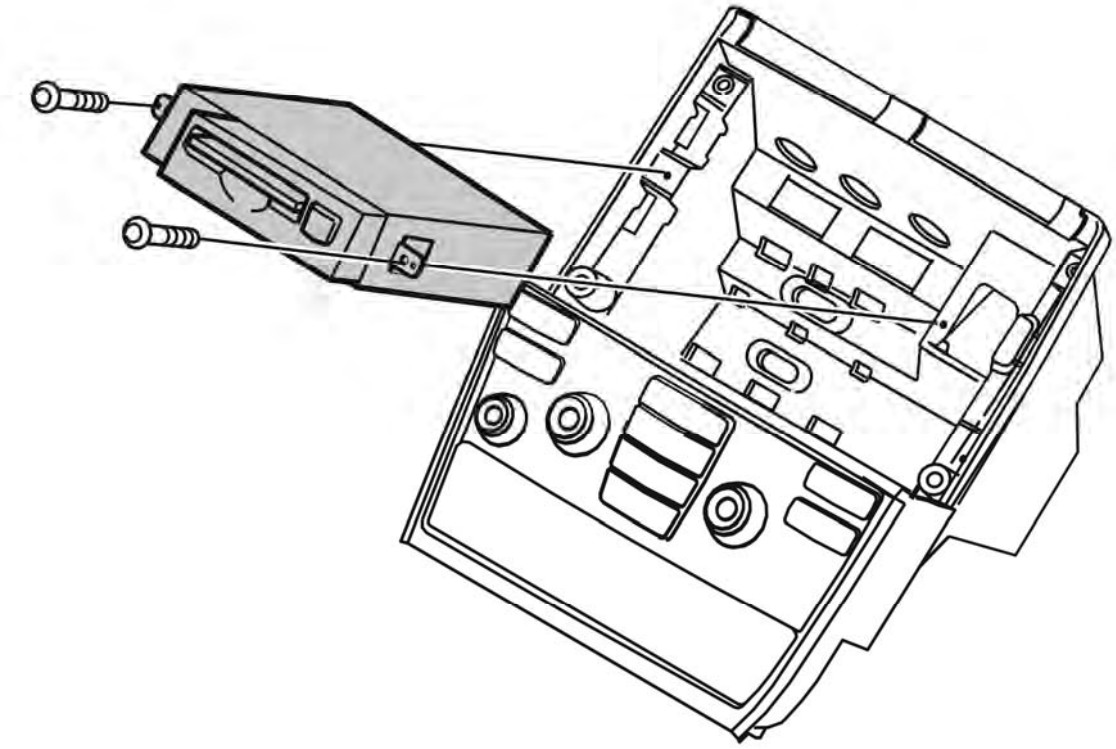

Fig. 157: Installing The Minidisc / CD Control Module
Courtesy of VOLVO CARS CORPORATION

CAUTION: If installing both a MiniDisc and CD control module. Always install the CD unit first.

Install the MiniDisc / CD control module.

Install the screws.

FINISHING WORK

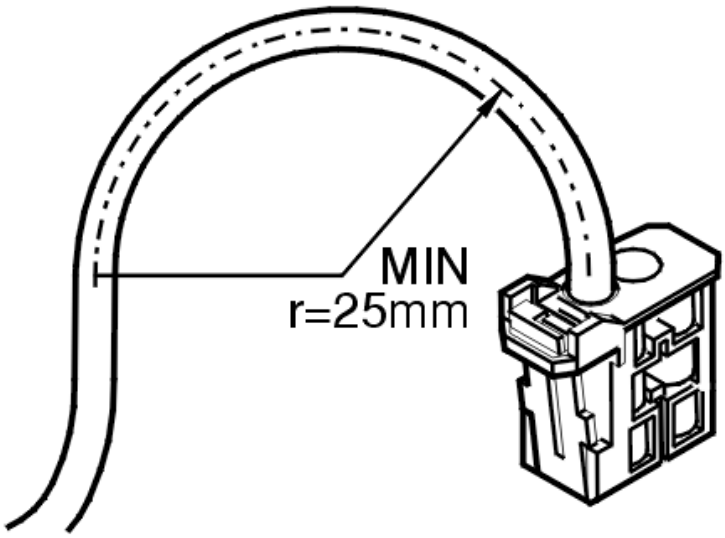

Fig. 158: Identifying Maximum Bend Radius Of Optic Cable
Courtesy of VOLVO CARS CORPORATION

Press the infotainment unit into place on the bracket.

Install the screws. Tighten.

Connect the connectors.

NOTE: **The connectors for the MiniDisc / CD control module are identical and can be switched.**

Check that there is no dirt in the optical connectors.

The bend radius of the optic cables must not be less than 25 mm .

Angle in the infotainment / dashboard environment panel and bracket.

HINT: Align the upper section and press it upwards so that the lower section can be worked in.

Install:

- 2 screws in the lower edge of the bracket

- the top of the tunnel compartment
- the 6 screws
- the rear cover
- the panel at the gear selector lever.

ORDERING SOFTWARE

Order software for the MiniDisc control module. See 8691146 .

Order software for the CD control module. See 8691147 .

RECEIVER AM/FM (ATM), REPLACING

REMOVAL

NOTE: **As the illustrations in this service information are used for different model years and / or models, some variation may occur. However, the essential information in the illustrations is always correct.**

LOCATION

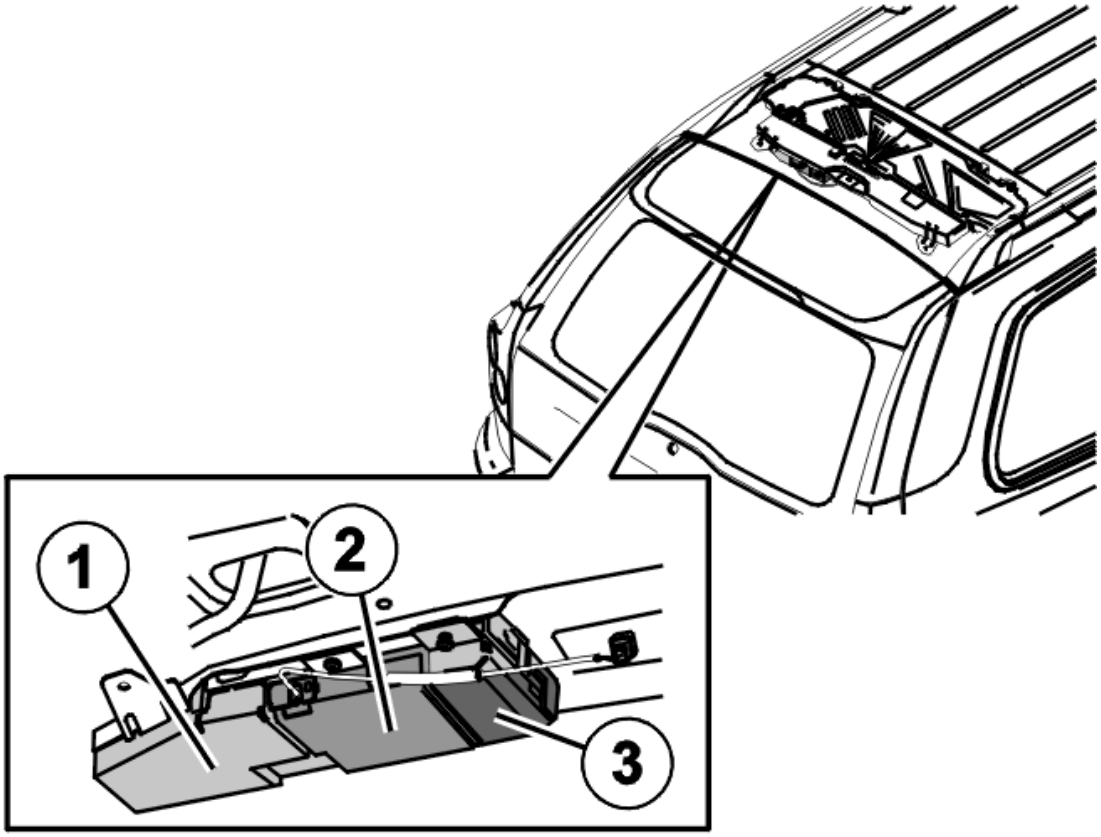

Fig. 159: AM/FM Receiver Location
Courtesy of VOLVO CARS CORPORATION

1. Receiver AM/FM (ATM)
2. Receiver TMC, see also, see **RECEIVER GPS, TMC (ATM), REPLACE**.
3. Receiver GPS, see also, see **RECEIVER GPS, TMC (ATM), REPLACE**.

PREPARATORY WORK

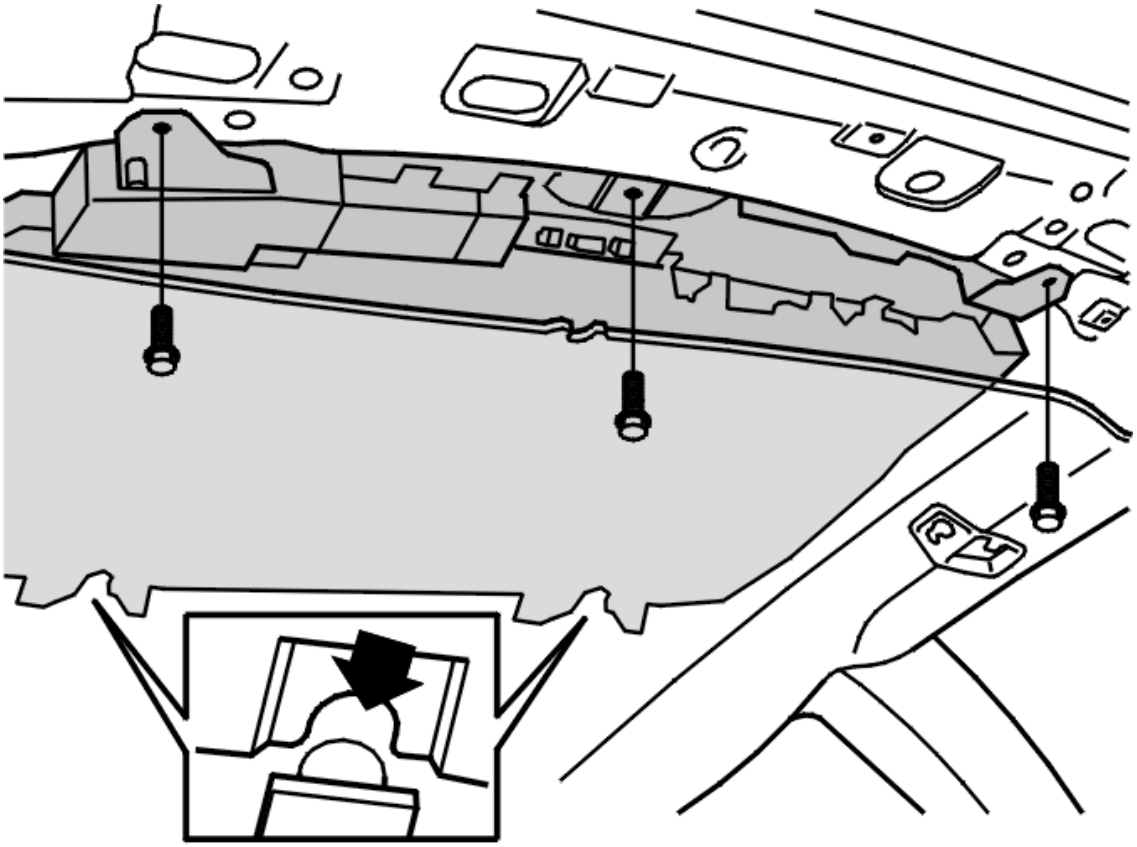

Fig. 160: Removing Aerial Mounting
Courtesy of VOLVO CARS CORPORATION

Remove the aerial mounting and the aerial. See **ANTENNA WITH ANTENNA MOUNTING (ATM), REPLACING**.

REMOVING THE AM/FM RECEIVER

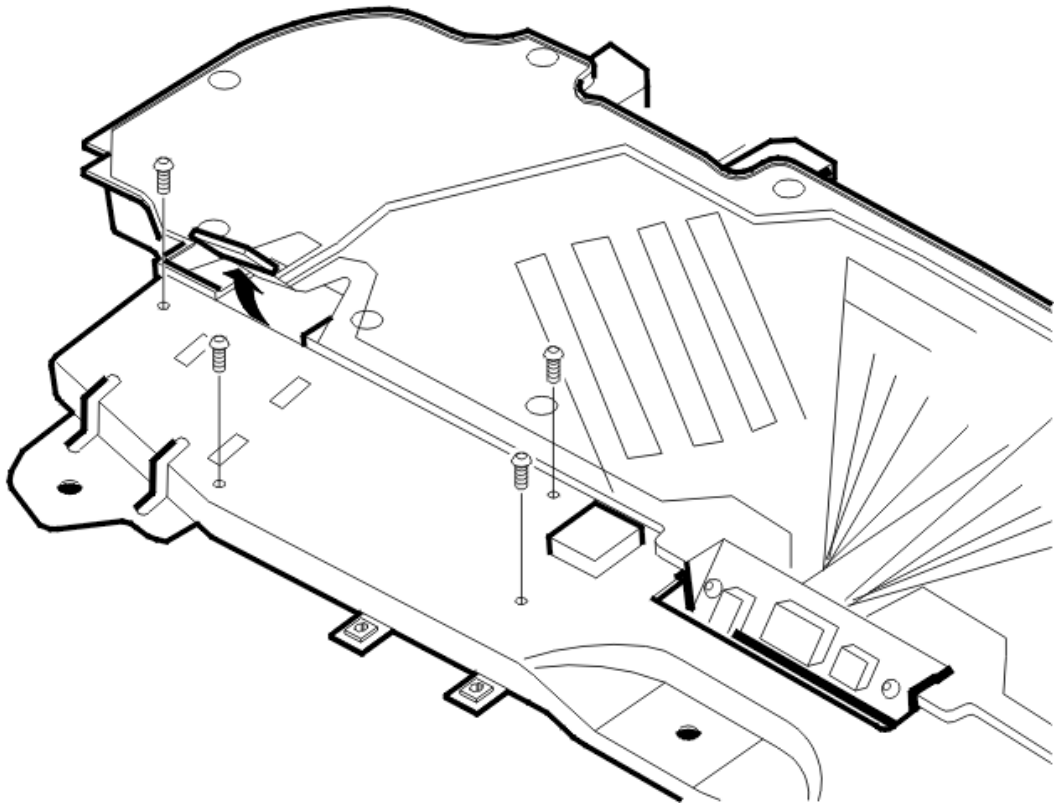

Fig. 161: Removing The AM/FM Receiver
Courtesy of VOLVO CARS CORPORATION

CAUTION: The connector for the antenna cover is fragile. Be careful when removing/installing.

Remove:

- the connectors
- the screws
- the AM/FM receiver
- the GPS receiver if applicable. See **RECEIVER GPS, TMC (ATM), REPLACE** and TMC, see **RECEIVER GPS, TMC (ATM), REPLACE**.

INSTALLATION

INSTALLING THE AM/FM RECEIVER

- Install the GPS receiver if applicable, see **RECEIVER GPS, TMC (ATM), REPLACE** and TMC, see **RECEIVER GPS, TMC (ATM), REPLACE**.
- Align the AM/FM receiver
- Install and tighten the screws

CAUTION: The connector for the antenna cover is fragile. Be careful when removing/installing.

- Connect the connectors.

FINISHING WORK

Install the aerial mounting and the aerial. See **ANTENNA WITH ANTENNA MOUNTING (ATM), REPLACING**.

ORDERING SOFTWARE

NOTE: After replacing the AM/FM (ATM) receiver, new software must be ordered and programmed.

Order the software. See 8691145 .

Test the function.

RECEIVER GPS, TMC (ATM), REPLACE

NOTE: As the illustrations in this service information are used for different model years and / or models, some variation may occur. However, the essential information in the illustrations is always correct.

LOCATION

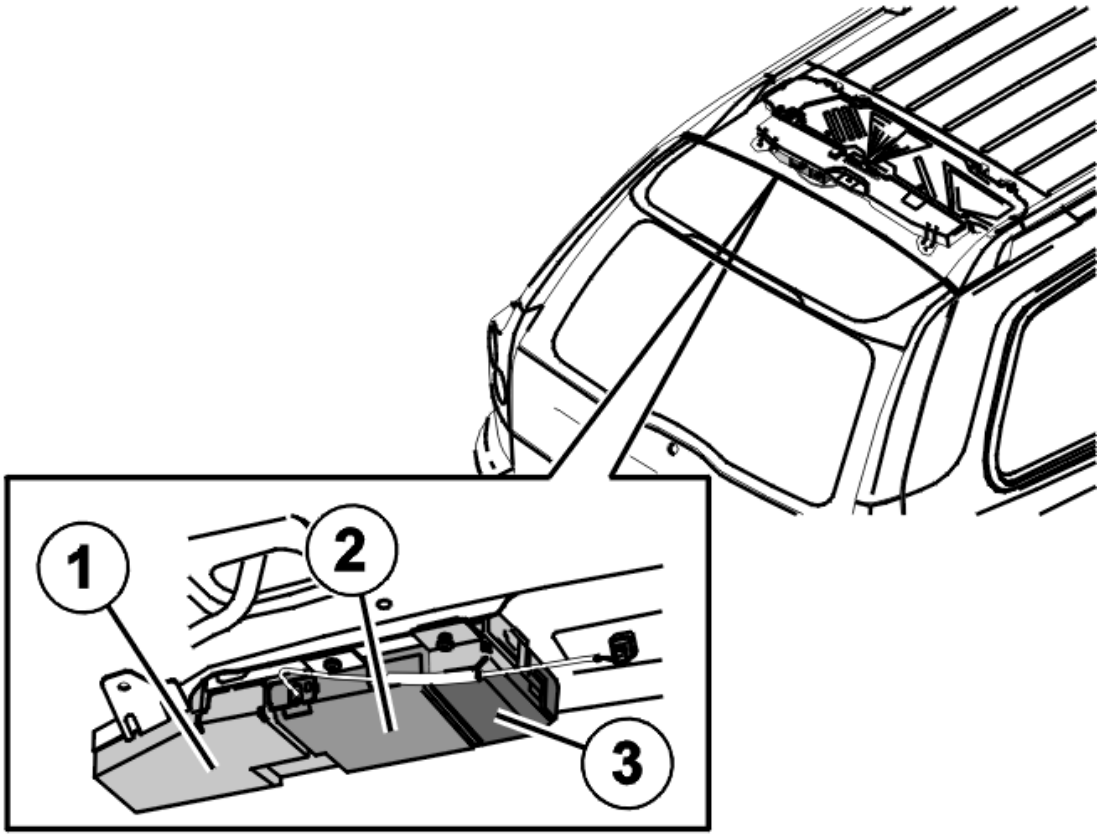

Fig. 162: AM/FM Receiver Location
Courtesy of VOLVO CARS CORPORATION

1. The AM/FM receiver, see also, see **RECEIVER AM/FM (ATM), REPLACING**
2. Receiver TMC
3. Receiver GPS.

PREPARATORY WORK

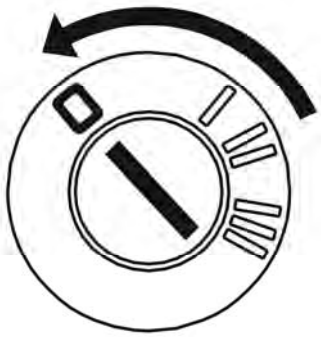

Fig. 163: Identifying Ignition In OFF Position
Courtesy of VOLVO CARS CORPORATION

Ignition off.

Remove the cantrail. See **PANEL CANTRAIL, REPLACING** .

REMOVING THE RECEIVER GPS/TMC

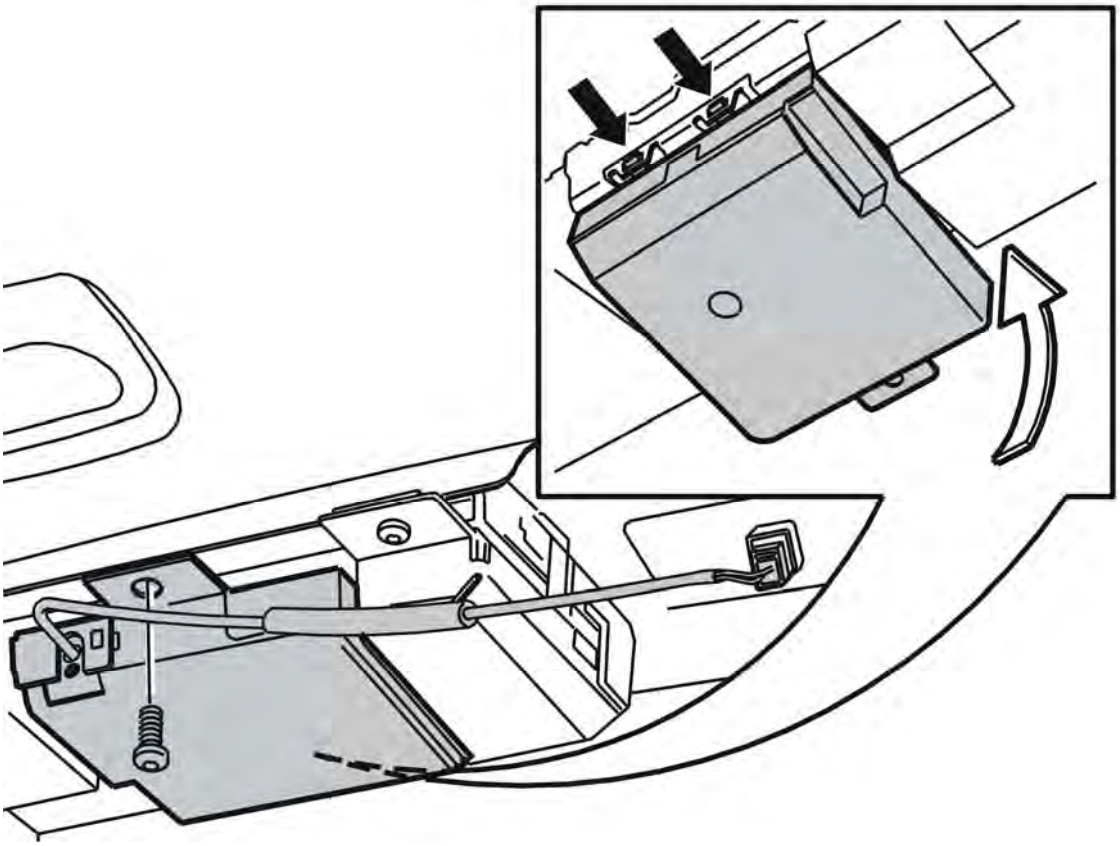

Fig. 164: Removing The Receiver GPS/TMC
Courtesy of VOLVO CARS CORPORATION

NOTE: The TMC receiver must always be removed before the GPS receiver. See the illustration.

- Disconnect connector
- Remove the screws
- Remove the receiver.

INSTALLING THE GPS/TMC RECEIVER

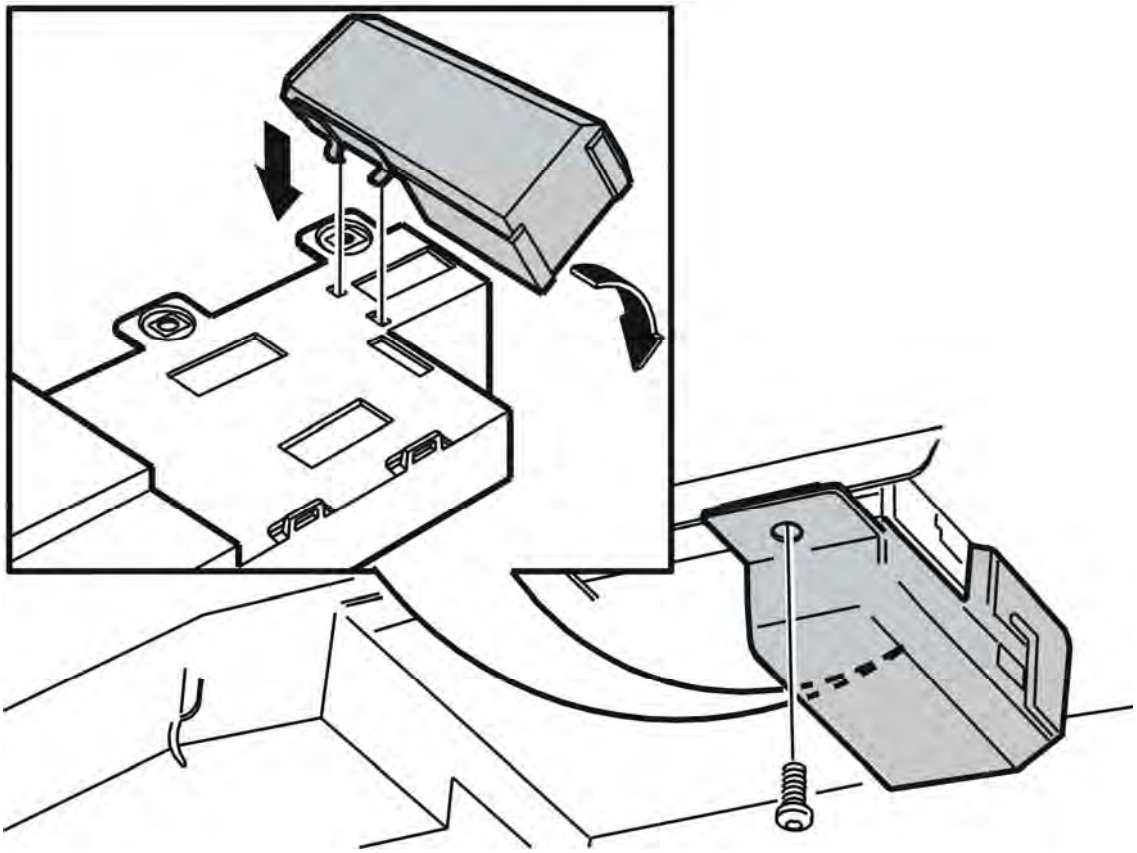

Fig. 165: Installing The GPS/TMC Receiver
Courtesy of VOLVO CARS CORPORATION

NOTE: The GPS receiver must always be installed before the TMC receiver. See the illustration.

Align the receiver.

Install the screws. Tighten.

Connect any connectors

FINISHING WORK

Install the cantrail. See **PANEL CANTRAIL, REPLACING** .

Test the function.

SUBWOOFER MODULE (SUB), REPLACING

see **SUBWOOFER MODULE (SUB), REPLACING**

RADIO EQUIPMENT (2007-2012)

ANTENNA AMPLIFIER

NOTE: Removal steps in this procedure may contain installation details.

For AM/FM 1 antenna

Remove the right side panel. See **SIDE PANEL CARGO COMPARTMENT, REPLACEMENT** .

For FM 2 antenna

Remove the left side panel. See **SIDE PANEL CARGO COMPARTMENT, REPLACEMENT** .

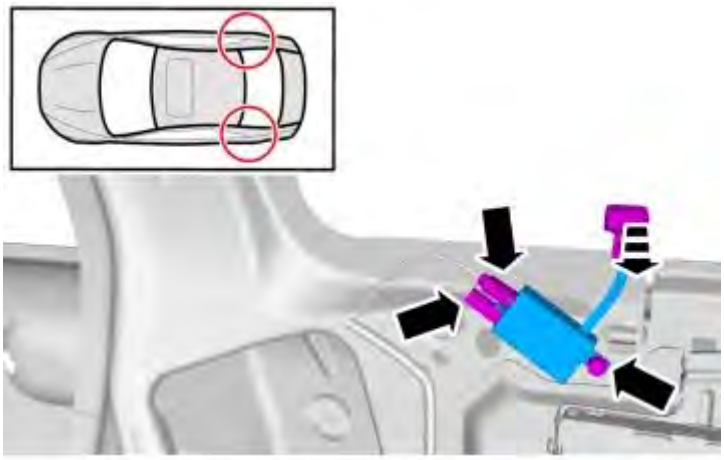

Fig. 166: Antenna Location
Courtesy of VOLVO CARS CORPORATION

Tighten, M6. See **TIGHTENING TORQUE**

INSTALLATION

To install, reverse the removal procedure

AUDIO MODULE (AUD), REPLACING

PREPARATORY WORK

NOTE: As the illustrations in this service information are used for different model years and / or models, some variation may occur. However, the essential information in the illustrations is always correct.

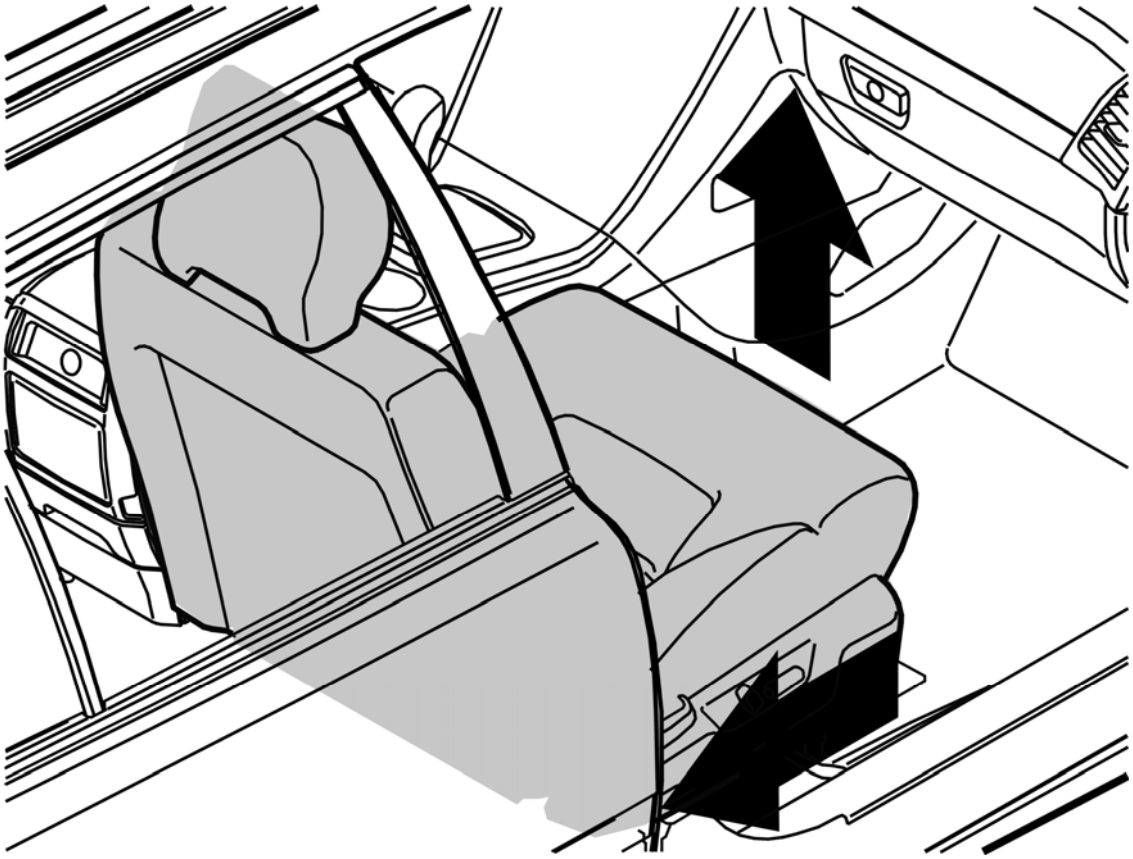

Fig. 167: Moving Right-Hand Front Seat To Its Rearmost Position
Courtesy of VOLVO CARS CORPORATION

The audio module (AUD) is under the right front seat.

Move the right-hand front seat to its rearmost position.

Ignition off.

REMOVING THE CONTROL MODULE

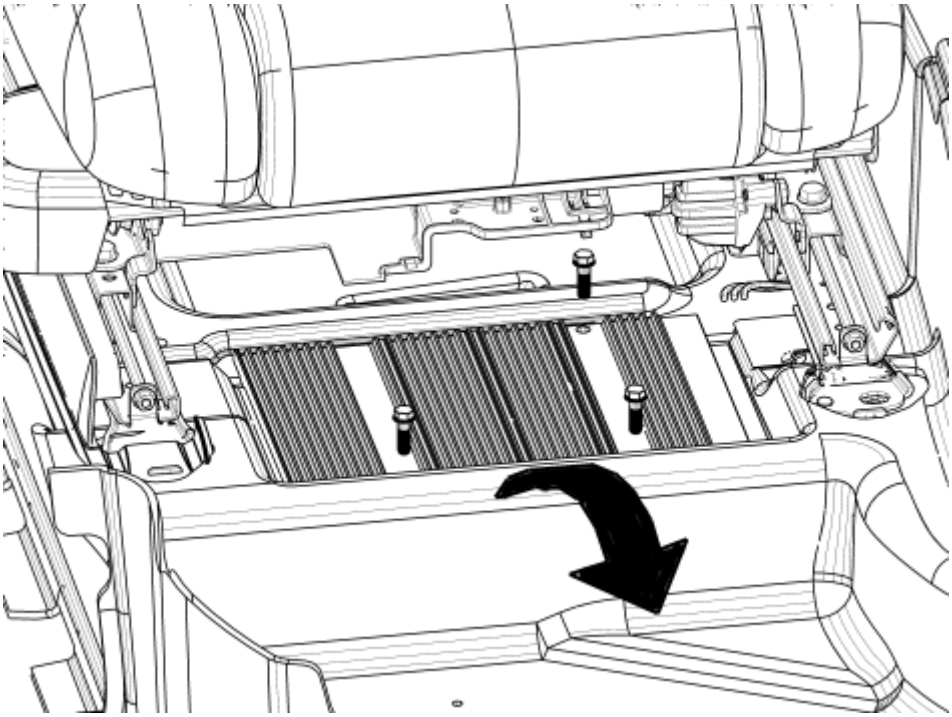

Fig. 168: Identifying Screws
Courtesy of VOLVO CARS CORPORATION

Remove the screws.

Disconnect the connectors.

INSTALLING THE CONTROL MODULE

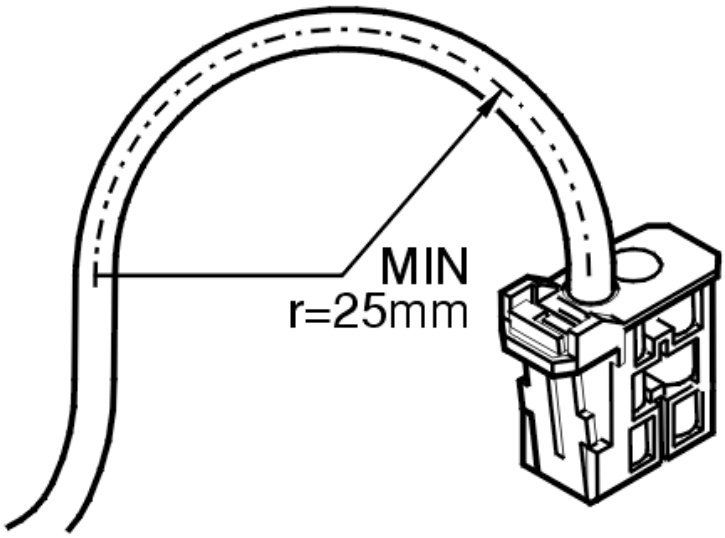

Fig. 169: Identifying Maximum Bend Radius Of Optic Cable
Courtesy of VOLVO CARS CORPORATION

NOTE: Check that there is no dirt in the optic connectors.

Reconnect connectors.

NOTE: The bend radius of the optic cables must not be less than 25 mm .

Install:

- audio module (AUD)
- the screws. Tighten.

ORDERING SOFTWARE

NOTE: After replacing the audio module (AUD), new software must be ordered and programmed.

Order the software. See 8691143 .

CENTRAL LOUDSPEAKER, REPLACING

The illustrations in this service information are used for different model years and/or models. Some variation may occur. However, the essential information in the illustrations is always correct.

CENTER LOUDSPEAKER WITHOUT DISPLAY SCREEN, REPLACING

REMOVING THE CENTER LOUDSPEAKER WHERE THERE IS NO DISPLAY SCREEN

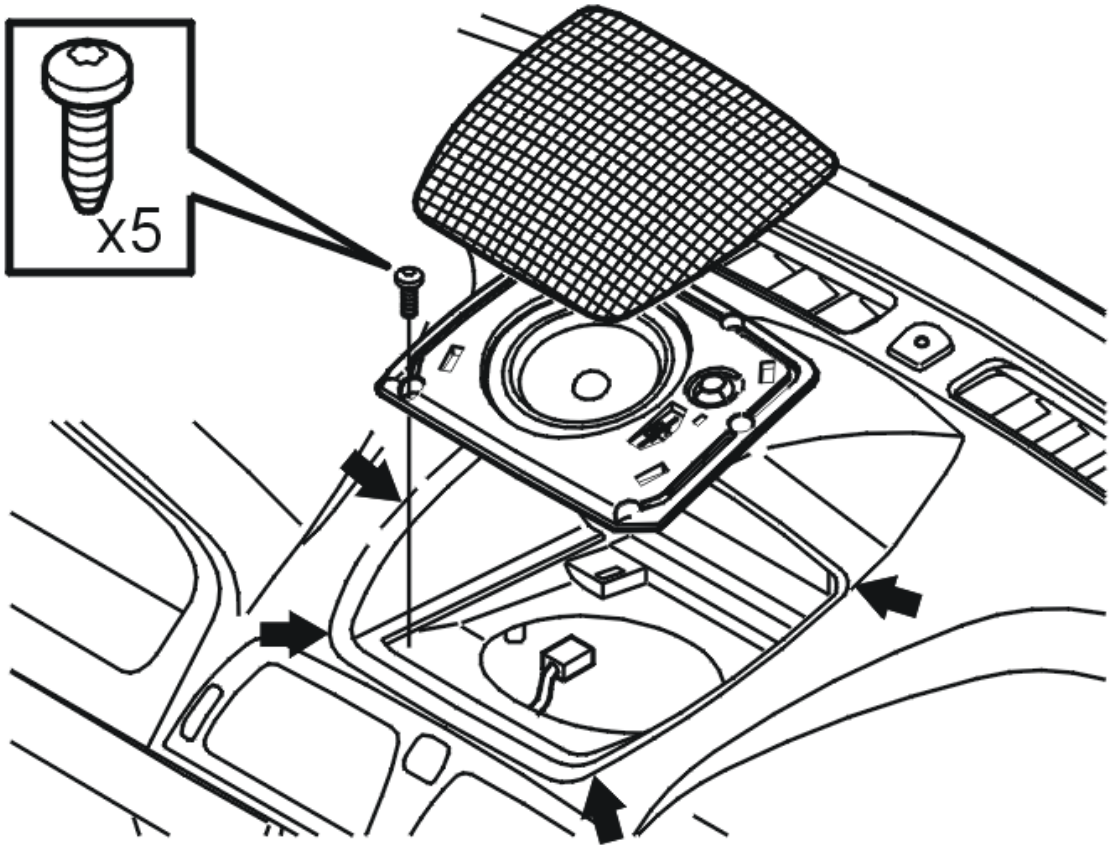

Fig. 170: Identifying Center Loudspeaker Removal (No Display Screen)
Courtesy of VOLVO CARS CORPORATION

Remove the loudspeaker grille. Use: see **9512943** protruding between the dashboard and the loudspeaker grille (at the arrows). Turn a quarter turn and pull up.

Remove the five screws.

Lift up the loudspeaker.

Remove the connector.

INSTALLING THE CENTER LOUDSPEAKER

Install:

- the connector for the loudspeaker

- the loudspeaker
- the 5 screws. Tighten.

Press the loudspeaker grille into place.

CENTER LOUDSPEAKER WITH DISPLAY SCREEN, REPLACING

REMOVING THE CENTER LOUDSPEAKER WHERE THERE IS A DISPLAY SCREEN

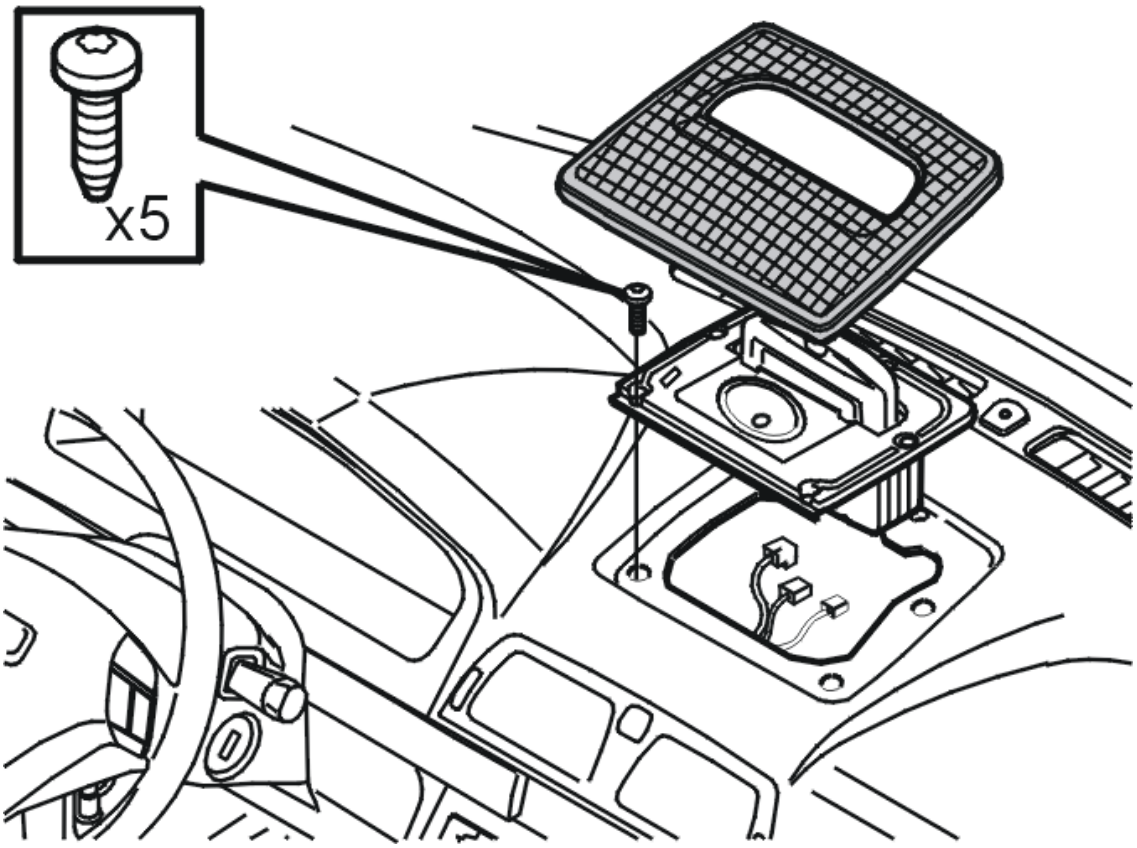

Fig. 171: Identifying Center Loudspeaker Removal (With Display Screen)
Courtesy of VOLVO CARS CORPORATION

Remove:

- the loudspeaker grille. Use: see **9512943** protruding between the dashboard and the loudspeaker grille (at the arrows). Turn a quarter turn and pull up
- the five screws.

Lift up the bracket for the loudspeaker / display screen.

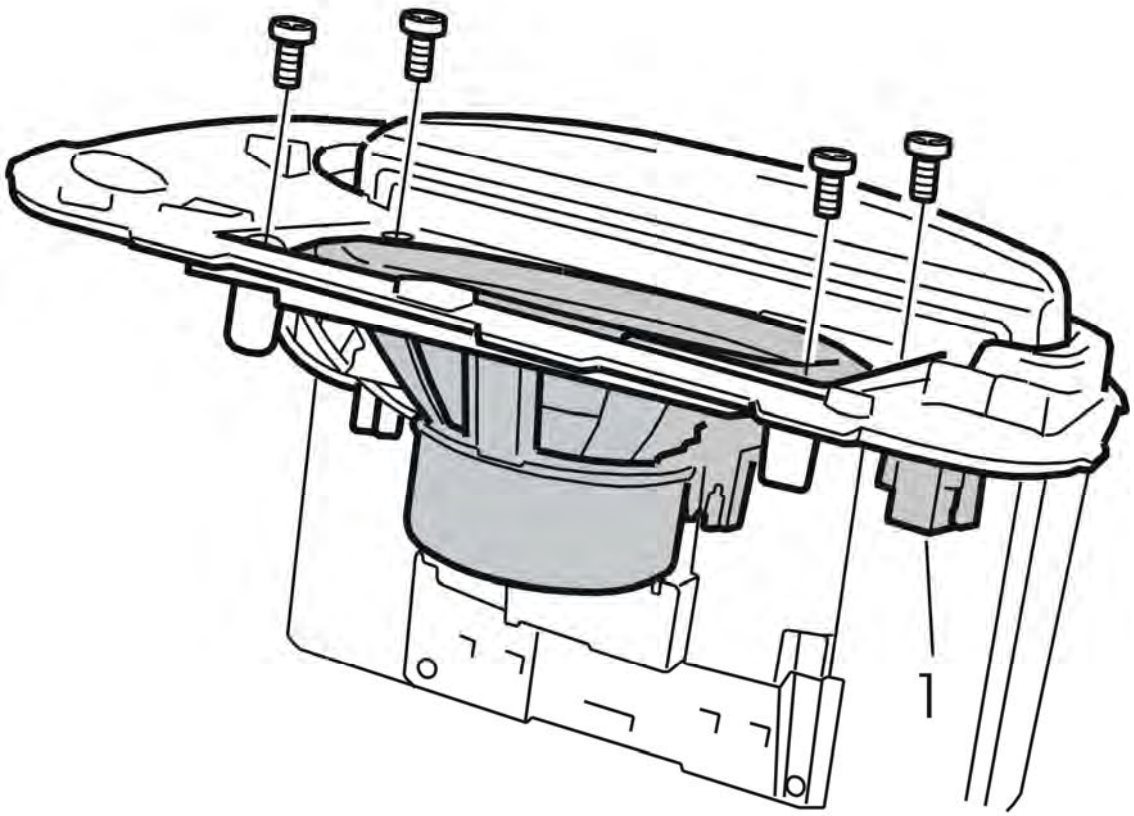

Fig. 172: Identifying Loudspeaker, Screws & Connector
Courtesy of VOLVO CARS CORPORATION

Remove:

- the connector for the loudspeaker
- the four screws.

Lift out the loudspeaker.

INSTALLING THE CENTER LOUDSPEAKER WHERE THERE IS A DISPLAY SCREEN

Install:

- the loudspeaker
- the 4 screws. Tighten
- the connector for the loudspeaker
- the bracket for the loudspeaker / display screen
- the 5 screws. Tighten.

Press the cover / grille into place.

EXTRA AUDIO INPUT (AUX) (2009, 2010)

REMOVAL

Remove the tunnel compartment according to: **CENTER CONSOLE, REPLACING**

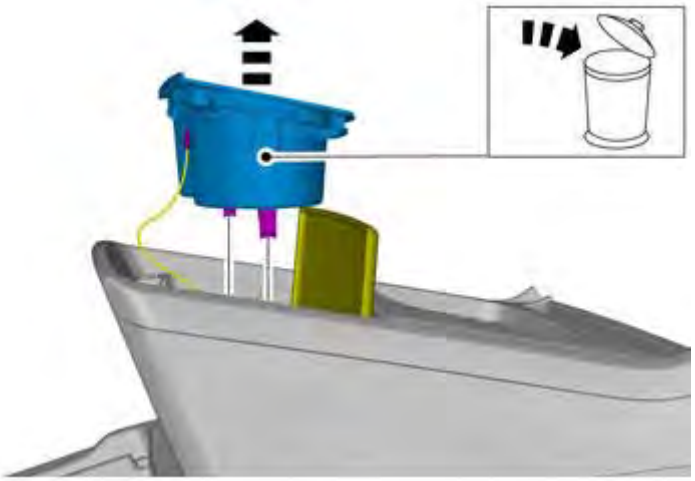

Fig. 173: Extra Audio Input Removal (1 of 6)
Courtesy of VOLVO CARS CORPORATION

Remove existing (AUX) cable harness.

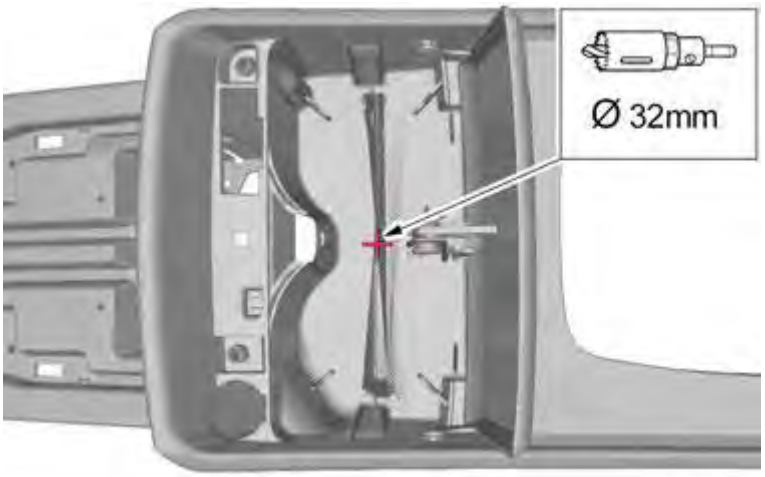

Fig. 174: Extra Audio Input Removal (2 of 6)
Courtesy of VOLVO CARS CORPORATION

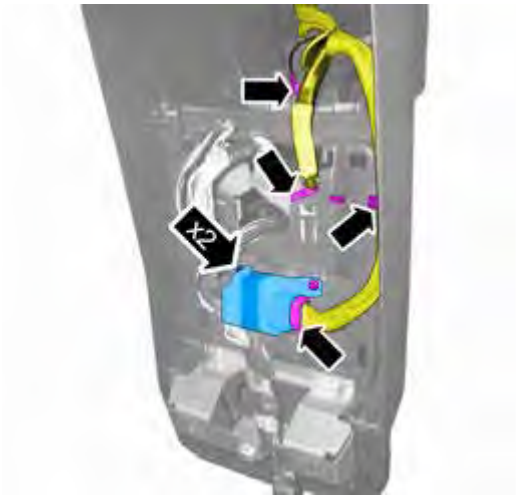

Fig. 175: Extra Audio Input Removal (3 of 6)
Courtesy of VOLVO CARS CORPORATION

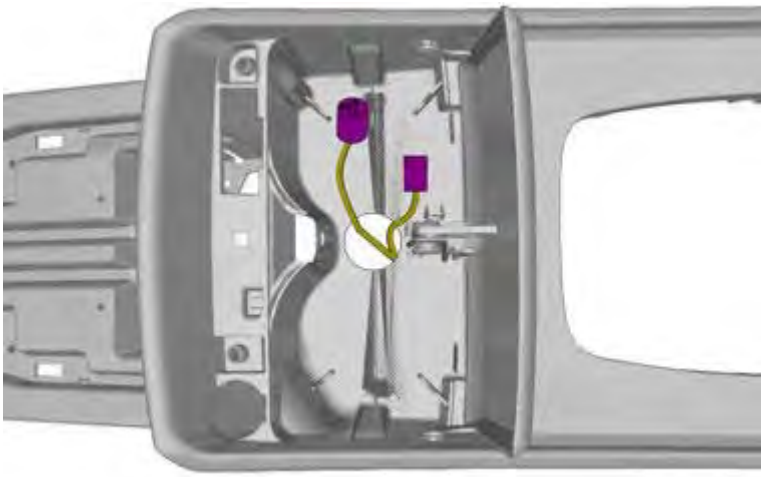

Fig. 176: Extra Audio Input Removal (4 of 6)
Courtesy of VOLVO CARS CORPORATION

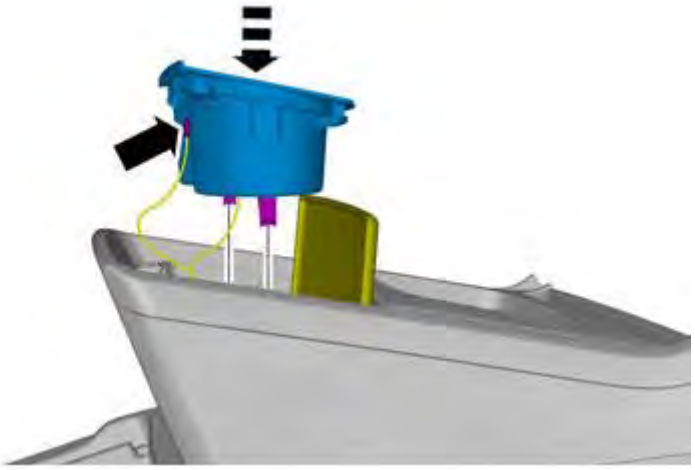

Fig. 177: Extra Audio Input Removal (5 of 6)
Courtesy of VOLVO CARS CORPORATION

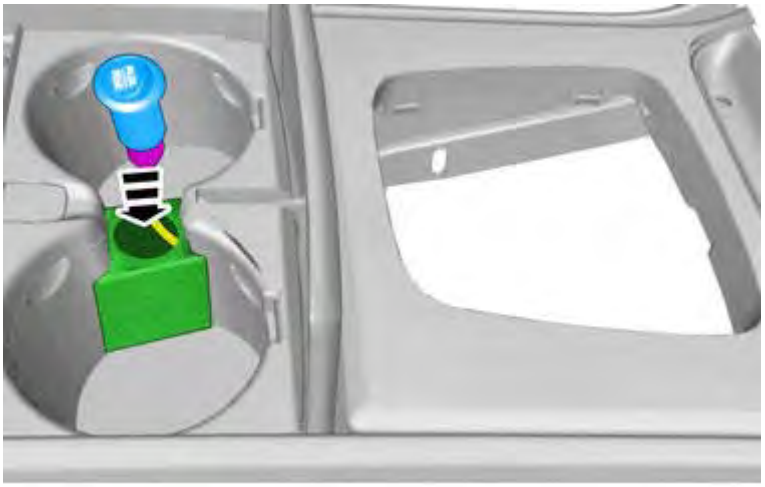

Fig. 178: Extra Audio Input Removal (6 of 6)
Courtesy of VOLVO CARS CORPORATION

INSTALLATION

To install, reverse the removal procedure.

LOUDSPEAKER, D-POST, REPLACING

As the illustrations in this service information are used for different model years and / or models, some variation may occur. However, the essential information in the illustrations is always correct.

REMOVING THE LOUDSPEAKER IN THE D-POST

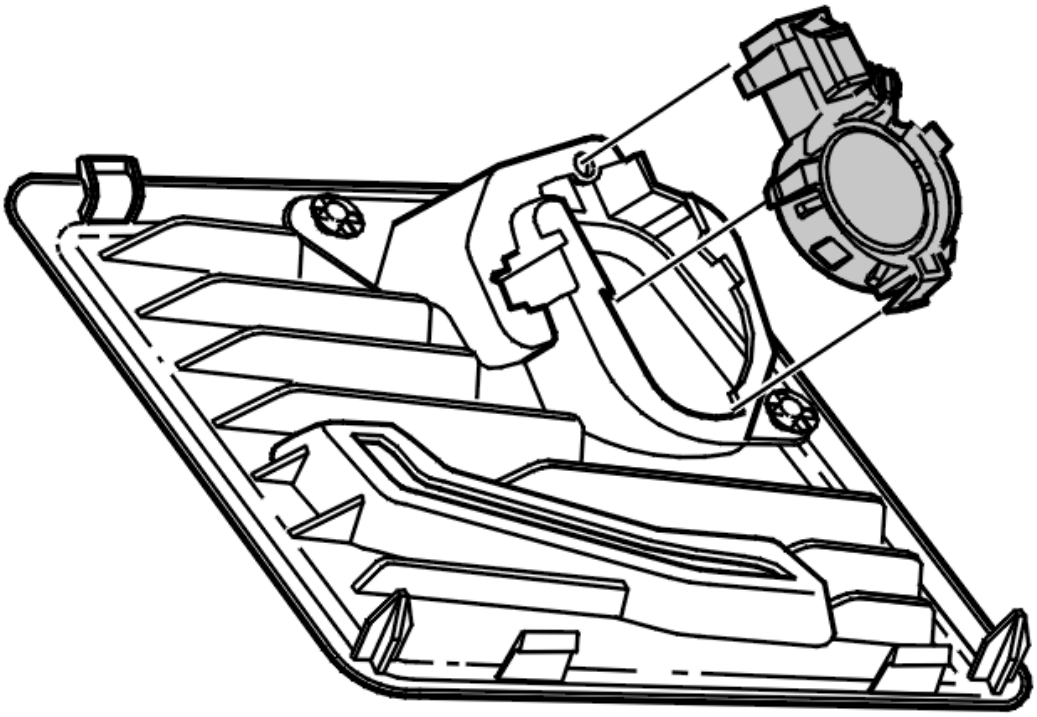

Fig. 179: Removing The Loudspeaker In The D-Post
Courtesy of VOLVO CARS CORPORATION

Remove:

- the cover in the D-post panel
- the connector.

Unsnap the loudspeaker.

INSTALLING THE LOUDSPEAKER IN THE D-POST

Snap the loudspeaker into the bracket.

Install:

- the connector
- the cover in the D-post panel.

LOUDSPEAKER, FRONT SIDE DOOR, REPLACING

As the illustrations in this service information are used for different model years and / or models, some variation may occur. However, the essential information in the illustrations is always correct.

Included in this method are methods for:

- the loudspeaker in the front side door. See **LOUDSPEAKER, FRONT SIDE DOOR, REPLACING**
- the **upper** loudspeaker in the front side door. See **UPPER LOUDSPEAKER FRONT SIDE DOOR, REPLACING**.

LOUDSPEAKER, FRONT SIDE DOOR, REPLACING

REMOVING THE LOUDSPEAKER FROM THE FRONT SIDE DOOR

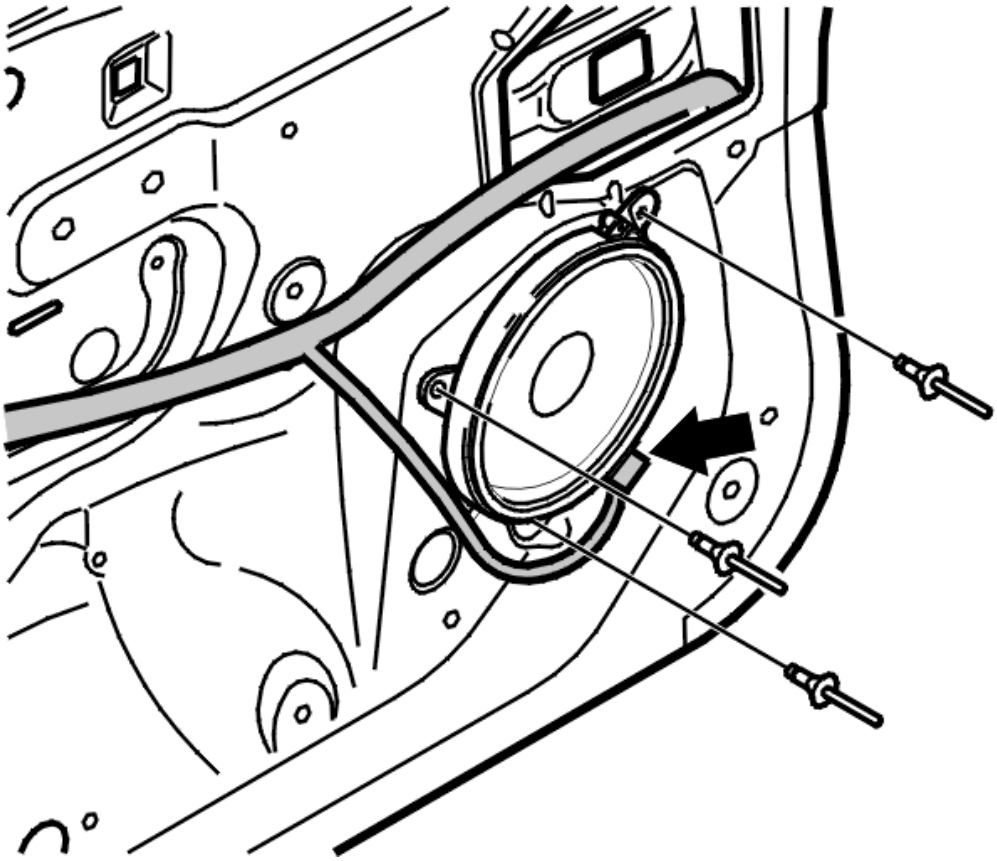

Fig. 180: Removing The Loudspeaker From The Front Side Door
Courtesy of VOLVO CARS CORPORATION

Remove:

- the panel. See **PANEL FRONT SIDE DOOR, REPLACING**
- the rivets. See **REMOVING RIVET**
- the connector
- the loudspeaker.

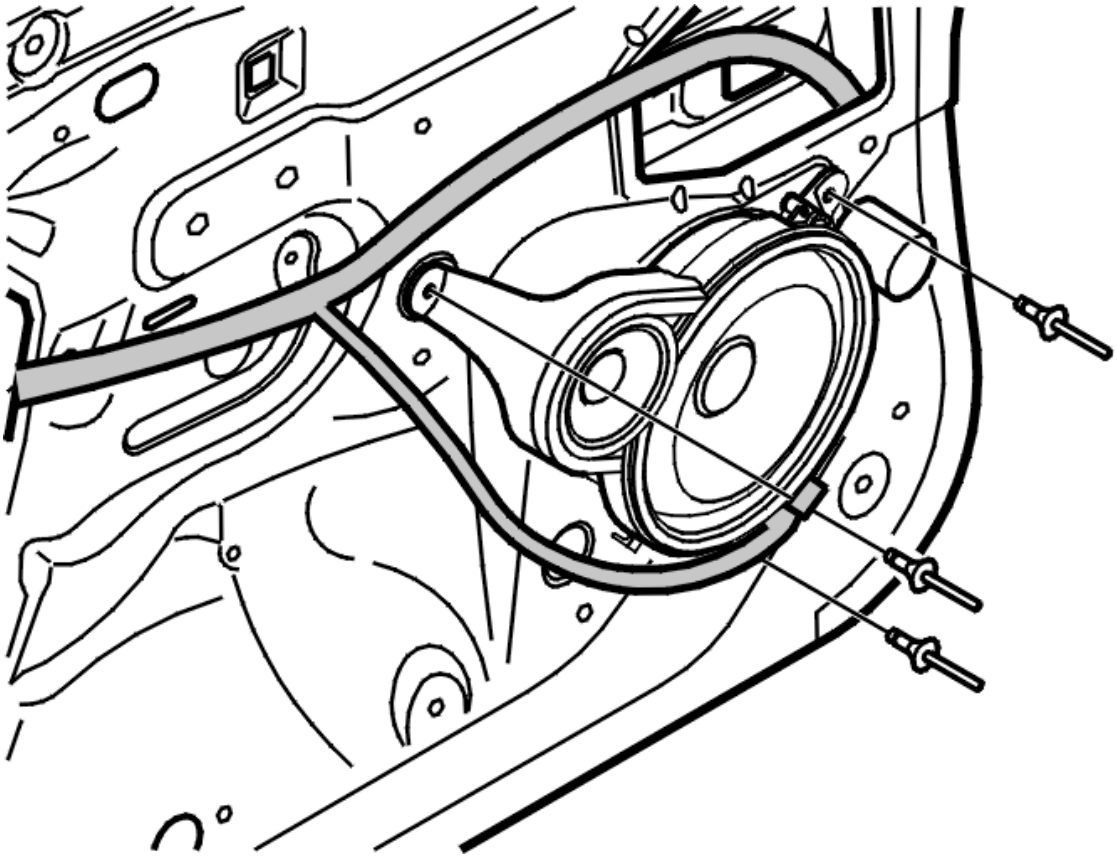

Fig. 181: Removing The Loudspeaker From The Front Side Door
Courtesy of VOLVO CARS CORPORATION

INSTALLING THE LOUDSPEAKER IN THE FRONT SIDE DOOR

Install:

- the loudspeaker
- the connector
- the 3 rivets
- the panel. See **PANEL FRONT SIDE DOOR, REPLACING** .

UPPER LOUDSPEAKER FRONT SIDE DOOR, REPLACING

REMOVING THE UPPER LOUDSPEAKER FROM THE FRONT SIDE DOOR

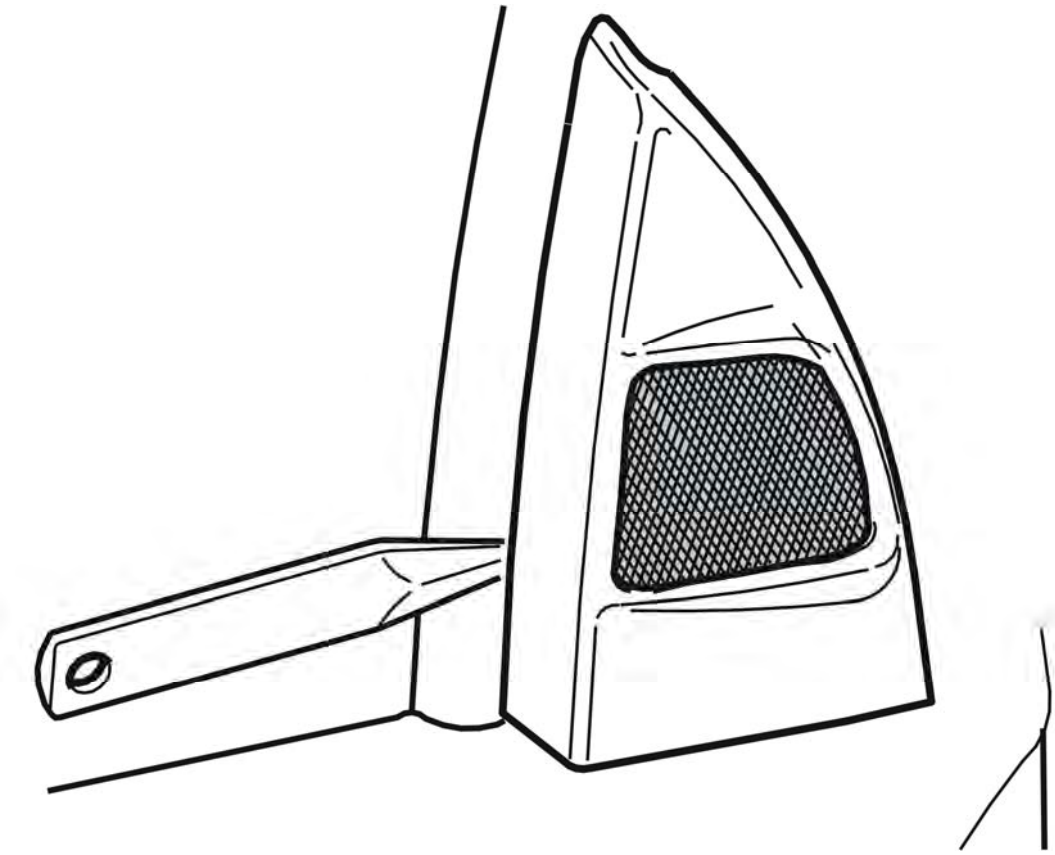

Fig. 182: Removing The Upper Loudspeaker From The Front Side Door
Courtesy of VOLVO CARS CORPORATION

Remove:

- the loudspeaker panel
- the connector.

Replace the entire unit.

INSTALLING THE UPPER LOUDSPEAKER IN THE FRONT SIDE DOOR

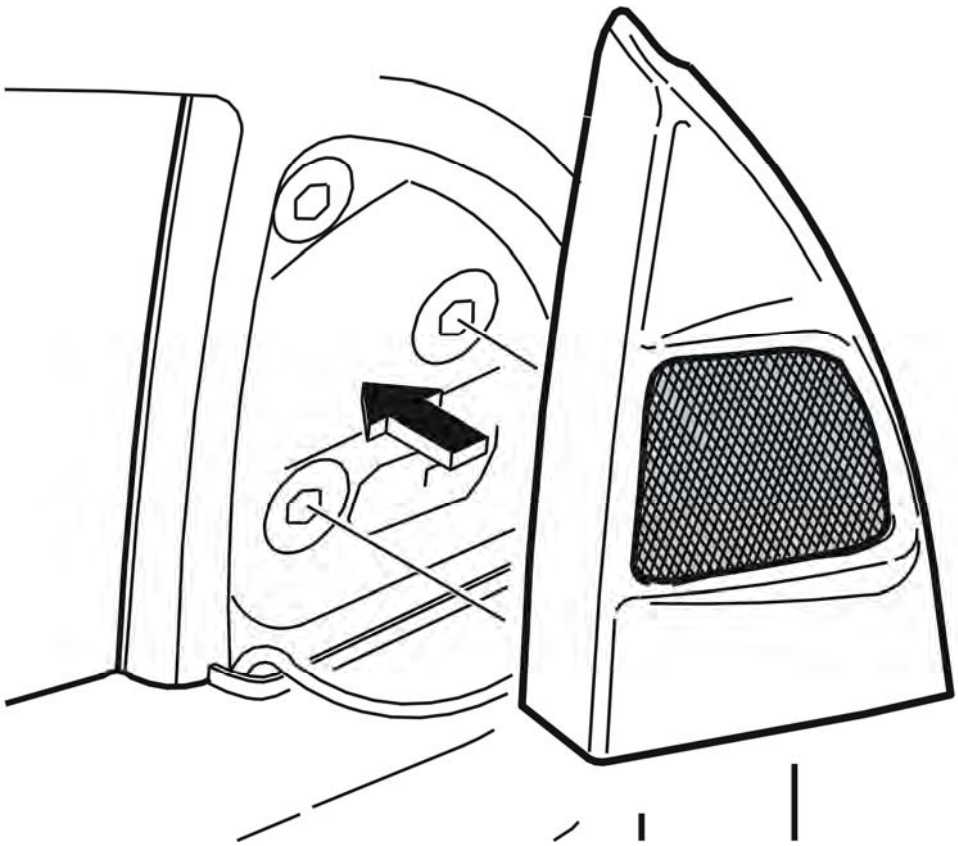

Fig. 183: Installing The Upper Loudspeaker In The Front Side Door
Courtesy of VOLVO CARS CORPORATION

Install:

- the connector
- the loudspeaker panel.

LOUDSPEAKER, REAR SIDE DOOR, REPLACING

As the illustrations in this service information are used for different model years and / or models, some variation may occur. However, the essential information in the illustrations is always correct.

REMOVING THE LOUDSPEAKER FROM THE REAR SIDE DOOR

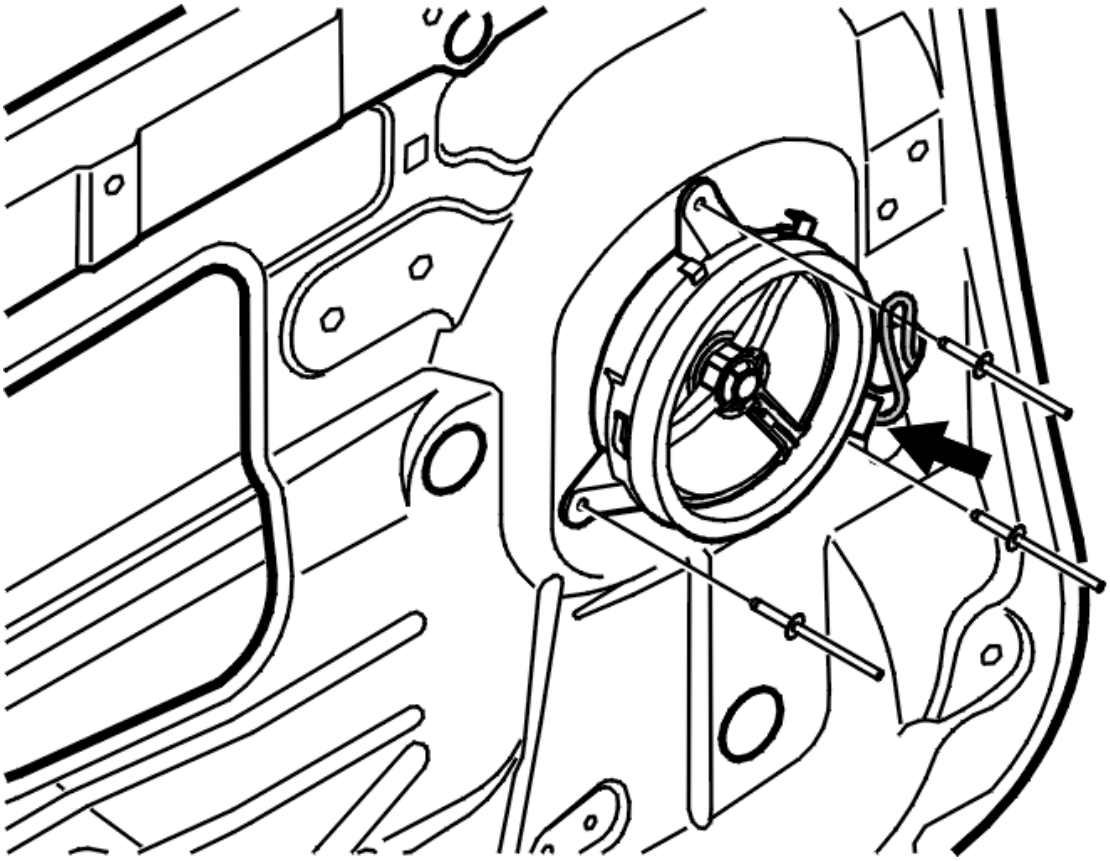

Fig. 184: Removing The Loudspeaker From The Rear Side Door
Courtesy of VOLVO CARS CORPORATION

Remove:

- the panel. See **PANEL REAR SIDE DOOR, REPLACING**
- the rivets. See **REMOVING RIVET**
- the connector
- the loudspeaker.

INSTALLING THE LOUDSPEAKER IN THE REAR SIDE DOOR

Install:

- the loudspeaker
- the connector
- the 3 rivets
- the panel. See **PANEL REAR SIDE DOOR, REPLACING** .

REMOVING RIVET

Special tools	

T9814075 SPRAY GUN
Tool number: T9814075
Tool description: SPRAY GUN
Tool boards:

Materials:	
Designation	**Part number**
Thin rustproofing agent	1161682

NOTE: If the pop rivet spins, drill at a 45° angle against the pop rivet.

Pay attention to heat generation when drilling in pop rivet mounted in plastic part.

Remove drill burrs and any remains of the rivet.

If possible, put tape on the back to catch pop rivet.

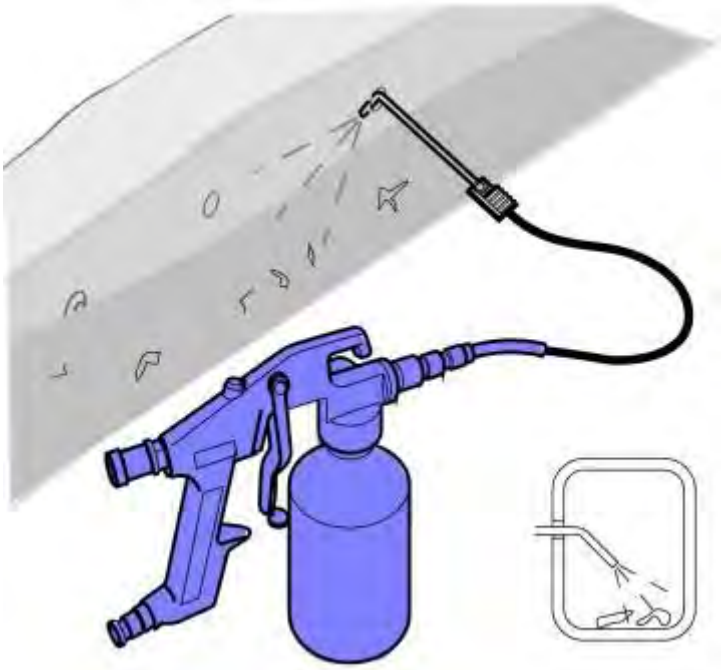

Fig. 185: Applying Thin Rustproofing Agent
Courtesy of VOLVO CARS CORPORATION

To avoid rattling if it is not possible to remove remains of rivet.

Use: Thin rustproofing agent, 1161682

see **9814075**

CAUTION: Make sure that rustproofing agent does not run out, discoloring the

upholstery or other.

SATELLITE RADIO CONTROL MODULE

NOTE: Removal steps in this procedure may contain installation details.

Remove the right side panel. See **SIDE PANEL CARGO COMPARTMENT, REPLACEMENT** .

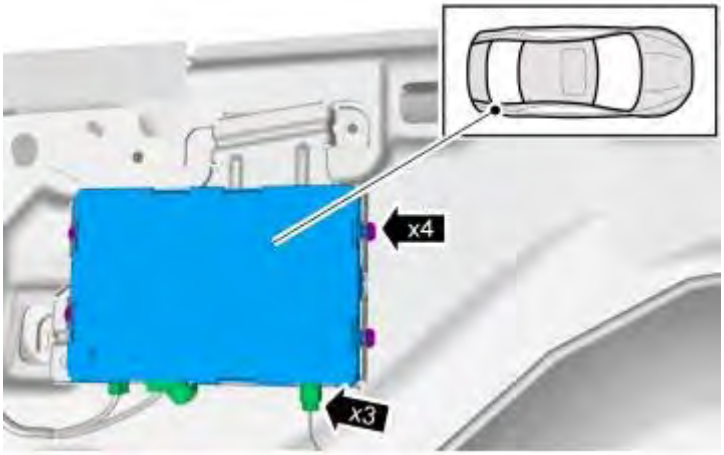

Fig. 186: Satellite Radio Control Module Location
Courtesy of VOLVO CARS CORPORATION

Torque: M6

10 Nm

INSTALLATION

To install, reverse the removal procedure.

ORDERING SOFTWARE

Order software for the control module. See: 30775465 .

SUBWOOFER MODULE (SUB), REPLACING

NOTE: As the illustrations in this service information are used for different model years and / or models, some variation may occur. However, the essential information in the illustrations is always correct.

PREPARATORY WORK

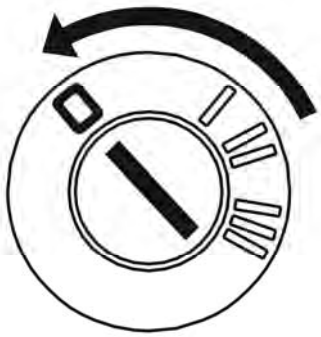

Fig. 187: Identifying Ignition In OFF Position
Courtesy of VOLVO CARS CORPORATION

Ignition off.

Remove the left-hand side panel in the cargo compartment. See **SIDE PANEL CARGO COMPARTMENT, REPLACEMENT** .

REMOVAL

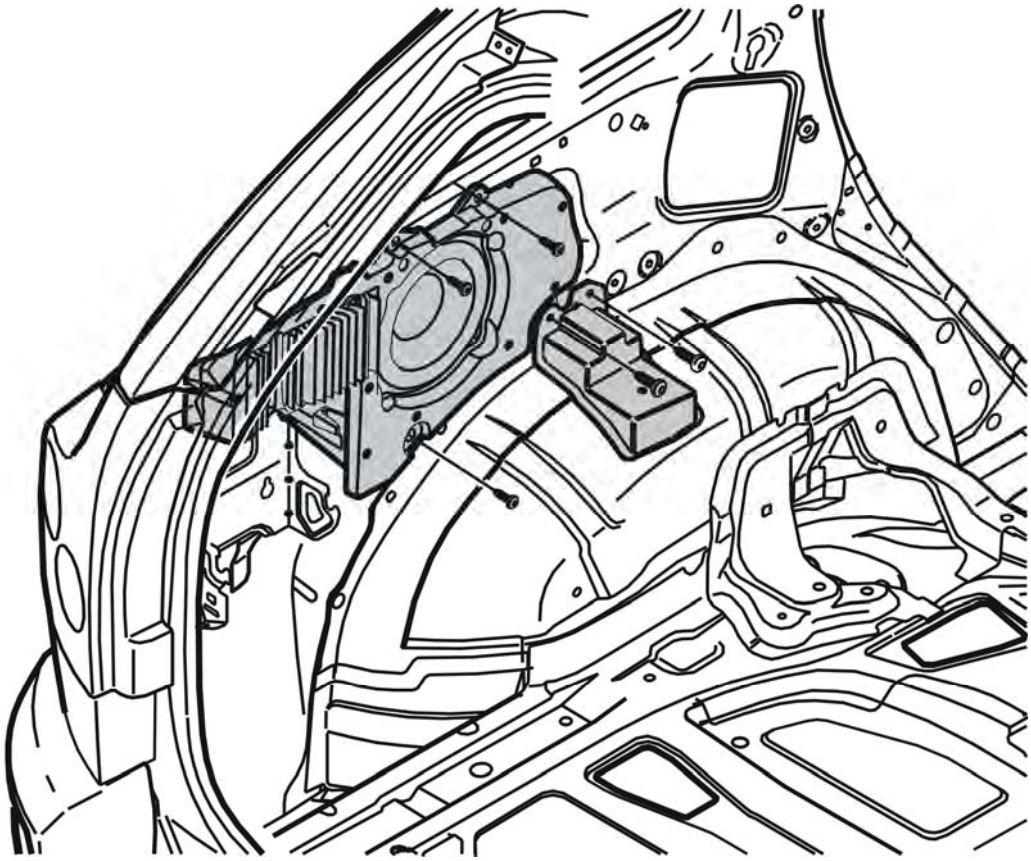

Fig. 188: Removing Subwoofer Module
Courtesy of VOLVO CARS CORPORATION

Disconnect the connectors at the control module.

Remove the screws.

Remove the bass speakers / subwoofer module (SUB).

NOTE: For tightening, see TIGHTENING TORQUE .

INSTALLATION

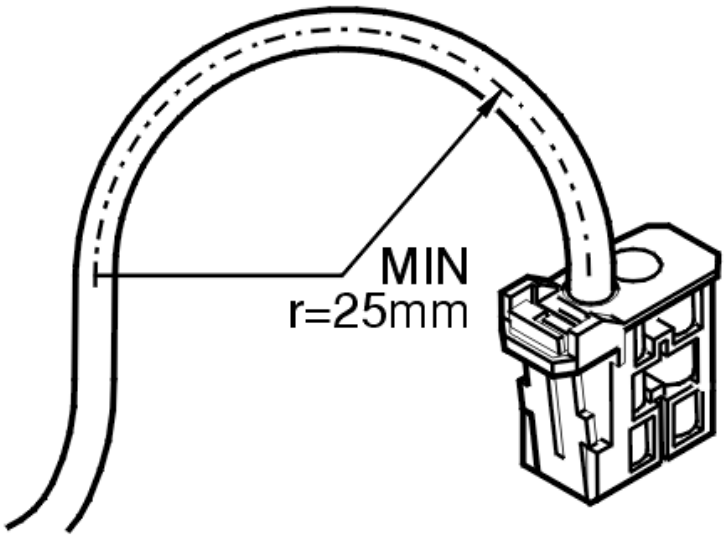

Fig. 189: Identifying Maximum Bend Radius Of Optic Cable
Courtesy of VOLVO CARS CORPORATION

Install the bass speakers / subwoofer module (SUB).

Install and tighten the screws.

NOTE: Check that there is no dirt in the optic connectors.

NOTE: The bend radius of the optic cables must not be less than 25 mm.

Reconnect connectors.

FINISHING WORK

Install the left-hand side panel in the cargo compartment. See **SIDE PANEL CARGO COMPARTMENT, REPLACEMENT** .

NOTE: After replacing the subwoofer module (SUB), new software must be ordered and programmed.

ORDERING SOFTWARE

Order the software. See 8691144 .

COMMUNICATION RADIO, MOBILE TELEPHONE (2011-2012)

BLUETOOTH CONTROL MODULE

REMOVAL

NOTE: Removal steps in this procedure may contain installation details.

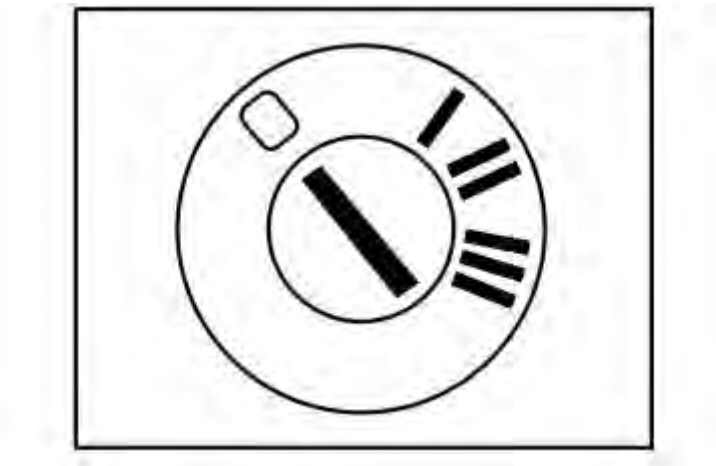

Fig. 190: Identifying Ignition In OFF Position
Courtesy of VOLVO CARS CORPORATION

Remove glove compartment, see **GLOVE COMPARTMENT**

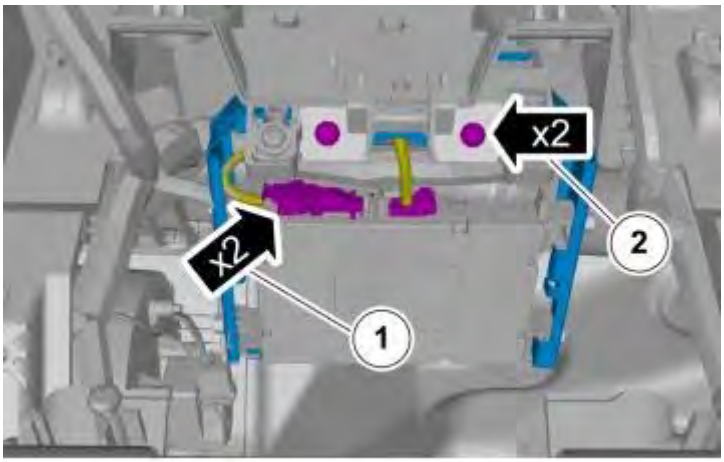

Fig. 191: Identifying Bluetooth Control Module Connectors
Courtesy of VOLVO CARS CORPORATION

NOTE: Make sure that the component terminals are not bent or damaged.

Torque: M6

10 Nm

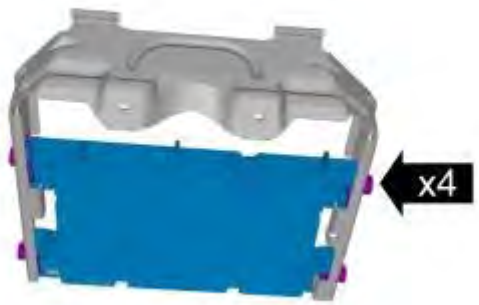

Fig. 192: Identifying Bluetooth Control Module Screws
Courtesy of VOLVO CARS CORPORATION

Torque: M6

10 Nm

VEHICLES WITH CELLULAR PHONE

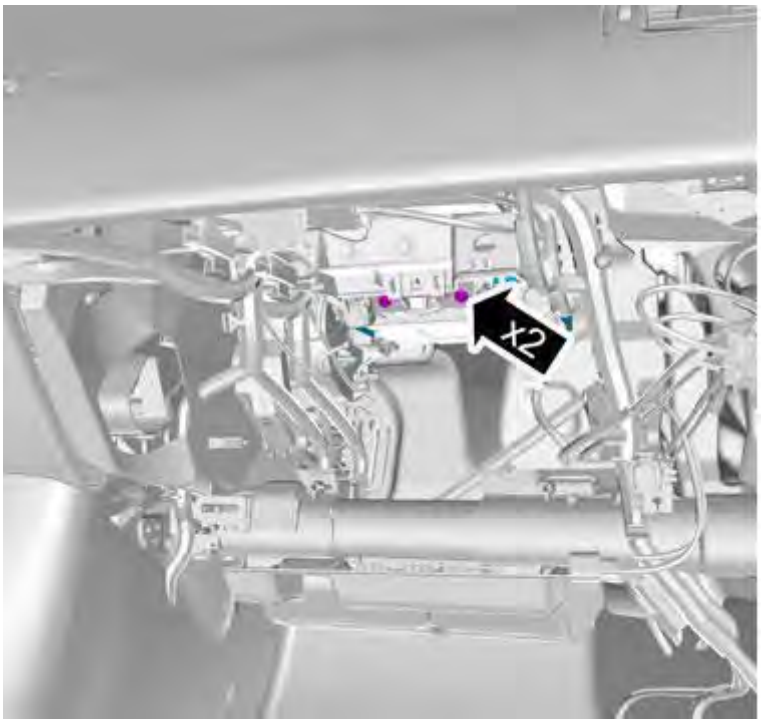

Fig. 193: Locating Screws

Courtesy of VOLVO CARS CORPORATION

Torque: M6

10 Nm

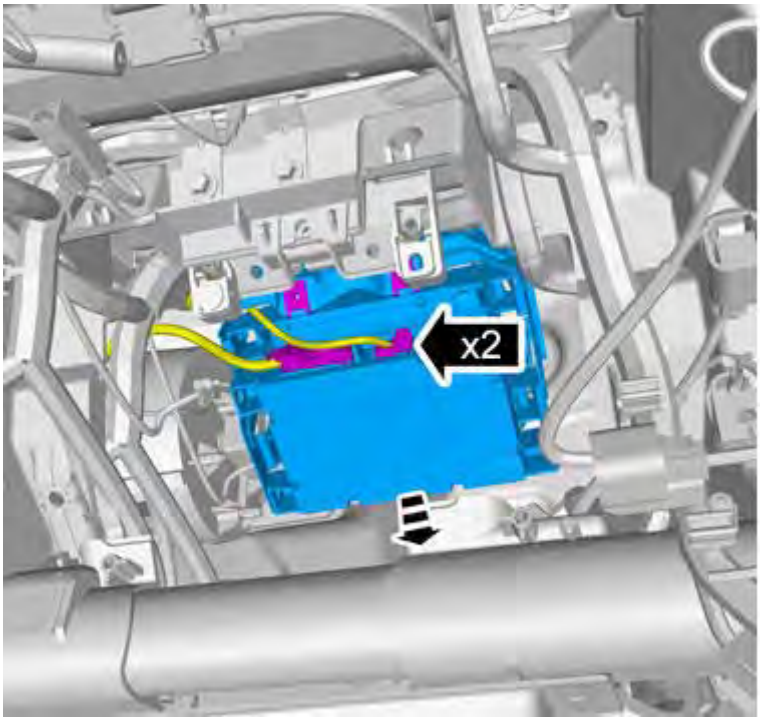

Fig. 194: Locating Terminals
Courtesy of VOLVO CARS CORPORATION

NOTE: **Make sure that the component terminals are not bent or damaged.**

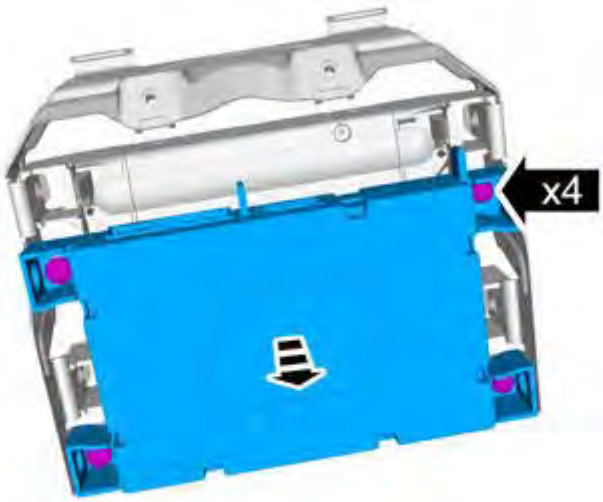

Fig. 195: Identifying Cover Screws
Courtesy of VOLVO CARS CORPORATION

INSTALLATION

To install, reverse the removal procedure.

ORDERING SOFTWARE

Order and download software according to: 31282116

GLOVE COMPARTMENT

REMOVAL

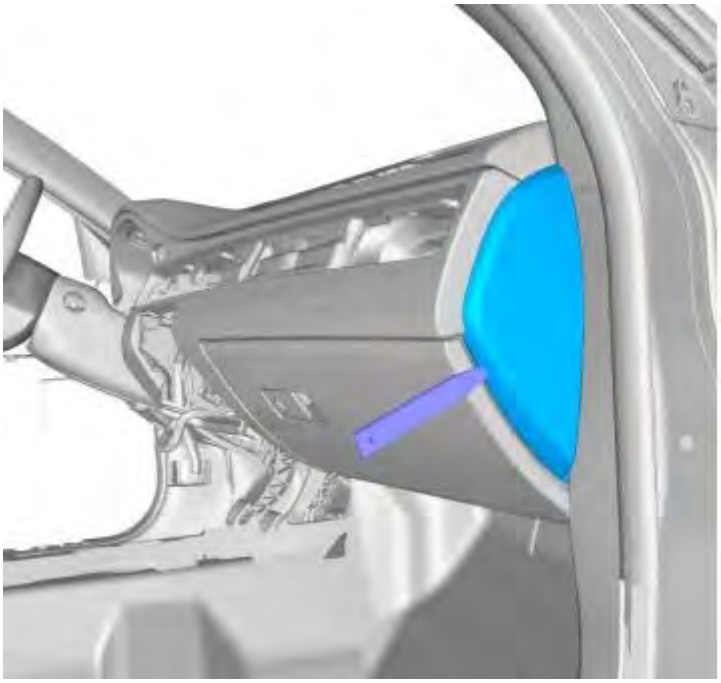

Fig. 196: Removing Glove Compartment (1 of 7)
Courtesy of VOLVO CARS CORPORATION

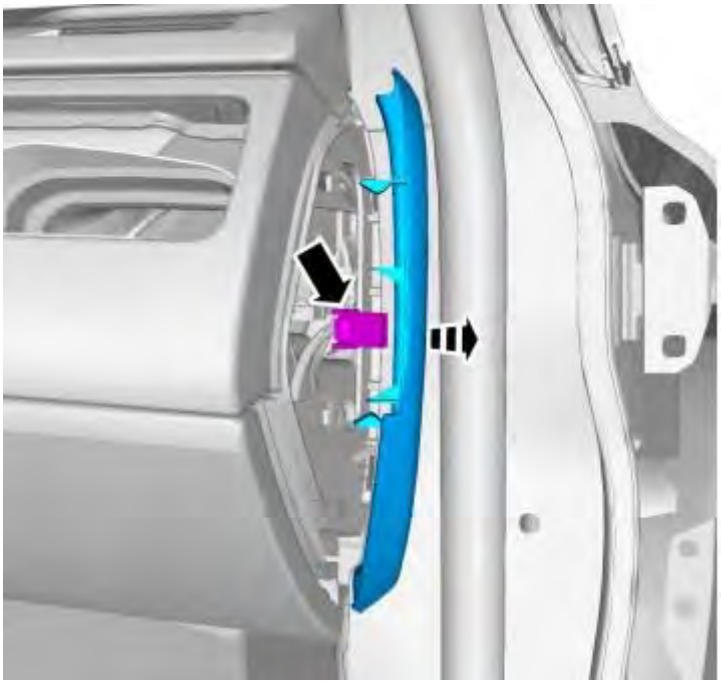

Fig. 197: Removing Glove Compartment (2 of 7)
Courtesy of VOLVO CARS CORPORATION

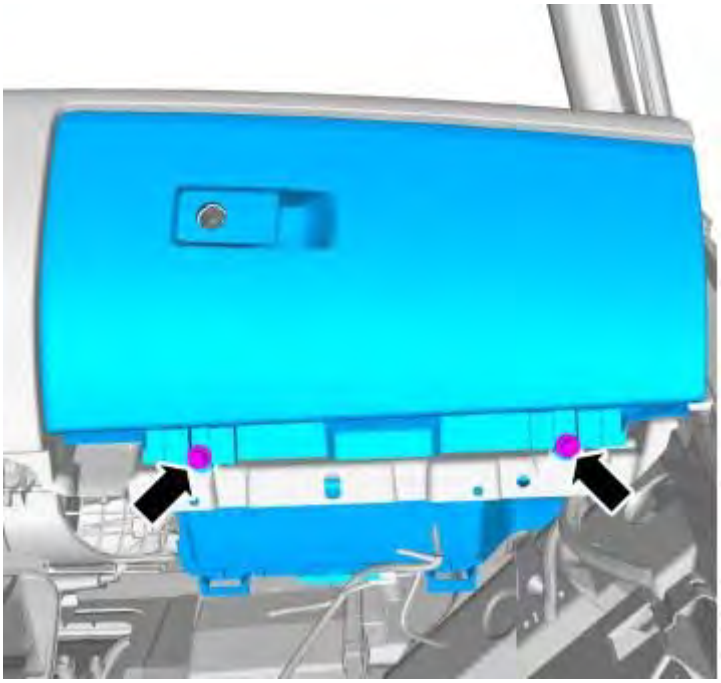

Fig. 198: Removing Glove Compartment (3 of 7)
Courtesy of VOLVO CARS CORPORATION

Remove the lower section of the instrument panel. See **INSTRUMENT PANEL LOWER** .

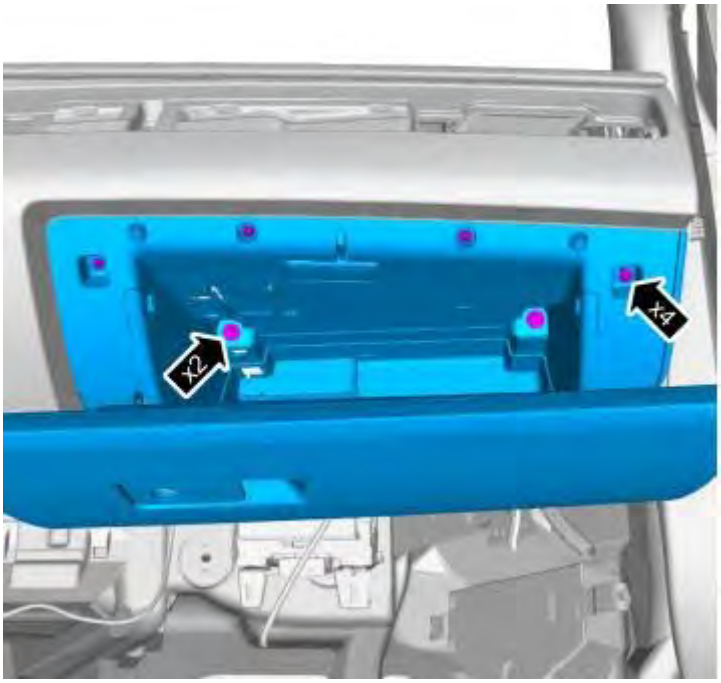

Fig. 199: Removing Glove Compartment (4 of 7)
Courtesy of VOLVO CARS CORPORATION

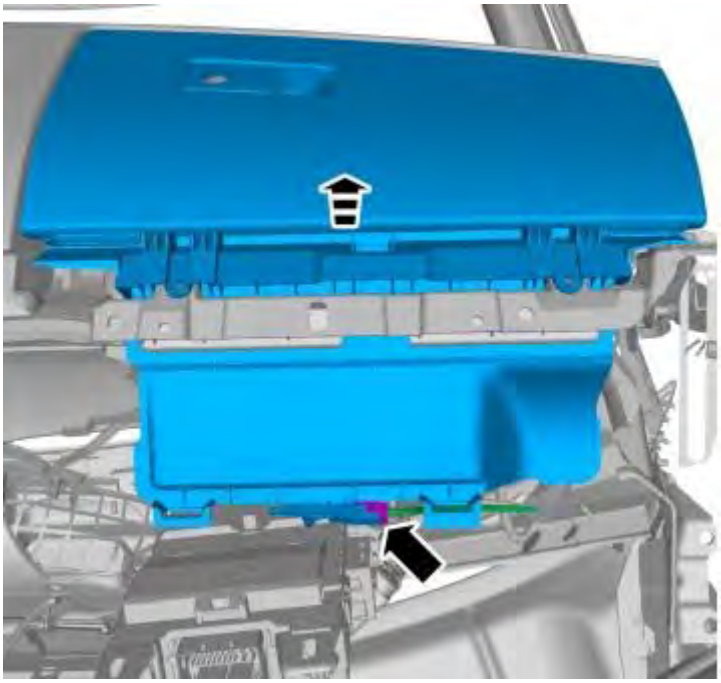

Fig. 200: Removing Glove Compartment (5 of 7)
Courtesy of VOLVO CARS CORPORATION

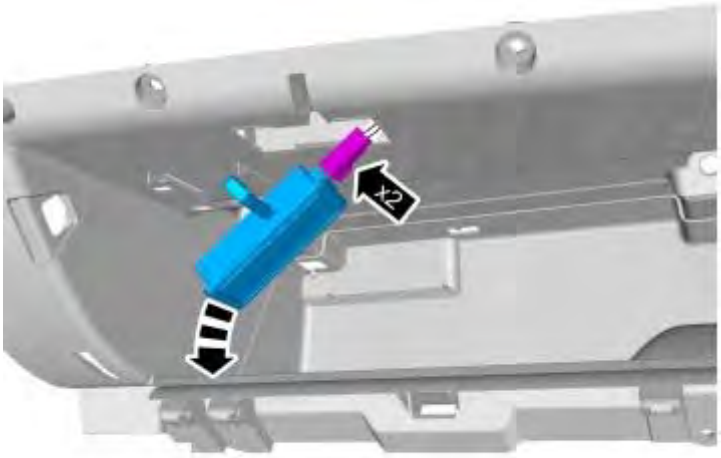

Fig. 201: Removing Glove Compartment (6 of 7)
Courtesy of VOLVO CARS CORPORATION

Fig. 202: Removing Glove Compartment (7 of 7)
Courtesy of VOLVO CARS CORPORATION

INSTALLATION

To install, reverse the removal procedure.

GLOVE COMPARTMENT

REMOVAL

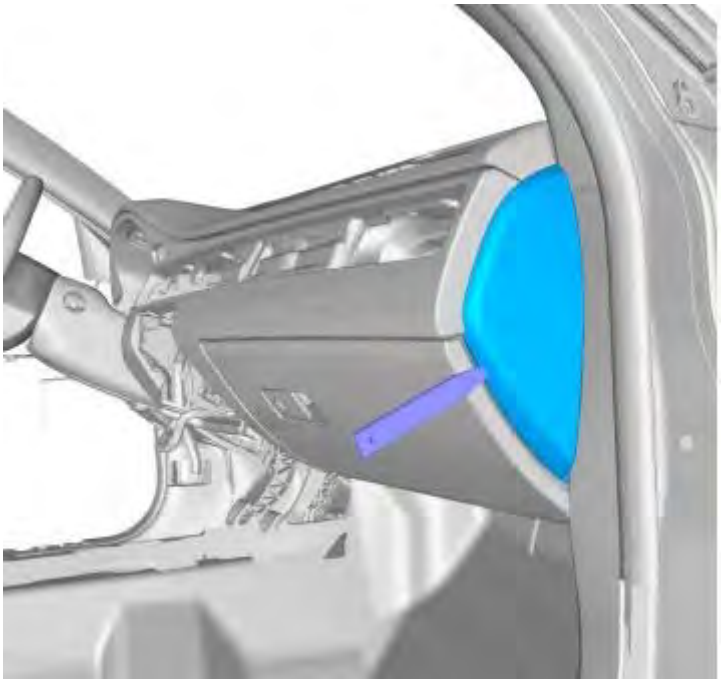

Fig. 203: Removing Glove Compartment (1 of 10)
Courtesy of VOLVO CARS CORPORATION

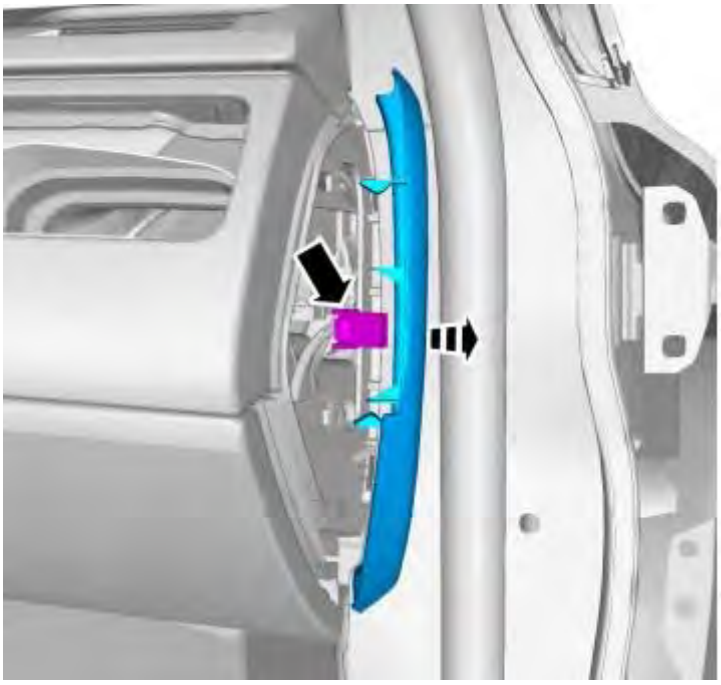

Fig. 204: Removing Glove Compartment (2 of 10)
Courtesy of VOLVO CARS CORPORATION

Fig. 205: Removing Glove Compartment (3 of 10)
Courtesy of VOLVO CARS CORPORATION

Fig. 206: Removing Glove Compartment (4 of 10)
Courtesy of VOLVO CARS CORPORATION

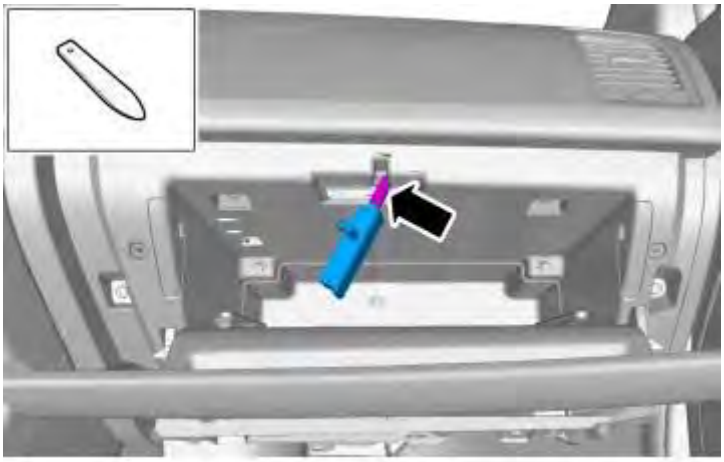

Fig. 207: Removing Glove Compartment (5 of 10)
Courtesy of VOLVO CARS CORPORATION

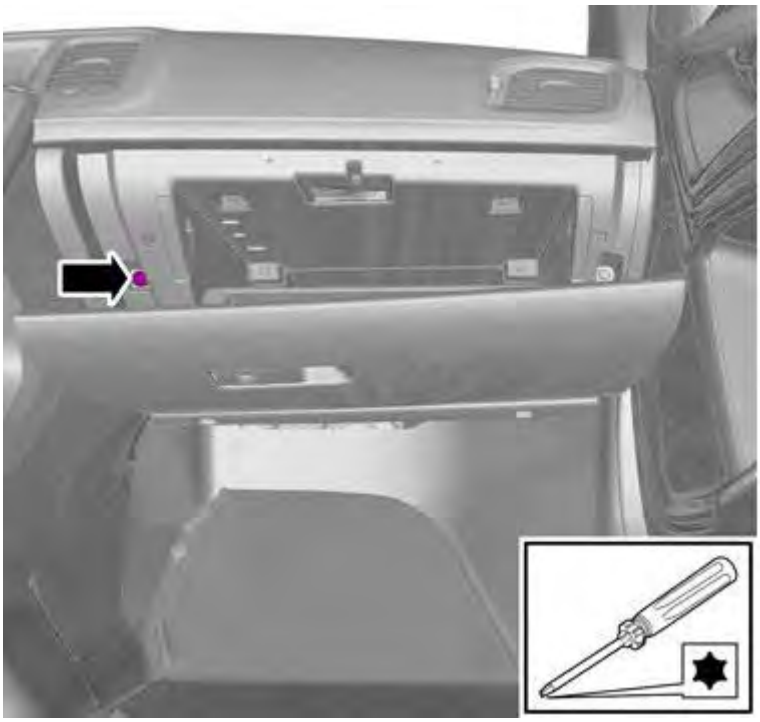

Fig. 208: Removing Glove Compartment (6 of 10)
Courtesy of VOLVO CARS CORPORATION

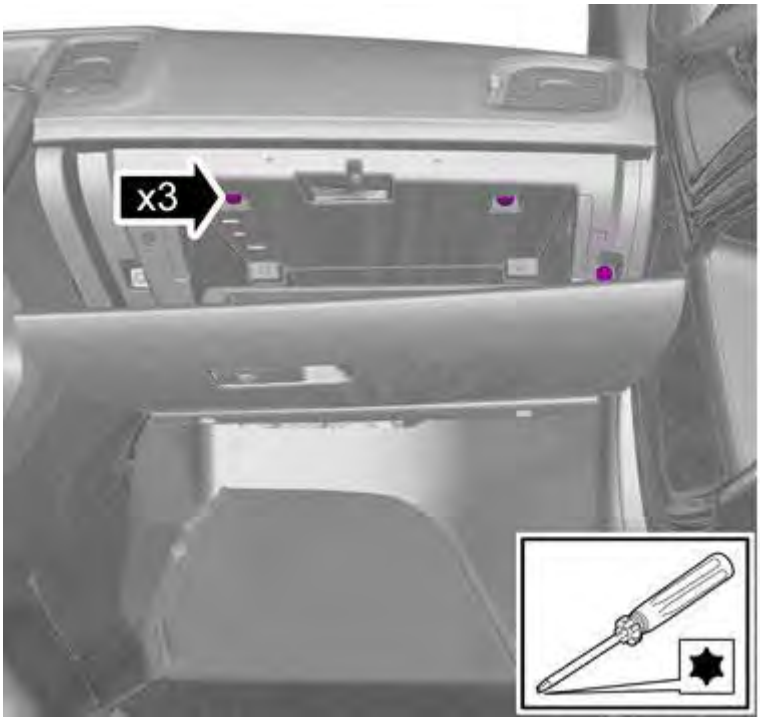

Fig. 209: Removing Glove Compartment (7 of 10)
Courtesy of VOLVO CARS CORPORATION

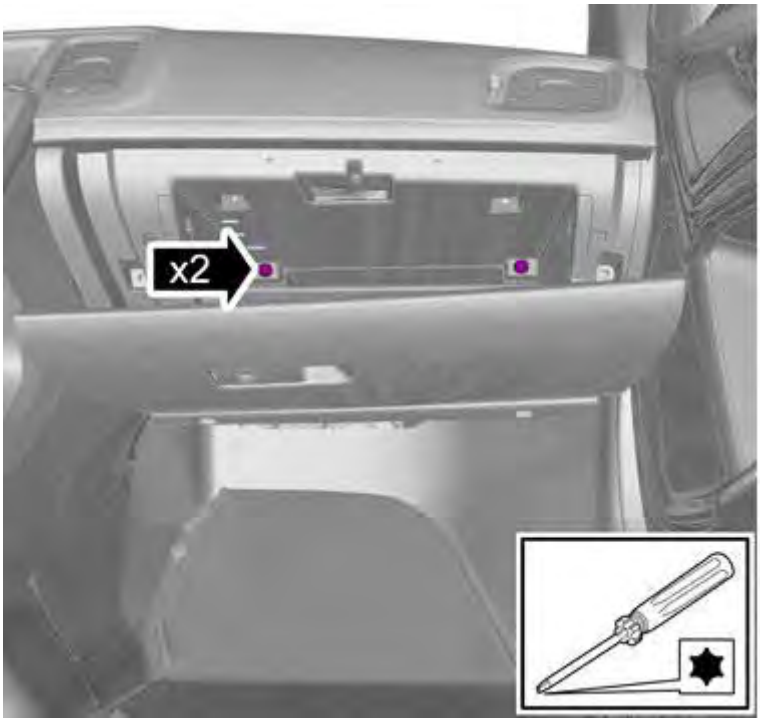

Fig. 210: Removing Glove Compartment (8 of 10)
Courtesy of VOLVO CARS CORPORATION

Fig. 211: Removing Glove Compartment (9 of 10)
Courtesy of VOLVO CARS CORPORATION

Fig. 212: Removing Glove Compartment (10 of 10)
Courtesy of VOLVO CARS CORPORATION

INSTALLATION

To install, reverse the removal procedure.

GLOVE COMPARTMENT

NOTE: **The illustrations in this service information are used for different model years and/or models. Some variation may occur. However, the essential information in the illustrations is always correct.**

REMOVAL

REMOVING THE GLOVE COMPARTMENT

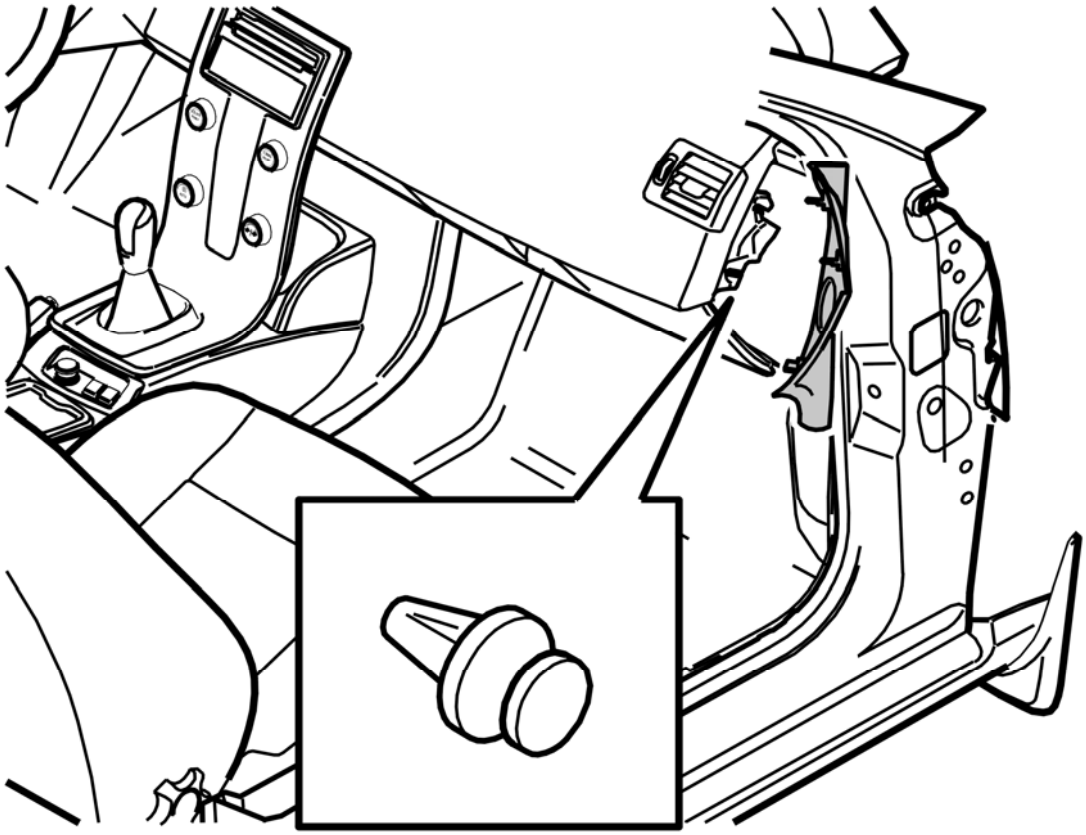

Fig. 213: Removing Air Duct Clip
Courtesy of VOLVO CARS CORPORATION

Remove:

- the end cover. It is secured with 3 hidden clips
- the clip for the air duct.

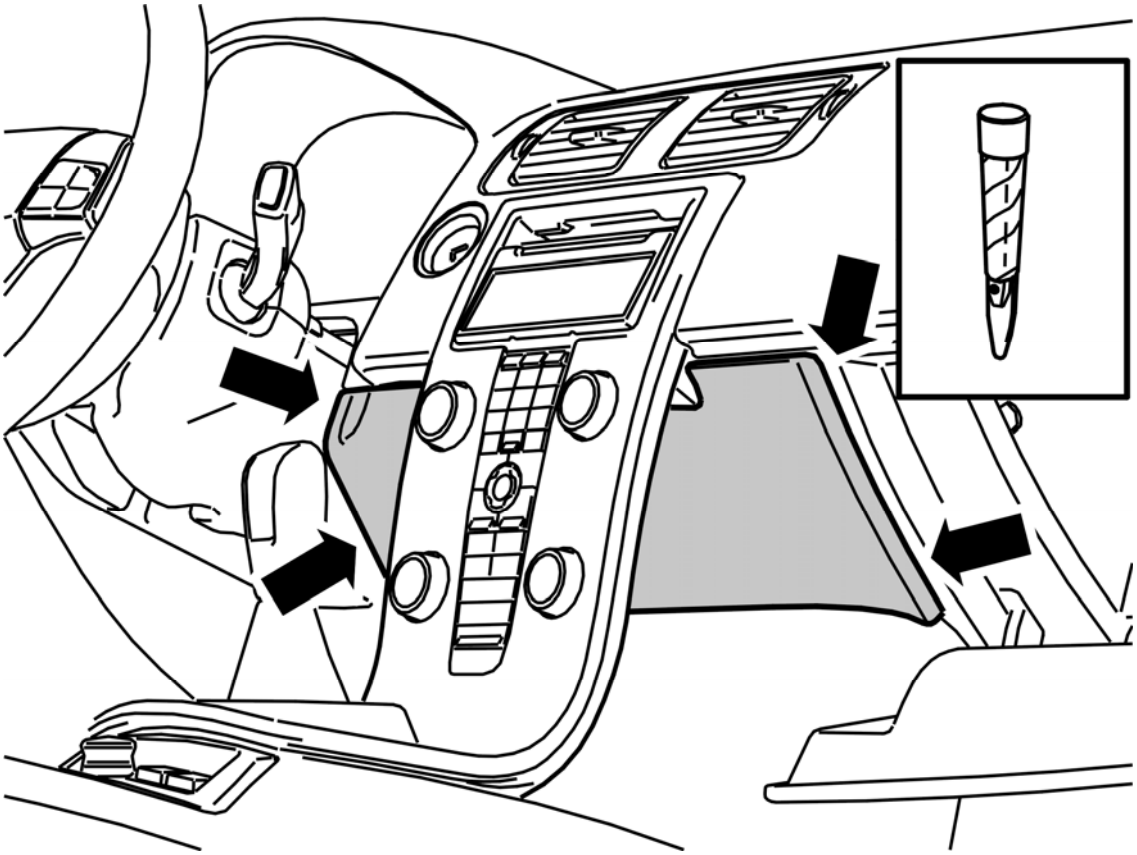

Fig. 214: Identifying 4 Hidden Clips
Courtesy of VOLVO CARS CORPORATION

Remove the panel inside the center console. It is secured with 4 hidden clips.

HINT: Use a weatherstrip tool.

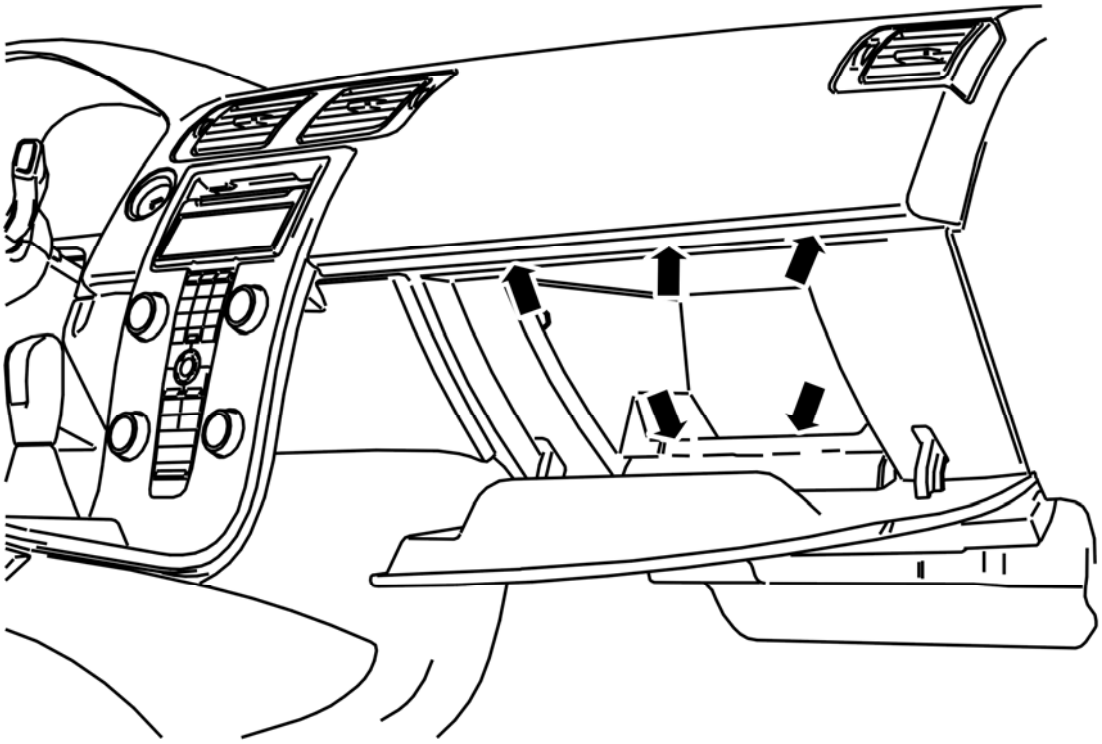

Fig. 215: Locating 5 Screws
Courtesy of VOLVO CARS CORPORATION

Remove:

- any accessories on the center console
- the 5 screws.

CAUTION: There is a risk of the center console being scratched.

HINT: Tape the edge of the center console to protect it against scratches.

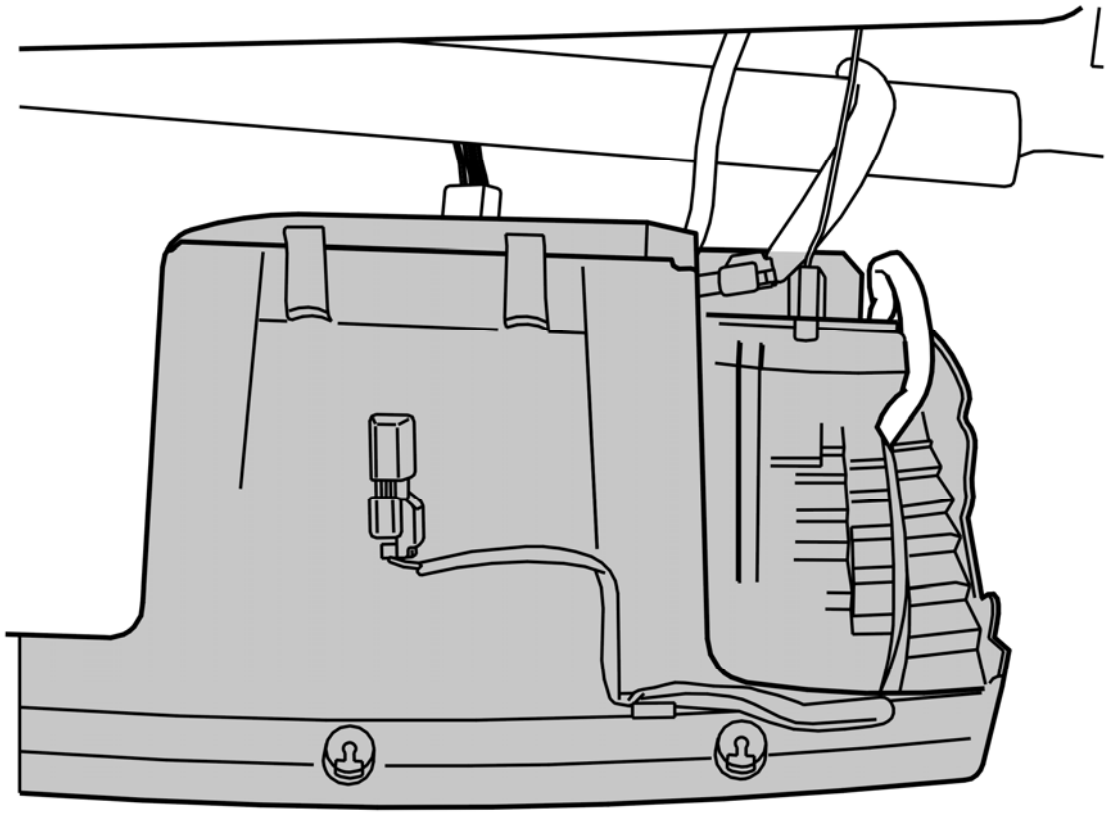

Fig. 216: Pulling Glove Compartment Straight Back
Courtesy of VOLVO CARS CORPORATION

Pull the glove compartment straight back into the vehicle to release the 2 hidden clips in the top edge.

NOTE: Note the position of the electric connections.

Disconnect the 2 connectors.

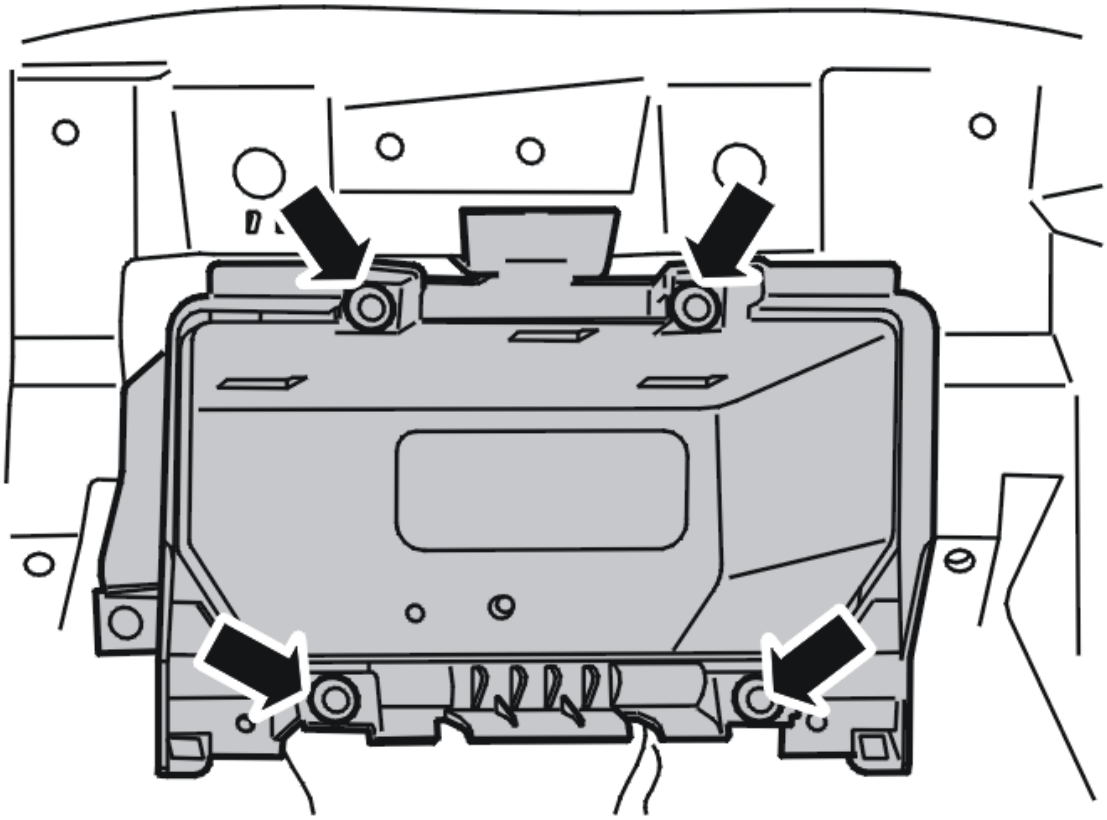

Fig. 217: Locating 4 Screws
Courtesy of VOLVO CARS CORPORATION

Remove the 4 screws for the inner glove compartment.

GLOVE COMPARTMENT

NOTE: **The illustrations in this service information are used for different model years and/or models. Some variation may occur. However, the essential information in the illustrations is always correct.**

REMOVAL

REMOVING THE GLOVE COMPARTMENT

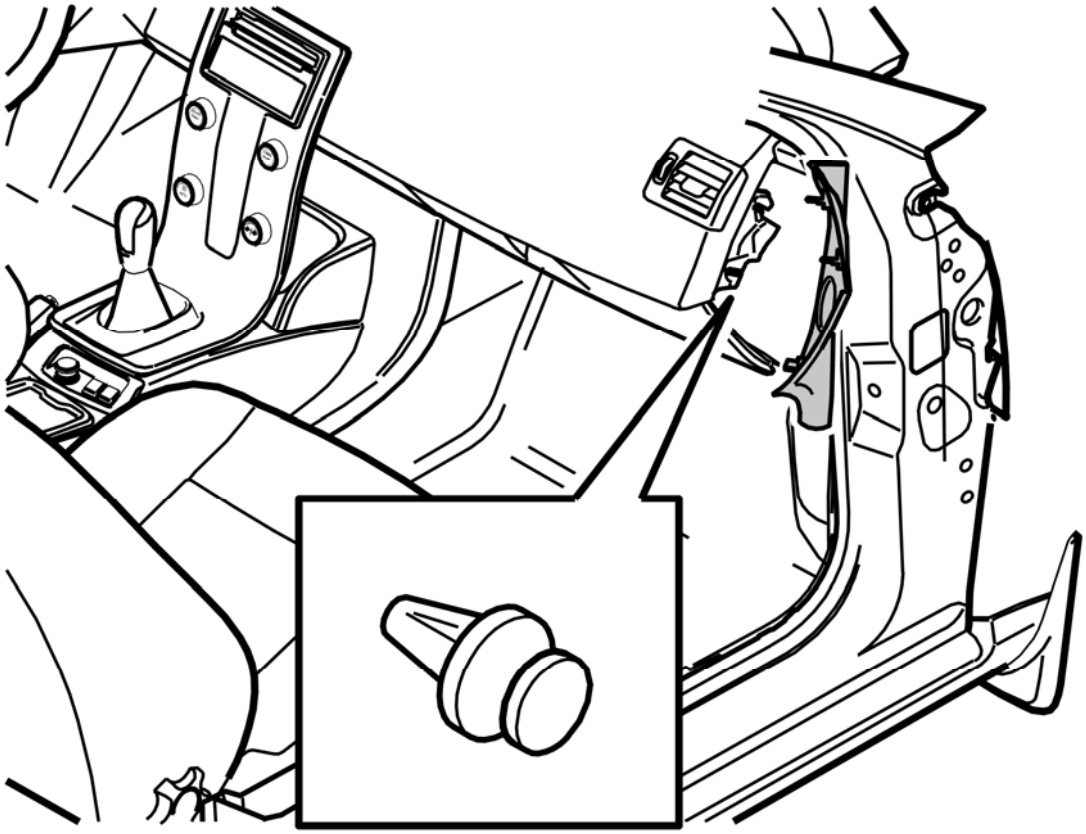

Fig. 218: Removing Air Duct Clip
Courtesy of VOLVO CARS CORPORATION

Remove:

- the end cover. It is secured with 3 hidden clips
- the clip for the air duct.

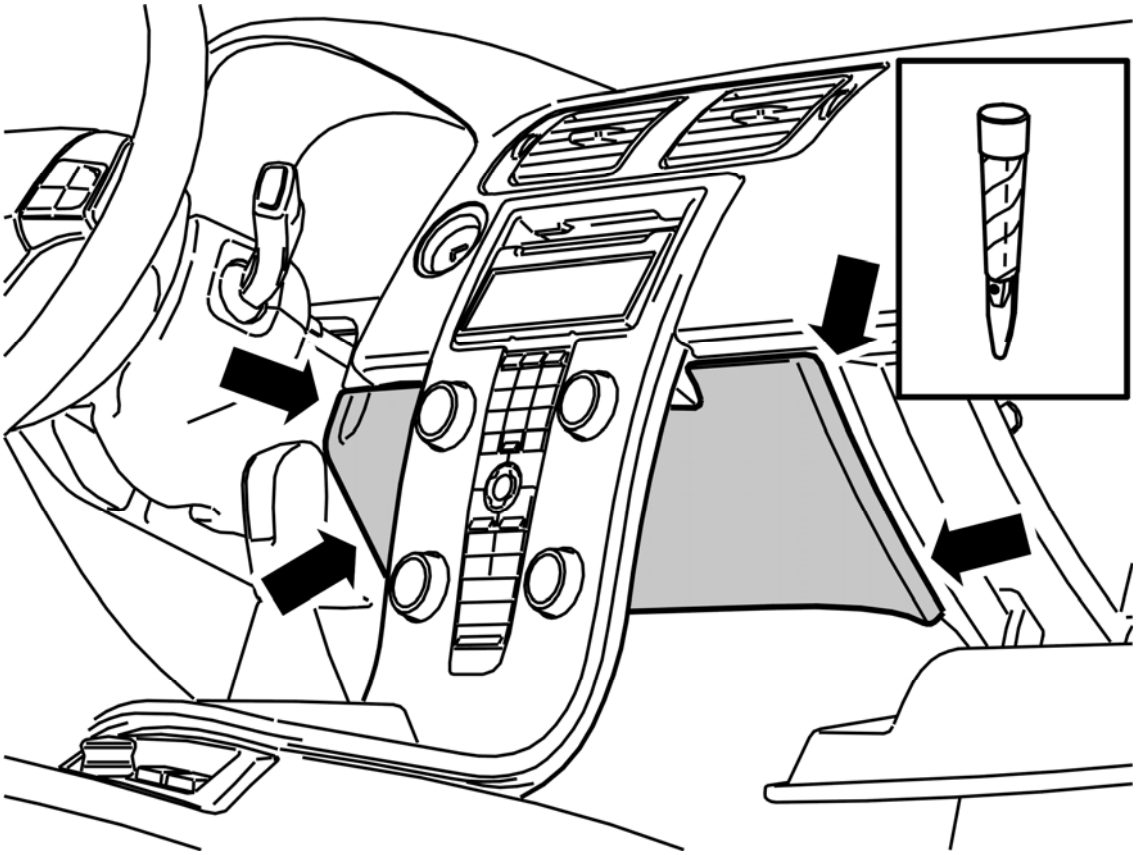

Fig. 219: Identifying 4 Hidden Clips
Courtesy of VOLVO CARS CORPORATION

Remove the panel inside the center console. It is secured with 4 hidden clips.

HINT: Use a weatherstrip tool.

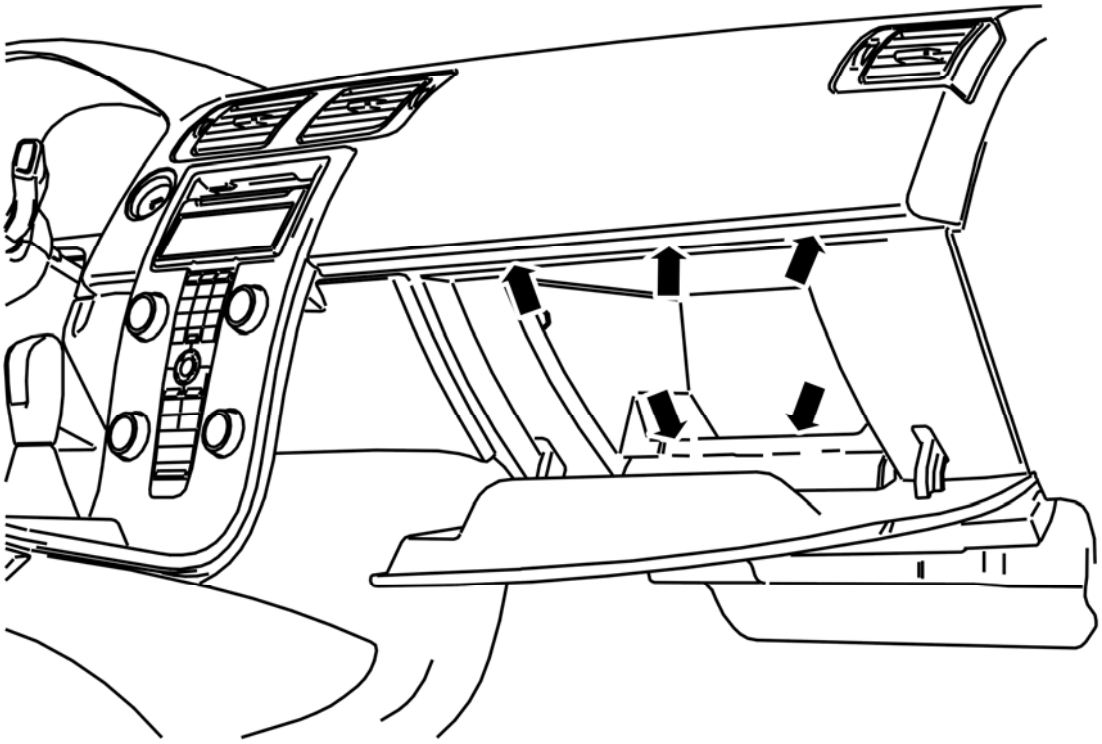

Fig. 220: Locating 5 Screws
Courtesy of VOLVO CARS CORPORATION

Remove:

- any accessories on the center console
- the 5 screws.

CAUTION: There is a risk of the center console being scratched.

HINT: Tape the edge of the center console to protect it against scratches.

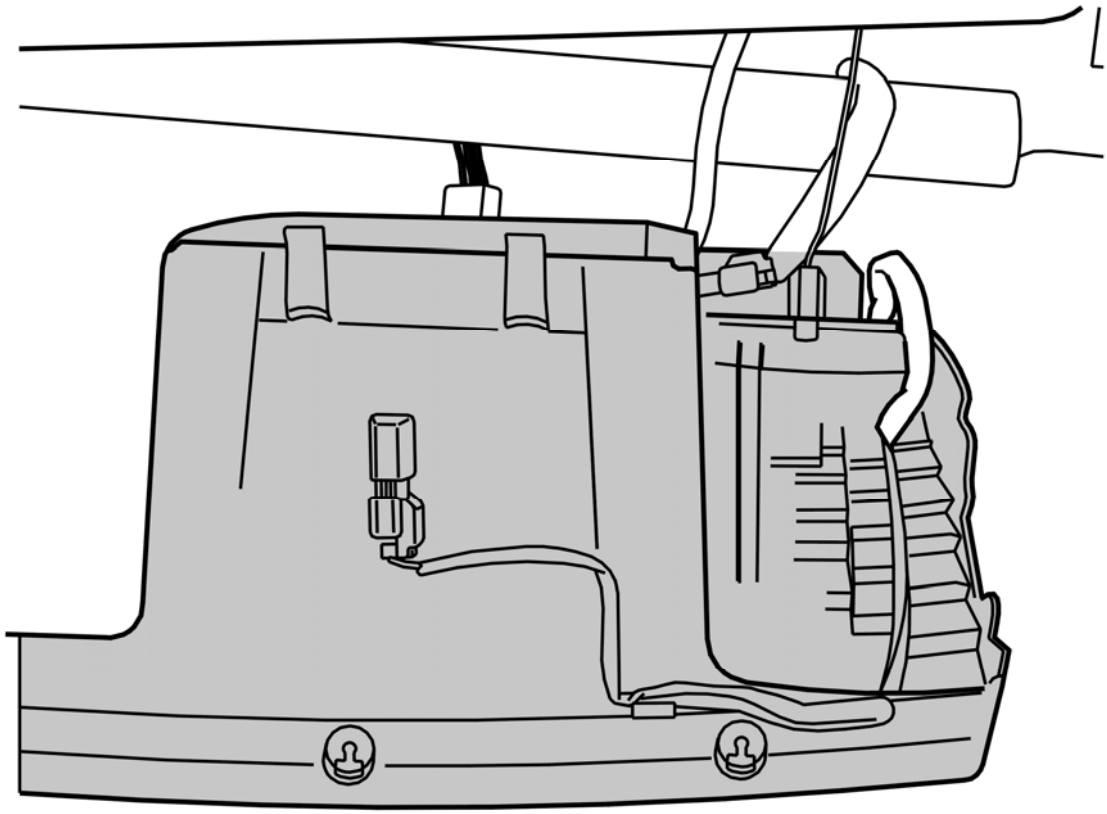

Fig. 221: Pulling Glove Compartment Straight Back
Courtesy of VOLVO CARS CORPORATION

Pull the glove compartment straight back into the vehicle to release the 2 hidden clips in the top edge.

NOTE: Note the position of the electric connections.

Disconnect the 2 connectors.

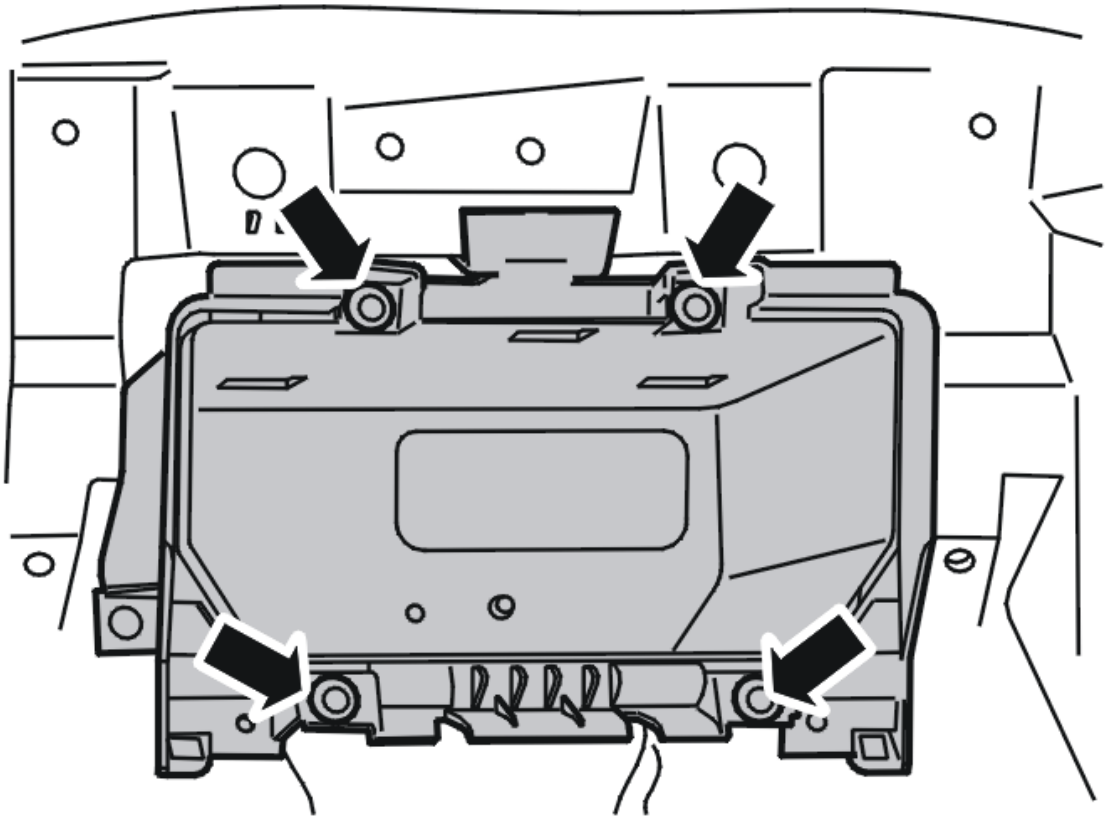

Fig. 222: Locating 4 Screws
Courtesy of VOLVO CARS CORPORATION

Remove the 4 screws for the inner glove compartment.

INSTALLATION

INSTALLING GLOVE COMPARTMENT

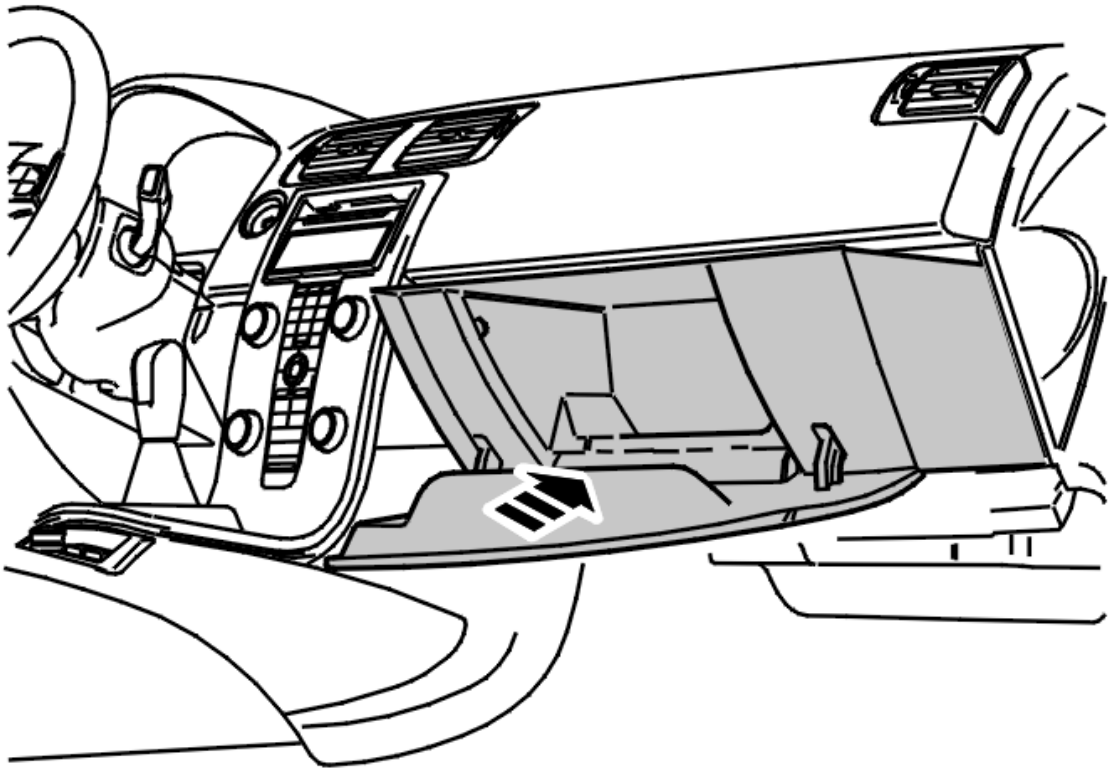

Fig. 223: Installation of Glove Compartment
Courtesy of VOLVO CARS CORPORATION

Install:

- the 4 screws for the inner glove compartment. Tighten
- the 2 connectors
- the glove compartment. Guide the glove compartment diagonally inside the center console
- the 2 hidden clips in the top edge of the glove compartment
- the 5 screws
- the clip for the air duct
- the end cover
- the panel inside the center console.

Remove any tape from the center console.

ACCESSORIES AND EQUIPMENT

Media, Communication And Navigation - Specifications, Electrical/Electronic

SIGNAL SPECIFICATION, PARKING ASSISTANCE CAMERA (PAC) (2007-12)

SIGNAL SPECIFICATION

All the values given below are between the respective terminal in column 1 and terminal #A15 (power ground), unless otherwise indicated in brackets.

NOTE: It is important to check ground terminals before taking readings.

U=	DC voltage in volts (V)
U_{bat} =	Battery voltage (V)
U_{low} =	Voltage approximately 0 V

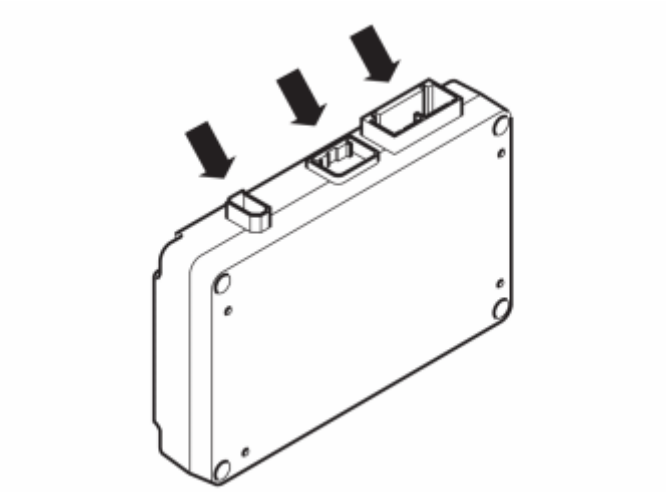

Fig. 1: Identifying Parking Assistance Camera (PAC)
Courtesy of VOLVO CARS CORPORATION

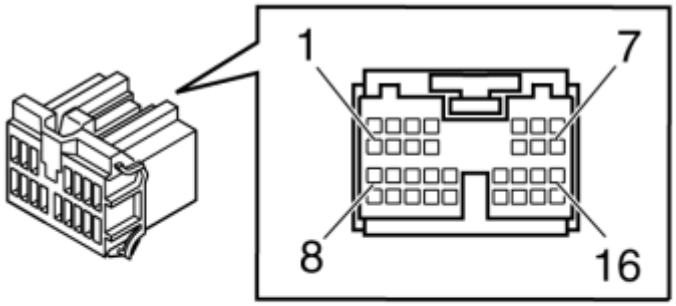

Fig. 2: Identifying 16-Pin Connector
Courtesy of VOLVO CARS CORPORATION

SIGNAL TABLE CONNECTOR A

Control module terminal	Signal type	Ignition on Active	Other
#A1	Not connected	-	-
#A2	Not connected	-	-
#A3	Not connected	-	-
#A4	Not connected	-	-
#A5	Ground, CAN	U= U_{low}	-
#A6	Power supply	U= U_{bat}	-
#A7	Not connected	-	-
#A8	Not connected	-	-
#A9	Not connected	-	-
#A10	Not connected	-	-
#A11	Not connected	-	-
#A12	Not connected	-	-
#A13	CAN L	During communication the voltage is 1.5-2.5 V	-
#A14	CAN H	During communication the voltage is 2.0-3.5 V	-
#A15	Ground	U= U_{low}	-
#A16	Not connected	-	-

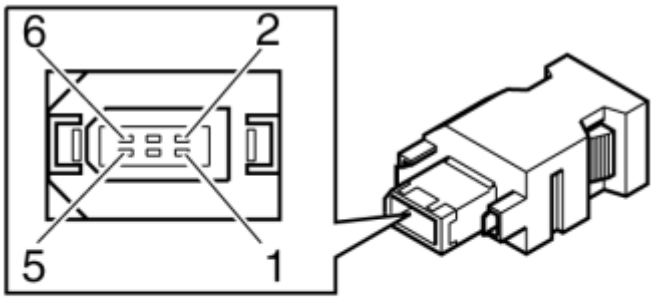

Fig. 3: Identifying 6-Pin Connector
Courtesy of VOLVO CARS CORPORATION

SIGNAL TABLE, CONNECTOR B

Control module terminal	Signal type	Ignition on Active	Other
#B1	Voltage supply, video camera	U= U_{bat}	-
#B2	Ground, video camera	U= U_{low}	-
#B3	LVDS-screen	-	-
#B4	LIN communication	U= 0-12 V, at communication.	-
#B5	LVDS-	-	LVDS-video signal low
#B6	LVDS+	-	LVDS-video signal high

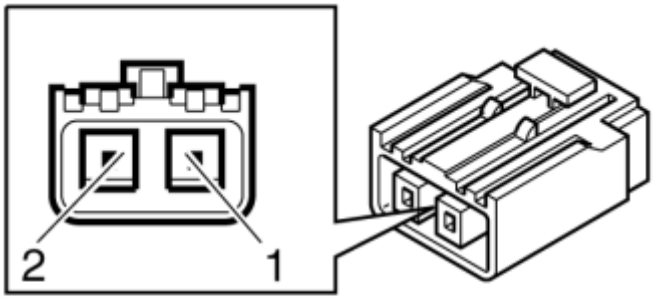

Fig. 4: Identifying 2-Bit Connector
Courtesy of VOLVO CARS CORPORATION

SIGNAL TABLE, CONNECTOR C

Control module terminal	Signal type	Ignition on Active	Other
#C1	Not connected	-	-
#C2	Video (Out)	-	Video signal for display screen

SIGNAL DESCRIPTION, AUDIO MODULE (AUD) (2007-12)

SIGNAL SPECIFICATION

U=	DC voltage in volts (V)	U_{AC} =	AC voltage in volts (V)
U_{bat} =	Battery voltage (V)	f =	Frequency in Hertz (Hz)
U_{low} =	Voltage approximately 0 V	t =	Time in seconds
PWM =	Pulse width modulated signal as a %	-	-

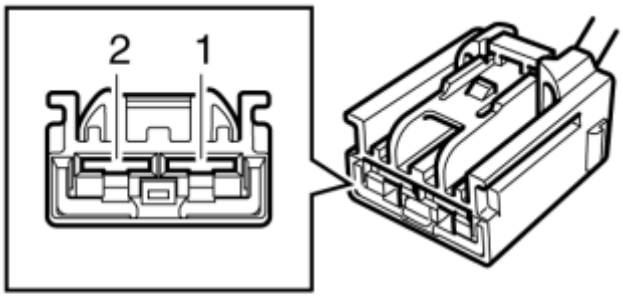

Fig. 5: Identifying Connector C442
Courtesy of VOLVO CARS CORPORATION

CONNECTOR A

Breakout box terminal	Control module terminal	Signal type	Ignition on	Other
-	#1	30-feed	U_{bat}	-
-	#2	Ground	U_{low}	-

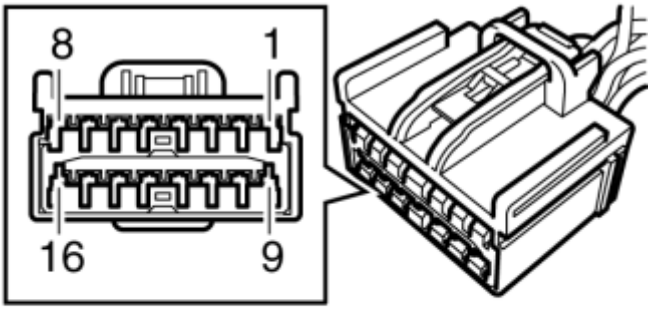

Fig. 6: Identifying Connector C977
Courtesy of VOLVO CARS CORPORATION

CONNECTOR B

Breakout box terminal	Control module terminal	Signal type	Ignition on	Other
#1	#1	Speaker left front door (-)	Analog output signal when the speaker is in use	0 - 19 V depending on control module output.
#2	#2	Center speaker (-)	Analog output signal when the speaker is in use	0 - 11 V depending on control module output.
#3	#3	Speaker right front door (-)	Analog output signal when the speaker is in use	0 - 19 V depending on control module output.
#4	#4	Speaker left rear door (-)	Analog output signal when the speaker is in use	0 - 19 V depending on control module output.
#5	#5	Speaker right rear door (-)	Analog output signal when the speaker is in use	0 - 19 V depending on control module output.
-	#6	Activation signal	$U = U_{bat}$	$U=U_{bat}$, the control module is activated $U=U_{low}$ control module not activated
-	#7	-	-	-
-	#8	Microphone, signal ground	$U = U_{low}$	-
#9	#9	Speaker left front door (+)	Analog output signal when the speaker is in use	0 - 19 V depending on control module output.

#10	#10	Center speaker (+)	Analog output signal when the speaker is in use	0 - 11 V depending on control module output.
#11	#11	Speaker right front door (+)	Analog output signal when the speaker is in use	0 - 19 V depending on control module output.
#12	#12	Speaker left rear door (+)	Analog output signal when the speaker is in use	0 - 19 V depending on control module output.
#13	#13	Speaker right rear door (+)	Analog output signal when the speaker is in use	0 - 19 V depending on control module output.
-	#14	-	-	-
-	#15	-	-	-
-	#16	Microphone, signal (+)	Analog input signal when the microphone is in use	-

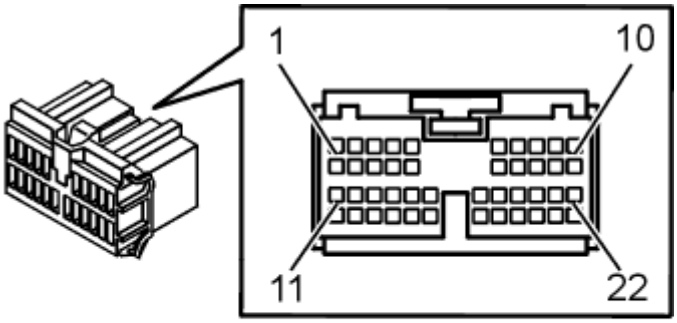

Fig. 7: Identifying Connector Terminals
Courtesy of VOLVO CARS CORPORATION

NOTE: The connector is only on cars with headset panels.

CONNECTOR C

Breakout box terminal	Control module terminal	Signal type	Ignition on	Other
#1	#1	Headphones 1, left headphone	Analog output signal when the headphones are in use	-
#2	#2	Headphones 1, right	Analog output signal	-

		headphone	when the headphones are in use	
#3	#3	Headphones 2, left headphone	Analog output signal when the headphones are in use	-
#4	#4	Headphones 2, right headphone	Analog output signal when the headphones are in use	-
-	#5	-	-	-
-	#6	-	-	-
#7	#7	Headphones 3, left headphone	Analog output signal when the headphones are in use	-
#8	#8	Headphones 3, right headphone	Analog output signal when the headphones are in use	-
#9	#9	Headphones 4, left headphone	Analog output signal when the headphones are in use	-
#10	#10	Headphones 4, right headphone	Analog output signal when the headphones are in use	-
-	#11	-	-	-
-	#12	-	-	-
#13	#13	Headphones 1, signal ground	$U = U_{low}$	-
#14	#14	Headphones 2, signal ground	$U = U_{low}$	-
#15	#15	Headphones 1 and 2, signal ground buttons	$U = U_{low}$	-
#16	#16	Headphones 1, control signal buttons	Analog input signal when buttons for track selection and source are used	U = 5.0 V (no headphone panel connected) U = 4.02 V (no button activated) U = 3.16 V (previous track) U = 2.37 V (next track) U = 0.9 V (select source)
#17	#17	Headphones 2, control signal buttons	Analog input signal when buttons for track selection and source are used	U = 5.0 V (no headphone panel connected) U = 4.02 V (no button

				activated) U = 3.16 V (previous track) U = 2.37 V (next track) U = 0.9 V (select source)
#18	#18	Headphones 3, signal ground	$U = U_{low}$	-
#19	#19	Headphones 4, signal ground	$U = U_{low}$	-
#20	#20	Headphones 3 and 4, signal ground buttons	$U = U_{low}$	-
#21	#21	Headphones 3, control signal buttons	Analog input signal when buttons for track selection and source are used	U = 5.0 V (no headphone panel connected) U = 4.02 V (no button activated) U = 3.16 V (previous track) U = 2.37 V (next track) U = 0.9 V (select source)
#22	#22	Headphones 4, control signal buttons	Analog input signal when buttons for track selection and source are used	U = 5.0 V (no headphone panel connected) U = 4.02 V (no button activated) U = 3.16 V (previous track) U = 2.37 V (next track) U = 0.9 V (select source)

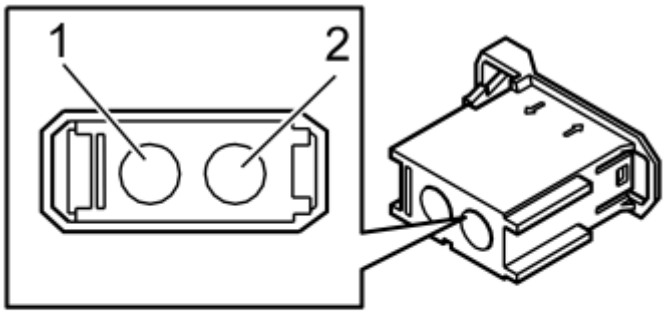

Fig. 8: Identifying Connector MOST (Optical Signal)
Courtesy of VOLVO CARS CORPORATION

CONNECTOR D

Breakout box terminal	Control module terminal	Signal type	Ignition on	Other
-	#1	MOST input signal	-	Optical input signal when the MOST network is activated
-	#2	MOST output signal	-	Optical output signal when the MOST network is activated

SIGNAL DESCRIPTION, INTEGRATED AUDIO MODULE (IAM) (2007-12)

SIGNAL SPECIFICATION

All the values given below are between the terminals stated in column 1 and terminal #A8 in column 2 (power ground). This applies unless otherwise indicated in brackets.

NOTE: **It is important to connect the breakout box and check the ground connections before starting to measure.**

U=	DC voltage in volts (V)	U_{low} =	Voltage approximately 0 V
U_{bat} =	Battery voltage (V)	-	-

Connector A

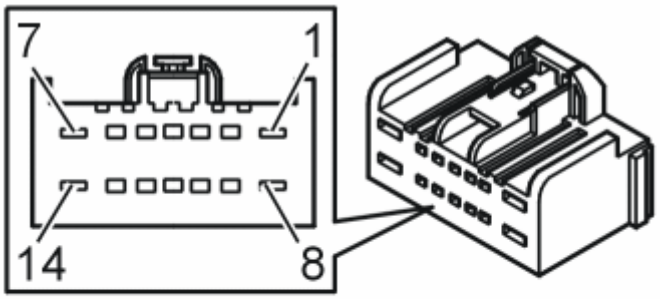

Fig. 9: Identifying 14-Pin Connector
Courtesy of VOLVO CARS CORPORATION

SIGNAL TABLE CONNECTOR A

Breakout box terminal	Control module terminal	Signal type	Ignition on	Miscellaneous
#1	#A1	Power supply	$U = U_{bat}$	-
#2	#A2	Control signal ring break	-	-
#3	#A3	Loudspeaker right rear door (+)	Analog output signal when the loudspeaker is in use	0 - 19 V depending on the output from the Integrated Audio Module (IAM) (only Performance). Impedance loudspeaker = 4 ohms
#4	#A4	Loudspeaker right front door (+)	Analog output signal when the loudspeaker is in use	0 - 19 V depending on the output from the Integrated Audio Module (IAM) (only Performance). Impedance loudspeaker = 4 ohms
#5	#A5	Loudspeaker left front door (+)	Analog output signal when the loudspeaker is in use	0 - 19 V depending on the output from the Integrated Audio Module (IAM) (only Performance). Impedance loudspeaker = 4 ohms
#6	#A6	Loudspeaker left rear	Analog output signal	0 - 19 V depending on

		door (+)	when the loudspeaker is in use	the output from the Integrated Audio Module (IAM) (only Performance). Impedance loudspeaker = 4 ohms
#7	#A7	AUX input, left channel (+)	-	-
#8	#A8	Ground	$U=U_{low}$	-
#9	#A9	AUX input, right channel (+)	-	-
#10	#A10	Loudspeaker right rear door (-)	Analog output signal when the loudspeaker is in use	0 - 19 V depending on the output from the Integrated Audio Module (IAM) (only Performance). Impedance loudspeaker = 4 ohms
#11	#A11	Loudspeaker right front door (-)	Analog output signal when the loudspeaker is in use	0 - 19 V depending on the output from the Integrated Audio Module (IAM) (only Performance). Impedance loudspeaker = 4 ohms
#12	#A12	Loudspeaker left front door (-)	Analog output signal when the loudspeaker is in use	0 - 19 V depending on the output from the Integrated Audio Module (IAM) (only Performance). Impedance loudspeaker = 4 ohms
#13	#A13	Loudspeaker left rear door (-)	Analog output signal when the loudspeaker is in use	0 - 19 V depending on the output from the Integrated Audio Module (IAM) (only Performance). Impedance loudspeaker = 4 ohms
#14	#A14	AUX-input, ground	-	-

Connector B

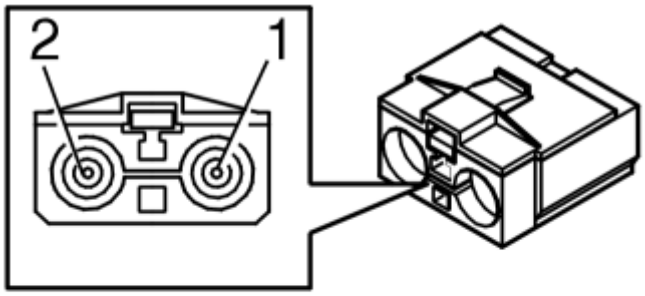

Fig. 10: Identifying 2-Pin Connector
Courtesy of VOLVO CARS CORPORATION

SIGNAL TABLE, CONNECTOR B

Control module terminal	Signal type	Miscellaneous
#B1	Antenna signal	Input signal FM Subantenna Phantom supply of antenna amplifier (11.5 ± 0.5 V at 13.5 V battery voltage)
#B2	Antenna signal	Input signal AM/FM Main antenna

Connector C

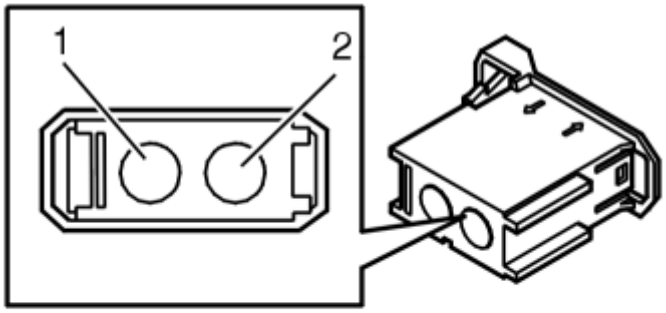

Fig. 11: Identifying 2-Pin Connector
Courtesy of VOLVO CARS CORPORATION

SIGNAL TABLE, CONNECTOR C

Control	Signal type	Ignition on	Miscellaneous

module terminal			
#C1	MOST input signal	-	Optical input signal when the MOST network is activated
#C2	MOST output signal	-	Optical output signal when the MOST network is activated

Connector D (from structure week 200848)

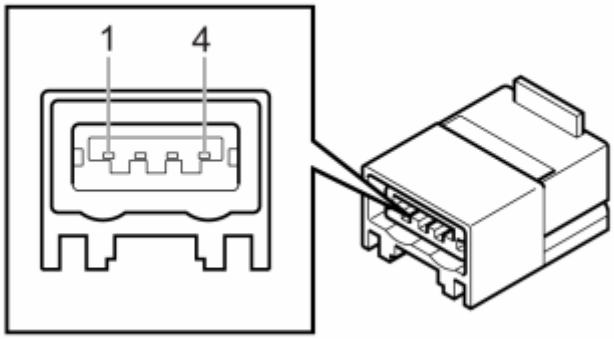

Fig. 12: Identifying 4-Pin Connector
Courtesy of VOLVO CARS CORPORATION

SIGNAL TABLE, CONNECTOR D

Control module terminal	Signal type	Ignition on	Miscellaneous
#D1	Power supply	-	+5 V to the connected USB device.
#D2	Data (-)	-	-
#D3	Data (+)	-	-
#D4	Signal ground	-	-

SIGNAL DESCRIPTION, MD/CD MODULE (MP1/MP2) (2003-06)

SIGNAL SPECIFICATION

All the values given below are between the respective terminal in column 1 and terminal #A2 in column 2 (power ground) unless otherwise stated in brackets after the table entry.

NOTE: **It is important to check ground terminals before taking readings.**

U=	DC voltage in volts (V)	U_{low} =	Voltage approximately 0 V
U_{bat} =	Battery voltage (V)	-	-

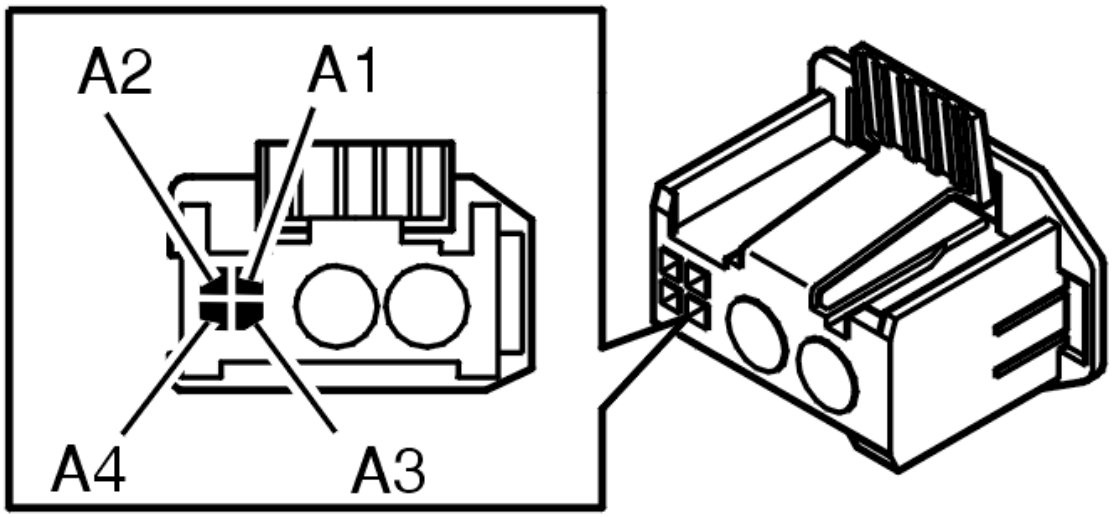

Fig. 13: Identifying Connector A
Courtesy of VOLVO CARS CORPORATION

CONNECTOR A

Terminal	Breakout box terminal	Signal type	Ignition on	Other
#A1	-	30 supply	U = U_{bat}	-
#A2	-	15 supply	U = U_{bat}	Relay voltage
#A3	-	-	-	-
#A4	-	Ground	U=U_{low}	-

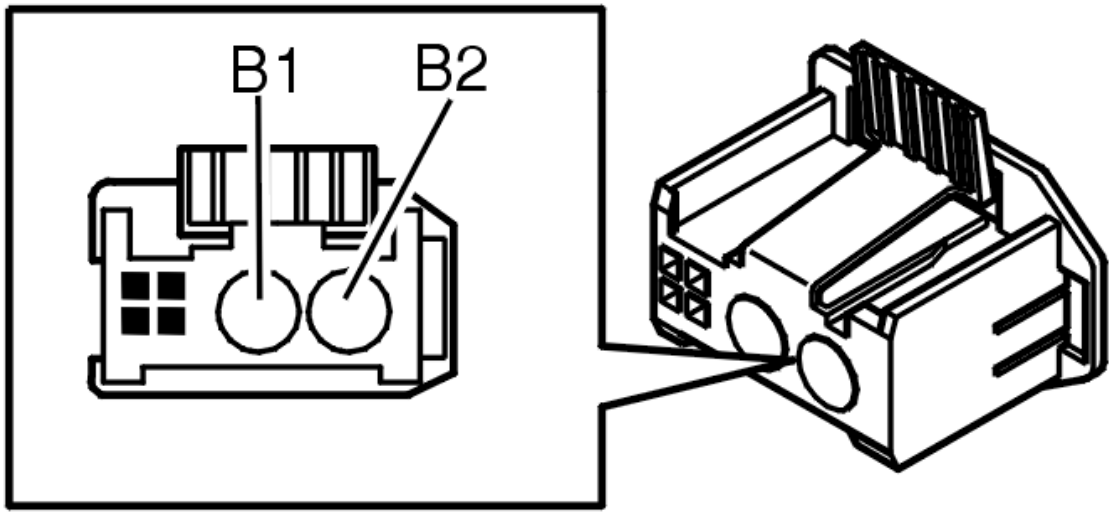

Fig. 14: Identifying Connector B
Courtesy of VOLVO CARS CORPORATION

CONNECTOR B

Terminal	Breakout box terminal	Signal type	Ignition on	Other
#B1	-	MOST input signal	Optical input signal when the MOST network is activated	-
#B2	-	MOST output signal	Optical output signal when the MOST network is activated	-

SIGNAL DESCRIPTION, MULTIMEDIA MODULE (MMM) (2003-06)

SIGNAL SPECIFICATION

All the values given below are between the respective terminal in column 1 and terminal #A5 in column 2 (power ground) unless otherwise stated in brackets after the table entry.

NOTE: **It is important to connect the breakout box and check the ground terminals before taking readings.**

U=	DC voltage in volts (V)	U_{low} =	Voltage approximately 0 V
U_{bat} =	Battery voltage (V)	-	-

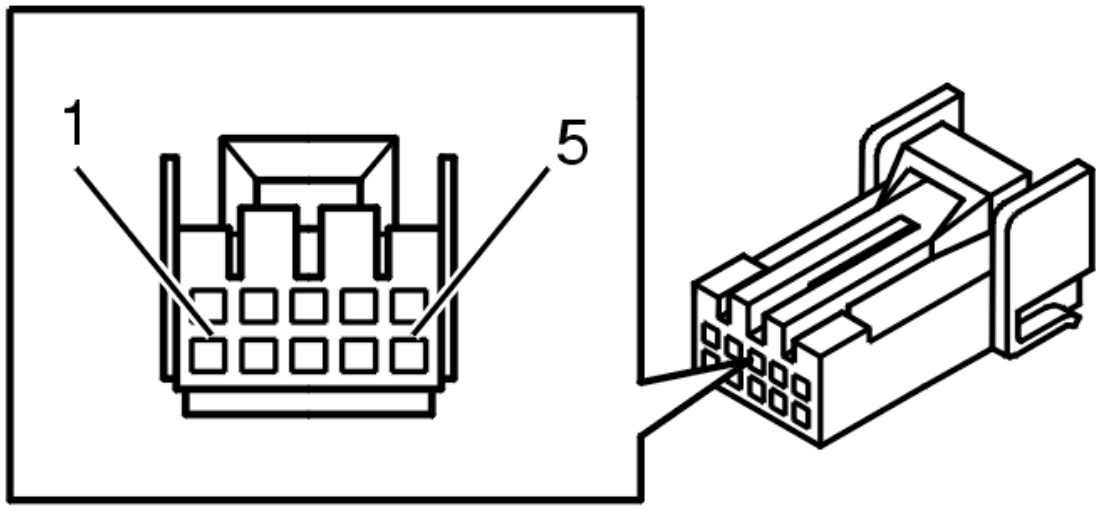

Fig. 15: 10-CD Changer Connector Terminals
Courtesy of VOLVO CARS CORPORATION

CONNECTOR A

Terminal	Breakout box terminal	Signal type	Ignition on	Other
#A1	#21	15 supply	$U = U_{bat}$	Powered (12 V) from the relay on the central electronic module (CEM)
#A2	#22	-	-	-
#A3	#23	-	-	-
#A4	#24	-	-	-
#A5	#25	Ground	$U=U_{low}$	-

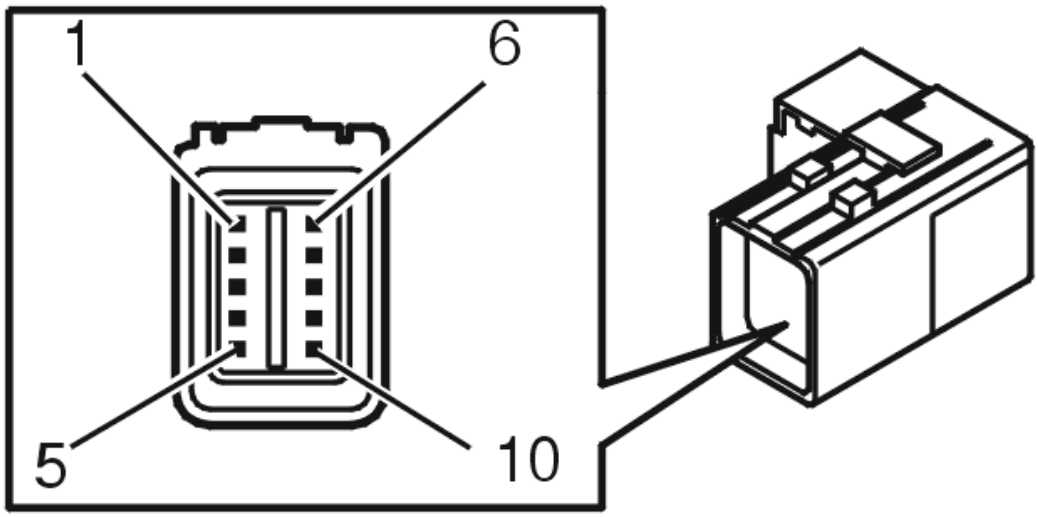

Fig. 16: Identifying RTI Control Module (To Display) Connector Terminals
Courtesy of VOLVO CARS CORPORATION

CONNECTOR B

Terminal	Breakout box terminal	Signal type	Ignition on	Other
#B1	#1	Color signal (red), screen	Analog signal when a red color signal is used	0.714 Vp-p
#B2	#2	Color signal (green), display	Analog signal when a green color signal is used	0.714 Vp-p
#B3	#3	-	-	-
#B4	#4	Serial bus to the display	Digital signal	Half duplex, start-stop synchronizer, 2400 bps
#B5	#5	-	Digital signal	38 kHz carrier wave when the remote control is pressed
#B6	#6	Color signal (blue), screen	Analog signal when a green color signal is used	0.714 Vp-p
#B7	#7	Screen ground video signals	U_{low}	-
#B8	#8	Composite sync, display screen	Analog signal	0-5 V
#B9	#9	-	-	-
#B10	#10	Video signal, display screen	Analog signal	1 Vp-p ± 0.2V
H	-	Screen ground	-	-

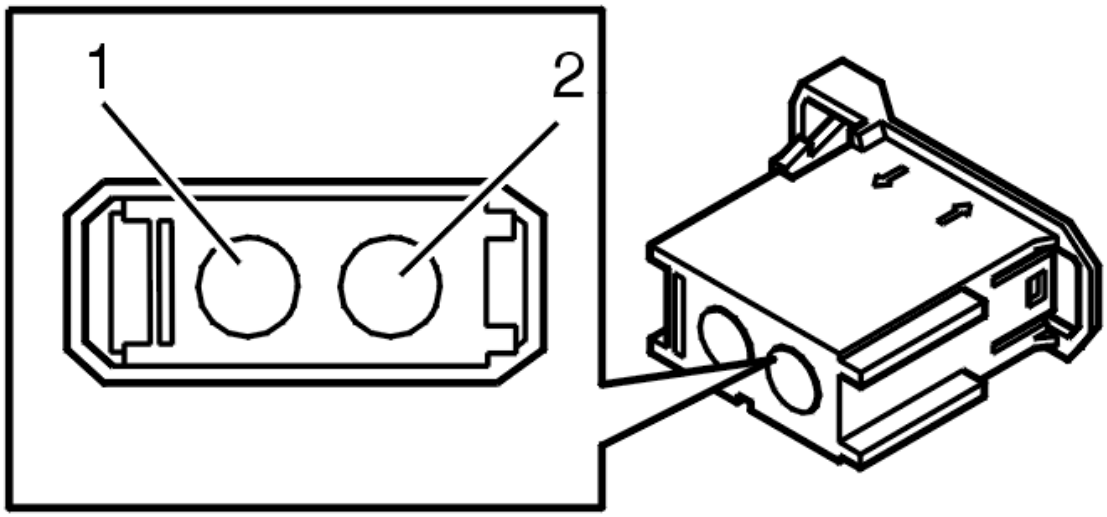

Fig. 17: Identifying Connector C
Courtesy of VOLVO CARS CORPORATION

CONNECTOR C

Terminal	Breakout box	Signal type	Ignition on	Other

	terminal			
#C1	-	MOST input signal	-	Optical input signal
#C2	-	MOST output signal	-	Optical output signal

SIGNAL DESCRIPTION, MULTIMEDIA MODULE (MMM) (2007-12)

SIGNAL SPECIFICATION

All the values given below are between the respective terminal in column 1 and terminal #A5 in column 2 (power ground) unless otherwise stated in brackets after the table entry.

NOTE: It is important to connect the breakout box and check the ground terminals before taking readings.

U=	DC voltage in volts (V)	U_{low} =	Voltage approximately 0 V
U_{bat} =	Battery voltage (V)	-	-

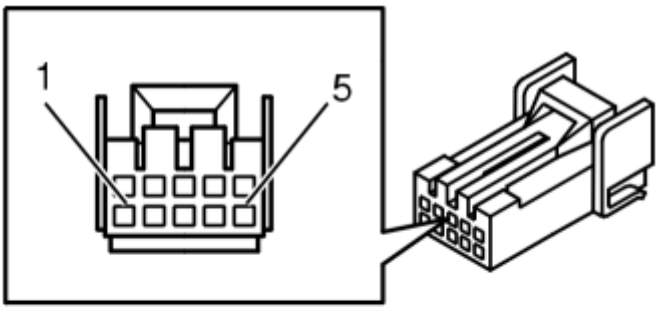

Fig. 18: Identifying 10-Bit Connector
Courtesy of VOLVO CARS CORPORATION

CONNECTOR A

Control module terminal	Signal type	Ignition on	Other
#A1	30-feed	U = U_{bat}	Power supply

#A2	-	-	-
#A3	-	-	-
#A4	-	-	-
#A5	Ground	$U=U_{low}$	-

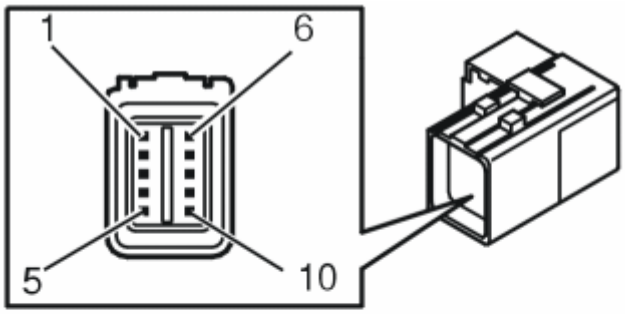

Fig. 19: Identifying 10-Bit Connector
Courtesy of VOLVO CARS CORPORATION

CONNECTOR B

Breakout box terminal	Control module terminal	Signal type	Ignition on	Other
#1	#B1	Color signal (red), screen	Analogue signal when a red color signal is used	0.714 Vp-p
#2	#B2	Colour signal (green), display	Analogue signal when a green color signal is used	0.714 Vp-p
#3	#B3	-	-	-
#4	#B4	Remote control, signal from display screen to Multimedia module (MMM)	-	-
#5	#B5	-	-	-
#6	#B6	Color signal (blue), screen	Analogue signal when a green colour signal is used	0.714 Vp-p

#7	#B7	Screen ground video signals	U_{low}	-
#8	#B8	RGB-synch, display screen	Analogue signal	0-5 V
#9	#B9	-	-	-
#10	#B10	Video signal, display screen	Analogue signal	1 Vp-p ± 0.2V
H	-	Screen ground	-	-

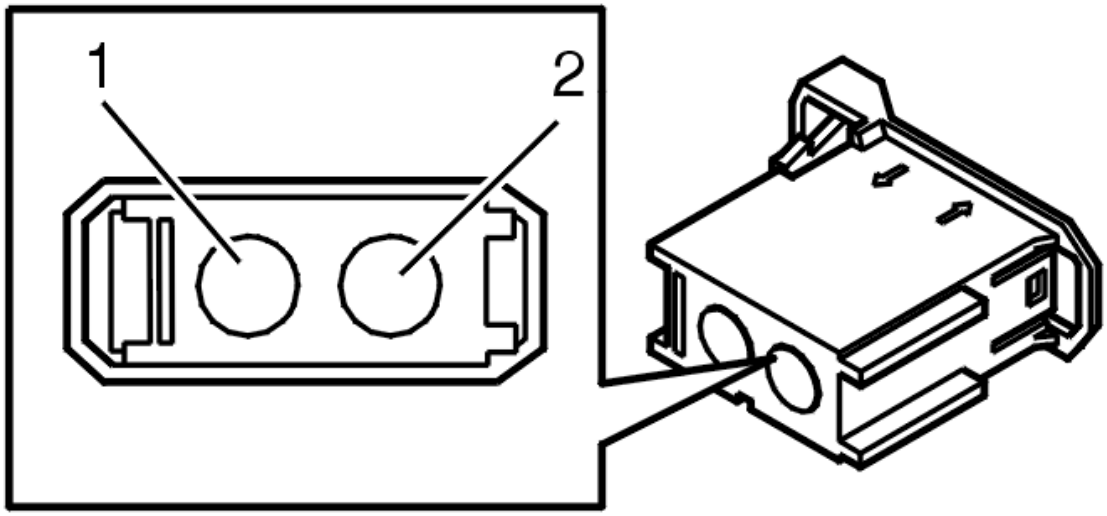

Fig. 20: Identifying Connector C
Courtesy of VOLVO CARS CORPORATION

CONNECTOR C

Control module terminal	Signal type	Ignition on	Other
#C1	MOST input signal	-	Optical input signal
#C2	MOST output signal	-	Optical output signal

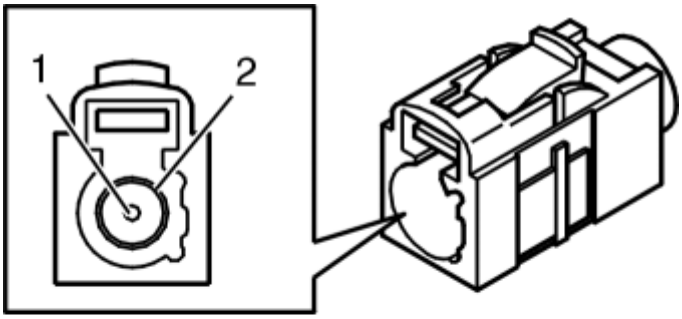

Fig. 21: Identifying 2-Bit Connector
Courtesy of VOLVO CARS CORPORATION

CONNECTOR D

Control module terminal	Signal type	Ignition on	Other
#D1	GPS signal	-	Antenna signal
#D2	Screen	-	-

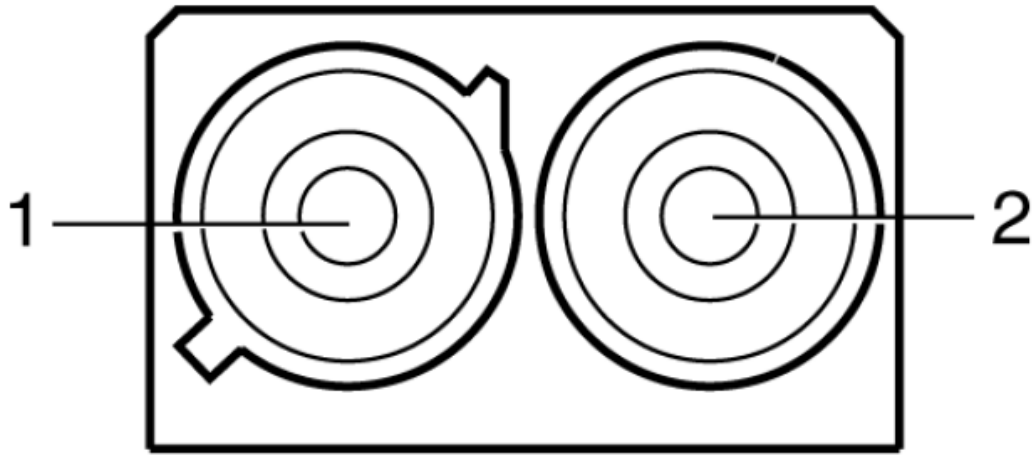

Fig. 22: Identifying 2-Bit Connector
Courtesy of VOLVO CARS CORPORATION

CONNECTOR E

Control module terminal	Signal type	Ignition on	Other
#E1	FM signal in (TMC)	-	Antenna signal
#E2	FM signal out (TMC)	-	Antenna signal

SIGNAL SPECIFICATION, AUDIO MODULE (AUM) (2003-06)

SIGNAL SPECIFICATION

All the values given below are between the respective terminal in column 1 and terminal #A2 in column 2 (power ground) unless otherwise stated in brackets after the table entry.

NOTE: **It is important to connect the breakout box and check the ground terminals before taking readings.**

U=	DC voltage in volts (V)	U_{low} =	Voltage approximately 0 V
U_{bat} =	Battery voltage (V)	-	-

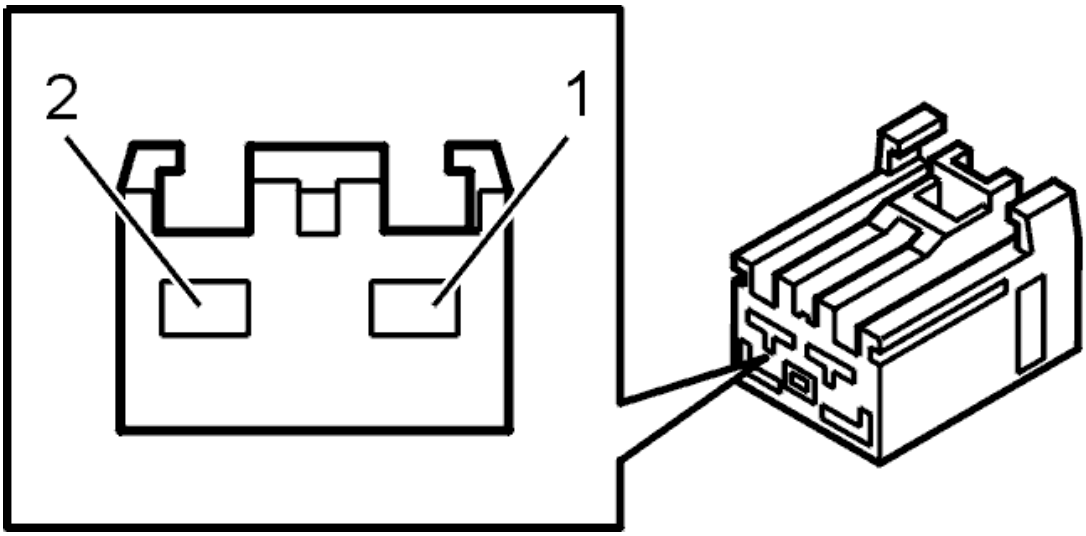

Fig. 23: Connector, Black (2-Pin)
Courtesy of VOLVO CARS CORPORATION

CONNECTOR A

Terminal	Breakout box terminal	Signal type	Ignition on	Other
#A1	#45	30 supply	U = U_{bat}	-
#A2	#46	Ground	U = U_{low}	-

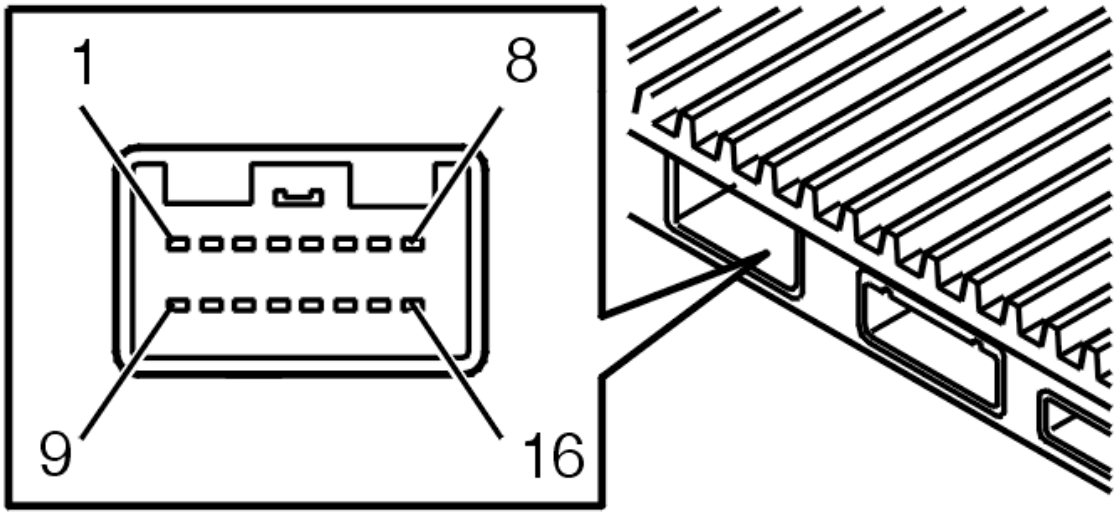

Fig. 24: Identifying Connector B
Courtesy of VOLVO CARS CORPORATION

CONNECTOR B

Terminal	Breakout box terminal	Signal type	Ignition on	Other
#B1	#1	Loudspeaker left front door (-)	Analog output signal when the loudspeaker is in use	0 - 19 V depending on the output from the control module. Loudspeaker impedance: Base performance = 4 ohms High performance = 2 ohms Premium sound = 4 ohms Treble loudspeaker = 8 ohms
#B2	#2	Center loudspeaker (-)	Analog output signal when the loudspeaker is in use	0 - 11 V depending on the output from the control module. Loudspeaker impedance: Premium sound with Multimedia Module (MMM) display screen = 6 ohms Premium sound without Multimedia Module (MMM) display screen = 8 ohms
#B3	#3	Loudspeaker right front door (-)	Analog output signal when the loudspeaker is in use	0 - 19 V depending on the output from the control module.

				Loudspeaker impedance: Base performance = 4 ohms High performance = 2 ohms Premium sound = 4 ohms Treble loudspeaker = 8 ohms
#B4	#4	Loudspeaker left rear door (-)	Analog output signal when the loudspeaker is in use	0 - 19 V depending on the output from the control module Loudspeaker impedance: Base performance = 4 ohms High performance = 2 ohms Premium sound = 6 ohms D-post treble loudspeaker = 8 ohms
#B5	#5	Loudspeaker right rear door (-)	Analog output signal when the loudspeaker is in use	0 - 19 V depending on the output from the control module. Loudspeaker impedance: Base performance = 4 ohms High performance = 2 ohms Premium sound = 6 ohms D-post treble loudspeaker = 8 ohms
#B6	#6	15 supply, activation signal for the control module	$U = U_{bat}$	$U=U_{bat}$, the control module is activated $U=U_{low}$ the control module is not activated
#B7	#7	-	-	-
#B8	#8	Signal ground, microphone	$U=U_{low}$	-
#B9	#9	Loudspeaker left front door (+)	Analog output signal when the loudspeaker is in use	0 - 19 V depending on the output from the control module. Loudspeaker impedance: Base performance = 4 ohms High performance = 2 ohms Premium sound = 4 ohms Treble loudspeaker = 8 ohms
#B10	#10	Center loudspeaker (+)	Analog output signal when the loudspeaker is	0 - 11 V depending on the output from the

			in use	control module. Loudspeaker impedance: Premium sound with Multimedia Module (MMM) display screen = 6 ohms Premium sound without Multimedia Module (MMM) display screen = 8 ohms
#B11	#11	Loudspeaker right front door (+)	Analog output signal when the loudspeaker is in use	0 - 19 V depending on the output from the control module. Loudspeaker impedance: Base performance = 4 ohms High performance = 2 ohms Premium sound = 4 ohms Treble loudspeaker = 8 ohms
#B12	#12	Loudspeaker left rear door (+)	Analog output signal when the loudspeaker is in use	0 - 19 V depending on the output from the control module. Loudspeaker impedance: Base performance = 4 ohms High performance = 2 ohms Premium sound = 6 ohms D-post treble loudspeaker = 8 ohms
#B13	#13	Loudspeaker right rear door (+)	Analog output signal when the loudspeaker is in use	0 - 19 V depending on the output from the control module. Loudspeaker impedance: Base performance = 4 ohms High performance = 2 ohms Premium sound = 6 ohms D-post treble loudspeaker = 8 ohms
#B14	#14	-	-	-
#B15	#15	-	-	-
#B16	#16	Microphone signal	Analog input signal when the microphone is in use	-

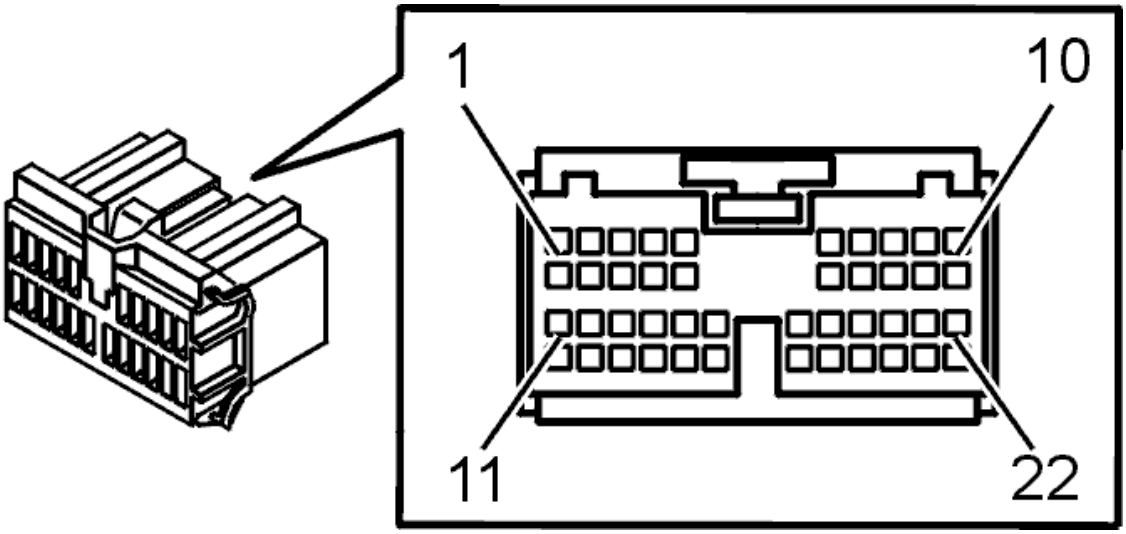

Fig. 25: Identifying Connector (F) Terminals
Courtesy of VOLVO CARS CORPORATION

CONNECTOR C

Terminal	Breakout box terminal	Signal type	Ignition on	Other
#C1	#1	Headset 1, left-hand headset	Analog output signal when the headset is in use	-
#C2	#2	Headset 1, right-hand headset	Analog output signal when the headset is in use	-
#C3	#3	Headset 2, left-hand headset	Analog output signal when the headset is in use	-
#C4	#4	Headset 2, right-hand headset	Analog output signal when the headset is in use	-
#C5	#5	-	-	-
#C6	#6	-	-	-
#C7	#7	Headset 3, left-hand headset	Analog output signal when the headset is in use	-
#C8	#8	Headset 3, right-hand headset	Analog output signal when the headset is in use	-
#C9	#9	Headset 4, left-hand headset	Analog output signal when the headset is in use	-
#C10	#10	Headset 4, right-hand headset	Analog output signal when the headset is in	-

			use	
#C11	#11	-	-	-
#C12	#12	-	-	-
#C13	#13	Headset 1. ground signal	$U=U_{low}$	-
#C14	#14	Headset 2. ground signal	$U=U_{low}$	-
#C15	#15	Headset 1 and 2, signal ground	$U=U_{low}$	-
#C16	#16	Headset 1, control signal buttons	Analog input signal when the buttons for selecting track and sound source are in use	The voltage varies between 5 - 0.9 V depending on which button is pressed in
#C17	#17	Headset 2, control signal buttons	Analog input signal when the buttons for selecting track and sound source are in use	The voltage varies between 5 - 0.9 V depending on which button is pressed in
#C18	#18	Headset 3, signal ground	$U=U_{low}$	-
#C19	#19	Headset 4, signal ground	$U=U_{low}$	-
#C20	#20	Headset 3 and 4, signal ground, buttons	$U=U_{low}$	-
#C21	#21	Headset 3, control signal buttons	Analog input signal when the buttons for selecting track and sound source are in use	The voltage varies between 5 - 0.9 V depending on which button is pressed in
#C22	#22	Headset 4, control signal buttons	Analog input signal when the buttons for selecting track and sound source are in use	The voltage varies between 5 - 0.9 V depending on which button is pressed in

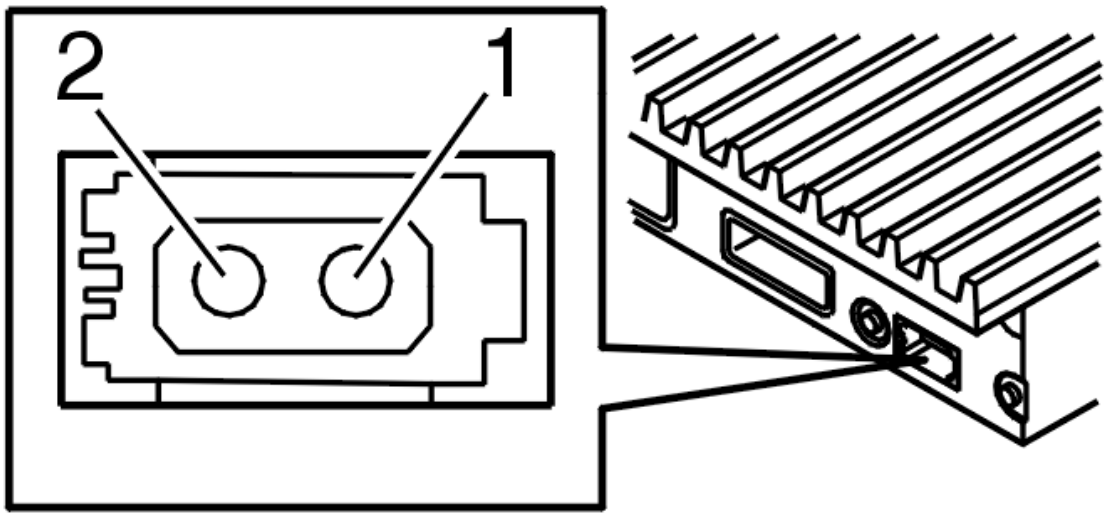

Fig. 26: Identifying Connector D
Courtesy of VOLVO CARS CORPORATION

CONNECTOR D

Terminal	Breakout box terminal	Signal type	Ignition on	Other
#D1	-	MOST input signal	-	Optical input signal when the MOST network is activated
#D2	-	MOST output signal	-	Optical output signal when the MOST network is activated

SIGNAL SPECIFICATION, INFOTAINMENT CONTROL MODULE (ICM) (2003-12)

SIGNAL SPECIFICATION

All values given below are between the terminals stated in column 1 and terminal #A10 in column 2 (signal ground). This applies unless otherwise indicated in brackets.

NOTE: **It is important to connect the breakout box and check the ground terminals before taking readings.**

U=	DC voltage in volts (V)	U_{low} =	Voltage approximately 0 V
U_{bat} =	Battery voltage (V)	-	-

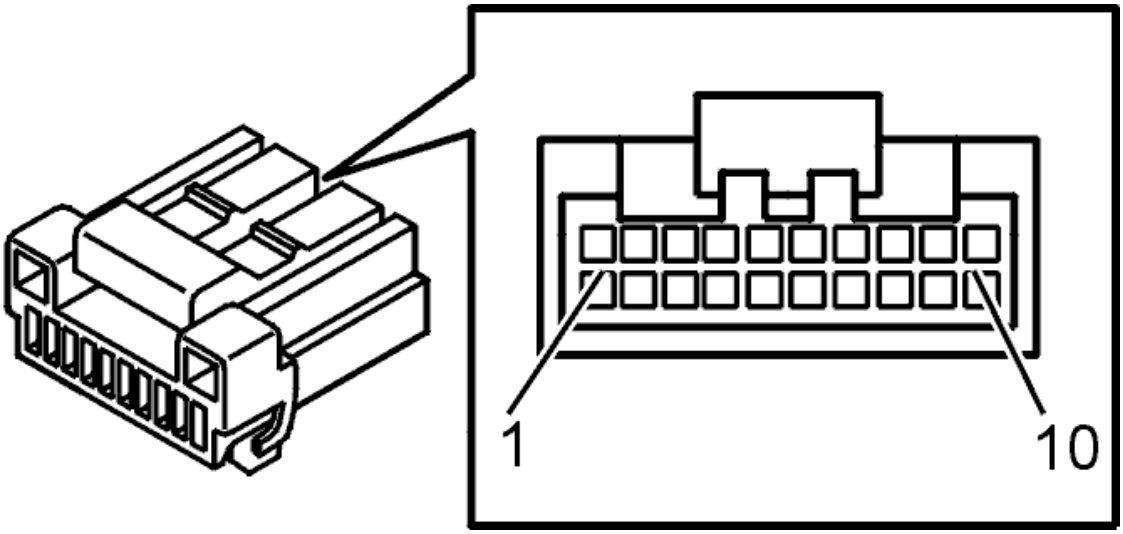

Fig. 27: Identifying Connector (D) Terminals
Courtesy of VOLVO CARS CORPORATION

CONNECTOR A

Terminal	Breakout box terminal	Signal type	Ignition on	Ignition off	Other
#A1	#A1	30 supply	U = Ubat	U = Ulow	-
#A2	#A2	Reserve	-	-	-
#A3	#A3	Communication CAN L low speed network	During communication the voltage is 1.5-2.5 V		-
#A4	#A4	Communication CAN L low speed network	During communication the voltage is 1.5-2.5 V		-
#A5	#A5	Communication CAN_H low speed network	During communication the voltage is 2.0-3.5 V		-
#A6	#A6	Communication CAN_H low speed network	During communication the voltage is 2.0-3.5 V		-
#A7	#A7	Reserve	-	-	-
#A8	#A8	Reserve	-	-	-
#A9	#A9	Reserve	-	-	-
#A10	#A10	Power ground	U = Ulow	U = Ulow	-

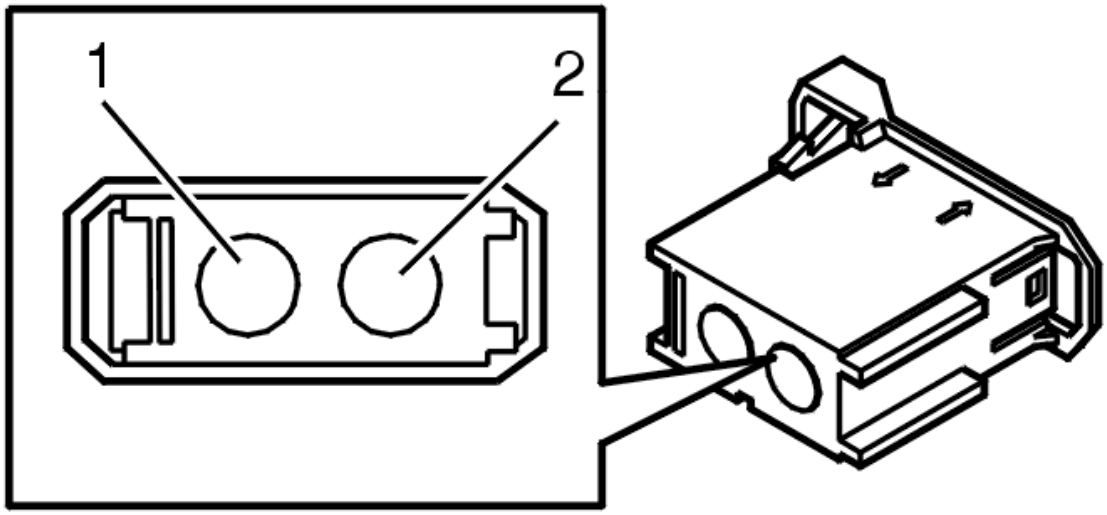

Fig. 28: Identifying Connector C
Courtesy of VOLVO CARS CORPORATION

CONNECTOR C

Terminal	Breakout box terminal	Signal type	Ignition on	Other
#C1	-	MOST input signal	-	Optical input signal
#C2	-	MOST output signal	-	Optical output signal

SIGNAL SPECIFICATION, REAR SEAT ENTERTAINMENT MODULE (RSE), GENERATION 3.2 (2005-06)

SIGNAL SPECIFICATION, REAR SEAT ENTERTAINMENT MODULE (RSE)

U=	DC voltage in volts (V)	U_{AC} =	AC voltage in volts (V)
U_{bat} =	Battery voltage (V)	f =	Frequency in Hertz (Hz)
U_{low} =	Voltage approximately 0 V	t =	Time in seconds
PWM =	Pulse width modulated signal as a %	-	-

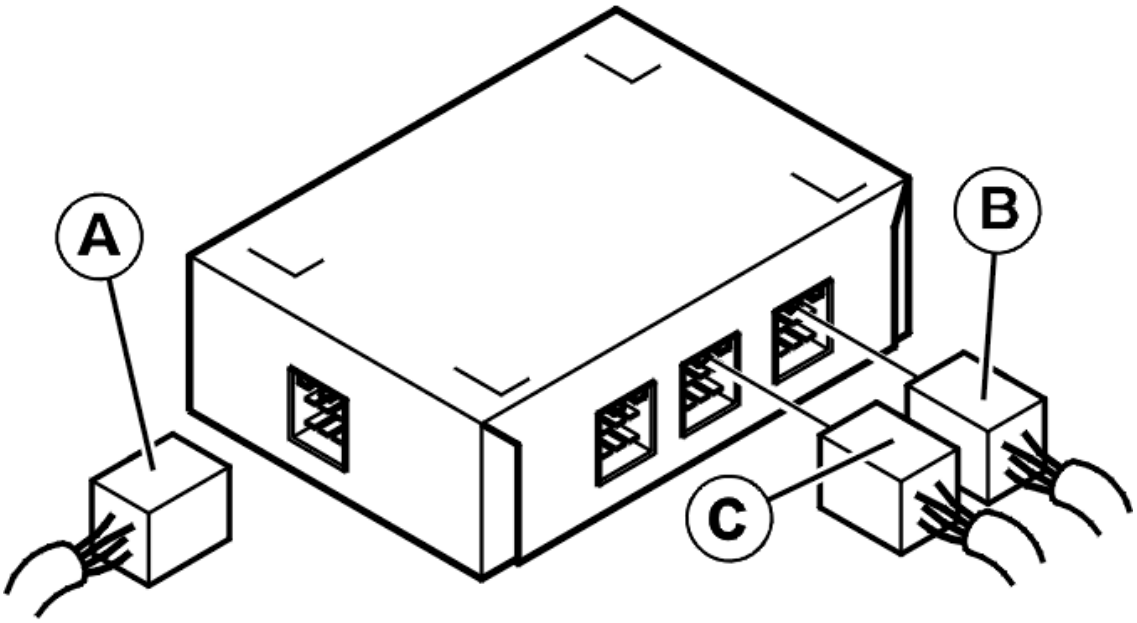

Fig. 29: Identifying Rear Seat Entertainment Module (RSE)
Courtesy of VOLVO CARS CORPORATION

SIGNAL TABLE

Terminal	Signal type	Ignition on	Other
#A1	I2C data bus (SDA)	Data signal 0-5 V	#1-#10 left-hand display screen
#A2	Synch clock signal I2C (SKL)	Data signal 0-5 V	-
#A3	Ground, display screen	U = Ulow	Cable casing
#A4	Signal infra-red receiver	-	Remote control receiver
#A5	Supply to infra-red receiver	5 V	Remote control receiver
#A6	Supply to display screen (LCD)	U = Uhigh	-
#A7	Picture signal	Analog signal	-
#A8	Reference ground picture signal and display screen	U = Ulow	-
#A9	Ground to display screen background lighting	U = Ulow	Liquid-crystal display (LCD) lighting
#A10	Supply to display screen background lighting	U = Uhigh	Liquid-crystal display (LCD) lighting
#A11	I2C data bus (SDA)	Data signal 0-5 V	#11-#20 right-hand display screen

#A12	Synch clock signal I2C (SKL)	Data signal 0-5 V	-
#A13	Ground, display screen	U = Ulow	Cable casing
#A14	Signal infra-red receiver	-	Remote control receiver
#A15	Supply to infra-red receiver	5 V	Remote control receiver
#A16	Supply to display screen (LCD)	U = Uhigh	-
#A17	Picture signal	Analog signal	-
#A18	Reference ground picture signal and display screen	U = Ulow	-
#A19	Ground to display screen background lighting	U = Ulow	Liquid-crystal display (LCD) lighting
#A20	Supply to display screen background lighting	U = Ulow	Liquid-crystal display (LCD) lighting

SIGNAL TABLE

Terminal	Signal type	Ignition on	Other
#B1	15 supply	U= Uhigh	U= Ulow with the ignition off
#B2	Ground TV	U= Ulow	TV ground, port select
#B3	-	-	-
#B4	-	-	-
#B5	-	-	-
#B6	Supply	U= Uhigh	-
#B7	-	-	-
#B8	-	-	-
#B9	-	-	-
#B10	-	-	-
#B11	-	-	-
#B12	Power ground	U= Ulow	-

SIGNAL TABLE

Terminal	Signal type	Ignition on	Other
#C1	Right-hand audio (out) audio channel 1	AC	Low level, signal to the headsets via the control module for rear audio separation. Each headset has an audio channel
#C2	Left-hand audio (out) audio channel 1	AC	Low level, signal to the headsets via the control module for rear audio separation. Each headset has an audio channel

#C3	-	-	-
#C4	Right-hand audio (out) audio channel 2	AC	Low level, signal to the headsets via the control module for rear audio separation. Each headset has an audio channel
#C5	Left-hand audio (out) audio channel 2	AC	Low level, signal to the headsets via the control module for rear audio separation. Each headset has an audio channel
#C6	Channel selector audio	0 V = no signal at all 5 V = Left-hand display screen audio in loudspeaker (master) 7.5 V = right-hand display screen audio in loudspeaker (master)	The left-hand passenger position sound is always in the left-hand headphone and vice versa
#C7	Video signal (in)	Analog signal	Wiring to the AUX-panel
#C8	Video signal ground	U = Ulow	Wiring to the AUX-panel
#C9	Right-hand audio signal (in)	-	Wiring to the AUX-panel
#C10	Left-hand audio signal (in)	-	Wiring to the AUX-panel
#C11	Audio ground	-	Wiring to the AUX-panel
#C12	Audio ground	-	Low level, signal to the headsets via the control module for rear audio separation

SIGNAL TABLE

Terminal	Signal type	Ignition on	Other
#D1	-	-	A and B refers to the connectors on the DVD player
#D2	Infra-red reference signal ground for DVD	U = Ulow	#A2 DVD (Infra-red GND)
#D3	-	-	-
#D4	15-supply and lighting for the DVD	U = Ubat	Terminal #A6 DVD (Lighting) and terminal #A7 (DVD 15 supply)
#D5	Infra-red control signal for DVD	U=5 V	#A1 DVD (Infra-red in)
#D6	Supply	U = Ubat	#A4 DVD (Batt)
#D7	Picture signal	Analog signal	#B7 DVD (Video out)
#D8	Picture signal reference ground	U = Ulow	#B8 DVD (Video GND)

#D9	Right audio channel	AC	#B6 DVD (Audio right)
#D10	Left audio channel	AC	#B5 DVD (Audio left)
#D11	Reference ground for audio channels	U = Ulow	#B4 DVD (Audio GND)
#D12	Ground	U = Ulow	#A8 DVD (ground)
#D13	-	-	-
#D14	-	-	-
#D15	-	-	-
#D16	-	-	-

SIGNAL SPECIFICATION, REAR SEAT ENTERTAINMENT MODULE (RSE), GENERATION 3.2 (EXECUTIVE; PREMIER; 2004)

SIGNAL SPECIFICATION, REAR SEAT ENTERTAINMENT MODULE (RSE)

see **SIGNAL SPECIFICATION, REAR SEAT ENTERTAINMENT MODULE (RSE)**

SIGNAL SPECIFICATION, REAR SEAT ENTERTAINMENT MODULE (RSE), GENERATION 4.1 (2006-07)

SIGNAL SPECIFICATION, REAR SEAT ENTERTAINMENT MODULE (RSE), GENERATION 4.1

U=	DC voltage in volts (V)	U_{AC} =	AC voltage in volts (V)
U_{bat} =	Battery voltage (V)	f =	Frequency in Hertz (Hz)
U_{low} =	Voltage approximately 0 V	t =	Time in seconds
PWM =	Pulse width modulated signal as a %	-	-

Damaged rear seat entertainment module (RSE).

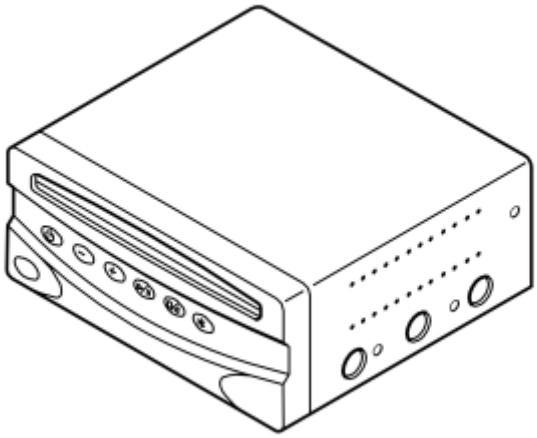

Fig. 30: Identifying Rear Seat Entertainment Module (RSE)
Courtesy of VOLVO CARS CORPORATION

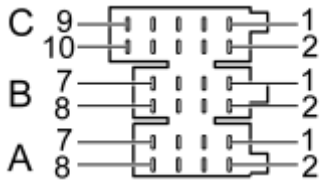

Fig. 31: Identifying Terminals
Courtesy of VOLVO CARS CORPORATION

SIGNAL TABLE

Terminal	Signal type	Ignition on	Miscellaneous
#A1	-	-	-
#A2	-	-	-
#A3	-	-	-
#A4	Power supply to control module	$U=U_{high}$	Direct from battery via fuse.
#A5	-	-	-
#A6	Power supply to control module	$U=U_{high}$	Via Central electronic module (CEM). For lighting in buttons.
#A7	Power supply to control module	$U=U_{high}$	Via Central electronic module (CEM). Indication of ignition on.
#A8	Ground terminal	$U=U_{low}$	-

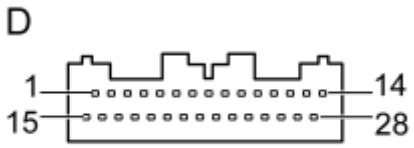

Fig. 32: Identifying 28-Bit Connector
Courtesy of VOLVO CARS CORPORATION

SIGNAL TABLE

Terminal	Signal type	Ignition on	Miscellaneous
#D1	-	-	-
#D2	Direct current (DC) voltage (out)	-	7-9 V at activation of rear audio separation module (RAS).
#D3	Ground terminal	$U=U_{low}$	Ground for audio signal from rear audio separation module (RAS).
#D4	Audio signal (in)	-	Left audio channel (+), RCA-switch. Alternating current (AC) voltage during signal.
#D5	-	-	-
#D6	-	-	-
#D7	Video signal (in)	-	Input signal from video terminal (+) on AUX panel. Analog signal.
#D8	-	-	-
#D9	Internal CAN (+)	U= 2.5-2.8 V	Connected to terminal #D10.
#D10	Internal CAN (+)	U= 2.5-2.8 V	Connected to terminal #D9.
#D11	-	-	-
#D12	Audio signal (out)	-	Signal to wire headsets via AUX panel. Left audio signal headset socket 1.
#D13	Audio signal (out)	-	Signal to wire headsets via AUX panel. Right audio signal headset socket 1.
#D14	Ground terminal	$U=U_{low}$	Ground terminal wire headsets via AUX panel. Headset socket 1.
#D15	-	-	-
#D16	Audio signal. (out)	-	Output signal to rear audio separation (RAS). Right audio signal.
#D17	Audio signal (out)	-	Output signal to rear audio

			separation (RAS). Left audio signal.
#D18	Audio signal (in)	-	Input signal from AUX panel. Right audio channel (+), RCA switch. Alternating current (AC) voltage during signal.
#D19	Ground terminal	$U=U_{low}$	Ground terminal for audio inputs on AUX panel.
#D20	-	-	-
#D21	Video signal. (in)	-	Input signal from video terminal (-) on AUX panel. Analog signal.
#D22	-	-	-
#D23	Internal CAN (-)	U= 2.5-2.8 V	Connected to terminal #D24.
#D24	Internal CAN (-)	U= 2.5-2.8 V	Connected to terminal #D23.
#D25	-	-	-
#D26	Ground terminal	$U=U_{low}$	Ground terminal wire headsets via AUX panel. Headset socket 2.
#D27	Audio signal (out)	-	Signal to wire headsets via AUX panel. Left audio signal headset socket 2.
#D28	Audio signal (out)	-	Signal to wire headsets via AUX panel. Right audio signal headset socket 2.

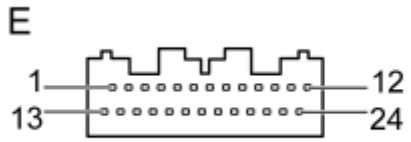

Fig. 33: Identifying 24-Bit Connector
Courtesy of VOLVO CARS CORPORATION

SIGNAL TABLE

Terminal	Signal type	Ignition on	Miscellaneous
#E1	Power supply	12 V	To left display screen terminal #2.
#E2	Wake-up signal	approximately 11-11.5 V	To left screen terminal #3. Upon start-up of the system and when there are communication faults with the screen, the voltages

			switches between 0 V and 11-11.5 V, 3 times.
#E3	CAN signal (+)	U= 2.5-2.8 V	Internal CAN network between control module and display screens. Left display screen terminal #4.
#E4	CAN signal (-)	U= 2.5-2.8 V	Internal CAN network between control module and display screens. Left display screen terminal #5.
#E5	IR control signal for system (in)	U= approx. 4 V when no IR signal received	From left screen terminal #12. Lowers upon signal receipt.
#E6	Ground terminal	U= U_{low}	For audio signal to left display screen #11.
#E7	Audio signal (out)	Analog signal	To left display screen terminal #9. Left audio channel.
#E8	Audio signal (out)	Analog signal	To left display screen terminal #10. Right audio channel.
#E9	-	-	-
#E10	Video signal (out)	Analog signal	To left display screen terminal #8. Video (+).
#E11	Video signal (out)	Analog signal	To left display screen terminal #7. Video (-).
#E12	Ground terminal	U= U_{low}	To left display screen terminal #1.
#E13	Power supply.	12 V	To right display screen terminal #2.
#E14	Wake-up signal	approximately 11-11.5 V	To right screen terminal #3. Upon start-up of the system and when there are communication faults with the screen, the voltages switches between 0 V and 11-11.5 V, 3 times.
#E15	CAN signal (+)	U= 2.5-2.8 V	Internal CAN network between control module and display screens. Right display screen terminal #4.
#E16	CAN signal (-)	U= 2.5-2.8 V	Internal CAN network between control module and display screens. Right display screen terminal #5.

#E17	IR control signal for system (in)	U= approx. 4 V when no IR signal received	From right screen terminal #12. Lowers upon signal receipt.
#E18	Ground terminal	U= U_{low}	For audio signal to right display screen terminal #11.
#E19	Audio signal (out)	Analog signal	To right display screen terminal #10. Left audio channel.
#E20	Audio signal (out)	Analog signal	To right display screen terminal #9. Right audio channel.
#E21	-	-	-
#E22	Video signal (out)	Analog signal	To right display screen terminal #8. Video (+).
#E23	Video signal (out)	Analog signal	To right display screen terminal #7. Video (-).
#E24	Ground terminal	U= U_{low}	To right display screen terminal #1.

SIGNAL SPECIFICATION, REAR SEAT ENTERTAINMENT MODULE (RSE), GENERATION 4.2 (2007-08)

SIGNAL SPECIFICATION, REAR SEAT ENTERTAINMENT MODULE (RSE), GENERATION 4.2

U=	DC voltage in volts (V)	U_{AC} =	AC voltage in volts (V)
U_{bat} =	Battery voltage (V)	f =	Frequency in Hertz (Hz)
U_{low} =	Voltage approximately 0 V	t =	Time in seconds
PWM =	Pulse width modulated signal as a %	-	-

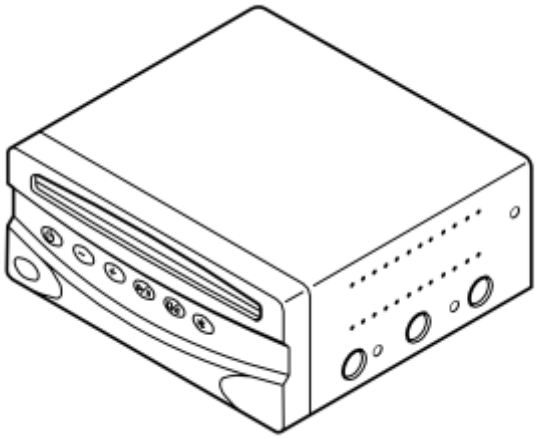

Fig. 34: Identifying Rear Seat Entertainment Module (RSE)
Courtesy of VOLVO CARS CORPORATION

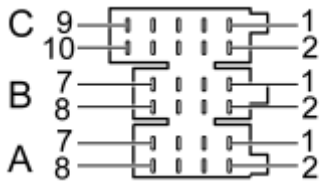

Fig. 35: Identifying Terminals
Courtesy of VOLVO CARS CORPORATION

SIGNAL TABLE

Terminal	Signal type	Ignition on	Miscellaneous
#A1	-	-	-
#A2	-	-	-
#A3	-	-	-
#A4	Power supply to control module	$U=U_{high}$	Direct from battery via fuse.
#A5	-	-	-
#A6	Power supply to control module	$U=U_{high}$	Via Central electronic module (CEM). For lighting in buttons.
#A7	Power supply to control module	$U=U_{high}$	Via Central electronic module (CEM). Indication of ignition on.
#A8	Ground terminal	$U=U_{low}$	-

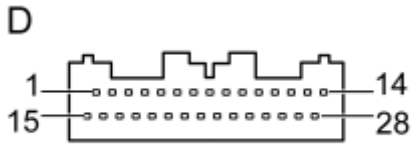

Fig. 36: Identifying 28-Bit Connector
Courtesy of VOLVO CARS CORPORATION

SIGNAL TABLE

Terminal	Signal type	Ignition on	Miscellaneous
#D1	-	-	-
#D2	-	-	-
#D3	Ground terminal	$U=U_{low}$	Ground for audio signal to AUX-input and Integrated Audio Module (IAM).
#D4	Audio signal (in)	-	Input signal from AV-panel.

			Left audio channel (+), RCA switch. Alternating current voltage during signal.
#D5	-	-	-
#D6	-	-	-
#D7	Video signal (in)	-	Input signal from video connection (+) on AV-panel. Analog signal.
#D8	-	-	-
#D9	Internal CAN (+)	U= 2.5-2.8 V	Connected to terminal #D10.
#D10	Internal CAN (+)	U= 2.5-2.8 V	Connected to terminal #D9.
#D11	-	-	-
#D12	Audio signal (out)	-	Signal to wire headsets via AV-panel. Left audio signal headset socket 1.
#D13	Audio signal (out)	-	Signal to wire headsets via AV-panel. Right audio signal headset socket 1.
#D14	Ground terminal	$U=U_{low}$	Ground connection wire headsets via AV-panel. Headset socket 1.
#D15	-	-	-
#D16	Audio signal. (out)	-	Output signal to AUX-input and Integrated Audio Module (IAM). Right audio signal.
#D17	Audio signal (out)	-	Output signal to AUX-input and Integrated Audio Module (IAM). Left audio signal.
#D18	Audio signal (in)	-	Input signal from AV-panel. Right audio channel (+), RCA switch. Alternating current voltage during signal.
#D19	Ground terminal	$U=U_{low}$	Ground connection for audio inputs on AV-panel.
#D20	-	-	-
#D21	Video signal. (in)	-	Input signal from video connection (-) on AV-panel. Analog signal.
#D22	-	-	-
#D23	Internal CAN (-)	U= 2.5-2.8 V	Connected to terminal #D24.
#D24	Internal CAN (-)	U= 2.5-2.8 V	Connected to terminal #D23.
#D25	-	-	-

#D26	Ground terminal	$U=U_{low}$	Ground connection wire headsets via AV-panel. Headset socket 2.
#D27	Audio signal (out)	-	Signal to wire headsets via AV-panel. Left audio signal headset socket 2.
#D28	Audio signal (out)	-	Signal to wire headsets via AV-panel. Right audio signal headset socket 2.

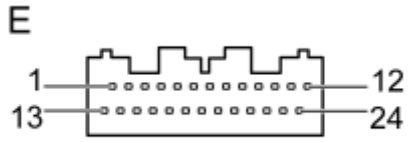

Fig. 37: Identifying 24-Bit Connector
Courtesy of VOLVO CARS CORPORATION

SIGNAL TABLE

Terminal	Signal type	Ignition on	Miscellaneous
#E1	Power supply	12 V	To left display screen terminal #2.
#E2	Wake-up signal	approximately 11-11.5 V	To left screen terminal #3. Upon start-up of the system and when there are communication faults with the screen, the voltages switches between 0 V and 11-11.5 V, 3 times.
#E3	CAN signal (+)	U= 2.5-2.8 V	Internal CAN network between control module and display screens. Left display screen terminal #4.
#E4	CAN signal (-)	U= 2.5-2.8 V	Internal CAN network between control module and display screens. Left display screen terminal #5.
#E5	IR control signal for system (in)	U= approx. 4 V when no IR signal received	From left screen terminal #12. Lowers upon signal receipt.
#E6	Ground terminal	$U=U_{low}$	For audio signal to left display screen #11.
#E7	Audio signal (out)	Analog signal	To left display screen terminal #9. Left audio channel.

#E8	Audio signal (out)	Analog signal	To left display screen terminal #10. Right audio channel.
#E9	-	-	-
#E10	Video signal (out)	Analog signal	To left display screen terminal #8. Video (+).
#E11	Video signal (out)	Analog signal	To left display screen terminal #7. Video (-).
#E12	Ground terminal	$U=U_{low}$	To left display screen terminal #1.
#E13	Power supply	12 V	To right display screen terminal #2.
#E14	Wake-up signal	approximately 11-11.5 V	To right screen terminal #3. Upon start-up of the system and when there are communication faults with the screen, the voltages switches between 0 V and 11-11.5 V, 3 times.
#E15	CAN signal (+)	U= 2.5-2.8 V	Internal CAN network between control module and display screens. Right display screen terminal #4.
#E16	CAN signal (-)	U= 2.5-2.8 V	Internal CAN network between control module and display screens. Right display screen terminal #5.
#E17	IR control signal for system (in)	U= approx. 4 V when no IR signal received	From right screen terminal #12. Lowers upon signal receipt.
#E18	Ground terminal	$U=U_{low}$	For audio signal to right display screen terminal #11.
#E19	Audio signal (out)	Analog signal	To right display screen terminal #10. Left audio channel.
#E20	Audio signal (out)	Analog signal	To right display screen terminal #9. Right audio channel.
#E21	-	-	-
#E22	Video signal (out)	Analog signal	To right display screen terminal #8. Video (+).
#E23	Video signal (out)	Analog signal	To right display screen terminal #7. Video (-).
#E24	Ground terminal	$U=U_{low}$	To right display screen terminal #1.

SIGNAL SPECIFICATION, REAR SEAT ENTERTAINMENT MODULE (RSE), GENERATION 4.3 (2009-12)

SIGNAL SPECIFICATION, REAR SEAT ENTERTAINMENT MODULE (RSE), GENERATION 4.3

All the values listed are measured between the terminal in column 1 and terminal #A8 (ground), unless otherwise indicated in brackets.

U=	DC voltage in volts (V)	U_{AC} =	AC voltage in volts (V)
U_{bat} =	Battery voltage (V)	f =	Frequency in Hertz (Hz)
U_{low} =	Voltage approximately 0 V	t =	Time in seconds
PWM =	Pulse width modulated signal as a %	-	-

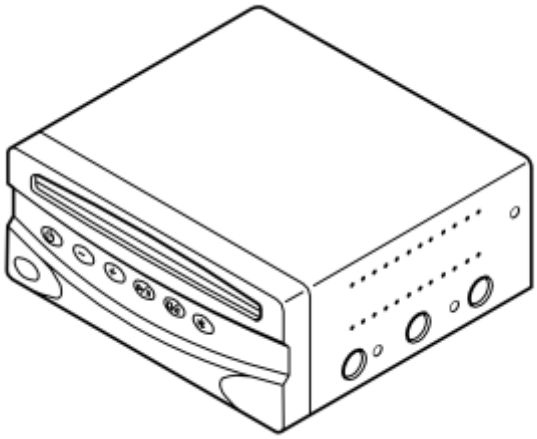

Fig. 38: Identifying Rear Seat Entertainment Module (RSE)
Courtesy of VOLVO CARS CORPORATION

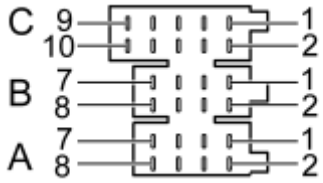

Fig. 39: Identifying Terminals
Courtesy of VOLVO CARS CORPORATION

SIGNAL TABLE

Terminal	Signal type	Ignition on	Miscellaneous
#A1	-	-	-
#A2	-	-	-
#A3	-	-	-

#A4	Power supply to control module	$U=U_{high}$	Direct from battery via fuse. Also supply to TV receiver, 26 pin connector terminal #26 via fuse.
#A5	-	-	-
#A6	Power supply to control module	$U=U_{high}$	Via Central electronic module (CEM). For lighting in buttons.
#A7	Power supply to control module	$U=U_{high}$	Via Central electronic module (CEM). Indication of ignition on.
#A8	Ground terminal	$U=U_{high}$	Also ground terminal for TV receiver, 26 pin connector terminal #13 via fuse.

SIGNAL TABLE

Terminal	Signal type	Ignition on	Miscellaneous
#C1	Video signal (in) from TV receiver	-	Input signal from TV receiver, 26 pin connector terminal #20. Video +.
#C2	Video signal (in) from TV receiver	-	Input signal from TV receiver, 26 pin connector terminal #5. Video -.
#C3	Audio signal (in) from TV receiver	-	Input signal from TV receiver, 26 pin connector terminal #22. Left audio channel (L+).
#C4	Audio signal (in) from TV receiver	-	Input signal from TV receiver, 26 pin connector terminal #21. Right audio channel (R+).
#C5	Ground terminal audio for TV receiver	-	Ground terminal audio for TV receiver, 26 pin connector terminal #6
#C6	-	-	-
#C7	-	-	-
#C8	-	-	-
#C9	-	-	-
#C10	-	-	-

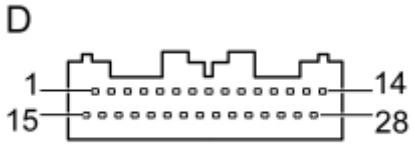

Fig. 40: Identifying 28-Bit Connector
Courtesy of VOLVO CARS CORPORATION

SIGNAL TABLE

Terminal	Signal type	Ignition on	Miscellaneous
#D1	-	-	-
#D2	-	-	-
#D3	Ground terminal	$U=U_{high}$	Ground for audio signal to AUX input terminal #1 and Integrated Audio Module (IAM). Internal AUX input connected with terminal #7.
#D4	Audio signal (in)	-	Input signal from AV-panel. Left audio channel (+), RCA switch. Alternating current voltage during signal.
#D5	-	-	-
#D6	-	-	-
#D7	Video signal (in)	-	Input signal from video connection (+) on AV-panel. Analog signal.
#D8	-	-	-
#D9	Internal CAN (+)	U= 2.5-2.8 V	Bridged to terminal #D10. Digital signal
#D10	Internal CAN (+)	U= 2.5-2.8 V	Bridged to terminal #D9. Digital signal
#D11	Wake-up signal, TV receiver	No wake-up signal: U= approx. 0 V Wake-up signal sent: U= approx. 9 V When the wake-up signal is sent and the TV receiver is disconnected, the voltage from the DVD player is approx. battery voltage.	To TV receiver, 26 pin connector terminal #25 Wake-up signals are only sent during start-up of the system (ignition on) and when the system is in operation. No wake-up signals are sent with the ignition on and when in standby. When the TV receiver's indication LED illuminates, a wake-up signal is sent.
#D12	-	-	-

#D13	-	-	-
#D14	-	-	-
#D15	IR ground signal to TV receiver	Ignition on and TV receiver's indication LED illuminated: U = approx. 9.3 V	To TV receiver's 6 pin connector terminal #3. Measured against terminal #D25
#D16	Audio signal (out)	-	Output signal to AUX input terminal #2 and integrated audio module (IAM). Right audio signal. Internal AUX input connected with terminal #6. Circuit broken if 3.5 mm connector is connected.
#D17	Audio signal (out)	-	Output signal to AUX input terminal #3 and integrated audio module (IAM). Left audio signal. Internal AUX input connected with terminal #5. Circuit broken if 3.5 mm connector is connected.
#D18	Audio signal (in)	-	Input signal from AV-panel. Right audio channel (+), RCA switch. Alternating current voltage during signal.
#D19	Ground terminal	$U=U_{low}$	Ground connection for audio inputs on AV-panel.
#D20	-	-	-
#D21	Video signal (in)	-	Input signal from video connection (-) on AV-panel. Analog signal.
#D22	-	-	-
#D23	Internal CAN (-)	U= 2.5-2.8 V	Bridged to terminal #D24. Digital signal
#D24	Internal CAN (-)	U= 2.5-2.8 V	Bridged to terminal #D23. Digital signal
#D25	IR signal to TV receiver	Ignition on and TV receiver's indication LED illuminated: U = approx. 9.3 V Ignition on and TV receiver's indication LED not illuminated: U = approx. X. X V	To TV receiver's 6 pin connector terminal #1. Measured against terminal #D15.
#D26	-	-	-

#D27	-	-	-
#D28	-	-	-

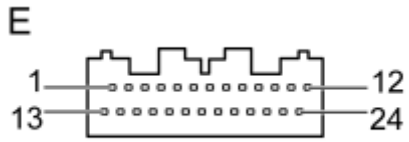

Fig. 41: Identifying 24-Bit Connector
Courtesy of VOLVO CARS CORPORATION

SIGNAL TABLE

Terminal	Signal type	Ignition on	Miscellaneous
#E1	Voltage supply, left screen	U= approx. 12 V	To left display screen terminal #6.
#E2	Wake-up signal, left screen	U= approx. 11-11.5 V	To left display screen terminal #5. At system start-up and when there is a communication fault with the screen, the voltage shifts between 0 V and 11-11.5 V, 3 times.
#E3	CAN-signal (+), left screen	U= 2.5-2.8 V	Internal CAN network between control module and display screens. Left display screen terminal #4.
#E4	CAN-signal (-), left screen	U= 2.5-2.8 V	Internal CAN network between control module and display screens. Left display screen terminal #3.
#E5	IR control signal for system (in), left screen	U= approx. 4 V when no IR signal received U= approx. 3 V when IR signal received	From left screen terminal #2. Lowers upon signal receipt.
#E6	Ground terminal, left screen	$U=U_{low}$	For audio signal to left display screen #8.
#E7	Audio signal (out), left screen	Analog signal	To left display screen terminal #9. Left audio channel.
#E8	Audio signal (out), left screen	Analog signal	To left display screen terminal #10. Right audio channel.
#E9	-	-	-
#E10	Video signal (out), left screen	Analog signal	To left display screen terminal #11. Video (+).

#E11	Video signal (out), left screen	Analog signal	To left display screen terminal #12. Video (-).
#E12	Ground terminal, left screen	$U=U_{low}$	To display left screen terminal #7.
#E13	Voltage supply, right screen	U= approx. 12 V	To right display screen terminal #6.
#E14	Wake-up signal, right screen	U= approx. 11-11.5 V	To right display screen terminal #5. At system start-up and when there is a communication fault with the screen, the voltage shifts between 0 V and 11-11.5 V, 3 times.
#E15	CAN-signal (+), right screen	U=2.5-2.8 V	Internal CAN network between control module and display screens. Right display screen terminal #4.
#E16	CAN-signal (-), right screen	U=2.5-2.8 V	Internal CAN network between control module and display screens. Right display screen terminal #3.
#E17	IR control signal for system (in), right screen	U=approx. 4 V when no IR signal received U=approx. 3 V when IR signal received	From right screen terminal #2. Lowers upon signal receipt.
#E18	Ground terminal, right screen	$U=U_{low}$	For audio signal to right display screen terminal #8.
#E19	Audio signal (out), right screen	Analog signal	To right display screen terminal #10. Left audio channel.
#E20	Audio signal (out), right screen	Analog signal	To right display screen terminal #9. Right audio channel.
#E21	-	-	-
#E22	Video signal (out), right screen	Analog signal	To right display screen terminal #11. Video (+).
#E23	Video signal (out), right screen	Analog signal	To right display screen terminal #12. Video (-).
#E24	Ground terminal, right screen	$U=U_{low}$	To right display screen terminal #7.

SIGNAL SPECIFICATION, REAR SOUND SEPARATION ELECTRONIC MODULE. REAR SEAT ENTERTAINMENT, GENERATION 3.2 (2005-06)

SIGNAL SPECIFICATION, CONTROL MODULE FOR REAR AUDIO SEPARATION

U=	DC voltage in volts (V)	U_{AC} =	AC voltage in volts (V)
U_{bat} =	Battery voltage (V)	f =	Frequency in Hertz (Hz)
U_{low} =	Voltage approximately 0 V	t =	Time in seconds
PWM =	Pulse width modulated signal as a %	-	-

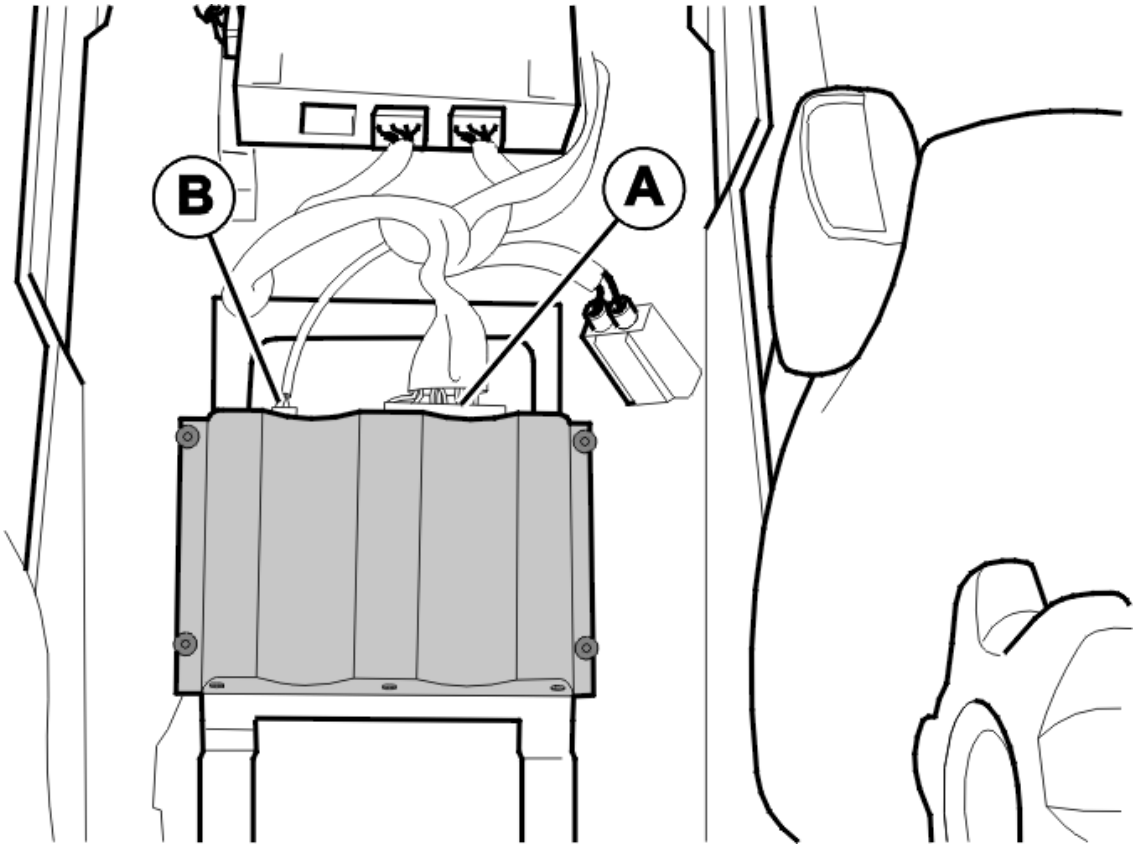

Fig. 42: Identifying Control Module For Rear Audio Separation
Courtesy of VOLVO CARS CORPORATION

SIGNAL TABLE

Terminal	Signal type	Ignition on	Other
#A1	Battery voltage supply	Ubat	-
#A2	Right-hand audio (out) audio channel 2	-	Headset signal channel 2, low level audio
#A3	Left-hand audio (out) audio channel 2	-	Headset signal channel 2, low level audio
#A4	15 supply	Ubat	-
#A5	Left-hand audio (out) audio channel 1	-	Headset signal channel 1, low level audio
#A6	Right-hand audio (out) audio channel 1	-	Headset signal channel 1, low level audio

#A7	-	-	-
#A8	Loudspeaker signal left-hand (L-)	U = Ulow	Rear loudspeakers, high level audio
#A9	Loudspeaker signal left-hand (R-)	-	Rear loudspeakers, high level audio
#A10	Loudspeaker signal left-hand (R+)	-	Rear loudspeakers, high level audio
#A11	Loudspeaker signal left-hand (L+)	-	Rear loudspeakers, high level audio
#A12	Incoming loudspeaker sound (L+)	-	The control module for rear audio separation receives audio signals from the standard system and processes the sound
#A13	Ground supply	Ulow	-
#A14	-	-	-
#A15	Audio ground	-	-
#A16	-	-	-
#A17	-	-	-
#A18	Channel selector ground	0 V = no signal at all 5 V = left-hand display screen audio in loudspeaker (master) 7.5 V = right-hand display screen audio in loudspeaker (master)	The left-hand passenger position sound is always in the left-hand headphone and vice versa
#A19	-	-	-
#A20	-	-	-
#A21	Incoming loudspeaker sound (R-)	Alternating current at sound in center loudspeaker	The control module for rear audio separation receives audio signals from the standard system and processes the sound
#A22	Incoming loudspeaker sound (R+)	-	The control module for rear audio separation receives audio signals from the standard system and processes the sound
#A23	Incoming loudspeaker sound (L-)	-	The control module for rear audio separation receives audio signals from the standard system and processes the sound
#A24	-	-	-

SIGNAL TABLE

Terminal	Signal type	Ignition on	Other
#B1	Infra-red supply	5 V	Infra-red receiver headsets
#B2	Infra-red audio Hi	Low level	Twisted
#B3	Infra-red audio Lo	Low level	Twisted
#B4	Ground	Ulow	-

SIGNAL SPECIFICATION, REAR SOUND SEPARATION ELECTRONIC MODULE. REAR SEAT ENTERTAINMENT, GENERATION 3.2 (EXECUTIVE; PREMIER; 2004)

SIGNAL SPECIFICATION, CONTROL MODULE FOR REAR AUDIO SEPARATION

see **SIGNAL SPECIFICATION, CONTROL MODULE FOR REAR AUDIO SEPARATION**

SIGNAL SPECIFICATION, REAR SOUND SEPARATION ELECTRONIC MODULE. REAR SEAT ENTERTAINMENT, GENERATION 4.1 (2006-07)

SIGNAL SPECIFICATION, REAR AUDIO SEPARATION

U=	DC voltage in volts (V)	U_{AC} =	AC voltage in volts (V)
U_{bat} =	Battery voltage (V)	f =	Frequency in Hertz (Hz)
U_{low} =	Voltage approximately 0 V	t =	Time in seconds
PWM =	Pulse width modulated signal as a %	-	-

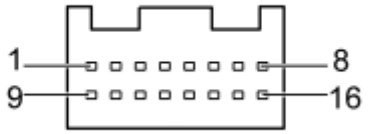

Fig. 43: Identifying 16-Bit Connector
Courtesy of VOLVO CARS CORPORATION

SIGNAL TABLE

Terminal	Signal type	Ignition on	Other
#A1	Battery voltage supply	U_{bat}	-
#A2	Switch signal for reverse warning	-	Connects audio from the reverse warning system to the rear speakers when reverse gear is engaged.
#A3	Left audio (in)	-	From DVD player.

#A4	Audio ground	-	For audio signal from DVD player. Internally connected to terminal #12
#A5	Loudspeaker signal left-hand (L+) (out)	-	Rear speakers, high level audio.
#A6	Loudspeaker signal left-hand (L-) (out)	$U=U_{low}$	Rear speakers, high level audio.
#A7	Loudspeaker signal right-hand (R-) (out)	$U=U_{low}$	Rear speakers, high level audio.
#A8	Loudspeaker signal right-hand (R+-) (out)	-	Rear speakers, high level audio.
#A9	Ground terminal control module	$U=U_{low}$	-
#A10	Activation signal for rear audio separation (RAS)	Approx. 7-9 V when function is activated.	Connecting function. From Rear seat entertainment module (RSE).
#A11	Right audio (in)	-	From DVD player.
#A12	Audio ground	-	For audio signal from DVD player. Is internally connected to terminal #4.
#A13	Incoming loudspeaker sound (L+)	-	Input signal from the front audio system.
#A14	Incoming loudspeaker sound (L-)	-	Input signal from the front audio system.
#A15	Incoming loudspeaker sound (R-)	-	Input signal from the front audio system.
#A16	Incoming loudspeaker audio (R+)	-	Input signal from the front audio system.

SIGNAL SPECIFICATION, REMOTE DIGITAL AUDIO RECEIVER (RDAR) (2007-12)

SIGNAL SPECIFICATION

SIGNAL SPECIFICATION

U=	DC voltage in volts (V)	U_{AC} =	AC voltage in volts (V)
U_{bat} =	Battery voltage (V)	f =	Frequency in Hertz (Hz)
U_{low} =	Voltage approximately 0 V	t =	Time in seconds
PWM =	Pulse width modulated signal as a %	-	-

Connector A

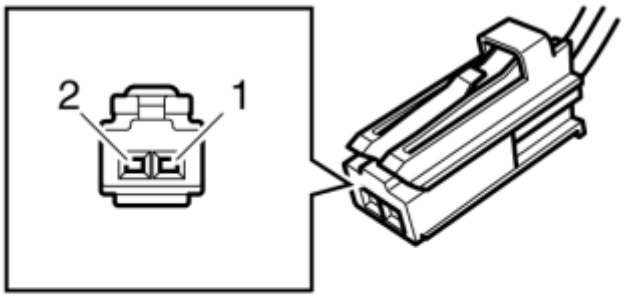

Fig. 44: Identifying Connector C784
Courtesy of VOLVO CARS CORPORATION

SIGNAL TABLE

Breakout box terminal	Control module terminal	Signal type	Ignition on	Ignition off	Other
-	#A-1	30-feed	$U = U_{bat}$	$U = U_{bat}$	-
-	#A-2	ground, 30 supply	$U=U_{low}$	$U=U_{low}$	-

Connector B

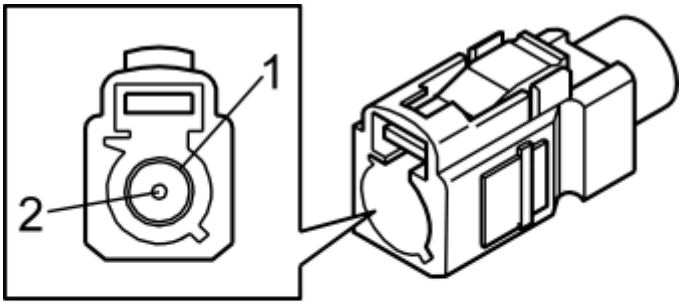

Fig. 45: Identifying Connector C782
Courtesy of VOLVO CARS CORPORATION

SIGNAL TABLE

Breakout box terminal	Control module terminal	Signal type	Ignition on	Ignition off	Other

-	#B-1	Input, antenna	-	-	-

Connector C

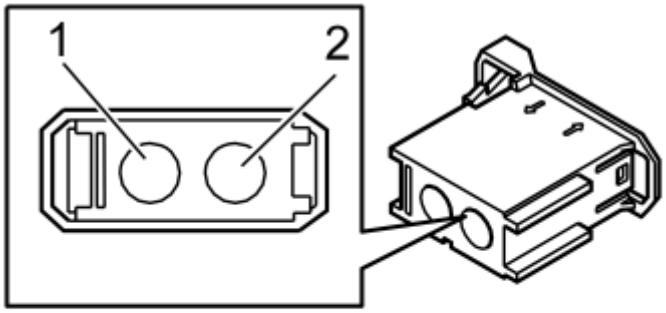

Fig. 46: Identifying Connector MOST (Optical Signal)
Courtesy of VOLVO CARS CORPORATION

SIGNAL TABLE

Breakout box terminal	Control module terminal	Signal type	Ignition on	Ignition off	Other
-	#C-1	Output, optical	-	-	-
-	#C-2	Input, optical	-	-	-

SIGNAL DESCRIPTION, PHONE MODULE (PHM) (2005)

SIGNAL DESCRIPTION

From week 46 year 2004, a new diagnosis system was introduced for phone module (PHM) on XC90.

Vehicles built up to and incl. week 45 year 2004: **SIGNAL SPECIFICATION**

Vehicles built from and incl. week 46 year 2004: **SIGNAL SPECIFICATION**

SIGNAL DESCRIPTION, PHONE MODULE (PHM) (2006-12)

SIGNAL SPECIFICATION

All the values given below are between the terminals stated in column 1 and terminal #1 in column 2 (signal ground). This applies unless otherwise indicated in brackets.

NOTE: It is important to connect the breakout box and check the ground terminals

before taking readings.

There may be several connections and connectors between the control module and components.

U=	DC voltage in volts (V)	U_{AC} =	AC voltage in volts (V)
U_{bat} =	Battery voltage (V)	f =	Frequency in Hertz (Hz)
U_{low} =	Voltage approximately 0 V	t =	Time in seconds
PWM =	Pulse width modulated signal as a %	-	-

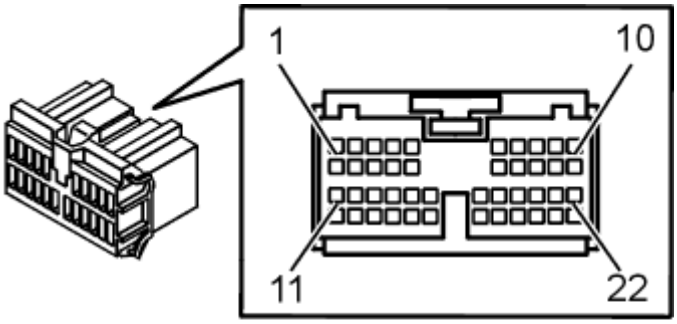

Fig. 47: Identifying Connector Terminals
Courtesy of VOLVO CARS CORPORATION

SIGNAL TABLE CONNECTOR A, PHONE MODULE (PHM)

Breakout box terminal	Control module terminal	Signal type	Ignition on	Idle	Other
#1	#A1	Diagnostic signal for switch ON CALL and SOS	U = 2 - 5 V	U = 2 - 5 V	Only Volvo On Call
#2	#A2	Input signal from switch ON CALL and SOS	ON CALL pressed in U= 2.6 V, SOS pressed in U= 2 V, otherwise U= 5 V	ON CALL pressed in U= 2.6 V, SOS pressed in U= 2 V, otherwise U= 5 V	Only Volvo On Call
#3	#A3	Voltage feed, lighting SOS-switch	U= 7 V	U= 7 V	Only Volvo On Call
#4	#A4	Voltage feed, lighting ON CALL-switch	U= 7 V	U= 7 V	Only Volvo On Call

#5	#A5	+30-feed	U_{bat}	U_{bat}	-
#6	#A6	Power ground	$U=U_{low}$	$U=U_{low}$	-
#7	#A7	Handset, voltage feed	U_{bat}	U_{bat}	-
#8	#A8	Handset, cradle signal	U= 3.34 V when the handset is in use, U= 1.9 V when the handset is not in use.	U= 3.34 V when the handset is in use, U= 1.9 V when the handset is not in use.	-
#9	#A9	-	-	-	-
#10	#A10	-	-	-	-
#11	#A11	CAN (L)	Digital signal	Digital signal	-
#12	#A12	CAN (H)	Digital signal	Digital signal	-
#13	#A13	Signal ground, switch ON CALL and SOS	U_{low}	U_{low}	Only Volvo On Call
#14	#A14	Signal ground, auxiliary microphone	U_{low}	U_{low}	Only Volvo On Call
#15	#A15	auxiliary microphone	U= 5 V	U= 5 V	Only Volvo On Call
#16	#A16	-	-	-	-
#17	#A17	Impact cable from SRS	U= 12 V at activated SRS-component, otherwise U= 0 V	U= 12 V at activated SRS-component, otherwise U= 0 V	-
#18	#A18	Handset, ground	U_{low}	U_{low}	-
#19	#A19	Handset, microphone	Alternating voltage at sound in microphone	Alternating voltage at sound in microphone	Difficult to measure
#20	#A20	Handset, speaker	Alternating voltage at sound in speaker	Alternating voltage at sound in speaker	Difficult to measure
#21	#A21	-	-	-	-
#22	#A22	-	-	-	-

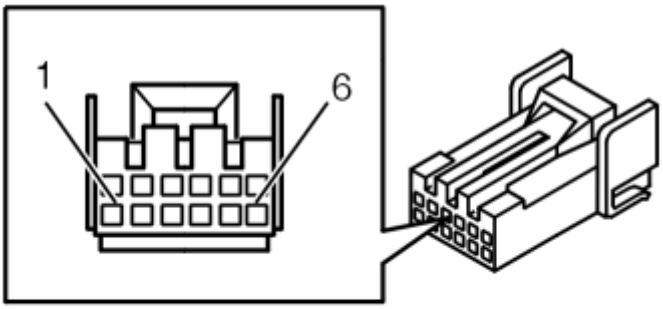

Fig. 48: Identifying Signal Table, Connector B
Courtesy of VOLVO CARS CORPORATION

SIGNAL TABLE CONNECTOR B, PHONE MODULE (PHM)

Breakout box terminal	Control module terminal	Signal type	Ignition on	Idle	Other
#21	#B1	Clock signal to SIM-card	Pound signal	Pound signal	-
#22	#B2	Signal ground, SIM-card	U_{low}	U_{low}	-
#23	#B3	Voltage feed, SIM-card	U=2.8 V	U=2.8 V	-
#24	#B4	Communication cable, SIM-card	Pulsed signal	Pulsed signal	-
#25	#B5	Control signal, SIM-card	Pulsed signal	Pulsed signal	-
#26	#B6	Diagnostic cable, SIM-card	U_{low}	U_{low}	-

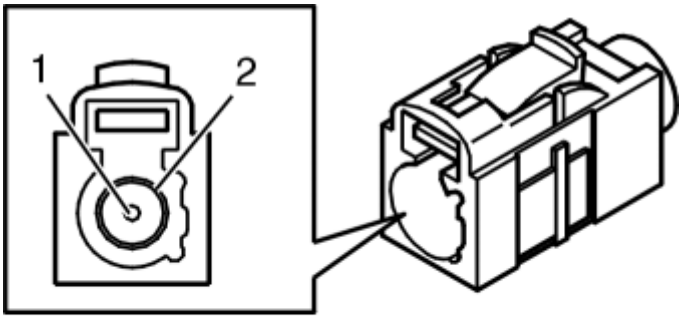

Fig. 49: Identifying Signal Table, Connector C
Courtesy of VOLVO CARS CORPORATION

SIGNAL TABLE CONNECTOR C, PHONE MODULE (PHM)

Breakout box terminal	Control module terminal	Signal type	Ignition on	Idle	Other
-	#C1	Telephone antenna	Antenna signal telephone	Antenna signal telephone	-
-	#C2	Antenna ground	U_{low}	U_{low}	-

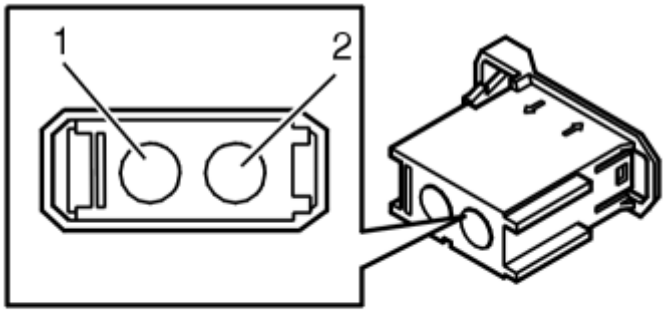

Fig. 50: Identifying 2-Pin Connector
Courtesy of VOLVO CARS CORPORATION

SIGNAL TABLE CONNECTOR D, PHONE MODULE (PHM)

Breakout box terminal	Control module	Signal type	Ignition on	Idle	Other

	terminal				
-	#D1	MOST input signal	Optical input signal when the MOST network is activated	Optical input signal when the MOST network is activated	-
-	#D2	MOST signal	Optical output signal when the MOST network is activated	Optical output signal when the MOST network is activated	-

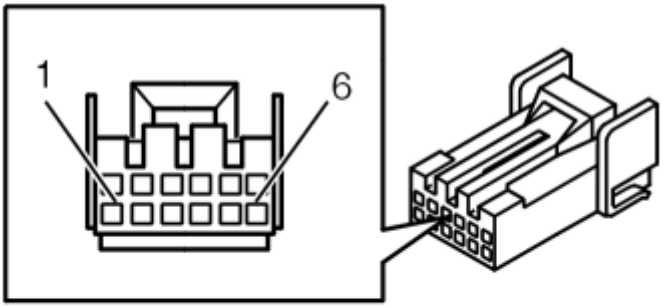

Fig. 51: Identifying Signal Table, Connector B
Courtesy of VOLVO CARS CORPORATION

SIGNAL TABLE CONNECTOR SIM-CARD HOLDER

Breakout box terminal	Control module terminal	Signal type	Ignition on	Idle	Other
#21	#1	Clock signal to SIM-card	Pound signal	Pound signal	-
#22	#2	Signal ground, SIM-card	U_{low}	U_{low}	-
#23	#3	Voltage feed, SIM-card	U= 2.8 V	U= 2.8 V	-
#24	#4	Communication cable, SIM-card	Pulsed signal	Pulsed signal	-
#25	#5	Control signal, SIM-card	Pulsed signal	Pulsed signal	-
#26	#6	Diagnostic cable, SIM-card	U_{low}	U_{low}	-

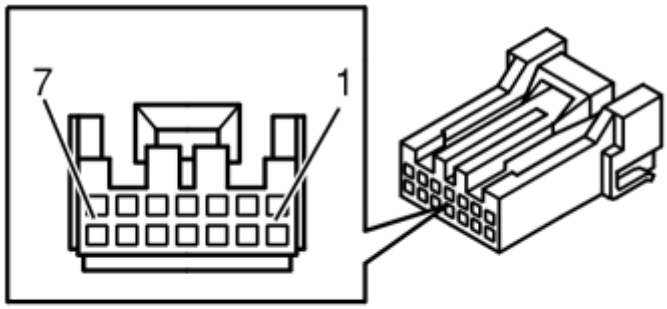

Fig. 52: Identifying Signal Table, Connector Volvo On Call Switch
Courtesy of VOLVO CARS CORPORATION

CONNECTOR VOLVO ON CALL

Breakout box terminal	Control module terminal	Signal type	Ignition on	Idle	Other
#13	#1	auxiliary microphone	U= 5 V	U= 5 V	-
#14	#2	Signal ground, auxiliary microphone	U_{low}	U_{low}	-
#15	#3	Voltage feed, lighting SOS-switch	U= 7 V	U= 7 V	-
#16	#4	Voltage feed, lighting ON CALL-switch	U= 7 V	U= 7 V	-
#17	#5	Diagnostic signal for switch ON CALL and SOS	U= 2-5 V	U= 2-5 V	-
#18	#6	Input signal from switch ON CALL and SOS	U= 2-5 V	U= 2-5 V	-
#19	#7	Signal ground, switch ON CALL and SOS	U_{low}	U_{low}	-

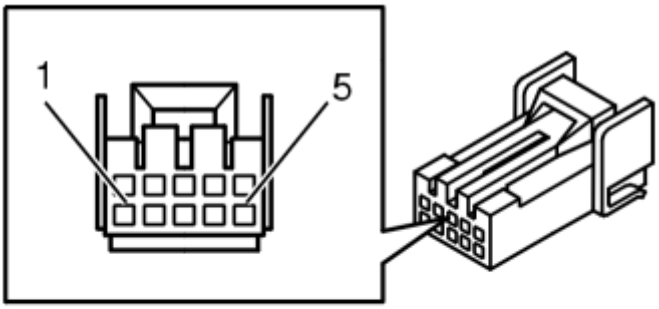

Fig. 53: Identifying 5-Pin Connector
Courtesy of VOLVO CARS CORPORATION

SIGNAL TABLE CONNECTOR HANDSET

Breakout box terminal	Control module terminal	Signal type	Ignition on	Idle	Other
#21	#1	Handset, microphone	Alternating voltage at sound in microphone	Alternating voltage at sound in microphone	Difficult to measure
#22	#2	Handset, speaker	Alternating voltage at sound in microphone	Alternating voltage at sound in microphone	Difficult to measure
#23	#3	Handset, ground	U_{low}	U_{low}	-
#24	#4	Handset, cradle signal	U= 3.34 V when the handset is in use, U=1.9 V when the handset is not in use.	U= 3.34 V when the handset is in use, U= 1.9 V when the handset is not in use.	-
#25	#5	Handset, voltage feed	U_{bat}	U_{bat}	-

SIGNAL SPECIFICATION, BLUETOOTH PHONE MODULE (BPM) (2011-12)

SIGNAL SPECIFICATION

U=	DC voltage in volts (V)	U_{AC} =	AC voltage in volts (V)
U_{bat} =	Battery voltage (V)	f =	Frequency in Hertz (Hz)
U_{low} =	Voltage approximately 0 V	t =	Time in seconds
PWM =	Pulse width modulated signal as	-	-

a %		

Connector C1

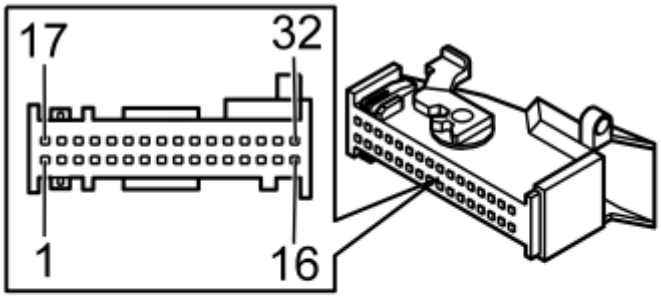

Fig. 54: Identifying Connector C1
Courtesy of VOLVO CARS CORPORATION

CONNECTOR C1

Breakout box terminal	Control module terminal	Signal type	Ignition on	Miscellaneous
-	#C1-1	Reserve	-	-
-	#C1-2	Reserve	-	-
-	#C1-3	Reserve	-	-
-	#C1-4	Reserve	-	-
-	#C1-5	Reserve	-	-
-	#C1-6	Reserve	-	-
-	#C1-7	Reserve	-	-
-	#C1-8	Reserve	-	-
-	#C1-9	Reserve	-	-
-	#C1-10	Reserve	-	-
-	#C1-11	Reserve	-	-
-	#C1-12	Reserve	-	-
-	#C1-13	Reserve	-	-
-	#C1-14	Reserve	-	-
-	#C1-15	Ground, power supply	$U=U_{low}$	-
-	#C1-16	Ground, power supply	$U=U_{low}$	-
-	#C1-17	Reserve	-	-
-	#C1-18	Reserve	-	-

-	#C1-19	Reserve	-	-
-	#C1-20	Reserve	-	-
-	#C1-21	Reserve	-	-
-	#C1-22	Reserve	-	-
-	#C1-23	Reserve	-	-
-	#C1-24	Reserve	-	-
-	#C1-25	Reserve	-	-
-	#C1-26	Reserve	-	-
-	#C1-27	Reserve	-	-
-	#C1-28	Reserve	-	-
-	#C1-29	Reserve	-	-
-	#C1-30	Reserve	-	-
-	#C1-31	Power supply, 30-supply	$U = U_{bat}$	-
-	#C1-32	Power supply, 30-supply	$U = U_{bat}$	-

Connector C2

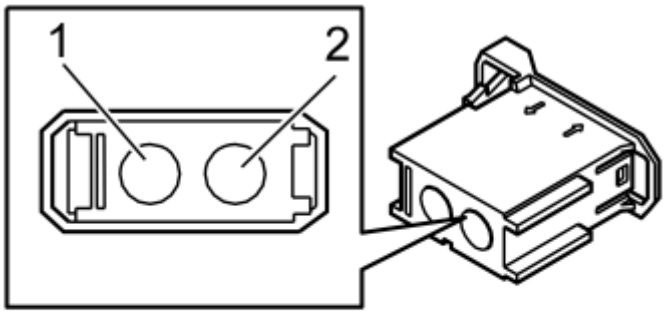

Fig. 55: Identifying Connector MOST (Optical Signal)
Courtesy of VOLVO CARS CORPORATION

CONNECTOR C2

Breakout box terminal	Control module terminal	Signal type	Ignition on	Miscellaneous
-	#C2-1	MOST input signal	Optical input signal when the MOST network is activated	-
-	#C2-2	MOST output signal	Optical output signal when the	-

			MOST network is activated	

SIGNAL SPECIFICATION, HANDSFREE ACCESSORIES (2003-12)

SIGNAL SPECIFICATION

All the values given below are between the terminals stated in column 1 and terminal #1 in column 2 (signal ground). This applies unless otherwise indicated in brackets.

NOTE: **It is important to connect the breakout box and check the ground terminals before taking readings.**

U=	DC voltage in volts (V)	U_{AC} =	AC voltage in volts (V)
U_{bat} =	Battery voltage (V)	f =	Frequency in Hertz (Hz)
U_{low} =	Voltage approximately 0 V	t =	Time in seconds
PWM =	Pulse width modulated signal as a %	-	-

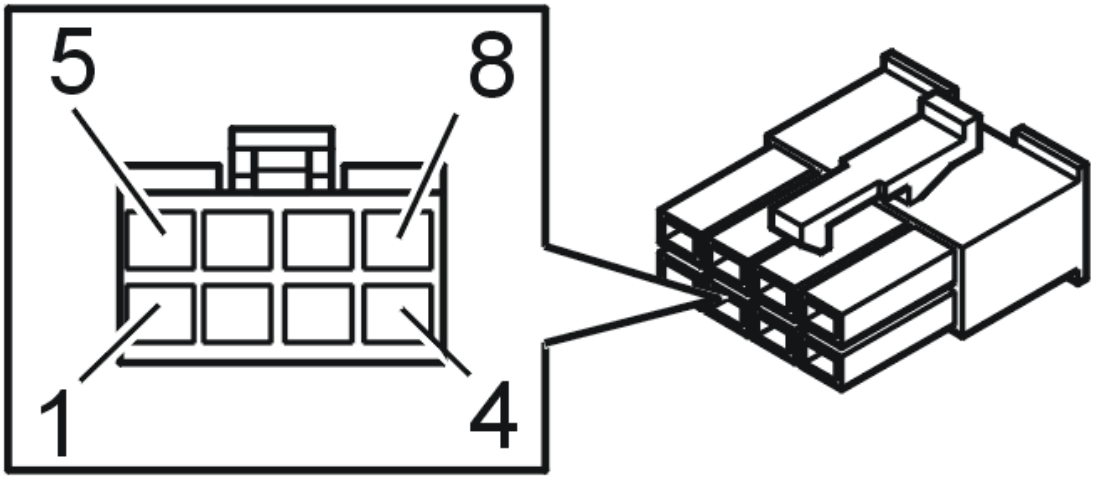

Fig. 56: Handsfree Box Connector
Courtesy of VOLVO CARS CORPORATION

CONNECTOR HANDSFREE BOX

Control module terminal	Signal type	Ignition on	Idle	Other
#1	Ground	U_{low}	-	-
#2	30 supply In the XC90, the	U_{bat}	-	-

	handsfree box is powered via the infotainment relay.			
#3	-	-	-	-
#4	Loudspeaker signal (+)	Alternating current when there is sound in the loudspeaker	-	-
#5	15 supply	U= 12 V	-	-
#6	Radio mute signal	During a call $U=U_{low}$ U= 12 V otherwise	-	-
#7	Loudspeaker signal (-)	Alternating current when there is sound in the loudspeaker	-	-
#8	-	-	-	-

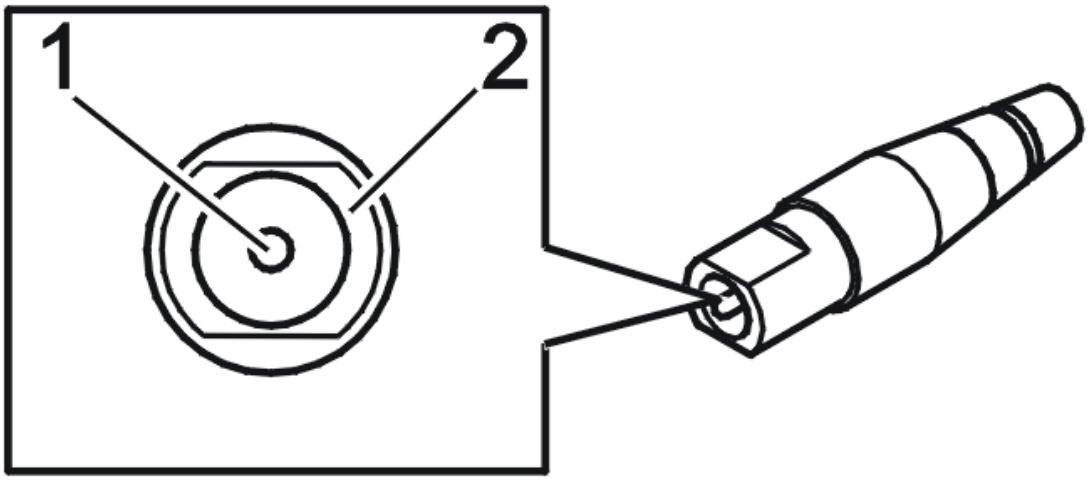

Fig. 57: Antenna Connector
Courtesy of VOLVO CARS CORPORATION

ANTENNA CONNECTOR

Control module terminal	Signal type	Ignition on	Idle	Other
#1	Handsfree antenna	Handsfree antenna signal	-	-
#2	Antenna ground	U_{low}	-	-

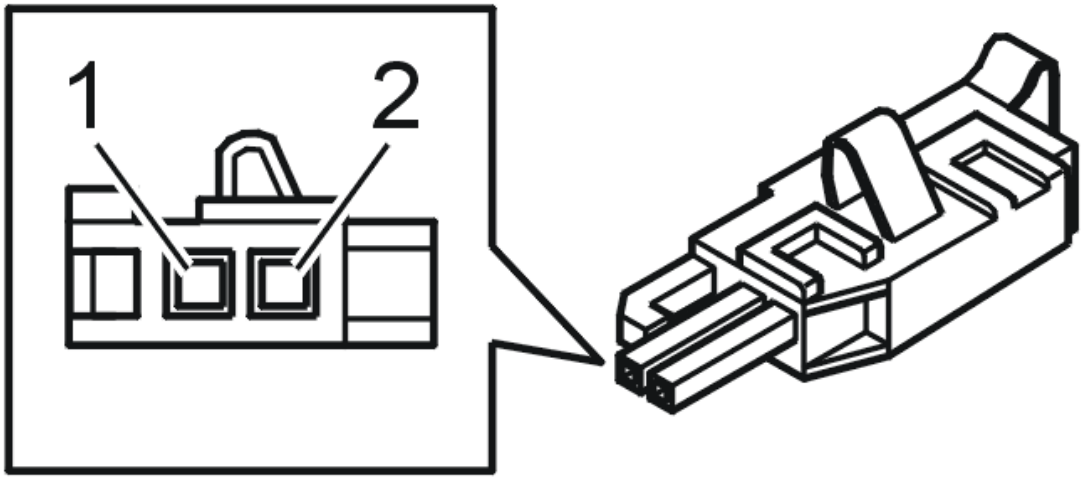

Fig. 58: Identifying Microphone Connector
Courtesy of VOLVO CARS CORPORATION

MICROPHONE CONNECTOR

Control module terminal	Signal type	Ignition on	Idle	Other
#1	Microphone	Alternating current when there is sound in the microphone	-	-
#2	Signal ground, microphone	U_{low}	-	-

SIGNAL SPECIFICATION, PHONE MODULE (PHM) (2003-04)

SIGNAL SPECIFICATION

NOTE: **It is important to connect the breakout box and check ground terminals before taking readings.**

There may be several connections and connectors between the control module and components.

For further information about:

- connecting the breakout box, see "Connecting the breakout box, phone module (PHM)".
- checking the ground terminal, see "Checking the ground terminal, Phone module (PHM)".

U=	DC voltage in volts (V)	U_{AC} =	AC voltage in volts (V)
U_{bat} =	Battery voltage (V)	f =	Frequency in Hertz (Hz)
U_{low} =	Voltage approximately 0 V	t =	Time in seconds

PWM =	Pulse width modulated signal as a %	-	-

CONNECTOR A, PHONE MODULE (PHM)

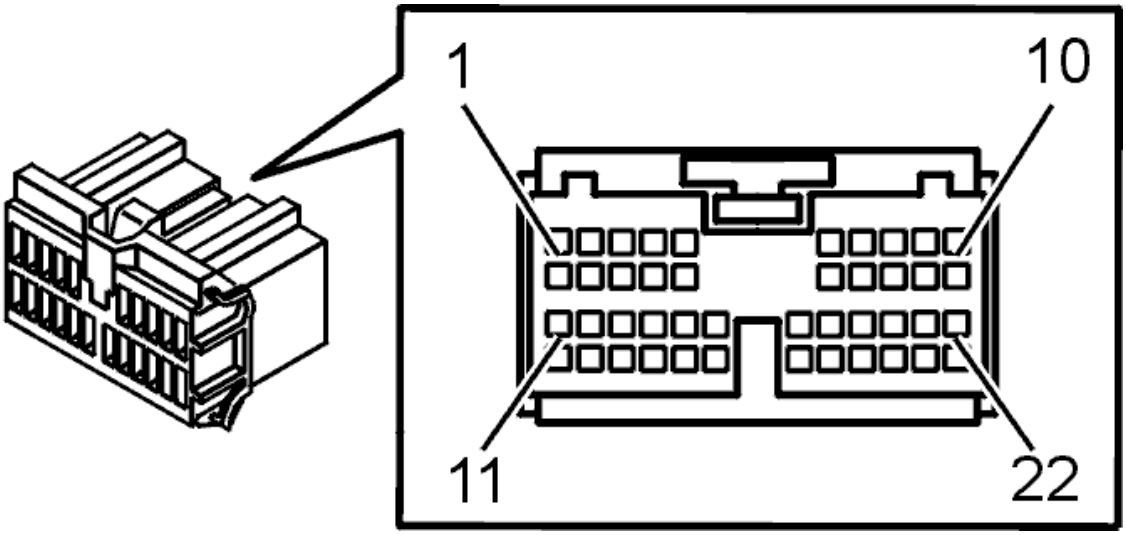

Fig. 59: Identifying Connector (F) Terminals
Courtesy of VOLVO CARS CORPORATION

Control module terminal	Breakout box terminal	Signal type	Ignition on	Other
A1	#1	Power ground	U_{low}	-
A2	#2	+30 supply	U_{bat}	-
A3	#3	-	-	-
A4	#4	CAN (L)	Digital signal	-
A5	#5	-	-	-
A6	#6	-	-	-
A7	#7	Power supply, SIM card	U= 2.8 V	-
A8	#8	Signal ground, SIM card	Ulow	-
A9	#9	Clock signal to the SIM card	Quadratic signal	-
A10	#10	-	-	-
A11	#11	-	-	-
A12	#12	-	-	-
A13	#13	-	-	-
A14	#14	CAN (H)	Digital signal	-
A15	#15	-	-	-
A16	#16	-	-	-
A17	#17	-	-	-
A18	#18	-	-	-

A19	#19	Control signal, SIM card	Pulsed signal	-
A20	#20	Diagnostic lead, SIM card	-	-
A21	#21	Communication cable, SIM card	Pulsed signal	-
A22	#22	-	-	-

CONNECTOR B, PHONE MODULE (PHM)

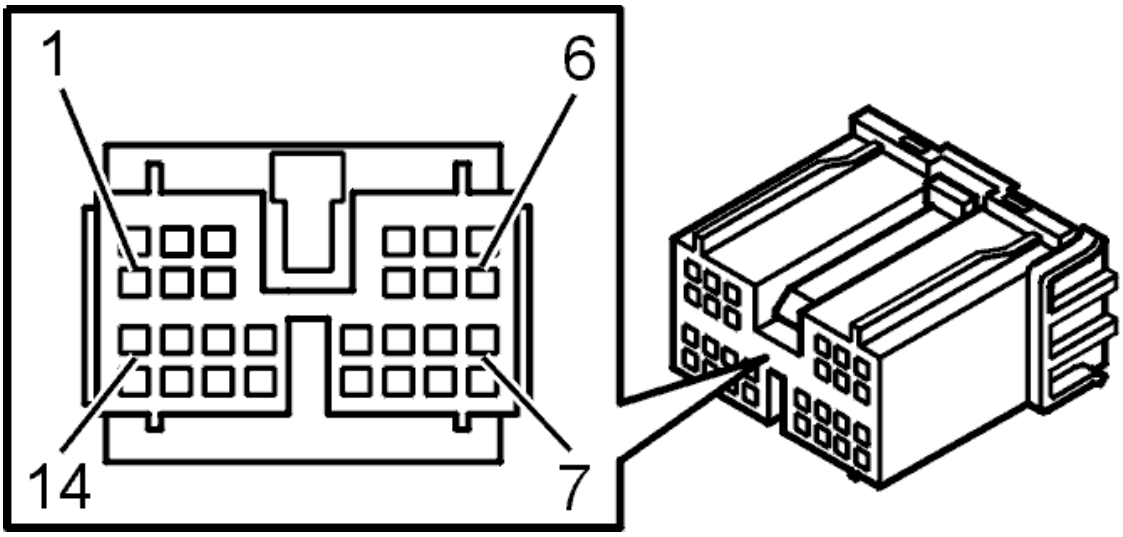

Fig. 60: Identifying M2D Control Module (FORTV Executive. Rear Seat Entertainment, Generation 3.1/3.2, Premier TV Receiver) Connector
Courtesy of VOLVO CARS CORPORATION

Control module terminal	Breakout box terminal	Signal type	Ignition on	Other
B1	#43	-	-	-
B2	#44	-	-	-
B3	#45	-	-	-
B4	#46	-	-	-
B5	#47	-	-	-
B6	#48	Handset, ground	U_{low}	-
B7	#49	-	-	-
B8	#50	-	-	-
B9	#51	-	-	-
B10	#52	-	-	-
B11	#53	Handset, power supply	U= 12 V when the handset is in use, otherwise U= 0 V	-
B12	#54	Handset, cradle signal	U= 2.9-3.7 V when the handset is in use, otherwise U= 1.6-	-

			2.1 V	
B13	#55	Handset, microphone	Alternating current when there is sound from the microphone	Difficult to measure
B14	#56	Handset, speaker	Alternating current when there is sound to the loudspeaker	Difficult to measure

CONNECTOR C, PHONE MODULE (PHM)

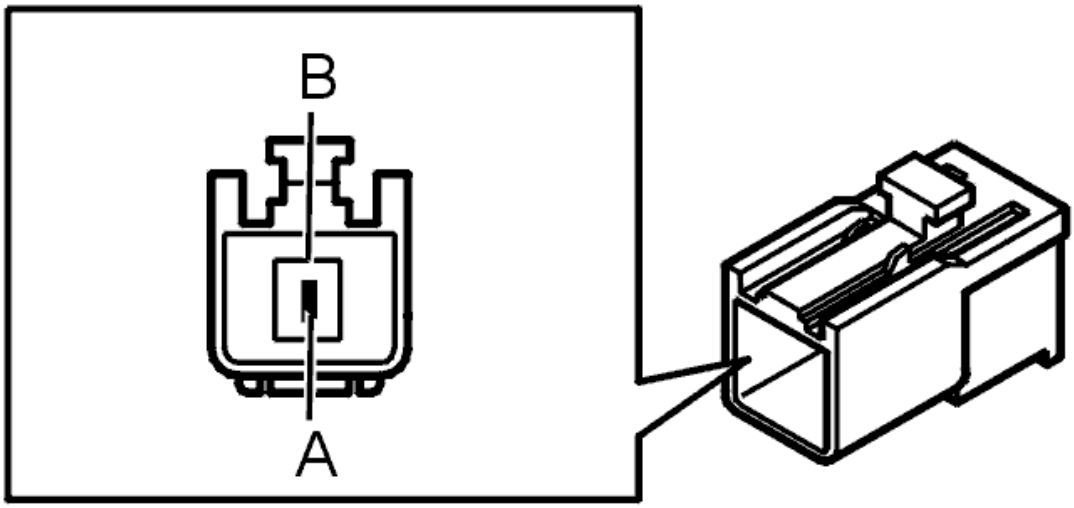

Fig. 61: Connector F, Carphone Antenna (Brown Connector), Single Hirose GT5
Courtesy of VOLVO CARS CORPORATION

Control module terminal	Breakout box terminal	Signal type	Ignition on	Other
A	-	Antenna	Antenna signal carphone	-
B	-	GND (shield)	Shield ground antenna signal	-

CONNECTOR D, PHONE MODULE (PHM)

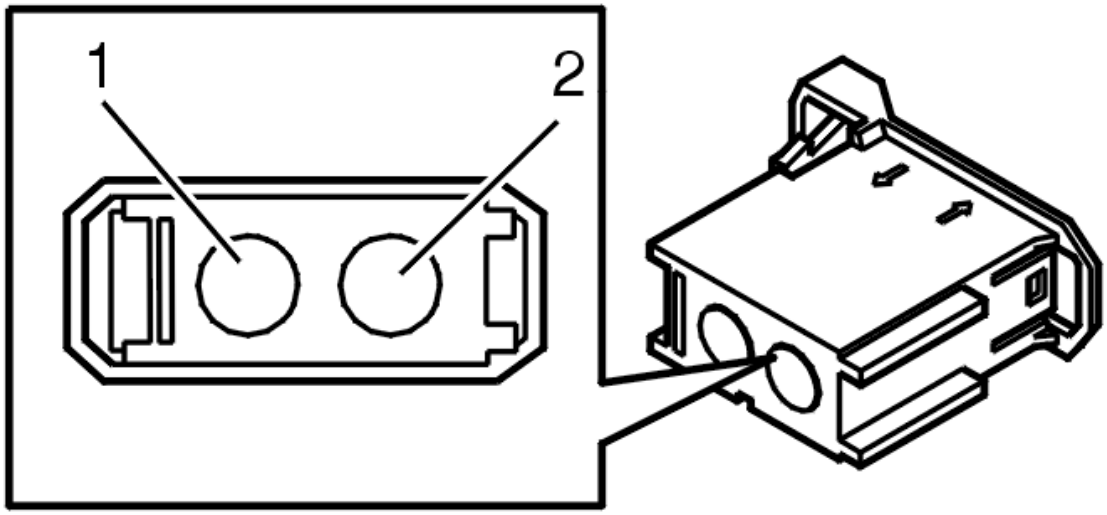

Fig. 62: Identifying Connector C
Courtesy of VOLVO CARS CORPORATION

Terminal	Breakout box terminal	Signal type	Ignition on	Other
#D1	-	MOST input signal	Optical input signal when the MOST network is activated	-
#D2	-	MOST output signal	Optical output signal when the MOST network is activated	-

COMPONENT DESCRIPTION, ANTENNA FLEX CONDUCTOR (2003-06)

COMPONENT DESCRIPTION, ANTENNA FLEX CONDUCTOR

Japanese market: **COMPONENT DESCRIPTION, ANTENNA FLEX CONDUCTOR**

Remaining markets: **COMPONENT DESCRIPTION, ANTENNA FLEX CONDUCTOR**.

COMPONENT DESCRIPTION, ANTENNA FLEX CONDUCTOR

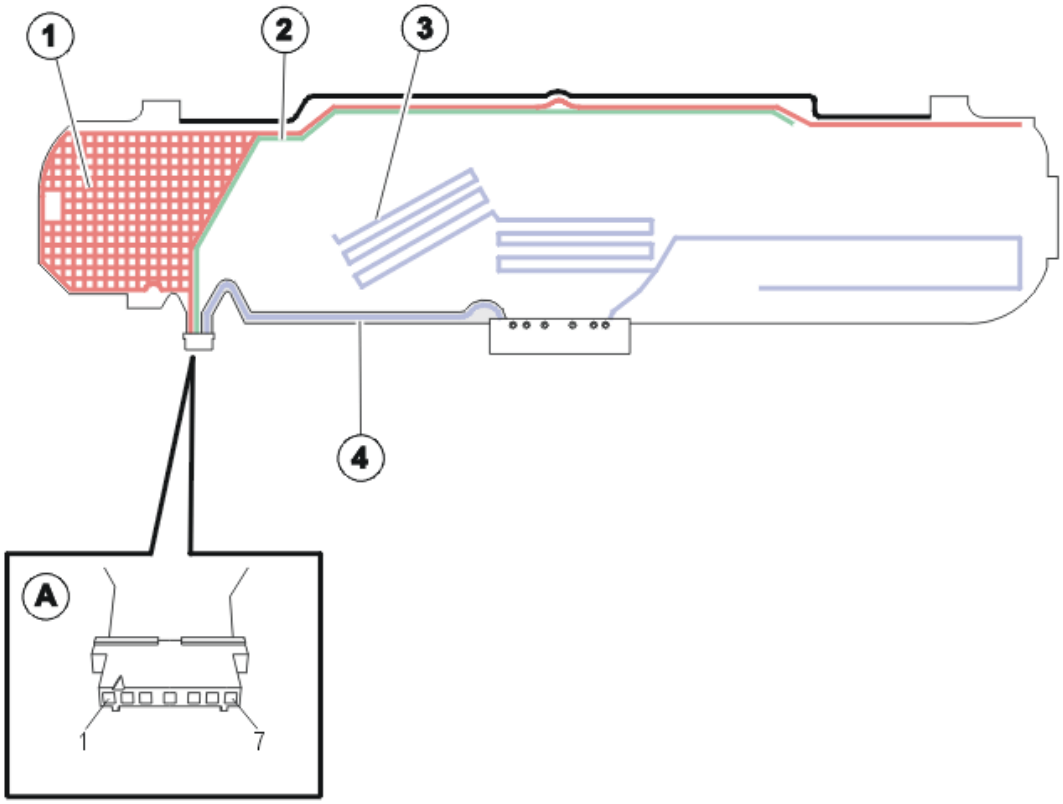

Fig. 63: Identifying Antenna Flex Conductor
Courtesy of VOLVO CARS CORPORATION

ANTENNA FLEX CONDUCTOR

Pos.	Description
1	AM-antenna
2	FM main antenna
3	FM sub-antenna
4	Ground (underside of flex conductor)

CONNECTOR A

Connection number	Connects to
#1	AM-antenna
#2	-
#3	FM main antenna
#4	Ground
#5	Ground
#6	-
#7	FM sub-antenna

COMPONENT DESCRIPTION, ANTENNA FLEX CONDUCTOR

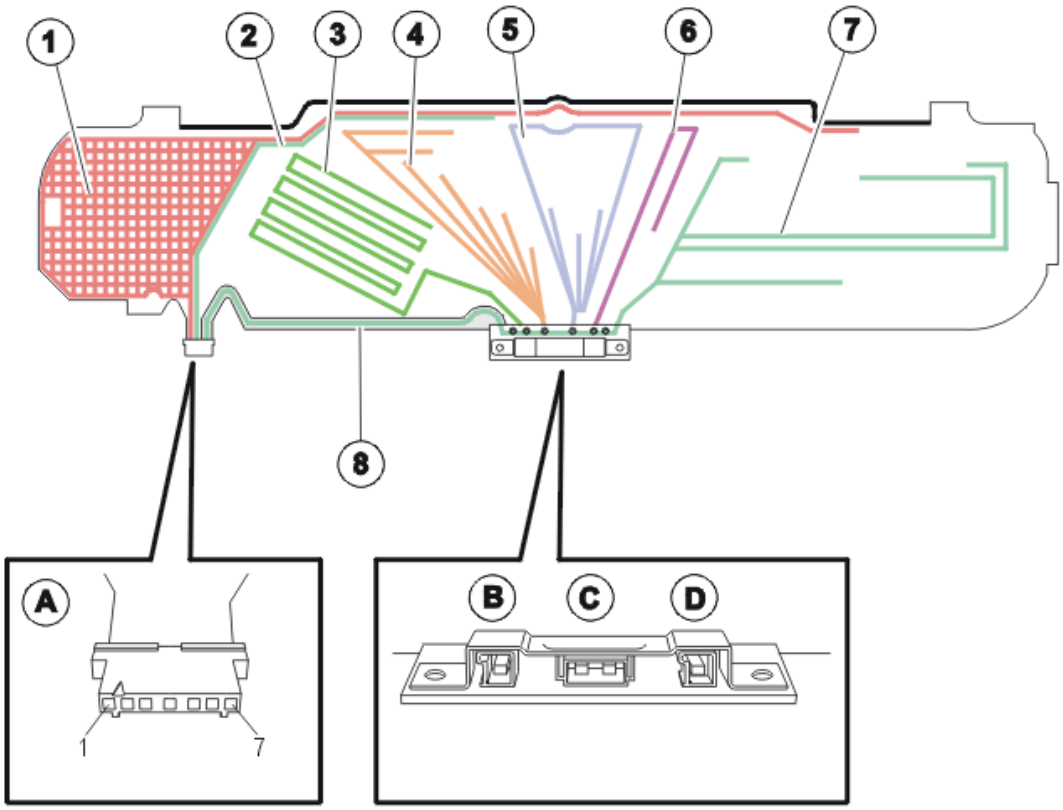

Fig. 64: Identifying Antenna Flex Conductor
Courtesy of VOLVO CARS CORPORATION

ANTENNA FLEX CONDUCTOR

Pos.	Description
1	AM-antenna
2	FM main antenna
3	TMC-antenna
4	Not used.
5	Not used.
6	Not used.
7	FM sub-antenna
8	Ground (underside of flex conductor)

CONNECTOR A

Connection number	Connects to
#1	AM-antenna
#2	-
#3	FM main antenna
#4	Ground
#5	Ground

#6	-
#7	FM sub-antenna

CONNECTOR B (ONLY CERTAIN MARKETS)

Connects to
TMC-antenna

CONNECTOR C (ONLY CERTAIN MARKETS)

Connects to
-

CONNECTOR D (ONLY CERTAIN MARKETS)

Connects to
-

SIGNAL SPECIFICATION, ANTENNA MODULE (ATM) (2003-06)

SIGNAL SPECIFICATION

All the values given below are between the terminals stated in column 1 and terminal #A2 in column 2 (signal ground). This applies unless otherwise indicated in brackets.

NOTE: It is important to check ground terminals before taking readings.

U=	DC voltage in volts (V)	U_{low} =	Voltage approximately 0 V
U_{bat} =	Battery voltage (V)	-	-

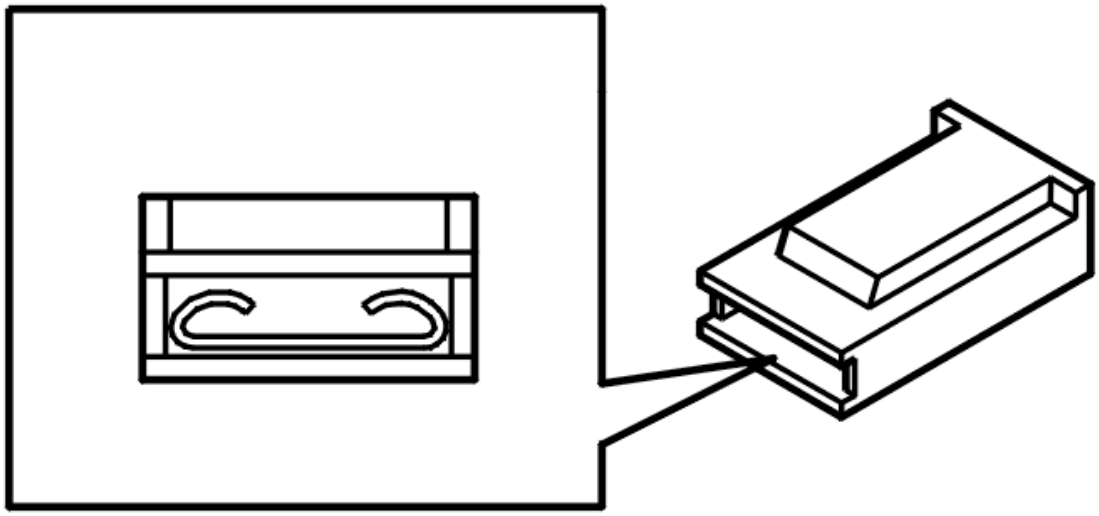

Fig. 65: Identifying Connector B
Courtesy of VOLVO CARS CORPORATION

CONNECTOR A

Terminal	Breakout box terminal	Signal type	Ignition on	Other
#A1	-	30 supply	$U = U_{bat}$	-

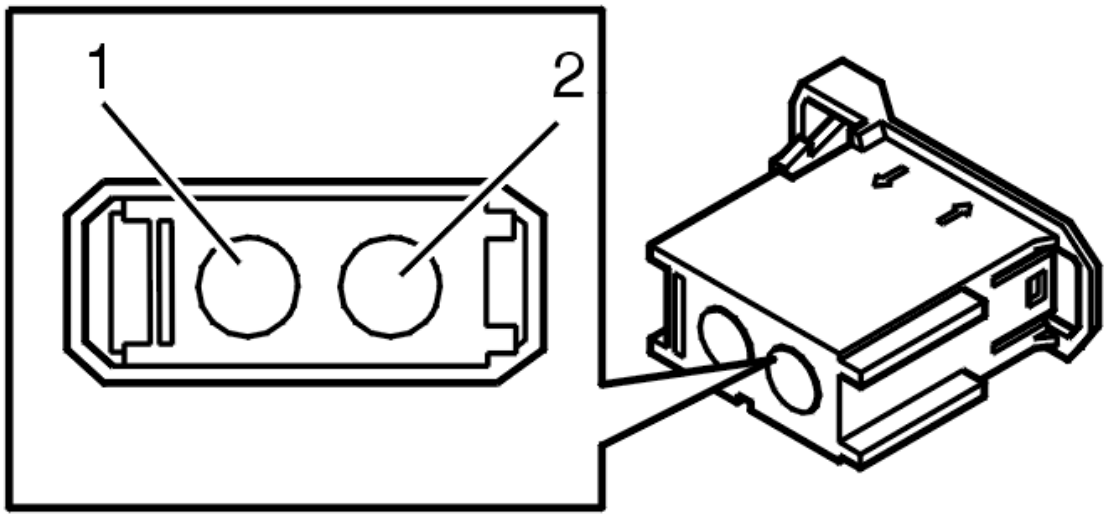

Fig. 66: Identifying Connector C
Courtesy of VOLVO CARS CORPORATION

CONNECTOR B

Terminal	Breakout box terminal	Signal type	Ignition on	Other
#B1	-	MOST input signal	Optical input signal when the MOST network is activated	-
#B2	-	MOST output signal	Optical output signal when the MOST network is activated	-

SIGNAL SPECIFICATION, SUBWOOFER MODULE (SUB) (2003-08)

SIGNAL SPECIFICATION

NOTE: **It is important to connect the breakout box and check the ground terminals before taking readings.**

U=	DC voltage in volts (V)	U_{low} =	Voltage approximately 0 V
U_{bat} =	Battery voltage (V)	-	-

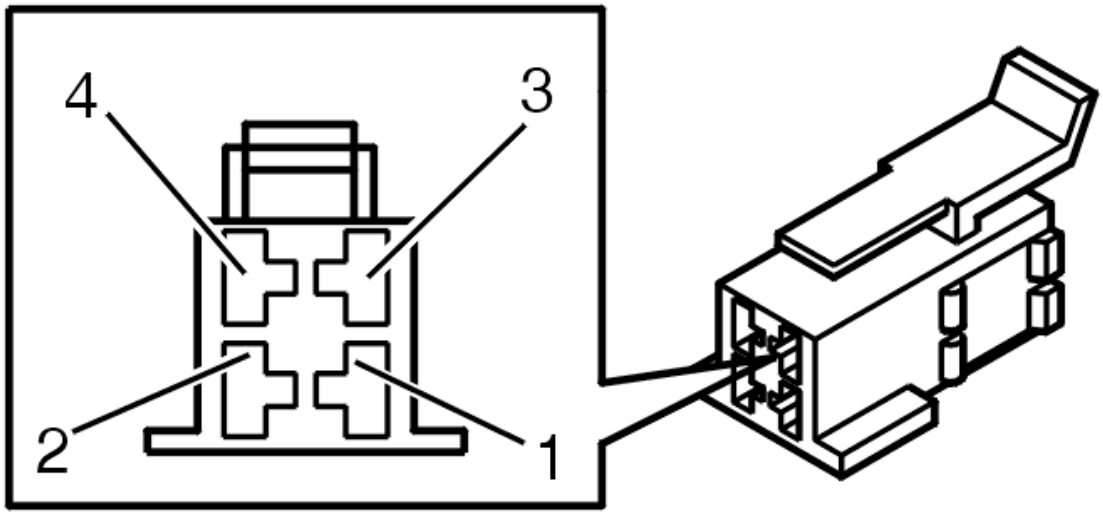

Fig. 67: Identifying Connector A, Subwoofer Module (Sub)
Courtesy of VOLVO CARS CORPORATION

CONNECTOR A, SUBWOOFER MODULE (SUB)

Terminal	Breakout box terminal	Signal type	Ignition on	Other
#A1	#51	Ground	$U=U_{low}$	-
#A2	#52	-	-	-
#A3	#53	15 supply	$U = U_{bat}$	-
#A4	#54	-	-	-

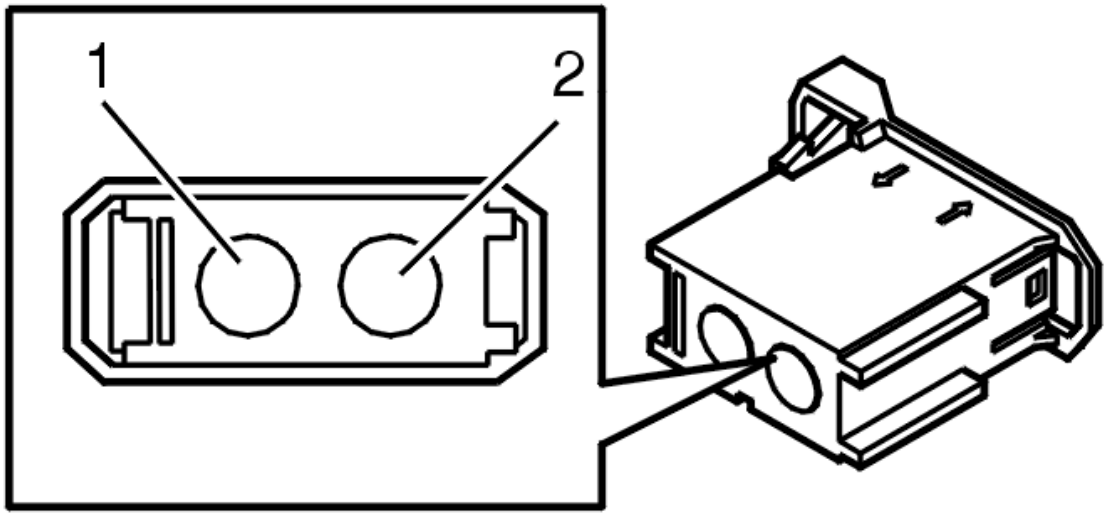

Fig. 68: Identifying Connector C
Courtesy of VOLVO CARS CORPORATION

CONNECTOR B, AUDIO MODULE (AUD)

Terminal	Breakout box	Signal type	Ignition on	Other

	terminal			
#B1	-	MOST input signal	Optical input signal when the MOST network is activated	-
#B2	-	MOST output signal	Analog output signal when the loudspeaker is in use	-

SIGNAL DESCRIPTION, GLOBAL POSITIONING SYSTEM MODULE (GPS) (2007-12)

SIGNAL SPECIFICATION

NOTE: It is important to check ground terminals before taking readings.

U=	DC voltage in volts (V)	U_{low} =	Voltage approximately 0 V
U_{bat} =	Battery voltage (V)	-	-

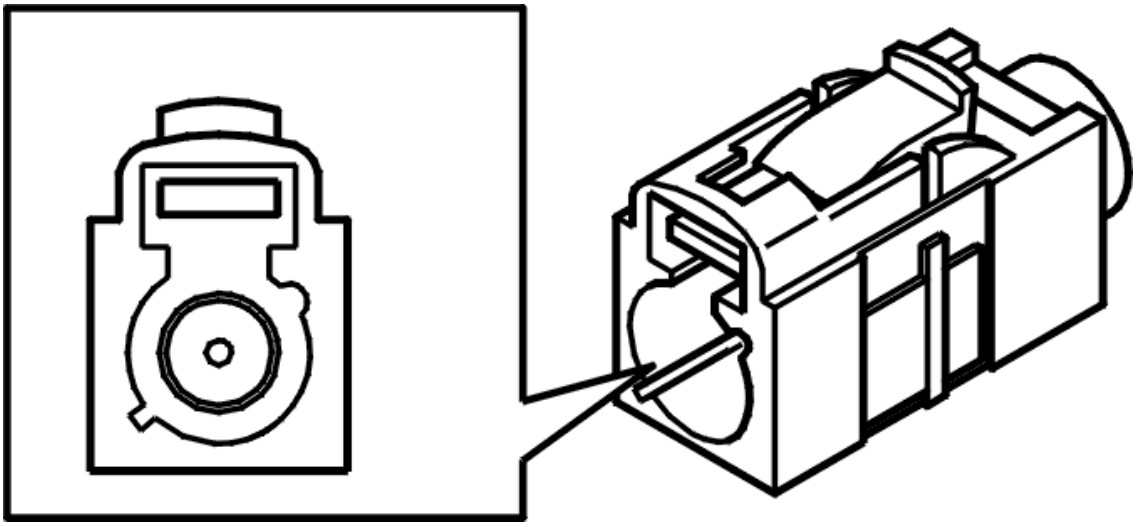

Fig. 69: Identifying Connector A
Courtesy of VOLVO CARS CORPORATION

CONNECTOR A

Terminal	Signal type	Ignition on	Other
#A1	Antenna signal	0-4.75 V	Pulse

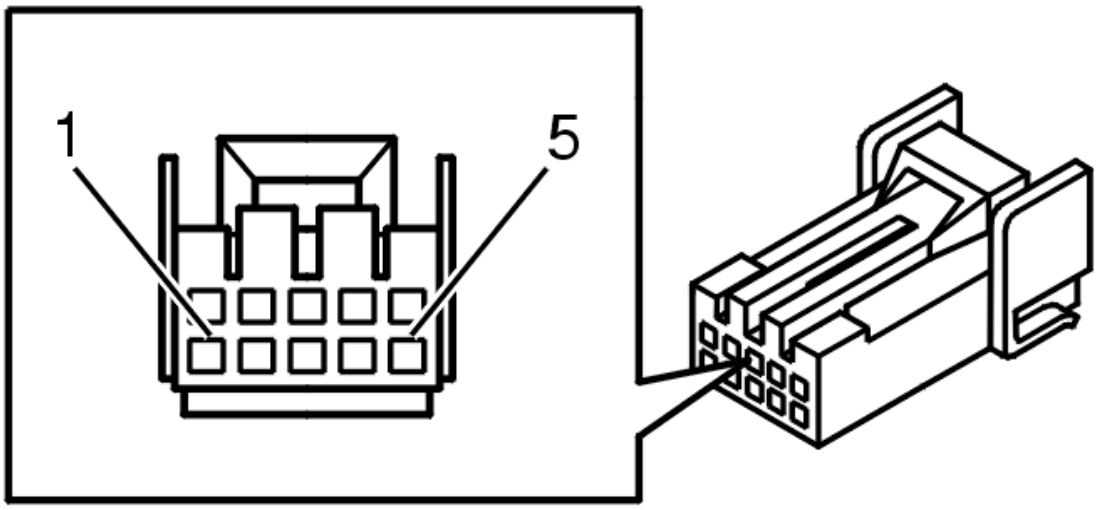

Fig. 70: Identifying Connector Terminals
Courtesy of VOLVO CARS CORPORATION

CONNECTOR B

Terminal	Signal type	Ignition on	Other
#B1	30 supply	$U = U_{bat}$	-
#B2	-	-	-
#B3	-	-	-
#B4	-	-	-
#B5	Ground	$U=U_{low}$	-

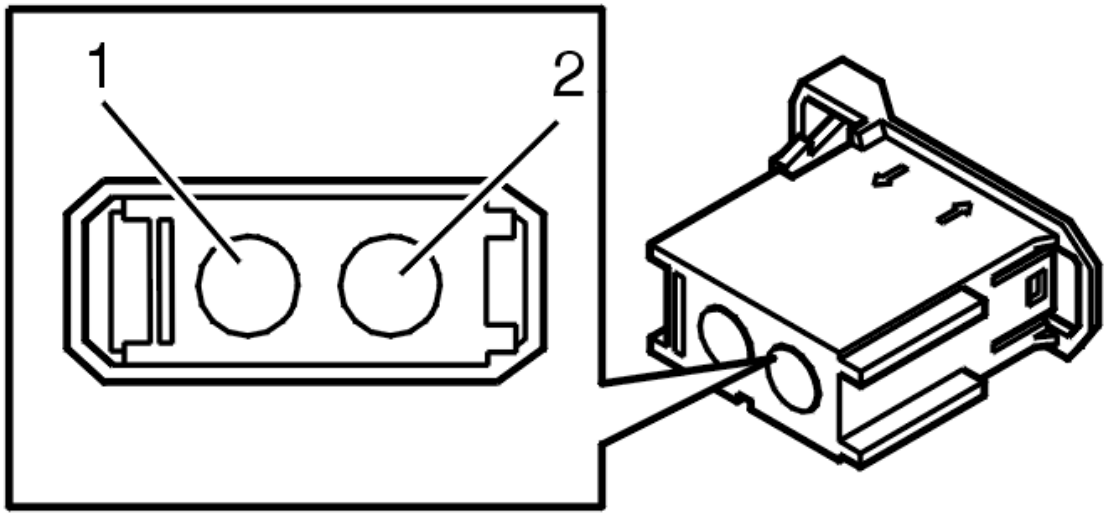

Fig. 71: Identifying Connector C
Courtesy of VOLVO CARS CORPORATION

CONNECTOR C

Terminal	Signal type	Ignition on	Other

#C1	MOST input signal	Optical input signal when the MOST network is activated	-
#C2	MOST output signal	Optical output signal when the MOST network is activated	-

ACCESSORIES AND EQUIPMENT

Media, Communication And Navigation - Specifications, Other

VEHICLE COMMUNICATION INFORMATION, AUDIO MODULE (AUM) (2003-06)

DESCRIPTION OF VEHICLE COMMUNICATION INFORMATION

CONTENTS

Select type of description.

- see **DESCRIPTION OF FROZEN VALUES**
- see **STATUS IDENTIFIER, DESCRIPTION**
- see **COUNTERS, DESCRIPTION**

DESCRIPTION OF FROZEN VALUES

EXPLANATION

Not all the parameters described need to be implemented in the control module. This varies from system to system.

Frozen values are parameter values that are stored when a diagnostic trouble code (DTC) is stored.

BATTERY VOLTAGE, VALUE

Measurement range: 8-16 V.

Normal value when the generator (GEN) is charging: 13.0-14.5 V.

DISTANCE, VALUE

Measurement range: 0-1048575 km.

The value indicates the total mileage of the car at the time the diagnostic trouble code (DTC) was stored.

PASSENGER COMPARTMENT TEMPERATURE, VALUE

Measurement range: -60 to 195 °C.

OUTSIDE TEMPERATURE, VALUE

Measurement range: -128 to 127.75 °C.

ENGINE RUNNING, STATUS

The status displays whether the engine was running when the diagnostic trouble code (DTC) was stored.

No = the engine was not running

Yes = the engine was running

-3 DB SWITCH, STATUS

The status indicates whether the -3 db switch was activated or not.

on = activated

off = not activated

TIME, VALUE

The value displays the time that has passed since the diagnostic trouble code (DTC) was stored.

STATUS IDENTIFIER, DESCRIPTION

Status identifier
There are different status identifiers that can be read off for each diagnostic trouble code (DTC). The control module tests each terminal almost continuously. By reading off the diagnostic trouble code (DTC) and the associated status identifier (which detects the fault and stores the DTC), information about the test is obtained. Not all status identifiers need to be implemented in one control module. This varies from system to system. All status identifiers are reset and start counting again each time the control module is powered up and when erasing diagnostic trouble codes (DTCs). The possible status identifiers are described below.

Status identifier	**Explanation**
Upper graph	When the signal value is above or below a maximum or minimum value that is considered to be a fault by the control module, an instantaneous fault is registered (i. e. a fault is active). The value may vary depending on the specific diagnostic trouble code (DTC). Examples of this are U > 11.5 V, U < 2 V or f < 10 Hz.
SI#01 (see the graph)	The test is active. The control module can only detect faults and store diagnostic trouble codes (DTC) when the test is running.
SI#02 (see the graph)	The test has been active. Indicates whether the control module was able to detect faults and store diagnostic trouble codes (DTC).
SI#03 (see the graph)	The control module detects an instantaneous fault. This information is used by the control module to determine if or when a diagnostic trouble code (DTC) should be stored. As soon as a signal exceeds the permitted value (compare with the upper graph), there is an instantaneous fault.
SI#04 (see the graph)	The control module has detected an instantaneous fault. An instantaneous fault has been detected at some stage.
SI#05	Lamp lighting / Text message. Information about whether the diagnostic trouble code (DTC) activates a warning lamp or text message in the combined instrument

	panel.
SI#06	The test is disabled because another fault has occurred. The diagnostic trouble code (DTC) is stored at the point of the base fault. If this leads to further faults, related diagnostic trouble codes (DTCs) are not stored.
SI#08 (see the graph)	Counter for instantaneous faults. When an instantaneous fault is detected by the control module, a counter counts up for as long as the fault exists. When the fault is no longer present, the counter counts down again. The diagnostic trouble code (DTC) is stored in the car if the counter reaches a certain maximum value. The maximum value varies between different diagnostic trouble codes (DTCs). The speed of the count depends on how long the fault can persist before it results in customer symptoms.
SI#09 (see the graph)	Maximum value of counter SI#08. There are a variety of ways that the counter value for instantaneous faults can be read off depending on how often the diagnostic has been run.
Lower graph	Validating diagnostic trouble codes (DTCs). The diagnostic trouble code (DTC) is stored when the counter for instantaneous faults has reached its maximum value.

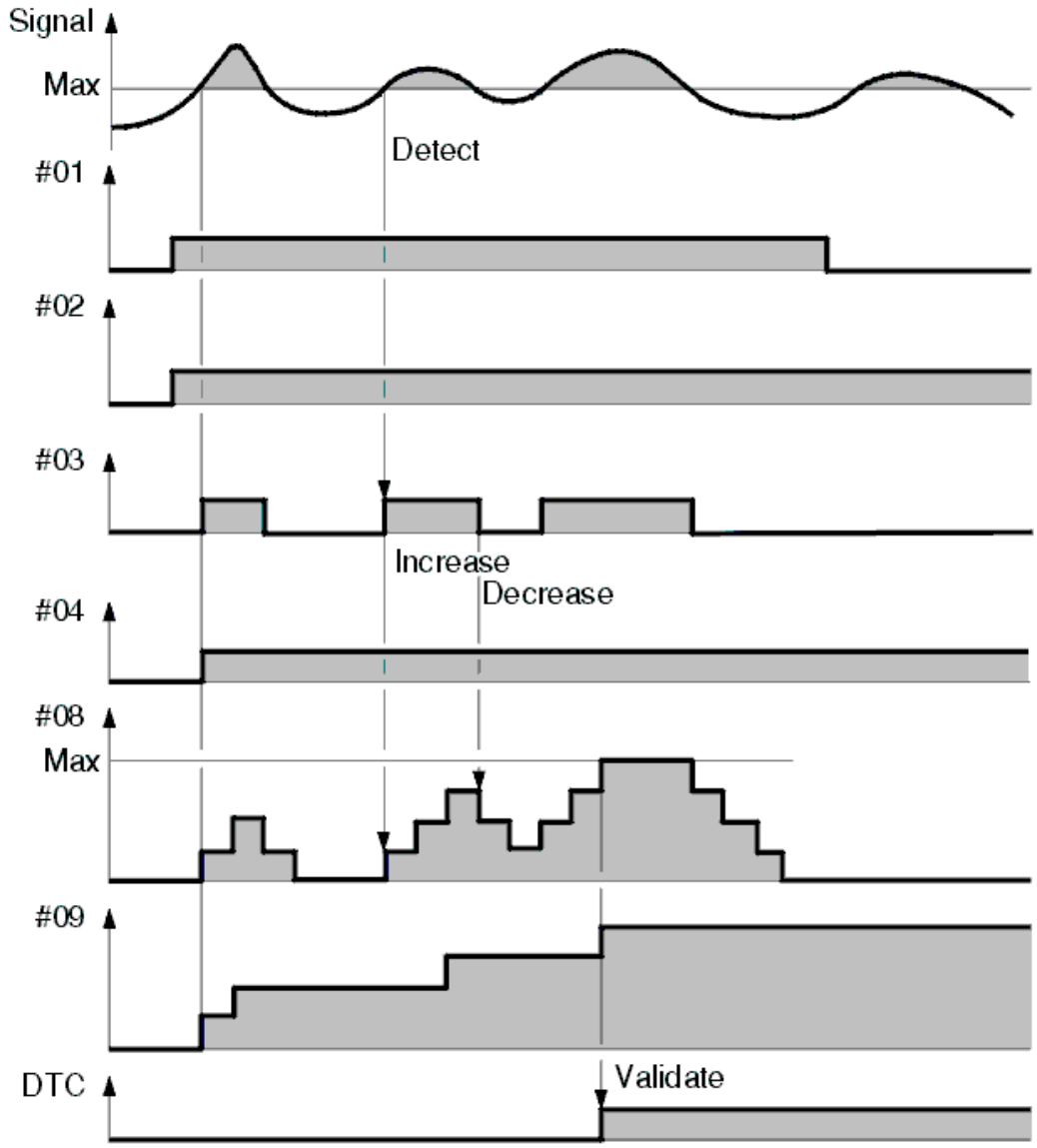

Fig. 1: Status Identifier Graph
Courtesy of VOLVO CARS CORPORATION

COUNTERS, DESCRIPTION

Counter
A useful fault-tracing tool is the Diagnostic Trouble Code (DTC) counter. The control module stores 6 different counters for each Diagnostic Trouble Code (DTC), which describes the occurrence. The counters can be used to determine when and how often a fault has been detected. Using the counters for the Diagnostic Trouble Code (DTC) it is possible to, see if the fault has only been registered during the current operating cycle or whether it has been detected previously. If a fault is intermittent it is possible to determine how intermittent the fault is by studying the values of

the different counters.
Example:

- Counter 1 = 15 Counts the number of operating cycles since the fault was last validated.
- Counter 3 = 69 Counts the number of operating cycles since the fault was first validated.
- Counter 4 = 1 Counts how many times the fault has occurred since the first time the fault was first validated.
- Counter 5 = 91764 The counter adds the time in seconds for which the control module has been operating since the fault was first validated and the diagnostic trouble code (DTC) was stored.
- Counter 6 = 0 The counter adds the time in seconds for which the test, the diagnostic, has run since the fault was first validated and the diagnostic trouble code (DTC) was stored.
- Counter 7 = 0 The counter adds the time in seconds for which the fault has been validated since the fault was first validated and the diagnostic trouble code (DTC) was stored.

In the examples given above, counter 1 gives the number of operating cycles where the diagnostic was run without a fault being detected. Counting takes place from when the fault was last detected. Counter 3 is the total number of operating cycles regardless of whether the diagnostic was run or not. Counter 4 shows the number of operating cycles where the diagnostic detected a fault. Counters 3 and 4 start to count from the first operating cycle after the operating cycle when the fault was first detected.
In the example, counter 4 = 1, which means that the fault was detected twice. One can, see that no fault was detected during the relevant operating cycle. Depending on the number of operating cycles and the customer's driving pattern, it can assist in ruling out this control module from the customer's current problems. The counters can help us understand how intermittent the fault can be. If the counters 1 = 0, 3 = 0 and 4 = 0 it indicates that there have not been any operating cycles since the fault was detected and that the fault was probably generated in the workshop.
For an operating cycle to be recognized certain requirements may be necessary, for example, increasing the engine coolant temperature. In certain cases ignition on, ignition off and ignition on again are counted as an operating cycle.
Counter 5 can be useful if the fault was detected in this operating cycle. The time can be used to determine more exactly when the fault occurred.

NOTE:
Not all counters need be implemented in a control module, this varies from system to system. The possible counters are described below.

Counter	Function
A (see the graph) Counter 1	The graph illustrates the time at which a fault occurs. In the illustration the control module has detected a fault in the second cycle. This fault has then occurred a total of 5 times. The counter can be read off for each diagnostic trouble code (DTC) in the control module in which this is implemented. Operating cycles are marked with vertical lines. An operating cycle usually begins at ignition on and finishes when the ignition is switched off.

C#1 (see the graph) Counter 2	Counts the number of operating cycles since the fault was *last* validated. This information can be used to determine whether the fault is active during the current operating cycle or not. The fault is present now if the value is zero. This counter is also used for most systems to give "Permanent fault" and " Intermittent fault" text messages in VIDA when reading off a diagnostic trouble code (DTC).
C#3 (see the graph) Counter 3	Counts the number of operating cycles since the fault was *first* validated. When a fault has been validated, the counter will count up by 1 for each subsequent operating cycle. The same as counter C#1 but monitors the number of cycles since the first fault occurred.
C#4 (see the graph) Counter 4	Counts the number of operating cycles in which the fault was validated since it was first validated. Counts the number of times the fault has occurred since the first time.
C#5 Counter 5	The counter assesses the number of seconds the control module has been operating since the fault was first validated and the diagnostic trouble code (DTC) was stored. The time the control module has been operating is only counted when it is active, not in "sleep mode".
C#6 Counter 6	The counter assesses the number of seconds the test (the diagnosis) has been operating since the fault was first validated and the diagnostic trouble code (DTC) was stored.
C#7 Counter 7	The counter assesses the number of seconds the fault has been valid since it was first validated and the diagnostic trouble code (DTC) was stored.

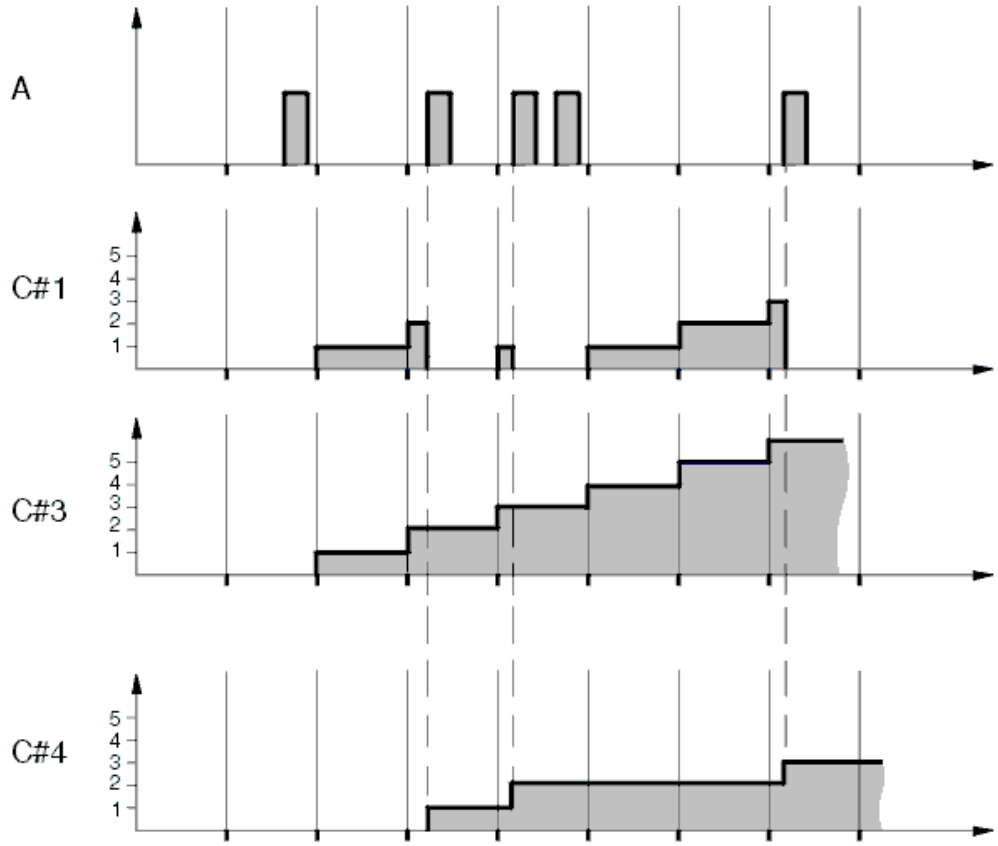

Fig. 2: Diagnostic Trouble Code (DTC) Counter Graph
Courtesy of VOLVO CARS CORPORATION

VEHICLE COMMUNICATION INFORMATION, CD MODULE (MP2) (2003-06)

DESCRIPTION OF VEHICLE COMMUNICATION INFORMATION

CONTENTS

Select type of description.

- see **DESCRIPTION OF FROZEN VALUES**
- see **DESCRIPTION OF PARAMETERS**
- see **DESCRIPTION OF ACTIVATIONS**

DESCRIPTION OF FROZEN VALUES

EXPLANATION

Not all the parameters described need to be implemented in the control module. This varies from system to system.

Frozen values are parameter values that are stored when a diagnostic trouble code (DTC) is stored.

BATTERY VOLTAGE, VALUE

Measurement range: 0-12 V.

Normal value when the generator (GEN) is charging: 13.0-14.5 V.

The value indicates the voltage to the CD player.

DISTANCE, VALUE

Measurement range: 0-1048575 km.

The value indicates the total mileage of the car at the time the diagnostic trouble code (DTC) was stored.

PASSENGER COMPARTMENT TEMPERATURE, VALUE

Measurement range: -60 - 195°C.

The value indicates the passenger compartment temperature at the time the diagnostic trouble code was stored.

OUTSIDE TEMPERATURE, VALUE

Measurement range: -128 - 127.75°C.

The value indicates the outside temperature at the time the diagnostic trouble code was stored.

ENGINE RUNNING, STATUS

The status displays whether the engine was running when the diagnostic trouble code was stored.

No = the engine was not running

Yes = the engine was running

TIME, VALUE

The value displays the time that has passed since the diagnostic trouble code was stored.

DESCRIPTION OF ACTIVATIONS

The following activations are available:

PLAY

Play the disc in the player

STOP

Stop the disc currently playing.

PAUSE

Set the player to pause mode.

UNLOAD

Remove the disc from the player

SEARCH FORWARDS

Search forwards with sound.

SEARCH BACKWARDS

Search backwards with sound.

FAST FORWARD

Search forwards without sound.

FAST BACKWARD

Search backwards without sound.

1-6

Selecting the disc in the CD changer.

VEHICLE COMMUNICATION INFORMATION, INFOTAINMENT CONTROL MODULE

DESCRIPTION OF ACTIVATIONS

BUTTONS ON THE LEFT-HAND KEYPAD

Activate the buttons on the left-hand keypad.

- CD button
- AM/FM button
- Forward button
- Back button
- 1 button
- 2 button
- 3 button
- 4 button
- 5 button

- 6 button
- 7 button
- 8 button
- 9 button
- 0 button
- * button
- # button
- button

BUTTONS ON THE RIGHT-HAND KEYPAD

Activate the buttons on the right-hand keypad.

- button
- button
- button
- button
- button
- Up button
- Down button
- Eject button.

DESCRIPTION OF PARAMETERS

30 SUPPLY, VALUE

Measurement range: 0 - 50 V

Normal range: 12 - 14 V

The value indicates the power supply to the infotainment control module (ICM).

5 V SUPPLY, VALUE

Measurement range: 0 - 10 V

Normal range: 4.5 - 5.5 V

The value indicates the internal power supply in the infotainment control module (ICM).

POWER CONSUMPTION INFOTAINMENT, VALUE

Measurement range: 0 - 50 A

The value indicates the power consumption for the infotainment control module (ICM).

POWER CONSUMPTION INFOTAINMENT CONTROL MODULE (ICM), VALUE

Measurement range: 0 - 50 A

The value indicates the power consumption for the infotainment control module (ICM).

INPUT SIGNAL FROM THE BUTTON CIRCUIT, VALUE

Measurement range: 0 - 1023 V

Normal range: ~ 4.1 V (when no buttons in the relevant circuit are affected)

The value indicates the voltage in the button circuit.

- Normal range: ~(3.6 V, 3.1 V, 2.4 V, 1.4 V)
- Left button circuit 1 (>>|, AM/FM, |<<, CD)
- Left button circuit 2 (*, 7, 4, 1)
- Left button circuit 3 (0, 8; 5, 2)
- Left button circuit 4
- Right button circuit 1
- Normal range: ~ (3.1 V, 2.4 V, 1.4 V)
- Right button circuit 2 (Up, Down, CD eject)
- Normal range: ~
- Right button circuit 5
- Button circuit.

NUMBER OF CONTROL MODULES IN THE MOST NETWORK, VALUE

The value indicates the number of control modules in the present MOST network. The number can be between 4-8.

BUTTONS IN THE KEYPAD, STATUS

The status displays if the selected button is activated or not

MOST-LOCKED, STATUS

The status indicates whether the MOST network is closed and communication possible.

- No
- Yes

RING BREAK DIAGNOSTIC, STATUS

NOTE: This parameter is only changed after a ring break diagnostic has been run.

After the ring break diagnosis has been carried out the status indicates if there is an open-circuit and if so the location of the open-circuit.

- OK
- Pos1 - Pos8

HINT: The number of possible positions varies depending on the number of control modules in the vehicle.

NETWORK ACTIVITY, STATUS

Status indicates if there is communication in the MOST network.

- No
- Yes

DESCRIPTION OF READING OFF OF EXTENDED DIAGNOSTIC TROUBLE CODE (DTC) INFORMATION

see **DESCRIPTION OF FROZEN VALUES**

see **STATUS IDENTIFIER, DESCRIPTION**

see **COUNTERS, DESCRIPTION**

DESCRIPTION OF FROZEN VALUES

EXPLANATION

Not all the parameters described need to be implemented in the control module. This varies from system to system.

Frozen values are parameter values that are stored when a diagnostic trouble code (DTC) is stored.

HINT: Frozen values are stored the first time a diagnostic trouble code (DTC) is generated. Because of this, intermittent open-circuits on the MOST network may be hard to diagnose.

BATTERY VOLTAGE, VALUE

Measurement range: 0 - 30 V.

Normal value when the generator (GEN) is charging: 13.0-14.5 V.

The voltage value at the Central Electronic Module (CEM).

DISTANCE, VALUE

Measurement range: 0-1048575 km.

The value indicates the total mileage of the car at the time the diagnostic trouble code (DTC) was stored.

PASSENGER COMPARTMENT TEMPERATURE, VALUE

Measurement range -60 - 195°C.

The driver information module (DIM) obtains the value via CAN.

OUTSIDE TEMPERATURE, VALUE

Measurement range -128 - 127.75°C.

The driver information module (DIM) obtains the value via CAN.

ENGINE RUNNING, STATUS

The status displays whether the engine was running when the diagnostic trouble code (DTC) was stored.

No = the engine was not running

Yes = the engine was running

TIME, VALUE

The value displays the time that has passed since the diagnostic trouble code (DTC) was stored.

CAN COMMUNICATION, STATUS

The status indicates the control modules in the Control area network (CAN) which were communicating when the diagnostic trouble code (DTC) was stored.

30 SUPPLY, VALUE

Measurement range: 0 - 50 V

The value indicates the power supply to the Infotainment control module (ICM) when the diagnostic trouble code was stored.

5 V SUPPLY, VALUE

Measurement range: 0 - 10 V

Normal range: 4.5 - 5.5 V

The value indicates the internal power supply in the Infotainment control module (ICM) when the diagnostic

trouble code was stored.

RING BREAK DIAGNOSTIC, STATUS

The status indicates the MOST network status when the Diagnostic Trouble Code (DTC) was stored.

The status is stored in the first event of a Diagnostic Trouble Code (DTC) being stored. If the fault is intermittent, the Diagnostic Trouble Code (DTC) can be stored on several occasions but the value freezes only on the first occasion. Intermittent open-circuit on the MOST network can be difficult to diagnose due to this.

Ok = MOST network ok.

Open-circuit location = Indicates the location of the open-circuit in the MOST network.

MOST LOCKED, STATUS

The status indicates whether the MOST network was closed when the diagnostic trouble code (DTC) was stored.

No = The MOST network was not closed and communication was not possible.

Yes = The MOST network was closed and communication was possible.

INPUT SIGNAL FROM THE BUTTON CIRCUIT, VALUE

Measurement range: 0 - 1023 V

The value indicates the voltage in the button circuit when the diagnostic trouble code (DTC) was stored.

- Left button circuit 1 (AM/FM, CD, |<<, >>|)
- Left button circuit 2
- Left button circuit 3
- Left button circuit 4
- Right button circuit 1
- Right button circuit 2
- Right button circuit 5
- Button circuit for.

VOLUME AND SELECTOR SWITCHES, STATUS

The status indicates the position of the switches in the controls and.

- Open
- Closed

STATUS IDENTIFIER, DESCRIPTION

Status identifier
There are different status identifiers that can be read off for each diagnostic trouble code (DTC). The control module tests each terminal almost continuously. By reading off the diagnostic trouble code (DTC) and the associated status identifier (which detects the fault and stores the DTC), information about the test is obtained. Not all status identifiers need to be implemented in one control module. This varies from system to system. All status identifiers are reset and start counting again each time the control module is powered up and when erasing diagnostic trouble codes (DTCs). The possible status identifiers are described below.

Status identifier	**Explanation**
Upper graph	When the signal value is above or below a maximum or minimum value that is considered to be a fault by the control module, an instantaneous fault is registered (i. e. a fault is active). The value may vary depending on the specific diagnostic trouble code (DTC). Examples of this are U > 11.5 V, U < 2 V or f < 10 Hz.
SI#01 (see the graph)	The test is active. The control module can only detect faults and store diagnostic trouble codes (DTC) when the test is running.
SI#02 (see the graph)	The test has been active. Indicates whether the control module was able to detect faults and store diagnostic trouble codes (DTC).
SI#03 (see the graph)	The control module detects an instantaneous fault. This information is used by the control module to determine if or when a diagnostic trouble code (DTC) should be stored. As soon as a signal exceeds the permitted value (compare with the upper graph), there is an instantaneous fault.
SI#04 (see the graph)	The control module has detected an instantaneous fault. An instantaneous fault has been detected at some stage.
SI#05	Lamp lighting / Text message. Information about whether the diagnostic trouble code (DTC) activates a warning lamp or text message in the combined instrument panel.
SI#06	The test is disabled because another fault has occurred. The diagnostic trouble code (DTC) is stored at the point of the base fault. If this leads to further faults, related diagnostic trouble codes (DTCs) are not stored.
SI#08 (see the graph)	Counter for instantaneous faults. When an instantaneous fault is detected by the control module, a counter counts up for as long as the fault exists. When the fault is no longer present, the counter counts down again. The diagnostic trouble code (DTC) is stored in the car if the counter reaches a certain maximum value. The maximum value varies between different diagnostic trouble codes (DTCs). The speed of the count depends on how long the fault can persist before it results in customer symptoms.
SI#09 (see the graph)	Maximum value of counter SI#08. There are a variety of ways that the counter value for instantaneous faults can be read off depending on how often the diagnostic has been run.
Lower graph	Validating diagnostic trouble codes (DTCs). The diagnostic trouble code (DTC) is stored when the counter for instantaneous faults has reached its maximum value.

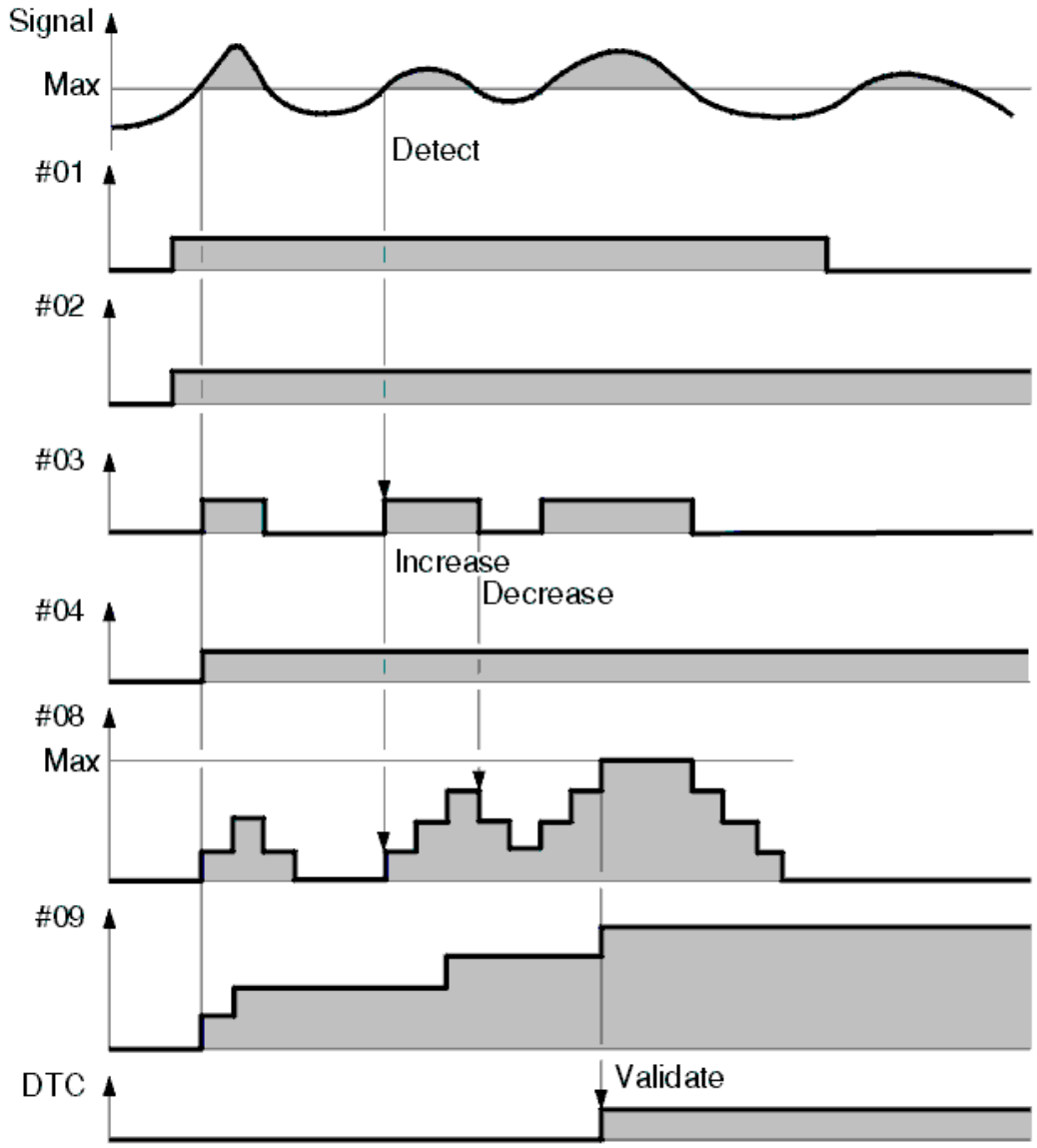

Fig. 3: Status Identifier Graph
Courtesy of VOLVO CARS CORPORATION

COUNTERS, DESCRIPTION

Counter
A useful fault-tracing tool is the Diagnostic Trouble Code (DTC) counter. The control module stores 6 different counters for each Diagnostic Trouble Code (DTC), which describes the occurrence. The counters can be used to determine when and how often a fault has been detected. Using the counters for the Diagnostic Trouble Code (DTC) it is possible to, see if the fault has only been registered during the current operating cycle or whether it has been detected previously. If a fault is intermittent it is possible to determine how intermittent the fault is by studying the values of

the different counters.
Example:

- Counter 1 = 15 Counts the number of operating cycles since the fault was last validated.
- Counter 3 = 69 Counts the number of operating cycles since the fault was first validated.
- Counter 4 = 1 Counts how many times the fault has occurred since the first time the fault was first validated.
- Counter 5 = 91764 The counter adds the time in seconds for which the control module has been operating since the fault was first validated and the diagnostic trouble code (DTC) was stored.
- Counter 6 = 0 The counter adds the time in seconds for which the test, the diagnostic, has run since the fault was first validated and the diagnostic trouble code (DTC) was stored.
- Counter 7 = 0 The counter adds the time in seconds for which the fault has been validated since the fault was first validated and the diagnostic trouble code (DTC) was stored.

In the examples given above, counter 1 gives the number of operating cycles where the diagnostic was run without a fault being detected. Counting takes place from when the fault was last detected. Counter 3 is the total number of operating cycles regardless of whether the diagnostic was run or not. Counter 4 shows the number of operating cycles where the diagnostic detected a fault. Counters 3 and 4 start to count from the first operating cycle after the operating cycle when the fault was first detected.
In the example, counter 4 = 1, which means that the fault was detected twice. One can, see that no fault was detected during the relevant operating cycle. Depending on the number of operating cycles and the customer's driving pattern, it can assist in ruling out this control module from the customer's current problems. The counters can help us understand how intermittent the fault can be. If the counters 1 = 0, 3 = 0 and 4 = 0 it indicates that there have not been any operating cycles since the fault was detected and that the fault was probably generated in the workshop.
For an operating cycle to be recognized certain requirements may be necessary, for example, increasing the engine coolant temperature. In certain cases ignition on, ignition off and ignition on again are counted as an operating cycle.
Counter 5 can be useful if the fault was detected in this operating cycle. The time can be used to determine more exactly when the fault occurred.

NOTE:
Not all counters need be implemented in a control module, this varies from system to system. The possible counters are described below.

Counter	Function
A (see the graph) Counter 1	The graph illustrates the time at which a fault occurs. In the illustration the control module has detected a fault in the second cycle. This fault has then occurred a total of 5 times. The counter can be read off for each diagnostic trouble code (DTC) in the control module in which this is implemented. Operating cycles are marked with vertical lines. An operating cycle usually begins at ignition on and finishes when the ignition is switched off.

C#1 (see the graph) Counter 2	Counts the number of operating cycles since the fault was *last* validated. This information can be used to determine whether the fault is active during the current operating cycle or not. The fault is present now if the value is zero. This counter is also used for most systems to give "Permanent fault" and " Intermittent fault" text messages in VIDA when reading off a diagnostic trouble code (DTC).
C#3 (see the graph) Counter 3	Counts the number of operating cycles since the fault was *first* validated. When a fault has been validated, the counter will count up by 1 for each subsequent operating cycle. The same as counter C#1 but monitors the number of cycles since the first fault occurred.
C#4 (see the graph) Counter 4	Counts the number of operating cycles in which the fault was validated since it was first validated. Counts the number of times the fault has occurred since the first time.
C#5 Counter 5	The counter assesses the number of seconds the control module has been operating since the fault was first validated and the diagnostic trouble code (DTC) was stored. The time the control module has been operating is only counted when it is active, not in "sleep mode".
C#6 Counter 6	The counter assesses the number of seconds the test (the diagnosis) has been operating since the fault was first validated and the diagnostic trouble code (DTC) was stored.
C#7 Counter 7	The counter assesses the number of seconds the fault has been valid since it was first validated and the diagnostic trouble code (DTC) was stored.

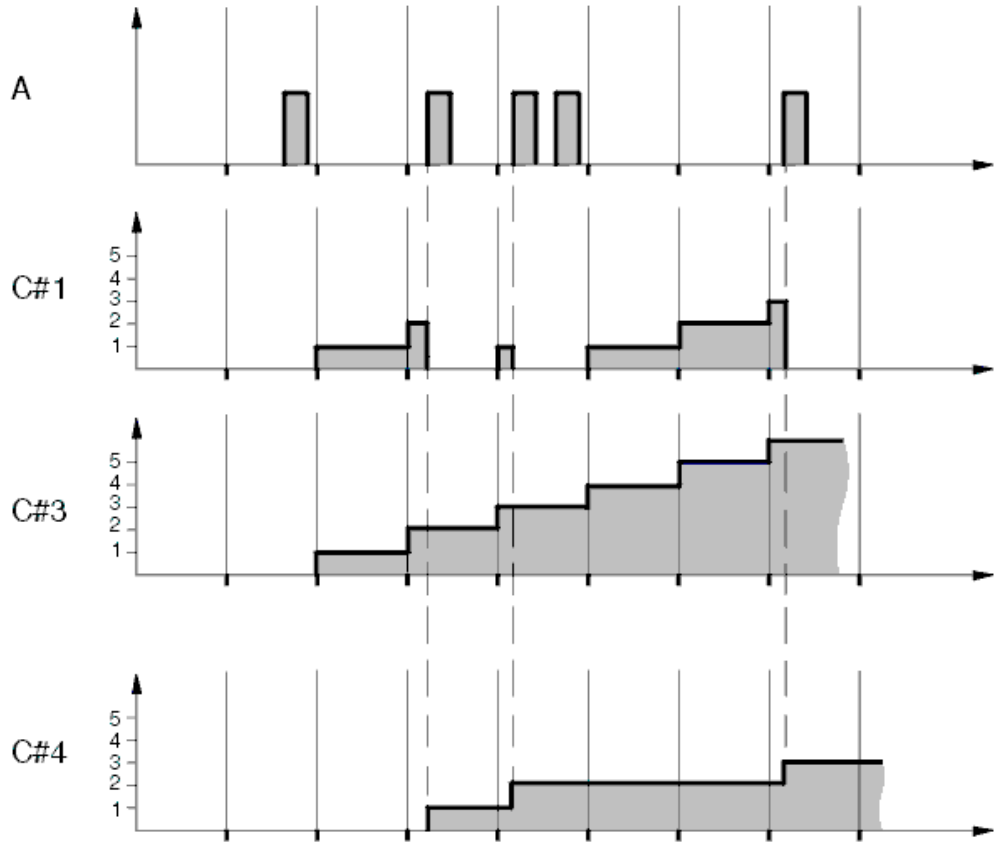

Fig. 4: Diagnostic Trouble Code (DTC) Counter Graph
Courtesy of VOLVO CARS CORPORATION

VEHICLE COMMUNICATION INFORMATION, INFOTAINMENT CONTROL MODULE (ICM) (2003-06)

DESCRIPTION OF VEHICLE COMMUNICATION INFORMATION

CONTENTS

Select type of description.

- see **DESCRIPTION OF FROZEN VALUES**
- see **DESCRIPTION OF EXTENDED DIAGNOSTIC TROUBLE CODE (DTC) INFORMATION**
- see **DESCRIPTION OF PARAMETERS**
- see **DESCRIPTION OF ACTIVATIONS**

DESCRIPTION OF FROZEN VALUES

EXPLANATION

Not all the parameters described need to be implemented in the control module. This varies from system to system.

Frozen values are parameter values that are stored when a diagnostic trouble code (DTC) is stored.

HINT: Frozen values are stored the first time a diagnostic trouble code (DTC) is generated. Because of this, intermittent open-circuits on the MOST network may be hard to diagnose.

BATTERY VOLTAGE, VALUE

Measurement range: 0-30 V.

Normal value when the generator (GEN) is charging: 13.0-14.5 V.

The value indicates the voltage at the central electronic module (CEM).

DISTANCE, VALUE

Measurement range: 0-1048575 km.

The value indicates the total mileage of the car at the time the diagnostic trouble code (DTC) was stored.

PASSENGER COMPARTMENT TEMPERATURE, VALUE

Measurement range: -60-195°C.

The combined instrument panel obtains the value via the control area network (CAN).

OUTSIDE TEMPERATURE, VALUE

Measurement range: -128-127.75°C.

The combined instrument panel obtains the value via the control area network (CAN).

ENGINE RUNNING, STATUS

The status displays whether the engine was running when the diagnostic trouble code (DTC) was stored.

No = the engine was not running

Yes = the engine was running

TIME, VALUE

The value displays the time that has passed since the diagnostic trouble code (DTC) was stored.

CAN COMMUNICATION, STATUS

The status indicates the control modules in the Control area network (CAN) which were communicating when the diagnostic trouble code (DTC) was stored.

30 SUPPLY, VALUE

Measurement range: 0-50 V

The value indicates the power supply to the infotainment control module (ICM) when the diagnostic trouble code (DTC) was stored.

5 V SUPPLY, VALUE

Measurement range: 0-10 V

Normal range: 4.5-5.5 V

The value indicates the internal power supply in the infotainment control module (ICM) when the diagnostic trouble code (DTC) was stored.

3.3 V SUPPLY, VALUE

Measurement range: 0-5 V

Normal range: 2.9-3.5 V

The value indicates the internal power supply in the infotainment control module (ICM) when the diagnostic trouble code (DTC) was stored.

DISPLAY VOLTAGE, VALUE

Measurement range: 0-600 V

Normal range: 40-80 V

The value indicates the power supply to the display in the infotainment control module (ICM) when the diagnostic trouble code (DTC) was stored.

RING BREAK DIAGNOSTIC, STATUS

The status indicates the status of the MOST network when the diagnostic trouble code (DTC) was stored.

Status is stored the first time a diagnostic trouble code (DTC) is generated. If the fault is intermittent, the diagnostic trouble code may be generated several times, but the frozen value is only stored the first time. Because of this, intermittent open-circuits on the MOST network may be hard to diagnose.

Ok = MOST network ok.

Open-circuit location = Indicates the location of the open-circuit in the MOST network.

MOST LOCKED, STATUS

The status indicates whether the MOST network was closed when the diagnostic trouble code (DTC) was stored.

No = The MOST network was not closed and communication was not possible.

Yes = The MOST network was closed and communication was possible.

BUTTONS LEFT KEYPAD, STATUS

The status indicates which button on the left-hand keypad was activated when the diagnostic trouble code (DTC) was stored.

Activated = The button was activated

Not activated = The button was not activated.

BUTTONS RIGHT KEYPAD, STATUS

The status indicates which button on the right-hand keypad was activated when the diagnostic trouble code (DTC) was stored.

Activated = The button was activated

Not activated = The button was not activated.

INPUT SIGNAL FROM THE BUTTON CIRCUIT, VALUE

Measurement range: 0-1023 V

The value indicates the voltage in the button circuit when the diagnostic trouble code was stored.

- Left button circuit 1
- Left button circuit 2
- Left button circuit 3
- Left button circuit 4
- Right button circuit 1
- Right button circuit 2
- Right button circuit 5
- Button circuit for.

VOLUME AND SELECTOR SWITCHES, STATUS

The status indicates the position of the switches in the and controls

Open

Closed

VOLUME AND SELECTOR KNOB MOVEMENT, VALUE

Measurement range: 0-FF

The value indicates whether the or controls have been activated and how many steps they had been moved when the diagnostic trouble code (DTC) was stored.

DESCRIPTION OF PARAMETERS

30 SUPPLY, VALUE

Measurement range: 0 - 50 V

Normal range: 12 - 14 V

The value indicates the power supply to the infotainment control module (ICM).

5 V SUPPLY, VALUE

Measurement range: 0 - 10 V

Normal range: 4.5 - 5.5 V

The value indicates the internal power supply in the infotainment control module (ICM).

3.3 V SUPPLY, VALUE

Measurement range: 0 - 5 V

Normal range: 2.9 - 3.5 V

The value indicates the internal power supply in the infotainment control module (ICM).

DISPLAY VOLTAGE, VALUE

Measurement range: 0 - 600 V

Normal range: 40 - 80 V

The value indicates the voltage to the display in the infotainment control module (ICM).

POWER CONSUMPTION INFOTAINMENT, VALUE

Measurement range: 0 - 50 A

The value gives the power consumption of the infotainment system.

POWER CONSUMPTION INFOTAINMENT CONTROL MODULE (ICM), VALUE

Measurement range: 0 - 50 A

The value gives the power consumption of the Infotainment Control Module (ICM).

INPUT SIGNAL FROM THE BUTTON CIRCUIT, VALUE

Measurement range: 0 - 1023 V

Normal range: ~4.1 V (when no buttons in the relevant circuit are affected.)

The value indicates the voltage in the button circuit.

- Normal range: ~(3.6V, 3.1V, 2.4V, 1.4V)
- Left button circuit 1 (>>|, AM/FM, |<<, CD)
- Left button circuit 2 (*, 7, 4, 1)
- Left button circuit 3 (0, 8; 5, 2)
- Left button circuit 4 (#, 9, 6, 3)
- Right button circuit 1
- Normal range: ~(3.1V, 2.4V, 1.4V)
- Right button circuit 2 (Up, Down, CD eject)
- Normal range: ~(1.4V)
- Right button circuit 5

NUMBER OF CONTROL MODULES IN THE MOST NETWORK, VALUE

The value indicates the number of control modules in the present MOST network. The number can be between 4-8.

BUTTONS IN THE KEYPAD, STATUS

The status displays if the selected button is activated or not

DISPLAY TEST, STATUS

Status displays the position for display test.

- Normal
- All pixels on
- All pixels off
- Predetermined pattern 1
- Predetermined pattern 2
- Predetermined pattern 3
- Predetermined pattern 4
- Undefined.

DISPLAY TYPE, STATUS

Status indicates what display type for the present unit.

- Standard
- Graphic
- Undefined.

MOST-LOCKED, STATUS

The status indicates whether the MOST network is closed and communication possible.

No

Yes

RING BREAK DIAGNOSTIC, STATUS

NOTE: This parameter is only changed after a ring break diagnostic has been run.

After the ring break diagnosis has been carried out the status indicates if there is an open-circuit and if so the location of the open-circuit.

Ok

Pos1 - Pos8

HINT: The number of possible positions varies depending on the number of control modules in the car.

NETWORK ACTIVITY, STATUS

Status indicates if there is communication in the MOST network.

No

Yes

3 DB SWITCH, STATUS

Status displays if the 3 dB switch is on or off.

DESCRIPTION OF ACTIVATIONS

BUTTONS ON THE LEFT-HAND KEYPAD

Activate the buttons on the left-hand keypad.

- CD button
- Back button

- AM/FM button
- Forward button
- 1 button
- 4 button
- 7 button
- * button
- 2 button
- 5 button
- 8 button
- 0 button
- 3 button
- 6 button
- 9 button
- # button

BUTTONS ON THE RIGHT-HAND KEYPAD

Activate the buttons on the right-hand keypad.

DISPLAY TEST

Activate the display test positions.

- Normal
- All pixels on
- All pixels off
- Predetermined pattern 1
- Predetermined pattern 2
- Predetermined pattern 3
- Predetermined pattern 4.

STANDARD DISPLAY SYMBOLS

Activate the symbols in the standard display.

- TP symbol
- Symbol)))
- DDPLII symbol
- PHONE symbol
- REG symbol
- 3CH symbol

- PHONE ONLINE symbol
- MESSAGE symbol
- VOICE MESSAGE symbol.

VEHICLE COMMUNICATION INFORMATION, INTEGRATED AUDIO MODULE (IAM) (2007-12)

DESCRIPTION OF COMPONENT/FUNCTION ACTIVATION

FREQUENCY BAND AM/FM FM

Selecting the frequency band FM.

The radio must be selected as sound source.

FREQUENCY BAND AM/FM AM

Selecting the frequency band AM.

The radio must be selected as sound source.

ANTENNA SELECTION, MAIN ANTENNA

Selecting the Main antenna.

The radio must be selected as the sound source and FM selected as the frequency band.

ANTENNA SELECTION, SUBANTENNA

Selecting the Subantenna.

The radio must be selected as the sound source and FM selected as the frequency band.

MEDIA PLAYER STATUS, STOP

Stops the media player.

The media player must be selected as sound source.

MEDIA PLAYER STATUS, EJECT

Ejects the disc from the media player.

The media player must be selected as sound source.

ACTIVE DISC, DISC 1-6

Selects disc in the CD changer.

The media player must be selected as sound source.

DESCRIPTION OF PARAMETERS

PARAMETERS, STATUS

MEDIA PLAYER STATUS

Displays current status of the media player:

- Play
- Stop
- Pause
- Load
- Eject
- Search forward (sound on)
- Search backward (sound on)
- Fast backward by time (mute)
- Fast forward by time (mute)
- Retract
- Empty

The parameter can be read when the media player is selected as the source.

ACTIVE DISC

Displays which disc is selected in the CD changer.

The parameter can be read when the vehicle is equipped with CD changer and this is selected as the source.

FREQUENCY BAND AM/FM

Displays which frequency band, AM or FM, is selected.

The parameter can be read when the radio is selected as the source.

ANTENNA SELECTION

Displays which antenna, main antenna or subantenna, is in use.

The parameter can be read when the radio is selected as the source.

REGION

Displays the region for which the antenna is configured.

EU=Europe

USA=USA

AUS=Australia

JPN=Japan

PARAMETERS, VALUE

TRACK

Displays the current track on the CD disc.

The parameter can be read when the media player is selected as the source.

FREQUENCY

Displays which frequency is set.

The parameter can be read when the radio is selected as the source.

SIGNAL STRENGTH

Obtaining radio signal strength readings.

The value read applies to the active antenna. The signal strength is presented as a figure between 0 and 255. The figure 0 means that no signal has been registered. The figure 255 means that the highest possible signal strength has been registered.

The parameter can be read when the radio is selected as the source.

NOISE LEVEL

Reading the radio signal noise level.

The value read applies to the active antenna. The noise level is presented as a figure between 0 and 15. The figure 0 means that no noise has been registered. The figure 15 means that the highest noise level that can be registered has been reached.

The parameter can be read when the radio FM band is selected as the source.

DESCRIPTION OF READING EXTENDED DIAGNOSTIC TROUBLE CODE (DTC) INFORMATION

CONTENTS

Select type of description:

- see **DESCRIPTION OF FROZEN VALUES**
- see **STATUS IDENTIFIER, DESCRIPTION**
- see **COUNTERS, DESCRIPTION**

DESCRIPTION OF FROZEN VALUES

EXPLANATION

All parameters described do not need to be implemented in the Integrated Audio Module (IAM), this varies from system to system.

Frozen values are parameter values stored when a Diagnostic Trouble Code (DTC) is generated.

BATTERY VOLTAGE, CENTRAL ELECTRONIC MODULE (CEM)

Measurement range: 5-30 V.

The normal value when the alternator is charging: 13.0-14.5 V.

The value indicates the voltage to the Central Electronic Module (CEM).

DISTANCE, VALUE

Measurement range: 0-1048575 km.

The value indicates the vehicle's total mileage when the Diagnostic Trouble Code (DTC) was generated.

PASSENGER COMPARTMENT TEMPERATURE, VALUE

Measurement range: -60 to +195°C.

The value indicates passenger compartment temperature when the Diagnostic Trouble Code (DTC) was generated.

OUTSIDE TEMPERATURE, VALUE

Measurement range: -128 to +127.75°C.

The value indicates outside temperature when the Diagnostic Trouble Code (DTC) was generated.

ENGINE RUNNING, STATUS

The status indicates whether the engine was running when the Diagnostic Trouble Code (DTC) was generated.

No = the engine was not running

Yes = the engine was running

STATUS IDENTIFIER, DESCRIPTION

Status identifier
There are different status identifiers that can be read off for each diagnostic trouble code (DTC). The control module tests each terminal almost continuously. By reading off the diagnostic trouble code (DTC) and the associated status identifier (which detects the fault and stores the DTC), information about the test is obtained. Not all status identifiers need to be implemented in one control module. This varies from system to system. All status identifiers are reset and start counting again each time the control module is powered up and when erasing diagnostic trouble codes (DTCs). The possible status identifiers are described below.

Status identifier	**Explanation**
Upper graph	When the signal value is above or below a maximum or minimum value that is considered to be a fault by the control module, an instantaneous fault is registered (i. e. a fault is active). The value may vary depending on the specific diagnostic trouble code (DTC). Examples of this are U > 11.5 V, U < 2 V or f < 10 Hz.
SI#01 (see the graph)	The test is active. The control module can only detect faults and store diagnostic trouble codes (DTC) when the test is running.
SI#02 (see the graph)	The test has been active. Indicates whether the control module was able to detect faults and store diagnostic trouble codes (DTC).
SI#03 (see the graph)	The control module detects an instantaneous fault. This information is used by the control module to determine if or when a diagnostic trouble code (DTC) should be stored. As soon as a signal exceeds the permitted value (compare with the upper graph), there is an instantaneous fault.
SI#04 (see the graph)	The control module has detected an instantaneous fault. An instantaneous fault has been detected at some stage.
SI#05	Lamp lighting / Text message. Information about whether the diagnostic trouble code (DTC) activates a warning lamp or text message in the combined instrument panel.
SI#06	The test is disabled because another fault has occurred. The diagnostic trouble code (DTC) is stored at the point of the base fault. If this leads to further faults, related diagnostic trouble codes (DTCs) are not stored.
SI#08 (see the graph)	Counter for instantaneous faults. When an instantaneous fault is detected by the control module, a counter counts up for as long as the fault exists. When the fault is no longer present, the counter counts down again. The diagnostic trouble code (DTC) is stored in the car if the counter reaches a certain maximum value. The maximum value varies between different diagnostic trouble codes (DTCs). The speed of the count depends on how long the fault can persist before it results in customer symptoms.
SI#09 (see the graph)	Maximum value of counter SI#08. There are a variety of ways that the counter value for instantaneous faults can be read off depending on how often the diagnostic has been run.
Lower graph	Validating diagnostic trouble codes (DTCs). The diagnostic trouble code (DTC) is stored when the counter for instantaneous faults has reached its maximum value.

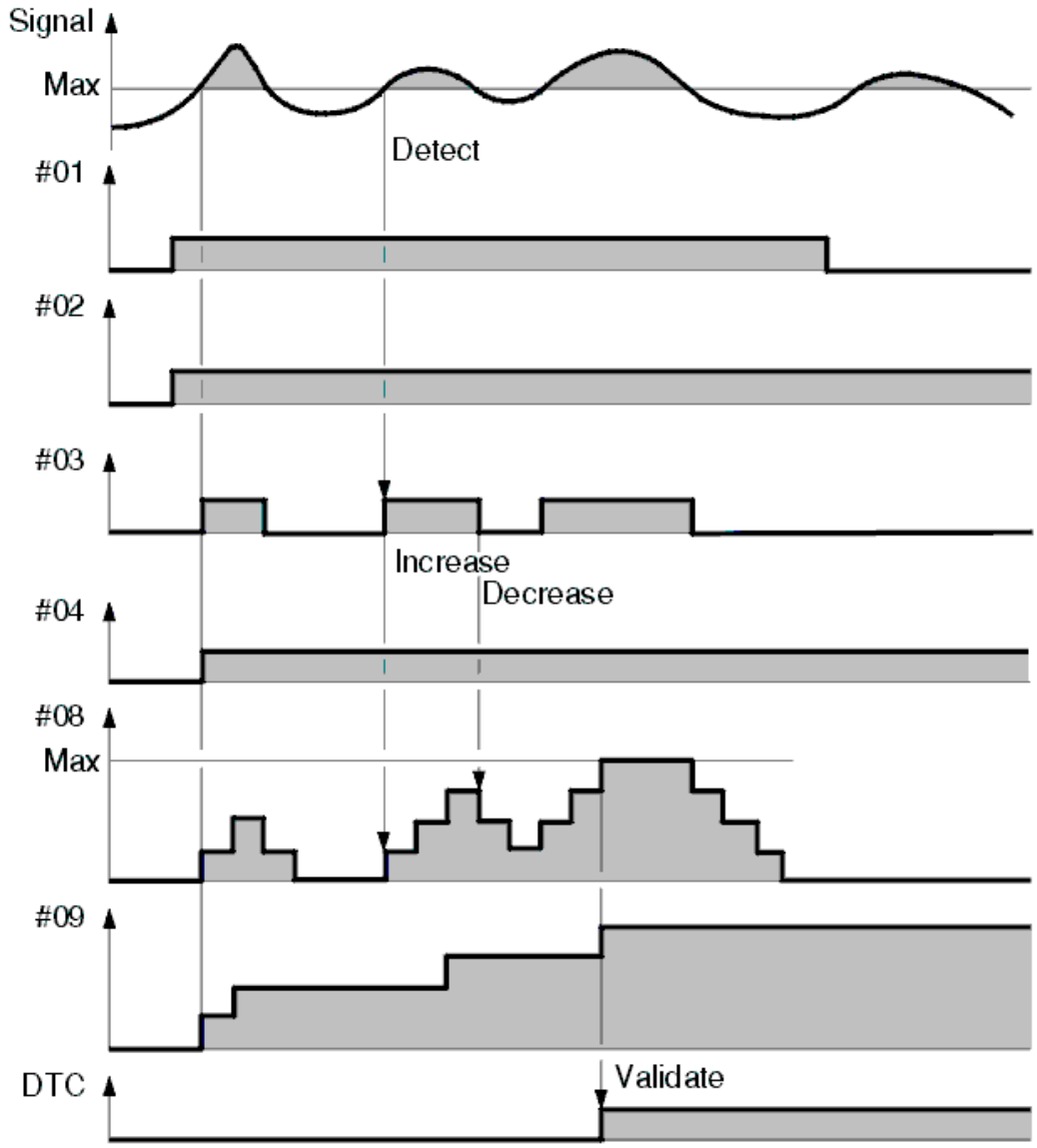

Fig. 5: Status Identifier Graph
Courtesy of VOLVO CARS CORPORATION

COUNTERS, DESCRIPTION

Counter
A useful fault-tracing tool is the Diagnostic Trouble Code (DTC) counter. The control module stores 6 different counters for each Diagnostic Trouble Code (DTC), which describes the occurrence. The counters can be used to determine when and how often a fault has been detected. Using the counters for the Diagnostic Trouble Code (DTC) it is possible to, see if the fault has only been registered during the current operating cycle or whether it has been detected previously. If a fault is intermittent it is possible to determine how intermittent the fault is by studying the values of

the different counters.
Example:

- Counter 1 = 15 Counts the number of operating cycles since the fault was last validated.
- Counter 3 = 69 Counts the number of operating cycles since the fault was first validated.
- Counter 4 = 1 Counts how many times the fault has occurred since the first time the fault was first validated.
- Counter 5 = 91764 The counter adds the time in seconds for which the control module has been operating since the fault was first validated and the diagnostic trouble code (DTC) was stored.
- Counter 6 = 0 The counter adds the time in seconds for which the test, the diagnostic, has run since the fault was first validated and the diagnostic trouble code (DTC) was stored.
- Counter 7 = 0 The counter adds the time in seconds for which the fault has been validated since the fault was first validated and the diagnostic trouble code (DTC) was stored.

In the examples given above, counter 1 gives the number of operating cycles where the diagnostic was run without a fault being detected. Counting takes place from when the fault was last detected. Counter 3 is the total number of operating cycles regardless of whether the diagnostic was run or not. Counter 4 shows the number of operating cycles where the diagnostic detected a fault. Counters 3 and 4 start to count from the first operating cycle after the operating cycle when the fault was first detected.
In the example, counter 4 = 1, which means that the fault was detected twice. One can, see that no fault was detected during the relevant operating cycle. Depending on the number of operating cycles and the customer's driving pattern, it can assist in ruling out this control module from the customer's current problems. The counters can help us understand how intermittent the fault can be. If the counters 1 = 0, 3 = 0 and 4 = 0 it indicates that there have not been any operating cycles since the fault was detected and that the fault was probably generated in the workshop.
For an operating cycle to be recognized certain requirements may be necessary, for example, increasing the engine coolant temperature. In certain cases ignition on, ignition off and ignition on again are counted as an operating cycle.
Counter 5 can be useful if the fault was detected in this operating cycle. The time can be used to determine more exactly when the fault occurred.

NOTE:
Not all counters need be implemented in a control module, this varies from system to system. The possible counters are described below.

Counter	Function
A (see the graph) Counter 1	The graph illustrates the time at which a fault occurs. In the illustration the control module has detected a fault in the second cycle. This fault has then occurred a total of 5 times. The counter can be read off for each diagnostic trouble code (DTC) in the control module in which this is implemented. Operating cycles are marked with vertical lines. An operating cycle usually begins at ignition on and finishes when the ignition is switched off.

C#1 (see the graph) Counter 2	Counts the number of operating cycles since the fault was *last* validated. This information can be used to determine whether the fault is active during the current operating cycle or not. The fault is present now if the value is zero. This counter is also used for most systems to give "Permanent fault" and " Intermittent fault" text messages in VIDA when reading off a diagnostic trouble code (DTC).
C#3 (see the graph) Counter 3	Counts the number of operating cycles since the fault was *first* validated. When a fault has been validated, the counter will count up by 1 for each subsequent operating cycle. The same as counter C#1 but monitors the number of cycles since the first fault occurred.
C#4 (see the graph) Counter 4	Counts the number of operating cycles in which the fault was validated since it was first validated. Counts the number of times the fault has occurred since the first time.
C#5 Counter 5	The counter assesses the number of seconds the control module has been operating since the fault was first validated and the diagnostic trouble code (DTC) was stored. The time the control module has been operating is only counted when it is active, not in "sleep mode".
C#6 Counter 6	The counter assesses the number of seconds the test (the diagnosis) has been operating since the fault was first validated and the diagnostic trouble code (DTC) was stored.
C#7 Counter 7	The counter assesses the number of seconds the fault has been valid since it was first validated and the diagnostic trouble code (DTC) was stored.

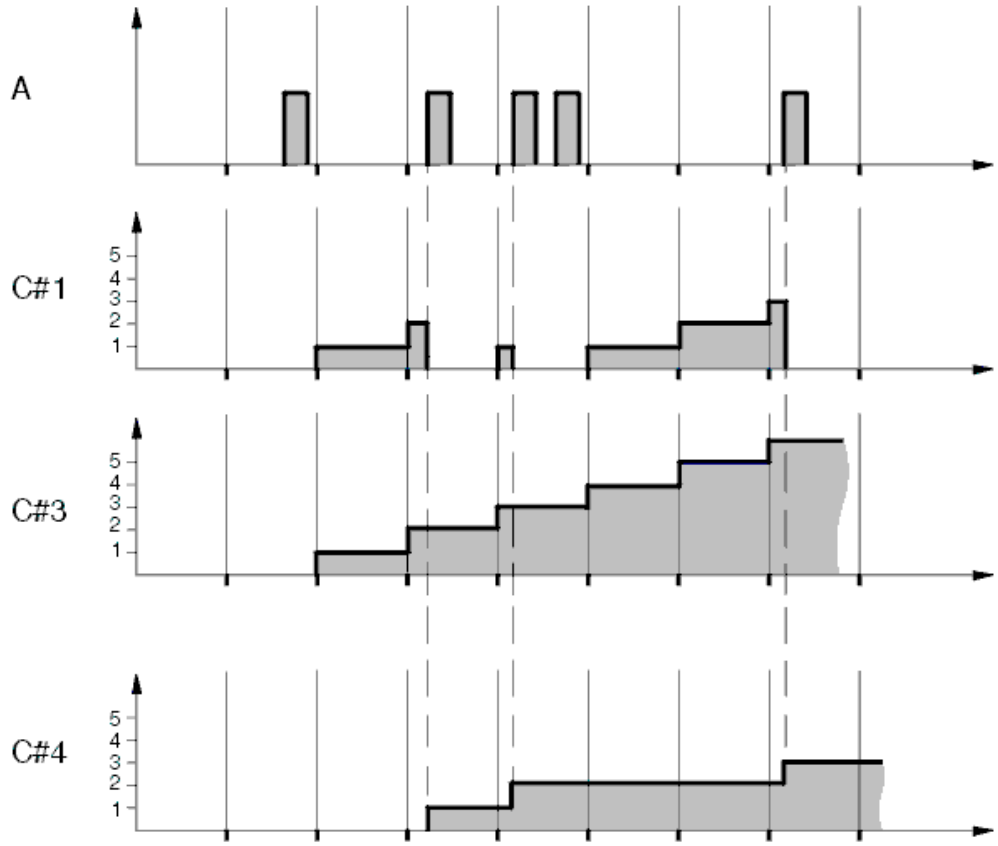

Fig. 6: Diagnostic Trouble Code (DTC) Counter Graph
Courtesy of VOLVO CARS CORPORATION

VEHICLE COMMUNICATION INFORMATION, MD MODULE (MP1) (2003-06)

DESCRIPTION OF VEHICLE COMMUNICATION INFORMATION

CONTENTS

Select type of description.

- see **DESCRIPTION OF FROZEN VALUES**
- see DESCRIPTION OF PARAMETERS
- see **DESCRIPTION OF ACTIVATIONS**

DESCRIPTION OF FROZEN VALUES

EXPLANATION

Not all the parameters described need to be implemented in the control module. This varies from system to system.

Frozen values are parameter values that are stored when a diagnostic trouble code (DTC) is stored.

BATTERY VOLTAGE, MP1, VALUE

Measurement range: 0-12 V.

Normal value when the generator (GEN) is charging: 13.0-14.5 V.

The value indicates the voltage to the MD player.

DISTANCE, VALUE

Measurement range: 0-1048575 km.

The value indicates the total mileage of the car at the time the diagnostic trouble code (DTC) was stored.

PASSENGER COMPARTMENT TEMPERATURE, VALUE

Measurement range: -60 - 195°C.

The value indicates the passenger compartment temperature at the time the diagnostic trouble code (DTC) was stored.

OUTSIDE TEMPERATURE, VALUE

Measurement range: -128 - 127.75°C.

The value indicates the outside temperature at the time the diagnostic trouble code (DTC) was stored.

ENGINE RUNNING, STATUS

The status displays whether the engine was running when the diagnostic trouble code (DTC) was stored.

No = the engine was not running

Yes = the engine was running

TIME, VALUE

The value displays the time that has passed since the diagnostic trouble code (DTC) was stored.

DESCRIPTION OF PARAMETERS

MD PLAYER STATUS

The MD player can have the following status:

- Play
- Stop
- Pause

- Load
- Unload
- Search forwards
- Search backwards
- Fast forward
- Fast backward
- Retract
- Empty

TRACK

The value indicates which disc track is playing at the moment.

PLAYED TIME

The value indicates the time the current track has been playing.

DESCRIPTION OF ACTIVATIONS

The following activations are available:

PLAY

Play the disc in the player

STOP

Stop the disc that is playing.

PAUSE

Set the player to pause mode.

UNLOAD

Remove the disc from the player

SEARCH FORWARDS

Search forwards with sound.

SEARCH BACKWARDS

Search backwards with sound.

FAST FORWARD

Fast forward without sound.

FAST BACKWARD

Fast rewind without sound.

VEHICLE COMMUNICATION INFORMATION, MULTIMEDIA MODULE (MMM) (2003-12)

DESCRIPTION OF VEHICLE COMMUNICATION INFORMATION

CONTENTS

Select type of description.

- see **DESCRIPTION OF FROZEN VALUES**
- see **STATUS IDENTIFIER, DESCRIPTION**
- see **COUNTERS, DESCRIPTION**

DESCRIPTION OF FROZEN VALUES

EXPLANATION

Not all the parameters described need to be implemented in the control module. This varies from system to system.

Frozen values are parameter values that are stored when a diagnostic trouble code (DTC) is stored.

BATTERY VOLTAGE, VALUE

Measurement range: 8-16 V.

Normal value when the generator (GEN) is charging: 13.0-14.5 V.

DISTANCE, VALUE

Measurement range: 0-1048575 km.

The value indicates the total mileage of the car at the time the diagnostic trouble code (DTC) was stored.

PASSENGER COMPARTMENT TEMPERATURE, VALUE

Measurement range: -60 to 195°C.

OUTSIDE TEMPERATURE, VALUE

Measurement range: -128 to 127.75°C.

ENGINE RUNNING, STATUS

The status displays whether the engine was running when the diagnostic trouble code (DTC) was stored.

No = the engine was not running

Yes = the engine was running

-3 DB SWITCH, STATUS

The status indicates whether the -3 db switch was activated or not.

on = activated

off = not activated

TIME, VALUE

The value displays the time that has passed since the diagnostic trouble code (DTC) was stored.

VEHICLE COMMUNICATION, REMOTE DIGITAL AUDIO RECEIVER (RDAR) (2007-12)

DESCRIPTION OF PARAMETERS

PARAMETERS, STATUS

SIGNAL SOURCE

The Remote Digital Audio Receiver (RDAR) can receive and decode a signal from either satellites, ground antennas or both. The control module selects the source whose signal is the strongest.

The following variations of detected sources are possible:

No signal = No signal detected.

SAT1 = Signal from satellite 1 detected.

SAT2 = Signal from satellite 2 detected.

ground transmission = Signal from ground antennas detected.

SAT1 & SAT2 = Signals from satellite 1 and 2 detected.

SAT1 & ground transmission = Signals from satellite 1 and ground antennas detected.

SAT2 & ground transmission = Signals from satellite 2 and ground antennas detected.

all = Signals from all sources detected.

DESCRIPTION OF READING OFF OF EXTENDED DIAGNOSTIC TROUBLE CODE (DTC) INFORMATION

Contents

Select type of description:

- see **DESCRIPTION OF FROZEN VALUES**
- see **STATUS IDENTIFIER, DESCRIPTION**
- see **COUNTERS, DESCRIPTION**

DESCRIPTION OF FROZEN VALUES

EXPLANATION

Not all the parameters that are described need to be implemented in the control module. These varies from system to system.

Frozen values are parameter values that are stored when a diagnostic trouble code (DTC) is stored.

BATTERY VOLTAGE, VALUE

Measurement range: 5-24 V.

Normal value when the generator (GEN) is charging: 13.0-14.5 V.

DISTANCE, VALUE

Measurement range: 0-1, 000, 000 km.

The value indicates the vehicle's total mileage when the Diagnostic Trouble Code (DTC) was generated.

PASSENGER COMPARTMENT TEMPERATURE, VALUE

Measurement range: -40 to +80°C.

OUTSIDE TEMPERATURE, VALUE

Measurement range: -40 to +80°C.

ENGINE RUNNING, STATUS

The status displays whether the engine was running when the diagnostic trouble code (DTC) was stored.

No = engine was not running.

Yes = engine was running.

TIME, VALUE

The value displays the time that has passed since the diagnostic trouble code (DTC) was stored.

VEHICLE COMMUNICATION INFORMATION (2006-12)

DESCRIPTION OF PARAMETERS

PARAMETERS, STATUS

STATUS, ALARM (VOLVO ON CALL)

This parameter indicates how the phone module (PHM) sees the status of the alarm.

This parameter is used by phone modules (PHM) with Volvo On Call functionality. If the car alarm is triggered, for example during a theft attempt, information about the status of the alarm from the upper electronic module (UEM) to the phone module (PHM) via the central electronic module (CEM). The phone module (PHM) then transmits vehicle data to the Volvo On Call Service Center which contacts the owner and informs him what has happened.

Alarm status 1 = the alarm has been disarmed with sensors

Alarm status 2 = the alarm has been armed with sensors

Alarm status 3 = the alarm is armed without sensors (reduced alarm)

Alarm status 4 = triggered alarm with sensors

Alarm status 5 = triggered alarm without sensors

Alarm status 6 = the alarm has been disarmed without sensors

STATUS, LOCK (VOLVO ON CALL)

This parameter indicates how the phone module (PHM) sees the status of the lock.

This parameter is used by phone modules (PHM) with Volvo On Call functionality.

Unlocked = the vehicle is unlocked

Locked from the inside = the vehicle is unlocked from the inside

Locked from the outside = the vehicle is unlocked from the outside

ANTENNA SIGNAL (VOLVO ON CALL)

The parameter indicates whether the phone module (PHM) is using the external or internal antenna.

This internal antenna is a spare antenna and is only available for phone modules (PHM) with Volvo On Call functionality.

The reserve antenna is only used when a Volvo On Call service is activated and when the normal antenna is not functioning.

Internal antenna = the internal spare antenna is used

External antenna = the external antenna is used

PARAMETERS, VALUE

GSM IMEI NUMBER (MARKETS WITH GSM ONLY)

This parameter displays the IMEI (International Mobile Equipment Identification) of the phone module (PHM).

The parameter will not be a valid value for non GSM phone modules (PHM).

HINT: GSM market phone modules (PHM) have a SIM card holder installed in the glove compartment.

The IMEI number can also be read off from the text window for the driver information module (DIM). To do this, enter *#06# on the keypad for the climate control module (CCM).

CAPACITY OF THE EMERGENCY BATTERY (VOLVO ON CALL)

This parameter indicates the remaining capacity of the internal emergency battery. The emergency battery is only used in phone modules (PHM) with Volvo On Call functionality.

The emergency battery is only used when activating the Volvo On Call service and if there is no power supply.

The remaining capacity is calculated by the phone module (PHM).

Measurement range 0-100%.

100% is full capacity.

The carphone module (PHM) stores a diagnostic trouble code (DTC) when the capacity drops to 30%.

- 0% corresponds to 0 minutes call time
- 10% corresponds to approximately 5 minutes call time
- 20% corresponds to approximately 10 minutes call time
- 30% corresponds to approximately 15 minutes call time
- 40-50% corresponds to approximately 20 minutes call time
- 60% corresponds to approximately 30 minutes call time

- 70-100% corresponds to more than 30 minutes call time.

VIN (VOLVO ON CALL)

This parameter displays the VIN (Vehicle Identification Number) programmed in the phone module (PHM).

This parameter is used by phone modules (PHM) with Volvo On Call functionality.

If an incorrect VIN is programmed in the phone module (PHM), the activation and deactivation code for the Volvo On Call subscription will not work.

GPS RECEIVED POSITION, LATITUDE (VOLVO ON CALL)

This parameter is used by phone modules (PHM) with Volvo On Call functionality. The phone module (PHM) receives the signal from the global positioning system module (GPS).

This parameter displays the latitude of the last received position of the vehicle.

The phone module (PHM) transmits the signal together with other vehicle data when a Volvo On Call service is activated.

GPS RECEIVED POSITION, LONGITUDE (VOLVO ON CALL)

This parameter is used by phone modules (PHM) with Volvo On Call functionality. The phone module (PHM) receives the signal from the global positioning system module (GPS).

This parameter displays the longitude of the last received position of the vehicle.

The phone module (PHM) transmits the signal together with other vehicle data when a Volvo On Call service is activated.

GSM SIGNAL STRENGTH (MARKETS WITH GSM ONLY)

This parameter indicates the signal strength for GSM phone modules (PHM).

Measurement range 0 - 31.

The value of the signal strength depends on the coverage and geographical location of the vehicle.

The value for normal coverage/reception should be approximately 20-25.

POWER SUPPLY

The parameter indicates the power supply to the phone module (PHM). The phone module (PHM) has a +30-supply.

Measurement range 0-66 V.

The normal value at ignition and with the engine running should be approximately 12 V (battery voltage).

TEMPERATURE UNIT

The parameter indicates the internal temperature in the phone module (PHM).

Measurement range -127 - 127°C.

The normal temperature is approximately 70°C but may vary depending on whether the air conditioning (A/C) or heater is in use.

DESCRIPTION OF READING DETAILED DIAGNOSTIC TROUBLE CODE (DTC) INFORMATION

SELECT DESCRIPTION

see **DESCRIPTION OF FROZEN VALUES**

see **STATUS IDENTIFIER, DESCRIPTION**

see **COUNTERS, DESCRIPTION**

DESCRIPTION OF FROZEN VALUES

EXPLANATION

Not all the parameters that are described need to be implemented in the control module. These varies from system to system.

The number of parameters can also vary between diagnostic trouble codes (DTCs).

Frozen values are parameter values that are stored when a diagnostic trouble code (DTC) is stored.

ENGINE RUNNING, STATUS

The status displays whether the engine was running when the diagnostic trouble code (DTC) was stored.

The phone module (PHM) obtains the value via the control area network (CAN).

No = the engine was not running

Yes = the engine was running

PASSENGER COMPARTMENT TEMPERATURE, VALUE

Measurement range -60 - 195°C.

The value indicates the passenger compartment temperature at the time the diagnostic trouble code (DTC) was stored.

The phone module (PHM) obtains the value via the control area network (CAN).

OUTSIDE TEMPERATURE, VALUE

Measurement range -128 - 127.75°C.

The value indicates the outside temperature at the time the diagnostic trouble code (DTC) was stored.

The phone module (PHM) obtains the value via the control area network (CAN).

BATTERY VOLTAGE, CENTRAL ELECTRONIC MODULE (CEM), VALUE

Measurement range 5-30 V.

The normal value when the alternator is charging: 13.0-14.5 V.

The parameter indicates the supply voltage to the central electronic module (CEM) when the diagnostic trouble code (DTC) was stored.

The phone module (PHM) obtains the value via the control area network (CAN).

DISTANCE, VALUE

Measurement range 0-1, 000, 000 km.

The parameter indicates the mileage when the diagnostic trouble code (DTC) was stored.

The phone module (PHM) obtains the value via the control area network (CAN).

POWER SUPPLY, VALUE

Measurement range 5 - 66 V.

The value indicates the power supply to the phone module (PHM) when the diagnostic trouble code (DTC) was stored.

TEMPERATURE UNIT, VALUE

Measurement range -127 - 127°C.

The value indicates the internal temperature in the phone module (PHM) when the diagnostic trouble code (DTC) was stored.

The normal temperature is approximately 70°C but this may vary depending on whether the air conditioning (A/C) or heater is in use.

SIGNAL STRENGTH GSM, VALUE

Measurement range 0 -31.

The value indicates the signal strength for GSM phone modules (PHM).

The value of the signal strength depends on the coverage and geographical location of the vehicle. The value for normal coverage/reception should be approximately 20-25.

VEHICLE COMMUNICATION INFORMATION, PHONE MODULE (PHM) (2003-2005)

DESCRIPTION OF VEHICLE COMMUNICATION INFORMATION

CONTENTS

Select type of description:

- see **DESCRIPTION OF FROZEN VALUES, PHONE MODULE (PHM)**
- see **DESCRIPTION OF PARAMETERS** .

VEHICLE COMMUNICATION, BLUETOOTH PHONE MODULE (BPM) (2011-12)

DESCRIPTION OF PARAMETERS

PARAMETERS, STATUS

MODULE 1 CONNECTED

Indicates if module 1 is connected or not.

Possible status:

False = the module is not connected.

True = the module is connected.

MODULE 2 CONNECTED

Indicates if module 2 is connected or not.

Possible status:

False = the module is not connected.

True = the module is connected.

PARAMETERS, VALUE

VOLTAGE SUPPLY CONTROL MODULE

Measurement range 0 to 25.5 V.

Indicates the value of the control module's power supply.

TEMPERATURE UNIT

Measurement range -40 to +215°C.

Indicates the control module's internal temperature.

DESCRIPTION OF READING OFF EXTENDED DIAGNOSTIC TROUBLE CODE (DTC) INFORMATION

CONTENTS

Select type of description.

- see **DESCRIPTION OF FROZEN VALUES**
- see **DESCRIPTION OF STATUS IDENTIFIER**
- see **DESCRIPTION OF COUNTER**

VEHICLE COMMUNICATION INFORMATION, ANTENNA MODULE (ATM) (2003-06)

DESCRIPTION OF VEHICLE COMMUNICATION INFORMATION

CONTENTS

Select type of description.

- see **DESCRIPTION OF PARAMETERS**
- see **DESCRIPTION OF READOUTS, FM**
- see **DESCRIPTION OF ACTIVATIONS AND READOUTS, FM**
- see **DESCRIPTION OF READOUTS, AM**

DESCRIPTION OF READOUTS, FM

FREQUENCY BAND AM/FM

Click on the button **AM/FM** to change frequency band between AM and FM.

Readout value indicates frequency band in question or if the control module is off.

AM = frequency band AM.

FM = frequency band FM.

Off = control module off.

FREQUENCY

Clicking on the button >>| starts an automatic search for radio stations in the frequency band.

Radio stations with a signal strength of approx. 110 or higher are found automatically.

Readout value indicates frequency in question in MHz.

MAIN ANTENNA

Readout value indicates if the main antenna is activated or deactivated.

On = main antenna activated.

Off = main antenna deactivated.

SUB-ANTENNA

Readout value indicates if the sub-antenna is activated or deactivated.

On = sub-antenna activated.

Off = sub-antenna deactivated.

SIGNAL STRENGTH

The readout value applies to the active antenna.

Signal strength is presented as a number between 0 and 255. 0 means that no signal has been registered, and 255 means that highest possible signal strength has been registered.

NOISE LEVEL

The readout value applies to the active antenna.

Noise level is presented as a number between 0 and 15. 0 means that no noise has been registered, and 15 means that highest possible noise level has been registered.

DESCRIPTION OF ACTIVATIONS AND READOUTS, FM

FREQUENCY BAND AM/FM

Click on the button **AM/FM** to change frequency band between AM and FM.

Readout value indicates frequency band in question or if the control module is off.

AM = frequency band AM.

FM = frequency band FM.

Off = control module off.

FREQUENCY

Clicking on the button>>| starts an automatic search for radio stations in the frequency band.

Radio stations with a signal strength of approx. 110 or higher are found automatically.

Readout value indicates frequency in question in MHz.

MAIN ANTENNA

By clicking on the button **Start readout 1** , the main antenna is activated. When the antenna has been activated, a readout is performed of the activation as well as the values for signal strength and noise level.

Readout value indicates if the main antenna is activated or deactivated.

On = main antenna activated.

Off = main antenna deactivated.

SUB-ANTENNA

By clicking on the button **Start readout 2** , the sub-antenna is activated. When the antenna has been activated, a readout is performed of the activation as well as the values for signal strength and noise level.

Readout value indicates if the sub-antenna is activated or deactivated.

On = sub-antenna activated.

Off = sub-antenna deactivated.

SIGNAL STRENGTH

The readout value applies to the active antenna.

Signal strength is presented as a number between 0 and 255. 0 means that no signal has been registered, and 255 means that highest possible signal strength has been reached.

NOISE LEVEL

The readout value applies to the active antenna.

Noise level is presented as a number between 0 and 15. 0 means that no noise has been registered, and 15 means that highest possible noise level has been registered.

DESCRIPTION OF READOUTS, AM

FREQUENCY BAND AM/FM

Click on the button **AM/FM** to change frequency band between AM and FM.

Readout value indicates frequency band in question or if the control module is off.

AM = frequency band AM.

FM = frequency band FM.

Off = control module off.

FREQUENCY

Clicking on the button>>| starts an automatic search for radio stations in the frequency band.

Radio stations with a signal strength of approx. 75 or higher are found automatically.

Readout value indicates frequency in question in kHz.

SIGNAL STRENGTH

Signal strength is presented as a number between 0 and 255. 0 means that no signal has been registered, and 255 means that highest possible signal strength has been registered.

VEHICLE COMMUNICATION INFORMATION, SUBWOOFER MODULE (SUB) (2003-08)

DESCRIPTION OF VEHICLE COMMUNICATION INFORMATION

CONTENTS

Select type of description.

- see **DESCRIPTION OF FROZEN VALUES**
- see **STATUS IDENTIFIER, DESCRIPTION**
- see **COUNTERS, DESCRIPTION**

DESCRIPTION OF FROZEN VALUES

EXPLANATION

Not all the parameters described need to be implemented in the control module. This varies from system to system.

Frozen values are parameter values that are stored when a diagnostic trouble code (DTC) is stored.

BATTERY VOLTAGE, VALUE

Measurement range: 5-24 V.

Normal value when the generator (GEN) is charging: 13.0-14.5 V.

DISTANCE, VALUE

Measurement range: 0-1, 000, 000 km.

The value indicates the total mileage of the car at the time the diagnostic trouble code (DTC) was stored.

PASSENGER COMPARTMENT TEMPERATURE, VALUE

Measurement range: -40 to +80°C.

OUTSIDE TEMPERATURE, VALUE

Measurement range: -40 to +80°C.

ENGINE RUNNING, STATUS

The status displays whether the engine was running when the diagnostic trouble code (DTC) was stored.

No = the engine was not running

Yes = the engine was running

SOUND VOLUME, VALUE

Measurement range: 0 to -127 dB.

TIME, VALUE

The value displays the time that has passed since the diagnostic trouble code (DTC) was stored.

VEHICLE COMMUNICATION INFORMATION, GLOBAL POSITIONING SYSTEM MODULE (GPS) (2007-12)

DESCRIPTION OF PARAMETERS

GPS RECEIVED POSITION, LONGITUDE

Indicates the vehicle's longitudinal position.

GPS RECEIVED POSITION, LATITUDE

Indicates the vehicle's latitudinal position.

GPS SATELLITES ACCESSIBLE

Indicates how many satellites the global positioning system module (GPS) is in contact with.

- Not available - no contact with any satellites
- No fix - contact with a satellite but unable to fix a position
- 2D Fix- contact with a satellite, two-dimensional position fixing
- 3D Fix - contact with satellites, three-dimensional position fixing
- Circuit fault - Open-circuit/short-circuit in the cable harness between the global positioning system module (GPS) and the GPS antenna.

DESCRIPTION OF READING OFF OF EXTENDED DIAGNOSTIC TROUBLE CODE (DTC) INFORMATION

see **DESCRIPTION OF FROZEN VALUES**

see **STATUS IDENTIFIER, DESCRIPTION**

see **COUNTERS, DESCRIPTION**

DESCRIPTION OF FROZEN VALUES

EXPLANATION

Not all the parameters described need to be implemented in the global positioning system module (GPS). This varies from system to system.

Frozen values are parameter values that are stored when a diagnostic trouble code (DTC) is stored.

BATTERY VOLTAGE, VALUE

Measurement range: 5-24 V.

Normal value when the generator (GEN) is charging: 13.0-14.5 V.

DISTANCE, VALUE

Measurement range: 0-1, 000, 000 km.

The value indicates the vehicle's total mileage when the Diagnostic Trouble Code (DTC) was generated.

PASSENGER COMPARTMENT TEMPERATURE, VALUE

Measurement range: -40 to 80°C.

The value indicates the vehicle's passenger compartment temperature when the Diagnostic Trouble Code (DTC) was generated.

OUTSIDE TEMPERATURE, VALUE

Measurement range: -40 to 80°C.

The value indicates the outside temperature at the time the diagnostic trouble code (DTC) was stored.

ENGINE RUNNING, STATUS

The status displays whether the engine was running when the diagnostic trouble code (DTC) was stored.

No = the engine was not running

Yes = the engine was running

TIME, VALUE

The value displays the time that has passed since the diagnostic trouble code (DTC) was stored.

ACCESSORIES AND BODY, CAB

Media, Communication And Navigation - Symptom Related Diagnostic Procedures

CHECKING THE SYSTEM, DIGITAL VERSATILE DISC PLAYER AND SCREENS. REAR SEAT ENTERTAINMENT, GENERATION 4.1 (2006-2007)

CHECKING THE SYSTEM, DIGITAL VERSATILE DISC PLAYER AND SCREENS

FAULT-TRACING INFORMATION

If the system cannot be turned on and no screen is lit up and the malfunction cannot be connected to a special function, e. g., that the AUX-input is used, the cause of the malfunction may be:

- Contact resistance or oxidation in the terminals.
- One or both screens not connected.
- Open-circuit in leads between screen and rear seat entertainment module (RSE).
- Voltage supply to the screen or Rear Seat Entertainment Module (RSE).
- Damaged screen.

If the DVD player does not work but other audio/picture sources work, the problem may be due to:

- Damaged dvd-disc.

If none or only one of the screens work, and this is not associated to a certain function in the system, the probable cause may be:

- Contact resistance or oxidation in the terminals.
- Open circuit on signal cable.
- Power supply missing
- Damaged screen.
- Open-circuit or short-circuit in the cable for the control area network (CAN).

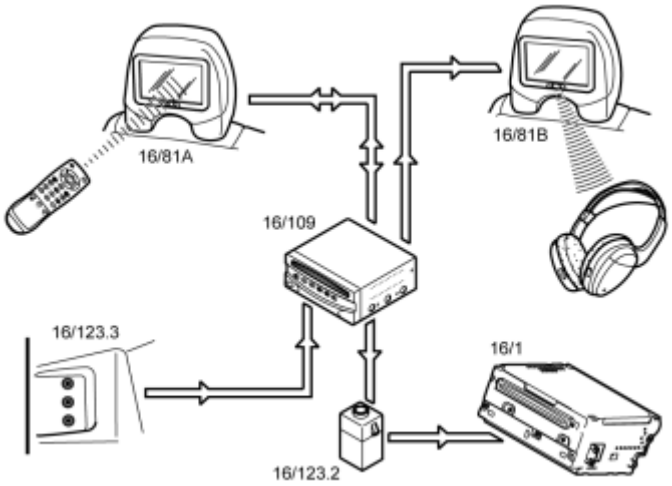

Fig. 1: Identifying Entertainment System Components & Communication
Courtesy of VOLKSWAGEN GROUP OF AMERICA, INC.

- **Continue**

  Refer to **FAULT-TRACING INFORMATION**

CHECKING THE POWER SUPPLY AND GROUND TERMINALS

If lighting in the buttons does not come on at all, this indicates malfunction of the voltage feed or ground for the rear seat entertainment module (RSE) / DVD-Player.

Check the lead for voltage feed to rear seat entertainment module (RSE)/DVD-player's #A4, #A6 and #A7 for short-circuiting to voltage, short-circuiting to ground and open circuit. The voltage should be approx. the same as the battery voltage.

HINT: Power supply (15 feed) is common with power supply to rear 12 V socket.

Check the lead for ground connection to rear seat entertainment module (RSE), connector #A8, for open circuit and short-circuit to voltage. Also check the ground terminal. Check for contact resistance and oxidation.

Check the connector for rear seat entertainment module (RSE) / DVD-Player contact resistance and oxidation.

Other information

- see **SIGNAL SPECIFICATION, REAR SEAT ENTERTAINMENT MODULE (RSE), GENERATION 4.1**
- see **CHECKING WIRING AND TERMINALS**

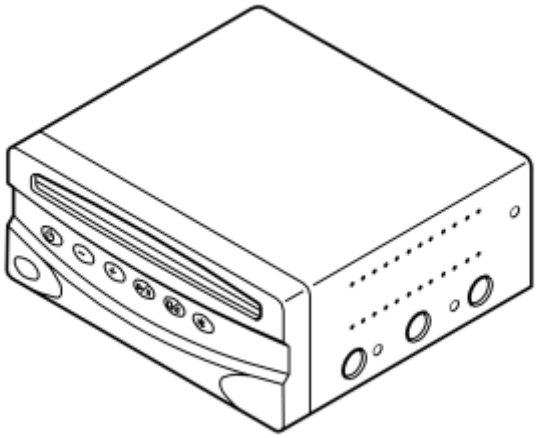

Fig. 2: Identifying Rear Seat Entertainment Module (RSE)
Courtesy of VOLKSWAGEN GROUP OF AMERICA, INC.

- **Continue**

  Refer to **VERIFICATION**

FAULT-TRACING INFORMATION

When the ignition is on, the rear seat entertainment module (RSE) performs a simple internal system-check and starts the start-up procedure with the screens.

- Ignition on. Lighting in the DVD-player's buttons is activated.
- When start-up is performed the lighting in the DVD-player's buttons goes off, does not apply to POWER-button.

Check how illumination of the function buttons behaves during start-up and then select the alternative described below. The specified times are to be considered guidelines, not exact times.

1. Lighting in the DVD-player's buttons is not activated at all with ignition on.
2. DVD player button illumination comes on. Goes out in all buttons except the POWER button after 4-10 seconds.
3. DVD player button illumination comes on. Goes out in all buttons except the POWER button after 15-35 seconds.
4. DVD player button illumination comes on. Goes out in all buttons only in brief intervals every 10 seconds.

HINT: That the lighting in the function buttons goes out after approx. 10 seconds, means that the screens are supplied with voltage and grounded as well as that Rear seat entertainment module (RSE) (DVD-player) has established contact with both screens on the internal CAN-net. This also means that the circuit boards behind the screens in both head restraints work as intended.

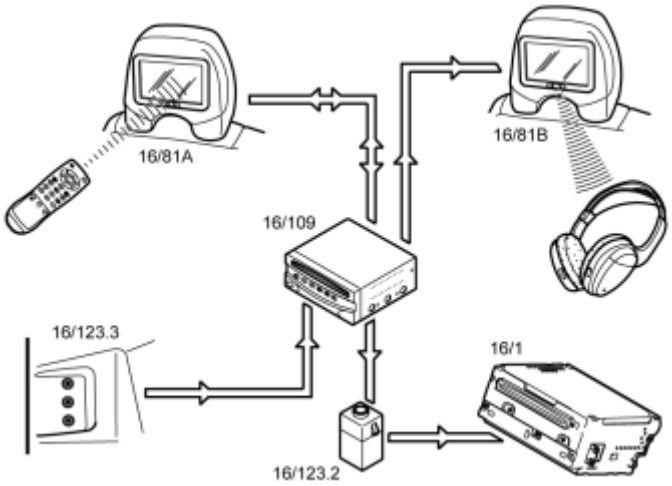

Fig. 3: Identifying Entertainment System Components & Communication
Courtesy of VOLKSWAGEN GROUP OF AMERICA, INC.

Select alternative according to above.

- **1**

  Refer to **CHECKING THE POWER SUPPLY AND GROUND TERMINALS**

- **2**

  Refer to **CHECKING THE POWER SUPPLY TO THE CONTROL MODULE**

- **3**

  Refer to **CHECKING VOLTAGE FEED AND GROUND FOR SCREENS**

- **4**

  Refer to **CHECKING WAKE-UP SIGNAL**

CHECKING THE POWER SUPPLY TO THE CONTROL MODULE

- Turn on the system with the main switch on the DVD-player.
- Lighting in all of the DVD-player's buttons shall now be activated and remain on.

HINT: If lighting in all of the DVD-player's buttons is activated, and then goes off after approx. 5-10 seconds, this indicates lost 15-feed to rear seat entertainment module (RSE) / DVD-Player.

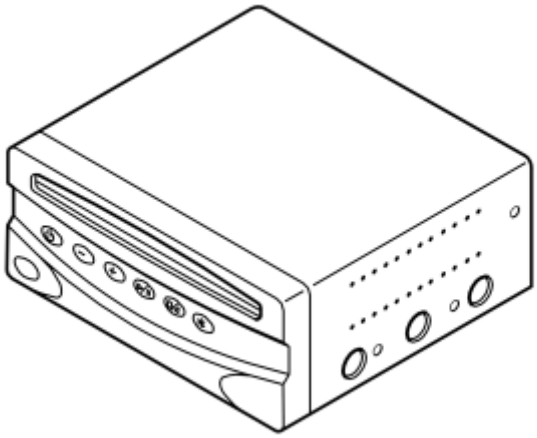

Fig. 4: Identifying Rear Seat Entertainment Module (RSE)
Courtesy of VOLKSWAGEN GROUP OF AMERICA, INC.

Does lighting stay on?

- **YES**

  Refer to **CHECKING THE DISPLAY SCREENS**

- **NO**

  Refer to **CHECKING THE WIRING AND TERMINALS**

CHECKING VOLTAGE FEED AND GROUND FOR SCREENS

Rear seat entertainment module (RSE) (DVD-player) has not established contact with one or both screens. Whatever the case is, can be indicated by how long time the start has taken.

NOTE: **If one of the screens does not respond but the other does, start-up takes about 15-25 seconds. If none of the screens respond, then start-up takes approx. 30-35 seconds.**

The specified times are to be considered guidelines, not exact times.

HINT: Turn on the system with the main switch on the DVD-player. The screen that does not have contact with the control module (DVD-player) will not light up. If the power supply and ground to the screen are working properly but the screen has no contact with the rear seat entertainment module (RSE)/DVD player via the CAN network, the screen will come on in LOCAL mode at start-up. Then neither sound will be heard nor picture shown at playback from DVD-player to this screen. This indicates a malfunction of either the wake-up signal or CAN-communication.

Take measurements for the screen that is not communicating.

Check the voltage feed from rear seat entertainment module (RSE) / DVD-Player to screens, #E1 (left screen) and #E13 (right screen), for short-circuiting to ground and open circuit. The voltage must be approximately battery voltage when the ignition is on.

Check the ground connection from rear seat entertainment module (RSE) / DVD-Player to screens, #E12 (left screen) and #E24 (right screen), for short-circuiting to voltage and open circuit.

Check the connector for rear seat entertainment module (RSE) / DVD-Player as well as screens for loose contact, contact resistance and oxidation.

HINT: If a screen is not working, try switching places between the screens/head restraints. If the malfunction remains, this indicates a malfunction either in the leads between the screen's circuit board and the display itself or in the display itself.

Other information

- see **SIGNAL SPECIFICATION, REAR SEAT ENTERTAINMENT MODULE (RSE), GENERATION 4.1**
- see **CHECKING WIRING AND TERMINALS**

Was a fault detected?

- **YES**

  Refer to **VERIFICATION**

- **NO**

  Refer to **CHECKING WAKE-UP SIGNAL**

CHECKING THE WIRING AND TERMINALS

Check the lead for voltage feed (15-feed) to rear seat entertainment module (RSE)/DVD-player's #A6 and #A7 for short-circuiting to voltage, short-circuiting to ground and open circuit.

HINT: Power supply (15 feed) is common with power supply to rear 12 V socket.

NOTE: When this feed is lost, the system will only work for another approx. 10 minutes. The system cannot be restarted until the power supply is OK. If no cable or fuse defects are found and there still is no power supply, the problem probably lies in the vehicle electrical system.

Other information

- see **SIGNAL SPECIFICATION, REAR SEAT ENTERTAINMENT MODULE (RSE), GENERATION 4.1**
- see **CHECKING WIRING AND TERMINALS**

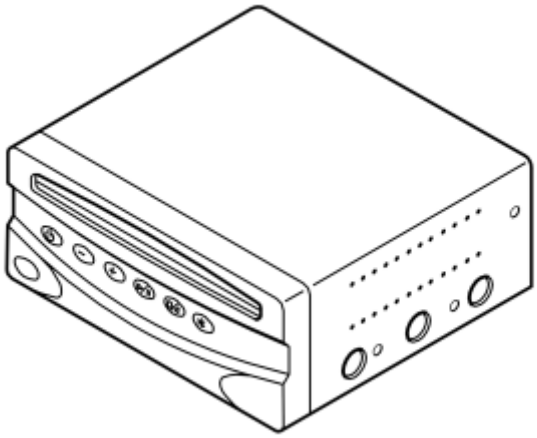

Fig. 5: Identifying Rear Seat Entertainment Module (RSE)
Courtesy of VOLKSWAGEN GROUP OF AMERICA, INC.

- **Continue**

  Refer to **VERIFICATION**

VERIFICATION

HINT: After carrying out the repair, check that the fault has been remedied.

- Ignition off.
- Restore components and connectors.
- Switch on the ignition. Lighting in the DVD-player's buttons is activated.
- When start-up is performed the lighting in the DVD-player's buttons goes off, does not apply to POWER-button.

NOTE: A long start-up time indicates a fault in communication with the screens.

- Start the system using the POWER button on the DVD player or the remote control. Use the buttons, on both DVD-player and remote control, to operate the system.

Check that:

- The screens show a picture.
- DVD-disc can be played.
- Sound is heard in wireless headphones.
- Sound can be heard in the vehicle's speakers.
- Menus can be accessed with the remote control in both screens.
- If possible, connect an external source to the AV input and test the function.

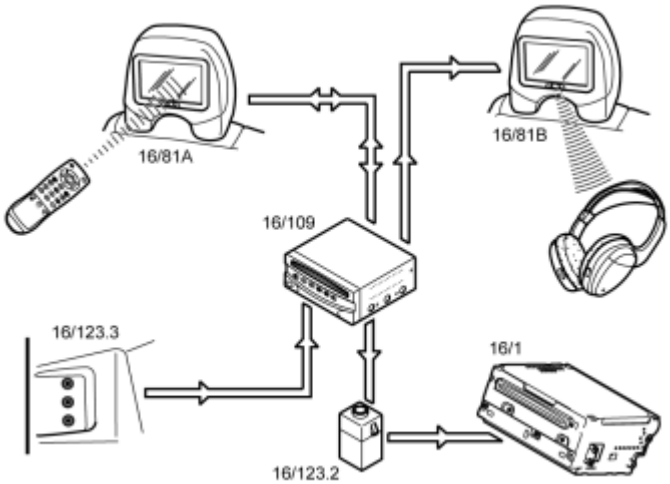

Fig. 6: Identifying Entertainment System Components & Communication
Courtesy of VOLKSWAGEN GROUP OF AMERICA, INC.

Is the function OK?

- **YES**

  OKAY: Troubleshooting has been completed.

- **NO**

  Refer to **INFORMATION**

CHECKING THE DISPLAY SCREENS

- Turn on the system with the main switch on the DVD-player.
- Lighting in all of the DVD-player's buttons shall now be activated and remain on.
- Now the screens shall be activated.

Fig. 7: Identifying Seat Headrest Video Screen
Courtesy of VOLKSWAGEN GROUP OF AMERICA, INC.

Do the screens come on?

- **YES**

  Refer to **CHECKING THE REMOTE CONTROL**

- **NO**

  Refer to **CHECKING THE COMPONENTS AND WIRING**

CHECKING THE COMPONENTS AND WIRING

Checking the components and wiring

HINT: If only one of the screens lights up, try installing the screen that is not working in the head restraint where the working screen was installed. Then restart the system by turning it off, switching off the ignition and then switching the ignition on again. Turn on the system with the main switch on the DVD-player. If the malfunction remains, this indicates a malfunction either in the leads between the screen's circuit board and the display itself or in the display itself.

If necessary, test with a new circuit card or a new display.

Other information

- see **SIGNAL SPECIFICATION, REAR SEAT ENTERTAINMENT MODULE (RSE), GENERATION 4.1**
- see **CHECKING WIRING AND TERMINALS**

Fig. 8: Identifying Seat Headrest Video Screen
Courtesy of VOLKSWAGEN GROUP OF AMERICA, INC.

- **Continue**

  Refer to **VERIFICATION**

CHECKING THE REMOTE CONTROL

Make sure the remote control batteries are fully charged.

- Turn off the system with the main switch on the DVD player.
- Wait until the system has shut down.
- Turn on the system with the remote control aimed at the left screen.

Then repeat with the right screen.

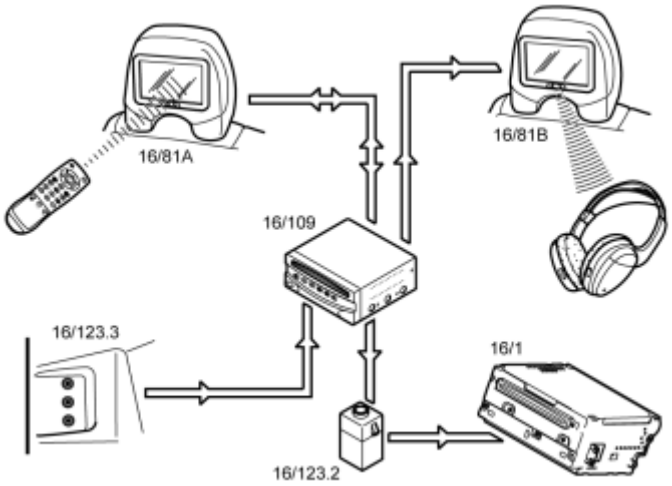

Fig. 9: Identifying Entertainment System Components & Communication
Courtesy of VOLKSWAGEN GROUP OF AMERICA, INC.

Do the screens come on?

- **YES**

  Refer to **CHECKING THE DVD PLAYER**

- **NO**

  Refer to **CHECKING THE REMOTE CONTROL SIGNAL**

CHECKING THE REMOTE CONTROL SIGNAL

HINT: If none of the screens come on in the previous test, the probable cause is a damaged remote control or discharged batteries.

HINT: If only one screen does not come on in the previous test, it indicates that the cable for infrared (IR) signals is probably damaged.

HINT: Activation of the infrared IR-receivers in the head restraints can be checked by the IR-lights in the screen's lower edge being on dimly after the system has been turned on.

Checking IR-signal, left screen

Check the lead for the infrared (IR) signal between the screen and rear seat entertainment module (RSE) for open circuit.

To check the voltage level on the signal cable for IR-signal, proceed as follows:

- Connect all cables and connectors.
- Measure the voltage between the signal cable for the Infra Red (IR) signal to the left-hand display screen

and ground. The measured voltage is reference value.

NOTE: Do not press any of the buttons on the remote control during this measurement.

- Measure from the rear side of a suitable connector. Do not damage the terminals in the connector.
- Aim the remote control at the left screen and press in a button on the remote control. The voltage on the signal cable must fall slightly for as long as the button on the remote control is pressed in.

NOTE: Important in this measurement are not the absolute voltage levels, instead you get a voltage difference downward.

Checking IR-signal, right screen

Compare the latest reading as above with the signal for the infra red (IR) signal from the right-hand infra red (IR) receiver for the display screen.

Conclusion

- If the result of the above checks is that no malfunction was found, this means that the receivers in both screens work and that the remote control is OK.
- If voltages on the cables are OK but a lower voltage cannot be measured when a button on the remote control is pressed down, try with replacing the remote control.

Other information

- see **SIGNAL SPECIFICATION, REAR SEAT ENTERTAINMENT MODULE (RSE), GENERATION 4.1**
- see **CHECKING WIRING AND TERMINALS**
- **Continue**

  Refer to **VERIFICATION**

CHECKING THE DVD PLAYER

Check that the DVD is not damaged and that it is clean. Try using another DVD if necessary.

Check that nothing has jammed in the DVD player. Check that there are no mechanical grinding noises coming from the DVD player when it is in operation.

Check that the disc can be inserted and ejected without problems.

NOTE: Only one disc at a time may be loaded in the DVD-player.

Check that the transport protection disc, which is supplied with system at delivery, is not in the DVD-player.

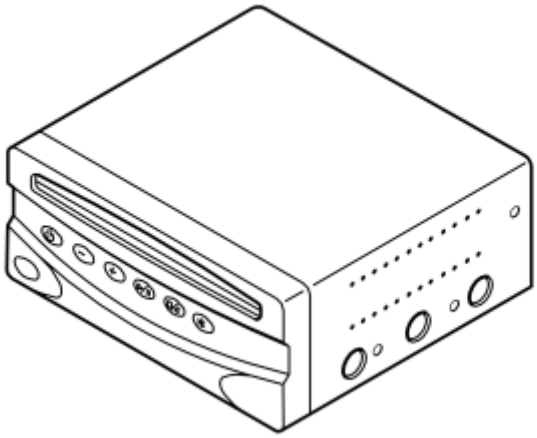

Fig. 10: Identifying Rear Seat Entertainment Module (RSE)
Courtesy of VOLKSWAGEN GROUP OF AMERICA, INC.

Was a fault detected?

- **YES**

  Refer to **VERIFICATION**

- **NO**

  Refer to **CHECKING THE FUNCTION**

CHECKING THE FUNCTION

- Select the dvd-player as source for one of the screens and press on the remote control's PLAY button.

  Check that picture is shown and sound is heard at playback.

  NOTE: If there is a picture but no audio in one or both of the headphones, see other fault tracing.

  If picture and sound are shown, start-up of the system, DVD-player, and screens is ok.

Is there a picture?

- **YES**

  FAULT NOT FOUND: Troubleshooting has been completed.

- **NO**

  Refer to **CHECKING THE CABLE AND COMPONENT**

CHECKING THE CABLE AND COMPONENT

Check the leads for video signals between the TV-receiver and rear seat entertainment module (RSE) for short-circuiting to voltage, short-circuiting to ground, and open circuit. There are two video leads for each screen. Regards the cables from rear seat entertainment module (RSE), terminals #E10 and #E11 for left screen as well as terminals #E22 and #E23 for right screen.

Other information

- see **SIGNAL SPECIFICATION, REAR SEAT ENTERTAINMENT MODULE (RSE), GENERATION 4.1**
- see **CHECKING WIRING AND TERMINALS**

- **Continue**

  Refer to **VERIFICATION**

CHECKING CAN CABLES

HINT: If the power supply and ground to the screen are working properly but the screen has no contact with the rear seat entertainment module (RSE)/DVD player via the CAN network, the screen will come on in LOCAL mode at start-up. Then neither sound will be heard nor picture shown at playback from DVD-player to this screen. Menus available locally in the screen can be accessed.

Check if the screens are activated in LOCAL-mode, which means that there is malfunction on the CAN-leads.

Check the leads for CAN-communication between rear seat entertainment module (RSE) / DVD-Player and screens, #E3 and #E4 (left screen) and #E15 and #E16 (right screen, for short-circuiting to voltage, short-circuiting to ground, and open circuit.

In connector D, on rear seat entertainment module (RSE) / DVD-Player, there is a bridging of the CAN-net for the right screen. Bridging is in place to enable future expansion of the system with additional control modules. If connector B has been damaged or is disconnected or if for some reason there is no contact between the two ends of the CAN cable jumper, it will not be possible to establish communication with the right screen.

HINT: If a screen is not working, try switching places between the screens/head restraints. If the malfunction remains, this indicates a malfunction either in the leads between the screen's circuit board and the display itself or in the display itself.

Other information

- see **SIGNAL SPECIFICATION, REAR SEAT ENTERTAINMENT MODULE (RSE), GENERATION 4.1**
- see **CHECKING WIRING AND TERMINALS**

- **Continue**

Refer to **VERIFICATION**

CHECKING WAKE-UP SIGNAL

The control module makes three attempts to activate a screen by transmitting a high signal on the cable as a wake-up signal to the screen in question. This takes place according to the following pattern, on the condition that the screen does not reply. Normally only one wake-up signal is sent for the screen to wake up.

If the pattern below appears, the screen is not responding.

- High voltage (approx. 11.5 V) for approx. one second.
- Low voltage (approx. 0 V) for approx. one second.
- High voltage (approx. 11.5 V) for approx. one second.
- Low voltage (approx. 0 V) for approx. 10 seconds.
- Constant high voltage.

Measurement of wake-up signal.

When the ignition is on, the rear seat entertainment module (RSE) performs a simple internal system-check and starts the start-up procedure with the screens.

- Measure wake-up signal at the screen. Measure from the rear side of a suitable connector. Do not damage the terminals in the connector. Measure signal that goes to the screen that does not answer the wake-up calls.
- Switch on the ignition. Lighting in the DVD-player's buttons is activated.
- Note voltage of the wake-up signal.

Other information

- see **SIGNAL SPECIFICATION, REAR SEAT ENTERTAINMENT MODULE (RSE), GENERATION 4.1**
- see **CHECKING WIRING AND TERMINALS**

Fig. 11: Identifying Seat Headrest Video Screen
Courtesy of VOLKSWAGEN GROUP OF AMERICA, INC.

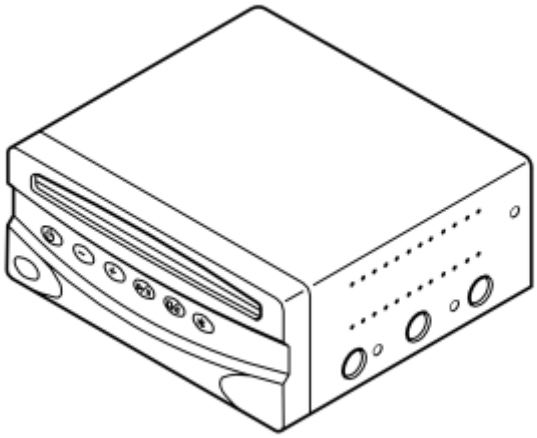

Fig. 12: Identifying Rear Seat Entertainment Module (RSE)
Courtesy of VOLKSWAGEN GROUP OF AMERICA, INC.

Is there any wake-up signal?

- **YES**

  Refer to **CHECKING CAN CABLES**

- **NO**

  Refer to **CHECKING THE CABLE AND COMPONENT**

CHECKING THE CABLE AND COMPONENT

Take measurements for the screen that is not communicating.

Check the lead for the wake-up signal from rear seat entertainment module (RSE) / DVD-Player to screens, #E2 (left screen) and #E14 (right screen), for short-circuiting to ground and open circuit.

Check the connector for rear seat entertainment module (RSE) / DVD-Player as well as screens for loose contact, contact resistance and oxidation.

HINT: If a screen is not working, try switching places between the screens/head restraints. If the malfunction remains, this indicates a malfunction either in the leads between the screen's circuit board and the display itself or in the display itself.

Remedy as necessary.

Other information

- see **SIGNAL SPECIFICATION, REAR SEAT ENTERTAINMENT MODULE (RSE), GENERATION 4.1**

- see **CHECKING WIRING AND TERMINALS**
- **Continue**

  Refer to **VERIFICATION**

CHECKING WAKE-UP SIGNAL

Rear seat entertainment module (RSE) (DVD-player) has not established contact with one or both screens. Follow the procedure below to check which screen has not responded.

NOTE: Switch off the system before connecting/disconnecting a connector.

- Turn off the ignition.
- Connect a voltmeter between the cable for the wake-up signal to right screen and ground. Measure wake-up signal at the screen. Measure from the rear side of a suitable connector. Do not damage the terminals in the connector.
- Switch on the ignition. Wait approximately 10 seconds.

Check the voltage of the wake-up signal. Note voltage of the wake-up signal.

- Then measure the wake-up signal of the left screen. Note voltage of the wake-up signal.

Left screen	Right screen	Options	
Voltage is continually high (approx. 11.5 V).	Voltage is continually high (approx. 11.5 V).	Communication established with both screens.	
Voltage is high (approx. 11.5 V) but goes down to approx. 0 V every 10 seconds.	Voltage is approx. 0 V.	No communication established with left screen.	1.
Voltage is continually high (approx. 11.5 V).	Voltage is high (approx. 11.5 V) but goes down to approx. 0 V every 10 seconds.	No communication established with right screen.	1.
Voltage is continually high (approx. 11.5 V).	Voltage is approx. 0 V.	Probable open circuit on wake-up signal for right screen.	2.
Voltage is approx. 0 V.	Voltage is approx. 0 V.	Probable open circuit on wake-up signal for left screen.	2.
Voltage is high (approx. 11.5 V) but goes down to approx. 0 V every 10 seconds.	Voltage is high (approx. 11.5 V) but goes down to approx. 0 V every 10 seconds.	Probable fault in CAN communication with screens.	3.

Fig. 13: Identifying Seat Headrest Video Screen
Courtesy of VOLKSWAGEN GROUP OF AMERICA, INC.

Select an alternative as set out in the table above.

- **1**

  Refer to **CHECKING THE POWER SUPPLY AND GROUND TERMINAL**

- **2**

  Refer to **CHECKING THE CABLE AND COMPONENT**

- **3**

  Refer to **CHECKING CAN CABLES**

CHECKING THE POWER SUPPLY AND GROUND TERMINAL

Take measurements for the screen that is not communicating.

Check the voltage feed from rear seat entertainment module (RSE) / DVD-Player to screens, #E1 (left screen) and #E13 (right screen), for short-circuiting to ground and open circuit. The voltage must be approximately battery voltage when the ignition is on.

Check the ground connection from rear seat entertainment module (RSE) / DVD-Player to screens, #E12 (left screen) and #E24 (right screen), for short-circuiting to voltage and open circuit.

Check the connector for rear seat entertainment module (RSE) / DVD-Player as well as screens for loose contact, contact resistance and oxidation.

HINT: If a screen is not working, try switching places between the screens/head restraints. If the malfunction remains, this indicates a malfunction either in the leads between the screen's circuit board and the display itself or in the display itself.

Remedy as necessary.

Other information

- see **SIGNAL SPECIFICATION, REAR SEAT ENTERTAINMENT MODULE (RSE), GENERATION 4.1**

- see **CHECKING WIRING AND TERMINALS**

Fig. 14: Identifying Seat Headrest Video Screen
Courtesy of VOLKSWAGEN GROUP OF AMERICA, INC.

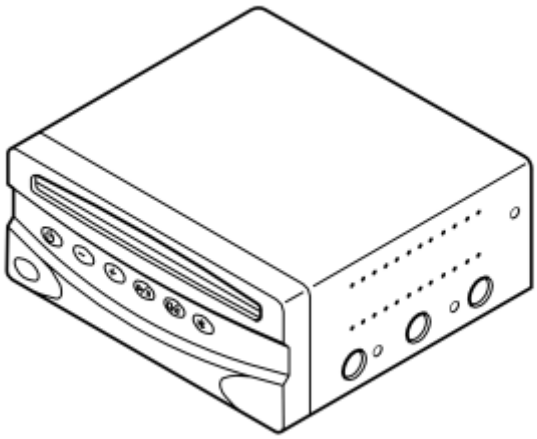

Fig. 15: Identifying Rear Seat Entertainment Module (RSE)
Courtesy of VOLKSWAGEN GROUP OF AMERICA, INC.

- **Continue**

  Refer to **VERIFICATION**

CHECKING THE CABLE AND COMPONENT

Take measurements for the screen that is not communicating.

Check the lead for the wake-up signal from rear seat entertainment module (RSE) / DVD-Player to screens, #E2 (left screen) and #E14 (right screen), for short-circuiting to ground and open circuit.

Check the connector for rear seat entertainment module (RSE) / DVD-Player as well as screens for loose contact, contact resistance and oxidation.

HINT: If a screen is not working, try switching places between the screens/head restraints. If the malfunction remains, this indicates a malfunction either in the leads between the screen's circuit board and the display itself or in the display itself.

Remedy as necessary.

Other information

- see **SIGNAL SPECIFICATION, REAR SEAT ENTERTAINMENT MODULE (RSE), GENERATION 4.1**
- see **CHECKING WIRING AND TERMINALS**

Fig. 16: Identifying Seat Headrest Video Screen
Courtesy of VOLKSWAGEN GROUP OF AMERICA, INC.

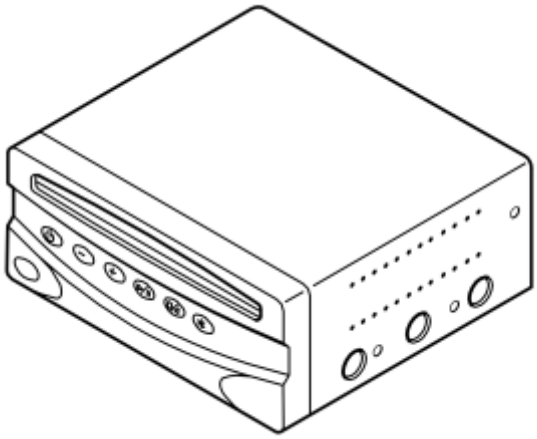

Fig. 17: Identifying Rear Seat Entertainment Module (RSE)
Courtesy of VOLKSWAGEN GROUP OF AMERICA, INC.

- **Continue**

  Refer to **VERIFICATION**

CHECKING CAN CABLES

Check the leads for CAN-communication between rear seat entertainment module (RSE) / DVD-Player and screens, #E3 and #E4 (left screen) and #E15 and #E16 (right screen, for short-circuiting to voltage, short-circuiting to ground, and open circuit.

In connector D, on rear seat entertainment module (RSE) / DVD-Player, there is a bridging of the CAN-net for the right screen. Bridging is in place to enable future expansion of the system with additional control modules. If connector B has been damaged or is disconnected or if for some reason there is no contact between the two ends of the CAN cable jumper, it will not be possible to establish communication with the right screen.

HINT: If a screen is not working, try switching places between the screens/head restraints. If the malfunction remains, this indicates a malfunction either in the leads between the screen's circuit board and the display itself or in the display itself.

Remedy as necessary.

Other information

- see **SIGNAL SPECIFICATION, REAR SEAT ENTERTAINMENT MODULE (RSE), GENERATION 4.1**
- see **CHECKING WIRING AND TERMINALS**
- **Continue**

  Refer to **VERIFICATION**

INFORMATION

FAULT-TRACING INFORMATION

The fault should have been detected and remedied. As this is not the case fault-tracing has failed.

Exit fault-tracing for this diagnostic trouble code (DTC) or make another attempt.

CHECKING THE SYSTEM, DIGITAL VERSATILE DISC PLAYER AND SCREENS. REAR SEAT ENTERTAINMENT, GENERATION 4.2 (2007-2008)

CHECKING THE SYSTEM, DIGITAL VERSATILE DISC PLAYER AND SCREENS

FAULT-TRACING INFORMATION

If the system cannot be turned on and no screen is lit up and the malfunction cannot be connected to a special function, e. g., that the AUX-input is used, the cause of the malfunction may be:

- Contact resistance or oxidation in the terminals.
- One or both screens not connected.
- Open-circuit in leads between screen and rear seat entertainment module (RSE).
- Voltage supply to the screen or Rear Seat Entertainment Module (RSE).
- Damaged screen.

If the DVD player does not work but other audio/picture sources work, the problem may be due to:

- Damaged dvd-disc.

If none or only one of the screens work, and this is not associated to a certain function in the system, the probable cause may be:

- Contact resistance or oxidation in the terminals.
- Open circuit on signal cable.
- Power supply missing
- Damaged screen.
- Open-circuit or short-circuit in the cable for the control area network (CAN).

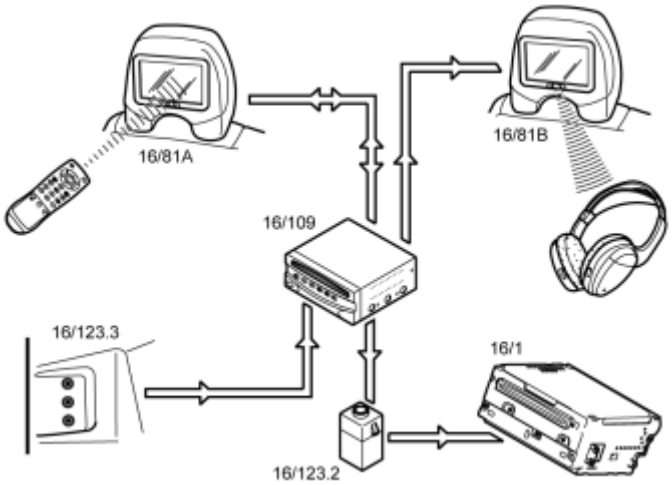

Fig. 18: Identifying Entertainment System Components & Communication
Courtesy of VOLKSWAGEN GROUP OF AMERICA, INC.

- **Continue**

  Refer to **FAULT-TRACING INFORMATION**

CHECKING THE POWER SUPPLY AND GROUND TERMINALS

If lighting in the buttons does not come on at all, this indicates malfunction of the voltage feed or ground for the rear seat entertainment module (RSE) / DVD-Player.

Check the lead for voltage feed to rear seat entertainment module (RSE)/DVD-player's #A4, #A6 and #A7 for short-circuiting to voltage, short-circuiting to ground and open circuit. The voltage should be approx. the same as the battery voltage.

HINT: Power supply (15 feed) is common with power supply to rear 12 V socket.

Check the lead for ground connection to rear seat entertainment module (RSE), connector #A8, for open circuit and short-circuit to voltage. Also check the ground terminal. Check for contact resistance and oxidation.

Check the connector for rear seat entertainment module (RSE) / DVD-Player contact resistance and oxidation.

Other information

- see **SIGNAL SPECIFICATION, REAR SEAT ENTERTAINMENT MODULE (RSE),**

GENERATION 4.2

- see **CHECKING WIRING AND TERMINALS**

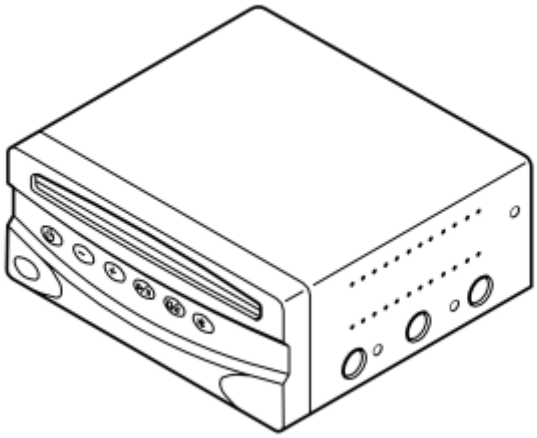

Fig. 19: Identifying Rear Seat Entertainment Module (RSE)
Courtesy of VOLKSWAGEN GROUP OF AMERICA, INC.

- **Continue**

  Refer to **VERIFICATION**

FAULT-TRACING INFORMATION

When the ignition is on, the rear seat entertainment module performs a simple internal system-check and starts the start-up procedure with the screens.

- Ignition on. Lighting in the DVD-player's buttons is activated.
- When start-up is performed the lighting in the DVD-player's buttons goes off, does not apply to POWER-button.
- Check how illumination of the function buttons behaves during start-up and then select the alternative described below. The specified times are to be considered guidelines, not exact times.

NOTE: Times for system start-up vary depending on the software. It is not necessary to identify software version to perform this fault tracing. Current software can be read using SERVICE MENU.

Later software. Software, version. Select an option:

1. Lighting in the DVD-player's buttons is not activated at all with ignition on.
2. Lighting in all of the DVD-player's buttons is activated and all buttons except the POWER-button go off after approx. 10 seconds.
3. Lighting in all of the DVD-player's buttons is activated and all buttons except the POWER-button go off after approx. 85-95 seconds.

Older software. Select an option:

1. Lighting in the DVD-player's buttons is not activated at all with ignition on. Refer to **CHECKING THE POWER SUPPLY AND GROUND TERMINALS**
2. DVD player button illumination comes on. Goes out in all buttons except the POWER button after 4-10 seconds. Refer to **CHECKING THE POWER SUPPLY TO THE CONTROL MODULE**
3. DVD player button illumination comes on. Goes out in all buttons except the POWER button after 15-35 seconds. Refer to **CHECKING VOLTAGE FEED AND GROUND FOR SCREENS**
4. DVD player button illumination comes on. Goes out in all buttons only in brief intervals every 10 seconds. Refer to **CHECKING WAKE-UP SIGNAL**

HINT: That the lighting in the function buttons goes out after approx. 10 seconds, means that the screens are supplied with voltage and grounded as well as that Rear seat entertainment module (RSE) (DVD-player) has established contact with both screens on the internal CAN-net. This also means that the circuit boards behind the screens in both head restraints work as intended.

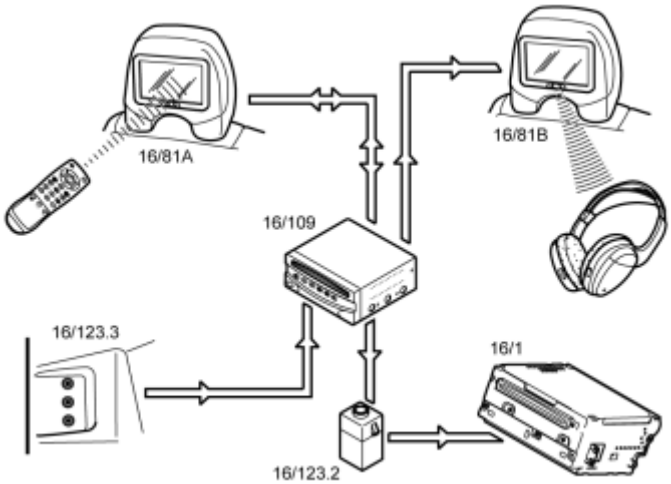

Fig. 20: Identifying Entertainment System Components & Communication
Courtesy of VOLKSWAGEN GROUP OF AMERICA, INC.

CHECKING THE POWER SUPPLY TO THE CONTROL MODULE

- Turn on the system with the main switch on the DVD-player.
- Lighting in all of the DVD-player's buttons shall now be activated and remain on.

HINT: If lighting in all of the DVD-player's buttons is activated, and then goes off after approx. 5-10 seconds, this indicates lost 15-feed to rear seat entertainment module (RSE) / DVD-Player.

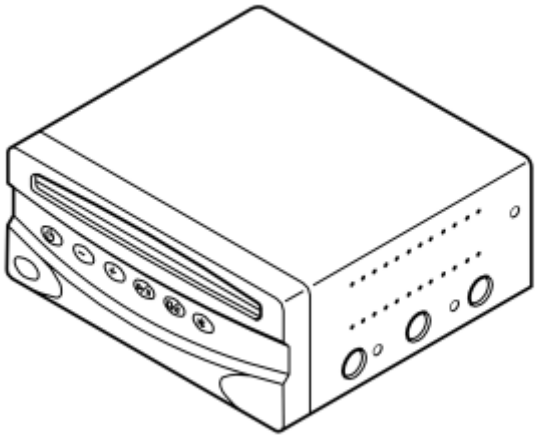

Fig. 21: Identifying Rear Seat Entertainment Module (RSE)
Courtesy of VOLKSWAGEN GROUP OF AMERICA, INC.

Does lighting stay on?

- **YES**

  Refer to **CHECKING THE DISPLAY SCREENS**

- **NO**

  Refer to **CHECKING THE WIRING AND TERMINALS**

CHECKING VOLTAGE FEED AND GROUND FOR SCREENS

Rear seat entertainment module (RSE) has not established contact with one or both screens. Whatever the case is, can be indicated by how long time the start has taken.

NOTE: **Later software. Software, version. If one of the screens does not respond but the other does, start-up takes about 85 seconds. If none of the screens respond, start-up takes approx. 95 seconds.**

NOTE: **Older software. If one of the screens does not respond but the other does, start-up takes about 15-25 seconds. If none of the screens respond, then start-up takes approx. 30-35 seconds.**

The specified times are to be considered guidelines, not exact times.

HINT: Turn on the system with the main switch on the DVD-player. The screen that does not have contact with the control module (DVD-player) will not light up. If the power supply and ground to the screen are working properly but the screen has no contact with the rear seat entertainment module (RSE)/DVD player via the CAN network, the screen will come on in LOCAL mode at start-up. Then neither sound will be heard nor picture shown at playback from DVD-player to this screen. This

indicates a malfunction of either the wake-up signal or CAN-communication.

Take measurements for the screen that is not communicating.

Check the voltage feed from rear seat entertainment module (RSE) / DVD-Player to screens, #E1 (left screen) and #E13 (right screen), for short-circuiting to ground and open circuit. The voltage must be approximately battery voltage when the ignition is on.

Check the ground connection from rear seat entertainment module (RSE) / DVD-Player to screens, #E12 (left screen) and #E24 (right screen), for short-circuiting to voltage and open circuit.

Check the connector for rear seat entertainment module (RSE) / DVD-Player as well as screens for loose contact, contact resistance and oxidation.

HINT: If a screen is not working, try switching places between the screens/head restraints. If the malfunction remains, this indicates a malfunction either in the leads between the screen's circuit board and the display itself or in the display itself.

Other information

- see **SIGNAL SPECIFICATION, REAR SEAT ENTERTAINMENT MODULE (RSE), GENERATION 4.2**
- see **CHECKING WIRING AND TERMINALS**

Was a fault detected?

- **YES**

  Refer to **VERIFICATION**

- **NO**

  Refer to **CHECKING WAKE-UP SIGNAL**

CHECKING THE WIRING AND TERMINALS

Check the lead for voltage feed (15-feed) to rear seat entertainment module (RSE)/DVD-player's #A6 and #A7 for short-circuiting to voltage, short-circuiting to ground and open circuit.

HINT: Power supply (15 feed) is common with power supply to rear 12 V socket.

NOTE: When this feed is lost, the system will only work for another approx. 10 minutes. The system cannot be restarted until the power supply is OK. If no cable or fuse defects are found and there still is no power supply, the problem probably lies in the vehicle electrical system.

Other information

- see **SIGNAL SPECIFICATION, REAR SEAT ENTERTAINMENT MODULE (RSE), GENERATION 4.2**
- see **CHECKING WIRING AND TERMINALS**

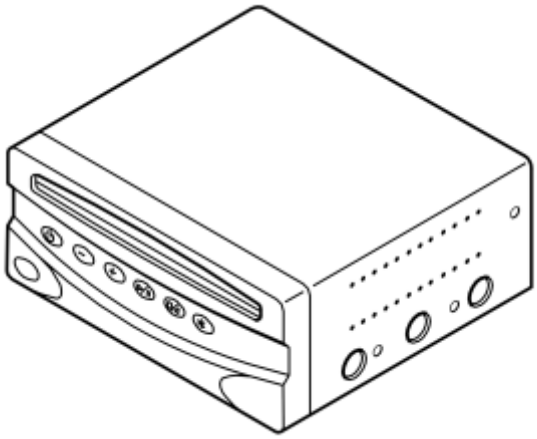

Fig. 22: Identifying Rear Seat Entertainment Module (RSE)
Courtesy of VOLKSWAGEN GROUP OF AMERICA, INC.

- **Continue**

  Refer to **VERIFICATION**

VERIFICATION

HINT: After carrying out the repair, check that the fault has been remedied.

- Ignition off.
- Restore components and connectors.
- Switch on the ignition. Lighting in the DVD-player's buttons is activated.
- When start-up is performed the lighting in the DVD-player's buttons goes off, does not apply to POWER-button.

NOTE: A long start-up time indicates a fault in communication with the screens.

- Start the system using the POWER button on the DVD player or the remote control. Use the buttons, on both DVD-player and remote control, to operate the system.

Check that:

- The screens show a picture.
- DVD-disc can be played.
- Sound is heard in wireless headphones.

- Sound can be heard in the vehicle's speakers.
- Menus can be accessed with the remote control in both screens.
- If possible, connect an external source to the AV input and test the function.

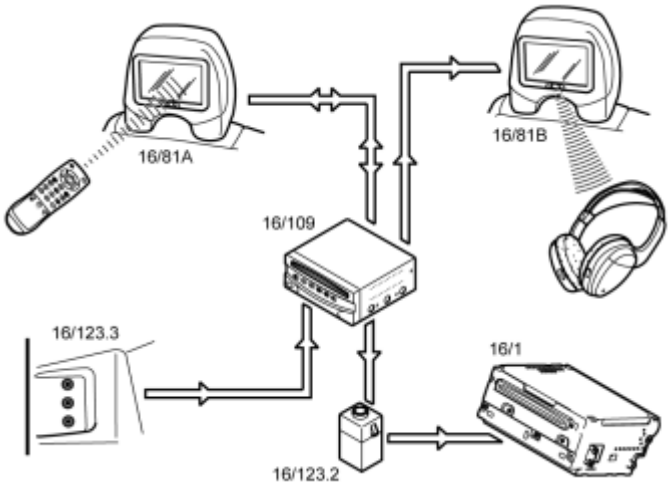

Fig. 23: Identifying Entertainment System Components & Communication
Courtesy of VOLKSWAGEN GROUP OF AMERICA, INC.

Is the function OK?

- **YES**

  OKAY: Troubleshooting has been completed.

- **NO**

  Refer to **INFORMATION**

CHECKING THE DISPLAY SCREENS

- Turn on the system with the main switch on the DVD-player.
- Lighting in all of the DVD-player's buttons shall now be activated and remain on.
- Now the screens shall be activated.

Fig. 24: Identifying Seat Headrest Video Screen
Courtesy of VOLKSWAGEN GROUP OF AMERICA, INC.

Do the screens come on?

- **YES**

  Refer to **CHECKING THE REMOTE CONTROL**

- **NO**

  Refer to **CHECKING THE COMPONENTS AND WIRING**

CHECKING THE COMPONENTS AND WIRING

Checking the components and wiring

HINT: If only one of the screens lights up, try installing the screen that is not working in the head restraint where the working screen was installed. Then restart the system by turning it off, switching off the ignition and then switching the ignition on again. Turn on the system with the main switch on the DVD-player. If the malfunction remains, this indicates a malfunction either in the leads between the screen's circuit board and the display itself or in the display itself.

If necessary, test with a new circuit card or a new display.

Other information

- see **SIGNAL SPECIFICATION, REAR SEAT ENTERTAINMENT MODULE (RSE), GENERATION 4.2**
- see **CHECKING WIRING AND TERMINALS**

Fig. 25: Identifying Seat Headrest Video Screen
Courtesy of VOLKSWAGEN GROUP OF AMERICA, INC.

- **Continue**

  Refer to **VERIFICATION**

CHECKING THE REMOTE CONTROL

Make sure the remote control batteries are fully charged.

- Turn off the system with the main switch on the DVD player.
- Wait until the system has shut down.

- Turn on the system with the remote control aimed at the left screen.

Then repeat with the right screen.

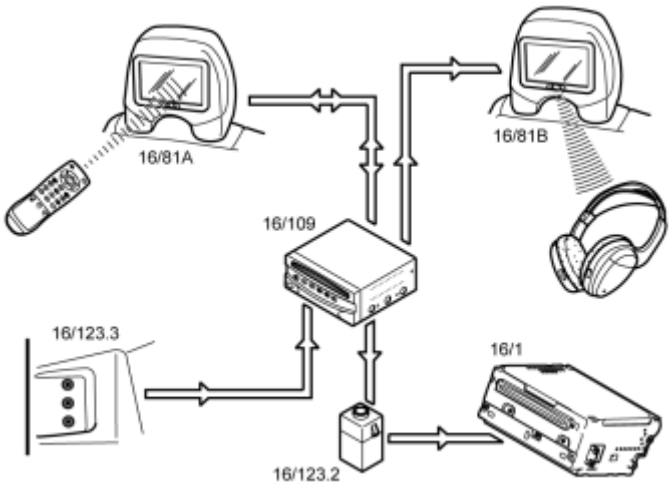

Fig. 26: Identifying Entertainment System Components & Communication
Courtesy of VOLKSWAGEN GROUP OF AMERICA, INC.

Do the screens come on?

- **YES**

  Refer to **CHECKING THE DVD PLAYER**

- **NO**

  Refer to **CHECKING THE REMOTE CONTROL SIGNAL**

CHECKING THE REMOTE CONTROL SIGNAL

HINT: If none of the screens come on in the previous test, the probable cause is a damaged remote control or discharged batteries.

HINT: If only one screen does not come on in the previous test, it indicates that the cable for infrared (IR) signals is probably damaged.

HINT: Activation of the infrared IR-receivers in the head restraints can be checked by the IR-lights in the screen's lower edge being on dimly after the system has been turned on.

Checking IR-signal, left screen

Check the lead for the infrared (IR) signal between the screen and rear seat entertainment module (RSE) for open circuit.

To check the voltage level on the signal cable for IR-signal, proceed as follows:

- Connect all cables and connectors.
- Measure the voltage between the signal cable for the Infra Red (IR) signal to the left-hand display screen and ground. The measured voltage is reference value.

NOTE: Do not press any of the buttons on the remote control during this measurement.

- Measure from the rear side of a suitable connector. Do not damage the terminals in the connector.
- Aim the remote control at the left screen and press in a button on the remote control. The voltage on the signal cable must fall slightly for as long as the button on the remote control is pressed in.

NOTE: Important in this measurement are not the absolute voltage levels, instead you get a voltage difference downward.

Checking IR-signal, right screen

Compare the latest reading as above with the signal for the infra red (IR) signal from the right-hand infra red (IR) receiver for the display screen.

Conclusion

- If the result of the above checks is that no malfunction was found, this means that the receivers in both screens work and that the remote control is OK.
- If voltages on the cables are OK but a lower voltage cannot be measured when a button on the remote control is pressed down, try with replacing the remote control.

Other information

- see **SIGNAL SPECIFICATION, REAR SEAT ENTERTAINMENT MODULE (RSE), GENERATION 4.2**
- see **CHECKING WIRING AND TERMINALS**

- **Continue**

  Refer to **VERIFICATION**

CHECKING THE DVD PLAYER

Check that the DVD is not damaged and that it is clean. Try using another DVD if necessary.

Check that nothing has jammed in the DVD player. Check that there are no mechanical grinding noises coming from the DVD player when it is in operation.

Check that the disc can be inserted and ejected without problems.

NOTE: Only one disc at a time may be loaded in the DVD-player.

Check that the transport protection disc, which is supplied with system at delivery, is not in the DVD-player.

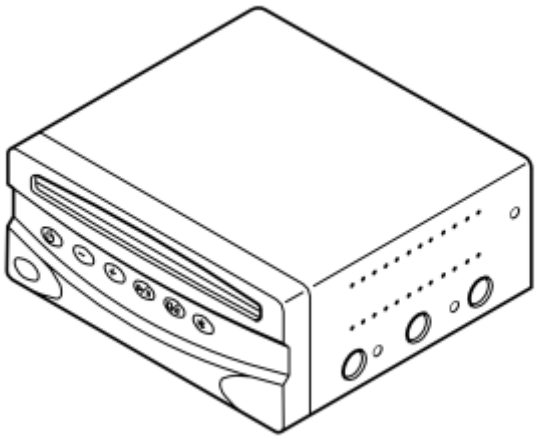

Fig. 27: Identifying Rear Seat Entertainment Module (RSE)
Courtesy of VOLKSWAGEN GROUP OF AMERICA, INC.

Was a fault detected?

- **YES**

  Refer to **VERIFICATION**

- **NO**

  Refer to **CHECKING THE FUNCTION**

CHECKING THE FUNCTION

- Select the dvd-player as source for one of the screens and press on the remote control's PLAY button.

  Check that picture is shown and sound is heard at playback.

  NOTE: If there is a picture but no audio in one or both of the headphones, see other fault tracing.

  If picture and sound are shown, start-up of the system, DVD-player, and screens is ok.

Is there a picture?

- **YES**

FAULT NOT FOUND: Troubleshooting has been completed.

- **NO**

  Refer to **CHECKING THE CABLE AND COMPONENT**

CHECKING THE CABLE AND COMPONENT

Check the leads for video signals between the TV-receiver and rear seat entertainment module (RSE) for short-circuiting to voltage, short-circuiting to ground, and open circuit. There are two video leads for each screen. Regards the cables from rear seat entertainment module (RSE), terminals #E10 and #E11 for left screen as well as terminals #E22 and #E23 for right screen.

Other information

- see **SIGNAL SPECIFICATION, REAR SEAT ENTERTAINMENT MODULE (RSE), GENERATION 4.2**
- see **CHECKING WIRING AND TERMINALS**

- **Continue**

  Refer to **VERIFICATION**

CHECKING CAN CABLES

HINT: If the power supply and ground to the screen are working properly but the screen has no contact with the rear seat entertainment module (RSE)/DVD player via the CAN network, the screen will come on in LOCAL mode at start-up. Then neither sound will be heard nor picture shown at playback from DVD-player to this screen. Menus available locally in the screen can be accessed.

Check if the screens are activated in LOCAL-mode, which means that there is malfunction on the CAN-leads.

Check the leads for CAN-communication between rear seat entertainment module (RSE) / DVD-Player and screens, #E3 and #E4 (left screen) and #E15 and #E16 (right screen, for short-circuiting to voltage, short-circuiting to ground, and open circuit.

In connector D, on rear seat entertainment module (RSE) / DVD-Player, there is a bridging of the CAN-net for the right screen. Bridging is in place to enable future expansion of the system with additional control modules. If connector B has been damaged or is disconnected or if for some reason there is no contact between the two ends of the CAN cable jumper, it will not be possible to establish communication with the right screen.

HINT: If a screen is not working, try switching places between the screens/head restraints. If the malfunction remains, this indicates a malfunction either in the leads between the screen's circuit board and the display itself or in the display itself.

Other information

- see **SIGNAL SPECIFICATION, REAR SEAT ENTERTAINMENT MODULE, GENERATION 4.2**
- see **CHECKING WIRING AND TERMINALS**
- **Continue**

  Refer to **VERIFICATION**

CHECKING WAKE-UP SIGNAL

The control module makes three attempts to activate a screen by transmitting a high signal on the cable as a wake-up signal to the screen in question. This takes place according to the following pattern, on the condition that the screen does not reply. Normally only one wake-up signal is sent for the screen to wake up.

If the pattern below appears, the screen is not responding.

Later software. Software, version.

- High voltage (approx. 11.5 V) for approx. one second.
- Low voltage (approx. 0 V) for approx. three seconds.
- High voltage (approx. 11.5 V) for approx. one second.
- Low voltage (approx. 0 V) for approx. three seconds.
- Constant high voltage.

Older software.

- High voltage (approx. 11.5 V) for approx. one second.
- Low voltage (approx. 0 V) for approx. one second.
- High voltage (approx. 11.5 V) for approx. one second.
- Low voltage (approx. 0 V) for approx. 10 seconds.
- Constant high voltage.

Measurement of wake-up signal.

When the ignition is on, the rear seat entertainment module (RSE) performs a simple internal system-check and starts the start-up procedure with the screens.

- Measure wake-up signal at the screen. Measure from the rear side of a suitable connector. Do not damage the terminals in the connector. Measure signal that goes to the screen that does not answer the wake-up calls.
- Switch on the ignition. Lighting in the DVD-player's buttons is activated.
- Note voltage of the wake-up signal.

Other information

- see **SIGNAL SPECIFICATION, REAR SEAT ENTERTAINMENT MODULE (RSE), GENERATION 4.2**
- see **CHECKING WIRING AND TERMINALS**

Fig. 28: Identifying Seat Headrest Video Screen
Courtesy of VOLKSWAGEN GROUP OF AMERICA, INC.

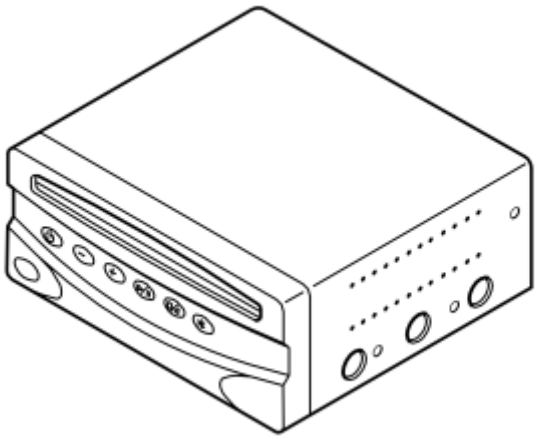

Fig. 29: Identifying Rear Seat Entertainment Module (RSE)
Courtesy of VOLKSWAGEN GROUP OF AMERICA, INC.

Is there any wake-up signal?

- **YES**

  Refer to **CHECKING CAN CABLES**

- **NO**

  Refer to **CHECKING THE CABLE AND COMPONENT**

CHECKING THE CABLE AND COMPONENT

Take measurements for the screen that is not communicating.

Check the lead for the wake-up signal from rear seat entertainment module (RSE) / DVD-Player to screens, #E2 (left screen) and #E14 (right screen), for short-circuiting to ground and open circuit.

Check the connector for rear seat entertainment module (RSE) / DVD-Player as well as screens for loose contact, contact resistance and oxidation.

HINT: If a screen is not working, try switching places between the screens/head restraints. If the malfunction remains, this indicates a malfunction either in the leads between the screen's circuit board and the display itself or in the display itself.

Remedy as necessary.

Other information

- see **SIGNAL SPECIFICATION, REAR SEAT ENTERTAINMENT MODULE (RSE), GENERATION 4.2**
- see **CHECKING WIRING AND TERMINALS**
- **Continue**

  Refer to **VERIFICATION**

CHECKING WAKE-UP SIGNAL

Rear seat entertainment module (RSE) (DVD-player) has not established contact with one or both screens. Follow the procedure below to check which screen has not responded.

NOTE: Switch off the system before connecting/disconnecting a connector.

- Turn off the ignition.
- Connect a voltmeter between the cable for the wake-up signal to right screen and ground. Measure wake-up signal at the screen. Measure from the rear side of a suitable connector. Do not damage the terminals in the connector.
- Switch on the ignition. Wait approximately 10 seconds.

Check the voltage of the wake-up signal. Note voltage of the wake-up signal.

- Then measure the wake-up signal of the left screen. Note voltage of the wake-up signal.

Left screen	Right screen		Options
Voltage is continually high (approx. 11.5 V).	Voltage is continually high (approx. 11.5 V).	Communication established with both screens.	
Voltage is high (approx. 11.5 V) but goes down to approx. 0 V every 10 seconds.	Voltage is approx. 0 V.	No communication established with left screen.	1.
Voltage is continually high (approx. 11.5 V).	Voltage is high (approx. 11.5 V) but goes down to approx. 0 V every 10 seconds.	No communication established with right screen.	1.

Voltage is continually high (approx. 11.5 V).	Voltage is approx. 0 V.	Probable open circuit on wake-up signal for right screen.	2.
Voltage is approx. 0 V.	Voltage is approx. 0 V.	Probable open circuit on wake-up signal for left screen.	2.
Voltage is high (approx. 11.5 V) but goes down to approx. 0 V every 10 seconds.	Voltage is high (approx. 11.5 V) but goes down to approx. 0 V every 10 seconds.	Probable fault in CAN communication with screens.	3.

Fig. 30: Identifying Seat Headrest Video Screen
Courtesy of VOLKSWAGEN GROUP OF AMERICA, INC.

Select an alternative as set out in the table above.

- **1**

  Refer to **CHECKING THE POWER SUPPLY AND GROUND TERMINAL**

- **2**

  Refer to **CHECKING THE CABLE AND COMPONENT**

- **3**

  Refer to **CHECKING CAN CABLES**

CHECKING THE POWER SUPPLY AND GROUND TERMINAL

Take measurements for the screen that is not communicating.

Check the voltage feed from rear seat entertainment module (RSE) / DVD-Player to screens, #E1 (left screen) and #E13 (right screen), for short-circuiting to ground and open circuit. The voltage must be approximately battery voltage when the ignition is on.

Check the ground connection from rear seat entertainment module (RSE) / DVD-Player to screens, #E12 (left screen) and #E24 (right screen), for short-circuiting to voltage and open circuit.

Check the connector for rear seat entertainment module (RSE) / DVD-Player as well as screens for loose contact, contact resistance and oxidation.

HINT: If a screen is not working, try switching places between the screens/head restraints. If the malfunction remains, this indicates a malfunction either in the leads between the screen's circuit board and the display itself or in the display itself.

Remedy as necessary.

Other information

- see **SIGNAL SPECIFICATION, REAR SEAT ENTERTAINMENT MODULE (RSE), GENERATION 4.2**
- see **CHECKING WIRING AND TERMINALS**

Fig. 31: Identifying Seat Headrest Video Screen
Courtesy of VOLKSWAGEN GROUP OF AMERICA, INC.

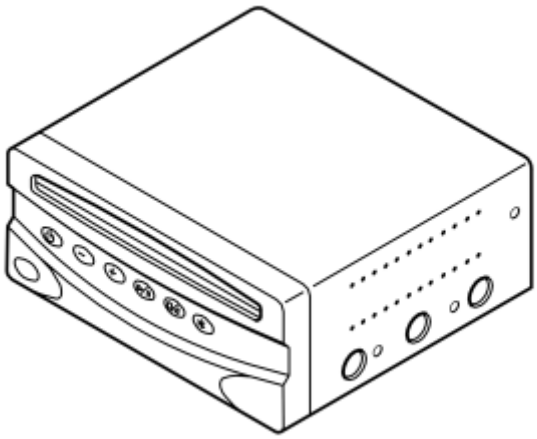

Fig. 32: Identifying Rear Seat Entertainment Module (RSE)
Courtesy of VOLKSWAGEN GROUP OF AMERICA, INC.

- **Continue**

  Refer to **VERIFICATION**

CHECKING THE CABLE AND COMPONENT

Take measurements for the screen that is not communicating.

Check the lead for the wake-up signal from rear seat entertainment module (RSE) / DVD-Player to screens, #E2

(left screen) and #E14 (right screen), for short-circuiting to ground and open circuit.

Check the connector for rear seat entertainment module (RSE) / DVD-Player as well as screens for loose contact, contact resistance and oxidation.

HINT: If a screen is not working, try switching places between the screens/head restraints. If the malfunction remains, this indicates a malfunction either in the leads between the screen's circuit board and the display itself or in the display itself.

Remedy as necessary.

Other information

- see **SIGNAL SPECIFICATION, REAR SEAT ENTERTAINMENT MODULE (RSE), GENERATION 4.2**
- see **CHECKING WIRING AND TERMINALS**

Fig. 33: Identifying Seat Headrest Video Screen
Courtesy of VOLKSWAGEN GROUP OF AMERICA, INC.

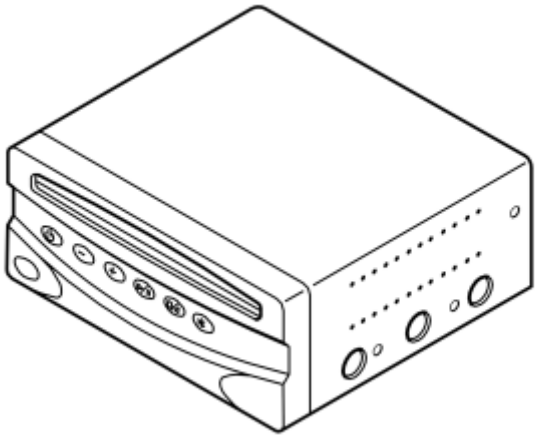

Fig. 34: Identifying Rear Seat Entertainment Module (RSE)
Courtesy of VOLKSWAGEN GROUP OF AMERICA, INC.

- **Continue**

  Refer to **VERIFICATION**

CHECKING CAN CABLES

Check the leads for CAN-communication between rear seat entertainment module (RSE) / DVD-Player and screens, #E3 and #E4 (left screen) and #E15 and #E16 (right screen, for short-circuiting to voltage, short-circuiting to ground, and open circuit.

In connector D, on rear seat entertainment module (RSE) / DVD-Player, there is a bridging of the CAN-net for the right screen. Bridging is in place to enable future expansion of the system with additional control modules. If connector B has been damaged or is disconnected or if for some reason there is no contact between the two ends of the CAN cable jumper, it will not be possible to establish communication with the right screen.

HINT: If a screen is not working, try switching places between the screens/head restraints. If the malfunction remains, this indicates a malfunction either in the leads between the screen's circuit board and the display itself or in the display itself.

Remedy as necessary.

Other information

- see **SIGNAL SPECIFICATION, REAR SEAT ENTERTAINMENT MODULE (RSE), GENERATION 4.2**
- see **CHECKING WIRING AND TERMINALS**
- **Continue**

  Refer to **VERIFICATION**

INFORMATION

FAULT-TRACING INFORMATION

The fault should have been detected and remedied. As this is not the case fault-tracing has failed.

Exit fault-tracing for this diagnostic trouble code (DTC) or make another attempt.

CHECKING THE SYSTEM, DIGITAL VERSATILE DISC PLAYER AND SCREENS

FAULT-TRACING INFORMATION

If the system cannot be turned on and no screen is lit up and the malfunction cannot be connected to a special function, e. g., that the AUX-input is used, the cause of the malfunction may be:

- Contact resistance or oxidation in the terminals.
- One or both screens not connected.
- Open-circuit in leads between screen and rear seat entertainment module (RSE).
- Voltage supply to the screen or Rear Seat Entertainment Module (RSE).
- Damaged screen.

If the DVD player does not work but other audio/picture sources work, the problem may be due to:

- Damaged dvd-disc.

If none or only one of the screens work, and this is not associated to a certain function in the system, the probable cause may be:

- Contact resistance or oxidation in the terminals.
- Open circuit on signal cable.
- Power supply missing
- Damaged screen.
- Open-circuit or short-circuit in the cable for the control area network (CAN).

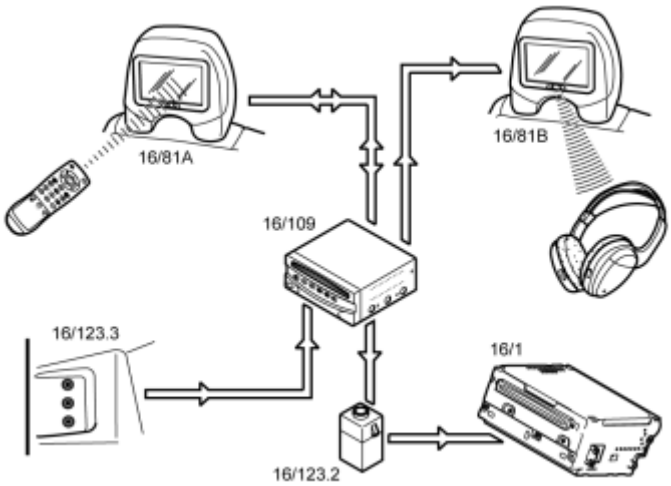

Fig. 35: Identifying Entertainment System Components & Communication
Courtesy of VOLKSWAGEN GROUP OF AMERICA, INC.

- **Continue**

  see **FAULT-TRACING INFORMATION**

CHECKING THE POWER SUPPLY AND GROUND TERMINALS

If lighting in the buttons does not come on at all, this indicates malfunction of the voltage feed or ground for the rear seat entertainment module (RSE) / DVD-Player.

Check the lead for voltage feed to rear seat entertainment module (RSE)/DVD-player's #A4, #A6 and #A7 for short-circuiting to voltage, short-circuiting to ground and open circuit. The voltage should be approx. the same as the battery voltage.

HINT: Power supply (15 feed) is common with power supply to rear 12 V socket.

Check the lead for ground connection to rear seat entertainment module (RSE), connector #A8, for open circuit

and short-circuit to voltage. Also check the ground terminal. Check for contact resistance and oxidation.

Check the connector for rear seat entertainment module (RSE) / DVD-Player contact resistance and oxidation.

Other information

- see **SIGNAL SPECIFICATION, REAR SEAT ENTERTAINMENT MODULE (RSE), GENERATION 4.2**
- see **CHECKING WIRING AND TERMINALS**

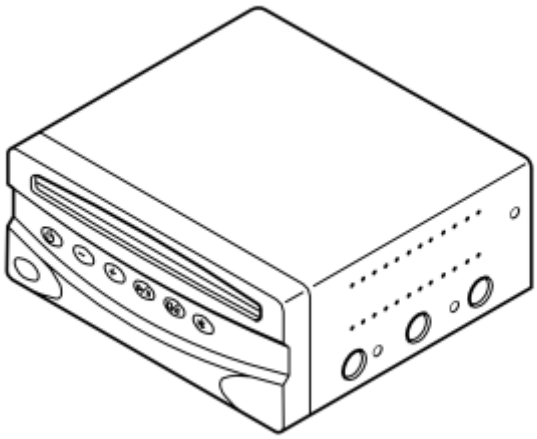

Fig. 36: Identifying Rear Seat Entertainment Module (RSE)
Courtesy of VOLKSWAGEN GROUP OF AMERICA, INC.

- **Continue**

  see **VERIFICATION**

FAULT-TRACING INFORMATION

- FAULT TRACING FAILED

  FAULT TRACING FAILED: The fault should have been detected and remedied. As this is not the case fault-tracing has failed. Exit fault-tracing for this diagnostic trouble code (DTC) or make another attempt.

- NEW TRY

  see **FAULT-TRACING INFORMATION**

FAULT-TRACING INFORMATION

When the ignition is on, the rear seat entertainment module performs a simple internal system-check and starts the start-up procedure with the screens.

- Ignition on. Lighting in the DVD-player's buttons is activated.
- When start-up is performed the lighting in the DVD-player's buttons goes off, does not apply to POWER-button.
- Check how illumination of the function buttons behaves during start-up and then select the alternative described below. The specified times are to be considered guidelines, not exact times.

NOTE: Times for system start-up vary depending on the software. It is not necessary to identify software version to perform this fault tracing.

Later software. Software, version. Select an option:

1. Lighting in the DVD-player's buttons is not activated at all with ignition on.
2. Lighting in all of the DVD-player's buttons is activated and all buttons except the POWER-button go off after approx. 10 seconds.
3. Lighting in all of the DVD-player's buttons is activated and all buttons except the POWER-button go off after approx. 85-95 seconds.

Older software. Select an option:

1. Lighting in the DVD-player's buttons is not activated at all with ignition on. See **CHECKING THE POWER SUPPLY AND GROUND TERMINALS**
2. DVD player button illumination comes on. Goes out in all buttons except the POWER button after 4-10 seconds. See **CHECKING THE POWER SUPPLY TO THE CONTROL MODULE**
3. DVD player button illumination comes on. Goes out in all buttons except the POWER button after 15-35 seconds. See **CHECKING VOLTAGE FEED AND GROUND FOR SCREENS**
4. DVD player button illumination comes on. Goes out in all buttons only in brief intervals every 10 seconds. See **CHECKING WAKE-UP SIGNAL**

HINT: That the lighting in the function buttons goes out after approx. 10 seconds, means that the screens are supplied with voltage and grounded as well as that Rear seat entertainment module (RSE) (DVD-player) has established contact with both screens on the internal CAN-net. This also means that the circuit boards behind the screens in both head restraints work as intended.

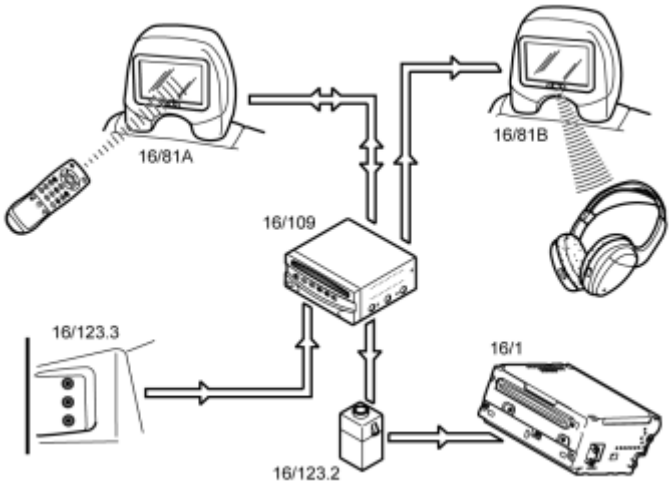

Fig. 37: Identifying Entertainment System Components & Communication
Courtesy of VOLKSWAGEN GROUP OF AMERICA, INC.

CHECKING THE POWER SUPPLY TO THE CONTROL MODULE

- Turn on the system with the main switch on the DVD-player.
- Lighting in all of the DVD-player's buttons shall now be activated and remain on.

HINT: If lighting in all of the DVD-player's buttons is activated, and then goes off after approx. 5-10 seconds, this indicates lost 15-feed to rear seat entertainment module (RSE) / DVD-Player.

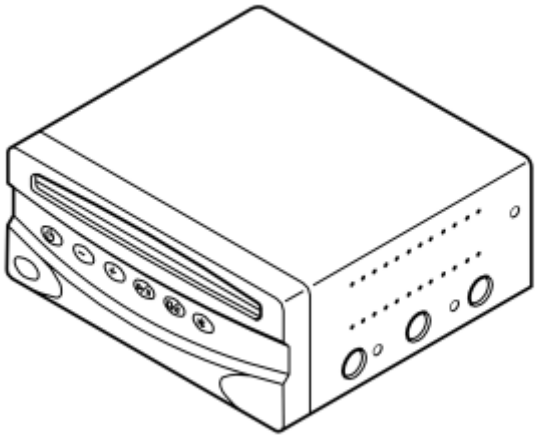

Fig. 38: Identifying Rear Seat Entertainment Module (RSE)
Courtesy of VOLKSWAGEN GROUP OF AMERICA, INC.

Does lighting stay on?

- **YES**

  see **CHECKING THE DISPLAY SCREENS**

- **NO**

  see **CHECKING THE WIRING AND TERMINALS**

CHECKING VOLTAGE FEED AND GROUND FOR SCREENS

Rear seat entertainment module (RSE) has not established contact with one or both screens. Whatever the case is, can be indicated by how long time the start has taken.

NOTE: **Later software. Software, version. If one of the screens does not respond but the other does, start-up takes about 85 seconds. If none of the screens respond, start-up takes approx. 95 seconds.**

NOTE: **Older software. If one of the screens does not respond but the other does, start-up takes about 15-25 seconds. If none of the screens respond, then start-up takes approx. 30-35 seconds.**

The specified times are to be considered guidelines, not exact times.

HINT: Turn on the system with the main switch on the DVD-player. The screen that does not have contact with the control module (DVD-player) will not light up. If the power supply and ground to the screen are working properly but the screen has no contact with the rear seat entertainment module (RSE)/DVD player via the CAN network, the screen will come on in LOCAL mode at start-up. Then neither sound will be heard nor picture shown at playback from DVD-player to this screen. This indicates a malfunction of either the wake-up signal or CAN-communication.

Take measurements for the screen that is not communicating.

Check the voltage feed from rear seat entertainment module (RSE) / DVD-Player to screens, #E1 (left screen) and #E13 (right screen), for short-circuiting to ground and open circuit. The voltage must be approximately battery voltage when the ignition is on.

Check the ground connection from rear seat entertainment module (RSE) / DVD-Player to screens, #E12 (left screen) and #E24 (right screen), for short-circuiting to voltage and open circuit.

Check the connector for rear seat entertainment module (RSE) / DVD-Player as well as screens for loose contact, contact resistance and oxidation.

HINT: If a screen is not working, try switching places between the screens/head restraints. If the malfunction remains, this indicates a malfunction either in the leads between the screen's circuit board and the display itself or in the display itself.

Other information

- see **SIGNAL SPECIFICATION, REAR SEAT ENTERTAINMENT MODULE (RSE), GENERATION 4.2**

- see **CHECKING WIRING AND TERMINALS**

Was a fault detected?

- **YES**

  see **VERIFICATION**

- **NO**

  see **CHECKING WAKE-UP SIGNAL**

CHECKING THE WIRING AND TERMINALS

Check the lead for voltage feed (15-feed) to rear seat entertainment module (RSE)/DVD-player's #A6 and #A7 for short-circuiting to voltage, short-circuiting to ground and open circuit.

HINT: Power supply (15 feed) is common with power supply to rear 12 V socket.

NOTE: When this feed is lost, the system will only work for another approx. 10 minutes. The system cannot be restarted until the power supply is OK. If no cable or fuse defects are found and there still is no power supply, the problem probably lies in the vehicle electrical system.

Other information

- see **SIGNAL SPECIFICATION, REAR SEAT ENTERTAINMENT MODULE (RSE), GENERATION 4.2**
- see **CHECKING WIRING AND TERMINALS**

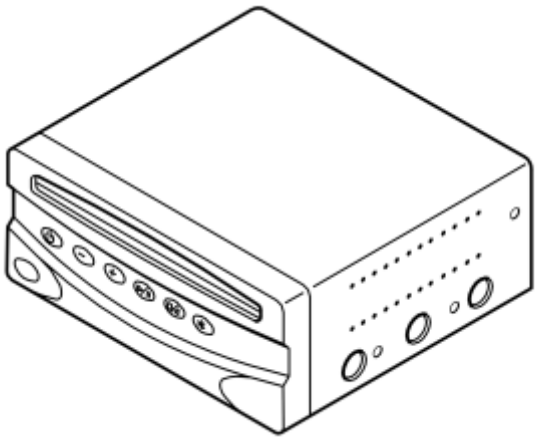

Fig. 39: Identifying Rear Seat Entertainment Module (RSE)
Courtesy of VOLKSWAGEN GROUP OF AMERICA, INC.

- **Continue**

  see **VERIFICATION**

VERIFICATION

HINT: After carrying out the repair, check that the fault has been remedied.

- Ignition off.
- Restore components and connectors.
- Switch on the ignition. Lighting in the DVD-player's buttons is activated.
- When start-up is performed the lighting in the DVD-player's buttons goes off, does not apply to POWER-button.

NOTE: A long start-up time indicates a fault in communication with the screens.

- Start the system using the POWER button on the DVD player or the remote control. Use the buttons, on both DVD-player and remote control, to operate the system.

Check that:

- The screens show a picture.
- DVD-disc can be played.
- Sound is heard in wireless headphones.
- Sound can be heard in the vehicle's speakers.
- Menus can be accessed with the remote control in both screens.
- If possible, connect an external source to the AV input and test the function.

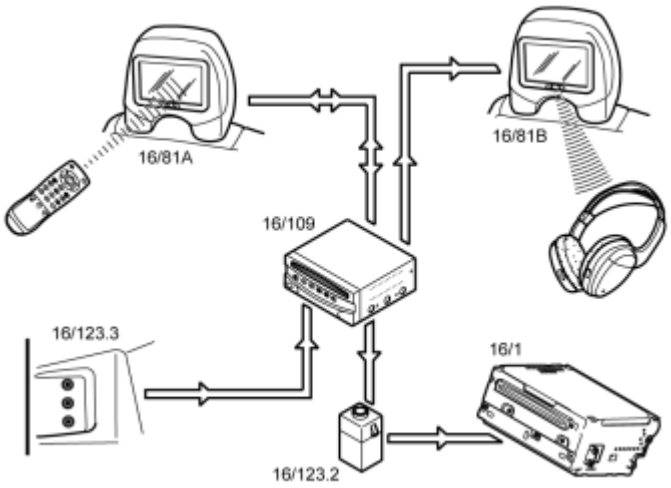

Fig. 40: Identifying Entertainment System Components & Communication
Courtesy of VOLKSWAGEN GROUP OF AMERICA, INC.

Is the function OK?

- **YES**

  OKAY: Troubleshooting has been completed.

- **NO**

  see **FAULT-TRACING INFORMATION**

CHECKING THE DISPLAY SCREENS

- Turn on the system with the main switch on the DVD-player.
- Lighting in all of the DVD-player's buttons shall now be activated and remain on.
- Now the screens shall be activated.

Fig. 41: Identifying Seat Headrest Video Screen
Courtesy of VOLKSWAGEN GROUP OF AMERICA, INC.

Do the screens come on?

- **YES**

  see **CHECKING THE REMOTE CONTROL**

- **NO**

  see **CHECKING THE COMPONENTS AND WIRING**

CHECKING THE COMPONENTS AND WIRING

Checking the components and wiring

HINT: If only one of the screens lights up, try installing the screen that is not working in the head restraint where the working screen was installed. Then restart the system by turning it off, switching off the ignition and then switching the ignition on again. Turn on the system with the main switch on the DVD-player. If the malfunction remains, this indicates a malfunction either in the leads between the screen's circuit board and the display itself or in the display itself.

If necessary, test with a new circuit card or a new display.

Other information

- see **SIGNAL SPECIFICATION, REAR SEAT ENTERTAINMENT MODULE (RSE), GENERATION 4.2**
- see **CHECKING WIRING AND TERMINALS**

Fig. 42: Identifying Seat Headrest Video Screen
Courtesy of VOLKSWAGEN GROUP OF AMERICA, INC.

- **Continue**

  see **VERIFICATION**

CHECKING THE REMOTE CONTROL

Make sure the remote control batteries are fully charged.

- Turn off the system with the main switch on the DVD player.
- Wait until the system has shut down.
- Turn on the system with the remote control aimed at the left screen.

Then repeat with the right screen.

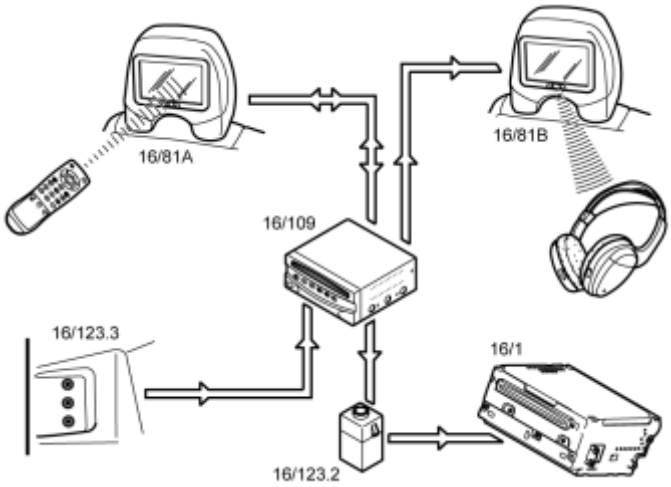

Fig. 43: Identifying Entertainment System Components & Communication
Courtesy of VOLKSWAGEN GROUP OF AMERICA, INC.

Do the screens come on?

- **YES**

  see **CHECKING THE DVD PLAYER**

- **NO**

  see **CHECKING THE REMOTE CONTROL SIGNAL**

CHECKING THE REMOTE CONTROL SIGNAL

HINT: If none of the screens come on in the previous test, the probable cause is a damaged remote control or discharged batteries.

HINT: If only one screen does not come on in the previous test, it indicates that the cable for infrared (IR) signals is probably damaged.

HINT: Activation of the infrared IR-receivers in the head restraints can be checked by the IR-lights in the screen's lower edge being on dimly after the system has been turned on.

Checking IR-signal, left screen

Check the lead for the infrared (IR) signal between the screen and rear seat entertainment module (RSE) for open circuit.

To check the voltage level on the signal cable for IR-signal, proceed as follows:

- Connect all cables and connectors.
- Measure the voltage between the signal cable for the Infra Red (IR) signal to the left-hand display screen and ground. The measured voltage is reference value.

NOTE: Do not press any of the buttons on the remote control during this measurement.

- Measure from the rear side of a suitable connector. Do not damage the terminals in the connector.
- Aim the remote control at the left screen and press in a button on the remote control. The voltage on the signal cable must fall slightly for as long as the button on the remote control is pressed in.

NOTE: Important in this measurement are not the absolute voltage levels, instead you get a voltage difference downward.

Checking IR-signal, right screen

Compare the latest reading as above with the signal for the infra red (IR) signal from the right-hand infra red (IR) receiver for the display screen.

Conclusion

- If the result of the above checks is that no malfunction was found, this means that the receivers in both screens work and that the remote control is OK.
- If voltages on the cables are OK but a lower voltage cannot be measured when a button on the remote control is pressed down, try with replacing the remote control.

Other information

- see **SIGNAL SPECIFICATION, REAR SEAT ENTERTAINMENT MODULE (RSE), GENERATION 4.2**
- see **CHECKING WIRING AND TERMINALS**
- **Continue**

  see **VERIFICATION**

CHECKING THE DVD PLAYER

Check that the DVD is not damaged and that it is clean. Try using another DVD if necessary.

Check that nothing has jammed in the DVD player. Check that there are no mechanical grinding noises coming from the DVD player when it is in operation.

Check that the disc can be inserted and ejected without problems.

NOTE: Only one disc at a time may be loaded in the DVD-player.

Check that the transport protection disc, which is supplied with system at delivery, is not in the DVD-player.

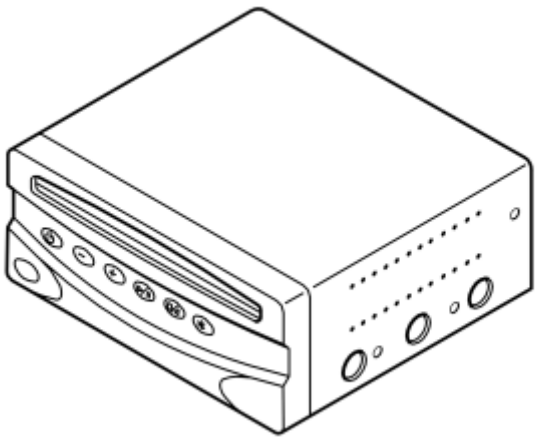

Fig. 44: Identifying Rear Seat Entertainment Module (RSE)
Courtesy of VOLKSWAGEN GROUP OF AMERICA, INC.

Was a fault detected?

- **YES**

  see **VERIFICATION**

- **NO**

  see **CHECKING THE FUNCTION**

CHECKING THE FUNCTION

- Select the dvd-player as source for one of the screens and press on the remote control's PLAY button.

  Check that picture is shown and sound is heard at playback.

  NOTE: If there is a picture but no audio in one or both of the headphones, see other fault tracing.

  If picture and sound are shown, start-up of the system, DVD-player, and screens is ok.

Is there a picture?

- **YES**

  FAULT NOT FOUND: Troubleshooting has been completed.

- **NO**

  see **CHECKING THE CABLE AND COMPONENT**

CHECKING THE CABLE AND COMPONENT

Check the leads for video signals between the TV-receiver and rear seat entertainment module (RSE) for short-circuiting to voltage, short-circuiting to ground, and open circuit. There are two video leads for each screen. Regards the cables from rear seat entertainment module (RSE), terminals #E10 and #E11 for left screen as well as terminals #E22 and #E23 for right screen.

Other information

- see **SIGNAL SPECIFICATION, REAR SEAT ENTERTAINMENT MODULE (RSE), GENERATION 4.2**
- see **CHECKING WIRING AND TERMINALS**

- **Continue**

  see **VERIFICATION**

CHECKING CAN CABLES

HINT: If the power supply and ground to the screen are working properly but the screen has no contact with the rear seat entertainment module (RSE)/DVD player via the CAN network, the screen will come on in LOCAL mode at start-up. Then neither sound will be heard nor picture shown at playback from DVD-player to this screen. Menus available locally in the screen can be accessed.

Check if the screens are activated in LOCAL-mode, which means that there is malfunction on the CAN-leads.

Check the leads for CAN-communication between rear seat entertainment module (RSE) / DVD-Player and screens, #E3 and #E4 (left screen) and #E15 and #E16 (right screen, for short-circuiting to voltage, short-circuiting to ground, and open circuit.

In connector D, on rear seat entertainment module (RSE) / DVD-Player, there is a bridging of the CAN-net for the right screen. Bridging is in place to enable future expansion of the system with additional control modules. If connector B has been damaged or is disconnected or if for some reason there is no contact between the two ends of the CAN cable jumper, it will not be possible to establish communication with the right screen.

HINT: If a screen is not working, try switching places between the screens/head restraints. If the malfunction remains, this indicates a malfunction either in the leads between the screen's circuit board and the display itself or in the display itself.

Other information

- see **SIGNAL SPECIFICATION, REAR SEAT ENTERTAINMENT MODULE, GENERATION 4.2**
- see **CHECKING WIRING AND TERMINALS**
- **Continue**

  see **VERIFICATION**

CHECKING WAKE-UP SIGNAL

The control module makes three attempts to activate a screen by transmitting a high signal on the cable as a wake-up signal to the screen in question. This takes place according to the following pattern, on the condition that the screen does not reply. Normally only one wake-up signal is sent for the screen to wake up.

If the pattern below appears, the screen is not responding.

Later software. Software, version.

- High voltage (approx. 11.5 V) for approx. one second.
- Low voltage (approx. 0 V) for approx. three seconds.
- High voltage (approx. 11.5 V) for approx. one second.
- Low voltage (approx. 0 V) for approx. three seconds.
- Constant high voltage.

Older software.

- High voltage (approx. 11.5 V) for approx. one second.
- Low voltage (approx. 0 V) for approx. one second.
- High voltage (approx. 11.5 V) for approx. one second.
- Low voltage (approx. 0 V) for approx. 10 seconds.
- Constant high voltage.

Measurement of wake-up signal.

When the ignition is on, the rear seat entertainment module (RSE) performs a simple internal system-check and starts the start-up procedure with the screens.

- Measure wake-up signal at the screen. Measure from the rear side of a suitable connector. Do not damage the terminals in the connector. Measure signal that goes to the screen that does not answer the wake-up calls.
- Switch on the ignition. Lighting in the DVD-player's buttons is activated.
- Note voltage of the wake-up signal.

Other information

- see **SIGNAL SPECIFICATION, REAR SEAT ENTERTAINMENT MODULE (RSE), GENERATION 4.2**
- see **CHECKING WIRING AND TERMINALS**

Fig. 45: Identifying Seat Headrest Video Screen
Courtesy of VOLKSWAGEN GROUP OF AMERICA, INC.

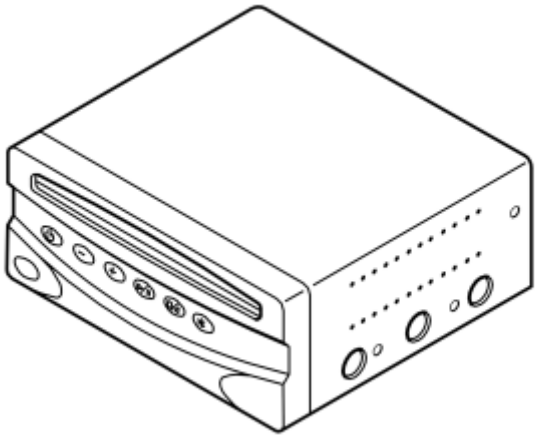

Fig. 46: Identifying Rear Seat Entertainment Module (RSE)
Courtesy of VOLKSWAGEN GROUP OF AMERICA, INC.

Is there any wake-up signal?

- **YES**

  see **CHECKING CAN CABLES**

- **NO**

  see **CHECKING THE CABLE AND COMPONENT**

CHECKING THE CABLE AND COMPONENT

Take measurements for the screen that is not communicating.

Check the lead for the wake-up signal from rear seat entertainment module (RSE) / DVD-Player to screens, #E2 (left screen) and #E14 (right screen), for short-circuiting to ground and open circuit.

Check the connector for rear seat entertainment module (RSE) / DVD-Player as well as screens for loose contact, contact resistance and oxidation.

HINT: If a screen is not working, try switching places between the screens/head restraints. If the malfunction remains, this indicates a malfunction either in the leads between the screen's circuit board and the display itself or in the display itself.

Remedy as necessary.

Other information

- see **SIGNAL SPECIFICATION, REAR SEAT ENTERTAINMENT MODULE (RSE), GENERATION 4.2**

- see **CHECKING WIRING AND TERMINALS**
- **Continue**

  see **VERIFICATION**

CHECKING WAKE-UP SIGNAL

Rear seat entertainment module (RSE) (DVD-player) has not established contact with one or both screens. Follow the procedure below to check which screen has not responded.

NOTE: Switch off the system before connecting/disconnecting a connector.

- Turn off the ignition.
- Connect a voltmeter between the cable for the wake-up signal to right screen and ground. Measure wake-up signal at the screen. Measure from the rear side of a suitable connector. Do not damage the terminals in the connector.
- Switch on the ignition. Wait approximately 10 seconds.

Check the voltage of the wake-up signal. Note voltage of the wake-up signal.

- Then measure the wake-up signal of the left screen. Note voltage of the wake-up signal.

Left screen	Right screen		Options
Voltage is continually high (approx. 11.5 V).	Voltage is continually high (approx. 11.5 V).	Communication established with both screens.	
Voltage is high (approx. 11.5 V) but goes down to approx. 0 V every 10 seconds.	Voltage is approx. 0 V.	No communication established with left screen.	1.
Voltage is continually high (approx. 11.5 V).	Voltage is high (approx. 11.5 V) but goes down to approx. 0 V every 10 seconds.	No communication established with right screen.	1.
Voltage is continually high (approx. 11.5 V).	Voltage is approx. 0 V.	Probable open circuit on wake-up signal for right screen.	2.
Voltage is approx. 0 V.	Voltage is approx. 0 V.	Probable open circuit on wake-up signal for left screen.	2.
Voltage is high (approx. 11.5 V) but goes down to approx. 0 V every 10 seconds.	Voltage is high (approx. 11.5 V) but goes down to approx. 0 V every 10 seconds.	Probable fault in CAN communication with screens.	3.

Fig. 47: Identifying Seat Headrest Video Screen
Courtesy of VOLKSWAGEN GROUP OF AMERICA, INC.

Select an alternative as set out in the table above.

- **1**

  see **CHECKING THE POWER SUPPLY AND GROUND TERMINAL**

- **2**

  see **CHECKING THE CABLE AND COMPONENT**

- **3**

  see **CHECKING CAN CABLES**

CHECKING THE POWER SUPPLY AND GROUND TERMINAL

Take measurements for the screen that is not communicating.

Check the voltage feed from rear seat entertainment module (RSE) / DVD-Player to screens, #E1 (left screen) and #E13 (right screen), for short-circuiting to ground and open circuit. The voltage must be approximately battery voltage when the ignition is on.

Check the ground connection from rear seat entertainment module (RSE) / DVD-Player to screens, #E12 (left screen) and #E24 (right screen), for short-circuiting to voltage and open circuit.

Check the connector for rear seat entertainment module (RSE) / DVD-Player as well as screens for loose contact, contact resistance and oxidation.

HINT: If a screen is not working, try switching places between the screens/head restraints. If the malfunction remains, this indicates a malfunction either in the leads between the screen's circuit board and the display itself or in the display itself.

Remedy as necessary.

Other information

- see **SIGNAL SPECIFICATION, REAR SEAT ENTERTAINMENT MODULE (RSE), GENERATION 4.2**

- see **CHECKING WIRING AND TERMINALS**

Fig. 48: Identifying Seat Headrest Video Screen
Courtesy of VOLKSWAGEN GROUP OF AMERICA, INC.

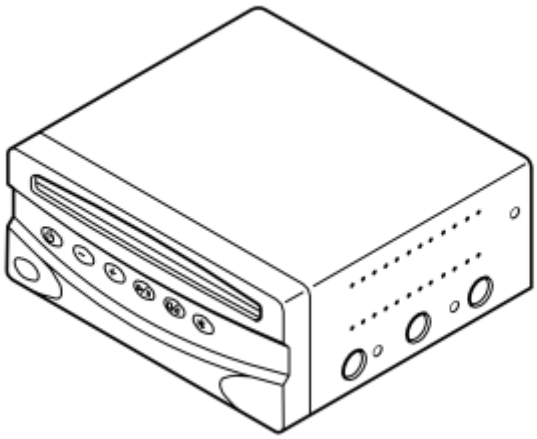

Fig. 49: Identifying Rear Seat Entertainment Module (RSE)
Courtesy of VOLKSWAGEN GROUP OF AMERICA, INC.

- **Continue**

  see **VERIFICATION**

CHECKING THE CABLE AND COMPONENT

Take measurements for the screen that is not communicating.

Check the lead for the wake-up signal from rear seat entertainment module (RSE) / DVD-Player to screens, #E2 (left screen) and #E14 (right screen), for short-circuiting to ground and open circuit.

Check the connector for rear seat entertainment module (RSE) / DVD-Player as well as screens for loose contact, contact resistance and oxidation.

HINT: If a screen is not working, try switching places between the screens/head restraints. If the malfunction remains, this indicates a malfunction either in the leads between the screen's circuit board and the display itself or in the display itself.

Remedy as necessary.

Other information

- see **SIGNAL SPECIFICATION, REAR SEAT ENTERTAINMENT MODULE (RSE), GENERATION 4.2**
- see **CHECKING WIRING AND TERMINALS**

Fig. 50: Identifying Seat Headrest Video Screen
Courtesy of VOLKSWAGEN GROUP OF AMERICA, INC.

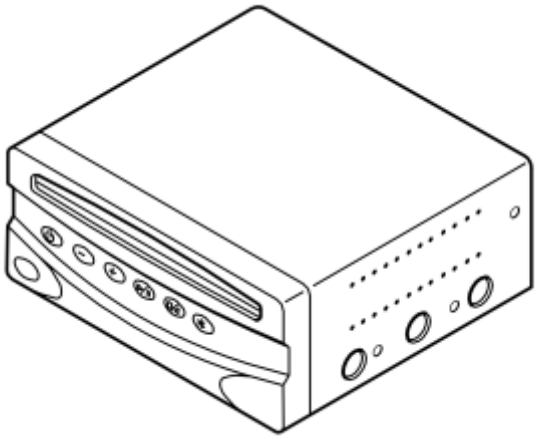

Fig. 51: Identifying Rear Seat Entertainment Module (RSE)
Courtesy of VOLKSWAGEN GROUP OF AMERICA, INC.

- **Continue**

  see **VERIFICATION**

CHECKING CAN CABLES

Check the leads for CAN-communication between rear seat entertainment module (RSE) / DVD-Player and screens, #E3 and #E4 (left screen) and #E15 and #E16 (right screen, for short-circuiting to voltage, short-circuiting to ground, and open circuit.

In connector D, on rear seat entertainment module (RSE) / DVD-Player, there is a bridging of the CAN-net for the right screen. Bridging is in place to enable future expansion of the system with additional control modules. If connector B has been damaged or is disconnected or if for some reason there is no contact between the two ends of the CAN cable jumper, it will not be possible to establish communication with the right screen.

HINT: If a screen is not working, try switching places between the screens/head restraints. If the malfunction remains, this indicates a malfunction either in the leads between the screen's circuit board and the display itself or in the display itself.

Remedy as necessary.

Other information

- see **SIGNAL SPECIFICATION, REAR SEAT ENTERTAINMENT MODULE (RSE), GENERATION 4.2**
- see **CHECKING WIRING AND TERMINALS**
- **Continue**

  see **VERIFICATION**

CHECKING THE SYSTEM, DIGITAL VERSATILE DISC PLAYER AND SCREENS. REAR SEAT ENTERTAINMENT, GENERATION 4.3 (2009-2011)

CHECKING THE SYSTEM, DIGITAL VERSATILE DISC PLAYER AND SCREENS

FAULT-TRACING INFORMATION

If the system cannot be turned on and no screen is lit up and the malfunction cannot be connected to a special function, e. g., that the AUX-input is used, the cause of the malfunction may be:

- Contact resistance or oxidation in the terminals.
- One or both screens not connected.
- Open-circuit in leads between screen and rear seat entertainment module (RSE).
- Voltage supply to the screen or Rear Seat Entertainment Module (RSE).
- Damaged screen.

If the DVD player does not work but other audio/picture sources work, the problem may be due to:

- Damaged dvd-disc.

If none or only one of the screens work, and this is not associated to a certain function in the system, the probable cause may be:

- Contact resistance or oxidation in the terminals.
- Open circuit on signal cable.
- Power supply missing
- Damaged screen.
- Open-circuit or short-circuit in the cable for the control area network (CAN).

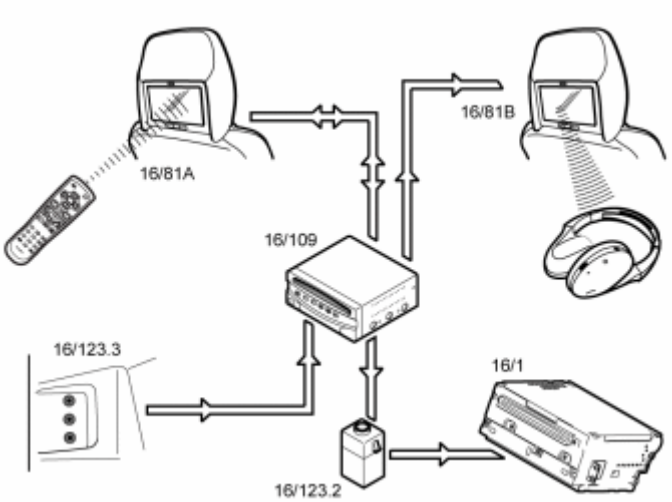

Fig. 52: Identifying Entertainment System Components & Communication
Courtesy of VOLKSWAGEN GROUP OF AMERICA, INC.

- **Continue**

  Refer to **FAULT-TRACING INFORMATION**

CHECKING THE POWER SUPPLY AND GROUND TERMINALS

If lighting in the buttons does not come on at all, this indicates malfunction of the voltage feed or ground for the rear seat entertainment module (RSE) / DVD-Player.

Check the lead for voltage feed to rear seat entertainment module (RSE)/DVD-player's #A4, #A6 and #A7 for short-circuiting to voltage, short-circuiting to ground and open circuit. The voltage should be approx. the same as the battery voltage.

HINT: Power supply (15 feed) is common with power supply to rear 12 V socket.

Check the lead for ground connection to rear seat entertainment module (RSE), connector #A8, for open circuit and short-circuit to voltage. Also check the ground terminal. Check for contact resistance and oxidation.

Check the connector for rear seat entertainment module (RSE) / DVD-Player contact resistance and oxidation.

Other information

- see **SIGNAL SPECIFICATION, REAR SEAT ENTERTAINMENT MODULE (RSE), GENERATION 4.3**
- see **CHECKING WIRING AND TERMINALS**

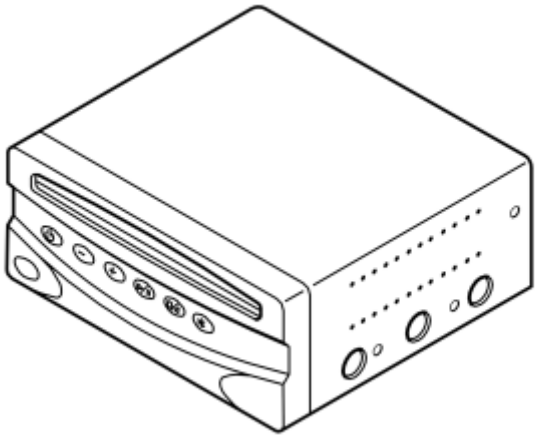

Fig. 53: Identifying Rear Seat Entertainment Module (RSE)
Courtesy of VOLKSWAGEN GROUP OF AMERICA, INC.

- **Continue**

  Refer to **VERIFICATION**

FAULT-TRACING INFORMATION

When the ignition is on, the rear seat entertainment module (RSE) performs a simple internal system-check and starts the start-up procedure with the screens.

- Ignition on. Lighting in the DVD-player's buttons is activated.
- When start-up is performed the lighting in the DVD-player's buttons goes off, does not apply to POWER-button.

Check how illumination of the function buttons behaves during start-up and then select the alternative described below.

1. Lighting in the DVD-player's buttons is not activated at all with ignition on. Refer to **CHECKING THE POWER SUPPLY AND GROUND TERMINALS**
2. Lighting in all of the DVD-player's buttons is activated and all buttons except the POWER-button go off after approx. 10 seconds. Refer to **CHECKING THE POWER SUPPLY TO THE CONTROL MODULE**
3. Lighting in all of the DVD-player's buttons is activated and all buttons except the POWER-button go off after approx. 85-95 seconds. Refer to **CHECKING VOLTAGE FEED AND GROUND FOR SCREENS**

The specified times are to be considered guidelines, not exact times.

HINT: That the lighting in the function buttons goes out after approx. 10 seconds, means that the screens are supplied with voltage and grounded as well as that Rear seat entertainment module (RSE) (DVD-player) has established contact with both screens on the internal CAN-net. This also means that the

circuit boards behind the screens in both head restraints work as intended.

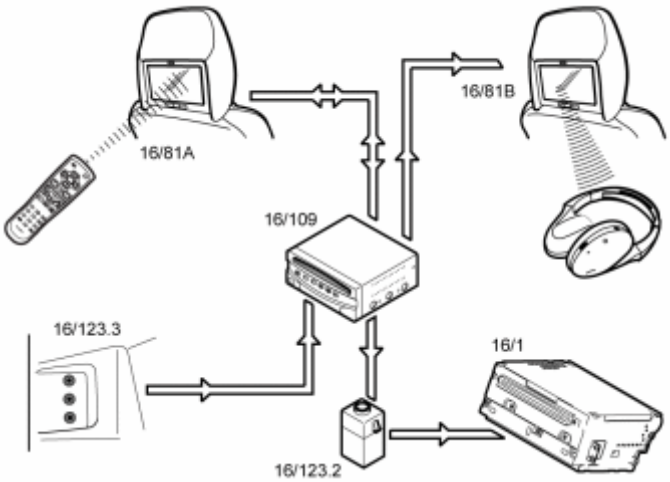

Fig. 54: Identifying Entertainment System Components & Communication
Courtesy of VOLKSWAGEN GROUP OF AMERICA, INC.

CHECKING THE POWER SUPPLY TO THE CONTROL MODULE

- Turn on the system with the main switch on the DVD-player.
- Lighting in all of the DVD-player's buttons shall now be activated and remain on.

HINT: If lighting in all of the DVD-player's buttons is activated, and then goes off after approx. 5-10 seconds, this indicates lost 15-feed to rear seat entertainment module (RSE) / DVD-Player.

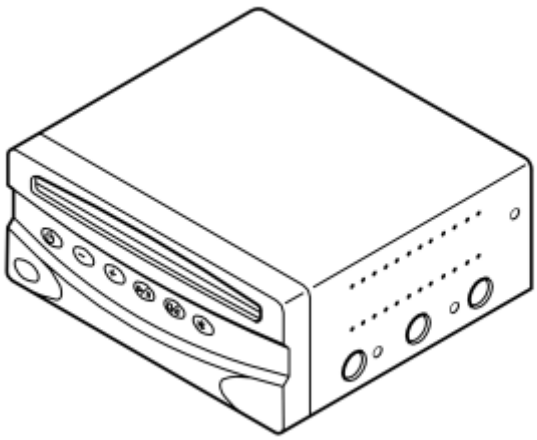

Fig. 55: Identifying Rear Seat Entertainment Module (RSE)
Courtesy of VOLKSWAGEN GROUP OF AMERICA, INC.

Does lighting stay on?

- **YES**

Refer to **CHECKING THE DISPLAY SCREENS**

- **NO**

  Refer to **CHECKING THE WIRING AND TERMINALS**

CHECKING VOLTAGE FEED AND GROUND FOR SCREENS

NOTE: **Rear seat entertainment module (RSE) (DVD-player) has not established contact with one or both screens. Whatever the case is, can be indicated by how long time the start has taken. If one of the screens does not respond but the other does, start-up takes about 85 seconds. If none of the screens respond, start-up takes approx. 95 seconds. The specified times are to be considered guidelines, not exact times.**

HINT: Turn on the system with the main switch on the DVD-player. The screen that does not have contact with the control module (DVD-player) will not light up. If the power supply and ground to the screen are working properly but the screen has no contact with the rear seat entertainment module (RSE)/DVD player via the CAN network, the screen will come on in LOCAL mode at start-up. Then neither sound will be heard nor picture shown at playback from DVD-player to this screen. This indicates a malfunction of either the wake-up signal or CAN-communication.

Take measurements for the screen that is not communicating.

Check the voltage feed from rear seat entertainment module (RSE) / DVD-Player to screens, #E1 (left screen) and #E13 (right screen), for short-circuiting to ground and open circuit. The voltage must be approximately battery voltage when the ignition is on.

Check the ground connection from rear seat entertainment module (RSE) / DVD-Player to screens, #E12 (left screen) and #E24 (right screen), for short-circuiting to voltage and open circuit.

Check the connector for rear seat entertainment module (RSE) / DVD-Player as well as screens for loose contact, contact resistance and oxidation.

HINT: If a screen is not working, try switching places between the screens/head restraints. If the malfunction remains, this indicates a malfunction either in the leads between the screen's circuit board and the display itself or in the display itself.

Other information

- see **SIGNAL SPECIFICATION, REAR SEAT ENTERTAINMENT MODULE (RSE), GENERATION 4.3**
- see **CHECKING WIRING AND TERMINALS**

Was a fault detected?

- **YES**

Refer to **VERIFICATION**

- **NO**

  Refer to **CHECKING WAKE-UP SIGNAL**

CHECKING THE WIRING AND TERMINALS

Check the lead for voltage feed (15-feed) to rear seat entertainment module (RSE)/DVD-player's #A6 and #A7 for short-circuiting to voltage, short-circuiting to ground and open circuit.

HINT: Power supply (15 feed) is common with power supply to rear 12 V socket.

NOTE: When this feed is lost, the system will only work for another approx. 10 minutes. The system cannot be restarted until the power supply is OK. If no cable or fuse defects are found and there still is no power supply, the problem probably lies in the vehicle electrical system.

Other information

1. see **SIGNAL SPECIFICATION, REAR SEAT ENTERTAINMENT MODULE (RSE), GENERATION 4.3**
2. see **CHECKING WIRING AND TERMINALS**

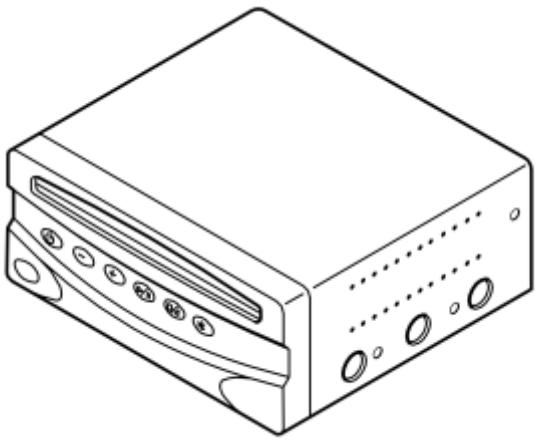

Fig. 56: Identifying Rear Seat Entertainment Module (RSE)
Courtesy of VOLKSWAGEN GROUP OF AMERICA, INC.

- **Continue**

  Refer to **VERIFICATION**

VERIFICATION

HINT: After carrying out the repair, check that the fault has been remedied.

- Ignition off.
- Restore components and connectors.
- Switch on the ignition. Lighting in the DVD-player's buttons is activated. If the TV receiver is installed, the receiver's LED lights up.
- When start-up is performed the lighting in the DVD-player's buttons goes off, does not apply to POWER-button. If the TV receiver is installed, the receiver's LED goes out.

NOTE: A long start-up time indicates a fault in communication with the screens.

- Start the system using the POWER button on the DVD player or the remote control. Use the buttons, on both DVD-player and remote control, to operate the system.

Check that:

- The screens show a picture.
- DVD-disc can be played.
- Sound is heard in wireless headphones.
- Sound can be heard in the vehicle's speakers.
- Menus can be accessed with the remote control in both screens.
- TV picture appears (if TV receiver is installed) and it is possible to change channels.
- If possible, connect an external source to the AV input and test the function.

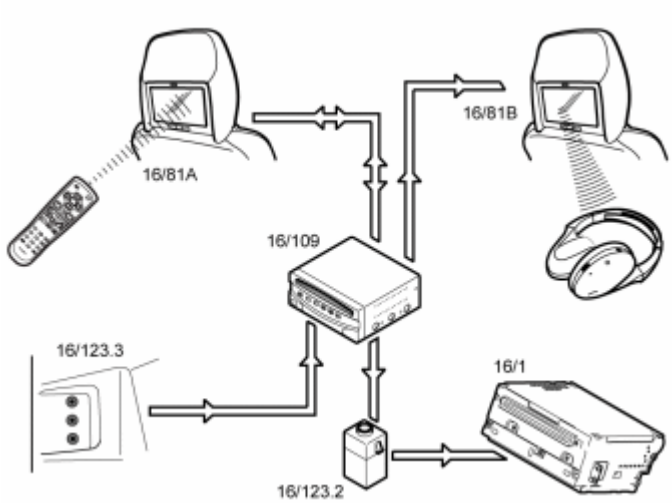

Fig. 57: Identifying Entertainment System Components & Communication
Courtesy of VOLKSWAGEN GROUP OF AMERICA, INC.

Is the function OK?

- **YES**

OKAY: Troubleshooting has been completed.

- **NO**

  Refer to **INFORMATION**

CHECKING THE DISPLAY SCREENS

- Turn on the system with the main switch on the DVD-player.
- Lighting in all of the DVD-player's buttons shall now be activated and remain on.
- Now the screens shall be activated.

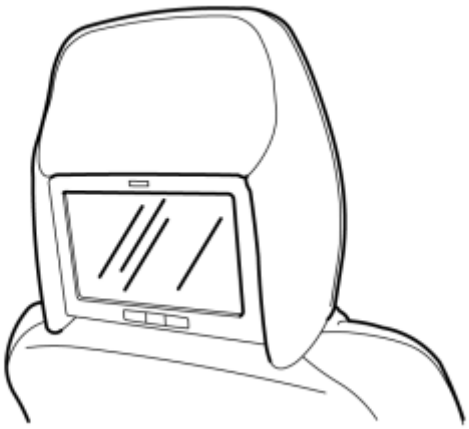

Fig. 58: View Of Display Screens
Courtesy of VOLKSWAGEN GROUP OF AMERICA, INC.

Do the screens come on?

- **YES**

  Refer to **CHECKING THE REMOTE CONTROL**

- **NO**

  Refer to **CHECKING THE COMPONENTS AND WIRING**

CHECKING THE COMPONENTS AND WIRING

Too high or too low temperature in the screen.

The screen has a built-in temperature sensor that registers the temperature inside the screen. The temperature signal is sent to the rear seat entertainment module (RSE)/DVD player and is used to prevent the use of the screen at too high or low a temperature. Temperature is not monitored for the first 5 minutes after the ignition is switched on.

The following happens:

- At +72 °C and -19 °C, a warning appears on the screen. The warning message is removed if the temperature changes to +70 °C or -17 °C.
- If the temperature changes to +77 °C or -24 °C, the system shuts off.

Check if the screen's temperature is within approved range.

Checking the components and wiring

HINT: If only one of the screens lights up, try installing the screen that is not working in the head restraint where the working screen was installed. Then restart the system by turning it off, switching off the ignition and then switching the ignition on again. Turn on the system with the main switch on the DVD-player. If the malfunction remains, this indicates a malfunction either in the leads between the screen's circuit board and the display itself or in the display itself.

Try a new screen if necessary.

Other information

- see **SIGNAL SPECIFICATION, REAR SEAT ENTERTAINMENT MODULE (RSE), GENERATION 4.3**
- see **CHECKING WIRING AND TERMINALS**

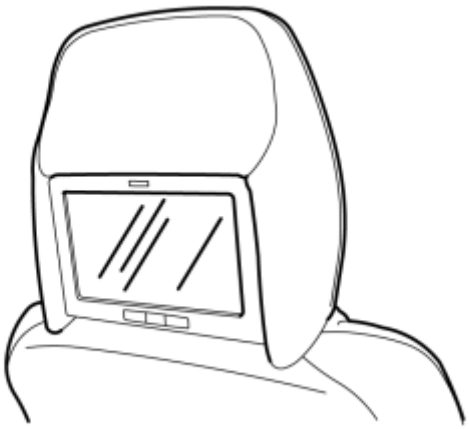

Fig. 59: View Of Display Screens
Courtesy of VOLKSWAGEN GROUP OF AMERICA, INC.

- **Continue**

  Refer to **VERIFICATION**

CHECKING THE REMOTE CONTROL

Make sure the remote control batteries are fully charged.

- Turn off the system with the main switch on the DVD player.
- Wait until the system has shut down.
- Turn on the system with the remote control aimed at the left screen.

Then repeat with the right screen.

Do the screens come on?

- **YES**

  Refer to **CHECKING THE DVD PLAYER**

- **NO**

  Refer to **CHECKING THE REMOTE CONTROL SIGNAL**

CHECKING THE REMOTE CONTROL SIGNAL

HINT: If none of the screens come on in the previous test, the probable cause is a damaged remote control or discharged batteries.

HINT: If only one screen does not come on in the previous test, it indicates that the cable for infrared (IR) signals is probably damaged.

HINT: Activation of the infrared IR-receivers in the head restraints can be checked by the IR-lights in the screen's lower edge being on dimly after the system has been turned on.

Checking IR-signal, left screen

Check the lead for the infrared (IR) signal between the screen and rear seat entertainment module (RSE) for open circuit.

To check the voltage level on the signal cable for IR-signal, proceed as follows:

- Connect all cables and connectors.
- Measure the voltage between the signal cable for the Infra Red (IR) signal to the left-hand display screen and ground. The measured voltage is reference value.

  NOTE: Do not press any of the buttons on the remote control during this measurement.

- Measure from the rear side of a suitable connector. Do not damage the terminals in the connector.
- Aim the remote control at the left screen and press in a button on the remote control. The voltage on the signal cable must fall slightly for as long as the button on the remote control is pressed in.

NOTE: Important in this measurement are not the absolute voltage levels, instead you get a voltage difference downward.

Checking IR-signal, right screen

Compare the latest reading as above with the signal for the infra red (IR) signal from the right-hand infra red (IR) receiver for the display screen.

Conclusion

- If the result of the above checks is that no malfunction was found, this means that the receivers in both screens work and that the remote control is OK.
- If voltages on the cables are OK but a lower voltage cannot be measured when a button on the remote control is pressed down, try with replacing the remote control.

Other information

- see **SIGNAL SPECIFICATION, REAR SEAT ENTERTAINMENT MODULE (RSE), GENERATION 4.3**
- see **CHECKING WIRING AND TERMINALS**
- **Continue**

  Refer to **VERIFICATION**

CHECKING THE DVD PLAYER

Check that the DVD is not damaged and that it is clean. Try using another DVD if necessary.

Check that nothing has jammed in the DVD player. Check that there are no mechanical grinding noises coming from the DVD player when it is in operation.

Check that the disc can be inserted and ejected without problems.

NOTE: Only one disc at a time may be loaded in the DVD-player.

Check that the transport protection disc, which is supplied with system at delivery, is not in the DVD-player.

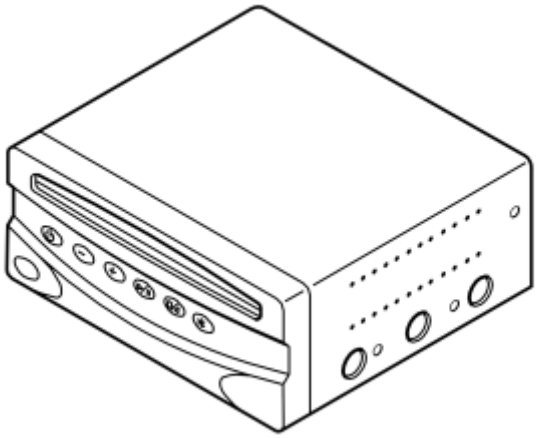

Fig. 60: Identifying Rear Seat Entertainment Module (RSE)
Courtesy of VOLKSWAGEN GROUP OF AMERICA, INC.

Was a fault detected?

- **YES**

  Refer to **VERIFICATION**

- **NO**

  Refer to **CHECKING THE FUNCTION**

CHECKING THE FUNCTION

- Select the dvd-player as source for one of the screens and press on the remote control's PLAY button.

  Check that picture is shown and sound is heard at playback.

  NOTE: If there is a picture but no audio in one or both of the headphones, see other fault tracing.

  If picture and sound are shown, start-up of the system, DVD-player, and screens is ok.

Is there a picture?

- **YES**

  FAULT NOT FOUND: Troubleshooting has been completed.

- **NO**

  Refer to **CHECKING THE CABLE AND COMPONENT**

CHECKING THE CABLE AND COMPONENT

Check the leads for video signals between the TV-receiver and rear seat entertainment module (RSE) for short-circuiting to voltage, short-circuiting to ground, and open circuit. There are two video leads for each screen. Regards the cables from rear seat entertainment module (RSE), terminals #E10 and #E11 for left screen as well as terminals #E22 and #E23 for right screen.

Other information

- see **SIGNAL SPECIFICATION, REAR SEAT ENTERTAINMENT MODULE (RSE), GENERATION 4.3**
- see **CHECKING WIRING AND TERMINALS**

- **Continue**

  Refer to **VERIFICATION**

CHECKING CAN CABLES

HINT: If the power supply and ground to the screen are working properly but the screen has no contact with the rear seat entertainment module (RSE)/DVD player via the CAN network, the screen will come on in LOCAL mode at start-up. Then neither sound will be heard nor picture shown at playback from DVD-player to this screen. Menus available locally in the screen can be accessed.

Check if the screens are activated in LOCAL-mode, which means that there is malfunction on the CAN-leads.

Check the leads for CAN-communication between rear seat entertainment module (RSE) / DVD-Player and screens, #E3 and #E4 (left screen) and #E15 and #E16 (right screen, for short-circuiting to voltage, short-circuiting to ground, and open circuit.

In connector D, on rear seat entertainment module (RSE) / DVD-Player, there is a bridging of the CAN-net for the right screen. Bridging is in place to enable future expansion of the system with additional control modules. If connector B has been damaged or is disconnected or if for some reason there is no contact between the two ends of the CAN cable jumper, it will not be possible to establish communication with the right screen.

HINT: If a screen is not working, try switching places between the screens/head restraints. If the malfunction remains, this indicates a malfunction either in the leads between the screen's circuit board and the display itself or in the display itself.

Other information

- see **SIGNAL SPECIFICATION, REAR SEAT ENTERTAINMENT MODULE (RSE), GENERATION 4.3**
- see **CHECKING WIRING AND TERMINALS**

- **Continue**

Refer to **VERIFICATION**

CHECKING WAKE-UP SIGNAL

The control module makes three attempts to activate a screen by transmitting a high signal on the cable as a wake-up signal to the screen in question. This takes place according to the following pattern, on the condition that the screen does not reply. Normally only one wake-up signal is sent for the screen to wake up.

If the pattern below appears, the screen is not responding.

- High voltage (approx. 11.5 V) for approx. one second.
- Low voltage (approx. 0 V) for approx. three seconds.
- High voltage (approx. 11.5 V) for approx. one second.
- Low voltage (approx. 0 V) for approx. three seconds.
- Constant high voltage.

Measurement of wake-up signal.

When the ignition is on, the rear seat entertainment module (RSE) performs a simple internal system-check and starts the start-up procedure with the screens.

- Measure wake-up signal at the screen. Measure from the rear side of a suitable connector. Do not damage the terminals in the connector. Measure signal that goes to the screen that does not answer the wake-up calls.
- Switch on the ignition. Lighting in the DVD-player's buttons is activated.
- Note voltage of the wake-up signal.

Other information

- see **SIGNAL SPECIFICATION, REAR SEAT ENTERTAINMENT MODULE (RSE), GENERATION 4.3**
- see **CHECKING WIRING AND TERMINALS**

Is there any wake-up signal?

- **YES**

  Refer to **CHECKING CAN CABLES**

- **NO**

  Refer to **CHECKING THE CABLE AND COMPONENT**

CHECKING THE CABLE AND COMPONENT

Take measurements for the screen that is not communicating.

Check the lead for the wake-up signal from rear seat entertainment module (RSE) / DVD-Player to screens, #E2 (left screen) and #E14 (right screen), for short-circuiting to ground and open circuit.

Check the connector for rear seat entertainment module (RSE) / DVD-Player as well as screens for loose contact, contact resistance and oxidation.

HINT: If a screen is not working, try switching places between the screens/head restraints. If the malfunction remains, this indicates a malfunction either in the leads between the screen's circuit board and the display itself or in the display itself.

Remedy as necessary.

Other information

- see **SIGNAL SPECIFICATION, REAR SEAT ENTERTAINMENT MODULE (RSE), GENERATION 4.3**
- see **CHECKING WIRING AND TERMINALS**

- **Continue**

  Refer to **VERIFICATION**

INFORMATION

FAULT-TRACING INFORMATION

The fault should have been detected and remedied. As this is not the case fault-tracing has failed.

Exit fault-tracing for this diagnostic trouble code (DTC) or make another attempt.

CHECKING TMC MESSAGES (2008-2010)

CHECKING TMC MESSAGES

FAULT-TRACING INFORMATION

When a warning message about an exit is received via TMC, it is possible that the warning is not displayed on the current exit road, but on the main road. Even if the exit is closed, RTI will guide the driver along the closed road.

Fault-tracing

NOTE: Replacing components does not solve the problem.

Order the latest service disc for your region as follows, to program the unit with new software.

Service discs are divided into the following regions:

- Europe/Russia
- Middle East/South Africa
- Australia/New Zealand
- USA/Mexico

Fault symptom

- Navigation/Other navigation problems
- Navigation/Does not work
- Navigation/Navigation system gives incorrect directions

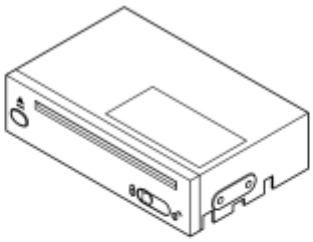

Fig. 61: Identifying TMC Receiver
Courtesy of VOLKSWAGEN GROUP OF AMERICA, INC.

CHECKING TV RECEPTION AND TV RECEIVER. REAR SEAT ENTERTAINMENT, GENERATION 4.3 (2009-2011)

CHECKING TV RECEPTION AND TV RECEIVER

FAULT-TRACING INFORMATION

Digital TV-receiver (DVB-T) is an extra option that receives the digital TV-channels, converts them and transmits them on to rear seat entertainment module (RSE). For the TV-receiver to be able to receive transmitted channels, two antennas are connected to the receiver. The TV receiver is operated by the remote control via the rear seat entertainment module (RSE).

No TV-picture is shown or no TV-sound is heard.

- No power supply or ground to TV receiver.
- Damaged TV receiver fuse.
- Damaged cables for audio and video signals between the rear seat entertainment module (RSE) and the

TV receiver.
- Damaged wake-up signal cables between the rear seat entertainment module (RSE) and TV receiver.
- The rear seat entertainment module (RSE) is not programmed for a TV receiver.

TV picture appears, but quality is poor.

- Weak or distorted antenna signal.
- Damaged cables between the TV receiver and the antennas.
- Damaged antennas.

Not possible to change channels with the remote control.

- Damaged cables for remote control's IR signals between the rear seat entertainment module (RSE) and the TV receiver.

TV channels deleted.

- Switch on the TV receiver is in the wrong position.

Message about software update is shown.

- Switch on the TV receiver is in the wrong position.

NOTE: **In order for TV-channels to be shown in the system for rear seat entertainment, the system for rear seat entertainment must be on and in other respects work trouble-free.**

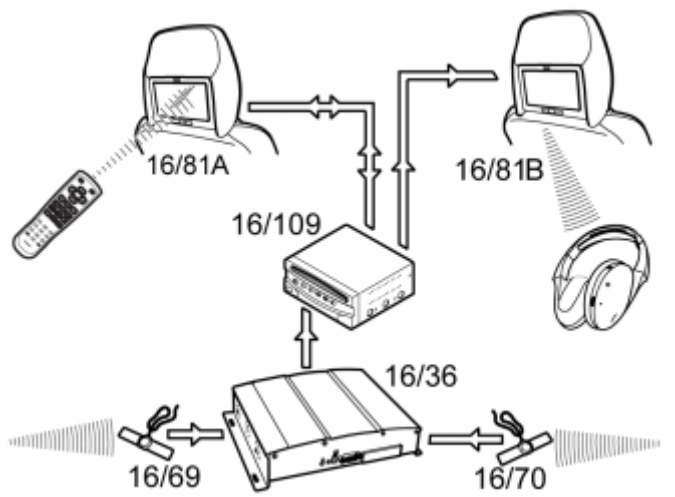

Fig. 62: View Of Checking TV Reception And TV Receiver
Courtesy of VOLKSWAGEN GROUP OF AMERICA, INC.

- **Continue**

Refer to **SYMPTOM SELECTION**

CHECKING THE WIRING AND COMPONENT

Check that the TV-receiver's extra fuse is trouble-free.

HINT: Check that the TV-receiver's indicator diode is turned on when the ignition is turned on. If the LED indicators come on, the power supply, ground connection and wake-up signal are OK. The indicator diode is only on during start-up of the system as well as when the system is on.

Check the lead for voltage feed to the TV-receiver's 26-pin connector #26 for short-circuiting to voltage, short-circuiting to ground and open circuit. The voltage should be approx. the same as the battery voltage.

Check the lead for ground connection to the TV-receiver's 26-pin connector #13 for open circuit and short-circuiting to voltage. Also check the ground terminal. Check for contact resistance and oxidation.

Check the lead for the wake-up signal to the TV-receiver's 26-pin connector #25 for short-circuiting to voltage, short-circuiting to ground and open circuit. When rear seat entertainment module (RSE) sends wake-up signal the voltage shall be approx. 9 V.

Check that rear seat entertainment module (RSE) is programmed for TV-receiver. If the vehicle is vehicle is equipped with TV receiver and the control unit has been replaced, the control unit setting must be changed.

If there is a picture but no audio

Check the leads for sound between TV-receiver and rear seat entertainment module (RSE) for short-circuiting to voltage, short-circuiting to ground and open circuit. Refers to leads to rear seat entertainment module (RSE), connections #C3, #C4, and #C5.

If there is a picture but no audio

Check the leads for video signals between the TV-receiver and rear seat entertainment module (RSE) for short-circuiting to voltage, short-circuiting to ground, and open circuit. Refers to leads to rear seat entertainment module (RSE), connections #C1 and #C2.

Other information

- see **SIGNAL SPECIFICATION, REAR SEAT ENTERTAINMENT MODULE (RSE), GENERATION 4.3**
- see **CHECKING WIRING AND TERMINALS**

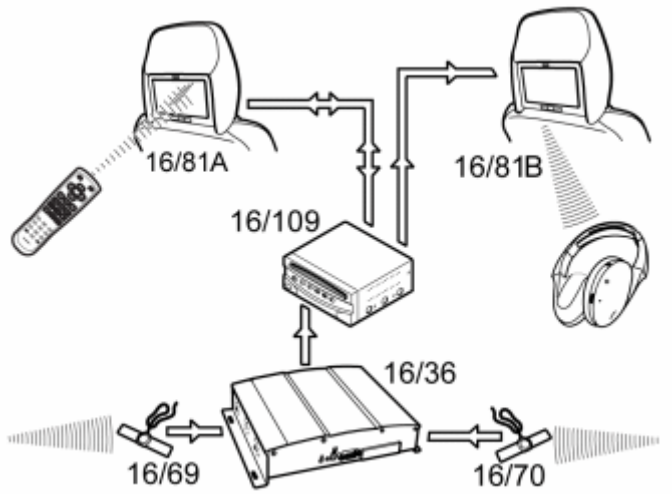

Fig. 63: View Of Checking TV Reception And TV Receiver
Courtesy of VOLKSWAGEN GROUP OF AMERICA, INC.

- **Continue**

  Refer to **VERIFICATION**

SYMPTOM SELECTION

Select one of the following options

1. No TV-picture is shown or no TV-sound is heard.

   Refer to **CHECKING THE WIRING AND COMPONENT**

2. TV picture appears, but quality is poor.

   Refer to **CHECKING SIGNAL FOR TV-PICTURE**

3. Not possible to change channels with the remote control.

   Refer to **CHECKING CONTROL OF TV-RECEIVER WITH REMOTE CONTROL**

4. TV channels deleted. Message about software update is shown.

   Refer to **CHECKING SETTING OF SWITCH TV-RECEIVER**

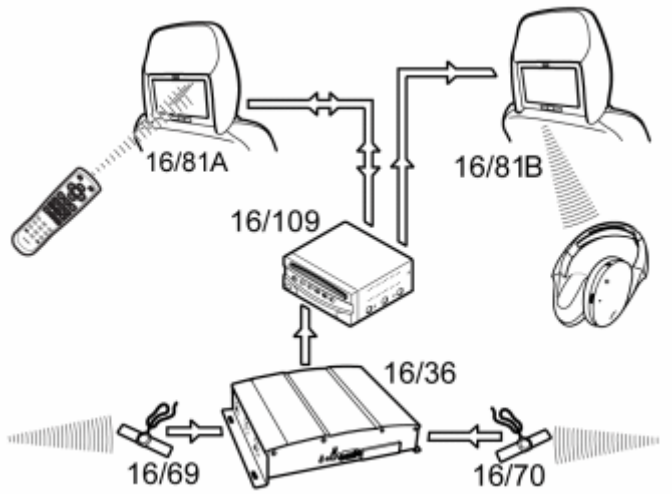

Fig. 64: View Of Checking TV Reception And TV Receiver
Courtesy of VOLKSWAGEN GROUP OF AMERICA, INC.

CHECKING SIGNAL FOR TV-PICTURE

The antenna's direction and the current receiver conditions are decisive to the picture's quality. If the picture deteriorates or disappears, if the audio is choppy or some of the channels disappear, it is likely due to a weak antenna signal. The signal is affected by factors such as terrain formations, weather conditions and vehicle position in relation to the TV transmitter. The problem could show up in conjunction with transfers, seasonal changes and types of weather.

Check that the antenna's leads are correctly connected to the TV-receiver and that the leads to the antennas are trouble-free.

HINT: The antenna gets voltage feed and ground from the TV-receiver. Supplied 5 V via the antenna cable's intermediate conductor and grounded via the cable screening. Under the casing of each antenna, there is an indicator LED that lights when the digital TV receiver is on and the antenna is OK. If the system is ON and the LED does not light, the fault lies in the antenna, its cables or the power supply/ground from the TV receiver.

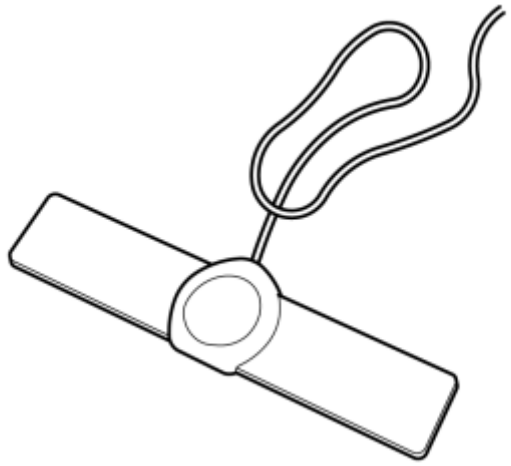

Fig. 65: Identifying TV Receiver Antenna
Courtesy of VOLKSWAGEN GROUP OF AMERICA, INC.

- **Continue**

  Refer to **VERIFICATION**

CHECKING CONTROL OF TV-RECEIVER WITH REMOTE CONTROL

NOTE: **If the remote control does not work with the rest of the system, stop this fault tracing.**

The TV receiver is operated by the remote control via the rear seat entertainment module (RSE).

Check the leads for the infrared signals between the TV-receiver's 6-pin connector, #1 and #3, and rear seat entertainment module (RSE), #D15 and #D25, for short-circuiting to voltage, short-circuiting to ground, and open circuit.

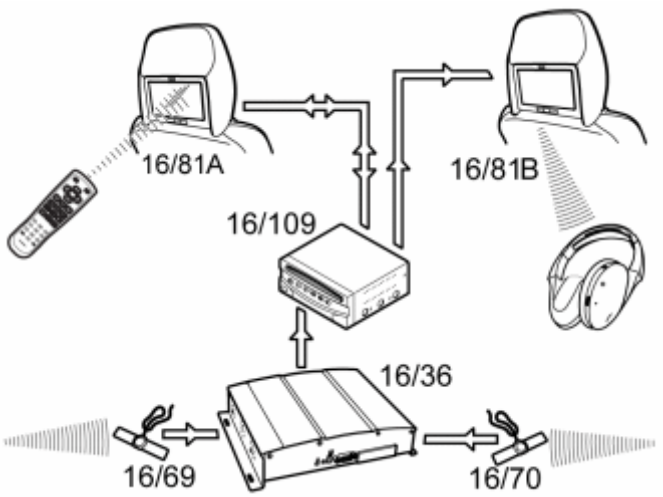

Fig. 66: View Of Checking TV Reception And TV Receiver

Courtesy of VOLKSWAGEN GROUP OF AMERICA, INC.

- **Continue**

  Refer to **VERIFICATION**

CHECKING SETTING OF SWITCH TV-RECEIVER

The TV receiver has two small switches located next to the program card slot.

The following settings are possible:

1. Normal position.
2. Mode for software update.
3. Mode for erasing programmed TV-channels.
4. Mode for changing signal standard between PAL and NTSC.

If a customer comes in with his/her vehicle and complains of any of the following, the positions of the TV receiver switches should be checked.

- A menu about software update is always shown in the screens at TV-display.
- The stored TV-channels are always erased and a message is shown.

Under normal conditions, the switches must always be in the Normal position.

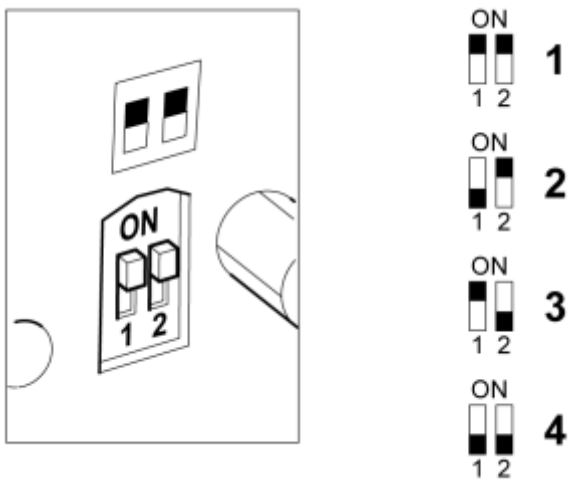

Fig. 67: View Of Switches In Normal Position
Courtesy of VOLKSWAGEN GROUP OF AMERICA, INC.

- **Continue**

  Refer to **VERIFICATION**

VERIFICATION

HINT: After carrying out the repair, check that the fault has been remedied.

- Ignition off.
- Restore components and connectors.
- Switch on the ignition. Lighting in the DVD-player's buttons is activated. If the TV receiver is installed, the receiver's LED lights up.
- When start-up is performed the lighting in the DVD-player's buttons goes off, does not apply to POWER-button. If the TV receiver is installed, the receiver's LED goes out.

NOTE: A long start-up time indicates a fault in communication with the screens.

- Start the system using the POWER button on the DVD player or the remote control. Use the buttons, on both DVD-player and remote control, to operate the system.

Check that:

- The screens show a picture.
- DVD-disc can be played.
- Sound is heard in wireless headphones.
- Sound can be heard in the vehicle's speakers.
- Menus can be accessed with the remote control in both screens.
- TV picture appears (if TV receiver is installed) and it is possible to change channels.
- If possible, connect an external source to the AV input and test the function.

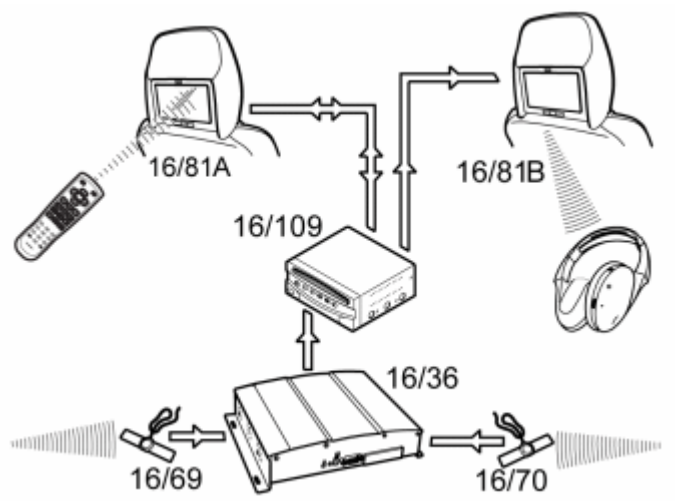

Fig. 68: View Of Checking TV Reception And TV Receiver
Courtesy of VOLKSWAGEN GROUP OF AMERICA, INC.

Is the function OK?

- **YES**

  OKAY: Troubleshooting has been completed.

- **NO**

  Refer to **INFORMATION**

INFORMATION

FAULT-TRACING INFORMATION

The fault should have been detected and remedied. As this is not the case fault-tracing has failed.

Exit fault-tracing for this diagnostic trouble code (DTC) or make another attempt.

CHECKING USB CONNECTION (2009-2011)

CHECKING USB CONNECTION

READING OFF DIAGNOSTIC TROUBLE CODES (DTCS)

Connect a USB memory to the USB connection.

Click the VCT2000 symbol to read out the USB memory ID.

If the USB memory ID can be read out, the USB connection is working.

If the USB memory ID cannot be read out, the USB connection is not working. This may be due to an open-circuit in one of the cables between the Integrated Audio Module (IAM) and USB-connection.

Checking for the fault

If possible, check if the customer's symptom remains.

Checking the wiring

Check the cables for short-circuit to voltage, short-circuit to ground and open circuit.

If no faults are found, replace the USB connection.

Other information

- see **SIGNAL SPECIFICATION**
- see **DIAGNOSTIC TROUBLE CODE (DTC) INFORMATION IAM-5001**
- see **DIAGNOSTIC TROUBLE CODE (DTC) INFORMATION IAM-5002**

- see **CHECKING WIRING AND TERMINALS**

Fig. 69: Identifying VCT2000 Diagnostic Tool Symbol In VIDA
Courtesy of VOLKSWAGEN GROUP OF AMERICA, INC.

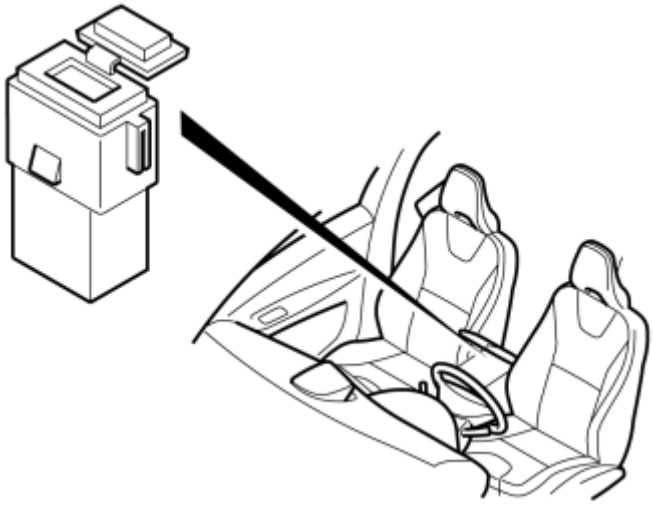

Fig. 70: Identifying Connector
Courtesy of VOLKSWAGEN GROUP OF AMERICA, INC.

Was a fault detected?

- **YES**

  OKAY: Troubleshooting has been completed.

- **NO**

  Refer to **INFORMATION**

INFORMATION

FAULT-TRACING INFORMATION

The fault should have been detected and remedied. As this is not the case fault-tracing has failed.

Exit fault-tracing for this diagnostic trouble code (DTC) or make another attempt.

CHECKING WIRELESS HEADPHONES. REAR SEAT ENTERTAINMENT,

GENERATION 4.1 (2006-2007)

CHECKING WIRELESS HEADPHONES

FAULT-TRACING INFORMATION

The wireless headsets can be used for both display screens. The sound to the headsets is transferred from the display screens, via infrared signals (IR), to the headsets in two channel stereo format. If the headsets do not function the fault could be due to:

- The headsets (Infra-red receiver in the headsets)
- Headset batteries discharged.
- Blocked path for infrared signals to the headsets.
- Damaged IR-transmitter/head rest.
- Leads between Rear seat entertainment module (RSE) and screens are damaged.

NOTE: In order for sound from the system for rear seat entertainment to be heard in the headsets, the system for rear seat entertainment must be on and work faultlessly.

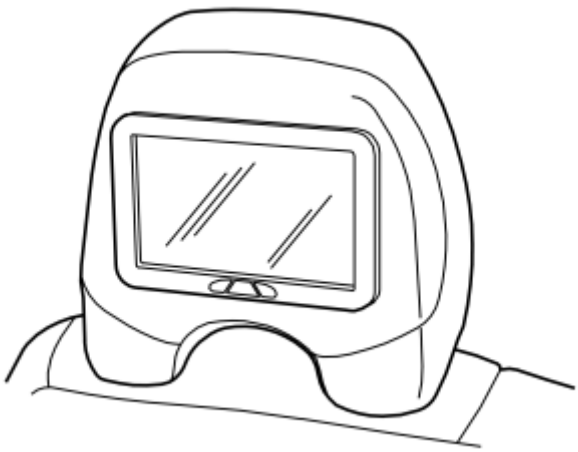

Fig. 71: Identifying Seat Headrest Video Screen
Courtesy of VOLKSWAGEN GROUP OF AMERICA, INC.

- **Continue**

  Refer to **CHECKING THE HEADSETS**

CHECKING THE HEADSETS

HINT: To obtain a certain audio source - insert a CD in the DVD-player, press the Play button, and select DVD as source on the screen where troubleshooting is to be performed.

Checking the settings

Check that the volume has not been turned down via VOLUME on the remote control or that the volume on the relevant headset has not been turned down.

Check that the sound source for the selected headset channel and the headsets are on. Sound that is sent from left screen is always channel A in the headphones, and sound that is sent from right screen is always channel B in the headphones.

Checking the infra-red transmitter/head restraint and infra-red receiver/headsets

Check that the infra-red transmitter/head restraint is not obstructed. In certain cases moisture can impair infra-red signal reception.

Also check that the receiver in the headsets is not obstructed.

Check that the IR-diodes at the bottom on the screen light up dimly when the system is on and that there is a sound source. If the IR-diodes are not lit up, the system will play some form of media, the circuit board in the head restraint is probably damaged.

Checking the headsets

Check the headset batteries.

Check to, see if the other headset functions. If this is the case the headsets are defective.

Checking audio leads for screen

Check if the malfunction only is at one screen or if the malfunction is present at both screens. If the problem only occurs at one screen - change place between both headrests and, see if the problem comes along.

Check that it is only the wireless headphones that do not work. If there is no sound from the vehicle's ordinary loudspeakers, the fault may be in the rear seat entertainment module (RSE). Before replacing the control module, ensure that all other relevant symptom tests have been carried out.

Check that the connector between Rear seat entertainment module (RSE) and both screens is installed correctly and that it is not damaged.

Check the leads for audio signals from Rear seat entertainment module (RSE) to respective screen. There are three audio leads for each screen, one for left audio channel, one for right audio channel and a ground connection which is common for both audio channels. Regards the cables from rear seat entertainment module (RSE), terminals #E6, #E7 and #E8 for left display screen as well as terminals #E18, #E19 and #E20 for right display screen.

Conclusion

- If no problem can be found on the cables to the screens and it is only from one screen that sound cannot

be played, but sound from Rear seat entertainment module (RSE) can be listened to from other places - try changing circuit board in the head restraint where the sound does not work.

- If no malfunction can be found on the leads to the screens, none of the screens can give sound to the headphones but sound from Rear seat entertainment module (RSE) can be heard from other places - try replacing Rear seat entertainment module (RSE). Before replacing the control module, ensure that all other relevant symptom tests have been carried out.
- If sound does not reach any receiver (neither AUX-panel, wired headphones, rear speakers nor wireless headphones) - replace Rear seat entertainment module (RSE). If sound is not heard from the front audio system or in the wireless headsets, there may be a fault in the Rear Seat Entertainment Module (RSE). Before replacing the control module, ensure that all other relevant symptom tests have been carried out.

Remedy as necessary.

Other information:

- see **SIGNAL SPECIFICATION, REAR SEAT ENTERTAINMENT MODULE (RSE), GENERATION 4.1**
- see **SCREEN/CIRCUIT BOARD, REPLACING**
- see **CHECKING WIRING AND TERMINALS**

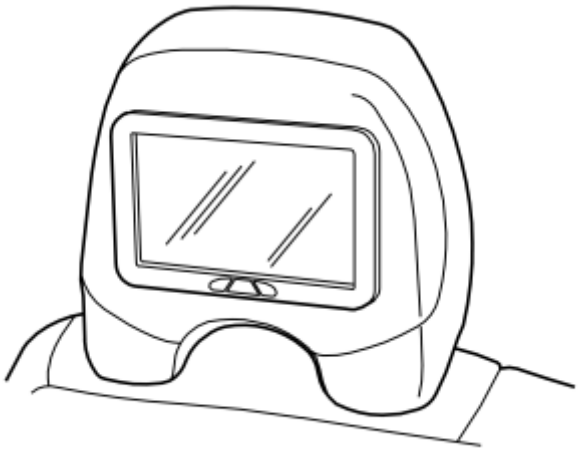

Fig. 72: Identifying Seat Headrest Video Screen
Courtesy of VOLKSWAGEN GROUP OF AMERICA, INC.

- **Continue**

  Refer to **CHECKING THE HEADSETS**

CHECKING THE HEADSETS

Check that the headsets function.

Do the headsets function?

- **YES**

  VERIFIED: Troubleshooting has been completed.

- **NO**

  Refer to **INFORMATION**

INFORMATION

FAULT-TRACING INFORMATION

The fault should have been detected and remedied. As this is not the case fault-tracing has failed.

Exit fault-tracing for this diagnostic trouble code (DTC) or make another attempt.

CHECKING WIRELESS HEADPHONES. REAR SEAT ENTERTAINMENT, GENERATION 4.2 (2007-2008)

CHECKING WIRELESS HEADPHONES

FAULT-TRACING INFORMATION

The wireless headsets can be used for both display screens. The sound to the headsets is transferred from the display screens, via infrared signals (IR), to the headsets in two channel stereo format. If the headsets do not function the fault could be due to:

- The headsets (Infra-red receiver in the headsets)
- Headset batteries discharged.
- Blocked path for infrared signals to the headsets.
- Damaged IR-transmitter/head rest.
- Leads between Rear seat entertainment module (RSE) and screens are damaged.

NOTE: **In order for sound from the system for rear seat entertainment to be heard in the headsets, the system for rear seat entertainment must be on and work faultlessly.**

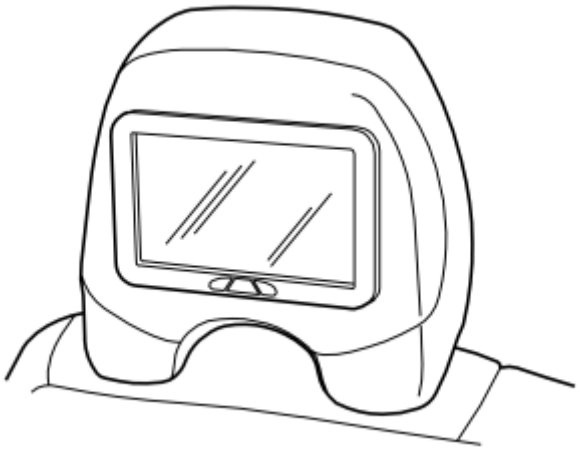

Fig. 73: Identifying Seat Headrest Video Screen
Courtesy of VOLKSWAGEN GROUP OF AMERICA, INC.

- **Continue**

  Refer to **CHECKING THE HEADSETS**

CHECKING THE HEADSETS

HINT: To obtain a certain audio source - insert a CD in the DVD-player, press the Play button, and select DVD as source on the screen where troubleshooting is to be performed.

Checking the settings

Check that the volume has not been turned down via VOLUME on the remote control or that the volume on the relevant headset has not been turned down.

Check that the sound source for the selected headset channel and the headsets are on. Sound that is sent from left screen is always channel A in the headphones, and sound that is sent from right screen is always channel B in the headphones.

Checking the infra-red transmitter/head restraint and infra-red receiver/headsets

Check that the infra-red transmitter/head restraint is not obstructed. In certain cases moisture can impair infra-red signal reception.

Also check that the receiver in the headsets is not obstructed.

Check that the IR-diodes at the bottom on the screen light up dimly when the system is on and that there is a sound source. If the IR-diodes are not lit up, the system will play some form of media, the circuit board in the head restraint is probably damaged.

Checking the headsets

Check the headset batteries.

Check to, see if the other headset functions. If this is the case the headsets are defective.

Checking audio leads for screen

Check if the malfunction only is at one screen or if the malfunction is present at both screens. If the problem only occurs at one screen - change place between both headrests and, see if the problem comes along.

Check that it is only the wireless headphones that do not work. If there is no sound from the vehicle's ordinary loudspeakers, the fault may be in the rear seat entertainment module (RSE). Before replacing the control module, ensure that all other relevant symptom tests have been carried out.

Check that the connector between Rear seat entertainment module (RSE) and both screens is installed correctly and that it is not damaged.

Check the leads for audio signals from Rear seat entertainment module (RSE) to respective screen. There are three audio leads for each screen, one for left audio channel, one for right audio channel and a ground connection which is common for both audio channels. Regards the cables from rear seat entertainment module (RSE), terminals #E6, #E7 and #E8 for left display screen as well as terminals #E18, #E19 and #E20 for right display screen.

Conclusion

- If no problem can be found on the cables to the screens and it is only from one screen that sound cannot be played, but sound from Rear seat entertainment module (RSE) can be listened to from other places - try changing circuit board in the head restraint where the sound does not work.
- If no malfunction can be found on the leads to the screens, none of the screens can give sound to the headphones but sound from Rear seat entertainment module (RSE) can be heard from other places - try replacing Rear seat entertainment module (RSE).
- If sound is not heard from the front audio system or in the wireless headsets, there may be a fault in the Rear Seat Entertainment Module (RSE).

Remedy as necessary.

Other information:

- see **SIGNAL SPECIFICATION, REAR SEAT ENTERTAINMENT MODULE (RSE), GENERATION 4.2**
- see **CHECKING WIRING AND TERMINALS**

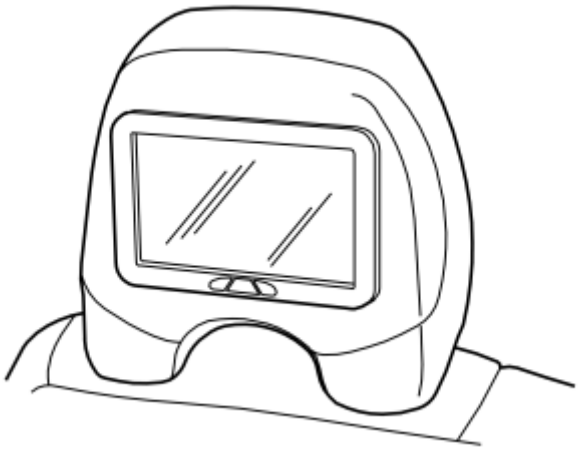

Fig. 74: Identifying Seat Headrest Video Screen
Courtesy of VOLKSWAGEN GROUP OF AMERICA, INC.

- **Continue**

  Refer to **CHECKING THE HEADSETS**

CHECKING THE HEADSETS

Check that the headsets function.

Do the headsets function?

- **YES**

  VERIFIED: Troubleshooting has been completed.

- **NO**

  Refer to **INFORMATION**

INFORMATION

FAULT-TRACING INFORMATION

The fault should have been detected and remedied. As this is not the case fault-tracing has failed.

Exit fault-tracing for this diagnostic trouble code (DTC) or make another attempt.

CHECKING WIRELESS HEADPHONES. REAR SEAT ENTERTAINMENT, GENERATION 4.3 (2009-2011)

CHECKING WIRELESS HEADPHONES

FAULT-TRACING INFORMATION

The wireless headsets can be used for both display screens. The sound to the headsets is transferred from the display screens, via infrared signals (IR), to the headsets in two channel stereo format. If the headsets do not function the fault could be due to:

- The headsets (Infra-red receiver in the headsets)
- Headset batteries discharged.
- Blocked path for infrared signals to the headsets.
- Damaged IR-transmitter/head rest.
- Leads between Rear seat entertainment module (RSE) and screens are damaged.

NOTE: **In order for sound from the system for rear seat entertainment to be heard in the headsets, the system for rear seat entertainment must be on and work faultlessly.**

Fig. 75: Identifying Wireless Headphones
Courtesy of VOLKSWAGEN GROUP OF AMERICA, INC.

- **Continue**

  Refer to **CHECKING THE HEADSETS**

CHECKING THE HEADSETS

HINT: To obtain a certain audio source - insert a CD in the DVD-player, press the Play button, and select DVD as source on the screen where troubleshooting is to be performed.

Checking the settings

Check that the volume on each headset is turned down.

Check that the sound source for the selected headset channel and the headsets are on. Sound that is sent from left screen is always channel A in the headphones, and sound that is sent from right screen is always channel B in the headphones.

Checking the infra-red transmitter/head restraint and infra-red receiver/headsets

Check that the infra-red transmitter/head restraint is not obstructed. In certain cases moisture can impair infra-red signal reception.

Also check that the receiver in the headsets is not obstructed.

Check that the IR-diodes at the bottom on the screen light up dimly when the system is on and that there is a sound source. If the IR-diodes are not lit up, the system will play some form of media, the circuit board in the head restraint is probably damaged.

Checking the headsets

Check the headset batteries.

Check to, see if the other headset functions. If this is the case the headsets are defective.

Checking audio leads for screen

Check if the malfunction only is at one screen or if the malfunction is present at both screens. If the problem only occurs at one screen - change place between both headrests and, see if the problem comes along.

Check that it is only the wireless headphones that do not work. If there is no sound from the vehicle's ordinary loudspeakers, the fault may be in the rear seat entertainment module (RSE). Before replacing the control module, ensure that all other relevant symptom tests have been carried out.

Check that the connector between Rear seat entertainment module (RSE) and both screens is installed correctly and that it is not damaged.

Check the leads for audio signals from Rear seat entertainment module (RSE) to respective screen. There are three audio leads for each screen, one for left audio channel, one for right audio channel and a ground connection which is common for both audio channels. Regards the cables from rear seat entertainment module (RSE), terminals #E6, #E7 and #E8 for left display screen as well as terminals #E18, #E19 and #E20 for right display screen.

Conclusion

- If no problem can be found on the cables to the screens and it is only from one screen that sound cannot be played, but sound from Rear seat entertainment module (RSE) can be listened to from other places - try changing circuit board in the head restraint where the sound does not work.
- If no malfunction can be found on the leads to the screens, none of the screens can give sound to the headphones but sound from Rear seat entertainment module (RSE) can be heard from other places - try replacing Rear seat entertainment module (RSE).

- If sound is not heard from the front audio system or in the wireless headsets, there may be a fault in the Rear Seat Entertainment Module (RSE). Before replacing the control module, ensure that all other relevant symptom tests have been carried out.

Remedy as necessary.

Other information:

- see **SIGNAL SPECIFICATION, REAR SEAT ENTERTAINMENT MODULE (RSE), GENERATION 4.3**
- see **CHECKING WIRING AND TERMINALS**

Fig. 76: Identifying Wireless Headphones
Courtesy of VOLKSWAGEN GROUP OF AMERICA, INC.

Was a fault detected?

- **YES**

  OKAY: Troubleshooting has been completed.

- **NO**

  Refer to **INFORMATION**

INFORMATION

FAULT-TRACING INFORMATION

The fault should have been detected and remedied. As this is not the case fault-tracing has failed.

Exit fault-tracing for this diagnostic trouble code (DTC) or make another attempt.

FAULT TRACING OF THE ROOF MOUNTED SYSTEM FOR REAR SEAT ENTERTAINMENT (2008-2011)

FAULT TRACING OF THE ROOF MOUNTED SYSTEM FOR REAR SEAT ENTERTAINMENT

FAULT-TRACING INFORMATION

Fault tracing of ceiling-mounted rear seat entertainment system is described.

Troubleshoot acc. to:**DIAGNOSTIC FUNCTIONS**

GENERATION IDENTIFICATION OF SYSTEM FOR REAR SEAT ENTERTAINMENT (2009-2011)

GENERATION IDENTIFICATION OF SYSTEM FOR REAR SEAT ENTERTAINMENT

FAULT-TRACING INFORMATION

There are several different generations of systems for rear seat entertainment. The generations have different constructions and have different functions. For certain models, several generations can be under one and the same model year. Fault tracing for the various generations can vary.

As several generations are under the same model year, it is important to first identify the generation of the vehicle to be able to then select correct fault tracing.

For information on generations, see:**IDENTIFICATION OF GENERATION**

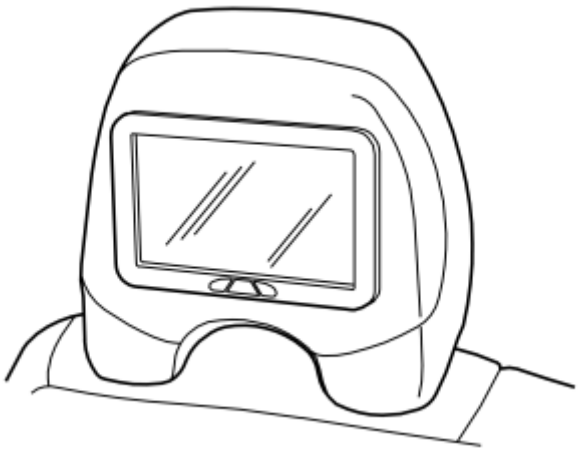

Fig. 77: Identifying Seat Headrest Video Screen
Courtesy of VOLKSWAGEN GROUP OF AMERICA, INC.

GENERATION IDENTIFICATION OF SYSTEM FOR REAR SEAT ENTERTAINMENT (2005-2008)

GENERATION IDENTIFICATION OF SYSTEM FOR REAR SEAT ENTERTAINMENT

see **GENERATION IDENTIFICATION OF SYSTEM FOR REAR SEAT ENTERTAINMENT**

GENERATION IDENTIFICATION OF SYSTEM FOR REAR SEAT ENTERTAINMENT (EXECUTIVE; PREMIER; 2004)

GENERATION IDENTIFICATION OF SYSTEM FOR REAR SEAT ENTERTAINMENT

see **GENERATION IDENTIFICATION OF SYSTEM FOR REAR SEAT ENTERTAINMENT**

NOISE FROM AUX-INPUT (2007)

NOISE FROM AUX-INPUT

FAULT-TRACING INFORMATION

NOTE: **This applies to vehicles up until structure week 200644, from and incl. structure week 200645 twisted cable is used in production.**

If the AUX-input is selected as source, there may be a clicking or scraping sound. This may occur when there is at least 50% audio power and no media player is connected or between two sound tracks.

A shielded signal cable runs from the AUX-input to Integrated Audio Module (IAM).

Change to twisted cable.

see **AUX SERVICE CABLE**

Was a fault detected?

- **YES**

  OKAY: Troubleshooting has been completed.

- **NO**

  Refer to **INFORMATION**

INFORMATION

FAULT-TRACING INFORMATION

The fault should have been detected and remedied. As this is not the case fault-tracing has failed.

Exit fault-tracing for this diagnostic trouble code (DTC) or make another attempt.

AUX SERVICE CABLE

Special tools	
	T9512639 REMOVAL TOOL (COLOR CODE: WHITE) **Tool number:** T9512639 **Tool description:** REMOVAL TOOL (COLOR CODE: WHITE) **Tool boards:**

Materials:	
Designation	**Part number**
Strip clamp	983747
Cable harness	30786841

REMOVE

NOTE: Removal steps in this procedure may contain installation details.

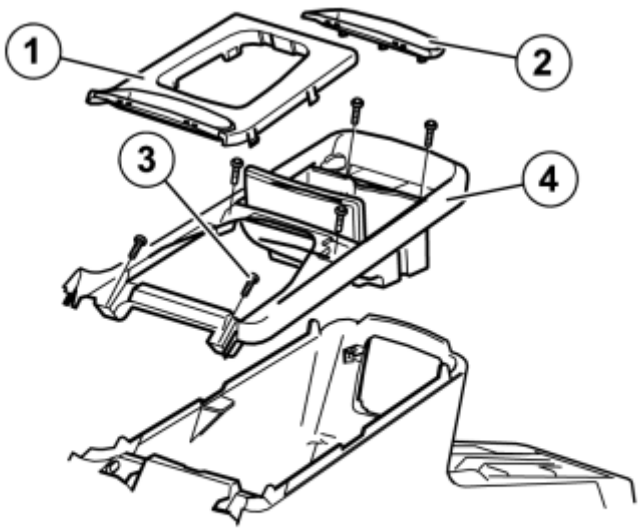

Fig. 78: Identifying Tunnel Compartment Components
Courtesy of VOLKSWAGEN GROUP OF AMERICA, INC.

Remove

- the edging (1)
- pen compartment/(handset) (2)
- screws, 6 pcs. (3)
- the top of the tunnel compartment (4)

- connector for the AUX-outlet

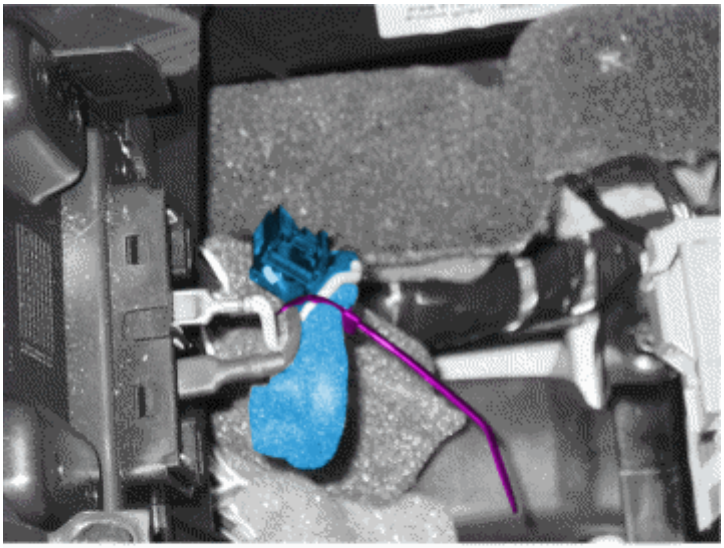

Fig. 79: Strip clamp, 983747
Courtesy of VOLKSWAGEN GROUP OF AMERICA, INC.

Secure the existing (AUX) cable. **Use:** Strip clamp, 983747

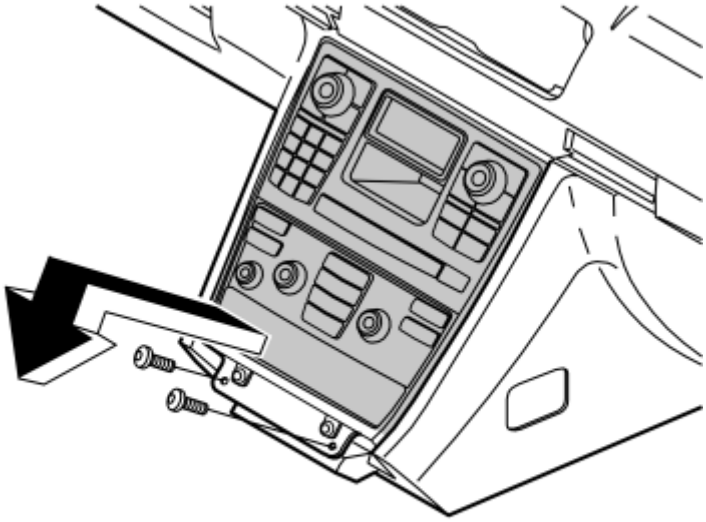

Fig. 80: Identifying The Console Lifted Forward
Courtesy of VOLKSWAGEN GROUP OF AMERICA, INC.

Lift forward the console. See **REMOVAL AND INSTALLATION**

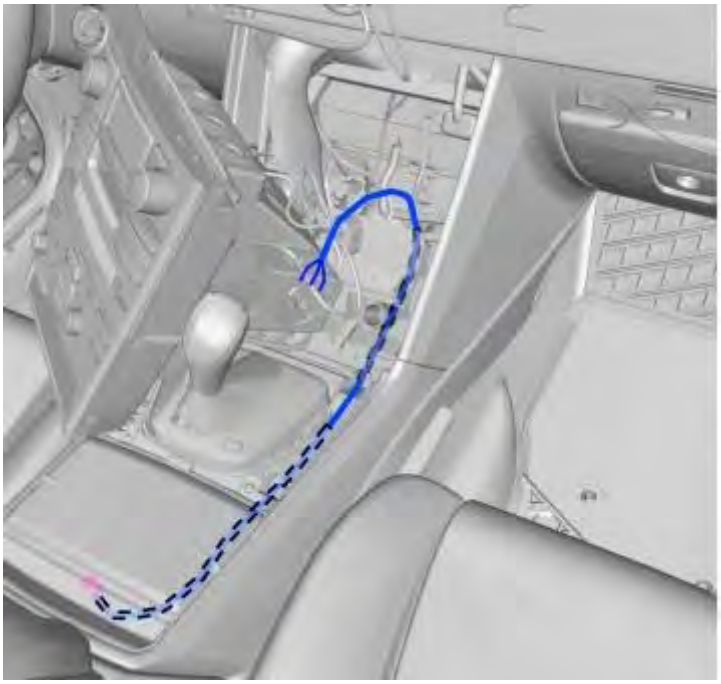

Fig. 81: Identifying Service Cable In The AUX-outlet
Courtesy of VOLKSWAGEN GROUP OF AMERICA, INC.

Install the service cable in the AUX-outlet and route the cable on the right side of the gear selector.

CAUTION: Route the cable as far from the GSM-module as possible.

CAUTION: Make sure that the cable is not trapped or damaged.

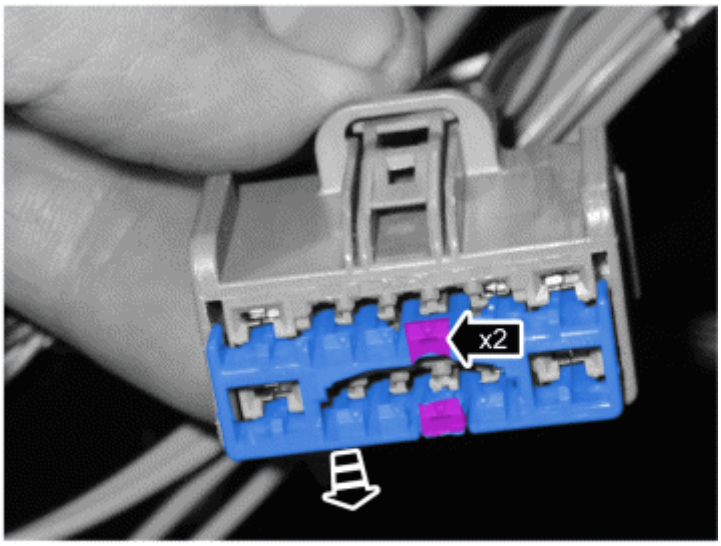

Fig. 82: View Of General Audio Player Control Module Connector Terminals
Courtesy of VOLKSWAGEN GROUP OF AMERICA, INC.

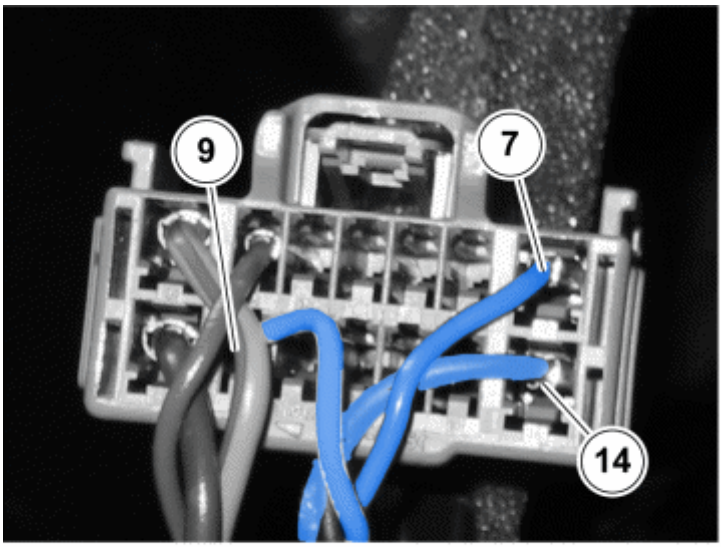

Fig. 83: Identifying General Audio Player Control Module Connector Terminals
Courtesy of VOLKSWAGEN GROUP OF AMERICA, INC.

Remove the existing terminals in outlet 7, 9, and 14 in the control module (AUM).

see **9512639**

Install the service cable according to markings on the terminals.

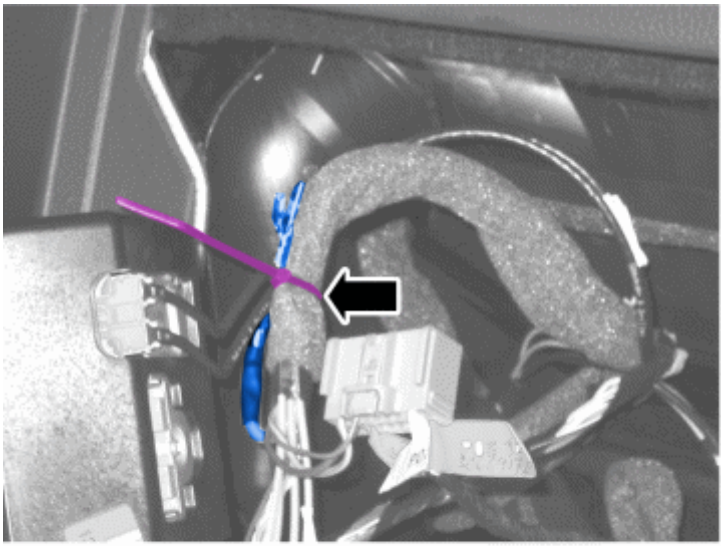

Fig. 84: Strip clamp, 983747
Courtesy of VOLKSWAGEN GROUP OF AMERICA, INC.

Secure the existing cable **Use:** Strip clamp, 983747

Secure the cable on the cable harness. **Use:** Cable harness, 30786841

INSTALL

To install, reverse the removal procedure.

PROBLEMS WITH SOUND QUALITY (2007-2008)

PROBLEMS WITH SOUND QUALITY

FAULT-TRACING INFORMATION

This applies to the following vehicles:

- XC90, structure week 200620 - 200748.

The audio system, Premium Sound, may have problems with sound quality at loud volumes. To improve audio quality a new software has been developed with improved settings for equalizer, high-pass filter, and amplification.

- Update software in Infotainment control module (ICM).

- Update the software in the Audio module (AUD) if the vehicle's structure week is earlier than 200724.

Was a fault detected?

- **YES**

  OKAY: Troubleshooting has been completed.

- **NO**

  Refer to **INFORMATION**

INFORMATION

FAULT-TRACING INFORMATION

The fault must now be detected and remedied. As this is not the case, troubleshooting has failed.

Exit symptom troubleshooting or try again.

Do you want to exit symptom troubleshooting?

- **YES**

  FAULT TRACING FAILED: The fault should have been detected and remedied. As this is not the case fault-tracing has failed. Exit fault-tracing for this diagnostic trouble code (DTC) or make another attempt.

- **NO**

CHECK THE SIM CARD HOLDER IN THE VEHICLE WITH BLUETOOTH PHONE MODULE (BPM). (2011)

CHECK THE SIM CARD HOLDER IN THE VEHICLE WITH BLUETOOTH PHONE MODULE (BPM).

CHECK THE SIM CARD HOLDER IN THE VEHICLE WITH BLUETOOTH PHONE MODULE (BPM).

Fault-tracing information

Vehicles with Bluetooth phone module (BPM) are also equipped with a SIM card holder and reader at the right keypad, despite the car not having Phone Module (PHM).

Action

NOTE: Do not replace any parts

Inform the customer that the SIM card holder and the reader are not working.

Fault symptom

Audio other/Other audio problems

Cellular phone/Other cellular phone problems

Buttons/control knobs on center console (Media, communication and navigation)/No/reduced/incorrect function

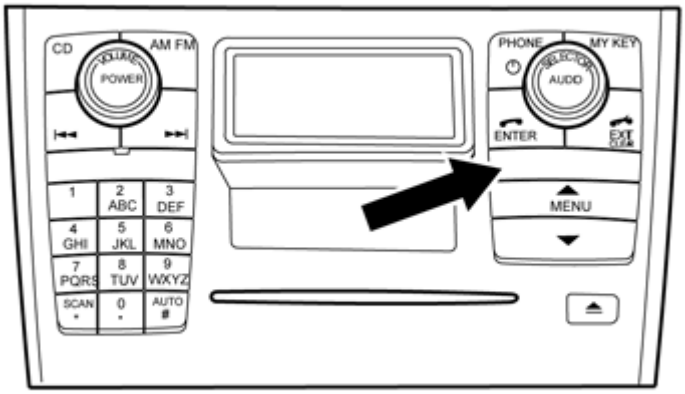

Fig. 85: View Of Buttons/Control Knobs On Centre Console
Courtesy of VOLKSWAGEN GROUP OF AMERICA, INC.

CHECKING BLUETOOTH PHONE MODULE (BPM) (2011)

CHECKING BLUETOOTH PHONE MODULE (BPM)

CHECKING FUNCTIONS

Bluetooth phone module (BPM) communicates with the mobile telephone via bluetooth protocol. Mobile telephones have many different built-in functions, that is why all functions are not available for all mobile telephones.

Compare the functions of the connected mobile phone with the list.

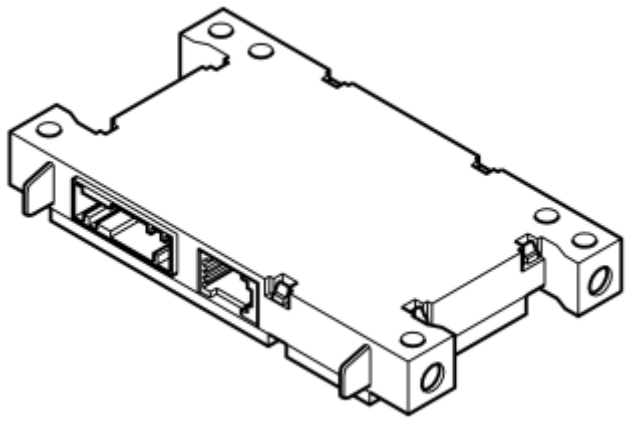

Fig. 86: Identifying Bluetooth Phone Module (BPM)
Courtesy of VOLKSWAGEN GROUP OF AMERICA, INC.

Do the functions match the list?

- **YES**

  OKAY: Troubleshooting has been completed.

- **NO**

  Refer to **CHECKING SOFTWARE**

CHECKING SOFTWARE

Functions of the Bluetooth phone module (BPM) may depend on which software is loaded in the control module. To ensure that the latest software is used, load Bluetooth phone module (BPM) with new software. Check the function and compare with the list of functions.

If it still differs, this may be due to that the mobile phone's software or mobile phone supplier not matching those used in the test.

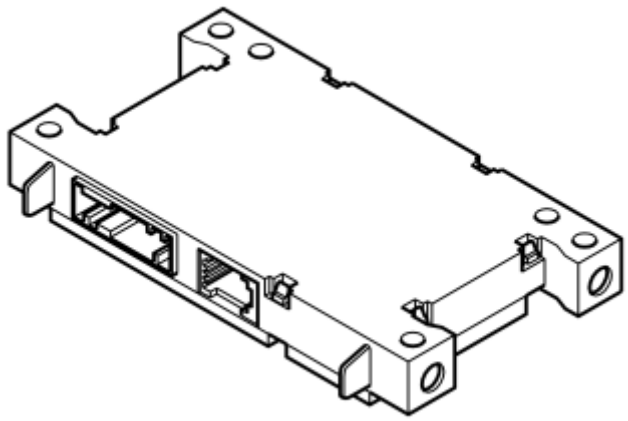

Fig. 87: Identifying Bluetooth Phone Module (BPM)
Courtesy of VOLKSWAGEN GROUP OF AMERICA, INC.

CHECKING COMMUNICATION, BLUETOOTH PHONE MODULE (BPM) (2011)

CHECKING COMMUNICATION, BLUETOOTH PHONE MODULE (BPM)

CHECKING COMMUNICATION, BLUETOOTH PHONE MODULE (BPM)

Fault-tracing information

Communication between the Bluetooth phone module (BPM) and mobile telephone can suddenly be interrupted. An audible signal is heard for about 2 seconds before the symbols for Bluetooth and signal strength disappear.

If the audio system is not in "telephone mode" the symbols for Bluetooth and signal strength disappear without warning and incoming calls are connected directly to the mobile telephone.

It is possible to manually connect the mobile telephone with the Bluetooth phone module (BPM). If the audio system is in "telephone mode" communication is established again as soon as Enter is pressed.

Action

Go to the tab software and program the control module with the latest software.

Fault symptom

Cellular phone/Handsfree does not work

Cellular phone/Does not work

Cellular phone/Other cellular phone problems

Cellular phone/Keypad on center console does not work

Cellular phone/Steering wheel cellular phone controls do not work

Fig. 88: Identifying "TELEFON" Screen
Courtesy of VOLKSWAGEN GROUP OF AMERICA, INC.

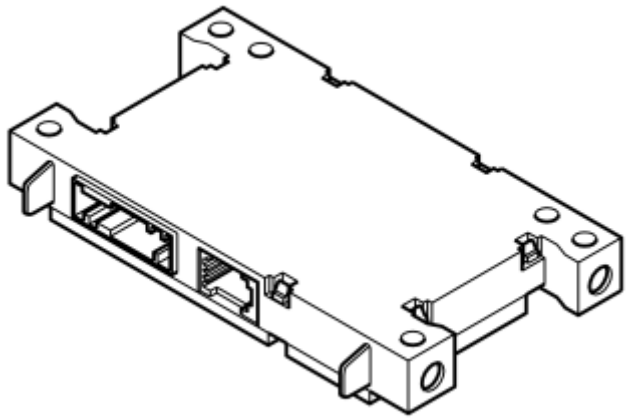

Fig. 89: Identifying Bluetooth Phone Module (BPM)
Courtesy of VOLKSWAGEN GROUP OF AMERICA, INC.

Has the fault been remedied?

- **YES**

  OKAY: Troubleshooting has been completed.

- **NO**

Refer to **INFORMATION**

INFORMATION

FAULT-TRACING INFORMATION

The fault should have been detected and remedied. As this is not the case fault-tracing has failed.

Exit fault-tracing for this diagnostic trouble code (DTC) or make another attempt.

CHECKING COMPATIBILITY BETWEEN MOBILE TELEPHONE AND HANDSFREE SYSTEM WITH BLUETOOTH (ACCESSORY). (2003-2011)

CHECKING COMPATIBILITY BETWEEN MOBILE TELEPHONE AND HANDSFREE SYSTEM WITH BLUETOOTH (ACCESSORY).

FAULT-TRACING INFORMATION

In case of problem with compatibility between the mobile telephone and handsfree system with bluetooth (accessory), a software update may solve the problem.

NOTE: Does not apply to all handsfree systems with bluetooth (accessory).

Reason for upgrading handsfree system with bluetooth (accessory):

- The customer has purchased a new mobile telephone that does not work together with handsfree systems with bluetooth (accessory), (it has worked with the earlier mobile telephone). Check that the new mobile telephone is compatible with handsfree system with bluetooth (accessory) according to TIE TJ 19168.
- The customer states that it is only possible to dial the 9 first items in the telephone book.
- The customer wants to add language choices Russian or Portuguese in handsfree system with bluetooth (accessory).
- The customer wants to transfer new contacts from his/her mobile telephone to the phone book in the handsfree system with bluetooth (accessory).

Before taking any actions, check if it is possible to update the software in the handsfree system with bluetooth (accessory) by following the instructions according to TIE TJ 19168.

Fault symptom

- Cellular phone/Other cellular phone problems
- Cellular phone/Voice control does not work

CHECKING HANDS-FREE AND HANDSET MODE

CHECKING HANDS-FREE AND HANDSET MODE (2006-2011)

FAULT-TRACING INFORMATION

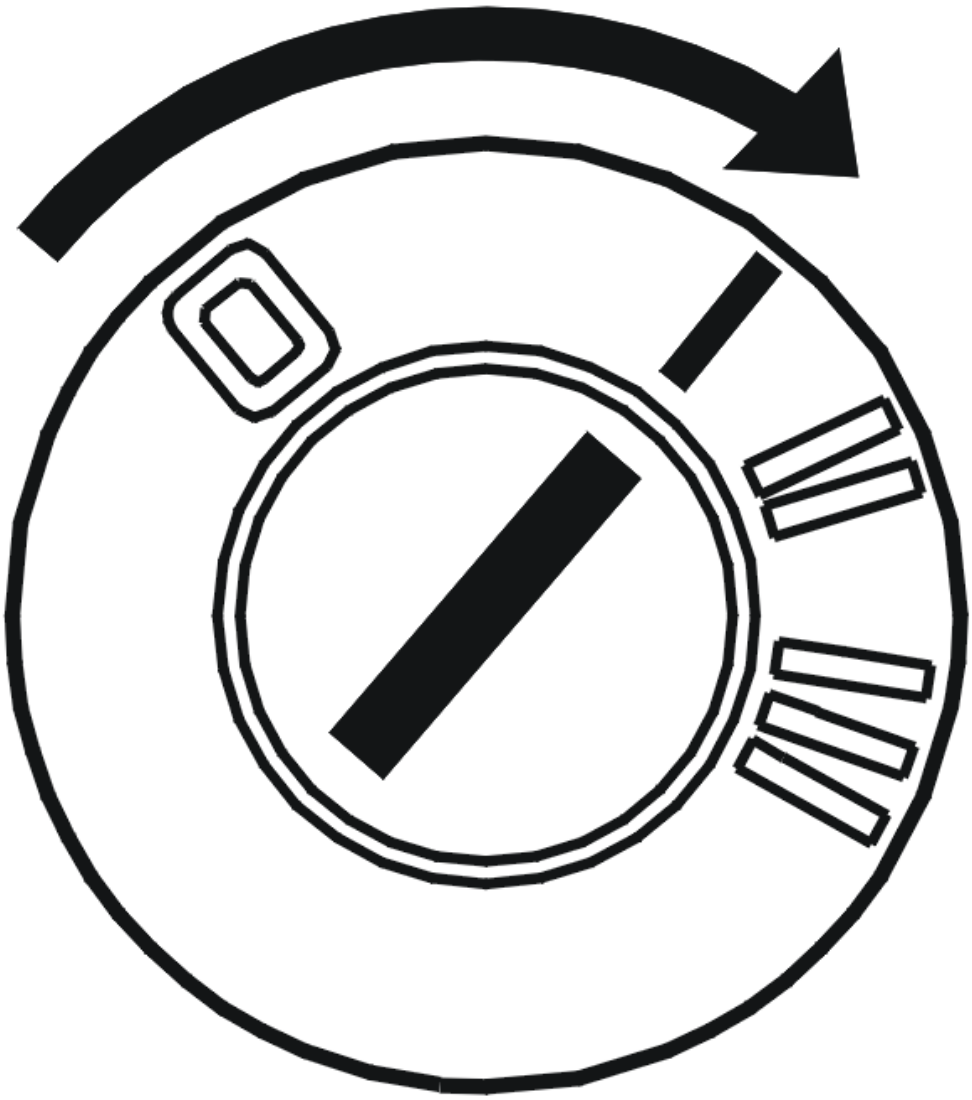

Fig. 90: Identifying Ignition Position 1
Courtesy of VOLKSWAGEN GROUP OF AMERICA, INC.

The phone module (PHM) determines whether the call should be connected via hands-free or the handset based on the hook signal of the handset. If the handset is in its holder (i. e. "on the hook"), all calls are connected via hands-free. The handset is activated when it is removed from its holder.

Check that the handset is properly positioned in its holder.

- Ignition in position 1.
- Telephone call connected.

Switch between handset and hands-free mode via the menu in the display.

Do both handset and hands-free mode work?

- **YES**

  Refer to **VERIFICATION**

- **NO**

  Refer to **CHECKING THE TELEPHONE HOLDER MAGNET**

CHECKING THE TELEPHONE HOLDER MAGNET

The handset houses a detector that is actuated by the magnetic field from the telephone holder magnet. It closes or opens a circuit depending on whether the handset is in or out of the holder.

Check the hook signals by connecting adapter cable see **9511463** and measuring box see **9511428** to the phone module.

Handset on: U = 1.9 V.

Handset off: U = 3.34 V.

Open circuit: U = 5 V.

If the correct voltage level value is not obtained when the handset is hung up, check the magnet as follows:

- Lift up the handset.
- Pull a paperclip across the magnet (marked with an arrow in the illustration) in the holder.
- If there is a strong reaction, the magnet is functional.
- If there is no reaction, replace the holder with magnet.

If the function check is successful the fault has been remedied.

Other information:

- see **MICROPHONE, REPLACING**
- see **SIGNAL SPECIFICATION**

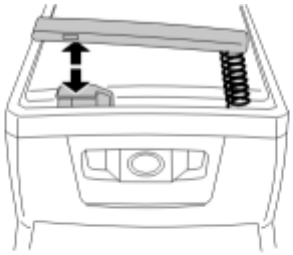

Fig. 91: Identifying Telephone Holder Magnet
Courtesy of VOLKSWAGEN GROUP OF AMERICA, INC.

Was a fault detected?

- **YES**

  Refer to **VERIFICATION**

- **NO**

  Refer to **CHECKING THE CONNECTORS**

CHECKING THE CONNECTORS

With functioning magnet but still lost function of the handset, try checking the connectors for the handset.

- Check that the connector (1) for the secrecy handset in the center console is connected.
- Check that the cable terminals of the connector have not retracted and that they are in the locked position.

With correctly connected connector but still lost function of the handset, try with another handset.

If this handset works, replace with a new handset.

If there is no function, replace the holder with magnet.

Other information:

- see **HANDSET, REPLACING**

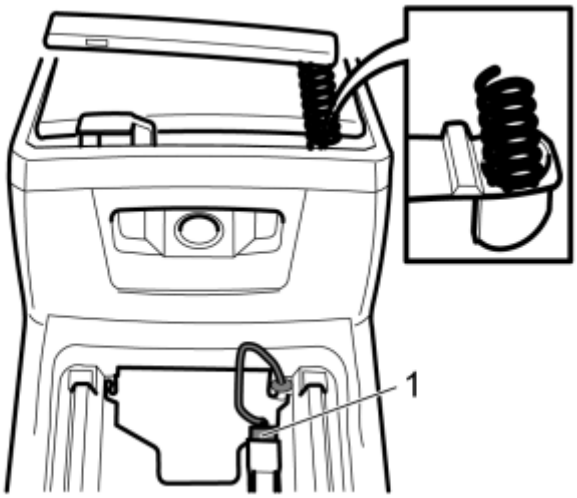

Fig. 92: View Of Telephone Holder Magnet Connectors
Courtesy of VOLKSWAGEN GROUP OF AMERICA, INC.

Was a fault detected?

- **YES**

  Refer to **VERIFICATION**

- **NO**

  FAULT NOT FOUND: Troubleshooting has been completed.

VERIFICATION

Fig. 93: Checking Traffic Load On CAN Cables
Courtesy of VOLKSWAGEN GROUP OF AMERICA, INC.

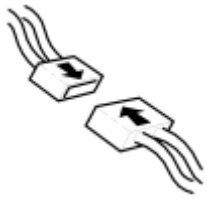

Fig. 94: Identifying Connector(s) Reinstallation
Courtesy of VOLKSWAGEN GROUP OF AMERICA, INC.

HINT: After carrying out the repair, check that the fault has been remedied.

- Ignition off.
- Reinstall the connectors, components etc.
- Ignition on.
- Switch on the carphone.

Make a call so that both the handset and the hands-free system are used.

CHECKING HANDS-FREE AND HANDSET MODE (2003-2005)

FAULT-TRACING INFORMATION

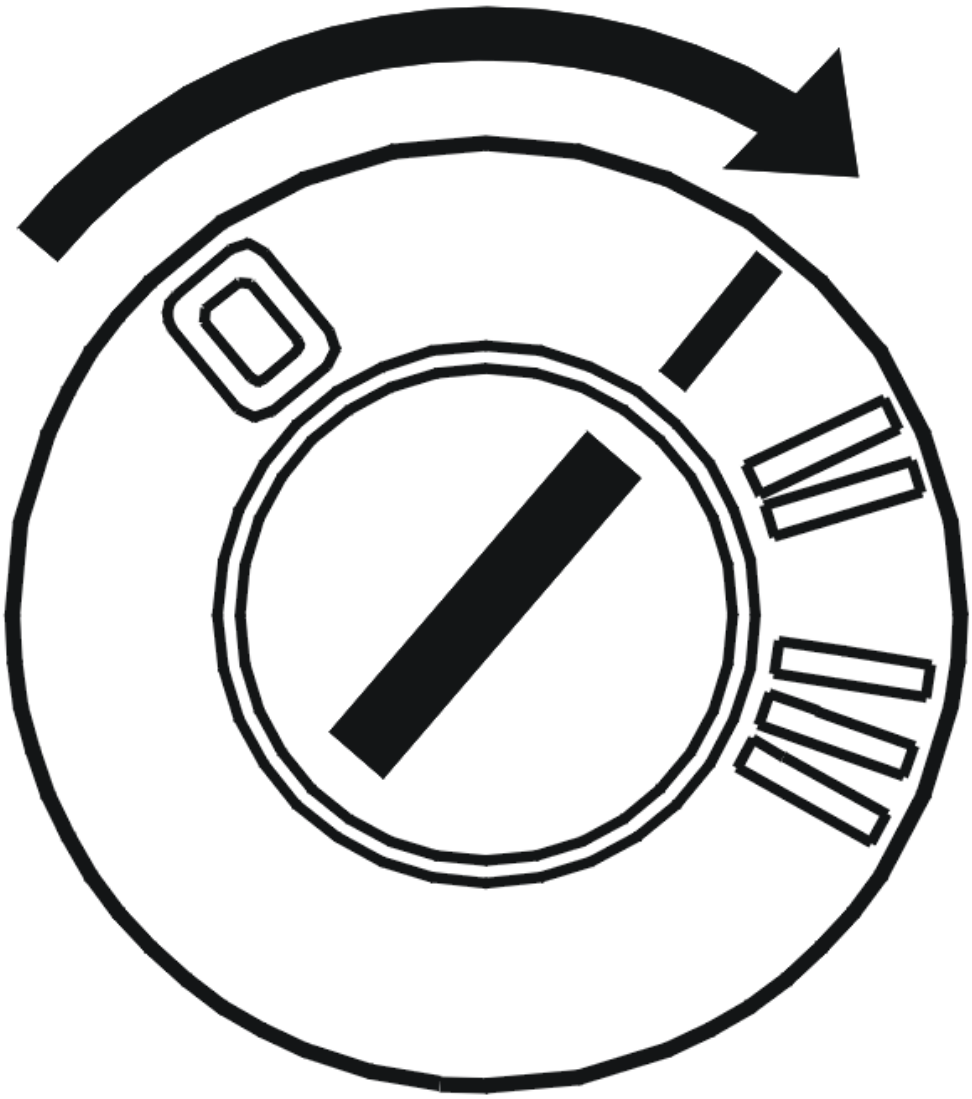

Fig. 95: Identifying Ignition Position 1
Courtesy of VOLKSWAGEN GROUP OF AMERICA, INC.

The phone module (PHM) determines whether the call should be connected via hands-free or the handset based

on the hook signal of the handset. If the handset is in its holder (i. e. "on the hook"), all calls are connected via hands-free. The handset is activated when it is removed from its holder.

Check that the handset is properly positioned in its holder.

- Ignition in position 1.
- Telephone call connected.

Switch between handset and hands-free mode via the menu in the display.

Do both handset and hands-free mode work?

- **YES**

  Refer to **VERIFICATION**

- **NO**

  Refer to **CHECKING THE TELEPHONE HOLDER MAGNET**

CHECKING THE TELEPHONE HOLDER MAGNET

The handset houses a detector that is actuated by the magnetic field from the telephone holder magnet. It closes or opens a circuit depending on whether the handset is in or out of the holder.

Check the hook signals by connecting adapter cable see **9511463** and measuring box see **9511428** to the phone module.

Handset on: U = 1.9 V.

Handset off: U = 3.34 V.

Open circuit: U = 5 V.

If the correct voltage level value is not obtained when the handset is hung up, check the magnet as follows:

- Lift up the handset.
- Pull a paperclip across the magnet (marked with an arrow in the illustration) in the holder.
- If there is a strong reaction, the magnet is functional.
- If there is no reaction, replace the holder with magnet.

If the function check is successful the fault has been remedied.

Other information:

- see **MICROPHONE, REPLACING**

- see **SIGNAL SPECIFICATION**

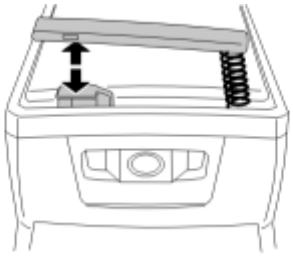

Fig. 96: Identifying Telephone Holder Magnet
Courtesy of VOLKSWAGEN GROUP OF AMERICA, INC.

Was a fault detected?

- **YES**

  Refer to **VERIFICATION**

- **NO**

  Refer to **CHECKING THE CONNECTORS**

CHECKING THE CONNECTORS

With functioning magnet but still lost function of the handset, try checking the connectors for the handset.

- Check that the connector (1) for the secrecy handset in the center console is connected.
- Check that the cable terminals of the connector have not retracted and that they are in the locked position.

With correctly connected connector but still lost function of the handset, try with another handset.

If this handset works, replace with a new handset.

If there is no function, replace the holder with magnet.

Other information:

- see **HANDSET, REPLACING**

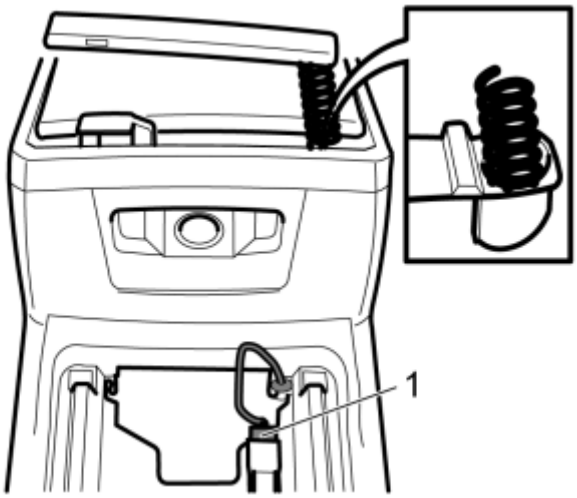

Fig. 97: View Of Telephone Holder Magnet Connectors
Courtesy of VOLKSWAGEN GROUP OF AMERICA, INC.

Was a fault detected?

- **YES**

  Refer to **VERIFICATION**

- **NO**

  FAULT NOT FOUND: Troubleshooting has been completed.

VERIFICATION

Fig. 98: Checking Traffic Load On CAN Cables
Courtesy of VOLKSWAGEN GROUP OF AMERICA, INC.

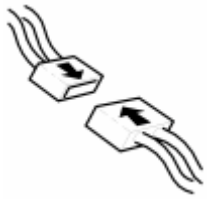

Fig. 99: Identifying Connector(s) Reinstallation
Courtesy of VOLKSWAGEN GROUP OF AMERICA, INC.

HINT: After carrying out the repair, check that the fault has been remedied.

- Ignition off.
- Reinstall the connectors, components etc.
- Ignition on.
- Switch on the carphone.

Make a call so that both the handset and the hands-free system are used.

CHECKING INCOMPLETE SYNCHRONIZATION OF TELEPHONE BOOK VIA THE BLUETOOTH PHONE MODULE (BPM) (2011)

CHECKING INCOMPLETE SYNCHRONIZATION OF TELEPHONE BOOK VIA THE BLUETOOTH PHONE MODULE (BPM)

CHECKING INCOMPLETE SYNCHRONIZATION OF TELEPHONE BOOK VIA THE BLUETOOTH PHONE MODULE (BPM)

Fault-tracing information

The customer experiences problems with synchronizing the telephone book or the calls list between certain mobile telephones and the Bluetooth phone module (BPM).

The Bluetooth phone module (BPM) can handle a maximum of 750 telephone numbers per synchronized mobile telephone.

Action

Go to the tab software and program the control module with the latest software.

Test synchronizing the telephone book between the mobile telephone and the Bluetooth phone module (BPM) to verify the results.

If the problem persists, check the number of received, missed or made calls in the calls lists. The telephone book cannot be synchronized if call lists transfer takes longer than 20 seconds. Erase calls from the calls lists for a better result.

Fault symptom

Cellular phone/Handsfree does not work

Cellular phone/Does not work

Cellular phone/Other cellular phone problems

Bluetooth/Phonebook synchronization problems

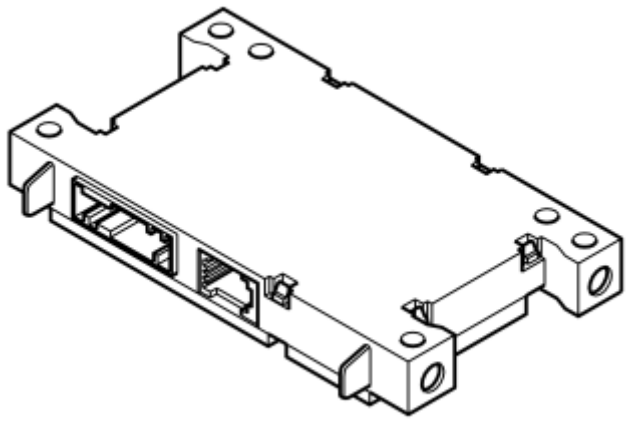

Fig. 100: Identifying Bluetooth Phone Module (BPM)
Courtesy of VOLKSWAGEN GROUP OF AMERICA, INC.

Has the fault been remedied?

- **YES**

  OKAY: Troubleshooting has been completed.

- **NO**

  Refer to **INFORMATION**

INFORMATION

FAULT-TRACING INFORMATION

The fault should have been detected and remedied. As this is not the case fault-tracing has failed.

Exit fault-tracing for this diagnostic trouble code (DTC) or make another attempt.

CHECKING MENU NAVIGATION (2003-2011)

CHECKING MENU NAVIGATION

CHECKING THE ADDRESS BOOK

Doubles in the address book may make it seem like menu navigation in the address book does not work. This problem may arise if the user has copied the entire address book on the SIM card more than once.

Check that there are doubles/triples in the address book by removing the SIM-card and inserting it in a mobile phone.

Remedy as necessary.

Was a fault detected?

- **YES**

  OKAY: Troubleshooting has been completed.

- **NO**

  Refer to **FAULT-TRACING INFORMATION**

FAULT-TRACING INFORMATION

If the user feels menu navigation is slow, the following information should be observed/provided to create a better understanding of telephone system characteristics.

- When temperatures are low, the display is more sluggish and menu navigation is slower than usual.
- Menu navigation via the steering wheel buttons is a bit slower than when using the Infotainment control module (ICM) buttons.
- In some cases, it may take up to 3-4 minutes to copy the address book. The message "Please wait" appears during this time. Copying time varies based on the number of items in the user address book.
- When started, the phone module (PHM) loads the address book from the SIM card. During this time, the user does not have access to the address book.

CHECKING MOBILE APPLICATIONS (2011)

CHECKING MOBILE APPLICATIONS

FAULT-TRACING INFORMATION

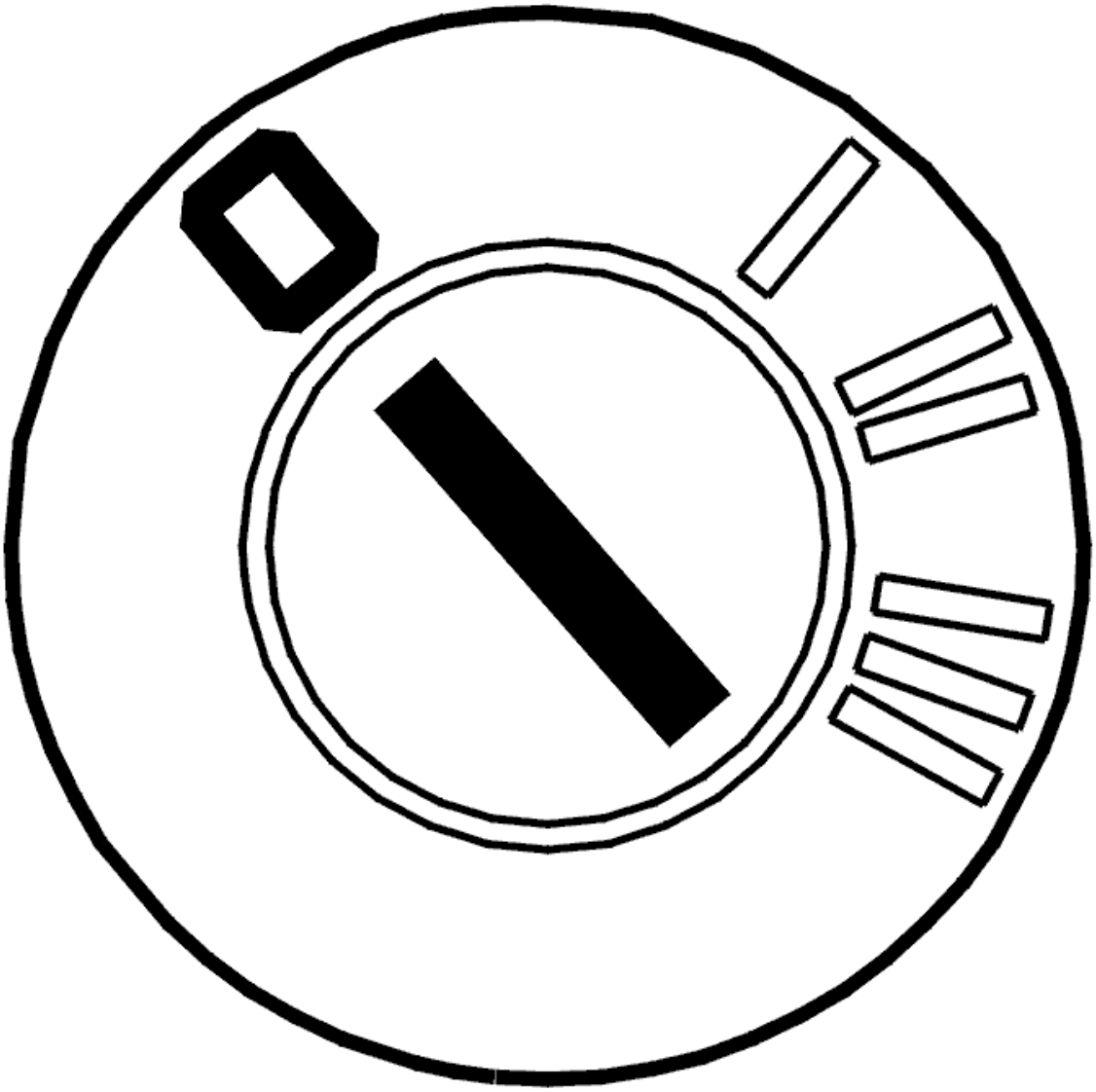

Fig. 101: Identifying Ignition OFF
Courtesy of VOLKSWAGEN GROUP OF AMERICA, INC.

Mobile applications use Volvo On call to communicate with the vehicle.

NOTE: This fault tracing only applies to vehicles with Volvo On Call subscriptions.

CHECKING RADIO MUTE, ACCESSORY (2003-2011)

CHECKING RADIO MUTE, ACCESSORY

FAULT-TRACING INFORMATION

Fault causes which will prevent the radio mute function working:

- Fault or loose connections in the cable between the telephone and the handsfree box
- Fault in the connection between the handsfree box and the accessory electronic module (AEM).

- **Continue**

  Refer to **CHECKING THE COMPONENTS AND WIRING**

CHECKING THE COMPONENTS AND WIRING

HINT: Check that no diagnostic trouble codes (DTCs) have been stored in the accessory electronic module (AEM) or in the MOST network before carrying out this fault-tracing.

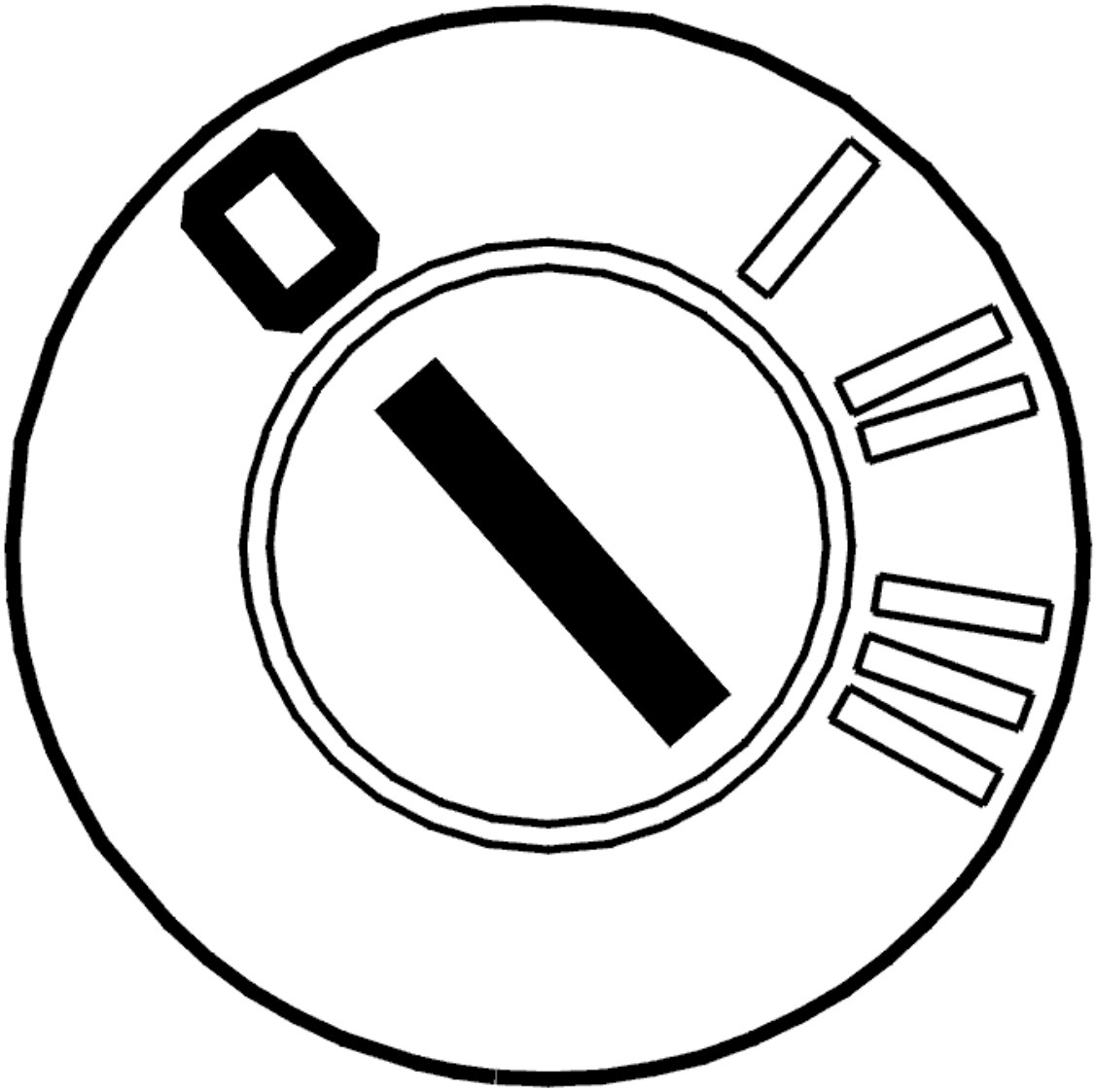

Fig. 102: Identifying Ignition OFF
Courtesy of VOLKSWAGEN GROUP OF AMERICA, INC.

- Ignition off
- Disconnect the connectors for the handsfree box and accessory electronic module (AEM).

  Check that the telephone connections on the phone and in the holder are clean. Check that the connector guards are in not place.

  Check the connectors. Check for loose connections. Check for contact resistance and oxidation. Check the female and male sections of the connectors. The terminals must not be damaged or pressed in.

  Check the cable between the phone and handsfree box. Check for an open-circuit.

  Check the cable between the handsfree box and the accessory electronic module (AEM). Check for an open-circuit.

  Other information

  - see **SIGNAL SPECIFICATION**
  - see **CHECKING WIRING AND TERMINALS**

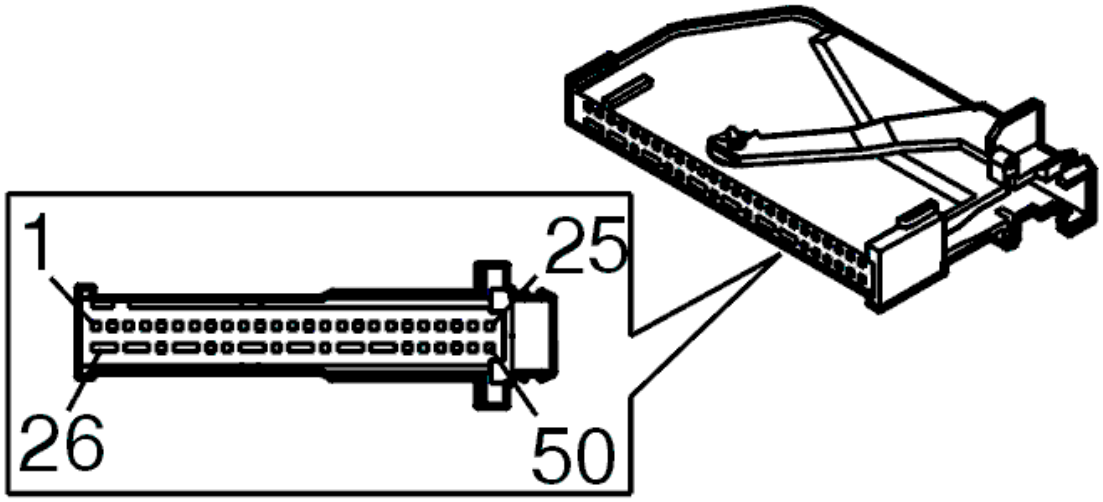

Fig. 103: Accessory Electronic Module Ground Terminals
Courtesy of VOLKSWAGEN GROUP OF AMERICA, INC.

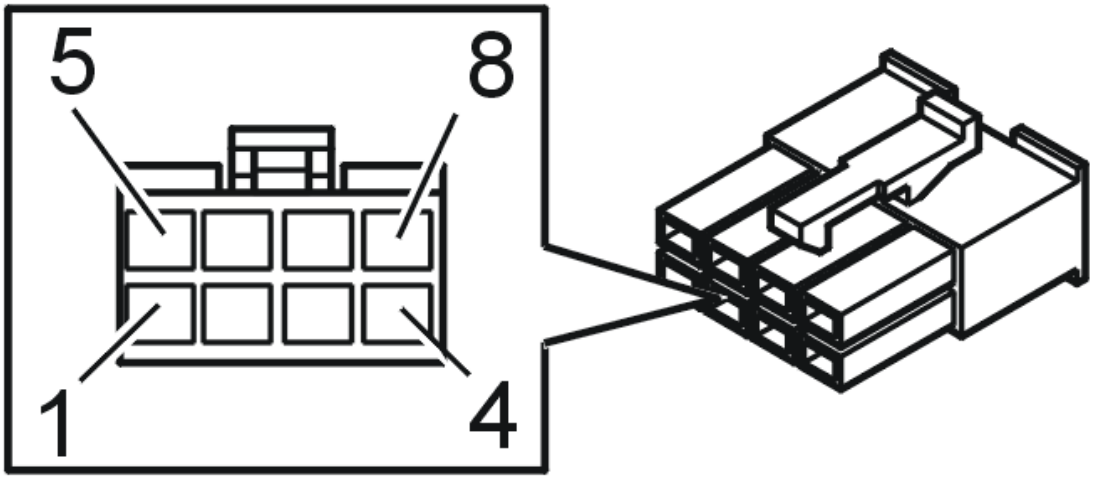

Fig. 104: Handsfree Box Connector
Courtesy of VOLKSWAGEN GROUP OF AMERICA, INC.

- **Continue**

  Refer to **VERIFICATION**

VERIFICATION

HINT: After carrying out the repair, check that the fault has been remedied.

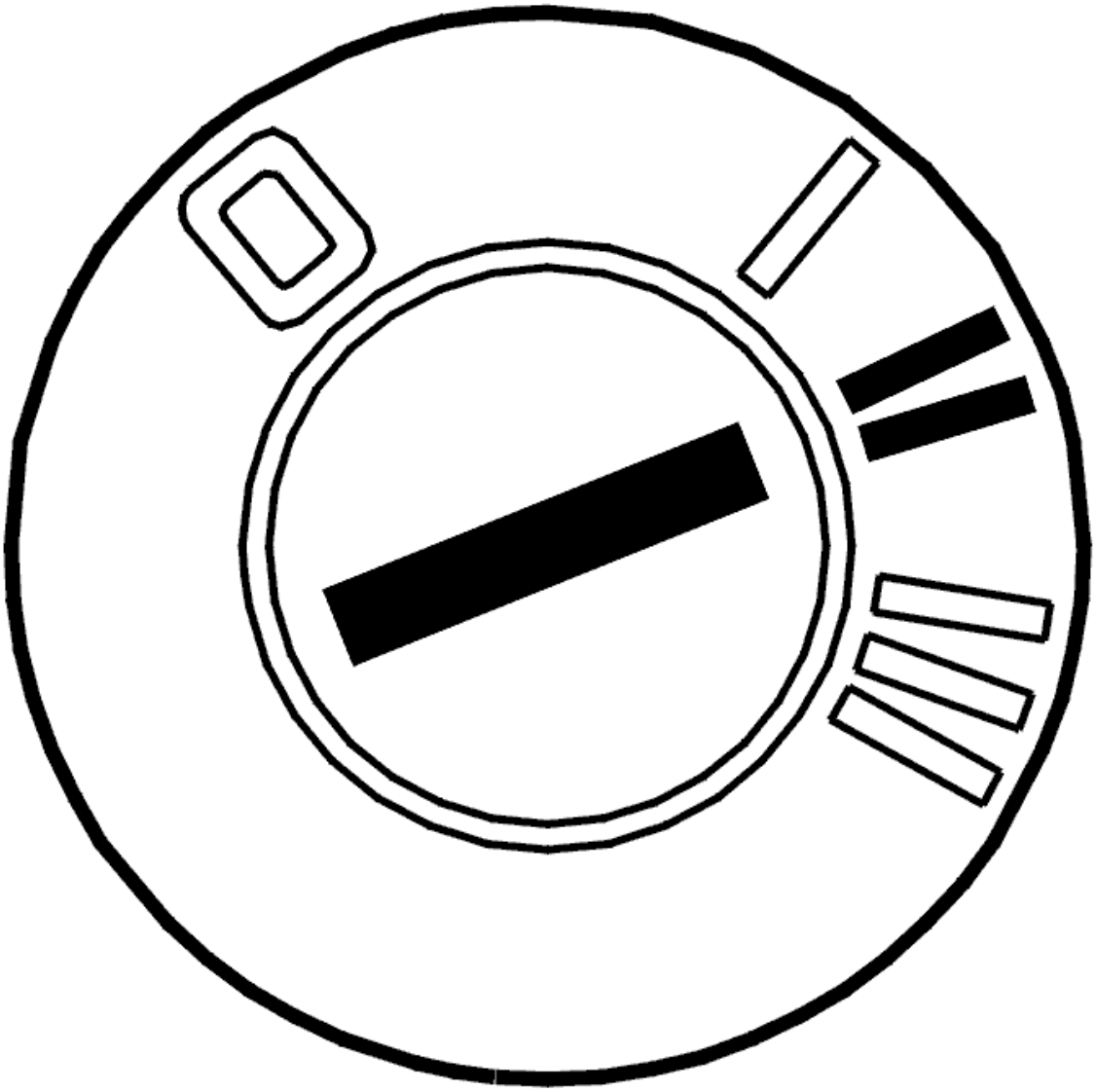

Fig. 105: Identifying Ignition ON
Courtesy of VOLKSWAGEN GROUP OF AMERICA, INC.

- Ignition on.

  Check that radio mute is functioning.

Is the function OK?

- **YES**

  VERIFIED: Troubleshooting has been completed.

- **NO**

  Refer to **INFORMATION**

INFORMATION

FAULT-TRACING INFORMATION

The fault should have been detected and remedied. As this is not the case fault-tracing has failed.

Exit fault-tracing for this diagnostic trouble code (DTC) or make another attempt.

CHECKING RECEPTION/COVERAGE (2003-2011)

CHECKING RECEPTION/COVERAGE (2006-2011)

FAULT-TRACING INFORMATION

If the customer feels the system functions poorly only at specific instances/locations, there may be poor local reception/coverage.

Compare the difference in sound quality between the hands-free and handset functions. If sound quality is significantly better in hands-free mode, test with an unmounted handset for comparison.

If sound quality is the same in both modes, there may be poor local reception/coverage.

Other information:

- see **PHONE MODULE (PHM), REPLACING (2006-2010)**

CHECKING RECEPTION/COVERAGE (2003-2005)

FAULT-TRACING INFORMATION

If the customer feels the system functions poorly only at specific instances/locations, there may be poor local reception/coverage.

Compare the difference in sound quality between the hands-free and handset functions. If sound quality is significantly better in hands-free mode, test with an unmounted handset for comparison.

If sound quality is the same in both modes, there may be poor local reception/coverage.

Other information:

- see **PHONE MODULE (PHM), REPLACING**

CHECKING SIM-CARD READER (2005)

CHECKING SIM-CARD READER

CHECKING STRUCTURE WEEK

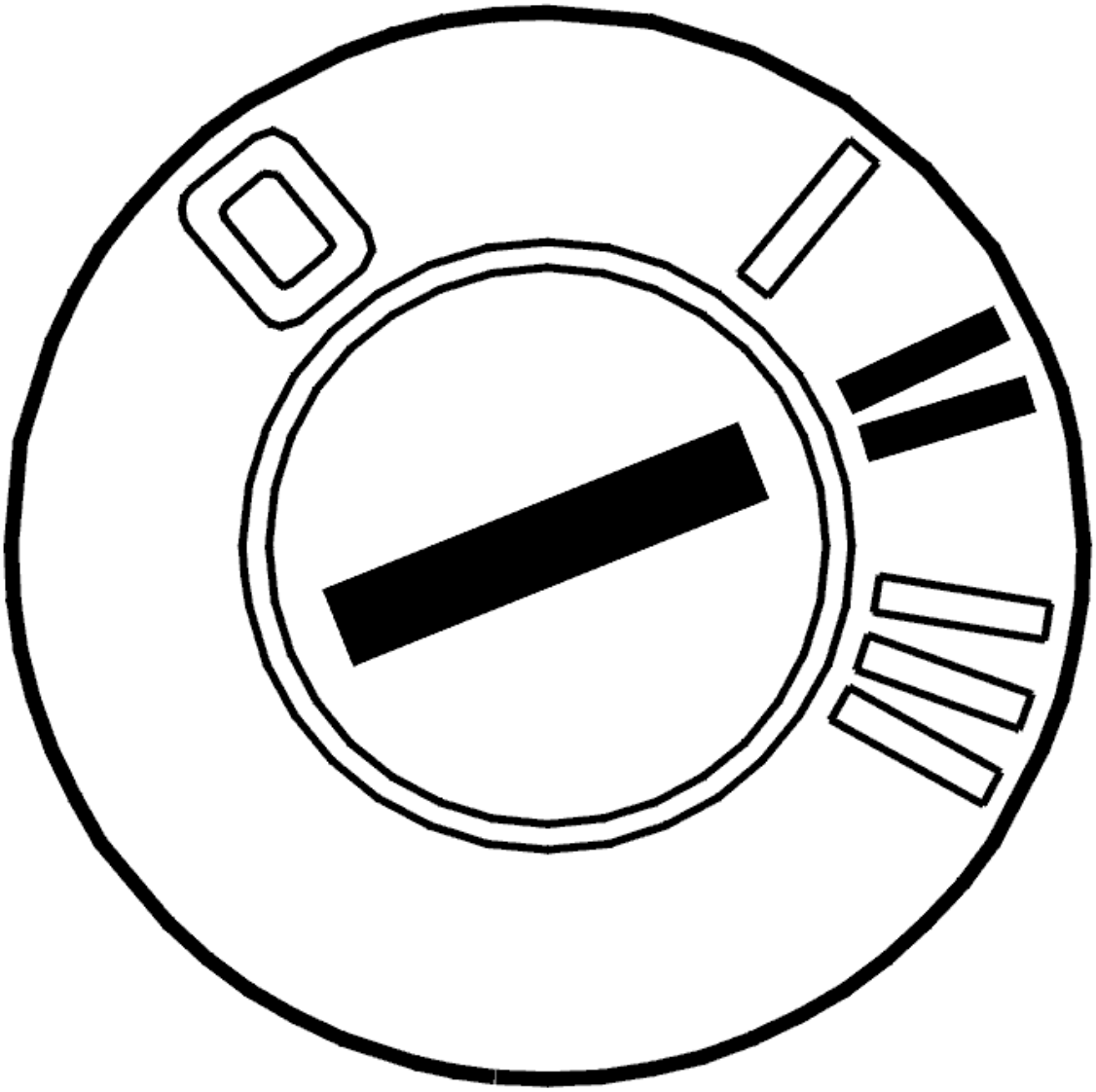

Fig. 106: Identifying Ignition ON
Courtesy of VOLKSWAGEN GROUP OF AMERICA, INC.

- Ignition on

  Read out the vehicle's structure week by clicking on the symbol for VCT2000.

  1. Vehicles with structure week up to and incl. 200445, that is, year 2004 week 45. Refer to **CHECKING THE SIM CARD READER**
  2. Vehicles with structure week from and incl. 200446, that is, year 2004 week 46. Refer to **CHECKING COMPONENTS AND WIRING**

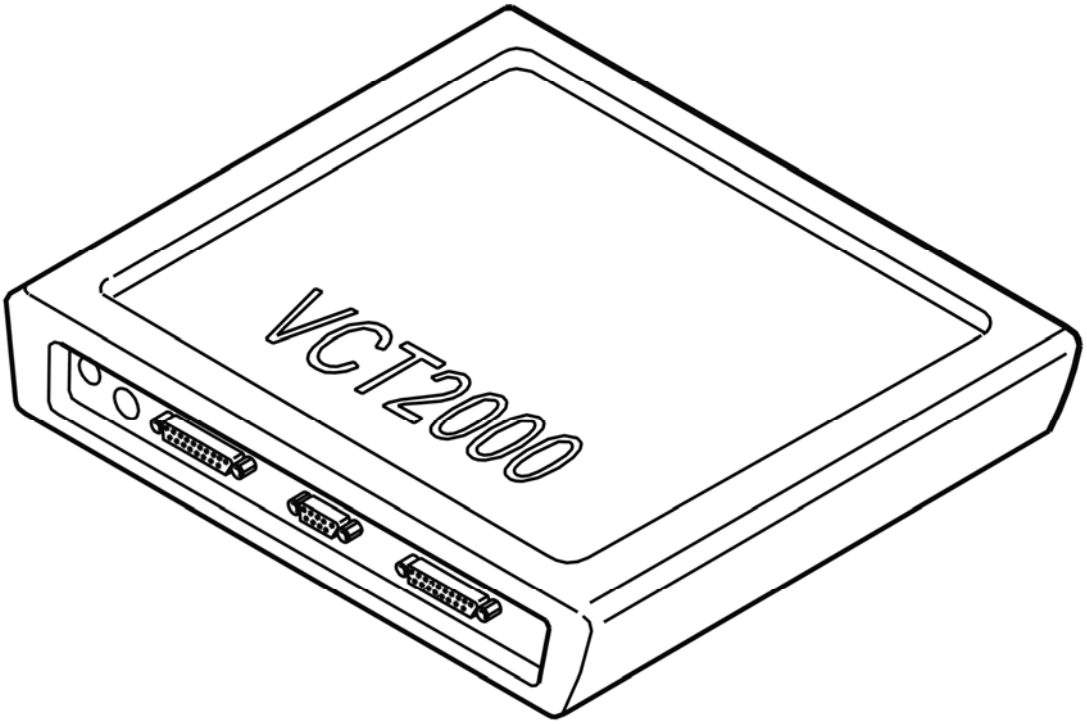

Fig. 107: Identifying VCT2000 Diagnostic Tool Symbol In VIDA
Courtesy of VOLKSWAGEN GROUP OF AMERICA, INC.

CHECKING COMPONENTS AND WIRING

Check the cable between connector B to phone module (PHM) and the SIM-card reader's connector for open circuit.

Check between:

- control module's connector B#1 (#21) and SIM-card reader's connector #1.
- control module's connector B#2 (#22) and SIM-card reader's connector #2.
- control module's connector B#3 (#3) and SIM-card reader's connector #3.
- control module's connector B#4 (#4) and SIM-card reader's connector #4.
- control module's connector B#5 (#5) and SIM-card reader's connector #5.
- control module's connector B#6 (#6) and SIM-card reader's connector #6.

Check the connectors for loose connections, damaged or bent pins as well as oxidation.

If no malfunction was found on the cable, try replacing the SIM-card reader.

Remedy as necessary.

Other information:

- see **CONNECTING THE BREAKOUT BOX**
- see **SIGNAL SPECIFICATION**
- see **LOCATION OF COMPONENTS**
- see **PHONE MODULE (PHM), REPLACING**
- see **HANDSET, REPLACING**
- see **CONTENTS**

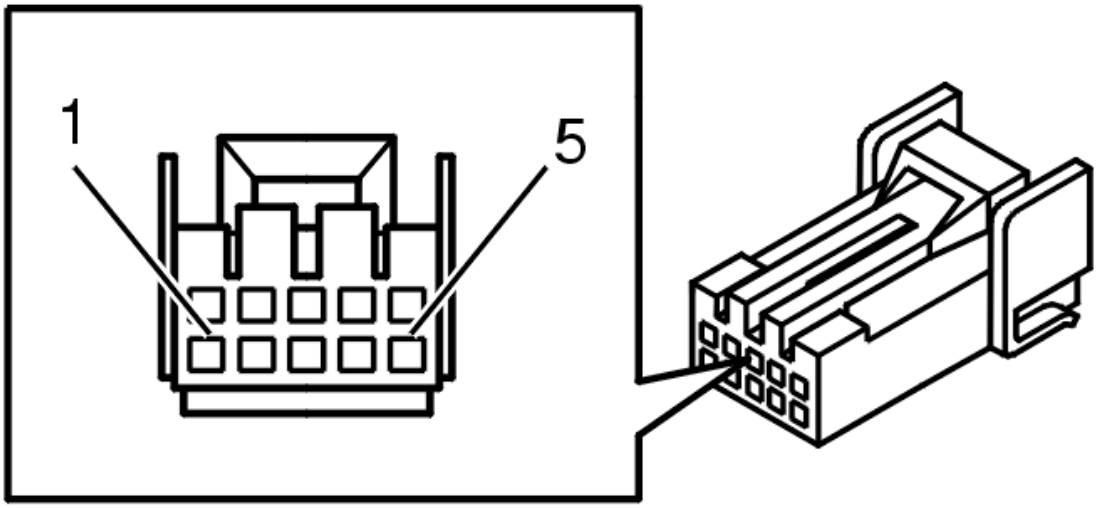

Fig. 108: 10 CD Changer Connector Terminals
Courtesy of VOLKSWAGEN GROUP OF AMERICA, INC.

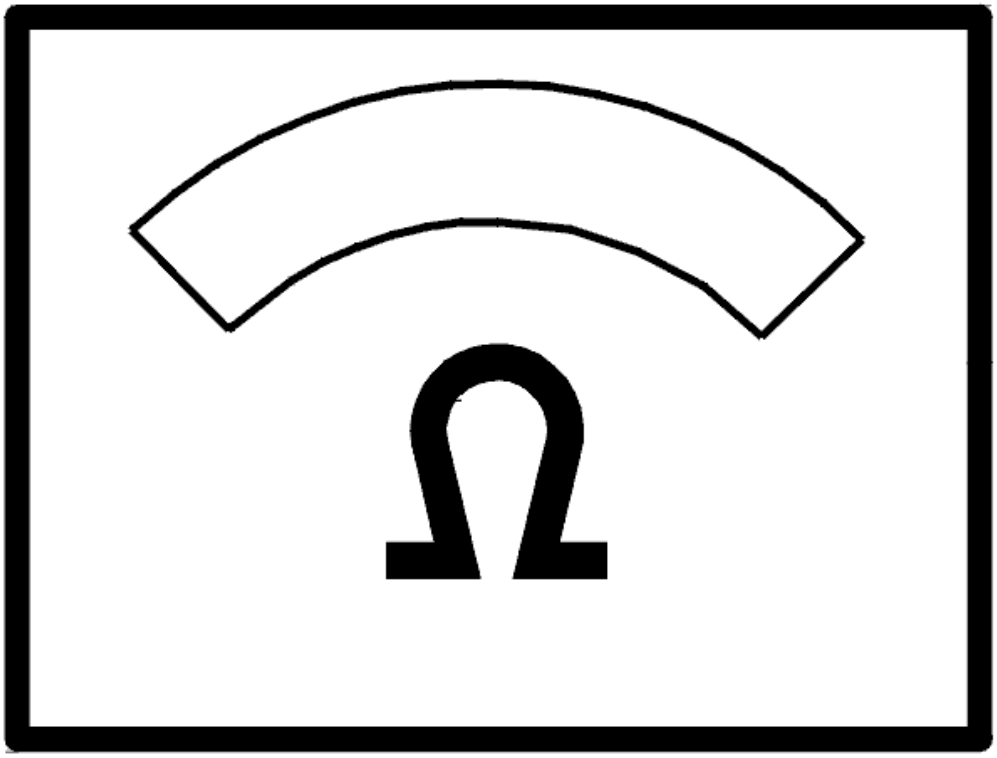

Fig. 109: Identifying Ohm Meter
Courtesy of VOLKSWAGEN GROUP OF AMERICA, INC.

CHECKING THE SIM CARD READER

CHECKING THE COMPONENT AND WIRING

If there is a open-circuit or short-circuit in the wiring, faulty SIM card reader or connector, the phone module (PHM) will not be able to communicate with the SIM card. The user will be asked to insert a SIM card even though there is already a card in the reader.

Checking the connectors, wiring and components

Try a different SIM card to check whether the problem is with that particular card.

Disconnect connector A at the phone module (PHM) and the connector for the SIM card reader. Check the

wiring. Check for an open-circuit by taking readings between:

- control module connector A terminal #9 (#9) and SIM card reader connector terminal #1
- control module connector A terminal #8 (#8) and SIM card reader connector terminal #2
- control module connector A terminal #7 (#7) and SIM card reader connector terminal #3
- control module connector A terminal #19 (#19) and SIM card reader connector terminal #5.

Check the wiring in the cable harness. Check for a short-circuit to each other.

Check the wiring in the cable harness. Check for a short-circuit to ground.

Check the connectors for loose connections, damaged or bent terminal pins and oxidation.

Other information:

- To access the phone module (PHM), see **PHONE MODULE (PHM), REPLACING**
- To access or replace the SIM card reader, see **INFOTAINMENT CONTROL MODULE (ICM), REPLACING**
- To connect the breakout box, see **CONNECTING THE BREAKOUT BOX**
- see **CONTENTS** .

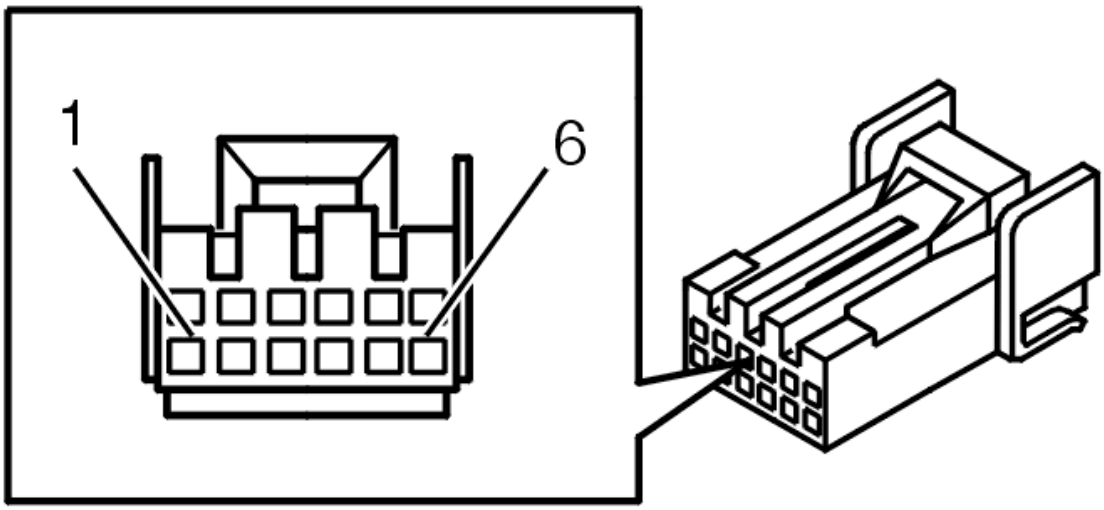

Fig. 110: Identifying Signal Table Connector B, Phone Module (PHM)
Courtesy of VOLKSWAGEN GROUP OF AMERICA, INC.

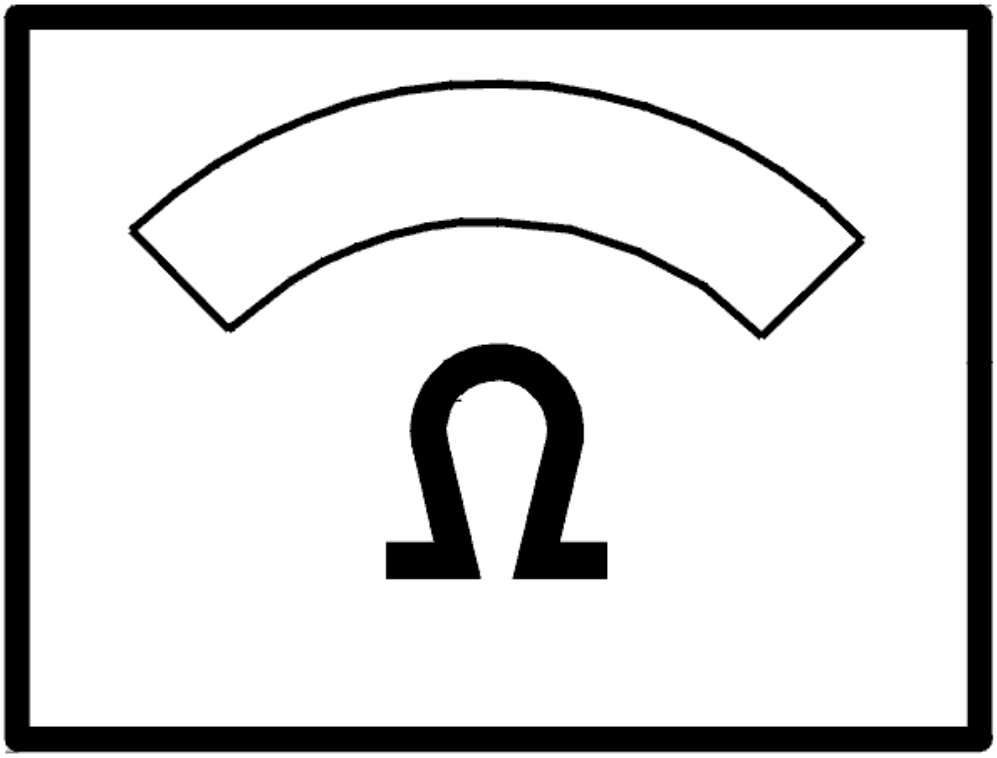

Fig. 111: Identifying Ohm Meter
Courtesy of VOLKSWAGEN GROUP OF AMERICA, INC.

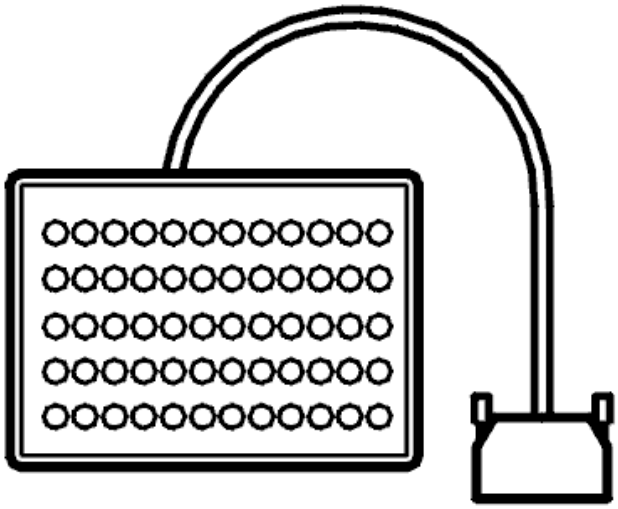

Fig. 112: Breakout Box
Courtesy of VOLKSWAGEN GROUP OF AMERICA, INC.

Was a fault detected?

- **YES**

  OKAY: Troubleshooting has been completed.

- **NO**

  Refer to **CHECKING THE COMPONENT AND WIRING**

CHECKING SOFTWARE (ECHO) (2003-2005)

CHECKING SOFTWARE (ECHO)

FAULT-TRACING INFORMATION

Problems with echoing with the other caller, outside the car, can occur when using handsfree. The echo can vary in magnitude and can vary in frequency. Interference and different clicking noises can also occur.

This can be remedied by upgrading the software. Order and download software in the following control modules:

1. New software for the GSM module. Download to the phone module (PHM). This software is not included when reloading the phone module (PHM).

   NOTE: **If the software download to the GSM module is interrupted, the phone module (PHM will not function afterwards. It is important that a battery charger with sufficient capacity is connected during download. Do not cancel the downloads for any reason.**

2. New software upgrade for the phone module (PHM). (This software is also included when reloading the phone module (PHM)).
3. New software upgrade for the infotainment control module (ICM). (This software is also included when reloading the infotainment control module (ICM)).
4. New software upgrade for the audio control module (AUD). (This software is also included when reloading the audio control module (AUD)).

NOTE: **It is extremely important that all four software downloads are downloaded for each control module at the same time and in the correct order. After the software has been downloaded into the vehicle, the new sound parameters must be updated in the phone module (PHM). This is carried out by turning the ignition key to position 0 and waiting 10 seconds. Then turn the ignition key to position II.**

Check that the latest available software for the control modules is downloaded into the vehicle by trying to purchase an "upgrade" for the relevant control module.

If an "upgrade" is available, continue to download the software according to the routine.

If an "upgrade" is not available, this can mean that the latest software is already installed in the vehicle. To find out why a purchase was declined, highlight the row for the relevant software purchase and click "Details". If the software purchase is void with trouble code 134, the software is already installed in the vehicle.

NOTE: **The corrective action above does not replace the electrical fault-tracings which are connected to the symptom.**

After checking the software, it is important to carry out a function check to verify that the problem has been remedied.

CHECKING SOFTWARE, PHONE MODULE (PHM) (2003-2011)

CHECKING SOFTWARE, PHONE MODULE (PHM)

Check that the latest available software for the phone module (PHM) is downloaded into the vehicle by purchasing an "upgrade" for the relevant control module.

If an "upgrade" is available, continue to download the software according to the routine.

If an "upgrade" is not available this could mean that the latest available software has already been installed in the vehicle. In order to find out why purchase was not permitted, mark the line for the relevant software purchase and click on "Details".

NOTE: **The corrective action above does not replace the electrical fault-tracings which are connected to the symptom.**

After checking the software, it is important to carry out a function check to verify that the problem has been remedied.

HINT: If the customer experiences problems with the Phone Module not switching back to the home network after a trip abroad, new software must be installed. The problem is based in, which is a function that not all networks support. The problem is solved in the software released 200722.

Select "Continue" to exit.

- **Continue**

  OKAY: Troubleshooting has been completed.

CHECKING SUBSCRIPTION AND SIM-CARD READER (2003-2011)

CHECKING THE SUBSCRIPTION AND SIM CARD READER

FAULT-TRACING INFORMATION

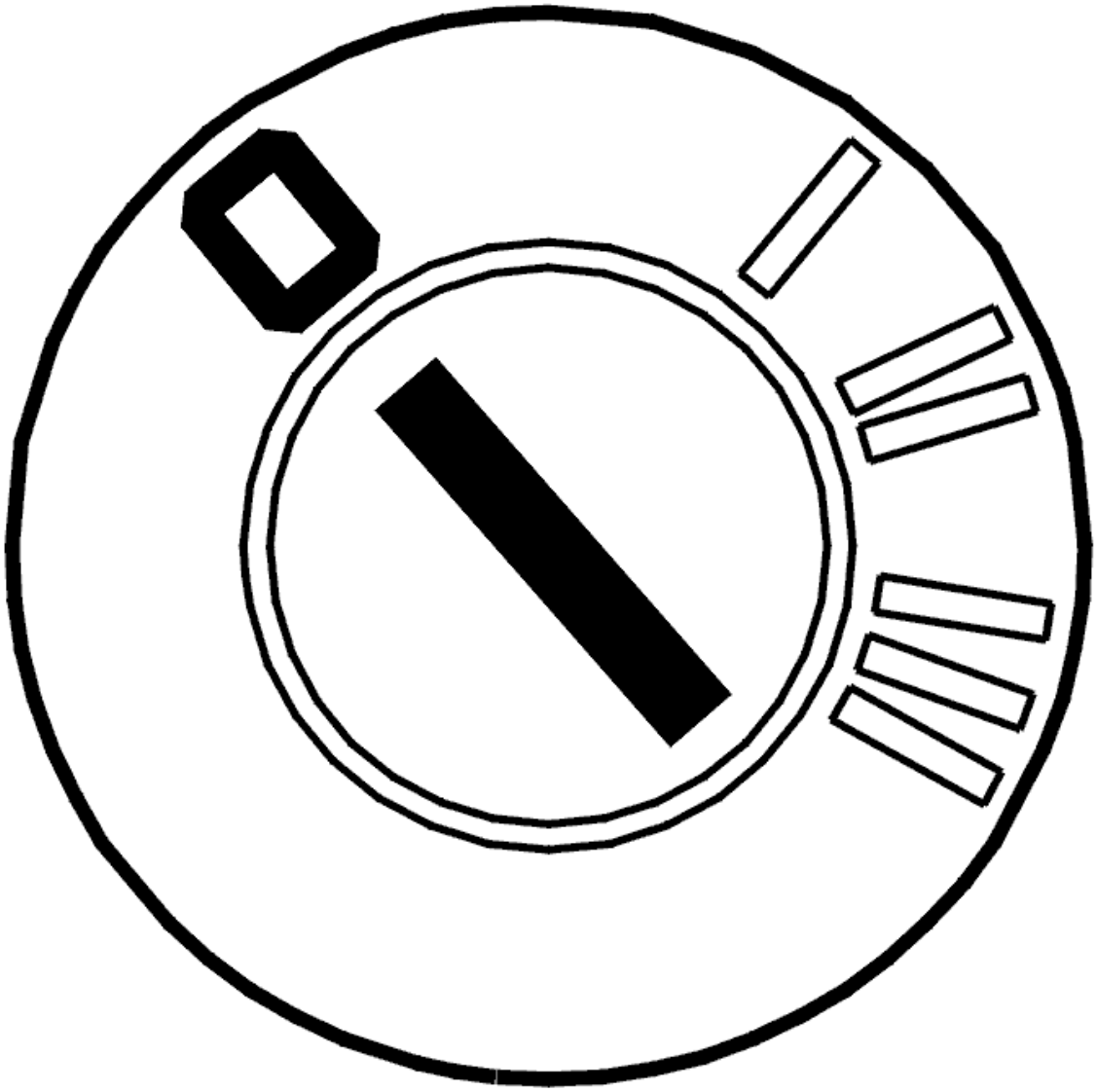

Fig. 113: Identifying Ignition OFF
Courtesy of VOLKSWAGEN GROUP OF AMERICA, INC.

Phone module (PHM) has a SIM-card reader for the customer's private telephone subscription. The SIM-card reader is located in the keypad for Infotainment control module (ICM). Sometimes the thickness of different network operators' SIM-cards may vary, which may result in the contact faces on the SIM-card not having contact with the SIM-card reader's contact in Phone module (PHM). This may be the cause of calls being cut off and that the telephone returns to basic mode.

If the customer has a "twin card", an extra SIM card connected to the existing subscription, a comparison between the function of the cards must be carried out.

If the customer experiences reduced function at certain specific occasions/places, this can be due to poor local reception/coverage.

In cases where the customer has a subscription which does not work on more than one frequency, this can be a

cause for the poor reception/coverage.

Check:

- that the mating surface of the SIM card is clean and that there are no dents in the mating surface
- that the SIM card is in the correct card holder
- the SIM card reader. Check for damage. Check for bent connectors
- the function using another SIM card/subscription.

CHECKING THE ANTENNA CABLE, ACCESSORY (2003-2011)

CHECKING THE ANTENNA CABLE, ACCESSORY

FAULT-TRACING INFORMATION

Fault causes which could result in poor antenna reception:

- Incorrect positioning of the antenna cable
- Fault or loose connections in the cable between the handsfree box and the antenna
- The antenna is not properly connected.

- **Continue**

  Refer to **CHECKING THE COMPONENTS AND WIRING**

CHECKING THE COMPONENTS AND WIRING

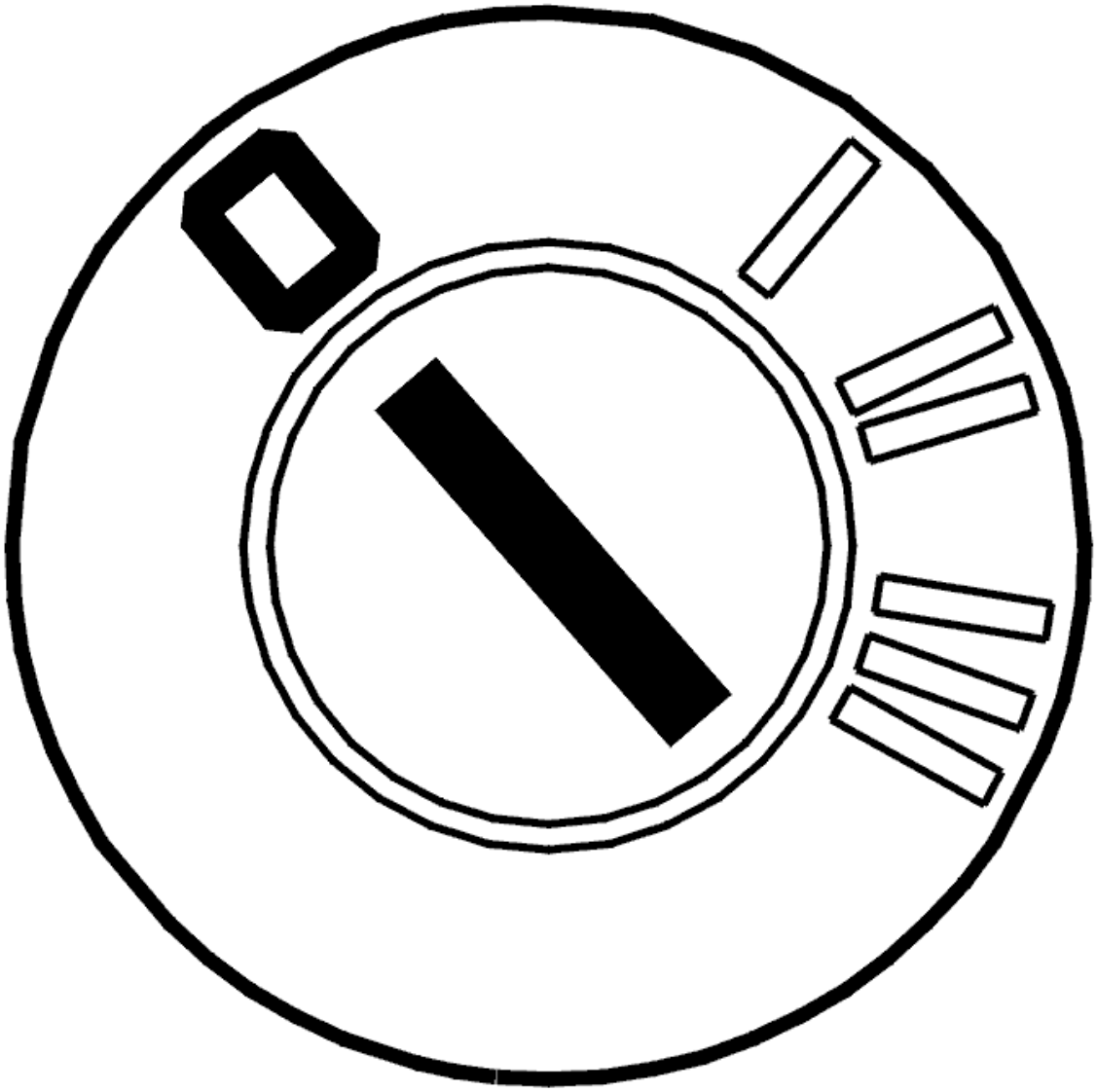

Fig. 114: Identifying Ignition OFF
Courtesy of VOLKSWAGEN GROUP OF AMERICA, INC.

- Ignition off
- Disconnect the connector for the antenna cable.

  Check the connector for the antenna cable. Check for loose connections. Check for contact resistance and oxidation.

  Check the antenna cable. Check that the cable harness is not trapped.

  Take readings between the antenna signal cable and signal ground. Check for a short-circuit to ground.

  NOTE: The resistance must not be 0 ohms or infinite. The resistance must be approximately 50 ohms.

Take readings between the signal ground and chassis ground. Check for a short-circuit to ground.

Other information

- see **SIGNAL SPECIFICATION**
- see **CONTENTS** .

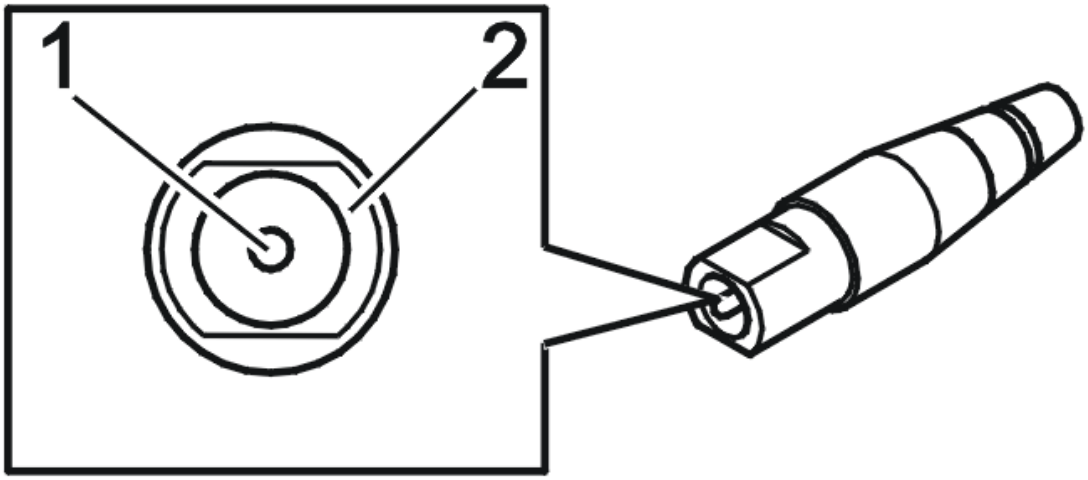

Fig. 115: Antenna Connector
Courtesy of VOLKSWAGEN GROUP OF AMERICA, INC.

- **Continue**

  Refer to **VERIFICATION**

VERIFICATION

HINT: After carrying out the repair, check that the fault has been remedied.

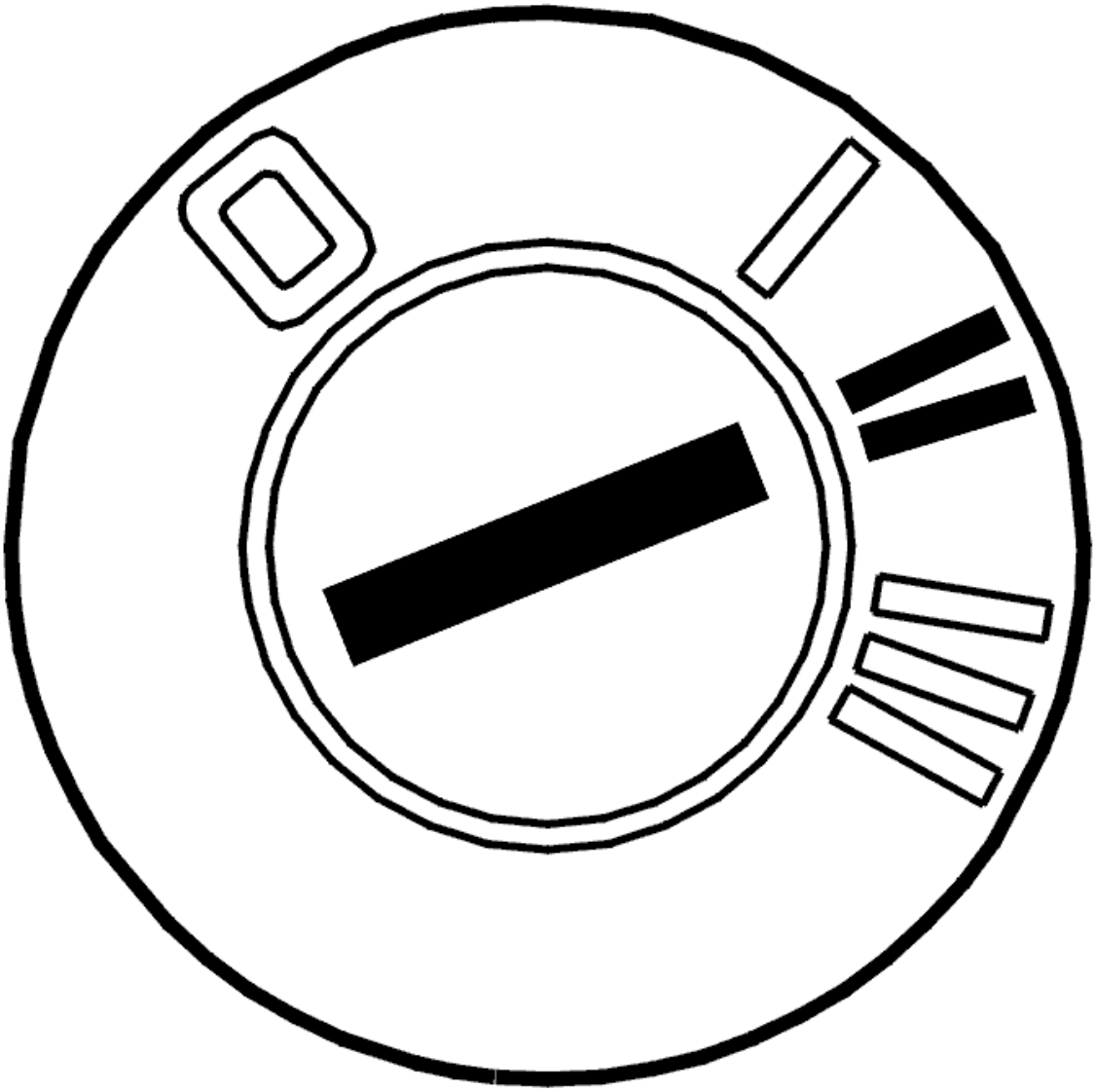

Fig. 116: Identifying Ignition ON
Courtesy of VOLKSWAGEN GROUP OF AMERICA, INC.

- Ignition on.

  Check that the antenna is working by using the telephone.

Is the function OK?

- **YES**

  VERIFIED: Troubleshooting has been completed.

- **NO**

  Refer to **INFORMATION**

INFORMATION

FAULT-TRACING INFORMATION

The fault should have been detected and remedied. As this is not the case fault-tracing has failed.

Exit fault-tracing for this diagnostic trouble code (DTC) or make another attempt.

CHECKING THE CARPHONE ANTENNA (2003-2011)

CHECKING THE CARPHONE ANTENNA (2003-2005)

CHECKING THE COMPONENT

HINT: If there is an extra antenna available, use it for a comparative test by connecting it to the phone module (PHM) or the A-post connector.

NOTE: The antenna must be pointing forward, immediately under the existing antenna.

Checking the connectors and cables

Disconnect the connector at the phone module (PHM) and take readings at the connector in the A-post between:

- screen and ground
- signal and ground
- screen and signal.

The resistance must be infinite. Replace the cable if the resistance is not infinite.

Measure the voltage from the connector in the A-post between screen and ground. The voltage must be 0 V. Replace the antenna cable if the voltage is not 0 V.

Check that the cable terminals in the connector at the phone module (PHM) and in the A-post are securely crimped. Remedy or replace if damaged.

Other information:

- see **ANTENNA CARPHONE, REPLACING**
- see **PHONE MODULE (PHM), REPLACING**
- see **CHECKING WIRING AND TERMINALS**

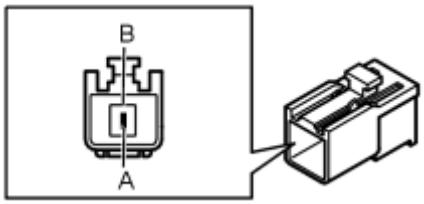

Fig. 117: Identifying Phone Module Connector
Courtesy of VOLKSWAGEN GROUP OF AMERICA, INC.

Was a fault detected?

- **YES**

  Refer to **VERIFICATION**

- **NO**

  Refer to **CHECKING THE CONNECTORS AND WIRING**

CHECKING THE CONNECTORS AND WIRING

Raise the secondary lock on the connector in the right A-pillar.

Loosen the primary lock and remove the insulator.

Carefully remove the antenna from the headlining.

Measure the resistance between the signal line and screen ground on the connector. The resistance must be approximately 0 ohms.

Measure the resistance between screen ground and ground. The resistance must be infinite.

Carefully remove the three screws that hold the antenna's circuit board.

Carefully lift up the circuit board from the mounting point so that there is no contact between the circuit board and the casing.

Measure the resistance between the signal line and screen ground. The resistance must be infinite. If the resistance is infinite there is a short-circuit between the signal line and screen ground.

Remedy as necessary.

Erase any diagnostic trouble codes (DTCs) after fault-tracing.

Perform a function check.

If the check succeeds, the malfunction has been fixed.

Other information

- see **ANTENNA CARPHONE, REPLACING**
- see **CONNECTORS, REPAIR**
- see **CHECKING WIRING AND TERMINALS**

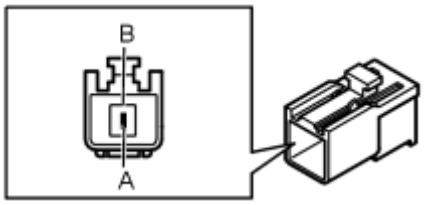

Fig. 118: Identifying Phone Module Connector
Courtesy of VOLKSWAGEN GROUP OF AMERICA, INC.

Was a fault detected?

- **YES**

  Refer to **VERIFICATION**

- **NO**

  Refer to **INFORMATION**

VERIFICATION

SYMPTOM VERIFICATION

HINT: After carrying out the repair check that the fault has been remedied.

Fig. 119: Checking Traffic Load On CAN Cables
Courtesy of VOLKSWAGEN GROUP OF AMERICA, INC.

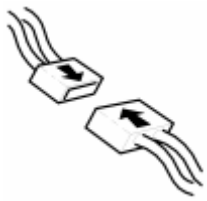

Fig. 120: Identifying Connector(s) Reinstallation
Courtesy of VOLKSWAGEN GROUP OF AMERICA, INC.

- Ignition off.
- Reinstall the connectors, components etc.
- Ignition on.

  Check the telephone antenna by using the telephone.

Does the telephone antenna work?

- **YES**

  VERIFIED: Troubleshooting has been completed.

- **NO**

  Refer to **INFORMATION**

INFORMATION

FAULT-TRACING INFORMATION

The fault should have been detected and remedied. As this is not the case fault-tracing has failed.

Exit fault-tracing for this diagnostic trouble code (DTC) or make another attempt.

CHECKING THE CARPHONE ANTENNA (2006-2011)

CHECKING THE COMPONENT

HINT: If there is an extra antenna available, use it for a comparative test by connecting it to the phone module (PHM) or the A-post connector.

NOTE: The antenna must be pointing forward, immediately under the existing antenna.

Checking the connectors and cables

Disconnect the connector at the phone module (PHM) and take readings at the connector in the A-post between:

- screen and ground
- signal and ground
- screen and signal.

The resistance must be infinite. Replace the cable if the resistance is not infinite.

Measure the voltage from the connector in the A-post between screen and ground. The voltage must be 0 V. Replace the antenna cable if the voltage is not 0 V.

Check that the cable terminals in the connector at the phone module (PHM) and in the A-post are securely crimped. Remedy or replace if damaged.

Other information:

- see **ANTENNA CARPHONE, REPLACING**
- see **PHONE MODULE (PHM), REPLACING (2006-2010)**
- see **CHECKING WIRING AND TERMINALS**

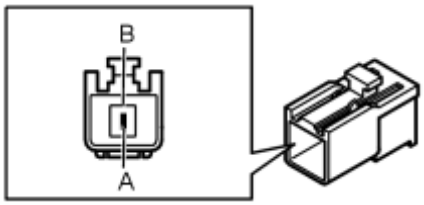

Fig. 121: Identifying Phone Module Connector
Courtesy of VOLKSWAGEN GROUP OF AMERICA, INC.

Was a fault detected?

- **YES**

  Refer to **VERIFICATION**

- **NO**

  Refer to **CHECKING THE CONNECTORS AND WIRING**

CHECKING THE CONNECTORS AND WIRING

Raise the secondary lock on the connector in the right A-pillar.

Loosen the primary lock and remove the insulator.

Carefully remove the antenna from the headlining.

Measure the resistance between the signal line and screen ground on the connector. The resistance must be approximately 0 ohms.

Measure the resistance between screen ground and ground. The resistance must be infinite.

Carefully remove the three screws that hold the antenna's circuit board.

Carefully lift up the circuit board from the mounting point so that there is no contact between the circuit board and the casing.

Measure the resistance between the signal line and screen ground. The resistance must be infinite. If the

resistance is infinite there is a short-circuit between the signal line and screen ground.

Remedy as necessary.

Erase any diagnostic trouble codes (DTCs) after fault-tracing.

Perform a function check.

If the check succeeds, the malfunction has been fixed.

Other information

- see **ANTENNA CARPHONE, REPLACING**
- see **CONNECTORS, REPAIR**
- see **CHECKING WIRING AND TERMINALS**

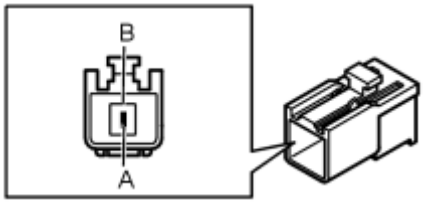

Fig. 122: Identifying Phone Module Connector
Courtesy of VOLKSWAGEN GROUP OF AMERICA, INC.

Was a fault detected?

- **YES**

  Refer to **VERIFICATION**

- **NO**

  Refer to **INFORMATION**

VERIFICATION

SYMPTOM VERIFICATION

HINT: After carrying out the repair check that the fault has been remedied.

Fig. 123: Checking Traffic Load On CAN Cables
Courtesy of VOLKSWAGEN GROUP OF AMERICA, INC.

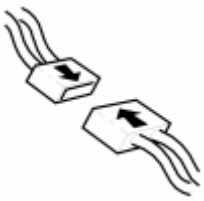

Fig. 124: Identifying Connector(s) Reinstallation
Courtesy of VOLKSWAGEN GROUP OF AMERICA, INC.

- Ignition off.
- Reinstall the connectors, components etc.
- Ignition on.

  Check the telephone antenna by using the telephone.

Does the telephone antenna work?

- **YES**

  VERIFIED: Troubleshooting has been completed.

- **NO**

  Refer to **INFORMATION**

INFORMATION

FAULT-TRACING INFORMATION

The fault should have been detected and remedied. As this is not the case fault-tracing has failed.

Exit fault-tracing for this diagnostic trouble code (DTC) or make another attempt.

CHECKING THE CARPHONE HANDSET (2003-2004)

CHECKING THE CARPHONE HANDSET

CHECKING COMPONENTS AND WIRING

The carphone handset will not function in the event of an open-circuit or short-circuit in the wiring, of a defective handset or faulty connectors. This means that the user will only be able to use the handsfree function.

Checking the connectors and cables

Check the power supply cable between phone module (PHM) connector terminal #11 (#53) and handset connector terminal #5 (#25). Check for an open-circuit.

Check the ground cable between phone module (PHM) connector terminal #B6 (#48) and handset connector terminal #3 (#23). Check for an open-circuit, for a short-circuit to ground and a short-circuit to supply voltage.

Check the connectors for loose connections, damaged or bent terminal pins and oxidation.

Try replacing the carphone handset if no fault is found.

Other information:

- To access the phone module (PHM), see **PHONE MODULE (PHM), REPLACING**
- To access or replace the handset, see **HANDSET, REPLACING**
- To connect the breakout box, see **CONNECTING THE BREAKOUT BOX**
- For information about signals and connectors, see **SIGNAL SPECIFICATION**
- see **CONTENTS** .

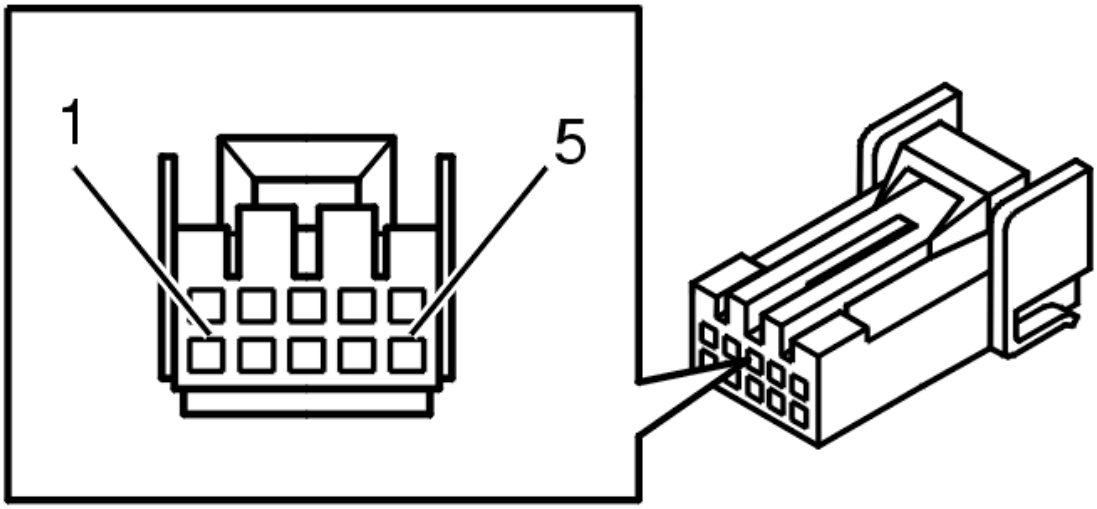

Fig. 125: 10 CD Changer Connector Terminals
Courtesy of VOLKSWAGEN GROUP OF AMERICA, INC.

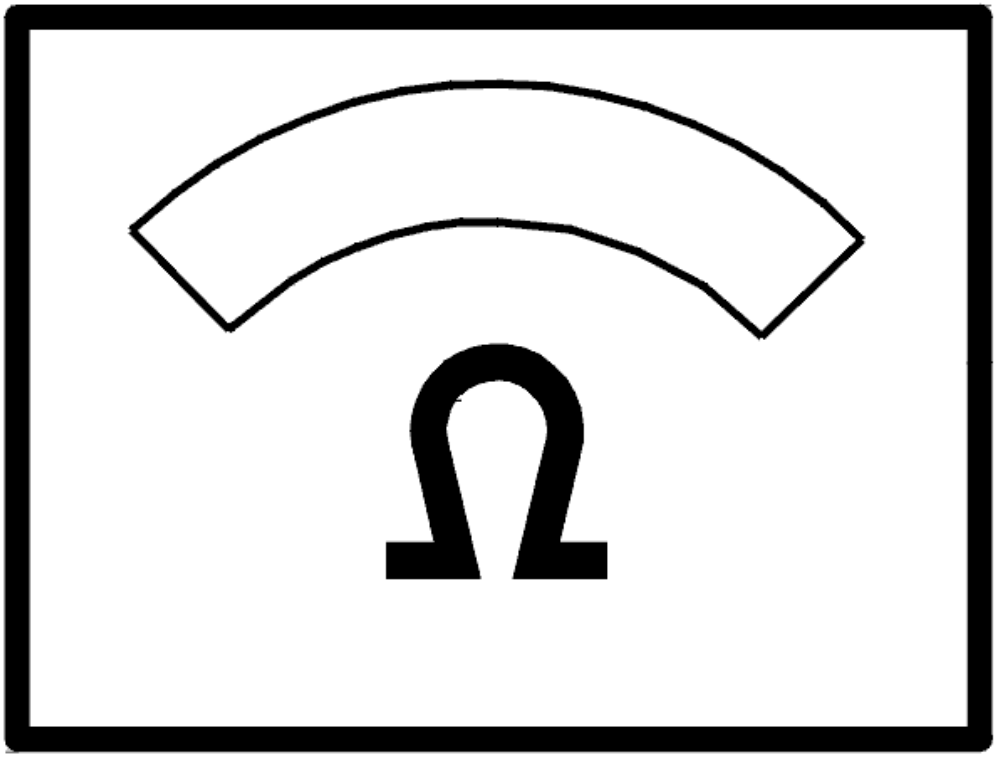

Fig. 126: Identifying Ohm Meter
Courtesy of VOLKSWAGEN GROUP OF AMERICA, INC.

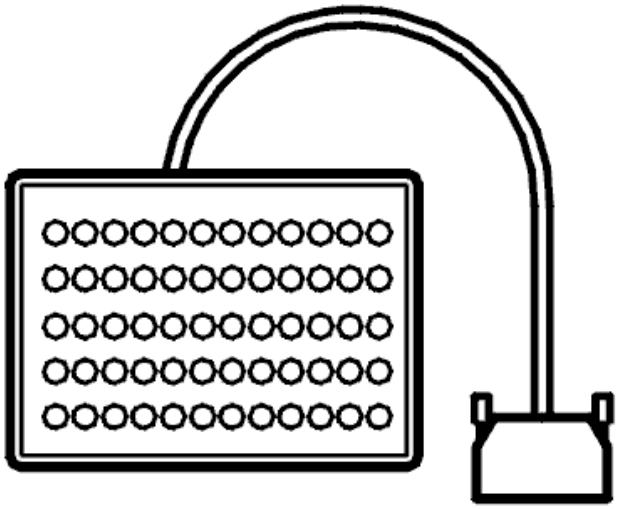

Fig. 127: Breakout Box
Courtesy of VOLKSWAGEN GROUP OF AMERICA, INC.

CHECKING THE CARPHONE HANDSET (2005)

CHECKING THE CARPHONE HANDSET

CHECKING STRUCTURE WEEK

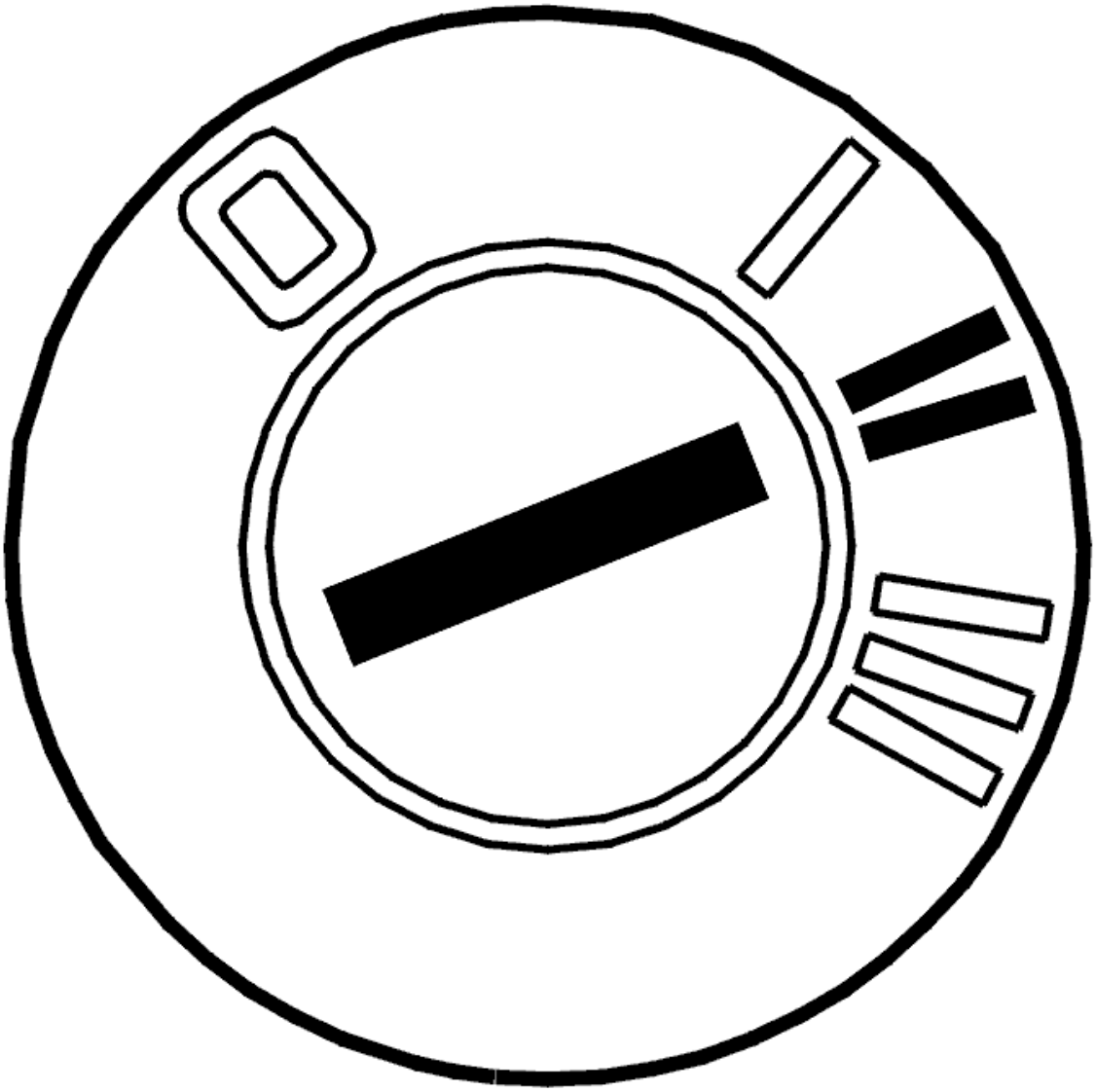

Fig. 128: Identifying Ignition ON
Courtesy of VOLKSWAGEN GROUP OF AMERICA, INC.

- Ignition on

  Read out the vehicle's structure week by clicking on the symbol for VCT2000.

  1. Vehicles with structure week up to and incl. 200445, that is, year 2004 week 45.
  2. Vehicles with structure week from and incl. 200446, that is, year 2004 week 46.

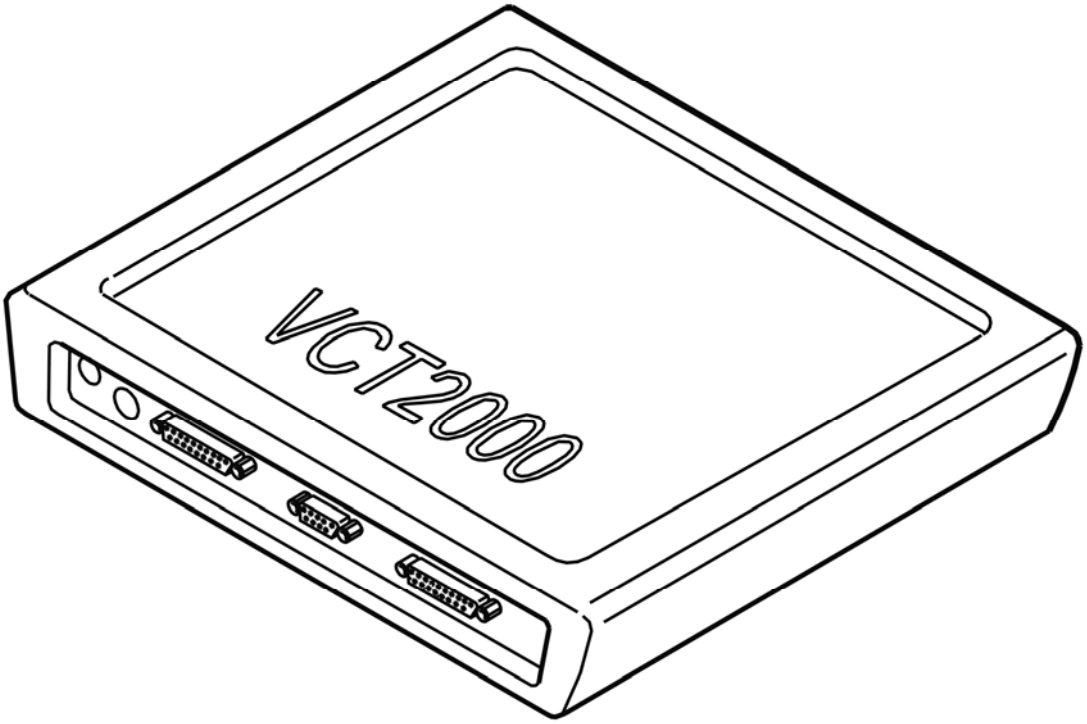

Fig. 129: Identifying VCT2000 Diagnostic Tool Symbol In VIDA
Courtesy of VOLKSWAGEN GROUP OF AMERICA, INC.

Select one of the above alternatives.

- **1**

  Refer to **CHECKING THE CARPHONE HANDSET**

- **2**

  Refer to **CHECKING COMPONENTS AND WIRING**

CHECKING COMPONENTS AND WIRING

In case of open circuit/short-circuiting of cables, defective handset or connector, the carphone handset will not work. This results in the user only being able to use handsfree.

Checking connectors and cables

Check the cable for voltage feed between phone module (PHM) connector #A7 (#7) and the handset's connector #5 (#25) for open circuit.

Check the cable for ground between phone module (PHM) connector #A18 (#18) and the handset's connector

#3 (#23) for open circuit, short-circuit to ground and short-circuit to voltage.

Check the connectors for loose connections, damaged or bent pins as well as oxidation.

If no malfunction was found, try replacing the handset.

Other information:

- see **CONNECTING THE BREAKOUT BOX**
- see **SIGNAL SPECIFICATION**
- see **LOCATION OF COMPONENTS**
- see **PHONE MODULE (PHM), REPLACING**
- see **HANDSET, REPLACING**
- see **CONTENTS**

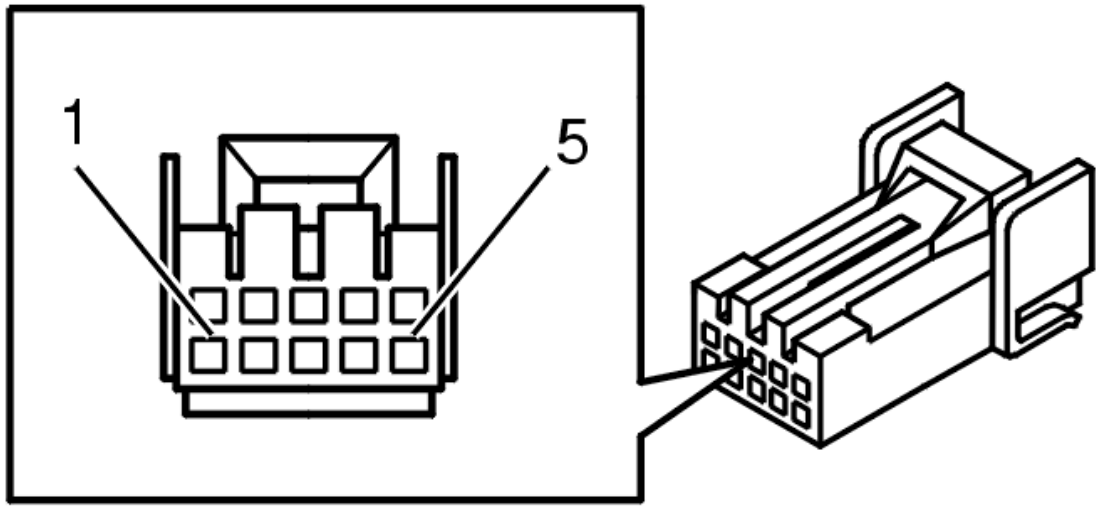

Fig. 130: 10 CD Changer Connector Terminals
Courtesy of VOLKSWAGEN GROUP OF AMERICA, INC.

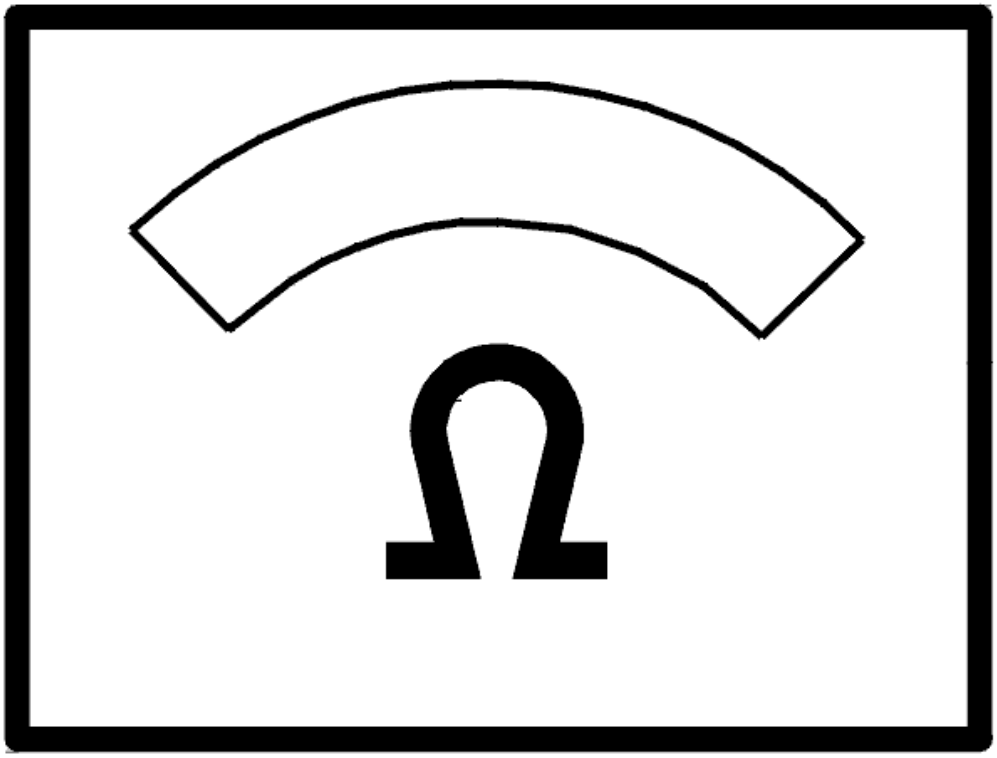

Fig. 131: Identifying Ohm Meter
Courtesy of VOLKSWAGEN GROUP OF AMERICA, INC.

CHECKING THE CARPHONE HANDSET

CHECKING COMPONENTS AND WIRING

The carphone handset will not function in the event of an open-circuit or short-circuit in the wiring, of a defective handset or faulty connectors. This means that the user will only be able to use the handsfree function.

Checking the connectors and cables

Check the power supply cable between phone module (PHM) connector terminal #11 (#53) and handset connector terminal #5 (#25). Check for an open-circuit.

Check the ground cable between phone module (PHM) connector terminal #B6 (#48) and handset connector

terminal #3 (#23). Check for an open-circuit, for a short-circuit to ground and a short-circuit to supply voltage.

Check the connectors for loose connections, damaged or bent terminal pins and oxidation.

Try replacing the carphone handset if no fault is found.

Other information:

- To access the phone module (PHM), see **PHONE MODULE (PHM), REPLACING**
- To access or replace the handset, see **HANDSET, REPLACING**
- To connect the breakout box, see **CONNECTING THE BREAKOUT BOX**
- For information about signals and connectors, see **SIGNAL SPECIFICATION**
- see **CONTENTS** .

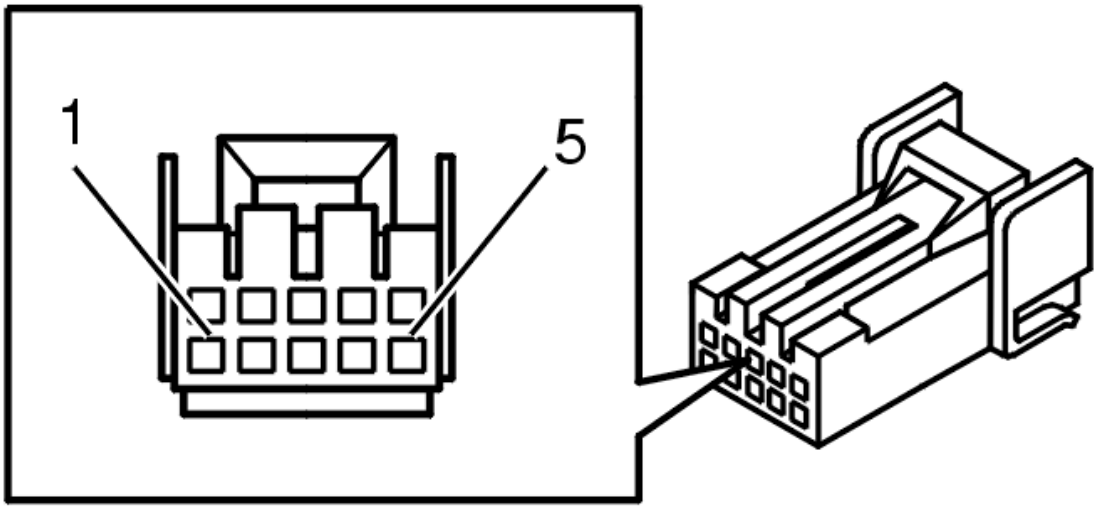

Fig. 132: 10 CD Changer Connector Terminals
Courtesy of VOLKSWAGEN GROUP OF AMERICA, INC.

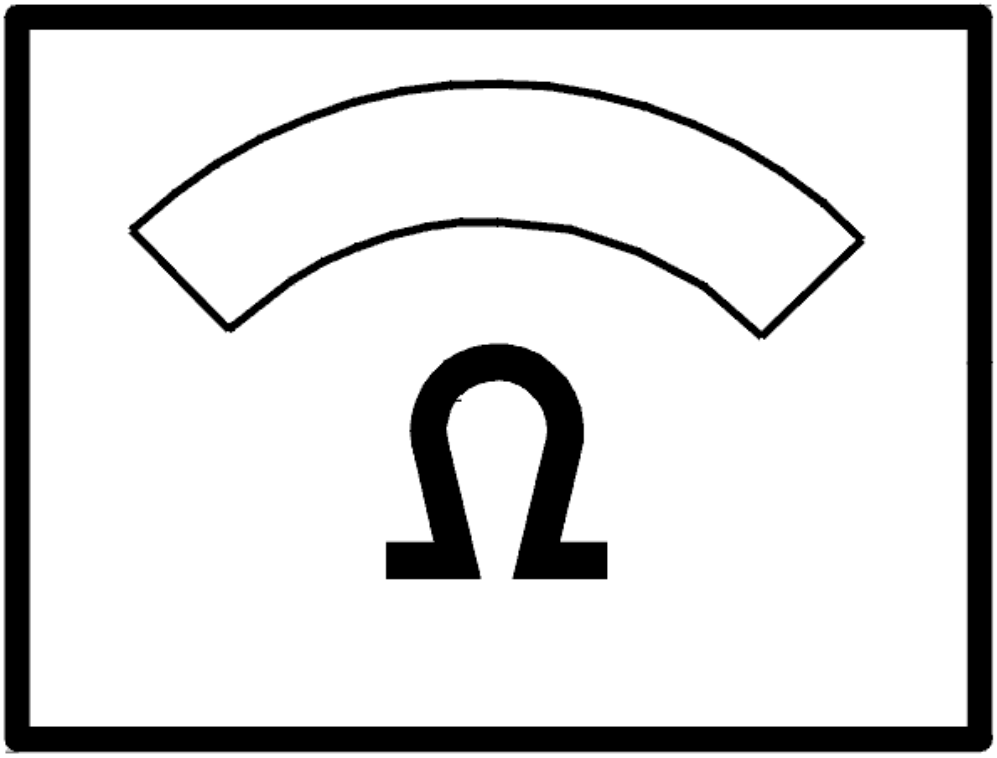

Fig. 133: Identifying Ohm Meter
Courtesy of VOLKSWAGEN GROUP OF AMERICA, INC.

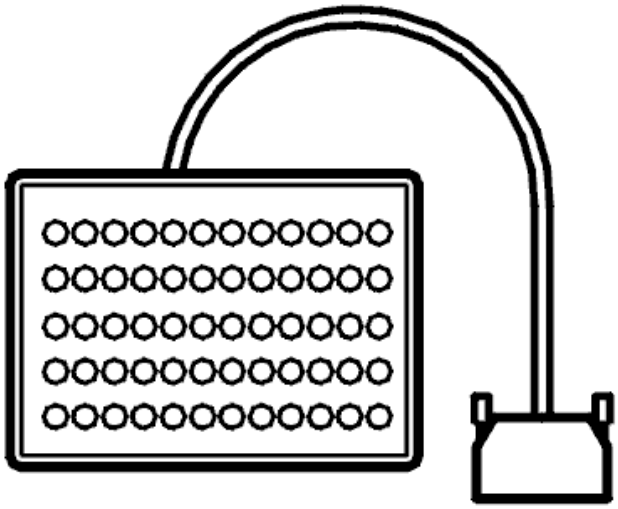

Fig. 134: Breakout Box
Courtesy of VOLKSWAGEN GROUP OF AMERICA, INC.

CHECKING THE CARPHONE HANDSET (2003-2011)

CHECKING THE CARPHONE HANDSET (2003, 2004)

CHECKING COMPONENTS AND WIRING

In case of open circuit/short-circuiting of cables, defective handset or connector, the carphone handset will not work. This results in the user only being able to use handsfree.

Checking connectors and cables

Check the cable for voltage feed between phone module (PHM) connector #A7 (#7) and the handset's connector #5 (#25) for open circuit.

Check the cable for ground between phone module (PHM) connector #A18 (#18) and the handset's connector #3 (#23) for open circuit, short-circuit to ground and short-circuit to voltage.

Check the connectors for loose connections, damaged or bent pins as well as oxidation.

If no malfunction was found, try replacing the handset.

Other information:

- see **CONNECTING THE BREAKOUT BOX**
- see **SIGNAL SPECIFICATION**
- see **LOCATION OF COMPONENTS**
- see **PHONE MODULE (PHM), REPLACING**
- see **HANDSET, REPLACING**

- see **CONTENTS**

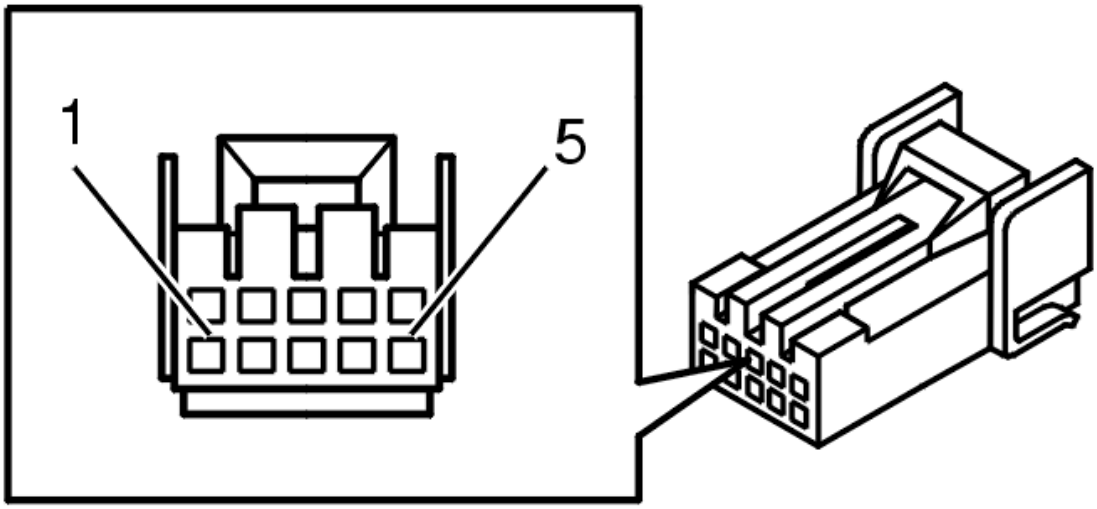

Fig. 135: 10 CD Changer Connector Terminals
Courtesy of VOLKSWAGEN GROUP OF AMERICA, INC.

CHECKING THE CARPHONE HANDSET (2006-2011)

CHECKING COMPONENTS AND WIRING

In case of open circuit/short-circuiting of cables, defective handset or connector, the carphone handset will not work. This results in the user only being able to use handsfree.

Checking connectors and cables

Check the cable for voltage feed between phone module (PHM) connector #A7 (#7) and the handset's connector #5 (#25) for open circuit.

Check the cable for ground between phone module (PHM) connector #A18 (#18) and the handset's connector #3 (#23) for open circuit, short-circuit to ground and short-circuit to voltage.

Check the connectors for loose connections, damaged or bent pins as well as oxidation.

If no malfunction was found, try replacing the handset.

Other information:

- see **CONNECTING THE BREAKOUT BOX**
- see **SIGNAL SPECIFICATION**
- see **LOCATION OF COMPONENTS**
- see **PHONE MODULE (PHM), REPLACING (2006-2010)**
- see **HANDSET, REPLACING**

- see **CONTENTS**

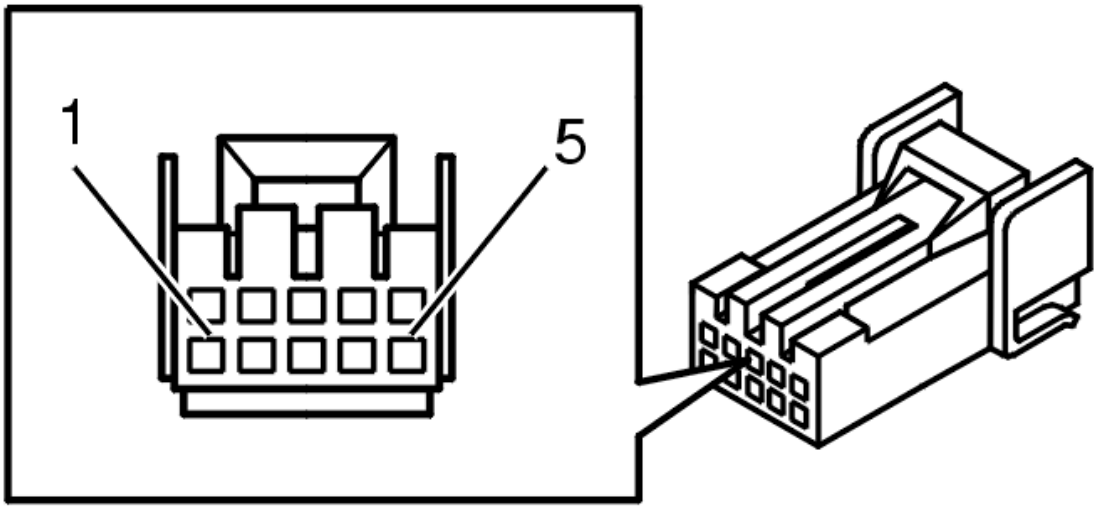

Fig. 136: 10 CD Changer Connector Terminals
Courtesy of VOLKSWAGEN GROUP OF AMERICA, INC.

CHECKING THE CRADLE SIGNAL (2003-2005)

CHECKING THE CRADLE SIGNAL

TROUBLESHOOTING INFORMATION

The phone module (PHM) decides if the call is to be connected via handsfree or the handset based on the cradle signal. When the handset is placed in its holder, all voice calls are routed via handsfree. The handset is activated when it is removed from the holder. The cradle signal to the phone module (PHM) is controlled by a magneto switch located in the handset. The switch is closed by a permanent magnet located in the holder. The magnet on XC90 is embedded in the plastic holder. When the handset is placed in the holder, the cradle signal to the phone module (PHM) is 0 V, if the handset is used the signal is 5 V.

The handsfree will not work if there is no signal from the cradle. If there are intermittent malfunctions, calls may be disconnected when handsfree is in use.

Causes of lost function may be:

- The permanent magnet in the holder demagnetized.
- Defective magneto switch in the handset.

- **Continue**

  Refer to **CHECKING THE MAGNET AND SWITCH**

CHECKING THE MAGNET AND SWITCH

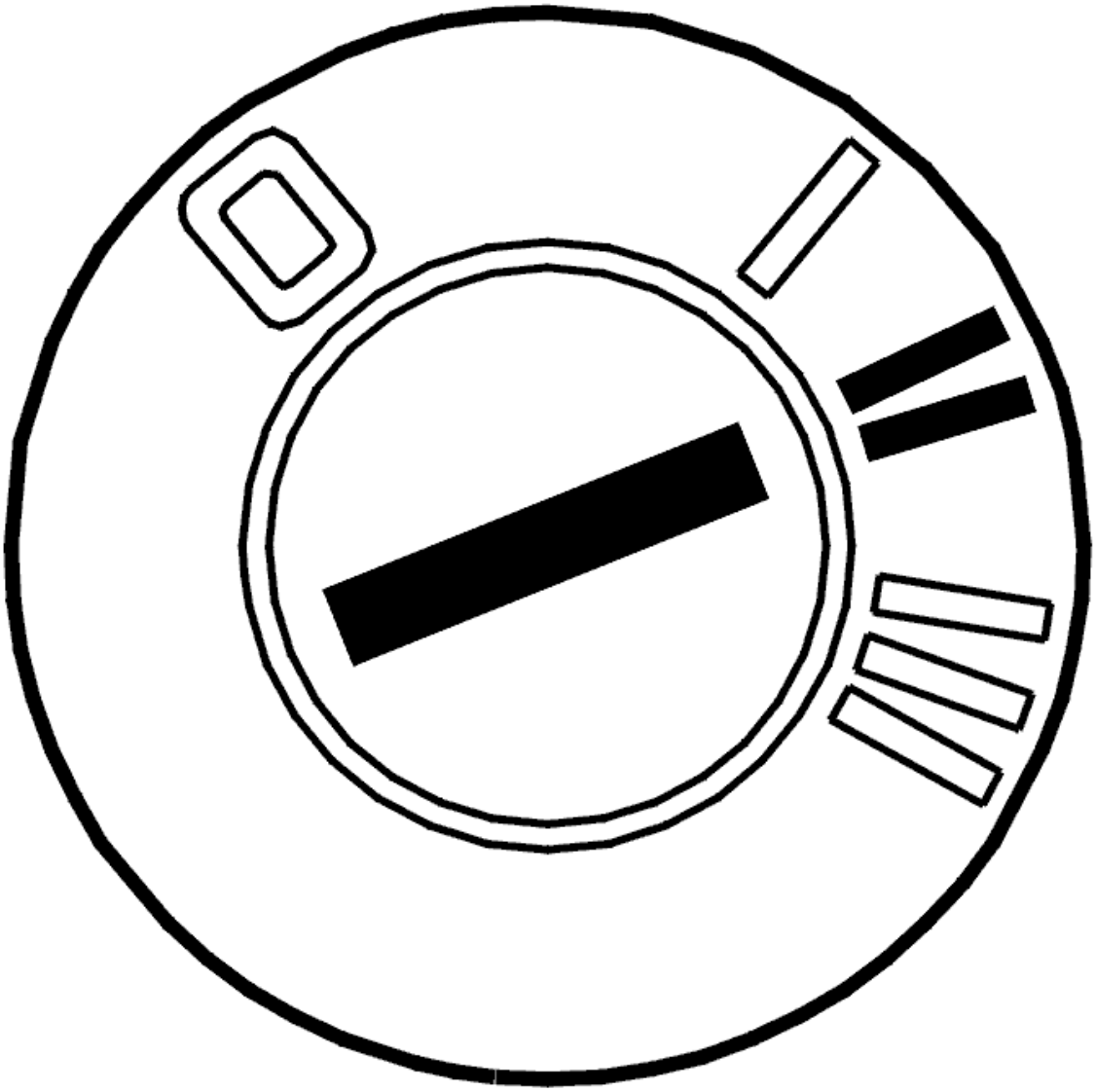

Fig. 137: Identifying Ignition ON
Courtesy of VOLKSWAGEN GROUP OF AMERICA, INC.

- Ignition on.

  Check the function of the cradle by measuring the signal at the handset connector. Take readings with the handset in and removed from the holder.

  Checking the permanent magnet

  If the correct cradle signal value is not obtained when the handset is on the cradle, check the cradle function as follows:

  - Lift off the handset
  - Run a metal object over the magnet (paper clip or similar)

Checking the switch

Check the switch in the handset using a magnet. Hold the magnet in the marked area in the illustration. Check that the cradle signal changes. Also check that the switch is working (closes) when the magnet is a couple of centimeters from the handset.

Remedy as necessary.

Other information:

- see **CONNECTING THE BREAKOUT BOX**
- see **SIGNAL DESCRIPTION**
- see **HANDSET, REPLACING**

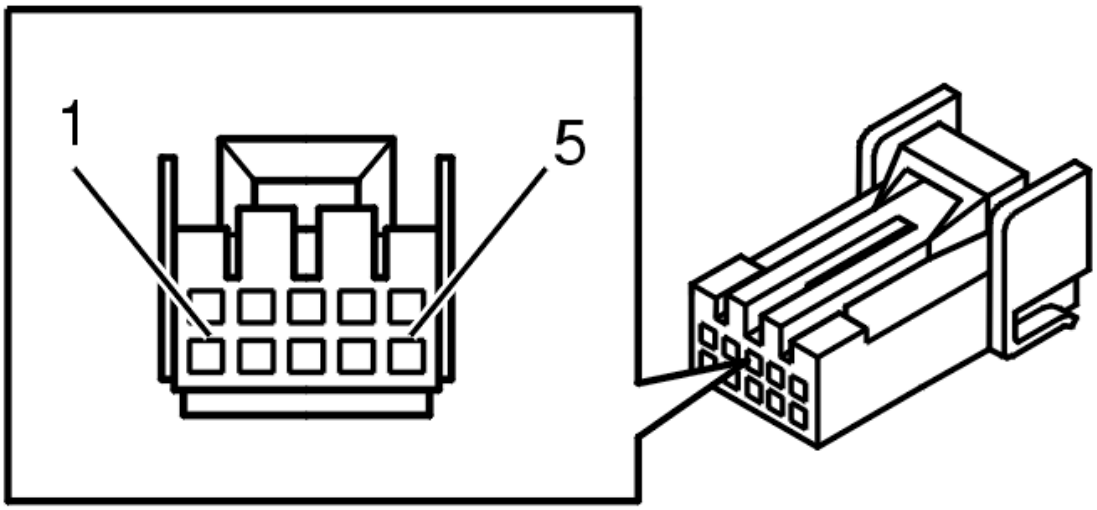

Fig. 138: 10 CD Changer Connector Terminals
Courtesy of VOLKSWAGEN GROUP OF AMERICA, INC.

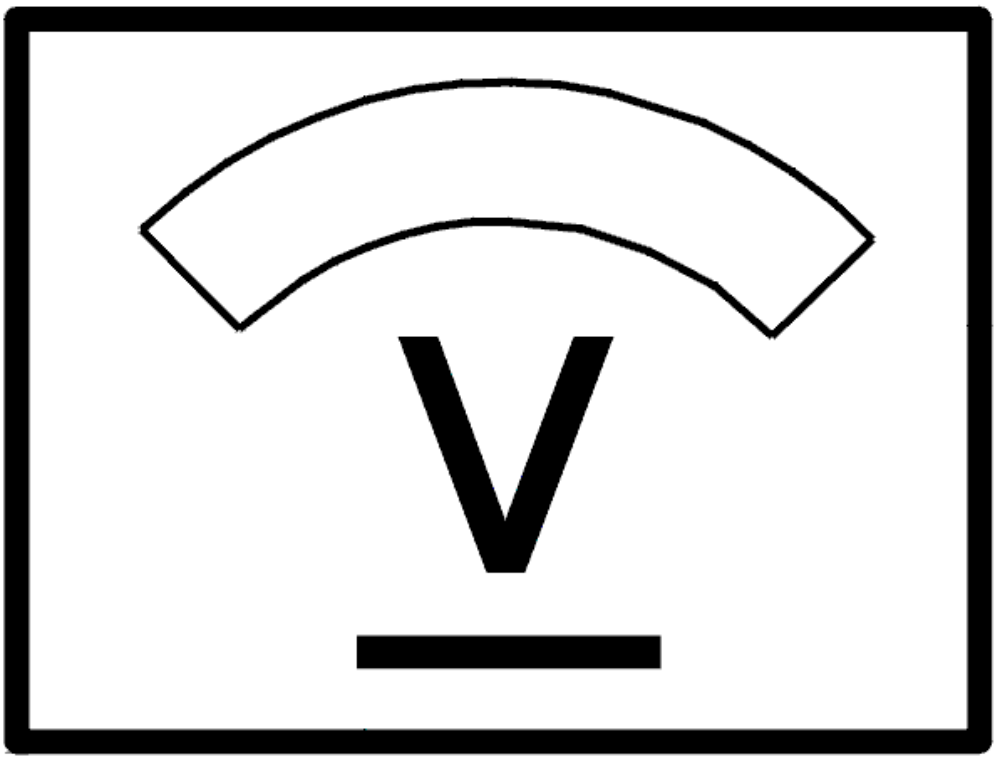

Fig. 139: Identifying Voltage Display
Courtesy of VOLKSWAGEN GROUP OF AMERICA, INC.

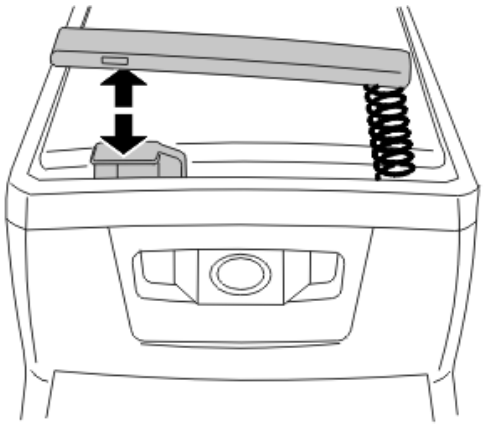

Fig. 140: Identifying Magnet And Switch

Courtesy of VOLKSWAGEN GROUP OF AMERICA, INC.

CHECKING THE HANDSFREE, ACCESSORY (2003-2011)

CHECKING THE HANDSFREE, ACCESSORY

FAULT-TRACING INFORMATION

Fault causes which will stop handsfree equipment working:

- Poor connection between the telephone and telephone holder
- The customer mobile phone is not set up for handsfree mode
- Fault in one of the power supply cables
- Defective fuse in one of the power supply cables
- Damaged loudspeaker(s) in the car
- The microphone switch is not properly connected
- Fault in the cable to the microphone
- Damaged microphone
- Fault or loose connection in the terminal for the handsfree box to the 15-supply.

- **Continue**

  Refer to **CHECKING THE POWER SUPPLY AND GROUND TERMINAL**

CHECKING THE POWER SUPPLY AND GROUND TERMINAL

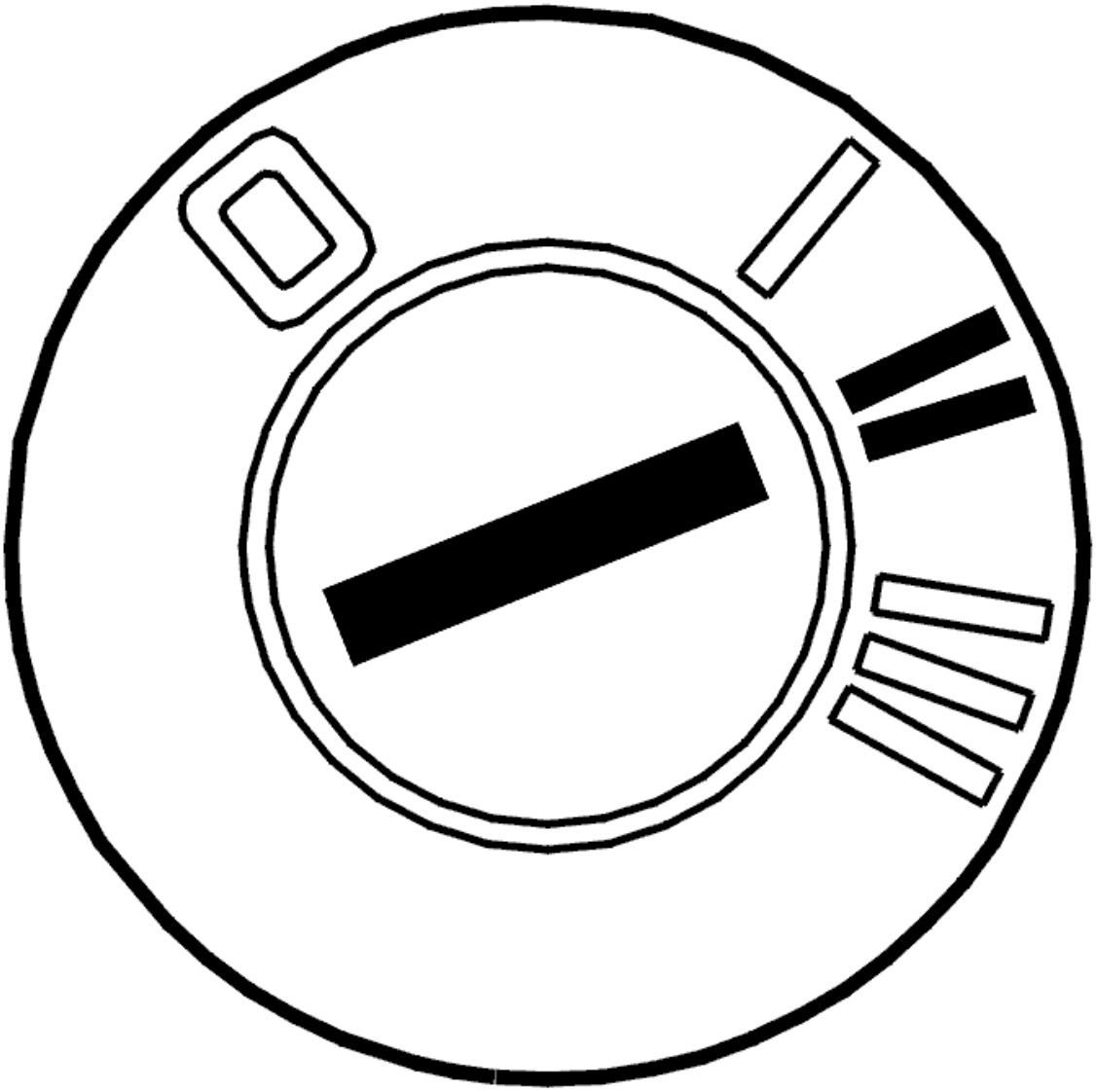

Fig. 141: Identifying Ignition ON
Courtesy of VOLKSWAGEN GROUP OF AMERICA, INC.

- Ignition off
- Disconnect the connector for the handsfree box
- Ignition on.

Check the connector. Check for loose connections. Check for contact resistance and oxidation. Check the female and male sections of the connector. The terminals must not be damaged or pressed in.

Checking the 15-supply

The 15-supply controls autostart of the phone. With the ignition on, the voltage must be approximately 12 V. When the ignition is off the voltage must be 0 V.

Check the 15-supply. Take readings between terminals #5 and #1 on the handsfree box. If the voltage is not approximately 12 V, check between terminals #5 and #1. Check for a short-circuit to ground.

Checking the 30-supply

Check the 30-supply. Take readings between terminals #2 and #1 on the handsfree box. The voltage must be approximately 12 V. If the voltage is not approximately 12 V between terminals #2 and #1 on the handsfree box check for a short-circuit to ground.

Remedy as necessary.

Other information:

- see **SIGNAL SPECIFICATION**
- see **CONTENTS** .

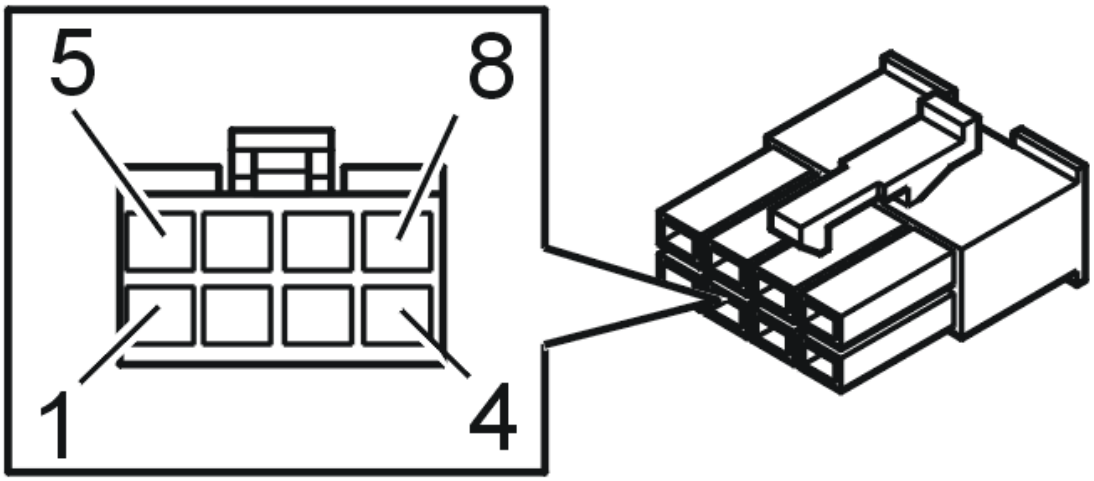

Fig. 142: Handsfree Box Connector
Courtesy of VOLKSWAGEN GROUP OF AMERICA, INC.

- **Continue**

Refer to **CHECKING CONTACTS AND TELEPHONE SETTINGS**

CHECKING CONTACTS AND TELEPHONE SETTINGS

Check that the telephone connections on the phone and in the holder are clean. Check that the connector guards are in not place.

NOTE: Depending on the mobile phone, it may need to be set to handsfree mode.

- **Continue**

Refer to **CHECKING THE LOUDSPEAKERS AND MICROPHONE**

CHECKING THE LOUDSPEAKERS AND MICROPHONE

HINT: The sound from the handsfree box is always routed out through the passenger loudspeaker.

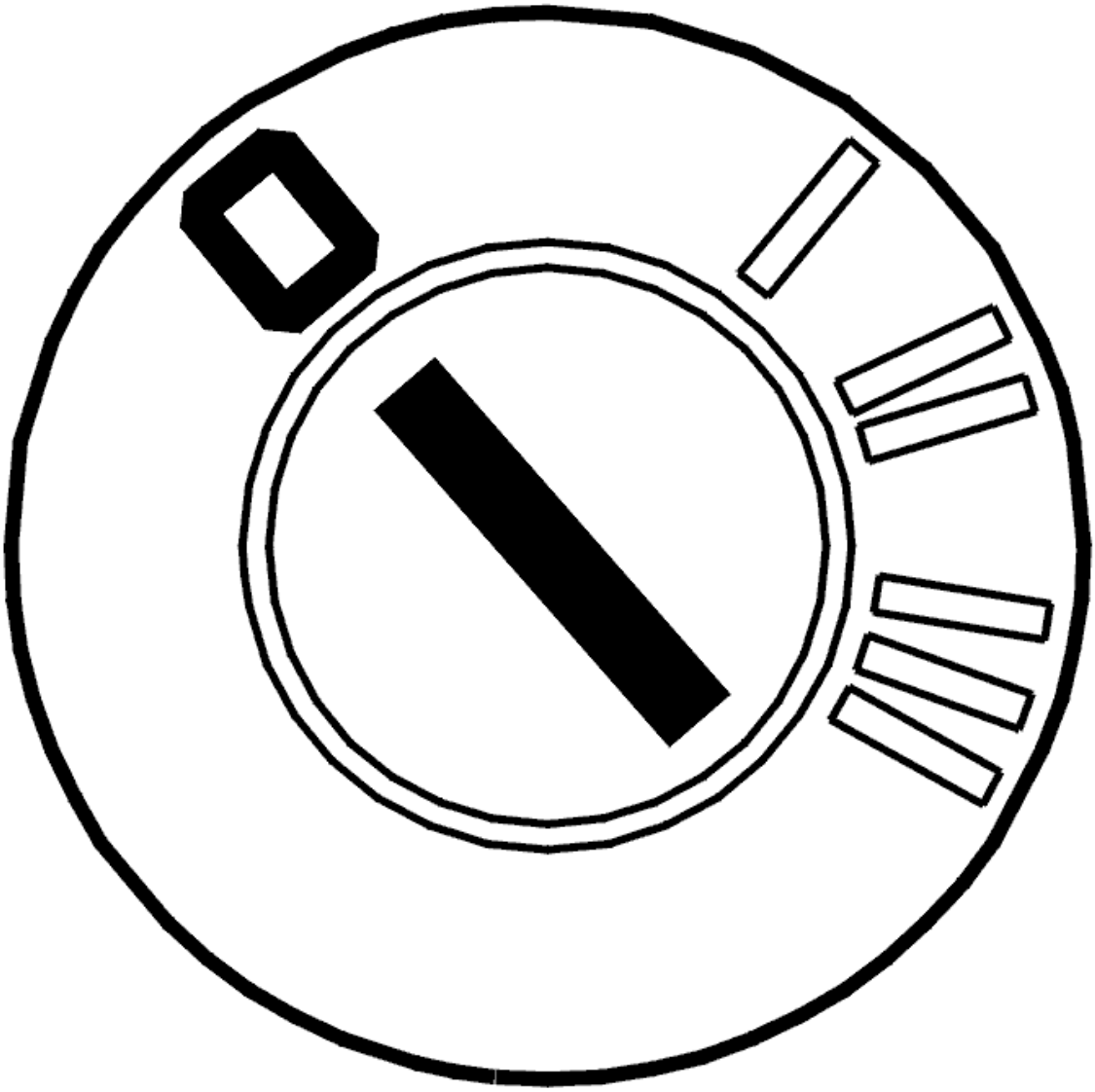

Fig. 143: Identifying Ignition OFF
Courtesy of VOLKSWAGEN GROUP OF AMERICA, INC.

- Ignition off
- Disconnect the connectors for the handsfree box and microphone.

  Check the connectors. Check for loose connections. Check for contact resistance and oxidation. Check the female and male sections of the connectors. The terminals must not be damaged or pressed in.

  HINT: If the microphone cable is positioned too close to the phone, the network signals may disrupt

sound reproduction. Check that the microphone cable is correctly installed.

Checking the loudspeaker

Check that the loudspeaker on the passenger side is working by listening to the audio equipment.

Check the wiring between terminal #7 on the handsfree box and the audio module (AUD/AUM). Also check the wiring between terminal #4 on the handsfree box and the audio module (AUD/AUM). Check for an open-circuit. Check for a short-circuit to supply voltage.

Checking the microphone

Check that the microphone connectors are correctly pressed in.

Check the microphone cable. Check for a short-circuit to ground. Check for an open-circuit.

If there is a loose microphone, try to connect it.

Other information:

- see **SIGNAL SPECIFICATION**
- see **CONTENTS** .

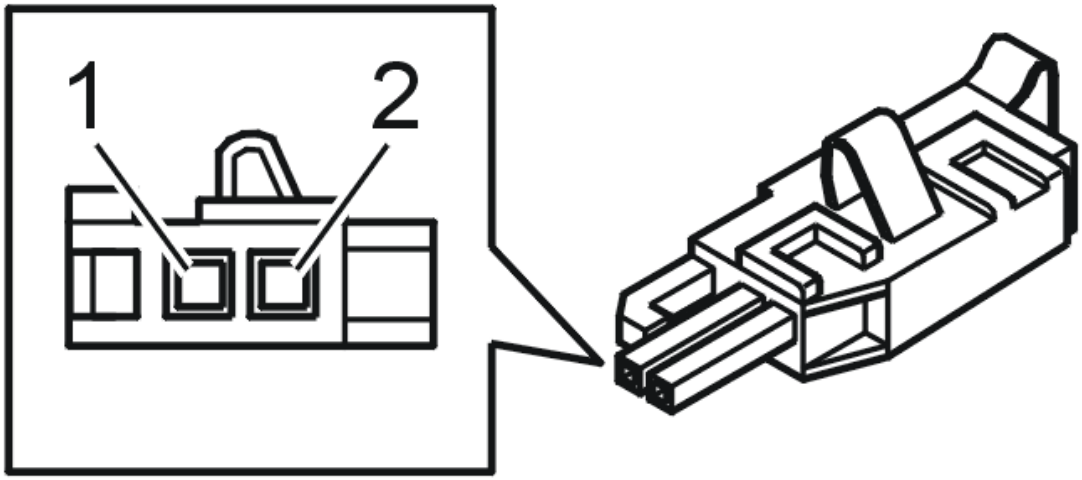

Fig. 144: Identifying Microphone Connector
Courtesy of VOLKSWAGEN GROUP OF AMERICA, INC.

- **Continue**

  Refer to **VERIFICATION**

VERIFICATION

HINT: After carrying out the repair, check that the fault has been remedied.

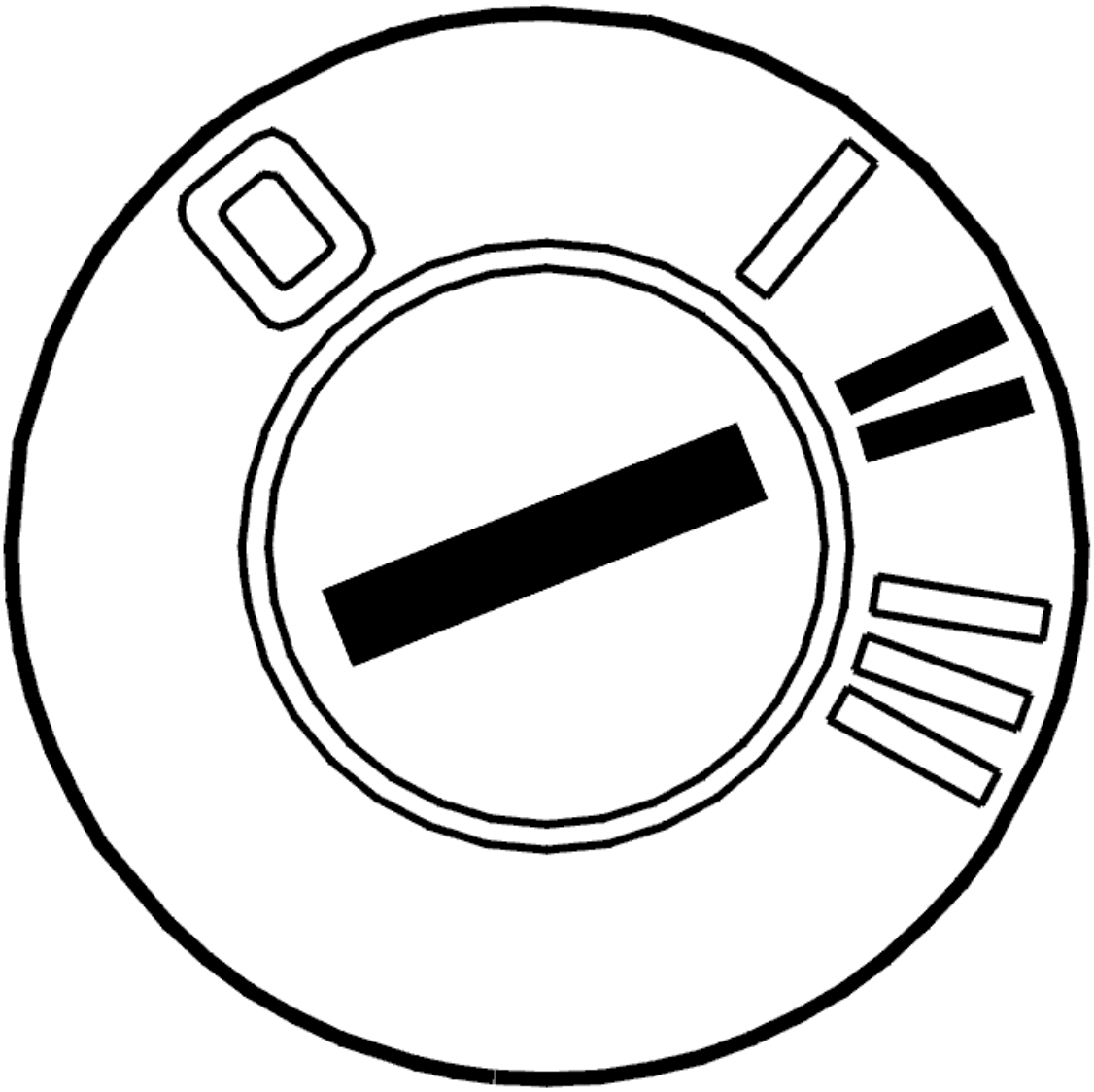

Fig. 145: Identifying Ignition ON
Courtesy of VOLKSWAGEN GROUP OF AMERICA, INC.

- Ignition on.

  Check that the handsfree function is working correctly by using the telephone.

Is the function OK?

- **YES**

  VERIFIED: Troubleshooting has been completed.

- **NO**

Refer to **INFORMATION**

INFORMATION

FAULT-TRACING INFORMATION

The fault should have been detected and remedied. As this is not the case fault-tracing has failed.

Exit fault-tracing for this diagnostic trouble code (DTC) or make another attempt.

CHECKING THE POWER SUPPLY (2003-2011)

CHECKING THE POWER SUPPLY (2006-2011)

CHECKING THE COMPONENTS AND WIRING

Check that the fuse for the Phone module (PHM) is intact.

Measure voltage between A5(#5) and A6(#6) in connector A. The voltage must be approximately 12 V.

Remedy as necessary.

Other information:

- see **CONNECTING THE BREAKOUT BOX**
- see **SIGNAL SPECIFICATION**
- see **PHONE MODULE (PHM), REPLACING (2006-2010)**

CHECKING THE POWER SUPPLY (2003-2005)

CHECKING THE COMPONENTS AND WIRING

Check that the fuse for the Phone module (PHM) is intact.

Measure voltage between A5(#5) and A6(#6) in connector A. The voltage must be approximately 12 V.

Remedy as necessary.

Other information:

- see **CONNECTING THE BREAKOUT BOX**
- see **SIGNAL SPECIFICATION**
- see **PHONE MODULE (PHM), REPLACING**

CHECKING THE PROGRAMMED VIN (2003-2011)

CHECKING THE PROGRAMMED VIN

CHECKING THE PROGRAMMED VIN IN THE PHONE MODULE (PHM)

Fig. 146: Checking Traffic Load On CAN Cables
Courtesy of VOLKSWAGEN GROUP OF AMERICA, INC.

- Ignition on.

  The VIN for the vehicle is programmed in phone modules (PHM) with Volvo On Call functionality. The VIN is transmitted every time a Volvo On Call service is started, together with the relevant vehicle data to the Volvo On Call Service Center. The VIN is used by the Volvo On Call Service Center to identify the customer.

  If an incorrect VIN is programmed in the phone module (PHM), the Volvo On Call Service Center will not be able to identify the customer.

  The VIN is also used when the activating/deactivating a Volvo On Call subscription for the customer. A code is entered via the keypad. If an incorrect VIN is programmed in the phone module (PHM), the Volvo On Call function cannot be activated/deactivated. The correct VIN must be programmed in order for the code to work.

  Check that the VIN that is programmed in the phone module (PHM) corresponds to the vehicle VIN by clicking on the VCT2000 symbol.

  Fig. 147: Identifying VCT2000 Diagnostic Tool Symbol In VIDA
  Courtesy of VOLKSWAGEN GROUP OF AMERICA, INC.

Is the VIN correct?

- **YES**

  FAULT NOT FOUND: Troubleshooting has been completed.

- **NO**

Refer to **PROGRAMMING THE VIN, PHONE MODULE (PHM)**

PROGRAMMING THE VIN, PHONE MODULE (PHM)

Fig. 148: Checking Traffic Load On CAN Cables
Courtesy of VOLKSWAGEN GROUP OF AMERICA, INC.

- Ignition on.

  Program the correct VIN in the phone module (PHM) by clicking on the VCT2000 symbol.

Fig. 149: Identifying VCT2000 Diagnostic Tool Symbol In VIDA
Courtesy of VOLKSWAGEN GROUP OF AMERICA, INC.

- **Continue**

  Refer to **SYMPTOM VERIFICATION**

SYMPTOM VERIFICATION

HINT: After carrying out the repair, check that the fault has been remedied.

Fig. 150: Checking Traffic Load On CAN Cables
Courtesy of VOLKSWAGEN GROUP OF AMERICA, INC.

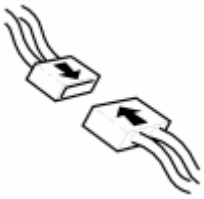

Fig. 151: Identifying Connector(s) Reinstallation
Courtesy of VOLKSWAGEN GROUP OF AMERICA, INC.

- Ignition off.
- Reinstall the connectors, components etc.
- Ignition on.

Check that correct VIN-code is programmed in Phone module (PHM) by clicking on the symbol for VCT2000.

Fig. 152: Identifying VCT2000 Diagnostic Tool Symbol In VIDA
Courtesy of VOLKSWAGEN GROUP OF AMERICA, INC.

Is the VIN-code correct?

- **YES**

  VERIFIED: Troubleshooting has been completed.

- **NO**

  FAULT TRACING FAILED: The fault should have been detected and remedied. As this is not the case fault-tracing has failed. Exit fault-tracing for this diagnostic trouble code (DTC) or make another attempt.

CHECKING THE SIM CARD READER (2003-2004)

CHECKING THE SIM CARD READER

CHECKING THE COMPONENT AND WIRING

If there is a open-circuit or short-circuit in the wiring, faulty SIM card reader or connector, the phone module (PHM) will not be able to communicate with the SIM card. The user will be asked to insert a SIM card even though there is already a card in the reader.

Checking the connectors, wiring and components

Try a different SIM card to check whether the problem is with that particular card.

Disconnect connector A at the phone module (PHM) and the connector for the SIM card reader. Check the wiring. Check for an open-circuit by taking readings between:

- control module connector A terminal #9 (#9) and SIM card reader connector terminal #1
- control module connector A terminal #8 (#8) and SIM card reader connector terminal #2
- control module connector A terminal #7 (#7) and SIM card reader connector terminal #3
- control module connector A terminal #19 (#19) and SIM card reader connector terminal #5.

Check the wiring in the cable harness. Check for a short-circuit to each other.

Check the wiring in the cable harness. Check for a short-circuit to ground.

Check the connectors for loose connections, damaged or bent terminal pins and oxidation.

Other information:

- To access the phone module (PHM), see **PHONE MODULE (PHM), REPLACING**
- To access or replace the SIM card reader, see **INFOTAINMENT CONTROL MODULE (ICM), REPLACING**
- To connect the breakout box, see **CONNECTING THE BREAKOUT BOX**
- see **CONTENTS** .

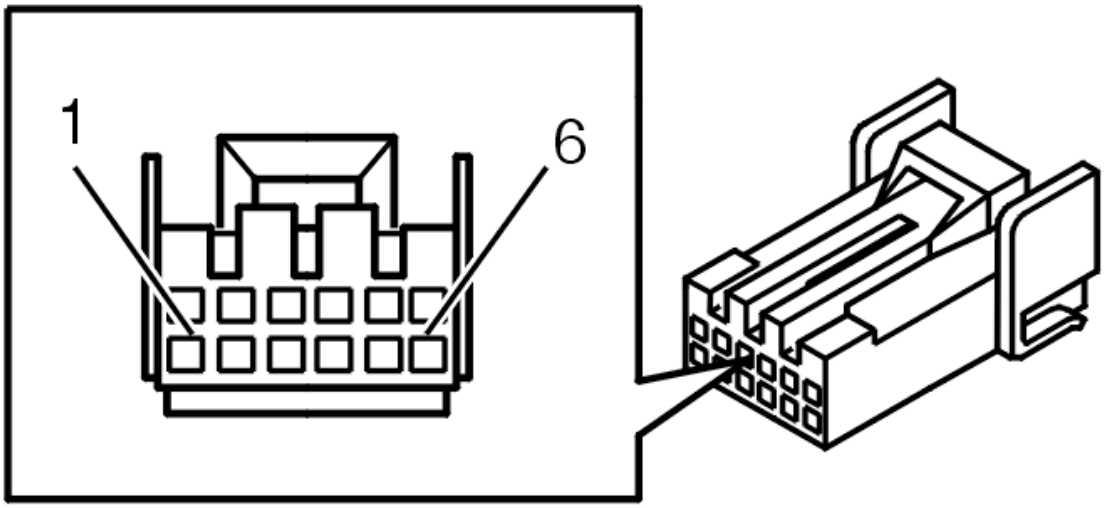

Fig. 153: Identifying Signal Table Connector B, Phone Module (PHM)
Courtesy of VOLKSWAGEN GROUP OF AMERICA, INC.

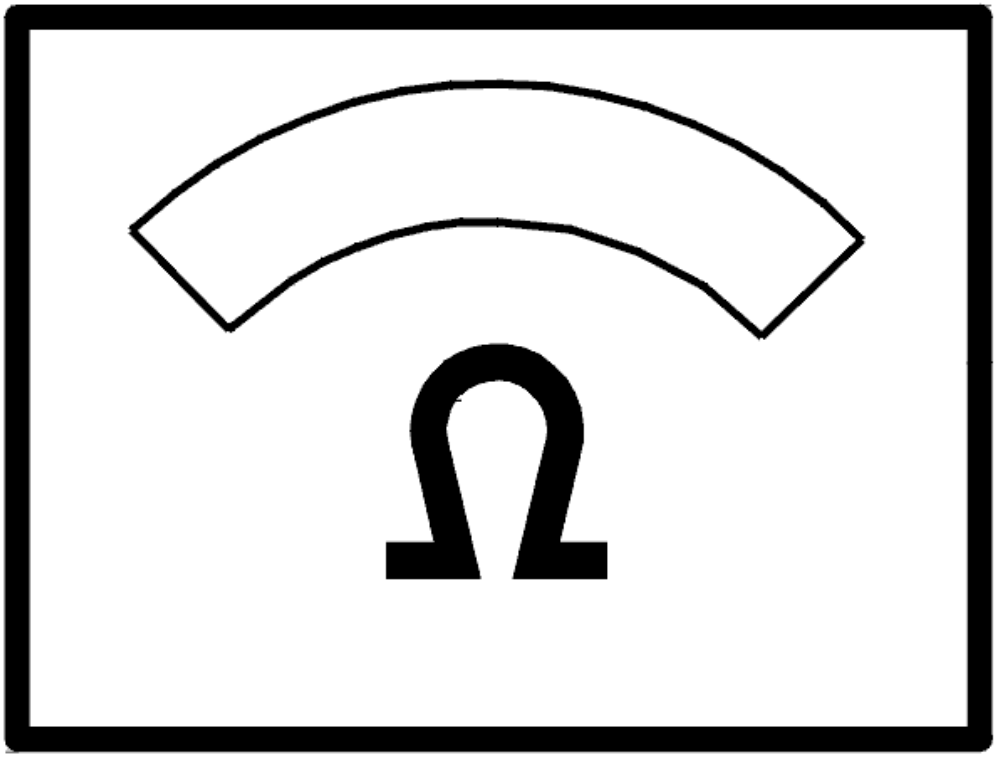

Fig. 154: Identifying Ohm Meter
Courtesy of VOLKSWAGEN GROUP OF AMERICA, INC.

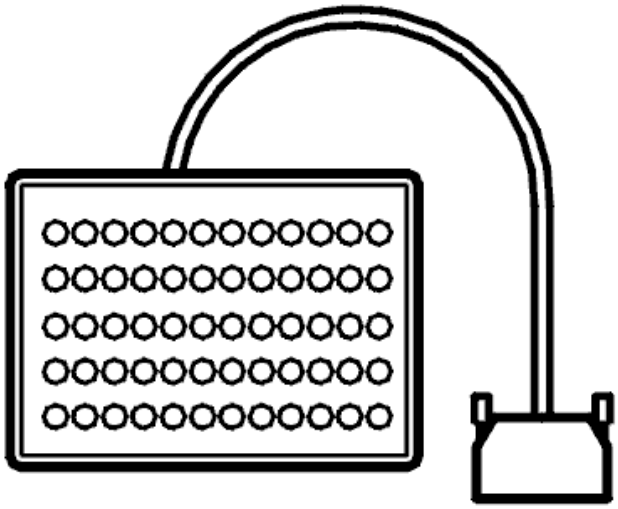

Fig. 155: Breakout Box
Courtesy of VOLKSWAGEN GROUP OF AMERICA, INC.

Was a fault detected?

- **YES**

  OKAY: Troubleshooting has been completed.

- **NO**

  Refer to **CHECKING THE COMPONENT AND WIRING**

CHECKING THE SOUND, BLUETOOTH PHONE MODULE (BPM) (2011)

CHECKING THE SOUND, BLUETOOTH PHONE MODULE (BPM)

Fault-tracing information

Always check that the microphone and attaching hooks are placed correctly.

HINT: It is recommended to replace the roof module seal if the sound quality from the microphone is experienced as poor, especially with calls on the mainland between the vehicle and a standard GSM telephone and/or between two vehicles.

New software was released in Structure week 200815 for the Bluetooth phone module (BPM), to improve the sound quality. Update the software in the event of sound problems.

We recommend switching to a ceiling-mounted microphone acc. to TIE TJ-20473 in instances where there is still a problem with the microphone sound quality after fitting the new seal and updating the software.

First check that the customer accepts this solution.

Fault symptom

Cellular phone/Handsfree does not work

Cellular phone/Other party cannot hear/Handsfree

Cellular phone/Other cellular phone problems

Cellular phone/Other party cannot hear/Unsure when/at all times

Other information

see **MICROPHONE TELEPHONE (2010)**

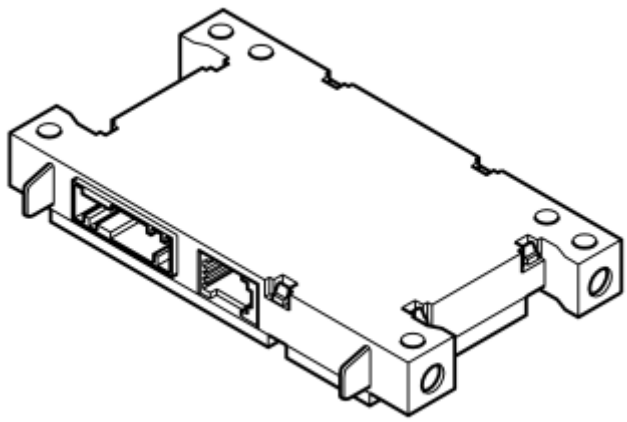

Fig. 156: Identifying Bluetooth Phone Module (BPM)
Courtesy of VOLKSWAGEN GROUP OF AMERICA, INC.

Has the fault been remedied?

- **YES**

  OKAY: Troubleshooting has been completed.

- **NO**

  Refer to **INFORMATION**

INFORMATION

FAULT-TRACING INFORMATION

The fault should have been detected and remedied. As this is not the case fault-tracing has failed.

Exit fault-tracing for this diagnostic trouble code (DTC) or make another attempt.

CHECKING RADIO RECEPTION (2003-2006)

CHECKING RADIO RECEPTION

ACTIVATING/READING OUT COMPONENTS/FUNCTIONS

CONDITIONS

CAUTION: Reference values from a vehicle (XC90) with good radio reception shall be used as comparison when reading out. Read out from a vehicle (XC90) with good radio reception.

- **Park the vehicle outdoors in a position with good radio reception.**
- **Search through the whole frequency range and save all readout values. Then these saved values shall be used as reference values.**
- **Make an exact note of the vehicle's position and direction.**

When reading out from vehicles for troubleshooting:

- **Park this vehicle in exactly the same position and in the same direction as the vehicle from which the reference values were obtained.**
- **When reading out, compare the readout values from the vehicle in question and the reference values.**

FM-band:

Select 1 to read out which antenna is active as well as signal strength and noise level for the FM-band.

Select 2 to enable manual activation of the desired antenna as well as read out signal strength and noise level for the FM-band.

AM-band:

Select 3 to read out signal strength for the AM-band.

Select an alternative.

- **1**

  Refer to **READING OUT COMPONENTS/FUNCTIONS, FM**

- **2**

Refer to **ACTIVATING AND READING OUT COMPONENTS/FUNCTIONS, FM**

- **3**

Refer to **READING OUT COMPONENTS/FUNCTIONS, AM**

READING OUT COMPONENTS/FUNCTIONS, FM

READING OUT COMPONENTS AND FUNCTIONS

CAUTION: Reference values from a vehicle (XC90) with good radio reception shall be used as comparison when reading out. Read out from a vehicle (XC90) with good radio reception.

- **Park the vehicle outdoors in a position with good radio reception.**
- **Search through the whole frequency range and read out from all radio stations found with automatic search. Note and save all readout values. Then these saved values shall be used as reference values.**
- **Make an exact note of the vehicle's position and direction.**

When reading out from vehicles for troubleshooting:

- **Park this vehicle in exactly the same position and in the same direction as the vehicle from which the reference values were obtained.**
- **When reading out, compare the readout values from the vehicle in question and the reference values.**

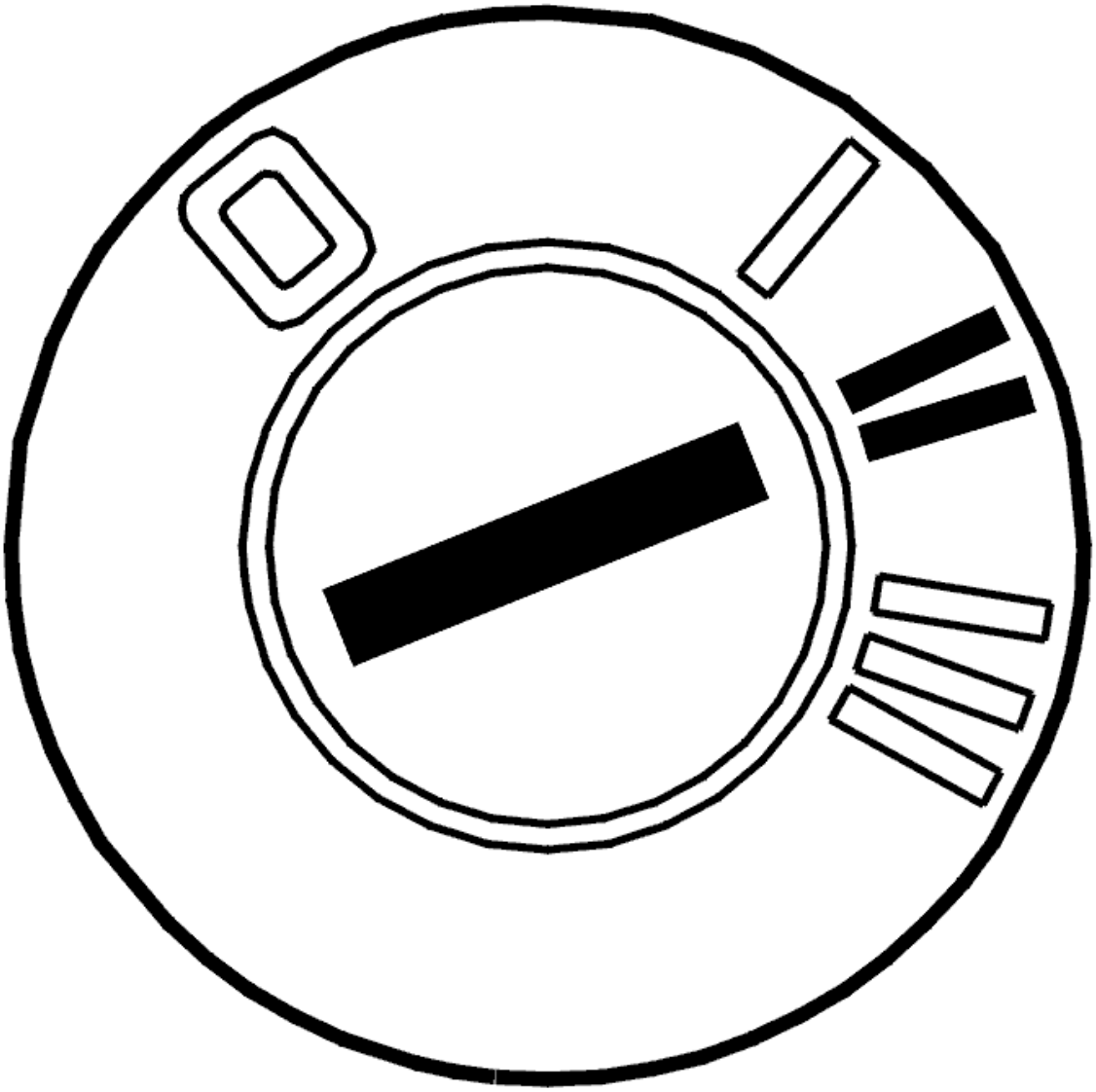

Fig. 157: Identifying Ignition ON
Courtesy of VOLKSWAGEN GROUP OF AMERICA, INC.

- Ignition on
- Engine running or battery charger on.
- Radio on.

Activate readout of components by clicking on the symbol for VCT2000.

Search through the whole frequency range and perform a read out from all radio stations found with automatic search.

When reading out, it is checked which antenna is active as well as signal strength and noise level for the antenna in question.

The comparison for deviations from reference values shall be performed on the readouts from stations that have a signal strength below 175.

If the signal strength deviates more than approx. 30 from the reference values:

- Go back in the troubleshooting and select alternative 2 to enable manual activation of the desired antenna as well as read out signal strength and noise level.

Other information

- see **DESCRIPTION OF READOUTS, FM** .
- To access/replace antenna module (ATM):**RECEIVER AM/FM (ATM), REPLACING** .
- see **COMPONENT DESCRIPTION, ANTENNA FLEX CONDUCTOR**
- see **CONTENTS**

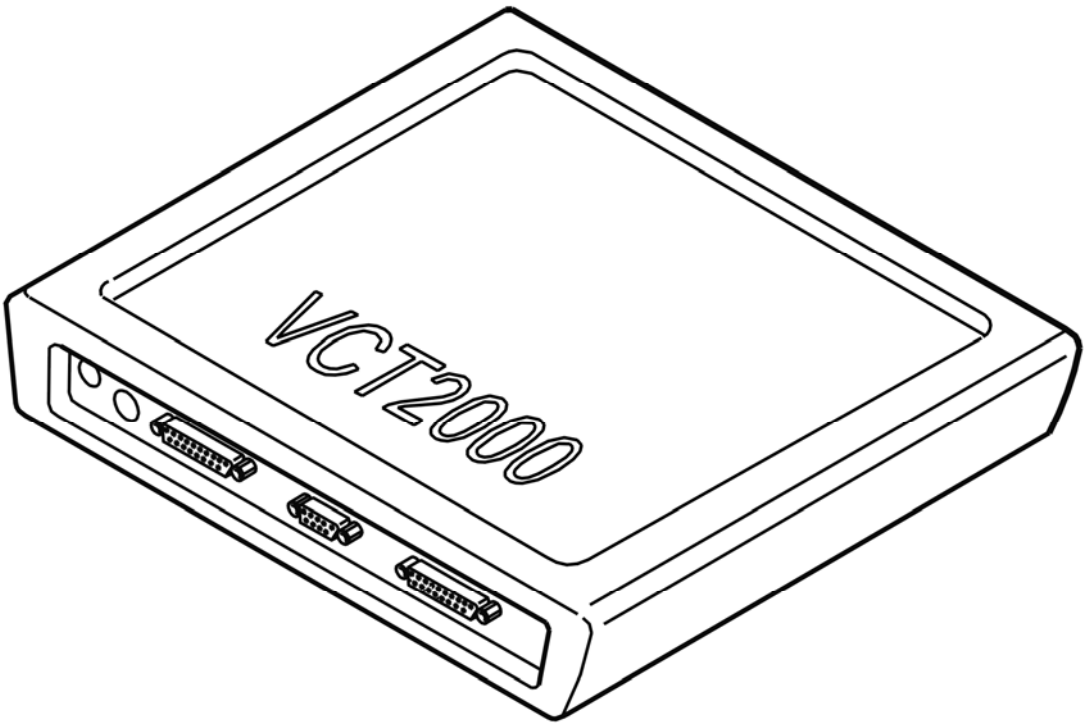

Fig. 158: Identifying VCT2000 Diagnostic Tool Symbol In VIDA
Courtesy of VOLKSWAGEN GROUP OF AMERICA, INC.

COMMUNICATION FAULT

Communication has been interrupted for one of the following reasons:

- The ignition is switched off

- VCT2000 disconnected from the data link connector (DLC)
- VCT2000 disconnected from the VIDA cart
- Communication problems in VIDA application or in car.
- No voltage in the data link connector (DLC).

Check therefore:

- That the control module power supply and ground terminal are fault-free.
- That the fuse for the data link connector (DLC) is intact.
- that the ignition is on
- that the battery voltage (system voltage) is normal (approximately 12 V).

  If necessary a battery charger can be connected during the test.

  For information about charge currents and the battery, see:**BATTERY, CHARGING**

- that VCT2000 is correctly connected to the VIDA cart and the data link connector (DLC)
- that VCT2000 and the wiring is fault-free.

Other information

Try to establish communication again or exit reading off diagnostic trouble codes (DTCs). Depending on the communication fault, select one of the following options.

1. Try again. Refer to **READING OUT COMPONENTS AND FUNCTIONS**
2. Fault-trace more comprehensively for the communication problem that has occurred. Refer to **CHECKING COMMUNICATION ERRORS**
3. Exit fault-tracing / Read off from the next system.

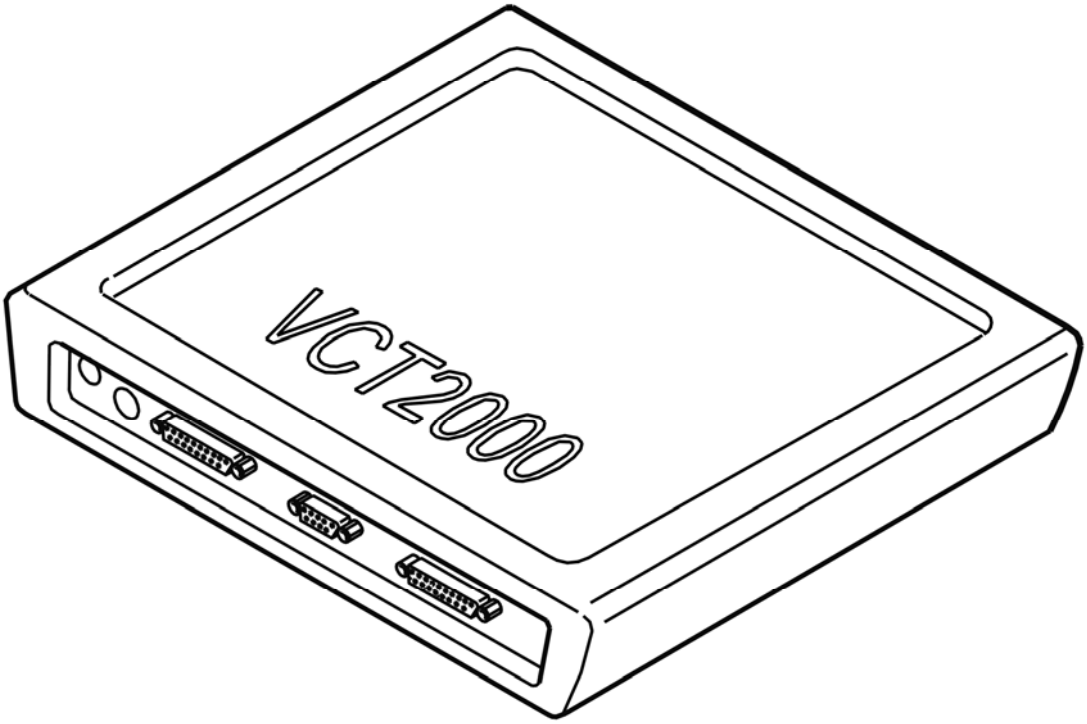

Fig. 159: Identifying VCT2000 Diagnostic Tool Symbol In VIDA
Courtesy of VOLKSWAGEN GROUP OF AMERICA, INC.

CHECKING COMMUNICATION ERRORS

SELECTING CAR MODEL

Select car model to obtain relevant troubleshooting information.

Select one of the following model alternatives

1. XC90. Refer to **CHECKING COMMUNICATION ERRORS, CAR MODEL XC90**

CHECKING COMMUNICATION ERRORS, CAR MODEL

HINT: Test the communication with another corresponding vehicle to decide if the malfunction is in the vehicle or in VIDA/VCT/cable harness. If the communication works on another vehicle, the malfunction is in the vehicle.

Different speed on the CAN-communication can lead to problems

Volvo's vehicles have different speed of communication on the high-speed part of the CAN-network (HS-CAN), depending on model year.

- Model year -2004 communicates with 250 kbit/s.
- Model year 2005- communicates with 500 kbit/s.

Due to this, it is very important to specify correct vehicle profile before any communication is started with the vehicle's HS-CAN. This is normally done by pressing on " Retrieve VIN" or by manually specifying vehicle parameters under "Vehicle profile".

If the wrong model year has been selected, it may lead to blocking of the CAN-net, diagnostic trouble codes being stored in several control modules or missing response from control modules at continued communication. The following control modules may be affected by this problem:

- Brake control module (BCM)/(ABS)
- Engine control module (ECM)
- Electronic Throttle Module (ETM)
- Suspension Module (SUM)
- Central electronic module (CEM)
- Transmission control module (TCM)
- Steering wheel angle sensor module (SAS)
- Steering Wheel Module (SWM)
- Electrical Power Steering Module (EPS)

If this happens, take the following action:

- Turn off the ignition and remove the ignition key. Insert the key again in position II.
- If the above does not work, remove the battery cable and connect it again after a minute to reset the control modules.
- Select the correct vehicle profile in VIDA and erase the diagnostic trouble codes. Check that the symptoms have disappeared.

Diagnostic outlet

- Check the voltage feed to diagnostic outlet #16. The voltage shall match battery voltage.
- Check the cable for power ground and signal ground to diagnostic outlet #4 and #5.

HINT: When VCT2000 is connected to the diagnostic outlet (is supplied with voltage), the indicator diode shall be activated with a green light. Then the indicator diode flashes quickly when communication takes place with a control module. In case of certain internal malfunctions on VCT2000 the indicator diode is activated with a red light.

Communication cables

- Check the communication cable (k-line) between diagnostic outlet #7 and central electronic module (CEM) #D6 and other connected control modules for open circuit, short-circuit to ground and short-circuit to voltage.

CAUTION: In case of malfunction on this communication cable, communication cannot be established on either the low or high-speed network. First when communication takes place on this cable, the low and high-speed cables between the diagnostic outlet and central electronic module (CEM) are connected to the rest of the network in the vehicle. This is controlled via a relay in the central electronic module (CEM). This relay is only found on vehicles of model year -2004.

- For communication problems with control units on **the high-speed network** , check communication cables between diagnostic outlet #6/ #14 and central electronic module (CEM) #B7/ #B8 for open circuit, short-circuit to ground and short-circuit to voltage according to references above.
- For communication problems with control units on **the low-speed network** , check communication cables between diagnostic outlet #3/#11 and central electronic module (CEM) #B19/#B20 for open circuit, short-circuit to ground and short-circuit to voltage according to references above.
- Also check the communication cables for the low and high-speed net between the central electronic module (CEM) and the other connected control modules according to troubleshooting above.

Control modules

- Check that the control module's voltage feed and ground connection are trouble-free.

CAUTION: If none of the above checks help, try reading out diagnostic trouble codes in the central electronic module (CEM). Done via VIDA vehicle communication. A prerequisite for being able to communicate with the control modules in the car is that the central electronic module (CEM) is active and can be communicated with. If communication is not possible with the central electronic module (CEM), check the voltage feed and ground for the central electronic module (CEM).

VCT2000 and cable harness

- Connect VCT2000 to the vehicle so that it is supplied with voltage. Test VCT2000 by selecting the system's self-test and VCT Test in the VIDA main menu. If any malfunction is found according to the test, first replace the cable harness then the VCT2000, if the test still indicates a malfunction.
- If no malfunctions were found after troubleshooting according to above, try with a new cable harness and/or new VCT2000.

VIDA

- If no malfunctions were found after troubleshooting according to above, try performing a complete system reset of VIDA (Volvo scan tool).

Other information

- see **CONTENTS**

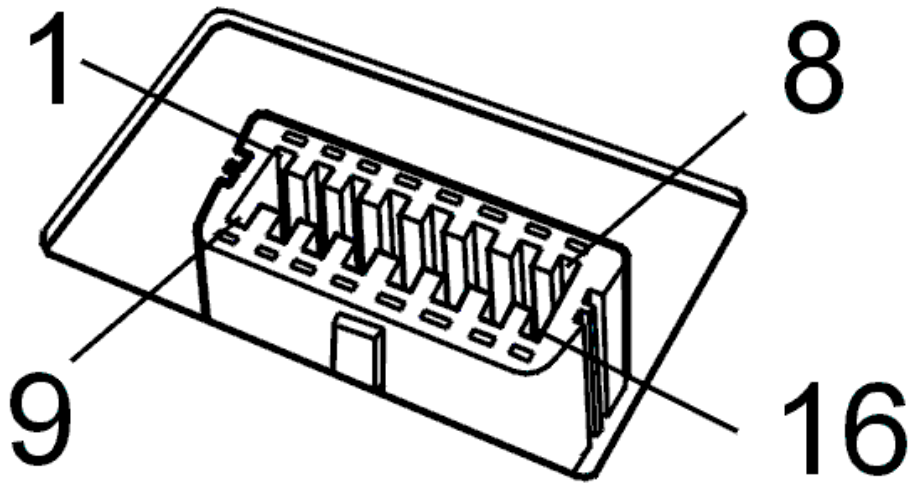

Fig. 160: Identifying Data Link Connector
Courtesy of VOLKSWAGEN GROUP OF AMERICA, INC.

- **Continue**

  Refer to **FAULT-TRACING INFORMATION**

FAULT-TRACING INFORMATION

Fault-tracing communication problems is now finished.

Do you want to try establishing communication again?

- **YES**

  Refer to **READING OUT COMPONENTS AND FUNCTIONS**

- **NO**

  NO

ACTIVATING AND READING OUT COMPONENTS/FUNCTIONS, FM

ACTIVATING AND READING OUT COMPONENTS

CAUTION: Reference values from a vehicle (XC90) with good radio reception shall be used as comparison when reading out. Read out from a vehicle (XC90) with good radio reception.

- **Park the vehicle outdoors in a position with good radio reception.**
- **Search through the whole frequency range and read out from all radio stations found with automatic search. Read out signal strength**

and noise level for both main antenna and sub-antenna. Note and save all readout values. Then these saved values shall be used as reference values.

- **Make an exact note of the vehicle's position and direction.**

When reading out from vehicles for troubleshooting:

- **Park this vehicle in exactly the same position and in the same direction as the vehicle from which the reference values were obtained.**
- **When reading out, compare the readout values from the vehicle in question and the reference values.**

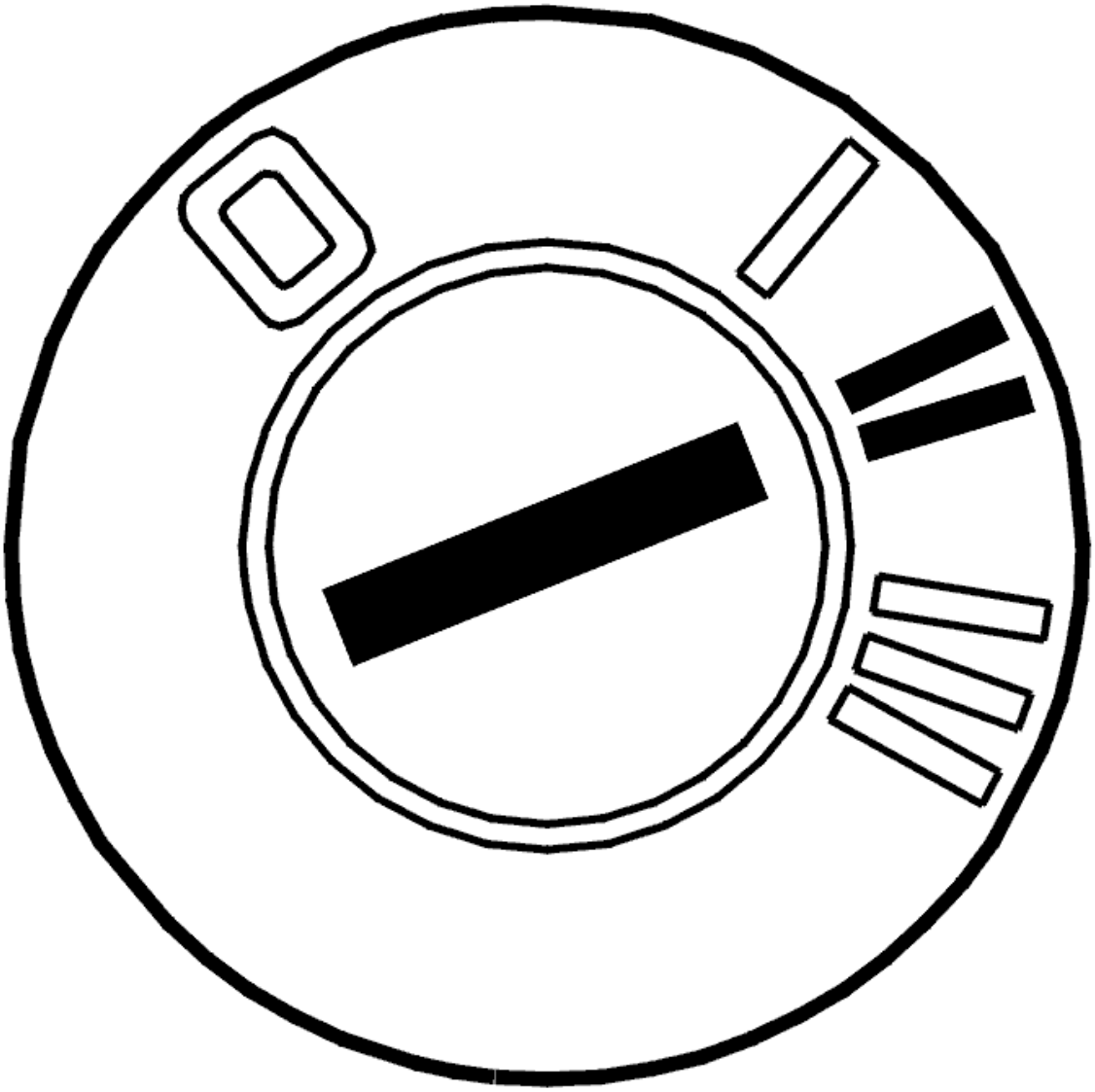

Fig. 161: Identifying Ignition ON
Courtesy of VOLKSWAGEN GROUP OF AMERICA, INC.

- Ignition on
- Engine running or battery charger on.
- Radio on.

Activate readout and activation of components/functions by clicking on the symbol for VCT2000.

Search through the whole frequency range and read out from all radio stations found with automatic search. Read out signal strength and noise level for both main antenna and sub-antenna.

When reading out, the signal strength and noise level are checked for the active antenna.

The most accurate comparison for deviations from reference values are performed on the readouts from stations that have a signal strength below 175.

If the signal strength deviates more than approx. 30 from the reference values:

- Check cables and connections for open circuit and contact resistance.
- Check the antenna flex conductor for open circuit on the antenna that deviates most from reference values.

Remedy as necessary.

If no malfunction was found, report the result of troubleshooting to the sales company/importer according to normal report procedure.

Other information

- see **DESCRIPTION OF ACTIVATIONS AND READOUTS, FM**
- To access/replace antenna module (ATM):**RECEIVER AM/FM (ATM), REPLACING** .
- see **COMPONENT DESCRIPTION, ANTENNA FLEX CONDUCTOR**
- see **CONTENTS**

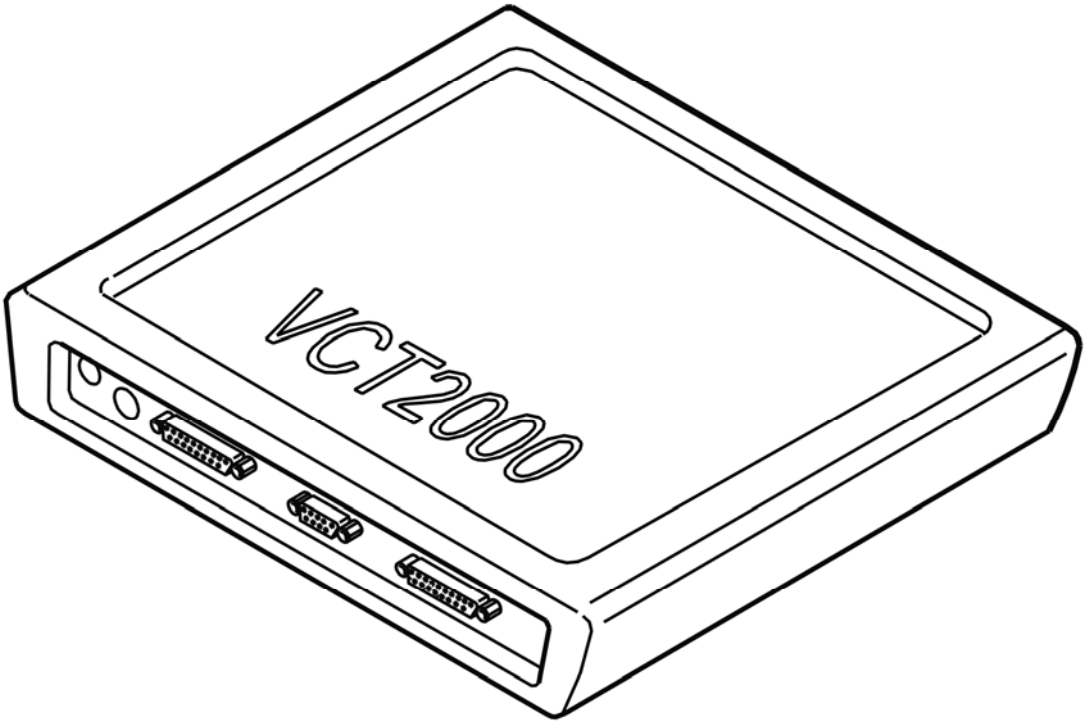

Fig. 162: Identifying VCT2000 Diagnostic Tool Symbol In VIDA
Courtesy of VOLKSWAGEN GROUP OF AMERICA, INC.

Do you want to exit the readout?

- **YES**

  OKAY: Troubleshooting has been completed.

- **NO**

  Refer to **ACTIVATING/READING OUT COMPONENTS/FUNCTIONS**

- 0

  Refer to **COMMUNICATION FAULT**

- 0

  Refer to **COMMUNICATION FAULT**

READING OUT COMPONENTS/FUNCTIONS, AM

READING OUT COMPONENTS AND FUNCTIONS

CAUTION: Reference values from a vehicle (XC90) with good radio reception shall be used as comparison when reading out. Read out from a vehicle (XC90) with good radio reception.

- **Park the vehicle outdoors in a position with good radio reception.**
- **Search through the whole frequency range and read out from all radio stations found with automatic search. Note and save all readout values. Then these saved values shall be used as reference values.**
- **Make an exact note of the vehicle's position and direction.**

When reading out from vehicles for troubleshooting:

- **Park this vehicle in exactly the same position and in the same direction as the vehicle from which the reference values were obtained.**
- **When reading out, compare the readout values from the vehicle in question and the reference values.**

When reading out from the AM-band the signal strength may vary depending on at what time the readout is performed.

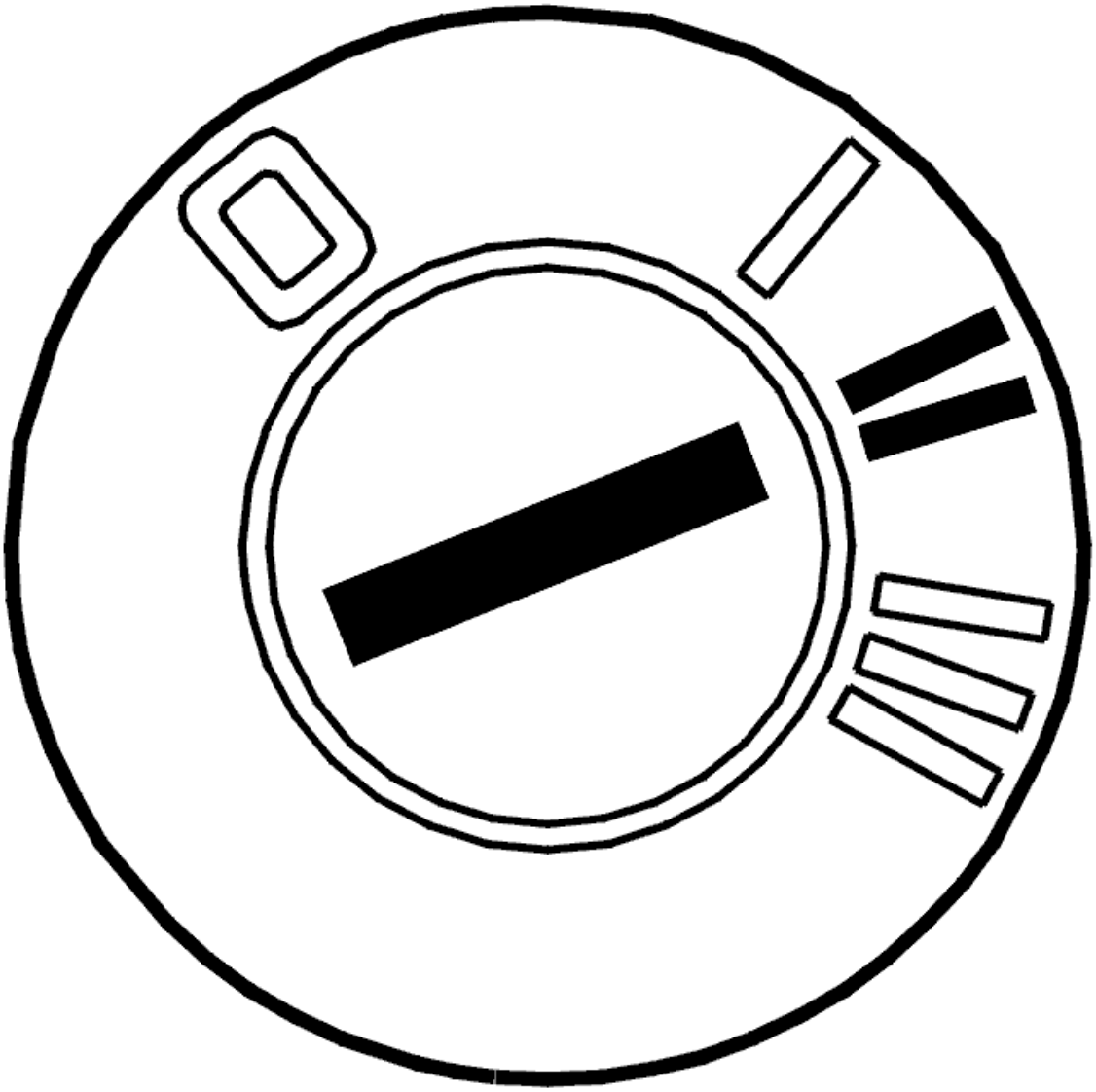

Fig. 163: Identifying Ignition ON
Courtesy of VOLKSWAGEN GROUP OF AMERICA, INC.

- Ignition on
- Engine running or battery charger on.
- Radio on.

Activate readout of components by clicking on the symbol for VCT2000.

Search through the whole frequency range and perform a read out from all radio stations found with automatic search.

When reading out, the signal strength of the selected radio station is checked.

The most accurate comparison for deviations from reference values are performed on the readouts from

stations that have a signal strength below 145.

If the signal strength deviates more than approx. 25 from the reference values:

- Check cables and connections for open circuit and contact resistance.
- Check the antenna flex conductor for open circuit on the AM-antenna.

Remedy as necessary.

If no malfunction was found, report the result of troubleshooting to the sales company/importer according to normal report procedure.

Other information

- see **DESCRIPTION OF READOUTS, AM**
- To access/replace antenna module (ATM):**RECEIVER AM/FM (ATM), REPLACING** .
- see **COMPONENT DESCRIPTION, ANTENNA FLEX CONDUCTOR**
- see **CONTENTS**

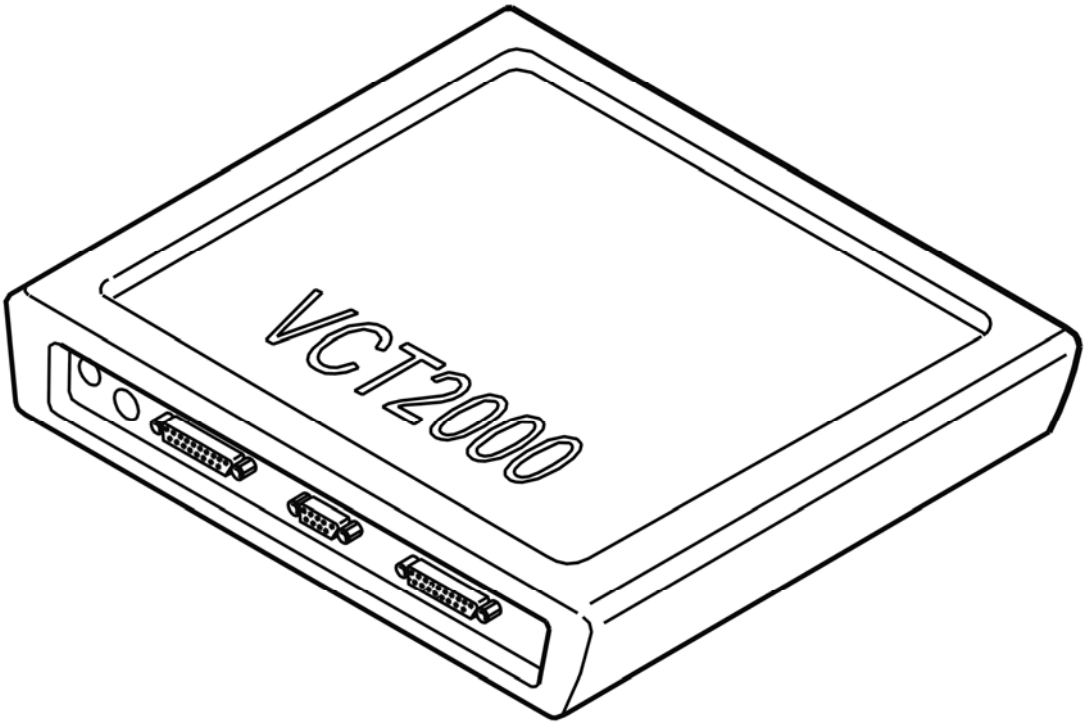

Fig. 164: Identifying VCT2000 Diagnostic Tool Symbol In VIDA
Courtesy of VOLKSWAGEN GROUP OF AMERICA, INC.

Do you want to exit the readout?

- **YES**

  OKAY: Troubleshooting has been completed.

- **NO**

  Refer to **ACTIVATING/READING OUT COMPONENTS/FUNCTIONS**

- 0

  Refer to **COMMUNICATION FAULT**

- 0

  Refer to **COMMUNICATION FAULT**

COMMUNICATION FAULT

Communication has been interrupted for one of the following reasons:

- The ignition is switched off
- VCT2000 disconnected from the data link connector (DLC)
- VCT2000 disconnected from the VIDA cart
- Communication problems in VIDA application or in car.
- No voltage in the data link connector (DLC).

Check therefore:

- That the control module power supply and ground terminal are fault-free.
- That the fuse for the data link connector (DLC) is intact.
- that the ignition is on
- that the battery voltage (system voltage) is normal (approximately 12 V).

  If necessary a battery charger can be connected during the test.

  For information about charge currents and the battery, see:**BATTERY, CHARGING**

- that VCT2000 is correctly connected to the VIDA cart and the data link connector (DLC)
- that VCT2000 and the wiring is fault-free.

Other information

Try to establish communication again or exit reading off diagnostic trouble codes (DTCs). Depending on the communication fault, select one of the following options.

1. Try again. Refer to **ACTIVATING AND READING OUT COMPONENTS**
2. Fault-trace more comprehensively for the communication problem that has occurred. Refer to **CHECKING COMMUNICATION ERRORS**
3. Exit fault-tracing / Read off from the next system.

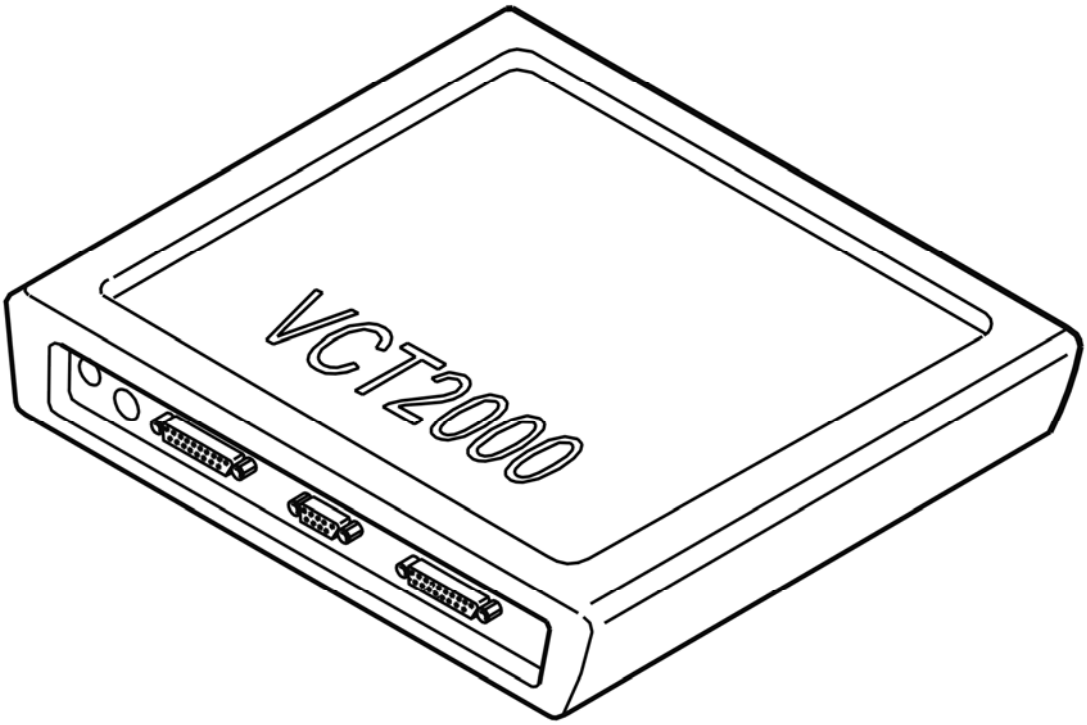

Fig. 165: Identifying VCT2000 Diagnostic Tool Symbol In VIDA
Courtesy of VOLKSWAGEN GROUP OF AMERICA, INC.

CHECKING COMMUNICATION ERRORS

SELECTING CAR MODEL

Select car model to obtain relevant troubleshooting information.

1. XC90. Refer to **CHECKING COMMUNICATION ERRORS, CAR MODEL XC90**

CHECKING COMMUNICATION ERRORS, CAR MODEL

HINT: Test the communication with another corresponding vehicle to decide if the malfunction is in the vehicle or in VIDA/VCT/cable harness. If the communication works on another vehicle, the malfunction is in the vehicle.

Different speed on the CAN-communication can lead to problems

Volvo's vehicles have different speed of communication on the high-speed part of the CAN-network (HS-CAN), depending on model year.

- Model year -2004 communicates with 250 kbit/s.
- Model year 2005- communicates with 500 kbit/s.

Due to this, it is very important to specify correct vehicle profile before any communication is started with the vehicle's HS-CAN. This is normally done by pressing on " Retrieve VIN" or by manually specifying vehicle parameters under "Vehicle profile".

If the wrong model year has been selected, it may lead to blocking of the CAN-net, diagnostic trouble codes being stored in several control modules or missing response from control modules at continued communication. The following control modules may be affected by this problem:

- Brake control module (BCM)/(ABS)
- Engine control module (ECM)
- Electronic Throttle Module (ETM)
- Suspension Module (SUM)
- Central electronic module (CEM)
- Transmission control module (TCM)
- Steering wheel angle sensor module (SAS)
- Steering Wheel Module (SWM)
- Electrical Power Steering Module (EPS)

If this happens, take the following action:

- Turn off the ignition and remove the ignition key. Insert the key again in position II.
- If the above does not work, remove the battery cable and connect it again after a minute to reset the control modules.
- Select the correct vehicle profile in VIDA and erase the diagnostic trouble codes. Check that the symptoms have disappeared.

Diagnostic outlet

- Check the voltage feed to diagnostic outlet #16. The voltage shall match battery voltage.
- Check the cable for power ground and signal ground to diagnostic outlet #4 and #5.

HINT: When VCT2000 is connected to the diagnostic outlet (is supplied with voltage), the indicator diode shall be activated with a green light. Then the indicator diode flashes quickly when communication takes place with a control module. In case of certain internal malfunctions on VCT2000 the indicator diode is activated with a red light.

Communication cables

- Check the communication cable (k-line) between diagnostic outlet #7 and central electronic module (CEM) #D6 and other connected control modules for open circuit, short-circuit to ground and short-circuit to voltage.

CAUTION: In case of malfunction on this communication cable, communication cannot be established on either the low or high-speed network. First when communication takes place on this cable, the low and high-speed cables between the diagnostic outlet and central electronic module (CEM) are connected to the rest of the network in the vehicle. This is controlled via a relay in the central electronic module (CEM). This relay is only found on vehicles of model year -2004.

- For communication problems with control units on **the high-speed network** , check communication cables between diagnostic outlet #6/ #14 and central electronic module (CEM) #B7/ #B8 for open circuit, short-circuit to ground and short-circuit to voltage according to references above.
- For communication problems with control units on **the low-speed network** , check communication cables between diagnostic outlet #3/#11 and central electronic module (CEM) #B19/#B20 for open circuit, short-circuit to ground and short-circuit to voltage according to references above.
- Also check the communication cables for the low and high-speed net between the central electronic module (CEM) and the other connected control modules according to troubleshooting above.

Control modules

- Check that the control module's voltage feed and ground connection are trouble-free.

CAUTION: If none of the above checks help, try reading out diagnostic trouble codes in the central electronic module (CEM). Done via VIDA vehicle communication. A prerequisite for being able to communicate with the control modules in the car is that the central electronic module (CEM) is active and can be communicated with. If communication is not possible with the central electronic module (CEM), check the voltage feed and ground for the central electronic module (CEM).

VCT2000 and cable harness

- Connect VCT2000 to the vehicle so that it is supplied with voltage. Test VCT2000 by selecting the system's self-test and VCT Test in the VIDA main menu. If any malfunction is found according to the test, first replace the cable harness then the VCT2000, if the test still indicates a malfunction.
- If no malfunctions were found after troubleshooting according to above, try with a new cable harness and/or new VCT2000.

VIDA

- If no malfunctions were found after troubleshooting according to above, try performing a complete system reset of VIDA (Volvo scan tool).

Other information

- see **CONTENTS**

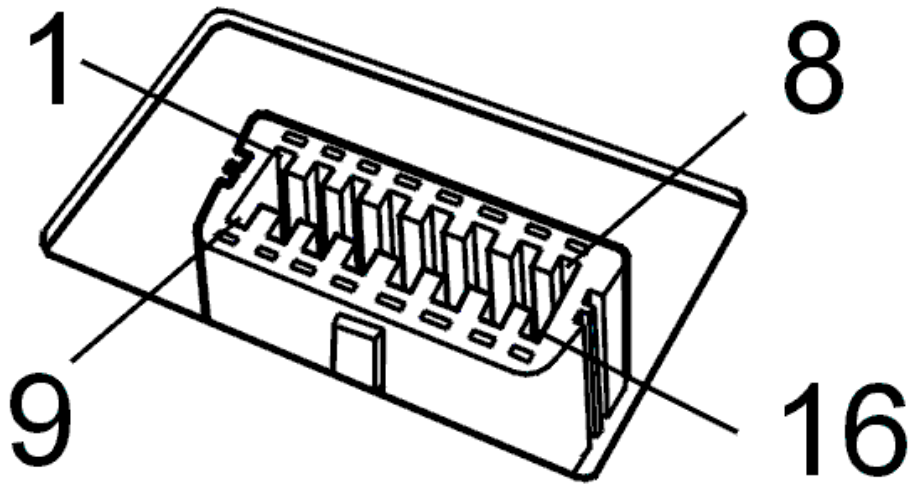

Fig. 166: Identifying Data Link Connector
Courtesy of VOLKSWAGEN GROUP OF AMERICA, INC.

- **Continue**

  Refer to **FAULT-TRACING INFORMATION**

FAULT-TRACING INFORMATION

FAULT-TRACING INFORMATION

Fault-tracing communication problems is now finished.

Do you want to try establishing communication again?

- **YES**

  Refer to **ACTIVATING AND READING OUT COMPONENTS**

- **NO**

  NO

COMMUNICATION FAULT

Communication has been interrupted for one of the following reasons:

- The ignition is switched off
- VCT2000 disconnected from the data link connector (DLC)

- VCT2000 disconnected from the VIDA cart
- Communication problems in VIDA application or in car.
- No voltage in the data link connector (DLC).

Check therefore:

- That the control module power supply and ground terminal are fault-free.
- That the fuse for the data link connector (DLC) is intact.
- that the ignition is on
- that the battery voltage (system voltage) is normal (approximately 12 V).

  If necessary a battery charger can be connected during the test.

  For information about charge currents and the battery, see:**BATTERY, CHARGING**

- that VCT2000 is correctly connected to the VIDA cart and the data link connector (DLC)
- that VCT2000 and the wiring is fault-free.

Other information

Try to establish communication again or exit reading off diagnostic trouble codes (DTCs). Depending on the communication fault, select one of the following options.

1. Try again
2. Fault-trace more comprehensively for the communication problem that has occurred
3. Exit fault-tracing / Read off from the next system.

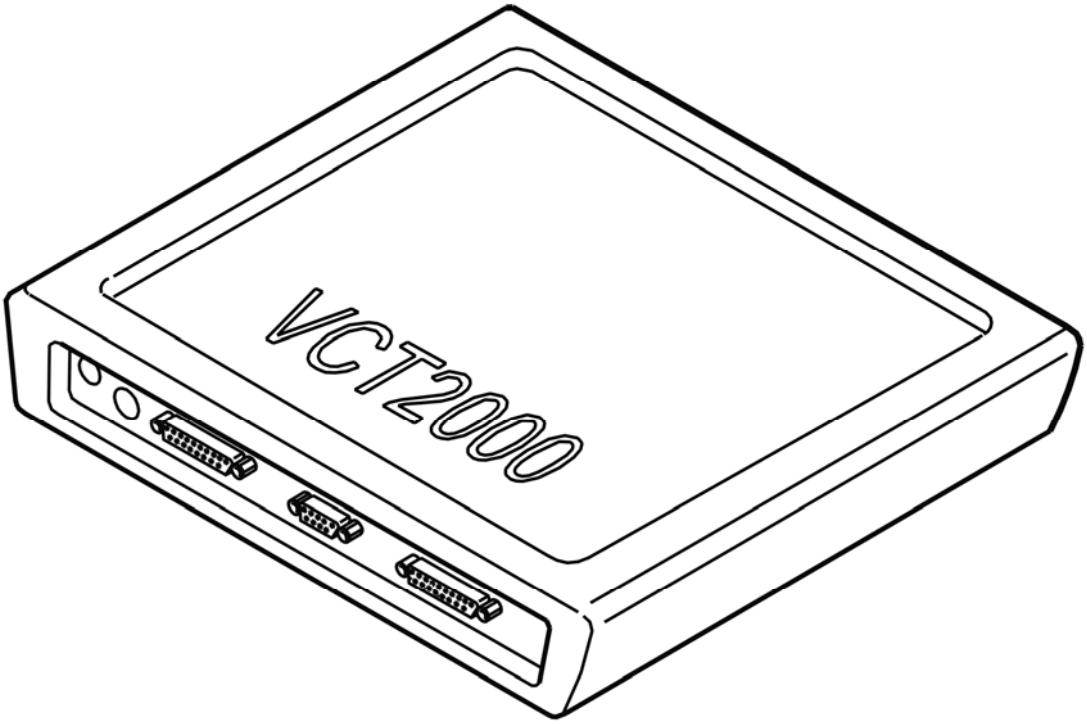

Fig. 167: Identifying VCT2000 Diagnostic Tool Symbol In VIDA
Courtesy of VOLKSWAGEN GROUP OF AMERICA, INC.

Which alternative is requested?

- **1**

  Refer to **READING OUT COMPONENTS AND FUNCTIONS**

- **2**

  Refer to **CHECKING COMMUNICATION ERRORS**

- **3**

  3

FAULT-TRACING INFORMATION

Fault-tracing communication problems is now finished.

Do you want to try establishing communication again?

- **YES**

Refer to **READING OUT COMPONENTS AND FUNCTIONS**

- **NO**

  NO

CHECKING SATELLITE RECEPTION (2005-2006)

CHECKING SATELLITE RECEPTION

CHECKING AERIAL MODULE (ATM)

Fig. 168: Checking Traffic Load On CAN Cables
Courtesy of VOLKSWAGEN GROUP OF AMERICA, INC.

Certain frequencies on the radio can interfere with GPS-reception. In turn, this may lead to the navigation system indicating the wrong position or providing incorrect guidance. There are three radio frequencies that may lead to this interference. These are:

- FM 87.8 MHz.
- FM 94.3 MHz.
- FM 101.8 MHz.

To check if the problem is in the Aerial module (ATM), check as follows.

HINT: Perform the following check with a frequency, set on the radio, that is not close to the ones indicated above. Then use the check for comparison.

- Set the frequency to be investigated on the radio.
- Wait awhile so that the GPS-reception has an opportunity to stabilize.
- Check the number of satellites by clicking the symbol for VCT2000.
- If the number of satellites is less than the control case, then Aerial module (ATM) shall be replaced.

Perform the test for the three stated frequencies.

Other information

- see **LOCATION OF COMPONENTS**
- see **RECEIVER AM/FM (ATM), REPLACING**

Fig. 169: Identifying VCT2000 Diagnostic Tool Symbol In VIDA
Courtesy of VOLKSWAGEN GROUP OF AMERICA, INC.

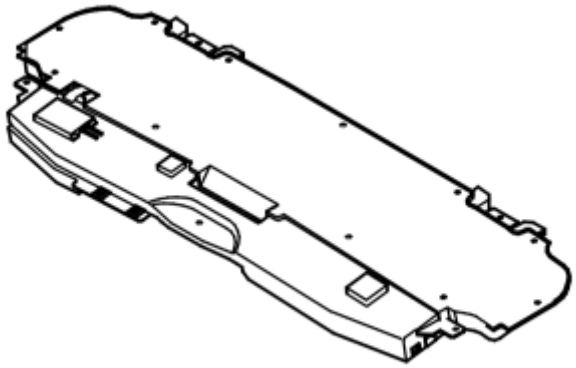

Fig. 170: Identifying Aerial Module (ATM) Component
Courtesy of VOLKSWAGEN GROUP OF AMERICA, INC.

Was a fault detected?

- **YES**

  Refer to **VERIFICATION**

- **NO**

  Refer to **CHECKING SYMPTOMS**

CHECKING SYMPTOMS

Check if the navigation system indicates wrong position, guides in an incorrect way, or if a similar symptom is found on any of the radio frequencies.

- FM 87.8 MHz.
- FM 94.3 MHz.
- FM 101.8 MHz.

If there is any symptom in the vehicle at these radio frequencies but not at others, the GPS-receiver shall be replaced.

Other information

- see **LOCATION OF COMPONENTS**
- see **RECEIVER GPS, TMC (ATM), REPLACE**

Fig. 171: Identifying VCT2000 Diagnostic Tool Symbol In VIDA
Courtesy of VOLKSWAGEN GROUP OF AMERICA, INC.

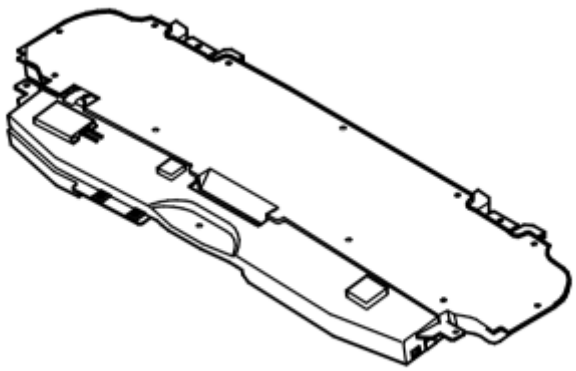

Fig. 172: Identifying Aerial Module (ATM) Component
Courtesy of VOLKSWAGEN GROUP OF AMERICA, INC.

Was a fault detected?

- **YES**

  Refer to **VERIFICATION**

- **NO**

  Refer to **INFORMATION**

VERIFICATION

Fig. 173: Checking Traffic Load On CAN Cables
Courtesy of VOLKSWAGEN GROUP OF AMERICA, INC.

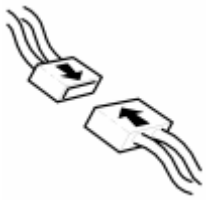

Fig. 174: Identifying Connector(s) Reinstallation
Courtesy of VOLKSWAGEN GROUP OF AMERICA, INC.

HINT: After carrying out the repair, check that the fault has been remedied.

- Ignition off.
- Reinstall the connectors, components etc.
- Ignition on.
- Check that the symptom is gone at each radio frequency.

Is the symptom still present?

- **YES**

  Refer to **INFORMATION**

- **NO**

  OKAY: Troubleshooting has been completed.

INFORMATION

FAULT-TRACING INFORMATION

The fault should have been detected and remedied. As this is not the case fault-tracing has failed.

Exit fault-tracing for this diagnostic trouble code (DTC) or make another attempt.

ACCESSORIES AND BODY, CAB

Media, Communication And Navigation - Symptom Related Diagnostic Procedures

CHECK OF SYSTEM FOR PARKING ASSISTANCE CAMERA (2007-2011)

CHECK OF SYSTEM FOR PARKING ASSISTANCE CAMERA

INTRODUCTION

The system for the parking assistance camera facilitates reversing by using a screen to display what is behind the vehicle.

This troubleshooting is to remedy problems that can arise with the parking assistance camera module (PAC) and constituent components.

First check that no diagnostic trouble codes that could affect the parking assistance camera system are stored in the central electronic module (CEM), brake control module (BCM), multimedia module (MMM) or infotainment control module (ICM).

Fig. 1: Locating Parking Assistance Camera
Courtesy of VOLVO CARS CORPORATION

- **Continue**

  Refer to **CONDITIONS**

CONDITIONS

Fig. 2: Checking Traffic Load On CAN Cables
Courtesy of VOLVO CARS CORPORATION

If the system for the parking assistance camera does not work as it should. First make sure that the following conditions are met.

- Ignition on.
- Reverse gear is engaged.

Does the system for parking assistance camera work?

- **YES**

  OKAY: Troubleshooting has been completed.

- **NO**

  Refer to **SYMPTOM SELECTION**

SYMPTOM SELECTION

A number of possible symptoms are listed below. Select the alternative that best describes the situation.

1. Screen does not come up even though reverse gear is engaged. Refer to **SCREEN DOES NOT COME UP EVEN THOUGH REVERSE GEAR IS ENGAGED**
2. A picture other than the parking view is displayed even though reverse gear is engaged. Refer to **AN IMAGE OTHER THAN THE PARKING VIEW IS DISPLAYED EVEN THOUGH REVERSE GEAR IS ENGAGED**
3. Screen is up but not image is displayed even though reverse gear is engaged. Refer to **SCREEN IS UP BUT NO IMAGE OR DISTORTED IMAGE EVEN THOUGH REVERSE GEAR IS ENGAGED.**
4. Image is frozen. Refer to **IMAGE IS FROZEN**
5. Help lines drawn incorrectly. Refer to **HELP LINES DRAWN INCORRECTLY**
6. Help lines not drawn. Refer to **HELP LINES NOT DRAWN, PICTURE COMES AND GOES, PICTURE MISSING**
7. Picture comes and goes. Refer to **HELP LINES NOT DRAWN, PICTURE COMES AND GOES, PICTURE MISSING**
8. Picture missing. Refer to **HELP LINES NOT DRAWN, PICTURE COMES AND GOES, PICTURE MISSING**

AN IMAGE OTHER THAN THE PARKING VIEW IS DISPLAYED EVEN THOUGH REVERSE GEAR IS ENGAGED

Check that the installation instructions for the parking assistance camera system have been included for software installation.

- **Continue**

  Refer to **CHECKING THE FUNCTION**

SCREEN IS UP BUT NO IMAGE OR DISTORTED IMAGE EVEN THOUGH REVERSE GEAR IS ENGAGED.

Check the following:

- Cable between camera and parking assistance camera module (PAC) for open circuit, loose connection and oxidation.
- The video cable between the parking assistance camera module (PAC) and the screen for open circuit, loose connection and oxidation.
- Checking the power supply to the control module

If no fault was detected, replace the camera.

Other information

- see **CHECKING WIRING AND TERMINALS**
- see **PARKING CAMERA**
- see **SIGNAL SPECIFICATION**
- For information about the cable routing, see the relevant Wiring Diagram.

- **Continue**

  Refer to **CHECKING THE FUNCTION**

IMAGE IS FROZEN

Either the camera or the parking assistance camera module (PAC) is not working. Replace the camera. If that does not help, replace the parking assistance camera module (PAC).

Other information

- see **CHECKING WIRING AND TERMINALS**
- see **PARKING CAMERA**
- see **PARKING CAMERA MODULE**
- see **SIGNAL SPECIFICATION**
- For information about the cable routing, see the relevant Wiring Diagram.

- **Continue**

Refer to **CHECKING THE FUNCTION**

HELP LINES DRAWN INCORRECTLY

Check that the camera is set properly.

Use Activation of installation image in vehicle communication and set the camera correctly if possible.

If this does not help, replace the camera.

Other information

- see **PARKING CAMERA**
- see **SIGNAL SPECIFICATION**

- **Continue**

  Refer to **CHECKING THE FUNCTION**

SCREEN DOES NOT COME UP EVEN THOUGH REVERSE GEAR IS ENGAGED

Check that the installation instructions for the parking assistance camera system have been included for software installation.

- **Continue**

  Refer to **CHECKING THE DISPLAY SCREEN**

CHECKING THE FUNCTION

Hint: After carrying out the repair, check that the fault has been remedied.

- Ignition off.
- Reinstall the connectors, components etc.
- Ignition on.

Check that the system for the parking assistance camera is working correctly.

Does the system for parking assistance camera work?

- **YES**

  OKAY: Troubleshooting has been completed.

- **NO**

  Refer to **INFORMATION**

HELP LINES NOT DRAWN, PICTURE COMES AND GOES, PICTURE MISSING

Reload the software in the control module.

- **Continue**

  Refer to **CHECKING THE FUNCTION**

INFORMATION

FAULT-TRACING INFORMATION

The fault should have been detected and remedied. As this is not the case fault-tracing has failed.

Exit fault-tracing for this diagnostic trouble code (DTC) or make another attempt.

CHECKING THE DISPLAY SCREEN

FAULT-TRACING INFORMATION

Fault causes which will stop the display working:

- Open-circuit in the signal cable between the display and the multimedia module (MMM)
- No power supply to the display screen
- The display screen is not working
- Defective multimedia module (MMM)
- The MOST network is not working
- The relay for the infotainment system (positioned on the central electronic module (CEM)) is not powered.

HINT: The display screen will not deploy in the event of a fault in the MOST network. If the display screen is deployed and the data on the screen does not update or the screen suddenly retracts, the MOST network may not be working. Check that the MOST network is working.

- **Continue**

  Refer to **SYMPTOM INFORMATION**

SYMPTOM INFORMATION

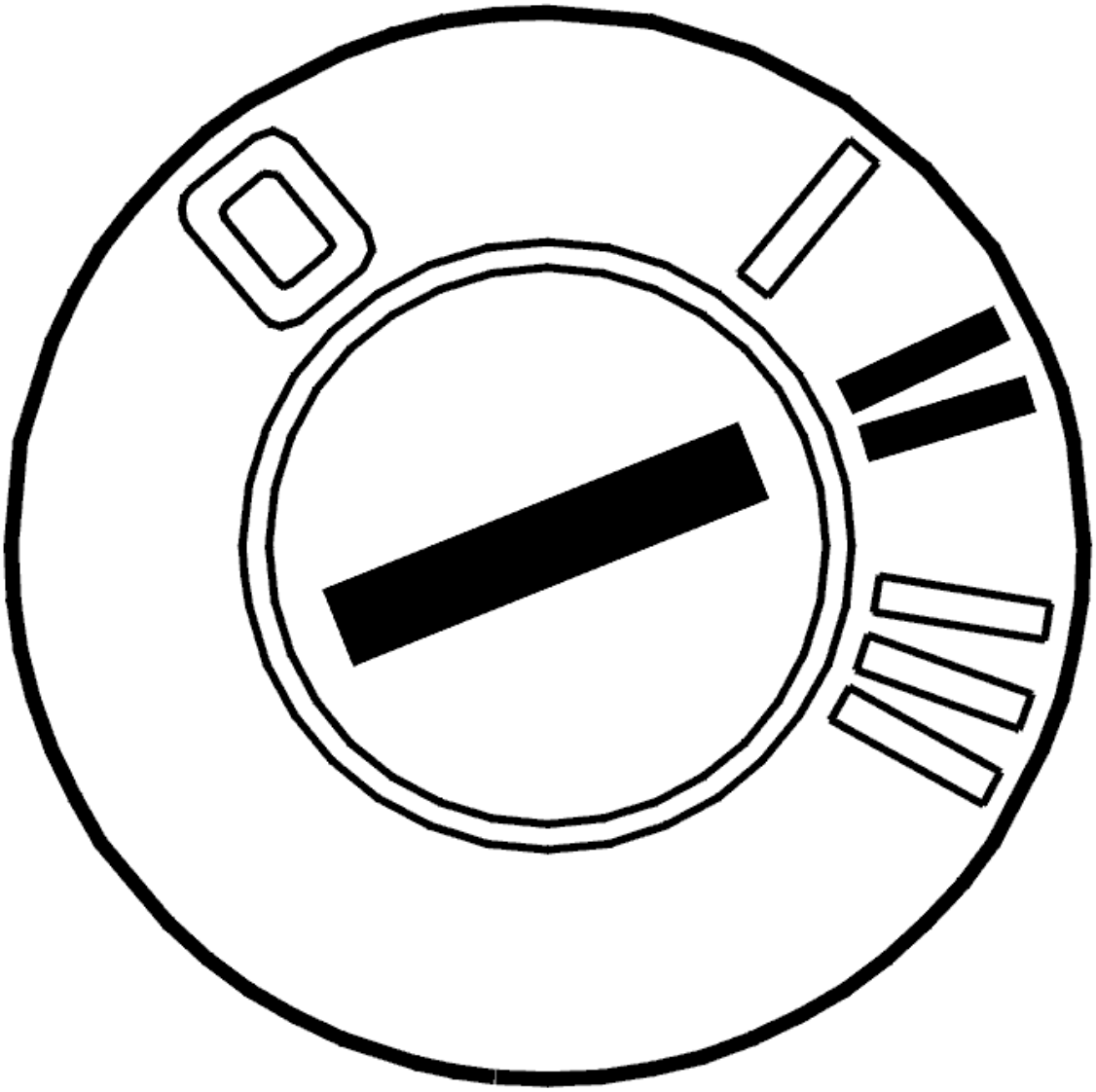

Fig. 3: Identifying Ignition ON
Courtesy of VOLVO CARS CORPORATION

- Ignition on.

  Activate the multimedia module (MMM) using the navigation buttons or the remote control so that the display screen deploys and folds away.

Does the screen deploy and fold away?

- **YES**

  Refer to **CHECKING THE FUNCTION**

- **NO**

Refer to **CHECKING THE CABLE**

CHECKING THE CABLE

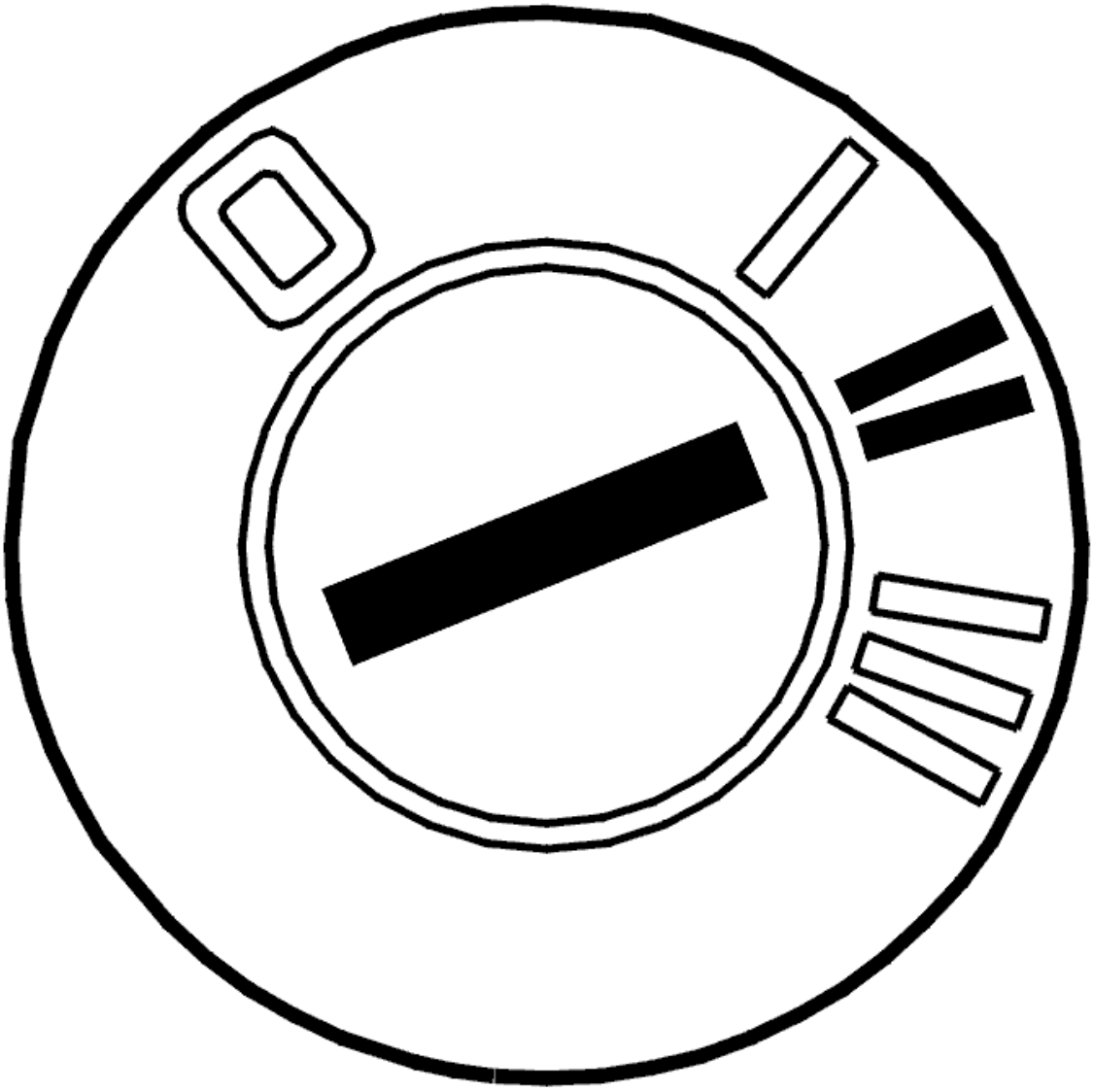

Fig. 4: Identifying Ignition ON
Courtesy of VOLVO CARS CORPORATION

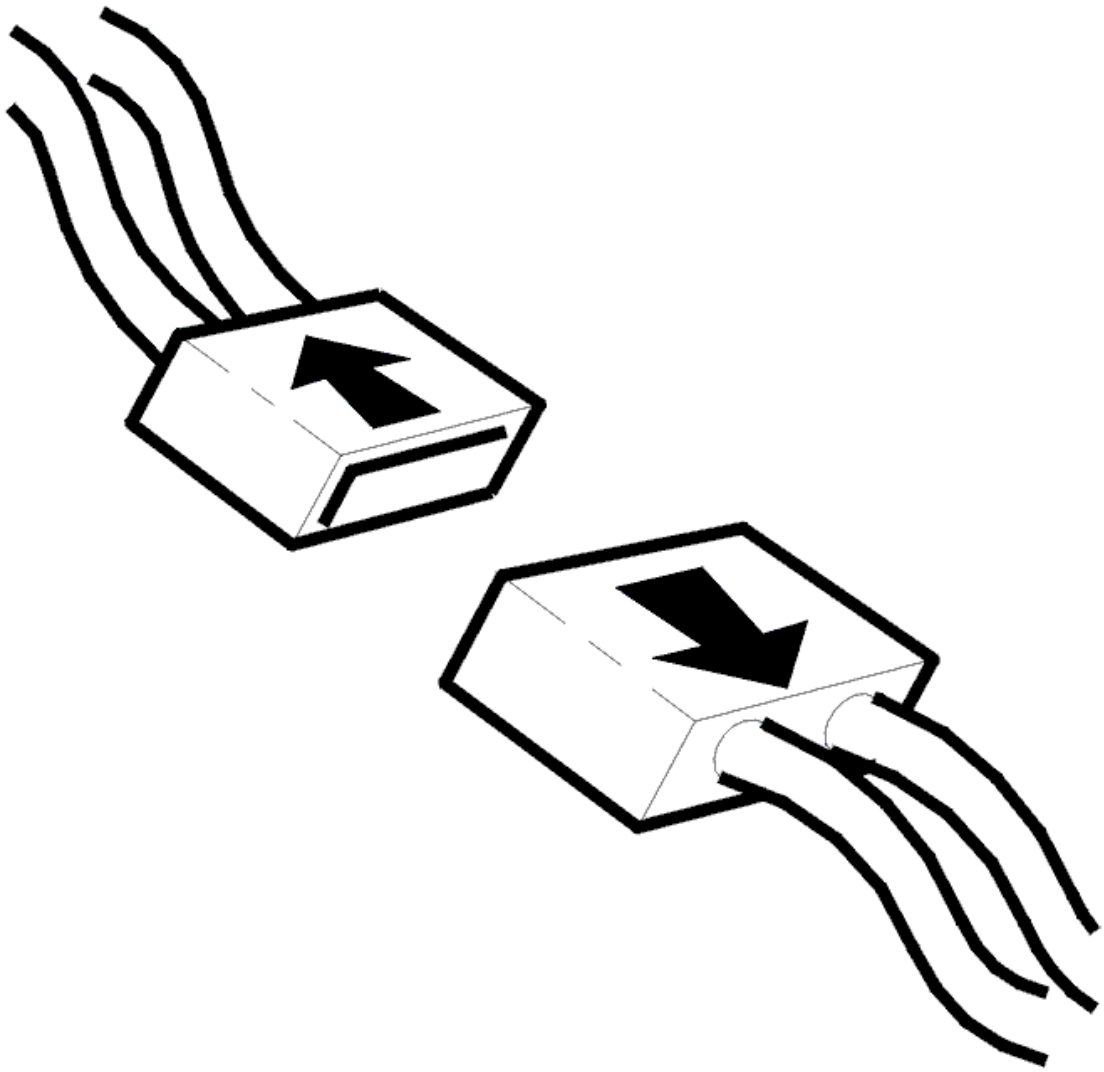

Fig. 5: Disconnecting Connector
Courtesy of VOLVO CARS CORPORATION

- Ignition off
- Disconnect the 5-pin connector from the display screen
- Ignition on.

Checking the cable

Check the display screen cable terminals. Check for oxidation and loose connections.

Check the cable terminals in the female and male sections of the connector. The cable terminals must not be damaged or pressed back

Check the voltage at the 5-pin connector for the screen. The voltage should be 12 V.

Take readings between:

- terminals #1 and #5
- terminals #2 and #4
- terminals #3 and #4.

If the voltage is not 12 V, check terminals #1, #2 and #3 in the 5-pin connector for the screen. Check for a short-circuit to ground. Check for an open-circuit.

If the voltage is not 12 V, check terminals #4 and #5 in the 5-pin connector for the screen. Check for a short-circuit to supply voltage. Check for an open-circuit.

Other information:

- To access or replace the multimedia module (MMM), see **MULTIMEDIA MODULE (MMM), REPLACING**
- To access or replace the display screen, see **CENTER LOUDSPEAKER WITH DISPLAY SCREEN, REPLACING**
- For information about signals, see **SIGNAL SPECIFICATION**
- For further information about the fuses and relays, see the Wiring Diagram
- see **CONTENTS** .

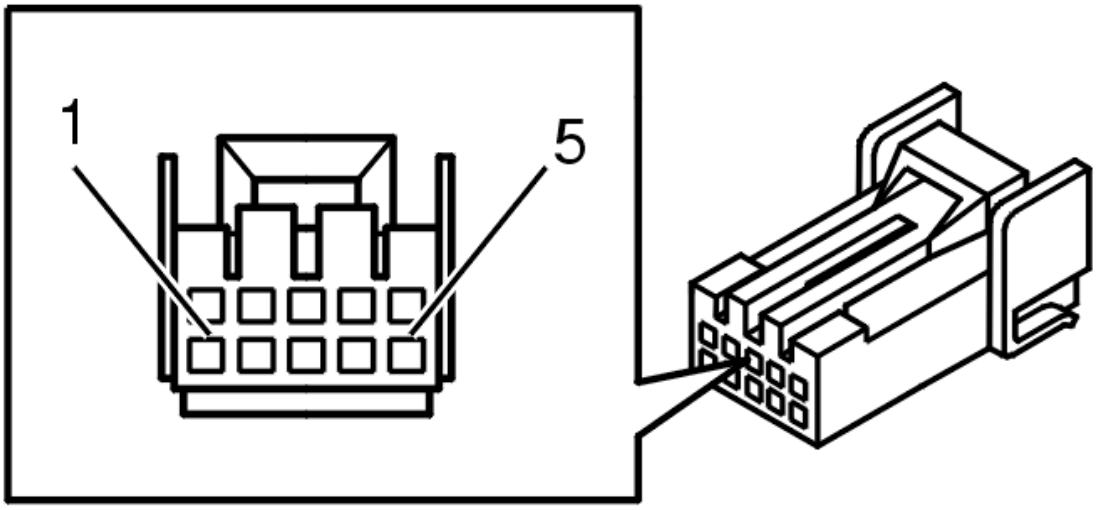

Fig. 6: 10 CD Changer Connector Terminals
Courtesy of VOLVO CARS CORPORATION

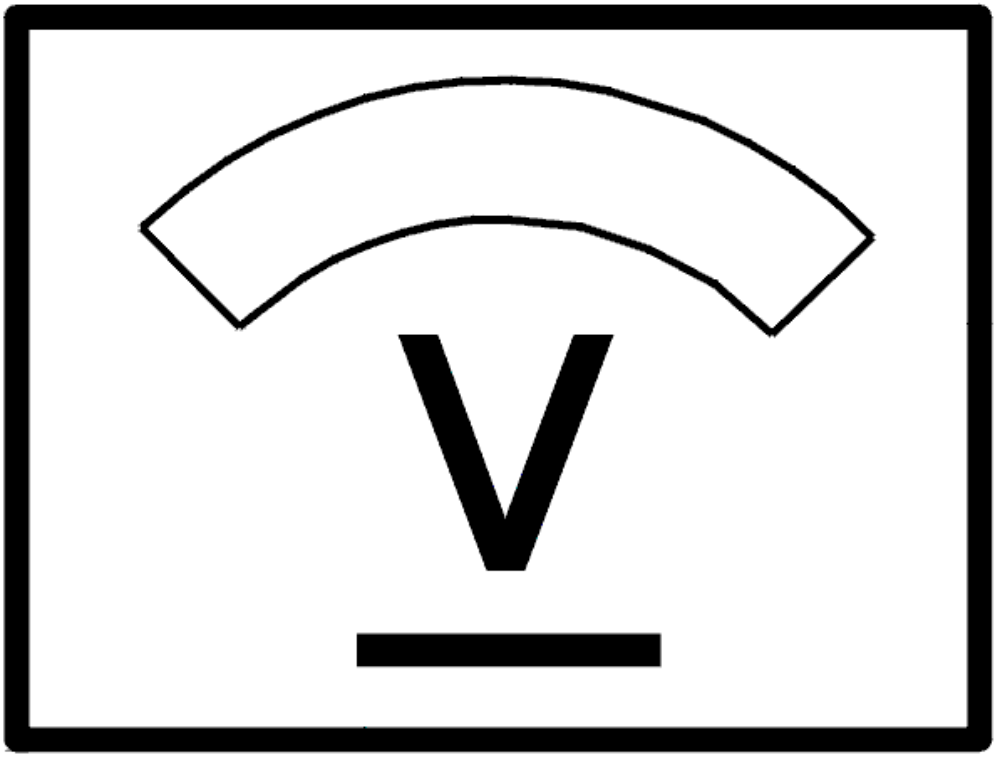

Fig. 7: Identifying Voltage Display
Courtesy of VOLVO CARS CORPORATION

Was the fault found?

- **YES**

  Refer to **VERIFICATION**

- **NO**

  Refer to **CHECKING THE CABLE**

CHECKING THE CABLE

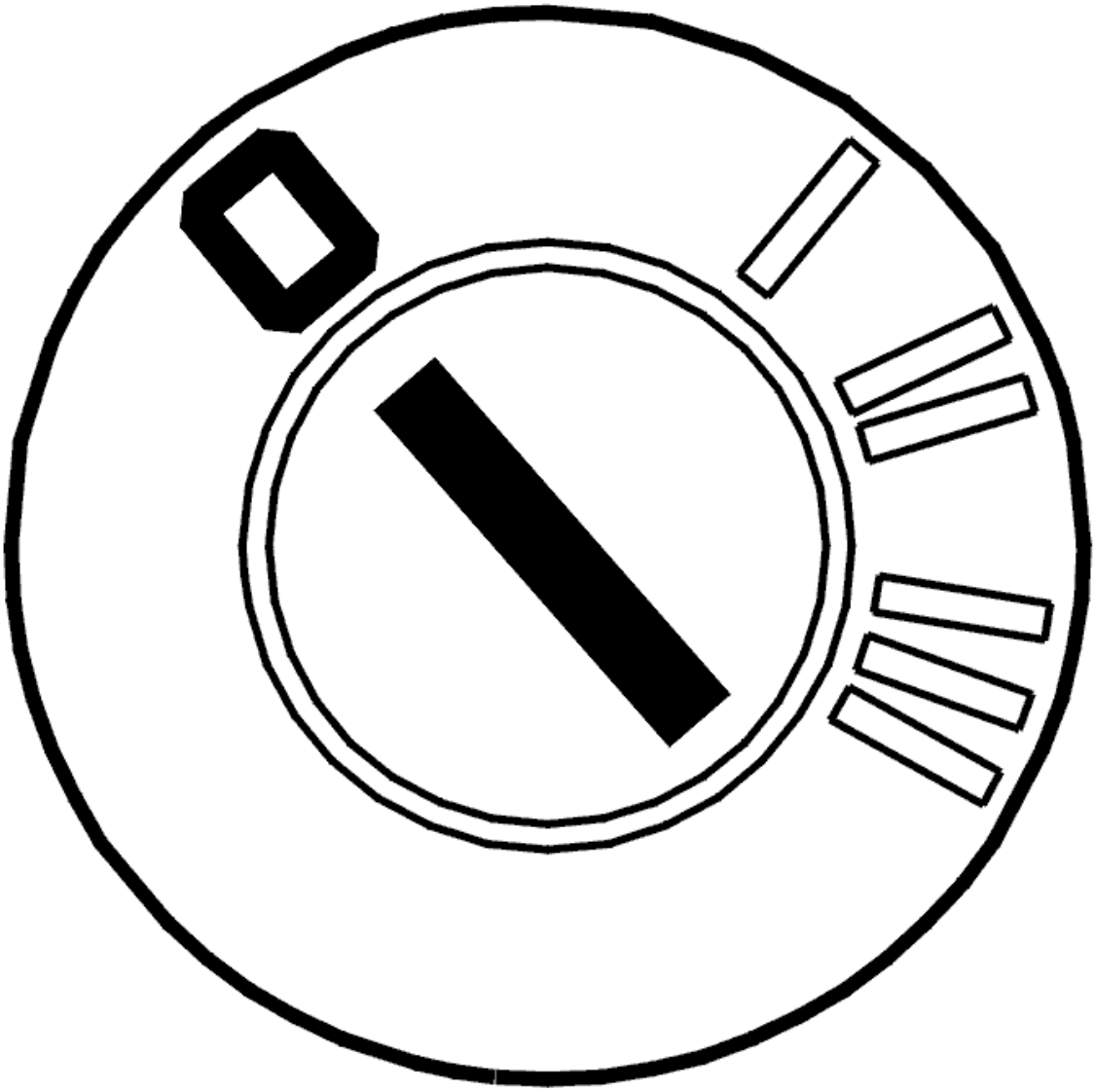

Fig. 8: Identifying Ignition OFF
Courtesy of VOLVO CARS CORPORATION

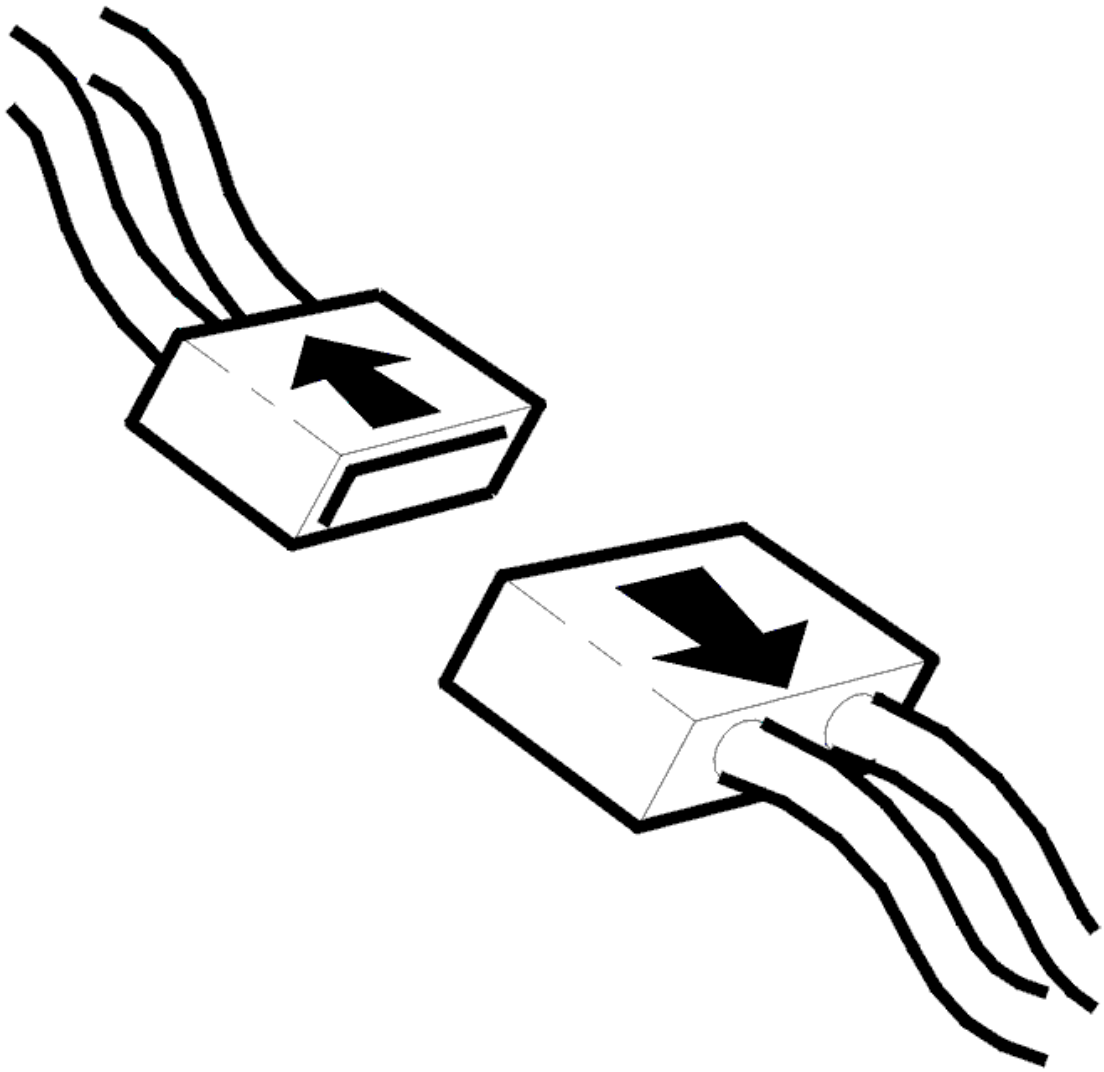

Fig. 9: Disconnecting Connector
Courtesy of VOLVO CARS CORPORATION

- Ignition off
- Disconnect the 10-pin connector from the display screen and multimedia module (MMM).

Checking the cable

Check the cable terminals between the display screen and multimedia module (MMM). Check for loose connections and oxidation.

Check the cable terminals in the female and male sections of the connector. The cable terminals must not be damaged or pressed back.

Check the signal cable between display screen terminal #7 (10-pin connector) and multimedia module (MMM) terminal #B7 (#7). Check for a short-circuit to supply voltage. Check for an open-circuit.

Check the signal cable between display screen terminal #4 (10-pin connector) and multimedia module (MMM) terminal #B4 (#4). Check for a short-circuit to supply voltage. Check for a short-circuit to ground. Check for an open-circuit.

If no fault is found, replace the display screen.

Remedy as necessary.

Other information:

- To connect the breakout box, see **CONNECTING THE BREAKOUT BOX (2003-2006)**
- To access or replace the multimedia module (MMM), see **MULTIMEDIA MODULE (MMM), REPLACING**
- To access or replace the display screen, see **CENTER LOUDSPEAKER WITH DISPLAY SCREEN, REPLACING**
- For information about signals, see **SIGNAL SPECIFICATION**
- see **CONTENTS** .

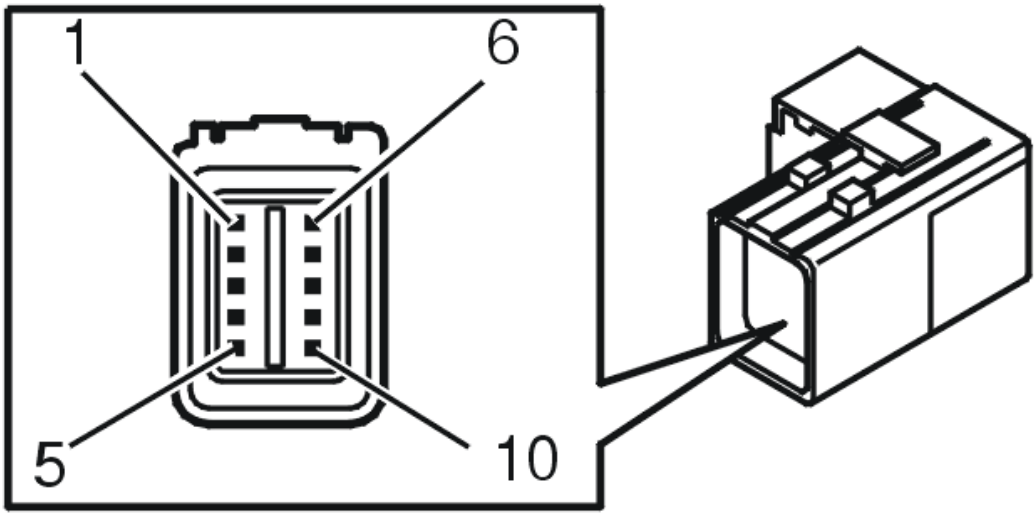

Fig. 10: Identifying RTI Control Module (To Display) Connector Terminals
Courtesy of VOLVO CARS CORPORATION

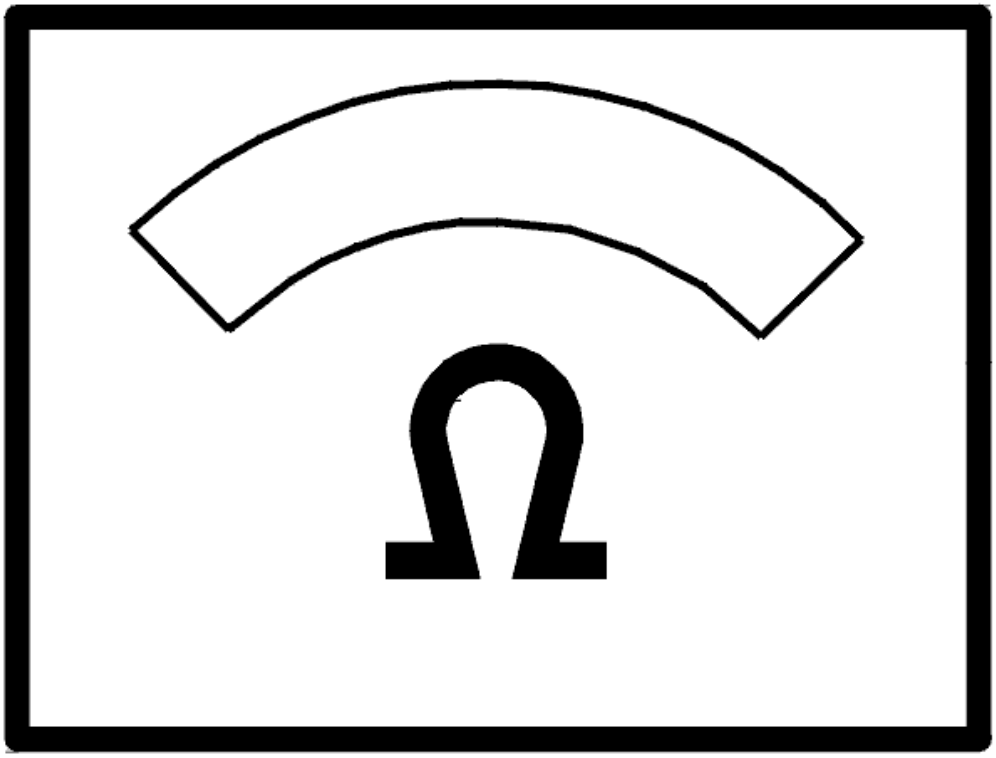

Fig. 11: Identifying Ohm Meter
Courtesy of VOLVO CARS CORPORATION

- **Continue**

  Refer to **VERIFICATION**

VERIFICATION

VERIFICATION

HINT: After carrying out the repair, check that the fault has been remedied.

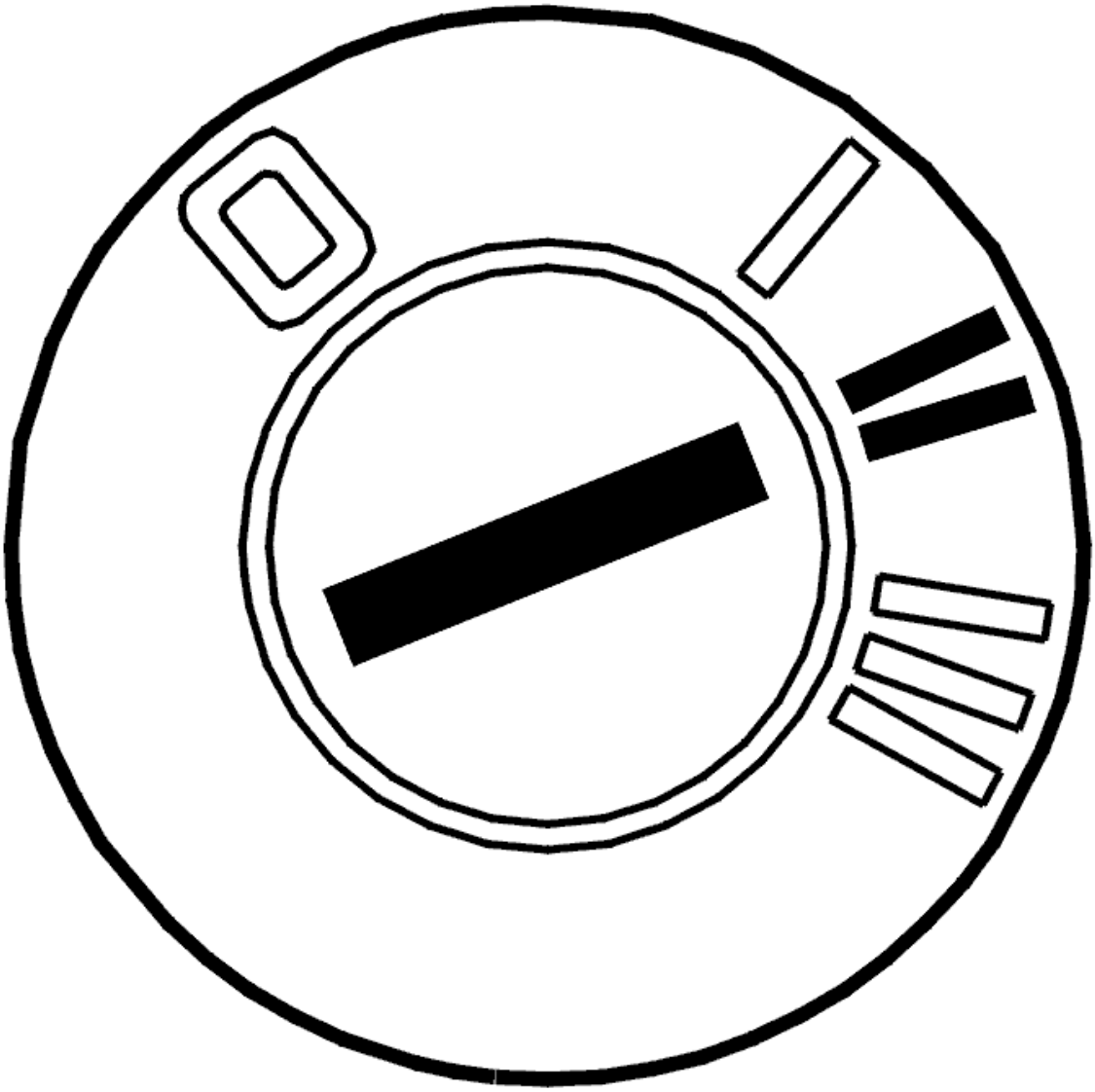

Fig. 12: Identifying Ignition ON
Courtesy of VOLVO CARS CORPORATION

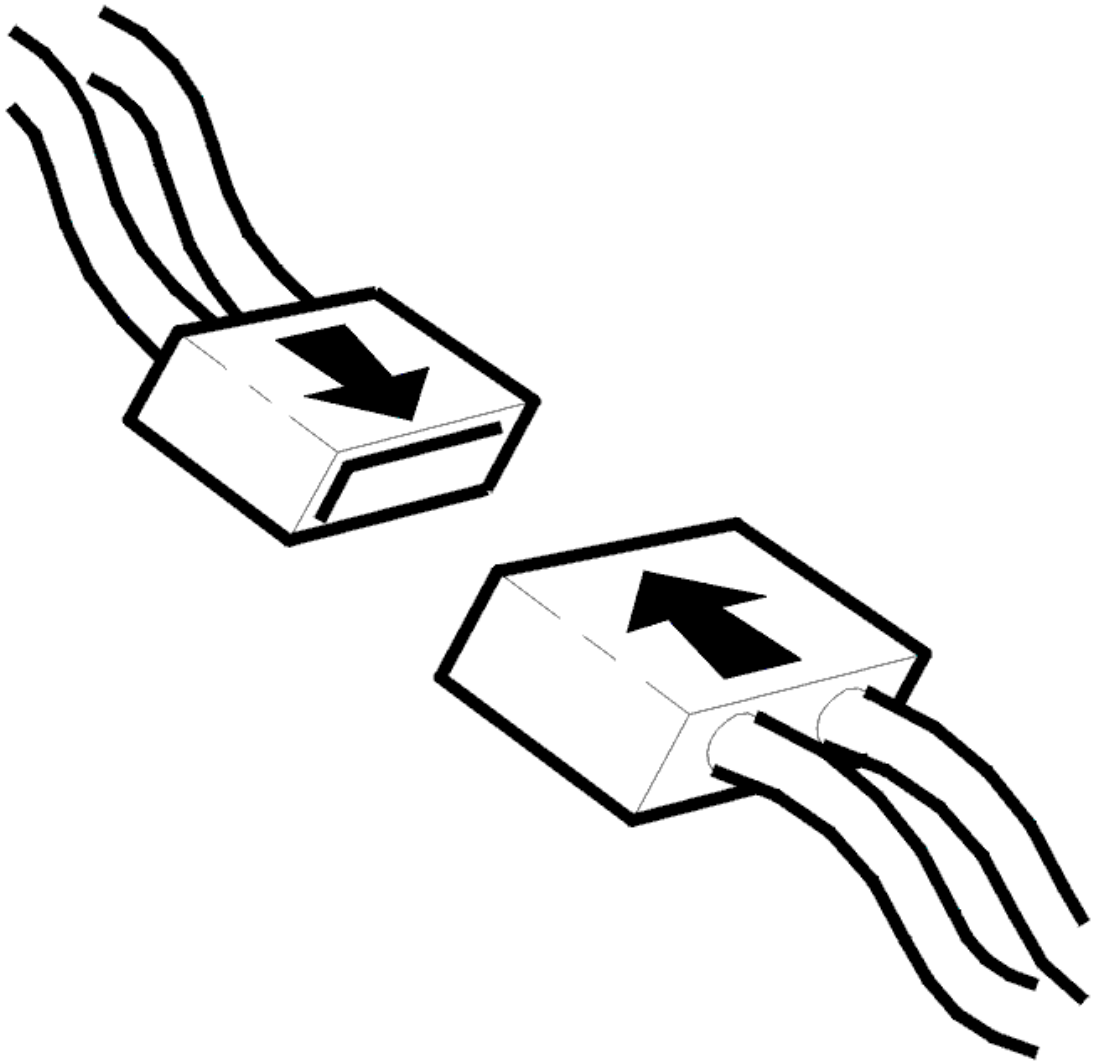

Fig. 13: Connecting Connector
Courtesy of VOLVO CARS CORPORATION

- Ignition off
- Reinstall the connectors, components etc.
- Ignition on.

  Check that the screen deploys when the ignition is switched on, when activated using the remote control or when using the steering wheel buttons for navigation.

  Ensure that the image and the colors of the image are good.

Does the display function?

- **YES**

Refer to **CHECKING THE FUNCTION**

- **NO**

  Refer to **INFORMATION**

CHECK MESSAGE ABOUT DISC INSERTION IN MMM WITH HARD DRIVE (2007-2011)

CHECK MESSAGE ABOUT DISC INSERTION IN MMM WITH HARD DRIVE

CHECK MESSAGE ABOUT DISC INSERTION IN MMM WITH HARD DRIVE

Fault-tracing information

In a vehicle with a Multimedia module (MMM) with a hard disk (HDD system), a message stating to insert a disc may appear on the screen. This is due to a software fault. There is a risk of the system drawing unnecessary battery capacity even when the vehicle has been turned off as the infotainment relay is continuously active.

Fault symptom

- Navigation/Does not work
- Navigation/Error message on screen

Check:

- If a software update is available.

CHECKING AUX-PANEL (2007-2011)

CHECKING AUX-PANEL

Remove the equipment that is connected to the AUX-panel.

Connect special tool to the AUX-panel.

see **9512989**

Click the VCT2000 symbol to begin.

Checking for the fault

If possible, check if the customer's symptom remains.

Checking the wiring

Check the cables for short-circuit to voltage, short-circuit to ground and open circuit. For further information, see the appropriate wiring diagram.

If no malfunction is found, replace the AUX-panel.

Other information

- see **CHECKING WIRING AND TERMINALS**

Fig. 14: Identifying VCT2000 Diagnostic Tool Symbol In VIDA
Courtesy of VOLVO CARS CORPORATION

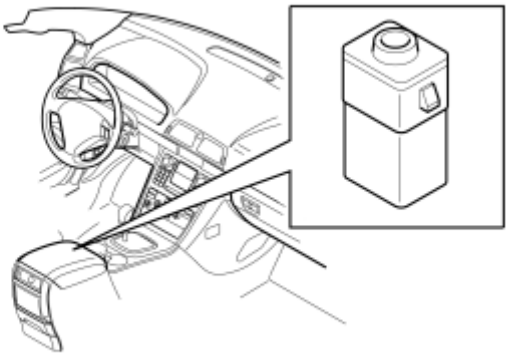

Fig. 15: Checking Aux-Panel
Courtesy of VOLVO CARS CORPORATION

Was a fault detected?

- **YES**

  OKAY: Troubleshooting has been completed.

- **NO**

  Refer to **INFORMATION**

INFORMATION

FAULT-TRACING INFORMATION

The fault should have been detected and remedied. As this is not the case fault-tracing has failed.

Exit fault-tracing for this diagnostic trouble code (DTC) or make another attempt.

CHECKING AUX-PANEL. REAR SEAT ENTERTAINMENT, GENERATION 4.1 (2006-2007)

CHECKING AUX-PANEL

FAULT-TRACING INFORMATION

The AUX-panel is there so that one can use other AV-sources in the system for rear seat entertainment than the DVD-player, e. g., video cameras, game pads and portable DVD-players. The panel has three RCA-contacts for connecting external equipment and two headphone outputs for connecting wired headphones. The headphone sockets are available as a back-up solution if the batteries in the wireless headphones should run out.

The RCA-contacts also function as an input in the system and when any AV-source, e. g., a video camera, has been connected to connections, it can be selected as a source with the remote control at any or both screens.

Headphones connected by wire to the headphone sockets will play the audio source that has been selected on the same side that the headphone socket is located on - that is, the left socket plays the sound that was selected at the left screen and the right socket plays the sound that was selected at the right screen.

If AV-signals to or from the AUX-panel should not arrive, probable malfunction causes are:

- Damaged leads between the Rear seat entertainment module (RSE) and the AUX-panel.
- Damaged AUX-panel.
- Connected AV source is damaged.

HINT: In order for AV sources to be played in the system for rear seat entertainment, the system for rear seat entertainment must be on and work faultlessly.

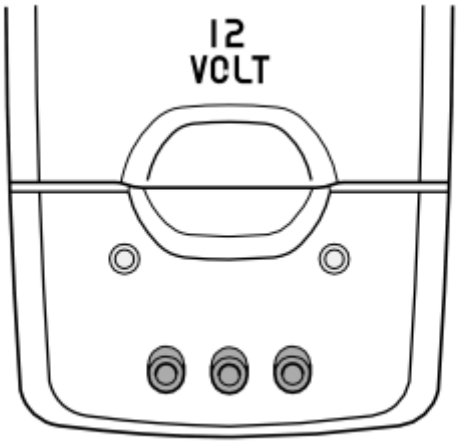

Fig. 16: Identifying AUX Panel
Courtesy of VOLVO CARS CORPORATION

- **Continue**

  Refer to **CHECKING THE WIRING AND COMPONENT**

CHECKING THE WIRING AND COMPONENT

Checking for the fault

If possible, check if the customer's symptom remains.

Loss of audio signals from the headphone sockets is easiest checked by inserting a CD or DVD in the DVD-player, and that the DVD-player is selected as source with the remote control.

Also check that the sound from the DVD-player can be heard via other channels such as the wireless headphones or via the rear speakers, this to ensure that there is no problem in the Rear seat entertainment module (RSE).

HINT: If possible, test the function with an AV source to determine whether the fault is in the vehicle or in the customer's connected equipment.

Checking the wiring

Check the leads between Rear seat entertainment module (RSE) and the AUX-panel for the malfunction that the customer complained about. Check the cables for short-circuit to voltage, short-circuit to ground and open circuit. For further information, see the appropriate wiring diagram.

Check the control module connector. Check for contact resistance and oxidation. Check for loose connections.

Check the AV panel's RCA connectors for loose connections, open-circuits, short-circuits and the connectors connection to wiring.

Other information

- see **SIGNAL SPECIFICATION, REAR SEAT ENTERTAINMENT MODULE (RSE), GENERATION 4.1**
- see **CHECKING WIRING AND TERMINALS**

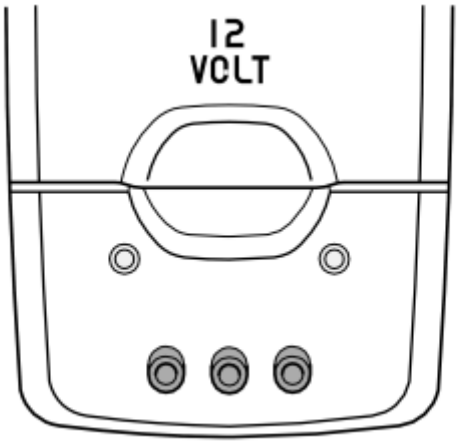

Fig. 17: Identifying AUX Panel
Courtesy of VOLVO CARS CORPORATION

Was a fault detected?

- **YES**

  OKAY: Troubleshooting has been completed.

- **NO**

  Refer to **INFORMATION**

INFORMATION

FAULT-TRACING INFORMATION

The fault should have been detected and remedied. As this is not the case fault-tracing has failed.

Exit fault-tracing for this diagnostic trouble code (DTC) or make another attempt.

CHECKING BUTTONS ON THE HEADSET PANEL (2003-2006)

CHECKING BUTTONS ON THE HEADSET PANEL

FAULT-TRACING INFORMATION

If the buttons on the headset panel are not working, it may be because:

- There is an open-circuit in the signal cable between the audio module (AUM) and the headset panel
- There is a short-circuit to supply voltage and ground between the audio module (AUD) and the headset panel
- Oxidation on the terminal pins in the connectors
- Defective headset panel
- Problems with the MOST network
- Defective control module.

HINT: If the buttons for any of the four headset outputs are not working, the fault is probably before the headset panel. Check that the 22-pin connector is connected to the audio module (AUD). Check that the MOST network to which the Audio module (AUD) is connected functions.

NOTE: **This fault-tracing only checks whether there is a short-circuit to supply voltage in the signal cable between the audio module (AUD) and the buttons for the headset panel. Use this fault-tracing only if no diagnostic trouble codes (DTCs) are stored in the system and the headset panel buttons are not working.**

Select an option:

1. left headset panel. Refer to **CHECKING THE CABLE**
2. right headset panel. Refer to **CHECKING THE CABLE**

CHECKING THE CABLE

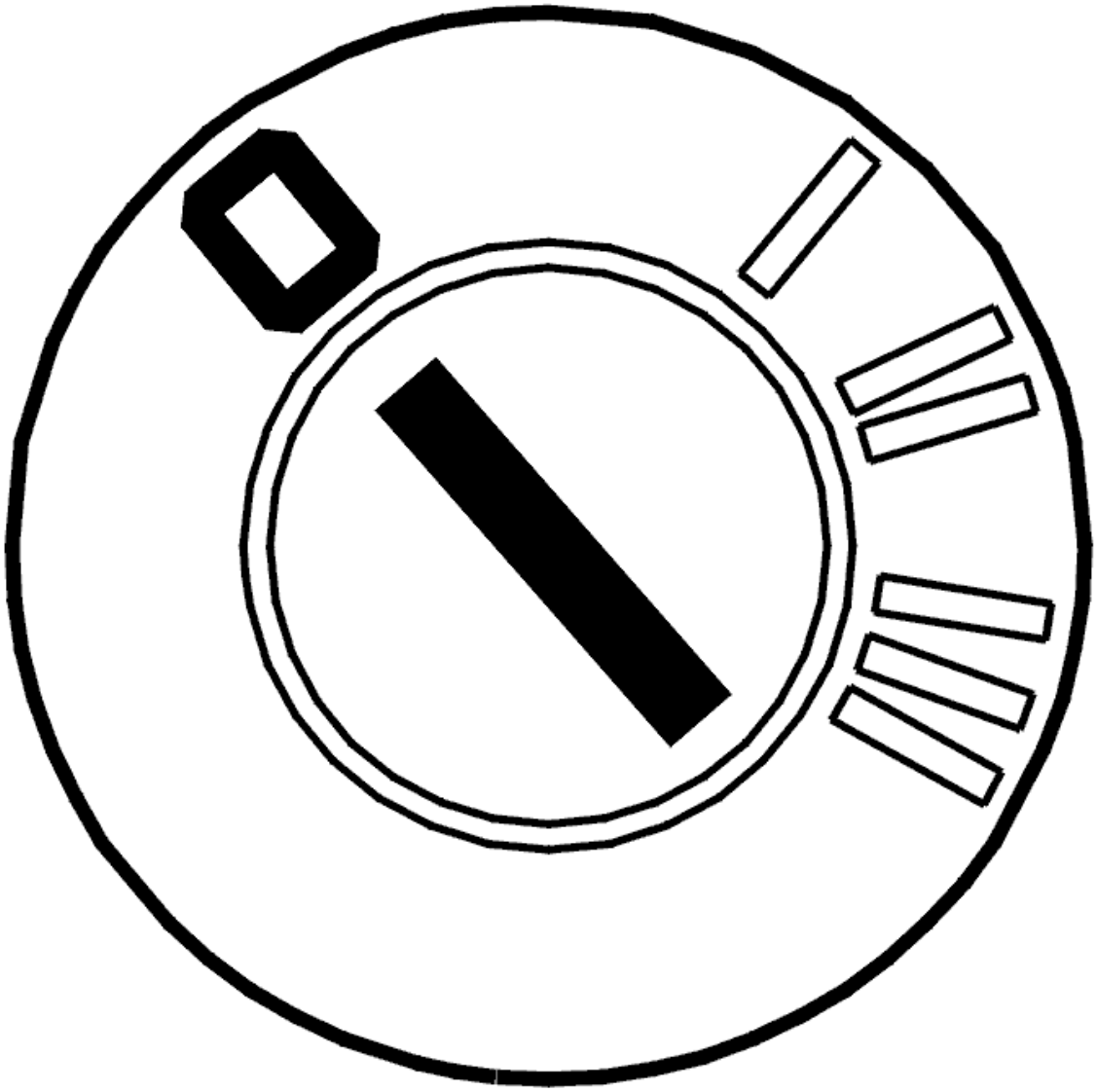

Fig. 18: Identifying Ignition OFF
Courtesy of VOLVO CARS CORPORATION

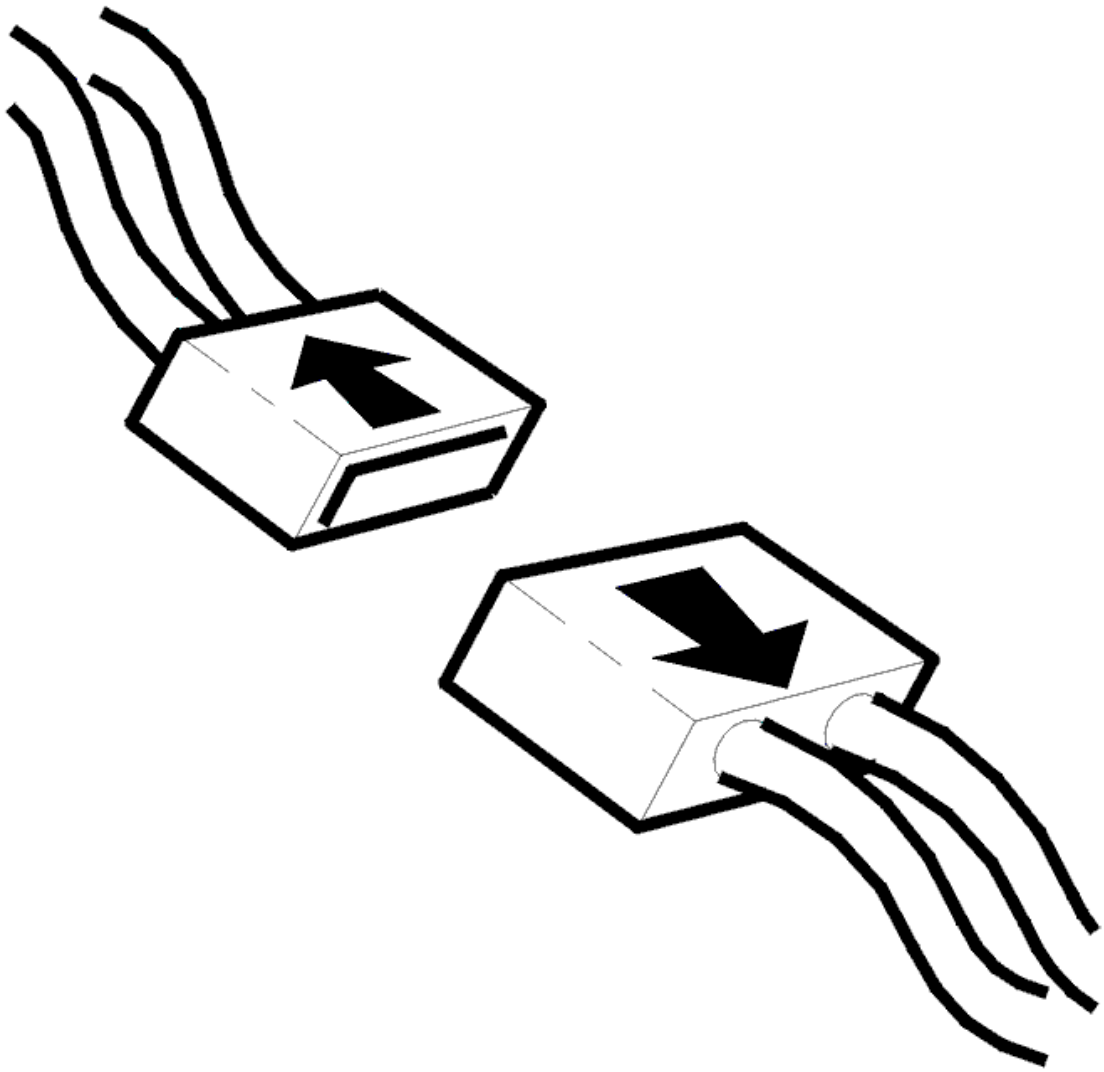

Fig. 19: Disconnecting Connector
Courtesy of VOLVO CARS CORPORATION

- Ignition off
- Disconnect the connector for the left headset panel
- Disconnect the 22-pin connector for the audio module (AUD).

Checking the cable

Check the cable terminals in the female and male sections of the connector. The cable terminals must not be damaged or pressed back.

Checking the cable for the buttons for headset output 1, left-hand headset panel

Check the cable between audio module (AUD) terminal #C15 and headset terminal #10 in the left C-post.

Check for a short-circuit to supply voltage.

Check the cable between audio module (AUD) terminal #C16 and headset terminal #8 in the left C-post. Check for a short-circuit to supply voltage.

Checking the cable for the buttons for headset output 2, left-hand headset panel

Check the cable between audio module (AUD) terminal #C17 and headset terminal #9 in the left C-post. Check for a short-circuit to supply voltage.

Check the cable between audio module (AUD) terminal #C15 and headset terminal #10 in the left C-post. Check for a short-circuit to supply voltage.

Remedy as necessary.

Other information:

- To connect the breakout box, see **CONNECTING THE BREAKOUT BOX**
- To access or replace the audio module (AUD), see **AUDIO MODULE (AUD), REPLACING**
- For information about signals, see **SIGNAL SPECIFICATION**
- see **CONTENTS** .

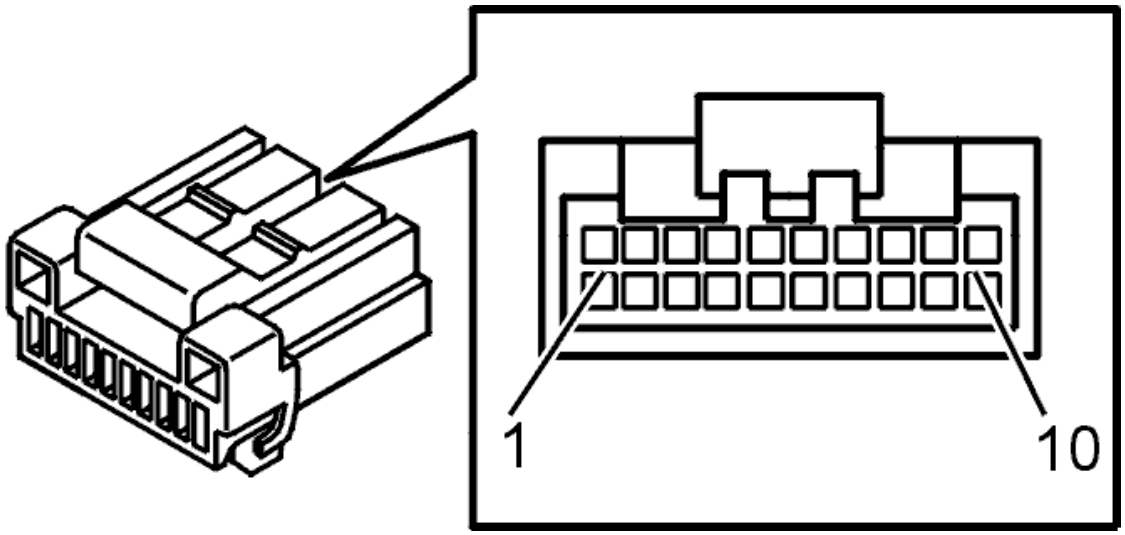

Fig. 20: Identifying Connector (D) Terminals
Courtesy of VOLVO CARS CORPORATION

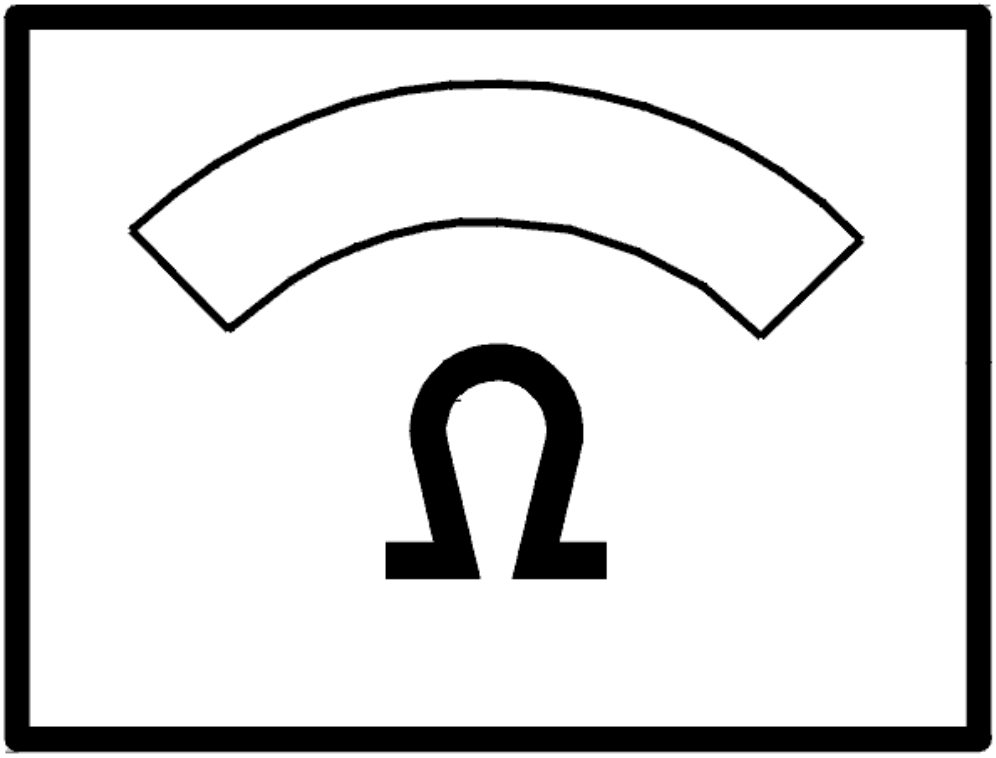

Fig. 21: Identifying Ohm Meter
Courtesy of VOLVO CARS CORPORATION

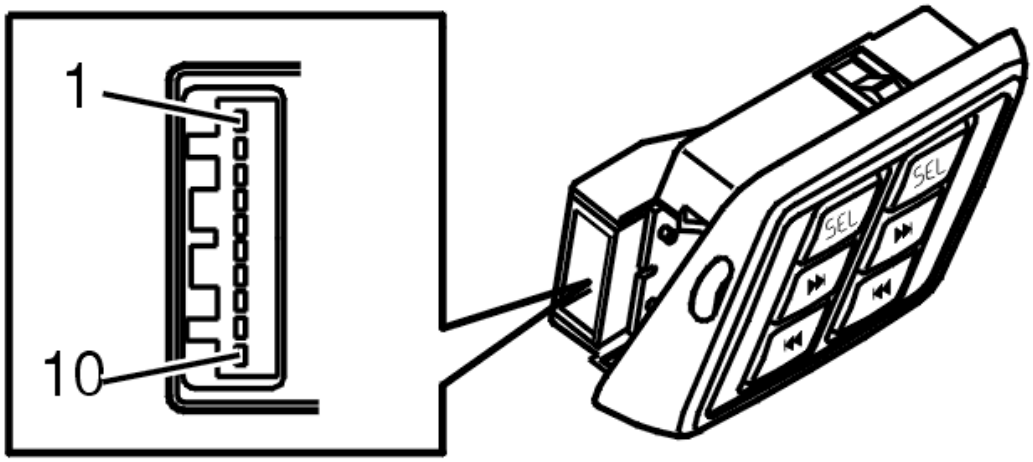

Fig. 22: Identifying Headset Panel Terminals
Courtesy of VOLVO CARS CORPORATION

Was a fault detected?

- **YES**

  Refer to **VERIFICATION**

- **NO**

  FAULT NOT FOUND: Troubleshooting has been completed.

CHECKING THE CABLE

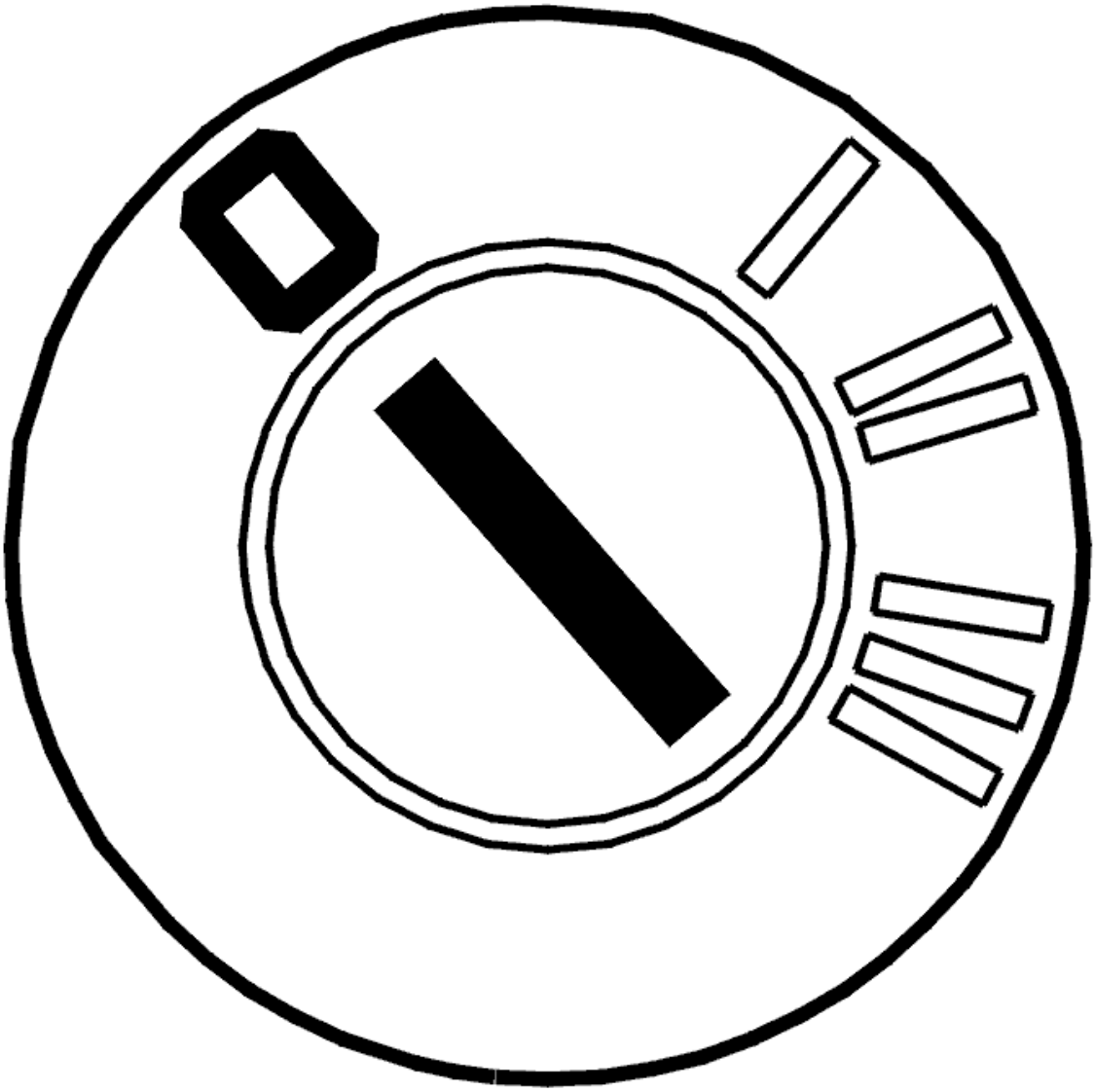

Fig. 23: Identifying Ignition OFF
Courtesy of VOLVO CARS CORPORATION

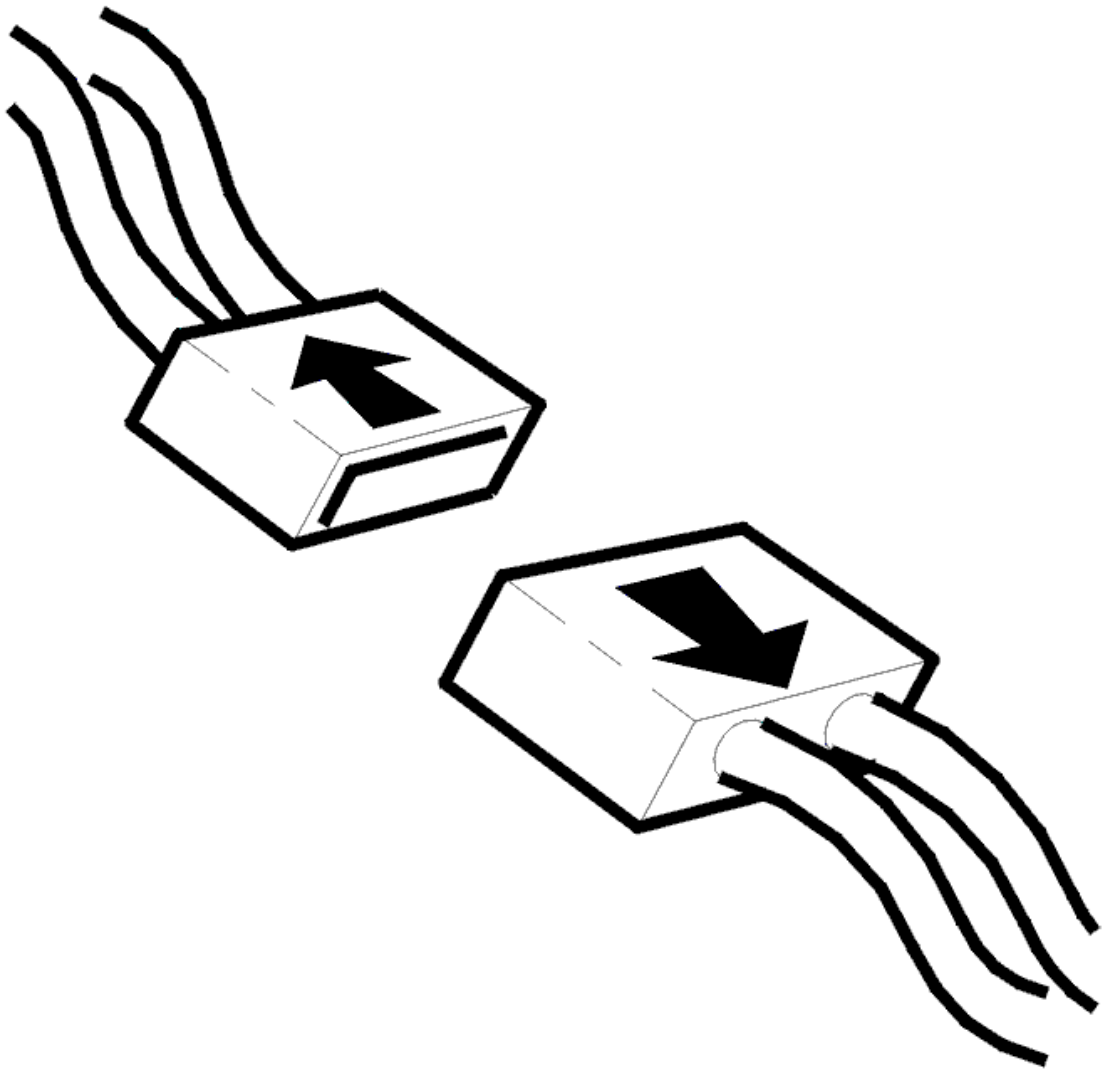

Fig. 24: Disconnecting Connector
Courtesy of VOLVO CARS CORPORATION

- Ignition off
- Disconnect the connector for the right headset panel
- Disconnect the 22-pin connector for the audio module (AUD).

Checking the cable

Check the cable terminals in the female and male sections of the connector. The cable terminals must not be damaged or pressed back.

Checking the cable for the buttons for headset output 3, right-hand headset panel

Check the cable between audio module (AUD) terminal #C21 and headset terminal #8 in the right C-post.

Check for a short-circuit to supply voltage.

Check the cable between audio module (AUD) terminal #C20 and headset terminal #10 in the right C-post. Check for a short-circuit to supply voltage.

Checking the cable for the buttons for headset output 4, right-hand headset panel

Check the cable between audio module (AUD) terminal #C22 and headset terminal #9 in the right C-post. Check for a short-circuit to supply voltage.

Check the cable between audio module (AUD) terminal #C20 and headset terminal #10 in the right C-post. Check for a short-circuit to supply voltage.

Remedy as necessary.

Other information:

- To connect the breakout box, see **CONNECTING THE BREAKOUT BOX**
- To access or replace the audio module (AUD), see **AUDIO MODULE (AUD), REPLACING**
- For information about signals, see **SIGNAL SPECIFICATION**
- see **CONTENTS** .

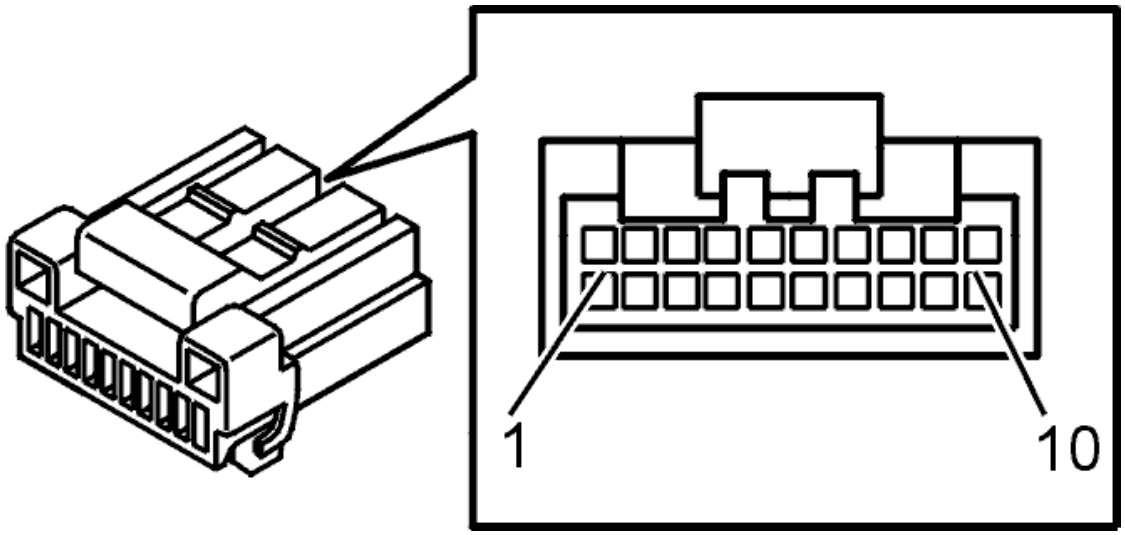

Fig. 25: Identifying Connector (D) Terminals
Courtesy of VOLVO CARS CORPORATION

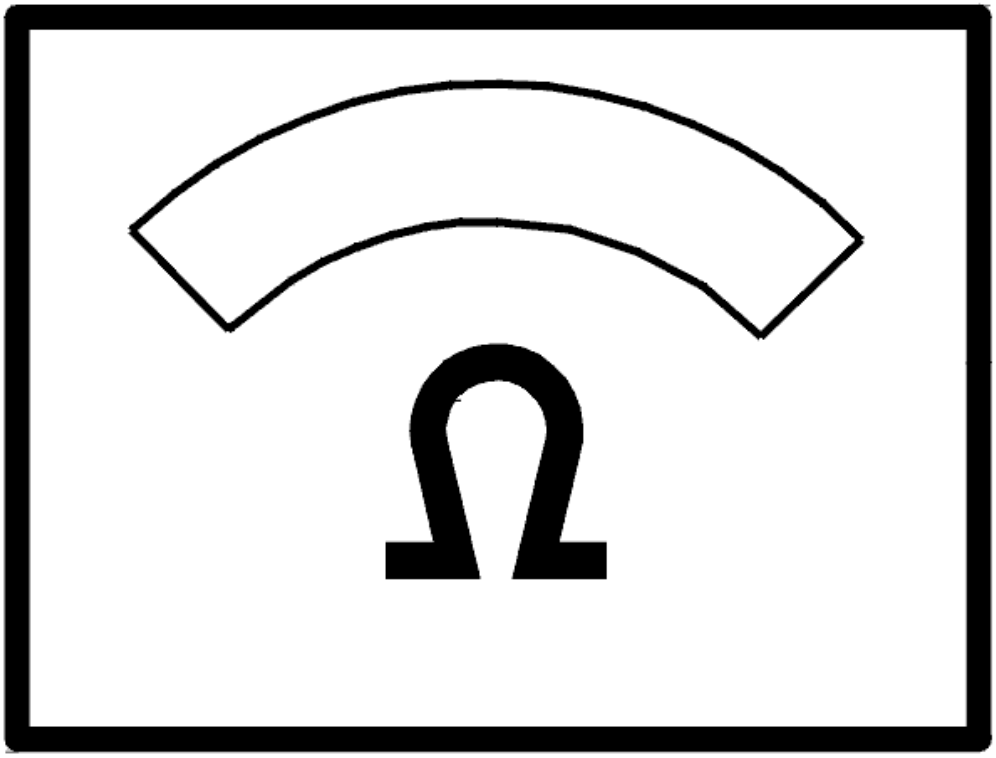

Fig. 26: Identifying Ohm Meter
Courtesy of VOLVO CARS CORPORATION

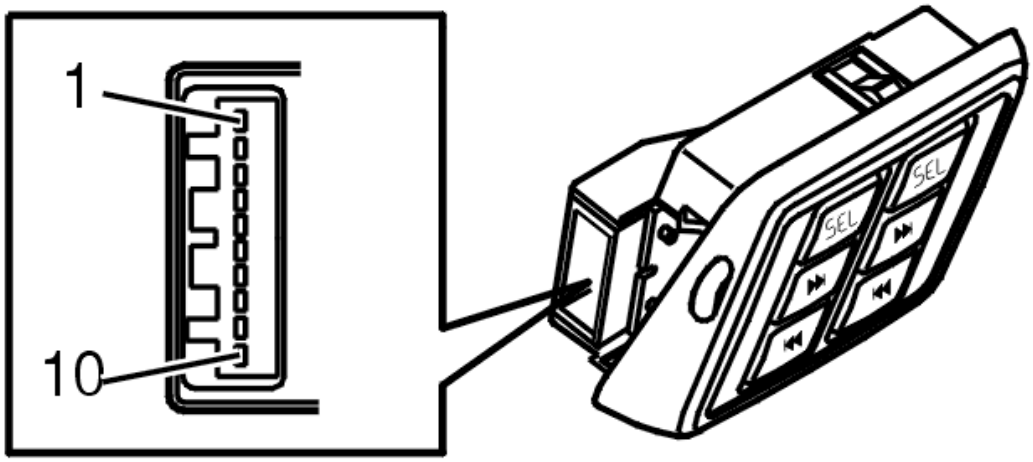

Fig. 27: Identifying Headset Panel Terminals
Courtesy of VOLVO CARS CORPORATION

Was a fault detected?

- **YES**

  Refer to **VERIFICATION**

- **NO**

  FAULT NOT FOUND: Troubleshooting has been completed.

VERIFICATION

HINT: After carrying out the repair, check that the fault has been remedied.

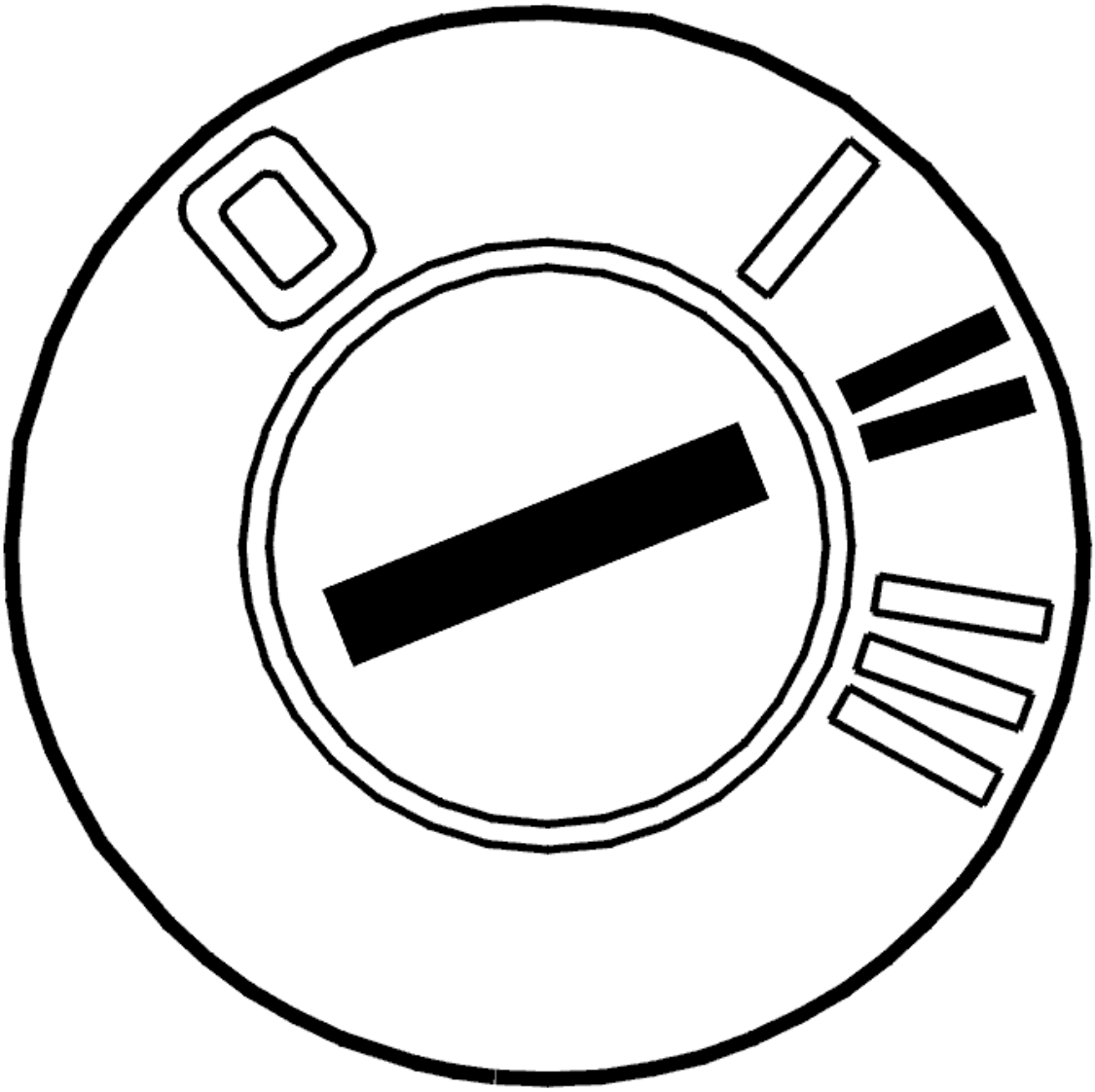

Fig. 28: Identifying Ignition ON
Courtesy of VOLVO CARS CORPORATION

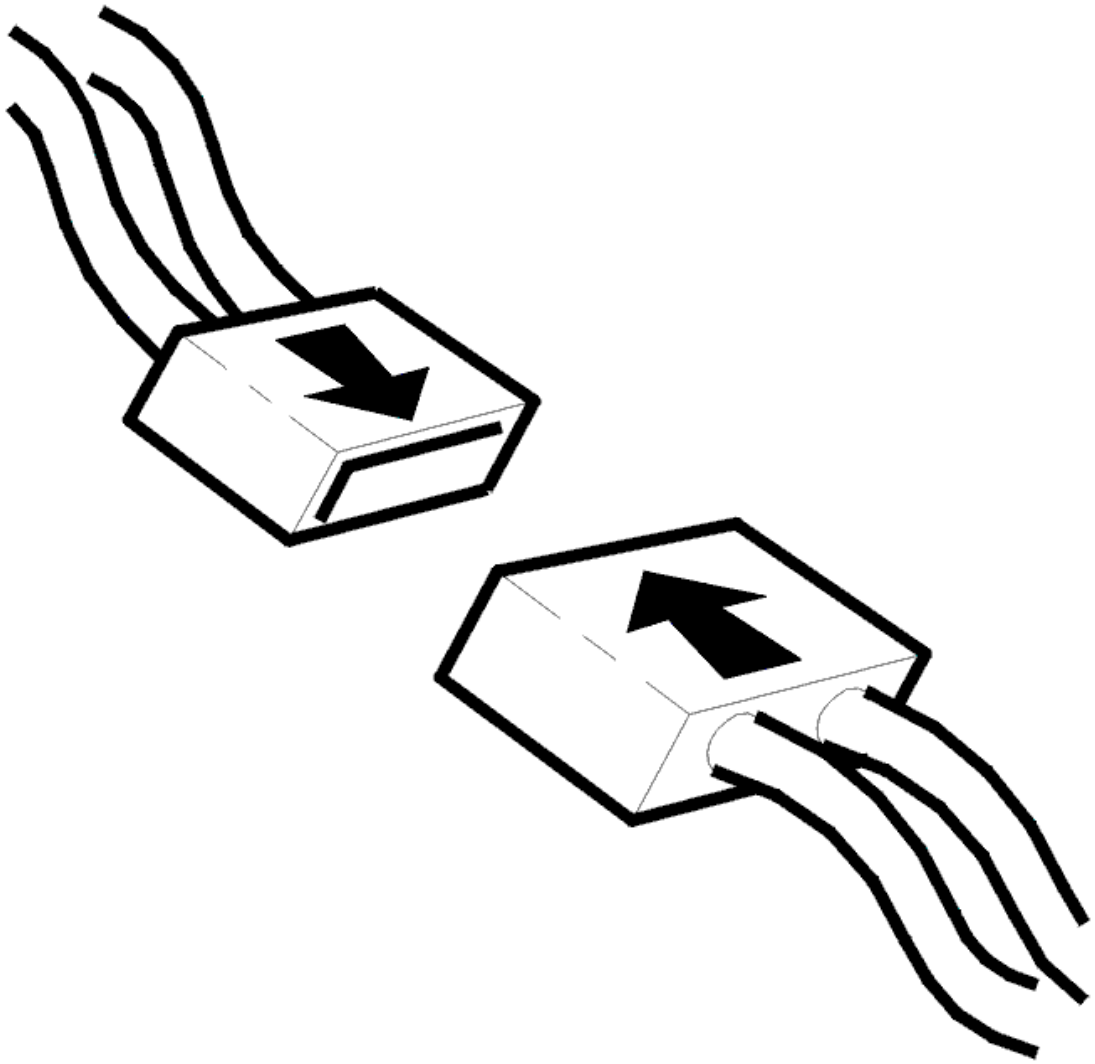

Fig. 29: Connecting Connector
Courtesy of VOLVO CARS CORPORATION

- Ignition off
- Reinstall the connectors, components etc.
- Ignition on.

  Check that the buttons for the headset output function. Check this by pressing the buttons for the next track and the previous track and by changing between the CD/MD and the radio using the SEL button.

Do the buttons function?

- **YES**

  VERIFIED: Troubleshooting has been completed.

- **NO**

  Refer to **INFORMATION**

INFORMATION

FAULT-TRACING INFORMATION

The fault should have been detected and remedied. As this is not the case fault-tracing has failed.

Exit fault-tracing for this diagnostic trouble code (DTC) or make another attempt.

CHECKING CD MODULE (MP2) (2003-2006)

CHECKING THE CD MODULE (MP2)

FAULT-TRACING INFORMATION

HINT: Check that the volume is not turned down.

Check other sound sources, to, see if the radio works for example.

Do other sound sources work?

- **YES**

  Refer to **CHECKING THE COMPONENT**

- **NO**

  Refer to **CHECKING THE SOUND**

CHECKING THE SOUND

Check that the settings (volume, fade, balance, central volume or power volume) are not causing the fault symptom.

Check the sound reproduction from multiple sources.

Check that all the connectors are correctly connected to the audio module (AUD) and amplifier.

CHECKING THE COMPONENT

Try listening to another CD Module (MP2).

Is there sound reproduction from the CD Module (MP2)?

- **YES**

  OKAY: Troubleshooting has been completed.

- **NO**

  Refer to **FAULT-TRACING INFORMATION**

FAULT-TRACING INFORMATION

The fault should now have been detected and remedied. As this is not the case, the fault-tracing has failed.

Exit fault-tracing for this diagnostic trouble code (DTC) or try again.

CHECKING CD/DVD (2003-2011)

CHECKING CD/DVD

FAULT-TRACING INFORMATION

Check that the CD/DVD does not have any fingerprints, dirt or other items which may interfere with reading.

If the disc is dirty the reader may have difficulty reading from the disc.

Problems may occur with a dirty CD/DVD

- Error message of unreadable disc is displayed on the screen
- Diagnostic trouble code (DTC) MMM-2000.

If the CD/DVD is dirty, clean the disc as follows:

- Spray ethanol-free washer fluid on the shiny surface of the disc.
- Give the fluid a few seconds to work.
- Carefully clean the surface with a soft fiber cloth or paper towel.
- Rinse the disc in warm water.
- Dry the disc with a soft, lint-free paper towel.

If cleaning the disc does not rectify the problem, try another CD/DVD in the reader.

If the fault recurs, replace the CD/DVD reader.

- **Continue**

  Refer to **VERIFICATION**

VERIFICATION

SYMPTOM VERIFICATION

HINT: After carrying out the repair, check that the fault has been remedied.

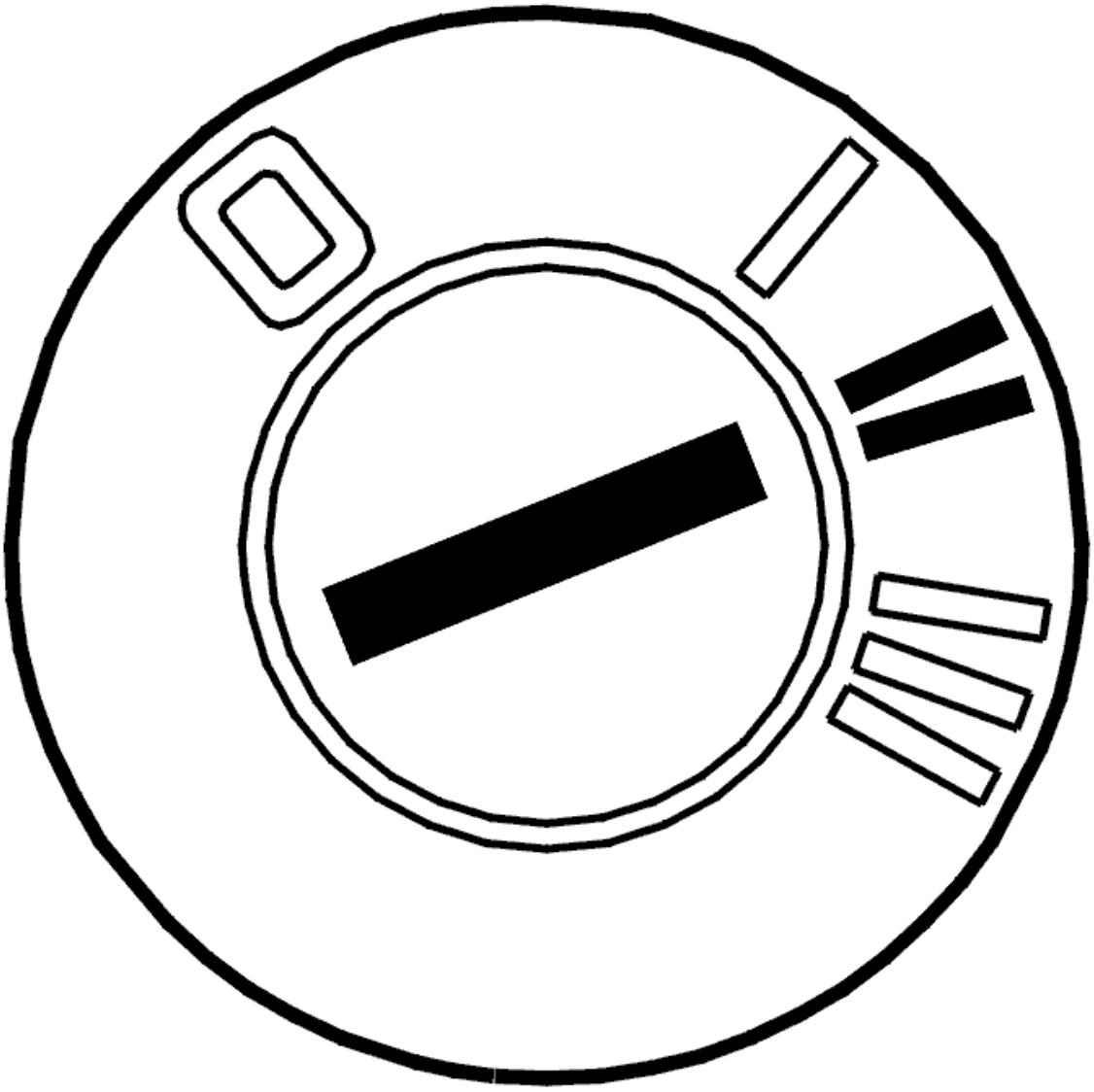

Fig. 30: Identifying Ignition ON
Courtesy of VOLVO CARS CORPORATION

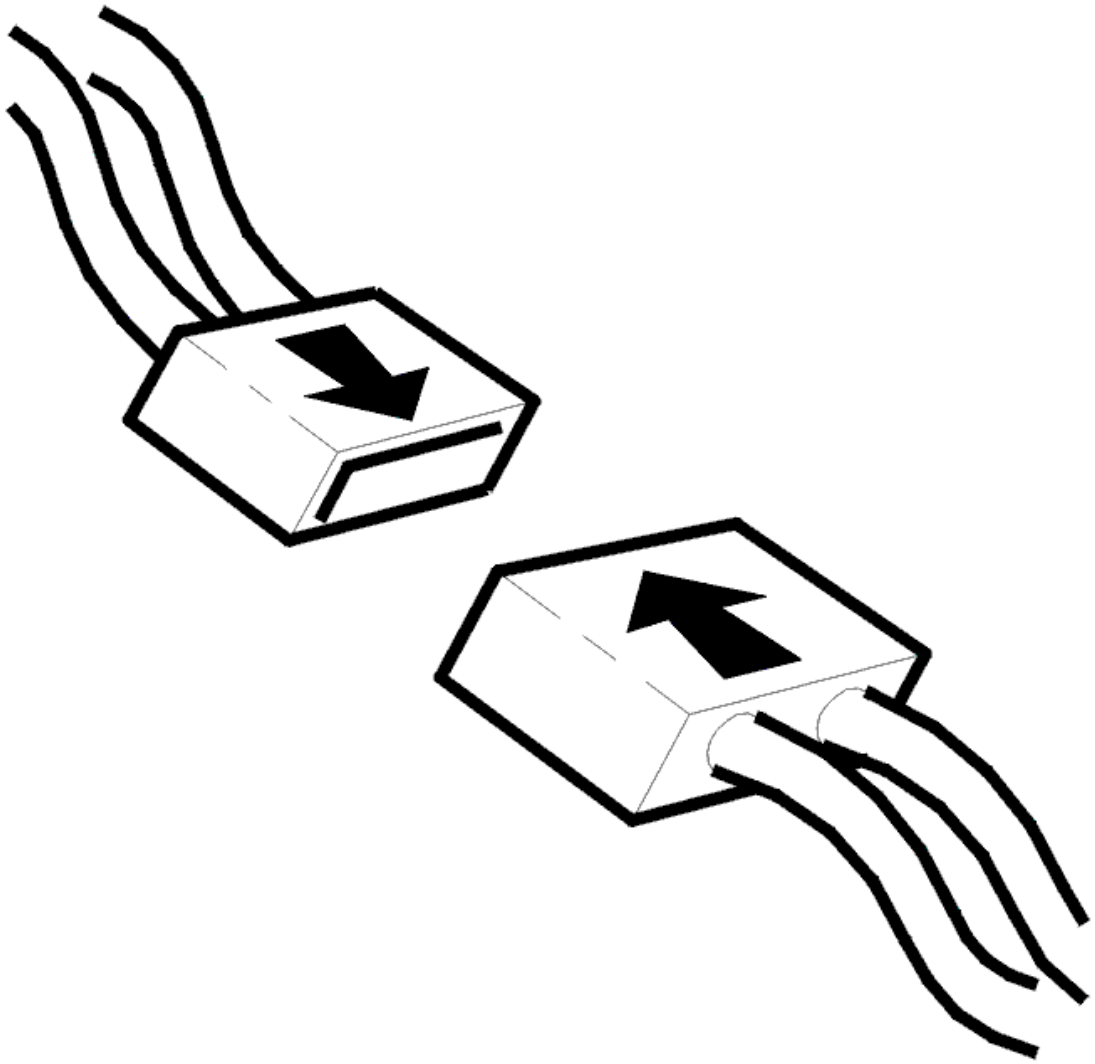

Fig. 31: Connecting Connector
Courtesy of VOLVO CARS CORPORATION

- Ignition off
- Reinstall the connectors, components etc.
- Ignition on

  Make sure there is a CD/DVD in the CD/DVD player. Check that the CD/DVD is read properly.

Can the CD/DVD be read?

- **YES**

  VERIFIED: Troubleshooting has been completed.

- **NO**

  Refer to **INFORMATION**

INFORMATION

FAULT-TRACING INFORMATION

The fault should have been detected and remedied. As this is not the case fault-tracing has failed.

Exit fault-tracing for this diagnostic trouble code (DTC) or make another attempt.

CHECKING COLOR DEVIATIONS, RTI DISPLAY (2003-2008)

CHECKING COLOR DEVIATIONS, RTI DISPLAY

A problem that seems to be a color variation up at the right hand corner of the screen is not a color variation and not a pixel problem. This affects the background design which was launched 200620 for all DVD and HDD systems. Even vehicles manufactured before 200620 may have obtained this software via an update. Changing the RTI screen does not change the background design because the design is implemented in the software. The background design does not affect the navigation system's technical function.

To rectify the problem, new software must be installed. Software with a new background design has been introduced and launched 200748. The software is not downloaded from PIE but installed via CD ROM or DVD ROM, depending on the system.

CHECKING DISC ERROR (2003-2006)

CHECKING DISK ERROR

FAULT-TRACING INFORMATION

If Multimedia module has problems reading a CD/DVD-disc, the message is shown on the screen.

The problem may be that the lens in the Multimedia module is dirty.

- Use (a cleaning disc) to clean the lens in Multimedia module.

  Follow the instructions that are supplied with.

If cleaning the lens in the Multimedia module (MMM) does not rectify the problem, check the CD/DVD.

Check that the CD/DVD does not have any fingerprints, dirt or other items which may interfere with reading.

If the CD/DVD is dirty, clean the disc as follows:

- Spray ethanol-free washer fluid on the shiny surface of the disc.

- Give the fluid a few seconds to work.
- Carefully clean the surface with a soft fiber cloth or paper towel.
- Rinse the disc in warm water.
- Dry the disc with a soft, lint-free paper towel.

If cleaning the disc does not rectify the problem, try another CD/DVD in the reader.

If the fault recurs, replace the multimedia module (MMM).

Was a fault detected?

- **YES**

  OKAY: Troubleshooting has been completed.

- **NO**

  Refer to **INFORMATION**

INFORMATION

FAULT-TRACING INFORMATION

The fault should have been detected and remedied. As this is not the case fault-tracing has failed.

Exit fault-tracing for this diagnostic trouble code (DTC) or make another attempt.

CHECKING INSERT AND EJECT, CD MODULE (MP2) (2003-2006)

CHECKING INSERT AND EJECT

FAULT-TRACING INFORMATION

Check that nothing is in the way or inserted into the MD player.

Remedy as necessary.

Was a fault detected?

- **YES**

  OKAY: Troubleshooting has been completed.

- **NO**

  Refer to **TESTING**

REPLACING THE COMPONENT

Before continuing with fault-tracing, the following must be checked:

- All tests for the relevant symptom must have been carried out
- No component, connector or wiring faults etc. should have been detected.

Try replacing the CD module (MP2).

NOTE: A new CD Player Module (MP2) was delivered without software. It must be programmed in order for it to function after replacement.

Other information:

- For information about programming and accessing or replacing the CD module (MP2), see **MINIDISC / CD CONTROL MODULE, REPLACING** .

TESTING

If a disc with contents that cannot be read by the CD player, e. g. a CD-ROM, has been inserted, the disc may get stuck and the text "unreadable disc" is shown on the display.

1. Turn on the CD player and wait until the text "unreadable disc" appears in the display.
2. Remove the fuses for the CD player module (MP2).
3. Wait at least 10 seconds and then refit the fuses.
4. Turn on the CD player again and wait until the text "unreadable disc" appears in the display.
5. Press the Eject button
6. Repeat as necessary, 2-5 times.

Other information:

- For information on fuses, see the relevant wiring diagram.

Was a fault detected?

- **NO**

  Refer to **REPLACING THE COMPONENT**

- **YES**

  OKAY: Troubleshooting has been completed.

CHECKING INSERT AND EJECT, MD MODULE (MP1) (2003-2006)

CHECKING INSERT AND EJECT

FAULT-TRACING INFORMATION

Check that nothing is in the way or inserted into the MD player.

Remedy as necessary.

Was a fault detected?

- **YES**

  OKAY: Troubleshooting has been completed.

- **NO**

  Refer to **REPLACING THE COMPONENT**

REPLACING THE COMPONENT

Before continuing with fault-tracing, the following must be checked:

- All tests for the relevant symptom must have been carried out
- No component, connector or wiring faults etc. should have been detected.

Try replacing the MD module (MP1).

CAUTION: A new MD module (MP1) is delivered without software. The MD module (MP1) must be programmed in order to function after replacement.

Other information:

- For further information about programming and replacing the MD module (MP1), see **MINIDISC / CD CONTROL MODULE, REPLACING** .

CHECKING IPOD COMPATIBILITY (2009-2011)

CHECKING IPOD COMPATIBILITY

This applies to the following vehicles:

- XC90, structure week 200848 -

If you connect an iPod that is not supported by the USB iPod interface in the USB slot, the message "Unreadable" may be shown in the Driver information module (DIM).

Fault-tracing information

Check the iPod-compatibility according to TIE: TJ 22530.

Fault symptom

- Audio other/Other audio problems
- USB unit/Does not work

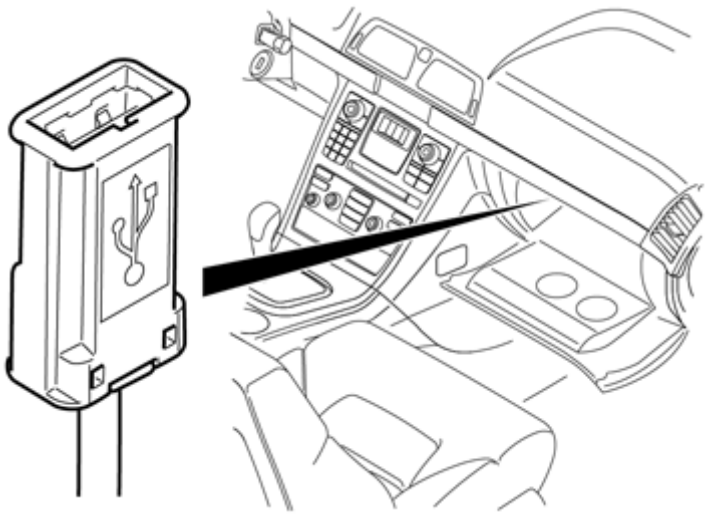

Fig. 32: Identifying USB Unit
Courtesy of VOLVO CARS CORPORATION

Has the fault been remedied?

- **YES**

  OKAY: Troubleshooting has been completed.

- **NO**

  Refer to **INFORMATION**

INFORMATION

FAULT-TRACING INFORMATION

The fault should have been detected and remedied. As this is not the case fault-tracing has failed.

Exit fault-tracing for this diagnostic trouble code (DTC) or make another attempt.

CHECKING MD MODULE (MP1) (2003-2006)

CHECKING THE MD MODULE (MP1)

FAULT-TRACING INFORMATION

HINT: Check that the volume is not turned down.

Check other sound sources, to, see if the radio works for example.

Do other sound sources work?

- **YES**

  Refer to **CHECKING THE COMPONENT**

- **NO**

  Refer to **CHECKING THE SOUND**

CHECKING THE SOUND

Check that the settings (volume, fade, balance, central volume or power volume) are not causing the fault symptom.

Check the sound reproduction from multiple sources.

Check that all the connectors are correctly connected to the audio module (AUD) and amplifier.

CHECKING THE COMPONENT

Try listening to another MD Module (MP1).

Is there sound reproduction from the MD Module (MP1)?

- **YES**

  OKAY: Troubleshooting has been completed.

- **NO**

  Refer to **FAULT-TRACING INFORMATION**

FAULT-TRACING INFORMATION

The fault should now have been detected and remedied. As this is not the case, the fault-tracing has failed.

Exit fault-tracing for this diagnostic trouble code (DTC) or try again.

CHECKING POWER SUPPLY, REAR SEAT ENTERTAINMENT MODULE (RSE). REAR SEAT ENTERTAINMENT, GENERATION 4.1-4.3 (2006-2011)

CHECKING POWER SUPPLY, REAR SEAT ENTERTAINMENT MODULE (RSE) (2009-2011)

FAULT-TRACING INFORMATION

The rear seat entertainment module (RSE) is supplied power from two different circuits. The following can occur if there is no power supply:

- Lighting in the DVD-player's buttons is not activated at all with ignition on.
- Lighting in all of the DVD-player's buttons is activated and then goes off, after approx. 5-10 seconds, when the system is turned on with the power switch on the DVD-player.

Causes of the problem may be:

- Contact resistance or oxidation in the terminals.
- Damaged fuse.
- Open circuit or short-circuiting of leads for voltage feeds and ground.

HINT: Power supply (15 feed) is common with power supply to rear 12 V socket.

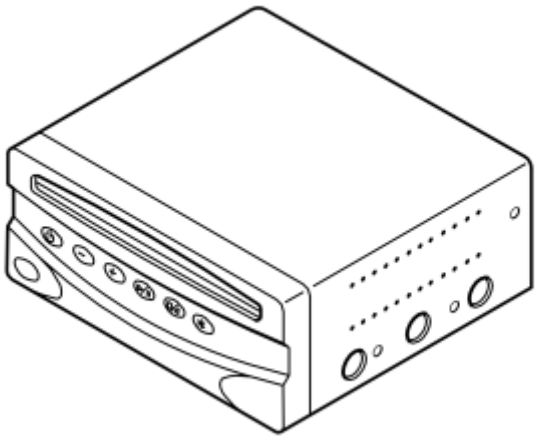

Fig. 33: Identifying Rear Seat Entertainment Module (RSE)
Courtesy of VOLVO CARS CORPORATION

- **Continue**

  Refer to **CHECKING THE POWER SUPPLY AND GROUND**

CHECKING THE POWER SUPPLY AND GROUND

- Ignition on.

- Turn on the system with the main switch on the DVD-player. Lighting in the DVD-player's buttons is activated.

If lighting in all of the DVD-player's buttons is activated, and then goes off after approx. 5-10 seconds, this indicates lost 15-feed to rear seat entertainment module (RSE)/DVD-player. Fault-trace according to the following options.

Check the lead for voltage feed (15-feed) to rear seat entertainment module (RSE)/DVD-player's #A6 and #A7 for short-circuiting to voltage, short-circuiting to ground and open circuit.

HINT: Power supply (15 feed) is common with power supply to rear 12 V socket.

HINT: When this feed is lost, the system will only work for another approx. 10 minutes. The system cannot be restarted until the power supply is OK.

NOTE: If no cable or fuse defects are found and there still is no power supply, the problem probably lies in the vehicle electrical system. For fuse position, see wiring diagram in question.

If lighting in the buttons does not come on at all, this indicates malfunction of the voltage feed or ground for the rear seat entertainment module (RSE)/DVD-player.

Check the lead for voltage feed to rear seat entertainment module (RSE)/DVD-player's #A4, #A6 and #A7 for short-circuiting to voltage, short-circuiting to ground and open circuit. The voltage should be approx. the same as the battery voltage.

Check the connector for rear seat entertainment module (RSE)/DVD-player contact resistance and oxidation.

Check the lead for ground connection to rear seat entertainment module (RSE), connector #A8, for open circuit and short-circuit to voltage. Also check the ground terminal. Check for contact resistance and oxidation.

HINT: Power supply (15 feed) is common with power supply to rear 12 V socket.

For more information, see wiring diagram and signal description.

Other information

- see **SIGNAL SPECIFICATION, REAR SEAT ENTERTAINMENT MODULE (RSE), GENERATION 4.3**
- see **CHECKING WIRING AND TERMINALS**

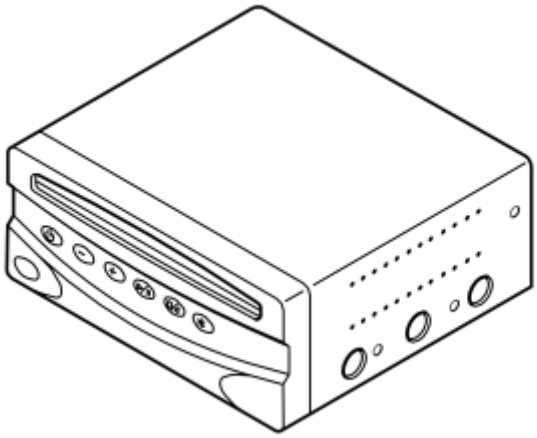

Fig. 34: Identifying Rear Seat Entertainment Module (RSE)
Courtesy of VOLVO CARS CORPORATION

- **Continue**

  Refer to **VERIFICATION**

VERIFICATION

HINT: After carrying out the repair, check that the fault has been remedied.

- Ignition off.
- Restore components and connectors.
- Switch on the ignition. Lighting in the DVD-player's buttons is activated. If the TV receiver is installed, the receiver's LED lights up.
- When start-up is performed the lighting in the DVD-player's buttons goes off, does not apply to POWER-button. If the TV receiver is installed, the receiver's LED goes out.

NOTE: A long start-up time indicates a fault in communication with the screens.

- Start the system using the POWER button on the DVD player or the remote control. Use the buttons, on both DVD-player and remote control, to operate the system.

Check that:

- The screens show a picture.
- DVD-disc can be played.
- Sound is heard in wireless headphones.
- Sound can be heard in the vehicle's speakers.
- Menus can be accessed with the remote control in both screens.
- TV picture appears (if TV receiver is installed) and it is possible to change channels.

- If possible, connect an external source to the AV input and test the function.

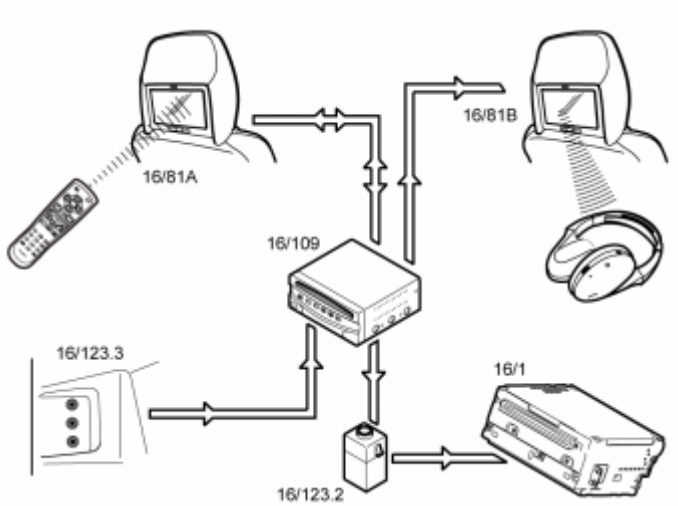

Fig. 35: Identifying Entertainment System Components & Communication
Courtesy of VOLVO CARS CORPORATION

Is the function OK?

- **YES**

  OKAY: Troubleshooting has been completed.

- **NO**

  Refer to **INFORMATION**

INFORMATION

FAULT-TRACING INFORMATION

The fault should have been detected and remedied. As this is not the case fault-tracing has failed.

Exit fault-tracing for this diagnostic trouble code (DTC) or make another attempt.

CHECKING POWER SUPPLY, REAR SEAT ENTERTAINMENT MODULE (RSE) (2008)

FAULT-TRACING INFORMATION

The rear seat entertainment module (RSE) is supplied power from two different circuits. The following can occur if there is no power supply:

- Lighting in the DVD-player's buttons is not activated at all with ignition on.
- Lighting in all of the DVD-player's buttons is activated and then goes off, after approx. 5-10 seconds, when the system is turned on with the power switch on the DVD-player.

Causes of the problem may be:

- Contact resistance or oxidation in the terminals.
- Damaged fuse.
- Open circuit or short-circuiting of leads for voltage feeds and ground.

HINT: Power supply (15 feed) is common with power supply to rear 12 V socket.

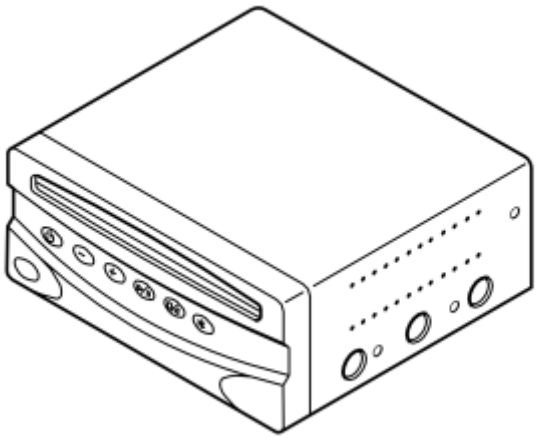

Fig. 36: Identifying Rear Seat Entertainment Module (RSE)
Courtesy of VOLVO CARS CORPORATION

- **Continue**

  Refer to **CHECKING THE POWER SUPPLY AND GROUND**

CHECKING THE POWER SUPPLY AND GROUND

- Ignition on.
- Turn on the system with the main switch on the DVD-player. Lighting in the DVD-player's buttons is activated.

If lighting in all of the DVD-player's buttons is activated, and then goes off after approx. 5-10 seconds, this indicates lost 15-feed to rear seat entertainment module (RSE)/DVD-player. Fault-trace according to the following options.

Check the lead for voltage feed (15-feed) to rear seat entertainment module (RSE)/DVD-player's #A6 and #A7 for short-circuiting to voltage, short-circuiting to ground and open circuit.

HINT: Power supply (15 feed) is common with power supply to rear 12 V socket.

HINT: When this feed is lost, the system will only work for another approx. 10 minutes. The system cannot be restarted until the power supply is OK.

NOTE: **If no cable or fuse defects are found and there still is no power supply, the problem probably lies in the vehicle electrical system. For fuse position, see wiring diagram in question.**

If lighting in the buttons does not come on at all, this indicates malfunction of the voltage feed or ground for the rear seat entertainment module (RSE)/DVD-player.

Check the lead for voltage feed to rear seat entertainment module (RSE)/DVD-player's #A4, #A6 and #A7 for short-circuiting to voltage, short-circuiting to ground and open circuit. The voltage should be approx. the same as the battery voltage.

Check the connector for rear seat entertainment module (RSE)/DVD-player contact resistance and oxidation.

Check the lead for ground connection to rear seat entertainment module (RSE), connector #A8, for open circuit and short-circuit to voltage. Also check the ground terminal. Check for contact resistance and oxidation.

HINT: Power supply (15 feed) is common with power supply to rear 12 V socket.

For more information, see wiring diagram and signal description.

Other information

- see **SIGNAL SPECIFICATION, REAR SEAT ENTERTAINMENT MODULE (RSE), GENERATION 4.2**
- see **CHECKING WIRING AND TERMINALS**

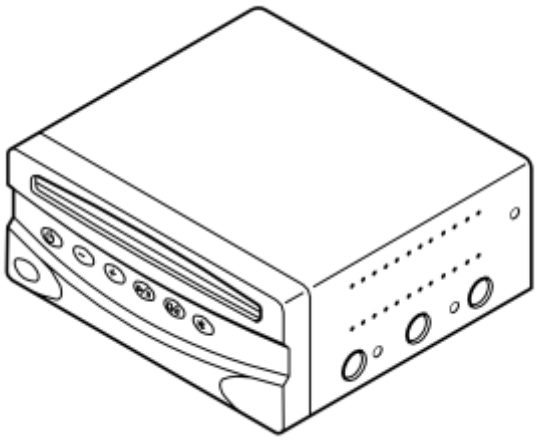

Fig. 37: Identifying Rear Seat Entertainment Module (RSE)
Courtesy of VOLVO CARS CORPORATION

- **Continue**

  Refer to **VERIFICATION**

VERIFICATION

HINT: After carrying out the repair, check that the fault has been remedied.

- Ignition off.
- Restore components and connectors.
- Switch on the ignition. Lighting in the DVD-player's buttons is activated. If the TV receiver is installed, the receiver's LED lights up.
- When start-up is performed the lighting in the DVD-player's buttons goes off, does not apply to POWER-button. If the TV receiver is installed, the receiver's LED goes out.

NOTE: A long start-up time indicates a fault in communication with the screens.

- Start the system using the POWER button on the DVD player or the remote control. Use the buttons, on both DVD-player and remote control, to operate the system.

Check that:

- The screens show a picture.
- DVD-disc can be played.
- Sound is heard in wireless headphones.
- Sound can be heard in the vehicle's speakers.
- Menus can be accessed with the remote control in both screens.
- TV picture appears (if TV receiver is installed) and it is possible to change channels.
- If possible, connect an external source to the AV input and test the function.

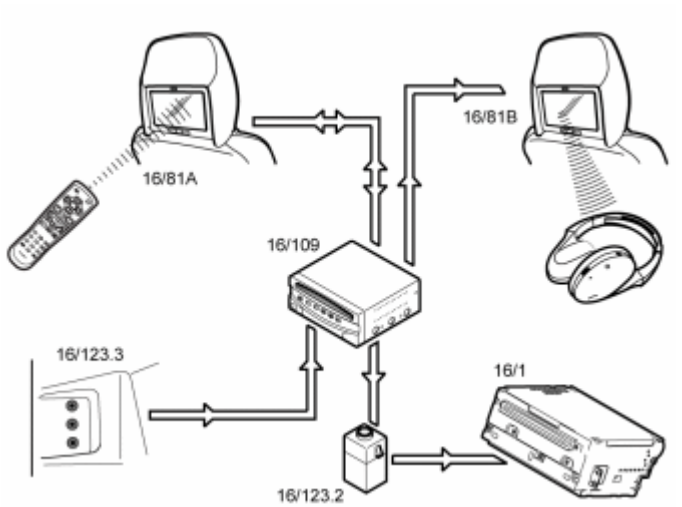

Fig. 38: Identifying Entertainment System Components & Communication
Courtesy of VOLVO CARS CORPORATION

Is the function OK?

- **YES**

  OKAY: Troubleshooting has been completed.

- **NO**

  Refer to **INFORMATION**

INFORMATION

FAULT-TRACING INFORMATION

The fault should have been detected and remedied. As this is not the case fault-tracing has failed.

Exit fault-tracing for this diagnostic trouble code (DTC) or make another attempt.

CHECKING POWER SUPPLY, REAR SEAT ENTERTAINMENT MODULE (RSE) (2006)

FAULT-TRACING INFORMATION

The rear seat entertainment module (RSE) is supplied power from two different circuits. The following can occur if there is no power supply:

- Lighting in the DVD-player's buttons is not activated at all with ignition on.
- Lighting in all of the DVD-player's buttons is activated and then goes off, after approx. 5-10 seconds, when the system is turned on with the power switch on the DVD-player.

Causes of the problem may be:

- Contact resistance or oxidation in the terminals.
- Damaged fuse.
- Open circuit or short-circuiting of leads for voltage feeds and ground.

HINT: Power supply (15 feed) is common with power supply to rear 12 V socket.

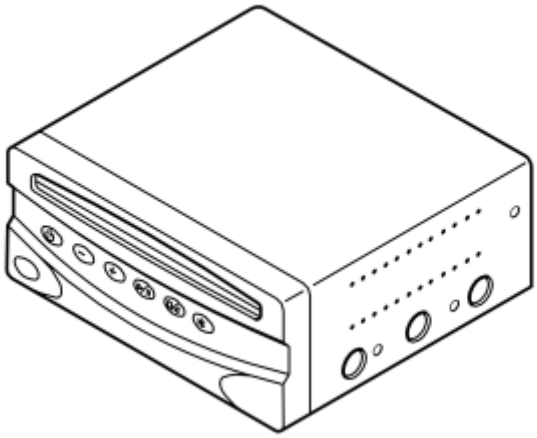

Fig. 39: Identifying Rear Seat Entertainment Module (RSE)
Courtesy of VOLVO CARS CORPORATION

- **Continue**

  Refer to **CHECKING THE POWER SUPPLY AND GROUND**

CHECKING THE POWER SUPPLY AND GROUND

- Ignition on.
- Turn on the system with the main switch on the DVD-player. Lighting in the DVD-player's buttons is activated.

If lighting in all of the DVD-player's buttons is activated, and then goes off after approx. 5-10 seconds, this indicates lost 15-feed to rear seat entertainment module (RSE)/DVD-player. Fault-trace according to the following options.

Check the lead for voltage feed (15-feed) to rear seat entertainment module (RSE)/DVD-player's #A6 and #A7 for short-circuiting to voltage, short-circuiting to ground and open circuit.

HINT: Power supply (15 feed) is common with power supply to rear 12 V socket.

HINT: When this feed is lost, the system will only work for another approx. 10 minutes. The system cannot be restarted until the power supply is OK.

NOTE: If no cable or fuse defects are found and there still is no power supply, the problem probably lies in the vehicle electrical system. For fuse position, see wiring diagram in question.

If lighting in the buttons does not come on at all, this indicates malfunction of the voltage feed or ground for the rear seat entertainment module (RSE)/DVD-player.

Check the lead for voltage feed to rear seat entertainment module (RSE)/DVD-player's #A4, #A6 and #A7 for

short-circuiting to voltage, short-circuiting to ground and open circuit. The voltage should be approx. the same as the battery voltage.

Check the connector for rear seat entertainment module (RSE)/DVD-player contact resistance and oxidation.

Check the lead for ground connection to rear seat entertainment module (RSE), connector #A8, for open circuit and short-circuit to voltage. Also check the ground terminal. Check for contact resistance and oxidation.

HINT: Power supply (15 feed) is common with power supply to rear 12 V socket.

For more information, see wiring diagram and signal description.

Other information

- see **SIGNAL SPECIFICATION, REAR SEAT ENTERTAINMENT MODULE (RSE), GENERATION 4.1**
- see **CHECKING WIRING AND TERMINALS**

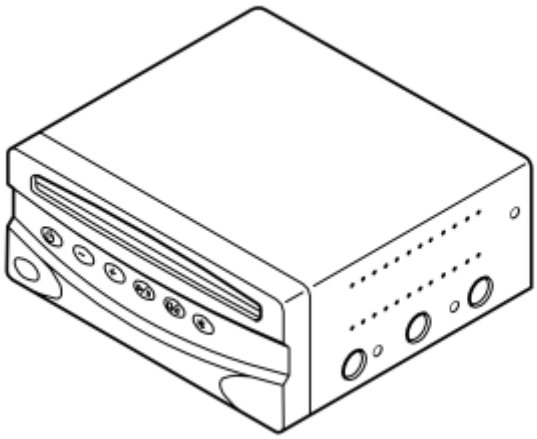

Fig. 40: Identifying Rear Seat Entertainment Module (RSE)
Courtesy of VOLVO CARS CORPORATION

- **Continue**

  Refer to **VERIFICATION**

VERIFICATION

HINT: After carrying out the repair, check that the fault has been remedied.

- Ignition off.
- Restore components and connectors.
- Switch on the ignition. Lighting in the DVD-player's buttons is activated. If the TV receiver is installed,

the receiver's LED lights up.

- When start-up is performed the lighting in the DVD-player's buttons goes off, does not apply to POWER-button. If the TV receiver is installed, the receiver's LED goes out.

NOTE: A long start-up time indicates a fault in communication with the screens.

- Start the system using the POWER button on the DVD player or the remote control. Use the buttons, on both DVD-player and remote control, to operate the system.

Check that:

- The screens show a picture.
- DVD-disc can be played.
- Sound is heard in wireless headphones.
- Sound can be heard in the vehicle's speakers.
- Menus can be accessed with the remote control in both screens.
- TV picture appears (if TV receiver is installed) and it is possible to change channels.
- If possible, connect an external source to the AV input and test the function.

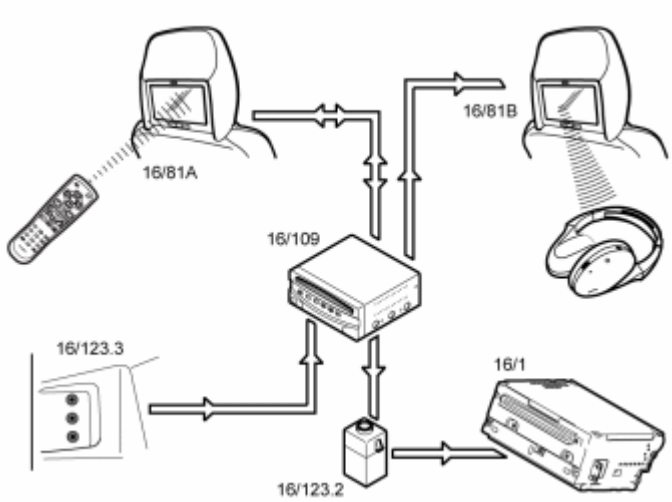

Fig. 41: Identifying Entertainment System Components & Communication
Courtesy of VOLVO CARS CORPORATION

Is the function OK?

- **YES**

  OKAY: Troubleshooting has been completed.

- **NO**

  Refer to **INFORMATION**

INFORMATION

FAULT-TRACING INFORMATION

The fault should have been detected and remedied. As this is not the case fault-tracing has failed.

Exit fault-tracing for this diagnostic trouble code (DTC) or make another attempt.

CHECKING POWER SUPPLY, REAR SEAT ENTERTAINMENT MODULE (RSE). REAR SEAT ENTERTAINMENT, GENERATION 4.1-4.3 (2007)

CHECKING POWER SUPPLY, REAR SEAT ENTERTAINMENT MODULE (RSE)

FAULT-TRACING INFORMATION

The rear seat entertainment module (RSE) is supplied power from two different circuits. The following can occur if there is no power supply:

- Lighting in the DVD-player's buttons is not activated at all with ignition on.
- Lighting in all of the DVD-player's buttons is activated and then goes off, after approx. 5-10 seconds, when the system is turned on with the power switch on the DVD-player.

Causes of the problem may be:

- Contact resistance or oxidation in the terminals.
- Damaged fuse.
- Open circuit or short-circuiting of leads for voltage feeds and ground.

HINT: Power supply (15 feed) is common with power supply to rear 12 V socket.

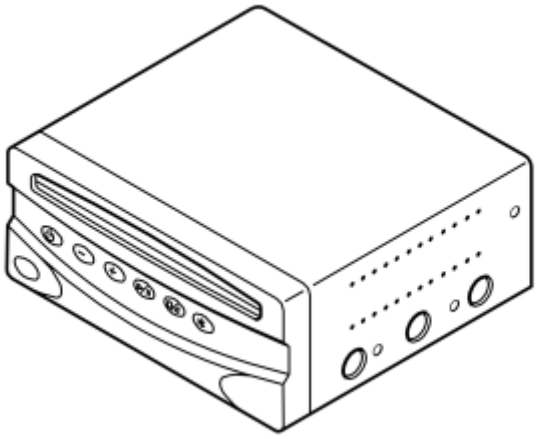

Fig. 42: Identifying Rear Seat Entertainment Module (RSE)
Courtesy of VOLVO CARS CORPORATION

- **Continue**

  Refer to **CHECKING THE POWER SUPPLY AND GROUND**

CHECKING THE POWER SUPPLY AND GROUND

- Ignition on.
- Turn on the system with the main switch on the DVD-player. Lighting in the DVD-player's buttons is activated.

If lighting in all of the DVD-player's buttons is activated, and then goes off after approx. 5-10 seconds, this indicates lost 15-feed to rear seat entertainment module (RSE)/DVD-player. Fault-trace according to the following options.

Check the lead for voltage feed (15-feed) to rear seat entertainment module (RSE)/DVD-player's #A6 and #A7 for short-circuiting to voltage, short-circuiting to ground and open circuit.

HINT: Power supply (15 feed) is common with power supply to rear 12 V socket.

HINT: When this feed is lost, the system will only work for another approx. 10 minutes. The system cannot be restarted until the power supply is OK.

NOTE: If no cable or fuse defects are found and there still is no power supply, the problem probably lies in the vehicle electrical system.

If lighting in the buttons does not come on at all, this indicates malfunction of the voltage feed or ground for the rear seat entertainment module (RSE)/DVD-player.

Check the lead for voltage feed to rear seat entertainment module (RSE)/DVD-player's #A4, #A6 and #A7 for short-circuiting to voltage, short-circuiting to ground and open circuit. The voltage should be approx. the same as the battery voltage.

Check the connector for rear seat entertainment module (RSE)/DVD-player contact resistance and oxidation.

Check the lead for ground connection to rear seat entertainment module (RSE), connector #A8, for open circuit and short-circuit to voltage. Also check the ground terminal. Check for contact resistance and oxidation.

HINT: Power supply (15 feed) is common with power supply to rear 12 V socket.

For more information, see wiring diagram and signal description.

Other information

- see **SIGNAL SPECIFICATION, REAR SEAT ENTERTAINMENT MODULE (RSE), GENERATION 4.1**
- see **SIGNAL SPECIFICATION, REAR SEAT ENTERTAINMENT MODULE (RSE),**

GENERATION 4.2

- see **CHECKING WIRING AND TERMINALS**

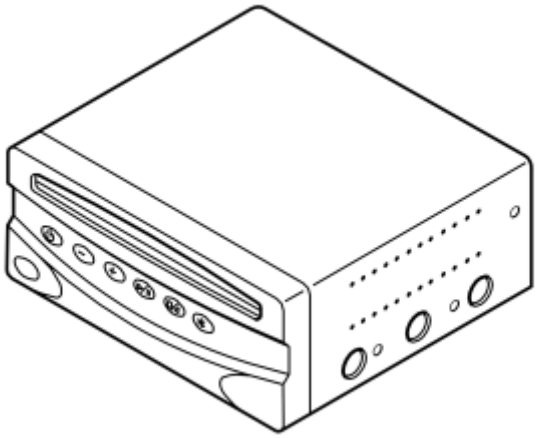

Fig. 43: Identifying Rear Seat Entertainment Module (RSE)
Courtesy of VOLVO CARS CORPORATION

- **Continue**

  Refer to **VERIFICATION**

VERIFICATION

HINT: After carrying out the repair, check that the fault has been remedied.

- Ignition off.
- Restore components and connectors.
- Switch on the ignition. Lighting in the DVD-player's buttons is activated. If the TV receiver is installed, the receiver's LED lights up.
- When start-up is performed the lighting in the DVD-player's buttons goes off, does not apply to POWER-button. If the TV receiver is installed, the receiver's LED goes out.

NOTE: A long start-up time indicates a fault in communication with the screens.

- Start the system using the POWER button on the DVD player or the remote control. Use the buttons, on both DVD-player and remote control, to operate the system.

Check that:

- The screens show a picture.
- DVD-disc can be played.
- Sound is heard in wireless headphones.

- Sound can be heard in the vehicle's speakers.
- Menus can be accessed with the remote control in both screens.
- TV picture appears (if TV receiver is installed) and it is possible to change channels.
- If possible, connect an external source to the AV input and test the function.

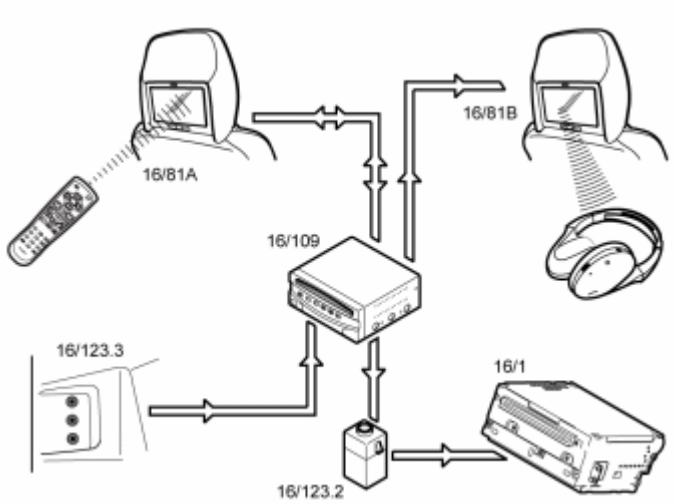

Fig. 44: Identifying Entertainment System Components & Communication
Courtesy of VOLVO CARS CORPORATION

Is the function OK?

- **YES**

  OKAY: Troubleshooting has been completed.

- **NO**

  Refer to **INFORMATION**

INFORMATION

FAULT-TRACING INFORMATION

The fault should have been detected and remedied. As this is not the case fault-tracing has failed.

Exit fault-tracing for this diagnostic trouble code (DTC) or make another attempt.

CHECKING RADIO RECEPTION (2007-2010)

CHECKING RADIO RECEPTION

FAULT-TRACING INFORMATION

Troubleshooting analyses have shown that poor AM/FM-reception may be due to several causes. To perform correct action, troubleshoot first according to the following:

- Check if there are diagnostic trouble codes set for integrated audio module (IAM) or Audio module (AUM) (applies to S60 07-) and primarily follow the instructions that each diagnostic trouble code refers to.
- Check fuses.
- Check the cable harness and connectors. Poor radio reception may be because the antenna connectors are not connected to the window antennas. If there is no radio reception, this may be because the antenna cable is not connected to the antenna amplifier.
- Check the antenna amplifier.
- Perform a visual check of the antennas.

Replace damaged components.

If no malfunction is found:

- Replace antenna amplifier. Check the function.
- If the problem remains, replace Integrated Audio Module (IAM) or Audio module (AUM).

Other information

- see **SIGNAL SPECIFICATION, AUDIO CONTROL MODULE**
- see **CHECKING WIRING AND TERMINALS**
- Wiring diagram.

Fault symptom

- Radio/Does not work
- Radio/Interference/AM frequency
- Radio/Interference/FM frequency
- Radio/Poor reception/AM frequency
- Radio/Poor reception/FM frequency

NOTE: Download new software in the new control module after replacement.

CHECKING SOUND CABLES. REAR SEAT ENTERTAINMENT, GENERATION 3.2 (2005-2006)

CHECKING THE WIRING FOR THE REAR SEAT ENTERTAINMENT MODULE (RSE)

FAULT-TRACING INFORMATION

If no sound is heard from the Rear Seat Entertainment Module (RSE) system but the sound system in general,

the car radio for example, otherwise functions, the fault could be due to:

- Supply/fuse for the control module for rear audio separation
- Supply/fuse for the rear seat entertainment module (RSE)
- Wiring from the ordinary sound system of the car
- The wiring between the rear seat entertainment module (RSE) and the control module for rear audio separation
- Rear seat entertainment module (RSE).

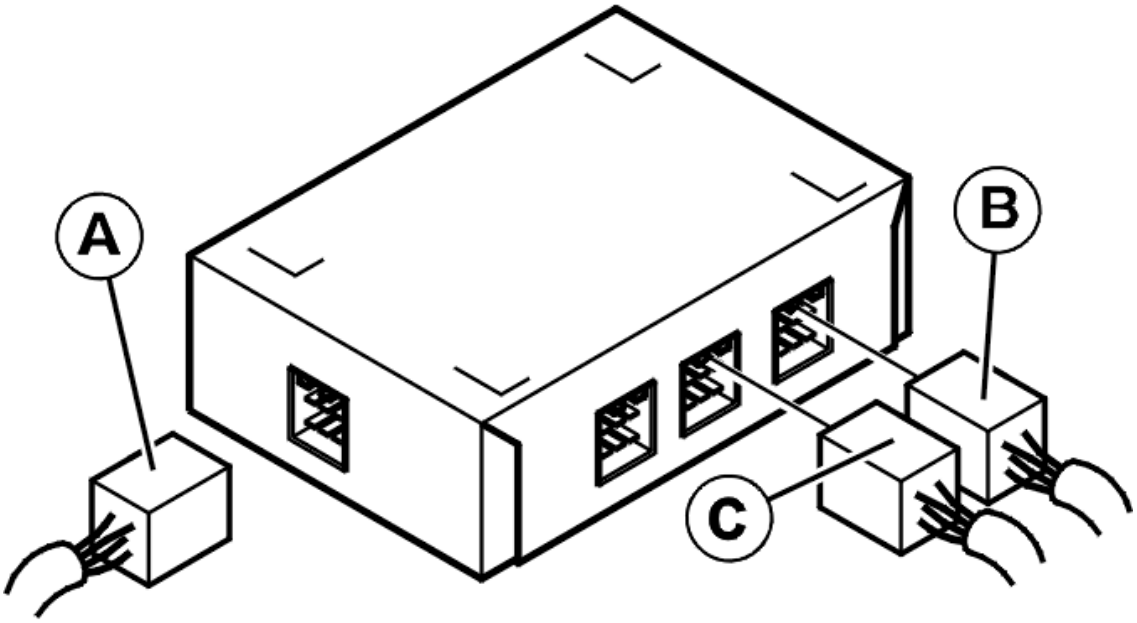

Fig. 45: Identifying Rear Seat Entertainment Module (RSE)
Courtesy of VOLVO CARS CORPORATION

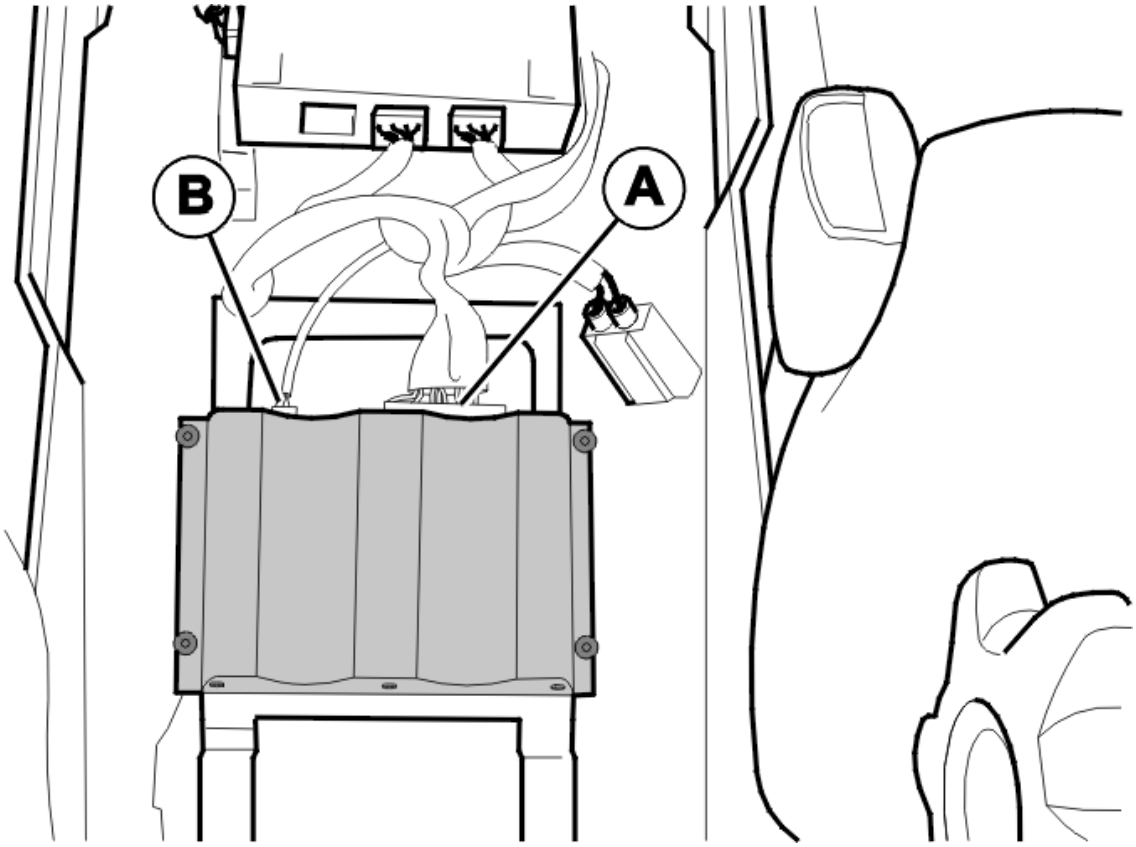

Fig. 46: Identifying Control Module For Rear Audio Separation
Courtesy of VOLVO CARS CORPORATION

- **Continue**

  Refer to **CHECKING THE WIRING FOR THE REAR SEAT ENTERTAINMENT MODULE (RSE)**

CHECKING THE WIRING FOR THE REAR SEAT ENTERTAINMENT MODULE (RSE)

Checking the settings

Check that the volume has not been turned down via the remote control menu system SPEAKERS. Also check that there is no sound from the rear speakers or from the headsets for the system. Check that the fault does not only occur when a specific sound source is selected.

Checking the power supply to the control module for rear audio separation

Check that the fuses for the control module rear audio separation are intact. Check that power is supplied to the fusebox and ground terminal for the control module.

HINT: The control module is supplied with power via terminals #A1 and #A4 and grounded via terminal #A13.

Checking the power supply to the rear seat entertainment module (RSE)

In addition check the fuses for rear seat entertainment module (RSE) in the same way.

HINT: The control module is supplied with power via terminals #B1, #B4 and #B6. The control module is grounded via terminal #B12.

Checking the input signals to the control module for rear audio separation from the standard audio system of the car

Sound is received by the control module for rear audio separation from the connections where the rear loudspeakers are normally mounted on a standard car without a rear seat entertainment module (RSE). Check the following cables between the terminals and the control module for rear audio separation:

- Left-hand loudspeaker terminal #A23 (Amplifier L-)
- Left-hand loudspeaker terminal #A12 (Amplifier L+)
- Right-hand loudspeaker terminal #A21 (Amplifier R-)
- Right-hand loudspeaker terminal #A22 (Amplifier R+).

Other information

- see **SIGNAL SPECIFICATION, CONTROL MODULE FOR REAR AUDIO SEPARATION**
- For further information about the fuses and relays, see the Wiring Diagram
- see **CONTROL MODULE REAR SOUND SEPARATION, REPLACING**
- see **CONTENTS**

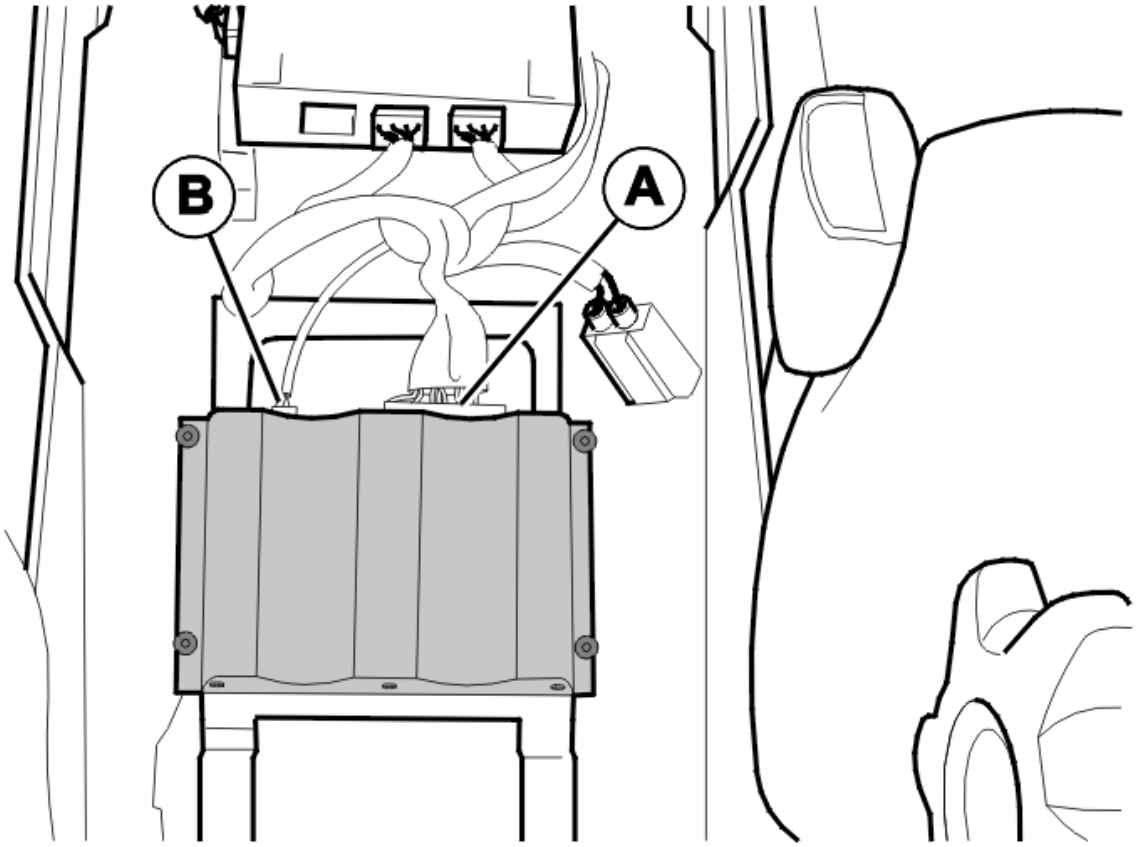

Fig. 47: Identifying Control Module For Rear Audio Separation
Courtesy of VOLVO CARS CORPORATION

- **Continue**

  Refer to **CHECKING THE WIRING FOR THE REAR SEAT ENTERTAINMENT MODULE (RSE)**

CHECKING THE WIRING FOR THE REAR SEAT ENTERTAINMENT MODULE (RSE)

Audio signals function description

The sound from the DVD or auxiliary input (AUX) source, for example, is connected between each source and the control module. The control module separates the desired sound source in two channels according to the wishes of the passengers. (This makes it possible to listen to different sources in the rear seat).

Channel 1 applies to passengers on the left-hand and channel 2 applies to passengers on the right-hand side. In addition there is an audio signal for each ear which achieves a stereo effect.

Checking signals

Check the audio cable between the rear seat entertainment module (RSE) (terminal #C) and the control module for rear audio separation (terminal #A).

- Check the audio cable for channel 1, left ear. This is the cable between control module terminal #C2 and control module terminal #A5
- Check the audio cable for channel 1, right ear. This is the cable between control module terminal #C1 and control module terminal #A6
- Check the audio cable for channel 2, left ear. This is the cable between control module terminal #C5 and control module terminal #A3
- Check the audio cable for channel 2, right ear. This is the cable between control module terminal #C4 and control module terminal #A2
- In addition there is a ground connection for the audio signals Check the ground lead for the audio signal between control module terminal #C12 and control module terminal #A15.

Control module for rear audio separation and speaker wiring

Check the function of the sound system. Check that both headsets function correctly. If the sound system functions, the control module for rear audio separation is receiving the correct signals from the control module.

The fault is probably in the loudspeaker wiring for the rear loudspeakers or in the control module for rear audio separation.

Remedy as necessary.

Other information

- see **SIGNAL SPECIFICATION, REAR SEAT ENTERTAINMENT MODULE (RSE)**
- see **SIGNAL SPECIFICATION, CONTROL MODULE FOR REAR AUDIO SEPARATION**
- For further information about the fuses and relays, see the Wiring Diagram
- see **CONTROL MODULE REAR SOUND SEPARATION, REPLACING**
- see **CONTENTS**

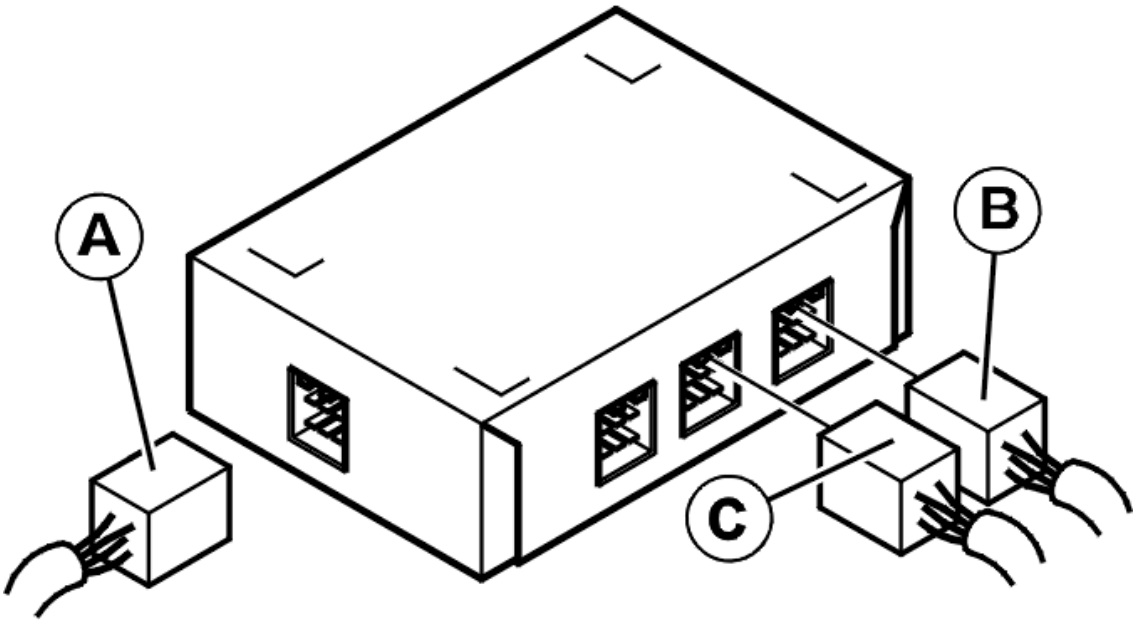

Fig. 48: Identifying Rear Seat Entertainment Module (RSE)
Courtesy of VOLVO CARS CORPORATION

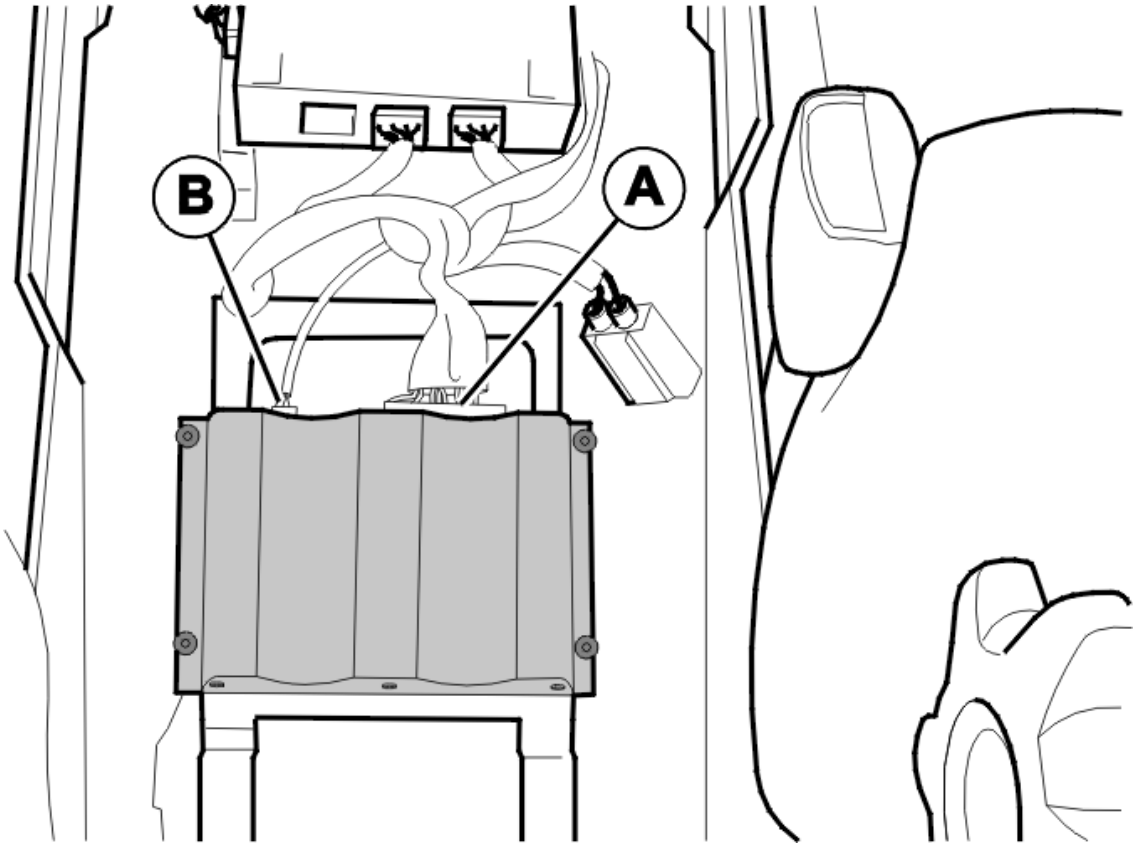

Fig. 49: Identifying Control Module For Rear Audio Separation
Courtesy of VOLVO CARS CORPORATION

- **Continue**

  Refer to **CHECKING THE AUDIO WIRING FOR THE REAR SEAT ENTERTAINMENT MODULE (RSE)**

CHECKING THE AUDIO WIRING FOR THE REAR SEAT ENTERTAINMENT MODULE (RSE)

Check that the sound system in the entire car functions.

Does the sound system in the entire function?

- **YES**

  VERIFIED: Troubleshooting has been completed.

- **NO**

  Refer to **INFORMATION**

INFORMATION

FAULT-TRACING INFORMATION

The fault should have been detected and remedied. As this is not the case fault-tracing has failed.

Exit fault-tracing for this diagnostic trouble code (DTC) or make another attempt.

CHECKING SOUND CABLES. REAR SEAT ENTERTAINMENT, GENERATION 3.2 (EXECUTIVE; PREMIER; 2004)

CHECKING THE WIRING FOR THE REAR SEAT ENTERTAINMENT MODULE (RSE)

see **CHECKING THE WIRING FOR THE REAR SEAT ENTERTAINMENT MODULE (RSE)**

CHECKING SOUND LOSS AT START (2009-2011)

CHECKING SOUND LOSS AT START

FAULT-TRACING INFORMATION

If the customer sometimes experiences that no sound is emitted from the audio unit after start-up, this may be due to a fault in the software in the Integrated Audio Module (IAM).

By switching the ignition off and on again, the audio unit can start as usual.

Fault-tracing

Download new software to the Integrated Audio Module (IAM).

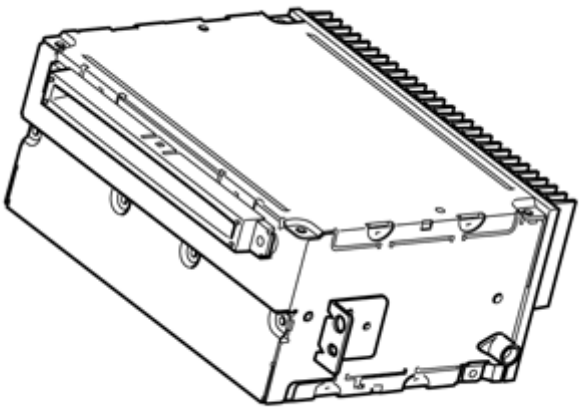

Fig. 50: Identifying Integrated Audio Module (IAM)
Courtesy of VOLVO CARS CORPORATION

Was a fault detected?

- **YES**

  OKAY: Troubleshooting has been completed.

- **NO**

  Refer to **INFORMATION**

INFORMATION

FAULT-TRACING INFORMATION

The fault should have been detected and remedied. As this is not the case fault-tracing has failed.

Exit fault-tracing for this diagnostic trouble code (DTC) or make another attempt.

CHECKING SUPPORT OF EXTERNAL MEDIA (2009-2011)

CHECKING SUPPORT OF EXTERNAL MEDIA

FAULT-TRACING INFORMATION

To check what is supported by Integrated Audio Module (IAM), see Design and Function for Integrated Audio Module (IAM) and TJ22530.

For iPod-compatibility, see attached file in TJ22530.

Fault symptom

- Audio other/Audio unit (complete) does not work
- Audio other/Other audio problems
- CD player/Other CD player problems
- CD player/Does not work
- Radio/Does not work
- USB unit/Does not work

Was a fault detected?

- **YES**

  OKAY: Troubleshooting has been completed.

- **NO**

  Refer to **INFORMATION**

INFORMATION

FAULT-TRACING INFORMATION

The fault should have been detected and remedied. As this is not the case fault-tracing has failed.

Exit fault-tracing for this diagnostic trouble code (DTC) or make another attempt.

CHECKING THE AUXILIARY INPUT (AUX). REAR SEAT ENTERTAINMENT, GENERATION 3.2 (2005-2006)

CHECKING THE AUXILIARY INPUT (AUX)

FAULT-TRACING INFORMATION

If the auxiliary input (AUX) does not function the fault could be due to:

- Wiring or contact resistance in the terminals
- Defective rear seat entertainment module (RSE)
- The AUX-panel
- Externally connected component.

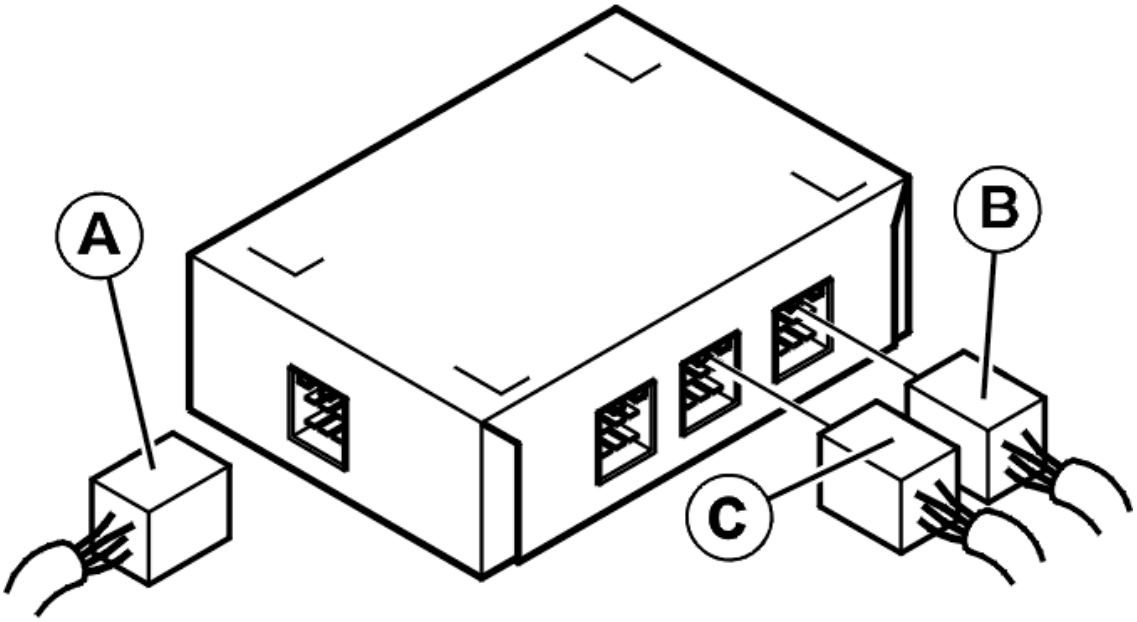

Fig. 51: Identifying Rear Seat Entertainment Module (RSE)
Courtesy of VOLVO CARS CORPORATION

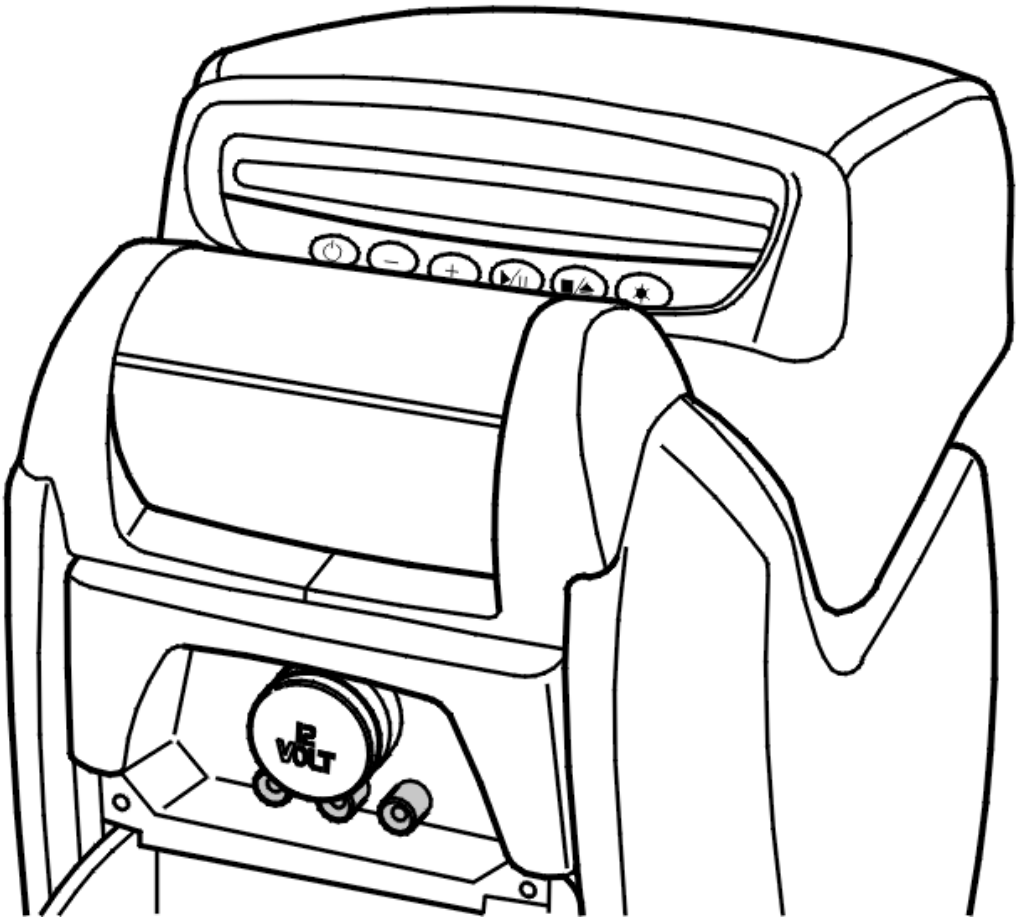

Fig. 52: View Of Rear Seat Entertainment Module (RSE)
Courtesy of VOLVO CARS CORPORATION

- **Continue**

  Refer to **CHECKING THE AUXILIARY INPUT (AUX)**

CHECKING THE AUXILIARY INPUT (AUX)

Checking the settings

Ensure that the problem only occurs when the accessory is connected.

Test by connecting an accessory which definitely functions correctly.

Check that there is power supplied to the accessory.

Checking the picture signal

Check the wiring for the picture signal. This is the cable between auxiliary input (AUX) terminal #6 and control module terminal #C7. Also check the cable for the picture ground. This is the cable between the auxiliary input

(AUX) terminal #5 and control module terminal #C8.

Checking wiring for audio signals

Check the audio wiring for the accessory. The right-hand audio signal. This is the cable between auxiliary input (AUX) terminal #4 and control module terminal #C9.

The left audio signal. This is the cable between auxiliary input (AUX) terminal #3 and control module terminal #C10.

The audio ground lead. This is the cable between auxiliary input (AUX) terminal #2 and control module terminal #C11.

Checking the auxiliary input (AUX)

Check the AUX panel, replace it if necessary. If no other fault is found there could be a fault in the control module.

Remedy as necessary.

Other information

- see **SIGNAL SPECIFICATION, REAR SEAT ENTERTAINMENT MODULE (RSE)**
- see **REAR SEAT ENTERTAINMENT MODULE (RSE), REPLACING**
- see **CONTENTS**

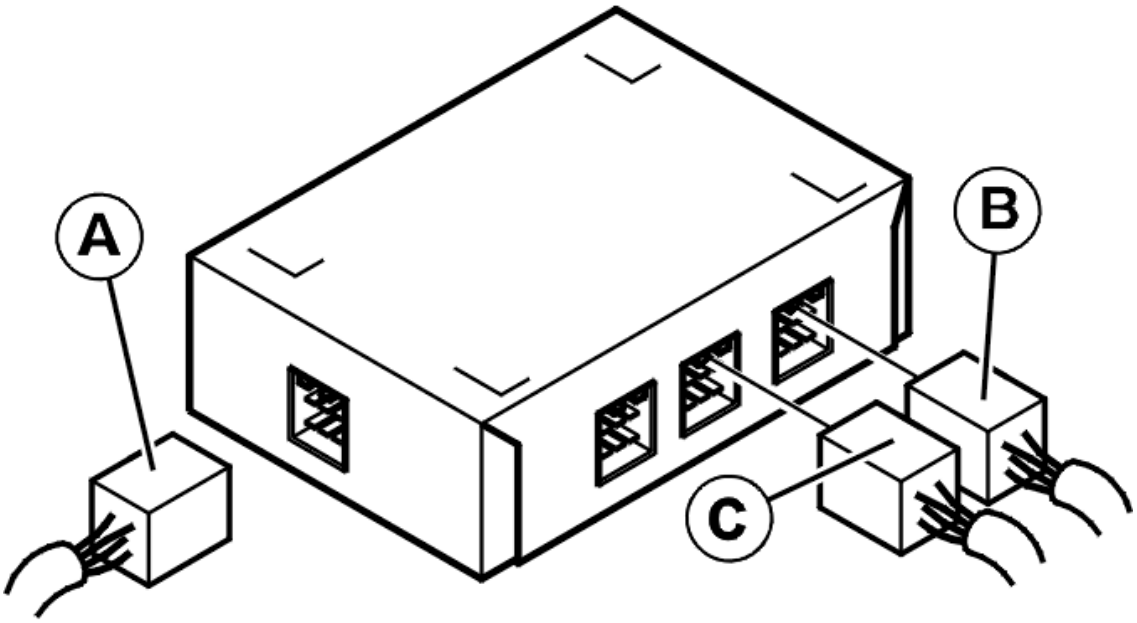

Fig. 53: Identifying Rear Seat Entertainment Module (RSE)
Courtesy of VOLVO CARS CORPORATION

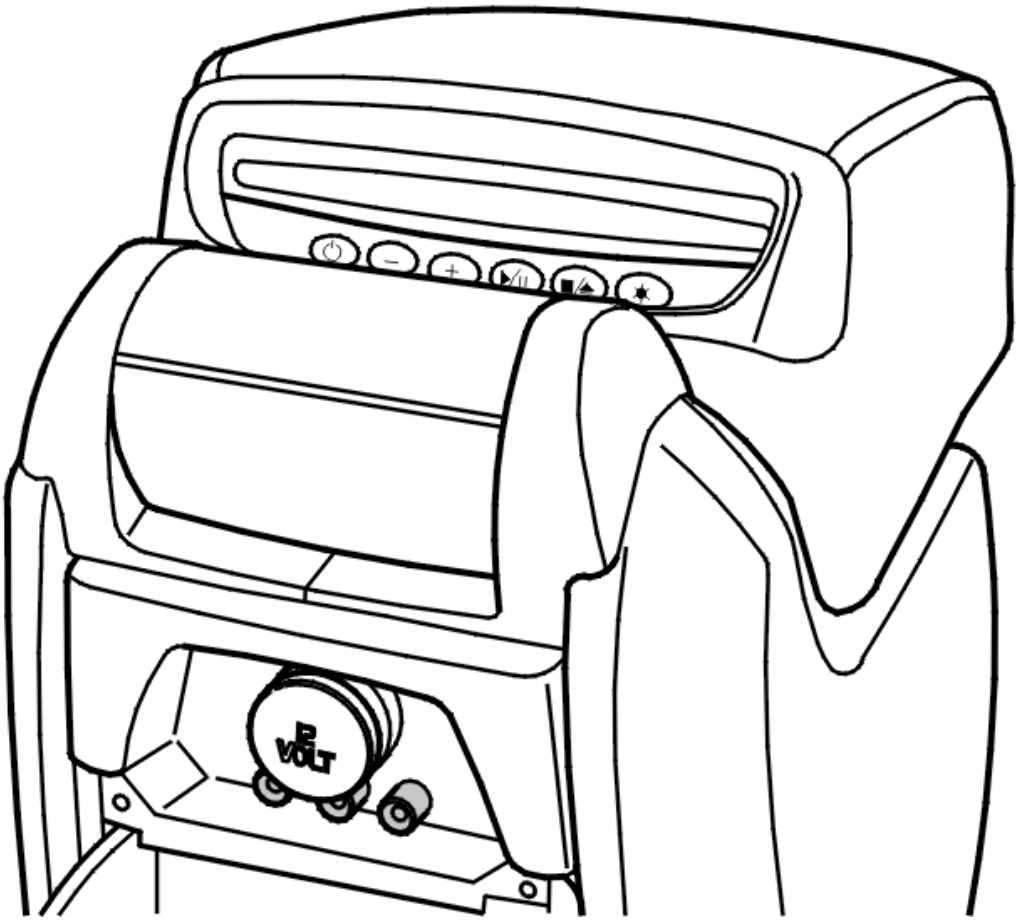

Fig. 54: View Of Rear Seat Entertainment Module (RSE)
Courtesy of VOLVO CARS CORPORATION

- **Continue**

  Refer to **CHECKING THE AUXILIARY JACK (AUX)**

CHECKING THE AUXILIARY JACK (AUX)

CHECKING THE AUXILIARY JACK (AUX)

Check that the auxiliary jack (AUX) functions.

Does the auxiliary jack (AUX) function?

- **YES**

  VERIFIED: Troubleshooting has been completed.

- **NO**

Refer to **INFORMATION**

INFORMATION

FAULT-TRACING INFORMATION

The fault should have been detected and remedied. As this is not the case fault-tracing has failed.

Exit fault-tracing for this diagnostic trouble code (DTC) or make another attempt.

CHECKING THE AUXILIARY INPUT (AUX). REAR SEAT ENTERTAINMENT, GENERATION 3.2 (EXECUTIVE; PREMIER; 2004)

CHECKING THE AUXILIARY INPUT (AUX)

see **CHECKING THE AUXILIARY INPUT (AUX)**

CHECKING THE DISPLAY COLORS, MULTIMEDIA MODULE (MMM) (2003-2011)

CHECKING THE DISPLAY SCREEN COLORS (2003-2006)

FAULT-TRACING INFORMATION

Faults that cause one or more colors to disappear from the screen are:

- Open-circuit in the signal cable between the display and the multimedia module (MMM)
- The display screen is not working
- Defective multimedia module (MMM).

- **Continue**

  Refer to **CHECKING THE DISPLAY SCREEN COLORS**

CHECKING THE DISPLAY SCREEN COLORS

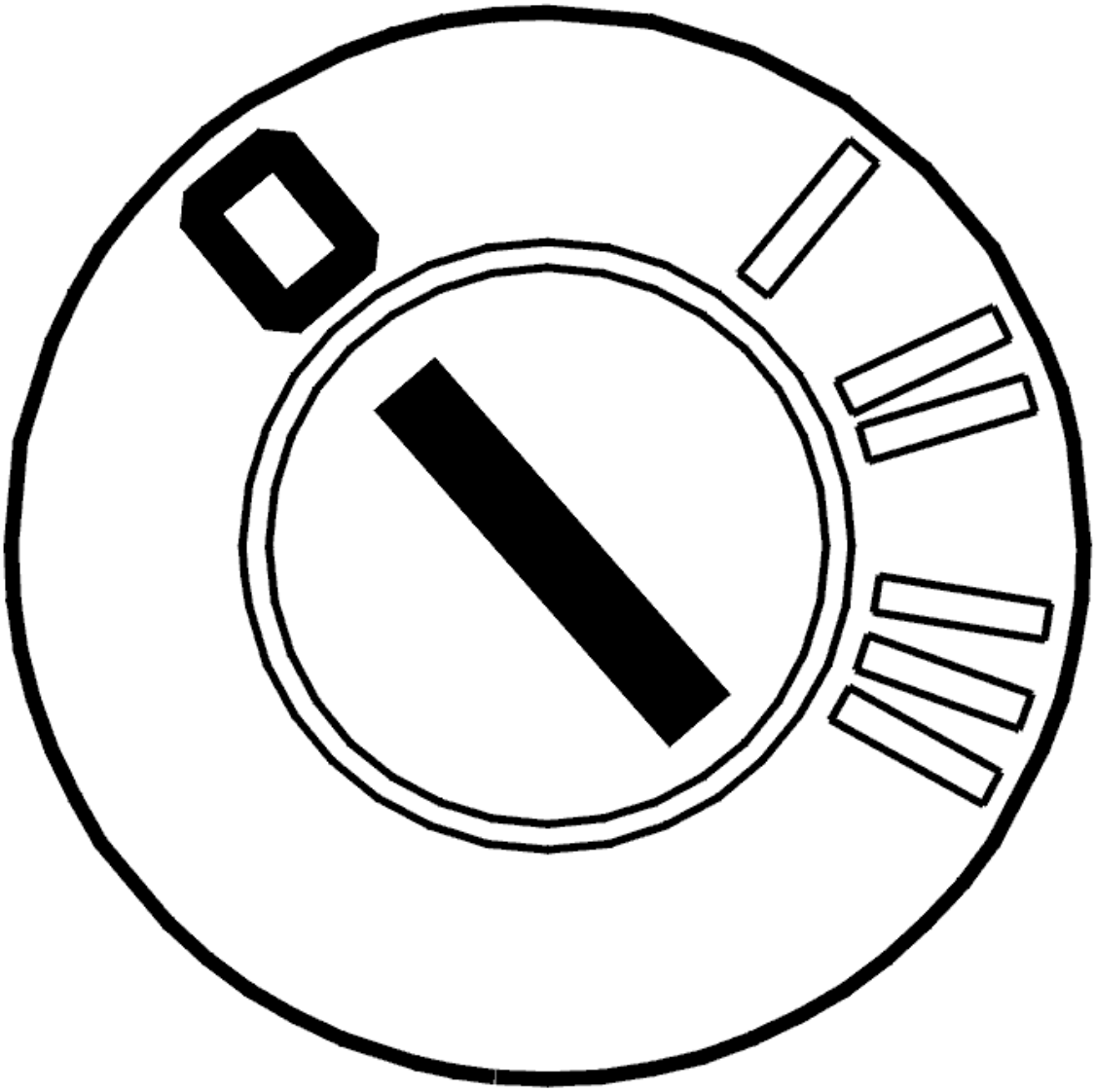

Fig. 55: Identifying Ignition OFF
Courtesy of VOLVO CARS CORPORATION

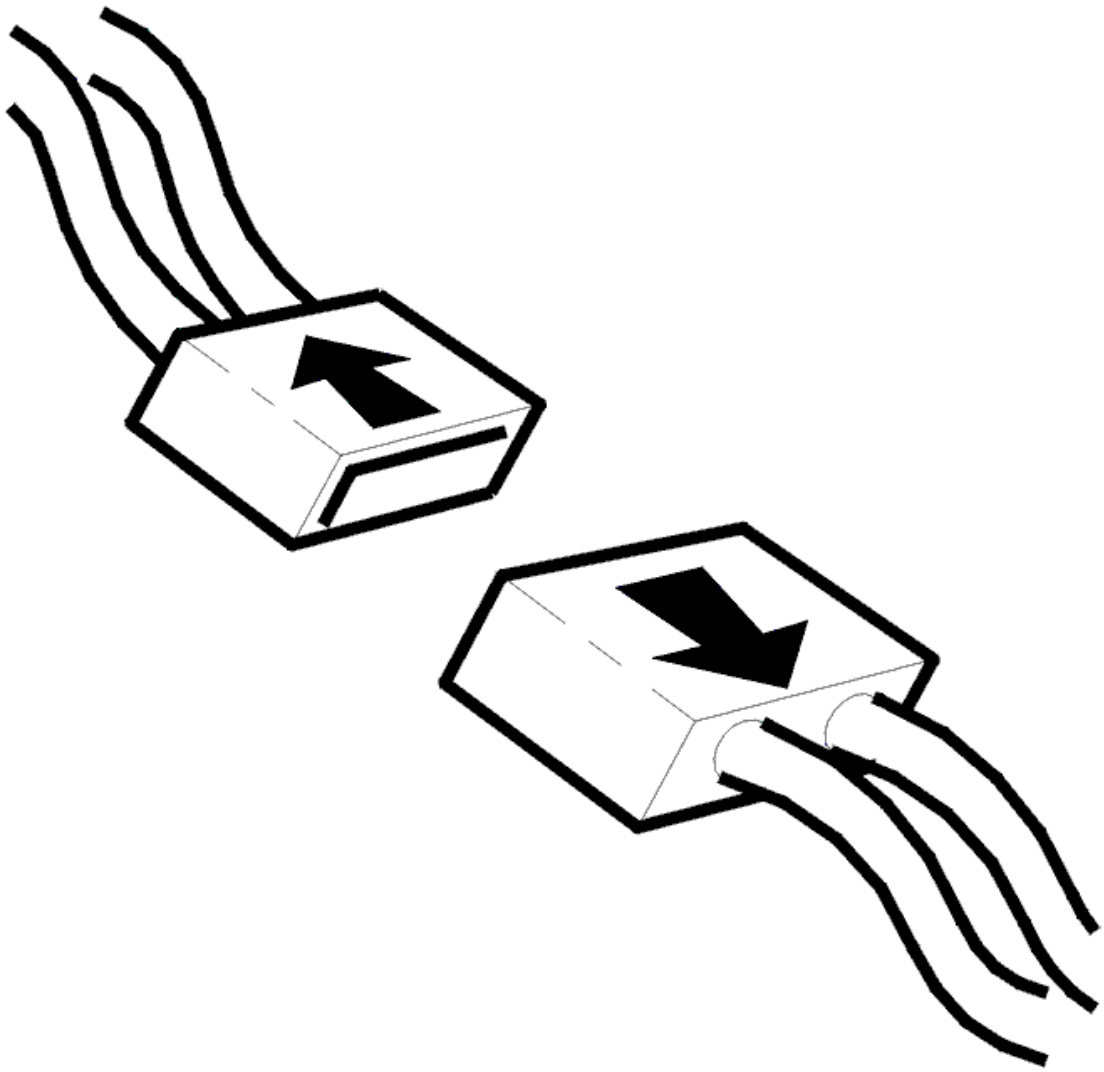

Fig. 56: Disconnecting Connector
Courtesy of VOLVO CARS CORPORATION

- Ignition off
- Disconnect the 10-pin connector from the display screen and multimedia module (MMM).

Checking the cable

Check the connectors. Check for loose connections and oxidation.

Check the cable terminals in the female and male sections of the connector. The cable terminals must not be damaged or pressed back

Check the signal cable between display screen terminal #1 (10-pin connector) and multimedia module (MMM) terminal #B1 (#1). Check for a short-circuit to supply voltage. Check for a short-circuit to ground. Check for an open-circuit.

Check the signal cable between display screen terminal #2 (10-pin connector) and multimedia module (MMM) terminal #B2 (#2). Check for a short-circuit to supply voltage. Check for a short-circuit to ground. Check for an open-circuit.

Check the signal cable between display screen terminal #7 (10-pin connector) and multimedia module (MMM) terminal #B7 (#7). Check for a short-circuit to supply voltage. Check for a short-circuit to ground. Check for an open-circuit.

Check the signal cable between the 10-pin connector for display screen terminal #6 and multimedia module (MMM) terminal #B6 (#6). Check for a short-circuit to supply voltage. Check for a short-circuit to ground. Check for an open-circuit.

Check the signal cable between display screen terminal #6 (10-pin connector) and multimedia module (MMM) terminal #B6 (#6). Check for a short-circuit to supply voltage. Check for a short-circuit to ground. Check for an open-circuit.

If no fault is found, replace the display screen.

Remedy as necessary

Other information:

- To connect the breakout box, see **CONNECTING THE BREAKOUT BOX (2003-2006)**
- To access or replace the multimedia module (MMM), see **MULTIMEDIA MODULE (MMM), REPLACING**
- To access or replace the display screen, see **CENTER LOUDSPEAKER WITH DISPLAY SCREEN, REPLACING**
- For information about signals, see **SIGNAL SPECIFICATION**
- see **CONTENTS** .

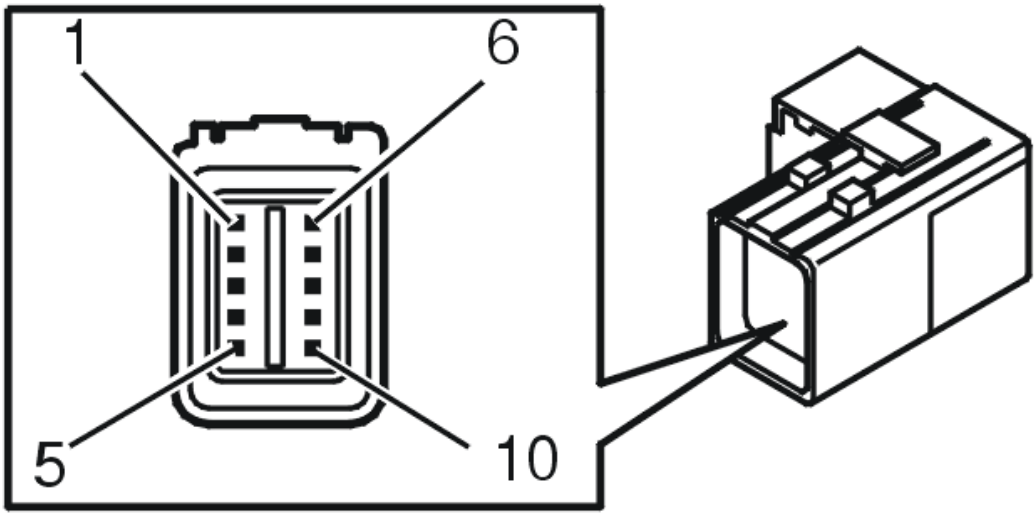

Fig. 57: Identifying RTI Control Module (To Display) Connector Terminals
Courtesy of VOLVO CARS CORPORATION

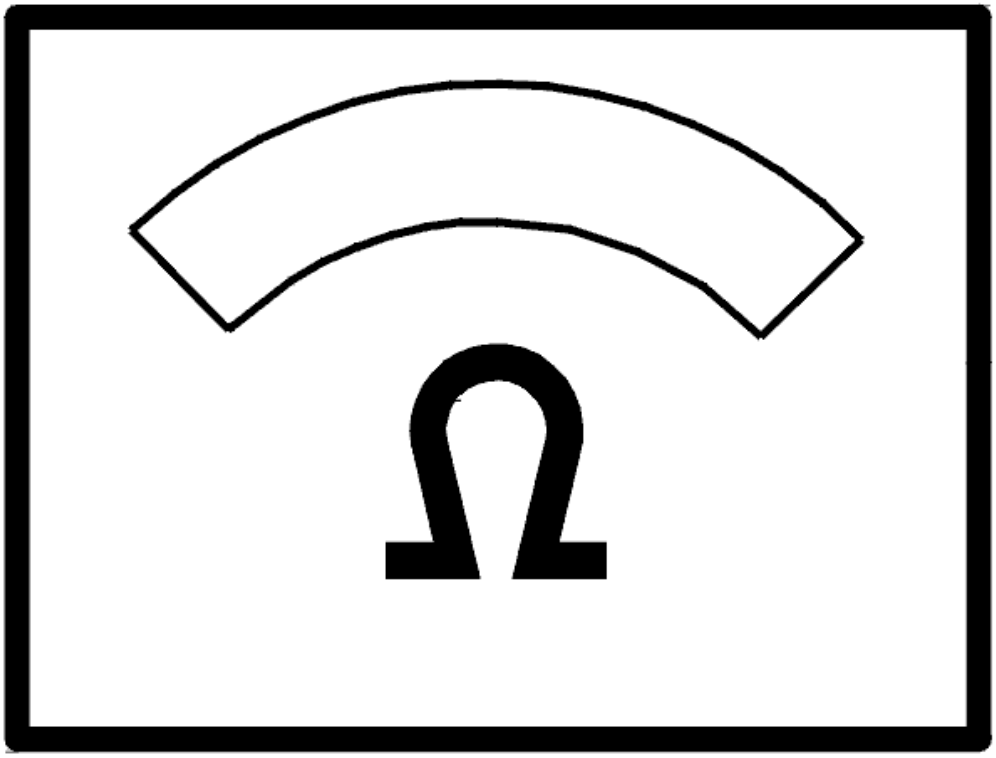

Fig. 58: Identifying Ohm Meter
Courtesy of VOLVO CARS CORPORATION

- **Continue**

  Refer to **VERIFICATION**

VERIFICATION

VERIFICATION

HINT: After carrying out the repair, check that the fault has been remedied.

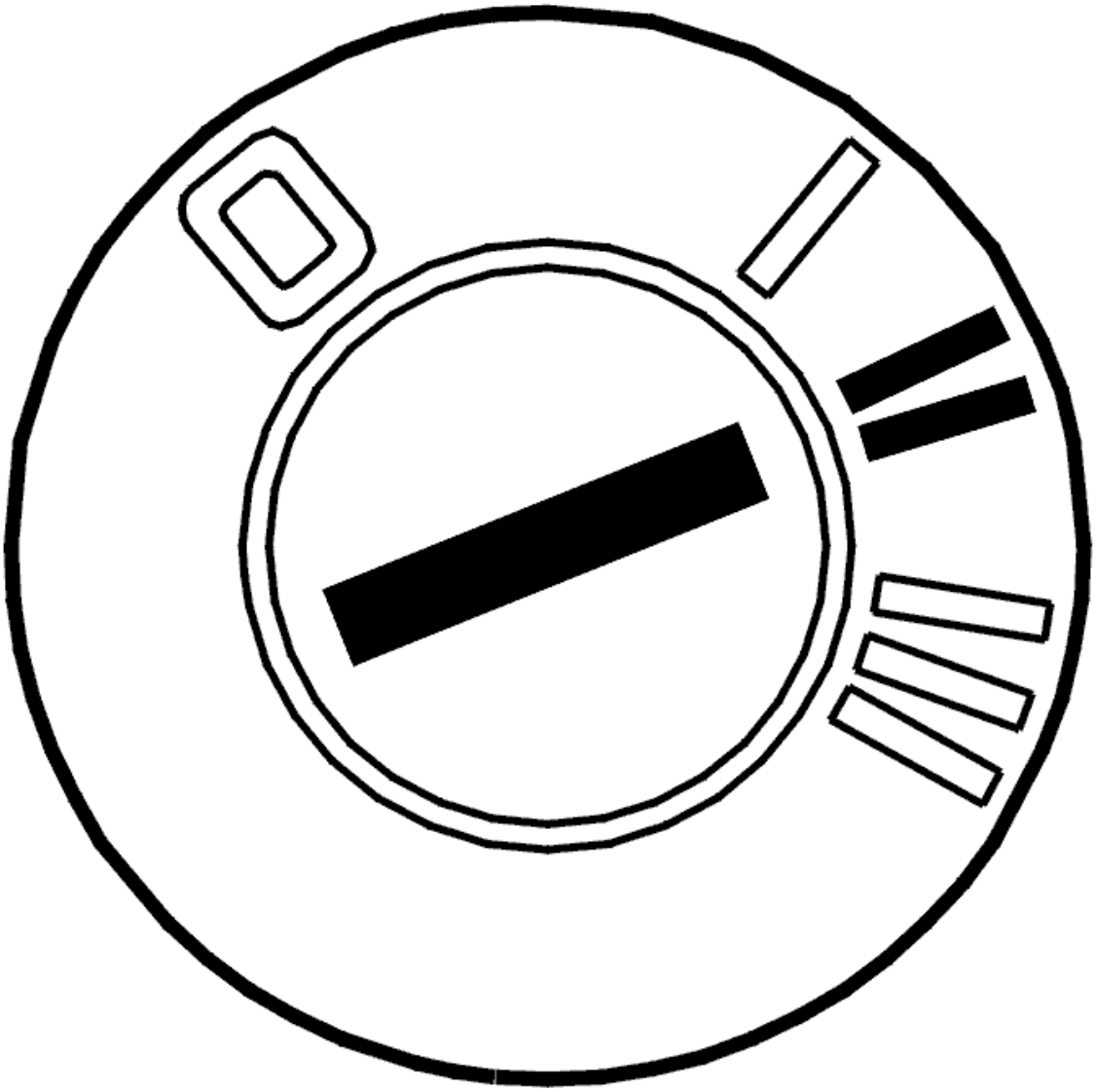

Fig. 59: Identifying Ignition ON
Courtesy of VOLVO CARS CORPORATION

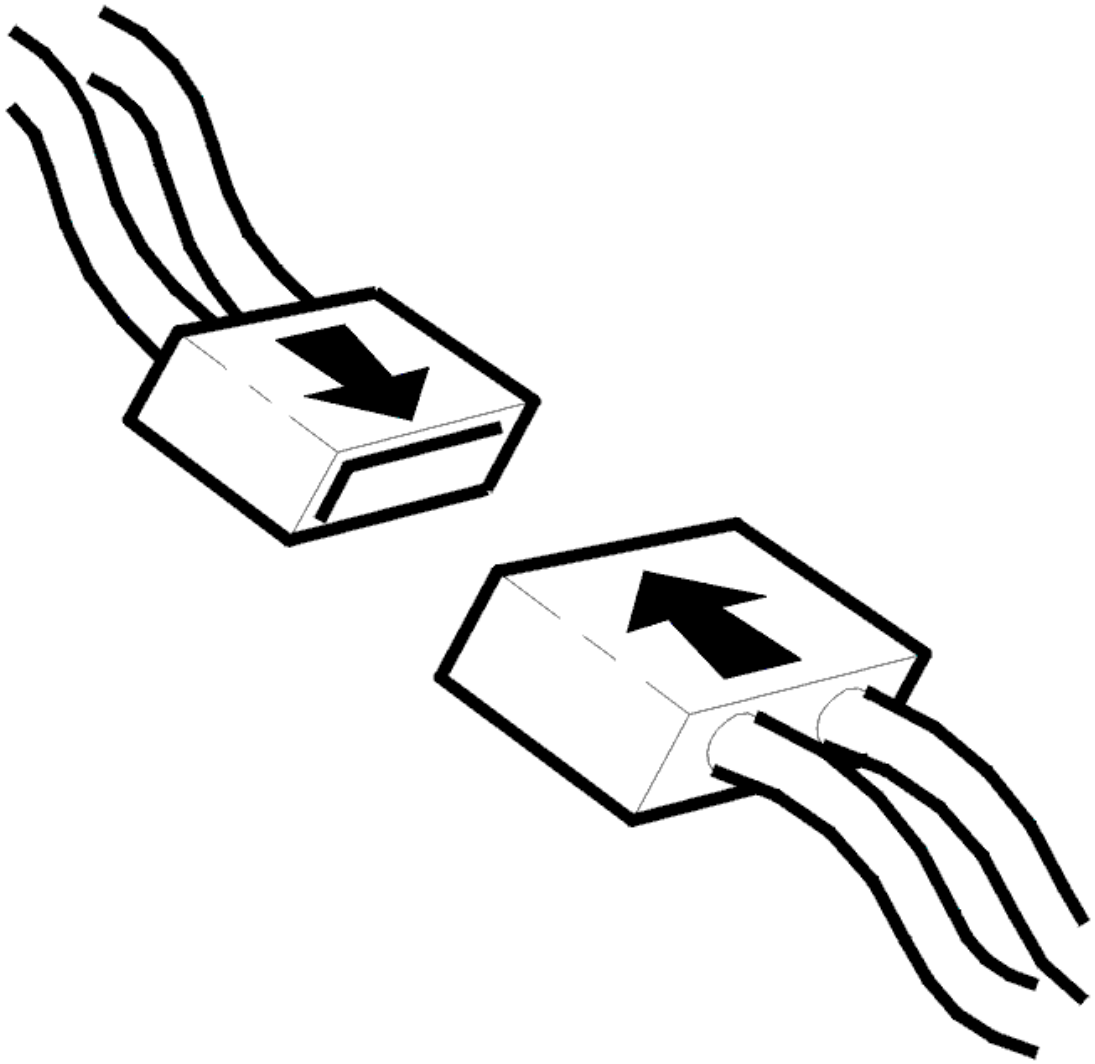

Fig. 60: Connecting Connector
Courtesy of VOLVO CARS CORPORATION

- Ignition off
- Reinstall the connectors, components etc.
- Ignition on.

  Check that the screen deploys when the ignition is switched on, when activated using the remote control or when using the steering wheel buttons for navigation.

  Ensure that the image and the colors of the image are good.

Does the display function?

- **YES**

VERIFIED: Troubleshooting has been completed.

- **NO**

  Refer to **INFORMATION**

INFORMATION

FAULT-TRACING INFORMATION

The fault should have been detected and remedied. As this is not the case fault-tracing has failed.

Exit fault-tracing for this diagnostic trouble code (DTC) or make another attempt.

CHECKING THE DISPLAY SCREEN COLORS (2007-2011)

FAULT-TRACING INFORMATION

Faults that cause one or more colors to disappear from the screen are:

- Open-circuit in the signal cable between the display and the multimedia module (MMM)
- The display screen is not working
- Defective multimedia module (MMM).

- **Continue**

  Refer to **CHECKING THE DISPLAY SCREEN COLORS**

CHECKING THE DISPLAY SCREEN COLORS

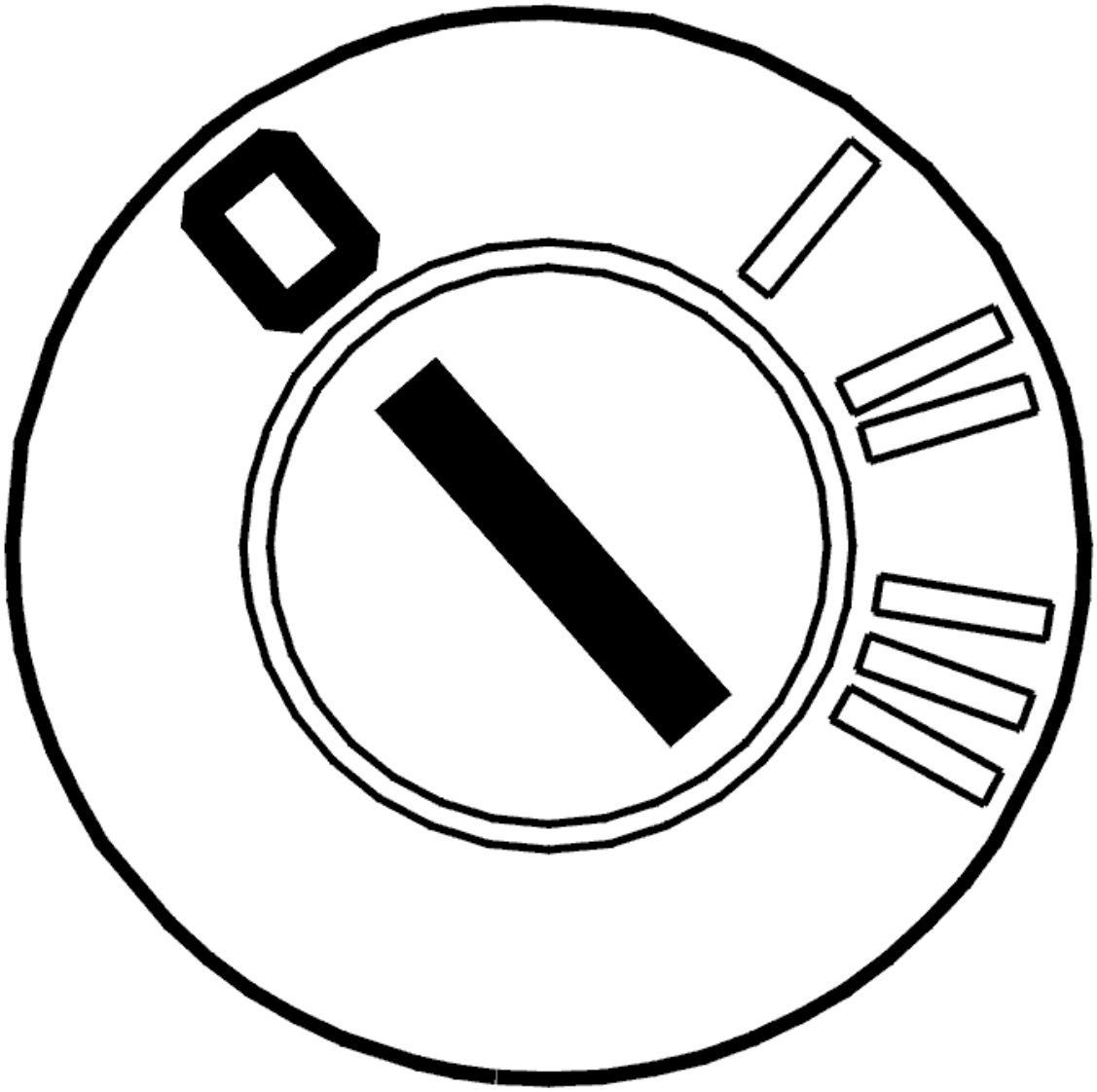

Fig. 61: Identifying Ignition OFF
Courtesy of VOLVO CARS CORPORATION

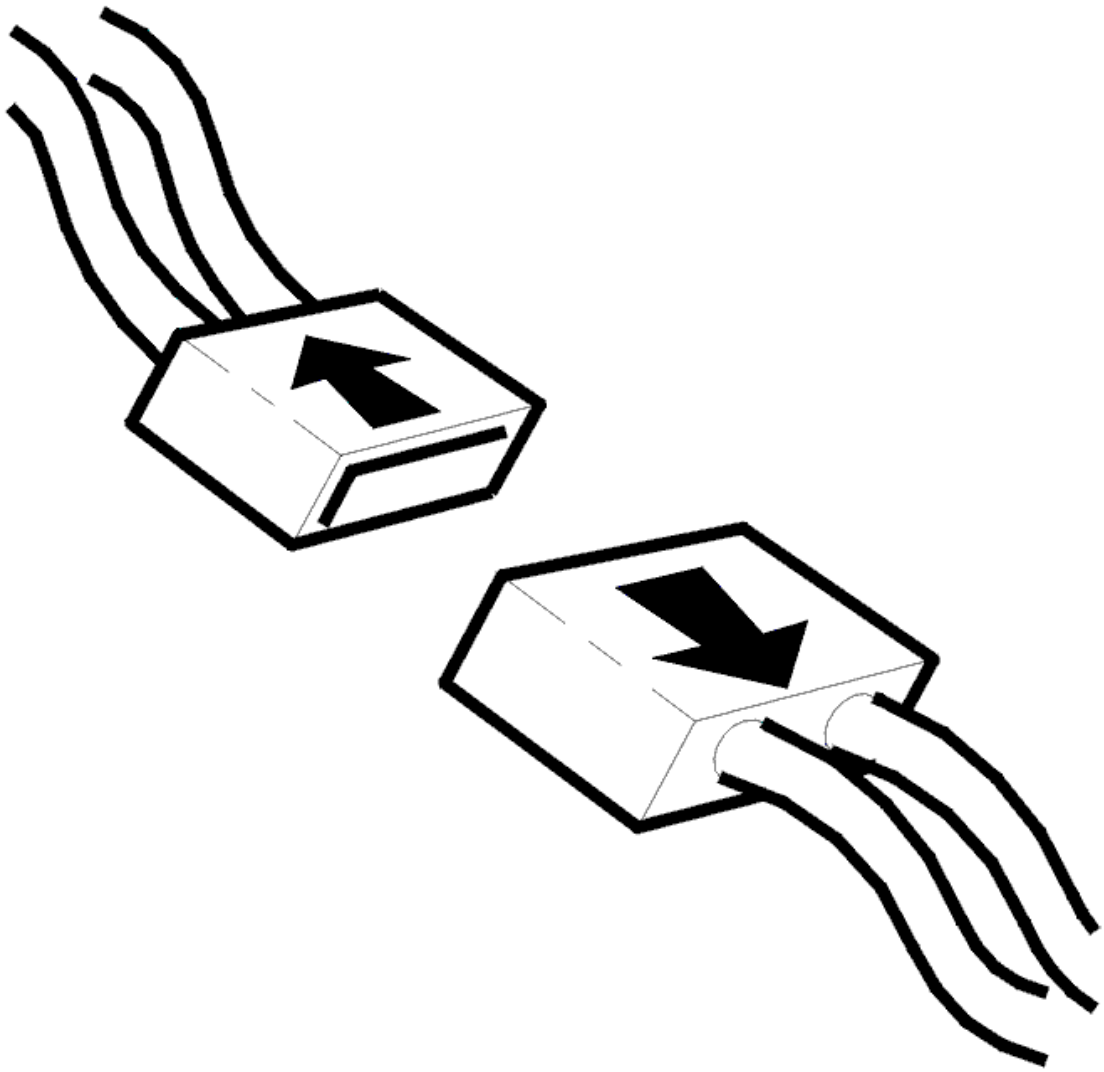

Fig. 62: Disconnecting Connector
Courtesy of VOLVO CARS CORPORATION

- Ignition off
- Disconnect the 10-pin connector from the display screen and multimedia module (MMM).

Checking the cable

Check the connectors. Check for loose connections and oxidation.

Check the cable terminals in the female and male sections of the connector. The cable terminals must not be damaged or pressed back

Check the signal cable between display screen terminal #1 (10-pin connector) and multimedia module (MMM) terminal #B1 (#1). Check for a short-circuit to supply voltage. Check for a short-circuit to ground. Check for an open-circuit.

Check the signal cable between display screen terminal #2 (10-pin connector) and multimedia module (MMM) terminal #B2 (#2). Check for a short-circuit to supply voltage. Check for a short-circuit to ground. Check for an open-circuit.

Check the signal cable between display screen terminal #7 (10-pin connector) and multimedia module (MMM) terminal #B7 (#7). Check for a short-circuit to supply voltage. Check for a short-circuit to ground. Check for an open-circuit.

Check the signal cable between the 10-pin connector for display screen terminal #6 and multimedia module (MMM) terminal #B6 (#6). Check for a short-circuit to supply voltage. Check for a short-circuit to ground. Check for an open-circuit.

Check the signal cable between display screen terminal #6 (10-pin connector) and multimedia module (MMM) terminal #B6 (#6). Check for a short-circuit to supply voltage. Check for a short-circuit to ground. Check for an open-circuit.

If no fault is found, replace the display screen.

Remedy as necessary

Other information:

- To connect the breakout box, see **CONNECTING THE BREAKOUT BOX (2003-2006)**
- To access or replace the multimedia module (MMM), see **MULTIMEDIA MODULE (MMM), REPLACING**
- To access or replace the display screen, see **CENTER LOUDSPEAKER WITH DISPLAY SCREEN, REPLACING**
- For information about signals, see **SIGNAL SPECIFICATION**
- see **CONTENTS** .

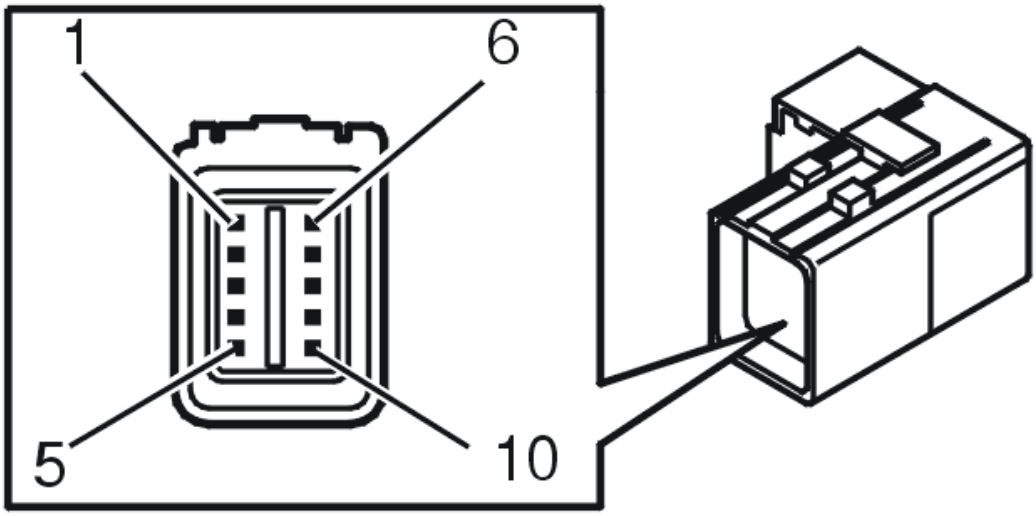

Fig. 63: Identifying RTI Control Module (To Display) Connector Terminals
Courtesy of VOLVO CARS CORPORATION

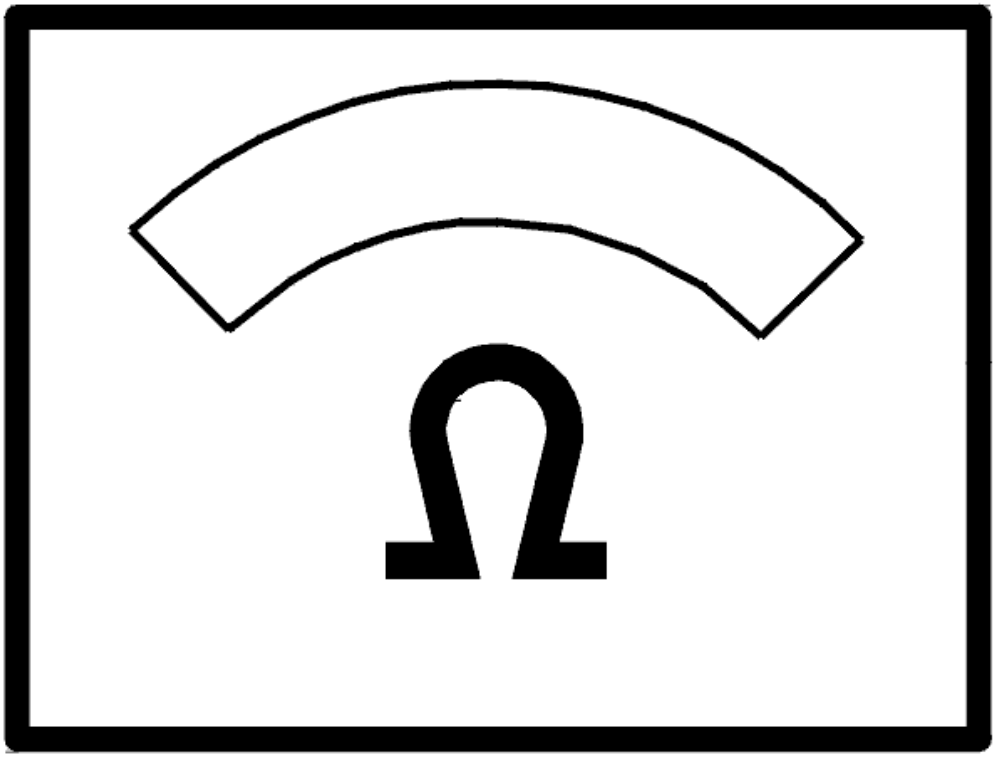

Fig. 64: Identifying Ohm Meter
Courtesy of VOLVO CARS CORPORATION

- **Continue**

  Refer to **VERIFICATION**

VERIFICATION

HINT: After carrying out the repair, check that the fault has been remedied.

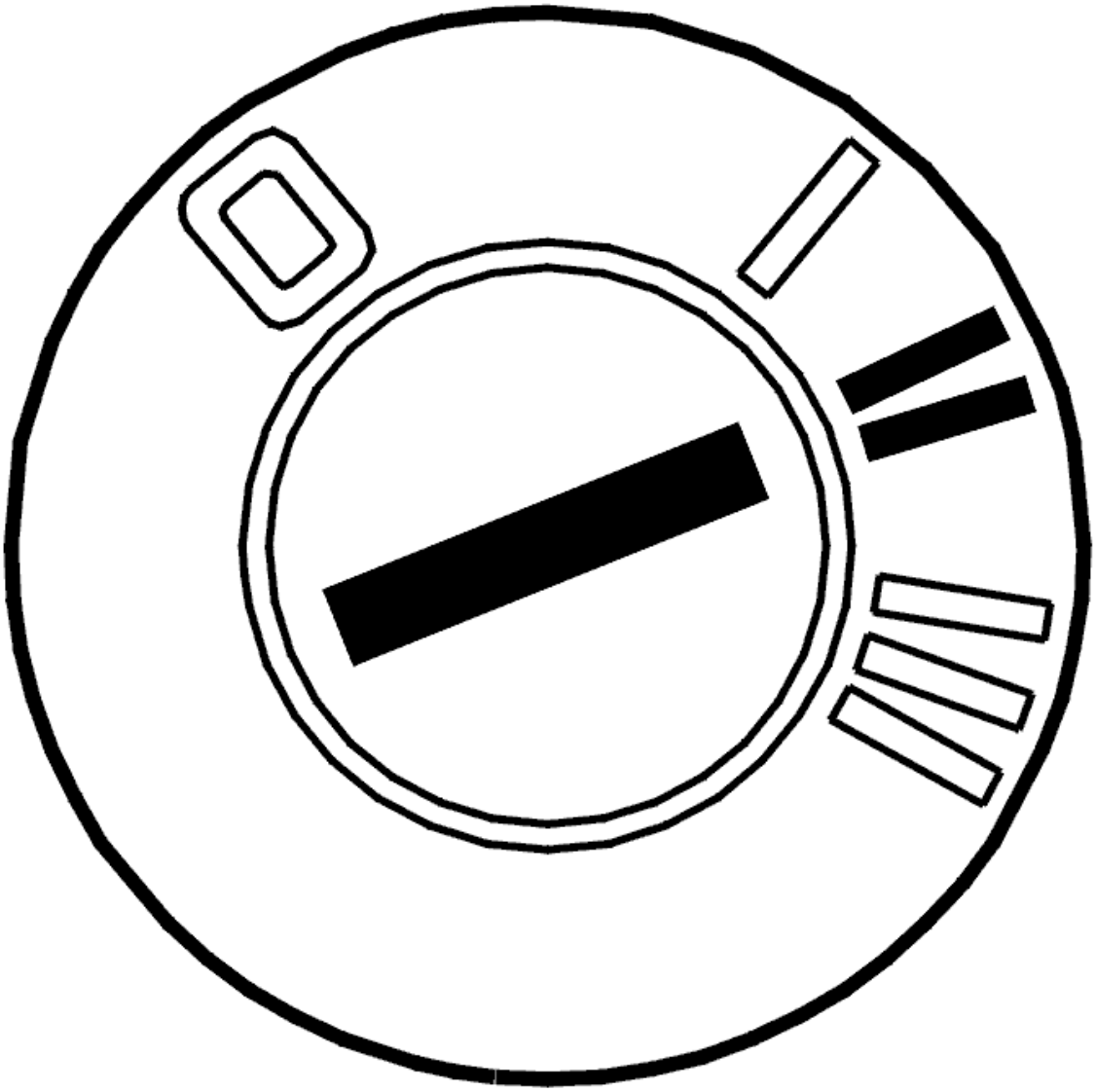

Fig. 65: Identifying Ignition ON
Courtesy of VOLVO CARS CORPORATION

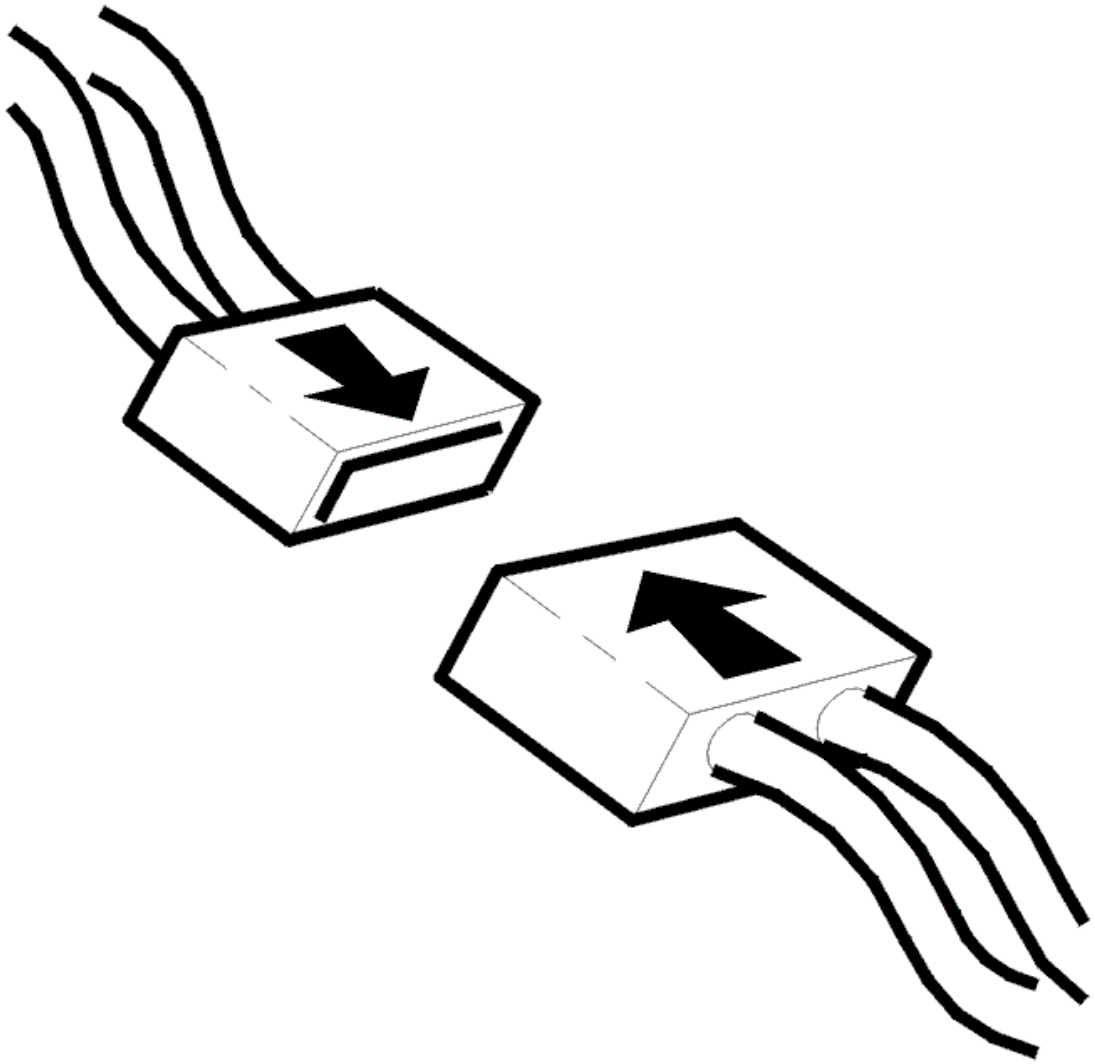

Fig. 66: Connecting Connector
Courtesy of VOLVO CARS CORPORATION

- Ignition off
- Reinstall the connectors, components etc.
- Ignition on.

  Check that the screen deploys when the ignition is switched on, when activated using the remote control or when using the steering wheel buttons for navigation.

  Ensure that the image and the colors of the image are good.

Does the display function?

- **YES**

VERIFIED: Troubleshooting has been completed.

- **NO**

  Refer to **INFORMATION**

INFORMATION

FAULT-TRACING INFORMATION

The fault should have been detected and remedied. As this is not the case fault-tracing has failed.

Exit fault-tracing for this diagnostic trouble code (DTC) or make another attempt.

CHECKING THE DISPLAY FOR THE INFOTAINMENT SYSTEM (2003-2011)

CHECKING THE DISPLAY FOR THE INFOTAINMENT UNIT (2003-2006)

FAULT-TRACING INFORMATION

The MOST network is a fiber optic ring network. This means that all control modules which are connected to the network must be powered and grounded for the infotainment system to work. If, for any reason, a control module is unable to transmit the signals onwards on the MOST network, or if there is an open-circuit in the fiber optic cable, the infotainment control module (ICM) will shut down all functionality.

Communication on the fiber optic net is one-directional. The control modules on the MOST network receive light signals, amplify them and then send them onwards. The MOST connectors for the control modules contain two fiber optic cables, one for incoming and one for outgoing signals. The cables must be correctly positioned in the connector for communication to function.

Faults in the infotainment system can cause the display for the infotainment control module (ICM) to flash or not light when the unit is activated.

The fault can be both permanent and intermittent.

The fault causes may be:

- Open-circuit or loose connections in the wiring between the display and the infotainment control module (ICM)
- Contact resistance and oxidation in the connectors between the infotainment control module (ICM) and the display screen
- A control module other than the infotainment control module (ICM) is interfering with the communication on the MOST network
- Problem downloading the correct software
- The software and display type are not compatible
- Defective display screen.

NOTE: **The infotainment control module (ICM) stores a diagnostic trouble code (DTC) if the power for the display from the infotainment control module (ICM) is incorrect. The display also switches off if the MOST network is not functioning or if there are internal faults in the infotainment control module (ICM). If there are diagnostic trouble codes (DTCs) in the infotainment control module (ICM), these must be fault-traced first.**

- **Continue**

  Refer to **CHECKING THE COMPONENT**

CHECKING THE COMPONENT

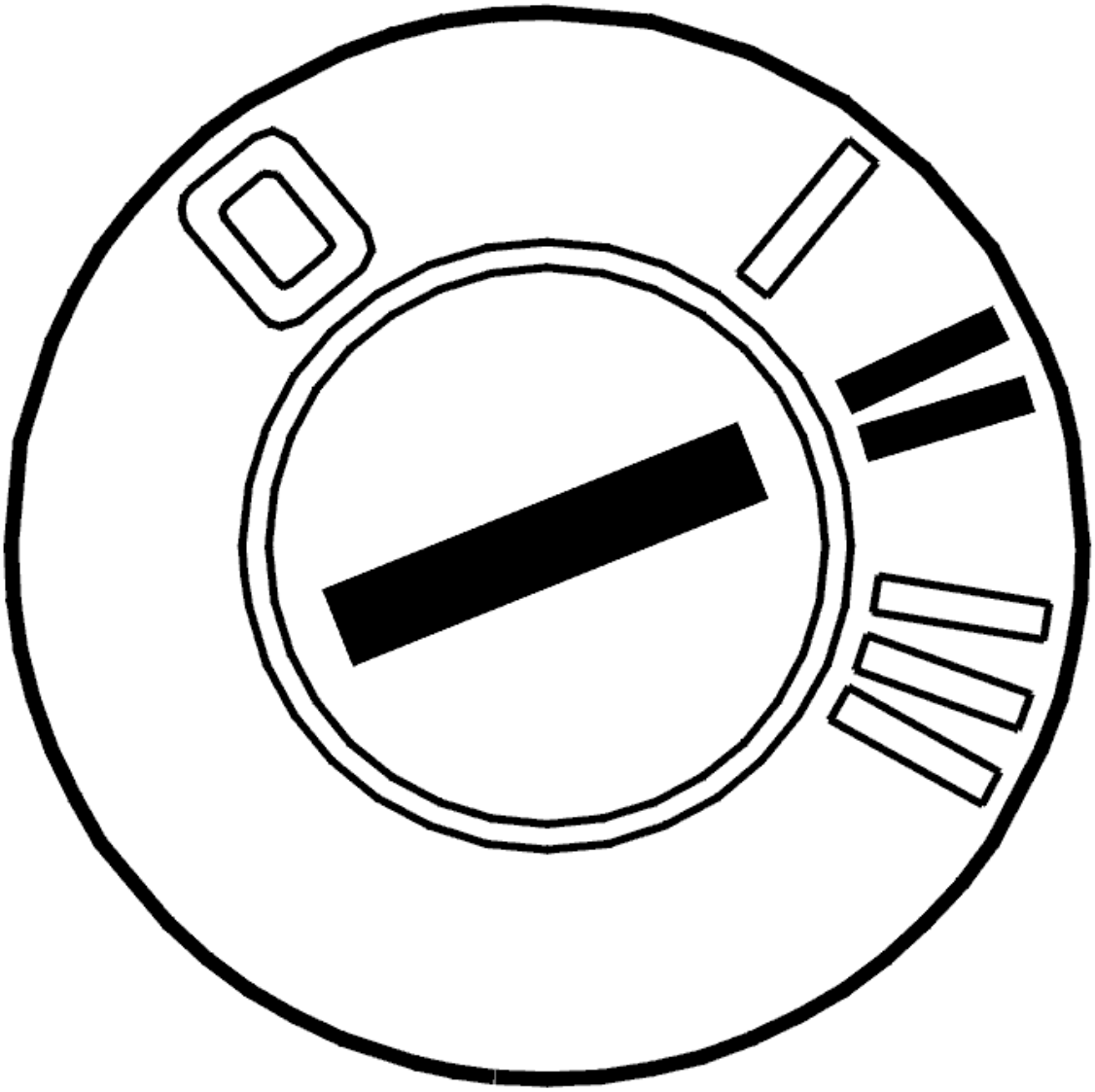

Fig. 67: Identifying Ignition ON
Courtesy of VOLVO CARS CORPORATION

- Ignition on.

  Check whether the fault is in the infotainment control module (ICM) as follows:

  - press the POWER button twice with a couple of seconds in-between
  - press the MENU button.

  If a menu text is now displayed, the fault is not in the infotainment control module (ICM) but in another control module on the MOST network.

  If no menu text is displayed, continue fault-tracing the infotainment control module (ICM) as follows.

  Checking the infotainment control module (ICM)

  Check the connectors between the display and the infotainment control module (ICM). Check for contact resistance and oxidation. Check for loose connections. Check for damage carefully.

  Visually check the wiring between the display and the infotainment control module (ICM). Check for damage.

  A test of the display can be run by clicking the VCT2000 symbol.

  Remedy as necessary.

  Other information

  - To access or replace the display / infotainment control module (ICM), see **INFOTAINMENT CONTROL MODULE (ICM), REPLACING**

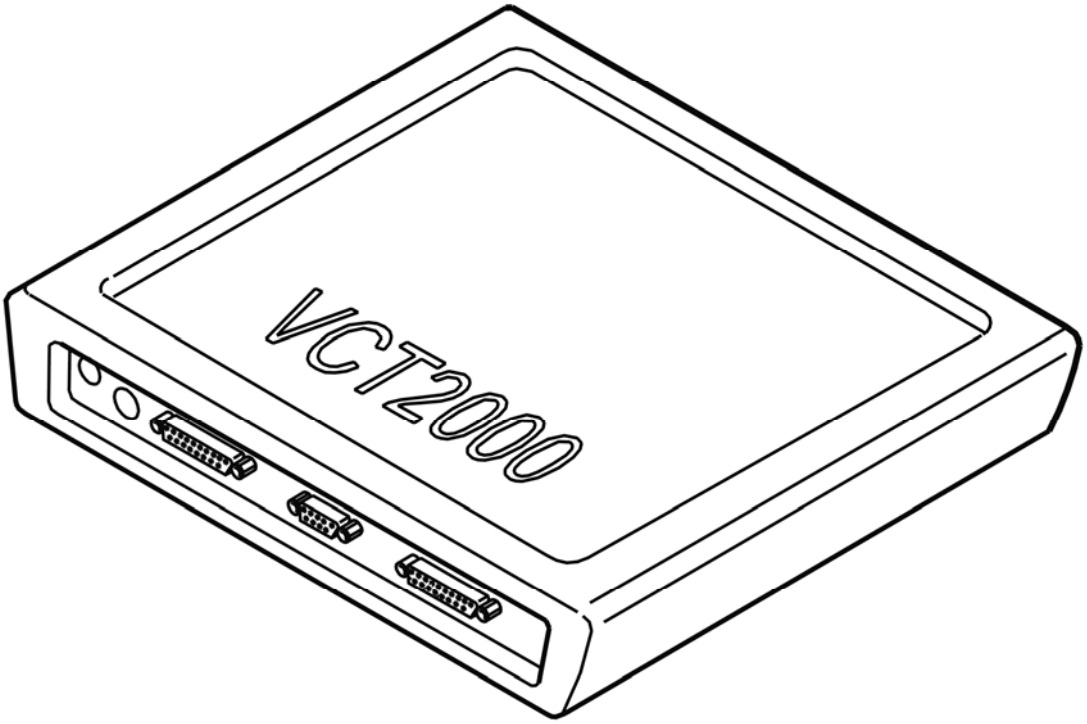

Fig. 68: Identifying VCT2000 Diagnostic Tool Symbol In VIDA
Courtesy of VOLVO CARS CORPORATION

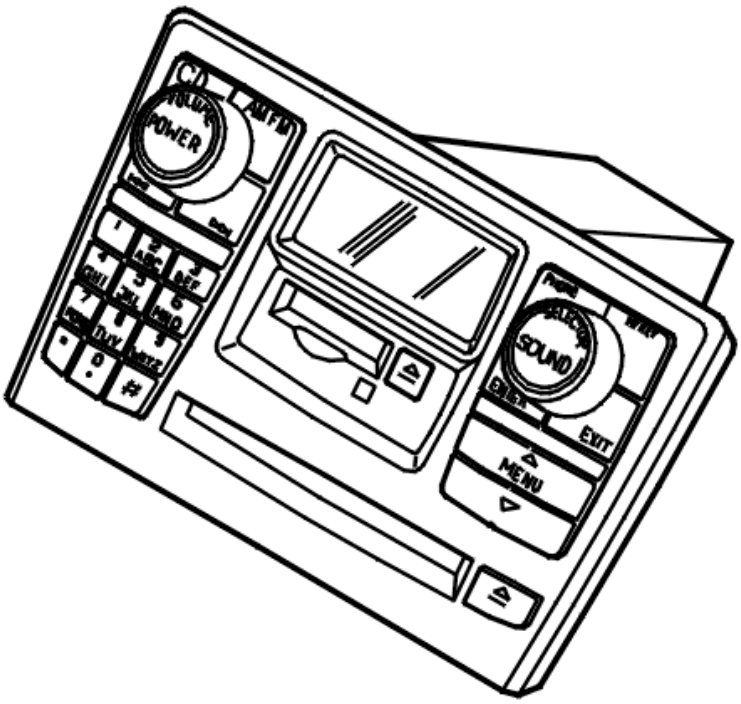

Fig. 69: Identifying Control Module Communication
Courtesy of VOLVO CARS CORPORATION

Was a fault detected?

- **YES**

  Refer to **VERIFICATION**

- **NO**

  Refer to **CHECKING COMPONENTS**

CHECKING COMPONENTS

Check the functionality of the MOST network by first checking the CD player and then the radio reception.

CD player

Check the functionality of the CD player as follows:

1. Select the CD player by pressing the CD button
2. Check that the display for the infotainment control module (ICM) shows that CD has been selected

3. Play a CD. Check that there is sound from the loudspeakers. Do not use copied CDs during this check.

Radio reception

Check the functionality of the antenna module (ATM) as follows:

1. Select radio reception by pressing the AM/FM button and switching between FM1, FM2 and AM
2. Check that the display for the infotainment control module (ICM) shows that the radio has been selected
3. Check that there is radio sound from the loudspeakers.

To continue fault-tracing, select from the following alternatives.

Alternative 1:

No sound in the loudspeakers when playing a CD.

Refer to **CHECKING THE CD PLAYER**

Alternative 2:

No sound in the loudspeakers when playing the radio.

Refer to **CHECKING THE ANTENNA MODULE (ATM)**

Alternative 3:

No sound from the loudspeakers for the CD or radio.

Refer to **CHECKING MOST COMMUNICATION**

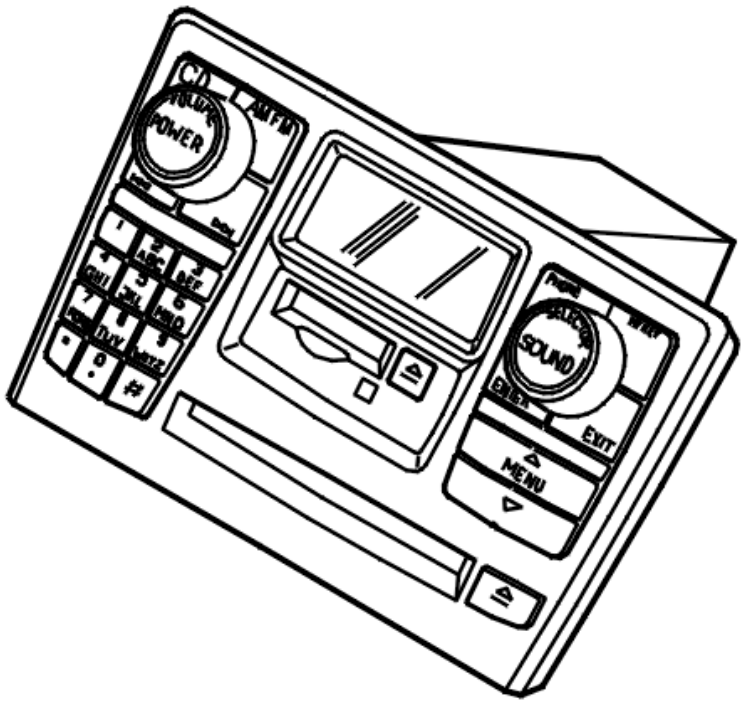

Fig. 70: Identifying Control Module Communication
Courtesy of VOLVO CARS CORPORATION

CHECKING THE CD PLAYER

Check the power supply and ground terminal for the CD player. Check for an intermittent open-circuit. Check for an intermittent short-circuit to ground. Check for an intermittent short-circuit to supply voltage.

Remedy as necessary.

Other information

- see **MINIDISC / CD CONTROL MODULE, REPLACING**
- **Continue**

  Refer to **VERIFICATION**

CHECKING THE ANTENNA MODULE (ATM)

Check the power supply and ground terminal for the antenna module (ATM). Check for an intermittent open-circuit. Check for an intermittent short-circuit to ground. Check for an intermittent short-circuit to supply voltage.

Remedy as necessary.

Other information

- see **RECEIVER AM/FM (ATM), REPLACING**
- **Continue**

  Refer to **VERIFICATION**

CHECKING MOST COMMUNICATION

Check the communication on the MOST network by bypassing the control modules one by one on the MOST network as follows:

- Ignition off
- Disconnect the MOST connector from the relevant control module
- Connect the MOST cable to special tool see **9512867**
- Ignition on
- Activate the infotainment system
- Check that the communication on the MOST network is functioning by reading off the status of the MOST locked parameter for at least 30 seconds. The parameter indicates whether the MOST network is closed and communication possible.

Click the VCT2000 symbol to read off the status of the MOST network.

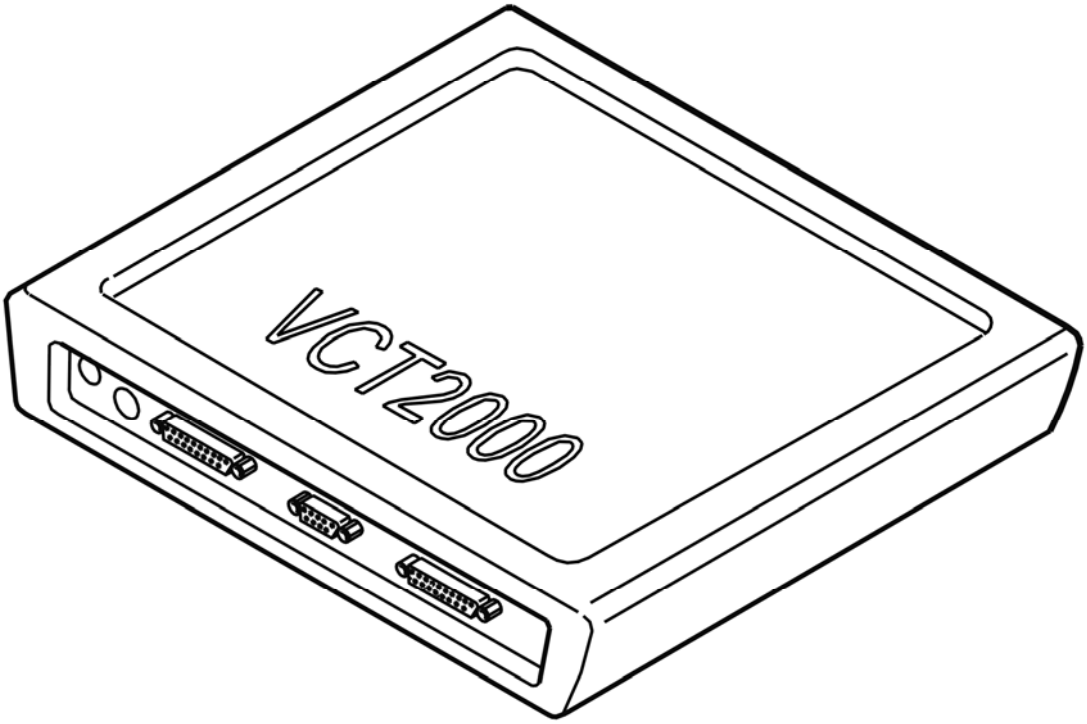

Fig. 71: Identifying VCT2000 Diagnostic Tool Symbol In VIDA
Courtesy of VOLVO CARS CORPORATION

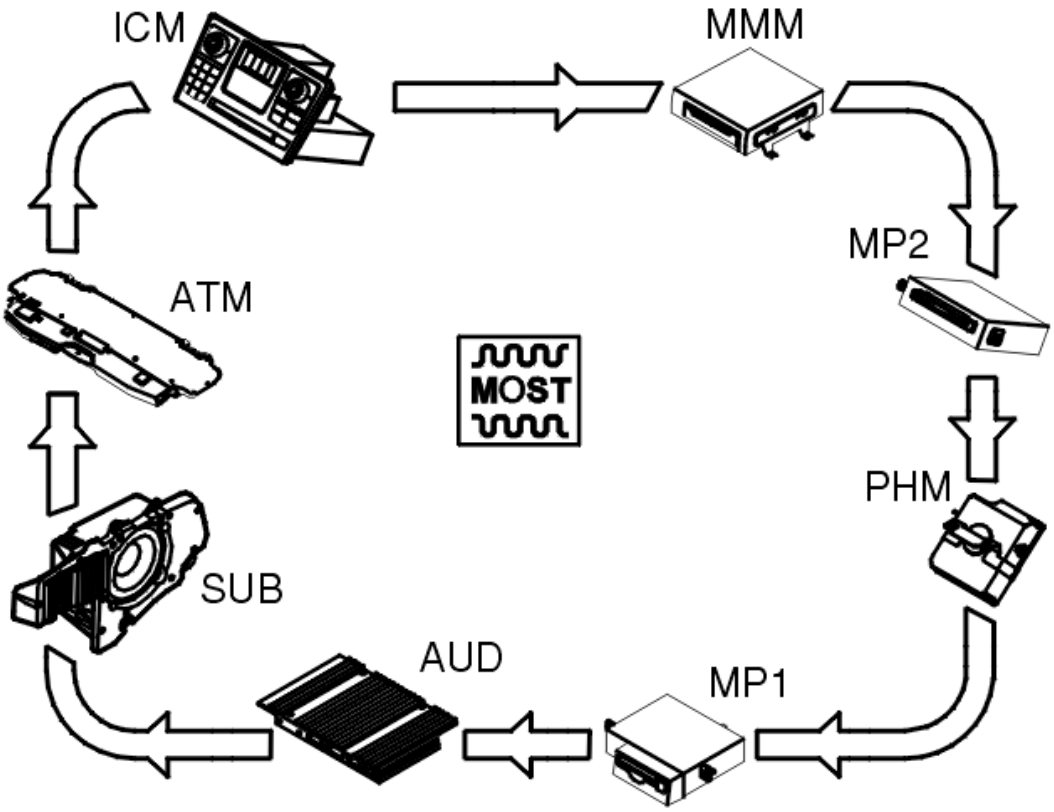

Fig. 72: MOST Bus (Media Oriented System Transportation) Communication Diagram
Courtesy of VOLVO CARS CORPORATION

- **Continue**

  Refer to **VERIFICATION**

VERIFICATION

VERIFICATION

HINT: After carrying out the repair, check that the fault has been remedied.

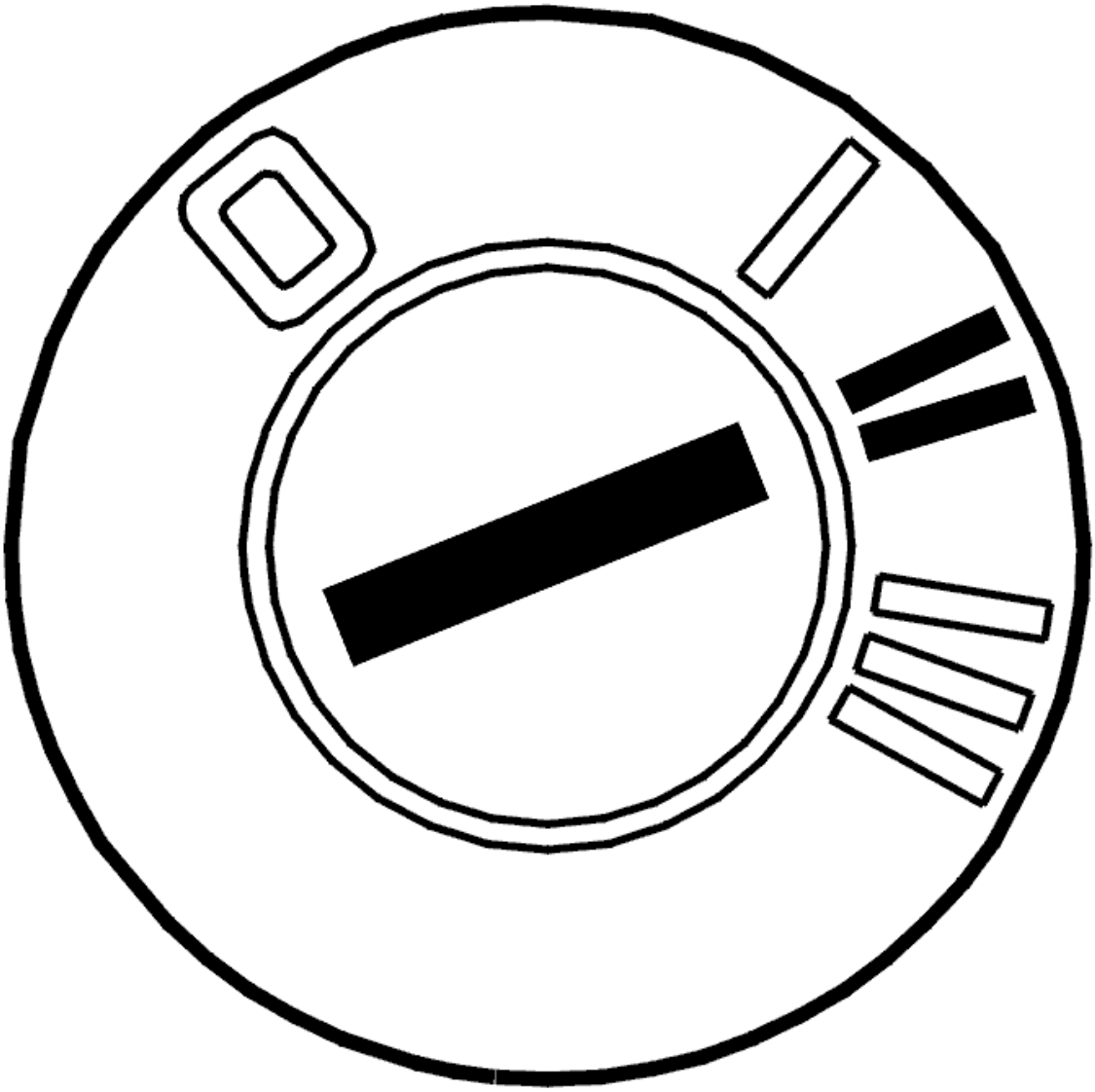

Fig. 73: Identifying Ignition ON
Courtesy of VOLVO CARS CORPORATION

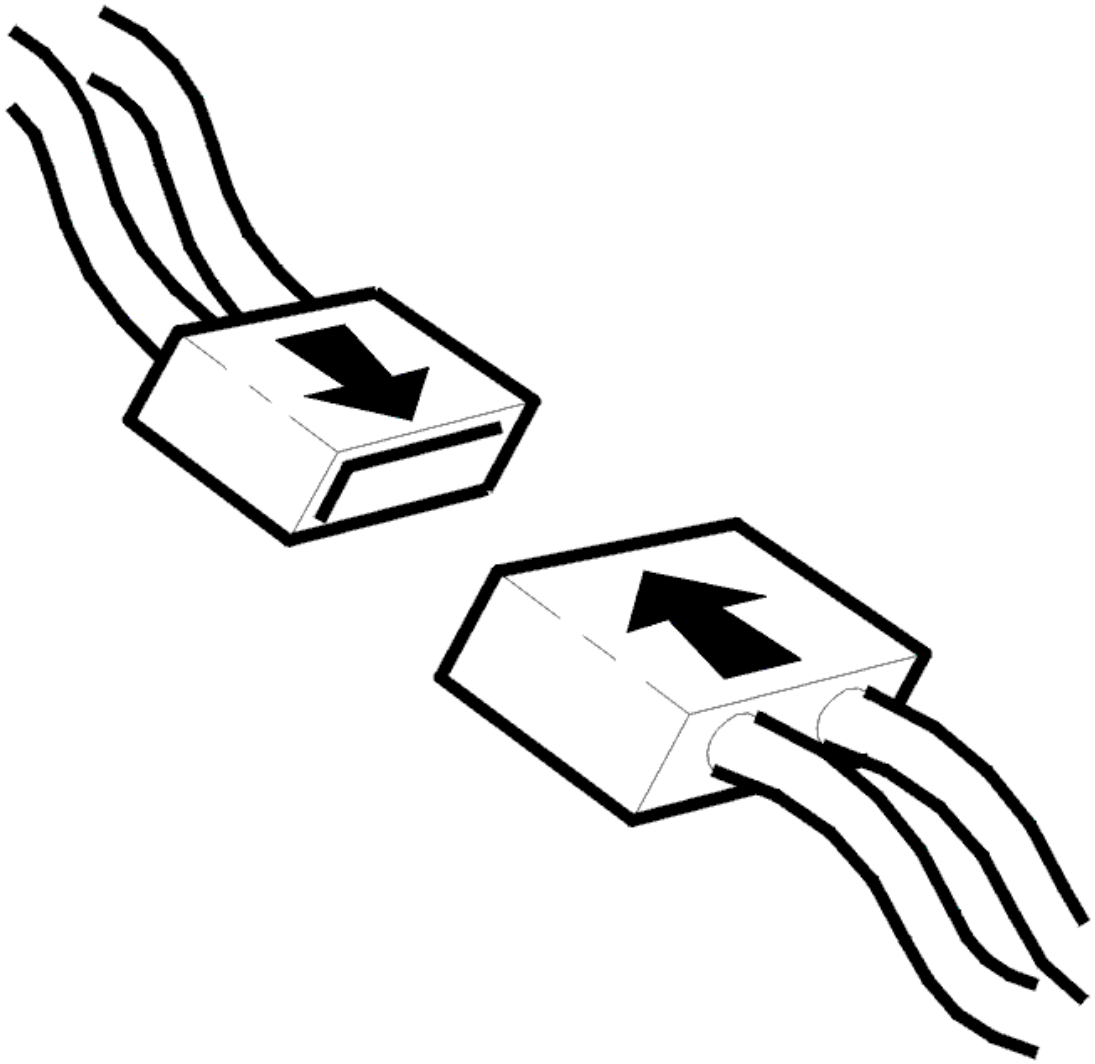

Fig. 74: Connecting Connector
Courtesy of VOLVO CARS CORPORATION

- Ignition off
- Reinstall the connectors, components etc.
- Ignition on.

  Activate the infotainment unit by pressing the POWER button.

  Check that the display lights.

Does the display light?

- **YES**

VERIFIED: Troubleshooting has been completed.

- **NO**

  Refer to **INFORMATION**

INFORMATION

FAULT-TRACING INFORMATION

The fault should have been detected and remedied. As this is not the case fault-tracing has failed.

Exit fault-tracing for this diagnostic trouble code (DTC) or make another attempt.

CHECKING THE DISPLAY FOR THE INFOTAINMENT UNIT (2007-2011)

FAULT-TRACING INFORMATION

The MOST network is a fiber optic ring network. This means that all control modules which are connected to the network must be powered and grounded for the infotainment system to work. If, for any reason, a control module is unable to transmit the signals onwards on the MOST network, or if there is an open-circuit in the fiber optic cable, the infotainment control module (ICM) will shut down all functionality.

Communication on the fiber optic net is one-directional. The control modules on the MOST network receive light signals, amplify them and then send them onwards. The MOST connectors for the control modules contain two fiber optic cables, one for incoming and one for outgoing signals. The cables must be correctly positioned in the connector for communication to function.

Faults in the infotainment system can cause the display for the infotainment control module (ICM) to flash or not light when the unit is activated.

The fault can be both permanent and intermittent.

The fault causes may be:

- Open-circuit or loose connections in the wiring between the display and the infotainment control module (ICM)
- Contact resistance and oxidation in the connectors between the infotainment control module (ICM) and the display screen
- A control module other than the infotainment control module (ICM) is interfering with the communication on the MOST network
- Problem downloading the correct software
- The software and display type are not compatible
- Defective display screen.

NOTE: The infotainment control module (ICM) stores a diagnostic trouble code (DTC) if

the power for the display from the infotainment control module (ICM) is incorrect. The display also switches off if the MOST network is not functioning or if there are internal faults in the infotainment control module (ICM). If there are diagnostic trouble codes (DTCs) in the infotainment control module (ICM), these must be fault-traced first.

- **Continue**

  Refer to **CHECKING THE COMPONENT**

CHECKING THE COMPONENT

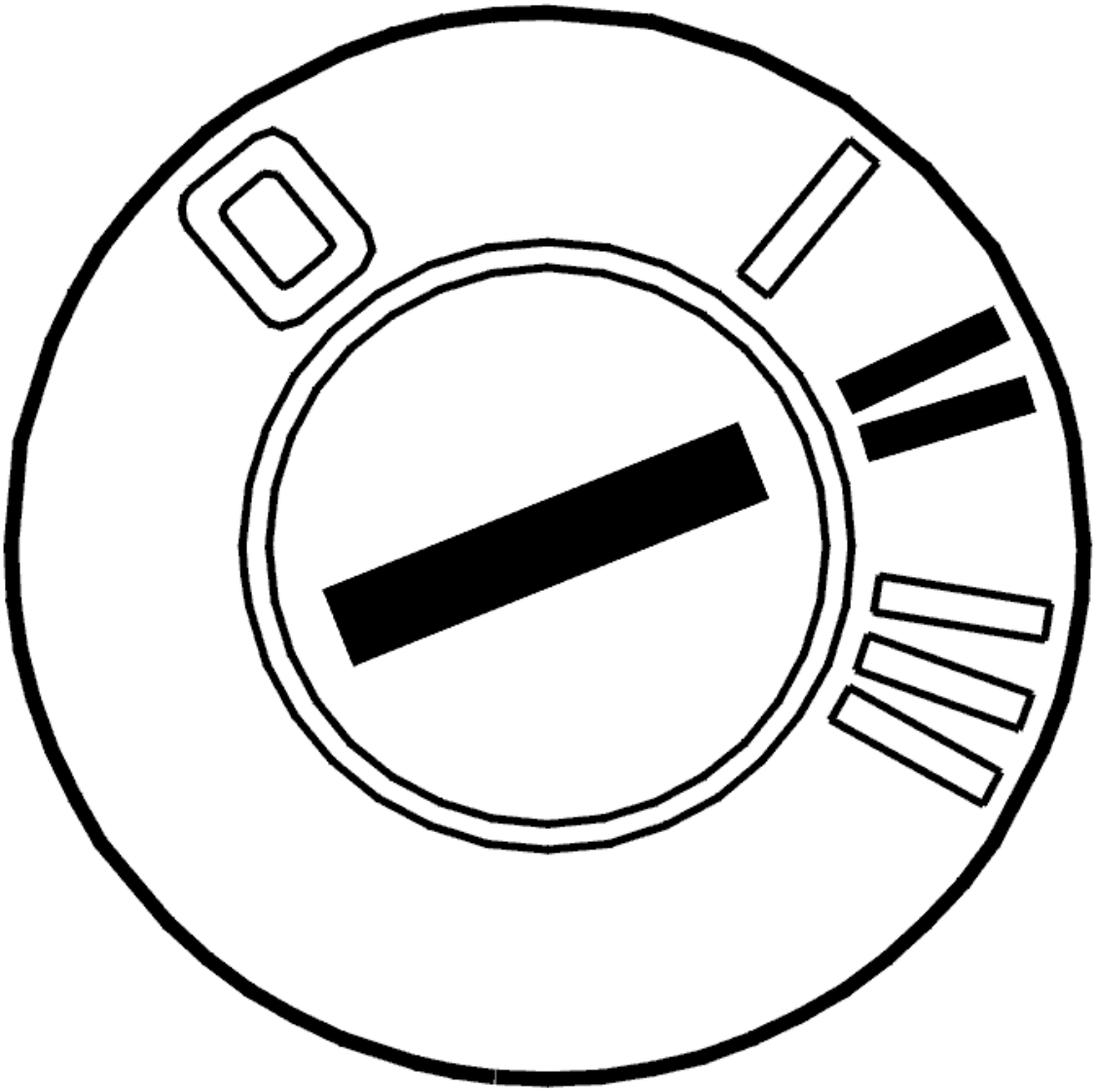

Fig. 75: Identifying Ignition ON
Courtesy of VOLVO CARS CORPORATION

- Ignition on.

Check whether the fault is in the infotainment control module (ICM) as follows:

- press the POWER button twice with a couple of seconds in-between
- press the MENU button.

If a menu text is now displayed, the fault is not in the infotainment control module (ICM) but in another control module on the MOST network.

If no menu text is displayed, continue fault-tracing the infotainment control module (ICM) as follows.

Checking the infotainment control module (ICM)

Check the connectors between the display and the infotainment control module (ICM). Check for contact resistance and oxidation. Check for loose connections. Check for damage carefully.

Visually check the wiring between the display and the infotainment control module (ICM). Check for damage.

A test of the display can be run by clicking the VCT2000 symbol.

Remedy as necessary.

Other information

- To access or replace the display / infotainment control module (ICM), see **INFOTAINMENT CONTROL MODULE (ICM), REPLACING**

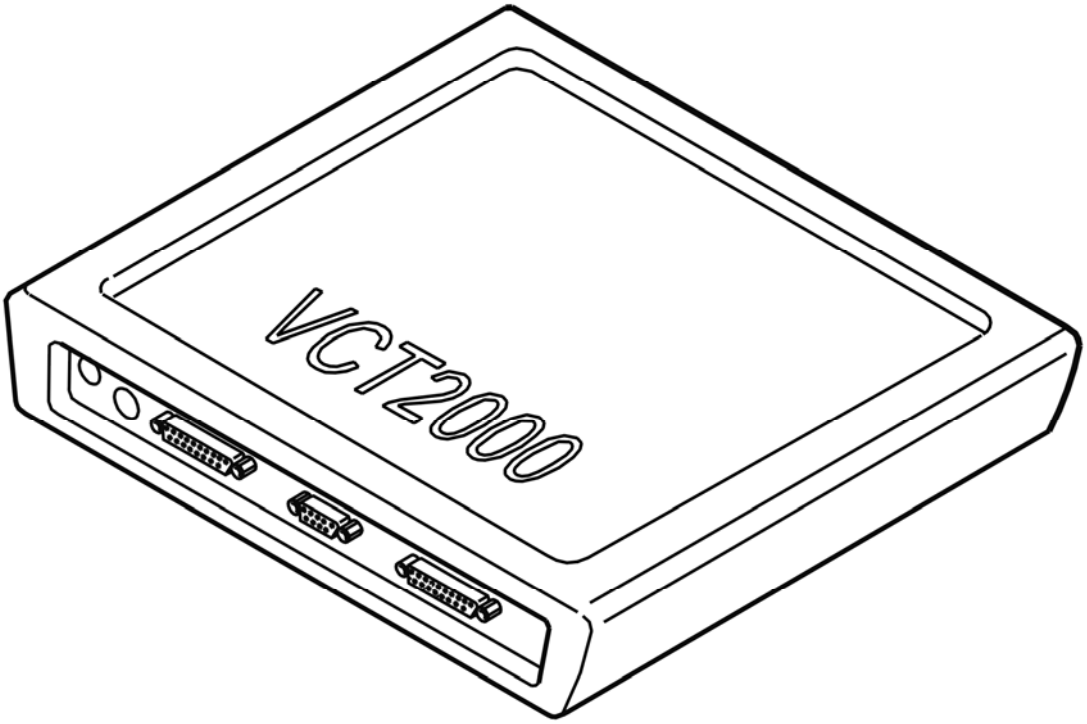

Fig. 76: Identifying VCT2000 Diagnostic Tool Symbol In VIDA
Courtesy of VOLVO CARS CORPORATION

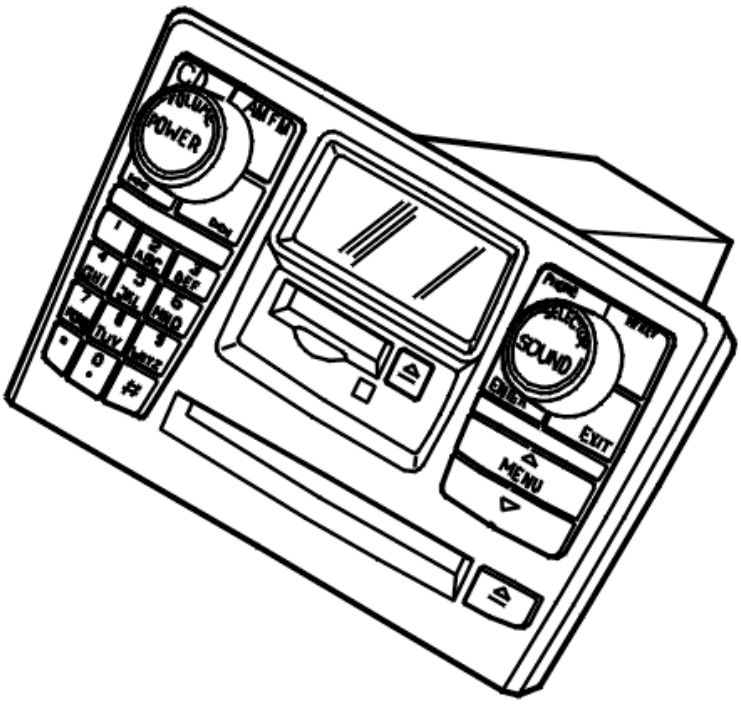

Fig. 77: Identifying Control Module Communication
Courtesy of VOLVO CARS CORPORATION

Was a fault detected?

- **YES**

  Refer to **VERIFICATION**

- **NO**

  Refer to **CHECKING COMPONENTS**

CHECKING COMPONENTS

Check the functionality of the MOST network by first checking the CD player and then the radio reception.

CD player

Check the functionality of the CD player as follows:

1. Select the CD player by pressing the CD button
2. Check that the display for the infotainment control module (ICM) shows that CD has been selected

3. Play a CD. Check that there is sound from the loudspeakers. Do not use copied CDs during this check.

Radio reception

Check the functionality of the antenna module (ATM) as follows:

1. Select radio reception by pressing the AM/FM button and switching between FM1, FM2 and AM
2. Check that the display for the infotainment control module (ICM) shows that the radio has been selected
3. Check that there is radio sound from the loudspeakers.

To continue fault-tracing, select from the following alternatives.

Alternative 1:

No sound in the loudspeakers when playing a CD.

Refer to **CHECKING THE CD PLAYER**

Alternative 2:

No sound in the loudspeakers when playing the radio.

Refer to **CHECKING THE ANTENNA MODULE (ATM)**

Alternative 3:

No sound from the loudspeakers for the CD or radio.

Refer to **CHECKING MOST COMMUNICATION**

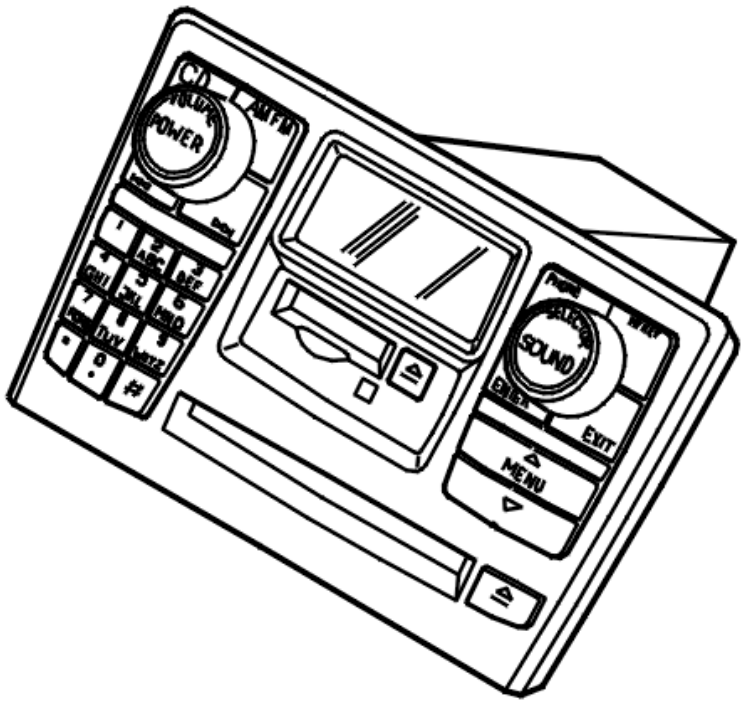

Fig. 78: Identifying Control Module Communication
Courtesy of VOLVO CARS CORPORATION

CHECKING THE CD PLAYER

Check the power supply and ground terminal for the CD player. Check for an intermittent open-circuit. Check for an intermittent short-circuit to ground. Check for an intermittent short-circuit to supply voltage.

Remedy as necessary.

Other information

- see **CONTROL MODULE GENERAL SOUND PLAYER**
- **Continue**

  Refer to **VERIFICATION**

CHECKING THE ANTENNA MODULE (ATM)

Check the power supply and ground terminal for the antenna module (ATM). Check for an intermittent open-circuit. Check for an intermittent short-circuit to ground. Check for an intermittent short-circuit to supply voltage.

Remedy as necessary.

Other information

- see **ANTENNA AMPLIFIER**
- **Continue**

  Refer to **VERIFICATION**

CHECKING MOST COMMUNICATION

Check the communication on the MOST network by bypassing the control modules one by one on the MOST network as follows:

- Ignition off
- Disconnect the MOST connector from the relevant control module
- Connect the MOST cable to special tool see **9512867**
- Ignition on
- Activate the infotainment system
- Check that the communication on the MOST network is functioning by reading off the status of the MOST locked parameter for at least 30 seconds. The parameter indicates whether the MOST network is closed and communication possible.

Click the VCT2000 symbol to read off the status of the MOST network.

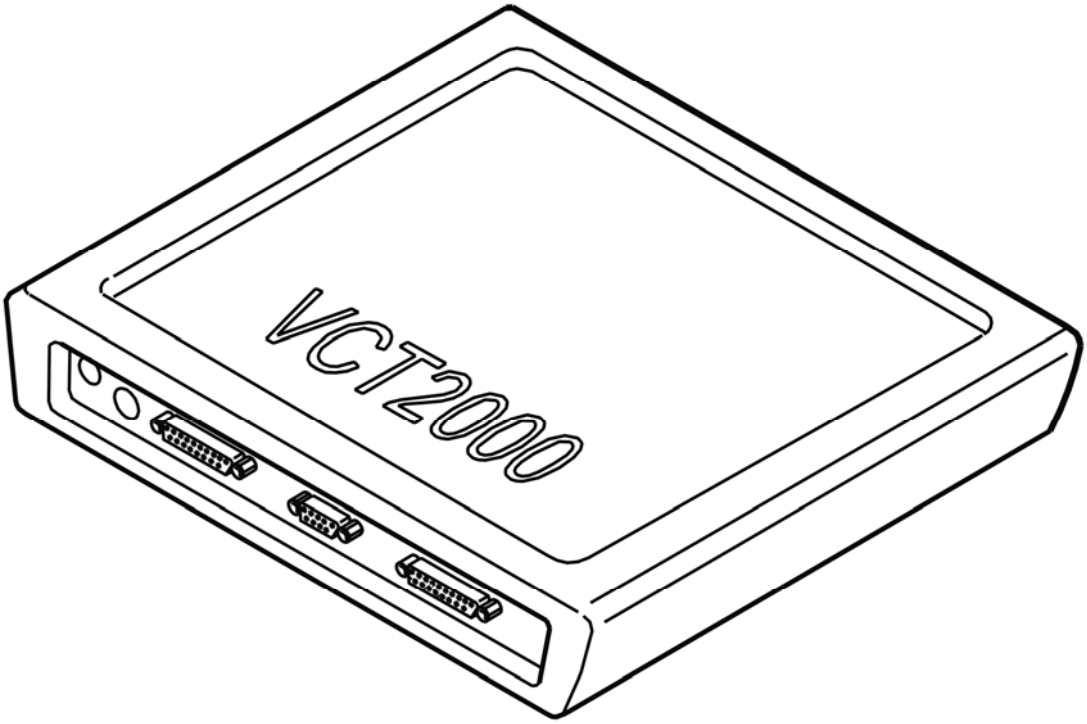

Fig. 79: Identifying VCT2000 Diagnostic Tool Symbol In VIDA
Courtesy of VOLVO CARS CORPORATION

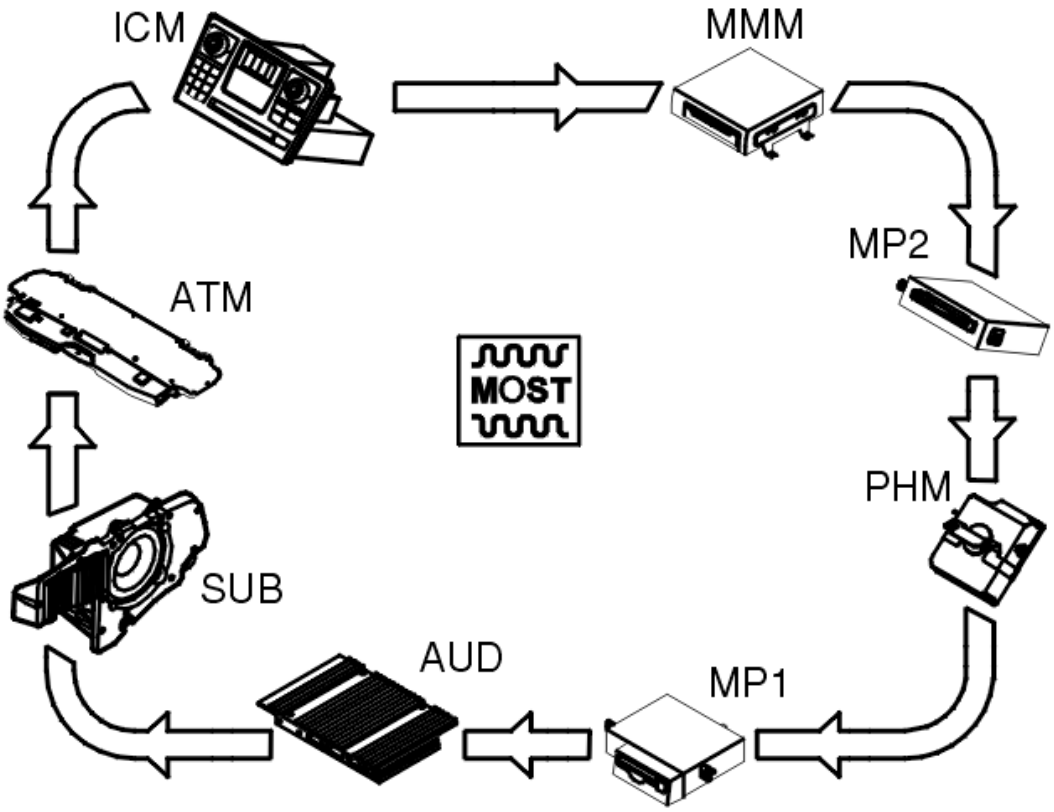

Fig. 80: MOST Bus (Media Oriented System Transportation) Communication Diagram
Courtesy of VOLVO CARS CORPORATION

- **Continue**

  Refer to **VERIFICATION**

VERIFICATION

VERIFICATION

HINT: After carrying out the repair, check that the fault has been remedied.

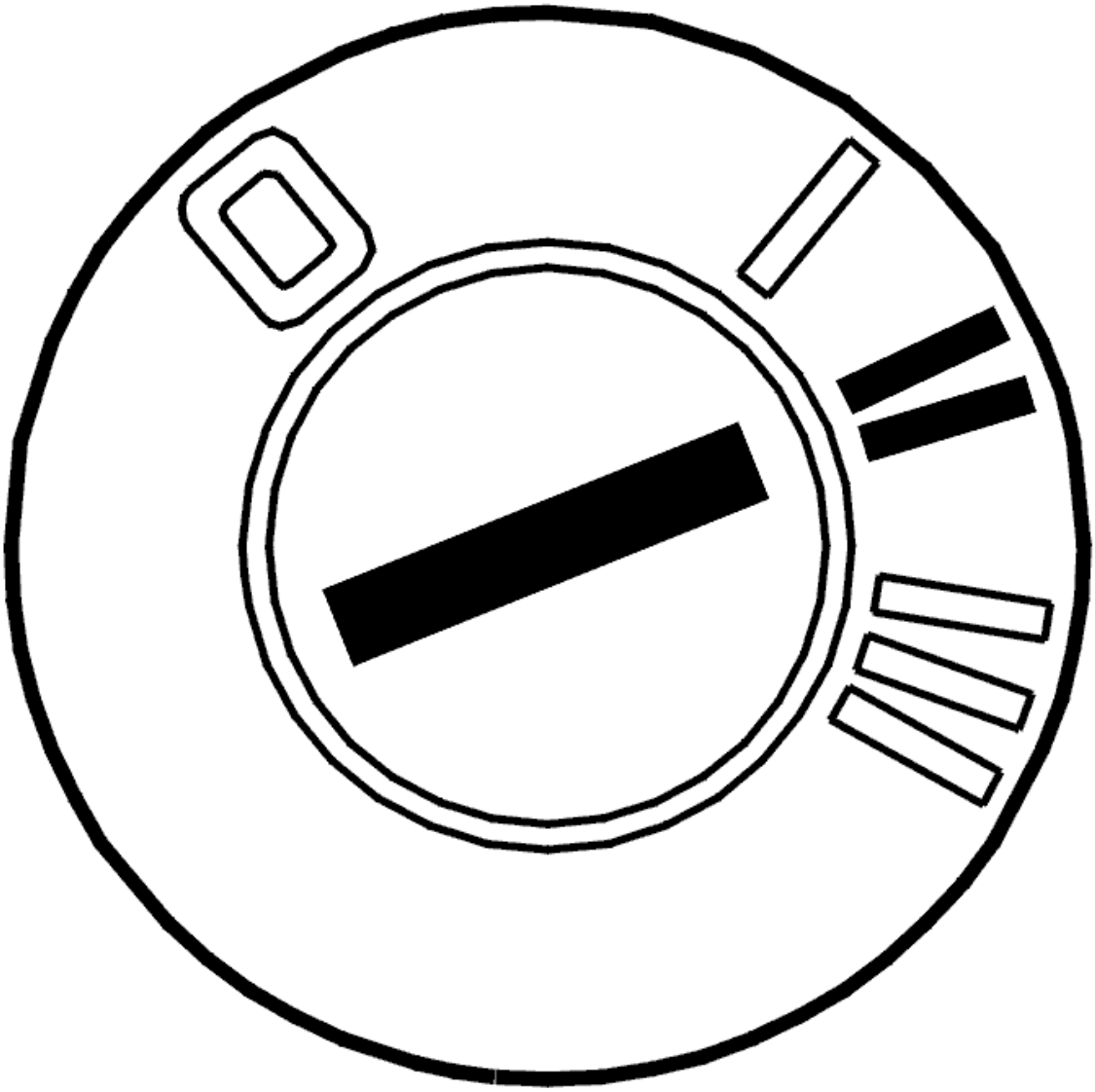

Fig. 81: Identifying Ignition ON
Courtesy of VOLVO CARS CORPORATION

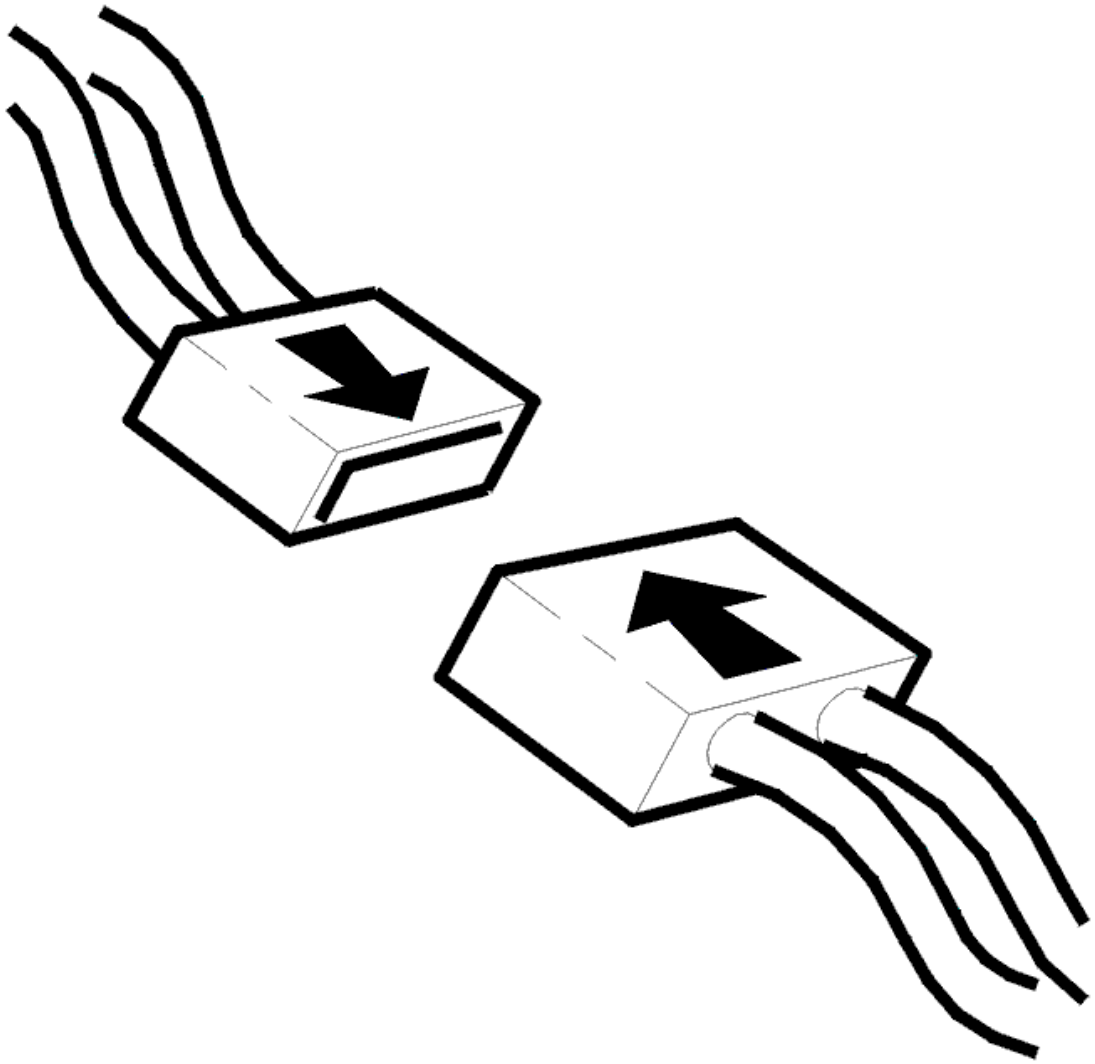

Fig. 82: Connecting Connector
Courtesy of VOLVO CARS CORPORATION

- Ignition off
- Reinstall the connectors, components etc.
- Ignition on.

  Activate the infotainment unit by pressing the POWER button.

  Check that the display lights.

Does the display light?

- **YES**

VERIFIED: Troubleshooting has been completed.

- **NO**

  Refer to **INFORMATION**

INFORMATION

FAULT-TRACING INFORMATION

The fault should have been detected and remedied. As this is not the case fault-tracing has failed.

Exit fault-tracing for this diagnostic trouble code (DTC) or make another attempt.

CHECKING THE DISPLAY SCREEN. REAR SEAT ENTERTAINMENT, GENERATION 3.2 (2003-2005)

CHECKING THE DISPLAY SCREEN

CHECKING THE DISPLAY SCREEN

Make sure that nothing is stuck at the screen hinges or there is no other mechanical fault that could prevent the screen from opening properly.

HINT: Information on screen initiation is found in the User Manual for the Rear Seat Entertainment system.

Initiate the screen motor as follows:

- Press the Power button (1) on the remote control to switch the system on.
- Press the Default Settings button (14) on the remote control.
- Press the Power button (1) on the remote control to switch the system off.

The check that the screen opens correctly when the system is switched off.

If initiation fails or the fault recurs often, replace the screen.

Remedy as necessary.

FAULT INFORMATION

Condition

Screen does not open. This can lead to an audible rattling noise from the screen while driving.

Substitute Value

- None.

Possible Source

- Screen has not been initiated.

Fault symptom[s]

- Display will not fold up

CHECKING THE DISPLAY, MULTIMEDIA MODULE (MMM) (2003-2011)

CHECKING THE DISPLAY SCREEN (2003-2006)

FAULT-TRACING INFORMATION

Fault causes which will stop the display working:

- Open-circuit in the signal cable between the display and the multimedia module (MMM)
- No power supply to the display screen
- The display screen is not working
- Defective multimedia module (MMM)
- The MOST network is not working
- The relay for the infotainment system (positioned on the central electronic module (CEM)) is not powered.

HINT: The display screen will not deploy in the event of a fault in the MOST network. If the display screen is deployed and the data on the screen does not update or the screen suddenly retracts, the MOST network may not be working. Check that the MOST network is working.

- **Continue**

  Refer to **SYMPTOM INFORMATION**

SYMPTOM INFORMATION

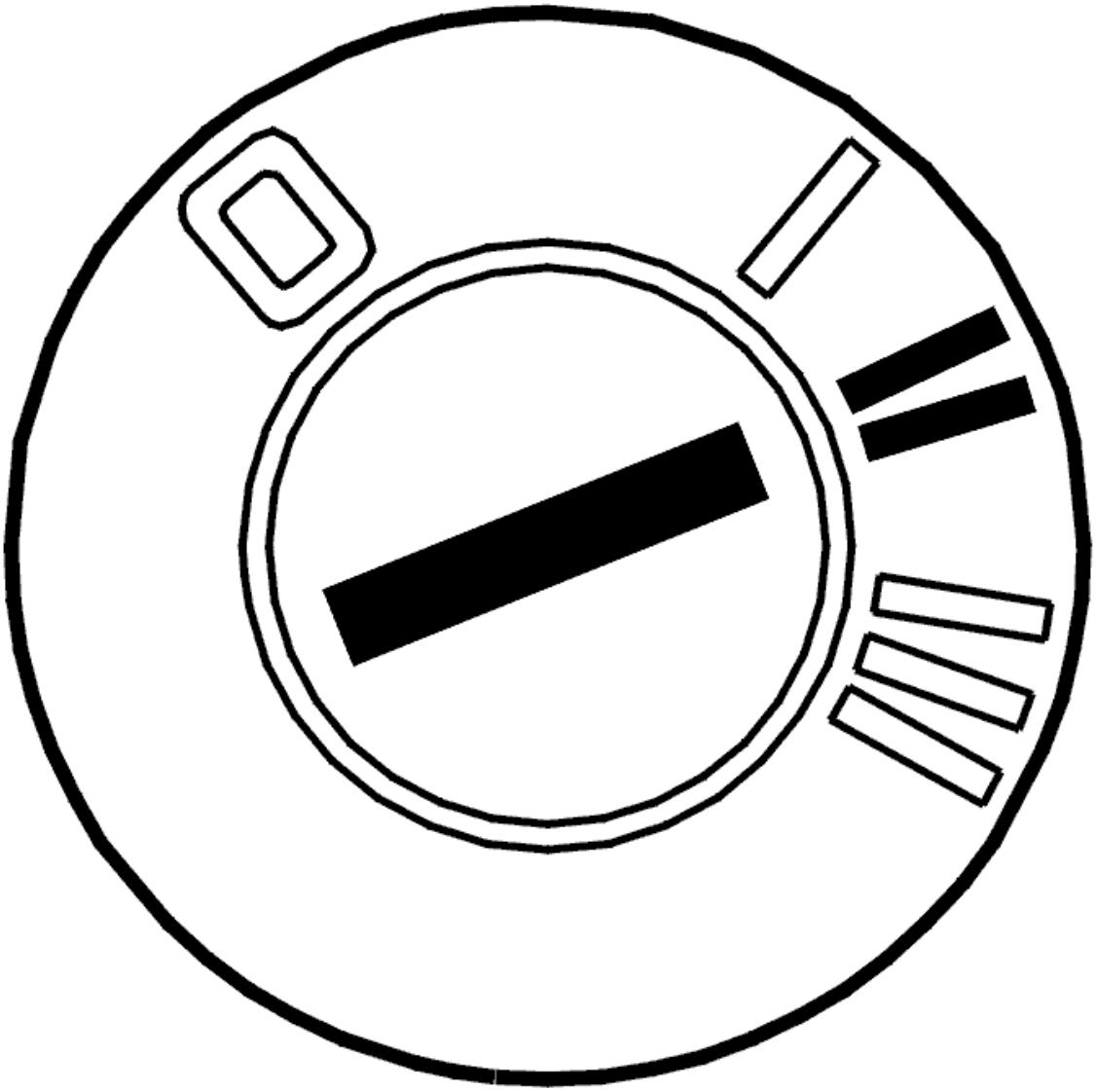

Fig. 83: Identifying Ignition ON
Courtesy of VOLVO CARS CORPORATION

- Ignition on.

  Activate the multimedia module (MMM) using the navigation buttons or the remote control so that the display screen deploys and folds away.

Does the screen deploy and fold away?

- **YES**

  OKAY: Troubleshooting has been completed.

- **NO**

Refer to **CHECKING THE CABLE**

CHECKING THE CABLE

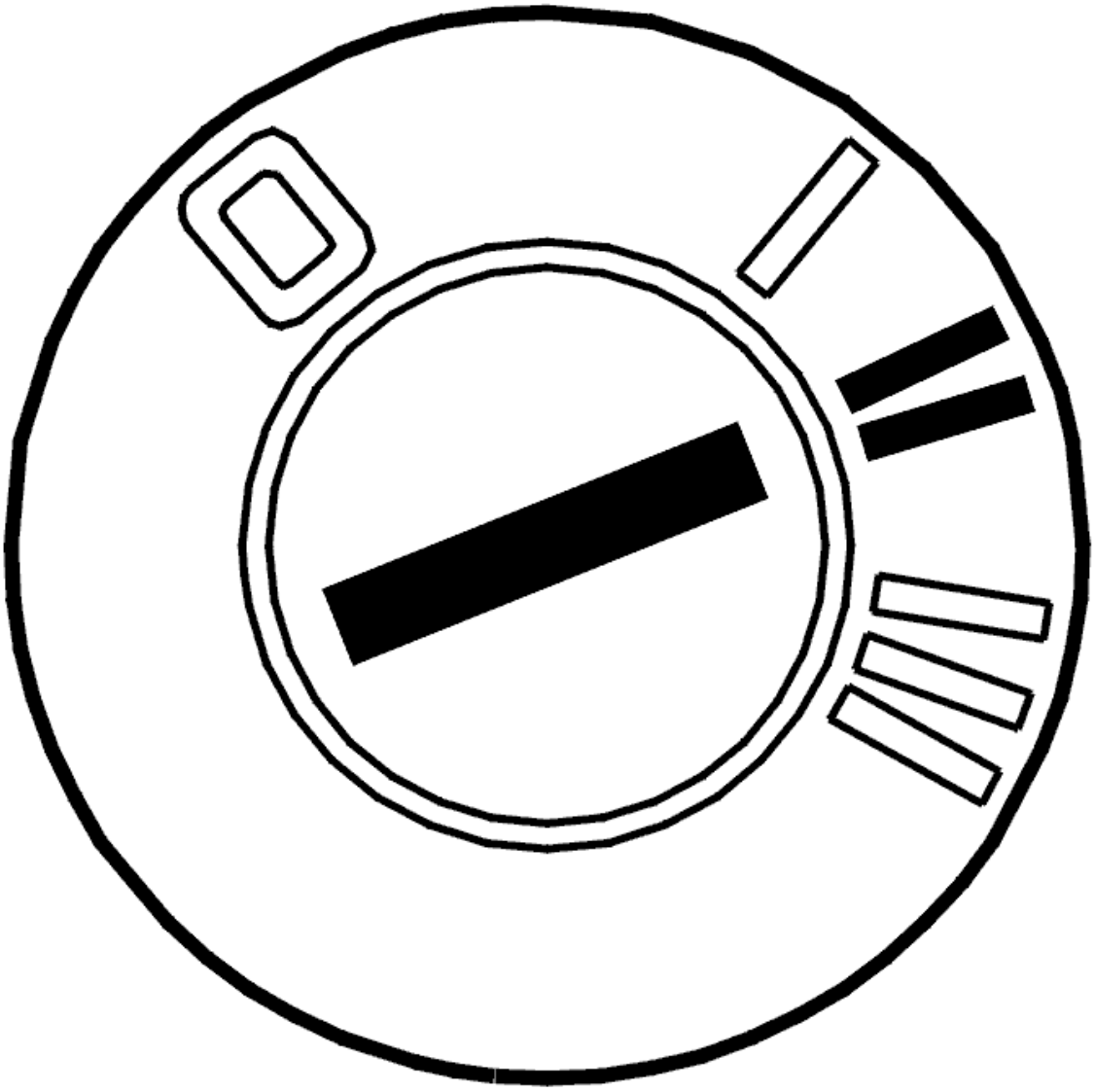

Fig. 84: Identifying Ignition ON
Courtesy of VOLVO CARS CORPORATION

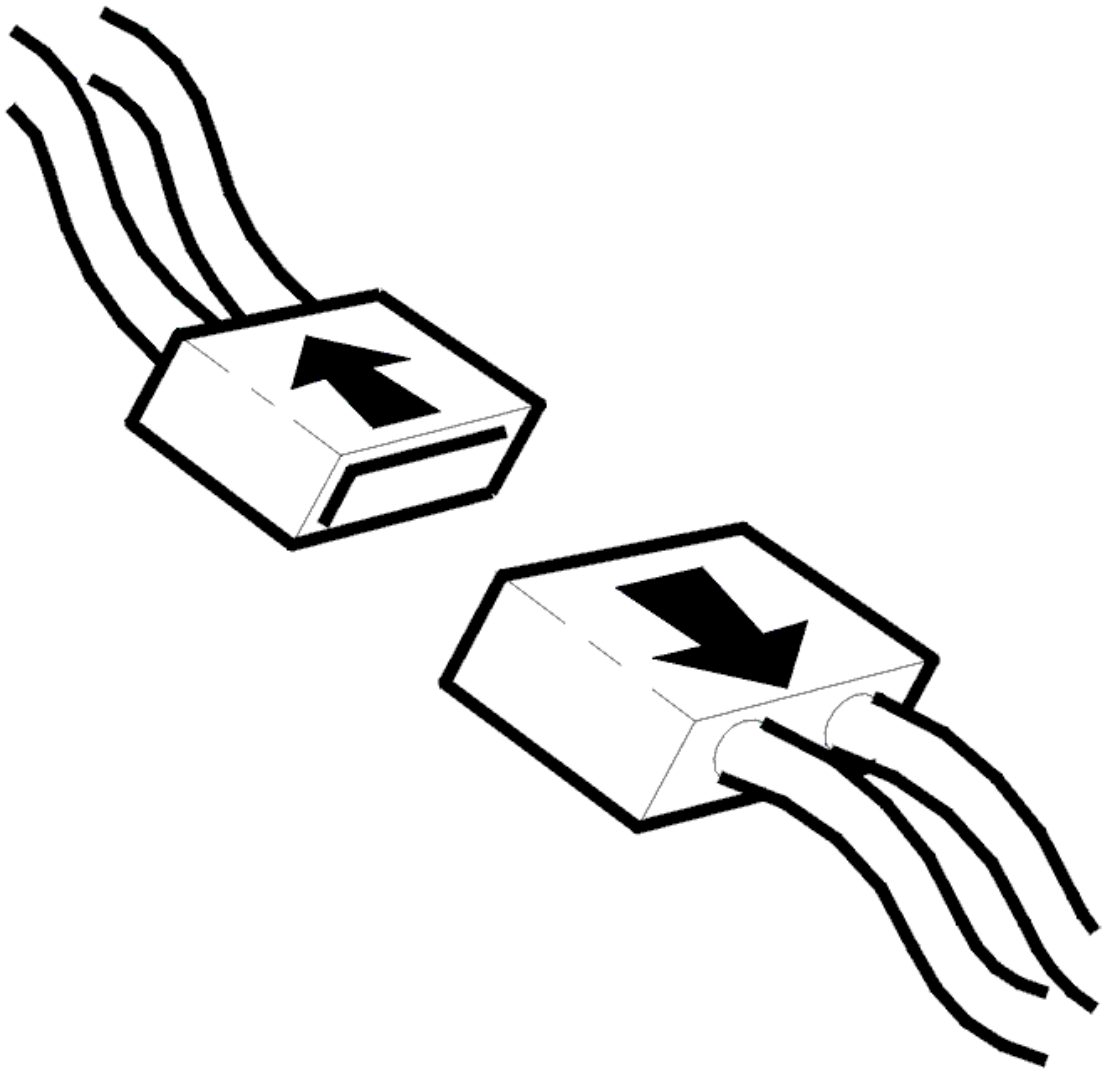

Fig. 85: Disconnecting Connector
Courtesy of VOLVO CARS CORPORATION

- Ignition off
- Disconnect the 5-pin connector from the display screen
- Ignition on.

Checking the cable

Check the display screen cable terminals. Check for oxidation and loose connections.

Check the cable terminals in the female and male sections of the connector. The cable terminals must not be damaged or pressed back

Check the voltage at the 5-pin connector for the screen. The voltage should be 12 V.

Take readings between:

- terminals #1 and #5
- terminals #2 and #4
- terminals #3 and #4.

If the voltage is not 12 V, check terminals #1, #2 and #3 in the 5-pin connector for the screen. Check for a short-circuit to ground. Check for an open-circuit.

If the voltage is not 12 V, check terminals #4 and #5 in the 5-pin connector for the screen. Check for a short-circuit to supply voltage. Check for an open-circuit.

Other information:

- To access or replace the multimedia module (MMM), see **MULTIMEDIA MODULE (MMM), REPLACING**
- To access or replace the display screen, see **CENTER LOUDSPEAKER WITH DISPLAY SCREEN, REPLACING**
- For information about signals, see **SIGNAL SPECIFICATION**
- For further information about the fuses and relays, see the Wiring Diagram
- see **CONTENTS** .

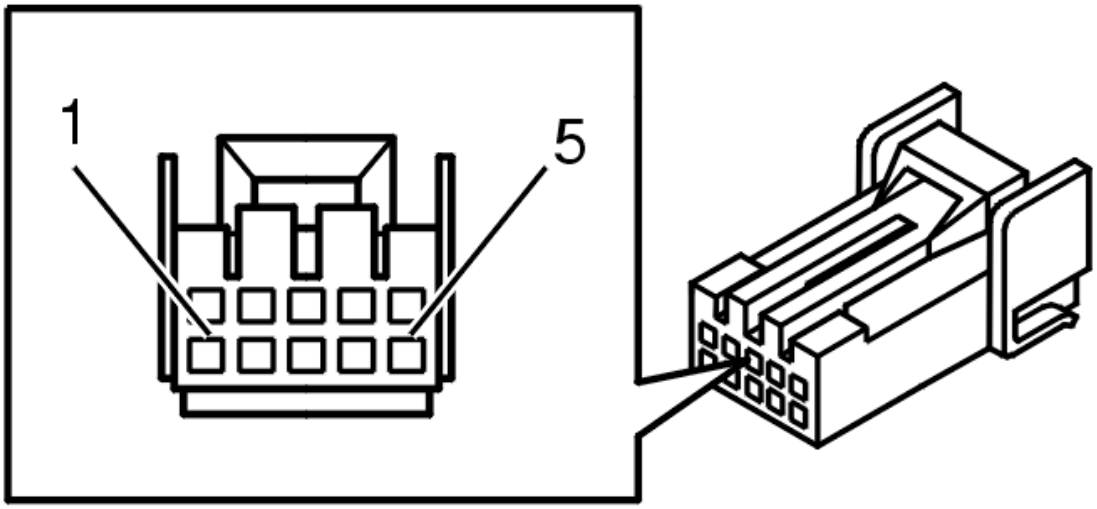

Fig. 86: 10 CD Changer Connector Terminals
Courtesy of VOLVO CARS CORPORATION

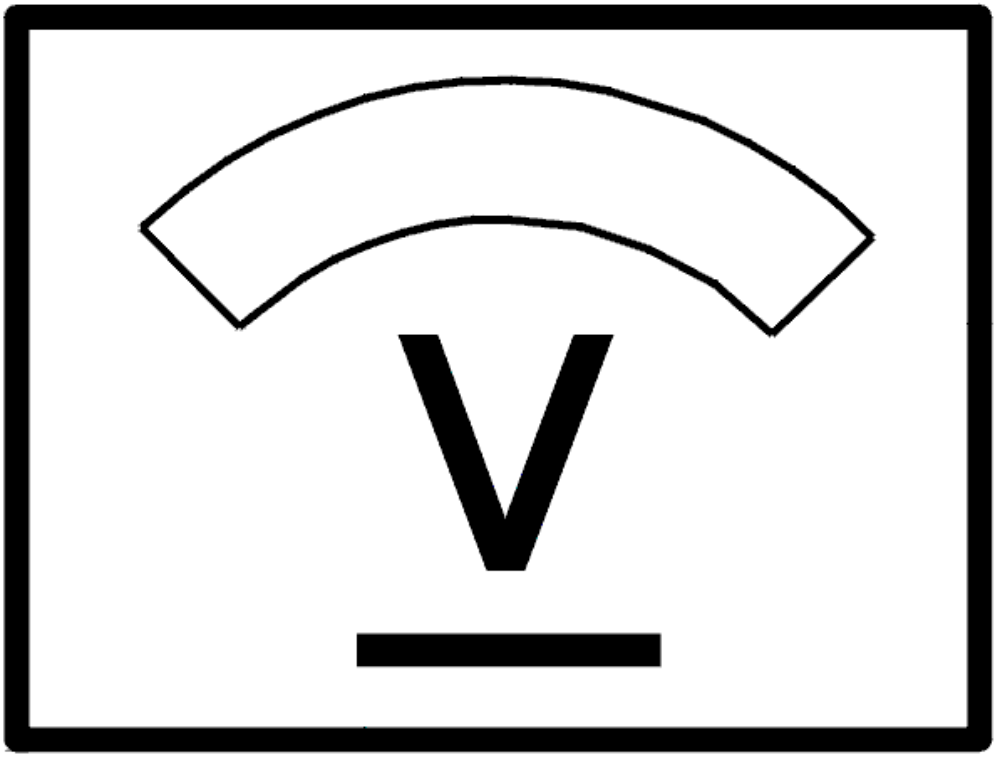

Fig. 87: Identifying Voltage Display
Courtesy of VOLVO CARS CORPORATION

Was the fault found?

- **YES**

  Refer to **VERIFICATION**

- **NO**

  Refer to **CHECKING THE CABLE**

CHECKING THE CABLE

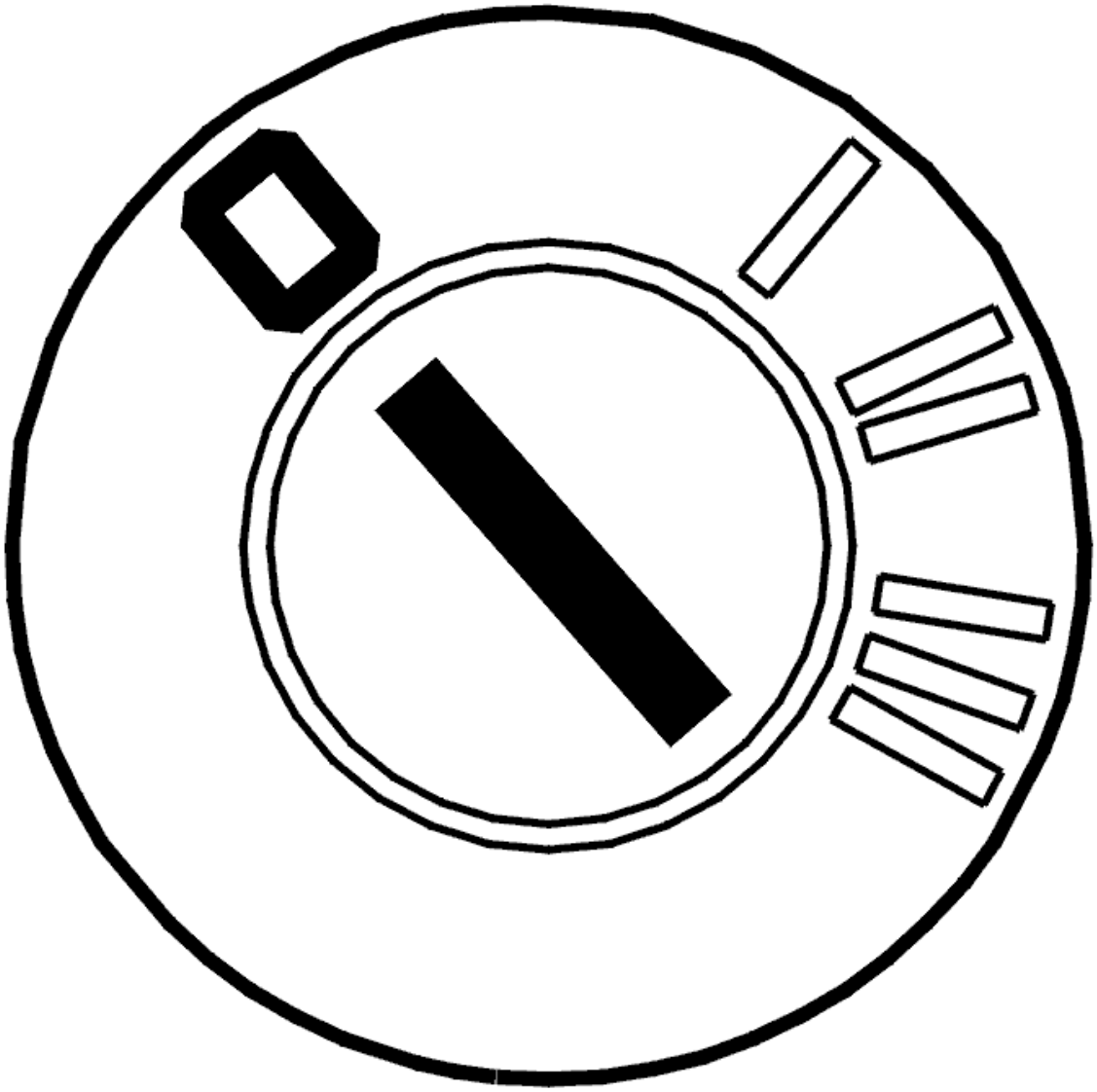

Fig. 88: Identifying Ignition OFF
Courtesy of VOLVO CARS CORPORATION

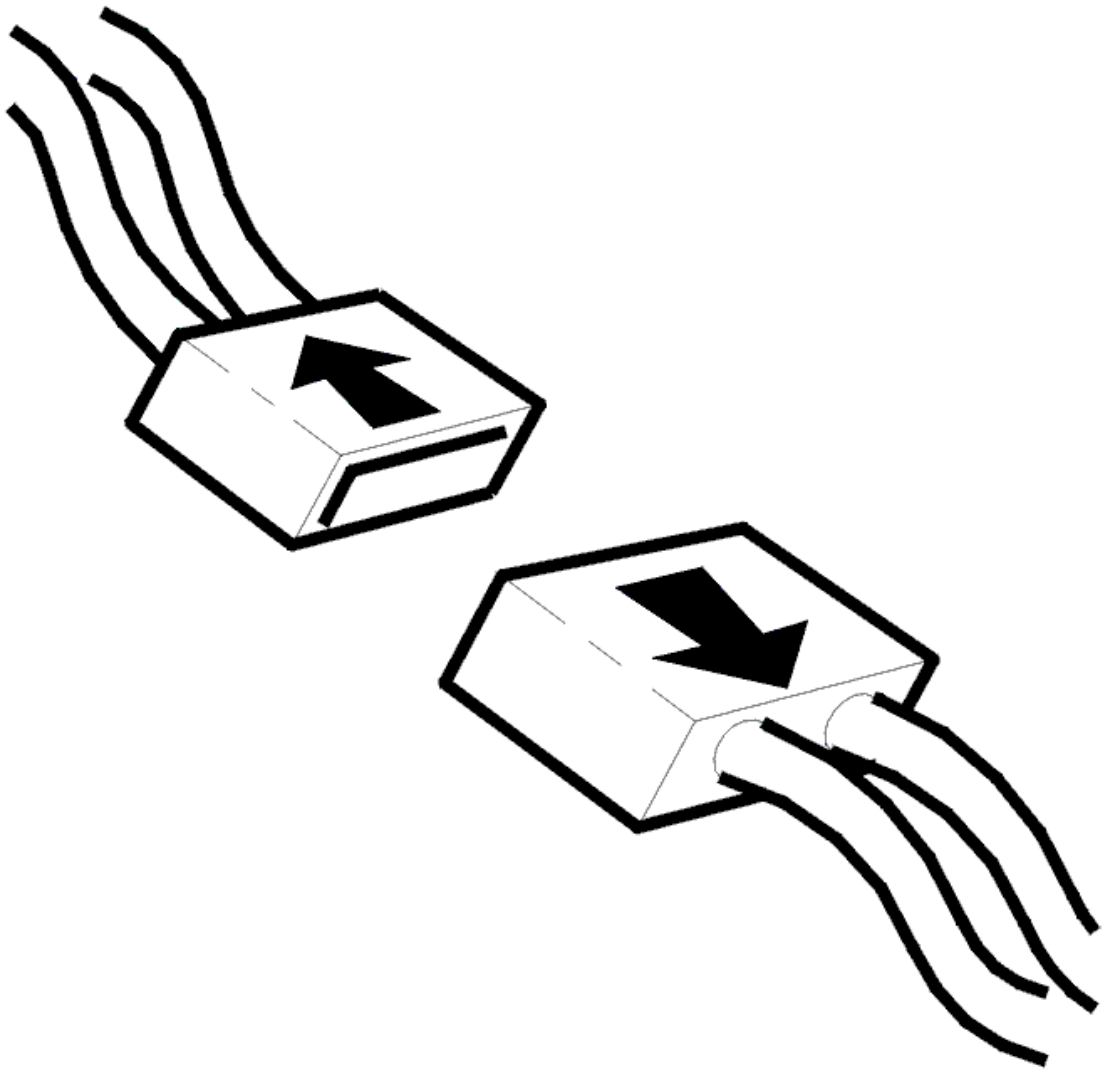

Fig. 89: Disconnecting Connector
Courtesy of VOLVO CARS CORPORATION

- Ignition off
- Disconnect the 10-pin connector from the display screen and multimedia module (MMM).

Checking the cable

Check the cable terminals between the display screen and multimedia module (MMM). Check for loose connections and oxidation.

Check the cable terminals in the female and male sections of the connector. The cable terminals must not be damaged or pressed back.

Check the signal cable between display screen terminal #7 (10-pin connector) and multimedia module (MMM) terminal #B7 (#7). Check for a short-circuit to supply voltage. Check for an open-circuit.

Check the signal cable between display screen terminal #4 (10-pin connector) and multimedia module (MMM) terminal #B4 (#4). Check for a short-circuit to supply voltage. Check for a short-circuit to ground. Check for an open-circuit.

If no fault is found, replace the display screen.

Remedy as necessary.

Other information:

- To connect the breakout box, see **CONNECTING THE BREAKOUT BOX (2003-2006)**
- To access or replace the multimedia module (MMM), see **MULTIMEDIA MODULE (MMM), REPLACING**
- To access or replace the display screen, see **CENTER LOUDSPEAKER WITH DISPLAY SCREEN, REPLACING**
- For information about signals, see **SIGNAL SPECIFICATION**
- see **CONTENTS** .

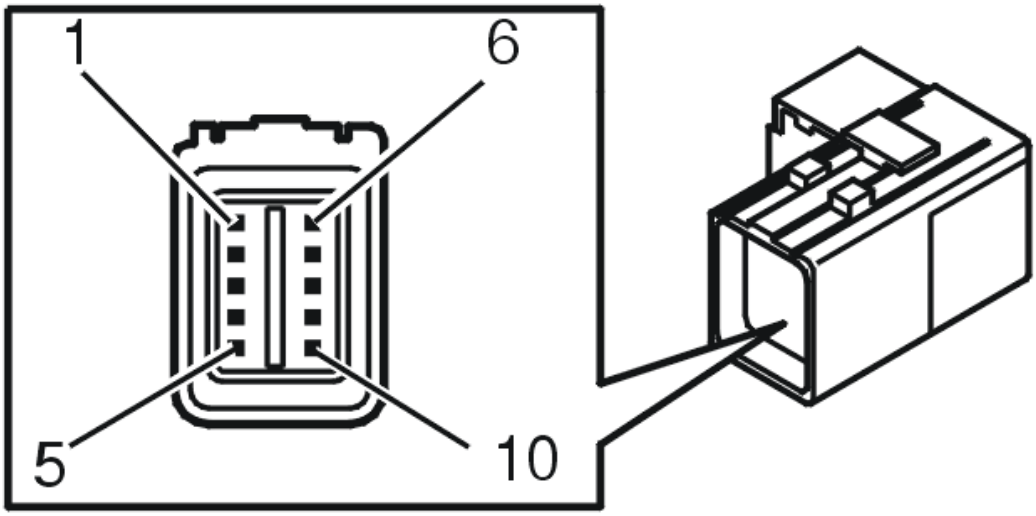

Fig. 90: Identifying RTI Control Module (To Display) Connector Terminals
Courtesy of VOLVO CARS CORPORATION

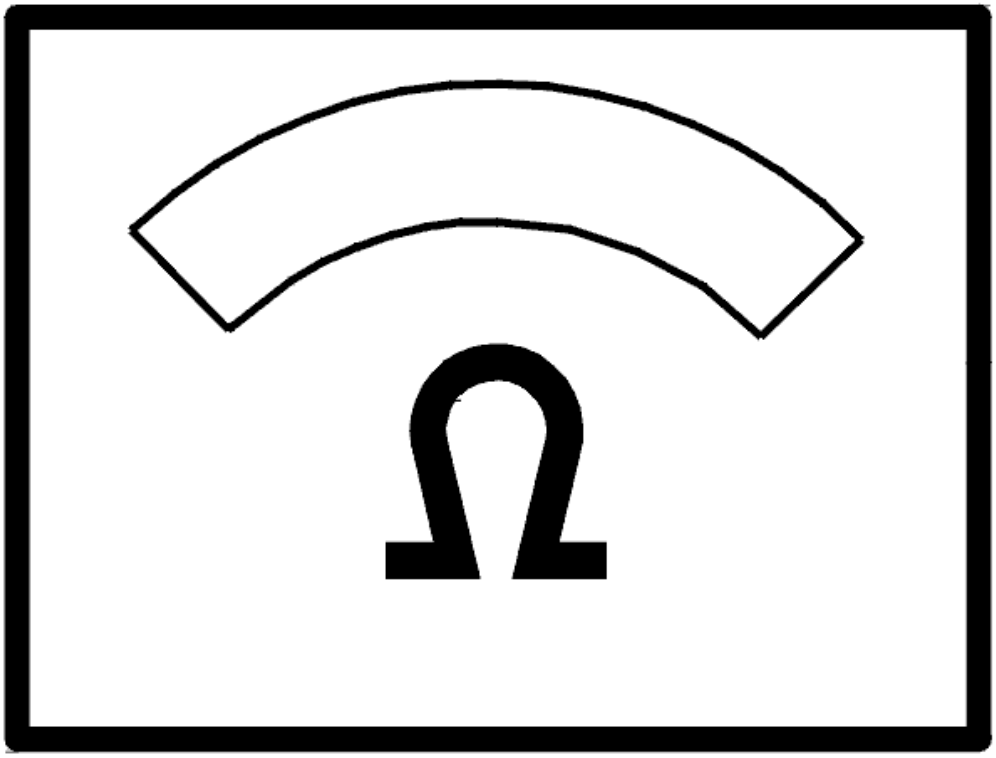

Fig. 91: Identifying Ohm Meter
Courtesy of VOLVO CARS CORPORATION

- **Continue**

  Refer to **VERIFICATION**

VERIFICATION

VERIFICATION

HINT: After carrying out the repair, check that the fault has been remedied.

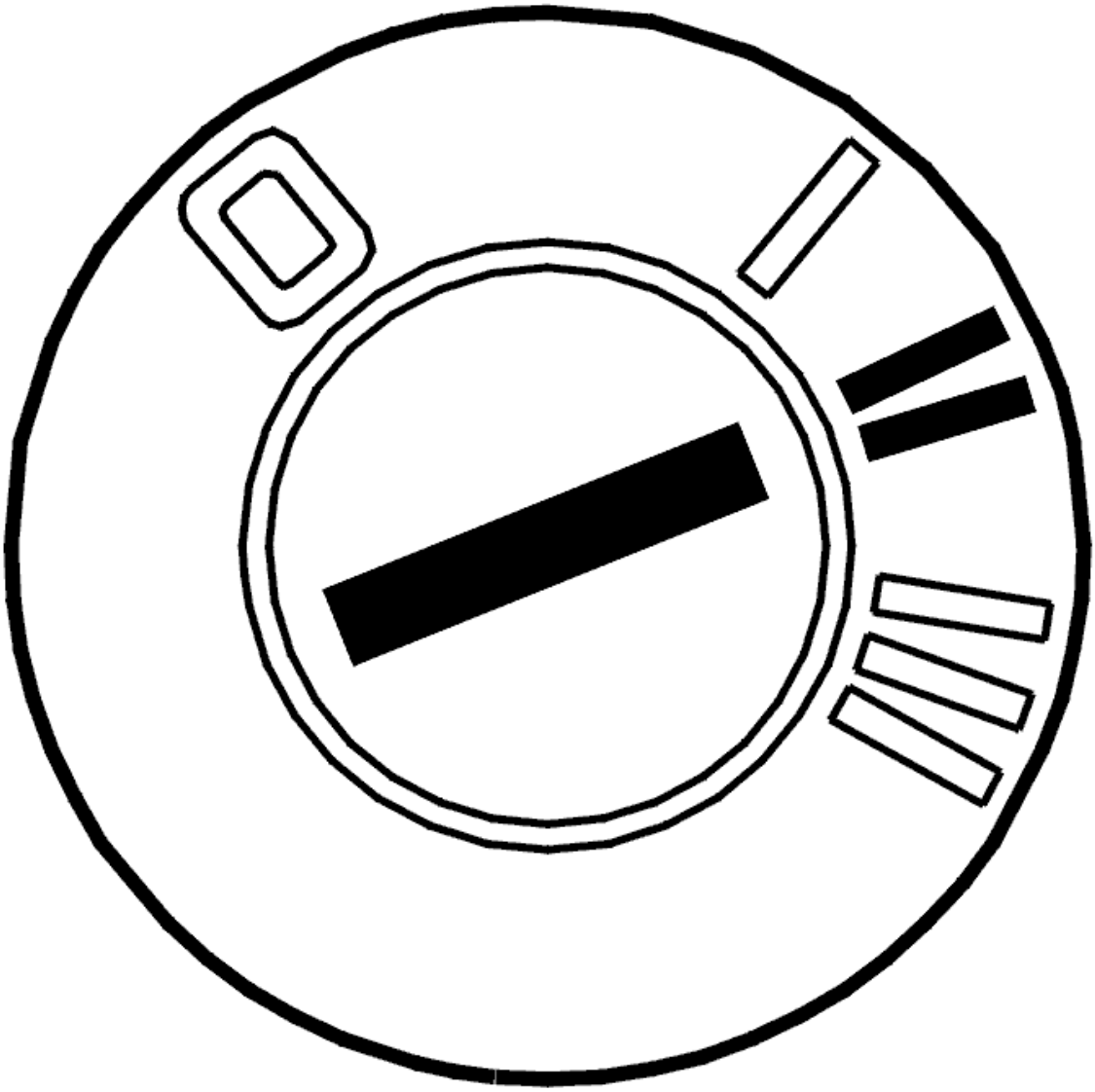

Fig. 92: Identifying Ignition ON
Courtesy of VOLVO CARS CORPORATION

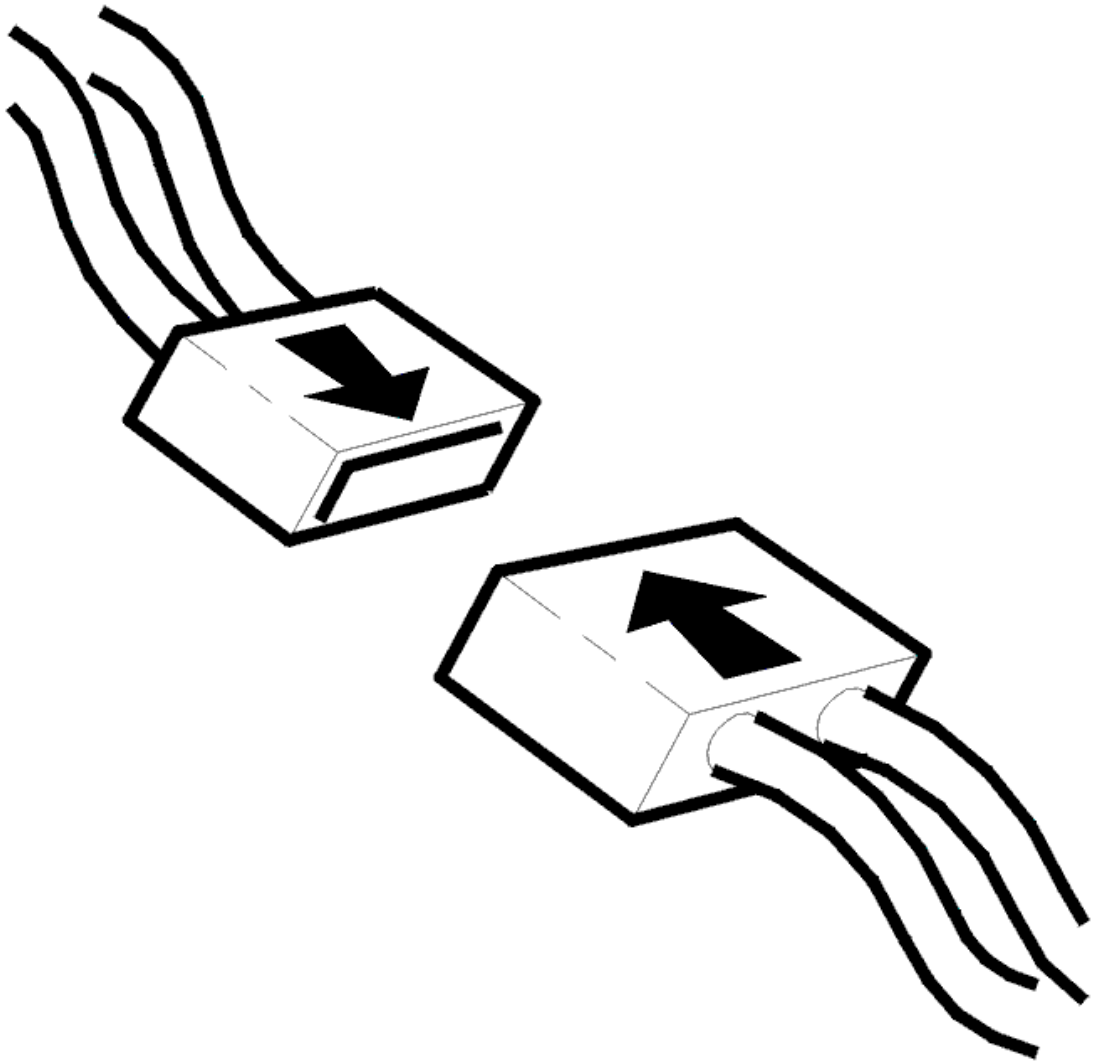

Fig. 93: Connecting Connector
Courtesy of VOLVO CARS CORPORATION

- Ignition off
- Reinstall the connectors, components etc.
- Ignition on.

  Check that the screen deploys when the ignition is switched on, when activated using the remote control or when using the steering wheel buttons for navigation.

  Ensure that the image and the colors of the image are good.

Does the display function?

- **YES**

VERIFIED: Troubleshooting has been completed.

- **NO**

  Refer to **INFORMATION**

INFORMATION

FAULT-TRACING INFORMATION

The fault should have been detected and remedied. As this is not the case fault-tracing has failed.

Exit fault-tracing for this diagnostic trouble code (DTC) or make another attempt.

CHECKING THE DISPLAY SCREEN (2007-2011)

FAULT-TRACING INFORMATION

Fault causes which will stop the display working:

- Open-circuit in the signal cable between the display and the multimedia module (MMM)
- No power supply to the display screen
- The display screen is not working
- Defective multimedia module (MMM)
- The MOST network is not working
- The relay for the infotainment system (positioned on the central electronic module (CEM)) is not powered.

HINT: The display screen will not deploy in the event of a fault in the MOST network. If the display screen is deployed and the data on the screen does not update or the screen suddenly retracts, the MOST network may not be working. Check that the MOST network is working.

- **Continue**

  Refer to **SYMPTOM INFORMATION**

SYMPTOM INFORMATION

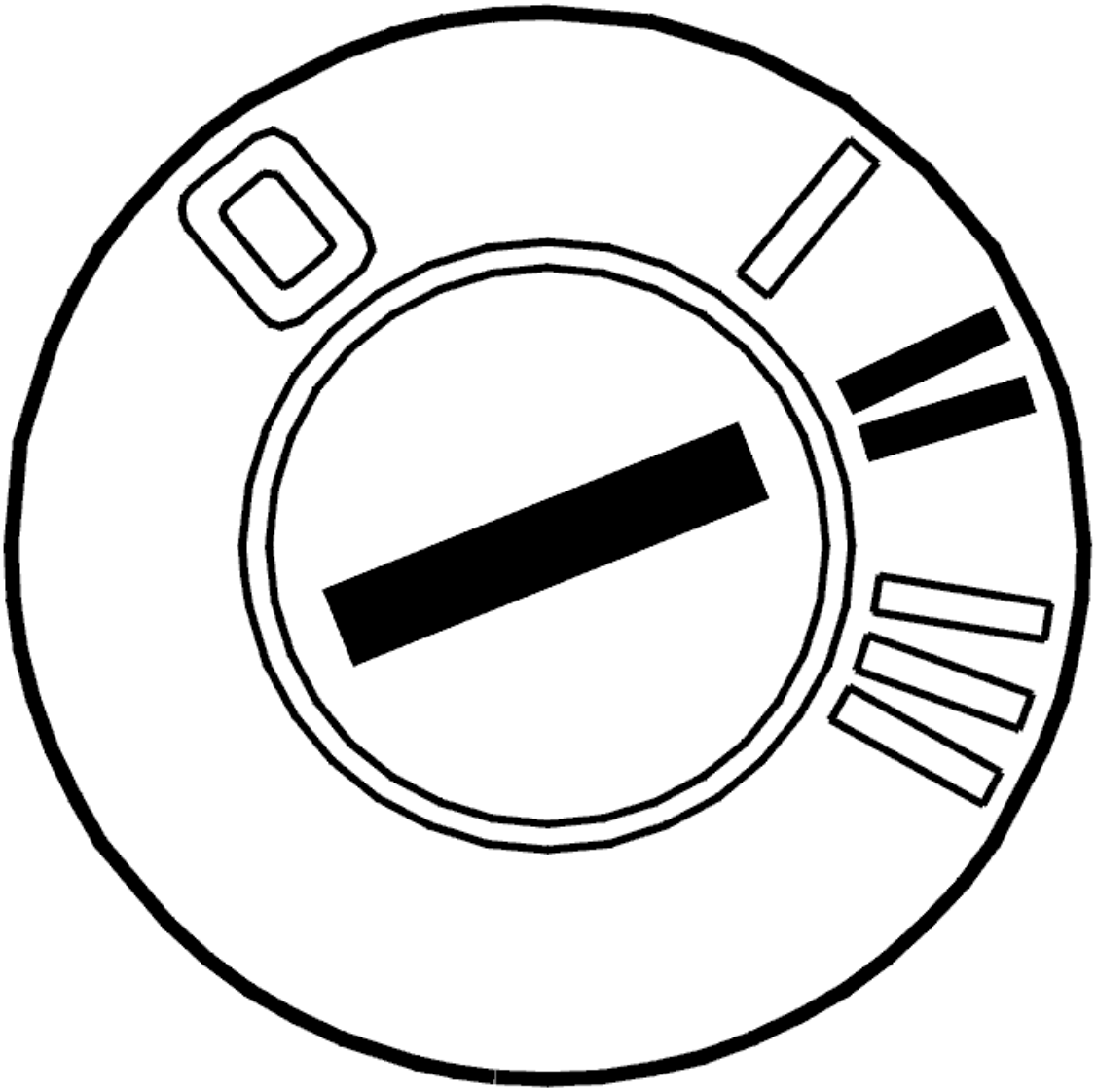

Fig. 94: Identifying Ignition ON
Courtesy of VOLVO CARS CORPORATION

- Ignition on.

  Activate the multimedia module (MMM) using the navigation buttons or the remote control so that the display screen deploys and folds away.

Does the screen deploy and fold away?

- **YES**

  OKAY: Troubleshooting has been completed.

- **NO**

Refer to **CHECKING THE CABLE**

CHECKING THE CABLE

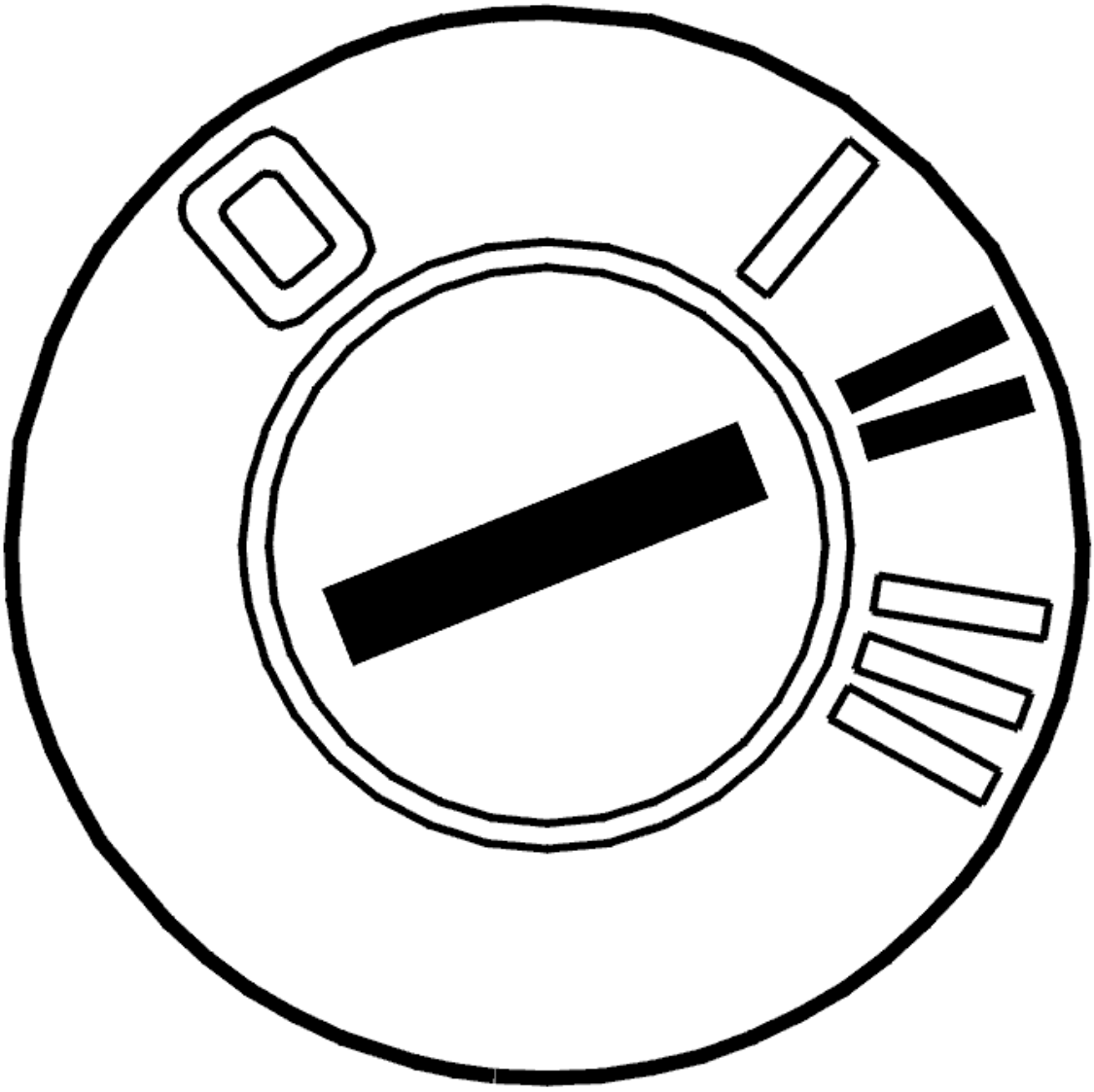

Fig. 95: Identifying Ignition ON
Courtesy of VOLVO CARS CORPORATION

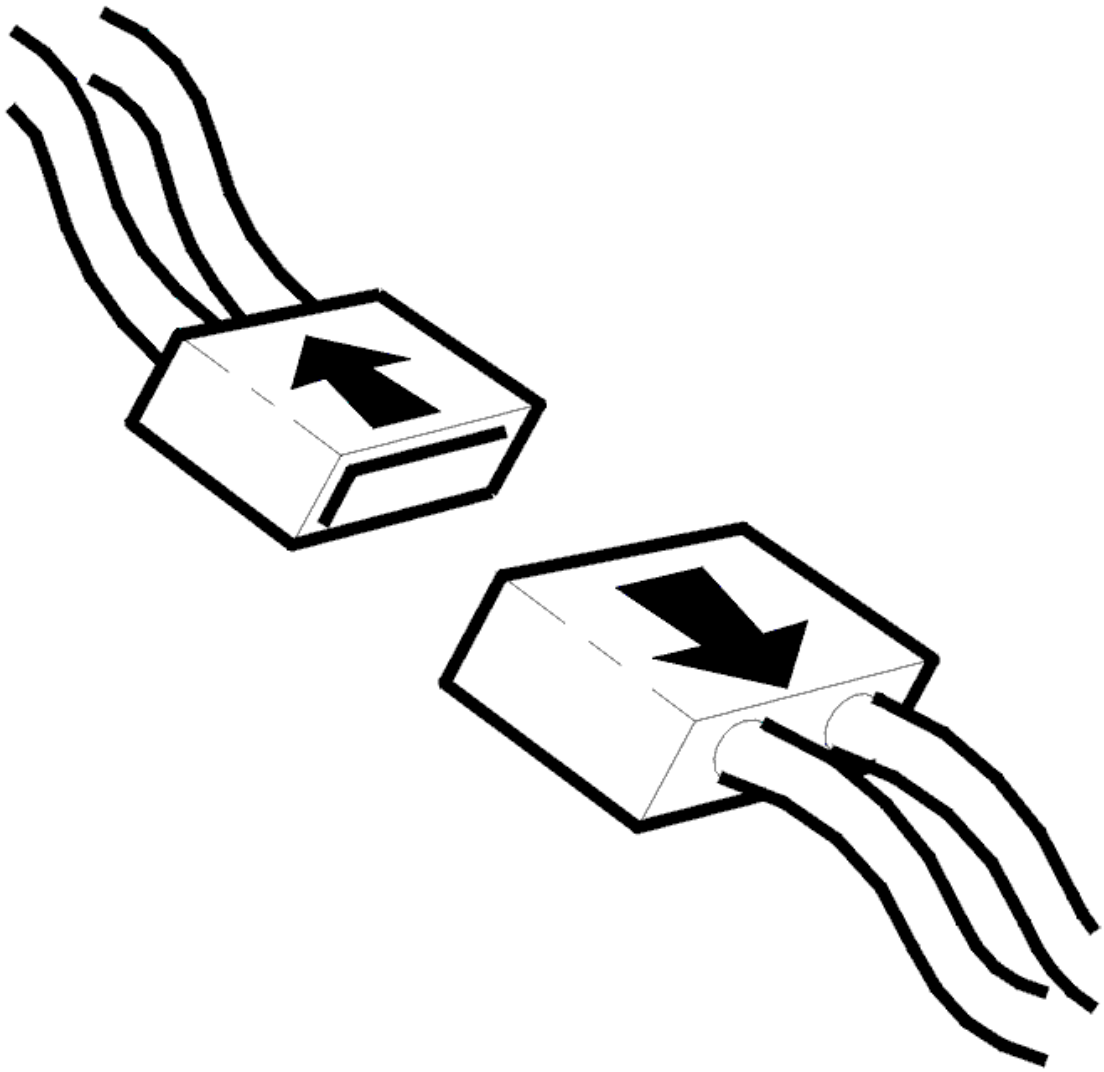

Fig. 96: Disconnecting Connector
Courtesy of VOLVO CARS CORPORATION

- Ignition off
- Disconnect the 5-pin connector from the display screen
- Ignition on.

Checking the cable

Check the display screen cable terminals. Check for oxidation and loose connections.

Check the cable terminals in the female and male sections of the connector. The cable terminals must not be damaged or pressed back

Check the voltage at the 5-pin connector for the screen. The voltage should be 12 V.

Take readings between:

- terminals #1 and #5
- terminals #2 and #4
- terminals #3 and #4.

If the voltage is not 12 V, check terminals #1, #2 and #3 in the 5-pin connector for the screen. Check for a short-circuit to ground. Check for an open-circuit.

If the voltage is not 12 V, check terminals #4 and #5 in the 5-pin connector for the screen. Check for a short-circuit to supply voltage. Check for an open-circuit.

Other information:

- To access or replace the multimedia module (MMM), see **MULTIMEDIA MODULE (MMM), REPLACING**
- To access or replace the display screen, see **CENTER LOUDSPEAKER WITH DISPLAY SCREEN, REPLACING**
- For information about signals, see **SIGNAL SPECIFICATION**
- For further information about the fuses and relays, see the Wiring Diagram
- see **CONTENTS** .

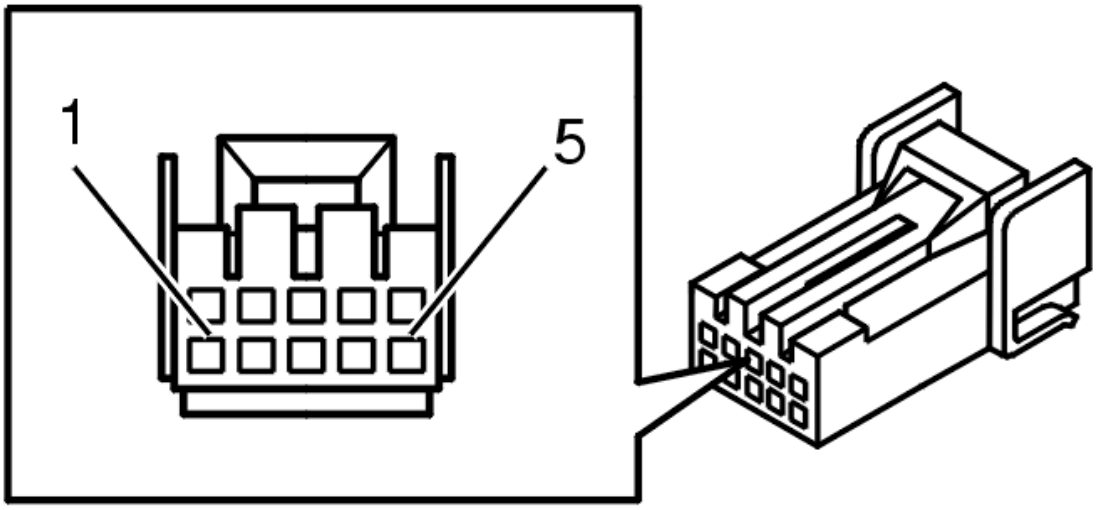

Fig. 97: 10 CD Changer Connector Terminals
Courtesy of VOLVO CARS CORPORATION

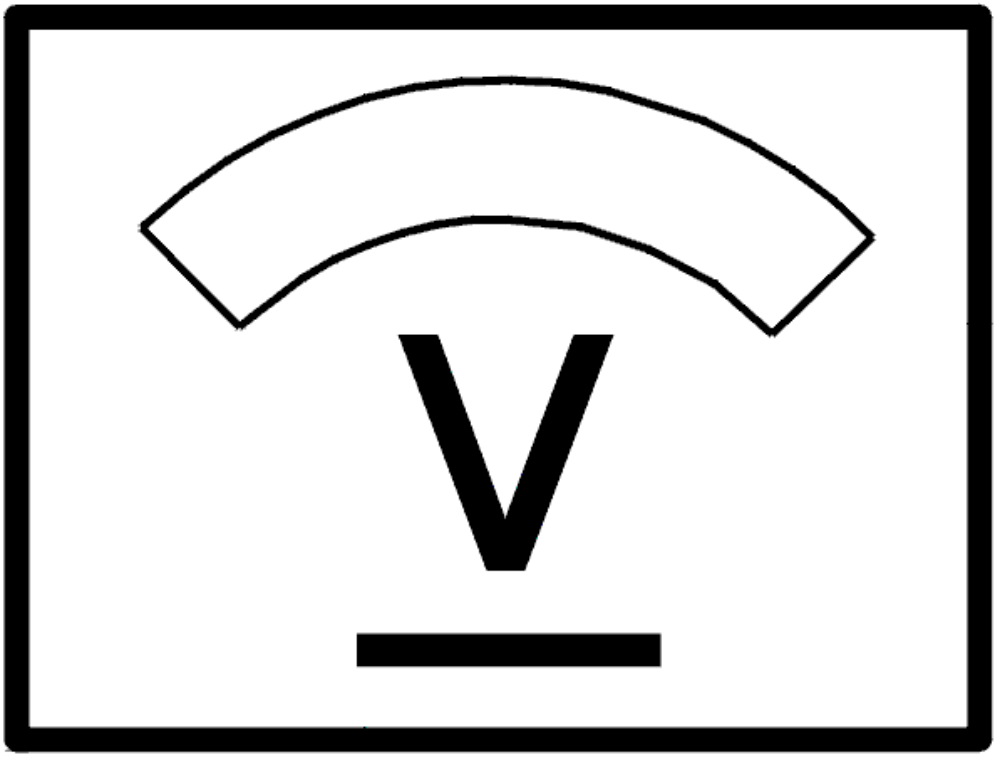

Fig. 98: Identifying Voltage Display
Courtesy of VOLVO CARS CORPORATION

Was the fault found?

- **YES**

  Refer to **VERIFICATION**

- **NO**

  Refer to **CHECKING THE CABLE**

CHECKING THE CABLE

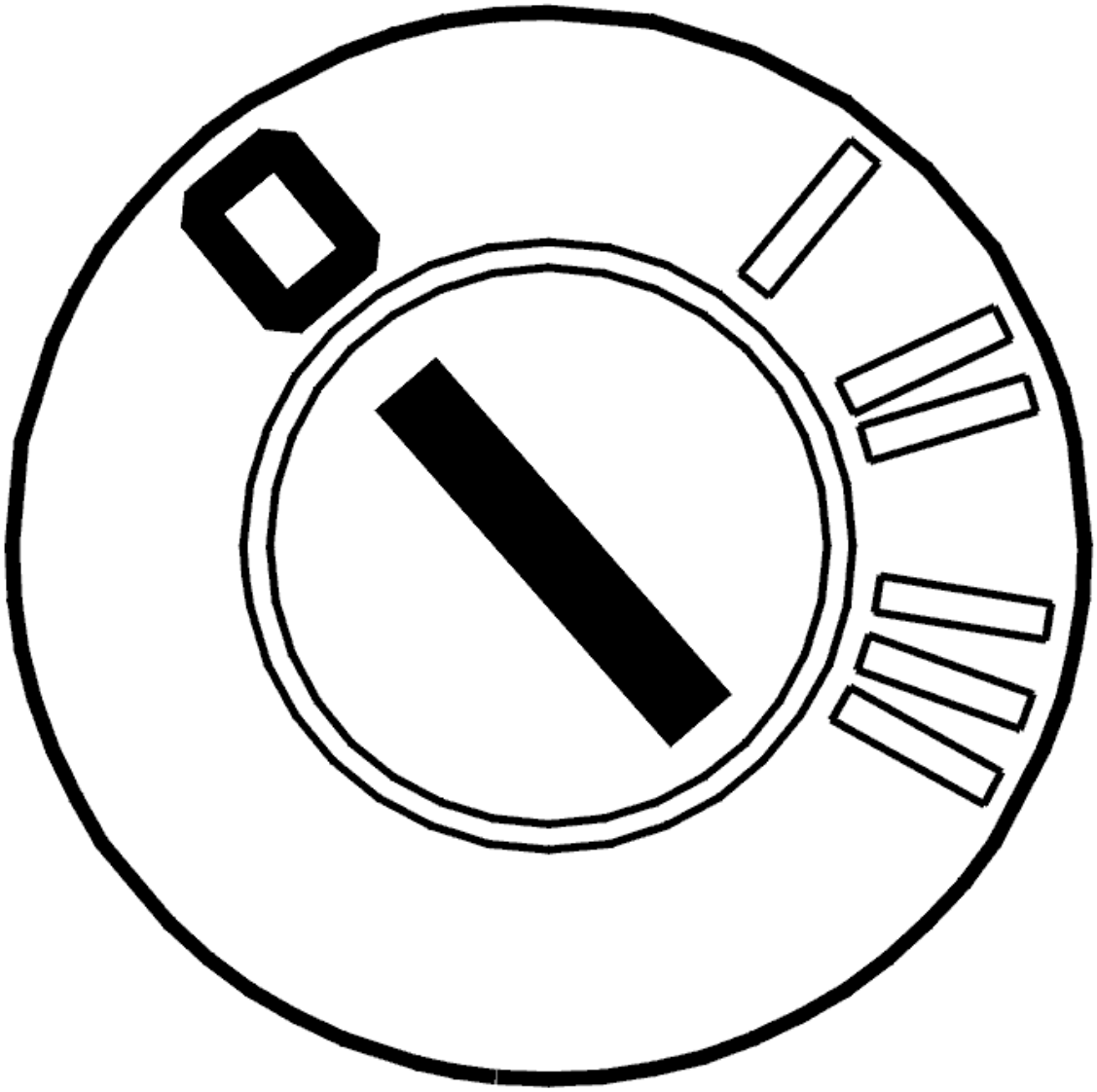

Fig. 99: Identifying Ignition OFF
Courtesy of VOLVO CARS CORPORATION

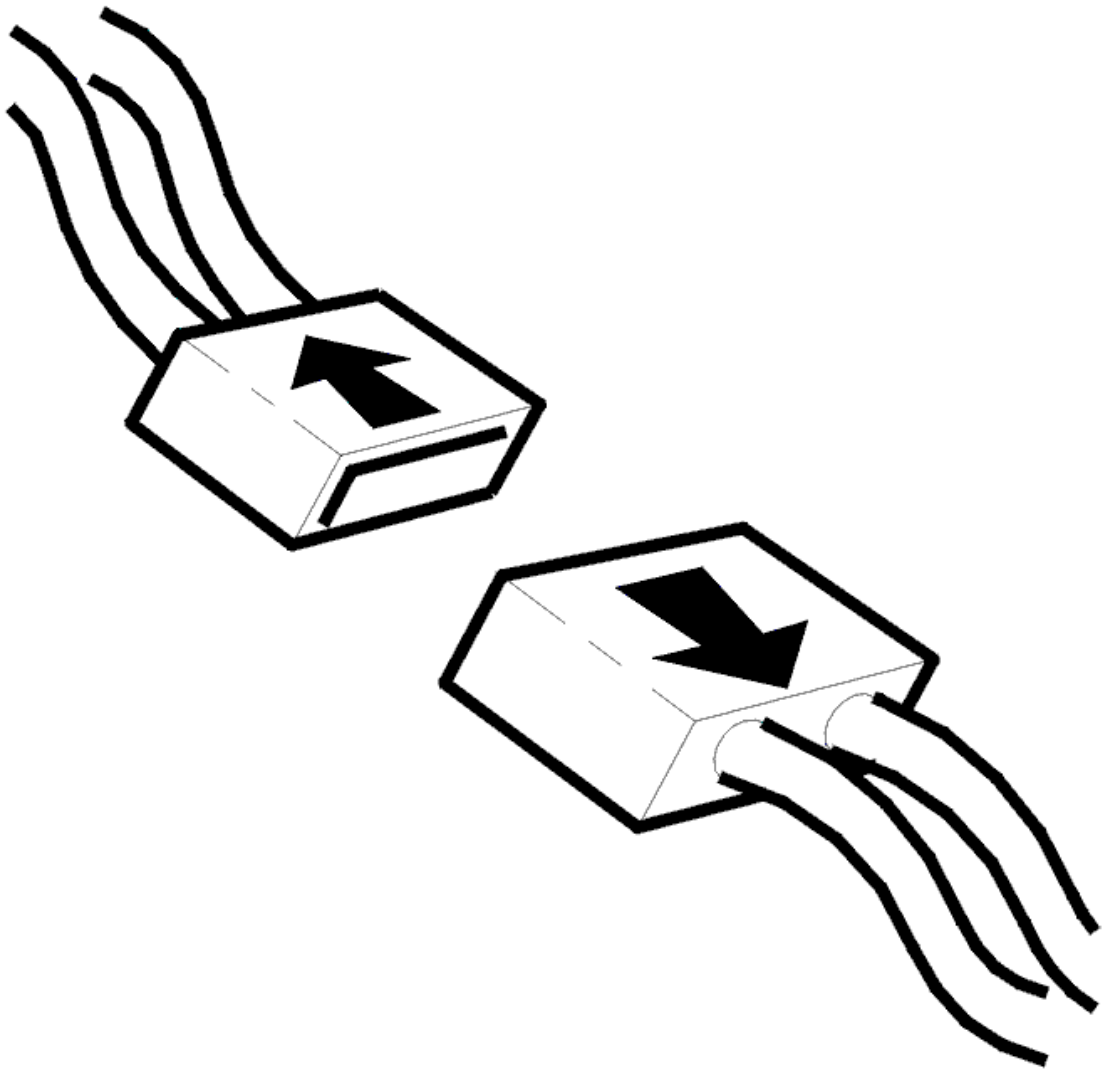

Fig. 100: Disconnecting Connector
Courtesy of VOLVO CARS CORPORATION

- Ignition off
- Disconnect the 10-pin connector from the display screen and multimedia module (MMM).

Checking the cable

Check the cable terminals between the display screen and multimedia module (MMM). Check for loose connections and oxidation.

Check the cable terminals in the female and male sections of the connector. The cable terminals must not be damaged or pressed back.

Check the signal cable between display screen terminal #7 (10-pin connector) and multimedia module (MMM) terminal #B7 (#7). Check for a short-circuit to supply voltage. Check for an open-circuit.

Check the signal cable between display screen terminal #4 (10-pin connector) and multimedia module (MMM) terminal #B4 (#4). Check for a short-circuit to supply voltage. Check for a short-circuit to ground. Check for an open-circuit.

If no fault is found, replace the display screen.

Remedy as necessary.

Other information:

- To connect the breakout box, see **CONNECTING THE BREAKOUT BOX (2003-2006)**
- To access or replace the multimedia module (MMM), see **MULTIMEDIA MODULE (MMM), REPLACING**
- To access or replace the display screen, see **CENTER LOUDSPEAKER WITH DISPLAY SCREEN, REPLACING**
- For information about signals, see **SIGNAL SPECIFICATION**
- see **CONTENTS** .

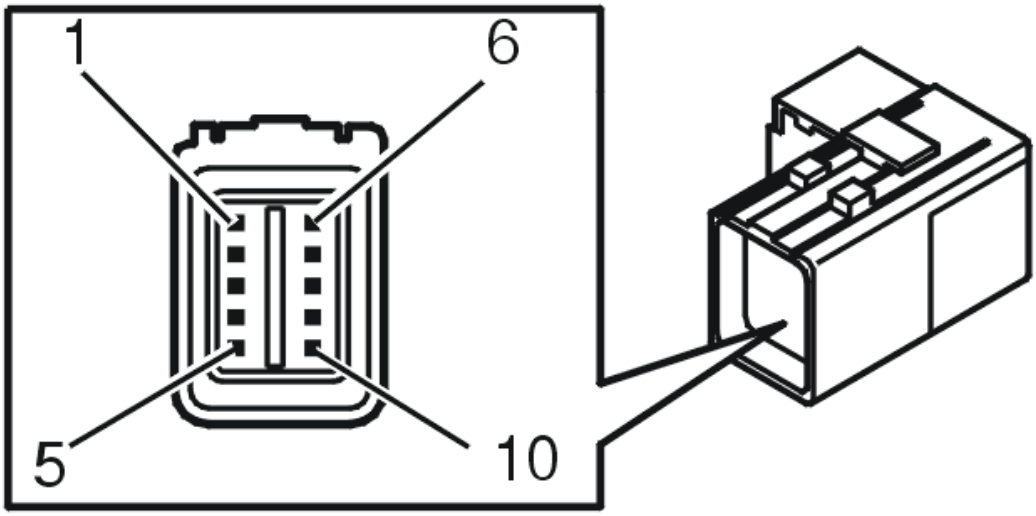

Fig. 101: Identifying RTI Control Module (To Display) Connector Terminals
Courtesy of VOLVO CARS CORPORATION

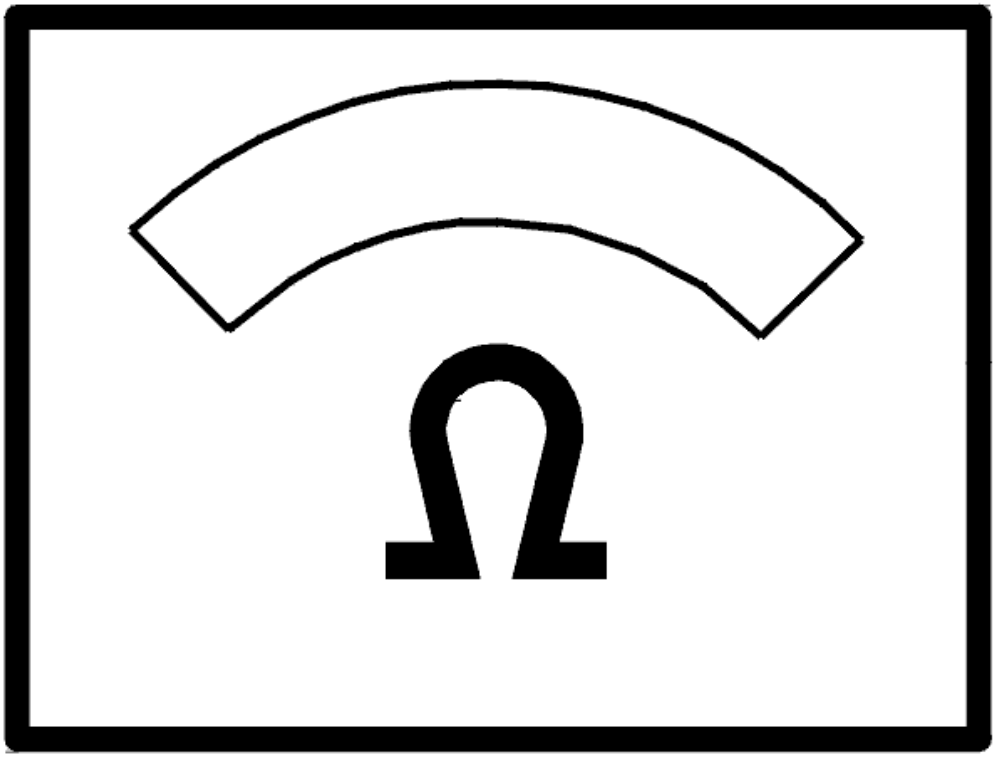

Fig. 102: Identifying Ohm Meter
Courtesy of VOLVO CARS CORPORATION

- **Continue**

  Refer to **VERIFICATION**

VERIFICATION

VERIFICATION

HINT: After carrying out the repair, check that the fault has been remedied.

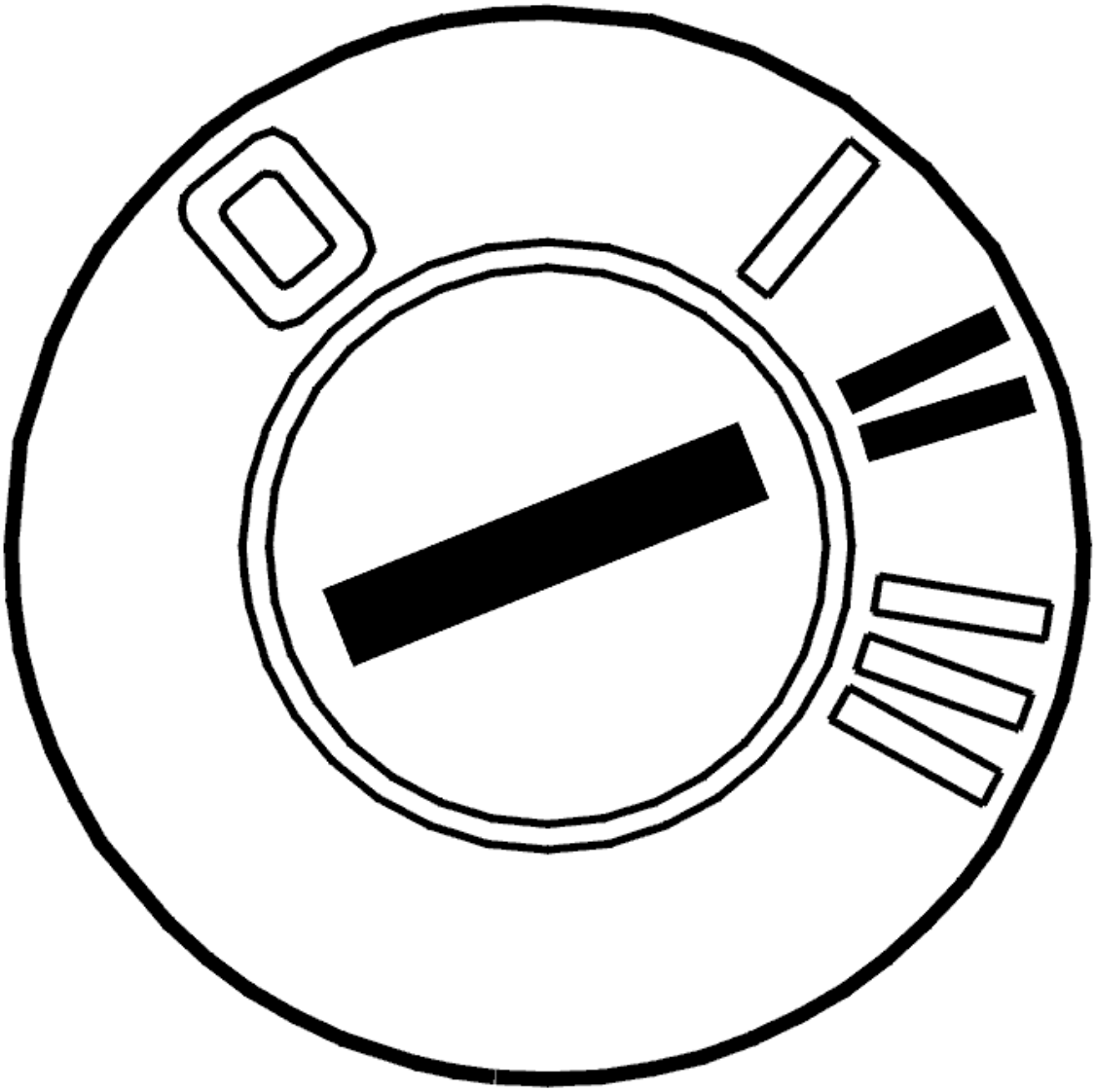

Fig. 103: Identifying Ignition ON
Courtesy of VOLVO CARS CORPORATION

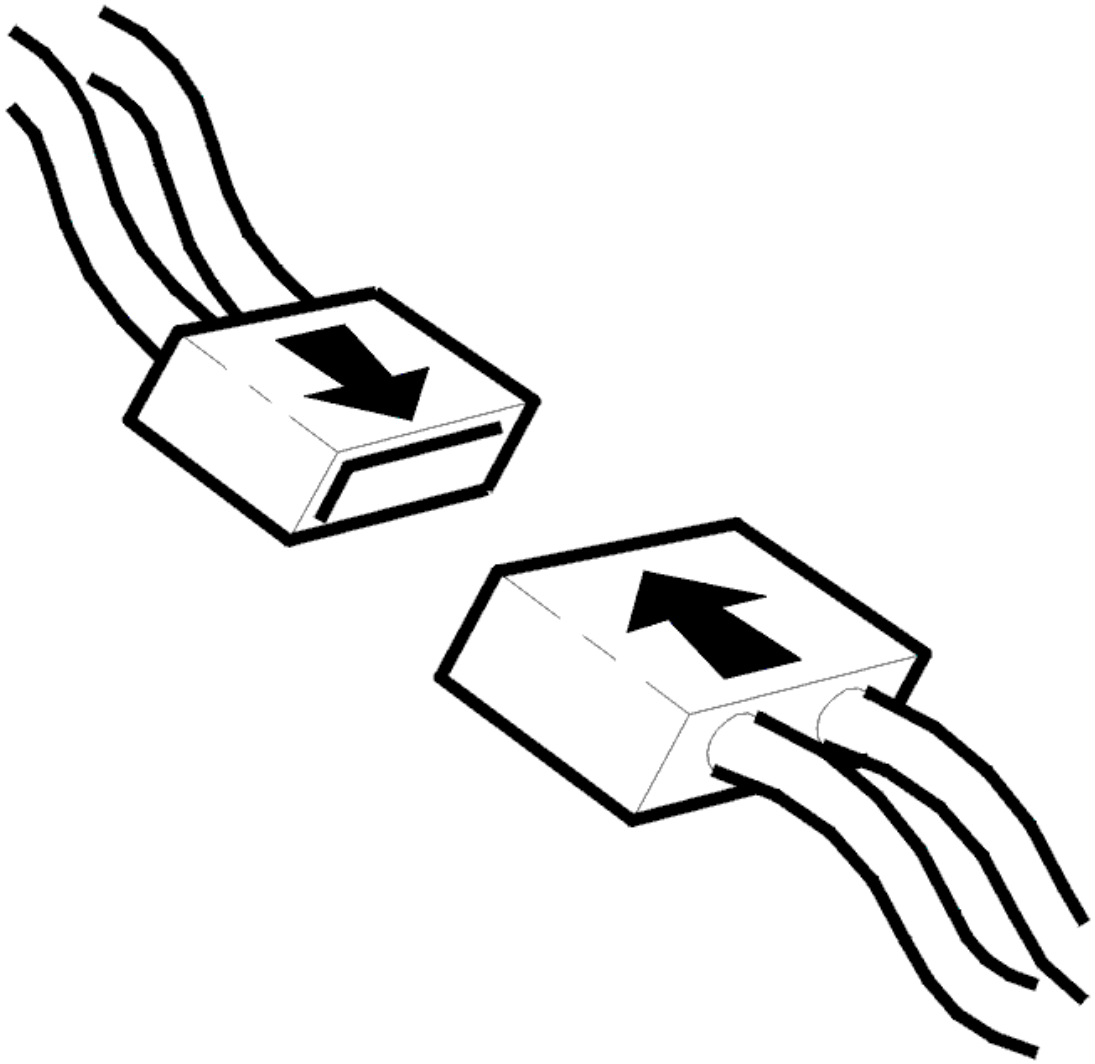

Fig. 104: Connecting Connector
Courtesy of VOLVO CARS CORPORATION

- Ignition off
- Reinstall the connectors, components etc.
- Ignition on.

  Check that the screen deploys when the ignition is switched on, when activated using the remote control or when using the steering wheel buttons for navigation.

  Ensure that the image and the colors of the image are good.

Does the display function?

- **YES**

VERIFIED: Troubleshooting has been completed.

- **NO**

  Refer to **INFORMATION**

INFORMATION

FAULT-TRACING INFORMATION

The fault should have been detected and remedied. As this is not the case fault-tracing has failed.

Exit fault-tracing for this diagnostic trouble code (DTC) or make another attempt.

CHECKING THE DVD PLAYER. REAR SEAT ENTERTAINMENT, GENERATION 3.2 (2005-2006)

CHECKING THE DVD PLAYER

FAULT-TRACING INFORMATION

If the DVD player does not function but the other audio/display sources do function the fault could be due to:

- Short-circuit/open circuit on cable.
- Damaged dvd-disc.
- Damaged dvd-player.
- Damaged rear seat entertainment module (RSE).

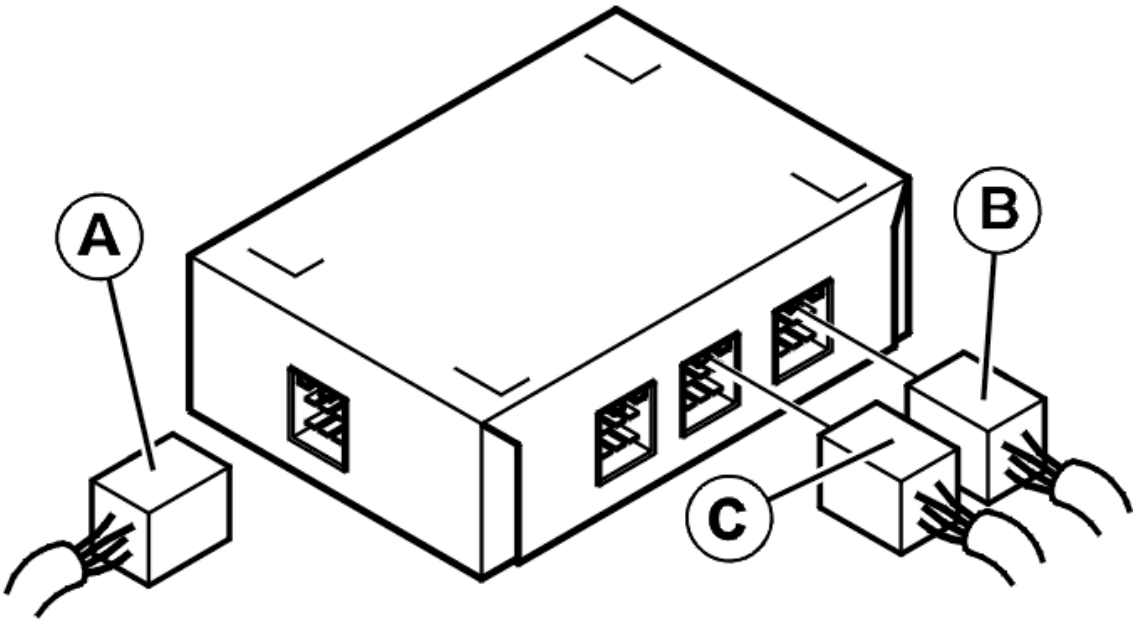

Fig. 105: Identifying Rear Seat Entertainment Module (RSE)
Courtesy of VOLVO CARS CORPORATION

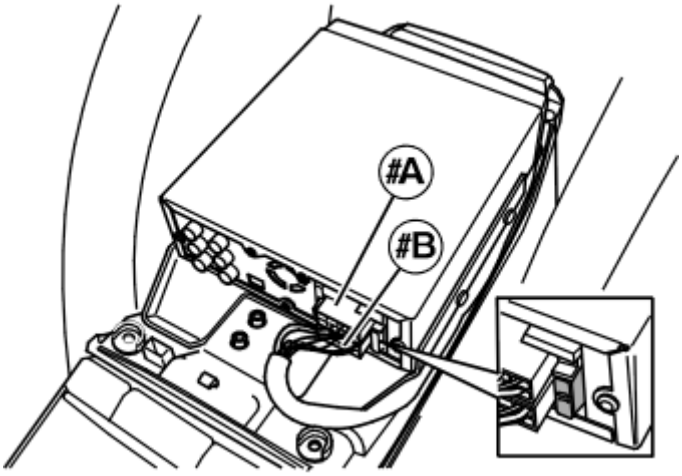

Fig. 106: Identifying DVD-Player And Connectors
Courtesy of VOLVO CARS CORPORATION

- **Continue**

  Refer to **CHECKING THE FUNCTION**

CHECKING THE FUNCTION

Fig. 107: Checking Traffic Load On CAN Cables
Courtesy of VOLVO CARS CORPORATION

- Ignition on.

  Turn on the system for rear seat entertainment using the remote control.

  Check that the buttons on the DVD player light up.

Do the buttons on the DVD player light up?

- **YES**

  Refer to **CHECKING THE WIRING**

- **NO**

  Refer to **CHECKING THE POWER SUPPLY**

CHECKING THE POWER SUPPLY

Check that the internal fuse in the DVD player is intact. Replace the fuse if it is damaged.

Check the wiring between the DVD player and the Rear Seat Entertainment Module (RSE).

Check the voltage to the DVD player at the Rear Seat Entertainment Module (RSE). Measure between #D4 and #D6.

Other information

- see **SIGNAL SPECIFICATION, REAR SEAT ENTERTAINMENT MODULE (RSE)**
- For further information about the fuses and relays, see the Wiring Diagram.
- see **REAR SEAT ENTERTAINMENT MODULE (RSE), REPLACING**
- see **DVD PLAYER, REPLACING**
- see **CHECKING WIRING AND TERMINALS**

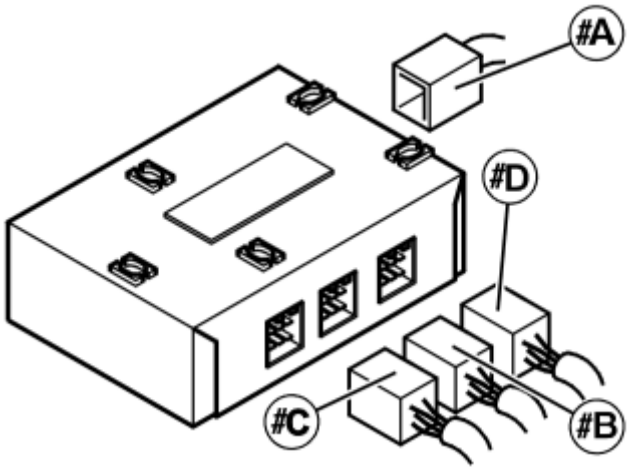

Fig. 108: Identifying Rear Seat Entertainment Module (RSE)
Courtesy of VOLVO CARS CORPORATION

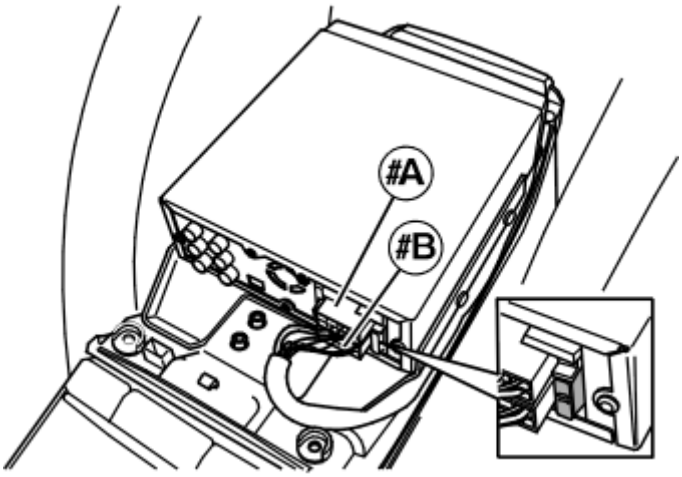

Fig. 109: Identifying DVD-Player And Connectors
Courtesy of VOLVO CARS CORPORATION

Is voltage between 10-14 V?

- **YES**

  Refer to **CHECKING GROUND CONNECTION**

- **NO**

  Refer to **CHECKING THE WIRING**

CHECKING GROUND CONNECTION

Measure the resistance between the Rear Seat Entertainment Module (RSE) terminal #D12 and ground. The

resistance must be less than 1 ohms.

Other information

- see **SIGNAL SPECIFICATION, REAR SEAT ENTERTAINMENT MODULE (RSE)**
- For further information about the fuses and relays, see the Wiring Diagram.
- see **REAR SEAT ENTERTAINMENT MODULE (RSE), REPLACING**
- see **DVD PLAYER, REPLACING**
- see **CHECKING WIRING AND TERMINALS**

Is resistance less than 1 ohms?

- **YES**

  Refer to **CHECKING THE WIRING**

- **NO**

  Refer to **CHECKING THE WIRING**

CHECKING THE WIRING

Check the wiring between the DVD player and the Rear Seat Entertainment Module (RSE). Check for an open-circuit and short-circuit.

If a fault is found change the wiring between the control module and the DVD player.

Was a fault detected?

- **YES**

  Refer to **CHECKING THE DVD PLAYER**

- **NO**

  Refer to **CHECKING THE DVD PLAYER**

CHECKING THE DVD PLAYER

Check that the DVD is not damaged and that it is clean. Try using another DVD if necessary.

Check that nothing has jammed in the DVD player. Check that there are no mechanical grinding noises coming from the DVD player when it is in operation.

Check that the DVD is the correct format for the DVD player (NTSC/PAL).

Is the transportation protection disc in the DVD player?

- **YES**

  Refer to **CHECKING THE FUNCTION**

- **NO**

  Refer to **CHECKING THE INLET ON THE CONTROL MODULE**

CHECKING THE INLET ON THE CONTROL MODULE

Fig. 110: Identifying Ignition In Off Position
Courtesy of VOLVO CARS CORPORATION

- Ignition off.
- Move the connector for the dvd-player to the input for the tv-connection.
- Ignition on.

  Select the dvd-player as source for one of the screens and press on the remote control's PLAY button. Adjust the screen settings for the monitor where playing takes place, if needed.

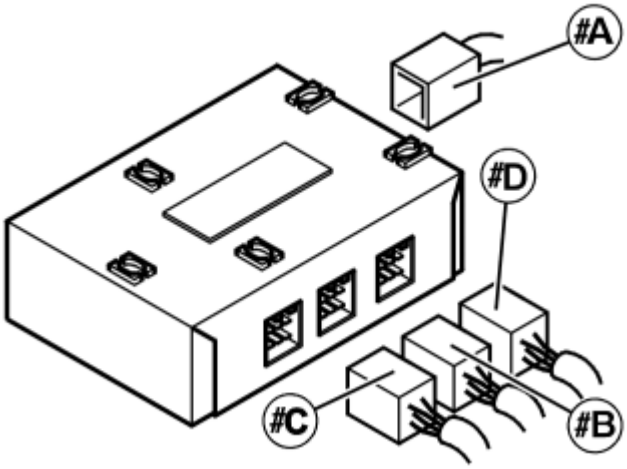

Fig. 111: Identifying Rear Seat Entertainment Module (RSE)
Courtesy of VOLVO CARS CORPORATION

Is playing OK?

- **YES**

  Refer to **CHECKING THE INLET ON THE CONTROL MODULE**

- **NO**

  Refer to **REPLACING THE DVD PLAYER**

CHECKING THE INLET ON THE CONTROL MODULE

Select TV as source for one of the screens and press on the remote control's PLAY button. Adjust the screen settings for the monitor where playing takes place, if needed.

NOTE: **If tv-receiver is not installed in the vehicle, connect DVD or AUX as source to that input.**

Is playing OK?

- **YES**

  Refer to **CHECKING THE FUNCTION**

- **NO**

  Refer to **REPLACING THE REAR SEAT ENTERTAINMENT MODULE (RSE)**

CHECKING THE FUNCTION

Fig. 112: Checking Traffic Load On CAN Cables
Courtesy of VOLVO CARS CORPORATION

- Ignition on.

  Turn on the system for rear seat entertainment using the remote control.

  Select DVD as source at one of the display screens. When DVD is selected a message about incorrect format is displayed within a few seconds. When the message is gone, press the EJECT button.

  If the disc is ejected, insert an undamaged dvd-disc and press the YES button below.

Is the transport protection disc ejected?

- **YES**

  Refer to **CHECKING THE DVD PLAYER**

- **NO**

  Refer to **REPLACING THE DVD PLAYER**

CHECKING THE FUNCTION

Select the dvd-player as source for one of the screens and press on the remote control's PLAY button.

Adjust the screen settings for the monitor where playing takes place, if needed.

Is playing OK?

- **YES**

  FAULT NOT FOUND: Troubleshooting has been completed.

- **NO**

  Refer to **REPLACING THE DVD PLAYER**

REPLACING THE DVD PLAYER

Replace dvd-player according to the following instruction.

- see **DVD PLAYER, REPLACING**

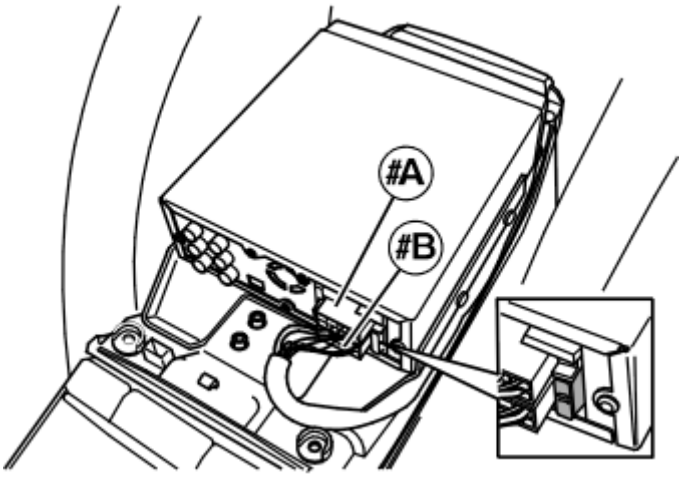

Fig. 113: Identifying DVD-Player And Connectors
Courtesy of VOLVO CARS CORPORATION

REPLACING THE REAR SEAT ENTERTAINMENT MODULE (RSE)

Replace the Rear Seat Entertainment Module (RSE) according to the following instruction.

- see **REAR SEAT ENTERTAINMENT MODULE (RSE), REPLACING**

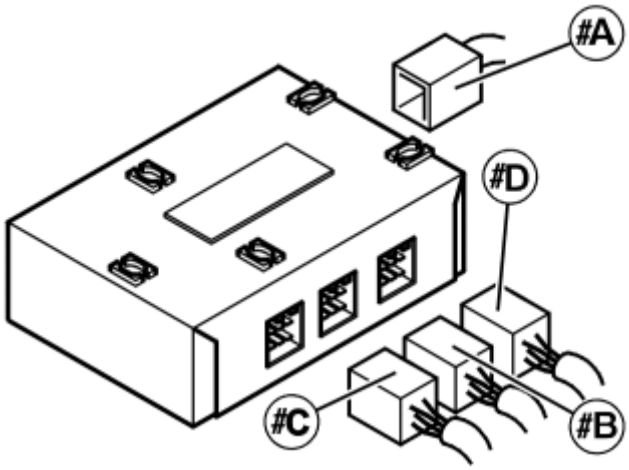

Fig. 114: Identifying Rear Seat Entertainment Module (RSE)
Courtesy of VOLVO CARS CORPORATION

CHECKING THE DVD PLAYER

CHECKING THE DVD PLAYER

Check that the DVD player and other audio and display sources function.

Do the DVD player and other audio and display sources function?

- **YES**

  VERIFIED: Troubleshooting has been completed.

- **NO**

  Refer to **INFORMATION**

INFORMATION

FAULT-TRACING INFORMATION

The fault should have been detected and remedied. As this is not the case fault-tracing has failed.

Exit fault-tracing for this diagnostic trouble code (DTC) or make another attempt.

CHECKING THE DVD PLAYER. REAR SEAT ENTERTAINMENT, GENERATION 3.2 (EXECUTIVE; PREMIER; 2004)

CHECKING THE DVD PLAYER

see **CHECKING THE DVD PLAYER**

CHECKING THE DVD PLAYER, MULTIMEDIA MODULE (MMM) (2003-2011)

CHECKING THE DVD PLAYER

FAULT-TRACING INFORMATION

Fault causes which will stop the data on the display from updating:

- Defective multimedia module (MMM)
- Problems with the MOST network.

HINT: Check that the MOST network is working before beginning fault-tracing.

NOTE: **Check that no diagnostic trouble codes (DTCs) are stored in the multimedia module (MMM) or the infotainment control module (ICM) and that other tests have been completed before fault-tracing.**

Have all tests been completed and no diagnostic trouble codes (DTCs) are stored?

- **YES**

  Refer to **CHECKING THE COMPONENT**

- **NO**

  OKAY: Troubleshooting has been completed.

CHECKING THE COMPONENT

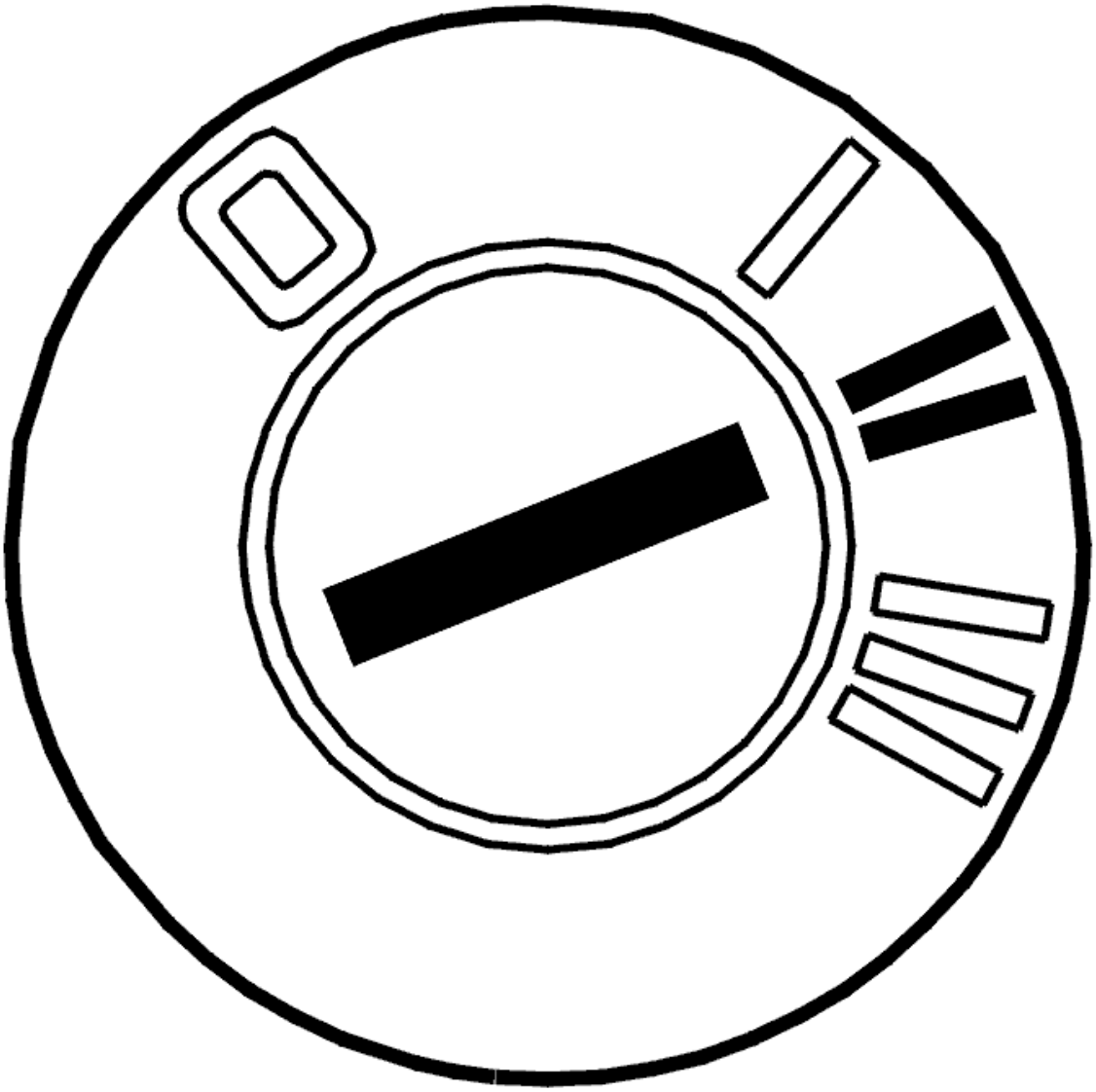

Fig. 115: Identifying Ignition ON
Courtesy of VOLVO CARS CORPORATION

- Ignition off
- Reinstall the connectors, components etc.
- Ignition on.

Checking the component

Check that the DVD player is working by clicking the VCT2000 symbol. If the DVD player is functioning, OK is displayed.

Try a new DVD player if it is not working.

Remedy as necessary

Other information:

- To access or replace the multimedia module (MMM), see **MULTIMEDIA MODULE (MMM), REPLACING** .

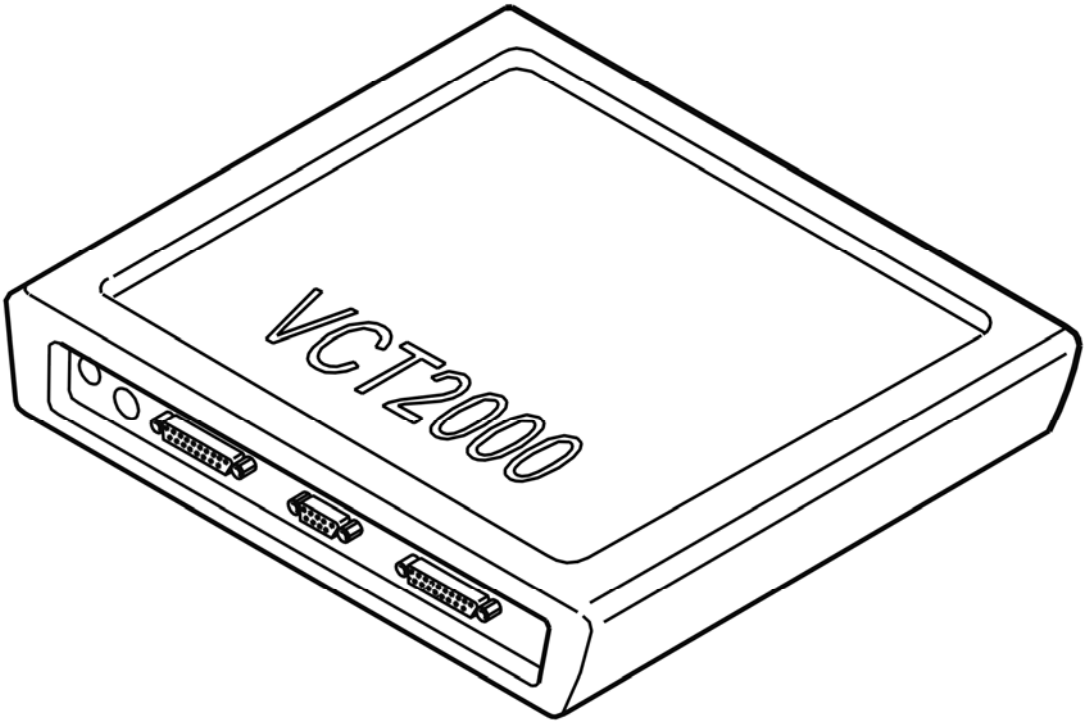

Fig. 116: Identifying VCT2000 Diagnostic Tool Symbol In VIDA
Courtesy of VOLVO CARS CORPORATION

CHECKING THE EXTERNAL VOLTAGE SUPPLY FOR THE CONNECTED AUDIO/VIDEO SOURCE FOR REAR SEAT ENTERTAINMENT. REAR SEAT ENTERTAINMENT, GENERATION 4.1-4.3 (2006-2011)

CHECKING THE EXTERNAL VOLTAGE SUPPLY FOR THE CONNECTED AUDIO/VIDEO SOURCE FOR REAR SEAT ENTERTAINMENT

FAULT-TRACING INFORMATION

When an external video/audio source is connected to the system for rear seat entertainment, via AUX-input, it may occur that there is interference with the picture on the screen. It may also happen that the sound is unclear with occurrence of "system sounds".

The fault causes may be:

- Voltage adapter to connected accessory.

NOTE: **In order for AV sources to be played in the system for rear seat entertainment, the system for rear seat entertainment must be on and work faultlessly.**

- **Continue**

  Refer to **FAULT-TRACING INFORMATION**

FAULT-TRACING INFORMATION

If the symptoms appear when a voltage adapter for 110 V or 220/240 V is used, the problem may be remedied by connected a 12 V DC adapter directly to the vehicle's 12 V socket.

NOTE: **This is only applicable for accessories that can function with system voltage 12 V.**

CHECKING THE HEAD RESTRAINT DISPLAY (BOTH SCREENS). REAR SEAT ENTERTAINMENT, GENERATION 3.2 (2005-2006)

CHECKING THE HEAD RESTRAINT DISPLAY (BOTH SCREENS)

FAULT-TRACING INFORMATION

If neither display screen functions and the fault is not related to a certain function, for example when the DVD or auxiliary input (AUX) is in use, the fault may be due to:

- Contact resistance in the terminals and connectors
- Disconnected connector to the display screen
- Open-circuit in the signal cable
- Power supply
- Defective rear seat entertainment module (RSE).

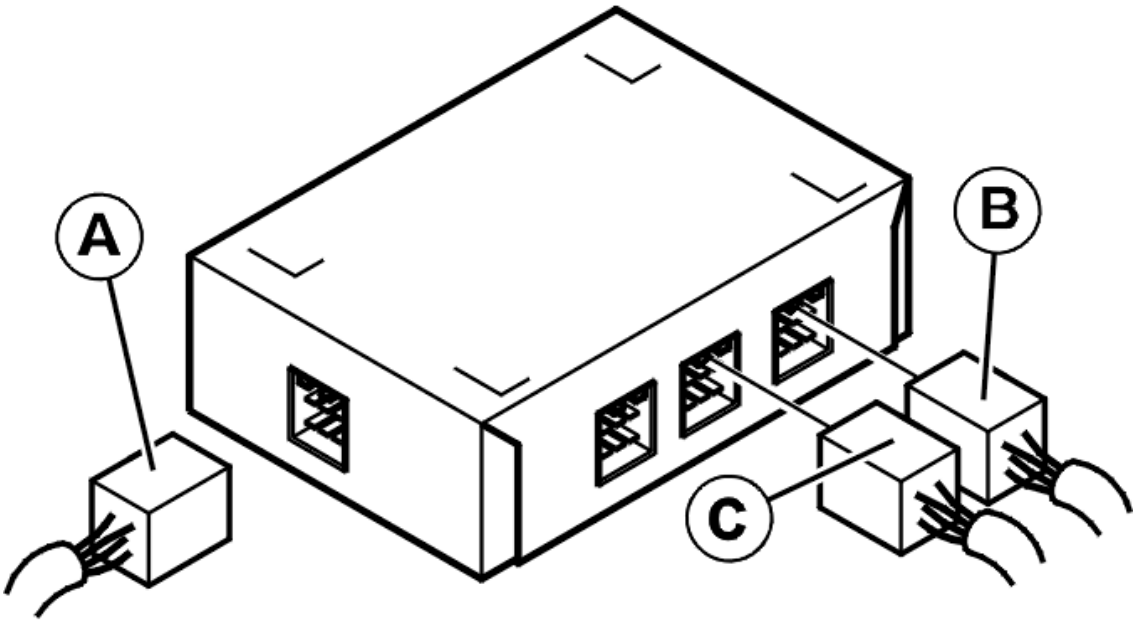

Fig. 117: Identifying Rear Seat Entertainment Module (RSE)
Courtesy of VOLVO CARS CORPORATION

- **Continue**

  Refer to **CHECKING THE HEAD RESTRAINT DISPLAY (BOTH SCREENS)**

CHECKING THE HEAD RESTRAINT DISPLAY (BOTH SCREENS)

Checking the settings

Check that the contrast is set correctly via the DISPLAY menu.

Check that the display screen has not been switched off via the remote control menu system SCREEN OFF.

Checking the power to the supply control module

Check that the fuses for the control module are intact and that power is supplied to the fusebox and ground terminal for the control module.

HINT: The control module is supplied with power via terminals #B1, #B4 and #B6. The control module is grounded via terminal #B12.

Checking the connector to the control module (neither display screens function)

Check that the connector between the control module and both display screens (terminal A) is connected. If the control module does not transmit picture signals from the DVD, or auxiliary input (AUX), there is probably a fault in the control module.

Checking the lighting for the control module

If the surround lighting for the display screen does not function. Carry out the above checks on another cable. Check the power supply to the lighting. Check the cable between the control module terminal #A10/#A20 and the display screen terminal #10. In addition check the lighting ground supply, the cable between the control module terminal #A9/ #A19 and display screen terminal #9. (One for each display screen).

Remedy as necessary.

Other information

- see **SIGNAL SPECIFICATION, REAR SEAT ENTERTAINMENT MODULE (RSE)**
- For further information about the fuses and relays, see the Wiring Diagram
- see **REAR SEAT ENTERTAINMENT MODULE (RSE), REPLACING**
- see **CONTENTS**

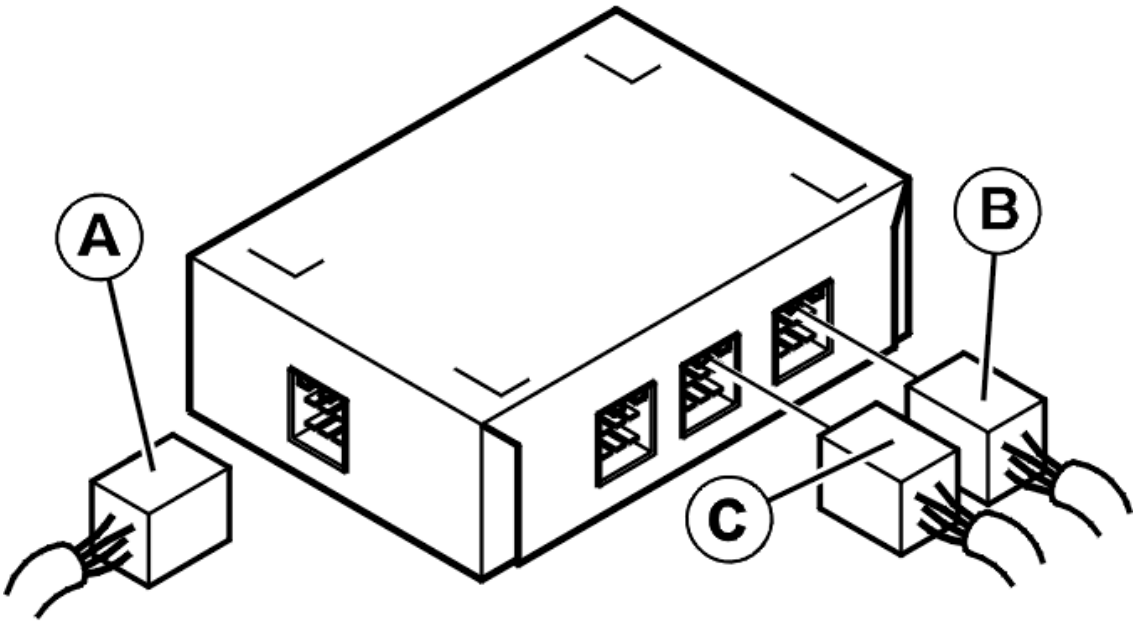

Fig. 118: Identifying Rear Seat Entertainment Module (RSE)
Courtesy of VOLVO CARS CORPORATION

- **Continue**

Refer to **CHECKING THE HEAD RESTRAINT DISPLAY (BOTH SCREENS)**

CHECKING THE HEAD RESTRAINT DISPLAY (BOTH SCREENS)

CHECKING THE HEAD RESTRAINT DISPLAY (BOTH SCREENS)

Check that both the display screens function.

Do the display screens in the head restraint function?

- **YES**

  VERIFIED: Troubleshooting has been completed.

- **NO**

  Refer to **INFORMATION**

INFORMATION

FAULT-TRACING INFORMATION

The fault should have been detected and remedied. As this is not the case fault-tracing has failed.

Exit fault-tracing for this diagnostic trouble code (DTC) or make another attempt.

CHECKING THE HEAD RESTRAINT DISPLAY (BOTH SCREENS). REAR SEAT ENTERTAINMENT, GENERATION 3.2 (EXECUTIVE; PREMIER; 2004)

CHECKING THE HEAD RESTRAINT DISPLAY (BOTH SCREENS)

see **CHECKING THE HEAD RESTRAINT DISPLAY (BOTH SCREENS)**

CHECKING THE HEAD RESTRAINT DISPLAY (ONE SCREEN FUNCTIONS). REAR SEAT ENTERTAINMENT, GENERATION 3.2 (2005-2006)

CHECKING THE HEAD RESTRAINT DISPLAY (ONE SCREEN FUNCTIONS)

FAULT-TRACING INFORMATION

If only one display screen functions the fault may be due to:

- Power supply
- Contact resistance in the connectors
- Open-circuit in the cable between the display screen/head restraint and the rear seat entertainment module (RSE)

- Open-circuit in the cable between the rear seat entertainment module (RSE) and the connector under the rear seat (Y-shaped cable)
- Damaged rear seat entertainment module (RSE).
- Damaged display screen.

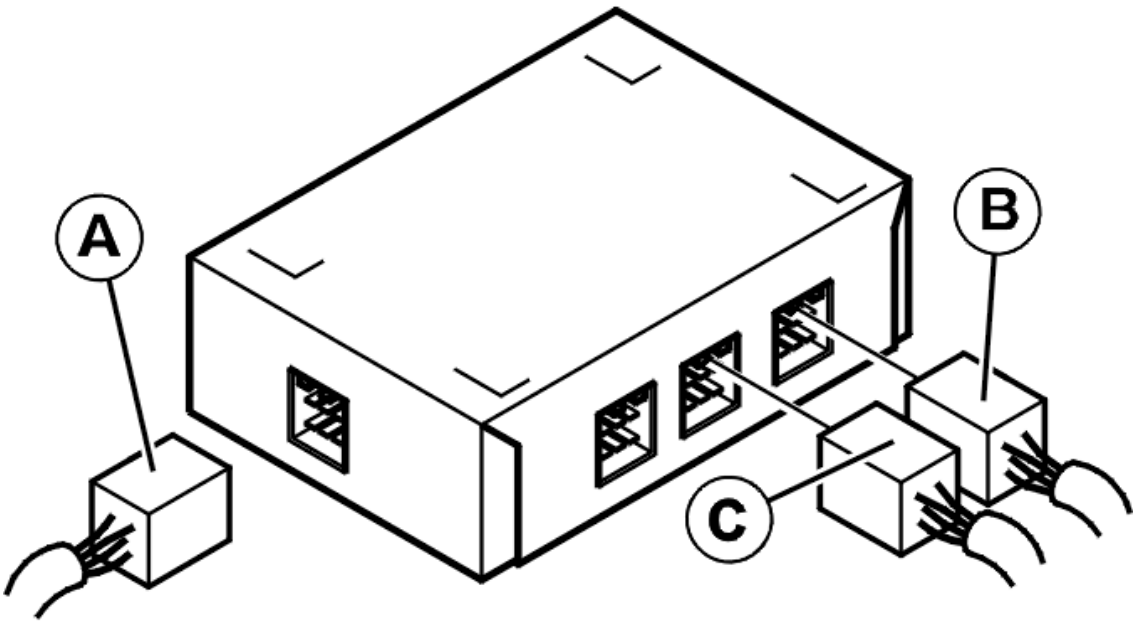

Fig. 119: Identifying Rear Seat Entertainment Module (RSE)
Courtesy of VOLVO CARS CORPORATION

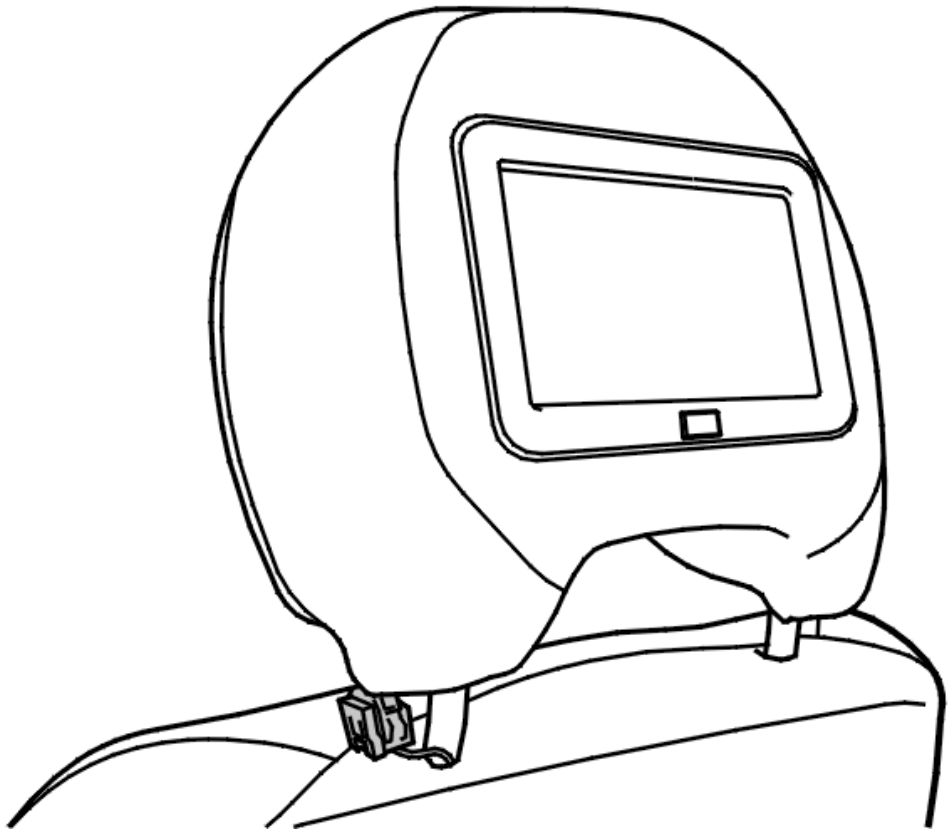

Fig. 120: Identifying Cable Connector To Display Screen/Head Restraint
Courtesy of VOLVO CARS CORPORATION

- **Continue**

  Refer to **CHECKING THE HEAD RESTRAINT DISPLAY (ONE SCREEN FUNCTIONS)**

CHECKING THE HEAD RESTRAINT DISPLAY (ONE SCREEN FUNCTIONS)

Checking for the fault

Check that the fault occurs regardless of sound or screen source (DVD, TV (if installed), AUX).

Checking screen head rest

Fault-tracing can be minimized by swapping the left and right-hand screens over. Check to, see if the fault remains after the transfer.

NOTE: Ensure that the system is switched off before disconnecting any connector.

HINT: It is unusual for a screen to break.

Checking the settings

Check that the contrast is set correctly via the DISPLAY menu.

Check that the display screen has not been switched off via the remote control menu system SCREEN OFF.

Select the non-functioning display screen:

1. Left-hand display screen
2. Right-hand display screen.

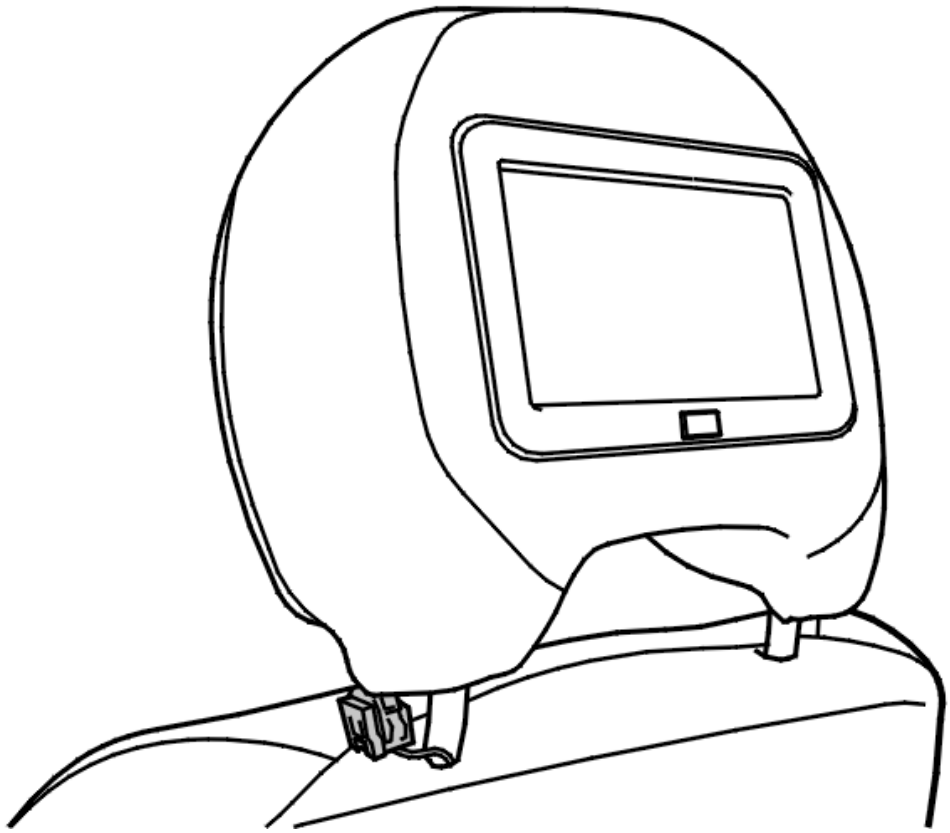

Fig. 121: Identifying Cable Connector To Display Screen/Head Restraint
Courtesy of VOLVO CARS CORPORATION

- **1**

  Refer to **CHECKING THE HEAD RESTRAINT DISPLAY (ONE SCREEN FUNCTIONS)**

- **2**

  Refer to **CHECKING THE HEAD RESTRAINT DISPLAY (ONE SCREEN FUNCTIONS)**

CHECKING THE HEAD RESTRAINT DISPLAY (ONE SCREEN FUNCTIONS)

Checking the control module connector

There is probably a fault in the wiring between the display screen and the control module or in the middle connector.

Check the left-hand picture signal. Check the cable between the control module terminal #A7 and display screen terminal #7.

Check the ground signal to left screen, that is, the cable between the control module #A8 and the screen #8.

Checking feed to screen

Check the supply to the display screen. Supply is carried via a cable between control module terminal #A6 and display screen terminal #6. The ground terminal is from control module terminal #A3 and display screen terminal #3.

Checking the lighting for the control module

If the surround lighting for the display screen does not function. Carry out the above checks on another cable.

Check the supply to the lighting. Check the cable between control module terminal #A10 and display screen terminal #10. The voltage must be approximately 10-14 V.

In addition check the power supply for the cable, the cable between control module terminal #A9 and display screen terminal #9. The resistance must be less than 1 ohms.

Remedy as necessary.

Other information:

- see **SIGNAL SPECIFICATION, REAR SEAT ENTERTAINMENT MODULE (RSE)**
- see **REAR SEAT ENTERTAINMENT MODULE (RSE), REPLACING**
- see **HEAD RESTRAINT WITH TV SCREEN, REPLACING**
- see **CONTENTS**

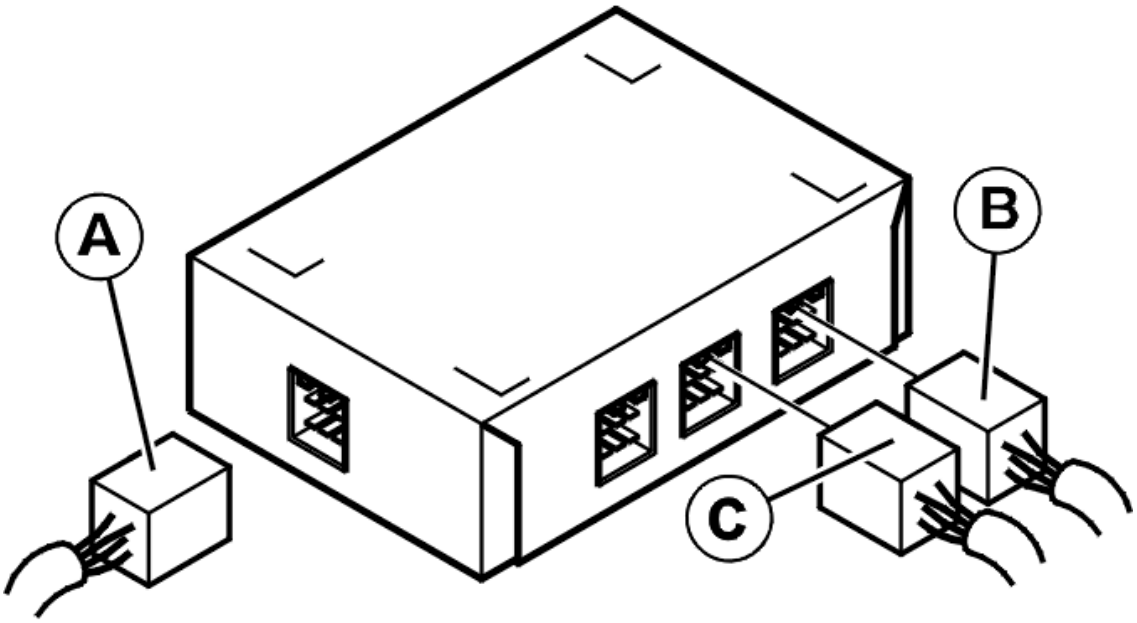

Fig. 122: Identifying Rear Seat Entertainment Module (RSE)
Courtesy of VOLVO CARS CORPORATION

- **Continue**

  Refer to **CHECKING THE HEAD RESTRAINT DISPLAY (BOTH SCREENS)**

CHECKING THE HEAD RESTRAINT DISPLAY (ONE SCREEN FUNCTIONS)

Checking the control module connector

There is probably a fault in the wiring between the display screen and the control module or in the middle connector.

Check the right-hand picture signal. Check the cable between the control module terminal #A17 and display screen terminal #7.

Check the ground signal for the right-hand picture. Check the cable between the control module terminal #A18 and display screen terminal #8.

Checking the supply to the display screen

Check the supply to the display screen. Supply is carried via a cable between control module terminal #A16 and display screen terminal #6. The ground terminal is from control module terminal #A13 and display screen terminal #3.

Checking the lighting for the control module

If the surround lighting for the display screen does not function. Carry out the checks as above on another cable.

Check the supply to the lighting. Check the cable between control module terminal #A20 and display screen terminal #10. The voltage must be approximately 10-14 V.

In addition check the power supply for the cable, the cable between control module terminal #A19 and display screen terminal #9. The resistance must be less than 1 ohms.

Remedy as necessary.

Other information:

- see **SIGNAL SPECIFICATION, REAR SEAT ENTERTAINMENT MODULE (RSE)**
- see **REAR SEAT ENTERTAINMENT MODULE (RSE), REPLACING**
- see **HEAD RESTRAINT WITH TV SCREEN, REPLACING**
- see **CONTENTS**

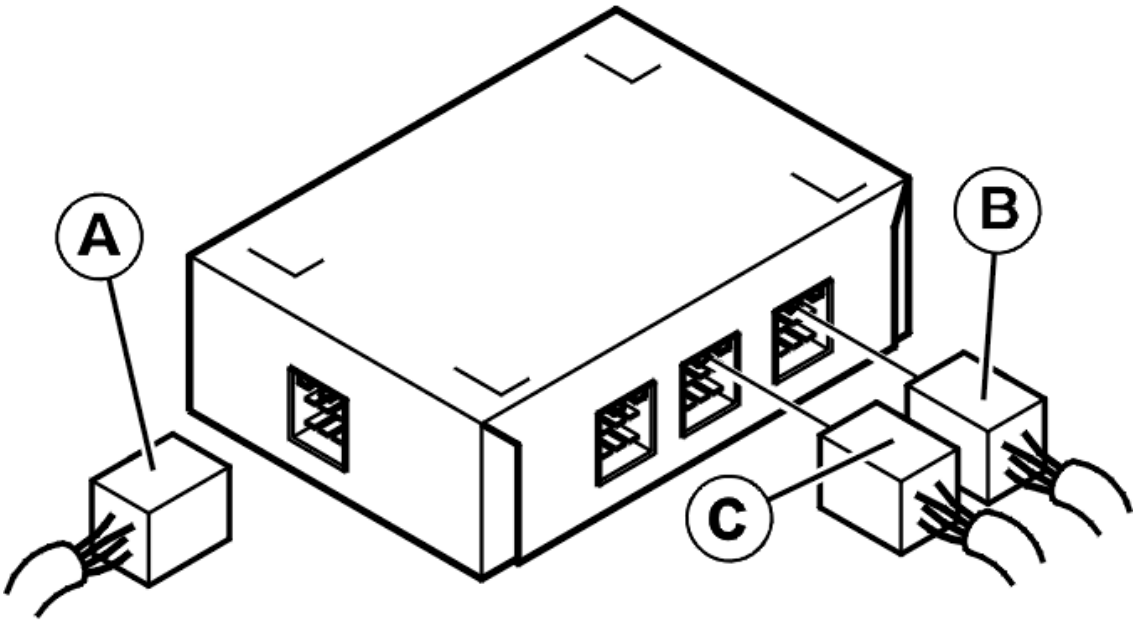

Fig. 123: Identifying Rear Seat Entertainment Module (RSE)
Courtesy of VOLVO CARS CORPORATION

- **Continue**

Refer to **CHECKING THE HEAD RESTRAINT DISPLAY (BOTH SCREENS)**

CHECKING THE HEAD RESTRAINT DISPLAY (BOTH SCREENS)

CHECKING THE HEAD RESTRAINT DISPLAY (BOTH SCREENS)

Check that both the display screens function.

Do the display screens in the head restraint function?

- **YES**

  VERIFIED: Troubleshooting has been completed.

- **NO**

  Refer to **INFORMATION**

INFORMATION

FAULT-TRACING INFORMATION

The fault should have been detected and remedied. As this is not the case fault-tracing has failed.

Exit fault-tracing for this diagnostic trouble code (DTC) or make another attempt.

CHECKING THE HEAD RESTRAINT DISPLAY (ONE SCREEN FUNCTIONS). REAR SEAT ENTERTAINMENT, GENERATION 3.2 (EXECUTIVE; PREMIER; 2004)

CHECKING THE HEAD RESTRAINT DISPLAY (ONE SCREEN FUNCTIONS)

see **CHECKING THE HEAD RESTRAINT DISPLAY (ONE SCREEN FUNCTIONS)**

CHECKING THE HEADSET PANEL (2003-2006)

CHECKING THE HEADSET PANEL

FAULT-TRACING INFORMATION

HINT: Check that the headsets used are functioning.

If there is no sound in the headsets it may be caused by:

- Open-circuit in the signal cable between the audio module (AUM) and the headset
- Oxidation on the terminal pins in the connectors

- Defective headset panel
- Problems with the MOST network
- Defective control module.

HINT: If there is no sound from any of the four headset outputs, the fault is probably before the headset panel. Check that the 22-pin connector is connected to the audio module (AUD). Check that the MOST network to which the Audio module (AUD) is connected functions.

Select an option:

1. left headset panel. Refer to **CHECKING THE CABLE, LEFT HEADSET PANEL**.
2. right headset panel. Refer to **CHECKING THE CABLE, RIGHT HEADSET PANEL**.

CHECKING THE CABLE, LEFT HEADSET PANEL

HINT: Turn up the volume for the headset output which does not function. If the volume changes the fault has been remedied.

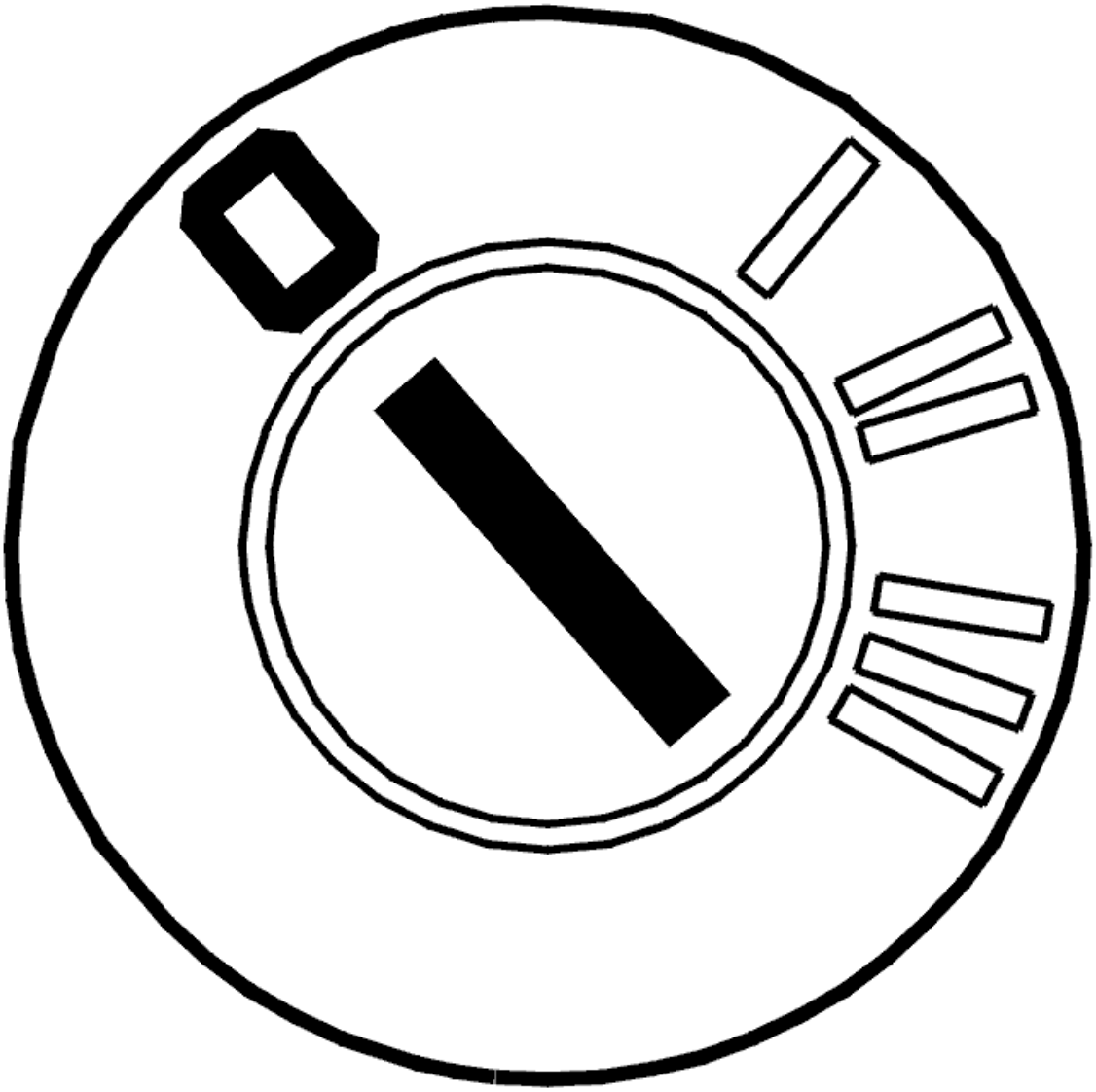

Fig. 124: Identifying Ignition OFF
Courtesy of VOLVO CARS CORPORATION

- Ignition off
- Disconnect the 22-pin connector for the audio module (AUD)
- Disconnect the connector for the left headset panel.

Checking the cable

Check that the headset panel connectors are correctly connected. Check the cable terminals. Check for contact resistance, loose connections and oxidation. Check the cable terminals in the female and male sections of the connector. The cable terminals must not be damaged or pressed back

Checking the signal cable to headset output 1, left-hand headset panel

Check the cable between audio module (AUD) terminal #C1 and headset terminal #1 in the left C-post. Check for a short-circuit to ground, for a short-circuit to supply and for an open-circuit.

Check the cable between audio module (AUD) terminal #C2 and headset terminal #3 in the left C-post. Check for a short-circuit to ground, for a short-circuit to supply and for an open-circuit.

Check the cable between audio module (AUD) terminal #C13 and headset terminal #2 in the left C-post. Check for a short-circuit to ground, for a short-circuit to supply and for an open-circuit.

Checking the signal cable to headset output 2, left-hand headset panel

Check the cable between audio module (AUD) terminal #C3 and headset terminal #5 in the left C-post. Check for a short-circuit to ground, for a short-circuit to supply and for an open-circuit.

Check the cable between audio module (AUD) terminal #C4 and headset terminal #7 in the left C-post. Check for a short-circuit to ground, for a short-circuit to supply and for an open-circuit.

Check the cable between audio module (AUD) terminal #C14 and headset terminal #6 in the left C-post. Check for a short-circuit to ground, for a short-circuit to supply and for an open-circuit.

If no fault is found, replace the headset panel.

Remedy as necessary

Other information:

- To connect the breakout box, see **CONNECTING THE BREAKOUT BOX**
- To access or replace the audio module (AUD), see **AUDIO MODULE (AUD), REPLACING**
- For information about signals, see **SIGNAL SPECIFICATION**
- see **CONTENTS** .

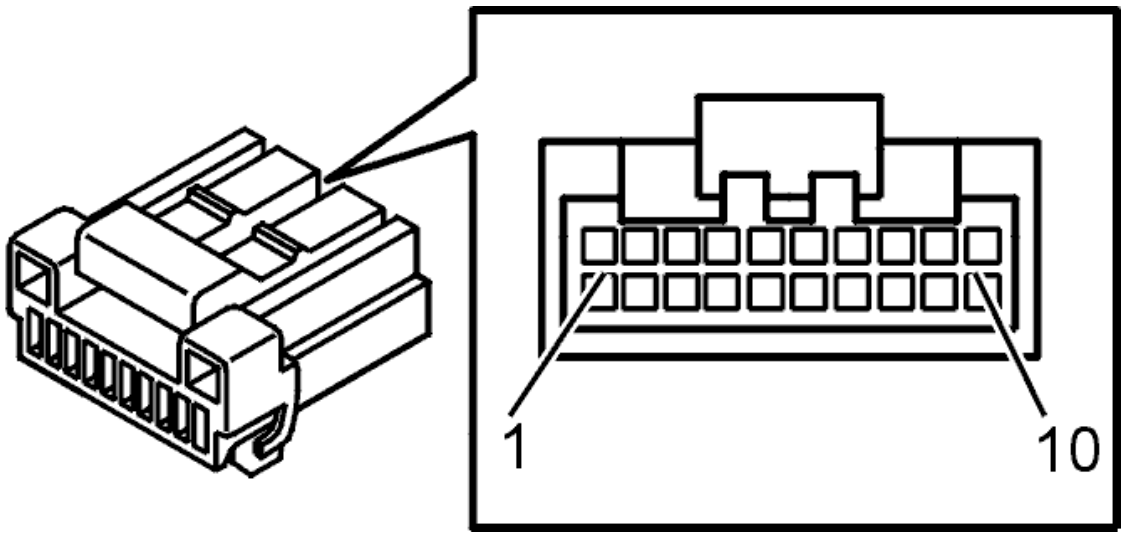

Fig. 125: Identifying Connector (D) Terminals

Courtesy of VOLVO CARS CORPORATION

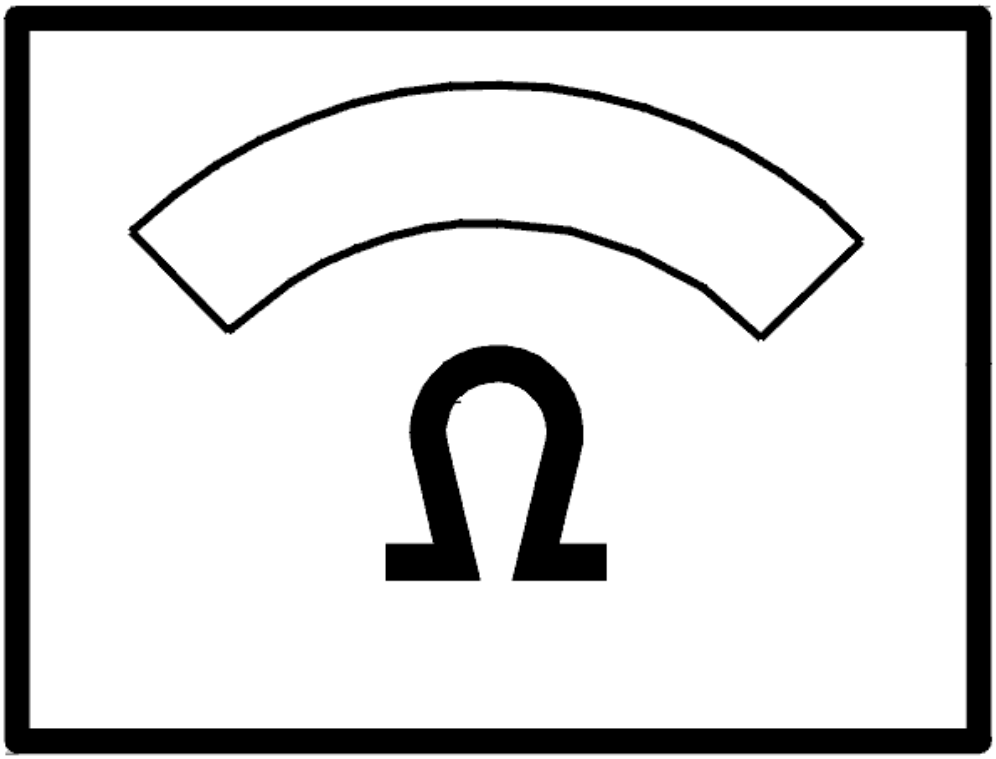

Fig. 126: Identifying Ohm Meter
Courtesy of VOLVO CARS CORPORATION

Was a fault detected?

- **YES**

  Refer to **VERIFICATION**

- **NO**

  FAULT NOT FOUND: Troubleshooting has been completed.

CHECKING THE CABLE, RIGHT HEADSET PANEL

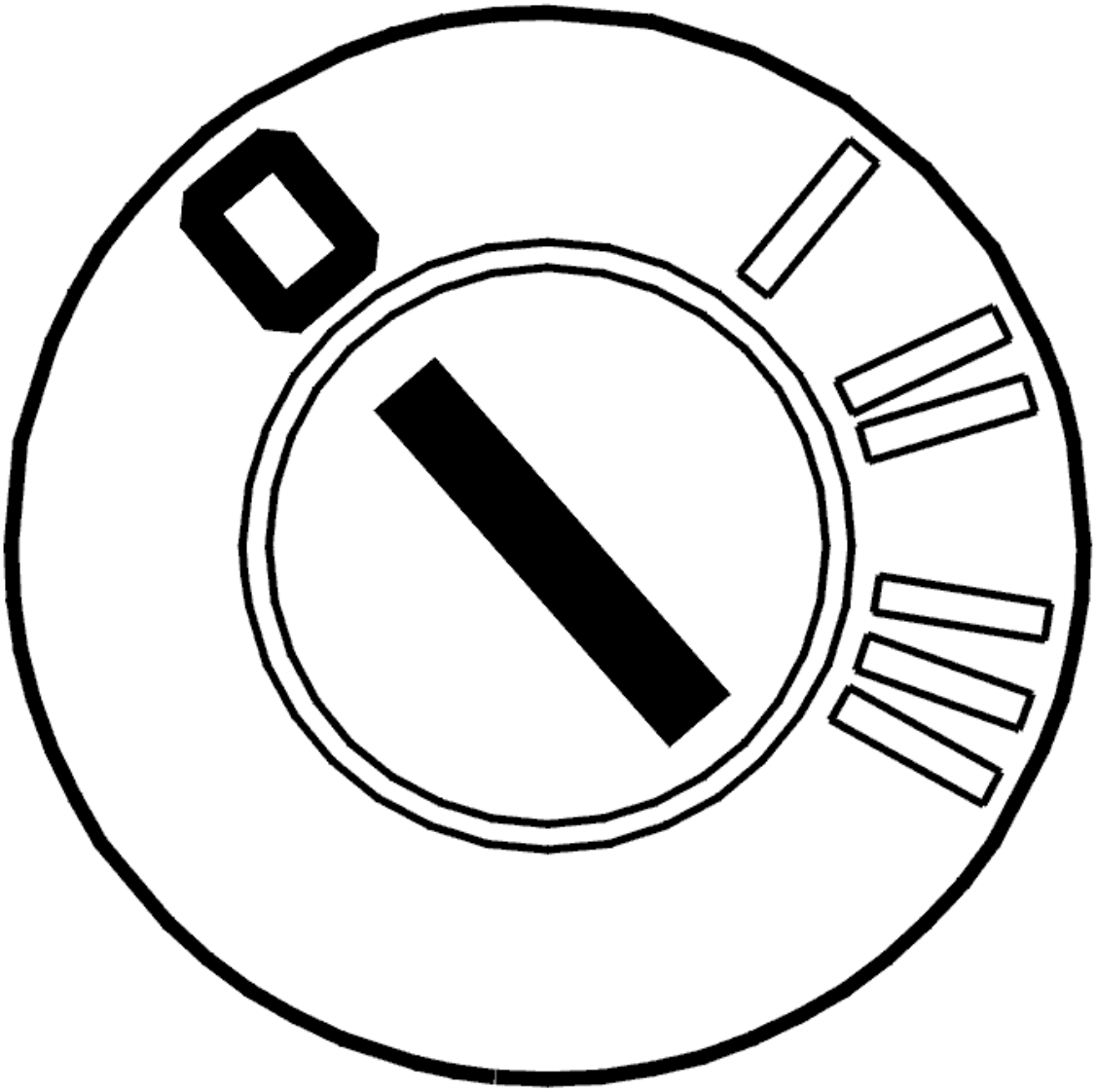

Fig. 127: Identifying Ignition OFF
Courtesy of VOLVO CARS CORPORATION

- Ignition off
- Disconnect the 22-pin connector for the audio module (AUD)
- Disconnect the connector for the right headset panel.

HINT: Turn up the volume for the headset output which does not function. If the volume changes the fault has been remedied.

Checking the cable

Check that the headset panel connectors are correctly connected. Check the cable terminals. Check for contact resistance, loose connections and oxidation. Check the cable terminals in the female and male sections of the connector. The cable terminals must not be damaged or pressed back

Checking the cable to headset output 3, right-hand headset panel

Check the cable between audio module (AUD) terminal #C7 and headset terminal #1 in the right C-post. Check for a short-circuit to ground, for a short-circuit to supply and for an open-circuit.

Check the cable between audio module (AUD) terminal #C8 and headset terminal #3 in the right C-post. Check for a short-circuit to ground, for a short-circuit to supply and for an open-circuit.

Check the cable between audio module (AUD) terminal #C18 and headset terminal #2 in the right C-post. Check for a short-circuit to ground, for a short-circuit to supply and for an open-circuit.

Checking the cable to headset output 4, right-hand headset panel

Check the cable between audio module (AUD) terminal #C9 and headset terminal #5 in the right C-post. Check for a short-circuit to ground, for a short-circuit to supply and for an open-circuit.

Check the cable between audio module (AUD) terminal #C10 and headset terminal #7 in the right C-post. Check for a short-circuit to ground, for a short-circuit to supply and for an open-circuit.

Check the cable between audio module (AUD) terminal #C19 and headset terminal #6 in the right C-post. Check for a short-circuit to ground, for a short-circuit to supply and for an open-circuit.

If no fault is found, replace the headset panel.

Remedy as necessary

Other information:

- To connect the breakout box, see **CONNECTING THE BREAKOUT BOX**
- To access or replace the audio module (AUD), see **AUDIO MODULE (AUD), REPLACING**
- For information about signals, see **SIGNAL SPECIFICATION**
- see **CONTENTS** .

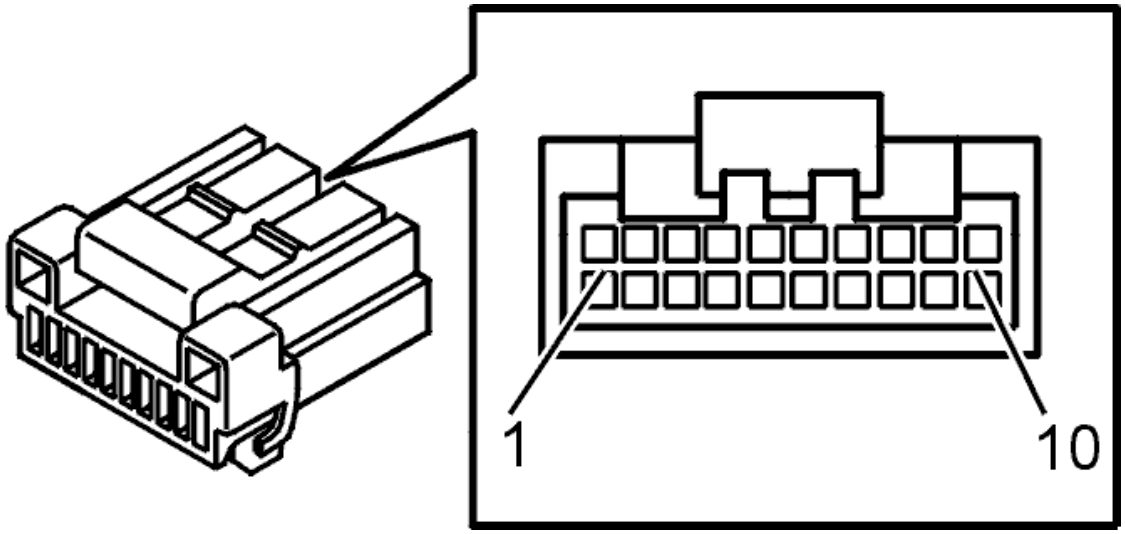

Fig. 128: Identifying Connector (D) Terminals
Courtesy of VOLVO CARS CORPORATION

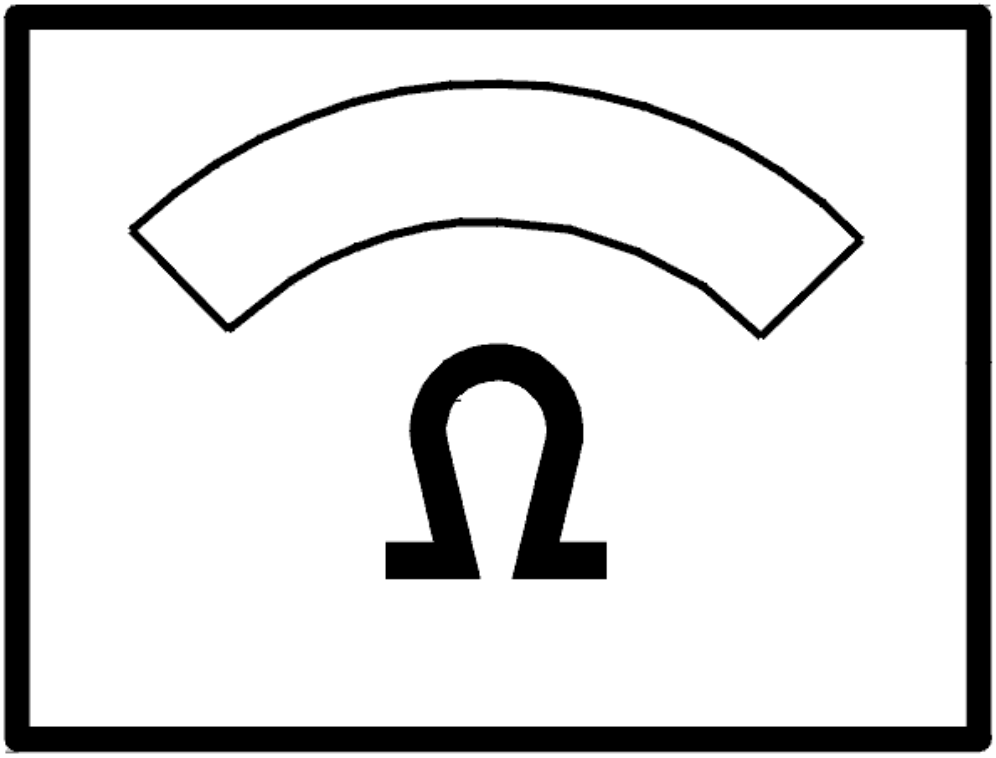

Fig. 129: Identifying Ohm Meter
Courtesy of VOLVO CARS CORPORATION

Was a fault detected?

- **YES**

  Refer to **VERIFICATION**

- **NO**

  FAULT NOT FOUND: Troubleshooting has been completed.

VERIFICATION

VERIFICATION

HINT: After carrying out the repair, check that the fault has been remedied. Check that the headsets to be used function before verification is carried out.

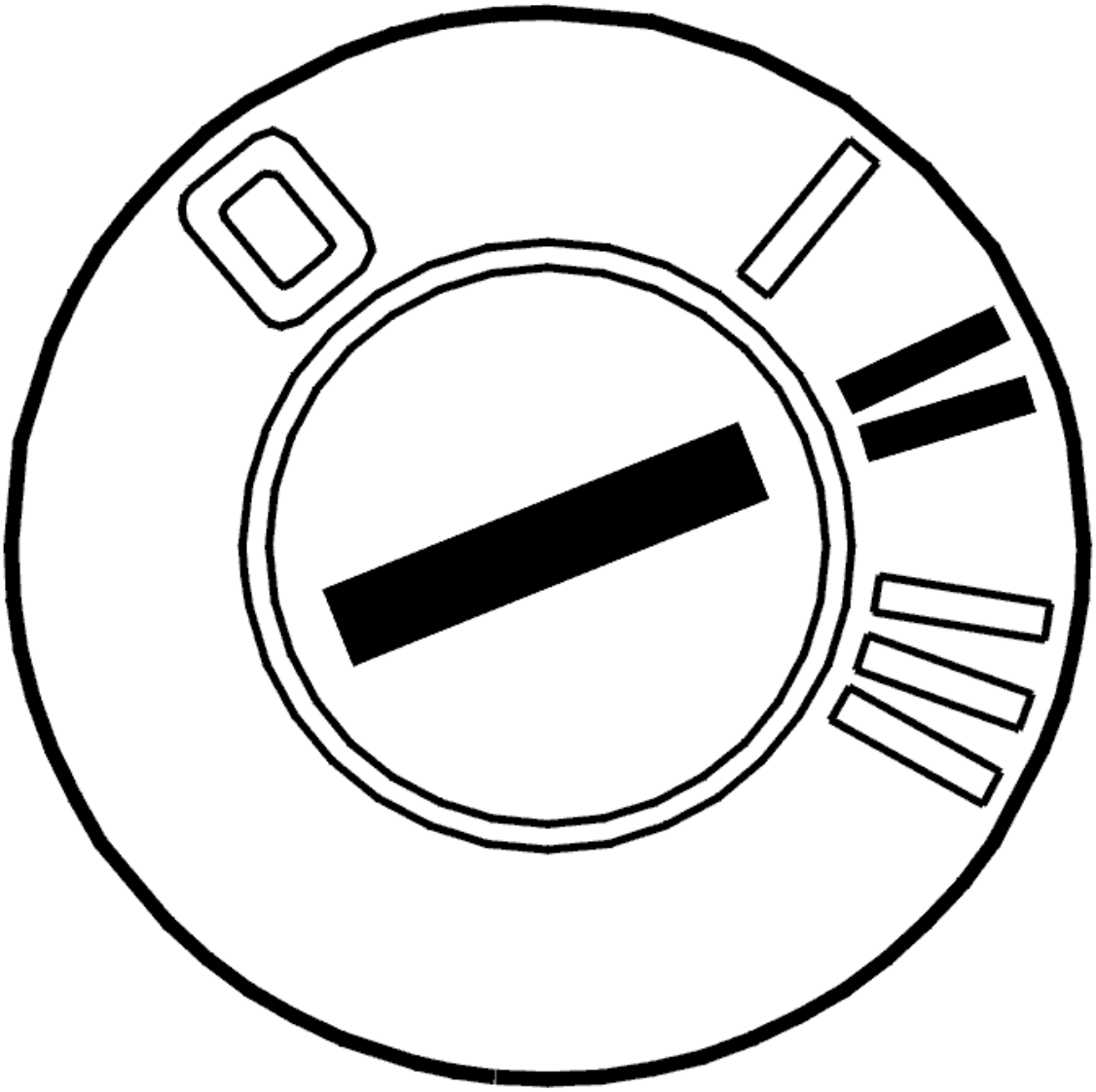

Fig. 130: Identifying Ignition ON
Courtesy of VOLVO CARS CORPORATION

- Ignition on
- Connect the headset to the output in the headset panel which did not function
- Switch on the radio or CD/MD player
- Press the SEL button to select the sound source for the output in the headset panel to be tested.

  Increase and decrease the volume on the headset panel for the selected output.

Is there sound?

- **YES**

  VERIFIED: Troubleshooting has been completed.

- **NO**

  Refer to **INFORMATION**

INFORMATION

FAULT-TRACING INFORMATION

The fault should have been detected and remedied. As this is not the case fault-tracing has failed.

Exit fault-tracing for this diagnostic trouble code (DTC) or make another attempt.

CHECKING THE HEADSETS. REAR SEAT ENTERTAINMENT, GENERATION 3.2 (2005-2006)

CHECKING THE HEADSETS

FAULT-TRACING INFORMATION

If the headsets do not function the fault could be due to:

- The headsets (Infra-red receiver in the headsets)
- Damaged IR-transmitter/head rest.
- Cable harness between control module rear sound separation and IR-transmitter/head rest.

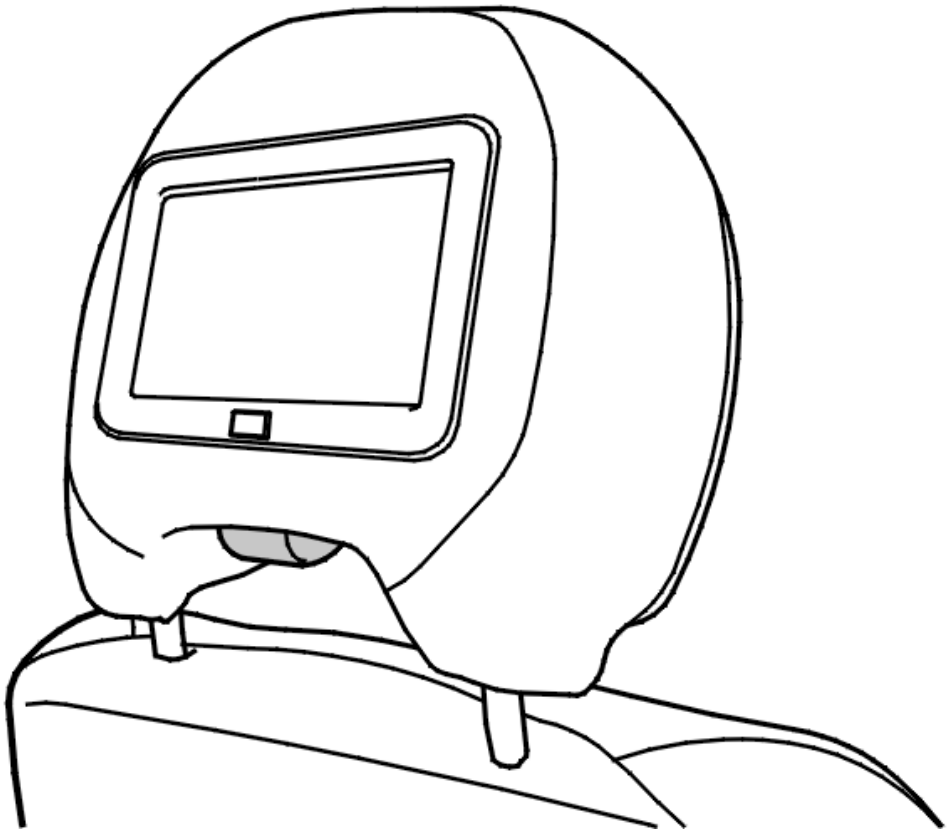

Fig. 131: View Of Rear Seat Entertainment
Courtesy of VOLVO CARS CORPORATION

- **Continue**

  Refer to **CHECKING THE HEADSETS**

CHECKING THE HEADSETS

Checking the settings

Check that the volume has not been turned down via VOLUME on the remote control or that the volume on the relevant headset has not been turned down.

Check that the sound source for the selected headset channel and the headsets are on.

Check that it is only the headsets that do not function. In the event of the control module rear audio separation not functioning, the rear loudspeakers will not function either.

Checking the infra-red transmitter/head restraint and infra-red receiver/headsets

Check that the infra-red transmitter/head restraint is not obstructed.

Also check that the receiver in the headsets is not obstructed.

HINT: In certain cases moisture can impair infra-red signal reception.

Checking the settings

Check that the headsets have been selected in the menu system.

Check that the correct channel has been selected. Check that the volume has been turned up.

Checking the headsets

Check the headset batteries.

Check to, see if the other headset functions. If this is the case the headsets are defective.

Checking the IR transmitter

Check that the IR-transmitter, on the underside of one of the head rests, is not concealed or damaged. When the IR-transmitter is active a weak glow shall be seen from the transmitter's diodes.

Checking cables to IR-transmitter

Check the connector on the control module for rear audio separation terminal #B.

Check the wiring between the infra-red transmitter/head restraint terminals #1-4 and the control module for rear audio separation terminals #B1 to #B4.

HINT: terminal #B1 is for the power supply and terminal #B4 is ground. The infra-red signal is transmitted between #B2 and #B3.

If no malfunction is found on the cables, try replacing the IR-transmitter.

Remedy as necessary.

Other information:

- see **SIGNAL SPECIFICATION, REAR SEAT ENTERTAINMENT MODULE (RSE)**
- see **SIGNAL SPECIFICATION, CONTROL MODULE FOR REAR AUDIO SEPARATION**
- see **INFRARED TRANSMITTER HEAD RESTRAINT, REPLACING**
- see **CONTENTS**

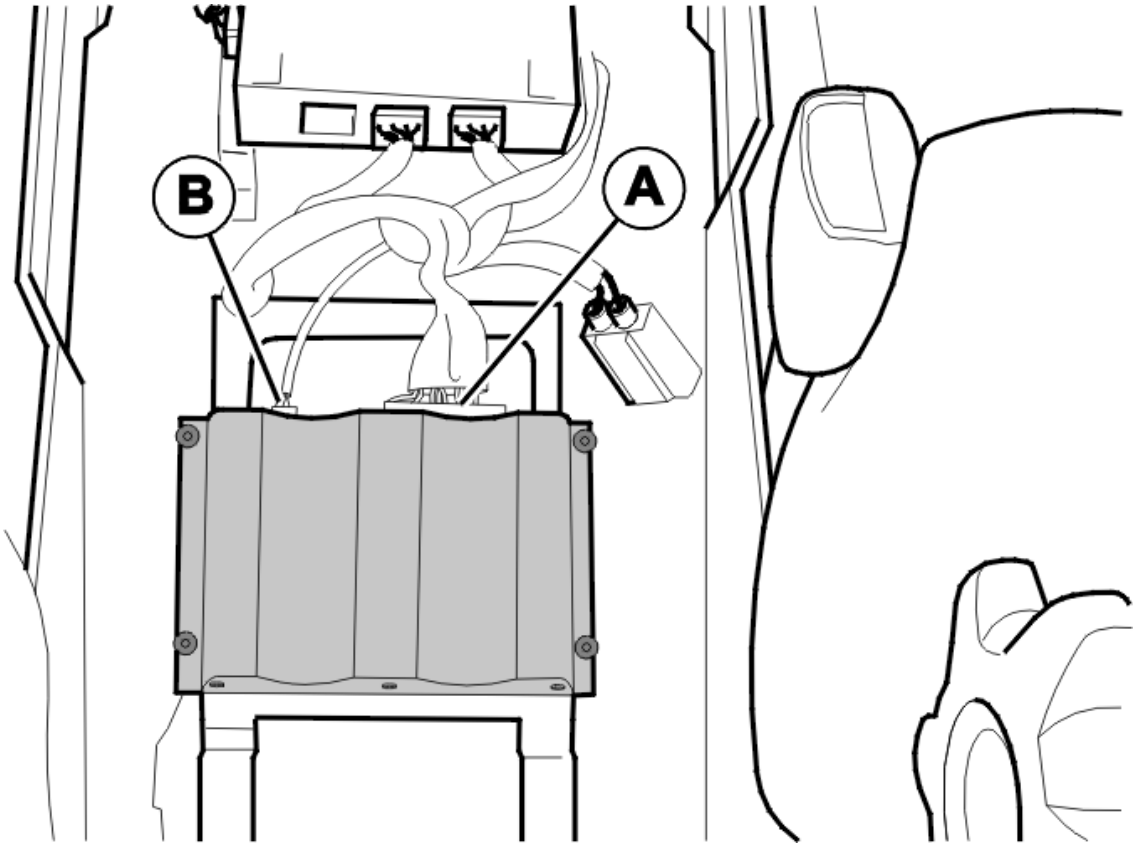

Fig. 132: Identifying Control Module For Rear Audio Separation
Courtesy of VOLVO CARS CORPORATION

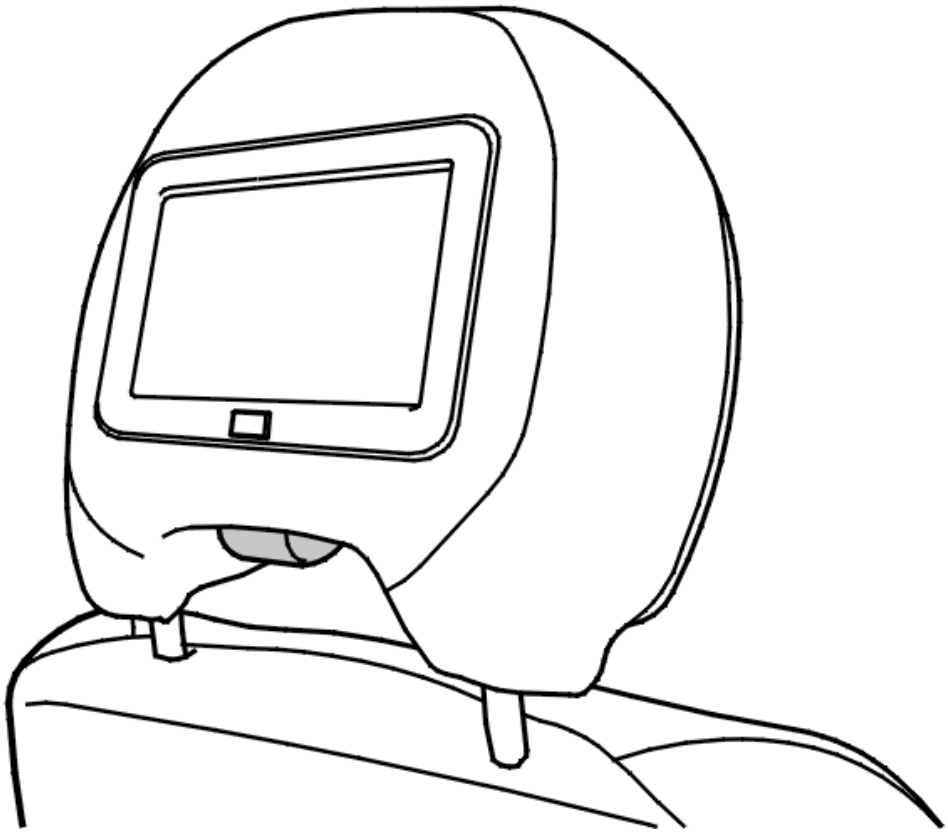

Fig. 133: View Of Rear Seat Entertainment
Courtesy of VOLVO CARS CORPORATION

- **Continue**

  Refer to **CHECKING THE HEADSETS**

CHECKING THE HEADSETS

CHECKING THE HEADSETS

Check that the headsets function.

Do the headsets function?

- **YES**

  VERIFIED: Troubleshooting has been completed.

- **NO**

  Refer to **INFORMATION**

INFORMATION

FAULT-TRACING INFORMATION

The fault should have been detected and remedied. As this is not the case fault-tracing has failed.

Exit fault-tracing for this diagnostic trouble code (DTC) or make another attempt.

CHECKING THE HEADSETS. REAR SEAT ENTERTAINMENT, GENERATION 3.2 (EXECUTIVE; PREMIER; 2004)

CHECKING THE HEADSETS

see **CHECKING THE HEADSETS**

CHECKING THE INSERT AND EJECT (2007-2011)

CHECKING THE INSERT AND EJECT

SELECTING THE MEDIA PLAYER

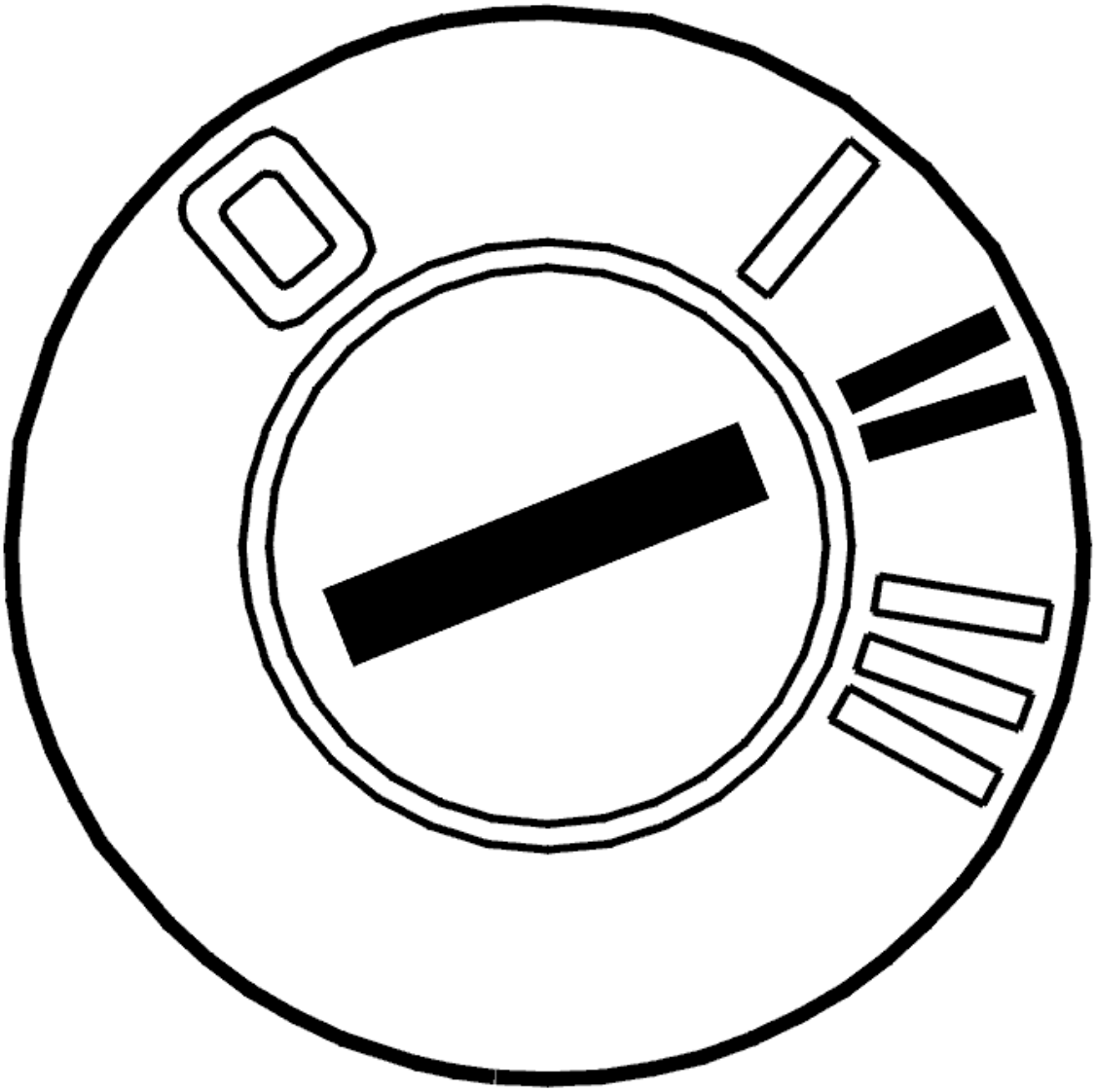

Fig. 134: Identifying Ignition ON
Courtesy of VOLVO CARS CORPORATION

- Ignition on

  Activate identification of the type of media player the vehicle is equipped with by clicking the symbol for VCT2000.

  Select the appropriate alternative.

  1. Integrated audio module (IAM)

     Refer to **FAULT-TRACING INFORMATION**

  2. Media player module (MPM)

Refer to **FAULT-TRACING INFORMATION**

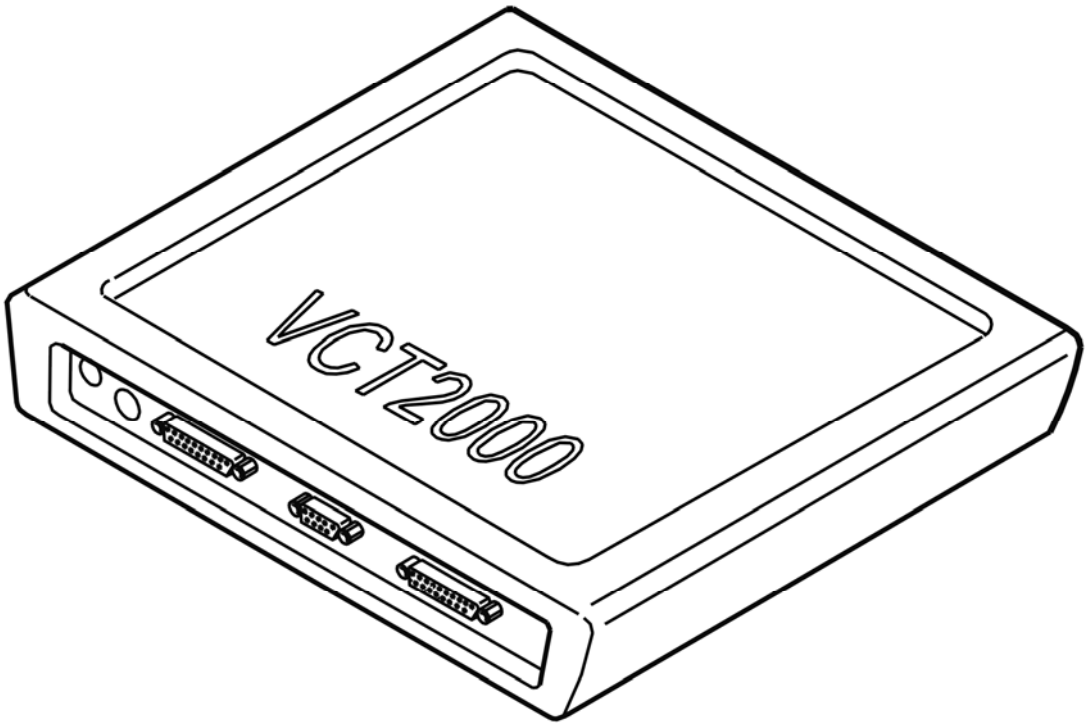

Fig. 135: Identifying VCT2000 Diagnostic Tool Symbol In VIDA
Courtesy of VOLVO CARS CORPORATION

FAULT-TRACING INFORMATION

Check that nothing is in the way or inserted into the media player.

Remedy as necessary.

Was a fault detected?

- **YES**

  OKAY: Troubleshooting has been completed.

- **NO**

  Refer to **REPLACING THE COMPONENT**

REPLACING THE COMPONENT

Before continuing with fault-tracing, the following must be checked:

- All tests for the relevant symptom must have been carried out
- No component, connector or wiring faults etc. should have been detected.

Try replacing the media player module (MPM).

CAUTION: A new media player module (MPM) is delivered without software. The transmission control module (TCM) must be programmed when it has been replaced.

Other information

- see **CONTROL MODULE GENERAL SOUND PLAYER**

FAULT-TRACING INFORMATION

Check that nothing is in the way or inserted into the media player.

Remedy as necessary.

Was a fault detected?

- **YES**

  OKAY: Troubleshooting has been completed.

- **NO**

  Refer to **REPLACING THE COMPONENT**

REPLACING THE COMPONENT

Before continuing with fault-tracing, the following must be checked:

- All tests for the relevant symptom must have been carried out
- No component, connector or wiring faults etc. should have been detected.

Try replacing the Integrated Audio Module (IAM).

CAUTION: A new Integrated Audio Module (IAM) is supplied without software. It must be programmed in order for it to function after replacement.

Other information

- see **CONTROL MODULE GENERAL SOUND PLAYER**

CHECKING THE LOUDSPEAKERS AND LOUDSPEAKER WIRING (2003-2006)

CHECKING THE LOUDSPEAKERS AND LOUDSPEAKER WIRING

FAULT-TRACING INFORMATION

HINT: Check that the volume is not turned down. Turn the VOLUME knob on the infotainment control module (ICM). Also check that the balance is set evenly between all the speakers using the SELECTOR knob.

The loudspeakers may stop playing back sound from a particular sound source, for example the MD and CD players or the radio.

Causes of the problem may be:

- Open-circuit in the signal cable between the audio module (AUM)/(AUD) and the loudspeakers
- defective loudspeakers
- Oxidation in the terminal pins in the connectors
- Problems on the MOST network
- Defective control module.

HINT: If there is no sound from any of the loudspeakers, check that the 16-pin connector on the audio module (AUD) is correctly connected. If there is still no sound from the loudspeakers, the problem is not in the loudspeaker wiring.

Select an option:

1. loudspeakers front/center

   Refer to **CHECKING THE CABLE, FRONT/CENTER LOUDSPEAKERS**

2. loudspeakers rear.

   Refer to **CHECKING THE LOUDSPEAKER WIRING, REAR DOORS**

CHECKING THE LOUDSPEAKER WIRING, REAR DOORS

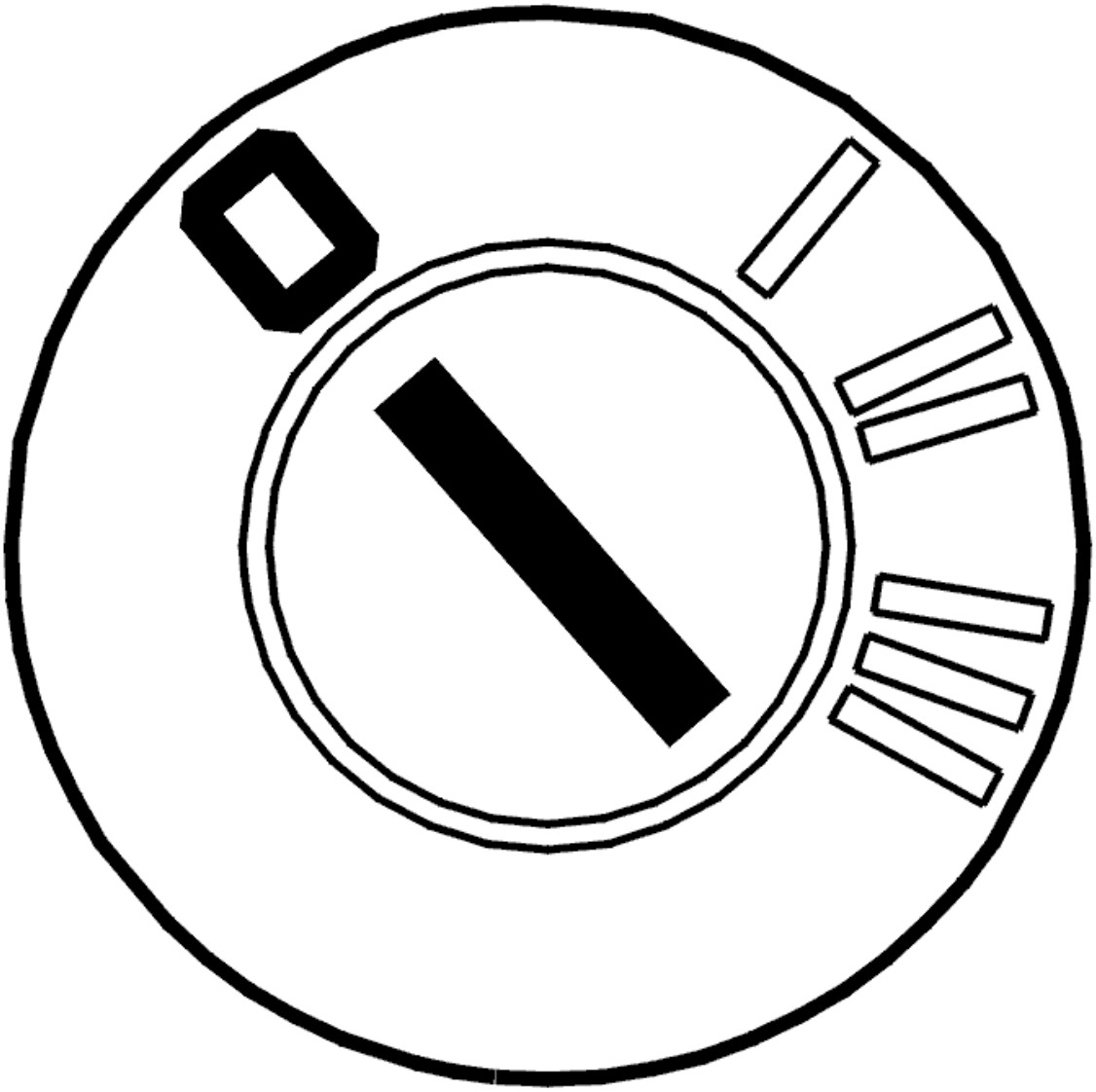

Fig. 136: Identifying Ignition OFF
Courtesy of VOLVO CARS CORPORATION

- Ignition off
- Disconnect the 16-pin connector for the audio module (AUD)
- Disconnect the connectors for the rear loudspeakers.

HINT: There may be two loudspeakers connected to these signal cables, one for the treble loudspeaker in the D-post and one for the loudspeaker in the rear door. For further information, see the wiring diagram.

Checking the cable

Check the cable terminals on the loudspeaker cable. Check for contact resistance, loose connections and oxidation. Check the cable terminals in the female and male sections of the connector. The cable

terminals must not be damaged or pressed back.

Checking the cable for the loudspeaker, left rear door

Check the cable between audio module (AUD) terminal #B12 and loudspeaker terminal #1 in the left rear door. Check for an open-circuit.

Check the cable between audio module (AUD) terminal #B4 and loudspeaker terminal #2 in the left rear door. Check for an open-circuit.

Check the resistance between terminals #B4 and #B12 in the connector for the audio module (AUD). The resistance must be infinite.

Checking the cable for the loudspeaker, right rear door

Check the cable between audio module (AUD) terminal #B13 and loudspeaker terminal #1 in the right rear door. Check for an open-circuit.

Check the cable between audio module (AUD) terminal #B5 and loudspeaker terminal #2 in the right rear door. Check for an open-circuit.

Check the resistance between terminals #B5 and #B13 in the connector for the audio module (AUD). The resistance must be infinite.

Remedy as necessary

Other information:

- To connect the breakout box, see **CONNECTING THE BREAKOUT BOX**
- To access or replace the audio module (AUD), see **AUDIO MODULE (AUD), REPLACING**
- To access or replace the loudspeaker in the D-post, see **LOUDSPEAKER, D-POST, REPLACING**
- To access or replace the loudspeaker in the rear side door, see **LOUDSPEAKER, REAR SIDE DOOR, REPLACING**
- For information about signals, see **SIGNAL SPECIFICATION**
- see **CONTENTS** .

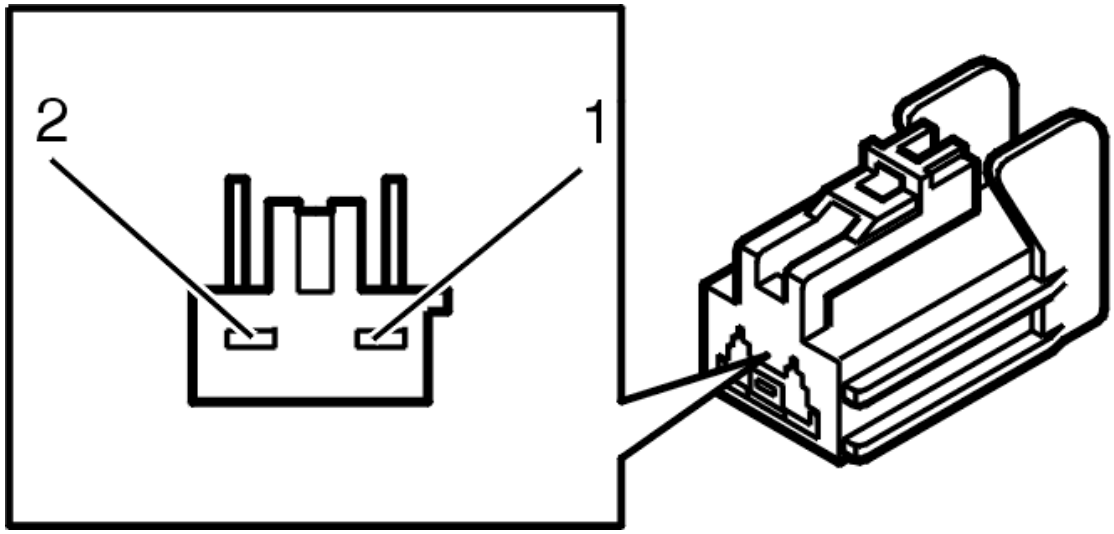

Fig. 137: Identifying 2-Bit Connector
Courtesy of VOLVO CARS CORPORATION

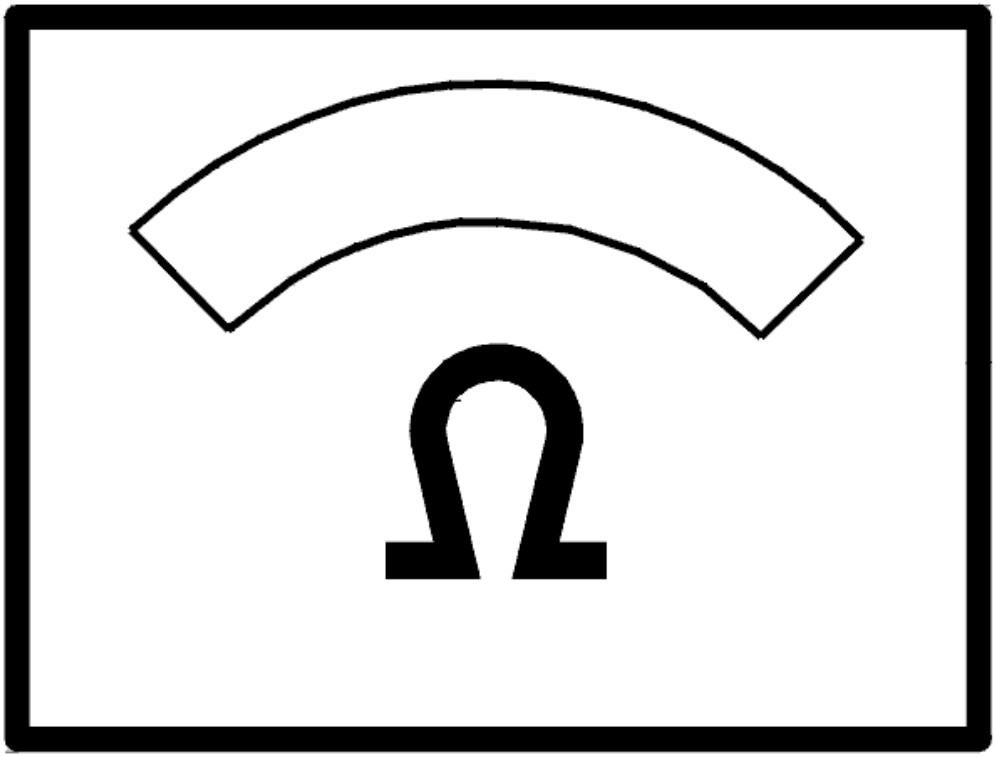

Fig. 138: Identifying Ohm Meter
Courtesy of VOLVO CARS CORPORATION

- **Continue**

  Refer to **CHECKING THE LOUDSPEAKERS, REAR DOOR**

CHECKING THE LOUDSPEAKERS, REAR DOOR

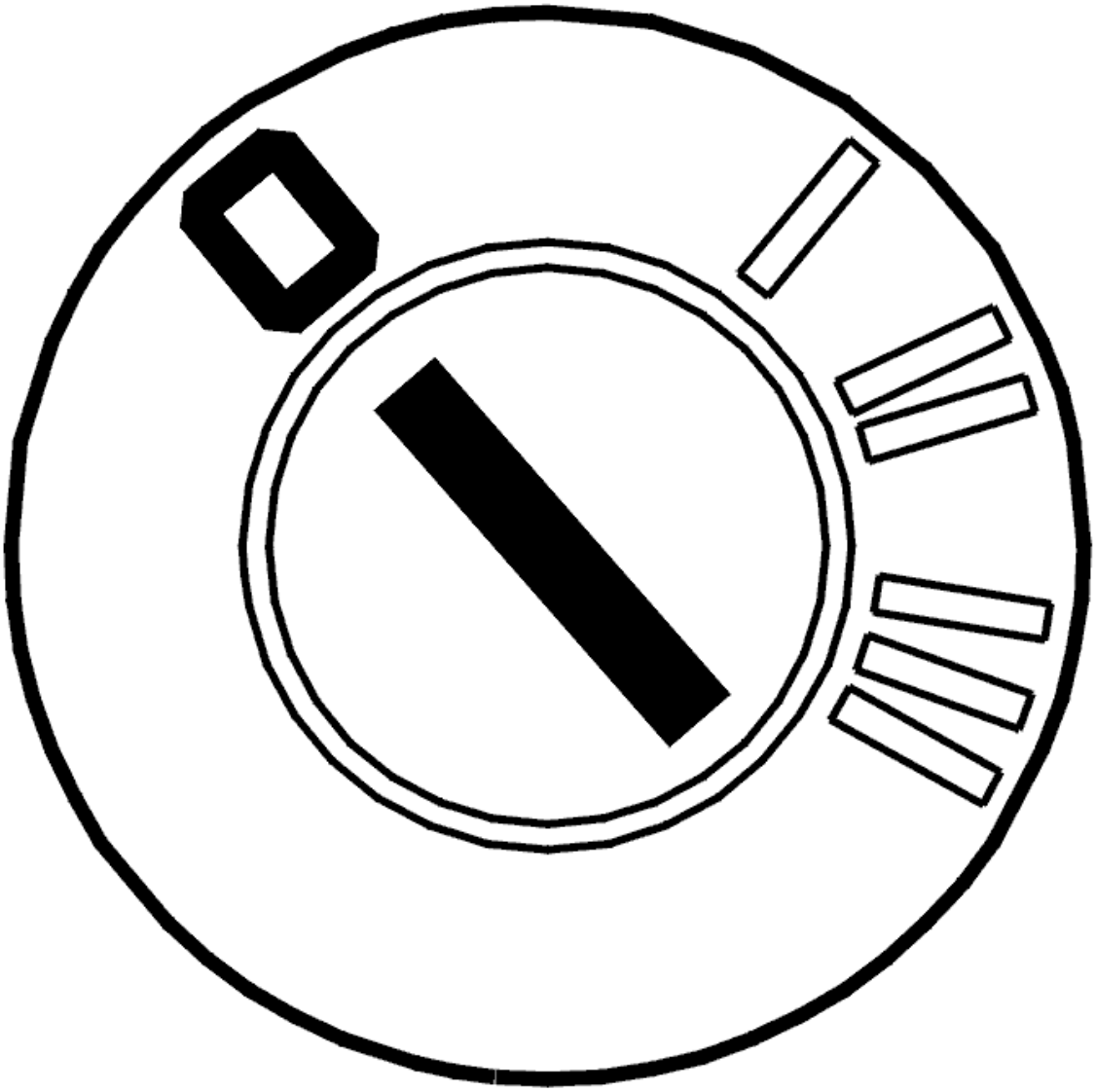

Fig. 139: Identifying Ignition OFF
Courtesy of VOLVO CARS CORPORATION

- Ignition off
- Disconnect the 16-pin connector for the audio module (AUD)
- Disconnect the connectors for the rear loudspeakers.

HINT: There may be two loudspeakers connected to the same signal cable, one for the treble loudspeaker in the D-post and one for the loudspeaker in the rear door. For further information, see the wiring diagram.

NOTE: **Take readings for the treble loudspeaker in the D-post on the two signal cables which are directly connected to the cone transducer. See the illustration. Take readings between points 1 and 2.**

Checking the cable

Check the cable terminals on the loudspeaker cable. Check for contact resistance, loose connections and oxidation. Check the cable terminals in the female and male sections of the connector. The cable terminals must not be damaged or pressed back

Checking the loudspeaker, left rear door

Check the resistance between loudspeaker terminals #1 and #2. The resistance must be approximately 2-8 ohms.

Checking the loudspeaker, left-hand D-post

Check the resistance of the treble loudspeaker in the left-hand D-post. See the illustration. Take readings between points 1 and 2. The resistance must be approximately 6-8 ohms.

Checking the loudspeaker, right rear door

Check the resistance between loudspeaker terminals #1 and #2. The resistance must be approximately 2-8 ohms.

Checking the loudspeaker, right-hand D-post

Check the resistance of the treble loudspeaker in the right-hand D-post. See the illustration. Take readings between points 1 and 2. The resistance must be approximately 6-8 ohms.

Remedy as necessary

Other information:

- To connect the breakout box, see **CONNECTING THE BREAKOUT BOX**
- To access or replace the audio module (AUD), see **AUDIO MODULE (AUD), REPLACING**
- To access or replace the loudspeaker in the D-post, see **LOUDSPEAKER, D-POST, REPLACING**
- To access or replace the loudspeaker in the rear side door, see **LOUDSPEAKER, REAR SIDE DOOR, REPLACING**
- For information about signals, see **SIGNAL SPECIFICATION**
- see **CONTENTS** .

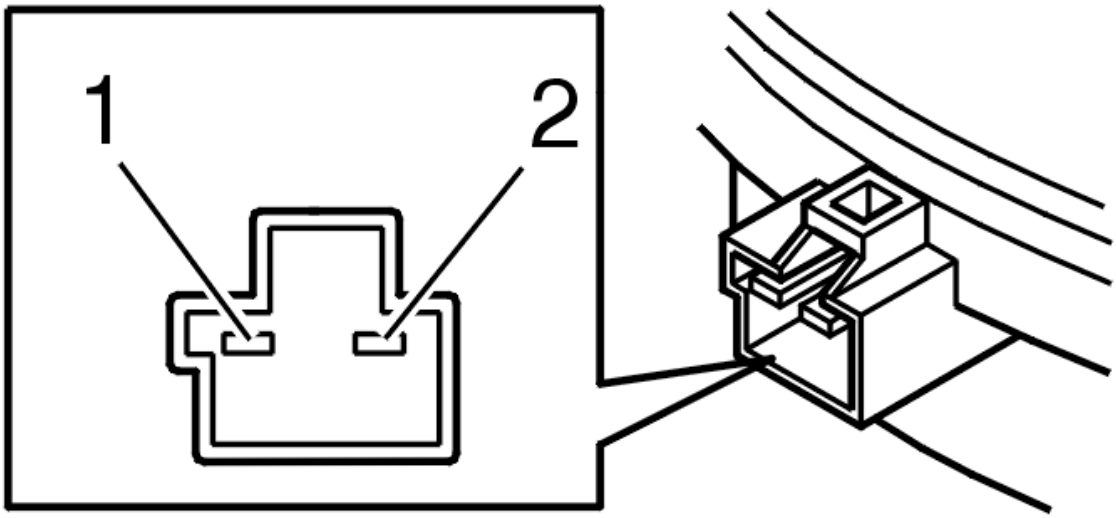

Fig. 140: Identifying 2-Bit Connector
Courtesy of VOLVO CARS CORPORATION

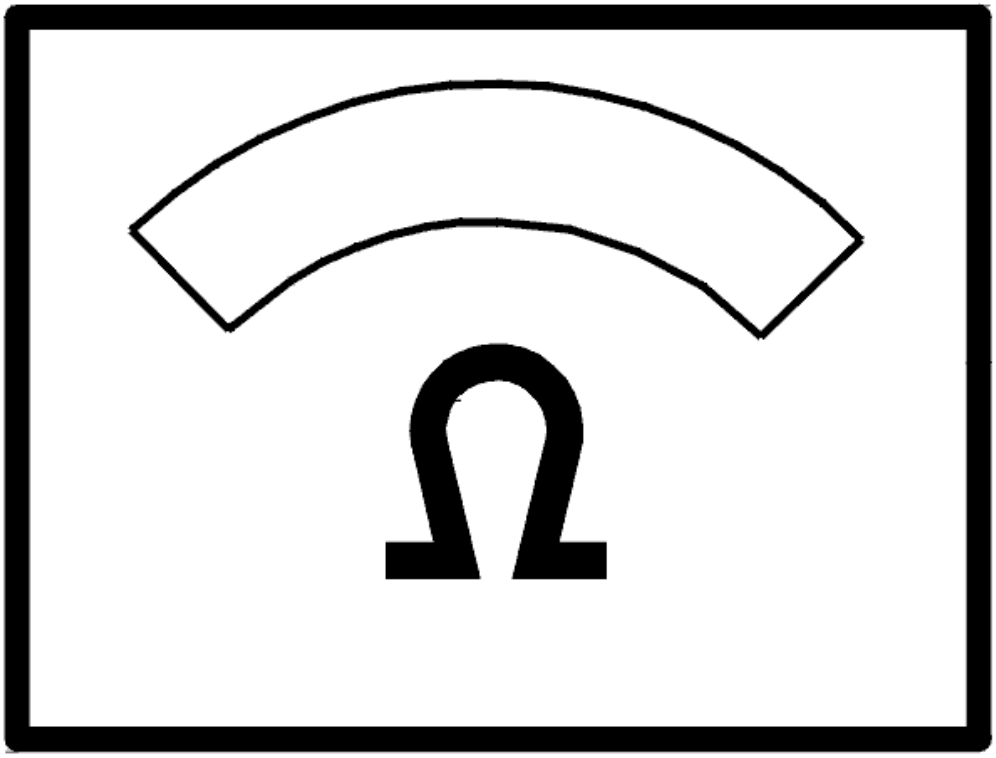

Fig. 141: Identifying Ohm Meter
Courtesy of VOLVO CARS CORPORATION

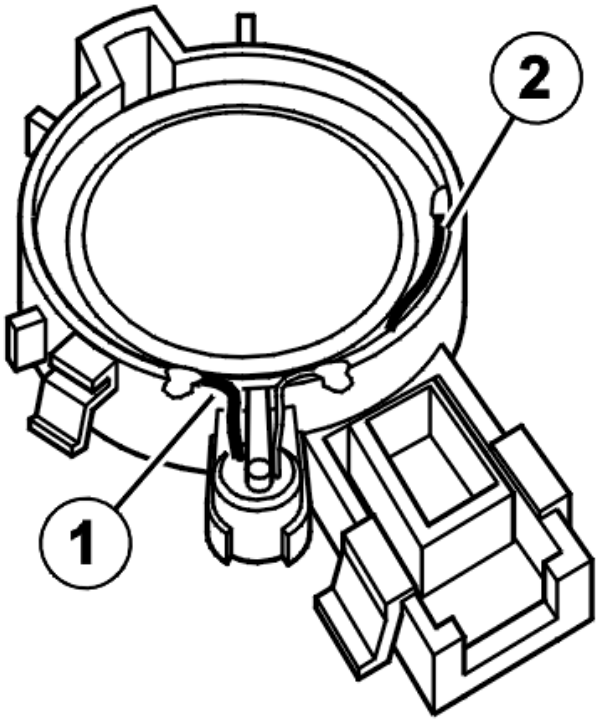

Fig. 142: Identifying Resistance Measurement Points On Treble Loudspeaker
Courtesy of VOLVO CARS CORPORATION

Was a fault detected?

- **YES**

  Refer to **VERIFICATION**

- **NO**

  FAULT NOT FOUND: Troubleshooting has been completed.

CHECKING THE CABLE, FRONT/CENTER LOUDSPEAKERS

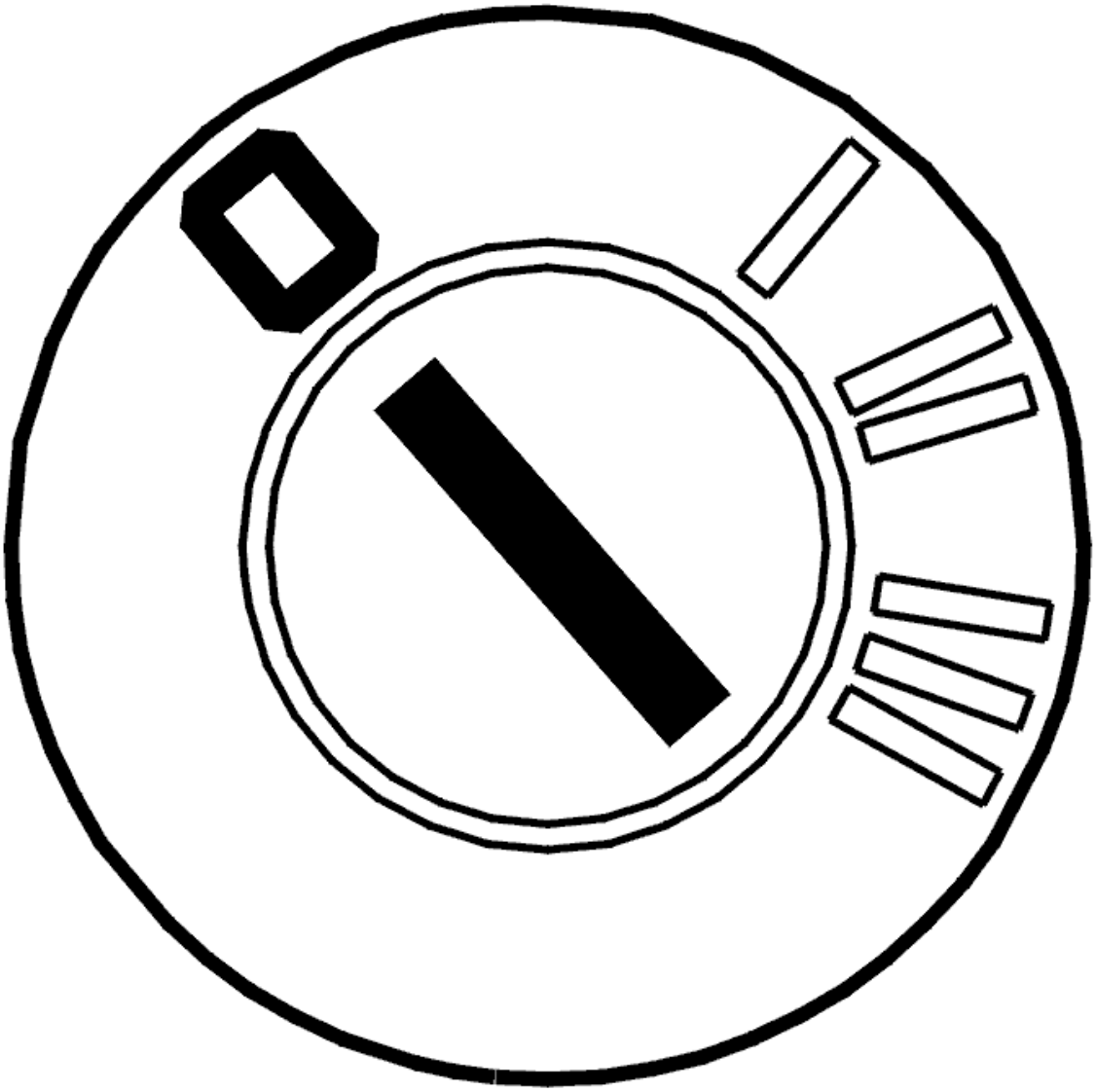

Fig. 143: Identifying Ignition OFF
Courtesy of VOLVO CARS CORPORATION

- Ignition off
- Disconnect the 16-pin connector for the audio module (AUD)
- Disconnect the connectors for the front loudspeakers
- Disconnect the connector for the center loudspeaker if it is connected.

NOTE: **Only some audio modules have a center loudspeaker connected. If the center loudspeaker is not connected do not perform fault-tracing for the center loudspeaker.**

HINT: There may be two loudspeakers connected to the same signal cable, one for the treble loudspeaker/upper loudspeaker in the front door and one for the loudspeaker in the front door. For further information, see the wiring diagram.

Checking the cable

Check the cable terminals on the loudspeaker cable. Check for contact resistance, loose connections and oxidation. Check the cable terminals in the female and male sections of the connector. The cable terminals must not be damaged or pressed back.

Checking the cable for the loudspeaker, left front door

Check the cable between audio module (AUD) terminal #B9 and loudspeaker terminal #1 in the left front door. Check for an open-circuit.

Check the cable between audio module (AUD) terminal #B1 and loudspeaker terminal #2 in the left front door. Check for an open-circuit.

Check the resistance between terminals #B1 and #B9 in the connector for the audio module (AUD). The resistance must be infinite.

Checking the cable for the loudspeaker, right front door

Check the cable between audio module (AUD) terminal #B3 and loudspeaker terminal #2 in the right front door. Check for an open-circuit.

Check the cable between audio module (AUD) terminal #B11 and loudspeaker terminal #1 in the right front door. Check for an open-circuit.

Check the resistance between terminals #B3 and #B11 in the connector for the audio module (AUD). The resistance must be infinite.

Checking the cable for the center loudspeaker

Check the cable between audio module (AUD) terminal #B2 and center speaker terminal #2 on the dashboard. Check for an open-circuit.

Check the cable between audio module (AUD) terminal #B10 and center speaker terminal #1 on the dashboard. Check for an open-circuit.

Check the resistance between terminals #B2 and #B10 in the connector for the audio module (AUD). The resistance must be infinite.

Remedy as necessary

Other information:

- To connect the breakout box, see **CONNECTING THE BREAKOUT BOX**
- To access or replace the audio module (AUD), see **AUDIO MODULE (AUD), REPLACING**
- To access or replace the loudspeaker in the front side door, see **LOUDSPEAKER, FRONT SIDE DOOR, REPLACING**

- To access or replace the center loudspeaker, see **CENTRAL LOUDSPEAKER, REPLACING**
- For information about signals, see **SIGNAL SPECIFICATION**
- see **CONTENTS** .

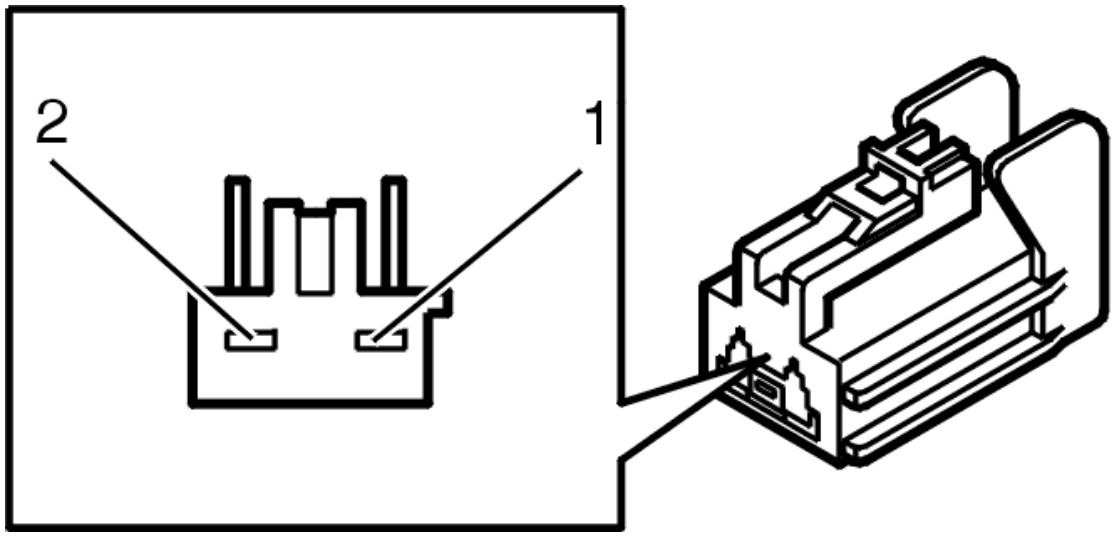

Fig. 144: Identifying 2-Bit Connector
Courtesy of VOLVO CARS CORPORATION

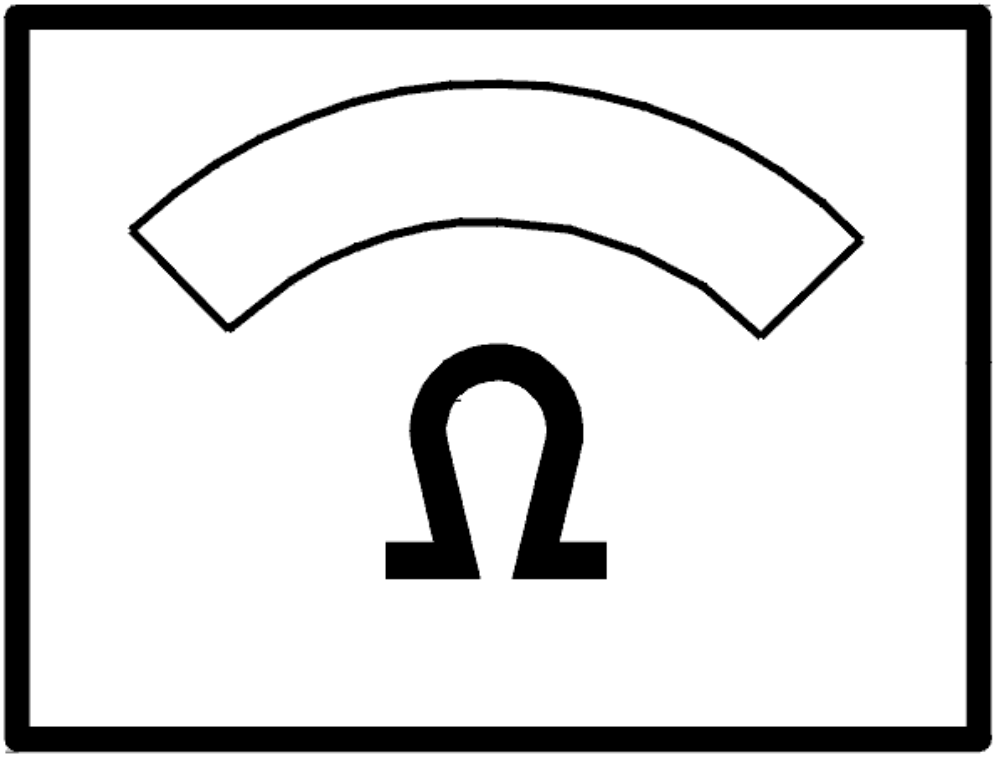

Fig. 145: Identifying Ohm Meter
Courtesy of VOLVO CARS CORPORATION

- **Continue**

Refer to **CHECKING THE CABLE, FRONT/CENTER LOUDSPEAKERS**

CHECKING THE CABLE, FRONT/CENTER LOUDSPEAKERS

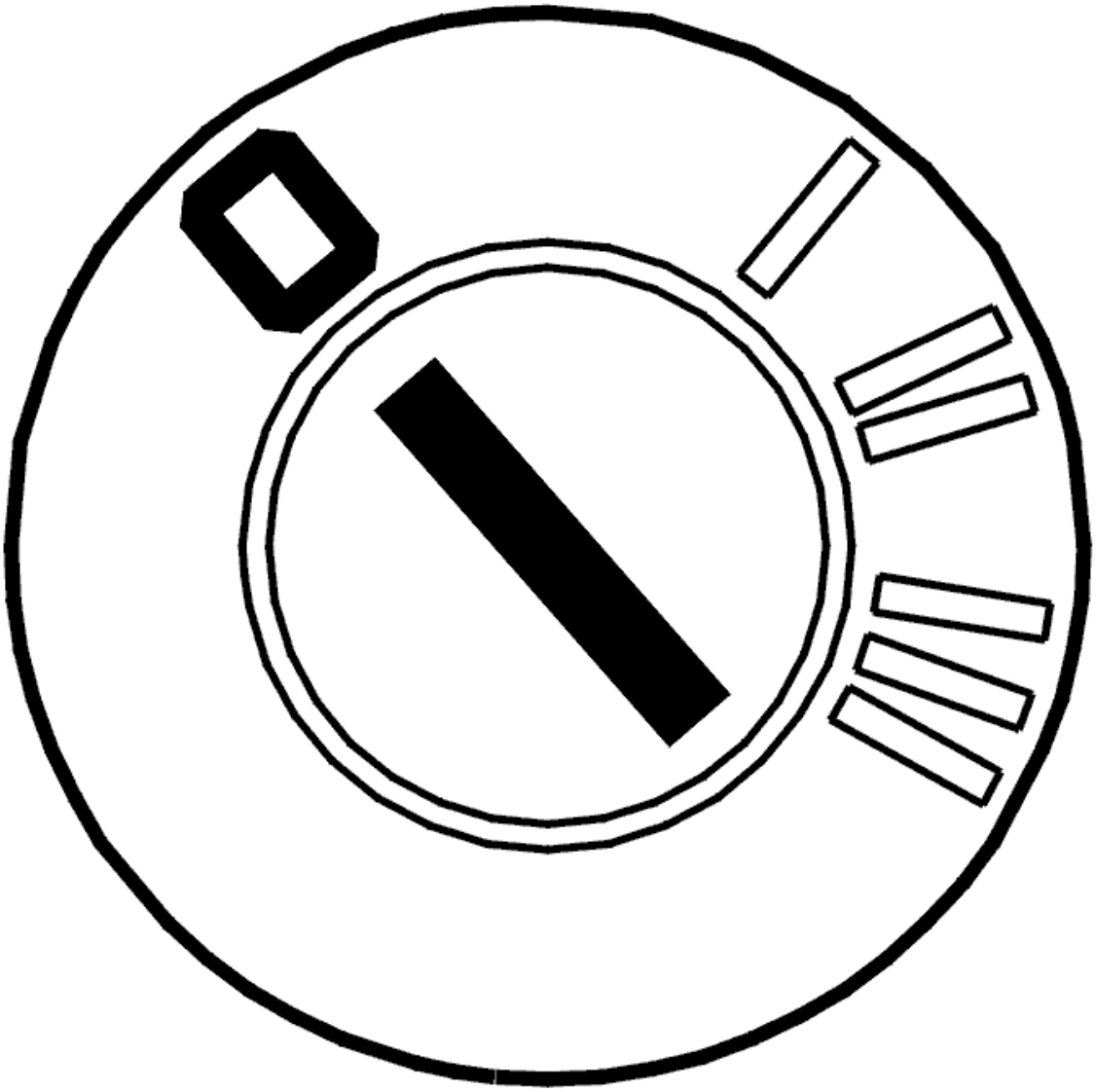

Fig. 146: Identifying Ignition OFF
Courtesy of VOLVO CARS CORPORATION

- Ignition off
- Disconnect the 16-pin connector for the audio module (AUD)
- Disconnect the connector for the center loudspeaker.

NOTE: **Take readings for the treble loudspeaker in the center loudspeaker bracket on the two signal cables which are directly connected to the treble cone transducer. See the illustration. Take readings between points 1 and 2.**

Checking the cable

Check the cable terminals on the loudspeaker cable. Check for contact resistance, loose connections and oxidation. Check the cable terminals in the female and male sections of the connector. The cable

terminals must not be damaged or pressed back.

Checking the center speaker

Check the resistance between terminals #1 and #2 on the center speaker. The resistance must be approximately 5-8 ohms.

Check the resistance in the treble transducer for the center speaker. See the illustration. Take readings between points 1 and 2. The resistance must be approximately 6-8 ohms

Remedy as necessary

Other information:

- To connect the breakout box, see **CONNECTING THE BREAKOUT BOX**
- To access or replace the audio module (AUD), see **AUDIO MODULE (AUD), REPLACING**
- To access or replace the center loudspeaker, see **CENTRAL LOUDSPEAKER, REPLACING**
- For information about signals, see **SIGNAL SPECIFICATION**
- see **CONTENTS** .

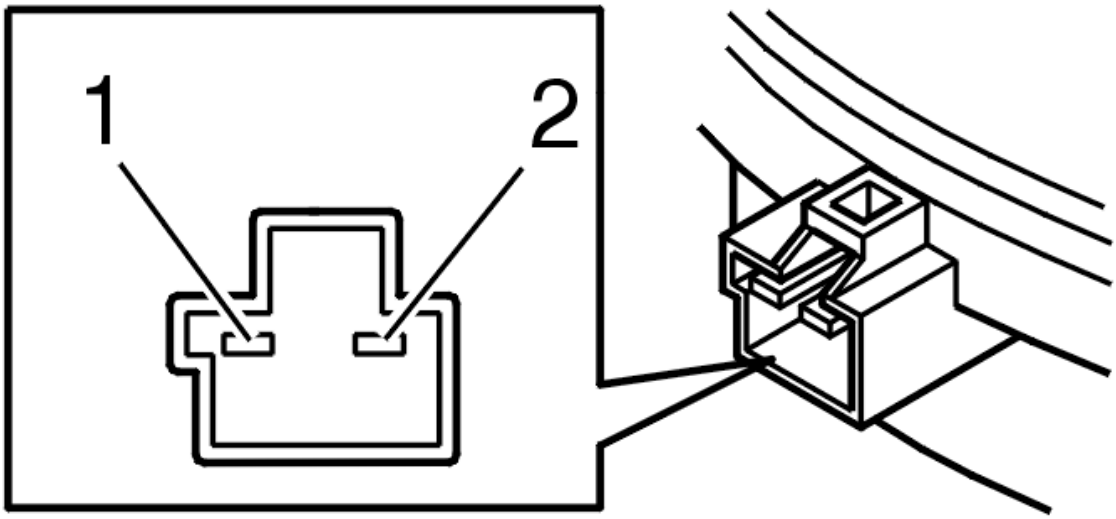

Fig. 147: Identifying 2-Bit Connector
Courtesy of VOLVO CARS CORPORATION

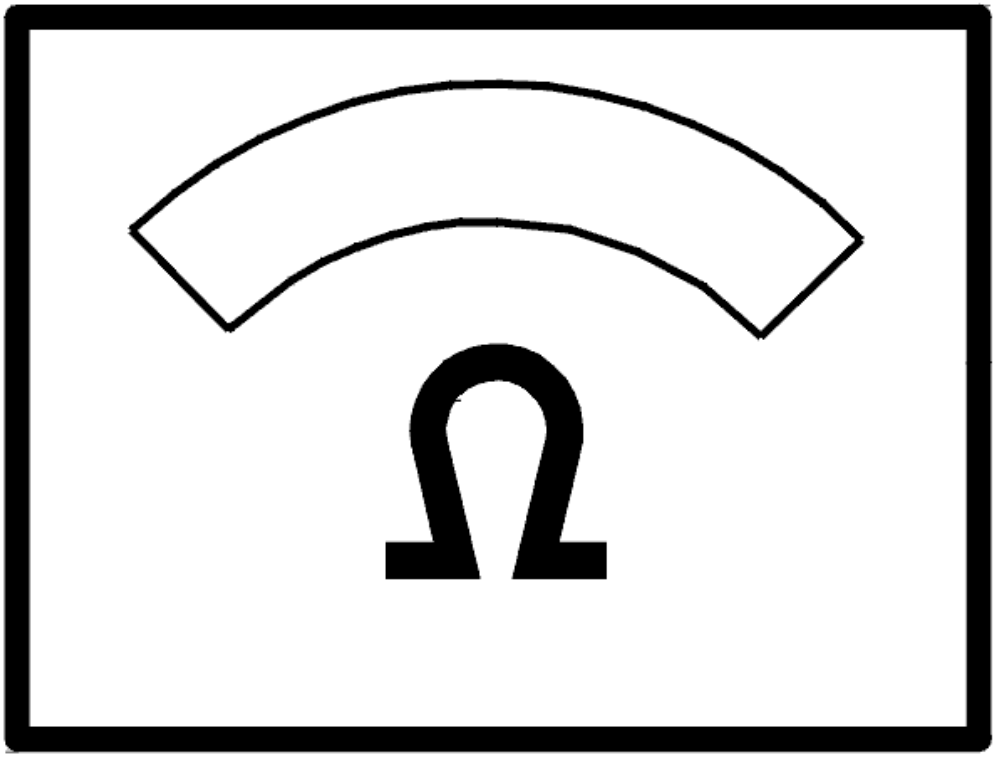

Fig. 148: Identifying Ohm Meter
Courtesy of VOLVO CARS CORPORATION

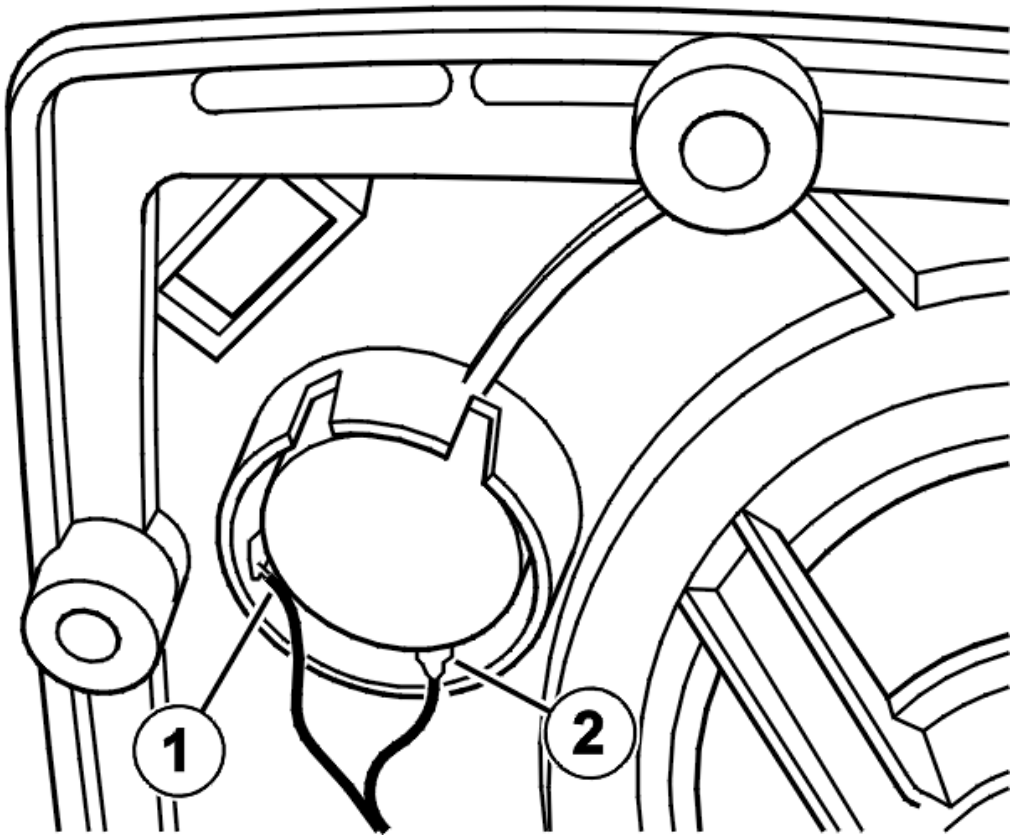

Fig. 149: Identifying Resistance Measurement Points On Center Speaker
Courtesy of VOLVO CARS CORPORATION

- **Continue**

  Refer to **CHECKING THE CABLE, FRONT/CENTER LOUDSPEAKERS**

CHECKING THE CABLE, FRONT/CENTER LOUDSPEAKERS

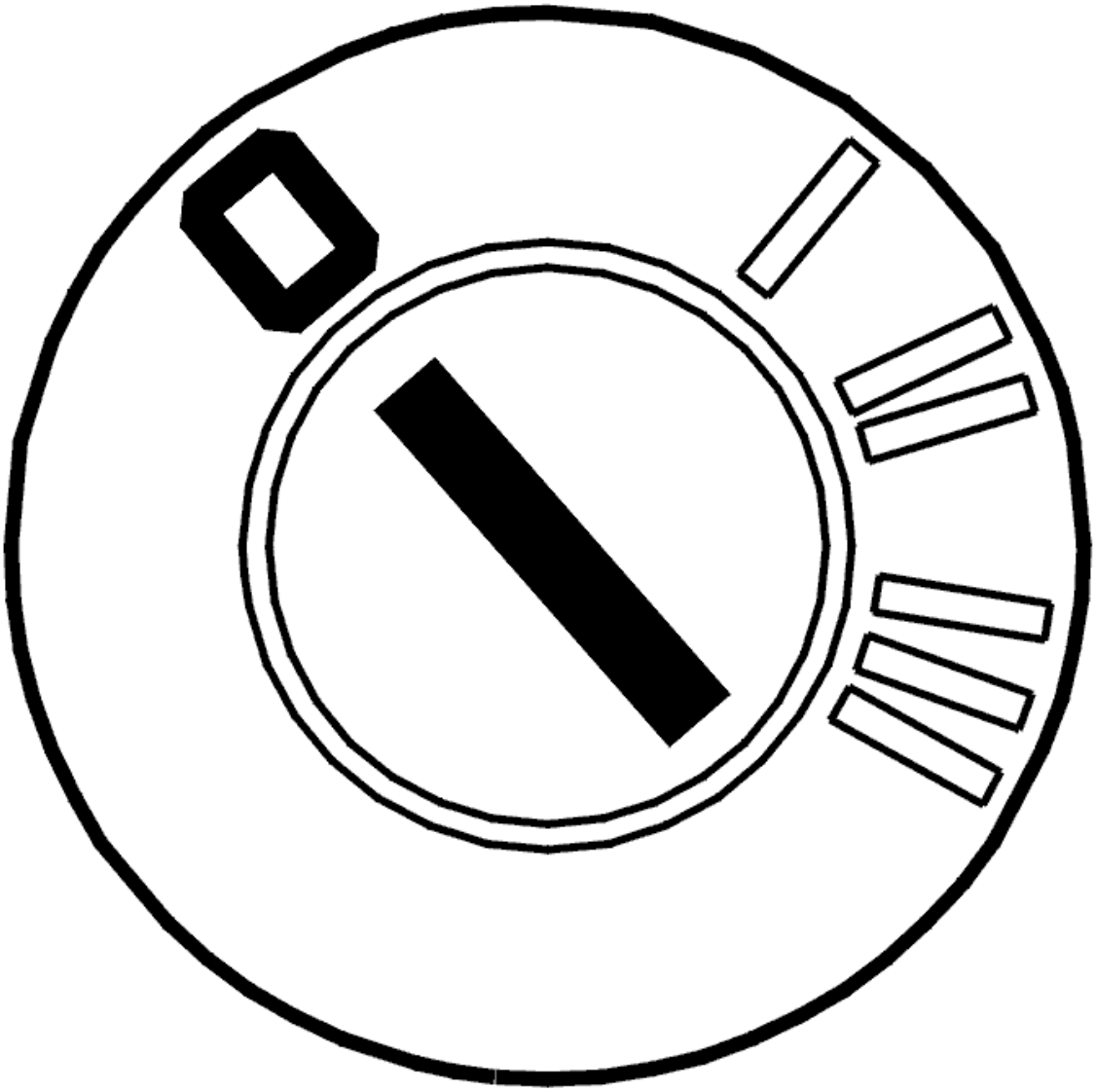

Fig. 150: Identifying Ignition OFF
Courtesy of VOLVO CARS CORPORATION

- Ignition off
- Disconnect the 16-pin connector for the audio module (AUD)
- Disconnect the connectors for the front loudspeakers.

HINT: There may be two loudspeakers connected to the same signal cable, one for the treble loudspeaker/upper loudspeaker and one for the loudspeaker in the front door. For further information, see the wiring diagram.

CAUTION: Check the treble loudspeaker/upper loudspeaker visually only. Check for oxidation and loose connections. Do not perform any electrical fault-tracing on the treble loudspeaker.

NOTE: **Certain loudspeakers may have two separate cone transducers. For these loudspeakers, follow the fault-tracing for both loudspeakers and cone transducers in the left and right front doors. For other loudspeakers, only perform the fault-tracing for the loudspeakers in the left and right-hand front doors.**

Checking the cable

Check the cable terminals on the loudspeaker cable. Check for contact resistance, loose connections and oxidation. Check the cable terminals in the female and male sections of the connector. The cable terminals must not be damaged or pressed back.

Checking the loudspeaker, left front door

Check the resistance between loudspeaker terminals #1 and #2 in the left front door. The resistance must be approximately 2-4 ohms.

Checking the upper cone transducer, left front door

Check the resistance between the terminals for the upper cone transducer in the left-hand front door. See the illustration. Take readings between points 1 and 2. The resistance must be approximately 3-5 ohms.

Checking the loudspeaker, right front door

Check the resistance between loudspeaker terminals #1 and #2 in the right front door. The resistance must be 2-4 ohms.

Checking the upper cone transducer, right front door

Check the resistance between the terminals for the upper cone transducer in the right-hand front door. See the illustration. Take readings between points 1 and 2. The resistance must be approximately 3-5 ohms.

Remedy as necessary

Other information:

- To connect the breakout box, see **CONNECTING THE BREAKOUT BOX**
- To access or replace the audio module (AUD), see **AUDIO MODULE (AUD), REPLACING**
- To access or replace the loudspeaker in the front side door, see **LOUDSPEAKER, FRONT SIDE DOOR, REPLACING**
- For information about signals, see **SIGNAL SPECIFICATION**
- see **CONTENTS** .

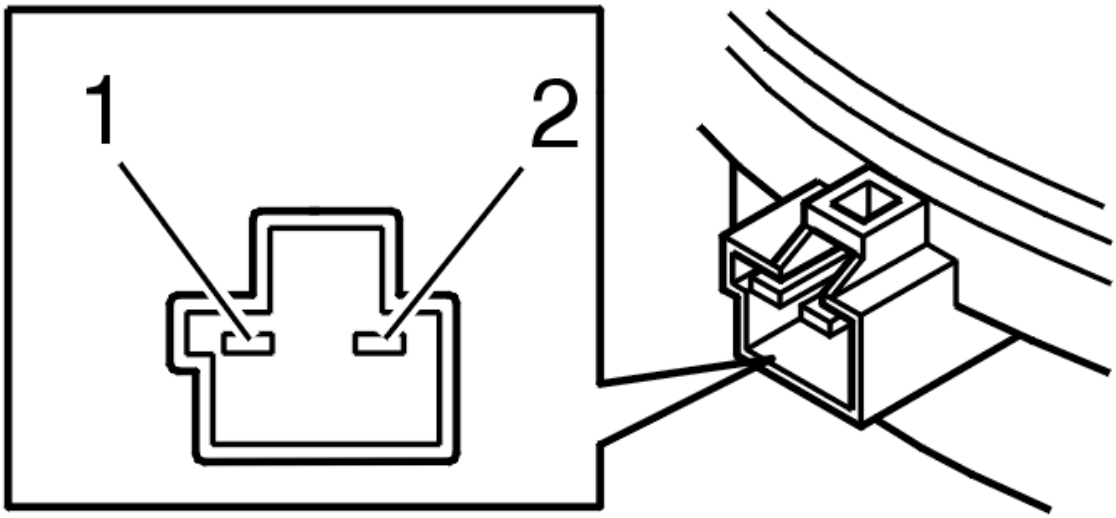

Fig. 151: Identifying 2-Bit Connector
Courtesy of VOLVO CARS CORPORATION

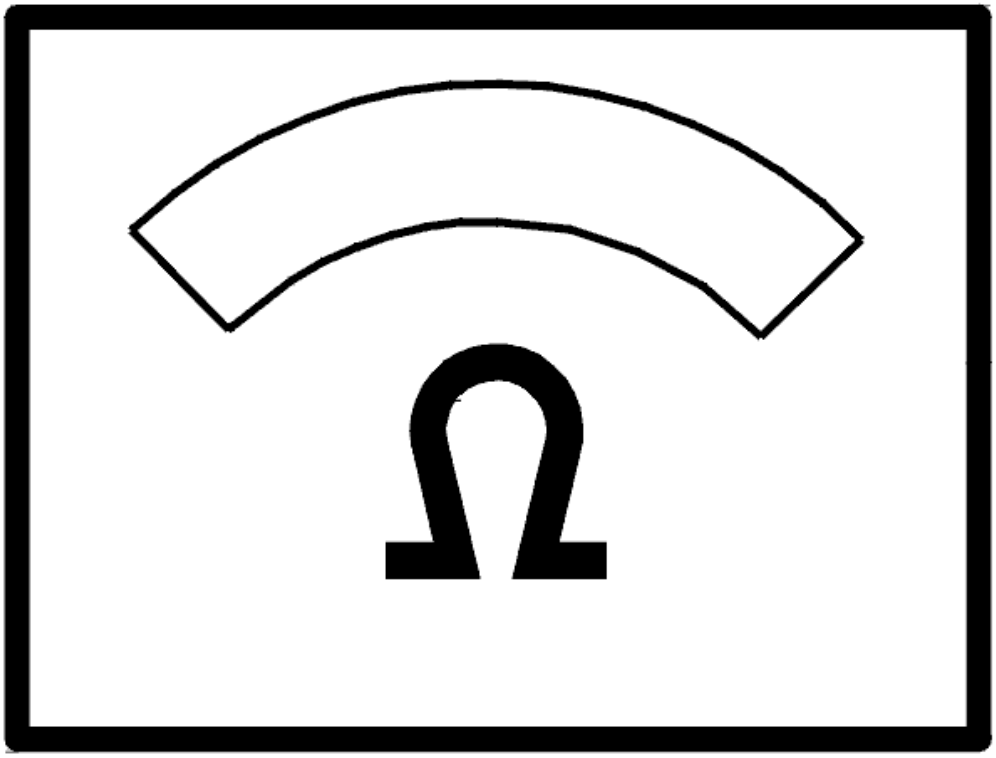

Fig. 152: Identifying Ohm Meter
Courtesy of VOLVO CARS CORPORATION

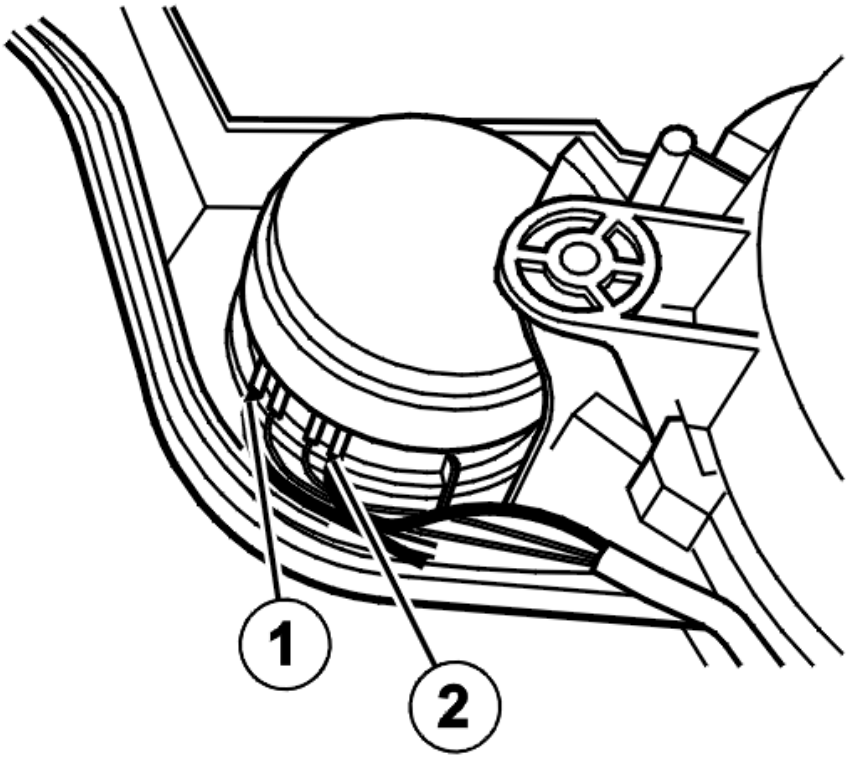

Fig. 153: Identifying Resistance Measurement Points On Front Loudspeaker
Courtesy of VOLVO CARS CORPORATION

VERIFICATION

HINT: After carrying out the repair, check that the fault has been remedied.

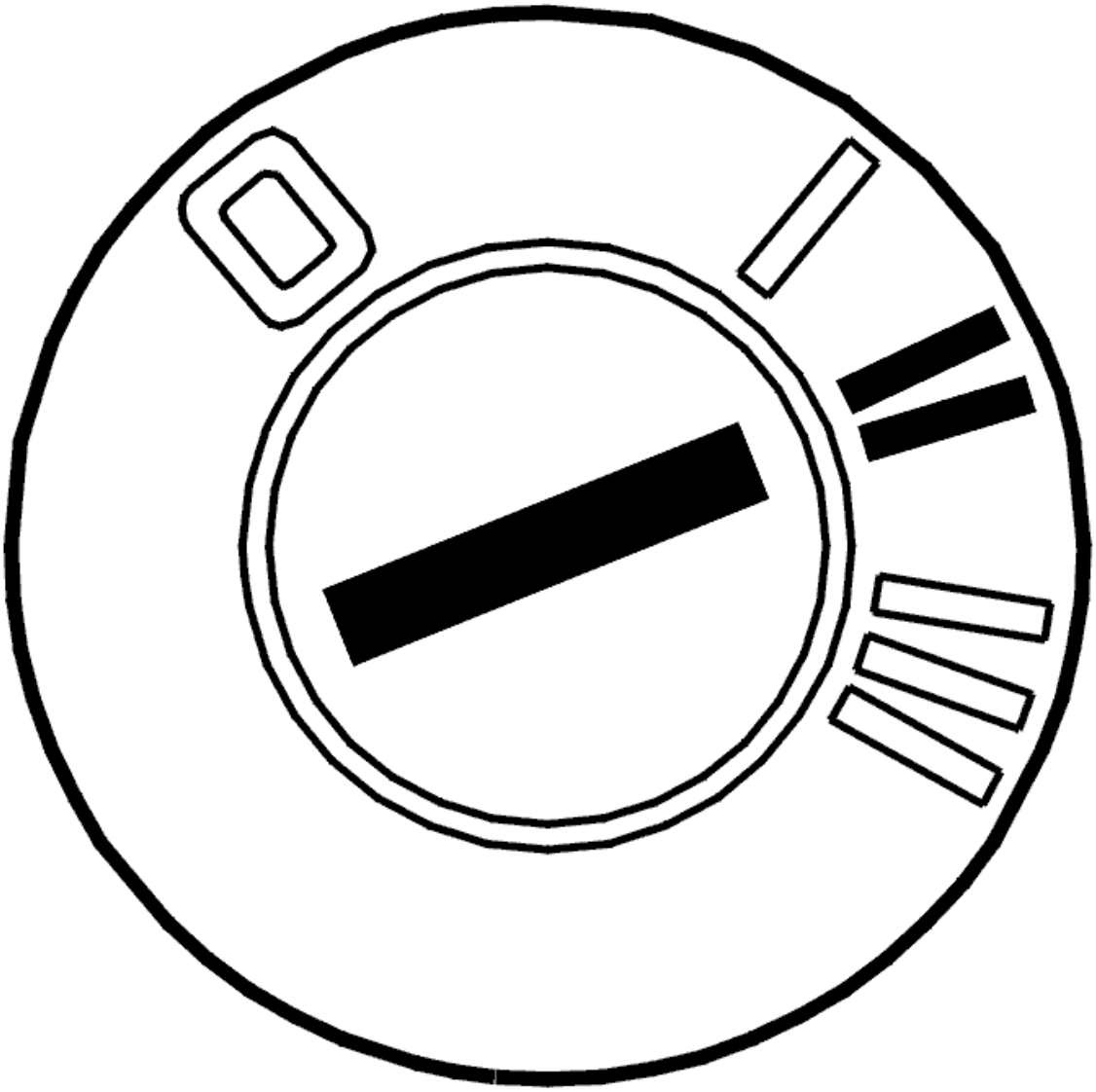

Fig. 154: Identifying Ignition ON
Courtesy of VOLVO CARS CORPORATION

- Ignition on
- Switch on the radio or CD/MD player.

  Raise and lower the volume using the VOLUME knob. Check that the sound increases and decreases in the loudspeakers at the same time.

Is there sound?

- **YES**

  VERIFIED: Troubleshooting has been completed.

- **NO**

Refer to **INFORMATION**

INFORMATION

FAULT-TRACING INFORMATION

The fault should have been detected and remedied. As this is not the case fault-tracing has failed.

Exit fault-tracing for this diagnostic trouble code (DTC) or make another attempt.

CHECKING THE MEDIA PLAYER (2007-2011)

CHECKING THE MEDIA PLAYER

SELECTING THE MEDIA PLAYER

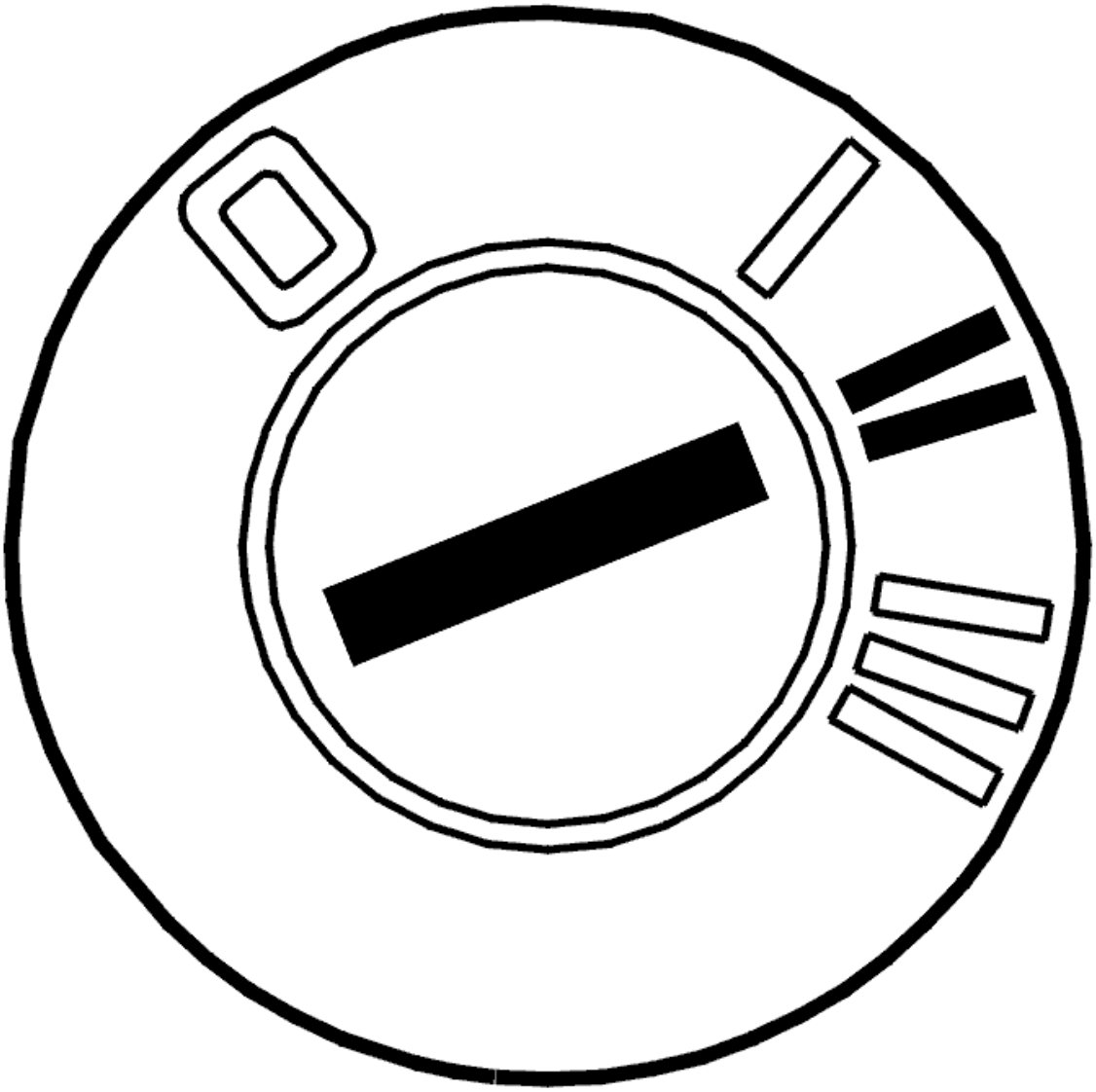

Fig. 155: Identifying Ignition ON
Courtesy of VOLVO CARS CORPORATION

- Ignition on

  Activate identification of the type of media player the vehicle is equipped with by clicking the symbol for VCT2000.

  Select the appropriate alternative.

  1. Integrated audio module (IAM)

     Refer to **FAULT-TRACING INFORMATION**

  2. Media player module (MPM)

     Refer to **FAULT-TRACING INFORMATION**

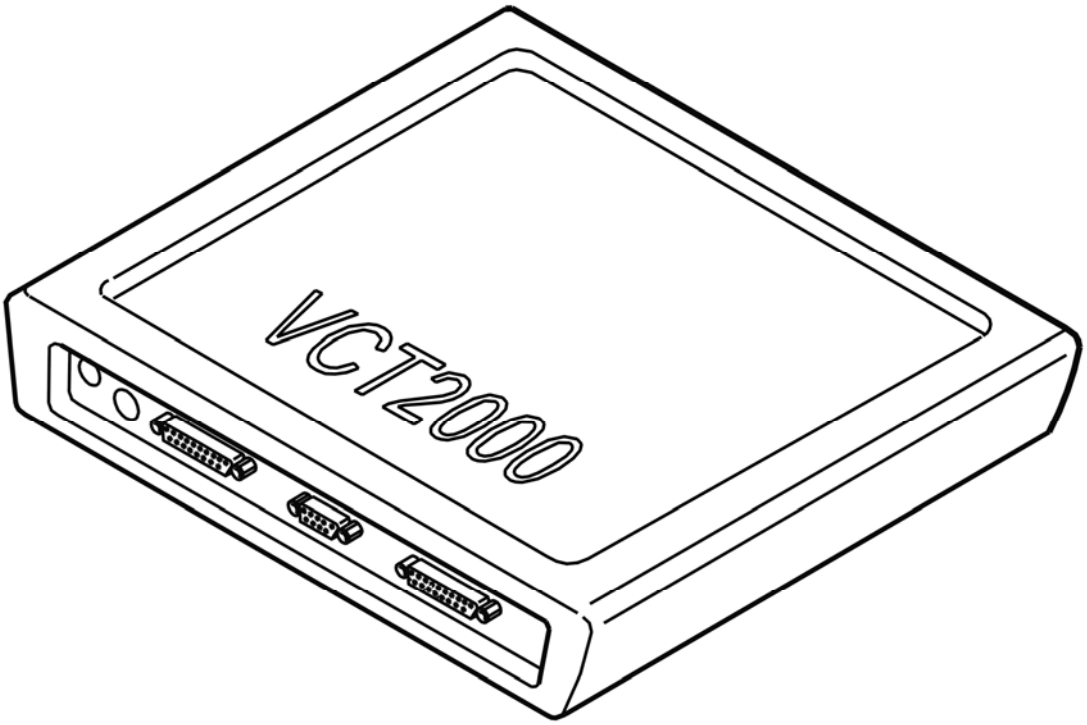

Fig. 156: Identifying VCT2000 Diagnostic Tool Symbol In VIDA
Courtesy of VOLVO CARS CORPORATION

FAULT-TRACING INFORMATION

HINT: Check that the volume is not turned down.

Check other sound sources, to, see if the radio works for example.

Do other sound sources work?

- **YES**

  Refer to **CHECKING THE COMPONENT**

- **NO**

  Refer to **CHECKING THE SOUND**

CHECKING THE SOUND

Check that the settings (volume, fade, balance, central volume or power volume) are not causing the fault symptom.

Check the sound reproduction from multiple sources.

Check that all the connectors are correctly connected to the audio module (AUD) and amplifier.

CHECKING THE COMPONENT

- Disconnect the media player module (MPM)
- Connect another media player.

  Load a CD disc and check that the media player is working.

  Other information

  - see **CONTROL MODULE GENERAL SOUND PLAYER**

Is there sound reproduction from the media player?

- **YES**

  FAULT NOT FOUND: Troubleshooting has been completed.

- **NO**

  Refer to **FAULT-TRACING INFORMATION**

FAULT-TRACING INFORMATION

The fault should now have been detected and remedied. As this is not the case, the fault-tracing has failed.

Complete the fault-tracing for this fault symptom or try again.

FAULT-TRACING INFORMATION

HINT: Check that the volume is not turned down.

Check other sound sources, to, see if the radio works for example.

Do other sound sources work?

- **YES**

  Refer to **CHECKING THE COMPONENT**

- **NO**

  Refer to **CHECKING THE SOUND**

CHECKING THE COMPONENT

- Detach the Integrated Audio Module (IAM).
- Connect another media player.

  Load a CD disc and check that the media player is working.

  Other information

  - see **CONTROL MODULE GENERAL SOUND PLAYER**

Is there sound reproduction from the media player?

- **YES**

  FAULT NOT FOUND: Troubleshooting has been completed.

- **NO**

  Refer to **FAULT-TRACING INFORMATION**

CHECKING THE SOUND

Check that the settings (volume, fade, balance, central volume or power volume) are not causing the fault symptom.

Check the sound reproduction from multiple sources.

Check that all connectors are correctly connected to the speakers or the Audio Control Module (AUD) (option).

CHECKING THE MICROPHONE (2003-2006)

CHECKING THE MICROPHONE

FAULT-TRACING INFORMATION

Fault causes which will stop the microphone working:

- Defective microphone
- Short-circuit to supply voltage in the signal cable between the microphone and the audio module (AUD)
- Defective audio module (AUD)
- Problems with the MOST network.

HINT: Check that the MOST network is working before beginning fault-tracing.

NOTE: Check that no diagnostic trouble codes (DTCs) are stored in the audio module (AUD) or the infotainment control module (ICM) and that other tests have been completed before fault-tracing.

Have all tests been completed and no diagnostic trouble codes (DTCs) are stored?

- **YES**

  Refer to **CHECKING THE CABLE**

- **NO**

  OKAY: Troubleshooting has been completed.

CHECKING THE CABLE

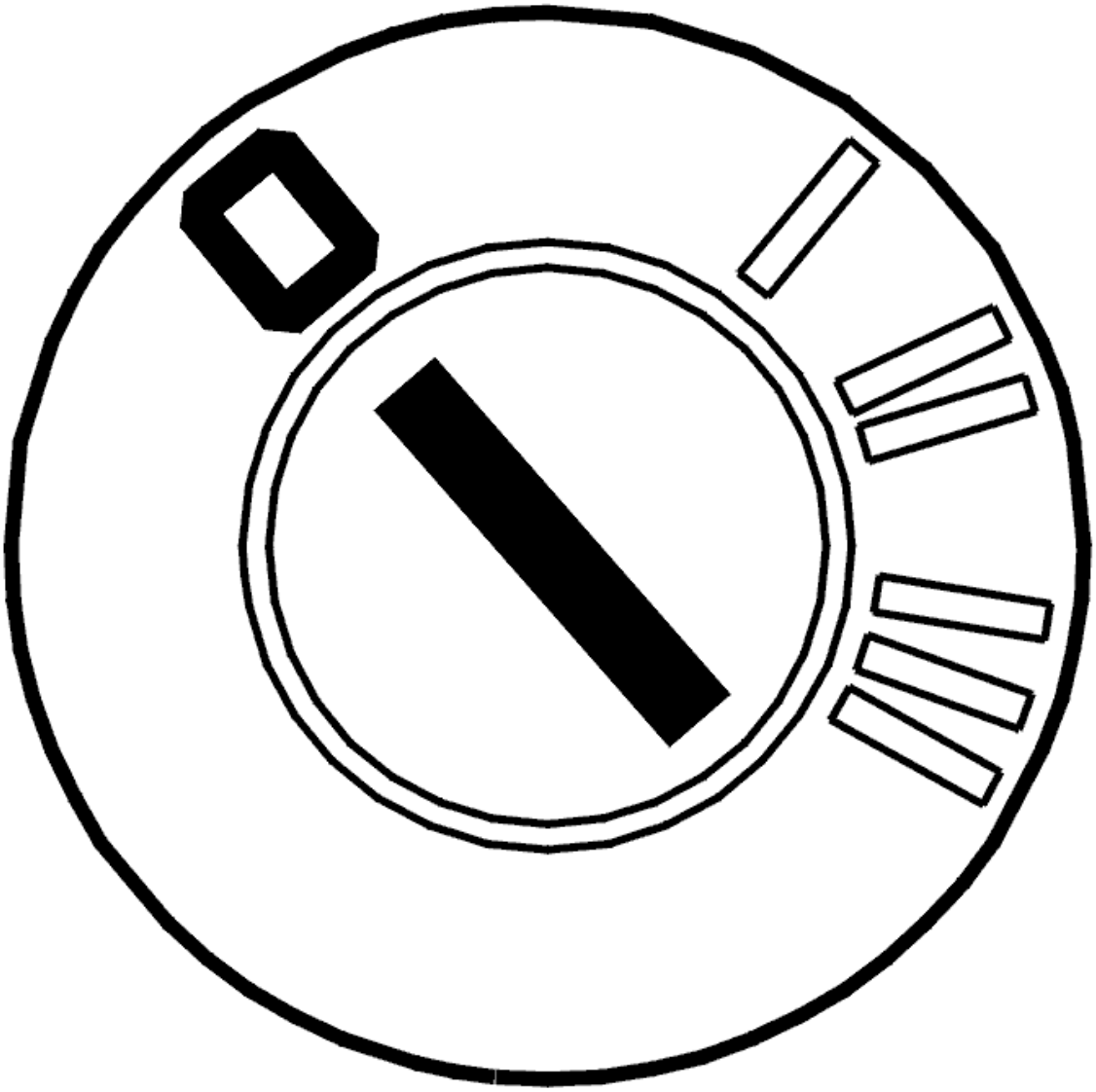

Fig. 157: Identifying Ignition OFF
Courtesy of VOLVO CARS CORPORATION

- Ignition off
- Disconnect the connector for the microphone in the rear view mirror.

  Check the cable terminals. Check for contact resistance and oxidation. Check the female and male sections of the connector. The cable terminals must not be damaged or pressed back.

  Check the signal cable between audio module (AUD) terminal #B8 and microphone terminal #A2 (pin B). Check for a short-circuit to supply voltage.

  Check the signal cable between audio module (AUD) terminal #B16 and microphone terminal #A1 (pin A). Check for a short-circuit to supply voltage.

  Remedy as necessary.

Other information:

- To connect the breakout box, see **CONNECTING THE BREAKOUT BOX**
- To access or replace the audio module (AUD), see **AUDIO MODULE (AUD), REPLACING**
- To access or replace the microphone, see **MICROPHONE, REPLACING**
- For information about signals, see **SIGNAL SPECIFICATION**
- see **CONTENTS** .

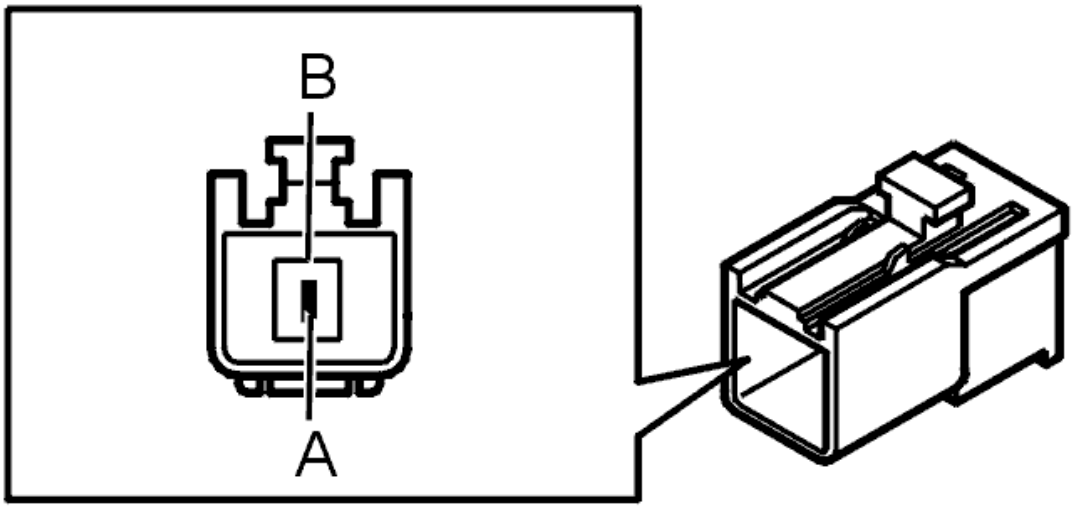

Fig. 158: Connector F, Carphone Antenna (Brown Connector), Single Hirose GT5
Courtesy of VOLVO CARS CORPORATION

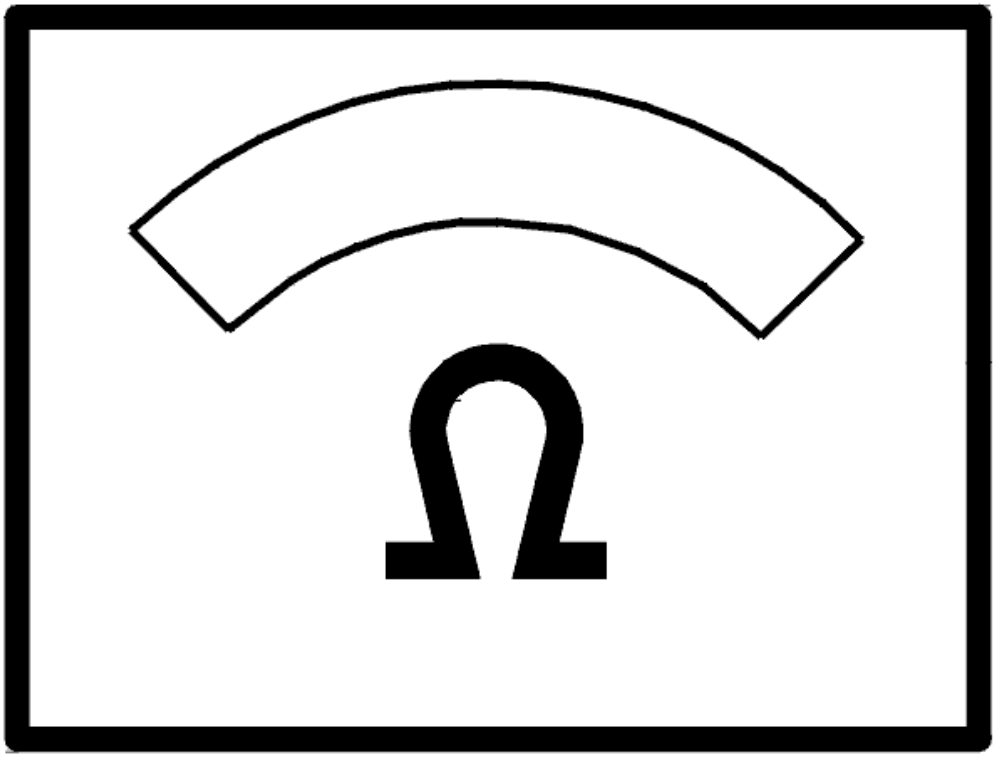

Fig. 159: Identifying Ohm Meter
Courtesy of VOLVO CARS CORPORATION

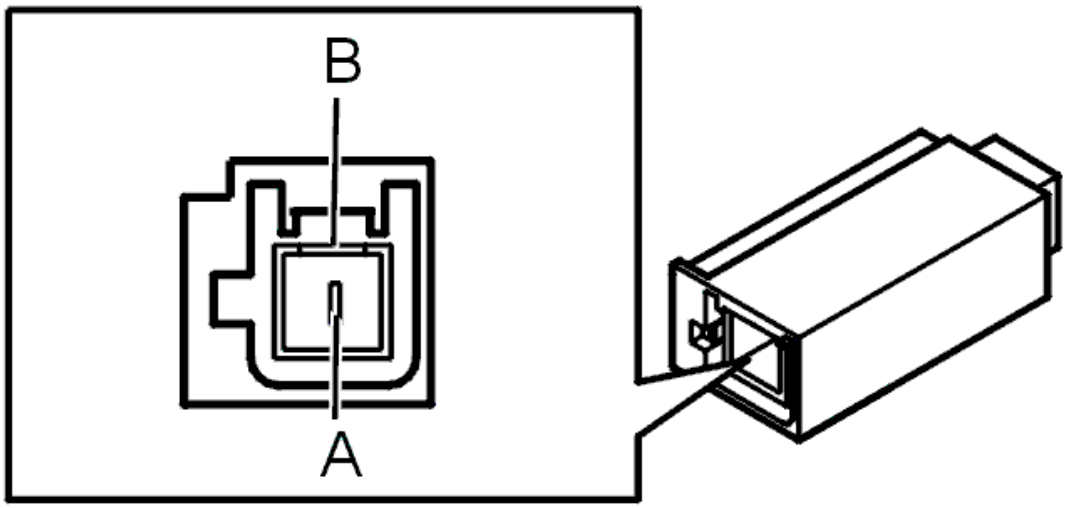

Fig. 160: Identifying 1-Bit Connector
Courtesy of VOLVO CARS CORPORATION

- **Continue**

  Refer to **VERIFICATION**

VERIFICATION

VERIFICATION

HINT: After carrying out the repair, check that the fault has been remedied.

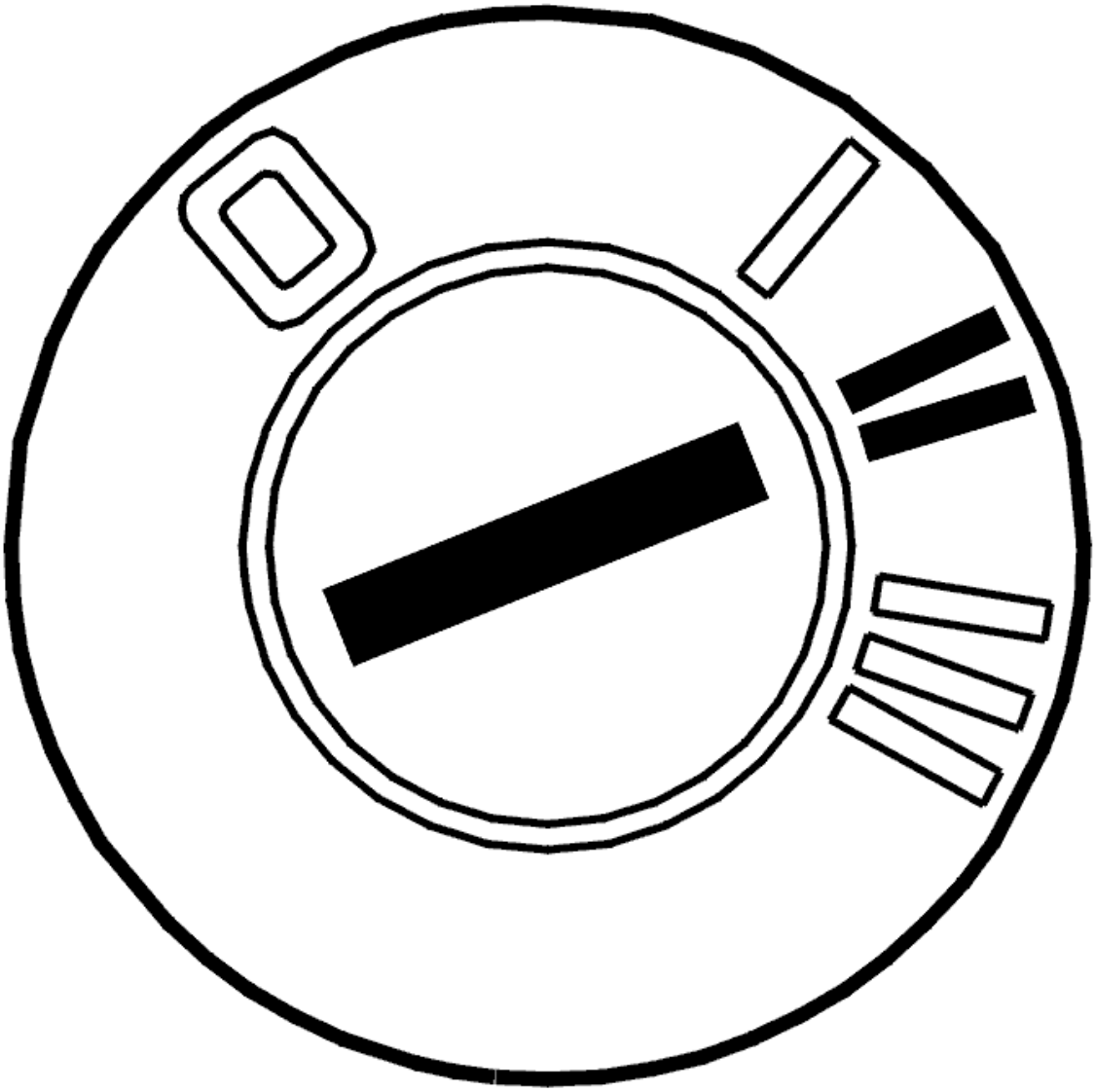

Fig. 161: Identifying Ignition ON
Courtesy of VOLVO CARS CORPORATION

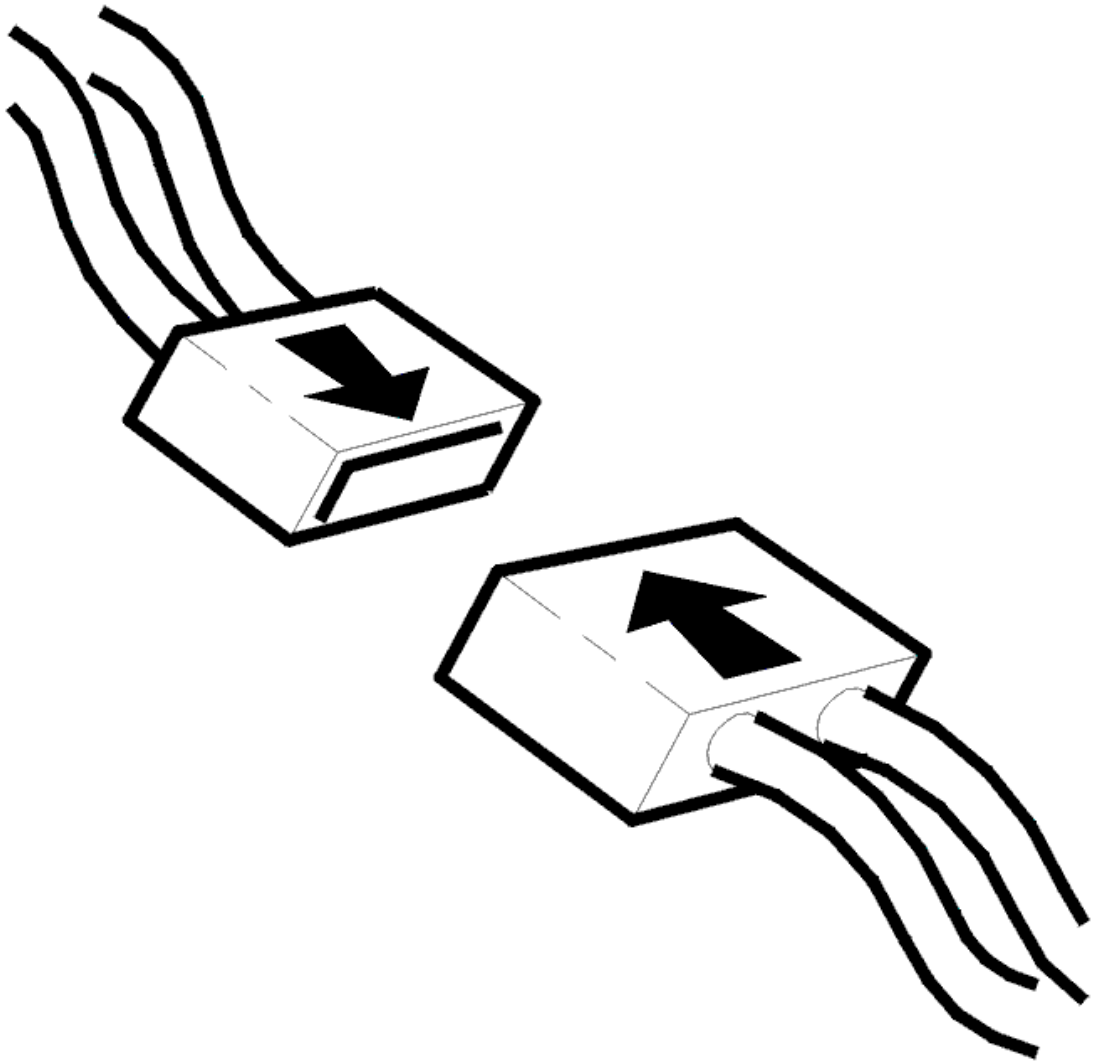

Fig. 162: Connecting Connector
Courtesy of VOLVO CARS CORPORATION

- Ignition off
- Reinstall the connectors, components etc.
- Ignition on.

  Check that the microphone input functions by activating the microphone appropriately. Make a telephone call using the handsfree system or use the voice control function.

Does the microphone function?

- **YES**

  VERIFIED: Troubleshooting has been completed.

- **NO**

  Refer to **INFORMATION**

INFORMATION

FAULT-TRACING INFORMATION

The fault should have been detected and remedied. As this is not the case fault-tracing has failed.

Exit fault-tracing for this diagnostic trouble code (DTC) or make another attempt.

CHECKING THE REAR LOUDSPEAKERS. REAR SEAT ENTERTAINMENT, GENERATION 3.2 (2005-2006)

CHECKING THE REAR LOUDSPEAKERS

FAULT-TRACING INFORMATION

If both headsets function but the rear loudspeakers do not function at the same time as the other speakers in the car, the fault can be due to:

- Cable harness to loudspeaker used by the system for rear seat entertainment.
- Rear audio separation module.

NOTE: **If the vehicle is equipped with a parking assistance system a shut-off function is activated if the reverse gear is selected. This is so the warning signals from the back-up warning system can be heard.**

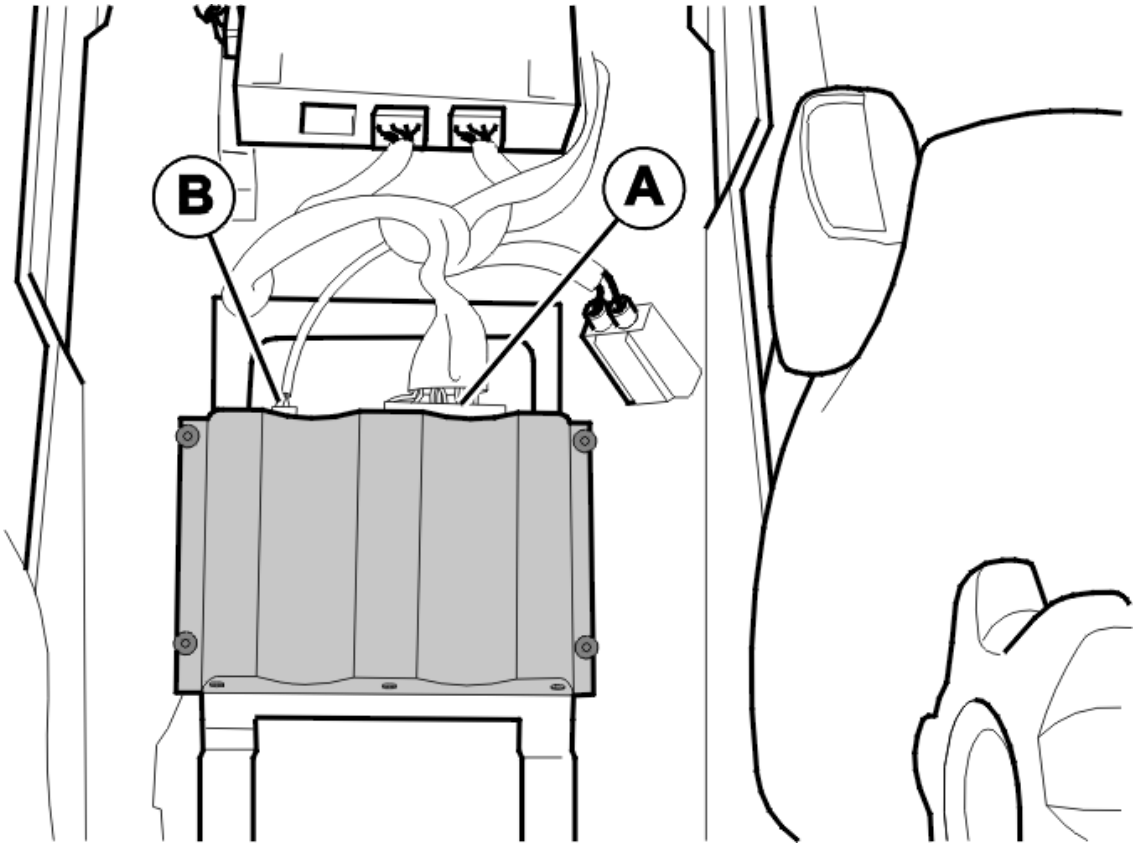

Fig. 163: Identifying Control Module For Rear Audio Separation
Courtesy of VOLVO CARS CORPORATION

- **Continue**

  Refer to **CHECKING REAR LOUDSPEAKER**

CHECKING REAR LOUDSPEAKER

Checking the settings

Check that the loudspeakers have not been switched off via the remote control menu system SPEAKERS.

Check that the volume has not been turned down via the remote control and that there is a sound source (listen at the speakers).

Ensure that the loudspeakers are not obstructed.

If the headsets do not work the fault is more general than described in this section.

The fault could be due to the control module for rear audio separation providing sound to the headsets but not the speakers.

NOTE: If the vehicle is equipped with a parking assistance system a shut-off function

is activated if the reverse gear is selected. This is so the warning signals from the back-up warning system can be heard.

Checking the wiring for the loudspeakers

Check the following wiring between the control module for rear audio separation and the rear loudspeakers.

- Left-hand loudspeaker terminal #A8 (Speaker L-)
- Left-hand loudspeaker terminal #A11 (Speaker L+)
- Right-hand loudspeaker terminal #A9 (Speaker R-)
- Right-hand loudspeaker terminal #A10 (Speaker R+).

Also check the loudspeakers for damage.

Checking the channel selector

The control module for rear audio separation receives a channel selection signal from the rear seat entertainment module (RSE). The signal informs the control module for rear audio separation what sound should be heard from the rear loudspeakers. If this does not work satisfactorily this signal is the cause of the fault. If the signal is 0V no sound will be heard from the loudspeakers. There might not be a fault but a selected setting carried out via the remote control, menu select SPEAKERS OFF.

Check the cable for the channel selector. This is the cable between rear seat entertainment module (RSE) terminal #C6 and control module for rear audio separation terminal #A18.

Checking the control module for rear audio separation

If no fault is found, replace the control module for rear audio separation.

Remedy as necessary.

Other information:

- see **SIGNAL SPECIFICATION, REAR SEAT ENTERTAINMENT MODULE (RSE)**
- see **SIGNAL SPECIFICATION, CONTROL MODULE FOR REAR AUDIO SEPARATION**
- see **REAR SEAT ENTERTAINMENT MODULE (RSE), REPLACING**
- see **CONTROL MODULE REAR SOUND SEPARATION, REPLACING**
- see **CONTENTS**

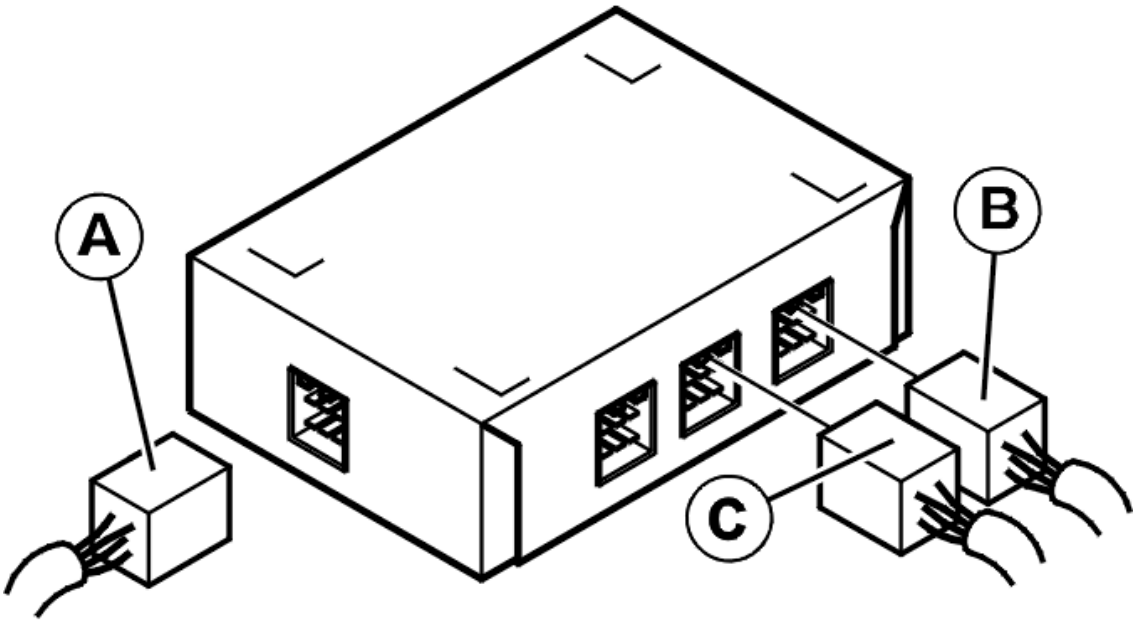

Fig. 164: Identifying Rear Seat Entertainment Module (RSE)
Courtesy of VOLVO CARS CORPORATION

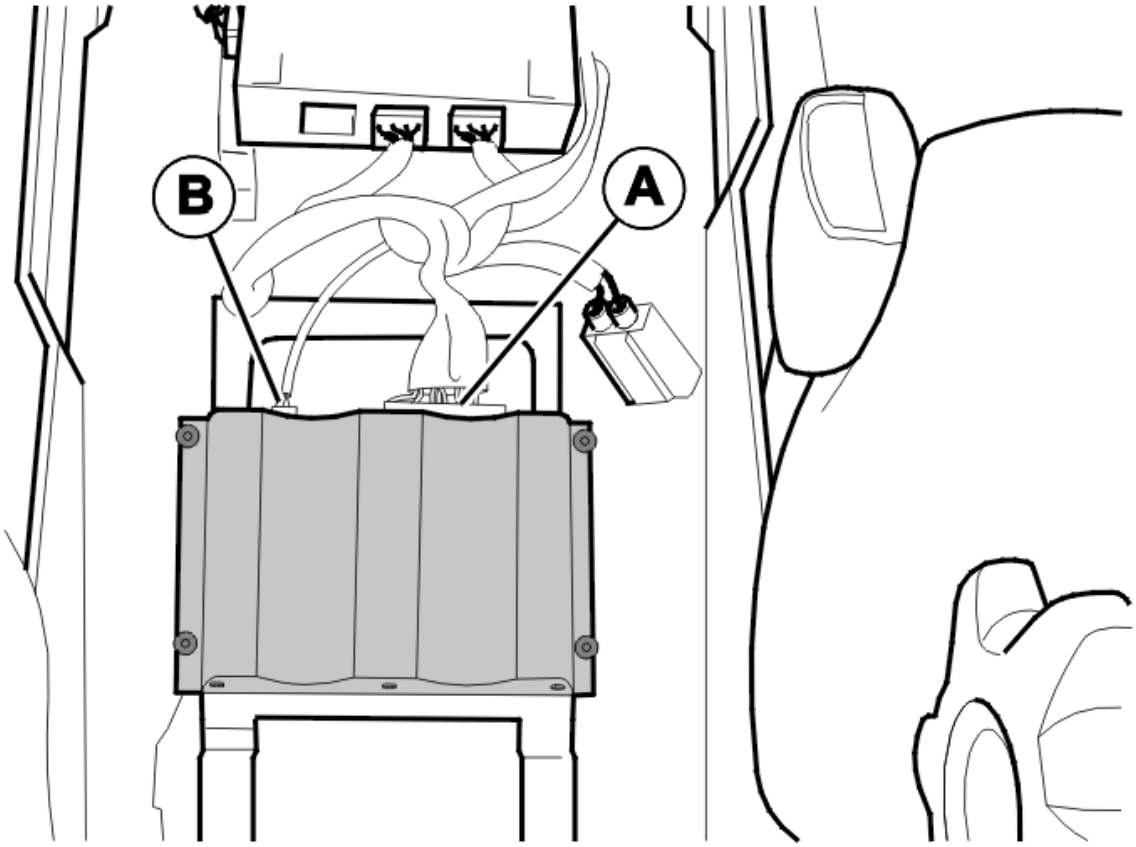

Fig. 165: Identifying Control Module For Rear Audio Separation
Courtesy of VOLVO CARS CORPORATION

- **Continue**

  Refer to **CHECKING THE REAR LOUDSPEAKERS**

CHECKING THE REAR LOUDSPEAKERS

CHECKING THE REAR LOUDSPEAKERS

Check that both headsets and all loudspeakers in the car function.

Do all headsets and speakers function?

- **YES**

  VERIFIED: Troubleshooting has been completed.

- **NO**

  Refer to **INFORMATION**

INFORMATION

FAULT-TRACING INFORMATION

The fault should have been detected and remedied. As this is not the case fault-tracing has failed.

Exit fault-tracing for this diagnostic trouble code (DTC) or make another attempt.

CHECKING THE REAR LOUDSPEAKERS. REAR SEAT ENTERTAINMENT, GENERATION 3.2 (EXECUTIVE; PREMIER; 2004)

CHECKING THE REAR LOUDSPEAKERS

see **CHECKING THE REAR LOUDSPEAKERS**

CHECKING THE REMOTE CONTROL. REAR SEAT ENTERTAINMENT, GENERATION 4.1-4.3 (2007)

CHECKING THE REMOTE CONTROL

FAULT-TRACING INFORMATION

The remote control uses infrared signals (IR) to transmit commands to the system. The signals are received by the screen's infrared receiver. If the remote control does not work, the problem may be due to:

- Discharged batteries.
- Damaged remote control.
- Damaged cable for infrared (IR) signals.

- **Continue**

  Refer to **CHECKING THE REMOTE CONTROL SIGNAL**

VERIFICATION

HINT: After carrying out the repair, check that the fault has been remedied.

- Ignition off.
- Restore components and connectors.
- Switch on the ignition. Lighting in the DVD-player's buttons is activated. If the TV receiver is installed, the receiver's LED lights up.
- When start-up is performed the lighting in the DVD-player's buttons goes off, does not apply to POWER-button. If the TV receiver is installed, the receiver's LED goes out.

NOTE: A long start-up time indicates a fault in communication with the screens.

- Start the system using the POWER button on the DVD player or the remote control. Use the

buttons, on both DVD-player and remote control, to operate the system.

Check that:

- The screens show a picture.
- DVD-disc can be played.
- Sound is heard in wireless headphones.
- Sound can be heard in the vehicle's speakers.
- Menus can be accessed with the remote control in both screens.
- TV picture appears (if TV receiver is installed) and it is possible to change channels.
- If possible, connect an external source to the AV input and test the function.

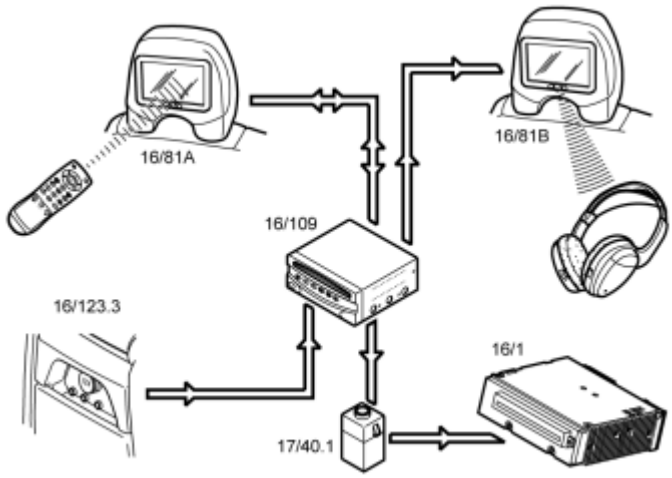

Fig. 166: View Of Rear Seat Entertainment Components
Courtesy of VOLVO CARS CORPORATION

Is the function OK?

- **YES**

  OKAY: Troubleshooting has been completed.

- **NO**

  Refer to **INFORMATION**

CHECKING THE REMOTE CONTROL SIGNAL

HINT: Activation of the infrared IR-receivers in the head restraints can be checked by the IR-lights in the screen's lower edge being on dimly after the system has been turned on.

Checking IR-signal, left screen

To check the voltage level on the signal cable for IR-signal, proceed as follows:

- Connect all cables and connectors.
- Measure the voltage between the signal cable for the Infra Red (IR) signal to the left-hand display screen and ground. The measured voltage is reference value.

NOTE: Do not press any of the buttons on the remote control during this measurement.

- Measure from the rear side of a suitable connector. Do not damage the terminals in the connector.
- Aim the remote control at the left screen and press in a button on the remote control. The voltage on the signal cable must fall slightly for as long as the button on the remote control is pressed in. Test all remote control buttons.

NOTE: Important in this measurement are not the absolute voltage levels, instead you get a voltage difference downward.

Checking IR-signal, right screen

Compare the latest reading as above with the signal for the infra red (IR) signal from the right-hand infra red (IR) receiver for the display screen.

Conclusion

- If the result of the above checks is that no malfunction was found, this means that the receivers in both screens work and that the remote control is OK.
- If voltages on the cables are OK but a lower voltage cannot be measured when a button on the remote control is pressed down, try with replacing the remote control.

If there signal cable fault for the IR signal to the screen, check the IR signal cable between the screen and rear seat entertainment module (RSE) for short circuit to ground, short circuit to voltage and open circuit.

Remedy as necessary.

Other information

- see **SIGNAL SPECIFICATION, REAR SEAT ENTERTAINMENT MODULE (RSE), GENERATION 4.1**
- see **SIGNAL SPECIFICATION, REAR SEAT ENTERTAINMENT MODULE (RSE), GENERATION 4.2**
- see **CHECKING WIRING AND TERMINALS**

- **Continue**

  Refer to **VERIFICATION**

INFORMATION

FAULT-TRACING INFORMATION

The fault should have been detected and remedied. As this is not the case fault-tracing has failed.

Exit fault-tracing for this diagnostic trouble code (DTC) or make another attempt.

CHECKING THE REMOTE CONTROL. REAR SEAT ENTERTAINMENT, GENERATION 4.1-4.3 (2006-2011)

CHECKING THE REMOTE CONTROL (2006)

FAULT-TRACING INFORMATION

The remote control uses infrared signals (IR) to transmit commands to the system. The signals are received by the screen's infrared receiver. If the remote control does not work, the problem may be due to:

- Discharged batteries.
- Damaged remote control.
- Damaged cable for infrared (IR) signals.

- **Continue**

  Refer to **CHECKING THE REMOTE CONTROL SIGNAL**

VERIFICATION

HINT: After carrying out the repair, check that the fault has been remedied.

- Ignition off.
- Restore components and connectors.
- Switch on the ignition. Lighting in the DVD-player's buttons is activated. If the TV receiver is installed, the receiver's LED lights up.
- When start-up is performed the lighting in the DVD-player's buttons goes off, does not apply to POWER-button. If the TV receiver is installed, the receiver's LED goes out.

NOTE: A long start-up time indicates a fault in communication with the screens.

- Start the system using the POWER button on the DVD player or the remote control. Use the buttons, on both DVD-player and remote control, to operate the system.

Check that:

- The screens show a picture.

- DVD-disc can be played.
- Sound is heard in wireless headphones.
- Sound can be heard in the vehicle's speakers.
- Menus can be accessed with the remote control in both screens.
- TV picture appears (if TV receiver is installed) and it is possible to change channels.
- If possible, connect an external source to the AV input and test the function.

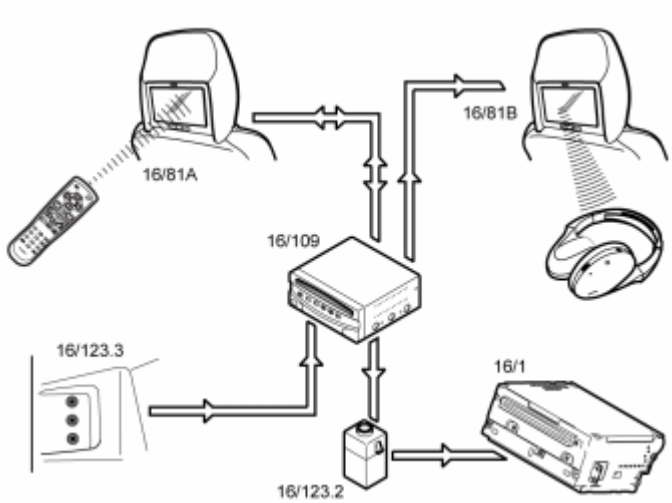

Fig. 167: Identifying Entertainment System Components & Communication
Courtesy of VOLVO CARS CORPORATION

Is the function OK?

- **YES**

  OKAY: Troubleshooting has been completed.

- **NO**

  Refer to **INFORMATION**

CHECKING THE REMOTE CONTROL SIGNAL

HINT: Activation of the infrared IR-receivers in the head restraints can be checked by the IR-lights in the screen's lower edge being on dimly after the system has been turned on.

Checking IR-signal, left screen

To check the voltage level on the signal cable for IR-signal, proceed as follows:

- Connect all cables and connectors.
- Measure the voltage between the signal cable for the Infra Red (IR) signal to the left-hand display screen

and ground. The measured voltage is reference value.

NOTE: Do not press any of the buttons on the remote control during this measurement.

- Measure from the rear side of a suitable connector. Do not damage the terminals in the connector.
- Aim the remote control at the left screen and press in a button on the remote control. The voltage on the signal cable must fall slightly for as long as the button on the remote control is pressed in. Test all remote control buttons.

NOTE: Important in this measurement are not the absolute voltage levels, instead you get a voltage difference downward.

Checking IR-signal, right screen

Compare the latest reading as above with the signal for the infra red (IR) signal from the right-hand infra red (IR) receiver for the display screen.

Conclusion

- If the result of the above checks is that no malfunction was found, this means that the receivers in both screens work and that the remote control is OK.
- If voltages on the cables are OK but a lower voltage cannot be measured when a button on the remote control is pressed down, try with replacing the remote control.

If there signal cable fault for the IR signal to the screen, check the IR signal cable between the screen and rear seat entertainment module (RSE) for short circuit to ground, short circuit to voltage and open circuit.

Remedy as necessary.

Other information

- see **SIGNAL SPECIFICATION, REAR SEAT ENTERTAINMENT MODULE (RSE), GENERATION 4.1**
- see **CHECKING WIRING AND TERMINALS**

- **Continue**

  Refer to **VERIFICATION**

INFORMATION

FAULT-TRACING INFORMATION

The fault should have been detected and remedied. As this is not the case fault-tracing has failed.

Exit fault-tracing for this diagnostic trouble code (DTC) or make another attempt.

CHECKING THE REMOTE CONTROL (2009-2011)

FAULT-TRACING INFORMATION

The remote control uses infrared signals (IR) to transmit commands to the system. The signals are received by the screen's infrared receiver. If the remote control does not work, the problem may be due to:

- Discharged batteries.
- Damaged remote control.
- Damaged cable for infrared (IR) signals.

- **Continue**

  Refer to **CHECKING THE REMOTE CONTROL SIGNAL**

VERIFICATION

HINT: After carrying out the repair, check that the fault has been remedied.

- Ignition off.
- Restore components and connectors.
- Switch on the ignition. Lighting in the DVD-player's buttons is activated. If the TV receiver is installed, the receiver's LED lights up.
- When start-up is performed the lighting in the DVD-player's buttons goes off, does not apply to POWER-button. If the TV receiver is installed, the receiver's LED goes out.

NOTE: A long start-up time indicates a fault in communication with the screens.

- Start the system using the POWER button on the DVD player or the remote control. Use the buttons, on both DVD-player and remote control, to operate the system.

Check that:

- The screens show a picture.
- DVD-disc can be played.
- Sound is heard in wireless headphones.
- Sound can be heard in the vehicle's speakers.
- Menus can be accessed with the remote control in both screens.
- TV picture appears (if TV receiver is installed) and it is possible to change channels.
- If possible, connect an external source to the AV input and test the function.

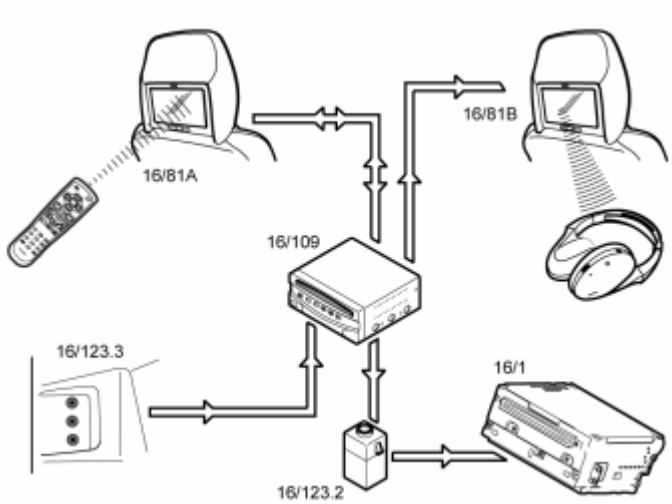

Fig. 168: Identifying Entertainment System Components & Communication
Courtesy of VOLVO CARS CORPORATION

Is the function OK?

- **YES**

  OKAY: Troubleshooting has been completed.

- **NO**

  Refer to **INFORMATION**

CHECKING THE REMOTE CONTROL SIGNAL

HINT: Activation of the infrared IR-receivers in the head restraints can be checked by the IR-lights in the screen's lower edge being on dimly after the system has been turned on.

Checking IR-signal, left screen

To check the voltage level on the signal cable for IR-signal, proceed as follows:

- Connect all cables and connectors.
- Measure the voltage between the signal cable for the Infra Red (IR) signal to the left-hand display screen and ground. The measured voltage is reference value.

  NOTE: Do not press any of the buttons on the remote control during this measurement.

- Measure from the rear side of a suitable connector. Do not damage the terminals in the connector.
- Aim the remote control at the left screen and press in a button on the remote control. The voltage on the signal cable must fall slightly for as long as the button on the remote control is pressed in. Test all remote

control buttons.

NOTE: Important in this measurement are not the absolute voltage levels, instead you get a voltage difference downward.

Checking IR-signal, right screen

Compare the latest reading as above with the signal for the infra red (IR) signal from the right-hand infra red (IR) receiver for the display screen.

Conclusion

- If the result of the above checks is that no malfunction was found, this means that the receivers in both screens work and that the remote control is OK.
- If voltages on the cables are OK but a lower voltage cannot be measured when a button on the remote control is pressed down, try with replacing the remote control.

If there signal cable fault for the IR signal to the screen, check the IR signal cable between the screen and rear seat entertainment module (RSE) for short circuit to ground, short circuit to voltage and open circuit.

Remedy as necessary.

Other information

- see **SIGNAL SPECIFICATION, REAR SEAT ENTERTAINMENT MODULE (RSE), GENERATION 4.3**
- see **CHECKING WIRING AND TERMINALS**

- **Continue**

  Refer to **VERIFICATION**

INFORMATION

FAULT-TRACING INFORMATION

The fault should have been detected and remedied. As this is not the case fault-tracing has failed.

Exit fault-tracing for this diagnostic trouble code (DTC) or make another attempt.

CHECKING THE REMOTE CONTROL (2008)

FAULT-TRACING INFORMATION

The remote control uses infrared signals (IR) to transmit commands to the system. The signals are received by the screen's infrared receiver. If the remote control does not work, the problem may be due to:

- Discharged batteries.
- Damaged remote control.
- Damaged cable for infrared (IR) signals.

- **Continue**

  Refer to **CHECKING THE REMOTE CONTROL SIGNAL**

VERIFICATION

HINT: After carrying out the repair, check that the fault has been remedied.

- Ignition off.
- Restore components and connectors.
- Switch on the ignition. Lighting in the DVD-player's buttons is activated. If the TV receiver is installed, the receiver's LED lights up.
- When start-up is performed the lighting in the DVD-player's buttons goes off, does not apply to POWER-button. If the TV receiver is installed, the receiver's LED goes out.

NOTE: A long start-up time indicates a fault in communication with the screens.

- Start the system using the POWER button on the DVD player or the remote control. Use the buttons, on both DVD-player and remote control, to operate the system.

Check that:

- The screens show a picture.
- DVD-disc can be played.
- Sound is heard in wireless headphones.
- Sound can be heard in the vehicle's speakers.
- Menus can be accessed with the remote control in both screens.
- TV picture appears (if TV receiver is installed) and it is possible to change channels.
- If possible, connect an external source to the AV input and test the function.

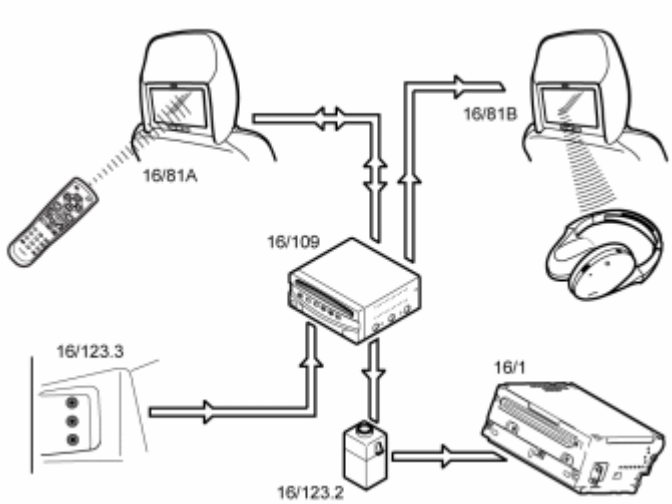

Fig. 169: Identifying Entertainment System Components & Communication
Courtesy of VOLVO CARS CORPORATION

Is the function OK?

- **YES**

  OKAY: Troubleshooting has been completed.

- **NO**

  Refer to **INFORMATION**

CHECKING THE REMOTE CONTROL SIGNAL

HINT: Activation of the infrared IR-receivers in the head restraints can be checked by the IR-lights in the screen's lower edge being on dimly after the system has been turned on.

Checking IR-signal, left screen

To check the voltage level on the signal cable for IR-signal, proceed as follows:

- Connect all cables and connectors.
- Measure the voltage between the signal cable for the Infra Red (IR) signal to the left-hand display screen and ground. The measured voltage is reference value.

  NOTE: Do not press any of the buttons on the remote control during this measurement.

- Measure from the rear side of a suitable connector. Do not damage the terminals in the connector.
- Aim the remote control at the left screen and press in a button on the remote control. The voltage on the signal cable must fall slightly for as long as the button on the remote control is pressed in. Test all remote

control buttons.

NOTE: Important in this measurement are not the absolute voltage levels, instead you get a voltage difference downward.

Checking IR-signal, right screen

Compare the latest reading as above with the signal for the infra red (IR) signal from the right-hand infra red (IR) receiver for the display screen.

Conclusion

- If the result of the above checks is that no malfunction was found, this means that the receivers in both screens work and that the remote control is OK.
- If voltages on the cables are OK but a lower voltage cannot be measured when a button on the remote control is pressed down, try with replacing the remote control.

If there signal cable fault for the IR signal to the screen, check the IR signal cable between the screen and rear seat entertainment module (RSE) for short circuit to ground, short circuit to voltage and open circuit.

Remedy as necessary.

Other information

- see **SIGNAL SPECIFICATION, REAR SEAT ENTERTAINMENT MODULE (RSE), GENERATION 4.2**
- see **CHECKING WIRING AND TERMINALS**

- **Continue**

  Refer to **VERIFICATION**

INFORMATION

FAULT-TRACING INFORMATION

The fault should have been detected and remedied. As this is not the case fault-tracing has failed.

Exit fault-tracing for this diagnostic trouble code (DTC) or make another attempt.

CHECKING THE SIGNAL FROM THE AV PANEL. REAR SEAT ENTERTAINMENT, GENERATION 4.2 (2007-2008)

CHECKING THE SIGNAL FROM THE AV PANEL

FAULT-TRACING INFORMATION

The AV-panel is there so that one can use other AV-sources than the DVD-player in the system for rear seat entertainment, e. g., video camera, game console and portable DVD-player.

The RCA-contacts also function as an input in the system and when any AV-source, e. g., a video camera, has been connected to connections, it can be selected as a source with the remote control at any or both screens.

If AV-signals to, or from, the AV-panel should not occur, probable malfunction causes are:

- Damaged leads between the Rear seat entertainment module (RSE) and the AV-panel.
- Damaged AV-panel.
- Connected AV source is damaged.

NOTE: In order for AV sources to be played in the system for rear seat entertainment, the system for rear seat entertainment must be on and work faultlessly.

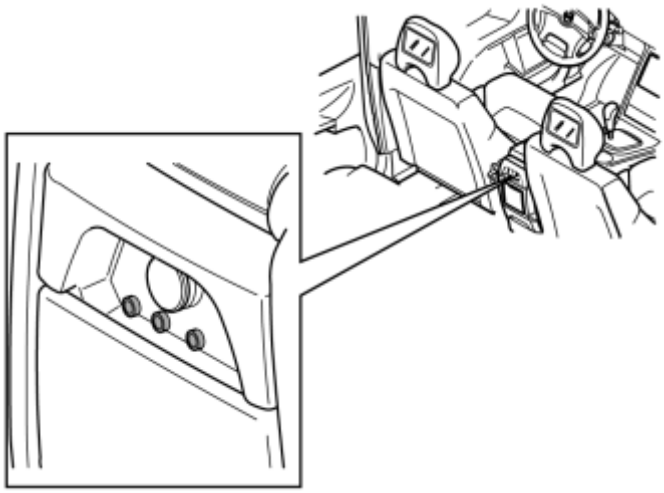

Fig. 170: Identifying AV-Panel
Courtesy of VOLVO CARS CORPORATION

- **Continue**

  Refer to **CHECKING THE WIRING AND COMPONENT**

CHECKING THE WIRING AND COMPONENT

Check the cables for short-circuit to voltage, short-circuit to ground and open circuit. Regards the cables from rear seat entertainment module (RSE), terminals #D4, #D7, #D18, #D19 and #D21, to the AV panel.

Check the control module connector. Check for contact resistance and oxidation.

Check the AV panel's RCA connectors for loose connections, open-circuits, short-circuits and the connectors connection to wiring.

HINT: If possible, test the function with an AV source to determine whether the fault is in the vehicle or in the customer's connected equipment.

For more information, see wiring diagram and signal description.

Other information

- see **SIGNAL SPECIFICATION, REAR SEAT ENTERTAINMENT MODULE (RSE), GENERATION 4.2**
- see **CHECKING WIRING AND TERMINALS**

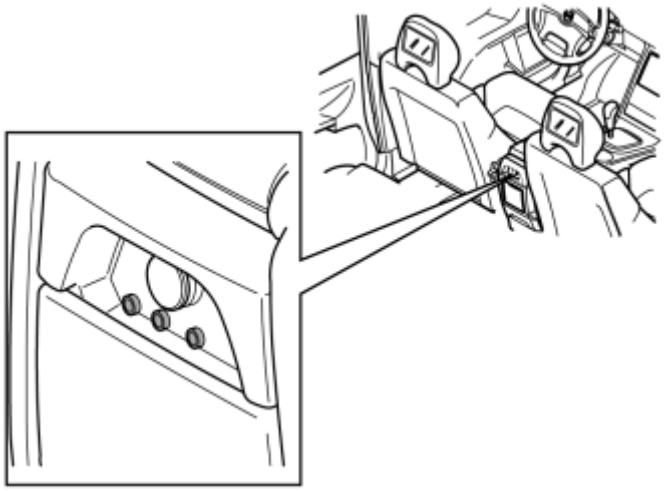

Fig. 171: Identifying AV-Panel
Courtesy of VOLVO CARS CORPORATION

Was a fault detected?

- **YES**

  OKAY: Troubleshooting has been completed.

- **NO**

  Refer to **INFORMATION**

INFORMATION

FAULT-TRACING INFORMATION

The fault should have been detected and remedied. As this is not the case fault-tracing has failed.

Exit fault-tracing for this diagnostic trouble code (DTC) or make another attempt.

CHECKING THE SIGNAL FROM THE AV PANEL. REAR SEAT

ENTERTAINMENT, GENERATION 4.3 (2009-2011)

CHECKING THE SIGNAL FROM THE AV PANEL

FAULT-TRACING INFORMATION

The AV-panel is there so that one can use other AV-sources than the DVD-player in the system for rear seat entertainment, e. g., video camera, game console and portable DVD-player.

The RCA-contacts also function as an input in the system and when any AV-source, e. g., a video camera, has been connected to connections, it can be selected as a source with the remote control at any or both screens.

If AV-signals to, or from, the AV-panel should not occur, probable malfunction causes are:

- Damaged leads between the Rear seat entertainment module (RSE) and the AV-panel.
- Damaged AV-panel.
- Connected AV source is damaged.

NOTE: In order for AV sources to be played in the system for rear seat entertainment, the system for rear seat entertainment must be on and work faultlessly.

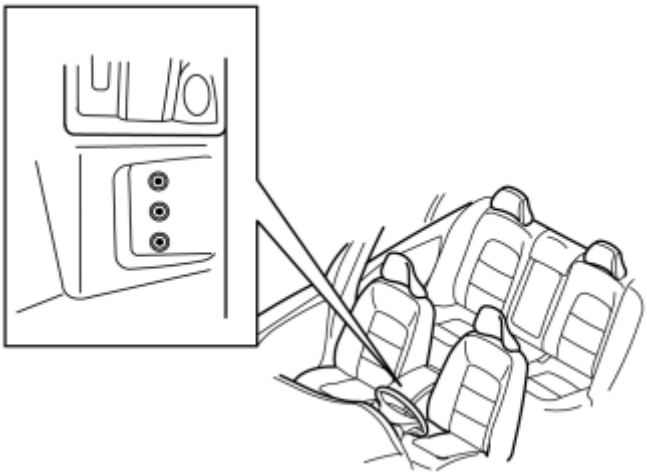

Fig. 172: Identifying AV Sources
Courtesy of VOLVO CARS CORPORATION

- **Continue**

  Refer to **CHECKING THE WIRING AND COMPONENT**

CHECKING THE WIRING AND COMPONENT

Check the cables for short-circuit to voltage, short-circuit to ground and open circuit. Regards the cables from rear seat entertainment module (RSE), terminals #D4, #D7, #D18, #D19 and #D21, to the AV panel.

Check the control module connector. Check for contact resistance and oxidation. Check for loose connections.

Check the AV panel's RCA connectors for loose connections, open-circuits, short-circuits and the connectors connection to wiring.

HINT: If possible, test the function with an AV source to determine whether the fault is in the vehicle or in the customer's connected equipment.

Other information

- see **SIGNAL SPECIFICATION, REAR SEAT ENTERTAINMENT MODULE (RSE), GENERATION 4.3**
- see **CHECKING WIRING AND TERMINALS**

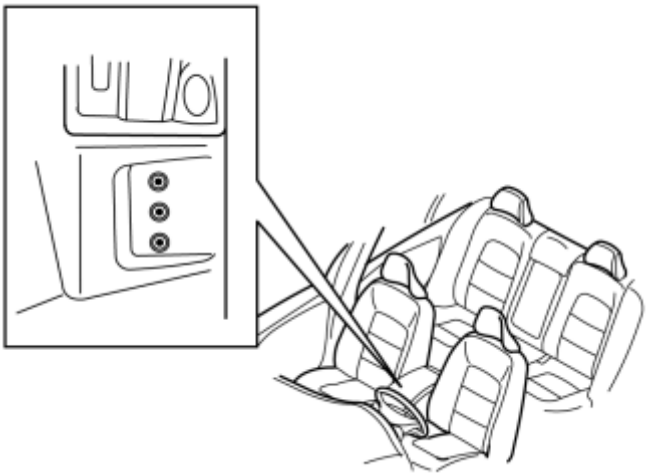

Fig. 173: Identifying AV Sources
Courtesy of VOLVO CARS CORPORATION

Was a fault detected?

- **YES**

  OKAY: Troubleshooting has been completed.

- **NO**

  Refer to **INFORMATION**

INFORMATION

FAULT-TRACING INFORMATION

The fault should have been detected and remedied. As this is not the case fault-tracing has failed.

Exit fault-tracing for this diagnostic trouble code (DTC) or make another attempt.

CHECKING THE SOFTWARE, INFOTAINMENT CONTROL MODULE (ICM) (2003-2005)

CHECKING THE SOFTWARE, INFOTAINMENT CONTROL MODULE

FAULT-TRACING INFORMATION

Infotainment control module controls the volume for the parking assistance system.

Check that the latest available software for Infotainment control module is loaded in the vehicle by trying to buy an **upgrade** for the control module in question.

If an **upgrade** is available, continue to download the software according to the routine.

If it is not possible to purchase an **upgrade** this may mean that the latest available software already is installed in the vehicle.

To find out why purchase was not allowed, mark the row for the software purchase in question and click on Details.

NOTE: After checking the software, it is important to carry out a function check to verify that the problem has been remedied.

CHECKING THE SOUND SIGNAL FROM THE REAR SEAT ENTERTAINMENT DVD PLAYER TO THE VEHICLE'S ORDINARY SPEAKERS. REAR SEAT ENTERTAINMENT, GENERATION 4.1 (2006-2007)

CHECKING THE SOUND SIGNAL FROM THE REAR SEAT ENTERTAINMENT DVD PLAYER TO THE VEHICLE'S ORDINARY SPEAKERS.

FAULT-TRACING INFORMATION

If sound from the system for rear seat entertainment cannot be played in the vehicle's rear loudspeakers, the cause of the problem may be any or some of the following:

- Supply/fuse for the control module for rear audio separation
- Supply/fuse for the rear seat entertainment module (RSE)
- Cable harness from the vehicle's ordinary sound system.
- Cable harness between Rear seat entertainment module (RSE) and rear audio separation module.

Fig. 174: Identifying Rear Seat Entertainment Module (RSE)
Courtesy of VOLVO CARS CORPORATION

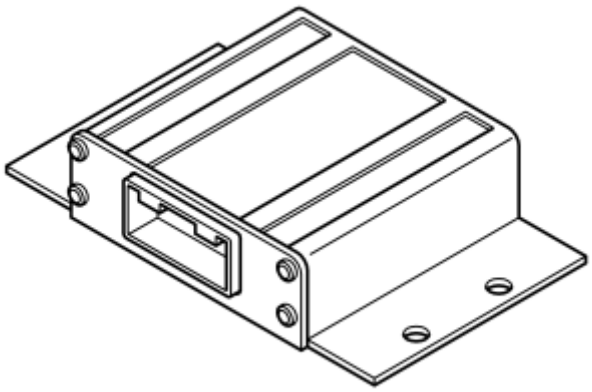

Fig. 175: Identifying Rear Audio Separation Module
Courtesy of VOLVO CARS CORPORATION

- **Continue**

  Refer to **CHECKING THE WIRING FOR THE REAR SEAT ENTERTAINMENT MODULE (RSE)**

CHECKING THE WIRING FOR THE REAR SEAT ENTERTAINMENT MODULE (RSE)

Checking the settings

Check that the volume is not turned down. Also check if the malfunction remains regardless of the chosen audio source. If the sound disappears when selecting a certain audio source, check the cables for loose connection or open circuit to that specific audio source. For further information, see the wiring diagram.

Checking the power supply to the control module for rear audio separation

When the sound is connected from the system for rear seat entertainment to the rear loudspeakers, a clicking sound shall be heard from an internal relay in the rear audio separation module (RAS). In this way it is possible to check that the control module has voltage feed and ground.

HINT: The control module is supplied with voltage via:

- #1. Power supply (30-supply)

HINT: The control module is grounded via:

- #9

Checking activation signal

To activate rear audio separation module (RAS), it must receive a high signal on the cable from Rear seat entertainment module (RSE).

Perform the following check.

- Switch on the ignition. Turn on the system for rear seat entertainment using the remote control.
- Insert a DVD or CD in the DVD-player and press the Play button. Select DVD-player as audio source via the remote control and check that sound comes either to the wireless headphones or the wired headphones (that are connected in the AUX-panel) in the place where DVD-player was selected as audio source.
- Press the button on the remote control to activate the sound for the rear loudspeakers. When the sound is connected from the system for rear seat entertainment to the rear loudspeakers, a clicking sound shall be heard from an internal relay in the rear audio separation module (RAS).
- Measure the voltage between the cable for activation of rear audio separation module (RAS) and ground. The voltage shall be approximately 7-9 V when the function is activated. If voltage on the cable is high, but the rear audio separation module (RAS) is not activated, the control module is probably damaged.

Remedy as necessary.

Other information

- see **SIGNAL SPECIFICATION, REAR AUDIO SEPARATION**
- For further information about the fuses and relays, see the Wiring Diagram
- see **CONTROL MODULE REAR SOUND SEPARATION, REPLACING**
- see **CHECKING WIRING AND TERMINALS**

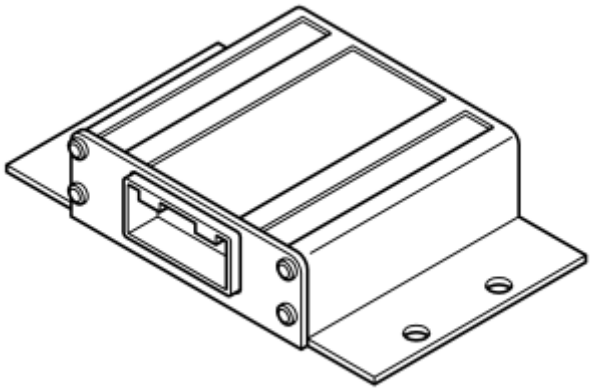

Fig. 176: Identifying Rear Audio Separation Module
Courtesy of VOLVO CARS CORPORATION

Was a fault detected?

- **YES**

  Refer to **CHECKING THE AUDIO WIRING FOR THE REAR SEAT ENTERTAINMENT MODULE (RSE)**

- **NO**

  Refer to **CHECKING THE WIRING FOR THE REAR SEAT ENTERTAINMENT MODULE (RSE)**

CHECKING THE WIRING FOR THE REAR SEAT ENTERTAINMENT MODULE (RSE)

Audio signals function description

The sound signals that the rear audio separation module (RAS) processes can either come from the Rear seat entertainment module (RSE) or from the vehicle's ordinary sound system.

Normally, the control module leads the sound from the vehicle's ordinary sound system to the rear speakers but can, via activation from the Rear seat entertainment module (RSE), also transmit the sound from the AUX-panel or DVD-player to the rear speakers.

Checking the audible warning signal

If sound can be heard in the headphones but not in the rear speakers - check the cables between Rear seat entertainment module (RSE) and rear audio separation module (RAS) for loose connection, short-circuiting or open circuit.

Remedy as necessary.

Control module for rear audio separation and speaker wiring

Check the cables from rear audio separation module (RAS) to the speakers for loose connection, open circuit and short-circuiting to ground and voltage. Also check the intermediate connectors.

If no other malfunction has been found, then the rear audio separation module (RAS) can be suspected as probable malfunction source.

Remedy as necessary.

Other information

- see **SIGNAL SPECIFICATION, REAR SEAT ENTERTAINMENT MODULE (RSE), GENERATION 4.1**
- see **SIGNAL SPECIFICATION, REAR AUDIO SEPARATION**
- For further information about the fuses and relays, see the Wiring Diagram
- see **CONTROL MODULE REAR SOUND SEPARATION, REPLACING**
- see **CHECKING WIRING AND TERMINALS**

Fig. 177: Identifying Rear Seat Entertainment Module (RSE)
Courtesy of VOLVO CARS CORPORATION

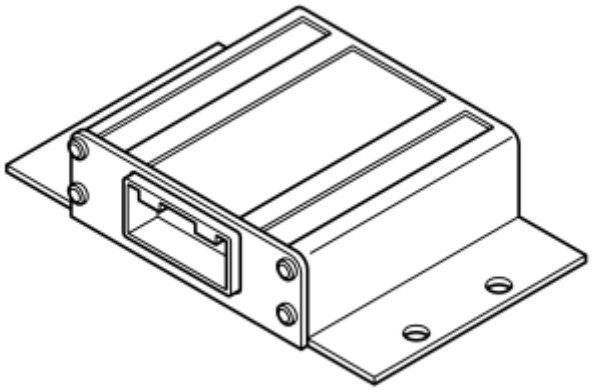

Fig. 178: Identifying Rear Audio Separation Module
Courtesy of VOLVO CARS CORPORATION

- **Continue**

Refer to **CHECKING THE AUDIO WIRING FOR THE REAR SEAT ENTERTAINMENT MODULE (RSE)**

CHECKING THE AUDIO WIRING FOR THE REAR SEAT ENTERTAINMENT MODULE (RSE)

CHECKING THE AUDIO WIRING FOR THE REAR SEAT ENTERTAINMENT MODULE (RSE)

Check that the sound system in the entire car functions.

Does the sound system in the entire function?

- **YES**

  VERIFIED: Troubleshooting has been completed.

- **NO**

  Refer to **INFORMATION**

INFORMATION

FAULT-TRACING INFORMATION

The fault should have been detected and remedied. As this is not the case fault-tracing has failed.

Exit fault-tracing for this diagnostic trouble code (DTC) or make another attempt.

CHECKING THE SOUND SIGNAL FROM THE REAR SEAT ENTERTAINMENT DVD PLAYER TO THE VEHICLE'S ORDINARY SPEAKERS.

FAULT-TRACING INFORMATION

If sound from the system for rear seat entertainment cannot be played in the vehicle's rear loudspeakers, the cause of the problem may be any or some of the following:

- Supply/fuse for the control module for rear audio separation
- Supply/fuse for the rear seat entertainment module (RSE)
- Cable harness from the vehicle's ordinary sound system.
- Cable harness between Rear seat entertainment module (RSE) and rear audio separation module.

Fig. 179: Identifying Rear Seat Entertainment Module (RSE)
Courtesy of VOLVO CARS CORPORATION

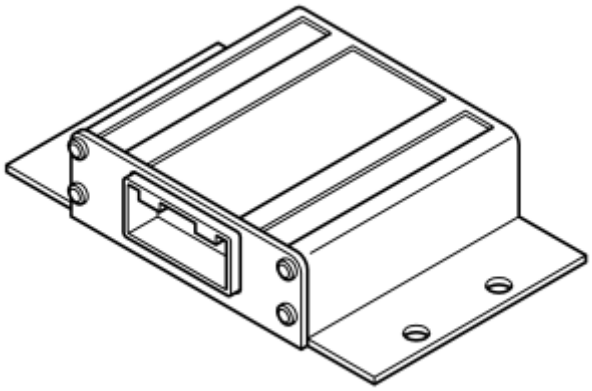

Fig. 180: Identifying Rear Audio Separation Module
Courtesy of VOLVO CARS CORPORATION

- **Continue**

  see **CHECKING THE WIRING FOR THE REAR SEAT ENTERTAINMENT MODULE (RSE)**

CHECKING THE WIRING FOR THE REAR SEAT ENTERTAINMENT MODULE (RSE)

Checking the settings

Check that the volume is not turned down. Also check if the malfunction remains regardless of the chosen audio source. If the sound disappears when selecting a certain audio source, check the cables for loose connection or open circuit to that specific audio source. For further information, see the wiring diagram.

Checking the power supply to the control module for rear audio separation

When the sound is connected from the system for rear seat entertainment to the rear loudspeakers, a clicking sound shall be heard from an internal relay in the rear audio separation module (RAS). In this way it is possible to check that the control module has voltage feed and ground.

HINT: The control module is supplied with voltage via:

- #1. Power supply (30-supply)

HINT: The control module is grounded via:

- #9

Checking activation signal

To activate rear audio separation module (RAS), it must receive a high signal on the cable from Rear seat entertainment module (RSE).

Perform the following check.

- Switch on the ignition. Turn on the system for rear seat entertainment using the remote control.
- Insert a DVD or CD in the DVD-player and press the Play button. Select DVD-player as audio source via the remote control and check that sound comes either to the wireless headphones or the wired headphones (that are connected in the AUX-panel) in the place where DVD-player was selected as audio source.
- Press the button on the remote control to activate the sound for the rear loudspeakers. When the sound is connected from the system for rear seat entertainment to the rear loudspeakers, a clicking sound shall be heard from an internal relay in the rear audio separation module (RAS).
- Measure the voltage between the cable for activation of rear audio separation module (RAS) and ground. The voltage shall be approximately 7-9 V when the function is activated. If voltage on the cable is high, but the rear audio separation module (RAS) is not activated, the control module is probably damaged.

Remedy as necessary.

Other information

- see **SIGNAL SPECIFICATION, REAR AUDIO SEPARATION**
- For further information about the fuses and relays, see the Wiring Diagram
- see **CONTROL MODULE REAR SOUND SEPARATION, REPLACING**
- see **CHECKING WIRING AND TERMINALS**

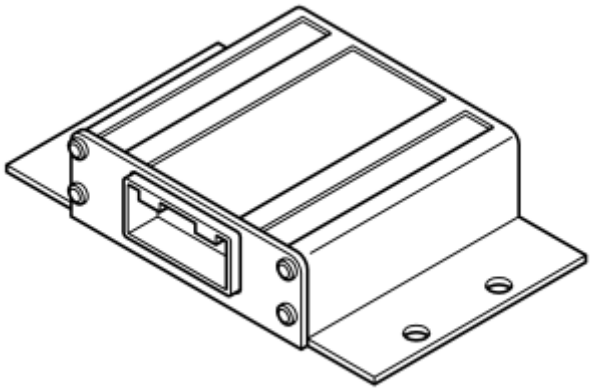

Fig. 181: Identifying Rear Audio Separation Module
Courtesy of VOLVO CARS CORPORATION

Was a fault detected?

- **YES**

  see **VERIFICATION**

- **NO**

see **CHECKING THE WIRING FOR THE REAR SEAT ENTERTAINMENT MODULE (RSE)**

CHECKING THE WIRING FOR THE REAR SEAT ENTERTAINMENT MODULE (RSE)

Audio signals function description

The sound signals that the rear audio separation module (RAS) processes can either come from the Rear seat entertainment module (RSE) or from the vehicle's ordinary sound system.

Normally, the control module leads the sound from the vehicle's ordinary sound system to the rear speakers but can, via activation from the Rear seat entertainment module (RSE), also transmit the sound from the AUX-panel or DVD-player to the rear speakers.

Checking the audible warning signal

If sound can be heard in the headphones but not in the rear speakers - check the cables between Rear seat entertainment module (RSE) and rear audio separation module (RAS) for loose connection, short-circuiting or open circuit.

Remedy as necessary.

Control module for rear audio separation and speaker wiring

Check the cables from rear audio separation module (RAS) to the speakers for loose connection, open circuit and short-circuiting to ground and voltage. Also check the intermediate connectors.

If no other malfunction has been found, then the rear audio separation module (RAS) can be suspected as probable malfunction source.

Remedy as necessary.

Other information

- see **SIGNAL SPECIFICATION, REAR SEAT ENTERTAINMENT MODULE (RSE), GENERATION 4.1**
- see **SIGNAL SPECIFICATION, REAR AUDIO SEPARATION**
- For further information about the fuses and relays, see the Wiring Diagram
- see **CONTROL MODULE REAR SOUND SEPARATION, REPLACING**
- see **CHECKING WIRING AND TERMINALS**

Fig. 182: Identifying Rear Seat Entertainment Module (RSE)

Courtesy of VOLVO CARS CORPORATION

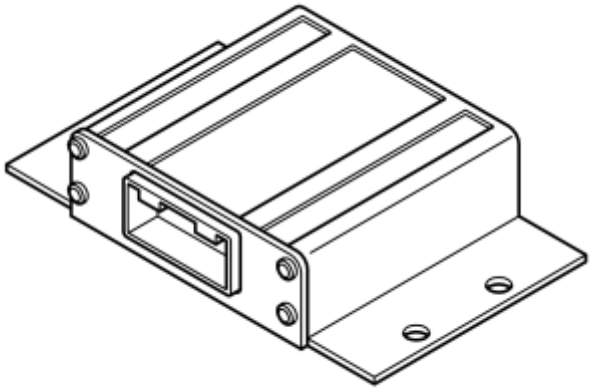

Fig. 183: Identifying Rear Audio Separation Module
Courtesy of VOLVO CARS CORPORATION

- **Continue**

  see **VERIFICATION**

VERIFICATION

see **CHECKING THE WIRING FOR THE REAR SEAT ENTERTAINMENT MODULE (RSE)**

- VERIFIED

  OKAY: Troubleshooting has been completed.

- **VERIFICATION FAILED:** The fault should have been detected and remedied. As this is not the case fault-tracing has failed. Exit fault-tracing for this diagnostic trouble code (DTC) or make another attempt.

  see **FAULT-TRACING INFORMATION**

FAULT-TRACING INFORMATION

see **INFORMATION**

- FAULT TRACING FAILED

  FAULT TRACING FAILED: The fault should have been detected and remedied. As this is not the case fault-tracing has failed. Exit fault-tracing for this diagnostic trouble code (DTC) or make another attempt.

- NEW TRY

see **FAULT-TRACING INFORMATION**

CHECKING THE SOUND SIGNAL FROM THE REAR SEAT ENTERTAINMENT DVD PLAYER TO THE VEHICLE'S ORDINARY SPEAKERS. REAR SEAT ENTERTAINMENT, GENERATION 4.2 (2007-2008)

CHECKING THE SOUND SIGNAL FROM THE REAR SEAT ENTERTAINMENT DVD PLAYER TO THE VEHICLE'S ORDINARY SPEAKERS.

FAULT-TRACING INFORMATION

Sound from the system for rear seat entertainment to the integrated audio module (IAM) goes via the AUX input. If sound from the system for rear seat entertainment cannot be played in the vehicle's loudspeakers, the cause of the problem may be any or some of the following:

- Cable harness from the vehicle's ordinary sound system.
- AUX input
- Damaged leads between the Rear seat entertainment module (RSE) and the AUX-input.

HINT: In order for sound from the system for rear seat entertainment to be played in the vehicle's loudspeaker system, the system for rear seat entertainment must be on and work faultlessly.

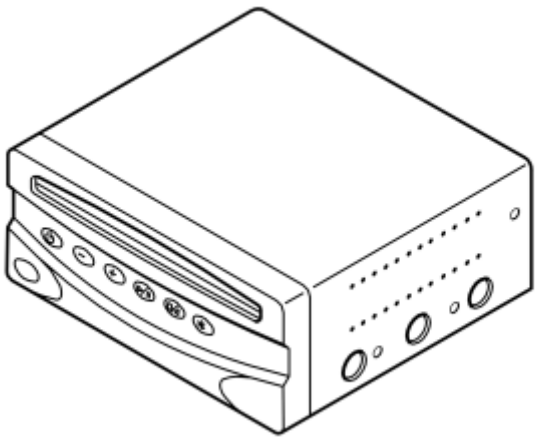

Fig. 184: Identifying Rear Seat Entertainment Module (RSE)
Courtesy of VOLVO CARS CORPORATION

- **Continue**

  Refer to **CHECKING THE WIRING FOR THE REAR SEAT ENTERTAINMENT MODULE (RSE)**

CHECKING THE WIRING FOR THE REAR SEAT ENTERTAINMENT MODULE (RSE)

HINT: In order for sound to be heard from the vehicle's loudspeakers, the function must be activated using the remote control for the system for rear seat entertainment (button for loudspeakers), the vehicle's audio system must be set to AUX and no other source must be connected to the AUX input.

Check that the volume is not turned down.

Check the cables from the Rear seat entertainment module (RSE) to the Integrated Audio Module (IAM). Check for a short-circuit to ground, for a short-circuit to supply and for an open circuit. Regards the cables from rear seat entertainment module (RSE), terminals #D3, #D16 and #D17, to the AUX-input.

Check the connection between the AUX input and the Integrated Audio Module (IAM). Check for a short-circuit to ground, for a short-circuit to supply and for an open circuit. Regards the cables from the AUX input to integrated audio module (IAM) terminals #C2:10, #C2:11 and #C2:12.

Also check the breaker function at the AUX input by connecting a plug into the AUX input. The connection between the Rear seat entertainment module (RSE) and the integrated audio module (AIM) should then be broken.

- AUX-input terminal #1 is internally connected with terminal #7 in the AUX input.
- AUX-input terminal #2 is internally connected with terminal #6 in the AUX input. The circuit is broken if a 3.5 mm connector is connected.
- AUX-input terminal #3 is internally connected with terminal #5 in the AUX input. The circuit is broken if a 3.5 mm connector is connected.

Remedy as necessary.

Other information

- see **SIGNAL SPECIFICATION, REAR SEAT ENTERTAINMENT MODULE (RSE), GENERATION 4.2**
- For further information about the fuses and relays, see the Wiring Diagram
- see **CHECKING WIRING AND TERMINALS**

- **Continue**

  Refer to **VERIFICATION**

VERIFICATION

CHECKING THE AUDIO WIRING FOR THE REAR SEAT ENTERTAINMENT MODULE (RSE)

Check that the audio system in the whole vehicle works.

Does the audio system work in the whole vehicle?

- **YES**

VERIFIED: Troubleshooting has been completed.

- **NO**

  Refer to **INFORMATION**

INFORMATION

FAULT-TRACING INFORMATION

The fault should have been detected and remedied. As this is not the case fault-tracing has failed.

Exit fault-tracing for this diagnostic trouble code (DTC) or make another attempt.

CHECKING THE SOUND SIGNAL FROM THE REAR SEAT ENTERTAINMENT DVD PLAYER TO THE VEHICLE'S ORDINARY SPEAKERS. REAR SEAT ENTERTAINMENT, GENERATION 4.3 (2009-2011)

CHECKING THE SOUND SIGNAL FROM THE REAR SEAT ENTERTAINMENT DVD PLAYER TO THE VEHICLE'S ORDINARY SPEAKERS.

FAULT-TRACING INFORMATION

Sound from the system for rear seat entertainment to the integrated audio module (IAM) goes via the AUX input. If sound from the system for rear seat entertainment cannot be played in the vehicle's loudspeakers, the cause of the problem may be any or some of the following:

- Cable harness from the vehicle's ordinary sound system.
- AUX input
- Damaged leads between the Rear seat entertainment module (RSE) and the AUX-panel.

NOTE: **In order for sound from the system for rear seat entertainment to be played in the vehicle's loudspeaker system, the system for rear seat entertainment must be on and work faultlessly.**

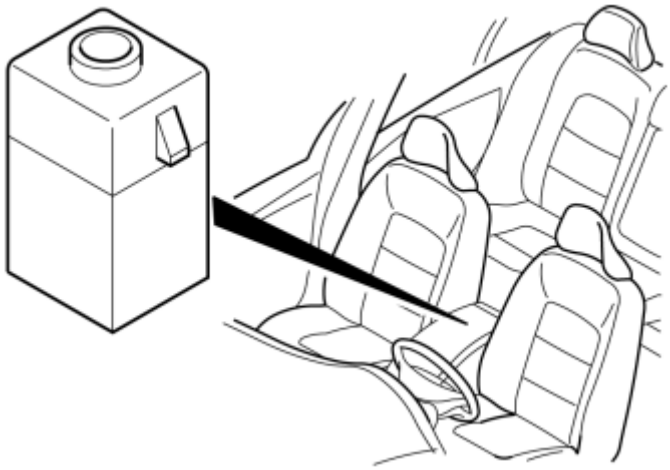

Fig. 185: Identifying AUX-panel
Courtesy of VOLVO CARS CORPORATION

- **Continue**

  Refer to **CHECKING THE WIRING FOR THE REAR SEAT ENTERTAINMENT MODULE (RSE)**

CHECKING THE WIRING FOR THE REAR SEAT ENTERTAINMENT MODULE (RSE)

HINT: In order for sound to be heard from the vehicle's loudspeakers, the function must be activated using the remote control for the system for rear seat entertainment (button for loudspeakers), the vehicle's audio system must be set to AUX and no other source must be connected to the AUX input.

Check the cables from the Rear seat entertainment module (RSE) to the Integrated Audio Module (IAM). Check for a short-circuit to ground, for a short-circuit to supply and for an open circuit. Regards the cables from rear seat entertainment module (RSE), terminals #D3, #D16 and #D17, to the AUX-input.

Check the connection between the AUX input and the Integrated Audio Module (IAM). Check for a short-circuit to ground, for a short-circuit to supply and for an open circuit. Regards the cables from the AUX input to integrated audio module (IAM) terminals #C2:10, #C2:11 and #C2:12.

Also check the breaker function at the AUX input by connecting a plug into the AUX input. The connection between the Rear seat entertainment module (RSE) and the integrated audio module (AIM) should then be broken.

- AUX-input terminal #1 is internally connected with terminal #7 in the AUX input.
- AUX-input terminal #2 is internally connected with terminal #6 in the AUX input. The circuit is broken if a 3.5 mm connector is connected.
- AUX-input terminal #3 is internally connected with terminal #5 in the AUX input. The circuit is broken if a 3.5 mm connector is connected.

HINT:

Remedy as necessary.

Other information

- see **SIGNAL SPECIFICATION, REAR SEAT ENTERTAINMENT MODULE (RSE), GENERATION 4.3**
- For further information about the fuses and relays, see the Wiring Diagram
- see **CHECKING WIRING AND TERMINALS**

Was a fault detected?

- **YES**

  OKAY: Troubleshooting has been completed.

- **NO**

  Refer to **INFORMATION**

INFORMATION

FAULT-TRACING INFORMATION

The fault should have been detected and remedied. As this is not the case fault-tracing has failed.

Exit fault-tracing for this diagnostic trouble code (DTC) or make another attempt.

CHECKING THE SYSTEM. REAR SEAT ENTERTAINMENT, GENERATION 3.2 (2005-2006)

CHECKING THE SYSTEM

INFORMATION

If no screens work and the malfunction cannot be connected to a special function, e. g., when the aux-input is used, the malfunction cause may be:

- Contact resistance in the terminals.
- One or both screens not connected.
- Open-circuit in the cable between the display screen and the Rear Seat Entertainment Module (RSE) (Y-shaped cable).
- Voltage supply to the screen or Rear Seat Entertainment Module (RSE).
- Damaged display screen.
- Damaged rear seat entertainment module (RSE).

- **Continue**

  Refer to **CHECKING THE FUNCTION**

CHECKING THE FUNCTION

Fig. 186: Checking Traffic Load On CAN Cables
Courtesy of VOLVO CARS CORPORATION

- Ignition on.
- Switch on the system using the remote control pointed directly at one of the display screens.

  Check that none of the display screens have been turned off using the remote control.

  Check the function of the system by changing the video source. Ensure that the infra red (IR) receiver on the lower section of the display screen is not blocked.

  Check the batteries in the remote control. Replace them if they are defective.

Can the system be turned on?

- **YES**

  FAULT NOT FOUND: Troubleshooting has been completed.

- **NO**

  Refer to **CHECKING THE POWER SUPPLY**

CHECKING THE POWER SUPPLY

NOTE: Switch off the system before connecting/disconnecting a connector.

Check that the fuse for the Rear Seat Entertainment Module (RSE) is intact.

Check that there is voltage to the fuse holder. The voltage must be approximately 10-14 V.

Disconnect the lower connector for the left-hand display screen. Turn on the ignition and try to turn on the system by aiming the remote control at the right screen. If the system can now be switched on the fault has probably been traced.

If the system still cannot be switched on: Turn off the ignition. Disconnect the lower connector for the right-hand display screen. Reconnect the lower connector for the left-hand display screen. Turn on the ignition and try to turn on the system by aiming the remote control at the left screen. If the system can be turned on now, change place of the two head rests to confirm that the malfunction 'changes place'.

Remedy as necessary.

Other information

- see **SIGNAL SPECIFICATION, REAR SEAT ENTERTAINMENT MODULE (RSE)**
- For further information about the fuses and relays, see the Wiring Diagram
- see **HEAD RESTRAINT WITH TV SCREEN, REPLACING**
- see **CONTENTS**

Does the rear seat entertainment system work?

- **YES**

  OKAY: Troubleshooting has been completed.

- **NO**

  Refer to **CHECKING THE DISPLAY SCREENS**

CHECKING THE DISPLAY SCREENS

NOTE: Switch off the system before connecting/disconnecting a connector.

Disconnect the connector from the one display screen. Turn on the system and investigate the trouble symptom. If the malfunction still exists, check in the same way but reinstall the first connector for the other screen.

Checking the head restraints

Minimize fault-tracing by swapping the position of the two head restraints to, see if the fault "follows". Change places of the head rests and check the trouble symptom.

HINT: It is unusual for a screen to break.

Checking the remote control signal

Checking the wiring

Turn off the ignition.

Check the wiring and connectors between the display screens. Check for damage or oxidation. Check for a short-circuit to ground. Check for a short-circuit to supply voltage. Also check the connector on the Rear Seat

Entertainment Module (RSE). Check for damage and oxidation. Remedy as necessary.

Checking IR-signal, left screen

Check the cable between the upper connector to the display screen terminal #4 and Rear Seat Entertainment Module (RSE) terminal #A4. Check for an open-circuit.

Check the cable between the upper connector to the display screen terminal #5 and Rear Seat Entertainment Module (RSE) terminal #A5. Check for an open-circuit.

Connect the head restraint, turn on the ignition and measure the voltage on connection #5 for the screen. The voltage must be 4-5 V.

To check the voltage level on signal cable for IR-signal #4, proceed as follows:

1. Connect all cables and connectors.
2. Measure the voltage between the signal cable for the Infra Red (IR) signal to the left-hand display screen and ground. The voltage must be 4-5 V.

   NOTE: Do not press any of the buttons on the remote control during this measurement. Measure from the rear side of a suitable connector. Do not damage the terminals in the connector.

3. Aim the remote control at the left screen and press in a button on the remote control. The voltage on the signal cable must fall to approximately 3.5 V for as long as the button on the remote control is pressed in.

Checking IR-signal, right screen

Check the cable between the upper connector to the display screen terminal #4 and Rear Seat Entertainment Module (RSE) terminal #A14. Check for an open-circuit.

Check the cable between the upper connector to the display screen terminal #5 and Rear Seat Entertainment Module (RSE) terminal #A15. Check for an open-circuit.

Connect the head restraint, turn on the ignition and measure the voltage on connection #5 for the screen. The voltage must be 4-5 V.

Compare the latest reading as above with the signal for the infra red (IR) signal from the right-hand infra red (IR) receiver for the display screen.

Conclusion

If the result of the above checks is that no malfunction was found, this means that the receivers in both screens work and that the remote control is OK. If voltages on the cables are OK but a lower voltage cannot be measured when a button on the remote control is pressed down, try with replacing the remote control.

- see **SIGNAL SPECIFICATION, REAR SEAT ENTERTAINMENT MODULE (RSE)**

- For further information about the fuses and relays, see the Wiring Diagram.
- see **HEAD RESTRAINT WITH TV SCREEN, REPLACING**
- see **CHECKING WIRING AND TERMINALS**

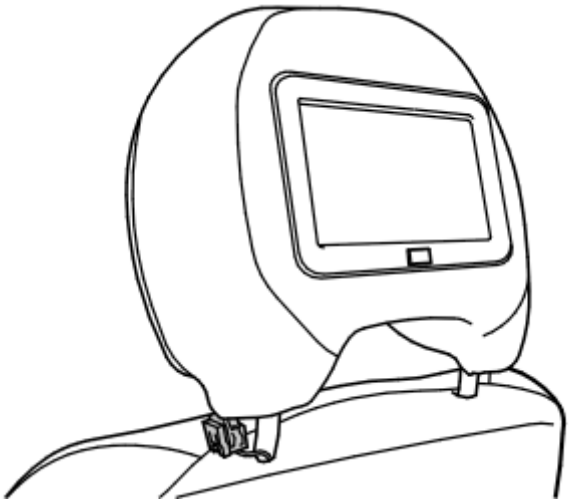

Fig. 187: Identifying Cable Connector To Display Screen/Head Restraint
Courtesy of VOLVO CARS CORPORATION

Was a fault detected?

- **YES**

  OKAY: Troubleshooting has been completed.

- **NO**

  Refer to **CHECKING SERIAL COMMUNICATION TO SCREENS**

CHECKING SERIAL COMMUNICATION TO SCREENS

Fig. 188: Checking Traffic Load On CAN Cables
Courtesy of VOLVO CARS CORPORATION

- Ignition on.
- Switch on the system using the remote control.

  Check if the screens flicker once or flicker continuously when the system is turned on.

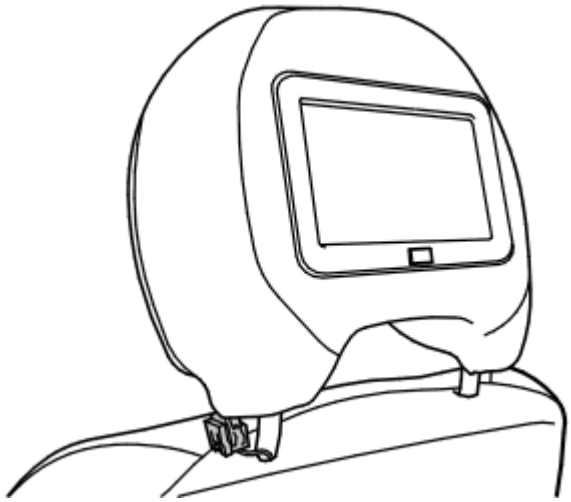

Fig. 189: Identifying Cable Connector To Display Screen/Head Restraint
Courtesy of VOLVO CARS CORPORATION

Do the display screens flicker when the power is switched on?

- **YES**

  Refer to **CHECKING SERIAL COMMUNICATION TO SCREENS 1**

- **NO**

  Refer to **CHECKING VOLTAGE TO REAR SEAT ENTERTAINMENT MODULE (RSE)**

CHECKING SERIAL COMMUNICATION TO SCREENS 1

Fig. 190: Checking Traffic Load On CAN Cables
Courtesy of VOLVO CARS CORPORATION

- Restore cables and contacts.
- Ignition on.

  Check the voltage on the serial connections between Rear Seat Entertainment Module (RSE) and the screens (4 cables). In all cases the voltage shall be approx. 2.5 V.

  HINT: It is easier to take measurements at the upper connector for the display screens.

  Other information

- see **SIGNAL SPECIFICATION, REAR SEAT ENTERTAINMENT MODULE (RSE)**
- see **REAR SEAT ENTERTAINMENT MODULE (RSE), REPLACING**
- see **HEAD RESTRAINT WITH TV SCREEN, REPLACING**
- see **CHECKING WIRING AND TERMINALS**

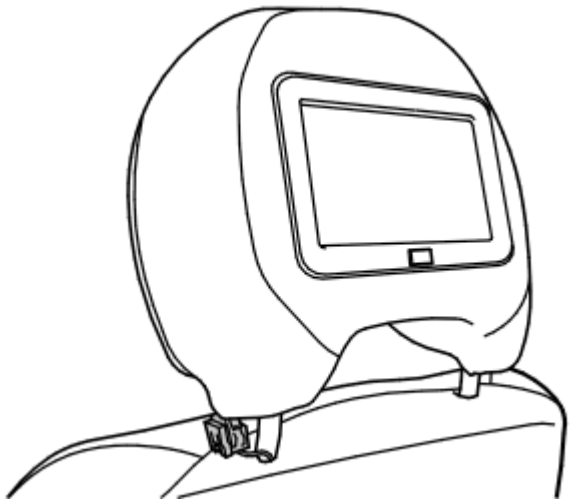

Fig. 191: Identifying Cable Connector To Display Screen/Head Restraint
Courtesy of VOLVO CARS CORPORATION

Is the voltage below 2 V for any measurement?

- **YES**

  Refer to **CHECKING SERIAL COMMUNICATION TO SCREENS 2**

- **NO**

  Refer to **CHECKING VOLTAGE TO REAR SEAT ENTERTAINMENT MODULE (RSE)**

CHECKING SERIAL COMMUNICATION TO SCREENS 2

Loosen the lower connector in the seat where the previous measurement was below 2 V.

Take readings from the same cable as before in the lower connector.

If voltage in the lower connector now is approx. 2.5 V, the screen in question is probably defective.

Remedy as necessary.

Other information

- see **SIGNAL SPECIFICATION, REAR SEAT ENTERTAINMENT MODULE (RSE)**
- see **REAR SEAT ENTERTAINMENT MODULE (RSE), REPLACING**

- see **HEAD RESTRAINT WITH TV SCREEN, REPLACING**
- see **CHECKING WIRING AND TERMINALS**

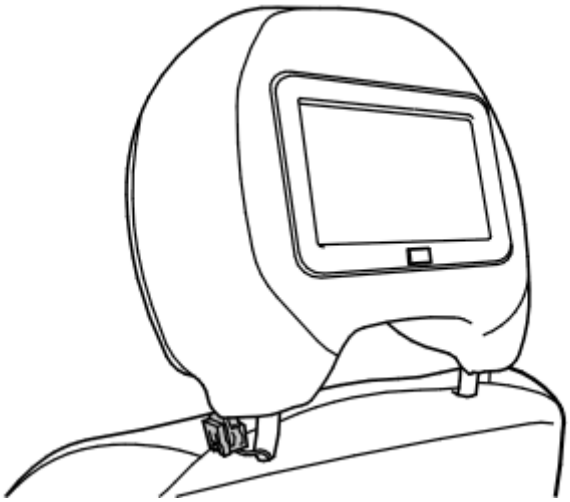

Fig. 192: Identifying Cable Connector To Display Screen/Head Restraint
Courtesy of VOLVO CARS CORPORATION

Was a fault detected?

- **YES**

  OKAY: Troubleshooting has been completed.

- **NO**

  Refer to **CHECKING VOLTAGE TO REAR SEAT ENTERTAINMENT MODULE (RSE)**

CHECKING VOLTAGE TO REAR SEAT ENTERTAINMENT MODULE (RSE)

Fig. 193: Checking Traffic Load On CAN Cables
Courtesy of VOLVO CARS CORPORATION

- Ignition on.

  Check the voltage feed to Rear Seat Entertainment Module (RSE).

  HINT: The control module has two voltage feeds.

HINT: At ignition on, the voltage shall be battery voltage on both feeds.

Also check the ground connection to the control module.

If no other malfunction has been found, try with replacing Rear Seat Entertainment Module (RSE).

Other information

- see **SIGNAL SPECIFICATION, REAR SEAT ENTERTAINMENT MODULE (RSE)**
- see **REAR SEAT ENTERTAINMENT MODULE (RSE), REPLACING**

CHECKING THE SYSTEM. REAR SEAT ENTERTAINMENT, GENERATION 3.2 (EXECUTIVE; PREMIER; 2004)

CHECKING THE SYSTEM

see **CHECKING THE SYSTEM**

ACCESSORIES AND EQUIPMENT

Media, Communication And Navigation - Symptom Verification

INFORMATION AND VERIFICATION, AUDIO OTHER (2003-12)

INFORMATION AND VERIFICATION, AUDIO OTHER

Symptom and function description

Messages and information about the climate control unit and audio system are shown in the display.

The display on the audio unit lights up in key position I or when the vehicle starts.

The display is of the LCD type and is equipped with a warm up system so that it is not slow at low temperatures.

When the temperature on the display's surface is below 0°C, warm-up comes on and when the temperature on the display's surface is greater than 20°C,

Verification

Access to the vehicle is necessary for the following checks.

- Ignition on.

Does the display light?

HINT: If the display lights up slowly when cold, this may be due to faulty warm-up of the display.

INFORMATION AND VERIFICATION, MOBILE TELEPHONE (2003-12)

INFORMATION AND VERIFICATION, MOBILE TELEPHONE

Symptom and function description

The telephone's system's functions can only be used when the telephone is in the active position. When the telephone system is deactivated, no phone calls can be received.

In standby, the audio system can be in operation at the same time as the call is received. In standby, it is not possible to make a call.

When the telephone system is activated or is in standby, a handset is shown in the display.

When the telephone is activated, the keypad in the steering wheel only controls the telephone functions. To control the audio system, the telephone must be in standby.

The call volume is controlled using the buttons in the steering wheel's keypad. If the handset is used, the volume can be controlled using a knob on the side of the handset.

The telephone uses the audio system's loudspeakers. Sound volume mutes temporarily during a phone call. At the end of a call, the sound volume resumes to its original volume. If the volume is controlled during the phone call, the new level is maintained after the call has ended.

The Phone module (PHM) determines whether the call is to be connected via hands free or handset from the cradle signal. When the handset is in the holder, all voice calls are handsfree. The handset is activated when it is removed from the holder. If the handset is lifted when a phone call is started, the sound will be emitted from the hands free system

The telephone can only be used together with a valid SIM card (Subscriber Identity Module). Card supplied by network operators. In the event of a problem with the card, contact the network operator.

For more information, see Design and Function.

Verification

Access to the vehicle is necessary for the following checks.

- Ignition on.
- Activate the carphone.

Make a call so that both the handset and the hands-free system are used. See the instruction manual.

Check that the following functions work as they should:

- Handset
- Hands free system.
- Steering wheel's keypad.
- Keypad on the center console.

SYMPTOM AND FUNCTION DESCRIPTION (2011-12)

Problem with synchronising the telephone book or calls list between certain mobile telephones and Bluetooth phone module (BPM) may be due to too many calls in the calls list.

The telephone book cannot be synchronised if calls list transfer takes longer than 20 seconds.

- Erase call from calls list for a better result.

Verification

Certain mobile telephones require manual transfer of the telephone book using business cards. Follow the instructions below to transfer the entire telephone book from the mobile telephone to the Bluetooth phone

module (BPM).

- Pair the mobile telephone with the Bluetooth phone module (BPM). See www. volvocars. com/bluetooth for further information.
- Enter the mobile telephone's menu and select Telephone book.
- Select Option - Mark/Unmark- Select all.
- Select Option - Send Business card.
- Select "Via bluetooth".
- Select "My Car". All entries in the telephone book are now transferred to the Bluetooth phone module (BPM).
- The telephone book should now be in the Bluetooth menu in the Bluetooth phone module (BPM).

EXTERIOR/INTERIOR TRIM

Body and interior

EXTERIOR/INTERIOR TRIM

COMBINED INSTRUMENT PANEL SURROUND

REPLACING COMBINED INSTRUMENT PANEL SURROUND

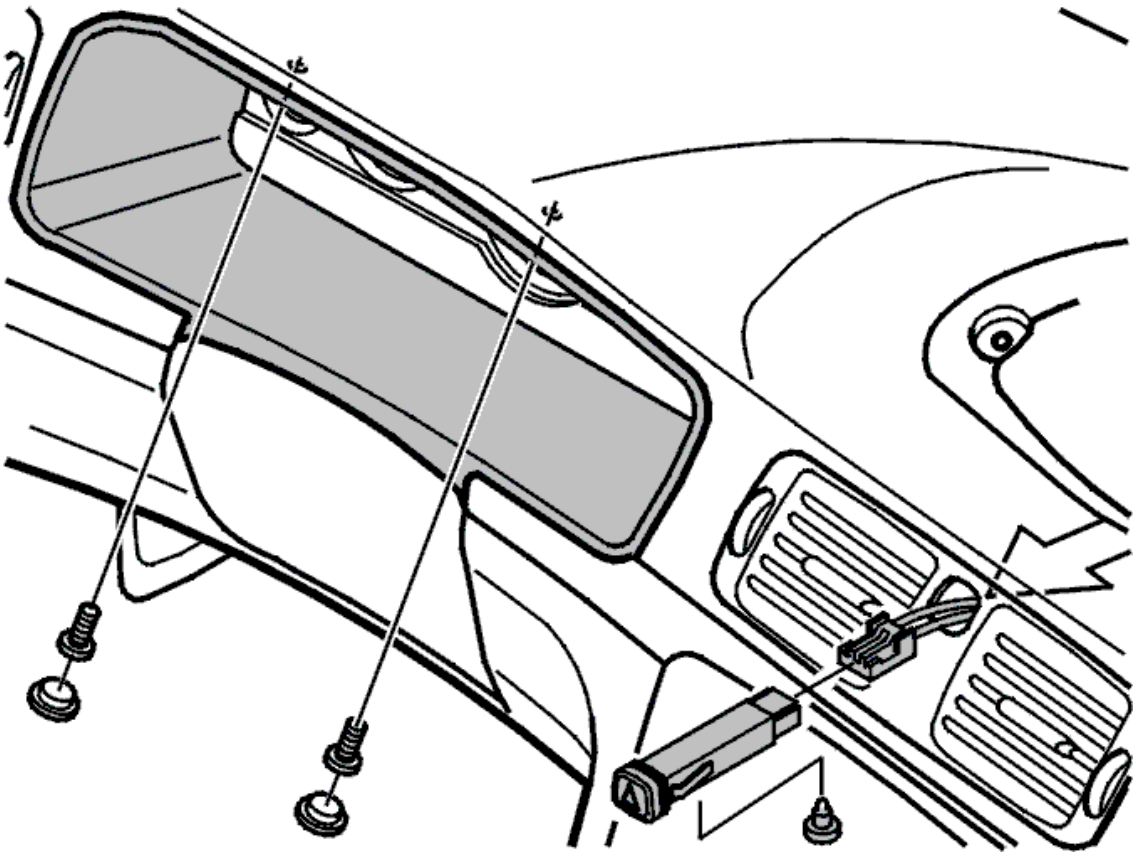

Fig. 1: Combined Instrument Panel Surround Screws
Courtesy of VOLVO CARS CORPORATION

Remove:

- screws (2) on the top of the surround.
- the surround

Install:

In reverse order.

COMPONENTS, COOL BOX REAR SEAT, REPLACING

NOTE: **As the illustrations in this service information are used for different model years and / or models, some variation may occur. However, the essential information in the illustrations is always correct.**

This service information contains procedures for:

- the entire cover. See **COVER ASSEMBLY, REPLACING**
- the lock on the cover. See **LOCK COVER, REPLACING**
- the blower fan motor. See **REPLACING BLOWER FAN MOTOR**
- the switch. See **SWITCH, REPLACING**.

COVER ASSEMBLY, REPLACING

REMOVING THE COVER ASSEMBLY

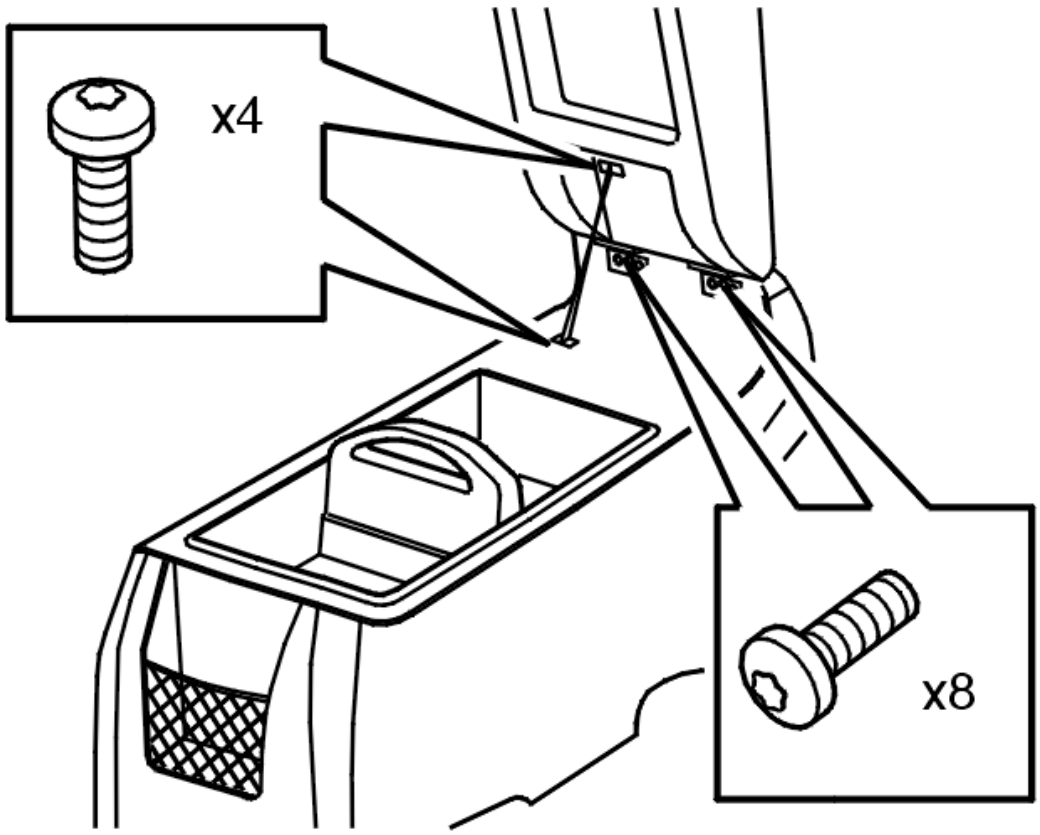

Fig. 2: Identifying Console Cover And Bolts
Courtesy of VOLVO CARS CORPORATION

Remove the cover.

Transfer the hinges and the retaining strap to the new cover.

INSTALLING THE COVER ASSEMBLY

Install:

- the cover
- the hinges
- the retaining strap.

LOCK COVER, REPLACING

REMOVING THE LOCK COVER

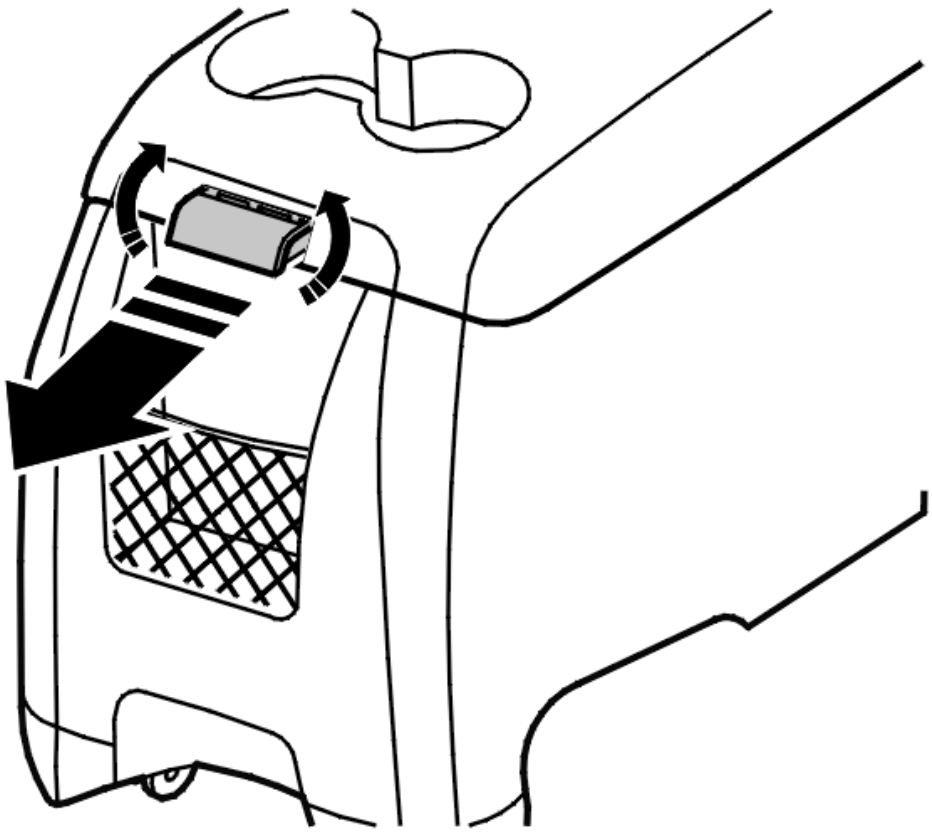

Fig. 3: Identifying Console Cover And Lock
Courtesy of VOLVO CARS CORPORATION

Grip the lock using heavy duty pliers.

Pull straight out in line with the cover whilst working the lock back and forth.

Pull heavily until the lock releases.

NOTE: The lock is secured by two plastic hooks which break when the lock releases.

Check that there are no loose plastic pieces where the old lock was positioned.

INSTALLING THE LOCK COVER

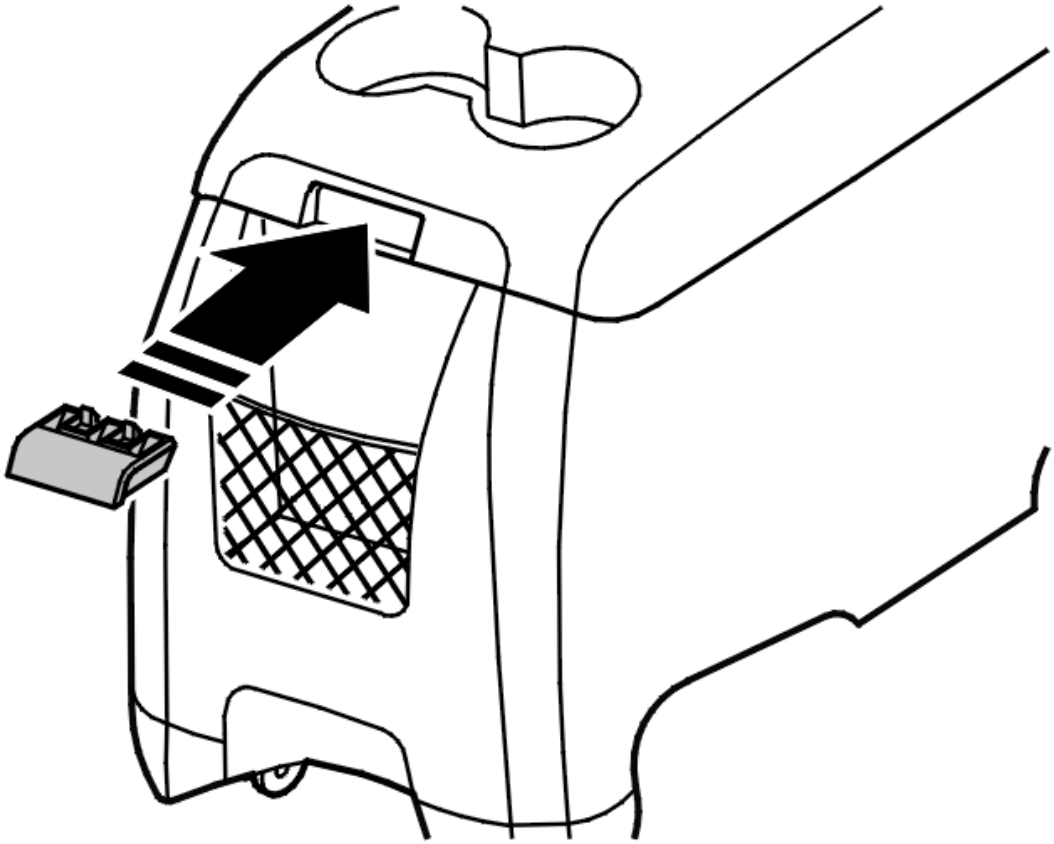

Fig. 4: Identifying Lock Inserted In Correct Position
Courtesy of VOLVO CARS CORPORATION

Insert the lock in the correct position.

Press so that the hooks engage securely.

REPLACING BLOWER FAN MOTOR

REMOVING THE BLOWER FAN MOTOR

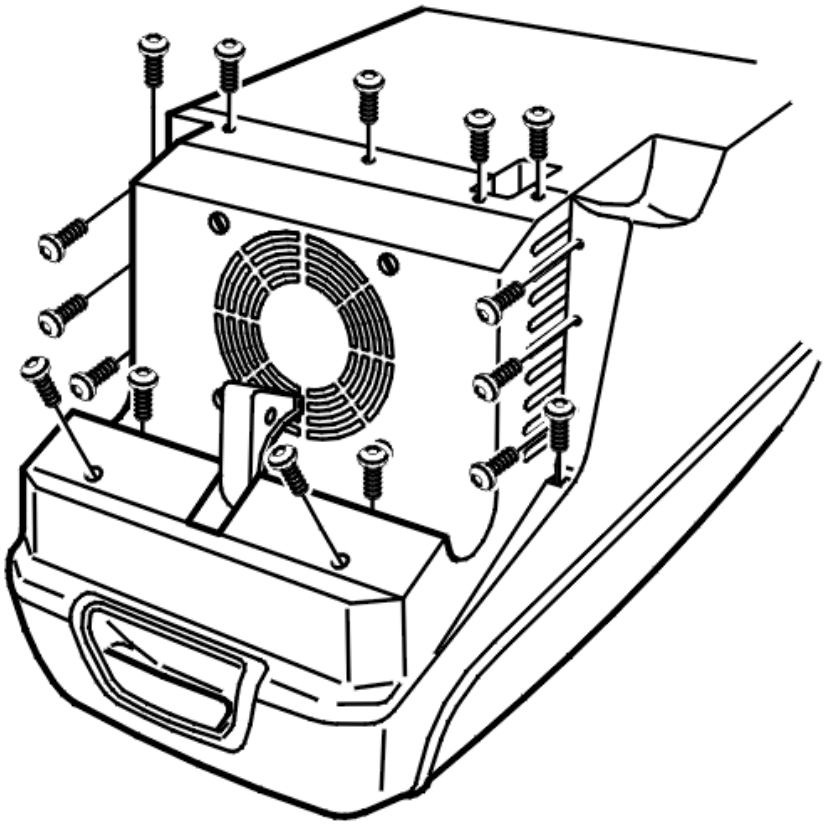

Fig. 5: Identifying Blower Fan Motor Screws
Courtesy of VOLVO CARS CORPORATION

Turn the coolbox upside down.

Remove the 16 screws.

NOTE: Do not slacken off the screws for the fan.

Remove the fan shroud.

NOTE: Do not damage the cable for the fan.

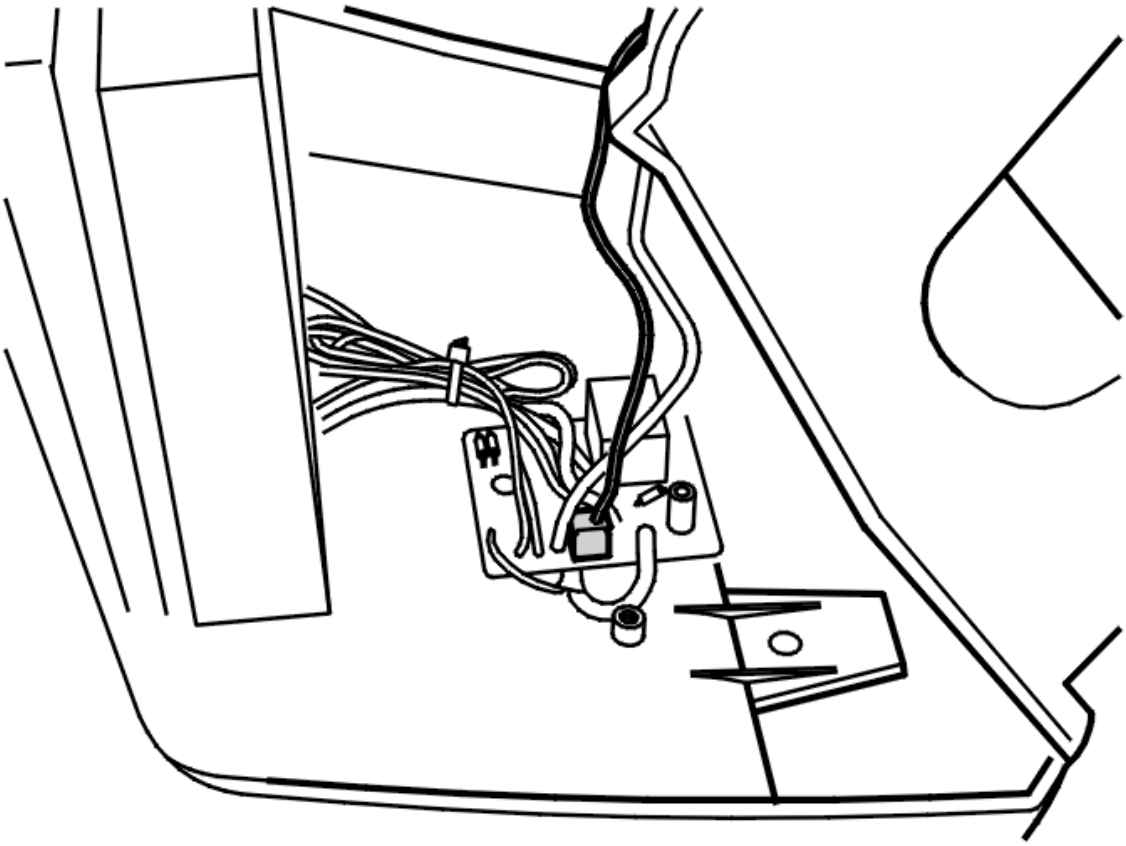

Fig. 6: Identifying Printed Circuit Board Fan Switch
Courtesy of VOLVO CARS CORPORATION

Remove the switch for the fan from the printed circuit board.

The switch is secured using hot adhesive, so it may need to be cut out.

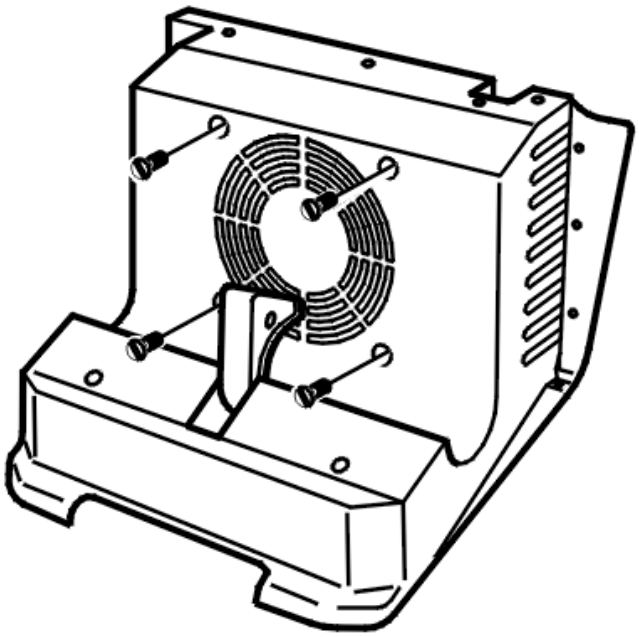

Fig. 7: Identifying Fan Screws
Courtesy of VOLVO CARS CORPORATION

Remove the 4 screws for the fan.

Lift out the fan.

INSTALLING THE BLOWER FAN MOTOR

Install:

- the engine coolant fan (FC)
- the 4 screws for the fan. Tighten
- the switch for the fan in the printed circuit board. Secure using hot adhesive
- the fan shroud
- the 16 screws for the fan shroud. Tighten.

SWITCH, REPLACING

REMOVING THE SWITCH

Remove the 16 screws. See **REPLACING BLOWER FAN MOTOR**.

NOTE: Do not slacken off the screws for the fan.

Remove the fan shroud. See **REPLACING BLOWER FAN MOTOR**.

NOTE: Do not damage the cable for the fan.

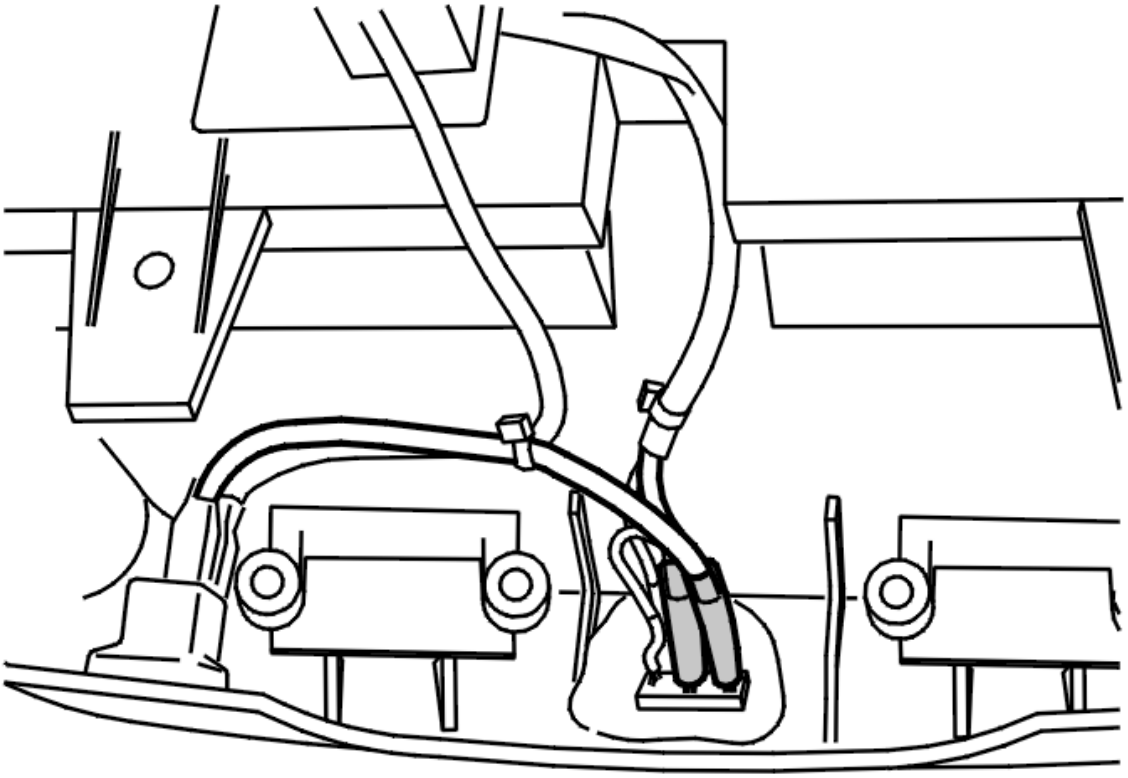

Fig. 8: Identifying Switch Cables
Courtesy of VOLVO CARS CORPORATION

Detach the 2 cables from the switch.

HINT: Mark up the cables before removal.

The switch is secured using hot adhesive.

Cut away the adhesive using a sharp knife.

Press out the switch.

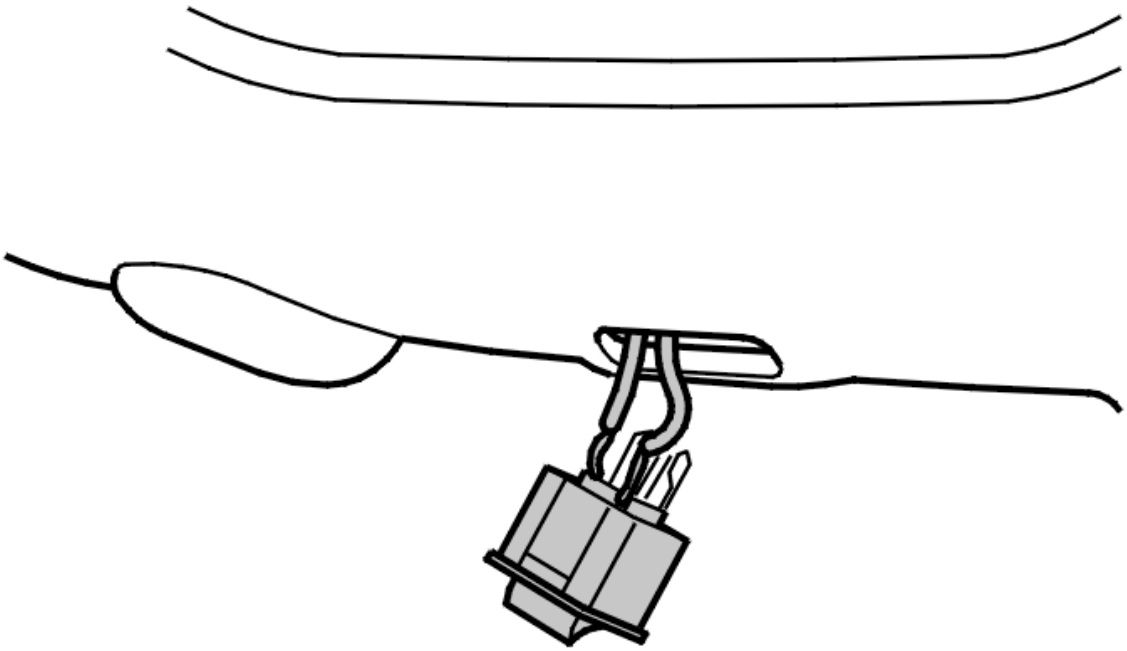

Fig. 9: Identifying Switch
Courtesy of VOLVO CARS CORPORATION

Heat both the cables so that they release from the switch. Use a soldering iron.

HINT: Mark up the cables before removal.

INSTALLING THE SWITCH

Solder both the small cables onto the switch.

Install:

- the switch.

Secure the switch using hot adhesive.

- the 2 cables for the switch
- the fan shroud. See **REPLACING BLOWER FAN MOTOR**
- the screws for the fan shroud. See **REPLACING BLOWER FAN MOTOR**.

FENDER EXTENSION, REPLACING

Special tools:

see **9512942**

see **9512949**

The illustrations in this service information are used for different model years and/or models. Some variation may occur. However, the essential information in the illustrations is always correct.

REMOVING FENDER EXTENSIONS

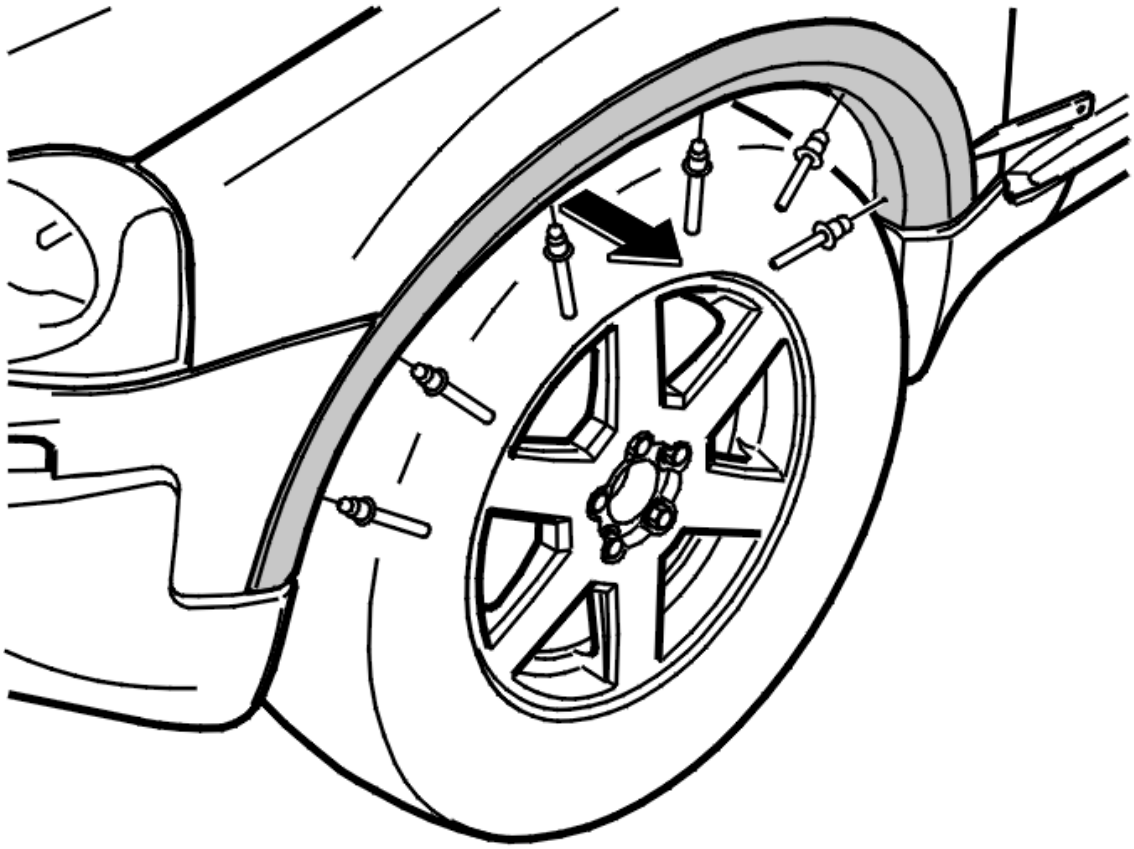

Fig. 10: Removing Front Inner Fender
Courtesy of VOLVO CARS CORPORATION

Remove:

- the 6 rivets from the front fender liner. See **REMOVING RIVET**

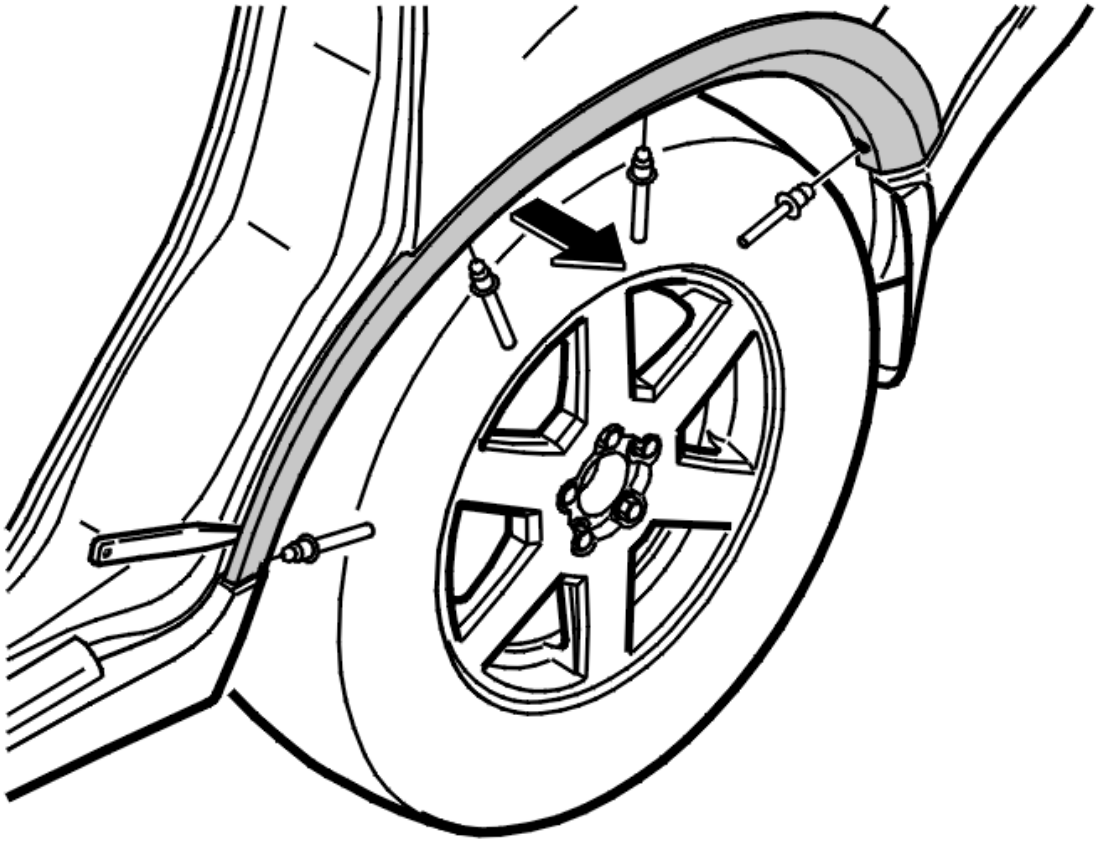

Fig. 11: Removing Rear Inner Fender
Courtesy of VOLVO CARS CORPORATION

- the 4 rivets from the rear fender liner. See **REMOVING RIVET** .

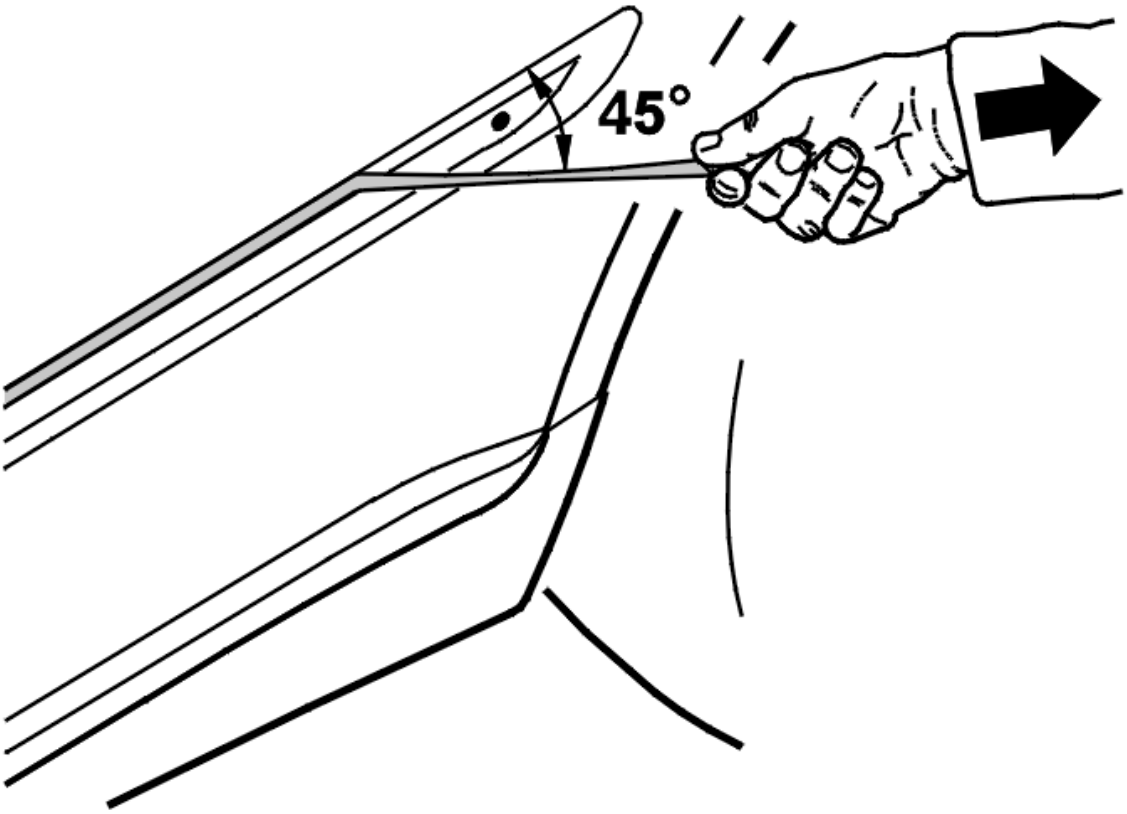

Fig. 12: Removing Tape Residue
Courtesy of VOLVO CARS CORPORATION

Detach the covered clips and the double-sided adhesive tape by pulling straight out.

The front molding has five clips, the rear has six.

HINT: Use a weatherstrip tool to facilitate removal. Start at the front or rear edge of the molding.

Remove any tape residue. Use: see **9512942** and: see **9512949** .

INSTALLING FENDER EXTENSIONS

NOTE: **Always use a new molding and new clips when installing.**

NOTE: **The car must be at least room temperature, i. e. warmer than 20 °C in order for the tape to bond correctly.**

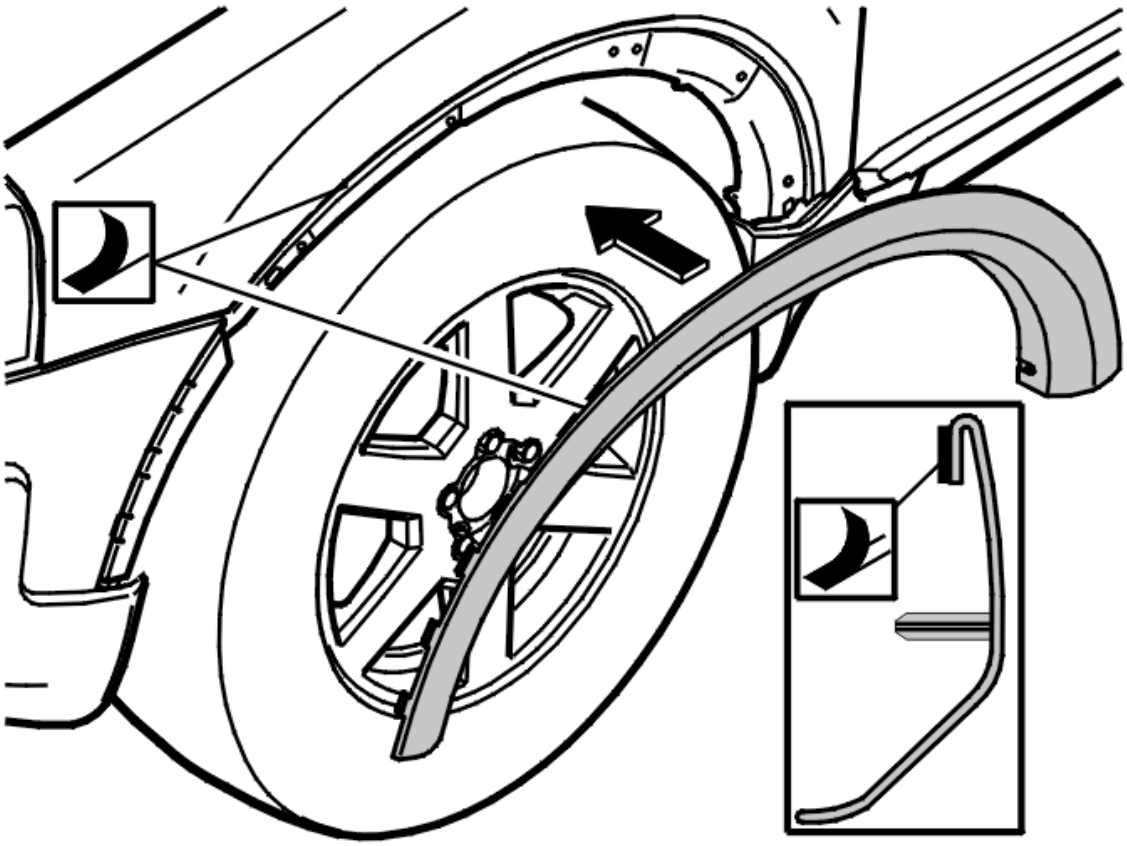

Fig. 13: Identifying Fender Extension Tape
Courtesy of VOLVO CARS CORPORATION

Wash the area for the molding. Use a 50/50 mixture of isopropanol and water.

Wipe dry using a clean lint-free cloth.

Locate the locating pins and clips for the molding in the holes.

Press down along the entire length of the molding, Check that the clips snap into the fender.

HINT: Remove approximately 50 mm of the backing from the molding before pressing it into place. This will make it easier to remove the remaining backing.

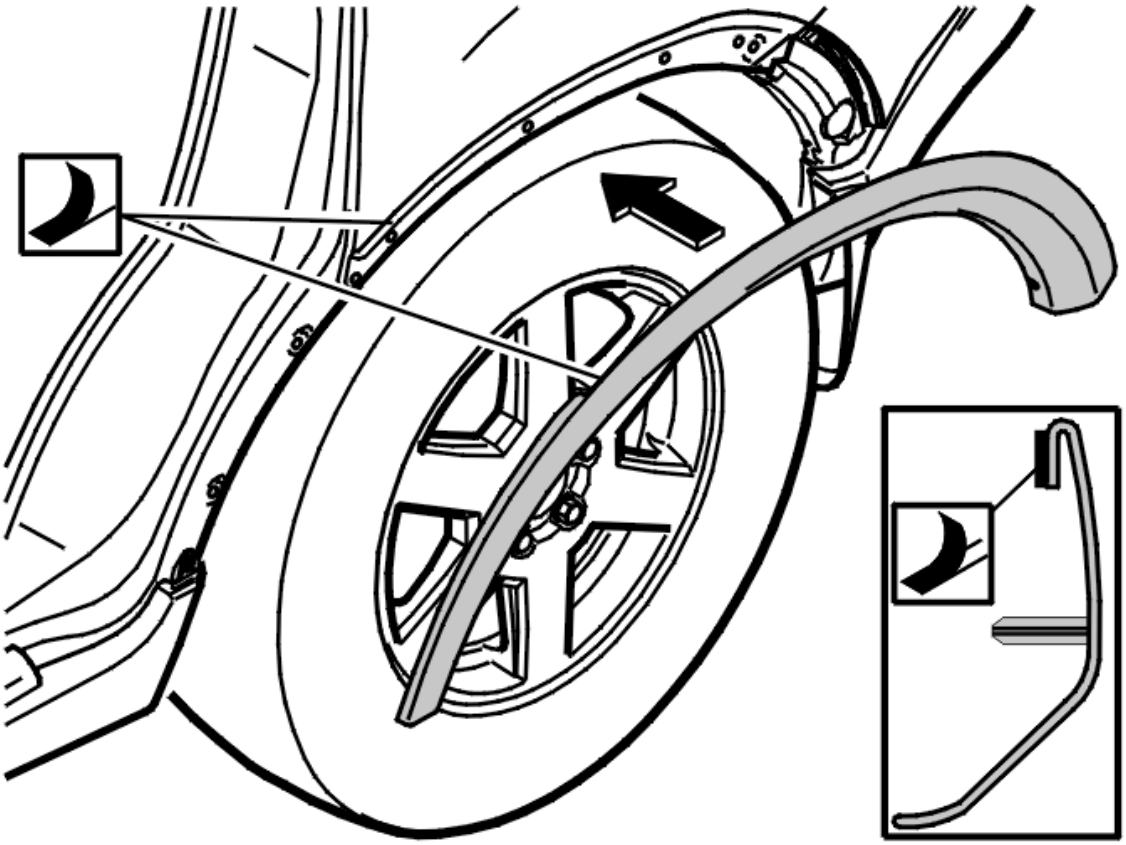

Fig. 14: Identifying Fender Extension Tape
Courtesy of VOLVO CARS CORPORATION

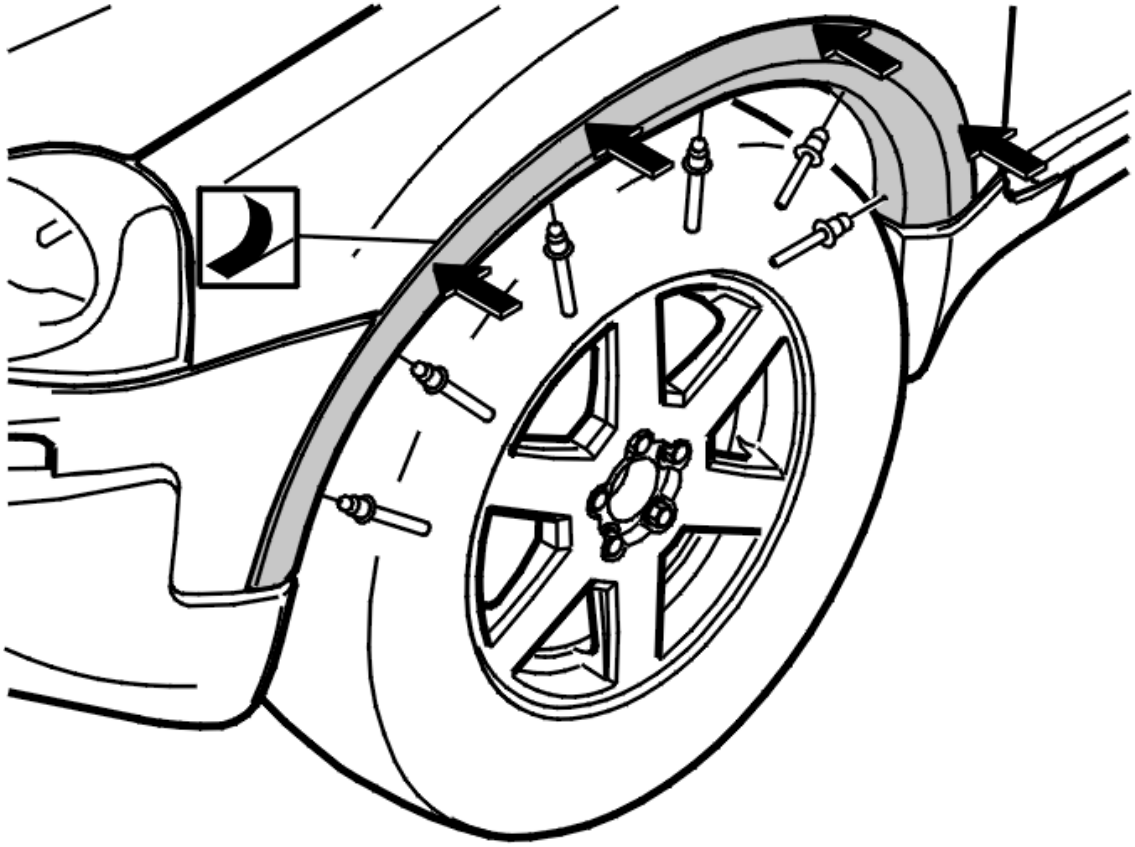

Fig. 15: Installing Front Fender Extension
Courtesy of VOLVO CARS CORPORATION

Check the position of the molding.

Remove the rest of the backing from the tape and press the molding hard by hand so that the tape secures correctly to the fender.

Install 5 new rivets on the front and 4 on the rear molding.

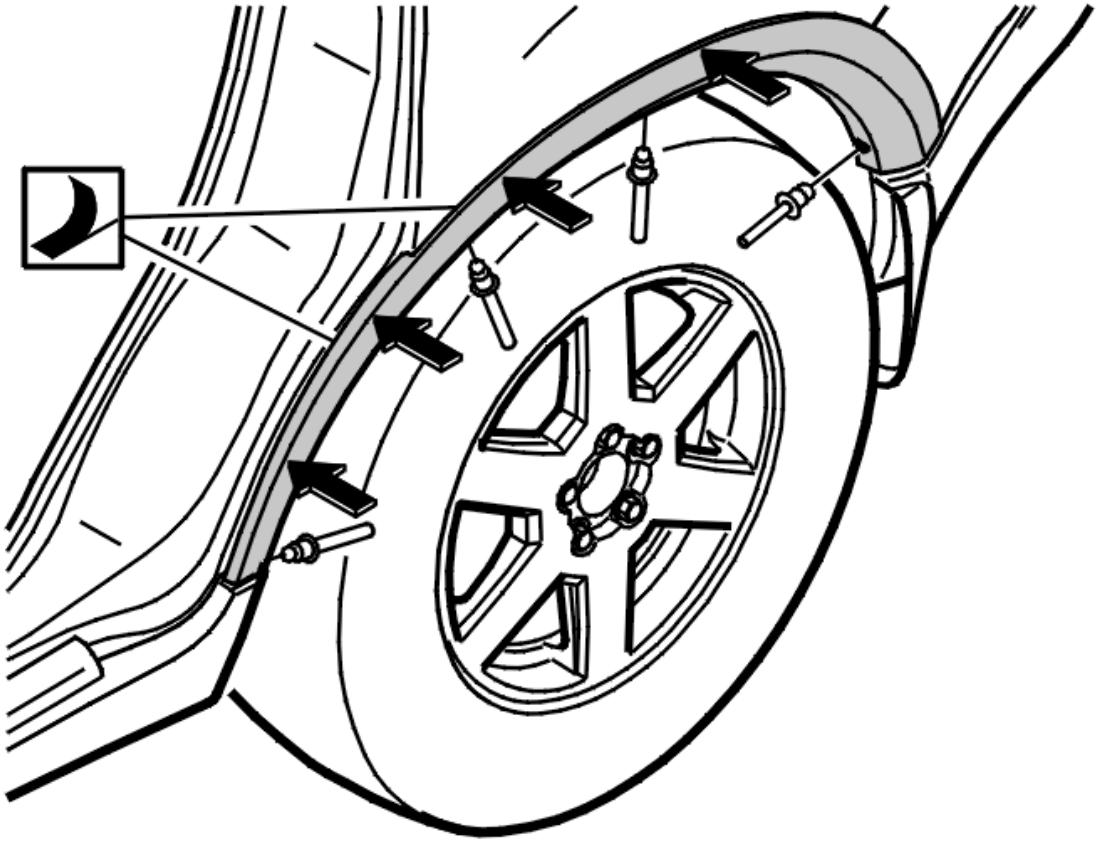

Fig. 16: Installing Rear Fender Extension
Courtesy of VOLVO CARS CORPORATION

NOTE: To ensure optimal adhesion, do not wash the car for 72 hours.

FLOOR CARPET, FRONT, REPLACING

FLOOR CARPET, FRONT, REPLACING

Remove:

- the seat from car according to:

  see **LIFTING THE FRONT SEATS IN AND OUT**

- the front sill trim panel. See **SILL TRIM PANEL FRONT SIDE DOOR**
- the soundproofing panel. See **SOUNDPROOFING PANEL, REPLACING** .

Lift out the carpet.

Install:

In reverse order.

FLOOR CARPET, REAR, REPLACING

FLOOR CARPET, REAR, REPLACING

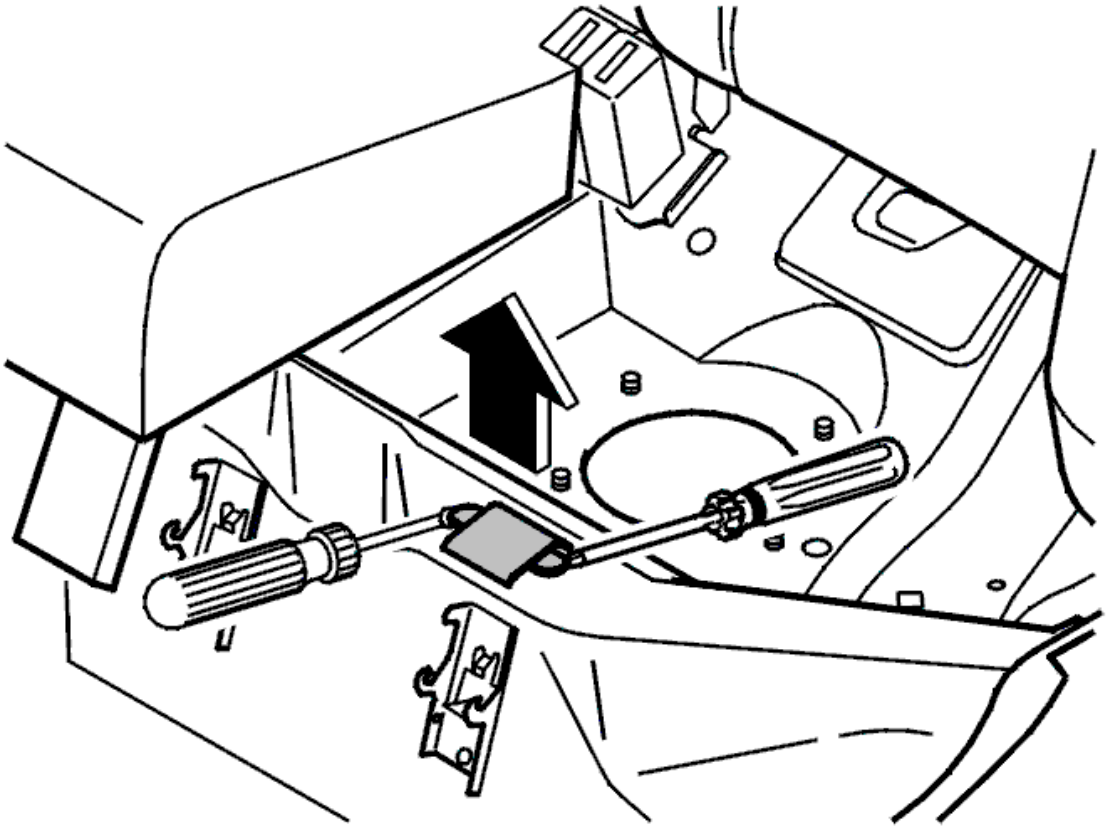

Fig. 17: Identifying Cushion Clip And Screwdrivers
Courtesy of VOLVO CARS CORPORATION

Remove:

- the front seat. See:

  see **LIFTING THE FRONT SEATS IN AND OUT**

- the center console. See **CENTER CONSOLE, REPLACING**
- the rear-seat seat cushion. See **CUSHION**.
- cushion clip.

  Carefully lift each end.

  Use a weatherstrip tool or a large screwdriver

- the rear sill trim panel. See **SILL TRIM PANEL, REPLACING**
- the front sill trim panel. See **FRONT DOOR SILL TRIM PANEL**.

- the power amplifier (radio) if applicable: Remove the two screws.

Lift up the carpet at the rear edge.

Pull the carpet backwards.

Lift out the carpet.

Install:

In reverse order.

CUSHION

REMOVING THE CUSHION

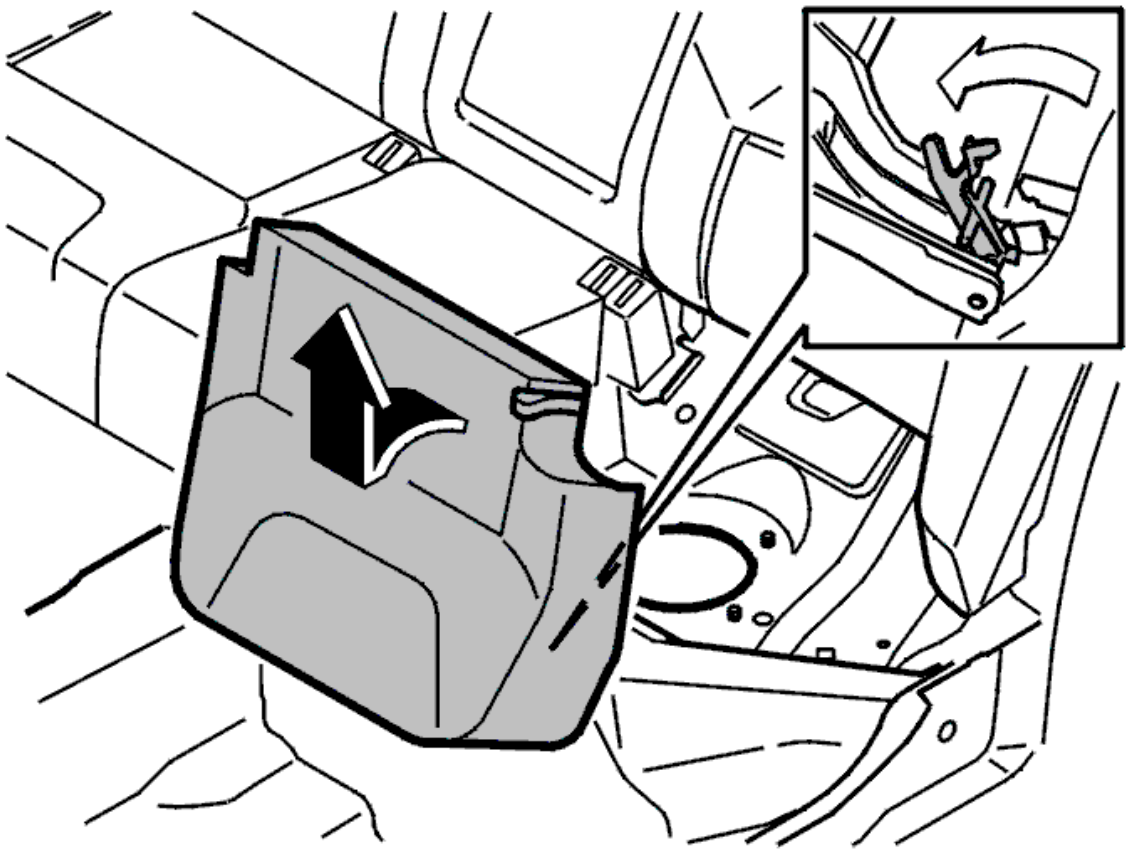

Fig. 18: Identifying Seat Cushion On Rear Seat Lifted Up By Pulling Strap
Courtesy of VOLVO CARS CORPORATION

- Tighten the strap to release the locking
- Fold the cushion up 45 degrees
- Release the locking. Lift in lengthwise.

NOTE: Lift at the front of the cushion, not the strap.

INSTALLATION

Install:

In reverse order.

FRONT DOOR SILL TRIM PANEL

REMOVING THE SILL TRIM PANEL

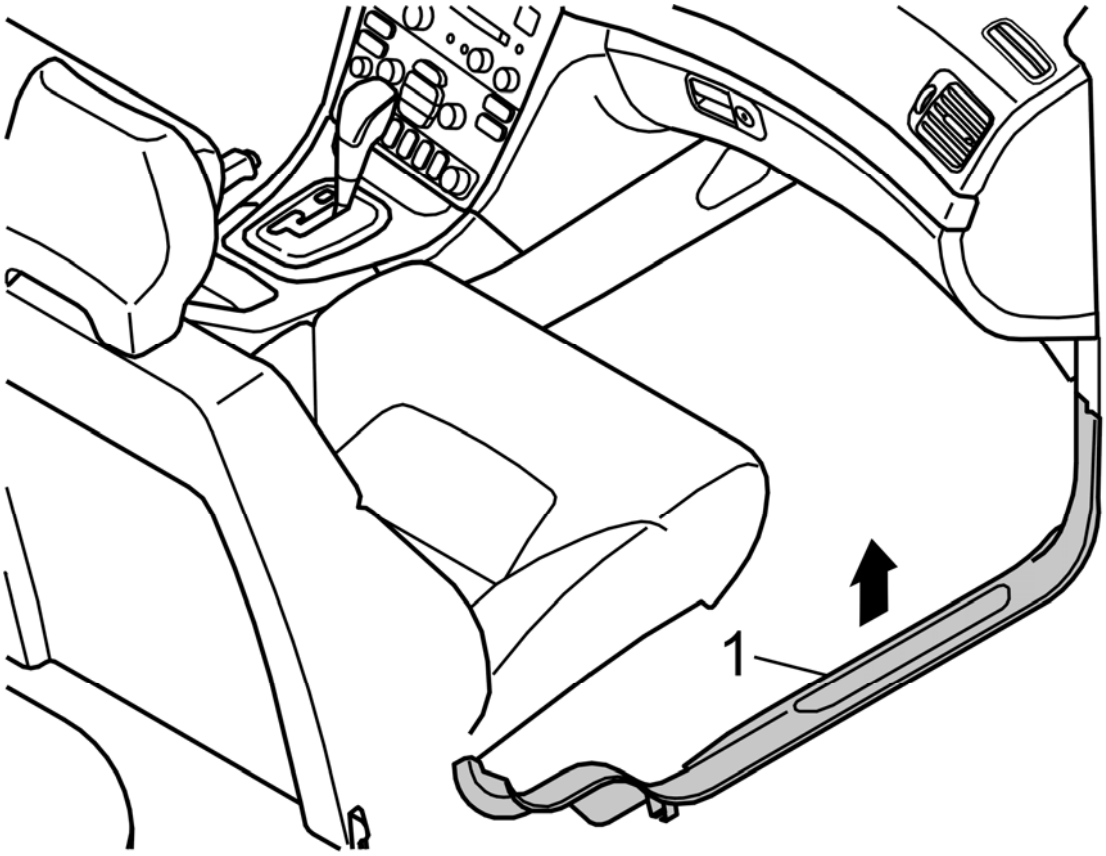

Fig. 19: Identifying Sill Trim Panel
Courtesy of VOLVO CARS CORPORATION

- Pull the sill trim panel to release the front clip (1)
- Angle out the front edge of the frame (2)
- Detach the rear edge
- Pull out.

INSTALLING THE SILL TRIM PANEL

Install:

In reverse order.

GLOVE COMPARTMENT, REPLACING

GLOVE COMPARTMENT, REPLACING

Remove the soundproofing panel on the passenger side. See **SOUNDPROOFING PANEL, REPLACING** .

Open the glove compartment.

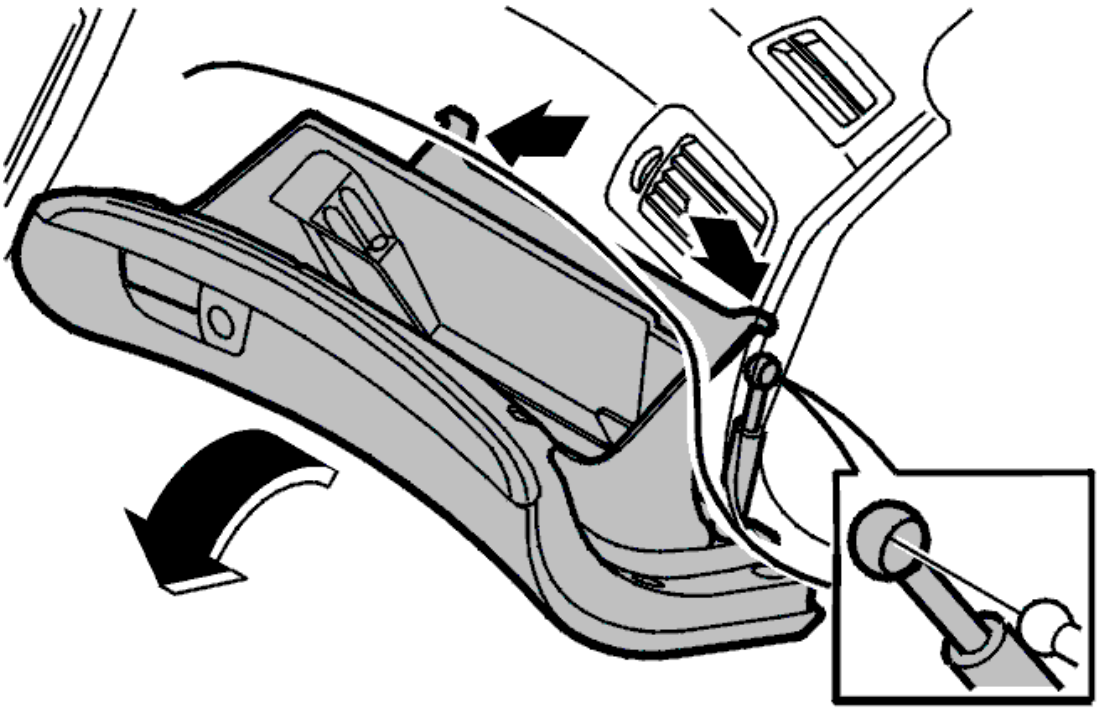

Fig. 20: Locating Hooks On Each Side
Courtesy of VOLVO CARS CORPORATION

Slide the two hooks on each side past the tabs.

Remove the gas strut by pulling it straight out.

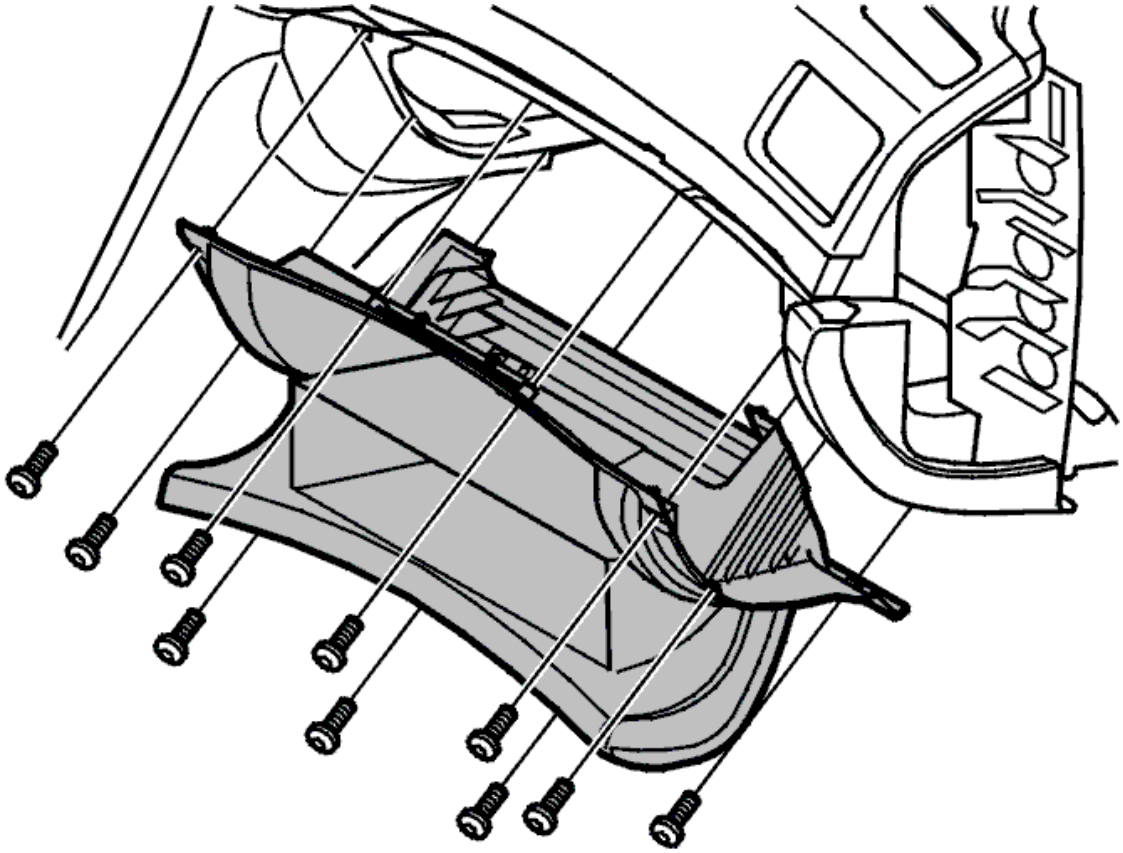

Fig. 21: Identifying Glove Compartment Screws
Courtesy of VOLVO CARS CORPORATION

Remove:

- ten screws
- the connector for the glove compartment lighting
- the connector for the foot well lighting
- the glove compartment.

Install:

In reverse order.

Transfer those components that do not need to be replaced.

DOOR LOCKS & ANTI-THEFT SYSTEMS

Body and interior

DOOR LOCKS & ANTI-THEFT SYSTEMS

DRIVER'S DOOR MODULE / PASSENGER DOOR MODULE (DDM/PDM), REPLACING

- Replacing the driver's side door module. See **DRIVER DOOR MODULE (DDM), REPLACING**
- Replacing the passenger side door module. See **PASSENGER DOOR MODULE (PDM), REPLACING** .

DRIVER DOOR MODULE (DDM), REPLACING

PREPARATIONS

CAUTION: New software can only be ordered when the control module is installed in the car. VIDA reads off the new control module identity which is required to order the correct software.

Always check that the control module and control module box connectors do not have bent or damaged terminals or sockets. This may have been the cause of the fault.

REMOVING THE DRIVER DOOR MODULE (DDM)

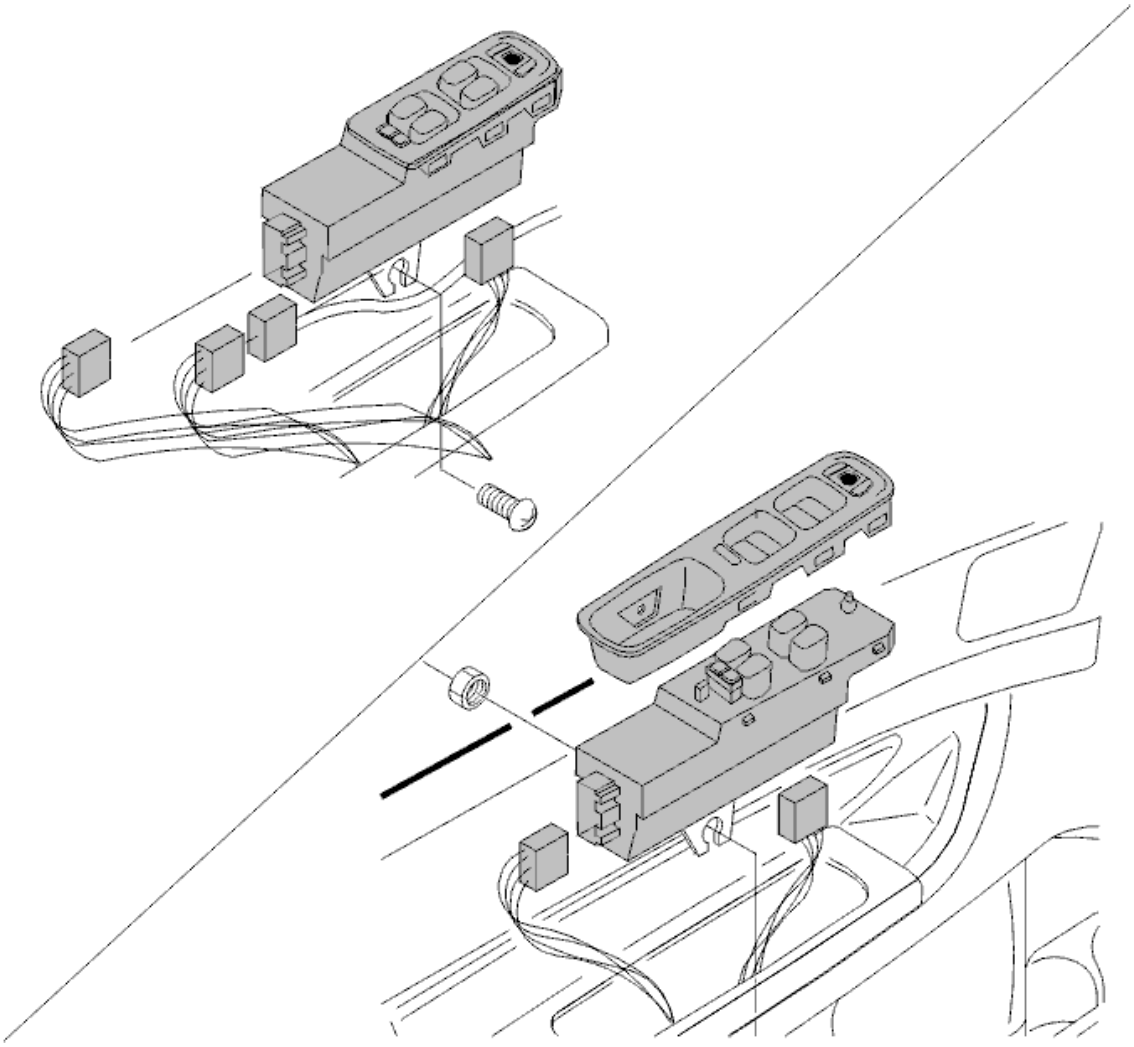

Fig. 1: Driver Door Module (DDM)
Courtesy of VOLVO CARS CORPORATION

Ignition off.

Remove:

- the door panel, see **PANEL FRONT SIDE DOOR, REPLACING** .
- the nut and screw holding the control module in place
- the connectors.

Pull up the rear edge of the door module.

Pull the control module backwards and upwards.

Detach the control module from the mounting on the door panel.

Press up the control module.

Disconnect the catches. Lift the upper panel from the control module.

NOTE: Check that the control module connectors are intact.

INSTALLING THE DRIVER DOOR MODULE (DDM)

Install the upper panel.

Position the control module in the hole on the door panel.

Check that the lower mounting for the control module is correctly located in the support on the door panel.

Press the control module into place.

Install:

- the connectors
- the nut and screw
- the door panel, see **PANEL FRONT SIDE DOOR, REPLACING** .

FINISHING

Initialize the window position in the communication input.

DOOR LOCKS & ANTI-THEFT SYSTEMS

Body and interior

DOOR LOCKS & ANTI-THEFT SYSTEMS

IGNITION KEY/REMOTE CONTROL, ADDITION/REPLACING/ERASING

NOTE: As the illustrations in this service information are used for different model years and / or models, some variation may occur. However, the essential information in the illustrations is always correct.

IGNITION KEY/REMOTE CONTROL, ADDITION/REPLACING/ERASING

CAUTION: When replacing an ignition key or remote control, the new unit must be programmed.

Both software and the code on the packaging are required to add a new remote control.

Only the software is required to erase a remote control.

Only the software is required to add an ignition key.

IGNITION KEY PROGRAMMING/ERASING

First order the software. See 9438428 .

REMOTE CONTROL PROGRAMMING/ERASING

First order the software. See 9438429 .

FINISHING

Check the function after programming an ignition key or remote control.

MODEL YEAR 2004

NOTE: 2004 sees the introduction of an ignition key integrated with the remote control.

REMOVING KEYS FROM THE REMOTE CONTROL

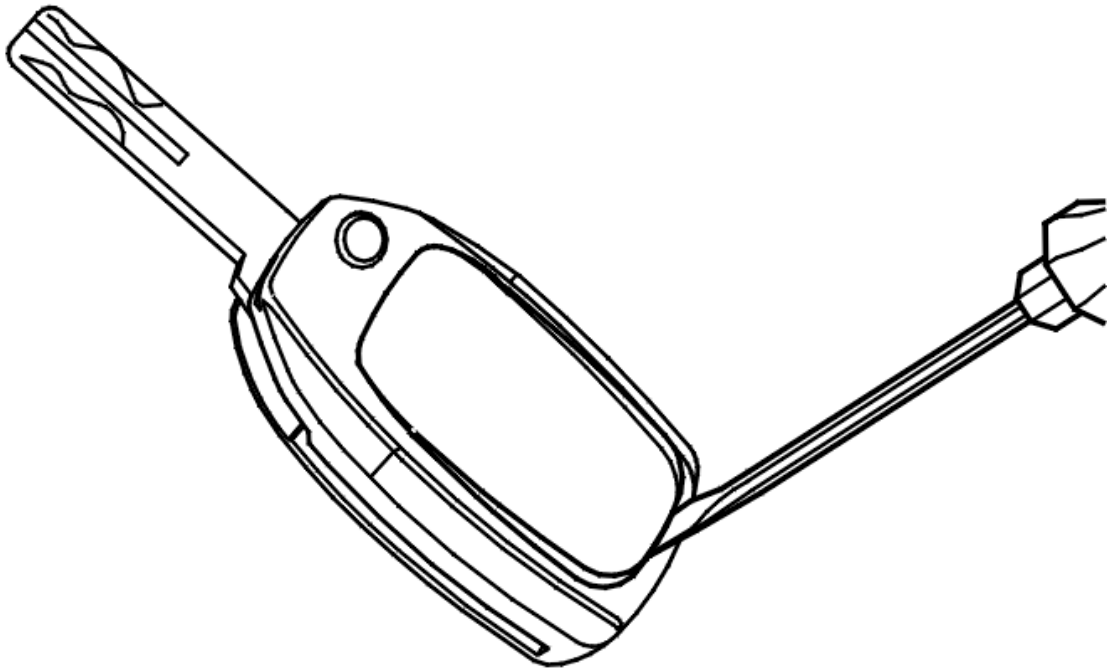

Fig. 1: Identifying Key Battery Cover Removal
Courtesy of VOLVO CARS CORPORATION

Fold out the key and remove the battery cover.

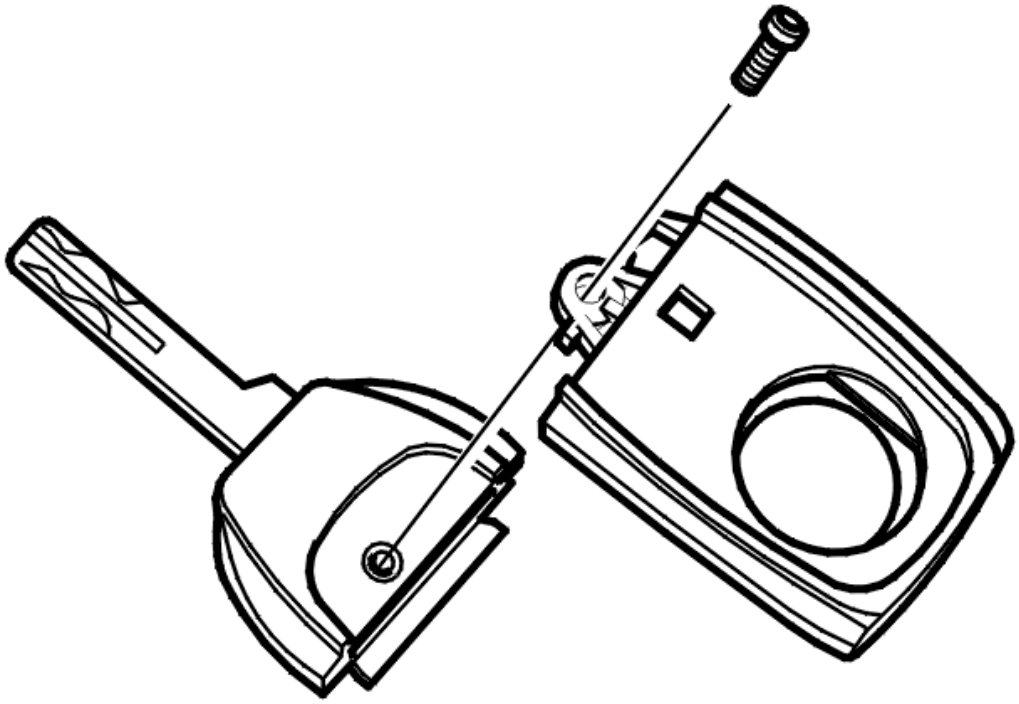

Fig. 2: Identifying Key, Remote Control Unit, And Screw
Courtesy of VOLVO CARS CORPORATION

Remove the screw and separate the unit.

INSTALLING KEYS IN THE REMOTE CONTROL

Install

- the key

NOTE: Always use a new key when installing.

- the screw
- the cover.

LOCK MECHANISM, TAILGATE, REPLACING

REMOVING THE TAILGATE LOCK

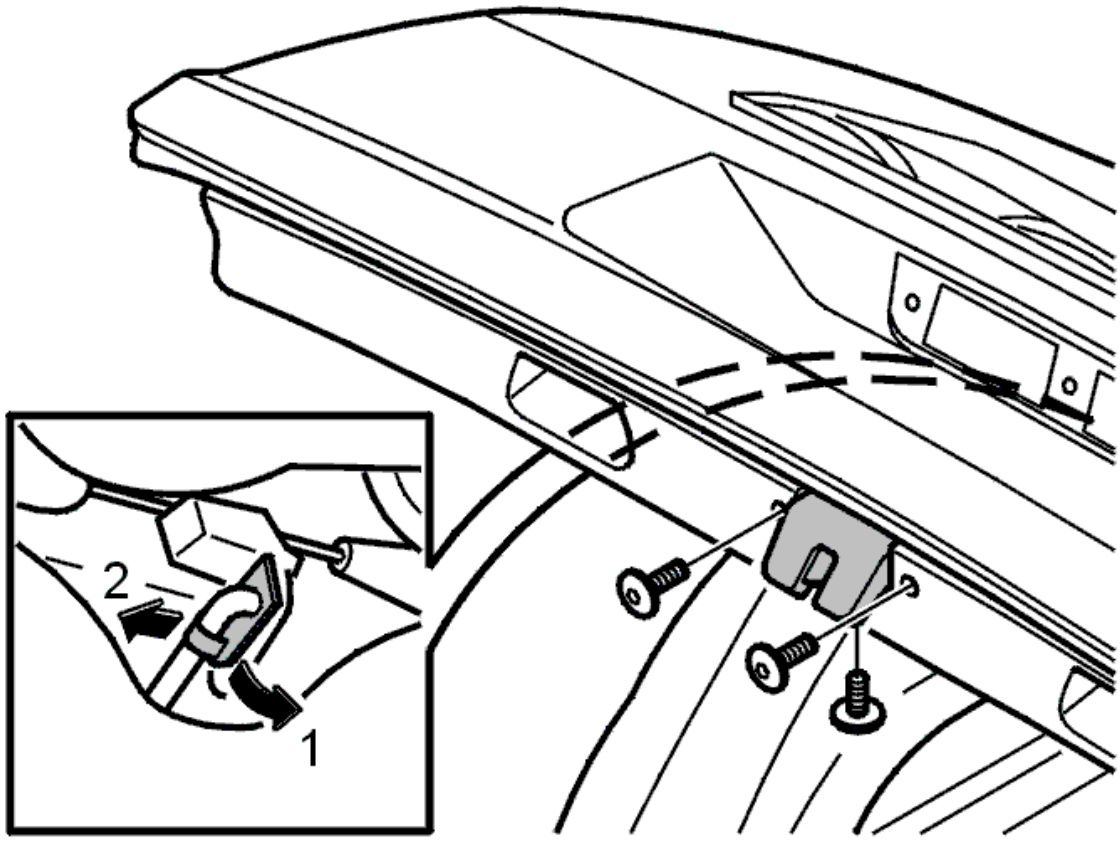

Fig. 3: Identifying Upper/Lower Tailgate Panel, Screws, Disconnecting Connector And Link, And Pulling Out Lock
Courtesy of VOLVO CARS CORPORATION

- Remove the upper tailgate panel. See **PANEL, TAILGATE, REPLACING**
- Remove the lower tailgate panel. See **LOWER TAILGATE PANEL**
- Remove the three screws
- Disconnect the connector
- Disconnect the link
- Pull out the lock.

INSTALLING THE TAILGATE LOCK

Install:

In reverse order.

NOTE: Adjust the lock. See STRIKER PLATE, ADJUSTING.

STRIKER PLATE, ADJUSTING

STRIKER PLATE, ADJUSTING

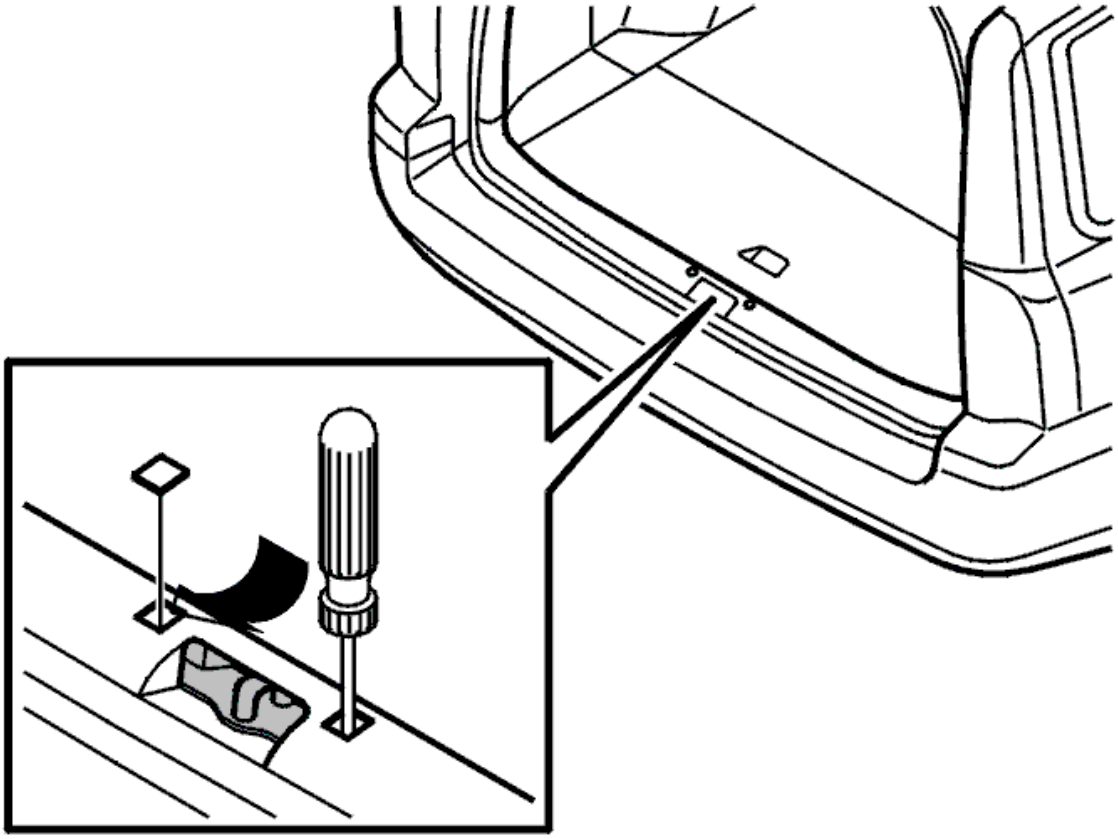

Fig. 4: Identifying Removal Of Cover From Tailgate Sill Trim Panel
Courtesy of VOLVO CARS CORPORATION

- Remove the cover from the tailgate sill trim panel
- Slacken off the screw
- Adjust the tailgate. See **DOORS / HOOD / TAILGATE, ADJUSTMENT CHART**
- Install the cover.

LOWER TAILGATE PANEL

REMOVING THE REAR DOOR PANEL

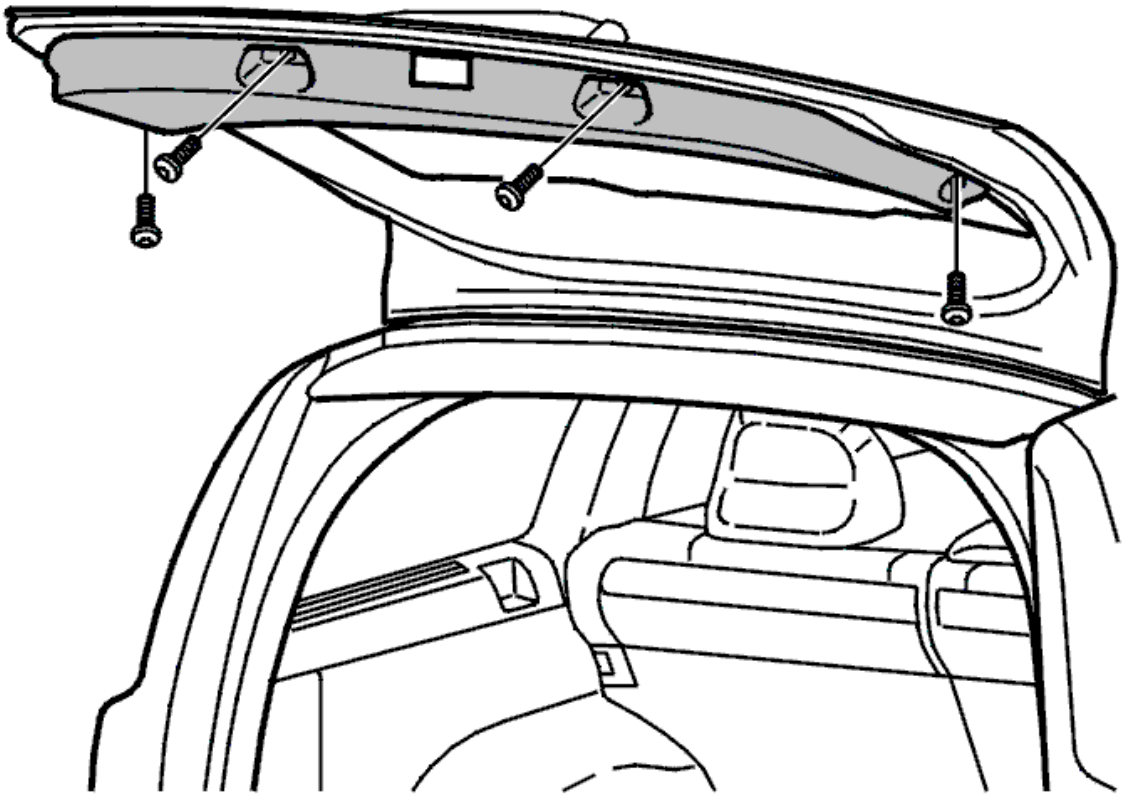

Fig. 5: Identifying Screws And Lower Tailgate Panel
Courtesy of VOLVO CARS CORPORATION

- Remove 2 screws on each side
- Begin by detaching the panel at the window (eight covered clips in total).

NOTE: When removing, note the position of the screws (the screws are two different lengths).

INSTALLING THE REAR DOOR PANEL

Install:

In reverse order.

NOTE: Ensure that the guide pins are correctly position before pushing the panel into place.

NOTE: Ensure that the clips click when they are pressed into place.

PASSENGER DOOR MODULE (PDM), REPLACING

PREPARATIONS

CAUTION: New software can only be ordered when the control module is installed in the car. VIDA reads off the new control module identity which is required to order the correct software.

Always check that the control module and control module box connectors do not have bent or damaged terminals or sockets. This may have been the cause of the fault.

REMOVING THE PASSENGER DOOR MODULE (PDM)

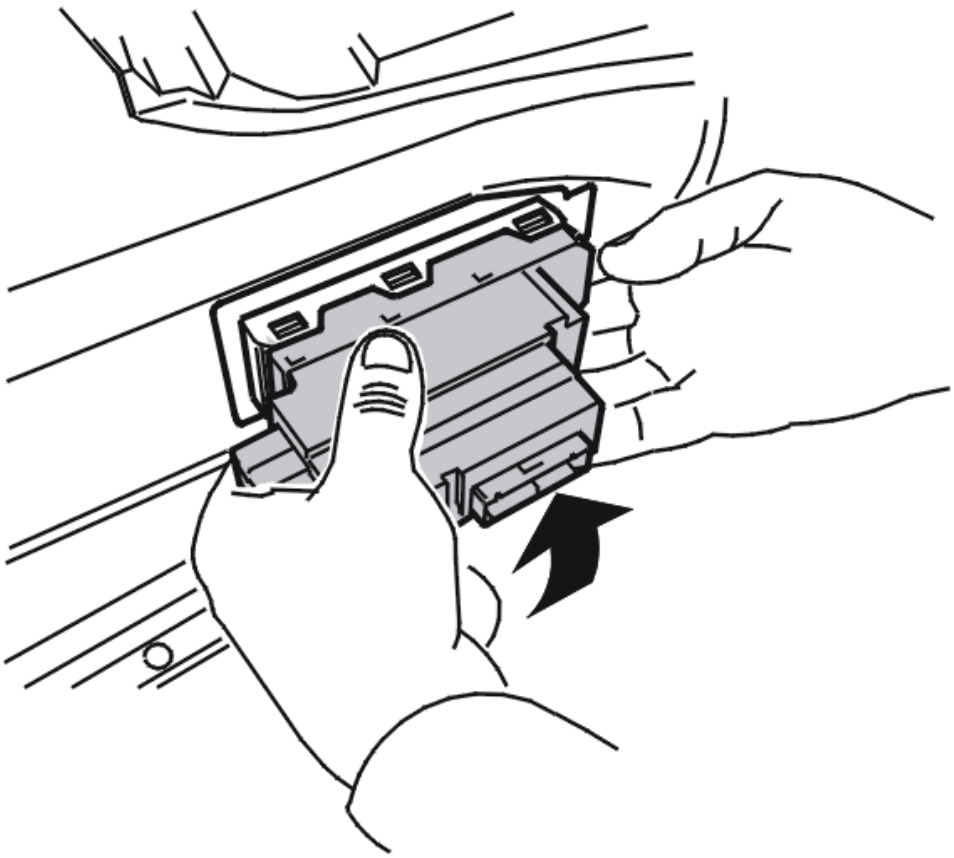

Fig. 6: Removing Passenger Door Module (PDM)
Courtesy of VOLVO CARS CORPORATION

Ignition off.

Remove:

- the door panel, see **PANEL FRONT SIDE DOOR, REPLACING** .
- the nut and screw holding the control module in place
- the connectors.

Grasp the underneath of the control module. Press upwards. Carefully pull the module from the lower catches.

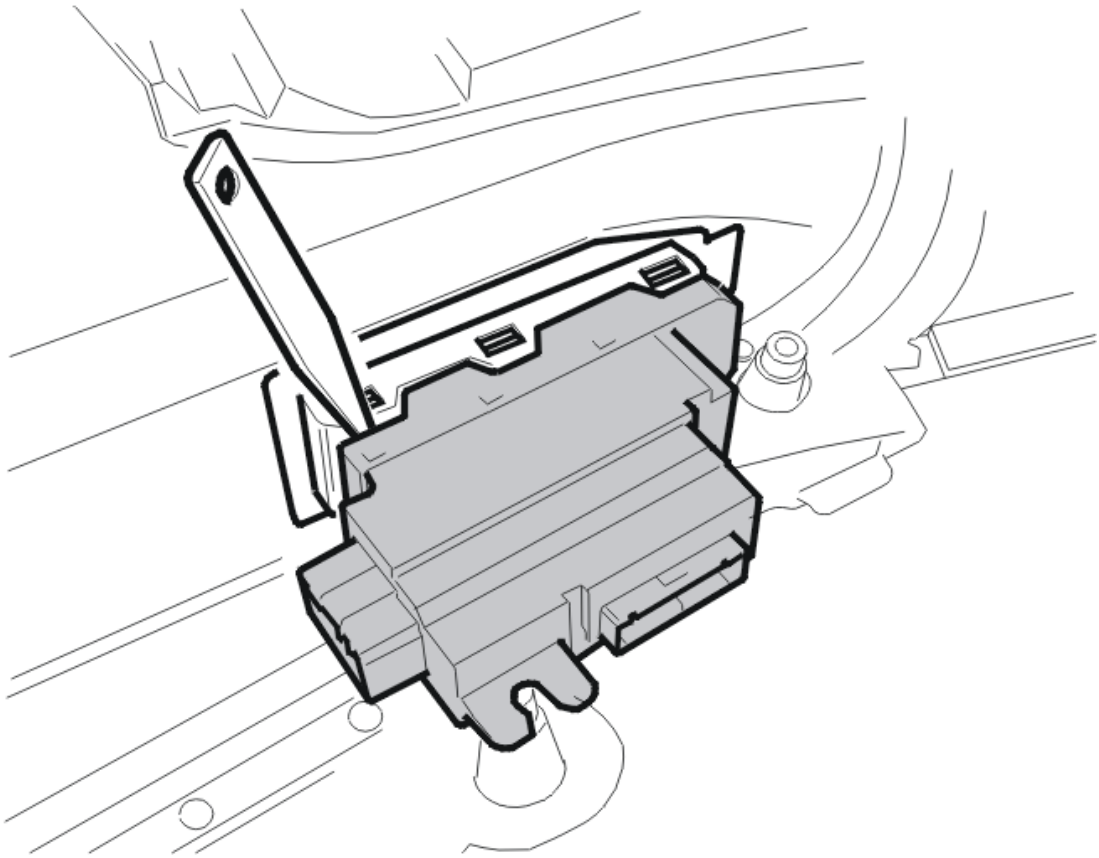

Fig. 7: Identifying Upper Catches Released Using Weatherstrip Tool
Courtesy of VOLVO CARS CORPORATION

Release the upper catches using a weatherstrip tool. Lift out the control module.

NOTE: Check that the control module connectors are intact.

INSTALLING THE PASSENGER DOOR MODULE (PDM)

Press the control module into place.

Install:

- the connectors
- the nut and screw
- the door panel, see **PANEL FRONT SIDE DOOR, REPLACING** .

Ordering software

Order software for the passenger door module (PDM) according to the table below.

XC90	9438296

FINISHING

Initialize the window position in the communication input.

GAUGES & INSTRUMENT PANELS

Body and interior

GAUGES & INSTRUMENT PANELS

DRIVER INFORMATION MODULE (DIM), REPLACING

COMBINED INSTRUMENT PANEL

REMOVAL AND INSTALLATION

CAUTION: The customer-programmed data must be read off before the control module is replaced. The information must then be entered into the new control module after it has been installed. This is carried out via VIDA vehicle communication.

Remove / install the combined instrument panel. See **DRIVER INFORMATION MODULE (DIM), REPLACING** .

OUTSIDE TEMPERATURE SENSOR

Body and interior

OUTSIDE TEMPERATURE SENSOR

OUTSIDE TEMPERATURE SENSOR, DOOR MIRROR, REPLACING

For outside temperature sensor **-2006** , see **OUTSIDE TEMPERATURE SENSOR DOOR MIRROR, REPLACING (-2006)**

For outside temperature sensor **2007-** , see **OUTSIDE TEMPERATURE SENSOR (2007-)**

OUTSIDE TEMPERATURE SENSOR DOOR MIRROR, REPLACING (-2006)

REMOVAL

PREPARATORY WORK

NOTE: **As the illustrations in this service information are used for different model years and / or models, some variation may occur. However, the essential information in the illustrations is always correct.**

Ignition off.

Remove the door mirror. See **REAR VIEW MIRROR, REPLACING** .

REMOVING THE OUTSIDE TEMPERATURE SENSOR

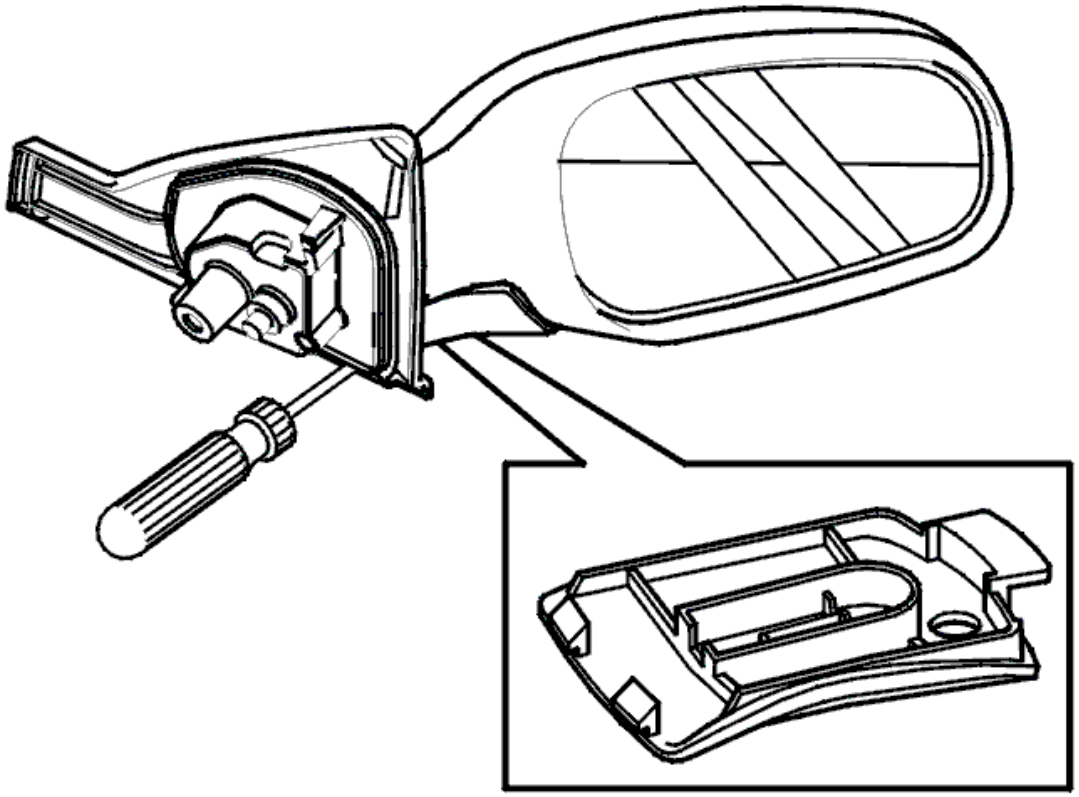

Fig. 1: Removing/Installing Outside Temperature Sensor
Courtesy of VOLVO CARS CORPORATION

- Remove the temperature sensor using a screwdriver as shown in the illustration
- Disconnect the terminal pin from connector
- Remove the temperature sensor.

INSTALLATION

INSTALLING THE OUTSIDE TEMPERATURE SENSOR

Route the cable for the temperature sensor to the connector.

Install the terminal pin in the connector.

Press the temperature sensor in the door mirror.

FINISHING WORK

Remove the door mirror. See **REAR VIEW MIRROR, REPLACING** .

MODEL YEARS 2004-

PREPARATORY WORK

Ignition off.

Remove the door mirror. See **REAR VIEW MIRROR, REPLACING** .

REMOVAL

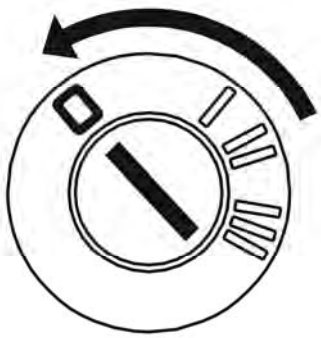

Fig. 2: Identifying Ignition In OFF Position
Courtesy of VOLVO CARS CORPORATION

Remove the temperature sensor using a screwdriver as shown in the illustration

Remove:

- the connector
- the terminal pins from the connector
- the temperature sensor.

INSTALLATION

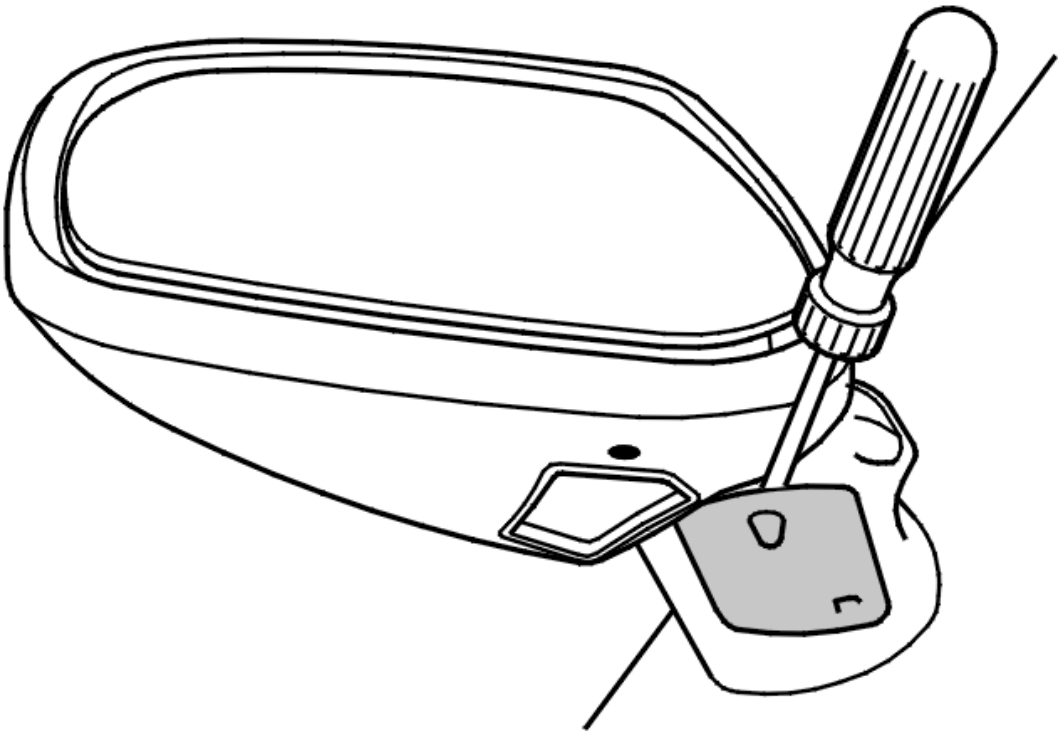

Fig. 3: Locating Outside Temperature Sensor
Courtesy of VOLVO CARS CORPORATION

Route the cable for the temperature sensor to the connector.

Install:

- the cable terminals in the connector
- the connector
- the temperature sensor in the door mirror
- the door mirror. See **REAR VIEW MIRROR, REPLACING** .

OUTSIDE TEMPERATURE SENSOR (2007-)

Remove the following items:

- door mirror's electric motor. See **MOTOR, EXTERNAL MIRROR**
- mirror cover. See **COVER, EXTERNAL MIRROR** .

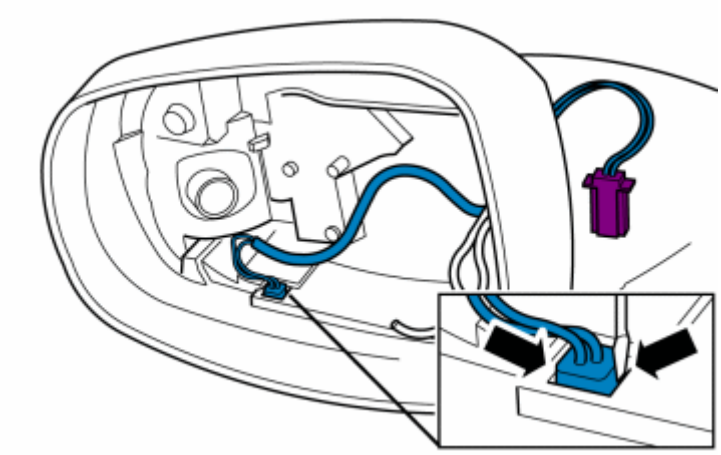

Fig. 4: Identifying Outside Temperature Sensor Connector
Courtesy of VOLVO CARS CORPORATION

NAVIGATION SYSTEM

Body and interior

NAVIGATION SYSTEM

CD READER, RTI (ROAD TRAFFIC INFORMATION), REPLACING

REMOVAL

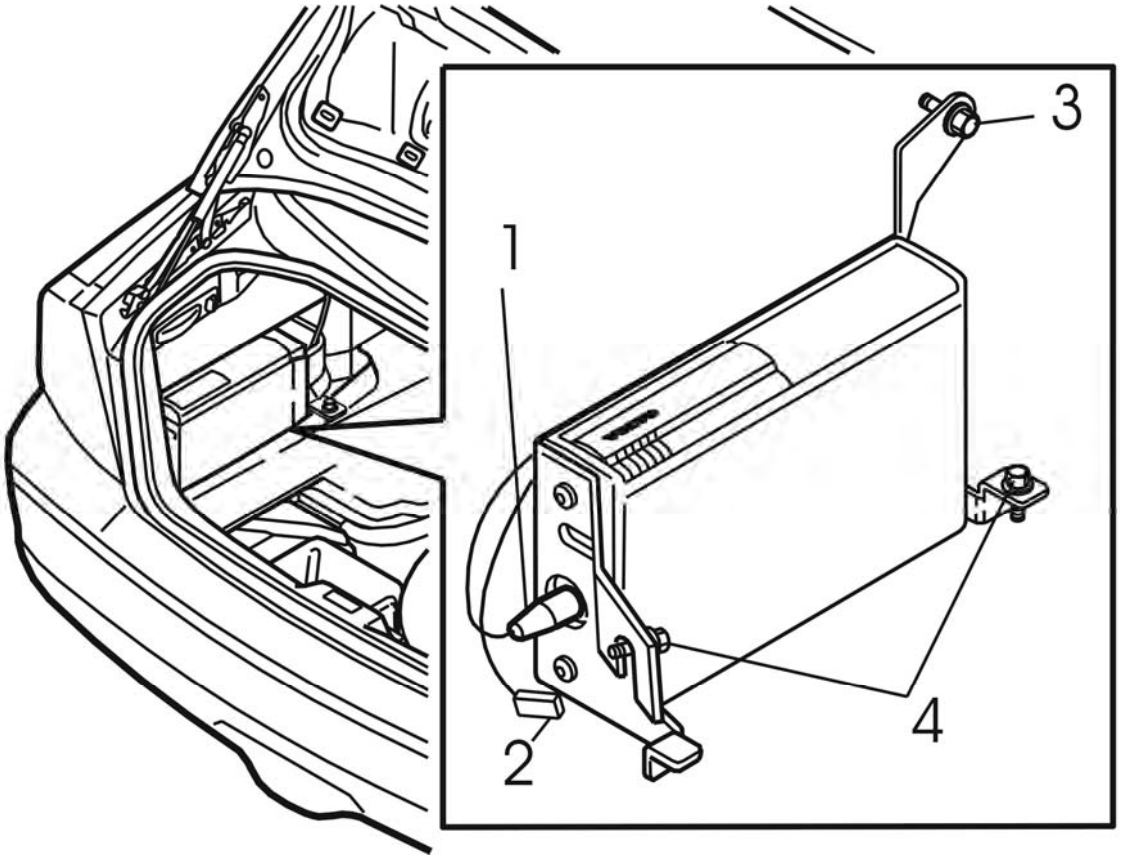

Fig. 1: CD Reader, RTI
Courtesy of VOLVO CARS CORPORATION

- Fold down the side panel on the left-hand side of the cargo compartment
- Remove the front and lower screws
- Loosen the other screws a few turns
- Unhook the changer and bracket and lift it up
- Disconnect the connectors
- Remove the screws for the bracket and changer. Detach the changer.

INSTALLATION

In reverse order.

SEATS

Body and interior

SEATS

BACKREST CATCHES

REMOVING BACKREST CATCHES

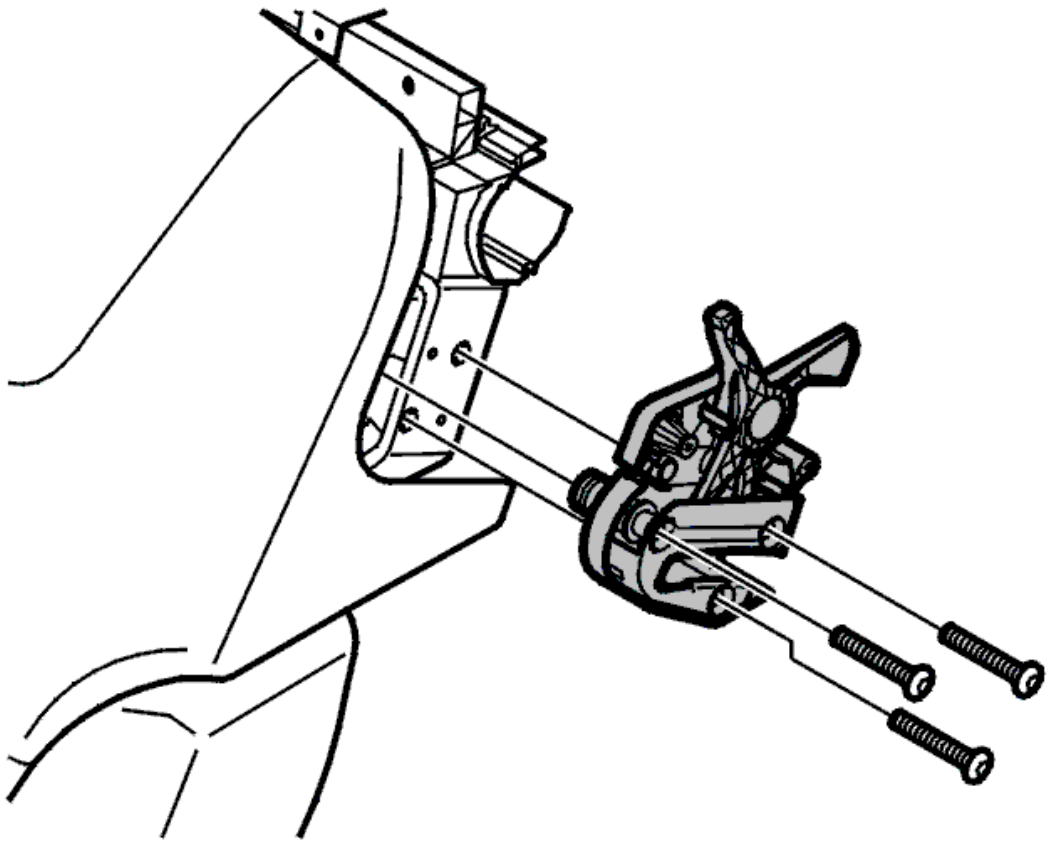

Fig. 1: Identifying Three Screws & Lock Side Piece
Courtesy of VOLVO CARS CORPORATION

Remove:

- the lock side piece according to **LOCK SIDE PIECE** .
- the three screws.

NOTE: Never lock a removed catch by pressing the arm (1).

INSTALLING BACKREST CATCHES

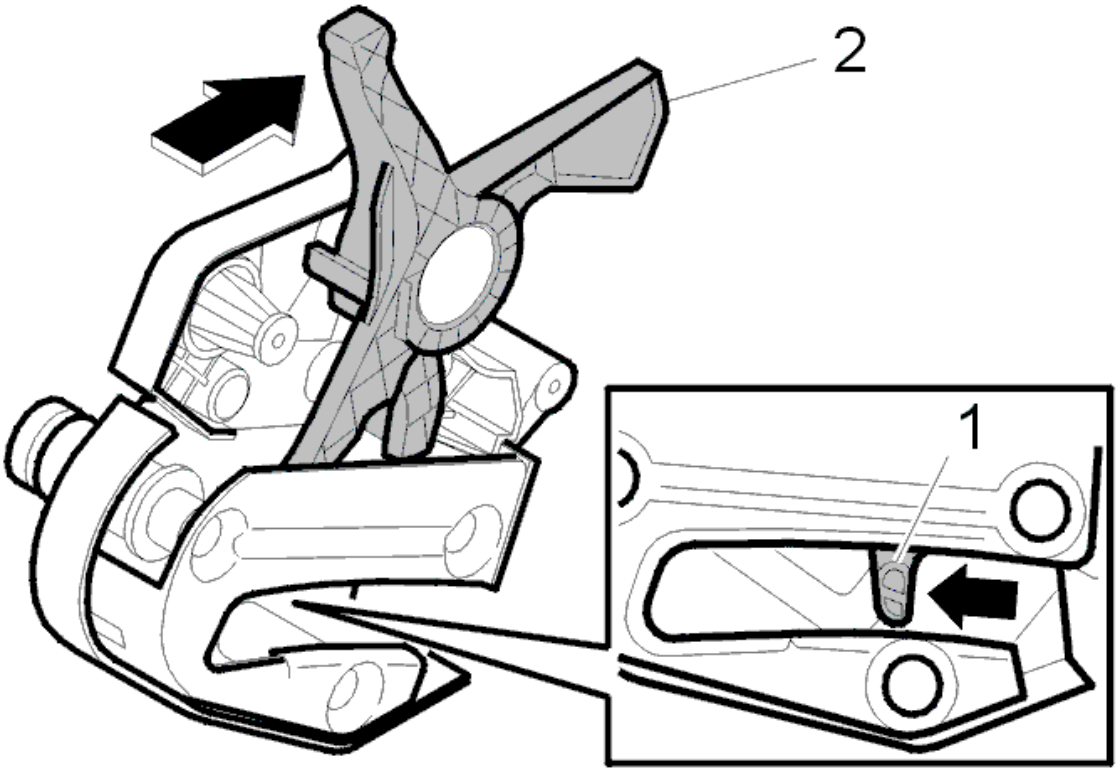

Fig. 2: Aligning Locking Arm With Indicator Button On Side Piece
Courtesy of VOLVO CARS CORPORATION

Install:

In reverse order.

NOTE: **The catch must be open during installation.**

NOTE: **Align the locking arm (2) with the indicator button on the side piece.**

NOTE: **If the backrest is equipped with a cargo net: Check that the lever for the recline angle function is in the correct position.**

BRACKET (CROSS STAY)

REPLACING BRACKET (CROSS STAY)

HINT: Adjust the seat to the upper position at front and back, otherwise the bracket cannot be removed.

Remove the seat from the car according to .

Fig. 3: Identifying Screw, Clip In Bracket, Connectors, Panel And Bracket
Courtesy of VOLVO CARS CORPORATION

Remove one screw.

Press out the clip in the bracket.

Disconnect connectors.

Lift the panel up.

Remove the bracket.

Install:

In reverse order and according to

.

CENTER HEAD RESTRAINT

REMOVING THE CENTRAL HEAD RESTRAINT

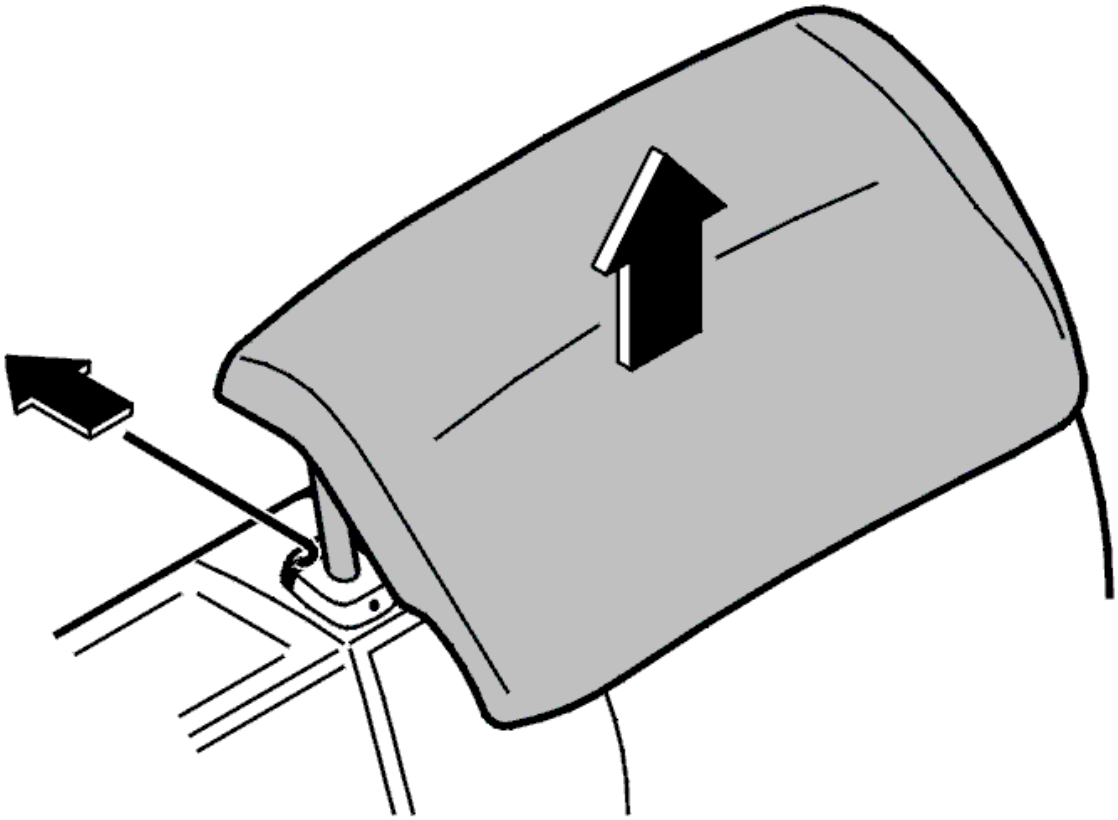

Fig. 4: Identifying Headrest & Side Piece
Courtesy of VOLVO CARS CORPORATION

- Lift up the head restraint.
- Remove the side piece according to **SIDE PIECE** .
- Remove the button for the head restraint.
- Insert a small screwdriver and press out lock spring.
- Detach the head restraint by pulling it straight up.

INSTALLING THE CENTRAL HEAD RESTRAINT

Install:

In reverse order.

SEATS

Body and interior

SEATS

CUSHION

CUSHION, REPLACING

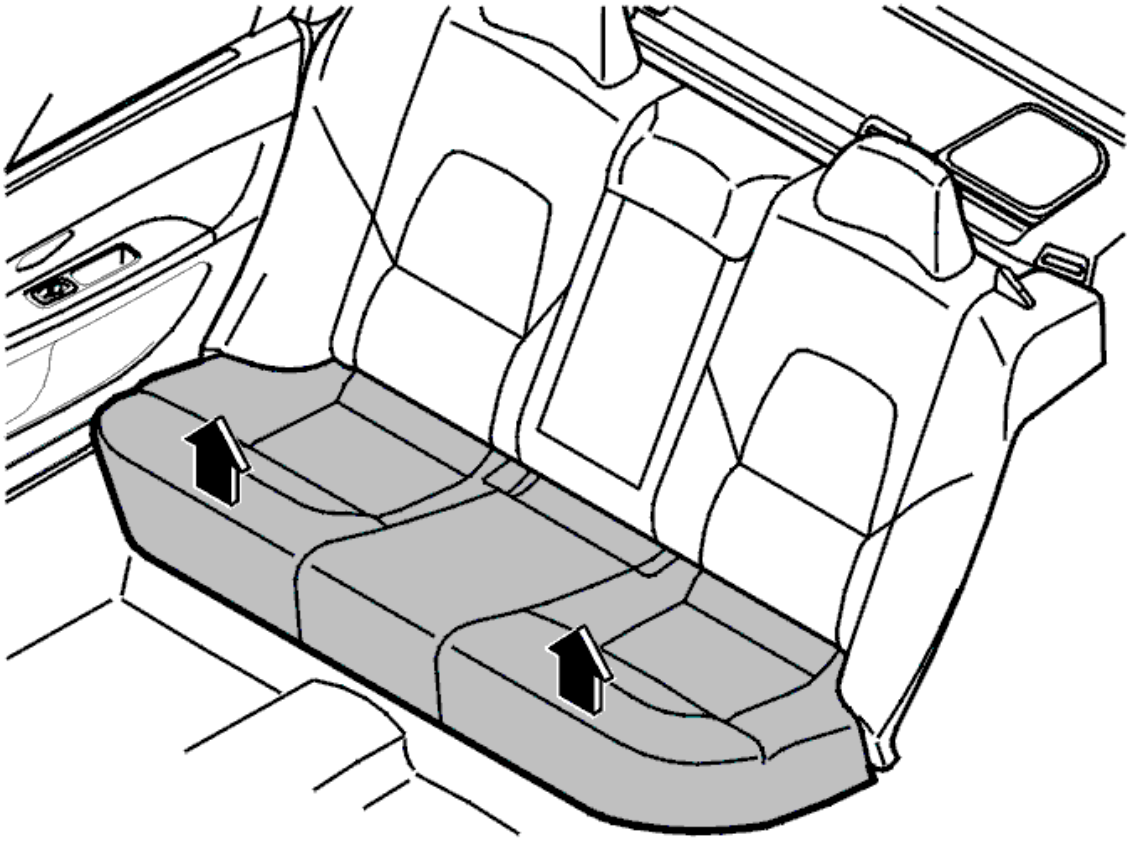

Fig. 1: Identifying Front Edge Of Cushion
Courtesy of VOLVO CARS CORPORATION

First lift the bottom edge of the end of the cushion.

Lift the front edge of the cushion.

NOTE: The cushion may be securely attached.

Lift out the cushion.

NOTE: Check that the cushion clips are intact.

If not: Replace.

INSTALLATION

Install in reverse order.

NOTE: **Check that the front edge of the cushion did not deform when it was removed.**

The front / lower edge of the cushion must be straight.

ELECTRIC MOTOR, CUSHION, REPLACING

NOTE: **The illustrations in this service information are used for different model years and/or models. Some variation may occur. However, the essential information in the illustrations is always correct.**

INFORMATION

METHOD CONTENT

This method consists of:

- see **ELECTRIC MOTOR FRONT HEIGHT ADJUSTMENT, REPLACING**
- see **ELECTRIC MOTOR REAR HEIGHT ADJUSTMENT, REPLACING**
- see **ELECTRIC MOTOR FRONT-REAR ADJUSTMENT, REPLACING**.

ELECTRIC MOTOR FRONT HEIGHT ADJUSTMENT, REPLACING

REMOVING THE ELECTRIC MOTOR FRONT HEIGHT ADJUSTMENT

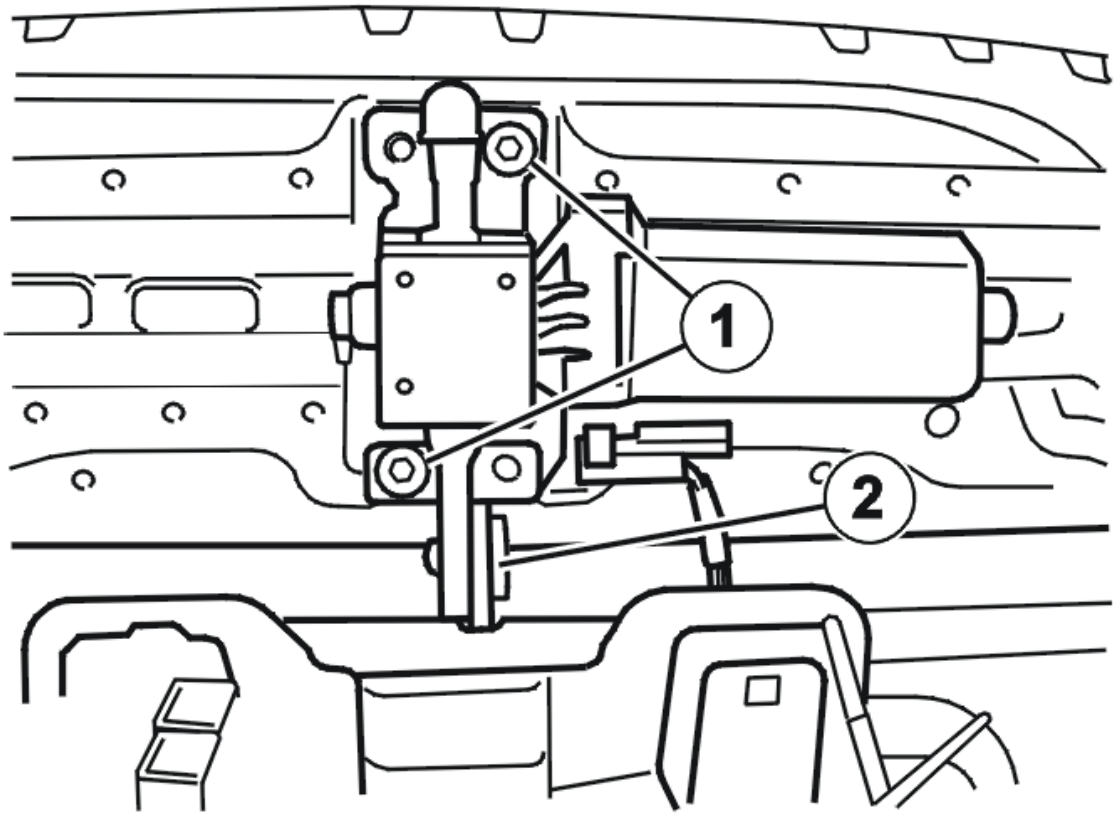

Fig. 2: Identifying M6 & M8 Screws
Courtesy of VOLVO CARS CORPORATION

Remove:

- the front seat. See: **FRONT SEAT, REPLACING**
- the 1 M6 screws (2)
- the M8 screw (2).

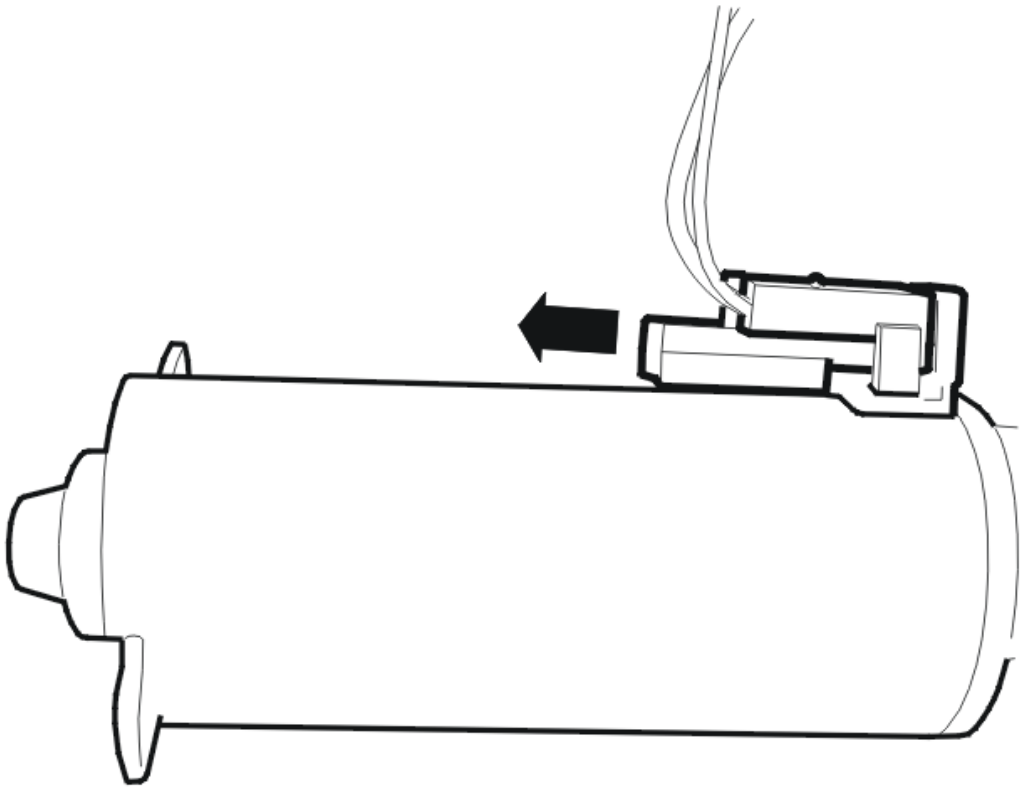

Fig. 3: Identifying Connector Removal
Courtesy of VOLVO CARS CORPORATION

Remove the connector by sliding it to one side.

INSTALLING THE ELECTRIC MOTOR FRONT HEIGHT ADJUSTMENT

NOTE: For tightening torques, see: TIGHTENING TORQUE .

Install:

- the connector
- the electric motor
- the 2 M6 screws
- the 1 M8 screw
- the front seat. See: **FRONT SEAT, REPLACING**.

ELECTRIC MOTOR REAR HEIGHT ADJUSTMENT, REPLACING

REMOVING THE ELECTRIC MOTOR REAR HEIGHT ADJUSTMENT

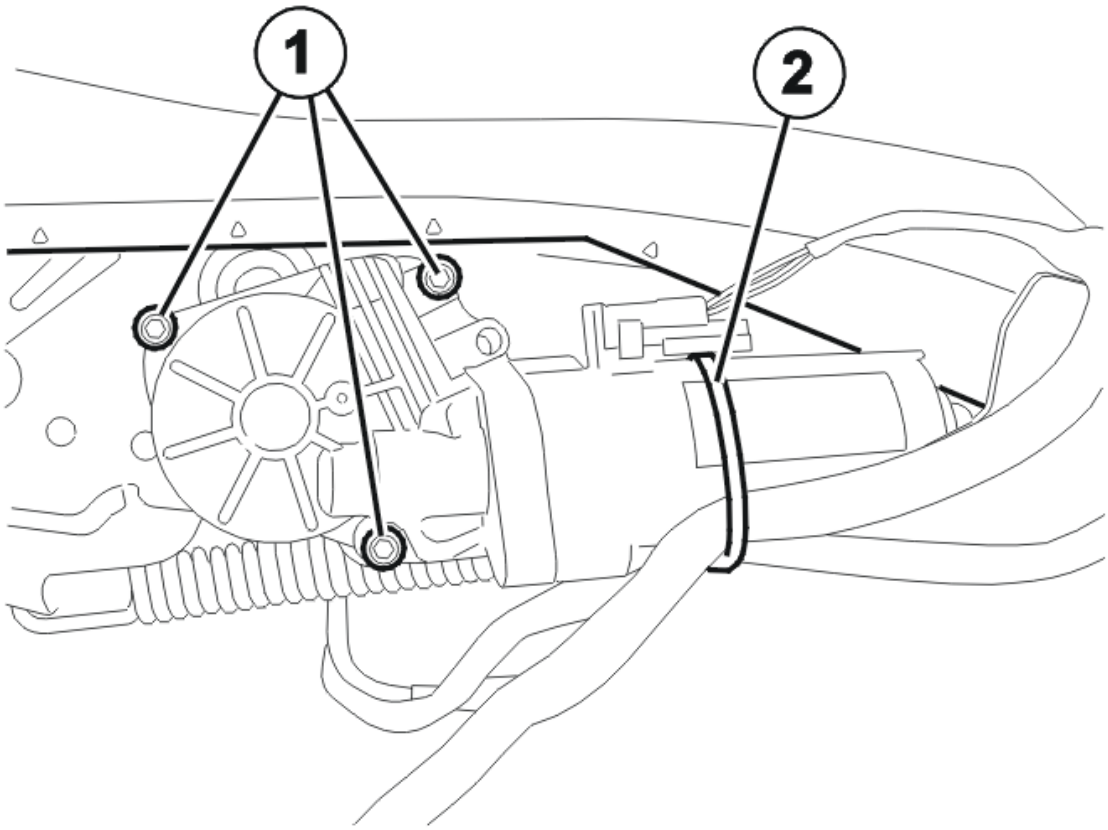

Fig. 4: Electric Motor Rear Height Adjustment
Courtesy of VOLVO CARS CORPORATION

Raise the seat to the uppermost position.

Remove:

- the side panel. See: **SIDE PANEL FRONT SEAT, REPLACING**
- the tie strap (2)
- the 3 screws (1).

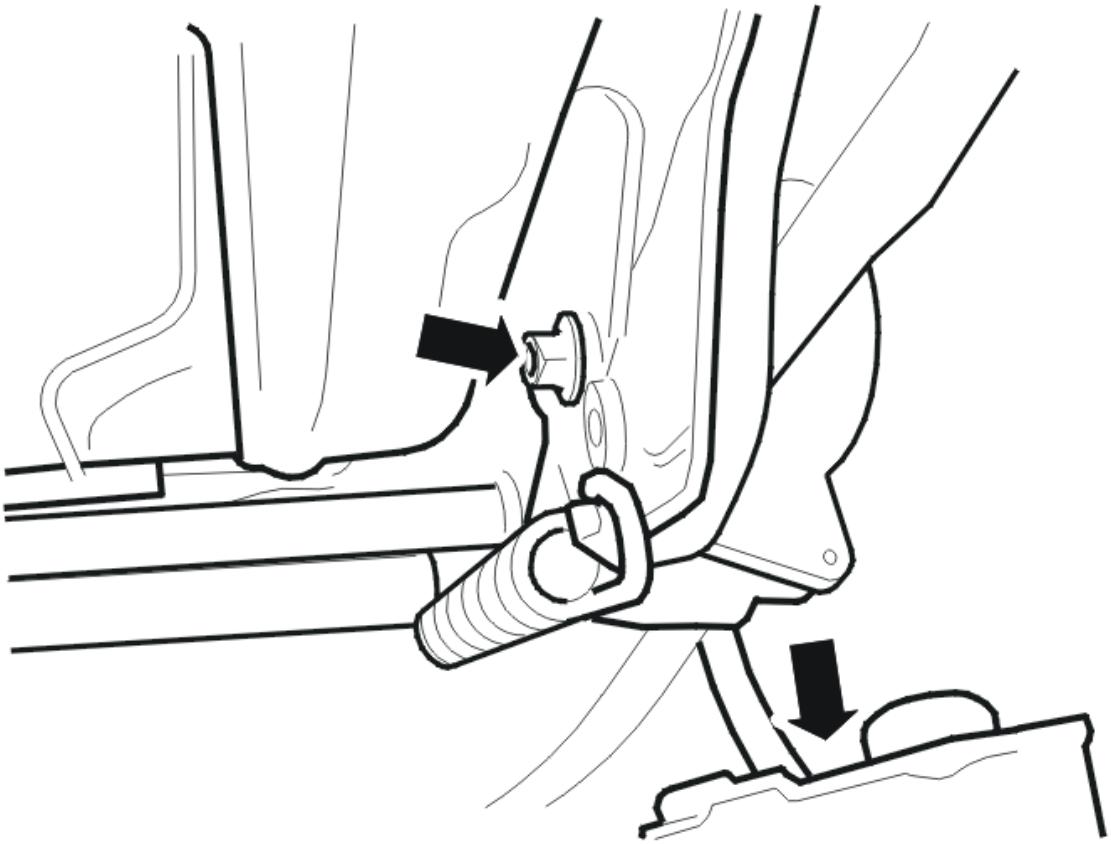

Fig. 5: Identifying M6 Screw & Electric Motor
Courtesy of VOLVO CARS CORPORATION

- the 1 M6 screw
- the electric motor.

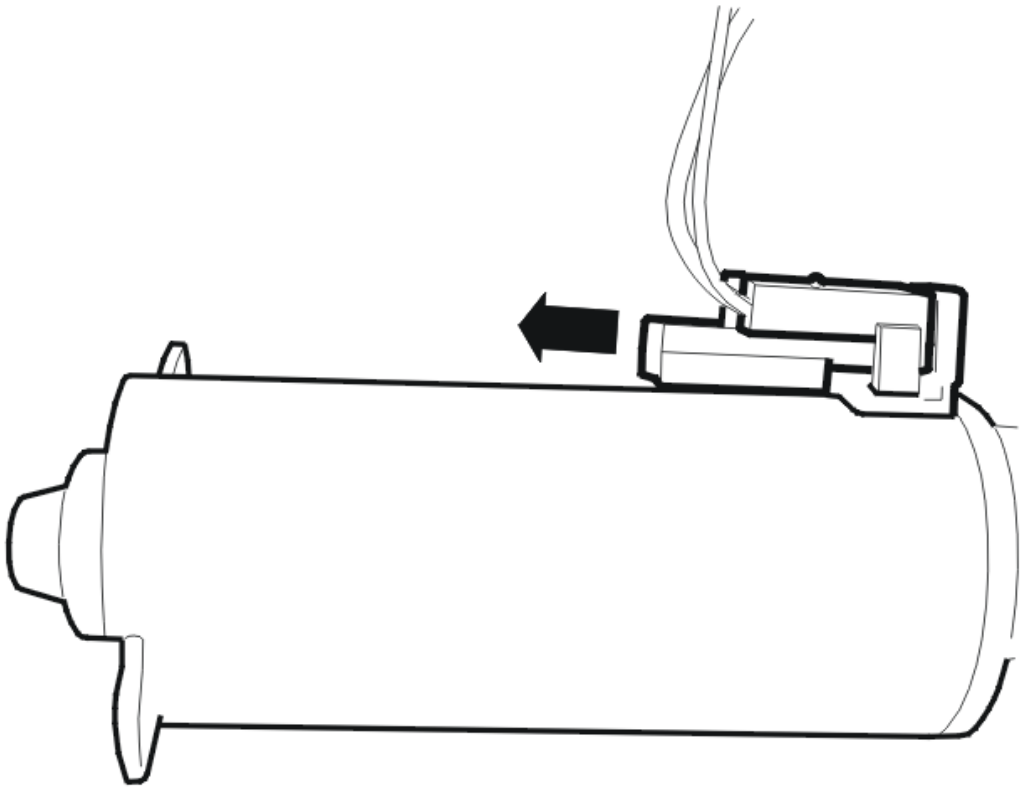

Fig. 6: Identifying Connector Removal
Courtesy of VOLVO CARS CORPORATION

Remove the connector by sliding it to one side.

INSTALLING THE ELECTRIC MOTOR REAR HEIGHT ADJUSTMENT

NOTE: For tightening torques, see: TIGHTENING TORQUE .

Install:

- the connector
- the electric motor
- the 3 M6 screws
- the 1 M6 screw
- the tie strap
- the side panel. See: **SIDE PANEL FRONT SEAT, REPLACING** .

ELECTRIC MOTOR FRONT-REAR ADJUSTMENT, REPLACING

REMOVING ELECTRIC MOTOR FRONT-REAR ADJUSTMENT

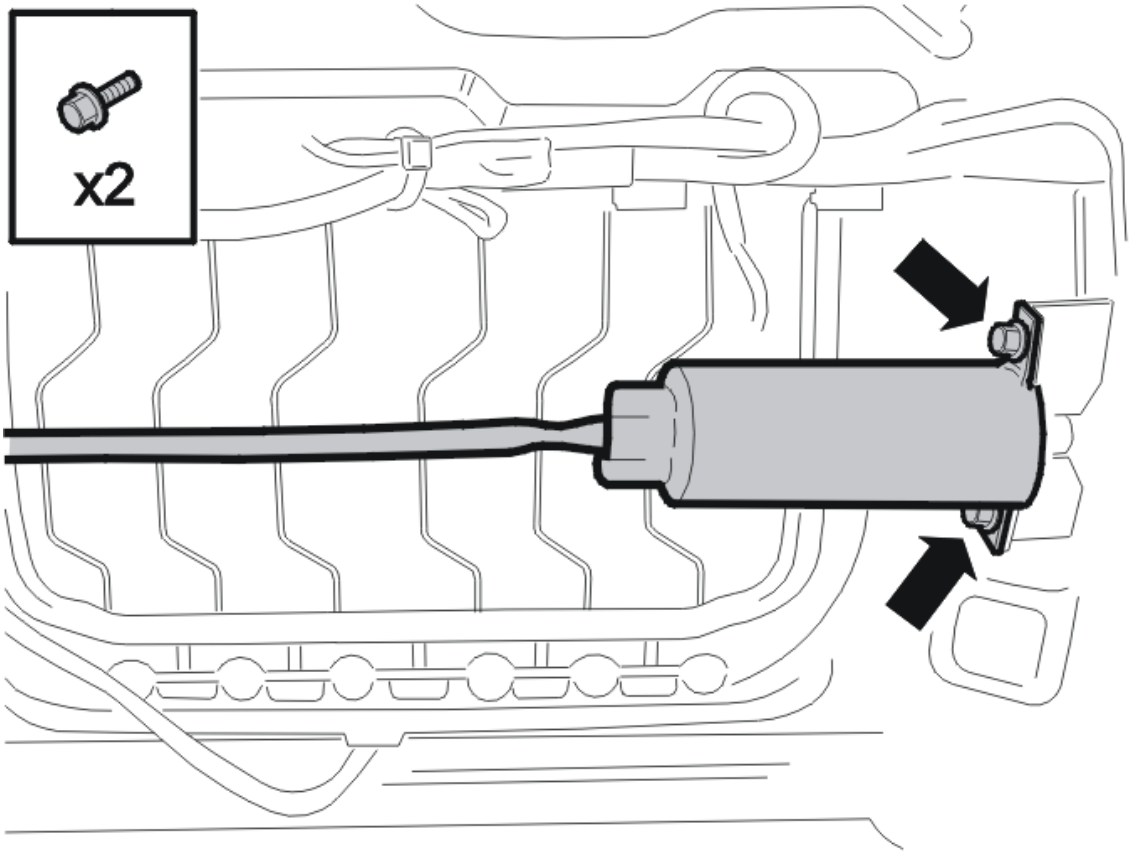

Fig. 7: Electric Motor And Mechanical Cables
Courtesy of VOLVO CARS CORPORATION

Remove:

- the front seat. See: **FRONT SEAT, REPLACING**
- the 2 M5 screws
- the electric motor and the mechanical cables.

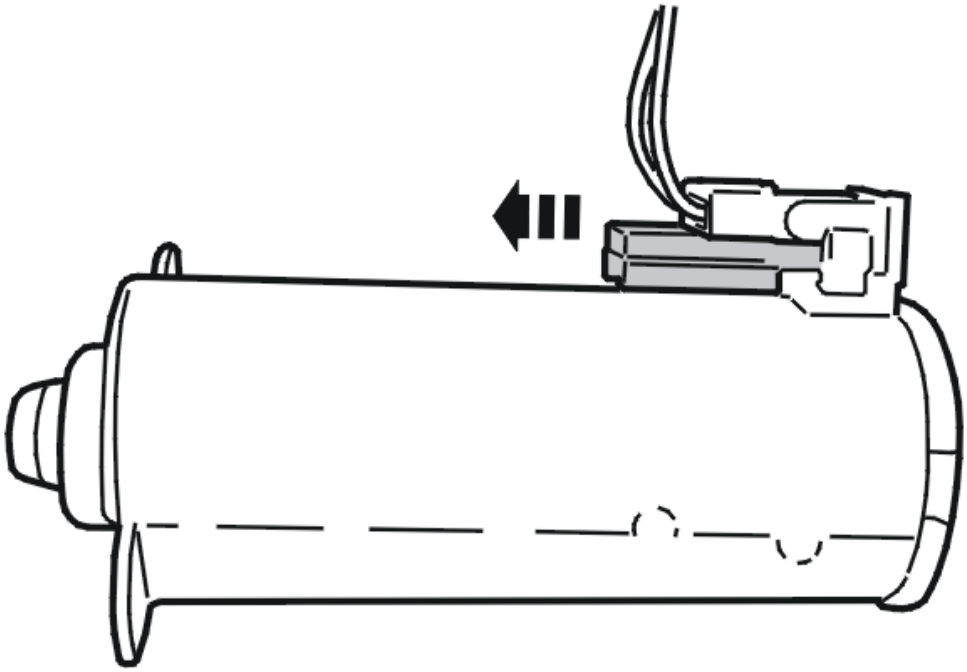

Fig. 8: Identifying Connector Removal
Courtesy of VOLVO CARS CORPORATION

Remove the connector by sliding it straight backwards.

INSTALLING THE ELECTRIC MOTOR FRONT-REAR ADJUSTMENT

NOTE: For tightening torques, see: TIGHTENING TORQUE .

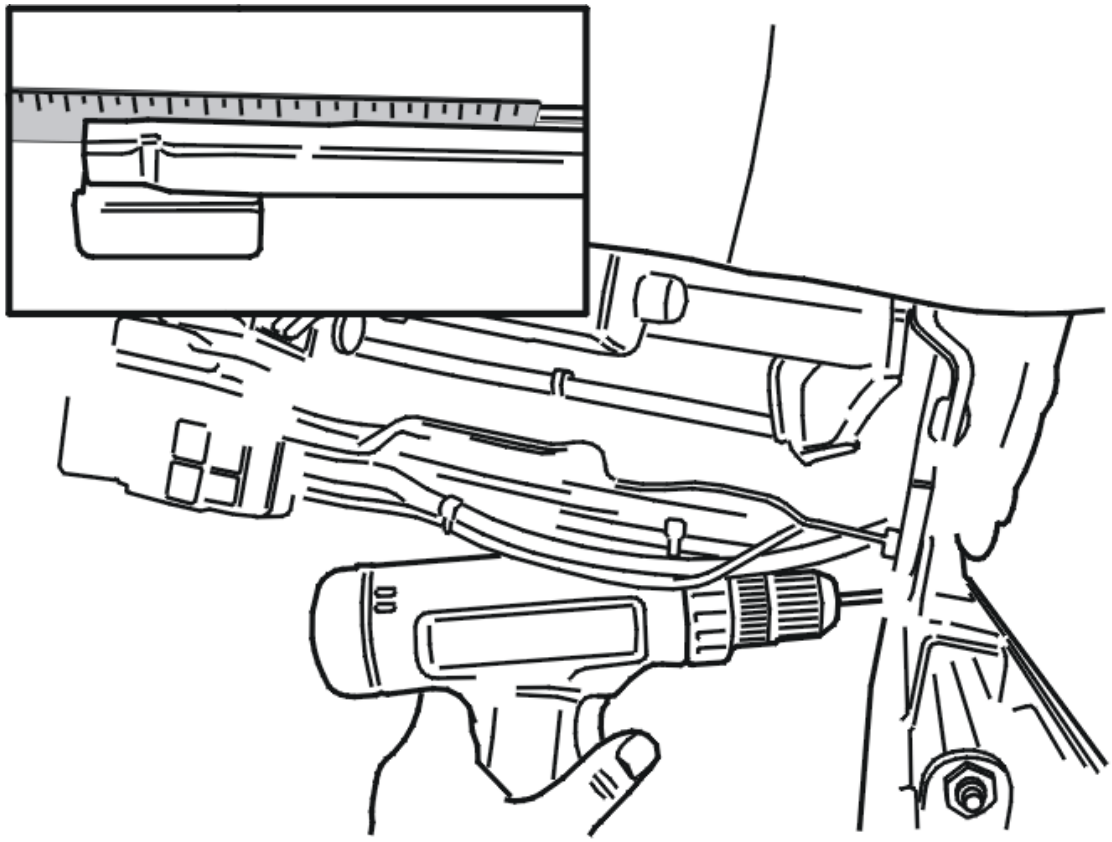

Fig. 9: Securing Short Mechanical Cable In A Power Screwdriver And Screw Until Rails Are Equal
Courtesy of VOLVO CARS CORPORATION

HINT: If the distance between the two rails differs, secure the short mechanical cable in a power screwdriver and screw until the rails are equal.

Install:

- the connector
- the electric motor and the mechanical cables
- the 2 M5 screws
- the front seat. See: **FRONT SEAT, REPLACING**.

FRONT SEAT, REPLACING

NOTE: **The illustrations in this service information are used for different model years and/or models. Some variation may occur. However, the essential information in the illustrations is always correct.**

PREPARATORY WORK

IGNITION OFF

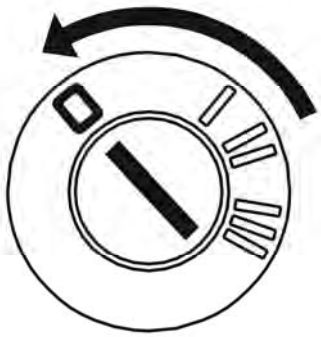

Fig. 10: Identifying Ignition In OFF Position
Courtesy of VOLVO CARS CORPORATION

Ignition off.

REMOVAL

REMOVING THE FRONT SEAT

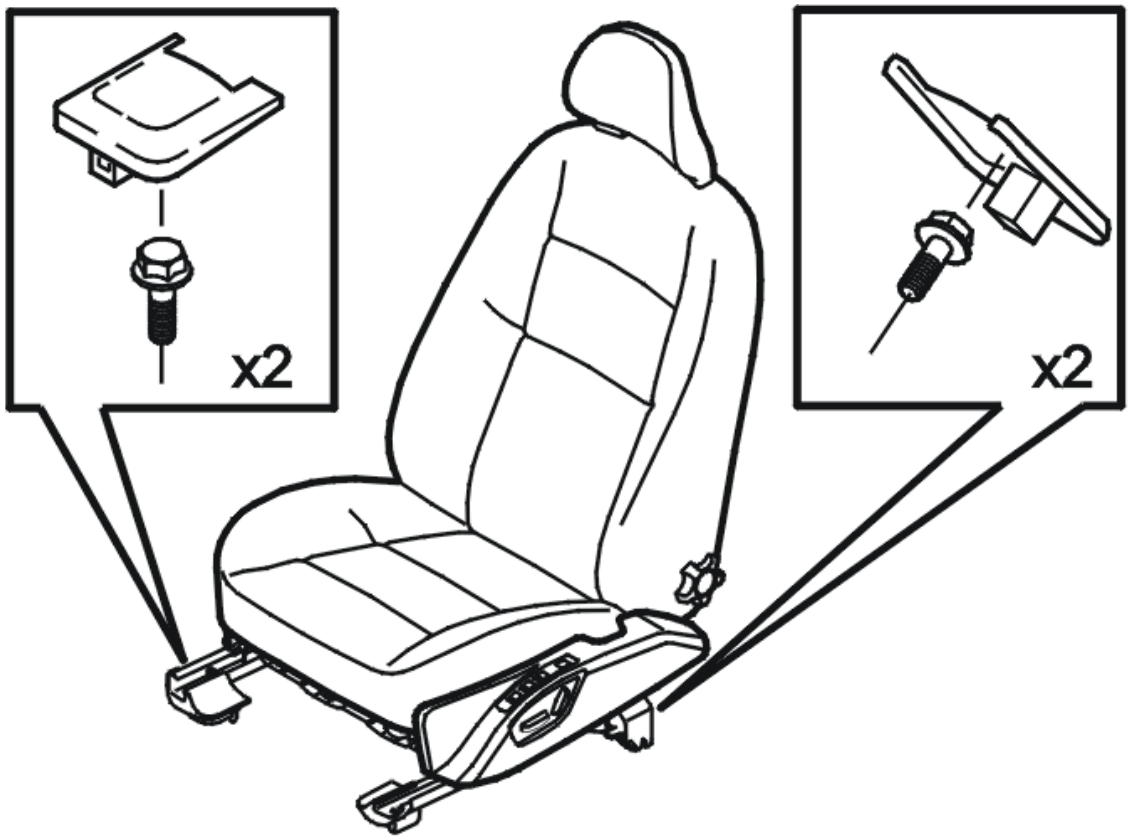

Fig. 11: Front Seat Side Panel & Front Screws For Seat
Courtesy of VOLVO CARS CORPORATION

Remove:

- the 2 panels located above the front screws for the seat
- the 4 x M10 screws
- the front seat side panel. See: **SIDE PANEL FRONT SEAT, REPLACING**
- the end mounting. See: **END MOUNTING, REPLACING**
- the screw. Remove the connector under the seat.

Lift out the seat.

CAUTION: Two people are required for this procedure to prevent damage to the interior trim or the seat.

INSTALLATION

NOTE: For tightening torques, see: TIGHTENING TORQUE .

INSTALLING THE FRONT SEAT

Install the seat.

CAUTION: Two people are required for this procedure to prevent damage to the interior trim or the seat.

Install:

- the connector using the screw
- the 4 x M10 screws
- the 2 panels
- the end mounting. See: **END MOUNTING, REPLACING**
- the side panel. See: **SIDE PANEL FRONT SEAT, REPLACING** .

END MOUNTING, REPLACING

NOTE: The illustrations in this service information are used for different model years and/or models. Some variation may occur. However, the essential information in the illustrations is always correct.

REMOVAL

REMOVING FRONT END MOUNTINGS

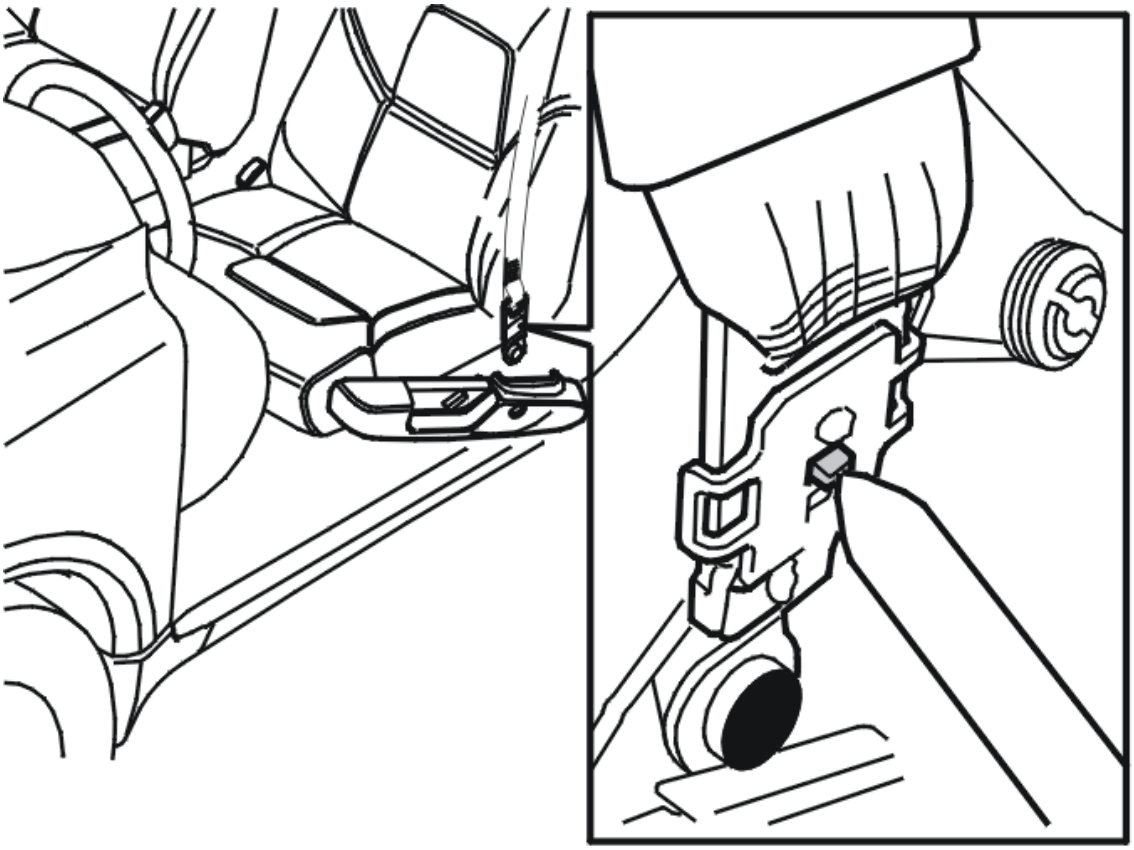

Fig. 12: Identifying Weatherstrip Tool And Seat Belt End Mounting
Courtesy of VOLVO CARS CORPORATION

Move the front seat as far forward as possible.

Remove the side panel. See: **SIDE PANEL** (-2004) or: **SIDE PANEL FRONT SEAT, REPLACING** (2005-).

NOTE: Use a weatherstrip tool to disconnect the seat belt from the end mounting. Carefully press the locking tab, as shown in the illustration.

Remove the screw from the seat. Remove the end mounting.

INSTALLATION

INSTALLING FRONT END MOUNTINGS

NOTE: For tightening torques, see: TIGHTENING TORQUE .

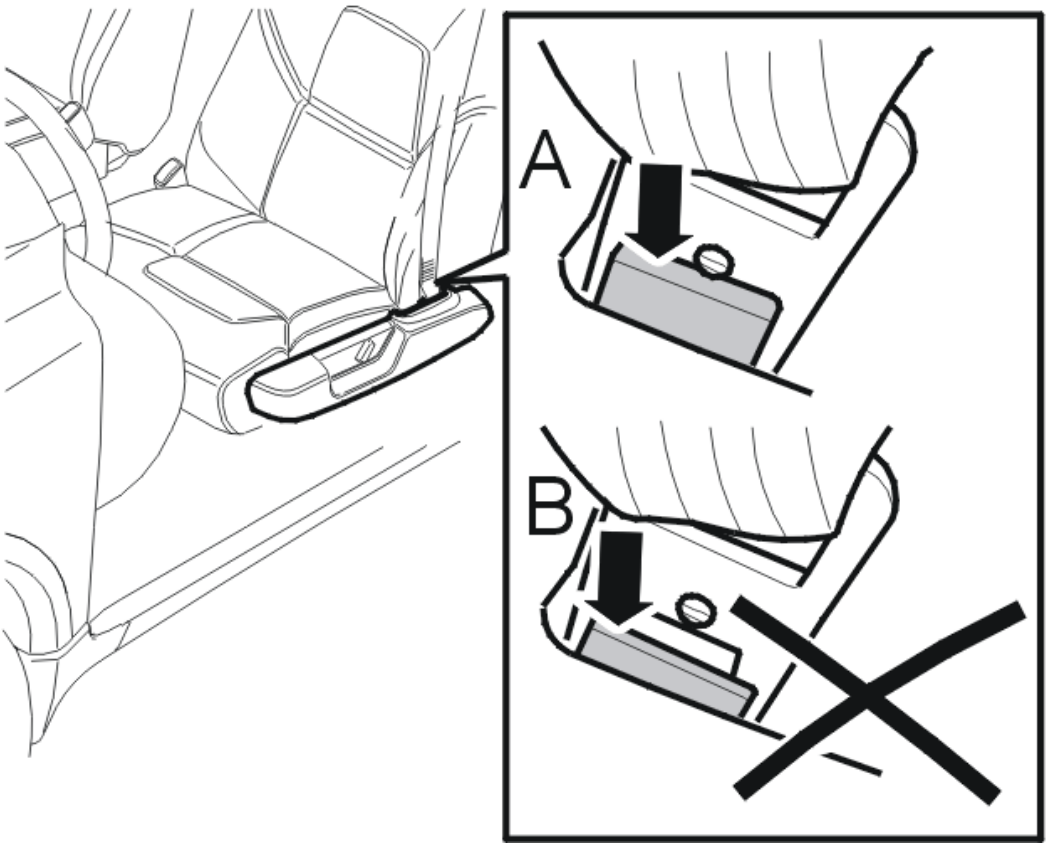

Fig. 13: Identifying Seat Belt And End Mounting
Courtesy of VOLVO CARS CORPORATION

Install:

- the end mounting
- the M10 screw. Tighten.

Press the seat belt into the end mounting.

NOTE: A clear click is heard when the seat belt has locked correctly with the end mounting.

NOTE: Also check that the seat belt has locked correctly with the end mounting by looking at the reverse of the end mounting.

Correct locking position: refer to **A** in, see **Fig. 13**.

Incorrect locking position: refer to **B** in, see **Fig. 13**. If the lock facing does not lock correctly with the end mounting, replace the end mounting with a **new** one.

NOTE: Check that the seat belt is secure by jerking it hard in an upwards direction.

Reinstall the side panel. See: **SIDE PANEL** (-2004) or: **SIDE PANEL FRONT SEAT, REPLACING** (2005-).

HEIGHT ADJUSTMENT MOTOR, FRONT / REAR

REMOVING THE FRONT HEIGHT ADJUSTMENT MOTOR

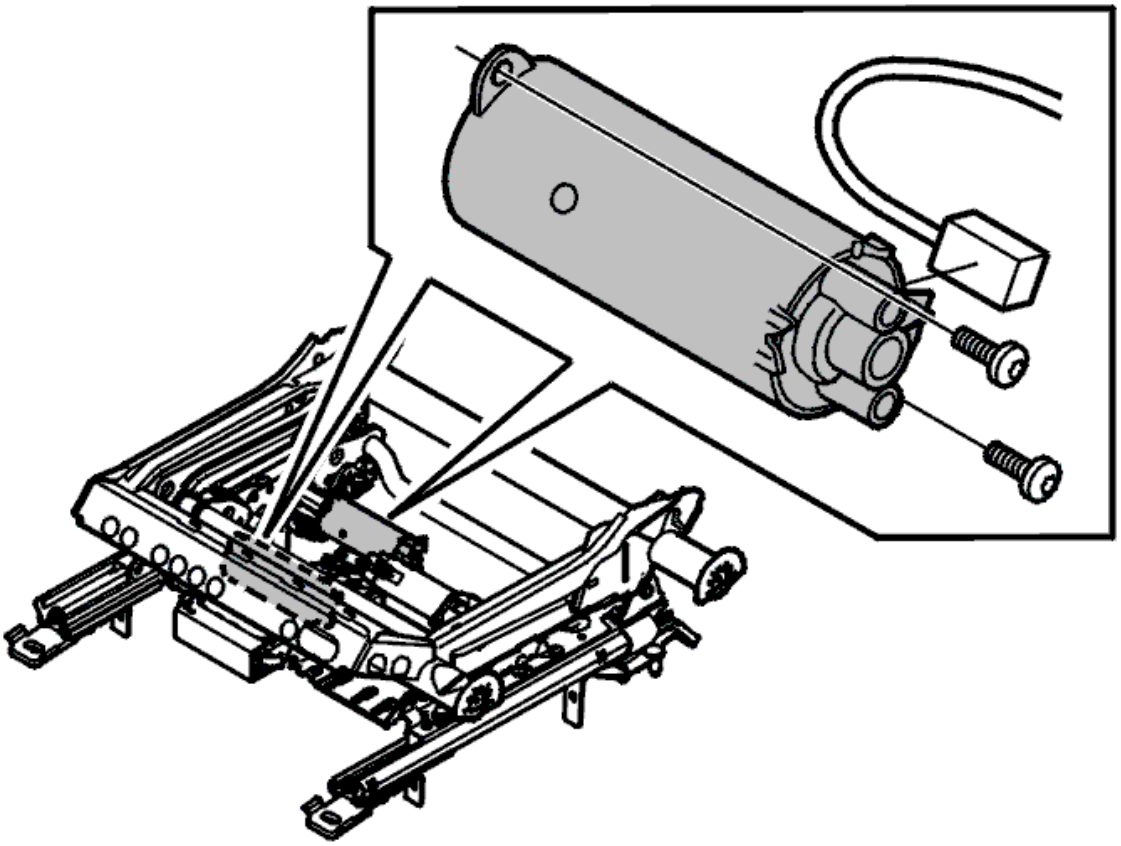

Fig. 14: Front Height Adjustment Motor
Courtesy of VOLVO CARS CORPORATION

Remove the seat from the car. See **LIFTING THE FRONT SEATS IN AND OUT** .

Disconnect the connector at the control module or the connector at the motor.

NOTE: Carefully release the catches on the connector.

Remove:

- the tie strap
- the two screws.

INSTALLING THE FRONT HEIGHT ADJUSTMENT MOTOR

Install:

- the two screws
- a new tie strap
- the connector
- the seat. See **LIFTING THE FRONT SEATS IN AND OUT** .

REMOVING THE REAR HEIGHT ADJUSTMENT MOTOR

Remove the seat from the car. See **LIFTING THE FRONT SEATS IN AND OUT** .

Disconnect the connector at the control module or the connector at the motor.

NOTE: Carefully release the catches on the connector.

Remove the two screws.

INSTALLING THE MOTOR FOR REAR HEIGHT ADJUSTMENT

Install:

- the two screws
- the connector
- the seat. See **LIFTING THE FRONT SEATS IN AND OUT** .

ELECTRICAL

Body and interior

ELECTRICAL

CONNECTING THE BREAKOUT BOX

Special tools:

see **9511510**

see **9511428**

CAUTION: Avoid touching control module connector pins and corresponding cable harness connectors. There is a risk of electrostatic discharge, which could damage the control module. Relieve any charge on yourself and the tools to be used by holding the metal part of the tool and touching part of the body just before starting work.

General information

Visually check the connectors to ensure that the male and female terminals are not damaged and that the cables are properly connected in the terminals.

The breakout box is designed to make it easier to take readings from cables and components when the control module is disconnected. The use of a breakout box reduces the risk of accidental short-circuited cables and damage to the connector pins.

Connecting the breakout box

- Ignition off.
- Disconnect the control module connector.

Connect adapter see **9511510** to the control module connector. Connect one or two breakout boxes see **9511428** to the adapter depending on the reading to be taken.

Disconnect the breakout box in reverse order.

Other information:

- To access / replace the SRS control module and connectors, see **SUPPLEMENTAL RESTRAINT SYSTEM MODULE (SRS), REPLACING** .
- For the location of the components, see **LOCATION OF COMPONENTS** .
- For other values, see **SIGNAL SPECIFICATION** .

CONNECTOR

Special tools:

see **9512638**

MOTORS CONNECTOR

NOTE: Always use a new clip when installing.

Remove the clip from connector.

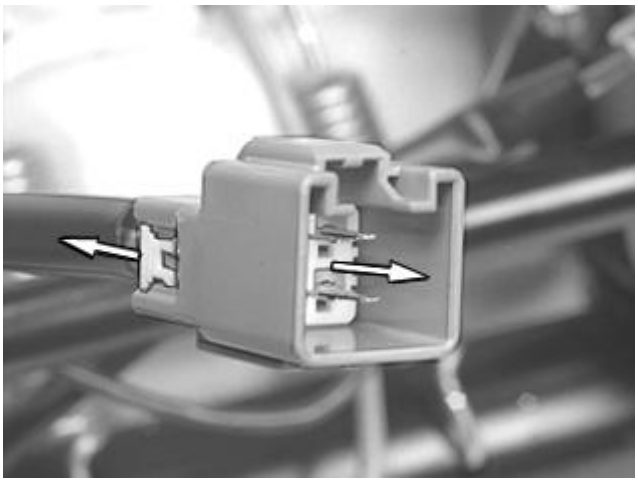

Fig. 1: Clip From Connector
Courtesy of VOLVO CARS CORPORATION

Remove:

- the bottom of the connector.

  Pry out the wings.

  Press forward.

  Remove bottom.

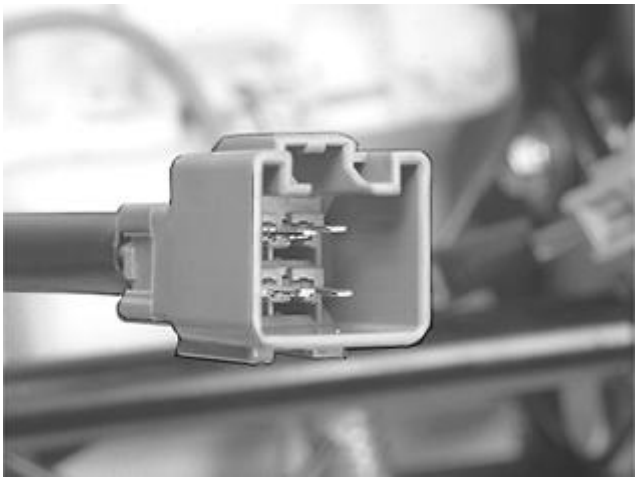

Fig. 2: Identifying Connector Pins
Courtesy of VOLVO CARS CORPORATION

- pins in switch.

Press in catch.

Move the pin backwards. Use special tool see **9512638** .

INSTALLATION

Install:

In reverse order.

SEATS

Body and interior

SEATS

LIFTING THE FRONT SEATS IN AND OUT

-2004

- See: **LIFTING THE FRONT SEATS IN AND OUT**.

2005-

- See: **FRONT SEAT, REPLACING** .

LIFTING THE FRONT SEATS IN AND OUT

LIFTING THE FRONT SEATS IN AND OUT

Remove the four panels located above the seat screws:

Pull the front panels straight up. Pull the rear panels diagonally upwards and backwards.

Unscrew the four M10 screws.

Carry out operation, see **SIDE PANEL**,

see **SEAT BELT BUCKLE END MOUNTING**, and **SRS CONNECTOR**.

Disconnect the remaining connectors.

Remove the seat.

NOTE: To prevent electric static discharge problems:

When removing a seat from a car with side airbags, the seat must be grounded. This is due to the danger of static electricity.

When the seat is removed from its screwed joints and **before** it is lifted out of the car:

Strip a long cable at both ends.

Secure one end to the rear mounting on the seat (the metal colored mounting).

Secure the other end in the car or to the car lift.

Install:

In reverse order.

The seat must be tightened to the floor. Tighten to **48 Nm** .

SEAT BELT BUCKLE END MOUNTING

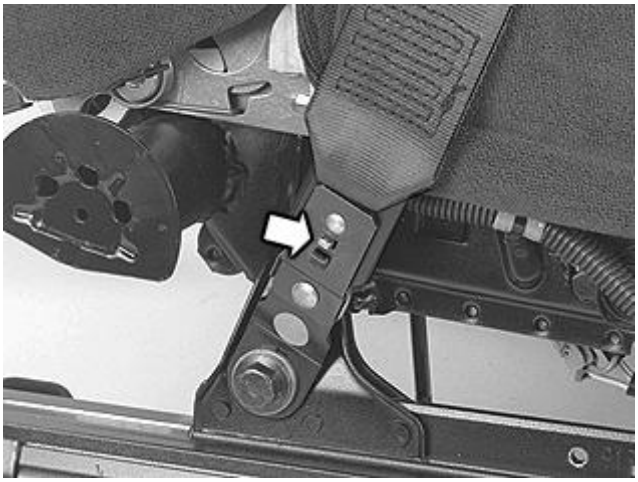

Fig. 1: Identifying Seat Belt Buckle End Mounting
Courtesy of VOLVO CARS CORPORATION

Remove end mounting:

Insert a screwdriver on the inside of the mounting.

Press the catches inwards.

Pull upwards.

Install:

In reverse order.

SIDE PANEL

REPLACING FRONT SEAT SIDE PANEL

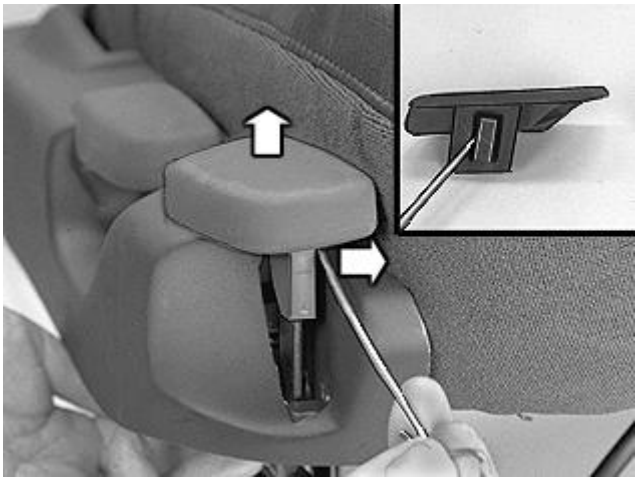

Fig. 2: Identifying Screwdriver Inserted At Rear Of Handle
Courtesy of VOLVO CARS CORPORATION

Remove the height adjustment lever handle:

Insert a screwdriver at the rear of the handle.

Release the catches.

Pull upwards.

Install:

In reverse order.

Fig. 3: Identifying Front Edge Of Panel Pulled Upwards And Backwards
Courtesy of VOLVO CARS CORPORATION

Pull the front edge of the panel upwards.

Pull panel backwards.

Install:

In reverse order.

SRS CONNECTOR

REMOVING THE SIPS BAG CONTROL MODULE CONNECTOR

NOTE: Take care when separating the connectors.

If the connector breaks the whole cable harness must be replaced.

NOTE: Always replace the clip if it has been removed.

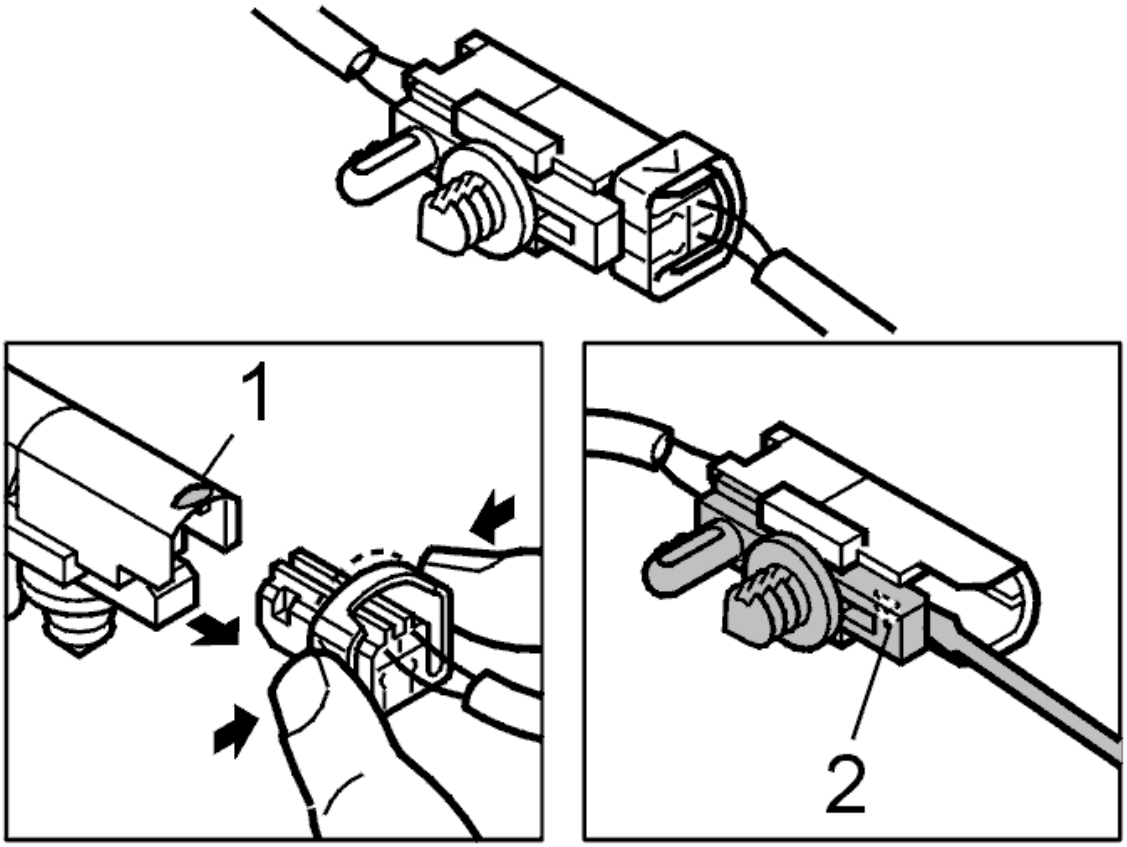

Fig. 4: Identifying SIPS Bag Control Module Connector
Courtesy of VOLVO CARS CORPORATION

Press on the side so that the bag goes over the edge (1).

Separate the connector.

Bend the clip at the front edge (2).

Move the clip backwards.

Remove clip.

Install:

In reverse order.

LOCK SIDE PIECE

REPLACING THE LOCK SIDE PIECE

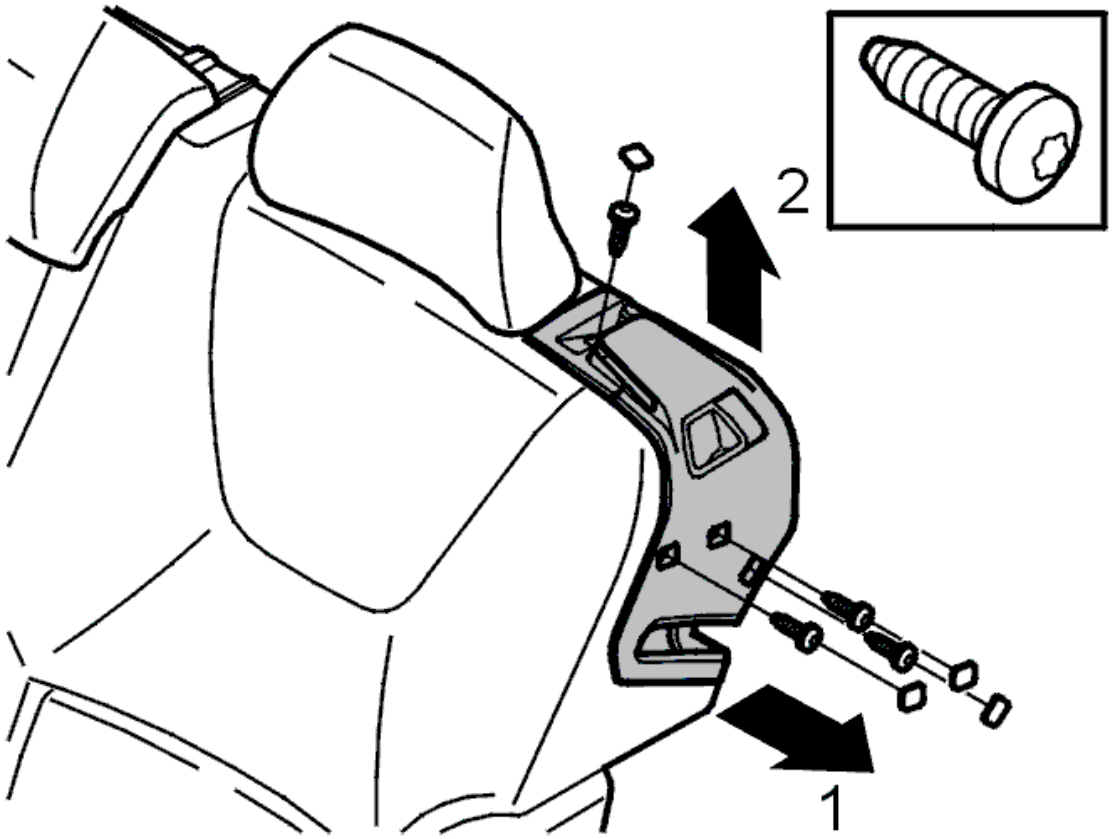

Fig. 5: Identifying Lock Side Piece And Screw
Courtesy of VOLVO CARS CORPORATION

Remove:

- the cover
- the screw
- Pull the guide to one side. Lift part of the panel over the guide. Slide the guide back to disconnect the other side.

REPLACING THE LOCK BUTTON AND INDICATOR

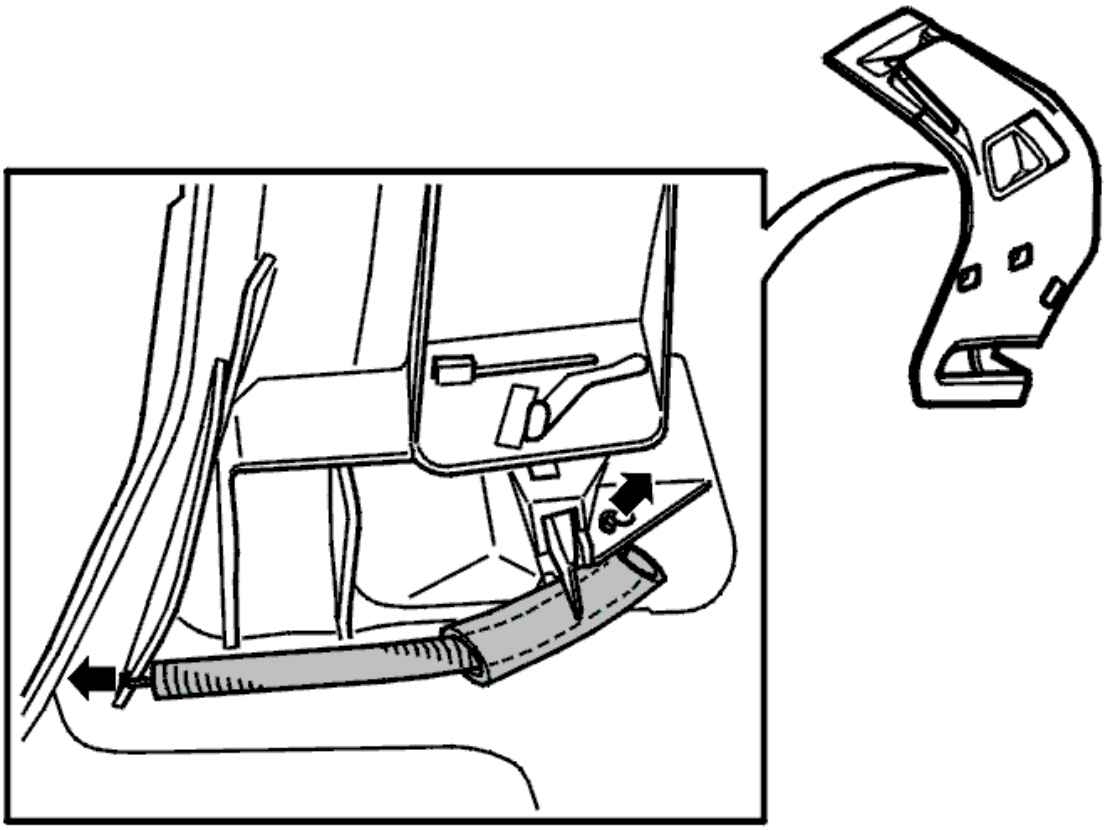

Fig. 6: Identifying Inner Cover And Indicator
Courtesy of VOLVO CARS CORPORATION

- Remove the lock side piece according to **REPLACING THE LOCK SIDE PIECE**
- Remove the spring and sleeve
- Press the button inwards at the bottom edge
- Lift the inner cover to remove the indicator.

INSTALLING THE LOCK SIDE PIECE

Install:

In reverse order.

For further information, see Removing backrest catches in, see **BACKREST CATCHES** .

NOTE: Check the function.

MOTOR FOR FRONT HEIGHT ADJUSTMENT

REPLACING THE MOTOR FOR HEIGHT ADJUSTMENT

Remove:

- the seat from the car and the bracket. See **BRACKET (CROSS STAY)**
- the connectors. See **CONNECTOR** .

Fig. 7: Identifying Motor For Front-Rear Adjustment
Courtesy of VOLVO CARS CORPORATION

- the two screws.

Install:

In reverse order.

MOTOR FOR REAR HEIGHT ADJUSTMENT

REPLACING THE REAR HEIGHT ADJUSTMENT MOTOR

Remove

- the seat from the car and the bracket. See **LIFTING THE FRONT SEATS IN AND OUT**
- the connectors. See **CONNECTOR** .

Fig. 8: Locating Seat Belt Buckle Screws
Courtesy of VOLVO CARS CORPORATION

- the two screws (seat belt buckle).

Fig. 9: Identifying Motor For Front-Rear Adjustment
Courtesy of VOLVO CARS CORPORATION

- the two screws.

Install:

In reverse order.

Tighten the screws for the seat belt buckle. Tighten to **48 Nm** .

SEAT SIDE PIECE

REMOVING THE SIDE PIECE

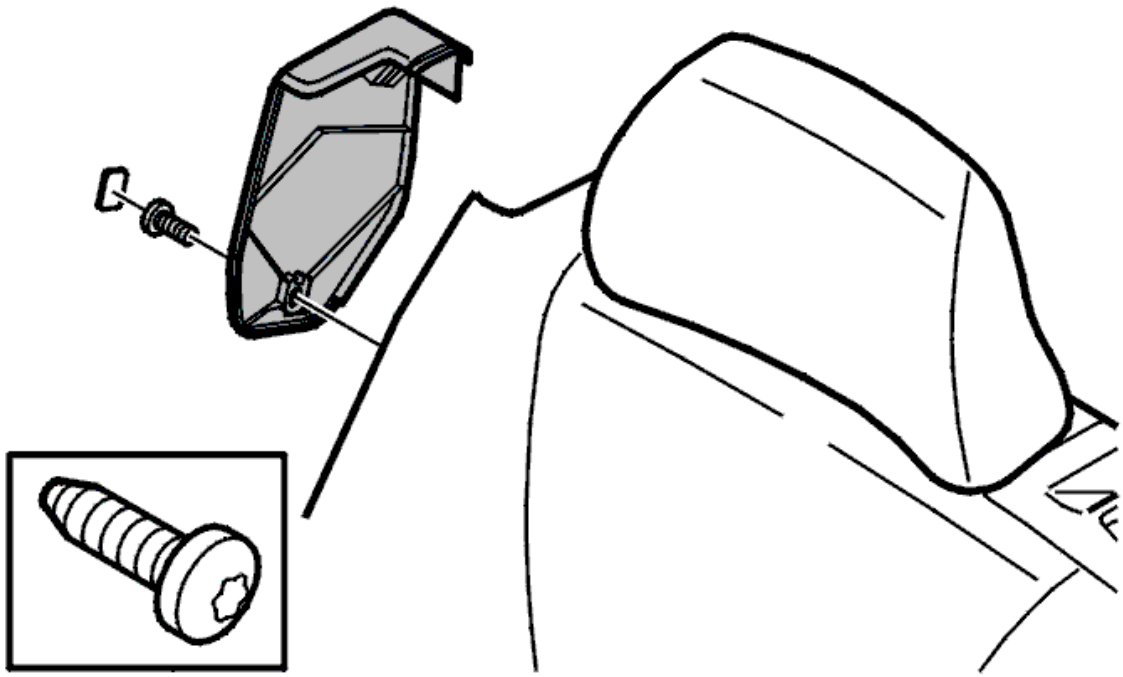

Fig. 10: Locating Side Piece
Courtesy of VOLVO CARS CORPORATION

- Remove the cover and the two screws.
- Remove the central head restraint according to **CENTER HEAD RESTRAINT** .
- Fold down the outer head restraint.
- Release the strap guide.
- Slide the side piece backwards whilst sliding the legs of the head restraint through the slit in the side piece.

NOTE: Check that the release strap for the head restraint does not catch.

INSTALLING THE SIDE PIECE

Install:

- Assemble the side pieces.

WINDSHIELD

Body and interior

WINDSHIELD

BONDED WINDSHIELD, INSTALLATION

NOTE: **The illustrations in this service information are used for different model years and/or models. Some variation may occur. However, the essential information in the illustrations is always correct.**

INSTALLATION

INSTALLING BONDED WINDSHIELD

WARNING: **All fixed windows are PUR bonded.**

PUR adhesive can cause asthma like symptoms. Isocyanate vapor from uncured primer or adhesive can cause allergies in the respiratory tract.

Once you have acquired an allergy the quantities required to trigger a reaction are very small

The risk remains until the material is cured.

Cured PUR adhesive can degrade if subjected to high temperatures and isocyanate compounds can be released when grinding or welding.

Ensure that ventilation is good. Use a fresh air mask

Never touch the adhesive surface with your fingers

Use protective gloves

NOTE: **Securely installed windows are part of the collision safety concept.**

Always use original PUR adhesive kits

These are selected and tested by VOLVO. They are the only ones for which VOLVO Car Corporation takes responsibility.

NOTE: **When bonding windshields, only Volvo's aftermarket adhesive is approved. This adhesive is continually tested to satisfy Volvo's demands on the vehicle in the aftermarket environment.**

Vehicles with a driver's airbag (SRS) and/or passenger airbag (SRS) must be bonded using 2-component adhesive.

If the windshield has been bonded with an adhesive that has not been approved by Volvo, this adhesive should be removed. This is because there are adhesives to which no PUR adhesive will bond.

NOTE: **See: BONDED WINDOW, GENERAL SAFETY INFORMATION .**

Place the windshield on a stand.

Apply the suction pads/winches.

NOTE: **Always keep a side window open when bonding the windshield. Otherwise it can move out of position when closing a side door.**

Fig. 1: Cleaning Remaining Adhesive
Courtesy of VOLVO CARS CORPORATION

Ensure that the remaining adhesive is even and that it is properly secured. Carefully check the corners where the adhesive meets the bodywork.

Do not touch the adhesive with your hands. Grease can cause adhesion problems.

Clean the remaining adhesive on the body flange using Cleaner-H.

CAUTION: **Only Cleaner-H should be used. Other cleaning agents can affect adhesion.**

Wash the entire windshield using glass cleaner.

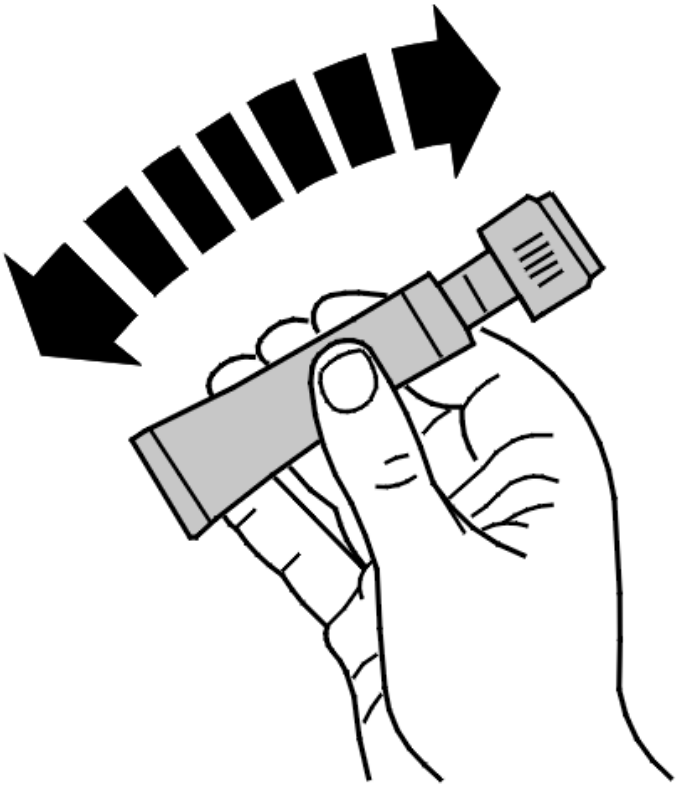

Fig. 2: Identifying Shaken Up Primer
Courtesy of VOLVO CARS CORPORATION

Apply glass primer where the adhesive will be applied. Apply generously (although not so that it runs).

Allow the glass primer to dry for 10 minutes.

If any part of the windshield frame has been painted, primer must be applied to the body flange.

If the adhesive has been exposed for more than 8 hours, it must be treated using PUR rim activator.

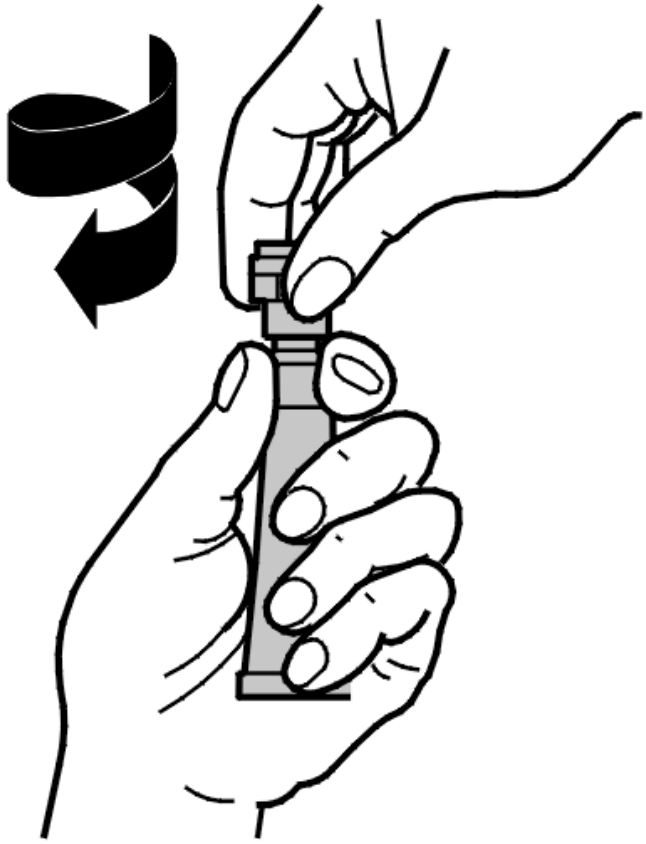

Fig. 3: Identifying Primer Cap Removal
Courtesy of VOLVO CARS CORPORATION

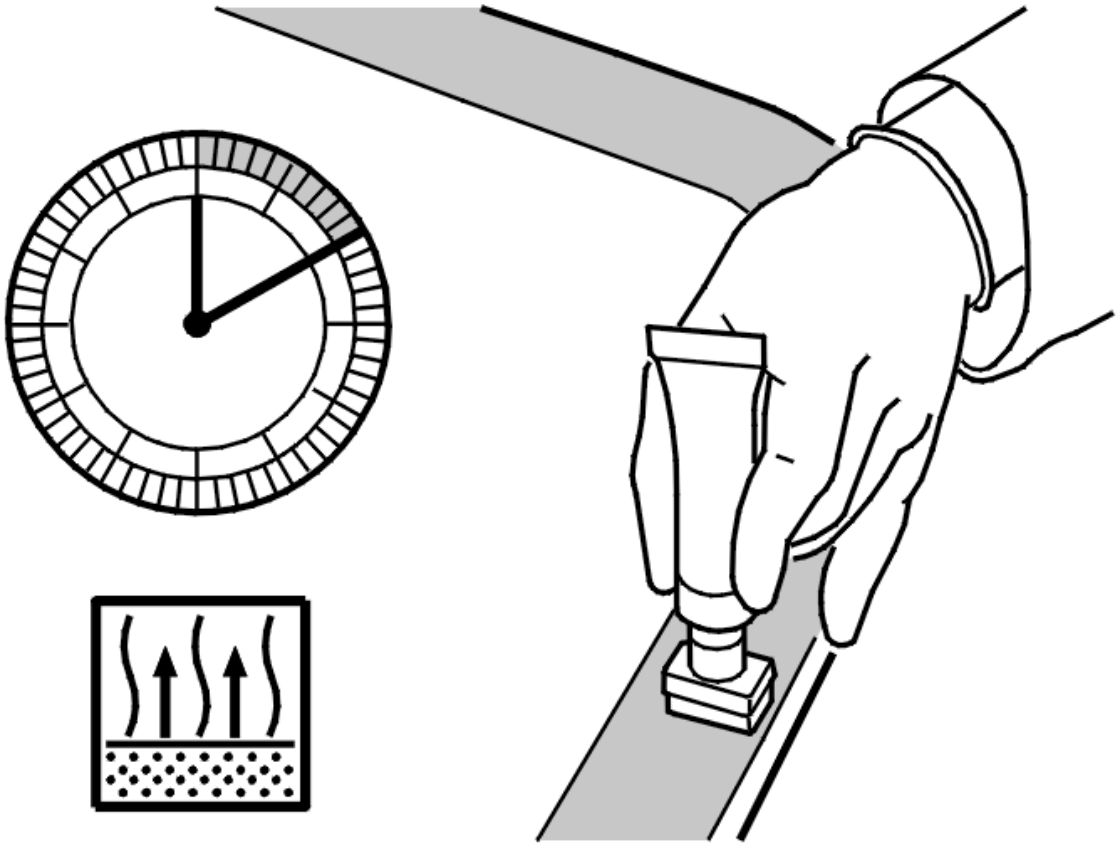

Fig. 4: Applying Primer
Courtesy of VOLVO CARS CORPORATION

Cut the pipe so that the adhesive is 12 mm high with a 6 mm base.

When bonding using 2-component adhesive, the windshield must be positioned within 10 minutes.

Apply adhesive to either the glass or to the body flange.

Hold the gun at right angles to the surface.

Ensure that the adhesive bead is continuous. A break in the adhesive bead can result in the adhesive join surface not being watertight.

Position the glass.

Check that the windshield is in the same position at both A-posts.

Push against the lower edge of the windshield by hand so that it bonds to the lower spacer cushions.

Place a few strips of masking tape on the glass and part way over the roof to prevent the glass from sliding down.

REAR SIDE WINDOW

Body and interior

REAR SIDE WINDOW

SIDE WINDOW, REAR, REPLACING

SIDE WINDOWS, REAR, REMOVING

Detach the C-post panel. See **PANEL C-POST, REPLACING** .

Detach the D-post panel. See **PANEL D-POST, REPLACING** .

Cut out the window.

NOTE: Use soap solution. This will facilitate cutting.

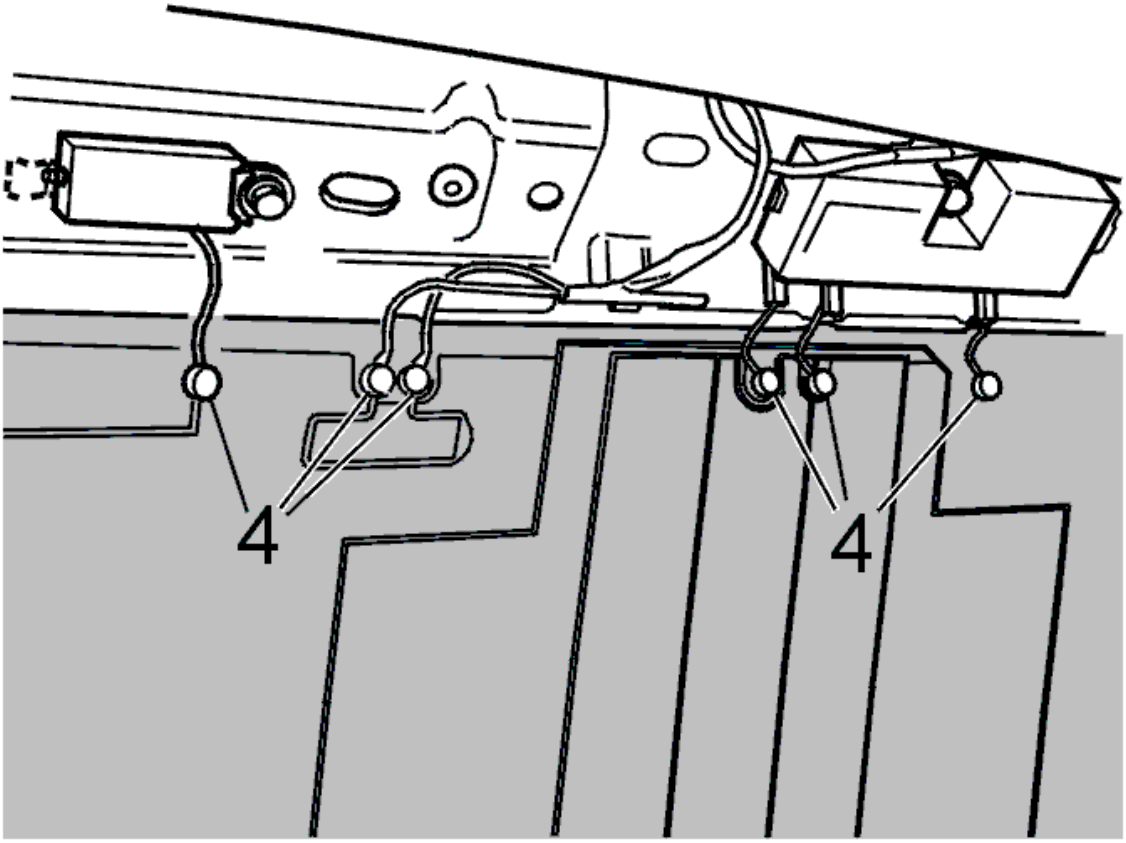

Fig. 1: Disconnecting Connectors For Radio Antenna, RTI, TV, And Alarm
Courtesy of VOLVO CARS CORPORATION

Disconnect the connectors for:

- the radio antenna
- RTI (road traffic information)
- TV
- alarm.

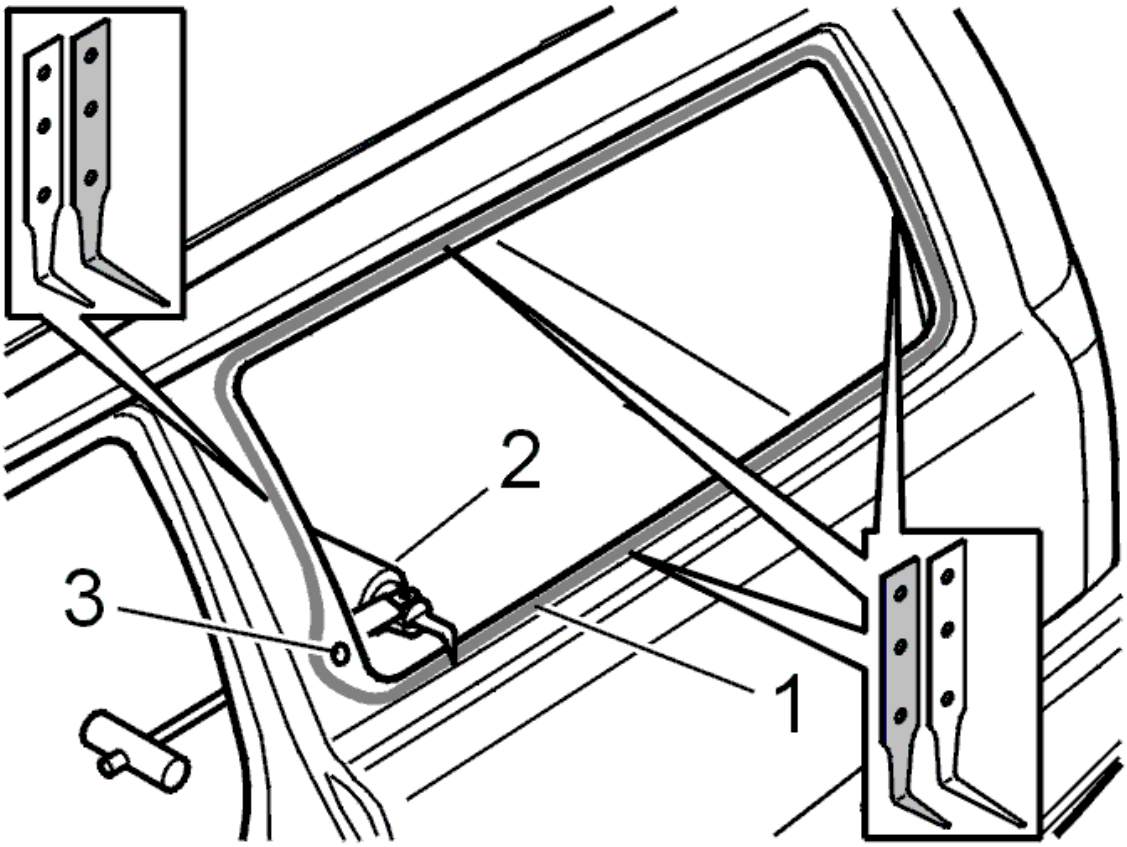

Fig. 2: Locating PUR Bead, Windshield Knife, And Locating Pin
Courtesy of VOLVO CARS CORPORATION

(1) = PUR bead.

(2) = Windshield knife

(3) = Locating pin.

Cut along the marked edge.

Use a long blade against the C-post.

Otherwise use a short blade.

Be careful around the locating pin. Do not damage the paint work.

If the window is to be reused: Remove the PUR bead with a chisel.

When working with PUR on the body flange, see **PUR ON BODY FLANGE** .

SIDE WINDOWS, REAR, INSTALLING

NOTE: Install the trim strip before positioning the window when replacing the rear side window.

When working with PUR on the body flange, see **PUR ON BODY FLANGE** .

Clean the area on the window to which PUR adhesive is to be applied with cleaner-H (black cap).

Apply glass activator (yellow cap) to the area on the glass to which PUR adhesive will be applied.

Apply glass primer (green cap) to the area on the glass to which PUR adhesive will be applied.

Apply generously (although not so much that it runs).

Let the primer dry until the surface is matte.

Apply the PUR/RIM activator (blue cap) on the remaining PUR bead on the body flange.

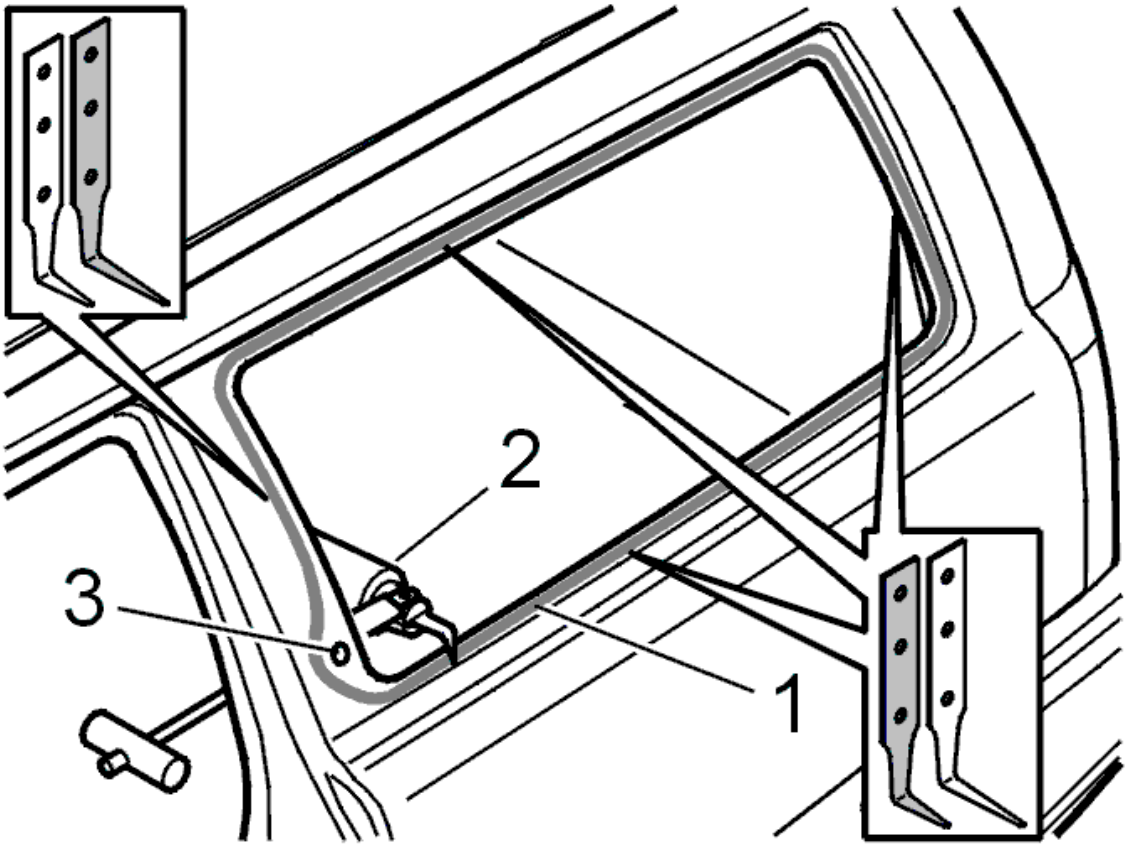

Fig. 3: Locating PUR Bead, Windshield Knife, And Locating Pin
Courtesy of VOLVO CARS CORPORATION

Load the gun with both cartridges and the mixing pipe.

Apply adhesive to either the glass or to the body flange.

Press the window into place by hand.

Secure with tape.

Load the gun with both cartridges and the mixing pipe.

Apply adhesive to either the glass or to the body flange.

Press the window into place by hand.

Secure with tape.

REAR WINDSHIELD

Body and interior

REAR WINDSHIELD

REMOVING THE REAR WINDSHIELD

Special tools:

see **9512786**

Special tools:

see **9512787**

Special tools:

see **9512788**

REMOVING THE REAR WINDSHIELD

NOTE: **Tape around the window to protect the paint.**

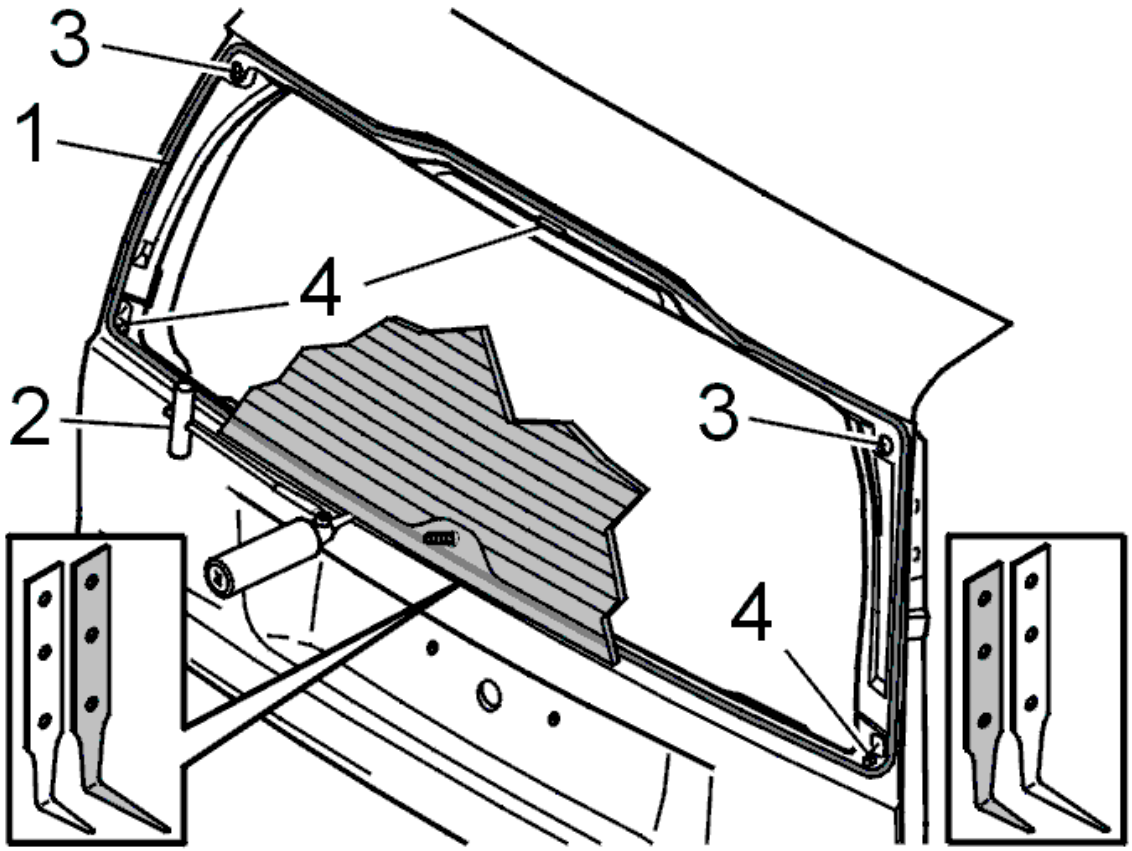

Fig. 1: Identifying PUR Bead, Window Knife, Guide Hole, And Spacers
Courtesy of VOLVO CARS CORPORATION

1 = PUR bead.

2 = Windshield removal knife (see, see **WINDOW KNIFE**).

3 = Guide hole.

4 = Spacers.

Use short bladed knife see **9512787**

Start at the upper corner and cut along the sides and top edge.

NOTE: Be careful at the spacers (4). Do not damage the paint work.

Use long bladed knife see **9512788** .

Cut at the bottom edge.

Carefully remove the window.

Remove the connectors for the heated rear windshield.

Lift out the windshield and place it on the stand.

When working with PUR on the body flange, see **PUR ON BODY FLANGE** .

WINDOW KNIFE

Special tools:

see **9512786**

see **9512787**

see **9512788**

WINDOW KNIFE AND BLADES

It can be difficult or impossible to remove some windows with string.

For this reason a window knife with long and short blades has been produced.

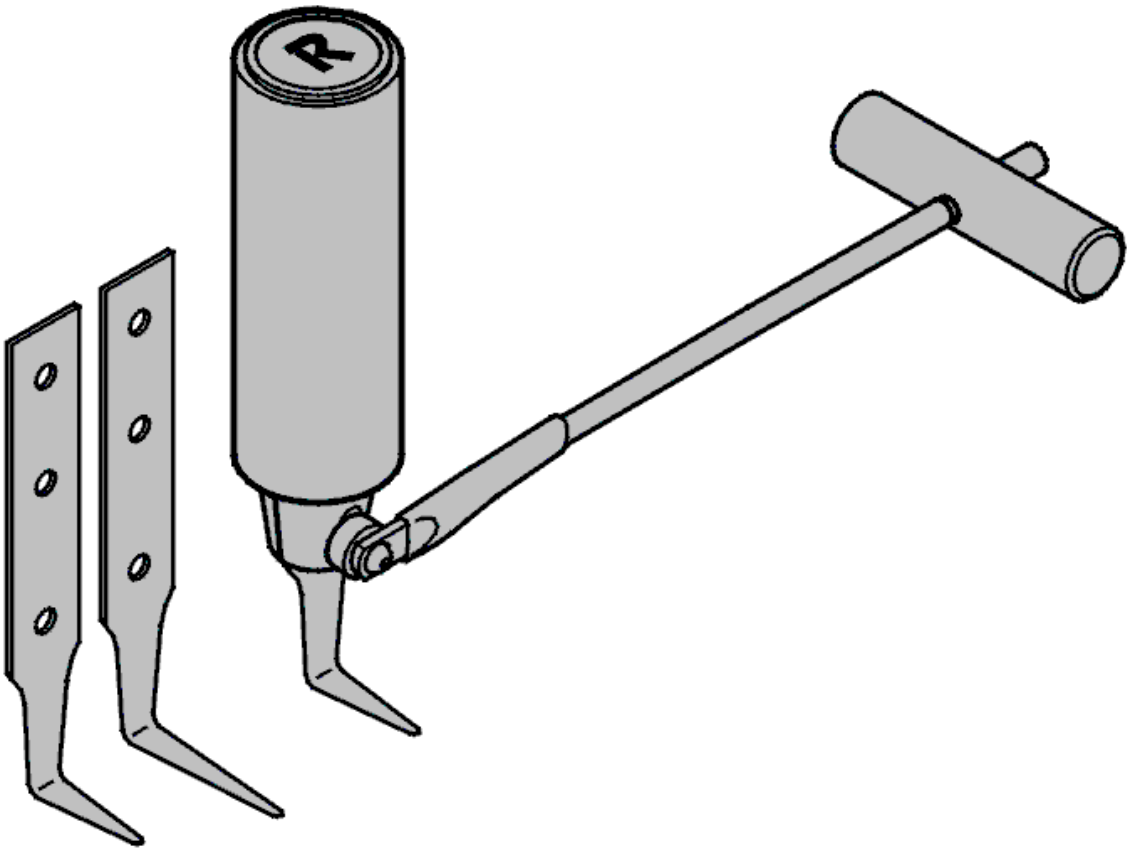

Fig. 2: Identifying Window Knife And Blades
Courtesy of VOLVO CARS CORPORATION

Window knife and blades.

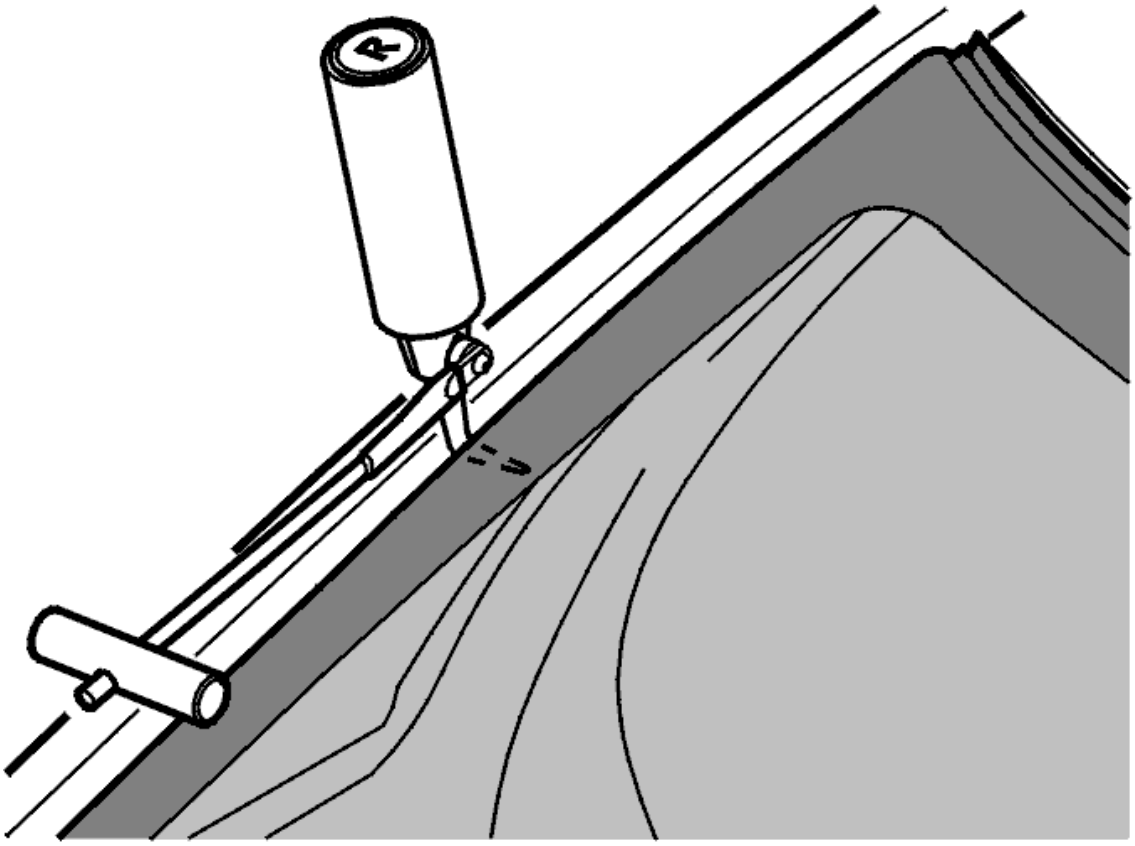

Fig. 3: Cutting Adhesive Using Window Knife
Courtesy of VOLVO CARS CORPORATION

Push tip of knife through adhesive bead.

Hold the shaft of the knife.

Pull the draw-handle.

WINDSHIELD

Body and interior

WINDSHIELD

WINDSCREEN REMOVAL

Special tools:

see **1159784**

see **1159783**

see **1159785**

Special tools:

see **9512335**

WINDSCREEN REMOVAL

Open bonnet.

Remove the windscreen wipers.

Loosen the plenum covering and pull it forward.

- For -2005, see **COWL, REPLACING** .
- For 2006- see **COWL, REPLACING** .

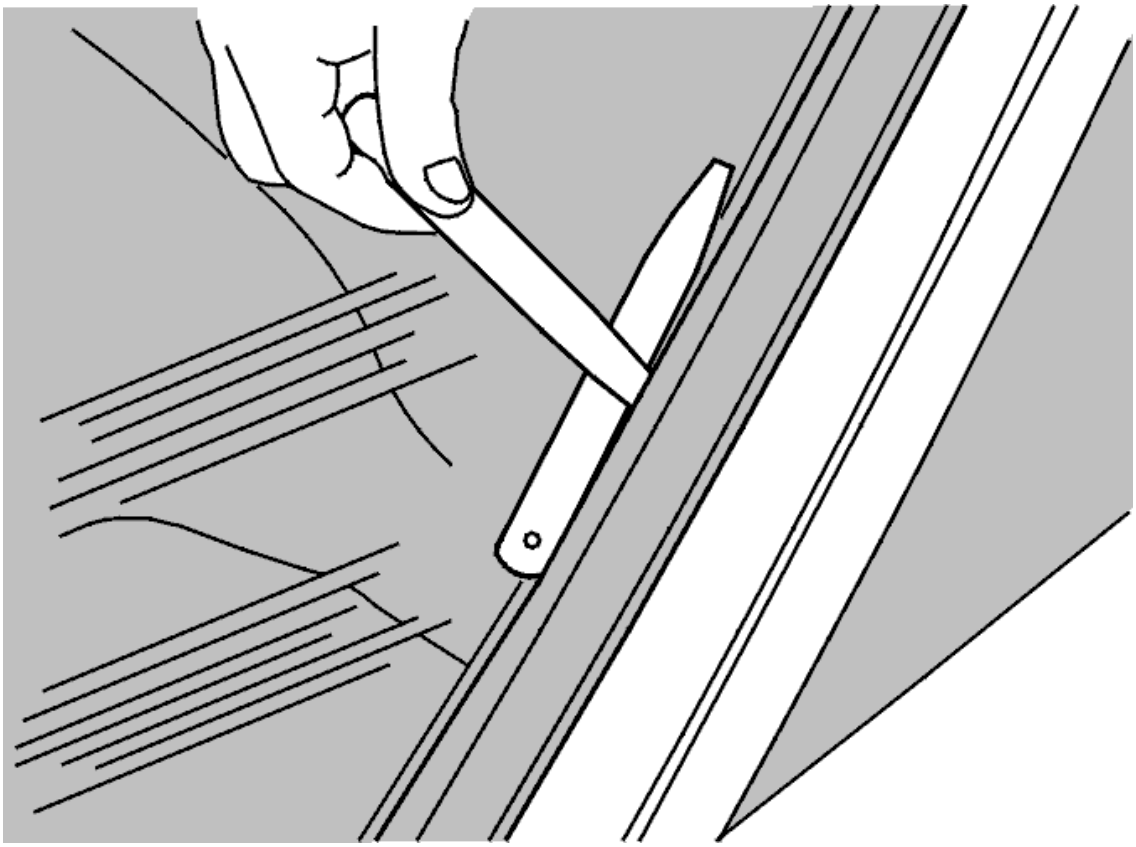

Fig. 1: Identifying Removal Of Strips Along A Pillars & Roof
Courtesy of VOLVO CARS CORPORATION

Remove the strips along the A pillars and the roof as described in, see **WEATHERSTRIPS AND TRIM STRIPS**.

Remove:

- the roof sealing strip.
- the guide strip on the lower edge.
- A pillar panels as described in, see **PANEL A-POST, REPLACING**

NOTE: Be careful not to damage the paint. Tape the A pillars with masking tape.

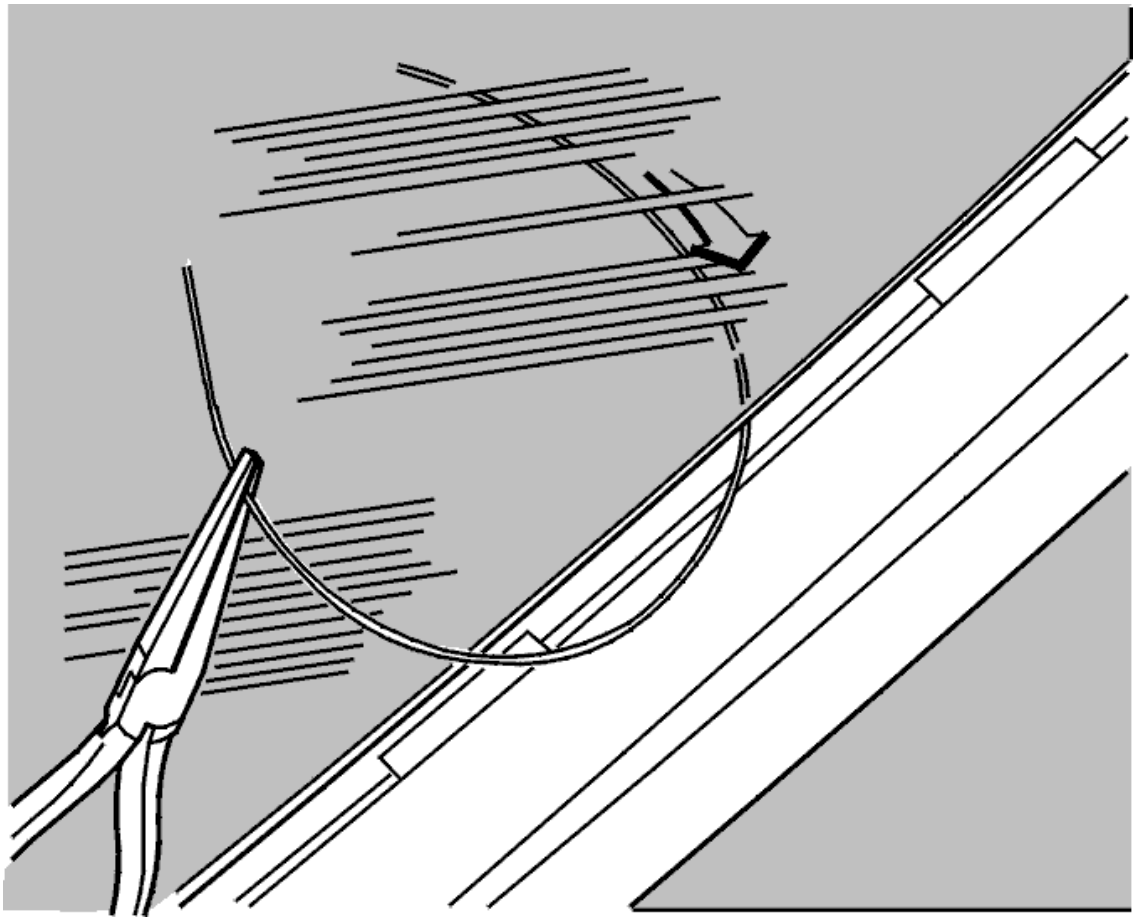

Fig. 2: Identifying Wire Pulled With Long Nose Pliers
Courtesy of VOLVO CARS CORPORATION

Pierce the wire through the PUR glue from the inside and out.

Pull through the wire from the outside using long nose pliers.

Fix the wire in the draw-handle on the outside and in the counterhold on the inside of the car.

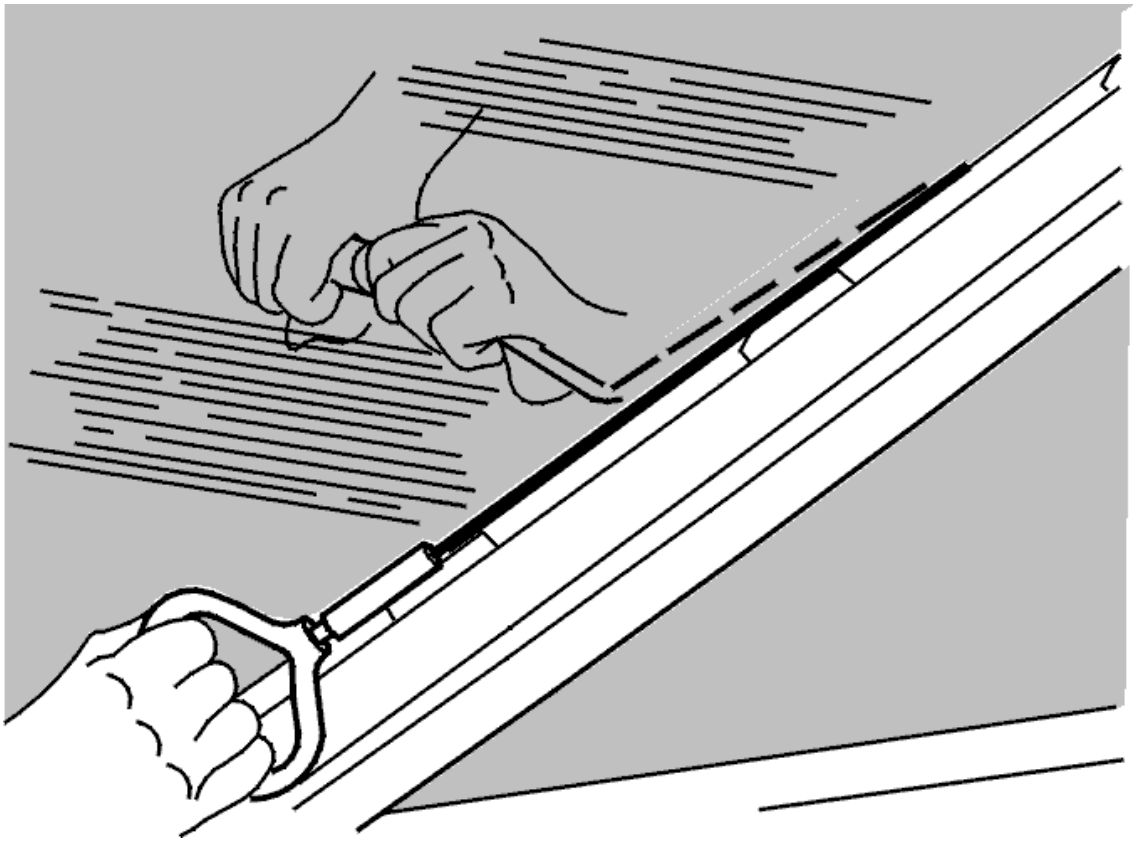

Fig. 3: Pulling On Draw-Handle From Outside
Courtesy of VOLVO CARS CORPORATION

Two people:

Press the counterhold as firmly as possible against the edge. Pull steadily on the draw-handle from the outside with uniform force.

Pause now and again and move the counterhold gradually forward.

"Saw" past the corners. Be extra careful near the roof edge strip.

Be careful not to damage the equipment and paint.

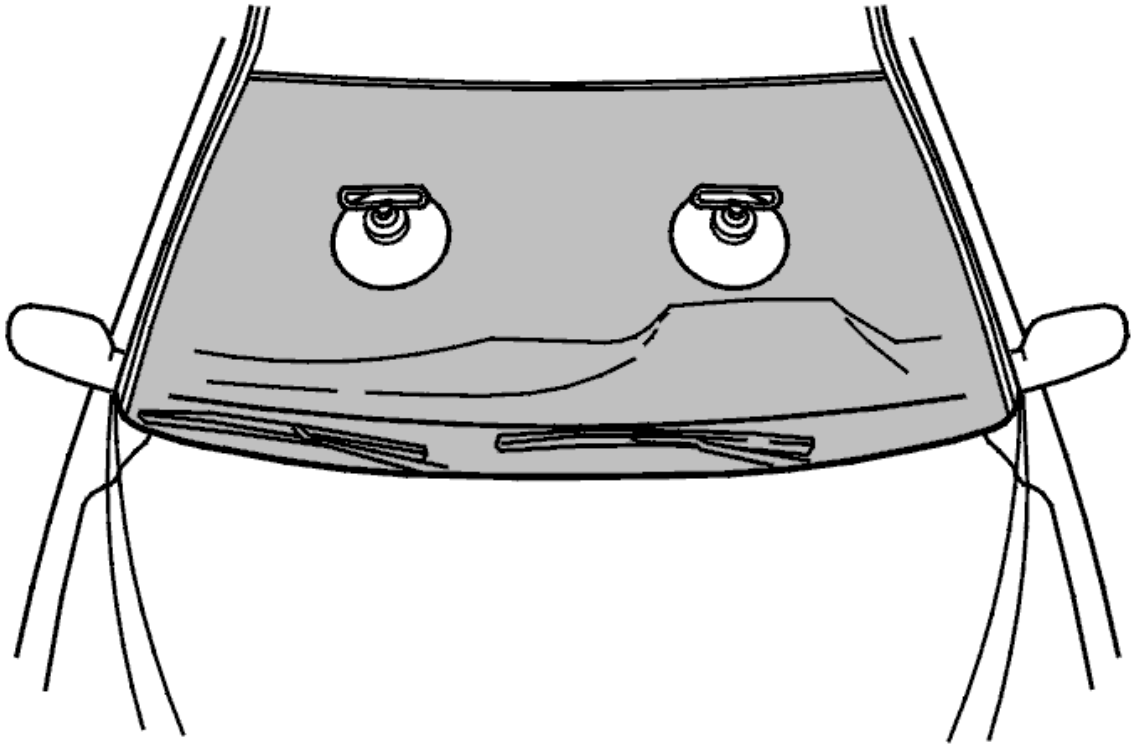

Fig. 4: Identifying Suction Cups On Window
Courtesy of VOLVO CARS CORPORATION

Install the suction cups see **9512335** on the window and lift it out.

For handling PUR on the body flange, see **PUR ON BODY FLANGE** .

WEATHERSTRIPS AND TRIM STRIPS

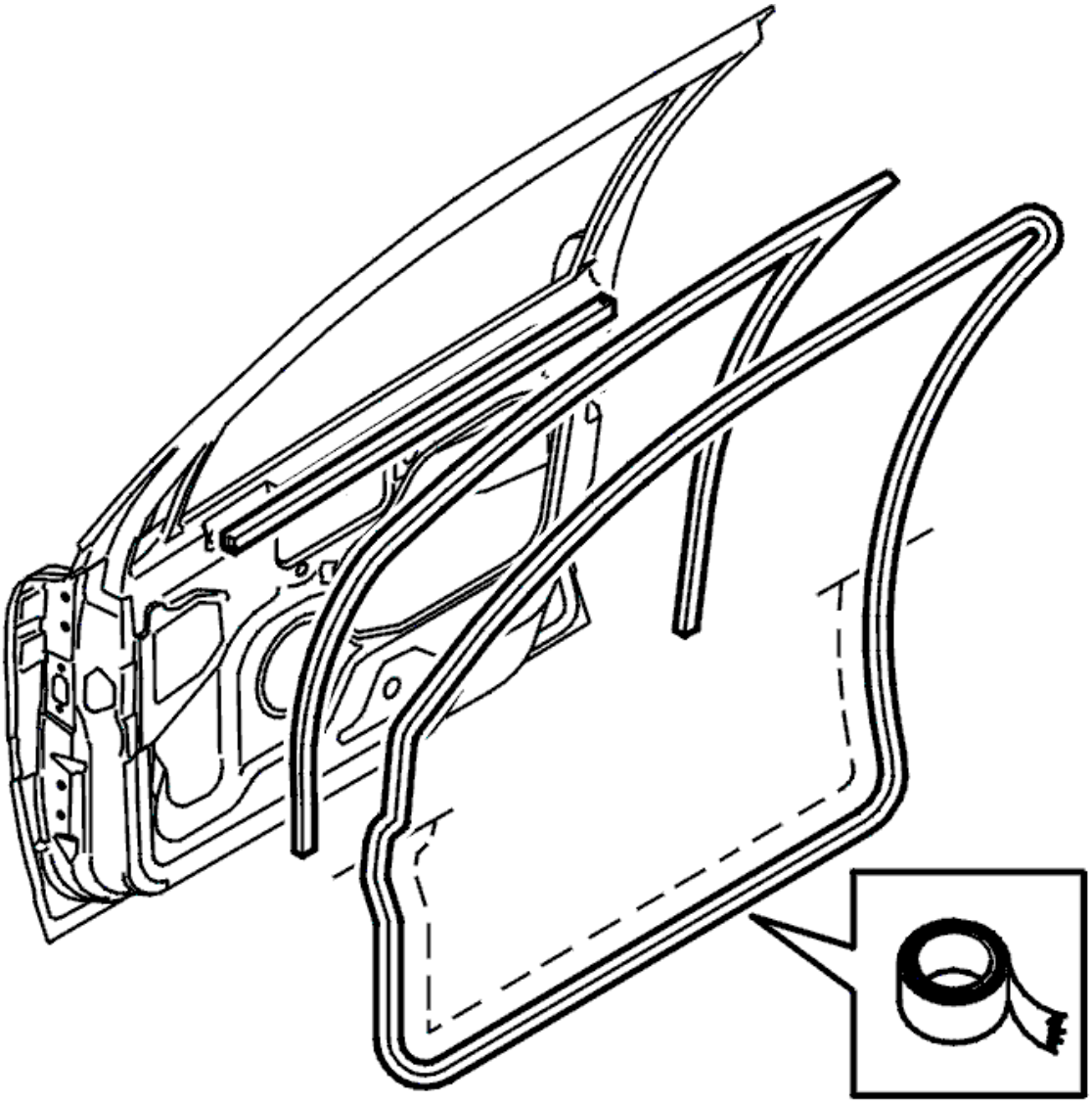

Fig. 5: Identifying Weatherstrips & Trim Strips (1 Of 4)
Courtesy of VOLVO CARS CORPORATION

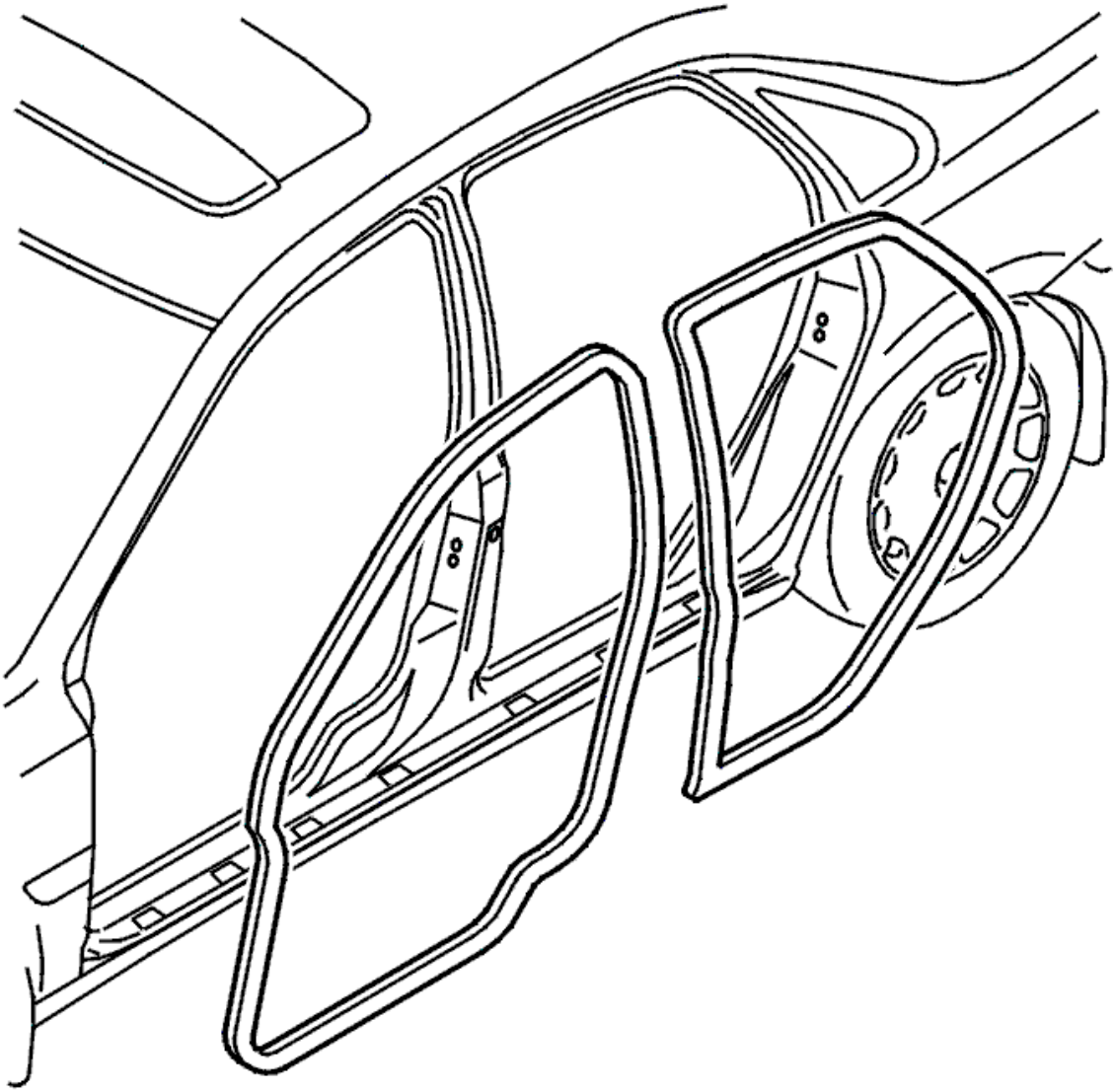

Fig. 6: Identifying Weatherstrips & Trim Strips (2 Of 4)
Courtesy of VOLVO CARS CORPORATION

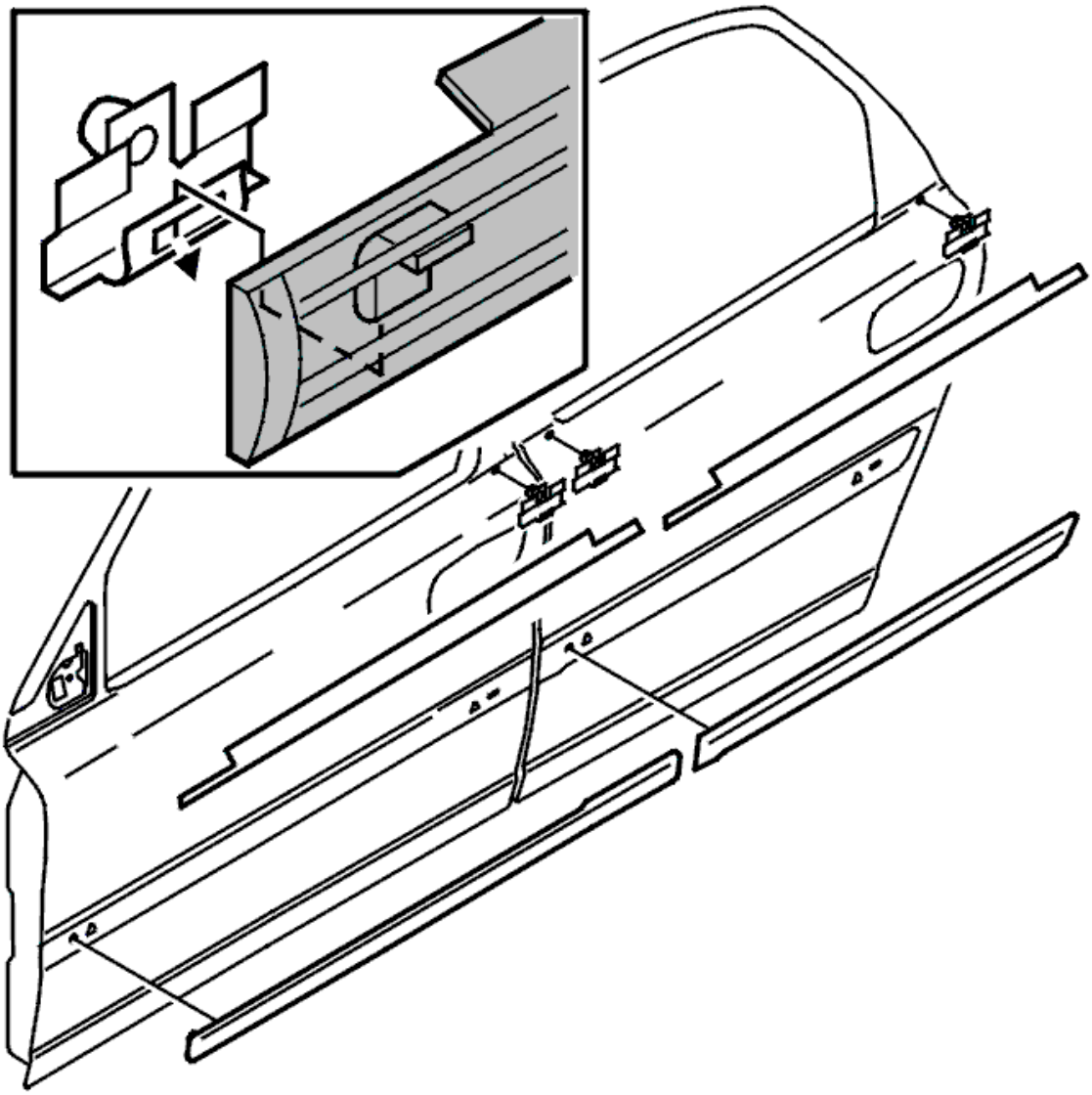

Fig. 7: Identifying Weatherstrips & Trim Strips (3 Of 4)
Courtesy of VOLVO CARS CORPORATION

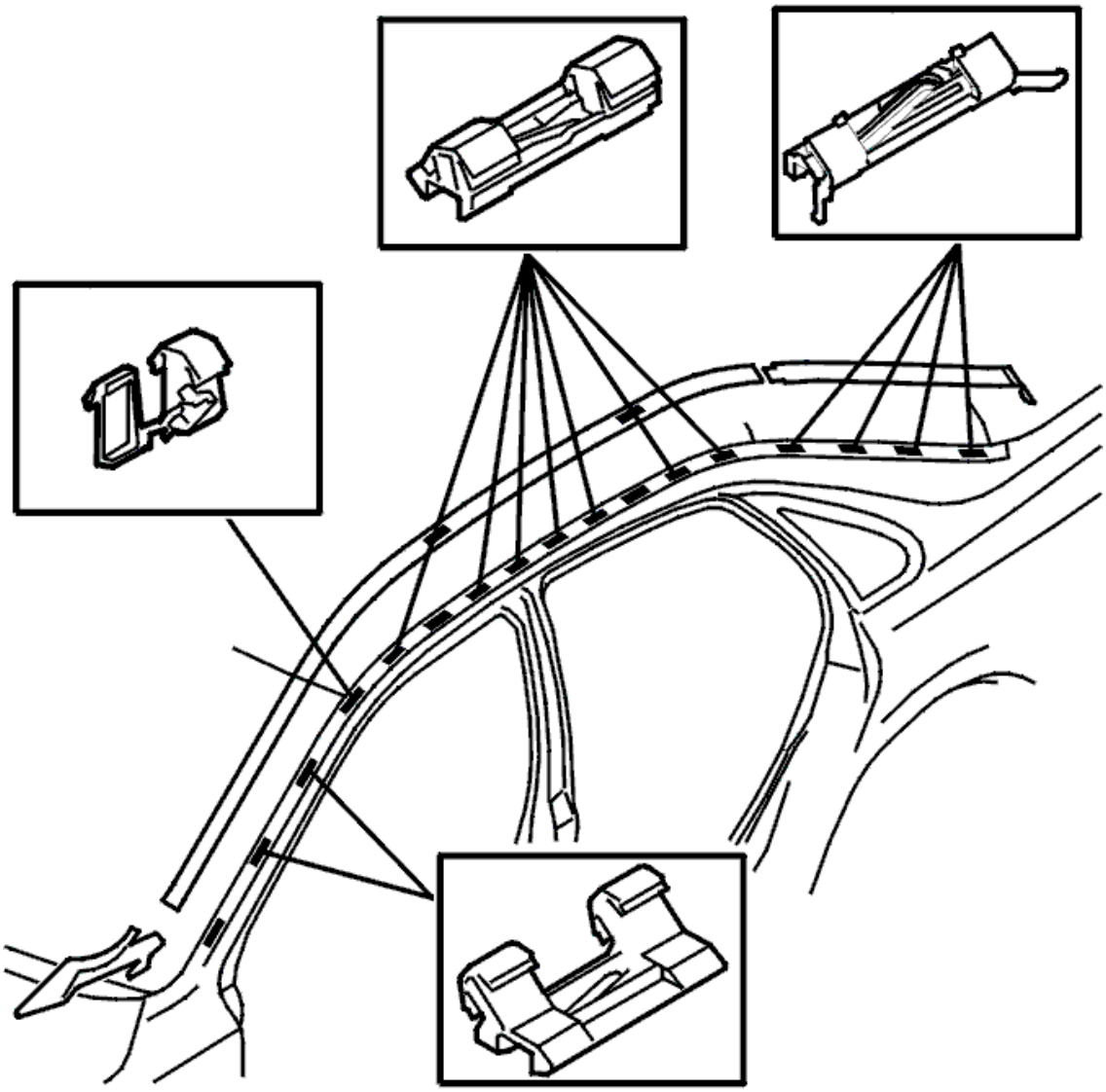

Fig. 8: Identifying Weatherstrips & Trim Strips (4 Of 4)
Courtesy of VOLVO CARS CORPORATION

BODY & FRAME

Body and interior

BODY & FRAME

PUR ON BODY FLANGE

PUR ON BODY FLANGE

- After the window has been removed, the surplus PUR glue on the body flange must be removed using H cleaner.

CAUTION: Do not use any cleaner other than H cleaner: Other cleaning agents affect the adhesion.

- If the surface is uneven, a chisel with width **approximately 13 mm / 0.5 in** may be used to even out the remaining PUR bead.
- **Do not touch the PUR bead with your hands. Grease on PUR can cause adhesion problems.**

Plate work

- If some of the window frames have been painted, the body flange must be coated with paint primer (Component number 1161386).
- If 2-component glue is used, the window must be in place within **10 minutes** .
- Ensure that the bead is continuous without break, otherwise the joint will not be tightly sealed which will result in water leakage.
- Always open a side window when replacing a window, otherwise the window may fall out of position when the door is closed.
- Read.

REMOVING RIVET

Special tools	
	T9814075 SPRAY GUN **Tool number:** T9814075 **Tool description:** SPRAY GUN **Tool boards:**

Materials:	
Designation	**Part number**
Thin rustproofing agent	1161682

NOTE: If the pop rivet spins, drill at a 45° angle against the pop rivet.

Pay attention to heat generation when drilling in pop rivet mounted in plastic part.

Remove drill burrs and any remains of the rivet.

If possible, put tape on the back to catch pop rivet.

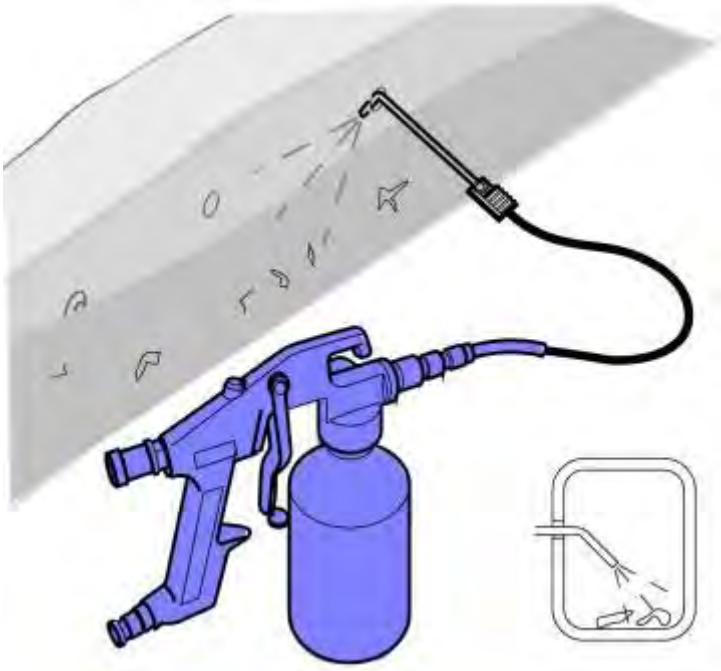

Fig. 1: Applying Thin Rustproofing Agent
Courtesy of VOLVO CARS CORPORATION

To avoid rattling if it is not possible to remove remains of rivet.

Use: Thin rustproofing agent, 1161682

see **9814075**

CAUTION: Make sure that rustproofing agent does not run out, discoloring the upholstery or other.

EXTERIOR/INTERIOR TRIM

Body and interior

EXTERIOR/INTERIOR TRIM

APRON MOLDING

REPLACING APRON MOLDING

The sun roof in tilted position.

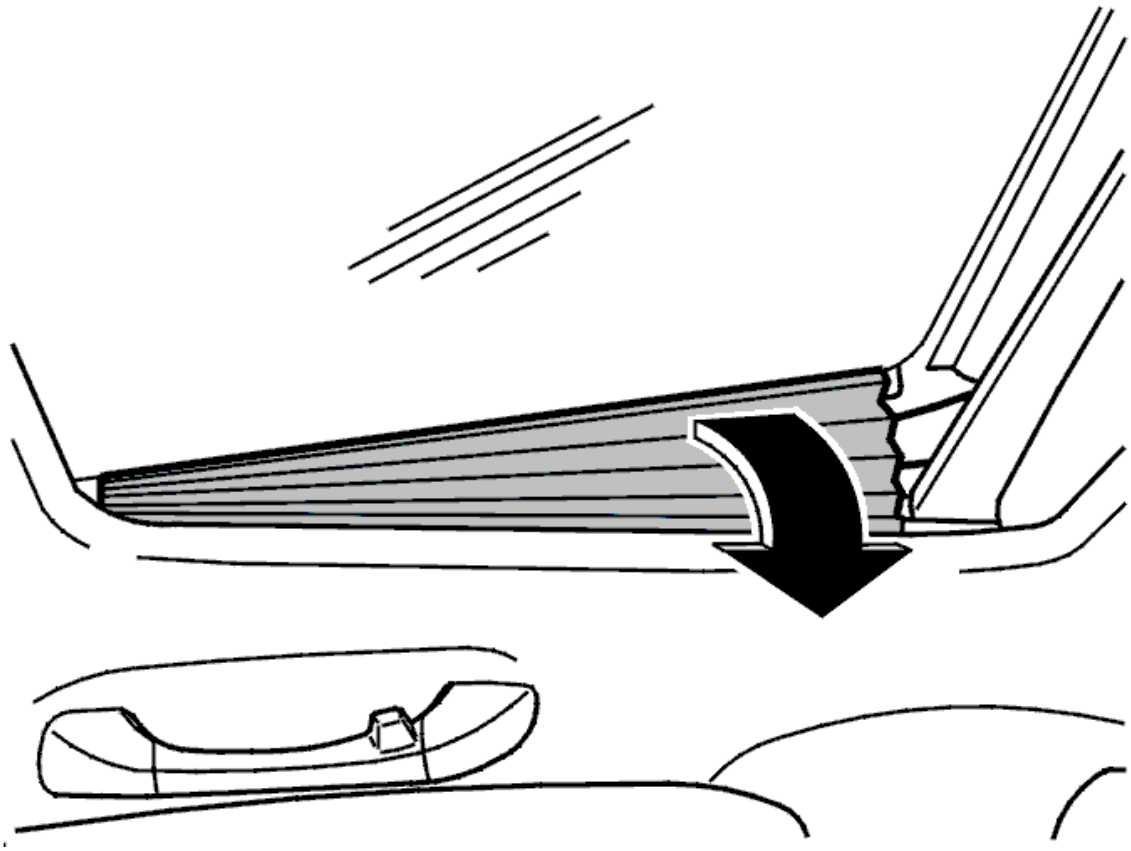

Fig. 1: Identifying Apron Molding Pulled Into Car
Courtesy of VOLVO CARS CORPORATION

Pull the apron molding into the car.

Detach at front edge.

Unhook at the lower edge.

Remove the apron molding.

Install:

In reverse order.

EXTERIOR/INTERIOR TRIM

Body and interior

EXTERIOR/INTERIOR TRIM

PANEL, TAILGATE, REPLACING

REMOVING THE TAILGATE PANEL

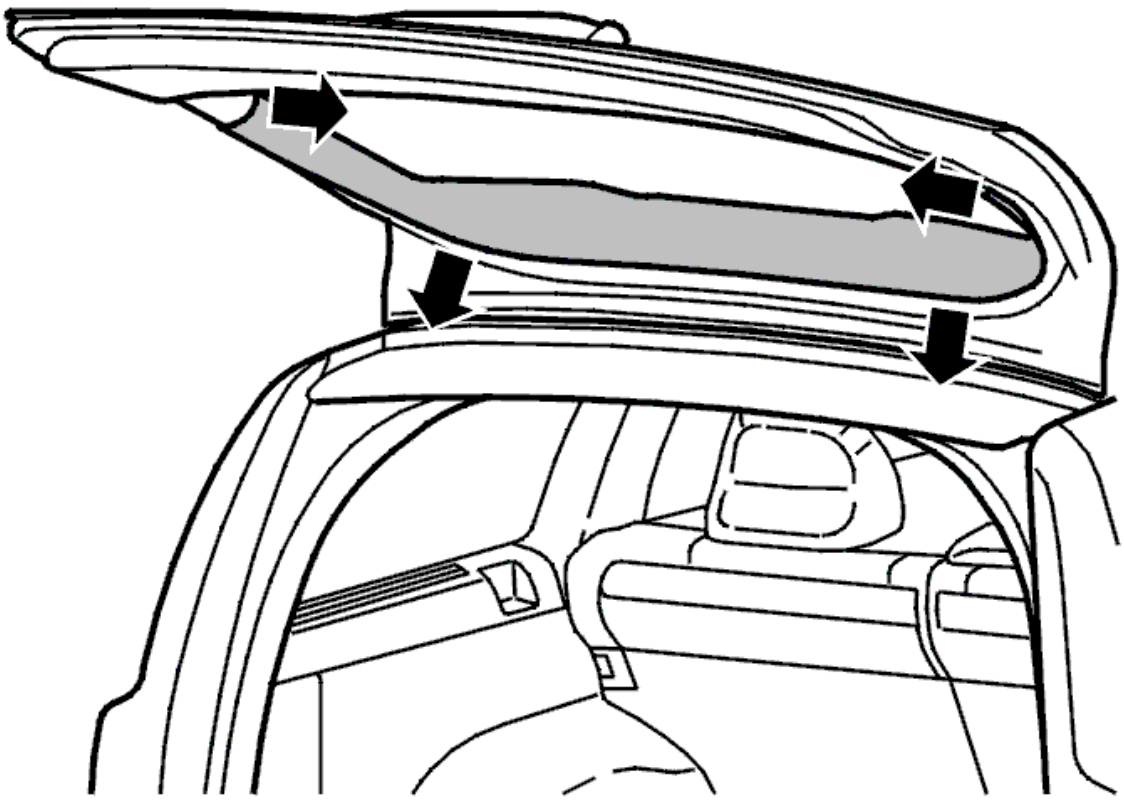

Fig. 1: Identifying Tailgate Panel
Courtesy of VOLVO CARS CORPORATION

- Remove the cargo compartment side panel. See **LOWER TAILGATE PANEL**
- Detach the two side clips by pulling the sides inwards
- Detach the four covered clips by pulling straight downwards (with the cover folded up completely).

INSTALLING THE TAILGATE PANEL

Install:

In reverse order.

ACCESSORIES AND BODY, CAB

Body Frame - Cleaning, Inspection and Adjustment

WINDOW MOLDING, MASKING

NOTE: **The illustrations in this service information are used for different model years and/or models. Some variation may occur. However, the essential information in the illustrations is always correct.**

MASKING OF WINDOW SEAL STRIPS WHEN PAINTING ROOF

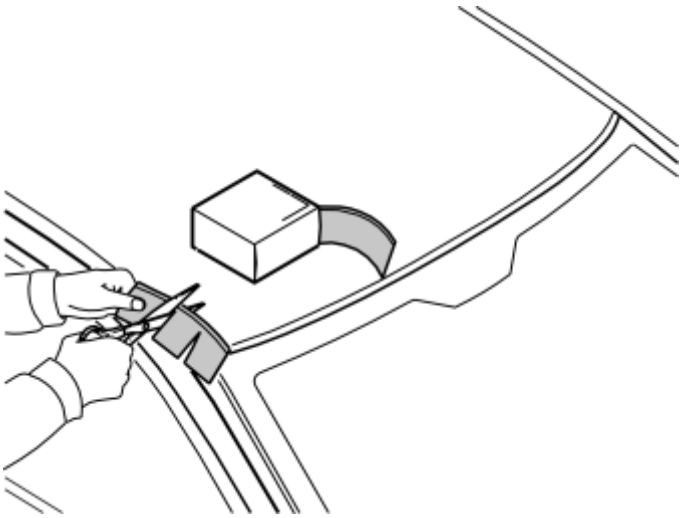

Fig. 1: Cutting Masking Tape
Courtesy of VOLVO CARS CORPORATION

The roof has an integrated seal strip against the roof.

To avoid removing the windows when painting, use of 3M's masking tape with the following part number is recommend:

7 mm	3M part number	06347
10 mm	3M part number	06349
15 mm	3M part number	06348

The masking consists of two plastic foil pieces that are to be inserted between the window seal strip and the roof side, and are then to be taped against the rear window.

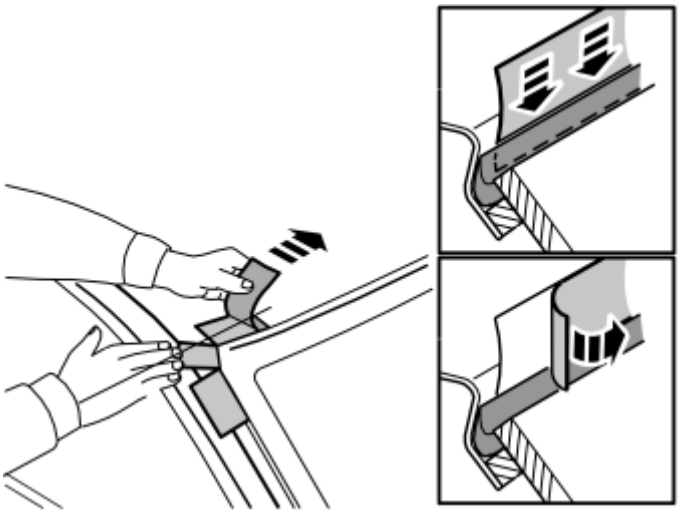

Fig. 2: Peeling Backing Off
Courtesy of VOLVO CARS CORPORATION

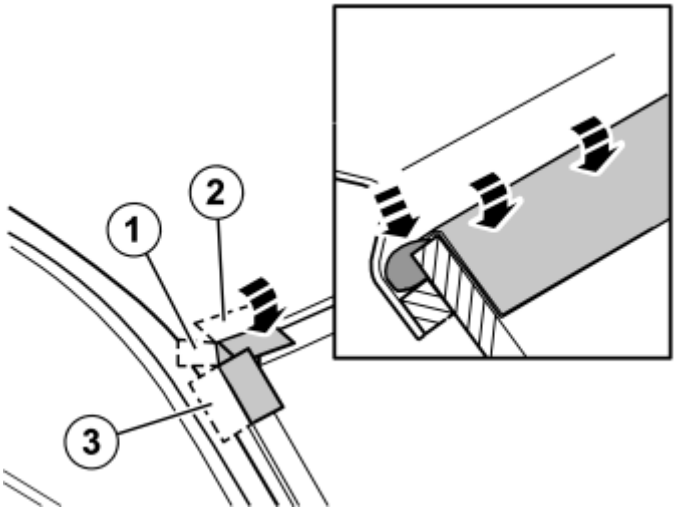

Fig. 3: Folding Tape Over
Courtesy of VOLVO CARS CORPORATION

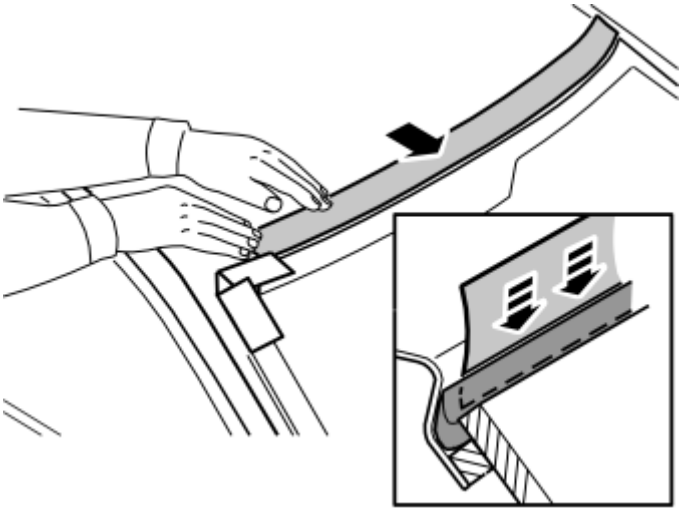

Fig. 4: Inserting Tape Into Groove
Courtesy of VOLVO CARS CORPORATION

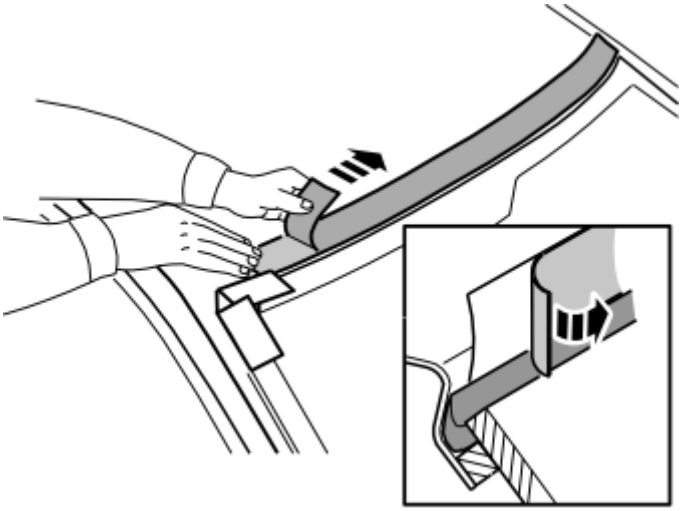

Fig. 5: Peeling Backing Off
Courtesy of VOLVO CARS CORPORATION

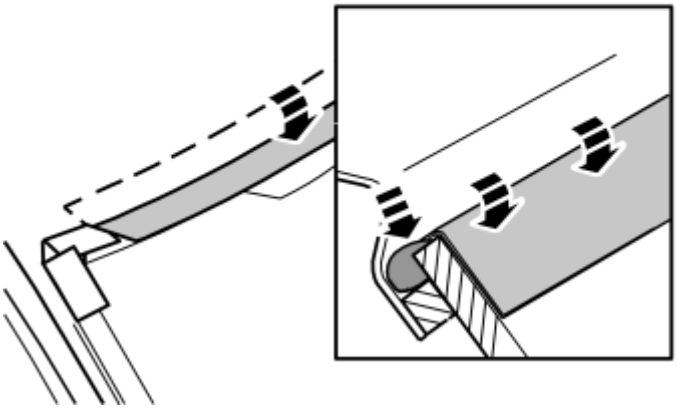

Fig. 6: Folding Tape Over
Courtesy of VOLVO CARS CORPORATION

ACCESSORIES AND EQUIPMENT

Body Frame - General Information

BODY MATERIALS

BODY SEAL

NOTE: **As the graphics in this service information are used for different model years and/or models, some variation may occur. However, the essential information in the graphics is always correct.**

CLASSIFICATION GROUPS

CLASS A

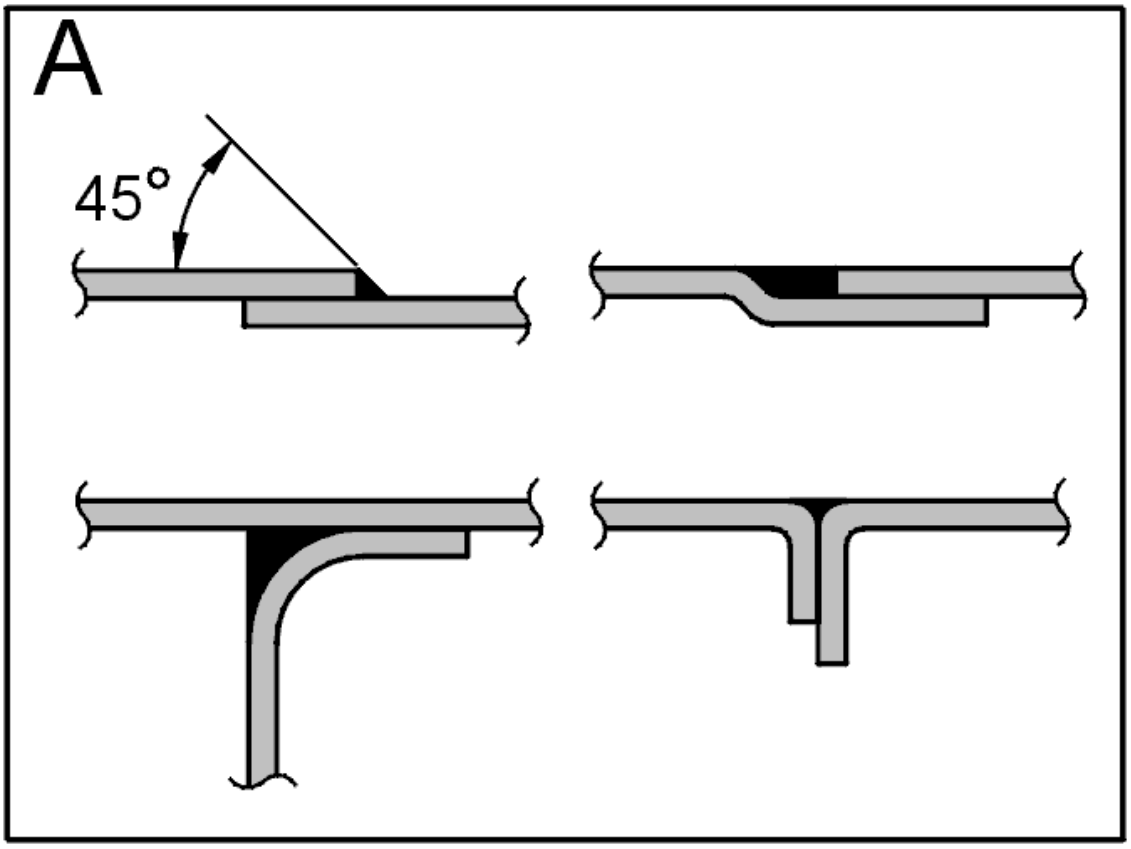

Fig. 1: Identifying Seal Class A
Courtesy of VOLVO CARS CORPORATION

Visible seal with high requirements for the finish.

The material must have been applied liberally but evenly. There must be no areas where excess sealant has gathered.

Use a rubber putty knife to smooth the surface.

See panel section A for the appearance of the bead.

CLASS B

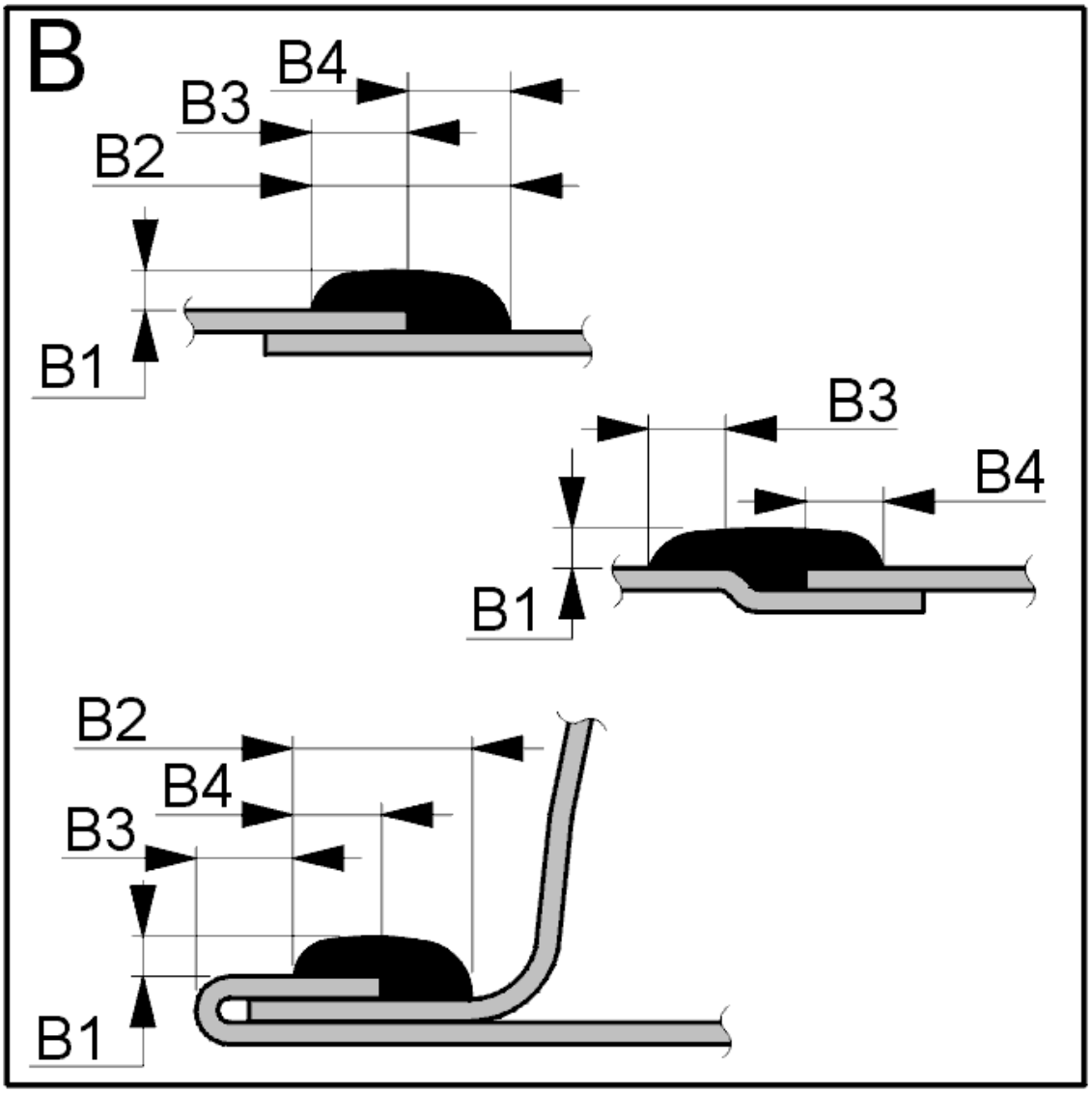

Fig. 2: Identifying Seal Class B
Courtesy of VOLVO CARS CORPORATION

Visible seal with lower requirements for the finish.

The material should be liberally but evenly applied.

Lines and minor pitting is acceptable.

The sealant must not have been applied too thickly.

The dimension of the bead must be as in panel section B.

B1 = min 0.5 mm; max 2.0 mm

B2 = min 4.0 mm; max 10.0 mm

B3 = min 2.0 mm

B4 = min 2.0 mm; max 4.0 mm

CLASS D

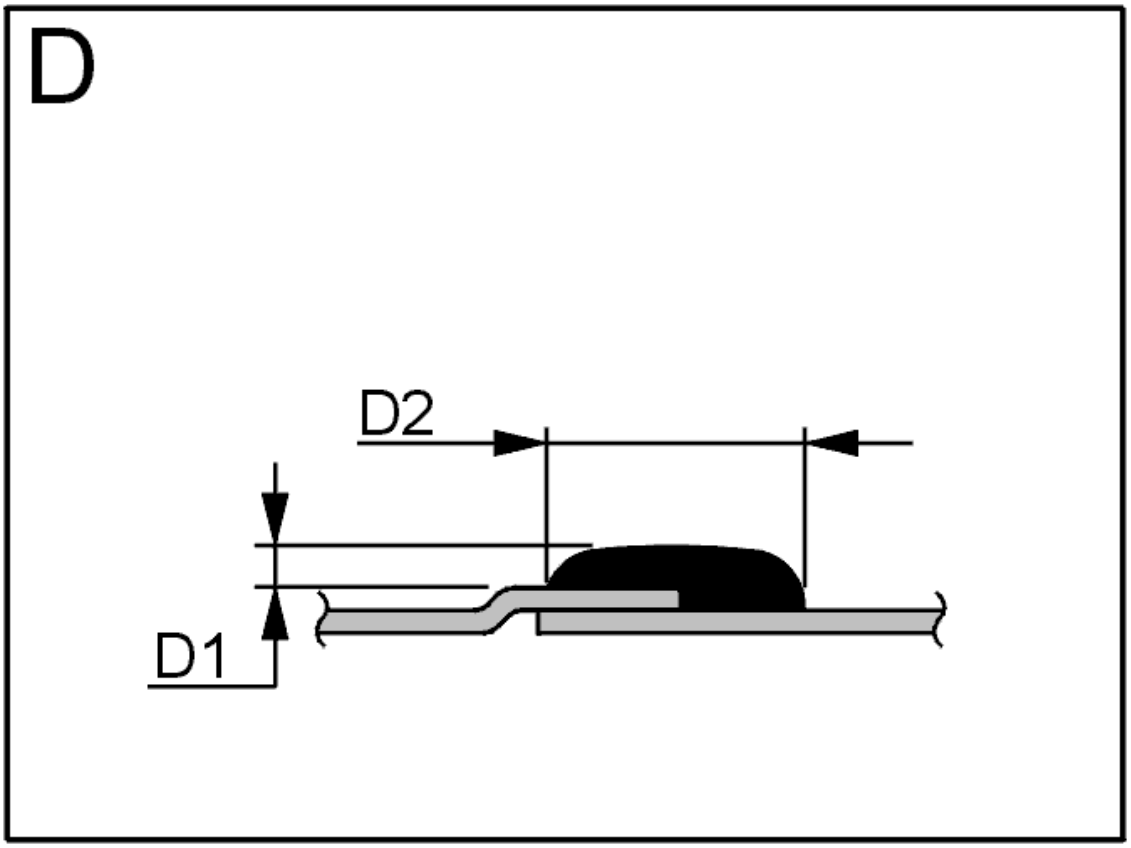

Fig. 3: Identifying Seal Class D
Courtesy of VOLVO CARS CORPORATION

Seal with no requirements for the finish.

The sealant must be liberally applied.

Minimum material thickness = 0.5 mm.

Lines, lumps and pools of up to 5 mm are acceptable.

The dimension of the bead must be as in panel section D.

D1 = min 0.5 mm; max 5.0 mm

D2 = min 7.0 mm; max 50 mm

SEALING PRODUCTS

In order to meet Volvo's requirements, only approved sealing products may be used.

The products that have been tested for body sealing are listed below.

SPRAY SEALANT

P/N 116 1443 is a sprayable bodywork sealant that restores the car to as-new condition after work on the body.

The sealant can be applied as a bead (class A and B) or sprayed on in a thin layer (class D) using a spray gun (P/N 116 1444).

When applying as a bead, this type of sealant is very difficult to work on afterwards because of its runny consistency.

The sealant can be painted and hardens approximately 3 mm every 24 hours.

WEATHERSTRIPS

Seal the joints between the panel sections when replacing panel sections such as the spare wheel well, tail panel etc. Class A and B (P/N 116 1377) sealing is suitable.

FOAM RUBBER REPLACEMENT

Install the foam rubber replacement in the cavity to counter sound spreading through the body.

The foam rubber replacement is a wax treated foam ball (P/N 681 7640) that can be compressed and inserted between the panel sections. More than one foam ball can be used if one is not sufficient.

GALVANIZED BODY COMPONENTS, ALIGNING AND WELDING

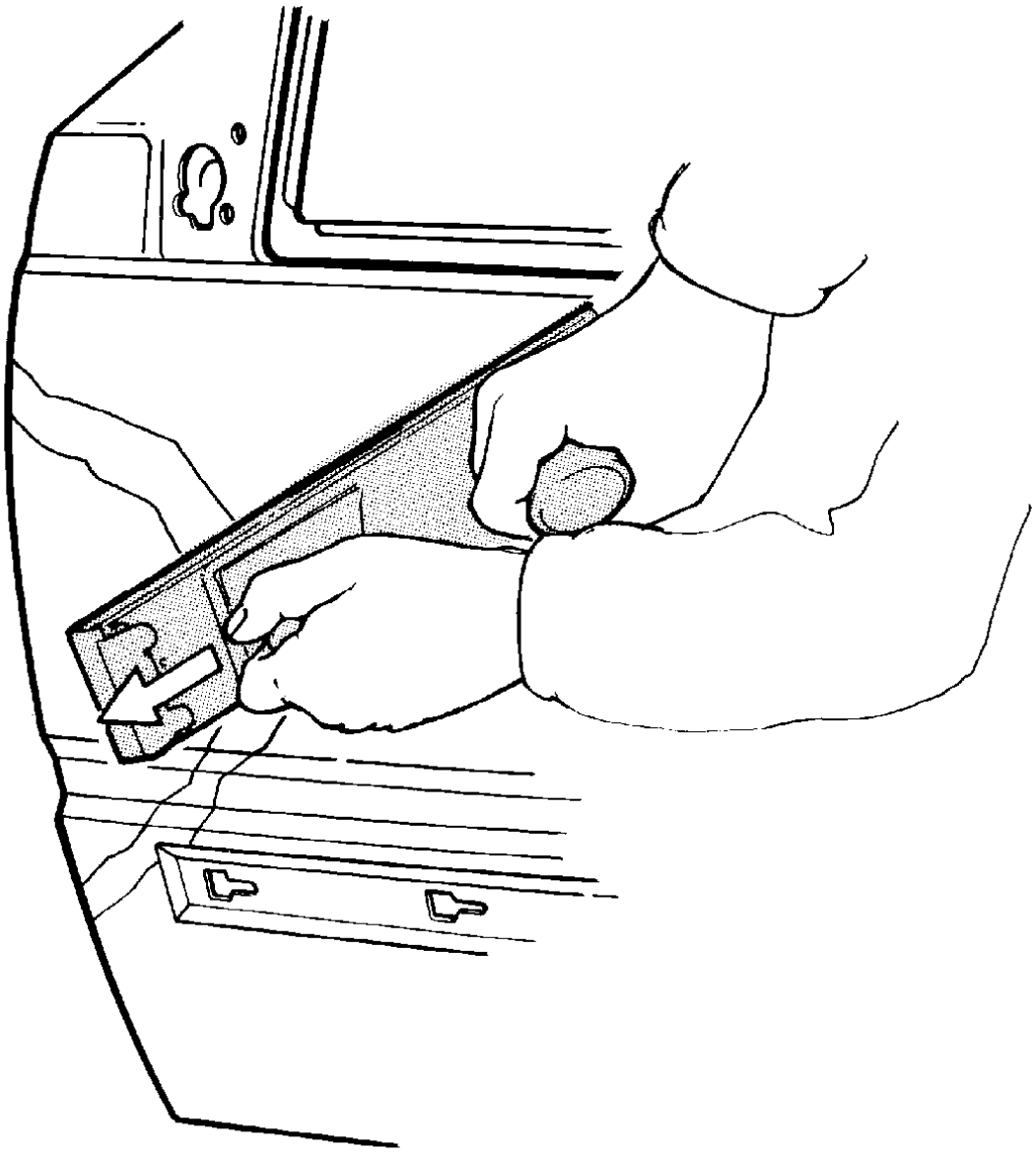

Fig. 4: Aligning Using Sanding Block
Courtesy of VOLVO CARS CORPORATION

Aligning

- Galvanized body components can be aligned in the usual way, but avoid using a body file. Use a sanding block or grinding disc with 80-grade paper instead
- Apply soldering paste in the usual way
- The soldering paste removes the galvanizing and adheres to the bare metal
- Always finish with 120-grain paper to prepare for spray painting.

NOTE: **Protect the galvanized layer as much as possible, as it is part of the rust protection.**

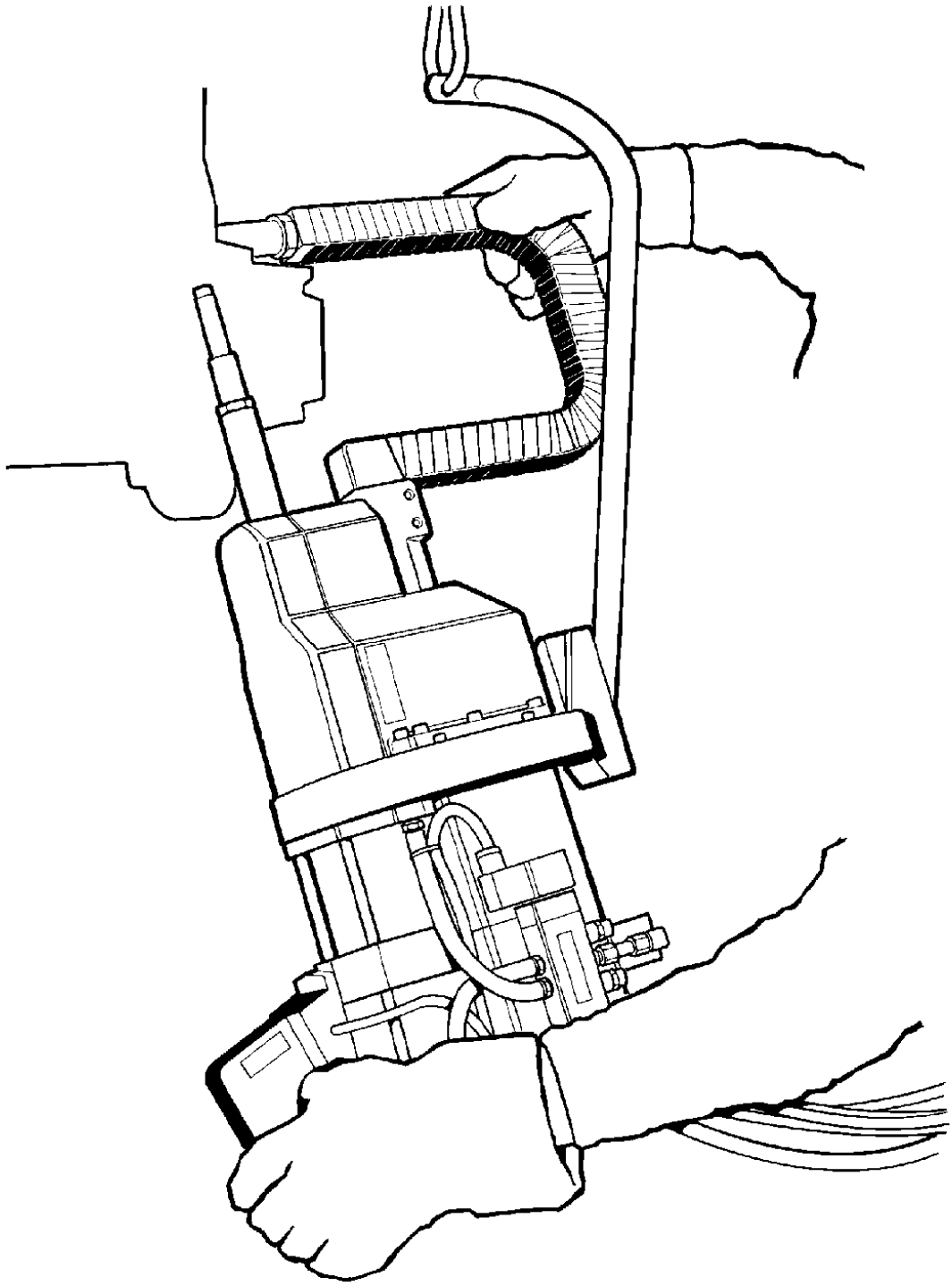

Fig. 5: Identifying MAG Spot Welder
Courtesy of VOLVO CARS CORPORATION

Welding

- Galvanized body components can be welded using **MAG** and resistance spot welding
- **Protect the galvanized layer** when preparing to weld.

NOTE: Use welding primer between the joins. Use point extraction .

- When **resistance spot welding** , the electrodes must be pressed together for a longer period than for untreated metal
- Voltage must also be increased slightly.

NOTE: Check welds carefully. Surfaces must be clean when resistance spot welding. Clean the surfaces using Scotch-Brite or similar. This protects the zinc coating and phosphate coating on the metal.

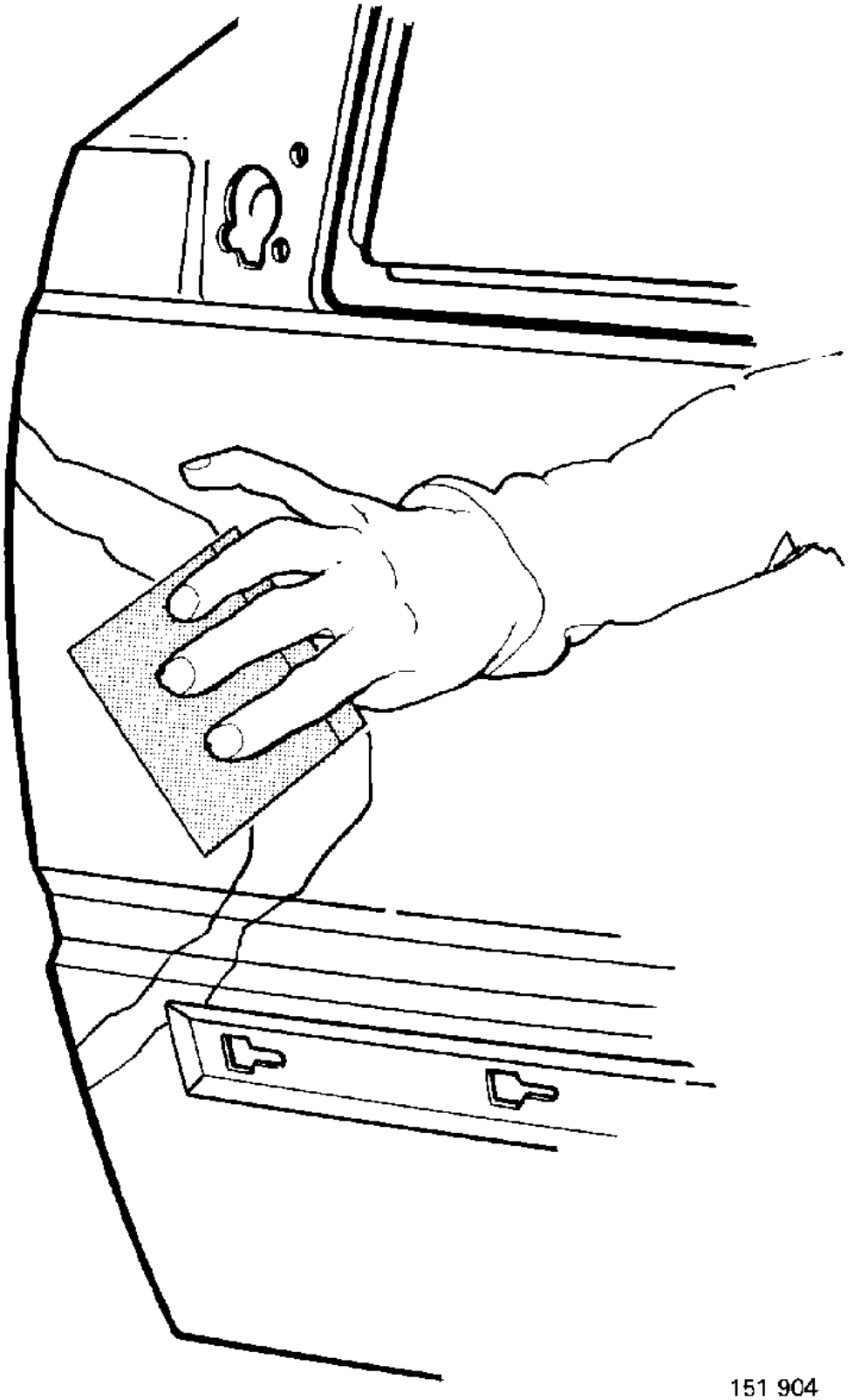

151 904

Fig. 6: Applying Special Filler
Courtesy of VOLVO CARS CORPORATION

Base filling

- After aligning galvanized panels use plastic filler in the same way as on ordinary body panels
- Not all types of filler can be used directly on galvanized metal
- Volvo has developed a **special filler** . This filler can be used on both aluminum and conventional body panels. **No primer is necessary** .

When applying plastic filler

- Apply filler
- Do not damage the galvanized layer
- Filler thickness **max 1 mm**
- Sand off the old paint
- Old paint need not be sanded off if damage is superficial. Matt using 120-grain paper.
- Limit the area being sanded. Remember that it will need to be spray painted later.
- Always finish with 120-grain paper to prepare for spray painting.

SHEET METAL, MATERIAL INFORMATION

GALVANIZED COMPONENTS

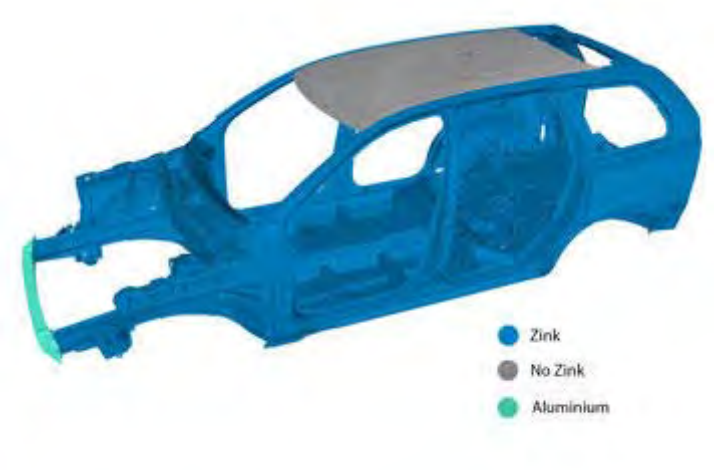

Fig. 7: Identifying Galvanized Components (1 Of 2)
Courtesy of VOLVO CARS CORPORATION

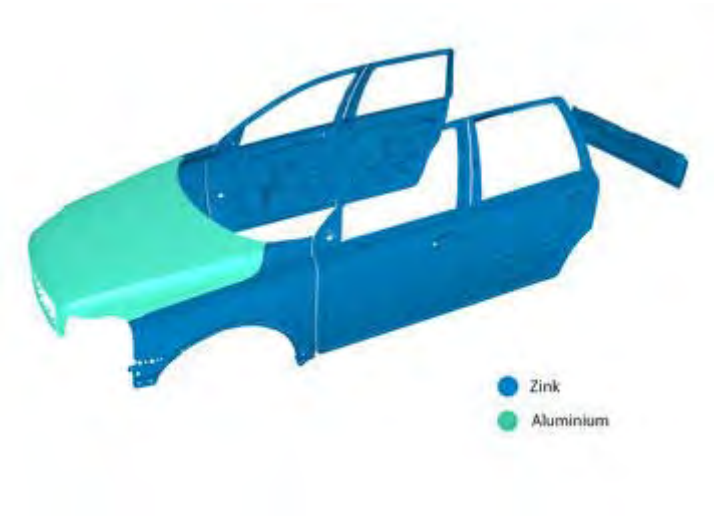

Fig. 8: Identifying Galvanized Components (2 Of 2)
Courtesy of VOLVO CARS CORPORATION

HSS STEEL

The bodywork is made up of a number of different steels to provide optimal protection in the event of a collision, rigidity, fuel economy etc.

The types of steel in this section are High Strength Steel (HSS). This has a higher tensile strength and yield point than ordinary steel sheet.

The yield point increases when it is heat treated. HSS-steel can be more difficult to align than ordinary steel plate.

When using an alignment bench, HSS components can cause problems if the counterhold is not fully tightened. Note how the bodywork reacts to tension and ensure that only the deformed area moves.

Always follow the welding procedures shown in VIDA (Volvo scan tool).

NOTE: HSS-steel must not be heat aligned.

BORON STEEL

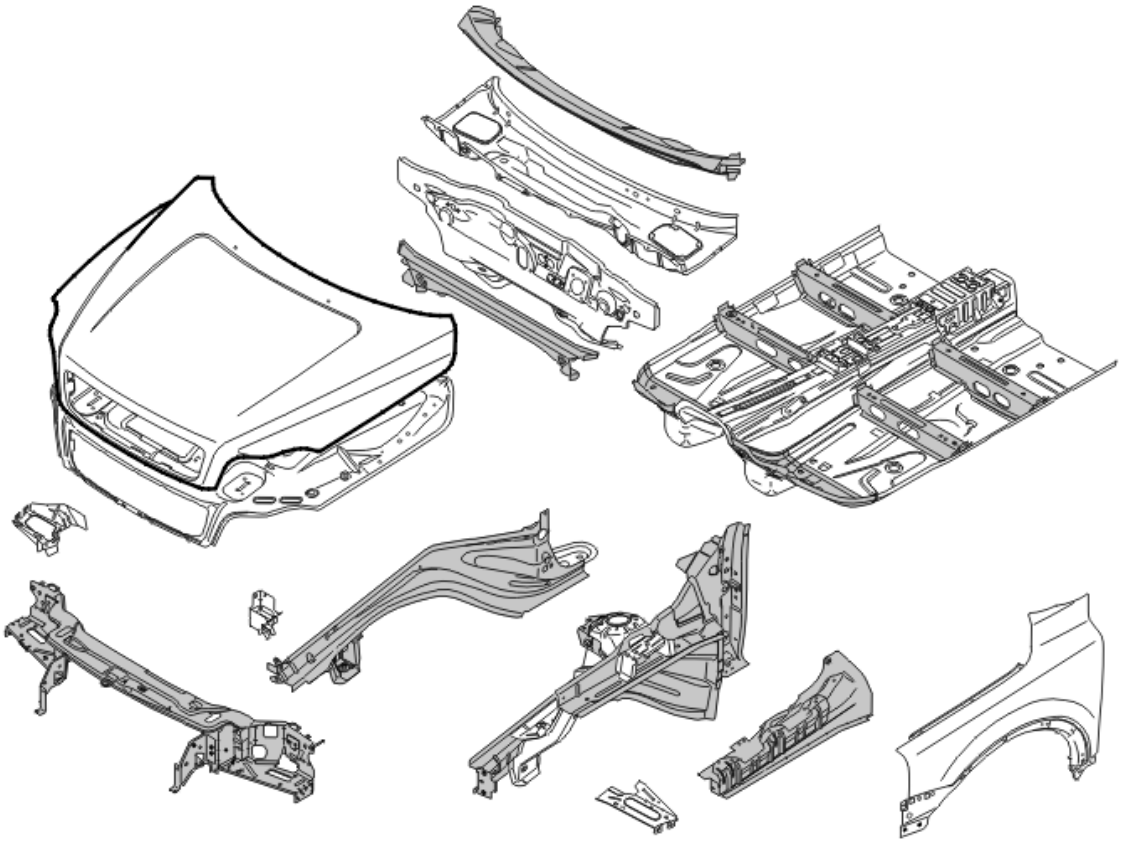

Fig. 9: Identifying BORON Steel (1 Of 4)
Courtesy of VOLVO CARS CORPORATION

BORON steel is in the same group as HSS steel.

The components marked in black are manufactured in Boron steel, The grey/dark grey sections in the graphics are High Strength Steel (HSS) with a yield point above 340 MPa and must therefore be treated with extra care during repair.

Boron steel is high tensile with a high breaking point.

When replacing Boron steel components, the welds cannot be drilled. Grind or plasma cut instead.

Boron steel has good tolerance for welding.

It is not possible to galvanise Boron steel during manufacture. These components must be rust-proofed extra thoroughly.

NOTE: **Boron steel must not be bent or heated.**

NOTE: **Boron steel may only be joined where indicated in the method. Mark carefully using a template. Use a cutting disc or plasma cutter.**

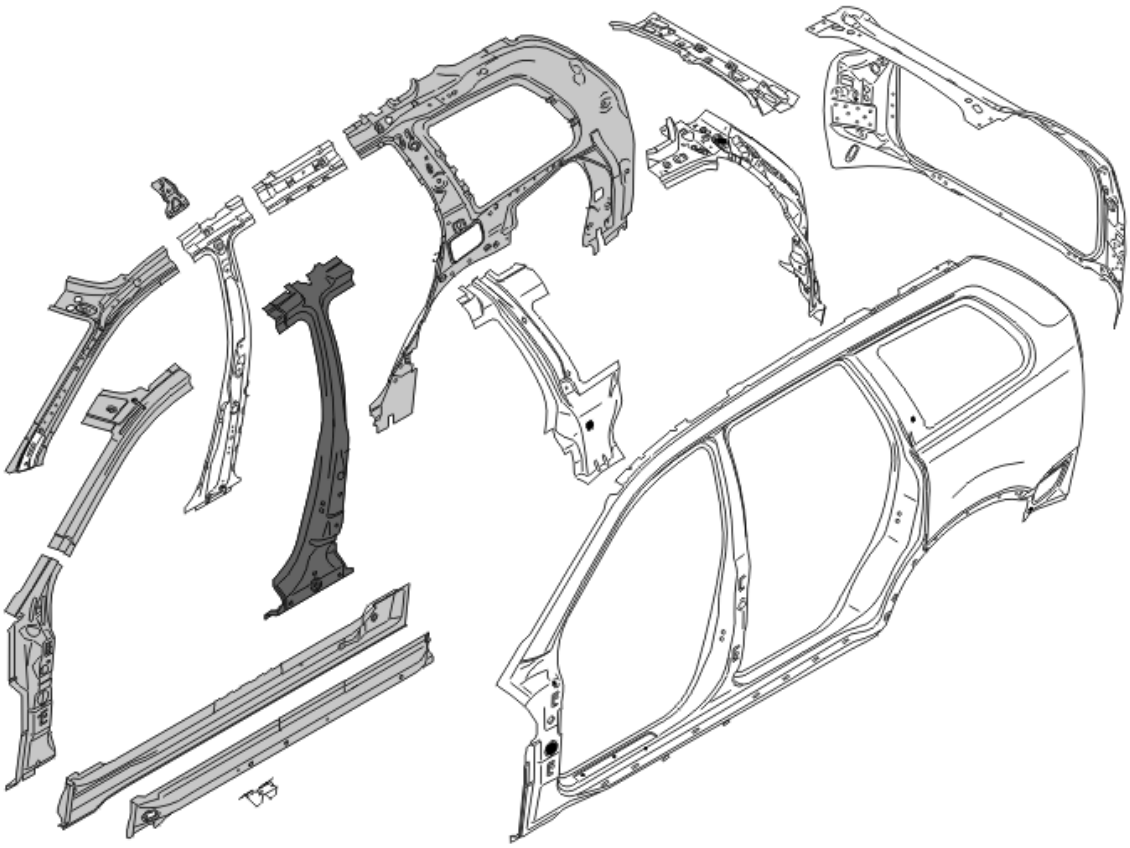

Fig. 10: Identifying BORON Steel (2 Of 4)
Courtesy of VOLVO CARS CORPORATION

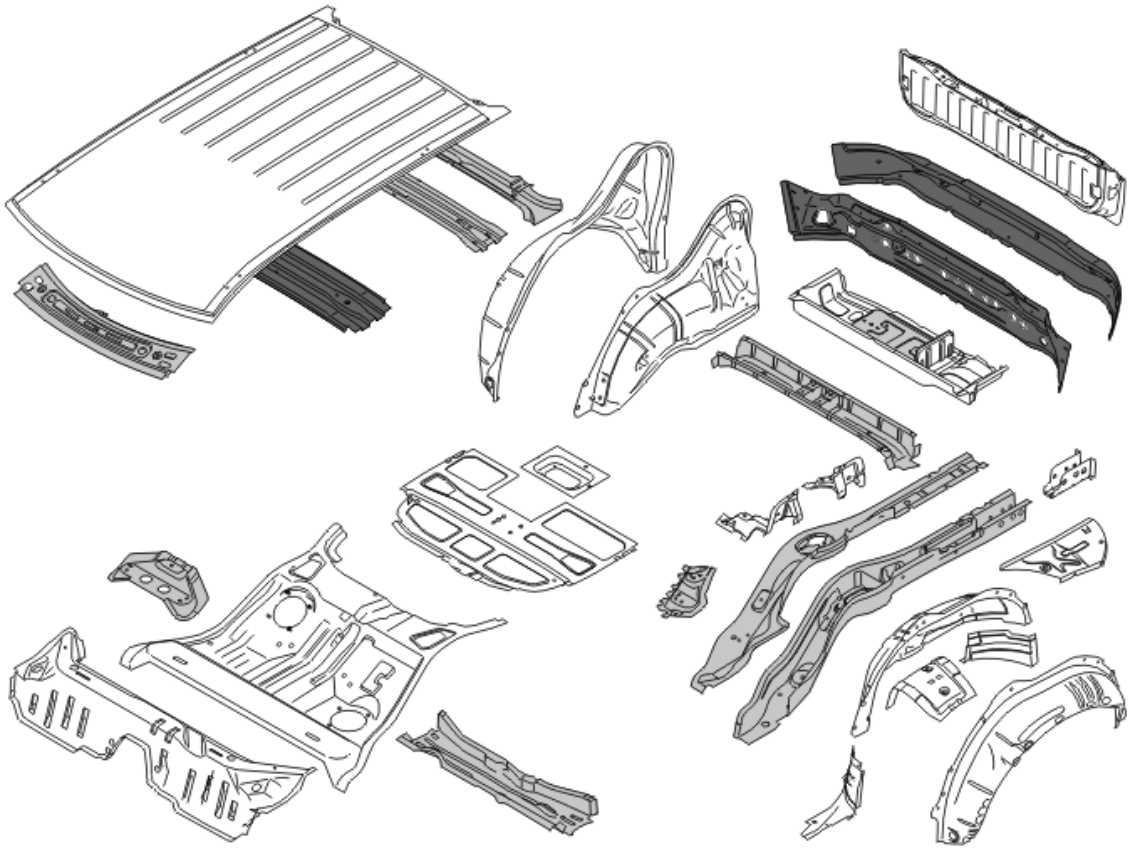

Fig. 11: Identifying BORON Steel (3 Of 4)
Courtesy of VOLVO CARS CORPORATION

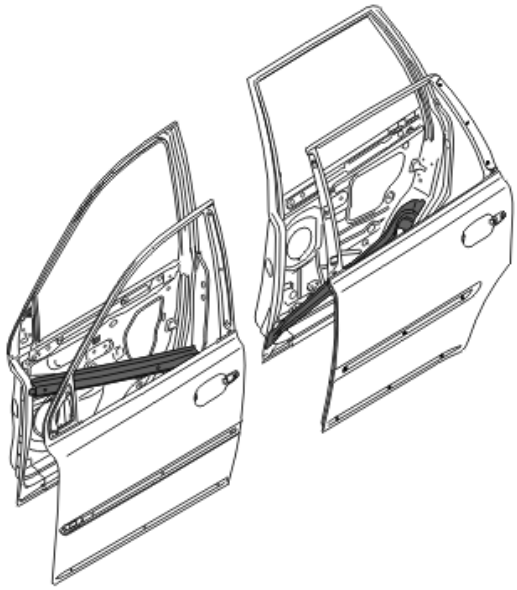

Fig. 12: Identifying BORON Steel (4 Of 4)
Courtesy of VOLVO CARS CORPORATION

EXTENDED INFORMATION

The steel can be divided into further subgroups based on the yield point, the force required to deform the steel. These groups are:

HS (HIGH STRENGTH STEEL)

Steel with a yield point between 220-450 MPa (marked light grey in the graphic).

There are three main types of steel within this group:

Phosphorous-alloy steel:

This steel has a higher strength as a result of the use of phosphorous alloy.

HSLA steel (High Strength Low Alloy):

This is a low alloy steel, where alloys such as Vanadium, Niobium or Titanium are used to increase the yield strength.

DP steel (Dual Phase):

This steel is strengthened by heat treatment during manufacture. A two phase structure of iron and carbon is formed. DP steel will lose its strength if it is exposed to temperatures in excess of 300°C.

EHS (EXTRA HIGH STRENGTH STEEL)

Has a yield point between 450-800 MPa. EHS is light grey in the graphic.

Both HSLA and DP steel are within this group, although the strength has been further increased through the addition of greater alloy substances.

UHS (ULTRA HIGH STRENGTH STEEL)

Has a yield point between 800-1400 MPa. UHS is dark grey in the graphic.

There are two main types of steel within this group:

DP steel:

The strength is even higher due to an advanced manufacturing process and the greater quantities of alloys.

BORON steel:

The additional of boron gives this steel greater strength. BORON steel also contains relatively high quantities of carbon. The profiles of the sheets are formed between a press and pad while the metal is red hot. The material also hardens here. These sections must not be straightened because of their extremely high strength.

WELDING, GENERAL

NOTE: The graphics in this service information are used for different model years and/or models. Some variation may occur. However, the essential information in the graphics is always correct.

Volvo bodies are manufactured to the highest quality. All bodywork repairs must therefore take place following the same principles. Use light tools. Take care of the surface coating, electro dip (ED) and phosphating.

Always use welding primer between welded panel flanges.

PRIOR TO WELDING

CAUTION: Always remove the battery cables before welding in accordance with, see BATTERY, DISCONNECTING .

CAUTION: Locate the welding ground connection as close as possible to the welding point.

CAUTION: If the welding must be carried out in the immediate vicinity of an electronic unit then this must be removed.

ASSEMBLY

Spot welding is mainly used when the bodies are manufactured, and use of this method should always be aimed for with a repair.

CAUTION: Gas welding must not be used on Volvo bodywork.

WARNING: Use ventilation/extraction equipment.

Unless otherwise specified in the method, the distance between the welds must be the same as the original design.

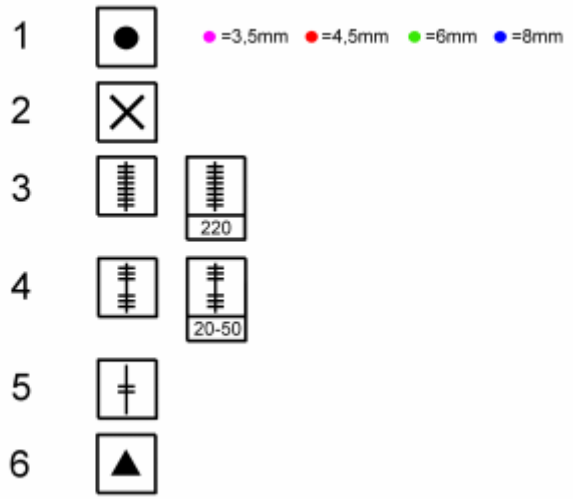

Fig. 13: Identifying Welding Symbols
Courtesy of VOLVO CARS CORPORATION

There are a number of other assembly methods that are illustrated with the following symbols:

1. Spot weld/spot weld with the location of the weld and lens diameter specified with colour (may be replaced with 2)
2. Plug weld (may be replaced with 1)
3. Seam weld/Seam weld with weld length specified in mm
4. Step weld/Step weld with weld length followed by length between welds specified in mm. Always start and finish with the weld.
5. Tack weld
6. Glue.

RESISTANCE SPOT WELDING

Resistance spot welding must primarily be used if the capacity of the welding equipment is matched to panel thickness. When carrying out resistance spot welding, grind down to bare metal.

Clean the surfaces with Scotch-Brite or similar to minimise zinc and phosphating damage. Apply welding primer between the panels.

NOTE: Always test weld in accordance with the method below. Always set the weld according to panel quality

MAG WELDING

Punch replacement part for plug welding.

Select size of hole for plug welding according to the following panel thicknesses:

8 mm for thicknesses less than 2.5 mm

10 mm or more for thicknesses above 2.5 mm.

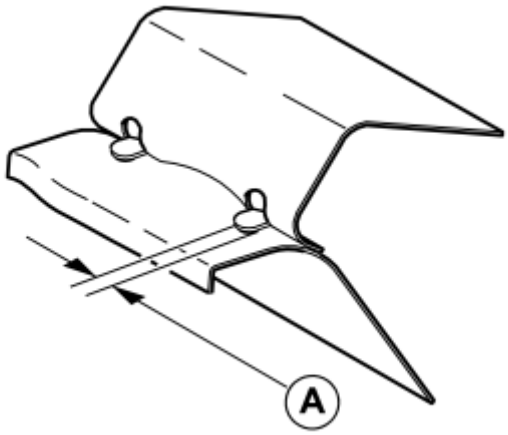

Fig. 14: Identifying Welding Lens Diameter
Courtesy of VOLVO CARS CORPORATION

Test weld several test pieces. Break the panels apart and measure the size of the welding lens diameter (A), see illustration.

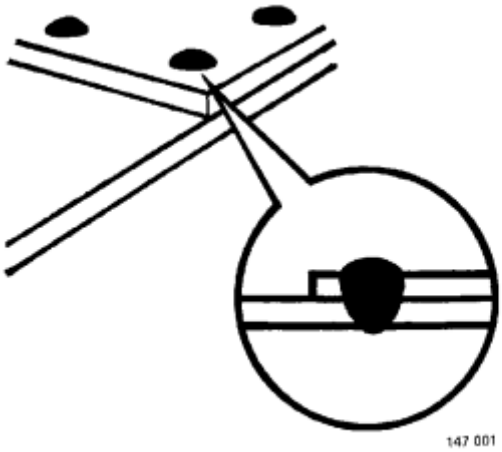

Fig. 15: Identifying Proper Spot Welds On Both Panels
Courtesy of VOLVO CARS CORPORATION

NOTE: Use welding primer on all internal flanges.

Add filling primer if there is grinding damage.

CAUTION: Make sure that the spot welds take properly on both panels.

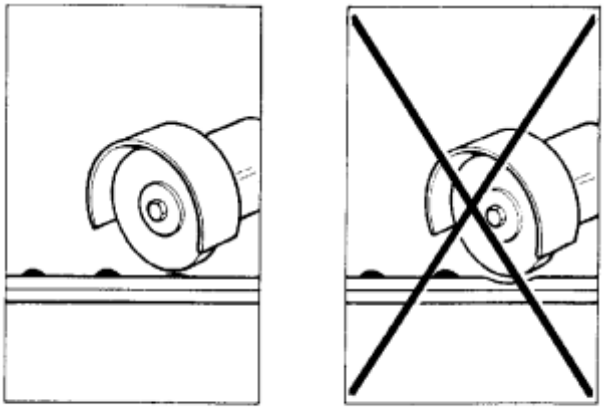

Fig. 16: Grinding Properly And Improperly
Courtesy of VOLVO CARS CORPORATION

Grind down the plug weld.

CAUTION: Only grind welds, not the adjacent panel.

ACCESSORIES AND BODY, CAB

Body Frame - Removal, Replacement And Installation

BODY SIDE (2003-2004)

A-POST, REPLACING

As the illustrations in this service information are used for different model years and / or models, some variation may occur. However, the essential information in the illustrations is always correct.

A-POST, REPLACING

REMOVING THE A-POST

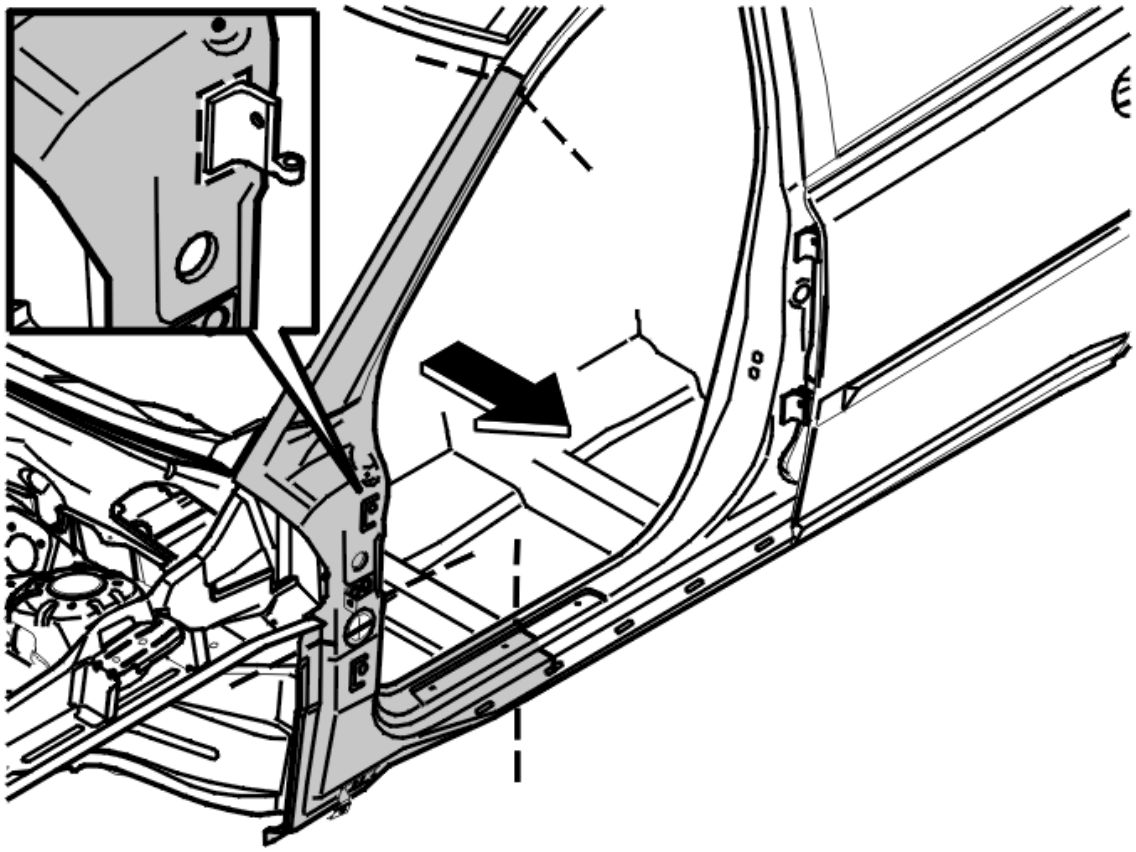

Fig. 1: Removing The A-Post
Courtesy of VOLVO CARS CORPORATION

Remove components. See **SIDE SECTION, EXPOSING** .

Determine the extent of the damage. See **WINDSHIELD FRAME, ALIGNMENT CHART** and **BODY SIDE, ALIGNMENT CHART** .

Roughly cut at an appropriate point. See the recommended cutting points in the illustration.

Remove:

- the door hinges. See **HINGES SIDE DOOR, REPLACING** . The replacement part can also be cut so that the A-post can be slid over the hinges
- the cover for the upper side member. See **SIDE MEMBER, UPPER, REPLACING**.

Grind and drill out the spot welds and bead welds.

Pry off the rear section.

Grind clean.

Apply welding primer.

INSTALLING THE A-POST

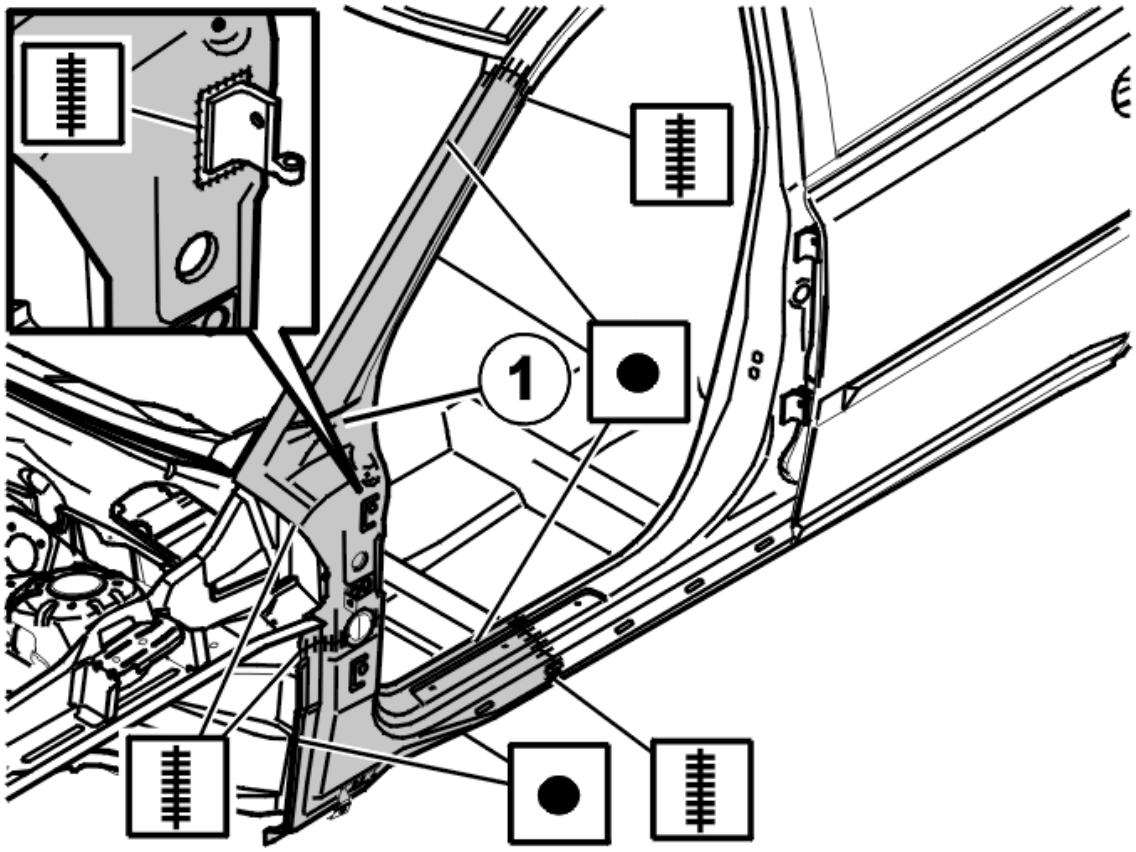

Fig. 2: Installing The A-Post
Courtesy of VOLVO CARS CORPORATION

Install foam rubber replacement at (1).

Align the replacement part. See **WINDSHIELD FRAME, ALIGNMENT CHART** and **BODY SIDE, ALIGNMENT CHART** .

Secure the replacement part.

Weld into place.

Install:

- the door hinges. See **HINGES SIDE DOOR, REPLACING**
- the cover for the upper side member. See **SIDE MEMBER, UPPER, REPLACING**.

Seal according to **BODY SEAL** .

REPLACING THE A-POST REINFORCEMENT

REMOVING THE A-POST REINFORCEMENT

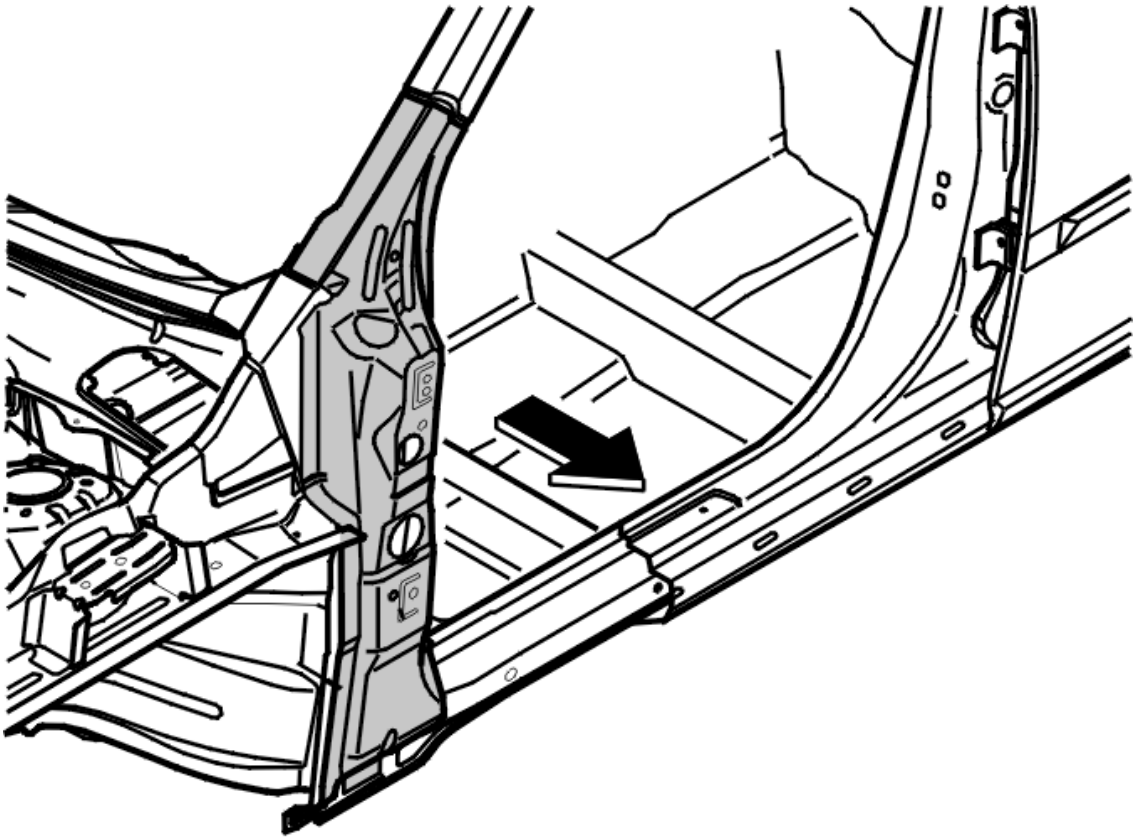

Fig. 3: Removing The A-Post Reinforcement
Courtesy of VOLVO CARS CORPORATION

Remove the dashboard. See **DASHBOARD, REPLACING** .

Grind and drill off the A-post reinforcement.

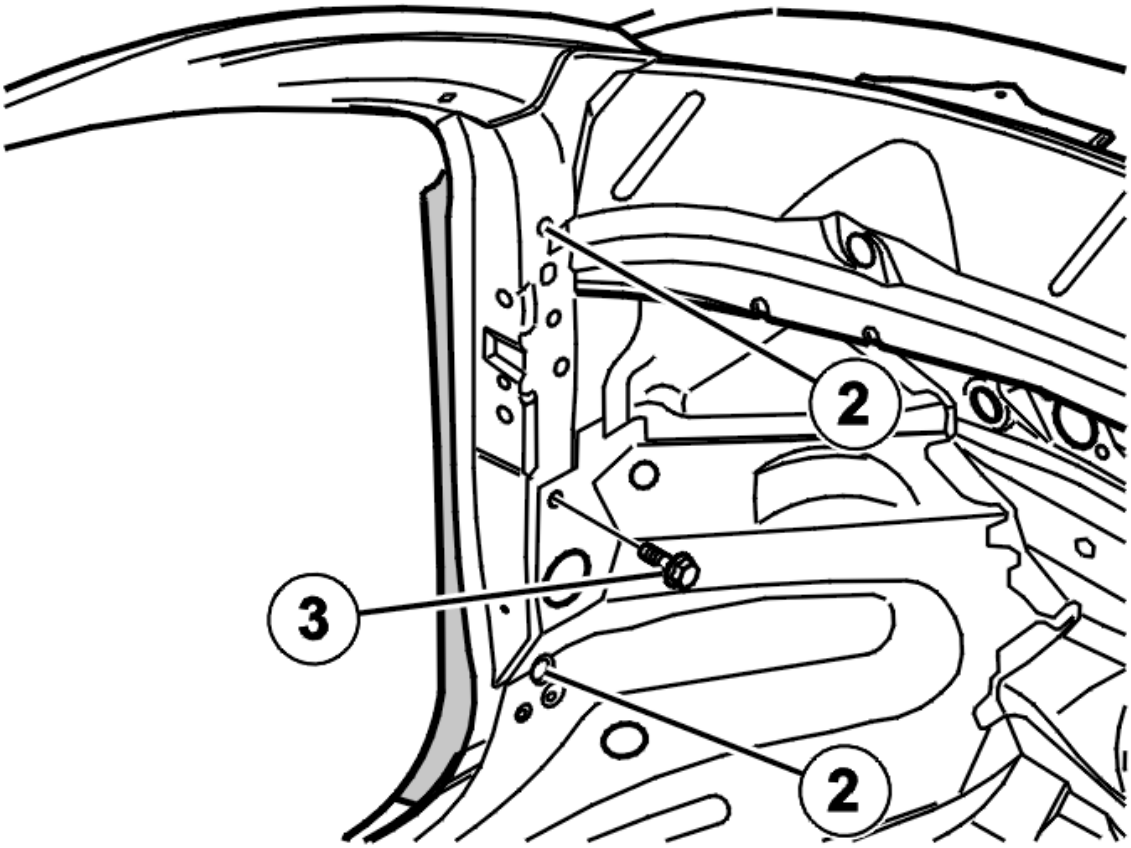

Fig. 4: Identifying A-Post Assembly Holes
Courtesy of VOLVO CARS CORPORATION

Grind off the MAG welds on the inside (2) which hold the reinforcement section inside the A-post reinforcement.

Remove the screw holding the reinforcement (3).

Grind clean.

Apply welding primer.

INSTALLING THE A-POST REINFORCEMENT

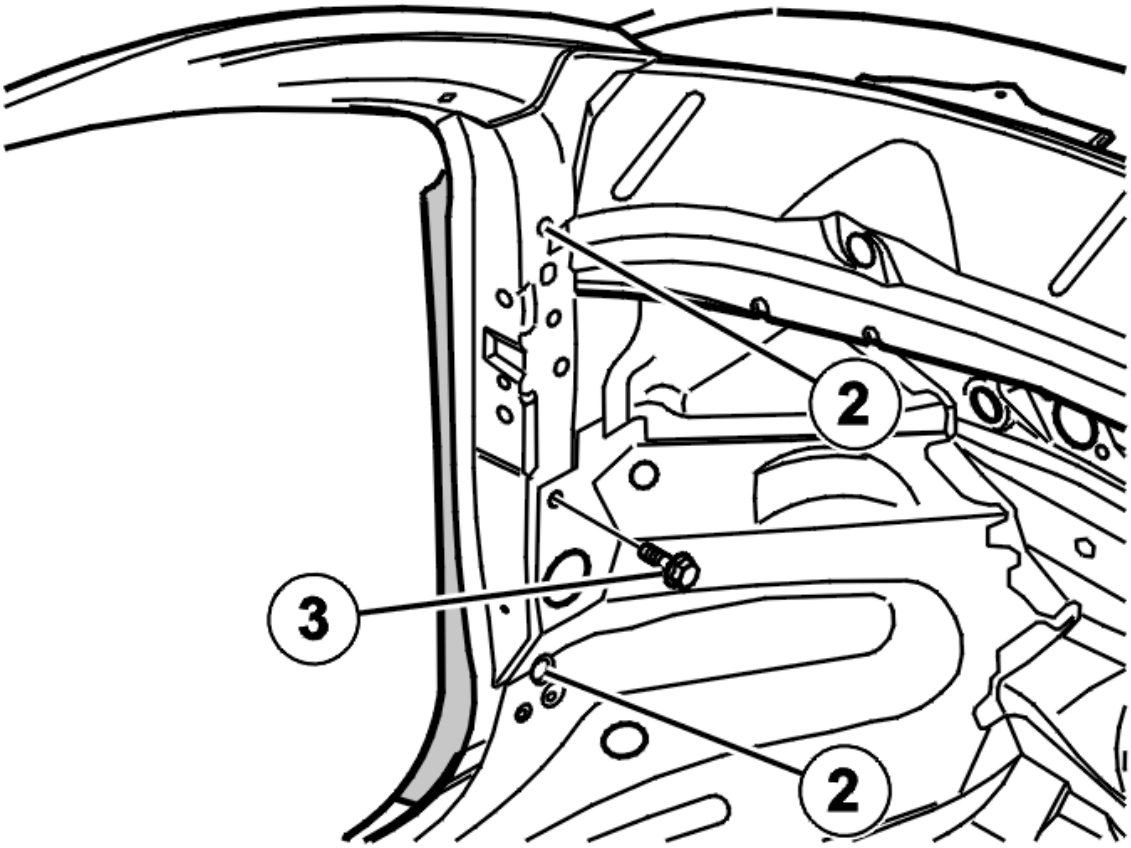

Fig. 5: Installing The A-Post Reinforcement
Courtesy of VOLVO CARS CORPORATION

Install foam rubber replacement at (1).

Secure the replacement part using the bolt on the inside of the A-post.

Weld into place.

Install:

- the outer A-post
- the hinges. See **HINGES SIDE DOOR, REPLACING** .

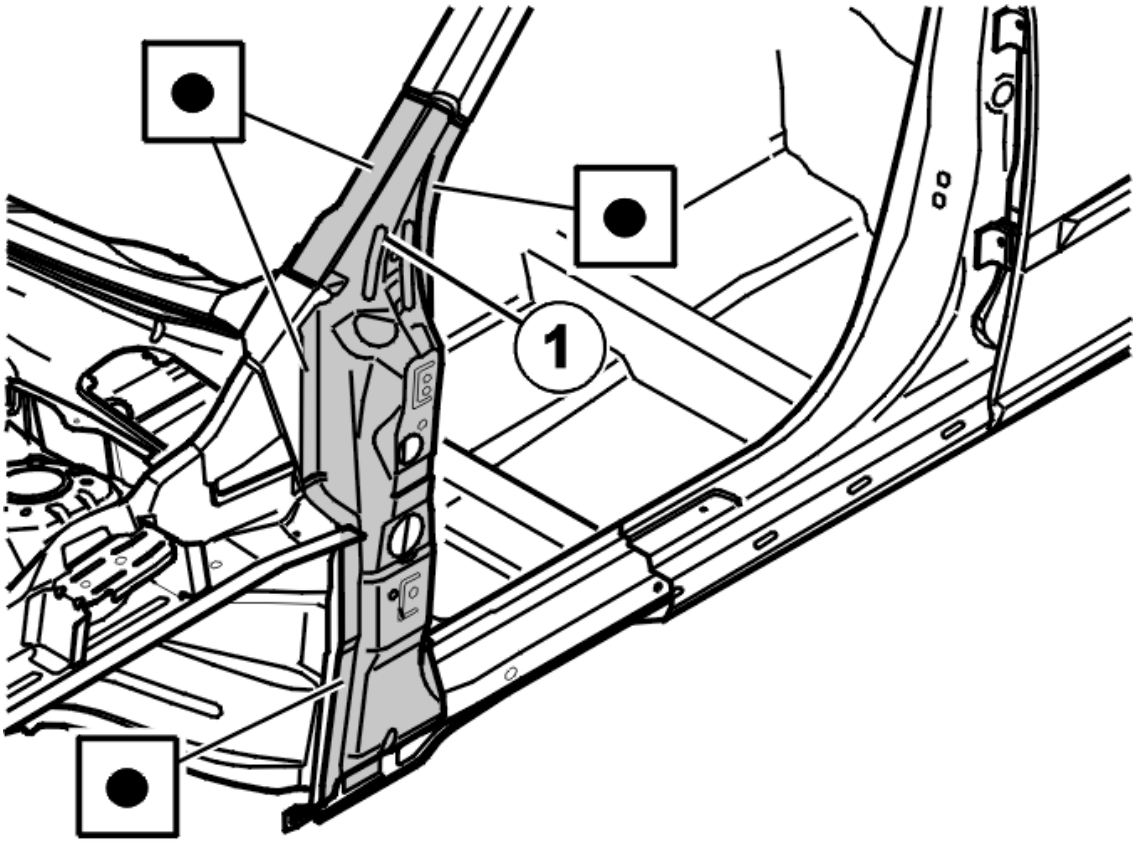

Fig. 6: Installing The A-Post Reinforcement
Courtesy of VOLVO CARS CORPORATION

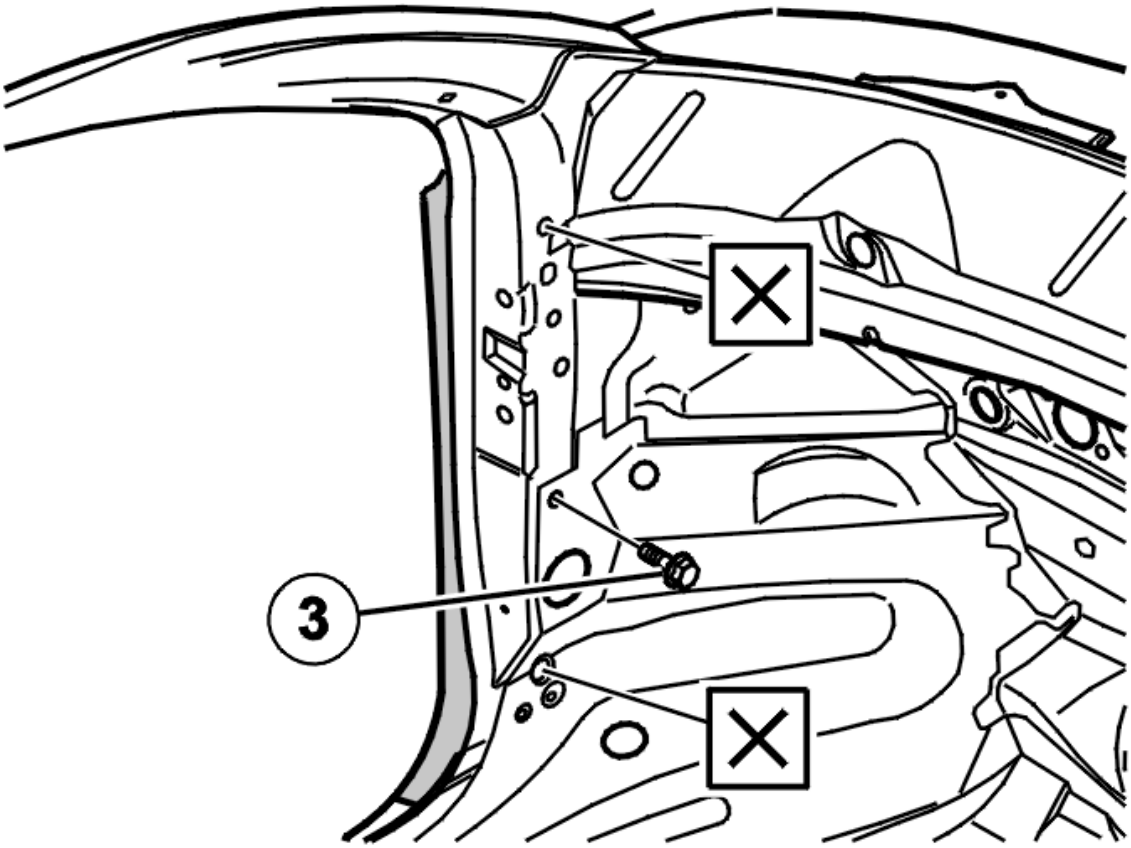

Fig. 7: Identifying A-Post Assembly Holes
Courtesy of VOLVO CARS CORPORATION

BODY SIDE INNER, REPLACING

REPLACING

As the illustrations in this service information are used for different model years and / or models, some variation may occur. However, the essential information in the illustrations is always correct.

REMOVING THE INNER BODY SIDE

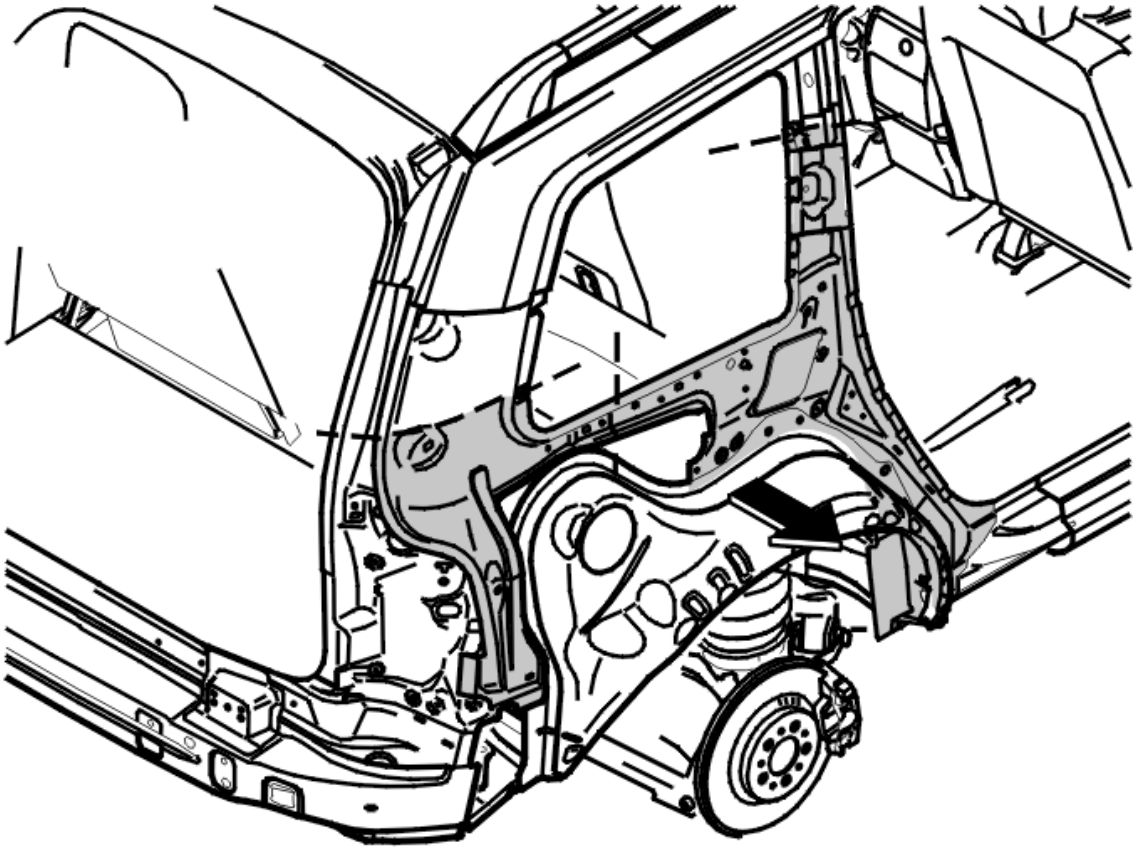

Fig. 8: Removing The Inner Body Side
Courtesy of VOLVO CARS CORPORATION

Remove the components. See **REAR SECTION, EXPOSING** and **SIDE SECTION, EXPOSING** .

Determine the extent of the damage. See **REAR END, ALIGNMENT CHART** and **BODY SIDE, ALIGNMENT CHART** .

Roughly cut at an appropriate point. See the recommended cutting points in the illustration.

If necessary, remove:

- the rear fender. See **REAR FENDER, REPLACING**
- the C-post. See **C-POST, REPLACING**
- the outer rear section. See **REAR SECTION OUTER, REPLACING**
- the rear bumper rail. See **BUMPER RAIL REAR, REPLACING**
- the inner rear section. See **REAR SECTION INNER, REPLACING**.

Grind off the spot welds.

Pry off the inner body side.

Grind clean.

Apply welding primer.

INSTALLING THE INNER BODY SIDE

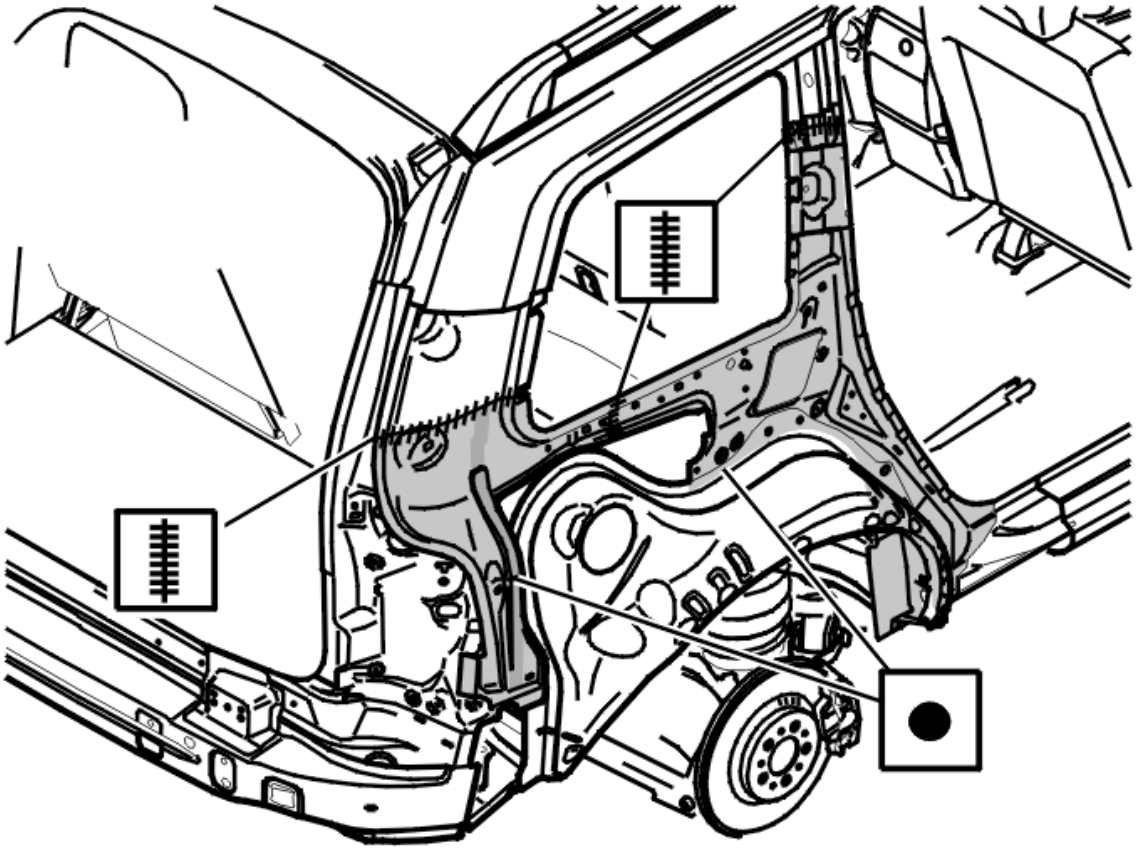

Fig. 9: Installing The Inner Body Side
Courtesy of VOLVO CARS CORPORATION

Secure the replacement part.

Weld into place.

Install:

- the rear fender. See **REAR FENDER, REPLACING**
- the C-post. See **C-POST, REPLACING**
- the outer rear section. See **REAR SECTION OUTER, REPLACING**
- the rear bumper rail. See **BUMPER RAIL REAR, REPLACING**
- the inner rear section. See **REAR SECTION INNER, REPLACING**.

Seal the body.

B-POST, REPLACING

REPLACING

As the illustrations in this service information are used for different model years and / or models, some variation may occur. However, the essential information in the illustrations is always correct.

B-POST, REPLACING

REMOVING THE B-POST

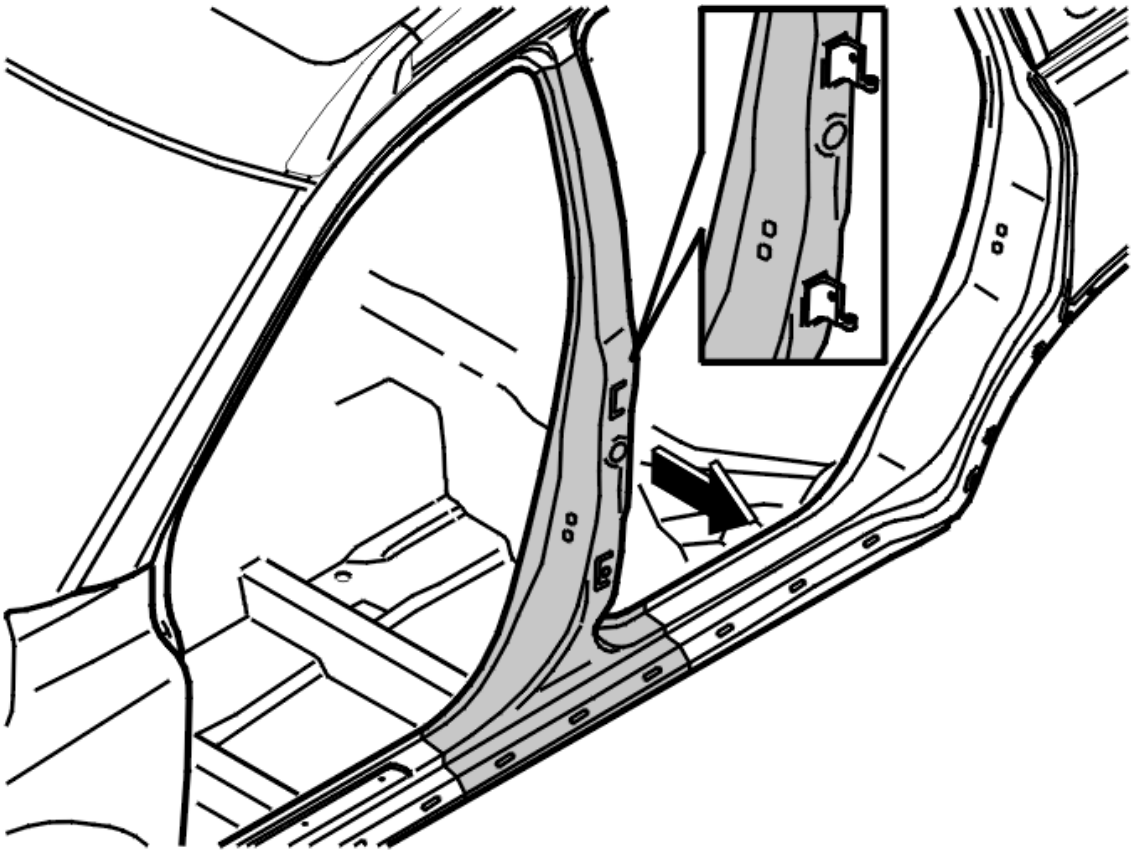

Fig. 10: Removing The B-Post
Courtesy of VOLVO CARS CORPORATION

Remove components. See **SIDE SECTION, EXPOSING** .

Pull out the damaged section to make it easier to re-align internal components.

Determine the extent of the damage. See **BODY SIDE, ALIGNMENT CHART** .

Roughly cut at an appropriate point. The recommended cutting points are marked in the illustration.

Remove the door hinges (see, see **HINGES SIDE DOOR, REPLACING**) or cut the replacement part so that the B-post can be slid over the hinge.

Grind and drill out the spot welds and bead welds.

Pry off the B-post.

INSTALLING THE B POST

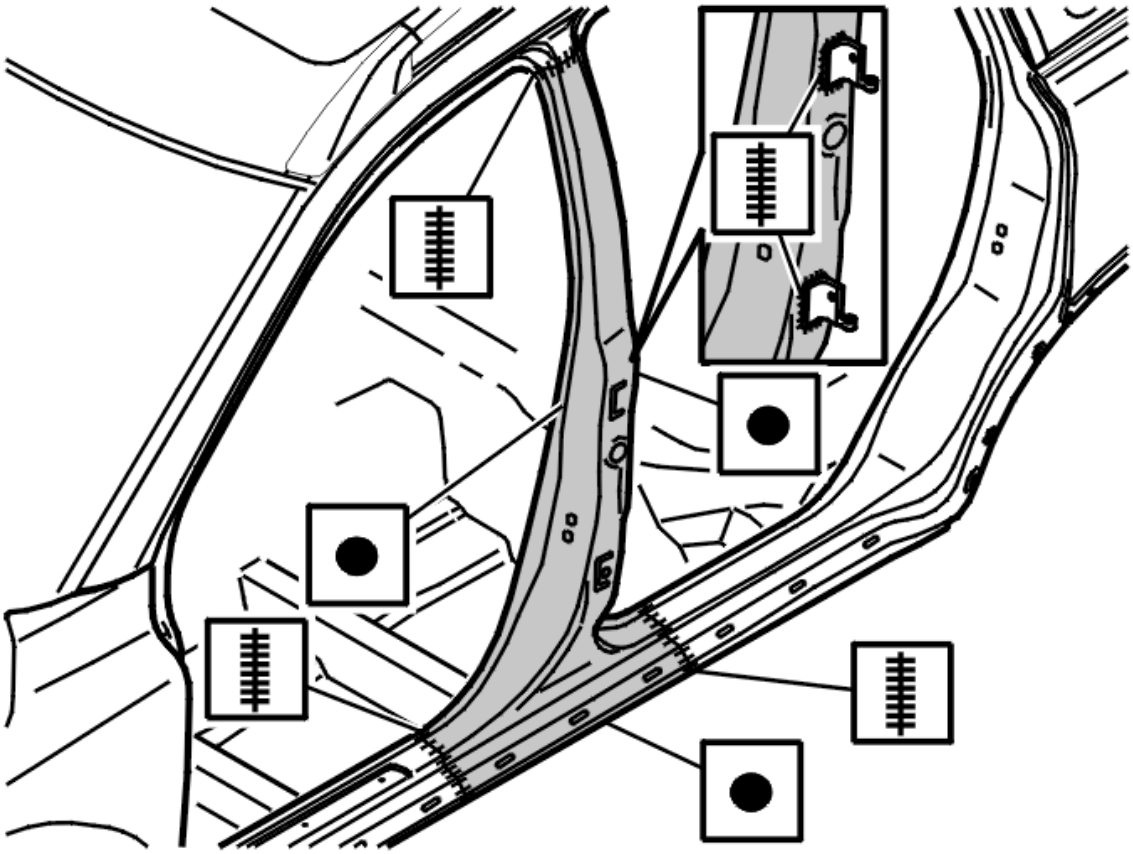

Fig. 11: Installing The B Post
Courtesy of VOLVO CARS CORPORATION

Grind clean.

Apply welding primer.

Install the replacement part so that it is slightly overlapping the old panel.

Align the replacement part.

Saw through the two panels.

Do not damage the internal reinforcements when sawing.

Secure the edges of the joints by tack welding.

Complete the welding.

Seal the seams and joins. See **BODY SEAL**

B-POST INNER AND REINFORCEMENT B-POST, REPLACING

REMOVING THE INNER B-POST AND B-POST REINFORCEMENT

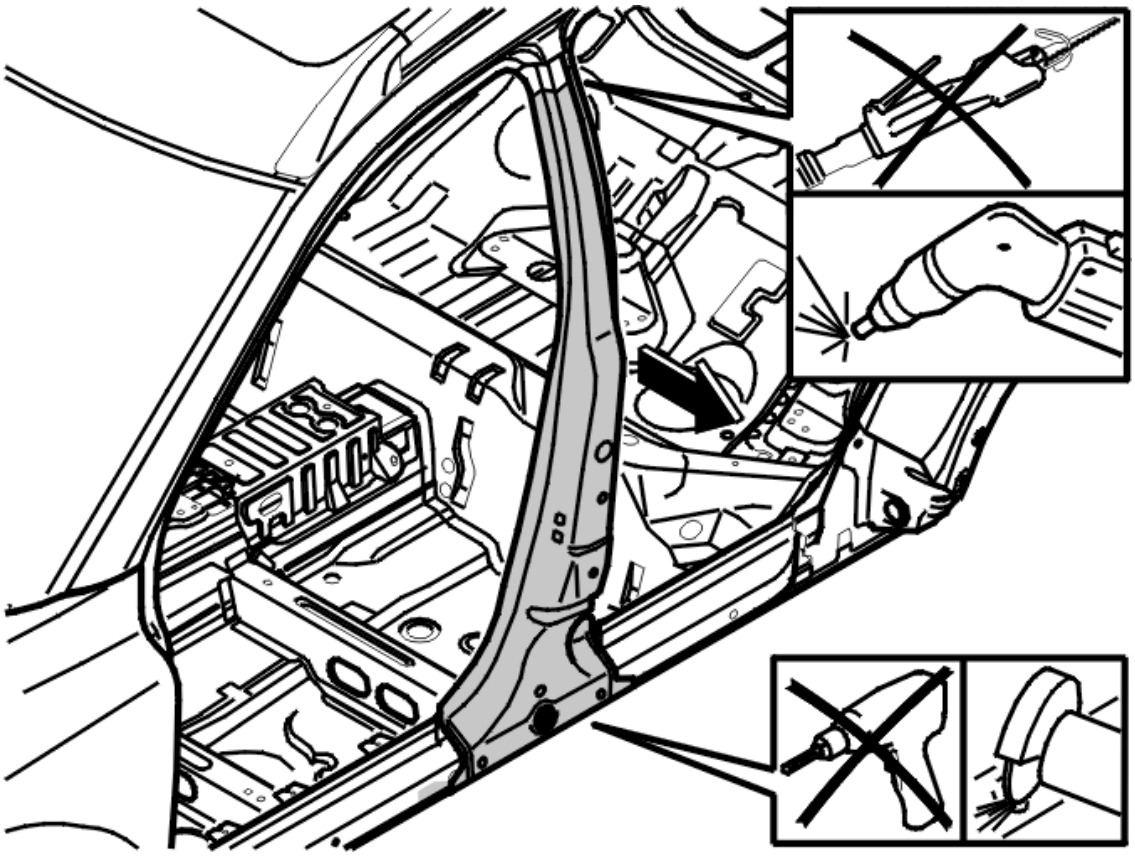

Fig. 12: Removing The Inner B-Post And B-Post Reinforcement
Courtesy of VOLVO CARS CORPORATION

NOTE: **The B-post reinforcement is made of BORON steel. This material cannot be sawn, drilled through or realigned. For more information, see SHEET METAL, MATERIAL INFORMATION .**

The inner B-post and the reinforcement must be replaced together; they are extremely difficult to separate.

Grind off the spot welds.

Cut the inner B-post at the top edge. See the illustration.

Grind off the bead welds on the inside of the B-post.

Pry off the component.

INSTALLING THE INNER B-POST AND B-POST REINFORCEMENT

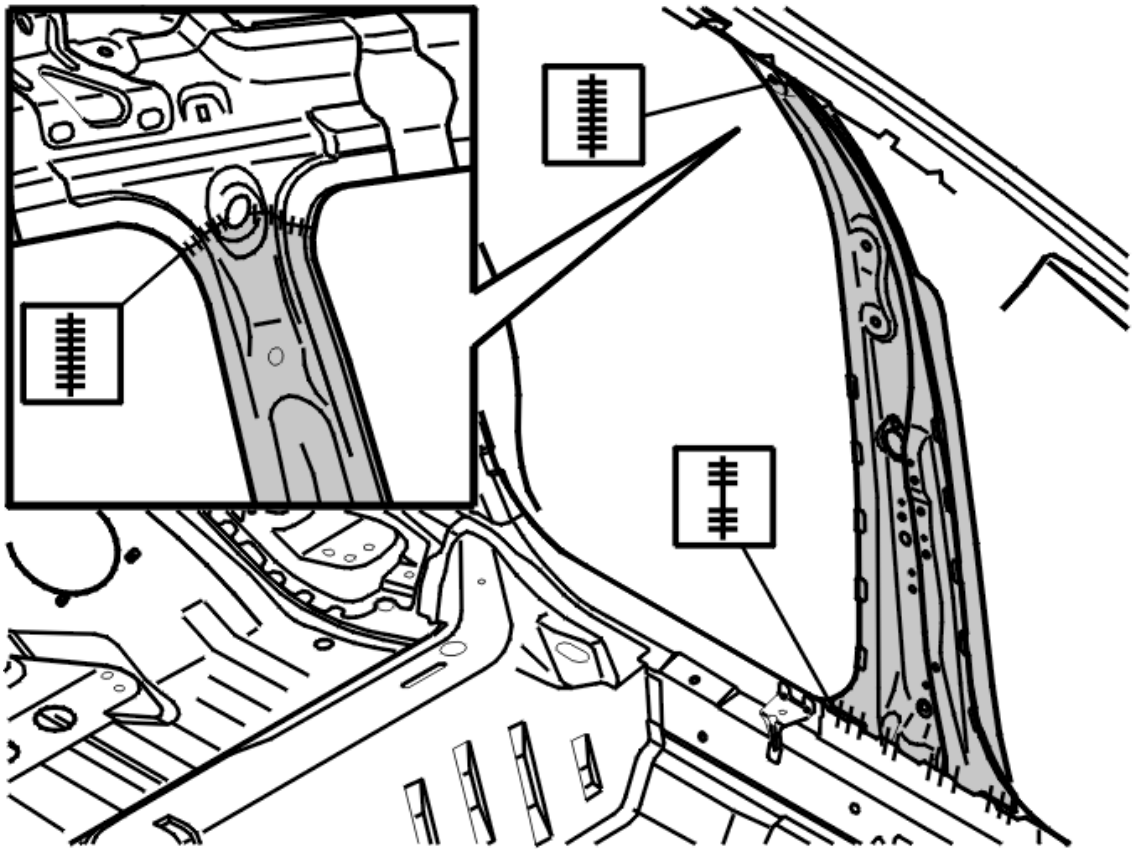

Fig. 13: Installing The Inner B-Post And B-Post Reinforcement (1 of 2)
Courtesy of VOLVO CARS CORPORATION

Grind clean.

Apply welding primer.

Align the replacement part. See **BODY SIDE, ALIGNMENT CHART** .

Secure and weld the replacement part into place.

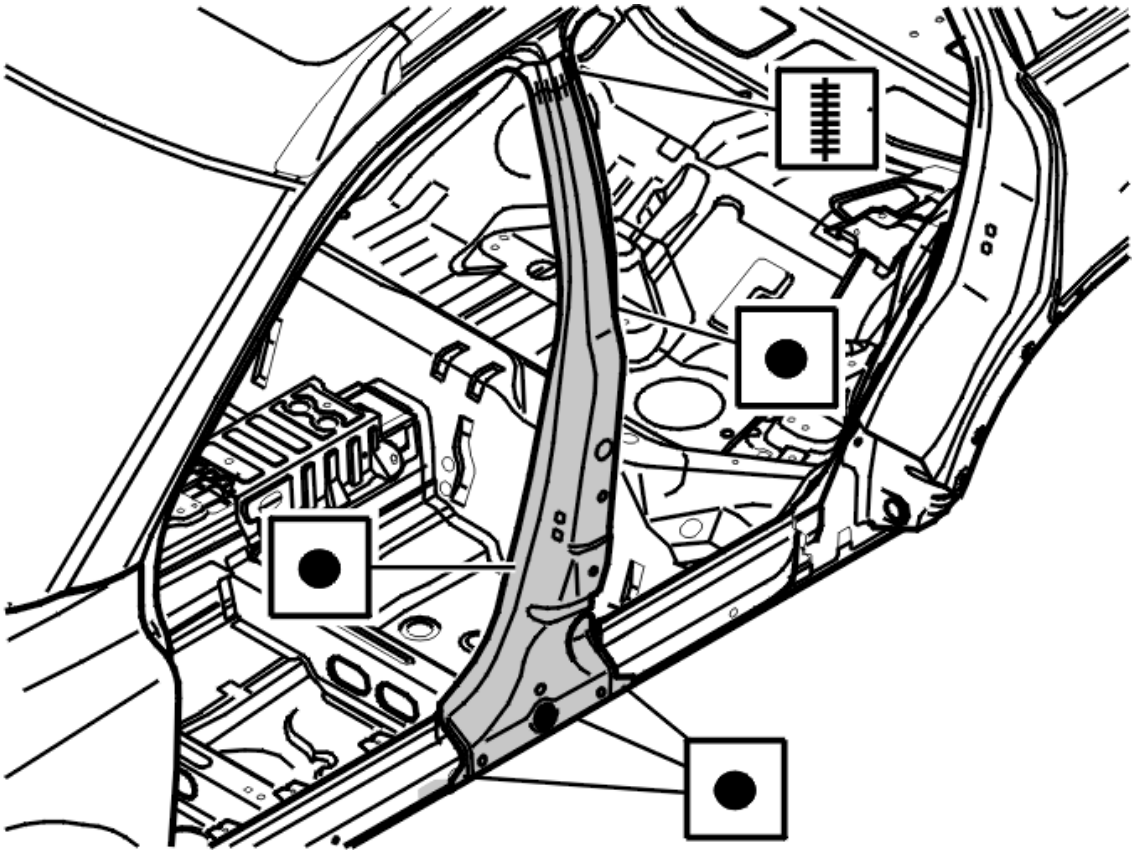

Fig. 14: Installing The Inner B-Post And B-Post Reinforcement (2 of 2)
Courtesy of VOLVO CARS CORPORATION

NOTE: **Start welding from the center outwards. This is to reduce stress and make spot welding easier in the tough material.**

C-POST, REPLACING

REPLACING

As the illustrations in this service information are used for different model years and / or models, some variation may occur. However, the essential information in the illustrations is always correct.

REMOVING THE C-POST

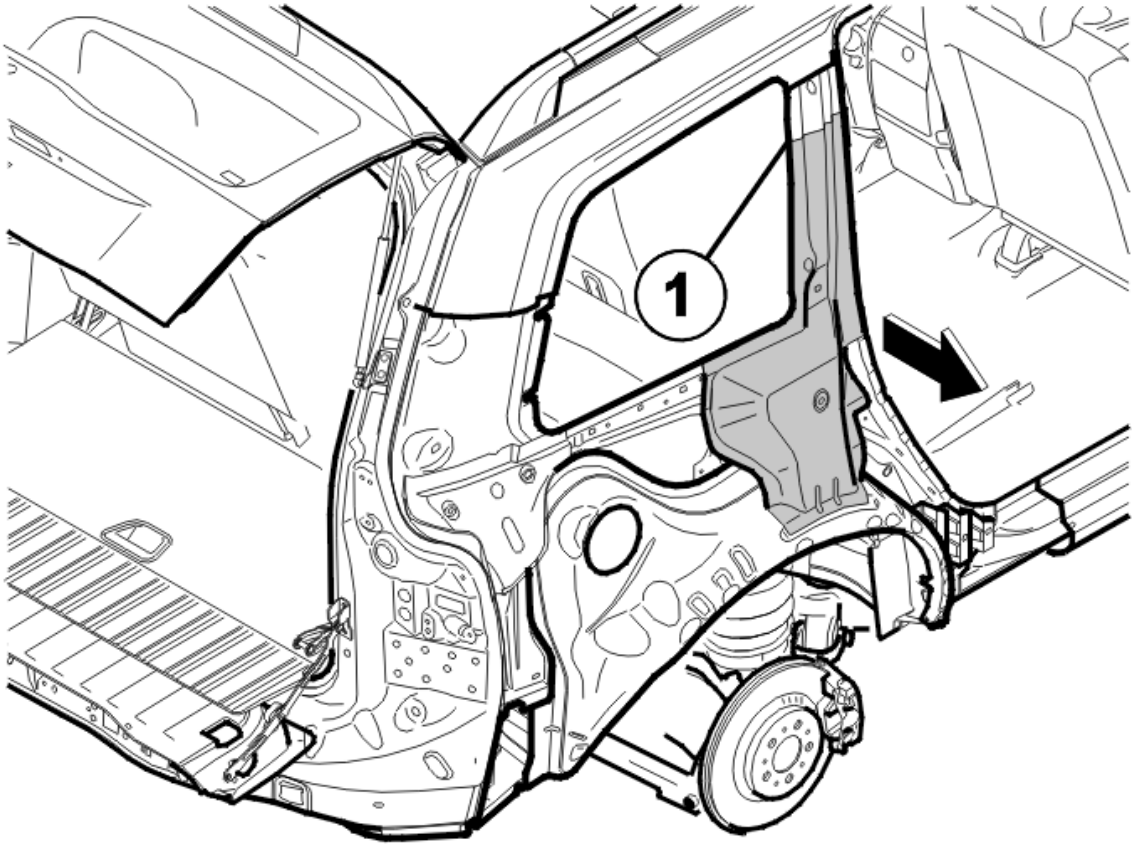

Fig. 15: Removing The C-Post
Courtesy of VOLVO CARS CORPORATION

Remove components. See **SIDE SECTION, EXPOSING** .

HINT: Before removing the rear fender, mark on the flange where the cutting edges used for the body side alignment chart are.

Remove the rear fender. See **REAR FENDER, REPLACING** .

Grind and drill off the C-post reinforcement. If joining the reinforcement, position the joint as illustrated (1).

Pry off the component.

Grind clean.

Apply welding primer.

INSTALLING THE C-POST

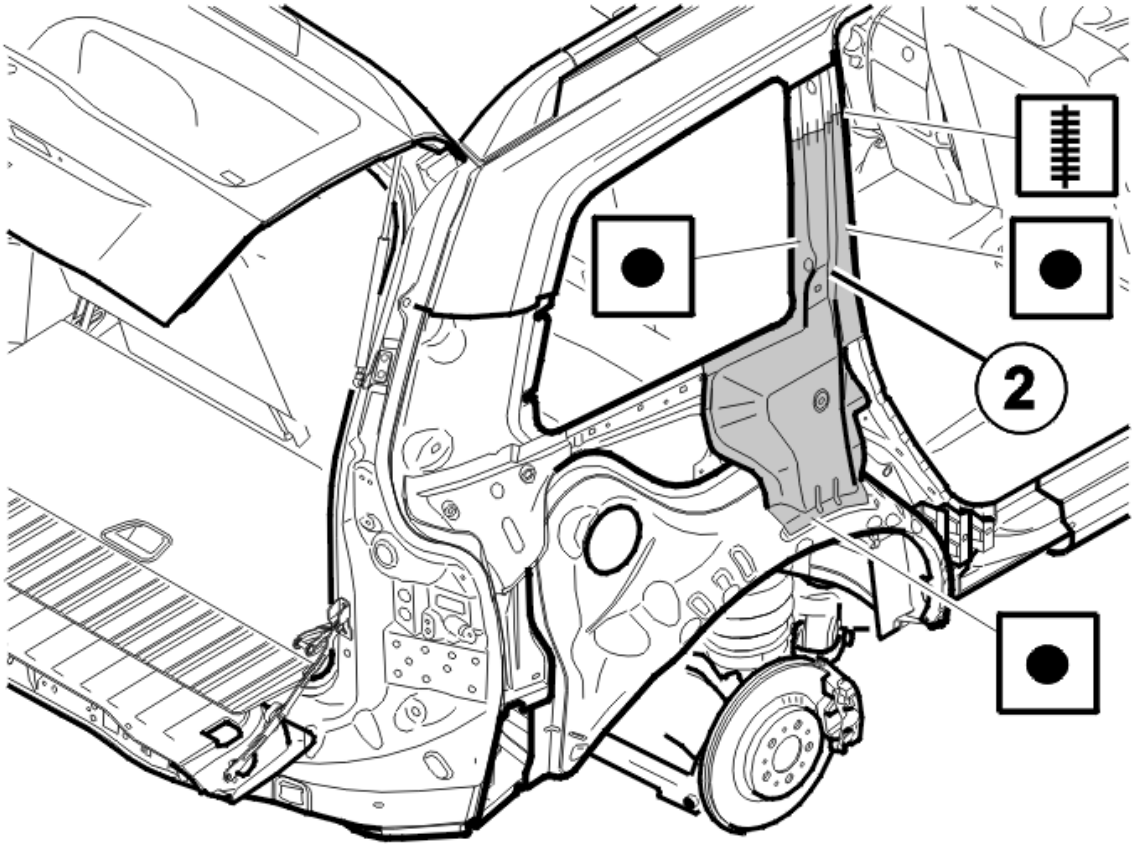

Fig. 16: Installing The C-Post
Courtesy of VOLVO CARS CORPORATION

Install foam rubber replacement between the C-post reinforcement and the inner body side (2). See **BODY SEAL** .

Secure the replacement part.

Weld into place.

DOOR SILL SILL REINFORCEMENT, REPLACING

REPLACING

As the illustrations in this service information are used for different model years and / or models, some variation may occur. However, the essential information in the illustrations is always correct.

DOOR SILL, REPLACING

REMOVING THE DOOR SILL

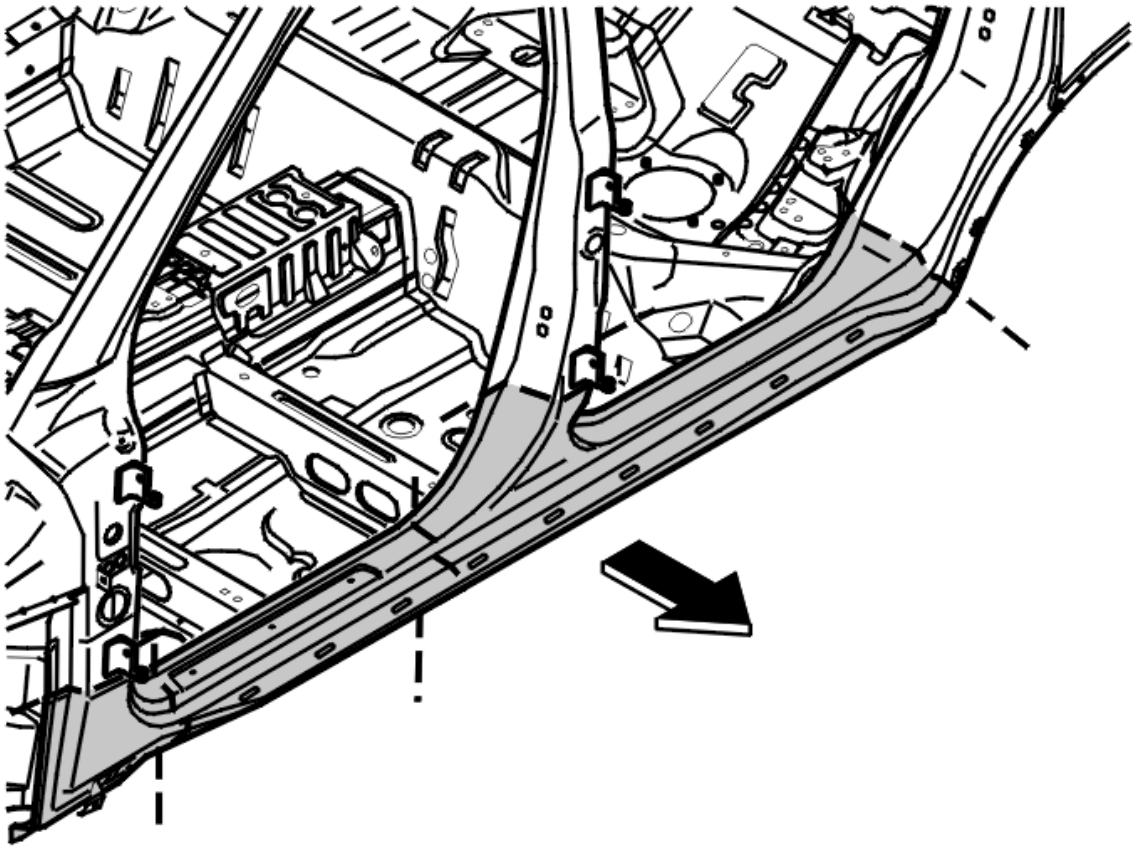

Fig. 17: Removing The Door Sill
Courtesy of VOLVO CARS CORPORATION

Remove components. See **SIDE SECTION, EXPOSING** .

Pull out the damaged section to make it easier to re-align internal components.

Determine the extent of the damage. See **BODY SIDE, ALIGNMENT CHART** .

Roughly cut at an appropriate point. The recommended cutting points are marked in the illustration.

NOTE: Do not replace too small a section of the door sill because the damage may have spread.

Grind and drill out the spot welds and bead welds.

Pry off the component.

INSTALLING THE DOOR SILL

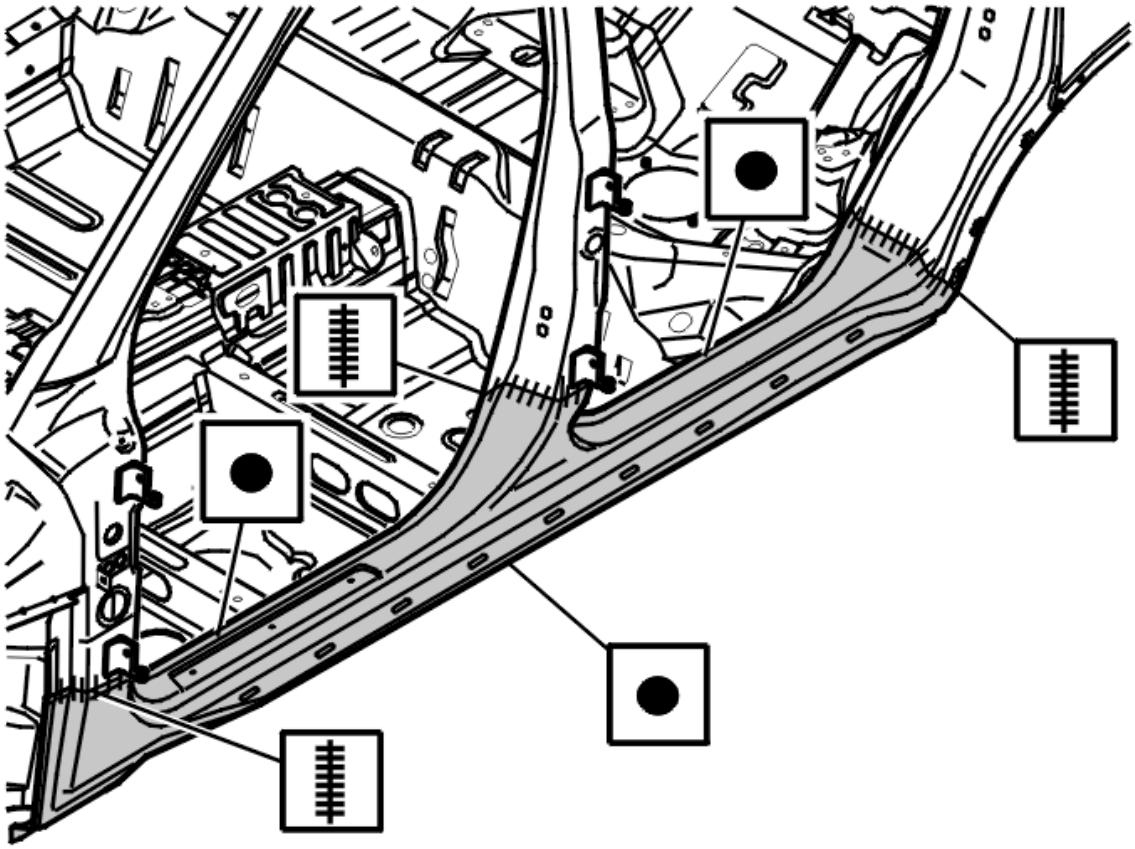

Fig. 18: Installing The Door Sill
Courtesy of VOLVO CARS CORPORATION

Grind clean.

Apply welding primer.

Saw through the two panels. Do not damage the reinforcements inside the door sill when sawing.

Secure the edges of the joints by tack welding.

Weld into place.

The brackets for the front fender must be installed when replacing the front section of the door sill. For the location, see **BODY SIDE, ALIGNMENT CHART** .

Seal the seams and joins. See **BODY SEAL** .

SILL REINFORCEMENT DOOR SILL, REPLACING

REMOVING THE SILL REINFORCEMENT FOR THE DOOR SILL

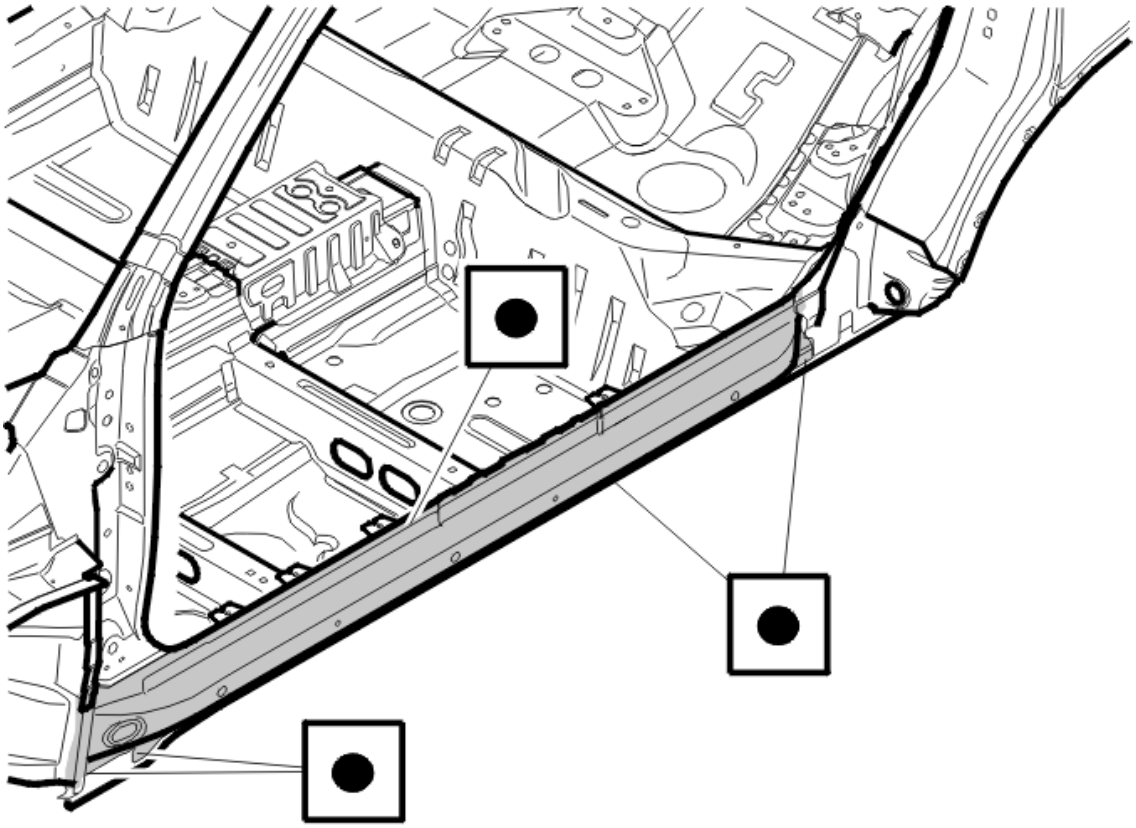

Fig. 19: Removing The Sill Reinforcement For The Door Sill
Courtesy of VOLVO CARS CORPORATION

The door sill reinforcement is inside both the B-post reinforcement and the A-post reinforcement. Remove the A-post. See **A-POST, REPLACING**. Remove the B-post. See **B-POST, REPLACING**.

NOTE: **The B-post reinforcement is made of BORON steel. This material cannot be sawn, drilled through or realigned. For more information, see SHEET METAL, MATERIAL INFORMATION .**

The sill reinforcement must not be joined.

Grind and drill out the spot welds and bead welds.

Pry off the component.

INSTALLING THE SILL REINFORCEMENT FOR THE DOOR SILL

Grind clean.

Apply welding primer.

Align the replacement part. See **BODY SIDE, ALIGNMENT CHART** .

Secure and weld the replacement part into place.

BODY SIDE (2005-2012)

A-POST, REPLACING

see **A-POST, REPLACING**

BODY SIDE INNER, REPLACING

REPLACING

The illustrations in this service information are used for different model years and/or models. Some variation may occur. However, the essential information in the illustrations is always correct.

REMOVING THE INNER BODY SIDE

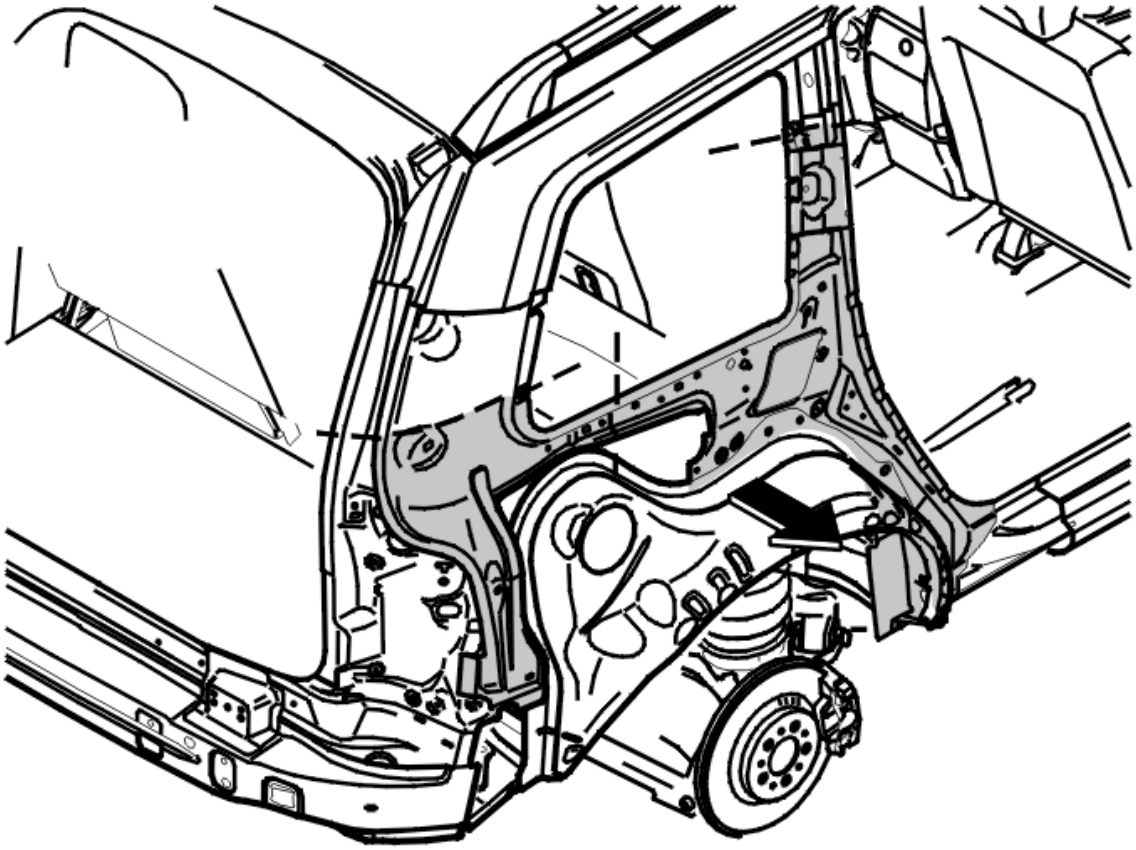

Fig. 20: Removing The Inner Body Side
Courtesy of VOLVO CARS CORPORATION

Remove the components. See **REAR SECTION, EXPOSING** and **SIDE SECTION, EXPOSING** .

Determine the extent of the damage. See **REAR END, ALIGNMENT CHART** and **BODY SIDE, ALIGNMENT CHART** .

Roughly cut at an appropriate point. See the recommended cutting points in the illustration.

If necessary, remove:

- the rear fender. See **REAR FENDER, REPLACING**
- the C-post. See **C-POST, REPLACING**
- the outer rear section. See **REAR SECTION OUTER, REPLACING**
- the rear bumper rail. See **BUMPER RAIL REAR, REPLACING**
- the inner rear section. See **REAR SECTION INNER, REPLACING**.

Grind off the spot welds.

Pry off the inner body side.

Grind clean.

Apply welding primer.

INSTALLING THE INNER BODY SIDE

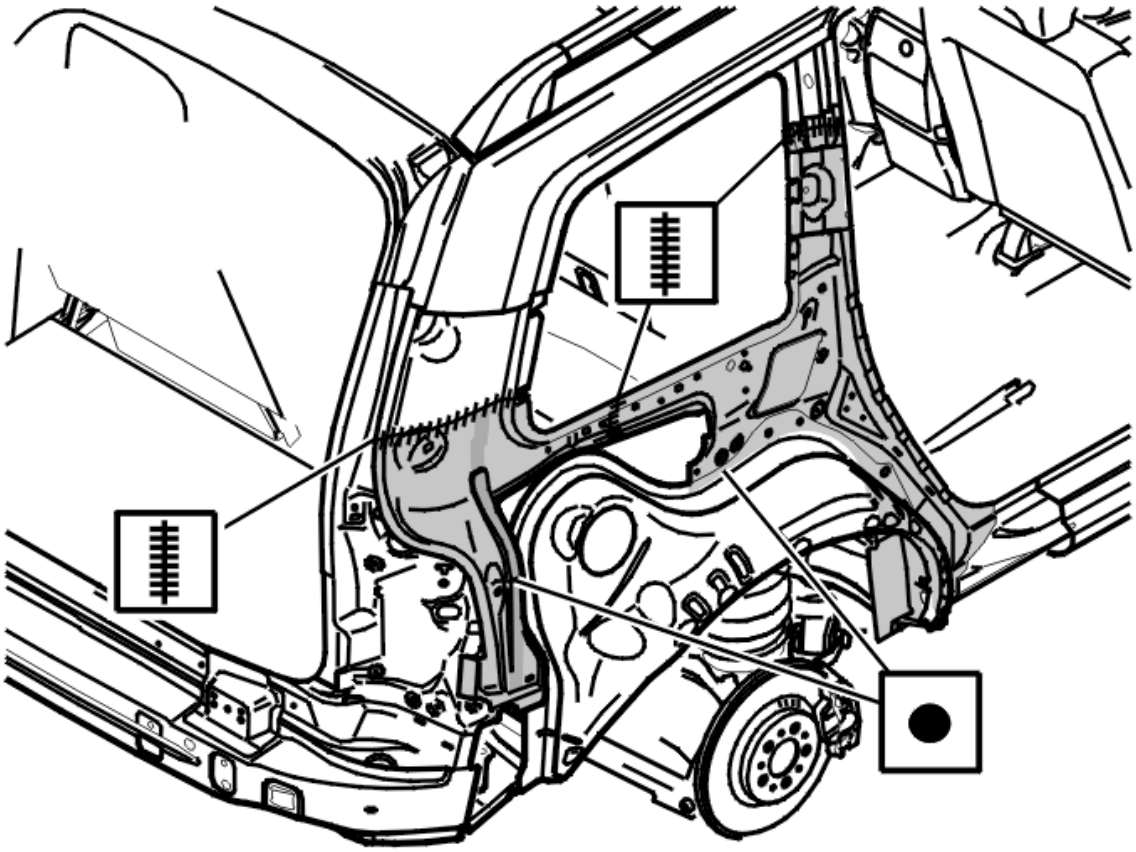

Fig. 21: Installing The Inner Body Side
Courtesy of VOLVO CARS CORPORATION

Secure the replacement part.

Weld into place.

Install:

- the rear fender. See **REAR FENDER, REPLACING**
- the C-post. See **C-POST, REPLACING**
- the outer rear section. See **REAR SECTION OUTER, REPLACING**
- the rear bumper rail. See **BUMPER RAIL REAR, REPLACING**
- the inner rear section. See **REAR SECTION INNER, REPLACING**.

Seal the body.

B-POST, REPLACING

see **B-POST, REPLACING**

C-POST, REPLACING

see **C-POST, REPLACING**

DOOR SILL SILL REINFORCEMENT, REPLACING

see **DOOR SILL SILL REINFORCEMENT, REPLACING**

FLOOR, FRAME SECTION, WHEEL ARCH, FIREWALL (2005-2012)

BATTERY COMPARTMENT, REMOVING

REMOVING

The illustrations in this service information are used for different model years and/or models. Some variation may occur. However, the essential information in the illustrations is always correct.

REMOVING THE BATTERY COMPARTMENT

Remove components. See **REAR SECTION, EXPOSING** .

If necessary, remove:

- the outer rear section. See **REAR SECTION OUTER, REPLACING**
- the rear bumper rail. See **BUMPER RAIL REAR, REPLACING**
- the inner rear section. See **REAR SECTION INNER, REPLACING**

Determine the extent of the damage. See **BODY SEAL** and **BODY SIDE, ALIGNMENT CHART** .

Grind off the spot welds.

Pry off the battery compartment.

Grind clean.

Apply welding primer.

INSTALLING THE BATTERY COMPARTMENT

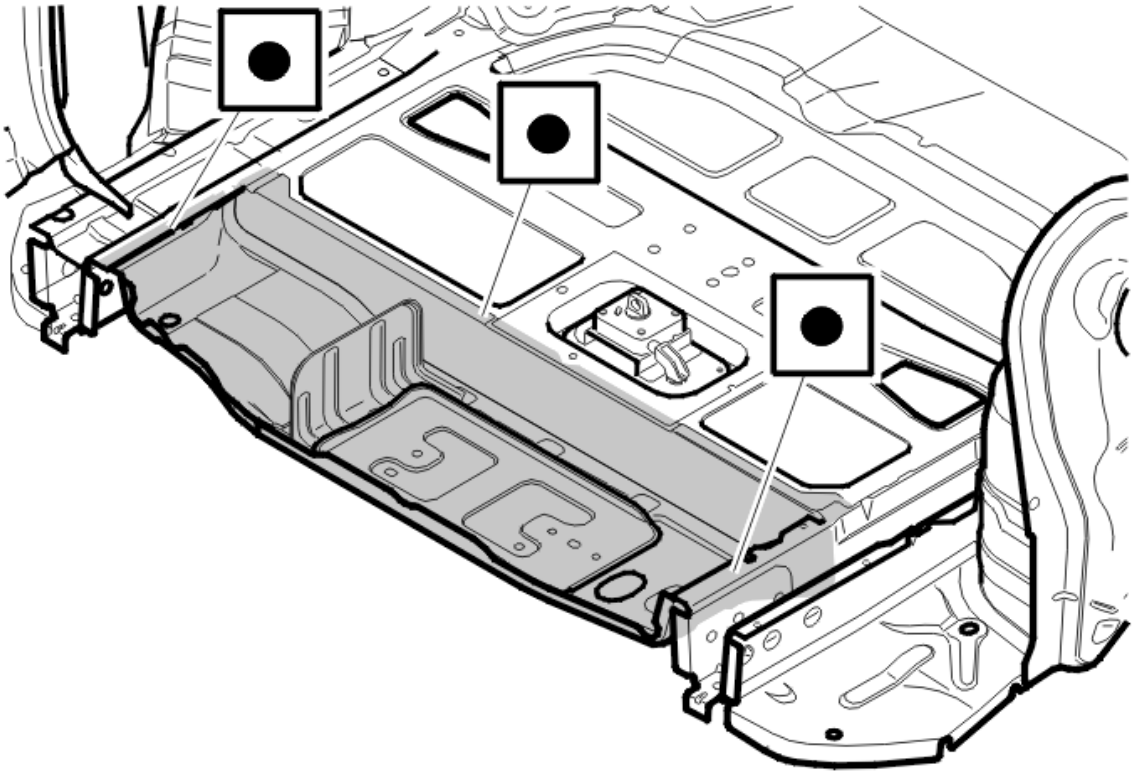

Fig. 22: Installing The Battery Compartment
Courtesy of VOLVO CARS CORPORATION

Secure the replacement part.

Weld into place.

Install:

- the inner rear section. See **REAR SECTION INNER, REPLACING**
- the rear bumper rail. See **BUMPER RAIL REAR, REPLACING**
- the outer rear section. See **REAR SECTION OUTER, REPLACING**.

Seal. See **BODY SEAL** .

NOTE: **For this type of damage, the whiplash system must be checked. See WHIPLASH UNIT, CHECKING .**

COLLISION MEMBER, REPLACING

NOTE: **The illustrations in this service information are used for different model years and / or models. Some variation may occur. However, the essential information in the illustrations is always correct.**

IMPORTANT INFORMATION

The collision member is designed to collapse at the first force in the event of a collision.

In the event of a minor collision, only the collision member will be deformed. The engine frame will not be deformed.

REMOVING THE COLLISION MEMBER

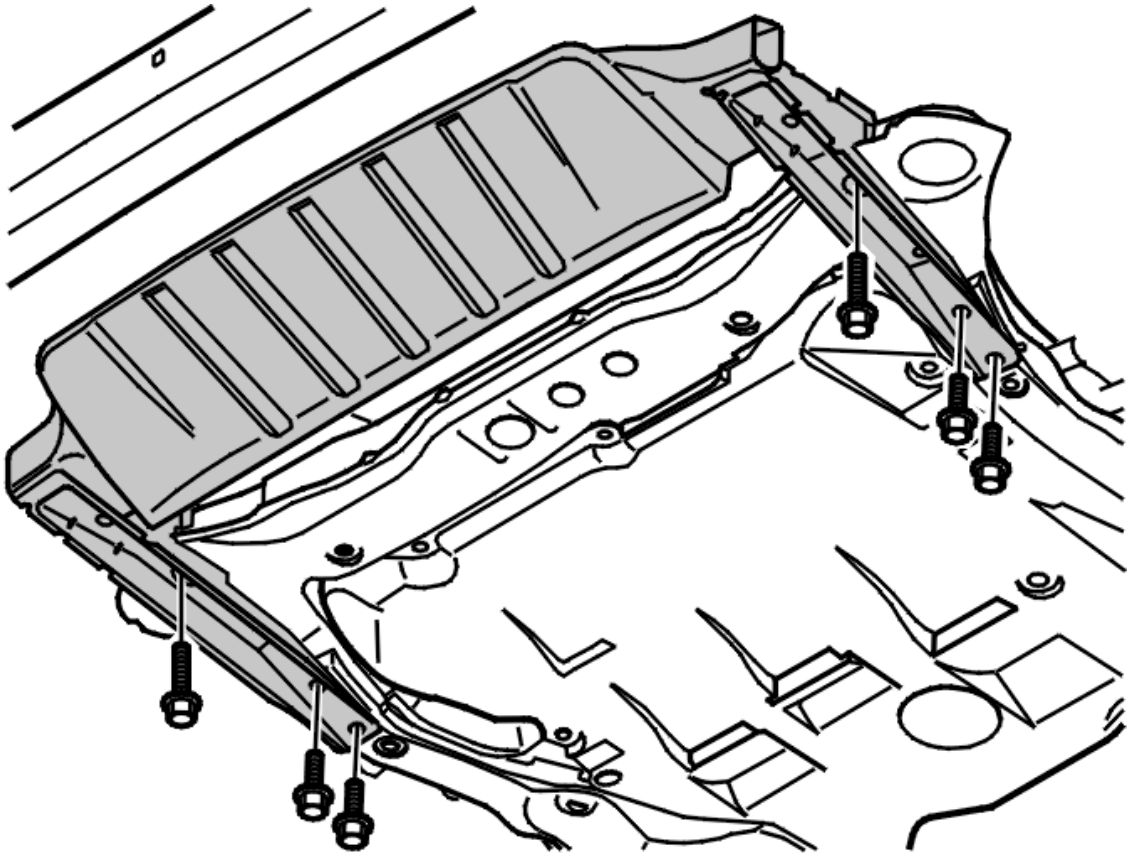

Fig. 23: Removing The Collision Member
Courtesy of VOLVO CARS CORPORATION

Remove:

- the bumper. See **CASING BUMPER FRONT, REPLACING**
- the 6 screws.

INSTALLING THE COLLISION MEMBER

NOTE: For tightening torques, see TIGHTENING TORQUE .

Suspend the member.

Install:

- the 6 M10 screws. Tighten
- the bumper according to **CASING BUMPER FRONT, REPLACING** .

SIDE MEMBER FRONT, REPLACING

Special tools:

see **9997072**

REPLACING

As the illustrations in this service information are used for different model years and / or models, some variation may occur. However, the essential information in the illustrations is always correct.

PREPARATIONS (OPERATIONS COMMON TO ALL METHODS)

Remove components. See **FRONT SECTION, EXPOSING** .

Pull out the damaged section using puller tool see **9997072** .

Determine the extent of the damage. See **SIDE MEMBERS / WHEEL ARCHES FRONT, ALIGNMENT CHART** and **FRONT SECTION, DIMENSIONS CHART** .

Included in this method are methods for:

- the outer section of the side member. See **SIDE MEMBER OUTER SECTION, REPLACING**
- the inner section of the side member. See **SIDE MEMBER INNER SECTION, REPLACING**.

SIDE MEMBER OUTER SECTION, REPLACING

REMOVING THE OUTER SECTION OF THE SIDE MEMBER

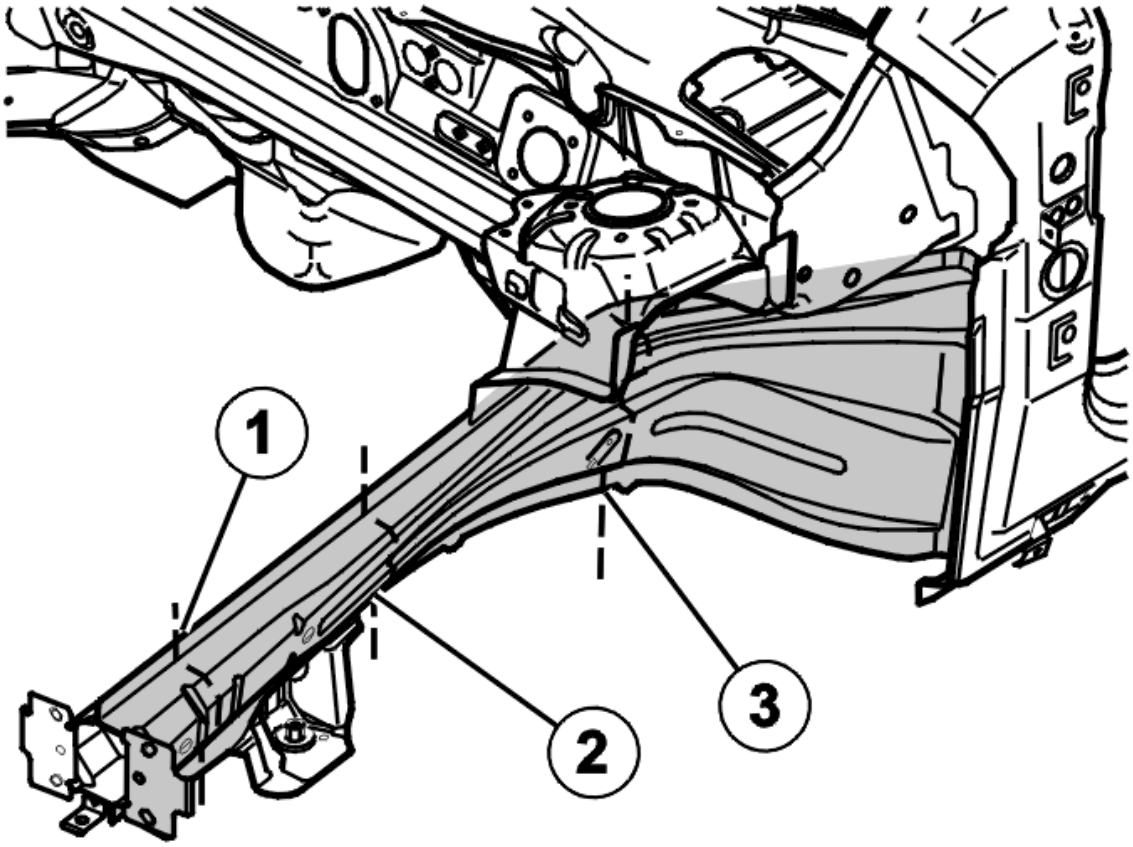

Fig. 24: Recommended Cutting Points
Courtesy of VOLVO CARS CORPORATION

Measure an appropriate cutting point on the side member. See the recommended cutting points, (1), (2) and (3), in the illustration.

CUTTING POINT 1

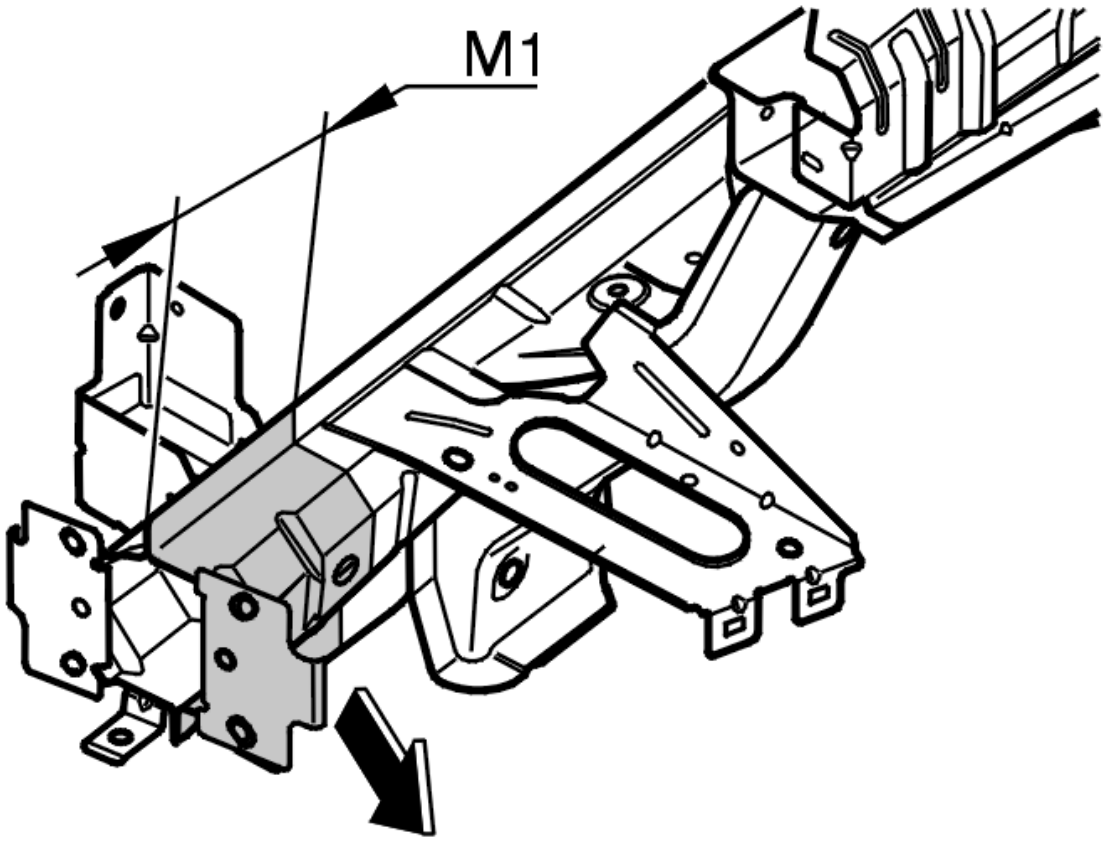

Fig. 25: Cutting Point Illustration
Courtesy of VOLVO CARS CORPORATION

Use this cutting point for minor damage to the side member.

The cutting point is 140 mm (M1) from the front end of the side member, between the inside of the towing eyelet and the fender bracket on the right-hand side.

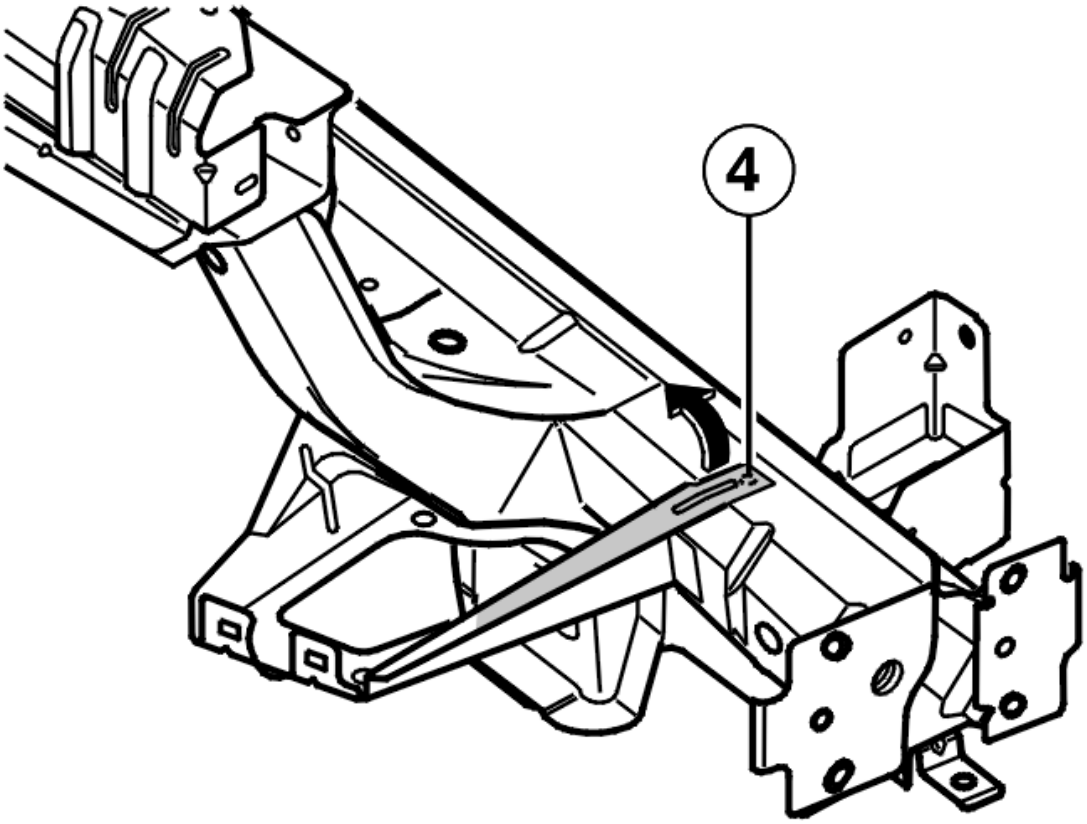

Fig. 26: Dismantling Fender bracket
Courtesy of VOLVO CARS CORPORATION

Only drill off the front point (4) of the fender bracket and fold it up.

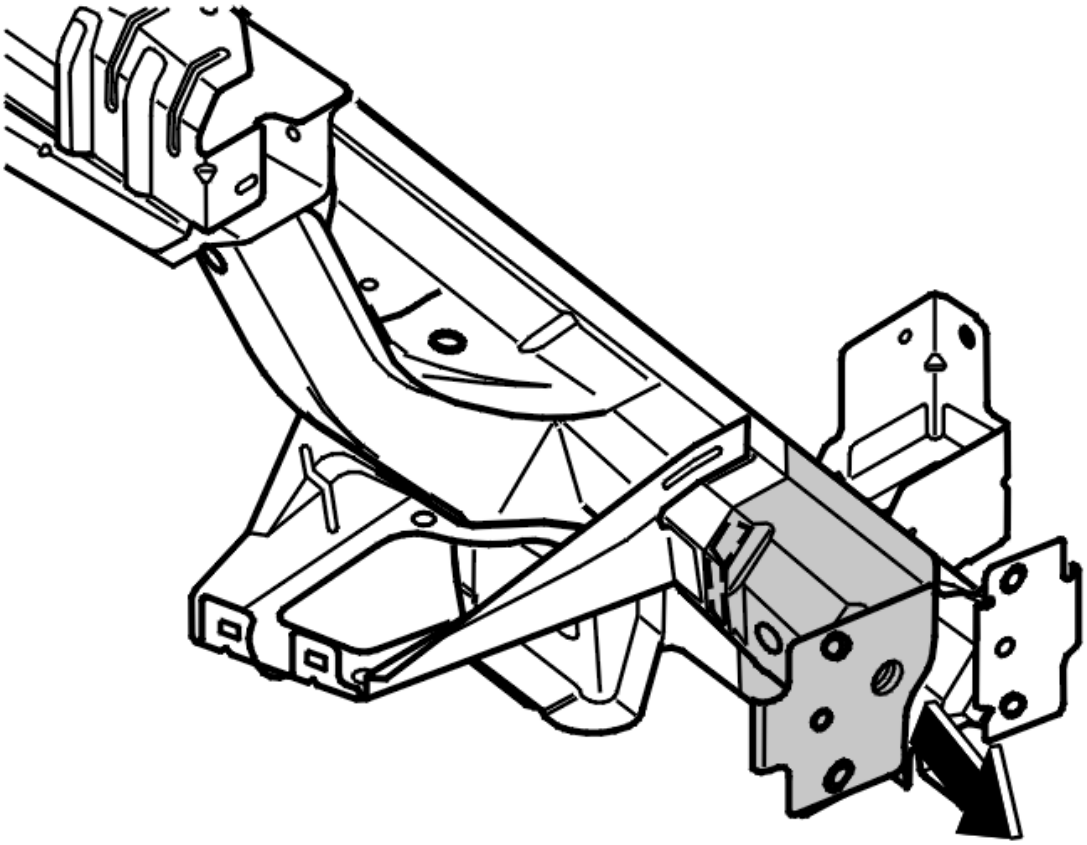

Fig. 27: Removing Member
Courtesy of VOLVO CARS CORPORATION

Cut the member.

Drill and grind off the spot welds.

Pry off the component.

CUTTING POINTS 2 AND 3

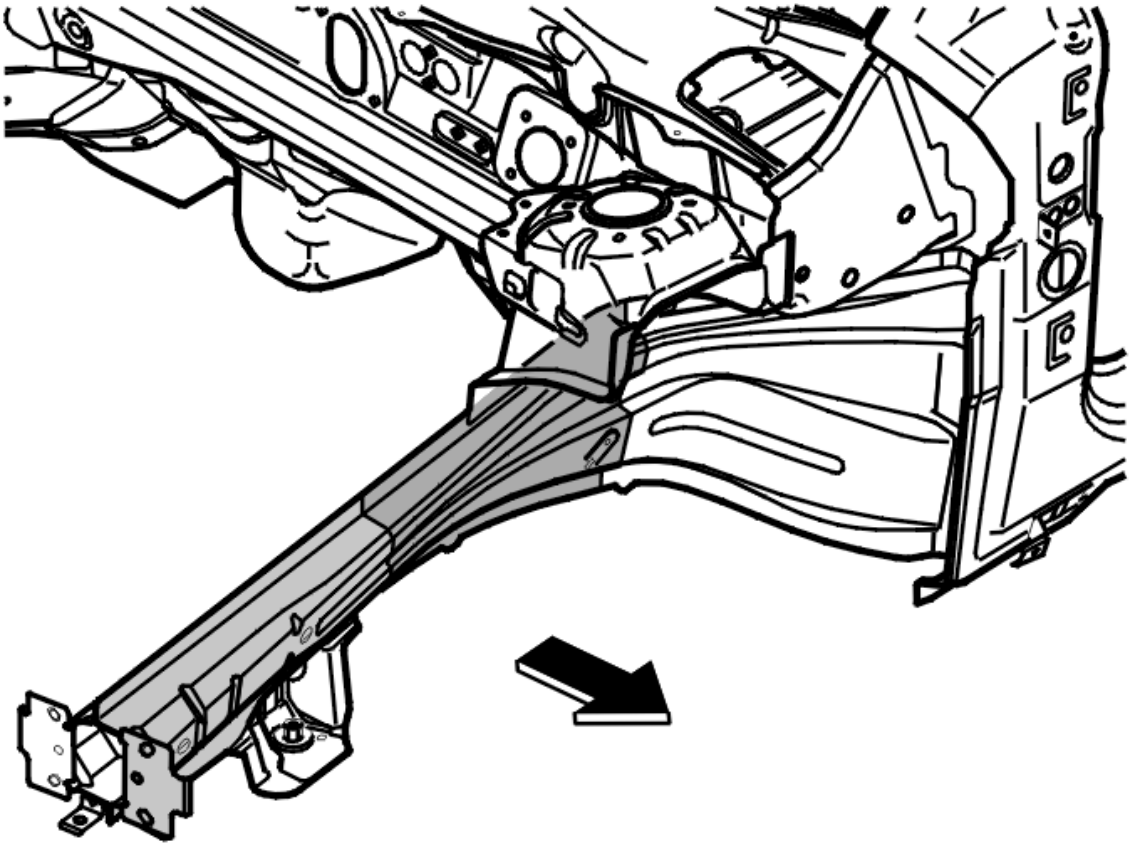

Fig. 28: Cutting Points Illustration
Courtesy of VOLVO CARS CORPORATION

Remove:

- the fender bracket
- the outer wheel arch reinforcement.

The wheel arch can be removed partially or fully. To replace, see **WHEEL HOUSING FRONT, REPLACING**.

Cut the member.

Grind and drill out the spot welds.

Pry off the component.

INSTALLING THE OUTER SECTION OF THE SIDE MEMBER

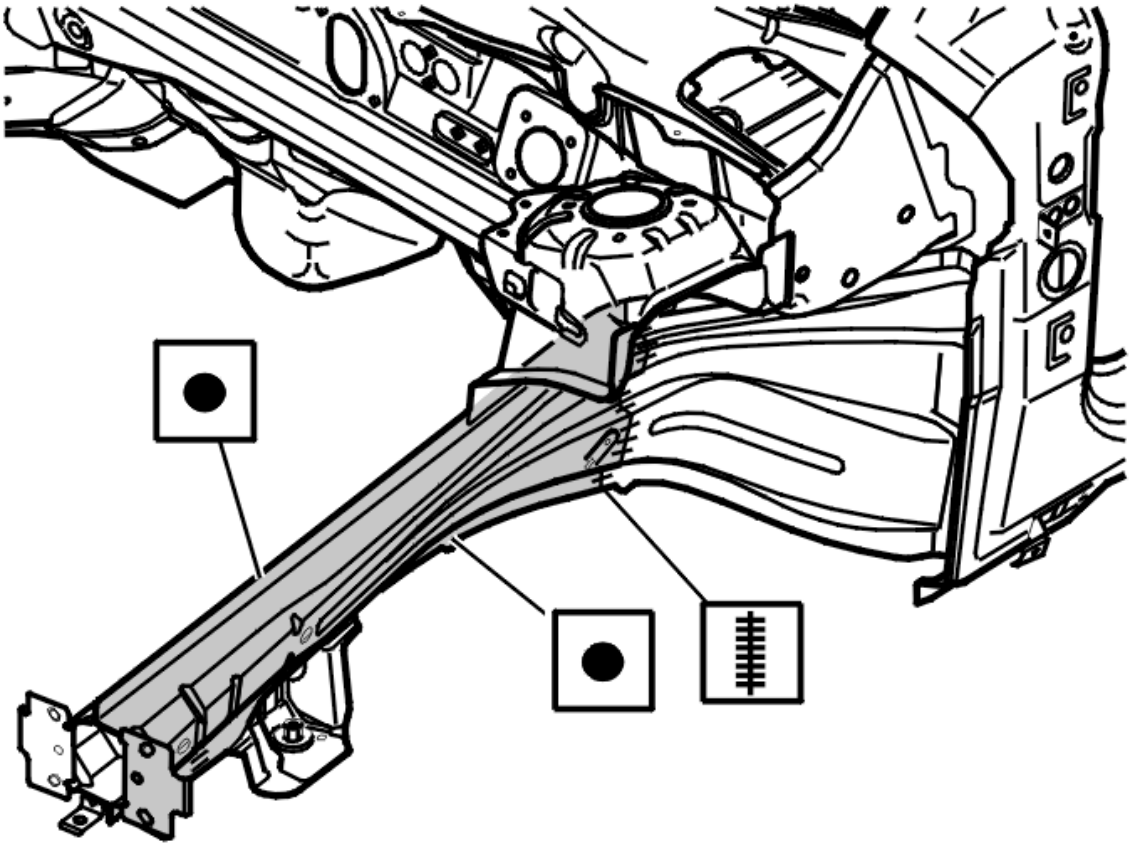

Fig. 29: Installing The Outer Section Of The Side Member
Courtesy of VOLVO CARS CORPORATION

Grind clean.

Apply welding primer.

Align and secure the replacement part.

NOTE: All cutting points are shown in the same illustration.

Cutting points 1, 2 and 3

Weld the fender bracket into place. For the location, see **SIDE MEMBERS / WHEEL ARCHES FRONT, ALIGNMENT CHART** .

Seal according to **BODY SEAL** .

Cutting points 2 and 3

Install the wheel arch. See **WHEEL HOUSING FRONT, REPLACING**.

Install wheel arch reinforcement.

Seal according to **BODY SEAL** .

SIDE MEMBER INNER SECTION, REPLACING

REMOVING THE INNER SECTION OF THE SIDE MEMBER

Measure an appropriate cutting point on the side member. See the recommended cutting points in the illustration.

CUTTING POINT 1

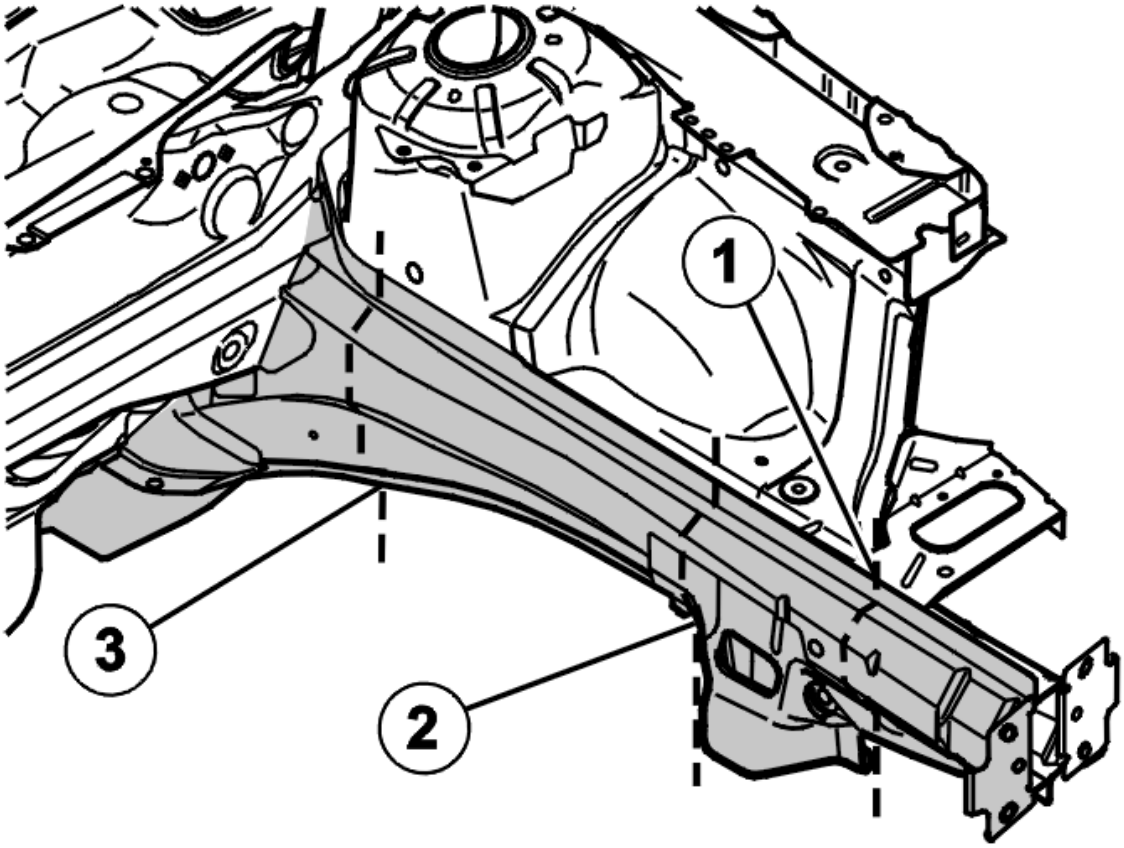

Fig. 30: Cutting Point Illustration
Courtesy of VOLVO CARS CORPORATION

Use this cutting point for minor damage to the side member.

The cutting point is 140 mm from the front end of the side member.

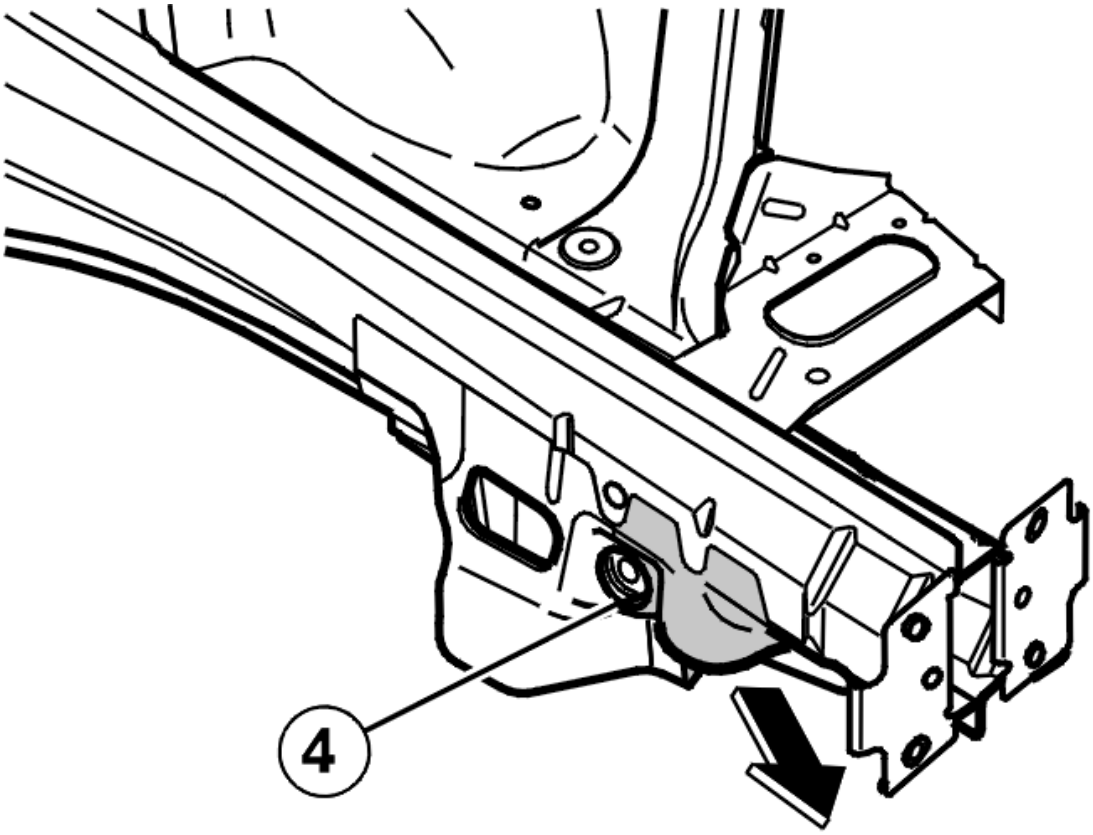

Fig. 31: Removing Front Section Of The Inner Wheel Arch Reinforcement
Courtesy of VOLVO CARS CORPORATION

Drill and saw off the front section of the inner wheel arch reinforcement. Saw in the center of the hole as illustrated (4).

Cut the side member.

Grind and drill out the spot welds.

Pry off the component.

CUTTING POINTS 2 AND 3

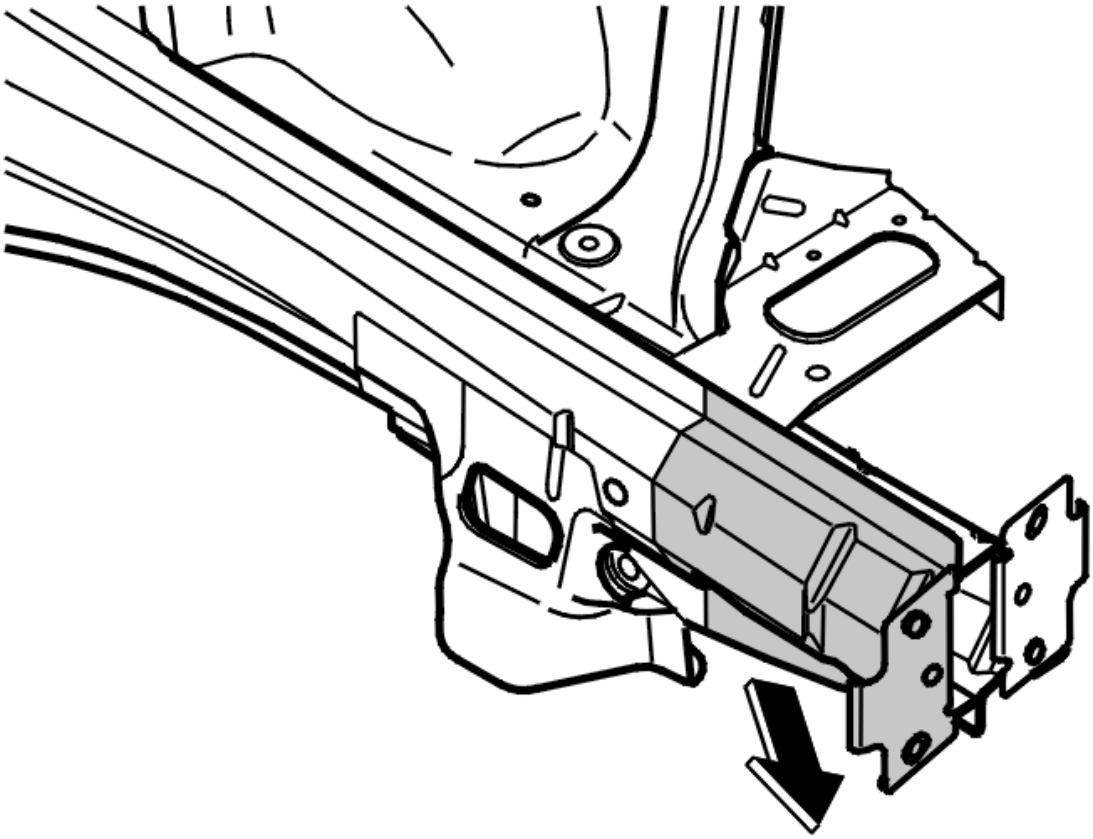

Fig. 32: Cutting Points 2 And 3
Courtesy of VOLVO CARS CORPORATION

Remove the inner wheel arch reinforcement.

Cut the member.

Grind and drill out the spot welds.

Pry off the component.

INSTALLING THE INNER SECTION OF THE SIDE MEMBER

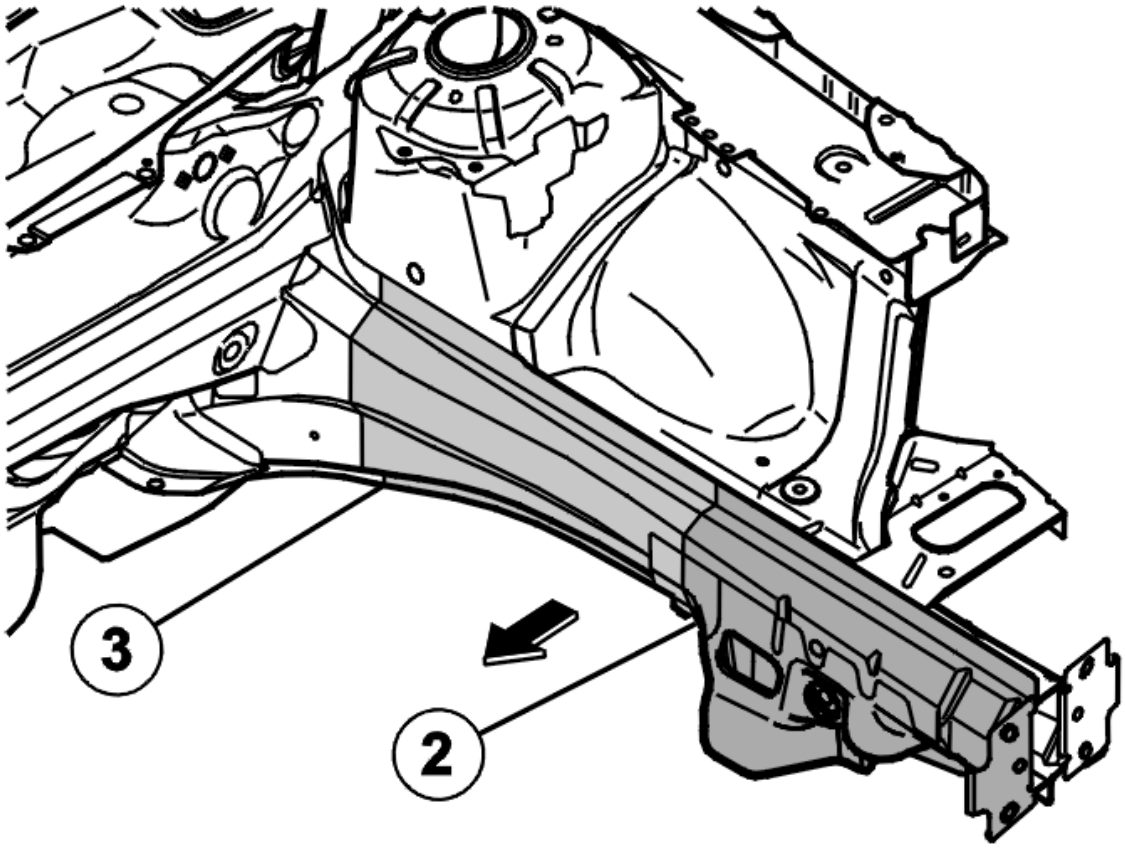

Fig. 33: Installing The Inner Section Of The Side Member
Courtesy of VOLVO CARS CORPORATION

Cutting points 1, 2 and 3

Grind clean.

Apply welding primer.

Align and secure the replacement part.

NOTE: All cutting points are shown in the same illustration.

Weld the replacement part into place.

Weld the fender bracket into place. For the location, see **SIDE MEMBERS / WHEEL ARCHES FRONT, ALIGNMENT CHART** .

Cutting points 2 and 3

Install the wheel arch. See **WHEEL HOUSING FRONT, REPLACING**.

Install wheel arch reinforcement.

Install the radiator bracket. See **SIDE MEMBERS / WHEEL ARCHES FRONT, ALIGNMENT CHART** .

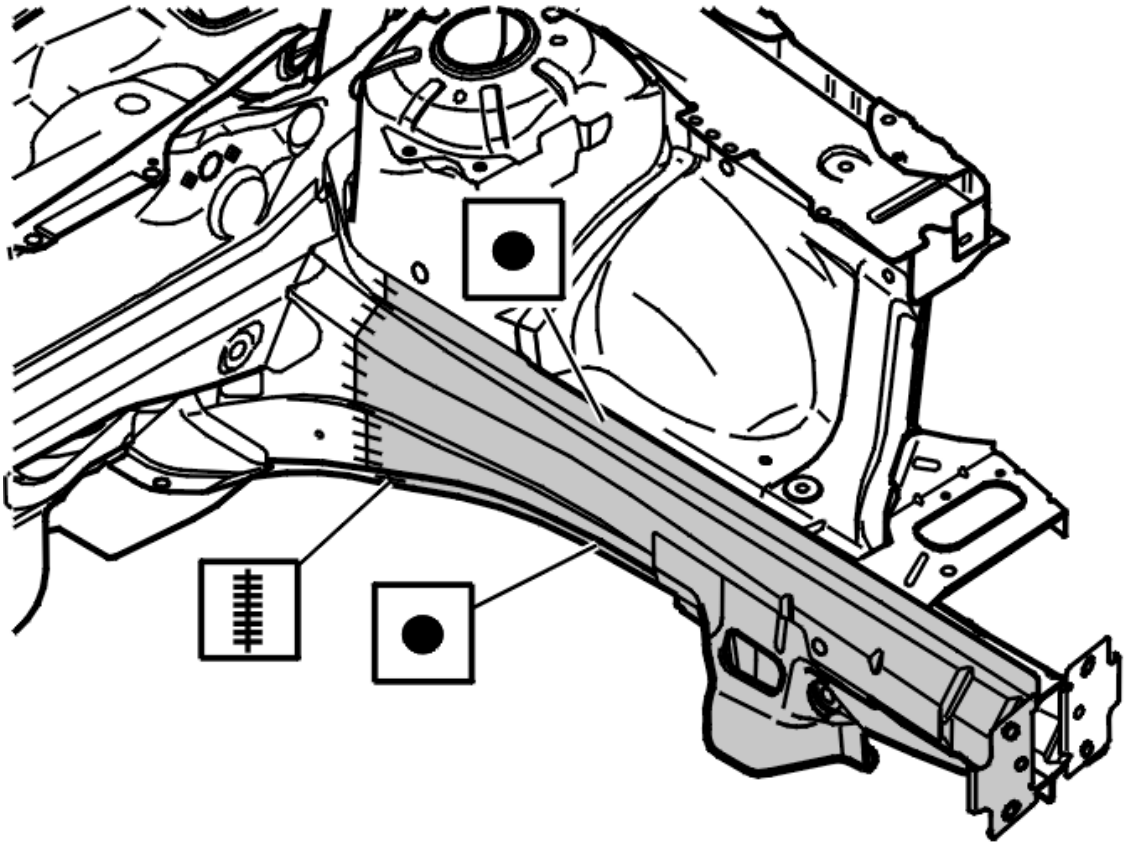

Fig. 34: Installing Side Member
Courtesy of VOLVO CARS CORPORATION

SIDE MEMBER REAR, REPLACE

Special tools:

see **9997001**

REPLACEMENT

The illustrations in this service information are used for different model years and/or models. Some variation may occur. However, the essential information in the illustrations is always correct.

REMOVING THE REAR SIDE MEMBER

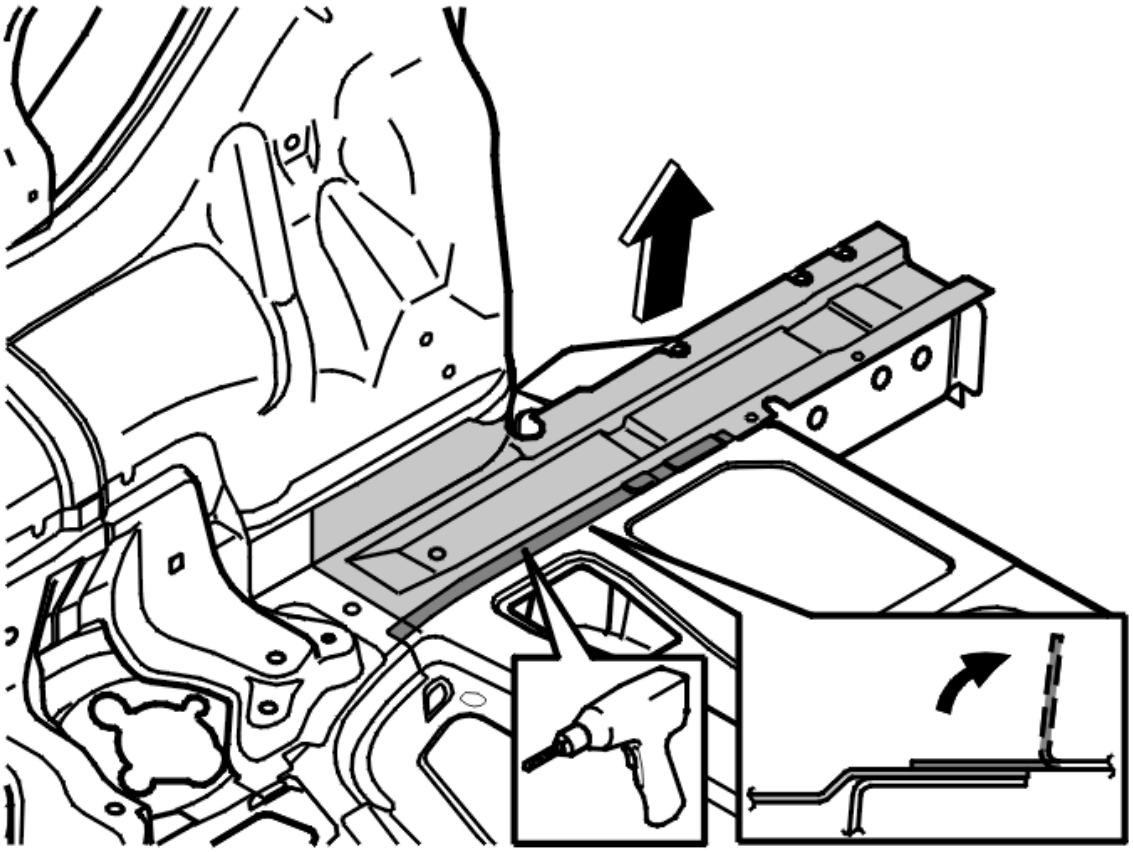

Fig. 35: Removing The Rear Side Member
Courtesy of VOLVO CARS CORPORATION

Remove components. See **REAR SECTION, EXPOSING** .

Correct the damage using an alignment bench. Use puller tool see **9997001** .

Determine the extent of the damage. See **REAR END, ALIGNMENT CHART** and **BODY SIDE, ALIGNMENT CHART** .

Roughly cut at an appropriate point. See the recommended cutting points in the illustration.

If necessary, remove:

- the rear fender. See **REAR FENDER, REPLACING**
- the outer rear section. See **REAR SECTION OUTER, REPLACING**
- the rear bumper rail. See **BUMPER RAIL REAR, REPLACING**
- the inner rear section. See **REAR SECTION INNER, REPLACING**
- the battery compartment. See **BATTERY COMPARTMENT, REMOVING**.

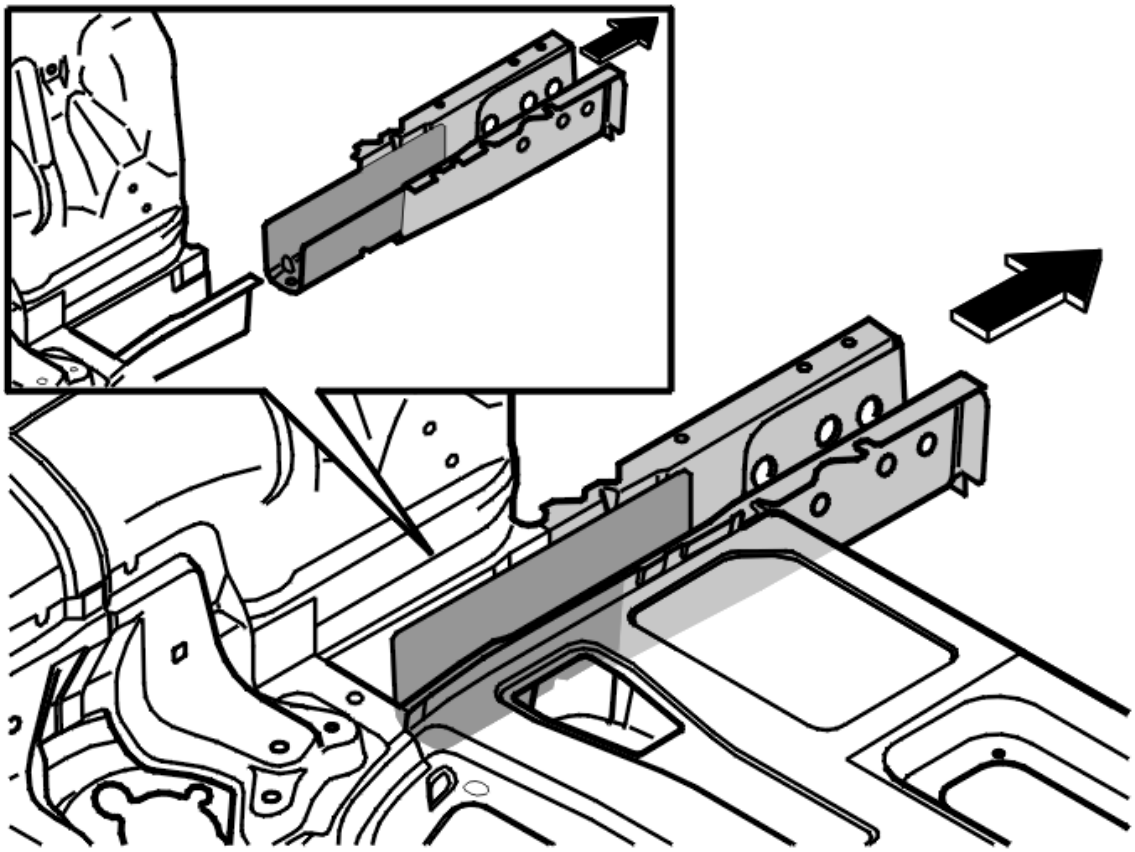

Fig. 36: Removing Side Member
Courtesy of VOLVO CARS CORPORATION

Drill off the rear floor and the battery compartment. Fold up as illustrated.

Drill off the spot welds for the cover on the side member and cut as illustrated.

Pry off the cover.

Cut the side member as illustrated.

Drill off the reinforcement in the side member in front of the cutting point.

Pry off the side member with both the rear reinforcements.

Grind clean.

Apply welding primer.

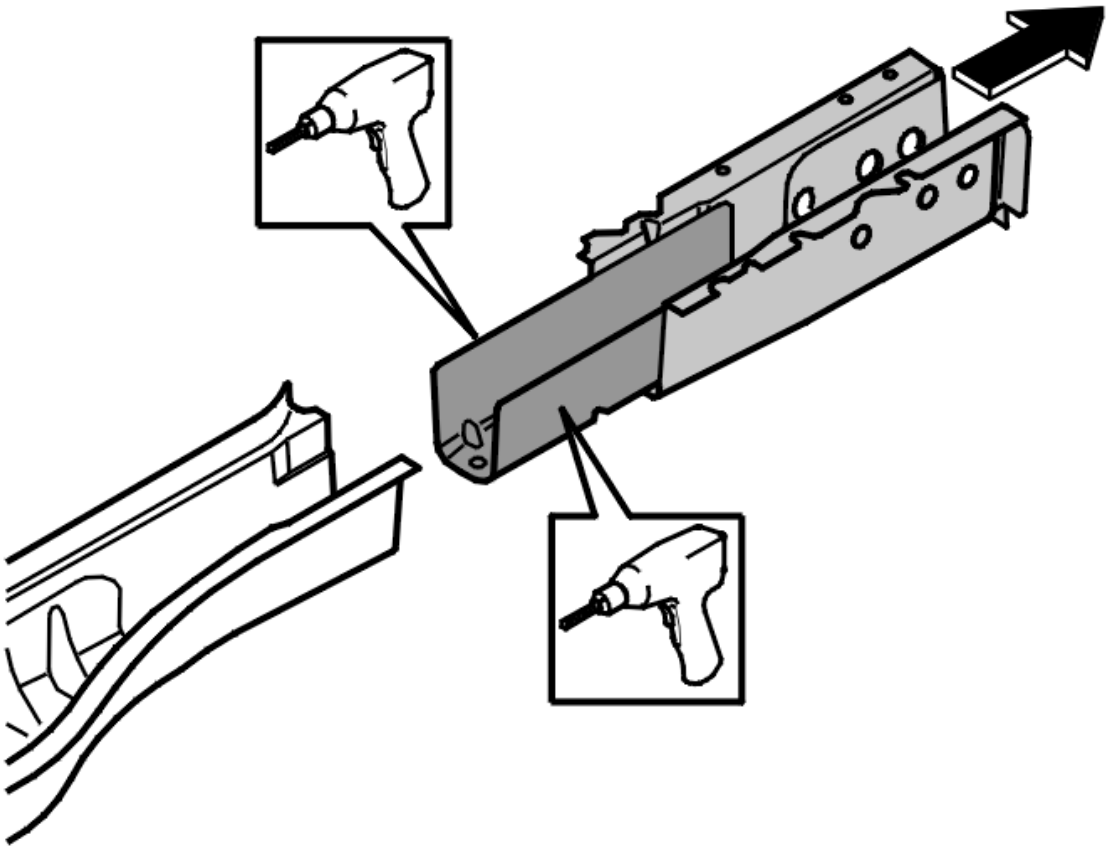

Fig. 37: Preparation Of Side Member
Courtesy of VOLVO CARS CORPORATION

INSTALLING THE REAR SIDE MEMBER

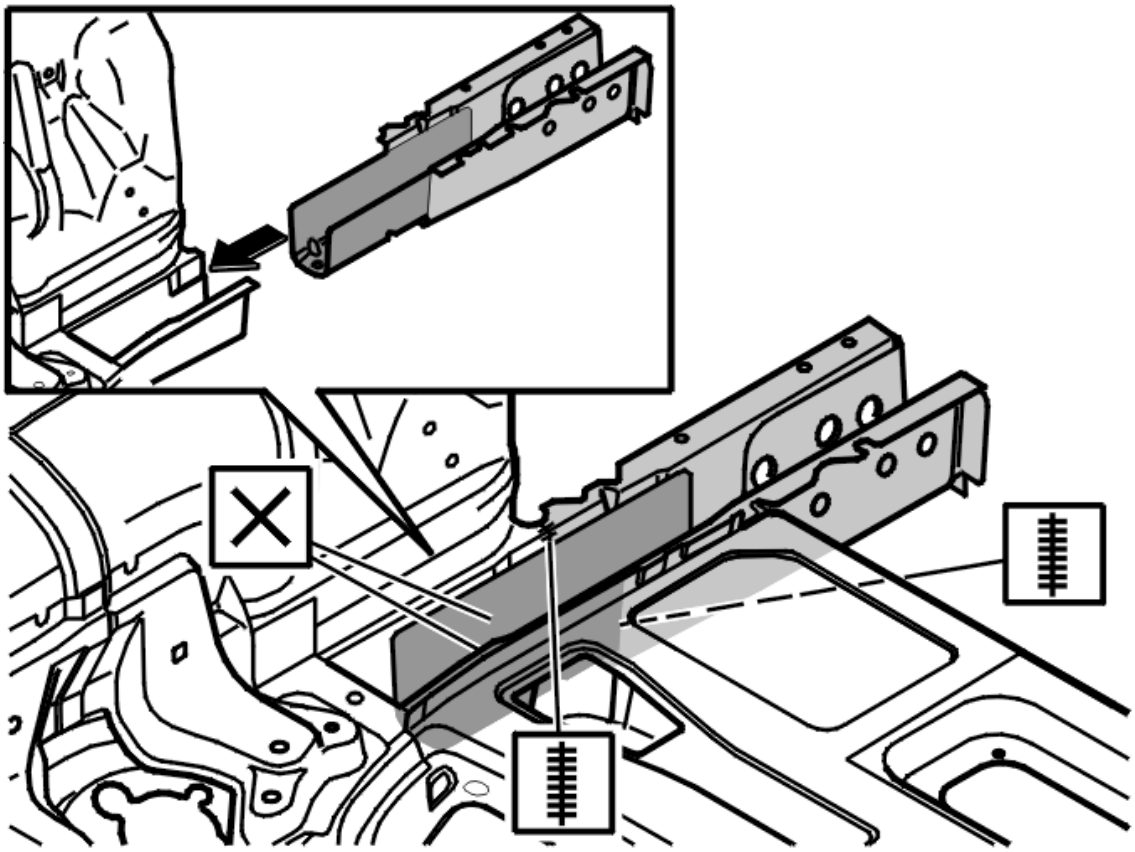

Fig. 38: Installing The Rear Side Member
Courtesy of VOLVO CARS CORPORATION

Cut the replacement part.

Drill holes for the plug welds in the section of the reinforcement protruding from the member.

Slide in the reinforcement with the rear section of the side member.

Secure the replacement part.

Weld into place.

Install:

- the rear fender. See **REAR FENDER, REPLACING**
- the outer rear section. See **REAR SECTION OUTER, REPLACING**
- the rear bumper rail. See **BUMPER RAIL REAR, REPLACING**
- the inner rear section. See **REAR SECTION INNER, REPLACING**
- the battery compartment. See **BATTERY COMPARTMENT, REMOVING**.

Seal. See **BODY SEAL** .

NOTE: **For this type of damage, the whiplash system must be checked. See WHIPLASH UNIT, CHECKING .**

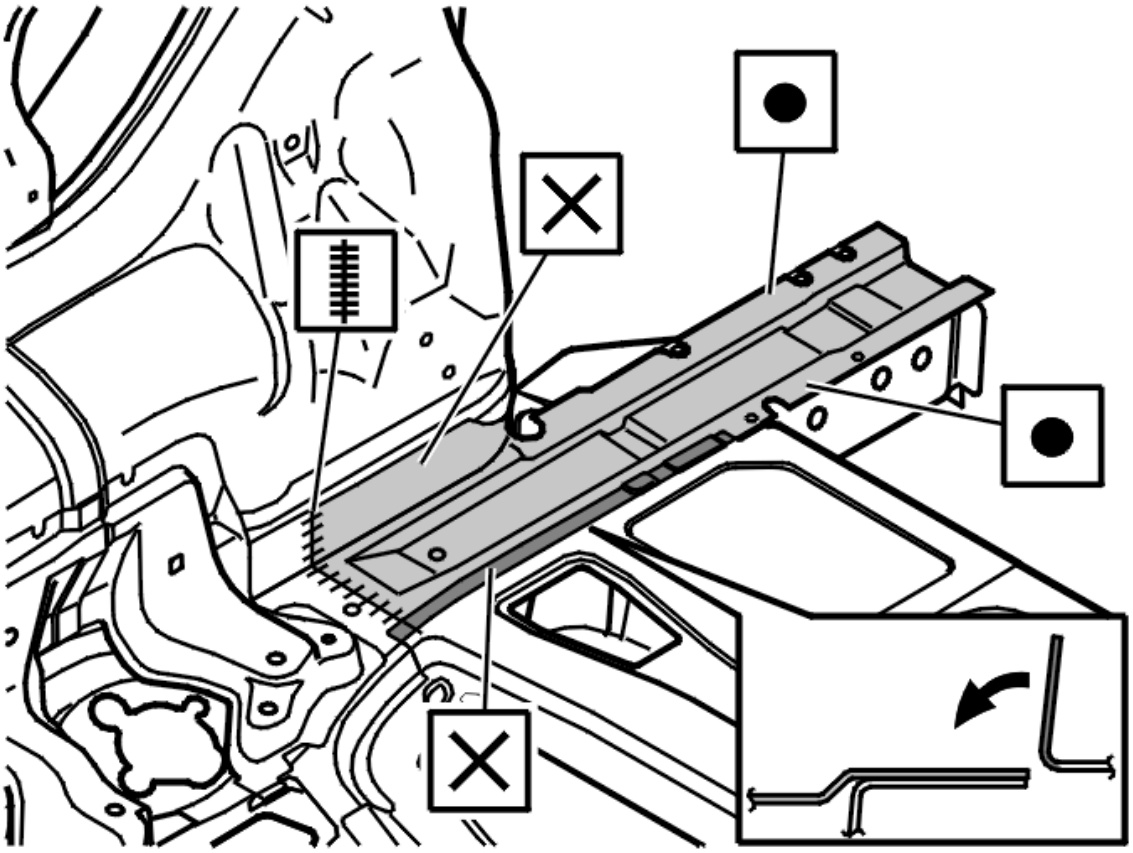

Fig. 39: Installing Side Member
Courtesy of VOLVO CARS CORPORATION

SIDE MEMBER, UPPER, REPLACING

REPLACING

As the illustrations in this service information are used for different model years and / or models, some variation may occur. However, the essential information in the illustrations is always correct.

REMOVING THE UPPER SIDE MEMBER

Remove components. See **FRONT SECTION, EXPOSING** .

Pull out the damage.

Determine the extent of the damage. See **FRONT SECTION, DIMENSIONS CHART** and **SIDE MEMBERS / WHEEL ARCHES FRONT, ALIGNMENT CHART** .

Drill and grind off the entire upper section of the member.

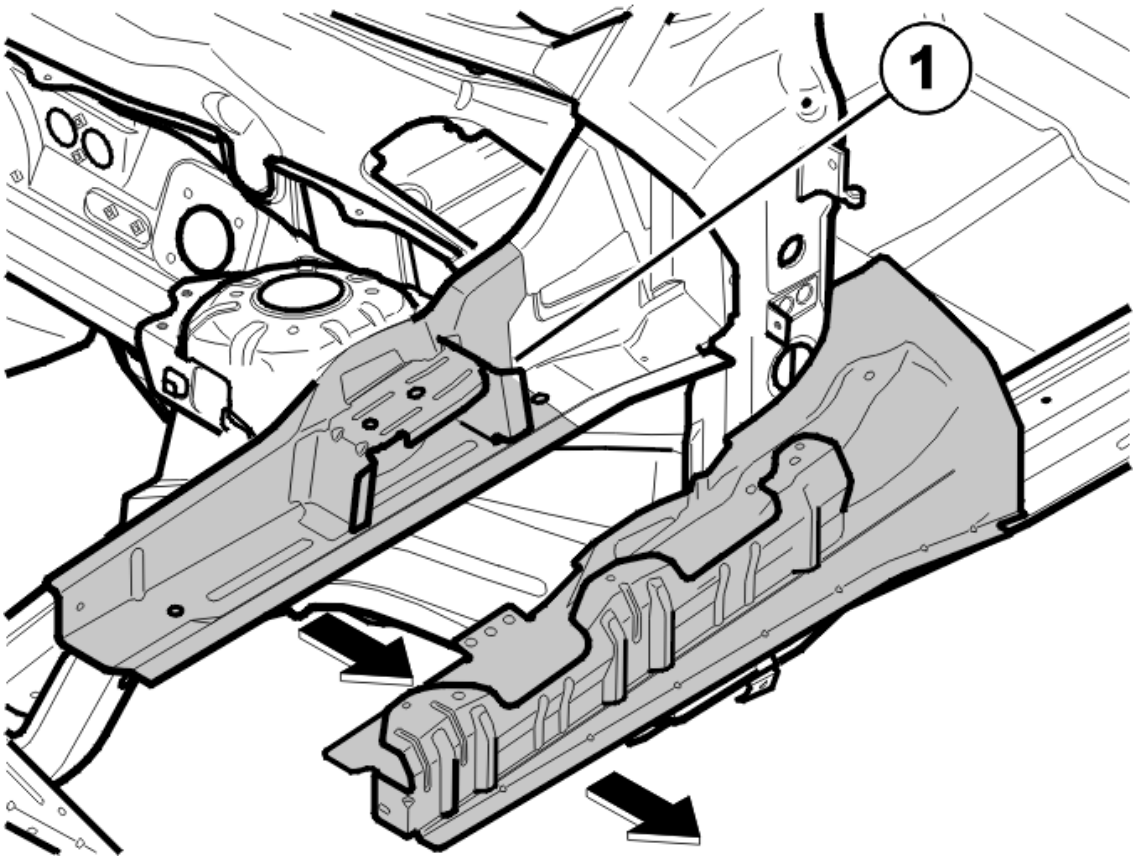

Fig. 40: Removing Upper Section Of Member
Courtesy of VOLVO CARS CORPORATION

The lower section of the side member is under the A-post, so cut as illustrated.

NOTE: **Often there will be deformation between the spring strut turret and the firewall (1) if the front of the car has been damaged.**

Grind clean.

Apply welding primer.

INSTALLING THE UPPER SIDE MEMBER

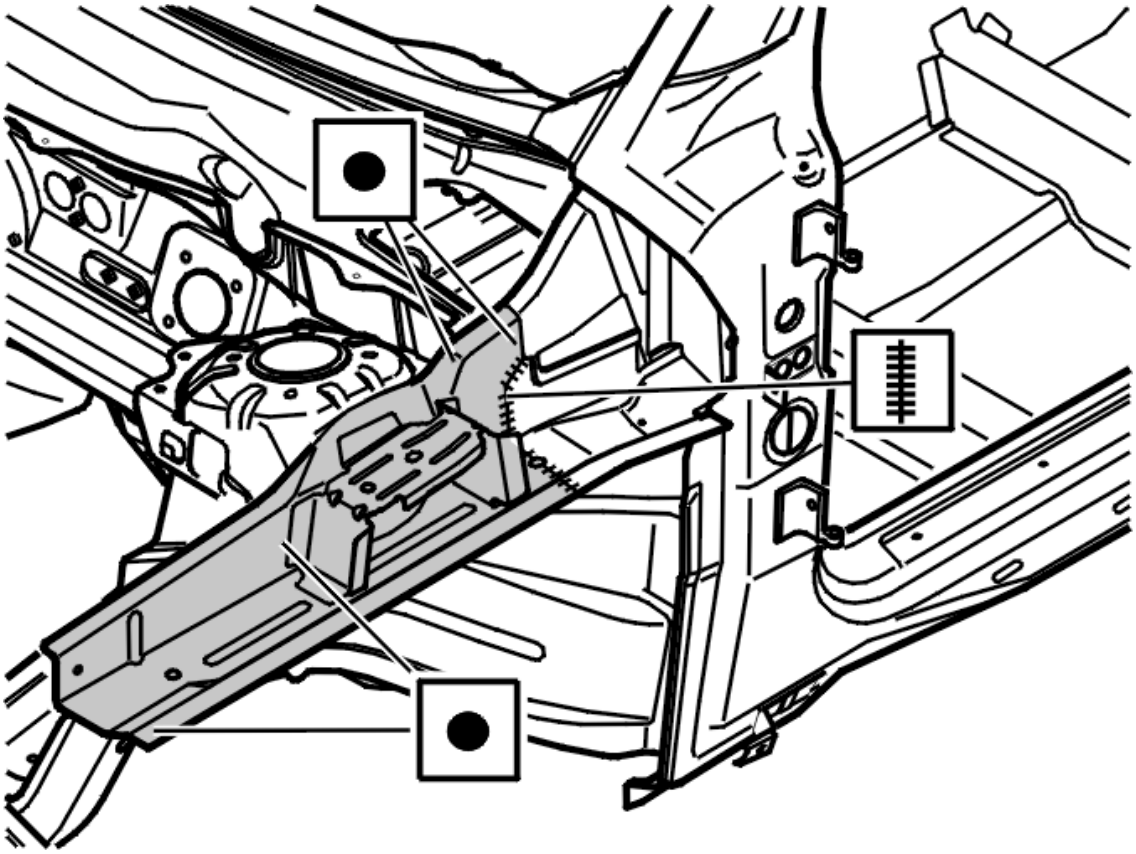

Fig. 41: Installing The Upper Side Member (1 of 2)
Courtesy of VOLVO CARS CORPORATION

Adjust and secure the replacement part. See **FRONT SECTION, DIMENSIONS CHART** .

Weld the replacement part into place.

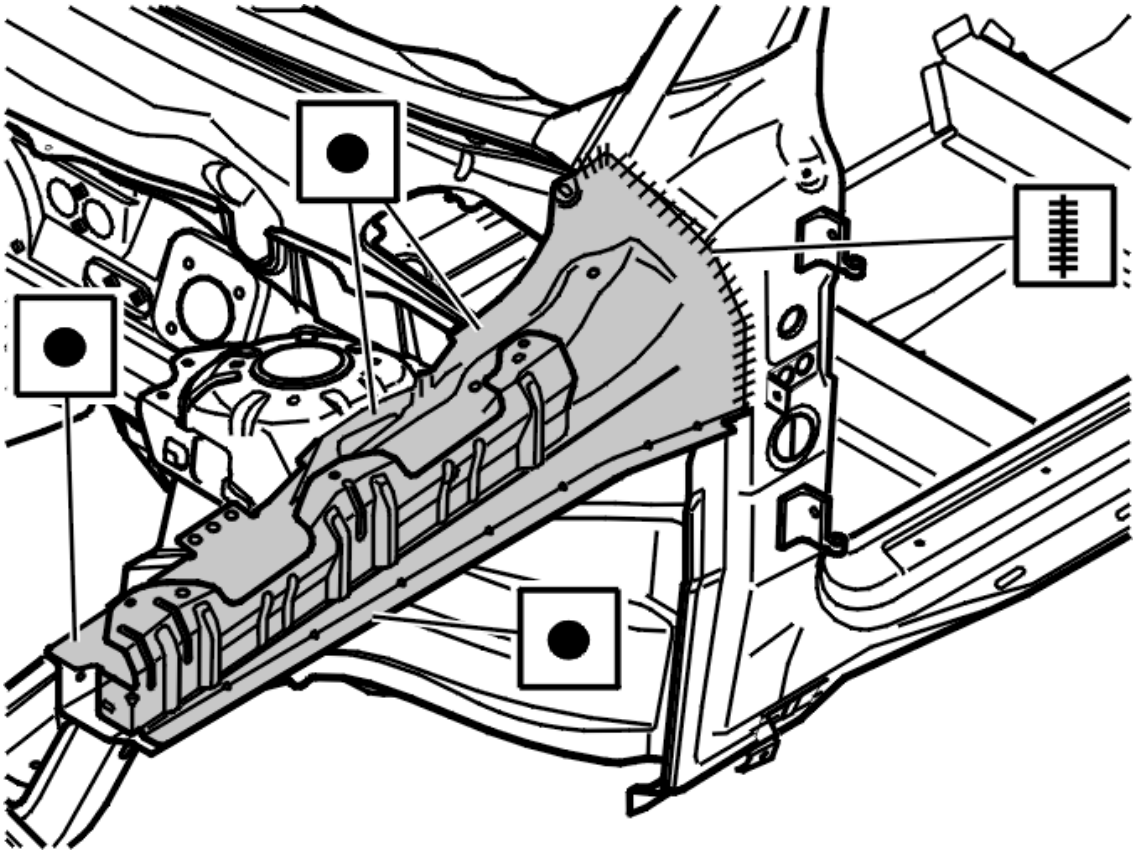

Fig. 42: Installing The Upper Side Member (2 of 2)
Courtesy of VOLVO CARS CORPORATION

WHEEL HOUSING FRONT, REPLACING

REPLACING

As the illustrations in this service information are used for different model years and / or models, some variation may occur. However, the essential information in the illustrations is always correct.

REMOVING THE FRONT WHEEL ARCH

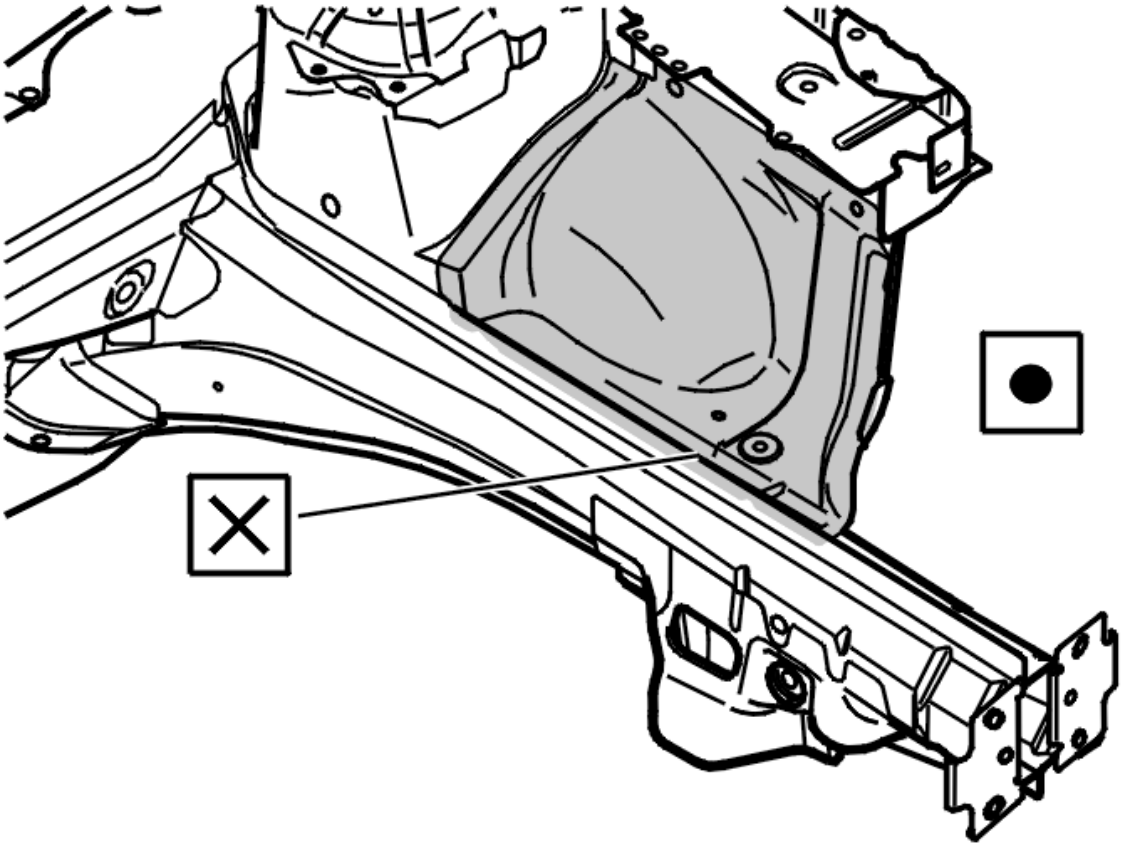

Fig. 43: Removing The Front Wheel Arch
Courtesy of VOLVO CARS CORPORATION

Remove components. See **FRONT SECTION, EXPOSING** .

Grind off the welds.

Cut off the damaged section.

Grind clean.

Apply welding primer.

INSTALLING THE FRONT WHEEL ARCH

Align and secure the wheel arch. See **FRONT SECTION, DIMENSIONS CHART** and **SIDE MEMBERS / WHEEL ARCHES FRONT, ALIGNMENT CHART** .

Weld the replacement part into place.

WHEEL HOUSING REAR, REPLACING

REPLACING

As the illustrations in this service information are used for different model years and / or models, some variation may occur. However, the essential information in the illustrations is always correct.

PREPARATIONS

Remove the components. See **REAR SECTION, EXPOSING** and **SIDE SECTION, EXPOSING** .

Pull out the damaged section to make it easier to re-align internal components.

REMOVING THE REAR WHEEL ARCH

Remove:

- the rear fender. See **REAR FENDER, REPLACING**
- The C-post reinforcement. See **C-POST, REPLACING**.

Grind and drill out the spot welds.

Pry off the component.

Grind clean.

Apply welding primer.

INSTALLING THE REAR WHEEL ARCH

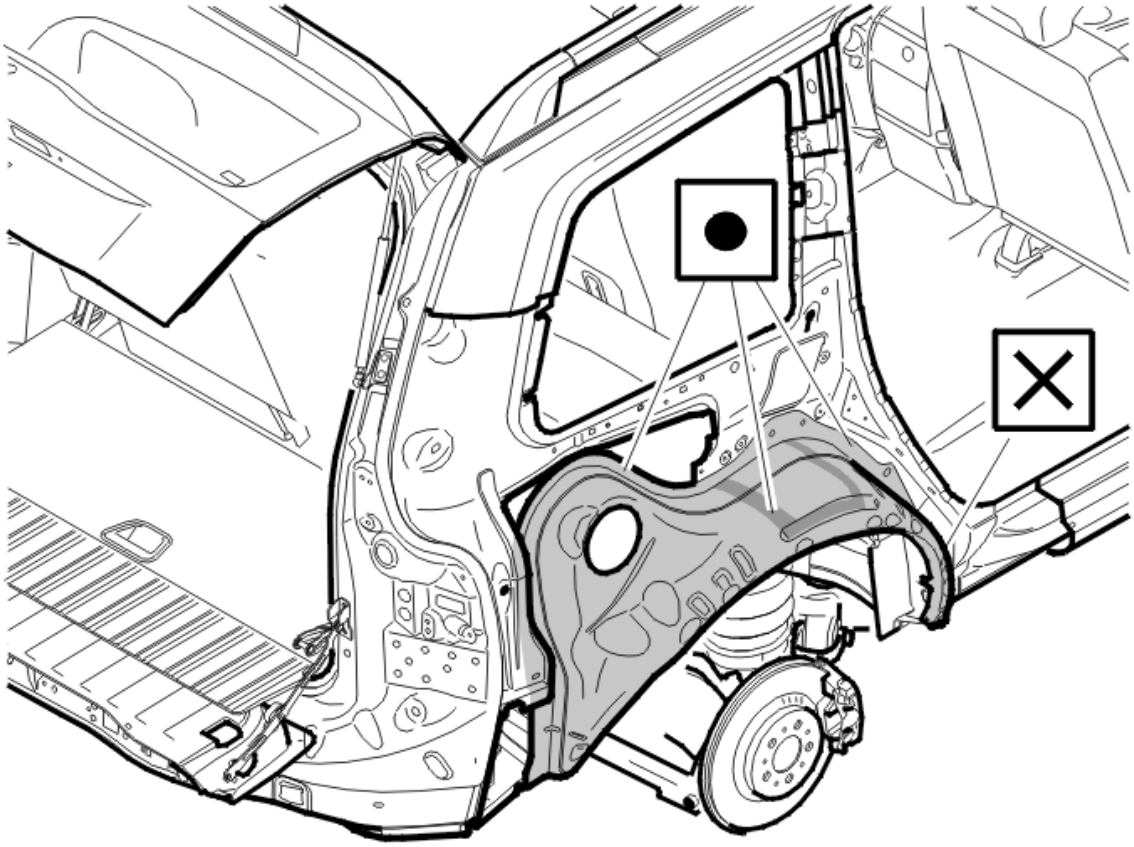

Fig. 44: Installing The Rear Wheel Arch
Courtesy of VOLVO CARS CORPORATION

Secure the wheel arch.

Check the alignment with the rear fender and door.

Weld into place.

Seal the wheel arch. See **BODY SEAL** .

Install:

- The C-post reinforcement. See **C-POST, REPLACING**
- the rear fender. See **REAR FENDER, REPLACING** .

FLOOR, FRAME SECTION, WHEEL ARCH, FIREWALL (2003-2004)

BATTERY COMPARTMENT, REMOVING

REMOVING

As the illustrations in this service information are used for different model years and / or models, some variation

may occur. However, the essential information in the illustrations is always correct.

REMOVING THE BATTERY COMPARTMENT

Remove components. See **REAR SECTION, EXPOSING** .

If necessary, remove:

- the outer rear section. See **REAR SECTION OUTER, REPLACING**
- the rear bumper rail. See **BUMPER RAIL REAR, REPLACING**
- the inner rear section. See **REAR SECTION INNER, REPLACING**.

Determine the extent of the damage. See **BODY SEAL** and **BODY SIDE, ALIGNMENT CHART** .

Grind off the spot welds.

Pry off the battery compartment.

Grind clean.

Apply welding primer.

INSTALLING THE BATTERY COMPARTMENT

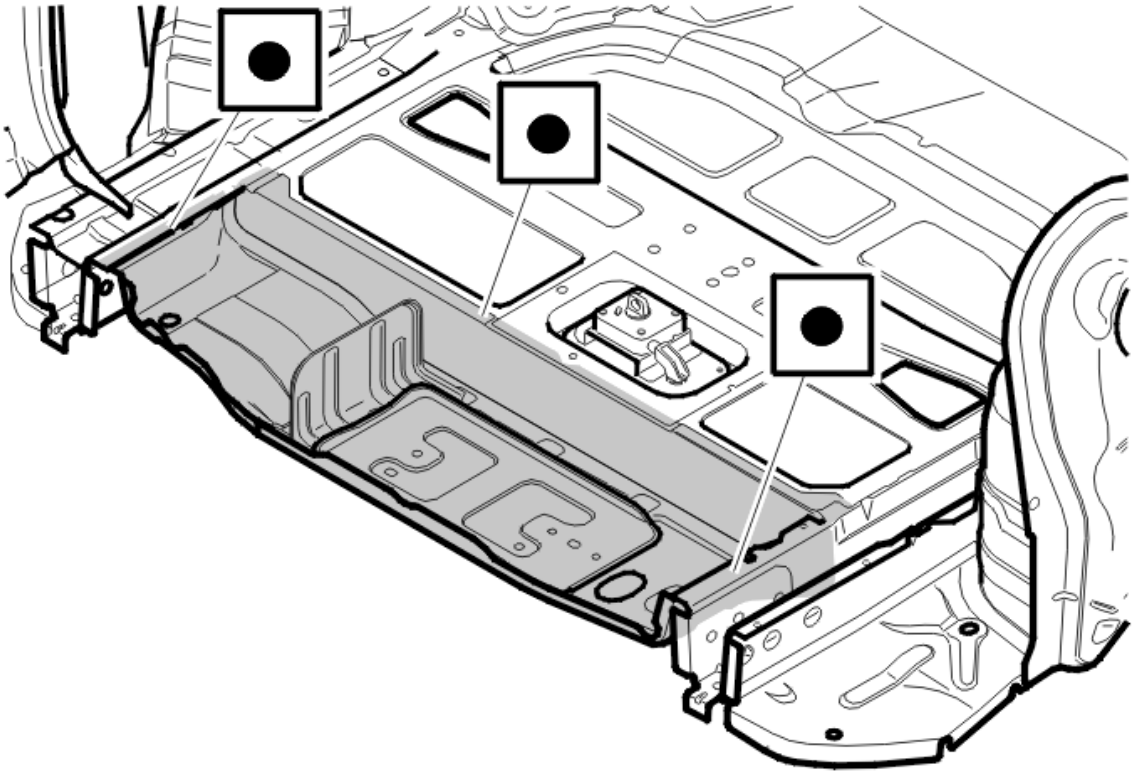

Fig. 45: Installing The Battery Compartment
Courtesy of VOLVO CARS CORPORATION

Secure the replacement part.

Weld into place.

Install:

- the inner rear section. See **REAR SECTION INNER, REPLACING**
- the rear bumper rail. See **BUMPER RAIL REAR, REPLACING**
- the outer rear section. See **REAR SECTION OUTER, REPLACING**

Seal according to **BODY SEAL** .

NOTE: For this type of damage, the whiplash system must be checked. See WHIPLASH UNIT, CHECKING .

COLLISION MEMBER, REPLACING

see **COLLISION MEMBER, REPLACING**

SIDE MEMBER FRONT, REPLACING

see **SIDE MEMBER FRONT, REPLACING**

SIDE MEMBER REAR, REPLACE

Special tools:

see **9997001**

REPLACING

As the illustrations in this service information are used for different model years and / or models, some variation may occur. However, the essential information in the illustrations is always correct.

REMOVING THE REAR SIDE MEMBER

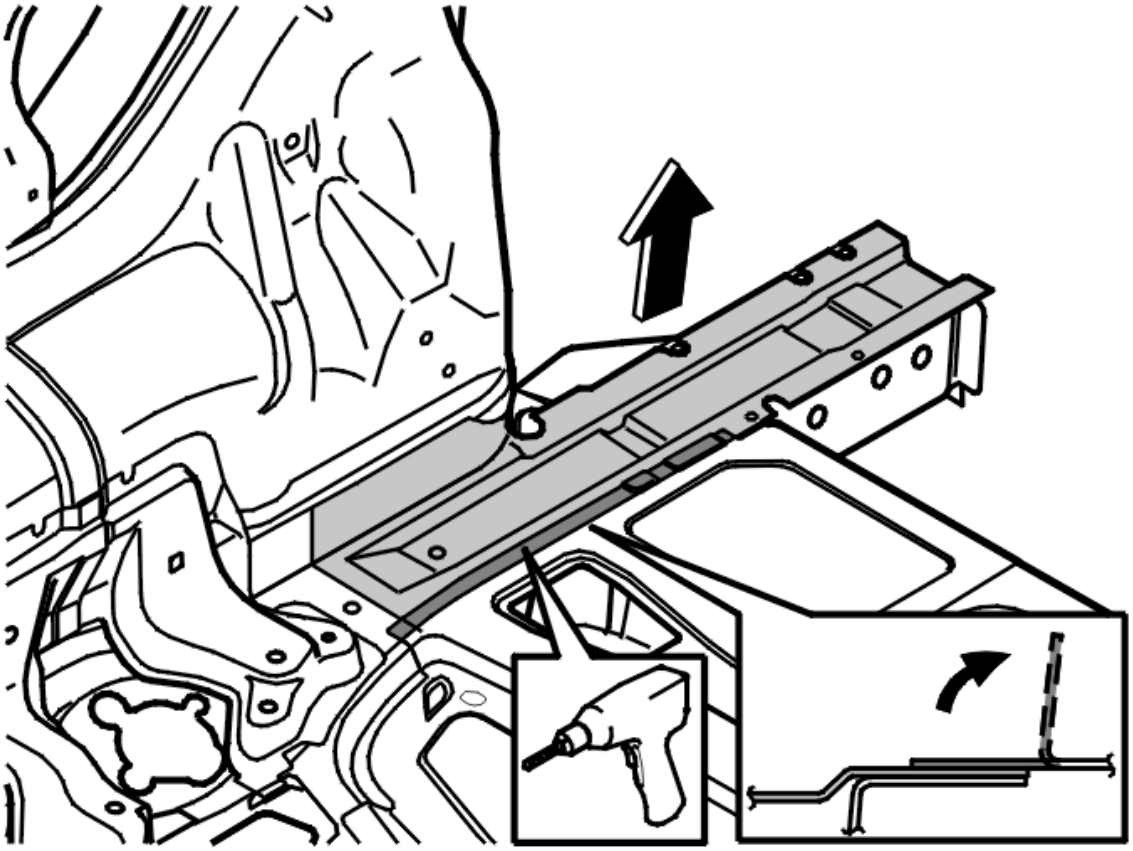

Fig. 46: Removing The Rear Side Member
Courtesy of VOLVO CARS CORPORATION

Remove components. See **REAR SECTION, EXPOSING** .

Correct the damage using an alignment bench. Use puller tool see **9997001** .

Determine the extent of the damage. See **REAR END, ALIGNMENT CHART** and **BODY SIDE, ALIGNMENT CHART** .

Roughly cut at an appropriate point. See the recommended cutting points in the illustration.

If necessary, remove:

- the rear fender. See **REAR FENDER, REPLACING**
- the outer rear section. See **REAR SECTION OUTER, REPLACING**
- the rear bumper rail. See **BUMPER RAIL REAR, REPLACING**
- the inner rear section. See **REAR SECTION INNER, REPLACING**
- the battery compartment. See **BATTERY COMPARTMENT, REMOVING**.

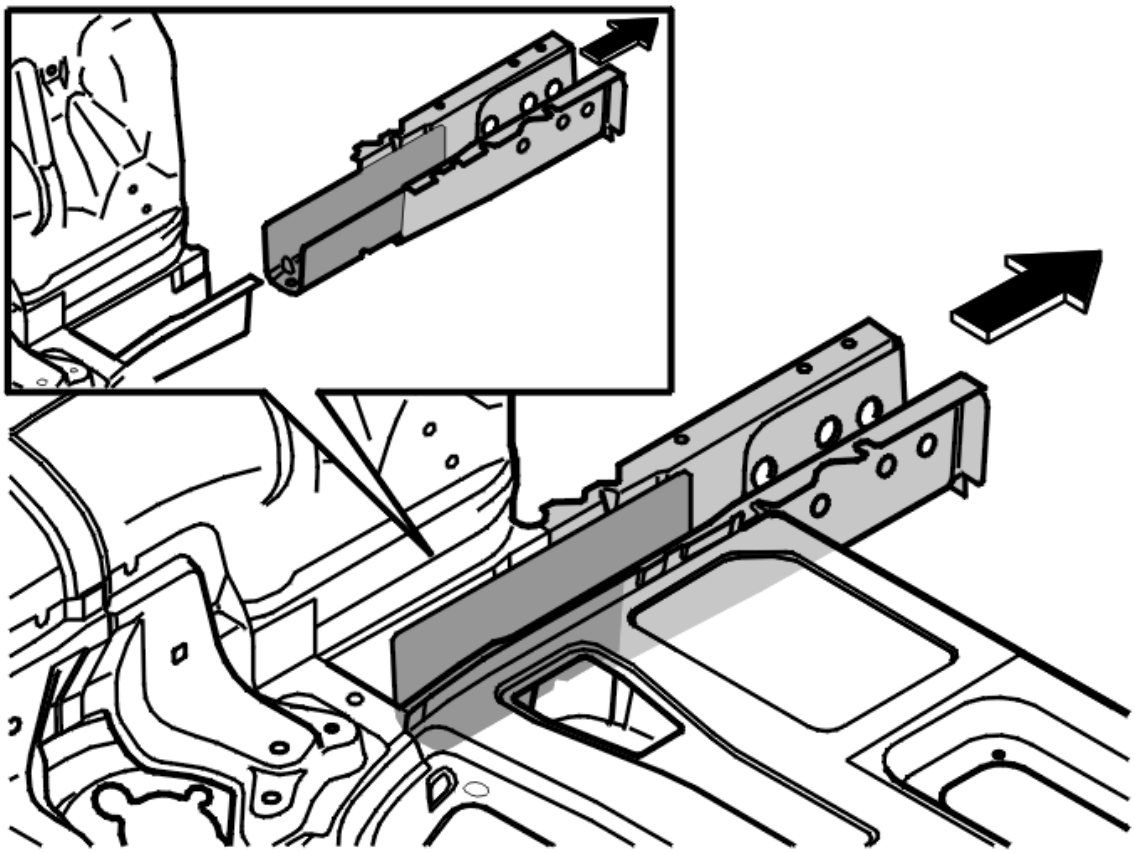

Fig. 47: Removing The Rear Side Member
Courtesy of VOLVO CARS CORPORATION

Drill off the rear floor and the battery compartment. Fold up as illustrated.

Drill off the spot welds for the cover on the side member and cut as illustrated.

Pry off the cover.

Cut the side member as illustrated.

Drill off the reinforcement in the side member in front of the cutting point.

Pry off the side member with both the rear reinforcements.

Grind clean.

Apply welding primer.

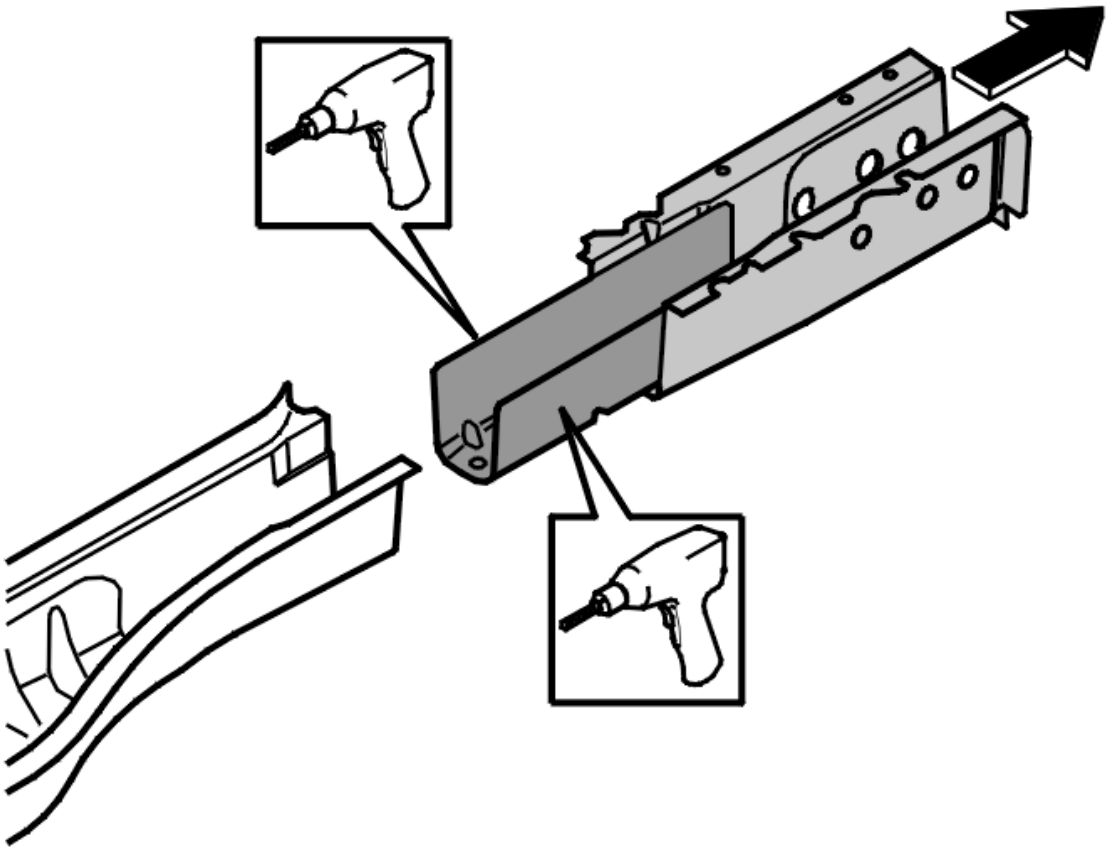

Fig. 48: Preparation Of Rear Side Member
Courtesy of VOLVO CARS CORPORATION

INSTALLING THE REAR SIDE MEMBER

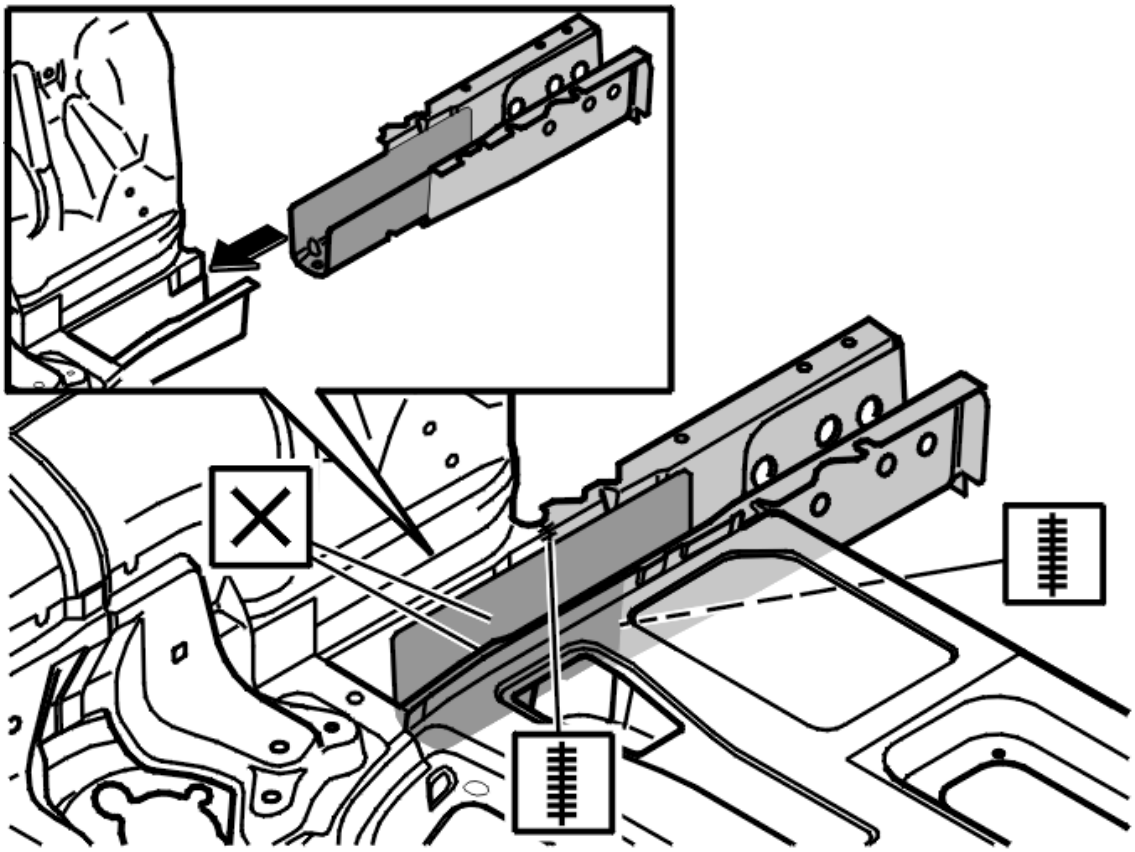

Fig. 49: Installing The Rear Side Member
Courtesy of VOLVO CARS CORPORATION

Cut the replacement part.

Drill holes for the plug welds in the section of the reinforcement protruding from the member.

Slide in the reinforcement with the rear section of the side member.

Secure the replacement part.

Weld into place.

Install:

- the rear fender. See **REAR FENDER, REPLACING**
- the outer rear section. See **REAR SECTION OUTER, REPLACING**
- the rear bumper rail. See **BUMPER RAIL REAR, REPLACING**
- the inner rear section. See **REAR SECTION INNER, REPLACING**
- the battery compartment. See **BATTERY COMPARTMENT, REMOVING**.

Seal according to **BODY SEAL** .

NOTE: **For this type of damage, the whiplash system must be checked. See WHIPLASH UNIT, CHECKING .**

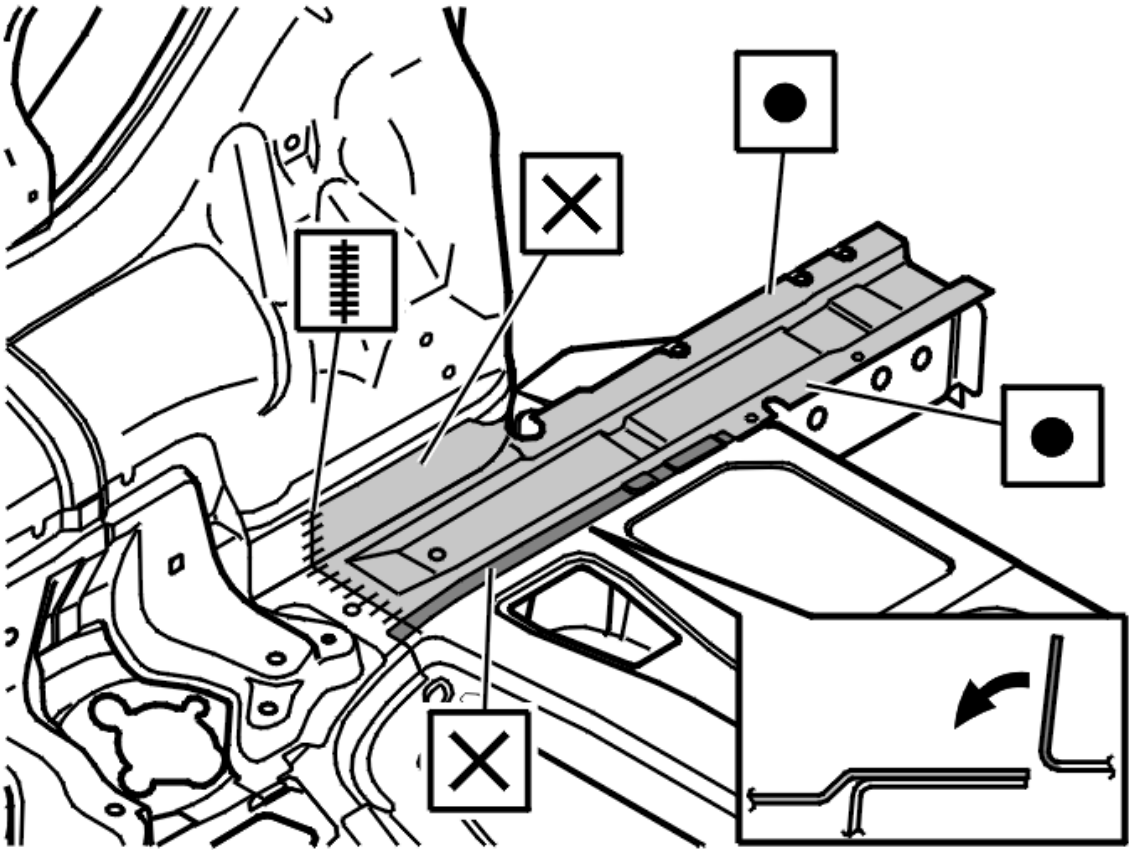

Fig. 50: Removing Side Member
Courtesy of VOLVO CARS CORPORATION

SIDE MEMBER, UPPER, REPLACING

see **SIDE MEMBER, UPPER, REPLACING**

WHEEL HOUSING FRONT, REPLACING

see **WHEEL HOUSING FRONT, REPLACING**

WHEEL HOUSING REAR, REPLACING

see **WHEEL HOUSING REAR, REPLACING**

REAR SECTION, PARCEL SHELF (2005-2012)

BUMPER RAIL REAR, REPLACING

REPLACING

The illustrations in this service information are used for different model years and/or models. Some variation may occur. However, the essential information in the illustrations is always correct.

REMOVING THE REAR BUMPER RAIL

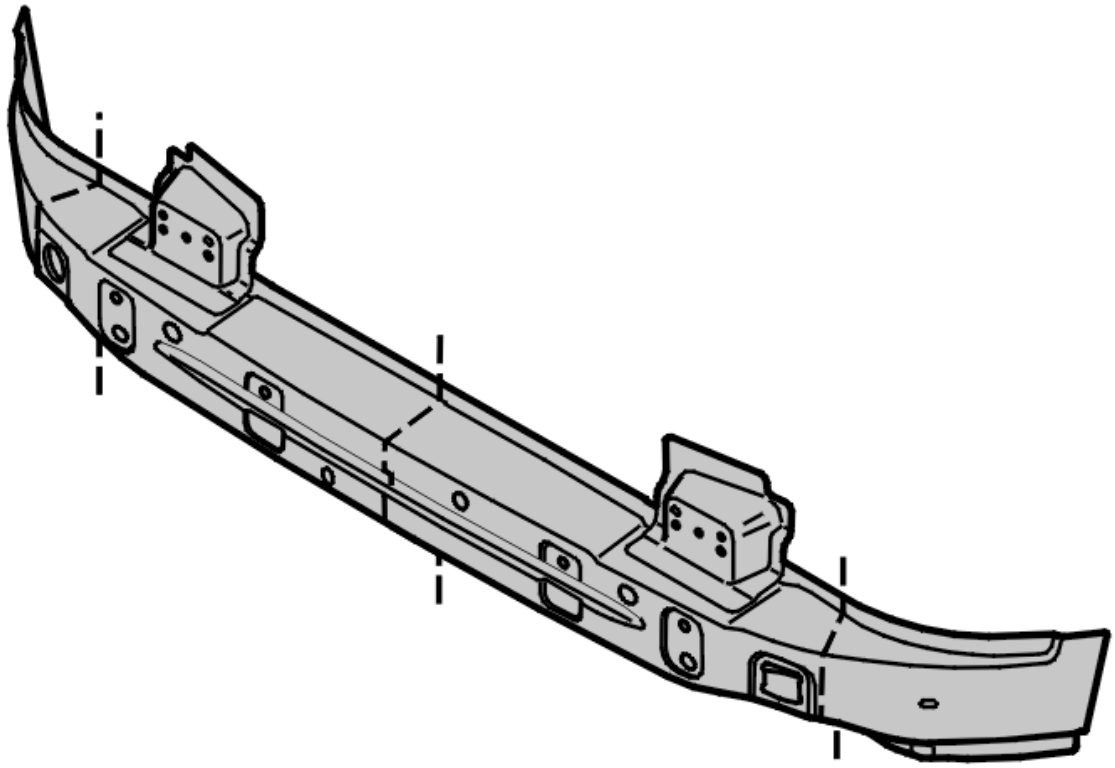

Fig. 51: Removing The Rear Bumper Rail
Courtesy of VOLVO CARS CORPORATION

NOTE: The bumper rail is made of BORON steel. This material cannot be sawn, drilled through or realigned. For more information, see SHEET METAL, MATERIAL INFORMATION .

To access the spot welds, remove the outer tail panel. See **REAR SECTION OUTER, REPLACING**.

HINT: The tail panel can also be drilled off.

Determine the extent of the damage. See **REAR END, ALIGNMENT CHART** and **BODY SIDE, ALIGNMENT CHART** .

Cut at a suitable point (see the recommended cutting points in the illustration).

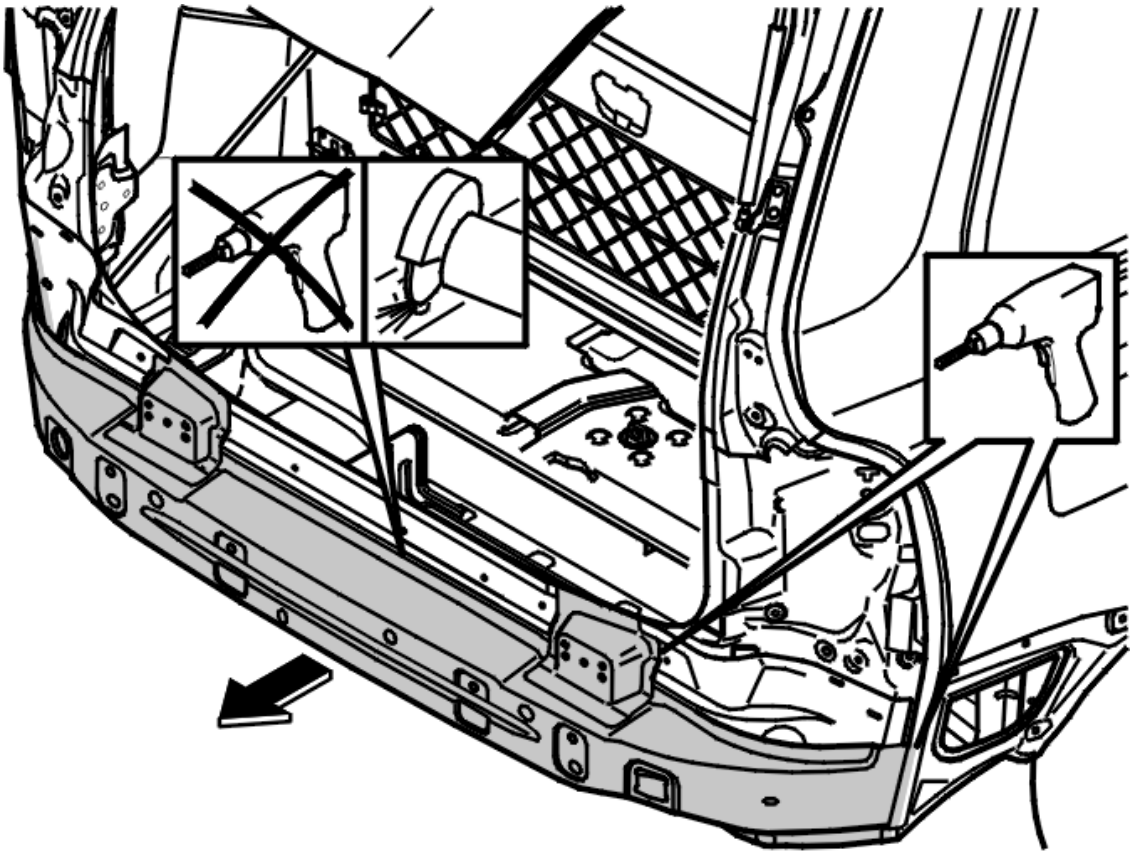

Fig. 52: Removing Rear Bumper Rail
Courtesy of VOLVO CARS CORPORATION

Drill off the rear fender where it is secure to the rail.

Grind off the spot welds and bead welds.

Grind clean the surfaces to be spot-welded. Also grind the replacement part clean. There may be a deposit on the Boron steel which will prevent the weld from securing.

Apply welding primer to all the surfaces to be welded.

INSTALLING THE REAR BUMPER RAIL

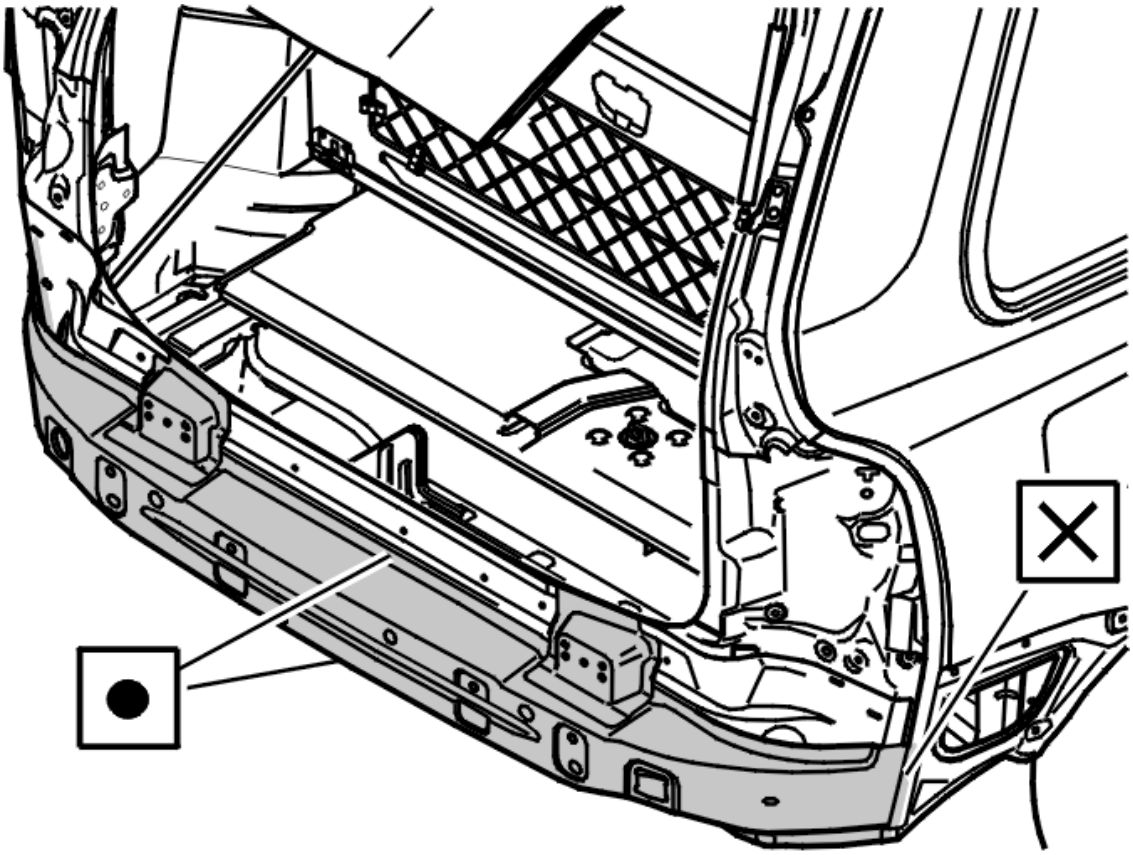

Fig. 53: Installing The Rear Bumper Rail
Courtesy of VOLVO CARS CORPORATION

Secure and weld the replacement part into place.

NOTE: **Start welding from the center outwards. This is to reduce stress and make spot welding easier in the tough material.**

Seal. See **BODY SEAL** .

NOTE: **Always check the Whiplash element if the rear section of the car is damaged. See WHIPLASH UNIT, CHECKING .**

REAR SECTION INNER, REPLACING

REPLACING

The illustrations in this service information are used for different model years and/or models. Some variation may occur. However, the essential information in the illustrations is always correct.

REMOVING THE INNER REAR SECTION

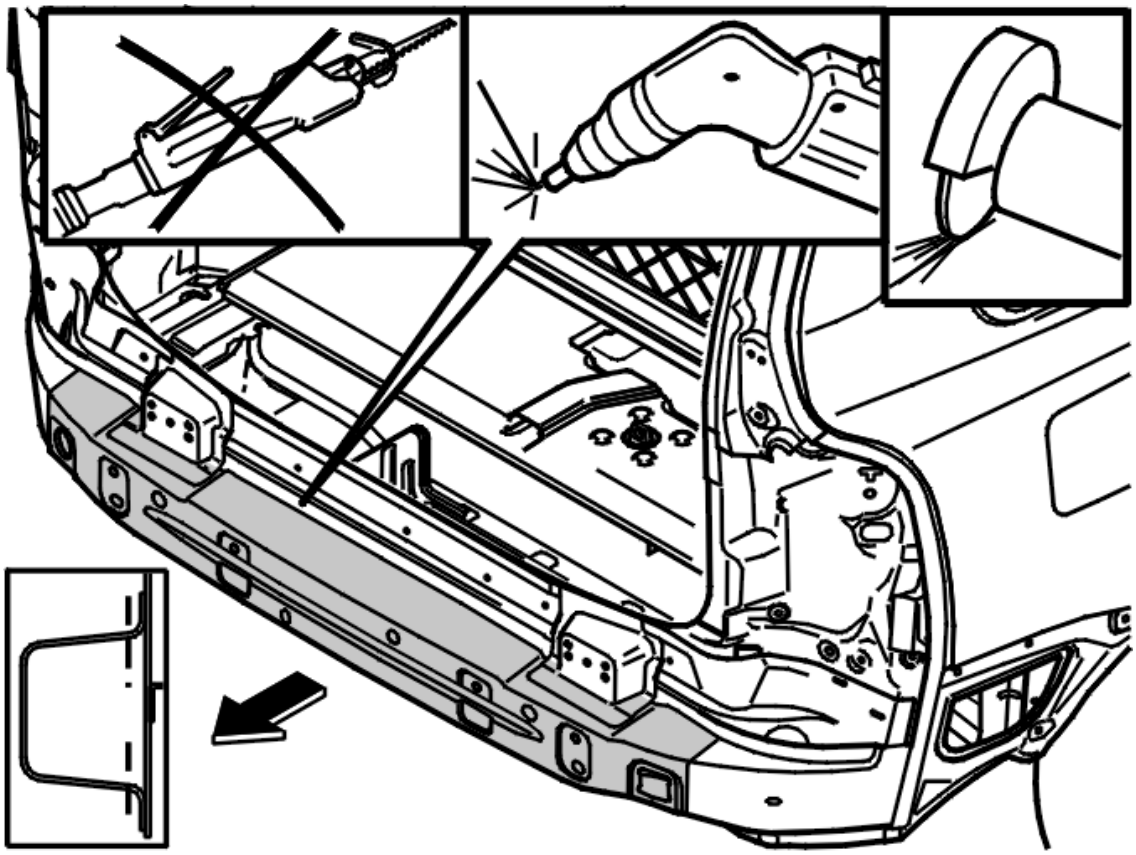

Fig. 54: Removing The Inner Rear Section
Courtesy of VOLVO CARS CORPORATION

NOTE: The bumper rail and the inner rear section made of BORON steel.

BORON steel cannot be sawn, drilled through or realigned. For more information, see **SHEET METAL, MATERIAL INFORMATION** .

Remove components. See **REAR SECTION, EXPOSING** .

Remove the outer rear section. See **REAR SECTION OUTER, REPLACING**.

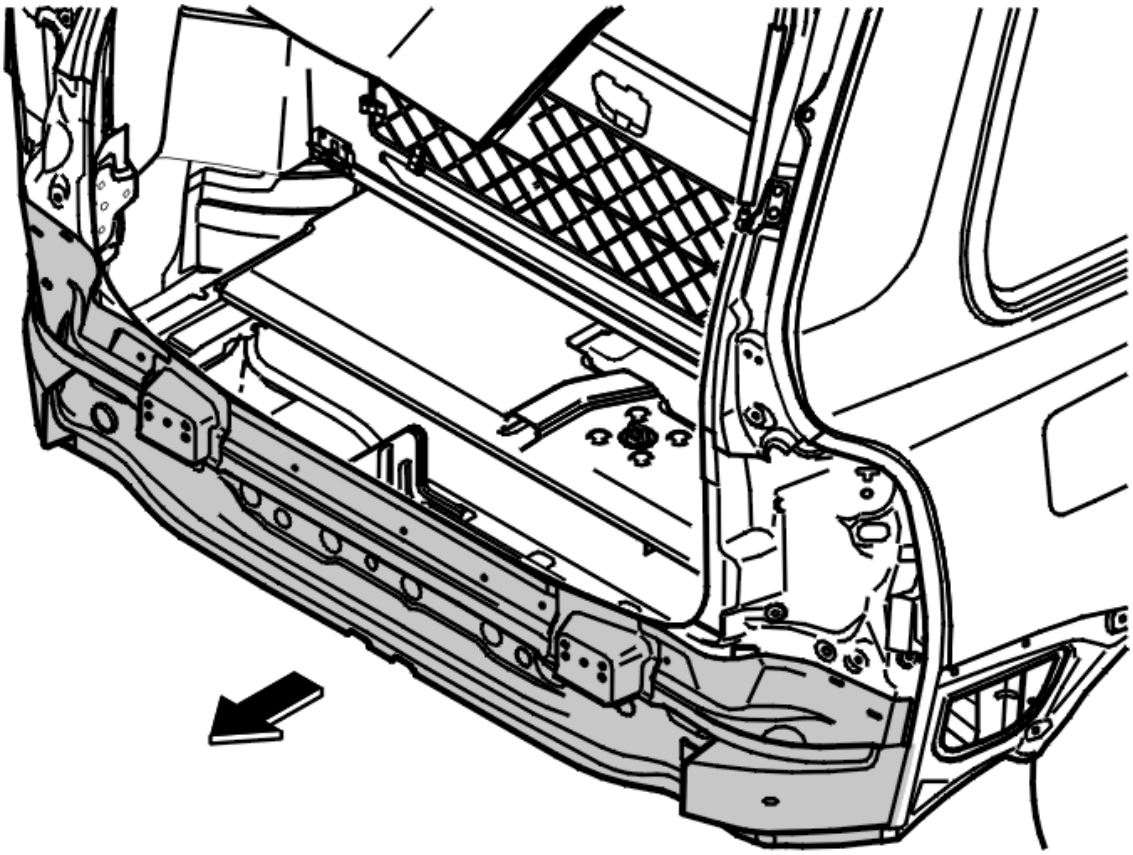

Fig. 55: Identifying Bumper Rail
Courtesy of VOLVO CARS CORPORATION

Roughly cut the bumper rail using a plasma torch or a cutter.

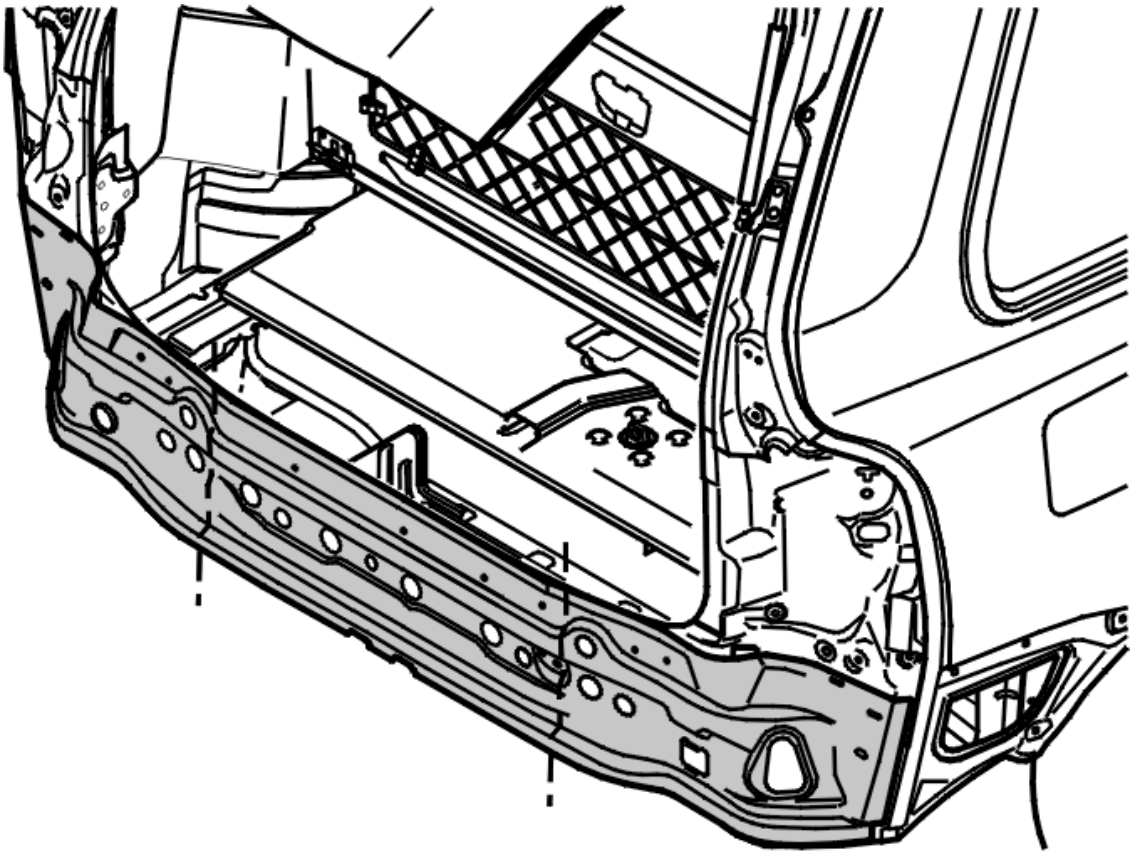

Fig. 56: Recommended Cutting Points
Courtesy of VOLVO CARS CORPORATION

Determine the extent of the damage. See **REAR END, ALIGNMENT CHART** and **BODY SIDE, ALIGNMENT CHART** .

Cut at a suitable point (see the recommended cutting points in the illustration).

Grind off spot welds and the bead welds.

Pry off the inner rear section.

Grind clean.

INSTALLING THE INNER REAR SECTION

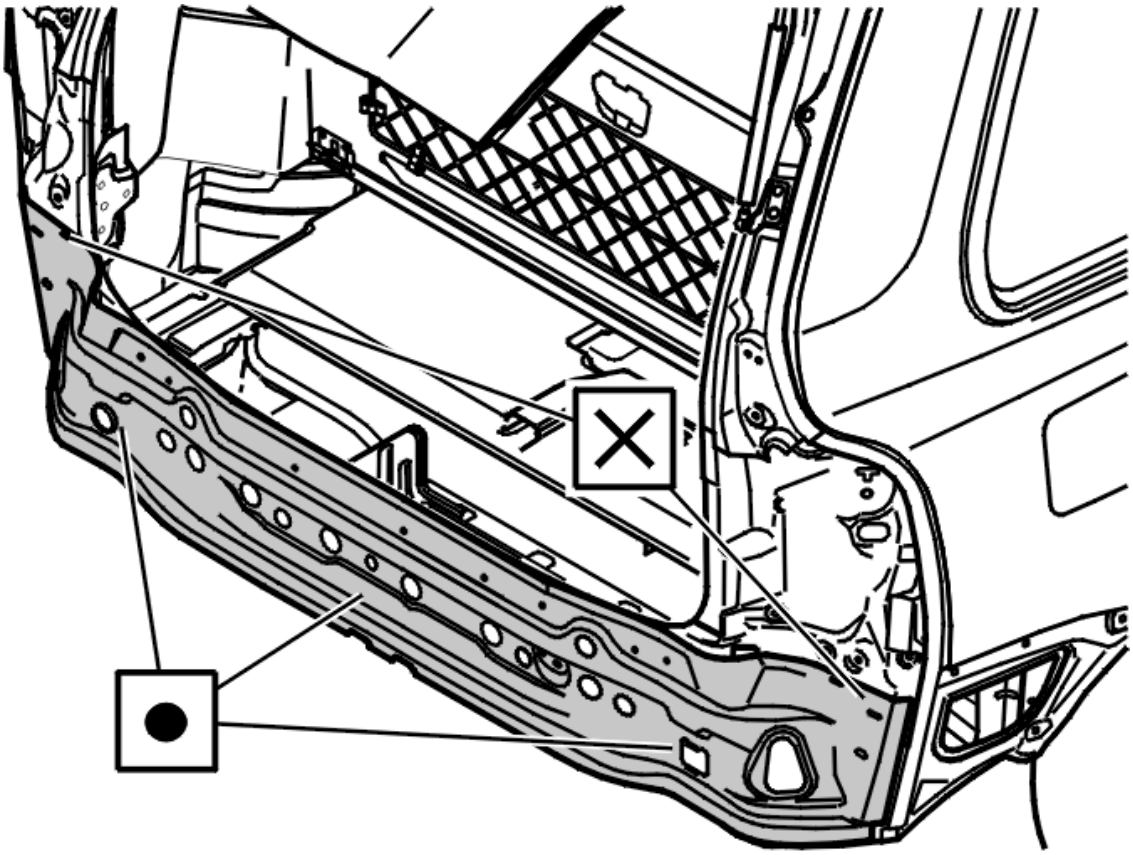

Fig. 57: Installing The Inner Rear Section
Courtesy of VOLVO CARS CORPORATION

Apply welding primer.

Secure and weld the replacement part into place.

Install:

- the bumper rail. See **BUMPER RAIL REAR, REPLACING**
- the outer rear section. See **REAR SECTION OUTER, REPLACING**.

Seal. See **BODY SEAL** .

NOTE: **For this type of damage, the whiplash system must be checked. See WHIPLASH UNIT, CHECKING .**

REAR SECTION OUTER, REPLACING

REPLACING

The illustrations in this service information are used for different model years and/or models. Some variation may occur. However, the essential information in the illustrations is always correct.

REMOVING THE OUTER REAR SECTION

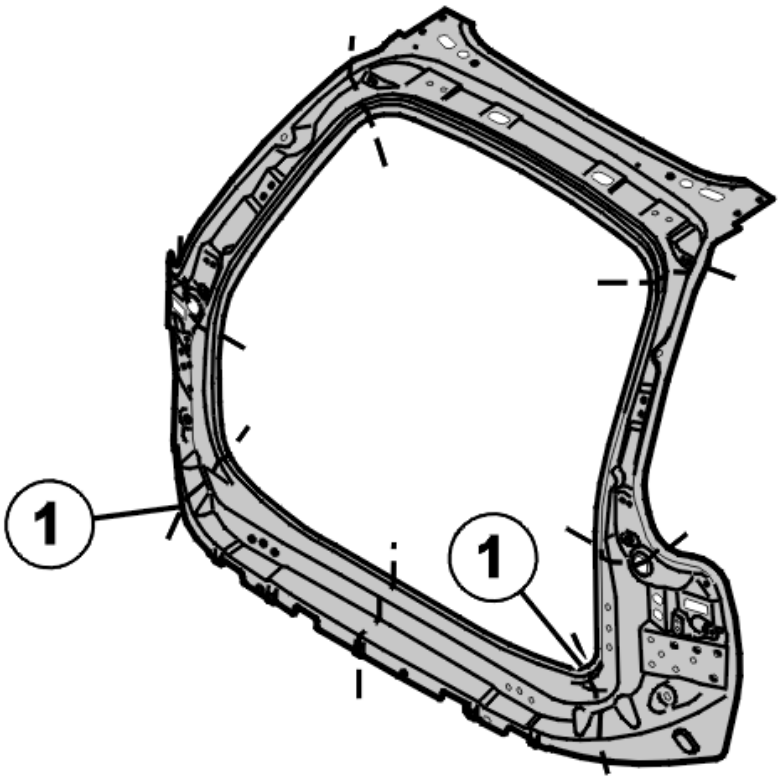

Fig. 58: Removing The Outer Rear Section
Courtesy of VOLVO CARS CORPORATION

Remove components. See **REAR SECTION, EXPOSING** .

Determine the extent of the damage. See **REAR END, ALIGNMENT CHART** and **BODY SIDE, ALIGNMENT CHART** .

Cut at a suitable point (see the recommended cutting points in the illustration).

Joint (1) should be used to limit the painted surfaces on the rear fender.

Grind and drill out the spot welds and bead welds.

Pry off the rear section.

Grind clean.

INSTALLING THE OUTER REAR SECTION

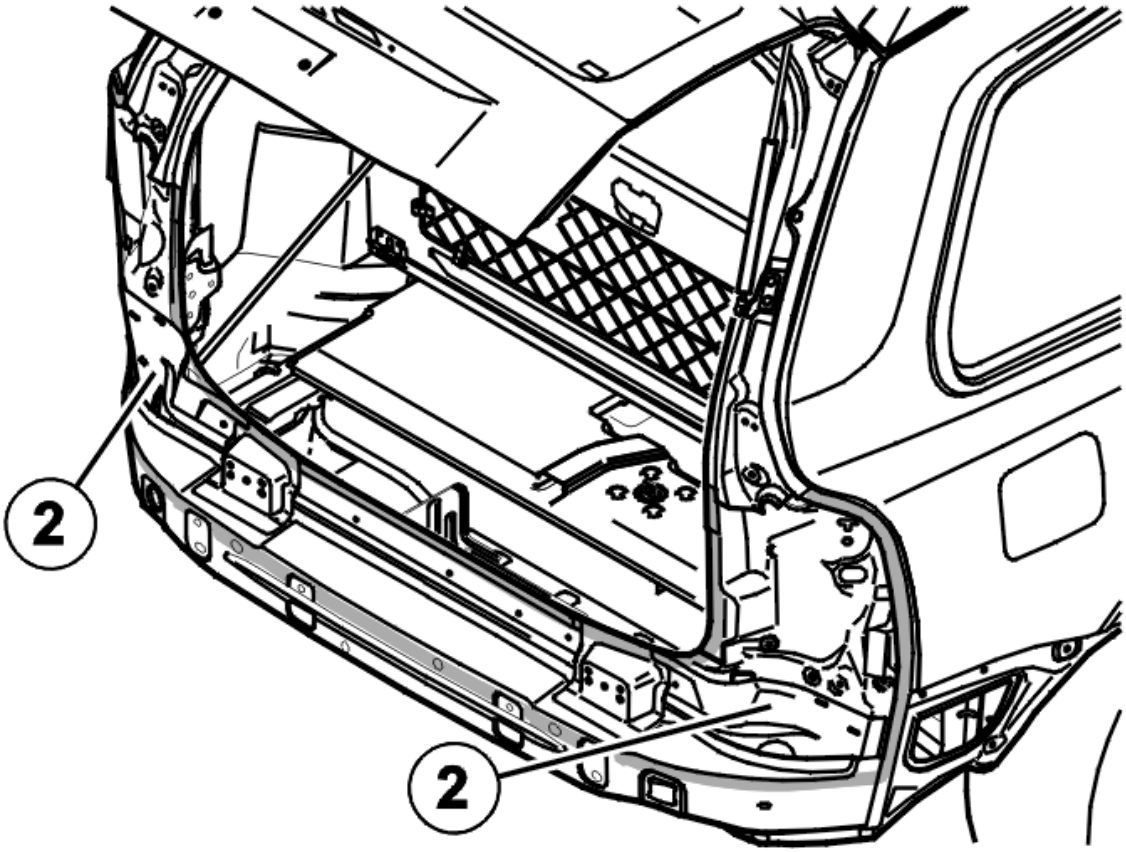

Fig. 59: Installing The Outer Rear Section (1 of 2)
Courtesy of VOLVO CARS CORPORATION

Apply welding primer.

Use foam rubber replacement at (2).

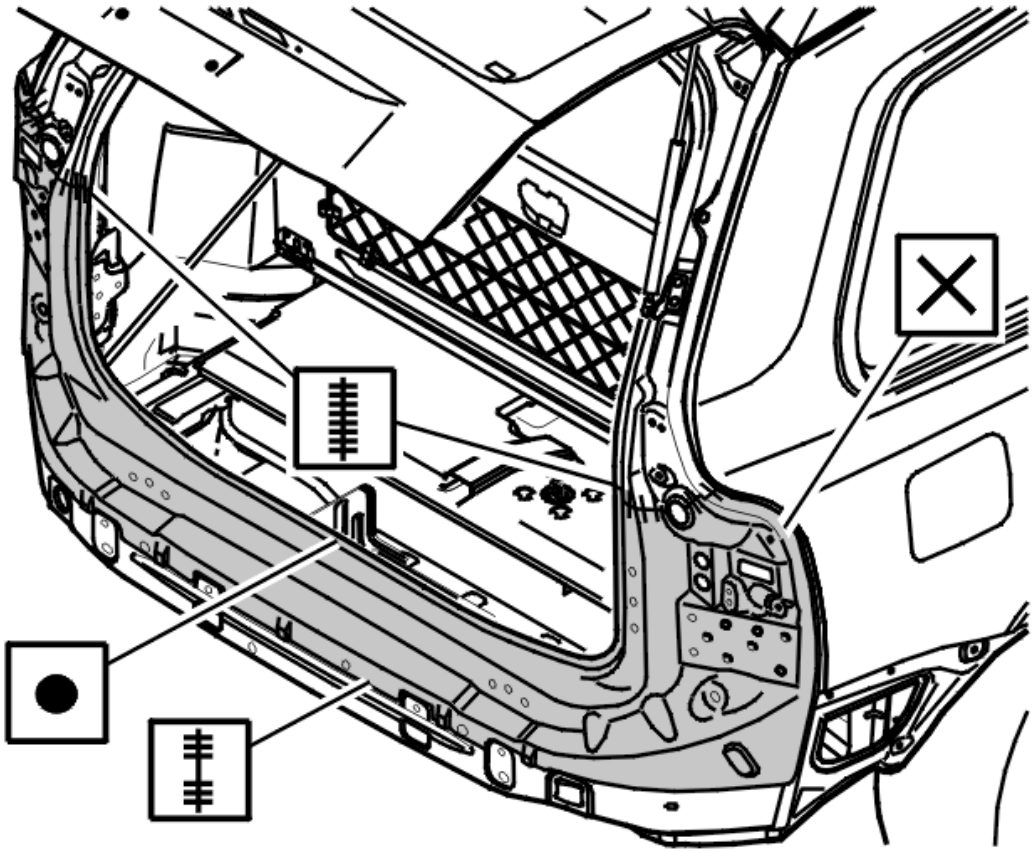

Fig. 60: Installing The Outer Rear Section (2 of 2)
Courtesy of VOLVO CARS CORPORATION

Secure and weld the replacement part into place.

Seal. See **BODY SEAL** .

NOTE: **For this type of damage, the whiplash system must be checked. See WHIPLASH UNIT, CHECKING .**

REAR SECTION, PARCEL SHELF (2003-2004)

BUMPER RAIL REAR, REPLACING

REPLACING

As the illustrations in this service information are used for different model years and / or models, some variation may occur. However, the essential information in the illustrations is always correct.

REMOVING THE REAR BUMPER RAIL

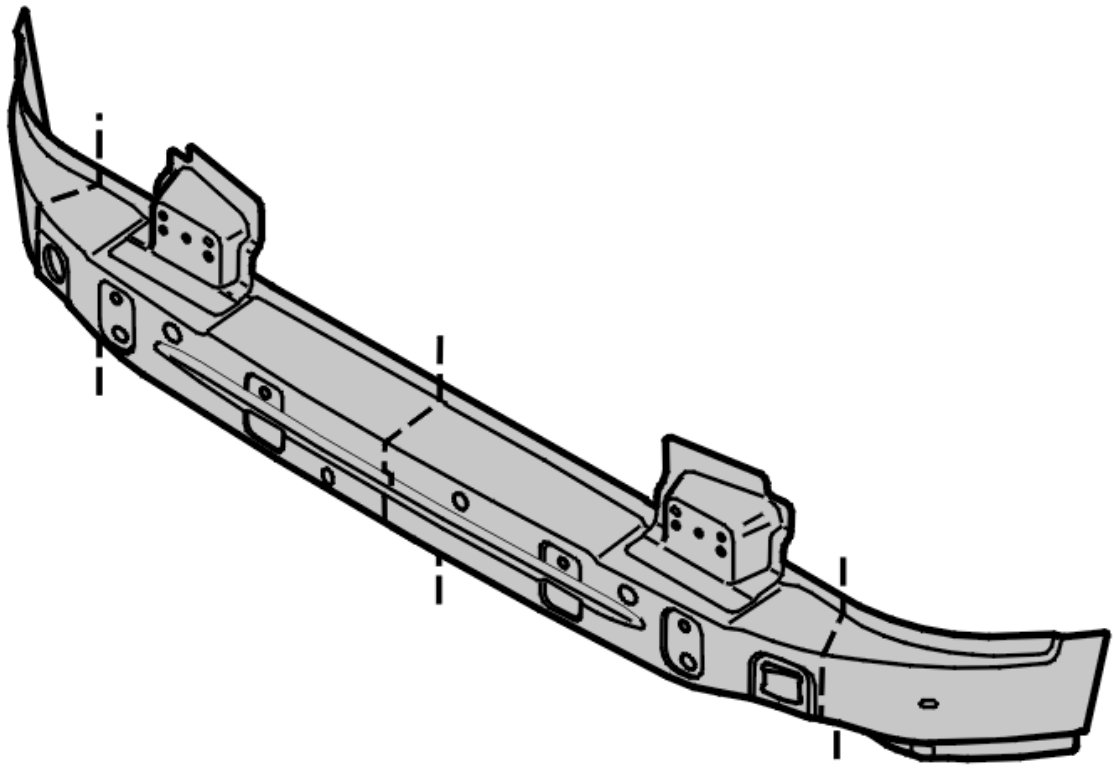

Fig. 61: Rear Bumper Rail
Courtesy of VOLVO CARS CORPORATION

NOTE: The bumper rail is made of BORON steel. This material cannot be sawn, drilled through or realigned. For more information, see SHEET METAL, MATERIAL INFORMATION .

To access the spot welds, remove the outer tail panel. See **ROOF SECTION, EXPOSING**.

HINT: The tail panel can also be drilled off.

Determine the extent of the damage. See **REAR END, ALIGNMENT CHART** and **BODY SIDE, ALIGNMENT CHART** .

Cut at a suitable point (see the recommended cutting points in the illustration).

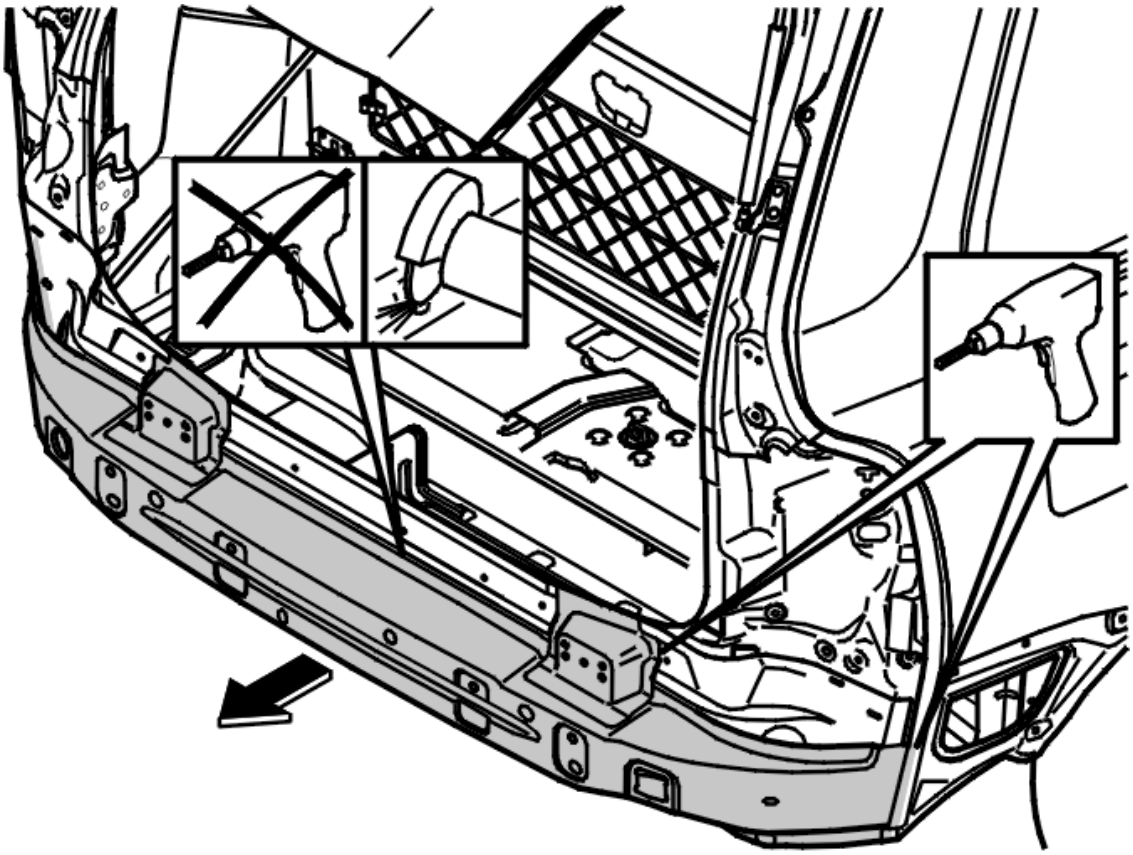

Fig. 62: Removing Rear Bumper Rail
Courtesy of VOLVO CARS CORPORATION

Drill off the rear fender where it is secure to the rail.

Grind off the spot welds and bead welds.

Grind clean the surfaces to be spot-welded. Also grind the replacement part clean. There may be a deposit on the Boron steel which will prevent the weld from securing.

Apply welding primer to all the surfaces to be welded.

INSTALLING THE REAR BUMPER RAIL

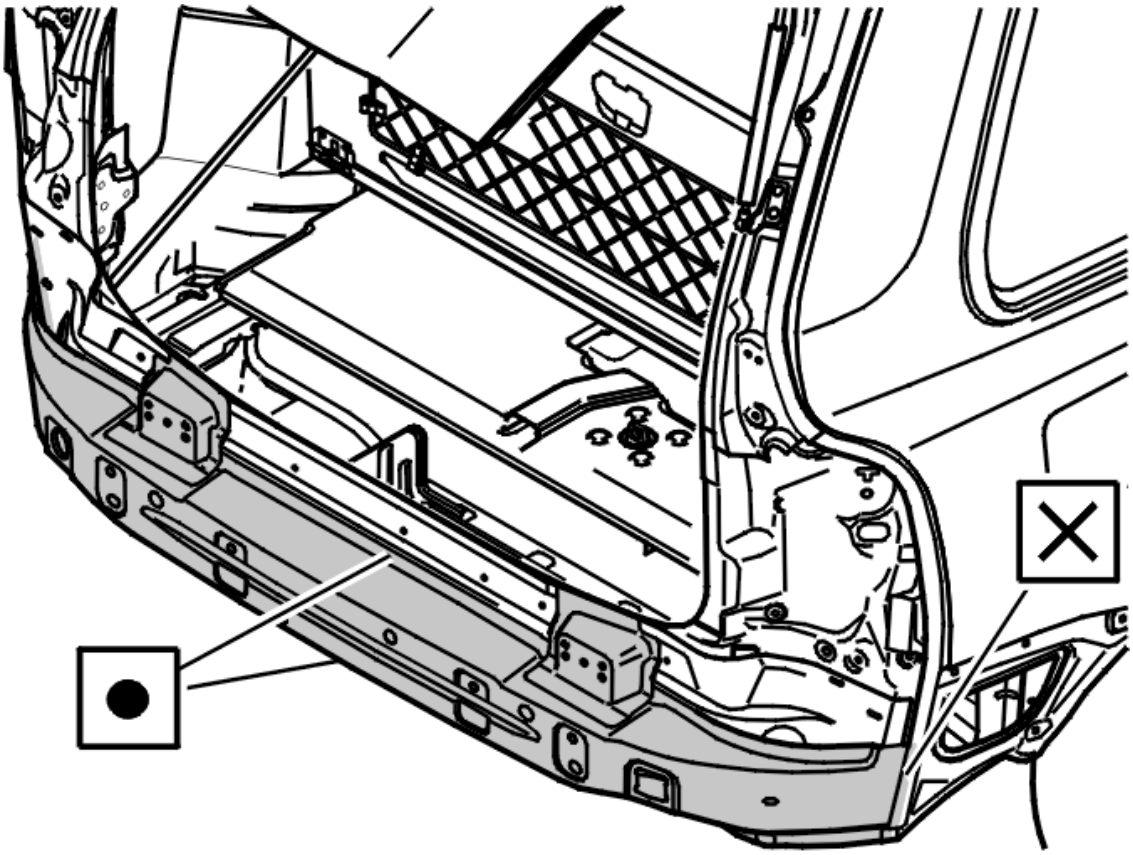

Fig. 63: Installing The Rear Bumper Rail
Courtesy of VOLVO CARS CORPORATION

Secure and weld the replacement part into place.

NOTE: **Start welding from the center outwards. This is to reduce stress and make spot welding easier in the tough material.**

Seal according to **BODY SEAL** .

NOTE: **Always check the Whiplash element if the rear section of the car is damaged. See WHIPLASH UNIT, CHECKING .**

ROOF SECTION, EXPOSING

PREPARATIONS

Remove the necessary components from the car according to the menu:

The front side door. See **PANEL, REAR SIDE DOOR, REPLACING**.

The rear side door. See **REPLACING THE FRONT DOOR SIDE PANEL**.

The rear side window. See **SIDE WINDOW, REAR, REPLACING** .

The windshield. See **WINDSCREEN REMOVAL** .

The rear windshield. See **REMOVING THE REAR WINDSHIELD** .

Weatherstrips.

Roof trim.

The cargo compartment. See **LOUDSPEAKER, D-POST, REPLACING** and **PANEL, TAILGATE, REPLACING** **LOCK MECHANISM, TAILGATE, REPLACING** **COMPONENTS COOL BOX REAR SEAT, REPLACING** .

The rear seat. See **REAR SEAT ASSEMBLY, REPLACEMENT**.

The front seats. See **LIFTING THE FRONT SEATS IN AND OUT** .

The floor carpets. See **FLOOR CARPET, FRONT, REPLACING** **FLOOR CARPET, REAR, REPLACING** .

The headlining:

- For 2003-2008, see **HEADLINING, REPLACING** .
- For 2009-2012, see **HEADLINING, REPLACING** .

The A-post panels. See **REPLACING THE A-POST PANEL**.

The B-post panels. See **PANEL B-POST, REPLACING** .

The C-post panels. See **PANEL C-POST, REPLACING** .

The D-post panels. See **PANEL D-POST, REPLACING** .

The front and rear sill trim panels See **FRONT DOOR SILL TRIM PANEL** and **SILL TRIM PANEL, REPLACING** .

The dashboard. See **DASHBOARD AND RADIO PANEL** .

The inflatable curtain. See **IC (INFLATABLE CURTAIN) MODULE, REPLACING** .

The inflatable curtains and seat belts:

- For front seat belts, see **SEAT BELT FRONT, REPLACING**
- For rear seat belts, see **SEAT BELT REAR, REPLACING** .

PANEL, REAR SIDE DOOR, REPLACING

REMOVING THE REAR SIDE DOOR PANEL

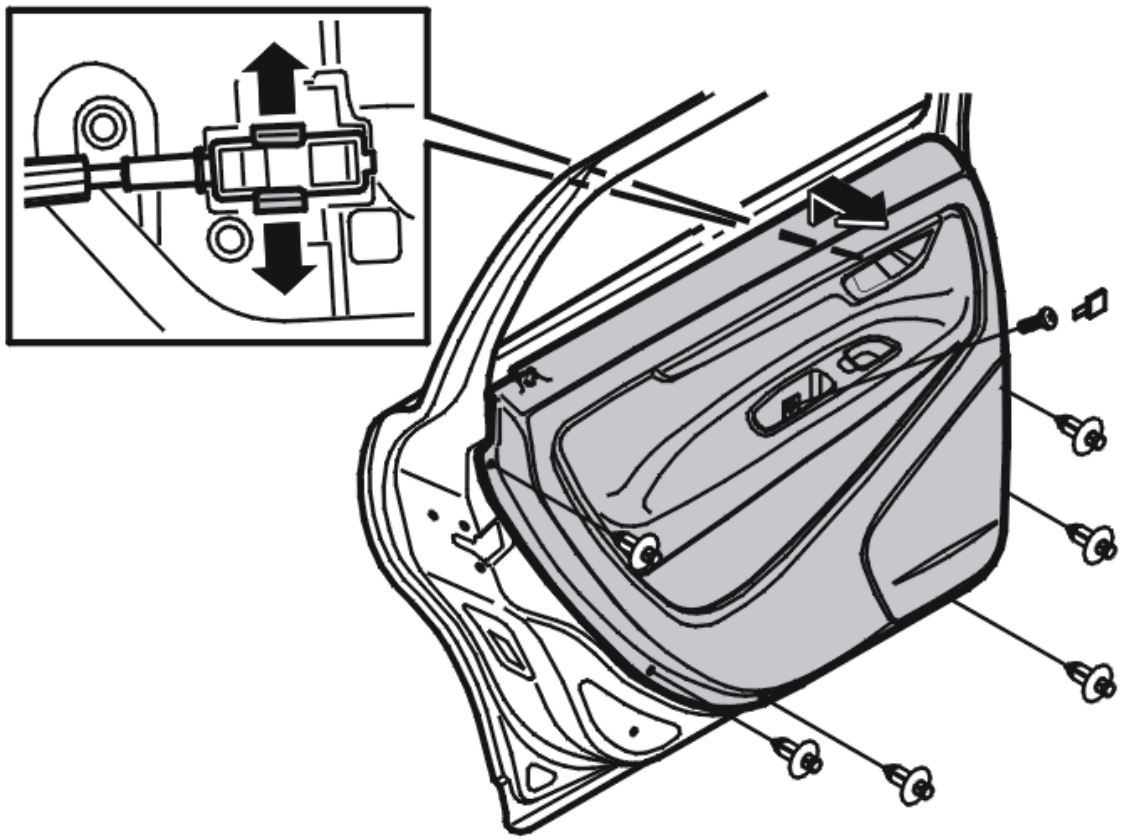

Fig. 64: Identifying Rear Side Door Side Panel, Clips, And Screw
Courtesy of VOLVO CARS CORPORATION

- Remove the cover and 1 screw
- Remove the 6 clips
- Disconnect the mechanical cable for the inner door opener
- Disconnect the connector
- Lift the panel upwards.

INSTALLING THE REAR SIDE DOOR PANEL

Install:

In reverse order.

NOTE: Ensure that the mounting for the mechanical cable for the inner door opener secures correctly in the fastener.

REPLACING THE FRONT DOOR SIDE PANEL

REMOVING THE PANEL FROM THE FRONT SIDE DOOR

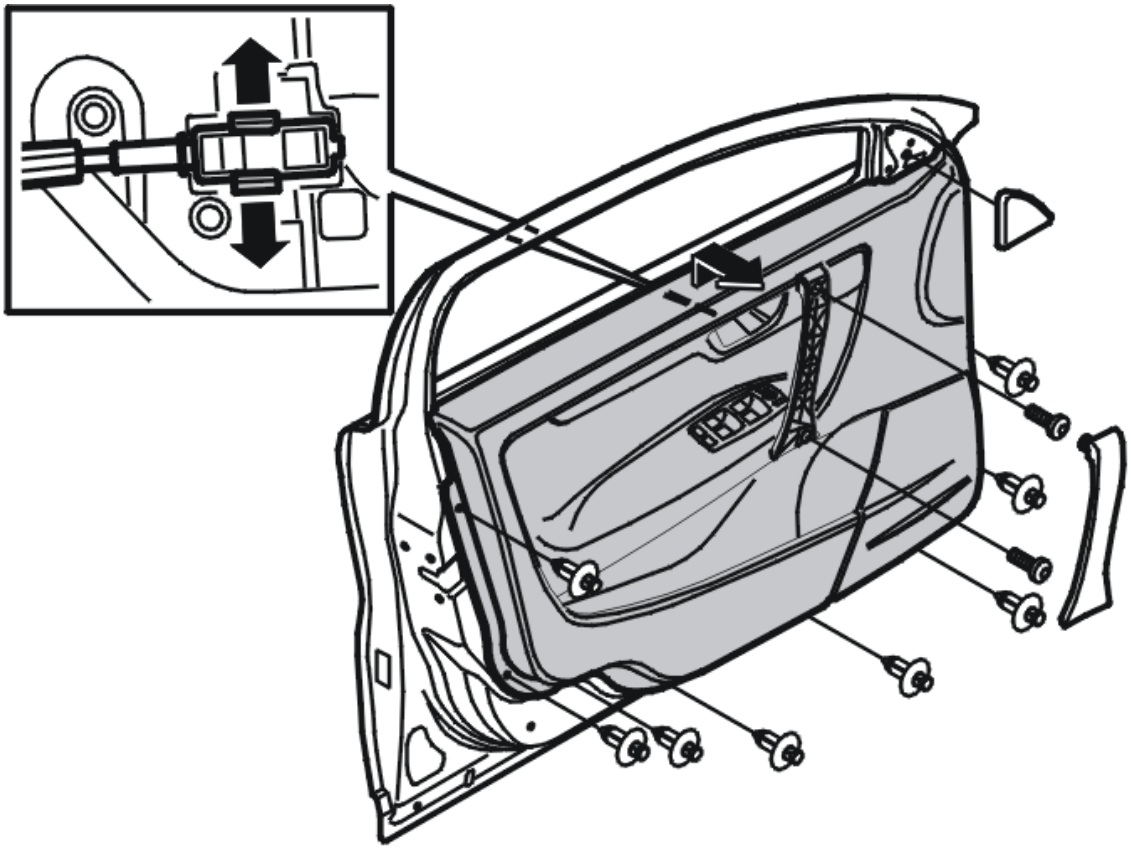

Fig. 65: Removing Screws, Clips, And Cover From Door Panel
Courtesy of VOLVO CARS CORPORATION

Remove the cover from the mirror by pulling it straight outwards.

Detach the side piece handle at the bottom edge. Use a weatherstrip tool.

Remove:

- the two screws
- the eight clips.

Twist the panel outwards and upwards.

Disconnect the mechanical cable for the inner door opener.

Disconnect the connectors.

INSTALLING THE PANEL ON THE FRONT DOOR

Install:

- the connectors

- the mechanical cable for the inner door opener.

Hang the panel in position.

Install:

- the clips
- the screws
- the side piece handle
- the cover for the mirror.

NOTE: Ensure that the mounting for the mechanical cable for the inner door opener secures correctly in the clip.

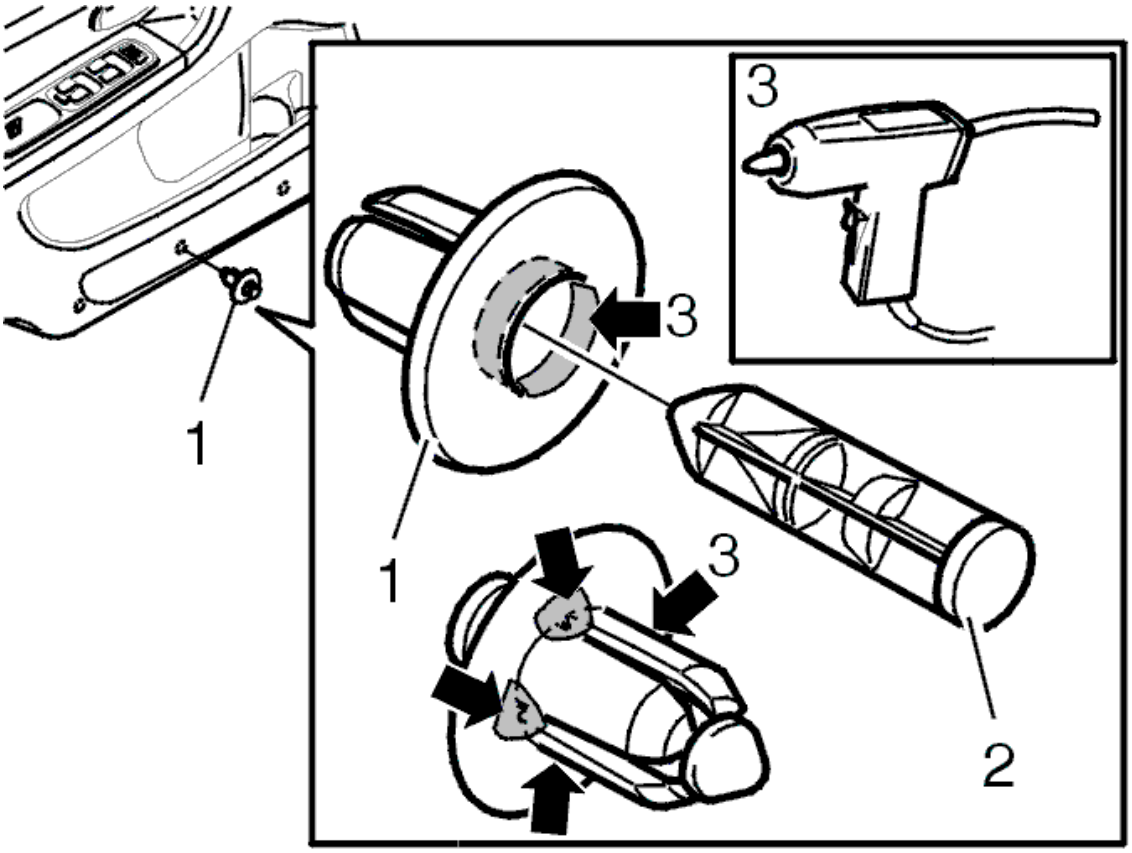

Fig. 66: Installing Clips For Door Panel
Courtesy of VOLVO CARS CORPORATION

NOTE: Certain inner door sides do not have a hole for a clip. These door panels must be modified. Take a correctly colored door clip. Cut off the clip. Bond the clip to the door. Do not forget the center section of the clip.

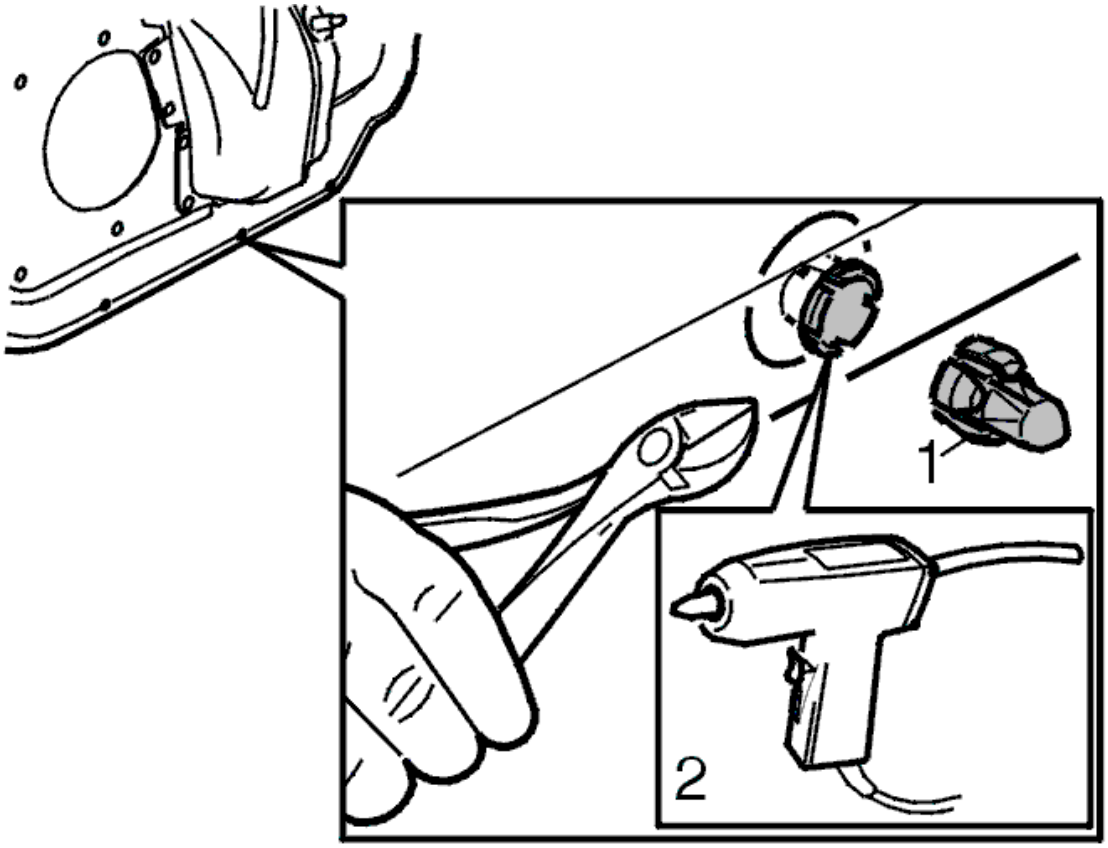

Fig. 67: Binding Clip To Door
Courtesy of VOLVO CARS CORPORATION

LOUDSPEAKER, D-POST, REPLACING

REMOVING THE LOUDSPEAKER IN THE D-POST

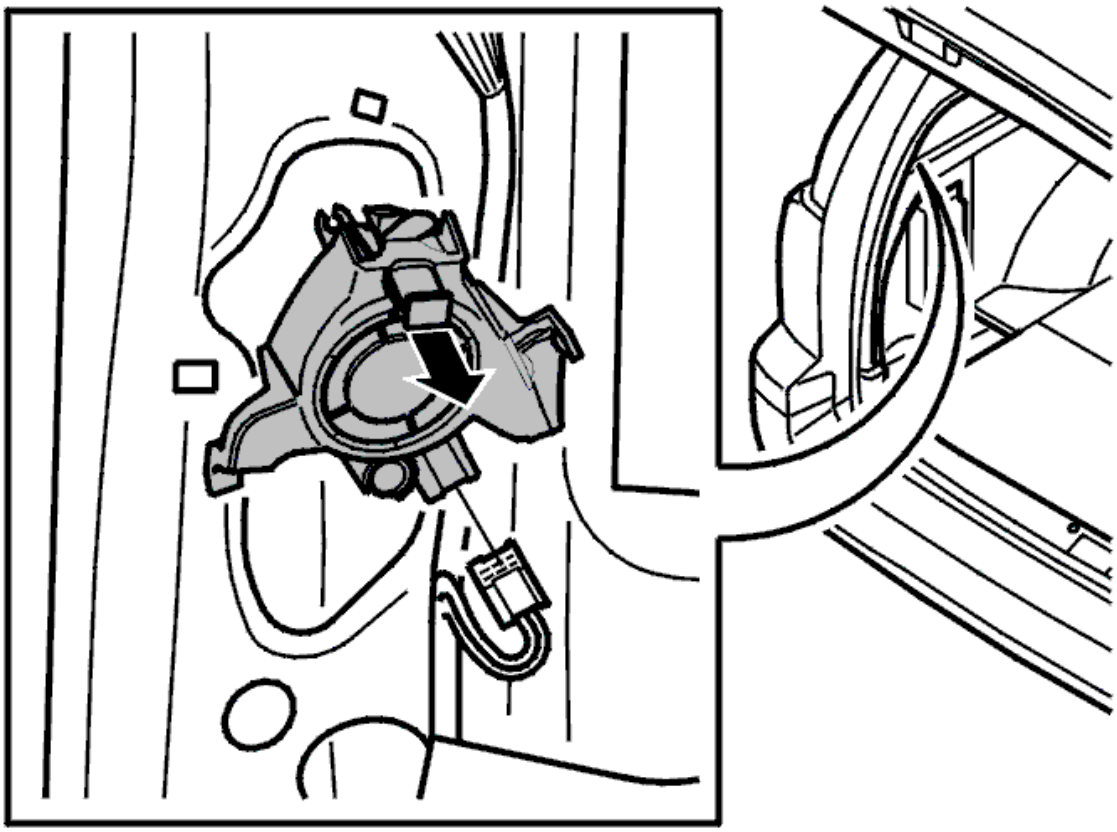

Fig. 68: Identifying Loudspeaker In D-Post
Courtesy of VOLVO CARS CORPORATION

- Detach the loudspeaker grille by releasing it at the lower edge and pulling straight downwards
- Pull out the clips
- Angle out the loudspeaker. Disconnect the connector.

INSTALLING THE LOUDSPEAKER IN THE D-POST

Install:

In reverse order.

REAR SEAT ASSEMBLY, REPLACEMENT

- For center seat cushion trim (second row), see **UPHOLSTERY SEAT CUSHION CENTER (SECOND ROW), REPLACING** .
- For outer seat cushion trim (second row), see **UPHOLSTERY SEAT CUSHION OUTER (SECOND ROW), REPLACING** .
- For seat cushion trim (third row), see **UPHOLSTERY SEAT CUSHION (THIRD ROW), REPLACING** .
- For center seat backrest trim (second row), see **UPHOLSTERY BACKREST CUSHION CENTER (SECOND ROW), REPLACING** .

- For outer seat backrest trim (second row), see **UPHOLSTERY BACKREST CUSHION OUTER (SECOND ROW)** .
- For backrest trim (third row), see **UPHOLSTERY BACKREST CUSHION (THIRD ROW), REPLACING** .

REAR SECTION INNER, REPLACING

REPLACING

As the illustrations in this service information are used for different model years and / or models, some variation may occur. However, the essential information in the illustrations is always correct.

REMOVING THE INNER REAR SECTION

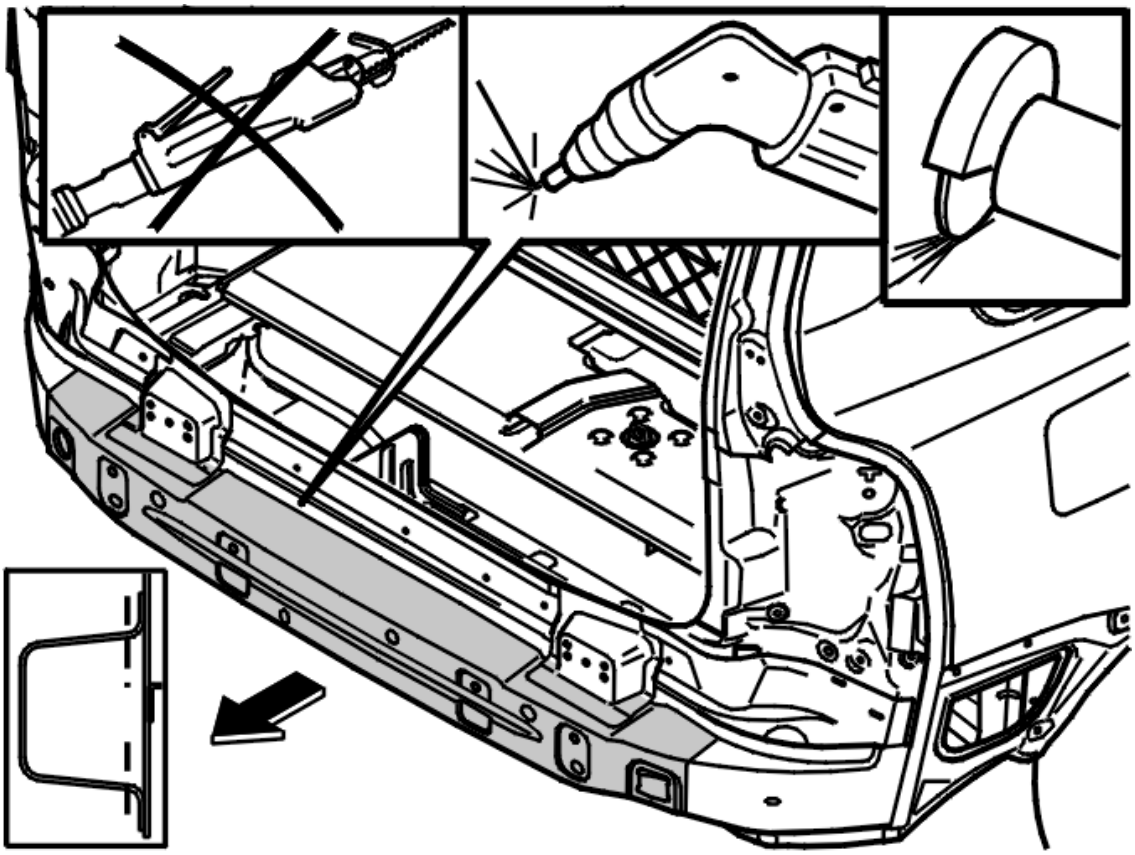

Fig. 69: Removing The Inner Rear Section
Courtesy of VOLVO CARS CORPORATION

NOTE: The bumper rail and the inner rear section made of BORON steel.

BORON steel cannot be sawn, drilled through or realigned. For more information, see **SHEET METAL, MATERIAL INFORMATION** .

Remove components. See **REAR SECTION, EXPOSING** .

Remove the outer rear section. See **REAR SECTION OUTER, REPLACING**.

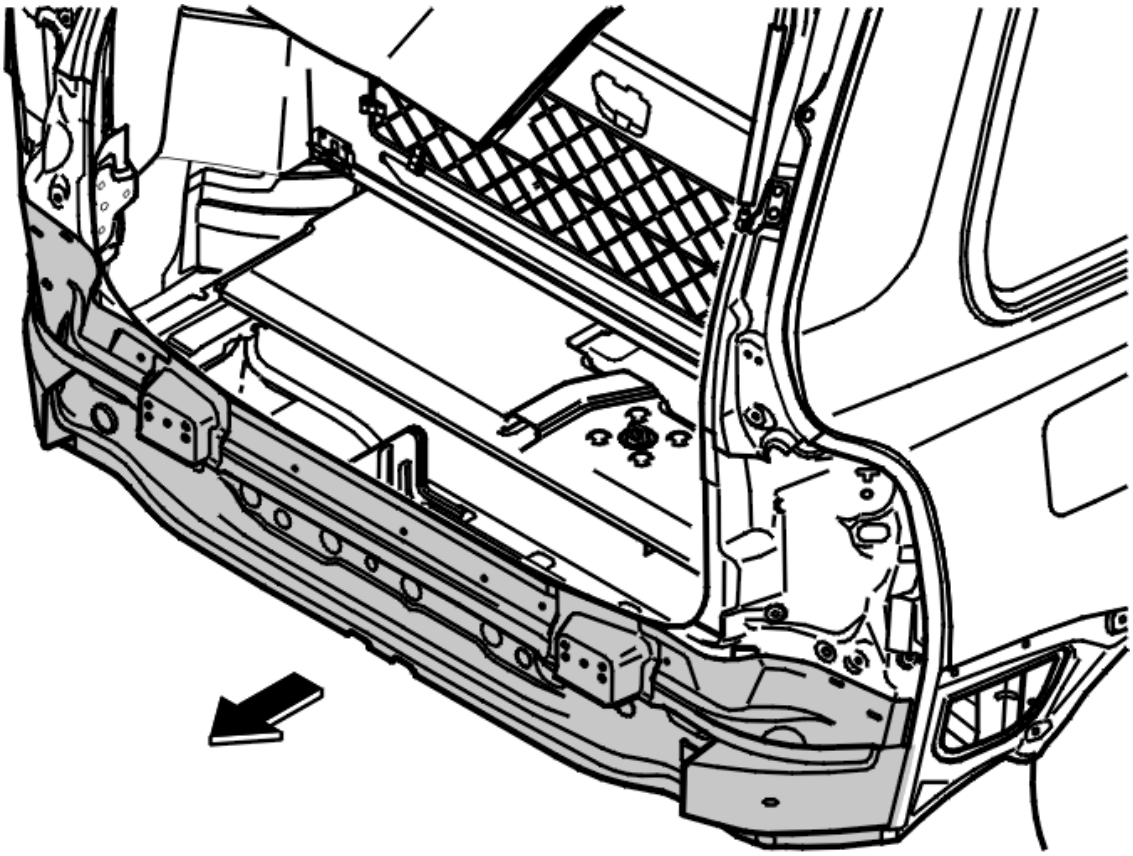

Fig. 70: Cutting Bumper Rail
Courtesy of VOLVO CARS CORPORATION

Roughly cut the bumper rail using a plasma torch or a cutter.

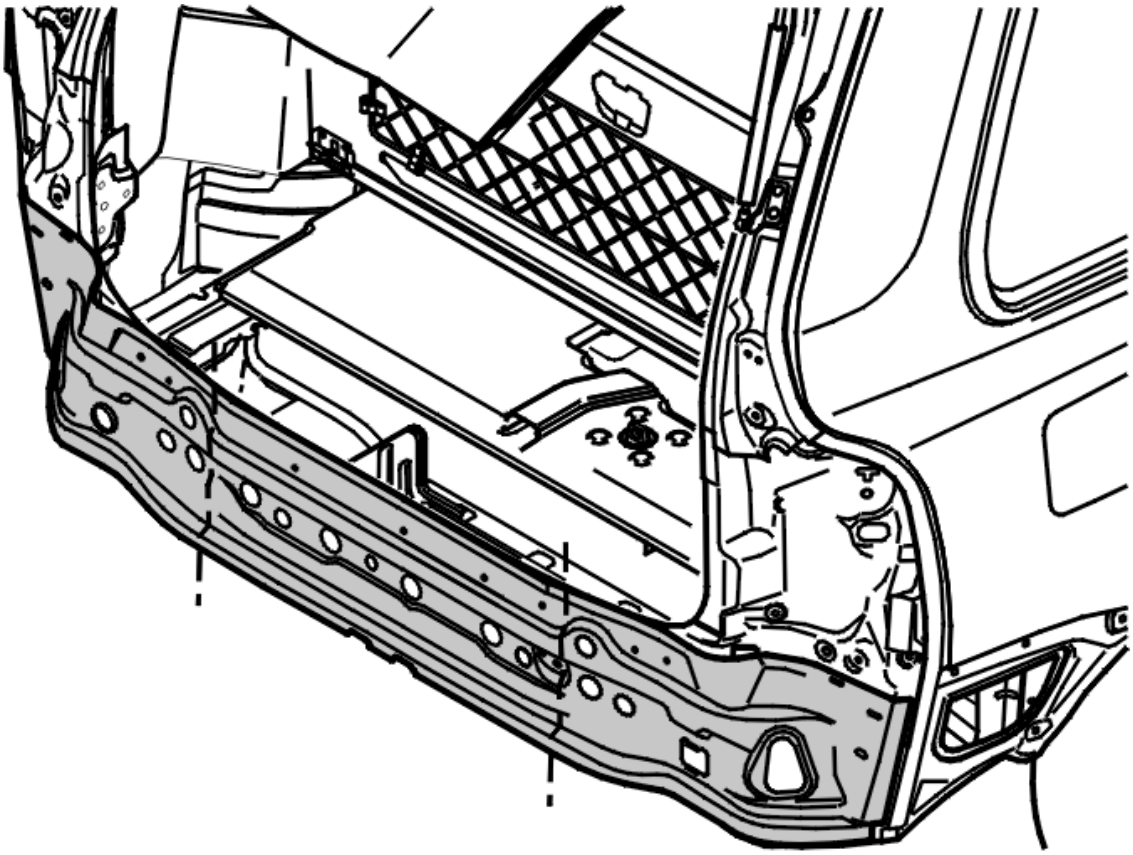

Fig. 71: Recommended Cutting Points
Courtesy of VOLVO CARS CORPORATION

Determine the extent of the damage. See **REAR END, ALIGNMENT CHART** and **BODY SIDE, ALIGNMENT CHART** .

Cut at a suitable point (see the recommended cutting points in the illustration).

Grind off spot welds and the bead welds.

Pry off the inner rear section.

Grind clean.

INSTALLING THE INNER REAR SECTION

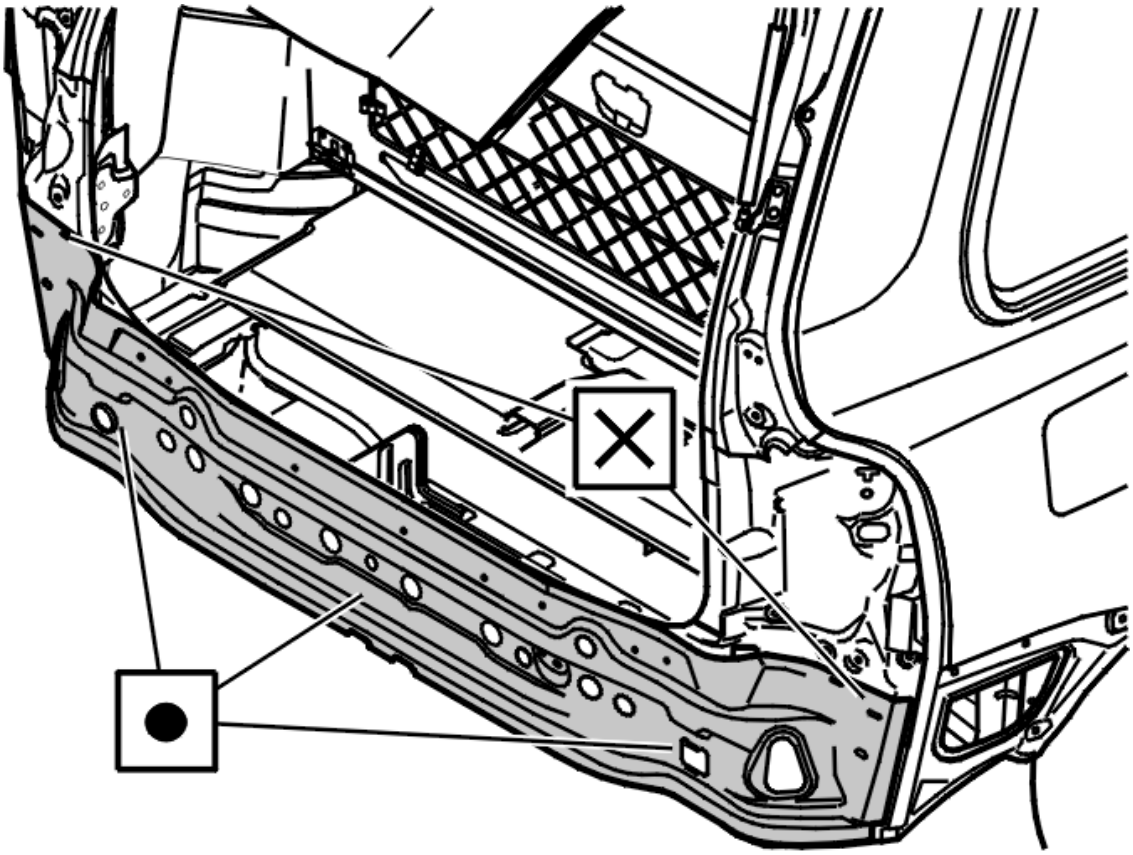

Fig. 72: Installing The Inner Rear Section
Courtesy of VOLVO CARS CORPORATION

Apply welding primer.

Secure and weld the replacement part into place.

Install:

- the bumper rail. See **BUMPER RAIL REAR, REPLACING**
- the outer rear section. See **REAR SECTION OUTER, REPLACING**.

Seal according to **BODY SEAL** .

NOTE: For this type of damage, the whiplash system must be checked. See WHIPLASH UNIT, CHECKING .

REAR SECTION OUTER, REPLACING

REPLACING

As the illustrations in this service information are used for different model years and / or models, some variation may occur. However, the essential information in the illustrations is always correct.

REMOVING THE OUTER REAR SECTION

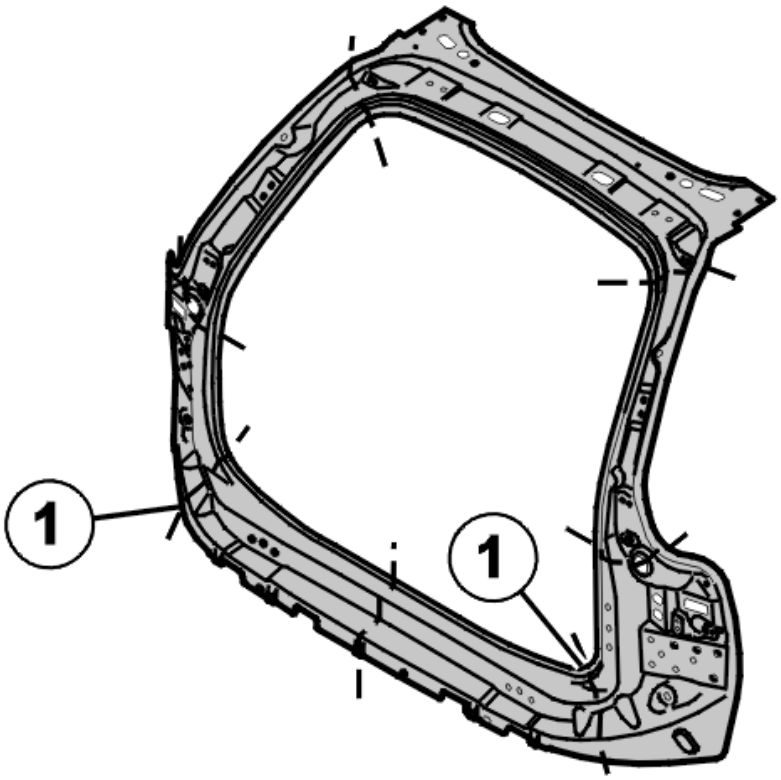

Fig. 73: Removing The Outer Rear Section
Courtesy of VOLVO CARS CORPORATION

Remove components. See **REAR SECTION, EXPOSING** .

Determine the extent of the damage. See **REAR END, ALIGNMENT CHART** and **BODY SIDE, ALIGNMENT CHART** .

Cut at a suitable point (see the recommended cutting points in the illustration).

Joint (1) should be used to limit the painted surfaces on the rear fender.

Grind and drill out the spot welds and bead welds.

Pry off the rear section.

Grind clean.

INSTALLING THE OUTER REAR SECTION

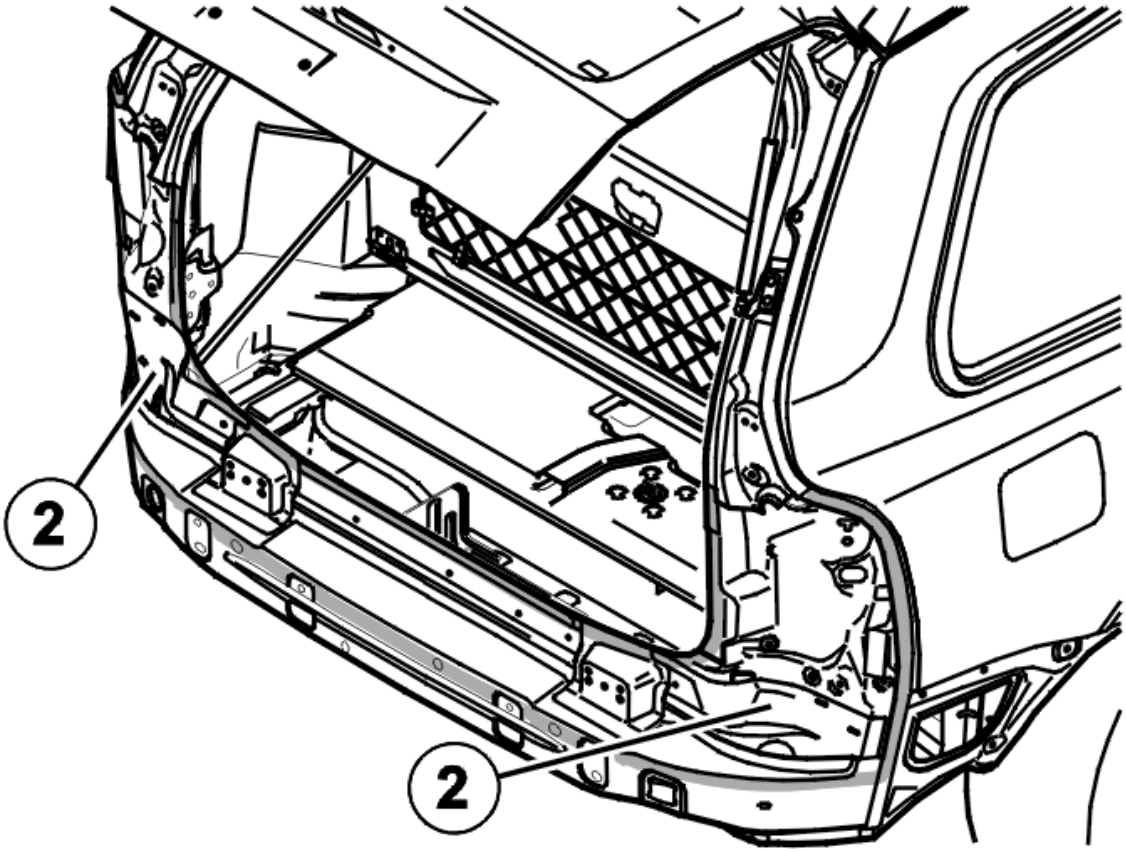

Fig. 74: Installing The Outer Rear Section (1 of 2)
Courtesy of VOLVO CARS CORPORATION

Apply welding primer.

Use foam rubber replacement at (2).

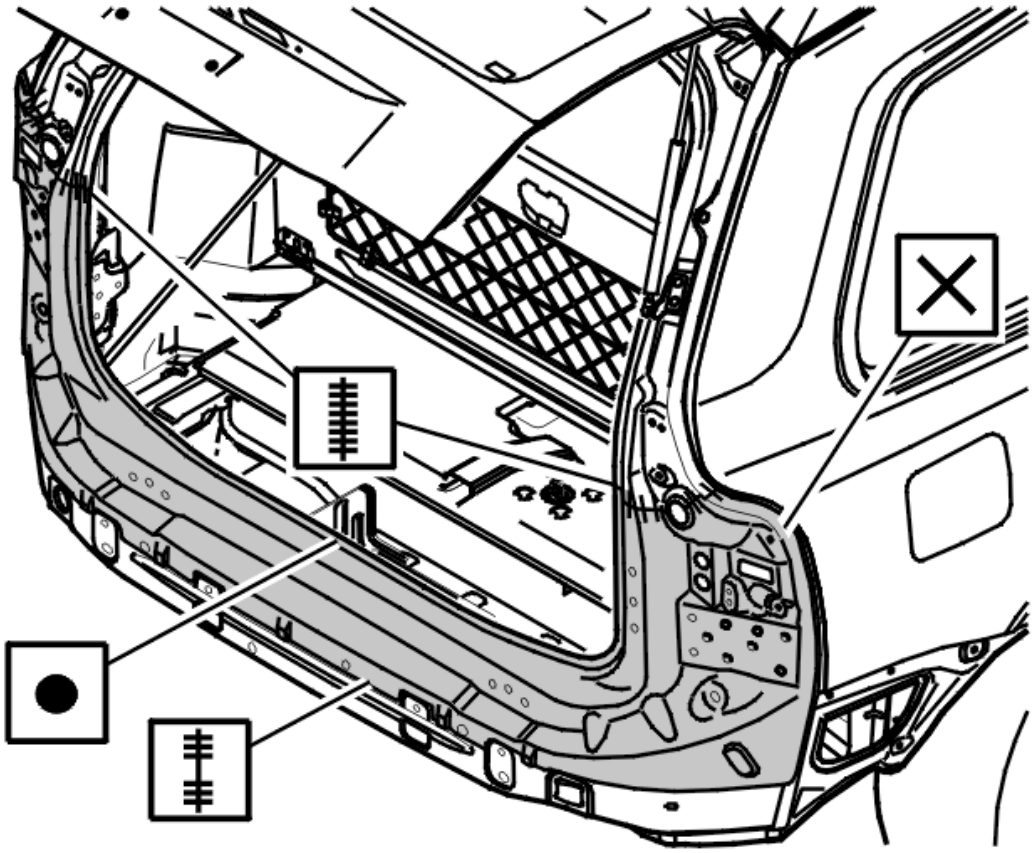

Fig. 75: Installing The Outer Rear Section (2 of 2)
Courtesy of VOLVO CARS CORPORATION

Secure and weld the replacement part into place.

Seal according to **BODY SEAL** .

NOTE: **For this type of damage, the whiplash system must be checked. See WHIPLASH UNIT, CHECKING .**

REPLACING THE A-POST PANEL

REPLACING

As the illustrations in this service information are used for different model years and / or models, some variation may occur. However, the essential information in the illustrations is always correct.

REMOVING THE A-POST PANEL

NOTE: **There are two types - safety hook or safety clips - of mounting for the panel nearest the headlining.**

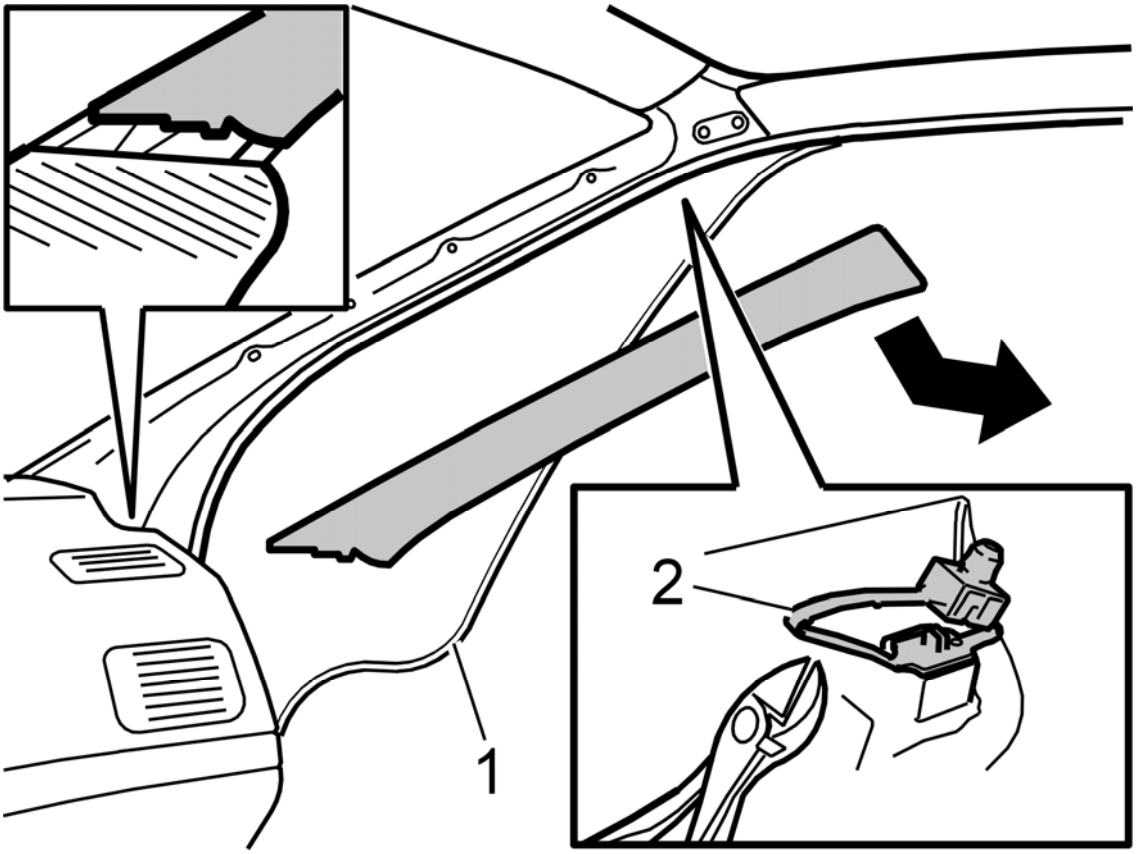

Fig. 76: Door Weatherstrip At Panel And Cutting Off Safety Clip
Courtesy of VOLVO CARS CORPORATION

- Detach the door weatherstrip at the panel (1)
- Pull the panel straight inwards into the car
- Lift upwards
- Cut off the safety clip or unhook the safety hook depending on the version (2).

NOTE: Ensure that the guide lugs on the panel do not scratch the dashboard.

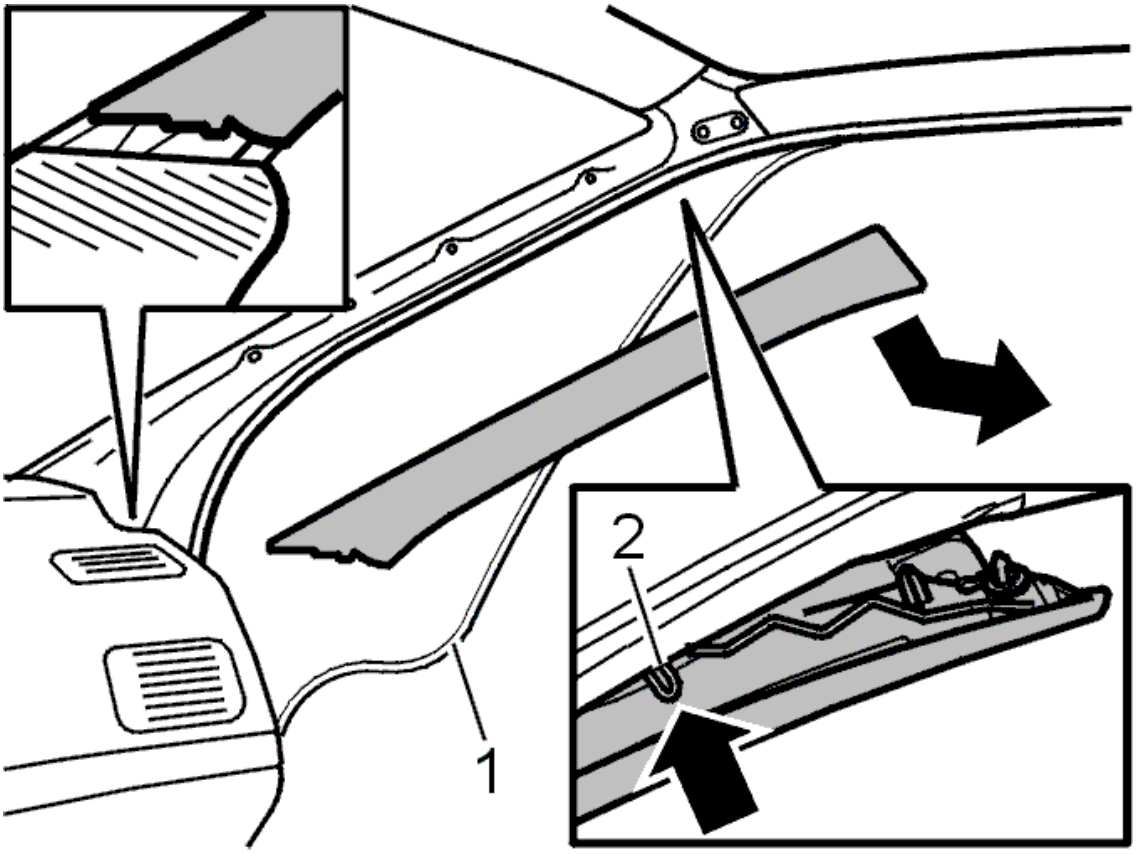

Fig. 77: Identifying Safety Clip
Courtesy of VOLVO CARS CORPORATION

Turn the safety clip a quarter turn. Remove the clip.

INSTALLING THE A-POST PANEL

Install:

- a new safety clip or alternatively a new hook in the safety hook
- the panel
- weatherstrip.

NOTE: It is important that a new safety clip is used when installing.

NOTE: It is important that the clips or hooks are correctly positioned and that the panel is correctly positioned or the Inflatable Curtain (IC) may be negatively affected.

FRONT DOOR SILL TRIM PANEL

REMOVING THE SILL TRIM PANEL

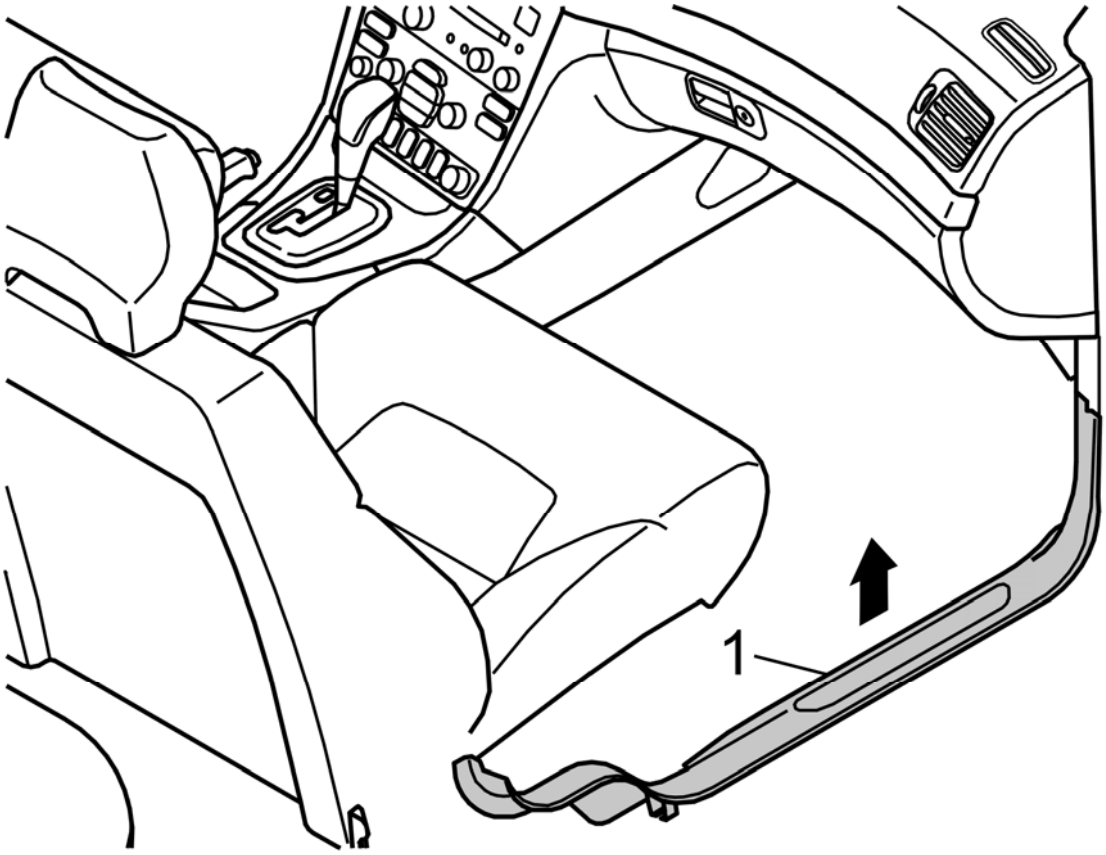

Fig. 78: Identifying Sill Trim Panel
Courtesy of VOLVO CARS CORPORATION

- Pull the sill trim panel to release the front clip (1)
- Angle out the front edge of the frame (2)
- Detach the rear edge
- Pull out.

INSTALLING THE SILL TRIM PANEL

Install:

In reverse order.

ROOF, FRONT AND REAR WINDSHIELD FRAME (2003-2012)

CANTRAIL / ROOF SIDE, REPLACING

REPLACING

As the illustrations in this service information are used for different model years and / or models, some variation may occur. However, the essential information in the illustrations is always correct.

PRINCIPLES OF JOINING

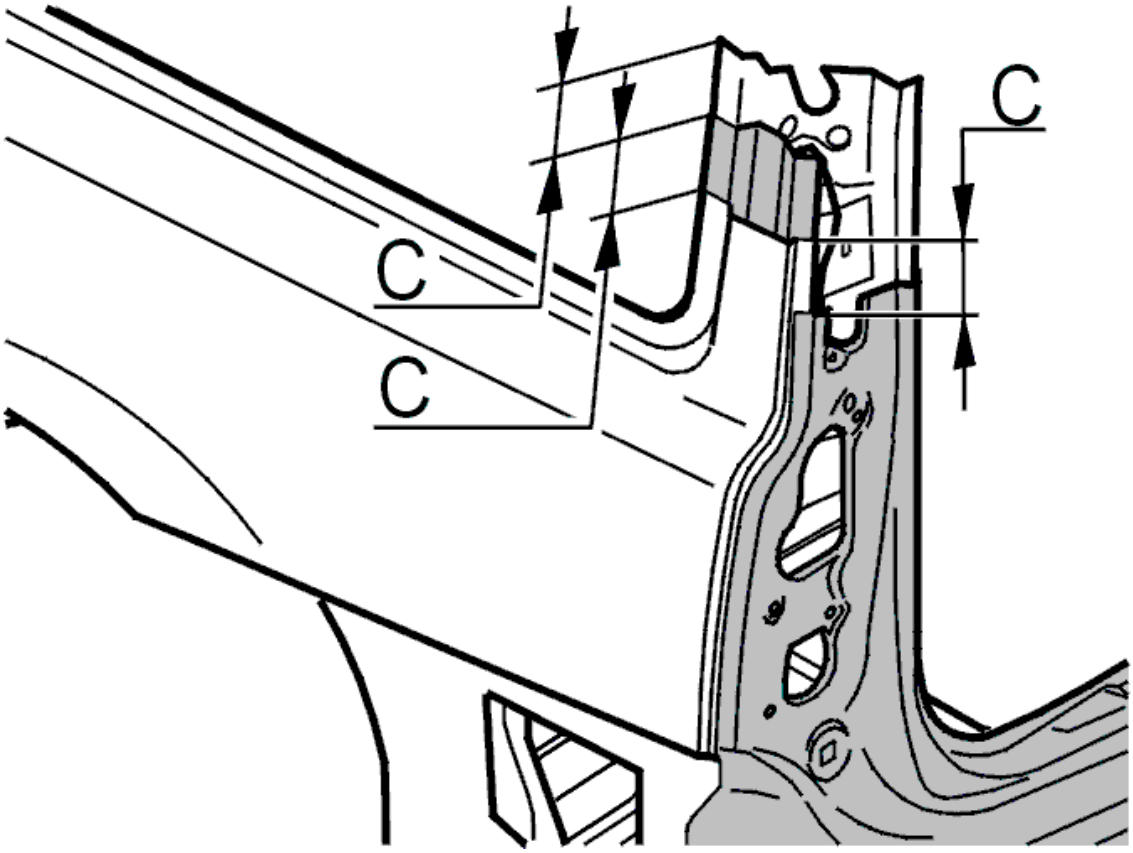

Fig. 79: Cut Panel Sections With a 50 mm Offset.
Courtesy of VOLVO CARS CORPORATION

Roof pillars must be joined as illustrated unless otherwise indicated in the method.

Cut the different panel sections with a 50 mm offset. This applies when replacing all roof pillars.

C = minimum 50 mm

HINT: When replacing a pillar, it is often difficult to identify where the deformation ends. It may be best to replace a larger section of the pillar.

REMOVING THE CANTRAIL / ROOF SIDE

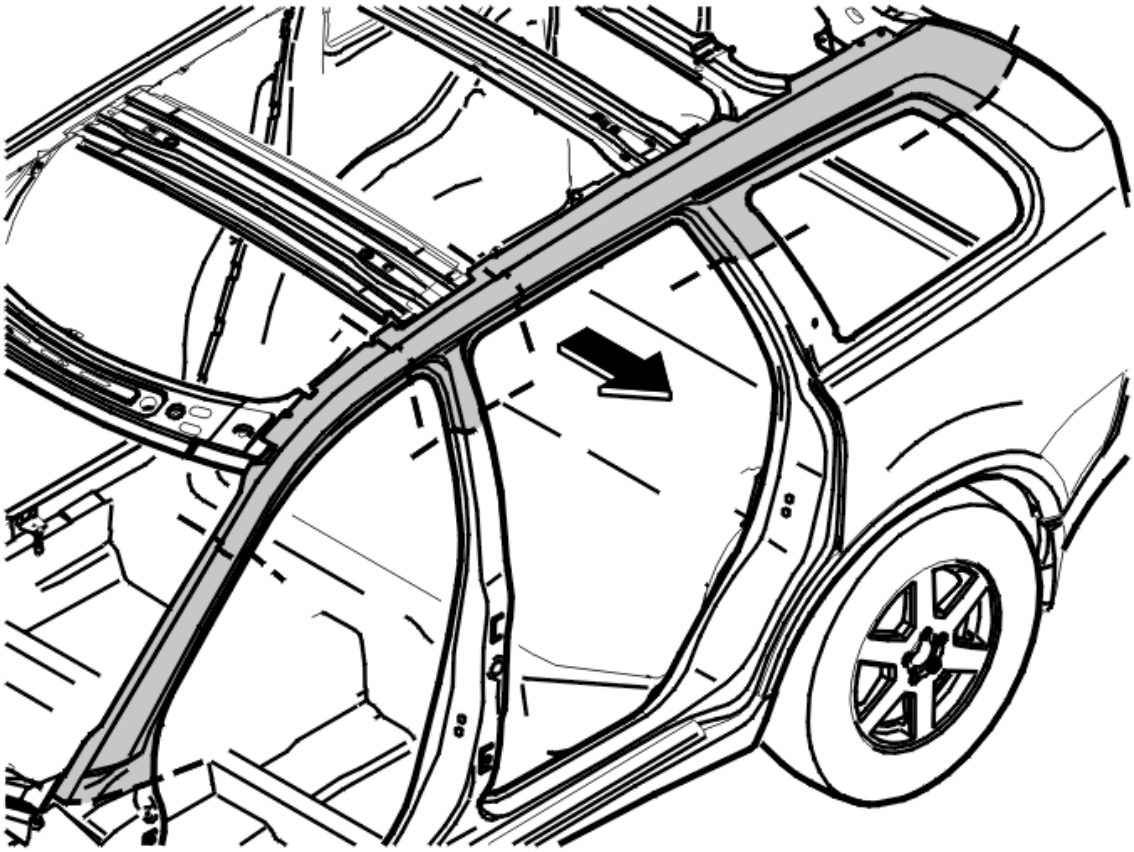

Fig. 80: Removing The Cantrail / Roof Side
Courtesy of VOLVO CARS CORPORATION

Remove components. See **ROOF SECTION, EXPOSING** .

Pull or press out the damaged section to make it easier to re-align internal components.

Determine the extent of the damage. See **BODY SIDE, ALIGNMENT CHART** and **ROOF, ALIGNMENT CHART** .

NOTE: Do not replace too small a section of the cantrail / roof side because the damage may have spread.

Roughly cut at the appropriate point so that the old and new sections are overlapping. See the recommended cutting points in the illustration.

HINT: The cantrail is under the roof panel at the top edge.

Remove the roof panel. See **ROOF PANEL, REPLACING**.

If replacing the cantrail without replacing the roof panel, the cantrail must be cut from front to rear at the top edge and then bead welded back together.

Grind and drill out the spot welds and bead welds.

Pry off the cantrail.

Grind clean.

Apply welding primer.

INSTALLING THE CANTRAIL / ROOF SIDE

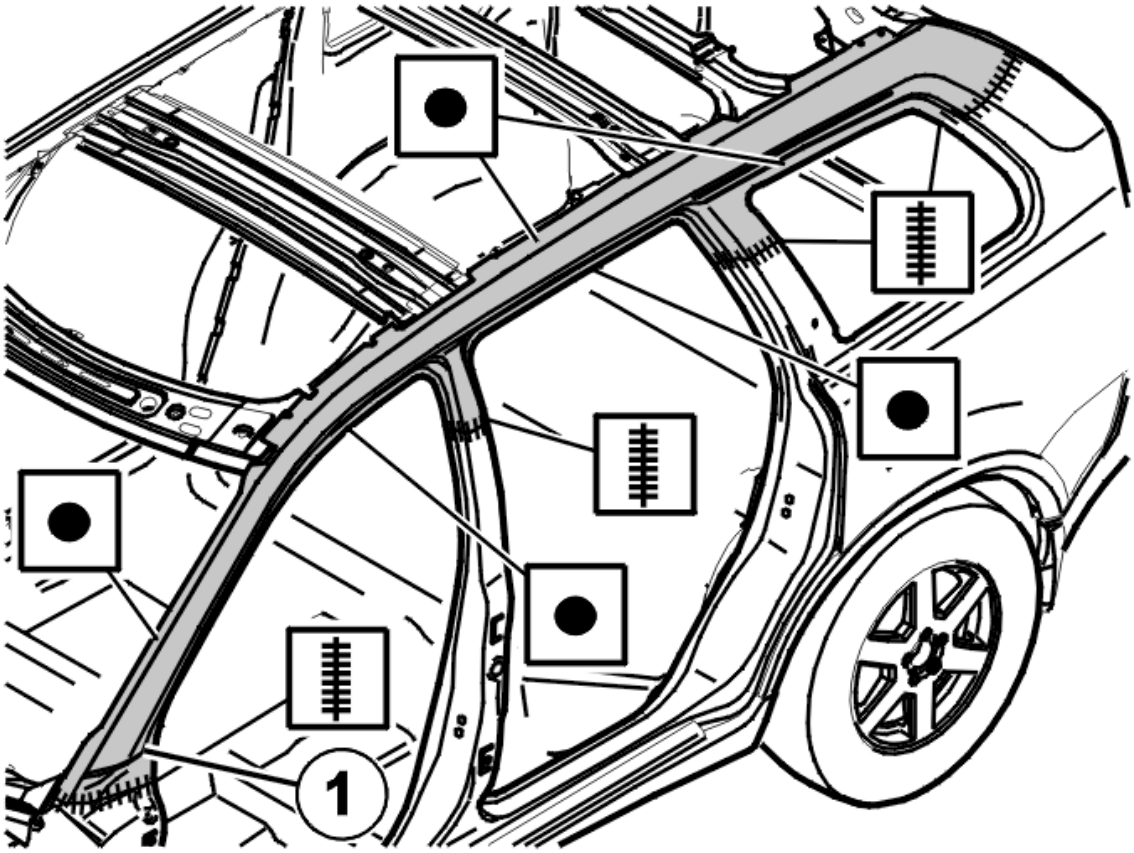

Fig. 81: Installing The Cantrail / Roof Side
Courtesy of VOLVO CARS CORPORATION

Install foam rubber replacement at (1). See **BODY SEAL** .

Secure the replacement part.

Saw through the two panels at the cutting points.

Take care not to damage the internal reinforcements when sawing.

Secure the edges of the joints by tack welding.

Complete the welding.

Seal the seams and joins. See **BODY SEAL** .

ROOF ARCH, REPLACING

REPLACING

As the illustrations in this service information are used for different model years and / or models, some variation may occur. However, the essential information in the illustrations is always correct.

REMOVING ROOF ARCHES

Remove components. See **ROOF SECTION, EXPOSING** .

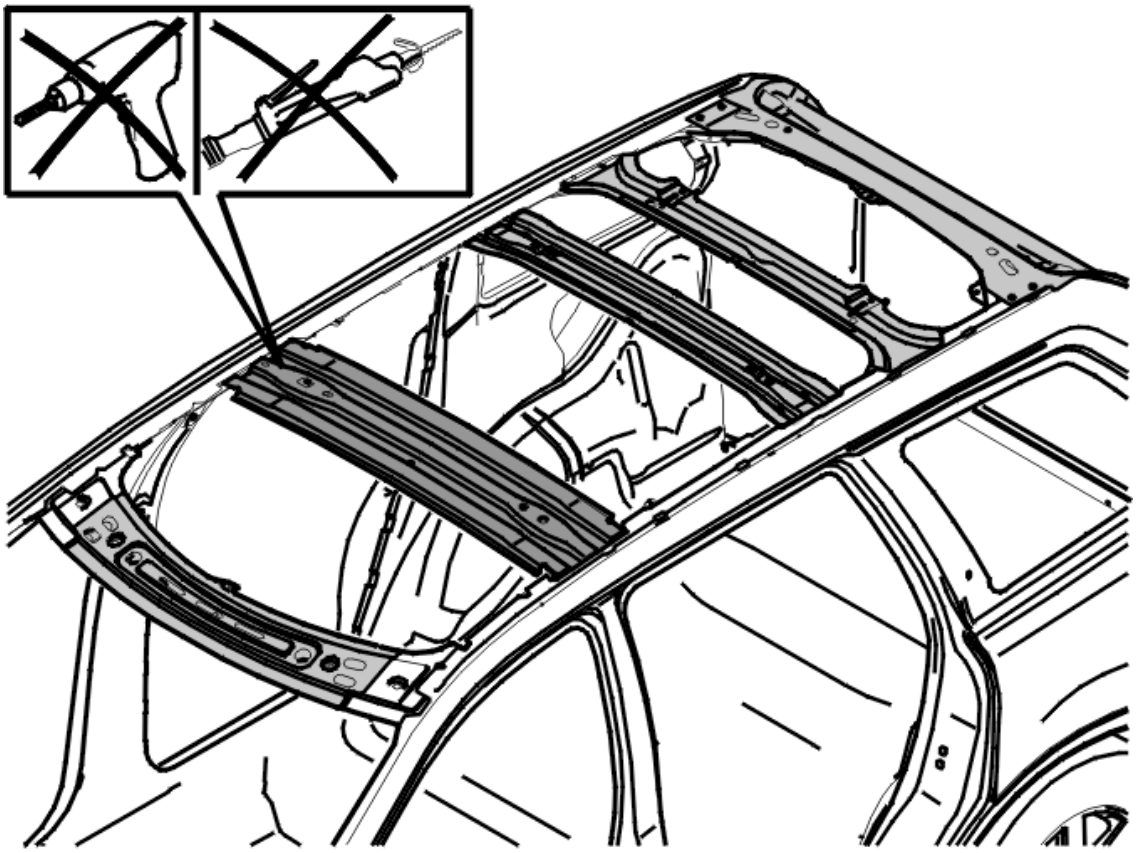

Fig. 82: Removing Roof Arches
Courtesy of VOLVO CARS CORPORATION

If necessary, remove the roof panel. See **ROOF PANEL, REPLACING**.

Drill out the spot welds.

Pry off the roof arch.

NOTE: The roof arch between the B-posts is manufactured of BORON steel. BORON steel cannot be straightened, sawn through or drilled. A cutter or plasma torch

should be used for removal.

For more information, see **SHEET METAL, MATERIAL INFORMATION** .

INSTALLING THE ROOF ARCH

Check the distance between the roof arches. See **ROOF, ALIGNMENT CHART** .

Apply welding primer.

Position and weld the roof arch into place.

NOTE: There is no roof member between the B-posts on cars with a sun roof.

The upper section of the rear roof member is made up of the upper section of the outer frame for the rear section.

NOTE: The corners must be bonded (adhesive P/N 116 1524) and spot welded. Note that the spot welds must be very close together.

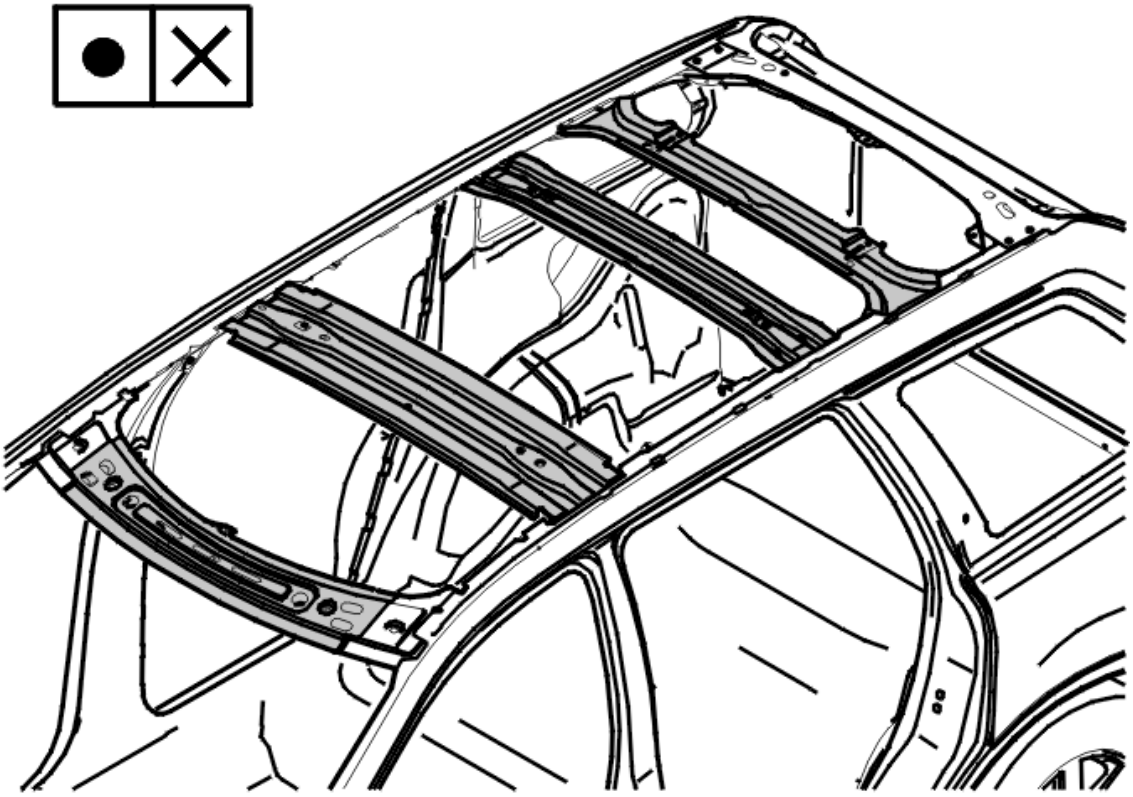

Fig. 83: Installing Roof Arch
Courtesy of VOLVO CARS CORPORATION

Install the roof panel. See **ROOF PANEL, REPLACING**.

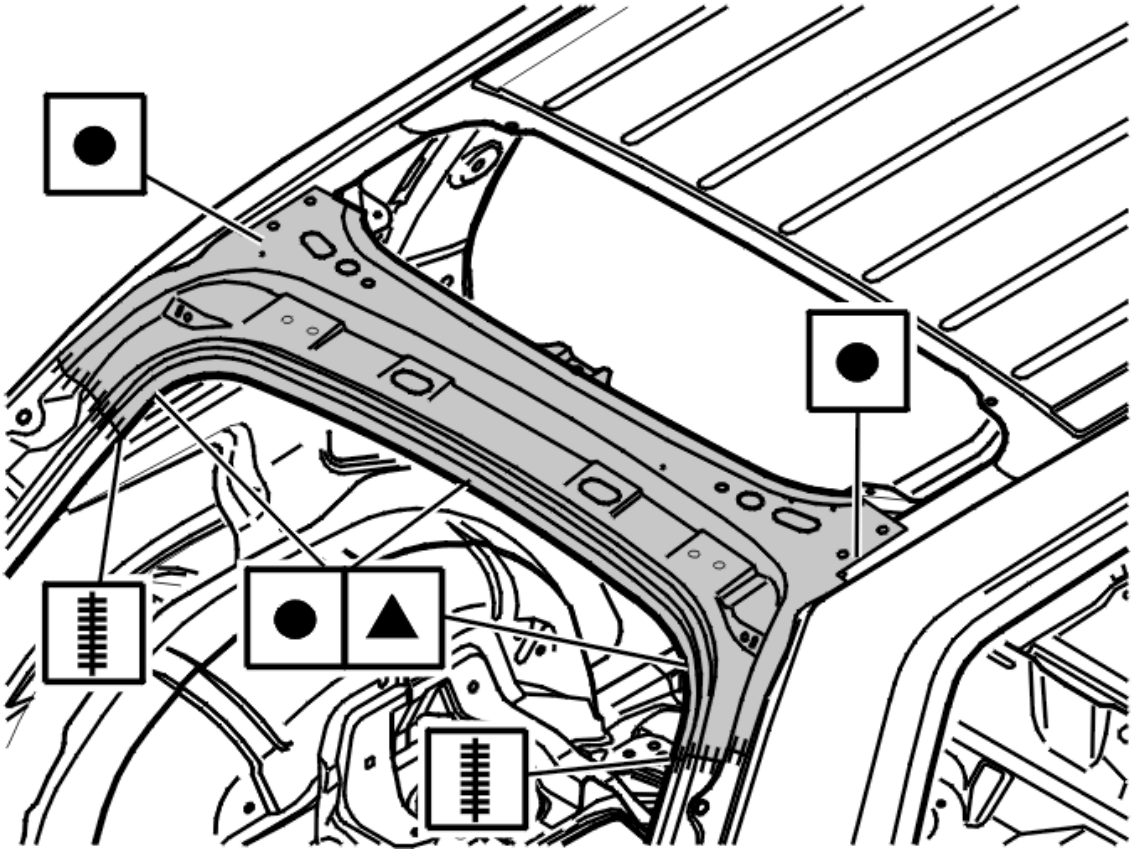

Fig. 84: Roof Panel
Courtesy of VOLVO CARS CORPORATION

ROOF PANEL, REPLACING

REPLACING

As the illustrations in this service information are used for different model years and / or models, some variation may occur. However, the essential information in the illustrations is always correct.

REMOVING THE ROOF PANEL

NOTE: **When welding in the roof area, all components and the interior that have not been removed must be covered thoroughly. This protects against welding drops and spray.**

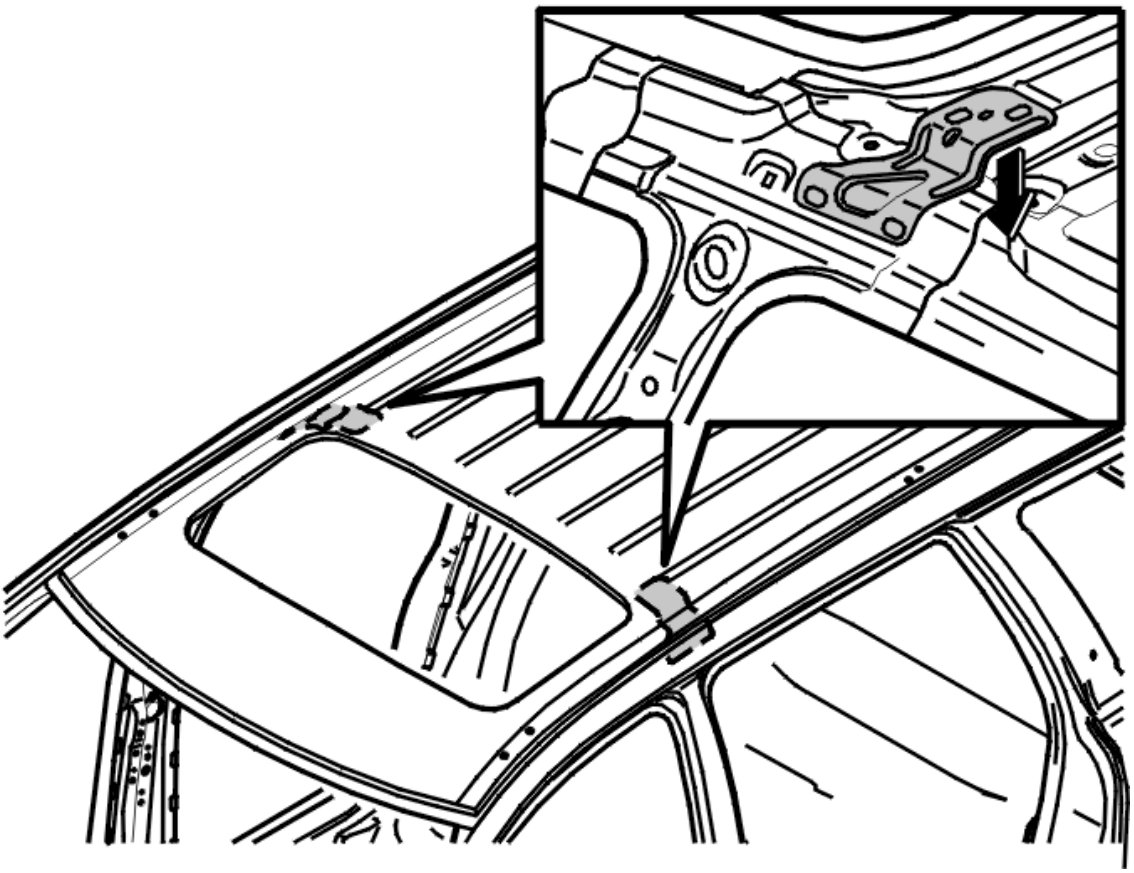

Fig. 85: Identifying Inner Cantrial Brackets
Courtesy of VOLVO CARS CORPORATION

Remove components. See **ROOF SECTION, EXPOSING** .

Drill off the spot welds at the front windshield, rear windshield and at the mountings for the rails.

Grind off the laser weld along the sides.

If the car has a sun roof:

Grind off the bracket on the inner cantrail (see the illustration).

Grind off the bead welds (four on each side) which hold the sun roof frame in the inner cantrail.

Remove the roof arch from the roof using a putty knife or piano wire.

WARNING: **Do not heat. There is a risk of toxic fumes.**

Lever carefully so as not to damage the cantrail.

Lift off the roof panel.

Check the distance between the cantrails. See **ROOF, ALIGNMENT CHART** .

Clean roof arches. Replace if necessary.

Grind all mating surfaces to bare metal.

INSTALLING THE ROOF PANEL

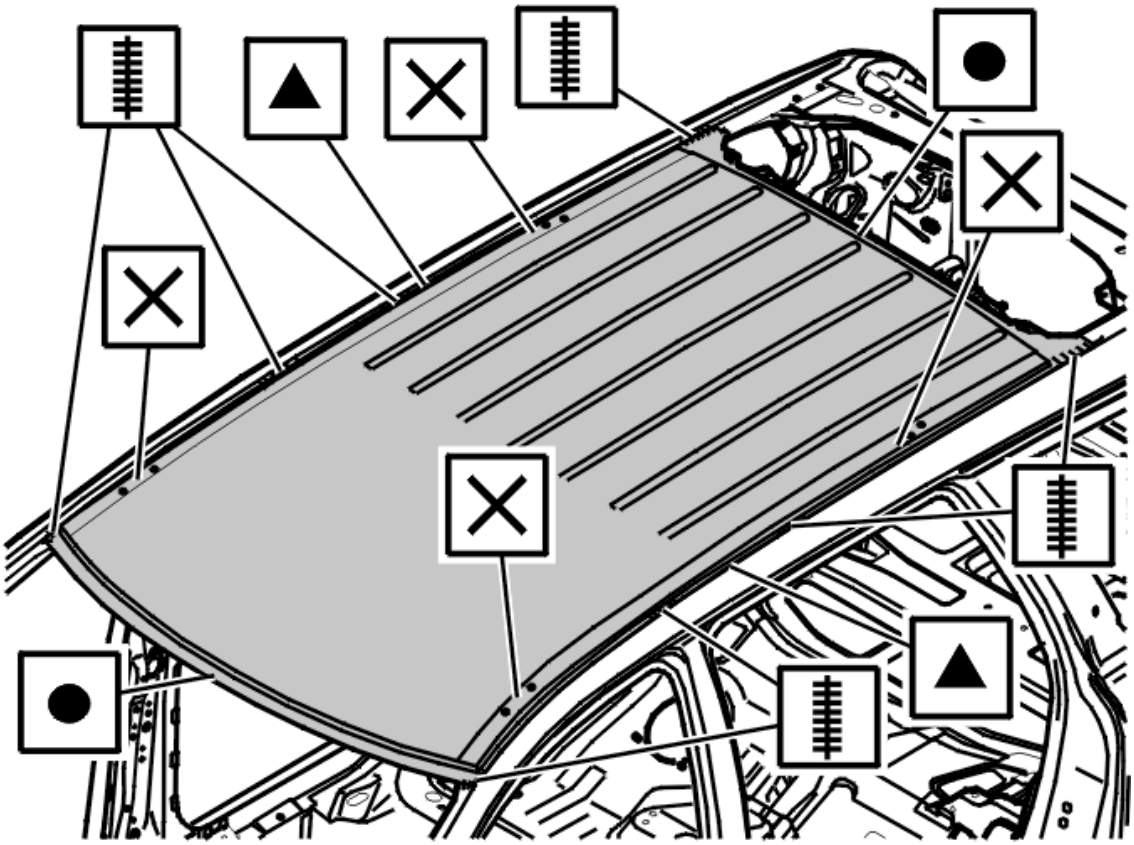

Fig. 86: Installing The Roof Panel
Courtesy of VOLVO CARS CORPORATION

Align a new roof panel.

Mark the roof arches using a pencil.

Lift off the roof panel.

Apply welding primer to the front and rear roof arches and at the mounting for the rail.

Apply welding primer (60 mm) on the surface where the bead weld will be applied (to points on each side and in the corners).

Apply adhesive (P/N 116 1524) to the cantrail or roof panel. Apply plenty of adhesive so that it squeezes out at the side when the rood is positioned.

Install the roof panel.

Secure using welding tongs.

Spot-weld the roof to the front and rear roof arches. Bead weld 15 mm as illustrated.

Bead weld the roof panel at the corners.

Wipe away the excess adhesive before it dries.

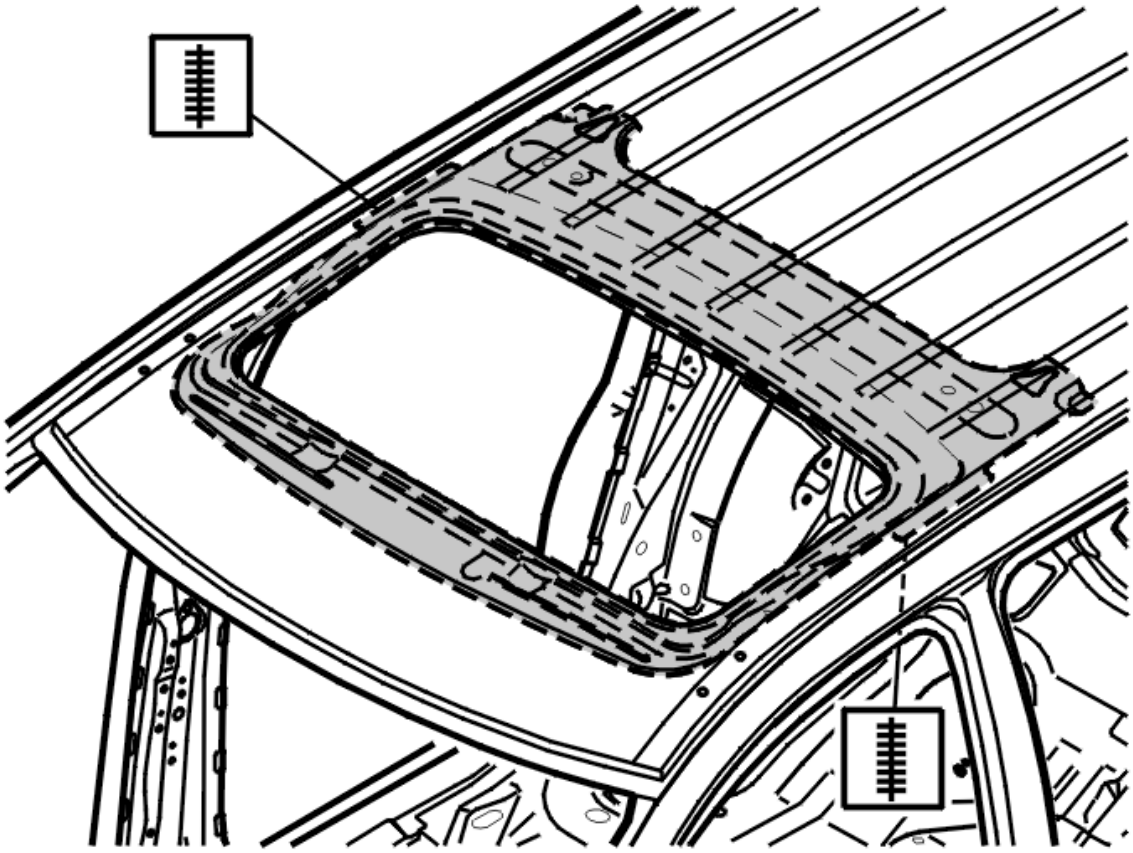

Fig. 87: Welding Sun Roof Unit
Courtesy of VOLVO CARS CORPORATION

If the car has a sun roof:

Weld the sun roof unit (see the illustration).

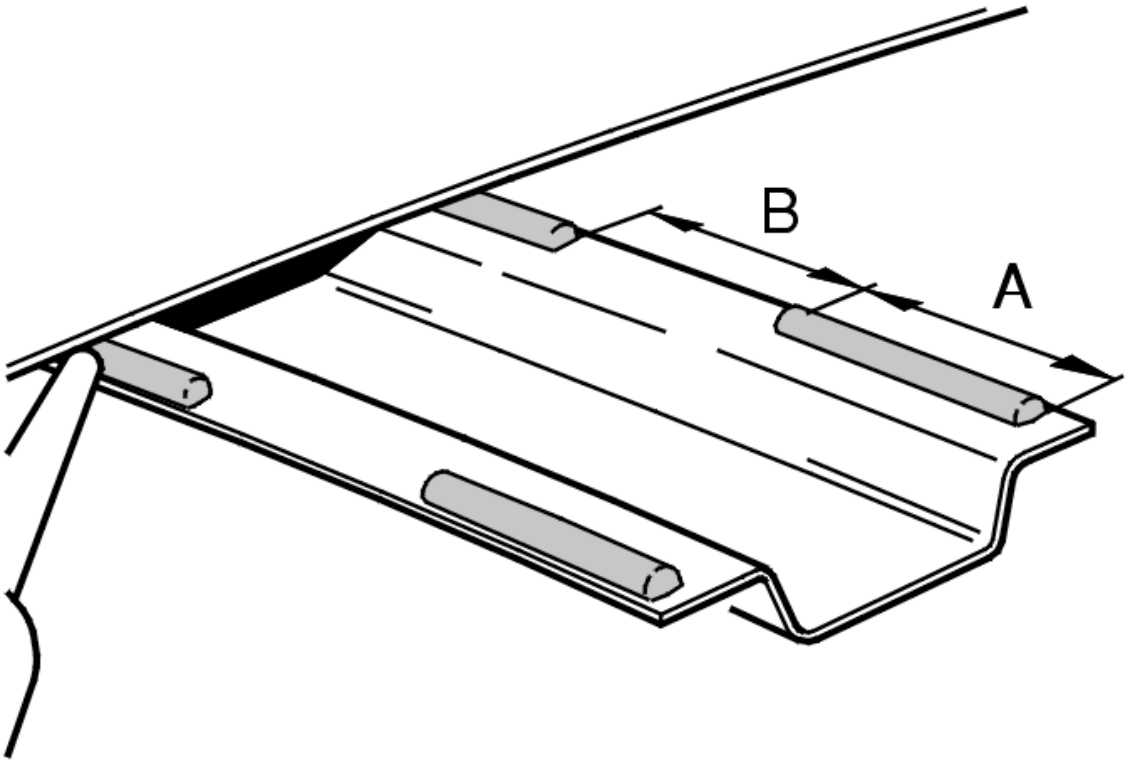

Fig. 88: Application Thickness
Courtesy of VOLVO CARS CORPORATION

Apply PUR adhesive between the roof plate and the cantrail.

A, B = 100 mm.

PUR adhesive can be applied after painting when the tension in the panel is released.

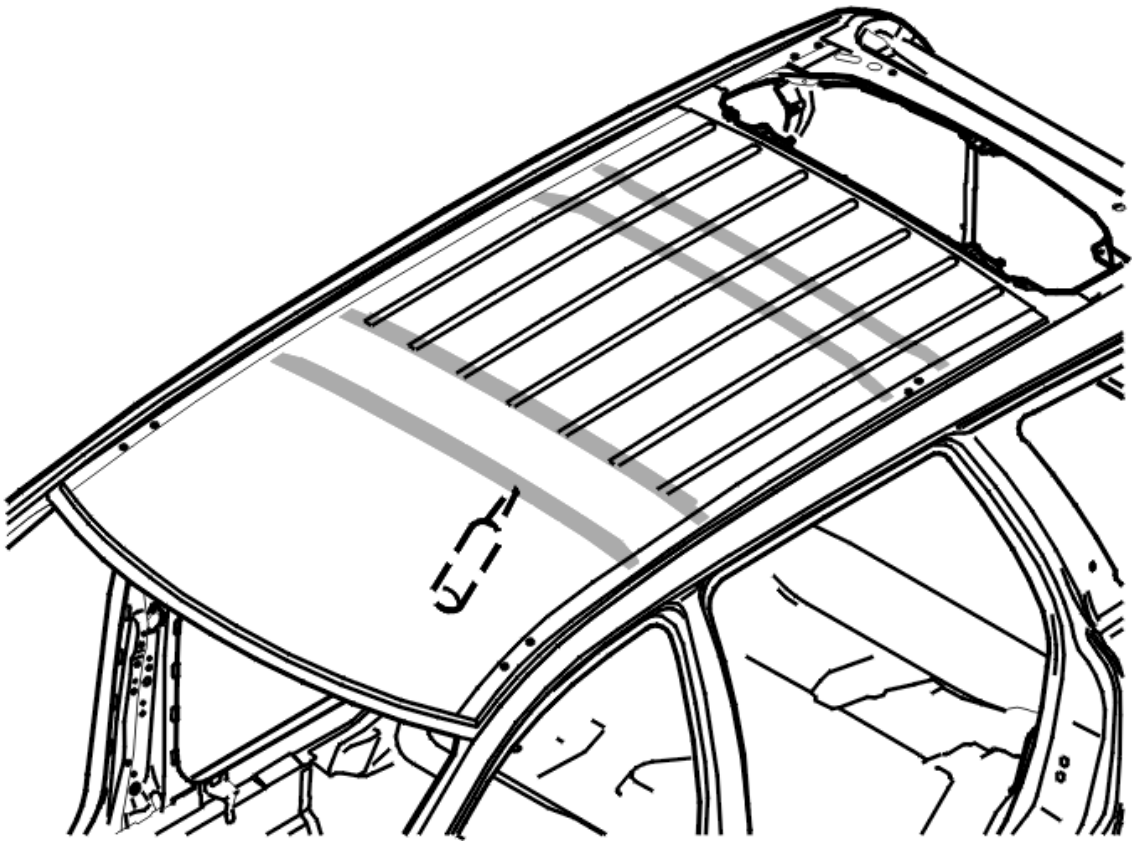

Fig. 89: Applying PUR Adhesive Between The Roof Plate And The Cantrail
Courtesy of VOLVO CARS CORPORATION

ACCESSORIES AND EQUIPMENT

Body Frame - Specifications, Mechanical

BODY SIDE

BODY SIDE, ALIGNMENT CHART

NOTE: **As the graphics in this service information are used for different model years and/or models, some variation may occur. However, the essential information in the graphics is always correct.**

EXPLANATION OF DIMENSIONS

Fig. 1: Identifying Measurement Dimensions
Courtesy of VOLVO CARS CORPORATION

The dimensions in the table are listed as follows:

Symbol number 1 means that the measurement is taken from the center.

Symbol number 2 means that the measurement is taken from one edge.

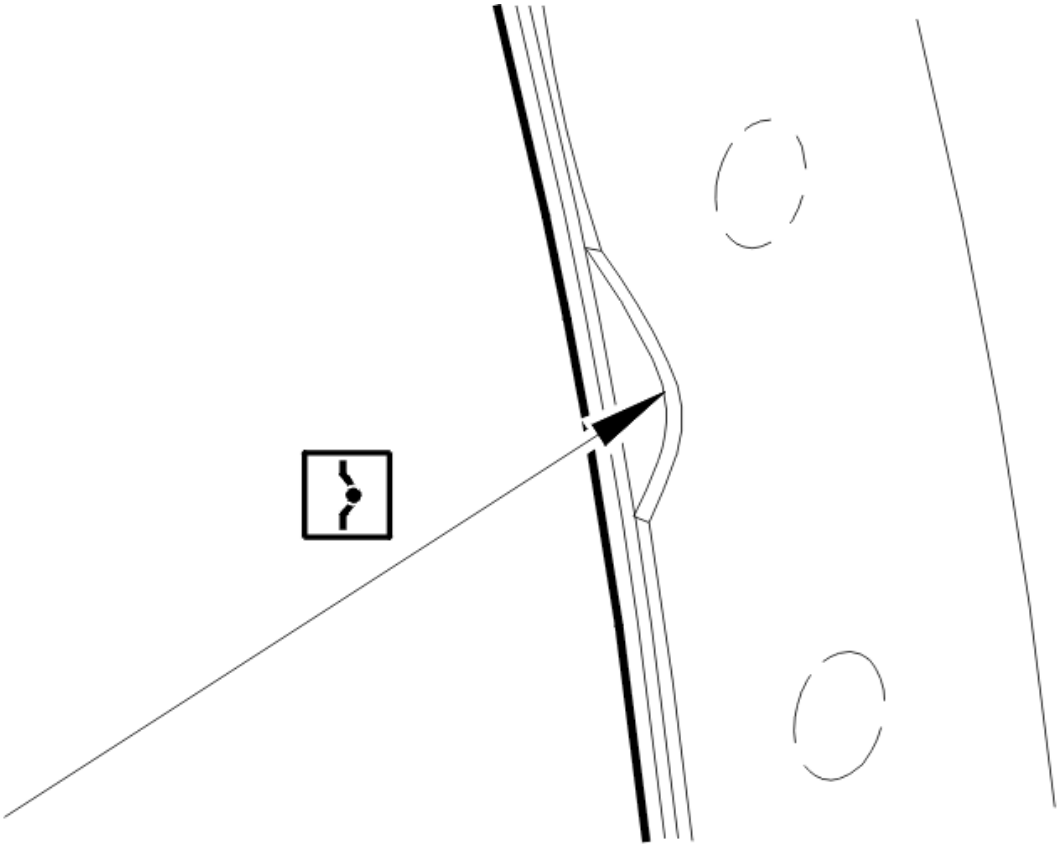

Fig. 2: Identifying Measuring Point Symbol
Courtesy of VOLVO CARS CORPORATION

Symbol number 3 means that the measurement is taken from a cut mark. Measurements are taken from the bottom of the recess as shown.

If only one measuring point symbol is displayed, the symbol applies to both measuring points. Otherwise the symbols are shown on each side of the dimension shown.

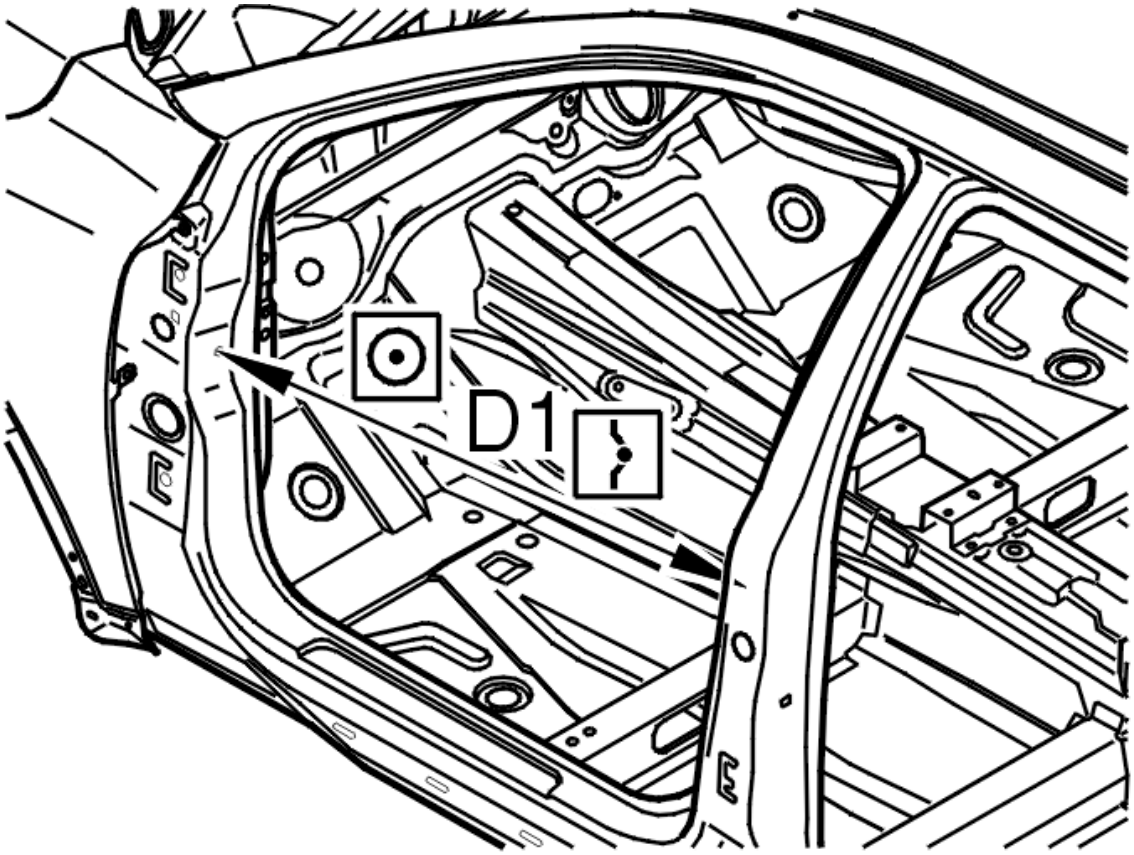

Fig. 3: Identifying Dimension D1
Courtesy of VOLVO CARS CORPORATION

D1 = 946 mm

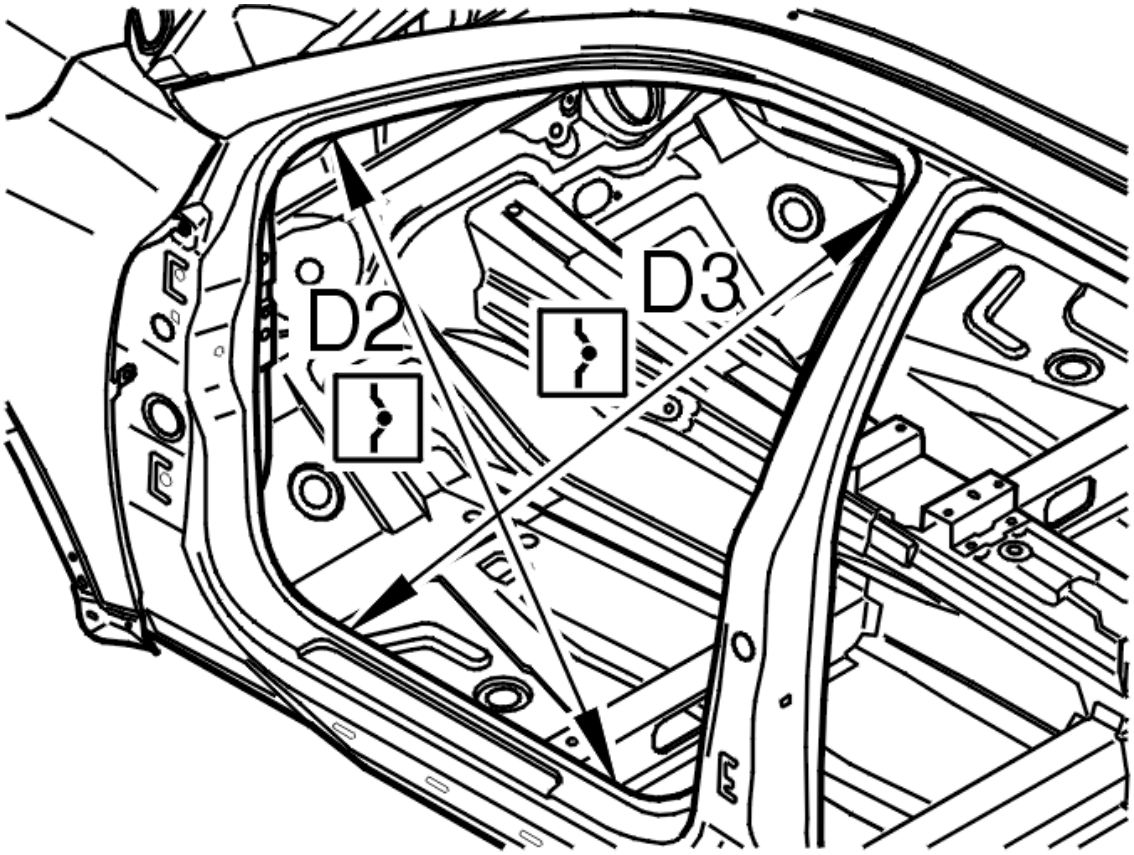

Fig. 4: Identifying Dimension D2 And D3
Courtesy of VOLVO CARS CORPORATION

D2 = 918 mm

D3 = 1351 mm

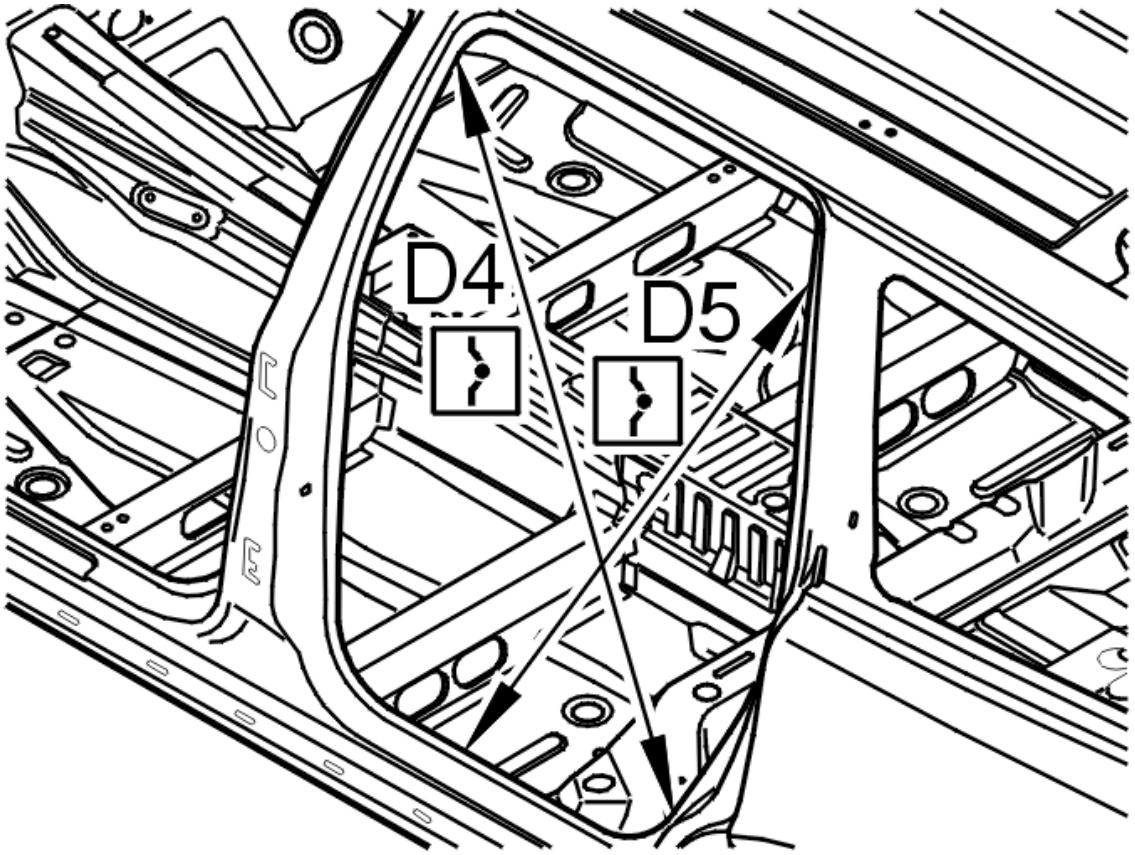

Fig. 5: Identifying Dimension D4 And D5
Courtesy of VOLVO CARS CORPORATION

D4 = 1046 mm

D5 = 1150 mm

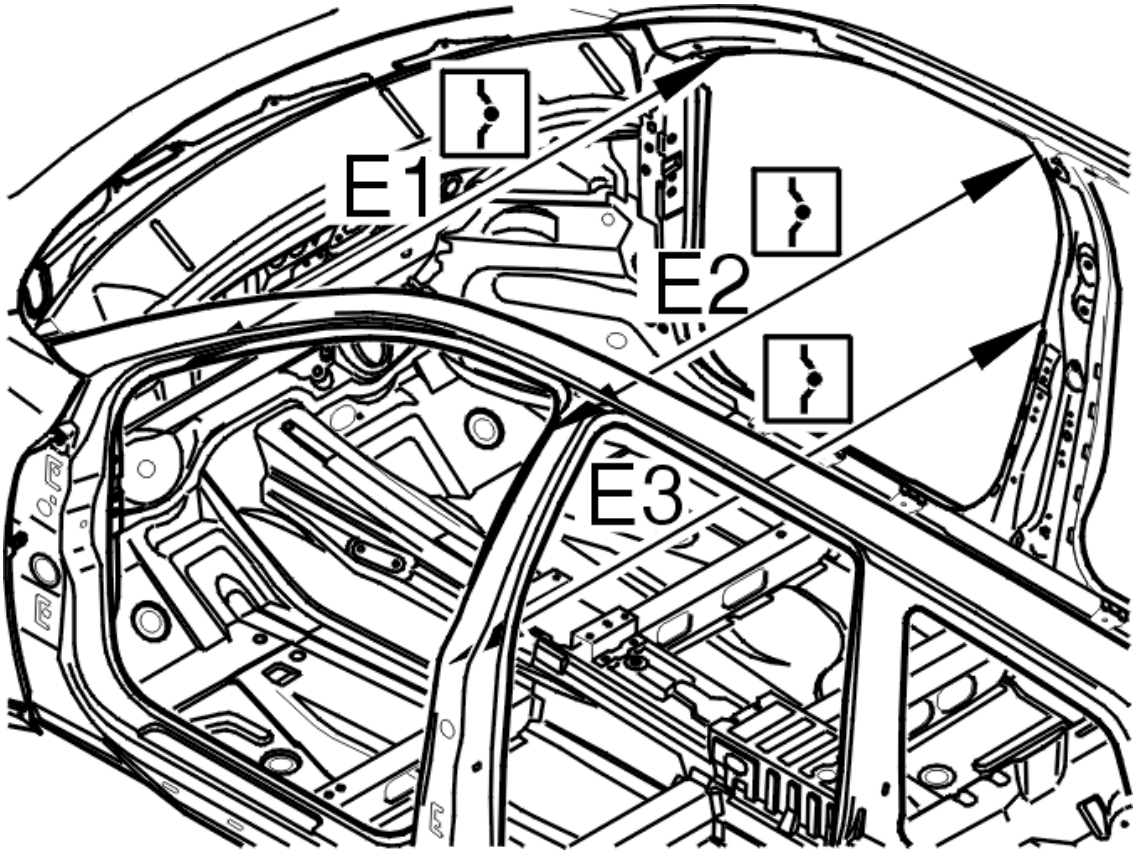

Fig. 6: Identifying Dimension E1, E2 And E3
Courtesy of VOLVO CARS CORPORATION

E1 = 1446 mm

E2 = 1276 mm

E3 = 1546 mm

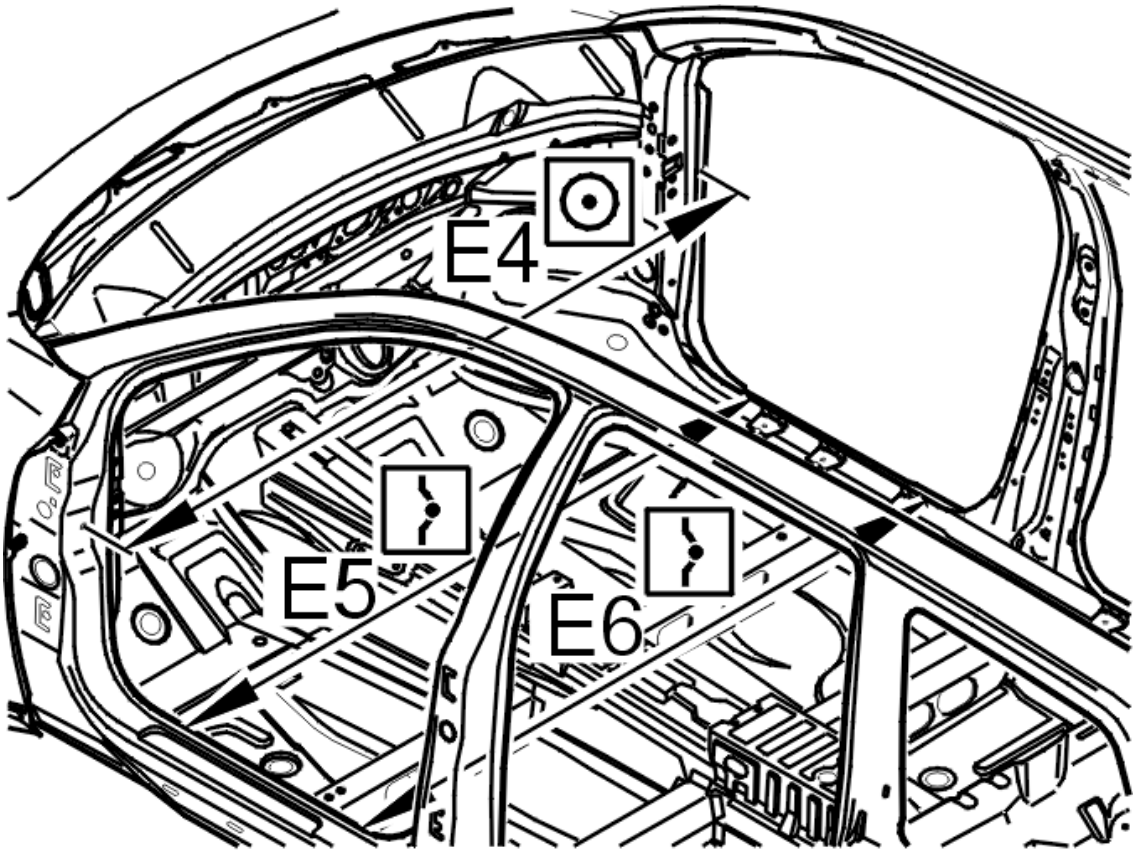

Fig. 7: Identifying Dimension E4, E5 And E6
Courtesy of VOLVO CARS CORPORATION

E4 = 1570 mm

E5 = 1478 mm

E6 = 1478 mm

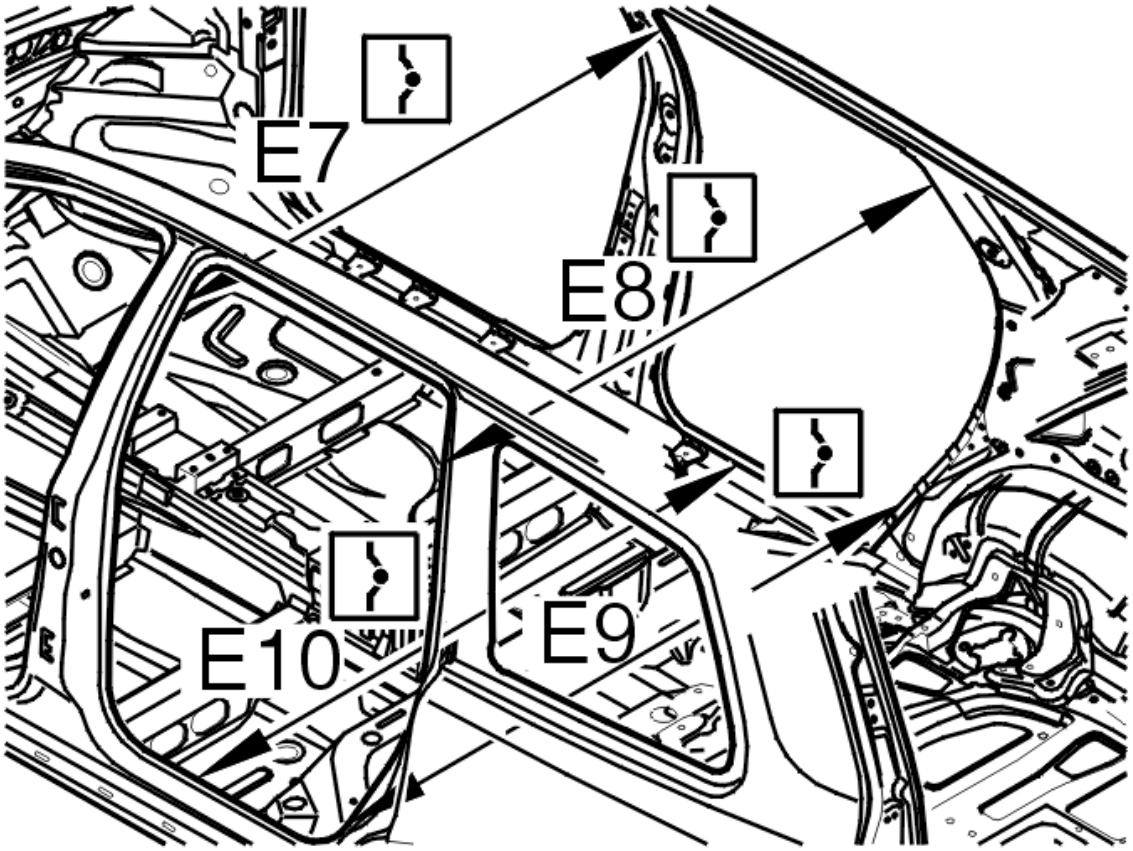

Fig. 8: Identifying Dimension E7, E8, E9 And E10
Courtesy of VOLVO CARS CORPORATION

E7 = 1307 mm

E8 = 1342 mm

E9 = 1490 mm

E10 = 1478 mm

FLOOR, FRAME SECTION, WHEEL ARCH AND FIREWALL

FRONT SECTION, DIMENSIONS CHART

NOTE: **The graphics in this service information are used for different model years and/or models. Some variation may occur. However, the essential information in the graphics is always correct.**

EXPLANATION OF DIMENSIONS

Fig. 9: Identifying Measurement Dimensions
Courtesy of VOLVO CARS CORPORATION

The dimensions in the table are listed as follows:

Symbol number 1 means that the measurement is taken from the center.

Symbol number 2 means that the measurement is taken from one edge.

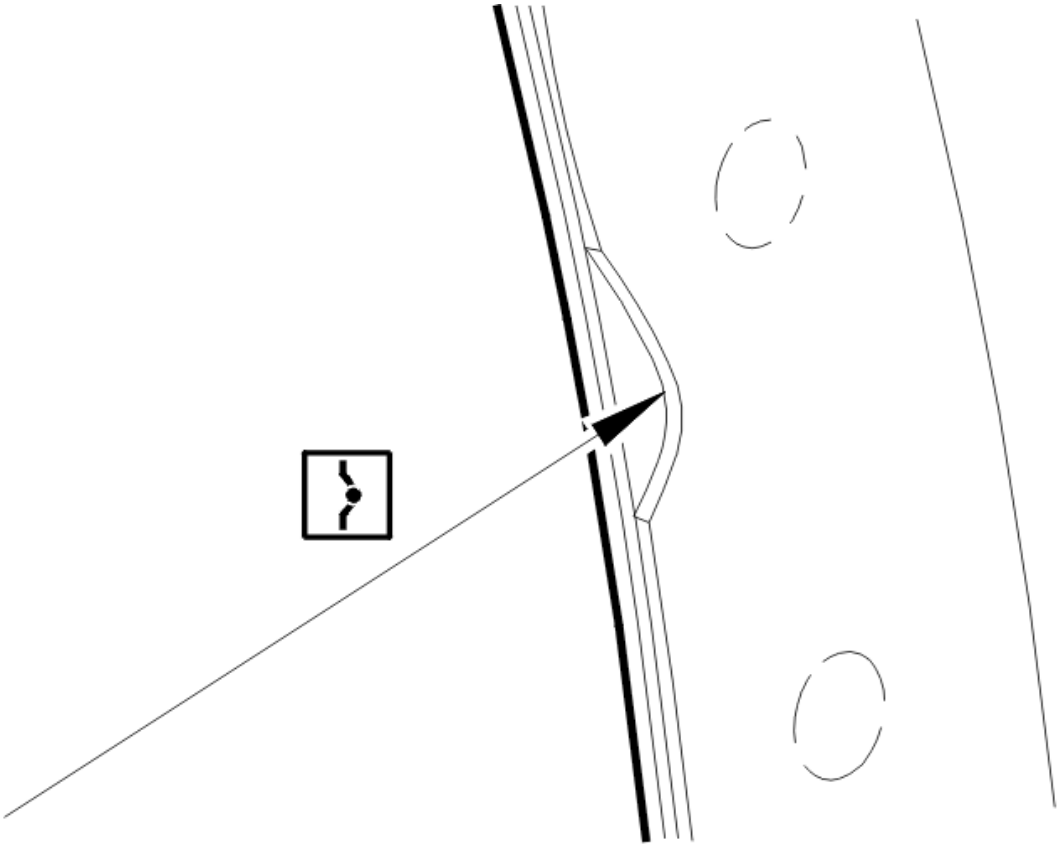

Fig. 10: Identifying Measuring Point Symbol
Courtesy of VOLVO CARS CORPORATION

Symbol number 3 means that the measurement is taken from a cut mark. Measurements are taken from the bottom of the recess as shown.

If only one measuring point symbol is displayed, the symbol applies to both measuring points. Otherwise the symbols are shown on each side of the dimension shown.

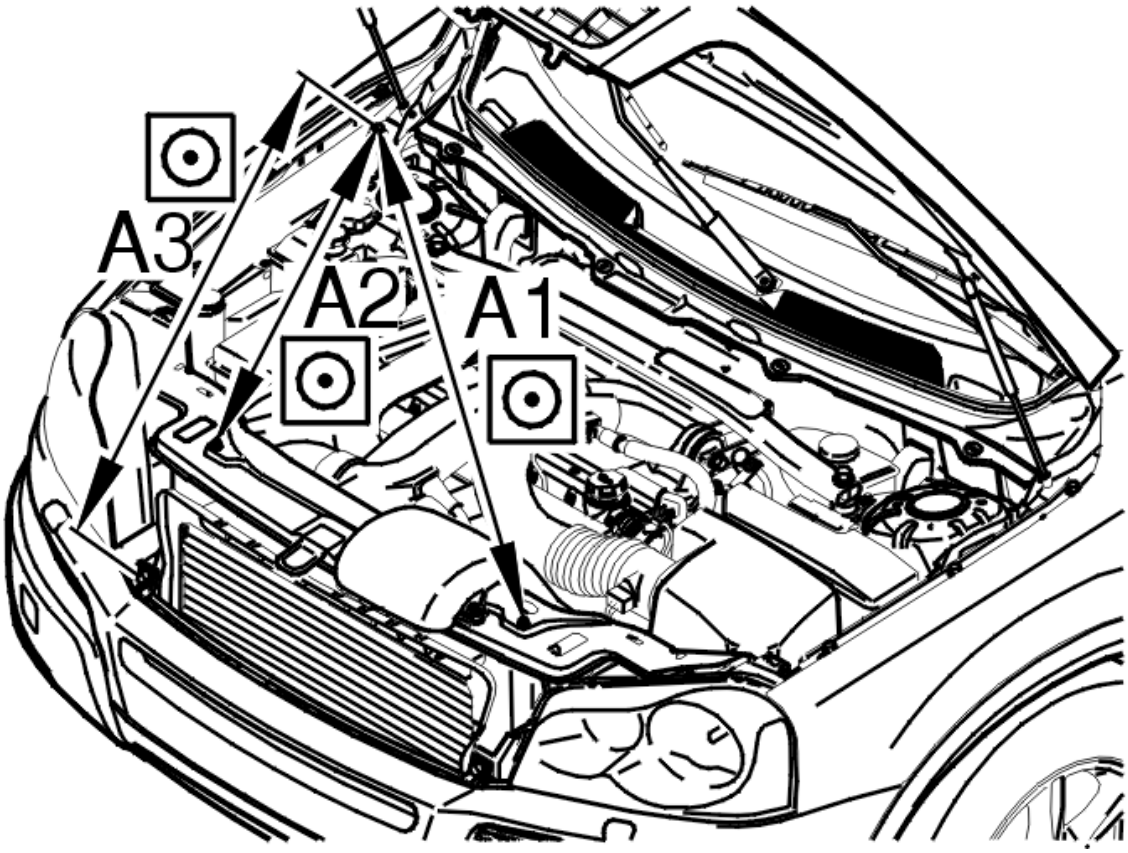

Fig. 11: Identifying Dimension A1, A2 And A3 (1 Of 3)
Courtesy of VOLVO CARS CORPORATION

A1 = 1282 mm

A2 = 791 mm

A3 = 954 mm

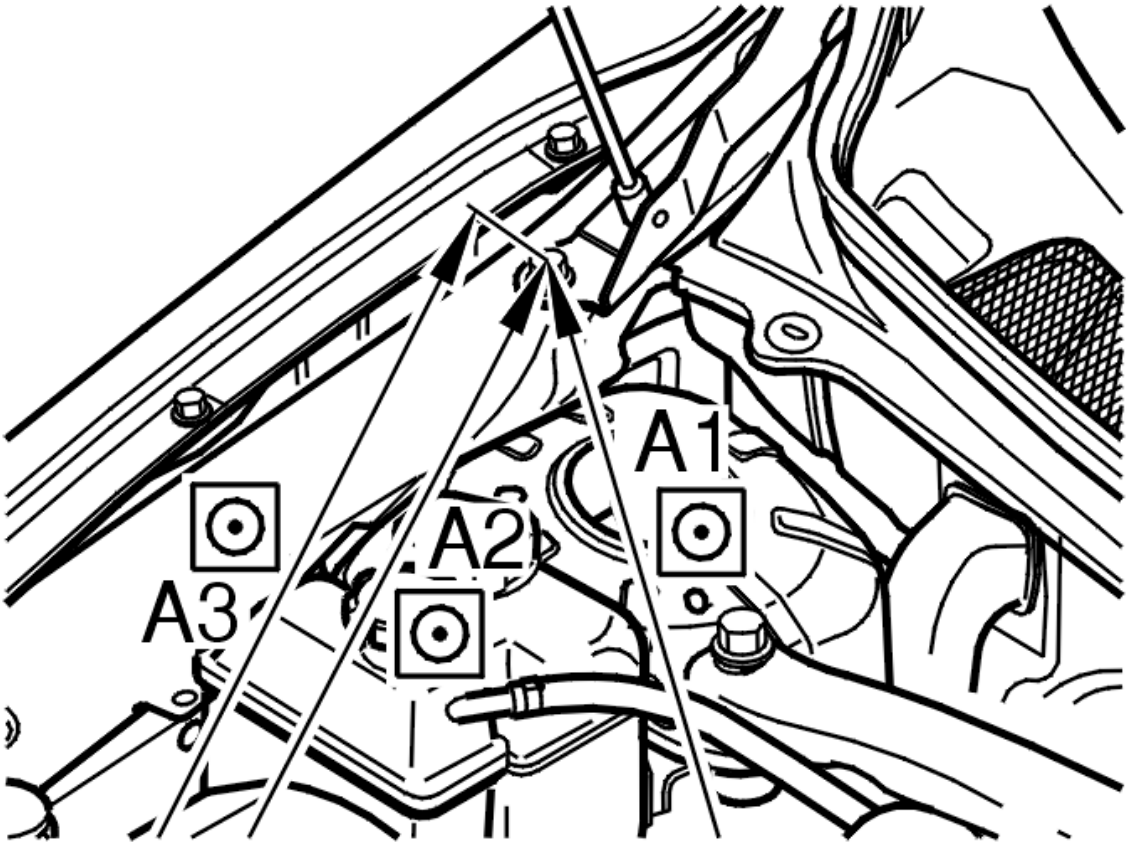

Fig. 12: Identifying Dimension A1, A2 And A3 (2 Of 3)
Courtesy of VOLVO CARS CORPORATION

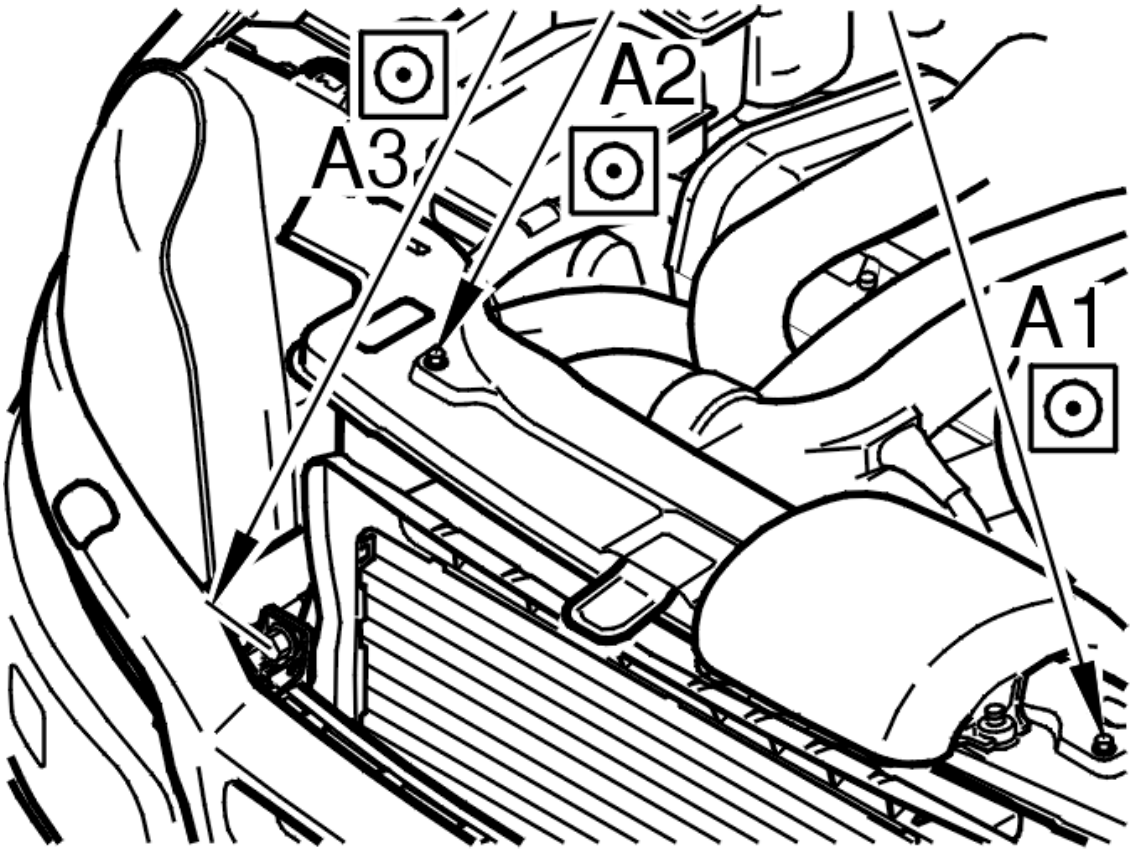

Fig. 13: Identifying Dimension A1, A2 And A3 (3 Of 3)
Courtesy of VOLVO CARS CORPORATION

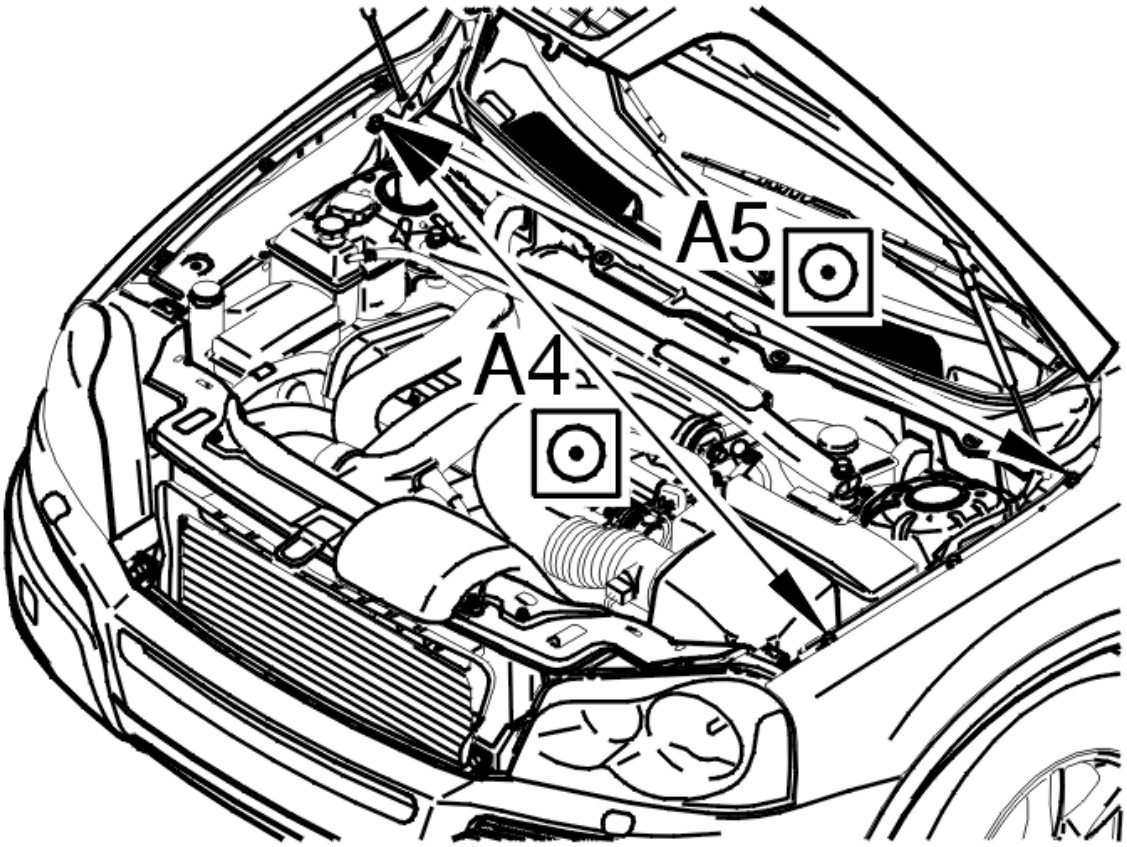

Fig. 14: Identifying Dimension A4 And A5 (1 Of 3)
Courtesy of VOLVO CARS CORPORATION

A4 = 1616 mm

A5 = 1570 mm

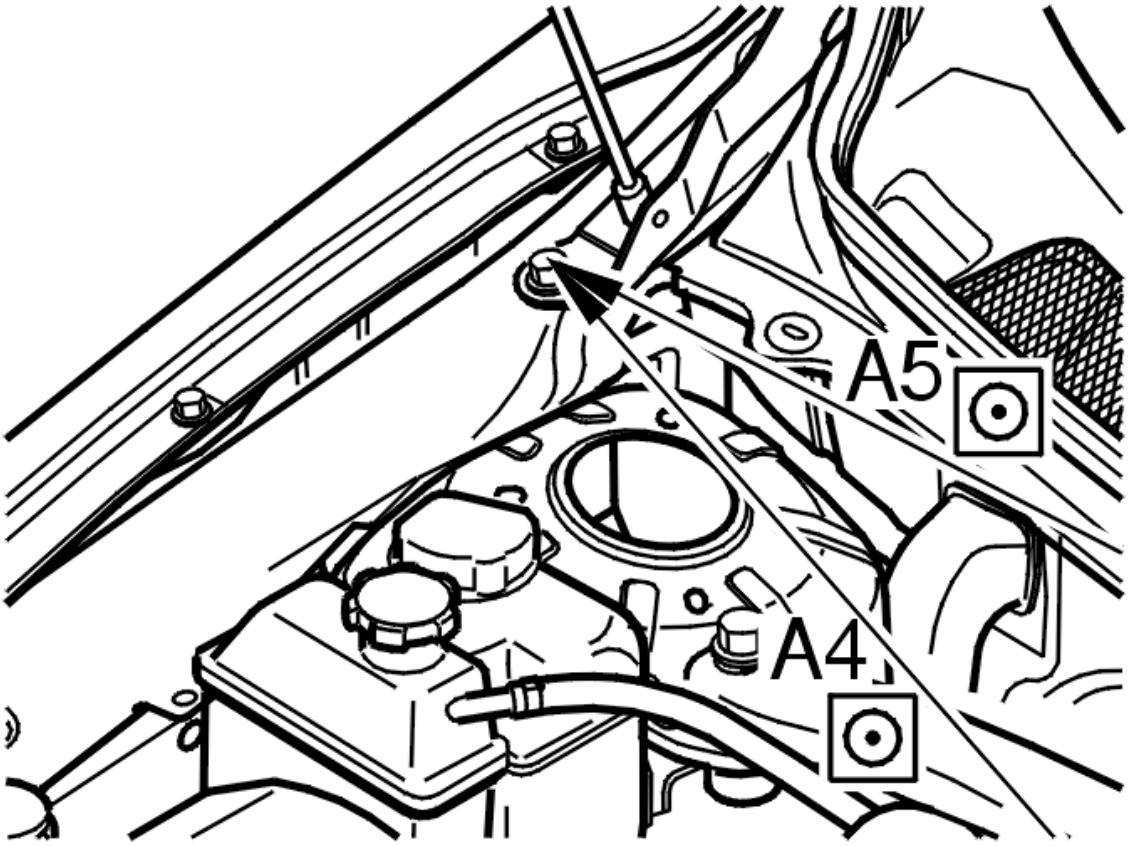

Fig. 15: Identifying Dimension A4 And A5 (2 Of 3)
Courtesy of VOLVO CARS CORPORATION

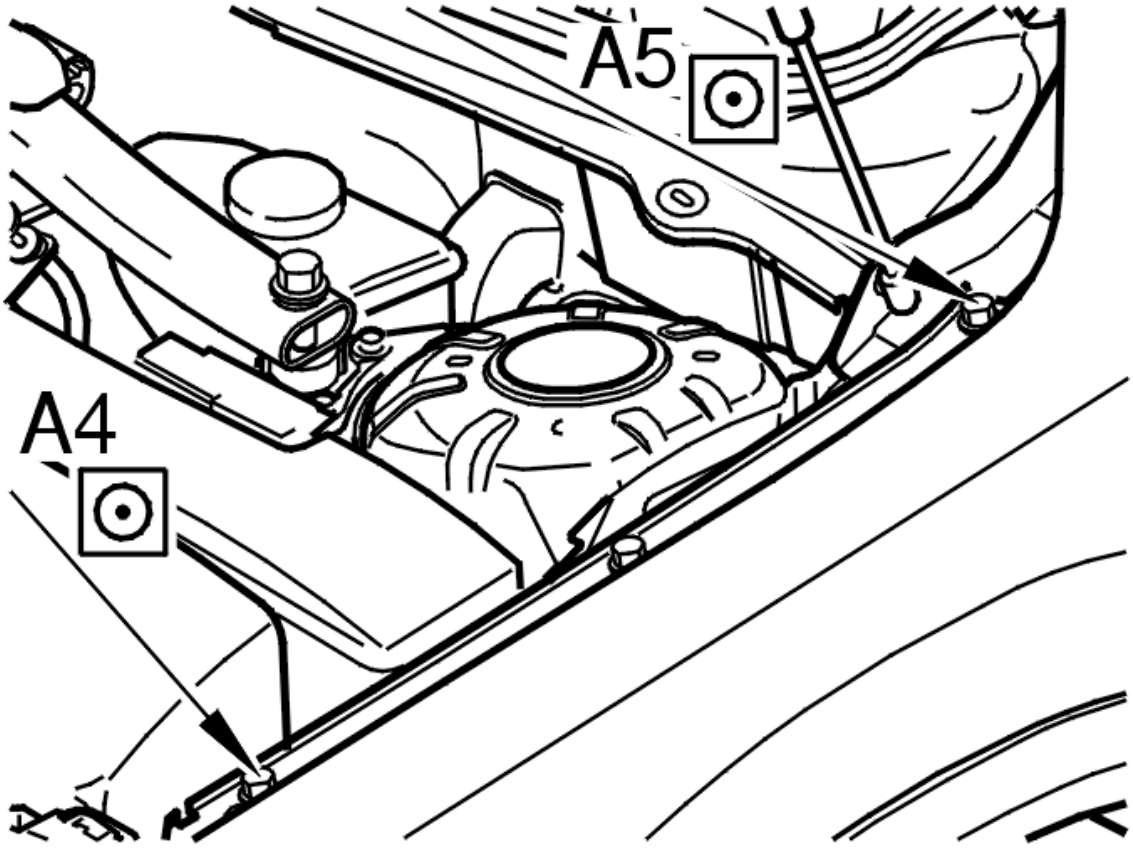

Fig. 16: Identifying Dimension A4 And A5 (3 Of 3)
Courtesy of VOLVO CARS CORPORATION

SIDE MEMBERS/WHEEL ARCHES FRONT, ALIGNMENT CHART

NOTE: **As the graphics in this service information are used for different model years and/or models, some variation may occur. However, the essential information in the graphics is always correct.**

EXPLANATION OF DIMENSIONS

Fig. 17: Identifying Measurement Dimensions
Courtesy of VOLVO CARS CORPORATION

The dimensions in the table are listed as follows:

Symbol number 1 means that the measurement is taken from the center.

Symbol number 2 means that the measurement is taken from one edge.

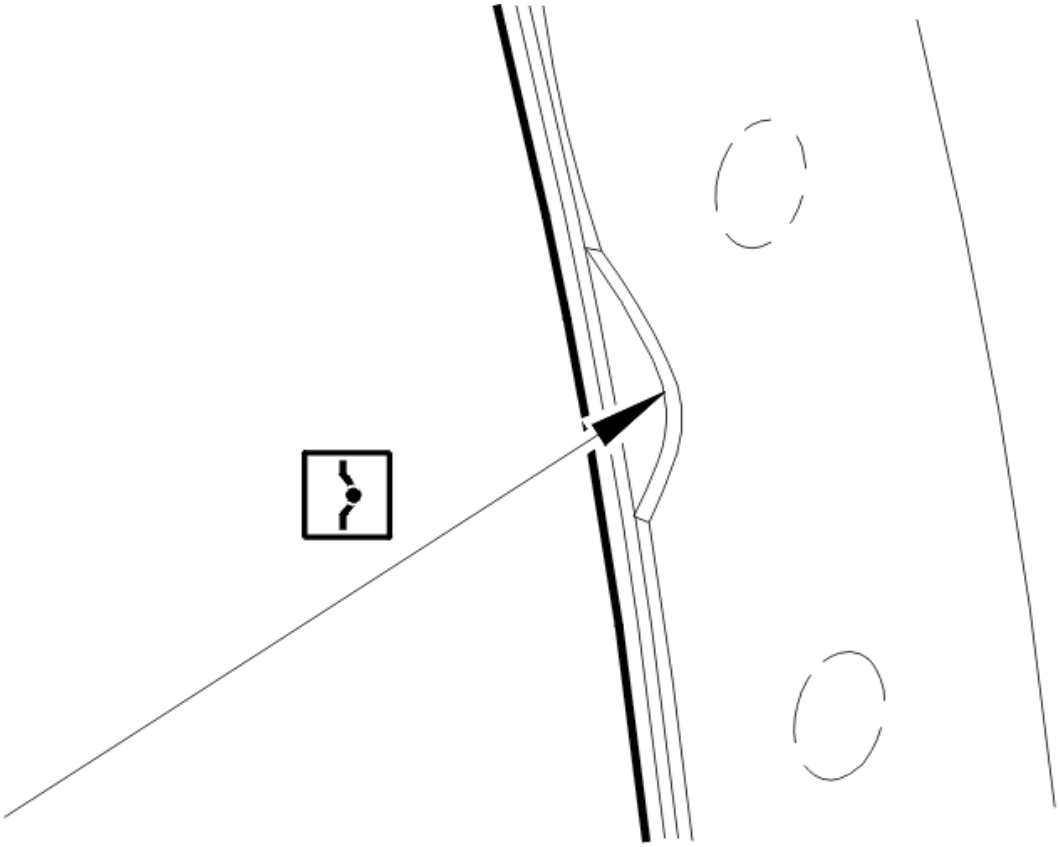

Fig. 18: Identifying Measuring Point Symbol
Courtesy of VOLVO CARS CORPORATION

Symbol number 3 means that the measurement is taken from a cut mark. Measurements are taken from the bottom of the recess as shown.

If only one measuring point symbol is displayed, the symbol applies to both measuring points. Otherwise the symbols are shown on each side of the dimension shown.

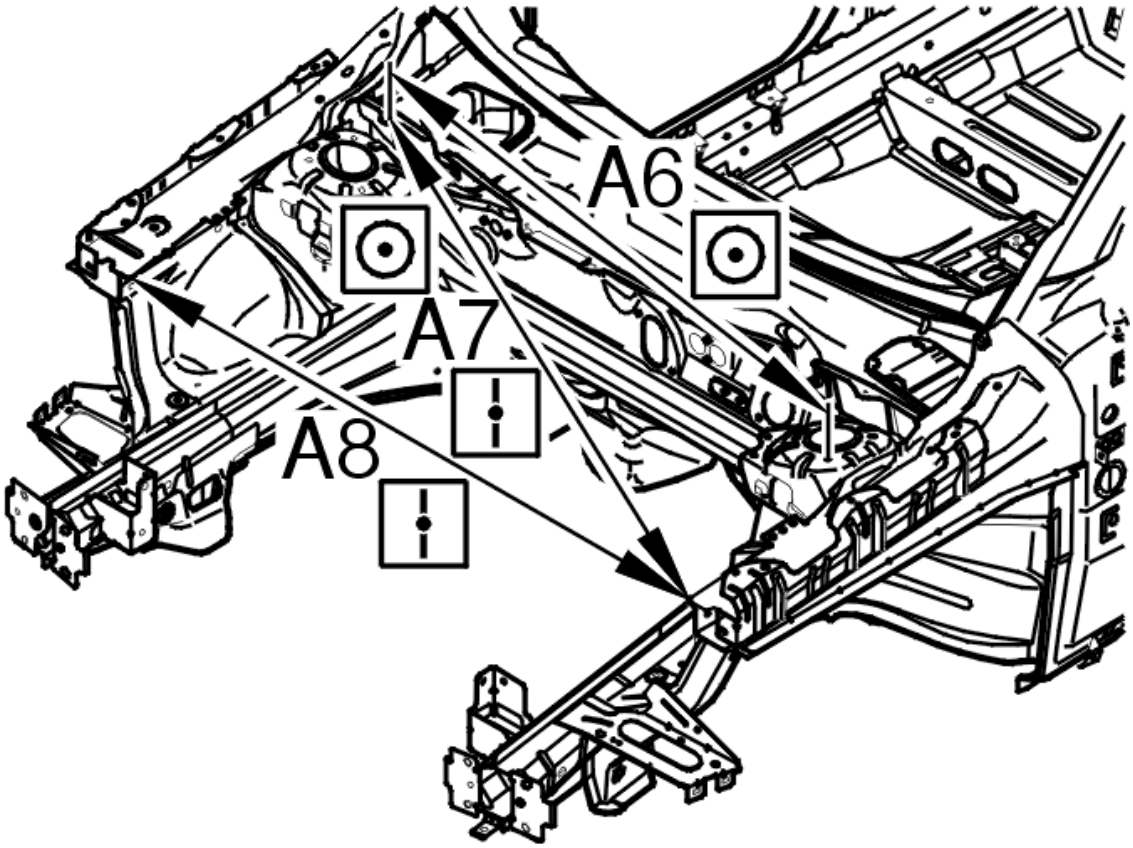

Fig. 19: Identifying Dimension A6, A7 And A8
Courtesy of VOLVO CARS CORPORATION

A6 = 1266 mm

A7 = 1419 mm

A8 = 1409 mm

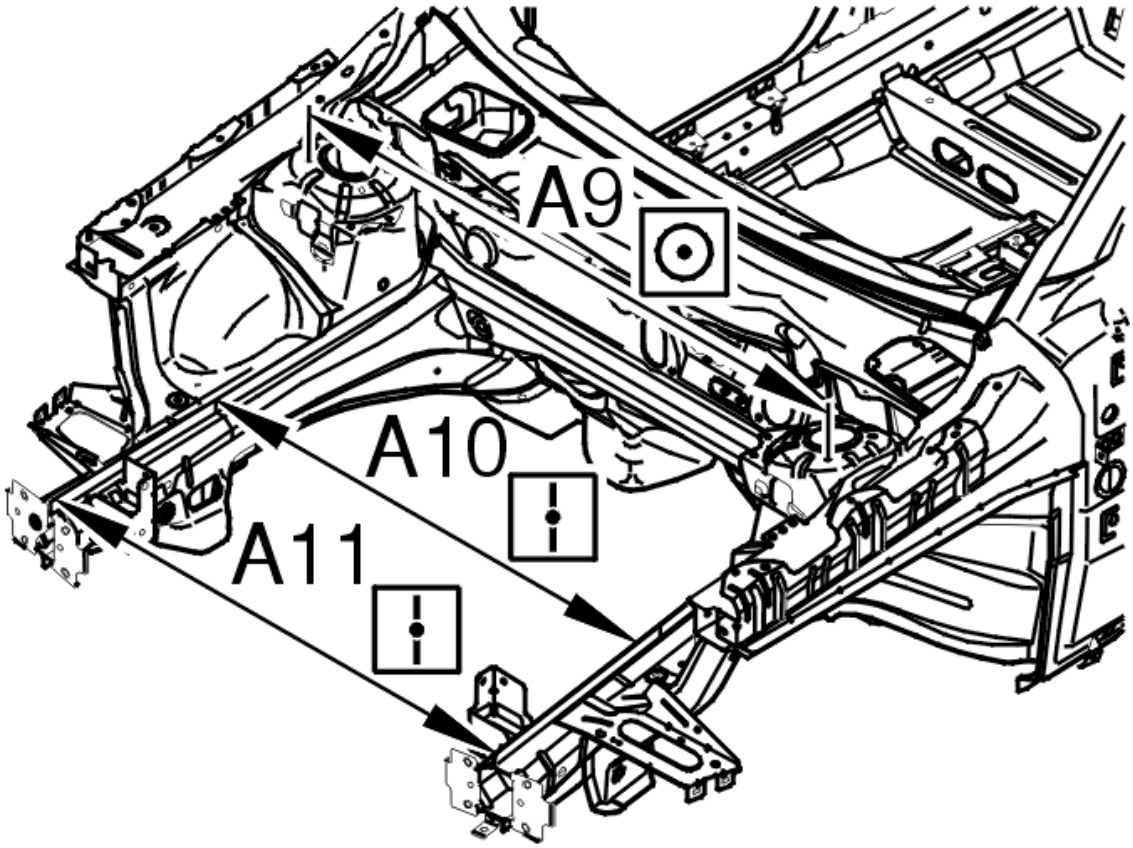

Fig. 20: Identifying Dimension A9, A10 And A11
Courtesy of VOLVO CARS CORPORATION

A9 = 1314 mm

Weld join A10 = 1070 mm

A11 = 1119 mm

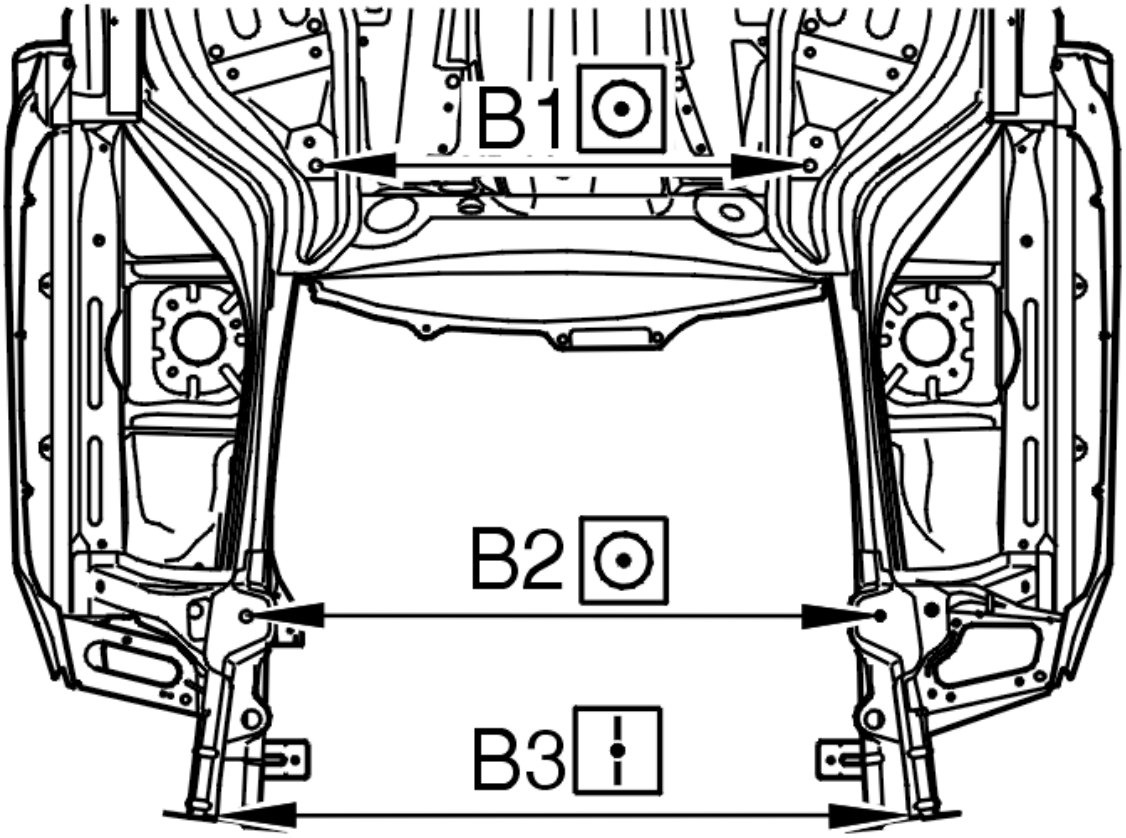

Fig. 21: Identifying Dimension B1, B2 And B3
Courtesy of VOLVO CARS CORPORATION

B1 = 862 mm

B2 = 1066 mm

B3 = 1163 mm

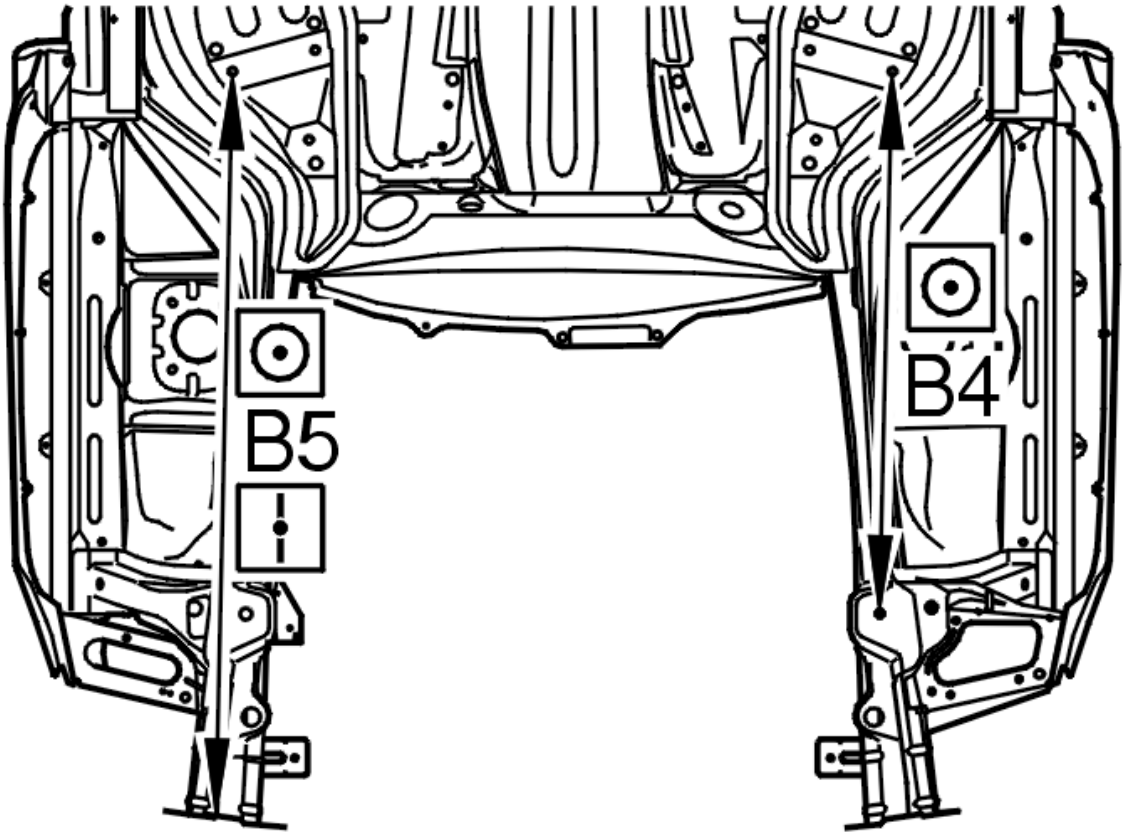

Fig. 22: Identifying Dimension B4 And B5
Courtesy of VOLVO CARS CORPORATION

B4 = 889 mm

B5 = 1247 mm

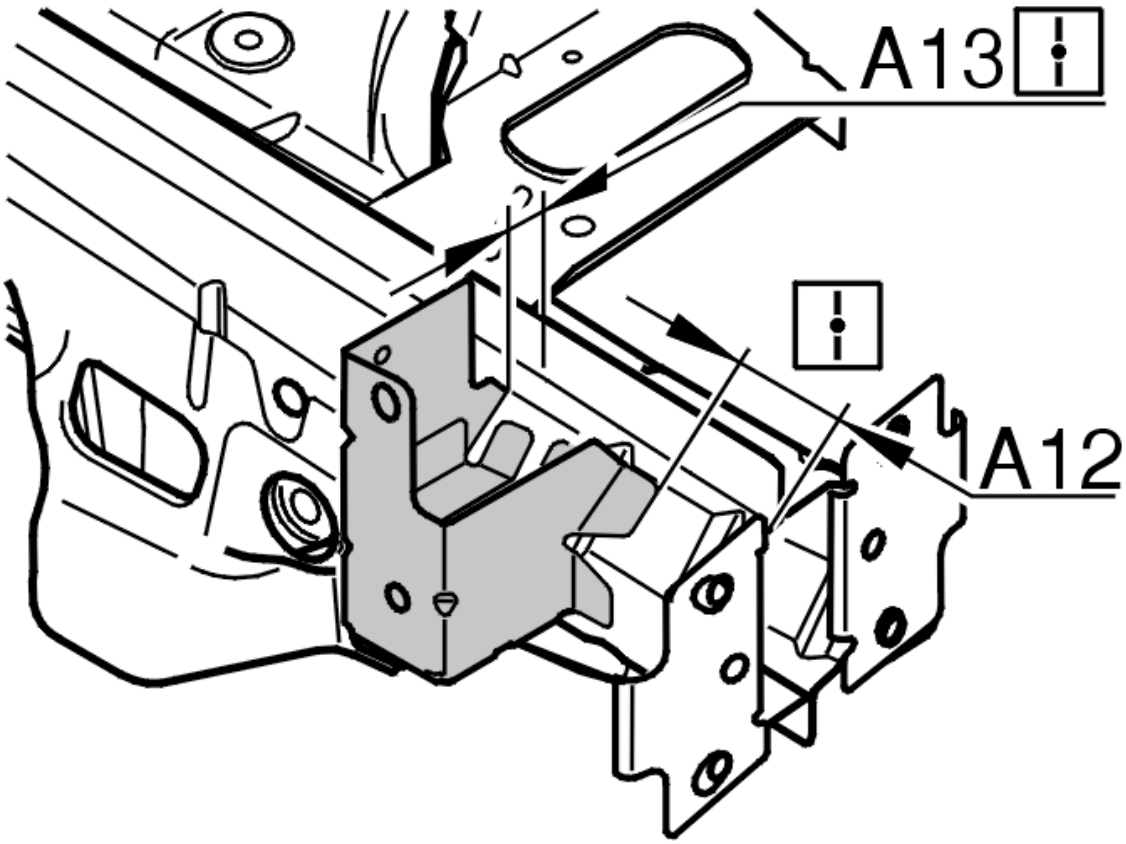

Fig. 23: Identifying Dimension A12 And A13
Courtesy of VOLVO CARS CORPORATION

A12 = 50 mm

A13 = 18 mm

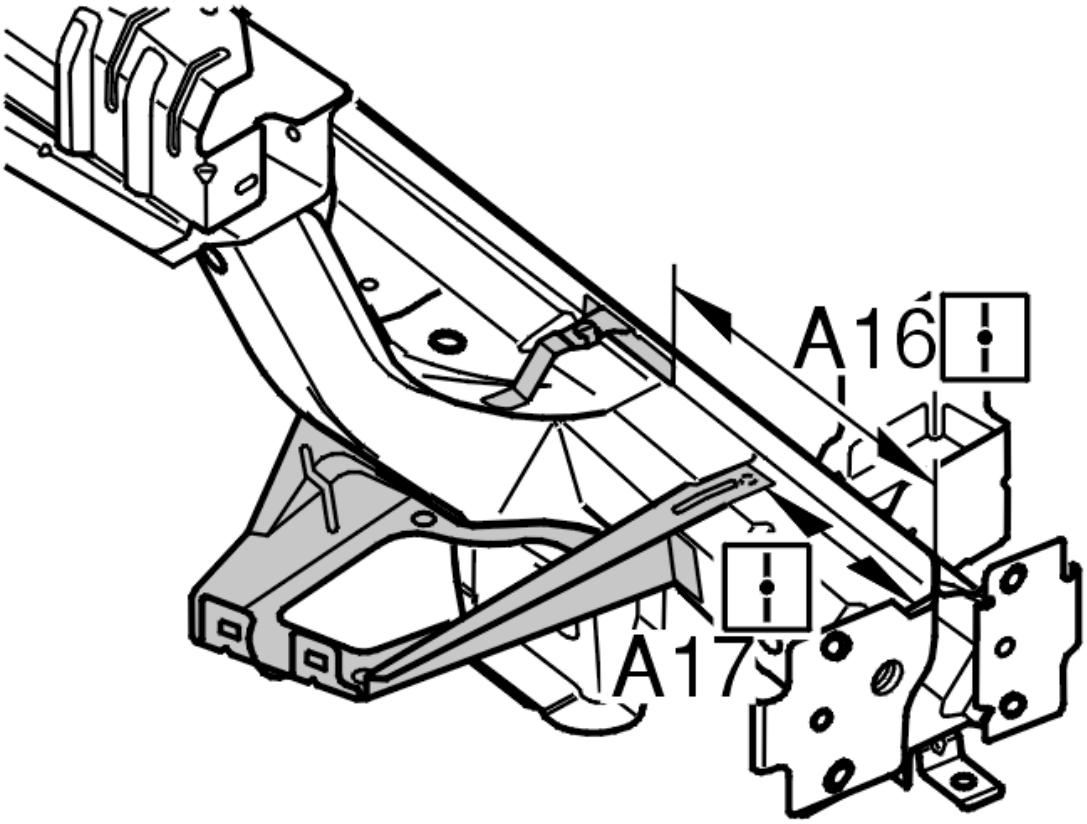

Fig. 24: Identifying Dimension A16 And A17
Courtesy of VOLVO CARS CORPORATION

A16 = 230 mm

A17 = 132 mm

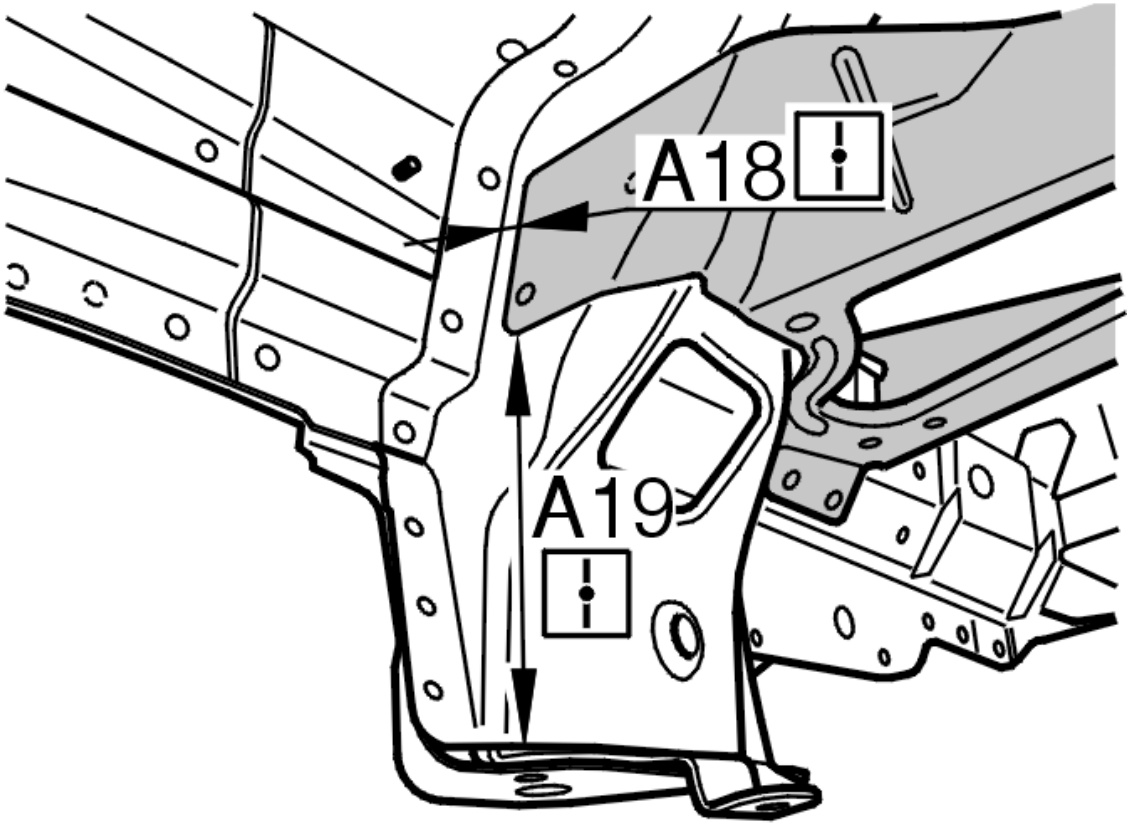

Fig. 25: Identifying Dimension A18 And A19
Courtesy of VOLVO CARS CORPORATION

A18 = 10 mm

A19 = 150 mm

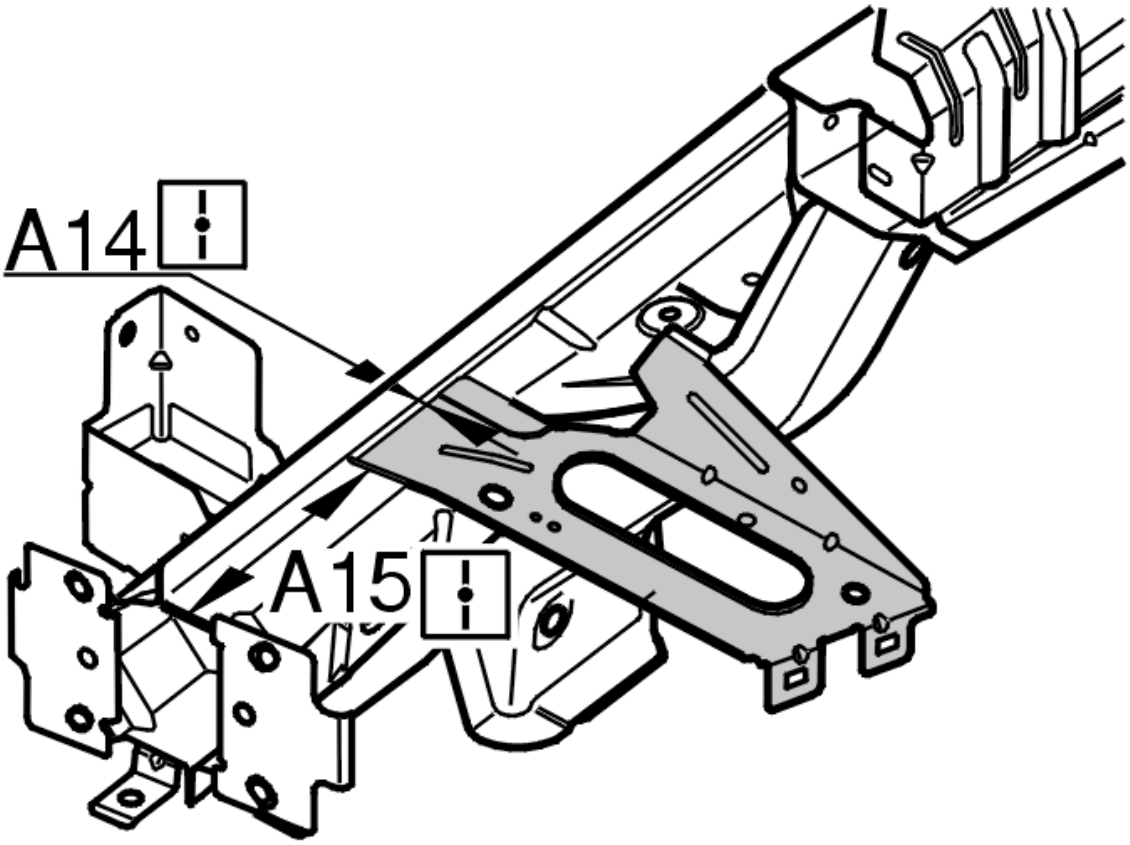

Fig. 26: Identifying Dimension A14 And A15
Courtesy of VOLVO CARS CORPORATION

A14 = 5 mm

A15 = 165 mm

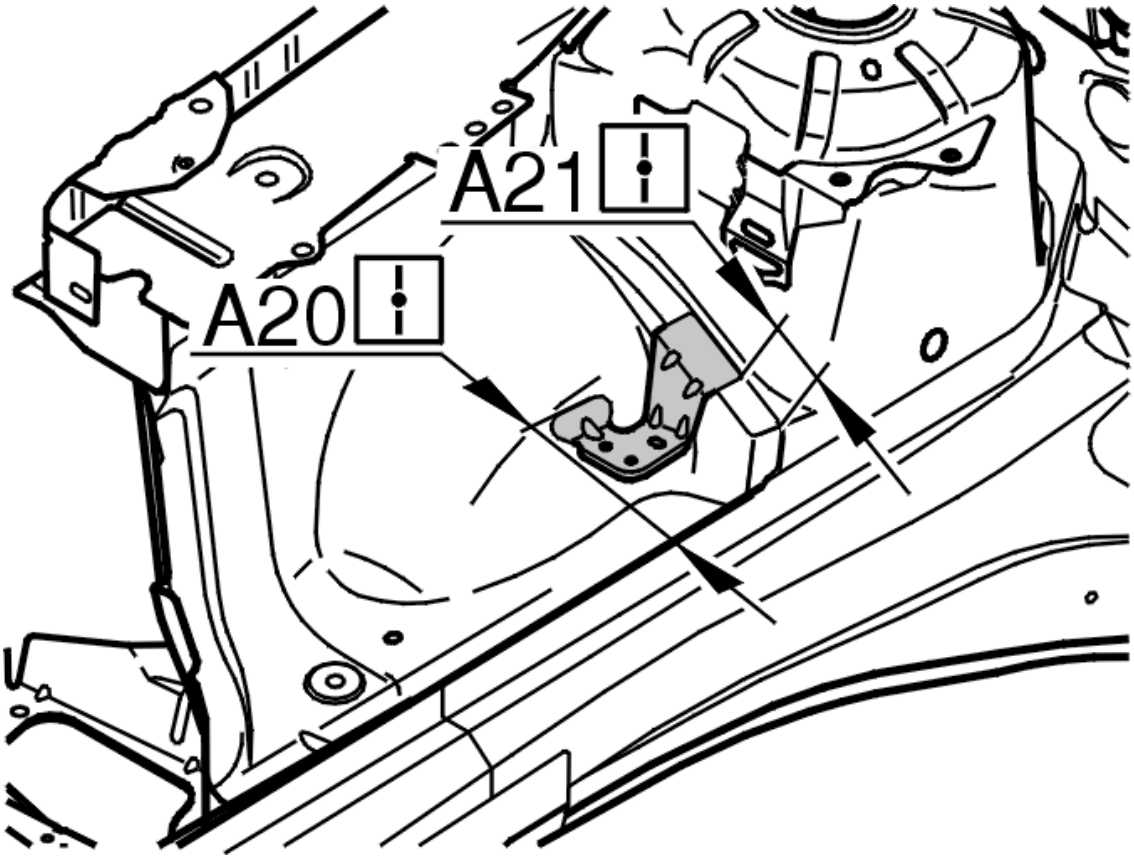

Fig. 27: Identifying Dimension A20 And A21
Courtesy of VOLVO CARS CORPORATION

A20 = 102 mm

A21 = 31 mm

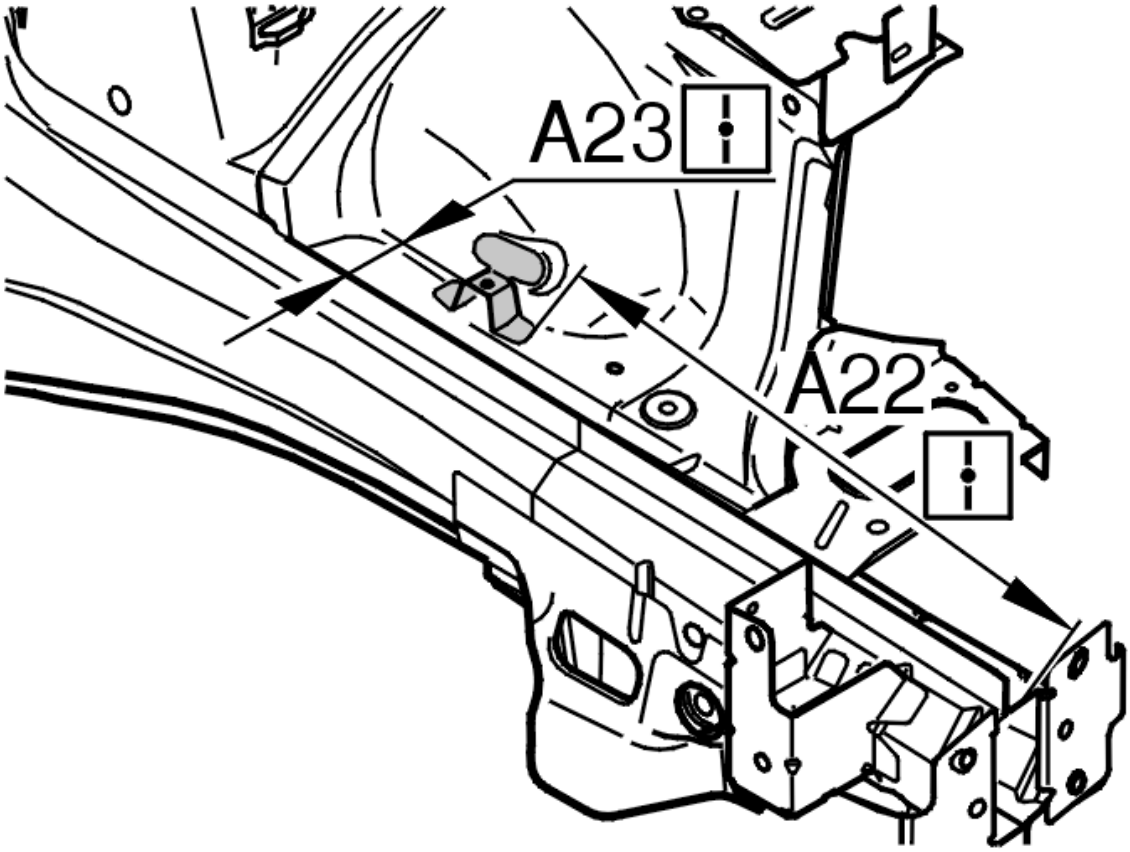

Fig. 28: Identifying Dimension A22 And A23
Courtesy of VOLVO CARS CORPORATION

A22 = 510 mm

A23 = 35 mm

SIDE MEMBERS REAR, ALIGNMENT CHART

NOTE: **As the graphics in this service information are used for different model years and / or models, some variation may occur. However, the essential information in the graphics is always correct.**

EXPLANATION OF DIMENSIONS

Fig. 29: Identifying Measurement Dimensions
Courtesy of VOLVO CARS CORPORATION

The dimensions in the table are listed as follows:

Symbol number 1 means that the measurement is taken from the center.

Symbol number 2 means that the measurement is taken from one edge.

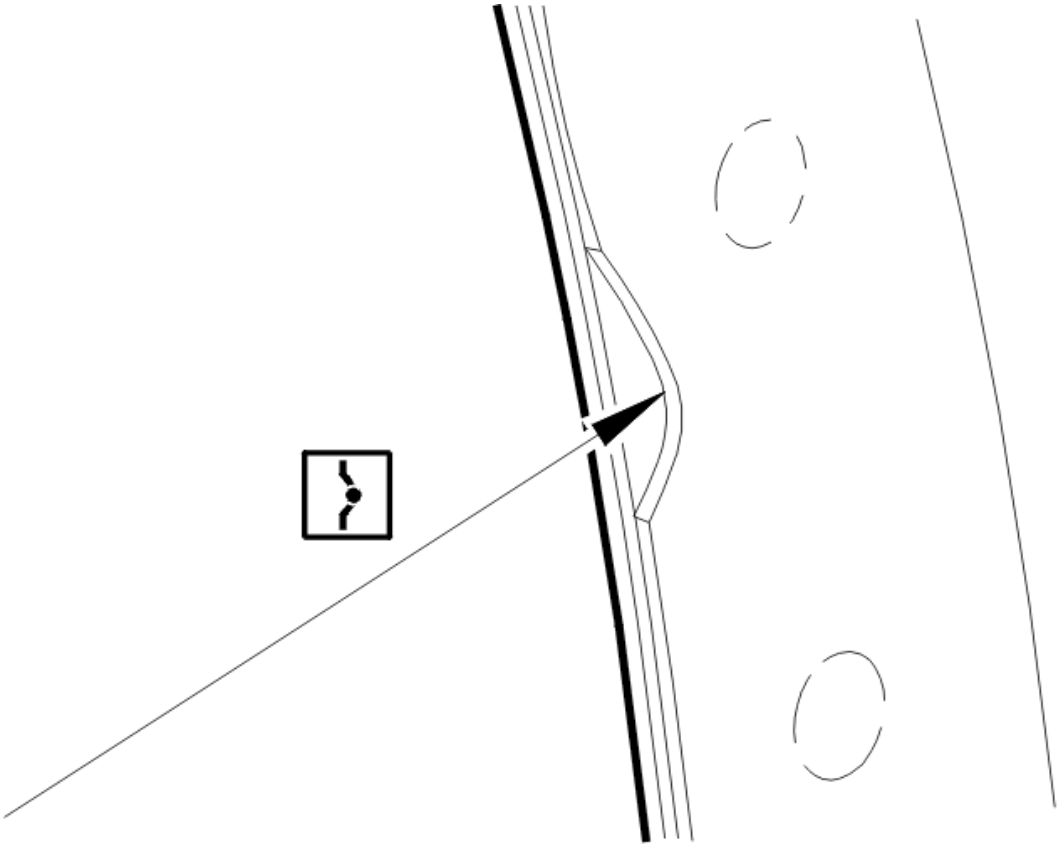

Fig. 30: Identifying Measuring Point Symbol
Courtesy of VOLVO CARS CORPORATION

Symbol number 3 means that the measurement is taken from a cut mark. Measurements are taken from the bottom of the recess as shown.

If only one measuring point symbol is displayed, the symbol applies to both measuring points. Otherwise the symbols are shown on each side of the dimension shown.

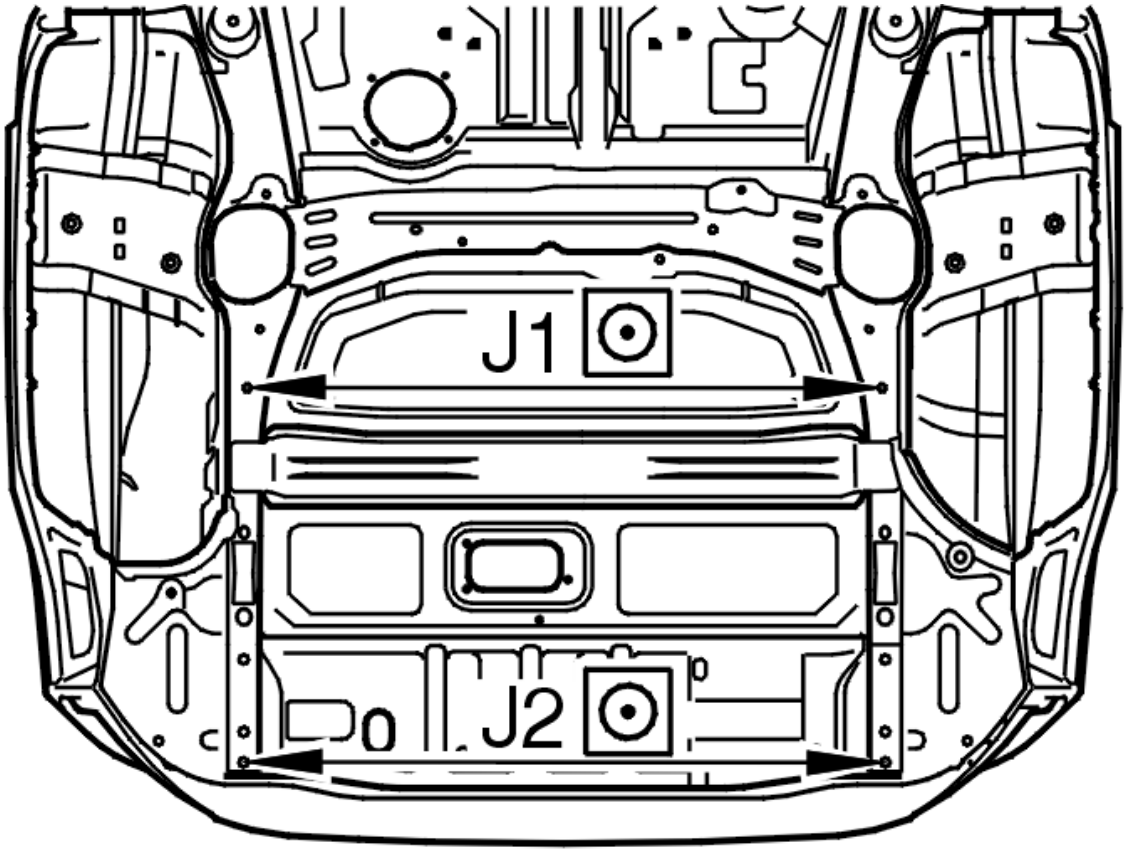

Fig. 31: Identifying Dimension J1 And J2
Courtesy of VOLVO CARS CORPORATION

J1 = 1068 mm

J2 = 1081 mm

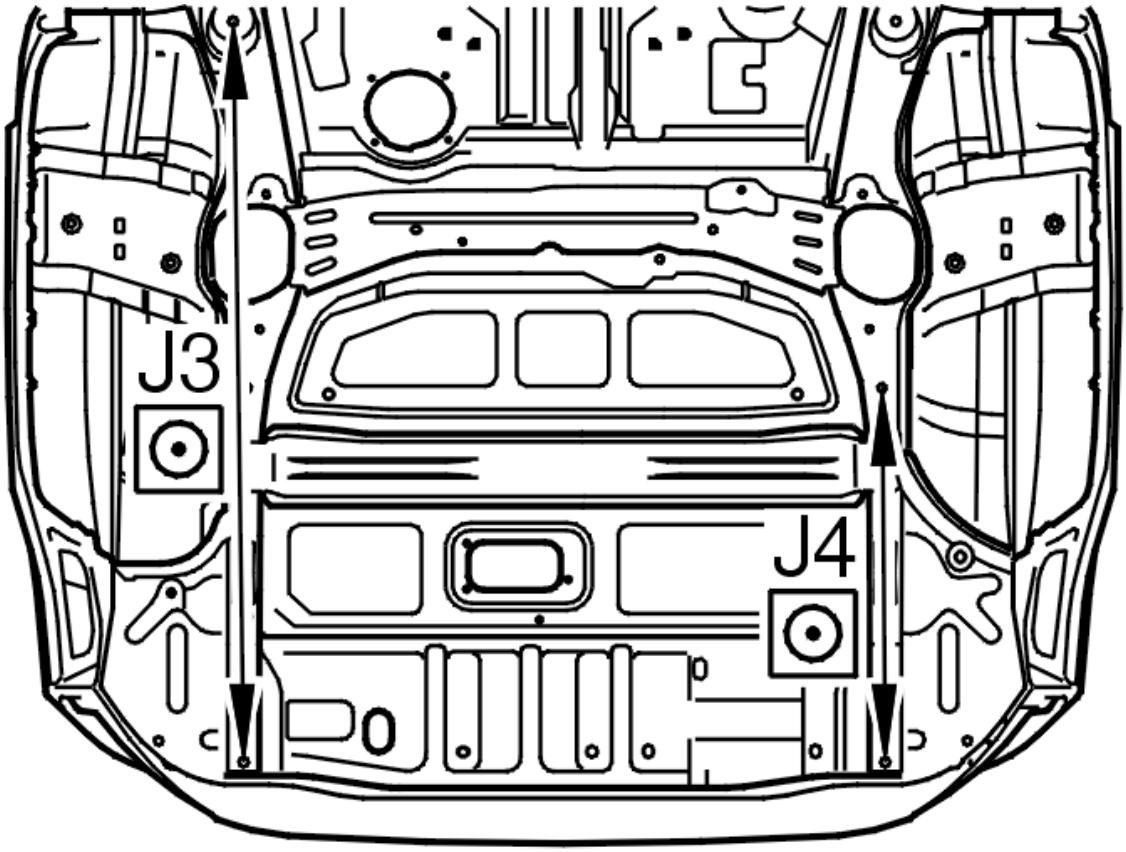

Fig. 32: Identifying Dimension J3 And J4
Courtesy of VOLVO CARS CORPORATION

J3 = 1259 mm

J4 = 631 mm

REAR FENDER

REAR END, ALIGNMENT CHART

NOTE: **As the graphics in this service information are used for different model years and / or models, some variation may occur. However, the essential information in the graphics is always correct.**

EXPLANATION OF DIMENSIONS

Fig. 33: Identifying Measurement Dimensions
Courtesy of VOLVO CARS CORPORATION

The dimensions in the table are listed as follows:

Symbol number 1 means that the measurement is taken from the center.

Symbol number 2 means that the measurement is taken from one edge.

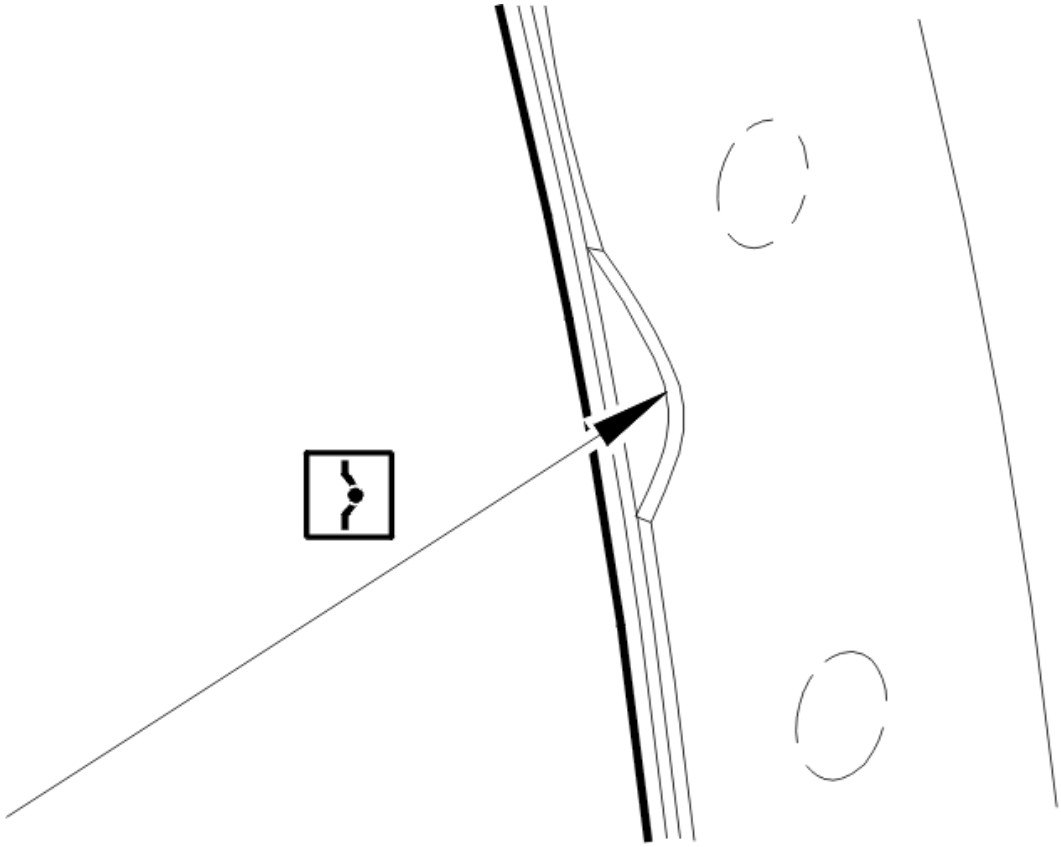

Fig. 34: Identifying Measuring Point Symbol
Courtesy of VOLVO CARS CORPORATION

Symbol number 3 means that the measurement is taken from a cut mark. Measurements are taken from the bottom of the recess as shown.

If only one measuring point symbol is displayed, the symbol applies to both measuring points. Otherwise the symbols are shown on each side of the dimension shown.

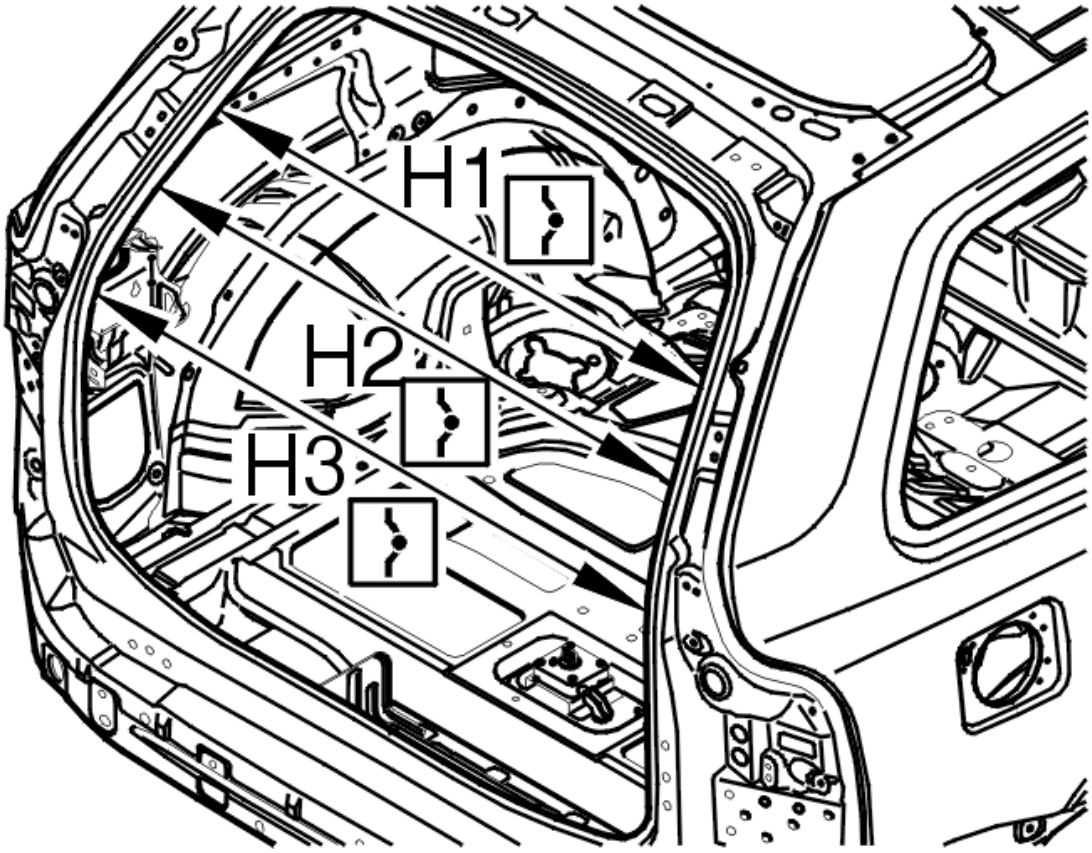

Fig. 35: Identifying Dimension H1, H2 And H3
Courtesy of VOLVO CARS CORPORATION

H1 = 984 mm

H2 = 1046 mm

H3 = 1128 mm

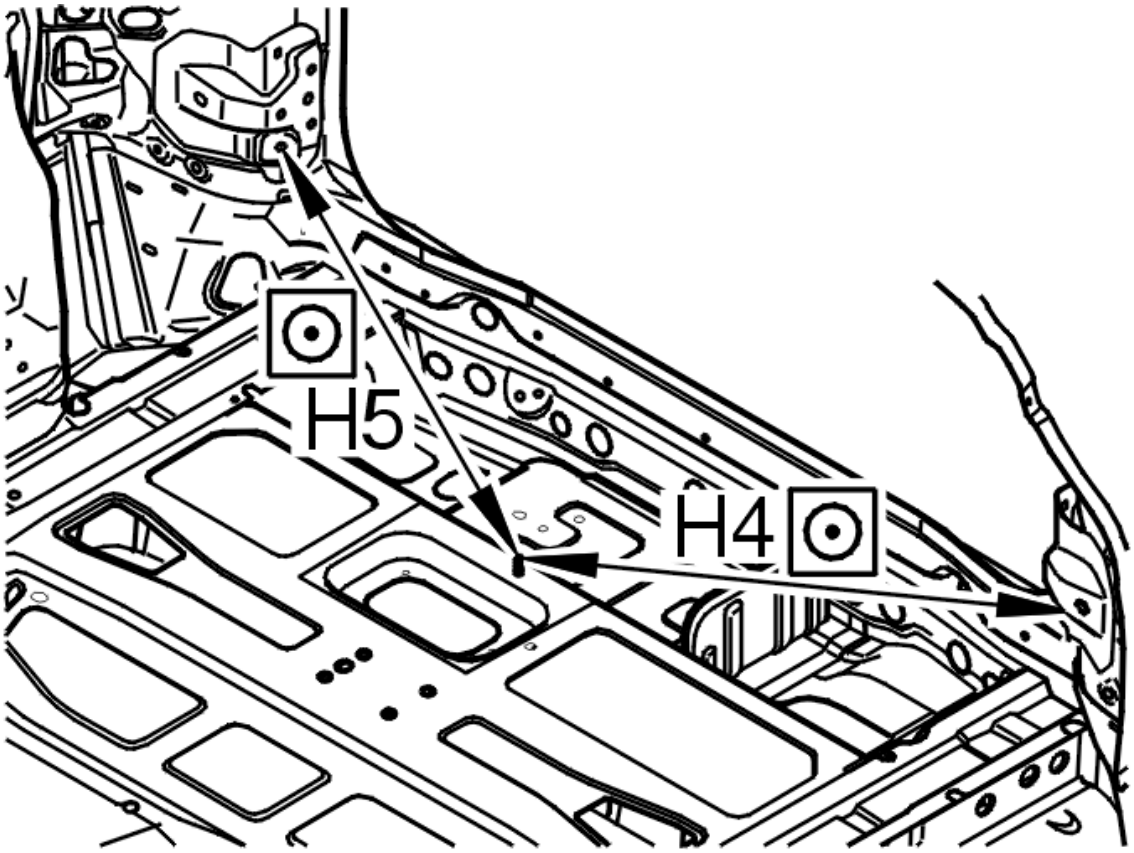

Fig. 36: Identifying Dimension H4 And H5
Courtesy of VOLVO CARS CORPORATION

H4 = 692 mm

H5 = 620 mm

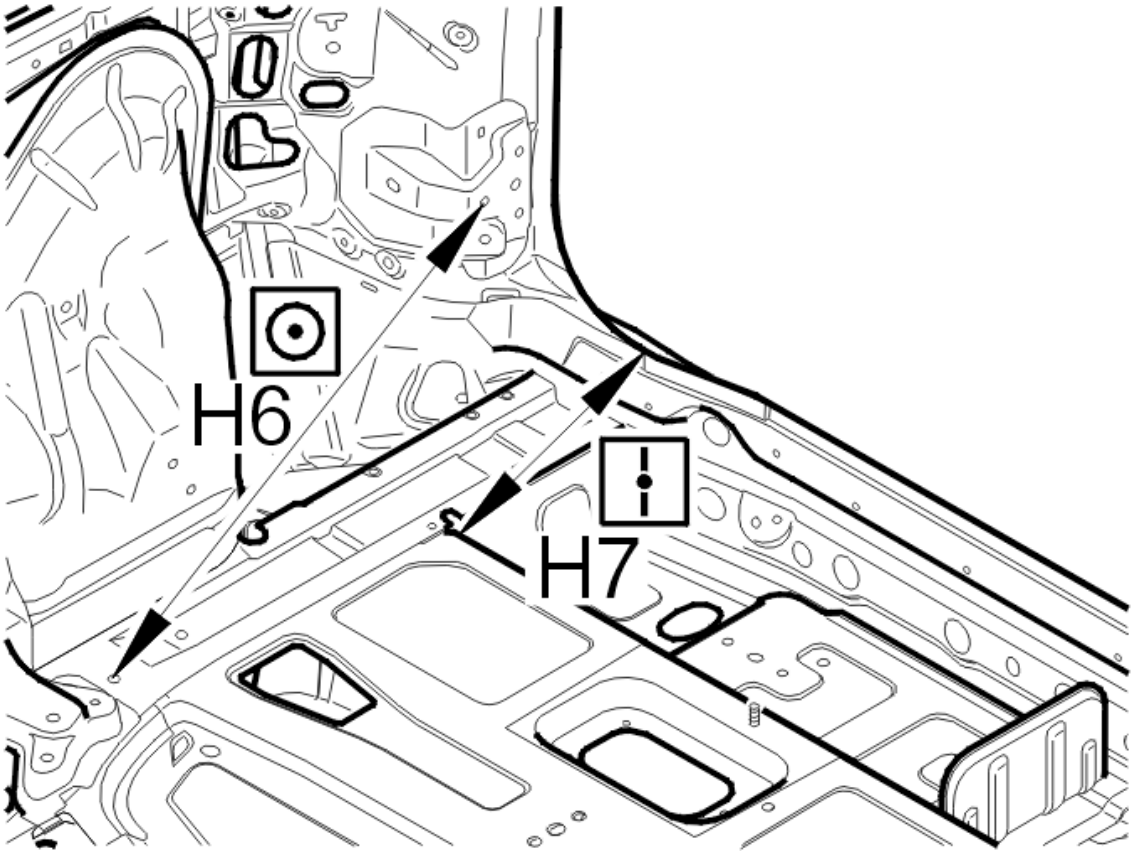

Fig. 37: Identifying Dimension H6 And H7
Courtesy of VOLVO CARS CORPORATION

H6 = 620 mm

H7 = 262 mm

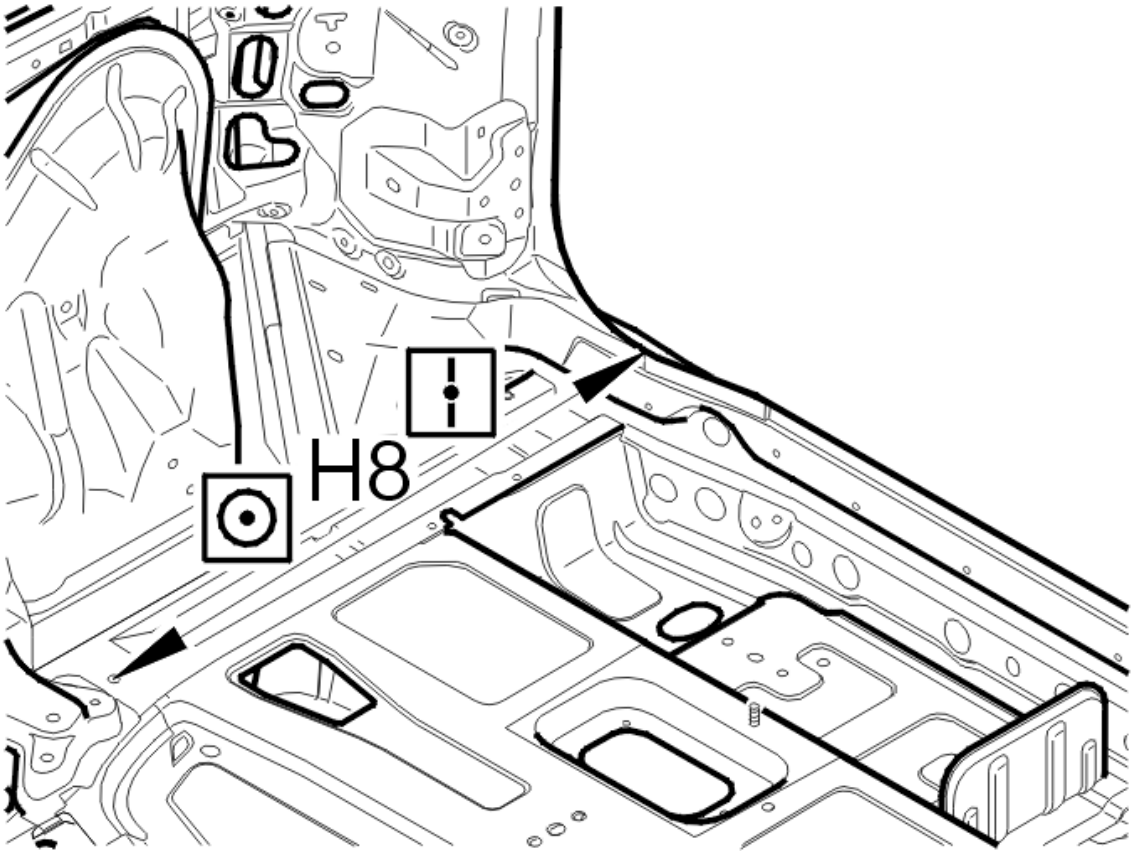

Fig. 38: Identifying Dimension H8
Courtesy of VOLVO CARS CORPORATION

H8 = 650 mm

ROOF, FRONT AND REAR WINDSHIELD FRAME

ROOF, ALIGNMENT CHART

Fig. 39: Identifying Measurement Dimensions
Courtesy of VOLVO CARS CORPORATION

The dimensions in the table are listed as follows:

Symbol number 1 means that the measurement is taken from the center.

Symbol number 2 means that the measurement is taken from one edge.

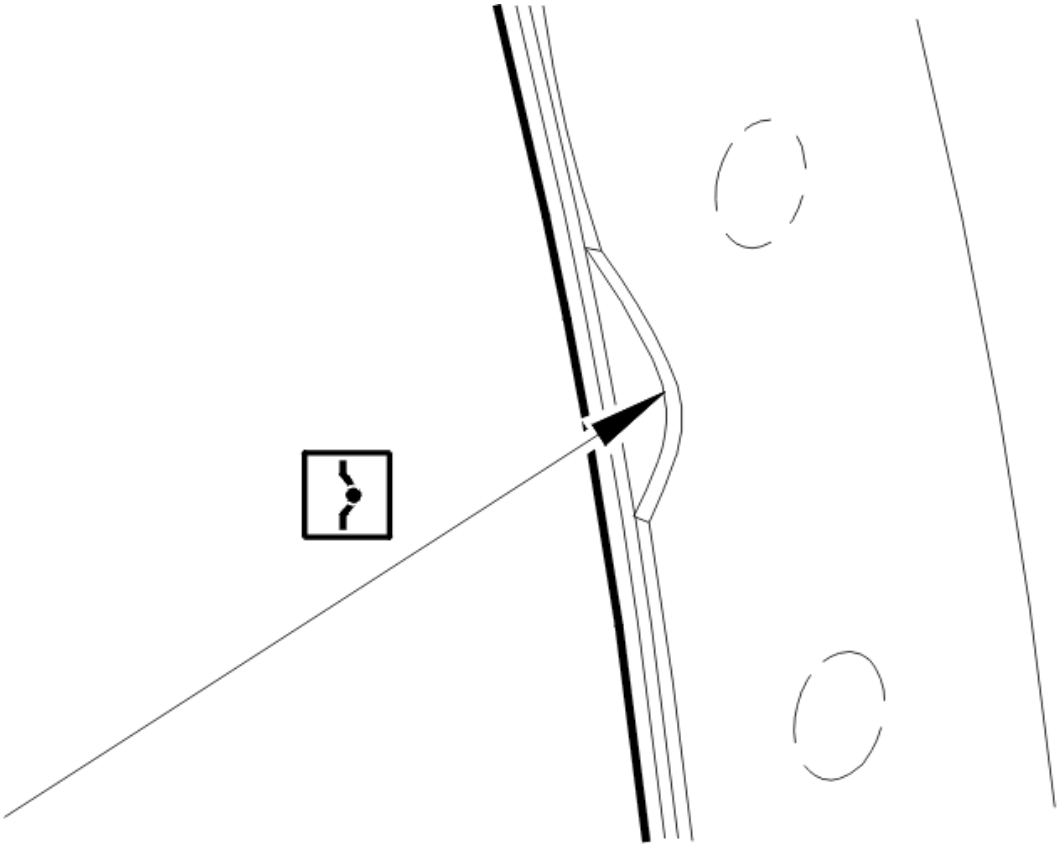

Fig. 40: Identifying Measuring Point Symbol
Courtesy of VOLVO CARS CORPORATION

Symbol number 3 means that the measurement is taken from a cut mark. Measurements are taken from the bottom of the recess shown.

If only one measuring point symbol is displayed, the symbol applies to both measuring points. Otherwise the symbols are shown on each side of the dimension shown.

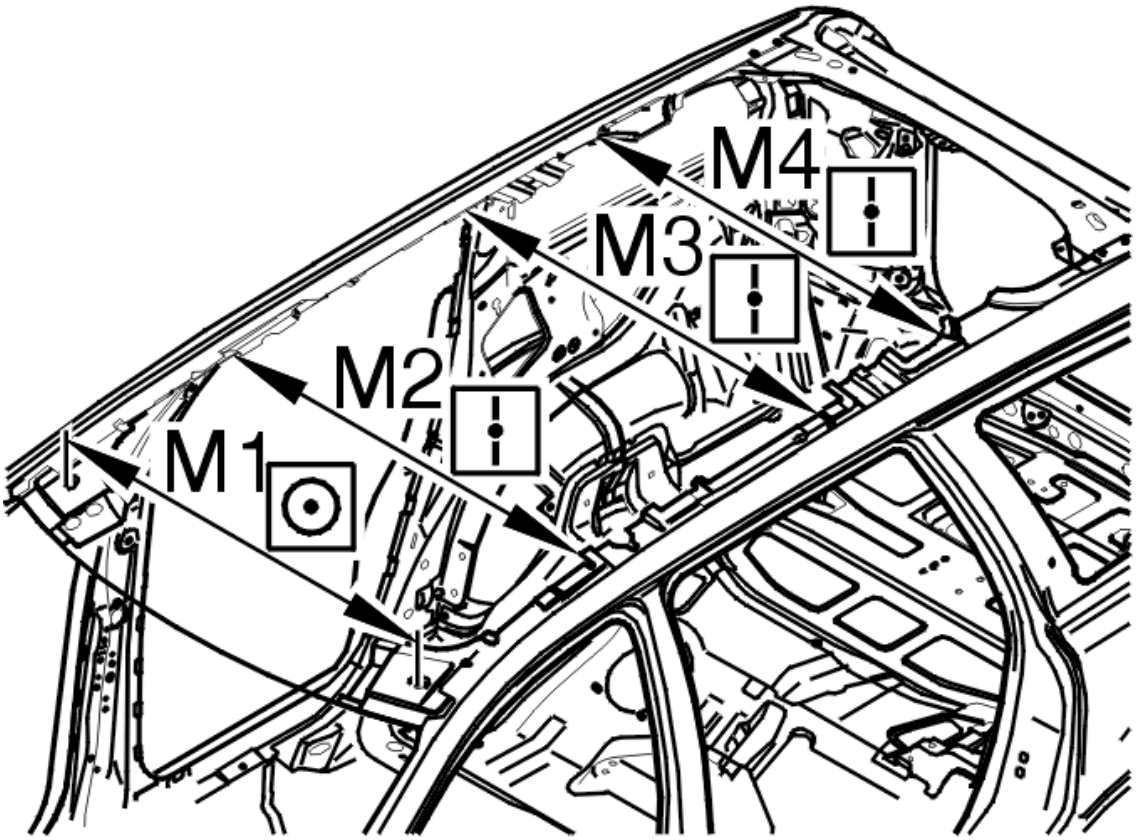

Fig. 41: Identifying Dimension M1, M2, M3 And M4
Courtesy of VOLVO CARS CORPORATION

M1 = 980 mm

M2 = 951 mm

M3 = 978 mm

M4 = 949 mm

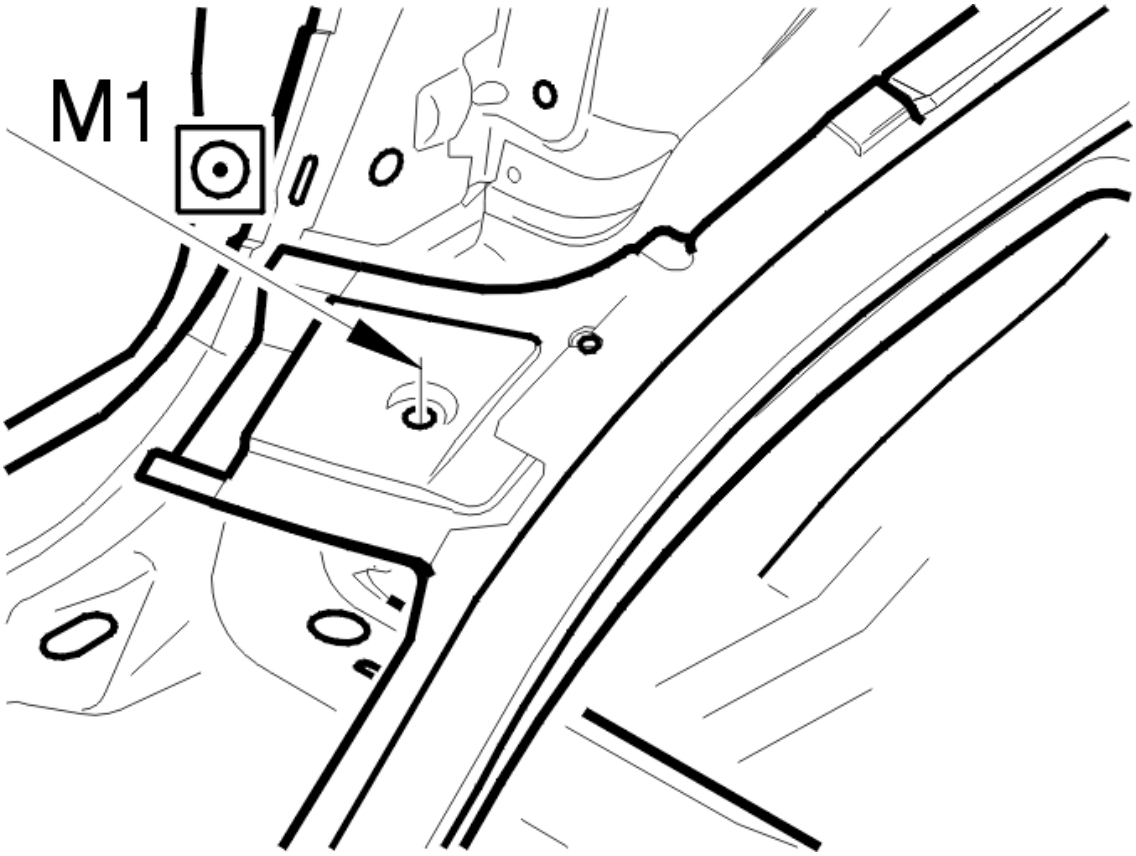

Fig. 42: Identifying Dimension M1
Courtesy of VOLVO CARS CORPORATION

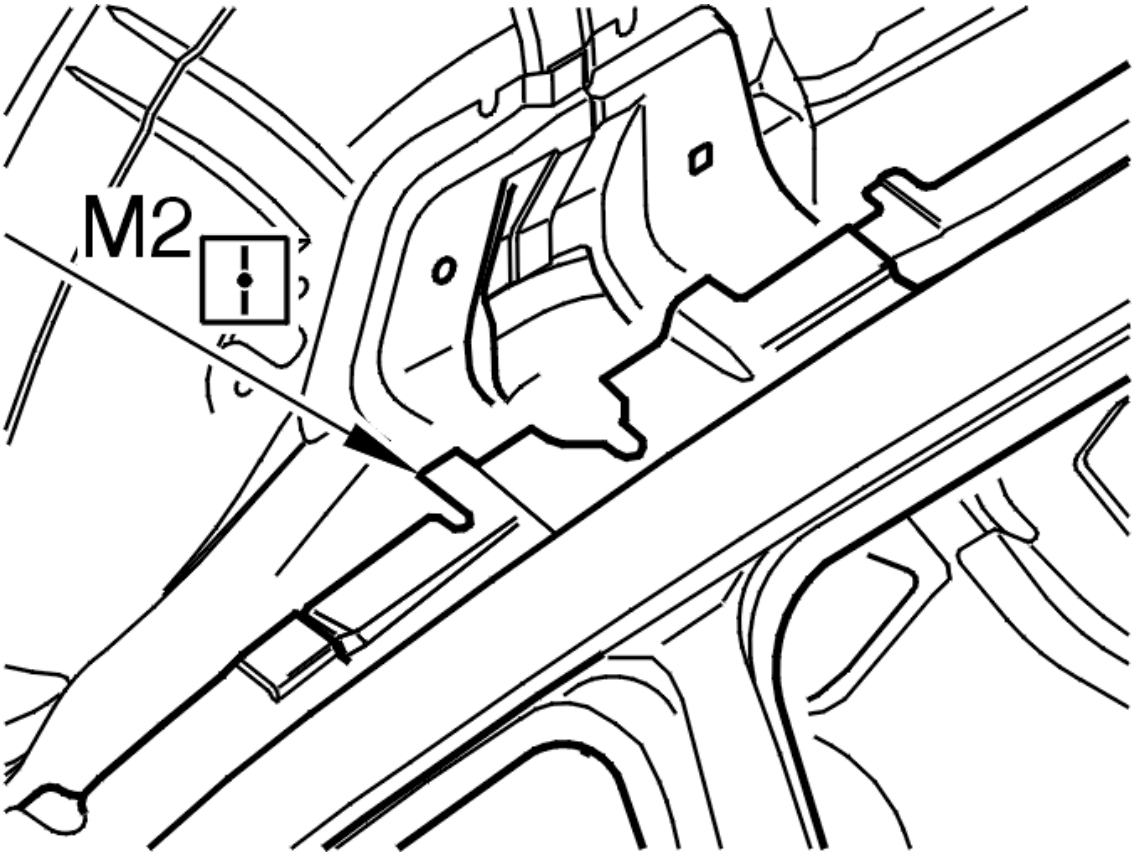

Fig. 43: Identifying Dimension M2
Courtesy of VOLVO CARS CORPORATION

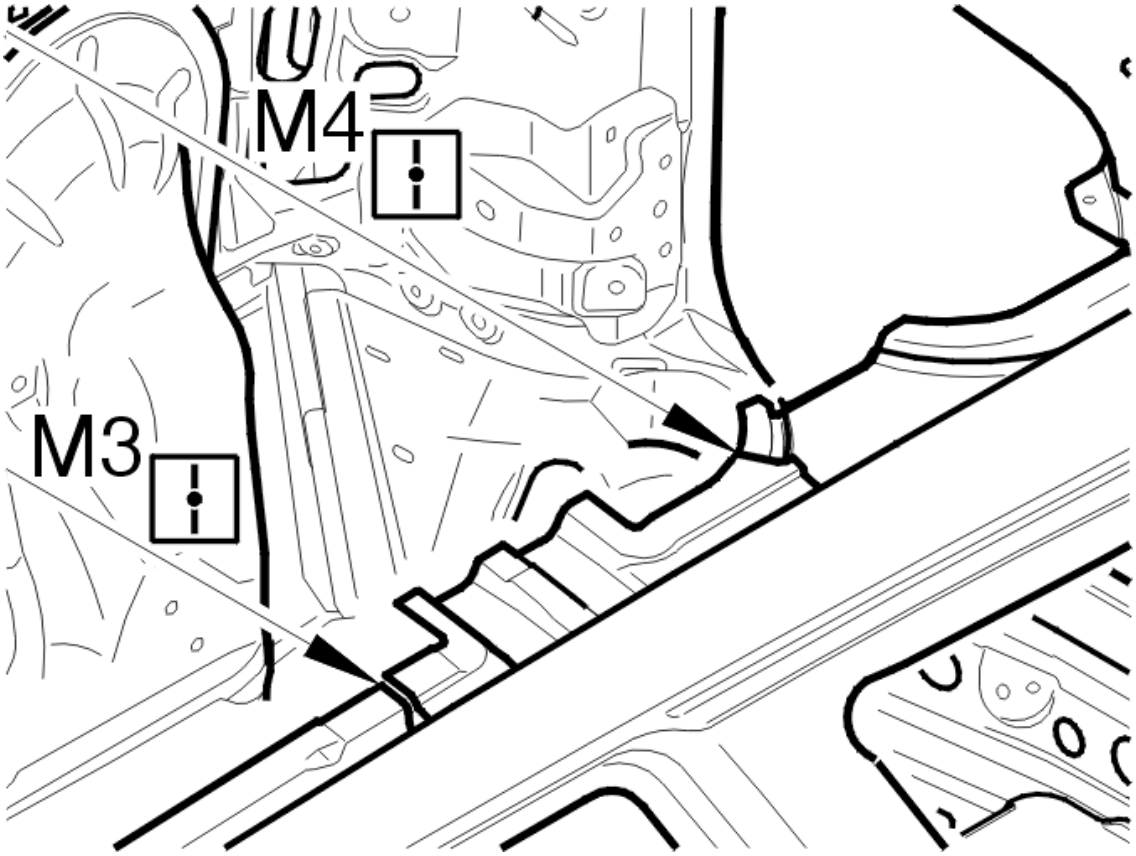

Fig. 44: Identifying Dimension M3 And M4
Courtesy of VOLVO CARS CORPORATION

WINDSHIELD FRAME, ALIGNMENT CHART

NOTE: **As the graphics in this service information are used for different model years and / or models, some variation may occur. However, the essential information in the graphics is always correct.**

EXPLANATION OF DIMENSIONS

Fig. 45: Identifying Measurement Dimensions
Courtesy of VOLVO CARS CORPORATION

The dimensions in the table are listed as follows:

Symbol number 1 means that the measurement is taken from the center.

Symbol number 2 means that the measurement is taken from one edge.

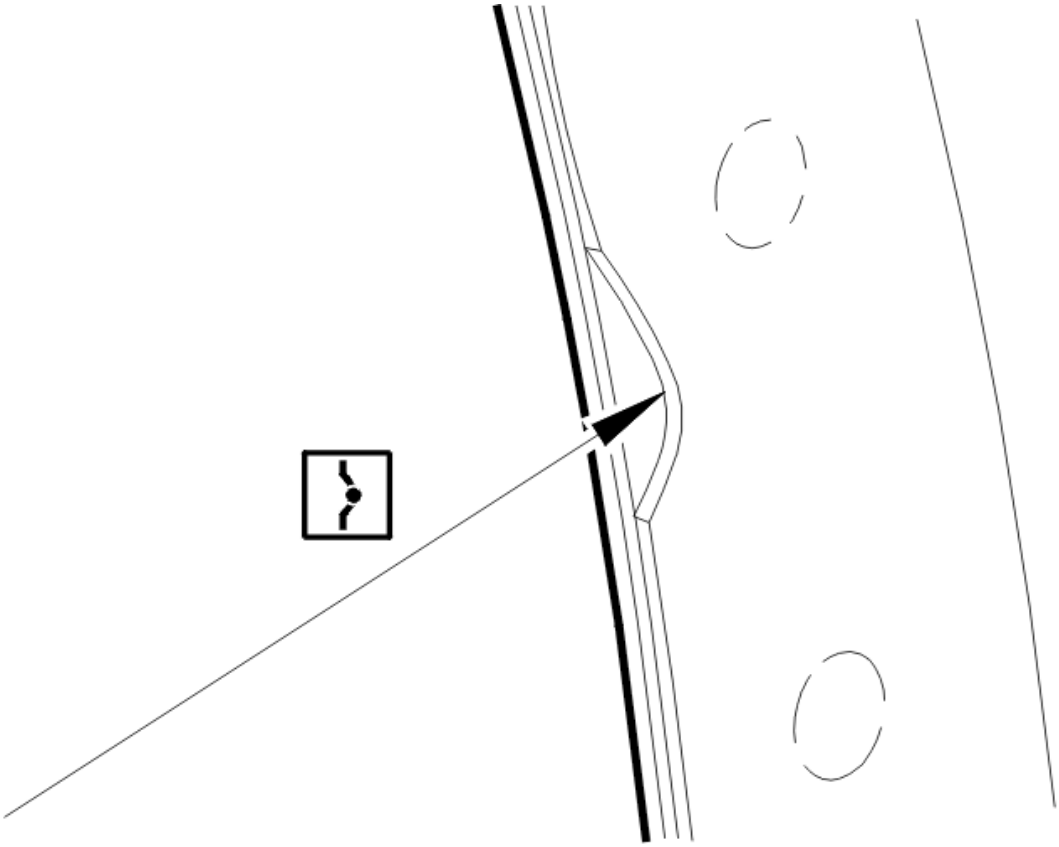

Fig. 46: Identifying Measuring Point Symbol
Courtesy of VOLVO CARS CORPORATION

Symbol number 3 means that the measurement is taken from a cut mark. Measurements are taken from the bottom of the recess as shown.

If only one measuring point symbol is displayed, the symbol applies to both measuring points. Otherwise the symbols are shown on each side of the dimension shown.

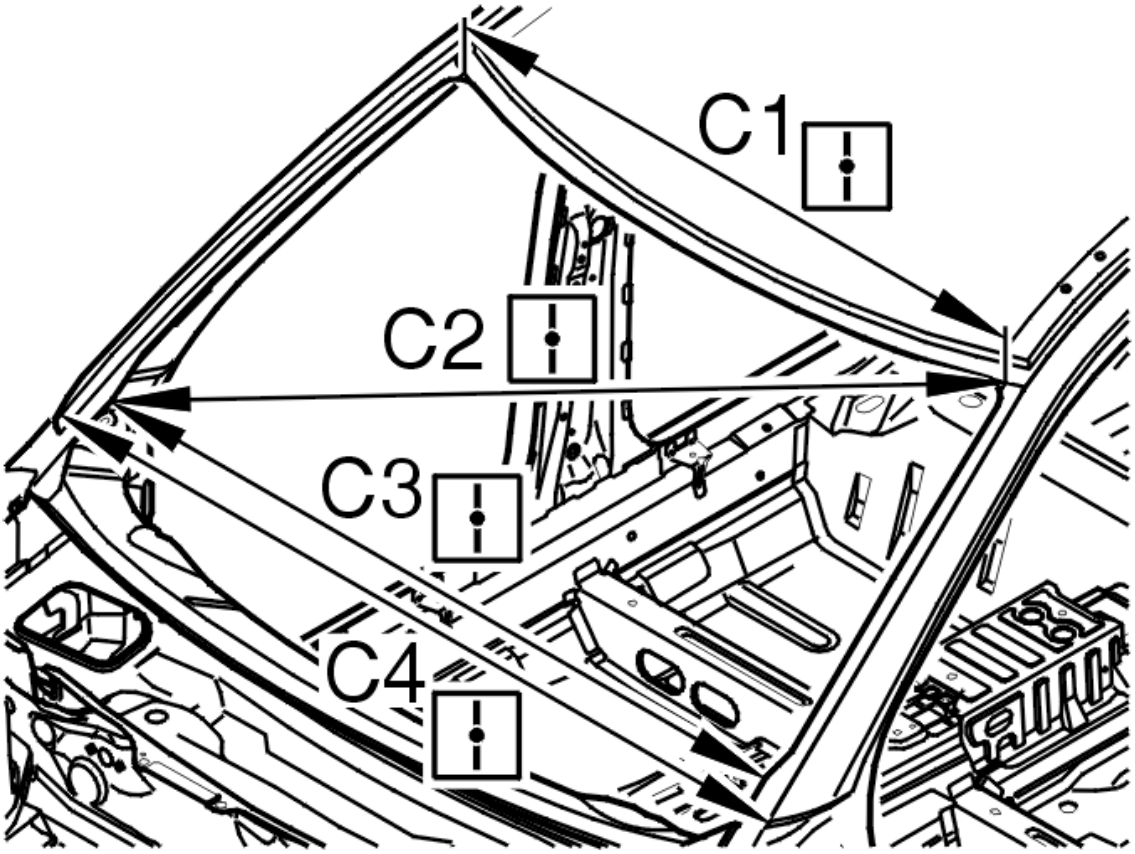

Fig. 47: Identifying Dimension C1, C2, C3 And C4
Courtesy of VOLVO CARS CORPORATION

C1 = 1125 mm

C2 = 1445 mm

C3 = 1368 mm

C4 = 1479 mm

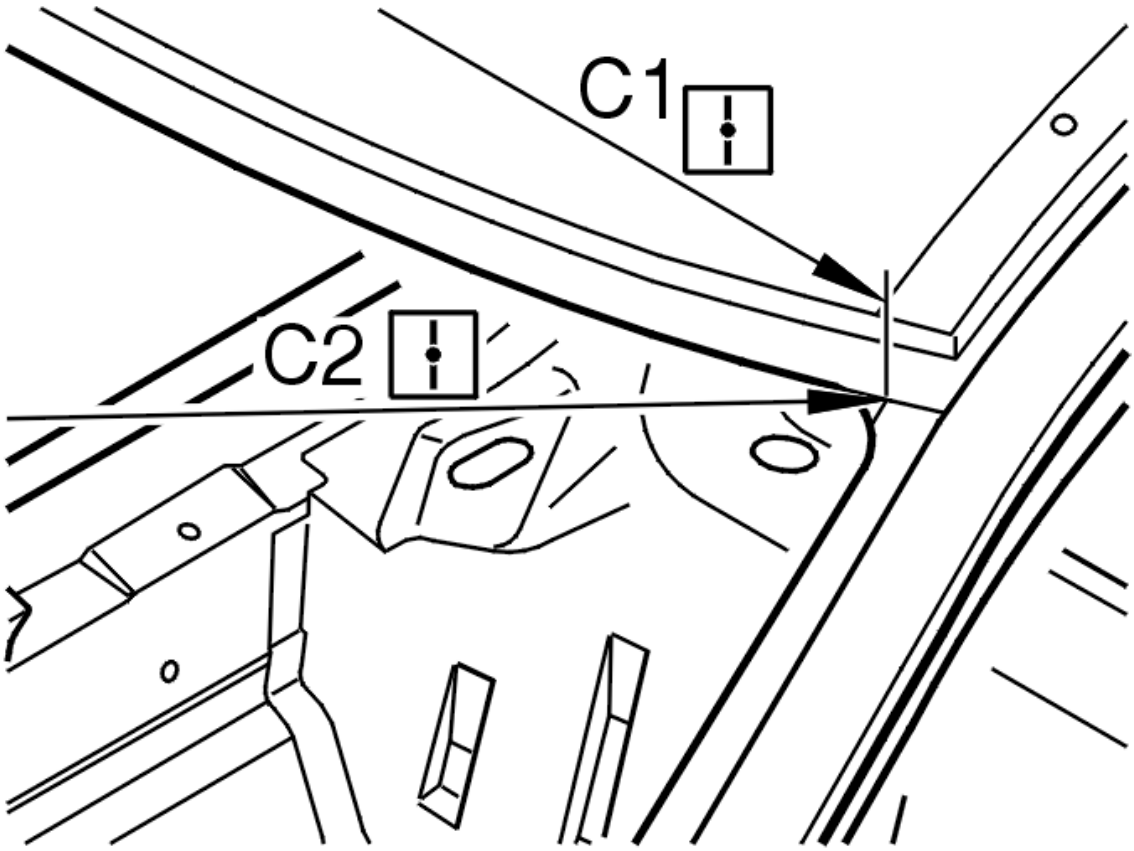

Fig. 48: Identifying Dimension C1 And C2
Courtesy of VOLVO CARS CORPORATION

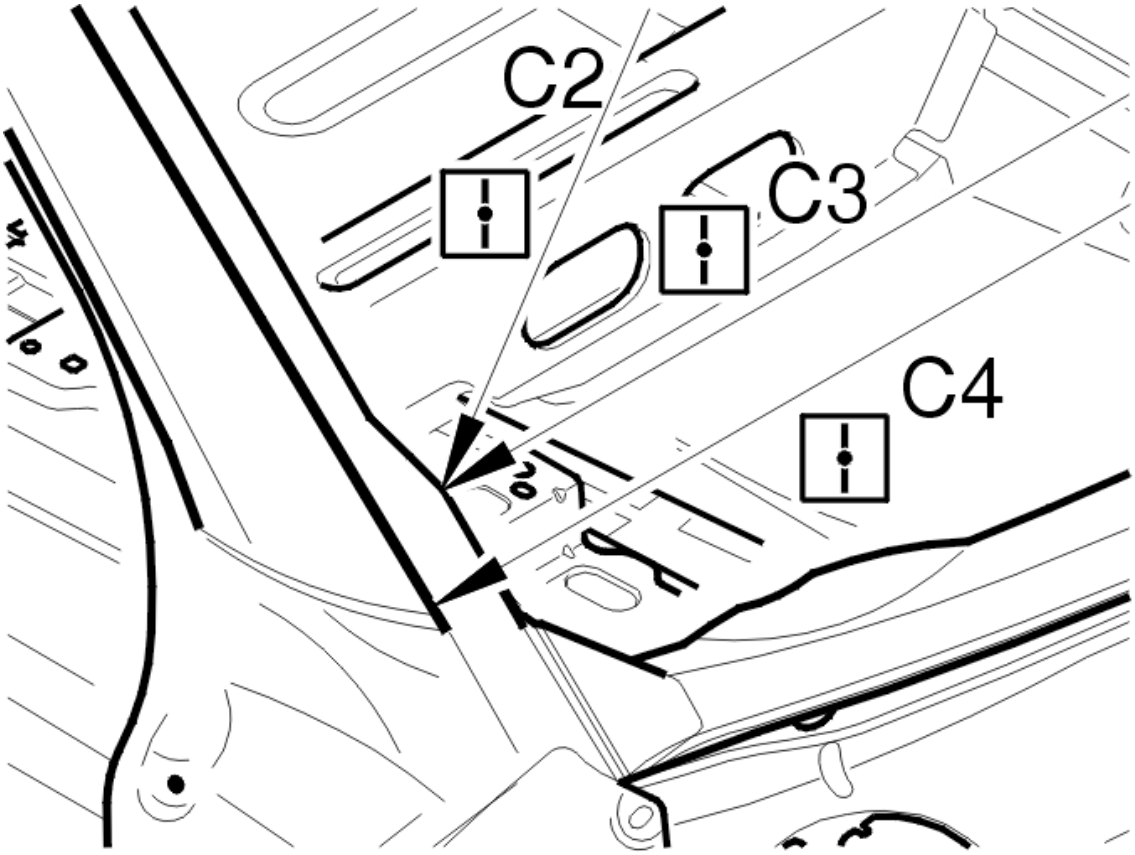

Fig. 49: Identifying Dimension C2, C3 And C4
Courtesy of VOLVO CARS CORPORATION

ACCESSORIES AND BODY, CAB

Body Frame - Symptom Verification

PAINT FINISH (NOT INCLUDING TRIM) - UNEVEN COLOR/COLOR DIFFERENCES BETWEEN BODY PANELS

SYMPTOM AND FUNCTION DESCRIPTION

NOTE: The symptom should always be verified together with the customer.

The following tips may be of help to decide if the symptom is due to a product feature or if continued troubleshooting is needed.

HINT: Minor hue differences may exist between metal and plastic materials.

ACCESSORIES AND BODY, CAB

Bumpers And Mudflaps - Installation instructions, accessories

BUMPER BARS - FRONT BUMPER (2003-2006)

BUMPER BARS - FRONT BUMPER

NOTE: **During installation the underlying surface must be kept at a temperature of at least +20°C (68°F).**

NOTE: **Console sockets must be made for auxiliary lights where fitted.**

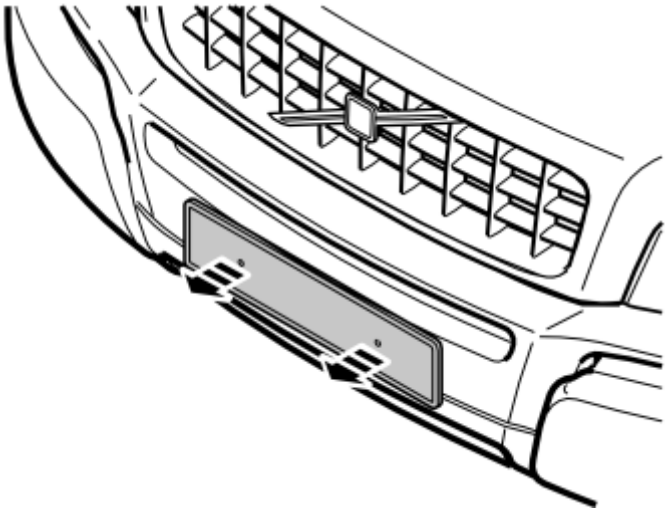

Fig. 1: Removing Number Plate And Plate Holder
Courtesy of VOLVO CARS CORPORATION

- Raise the car to a suitable working height.
- Remove the number plate and the number plate holder.

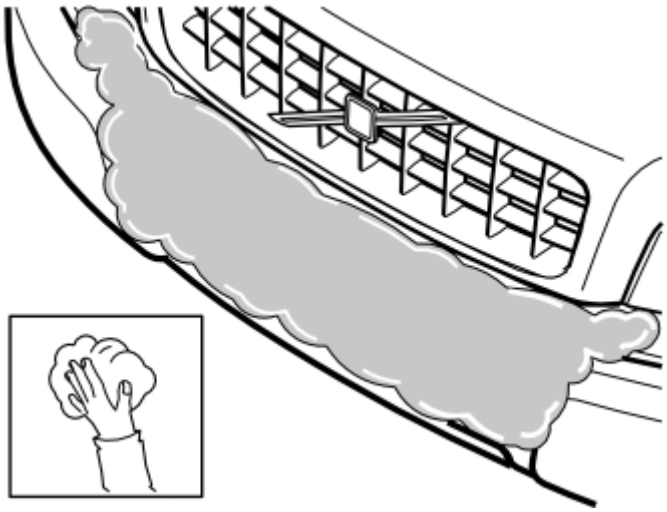

Fig. 2: Cleaning Off The Front
Courtesy of VOLVO CARS CORPORATION

- Clean off the front of the car and wipe dry.

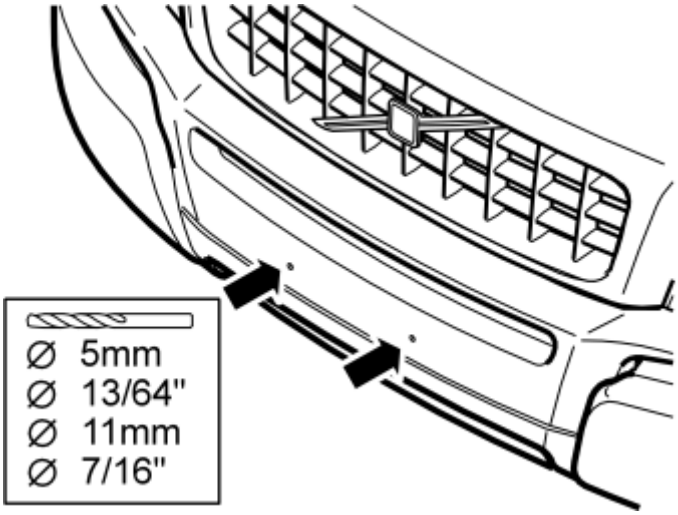

Fig. 3: Identifying Two Markings
Courtesy of VOLVO CARS CORPORATION

Applies to cars without expander nuts for the number plate holder

- Pre-drill with a **5 mm (13/64')** diameter drill bit as per the two markings in the bumper cover.

  Drill out the holes to **11 mm (7/16')** and deburr the hole edges. Drill deep enough in the foam plastic so that the expander nuts can be pressed fully into the bumper cover.

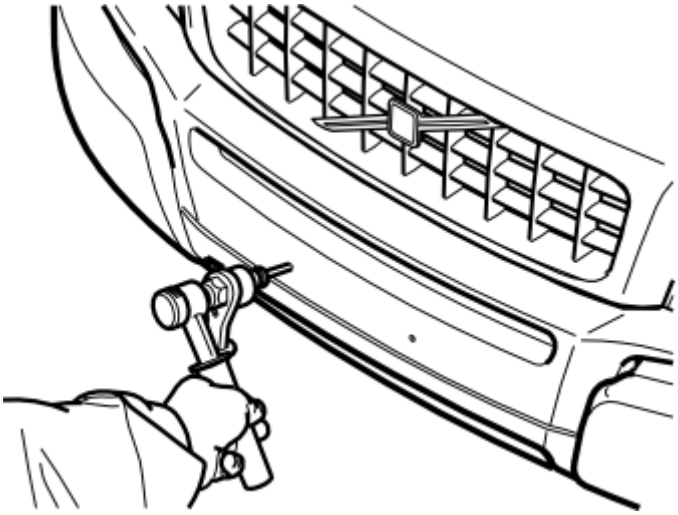

Fig. 4: Identifying Expander Nut Tool 9512782
Courtesy of VOLVO CARS CORPORATION

Applies to cars without expander nuts for the number plate holder

- Take the expander nuts from the kit and tighten them in the bumper cover, use.

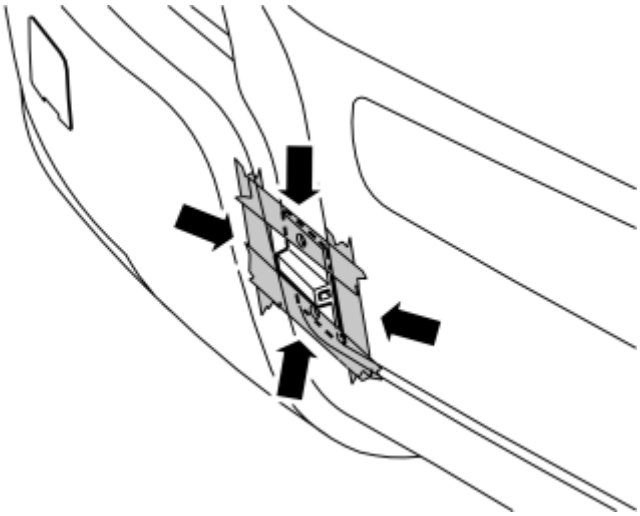

Fig. 5: Locating The Holder
Courtesy of VOLVO CARS CORPORATION

- Take the holder for one side from the kit and place it in the corner of the bumper cover panel, as illustrated. The holders are unique and only suit one of the two sides.
- Tape the holder securely to the body for marking the primer surfaces.
- Repeat the operation with the other holder.

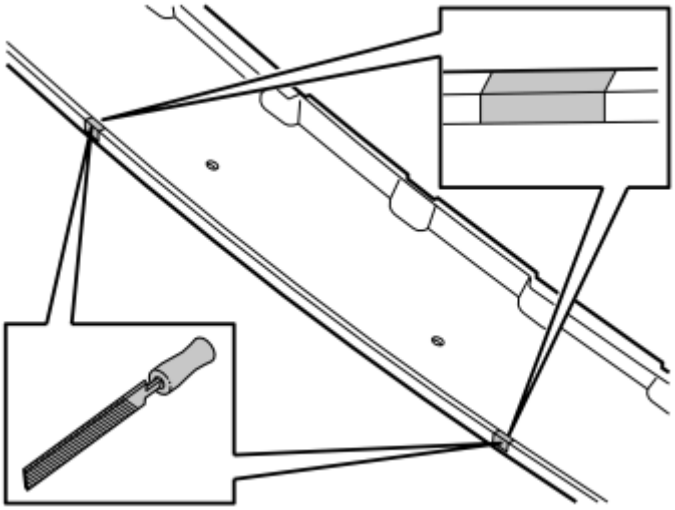

Fig. 6: Identifying Two Recesses
Courtesy of VOLVO CARS CORPORATION

Applies to cars with auxiliary lights

- Saw/file out two recesses for the auxiliary lights' consoles in accordance with the markings on the inside of the decor panel top edge with a fine-toothed saw/file. Be careful with the tape.
- Even out the edges and remove the shavings.

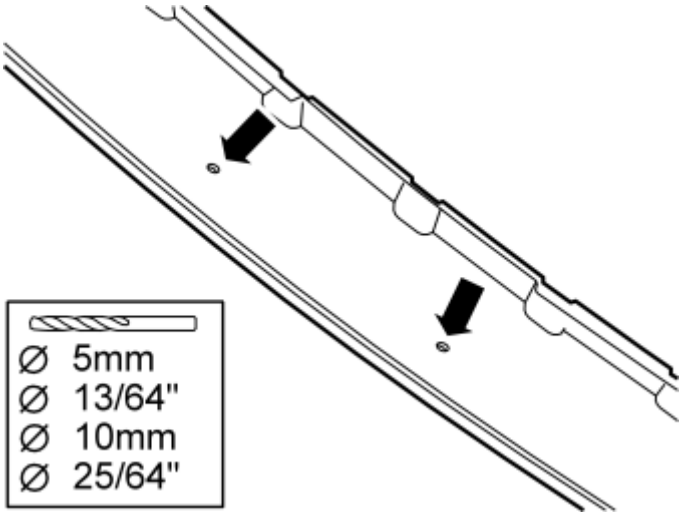

Fig. 7: Pre-Drilling Holes
Courtesy of VOLVO CARS CORPORATION

- Pre-drill the holes for the number plate holder as per the existing markings on the inside using a **5 mm (13/64')** diameter drill bit. Drill out the holes using a **10 mm (25/64')** diameter drill bit.
- Even out the hole edges and remove the shavings.

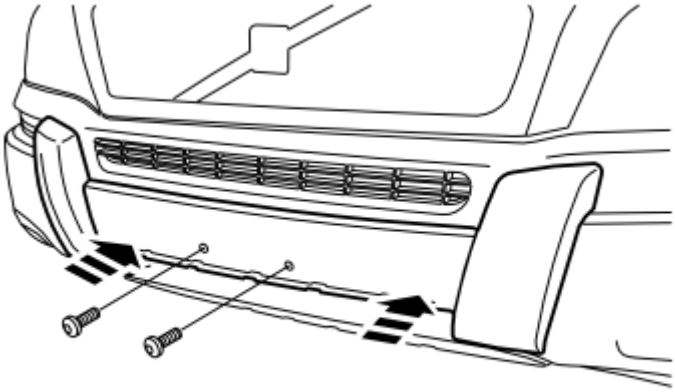

Fig. 8: Checking That The Holes In The Panel Correspond
Courtesy of VOLVO CARS CORPORATION

- Press in the panel onto the taped holders and check that the holes in the panel correspond with the holes in the bumper cover.

  Test with the screws from the kit and file out the holes as necessary.

  If the panel is removed for adjusting the holes, then tape on the holders again.

Illustration A

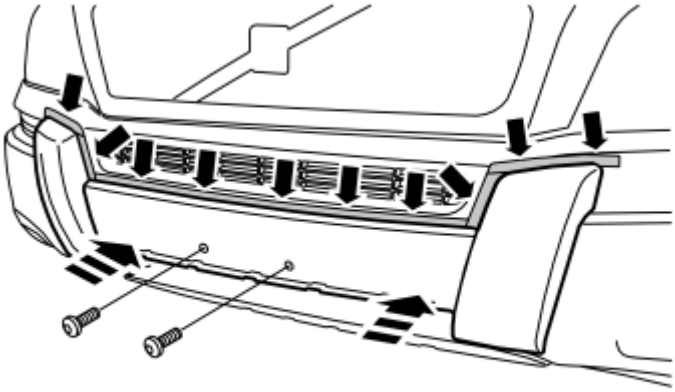

Fig. 9: Securing To The Body With Two Screws
Courtesy of VOLVO CARS CORPORATION

- Press the panel onto the holders (if the panel was removed to adjust the holes). Secure it to the body with the two screws, for marking the surfaces for applying the primer. Adjust the position of the panel in accordance with Fig 21.

NOTE: Do not remove the panel's protective tape at this point.

Illustration B

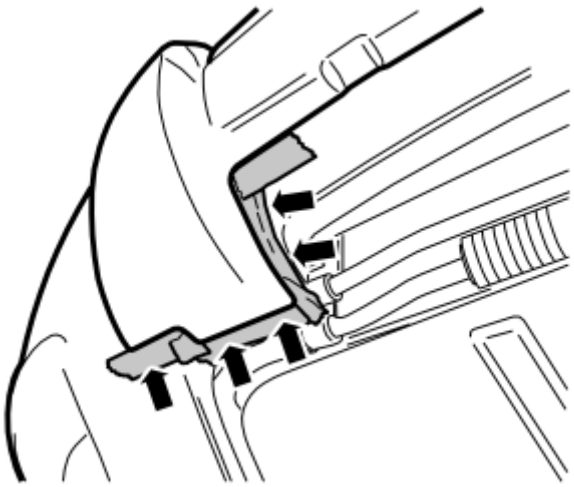

Fig. 10: Marking the Outline
Courtesy of VOLVO CARS CORPORATION

- Tape the body just in front of where the panel's mounting tape shall adhere. Tape edge to edge with the panel's edge on both sides.
- Remove the panel from the body.

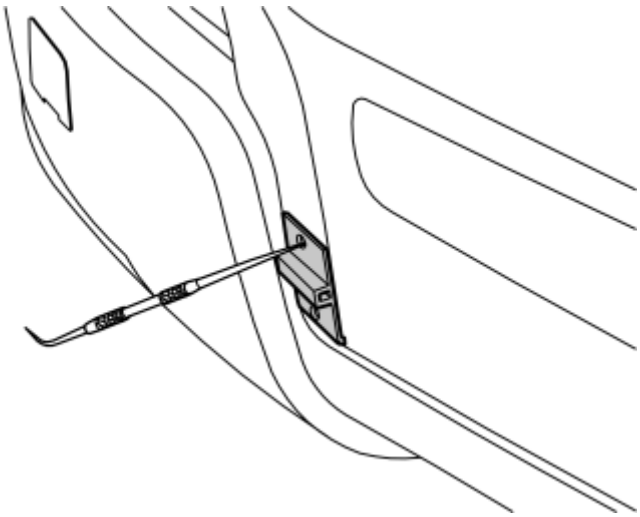

Fig. 11: Marking For Holes
Courtesy of VOLVO CARS CORPORATION

- Take the holder for one side from the kit and place it in the corner of the bumper cover panel as illustrated.
- Mark out for drilling holes in the bumper cover through the holes in the holder using a scriber.

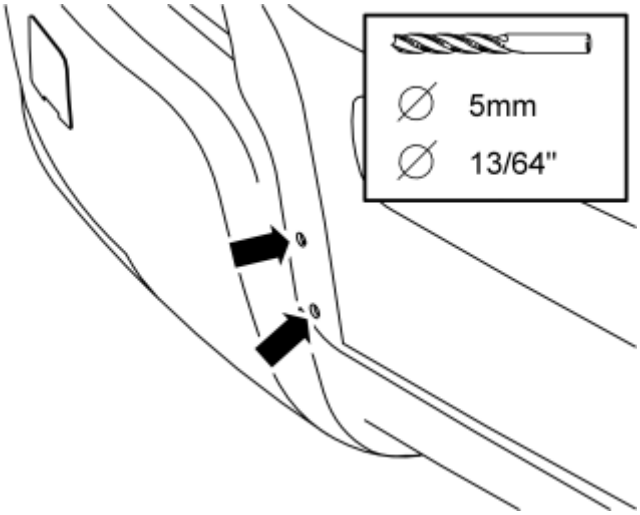

Fig. 12: Drilling Out The Two Holes
Courtesy of VOLVO CARS CORPORATION

- Take a **5 mm (13/64')** diameter drill bit and drill out the two holes.
- Even out the hole edges and remove the shavings.

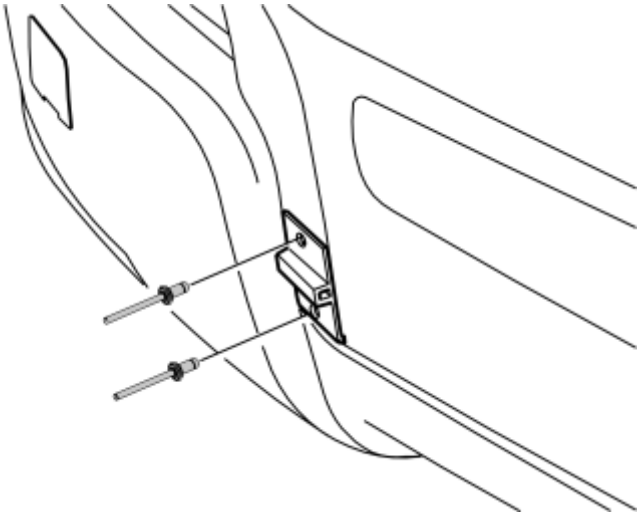

Fig. 13: Riveting The Holder
Courtesy of VOLVO CARS CORPORATION

- Take two pop rivets from the kit and rivet in the holder to the bumper cover.
- Repeat the operation with the other holder.

Illustration A

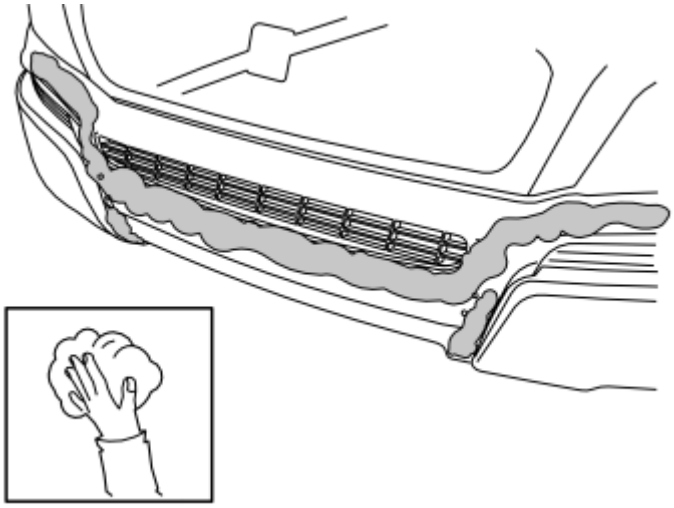

Fig. 14: Cleaning The Marked Surfaces
Courtesy of VOLVO CARS CORPORATION

- Clean the marked surfaces between the inner tape edge and the marked line using isopropanol part no. 1161721 and wipe dry. The surface to be coated with primer must be **8 - 10 mm (5/16' - 25/64')** wide, so adapt the cleaning to this.

Illustration B

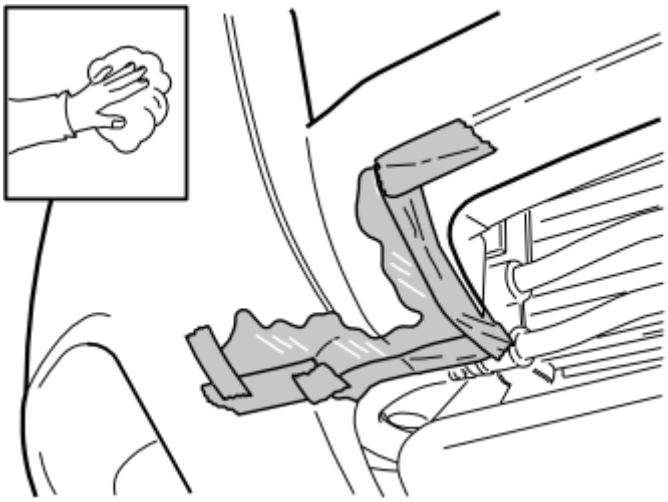

Fig. 15: Cleaning The Marked Surfaces
Courtesy of VOLVO CARS CORPORATION

- Clean the right and left-hand sides.

APPLYING PRIMER TO THE BODYWORK

Illustration A

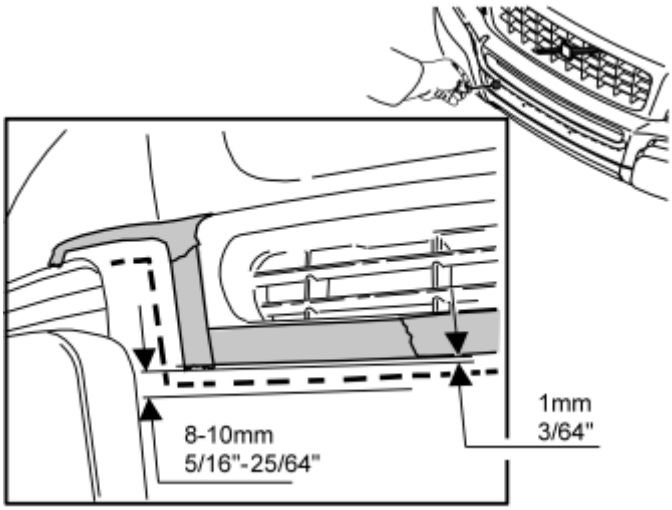

Fig. 16: Applying Primer To The Bodywork
Courtesy of VOLVO CARS CORPORATION

Illustration B

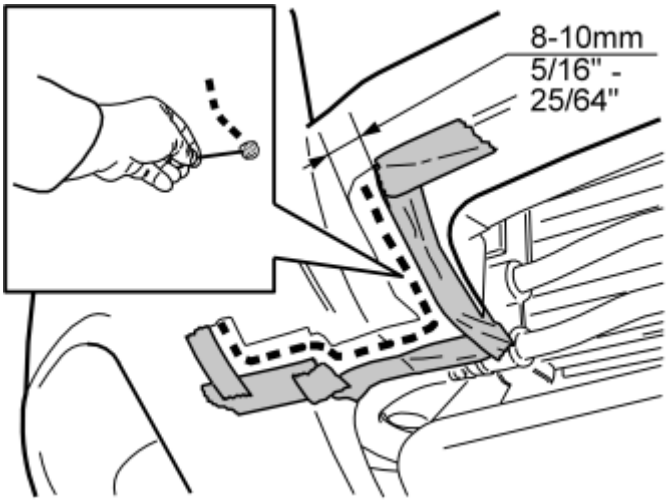

Fig. 17: Applying Primer To The Bodywork
Courtesy of VOLVO CARS CORPORATION

NOTE: **The temperature of the car must be at least 20 °C (68 °F) when installing the panel.**

CAUTION: The panel can be fitted at the earliest 15 minutes, and at the latest 3 hours, after applying the primer.

Applies to the right and left-hand sides:

- Take primer, P/N 1161727 for the painted surfaces, primer P/N 1161765 for the plastic surfaces in the lower section of the bumper cover, and cotton buds from the kit.

NOTE: **The primer must be applied to the whole car in one operation. Any spillage must be wiped up immediately.**

- Apply the primer between the inner tape edge and the marked line to a width of **8 - 10 mm (5/1 ' - 25/64')** .

  It is vital that no primer strays onto visible painted parts outside of the markings, especially at the top sides of the panels where there must be a space of approx. 1 mm between the primer and the inner tape marking.

- Carefully remove the tape when the primer has been applied.
- Allow the primer to harden for 15 minutes.

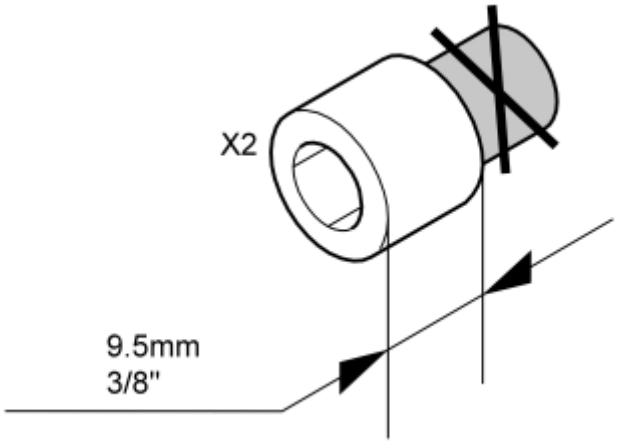

Fig. 18: Cutting The Two Spacer Sleeves
Courtesy of VOLVO CARS CORPORATION

Applies to cars with auxiliary lights

- Take the two spacer sleeves from the kit and cut them level with the larger collar so that the length is **9.5 mm (3/8')** .

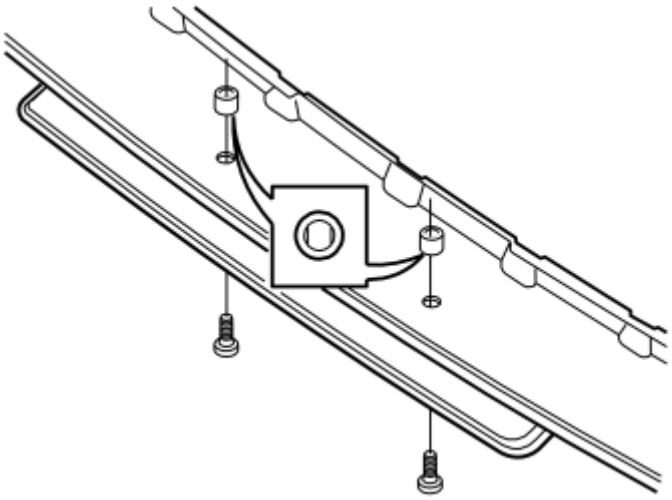

Fig. 19: Installing Two Spacer Sleeves
Courtesy of VOLVO CARS CORPORATION

- Take two spacer sleeves and new screws from the kit. Install them together with decor panel and number plate holder.

NOTE: **The end of the spacer sleeve with a constriction must be turned toward the decor panel.**

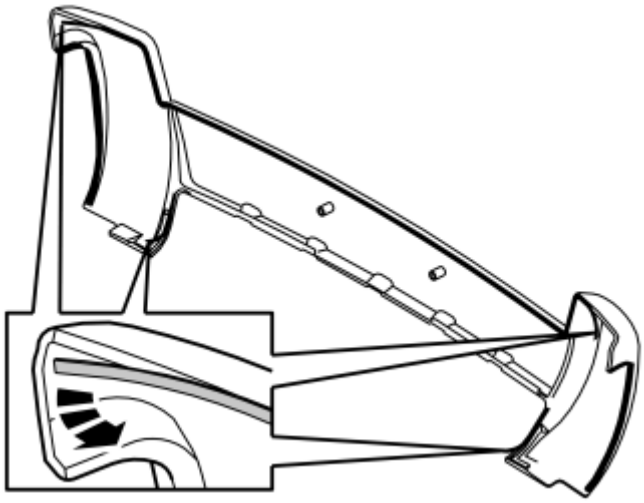

Fig. 20: Detaching The Protective Backing Slightly
Courtesy of VOLVO CARS CORPORATION

- Detach the protective backing slightly on all of the decor panel's mounting tapes.

Illustration A

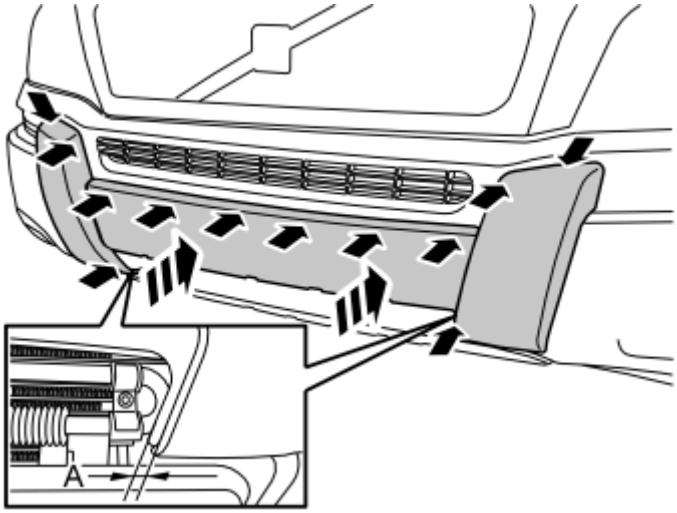

Fig. 21: Pressing The Decor Panel Into Both Holders
Courtesy of VOLVO CARS CORPORATION

- Position the decor panel carefully at the bumper cover without securing the tape.
- Screw in the screws until they have engaged the threads in the bumper cover. Make sure that the tape tabs are accessible for removing the protective backing.
- Carefully press the decor panel into both holders on the inside without securing the tape.
- Adjust so that the measurement (A) is equal on both sides.

Illustration B

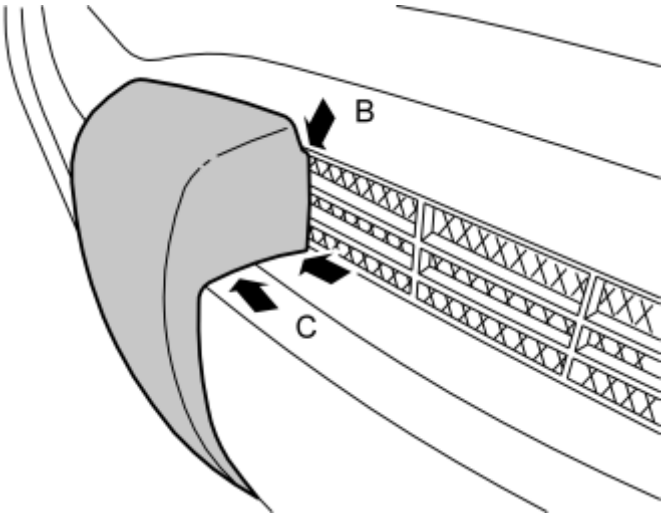

Fig. 22: Adjust The Decor Panel And Peel Away The Protective Backing
Courtesy of VOLVO CARS CORPORATION

- Adjust the decor panel on both sides in accordance with illustration B:

  No play at point B.

  There should be play at the points C between decor panel and bumper cover so that the decor panel does not hang on the bumper cover.

- Carefully tear away all of the protective backing. Press the decor panel into the bumper cover so that the tape adheres. Press firmly all the way round.
- Tighten the number plate holder firmly and reinstall the number plate.

NOTE: Leave the car indoors for 2 hours after carrying out the work. Do not wash the car for 48 hours.

FRONT BUMPERS (2007-2012)

FRONT BUMPERS

NOTE: Applies to trim panels that are only primed.

CAUTION: The trim panel is manufactured of a PUR plastic which is very malleable. If the plastic part is not adequately supported in storage or when mounted during painting then there is significant risk that the plastic will change shape. Guide pins or other protruding parts must not bear the weight of a plastic part. Lay the plastic parts with support across a wide area. The malleability will be even greater when heated. Drying in an oven must not be used in temperatures above 50 C. The best method is to allow the plastic parts to dry in the air.

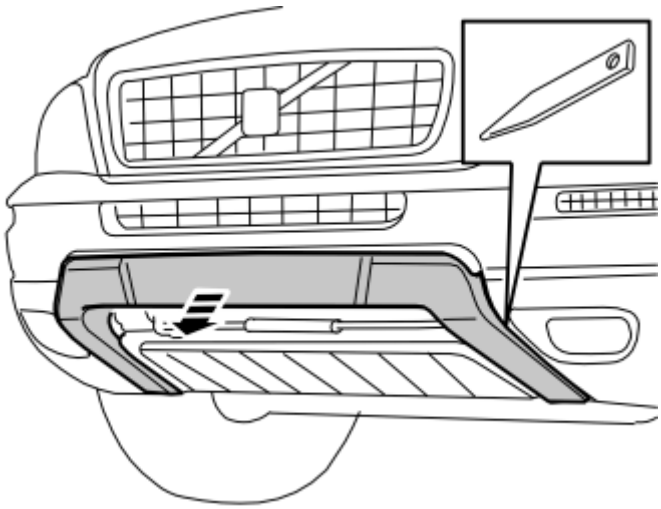

Fig. 23: Detaching The Existing Bumper
Courtesy of VOLVO CARS CORPORATION

- Detach the existing bumper by carefully prizing at the lower edge, between bumper and bumper cover, using a plastic weatherstrip tool. Following which, pull the bumper straight out so that the catches release.

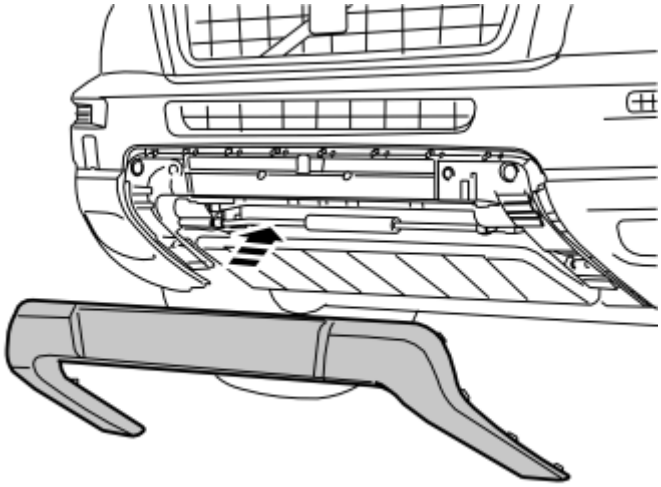

Fig. 24: Aligning The New Bumper
Courtesy of VOLVO CARS CORPORATION

- Align the new bumper from the kit and press it in.

NOTE: Make sure that all of the catches engage.

MUDGUARD FRONT (2003-2012)

MUDGUARD FRONT

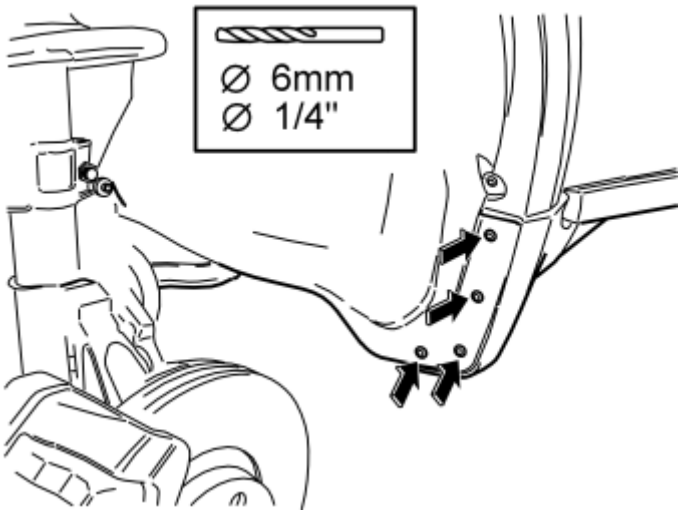

Fig. 25: Drilling Out The Four Rivets
Courtesy of VOLVO CARS CORPORATION

- Remove the front wheels
- Carefully drill out the four rivets holding the bumper liner at the rear edge of the front fender. Use a 6 mm (1/4") diameter drill bit
- Remove any rivet shavings.

NOTE: Do not damage any of the plastic components.

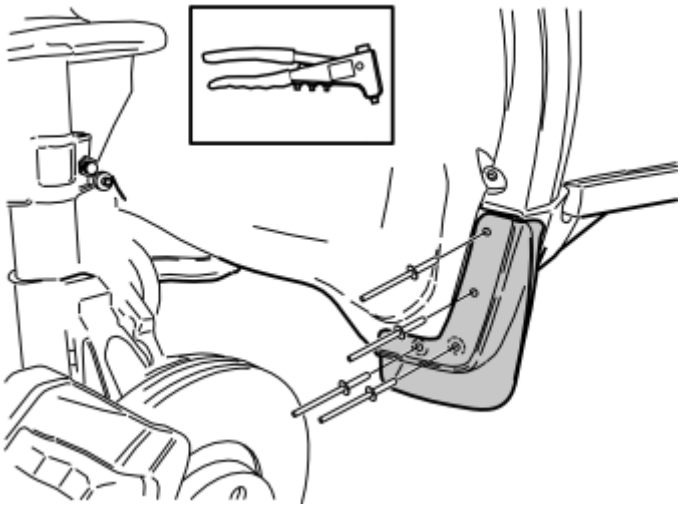

Fig. 26: Installing The Mudguard.
Courtesy of VOLVO CARS CORPORATION

- Install the mudguard. Rivet the mudguard into place in the bumper liner and the rear edge of the bumper cover
- Reinstall the front wheels. Tighten the wheels. Tighten to **140 Nm (103 lbf. ft)** .

REAR MUDGUARD (2003-2008)

REAR MUDGUARD

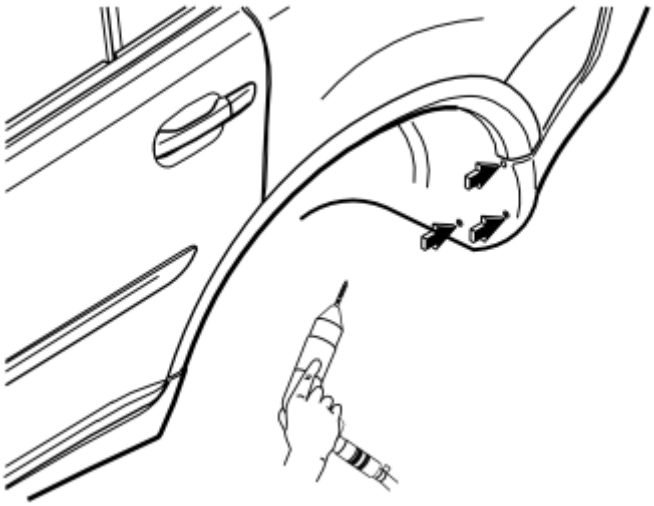

Fig. 27: Drilling Out The Rivets
Courtesy of VOLVO CARS CORPORATION

- Raise the car
- Remove the rear wheels

- Carefully drill out the rivets holding the fender liner and the bumper cover. Use a **6 mm (1/4 ")** diameter drill bit. Do not damage any of the plastic components.

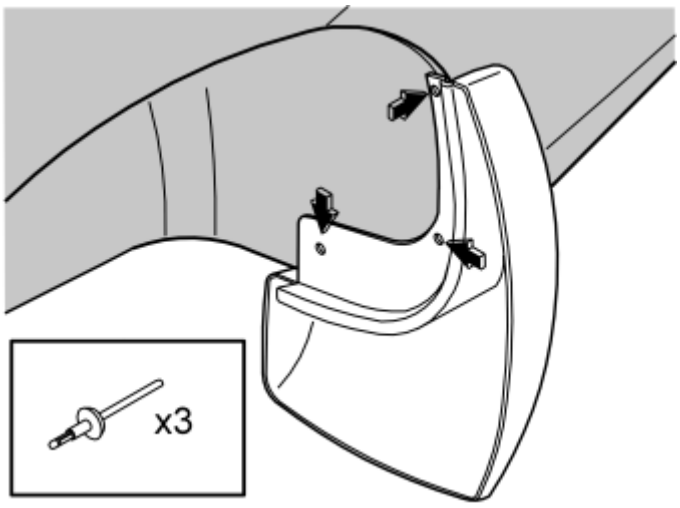

Fig. 28: Riveting The Mudguard
Courtesy of VOLVO CARS CORPORATION

- Rivet the mudguard in the fender liner and the bumper cover
- Reinstall the wheels. Tighten to **140 Nm (104 lbf. ft)**
- Lower the car.

REAR SKID PLATE (2003-2008)

REAR SKID PLATE

- Cut out the cover following the markings on the inside
- Even off the edges using a file.

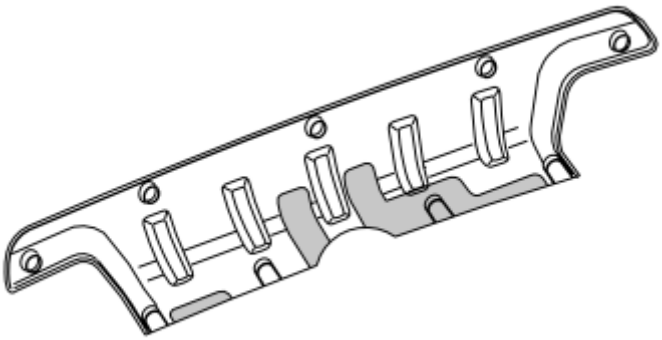

Fig. 29: Cutting The Cover Following The Markings

Courtesy of VOLVO CARS CORPORATION

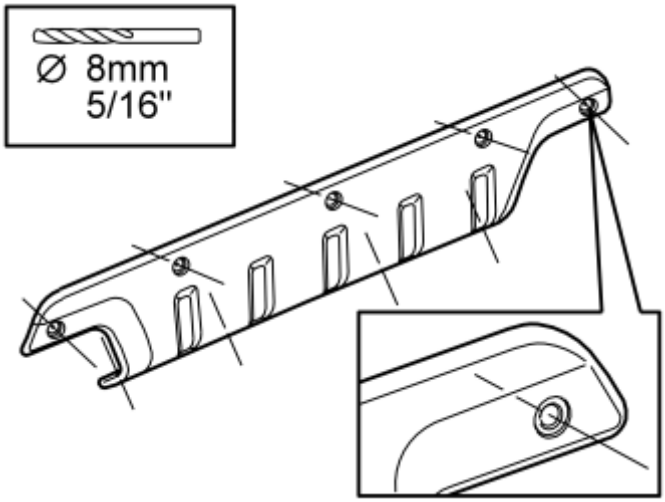

Fig. 30: Drilling Nine Countersink Markings In The Skid Plate
Courtesy of VOLVO CARS CORPORATION

- Drill out the nine countersink markings in the skid plate. Use an **8 mm (5/16")** diameter drill bit. Drill in the centre of the countersinks.
- If necessary, even off the edges using a small round file.
- Clean the section of the bumper surface that will be covered by the skid plate.

Illustration A

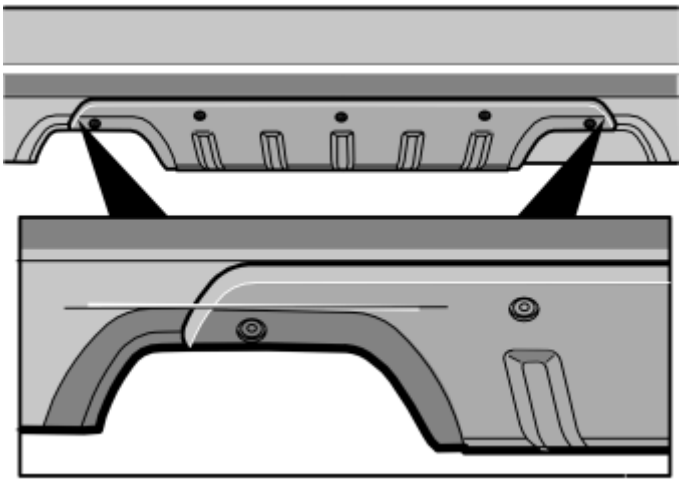

Fig. 31: Aligning The Skid Plate Symmetrically
Courtesy of VOLVO CARS CORPORATION

NOTE: Two people are required for this operation.

- Align the skid plate at the sides by holding it in position so that it is aligned with the embossing at the exhaust pipe. If the car has a towbar, the skid plate must be aligned symmetrically with the vertical mounting brackets for the towbar.
- Align the skid plate vertically so that the embossing is at the same level as the embossing on the bumper seen from immediately behind.

Illustration B

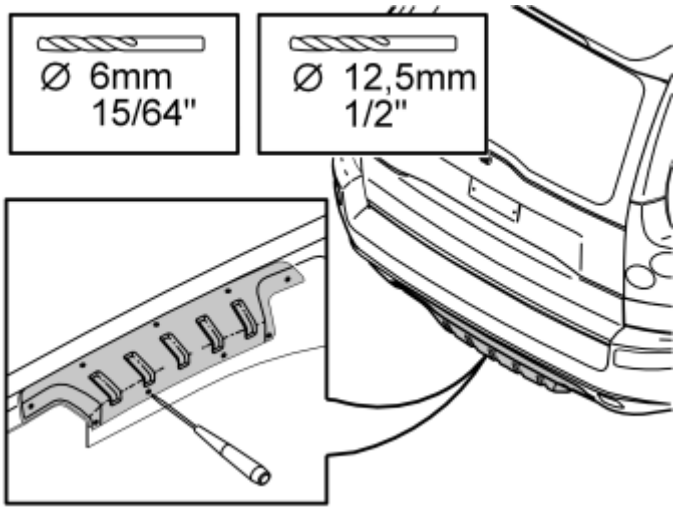

Fig. 32: Marking and Drilling Holes For The Screws
Courtesy of VOLVO CARS CORPORATION

- Accurately mark the holes for the screws by pressing through the holes in the skid plate using a pointed tool
- Remove the skid plate. First drill out the holes. Use a **6 mm (15/64 ")** diameter drill bit. Then enlarge the holes using a **12.5 mm (1/2")** diameter drill bit. Drill at right angles to the underlying surface. Do not enlarge the holes excessively or the rubber nut may not secure.
- Remove any shavings. Clean around the edges of the holes.

Illustration A

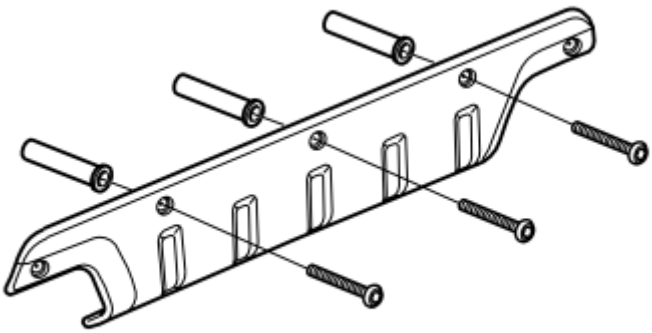

Fig. 33: Identifying Three Screws and Three Rubber Nuts
Courtesy of VOLVO CARS CORPORATION

- Take three screws and thread them through the three upper / middle holes in the skid plate. Take three rubber nuts and screw them 2-3 turns on to the three screws. The rubber nuts must be turned so that the threaded ends enter into the holes in the bumper during installation.

Illustration B

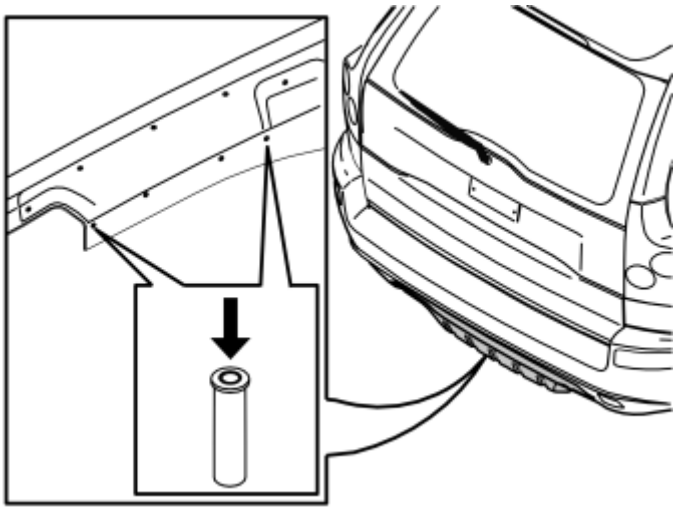

Fig. 34: Placing The Other Rubber Nuts Into Drilled Holes
Courtesy of VOLVO CARS CORPORATION

- Press the other rubber nuts into place in the drilled holes in the bumper, with the threaded ends first
- Press the skid plate all the way into place in the three upper / centre holes in the bumper
- Screw in the other screws as far as they will go
- Tighten the skid plate with the screws. Tighten to **1.5-2 Nm (1-1.5 lbf. ft.)** .

SIDE PANEL (2004-2006)

SIDE PANEL

NOTE: Install the side panel in the same way on both sides of the car.

PREPARATIONS

- Wash and degrease the car.

NOTE: It is important that the surfaces on which the side panels will be mounted are completely free of tar and other road dirt.

Remove the front wheel arch extension (secured by three hooks at the bottom, tape at the top, five clips and six rivets):

Illustration A

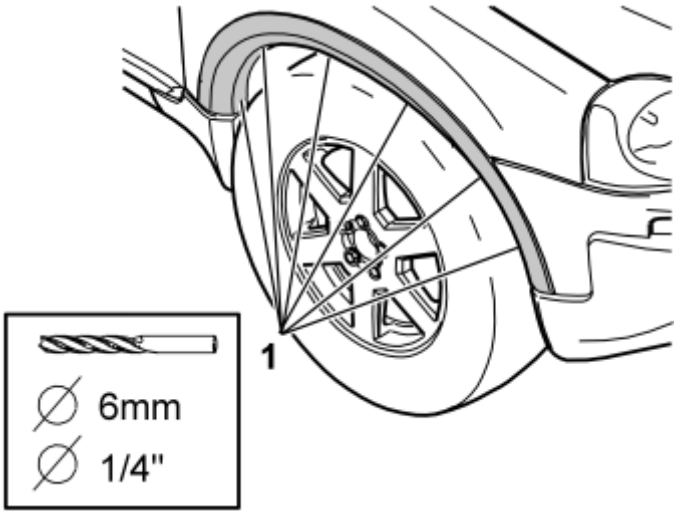

Fig. 35: Drilling Out The Six Rivets
Courtesy of VOLVO CARS CORPORATION

- Drill out the six rivets (1) holding the front wheel arch extension to the edge of the wheel arch. Use a **6 mm (1/4")** diameter drill bit.
- Remove the remains of the rivets.

Illustration B

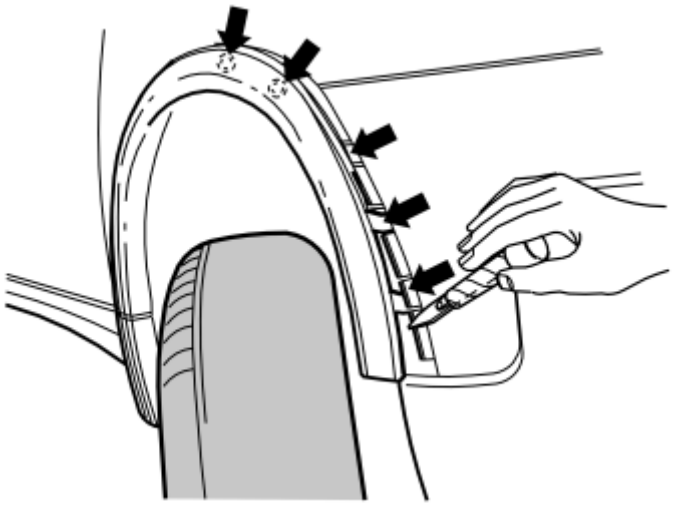

Fig. 36: Using A Plastic Weatherstrip Tool
Courtesy of VOLVO CARS CORPORATION

- Carefully pry off the front lower edge of the wheel arch extension. Use a plastic weatherstrip tool.

NOTE: Do not damage the paint work.

- Fold out the front lower edge of the wheel arch extension to expose the first mounting clip
- Insert the weatherstrip tool at the side of the clip, between the panel and the wheel arch extension. Twist the weatherstrip tool to pull the clip away from the edge of the wheel arch or so that it breaks
- Then continue in the same way until all five clips have released
- Remove the wing extension. Place the wing extension to one side. This will not be reused.

Removing the lower trim strip on the front door:

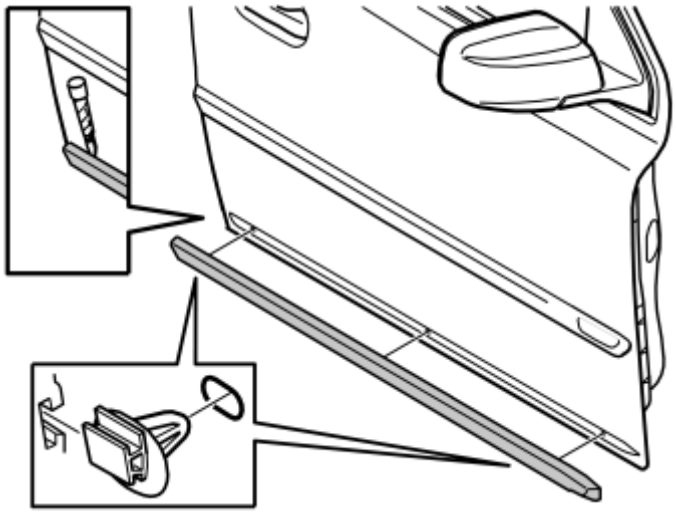

Fig. 37: Using A Plastic Weatherstrip Tool
Courtesy of VOLVO CARS CORPORATION

- Use the weatherstrip tool to pry the rear edge of the trim strip until the tape comes away at the bottom and top edges.

NOTE: Do not damage the paint work.

- Push the trim strip to one side to expose the first clip
- Remove the clip in the same way as for the clips on the wheel arch extension
- Pry the trim strip off working forwards. Remove the last clip in the same way as previously
- Place the trim strip to one side. This will not be reused.

Remove the upper trim strip on the front door:

Illustration A

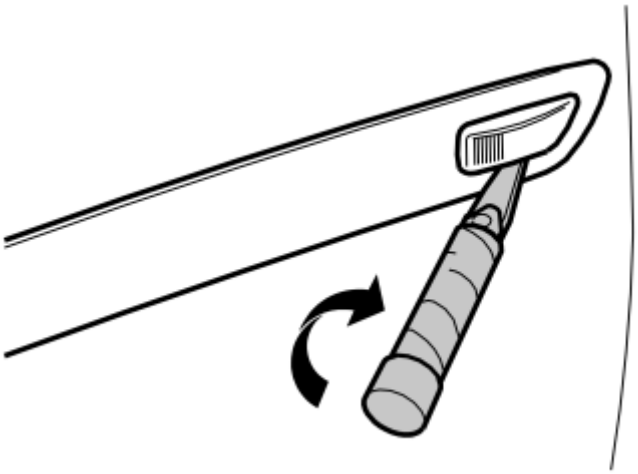

Fig. 38: Removing The Parking Lamp
Courtesy of VOLVO CARS CORPORATION

- Remove the parking lamp. Carefully pry off the bottom edge. The parking lamp has a cut out on its lower edge to make prying it off easier
- Disconnect the connector from the parking lamp.

NOTE: Ensure that the connector does not fall into the door.

Illustration B

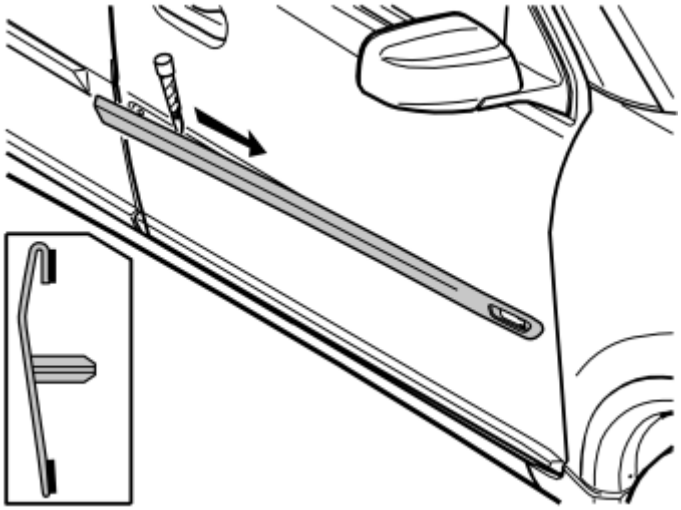

Fig. 39: Using Weatherstrip Tool To Pry The Rear Edge
Courtesy of VOLVO CARS CORPORATION

- Use the weatherstrip tool to pry the rear edge of the trim strip until the tape comes away at the bottom and top edges.

NOTE: Do not damage the paint work.

- Continue to pry off the trim strip working forwards until it has detached completely
- Place the trim strip to one side. This will not be reused.

Remove the lower trim strip on the rear door:

- Carry out the same procedure as for the front door, but start at the front of the trim strip and work backwards
- Place the trim strip to one side. This will not be reused.

Removing the upper trim strip on the rear door:

- Carry out the same procedure as for the front door, but start at the front of the trim strip and work backwards
- Place the trim strip to one side. This will not be reused.

Removing the rear wheel arch extension (secured by two hooks at the rear bottom edge, tape at the top, six clips and four rivets):

Illustration A

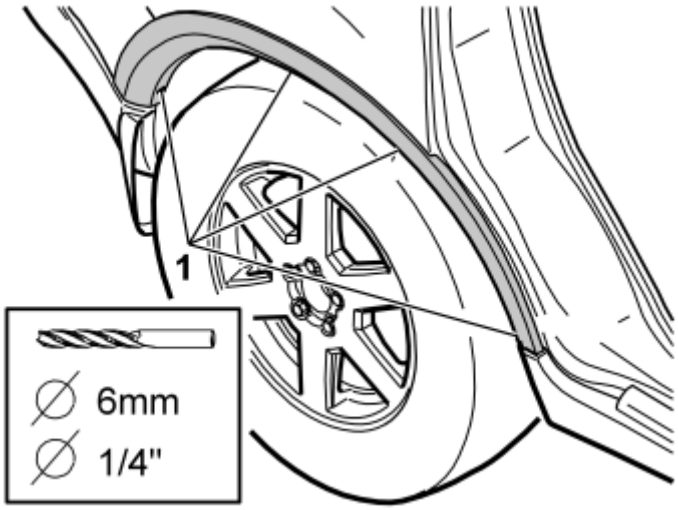

Fig. 40: Drilling Out The Four Rivets
Courtesy of VOLVO CARS CORPORATION

- Drill out the four rivets (1) holding the wheel arch extension to the edge of the wheel arch. Use a **6 mm (1/4")** diameter drill bit.
- Remove the remains of the rivets.

Illustration B

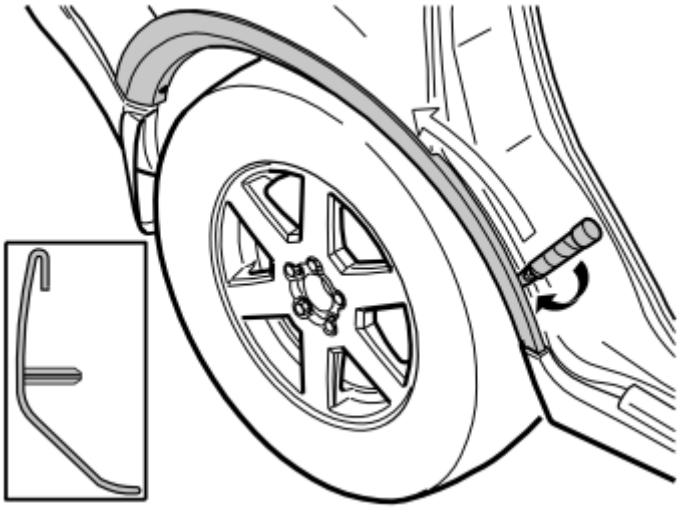

Fig. 41: Using A Plastic Weatherstrip Tool
Courtesy of VOLVO CARS CORPORATION

- Carefully pry off the front lower edge of the wheel arch extension. Use a plastic weatherstrip tool.

NOTE: Do not damage the paint work.

- Fold out the front lower edge of the wheel arch extension to expose the first mounting clip
- Insert the weatherstrip tool at the side of the clip, between the panel and the wheel arch extension. Twist

the weatherstrip tool to pull the clip away from the edge of the wheel arch or so that it breaks
- Then continue in the same way until all six clips have released
- Pull the two mounting hooks at the rear edge of the wheel arch extension off from their mountings
- Remove the wing extension. Place the wing extension to one side. This will not be reused.

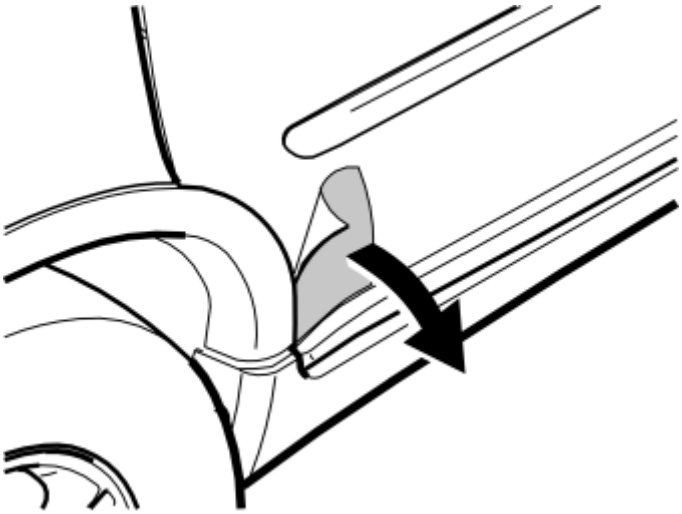

Fig. 42: Removing Stone-Chip Protection
Courtesy of VOLVO CARS CORPORATION

- Remove the stone-chip protection at the rear edge of the rear door.

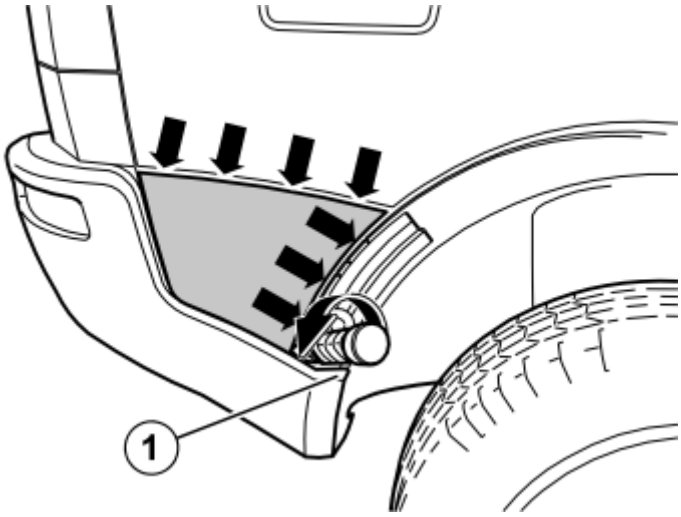

Fig. 43: Releasing The Catch In The Body
Courtesy of VOLVO CARS CORPORATION

- Grip the bumper shell at point (1) and pull it out slightly so that the weatherstrip tool can be inserted in the opening formed.
- Position and turn the weatherstrip tool in the lower edge of each mounting hook (approx. in front of the three arrows) so that they release from the catch in the body.
- Carefully pull the bumper shell end with the small painted panel in the top edge from the body starting

from the front. It is held in place by four clips.

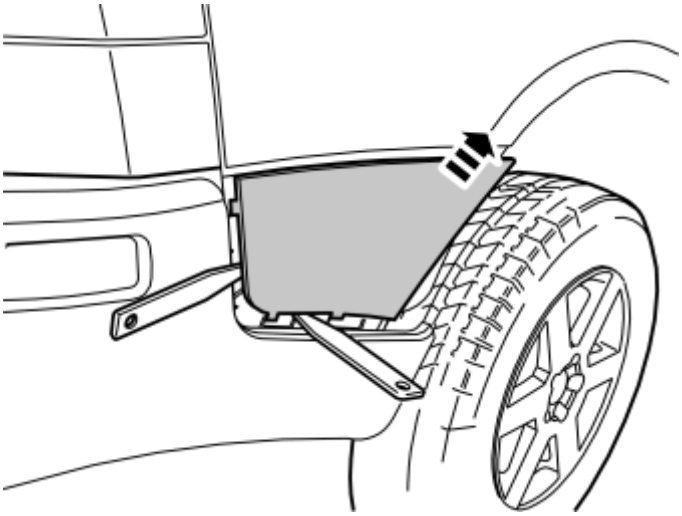

Fig. 44: Loosening The Small Painted Panel
Courtesy of VOLVO CARS CORPORATION

- Bend the small painted panel loose from the bumper shell end and then pull it off at an angle upwards. It is held in place by ten mounting hooks along its periphery. Lay it aside. It will not be used again.

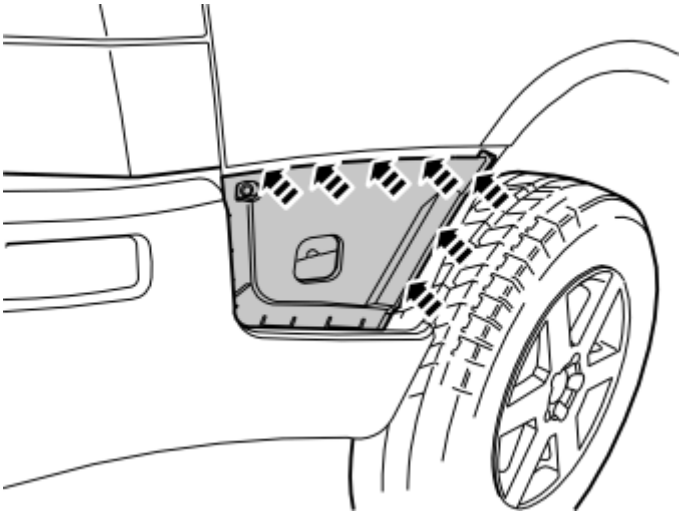

Fig. 45: Locating Bumper Shell End Into The Catches
Courtesy of VOLVO CARS CORPORATION

- Press the bumper shell end into the catches in the body. Make sure that all seven mounting hooks engage.

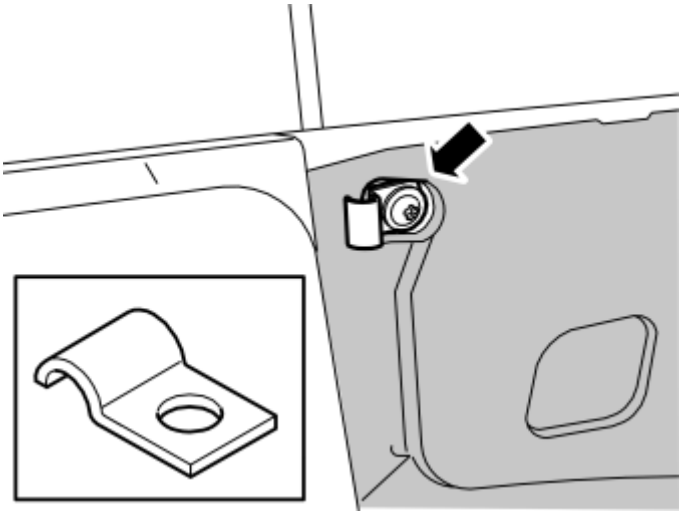

Fig. 46: Installing Clamp From The Kit
Courtesy of VOLVO CARS CORPORATION

- Remove the screw and washer from the rear edge of the bumper shell end.
- Take the clamp from the kit and tighten it with the screw and washer as illustrated. The clamp should fix the bumper shell end against the body.

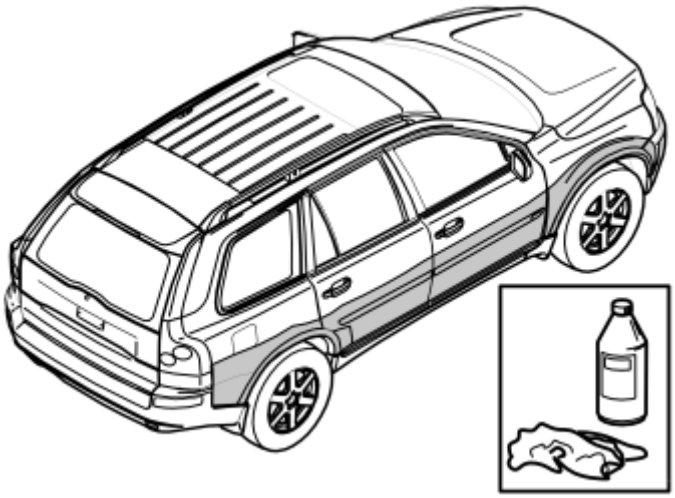

Fig. 47: Using Cleaner H (1161436)
Courtesy of VOLVO CARS CORPORATION

- Wash the entire surface of where the new decor panels and wing extensions shall sit. Use cleaner H (part no. 1161436).
- Wipe dry

MARKING THE PRIMER SURFACE ON THE BODYWORK

NOTE: Two people must help each other to mark the primer surface on the bodywork.

- Remove the side panel components from the packaging
- Check how the mounting tape is positioned on the components. This determines where the primer must be applied and where the markings must be made
- Clean the backing tape using a moist cloth. Use a mixture of 30% windscreen washer fluid and 70% water.

NOTE: There must not be any dirt or grease on the backing tape on the panel. This could contaminate the bodywork when making markings in the next step.

- Wipe dry

Test mount the panels according to points 19-22.

Illustration A

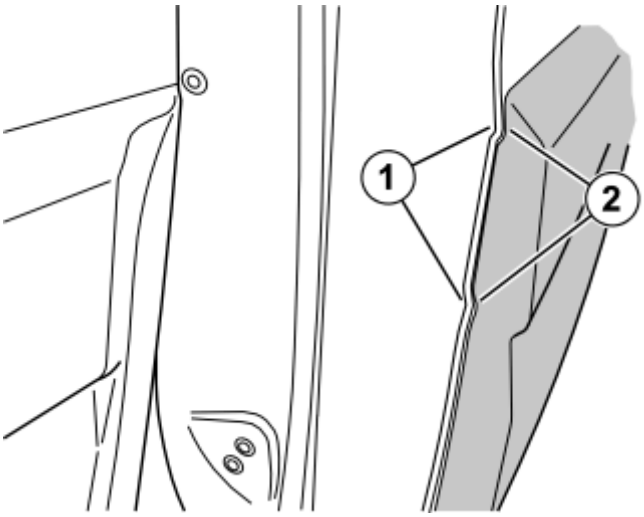

Fig. 48: Checking Alignment
Courtesy of VOLVO CARS CORPORATION

- Check that the embossings (1) in the rear edge of the front door and the corresponding rear door are in the centre of the cut out (2) in the relevant side panel (both door panels should end up at the same height horizontally).

NOTE: Leave the backing tape for the mounting tape in place. Ensure that the panels are aligned horizontally.

Illustration B

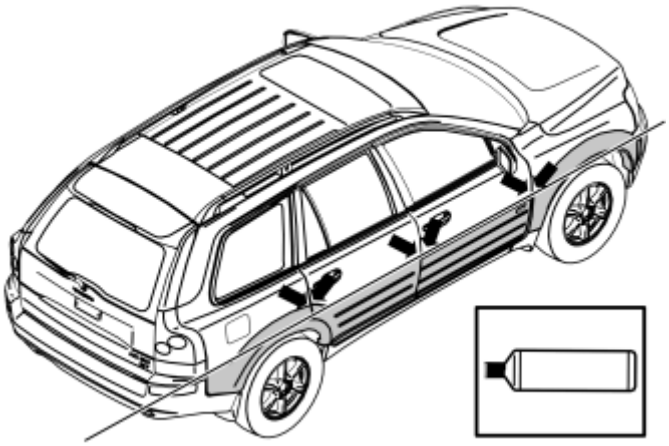

Fig. 49: Marking The Outer Contours Of The Panels
Courtesy of VOLVO CARS CORPORATION

- Mark the outer contours of the panels using a Whiteboard pen.

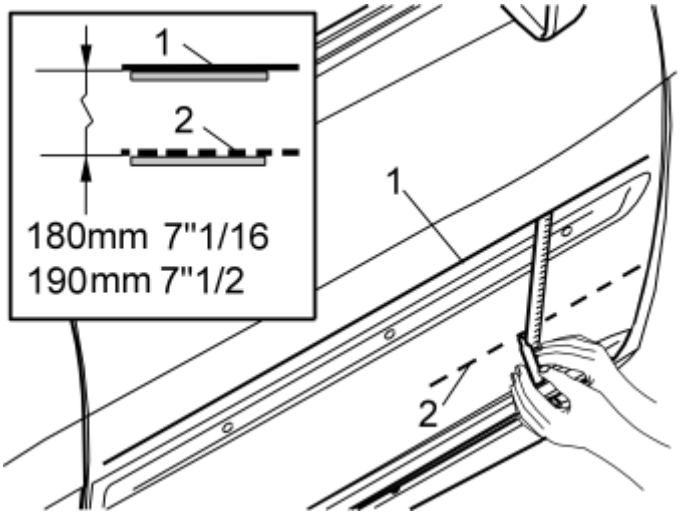

Fig. 50: Measuring From The Upper Marking (1)
Courtesy of VOLVO CARS CORPORATION

Marking the centre panel tape

- Measure from the upper marking (1) and mark out a line (2) for the centre panel tape. On the front door, the distance between the lower limits of the markings must be 180 mm (7 1/16"). On the rear door, the corresponding distance must be 190 mm (7 1/2").

INSTALLING THE SIDE PANEL

NOTE: The temperature of the car must be at least 20°C (68°F) when installing the side panels.

NOTE: Two people must help each other to align and secure the side panels.

NOTE: The panels must be installed according to the markings.

APPLYING PRIMER TO THE BODYWORK

CAUTION: The side panels must be installed at the earliest 15 minutes, and at the latest 3 hours, after applying the primer.

- Take the primer (part no. 1161727) and cotton buds from the kit.

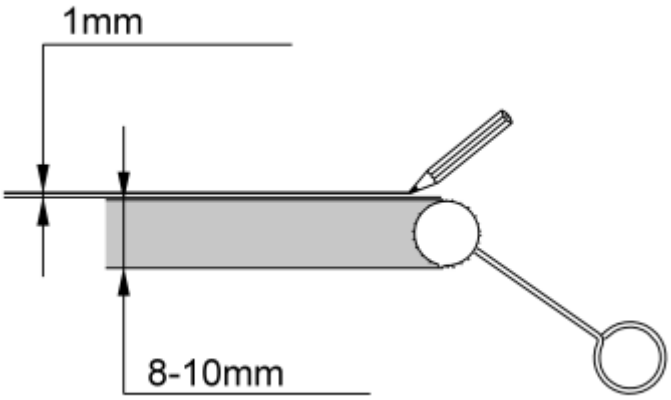

Fig. 51: Applying Primer To The Bodywork
Courtesy of VOLVO CARS CORPORATION

NOTE: The primer must be applied to the whole car in one operation. Any spillage must be wiped up immediately.

- Apply the primer inside the outer contours of the panels. It is important that nothing goes outside the markings, particularly on the upper sides of the panels, where there should be a space of approximately 1 mm between the primer and the marking.
- Apply the primer immediately below the markings for the central mounting tape for the panel
- Allow the primer to harden for 15 minutes.

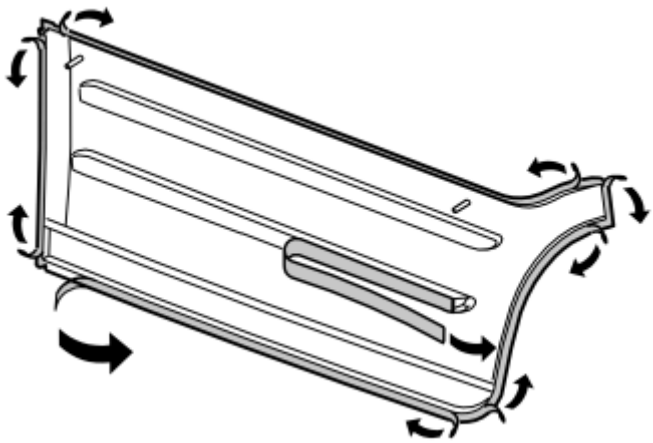

Fig. 52: Removing The Tape Backing
Courtesy of VOLVO CARS CORPORATION

Applies to all components

- Remove the backing tape at each corner of the panel.

Applies to the door panels

- Remove the backing tape from the middle of the panel.

SECURING THE FRONT WING SIDE PANEL

Illustration A

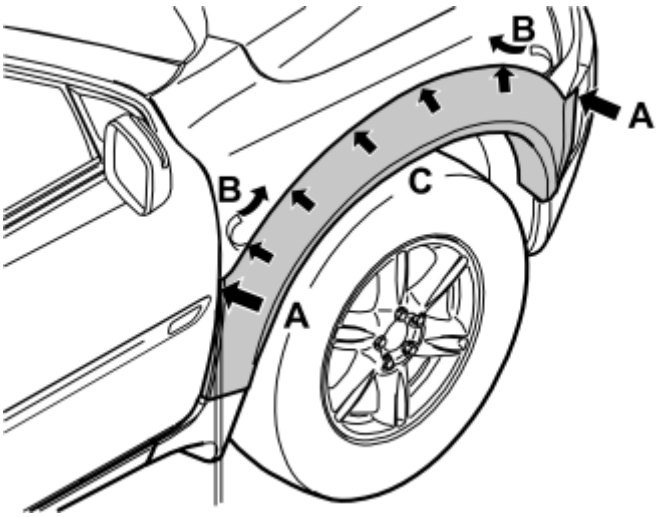

Fig. 53: Adjust The Panel Into Place
Courtesy of VOLVO CARS CORPORATION

Carried out by two people, one at the front and one at the rear of the side panel:

- Carefully insert the panel locating pins in the holes in the edges of the wing
- Move the panel as close as possible to the wing without the tape on the corners securing. Adjust the panel. There must be parallel vertical play between the panel and the rear edge of the front wing
- Press the panel into place at the upper corners (A). Carefully remove the upper backing tape (B) by pulling it off from both sides at the same time.

NOTE: Ensure that the backing tape does not come off the reverse of the panel as the panel may lie firmly against the front wing.

- Press the upper section of the side panel (C) into place on the front wing so that it is firmly secure.

Illustration B

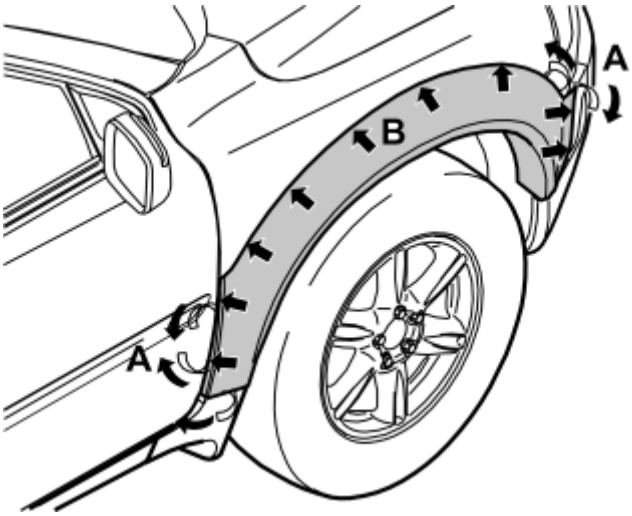

Fig. 54: Remove Tape Backing and Press The Panel Into Place
Courtesy of VOLVO CARS CORPORATION

- Remove the backing tape on the sides (A) of the panel.

NOTE: Ensure that the backing tape does not come off on the reverse of the panel.

- Press the panel into place on the front wing at every point that there is tape (C)
- Apply a pressure of **1-2 kg/cm^2 (14-28 lbf/in^2)** around the entire panel so that the tape sticks firmly.

SECURING THE REAR WING SIDE PANEL

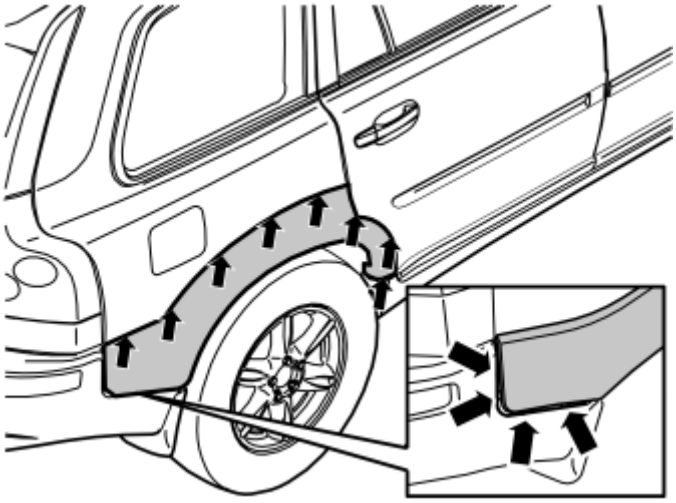

Fig. 55: Identifying Four Mounting Hooks and Locating Pins
Courtesy of VOLVO CARS CORPORATION

Carried out by two people, one at the front and one at the rear of the side panel:

- Insert the four mounting hooks in the rear edge of the side panel in the corresponding recess in the bumper shell end.
- Bend the panel in toward the rear wing while making sure that each side panel locating pin fits in the corresponding hole in the edge of the wheel arch.
- Follow the same procedure for the front wing. The front edge of this panel, however, will not need adjustment as the position is fixed against the door sill.

SECURING THE SIDE PANEL FOR THE REAR DOOR

Illustration A

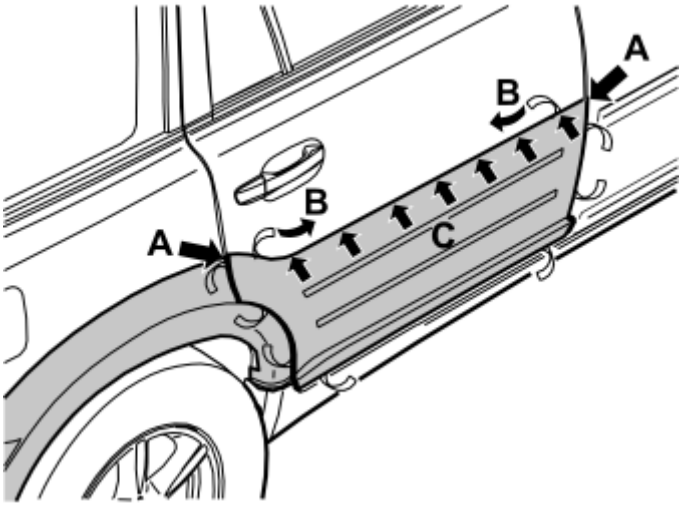

Fig. 56: Inserting Locating Pins
Courtesy of VOLVO CARS CORPORATION

Carried out by two people, one at the front and one at the rear of the side panel:

- Carefully insert the panel locating pins in the holes in the door
- Move the panel as close as possible to the door without the tape on the corners securing. Ensure that the rear upper corner of the panel follows the same line as the side panel for the rear wing (there is little clearance between the locating pins and the holes in the side of the door)
- Press the panel into place at the upper corners (A). Carefully remove the upper backing tape (B) by pulling it off from both sides at the same time.

NOTE: Ensure that the backing tape does not come off on the reverse of the panel as the panel may be firmly attached to the door.

- Press the upper section of the panel (C) into place on the door. Press the panel so that it is firmly secured.

Illustration B

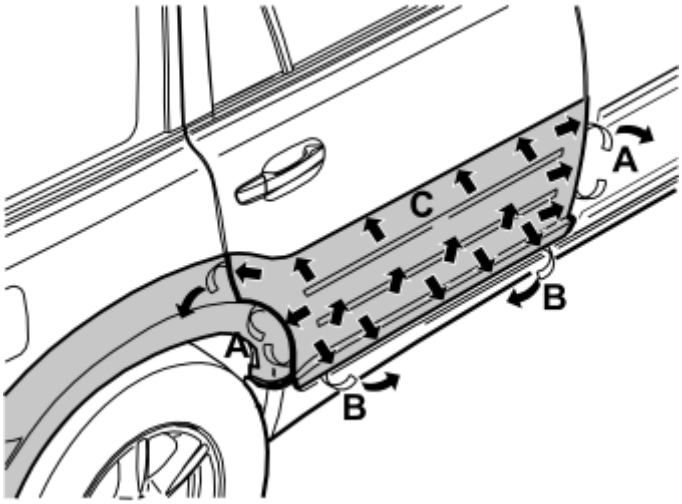

Fig. 57: Removing The Backing Tape, Apply Pressure
Courtesy of VOLVO CARS CORPORATION

- Remove the backing tape on the sides (A) and lower edge (B) of the panel.

NOTE: Ensure that the backing tape does not come off on the reverse of the panel.

- Press the panel into place on the door at every point where there is tape (C)
- Apply a pressure of **1-2 kg/cm^2 (14-28 lbf/in^2)** around the entire panel so that the tape sticks firmly.

SECURING THE FRONT DOOR SIDE PANEL

Illustration A

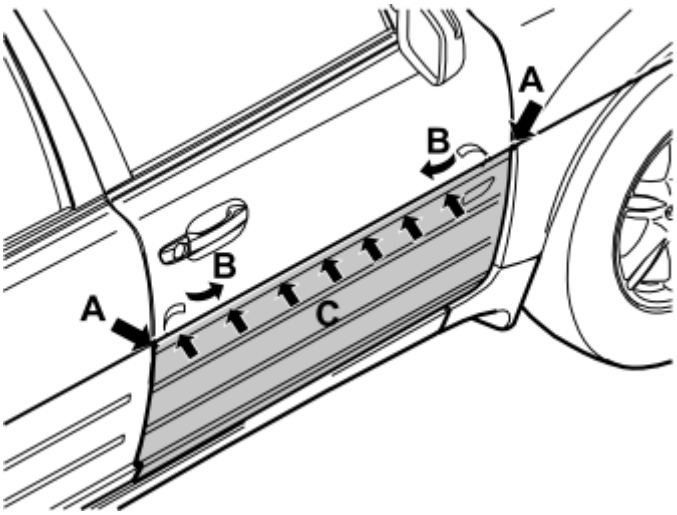

Fig. 58: Inserting Locating Pins
Courtesy of VOLVO CARS CORPORATION

Illustration B

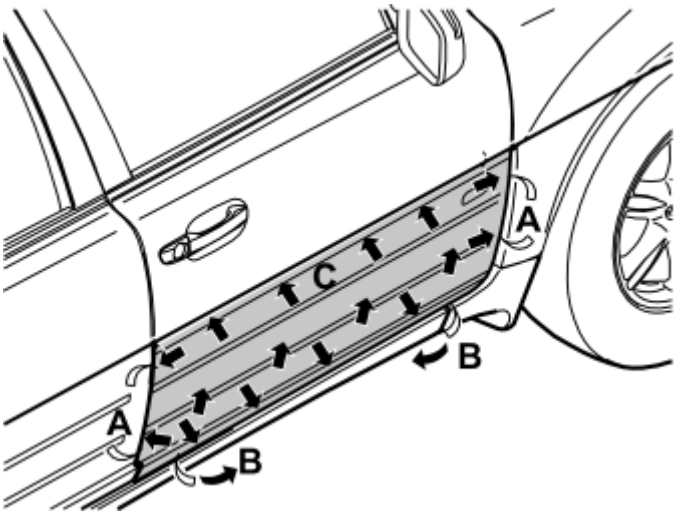

Fig. 59: Removing The Backing Tape, Apply Pressure
Courtesy of VOLVO CARS CORPORATION

- Carry out the same procedure as for the rear door. Ensure that the rear edge of the panel is parallel with the rear edge of the door. In addition, adjust the height of the panel so that the top is in line with the panels for the rear door and the front wing.

FINISHING WORK

- Remove the Whiteboard ink from the car. Use a rag.
- Reconnect the connector to the lamp
- Press the parking lamp into the hole in the side panel. Ensure that the parking lamp clips into place correctly.

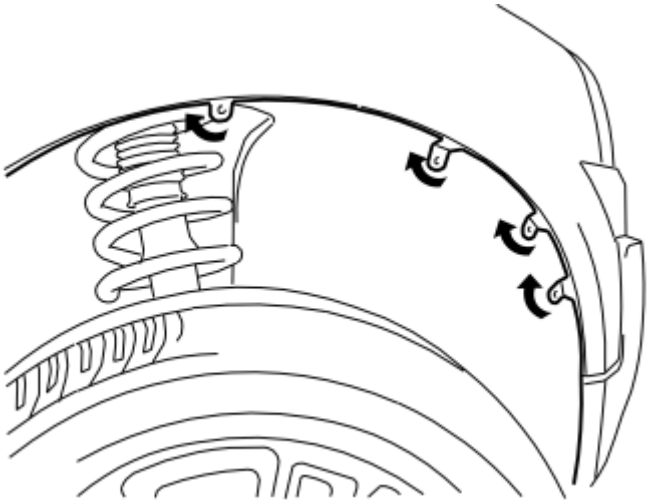

Fig. 60: Folding In The Mounting Lugs
Courtesy of VOLVO CARS CORPORATION

- Fold in the mounting lugs on the front wing side panel so that the holes in the mounting lugs align with the holes in the wing liner.

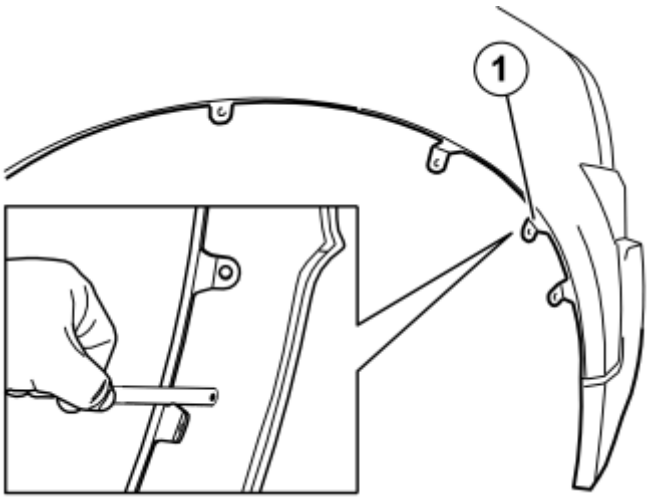

Fig. 61: Cutting Holes For The Mounting Lug (1
Courtesy of VOLVO CARS CORPORATION

Applies to cars missing a hole in the inner wing for the mounting lug for the panel

- Certain cars do not have holes for the mounting lug (1) on the left and right-hand sides. In these cases the holes must be carefully cut. Use a knife or a hacksaw blade
- Fold the mounting lug in (the second mounting lug in the front edge of the panel counted from underneath) and saw off at the crack which forms
- Smooth off the edges using a file
- Repeat the operation on the other panel.

Illustration A shows the rear wheel

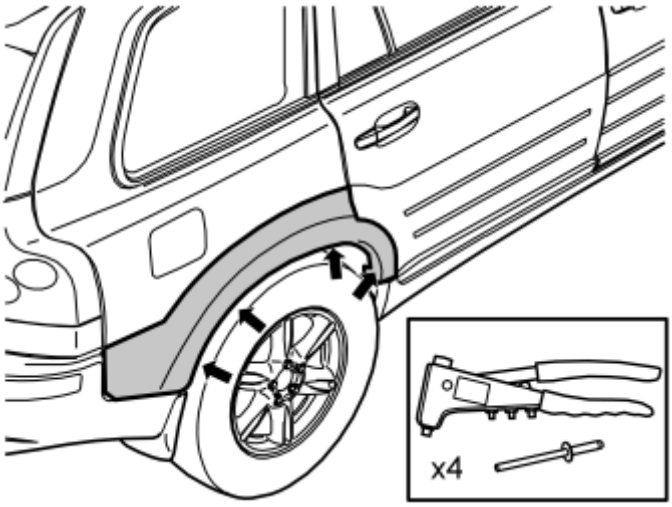

Fig. 62: Riveting Edges Of The Wheel Arch Extensions
Courtesy of VOLVO CARS CORPORATION

Illustration B shows the front wheel

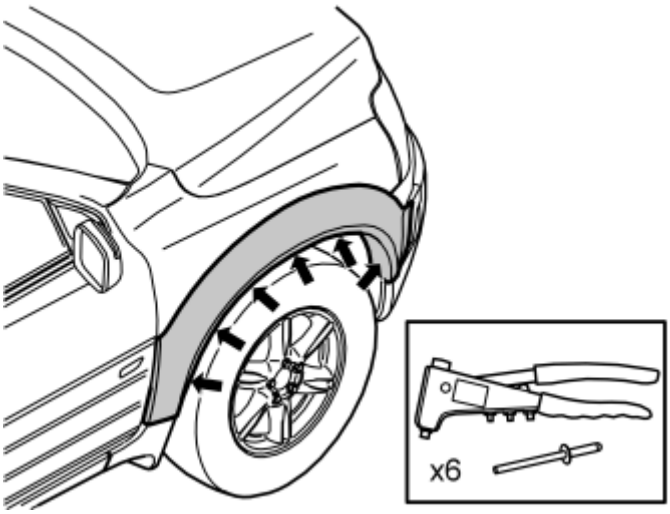

Fig. 63: Riveting Edges Of The Wheel Arch Extensions
Courtesy of VOLVO CARS CORPORATION

- Rivet the edges of the wheel arch extensions to the wing liner along the edges of the wheel arches. Do this on both the front and rear wheels. Use the rivets from the kit.

Illustration A shows the front edge of the rear door

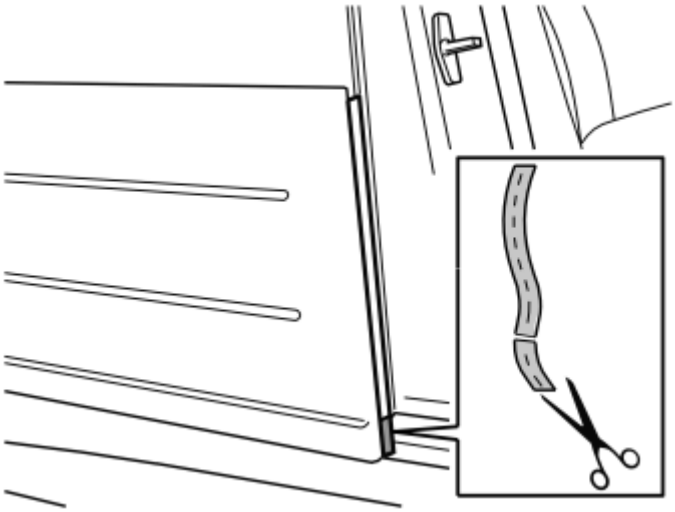

Fig. 64: Applying Tape Over a Visible Gap.
Courtesy of VOLVO CARS CORPORATION

Illustration B shows the rear edge of the front door

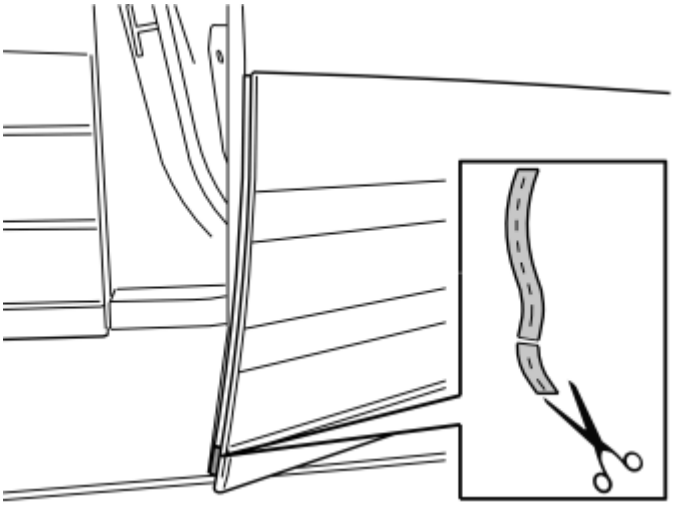

Fig. 65: Applying Tape Over a Visible Gap.
Courtesy of VOLVO CARS CORPORATION

- If there is a visible gap between the black painted lower section of the side panel and the front edge of the rear door or the rear edge of the front door: cut the supplied tape to the same length as the lower gap. Apply the tape.

- The car must be kept dry and at a temperature of at least 15°C (59°F) for 2 hours
- Do not wash the car for 72 hours after installing the side panel.

WHEEL ARCH EXTENSIONS (2003-2009)

WHEEL ARCH EXTENSIONS

REMOVAL

NOTE: During installation the underlying surface must maintain a temperature of at least +20°C (68°F).

REMOVING THE FRONT WHEEL ARCH EXTENSIONS

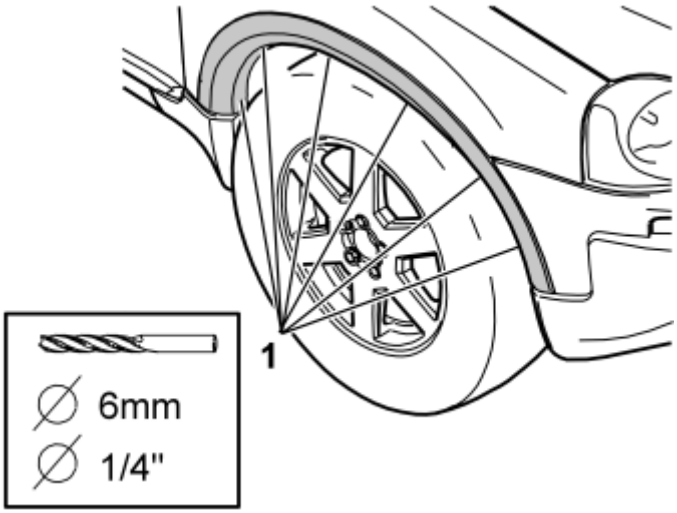

Fig. 66: Drilling Out The Six Rivets
Courtesy of VOLVO CARS CORPORATION

- The front wheel arch extensions are secured with three catches in the lower edge, tape in the top edge, five clips and six pop rivets.

  Drill out the six pop rivets (1) holding the front wheel arch extension to the edge of the wheel arch. Use a **6 mm (1/4")** diameter drill bit.

- Remove the remains of the rivets.

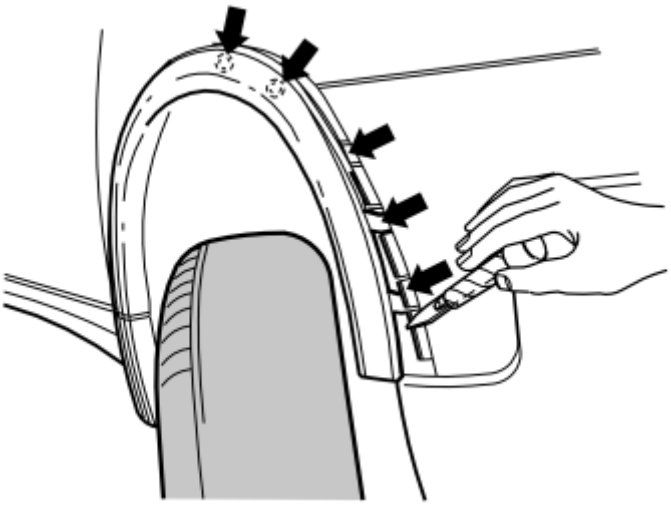

Fig. 67: Using A Plastic Weatherstrip Tool

Courtesy of VOLVO CARS CORPORATION

- Carefully pry off the front lower edge of the wheel arch extension. Use a plastic weatherstrip tool.

  NOTE: Do not damage the paint work.

- Fold out the front lower edge of the wheel arch extension to expose the first mounting clip.
- Insert the weatherstrip tool at the side of the clip, between the panel and the wheel arch extension. Twist the weatherstrip tool to pull the clip away from the edge of the wheel arch or so that it breaks.
- Then continue in the same way until all five clips have released.
- Remove the wing extension. Place the wing extension to one side. This will not be reused.

REMOVING THE REAR WHEEL ARCH EXTENSIONS

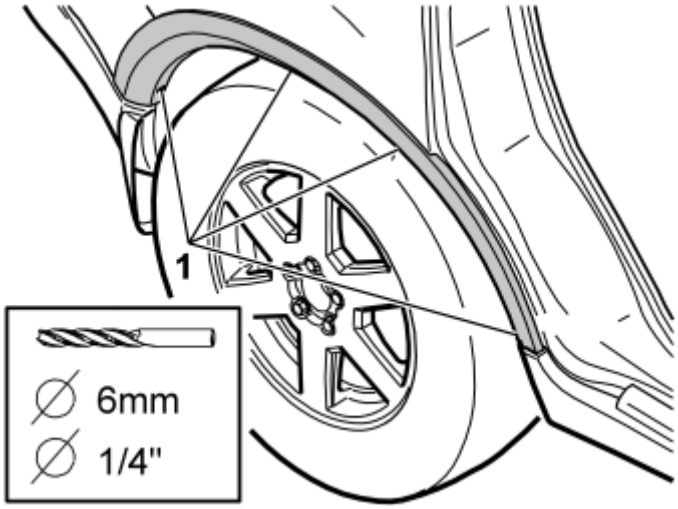

Fig. 68: Drilling Out The Four Rivets
Courtesy of VOLVO CARS CORPORATION

- The rear wheel arch extensions are secured with two catches in the rear lower edge, tape in the top edge, six clips and four pop rivets.

  Drill out the four pop rivets (1) holding the wheel arch extension to the edge of the wheel arch. Use a **6 mm (1/4")** diameter drill bit.

- Remove the remains of the rivets.

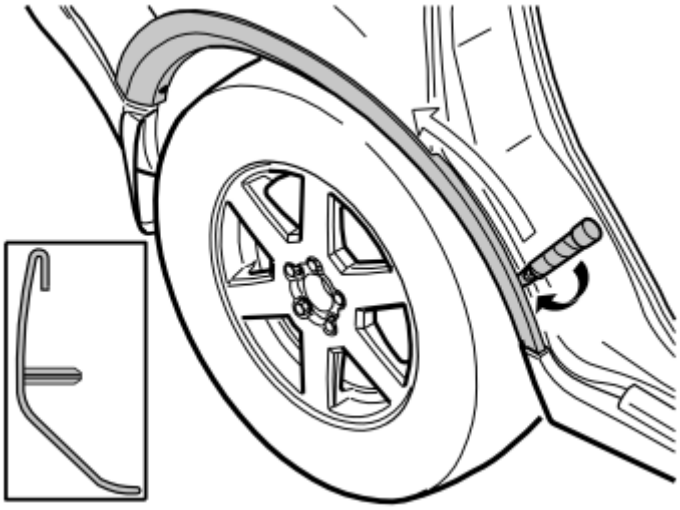

Fig. 69: Using A Plastic Weatherstrip Tool
Courtesy of VOLVO CARS CORPORATION

- Carefully pry off the front lower edge of the wheel arch extension. Use a plastic weatherstrip tool.

NOTE: Do not damage the paint work.

- Fold out the front lower edge of the wheel arch extension to expose the first mounting clip.
- Insert the weatherstrip tool at the side of the clip, between the panel and the wheel arch extension. Twist the weatherstrip tool to pull the clip away from the edge of the wheel arch or so that it breaks.
- Then continue in the same way until all six clips have released.
- Pull the two mounting hooks at the rear edge of the wheel arch extension off from their mountings.
- Remove the wing extension. Place the wing extension to one side. This will not be reused.

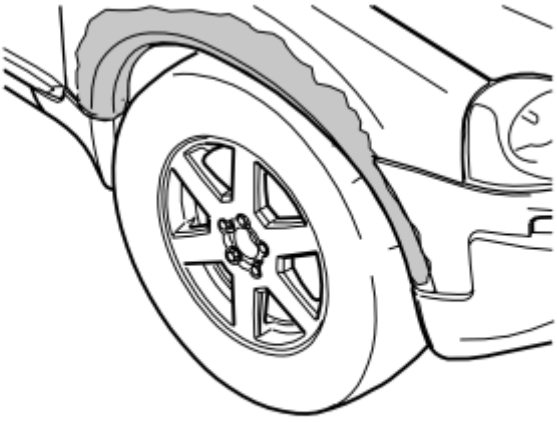

Fig. 70: Cleaning The Marked Surface
Courtesy of VOLVO CARS CORPORATION

- Clean the marked surface around the edge of the wheel arch where the tape shall be affixed using

isopropanol P/N 1161721. Wipe dry.

- Clean the corresponding surface on the edge of the wheel arch for the rear wheel.
- Repeat steps for the other side.

INSTALLATION

APPLYING THE PRIMER TO THE BODY

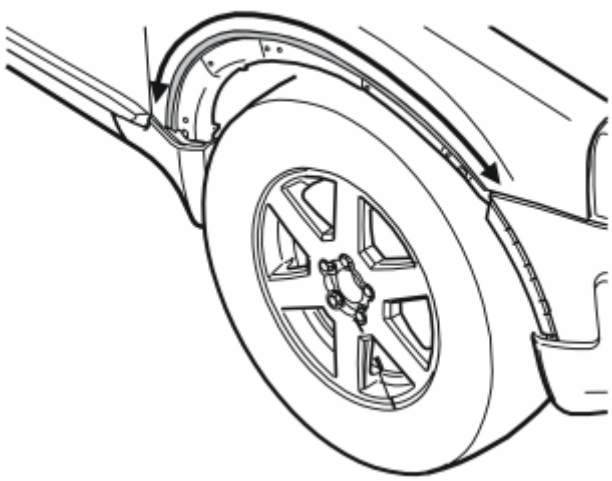

Fig. 71: Applying The Primer To The Body
Courtesy of VOLVO CARS CORPORATION

CAUTION: The wheel arch extensions can be installed at the earliest 15 minutes or at the latest 3 hours after application.

- Take the primer (P/N 1161727) and cotton buds from the kit.

NOTE: The primer must be applied to the car in one operation, and any spillage must be wiped up immediately.

- Apply primer to the surfaces where the tape shall adhere. Make sure that there is no primer outside of the surfaces to which the tape shall adhere.
- Allow the primer to harden for 15 minutes.

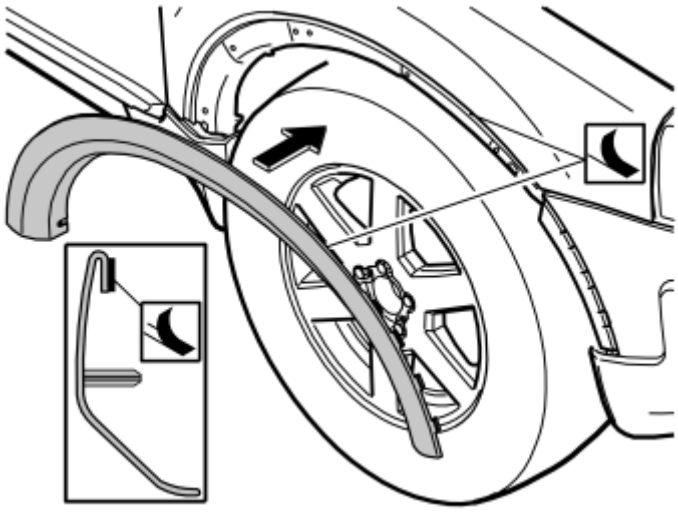

Fig. 72: Inserting Guide Pins
Courtesy of VOLVO CARS CORPORATION

- Detach the backing from the mounting tape at the ends of the new wheel arch extension to the front wing in order to facilitate removal when the wheel arch extension is installed.
- Insert the wheel arch extension guide pins in the corresponding holes around the edge of the wheel arch.

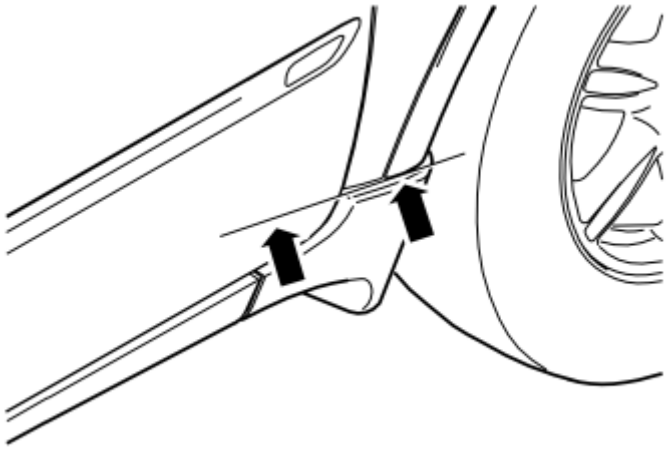

Fig. 73: Checking The Lower Edge
Courtesy of VOLVO CARS CORPORATION

- Check that the lower edge of the front wing's rear edge is level with the corresponding edge of the wheel arch extension.

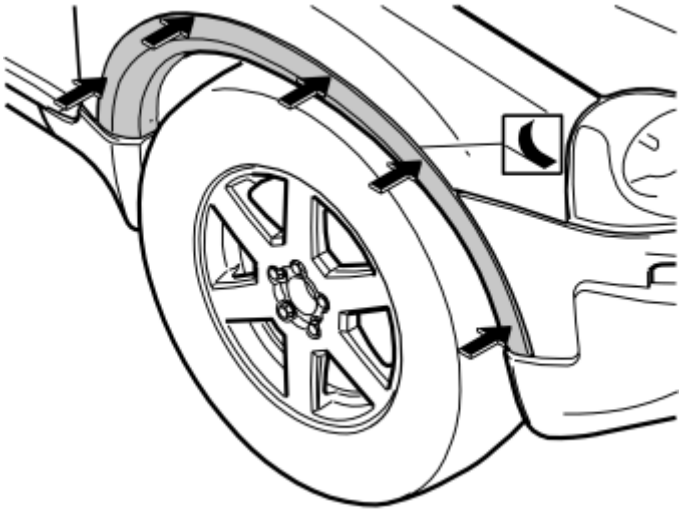

Fig. 74: Removing The Remainder Of The Tape Backing And Pressing In
Courtesy of VOLVO CARS CORPORATION

- Press in the ends of the wheel arch extension where the tape was detached.
- Remove the remainder of the backing and press in the wheel arch extension so that the tape is firmly applied. At the same time make sure that the upper edge of the wheel arch extension follows the edge of the wing.

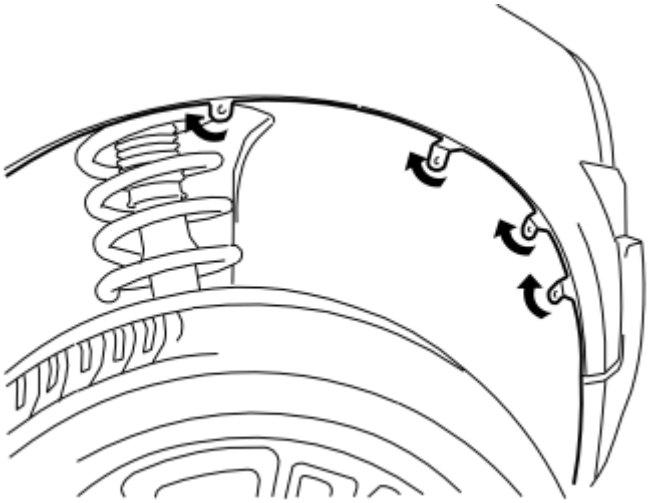

Fig. 75: Folding In The Mounting Lugs
Courtesy of VOLVO CARS CORPORATION

- Fold in the mounting lugs on the front wing's wheel arch extension so that the holes in the mounting lugs align with the holes in the wing liner.

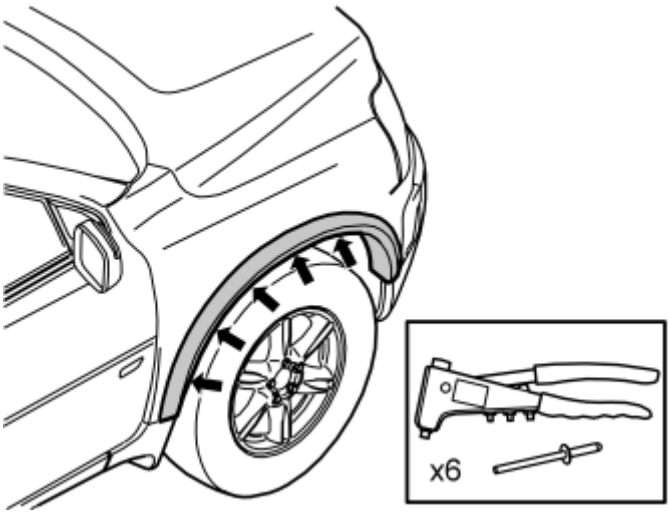

Fig. 76: Riveting The Wheel Arch Extension
Courtesy of VOLVO CARS CORPORATION

- Take five pop rivets from the kit and securely rivet the wheel arch extension with the wing liner to the edge of the wheel arch.

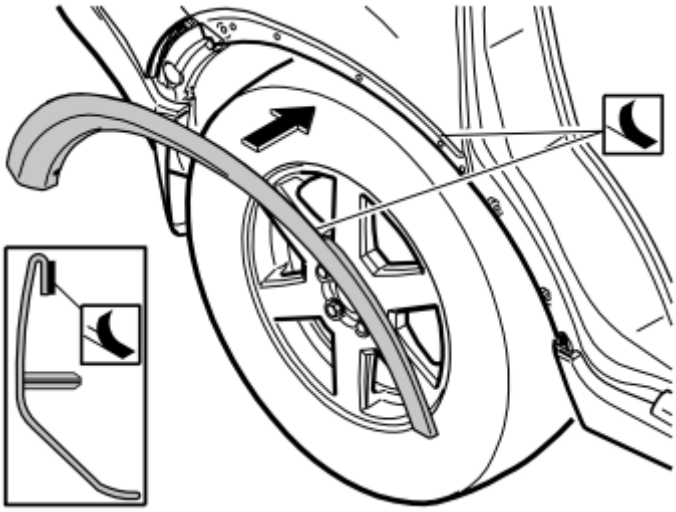

Fig. 77: Removing Ends Of The Tape Backing
Courtesy of VOLVO CARS CORPORATION

- Detach the backing from the mounting tape at the ends of the wheel arch extension to the rear wing in order to facilitate removal when the wheel arch extension is installed.

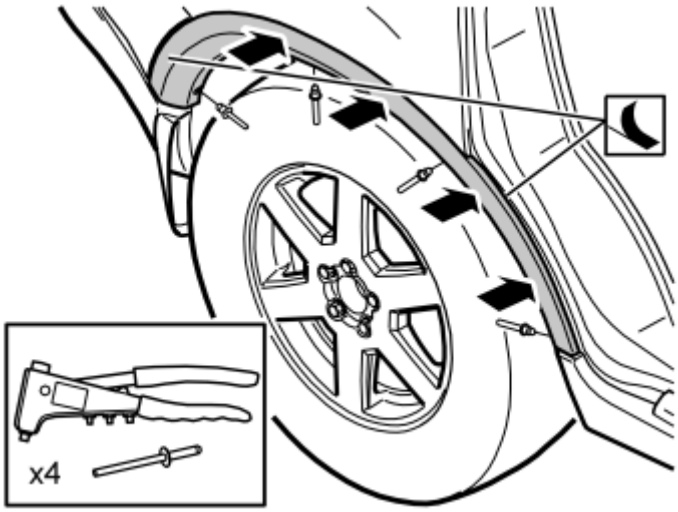

Fig. 78: Removing The Remainder Of The Tape Backing And Pressing In
Courtesy of VOLVO CARS CORPORATION

- Press in the ends of the wheel arch extension where the tape was detached.
- Remove the remainder of the backing and press in the wheel arch extension so that the tape is firmly applied. At the same time make sure that the upper edge of the wheel arch extension follows the edge of the wing.
- Take four pop rivets from the kit and securely rivet the wheel arch extension to the edge of the wheel arch.
- Repeat steps for the other side.

NOTE: Keep the car indoors for 2 hours after the work has been completed and do not wash the car for 48 hours.

BODY KIT (2007-2010)

BODY KIT

NOTE: Accessories such as parking assistance, front/rear and tow bars should be installed on the car before the body kit.

- Wash and degrease the car.

NOTE: It is important that the surfaces on which the side panels will be mounted are completely free of tar and other road dirt.

REMOVING THE FRONT WHEEL ARCH EXTENSIONS

Illustration A

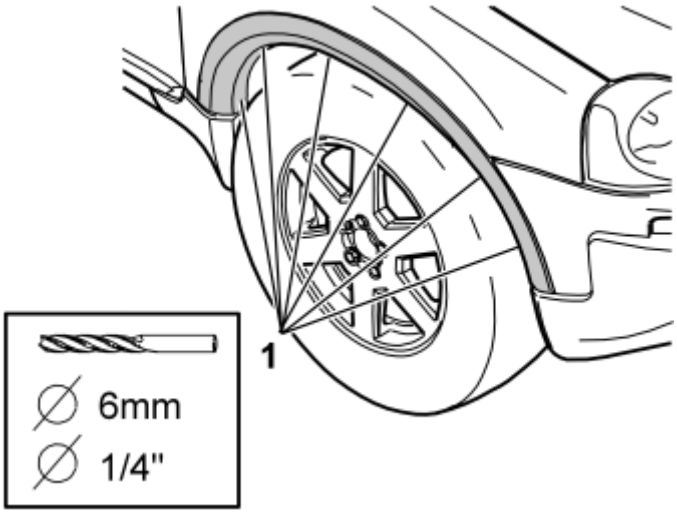

Fig. 79: Drilling Out The Six Rivets
Courtesy of VOLVO CARS CORPORATION

- Drill out the five pop rivets (1) holding the front fender widener to the edge of the wheel arch. Use a **6 mm " (1/4")** diameter drill bit.
- Remove the rivet shavings and ensure that none remains in the holes.

Illustration B

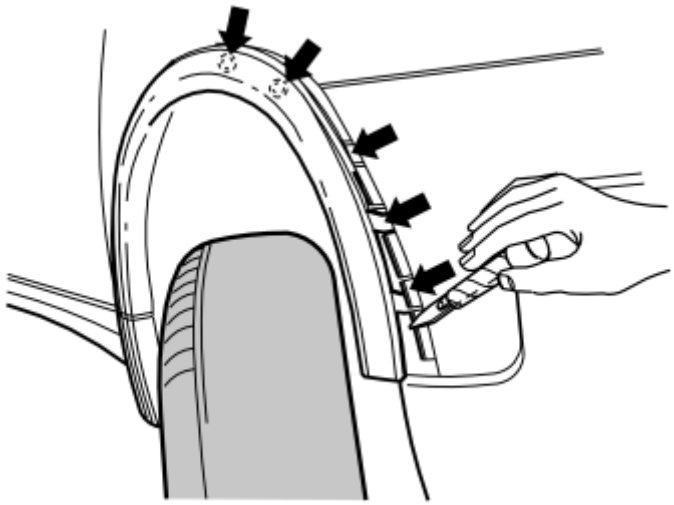

Fig. 80: Using A Plastic Weatherstrip Tool
Courtesy of VOLVO CARS CORPORATION

- Carefully pry off the front lower edge of the wheel arch extension. Use a plastic weatherstrip tool.

NOTE: Do not damage the paint work.

- Fold out the front lower edge of the wheel arch extension to expose the first mounting clip
- Insert the weatherstrip tool at the side of the clip, between the panel and the wheel arch extension. Twist

the weatherstrip tool to pull the clip away from the edge of the wheel arch or so that it breaks.
- Then continue in the same way until all five clips have released.
- Remove the wing extension. Place the wing extension to one side. This will not be reused.

REMOVAL OF THE LOWER TRIM STRIP ON THE FRONT AND REAR DOORS.

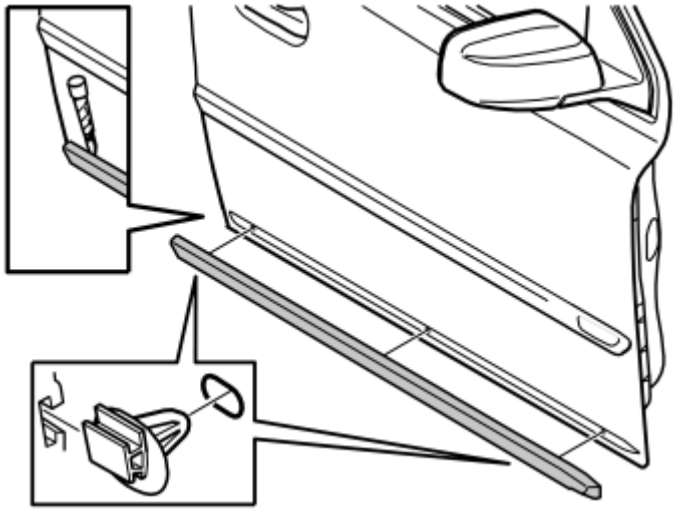

Fig. 81: Using A Plastic Weatherstrip Tool
Courtesy of VOLVO CARS CORPORATION

- Use the weatherstrip tool to pry the rear edge of the trim strip until the tape comes away at the bottom and top edges.

NOTE: Do not damage the paint work.

- Push the trim strip to one side to expose the first clip
- Remove the clip in the same way as for the clips on the wheel arch extension
- Pry the trim strip off working forwards. Remove the last clip in the same way as previously
- Place the trim strip to one side. This will not be reused.

REMOVING THE REAR WHEEL ARCH EXTENSIONS

Illustration A

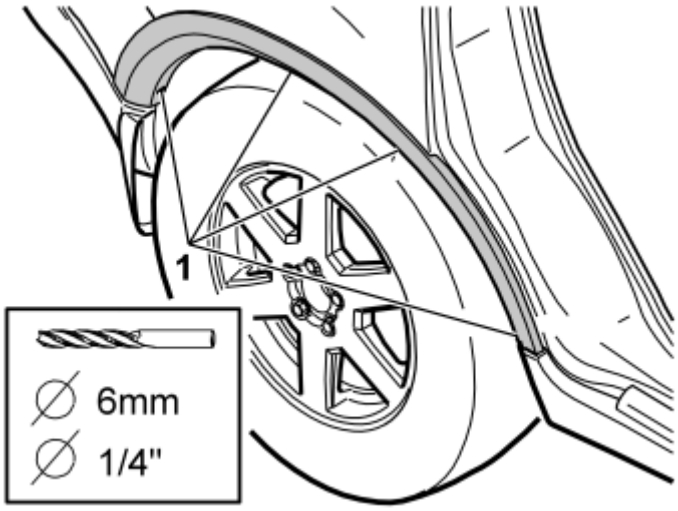

Fig. 82: Drilling Out The Four Rivets
Courtesy of VOLVO CARS CORPORATION

- Drill out the four pop rivets (1) holding the fender widener to the edge of the wheel arch. Use a **6 mm " (1/4")** diameter drill bit.
- Remove the rivet shavings and ensure that none remains in the holes.

Illustration B

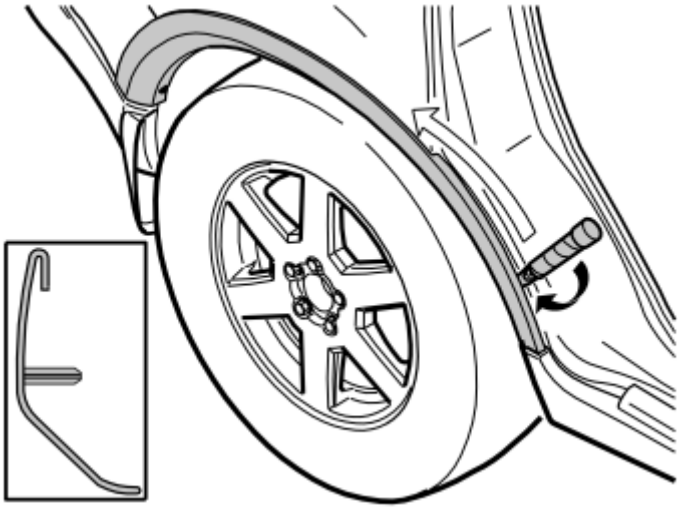

Fig. 83: Using A Plastic Weatherstrip Tool
Courtesy of VOLVO CARS CORPORATION

- Carefully pry off the front lower edge of the wheel arch extension. Use a plastic weatherstrip tool.

NOTE: Do not damage the paint work.

- Fold out the front lower edge of the wheel arch extension to expose the first mounting clip
- Insert the weatherstrip tool at the side of the clip, between the panel and the wheel arch extension. Twist

the weatherstrip tool to pull the clip away from the edge of the wheel arch or so that it breaks.
- Then continue in the same way until all six clips have released.
- Pull the two mounting hooks at the rear edge of the wheel arch extension off from their mountings.
- Remove the wing extension. Place the wing extension to one side. This will not be reused.

REMOVING STONE-CHIP PROTECTION

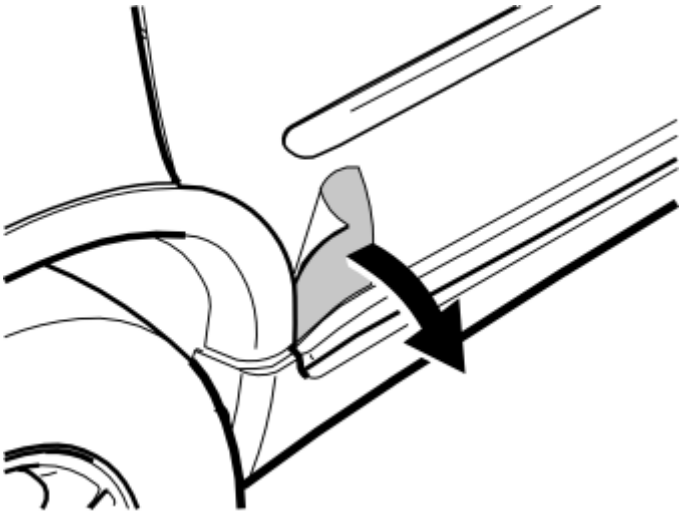

Fig. 84: Removing Stone-Chip Protection
Courtesy of VOLVO CARS CORPORATION

- Remove the stone-chip protection at the rear edge of the rear door.

CLEANING PANEL SURFACES

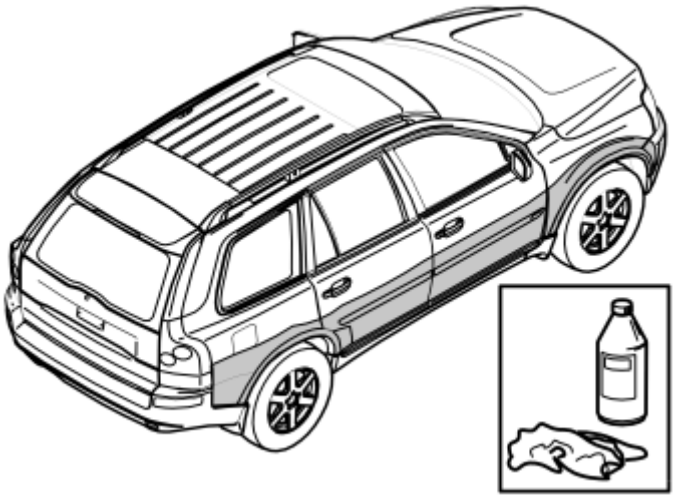

Fig. 85: Using Cleaner H (1161436)
Courtesy of VOLVO CARS CORPORATION

- Wash the entire surface of where the new decor panels and fender wideners shall be installed. Use cleaner

H **part no. 1161436** .

- Wipe dry.

MARKING THE PRIMER SURFACE ON THE BODYWORK

NOTE: Two people must help each other to mark the primer surface on the bodywork.

- Remove the side panel components from the packaging
- Check how the mounting tape is positioned on the components. This determines where the primer must be applied and where the markings must be made
- Clean the protective film with a moist cloth. Use a mixture of 30% windshield washer fluid and 70% water.

NOTE: There must not be any dirt or grease on the protective film on the panel. This could contaminate the bodywork when making markings in the next step.

- Wipe dry.

MARKING THE PANELS' OUTER CONTOURS

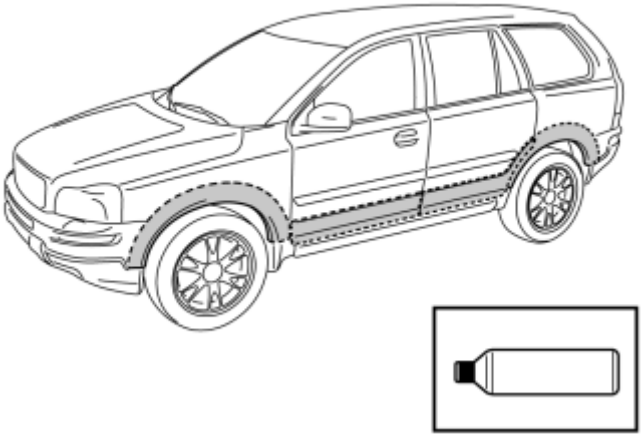

Fig. 86: Checking The Panels Fit And Marking The Outer Contours
Courtesy of VOLVO CARS CORPORATION

- Check-fit the panels and mark these outer contours with a Whiteboard pen.

NOTE: Leave the mounting tape's protective film in place and make sure that the panels are aligned horizontally.

- Install clips on side panel (door) 8 pcs.

APPLYING PRIMER TO THE BODYWORK

- Take the primer **part no. 1161727** and cotton buds from the kit.

NOTE: The primer must be applied to the whole car in one operation. Any spillage must be wiped up immediately.

- Apply primer inside the panels' outer contours.

NOTE: It is important that nothing ends up outside the markings, especially by the panels' top sides where there shall be a gap of approx. 1 mm between the primer and the marking.

- Allow the primer to harden for 15 minutes.

CAUTION: The side panels shall be installed at the earliest 15 minutes, and at the latest 3 hours, after applying the primer.

FASTENING SIDE PANEL, FRONT FENDER

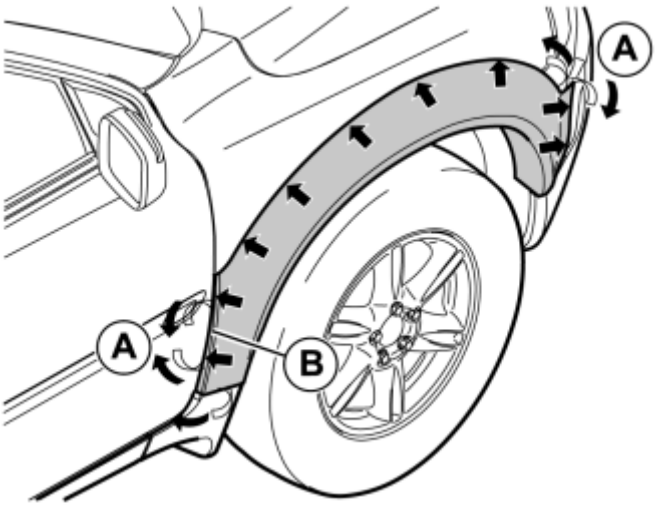

Fig. 87: Pressing The Panel Into Place
Courtesy of VOLVO CARS CORPORATION

- Fold up the protective film on the sides of the panel (A).

NOTE: Be careful so that the protective film does not come off on the back of the panel.

- Make sure that the measurement **2mm (5/64")** between trailing edge fender widener and the front fender's trailing edge is obtained (B).
- Press the panel into place against the front fender at every point that there is tape.
- Apply a pressure of **1-2 kg/cm^2 (14-28 lbf/in^2)** around the entire panel so that the tape sticks firmly.

FASTENING SIDE PANEL, REAR FENDER

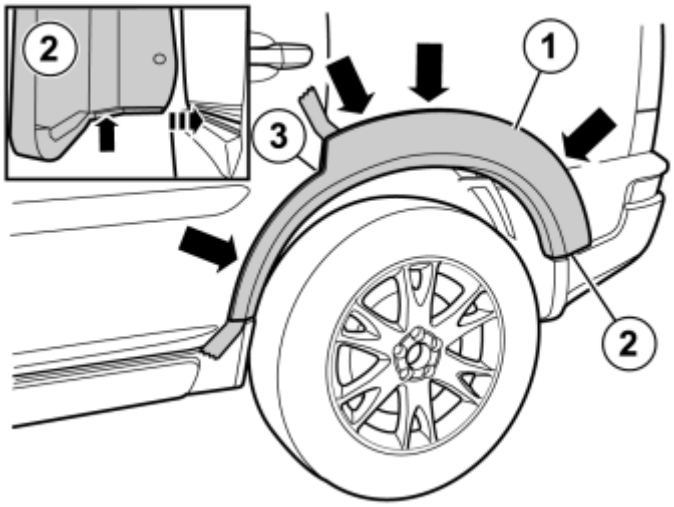

Fig. 88: Pressing The Panel Into Place
Courtesy of VOLVO CARS CORPORATION

- Open the back door.
- Bend in the panel against the rear fender while making sure that the side panel's guide pin fits in the corresponding hole in the edge of the wheel arch (1).
- Place the raised edge (guide edge) on the fender widener butt-to-butt with bumper as shown (2).
- Place the corner in the door opening (3).

NOTE: Make sure that the panel does not touch the back door.

- Fold up the protective film on the sides and the lower edge of the panel.

NOTE: Be careful so that the protective film does not come off on the back of the panel.

- Press the panel into place against the rear fender at every point that there is tape.
- Apply a pressure of **1-2 kg/cm^2 (14-28 lbf/in^2)** around the entire panel so that the tape sticks firmly.

FASTENING SIDE PANEL, BACK DOOR

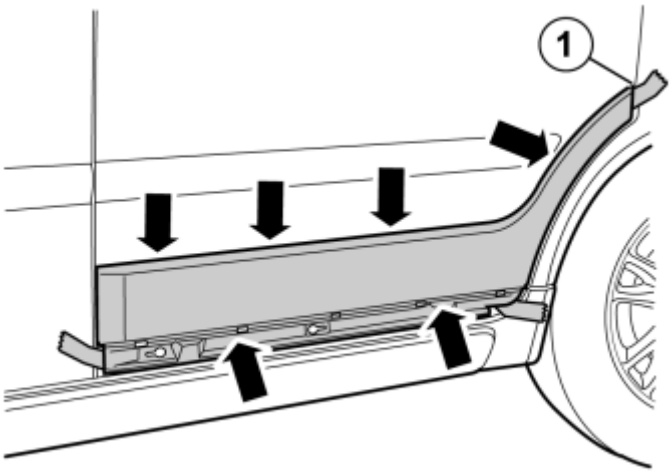

Fig. 89: Pressing The Panel Into Place
Courtesy of VOLVO CARS CORPORATION

- Fold up the protective film over the edge of the panel.
- Remove the lower protective film on the side panel.
- Fold in the panel with the lower edge first and carefully insert the panel's guide pin as well as click in the two clips in the door side's hole without fastening the tape on the panel's corners.
- Move the panel as close as possible to the door side without the tape in the corners fastening.
- Make sure that the panel's rear upper corner (1) follows the same line as the rear fender's side panel (there is some clearance between the guide pins and the holes in the door side).
- Press the panel into place at the upper corners and carefully remove the upper protective film by pulling it off from both ends at the same time.

NOTE: **Make sure that the protective film does not come off on the back of the panel. The panel may have contact with the side of the door with some pressure.**

- Press the upper section of the panel into place against the side of the door. Press the panel so that it is firmly secured.
- Apply a pressure of **1-2 kg/cm^2 (14-28 lbf/in^2)** around the entire panel so that the tape sticks firmly.

FASTENING DECOR STRIP, BACK DOOR

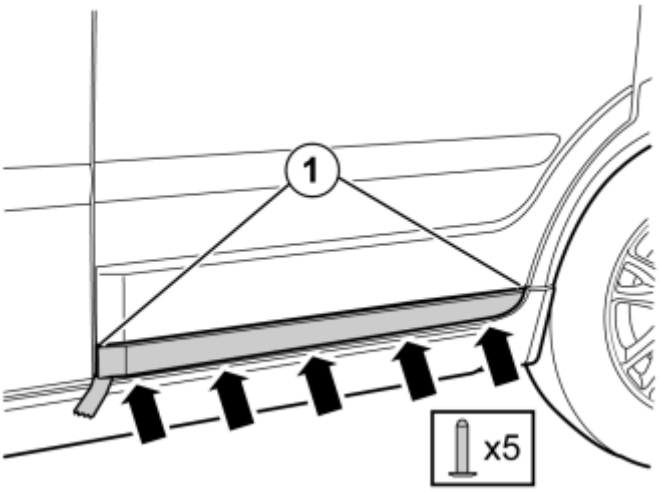

Fig. 90: Pressing The Panel Into Place
Courtesy of VOLVO CARS CORPORATION

- Remove the protective film on the strip and move it in to correct position on the side panel.
- Make sure that the line between the decor strip and panel is obtained by pressing up the upper corners on the strip (1).
- Apply a pressure of **1-2 kg/cm^2 (14-28 lbf/in^2)** around the entire panel so that the tape sticks firmly.
- Press in the 5 clips in the lower edge on the side panel.

FASTENING SIDE PANEL, FRONT DOOR

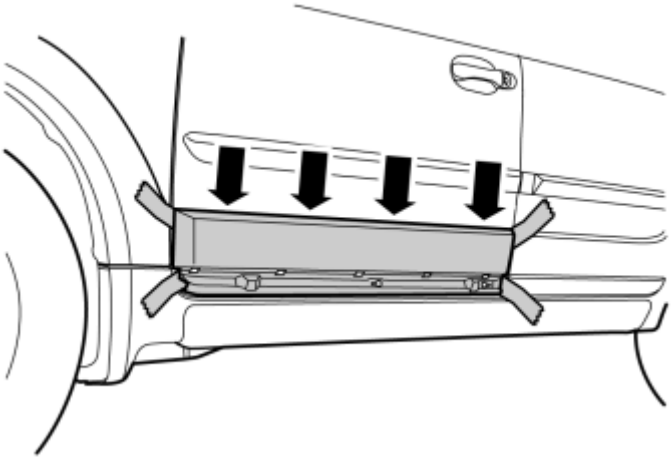

Fig. 91: Pressing The Panel Into Place
Courtesy of VOLVO CARS CORPORATION

- Fold up the protective film on the panel's upper edge.
- Loosen the lower protective film on the side panel.
- Fold in the panel with the lower edge first, carefully insert the panel's guide pin as well as click in the two clips in the door side's hole without fastening the tape on the panel's corners.

- Make sure that the panel's rear/upper corner follows the same line as the back door's side panel (there is some clearance between the guide pins and the holes in the door side).
- Press the panel into place at the upper corners and carefully remove the upper protective film by pulling it off from both ends at the same time.

NOTE: Make sure that the protective film does not come off on the back of the panel. The panel may have contact with the side of the door with some pressure.

- Press the upper part of the panel into place against the side of the door. Press the panel so that it is firmly secured.
- Apply a pressure of **1-2 kg/cm^2 (14-28 lbf/in^2)** around the entire panel so that the tape sticks firmly.

FASTENING DECOR STRIP, FRONT DOOR

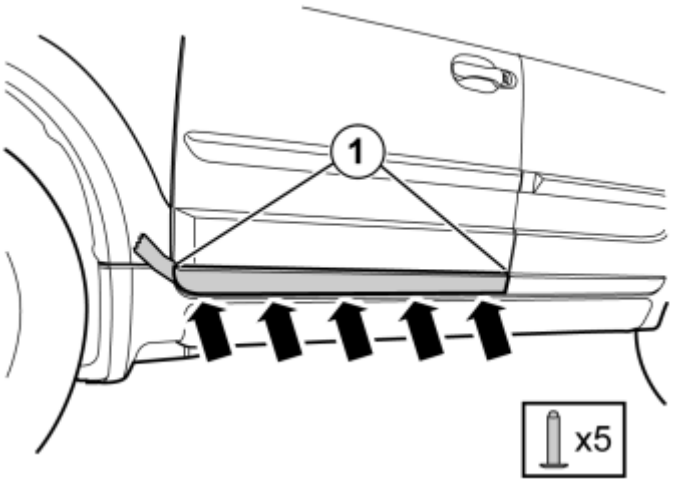

Fig. 92: Pressing The Panel Into Place
Courtesy of VOLVO CARS CORPORATION

- Remove the protective film on the strip and move it in to correct position on the side panel.
- Make sure that the line between the decor strip and panel is obtained by pressing up the upper corners on the strip (1).
- Apply a pressure of **1-2 kg/cm^2 (14-28 lbf/in^2)** around the entire panel so that the tape sticks firmly.
- Press in the 5 clips in the lower edge on the side panel.

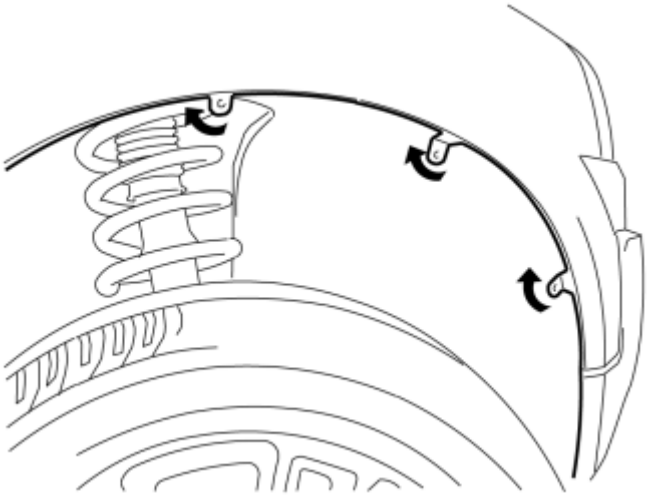

Fig. 93: Folding In The Mounting Lugs
Courtesy of VOLVO CARS CORPORATION

- Fold in the mounting lugs on the front fender's side panel, so that the holes in these align with the holes in the fender liner.

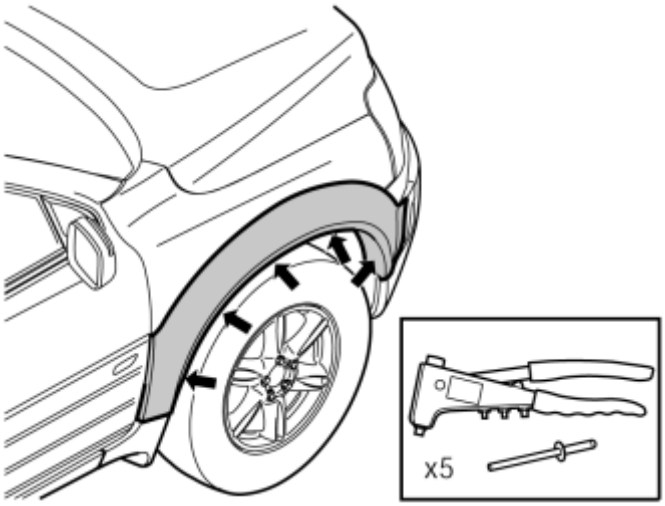

Fig. 94: Riveting The Fender Widener
Courtesy of VOLVO CARS CORPORATION

- Pop rivet the fender widener's edges to the fender liners along the wheel arches in the front fender.

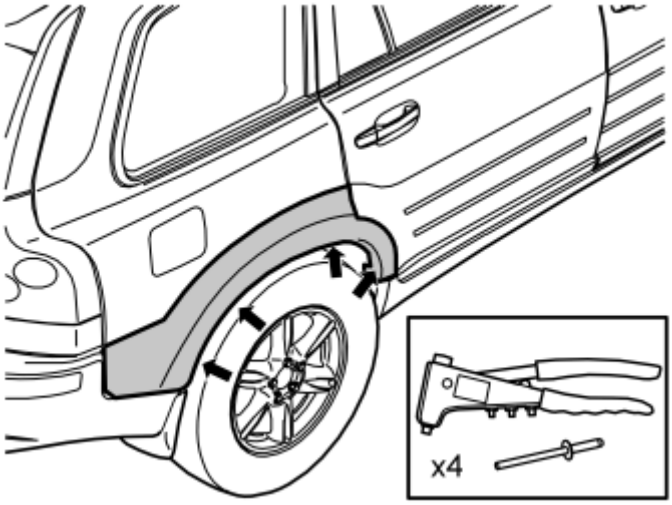

Fig. 95: Riveting The Fender Widener
Courtesy of VOLVO CARS CORPORATION

- Pop rivet the fender widener's edges to the fender liners along the wheel arches in the rear fender.

- Remove the whiteboard markings with a dry rag.
- The car must be kept dry and at a temperature of at least 15 C (59 F) for 2 hours
- Do not wash the car for 72 hours after installing the side panels.

SIDE DECOR REPAIR KIT (2007-2009)

SIDE DECOR REPAIR KIT

RETAPING THE SIDE PANEL

- Remove the side panel from the car.
- Remove the glue residue from the car. Clean the surfaces with a mixture of 70% Isopropanol and 30% water.
- Wipe clean.

- Remove the tape residue from the side panel.

NOTE: **Do not use solvent. The tape residue is removed mechanically with a rotating stripe remover, or a piece of rubber. Ensure you do not damage the surfaces of the side panel where the new tape is to be applied.**

- Clean the surfaces with a mixture of 70% Isopropanol and 30% water.
- Wipe clean.

- Apply the primer to the tape surfaces on the side panel. Apply the tape on the side panel. Remove the protective paper from the tape.

- Fit the side panel on the car according to assembly instruction 30744180.

SILL DECOR (2008-2012)

SILL DECOR

PREPARATIONS

Fig. 96: Removing The Front And Rear Wheels
Courtesy of VOLVO CARS CORPORATION

- Remove the front and rear wheels on one side.

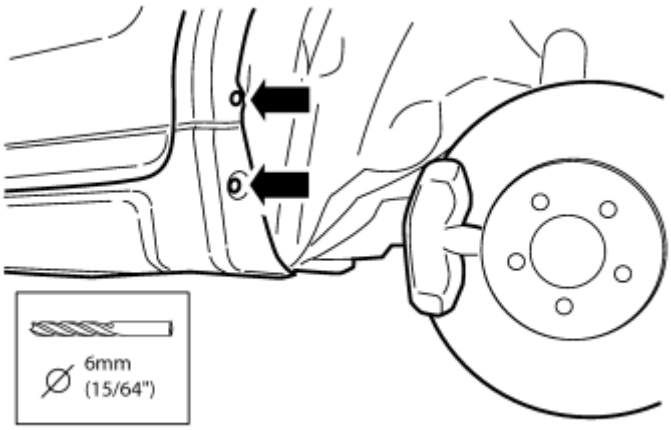

Fig. 97: Drilling Out Rivets
Courtesy of VOLVO CARS CORPORATION

- Drill out the pop rivet at the rear edge of the door sill panel and the rear pop rivet in the wing extender. Use a **6 mm (15/64")** drill bit.

- Remove any shavings and rivet residue.

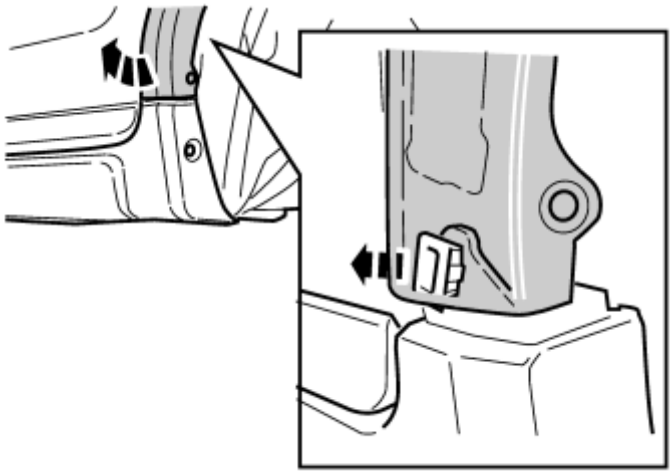

Fig. 98: Removing The Clip
Courtesy of VOLVO CARS CORPORATION

- Carefully turn out the lower edge/rear edge of the front end of the wing extender.

NOTE: Do not turn excessively so that the tape at the front edge detaches.

- Remove the clip holding the rear end of the door sill panel.

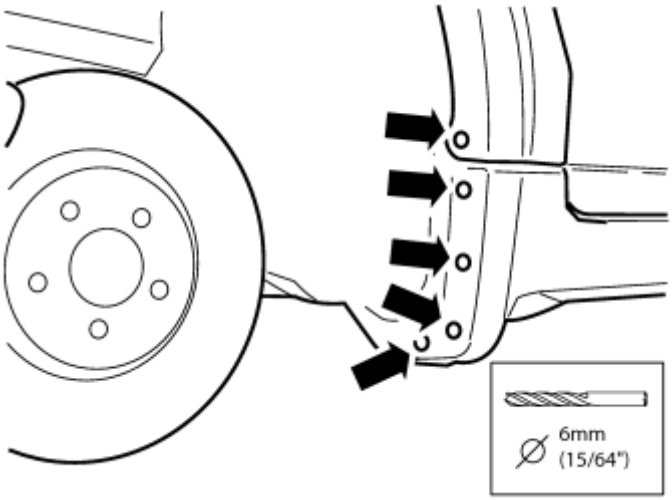

Fig. 99: Drilling Out Rivets
Courtesy of VOLVO CARS CORPORATION

- Drill out the pop rivets at the front edge of the door sill panel and in the rear edge of the wing extender. Use a **6 mm (15/64")** drill bit.
- Remove any shavings and rivet residue.

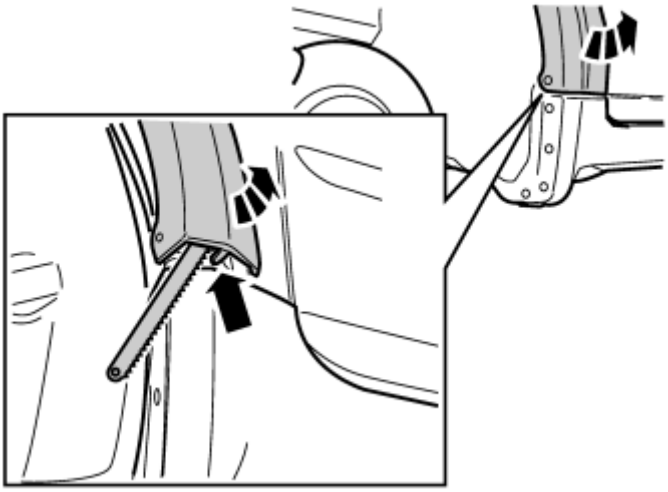

Fig. 100: Cutting Off The Pin
Courtesy of VOLVO CARS CORPORATION

- Carefully turn out the lower edge/rear edge of the wing extender to make room to saw off the pin in the lower edge of the panel on the inside.

NOTE: Do not turn excessively so that the tape at the front edge detaches.

- Carefully cut off the pin on the panel. Use part of a hacksaw blade.

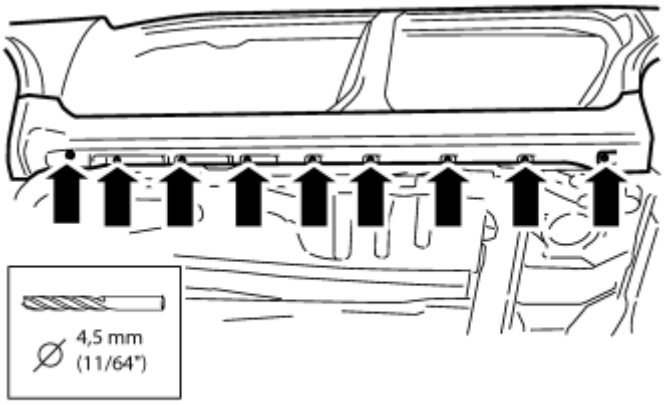

Fig. 101: Viewing Lower Edge Of The Door Sill Panel
Courtesy of VOLVO CARS CORPORATION

- Drill out the central pins in the clips at the lower edge of the door sill panel and remove them. Use a **4.5 mm (11/64")**

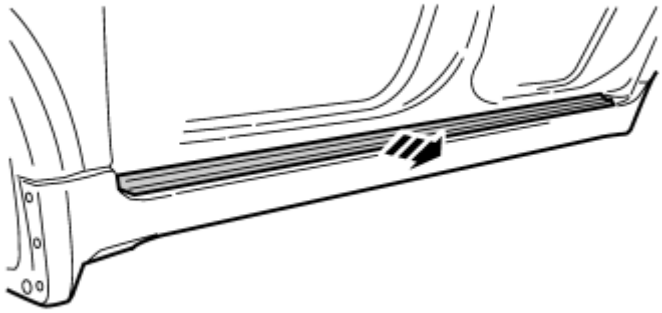

Fig. 102: Removing The Rubber Strip
Courtesy of VOLVO CARS CORPORATION

- Remove the rubber strip.

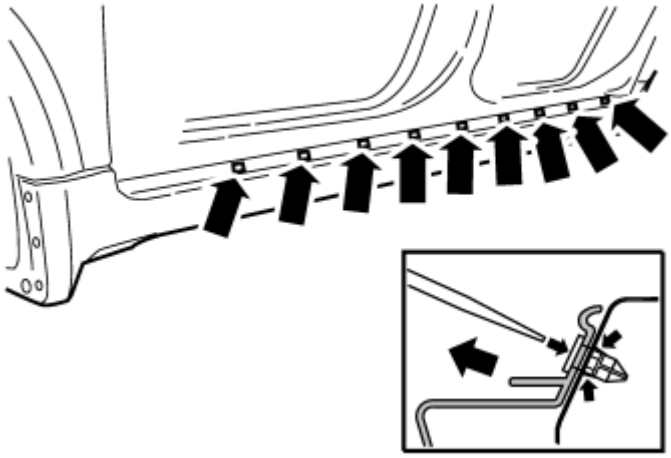

Fig. 103: Releasing The Clips
Courtesy of VOLVO CARS CORPORATION

- Insert a large flat-bladed screwdriver, press the bottom of the clips and pull off the door sill panel with the clips.

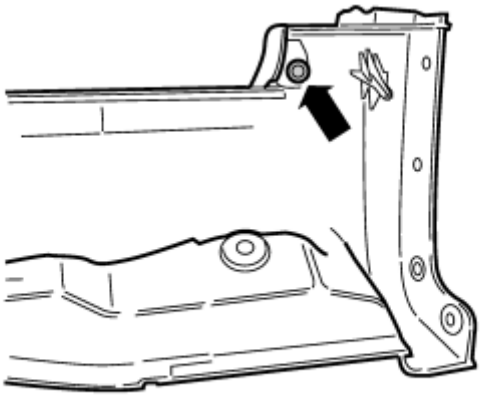

Fig. 104: Identifying Secured By A Clip
Courtesy of VOLVO CARS CORPORATION

- Detach the door sill panel's front end. It is secured by a clip.

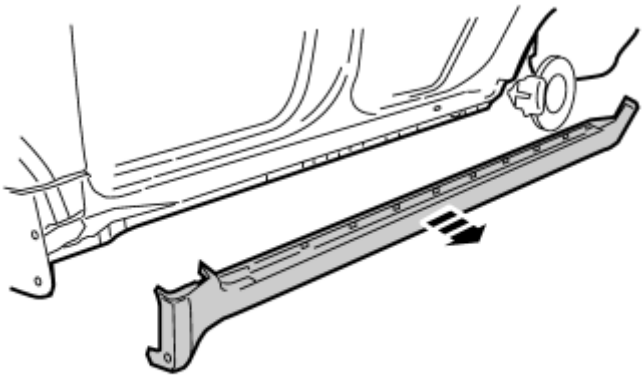

Fig. 105: Removing The Panel
Courtesy of VOLVO CARS CORPORATION

- Remove the panel from the body. It will not be reused.

INSTALLATION

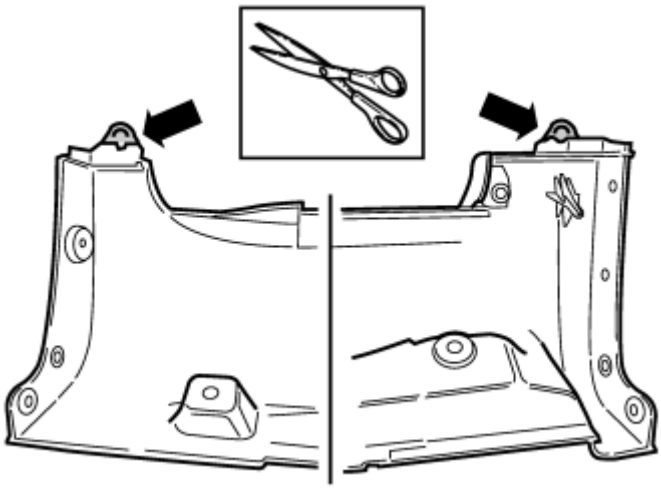

Fig. 106: Cutting Off The Mounting Eyelets
Courtesy of VOLVO CARS CORPORATION

- Take a new panel from the kit. Cut off the mounting eyelets on top of the upper sides.

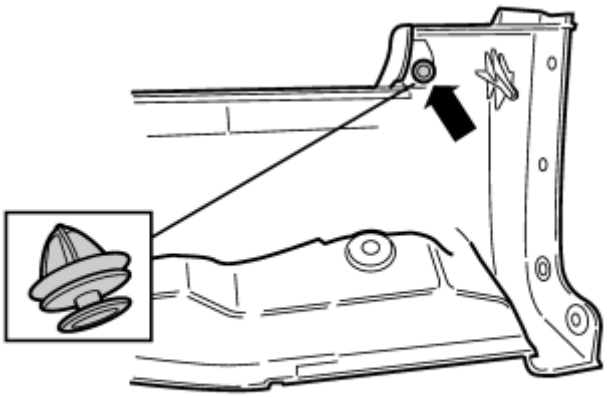

Fig. 107: Installing A New Clip
Courtesy of VOLVO CARS CORPORATION

- Install a new clip.

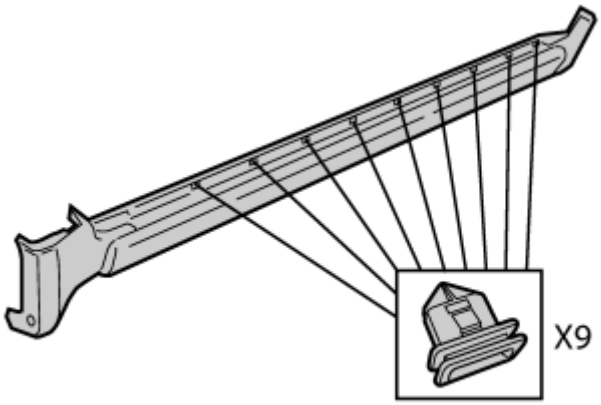

Fig. 108: Installing New Clips
Courtesy of VOLVO CARS CORPORATION

- Install new clips.

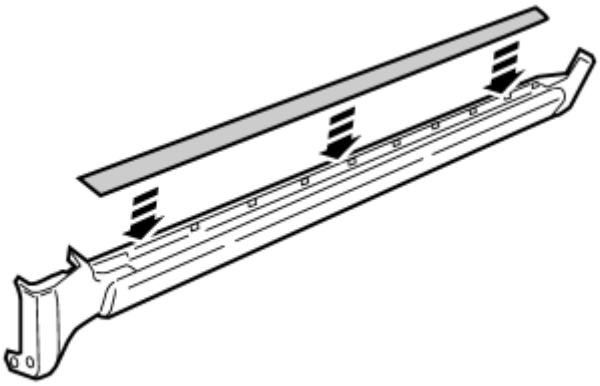

Fig. 109: Installing Rubber Strip Onto The New Panel.
Courtesy of VOLVO CARS CORPORATION

- Press the rubber strip onto the new panel.

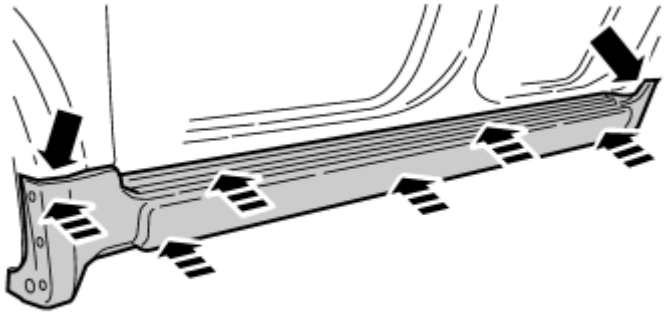

Fig. 110: Ensure All Clips Engage And Rubber Strip Correctly Positioned
Courtesy of VOLVO CARS CORPORATION

- Align the door sill panel ends under the wing extenders.
- Press the front section clips into place.
- Press the panel with the rubber strip along the body side. Ensure that all clips engage and that the rubber strip is correctly positioned.

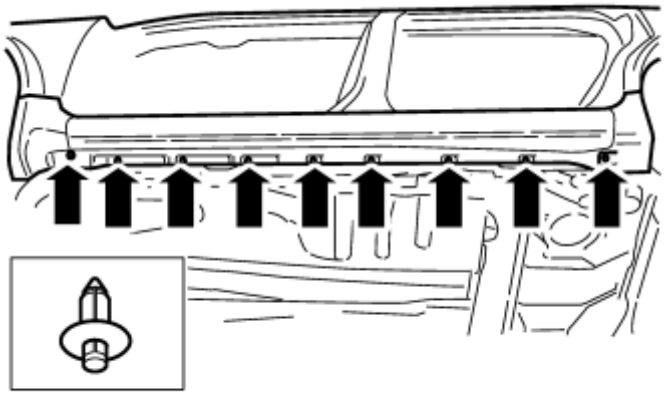

Fig. 111: Press The Panel In The Lower Edge
Courtesy of VOLVO CARS CORPORATION

- Press the panel into place in the lower edge using new clips.

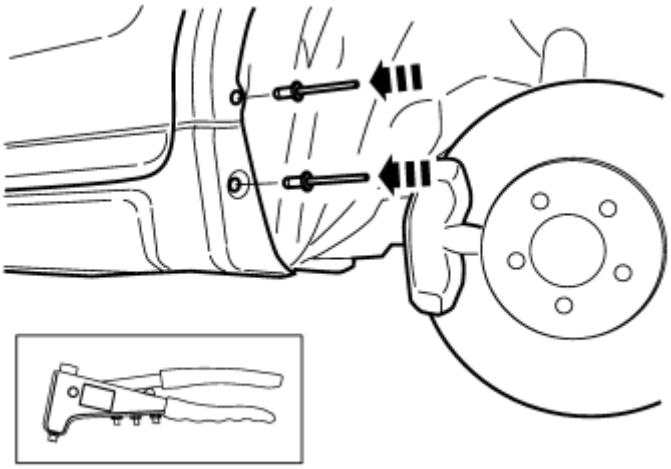

Fig. 112: Riveting The Panels
Courtesy of VOLVO CARS CORPORATION

- Pop rivet the panels into place.

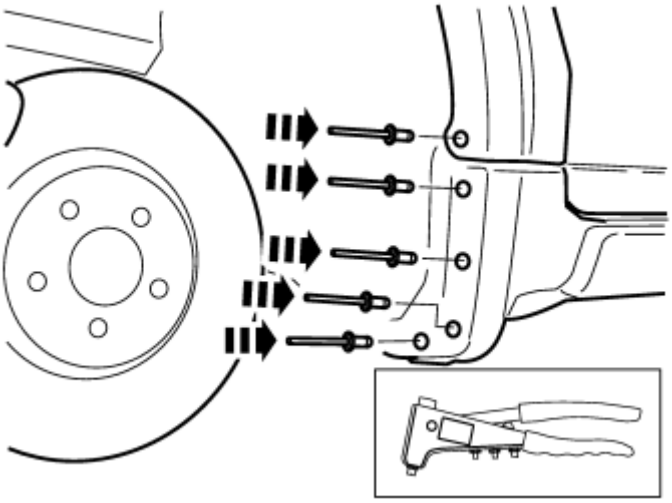

Fig. 113: Riveting The Panels
Courtesy of VOLVO CARS CORPORATION

- Pop rivet the panels into place.

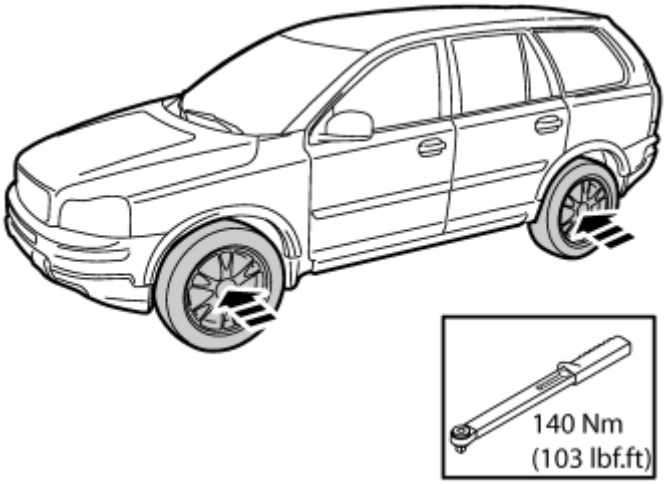

Fig. 114: Reinstall Front And Rear Wheels
Courtesy of VOLVO CARS CORPORATION

- Reinstall the front and rear wheels.
- Repeat all steps for the other side.

ACCESSORIES AND EQUIPMENT

Bumpers And Mudflaps - Removal, Replacement And Installation

BUMPER WITH MOUNTINGS AND DAMPING

CASING BUMPER FRONT, REPLACING

NOTE: **As the graphics in this service information are used for different model years and/or models, some variation may occur. However, the essential information in the graphics is always correct.**

PREPARATIONS

Open and secure the hood.

REMOVING THE FRONT BUMPER CASING

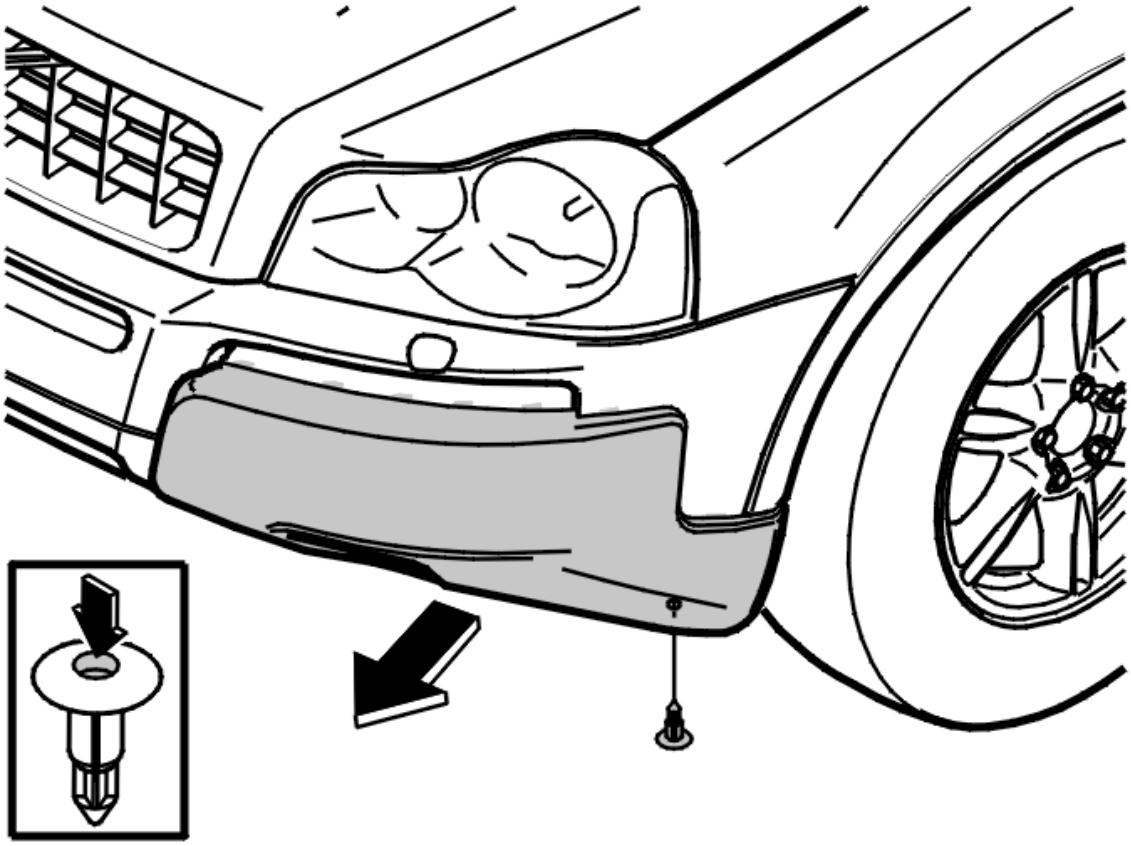

Fig. 1: Identifying Clips And Side Panels
Courtesy of VOLVO CARS CORPORATION

Remove:

- the 2 clips under the car (1 per side)
- the 2 side panels.

Detach the sides of the bumper by pulling it upwards at an angle and outwards.

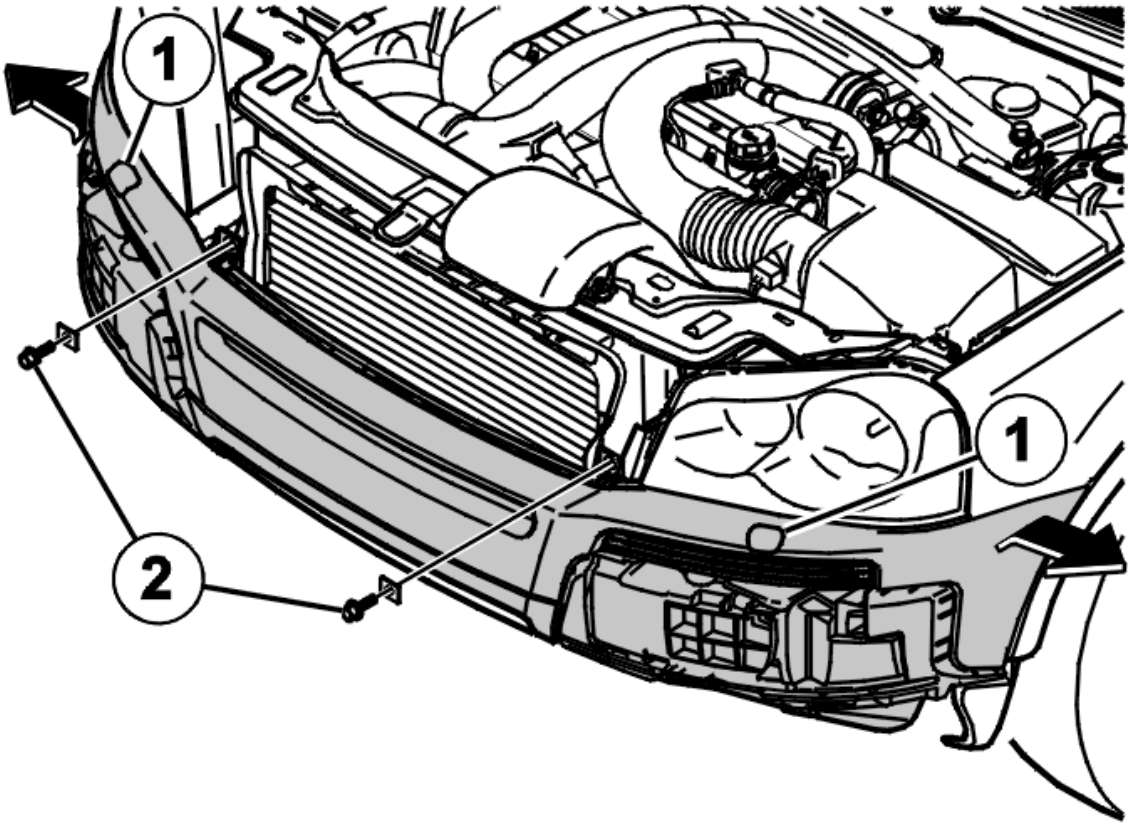

Fig. 2: Identifying High-Pressure Cleaner And Screws
Courtesy of VOLVO CARS CORPORATION

Remove:

- the covers for the high-pressure cleaner (1)
- the covers for the screw mounting
- the 2 screws (2).

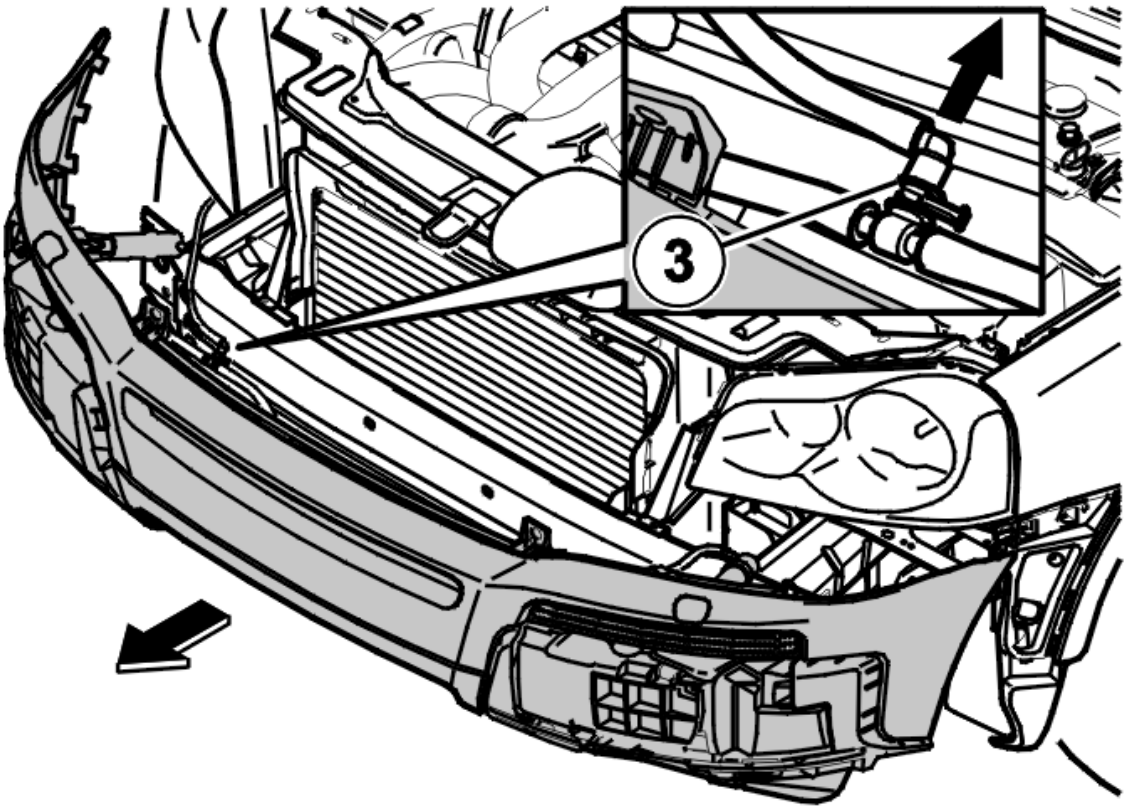

Fig. 3: Identifying Quick-Release Connector
Courtesy of VOLVO CARS CORPORATION

Pull the bumper straight out.

Release the quick-release connector (3) for the washer hose.

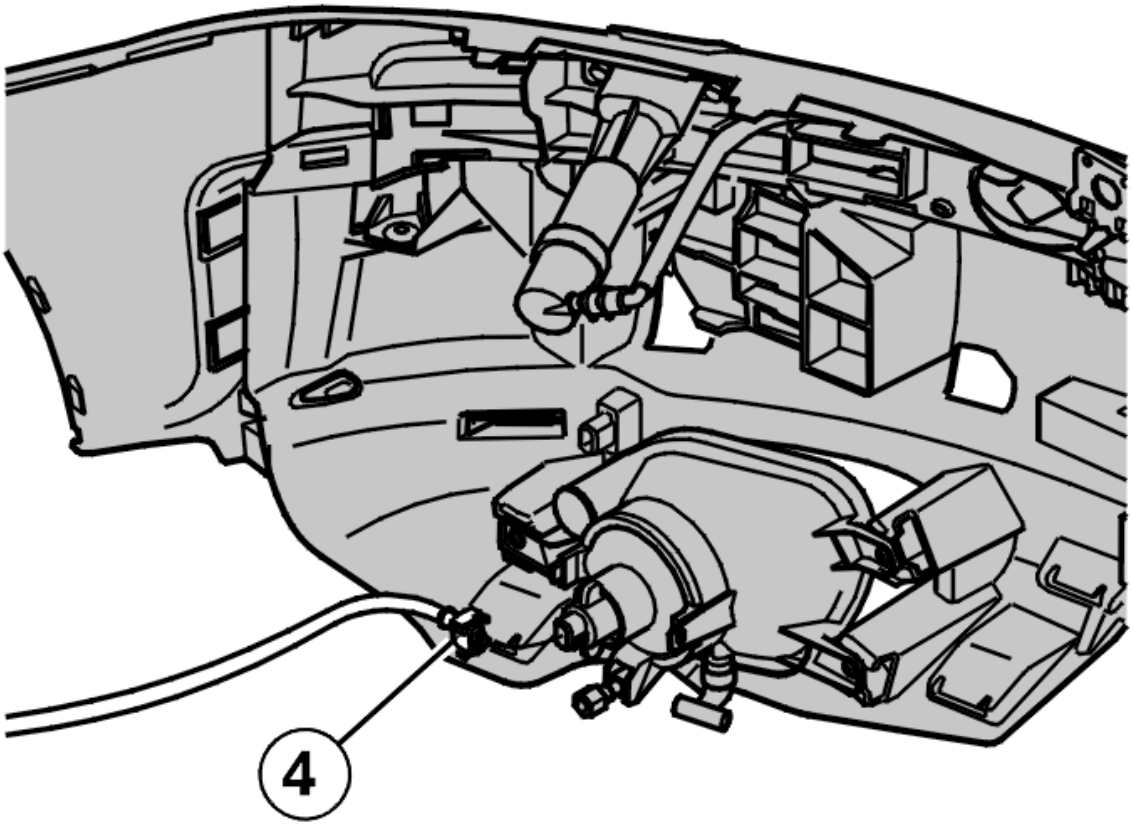

Fig. 4: Identifying Connectors For Fog Lamps
Courtesy of VOLVO CARS CORPORATION

Disconnect the connectors for the fog lamps (4).

Remove the bumper.

TRANSFERRING COMPONENTS

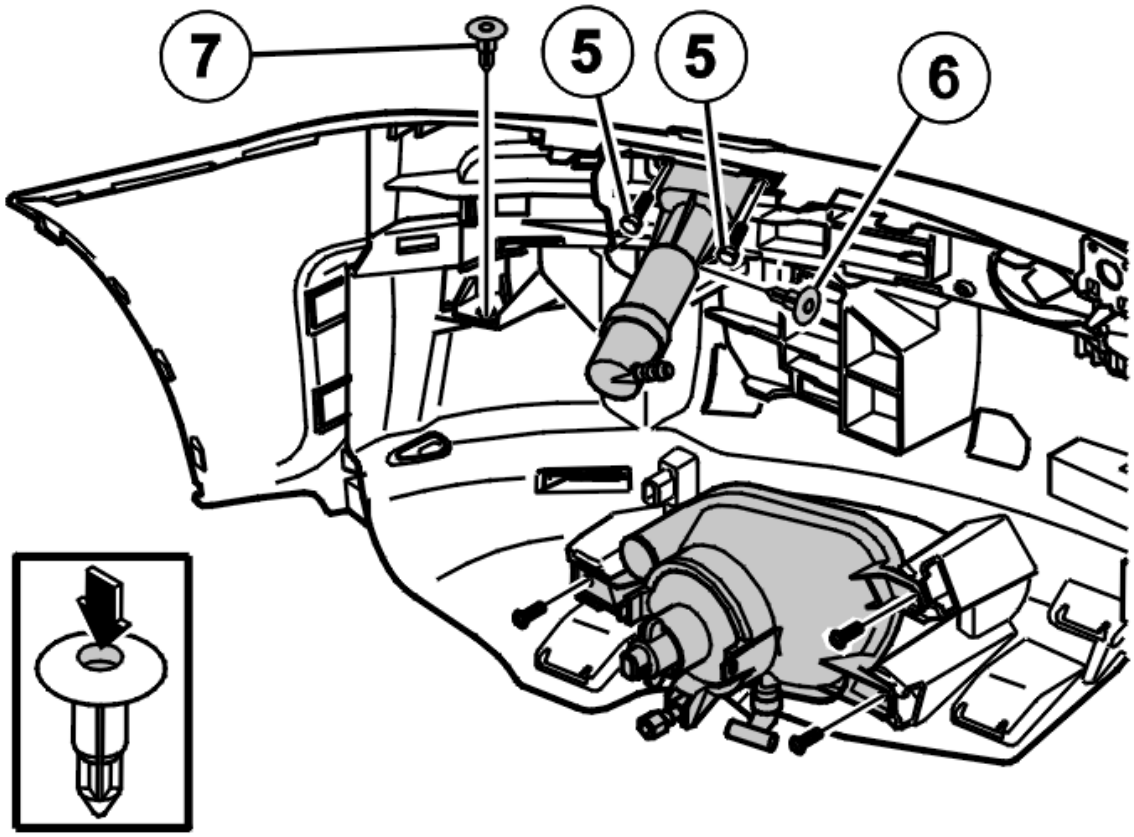

Fig. 5: Identifying High-Pressure Cleaner Screws And Clips
Courtesy of VOLVO CARS CORPORATION

Transfer:

- the 2 screws for the license plate
- the 4 screws (5) for the high-pressure cleaner
- the 2 clips (6) for the high-pressure cleaner
- the washer hose
- the rear section by releasing the 2 clips (7) and the 31 hooks
- the fog lamps. See **REMOVAL** and **INSTALLATION** .

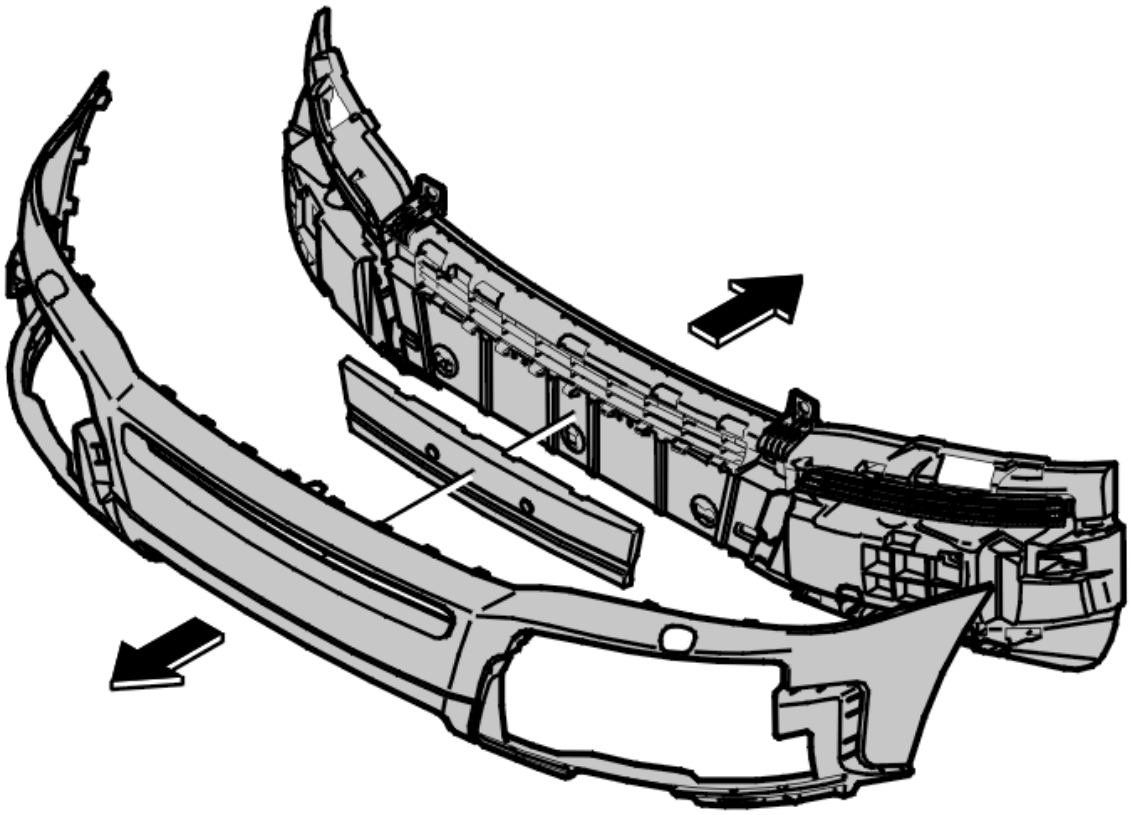

Fig. 6: Identifying Engine Block Heater
Courtesy of VOLVO CARS CORPORATION

- the foam in the bumper
- the engine block heater (if applicable).

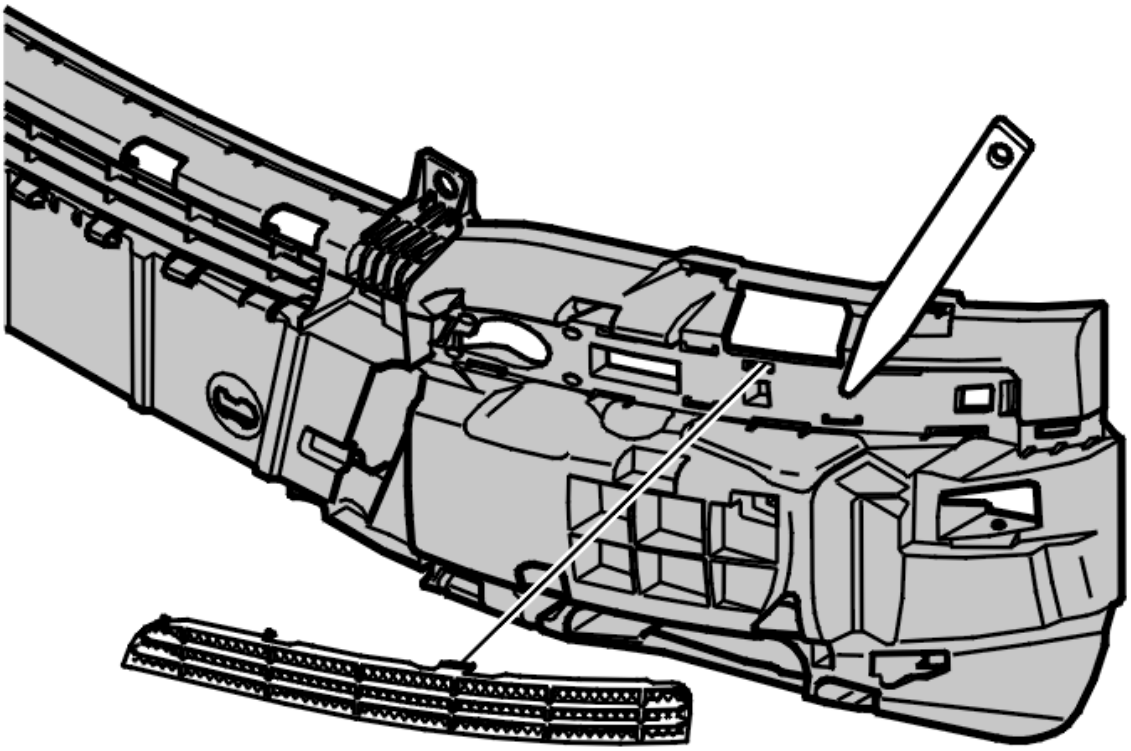

Fig. 7: Identifying Grilles
Courtesy of VOLVO CARS CORPORATION

- the 2 grilles.

INSTALLING THE FRONT BUMPER CASING

NOTE: For tightening torques, see TIGHTENING TORQUE .

Install:

- the foam for the rear section
- the rear section on the casing.

Press the 31 hooks and 2 clips into place.

Install:

- the washer hose
- the high-pressure cleaner
- the 4 screws and 2 clips for the high-pressure cleaner
- the license plate.

Tighten the screws.

Install:

- the quick-release connector for the washer hose
- the 2 connectors for the fog lamp.

Connect the additional engine block heater (if applicable).

Secure the bumper and install the 2 screws loosely.

Press the hooks into place on both sides of the bumper.

HINT: Guide in the sides of the bumper from above.

Install:

- the 2 M8 screws. Tighten
- the 2 side panels
- the 2 clips under the car
- the 2 grilles
- the 2 covers for the high-pressure cleaner.

HINT: Pull out the washer nozzle using pliers and secure the cover. Carefully release the washer nozzle.

Check that the headlamp washer is working.

CASING BUMPER REAR, REPLACING

NOTE: **The graphics in this service information are used for different model years and / or models. Some variation may occur. However, the essential information in the graphics is always correct.**

PREPARATIONS

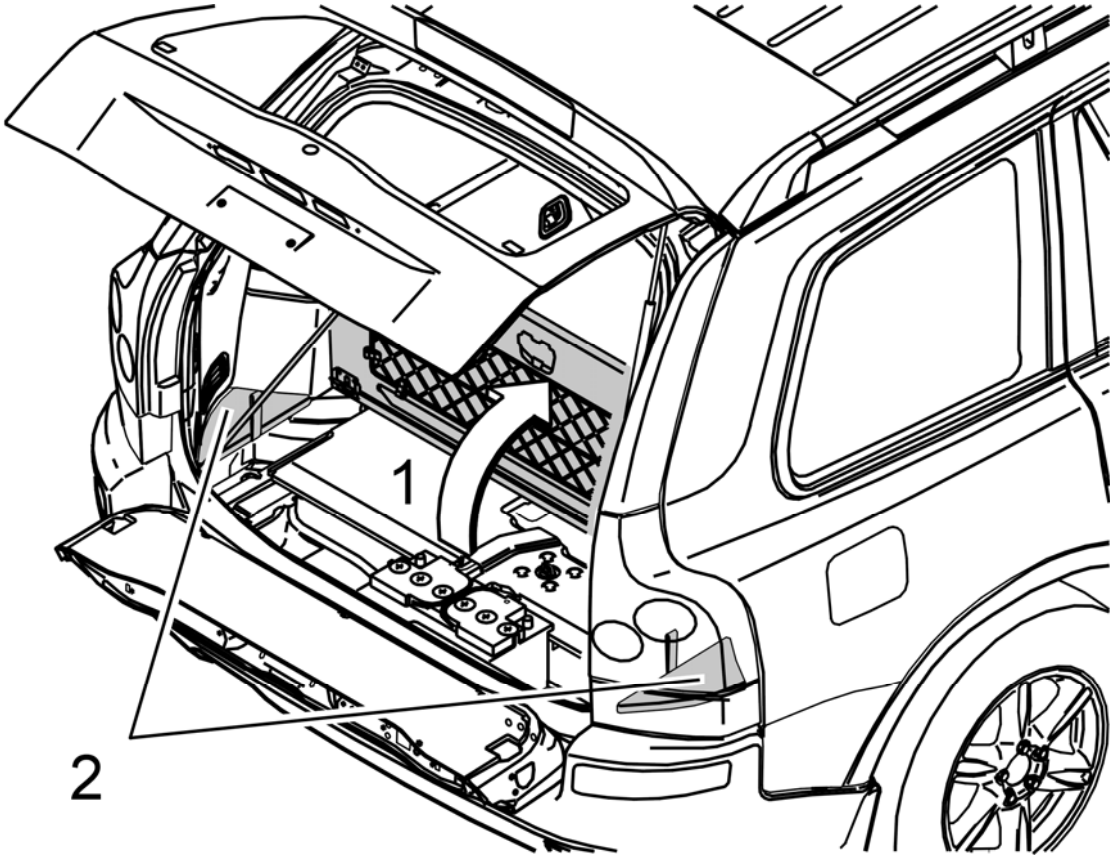

Fig. 8: Identifying Floor Hatch And Outer Side Floor
Courtesy of VOLVO CARS CORPORATION

Open the tailgate and floor hatch (1) and remove the outer side floor (2).

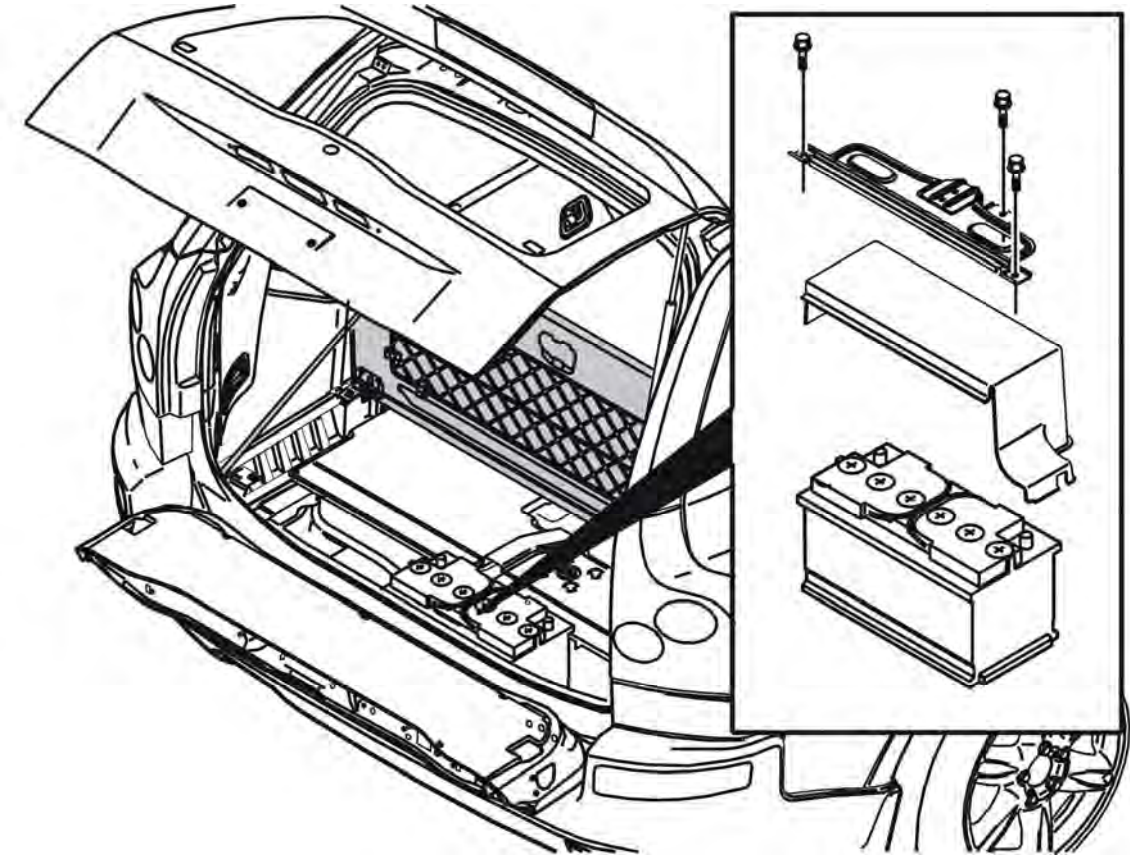

Fig. 9: Identifying Battery Cover And Mounting Bracket
Courtesy of VOLVO CARS CORPORATION

Remove the battery cover and mounting bracket.

REMOVING THE REAR BUMPER CASING

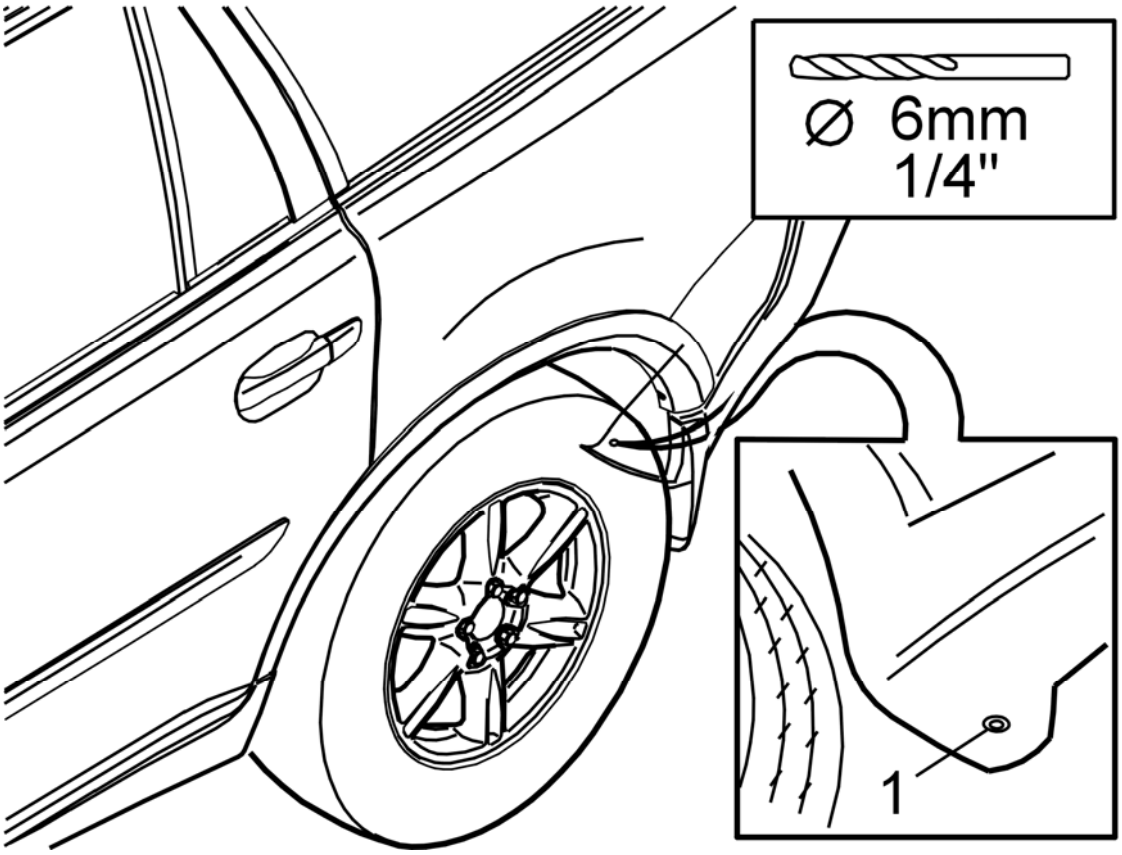

Fig. 10: Identifying Rivets
Courtesy of VOLVO CARS CORPORATION

Remove:

- the 2 rivets under the car.

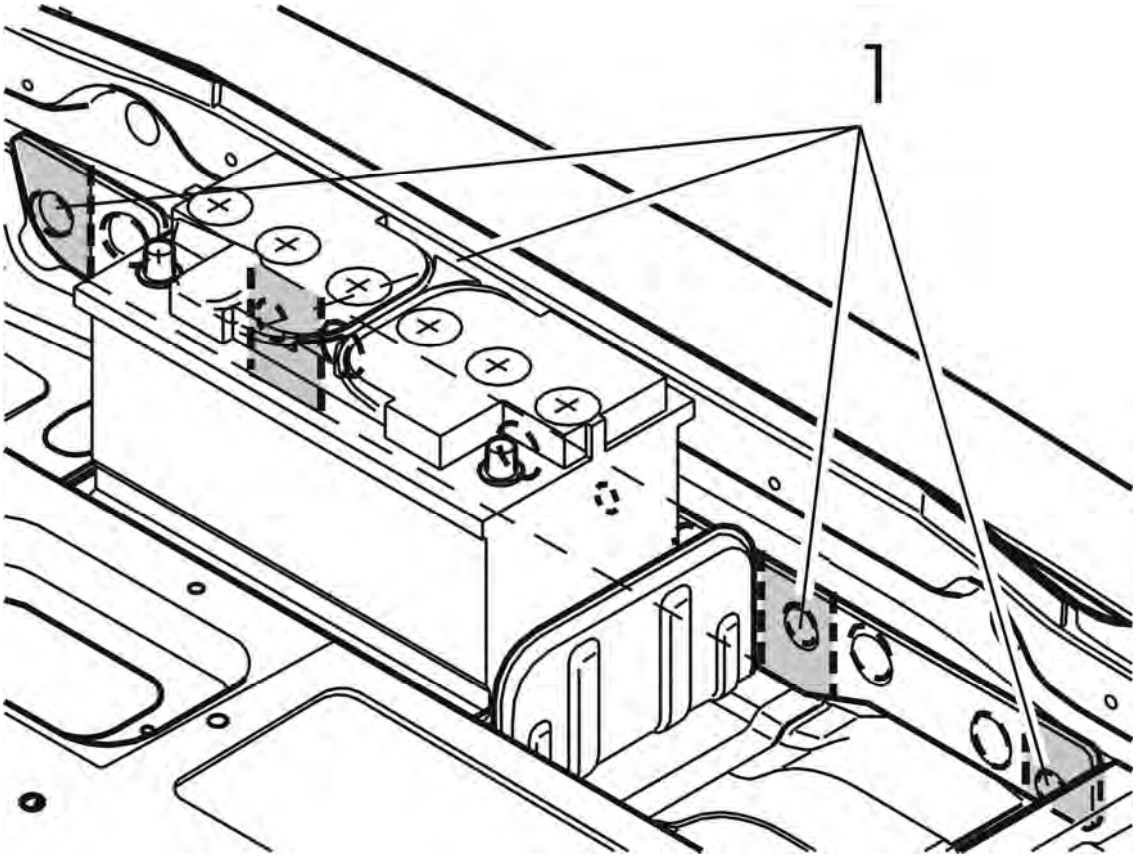

Fig. 11: Identifying Soundproofing Sections
Courtesy of VOLVO CARS CORPORATION

- the 4 soundproofing sections (1)
- the 4 nuts.

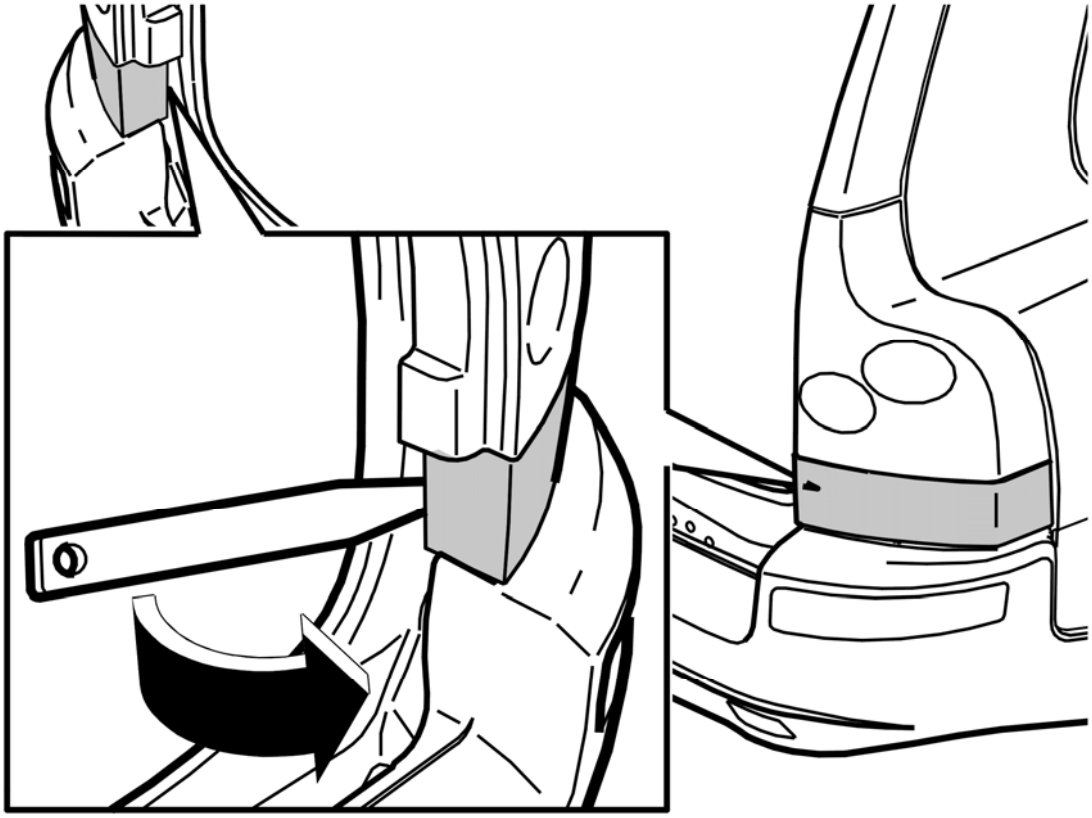

Fig. 12: Identifying Panels
Courtesy of VOLVO CARS CORPORATION

- the 2 panels.

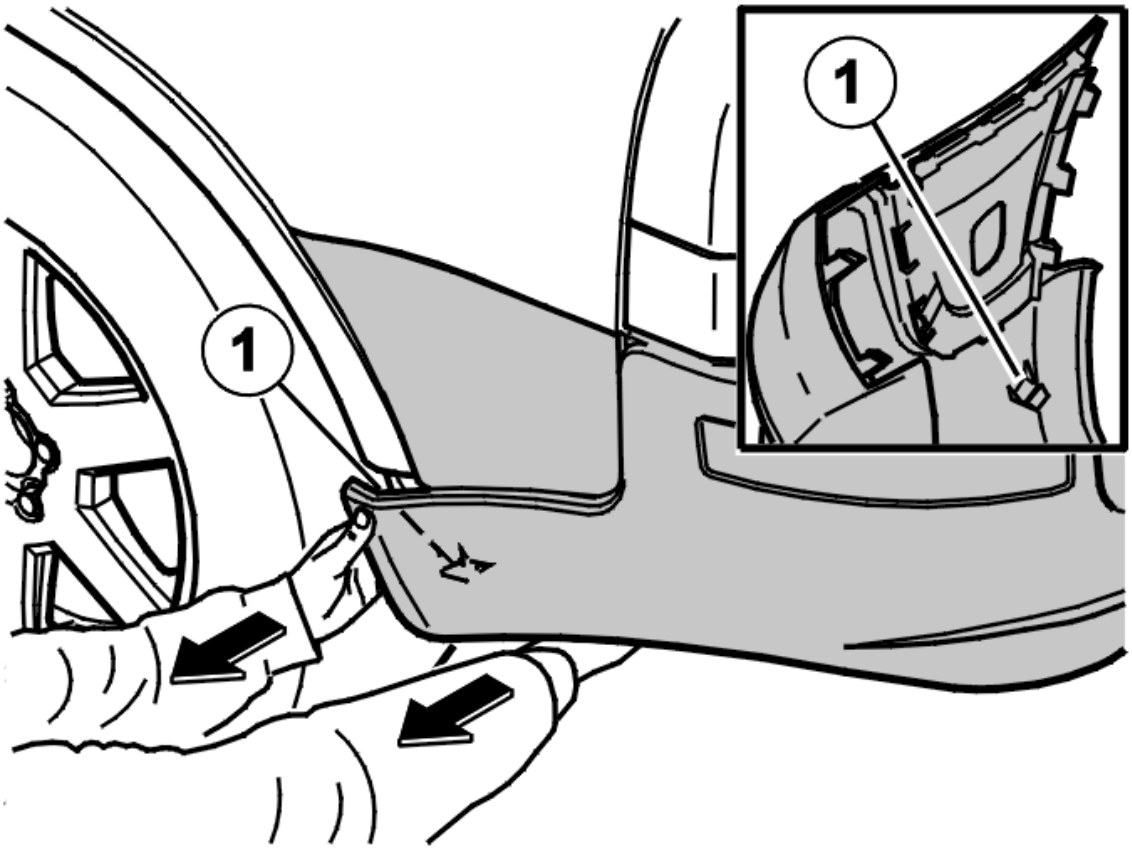

Fig. 13: Identifying Hidden Clips
Courtesy of VOLVO CARS CORPORATION

Disconnect the 2 connectors for the sidemarker lamps.

Release the hidden clips (1), 1 on each side, at the bottom of the casing.

NOTE: Grasp with both hands and pull straight out.

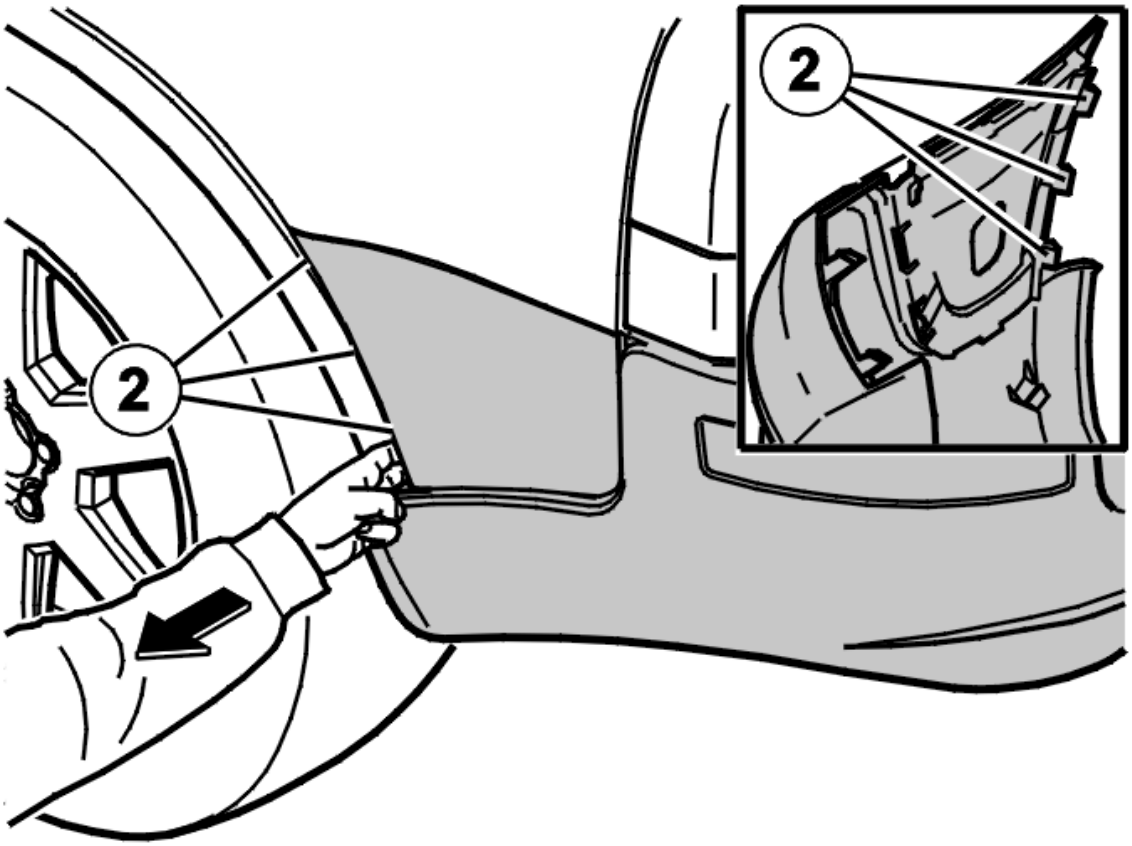

Fig. 14: Identifying Hooks
Courtesy of VOLVO CARS CORPORATION

Continue upwards along the fender extensions and detach the 3 hooks on each side (2).

CAUTION: Do not only pull the painted panel. Pull the panel/bumper behind it as well.

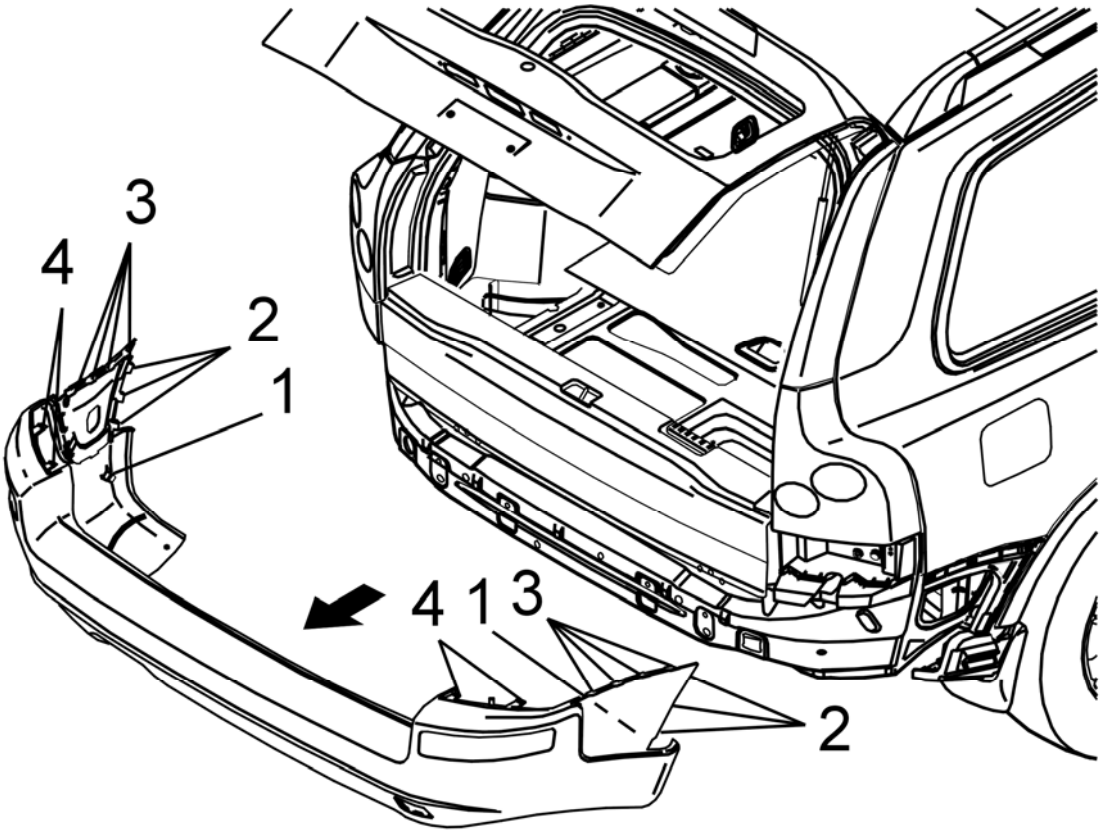

Fig. 15: Identifying Hooks
Courtesy of VOLVO CARS CORPORATION

Then pull out the ends more until the hooks (3) release, 4 on each side.

Release the hooks (4), 2 on each side.

Lift off the bumper.

TRANSFERRING COMPONENTS

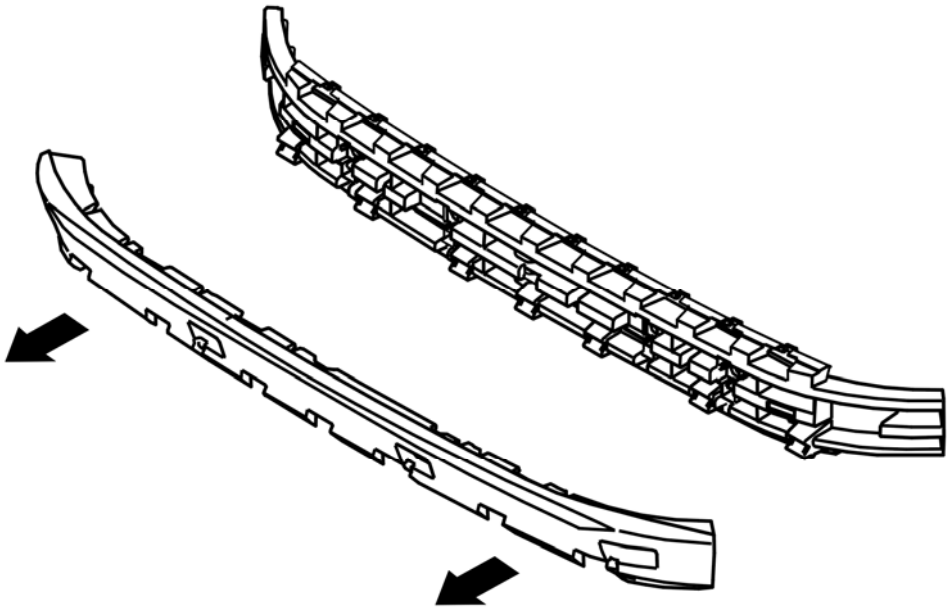

Fig. 16: Identifying Transferring Components
Courtesy of VOLVO CARS CORPORATION

Transfer:

- the 2 painted panels
- the 2 sidemarker/fog lamps
- the cover for the towing eyelet
- the 3 vertical support struts which are secured with 3 screws and 3 clips
- the 7 hooks for the rear section at the bottom edge.

HINT: Detach the top edge first.

Transfer the bumper padding which is secured at 3 points.

INSTALLING THE REAR BUMPER CASING

NOTE: For tightening torques, see TIGHTENING TORQUE .

Install:

- the foam for the rear section

- the rear section on the bumper cover.

HINT: First press the upper edge of the rear section into place. Then guide the hooks on the bottom edge of the bumper casing into the rear section and press them into place.

Install:

- the bumper cover
- the 2 connectors
- the 4 M8 nuts. Tighten
- the 2 covers.

Press the sides of the bumper into place.

Install:

- the 2 rivets under the car
- the 4 pre-punched soundproofing sections
- the 1 M8 screw for the battery cover and the bracket. Tighten
- the outer side floor.

Fold down the floor hatch.

ACCESSORIES AND EQUIPMENT

Doors And Lids - Cleaning, Inspection And Adjustment

SUN ROOF

SUN ROOF MODULE (SRM), CALIBRATING

NOTE: **The graphics in this service information are used for different model years and/or models. Some variation may occur. However, the essential information in the graphics is always correct.**

CALIBRATION

CALIBRATING THE SUN ROOF MODULE (SRM)

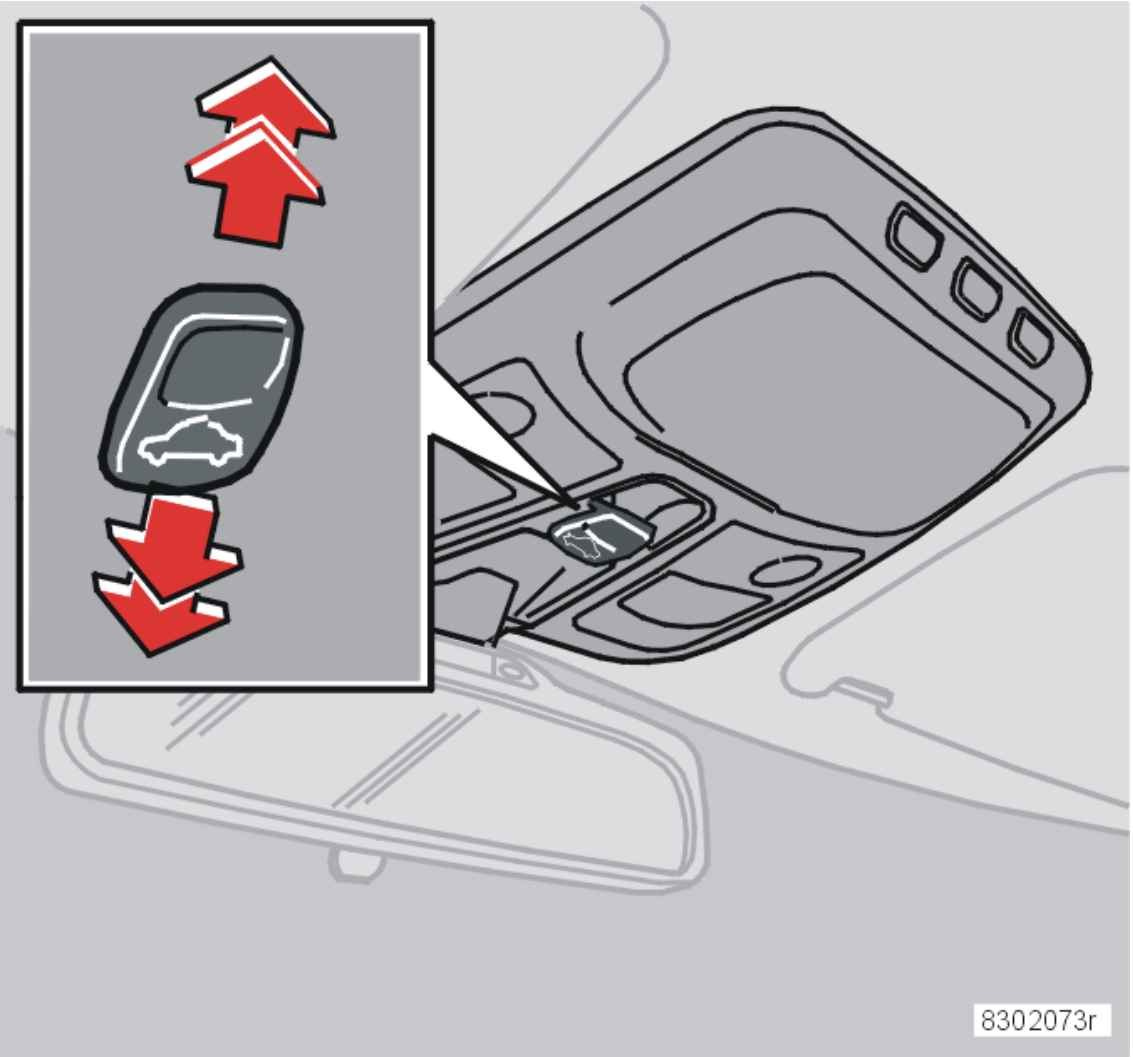

Fig. 1: Identifying Sun Roof Switch
Courtesy of VOLVO CARS CORPORATION

The sun roof must be closed.

Ignition in position I.

1

Press the sun roof switch so that the sun roof is in the tilt position.

Release the switch.

2

Press the switch (in the tilt position) again for at least 5 seconds so that the sun roof flickers.

Release the switch.

The calibration is complete.

NOTE: If the sun roof has not moved to the correct position, carry out calibration again.

HINT: If the sun roof has still not moved to the correct position:

HINT: Press the sun roof switch so that the sun roof moves to the rearmost position (completely open).

HINT: Release the switch.

HINT: Press the switch (in the completely open position) in again for at least 5 seconds so that the sun roof flickers.

HINT: Release the switch.

HINT: Close the sun roof and carry out calibration again. See steps 1 and 2 above.

For further information on the sunroof, see **DESIGN** and **FUNCTION**

SUN ROOF, ADJUSTING

NOTE: As the graphics in this service information are used for different model years and / or models, some variation may occur. However, the essential information in the graphics is always correct.

VERTICAL ADJUSTMENT

NOTE: For tightening torques, see TIGHTENING TORQUE .

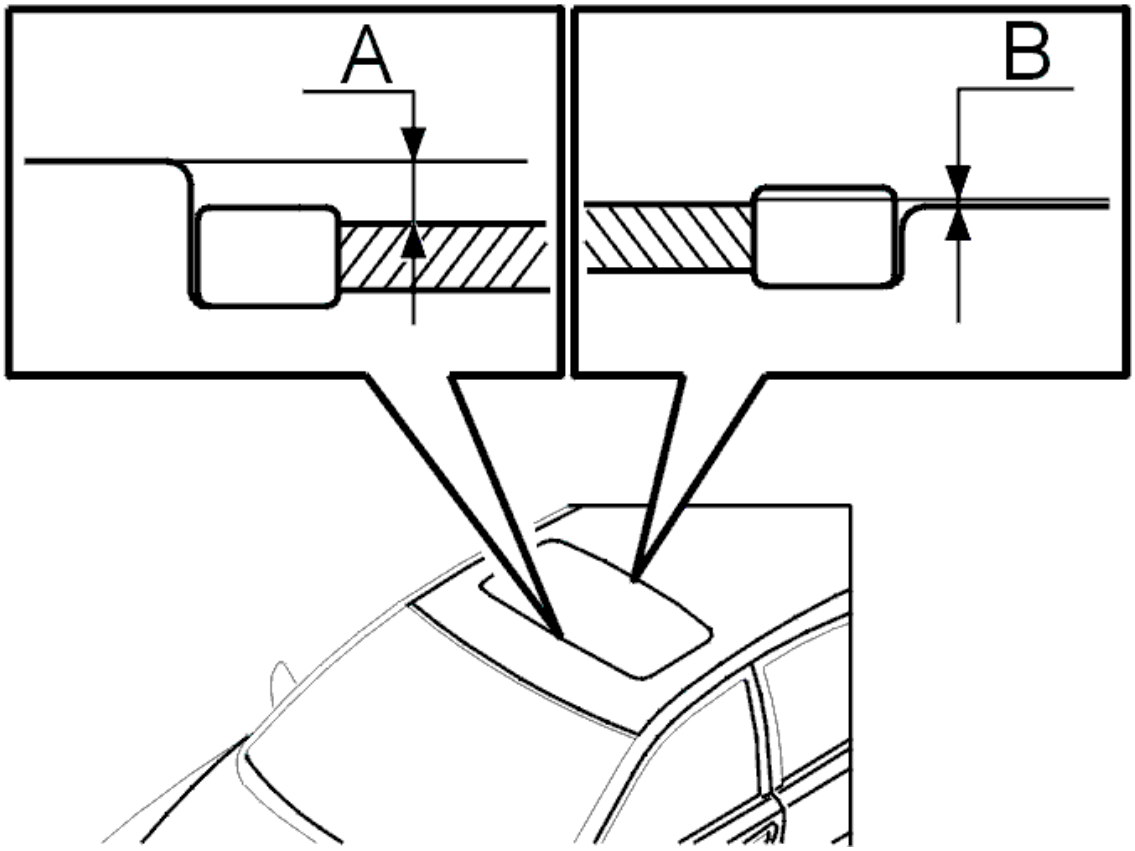

Fig. 2: Identifying Sun Roof Height Adjustment
Courtesy of VOLVO CARS CORPORATION

Slacken off the screws. See **GLASS COVER** .

Lower the sun roof to its closed position.

Front edge:

The upper section of the molding must be flush with or one mm under the roof panel (dimension A).

Rear edge:

The upper section of the molding must be flush with or one mm above the roof panel (dimension A).

Install the 4 M5 screws. Tighten.

Calibrate the sun roof control module. See **SUN ROOF MODULE (SRM), CALIBRATING**.

Install the cargo compartment cover.

ADJUSTING SIDEWAYS AND FRONT-REAR

NOTE: For tightening torques, see TIGHTENING TORQUE .

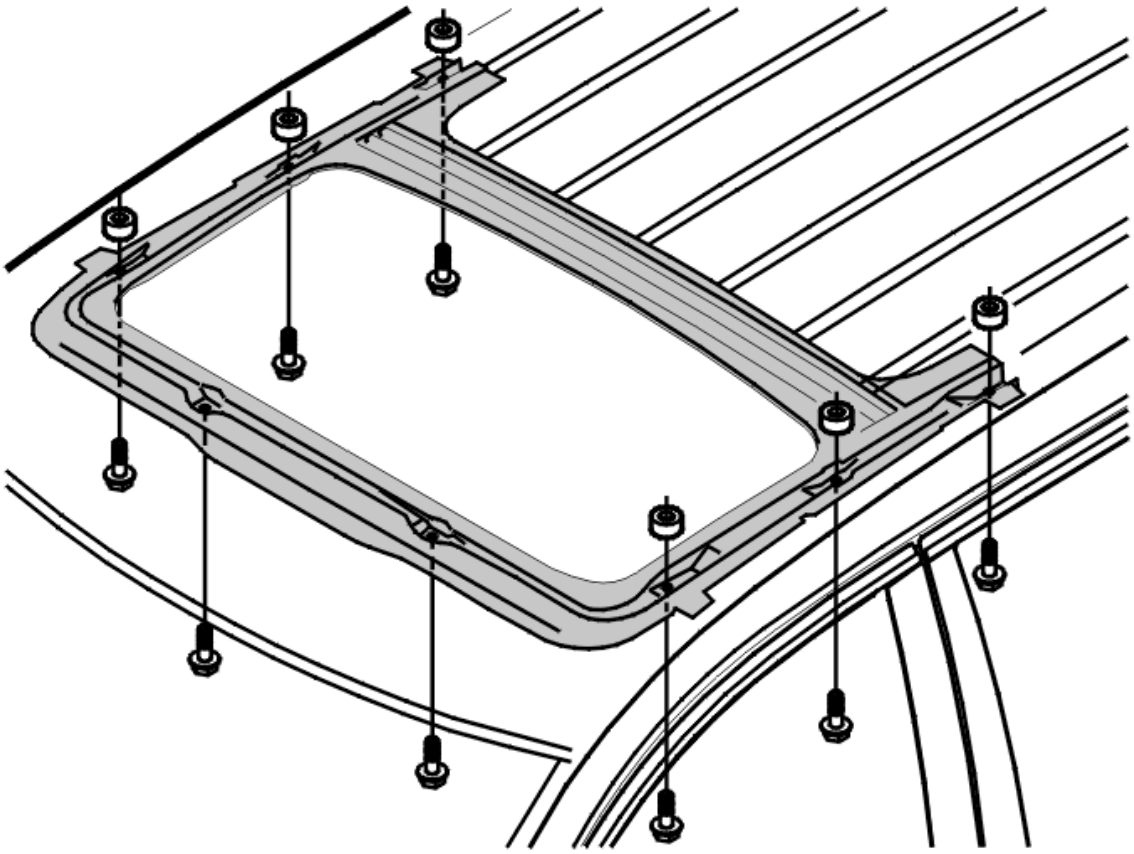

Fig. 3: Identifying Sun Roof Bolts & Nuts
Courtesy of VOLVO CARS CORPORATION

Remove the headlining. See **HEADLINING, REPLACING** .

Slacken off the 8 M6 screws.

Move the sun roof unit so that the sun roof is under even pressure on all sides.

Check the function of the sun roof by opening and closing it as far as it will go.

NOTE: The screws must be tightened for the function check.

Calibrate the sun roof control module. See **SUN ROOF MODULE (SRM), CALIBRATING**.

Tighten the 8 M6 screws.

Install the headlining. See **HEADLINING, REPLACING** .

GLASS COVER

PREPARATIONS

Remove:

Carry out operation, see **APRON MOLDING**.

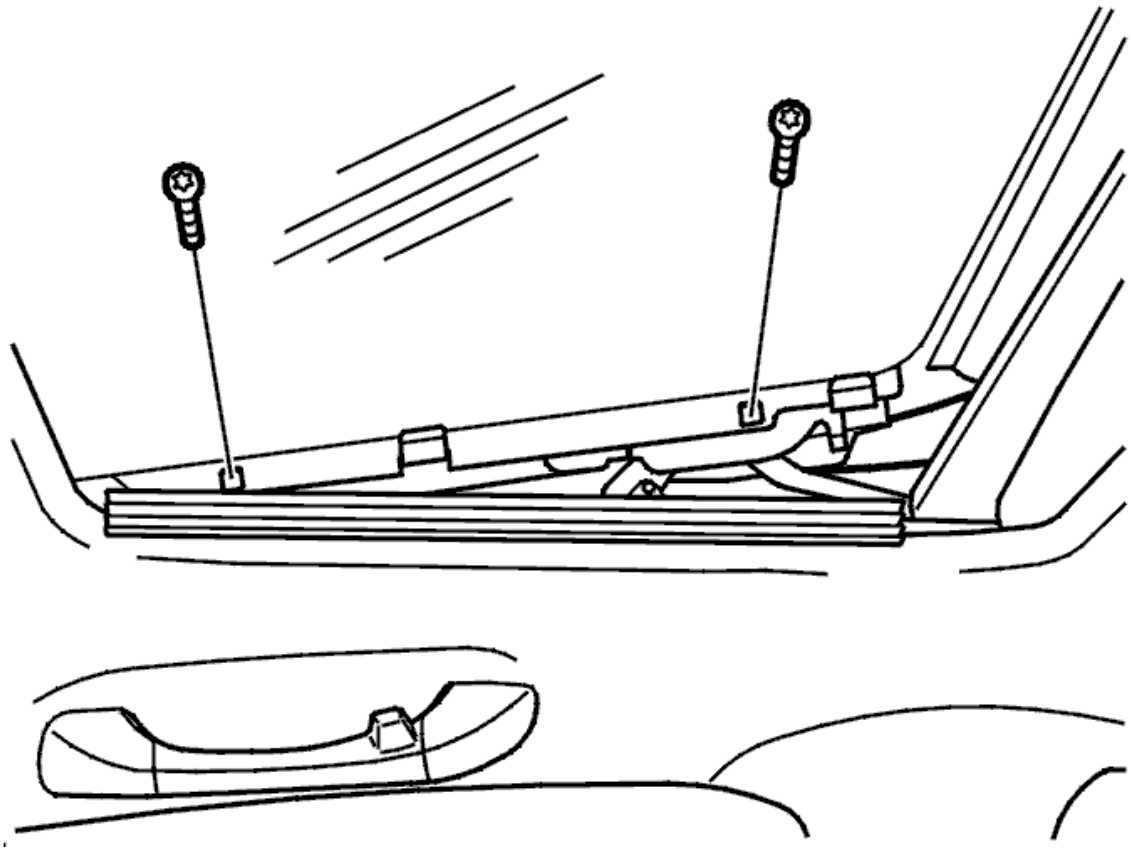

Fig. 4: Identifying Glass Sun Roof And Screws
Courtesy of VOLVO CARS CORPORATION

Remove two screws from each side.

Lift out the glass.

Replace the glass.

Install:

In reverse order.

NOTE: Check that the mechanism has not moved during the replacement.

APRON MOLDING

REPLACING APRON MOLDING

The sun roof in tilted position.

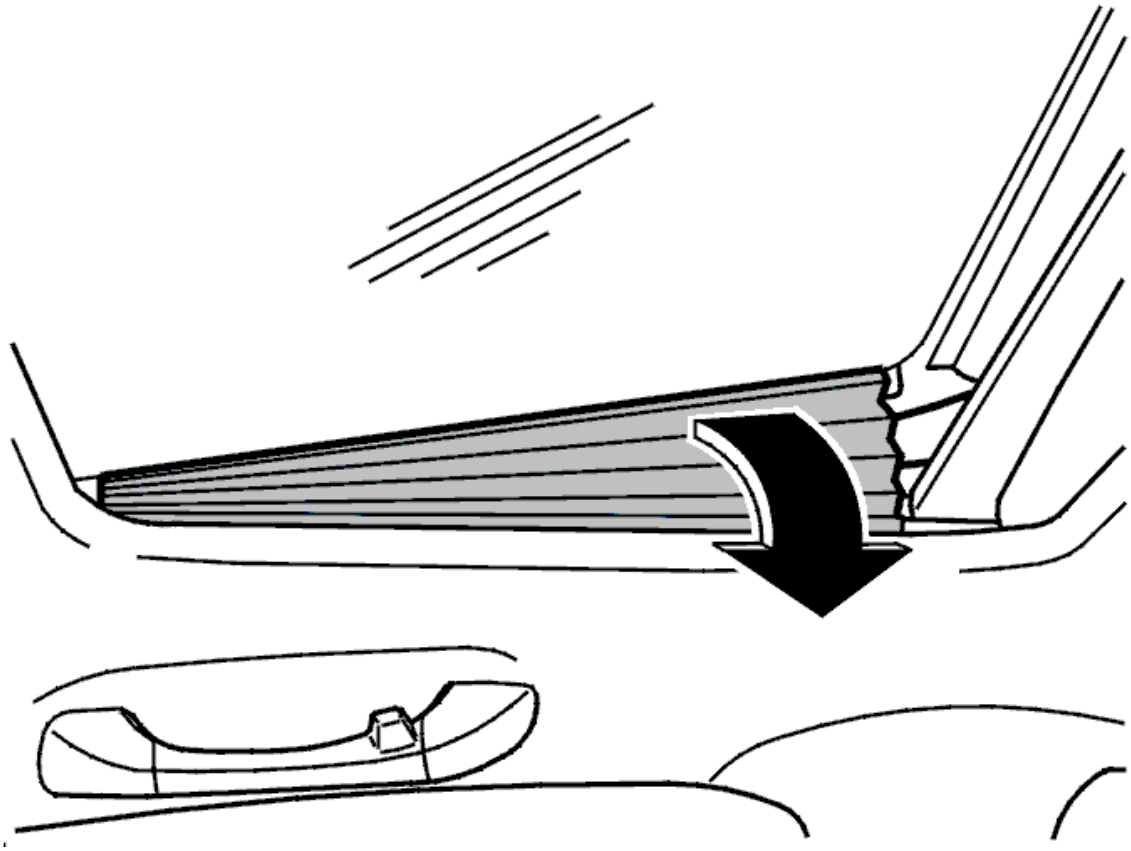

Fig. 5: Identifying Apron Molding Pulled Into Car

Pull the apron molding into the car.

Detach at front edge.

Unhook at the lower edge.

Remove the apron molding.

Install:

In reverse order.

SUN ROOF, LEAK TEST

Special tools:

see **1158957**

NOTE: As the graphics in this service information are used for different model years

and/or models, some variation may occur. However, the essential information in the graphics is always correct.

If any work that may effect the sun roof seals has been carried out, it must be checked.

Remove:

- the A-post panel. See **PANEL A-POST, REPLACING**
- the C-post panel. See **PANEL C-POST, REPLACING** .

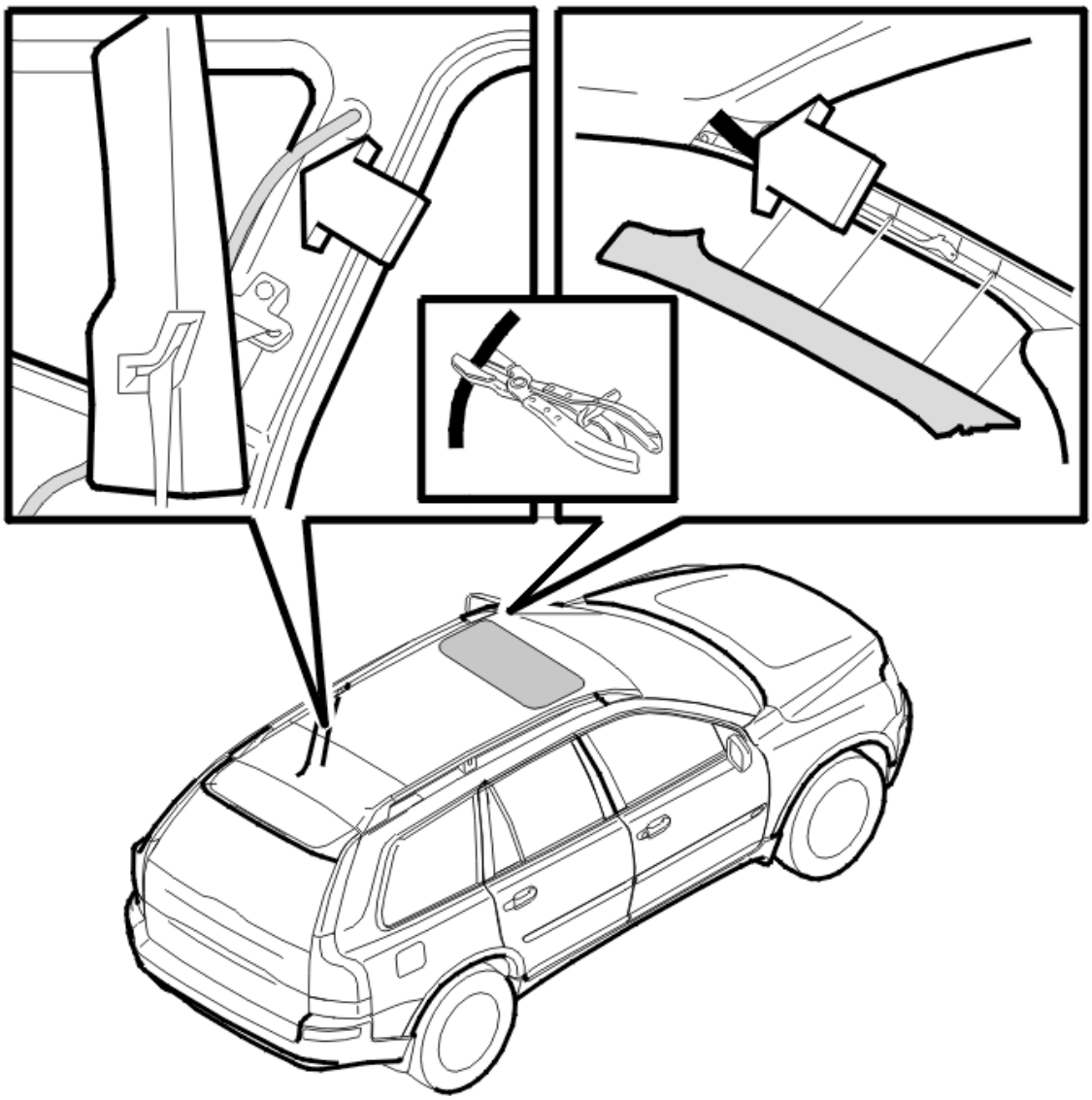

Fig. 6: Sealing Drainage Hoses
Courtesy of VOLVO CARS CORPORATION

Seal the drainage hoses and pour water into the sun roof base plate.

The front hoses are between the A-post and the front edge of the sun roof. The best way to seal the hoses is by clamping them using special tool see **1158957** .

The rear hoses are inside the C-post panel. Seal the hoses by clamping them using special tool see **1158957** .

After work involving the removal of the drainage frame, carry out the following test:

1. Test both the gutters for leaks at the front and rear edges before installing them in the car
2. Install the sun roof base plate in the car and connect the drain hoses
3. Check that all seals are intact. Install other components so that the entire sun roof is complete
4. Seal the drains as above
5. Check for leaks
6. Remove the hose clip and sealant
7. Check that the drains function.

ACCESSORIES AND EQUIPMENT

Doors And Lids - Specifications, Mechanical

DOORS AND HATCHES, GENERAL (2003-12)

DOORS/HOOD/TAILGATE, ADJUSTMENT CHART

ADJUSTMENT DIMENSIONS

Below are the dimensions of the bodywork clearance measured during manufacture of the car. The dimensions are an average value of the dimensions of new cars.

Measurements are taken from painted bodywork. If the bodywork is not painted, the gap increases by approximately 0.2 mm.

NOTE: These dimensions vary from car to car. This list is only a guide from which to work.

No maximum or minimum dimensions are listed, account must be taken of the appearance of the gaps in relation to the surfaces.

NOTE: The final check/adjustment must be made when the car has been painted.

If an unpainted black front fender is installed on a white car, it will be very difficult to, see the size of the gap between the fender and the door.

LEVEL ADJUSTING (APPLIES WHEN ADJUSTING DOORS, FENDERS AND HATCHES)

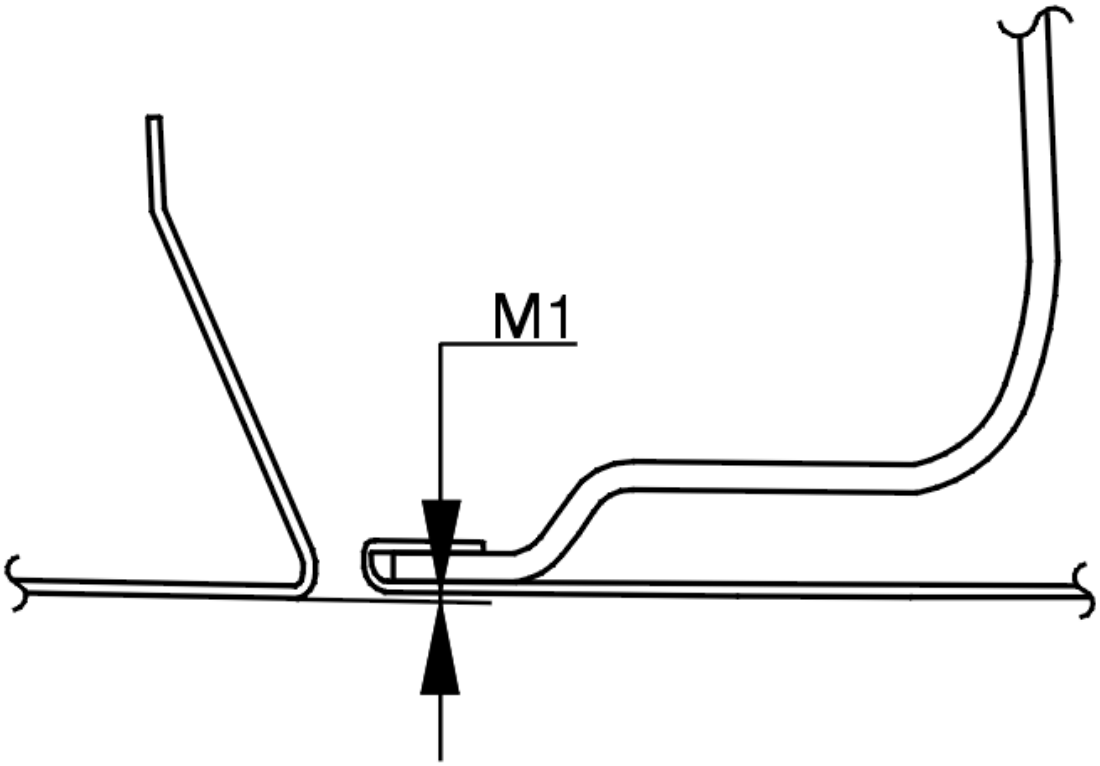

Fig. 1: Identifying Level Adjustment
Courtesy of VOLVO CARS CORPORATION

The front component must overlap the rear component as shown, partly for safety reasons in the event of a collision and partly to reduce wind noise.

Dimension M1 = 0.5 mm

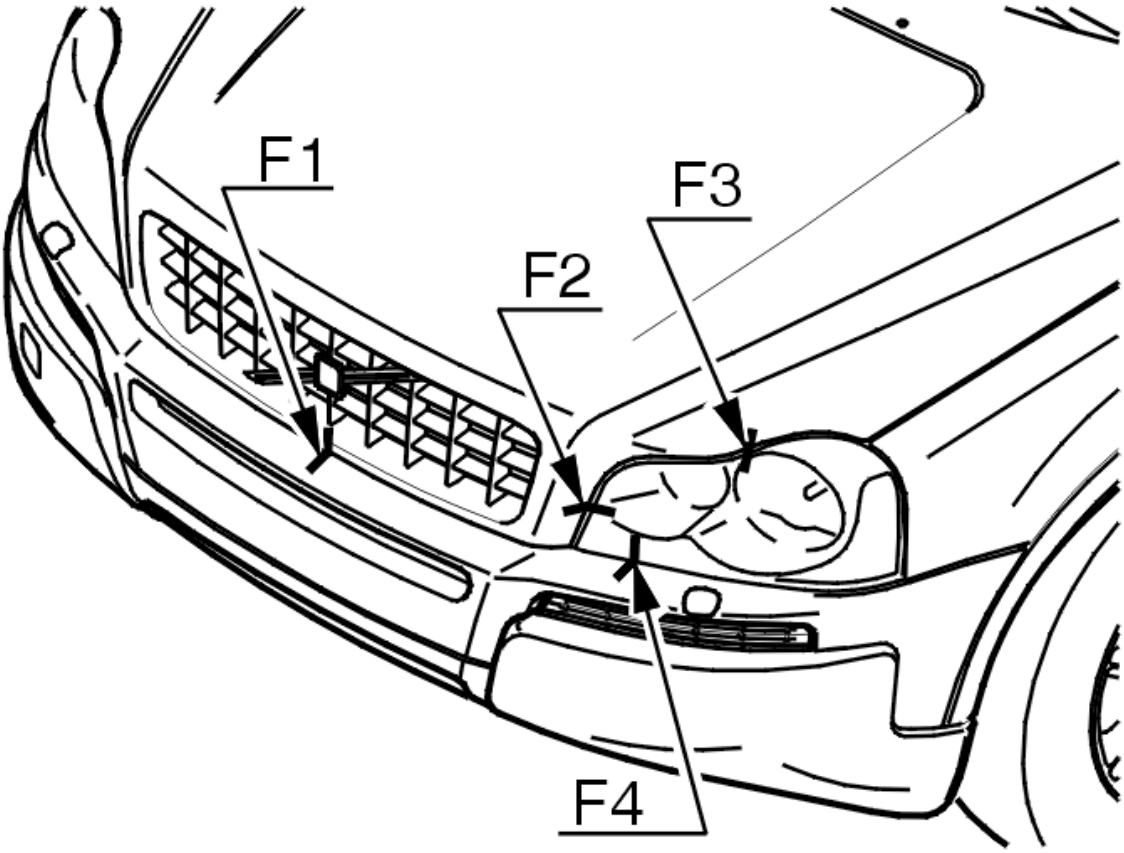

Fig. 2: Identifying Dimensions F1, F2, F3, F4
Courtesy of VOLVO CARS CORPORATION

F1 = 7.0 mm

F2 = 5.3 mm

F3 = 4.0 mm

F4 = 2.0 mm

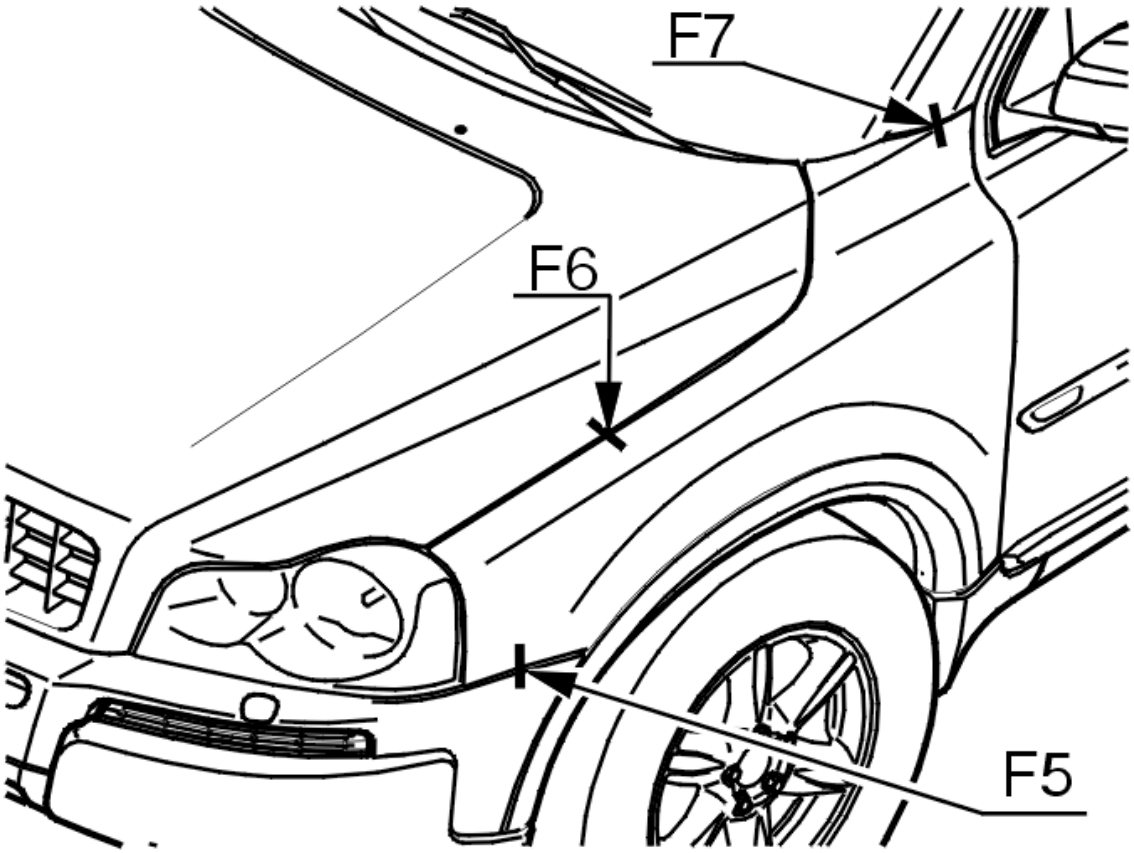

Fig. 3: Identifying Dimensions F5, F6, F7
Courtesy of VOLVO CARS CORPORATION

F5 = 1.0 mm

F6 = 3.0 mm

F7 = 2.6 mm

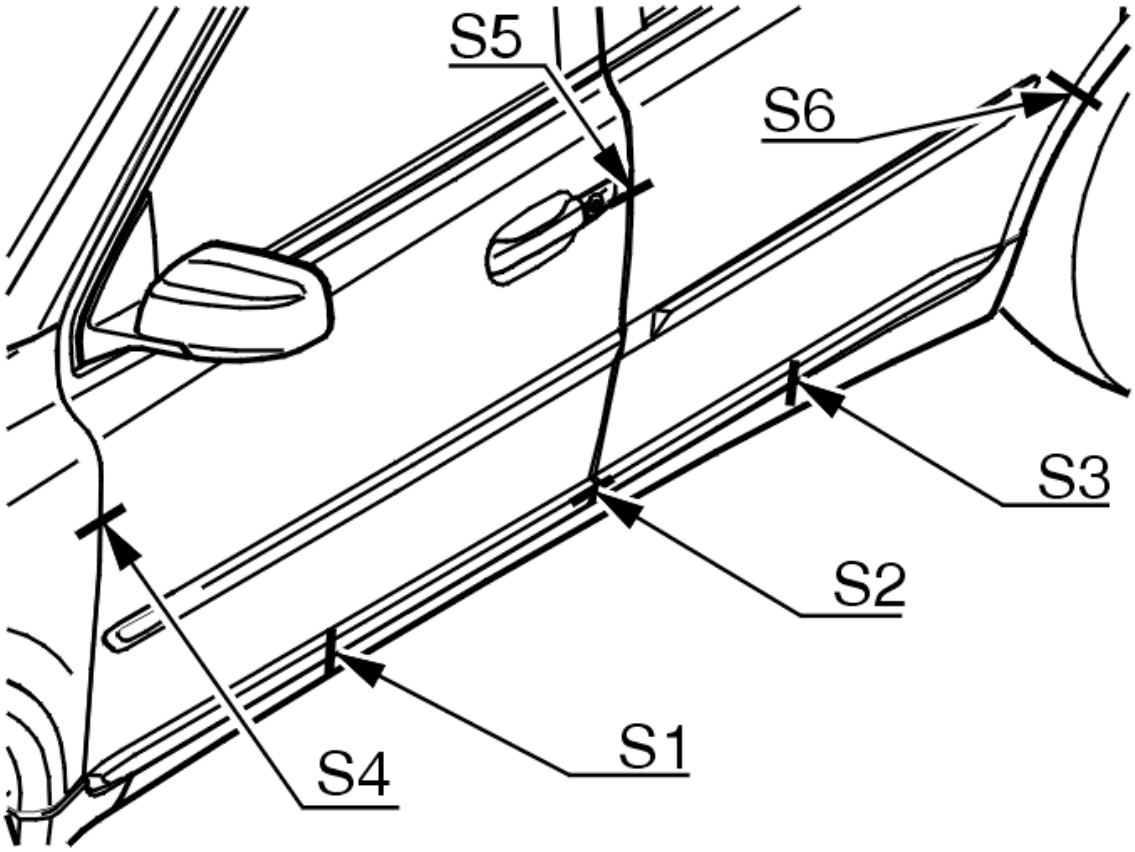

Fig. 4: Identifying Dimensions S1, S2, S3, S4, S5, S6
Courtesy of VOLVO CARS CORPORATION

S1 = 4.6 mm

S2 = 4.5 mm

S3 = 4.6 mm

S4 = 4.9 mm

S5 = 4.5 mm

S6 = 4.0 mm

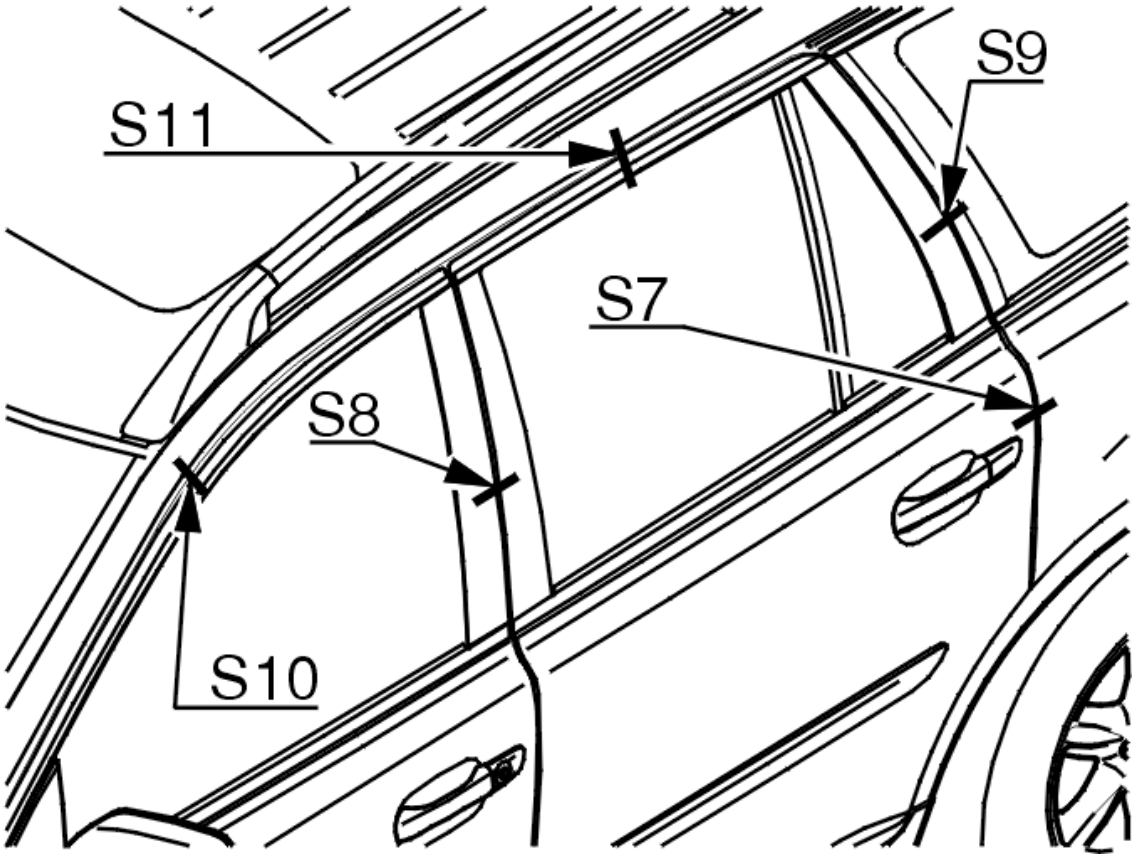

Fig. 5: Identifying Dimensions S7, S8, S9, S10, S11
Courtesy of VOLVO CARS CORPORATION

S7 = 4.5 mm

S8 = 4.5 mm

S9 = 4.8 mm

S10 = 4.8 mm

S11 = 4.8 mm

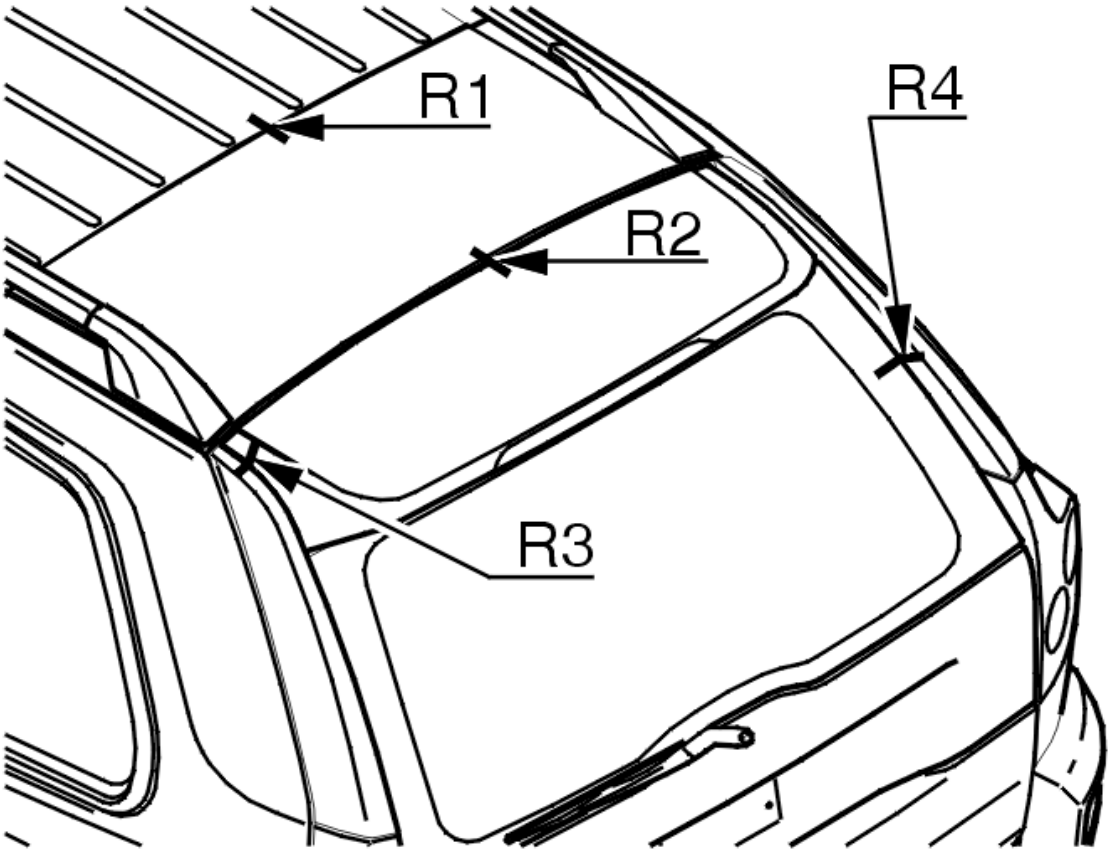

Fig. 6: Identifying Dimensions R1, R2, R3, R4
Courtesy of VOLVO CARS CORPORATION

R1 = 4.0 mm

R2 = 4.8 mm

R3 = 1.6 mm

R4 = 4.0 mm

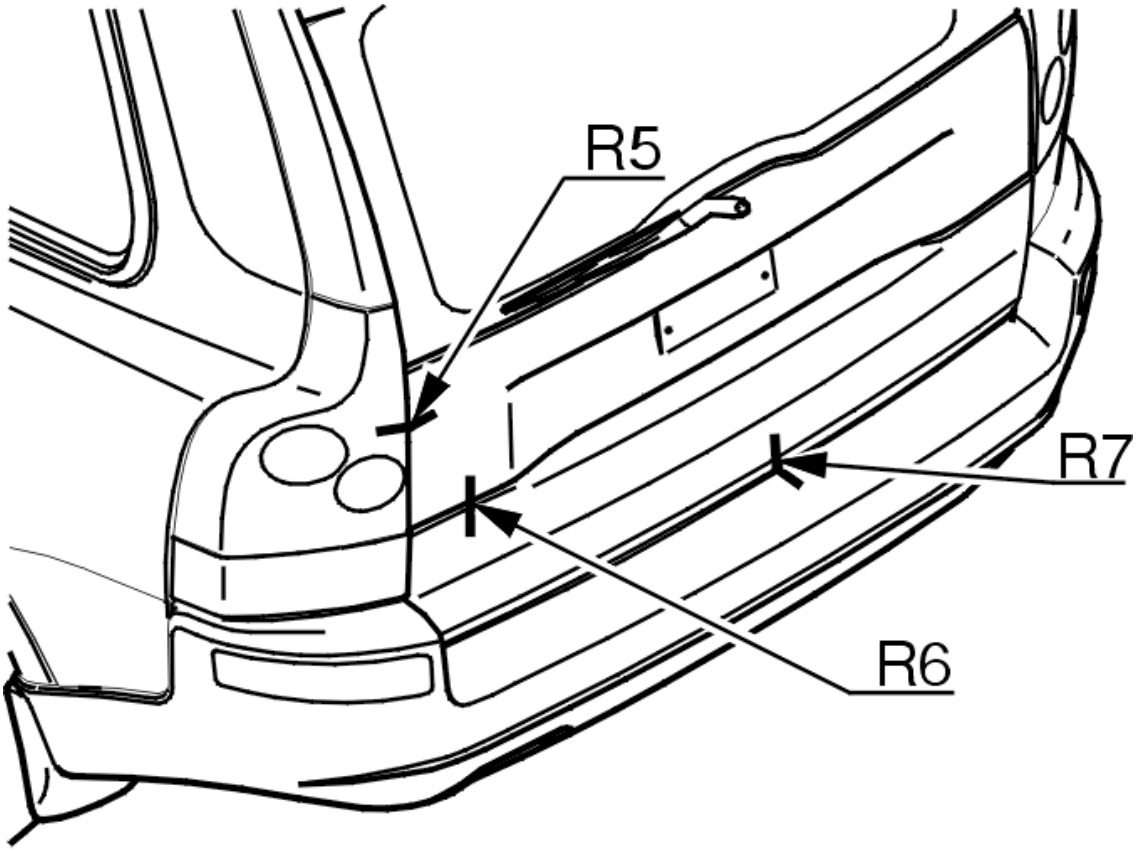

Fig. 7: Identifying Dimensions R5, R6, R7
Courtesy of VOLVO CARS CORPORATION

R5 = 4.2 mm

R6 = 4.0 mm

R7 = 5.0 mm

GENINFO

Electrical system

GENINFO

JACKING POINTS, BODY FRAME

NOTE: **The illustrations in this service information are used for different model years and/or models. Some variation may occur. However, the essential information in the illustrations is always correct.**

JACKING POINTS IN BODY FRAME

JACKING POINTS FOR LIFTING THE VEHICLE, OPTION A

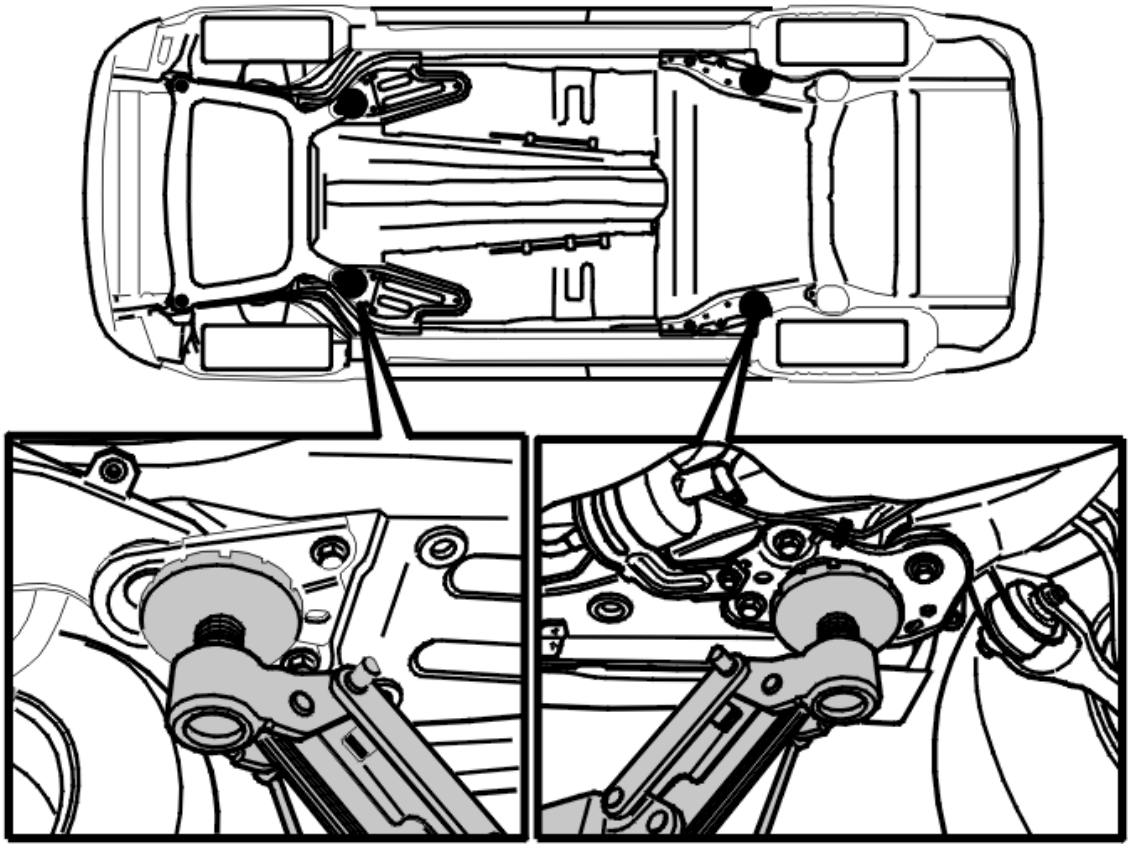

Fig. 1: Identifying Vehicle Lift Points (Alternative A)
Courtesy of VOLVO CARS CORPORATION

The following jacking points must be used when lifting the vehicle. The jacking plate must have a rubber pad to prevent damage to the vehicle.

JACKING POINTS FOR LIFTING THE VEHICLE, OPTION B

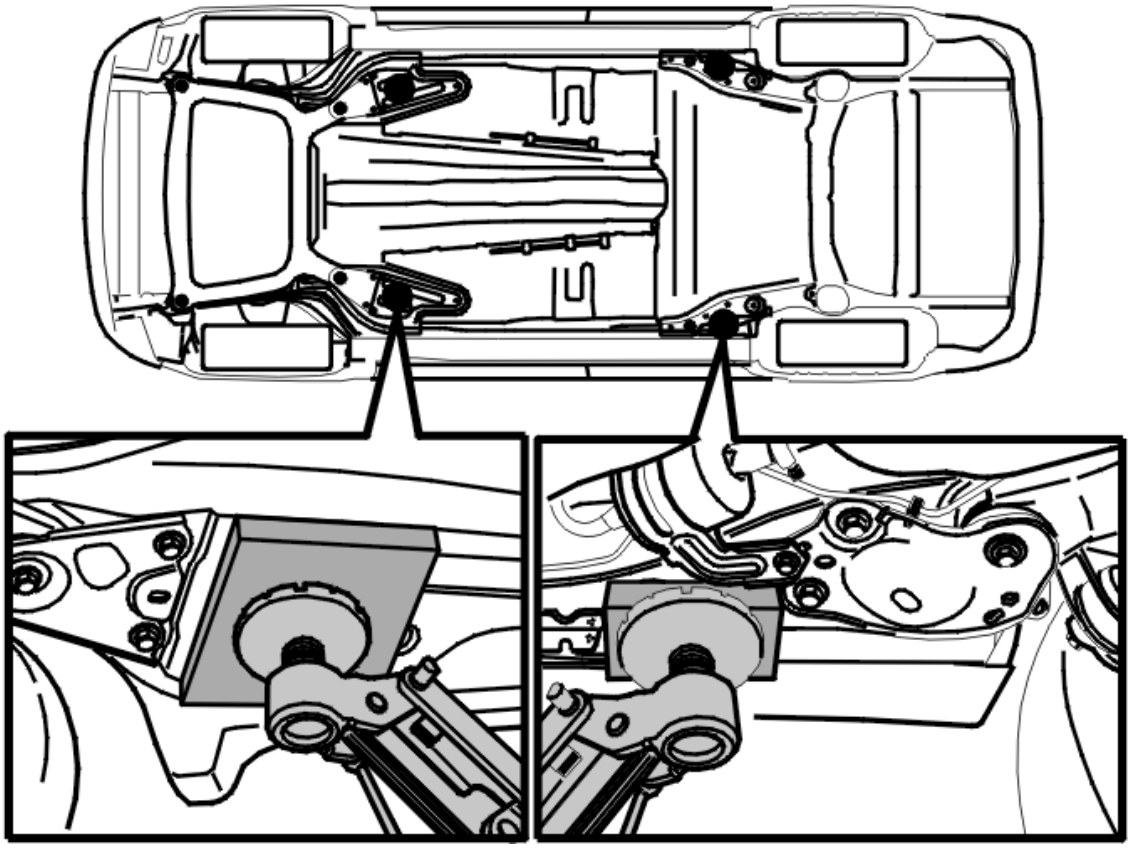

Fig. 2: Identifying Vehicle Lift Points (Alternative B)
Courtesy of VOLVO CARS CORPORATION

The following jacking points must be used when lifting the vehicle. The jacking plate must have a rubber pad to prevent damage to the vehicle.

Front lift:

A wooden load relief plate (200*200*20 mm) must be used behind the sub-frame bracket.

Rear lift:

A wooden spacer (170*80*50 mm) must be used in front of the sub-frame bracket.

ENGINE

Engine - Removal, replacement and installation

CRANK MECHANISM (B6324S; 2007-2010)

CRANKSHAFT FRONT SEAL

Remove the right hand front wheel. See **INSTALLING WHEELS**

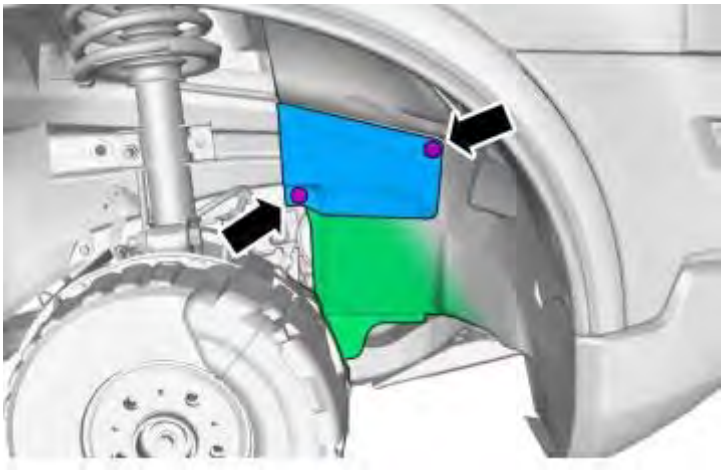

Fig. 1: Locating Access to Front of Engine
Courtesy of VOLVO CARS CORPORATION

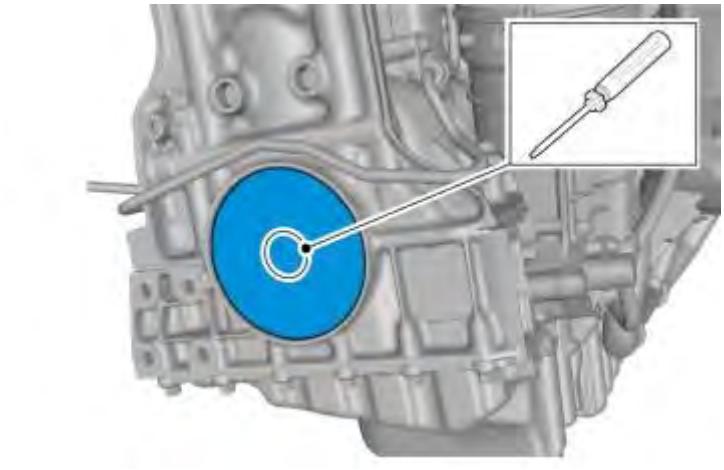

Fig. 2: Identifying Front of Engine
Courtesy of VOLVO CARS CORPORATION

To install, reverse the removal procedure

CRANKSHAFT SEAL, REAR

Special tools

	T9995651 PULLER (REAR SEAL CRANKSHAFT) D5252T **Tool number:** T9995651 **Tool description:** PULLER (REAR SEAL CRANKSHAFT) D5252T **Tool boards:**
	T9997311 DRIFT **Tool number:** T9997311 **Tool description:** DRIFT **Tool boards:**

Materials	
Designation	**Part number**
Emery paper	9511024
Engine oil	

NOTE: Removal steps in this procedure may contain installation details.

Remove the transmission and carrier plate. See **CARRIER PLATE**

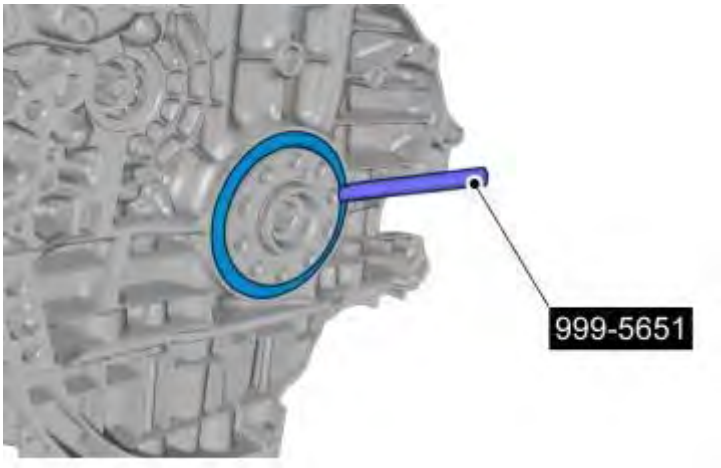

Fig. 3: Removing Seal with Tool 9995651
Courtesy of VOLVO CARS CORPORATION

Use special tool: see **9995651**

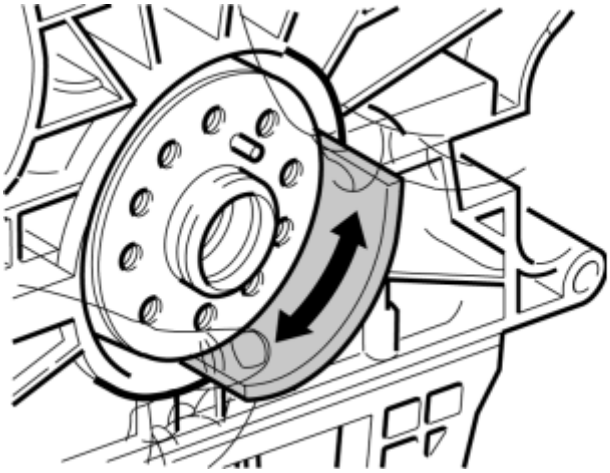

Fig. 4: Identifying Emery paper, 9511024
Courtesy of VOLVO CARS CORPORATION

CAUTION: Cleaning must be directed around the crankshaft journal, not along it. Make sure that any residue from the emery cloth and any other foreign materials are completely removed before installing a new crankshaft rear seal.

Use: Emery paper, 9511024

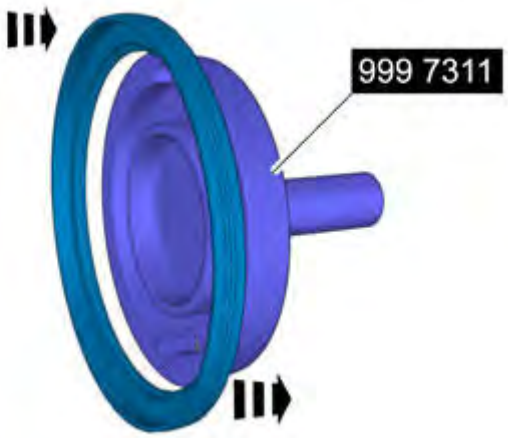

Fig. 5: Fitting New Seal on Tool 9997311
Courtesy of VOLVO CARS CORPORATION

Use special tool: see **9997311**

Use: ,

Engine oil

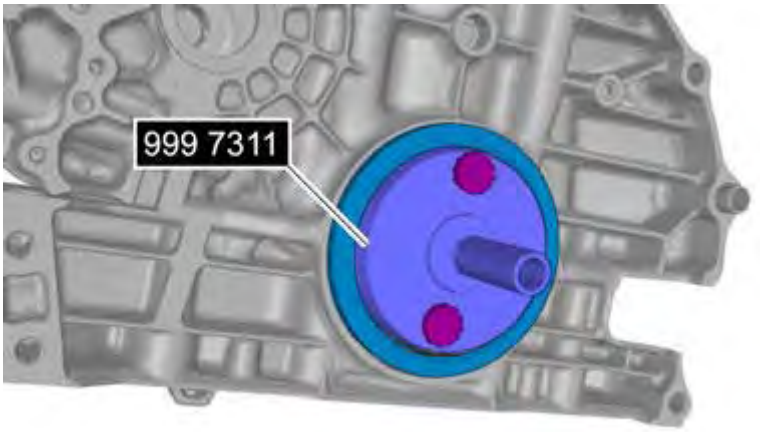

Fig. 6: Seal Holder Installed on Crank End
Courtesy of VOLVO CARS CORPORATION

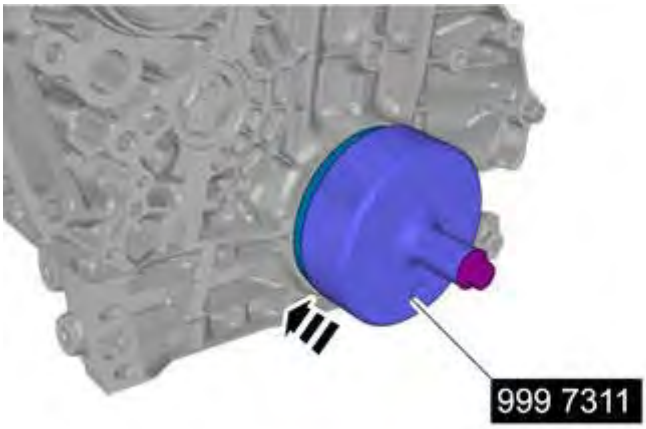

Fig. 7: Installing The Seal
Courtesy of VOLVO CARS CORPORATION

To install, reverse the removal procedure.

CRANK MECHANISM (B6324S, TF-80SC; B6324S, TF-80SC AWD; 2007-2010)

CARRIER PLATE

Special tools	
	T9997120 Gear sector **Tool number:** T9997120 **Tool description:** Gear sector **Tool boards:**
	T9995678 SPECIAL SCREW (FLYWHEEL) B4184-B6304

Tool number: T9995678
Tool description: SPECIAL SCREW (FLYWHEEL) B4184-B6304
Tool boards:

NOTE: Removal steps in this procedure may contain installation details.

Remove the transaxle. See **TRANSMISSION** (B6324S, TF-80SC AWD; 2007-2010) or **TRANSMISSION** (B6324S, TF-80SC; 2007-2010).

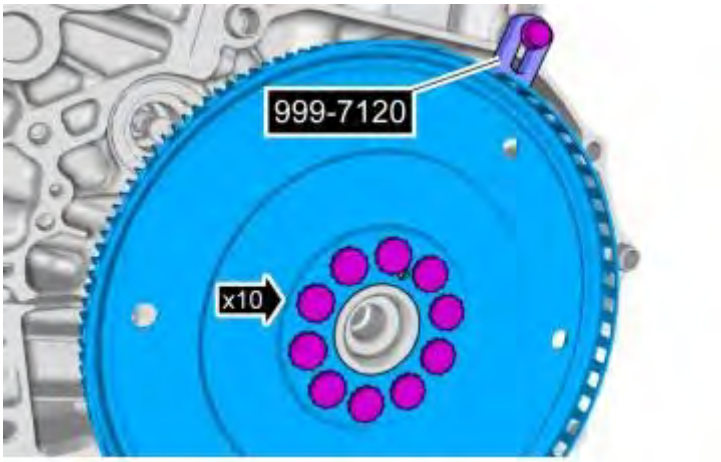

Fig. 8: Identifying Flex Plate Gear Sector & Bolts
Courtesy of VOLVO CARS CORPORATION

see **9997120** .

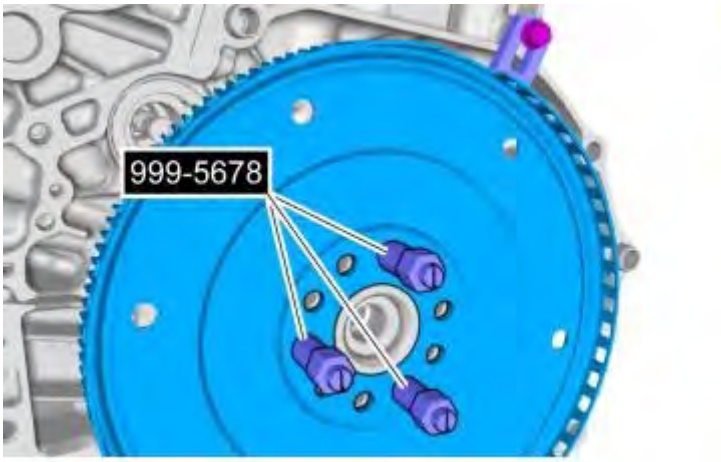

Fig. 9: Identifying Flex Plate Bolts
Courtesy of VOLVO CARS CORPORATION

see **9995678** .

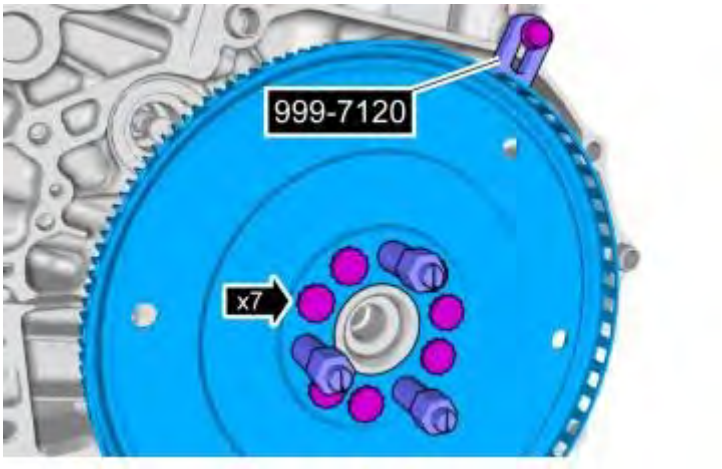

Fig. 10: Identifying Flex Plate Bolts & Gear Sector
Courtesy of VOLVO CARS CORPORATION

see **9995678** and see **9997120** .

Tightening torque: Flexplate, see **TIGHTENING TORQUE** .

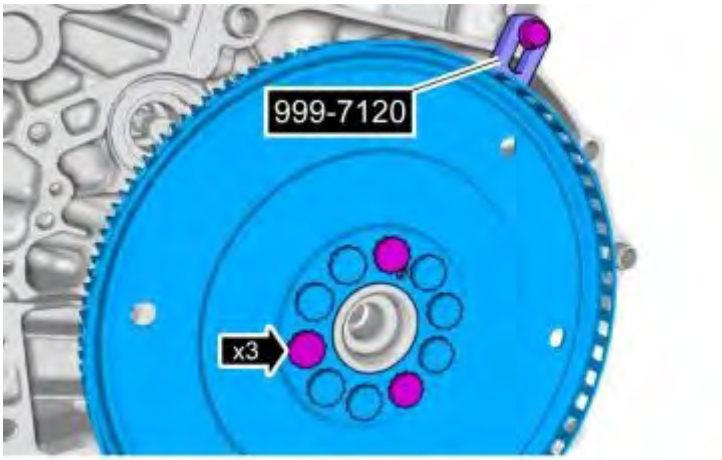

Fig. 11: Identifying Flex Plate Gear Sector & Bolts
Courtesy of VOLVO CARS CORPORATION

see **9997120** .

Tightening torque: Flexplate, see **TIGHTENING TORQUE** .

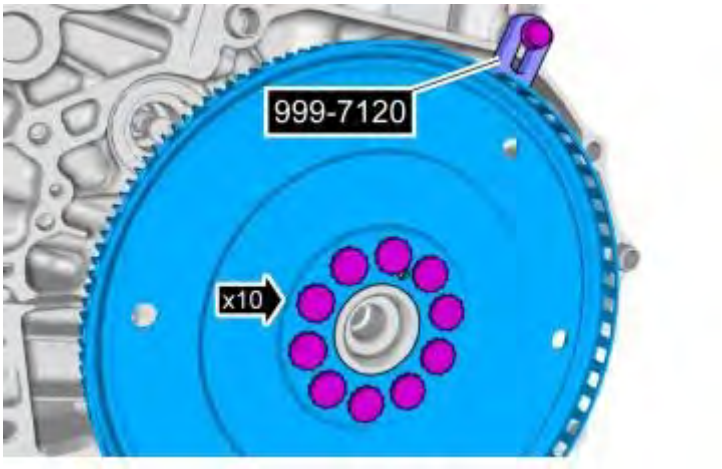

Fig. 12: Identifying Flex Plate Gear Sector & Bolts
Courtesy of VOLVO CARS CORPORATION

see **9997120** .

Tightening torque: Flexplate, see **TIGHTENING TORQUE** .

Install the transaxle. See **TRANSMISSION** (B6324S, TF-80SC; 2007-2010) or **TRANSMISSION** (B6324S, TF-80SC AWD; 2007-2010).

CRANK MECHANISM (B6324S5; 2011-2012)

CRANKSHAFT FRONT SEAL

see **CRANKSHAFT FRONT SEAL**

CRANKSHAFT SEAL, REAR

see **CRANKSHAFT SEAL, REAR**

CRANK MECHANISM (B6324S5, TF-80SC; B6324S5, TF-80SC AWD; 2011-2012)

CARRIER PLATE

see **CARRIER PLATE**

CRANK MECHANISM (B8444S, TF-80SC AWD; 2005-2011)

CARRIER PLATE

see **CARRIER PLATE**

CYLINDER HEAD (B6324S; 2007-2010)

CYLINDER HEAD

Special tools	
	T9997300 WRENCH **Tool number:** T9997300 **Tool description:** WRENCH **Tool boards:**

Materials:	
Designation	**Part number**
Gasket solution	1161 440

Depressurize the fuel system. See **FUEL SYSTEM PRESSURE RELEASE**

Remove the following items:

- the exhaust manifold. See **EXHAUST MANIFOLD**
- induction pipe. See **INDUCTION PIPE**
- the valve cover. See **VALVE COVER**
- injectors and fuel rail. See **INJECTOR** .

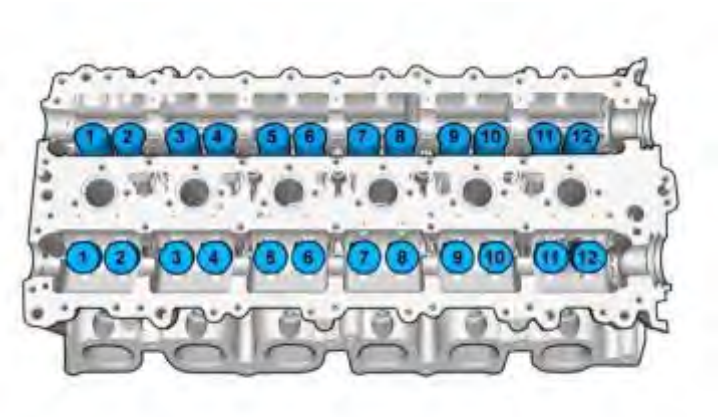

Fig. 13: Keeping Components In Order Upon Removal
Courtesy of VOLVO CARS CORPORATION

NOTE: Note/mark the position of the components before removal.

Lift out the valve lifters. Use a magnet or suction cup.

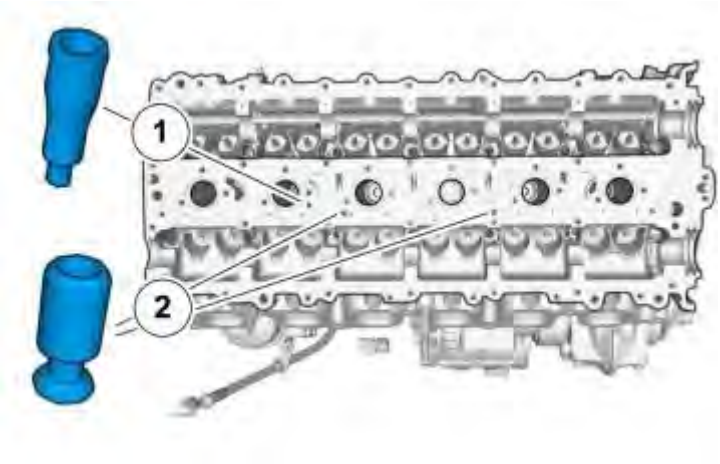

Fig. 14: Identifying Throttle Valves
Courtesy of VOLVO CARS CORPORATION

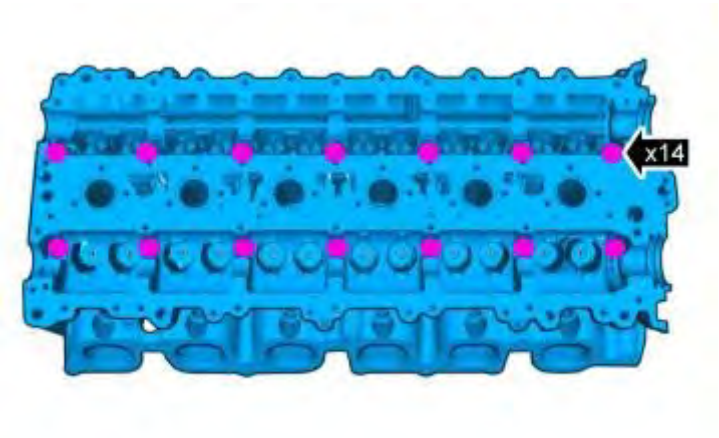

Fig. 15: Identifying Cylinder Head Bolts
Courtesy of VOLVO CARS CORPORATION

CAUTION: Take extra care not to damage the mating faces.

CAUTION: Make sure that the mating faces are clean and free of foreign material.

CAUTION: Make sure that the cylinder head screw's threaded holes in the engine block are free of fluid.

Use: Gasket solution, 1161 440

Thoroughly blow clean the oil ducts in the cylinder head.

Fig. 16: Identifying Special Tool (9997300) For Left-Threaded Sleeves
Courtesy of VOLVO CARS CORPORATION

Check that the left-threaded sleeves are tightened to the bottom.

Cylinder screw sleeves. See **TIGHTENING TORQUE**

see **9997300**

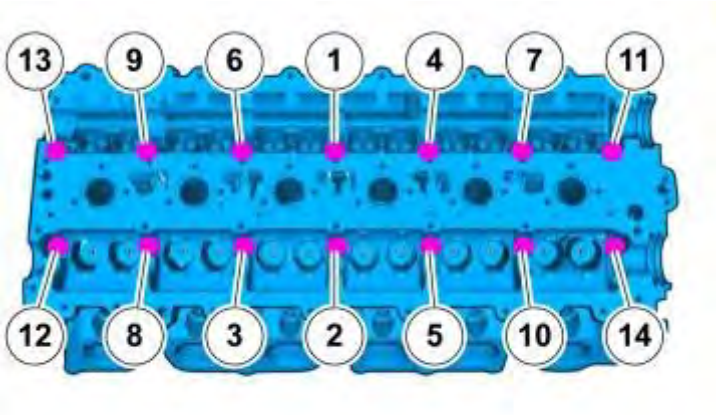

Fig. 17: Identifying Torque Sequence
Courtesy of VOLVO CARS CORPORATION

CAUTION: Take extra care not to damage the mating faces.

Cylinder head. See **TIGHTENING TORQUE**

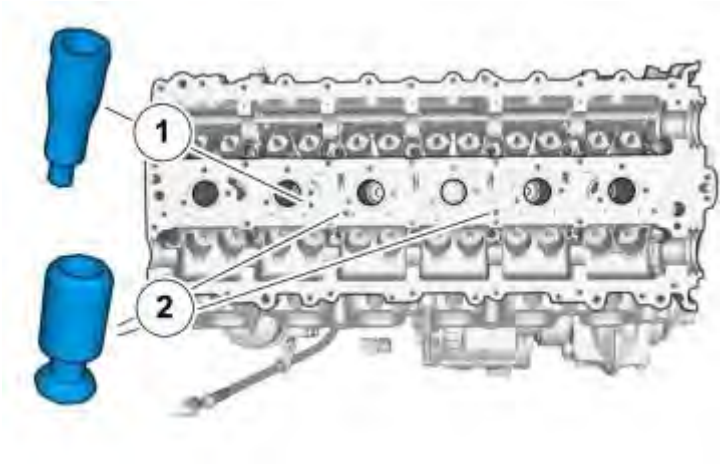

Fig. 18: Identifying Throttle Valves
Courtesy of VOLVO CARS CORPORATION

Make sure that the throttle valves (1) and (2) are in place.

Upon replacement of the cylinder head gasket along, reinstall the valve lifters in their original position.

Fig. 19: Locating Locating Pin
Courtesy of VOLVO CARS CORPORATION

When the cylinder head is replace, valve clearance must be checked. See **VALVE CLEARANCE CHECK, ADJUSTMENT** .

Install the following items:

- the valve cover. See **VALVE COVER**
- injectors and fuel rail. See **INJECTOR**
- the intake manifold, see **INDUCTION PIPE**
- the exhaust manifold, see **EXHAUST MANIFOLD** .

Replace the engine oil and oil filter. See **OIL FILTER** .

Check the engine oil and coolant levels.

Warm up the engine until the thermostat opens. Check the engine for leaks.

Top up the coolant if necessary. See **COOLING SYSTEM - DRAINING, CHARGING AND BLEEDING** .

VALVE COVER

Special tools	
	T9512767 ROLLER (APPLY LIQUID GASKET) B234, 5234, 6304 **Tool number:** T9512767 **Tool description:** ROLLER (APPLY LIQUID GASKET) B234, 5234, 6304 **Tool boards:**

Materials	
Designation	**Part number**
gasket solution	1161 440
Chemical gasket	1161 059

Remove the inner gasket, timing cover. See **GASKET, INNER TIMING COVER**

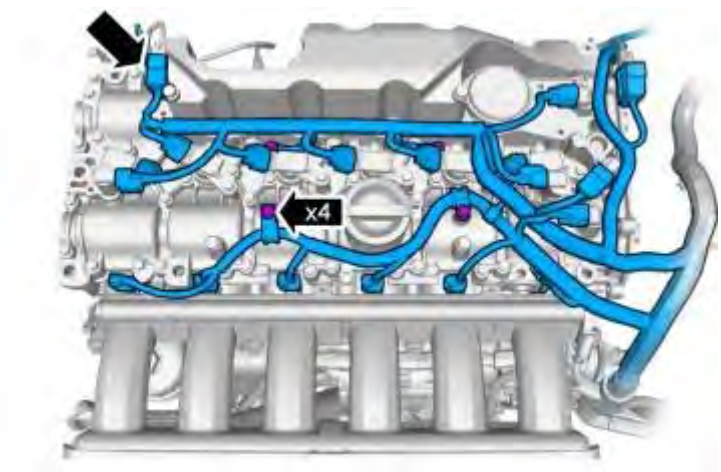

Fig. 20: Identifying Wire Harness Clips
Courtesy of VOLVO CARS CORPORATION

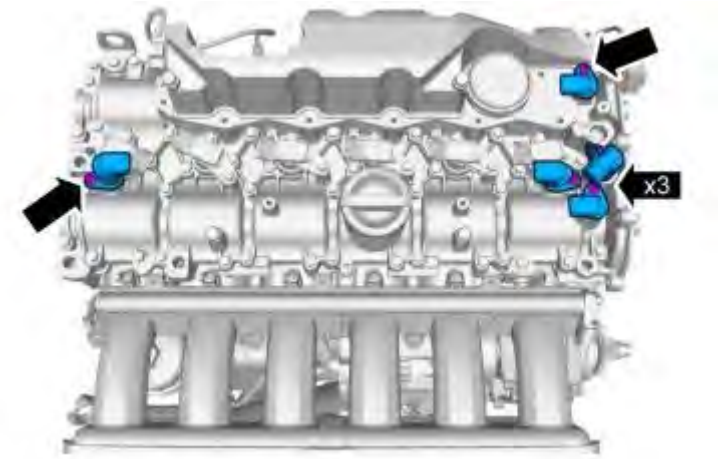

Fig. 21: Removing Engine Components (1 Of 2)
Courtesy of VOLVO CARS CORPORATION

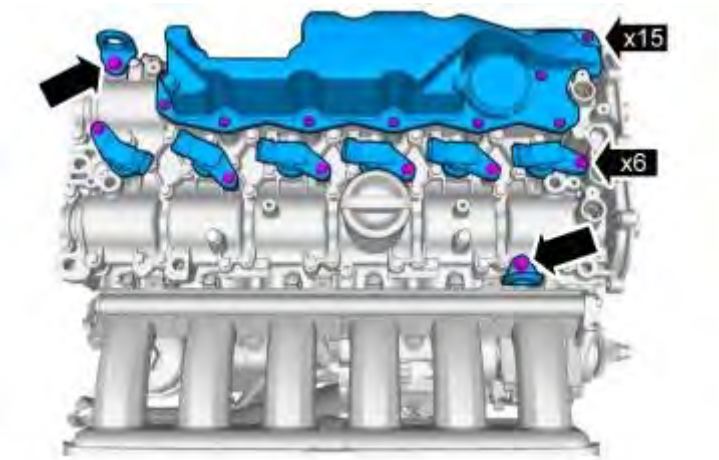

Fig. 22: Removing Engine Components (2 Of 2)
Courtesy of VOLVO CARS CORPORATION

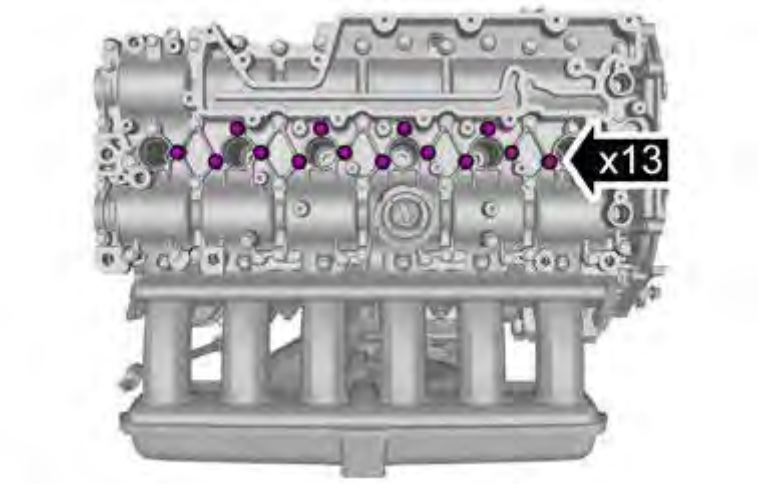

Fig. 23: Identifying 13 Screws

Courtesy of VOLVO CARS CORPORATION

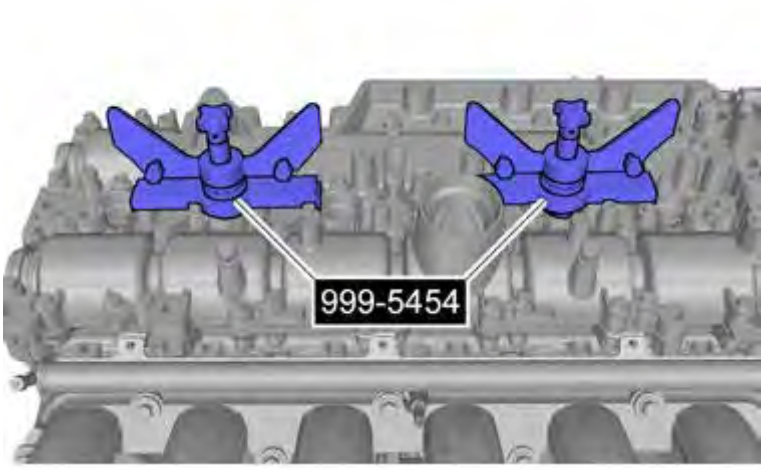

Fig. 24: Press Tools Installed
Courtesy of VOLVO CARS CORPORATION

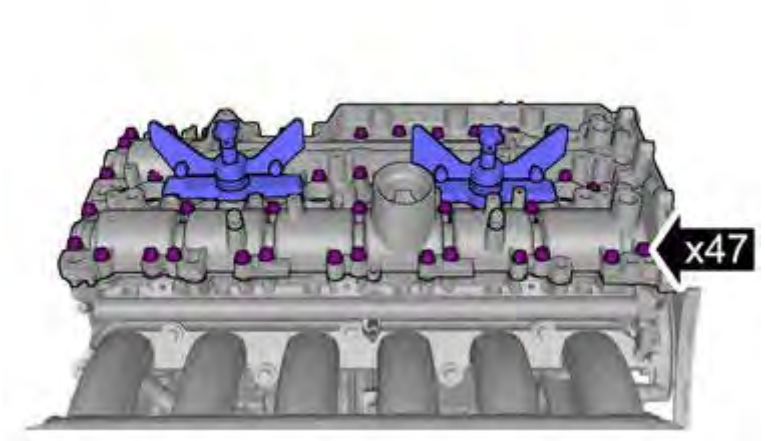

Fig. 25: Identifying 47 Screws
Courtesy of VOLVO CARS CORPORATION

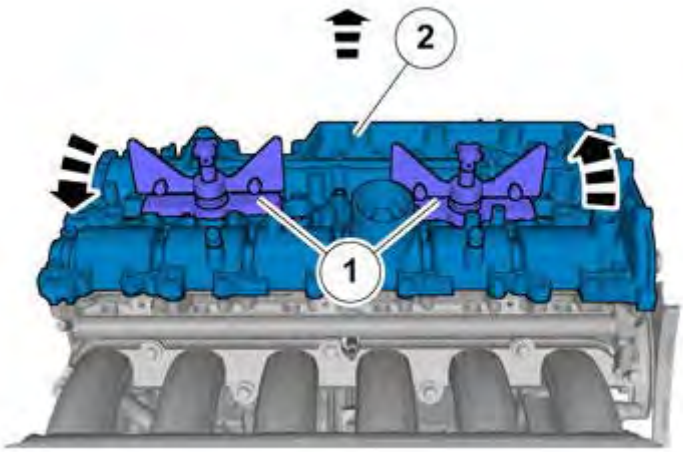

Fig. 26: Releasing Press Tools
Courtesy of VOLVO CARS CORPORATION

CAUTION: Take extra care not to damage the mating faces.

NOTE: Only use moderate force.

CAUTION: Take extra care when handling the components.

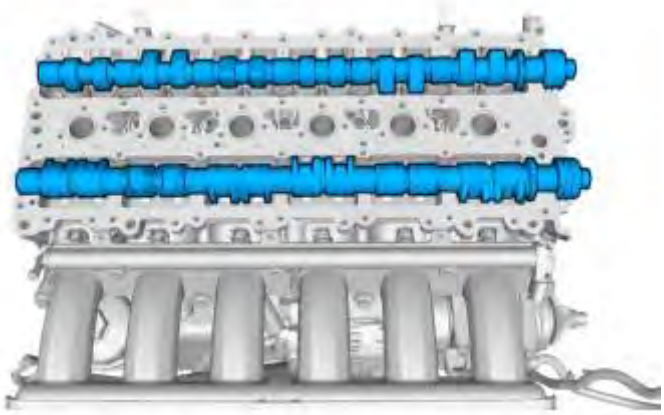

Fig. 27: Identifying Camshafts
Courtesy of VOLVO CARS CORPORATION

CAUTION: Note the position of each component before removal.

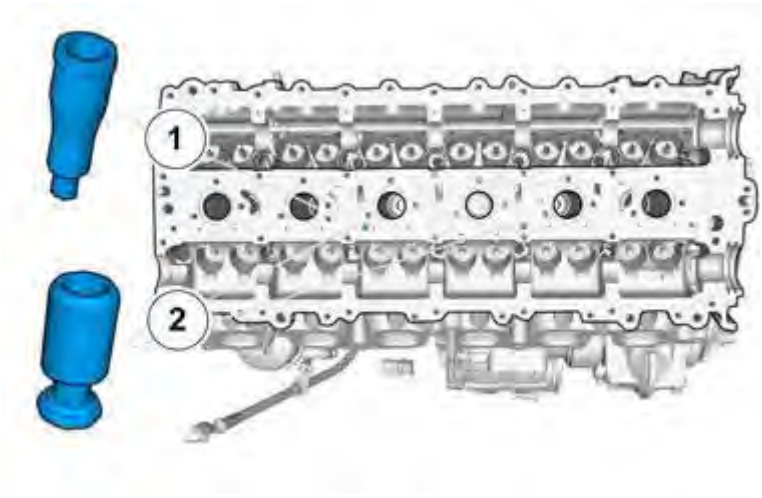

Fig. 28: Identifying Throttle Valves 1 and 2
Courtesy of VOLVO CARS CORPORATION

CAUTION: Note the position of each component before removal.

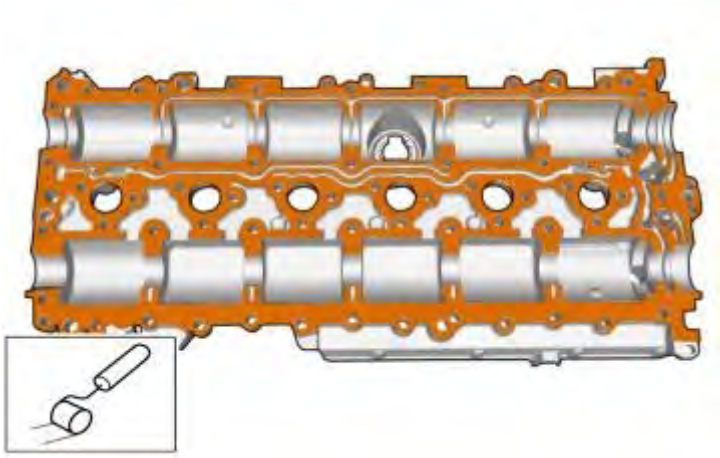

Fig. 29: Applying Gasket Solution, 1161 440
Courtesy of VOLVO CARS CORPORATION

CAUTION: Make sure that the mating faces are clean and free of foreign material.

CAUTION: Make sure that the oil galleries are clean and free of foreign material.

Use: gasket solution, 1161 440

Use special tool: see **9512767**

Use: liquid gasket, 1161 059

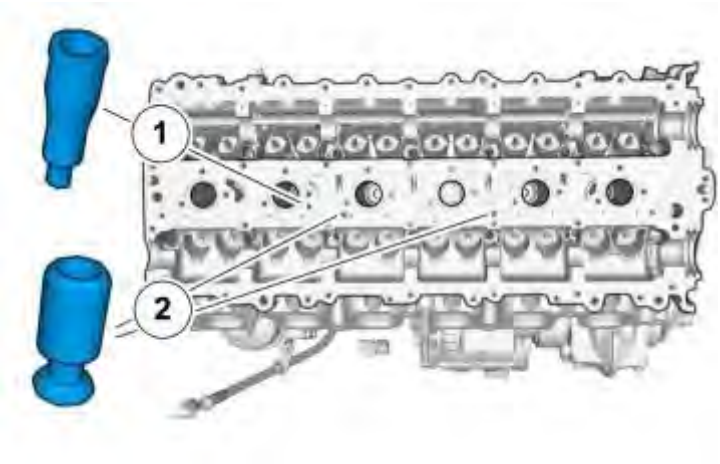

Fig. 30: Identifying Throttle Valves
Courtesy of VOLVO CARS CORPORATION

NOTE: Make sure that these components are installed to the noted removal position.

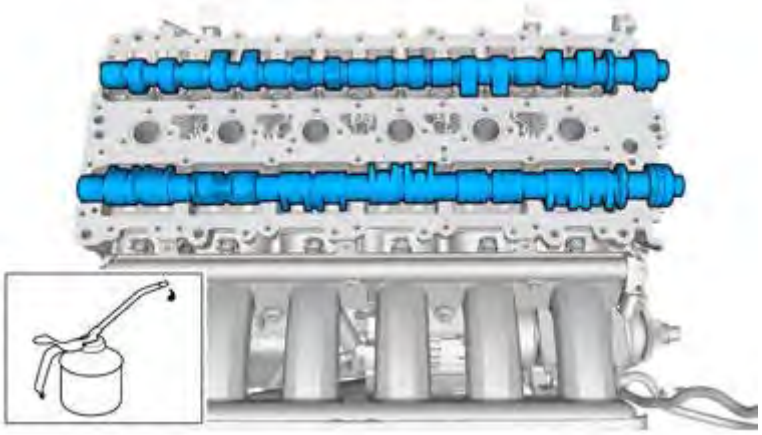

Fig. 31: Identifying Camshafts
Courtesy of VOLVO CARS CORPORATION

NOTE: Make sure that these components are installed to the noted removal position.

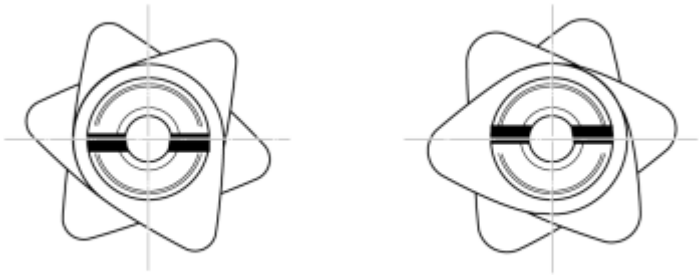

Fig. 32: Locating Installation Marks
Courtesy of VOLVO CARS CORPORATION

NOTE: Make sure that the installation marks are aligned.

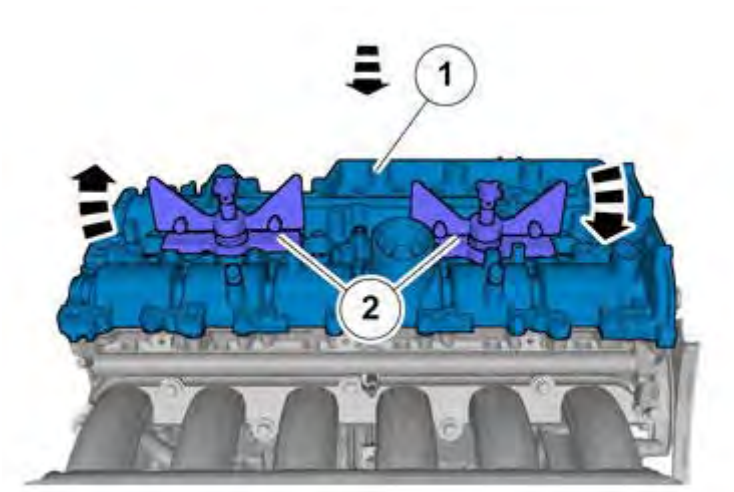

Fig. 33: Installation Of Press Tools
Courtesy of VOLVO CARS CORPORATION

CAUTION: Take extra care not to damage the mating faces.

CAUTION: Take extra care when handling the component.

NOTE: Only use moderate force.

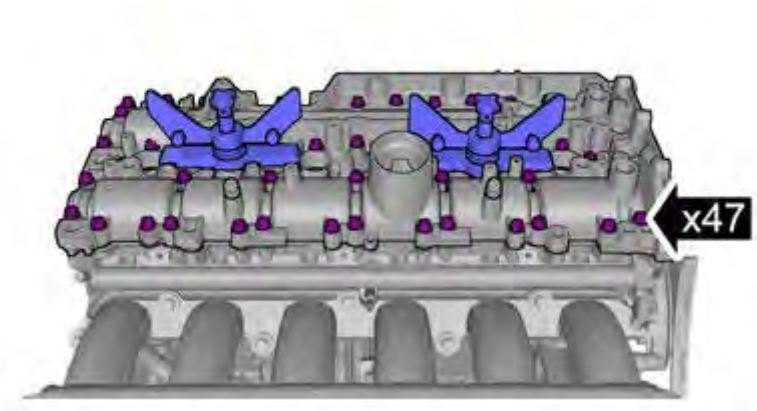

Fig. 34: Identifying 47 Screws
Courtesy of VOLVO CARS CORPORATION

Tightening torque: M7, 17 Nm

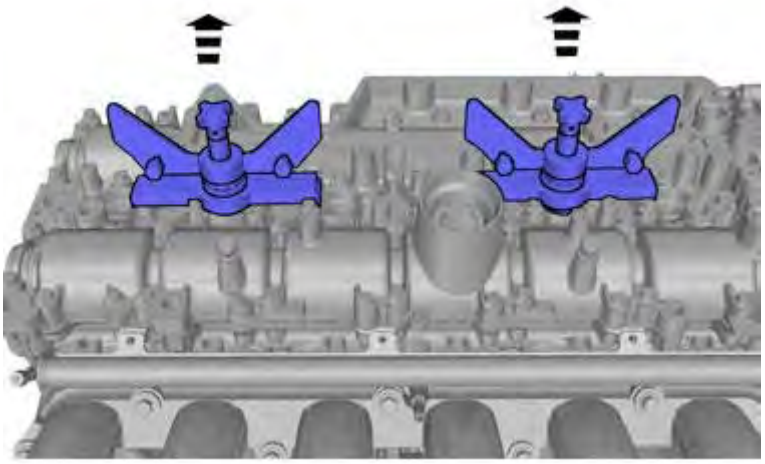

Fig. 35: Removing Tools
Courtesy of VOLVO CARS CORPORATION

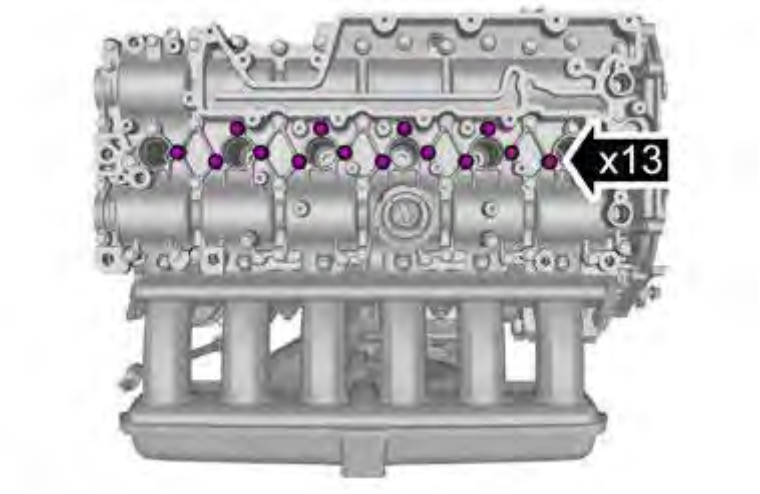

Fig. 36: Identifying 13 Screws
Courtesy of VOLVO CARS CORPORATION

Tightening torque: M7, 17 Nm

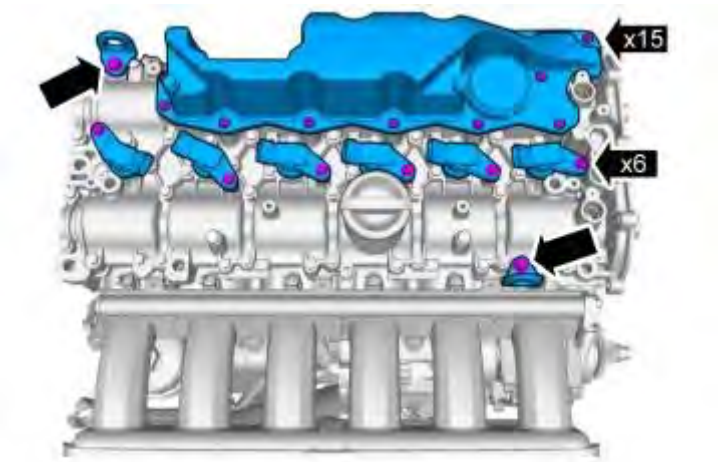

Fig. 37: Removing Identified Components
Courtesy of VOLVO CARS CORPORATION

1. **Tightening torque:** M6, 10 Nm
2. **Tightening torque:** M10, 50 Nm

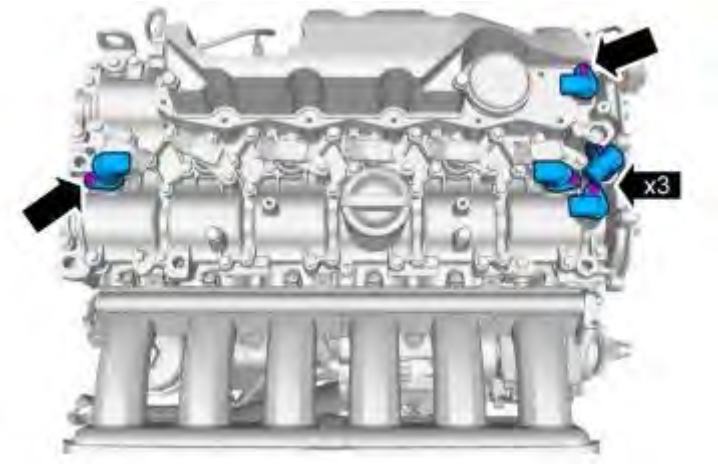

Fig. 38: Removing Identified Components
Courtesy of VOLVO CARS CORPORATION

Tightening torque: M6, 10 Nm

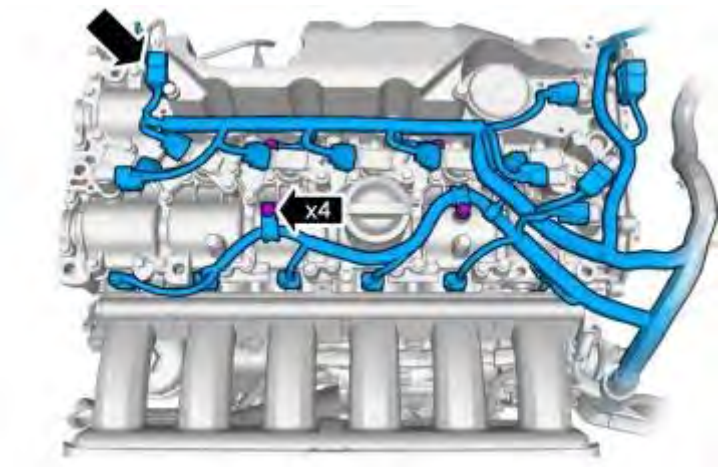

Fig. 39: Identifying Wire Harness Clips
Courtesy of VOLVO CARS CORPORATION

Install gasket inner timing gear casing. See **GASKET, INNER TIMING COVER**.

CYLINDER HEAD (B6324S5; 2011-2012)

CYLINDER HEAD

see **CYLINDER HEAD**

VALVE COVER

see **VALVE COVER**

ENGINE/TRANSAXLE, REMOVING (B8444S)

ENGINE/TRANSAXLE, REMOVING

Special tools:

see **9997077**

see **9997298**

see **9995259**

see **9997062**

see **9997057**

see **9997076**

NOTE: **The illustrations in this service information are used for different model years and/or models. Some variation may occur. However, the essential information in the illustrations is always correct.**

REMOVAL

PREPARATORY WORK

Remove:

- the battery negative lead. See: **BATTERY, DISCONNECTING** .
- the cover for the expansion vessel,

REMOVING PROTECTIVE PLATE

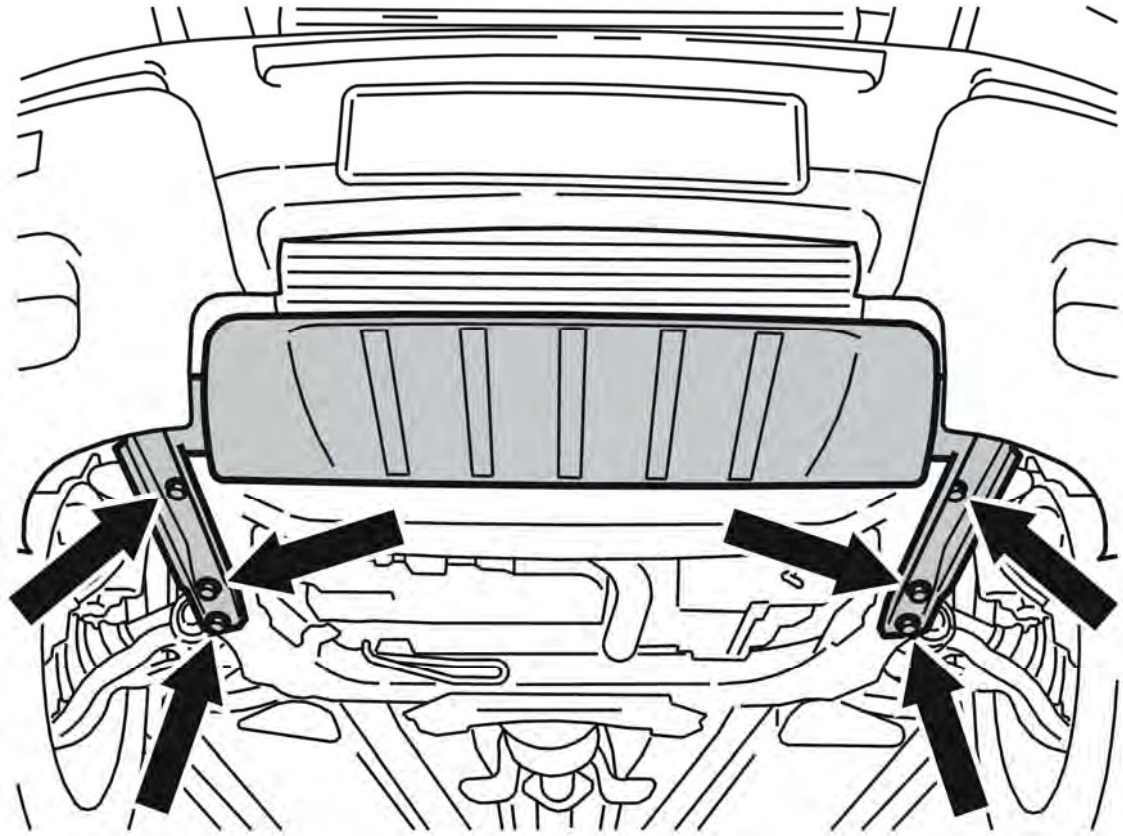

Fig. 40: Splash Guard. Protective Plate And Screws
Courtesy of VOLVO CARS CORPORATION

NOTE: There is a guide sleeve on the upper mounting for the plate. This must be lifted slightly so that the panel can be slid forward.

Remove the 6 screws.

Lift and slide the protective plate forward.

Remove the splash guard.

REMOVING THE LOWER ENGINE COVER

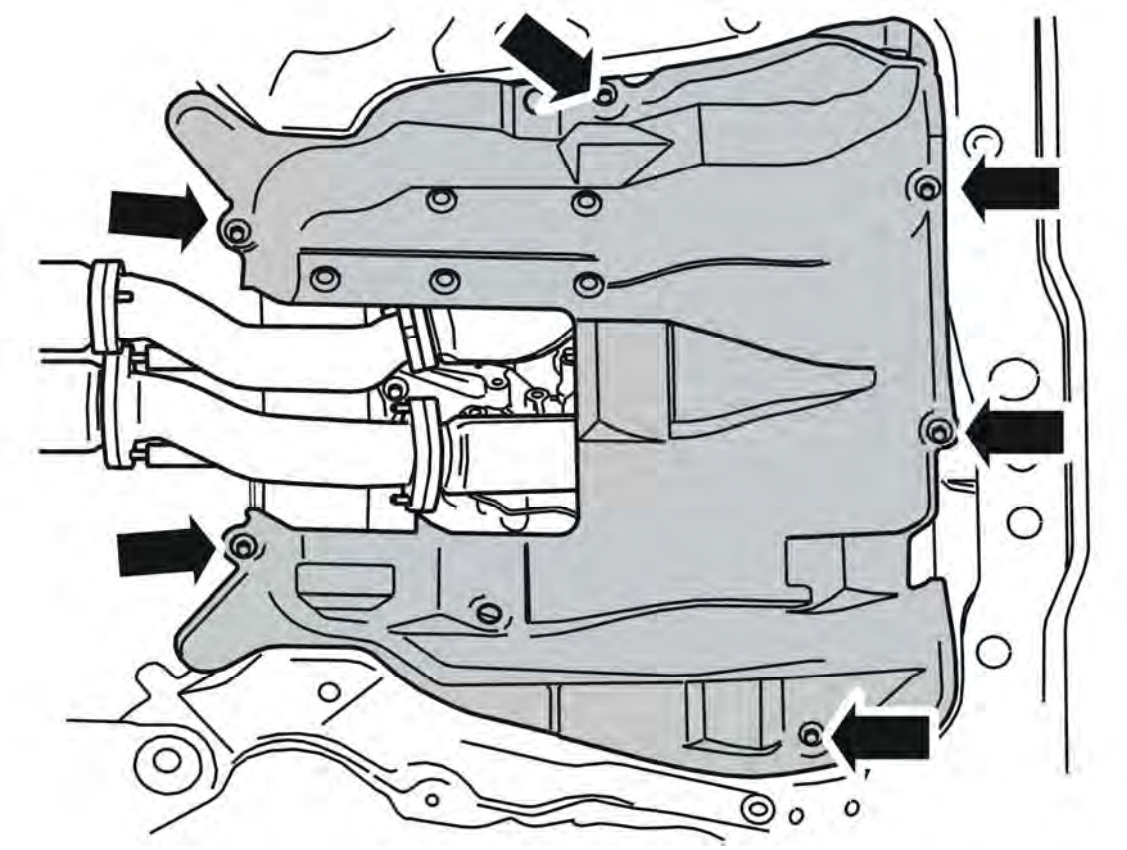

Fig. 41: Removing The Lower Engine Cover
Courtesy of VOLVO CARS CORPORATION

Remove:

- the bolts, x6
- the lower engine cover.

DRAINING COOLANT

Open the cock on the lower left edge of the radiator.

Drain the coolant into a clean container.

Close the cock.

REMOVING THE UPPER CROSS STAY

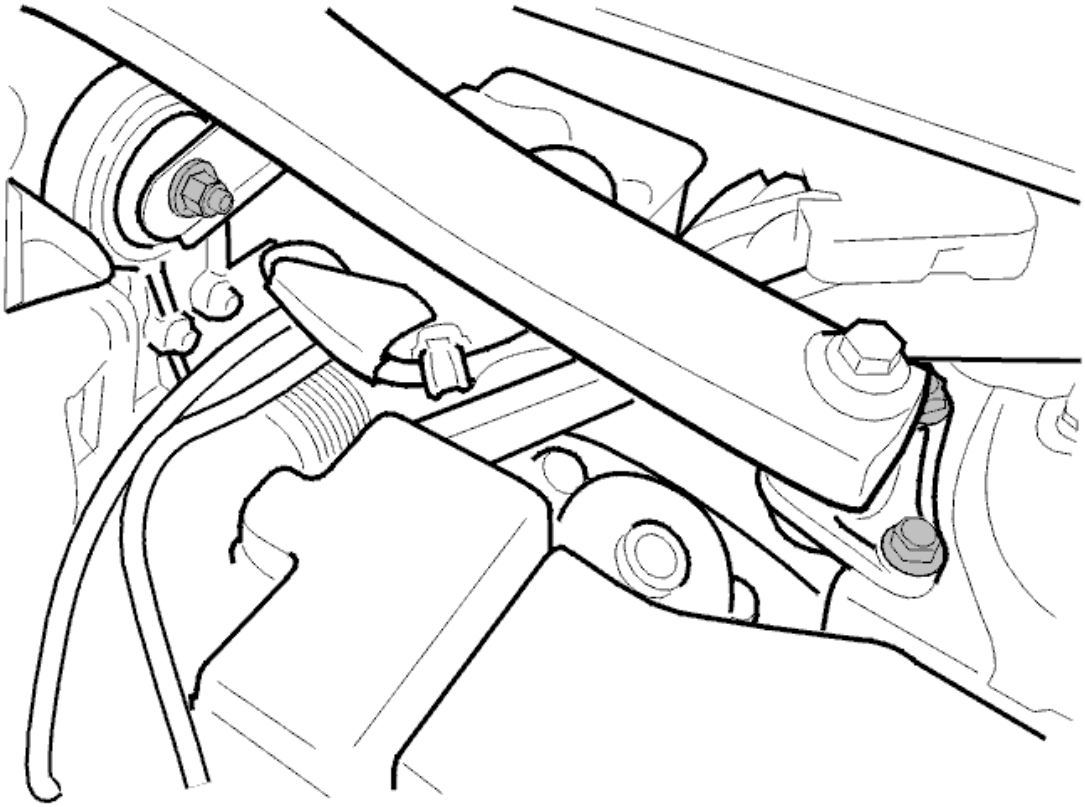

Fig. 42: Engine Stabilizer Brace
Courtesy of VOLVO CARS CORPORATION

Remove:

- the 4 screws at the suspension turrets
- the screws of the upper engine mount on the engine
- the upper cross stay.

REMOVING THE AIR CLEANER COVER

Fig. 43: View of Engine Compartment
Courtesy of VOLVO CARS CORPORATION

Remove the air cleaner cover by pulling it straight up.

DISCONNECTING THE CONNECTOR

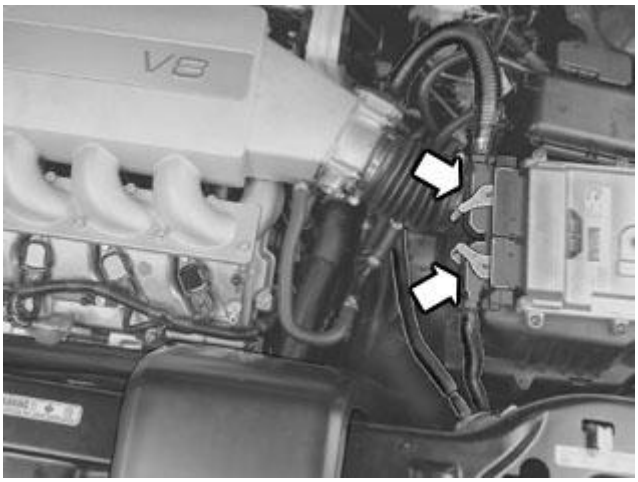

Fig. 44: Identifying 2 Connectors At The Engine Control Module (ECM)
Courtesy of VOLVO CARS CORPORATION

Remove:

- the 2 connectors from the engine control module (ECM); clip the band clamp to the cable harness
- the connector from the mass air flow sensor.

REMOVAL OF AIR FILTER

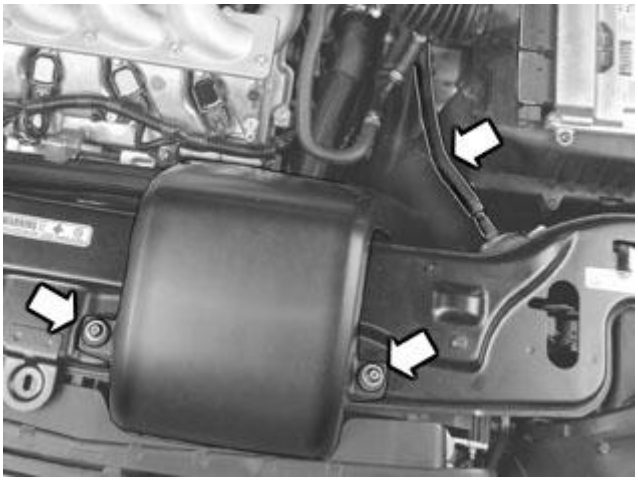

Fig. 45: Identifying Air Horn
Courtesy of VOLVO CARS CORPORATION

Remove:

- the brake vacuum hose from the vacuum pump
- the 2 screws of the fresh air hose in the front plate
- the fresh air hose
- the air cleaner by pulling it straight up.

REMOVING COMPONENTS

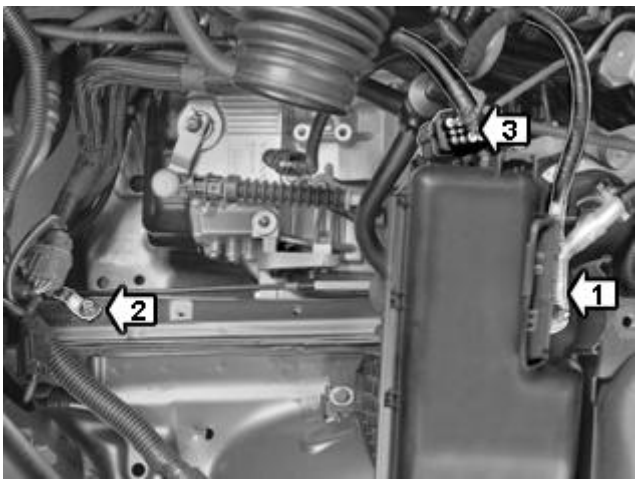

Fig. 46: Identifying Lead, Cable and Connector
Courtesy of VOLVO CARS CORPORATION

Remove:

- the positive lead (1) from the electrical distribution box
- the ground cable (2) between the engine and body (loosen in the body).

Remove the connector:

- at the electrical distribution box (3)
- from the brake vacuum valve. Detach the vacuum hose from the valve that leads to the brake vacuum amplifier.

REMOVAL OF PARTS ON TRANSMISSION

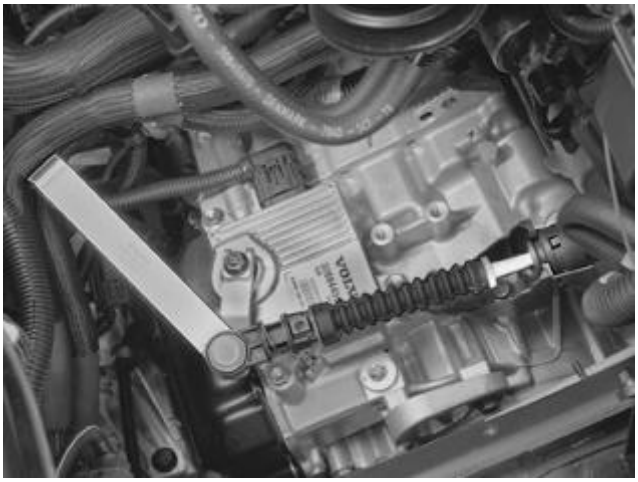

Fig. 47: Identifying The Gear Selector Cable
Courtesy of VOLVO CARS CORPORATION

Remove:

- the gear selector cable using a jimmy bar see **9997077** to break the cable loose from its ball
- the transmission control module (TCM) connector.

REMOVING THE OIL COOLER HOSES

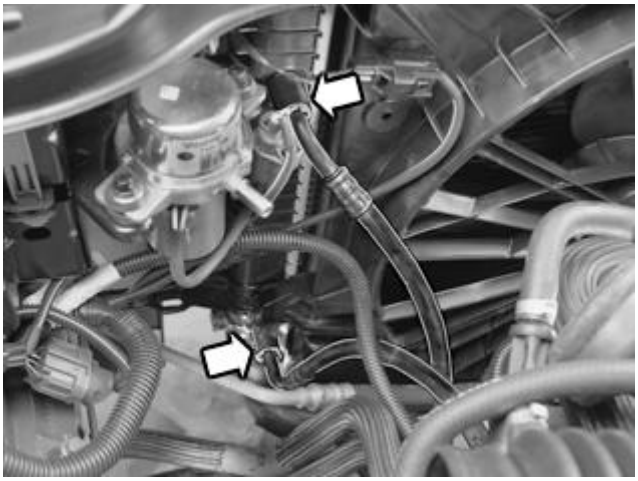

Fig. 48: Removing Transaxle Oil Cooler Lines
Courtesy of VOLVO CARS CORPORATION

CAUTION: Mark up the hoses.

Remove:

- the lower line of the transaxle oil cooler
- the upper line of the transaxle oil cooler.

NOTE: Seal the openings and collect the oil from the oil cooler in a receptacle. Do not reuse the drained oil.

DETACHING RADIATOR HOSES

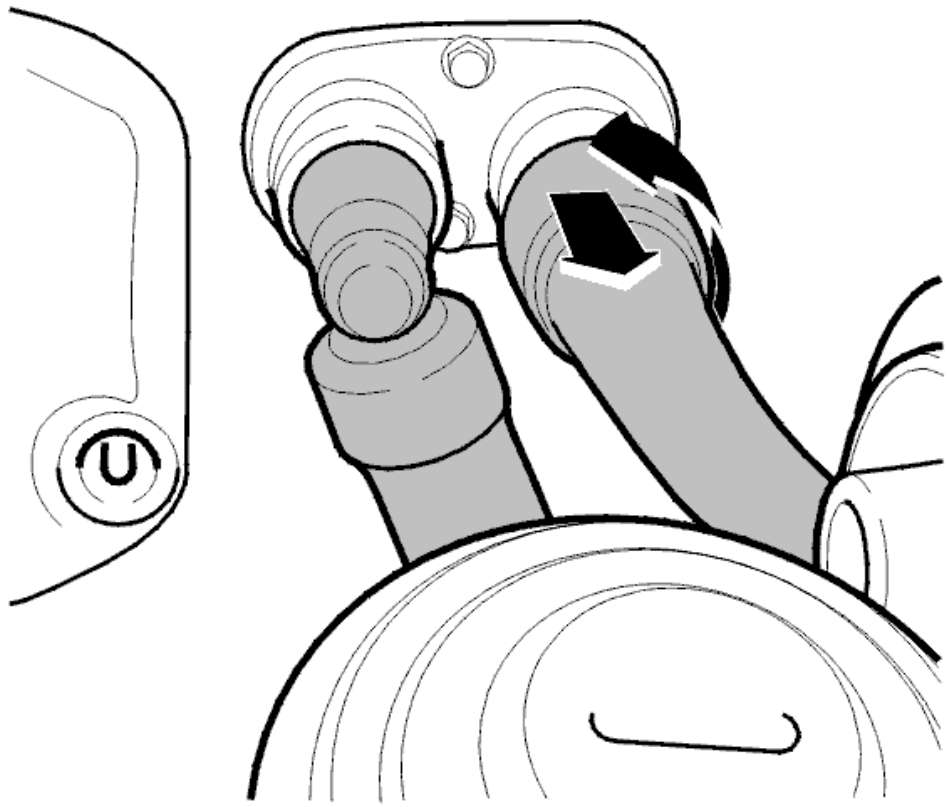

Fig. 49: Identifying Front Section Of Terminal And Hose
Courtesy of VOLVO CARS CORPORATION

Detach the radiator hoses at the quick-release coupling toward the firewall.

REMOVING COOLANT HOSES

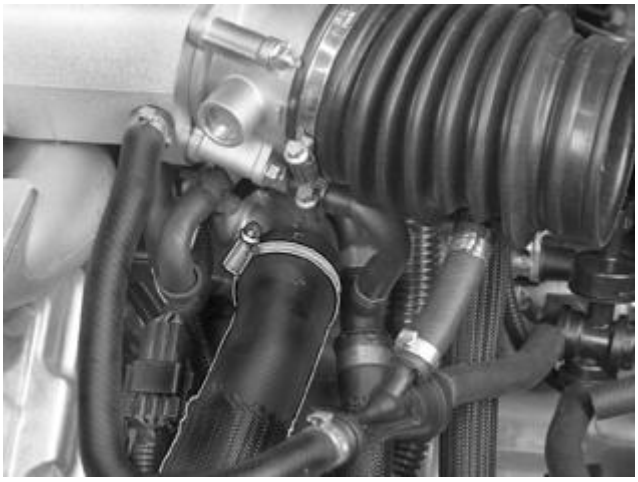

Fig. 50: Removing Coolant Hoses
Courtesy of VOLVO CARS CORPORATION

Remove:

- the upper radiator hose from the distributor housing
- the lower radiator hose from the thermostat housing.

REMOVING THE UPPER ENGINE COVERS

Remove the upper engine covers by pulling them straight up.

REMOVING THE COVER OVER THE SERVO PUMP

Remove:

- the 2 screws on the cover over the servo pump
- the cover.

REMOVING THE SERVO OIL RESERVOIR

Fig. 51: Removing The Servo Oil Reservoir
Courtesy of VOLVO CARS CORPORATION

Remove:

- the screw on the washer fluid filler pipe; bend out the pipe
- the return line for servo oil from the clips and clamps.

Lift up the servo oil reservoir.

Remove:

- the 2 coolant hoses from the expansion tank
- the 3 ground cables from the body at the expansion tank
- the connector from the electric cooling fan.

Position the oil reservoir on the engine.

NOTE: Make sure no oil runs out.

NOTE: Make sure that the oil return line is on the correct side of the upper coolant hose that runs to the engine.

REMOVING THE AUXILIARIES BELT

Remove the accessory drive belt. See **AUXILIARIES BELT/BELT TENSIONER, REPLACEMENT**.

REMOVING THE GROUND CABLE

Remove the ground cable screw between the engine and body. It is located beneath the expansion tank.

REMOVING FRONT ASSEMBLY COMPONENTS

Raise the vehicle.

Remove the front wheels.

REMOVING THE BALL JOINT FROM THE LINK ARM (ON BOTH SIDES OF THE VEHICLE)

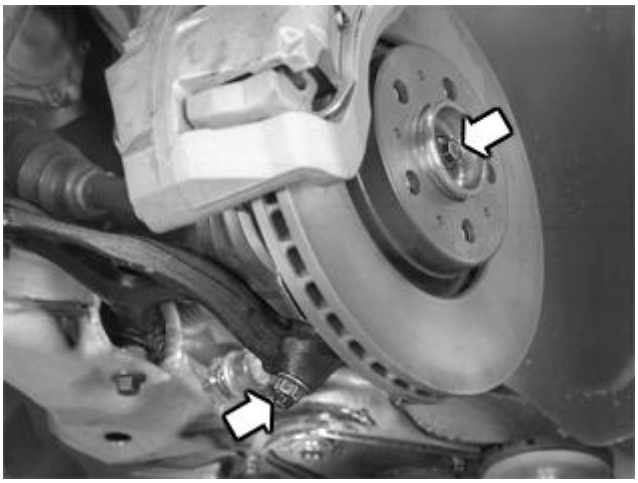

Fig. 52: Locating Drive Shaft Nut And Lower Ball Joint Nut
Courtesy of VOLVO CARS CORPORATION

Remove:

- the drive shaft screw. Counterhold with a screwdriver in the brake disc cooling channels.
- the rubber sleeve in the wheel hub
- the nut between the ball joint and link arm
- the nut of the anti-roll bar link in the anti-roll bar.

NOTE: Counterhold with a Torx wrench so that the ball joint gaiters do not turn when the nuts are removed.

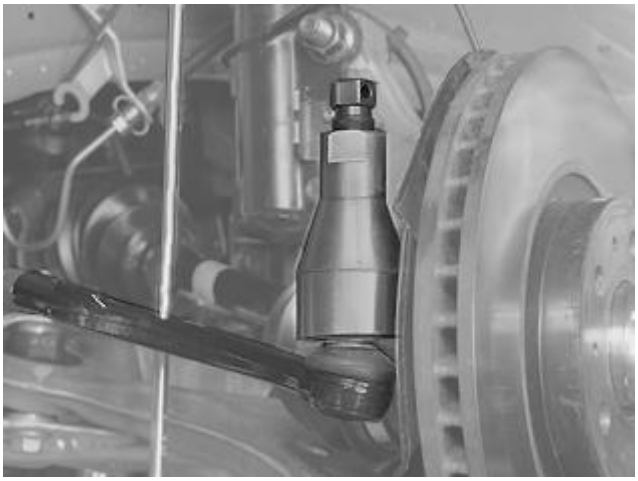

Fig. 53: Identifying Steering Arm Track Rod End

Courtesy of VOLVO CARS CORPORATION

Mark the position of the track rod.

Remove the track rod end from the guide arm. Use puller: see **9995259** .

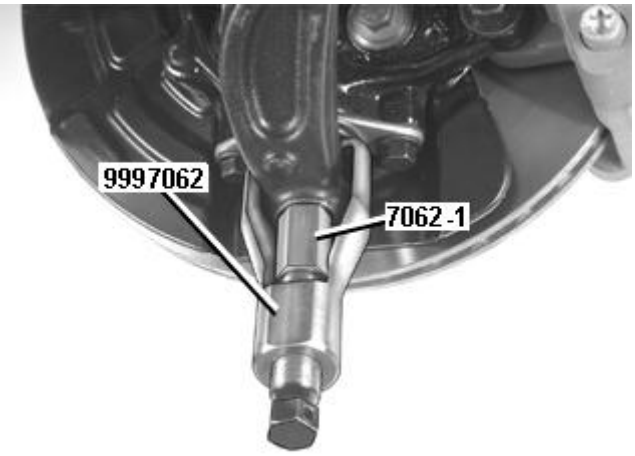

Fig. 54: Disconnecting Ball Joint Pinion From Control Arm Using 999 7062
Courtesy of VOLVO CARS CORPORATION

Loosen the ball joint pin from the link arm. Use: see **9997062** .

Fit the cap nut, 7062-1, on the ball joint pin.

Tighten the nut toward the link arm. Then turn it back one rotation to create play between the cap nut and the link arm. Position the puller on the link arm and detach the ball joint from the link arm.

REMOVING THE EXHAUST PIPE

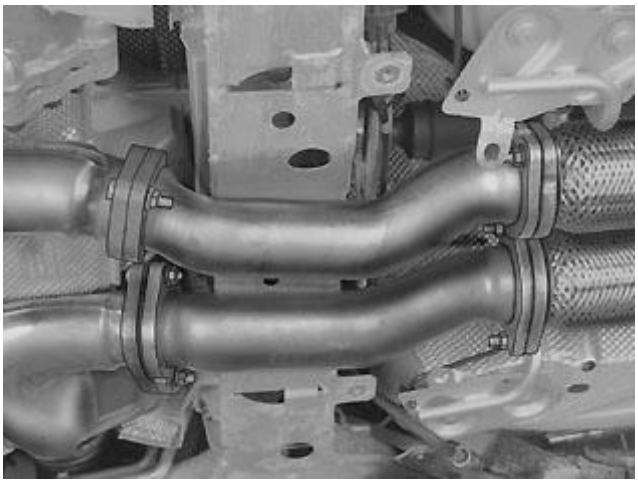

Fig. 55: Identifying Intermediate Pipes
Courtesy of VOLVO CARS CORPORATION

Remove:

- the nuts at intermediate pipe joints
- the intermediate pipes; scrap the gaskets.

REMOVING THE SCREWS FROM THE FRONT PROPELLER SHAFT

Fig. 56: Drive Flange Front Joint
Courtesy of VOLVO CARS CORPORATION

CAUTION: Mark the position of the flange against the propeller shaft.

Remove the propeller shaft screws. Use: see **9997057** .

REMOVING THE LOWER STEERING SHAFT JOINT

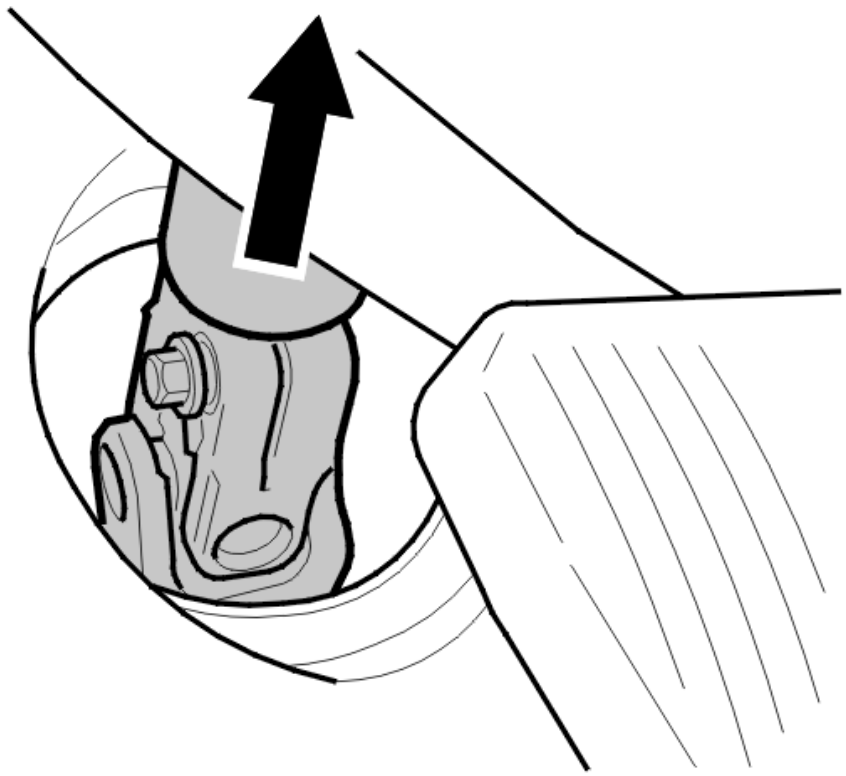

Fig. 57: Identifying Lower Steering Shaft Joint
Courtesy of VOLVO CARS CORPORATION

CAUTION: Do not move the steering wheel. The contact reel in the SRS (supplemental restraint system) could be damaged.

Set the front wheels in the straight-ahead position.

Fold the floor carpet out of the way.

Bend up the outer section of the steering shaft boot.

Remove the retaining clip around the boot.

Pull the boot up.

Turn the steering wheel to gain the best possible access to the steering shaft nut.

Remove the ignition key and activate the steering wheel lock.

Remove:

- the screw securing the mounting for the steering shaft in the joint

- the joint from the steering shaft by pressing the shaft upwards.

REMOVING THE STEERING GEAR CONNECTOR

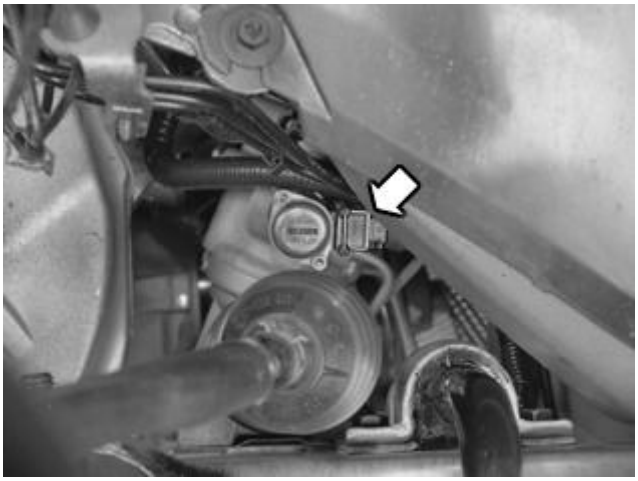

Fig. 58: Locating Steering Gear Connector (Blue)
Courtesy of VOLVO CARS CORPORATION

Detach the connector (blue) from the steering gear.

DRAINING THE FUEL LINE

Fig. 59: Installing Fuel Lines
Courtesy of VOLVO CARS CORPORATION

Drain the fuel line. See **FUEL SYSTEM, DRAINING** .

Detach the quick-release coupling of the fuel line at the right rear sub-frame mount. see **9997298** for the pressure line.

Detach the fuel return line.

NOTE: Seal the openings against dirt.

REMOVAL OF A/C COMPRESSOR

Detach the connector from:

- the A/C compressor (x2)

Pull out the cable harness and bend it aside.

LOWERING THE ENGINE/TRANSMISSION UNIT

Fig. 60: Secured Lifting Table Under The Sub-Frame
Courtesy of VOLVO CARS CORPORATION

CAUTION: Ensure that the lifting table is properly centred under the engine.

Position a lifting table under the sub-frame. Secure the table against the sub-frame.

LOWERING THE ENGINE/TRANSMISSION UNIT

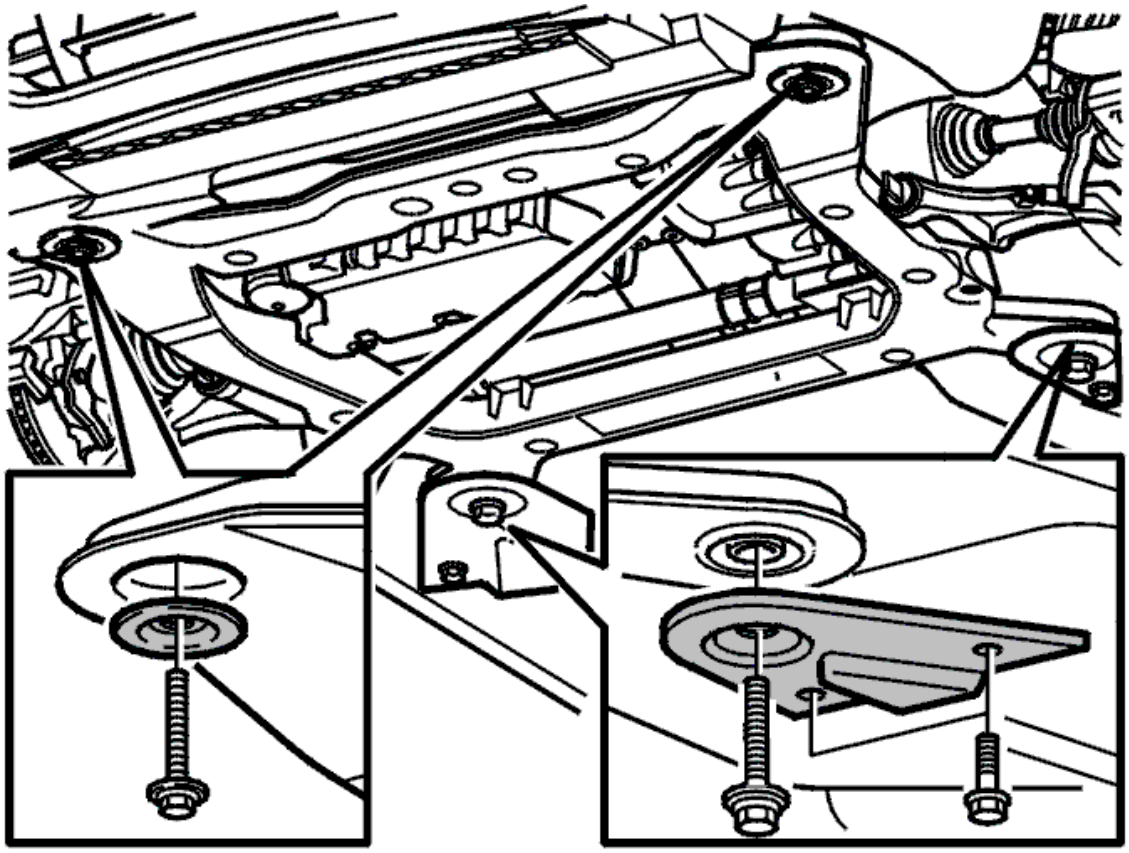

Fig. 61: Identifying Bolts, Washers And Brackets In Sub-Frame
Courtesy of VOLVO CARS CORPORATION

Remove:

- the connector from the circulation pump.
- the 4 M10 screws in the rear edge of the sub-frame brackets
- the 4 screws in the sub-frame. Lower the engine/transmission unit approx. 15 cm so that the drive shafts create a horizontal line between the hub and the transmission.

NOTE: Take great care that no hoses, wiring or anything else catches in the engine / gearbox unit when it is lowered.

Tap the control arms off of the ball joint pin. Use see **9997076** . Release the drive shafts from the wheel hubs by pressing the drive shafts into the hub.

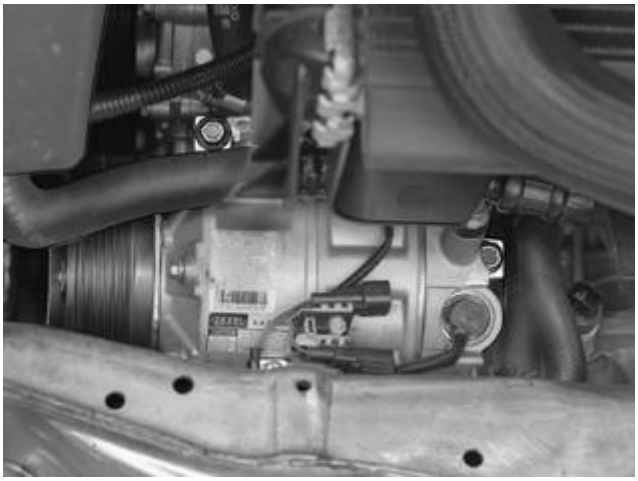

Fig. 62: Remove The 3 A/C Compressor Screws.
Courtesy of VOLVO CARS CORPORATION

Remove the 3 A/C compressor screws.

Bend out the A/C compressor and suspend it in a suitable manner.

Continue lowering the engine/transmission unit.

ENGINE/TRANSMISSION, INSTALLING

Special tools:

see **9512050**

see **9512957**

see **9512953**

NOTE: The illustrations in this service information are used for different model years and/or models. Some variation may occur. However, the essential information in the illustrations is always correct.

INSTALLATION

NOTE: For tightening torques, see: TIGHTENING TORQUE .

RAISING THE ENGINE/TRANSMISSION UNIT

Fig. 63: Secured Lifting Table Under The Sub-Frame
Courtesy of VOLVO CARS CORPORATION

CAUTION: Ensure that no hoses, wiring or other components catch or become trapped during lifting.

NOTE: Make sure that the contact faces on the ball joints and link arms are clean.

Raise the engine/transmission unit using a lifting table. Stop approx. 15 cm before the sub-frame reaches the frame members.

INSTALLING THE A/C COMPRESSOR

Install:

- the lower radiator hose in the mount on the sub-frame
- the A/C compressor; tighten 3 screws

Attach the connectors to:

- the A/C compressor
- the oil pressure sensor
- the oil level sensor; secure the cable harness in the clips and clamps.

Install the drive shaft in the hub on both sides.

Continue raising the engine to approx. 50 mm before it makes contact.

CAUTION: Guide the lower steering shaft into the hole in the firewall.

Guide the ball joint to the link arm.

INSTALLING THE SUB-FRAME

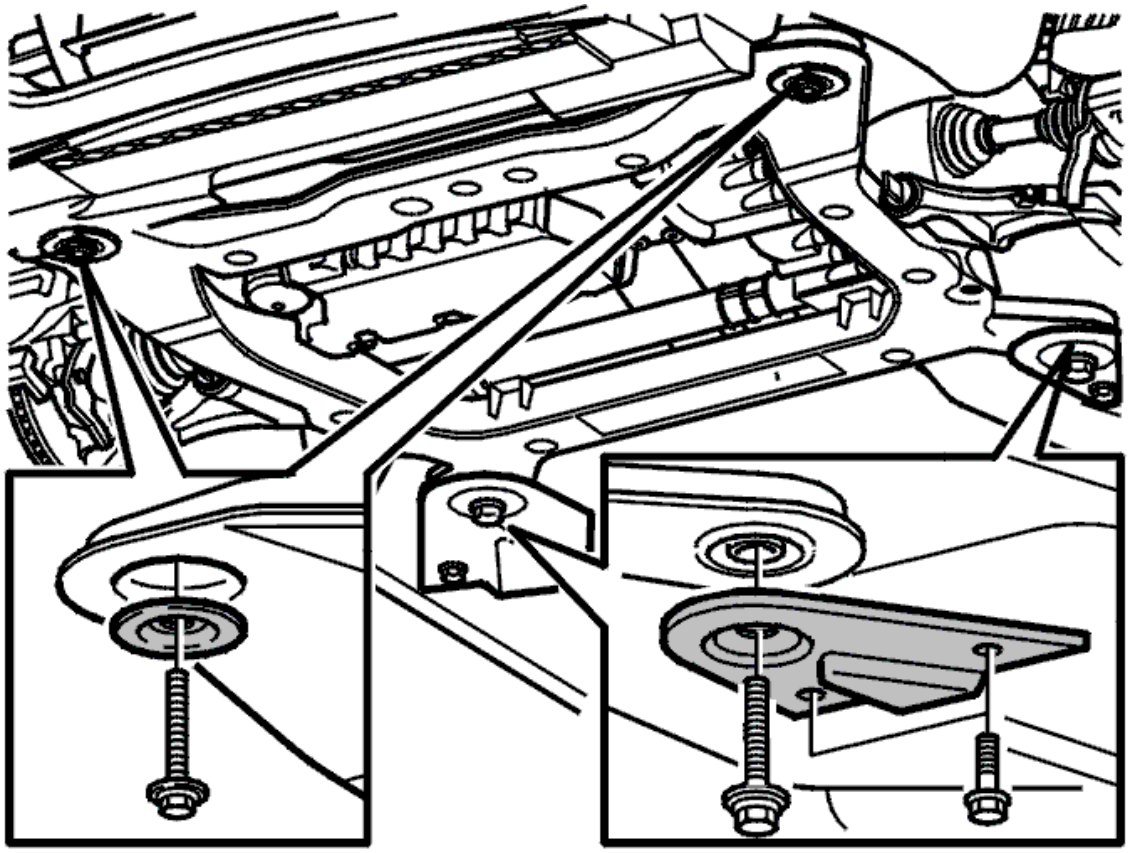

Fig. 64: Identifying Bolts, Washers And Brackets In Sub-Frame
Courtesy of VOLVO CARS CORPORATION

Raise the sub-frame toward the frame members until it makes contact.

Install the sub-frame's four screws together with the sub-frame's brackets and engine heater, if installed.

Use new screws. Lube the screws with oil.

Tighten acc. to: **TIGHTENING TORQUE** . First tighten the screws on the sub-frame's left side, then on the right.

Use: see **9512050** .

Tighten the screws for the brackets M10.

Remove the lifting table.

INSTALLING COMPONENTS IN THE FRONT ASSEMBLY

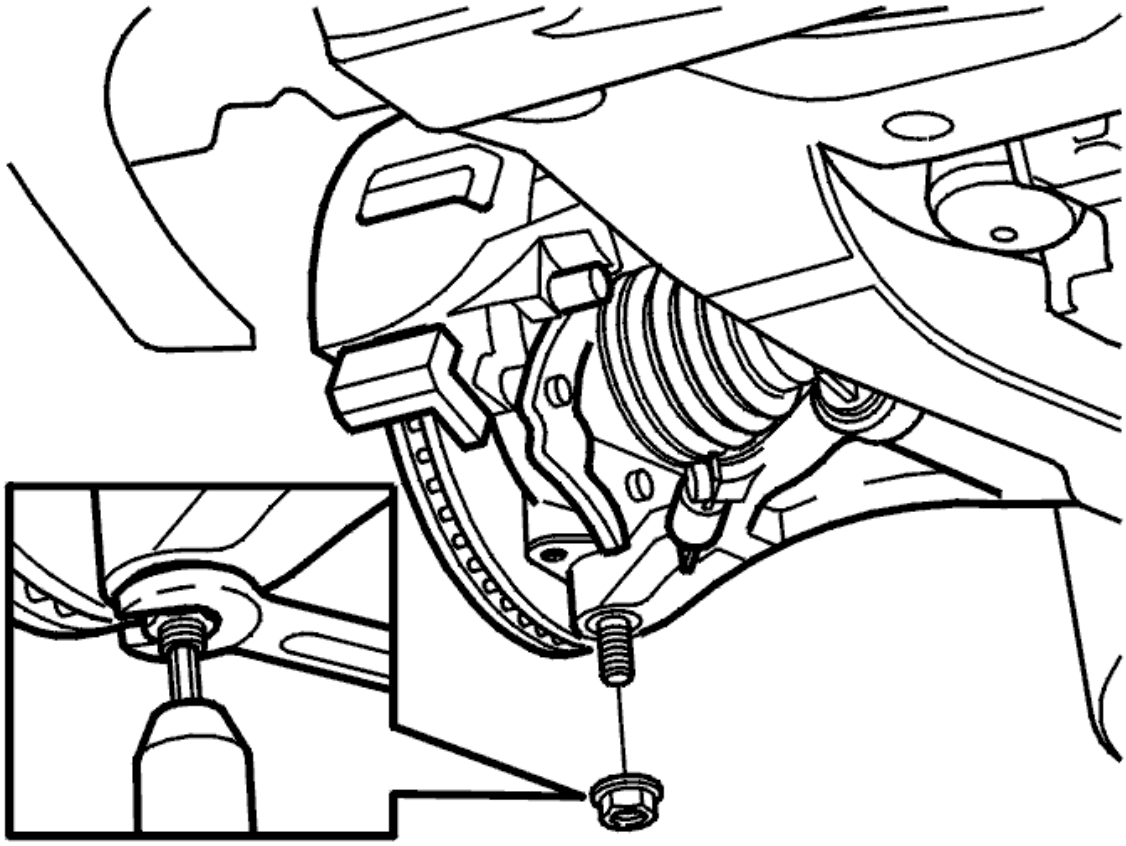

Fig. 65: Ball Joints Nuts
Courtesy of VOLVO CARS CORPORATION

Tighten the ball joint and link arm. See **TIGHTENING TORQUE** .

Counterhold with Torx 40 so that the ball joint gaiter does not rotate.

Install:

- the anti-roll bar links. Use new lock nuts. Tighten as specified: **TIGHTENING TORQUE** .
- new center screws and a rubber sleeve on the drive shafts. Tighten as specified: **TIGHTENING TORQUE** .

INSTALLING TRACK RODS

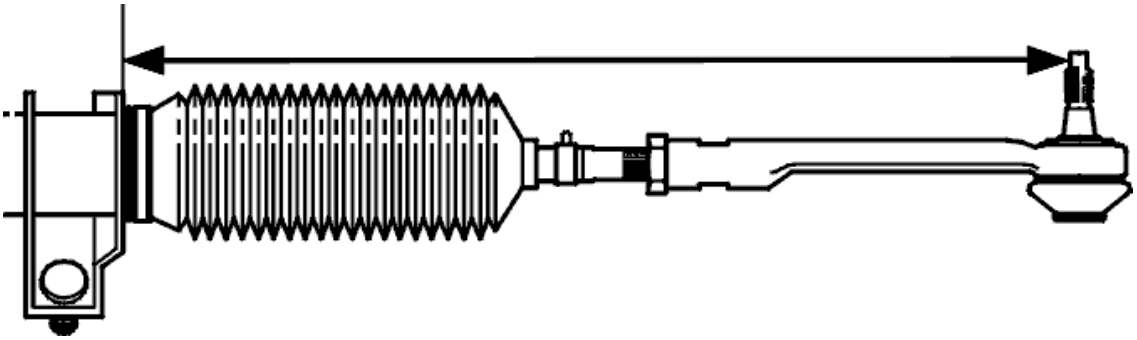

Fig. 66: Identifying Length Of Track Rod In Relation To Steering Gear Housing
Courtesy of VOLVO CARS CORPORATION

Install the track rods following the marks made during removal. Use new lock nuts. Tighten as specified: **TIGHTENING TORQUE** .

INSTALLING FUEL LINES

Fig. 67: Installing Fuel Lines
Courtesy of VOLVO CARS CORPORATION

NOTE: Remove the seals.

Connect the fuel lines.

ATTACHING THE STEERING GEAR CONNECTOR

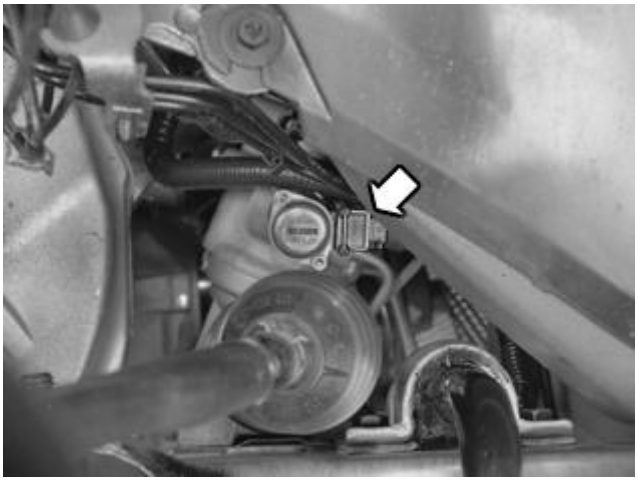

Fig. 68: Locating Steering Gear Connector (Blue)
Courtesy of VOLVO CARS CORPORATION

Attach the connector to the steering gear.

INSTALLING THE PROPELLER SHAFT

Install the anti-roll bar. See: **PROPELLER SHAFT, REPLACING** .

INSTALLING EXHAUST AND INTERMEDIATE PIPES

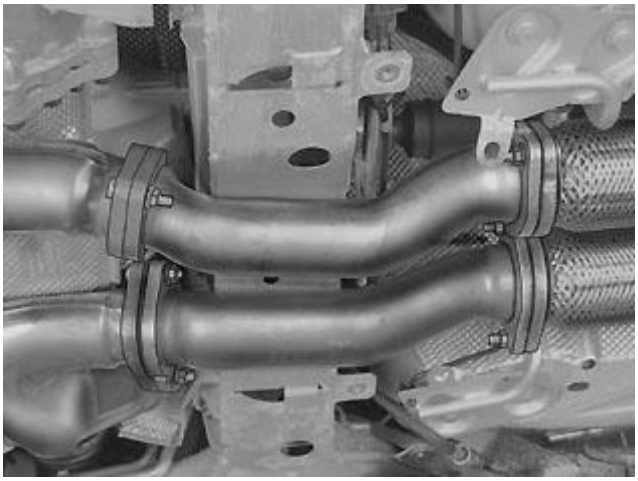

Fig. 69: Identifying Intermediate Pipes
Courtesy of VOLVO CARS CORPORATION

Install:

- the intermediate pipes using new gaskets
- the nuts at intermediate pipe joints.

INSTALLING COMPONENTS ON THE TRANSMISSION

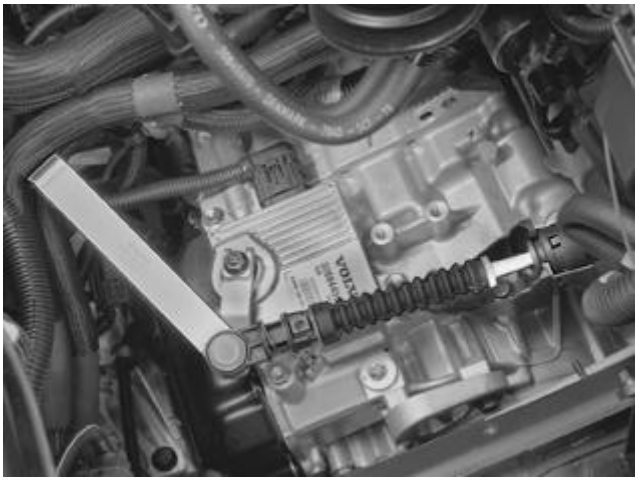

Fig. 70: Identifying The Gear Selector Cable
Courtesy of VOLVO CARS CORPORATION

Install:

- the gear selector cable in the mount on the transmission and press the cable into the ball
- the transmission control module (TCM) connector.

INSTALLING THE RADIATOR HOSES

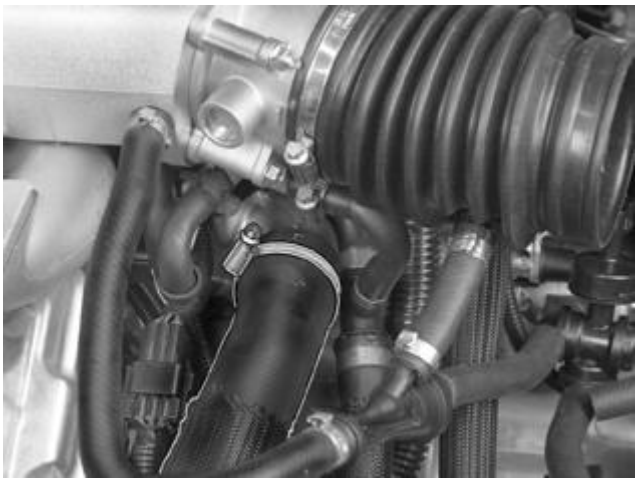

Fig. 71: Removing Coolant Hoses
Courtesy of VOLVO CARS CORPORATION

Install:

- the upper radiator hose on the distributor housing; tighten the clamp
- the lower radiator hose on the thermostat housing; tighten the clamp.

Connect the radiator hoses at the firewall.

INSTALLING THE OIL COOLER HOSES

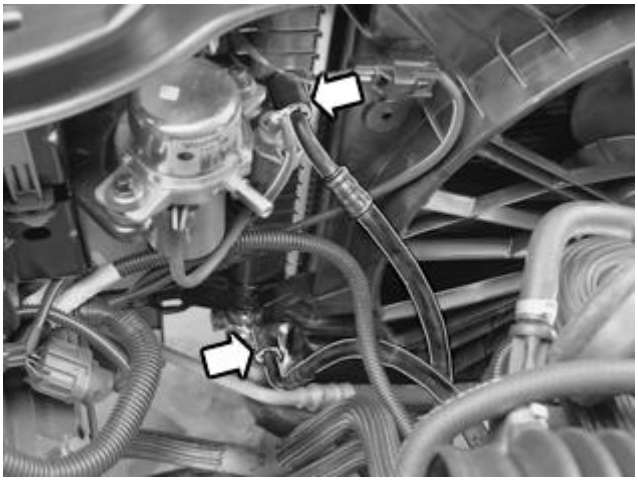

Fig. 72: Removing Transaxle Oil Cooler Lines
Courtesy of VOLVO CARS CORPORATION

Remove the seals.

Install:

- the lower line to the transmission oil cooler as marked; secure with a quick-acting lock
- the upper line to the transmission oil cooler as marked; secure with a quick-acting lock.

INSTALLING COMPONENTS

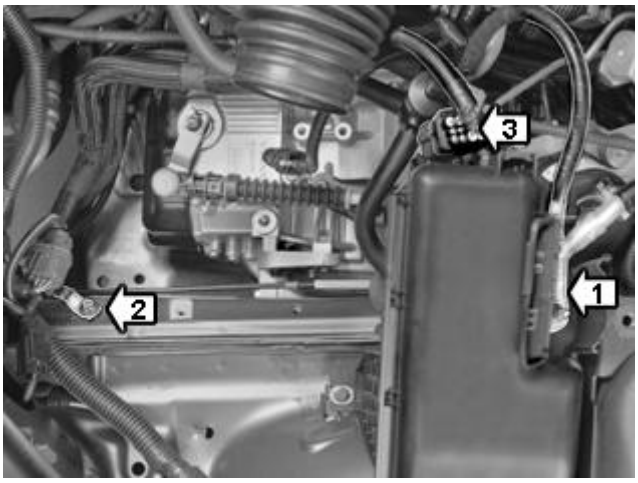

Fig. 73: Identifying Lead, Cable and Connector
Courtesy of VOLVO CARS CORPORATION

Install:

- the positive lead (1) in the electrical distribution box
- the ground cable (2) in the body (between the engine and body)
- the connector at the electrical distribution box (3)

- the connector to the brake vacuum valve and the vacuum hose on the valve leading to the brake vacuum amplifier.

INSTALLING THE AIR CLEANER (ACL)

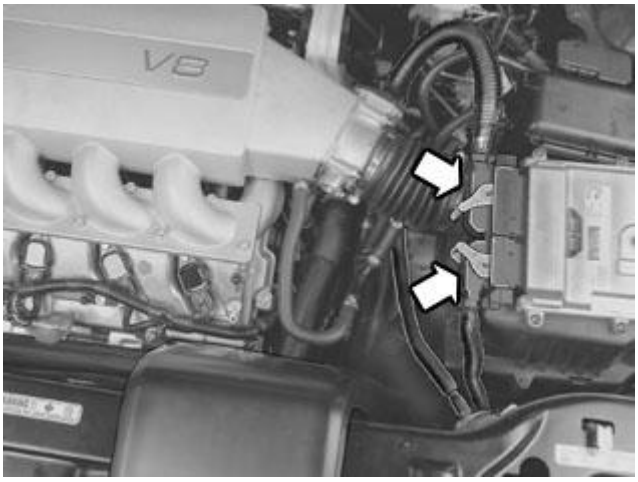

Fig. 74: Identifying 2 Connectors At The Engine Control Module (ECM)
Courtesy of VOLVO CARS CORPORATION

Install:

- the air cleaner; tighten the hose clip on the mass air flow sensor
- the brake vacuum hose on the brake pump
- the fresh air hose
- the 2 screws of the fresh air hose in the front plate
- the 2 connectors to the engine control module (ECM)
- the connector to the mass air flow sensor
- the band clamp on the cable harness in the air cleaner housing
- the cover over the air cleaner.

INSTALLING THE AUXILIARIES BELT

Install the accessory drive belt. See **AUXILIARIES BELT/BELT TENSIONER, REPLACEMENT**.

INSTALLING THE GROUND CABLE

Install:

- the ground cable between the engine and body, located beneath the expansion tank
- the screw; tighten.

INSTALLING THE SERVO OIL RESERVOIR

Fig. 75: Removing The Servo Oil Reservoir
Courtesy of VOLVO CARS CORPORATION

Install:

- the servo oil reservoir
- the return line for servo oil in the clips and clamps
- the screw on the washer fluid filler pipe; tighten
- the 3 ground cables in the body at the expansion tank
- the 3 screws; tighten
- the 2 coolant hoses to the expansion tank; tighten the clamps
- the connector to the electric cooling fan.

INSTALLING THE COVER OVER THE SERVO PUMP

Install:

- the cover over the servo pump
- the 2 screws; tighten

INSTALLING THE UPPER ENGINE COVERS

Position the upper engine covers and press them into the retainers.

INSTALLING THE UPPER CROSS STAY

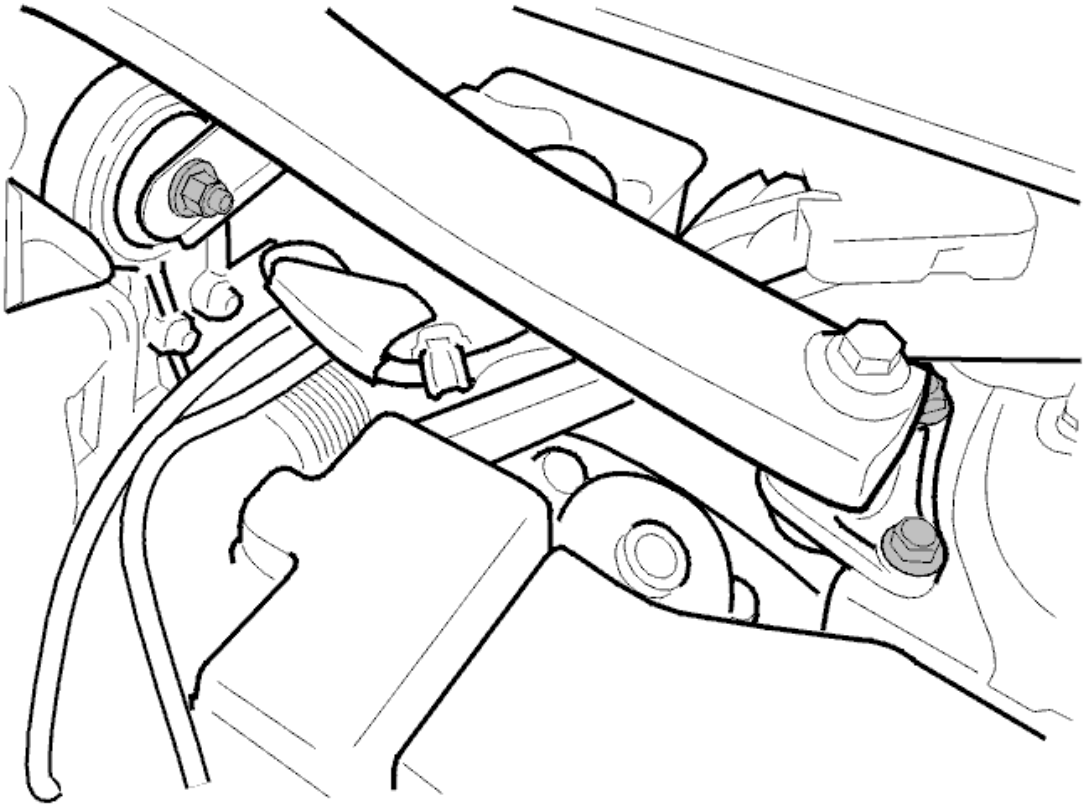

Fig. 76: Engine Stabilizer Brace
Courtesy of VOLVO CARS CORPORATION

Install:

- the upper cross stay between the suspension turrets
- the 4 screws in the suspension turrets; tighten
- the screw of the cross stay mount on the upper engine mount; tighten.

INSTALLING THE LOWER ENGINE COVER

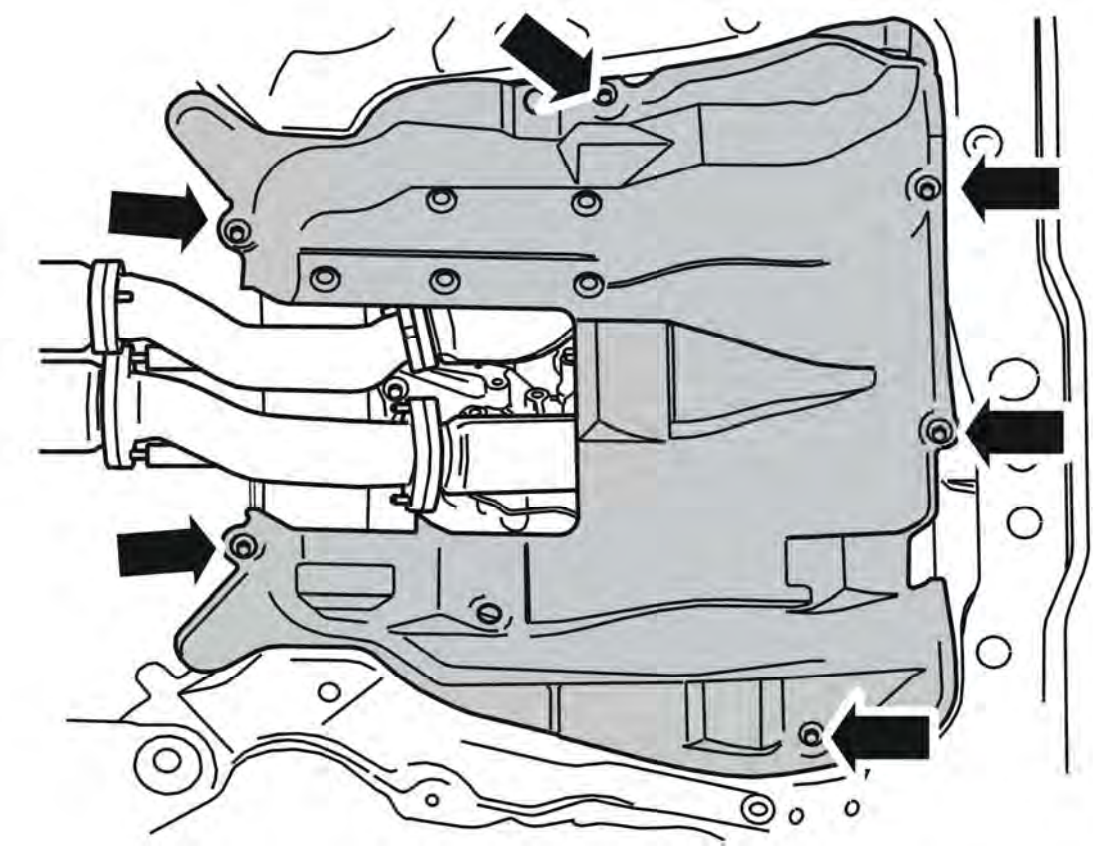

Fig. 77: Removing The Lower Engine Cover
Courtesy of VOLVO CARS CORPORATION

Install:

- the lower engine cover
- the 6 screws; tighten.

INSTALLING THE PROTECTIVE PLATE

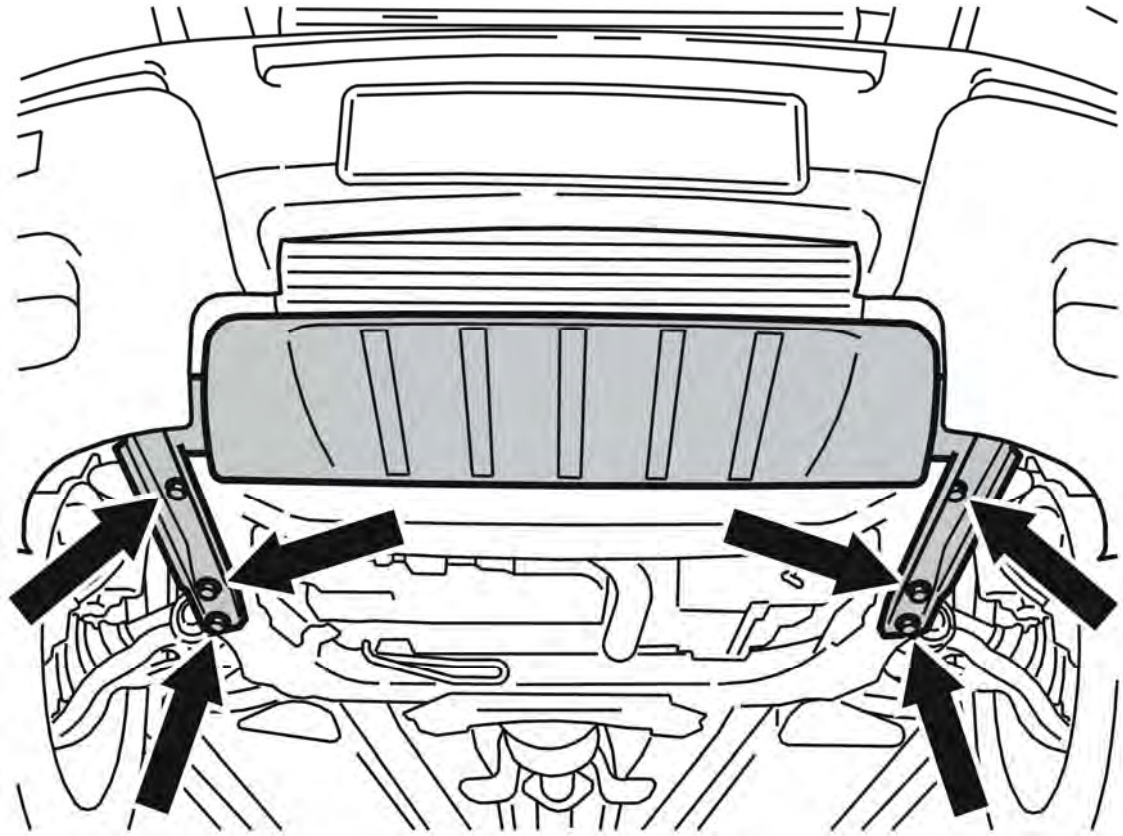

Fig. 78: Splash Guard. Protective Plate And Screws
Courtesy of VOLVO CARS CORPORATION

Install:

- the protective plate
- the 6 screws; tighten.

INSTALLING WHEELS

Install the front wheels. See: **INSTALLING WHEELS** .

INSTALLING THE BATTERY CABLE

Fit the battery's negative cable in accordance with: **BATTERY, DISCONNECTING** .

CHECK

CAUTION: Make sure the outlet hose of filling equipment is not blocked as this could damage the cooling system.

Fill with coolant using filling equipment: see **9512957** and cover: see **9512953** .

Check the oil level in the engine and transmission. Start the engine and allow it to warm to normal operating temperature. Check for leaks and proper function. Fill up fluids as necessary.

ENGINE, INSTALLING (B6324S)

ENGINE, INSTALLING

Special tools	
	T9995666 WRENCH(DISCONNECTING FUEL LINE) **Tool number:** T9995666 **Tool description:** WRENCH (DISCONNECTING FUEL LINE) **Tool boards:**
	T9997076 LEVER **Tool number:** T9997076 **Tool description:** LEVER **Tool boards:**

Fig. 79: Identifying Lift Table
Courtesy of VOLVO CARS CORPORATION

CAUTION: Make sure that no components catch when lifting the engine.

Use: Lift table.

Make sure that the mating surfaces on the ball joints and control arms are clean.

Raise the engine/transmission unit. Stop the lift approx. 15 cm before the subframe reaches the frame members.

Install (on both sides) the drive shaft to the hub.

Continue raising the engine until it is only approx. 50 mm before it makes contact.

Guide the lower steering shaft into the hole in the firewall.

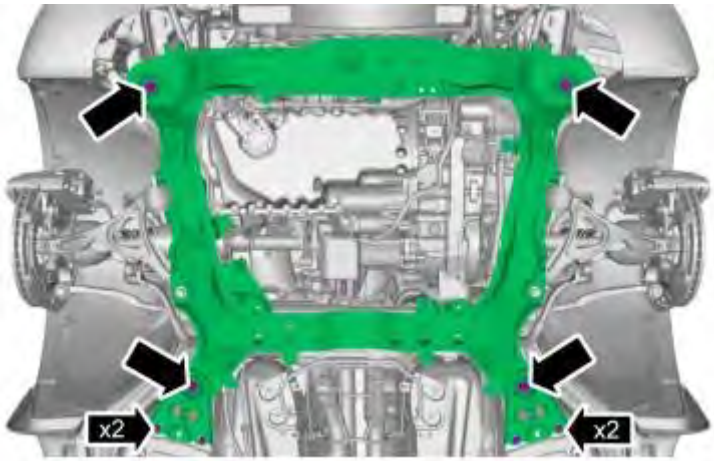

Fig. 80: Identifying Subframe Bolts
Courtesy of VOLVO CARS CORPORATION

the subframe. See **TIGHTENING TORQUE**

Fig. 81: Identifying Using Tool 9995666
Courtesy of VOLVO CARS CORPORATION

see **9995666**

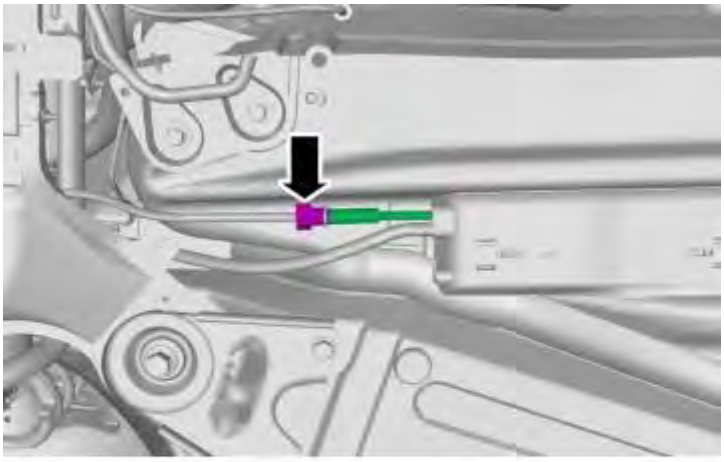

Fig. 82: Locating Fuel Line Connector
Courtesy of VOLVO CARS CORPORATION

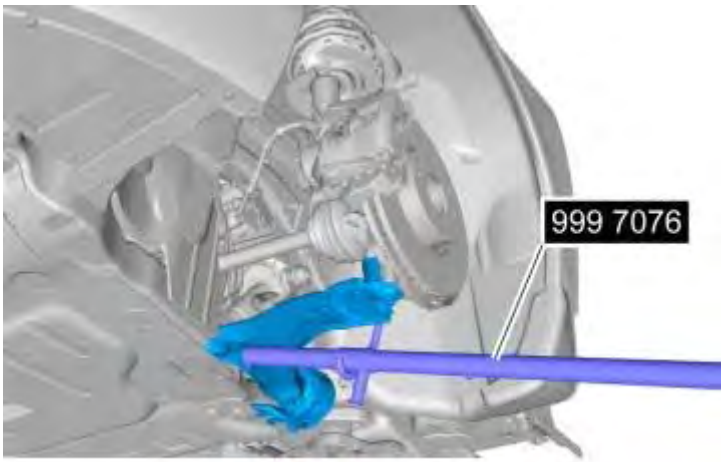

Fig. 83: Identifying Lever Tool 9997076
Courtesy of VOLVO CARS CORPORATION

see **9997076**

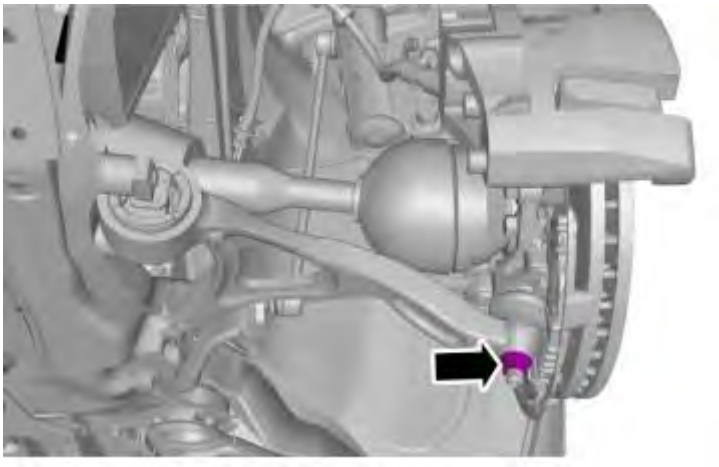

Fig. 84: Identifying Nut, Ball Joint.
Courtesy of VOLVO CARS CORPORATION

Nut, ball joint. See **TIGHTENING TORQUE**

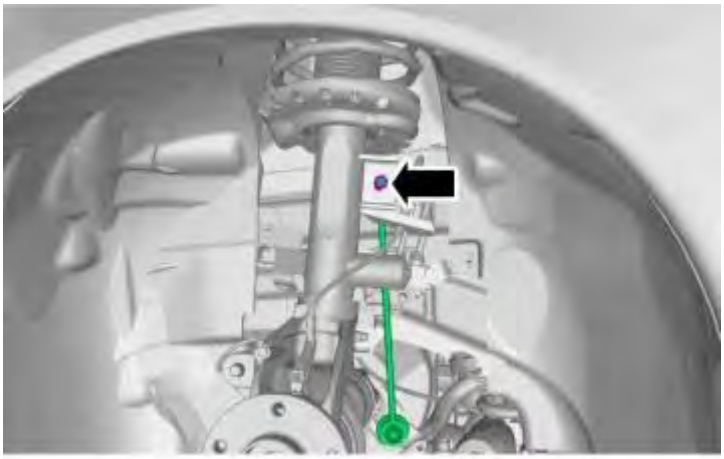

Fig. 85: View of Stabilizer Link
Courtesy of VOLVO CARS CORPORATION

Anti-roll bar link. See **TIGHTENING TORQUE**

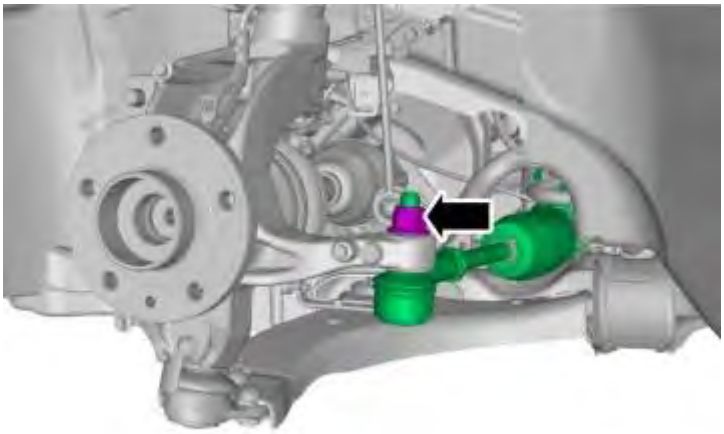

Fig. 86: Identifying Tie Rod End
Courtesy of VOLVO CARS CORPORATION

Ball joint. See **TIGHTENING TORQUE**

Fig. 87: Identifying Drive Shaft Bolt
Courtesy of VOLVO CARS CORPORATION

Drive shaft screw. See **TIGHTENING TORQUE**

Fig. 88: Locating Bracket Bolts
Courtesy of VOLVO CARS CORPORATION

Fig. 89: Identifying Splash Panel.
Courtesy of VOLVO CARS CORPORATION

M10. See **TIGHTENING TORQUE**

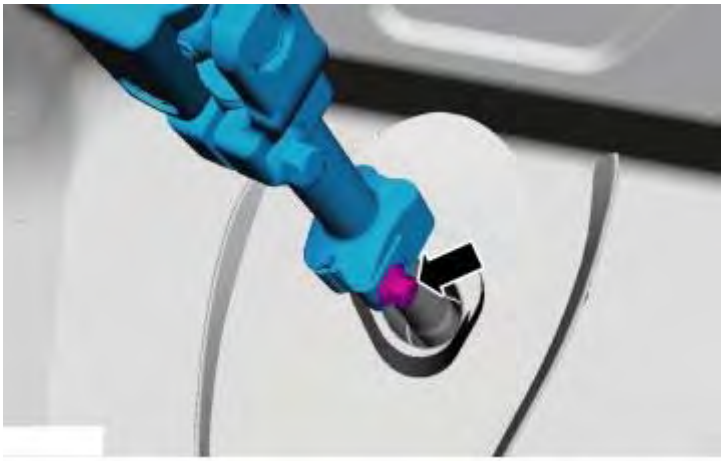

Fig. 90: Identifying Steering Shaft Pinch Bolt
Courtesy of VOLVO CARS CORPORATION

Steering shaft joint. See **TIGHTENING TORQUE**

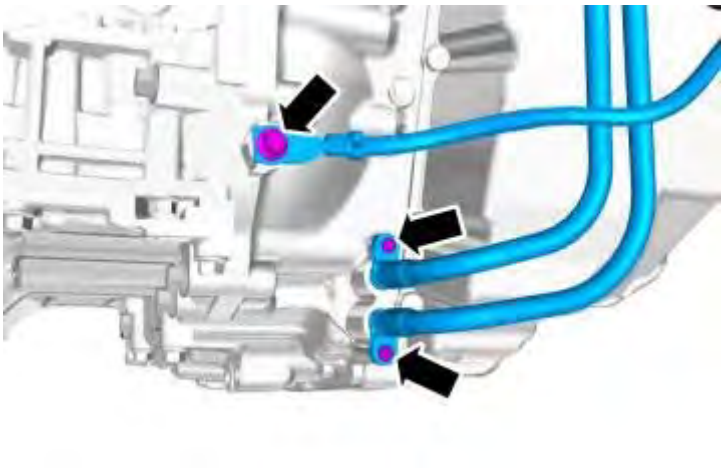

Fig. 91: Viewing Bolts For Cable And Tubes
Courtesy of VOLVO CARS CORPORATION

M8. See **TIGHTENING TORQUE**

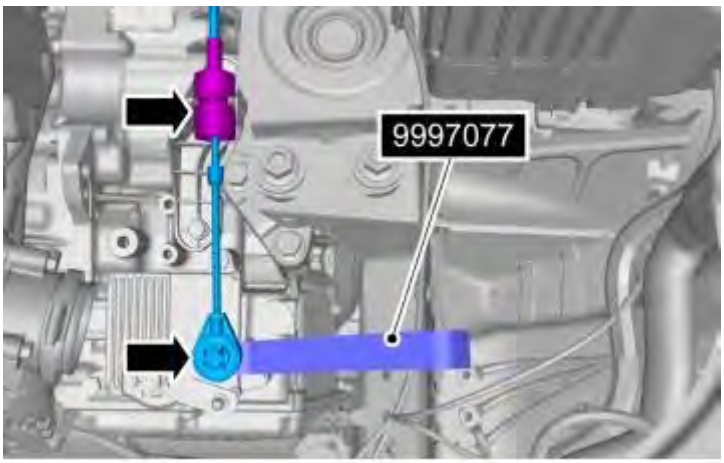

Fig. 92: Identifying Special Tool 9997077
Courtesy of VOLVO CARS CORPORATION

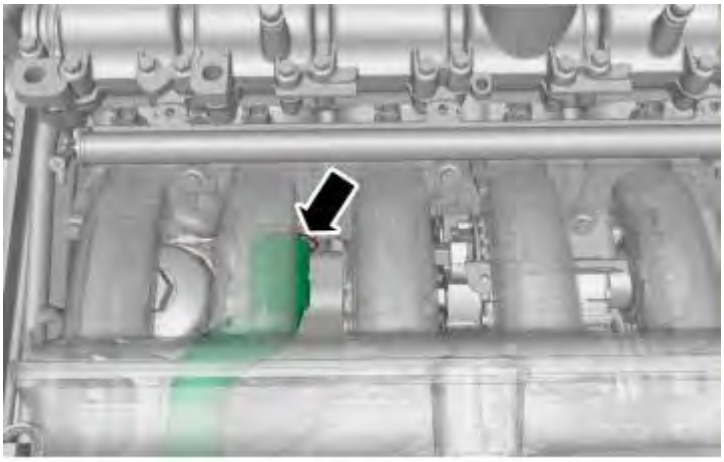

Fig. 93: Identifying Hose Connector Below Intake
Courtesy of VOLVO CARS CORPORATION

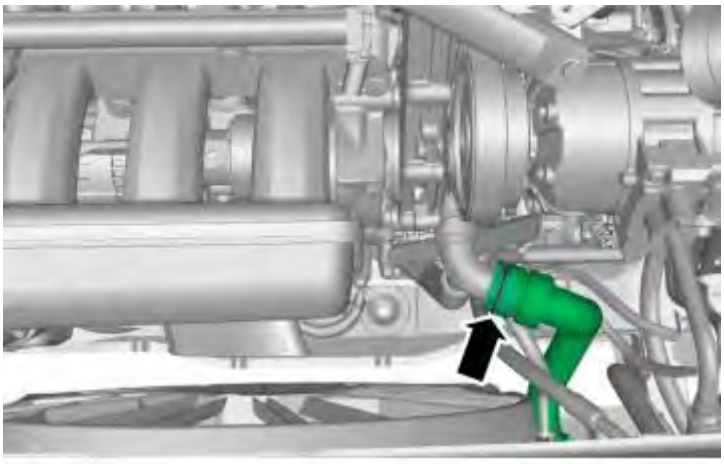

Fig. 94: Identifying Radiator Hose Connector
Courtesy of VOLVO CARS CORPORATION

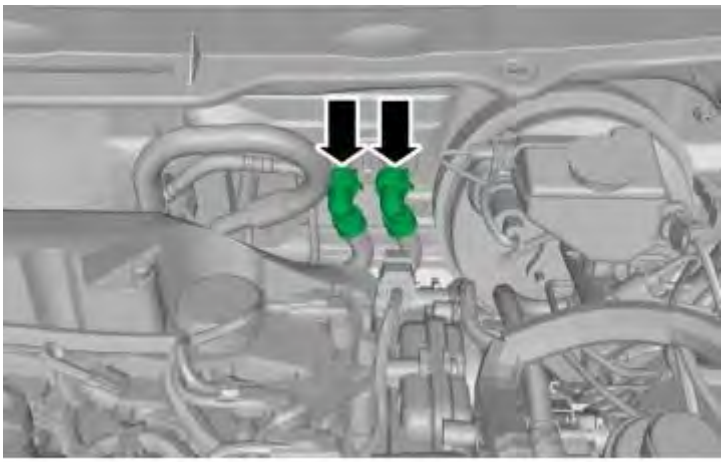

Fig. 95: Locating Heater Hose Connectors
Courtesy of VOLVO CARS CORPORATION

Fig. 96: Identifying Quick Connect Vacuum Hose
Courtesy of VOLVO CARS CORPORATION

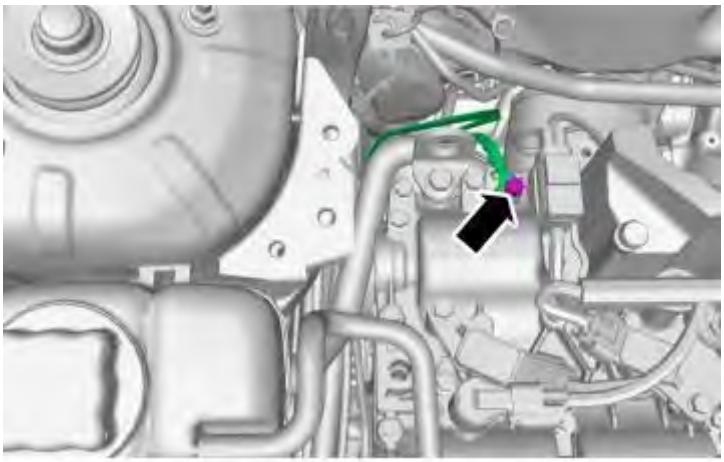

Fig. 97: Locating Ground Point
Courtesy of VOLVO CARS CORPORATION

M6. See **TIGHTENING TORQUE**

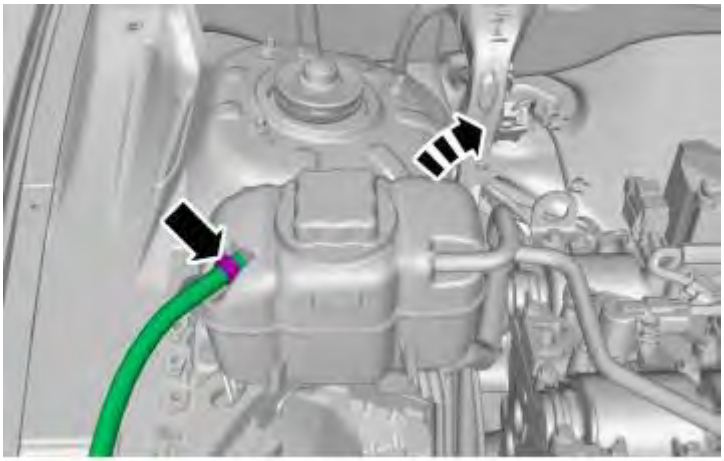

Fig. 98: Identifying Coolant Hose to Reservoir
Courtesy of VOLVO CARS CORPORATION

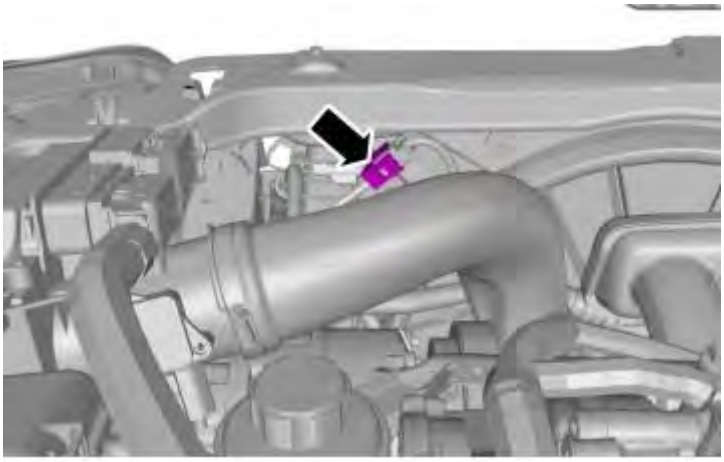

Fig. 99: Locating Electrical Connector
Courtesy of VOLVO CARS CORPORATION

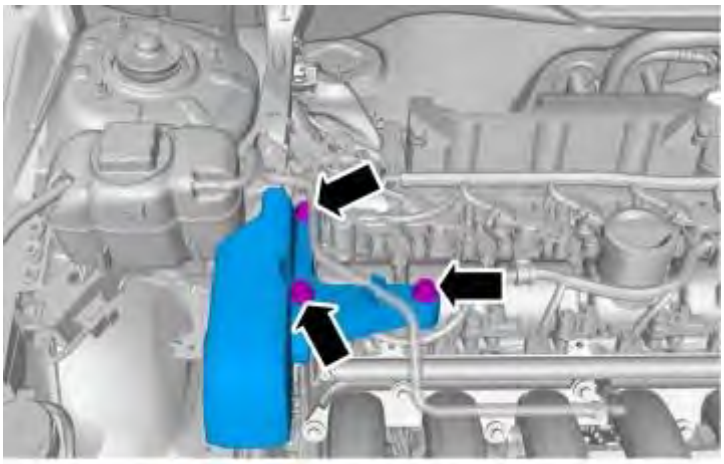

Fig. 100: Identifying Upper Engine Mounting Bolts
Courtesy of VOLVO CARS CORPORATION

Install the following items:

- M10. See **TIGHTENING TORQUE**
- M12. See **TIGHTENING TORQUE**

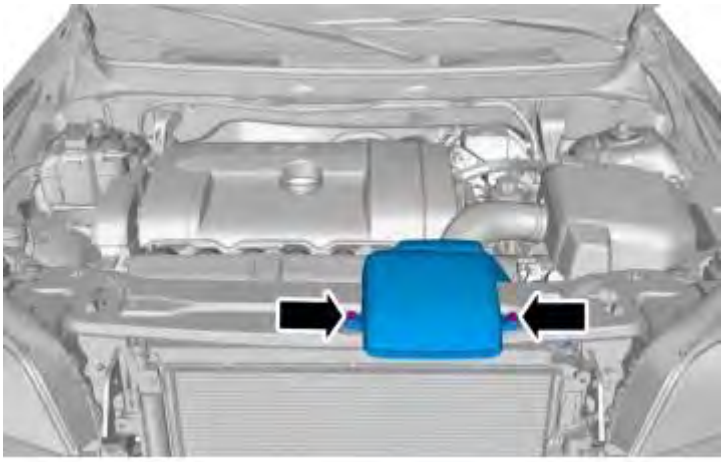

Fig. 101: Locating Air Intake
Courtesy of VOLVO CARS CORPORATION

Install the following items:

- the auxiliaries belt. See **AUXILIARY BELT**
- the catalytic converter. See **CATALYTIC CONVERTER**
- the propeller shaft. See **PROPELLER SHAFT**
- front tires. See **INSTALLING WHEELS**

Charge the cooling system. See **COOLING SYSTEM - DRAINING, CHARGING AND BLEEDING**

Connect the battery. See **BATTERY, REPLACING**

Move over the oil level sensor. See **LEVEL SENSOR ENGINE OIL**

LEVEL SENSOR ENGINE OIL

Removal

NOTE: Removal steps in this procedure may contain installation details.

Fig. 102: Locating Engine Undercover And Clips

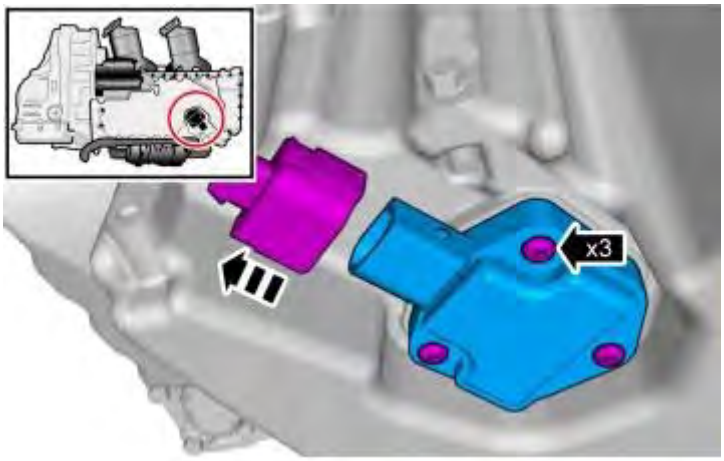

Fig. 103: Locating Engine Oil Level Sensor

Engine oil level sensor. **TIGHTENING TORQUE**

Installation

To install, reverse the removal procedure

ENGINE, REMOVAL

Special tools	
	T9997077 JIMMY BAR **Tool number:** T9997077 **Tool description:** JIMMY BAR **Tool boards:**
	T9512945 PULLER **Tool number:** T9512945 **Tool description:** PULLER **Tool boards:**

	T9997076 LEVER **Tool number:** T9997076 **Tool description:** LEVER **Tool boards:**
-	**T9995666 WRENCH(DISCONNECTING FUEL LINE) 800, S40/V40** **Tool number:** T9995666 **Tool description:** WRENCH (DISCONNECTING FUEL LINE) 800, S40/V40 **Tool boards:**

Materials:	
Designation	**Part number**
Transmission jack	

Disconnect the battery. See **BATTERY, DISCONNECTING** .

Evacuate the fuel pressure. See **FUEL SYSTEM PRESSURE RELEASE** .

Drain the cooling system. See **COOLING SYSTEM - DRAINING, CHARGING AND BLEEDING** .

Remove the following items:

- the auxiliaries belt, see **AUXILIARY BELT**
- the catalytic converter. See **CATALYTIC CONVERTER**
- the upper torque rod. See **UPPER TORQUE ROD**
- the propeller shaft. See **PROPELLER SHAFT**
- front tires. See **INSTALLING WHEELS**
- air cleaner housing. See **AIR CLEANER HOUSING**
- engine control module (ECM). See **ENGINE CONTROL MODULE (ECM)**

Loosen the AC-compressor and lay aside. See **AC COMPRESSOR, REPLACEMENT**

Loosen nut link arm. See **BALL JOINT, REPLACING**

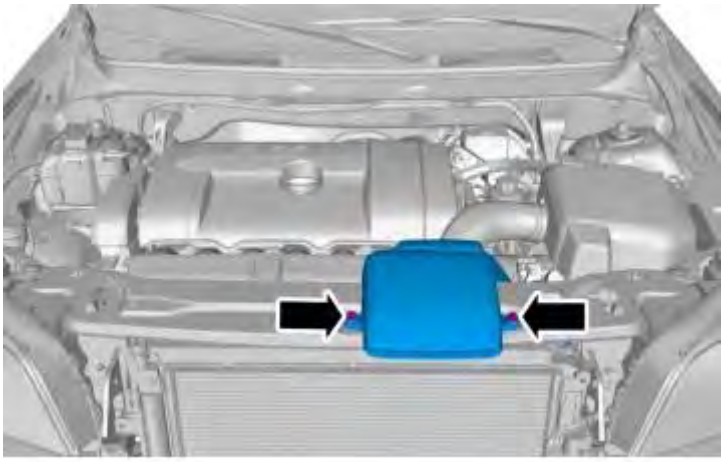

Fig. 104: Locating Air Intake
Courtesy of VOLVO CARS CORPORATION

Fig. 105: Identifying Cover Removal
Courtesy of VOLVO CARS CORPORATION

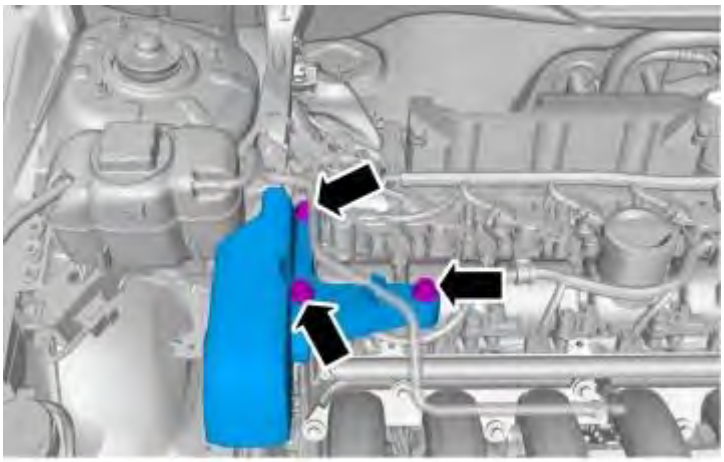

Fig. 106: Identifying Upper Engine Mounting Bolts
Courtesy of VOLVO CARS CORPORATION

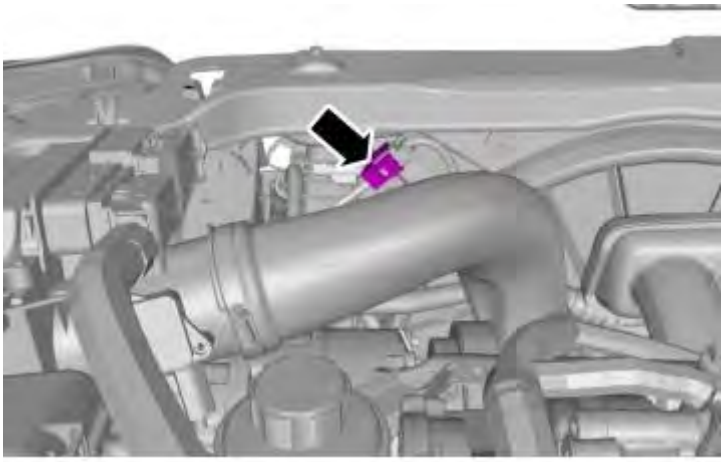

Fig. 107: Locating Electrical Connector
Courtesy of VOLVO CARS CORPORATION

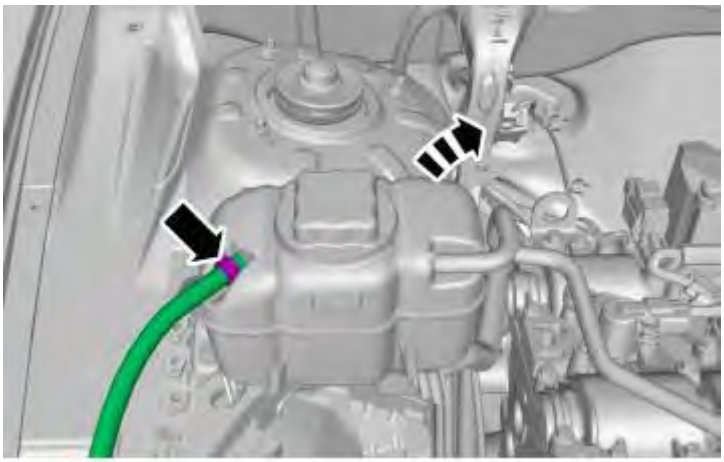

Fig. 108: Identifying Coolant Hose to Reservoir
Courtesy of VOLVO CARS CORPORATION

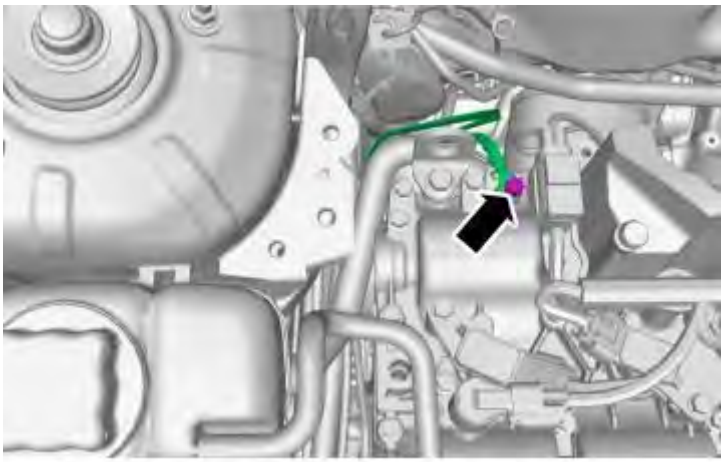

Fig. 109: Locating Ground Point
Courtesy of VOLVO CARS CORPORATION

Fig. 110: Identifying Quick Connect Vacuum Hose
Courtesy of VOLVO CARS CORPORATION

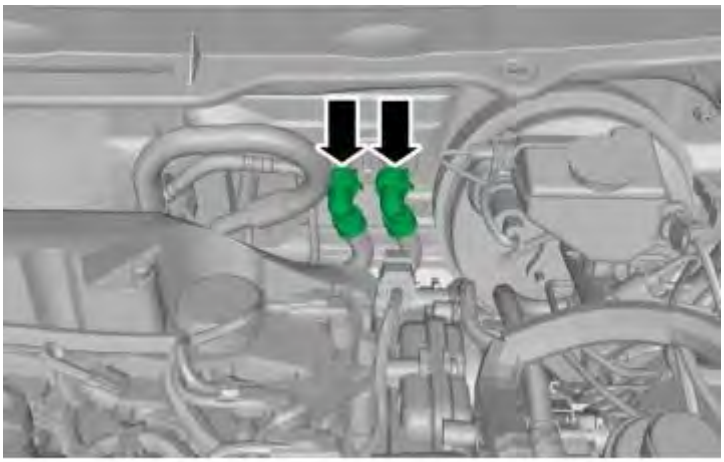

Fig. 111: Locating Heater Hose Connectors
Courtesy of VOLVO CARS CORPORATION

WARNING: **Be prepared to collect escaping fluid.**

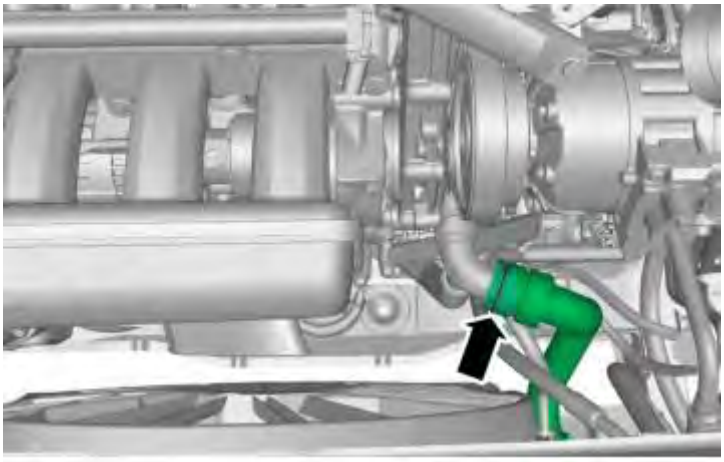

Fig. 112: Identifying Radiator Hose Connector
Courtesy of VOLVO CARS CORPORATION

WARNING: Be prepared to collect escaping fluid.

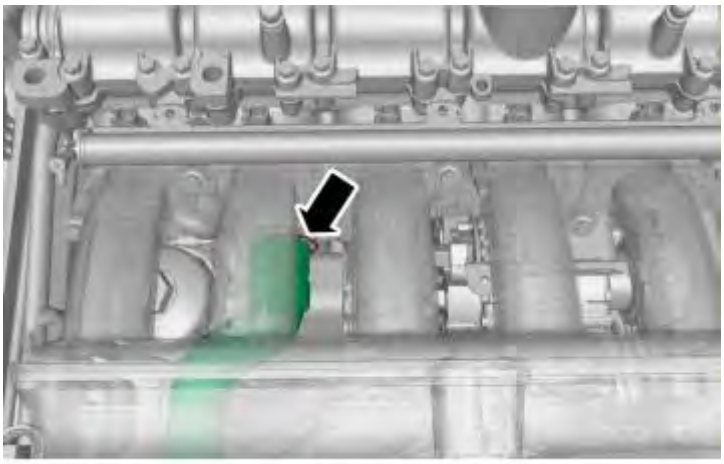

Fig. 113: Identifying Hose Connector Below Intake
Courtesy of VOLVO CARS CORPORATION

WARNING: Be prepared to collect escaping fluid.

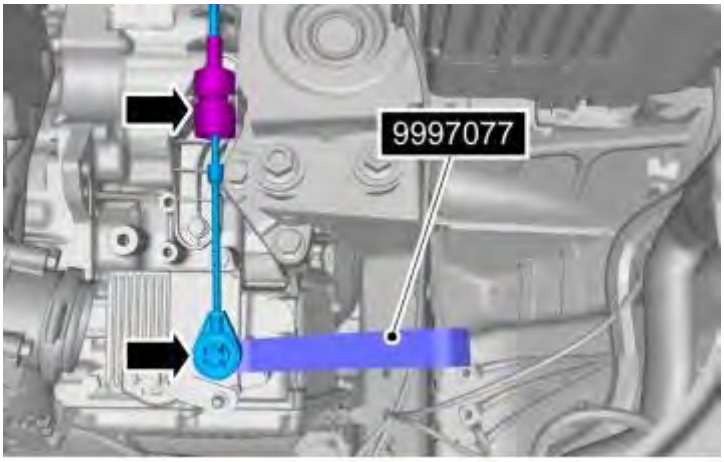

Fig. 114: Identifying Special Tool 9997077
Courtesy of VOLVO CARS CORPORATION

see **9997077**

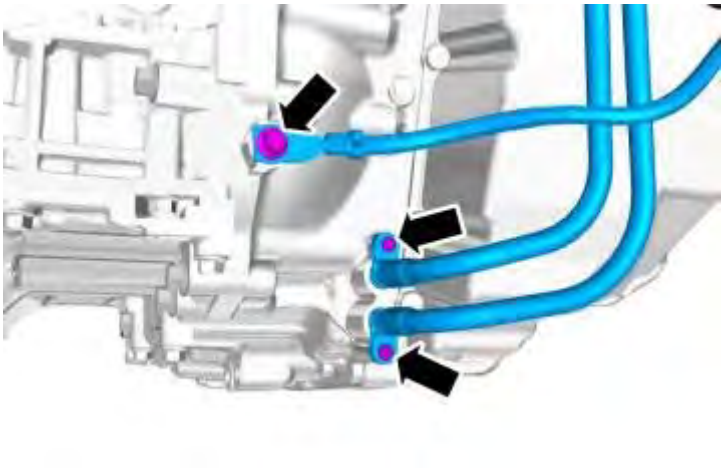

Fig. 115: Viewing Bolts For Cable And Tubes
Courtesy of VOLVO CARS CORPORATION

WARNING: **Be prepared to collect escaping fluid.**

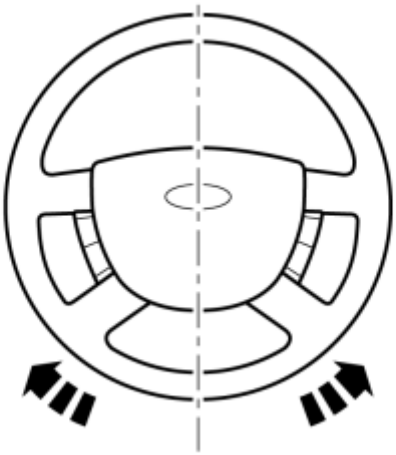

Fig. 116: Identifying Steering Column Directions Of Motion
Courtesy of VOLVO CARS CORPORATION

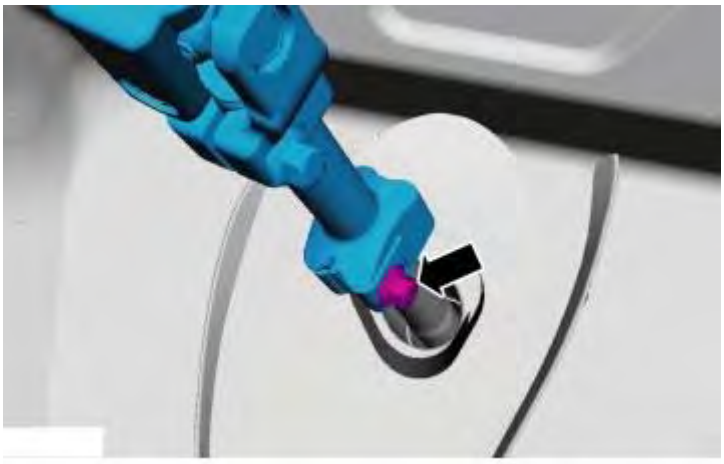

Fig. 117: Identifying Steering Shaft Pinch Bolt
Courtesy of VOLVO CARS CORPORATION

Fig. 118: Identifying Splash Panel.
Courtesy of VOLVO CARS CORPORATION

Fig. 119: Locating Bracket Bolts
Courtesy of VOLVO CARS CORPORATION

Fig. 120: Identifying Drive Shaft Bolt
Courtesy of VOLVO CARS CORPORATION

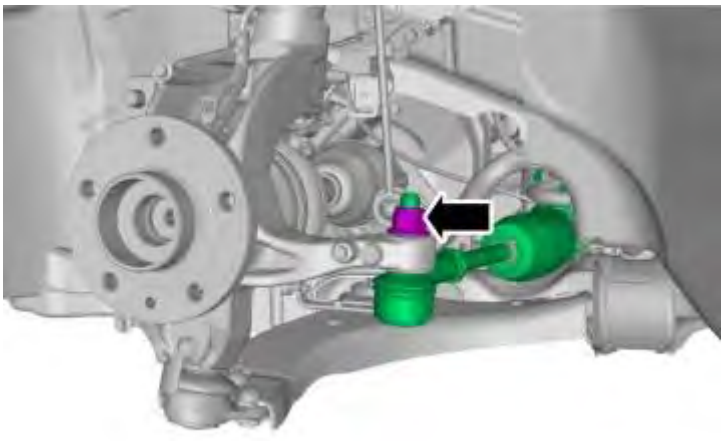

Fig. 121: Viewing Outer Tie Rod End
Courtesy of VOLVO CARS CORPORATION

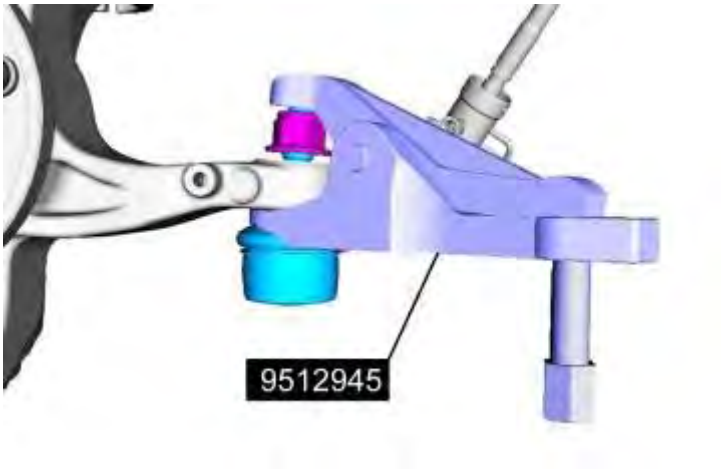

Fig. 122: Special Tool (9512945) Installed
Courtesy of VOLVO CARS CORPORATION

CAUTION: Make sure that the ball joint ball does not rotate.

see **9512945**

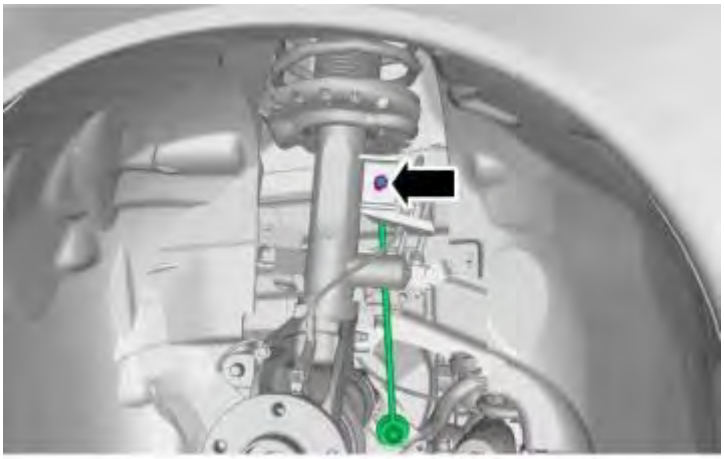

Fig. 123: View of Stabilizer Link
Courtesy of VOLVO CARS CORPORATION

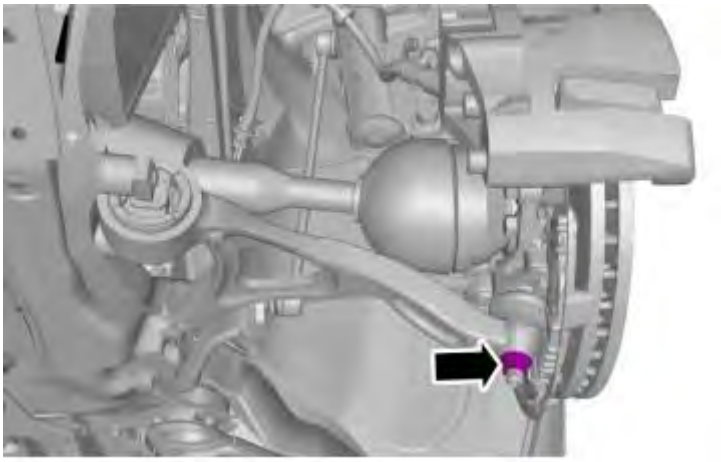

Fig. 124: Identifying Nut, Ball Joint.
Courtesy of VOLVO CARS CORPORATION

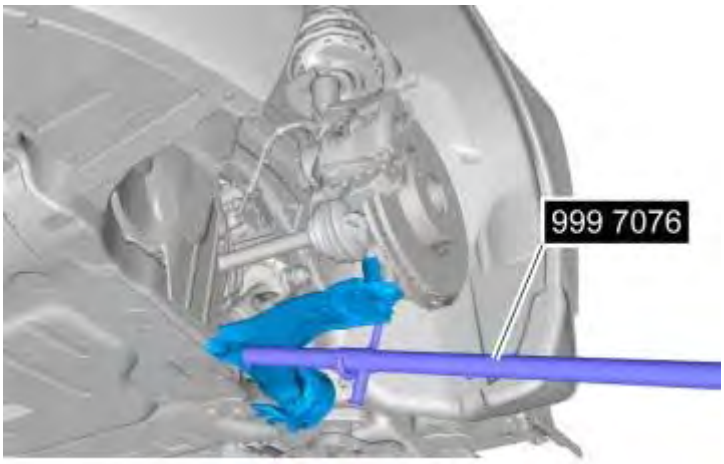

Fig. 125: Identifying Lever Tool 9997076
Courtesy of VOLVO CARS CORPORATION

see **9997076**

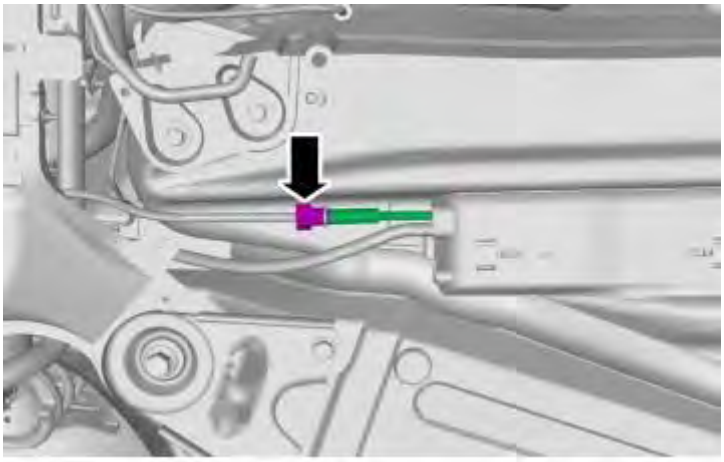

Fig. 126: Locating Fuel Line Connector
Courtesy of VOLVO CARS CORPORATION

Fig. 127: Identifying Using Tool 9995666
Courtesy of VOLVO CARS CORPORATION

CAUTION: Be prepared to collect escaping fluid.

see **9995666**

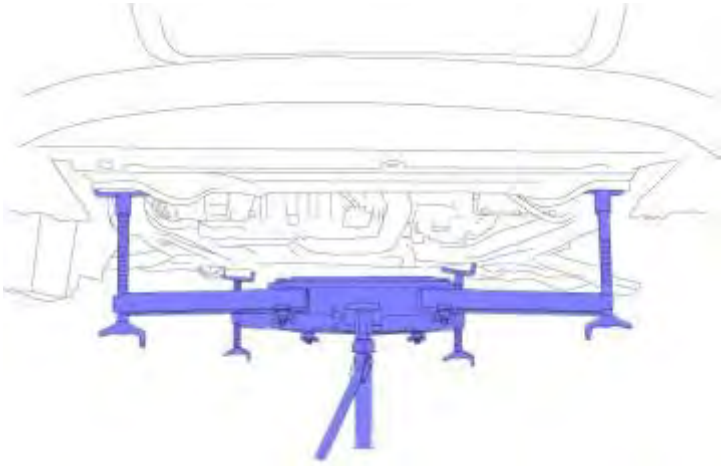

Fig. 128: Identifying Lift Table
Courtesy of VOLVO CARS CORPORATION

CAUTION: Make sure that the lifting table is centred correctly under the engine.

Use: Transmission jack,

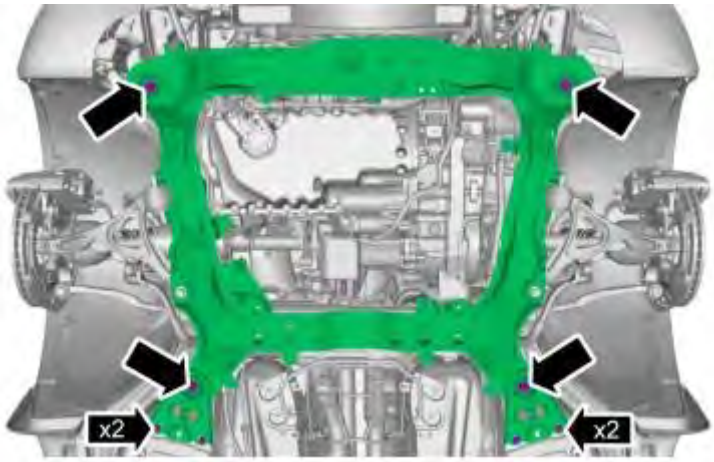

Fig. 129: Identifying Subframe Bolts
Courtesy of VOLVO CARS CORPORATION

CAUTION: Make sure that no components catch when lowering the subframe.

ENGINE MOUNTING (2009-2012)

BUSHING SUB-FRAME, REPLACING (2009-2012)

see **BUSHING SUB-FRAME, REPLACING (2009-2012)**

ENGINE MOUNTING (2003-2008)

BUSHING SUB-FRAME, REPLACING (2003-2008)

see **BUSHING SUB-FRAME, REPLACING (2003-2008)**

ENGINE MOUNTING (B6324S(5)

ENGINE SUPPORT INSULATOR FRONT

Special tool	
	T9995716 LIFTING BEAM (ENGINES) USED WITH 2 X 999 5460 **Tool number:** T9995716 **Tool description:** LIFTING BEAM (ENGINES) USED WITH 2 X 999 5460 **Tool boards:**

NOTE: Removal steps in this procedure may contain installation details.

Fig. 130: Identifying Cover Removal
Courtesy of VOLVO CARS CORPORATION

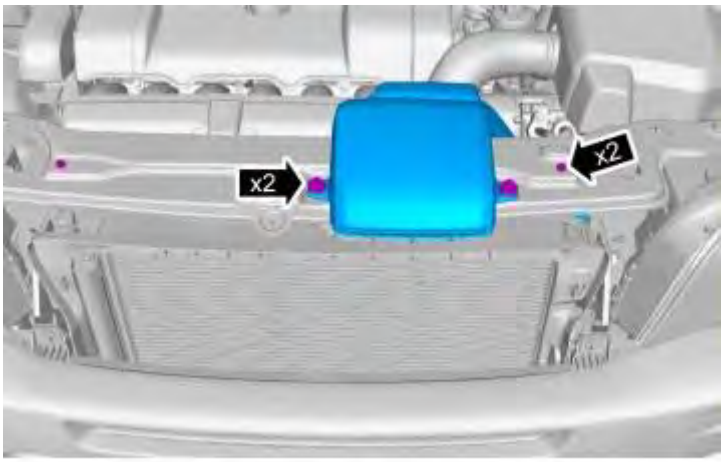

Fig. 131: View of Air Intake
Courtesy of VOLVO CARS CORPORATION

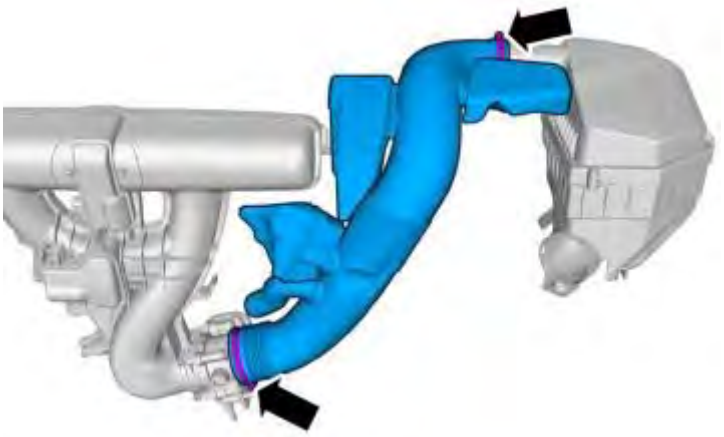

Fig. 132: Locating Air Tube Clamps
Courtesy of VOLVO CARS CORPORATION

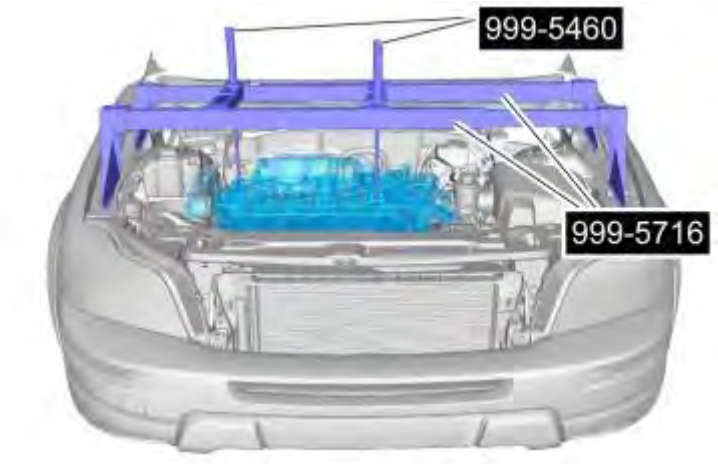

Fig. 133: Identifying Engine Supports 9995716 and Adapters 9995460
Courtesy of VOLVO CARS CORPORATION

see **9995716**

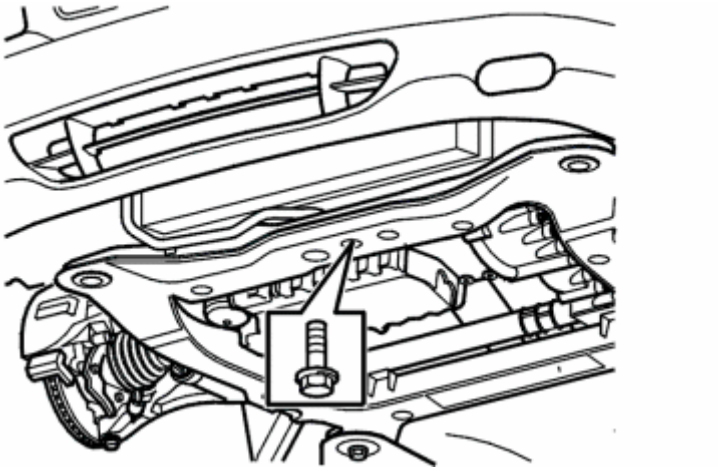

Fig. 134: Viewing Front Lower Engine Mount Bolt
Courtesy of VOLVO CARS CORPORATION

Torque: M10

50 Nm

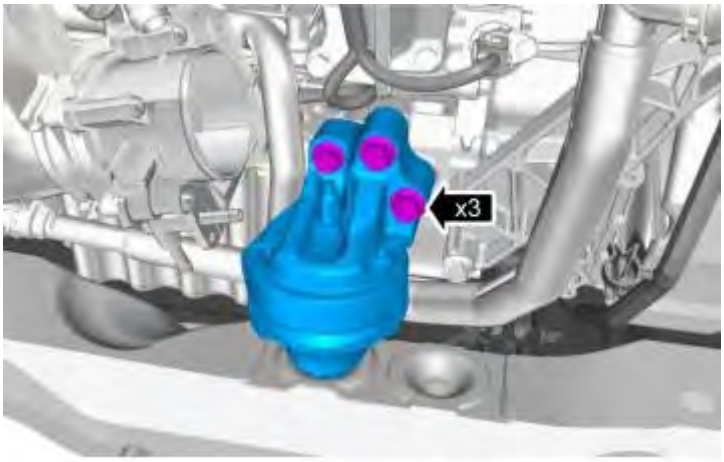

Fig. 135: Identifying Engine Mounting
Courtesy of VOLVO CARS CORPORATION

Torque: M10

50 Nm

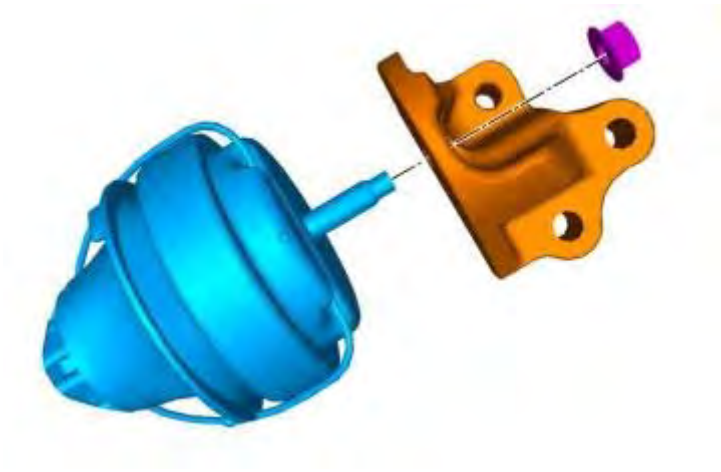

Fig. 136: Identifying Engine Mounting
Courtesy of VOLVO CARS CORPORATION

Torque: M10

50 Nm

To install, reverse the removal procedure

ENGINE SUPPORT INSULATOR, REAR

Special tool	
	T9995716 LIFTING BEAM (ENGINES) USED WITH 2 X 999 5460 **Tool number:** T9995716

Tool description: LIFTING BEAM (ENGINES) USED WITH 2 X 999 5460
Tool boards:

NOTE: Removal steps in this procedure may contain installation details.

Fig. 137: Identifying Cover Removal
Courtesy of VOLVO CARS CORPORATION

Fig. 138: Locating Rear Upper Engine Mount Bolt
Courtesy of VOLVO CARS CORPORATION

Torque: M10

50 Nm

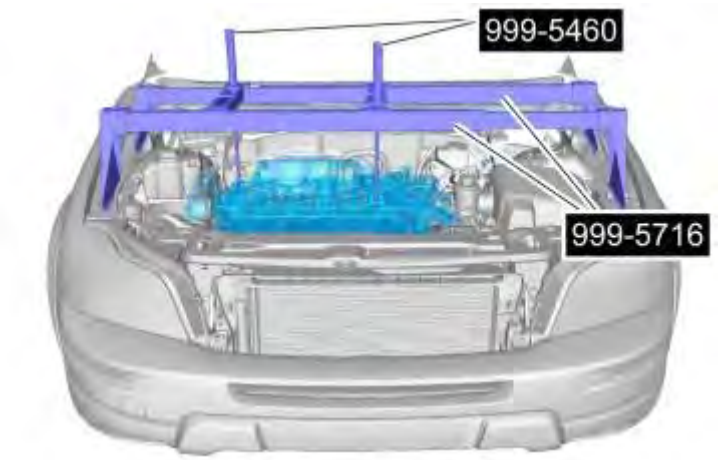

Fig. 139: Identifying Engine Supports 9995716 and Adapters 9995460
Courtesy of VOLVO CARS CORPORATION

see **9995716**

Fig. 140: Locating Engine Undercover And Clips
Courtesy of VOLVO CARS CORPORATION

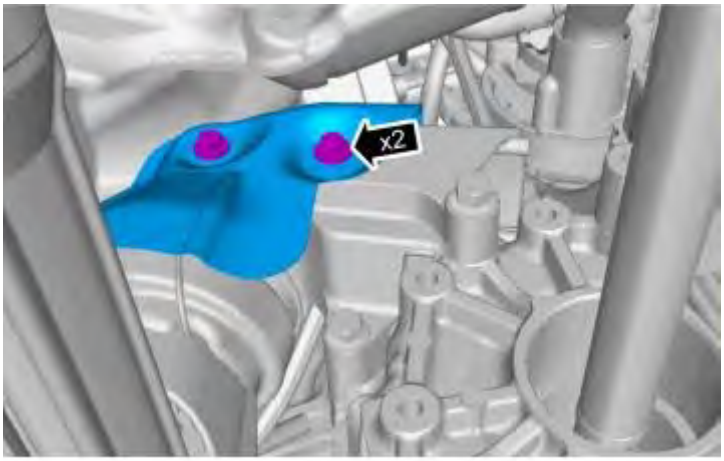

Fig. 141: Identifying Heat Guard To The Engine Mount
Courtesy of VOLVO CARS CORPORATION

Tighten the heat guard to the engine pad. See **TIGHTENING TORQUE**

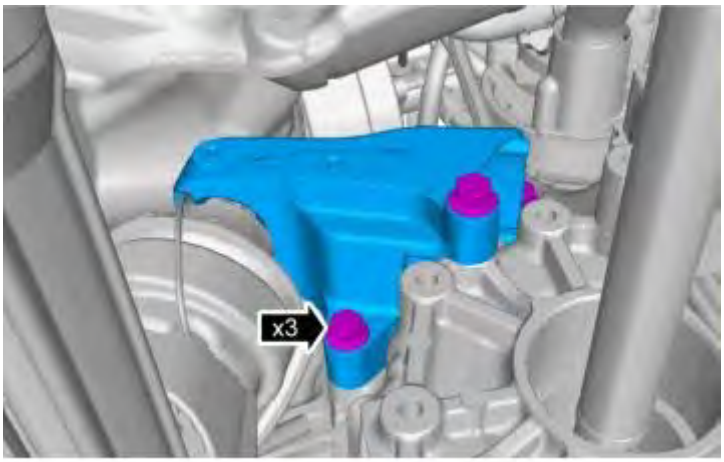

Fig. 142: Identifying Rear Engine Mount
Courtesy of VOLVO CARS CORPORATION

Torque: M10

50 Nm

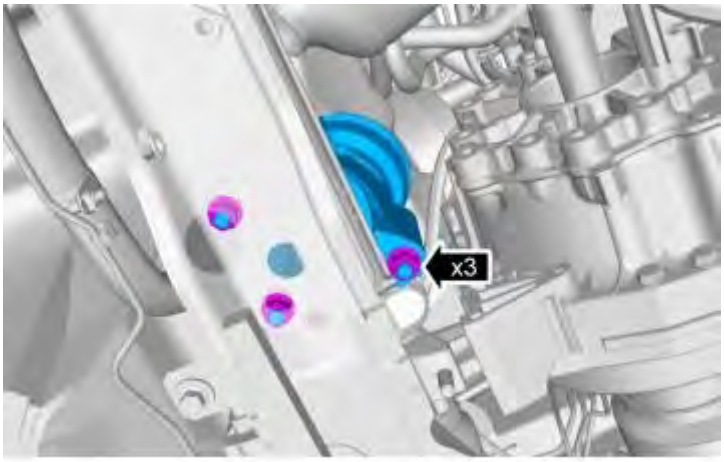

Fig. 143: View of Rear Engine Mount Lower Nuts
Courtesy of VOLVO CARS CORPORATION

Torque: M10

50 Nm

To install, reverse the removal procedure

ENGINE SUPPORT INSULATOR, RIGHT

Special tool	
	T9995716 LIFTING BEAM (ENGINES) USED WITH 2 X 999 5460 **Tool number:** T9995716 **Tool description:** LIFTING BEAM (ENGINES) USED WITH 2 X 999 5460 **Tool boards:**

NOTE: Removal steps in this procedure may contain installation details.

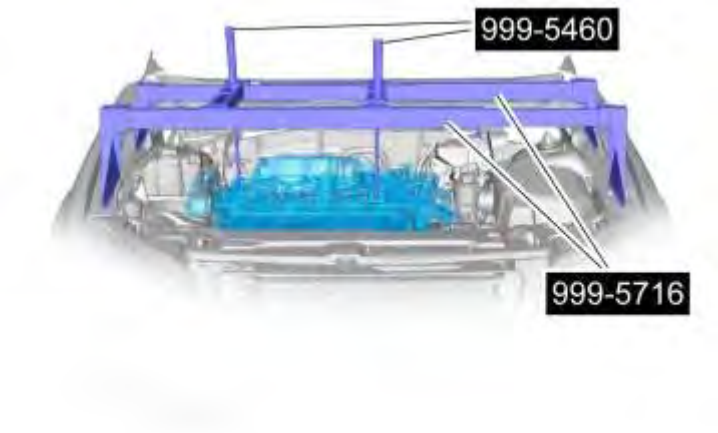

Fig. 144: View Of Engine Supports 9995716 And Adapters 9995460
Courtesy of VOLVO CARS CORPORATION

see **9995716**

Remove the right-hand front wheel. See **INSTALLING WHEELS** .

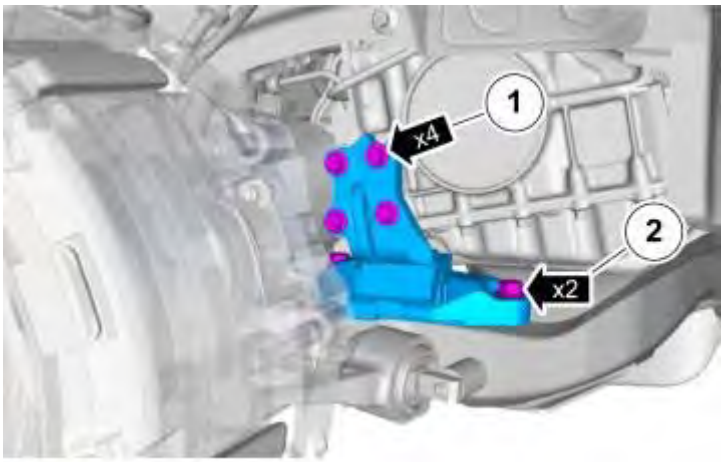

Fig. 145: Identifying Right-Hand Engine Pad
Courtesy of VOLVO CARS CORPORATION

Remove the following items:

1. Right-hand engine pad to engine. See **TIGHTENING TORQUE**
2. Right-hand engine pad to subframe. See **TIGHTENING TORQUE**

To install, reverse the removal procedure

LOWER TORQUE ROD FRONT

NOTE: Removal steps in this procedure may contain installation details.

Fig. 146: Locating Engine Undercover And Clips
Courtesy of VOLVO CARS CORPORATION

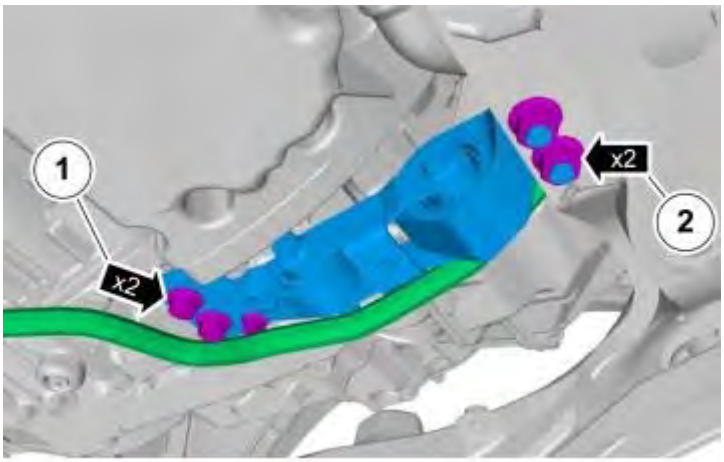

Fig. 147: View of Lower Torque Rod
Courtesy of VOLVO CARS CORPORATION

Remove the following items:

1. Lower torque rod to transmission. See **TIGHTENING TORQUE**

2. Lower torque rod to subframe. See **TIGHTENING TORQUE**

To install, reverse the removal procedure

LOWER TORQUE ROD REAR

NOTE: Removal steps in this procedure may contain installation details.

Fig. 148: Locating Engine Undercover And Clips
Courtesy of VOLVO CARS CORPORATION

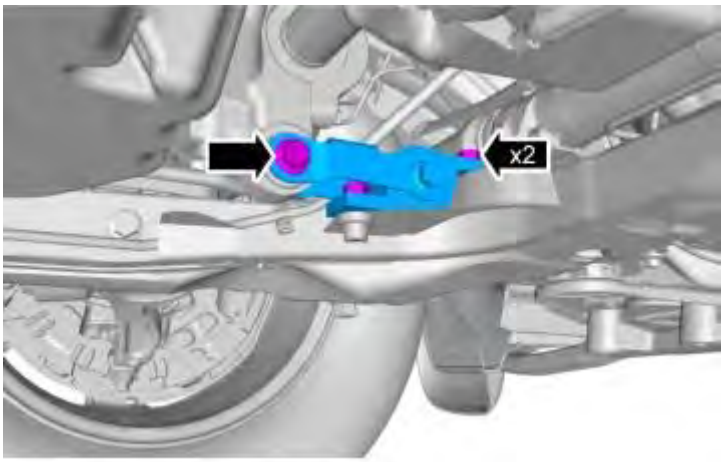

Fig. 149: Identifying Lower Torque Rod Bolts
Courtesy of VOLVO CARS CORPORATION

Torque: M12

80 Nm

To install, reverse the removal procedure

SUB-FRAME FRONT, REPLACING

Special tools	
	T9995716 LIFTING BEAM (ENGINES) USED WITH 2 X 999 5460 **Tool number:** T9995716 **Tool description:** LIFTING BEAM (ENGINES) USED WITH 2 X 999 5460 **Tool boards:**
	T9997070 Mounting (For 9995716B) **Tool number:** T9997070 **Tool description:** Mounting (For 9995716B) **Tool boards:**
	T9995460 LIFTING HOOK (RAISE ENGINE) B5204, B5254, X40 **Tool number:** T9995460 **Tool description:** LIFTING HOOK (RAISE ENGINE) B5204, B5254, X40 **Tool boards:**
	T9995500 SOCKET UPPER NUT REAR SHOCK ABSORBER **Tool number:** T9995500 **Tool description:** SOCKET UPPER NUT REAR SHOCK ABSORBER **Tool boards:**
	T9997062 PULLER **Tool number:** T9997062 **Tool description:** PULLER **Tool boards:**
	T9997076 LEVER **Tool number:** T9997076 **Tool description:** LEVER **Tool boards:**
	T9995562 PROTECTIVE SOCKET (PROTECTION-BALL JOINT PINION) P800 **Tool number:** T9995562 **Tool description:** PROTECTIVE SOCKET (PROTECTION-BALL JOINT PINION) P800 **Tool boards:**
	T9997414 POSITION SETTING TOOL **Tool number:** T9997414 **Tool description:** POSITION SETTING TOOL **Tool boards:**

Special tools:

see **9995716**

see **9997070**

see **9995460**

see **9995500**

see **9997062**

see **9997076**

see **9995562**

NOTE: **The illustrations in this service information are used for different model years and/or models. Some variation may occur. However, the essential information in the illustrations is always correct.**

REMOVAL

PREPARATORY WORK

Remove the front wheels on both sides.

INSTALLING THE LIFTING TOOL

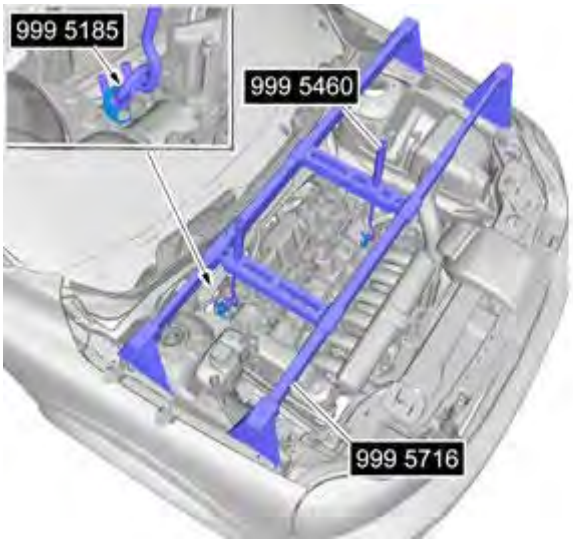

Fig. 150: Installing The Lifting Tool 9995716 and Adapters 9995460
Courtesy of VOLVO CARS CORPORATION

the lifting tool: see **9995716** and lifting hooks: see **9995460** . Lift up the engine slightly so that the engine pads are unloaded.

REMOVING THE WING LINER

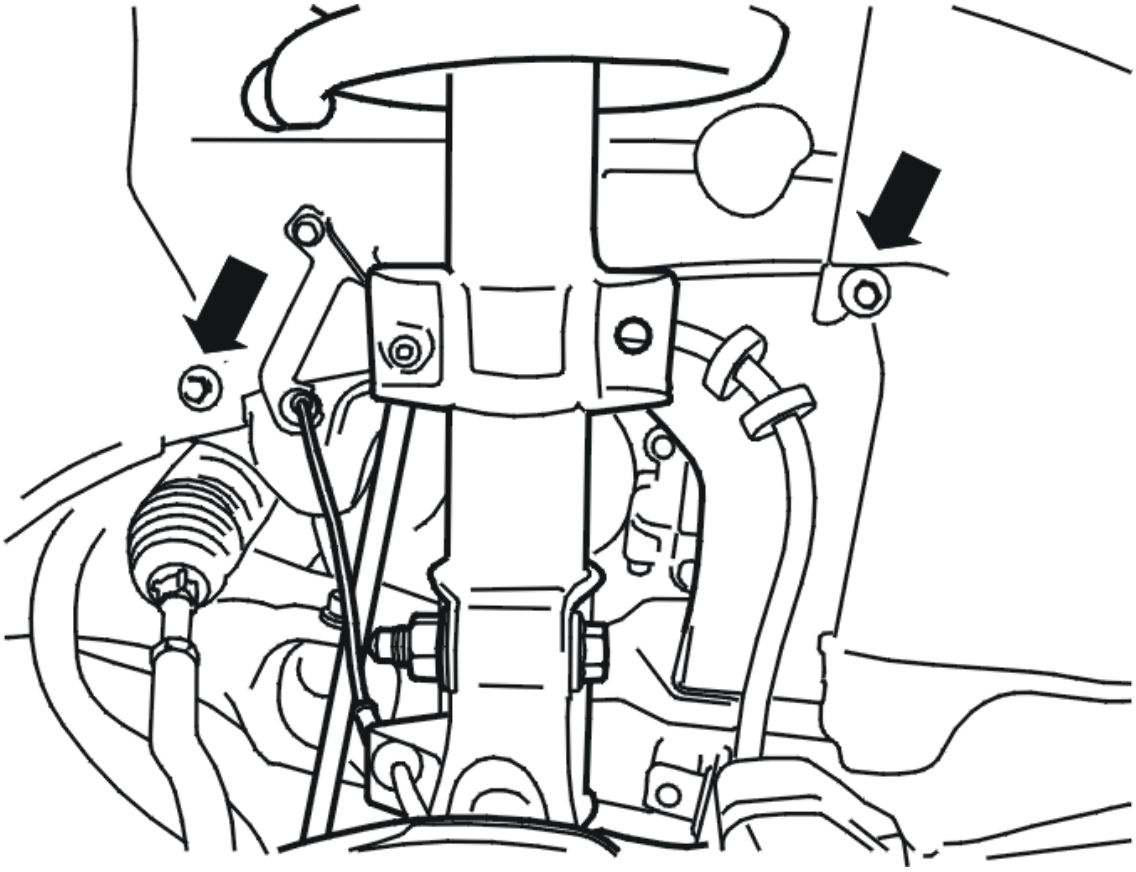

Fig. 151: Identifying Plastic Nuts
Courtesy of VOLVO CARS CORPORATION

Remove:

- the plastic nuts, x2
- the wing liner.

Remove the right engine pad. See:**ENGINE SUPPORT INSULATOR, RIGHT**

REMOVING THE PROTECTIVE PLATE

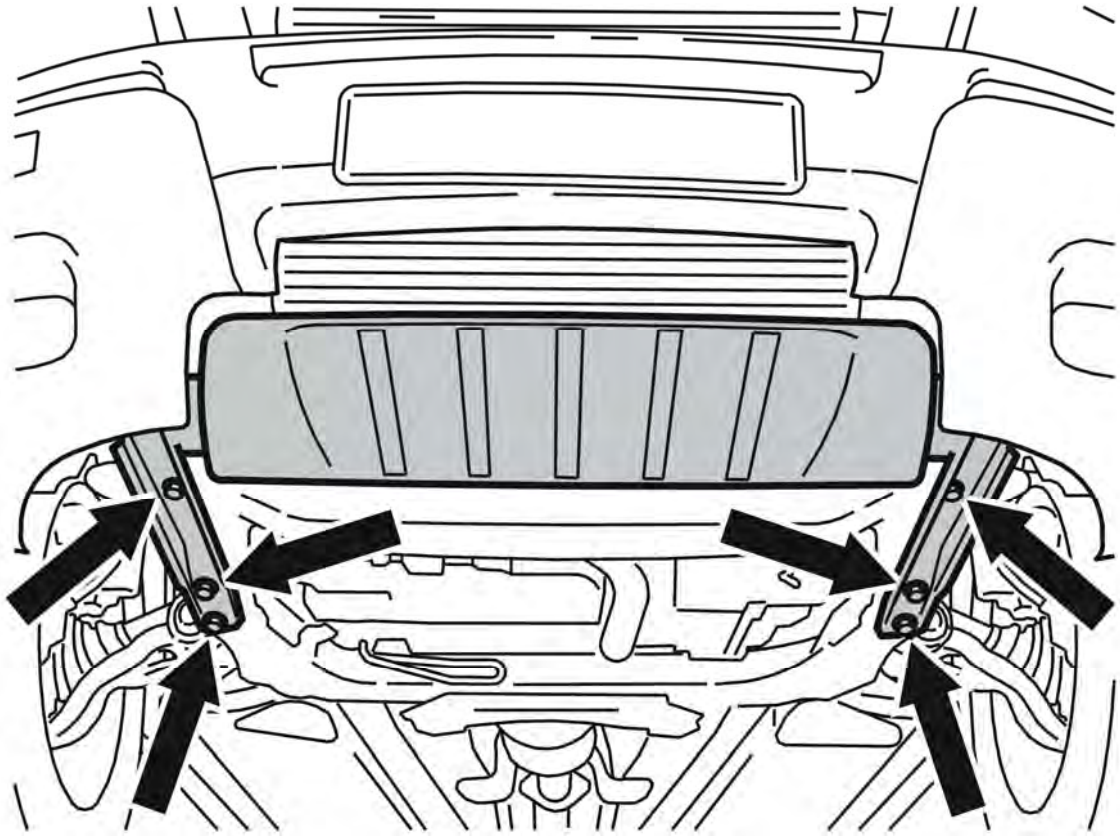

Fig. 152: Splash Guard. Protective Plate And Screws
Courtesy of VOLVO CARS CORPORATION

Remove the 6 screws.

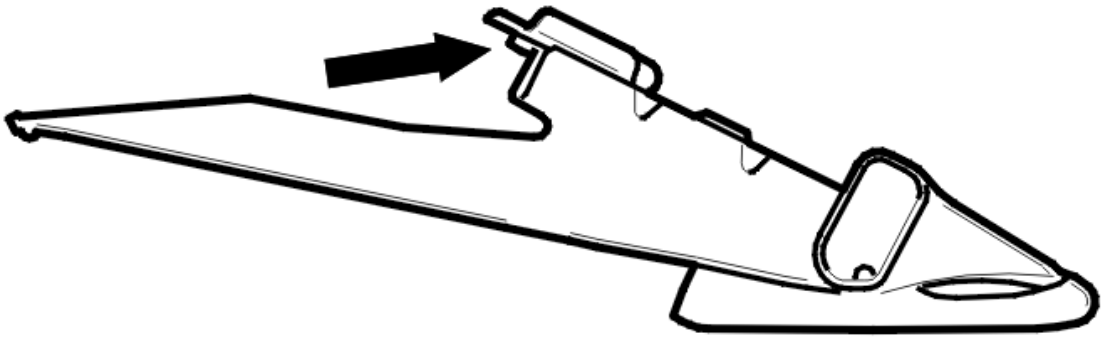

Fig. 153: Identifying Protective Plate
Courtesy of VOLVO CARS CORPORATION

NOTE: There is a guide sleeve on the upper mounting for the plate. This must be lifted slightly so that the panel can be slid forward.

Raise and move the protective plate forward. Remove the protective plate.

REMOVING THE PROTECTIVE COVER UNDER THE ENGINE

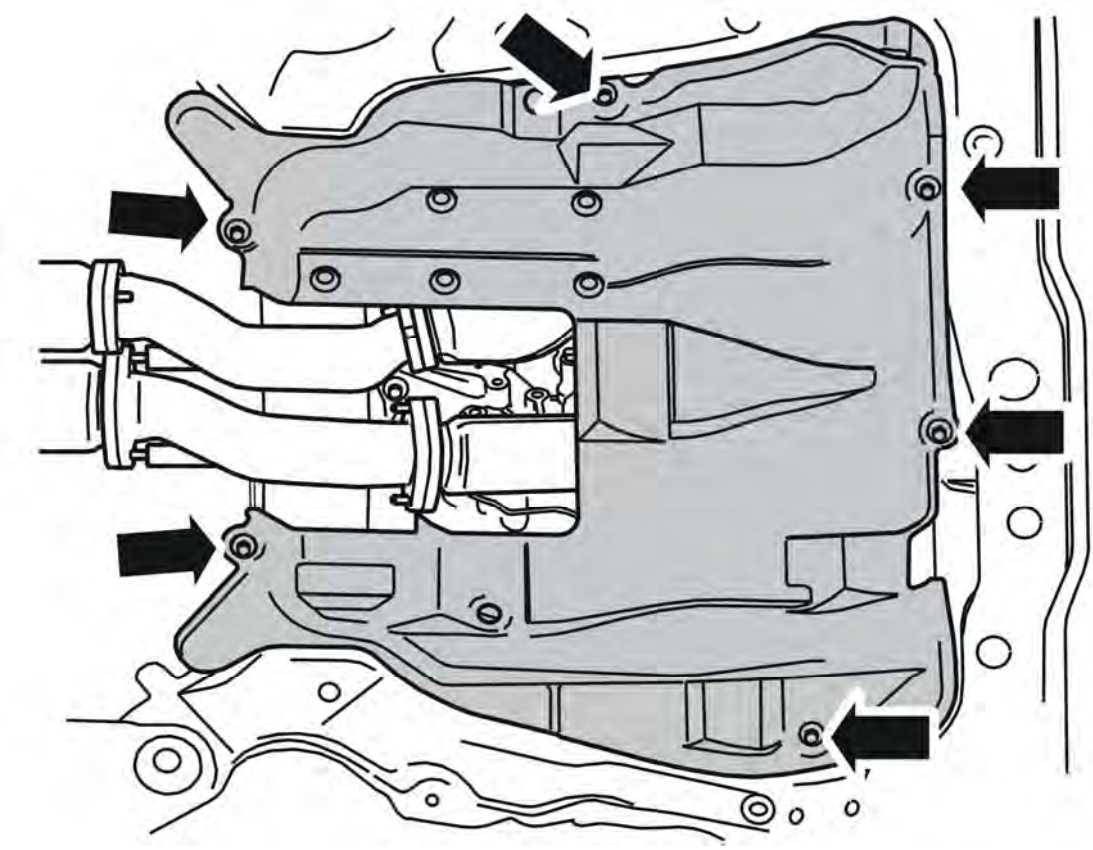

Fig. 154: Removing The Lower Engine Cover
Courtesy of VOLVO CARS CORPORATION

Remove:

- the bolts, x6
- the protective cover under the engine.

REMOVING THE GEARBOX BOLTS TO THE LOWER TORQUE ROD

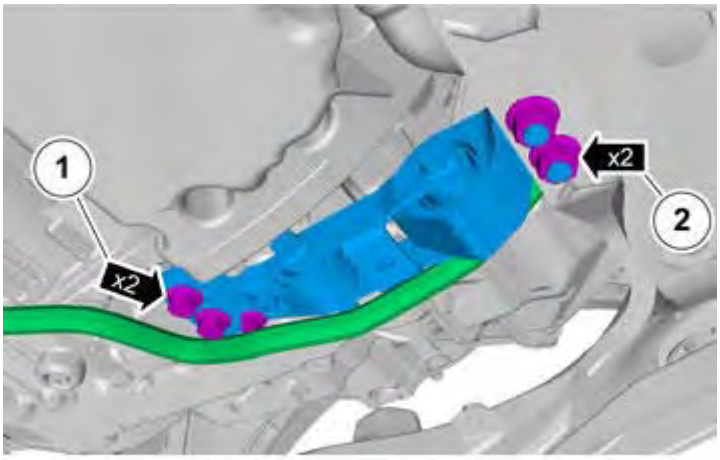

Fig. 155: Identifying Bolts To The Lower Torque Rod
Courtesy of VOLVO CARS CORPORATION

REMOVING THE LOWER BOLT TO THE FRONT ENGINE PAD

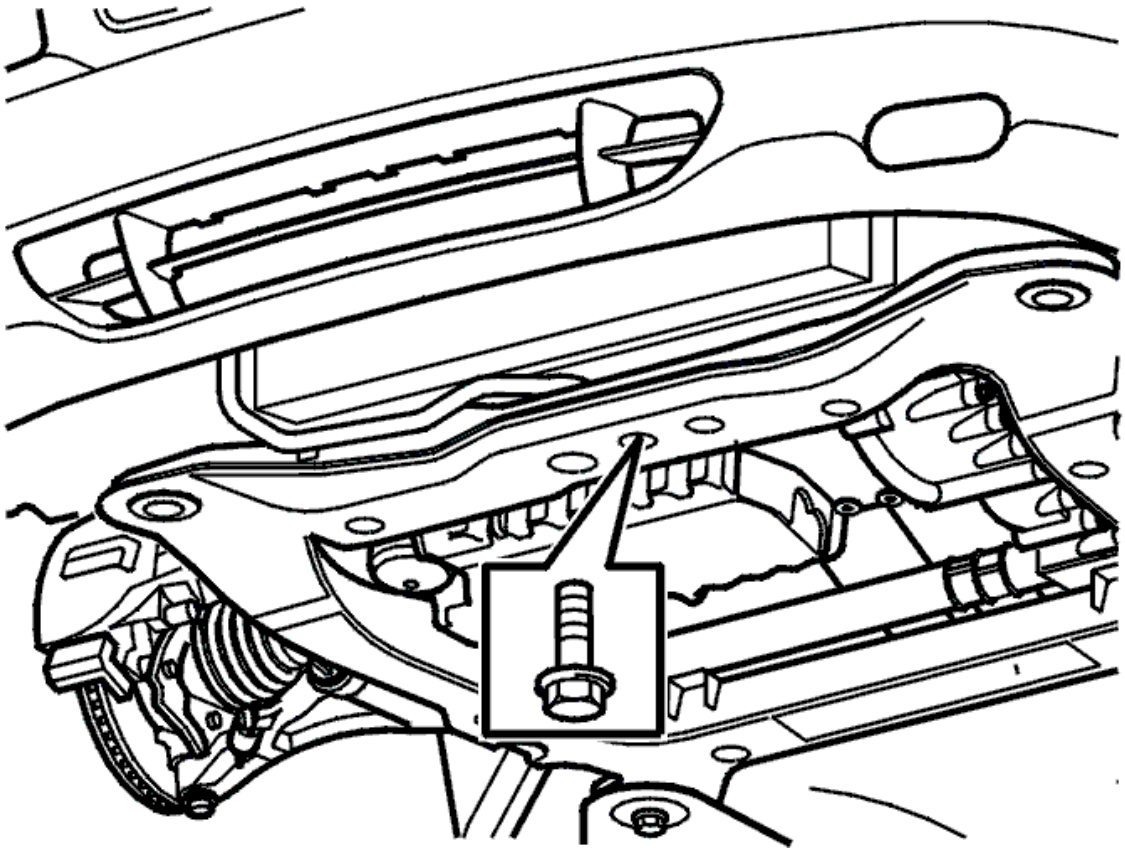

Fig. 156: Lower Front Engine Pad Bolt
Courtesy of VOLVO CARS CORPORATION

Remove the lower bolt to the engine pad.

REMOVING THE ANTI-ROLL BAR LINK FROM THE ANTI-ROLL BAR ON BOTH SIDES

Remove the anti-roll bar. See:**ANTI-ROLL BAR LINK FRONT, REPLACING**

REMOVING THE DRIVE SHAFT

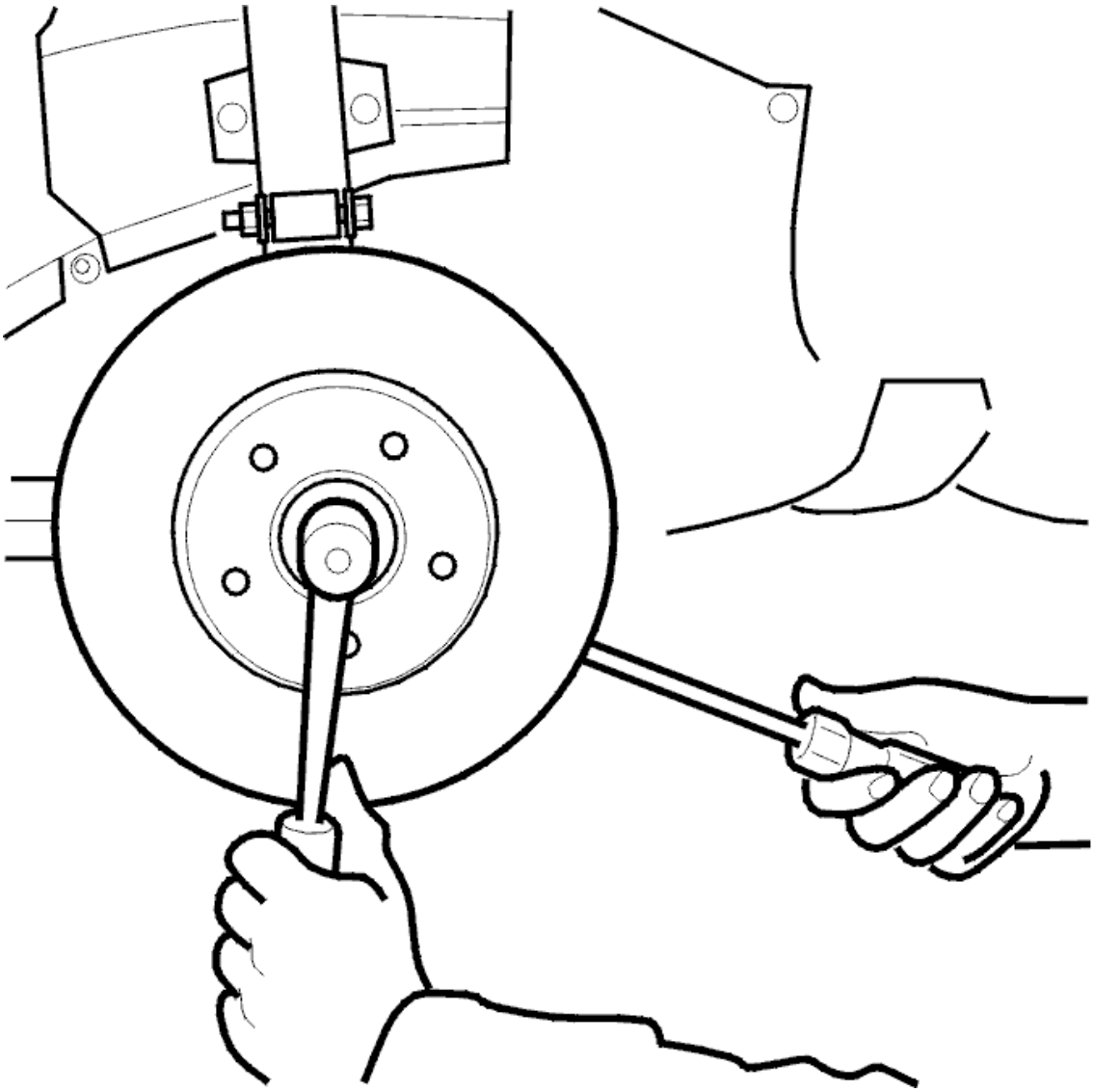

Fig. 157: Identifying Drive Shaft Screw Removal Using A Screwdriver As A Counter Hold On Brake Disc
Courtesy of VOLVO CARS CORPORATION

Remove the bolt for the drive shaft. Use a screwdriver in the brake disc as counterhold. Tap the drive shaft into the hub slightly. Use a brass drift.

REMOVING THE LINK ARM FROM THE WHEEL SPINDLE ON BOTH SIDES

Remove the ball joint according to **BALL JOINT, REPLACING**

REMOVING THE STEERING GEAR FROM THE SUBFRAME

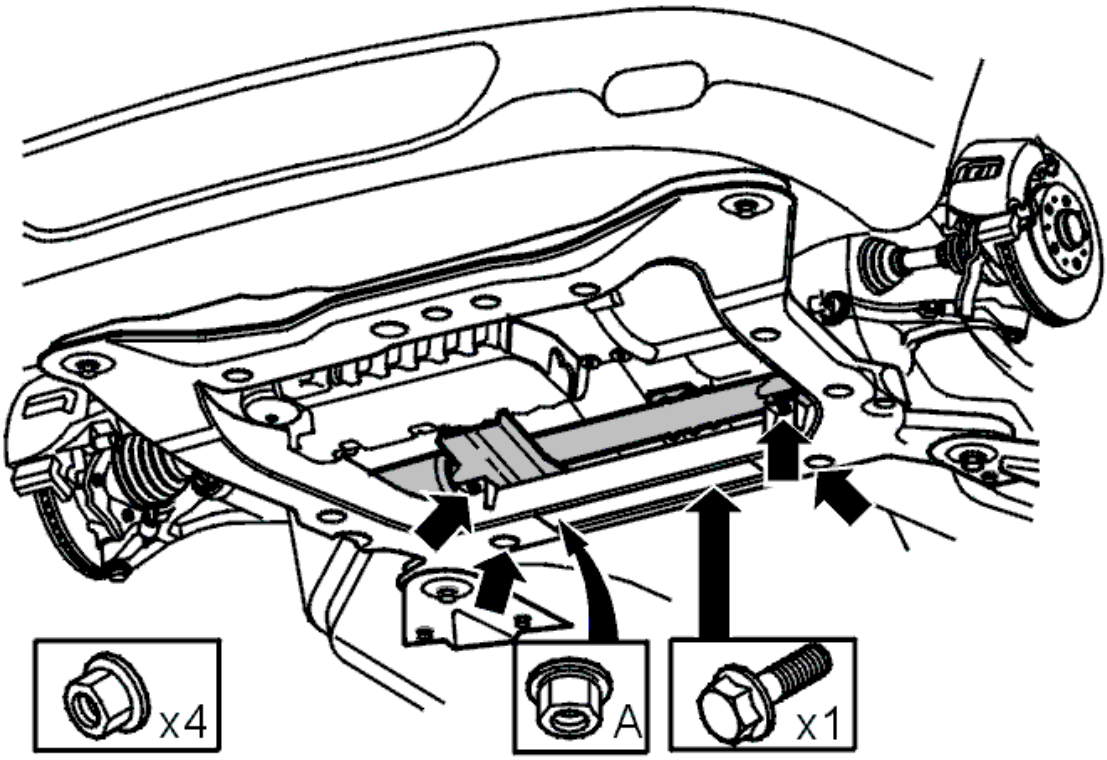

Fig. 158: Identifying Bolt And Nut Holding Steering Gear To Sub-Frame
Courtesy of VOLVO CARS CORPORATION

Remove:

- the nuts, x4
- the bolt, x1.

REMOVING THE SUBFRAME

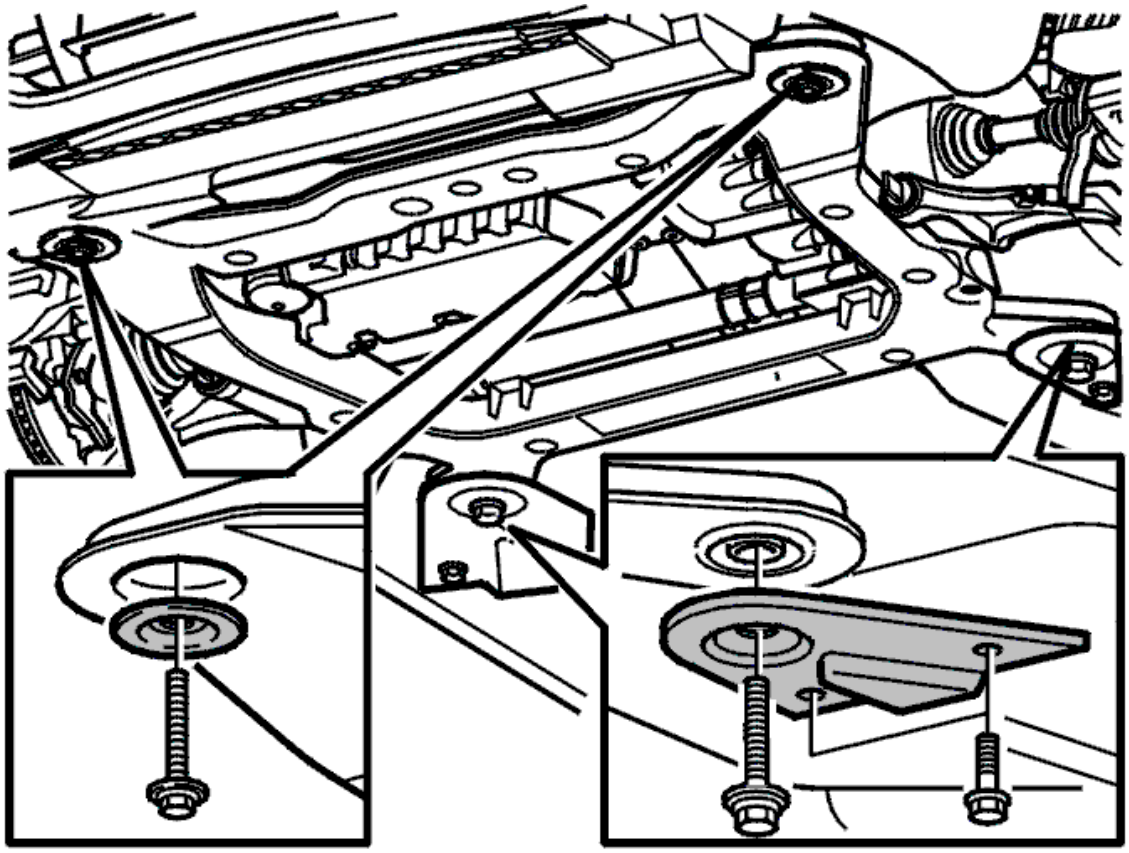

Fig. 159: Identifying Bolts, Washers And Brackets In Sub-Frame
Courtesy of VOLVO CARS CORPORATION

CAUTION: Ensure that no pipes or cables are under load or are trapped when lowering the sub-frame.

Release:

- the 2 x heated oxygen sensor (HO2S) connectors from the rear edge of the subframe
- the heated oxygen sensor (HO2S) connector from the front edge of the subframe.

Remove the bolt to the ground cable bracket on the front edge of the subframe.

Position a lifting table under the subframe.

Remove:

- the bolts to the subframe's brackets at the rear edge
- the bolts to the subframe in the front and rear edge
- the subframe's brackets.

Release the heated oxygen sensor (HO2S) cables from the anti-roll bar.

Remove the lower coolant hose from the bracket on the subframe.

Lower the subframe carefully. Release the oil pipes to the steering gear from the clips on the subframe.

Remove the bolt to the bracket holding the pressure pipe to the steering gear on the subframe.

TRANSFERRING THE COMPONENTS

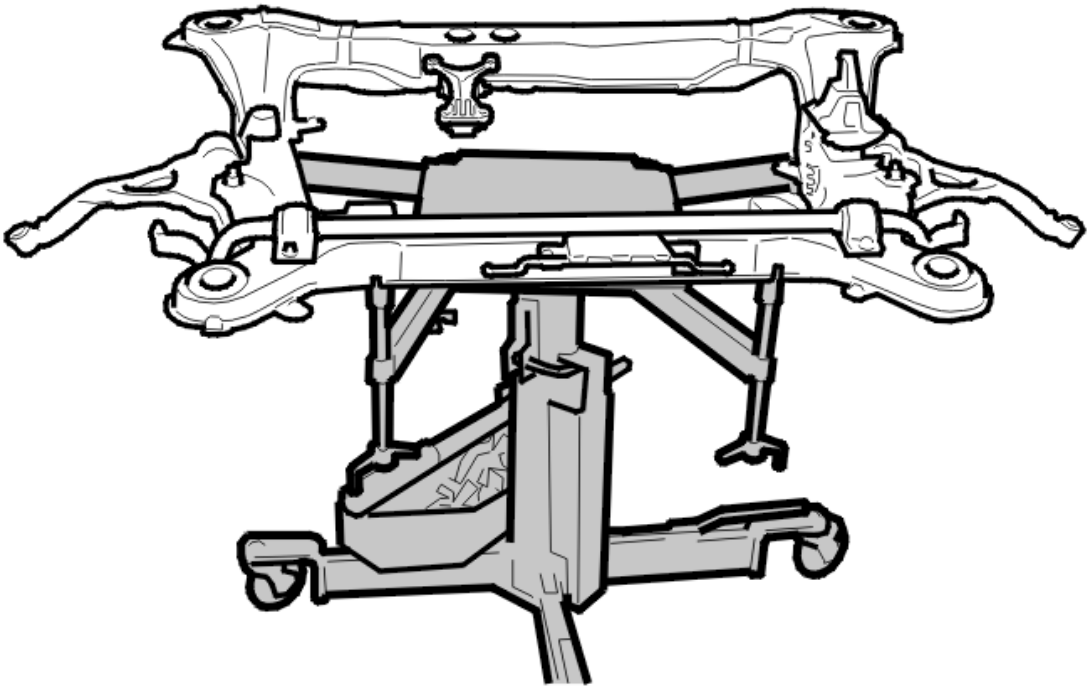

Fig. 160: Identifying Front And Rear Screws To Control Arms
Courtesy of VOLVO CARS CORPORATION

Transfer the link arms on both sides.

Install:

- the 2 x front screws to the control arms. Tighten. See: **SUMMARY OF TIGHTENING TORQUES FOR SPECIFIC COMPONENTS**
- the rear screw to the control arms. Tighten. See **SUMMARY OF TIGHTENING TORQUES FOR SPECIFIC COMPONENTS** .

Transfer the anti-roll bar. Fit the bolts to the anti-roll bar, M10 x4.

Transfer the right-hand engine pad.

Fit the bolts to the engine pad, x2, in accordance with: **TIGHTENING TORQUE** .

Install a new lower torque rod with the nuts. See **TIGHTENING TORQUE** .

Install new pipe/hose holder. Transfer the bracket to the lower coolant hose. Install an M6 screw in the bracket.

INSTALLATION

INSTALLING THE SUBFRAME

CAUTION: Ensure that no pipes or cables are loaded or trapped when raising the sub-frame.

Raise the subframe.

Install:

- the oil pipes to the steering gear in the clips on the subframe
- the bolt, M6, to the bracket holding the pressure pipe to the steering gear on the subframe
- the lower coolant hose in the bracket on the sub-frame.

See instructions about adjustment. See : **SUBFRAME, ADJUSTING**

Install the sub-frame's four screws together with the sub-frame's brackets and engine heater, if installed.

Use new screws. Lube the screws with oil.

Tighten. See : **TIGHTENING TORQUE** . First tighten the screws on the sub-frame's left side, then on the right.

Tighten the screws for the brackets M10.

Install the heated oxygen sensor's cables on the anti-roll bar.

Remove the lifting table.

Install:

- the 2 x heated oxygen sensor (HO2S) connectors on the rear edge of the subframe
- the heated oxygen sensor (HO2S) connector on the front edge of the subframe
- the M6 screw to the ground cable mounting on the front edge of the subframe.

INSTALLING THE STEERING GEAR ON THE SUBFRAME

Install:

- the nuts, M10 x4.
- the M10 screw.

FITTING THE LOWER BOLT TO THE FRONT ENGINE PAD

Install the lower M10 screw for the engine pad.

INSTALLING THE GEARBOX BOLTS TO THE LOWER TORQUE ROD

Fit the bolts, x2. Tighten in accordance with: **SUMMARY OF TIGHTENING TORQUES FOR SPECIFIC COMPONENTS** .

INSTALLING THE EXHAUST PIPES BETWEEN FRONT AND REAR CATALYTIC CONVERTERS

NOTE: To ensure that there is no exhaust leakage, see: FLANGED JOINT, ASSEMBLING .

Install:

- both exhaust pipes
- both exhaust pipes' nuts, M8.

INSTALLING THE LINK ARM ON BOTH SIDES

Install:

- the link arm. see **9997076** .
- the nut. Tighten. See **SUMMARY OF TIGHTENING TORQUES FOR SPECIFIC COMPONENTS** . Counterhold using a Torx wrench to prevent damaging the ball joint boot.

INSTALLING THE ANTI-ROLL BAR LINK ON BOTH SIDES

Install:

- the anti-roll bar link
- the nut. Tighten acc. to: **SUMMARY OF TIGHTENING TORQUES FOR SPECIFIC COMPONENTS** . Use socket see **9995500** and a Torx wrench as a counterhold to prevent damaging the rubber gaiter.

INSTALLING THE DRIVE SHAFT

Fit the bolt on both sides in accordance with: **TIGHTENING TORQUE** .

Use a screwdriver as counterhold.

INSTALLING THE PROTECTIVE COVER UNDER THE ENGINE

Install:

- the protective cover under the engine
- the bolts, M8 x6.

INSTALLING THE PROTECTIVE PLATE

Move the skid plate up into the bumper cover. Press forward until the mounting brackets enter the sub-frame. Install the screws.

FITTING THE BOLTS TO THE RIGHT-HAND ENGINE PAD

Fit the bolts, x2. Tighten in accordance with: **TIGHTENING TORQUE** .

INSTALLING THE WING LINER

Install:

- the wing liner
- the plastic nuts, x2.

REMOVING THE LIFTING TOOL

Remove the lifting tool see **9995716** , kit: see **9997070** and lifting hooks: see **9995460** .

FITTING THE BOLTS TO THE TORQUE ROD

Install the 2 x M10 screws, by the suspension turret on both sides.

FINISHING

Fit the front wheels on both sides in accordance with: **INSTALLING WHEELS** .

Remove the oil filler cap.

Install:

- the upper front engine casing
- the oil filler cap. Carry out wheel alignment in accordance with: **WHEEL ALIGNMENT, CHECKING / ADJUSTING** .

NOTE: **If the entire subframe has been removed for exposing other units/components, do not perform wheel alignment after installing the subframe.**

UPPER TORQUE ROD

NOTE: Removal steps in this procedure may contain installation details.

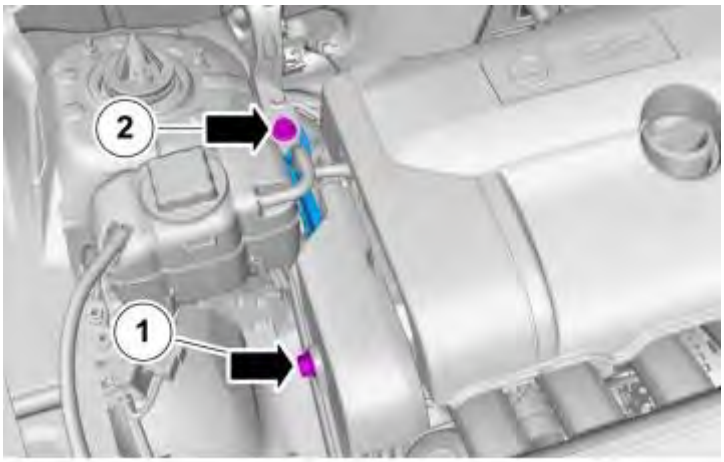

Fig. 161: Locating Upper Torque Rod
Courtesy of VOLVO CARS CORPORATION

Torque: M12

80 Nm

To install, reverse the removal procedure

OIL PAN (B6324S(5)

OIL PAN

Special tools	
	T9997270 TEMPLATE **Tool number:** T9997270 **Tool description:** TEMPLATE **Tool boards:**
	T9997273 GUIDE PIN **Tool number:** T9997273 **Tool description:** GUIDE PIN **Tool boards:**

Materials:	
Designation	**Part number**
Sealant	1161 771

NOTE: Removal steps in this procedure may contain installation details.

Remove the following items:

- Engine oil level sensor. See **LEVEL SENSOR ENGINE OIL**
- Engine pad right. See **ENGINE SUPPORT INSULATOR, RIGHT**
- Engine Front Lower Support Insulator. See **LOWER TORQUE ROD FRONT**
- Starter motor. See **STARTER MOTOR**

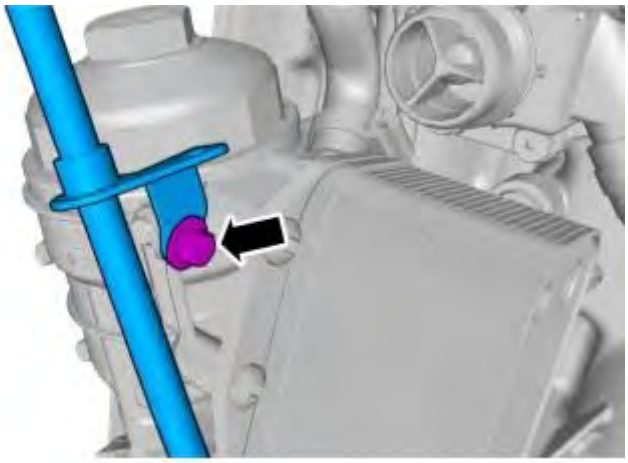

Fig. 162: Locating Dipstick Tube Bolt
Courtesy of VOLVO CARS CORPORATION

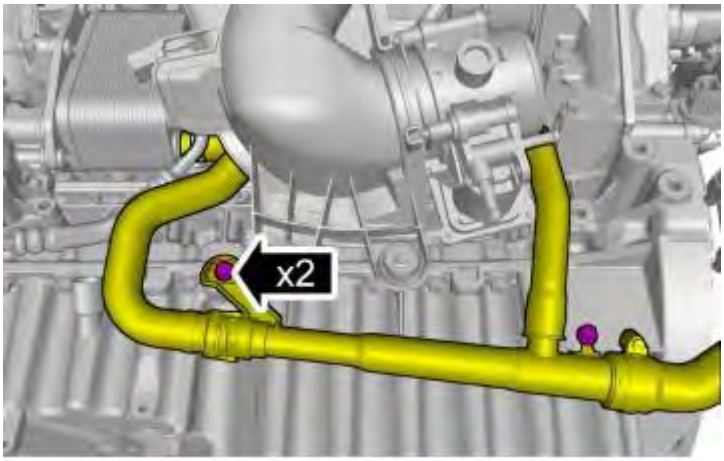

Fig. 163: Identifying Coolant Tube Bracket
Courtesy of VOLVO CARS CORPORATION

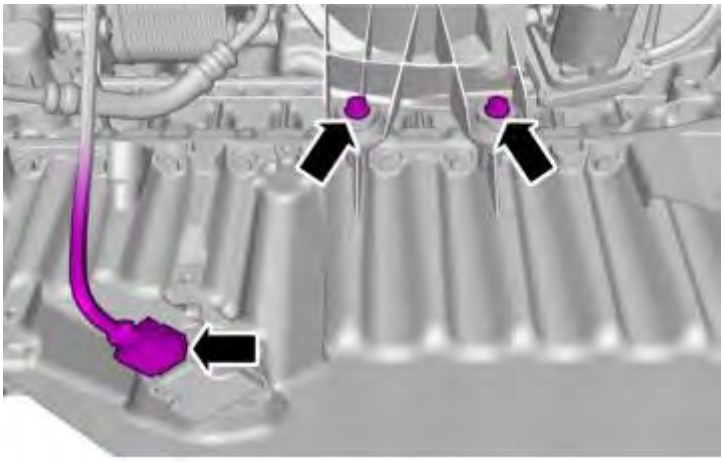

Fig. 164: Viewing Oil Level Sensor Connector
Courtesy of VOLVO CARS CORPORATION

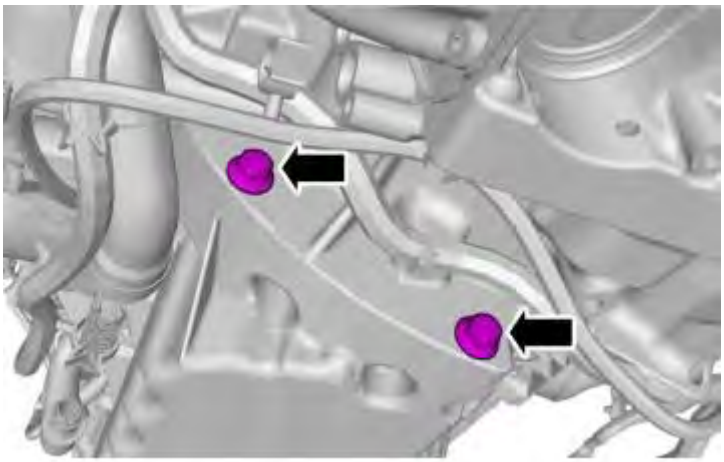

Fig. 165: Identifying Bolts
Courtesy of VOLVO CARS CORPORATION

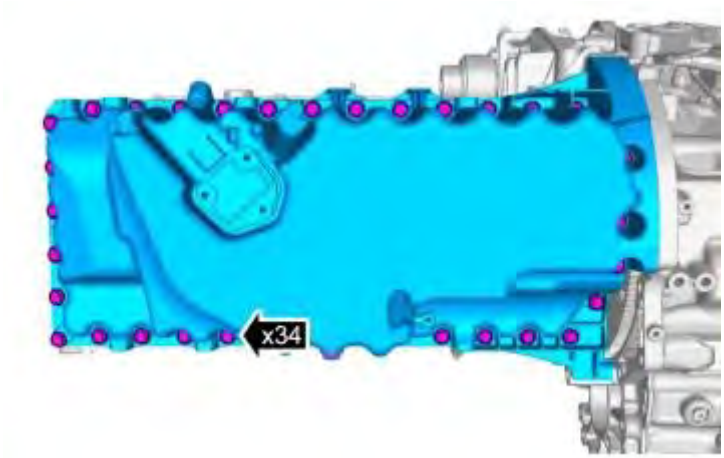

Fig. 166: Locating 34 Oil Pan Bolts
Courtesy of VOLVO CARS CORPORATION

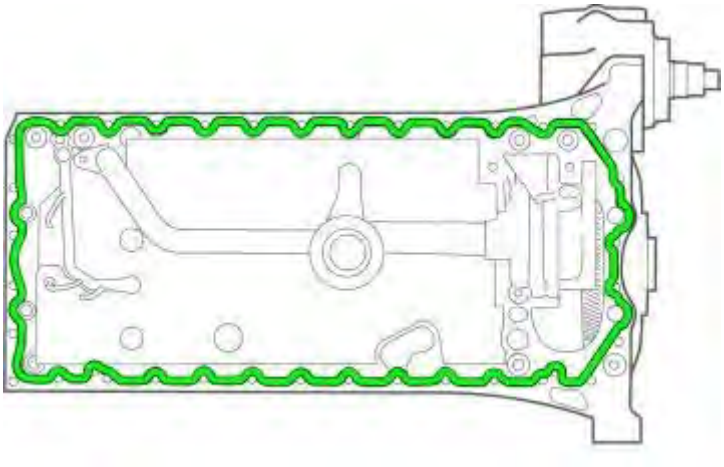

Fig. 167: Sealant, 1161 771
Courtesy of VOLVO CARS CORPORATION

CAUTION: Make sure that the mating faces are clean and free of foreign material.

CAUTION: Take extra care not to damage the mating faces.

see **9997270**

Use: Sealant, 1161 771

Use the tool as a template and trace with a felt-tip pen. Apply sealant. O 2.5 ±0.5mm.

The component must be installed within 5 minutes of applying the sealant.

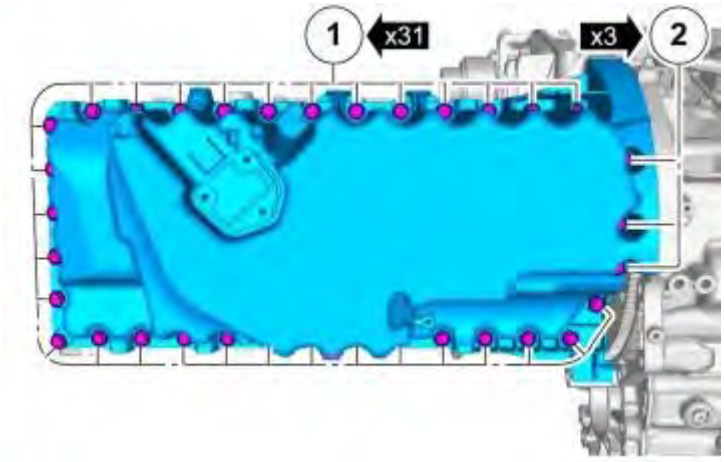

Fig. 168: Identifying Bolt Locations
Courtesy of VOLVO CARS CORPORATION

see **9997273**

To ensure sealing in the joint, all screws shall be tightened twice in a row.

Install the following items:

1. M7. See **TIGHTENING TORQUE**
2. M7, see **TIGHTENING TORQUE**

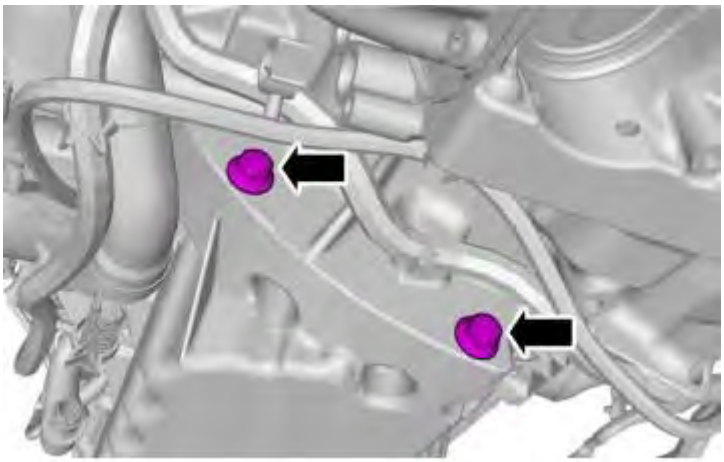

Fig. 169: Identifying Bolts
Courtesy of VOLVO CARS CORPORATION

M10. See **TIGHTENING TORQUE**

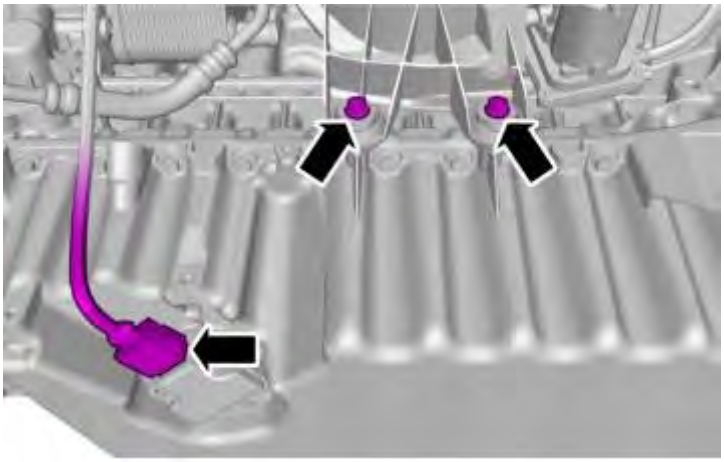

Fig. 170: Viewing Oil Level Sensor Connector
Courtesy of VOLVO CARS CORPORATION

M6. See **TIGHTENING TORQUE**

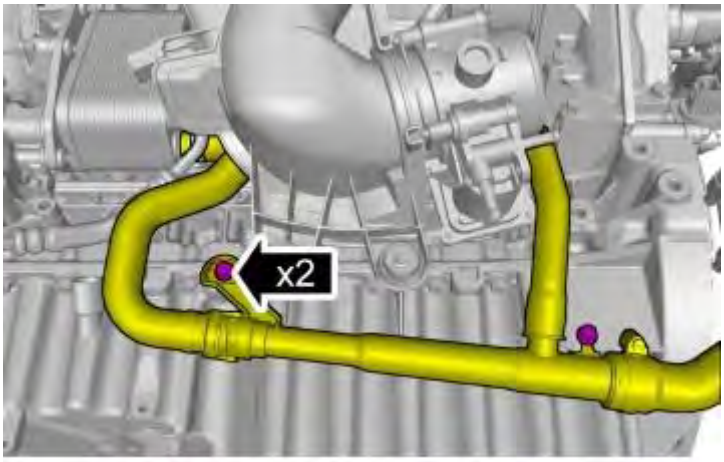

Fig. 171: Identifying Coolant Tube Bracket
Courtesy of VOLVO CARS CORPORATION

M6. See **TIGHTENING TORQUE**

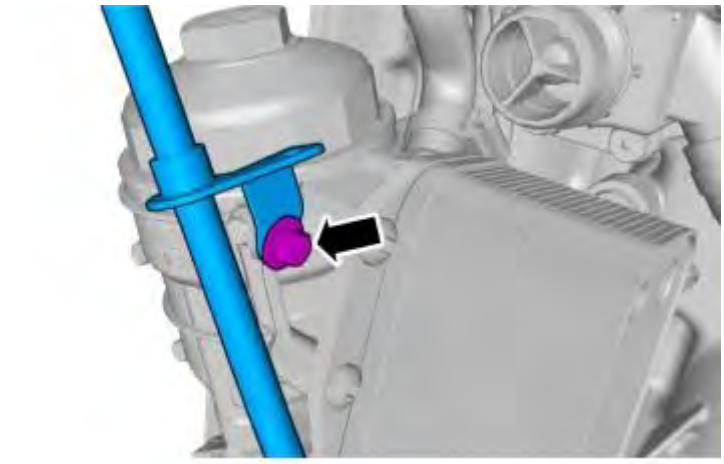

Fig. 172: Locating Dipstick Tube Bolt
Courtesy of VOLVO CARS CORPORATION

M6. See **TIGHTENING TORQUE**

Install the following items:

- Engine pad right. See **ENGINE SUPPORT INSULATOR, RIGHT**
- Engine Front Lower Support Insulator. See **LOWER TORQUE ROD FRONT**
- Starter motor. See **STARTER MOTOR**
- Engine oil level sensor. See **LEVEL SENSOR ENGINE OIL**

OIL PAN (B8444S

OIL PAN, REPLACING

NOTE: **Some variation may occur. However, the essential information in the illustrations is always correct.**

Remove the following items:

- oil filter
- engine support insulator, right, see **ENGINE PAD, RIGHT, REPLACEMENT**
- lower torque rod, see **TORQUE ROD, LOWER, REPLACEMENT**
- catalytic converter, see **THREE-WAY CATALYTIC CONVERTER (TWC), REPLACING**
- engine cooling fan (fc) see **ENGINE COOLING FAN (FC), REPLACING**

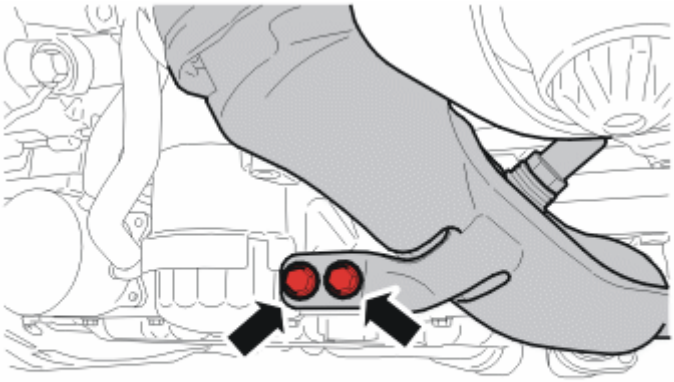

Fig. 173: Identifying Exhuast Manifold Bracket
Courtesy of VOLVO CARS CORPORATION

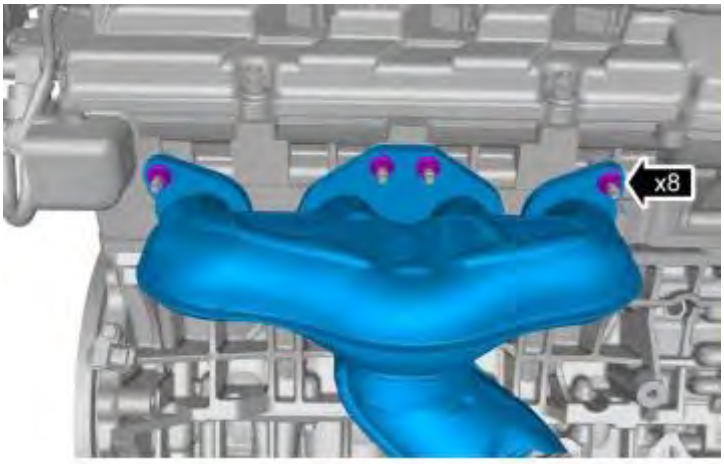

Fig. 174: View of Exhaust Manifold
Courtesy of VOLVO CARS CORPORATION

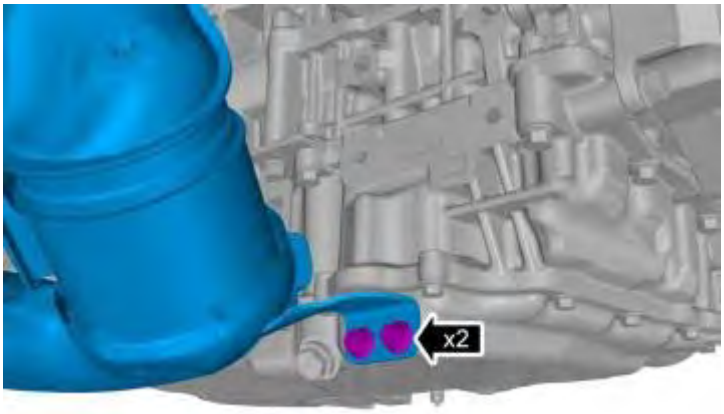

Fig. 175: Identifying Exhuast Manifold Bracket
Courtesy of VOLVO CARS CORPORATION

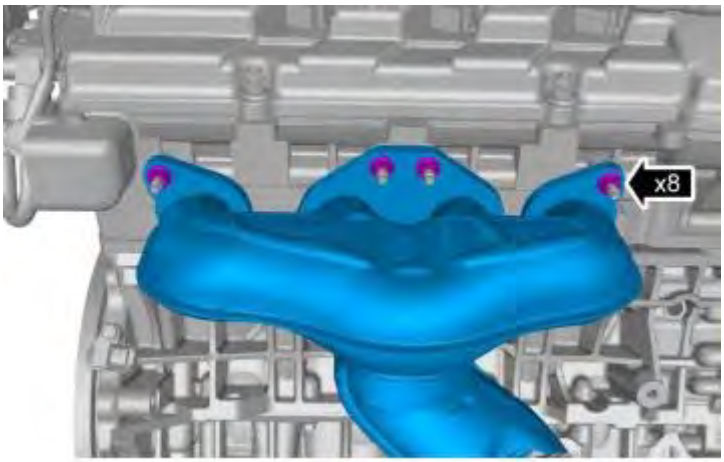

Fig. 176: View of Exhaust Manifold
Courtesy of VOLVO CARS CORPORATION

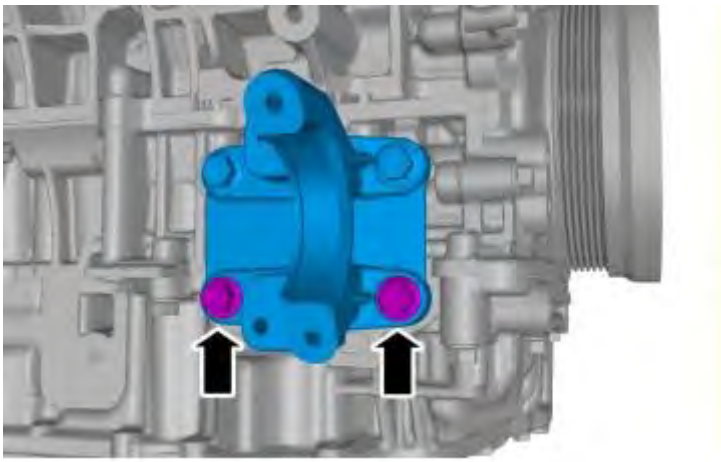

Fig. 177: Identifying Axle Shaft Support Bolts
Courtesy of VOLVO CARS CORPORATION

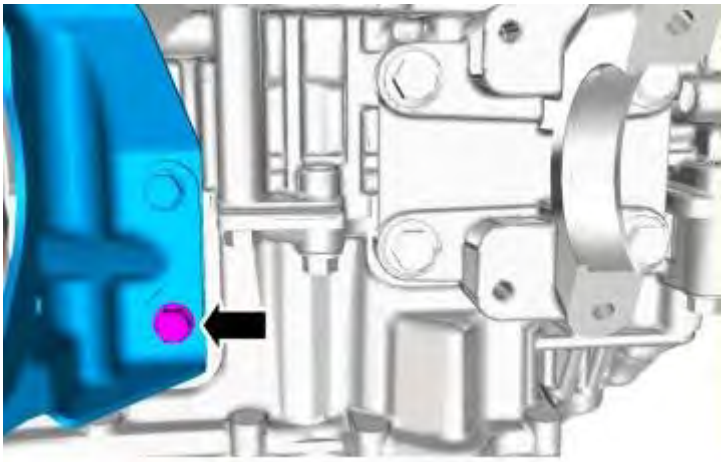

Fig. 178: Locating Bracket Bolt
Courtesy of VOLVO CARS CORPORATION

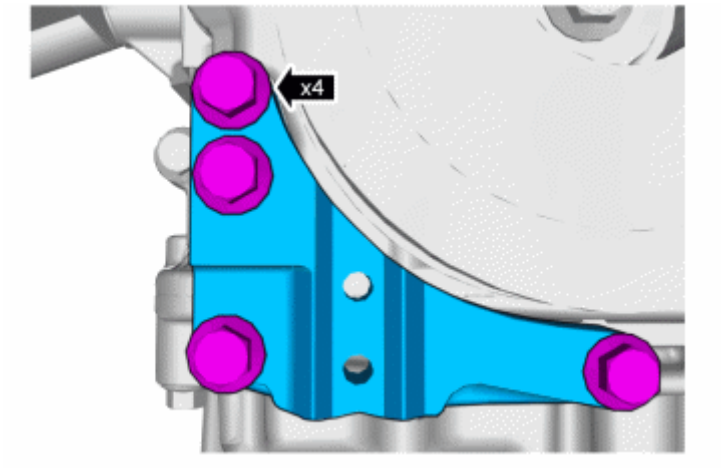

Fig. 179: Locating Bracket Bolts
Courtesy of VOLVO CARS CORPORATION

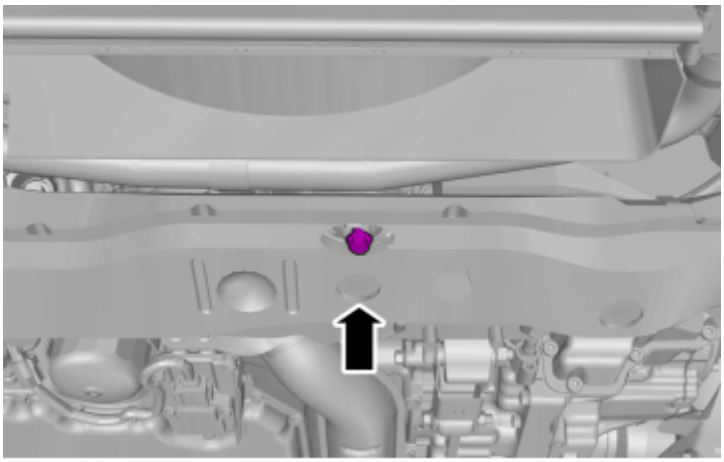

Fig. 180: Identifying Front Lower Mount Nut
Courtesy of VOLVO CARS CORPORATION

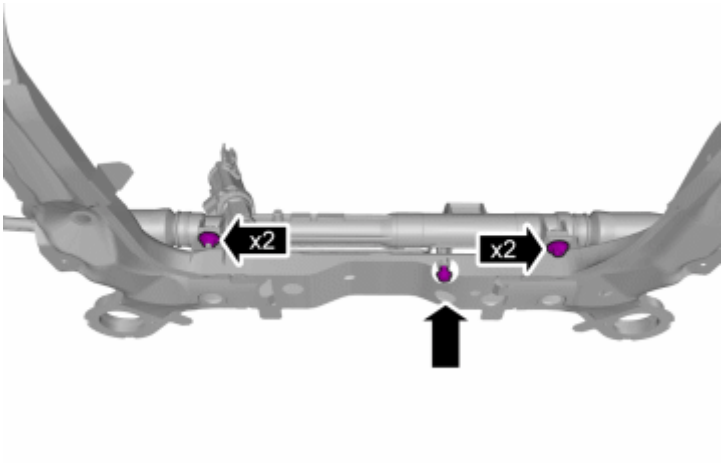

Fig. 181: View of Steering Rack to Subframe Nuts
Courtesy of VOLVO CARS CORPORATION

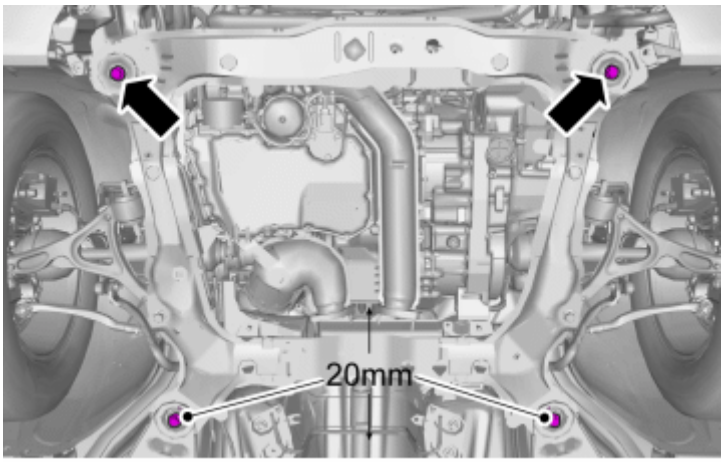

Fig. 182: Identifying Subframe Bolts
Courtesy of VOLVO CARS CORPORATION

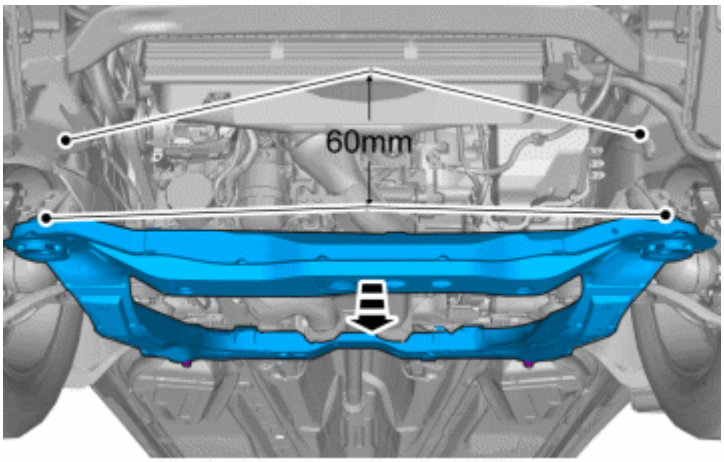

Fig. 183: Lowering Subframe 60mm
Courtesy of VOLVO CARS CORPORATION

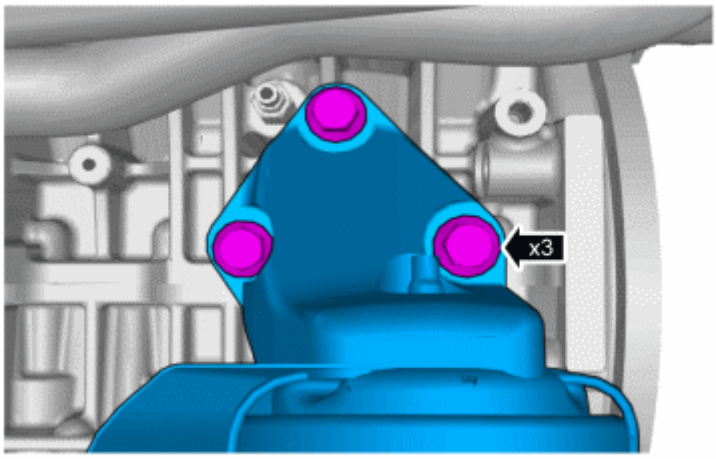

Fig. 184: Identifying Engine Mount Bolts
Courtesy of VOLVO CARS CORPORATION

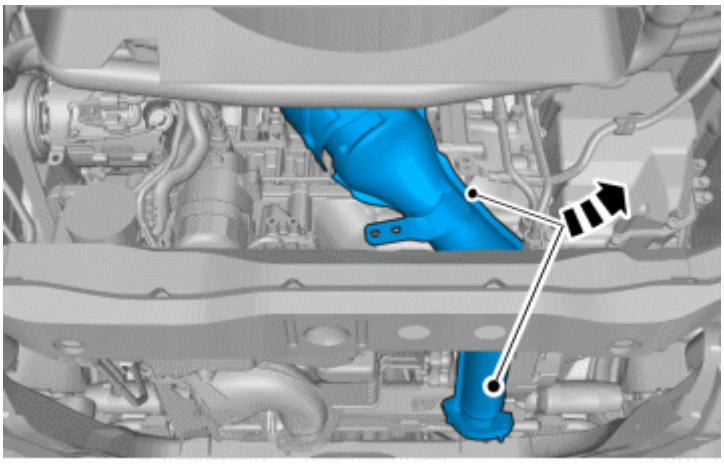

Fig. 185: Removing Exhaust Manifold
Courtesy of VOLVO CARS CORPORATION

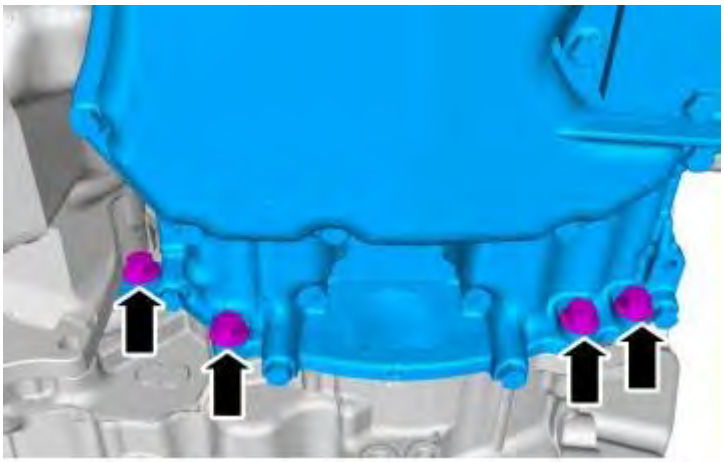

Fig. 186: Locating Oil Pan to Transaxle Bolts
Courtesy of VOLVO CARS CORPORATION

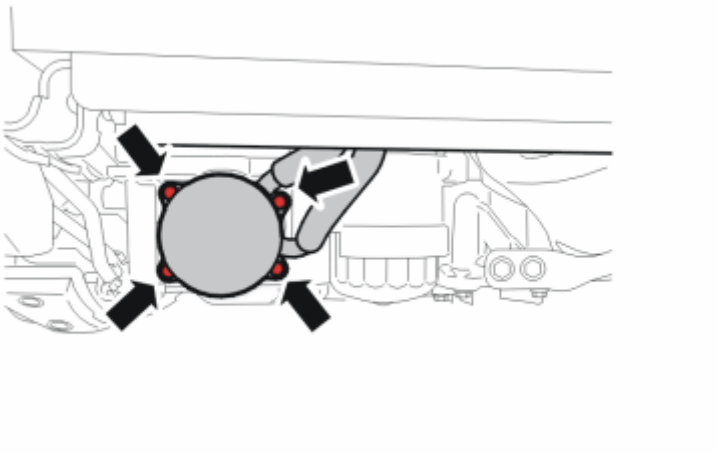

Fig. 187: Identifying Oil Cooler Bolts
Courtesy of VOLVO CARS CORPORATION

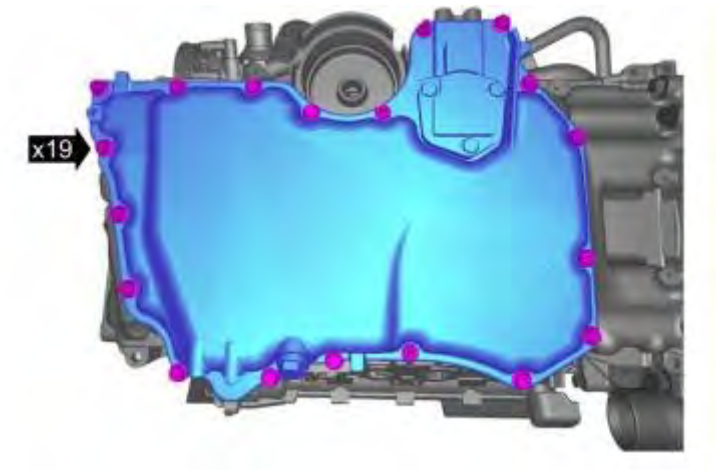

Fig. 188: Locating 19 Sub Pan Bolts
Courtesy of VOLVO CARS CORPORATION

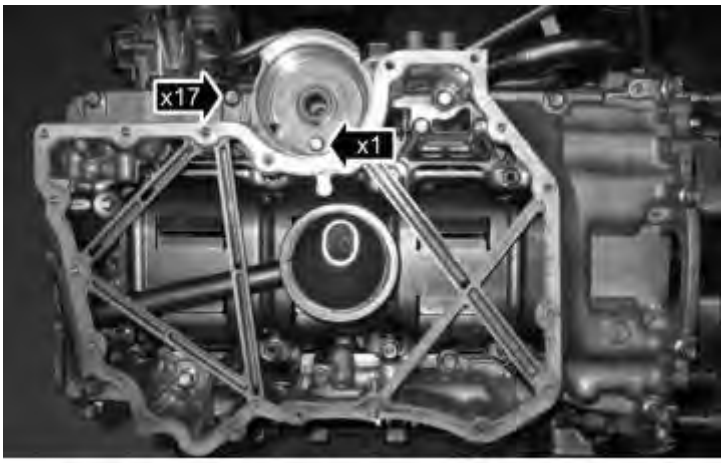

Fig. 189: Identifying Intermediate Section Bolts
Courtesy of VOLVO CARS CORPORATION

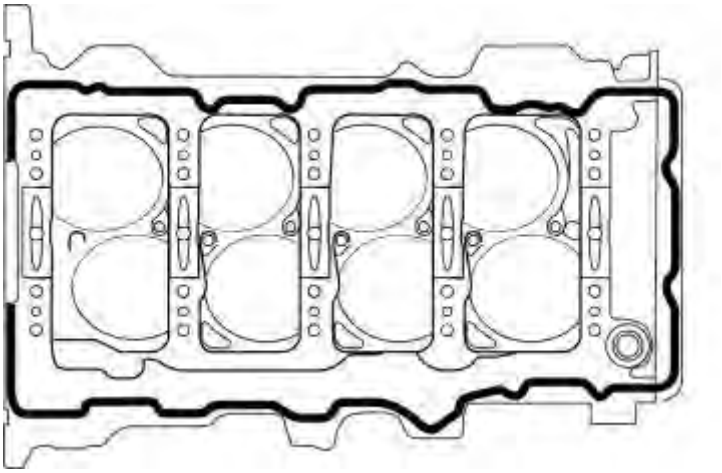

Fig. 190: Apply Liquid Gasket 30757050
Courtesy of VOLVO CARS CORPORATION

For tightening torques, see **TIGHTENING TORQUE**

CAUTION: Make sure that the mating faces are clean and free of foreign material.

CAUTION: Take extra care not to damage the mating faces.

Use: Liquid gasket, 30757050.

NOTE: Minimum 1 mm bead thickness.

NOTE: The component must be installed within 5 minutes of applying the sealant.

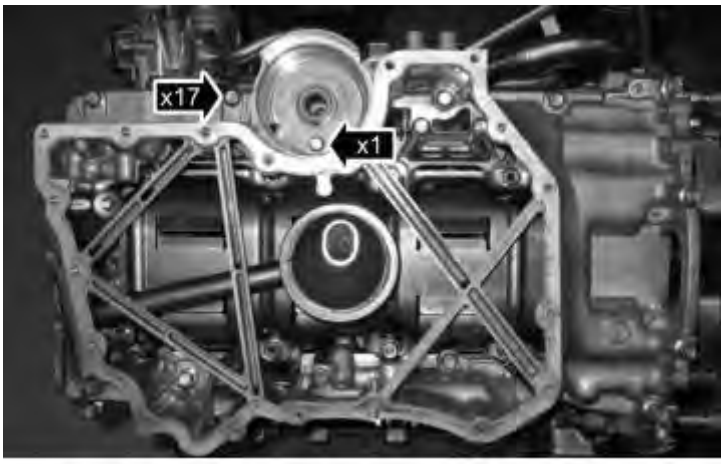

Fig. 191: Identifying Intermediate Section Bolts
Courtesy of VOLVO CARS CORPORATION

Tighten, M6

Tighten, M8

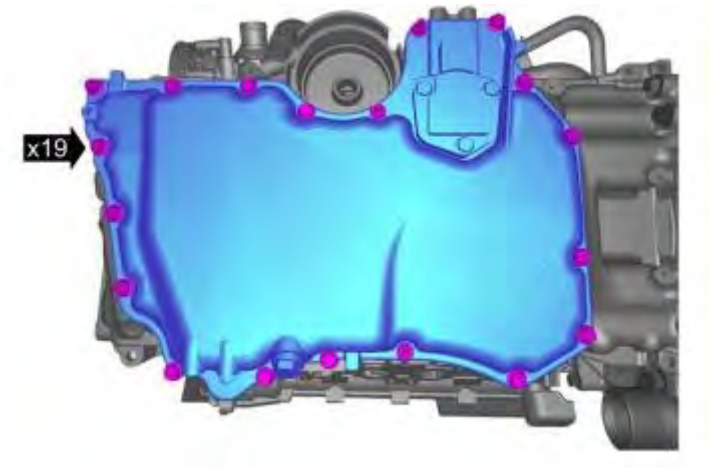

Fig. 192: Locating 19 Sub Pan Bolts
Courtesy of VOLVO CARS CORPORATION

CAUTION: Make sure that the mating faces are clean and free of foreign material.

CAUTION: Take extra care not to damage the mating faces.

Use: Liquid gasket, 307 57050.

NOTE: minimum 1 mm bead width.

NOTE: The component must be installed within 5 minutes of applying the sealant.

Tighten, M6

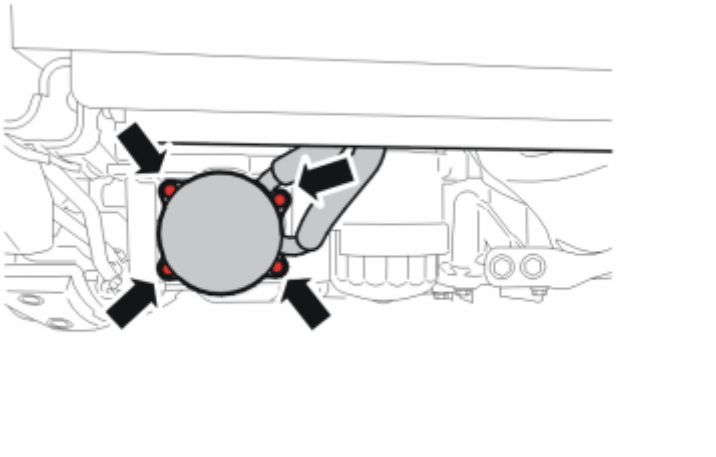

Fig. 193: Identifying Oil Cooler Bolts
Courtesy of VOLVO CARS CORPORATION

Tighten, M6

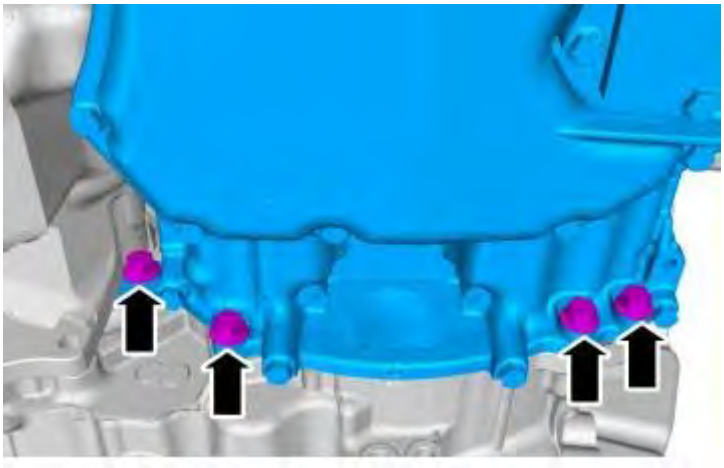

Fig. 194: Locating Oil Pan to Transaxle Bolts
Courtesy of VOLVO CARS CORPORATION

Tighten, M10

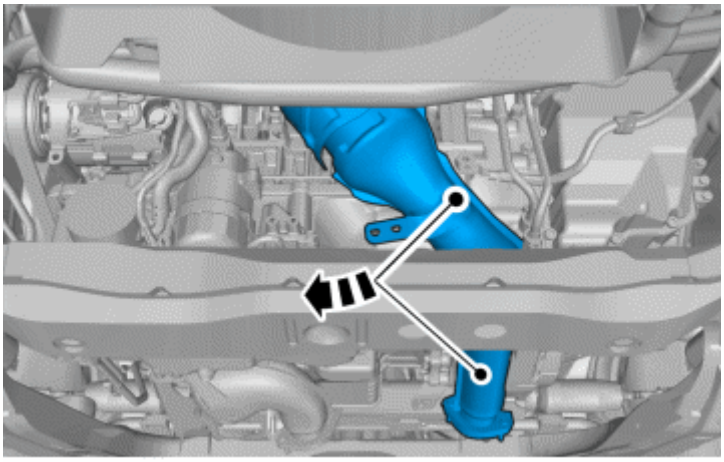

Fig. 195: Removing Exhaust Manifold
Courtesy of VOLVO CARS CORPORATION

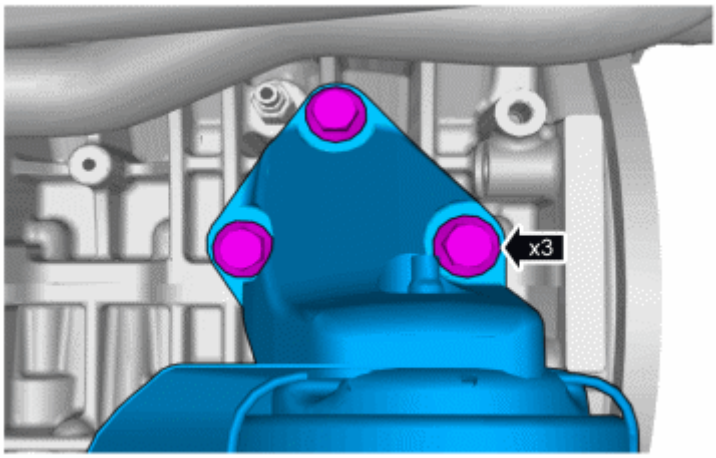

Fig. 196: Identifying Engine Mount Bolts
Courtesy of VOLVO CARS CORPORATION

Tighten, M10

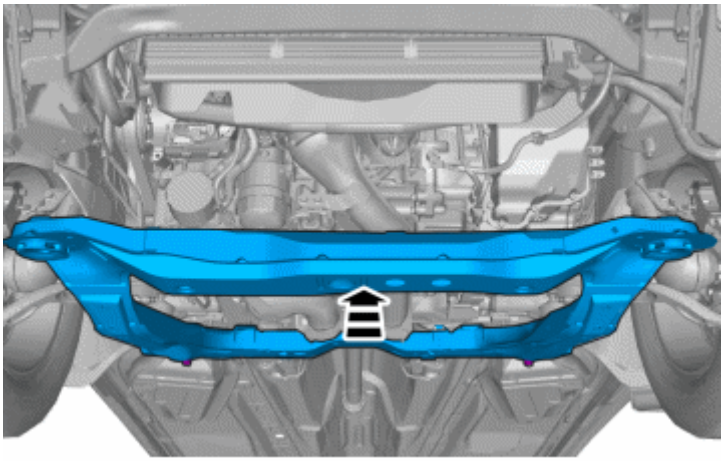

Fig. 197: Raising Subframe
Courtesy of VOLVO CARS CORPORATION

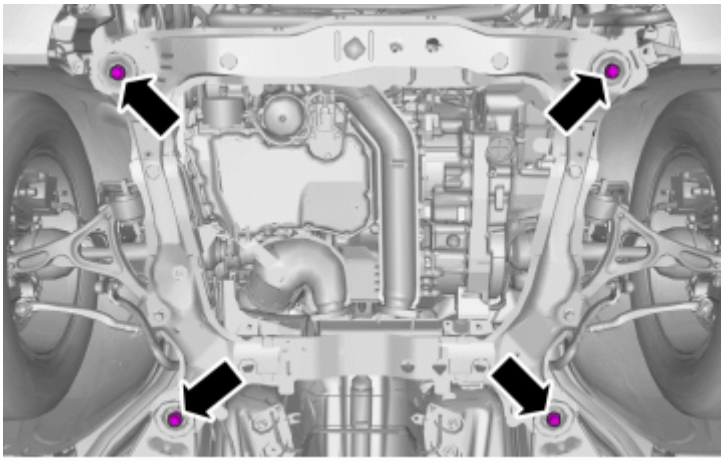

Fig. 198: Tightening Sub-Frame Bolts
Courtesy of VOLVO CARS CORPORATION

Tighten, Sub-frame, see **SUMMARY OF TIGHTENING TORQUES FOR SPECIFIC COMPONENTS**

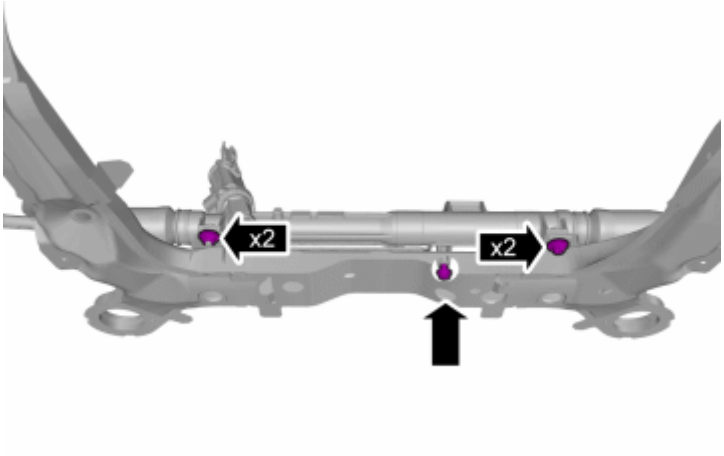

Fig. 199: View of Steering Rack to Subframe Nuts
Courtesy of VOLVO CARS CORPORATION

Tighten, M10

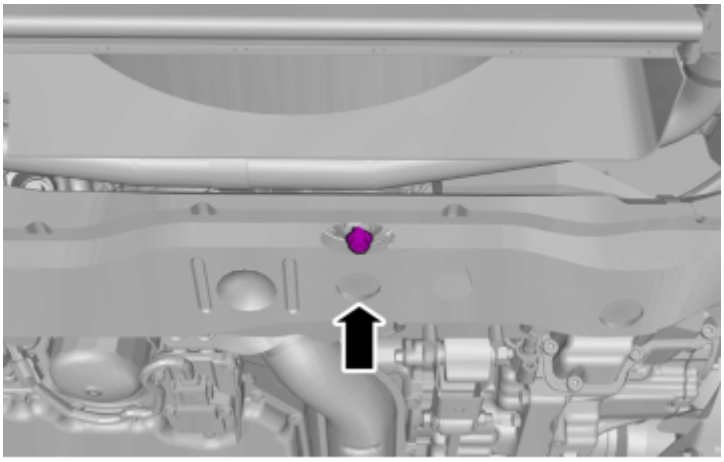

Fig. 200: Identifying Front Lower Mount Nut
Courtesy of VOLVO CARS CORPORATION

Tighten, M10

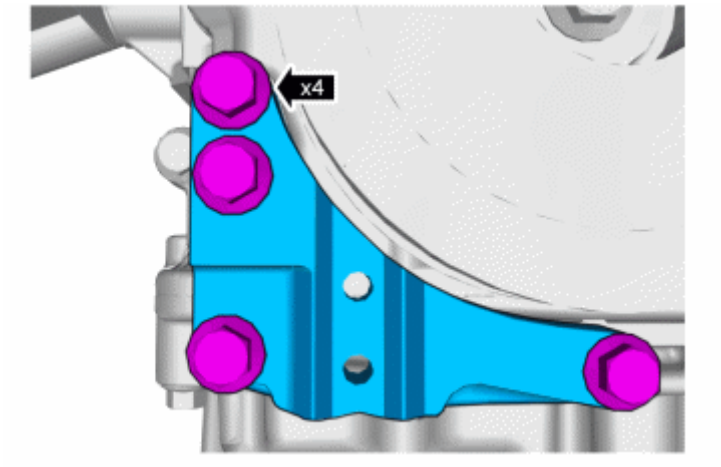

Fig. 201: Locating Bracket Bolts
Courtesy of VOLVO CARS CORPORATION

Tighten, M10

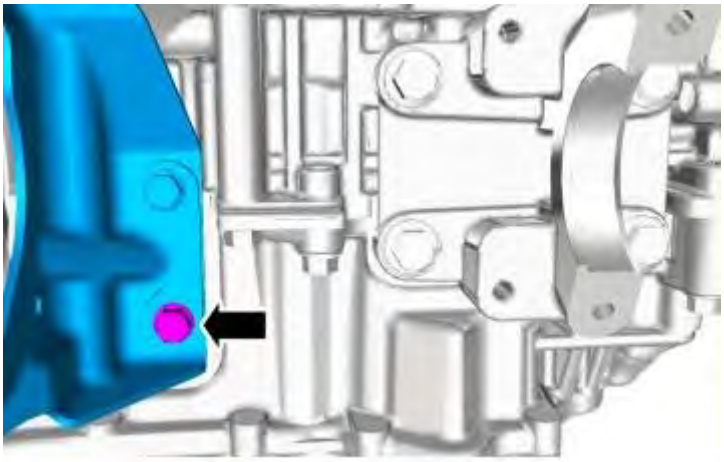

Fig. 202: Locating Bracket Bolt
Courtesy of VOLVO CARS CORPORATION

Tighten, M10

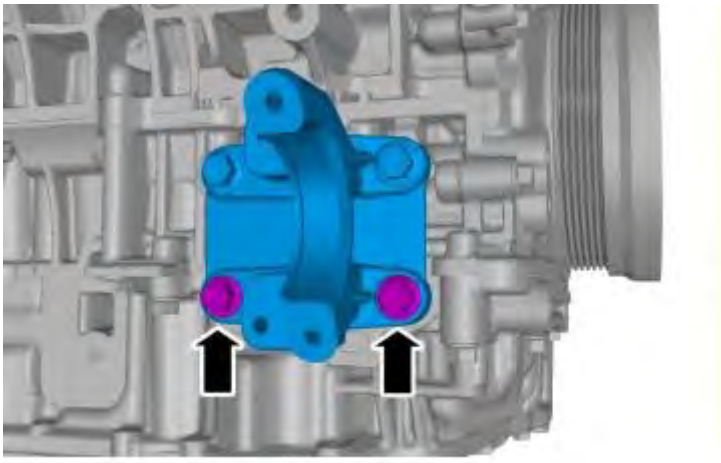

Fig. 203: Identifying Axle Shaft Support Bolts
Courtesy of VOLVO CARS CORPORATION

Tighten, M10

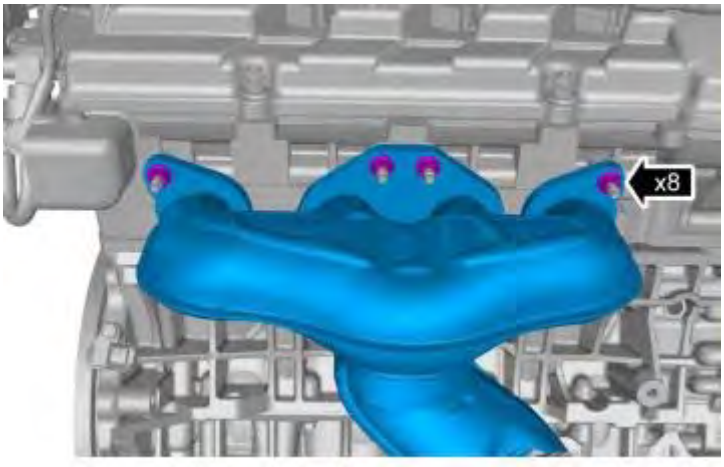

Fig. 204: View of Exhaust Manifold
Courtesy of VOLVO CARS CORPORATION

Tighten, M8

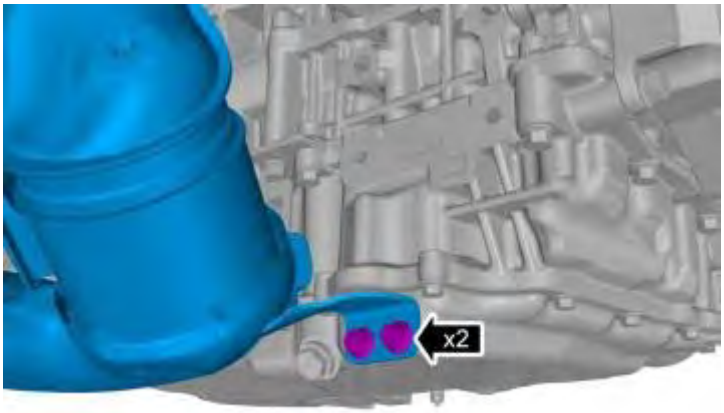

Fig. 205: Identifying Exhuast Manifold Bracket
Courtesy of VOLVO CARS CORPORATION

Tighten, M8

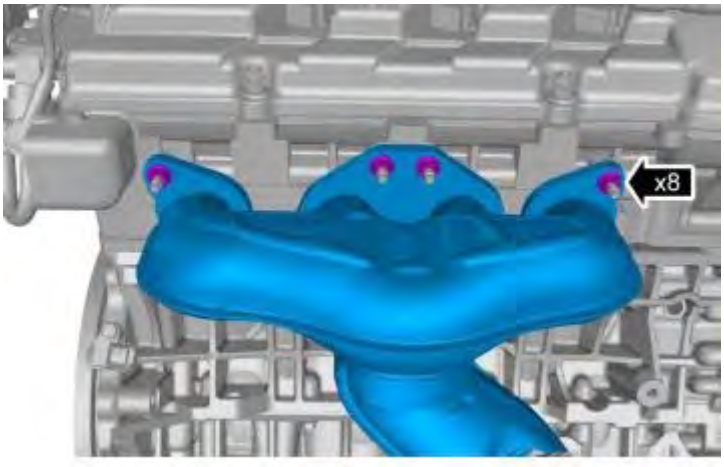

Fig. 206: View of Exhaust Manifold
Courtesy of VOLVO CARS CORPORATION

Tighten, M8

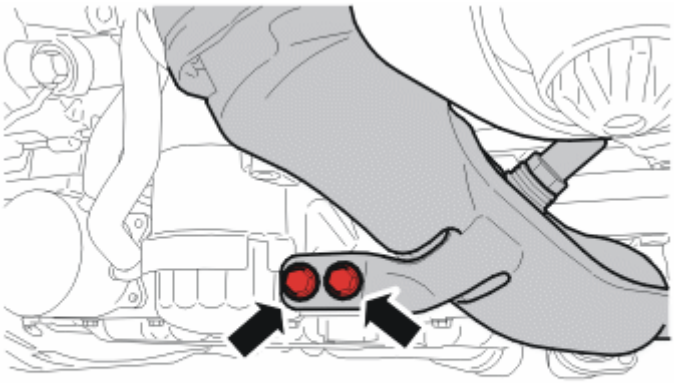

Fig. 207: Identifying Exhuast Manifold Bracket
Courtesy of VOLVO CARS CORPORATION

Install the following items:

- engine cooling fan (fc) see **ENGINE COOLING FAN (FC), REPLACING**
- catalytic converter, see **THREE-WAY CATALYTIC CONVERTER (TWC), REPLACING**
- lower torque rod, see **TORQUE ROD, LOWER, REPLACEMENT**
- engine support insulator, right, see **ENGINE PAD, RIGHT, REPLACEMENT**
- oil filter

OIL SUMP (B5254T2; 2003-2007)

OIL SUMP REPLACEMENT

Special tools:

see **9512767**

PREPARATION

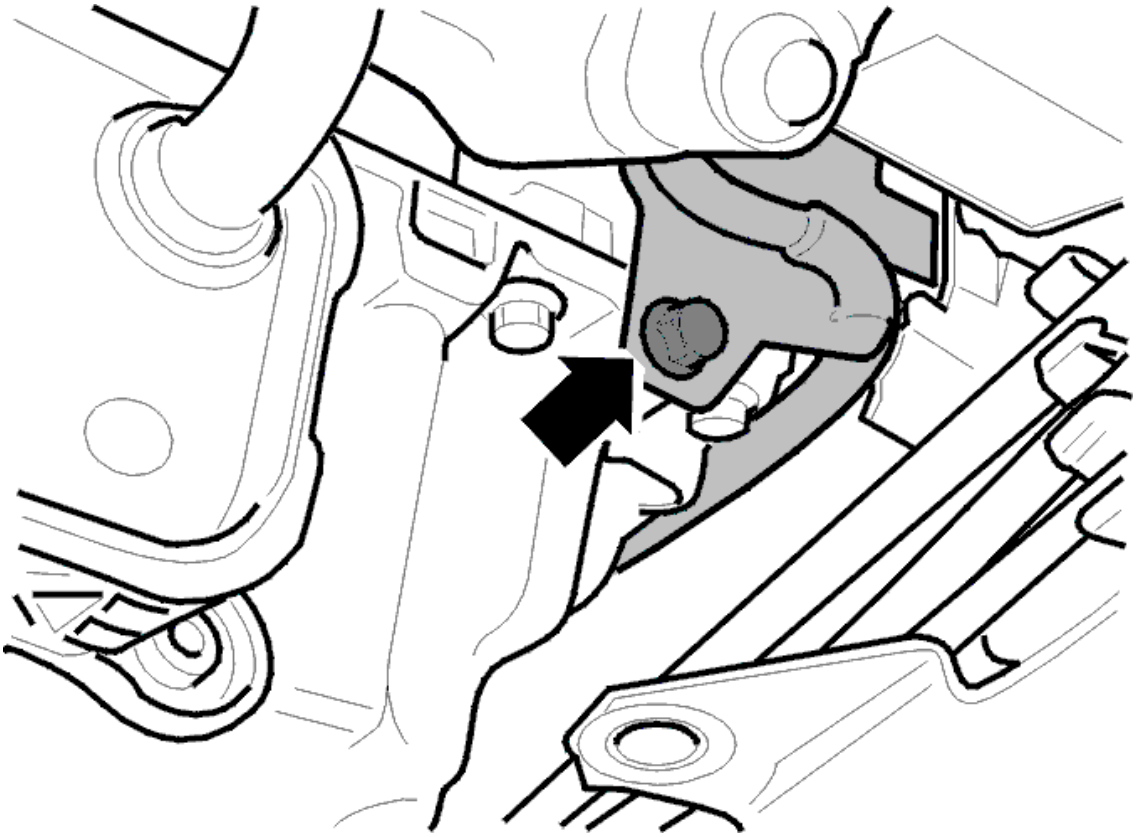

Fig. 208: Identifying Fuel Line Bracket And Screw
Courtesy of VOLVO CARS CORPORATION

Remove

- the oil dipstick and its pipe.
- the splashguard under the engine.

Drain the engine oil and remove the oil filter.

Release the oil cooler from the sump. Hang up at the rear.

Remove the screw from the bracket for the fuel line.

REMOVING THE OIL SUMP

Slacken off all screws holding the oil sump.

Remove all screw except for four. It is recommended that the four screws in the corners of the sump are left in place.

Carefully tap the sump with a rubber mallet until the joint and its liquid gasket releases.

Remove the four remaining screws.

Remove the sump.

CLEANING

Clean the gasket surfaces on the oil sump and cylinder block. Use a razor blade or a gasket scraper and gasket solvent P/N 1161 440.

WARNING: Use a fume hood or extractor when using gasket solvent.

INSTALLING THE OIL PAN

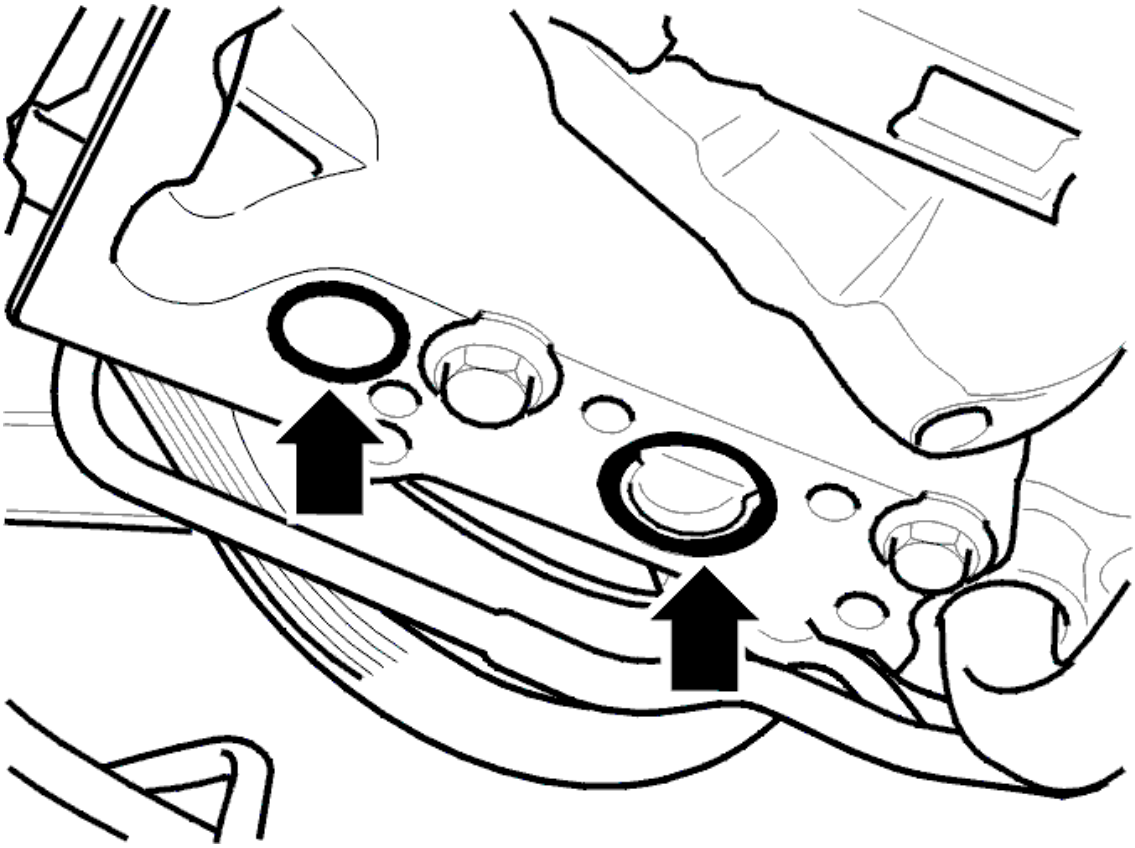

Fig. 209: Applying Liquid Gasket To Oil Pan
Courtesy of VOLVO CARS CORPORATION

Apply liquid gasket 1161 059-9 to the sump. Use roller see **9512767** .

Install

- new O-rings.
- the oil sump. Secure it loosely with a few screws.
- the remaining screws loosely.

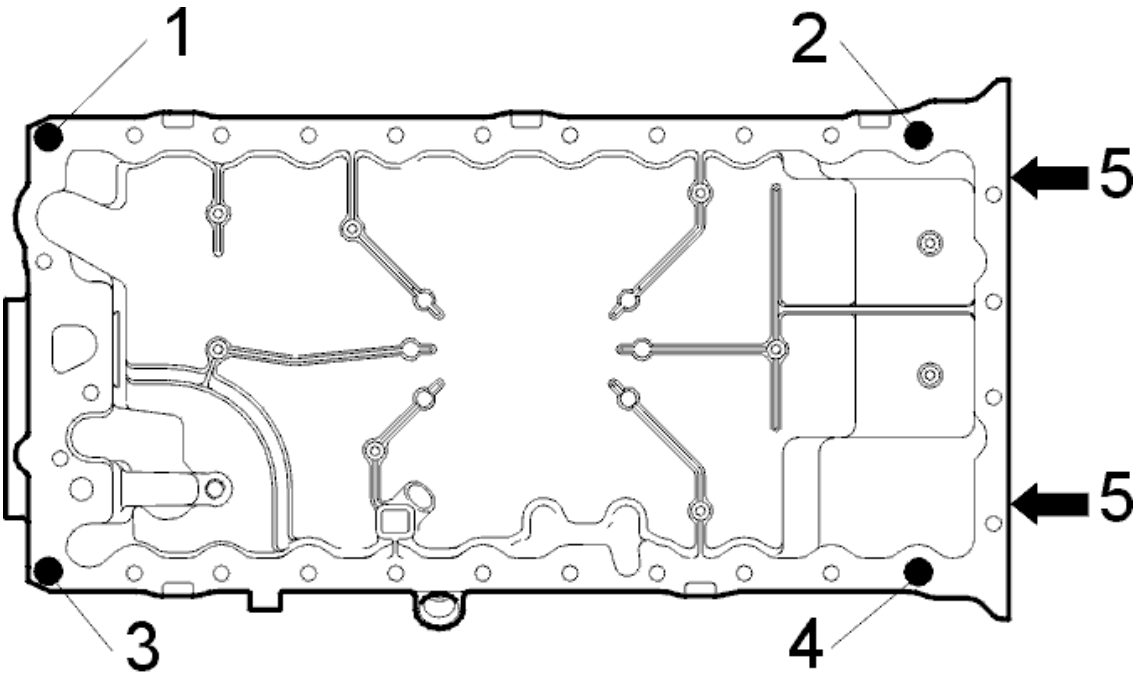

Fig. 210: Identifying Oil Pan Tightening Sequence
Courtesy of VOLVO CARS CORPORATION

Press the sump against the transmission. Tighten the screws (1), (2), (3) and (4) to **3 Nm** . First tighten the screws (5) to **25 Nm** . Then tighten to **48 Nm** .

Tighten all screws in the sump joint to 17 Nm. Start at the transmission and continue forwards in pairs.

Install the screw for the bracket for the fuel line.

Connect the oil cooler to the sump. Use new O-rings. Reinstall the pipe on the sub-frame.

Install

- a new oil filter.
- the oil plug with a new gasket.
- the oil dipstick and its pipe. Use a new O-ring.

NOTE: Check that the O-ring is correctly positioned.

Fill with engine oil. Run the engine to operating temperature.

Check for oil leaks from the oil sump or oil cooler.

Install the splashguard under the engine.

Check the oil level. Top up if required.

OIL SUMP (B6294T; 2003-2006)

REPLACING THE OIL PAN

Special tools:

see **9511205**

see **9995460**

see **9995716**

see **9995717**

NOTE: **As the illustrations in this service information are used for different model years and / or models, some variation may occur. However, the essential information in the illustrations is always correct.**

PREPARATION

Remove the oil dipstick and pipe.

Turbocharged engines only

Remove:

- the connector and hose from the crankcase ventilation terminal in the plastic intake pipe
- the hose from the plastic charge air pipe
- the screws for the charge air pipe in the intake pipe.

Remove:

- the hose clamps from the plastic pipe at the rear of the engine
- the plastic pipes. If necessary, heat carefully using a hot air gun. Leave the pipes lying on the spark plug cover.

INSTALLING THE LIFTING FIXTURE

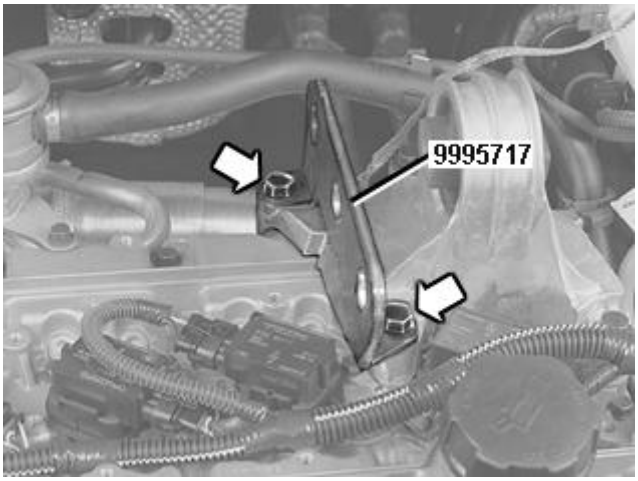

Fig. 211: Identifying Special Tool 999 5717 (Lifting Lug) And Engine Mounting Screws
Courtesy of VOLVO CARS CORPORATION

Remove:

- the cover over the ignition coils
- the 2 screws at the engine mounting.

Install fixture see **9995717** .

INSTALLING THE LIFTING BEAM AND LIFTING HOOK ON THE ENGINE LIFTING EYELET

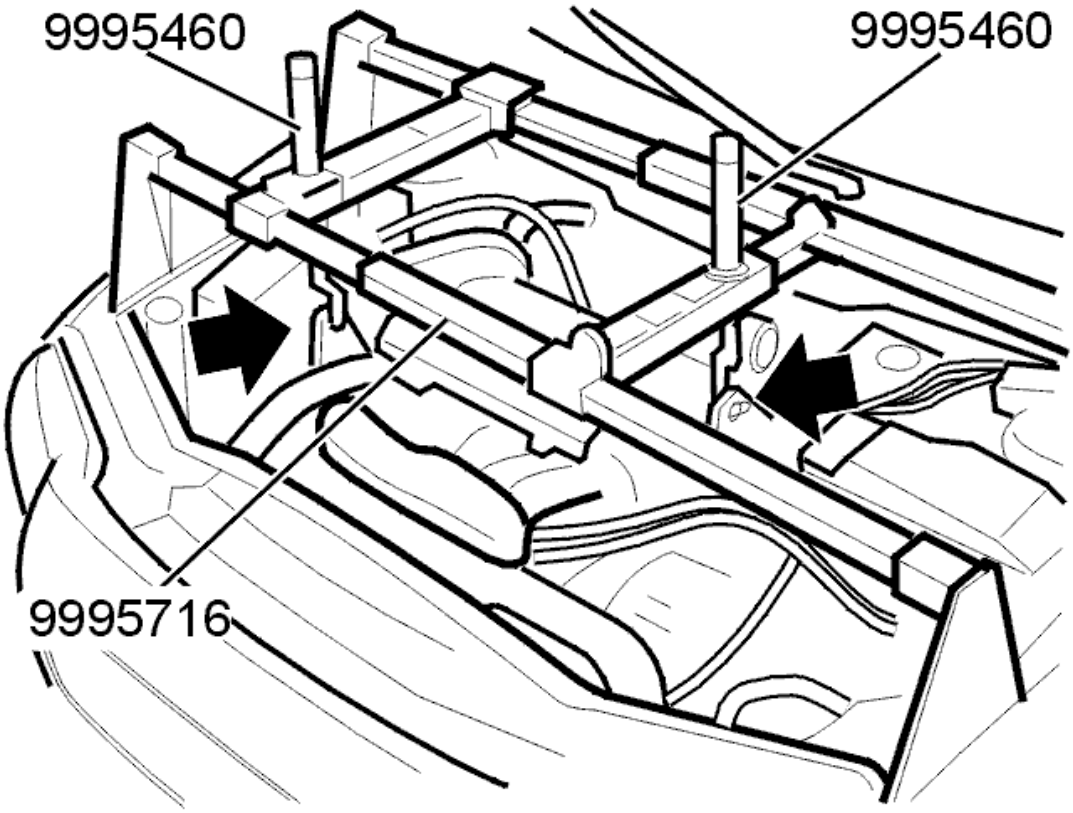

Fig. 212: 999 5716 And Lifting Hooks 999 5460 Installed
Courtesy of VOLVO CARS CORPORATION

NOTE: Position the stand for lifting beam see 9995716 on the upper wheel arch members.

Then position the lifting beam directly above the engine lifting eyes on both sides.

Connect to the hole nearest the firewall. Connect lifting hook see **9995460** .

Tighten to light contact.

DRAINING THE ENGINE OIL

Remove:

- the lower engine cover
- the front air baffle.

Drain the engine oil. Remove the oil filter.

REMOVING COMPONENTS

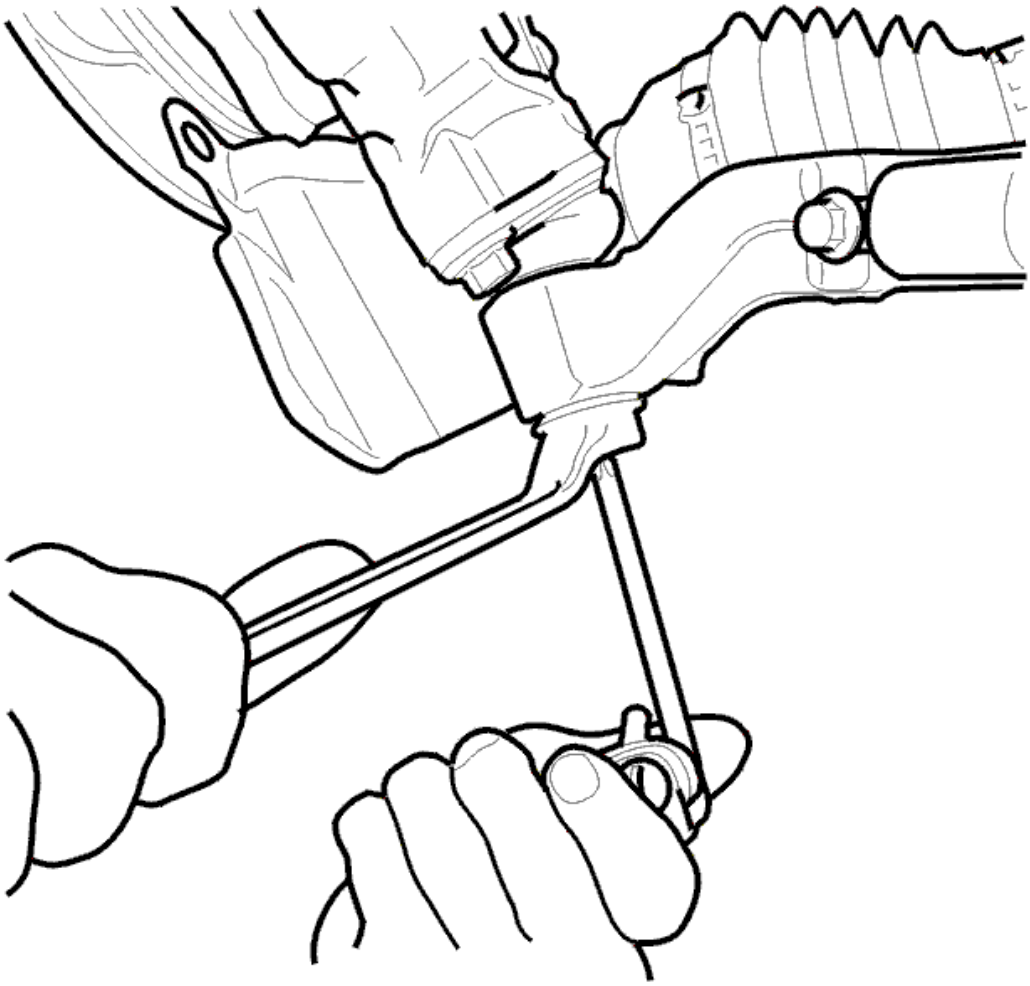

Fig. 213: Removing Screw And Nuts For Steering Gear
Courtesy of VOLVO CARS CORPORATION

Remove:

- the front wheel
- the nuts for the lower ball joints
- the anti-roll bar links from the anti-roll bar
- the center screw for the right-hand drive shaft
- the screw and nuts for the steering gear
- the screw for the front engine mounting
- the torque rod including the mounting in the sub-frame.

REMOVING THE SPINDLES

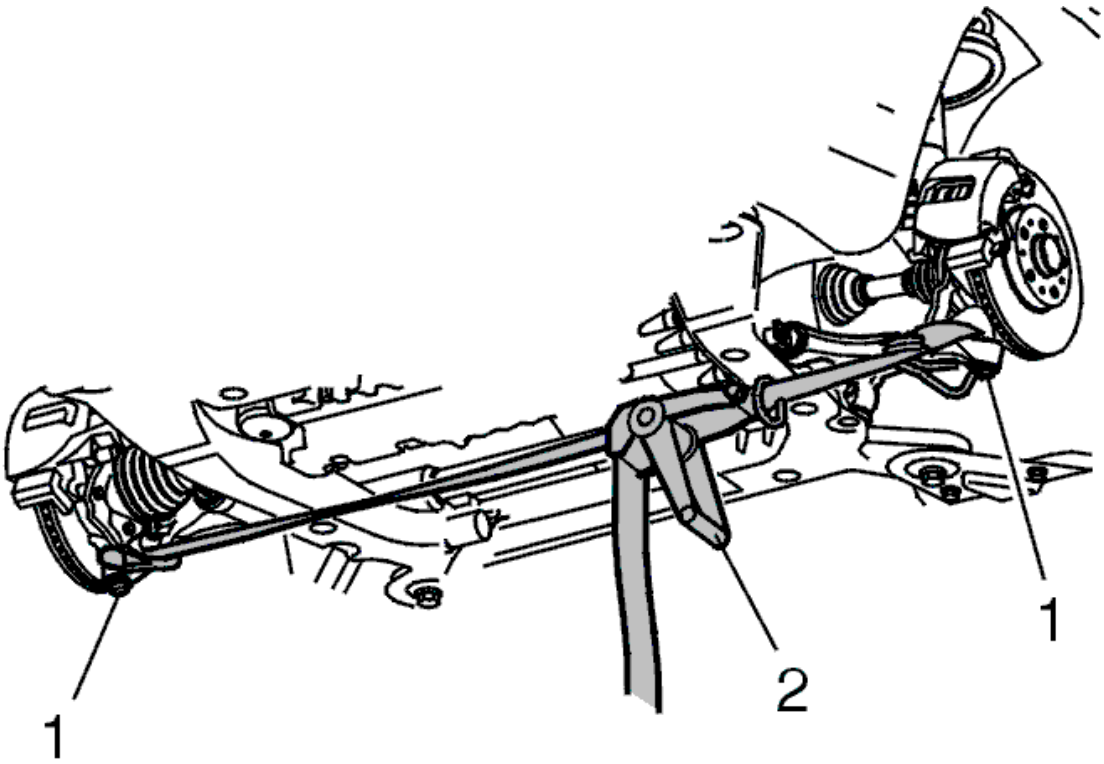

Fig. 214: Identifying Drive Shaft Installation
Courtesy of VOLVO CARS CORPORATION

Tension the trailing arms together to release the spindles. Use a retaining strap.

Unhook the right drive shaft from the wheel spindle. Tension the spring strut backwards. Use a retaining strap.

REMOVING COMPONENTS FROM THE SUB-FRAME

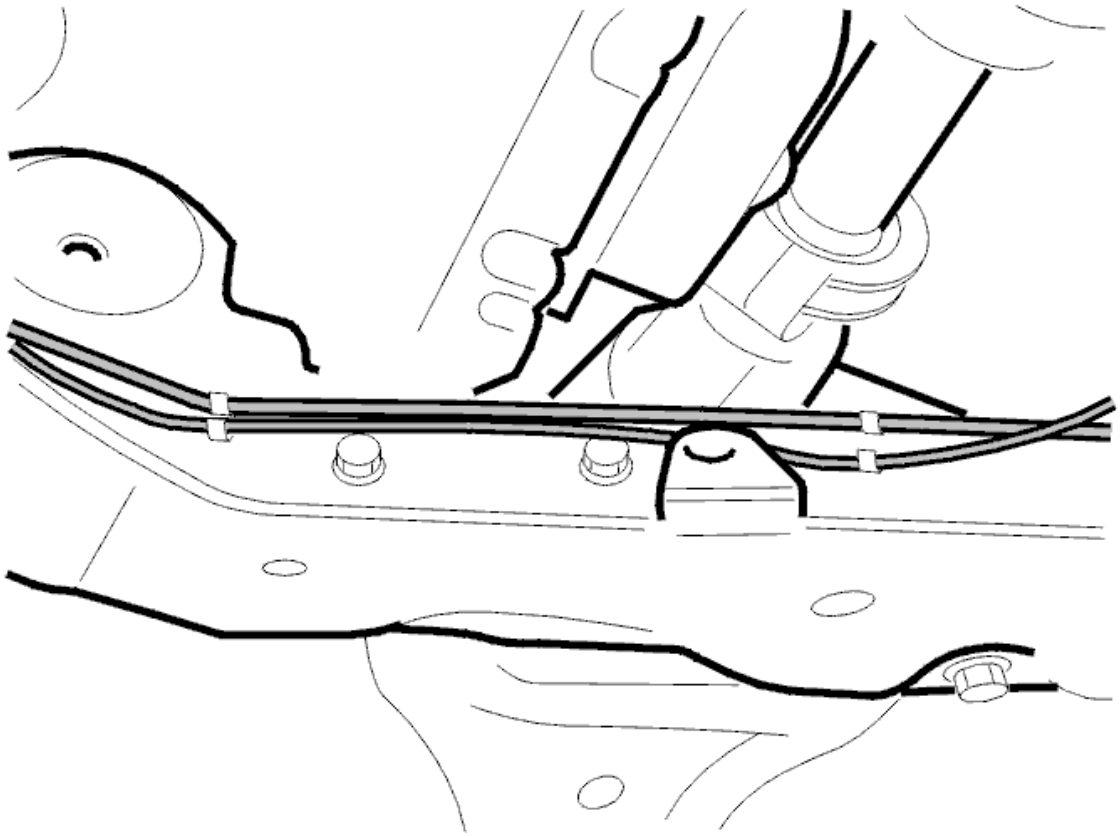

Fig. 215: Identifying Oil Pipe And Clamps For Steering Gear
Courtesy of VOLVO CARS CORPORATION

Remove the screw for the cable duct.

Remove:

- the oil pipe for the steering gear from the snap fasteners along the sub-frame
- the hose for the EVAP canister in the clips on the upper side of the sub-frame
- any fuel line for the engine block heater and any engine block heater if mounted on the left hand side of the sub-frame
- the air duct from the clip
- the screw for the ground cable bracket
- the connectors for the heated oxygen sensors (HO2S) in the clips at the rear of the sub-frame.

LOWERING SUB-FRAME

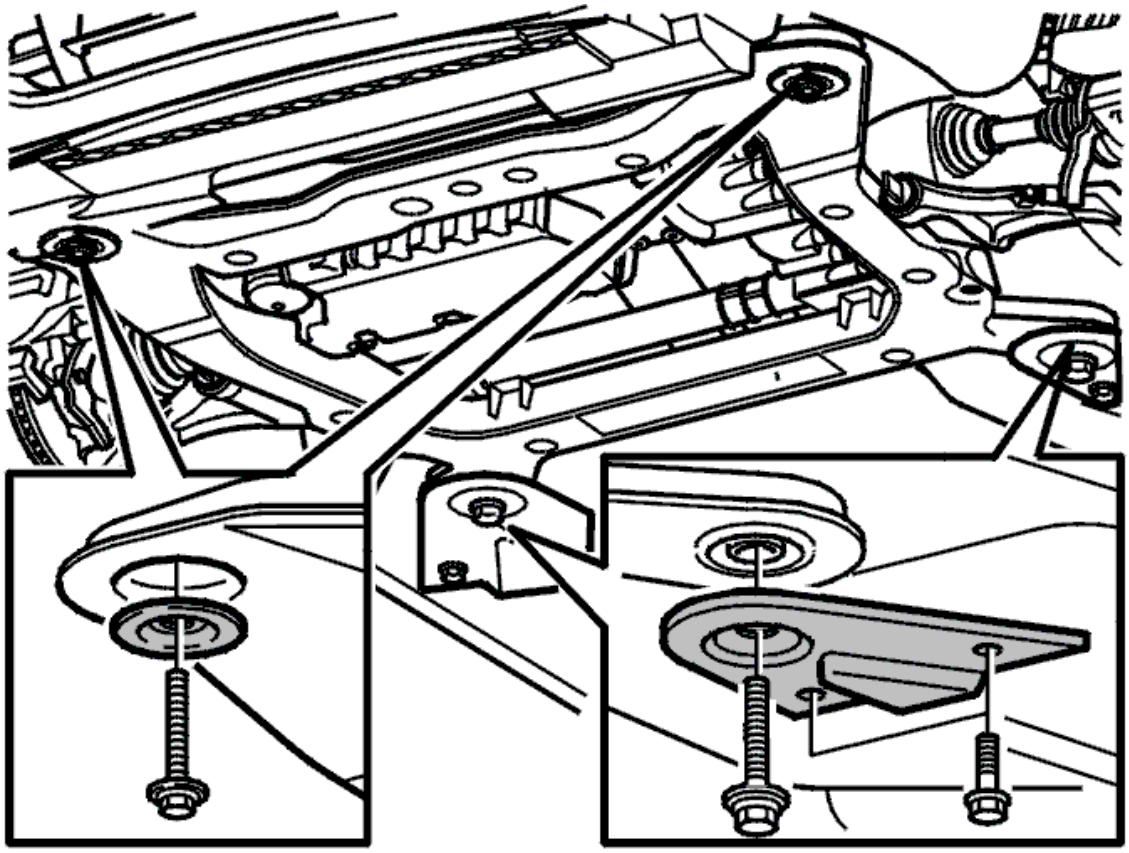

Fig. 216: Identifying Bolts, Washers And Brackets In Sub-Frame
Courtesy of VOLVO CARS CORPORATION

Slacken off the subframe screws. Lower the sub-frame slightly.

Remove the heated oxygen sensor (HO2S) bracket on the reverse of the sub-frame.

Unscrew the screws for the sub-frame approximately 2.5 cm on the right-hand side.

Fully remove the screws on the left-hand side.

Angle the sub-frame down on the left-hand side.

Ensure that the screws for the steering gear release from the frame.

DISCONNECTING THE OIL COOLER

Disconnect the oil cooler from the sump. Hang the oil cooler from a suitable place.

REMOVING THE OIL PAN

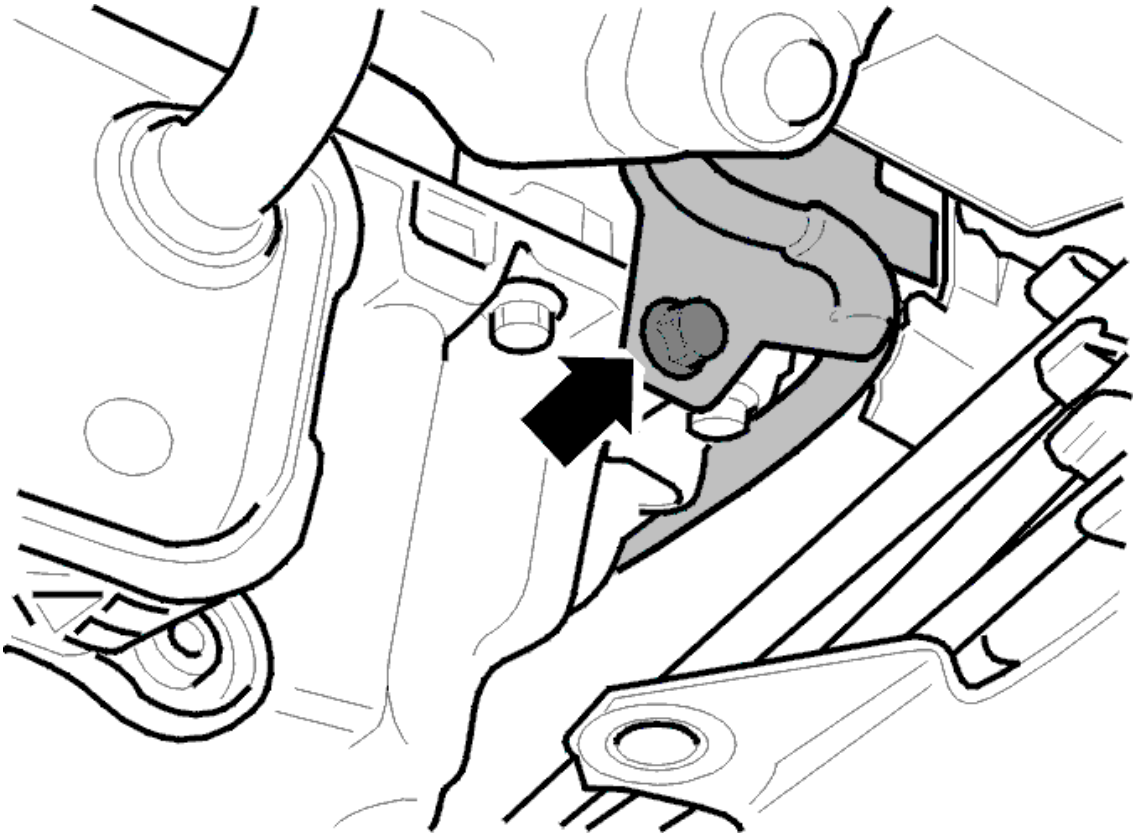

Fig. 217: Identifying Fuel Line Bracket And Screw
Courtesy of VOLVO CARS CORPORATION

Remove the screw from the bracket for the fuel line.

Remove the screw for the bracket for the fuel line on the auxiliaries bracket.

Slacken off all the screws holding the oil pan.

Remove all but four screws. It is recommended that the four screws in the corners of the pan are left in place.

Carefully tap the pan using a rubber mallet until the joint and its liquid gasket releases.

Remove:

- the four remaining screws
- the oil sump.

CLEANING

Clean the gasket surfaces on the oil pan and cylinder block. Use a razor blade or a gasket scraper and gasket solvent **116 1440** .

WARNING: **Use a fume hood or extractor when using gasket solvent.**

NOTE: Also clean the gasket faces for the screws for the torque rod.

INSTALLING THE OIL PAN

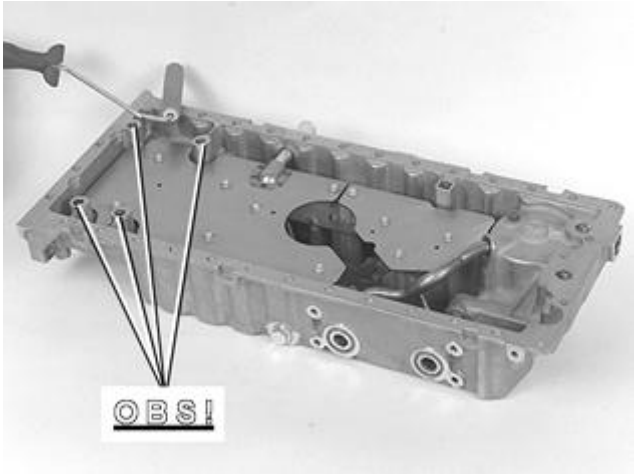

Fig. 218: Applying Liquid Gasket To Oil Pan
Courtesy of VOLVO CARS CORPORATION

Apply liquid gasket **116 1059-9** to the sump. Use roller see **9511205** .

NOTE: Also apply liquid gasket around the holes for the screws for the torque rod.

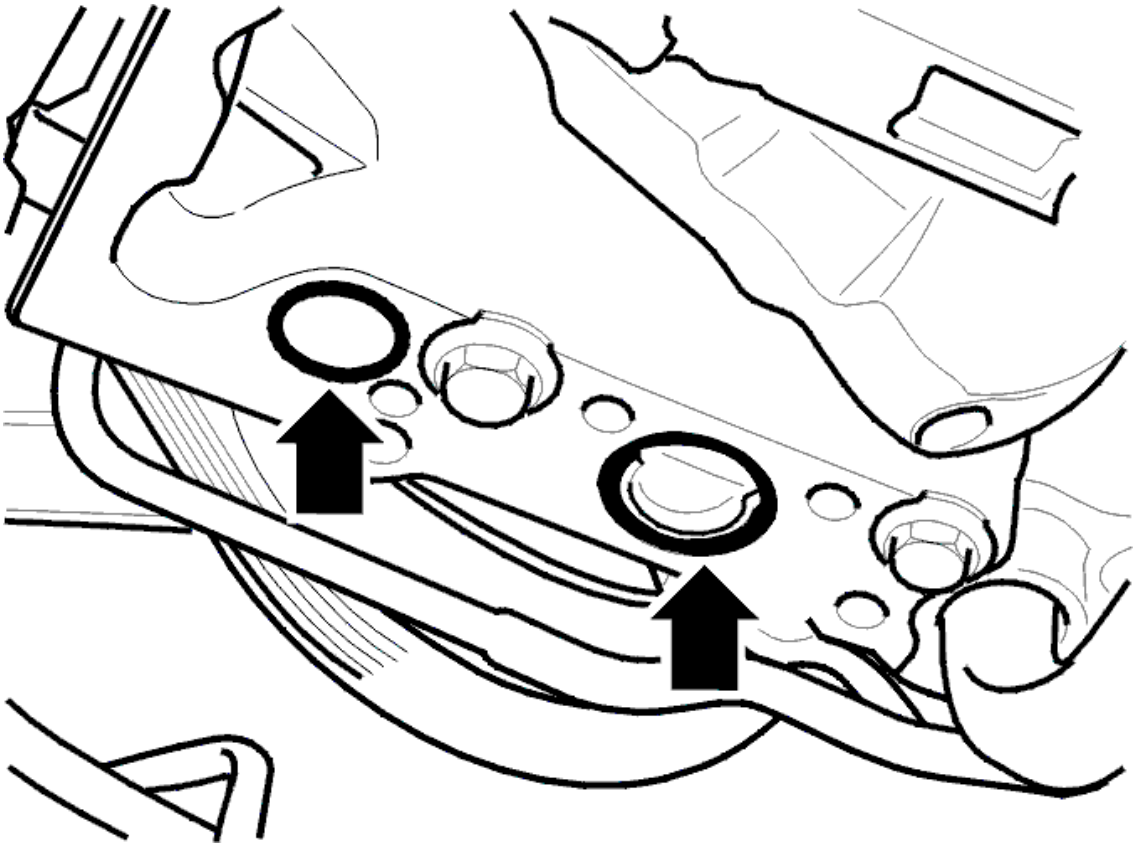

Fig. 219: Applying Liquid Gasket To Oil Pan
Courtesy of VOLVO CARS CORPORATION

Install

- new O-rings
- the oil sump. Secure the oil sump loosely using a few screws
- the remaining screws loosely.

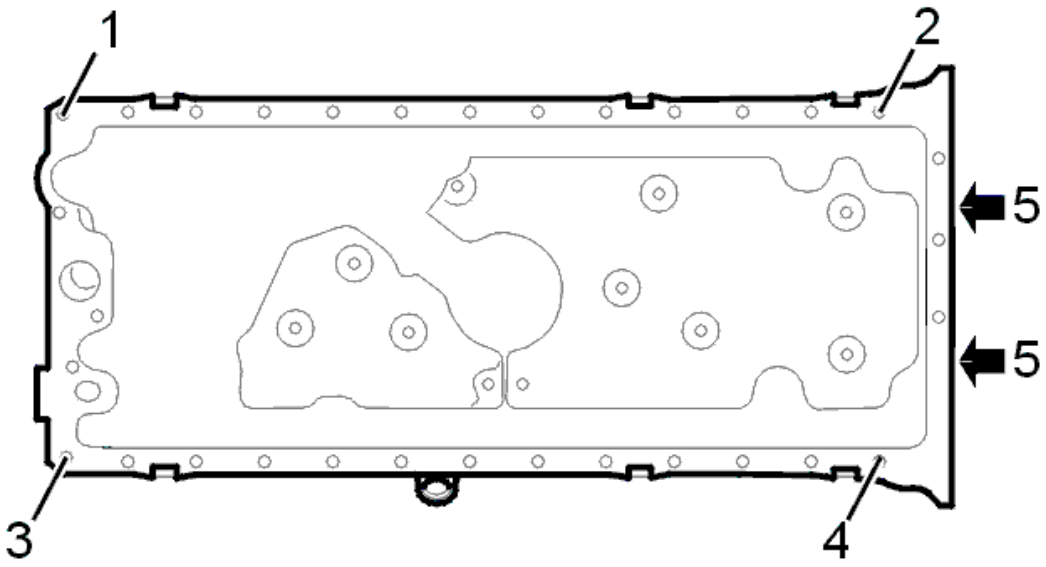

Fig. 220: Oil Pan Screw Tightening Sequence
Courtesy of VOLVO CARS CORPORATION

Press the oil pan against the transmission. Tighten the screws (1), (2), (3) and (4). Tighten to **3 Nm** .

Tighten the screws (5). First tighten to **25 Nm** . Then tighten to **48 Nm** .

Tighten all screws in the oil pan joint. Tighten to **17 Nm** . Start at the transmission and continue forwards in pairs.

Connect the oil cooler to the sump. Use new O-rings.

Install the screw for the bracket for the fuel line.

Install:

- a new oil filter
- the oil plug with a new gasket.

INSTALLING THE SUB-FRAME

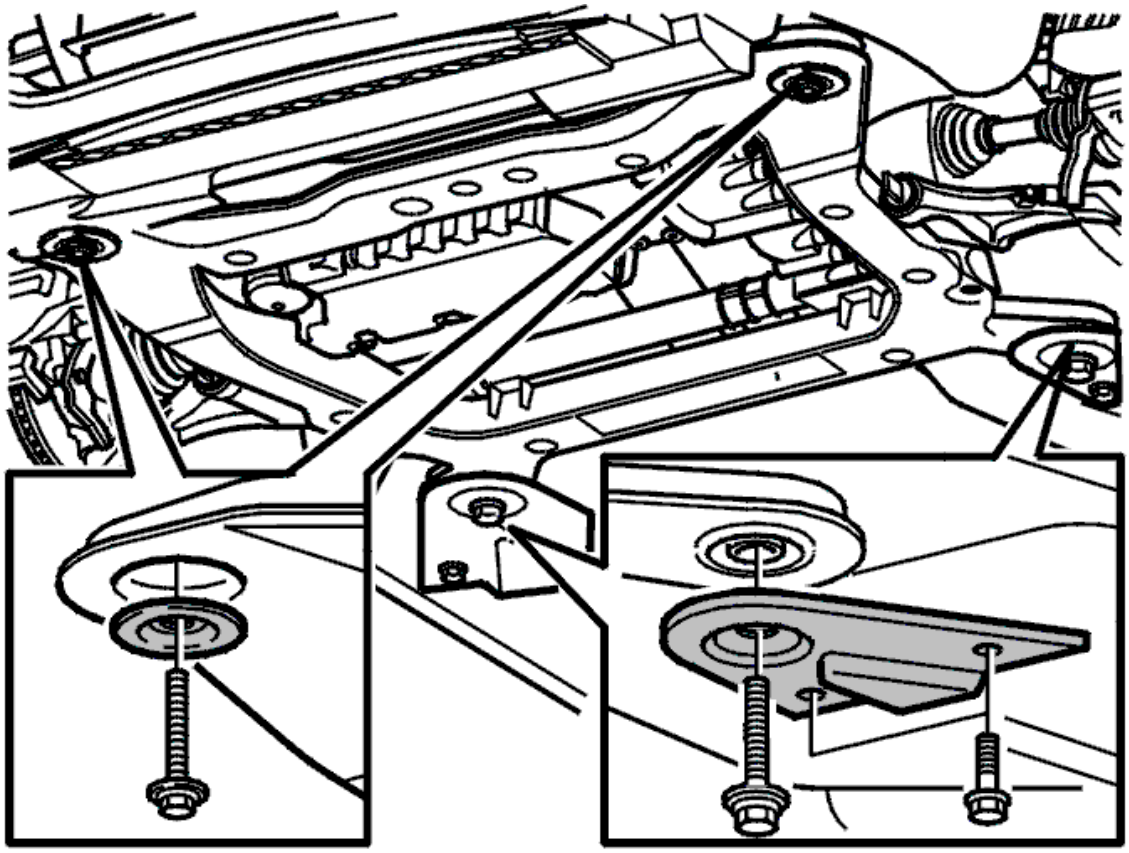

Fig. 221: Identifying Bolts, Washers And Brackets In Sub-Frame
Courtesy of VOLVO CARS CORPORATION

Lift the sub-frame. Use a mobile jack.

Install:

- the bracket for the heated oxygen sensors (HO2S) in the rear edge of the sub-frame
- new screw in the sub-frame. Lubricate the screws
- the washers at the front edge and the support plates at the rear edge of the sub-frame.

Tighten the screws for the sub-frame. Tighten to **105 Nm** .

Angle-tighten **120°** . Use bevel protractor see **9512050** .

Start on the left hand side of the sub-frame. Continue with the right hand side.

Tighten the screws for the brackets at the rear of the sub-frame. Tighten to **50 Nm** .

INSTALLING COMPONENTS ON THE SUB-FRAME

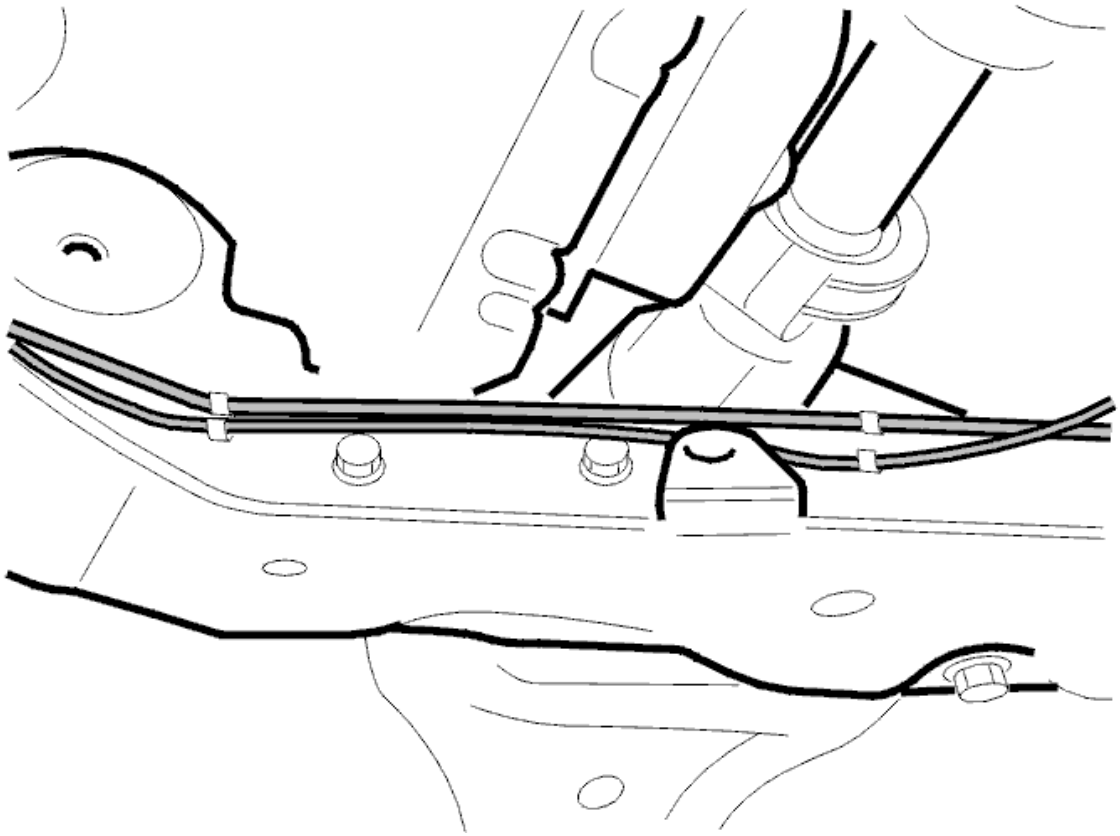

Fig. 222: Identifying Oil Pipe And Clamps For Steering Gear
Courtesy of VOLVO CARS CORPORATION

Install:

- the screw for the cable and air duct
- the oil pipe for the steering gear in the snap fasteners along the sub-frame
- the hose for the EVAP canister in the clip on the upperside of the sub-frame
- the engine block heater and the fuel line to the engine block heater if applicable
- the air duct in the clips
- the screw for the ground cable bracket
- the connectors for the heated oxygen sensors (HO2S) in the clips at the rear of the sub-frame.

REMOVING RETAINING STRAPS

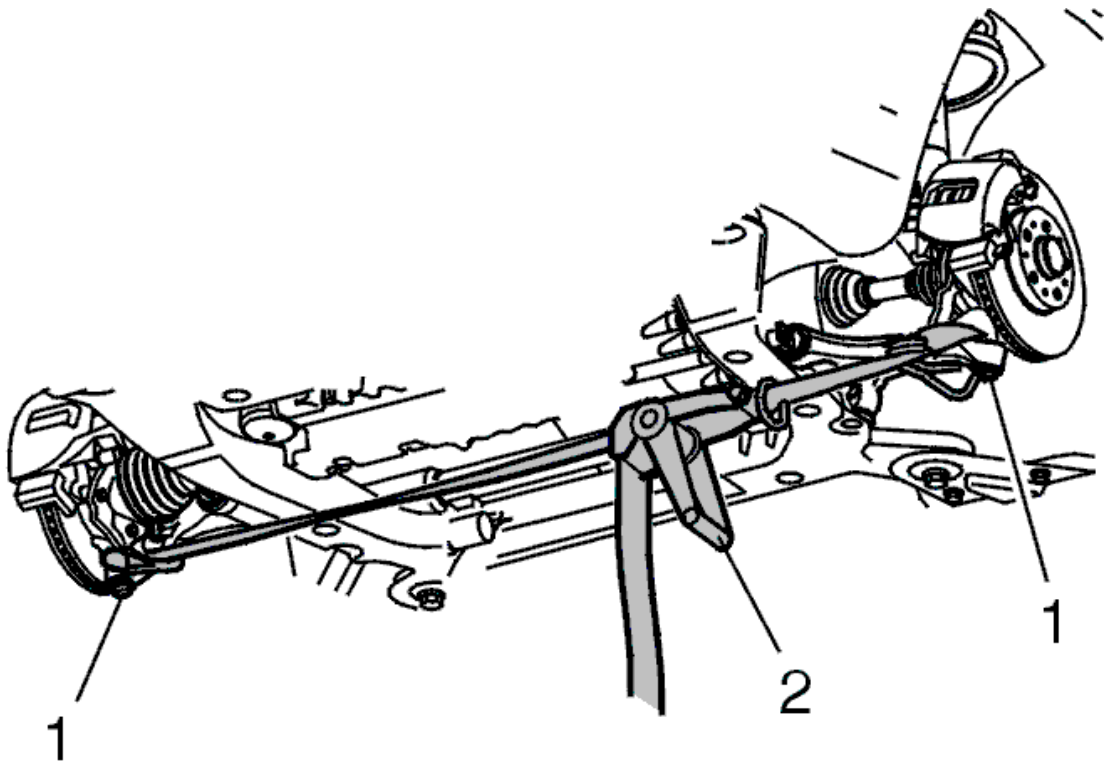

Fig. 223: Identifying Drive Shaft Installation
Courtesy of VOLVO CARS CORPORATION

Slacken off the retaining straps for the spring strut. Thread the drive shaft into the wheel spindle.

Carefully release the retaining strap for trailing arms. At the same time guide the lower ball joints into the trailing arms.

INSTALLING COMPONENTS

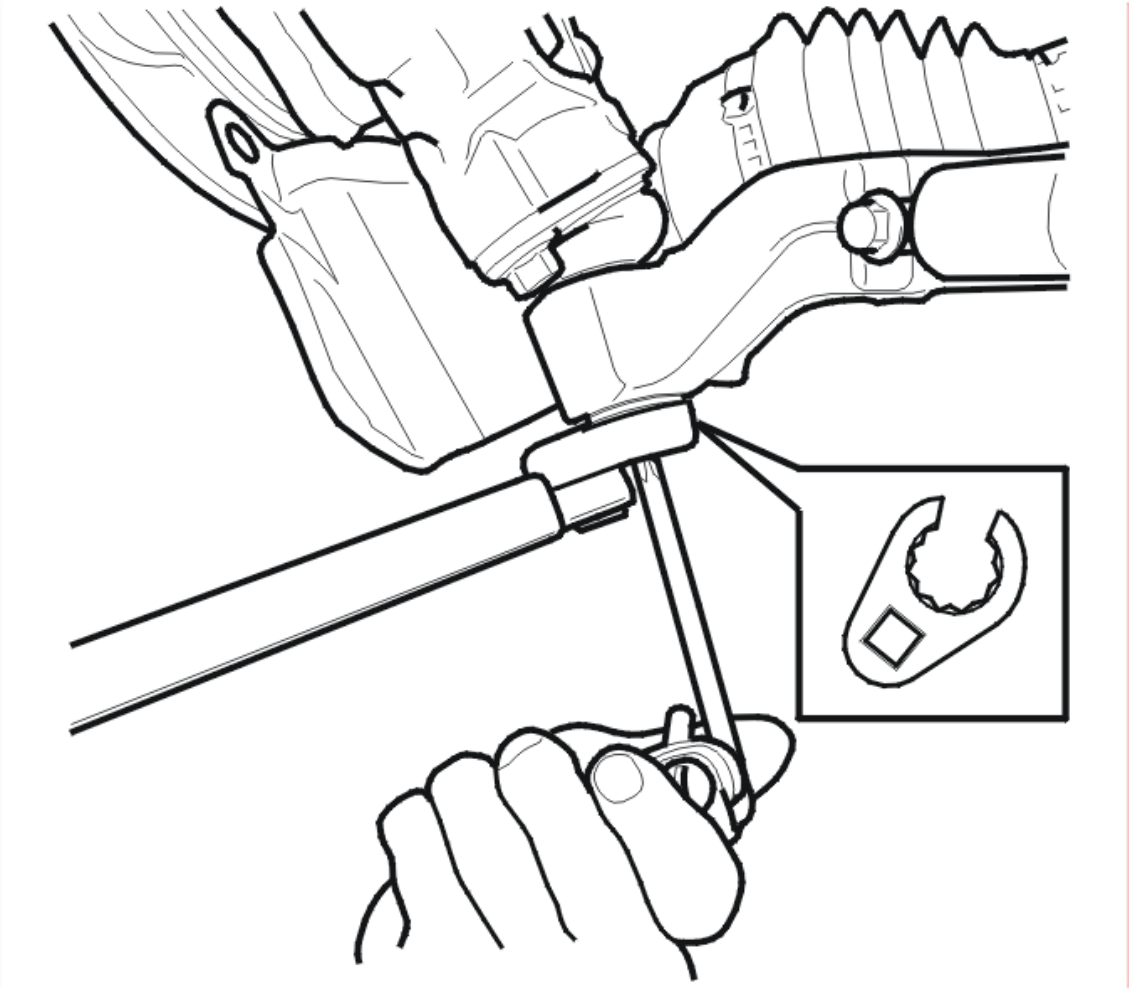

Fig. 224: Installing Anti-Roll Bar Links
Courtesy of VOLVO CARS CORPORATION

Install new nuts on the ball joints. Tighten to **80 Nm** .

Counterhold using a Torx wrench so that the ball joint boot is not damaged.

Install the anti-roll bar links. Use new nuts. Tighten to **50 Nm** .

Counterhold using a Torx wrench so that the boot is not damaged.

Install:

- the screw and nuts for the steering gear. Use new nuts and new screws. Tighten to **50 Nm**
- the front engine pad. Tighten to **50 Nm**

- the torque rod. Tighten the screws through the oil pan. Tighten to **50 Nm** . Tighten the nuts in the sub-frame. Tighten to **65 Nm**
- the center screw for the drive shaft. Use a new screw. Counterhold using a screwdriver in the brake disc vents. Tighten to **50 Nm**
- the front air baffle
- the front wheel.

REMOVING THE LIFTING BEAM AND THE LIFTING HOOK

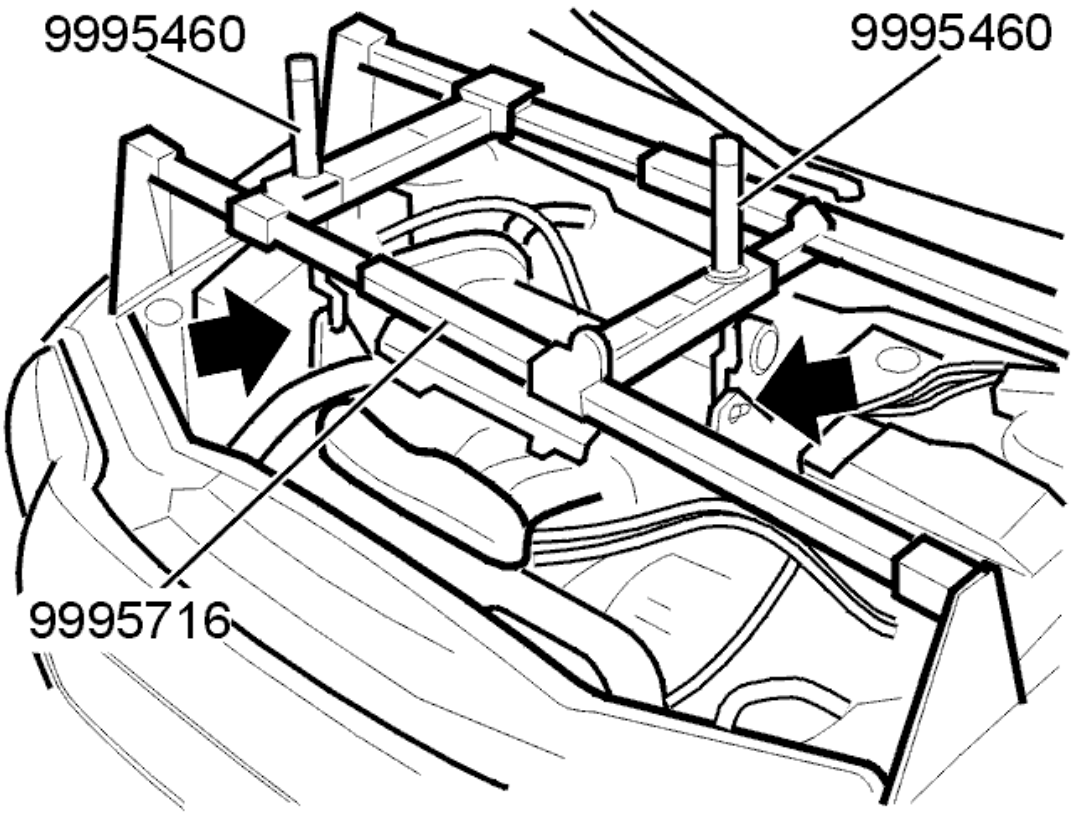

Fig. 225: 999 5716 And Lifting Hooks 999 5460 Installed
Courtesy of VOLVO CARS CORPORATION

Remove:

- the lifting beam
- the lifting hooks
- the lifting fixture from the engine. Install the screws in the engine mounting.

FINISHING

Install:

- the cover over the ignition coils
- the oil dipstick and pipe. Use a new O-ring. Check that the O-ring is correctly positioned.

Turbocharged engines only

Install:

- the plastic pipes. Tighten the hose clamps
- the screws for the charge air pipe in the intake pipe
- the connector and hose to the crankcase ventilation terminal in the plastic intake pipe
- the hose to the plastic charge air pipe.

Filling with engine oil

Fill with **6.7 liters** of new engine oil.

CHECK

Start the engine and check for oil leakage.

Stop the engine. Give the oil time to run down into the oil pan. Then check the oil level.

Top up if necessary but do not overfill.

Wipe the engine compartment clean.

Install the lower engine cover.

TIMING GEAR (B6324S; 2007-2010)

AUXILIARY BELT

NOTE: Removal steps in this procedure may contain installation details.

Remove the battery. See **BATTERY, DISCONNECTING** .

Fig. 226: Identifying Cover Removal
Courtesy of VOLVO CARS CORPORATION

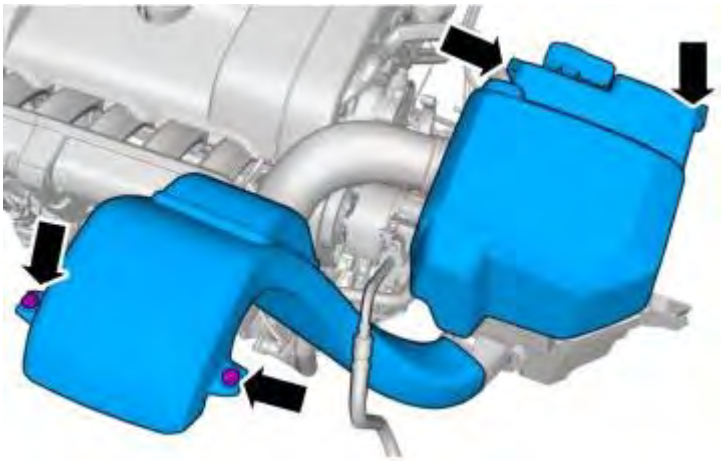

Fig. 227: Removing Air Intake and Electrical Center Cover
Courtesy of VOLVO CARS CORPORATION

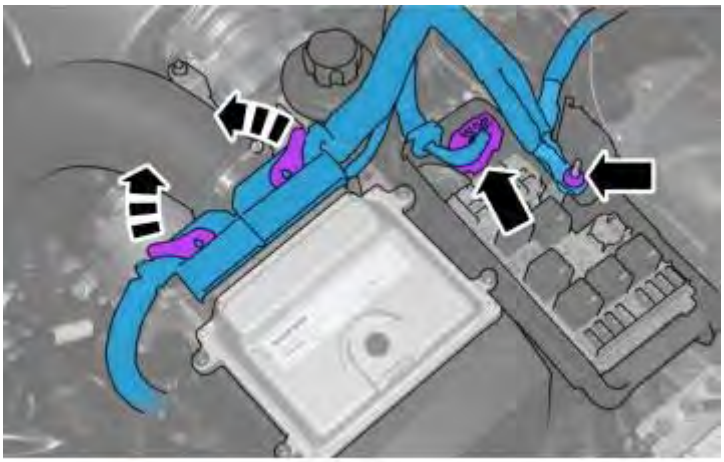

Fig. 228: Identifying Battery Leads
Courtesy of VOLVO CARS CORPORATION

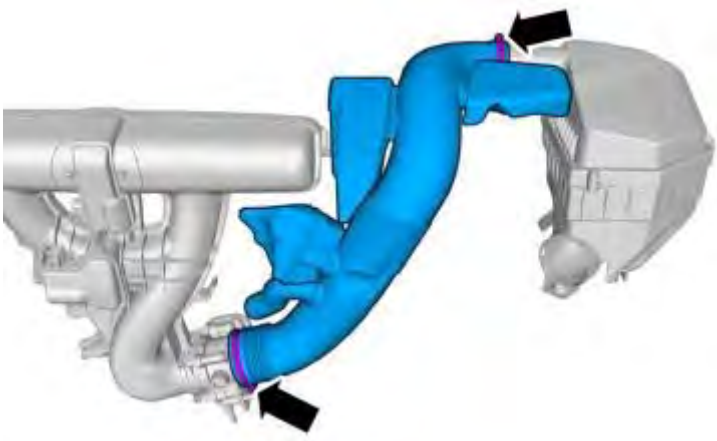

Fig. 229: Locating Air Tube Clamps
Courtesy of VOLVO CARS CORPORATION

Fig. 230: Identifying Air Filter Housing
Courtesy of VOLVO CARS CORPORATION

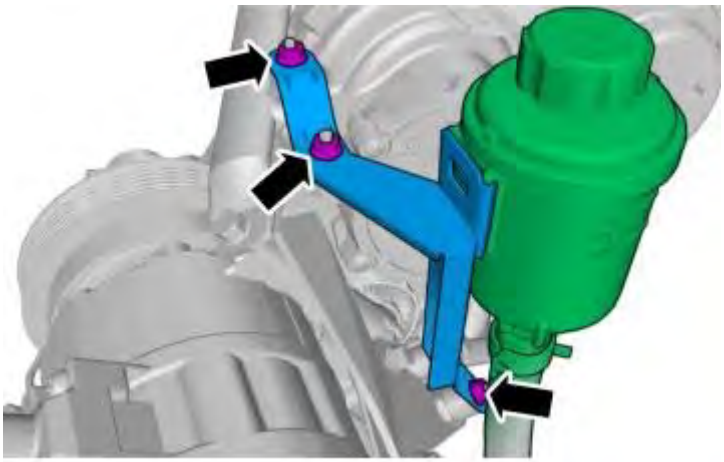

Fig. 231: Identifying Reservoir Bracket and Nuts
Courtesy of VOLVO CARS CORPORATION

M6. See **TIGHTENING TORQUE**

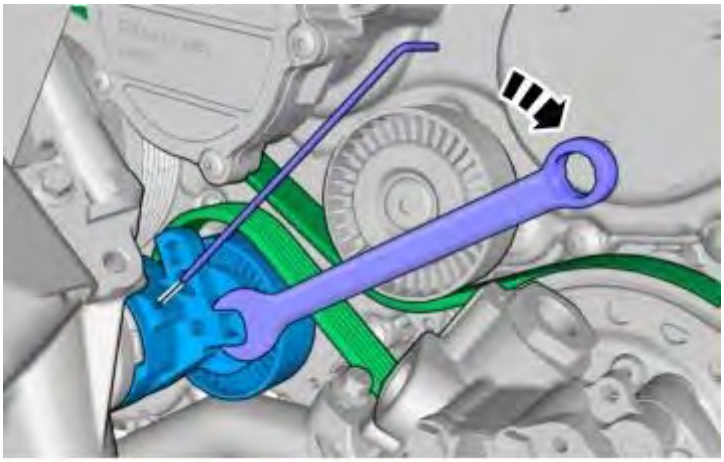

Fig. 232: Locking The Tensioner In Position
Courtesy of VOLVO CARS CORPORATION

, slacken the tensioner and relieve the tension on the belt.

and lock the tensioner in position.

When installing, check the belt's position on all belt grooves.

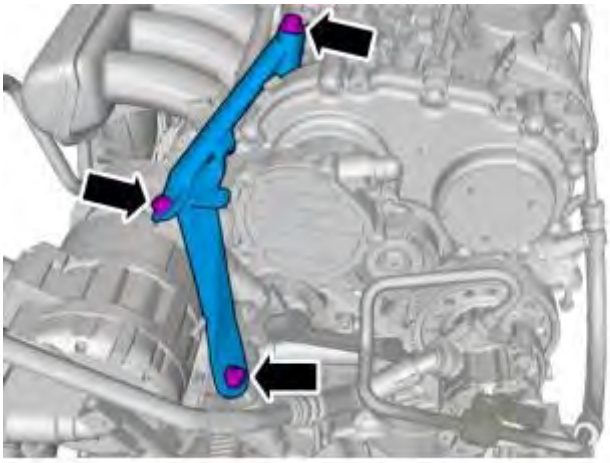

Fig. 233: Locating Brace
Courtesy of VOLVO CARS CORPORATION

M8. See **TIGHTENING TORQUE**

M10. See **TIGHTENING TORQUE**

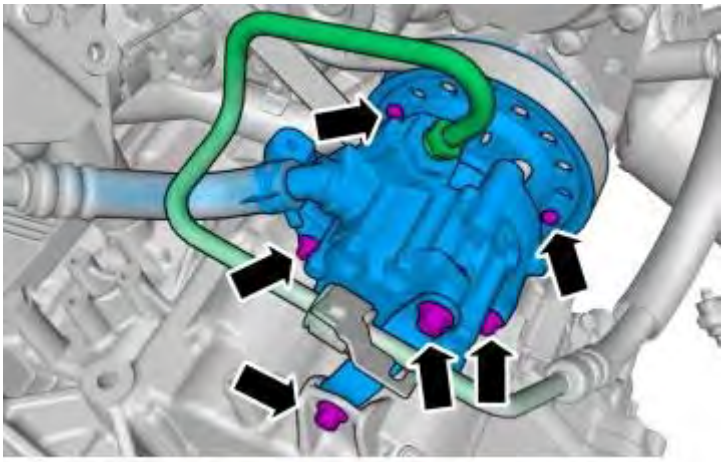

Fig. 234: Identifying Power Steering Pump/Water Pump Coupling
Courtesy of VOLVO CARS CORPORATION

1. the power steering pump bracket in the transmission. M8. See **TIGHTENING TORQUE**
2. the power steering pump's rear stay. M8. See **TIGHTENING TORQUE**
3. the water pump coupling/pulley. M5. See **TIGHTENING TORQUE**
4. Delivery line to power steering pump. See **TIGHTENING TORQUE**

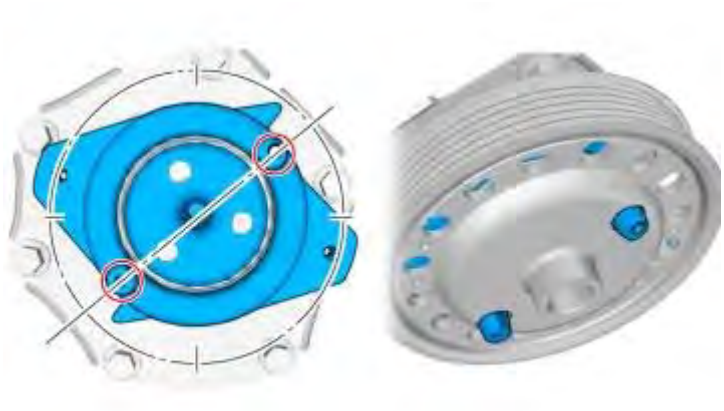

Fig. 235: Identifying Water Pump Coupling/Pulley.
Courtesy of VOLVO CARS CORPORATION

When removing

Remove the pins from the pulley. Rotate the power steering pump upward and rearward.

When installing

To facilitate fitting of the water pump coupling in the power steering pump pulley, turn the coupling until the spikes are in the 8 o'clock and 2 o'clock position as illustrated. Make sure that the pins stick out through the holes in the pulley.

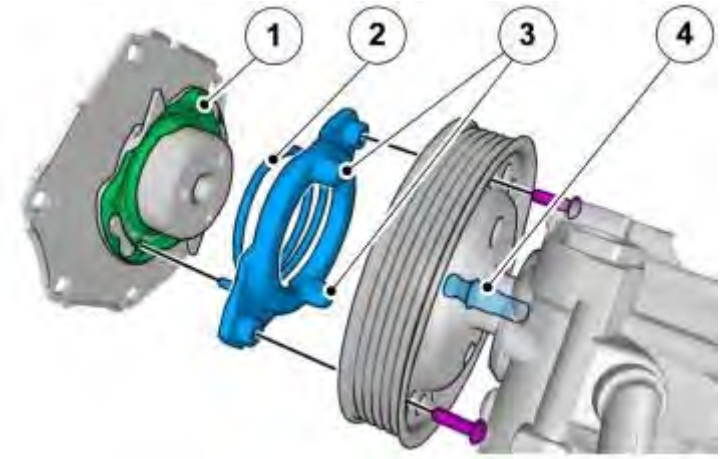

Fig. 236: Locating Water Pump Coupling/Pulley
Courtesy of VOLVO CARS CORPORATION

When installing

Make sure that the coupling's spring (2) clicks in position at the bonded part of the water pump (1) and that the pins (3) enter the holes of the pulley.

Always use new centering pins (4).

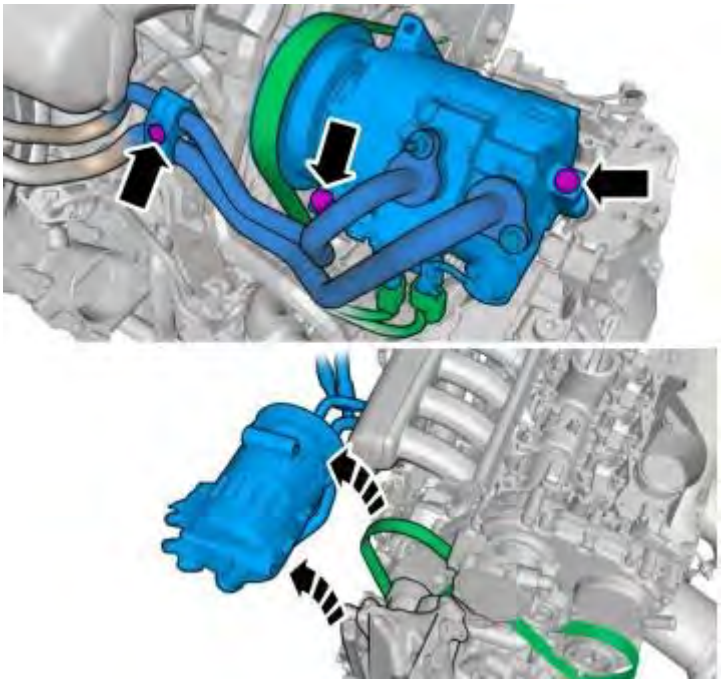

Fig. 237: Removing A/C Compressor
Courtesy of VOLVO CARS CORPORATION

M8. See **TIGHTENING TORQUE**

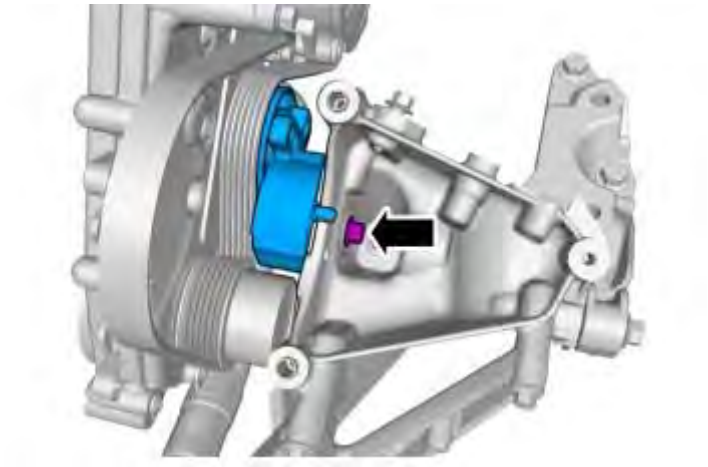

Fig. 238: Removing Bolt
Courtesy of VOLVO CARS CORPORATION

M8. See **TIGHTENING TORQUE**

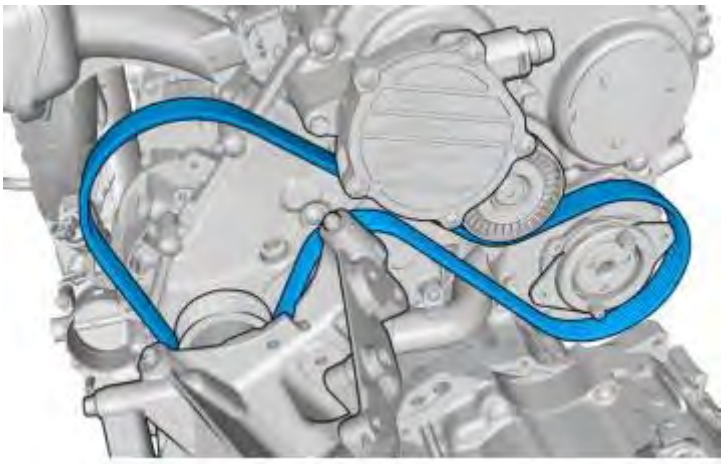

Fig. 239: Identifying Belt Routing
Courtesy of VOLVO CARS CORPORATION

To install, reverse the removal procedure.

AUXILIARY BRACKETS

Special tools	
	T9997262 POSITION SENSOR **Tool number:** T9997262 **Tool description:** POSITION SENSOR **Tool boards:**

Drain cooling system, draining, filling, and bleeding, see **COOLING SYSTEM - DRAINING, CHARGING AND BLEEDING**

Remove the Accessory Drive Belt, see **AUXILIARY BELT**

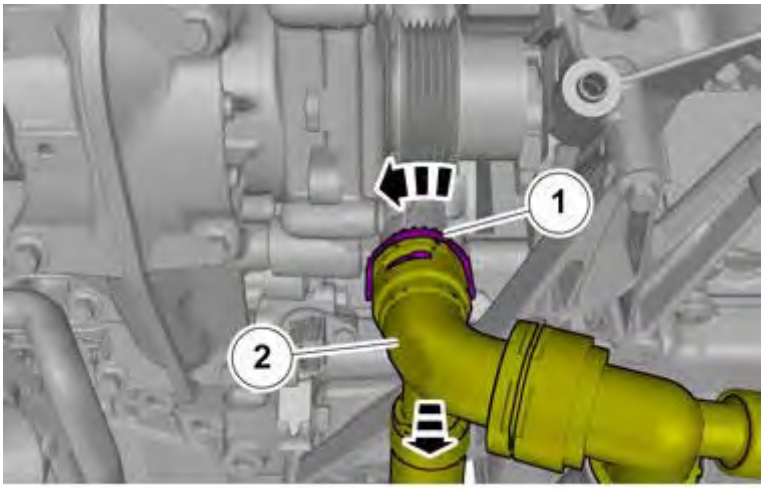

Fig. 240: Identifying Coolant Hose Connectors
Courtesy of VOLVO CARS CORPORATION

NOTE: Use suitable paper to absorb any escaping fluid.

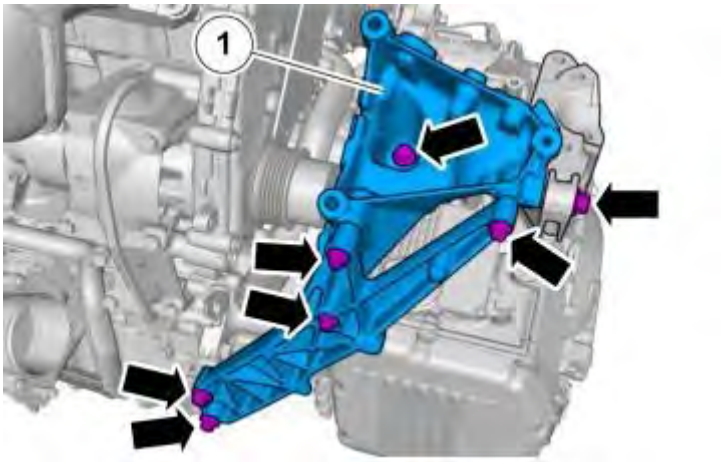

Fig. 241: Identifying Accessory Drive Bracket
Courtesy of VOLVO CARS CORPORATION

CAUTION: The alignment procedure must be carried out in full even if only one part of the accessory drive component bracket has been removed.

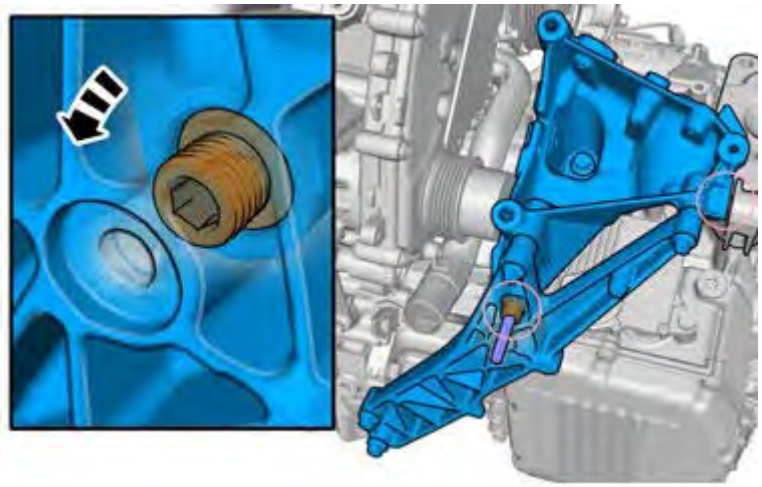

Fig. 242: Accessory Drive Bracket Alignment Procedure (1 of 10)
Courtesy of VOLVO CARS CORPORATION

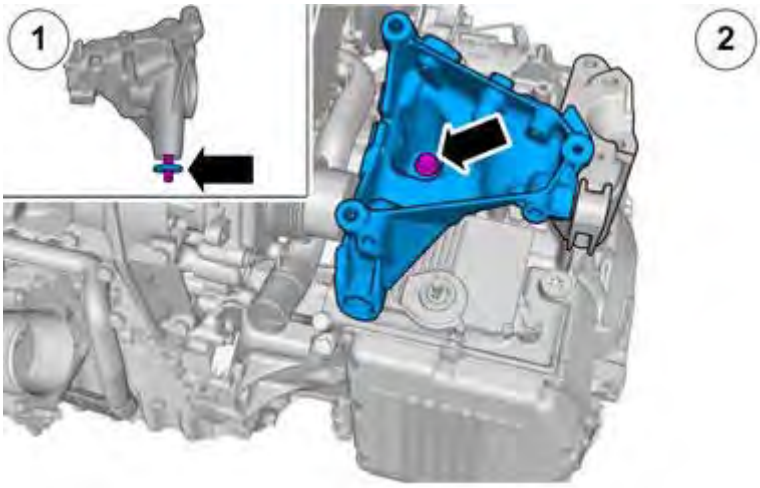

Fig. 243: Accessory Drive Bracket Alignment Procedure (2 of 10)
Courtesy of VOLVO CARS CORPORATION

CAUTION: Make sure that no components catch.

NOTE: Only tighten the bolt finger tight at this stage.

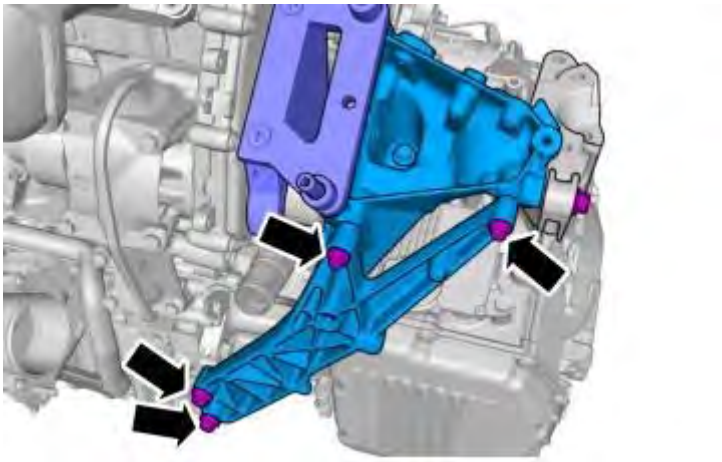

Fig. 244: Accessory Drive Bracket Alignment Procedure (3 of 10)
Courtesy of VOLVO CARS CORPORATION

NOTE: Only tighten the bolt finger tight at this stage.

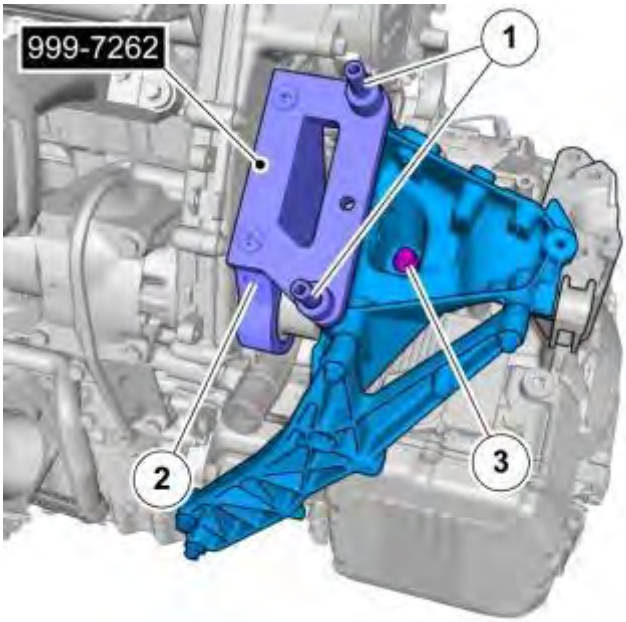

Fig. 245: Identifying Special Tool 9997262 (4 of 10)
Courtesy of VOLVO CARS CORPORATION

CAUTION: Take extra care when handling the component.

CAUTION: Only rotate the pulley anticlockwise.

see **9997262**

NOTE: **Only use moderate force.**

NOTE: **Only use moderate force.**

Torque: M10

50 Nm

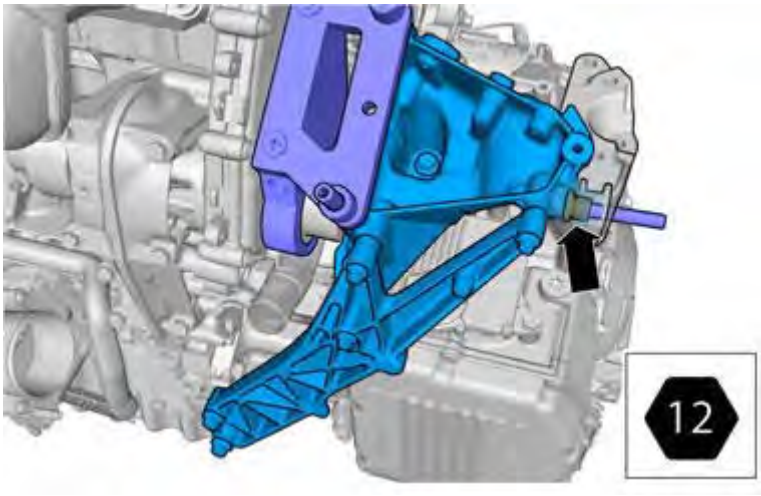

Fig. 246: Identifying Accessory Drive Component, Adjusting Screw (5 of 10)
Courtesy of VOLVO CARS CORPORATION

Torque: Accessory Drive Component, adjusting screw

1 Nm

Torque: Accessory Drive Component, adjusting screw

4 Nm

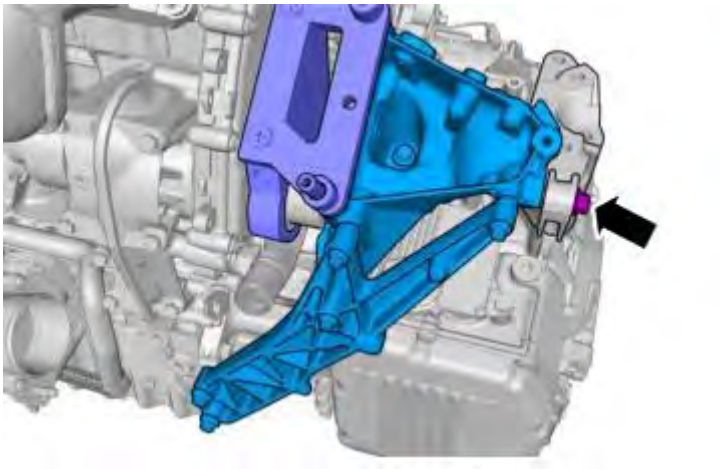

Fig. 247: Accessory Drive Bracket Alignment Procedure (6 of 10)
Courtesy of VOLVO CARS CORPORATION

Torque: M10

50 Nm

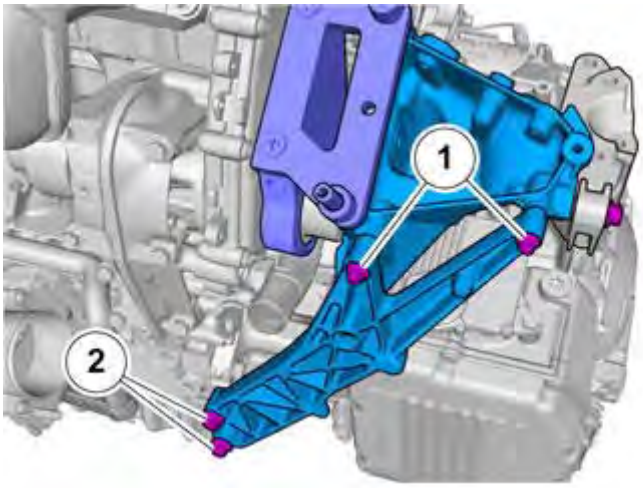

Fig. 248: Accessory Drive Bracket Alignment Procedure (7 of 10)
Courtesy of VOLVO CARS CORPORATION

- **Torque:** M8

  24 Nm

- **Torque:** M10

  50 Nm

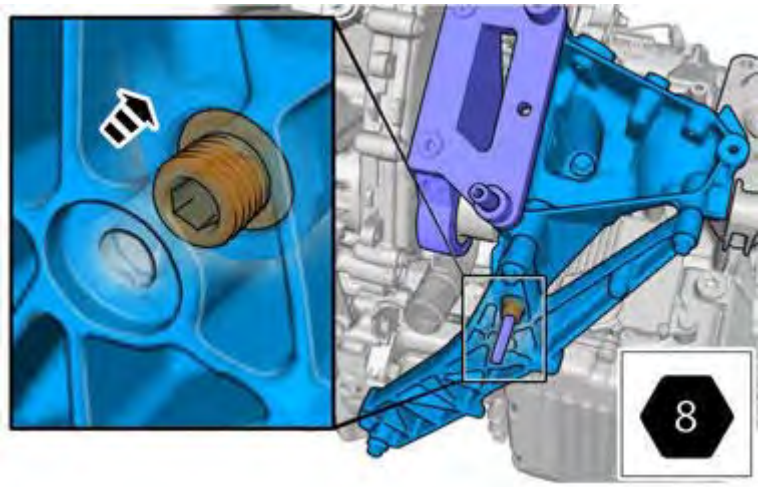

Fig. 249: Accessory Drive Bracket Alignment Procedure (8 of 10)
Courtesy of VOLVO CARS CORPORATION

Torque: Accessory Drive Component, adjusting screw

4 Nm

Torque: Accessory Drive Component, adjusting screw

1 Nm

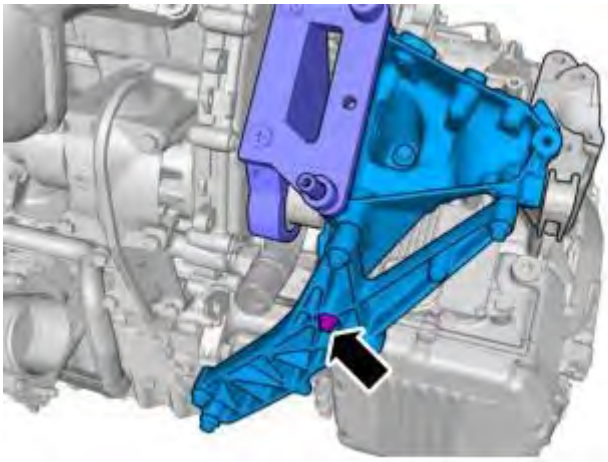

Fig. 250: Accessory Drive Bracket Alignment Procedure (9 of 10)
Courtesy of VOLVO CARS CORPORATION

Torque: M8

24 Nm

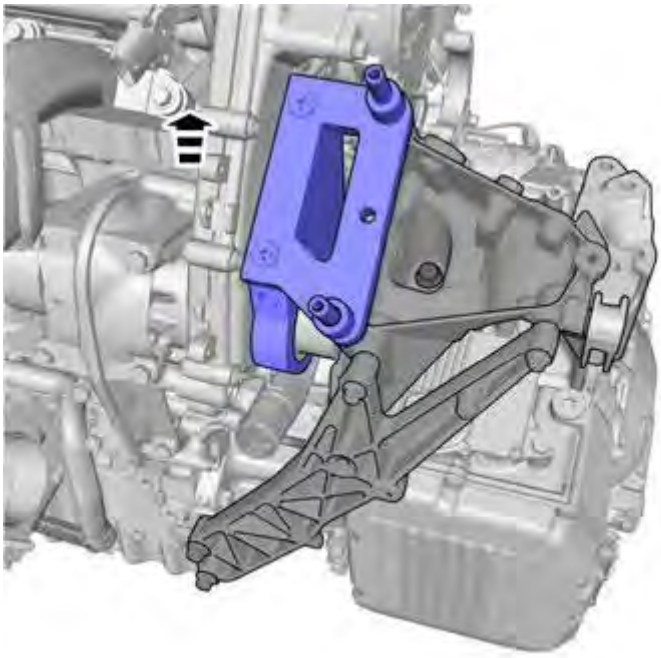

Fig. 251: Removal of Special Tool (10 of 10)
Courtesy of VOLVO CARS CORPORATION

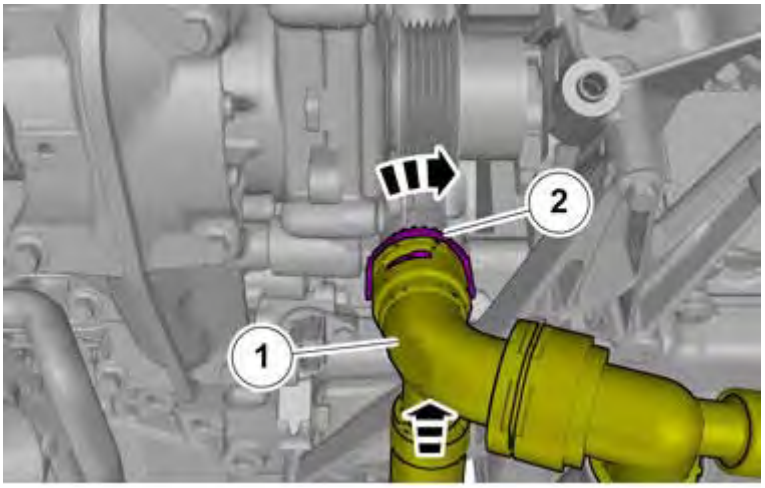

Fig. 252: Coolant Hoses Identified
Courtesy of VOLVO CARS CORPORATION

Install the Accessory Drive Belt, see **AUXILIARY BELT**

Fill cooling system, draining filling, and bleeding, see **COOLING SYSTEM - DRAINING, CHARGING AND BLEEDING**

CAMSHAFT CHAIN

Special tools	
	T9997257 WRENCH **Tool number:** T9997257 **Tool description:** WRENCH **Tool boards:**
	T9997261 POSITION SENSOR **Tool number:** T9997261 **Tool description:** POSITION SENSOR **Tool boards:**
	T9997264 ANVIL BLOCK **Tool number:** T9997264 **Tool description:** ANVIL BLOCK **Tool boards:**
	T9997263 ANVIL BLOCK **Tool number:** T9997263 **Tool description:** ANVIL BLOCK **Tool boards:**
	T9997272 TORX 60 **Tool number:** T9997272 **Tool description:** TORX 60 **Tool boards:**

Remove the front crankshaft seal. See **CRANKSHAFT FRONT SEAL**.

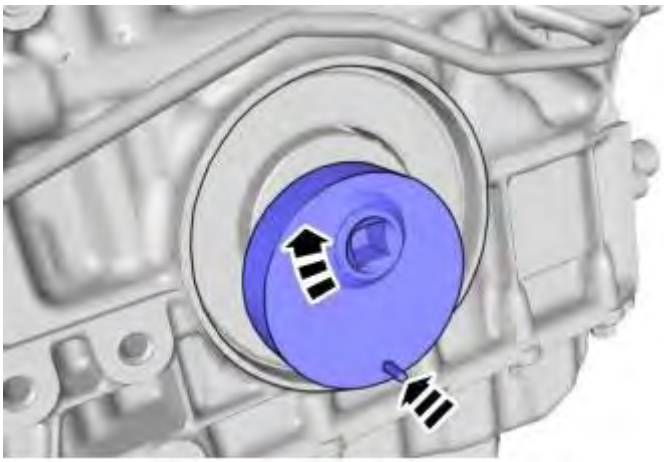

Fig. 253: Identifying Special Tool 9997257 Installed
Courtesy of VOLVO CARS CORPORATION

Rotate the engine to the zero position. see **9997257**

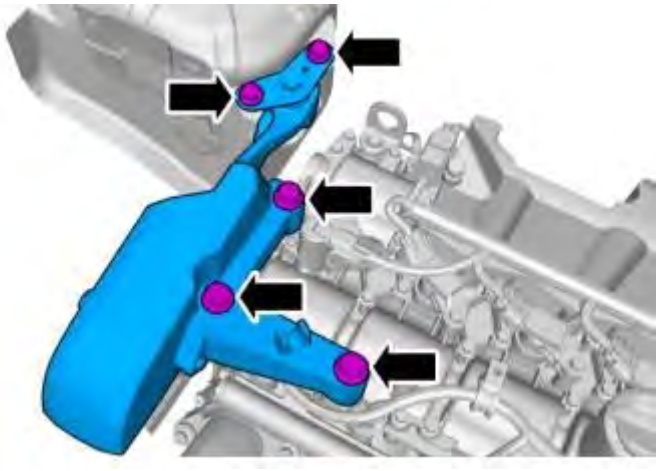

Fig. 254: Removing Bracket Bolts
Courtesy of VOLVO CARS CORPORATION

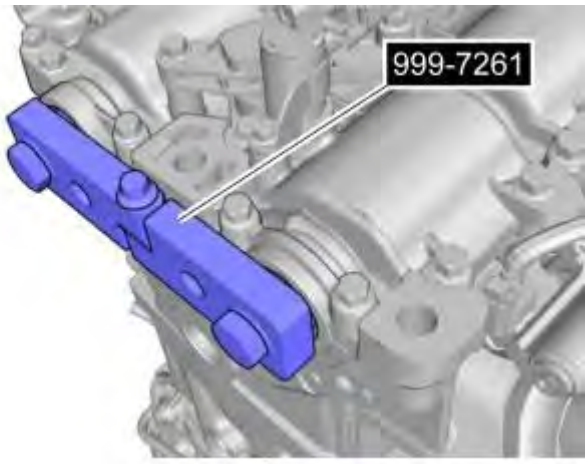

Fig. 255: Locating Special Tools 9997261
Courtesy of VOLVO CARS CORPORATION

see **9997261**

Remove the outer timing cover. See **OUTER TIMING COVER GASKET**

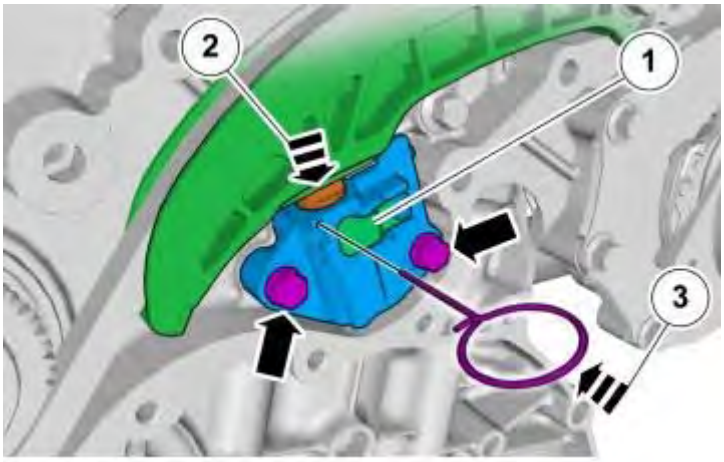

Fig. 256: Compressing and Securing Tensioner
Courtesy of VOLVO CARS CORPORATION

Raise the tensioner's lock plate (1) slightly and press the tensioner together (2). Secure with a steel wire, drill or the like of O 2 mm in the tensioner hole (3).

Fig. 257: Attachment of Special Tools 9997264, 9997263, 9997272
Courtesy of VOLVO CARS CORPORATION

Attach the following items:

- see **9997264**
- see **9997263**
- see **9997272**

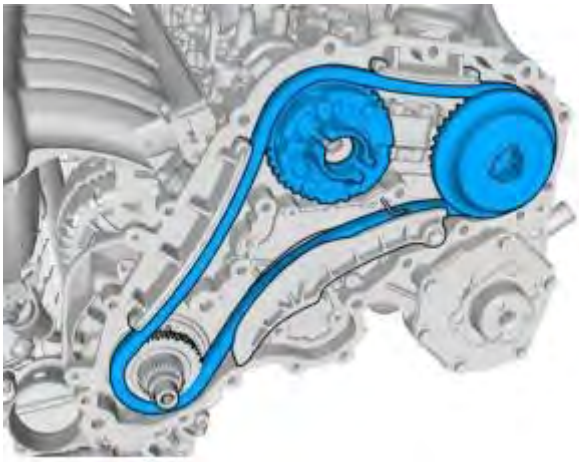

Fig. 258: Remove/Install Components
Courtesy of VOLVO CARS CORPORATION

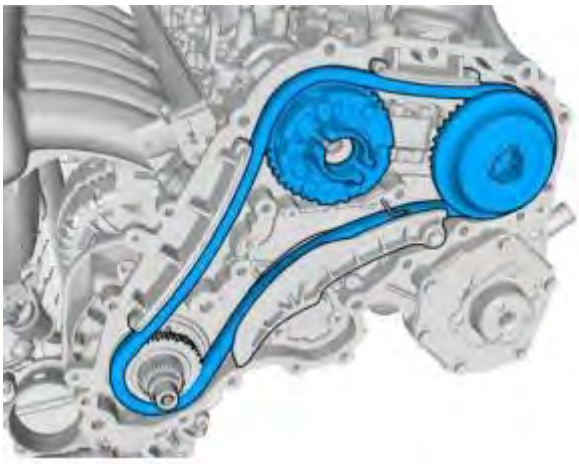

Fig. 259: Remove/Install Components
Courtesy of VOLVO CARS CORPORATION

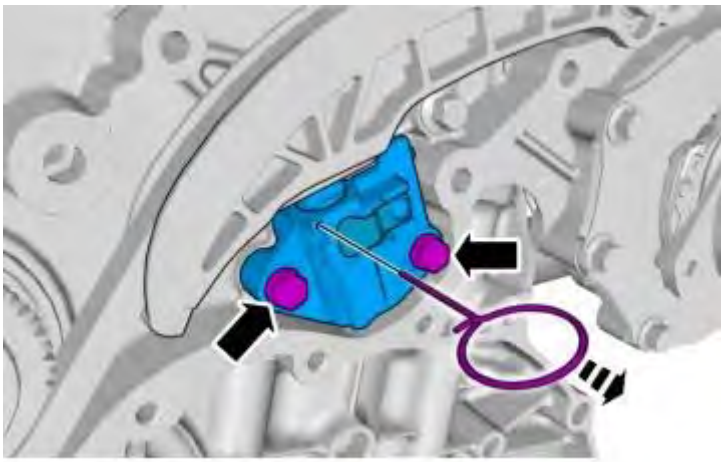

Fig. 260: Installing Tensioner And Releasing
Courtesy of VOLVO CARS CORPORATION

M7. See **TIGHTENING TORQUE**

Fig. 261: Attachment of Special Tools 9997264, 9997263, 9997272
Courtesy of VOLVO CARS CORPORATION

Attach the following items:

- see **9997264**
- see **9997263**
- see **9997272**

Install the following items:

- Center screw, exhaust camshaft. See **TIGHTENING TORQUE**
- Center screw, intake camshaft. See **TIGHTENING TORQUE**

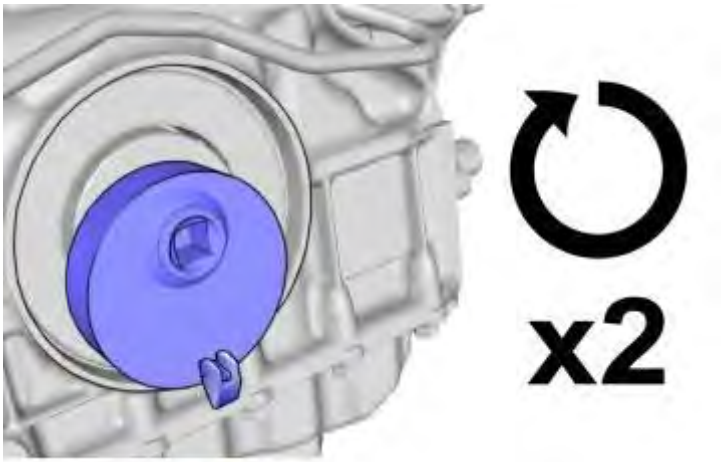

Fig. 262: Rotating Crankshaft Through 2 Revolutions
Courtesy of VOLVO CARS CORPORATION

see **9997257**

Install the outer timing cover. See **OUTER TIMING COVER GASKET**.

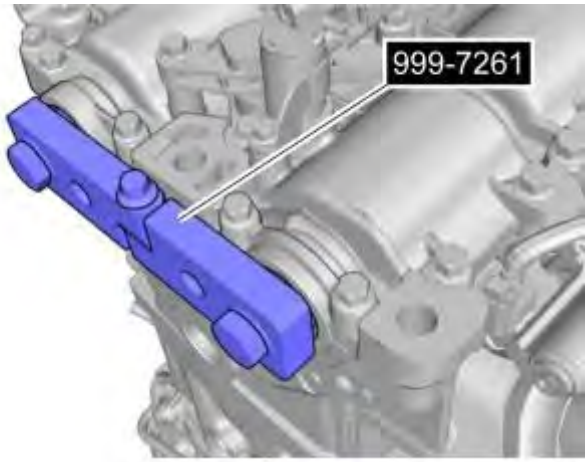

Fig. 263: Locating Special Tools 9997261
Courtesy of VOLVO CARS CORPORATION

see **9997261**

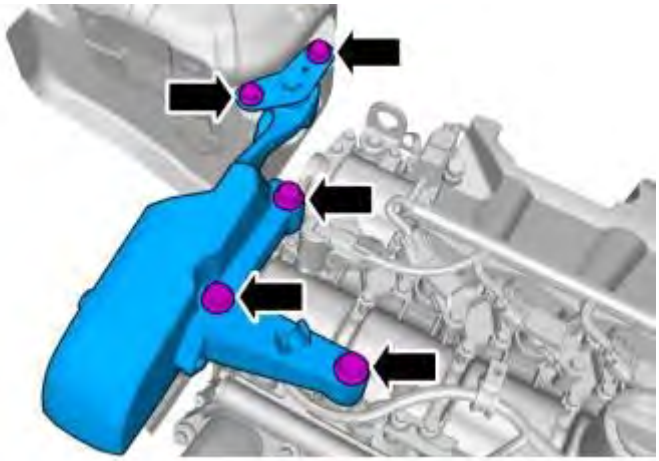

Fig. 264: Removing Bracket Bolts
Courtesy of VOLVO CARS CORPORATION

M12. See **TIGHTENING TORQUE**

Fit the front crankshaft seal. See **CRANKSHAFT FRONT SEAL**.

CAMSHAFT SEAL

NOTE: Removal steps in this procedure may contain installation details.

Fig. 265: Identifying Cover Removal
Courtesy of VOLVO CARS CORPORATION

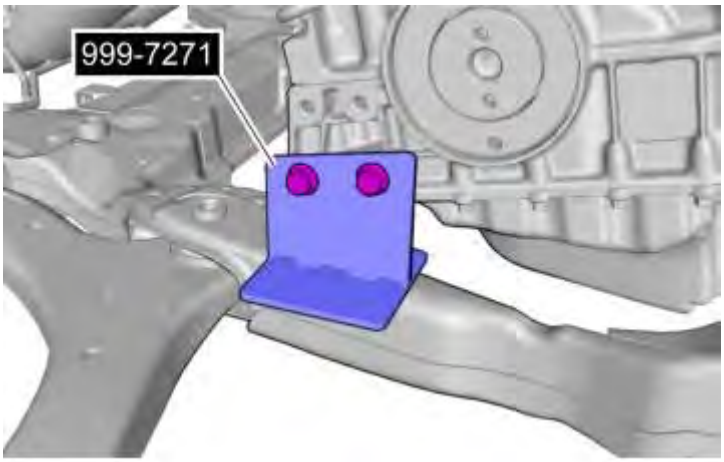

Fig. 266: Support Tool 9997271 Installed
Courtesy of VOLVO CARS CORPORATION

see **9997271**

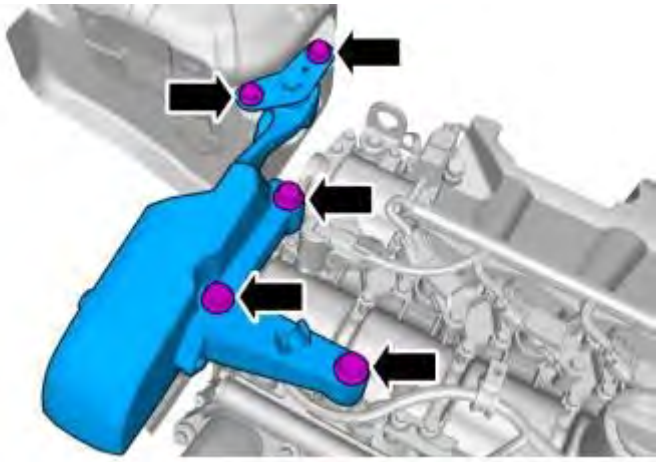

Fig. 267: Removing Bracket Bolts
Courtesy of VOLVO CARS CORPORATION

Install the following items:

- M10. See **TIGHTENING TORQUE**
- M12. See **TIGHTENING TORQUE**

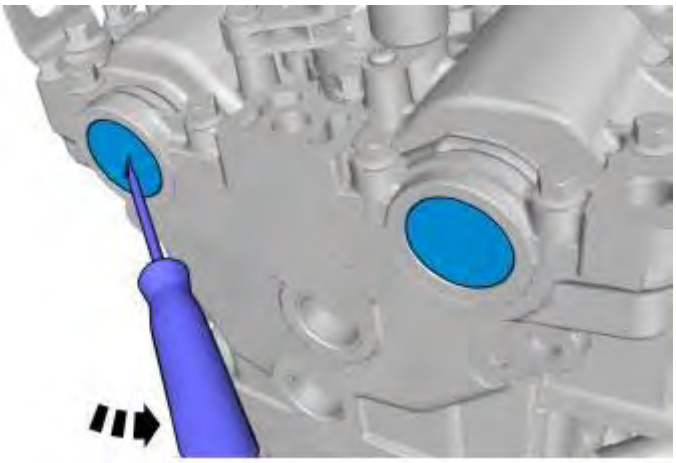

Fig. 268: Removing End Cap Seals
Courtesy of VOLVO CARS CORPORATION

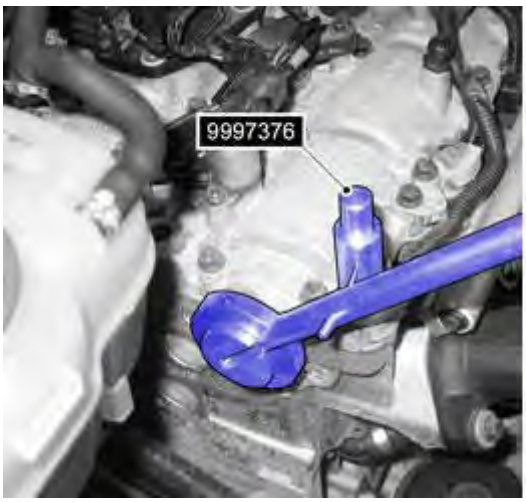

Fig. 269: Installing New Seal with Tool 9997376
Courtesy of VOLVO CARS CORPORATION

see **9997376**

Fig. 270: Installing New Seal with Tool 9997376
Courtesy of VOLVO CARS CORPORATION

see **9997376**

To install, reverse the removal procedure.

CPS SOLENOID

NOTE: Removal steps in this procedure may contain installation details.

Fig. 271: Identifying Cover Removal
Courtesy of VOLVO CARS CORPORATION

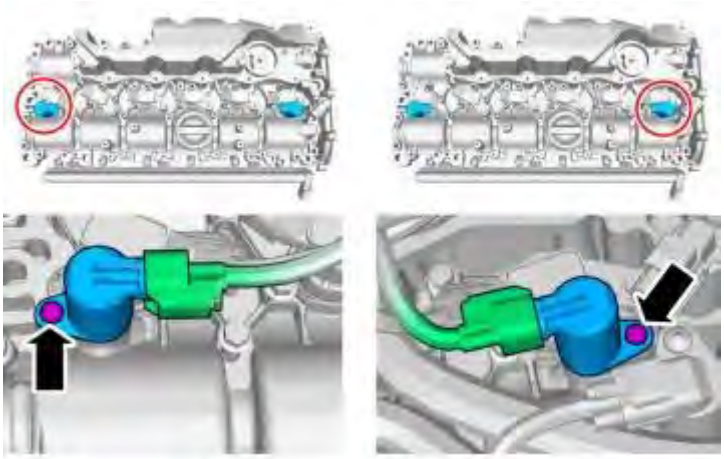

Fig. 272: View of CPS Solenoids
Courtesy of VOLVO CARS CORPORATION

M6. See **SUMMARY OF TIGHTENING TORQUES FOR SPECIFIC COMPONENTS**

To install, reverse the removal procedure

GASKET, INNER TIMING COVER

Special tools	
	T9997257 WRENCH **Tool number:** T9997257 **Tool description:** WRENCH **Tool boards:**
	T9997261 POSITION SENSOR **Tool number:** T9997261 **Tool description:** POSITION SENSOR **Tool boards:**
	T9997264 ANVIL BLOCK **Tool number:** T9997264 **Tool description:** ANVIL BLOCK **Tool boards:**
	T9997263 ANVIL BLOCK **Tool number:** T9997263 **Tool description:** ANVIL BLOCK **Tool boards:**
	T9997272 TORX 60 **Tool number:** T9997272 **Tool description:** TORX 60 **Tool boards:**
	T9997266 POSITION SENSOR **Tool number:** T9997266 **Tool description:** POSITION SENSOR

	Tool boards:
	T9997267 POSITION SENSOR **Tool number:** T9997267 **Tool description:** POSITION SENSOR **Tool boards:**

NOTE: Removal steps in this procedure may contain installation details.

Remove the front crankshaft seal. See **CRANKSHAFT FRONT SEAL**.

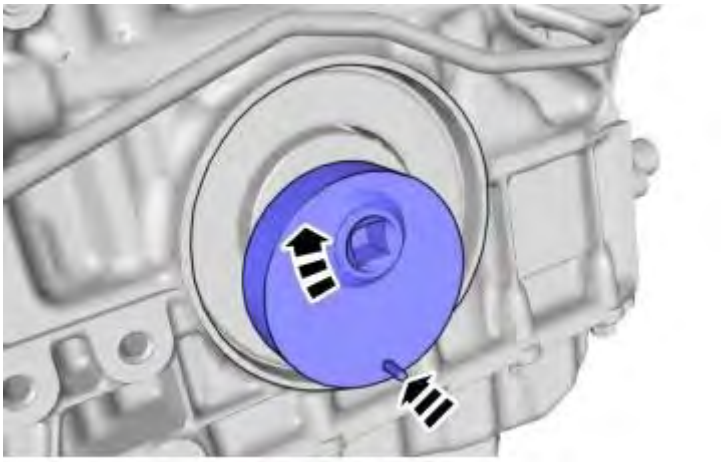

Fig. 273: Identifying Special Tool 9997257 Installed
Courtesy of VOLVO CARS CORPORATION

Rotate the engine to the zero position. see **9997257** .

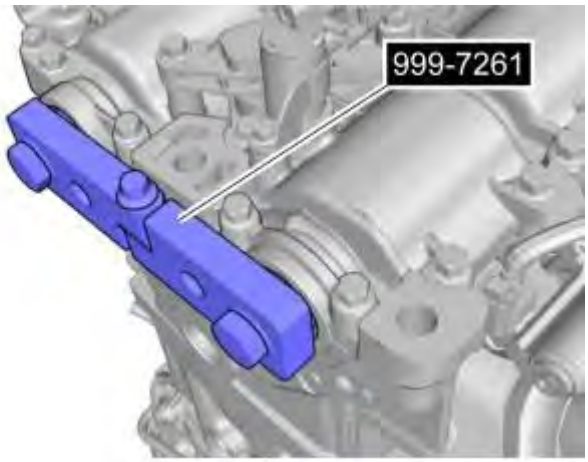

Fig. 274: Locating Special Tools 9997261
Courtesy of VOLVO CARS CORPORATION

Lock the camshafts. see **9997261** .

Remove the outer timing cover. See **OUTER TIMING COVER GASKET**.

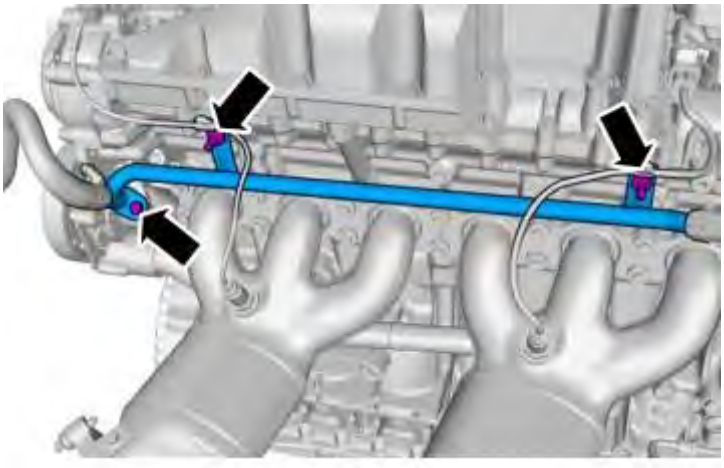

Fig. 275: Removing Bolts Securing Tube
Courtesy of VOLVO CARS CORPORATION

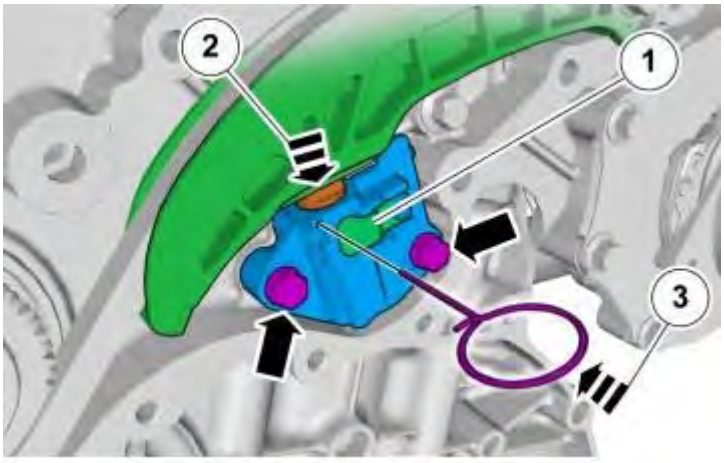

Fig. 276: Compressing and Securing Tensioner
Courtesy of VOLVO CARS CORPORATION

Raise the tensioner's lock plate (1) slightly and press the tensioner together (2). Secure with a steel wire, drill or the like with a 2 mm diameter in the tensioner hole (3).

Fig. 277: Attachment of Special Tools 9997264, 9997263, 9997272
Courtesy of VOLVO CARS CORPORATION

- see **9997264**
- see **9997263**
- see **9997272**

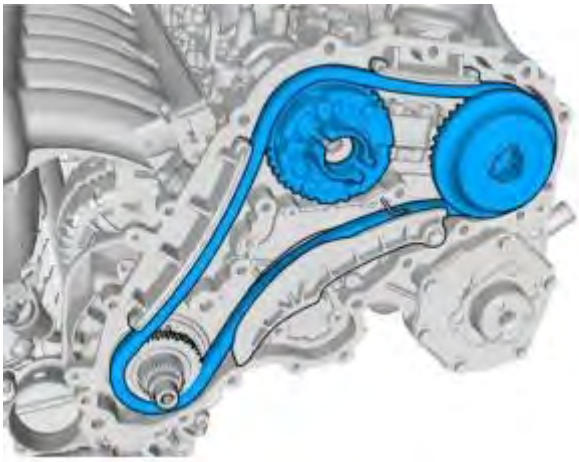

Fig. 278: Remove/Install Components
Courtesy of VOLVO CARS CORPORATION

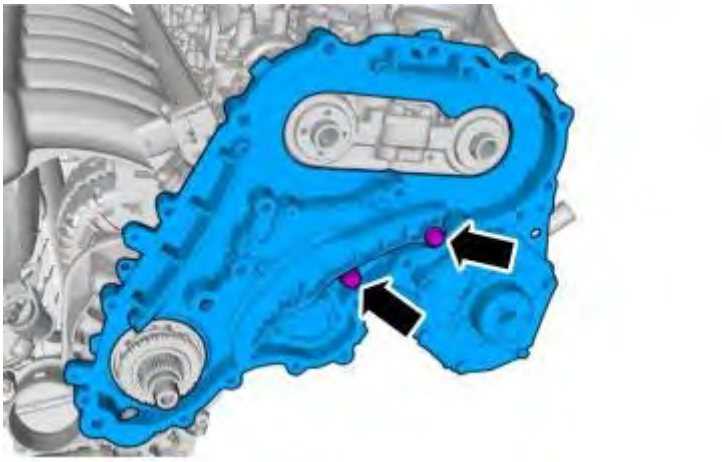

Fig. 279: Identifying Bolts Necessary to Remove/Install
Courtesy of VOLVO CARS CORPORATION

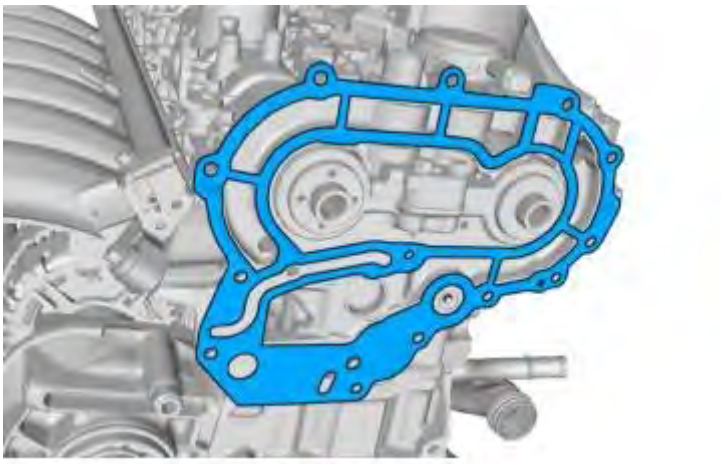

Fig. 280: Identifying Gasket
Courtesy of VOLVO CARS CORPORATION

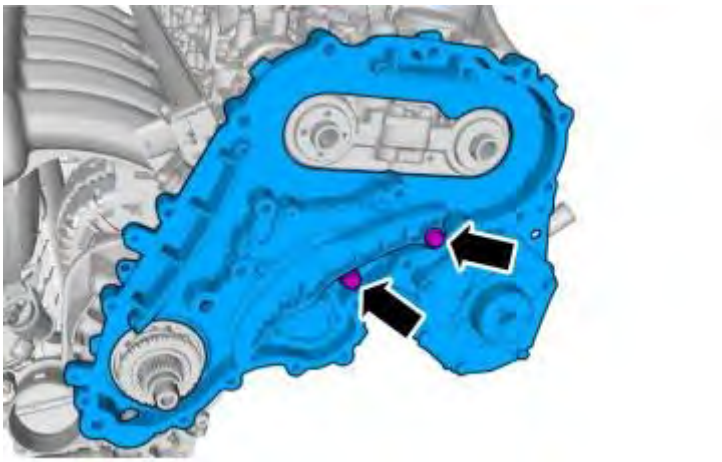

Fig. 281: Identifying Bolts Necessary to Remove/Install
Courtesy of VOLVO CARS CORPORATION

M7. See **TIGHTENING TORQUE**

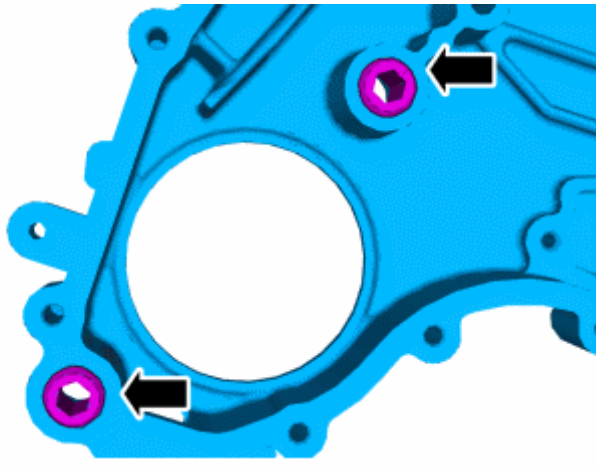

Fig. 282: Slackening the Screws
Courtesy of VOLVO CARS CORPORATION

Slacken the screws two turns.

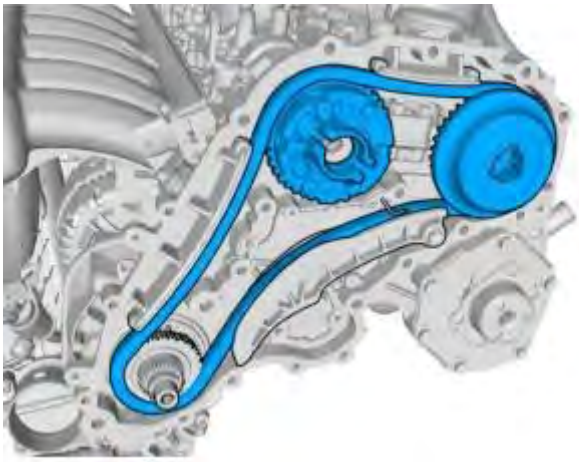

Fig. 283: Remove/Install Components
Courtesy of VOLVO CARS CORPORATION

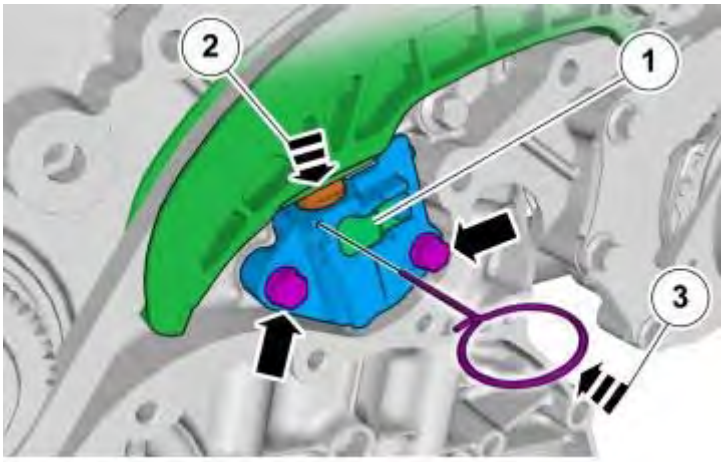

Fig. 284: Compressing and Securing Tensioner
Courtesy of VOLVO CARS CORPORATION

M6. See **TIGHTENING TORQUE**

Remove the lock for the tensioner.

Fig. 285: Attachment of Special Tools 9997264, 9997263, 9997272
Courtesy of VOLVO CARS CORPORATION

Attach the following items:

- see **9997264**
- see **9997263**
- see **9997272**

Install the following items:

- Center screw, exhaust camshaft. See **TIGHTENING TORQUE**
- Center screw, intake camshaft. See **TIGHTENING TORQUE**

Remove the following items:

- see **9997263**
- see **9997264**
- see **9997272**

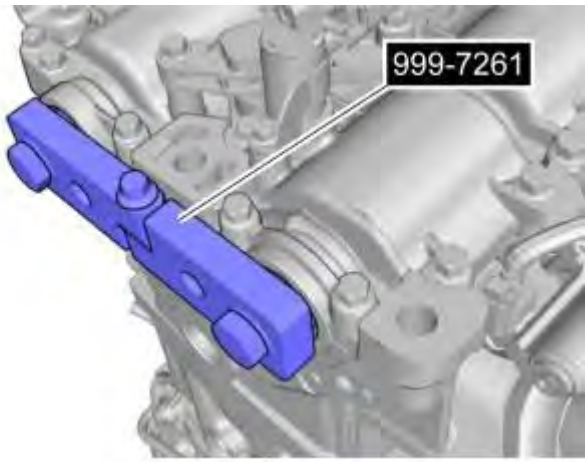

Fig. 286: Locating Special Tools 9997261
Courtesy of VOLVO CARS CORPORATION

Remove the following items:

- see **9997261**

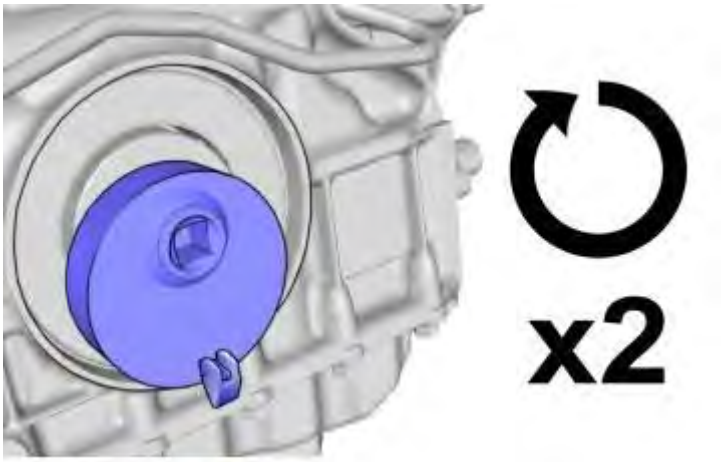

Fig. 287: Rotating Crankshaft Through 2 Revolutions
Courtesy of VOLVO CARS CORPORATION

Turn the engine two rotations and check the setting.

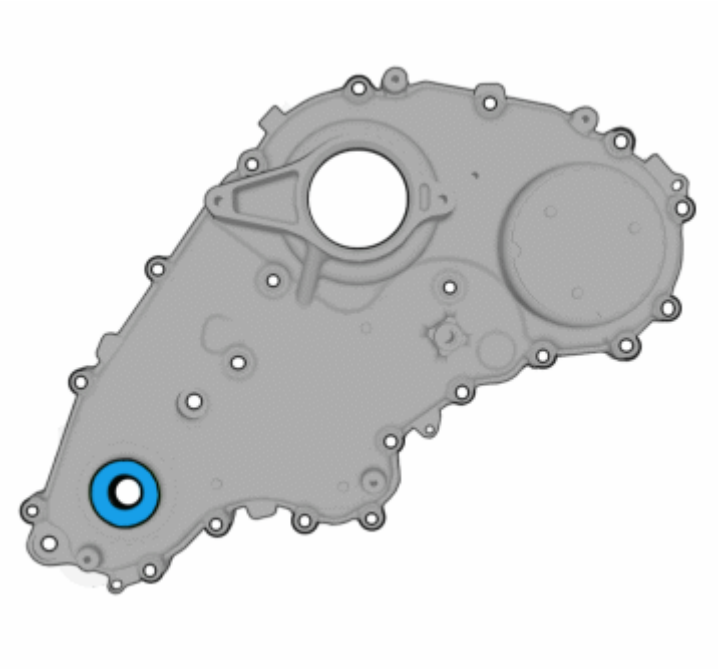

Fig. 288: Identifying Intermediate Shaft Seal
Courtesy of VOLVO CARS CORPORATION

Remove and discard the intermediate shaft seal.

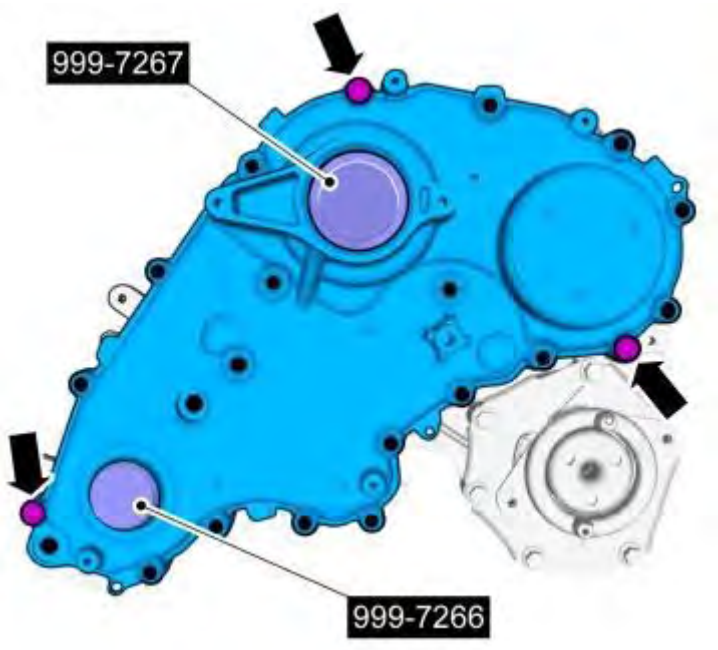

Fig. 289: Installing The Cover Using Guide Tools
Courtesy of VOLVO CARS CORPORATION

Install the cover.

Use the tool and 3 screws in the indicated spot to guide the cover and gasket into the right position. Do not tighten.

see **9997266** and see **9997267** .

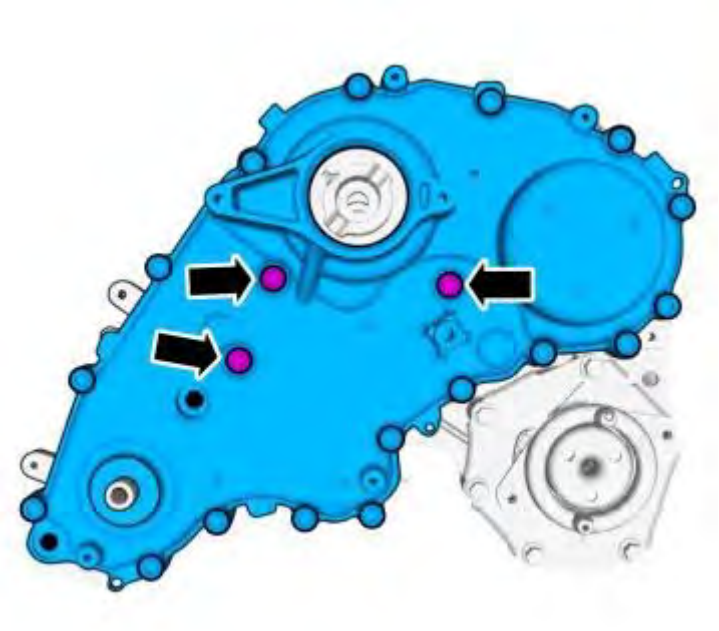

Fig. 290: Tightening Indicated Bolts
Courtesy of VOLVO CARS CORPORATION

M7. See **TIGHTENING TORQUE**

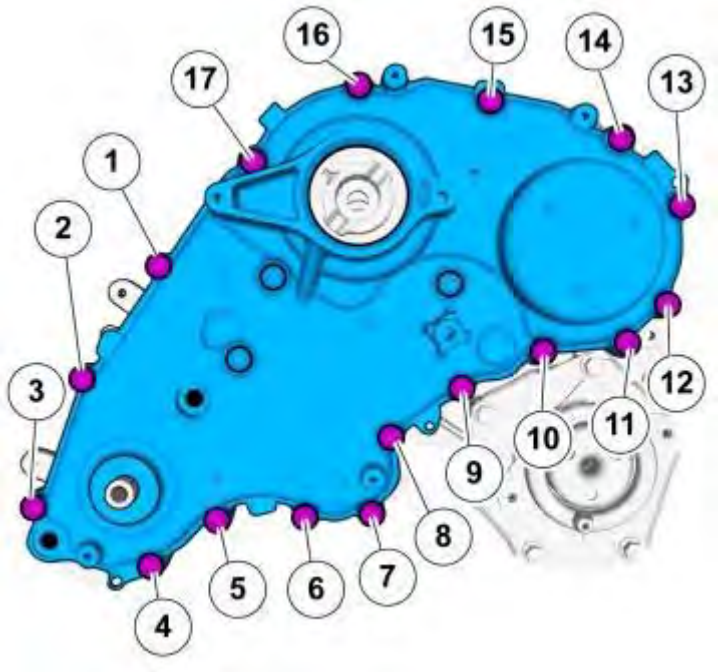

Fig. 291: Tightening Screws In Illustrated Order
Courtesy of VOLVO CARS CORPORATION

Tighten the screws in the order illustrated.

M7. See **TIGHTENING TORQUE**

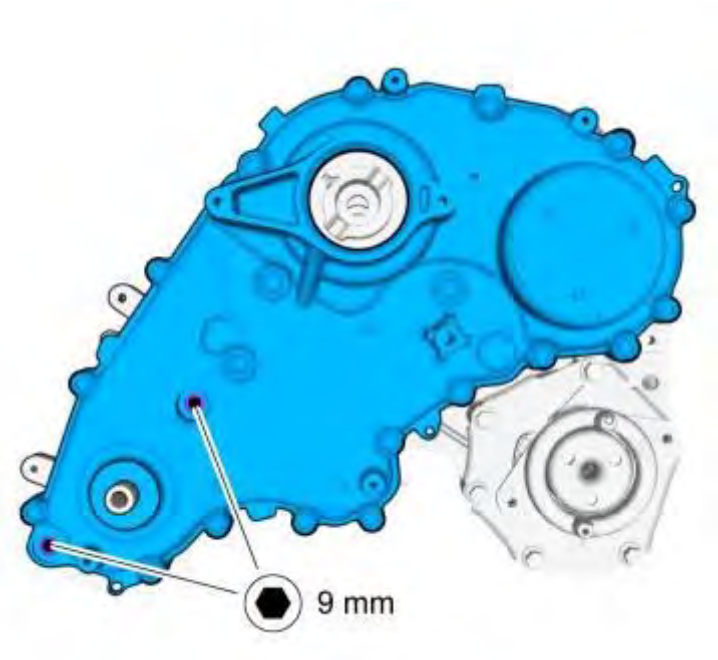

Fig. 292: Screw In The Adjusters Until Contact Is Made
Courtesy of VOLVO CARS CORPORATION

Screw in the adjuster screws until they make contact.

Inner timing cover adjuster screw. See **TIGHTENING TORQUE**

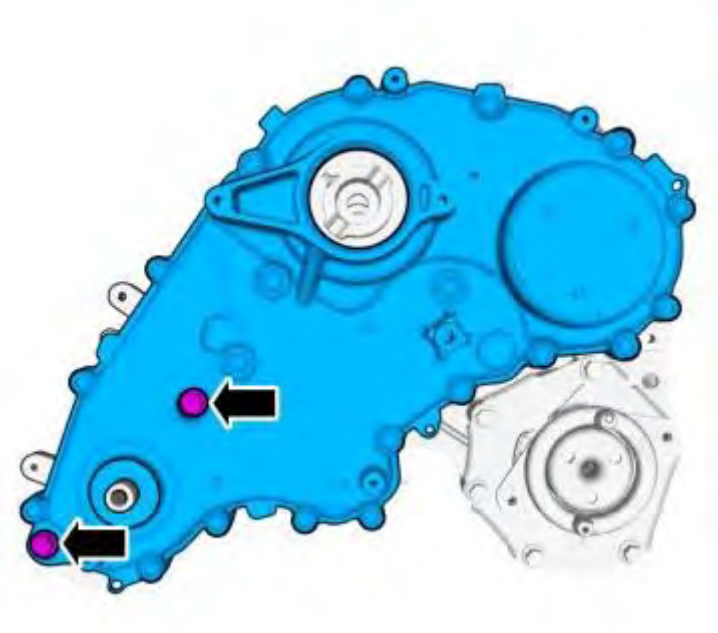

Fig. 293: Installing 2 Screws
Courtesy of VOLVO CARS CORPORATION

M8. See **TIGHTENING TORQUE**

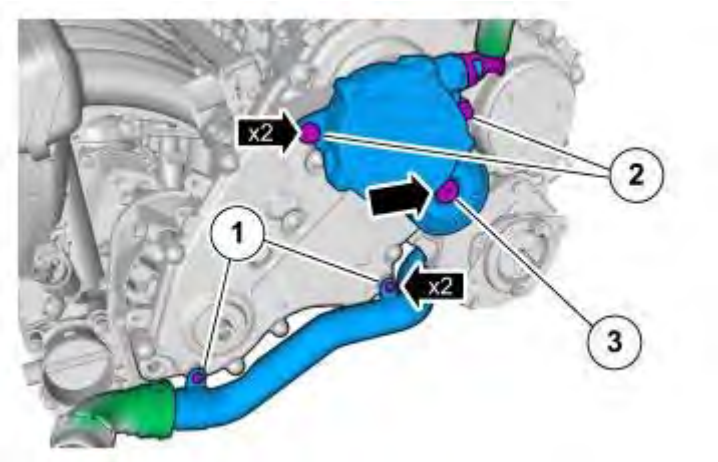

Fig. 294: Remove/Install Components
Courtesy of VOLVO CARS CORPORATION

Install the following items:

- M6. See **TIGHTENING TORQUE**
- M7. See **TIGHTENING TORQUE**
- M8. See **TIGHTENING TORQUE**

Install the following items:

- the drive wheel and new seal. See **INTERMEDIATE SHAFT GASKET, AUXILIARIES SIDE**
- auxiliary brackets. See **AUXILIARY BRACKETS**.

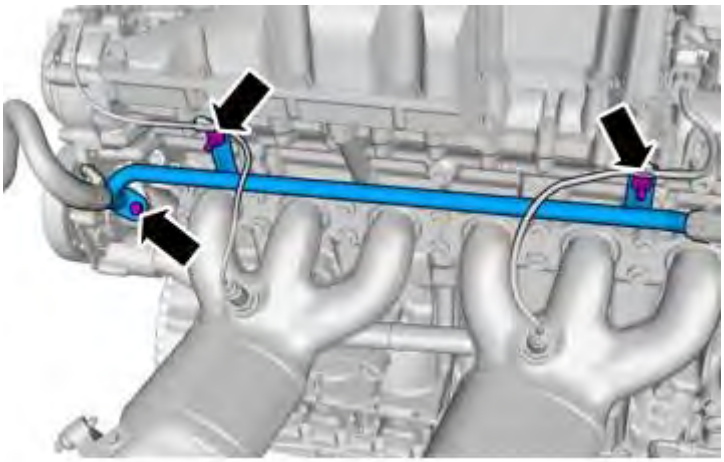

Fig. 295: Removing Bolts Securing Tube
Courtesy of VOLVO CARS CORPORATION

M7. See **TIGHTENING TORQUE**

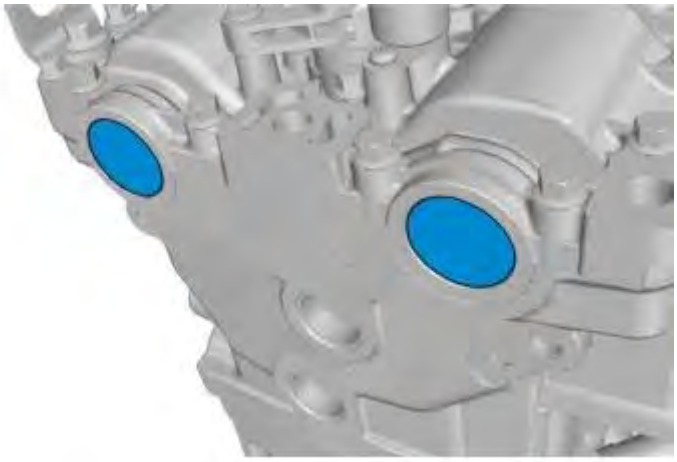

Fig. 296: New Seals Installed
Courtesy of VOLVO CARS CORPORATION

Install new seals.

Fill the cooling system. See **COOLING SYSTEM - DRAINING, CHARGING AND BLEEDING** .

INTERMEDIATE SHAFT GASKET, ALTERNATOR SIDE

Special tools	
	T9997258 ANVIL BLOCK **Tool number:** T9997258

	Tool description: ANVIL BLOCK **Tool boards:**
	T9997259 PULLER **Tool number:** T9997259 **Tool description:** PULLER **Tool boards:**
	T9995919 PULLER (SEAL-DRIVE PINION, CAM-CRANKSHAFT)B200-6304 **Tool number:** T9995919 **Tool description:** PULLER (SEAL-DRIVE PINION, CAM-CRANKSHAFT)B200-6304 **Tool boards:**
	T9997260 DRIFT **Tool number:** T9997260 **Tool description:** DRIFT **Tool boards:**

Remove the generator (GEN). See **GENERATOR (2007, 2008)** .

Fig. 297: Identifying Intermediate Shaft
Courtesy of VOLVO CARS CORPORATION

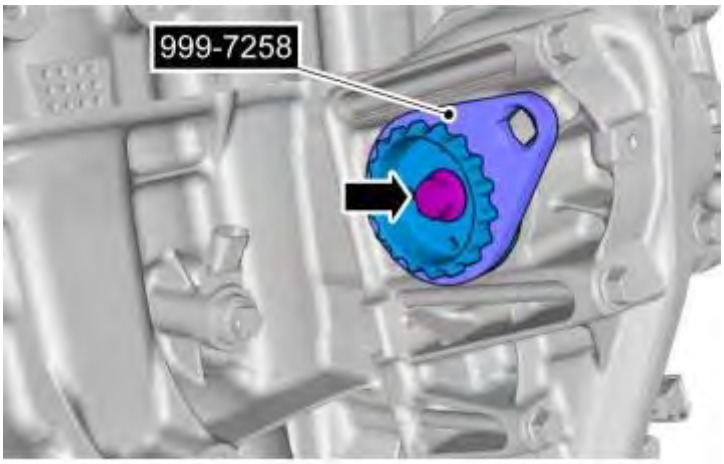

Fig. 298: Installing Intermediate Shaft Drive Using Counterhold 9997258

Courtesy of VOLVO CARS CORPORATION

see **9997258**

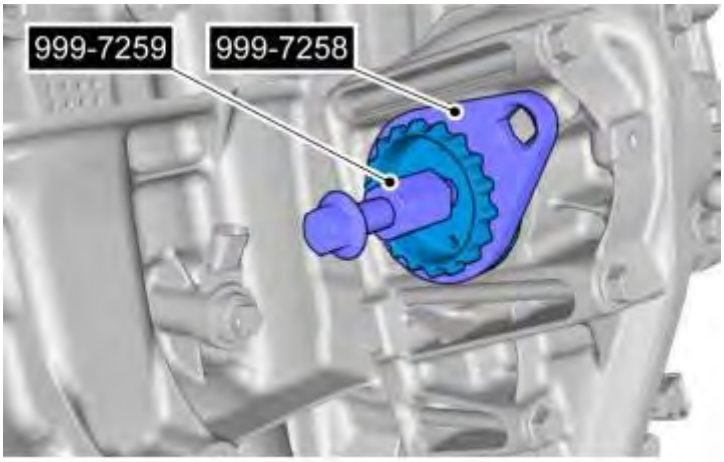

Fig. 299: Removing Drive with Puller 9997259 and Counterhold
Courtesy of VOLVO CARS CORPORATION

Attach the following items:

- see **9997258**
- see **9997259**

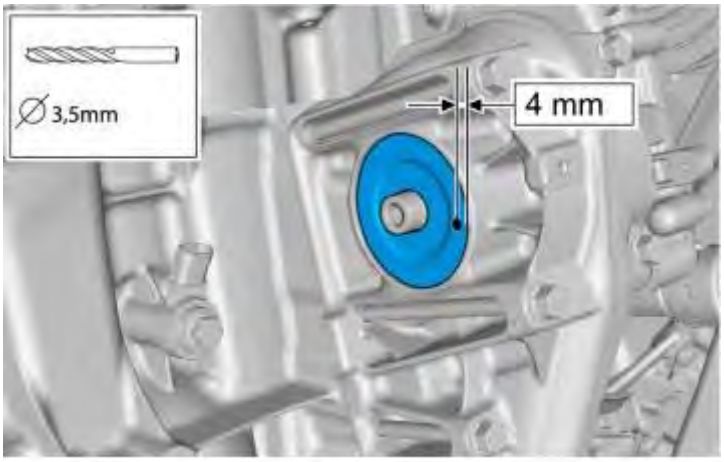

Fig. 300: Drilling Hole in Seal Edge
Courtesy of VOLVO CARS CORPORATION

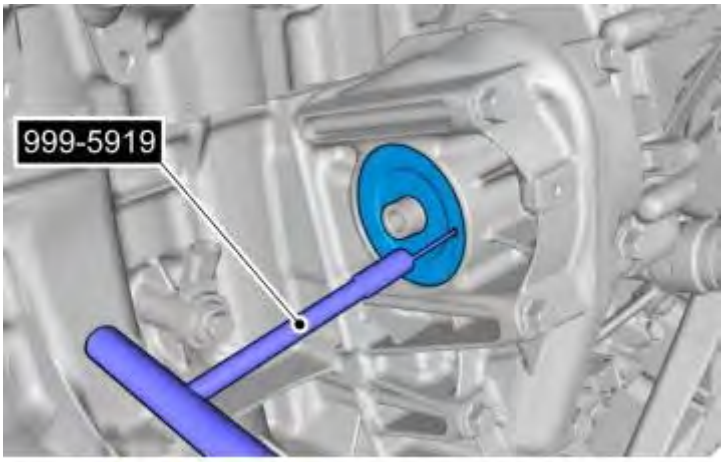

Fig. 301: Pulling Seal with Tool 9995919
Courtesy of VOLVO CARS CORPORATION

see **9995919**

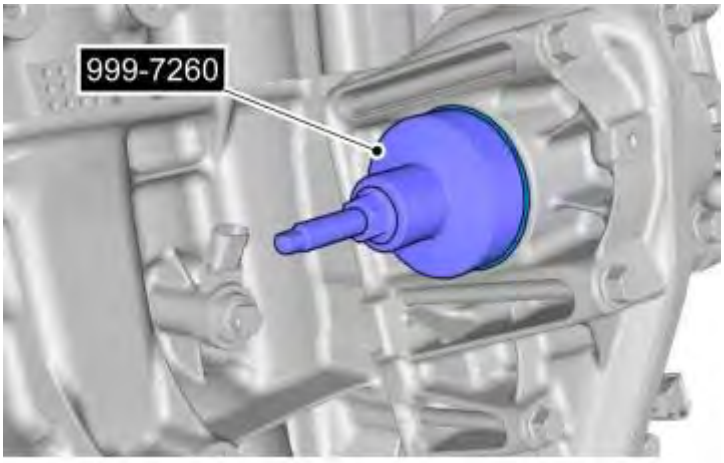

Fig. 302: Installing Seal With Tool 9997260
Courtesy of VOLVO CARS CORPORATION

see **9997260**

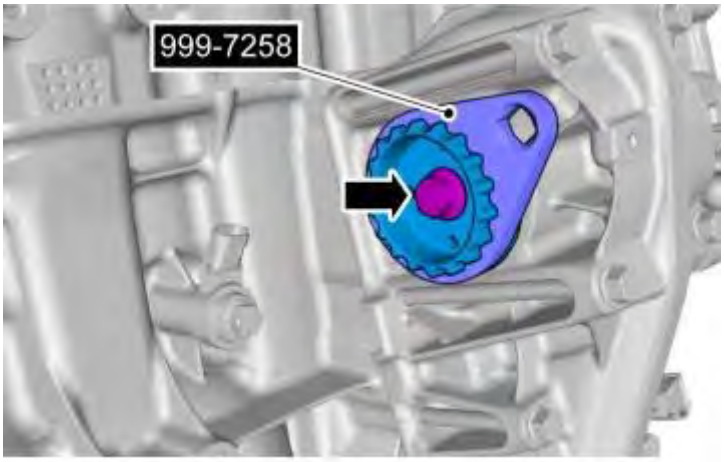

Fig. 303: Installing Intermediate Shaft Drive Using Counterhold 9997258
Courtesy of VOLVO CARS CORPORATION

see **9997258**

Intermediate shaft, alternator side. See **TIGHTENING TORQUE**

Fig. 304: Installing Drive Adapter
Courtesy of VOLVO CARS CORPORATION

Install the alternator. See **GENERATOR (2007, 2008)** .

INTERMEDIATE SHAFT GASKET, AUXILIARIES SIDE

Special tools
T9995760 ANVIL BLOCK (REMOVE/INSTALL/FREEWHEEL GENERATOR) BOSCH, DENSO **Tool number:** T9995760 **Tool description:** ANVIL BLOCK (REMOVAL/INSTALL/FREEWHEEL GENERATOR) BOSCH, DENSO **Tool boards:**

	T9512926 BIT TORX 50 **Tool number:** T9512926 **Tool description:** BIT TORX 50 **Tool boards:**
	T9997265 DRIFT **Tool number:** T9997265 **Tool description:** DRIFT **Tool boards:**

Remove the auxiliaries brackets. See **AUXILIARY BRACKETS**.

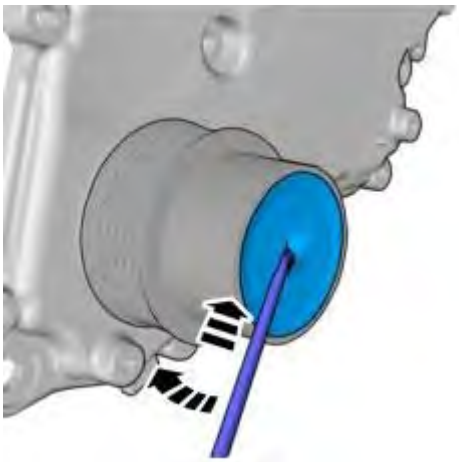

Fig. 305: Removing/InstallingCap
Courtesy of VOLVO CARS CORPORATION

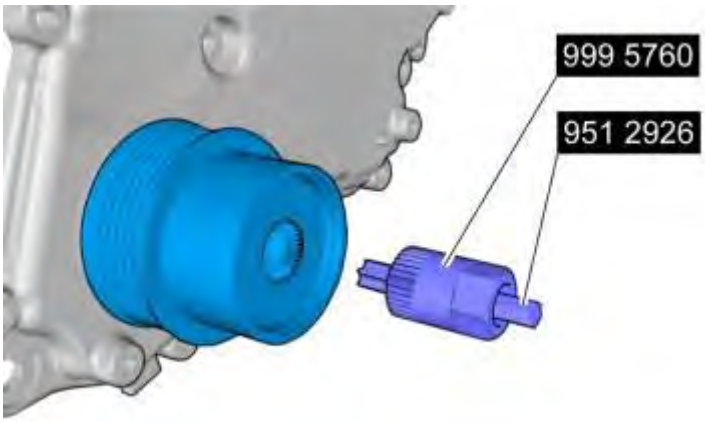

Fig. 306: Removing/Installing Freewheel/Pulley
Courtesy of VOLVO CARS CORPORATION

see **9995760** and see **9512926** .

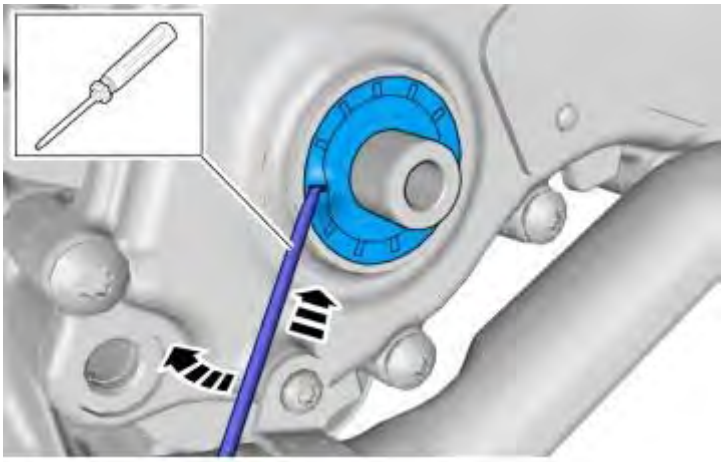

Fig. 307: Prying Out Seal
Courtesy of VOLVO CARS CORPORATION

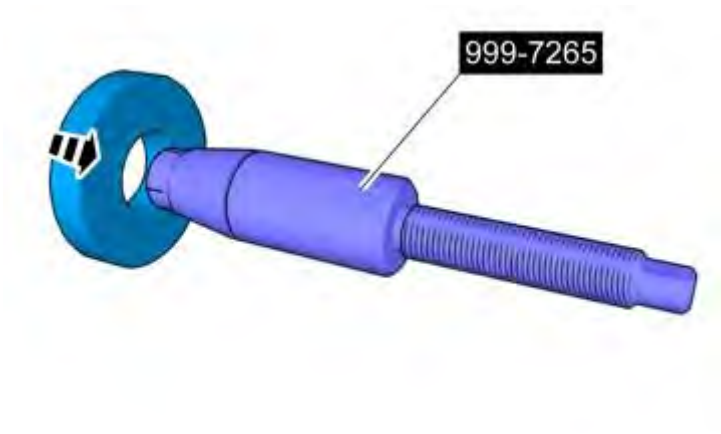

Fig. 308: Identifying Seal Installing Tool 9997265
Courtesy of VOLVO CARS CORPORATION

see **9997265** .

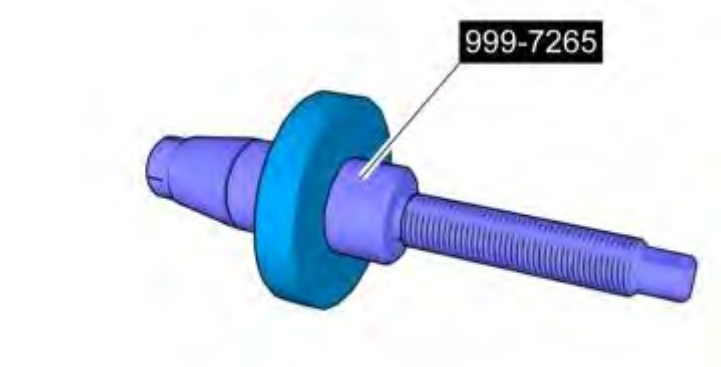

Fig. 309: Seal Placement on Tool
Courtesy of VOLVO CARS CORPORATION

see **9997265** .

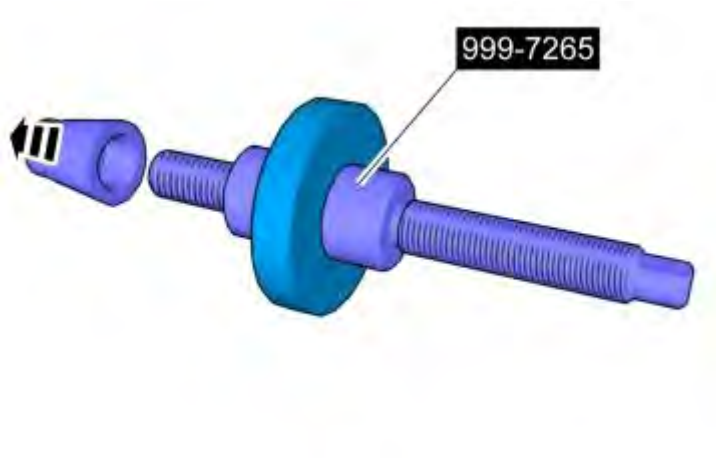

Fig. 310: Installing Tool onto Shaft
Courtesy of VOLVO CARS CORPORATION

see **9997265** .

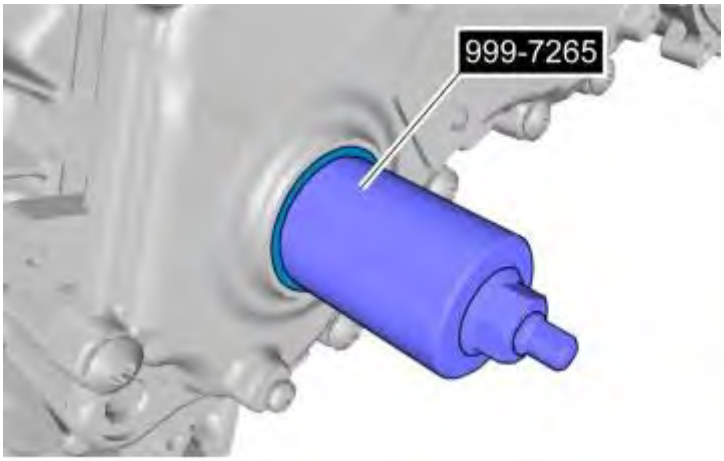

Fig. 311: Pressing in Seal with Tool 9997265
Courtesy of VOLVO CARS CORPORATION

see **9997265** .

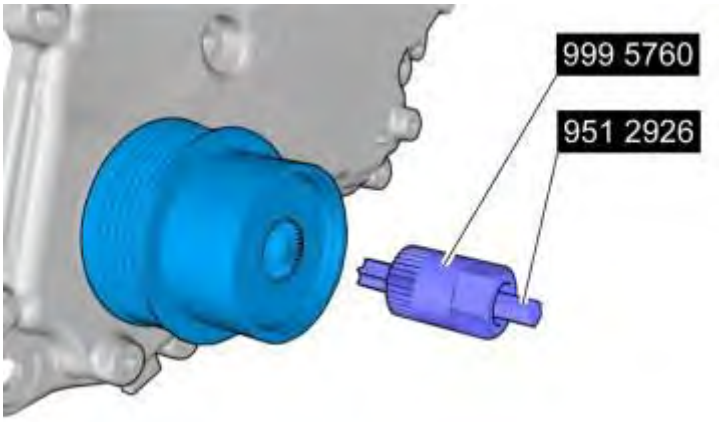

Fig. 312: Removing/Installing Freewheel/Pulley
Courtesy of VOLVO CARS CORPORATION

see **9995760** and see **9512926** .

Auxiliaries belt pulley. See **TIGHTENING TORQUE** .

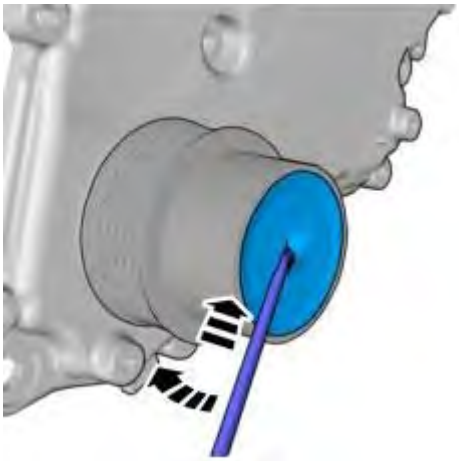

Fig. 313: Removing/InstallingCap
Courtesy of VOLVO CARS CORPORATION

OUTER TIMING COVER GASKET

Special tools
T9995760 ANVIL BLOCK (REMOVE/INSTALL/FREEWHEEL GENERATOR) BOSCH, DENSO **Tool number:** T9995760 **Tool description:** ANVIL BLOCK (REMOVAL/INSTALL/FREEWHEEL GENERATOR) BOSCH, DENSO **Tool boards:**
T9512926 BIT TORX 50 **Tool number:** T9512926

	Tool description: BIT TORX 50 **Tool boards:**
	T9997266 POSITION SENSOR **Tool number:** T9997266 **Tool description:** POSITION SENSOR **Tool boards:**
	T9997267 POSITION SENSOR **Tool number:** T9997267 **Tool description:** POSITION SENSOR **Tool boards:**

Remove the auxiliaries brackets. See **AUXILIARY BRACKETS**.

Drain the cooling system. See **COOLING SYSTEM - DRAINING, CHARGING AND BLEEDING** .

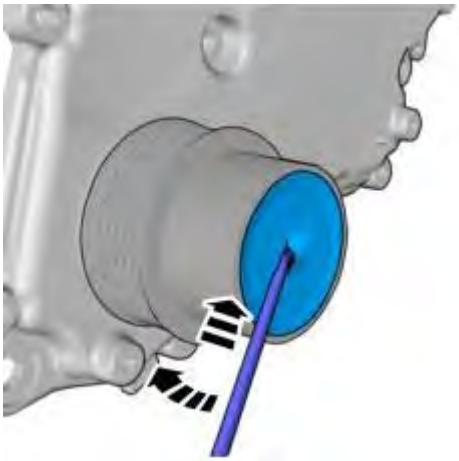

Fig. 314: Removing/InstallingCap
Courtesy of VOLVO CARS CORPORATION

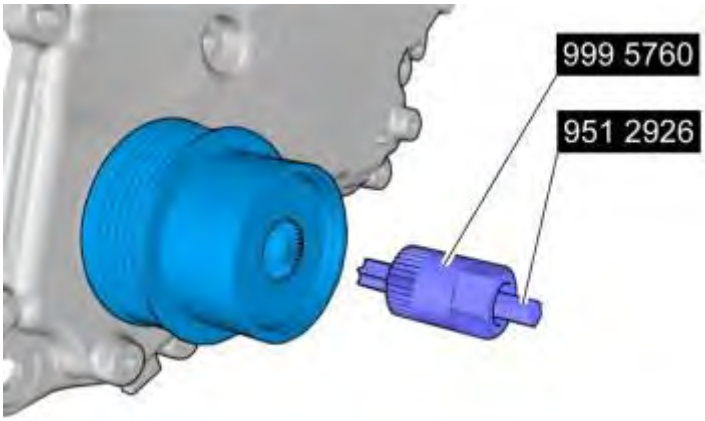

Fig. 315: Removing/Installing Freewheel/Pulley
Courtesy of VOLVO CARS CORPORATION

see **9995760** and see **9512926** .

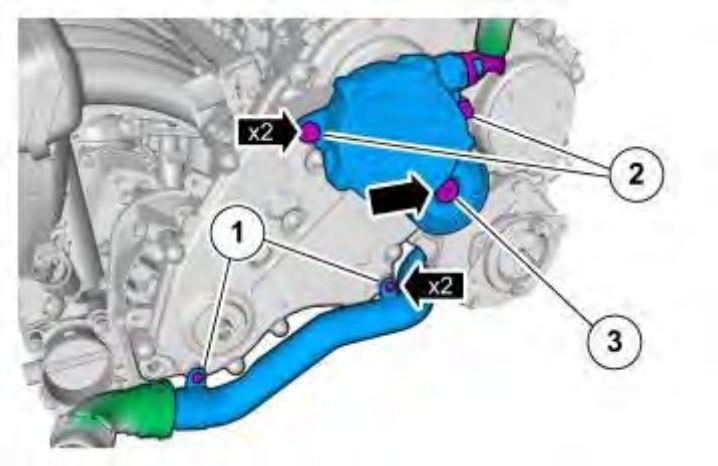

Fig. 316: Remove/Install Components
Courtesy of VOLVO CARS CORPORATION

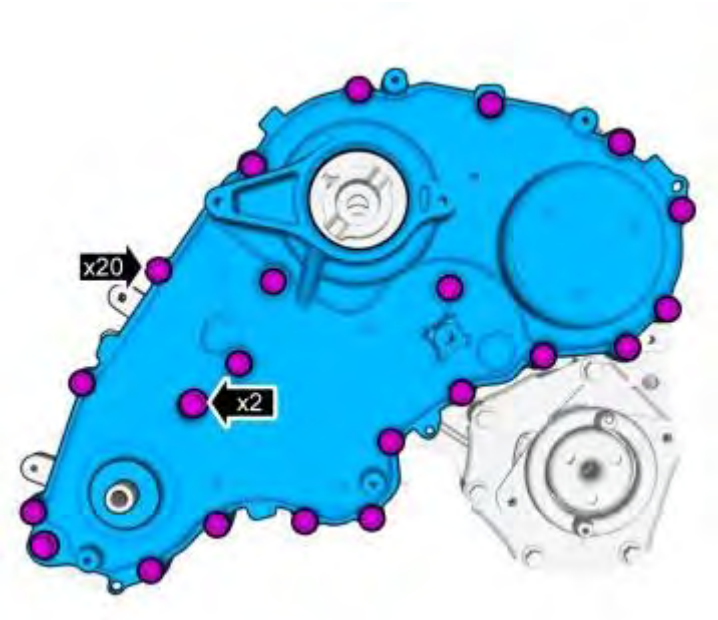

Fig. 317: Identifying Cover Bolts
Courtesy of VOLVO CARS CORPORATION

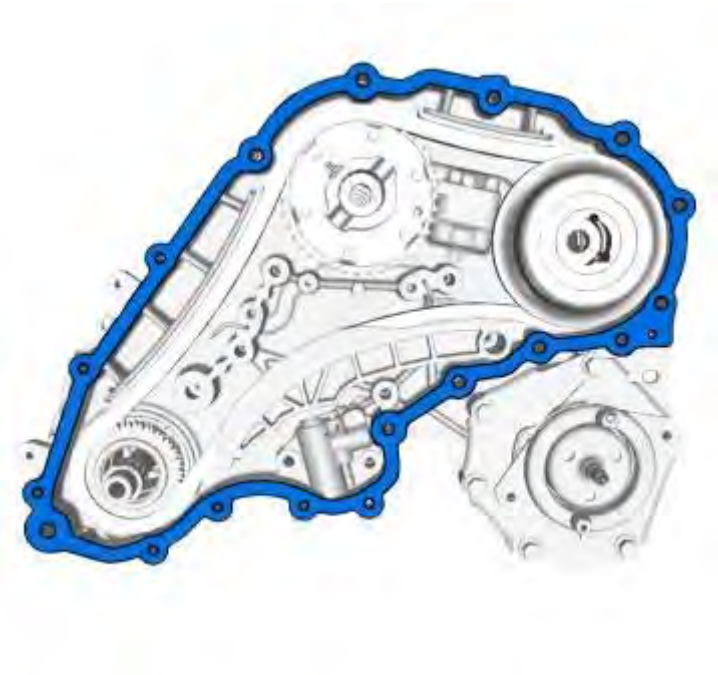

Fig. 318: Removing and Replacing the Gasket
Courtesy of VOLVO CARS CORPORATION

Remove the gasket and replace with a new one.

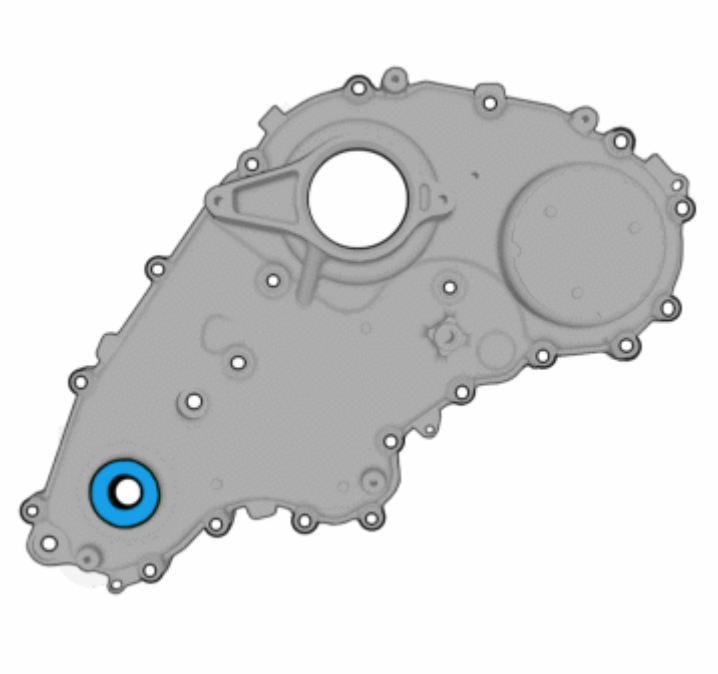

Fig. 319: Identifying Intermediate Shaft Seal
Courtesy of VOLVO CARS CORPORATION

Remove and scrap the intermediate shaft seal.

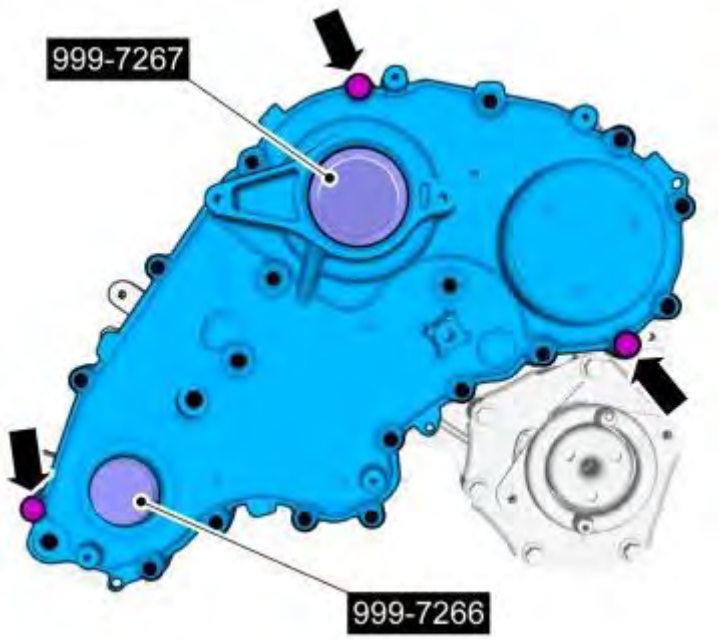

Fig. 320: Installing The Cover Using Guide Tools
Courtesy of VOLVO CARS CORPORATION

Use the tool and 3 screws in the indicated spot to guide the cover and gasket in the right position.

see **9997266** and see **9997267** .

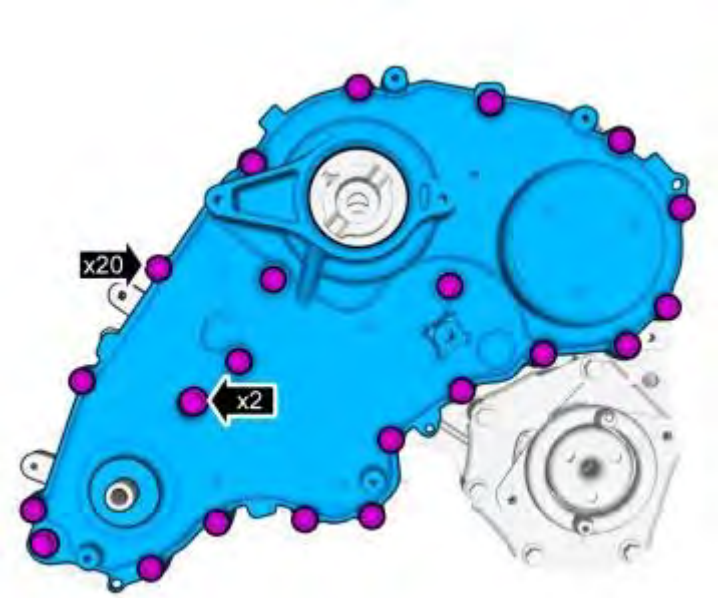

Fig. 321: Identifying Cover Bolts
Courtesy of VOLVO CARS CORPORATION

Insert all screws - 20 M7 screws and 2 M8 screws. Do not tighten.

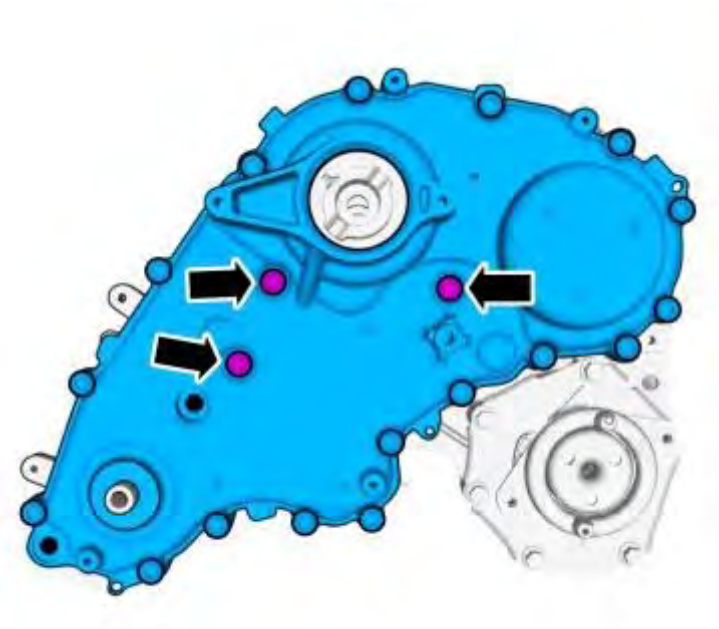

Fig. 322: Tightening Indicated Bolts
Courtesy of VOLVO CARS CORPORATION

M7. See **TIGHTENING TORQUE**

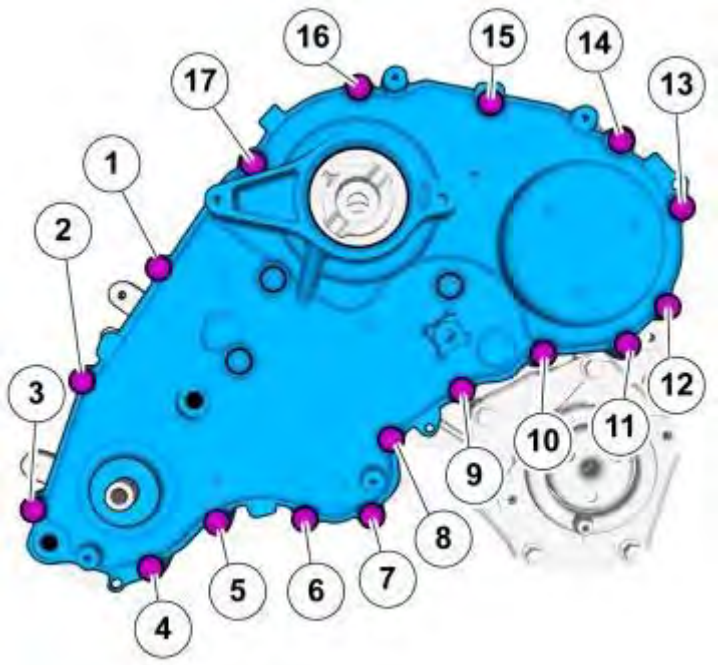

Fig. 323: Tightening Screws In Illustrated Order
Courtesy of VOLVO CARS CORPORATION

Tighten the screws in the order illustrated.

M7. See **TIGHTENING TORQUE**

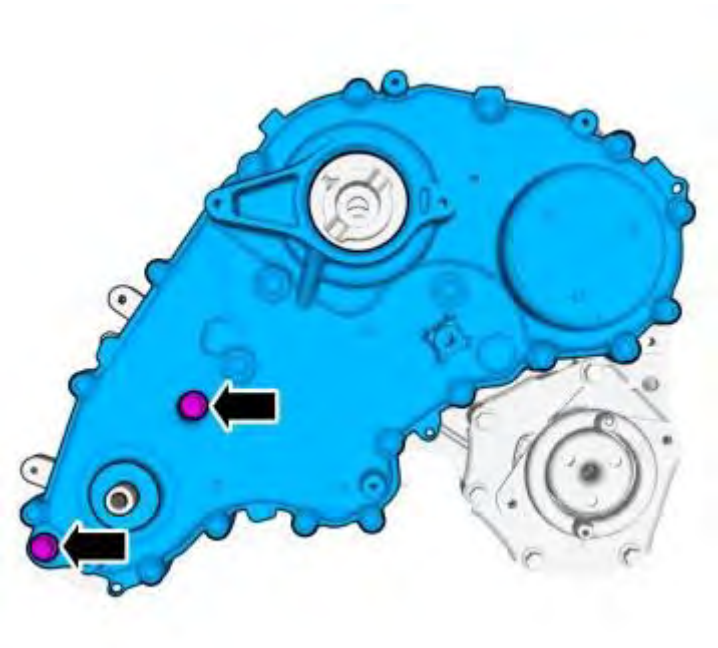

Fig. 324: Installing 2 Screws
Courtesy of VOLVO CARS CORPORATION

M8. See **TIGHTENING TORQUE**

Fig. 325: Remove/Install Components
Courtesy of VOLVO CARS CORPORATION

Install the following items:

- M6. See **TIGHTENING TORQUE**

- M7. See **TIGHTENING TORQUE**
- M8. See **TIGHTENING TORQUE**

Install the drive wheel and new seal. See **INTERMEDIATE SHAFT GASKET, AUXILIARIES SIDE**.

Install the auxiliaries brackets. See **AUXILIARY BRACKETS**.

Charge the cooling system. See **COOLING SYSTEM - DRAINING, CHARGING AND BLEEDING** .

REAR END ACCESSORY DRIVE

Special tools	
	T9995670 PLIERS (REMOVING VALVES/CAMSHAFT COVER) B4184-B6304 **Tool number:** T9995670 **Tool description:** PLIERS (REMOVING VALVES/CAMSHAFT COVER) B4184-B6304 **Tool boards:**
	T9997315 PULLER **Tool number:** T9997315 **Tool description:** PULLER **Tool boards:**
	T9997316 PUNCH **Tool number:** T9997316 **Tool description:** DRIFT **Tool boards:**

Materials	
Designation	**Part number**
Liquid gasket	1161771
Thread sealant	1161056

REMOVE THE FOLLOWING COMPONENTS:

- Gasket, inner timing cover, see **GASKET, INNER TIMING COVER**
- alternator, see **GENERATOR (2007, 2008)**

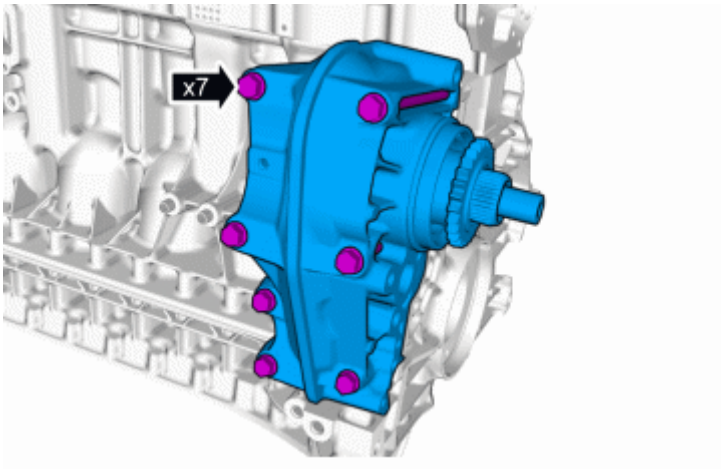

Fig. 326: Remove/Install Component Bolts
Courtesy of VOLVO CARS CORPORATION

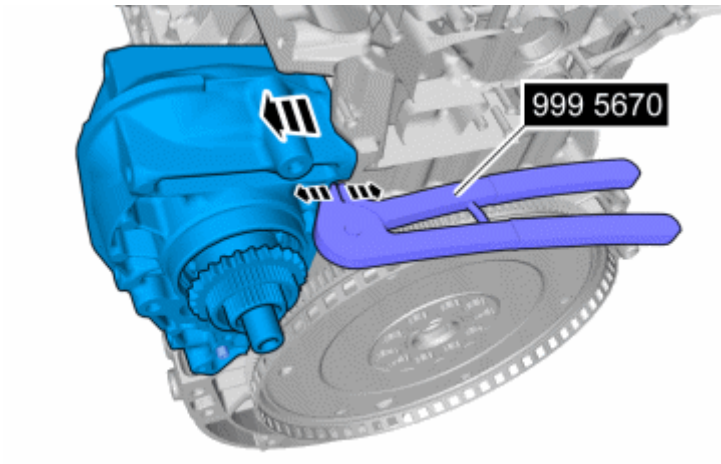

Fig. 327: Separating Component Using Tool 9995670
Courtesy of VOLVO CARS CORPORATION

CAUTION: The component being removed is paired to the component it is installed to. If either component is damaged, install new components.

CAUTION: Take extra care when handling the components.

see **9995670**

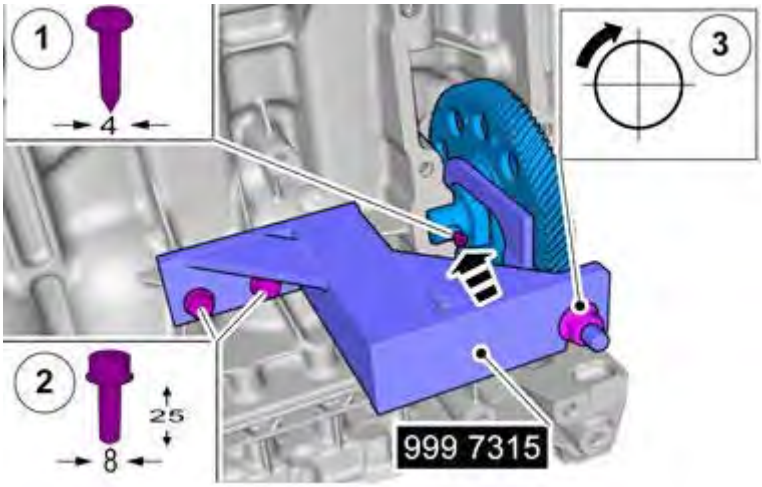

Fig. 328: Identifying Pulling Tool 9997315
Courtesy of VOLVO CARS CORPORATION

CAUTION: Take extra care when handling the components.

see **9997315**

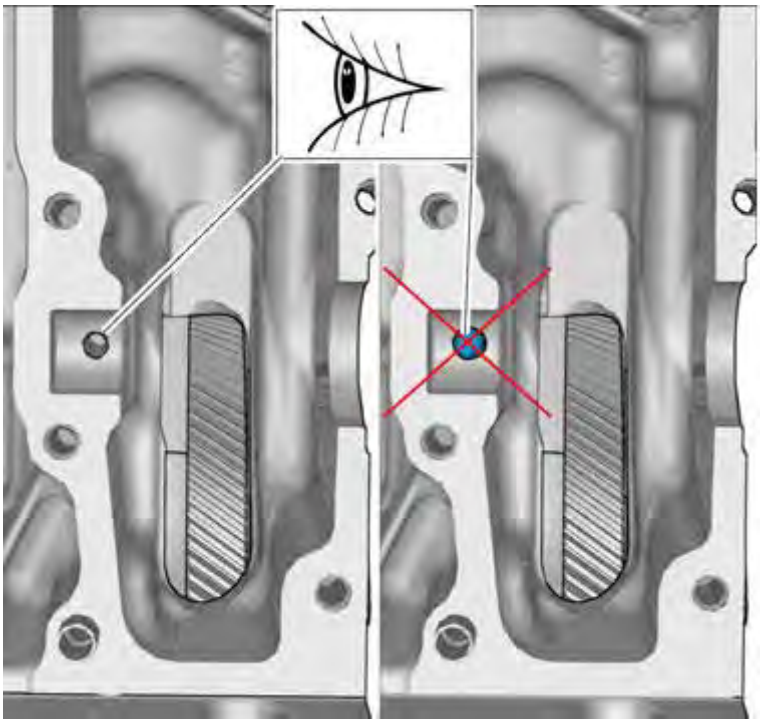

Fig. 329: Visual Inspecton of Passage
Courtesy of VOLVO CARS CORPORATION

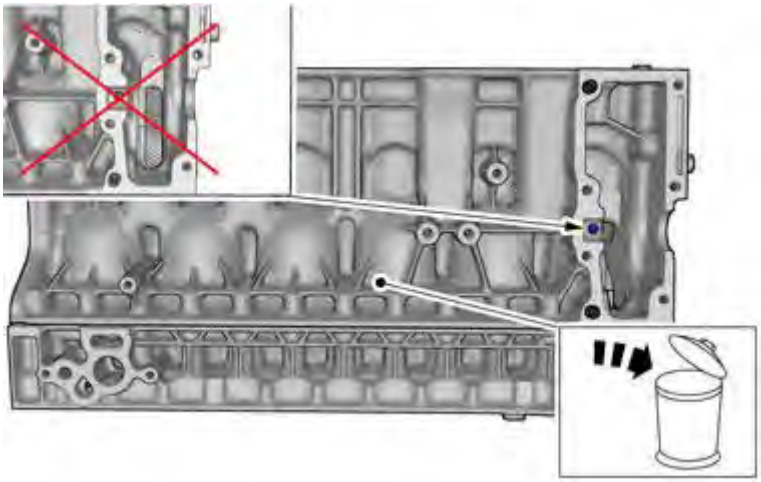

Fig. 330: Passage Must Be Clear
Courtesy of VOLVO CARS CORPORATION

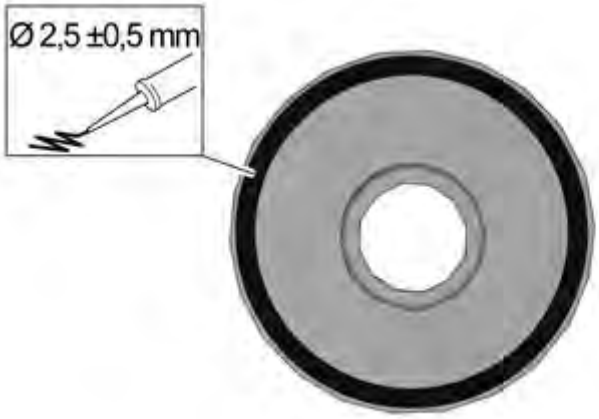

Fig. 331: Apply Liquid Sealer 1161771
Courtesy of VOLVO CARS CORPORATION

Use: Liquid gasket, 1161771

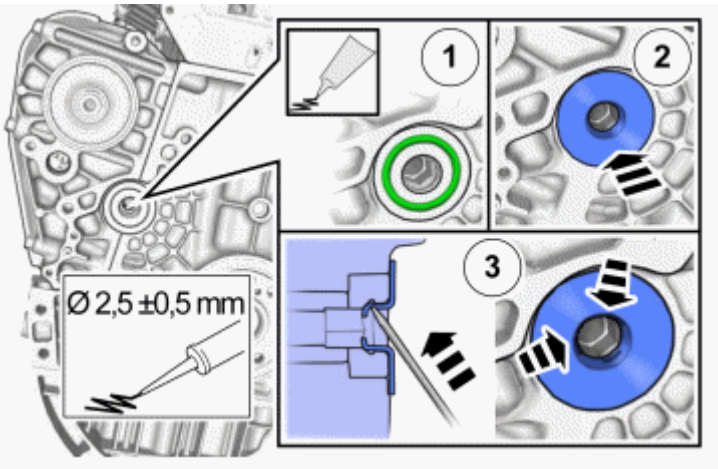

Fig. 332: Apply Liquid gasket, 1161771
Courtesy of VOLVO CARS CORPORATION

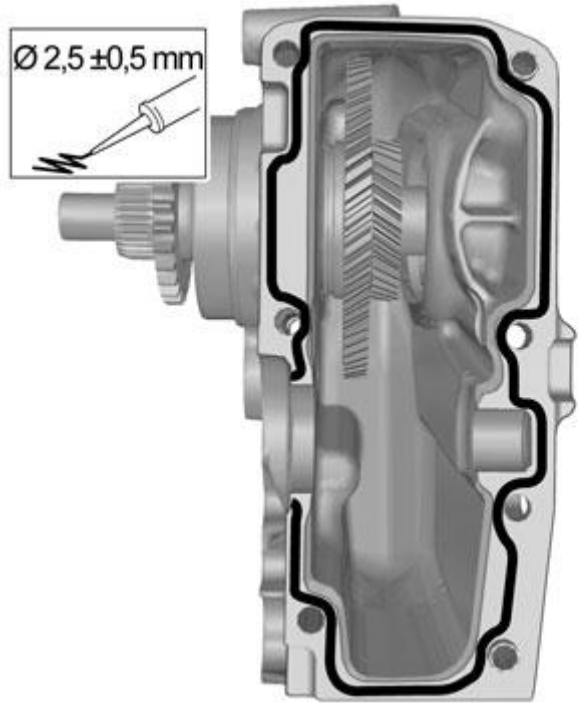

Fig. 333: Apply Liquid gasket, 1161771
Courtesy of VOLVO CARS CORPORATION

Use: Liquid gasket, 1161771

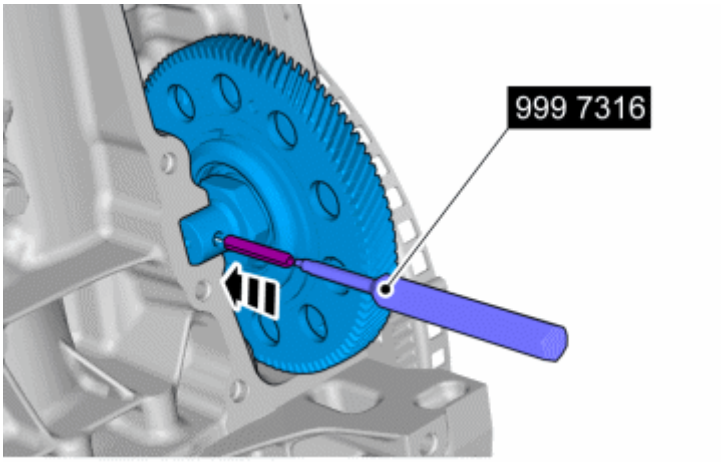

Fig. 334: Installing Pin with Tool 9997316
Courtesy of VOLVO CARS CORPORATION

CAUTION: Take extra care when handling the components.

see **9997316**

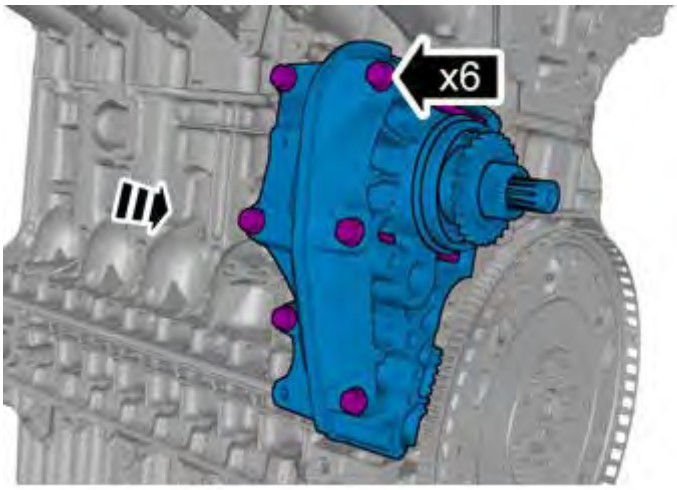

Fig. 335: Bolts Only Finger Tight
Courtesy of VOLVO CARS CORPORATION

NOTE: Only tighten the bolt finger tight at this stage.

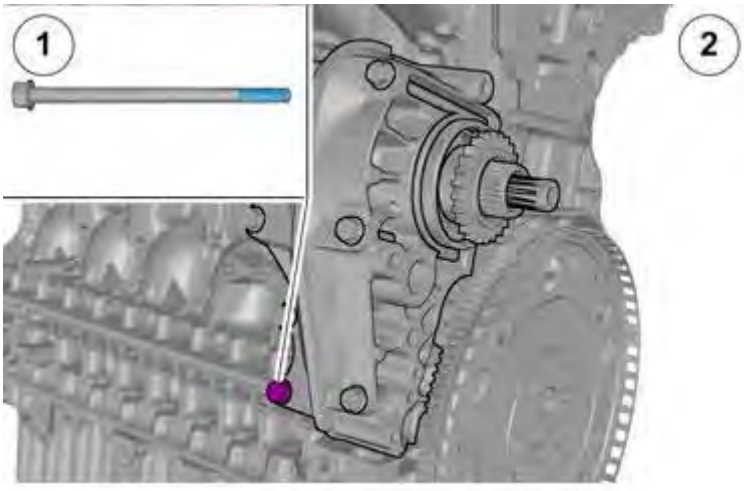

Fig. 336: Apply Thread sealant, 1161056
Courtesy of VOLVO CARS CORPORATION

NOTE: Only tighten the bolt finger tight at this stage.

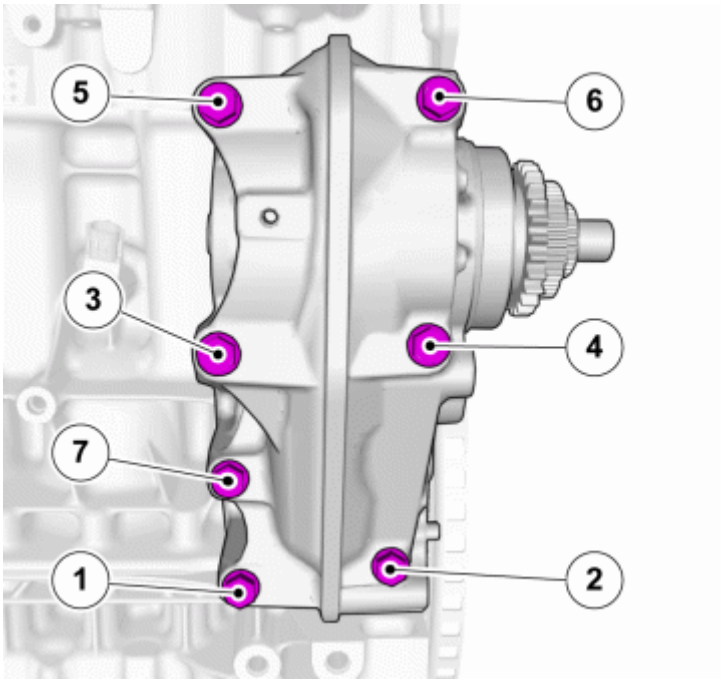

Fig. 337: Identifying Torque Sequence
Courtesy of VOLVO CARS CORPORATION

Torque: Gear housing

• Stage 1: 10 Nm

• Stage 2: 24 Nm

INSTALL THE FOLLOWING ITEMS:

- alternator, see **GENERATOR (2007, 2008)**
- gasket, inner timing cover, see **GASKET, INNER TIMING COVER**

TENSIONER ACCESSORY DRIVE BELT

NOTE: Removal steps in this procedure may contain installation details.

Remove the battery. See **BATTERY, DISCONNECTING**

Fig. 338: Identifying Cover Removal
Courtesy of VOLVO CARS CORPORATION

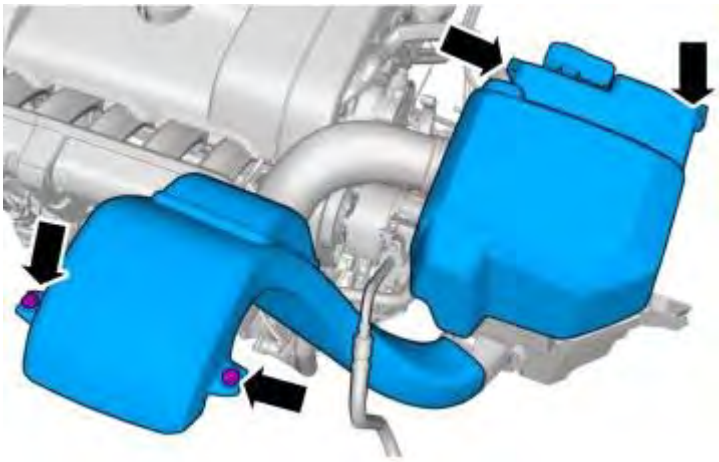

Fig. 339: Removing Air Intake and Electrical Center Cover
Courtesy of VOLVO CARS CORPORATION

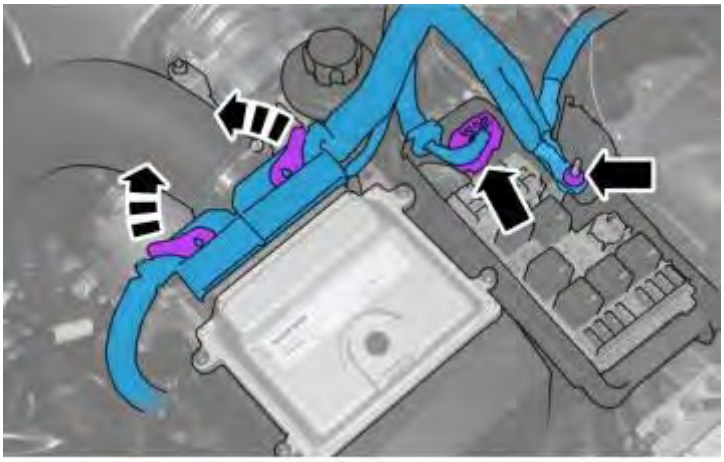

Fig. 340: Identifying Battery Leads
Courtesy of VOLVO CARS CORPORATION

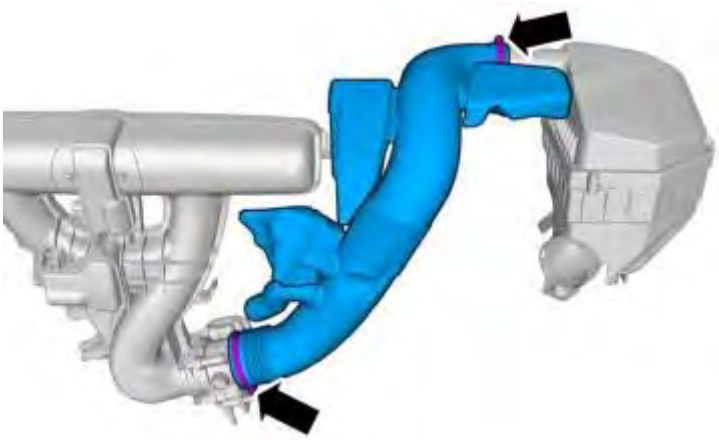

Fig. 341: Locating Air Tube Clamps
Courtesy of VOLVO CARS CORPORATION

Fig. 342: Identifying Air Filter Housing
Courtesy of VOLVO CARS CORPORATION

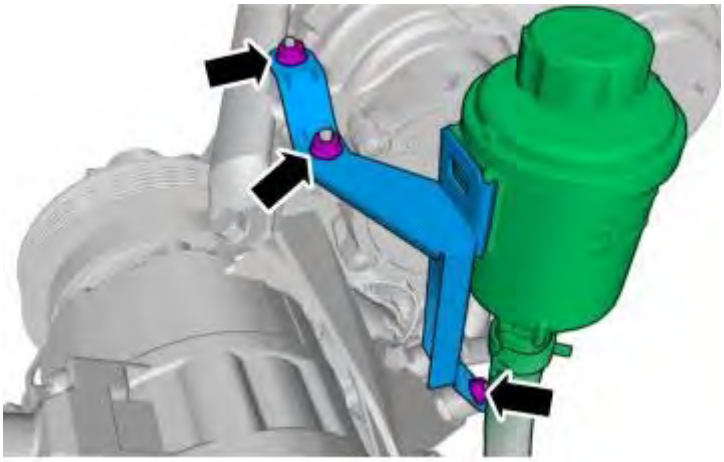

Fig. 343: Identifying Reservoir Bracket and Nuts
Courtesy of VOLVO CARS CORPORATION

M6. See **TIGHTENING TORQUE**

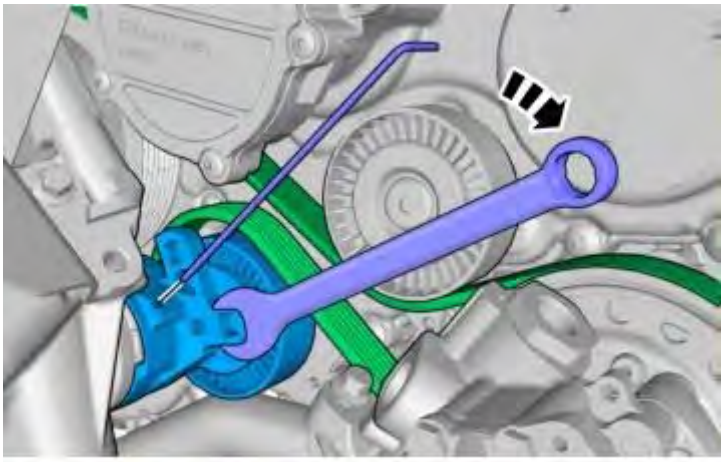

Fig. 344: Locking The Tensioner In Position
Courtesy of VOLVO CARS CORPORATION

, slacken the tensioner and relive the tension on the belt.

and lock the tensioner in position.

When installing, check the belt's position on all belt grooves.

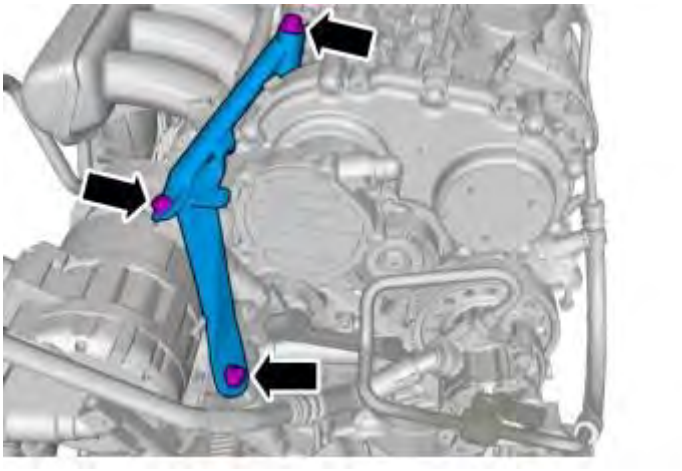

Fig. 345: Locating Brace
Courtesy of VOLVO CARS CORPORATION

M8. See **TIGHTENING TORQUE**

M10. See **TIGHTENING TORQUE**

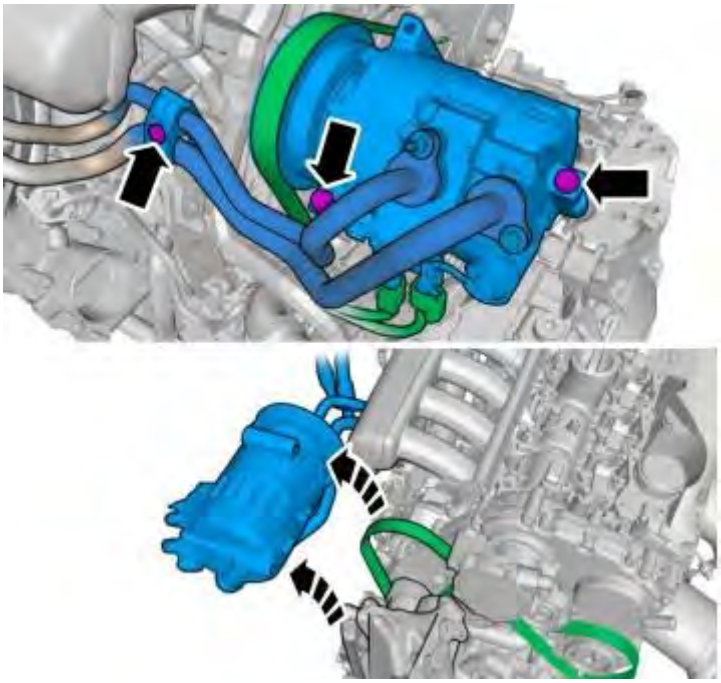

Fig. 346: Removing A/C Compressor
Courtesy of VOLVO CARS CORPORATION

M8. See **TIGHTENING TORQUE**

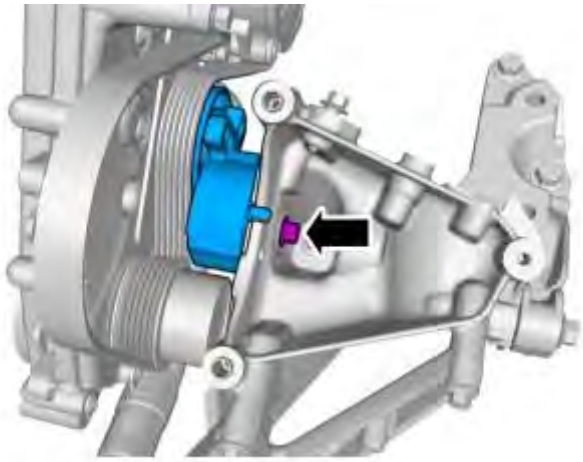

Fig. 347: Removing Bolt
Courtesy of VOLVO CARS CORPORATION

M8. See **TIGHTENING TORQUE**

To install, reverse the removal procedure

VARIABLE CAMSHAFT TIMING OIL CONTROL SOLENOID

NOTE: Removal steps in this procedure may contain installation details.

Fig. 348: Identifying Cover Removal
Courtesy of VOLVO CARS CORPORATION

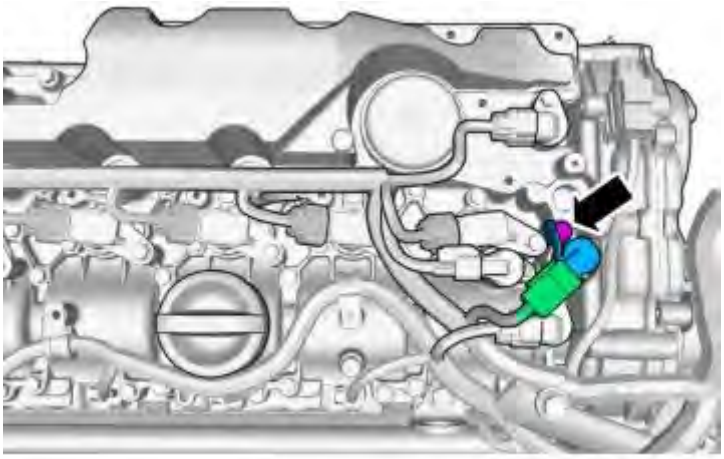

Fig. 349: Locating Retaining Bolt
Courtesy of VOLVO CARS CORPORATION

M6. See **TIGHTENING TORQUE**

To install, reverse the removal procedure

VVT UNIT

Special tools	
	T9997257 WRENCH **Tool number:** T9997257 **Tool description:** WRENCH **Tool boards:**
	T9997271 SUPPORT **Tool number:** T9997271 **Tool description:** SUPPORT **Tool boards:**
	T9997261 POSITION SENSOR **Tool number:** T9997261 **Tool description:** POSITION SENSOR **Tool boards:**

Remove the front crankshaft seal. See **CRANKSHAFT FRONT SEAL**

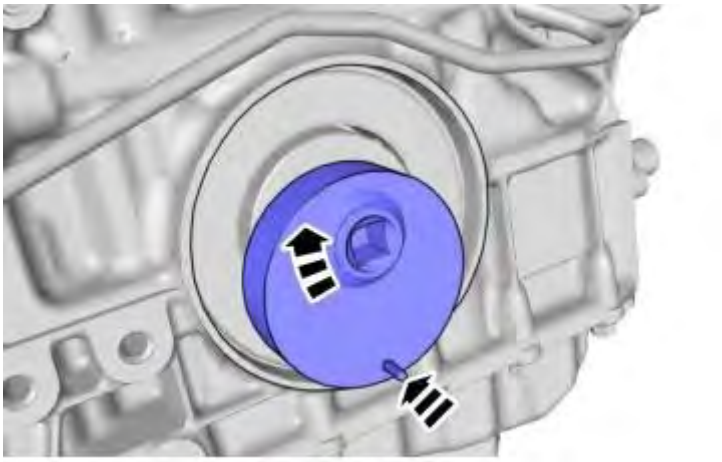

Fig. 350: Identifying Special Tool 9997257 Installed
Courtesy of VOLVO CARS CORPORATION

Rotate the engine to the zero position. see **9997257**

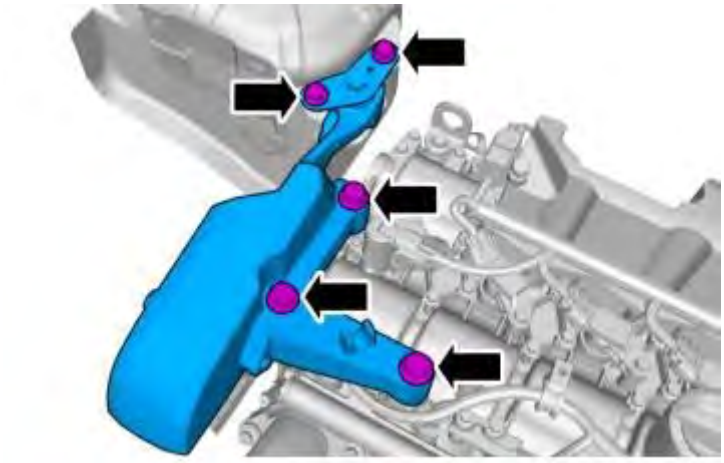

Fig. 351: Removing Bracket Bolts
Courtesy of VOLVO CARS CORPORATION

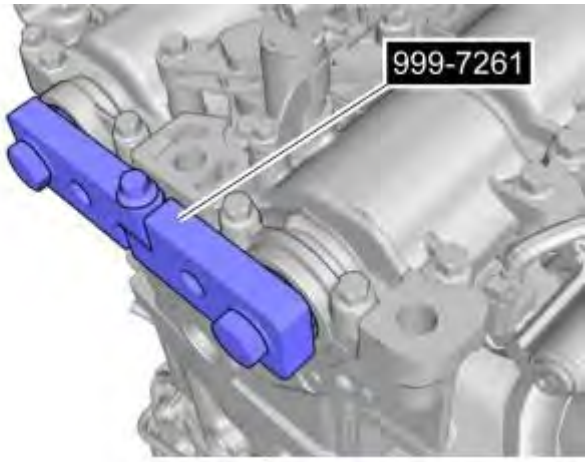

Fig. 352: Locating Special Tools 9997261
Courtesy of VOLVO CARS CORPORATION

see **9997261**

Remove the outer timing cover. See **OUTER TIMING COVER GASKET**

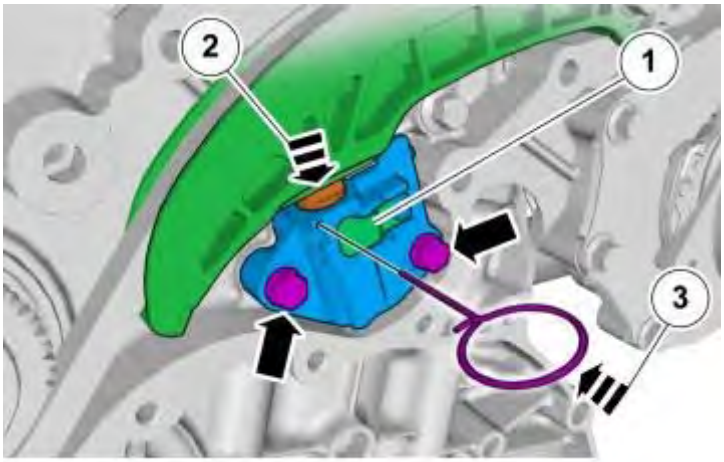

Fig. 353: Compressing and Securing Tensioner
Courtesy of VOLVO CARS CORPORATION

Raise the tensioner's lock plate (1) slightly and press the tensioner together (2). Secure with a steel wire, drill or the like of O 2 mm in the tensioner hole (3).

Fig. 354: Attachment of Special Tools 9997264, 9997263, 9997272
Courtesy of VOLVO CARS CORPORATION

Attach the following items:

- see **9997263**
- see **9997264**
- see **9997272**

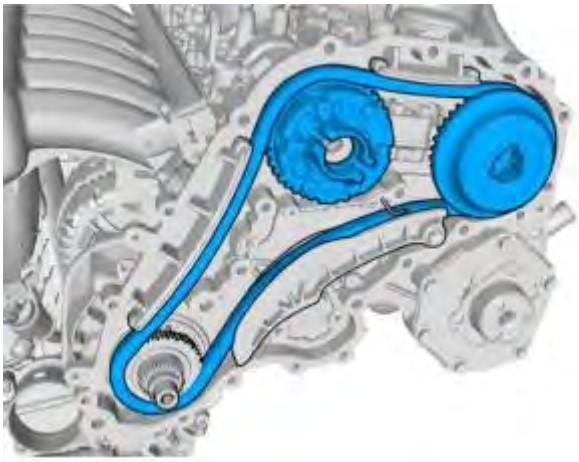

Fig. 355: Remove/Install Components
Courtesy of VOLVO CARS CORPORATION

Fig. 356: Fitting VVT Units Without Chain
Courtesy of VOLVO CARS CORPORATION

Fit the VVT units without chain.

Torque: VVT unit, center screw

30 Nm

Check that the VVT units are locked by turning them in both directions.

Remove the VVT units.

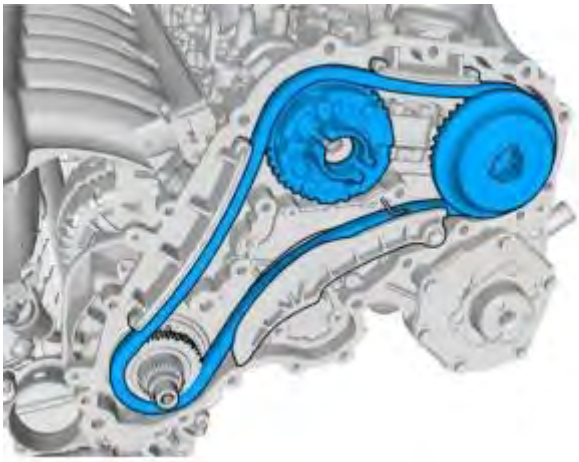

Fig. 357: Remove/Install Components
Courtesy of VOLVO CARS CORPORATION

Install the VVT units together with the chain. Do not tighten.

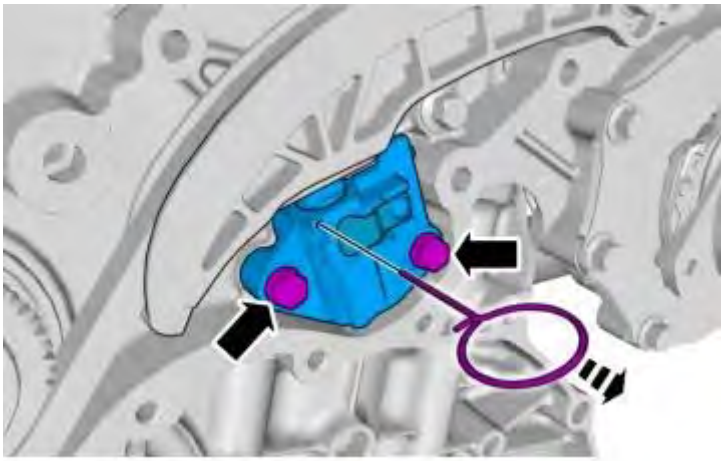

Fig. 358: Installing Tensioner And Releasing
Courtesy of VOLVO CARS CORPORATION

M7. See **TIGHTENING TORQUE**

Fig. 359: Attachment of Special Tools 9997264, 9997263, 9997272
Courtesy of VOLVO CARS CORPORATION

Attach the following items:

- see **9997263**
- see **9997264**
- see **9997272**

Tighten centre bolt, exhaust camshaft. See **TIGHTENING TORQUE**

Tighten centre bolt, inlet camshaft. See **TIGHTENING TORQUE**

Remove the following items:

- see **9997263**
- see **9997264**
- see **9997272**

Install the outer timing cover. See **OUTER TIMING COVER GASKET**.

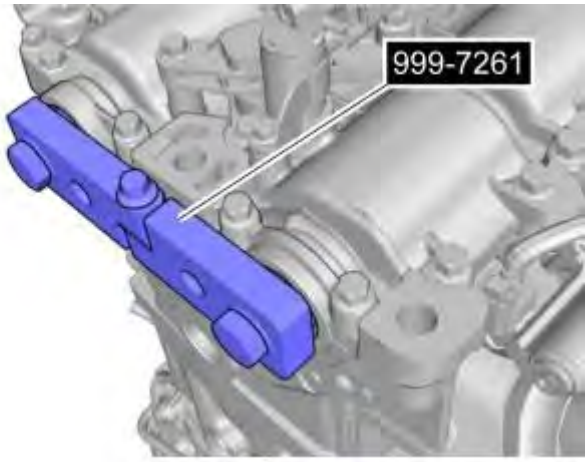

Fig. 360: Locating Special Tools 9997261
Courtesy of VOLVO CARS CORPORATION

Remove special tool see **9997261**

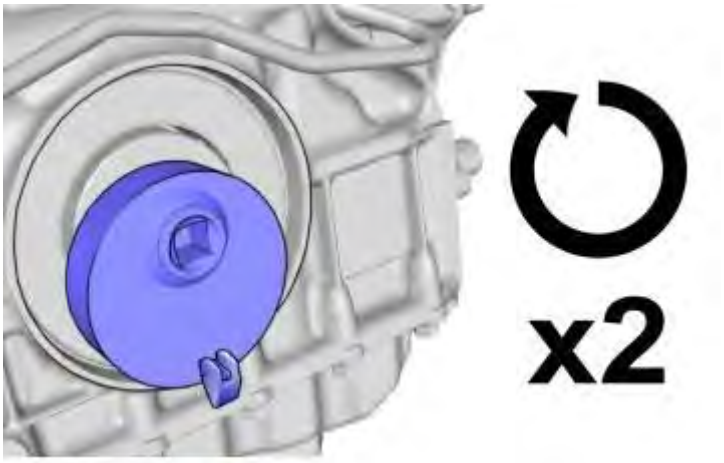

Fig. 361: Rotating Crankshaft Through 2 Revolutions
Courtesy of VOLVO CARS CORPORATION

see **9997257**

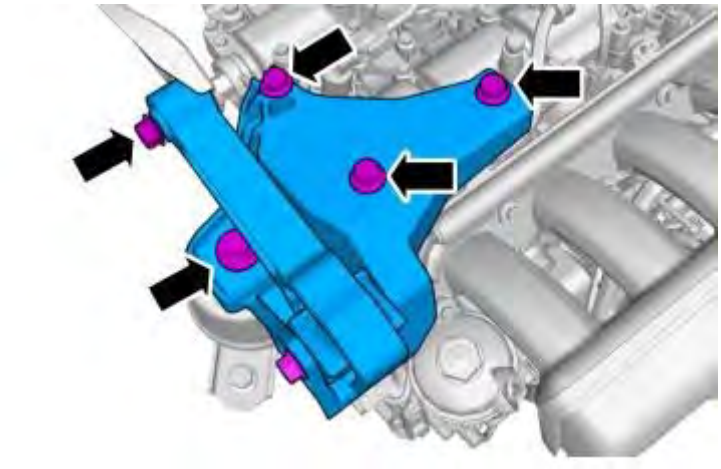

Fig. 362: Locating Engine Mounting Bolts
Courtesy of VOLVO CARS CORPORATION

M12. See **TIGHTENING TORQUE**

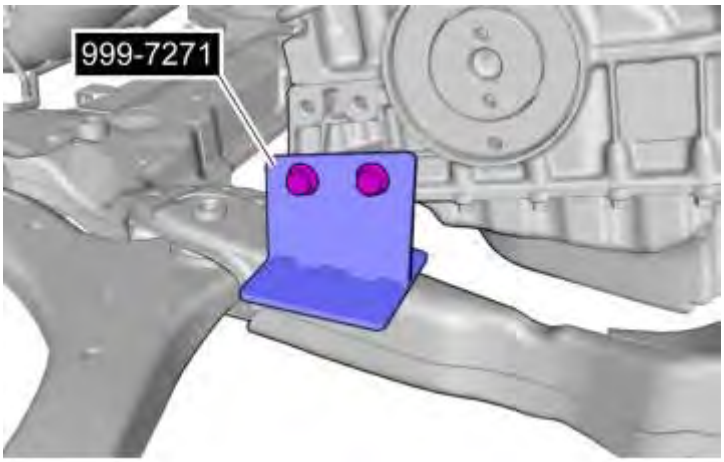

Fig. 363: Support Tool 9997271 Installed
Courtesy of VOLVO CARS CORPORATION

see **9997271**

Fit the front crankshaft seal. See **CRANKSHAFT FRONT SEAL**.

TIMING GEAR (B6324S5; 2011-2012)

ACCESSORY DRIVE COMPONENT BRACKET

Drain cooling system, draining, filling, and bleeding. See **COOLING SYSTEM - DRAINING, CHARGING AND BLEEDING**

Remove the auxiliaries belt. See **AUXILIARY BELT**

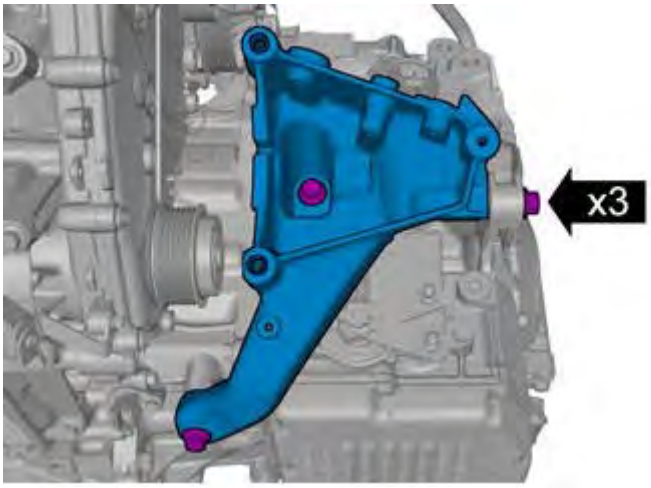

Fig. 364: Identifying Accessory Drive Component Bracket
Courtesy of VOLVO CARS CORPORATION

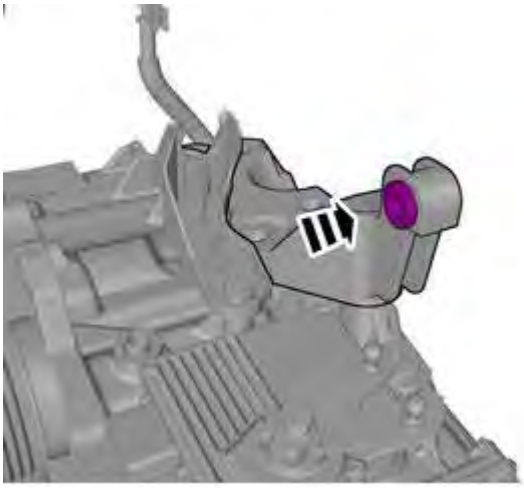

Fig. 365: Identifying Sleeve
Courtesy of VOLVO CARS CORPORATION

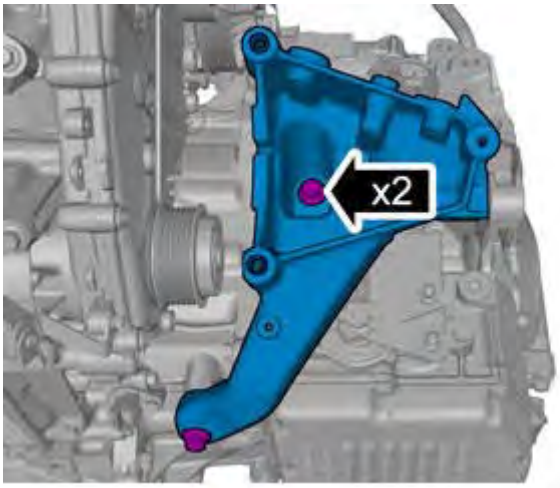

Fig. 366: Locating Bolts (10mm)
Courtesy of VOLVO CARS CORPORATION

Torque: M10

50 Nm

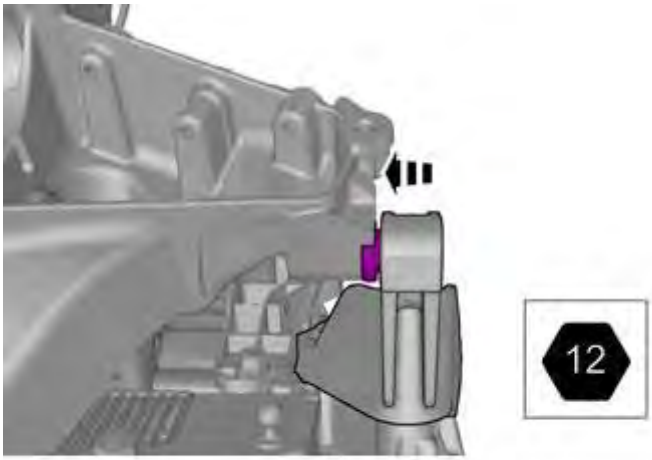

Fig. 367: Fitting the Bracket
Courtesy of VOLVO CARS CORPORATION

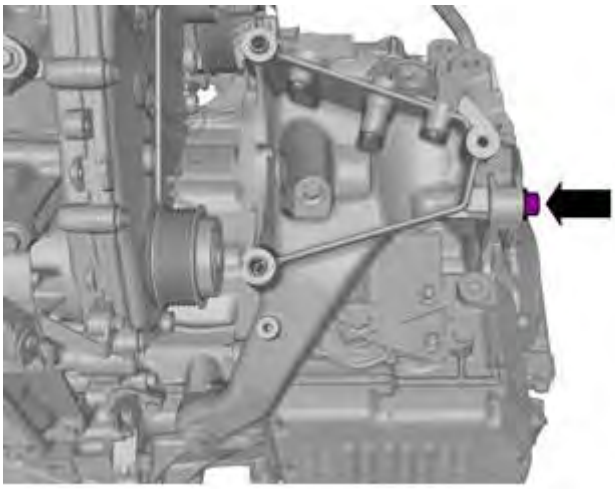

Fig. 368: Installing Bolt
Courtesy of VOLVO CARS CORPORATION

Torque: M10

50 Nm

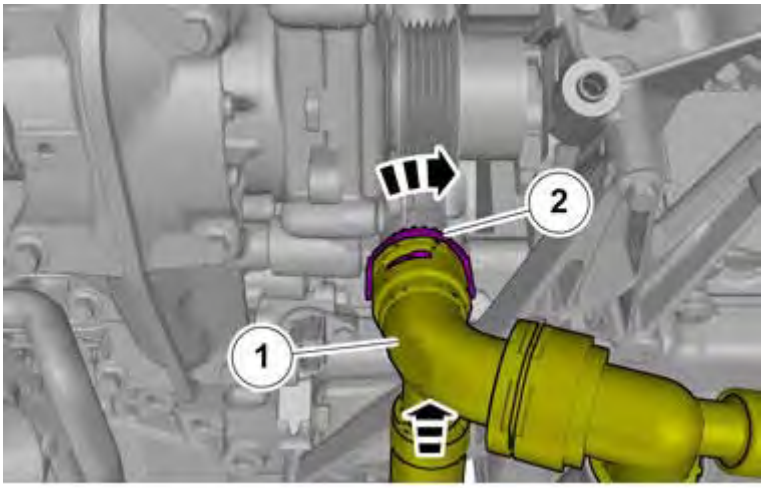

Fig. 369: Coolant Hoses Identified
Courtesy of VOLVO CARS CORPORATION

Install the auxiliaries belt. See **AUXILIARY BELT**

Fill cooling system, draining, filling, and bleeding. See **COOLING SYSTEM - DRAINING, CHARGING AND BLEEDING**

AUXILIARY BELT

see **AUXILIARY BELT**

AUXILIARY BRACKETS

see **AUXILIARY BRACKETS**

CAMSHAFT CHAIN

see **CAMSHAFT CHAIN**

CAMSHAFT SEAL

see **CAMSHAFT SEAL**

CPS SOLENOID

see **CPS SOLENOID**

GASKET, INNER TIMING COVER

see **GASKET, INNER TIMING COVER**

INTERMEDIATE SHAFT GASKET, ALTERNATOR SIDE

see **INTERMEDIATE SHAFT GASKET, ALTERNATOR SIDE**

INTERMEDIATE SHAFT GASKET, AUXILIARIES SIDE

see **INTERMEDIATE SHAFT GASKET, AUXILIARIES SIDE**

OUTER TIMING COVER GASKET

see **OUTER TIMING COVER GASKET**

REAR END ACCESSORY DRIVE

see **REAR END ACCESSORY DRIVE**

TENSIONER ACCESSORY DRIVE BELT

see **TENSIONER ACCESSORY DRIVE BELT**

VARIABLE CAMSHAFT TIMING OIL CONTROL SOLENOID

see **VARIABLE CAMSHAFT TIMING OIL CONTROL SOLENOID**

VVT UNIT

see **VVT UNIT**

TIMING GEAR (B5254T2; 2003-2004)

AUXILIARIES BELT / BELT TENSIONER, REPLACING

NOTE: **Since the illustrations in this service information are used for different model years and / or models, some variation may occur. However, the essential information in the illustrations is always correct.**

REMOVAL

REMOVING THE AUXILIARIES BELT

Fig. 370: Identifying Belt And Special Tool 999 7109
Courtesy of VOLVO CARS CORPORATION

Relieve the belt. see **9997109**

Remove the belt

REPLACING THE BELT TENSIONER

Fig. 371: Belt Tensioner And Screws
Courtesy of VOLVO CARS CORPORATION

Remove:

- both mounting screws from the auxiliaries belt bracket for the belt tensioner
- the belt tensioner. Install the new belt tensioner. Tighten.

INSTALLATION

NOTE: For tightening torques, see TIGHTENING TORQUE .

INSTALLING THE AUXILIARIES BELT

Fig. 372: Identifying Belt And Special Tool 999 7109
Courtesy of VOLVO CARS CORPORATION

CAUTION: Make sure that the belt is correctly seated in all the grooves on each pulley.

Turn the belt tensioner clockwise as much as possible.

see **9997109**

Fit the belt.

CHECKING WORK

Start the engine.

Check the rotation of the belt and the function of the belt tensioner.

CAMSHAFT SEAL/VARIABLE VALVE TIMING (VVT) UNIT, REPLACING

Special tools:

see **9995452**

see **9995651**

see **9995719**

see **9995718**

see **9995474**

see **9995451**

see **9995919**

see **9995450**

NOTE: **As the illustrations in this service information are used for different model years and / or models, some variation may occur. However, the essential information is always correct.**

REMOVAL

CAUTION: There are a number of versions of the variable valve timing unit. Therefore it is extremely important to always read the information referring to the engine variant/model year to be remedied.

REMOVING THE CAMSHAFT SEAL

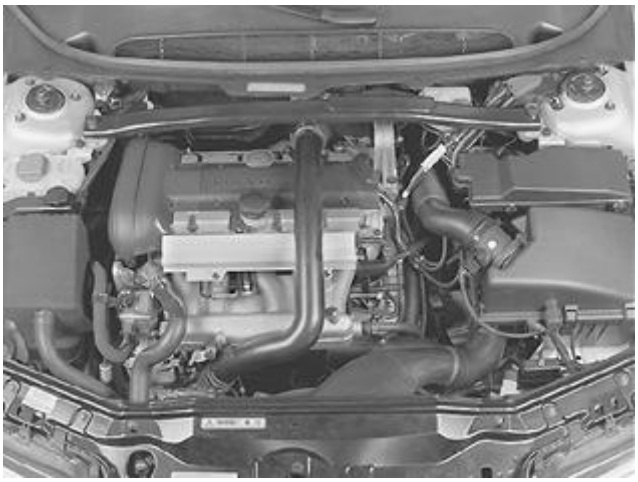

Fig. 373: Engine Compartment Components
Courtesy of VOLVO CARS CORPORATION

NOTE: **Crankshaft and camshafts must not be turned more than is stated in the method description**

If the shafts are turned in any other way the valves may be damaged.

Remove:

- the cable from the battery negative terminal.

  First read see **BATTERY, DISCONNECTING** .

- the cross stay between the suspension turrets

- the air intake hose for the turbocharger (TC) from the air cleaner (ACL) cover. Put to one side
- the upper timing belt cover
- the cover over the ignition coils
- the upper engine stabiliser brace
- the camshaft position (CMP) sensor housing
- the trigger wheel
- the servo reservoir and the expansion tank. Lift up and place on top of the engine.

WARNING: Ensure that no power steering fluid is spilled. Extremely flammable.

- the auxiliaries belt
- the front timing belt cover.

ALIGNING THE ENGINE ACCORDING TO THE MARKING

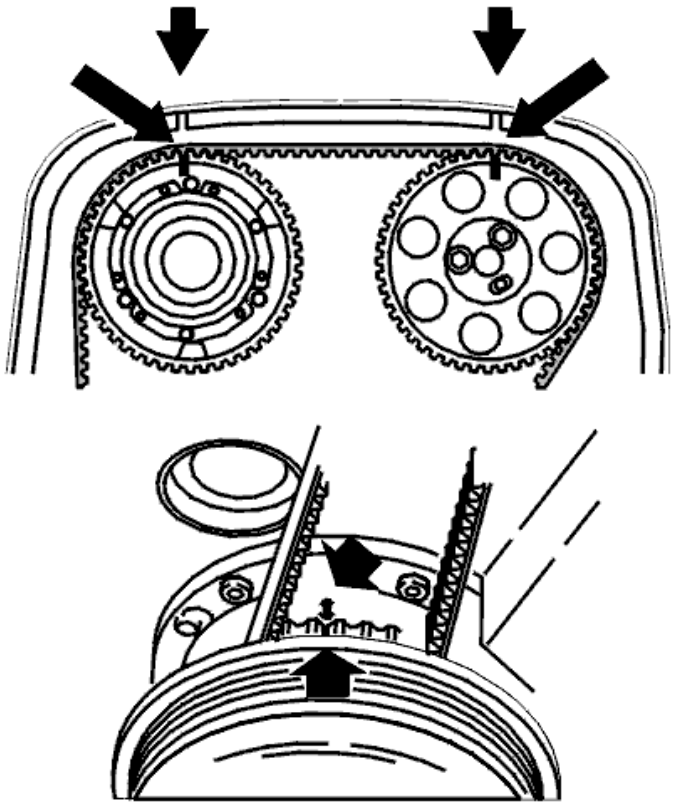

Fig. 374: Crankshaft And Camshafts Markings
Courtesy of VOLVO CARS CORPORATION

Raise the car.

Remove:

- the right front wheel
- the nuts for the cover in the wing liner.

Install the upper timing belt cover.

Turn the crankshaft clockwise until the markings on the crankshaft and camshaft pulley correspond.

Turn the crankshaft a further 1/4 of a turn clockwise, then turn back counter-clockwise until the markings correspond.

The markings are illustrated.

Remove the upper timing belt cover.

REMOVING THE TIMING BELT

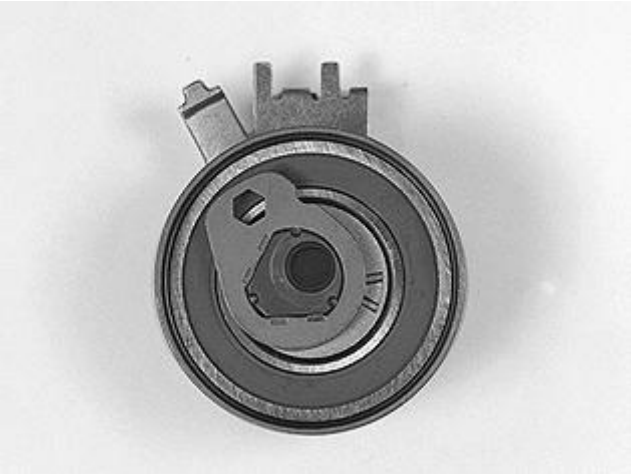

Fig. 375: Belt Tensioner
Courtesy of VOLVO CARS CORPORATION

- Slacken off the belt tensioner
- Slacken off the centre screw for the belt tensioner slightly
- Hold the centre screw still. Turn the tensioner eccentric clockwise to 10 o'clock using a 6 mm Allen key
- Remove the timing belt from the camshaft pulleys.

REMOVING THE TIMING GEAR PULLEY WITH THE VARIABLE VALVE TIMING UNIT

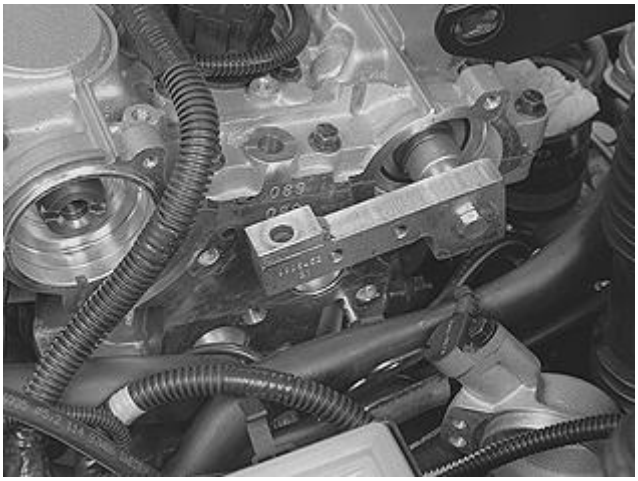

Fig. 376: Camshaft Adjustment Tool 999 5452 Installed
Courtesy of VOLVO CARS CORPORATION

Use camshaft adjustment tool:

- Install camshaft adjustment tool see **9995452** at the rear of the camshafts.
- First screw in the part of the tool intended for the exhaust camshaft (drilled hole)
- Then carefully turn the exhaust camshaft clockwise with the camshaft adjustment tool until the intake camshaft tool can be applied (threaded hole)
- Install the intake camshaft adjustment tool.

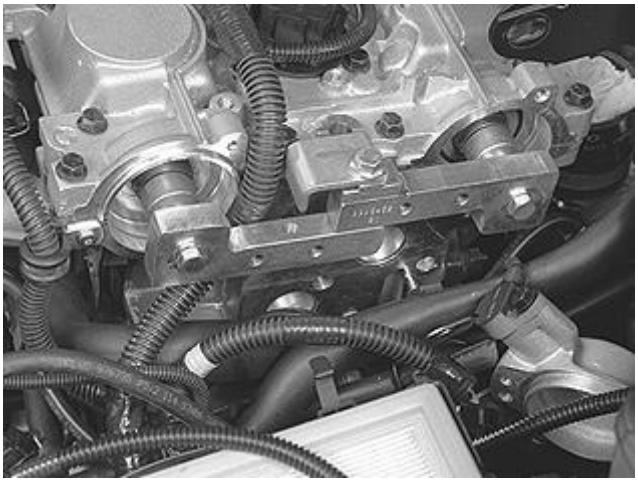

Fig. 377: Camshaft Adjustment Tool 999 5452 Installed
Courtesy of VOLVO CARS CORPORATION

Screw the camshaft adjustment tools together.

Remove:

- the plug at the front edge of the variable valve timing unit (TORX 55)
- the centre screw in the variable valve timing unit (TORX 55). Carefully pull out the timing gear pulley

with the variable valve timing (VVT) unit.

NOTE: Use paper to collect any spilled oil under the variable valve timing units.

REPLACING THE CAMSHAFT SEAL

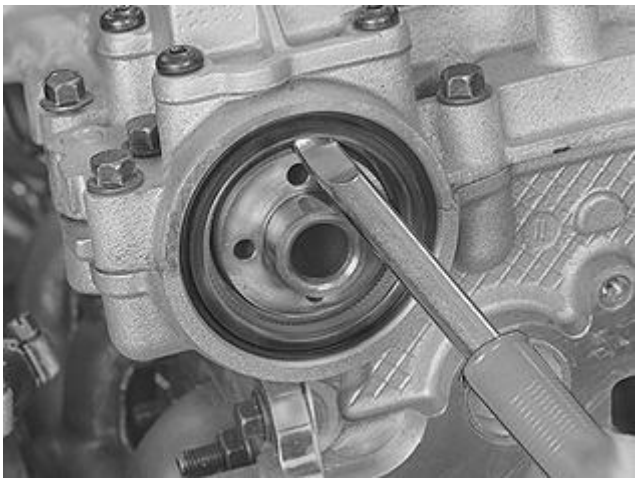

Fig. 378: Identifying Front Camshaft Seal And Special Tool 999 5651
Courtesy of VOLVO CARS CORPORATION

Carefully press in tool see **9995651** between the sealing ring and the camshaft. Carefully pry out the seal.

Cleaning

To clean the shaft journal and mating surface, use emery cloth P/N 951 1024.

NOTE: When cleaning work around the shaft journal, not in and out. It is essential that any residue from the emery cloth and any other contaminants are completely removed before the new sealing ring is installed.

Fig. 379: Drift 999 5718
Courtesy of VOLVO CARS CORPORATION

Lubricate the new seal. Install the new seal for the exhaust camshaft. Use drift see **9995718** .

INSTALLATION

CHECKING AND ADJUSTING THE VARIABLE VALVE TIMING UNIT

Check and adjust the variable valve timing unit. See: **VARIABLE VALVE TIMING UNIT, CHECKING AND ADJUSTING**

INSTALLING COMPONENTS

Install:

- the front timing belt cover.
- the torque rod bracket
- the cover over the ignition coils
- the upper timing belt cover
- the auxiliaries belt
- the expansion tank
- the servo reservoir. Check that the hoses are correctly positioned

- the starter motor. Tighten the screws at the gearbox to **40 Nm** . Tighten the support bracket screw to **25 Nm**
- the charge air pipe between the throttle body (TB) and the charge air cooler (CAC).

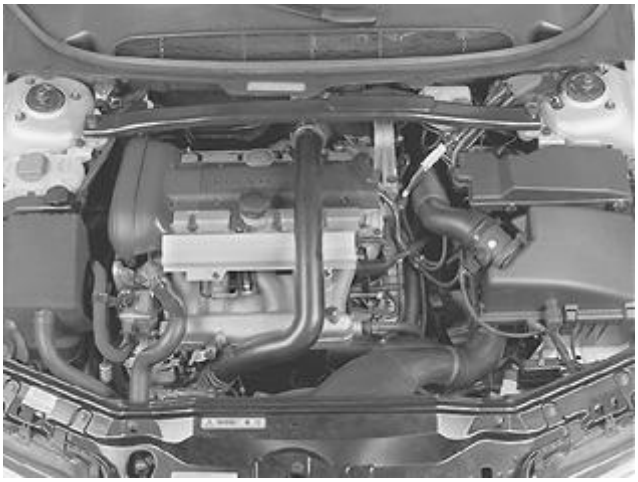

Fig. 380: Engine Compartment Components
Courtesy of VOLVO CARS CORPORATION

Install:

- the trigger wheel
- the camshaft position (CMP) sensor housing and a new cover
- the intake air hose between the turbocharger (TC) and the air cleaner (ACL) cover
- the engine stabiliser brace. Tighten the screws at the suspension turrets and the screw for motor bracket
- the negative battery cable. **First read** see **BATTERY, DISCONNECTING** .

CHECKING THE ENGINE

Test drive the car to check the function of the engine.

REPLACING THE REAR SEAL

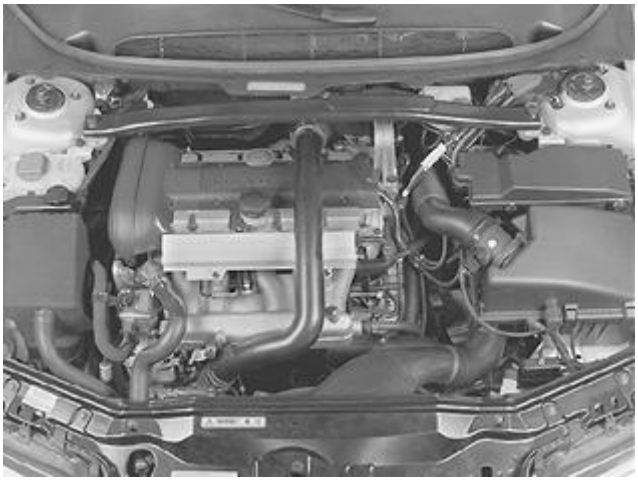

Fig. 381: Engine Compartment Components
Courtesy of VOLVO CARS CORPORATION

The following components must be removed when replacing the rear seal:

- the cross stay between the suspension turrets
- the air hose from the air cleaner (ACL) to the turbocharger (TC). Place to one side. Seal the openings
- place the air cleaner (ACL) cover to one side
- the charge air pipe over the engine. Seal the openings
- the cover over the ignition coils
- the upper torque rod bracket
- the camshaft position sensor (CMP) housing and trigger wheel.

REPLACING THE REAR CAMSHAFT SEAL

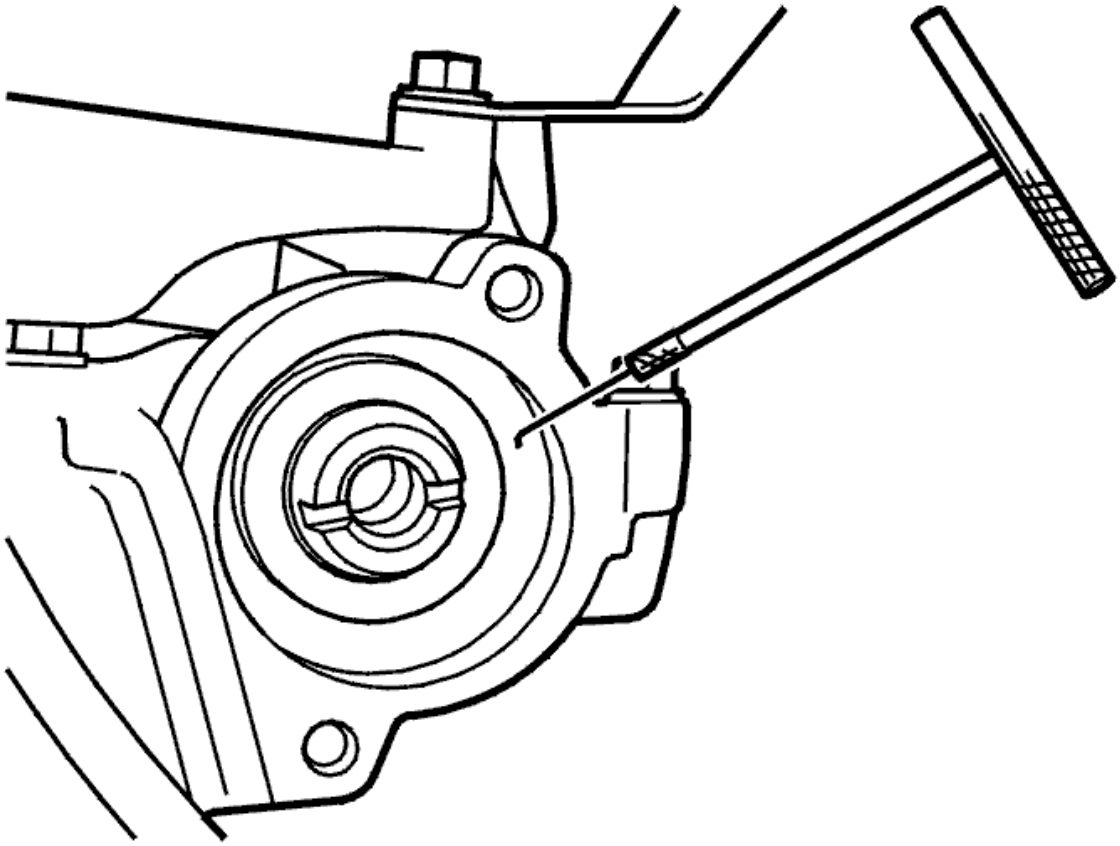

Fig. 382: Identifying Special Tool Extractor 999 5919
Courtesy of VOLVO CARS CORPORATION

Pull out the seal. Use puller see **9995919** . Use emery cloth 951 1024 to clean the shaft journal and mating surface.

NOTE: **When cleaning work around the shaft journal, not in and out. It is essential that any residue from the emery cloth and any other contaminants are completely removed before the new sealing ring is installed.**

Lubricate the surface of the seal that the camshaft rotates against. Install the camshaft seal. Use drift see **9995450** .

NOTE: **The seal is normally pressed in so that it is level with the internal bevelled edge.**

If the shaft journal is showing signs of wear, the seal can be pressed in 2 mm deeper by turning the drift socket.

INSTALLING COMPONENTS

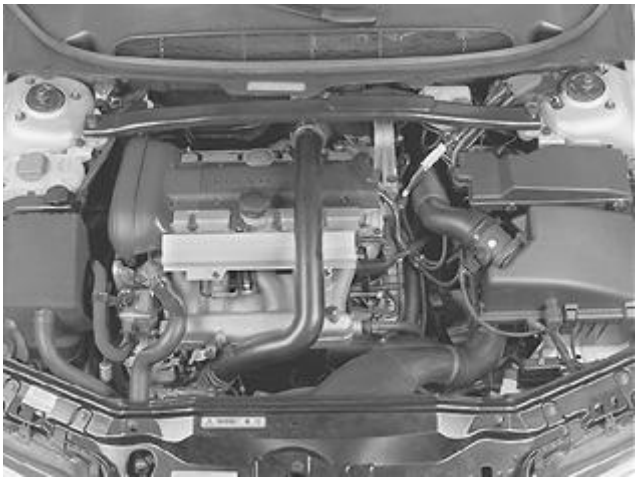

Fig. 383: Engine Compartment Components
Courtesy of VOLVO CARS CORPORATION

Install:

- the trigger wheel
- the camshaft position (CMP) sensor housing and a new cover
- the torque rod bracket. Tighten
- the cover over the ignition coils
- the charge air pipe over the engine. Remove the seals
- the air cleaner (ACL) cover and the intake air hose
- the engine stabiliser brace. Tighten the screws at the suspension turrets and the screw for motor bracket

Check the engine compartment. Wipe the engine compartment clean.

TIMING BELT, REPLACING

Special tools:

see **9995433**

NOTE: **Since the illustrations in this service information are used for different model years and/or models, some variation may occur. However, the essential information is always correct.**

REMOVE COMPONENTS

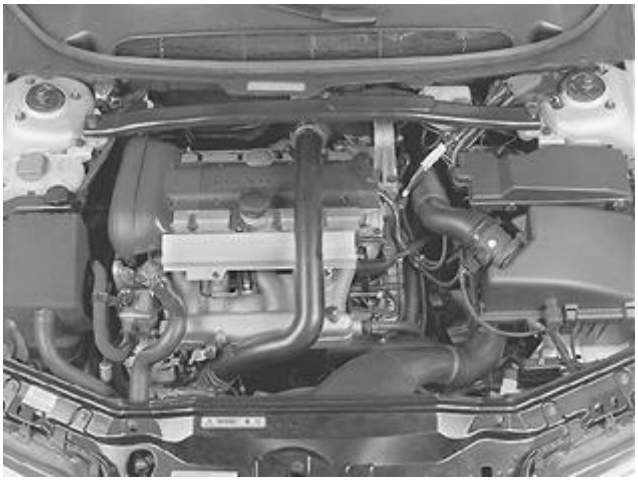

Fig. 384: Engine Compartment Components
Courtesy of VOLVO CARS CORPORATION

CAUTION: Remove the ignition key.

Remove:

- the cross stay between the suspension turrets
- the upper timing belt cover
- the servo reservoir and the expansion tank.

Lift up and place on top of the engine.

WARNING: Ensure that no power steering fluid is spilled. Extremely flammable.

- the auxiliaries belt
- the front timing belt cover.

POSITION THE ENGINE ACCORDING TO THE MARKING

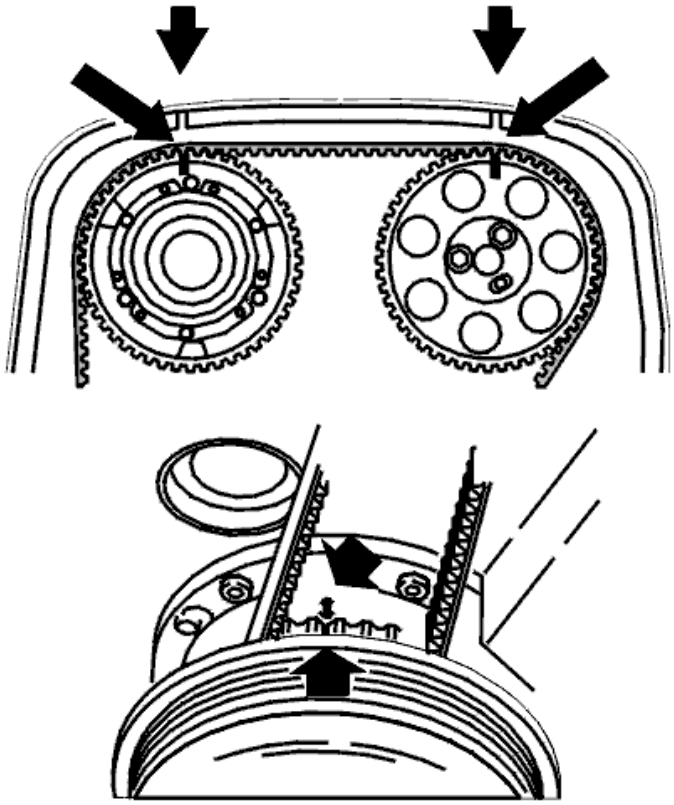

Fig. 385: Crankshaft And Camshafts Markings
Courtesy of VOLVO CARS CORPORATION

- Remove the right front wheel
- Remove the nut from the cover in the wing liner
- Install the upper timing belt cover
- Turn the crankshaft clockwise until the markings on the crankshaft and camshaft pulley correspond
- Turn the crankshaft a further 1/4 turn clockwise and then back again until the markings correspond.

  The markings are illustrated

- Remove the upper timing belt cover.

REMOVING THE TIMING BELT

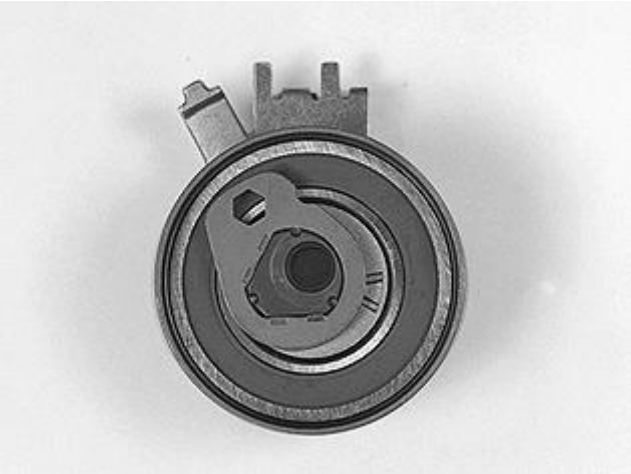

Fig. 386: Belt Tensioner
Courtesy of VOLVO CARS CORPORATION

Slacken off the belt tensioner.

Slacken off the centre screw for the belt tensioner slightly.

Hold the centre screw still. Turn the tensioner eccentric clockwise using a 6 mm Allen key to 10 o'clock.

Remove the timing belt from the tension pulley, camshaft pulley and water pump.

NOTE: The component can be reused unless it has been subjected to abnormal mechanical stress, damage or oil contamination.

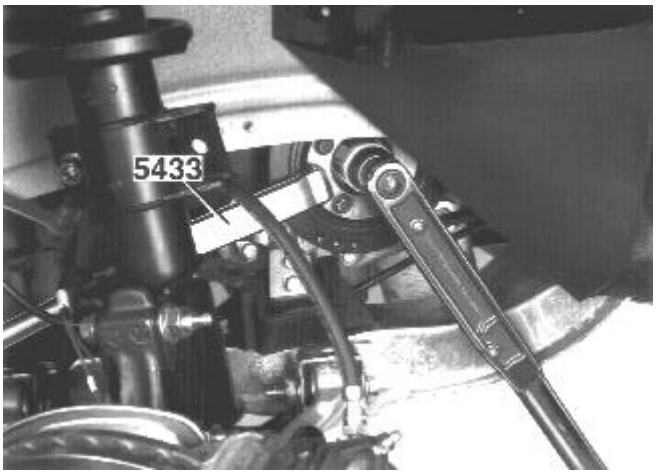

Fig. 387: Identifying Vibration Damper & Counterhold 9995433
Courtesy of VOLVO CARS CORPORATION

Remove the vibration damper.

Remove the oscillation damper. Use counterhold see **9995433** . Work the oscillation damper loose.

Remove the timing belt

CHECKING THE TENSIONER PULLEY AND IDLER PULLEY

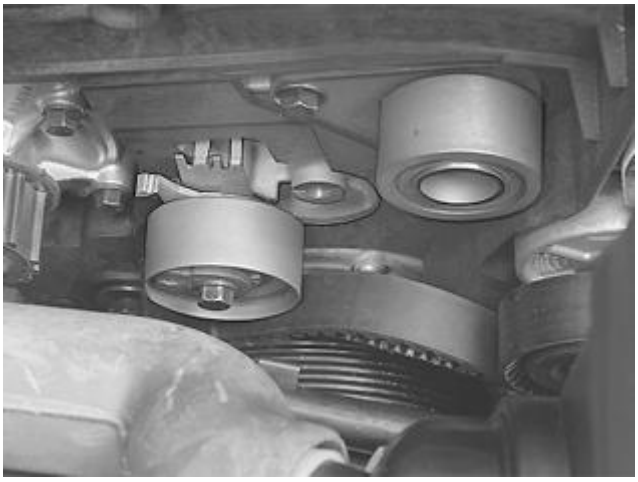

Fig. 388: Identifying Belt Tensioner
Courtesy of VOLVO CARS CORPORATION

Check bearing wear:

- spin the idler pulley and listen for noise.

  If replacing with a new idler pulley, tighten to **24 Nm** .

- spin the tension pulley and listen for noise.

  When replacing, screw the tension pulley into place using the centre screw.

Screw in the centre screw by hand.

Ensure that the tensioner fork is centred over the cylinder block rib.

Ensure that the Allen hole on the eccentric is at "10 o'clock".

INSTALLING THE TIMING BELT

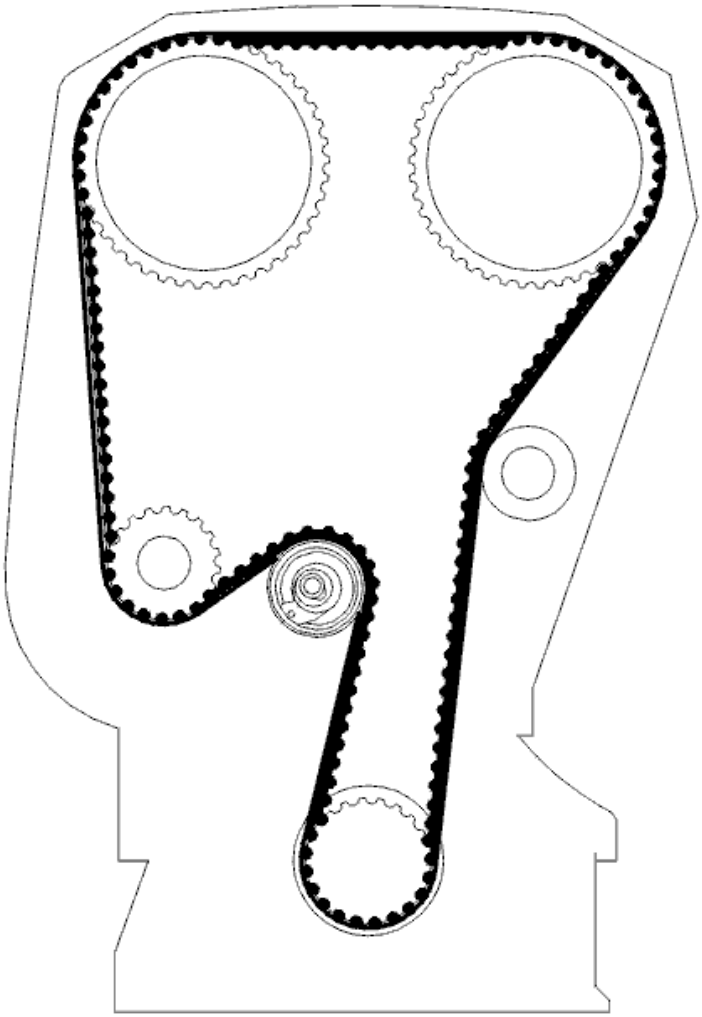

Fig. 389: Timing Belt Routing
Courtesy of VOLVO CARS CORPORATION

NOTE: The component can be reused unless it has been subjected to abnormal mechanical stress, damage or oil contamination.

Install the timing belt over the pulley on the crankshaft.

Install the oscillation damper. Tighten the center nut to **180 Nm** . Use counterhold see **9995433** .

Remove the counterhold and install new screws. Tighten the screws to **25 Nm** . Angle-tighten **30°**

Install the new belt in the following order:

- crankshaft

- the idler pulley
- intake camshaft pulley
- exhaust camshaft pulley
- water pump
- belt tensioner.

TIGHTEN THE TIMING BELT

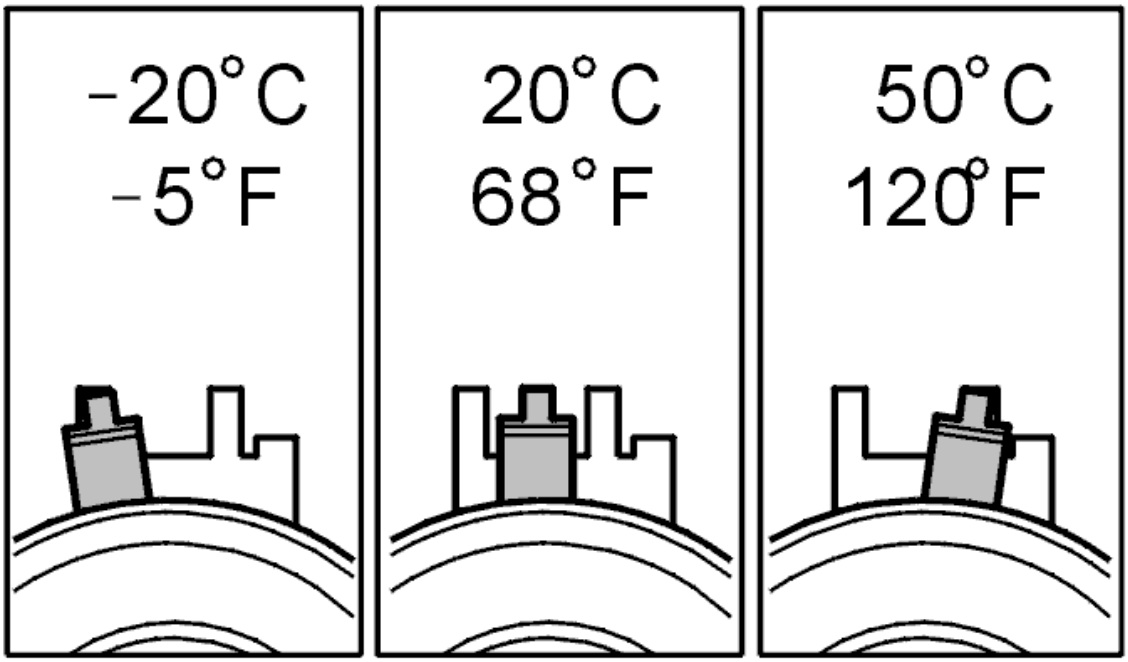

Fig. 390: Identifying Needle Position At Varying Temperatures
Courtesy of VOLVO CARS CORPORATION

This adjustment is carried out on a cold engine. A suitable temperature is approximately 20°C/68°F.

At higher temperatures, for example with the engine at operating temperature or at higher ambient temperature, the needle is further to the right.

The illustration shows the position of the indicator when aligning the timing belt tensioner at different temperatures.

FOR ENGINE SERIAL NO. UP TO 3188688

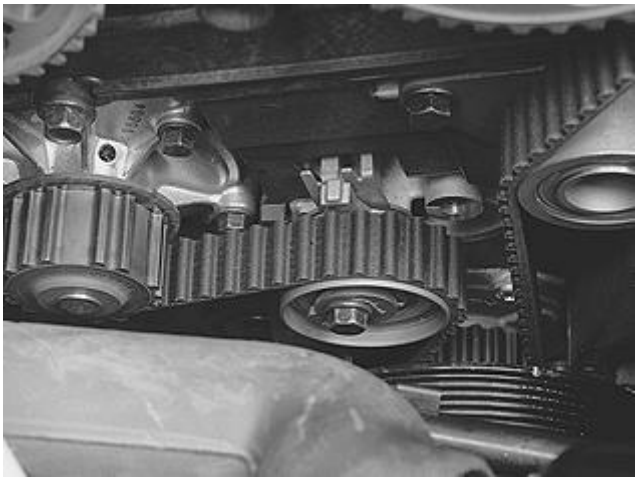

Fig. 391: Belt Between Intake Camshaft Pulley, Idler Pulley And Crankshaft
Courtesy of VOLVO CARS CORPORATION

Tension the timing belt as follows:

- turn the crankshaft clockwise carefully until the timing belt is tensioned. The belt must be tensioned between the intake camshaft pulley, the idler pulley and the crankshaft
- hold the centre screw on the belt tensioner fixed. Turn the belt tensioner eccentric **counter-clockwise** until the tensioner indicator passes the marked position.

  Then turn the eccentric back so that the indicator reaches the marked position in the centre of the window

- Secure the eccentric and tighten the center screw to **20 Nm** .

Check that the indicator is in the correct position.

FOR ENGINE SERIAL NO. FROM 3188689

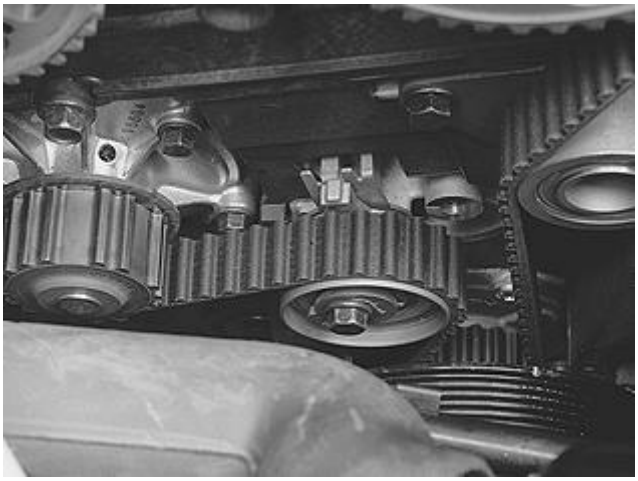

Fig. 392: Belt Between Intake Camshaft Pulley, Idler Pulley And Crankshaft
Courtesy of VOLVO CARS CORPORATION

Tension the timing belt as follows:

- turn the crankshaft clockwise carefully until the timing belt is tensioned. The belt must be tensioned between the intake camshaft pulley, the idler pulley and the crankshaft
- hold the centre screw on the belt tensioner fixed. Turn the belt tensioner eccentric **clockwise** until the tensioner indicator passes the marked position.

  Then turn the eccentric back so that the indicator reaches the marked position in the centre of the window

- Secure the eccentric and tighten the center screw to **20 Nm** .

Check that the indicator is in the correct position.

CHECK

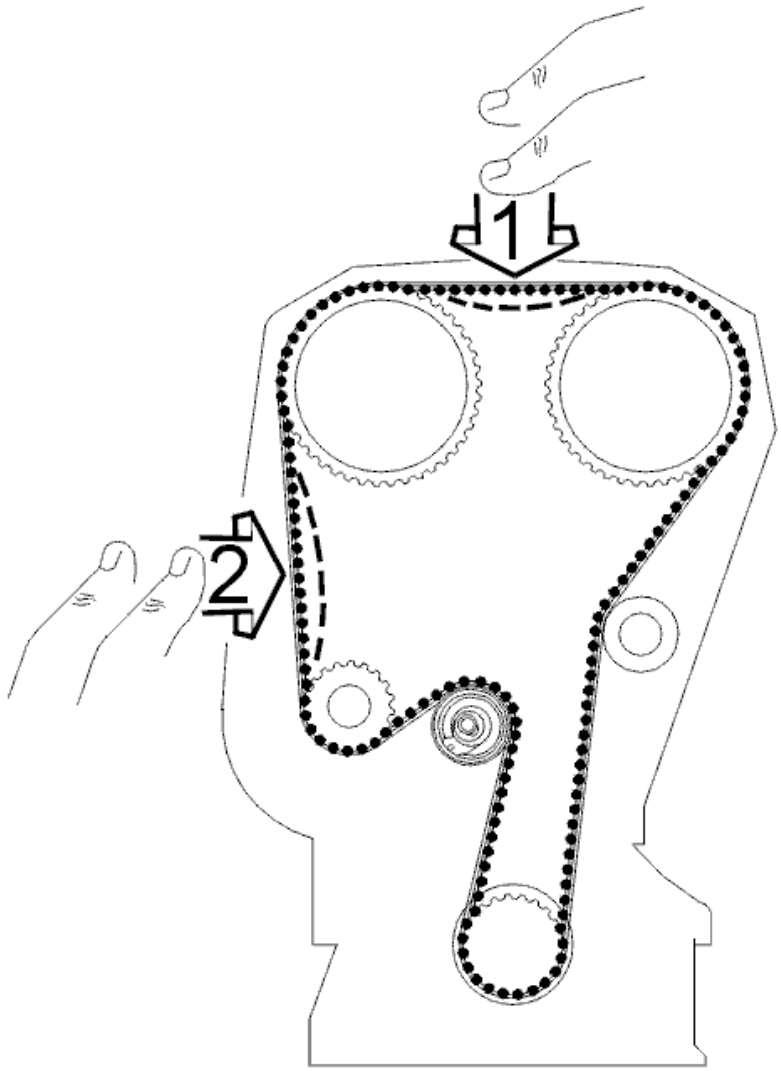

Fig. 393: Pressing Belt To Check That Indicator On Tensioner Moves Easily

Courtesy of VOLVO CARS CORPORATION

Checking markings:

- press the belt to check that the indicator on the tensioner moves easily
- install the upper timing belt cover
- turn the crankshaft 2 turns. Check that the markings on the crankshaft and camshaft pulley correspond
- check that the indicator on the belt tensioner is within the marked area.

REINSTALL

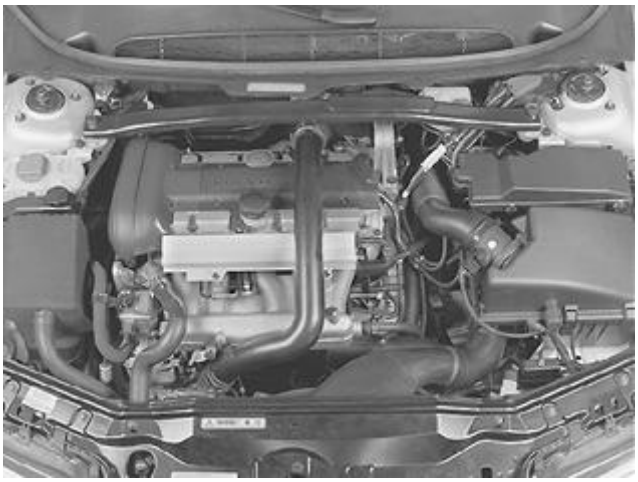

Fig. 394: Engine Compartment Components
Courtesy of VOLVO CARS CORPORATION

Reinstall the removed components:

- the front timing belt cover.

  Tighten to **12 Nm.** .

- the upper timing belt cover
- install the auxiliaries belt
- the servo reservoir
- the expansion tank.

NOTE: Ensure that the hoses are positioned correctly.

- the cross member. Tighten the screws at the suspension turret to **50 Nm** and the screw for the engine bracket to **80 Nm** .

  Wipe clean and check the engine compartment

- the cover in the wing liner
- the front wheel according to **INSTALLING WHEELS** .

CHECKING WORK

Function test:

- Test drive the engine.

VARIABLE VALVE TIMING SOLENOID, REPLACING

ALL MODELS

REMOVING THE VARIABLE VALVE TIMING (VVT) CONTROL VALVE

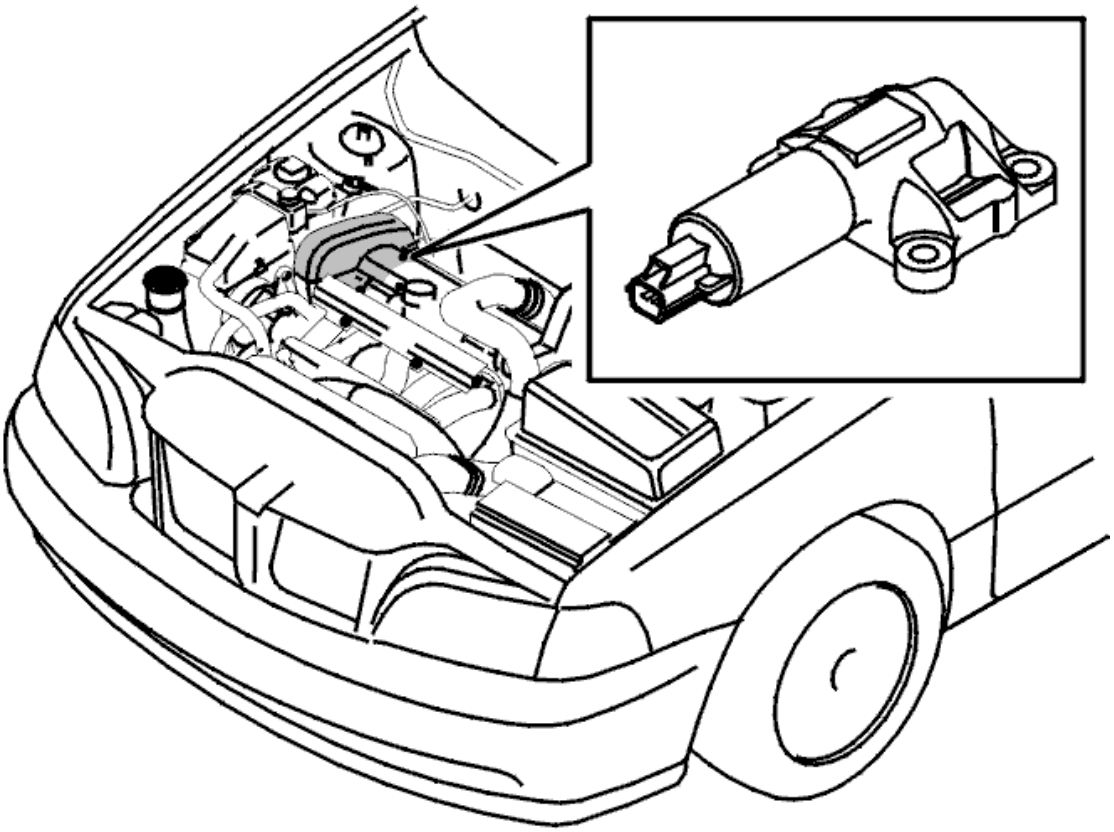

Fig. 395: Identifying Upper Timing Belt Cover
Courtesy of VOLVO CARS CORPORATION

Remove

- the upper timing belt cover.

NOTE: Clean the area around the variable valve timing (VVT) valve thoroughly to

prevent anything else than clean oil from entering the channels/ variable valve timing (VVT) valve.

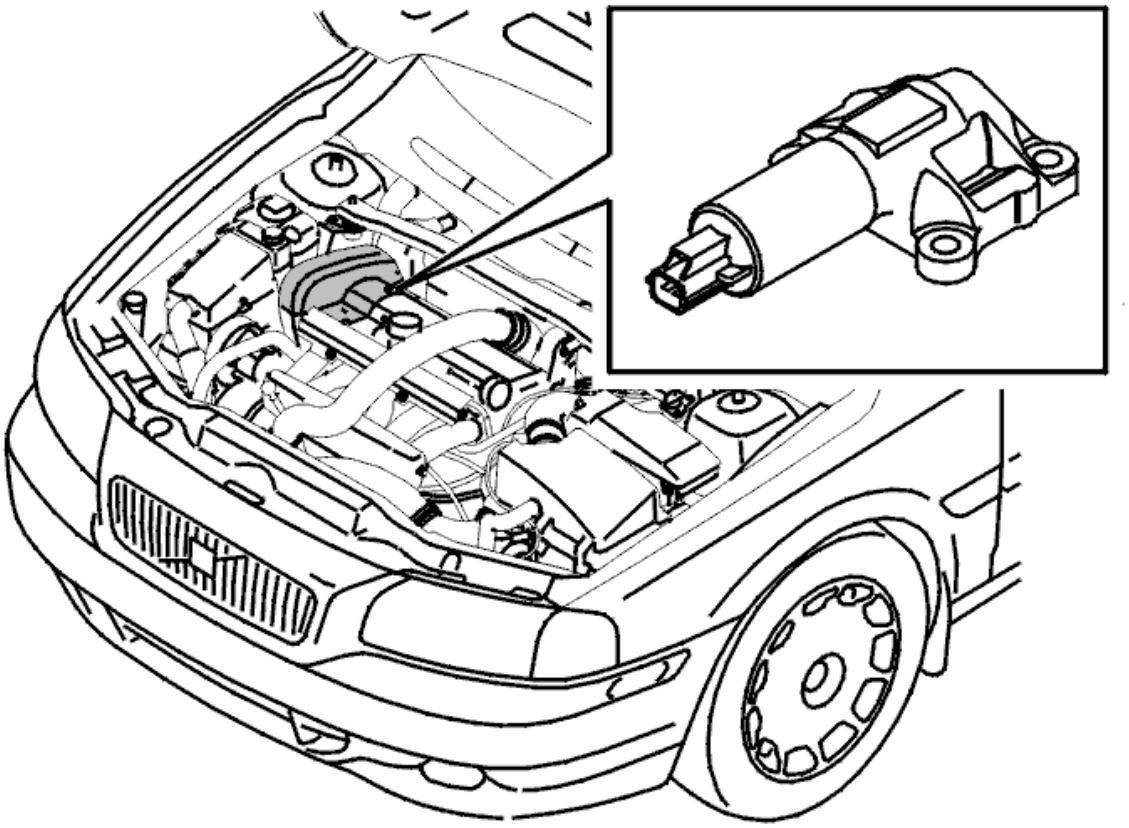

Fig. 396: Identifying Variable Valve Timing (VVT) Control Valve
Courtesy of VOLVO CARS CORPORATION

- the connector for the check valve
- the screws holding the valve
- the control valve and the gasket.

APPLIES TO B5244SX MODEL YEARS 1999-2001

A modified VVT-solenoid is now available as spare part for **B5244Sx model years 1999-2001** . This means that the connector on the cable must be replaced.

NOTE: Note the position of the electric connections.

Cut the cables next to the connector.

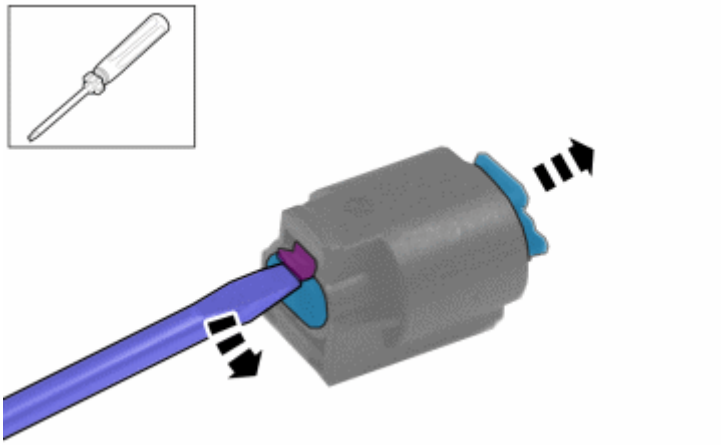

Fig. 397: Identifying Lock Tab, Seat & Casing
Courtesy of VOLVO CARS CORPORATION

Press up the lock tab and pull out the seat for the connector pins from the casing.

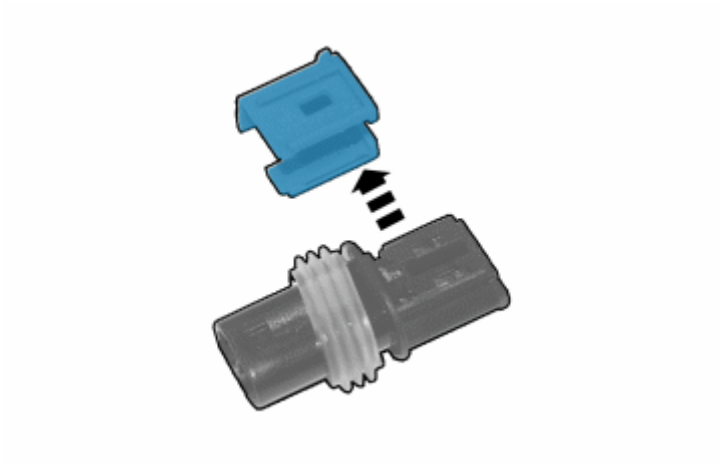

Fig. 398: Identifying Lock
Courtesy of VOLVO CARS CORPORATION

Remove the lock

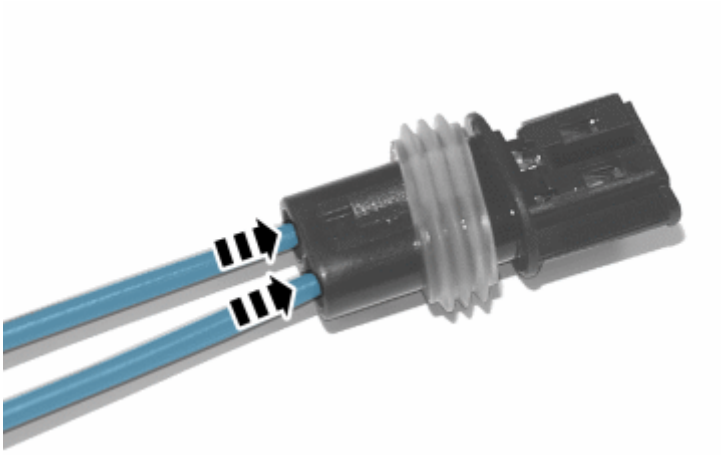

Fig. 399: Identifying Connector Pin(s) Installation In Seat
Courtesy of VOLVO CARS CORPORATION

CAUTION: Make sure that the connector pins end up in the correct position.

Install the connector pins in the seat so that the locks on the pin end up in the opening on the side of the seat.

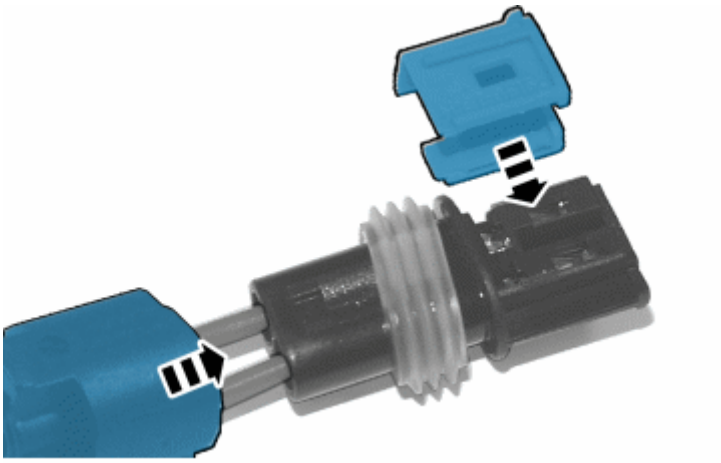

Fig. 400: Identifying Catch And Casing
Courtesy of VOLVO CARS CORPORATION

Install the catch.

Install the casing.

Splice the cables. See **JOINING THE CABLES**

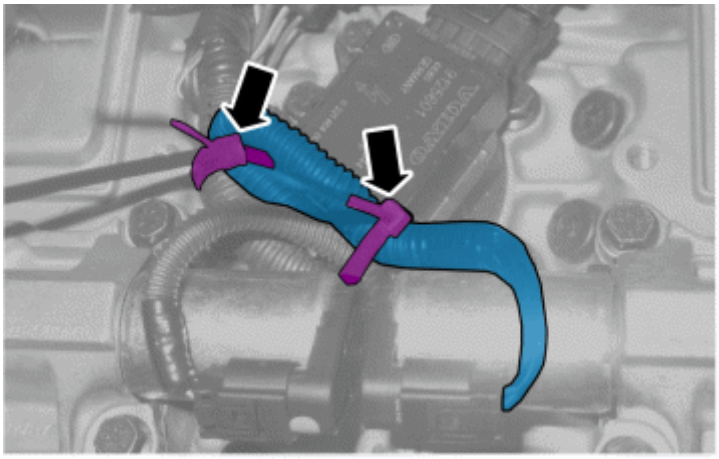

Fig. 401: Clamping Excess Cable With Cable Ties
Courtesy of VOLVO CARS CORPORATION

CAUTION: Make sure that the cable cannot enter the timing gears by clamping any excess cable with cable ties.

APPLIES TO ALL: INSTALLING VVT-CONTROL VALVE

Clean the gasket faces. Note the cleanliness requirements above.

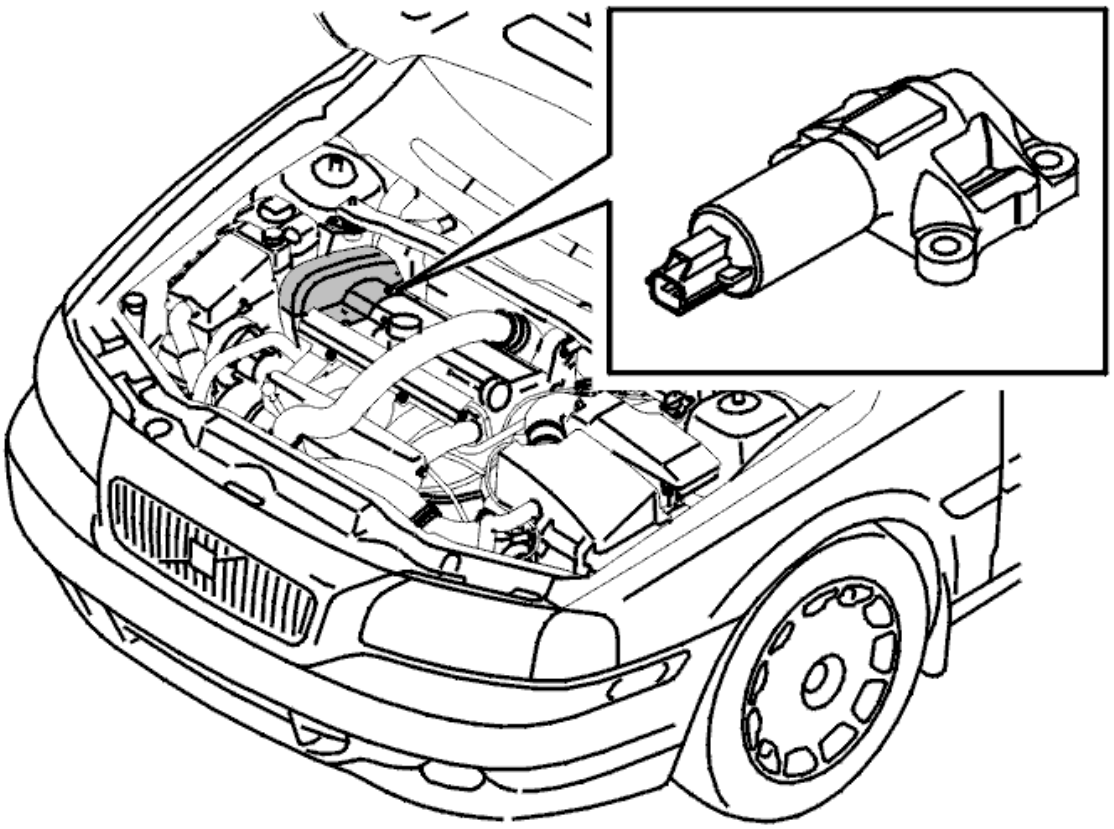

Fig. 402: Identifying Variable Valve Timing (VVT) Control Valve
Courtesy of VOLVO CARS CORPORATION

Install a **new gasket** .

Install a new control valve. Tighten the control valve crosswise. Tighten to **10 Nm**

Connect the connector.

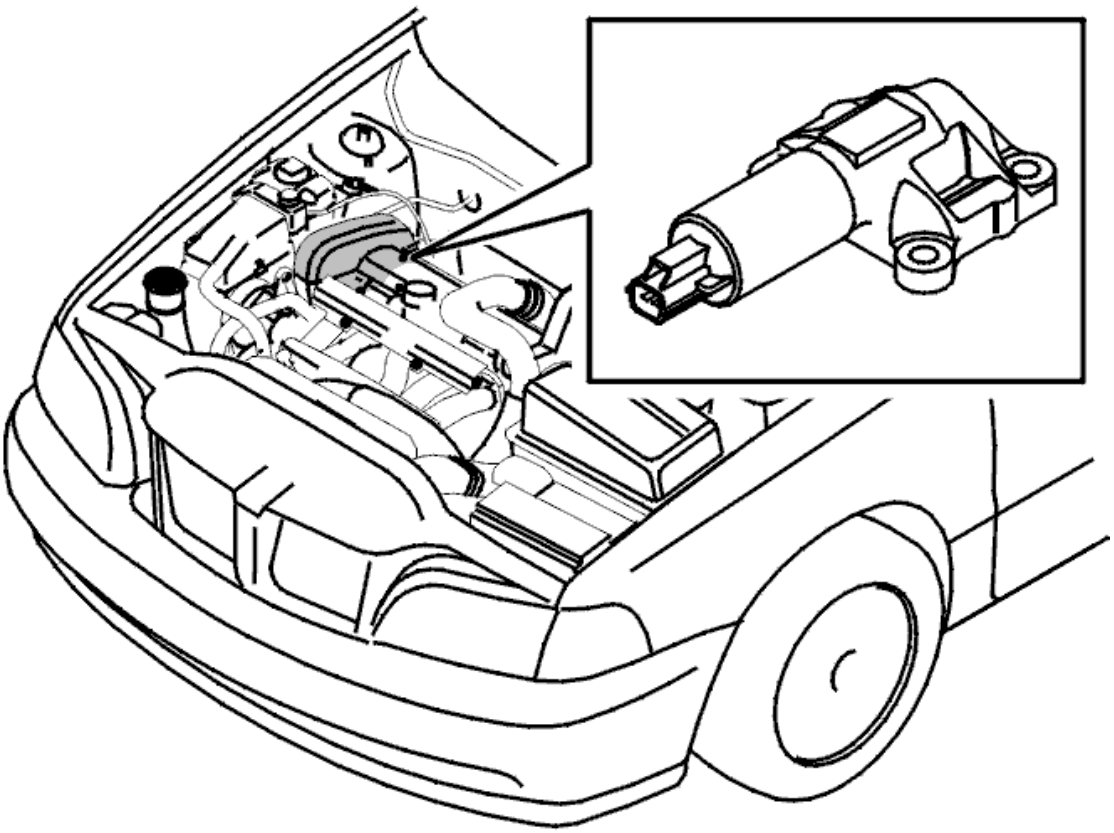

Fig. 403: Identifying Upper Timing Belt Cover
Courtesy of VOLVO CARS CORPORATION

Install the upper timing belt cover.

TIMING GEAR (B5254T2; 2005-2007)

AUXILIARIES BELT / BELT TENSIONER, REPLACING

Special tools:

see **9995722**

see **9997109**

NOTE: **The illustrations in this service information are used for different model years and/or models. Some variation may occur. However, the essential information in the illustrations is always correct.**

REMOVAL

REMOVING THE ENGINE CONTROL MODULE (ECM)

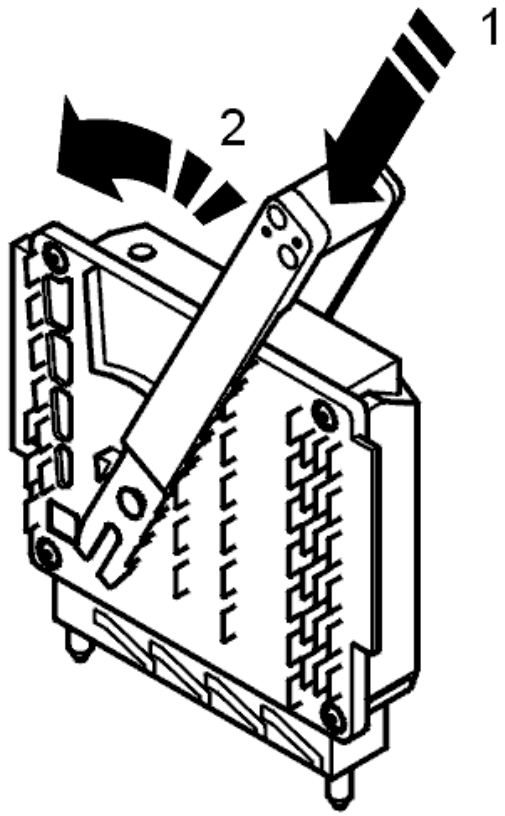

Fig. 404: Identifying Engine Control Module
Courtesy of VOLVO CARS CORPORATION

Ignition off. Wait 2 minutes.

CAUTION: **Do not touch the terminal pins on the engine control module (ECM) with your fingers. Static electricity may damage components in the control module.**

Remove the cover over the control module box. Put the cover to one side.

Insert tool: see **9995722** around the control module. Move the upper section of the tool backwards as far as it will go. Pull up the tool. Carefully pull up the control module.

For vehicles with automatic transmissions repeat the above work.

Remove the surround from around the control module box.

REMOVING THE AUXILIARIES BELT

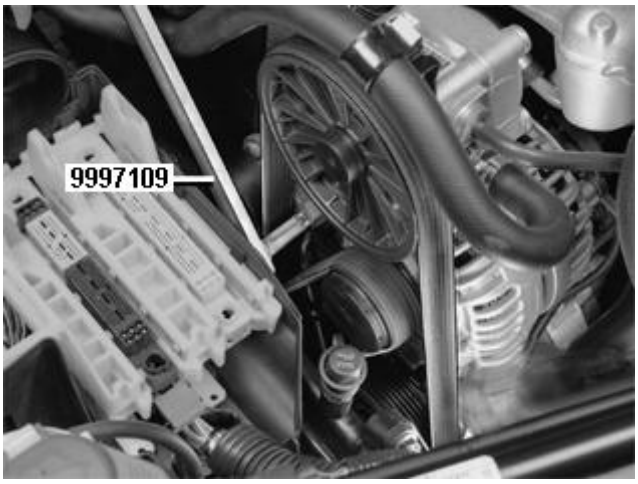

Fig. 405: Identifying Auxiliaries Belt And Special Tool 999 7109
Courtesy of VOLVO CARS CORPORATION

NOTE: Make a note of the routing of the belt.

Remove the auxiliaries belt. Use: see **9997109** .

REPLACING THE BELT TENSIONER

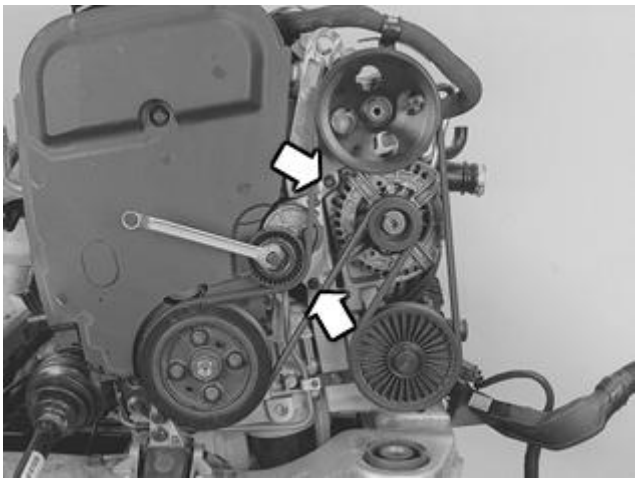

Fig. 406: Belt Tensioner Mounting Screws
Courtesy of VOLVO CARS CORPORATION

Remove:

- both mounting screws from the auxiliaries belt bracket for the belt tensioner
- the belt tensioner.

Install:

- a new belt tensioner
- the screws for the belt tensioner. Tighten.

INSTALLATION

NOTE: For tightening torques, see: TIGHTENING TORQUE .

INSTALLING THE AUXILIARIES BELT

NOTE: Ensure that the auxiliaries belt is correctly positioned on all the pulleys.

Install the auxiliaries belt. Use: see **9997109** .

INSTALLING THE ENGINE CONTROL MODULE (ECM)

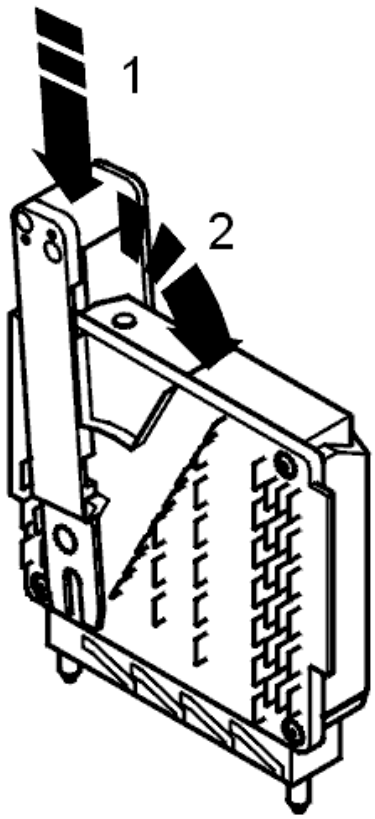

Fig. 407: Identifying Engine Control Module
Courtesy of VOLVO CARS CORPORATION

CAUTION: Check that no pins or sockets are damaged on the connector.

Install the surround for the control module box.

Carefully press the engine control module (ECM) down into the grooves on the inside of the control module box. Press down all the way.

Install the tool: see **9995722** around the control module.

Move the upper section of the tool forwards as far as it will go. Pull up the tool.

Press the cover into place over the control module. Check that the air ducts are correctly positioned.

FINISHING

Start the engine and check the function.

CAMSHAFT SEAL/VARIABLE VALVE TIMING (VVT) UNIT, REPLACING

see **CAMSHAFT SEAL/VARIABLE VALVE TIMING (VVT) UNIT, REPLACING**

TIMING BELT, REPLACING

see **TIMING BELT, REPLACING**

VARIABLE VALVE TIMING SOLENOID, REPLACING

see **VARIABLE VALVE TIMING SOLENOID, REPLACING**

TIMING GEAR (B8444S; 2005-2011)

VVT UNIT EXHAUST CAMSHAFT, REPLACING

Remove VVT-unit exhaust camshaft. See **VVT UNIT, RIGHT CYLINDER HEADVVT UNIT, LEFT CYLINDER HEAD**

AUXILIARIES BELT/BELT TENSIONER, REPLACEMENT

Special tools:

see **9997195**

see **9997279**

NOTE: **The illustrations in this service information are used for different model years and/or models. Some variation may occur. However, the essential information in the illustrations is always correct.**

REMOVAL

REMOVING THE UPPER ENGINE COVERS

Remove the upper engine covers by pulling them straight up.

REMOVING THE COVER OVER THE SERVO PUMP

Remove:

- one end of the ground cable between the engine and body and the hose between the expansion tank and engine
- the 2 screws on the cover over the servo pump
- the cover.

REMOVING THE SERVO OIL LINE

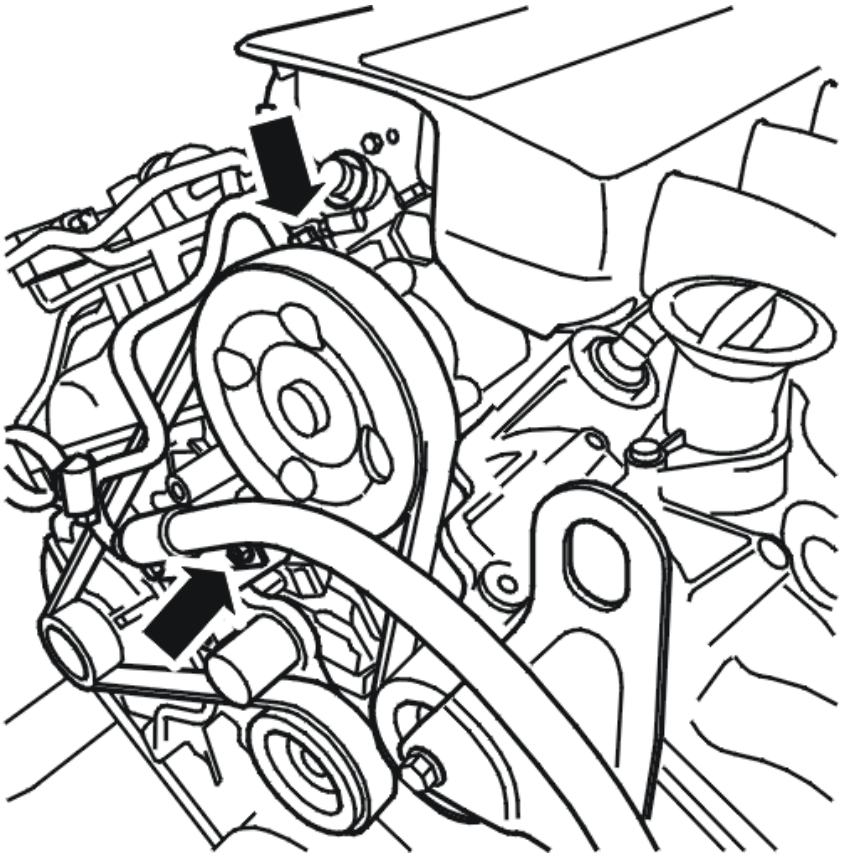

Fig. 408: Removing the Servo Oil Line
Courtesy of VOLVO CARS CORPORATION

Remove:

- the nut of the clamp
- the screw on the oil feed pipe.

Plug the openings and wipe up any spills.

Bend aside the servo oil line. Scrap the gasket.

REMOVING THE AUXILIARIES BELT

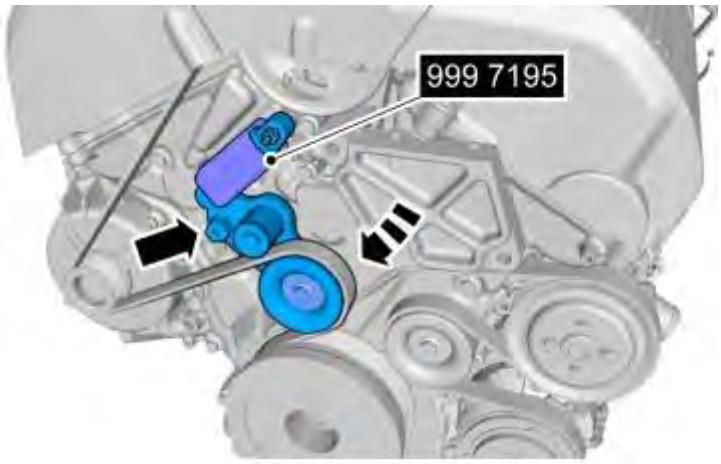

Fig. 409: Locking the Tensioner with Holder 9997195
Courtesy of VOLVO CARS CORPORATION

CAUTION: Relieve the load on the belt tensioner by turning it clockwise to max. 230 Nm and lock the tensioner with relevant tool.

CAUTION: Ensure that 230 Nm is not exceeded when the belt tensioner is relieved. The torque takes more than 20 seconds to carry out without risk of affecting the belt tensioner.

see **9997195**

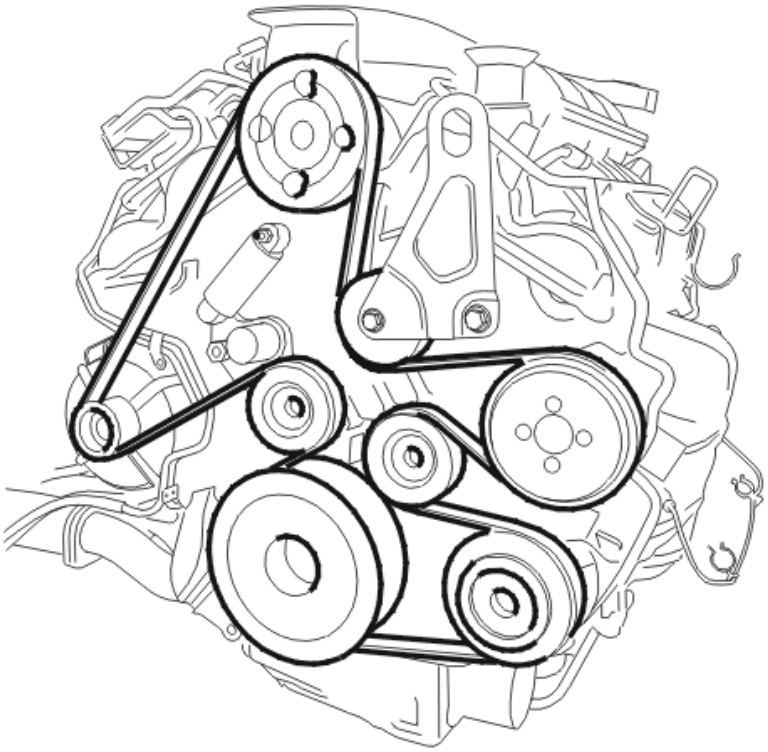

Fig. 410: Routing Of The Belt
Courtesy of VOLVO CARS CORPORATION

Lift off the auxiliaries belt.

HINT: Note the routing of the belt to facilitate reinstallation.

REMOVING THE BELT TENSIONER

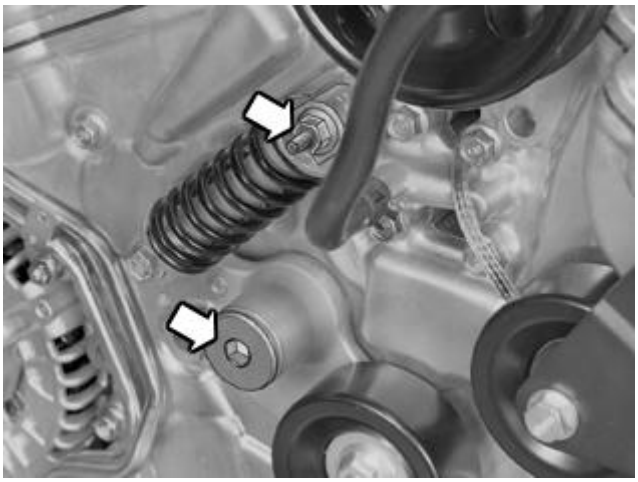

Fig. 411: Removing The Belt Tensioner
Courtesy of VOLVO CARS CORPORATION

Remove:

- the screw of the tensioning and damping element
- the center screw to the belt tensioner. see **9997279**
- the belt tensioner.

INSTALLATION

NOTE: For tightening torques, see: TIGHTENING TORQUE .

INSTALLING THE BELT TENSIONER

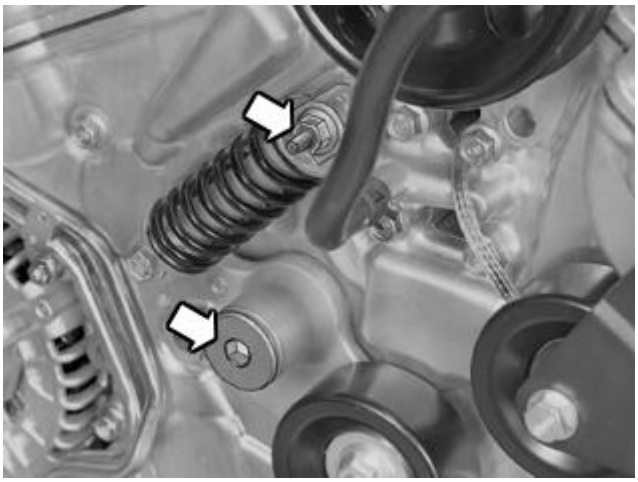

Fig. 412: Removing The Belt Tensioner The Center Screw To The Belt Tensioner. see 9997279 tighten. See Tightening Torque.
Courtesy of VOLVO CARS CORPORATION

Install:

- the belt tensioner
- the center screw to the belt tensioner. see **9997279** Tighten. See **TIGHTENING TORQUE** .
- the screw of the tensioning and damping element; tighten

INSTALLING THE AUXILIARIES BELT

Fig. 413: Installing The Auxiliaries Belt
Courtesy of VOLVO CARS CORPORATION

Install the auxiliaries belt.

Rotate the belt tensioner clockwise to max. 230 Nm and remove tool: see **9997195** .

NOTE: Make sure the belt is properly seated in the groove.

INSTALLING THE SERVO OIL LINE

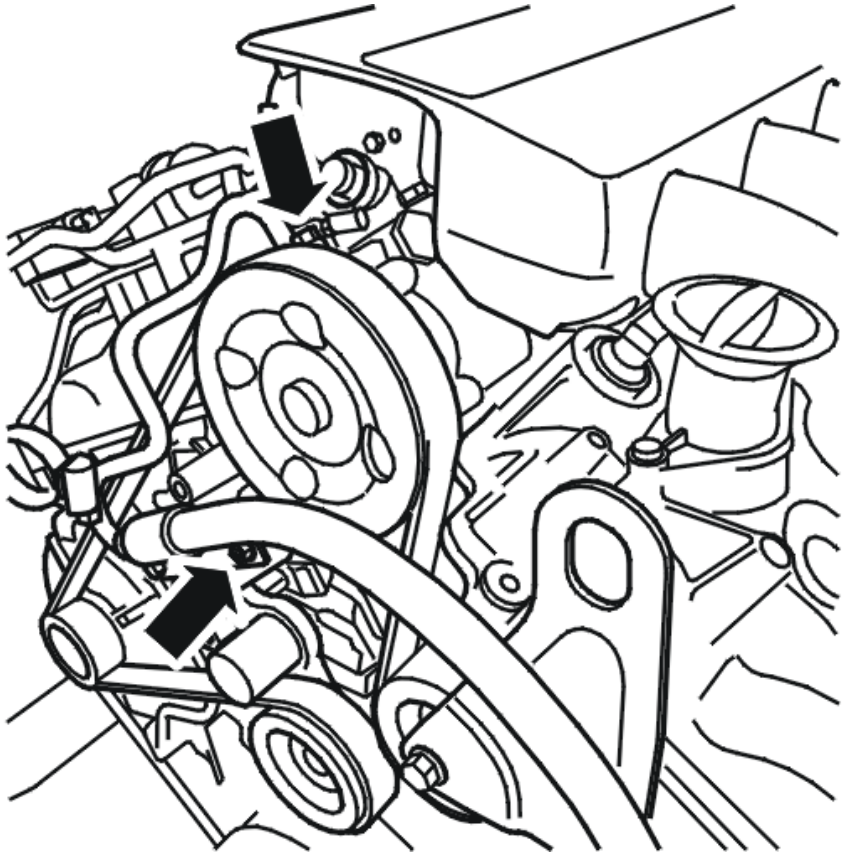

Fig. 414: Removing the Servo Oil Line
Courtesy of VOLVO CARS CORPORATION

Install:

- a new gasket
- the servo oil line
- the nut on the clamp; tighten
- the screw on the oil feed pipe; tighten.

Wipe up any spills.

INSTALLING THE COVER OVER THE SERVO PUMP

Install:

- the cover over the servo pump.
- the 2 screws; tighten.
- the ground cable between the engine and body and the hose between the expansion tank and engine.

INSTALLING THE UPPER ENGINE COVERS

Position the upper engine covers and press them into the retainers.

BALANCE SHAFT BEARING

Special tools	
	T9997246 PRESS TOOL **Tool number:** T9997246 **Tool description:** PRESS TOOL **Tool boards:**
	T9997245 SCREW **Tool number:** T9997245 **Tool description:** SCREW **Tool boards:**
	T9997248 POSITION SETTING TOOL **Tool number:** T9997248 **Tool description:** POSITION SETTING TOOL **Tool boards:**
	T9997025 DRIFT HALDEX CLUTCH **Tool number:** T9997025 **Tool description:** DRIFT HALDEX CLUTCH **Tool boards:**
	T9997247 DRIFT **Tool number:** T9997247 **Tool description:** DRIFT **Tool boards:**

Remove cylinder head, left. See **CYLINDER HEAD/GASKET, CYLINDER 1, 3, 5 AND 7 (BANK 1), REPLACING**

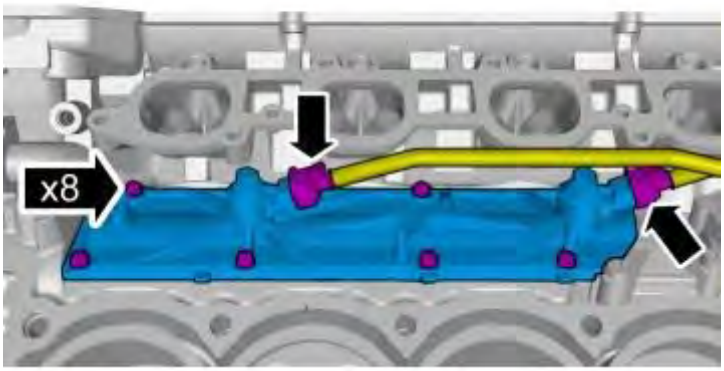

Fig. 415: Identifying 8 Screws and 2 Connectors
Courtesy of VOLVO CARS CORPORATION

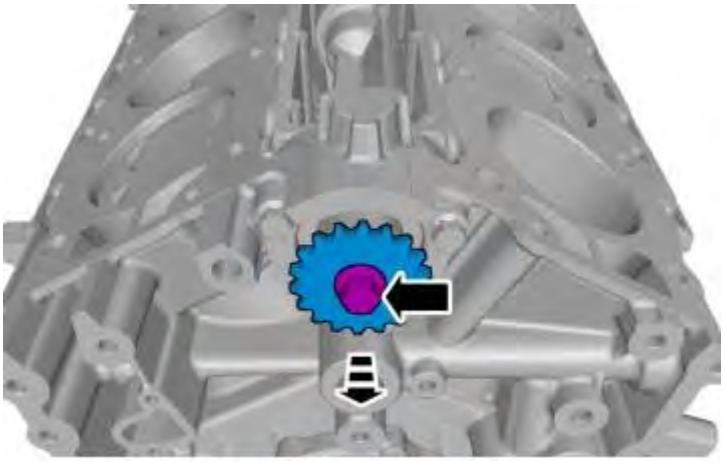

Fig. 416: Removing Balance Shaft Gear
Courtesy of VOLVO CARS CORPORATION

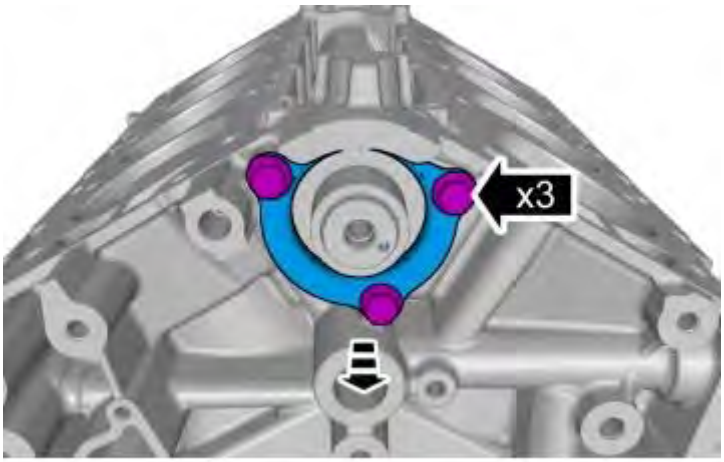

Fig. 417: Removing Balance Shaft Retainer
Courtesy of VOLVO CARS CORPORATION

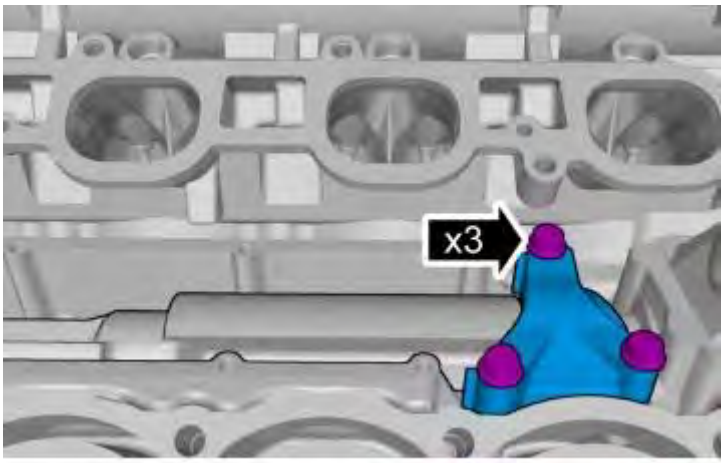

Fig. 418: Identifying Bearing Cap and Bolts
Courtesy of VOLVO CARS CORPORATION

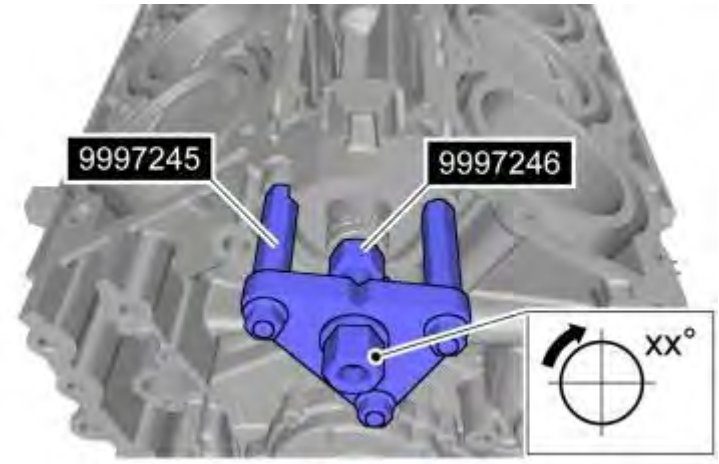

Fig. 419: Identifying Pulling Tool 9997246 and Adapters 9997245
Courtesy of VOLVO CARS CORPORATION

see **9997246** see **9997245**

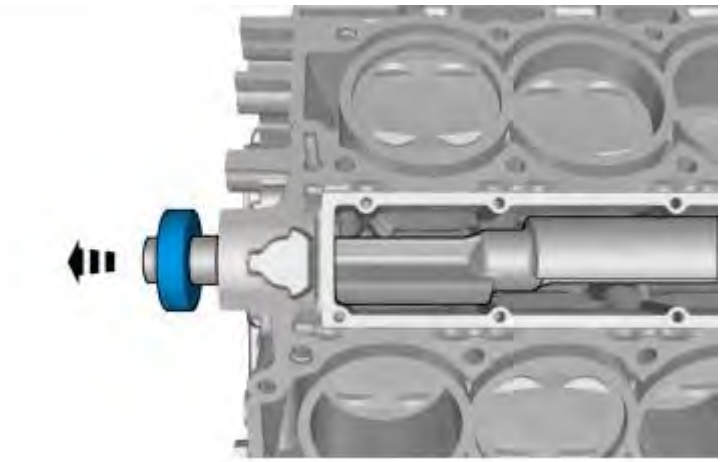

Fig. 420: Removing Balance Shaft (1 of 2)
Courtesy of VOLVO CARS CORPORATION

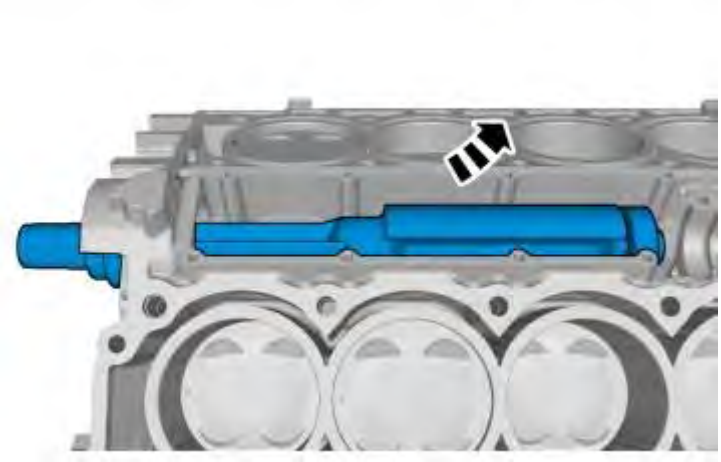

Fig. 421: Removing Balance Shaft (2 of 2)
Courtesy of VOLVO CARS CORPORATION

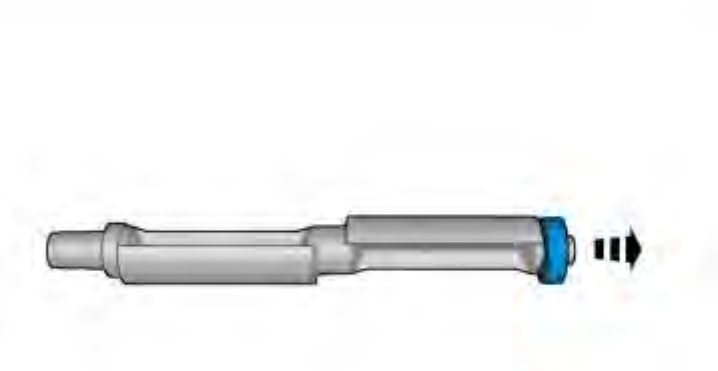

Fig. 422: Remove the Bearing
Courtesy of VOLVO CARS CORPORATION

VEHICLES WITH ENGINE SERIAL NUMBER UP TO 6833

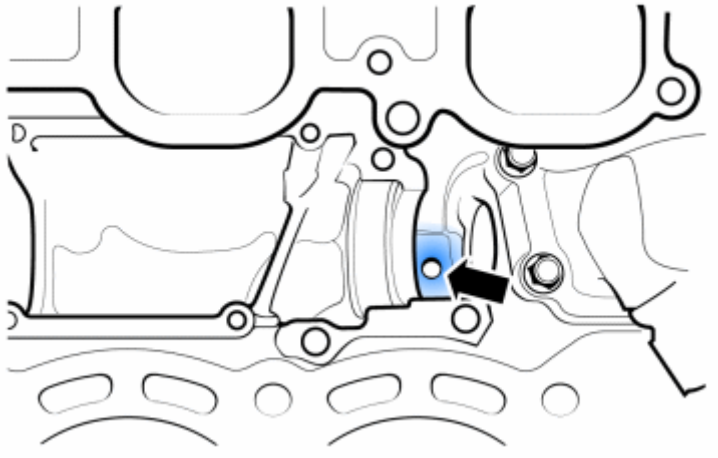

Fig. 423: Locating Hole
Courtesy of VOLVO CARS CORPORATION

VEHICLES WITH ENGINE SERIAL NUMBER UP TO 6833

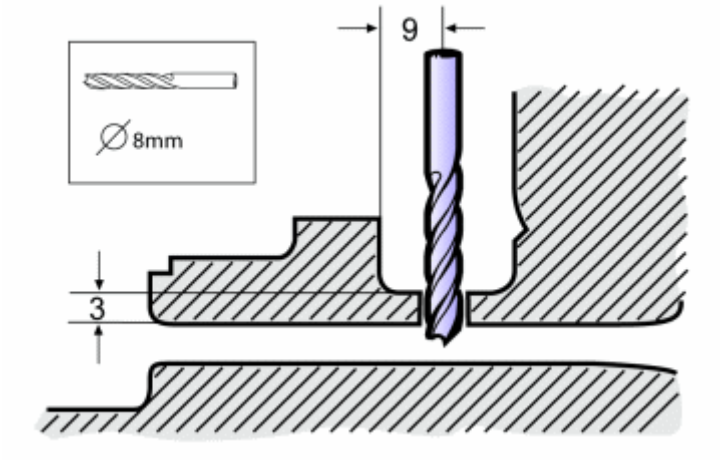

Fig. 424: Enlarge Hole to 8mm
Courtesy of VOLVO CARS CORPORATION

ALL VEHICLES

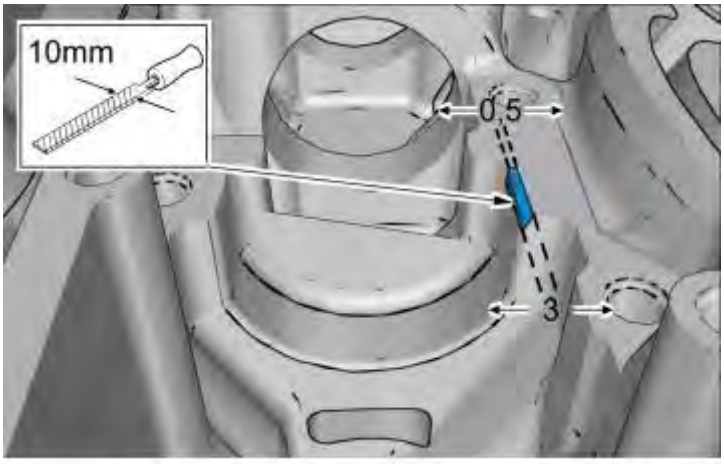

Fig. 425: Adding Bevel Edge
Courtesy of VOLVO CARS CORPORATION

CAUTION: Make sure that the area around the component is clean and free of foreign material.

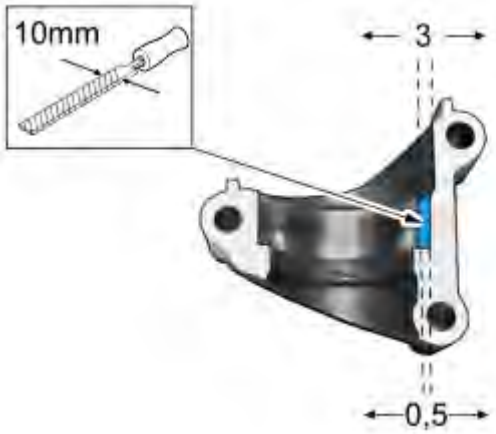

Fig. 426: Adding Bevel Edge
Courtesy of VOLVO CARS CORPORATION

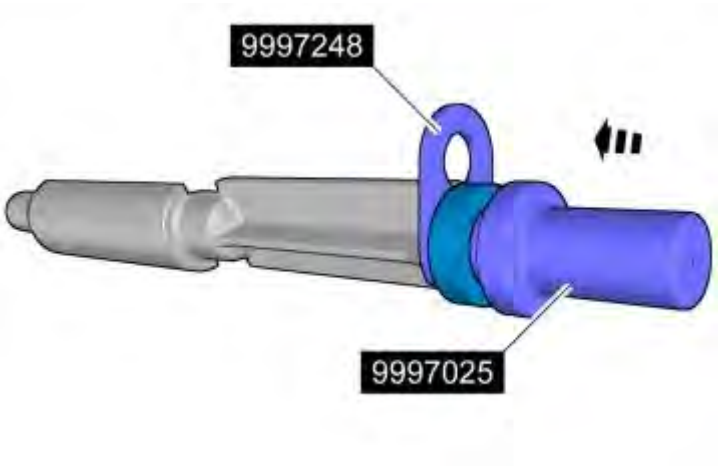

Fig. 427: Identifying Install Tools 9997248, 9997025
Courtesy of VOLVO CARS CORPORATION

see **9997248** see **9997025**

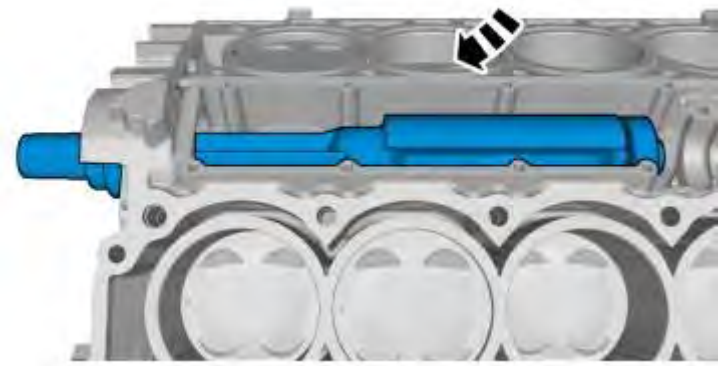

Fig. 428: Installing Balance Shaft (1 of 2)
Courtesy of VOLVO CARS CORPORATION

Fig. 429: Installing Balance Shaft (2 of 2)
Courtesy of VOLVO CARS CORPORATION

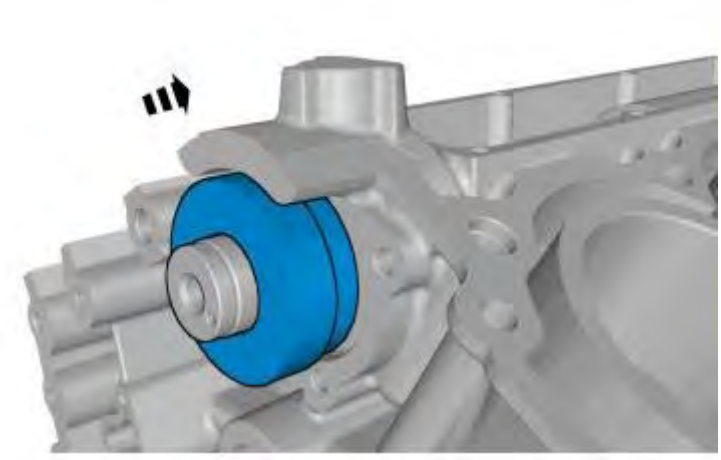

Fig. 430: Installing Bearing
Courtesy of VOLVO CARS CORPORATION

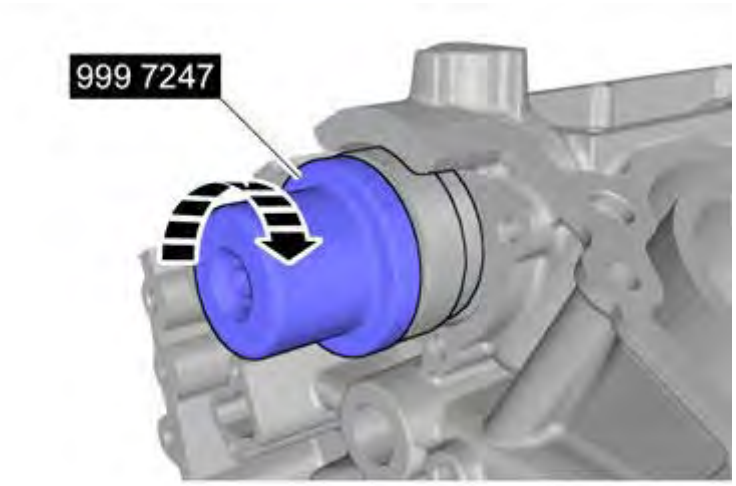

Fig. 431: Identifying Drift 9997247
Courtesy of VOLVO CARS CORPORATION

see **9997247**

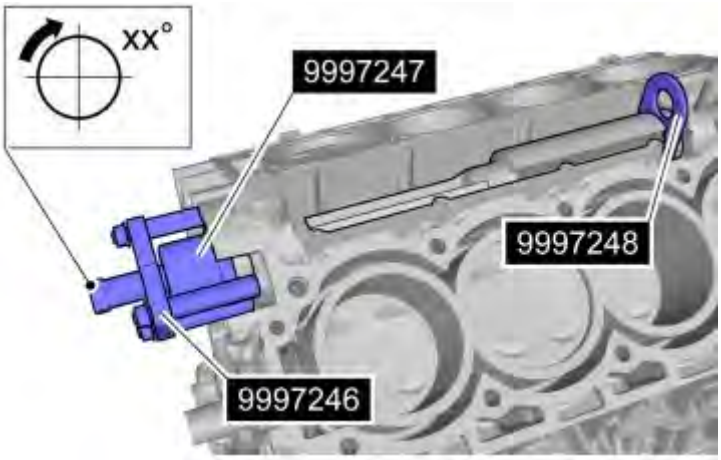

Fig. 432: Identifying Tools 9997246, 9997247, 9997248
Courtesy of VOLVO CARS CORPORATION

see **9997246** see **9997247** see **9997248**

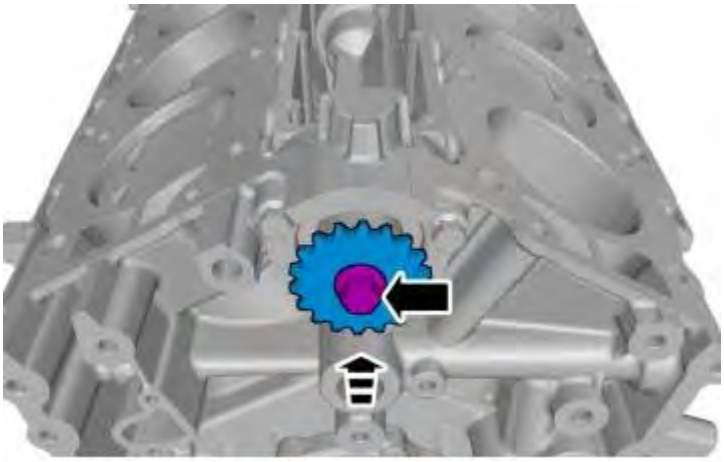

Fig. 433: Installing Gear and Bolt
Courtesy of VOLVO CARS CORPORATION

Torque: M10

50 Nm

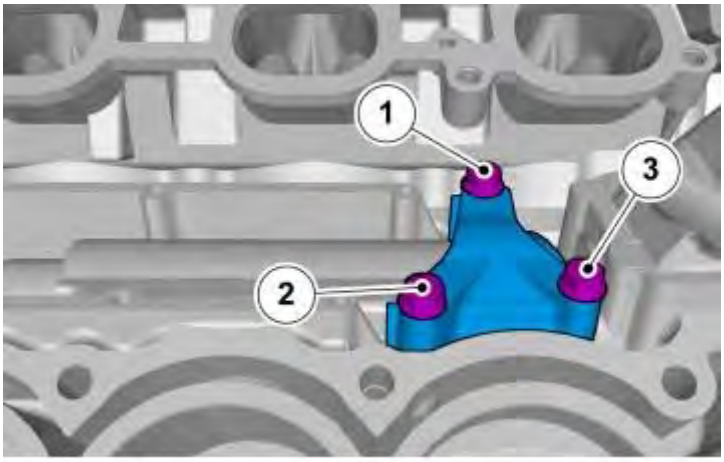

Fig. 434: Identifying Bearing Cap and Bolts
Courtesy of VOLVO CARS CORPORATION

Torque: M8

24 Nm

.

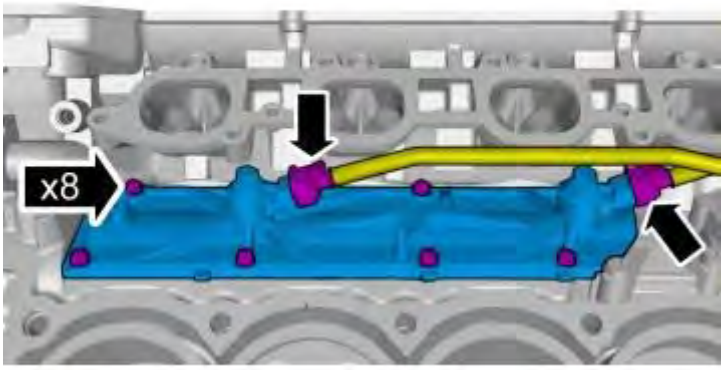

Fig. 435: Identifying 8 Screws and 2 Connectors
Courtesy of VOLVO CARS CORPORATION

Torque: M6

10 Nm

Install cylinder head, left. See **CYLINDER HEAD/GASKET, CYLINDER 1, 3, 5 AND 7 (BANK 1), REPLACING**

CAMSHAFT CHAIN, REPLACING

Special tools:

see **9997196**

see **9997198**

see **9995304**

see **9995716**

see **9997070**

see **9995460**

see **9997235**

see **9997236**

NOTE: **Since the illustrations in this service information are used for different model years and/or models, some variation may occur. However, the essential information in the illustrations is always correct.**

PREPARATORY WORK

Disconnect the battery ground cable. See **BATTERY, DISCONNECTING** .

This procedure requires that the car is raised. See **JACKING POINTS, BODY** .

Remove:

- the valve covers. See **VALVE COVER/GASKET, REPLACING**
- auxiliaries belt/tensioner. See **AUXILIARIES BELT/BELT TENSIONER, REPLACEMENT**
- upper torque rod. See **REPLACING THE TORQUE ROD**
- engine pad right. See **ENGINE PAD, RIGHT, REPLACEMENT**

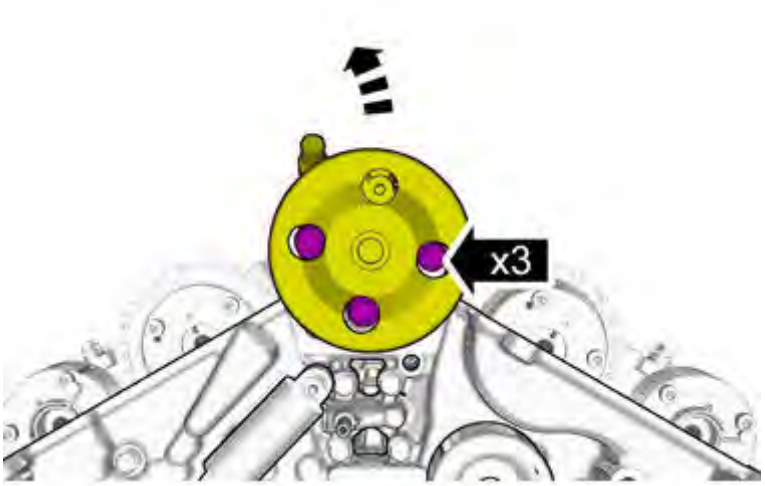

Fig. 436: Remove/Install Pulley
Courtesy of VOLVO CARS CORPORATION

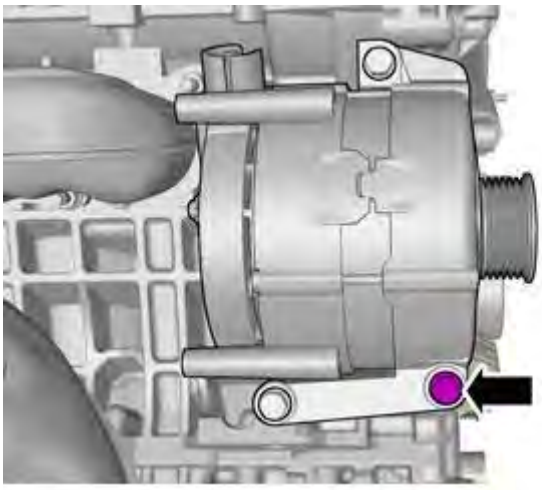

Fig. 437: Remove/Install Pulley
Courtesy of VOLVO CARS CORPORATION

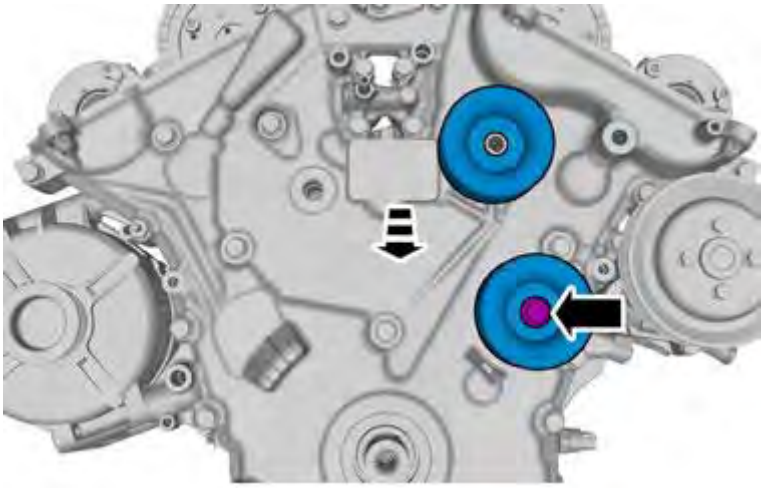

Fig. 438: Removing Belt Idler
Courtesy of VOLVO CARS CORPORATION

Tighten M10. See **TIGHTENING TORQUE**

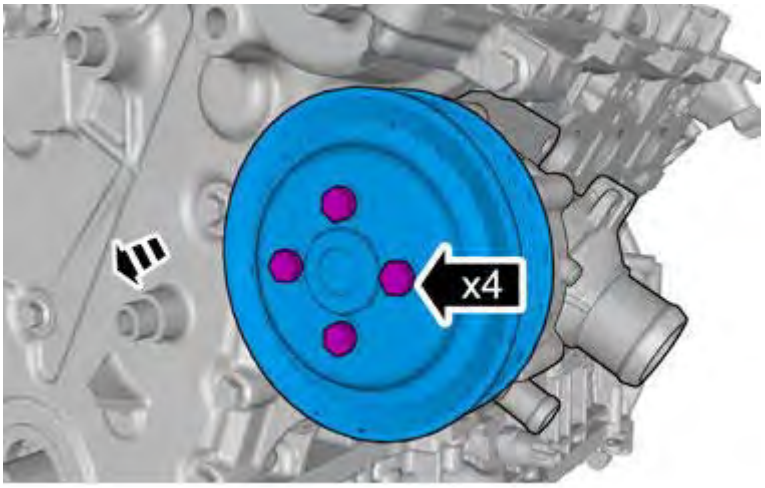

Fig. 439: Remove/Install Components
Courtesy of VOLVO CARS CORPORATION

Tighten M6. See **TIGHTENING TORQUE**

Fig. 440: Locating 24 Cover Bolts
Courtesy of VOLVO CARS CORPORATION

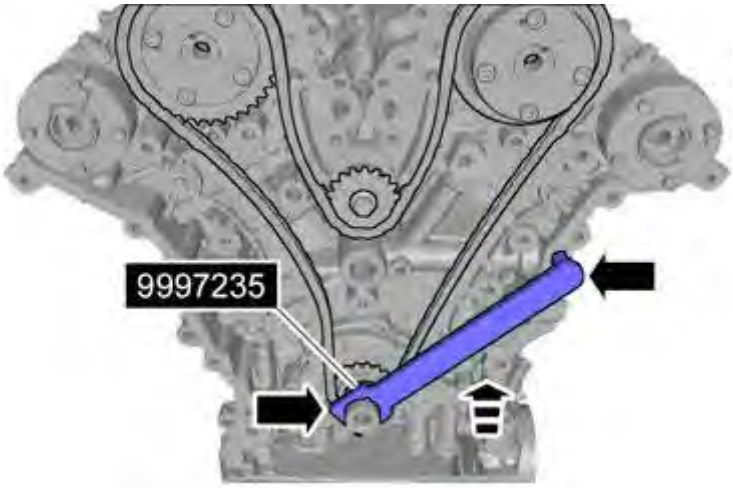

Fig. 441: Identifying Crankshaft Position Setting Tool 9997235
Courtesy of VOLVO CARS CORPORATION

see **9997235**

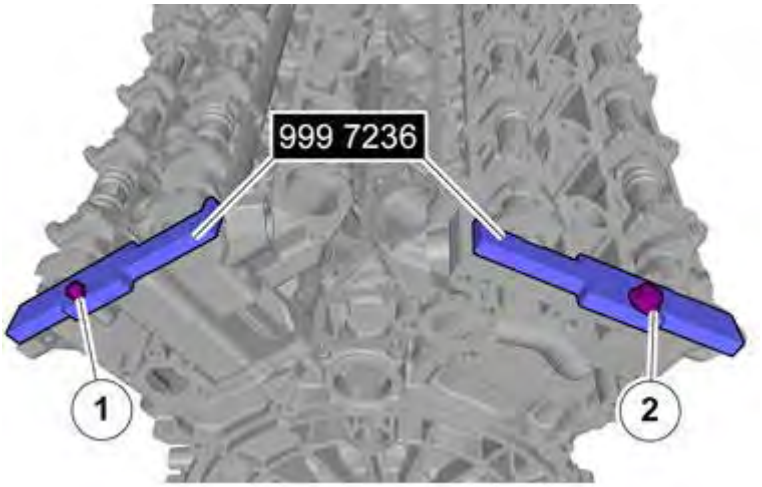

Fig. 442: Identifying Camshaft Position Setting Tools 9997236
Courtesy of VOLVO CARS CORPORATION

see **9997236**

1. Tighten M6. See **TIGHTENING TORQUE**
2. Tighten M10. See **TIGHTENING TORQUE**

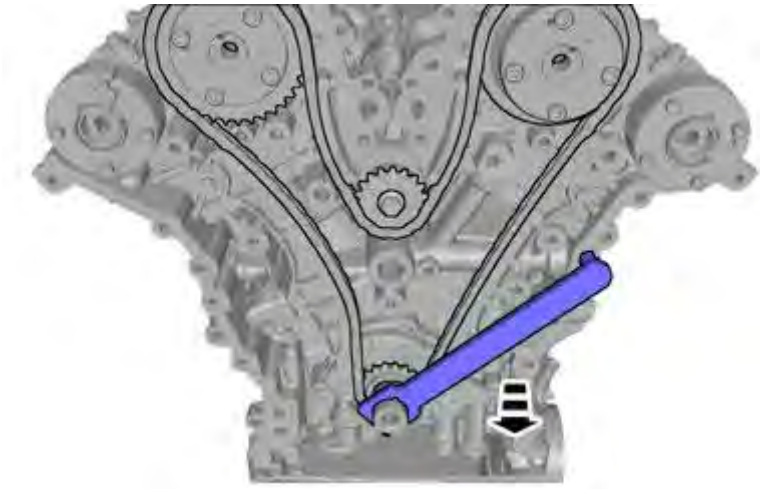

Fig. 443: Removing Tool
Courtesy of VOLVO CARS CORPORATION

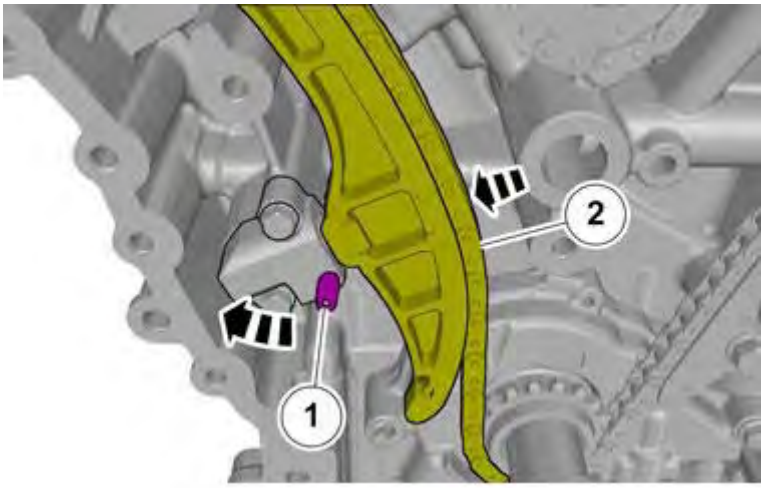

Fig. 444: Depressing Chain Tensioner
Courtesy of VOLVO CARS CORPORATION

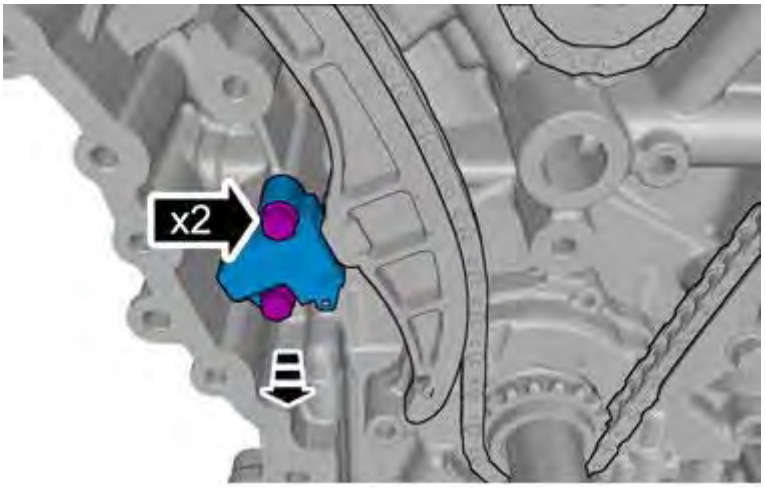

Fig. 445: Removing Chain Tensioner
Courtesy of VOLVO CARS CORPORATION

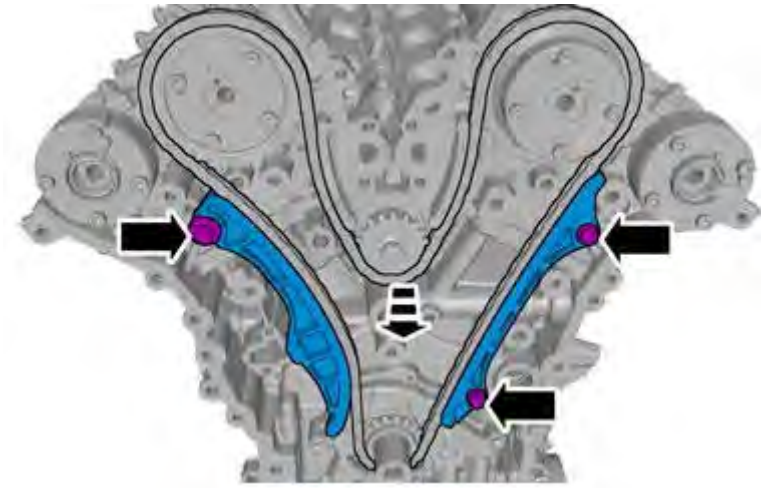

Fig. 446: Identifying Chain Guide Bolts
Courtesy of VOLVO CARS CORPORATION

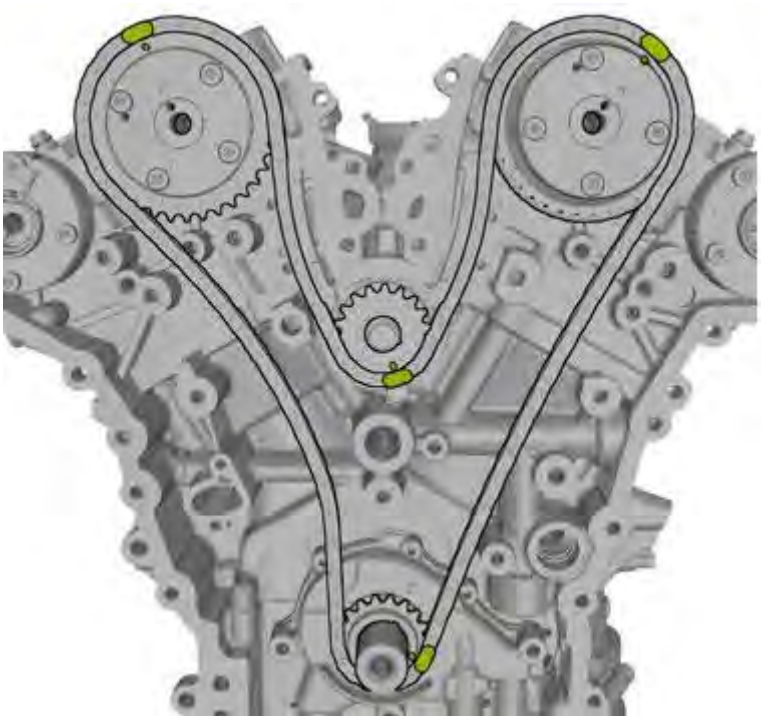

Fig. 447: Position Noted Before Removal.
Courtesy of VOLVO CARS CORPORATION

CAUTION: Note the position of each component before removal.

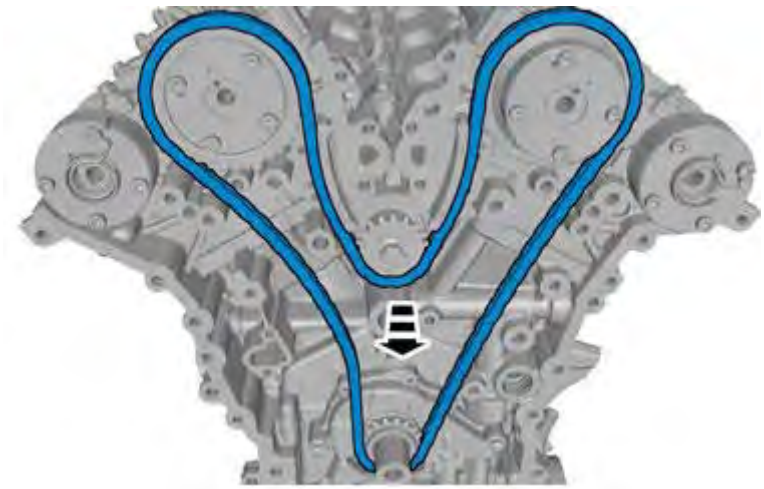

Fig. 448: Removing Chain
Courtesy of VOLVO CARS CORPORATION

INSTALLATION

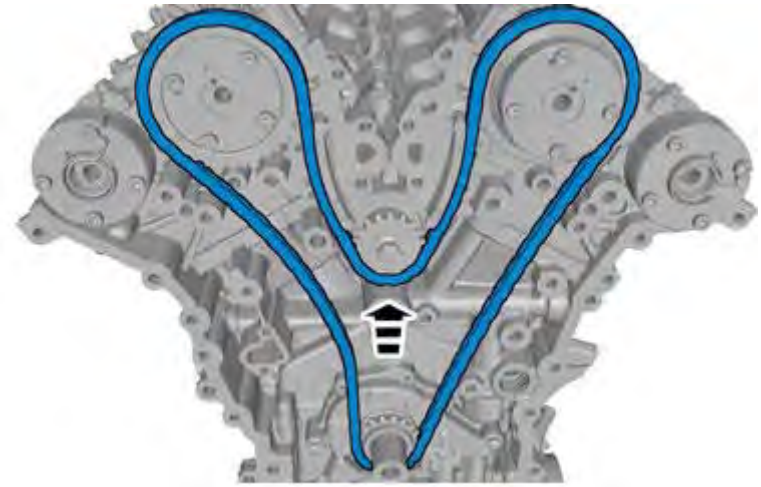

Fig. 449: Installing Chain
Courtesy of VOLVO CARS CORPORATION

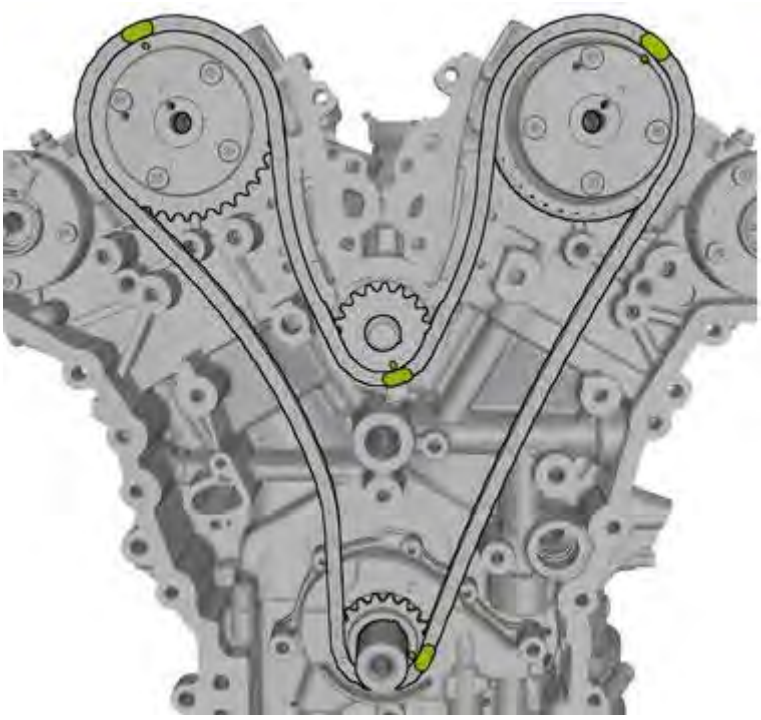

Fig. 450: Position Noted Before Removal.
Courtesy of VOLVO CARS CORPORATION

NOTE: Make sure that these components are installed to the noted removal position.

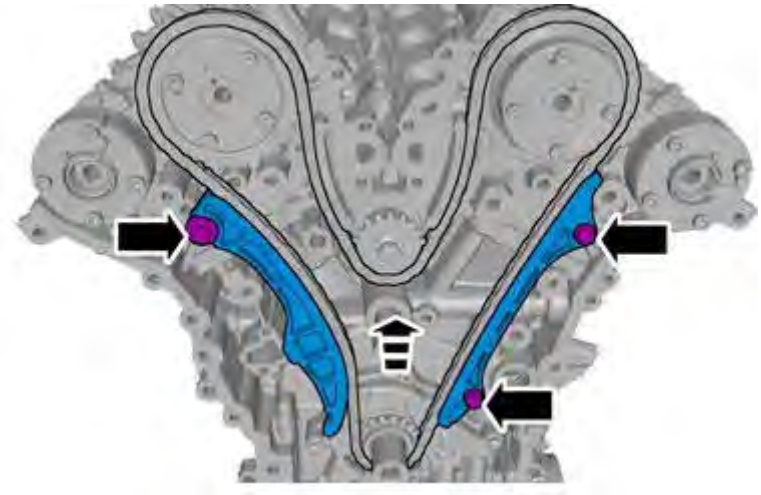

Fig. 451: Installing Guides
Courtesy of VOLVO CARS CORPORATION

Tighten M8. See **TIGHTENING TORQUE**

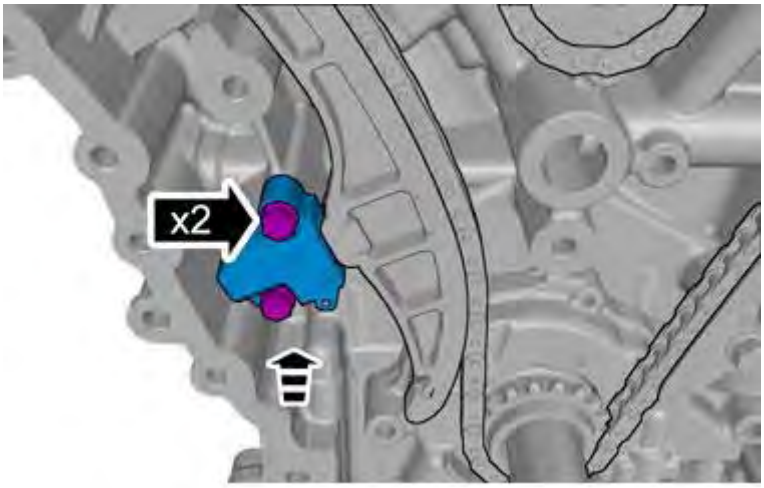

Fig. 452: Installing Tensioner
Courtesy of VOLVO CARS CORPORATION

Tighten M6. See **TIGHTENING TORQUE**

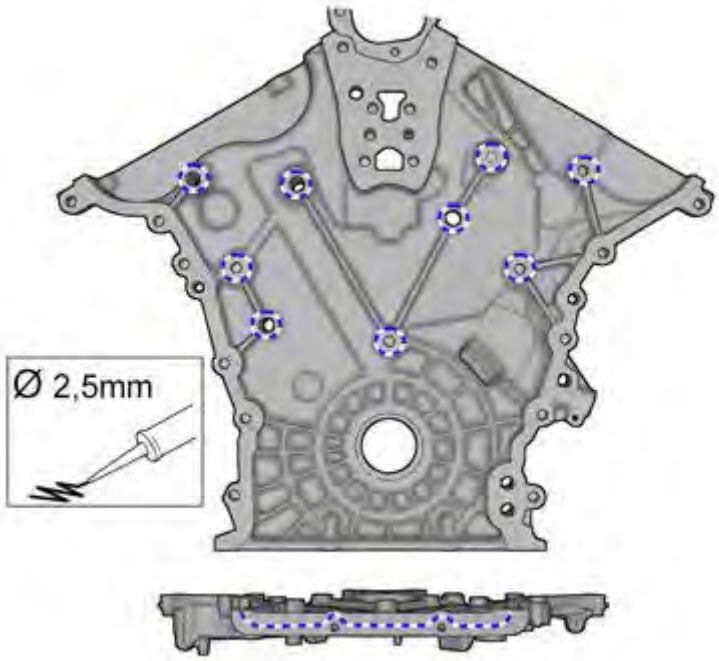

Fig. 453: Applying Liquid gasket, 30757050
Courtesy of VOLVO CARS CORPORATION

Use: Sealant, 30757050

CAUTION: Take extra care not to damage the mating faces.

NOTE: Make sure that the mating faces are clean and free of foreign material.

NOTE: The component must be installed within 5 minutes of applying the sealant.

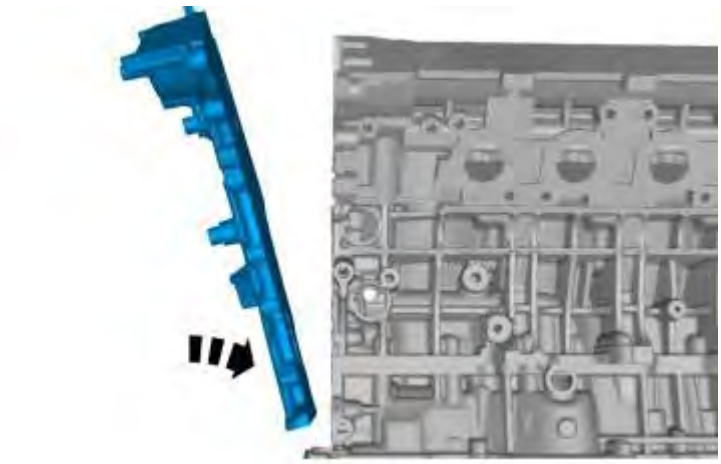

Fig. 454: Installing the Timing Chain Cover

Courtesy of VOLVO CARS CORPORATION

Fig. 455: Locating 24 Cover Bolts
Courtesy of VOLVO CARS CORPORATION

Tighten M8. See **TIGHTENING TORQUE**

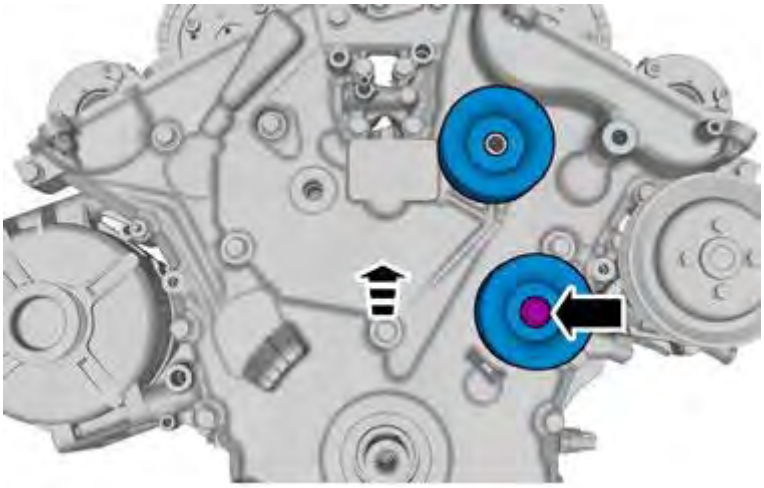

Fig. 456: Installing Belt Idler
Courtesy of VOLVO CARS CORPORATION

Tighten centre bolt, idler roller. See **TIGHTENING TORQUE**

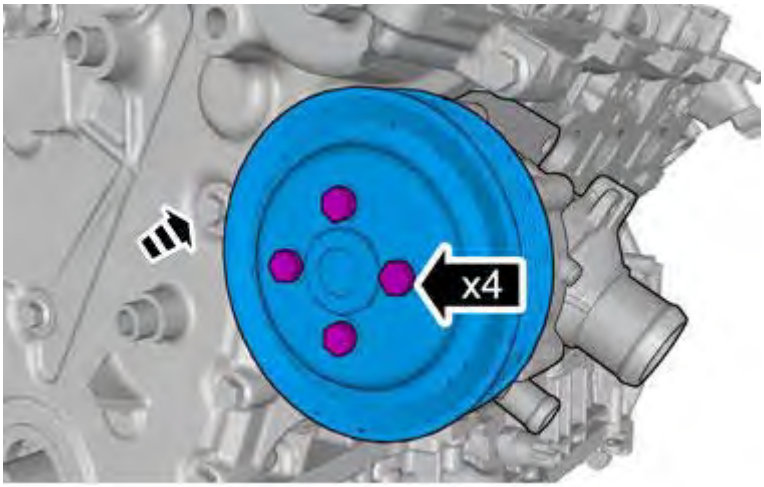

Fig. 457: Identifying Water Pump Pulley Bolts
Courtesy of VOLVO CARS CORPORATION

Tighten M6. See **TIGHTENING TORQUE**

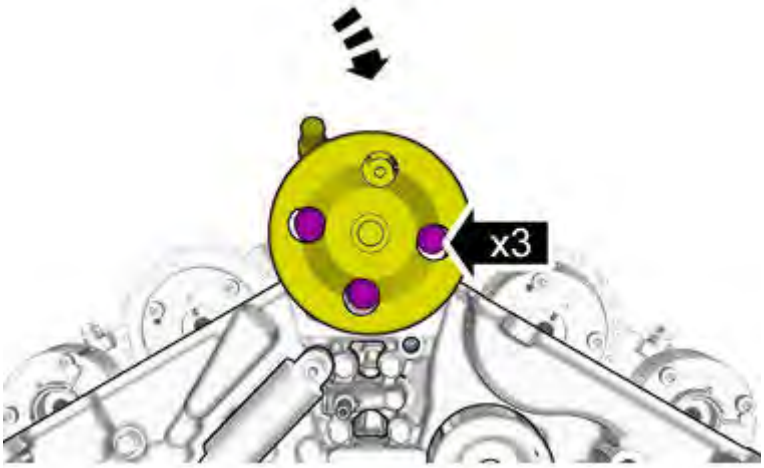

Fig. 458: Remove/Install Components
Courtesy of VOLVO CARS CORPORATION

Tighten M8. See **TIGHTENING TORQUE**

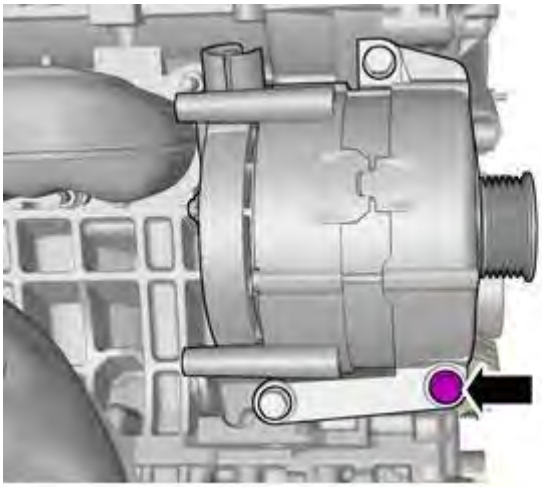

Fig. 459: Remove/Install Components
Courtesy of VOLVO CARS CORPORATION

Tighten M8. See **TIGHTENING TORQUE**

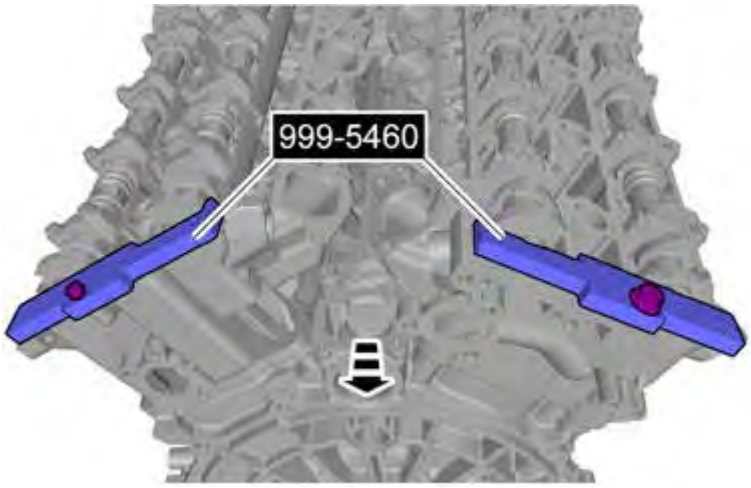

Fig. 460: Removing Tool Set
Courtesy of VOLVO CARS CORPORATION

Install crankshaft seal, front. See **CRANKSHAFT SEAL, FRONT, REPLACING**

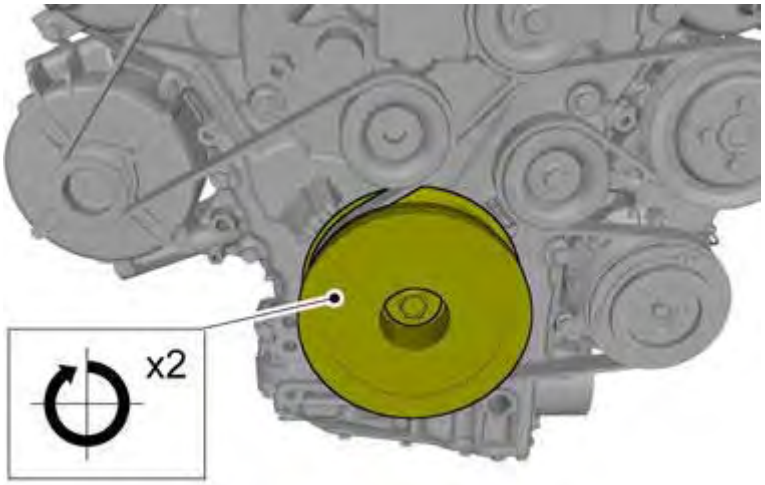

Fig. 461: Rotating Crankshaft 2 Revolutions
Courtesy of VOLVO CARS CORPORATION

Install the following items:

- valve cover, see **BATTERY, DISCONNECTING**
- tensioner accessories belt, see **AUXILIARIES BELT/BELT TENSIONER, REPLACEMENT**
- engine support insulator, right, see **ENGINE PAD, RIGHT, REPLACEMENT**
- Upper torque rod, see **REPLACING THE TORQUE ROD**

Perform battery disconnecting and connecting, see **BATTERY, DISCONNECTING**

VARIABLE VALVE TIMING SOLENOID, REPLACING

NOTE: **The illustrations in this service information are used for different model years and/or models. Some variation may occur. However, the essential information in the illustrations is always correct.**

REMOVAL

REMOVING THE VALVE COVER

Remove the valve cover. See: **VALVE COVER/GASKET, REPLACING** .

REMOVING THE VARIABLE VALVE TIMING SOLENOID

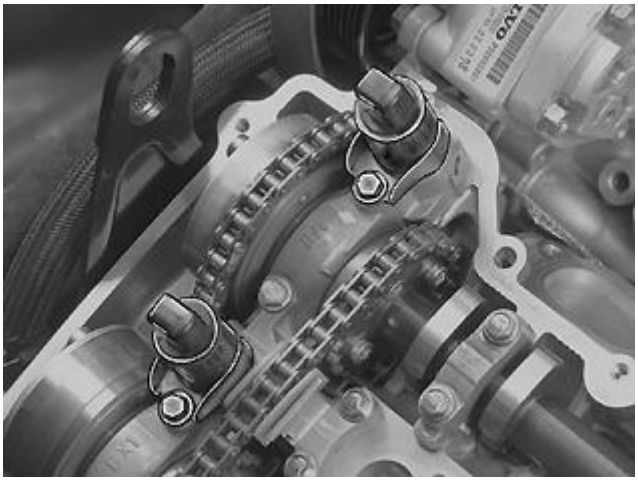

Fig. 462: Identifying Variable Valve Timing Solenoid
Courtesy of VOLVO CARS CORPORATION

Remove:

- the 1 M6 screw
- the variable valve timing solenoid by pulling it straight up.

INSTALLATION

NOTE: For tightening torques, see: TIGHTENING TORQUE .

INSTALLING THE VARIABLE VALVE TIMING SOLENOID

Install:

- the variable valve timing (VVT) solenoid
- the 1 M6 screw; tighten.

INSTALLING THE VALVE COVER

Install the valve cover. See: **VALVE COVER/GASKET, REPLACING** .

VVT UNIT, LEFT CYLINDER HEAD

Special tools	
	T9997236 POSITION SETTING TOOL **Tool number:** T9997236 **Tool description:** POSITION SETTING TOOL **Tool boards:**
	T9997232 WRENCH **Tool number:** T9997232 **Tool description:** WRENCH

	Tool boards:
	T9997229 ANVIL BLOCK **Tool number:** T9997229 **Tool description:** ANVIL BLOCK **Tool boards:**

Materials	
Designation	**Part number**
H Cleaner	1161436-9
Tape	

Remove camshaft chain. See **CAMSHAFT CHAIN, REPLACING**

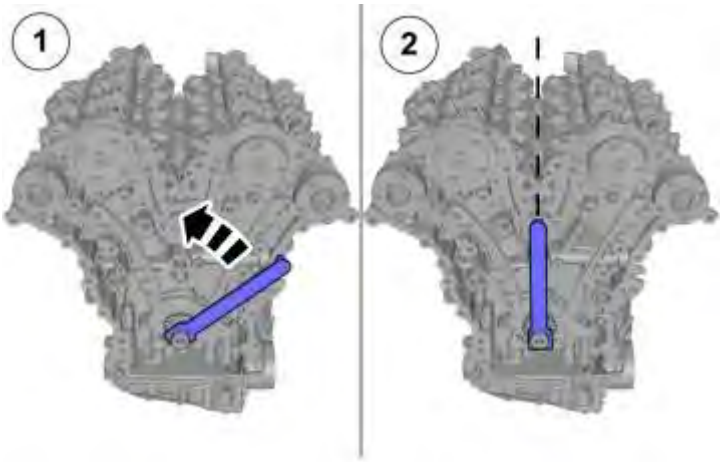

Fig. 463: Turning Crankshaft to Avoid Piston/Valve Contact
Courtesy of VOLVO CARS CORPORATION

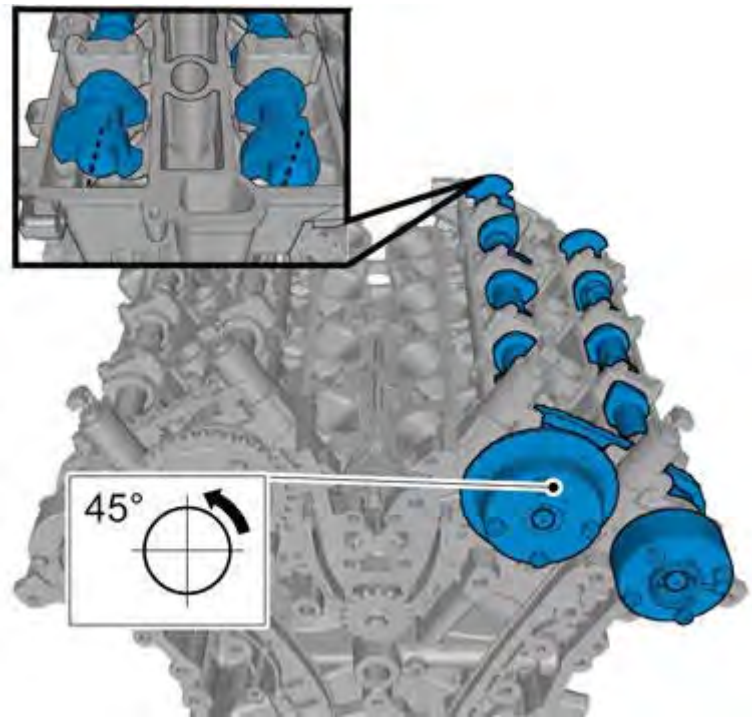

Fig. 464: Valve Spring Load Minimized
Courtesy of VOLVO CARS CORPORATION

CAUTION: Make sure to turn the camshaft to a position where valve spring load is minimized.

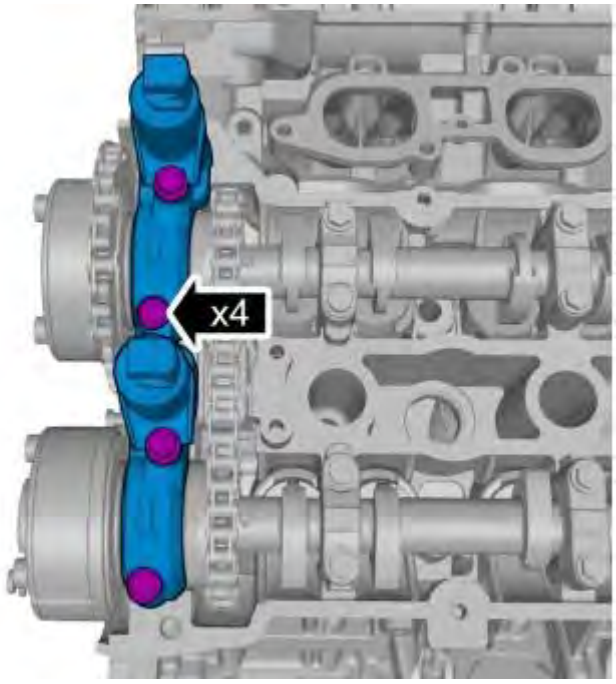

Fig. 465: Removing/Installing Front Bearing Cap
Courtesy of VOLVO CARS CORPORATION

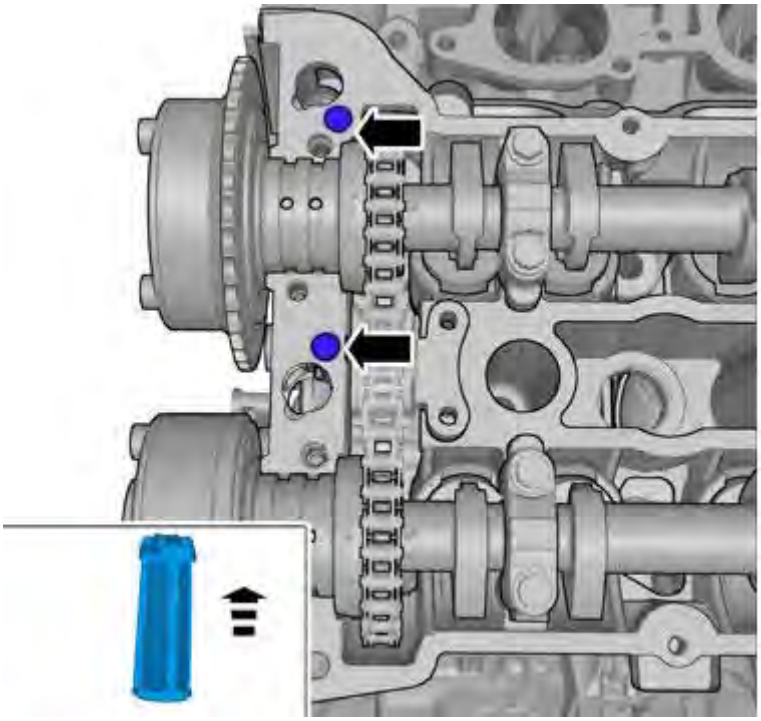

Fig. 466: Noting Position Before Removal
Courtesy of VOLVO CARS CORPORATION

CAUTION: Note the position of each component before removal.

FOLLOWNG STEPS CONCERN INLET CAMSHAFT

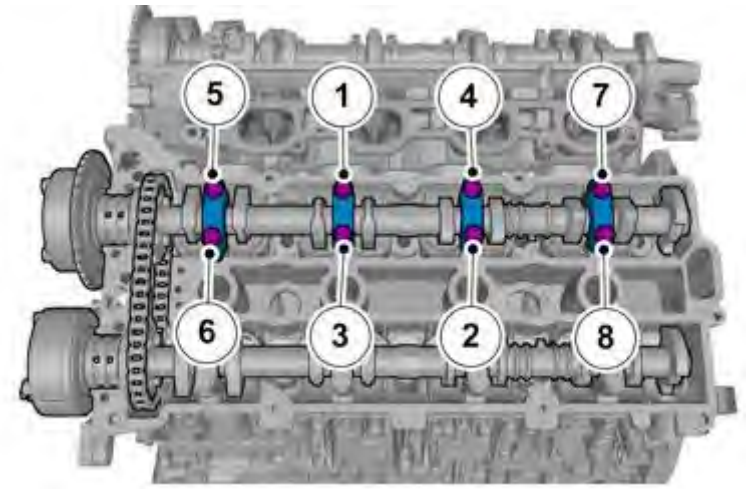

Fig. 467: Noting Bearing Position Before Removal and Sequence
Courtesy of VOLVO CARS CORPORATION

CAUTION: Note the position of each component before removal.

Loosen each bolt 2 turns at a time until all bolts are removed.

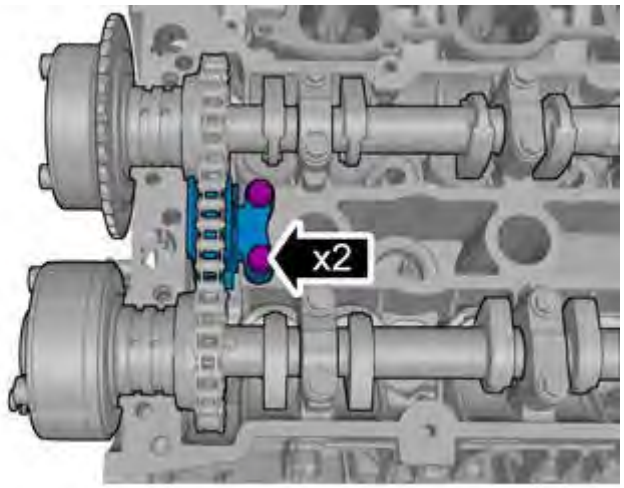

Fig. 468: Identifying Chain Guide Bolts
Courtesy of VOLVO CARS CORPORATION

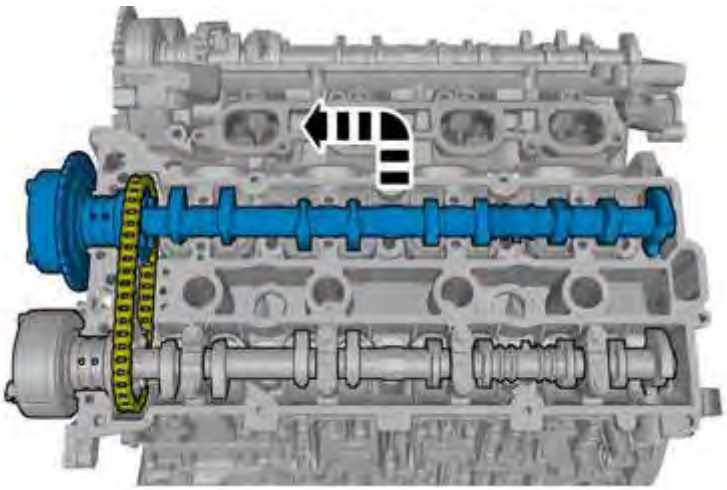

Fig. 469: Removing the Camshaft
Courtesy of VOLVO CARS CORPORATION

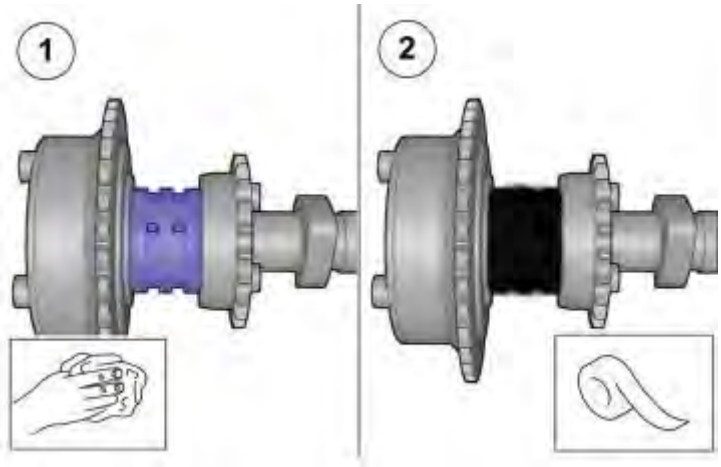

Fig. 470: H Cleaner, 1161436-9 and Sealing Tape
Courtesy of VOLVO CARS CORPORATION

1. **Use:** H Cleaner, 1161436-9
2. **Use:** Tape,

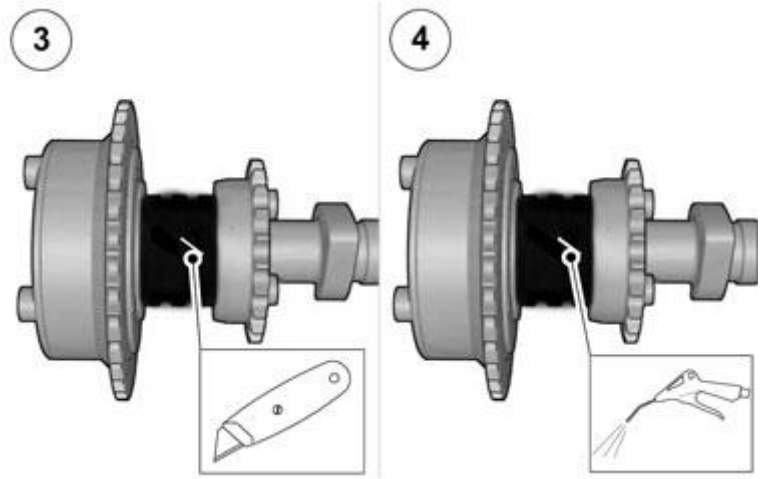

Fig. 471: Applying Air Pressure to Hole in Tape
Courtesy of VOLVO CARS CORPORATION

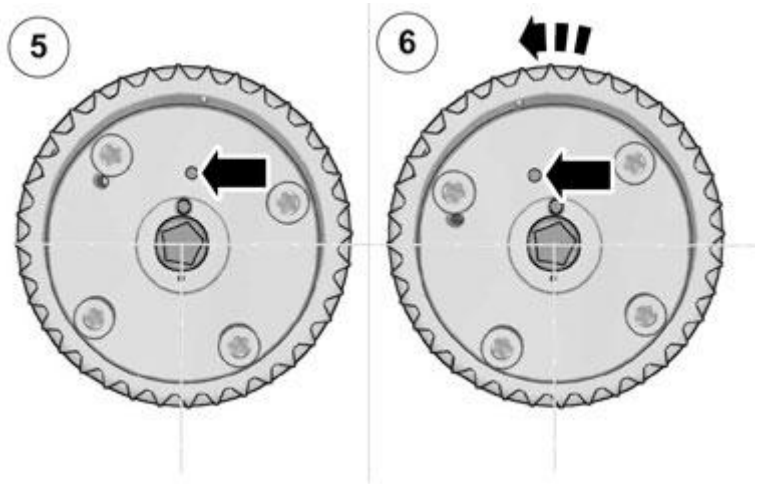

Fig. 472: Noting Movement of Chain Sprocket
Courtesy of VOLVO CARS CORPORATION

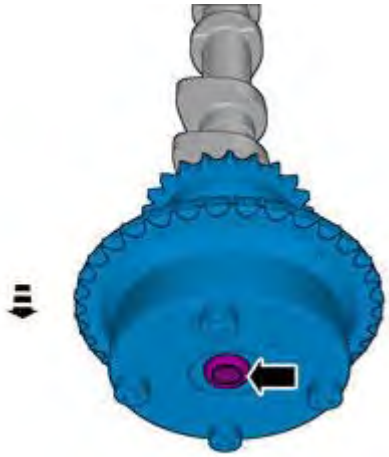

Fig. 473: Removing VVT Unit
Courtesy of VOLVO CARS CORPORATION

FOLLOWING STEPS CONCERN EXHAUST CAMSHAFT

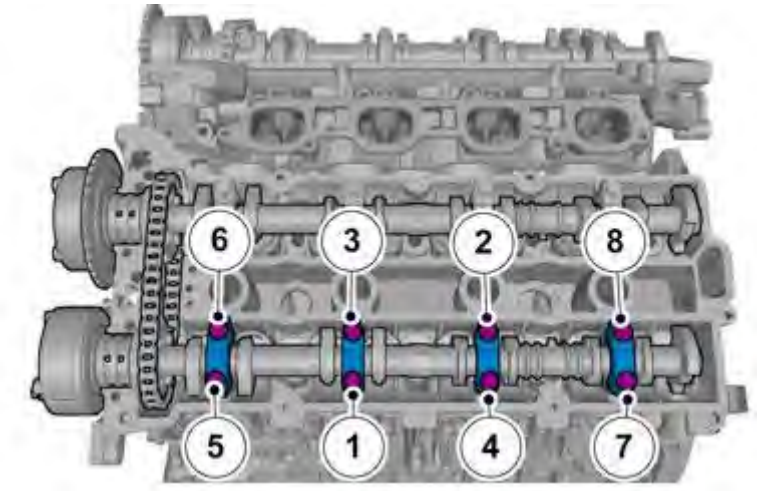

Fig. 474: Bearing Caps Installed as Removed, Tightened In Sequence
Courtesy of VOLVO CARS CORPORATION

CAUTION: Note the position of each component before removal.

Loosen each bolt 2 turns at a time until all bolts are removed.

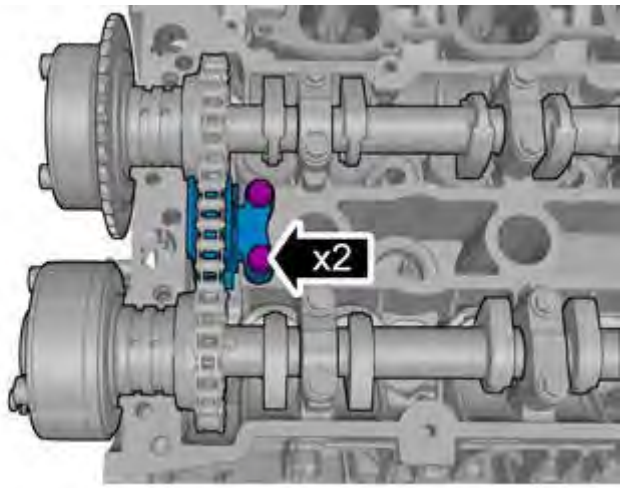

Fig. 475: Identifying Chain Guide Bolts
Courtesy of VOLVO CARS CORPORATION

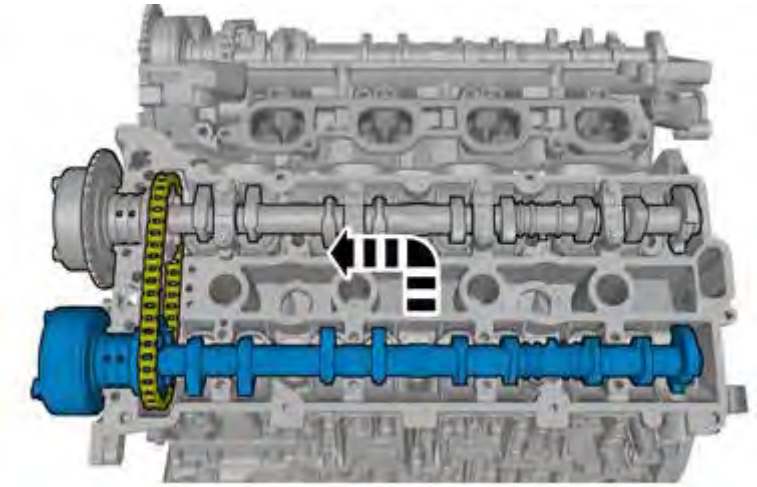

Fig. 476: Removing Camshaft
Courtesy of VOLVO CARS CORPORATION

Fig. 477: Removing VVT Unit
Courtesy of VOLVO CARS CORPORATION

FOLLOWING STEPS CONCERN EXHAUST CAMSHAFT

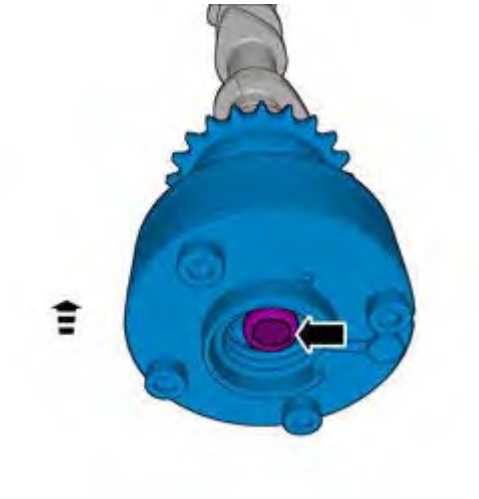

Fig. 478: Installing VVT Unit
Courtesy of VOLVO CARS CORPORATION

NOTE: Only tighten the bolt finger tight at this stage.

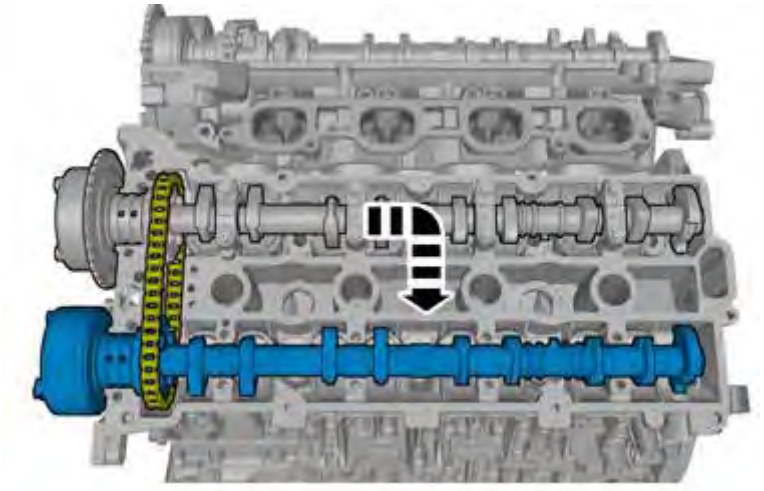

Fig. 479: Installing Camshaft
Courtesy of VOLVO CARS CORPORATION

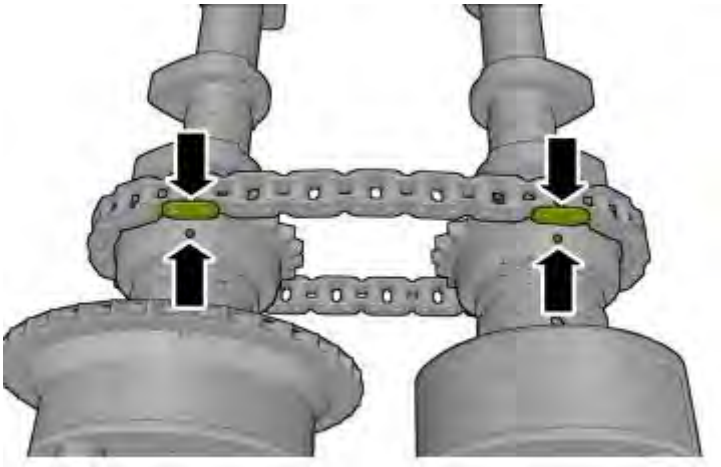

Fig. 480: Identifying Alignment Marks
Courtesy of VOLVO CARS CORPORATION

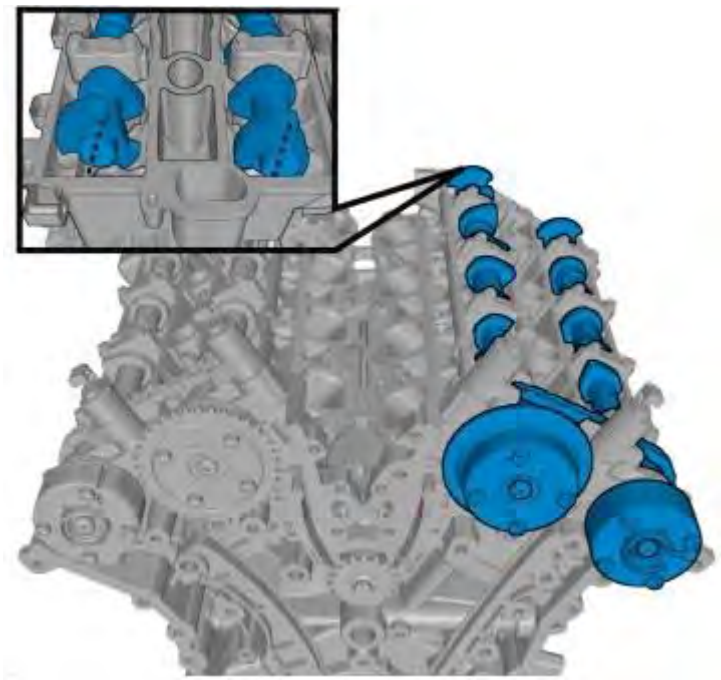

Fig. 481: Valve Spring Load Minimized
Courtesy of VOLVO CARS CORPORATION

CAUTION: Make sure to turn the camshaft to a position where valve spring load is minimized.

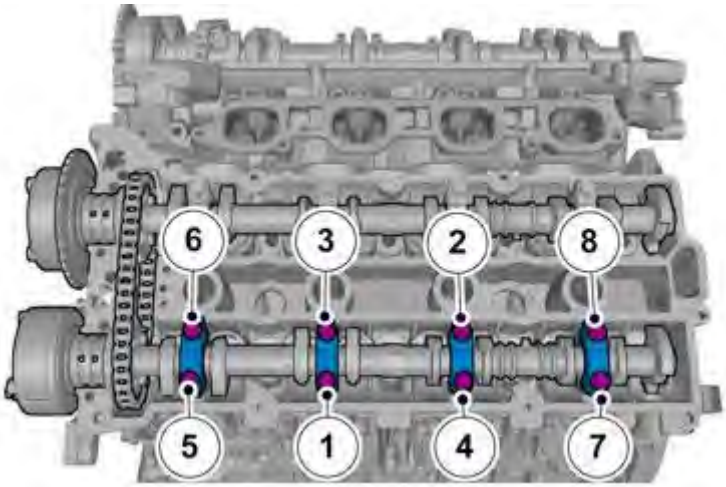

Fig. 482: Bearing Caps Installed as Removed, Tightened In Sequence
Courtesy of VOLVO CARS CORPORATION

CAUTION: Take extra care when handling the components.

NOTE: Make sure that these components are installed to the noted removal position.

Tighten each bolt 1 turn at a time.

Torque: M6

10 Nm

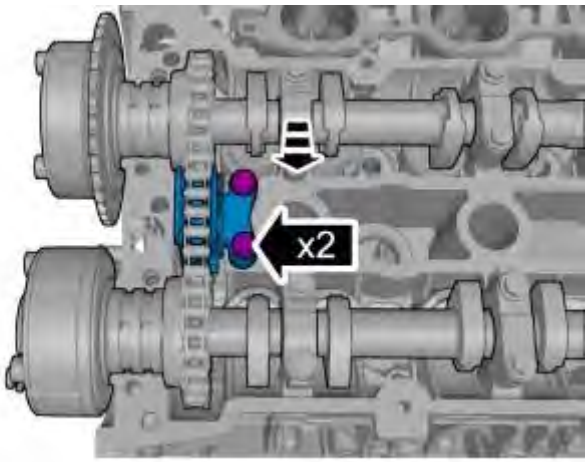

Fig. 483: Installing Chain Guide
Courtesy of VOLVO CARS CORPORATION

Torque: M6

10 Nm

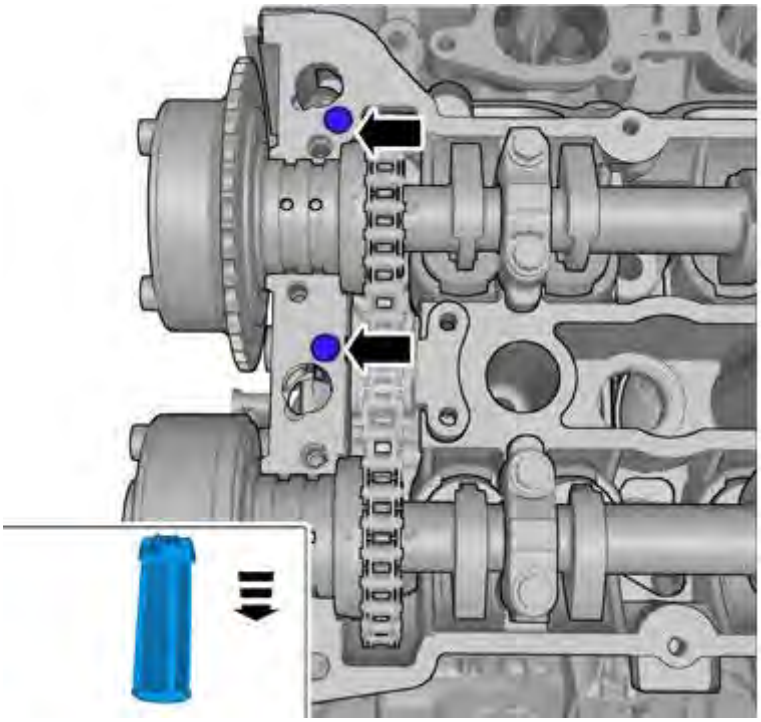

Fig. 484: Replace Screen With New Component
Courtesy of VOLVO CARS CORPORATION

NOTE: Make sure that a new component is installed.

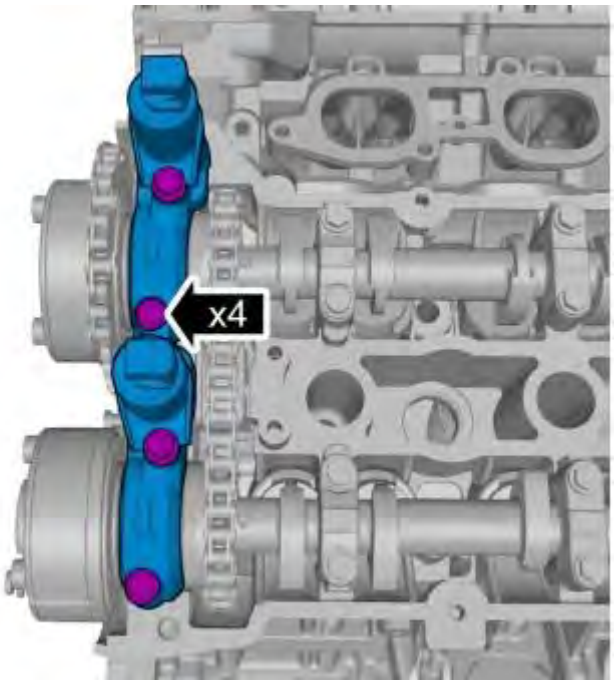

Fig. 485: Removing/Installing Front Bearing Cap

Courtesy of VOLVO CARS CORPORATION

Torque: M6

10 Nm

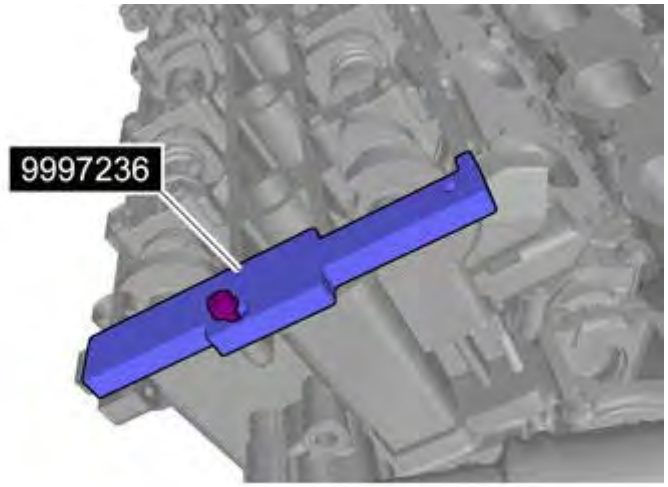

Fig. 486: Identifying Positioning Tool 9997236
Courtesy of VOLVO CARS CORPORATION

see **9997236**

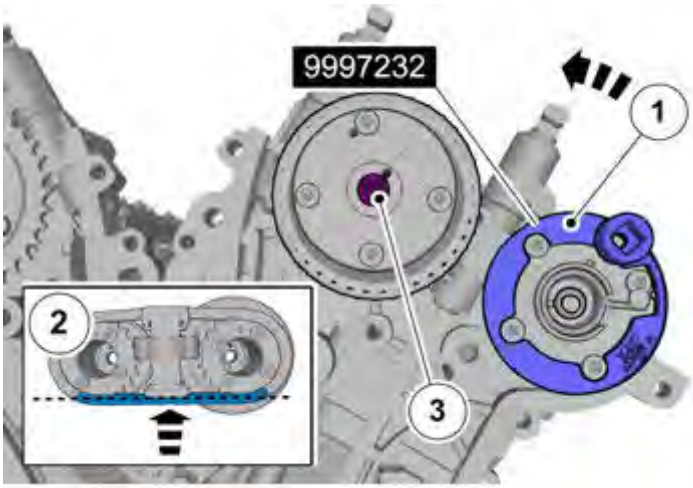

Fig. 487: Identifying Key Tool 9997232 Installed
Courtesy of VOLVO CARS CORPORATION

1. see **9997232**

NOTE: **Make sure that there is no slack in the lower part of the transmission chain.**

2. **Torque:** Center screw, VVT unit (Pre-tightening)

   20 Nm

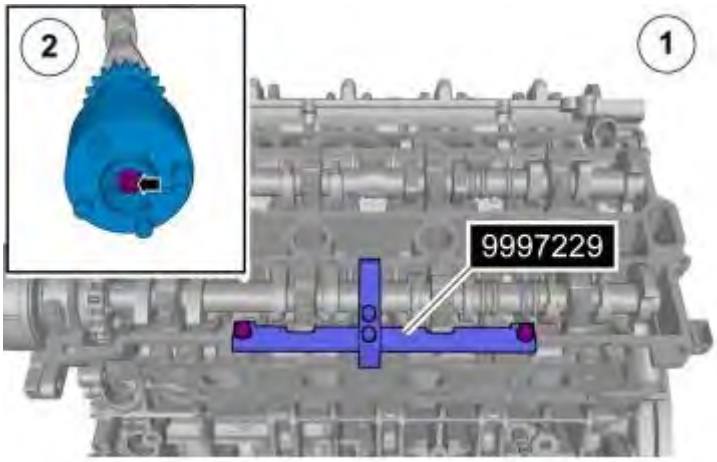

Fig. 488: Identifying Counterhold Tool 9997229
Courtesy of VOLVO CARS CORPORATION

1. see **9997229**
2. **Torque:** M12

   80 Nm

FOLLOWNG STEPS CONCERN INLET CAMSHAFT

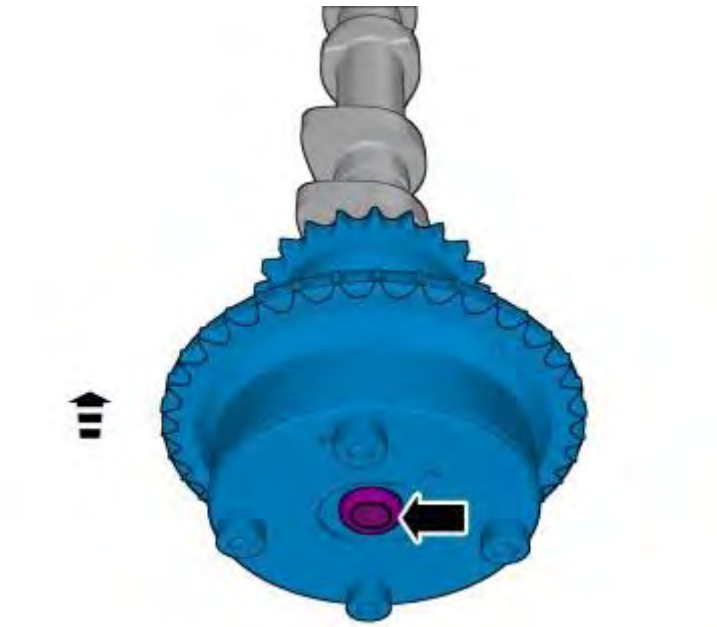

Fig. 489: Installing VVT Unit

Courtesy of VOLVO CARS CORPORATION

NOTE: Only tighten the bolt finger tight at this stage.

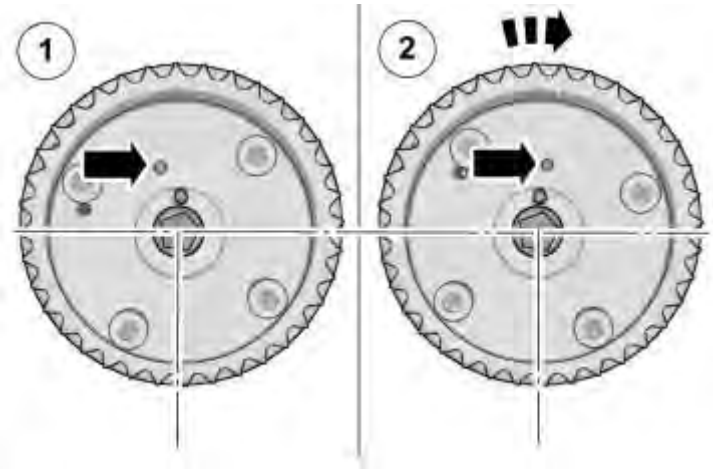

Fig. 490: Verifying Movement
Courtesy of VOLVO CARS CORPORATION

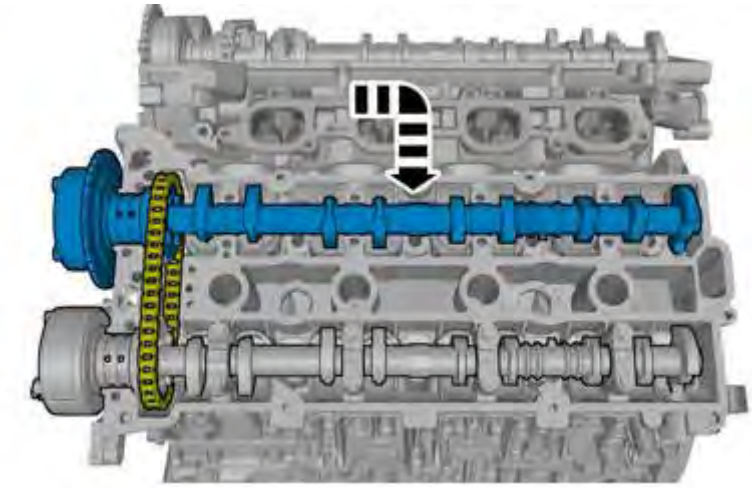

Fig. 491: Installing the Camshaft
Courtesy of VOLVO CARS CORPORATION

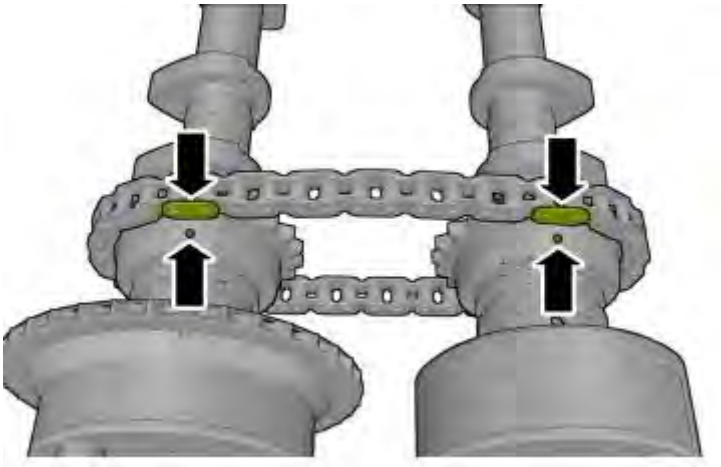

Fig. 492: Identifying Alignment Marks
Courtesy of VOLVO CARS CORPORATION

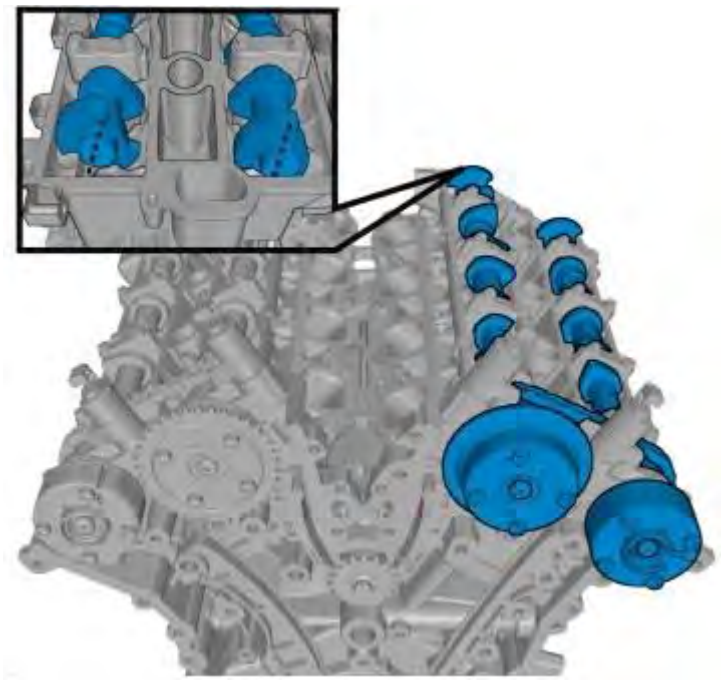

Fig. 493: Valve Spring Load Minimized
Courtesy of VOLVO CARS CORPORATION

CAUTION: Make sure to turn the camshaft to a position where valve spring load is minimized.

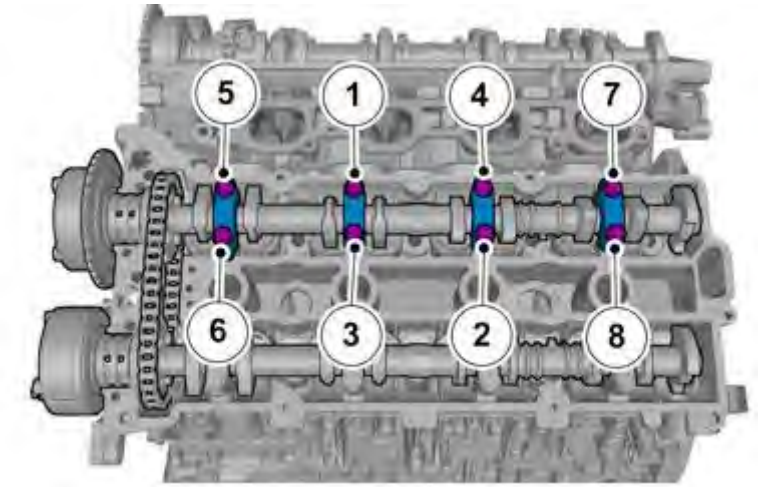

Fig. 494: Identifying Removal Sequence
Courtesy of VOLVO CARS CORPORATION

CAUTION: Take extra care when handling the components.

NOTE: Make sure that these components are installed to the noted removal position.

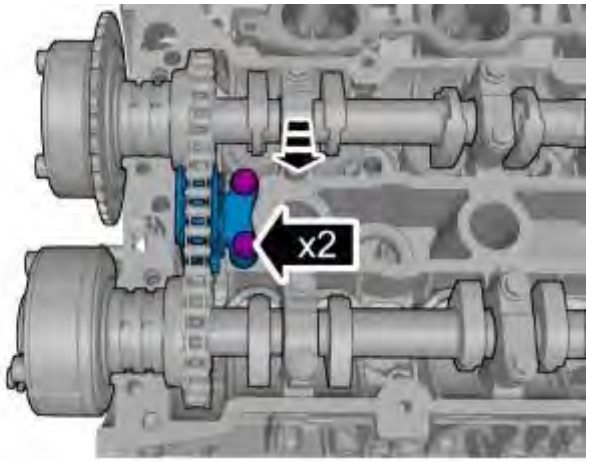

Fig. 495: Installing Chain Guide
Courtesy of VOLVO CARS CORPORATION

Torque: M6

10 Nm

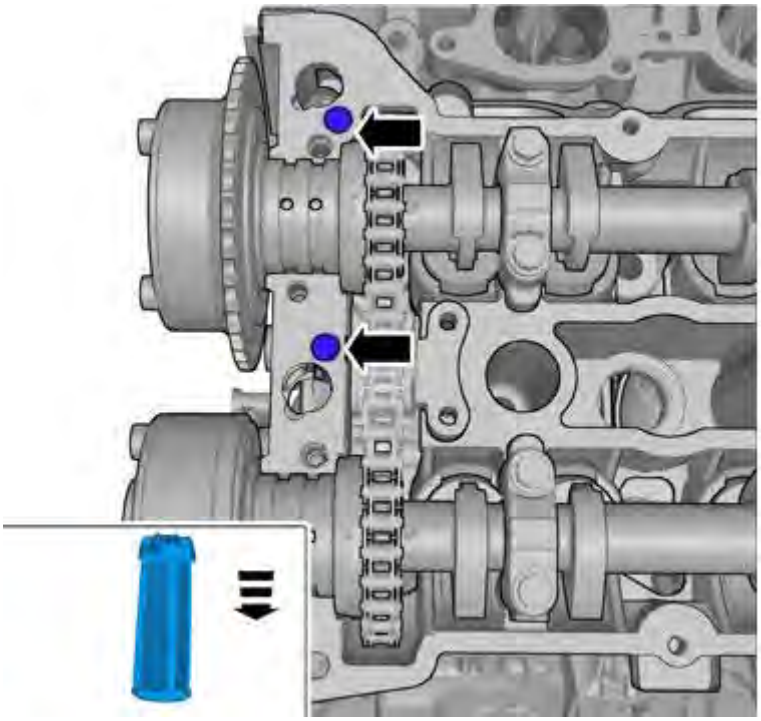

Fig. 496: Replace Screen With New Component
Courtesy of VOLVO CARS CORPORATION

NOTE: Make sure that a new component is installed.

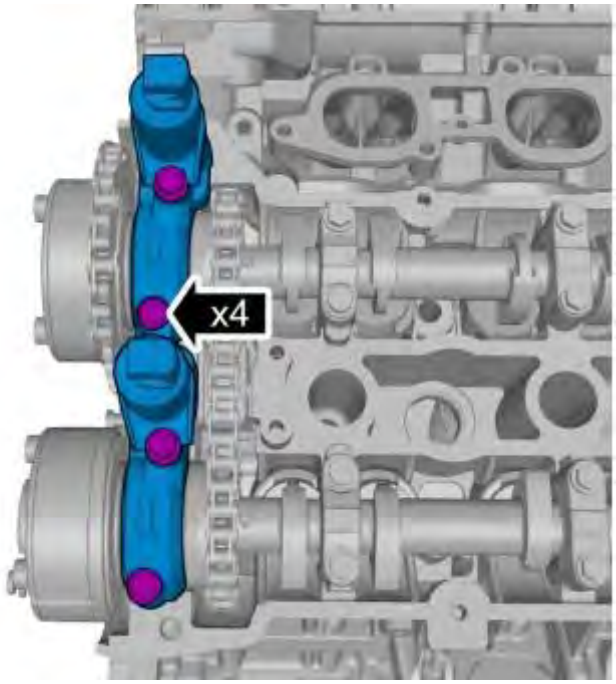

Fig. 497: Removing/Installing Front Bearing Cap
Courtesy of VOLVO CARS CORPORATION

Torque: M6

10 Nm

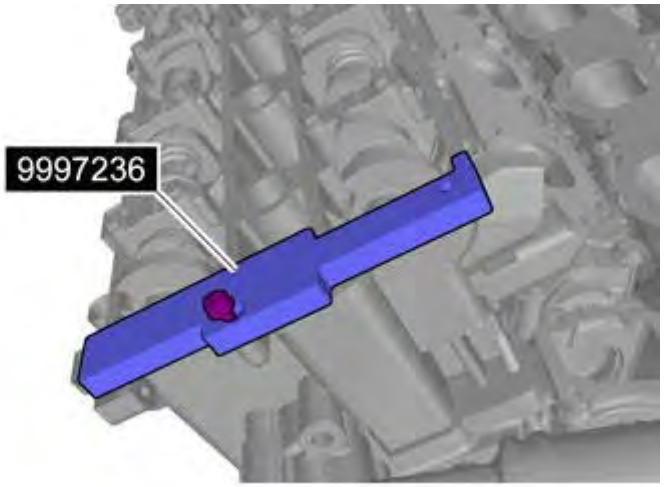

Fig. 498: Identifying Positioning Tool 9997236
Courtesy of VOLVO CARS CORPORATION

see **9997236**

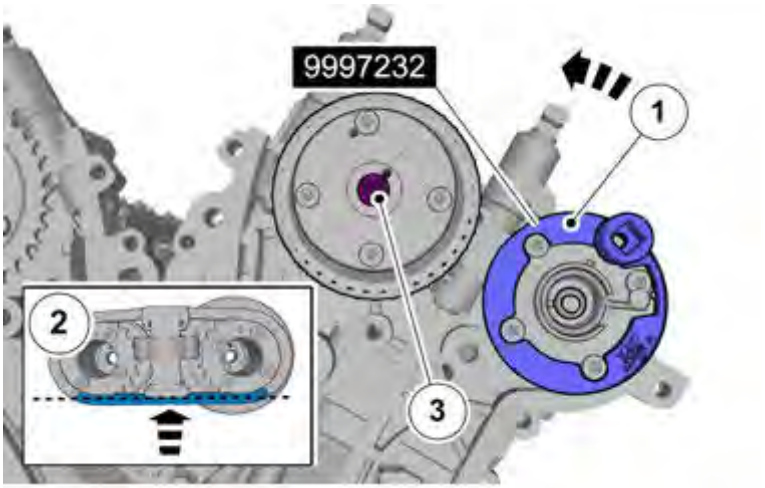

Fig. 499: Identifying Key Tool 9997232 Installed
Courtesy of VOLVO CARS CORPORATION

see **9997232**

NOTE: **Make sure that there is no slack in the lower part of the transmission chain.**

Torque: Center screw, VVT unit (Pre-tightening)

20 Nm

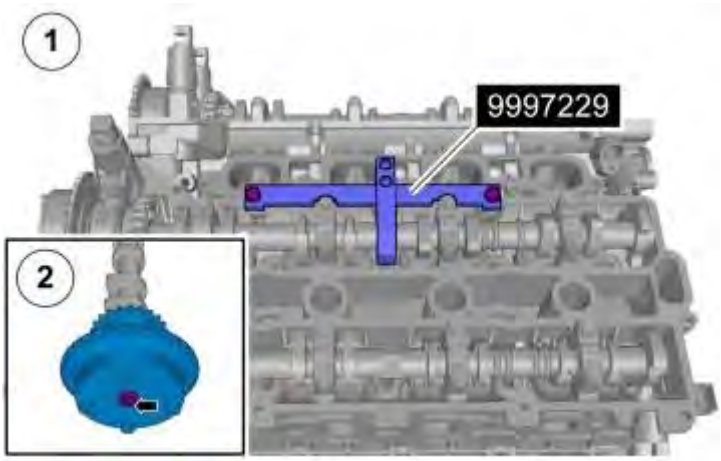

Fig. 500: Identifying Counterhold Tool 9997229
Courtesy of VOLVO CARS CORPORATION

1. see **9997229**
2. **Torque:** M12

   80 Nm

Install timing chain. See **CAMSHAFT CHAIN, REPLACING**

VVT UNIT, RIGHT CYLINDER HEAD

Special tools	
	T9997236 POSITION SETTING TOOL **Tool number:** T9997236 **Tool description:** POSITION SETTING TOOL **Tool boards:**
	T9997232 WRENCH **Tool number:** T9997232 **Tool description:** WRENCH **Tool boards:**
	T9997229 ANVIL BLOCK **Tool number:** T9997229 **Tool description:** ANVIL BLOCK **Tool boards:**

Materials	
Designation	**Part number**
H Cleaner	1161436-9
Tape	

Remove camshaft chain. See **CAMSHAFT CHAIN, REPLACING**

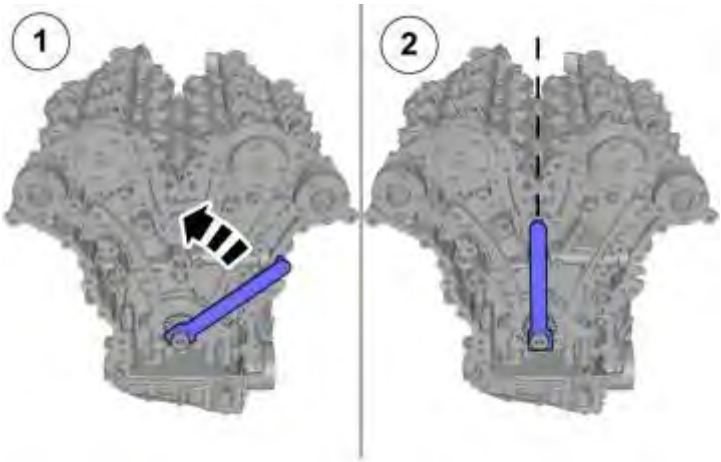

Fig. 501: Turning Crankshaft to Avoid Piston/Valve Contact
Courtesy of VOLVO CARS CORPORATION

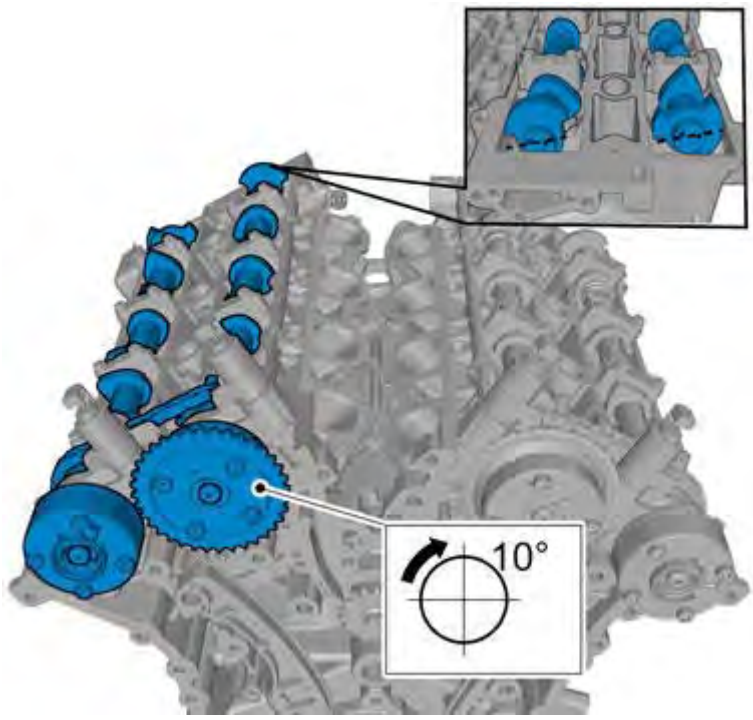

Fig. 502: Valve Spring Load Minimized
Courtesy of VOLVO CARS CORPORATION

CAUTION: Make sure to turn the camshaft to a position where valve spring load is minimized.

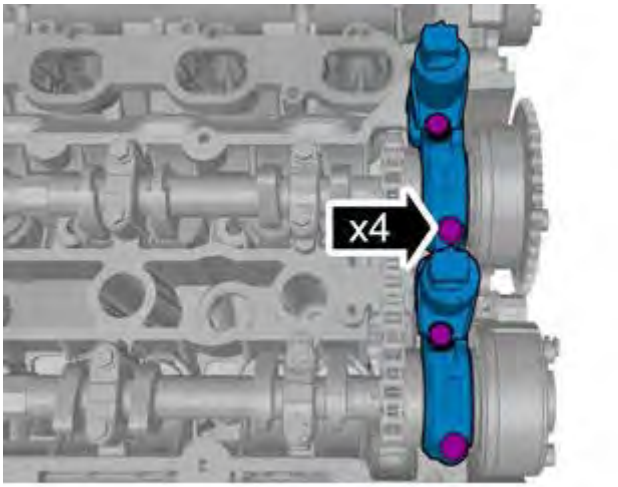

Fig. 503: Removing Front Bearing Assembly
Courtesy of VOLVO CARS CORPORATION

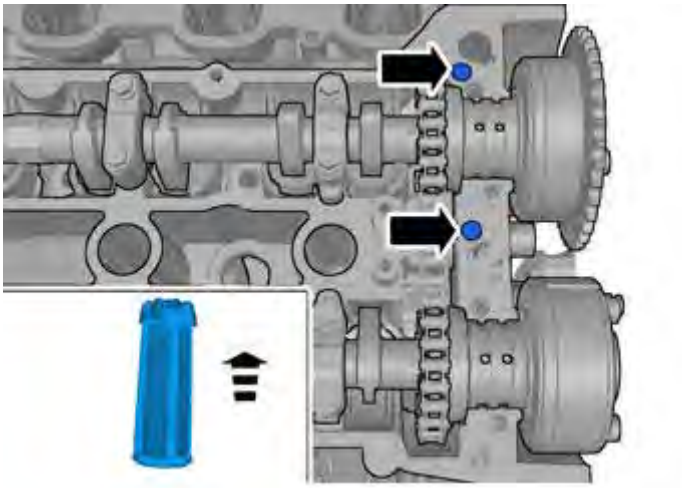

Fig. 504: Note Position Before Removal
Courtesy of VOLVO CARS CORPORATION

CAUTION: Note the position of each component before removal.

FOLLOWNG STEPS CONCERN INLET CAMSHAFT

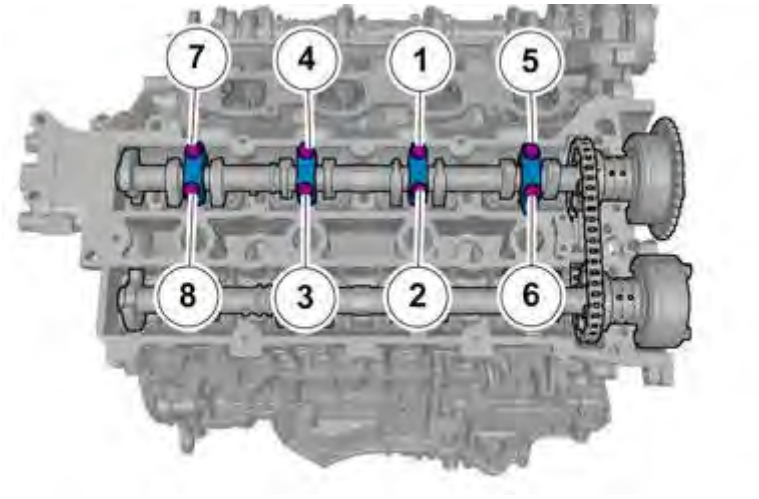

Fig. 505: Note Bearing Position Before Removal in Sequence
Courtesy of VOLVO CARS CORPORATION

CAUTION: Note the position of each component before removal.

Loosen each bolt 2 turns at a time until all bolts are removed.

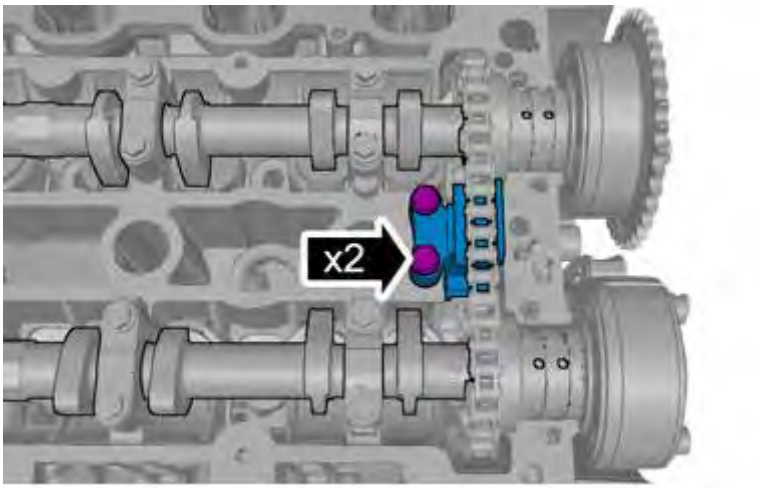

Fig. 506: Identifying Chain Guide Bolts
Courtesy of VOLVO CARS CORPORATION

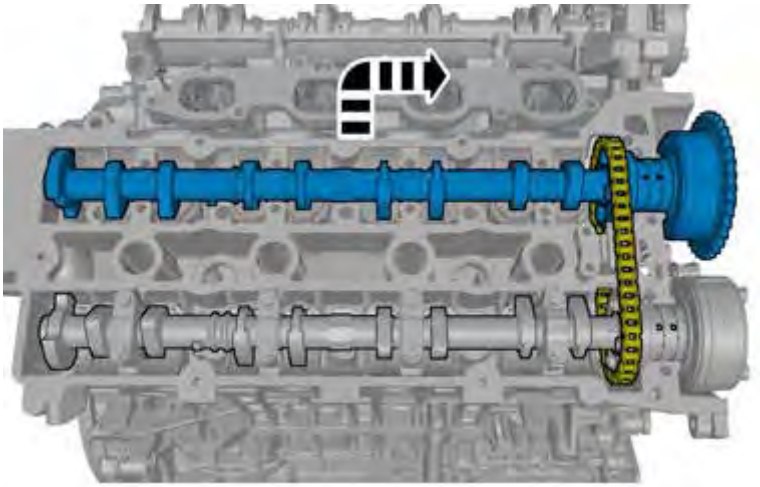

Fig. 507: Removing Camshaft
Courtesy of VOLVO CARS CORPORATION

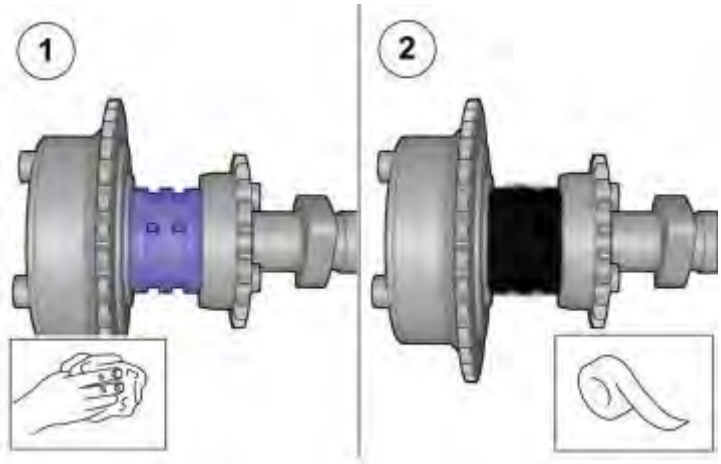

Fig. 508: H Cleaner, 1161436-9 and Sealing Tape
Courtesy of VOLVO CARS CORPORATION

1. **Use:** H Cleaner, 1161436-9
2. **Use:** Tape,

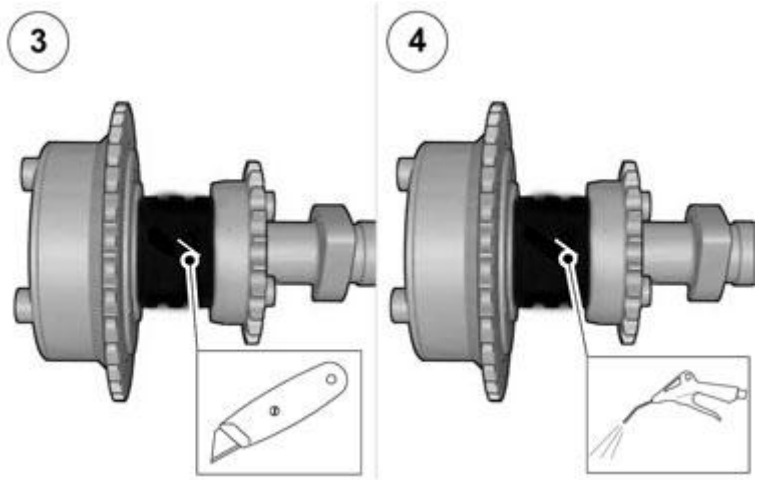

Fig. 509: Applying Air Pressure to Hole in Tape
Courtesy of VOLVO CARS CORPORATION

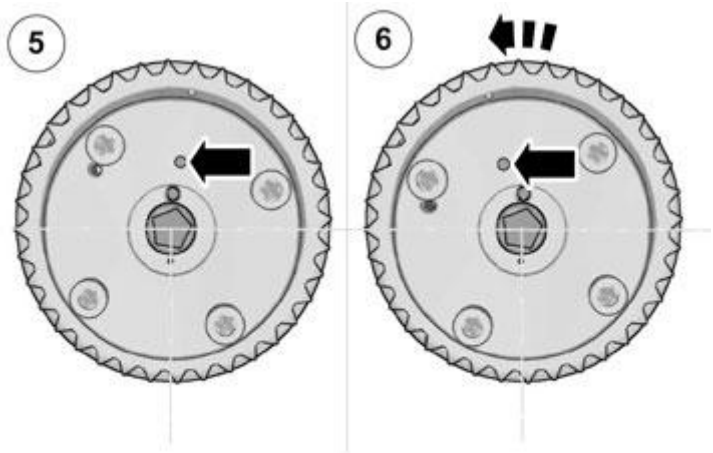

Fig. 510: Verifying Movement of Sprocket
Courtesy of VOLVO CARS CORPORATION

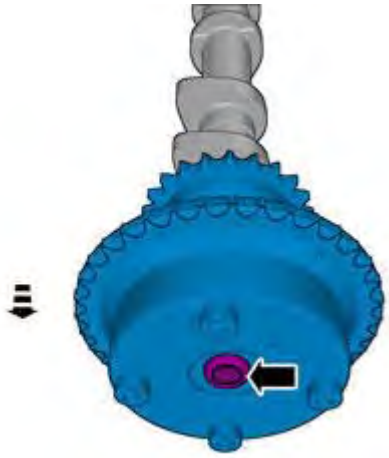

Fig. 511: Removing VVT Unit
Courtesy of VOLVO CARS CORPORATION

FOLLOWING STEPS CONCERN EXHAUST CAMSHAFT

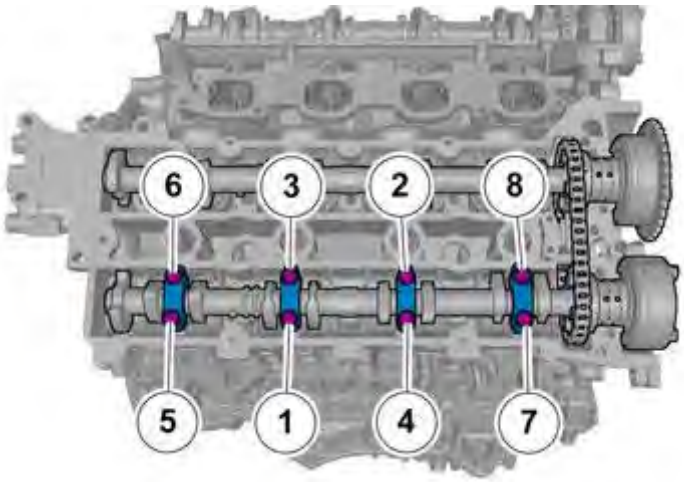

Fig. 512: Note Bearing Position Before Removal in Sequence
Courtesy of VOLVO CARS CORPORATION

CAUTION: Note the position of each component before removal.

Loosen each bolt 2 turns at a time until all bolts are removed.

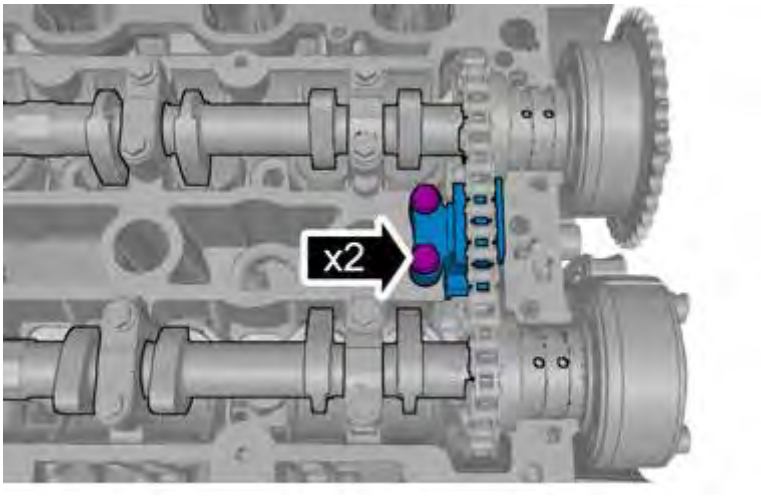

Fig. 513: Identifying Chain Guide Bolts
Courtesy of VOLVO CARS CORPORATION

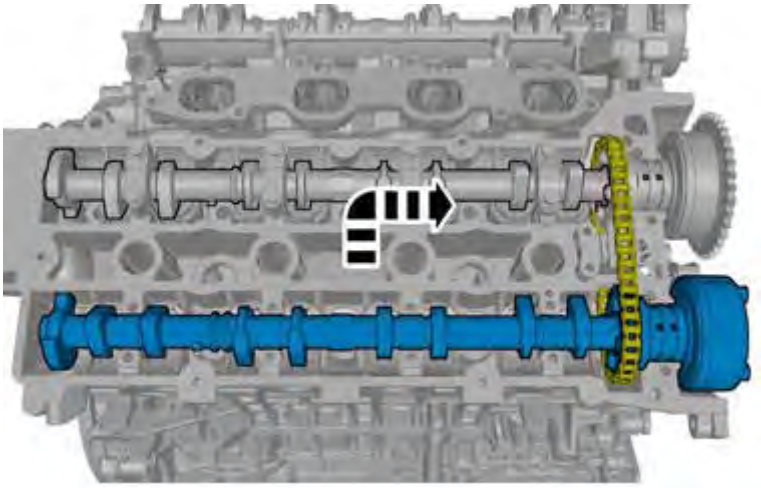

Fig. 514: Removing Camshaft
Courtesy of VOLVO CARS CORPORATION

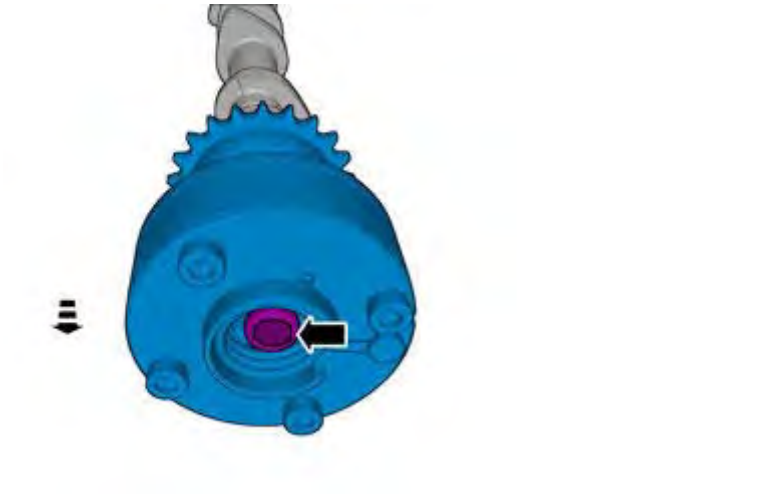

Fig. 515: Removing VVT Unit
Courtesy of VOLVO CARS CORPORATION

FOLLOWING STEPS CONCERN EXHAUST CAMSHAFT

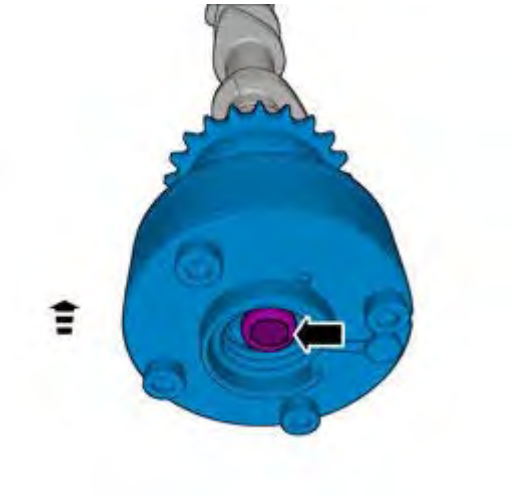

Fig. 516: Installing VVT Unit
Courtesy of VOLVO CARS CORPORATION

NOTE: Only tighten the bolt finger tight at this stage.

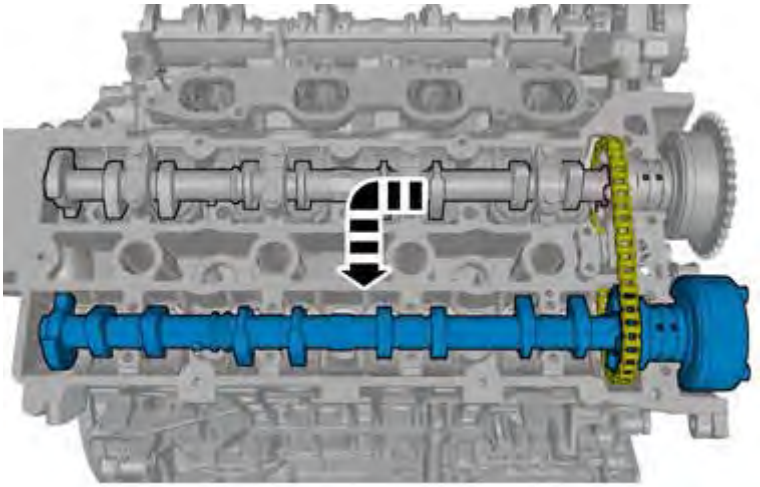

Fig. 517: Installing Camshaft
Courtesy of VOLVO CARS CORPORATION

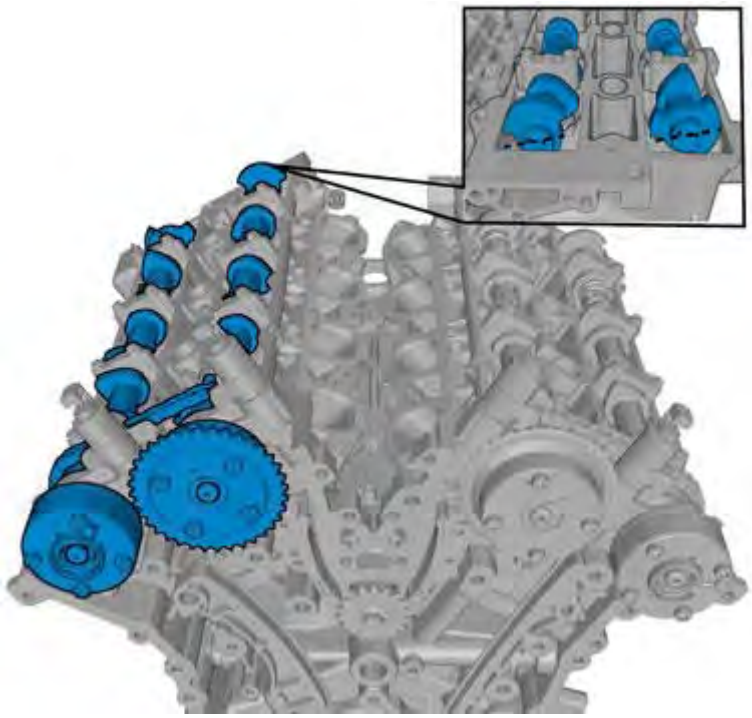

Fig. 518: Valve Spring Load Minimized
Courtesy of VOLVO CARS CORPORATION

CAUTION: Make sure to turn the camshaft to a position where valve spring load is minimized.

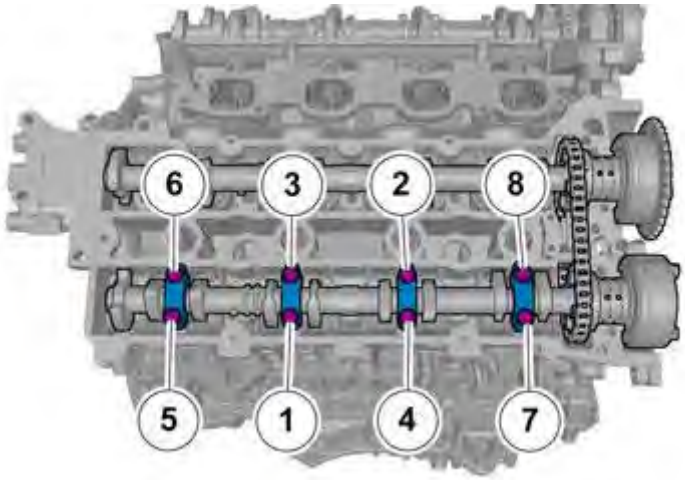

Fig. 519: Note Bearing Position Before Removal in Sequence
Courtesy of VOLVO CARS CORPORATION

CAUTION: Take extra care when handling the components.

NOTE: Make sure that these components are installed to the noted removal position.

Tighten each bolt 1 turn at a time.

Torque: M6

10 Nm

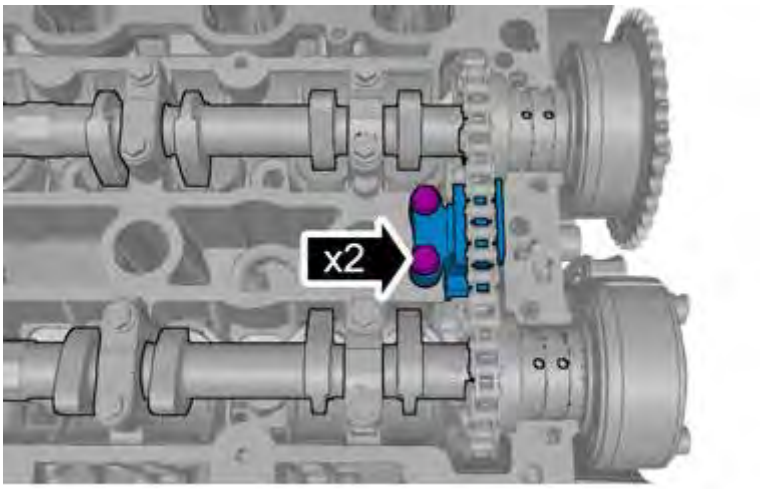

Fig. 520: Identifying Chain Guide Bolts
Courtesy of VOLVO CARS CORPORATION

Torque: M6

10 Nm

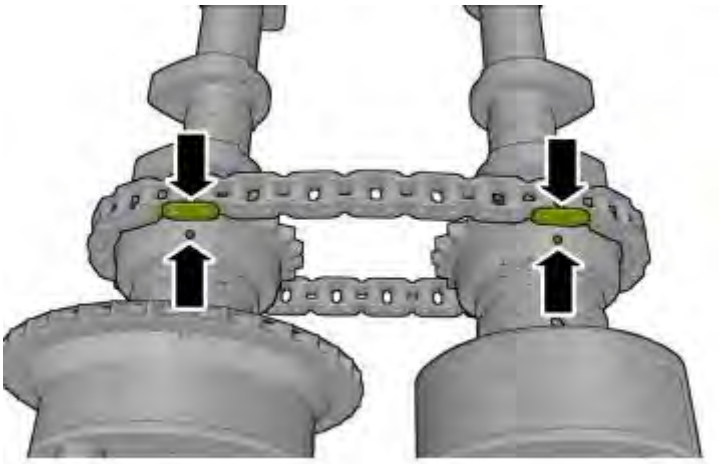

Fig. 521: Identifying Alignment Marks
Courtesy of VOLVO CARS CORPORATION

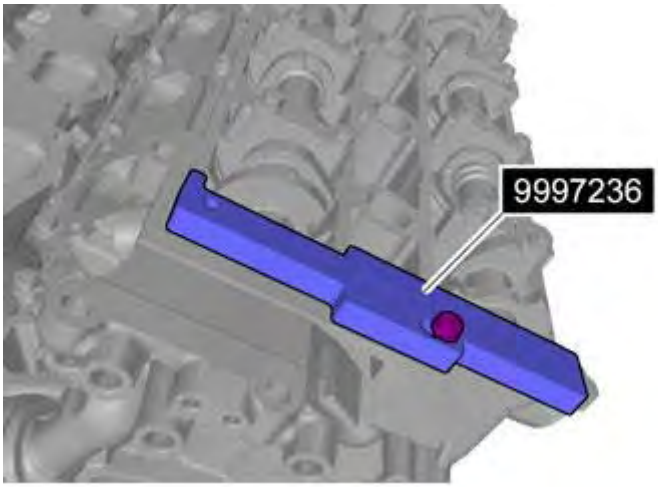

Fig. 522: Identifying Position Setting Tool 9997236
Courtesy of VOLVO CARS CORPORATION

see **9997236**

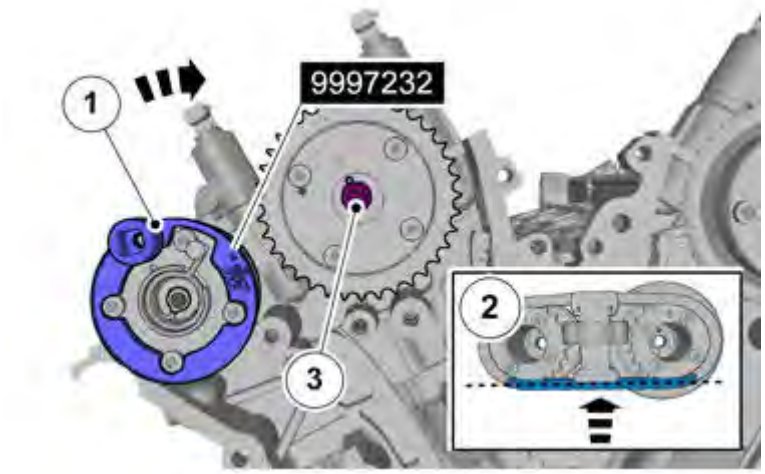

Fig. 523: Identifying Key Tool 9997232
Courtesy of VOLVO CARS CORPORATION

1. see **9997232**

   NOTE: **Make sure that there is no slack in the lower part of the transmission chain.**

2.
3. **Torque:** Center screw, VVT unit (Pre-tightening)

   20 Nm

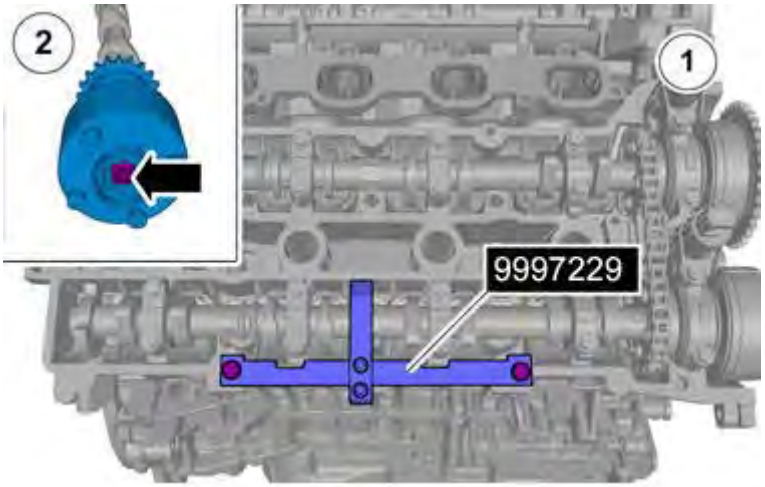

Fig. 524: Identifying Counterhold Tool 9997229
Courtesy of VOLVO CARS CORPORATION

1. see **9997229**
2. **Torque:** M12

   80 Nm

FOLLOWNG STEPS CONCERN INLET CAMSHAFT

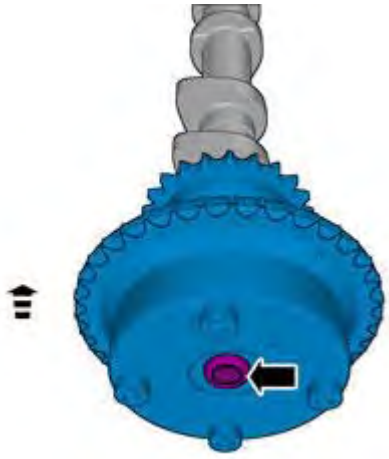

Fig. 525: Installing VVT Unit
Courtesy of VOLVO CARS CORPORATION

NOTE: Only tighten the bolt finger tight at this stage.

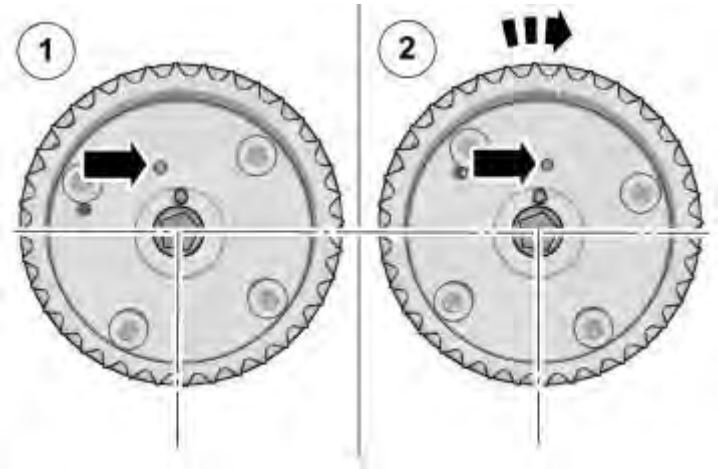

Fig. 526: Verifying Movement
Courtesy of VOLVO CARS CORPORATION

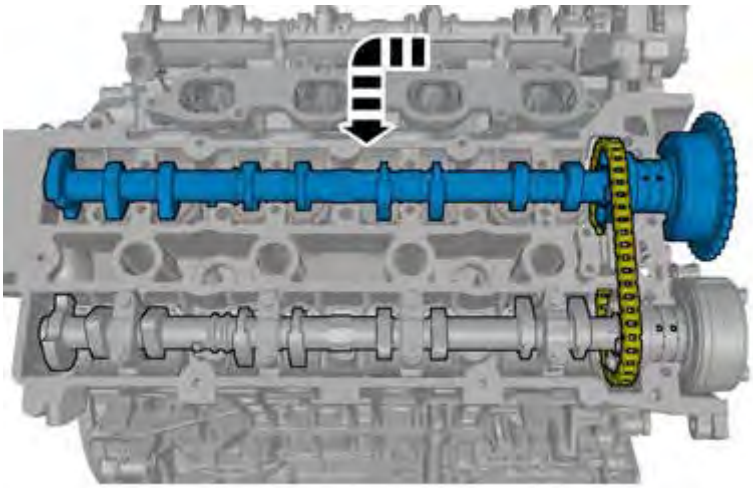

Fig. 527: Installing Camshaft
Courtesy of VOLVO CARS CORPORATION

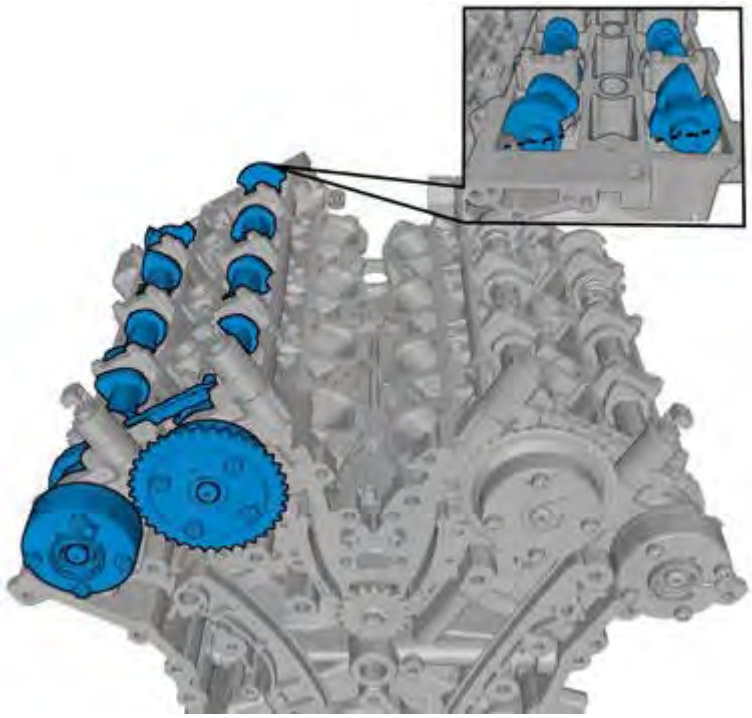

Fig. 528: Valve Spring Load Minimized
Courtesy of VOLVO CARS CORPORATION

CAUTION: Make sure to turn the camshaft to a position where valve spring load is minimized.

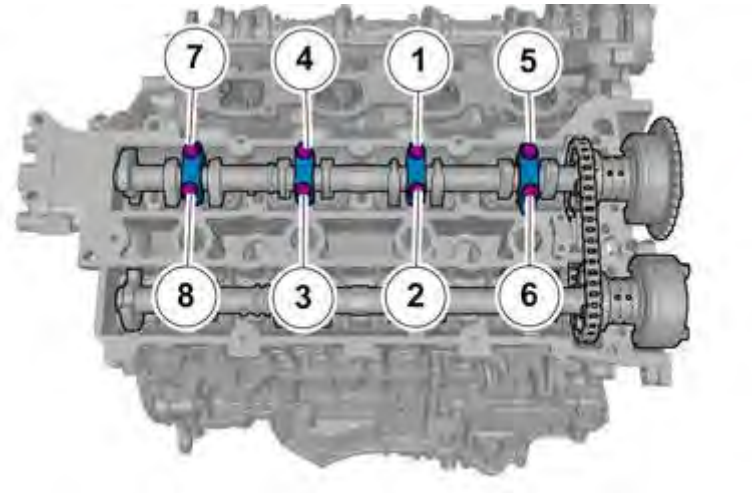

Fig. 529: Note Bearing Position Before Removal in Sequence
Courtesy of VOLVO CARS CORPORATION

CAUTION: Take extra care when handling the components.

NOTE: Make sure that these components are installed to the noted removal position.

Tighten one screw at a time.

Torque: M6

10 Nm

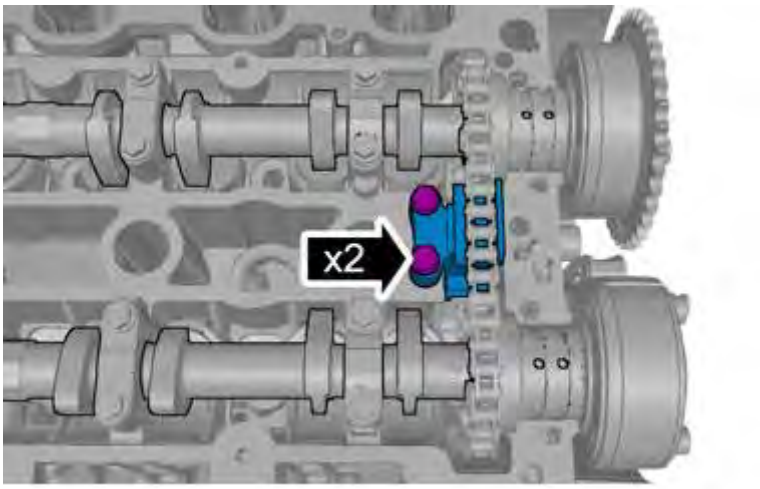

Fig. 530: Identifying Chain Guide Bolts
Courtesy of VOLVO CARS CORPORATION

Torque: M6

10 Nm

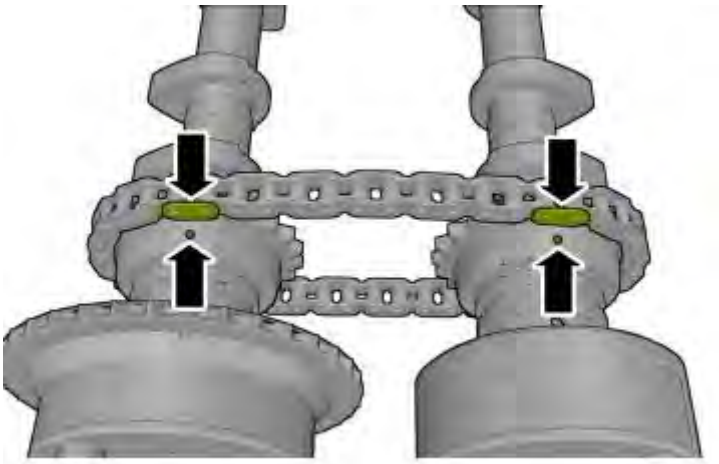

Fig. 531: Identifying Alignment Marks
Courtesy of VOLVO CARS CORPORATION

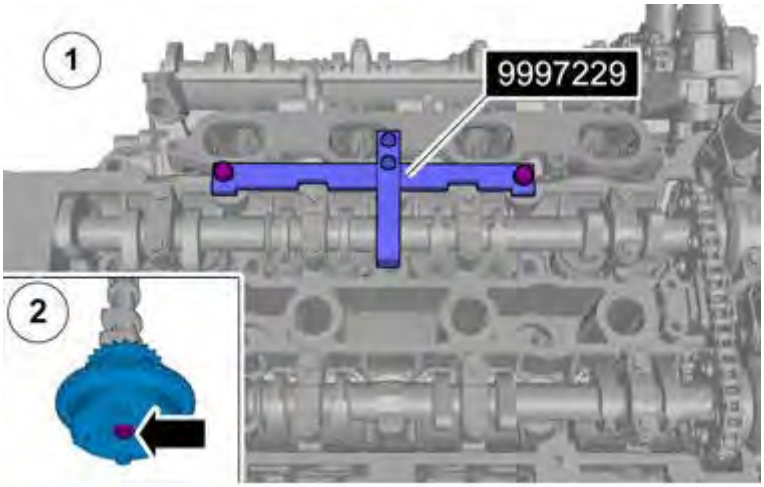

Fig. 532: Identifying Counterhold Tool 9997229
Courtesy of VOLVO CARS CORPORATION

1. see **9997229**
2. **Torque:** M12

   80 Nm

Install timing chain. See **CAMSHAFT CHAIN, REPLACING**

ENGINE

Engine - Removal, replacement and installation

CRANK MECHANISM (B5254T2, AW50/51 AWD; B5254T2, AW55-50/51SN; 2003-2007)

CARRIER PLATE, REPLACING

Special tools:

see **9995112**

see **9995678**

REMOVAL

PREPARATORY WORK

Remove transmission AW55-50. See **TRANSMISSION, REMOVING** .

Remove transmission AW50AWD. See **TRANSMISSION, REMOVING** .

REMOVING THE CARRIER PLATE

Remove the engine speed (RPM) sensor with the bracket. Place it to one side.

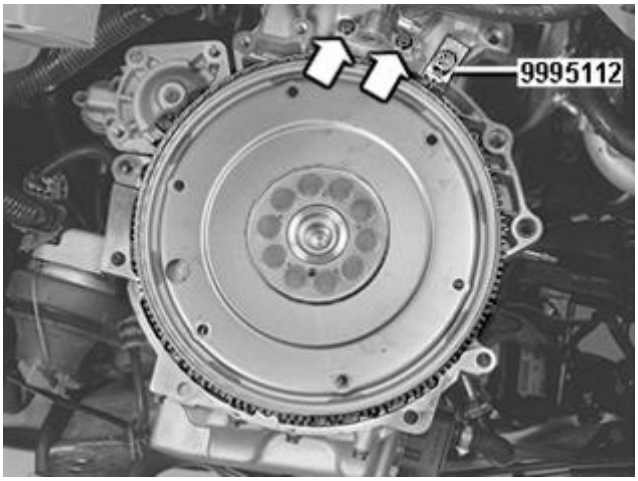

Fig. 1: Blocking Carrier Plate Using Gear Sector 999 5112
Courtesy of VOLVO CARS CORPORATION

Block the carrier plate using gear sector see **9995112** .

Remove:

- all screws
- the carrier plate
- gear sector see **9995112** .

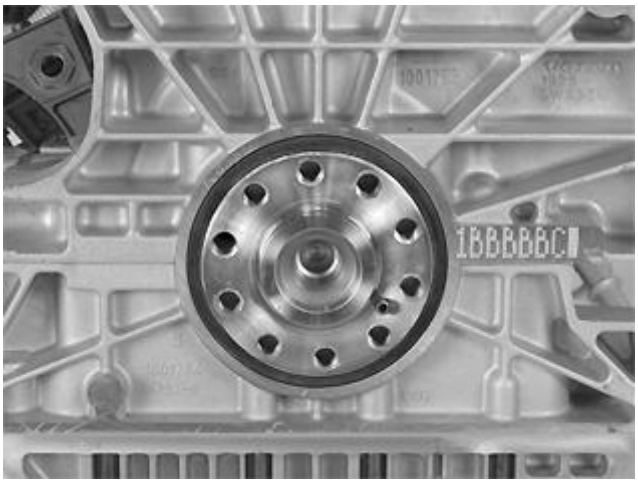

Fig. 2: Check Crankshaft Seal For Leakage
Courtesy of VOLVO CARS CORPORATION

Check the crankshaft seal for leakage.

INSTALLATION

NOTE: For tightening torques, see TIGHTENING TORQUE .

INSTALLING THE CARRIER PLATE

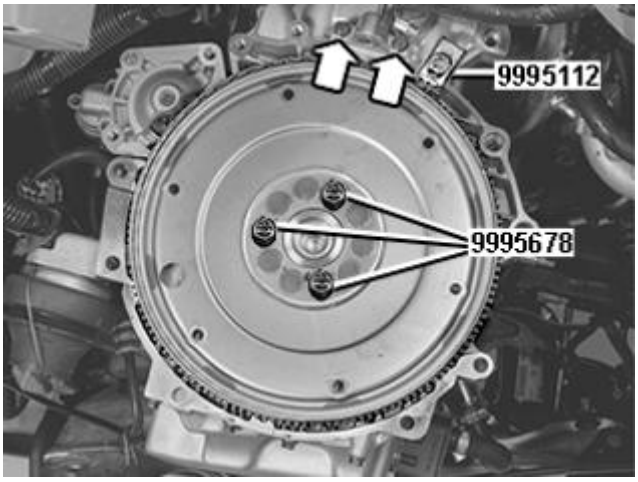

Fig. 3: Carrier Plate, Studs And Gear Sector
Courtesy of VOLVO CARS CORPORATION

NOTE: Ensure that the mating surfaces on the crankshaft and carrier plate are completely clean.

Use tool see **9995678** , which consists of 3 studs with nuts.

Install:

- The 3 studs belonging to tool see **9995678** , distributed as illustrated
- the carrier plate.

NOTE: Check that the locating pin on the crankshaft is positioned opposite the hole in the carrier plate.

Locate gear sector see **9995112** against the carrier plate.

Pull the flywheel towards the crankshaft using the three nuts on special tool see **9995678** .

CAUTION: The carrier plate must lie against the crankshaft flange before the screws are installed. There is a risk that excess locking fluid on the screws will come between the mating surfaces.

Install 7 new screws. Tighten. See **SUMMARY OF SPECIFIC COMPONENTS AND TIGHTENING TORQUES** .

Remove the 3 nuts and studs.

Install the remaining 3 new screws. Tighten. See **SUMMARY OF SPECIFIC COMPONENTS AND TIGHTENING TORQUES** .

Install the engine speed (RPM) sensor with the bracket. Tighten.

FINISHING

Install transmission AW55-50. See **TRANSMISSION, INSTALLING** .

Install transmission AW50AWD. See **TRANSMISSION, INSTALLING** .

CRANKSHAFT SEAL REAR, REPLACING

Special tools:

see **9995112**

see **9997174**

see **9991801**

see **9995678**

NOTE: **As the illustrations in this service information are used for different model years and / or models, some variation may occur. However, the essential information is always correct.**

REMOVAL

REMOVING THE FLYWHEEL AND CARRIER PLATE

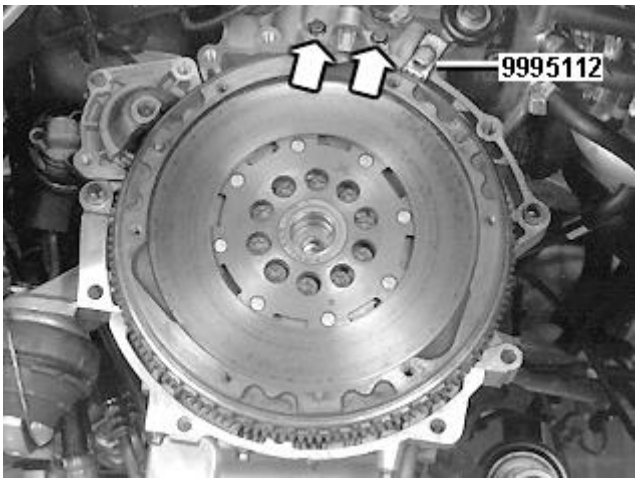

Fig. 4: Checking Flywheel
Courtesy of VOLVO CARS CORPORATION

Remove the gearbox:

- See **TRANSMISSION - REMOVAL, REPLACEMENT AND INSTALLATION** .

Remove the flywheel / carrier plate. Use gear sector see **9995112** as a counterhold when slackening off the screws.

REMOVING THE SEAL

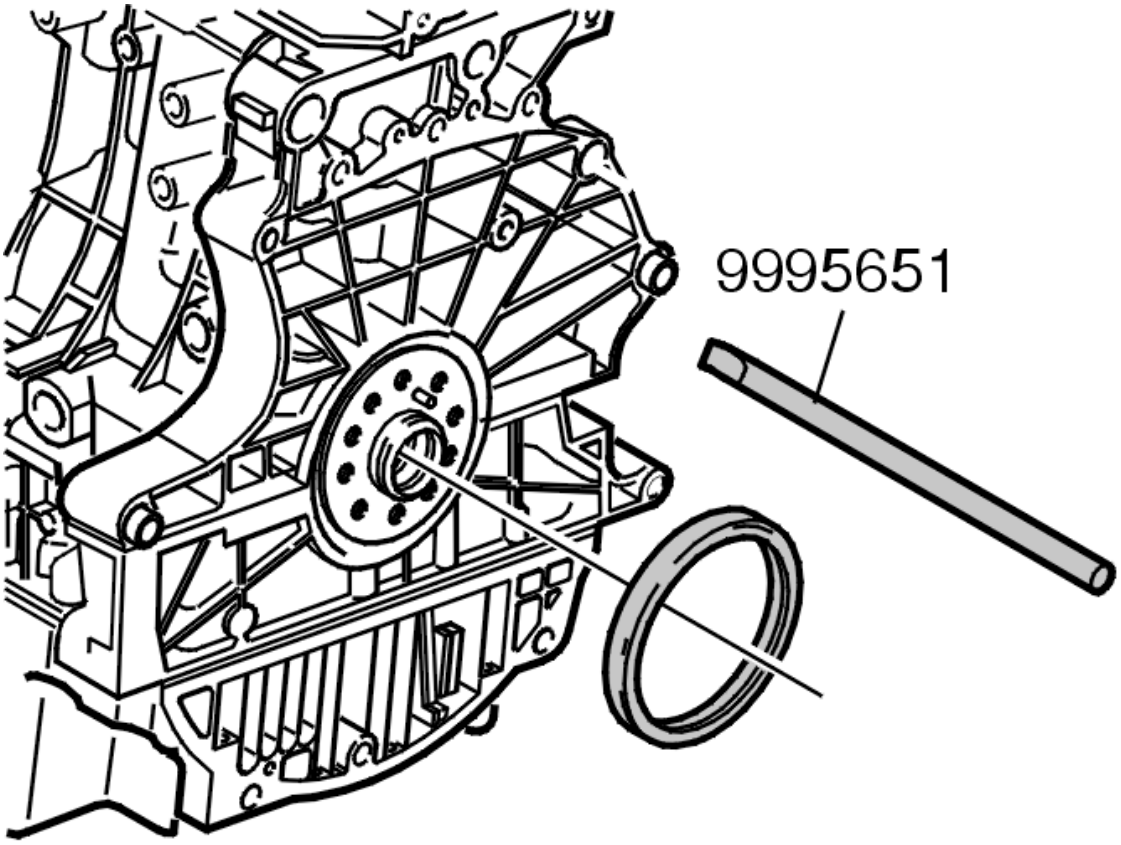

Fig. 5: Identifying Old Seal And Special Tool Extractor 999 5651
Courtesy of VOLVO CARS CORPORATION

NOTE: Do not damage the mating surfaces of the crankshaft and cylinder block

Remove the old seal using extractor see **9995651** .

Clean around the crankshaft flange at the front and rear. Remove any thread sealant residue from the screw holes.

If necessary wash off the oil on the rear cylinder block surface and the gearbox clutch housing. Blow clean using compressed air.

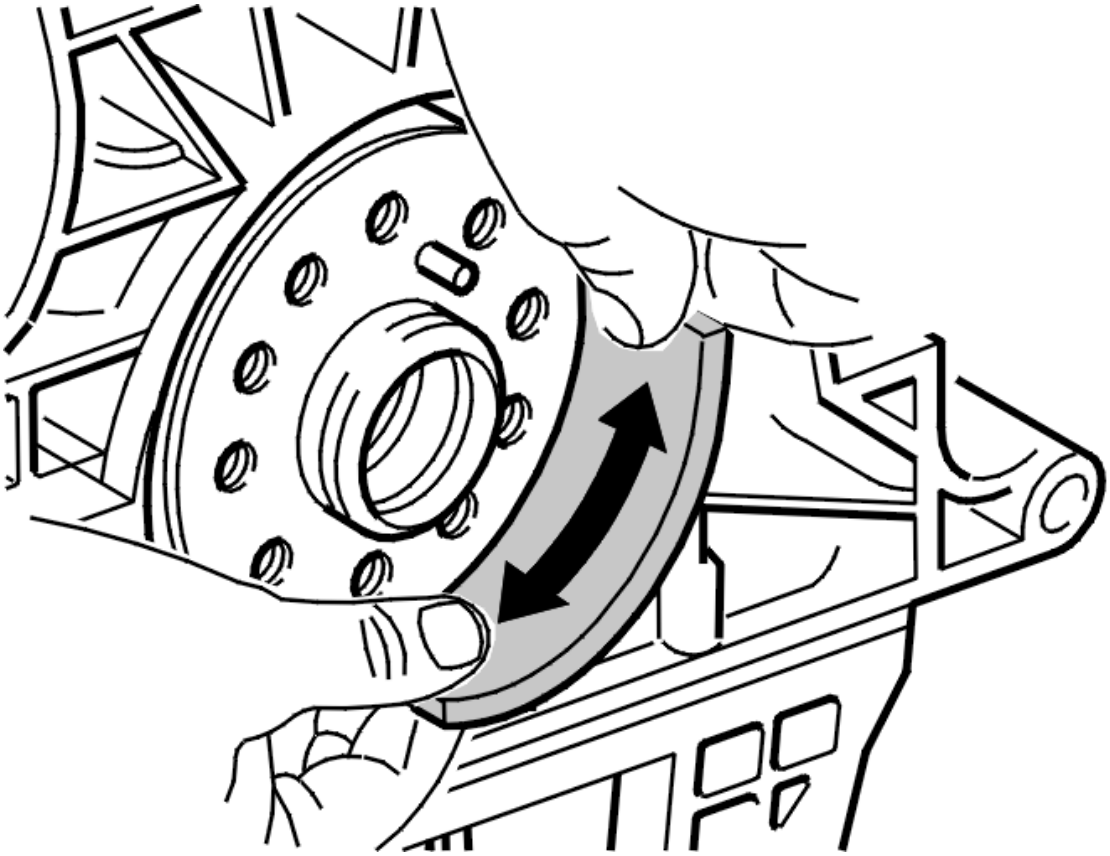

Fig. 6: Cleaning Around Crankshaft Flange
Courtesy of VOLVO CARS CORPORATION

CAUTION: When cleaning work around the flange, not in and out. No grinding tools or similar may be used.

It is extremely important that there is no thread sealant residue or other dirt. This could cause leakage.

NOTE: To clean the crankshaft, use cloth 9511024.

INSTALLATION

INSTALLING THE SEALING RING

CAUTION: Only Volvo approved engine oil may be used. Grease must not be used at all. It attracts dirt and results in the build up of coke.

Lubricate the sealing ring mating surface against the cylinder block and the lips of the seal.

Fig. 7: Identifying Special Tool 999 7174
Courtesy of VOLVO CARS CORPORATION

Thread the seal onto the bevelled part of the inner section of see **9997174** with the felt side of the seal outward.

Screw the drift onto the crankshaft (2 screws) of the flywheel.

Pull in the seal with the outer part of the drift, see **9997174** , using the screw in the center of the tool. The seal is in place when the outer drift bottoms against the inner drift. Remove tool see **9997174** . Scrap the old flywheel screws.

INSTALLING FLYWHEEL AND CARRIER PLATE

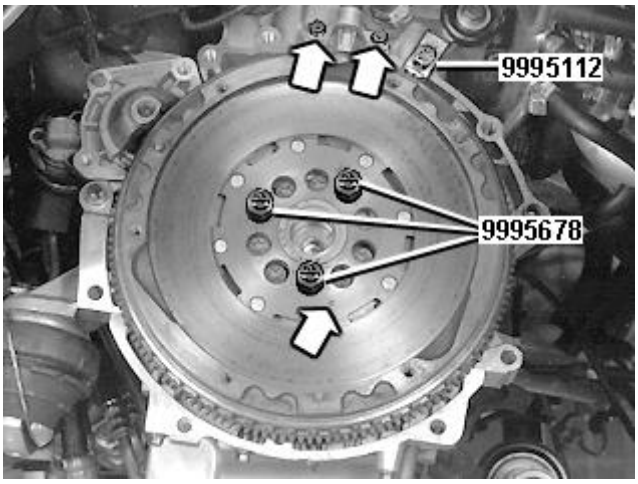

Fig. 8: 3 Flywheel Studs
Courtesy of VOLVO CARS CORPORATION

CAUTION: Ensure that the surface of the crankshaft and the mating surfaces for the flywheel / carrier plate are clean. Ensure that there is no thread sealant residue in the screw holes.

Install:

- the flywheel and carrier plate
- the 3 studs see **9995678** distributed as illustrated. Turn the short thread length towards the crankshaft.

NOTE: Check that the locating pin on the crankshaft is positioned opposite the hole in the flywheel / carrier plate. The position of the guide hole is marked.

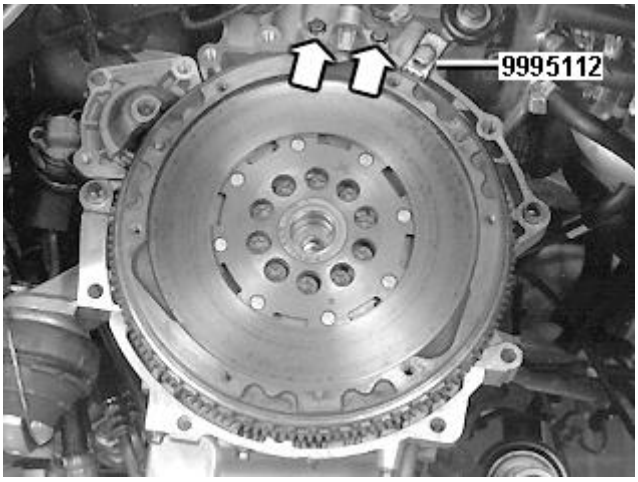

Fig. 9: Checking Flywheel
Courtesy of VOLVO CARS CORPORATION

CAUTION: It is important that the flywheel and carrier plate bear on the crankshaft flange before the other screws are installed.

Always use new screws. Ensure that the thread sealant on the new screws is intact. If not apply a few drops of sealant 1161056 to the thread.

- Align gear sector: see **9995112** .
- Pull the flywheel / carrier plate towards the crankshaft using the 3 nuts on special tool see **9995678** . The turned section of the nut must be turned towards the flywheel / carrier plate.
- Install the other screws. Tighten. See **SUMMARY OF SPECIFIC COMPONENTS AND TIGHTENING TORQUES** .
- Replace the 3 special screws with new standard screws. Tighten. See **SUMMARY OF SPECIFIC COMPONENTS AND TIGHTENING TORQUES** .
- Then angle-tighten all 10 screws crosswise. Use see **9512050** . Tighten. See **SUMMARY OF SPECIFIC COMPONENTS AND TIGHTENING TORQUES** .
- Ensure that the flywheel sensor and bracket are installed. Install the clutch driven plate and clutch.

INSTALLING THE GEARBOX

Install the gearbox:

- **manual transmissions** . See **TRANSMISSION - REMOVAL, REPLACEMENT AND**

INSTALLATION .

- **automatic transmissions** . See:
- For gasoline 4T65 2003- see **TRANSMISSION, INSTALLING (2003, 2004)** or **TRANSMISSION, INSTALLING (2005, 2006)** .
- For gasoline AW50AWD 2003- see **TRANSMISSION, INSTALLING**
- For gasoline AW55-50 2004- see **TRANSMISSION, INSTALLING** .

CHECKING THE ENGINE:

Test drive the car to check the function of the engine and the gearbox.

CRANKSHAFT SEAL, FRONT, REPLACING

Replace the front crankshaft seal. See **OIL PUMP / CRANKSHAFT SEAL, FRONT, REPLACING** .

CRANK MECHANISM (B6294T; 2003-2006)

CARRIER PLATE, REPLACING

Special tools:

see **9995112**

see **9995678**

REMOVAL

PREPARATORY WORK

Remove the transmission. See **TRANSMISSION, REMOVING** .

REMOVING THE CARRIER PLATE

Remove the engine speed (RPM) sensor with the bracket. Place it to one side.

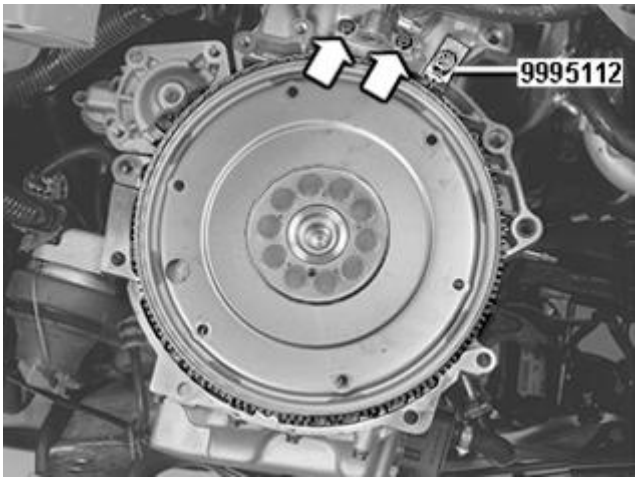

Fig. 10: Blocking Carrier Plate Using Gear Sector 999 5112
Courtesy of VOLVO CARS CORPORATION

Block the carrier plate using gear sector see **9995112** .

Remove:

- all screws
- the carrier plate
- gear sector see **9995112** .

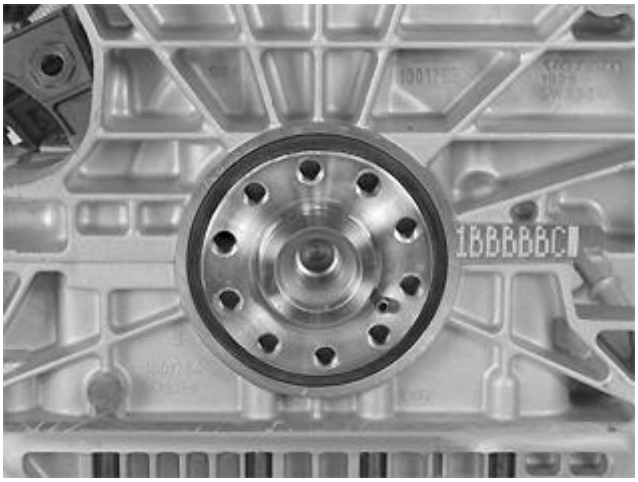

Fig. 11: Check Crankshaft Seal For Leakage
Courtesy of VOLVO CARS CORPORATION

Check the crankshaft seal for leakage.

INSTALLATION

INSTALLING THE CARRIER PLATE

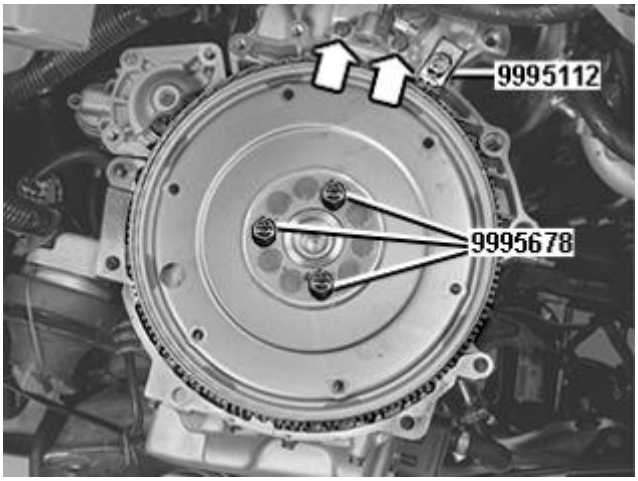

Fig. 12: Carrier Plate, Studs And Gear Sector
Courtesy of VOLVO CARS CORPORATION

NOTE: Ensure that the mating surfaces on the crankshaft and carrier plate are completely clean.

Use tool see **9995678** , which consists of 3 studs with nuts.

Install:

- the 3 studs belonging to tool see **9995678** , distributed as illustrated
- the carrier plate.

NOTE: Check that the locating pin on the crankshaft is positioned opposite the hole in the carrier plate.

Locate gear sector see **9995112** against the carrier plate.

Pull the carrier plate towards the crankshaft using the three nuts on special tool see **9995678** .

CAUTION: The carrier plate must lie against the crankshaft flange before the screws are installed. There is a risk that excess locking fluid on the screws will come between the mating surfaces.

Install 7 **new** screws. Tighten crosswise. Tighten to **45 Nm** .

Remove the 3 nuts and studs.

Install the remaining 3 **new** screws. Tighten the screws. Tighten to **45 Nm** . Then angle-tighten all 10 screws crosswise 50°.

Install the engine speed (RPM) sensor with the bracket. Tighten to **10 Nm** .

FINISHING

Install the transmission. See **TRANSMISSION, INSTALLING** .

CRANKSHAFT SEAL REAR, REPLACING

Special tools:

see **9995112**

see **9995919**

see **9997174**

see **9991801**

see **9995678**

NOTE: **As the illustrations in this service information are used for different model years and / or models, some variation may occur. However, the essential information is always correct.**

REMOVING THE FLYWHEEL AND CARRIER PLATE

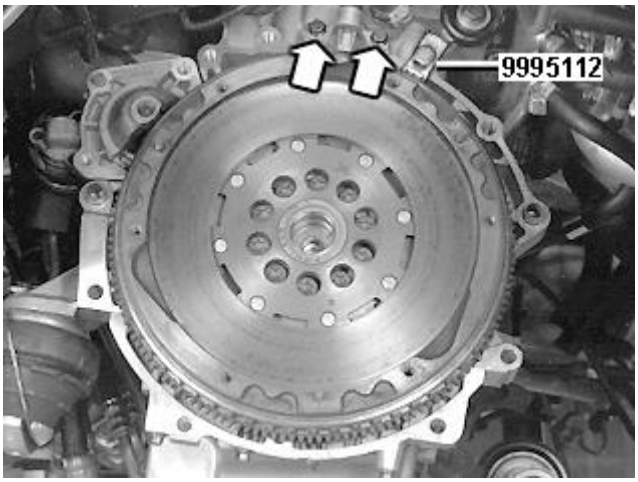

Fig. 13: Checking Flywheel
Courtesy of VOLVO CARS CORPORATION

Remove the gearbox:

- For gasoline 4T65 2003- see **TRANSMISSION, REMOVING** .
- For gasoline AW50AWD 2003- see **TRANSMISSION, REMOVING**
- For gasoline AW55-50 2004- see **TRANSMISSION, REMOVING** .

Remove the flywheel / carrier plate. Use gear sector see **9995112** as a counterhold when slackening off the screws.

REMOVING THE SEAL

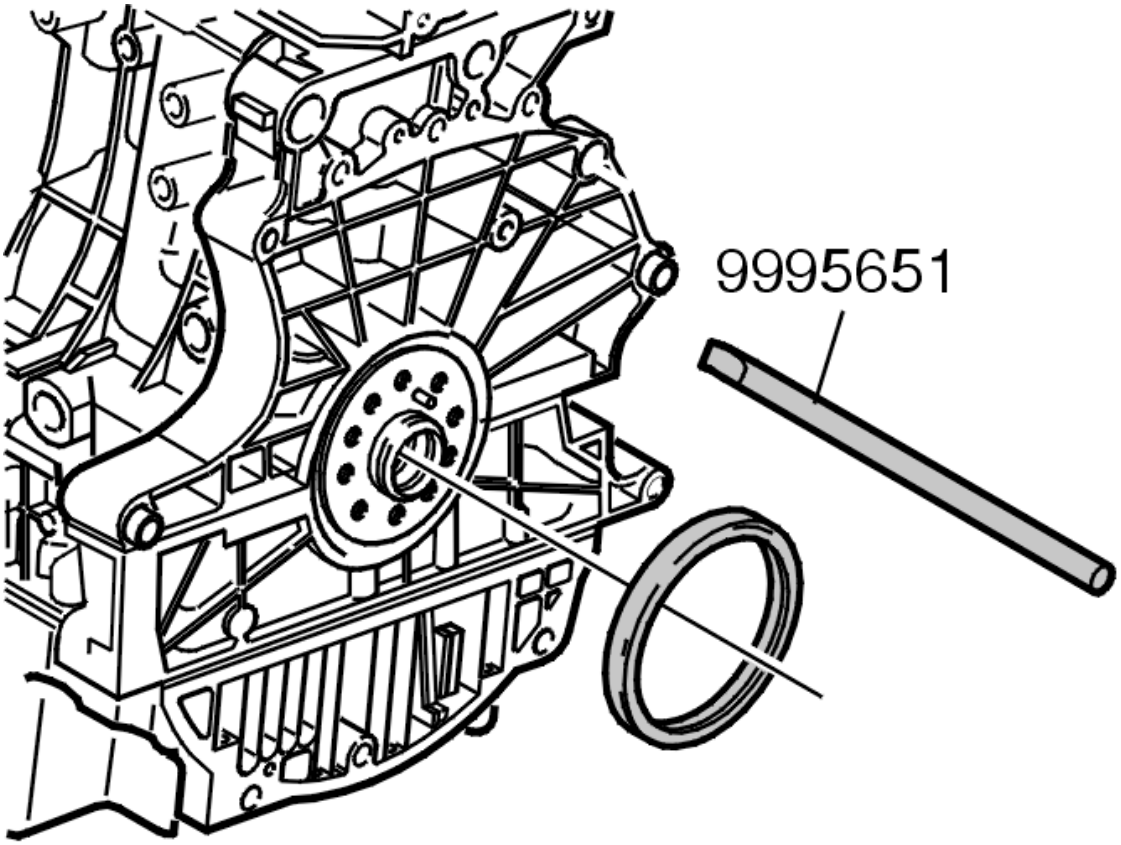

Fig. 14: Identifying Old Seal And Special Tool Extractor 999 5651
Courtesy of VOLVO CARS CORPORATION

NOTE: Do not damage the mating surfaces of the crankshaft and cylinder block

Remove the old seal using extractor see **9995919** .

Clean around the crankshaft flange at the front and rear. Remove any thread sealant residue from the screw holes.

If necessary wash off the oil on the rear cylinder block surface and the gearbox clutch housing. Blow clean using compressed air.

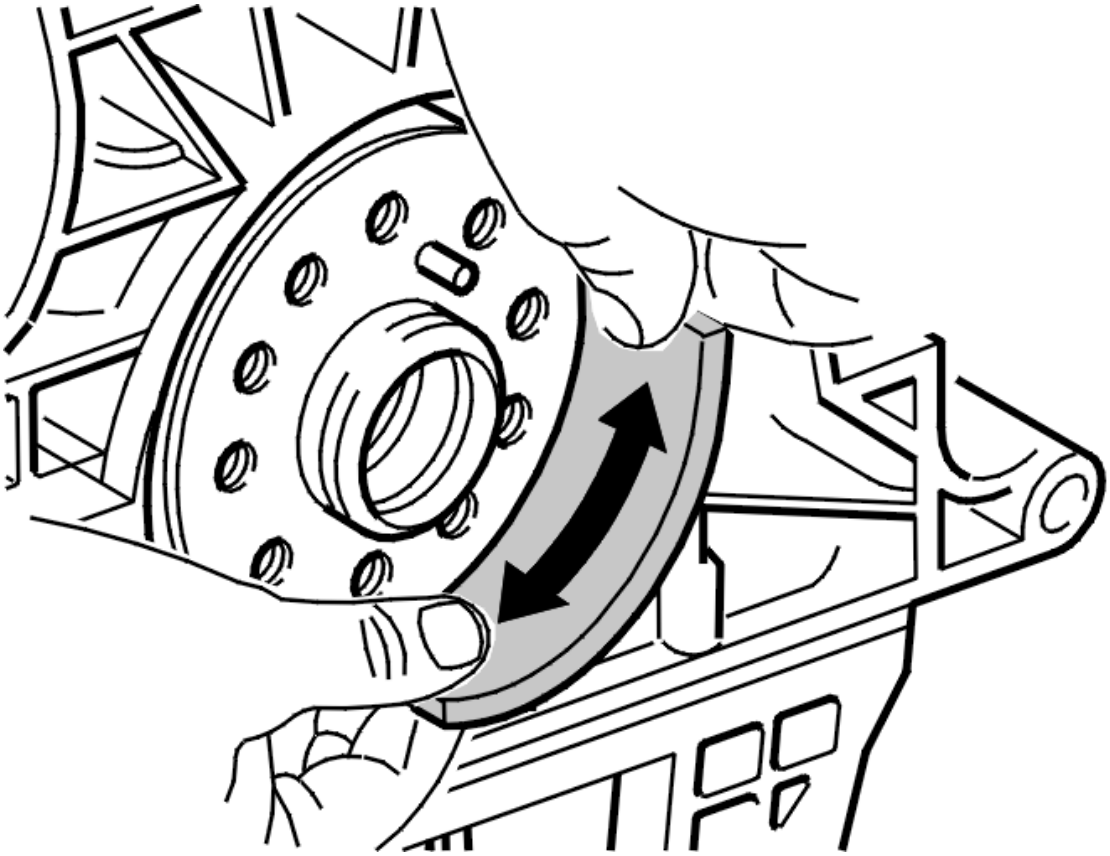

Fig. 15: Cleaning Around Crankshaft Flange
Courtesy of VOLVO CARS CORPORATION

CAUTION: When cleaning work around the flange, not in and out. No grinding tools or similar may be used.

It is extremely important that there is no thread sealant residue or other dirt. This could cause leakage.

NOTE: To clean the crankshaft, use cloth 9511024.

INSTALLING THE SEALING RING

CAUTION: Only Volvo approved engine oil may be used. Grease must not be used at all. It attracts dirt and results in the build up of coke.

Lubricate the sealing ring mating surface against the cylinder block and the lips of the seal.

Fig. 16: Identifying Sealing Ring
Courtesy of VOLVO CARS CORPORATION

Thread the seal onto the beveled section of the inner section of tool see **9997174** with the felt side of the seal outwards. Install the drift on the crankshaft, 2 x screws, for the flywheel. Pull in the seal using the outer section of the drift: see **9997174** using the screw in the center of the tool. The seal is in position when the outer drift bottoms out against the inner drift. Remove the tool: see **9997174** . Discard the old screws for the flywheel.

INSTALLING FLYWHEEL AND CARRIER PLATE

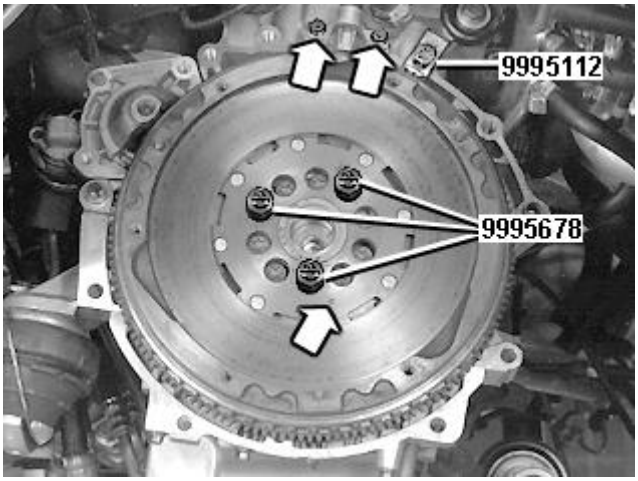

Fig. 17: 3 Flywheel Studs
Courtesy of VOLVO CARS CORPORATION

CAUTION: Ensure that the surface of the crankshaft and the mating surfaces for the flywheel / carrier plate are clean. Ensure that there is no thread sealant residue in the screw holes.

Install:

- the flywheel and carrier plate

- the 3 studs see **9995678** distributed as illustrated. Turn the short thread length towards the crankshaft.

NOTE: Check that the locating pin on the crankshaft is positioned opposite the hole in the flywheel / carrier plate. The position of the guide hole is marked.

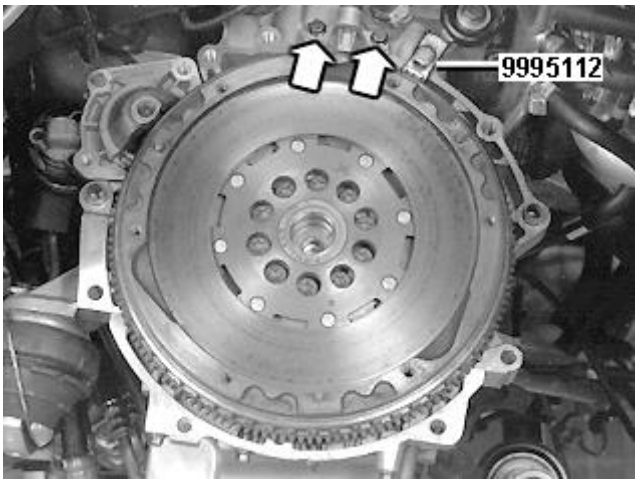

Fig. 18: Checking Flywheel
Courtesy of VOLVO CARS CORPORATION

CAUTION: It is important that the flywheel and carrier plate bear on the crankshaft flange before the other screws are installed.

Always use new screws. Ensure that the thread sealant on the new screws is intact. If not apply a few drops of sealant 1161056 to the thread.

- Align gear sector: see **9995112** .
- Pull the flywheel / carrier plate towards the crankshaft using the 3 nuts on special tool see **9995678** . The turned section of the nut must be turned towards the flywheel / carrier plate.
- Install the other screws. Tighten. See **SUMMARY OF TIGHTENING TORQUES FOR SPECIFIC COMPONENTS** .
- Replace the 3 special screws with new standard screws. Tighten. See **SUMMARY OF TIGHTENING TORQUES FOR SPECIFIC COMPONENTS** .
- Then angle tighten all 10 screws crosswise. Use see **9512050** . Tighten. See **SUMMARY OF TIGHTENING TORQUES FOR SPECIFIC COMPONENTS** .
- Ensure that the flywheel sensor and bracket are installed. Install the clutch driven plate and clutch.

INSTALLING THE GEARBOX

Install the gearbox:

- For gasoline 4T65 2003- see **TRANSMISSION, REMOVING** .
- For gasoline AW50AWD 2003- see **TRANSMISSION, REMOVING**

- For gasoline AW55-50 2004- see **TRANSMISSION, REMOVING** .

CHECKING THE ENGINE:

Test drive the car to check the function of the engine and the transmission.

CRANKSHAFT SEAL, FRONT, REPLACING

Special tools:

see **9995304**

see **9995919**

see **9995455**

see **9995433**

REMOVAL

NOTE: **As the illustrations in this service information are used for different model years and / or models, some variation may occur. However, the essential information in the illustrations is always correct.**

PREPARATION

Remove the timing belt. See **REMOVAL**.

Check the tensioner and idler pulleys. See **CHECKING THE TENSIONER PULLEY AND IDLER PULLEY**.

Fig. 19: Pulling Away Timing Gear Pulley Using Puller 999 5304
Courtesy of VOLVO CARS CORPORATION

Carefully pull crankshaft timing gear pulley free. Use puller see **9995304** .

REMOVING FRONT CRANKSHAFT SEAL

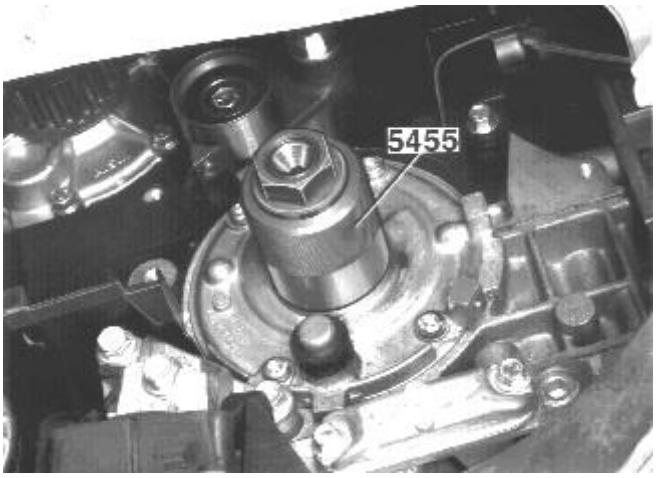

Fig. 20: Identifying Seal Installation Using Tool 9995455
Courtesy of VOLVO CARS CORPORATION

Remove the old seal. Use extractor see **9995919** .

Clean sealing surfaces.

Lubricate and install the new seal. Use drift see **9995455** .

Press in drift and seal with crankshaft center nut.

NOTE: **Ensure that the crankshaft does not rotate when pressing in the crankshaft seal.**

INSTALLATION

FINISHING

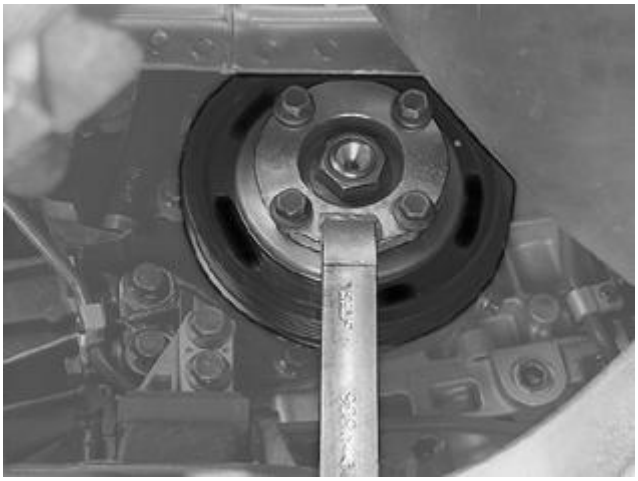

Fig. 21: Installing Pulley For Auxiliaries Belt
Courtesy of VOLVO CARS CORPORATION

Install a **new timing belt** . See **INSTALLATION**.

Install the pulley for the auxiliaries belt. Locate the steering gear on the locating pin in the timing gear pulley.

Install the auxiliaries belt.

Install counterhold see **9995433** .

Tighten the crankshaft center nut. Install the vibration damper using **new screws** . See **SUMMARY OF TIGHTENING TORQUES FOR SPECIFIC COMPONENTS** .

Use the crankshaft center nut as a counterhold.

FINAL CHECK

Check the engine oil level. Top up if necessary.

Test drive the engine.

CRANKSHAFT MECHANISM (B8444S, TF-80SC AWD; 2005-2011)

CARRIER PLATE, REPLACING

REMOVAL

REMOVING THE TRANSMISSION AND CARRIER PLATE

Remove the transmission. See **REPLACING THE GEARBOX** .

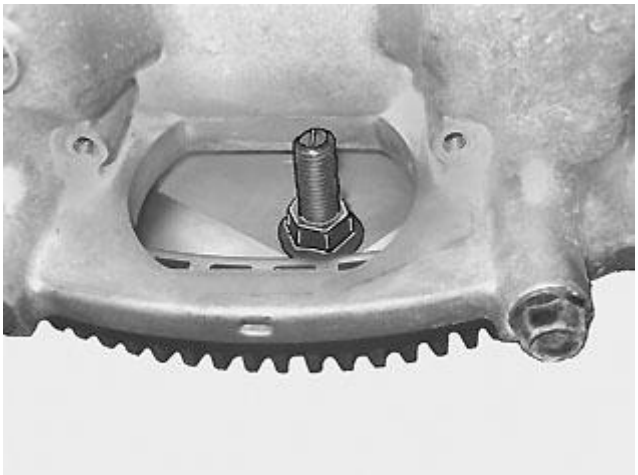

Fig. 22: Locking The Carrier Plate
Courtesy of VOLVO CARS CORPORATION

Lock the carrier plate using an M10 screw. Remove the carrier plate.

INSTALLATION

INSTALLING THE CARRIER PLATE

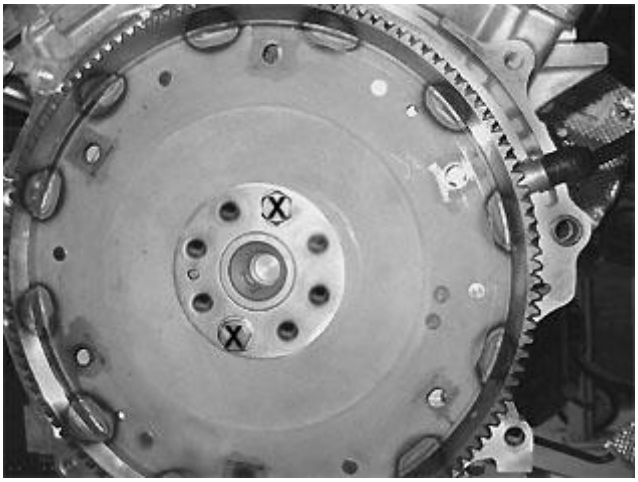

Fig. 23: Identifying The Carrier Plate
Courtesy of VOLVO CARS CORPORATION

CAUTION: Ensure that the mating surfaces on the crankshaft and carrier plate are completely clean.

The carrier plate must lie against the crankshaft flange before the screws are installed. There is a risk that excess locking fluid on the screws will come between the mating surfaces.

Brush off all the old locking fluid from the two old screws. Use a wire brush. Mark the cleaned screws using a marker pen.

Install:

- the carrier plate, tighten it in towards the crankshaft with the two cleaned and marked screws.

NOTE: Check that the locating pin on the crankshaft is positioned opposite the hole in the carrier plate.

- 6 x **new** screws. Tighten. See: **SUMMARY OF TIGHTENING TORQUES FOR SPECIFIC COMPONENTS** .

Remove the two old marked screws.

Install the remaining **new** screws. Tighten. See: **SUMMARY OF TIGHTENING TORQUES FOR SPECIFIC COMPONENTS** .

Fig. 24: Locking The Carrier Plate
Courtesy of VOLVO CARS CORPORATION

Remove the locking screw.

INSTALLING THE GEARBOX

Install the gearbox. See: **REPLACING THE GEARBOX** .

CRANKSHAFT SEAL REAR, REPLACING

Special tools:

see **9995651**

see **9997194**

NOTE: The illustrations in this service information are used for different model years

and/or models. Some variation may occur. However, the essential information in the illustrations is always correct.

REMOVAL

REMOVING THE CARRIER PLATE

Remove the carrier plate. See: **CARRIER PLATE, REPLACING**.

REMOVING THE REAR SEALING RING

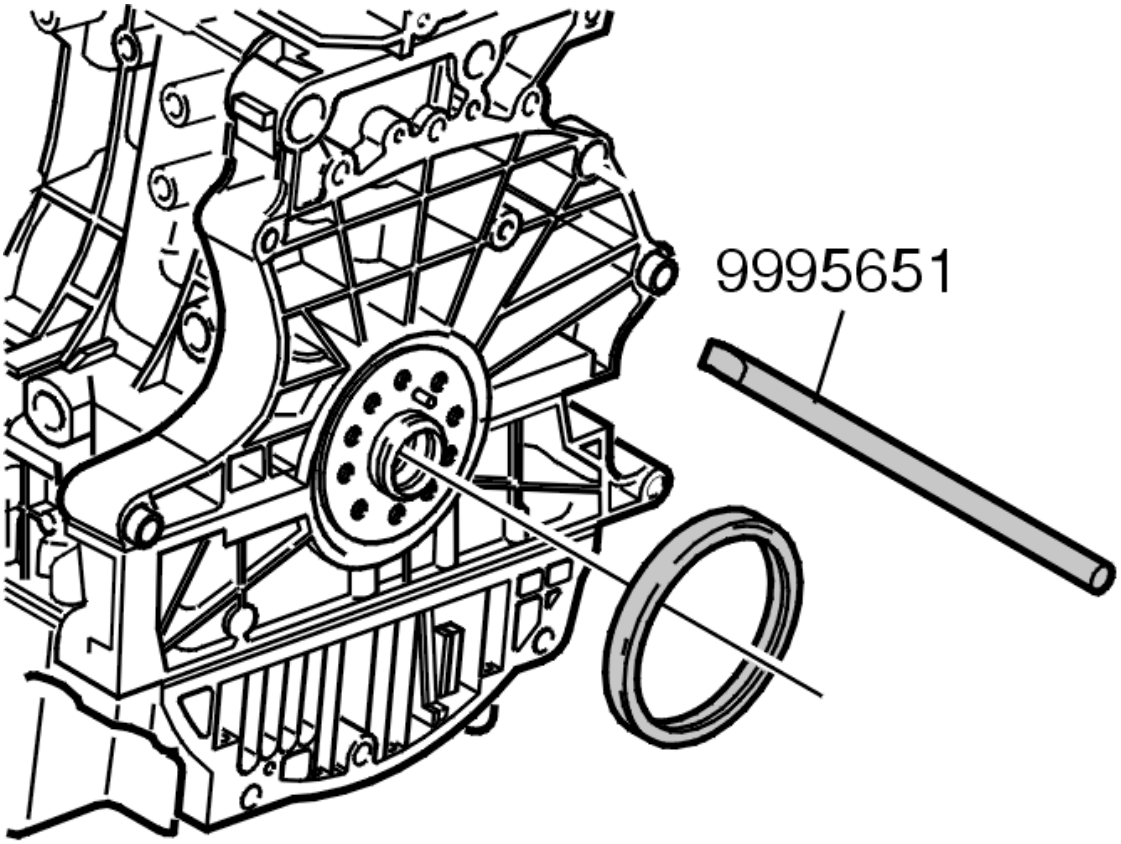

Fig. 25: Identifying Old Seal And Special Tool Extractor 999 5651
Courtesy of VOLVO CARS CORPORATION

CAUTION: Do not damage the mating surfaces of the crankshaft and cylinder block.

Remove the old sealing ring using puller see **9995651** .

Clean around the crankshaft flange and screw holes to remove any thread sealant residue. If necessary, wash and dry away any oil from the engine's rear engine block plane and the transmission clutch housing. Blow clean with compressed air.

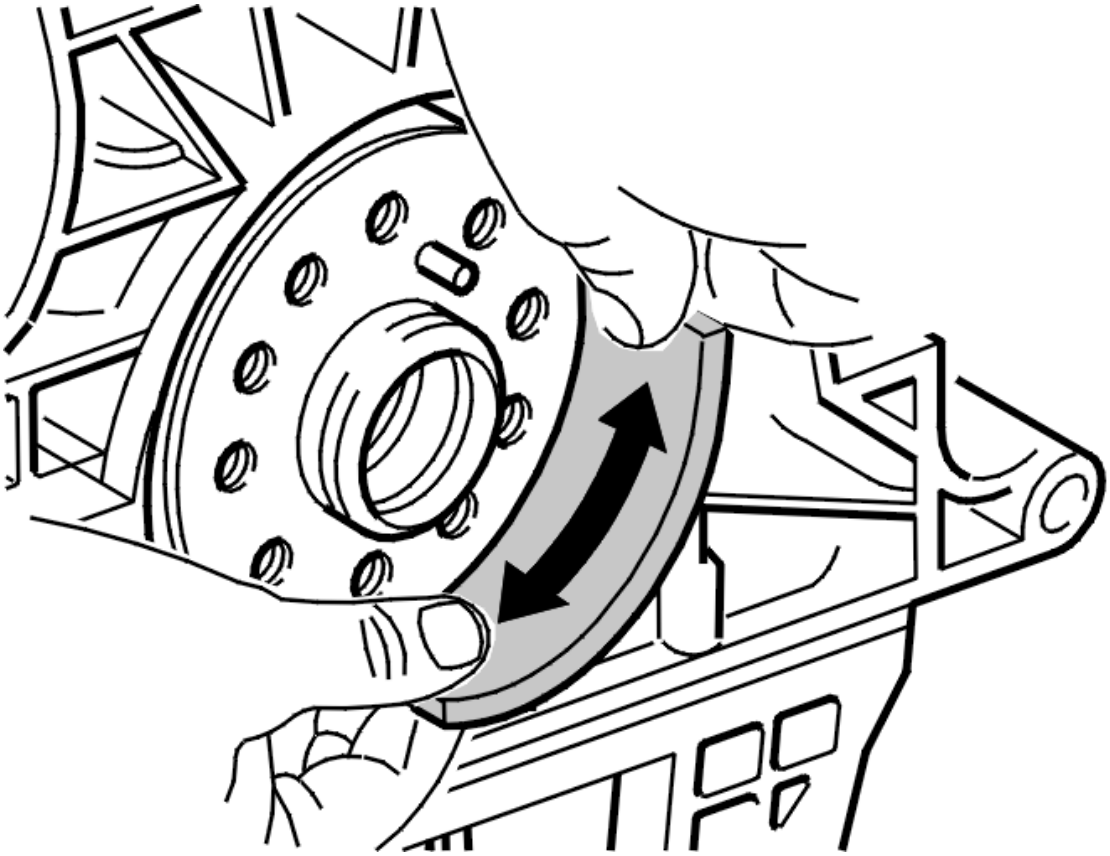

Fig. 26: Cleaning Around Crankshaft Flange
Courtesy of VOLVO CARS CORPORATION

CAUTION: When cleaning work around the flange, not in and out. No grinding tools or similar may be used. It is extremely important that there is no thread sealant residue or other dirt. This could cause leakage.

NOTE: To clean the crankshaft, use cloth 9511024.

INSTALLATION

INSTALLING THE REAR SEALING RING

CAUTION: Only Volvo approved engine oil may be used. Grease must not be used at all. It attracts dirt and results in the build-up of coke.

Fig. 27: Locating The Inner Part Onto The Crankshaft (Tool 9997194)
Courtesy of VOLVO CARS CORPORATION

Lubricate the sealing ring mating surface against the cylinder block and the lips of the seal.

Fit a new sealing ring on the inner part of tool see **9997194** and screw the inner part onto the crankshaft using two old screws from the carrier plate.

Fig. 28: Press In The Sealing Ring With The Outer Part (Tool 9997194)
Courtesy of VOLVO CARS CORPORATION

Press in the sealing ring with the outer part of tool see **9997194** with the center screw to the stop.

Remove tool see **9997194** . Scrap the carrier plate screws.

INSTALLING THE CARRIER PLATE

Install the carrier plate. See to: **CARRIER PLATE, REPLACING**.

CRANKSHAFT SEAL, FRONT, REPLACING

Special tools:

see **9997196**

see **9997198**

see **9995304**

see **9995069**

see **9997197**

NOTE: **The illustrations in this service information are used for different model years and/or models. Some variation may occur. However, the essential information in the illustrations is always correct.**

REMOVAL

REMOVING THE AUXILIARIES BELT

Remove the auxiliaries belt. See **AUXILIARIES BELT/BELT TENSIONER, REPLACEMENT** .

REMOVING THE RIGHT FRONT WHEEL

Raise the vehicle. See **JACKING POINTS, BODY** .

Remove:

- the right front wheel
- the 1 plastic nut of the wheel arch liner. Bend aside the wheel arch liner.

REMOVING THE VIBRATION DAMPER

Fig. 29: Identifying Counterhold 9997196

Courtesy of VOLVO CARS CORPORATION

Install counterhold see **9997196** . Undo the center screw.

Fig. 30: Identifying Insert Screw
Courtesy of VOLVO CARS CORPORATION

Insert screw see **9997198** in the center hole of the crankshaft.

Fig. 31: Puller 9995304 Installed
Courtesy of VOLVO CARS CORPORATION

Install puller see **9995304** . Pull off the vibration damper.

REMOVING THE FRONT SEALING RING

Fig. 32: Removing the Sealing Ring Using Puller 9995069
Courtesy of VOLVO CARS CORPORATION

Remove:

- the sealing ring using puller see **9995069**
- screw see **9997198** in the center hole of the crankshaft.

INSTALLATION

NOTE: For tightening torques, see: TIGHTENING TORQUE .

INSTALLING THE FRONT SEALING RING

Fig. 33: Installing New Sealing Ring With Drift 9997197
Courtesy of VOLVO CARS CORPORATION

Install a new sealing ring with drift see **9997197** . Pull the drift in to the stop with the old center screw. Remove the drift.

INSTALLING THE VIBRATION DAMPER

Clean the surface for the sealing ring on the vibration damper with cloth 951 1024.

CAUTION: The direction of cleaning should be around the flange.

Fig. 34: Identifying The Vibration Damper
Courtesy of VOLVO CARS CORPORATION

Install:

- the vibration damper
- screw see **9997198** in the center hole of the crankshaft.

Fig. 35: Counterhold 9997196 Installed
Courtesy of VOLVO CARS CORPORATION

Install:

- counterhold see **9997196**

- drift see **9997198** and press the vibration damper in to the stop using the old center screw. Tighten to 100 Nm.

Remove:

- the center screw; scrap it
- tools see **9997198** and see **9997198** .

Insert a new screw at the vibration damper and tighten as specified: **TIGHTENING TORQUE** .

Remove counterhold see **9997196** .

INSTALLING THE RIGHT FRONT WHEEL

Install:

- the wheel arch liner; tighten the plastic nut
- the right front wheel. See **INSTALLING WHEELS** .

Lower the vehicle.

INSTALLING THE AUXILIARIES BELT

Install the auxiliaries belt. See **AUXILIARIES BELT/BELT TENSIONER, REPLACEMENT** .

CHECK

Start the engine and check for leaks and proper function.

CYLINDER HEAD (B5254T2; 2003-2007)

CYLINDER HEAD/GASKET, REPLACEMENT

Special tools:

see **9995452**

see **9995454**

see **9995670**

see **9995451**

see **9512050**

see **9512767**

see **9995450**

see **9995718**

see **9995719**

NOTE: **Since the illustrations in this service information are used for different model years and / or models, some variation may occur. However, the essential information in the illustrations is always correct.**

NOTE: **There are a number of versions of the VVT-unit (variable valve timing). Therefore it is extremely important to always read the information referring to the engine variant/model year to be remedied.**

REMOVAL

PREPARATION

Fig. 36: Pinching Expansion Tank Hose
Courtesy of VOLVO CARS CORPORATION

Remove

- the radiator breather tube from the expansion tank. Install lock grip pliers
- the battery negative lead. First read, see **BATTERY, DISCONNECTING**
- the right front wheel.

DRAINING COOLANT

Fig. 37: Coolant Drain Plug
Courtesy of VOLVO CARS CORPORATION

Raise the car.

Remove the splash guard under the engine.

Open the engine nipple.

Drain the coolant into a container.

Close the nipple.

REMOVING COMPONENTS

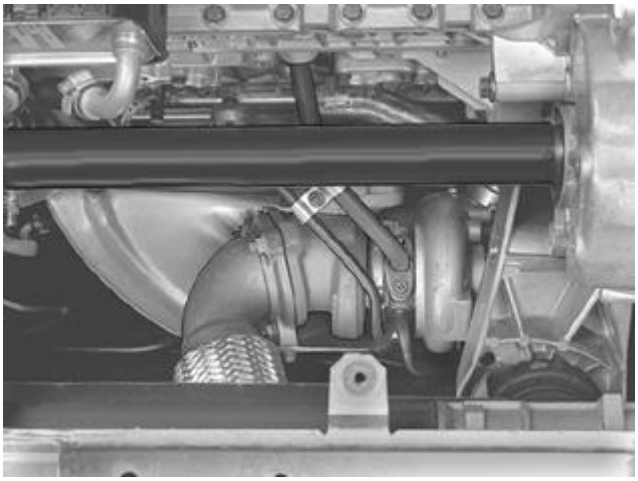

Fig. 38: Identifying Clamp, Pipe Screw, Oil Return Line And Turbocharger
Courtesy of VOLVO CARS CORPORATION

Remove:

- the clamp between the oil pressure pipe and the oil return line at the turbocharger (TC)

- the pipe screw that holds the oil pressure pipe to the connector on the cylinder block
- the oil return line. Seal the opening in the cylinder block
- the lower screw that holds the heat deflector plate over the turbocharger (TC)
- the nuts for the front exhaust pipe connection to the turbocharger (TC). Lift off the exhaust pipe and tie it up. Seal the opening in the exhaust pipe

NOTE: The metal hose for the front exhaust pipe is easy to damage if it is twisted. Handle it with care to avoid leakage.

DEPRESSURIZING THE FUEL SYSTEM

Lower the car.

Depressurize the fuel system acc. to:

Start the engine.

Remove the fuel pump fuse.

The engine will stop after approx. 20 seconds.

Turn over the engine 3-5 seconds.

Switch off the ignition.

Replace the fuse.

REMOVING COMPONENTS

Fig. 39: Engine Compartment
Courtesy of VOLVO CARS CORPORATION

Remove

- the engine stabilizer brace between the suspension turrets
- the ground strips between the engine and the firewall
- the heat deflector plate above the turbocharger (TC)
- the plastic charge air pipe above the engine. Seal the openings
- the cover over the nozzle pipes
- the cover over the ignition coils
- the upper engine coolant hose for the engine and radiator
- the screw holding the dip stick pipe to the intake manifold
- the brake vacuum hose from the intake manifold.

Undo the clamp holding the plastic charge air pipe to the electronic throttle module.

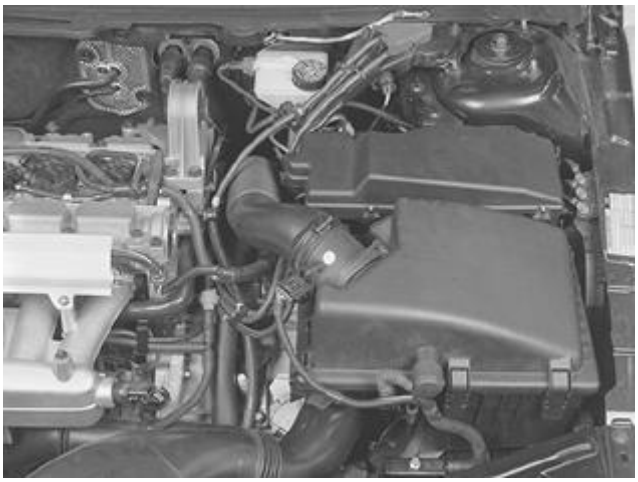

Fig. 40: Air Cleaner And Fuse Box
Courtesy of VOLVO CARS CORPORATION

Remove

- the connector from the mass air flow (MAF) sensor
- the intake hose from the mass air flow (MAF) sensor. Seal the opening.

Release the hoses from the bracket at the rear of the cylinder head. Remove the bracket.

Remove

- the clamp for the positive lead at the rear of the cylinder head
- the torque bracket
- the pipe screw for the water-heated crankcase ventilation.

REMOVING THE FUEL RAIL

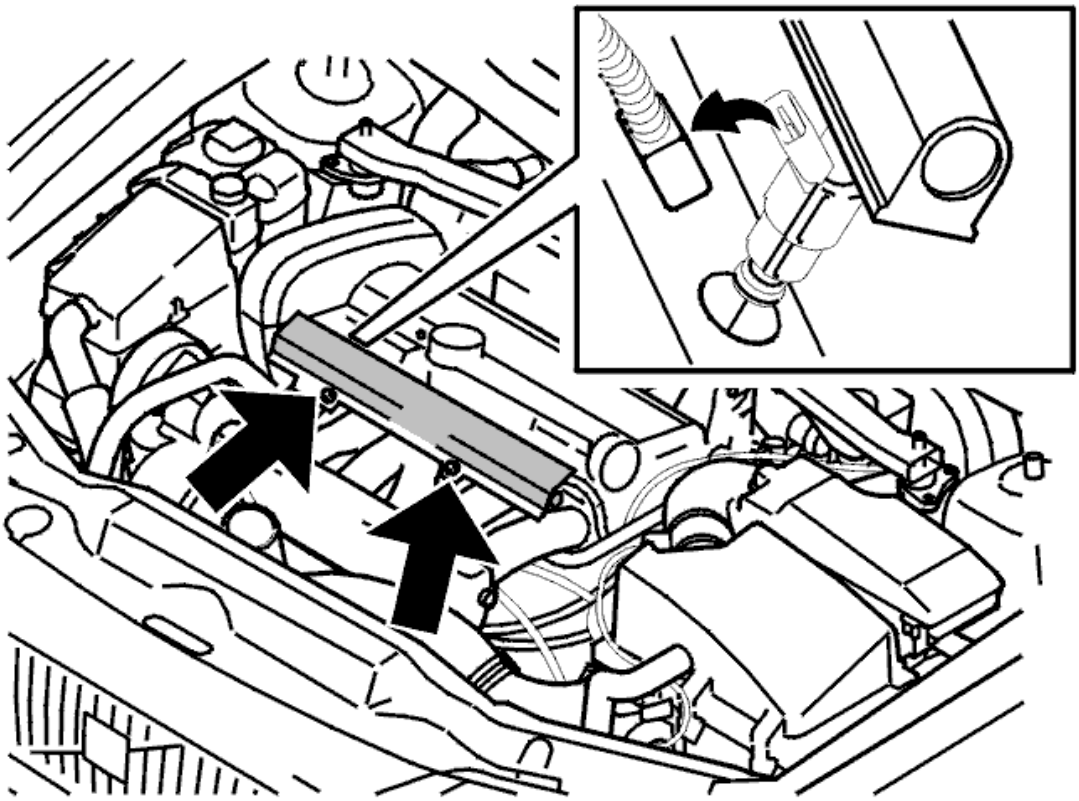

Fig. 41: Fuel Rail
Courtesy of VOLVO CARS CORPORATION

- Remove the clamp for the injector wiring at the rear of the cylinder head
- Detach the wiring from the injectors
- Remove the fuel rail mounting screws
- Spray universal oil or similar around the injector connectors on the intake manifold
- Gently work the fuel rail and injectors loose
- Separate the quick-release connector for the fuel line. See **FUEL LINE, LOCK**.
- Carefully put the fuel rail to one side.

FUEL LINE, LOCK

REMOVING LOCK

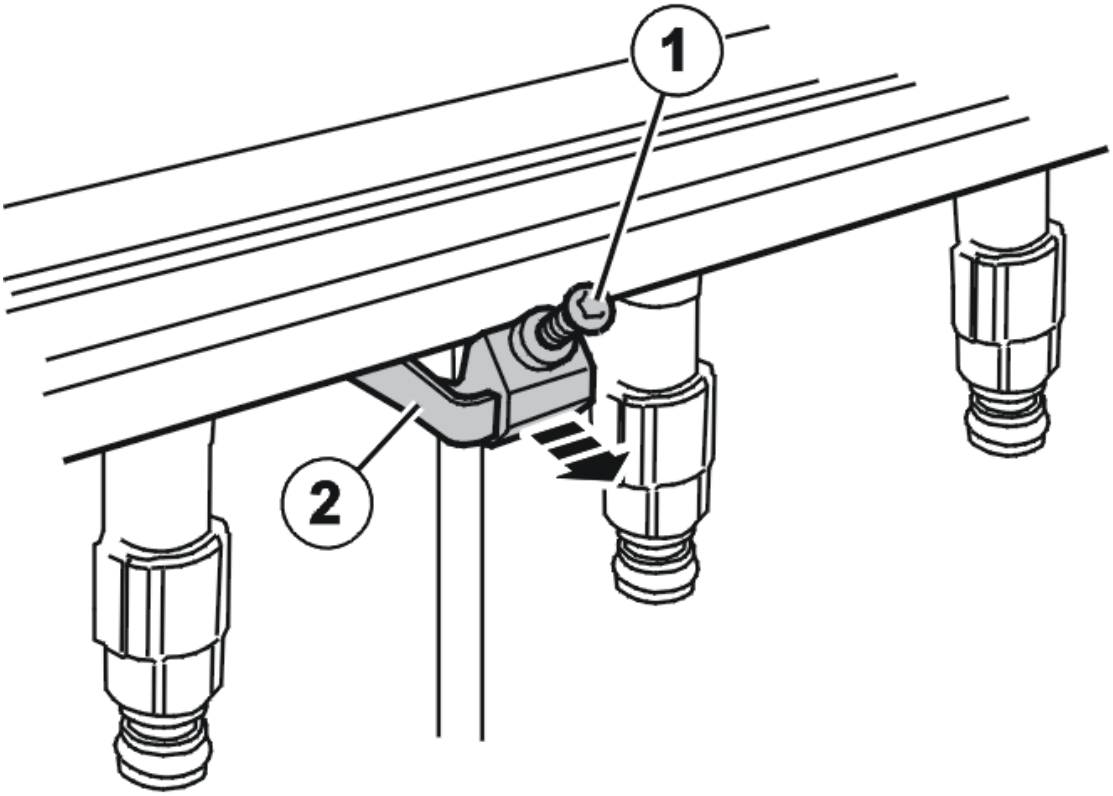

Fig. 42: Identifying Secondary Lock & Screw

Unscrew the screw (1).

Bend out the secondary lock (2). Pull out the catch.

Remove the fuel rail.

INSTALLING THE LOCK

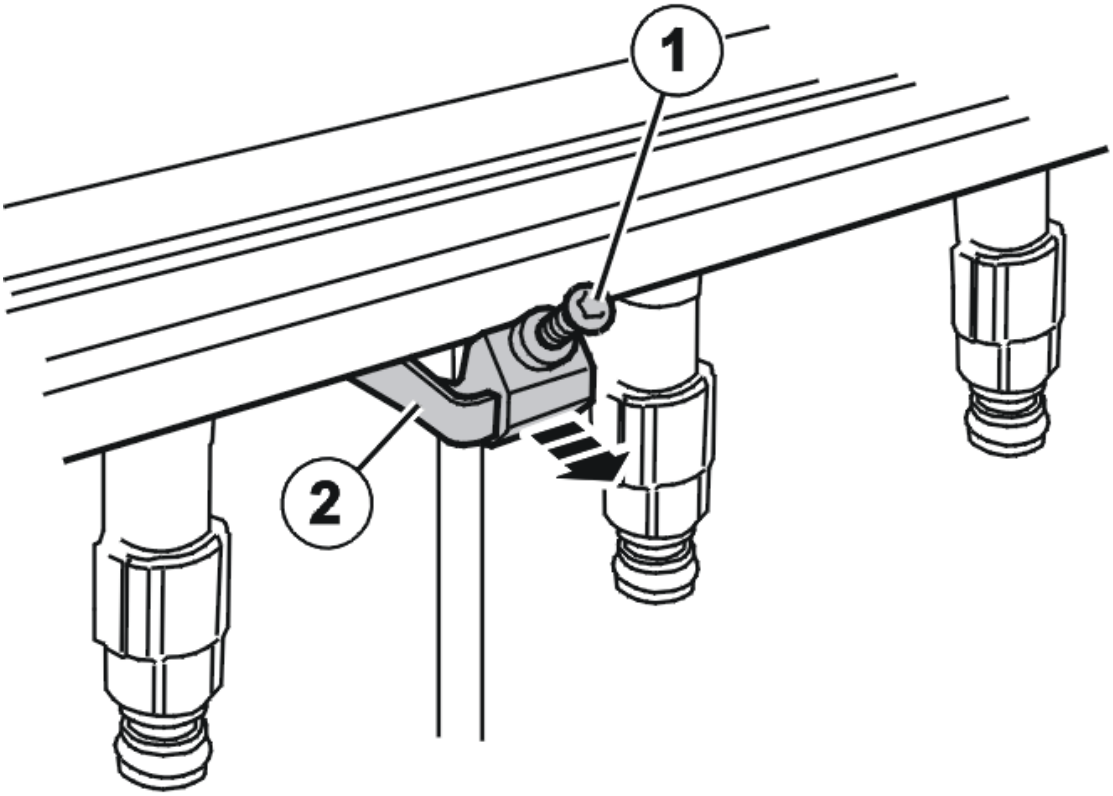

Fig. 43: Identifying Secondary Lock & Screw

NOTE: Screw in the screw until it takes.

Install the fuel rail.

Press in the secondary lock (2).

Screw the screw (1) right in.

REMOVING IGNITION COILS

Fig. 44: Identifying Ignition Coils
Courtesy of VOLVO CARS CORPORATION

- Mark up the ignition coils so that their original positions can be established
- Remove the mounting screws for the ignition coils and the screws at the two ground terminals
- Disconnect the connector for the variable valve timing solenoid
- Lift up and place the ignition coils and wiring to one side.

Remove:

- the crankcase ventilation hose from the top of the camshaft cover
- the camshaft position sensor (CMP) housing and trigger wheel.

REMOVING INTAKE MANIFOLD

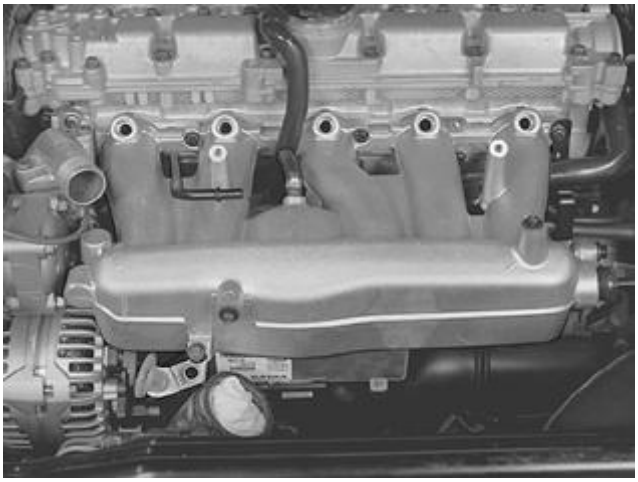

Fig. 45: Identifying Intake Manifold
Courtesy of VOLVO CARS CORPORATION

Remove:

- The EVAP hose from the intake manifold
- the by-pass valve vacuum hose. Disconnect the connector for the electronic throttle module (ETM)
- the upper row of screws holding the intake manifold to the cylinder head. Slacken off the lower screws. Lift up the intake manifold. Remove the pipe screw for the water heated crankcase ventilation underneath the intake manifold
- the pipe screw for the crankcase ventilation from the underside of the intake manifold.

Lift up and remove the intake manifold.

NOTE: Make sure that the fuel pressure pipe is not damaged.

REMOVING COMPONENTS

Fig. 46: Expansion Tank And Servo Oil Reservoir
Courtesy of VOLVO CARS CORPORATION

Disconnect the connectors for the ABS sensor and level sensor in the expansion tank.

Lift up the expansion tank and servo oil reservoir. Place them on top of the engine.

NOTE: Make sure that oil does not leak from the breather hole in the filler cap.

Remove the auxiliaries belt.

Remove:

- front timing cover
- the hose for the water-heated crankcase ventilation from the thermostat housing.

Separate the connector for the engine coolant temperature (ECT) sensor.

SETTING UP THE ENGINE

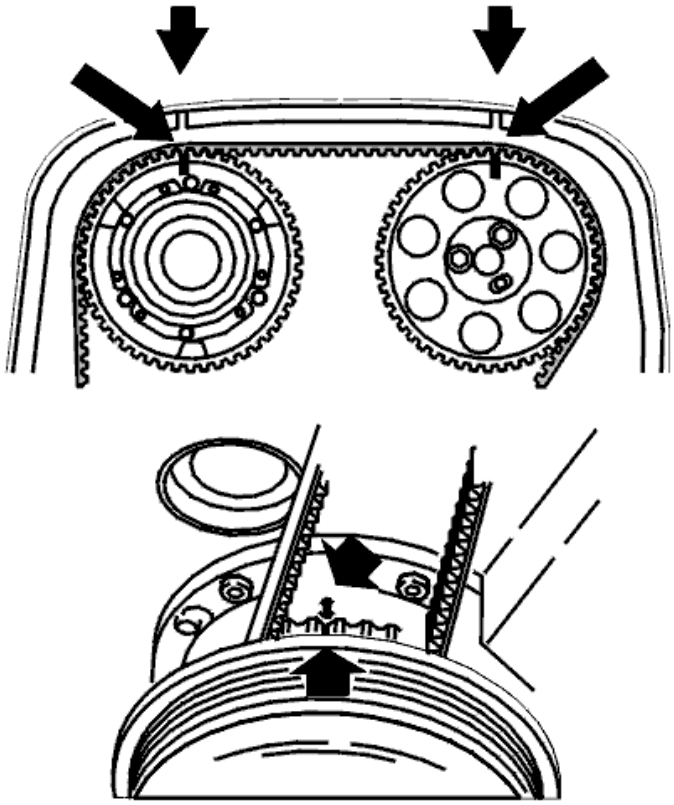

Fig. 47: Crankshaft And Camshafts Markings
Courtesy of VOLVO CARS CORPORATION

Remove the nuts from the cover on the fender liner.

Turn the crankshaft clockwise until the markings on the crankshaft and camshafts correspond.

Remove the upper timing cover.

REMOVING THE TIMING BELT

Slacken off the center screw for the belt tensioner slightly.

Hold the center screw secure and turn the tensioner eccentric clockwise with a 6 mm Allen key to 10 o'clock.

Remove:

- the timing belt from the timing gear pulley
- the screw that holds the inner timing cover to the cylinder head.

Install tool see **9995452** at the rear of the camshafts.

REMOVING THE TIMING GEAR PULLEY

Remove the cable duct from its mountings on the right-hand suspension turret.

NOTE: Do not damage the paintwork.

Hold the cable duct out of the way and remove:

- the plug at the front of the variable valve timing unit (TX55).

  NOTE: Use paper or similar to absorb oil that drains.

- the center screw in the variable valve timing unit (TX55).

Carefully pull out the timing gear pulley with the variable valve timing (VVT) unit.

Remove tool see **9995452** .

REMOVING COMPONENTS FROM TURBOCHARGER (TC)

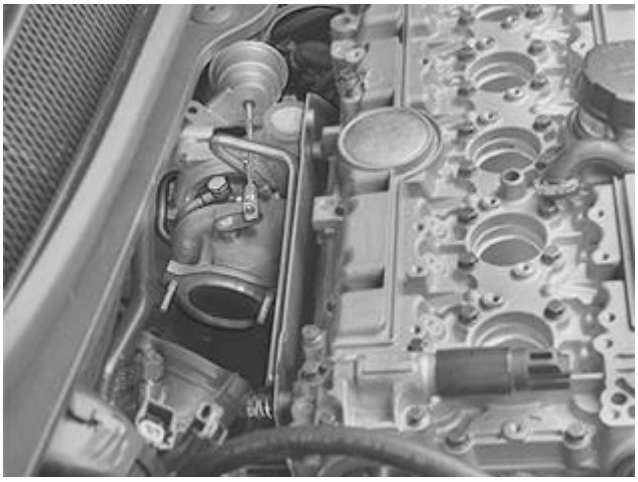

Fig. 48: Identifying Turbocharger Components
Courtesy of VOLVO CARS CORPORATION

Remove:

- the heat deflector plate above the manifold
- the upper engine coolant pipe. Place it to one side
- the oil pressure pipe for the turbocharger (TC)
- the pipe screw at the lower coolant pipe for the turbocharger (TC). Put the pipe to one side
- the nuts and washers holding the manifold to the cylinder head.

Lift off the turbocharger and manifold. Carefully put them on top of the transmission.

RELEASING THE INLET PIPE FOR THE COOLANT PUMP

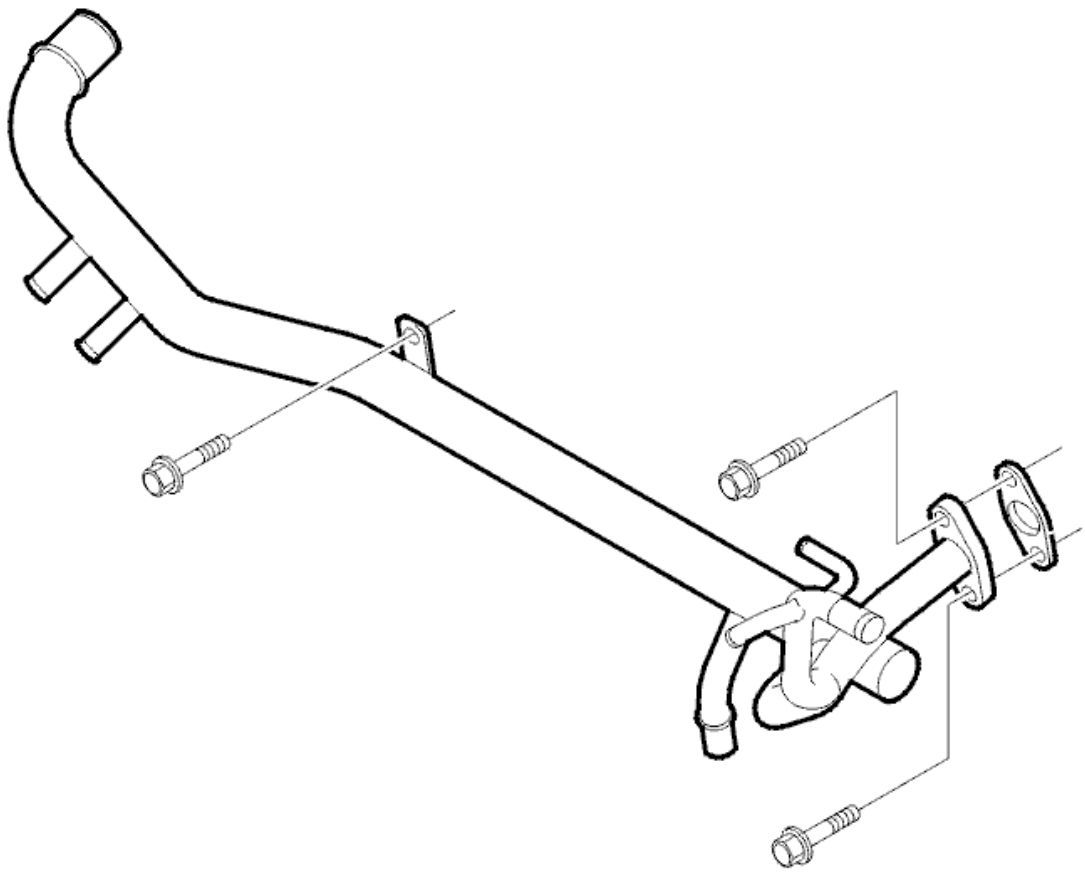

Fig. 49: Viewing Coolant Pump Inlet Pipe
Courtesy of VOLVO CARS CORPORATION

Remove:

- the screw that holds the coolant pump intake pipe to the engine block a few turns. Leave the screw in place
- the two screws for the connection between the coolant pipe and the bypass channel. Carefully turn the pipe to remove it from the cylinder block.

REMOVING THE CAMSHAFT COVER AND CYLINDER HEAD

Fig. 50: Identifying Special Tool 999 5454
Courtesy of VOLVO CARS CORPORATION

- Remove the spark plugs from cylinders 1 and 5
- Install 2 tools see **9995454** . Leave a 2-3 mm gap to the camshaft cover.

NOTE: Make sure that the screw in the sparkplug thread is fully tightened. VVT-solenoid (variable valve timing).

- The variable valve timing solenoids.
- Remove all the screws securing the camshaft cover to the cylinder head.

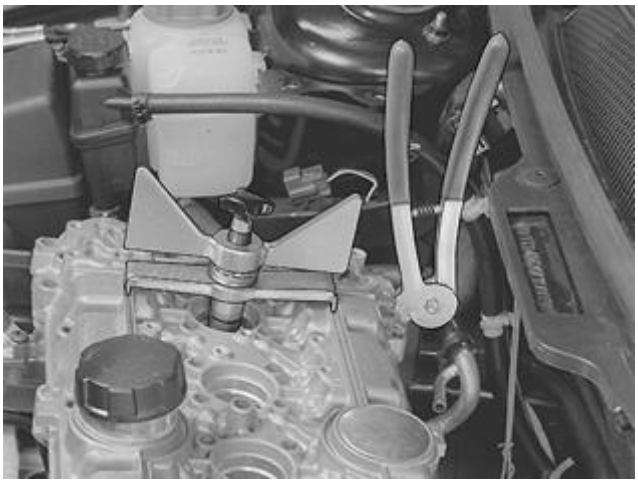

Fig. 51: Identifying Pliers And Stop Lugs
Courtesy of VOLVO CARS CORPORATION

- Use pliers see **9995670** to lift the cover from the cylinder head.
- Install the pliers at the stop lugs. Start with cylinder 1 and work alternately backwards
- Slacken off the wing nuts approximately 2 turns. Repeat the procedure.

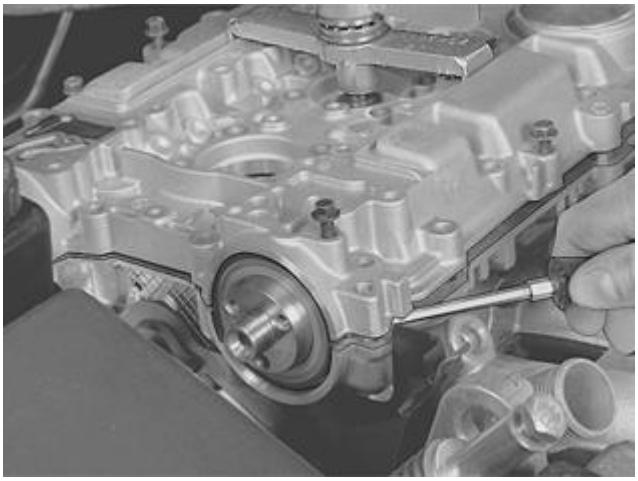

Fig. 52: Identifying Pressing Out Of Camshaft Seals
Courtesy of VOLVO CARS CORPORATION

Carefully press out the front and rear camshaft seals.

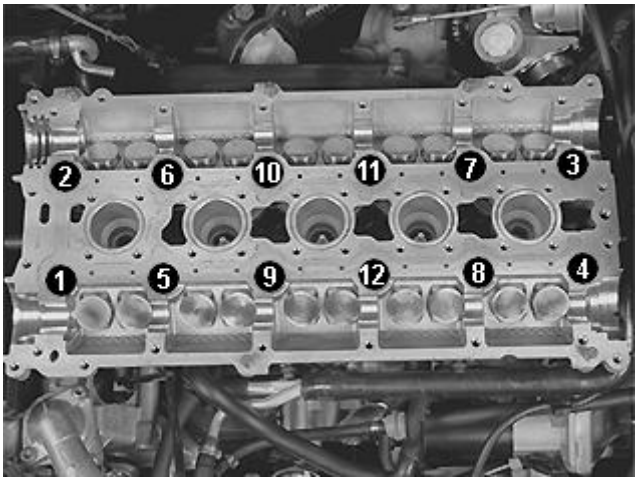

Fig. 53: Cylinder Head Bolt Removal Sequence
Courtesy of VOLVO CARS CORPORATION

Remove:

- tools see **9995454**
- the camshaft cover
- the camshafts
- the screws holding the cylinder head onto the cylinder block. Start at the sides and work alternately towards the center.

Get some help and lift of the cylinder head. Place the cylinder head on two wooden blocks.

NOTE: Work carefully to avoid damaging the contact faces.

WHEN REPLACING OR WORKING ON THE CYLINDER HEAD

Lift out the valve lifters. Use a magnet or suction cup.

Remove the thermostat housing and transfer it to the new cylinder head.

NOTE: Work carefully to avoid damaging the contact faces.

INSTALLATION

NOTE: For tightening torques, see: TIGHTENING TORQUE .

NOTE: To ensure that there is no exhaust leakage, see: FLANGED JOINT, ASSEMBLING .

CLEANING

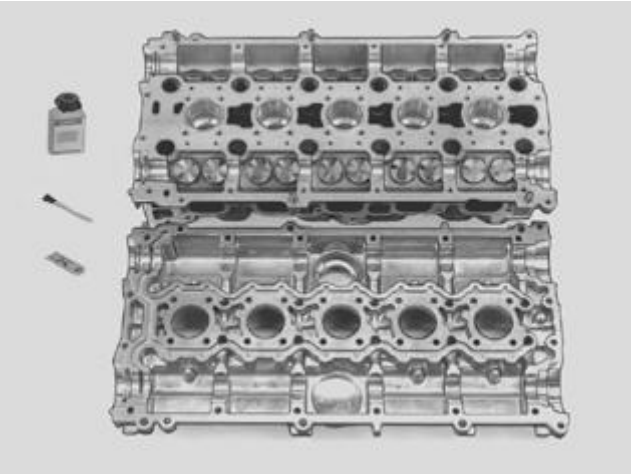

Fig. 54: Cleaning Camshaft And Cylinder Block
Courtesy of VOLVO CARS CORPORATION

WARNING: Use a fume hood or extractor when using gasket solvent

Clean the gasket faces for:

- the manifold. Check that the studs are tightened
- the coolant bypass channel
- the thermostat housing
- the intake manifold
- the cylinder block
- camshaft cover.

Blow the oil ducts clean.

NOTE: Use a razor blade or a gasket scraper and gasket solvent P/N 1161 440.

SETTING UP THE ENGINE

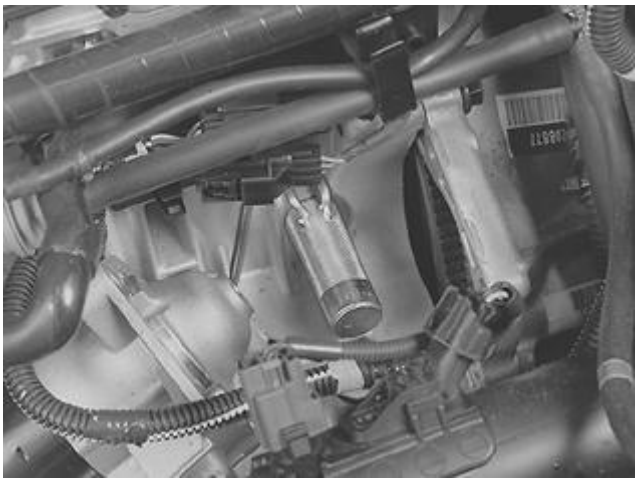

Fig. 55: Crankshaft Stop Tool 9995451 Installed
Courtesy of VOLVO CARS CORPORATION

- Position the crankshaft
- Remove the starter motor mounting screws. Pull out the starter motor and place it to one side
- Remove the blind cover plug
- Turn the crankshaft slightly **clockwise** .
- Install crankshaft stop see **9995451** . Ensure that it bottoms out against the cylinder block.
- Turn the crankshaft **counter-clockwise** until it stops against the crankshaft stop
- Check that the marking on the crankshaft timing gear pulley corresponds with the marking on the oil pump.

INSTALLING THE CYLINDER HEAD

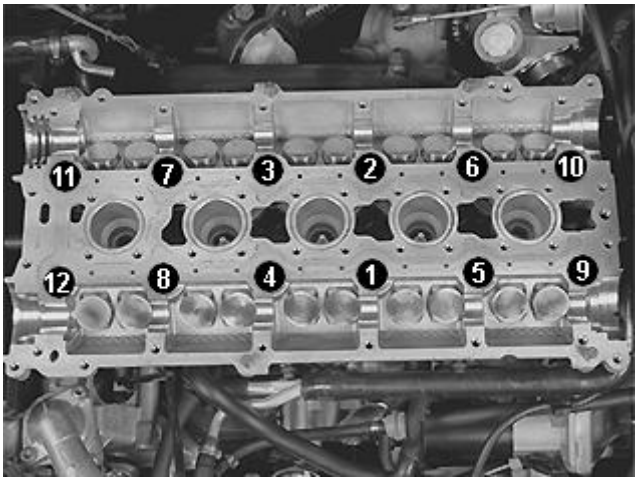

Fig. 56: Cylinder Head Bolt Installation Sequence
Courtesy of VOLVO CARS CORPORATION

- Ensure that all studs at the exhaust ports are tightened
- Lubricate the studs with paste **116 1408.**
- Install a new cylinder head gasket
- Install the cylinder head
- Lubricate and install all the screws (use new screws).
- Tighten the screws as illustrated. Tighten. See **SUMMARY OF SPECIFIC COMPONENTS AND TIGHTENING TORQUES** . Use protractor see **9512050** .

INSTALLING VALVE LIFTERS AND CAMSHAFTS

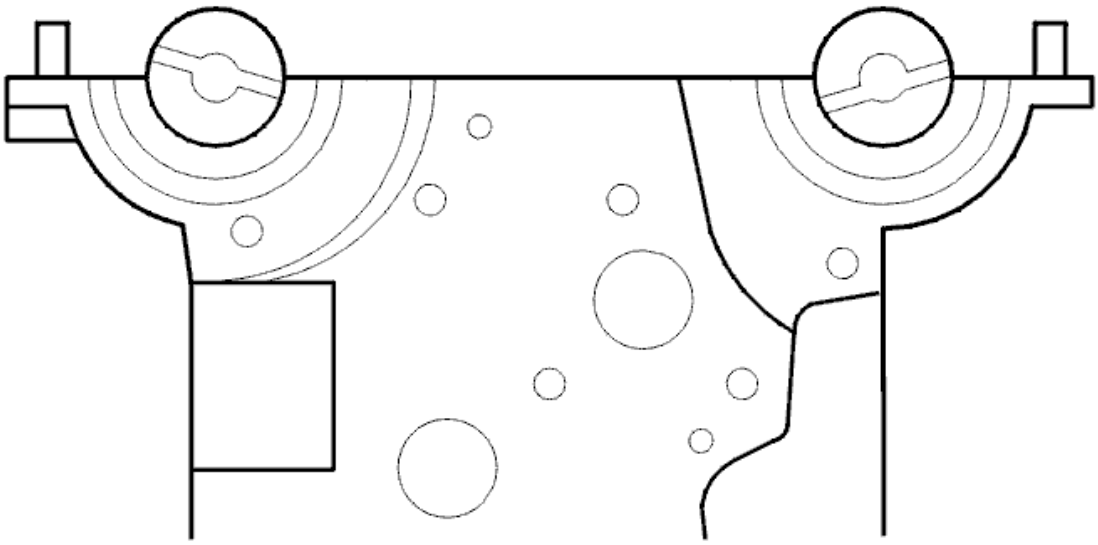

Fig. 57: Identifying Intake And Exhaust Camshafts
Courtesy of VOLVO CARS CORPORATION

- Lubricate the valve lifter wells.

NOTE: **If the cylinder head has been replaced, the valve clearance must be adjusted. See VALVE CLEARANCE .**

- Install all valve lifters
- Lubricate the camshaft bearing positions
- Install the intake camshaft. Ensure that the groove at the back of the camshaft is **above** an imaginary center line
- Position the exhaust camshaft. Ensure that the groove at the back of the camshaft is **below** an imaginary center line.

APPLYING LIQUID GASKET

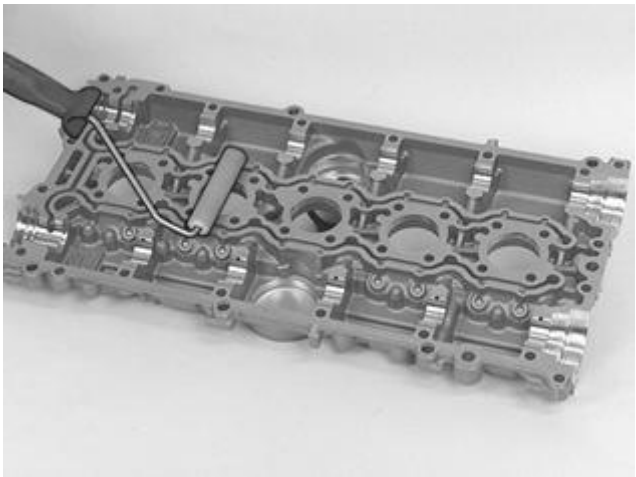

Fig. 58: Applying Liquid Gasket
Courtesy of VOLVO CARS CORPORATION

Install new O-rings around the spark plug wells at the cylinder head.

Apply liquid gasket **1161 059** to the camshaft cover.

Use roller see **9512767** . The surface must be **covered without any excess** .

NOTE: Make sure that no liquid gasket ends up in the oil channels.

INSTALLING THE CAMSHAFT COVER

Fig. 59: Identifying Special Tool 999 5454
Courtesy of VOLVO CARS CORPORATION

- Lubricate the camshaft lobes, the camshaft bearing surfaces and the valve lifters
- Install the camshaft cover
- Install press tool see **9995454** (2x).
- Tighten the camshaft cover screws alternately, keeping it parallel to the cylinder head using the press

tools

- Install all the screws. Tighten the screws from the middle and outwards
- Remove the press tools.

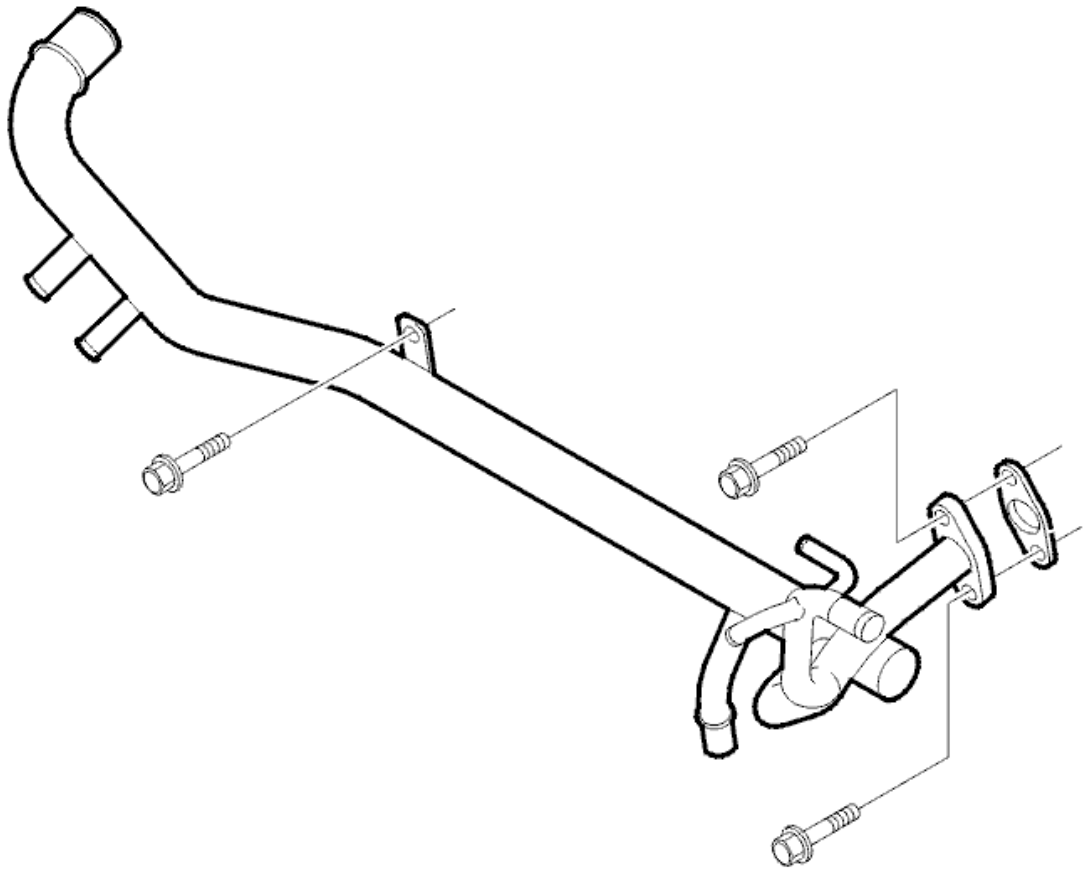

Fig. 60: Viewing Coolant Pump Inlet Pipe
Courtesy of VOLVO CARS CORPORATION

Install:

- the variable valve timing (VVT) solenoid. Use a new gasket.
- the spark plugs. Tighten. See **SUMMARY OF SPECIFIC COMPONENTS AND TIGHTENING TORQUES**
- the hose for water-heated crankcase ventilation to the thermostat housing. Tighten the clamp.

Connect the connector for the engine coolant temperature (ECT) sensor.

Install the inlet pipe for the coolant pump on the cylinder head. Use a new gasket.

NOTE: Apply thread sealant, 116 056 to the screw threads.

Tighten the screw for securing the coolant pump inlet pipe to the cylinder block.

INSTALLING THE MANIFOLD AND TURBOCHARGER (TC)

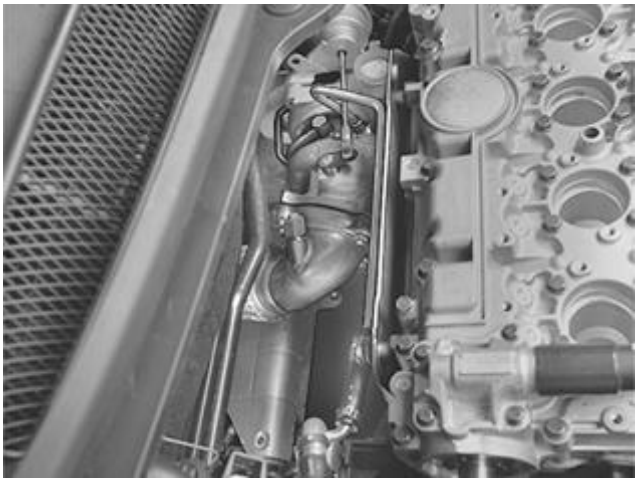

Fig. 61: Identifying Manifold And Turbocharger
Courtesy of VOLVO CARS CORPORATION

Install:

- new gaskets. Lift and install the manifold and turbocharger (TC)
- the nuts and washers holding the manifold to the cylinder head
- the upper and lower turbocharger (TC) coolant pipes. Tighten the clamp on the rubber hose
- the pipe screws for the coolant pipes. Use new seal washers. Tighten
- the oil pressure pipe
- the pipe screw holding the oil pressure pipe to the turbocharger (TC). Use new seal washers. **Do not tighten.**

Lubricate the studs on the turbocharger (TC). Use paste **116 1408** .

Install the front exhaust pipe onto the turbocharger (TC). Use new nuts. **Do not tighten.** Install the heat deflector plate over the manifold.

INSTALLING THE REAR CAMSHAFT SEAL

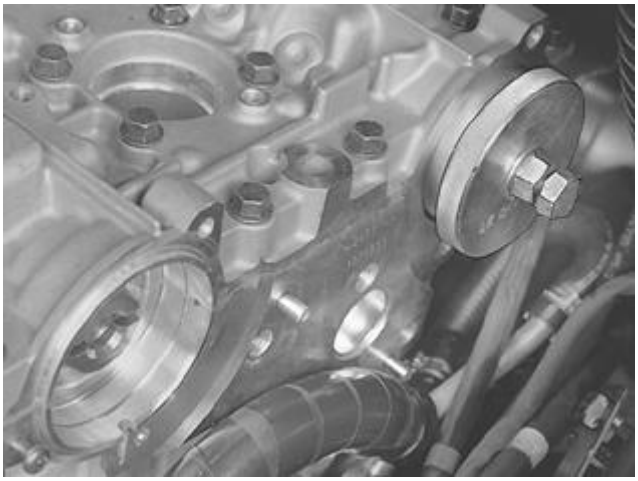

Fig. 62: Identifying Rear Camshaft Seal And Special Tool 999 5450
Courtesy of VOLVO CARS CORPORATION

To clean the shaft journal and mating surface, use emery cloth P/N 951 1024.

NOTE: For cleaning, work around the shaft journal - not in and out. It is essential that any residue from the emery cloth and any other contaminants are completely removed before the new seal ring is installed.

Use drift see **9995450** .

Lubricate the surface of the seal that the camshaft rotates against.

Press in the seal until the drift bottoms out.

NOTE: If there are grooves on the camshaft, the seal can be pressed in a further 2 mm: Reverse the sleeve.

Install camshaft adjustment tool see **9995452** at the rear of the camshafts.

Ensure that the screws retaining the adjustment tool to the camshafts and the screws holding the tool together are well tightened.

INSTALLING THE FRONT CAMSHAFT SEALS

Fig. 63: Front Camshaft Seals
Courtesy of VOLVO CARS CORPORATION

- Use drift see **9995718** .
- Lubricate the surface of the seal that the camshaft rotates against.
- Use the variable valve timing unit / timing belt pulley mounting screws. Tighten the screws until the drift bottoms out
- Remove the drift
- Install the screw holding the inner timing cover to the cylinder head.

CHECKING AND ADJUSTING THE VARIABLE VALVE TIMING UNIT

Check and adjust the variable valve timing unit. See: **VARIABLE VALVE TIMING UNIT, CHECKING AND ADJUSTING**

INSTALLING COMPONENTS

Fig. 64: Expansion Tank And Servo Oil Reservoir
Courtesy of VOLVO CARS CORPORATION

Install:

- front timing cover
- the cable duct to the mountings on the right suspension turret
- the auxiliaries belt
- the expansion tank
- the servo oil reservoir
- the bleed hose to the expansion tank. Tighten the clamp.

Check that the hoses are installed correctly.

Connect the connectors for the ABS sensor at the right suspension turret and for the coolant level sensor in the expansion tank.

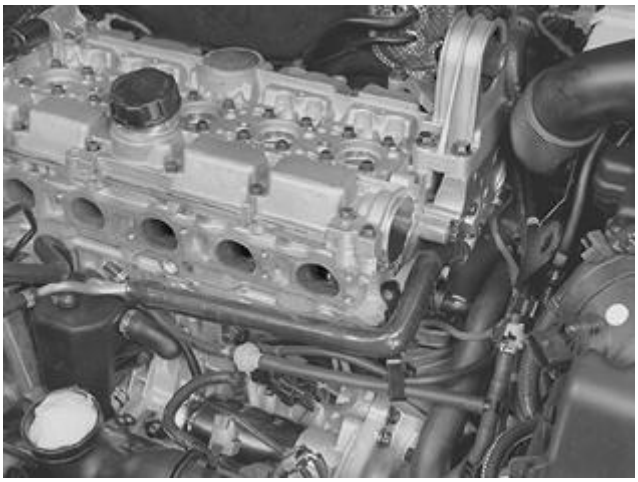

Fig. 65: Engine Components
Courtesy of VOLVO CARS CORPORATION

Install:

- the starter motor
- the pipe screw for the water heated crankcase ventilation at the rear of the cylinder head. Use new seal washers. Tighten to **26 Nm**
- the camshaft position sensor (CMP) housing and trigger wheel
- the lower engine stabilizer brace bracket in the cylinder head
- the upper engine stabilizer brace.

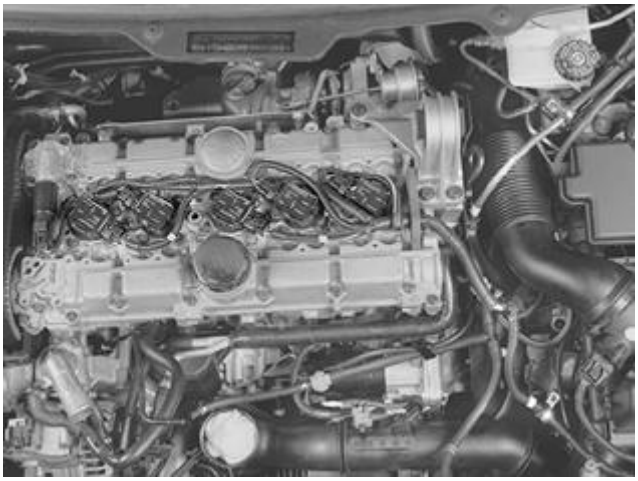

Fig. 66: Identifying Ignition Coils And Components
Courtesy of VOLVO CARS CORPORATION

Install:

- the bracket and lifting eyelet for the engine stabilizer brace bracket
- the ignition coils and ground terminals according to earlier markings. Connect the connector for the variable valve timing solenoid
- the clamp for the positive lead at the lifting eyelet bracket
- the plastic intake pipe to the mass air flow (MAF) sensor. Tighten the clamp.

Connect the connector to the mass air flow (MAF) sensor. Use a clamp on the wiring at the front of the air cleaner (ACL).

INSTALLING INTAKE MANIFOLD

Fig. 67: Identifying Intake Manifold And Components
Courtesy of VOLVO CARS CORPORATION

Clean the intake manifold gasket face to the cylinder head.

Install a new gasket on the cylinder head. Secure with the two screws in the lower row.

Lower and twist the intake manifold so that the fuel pressure line goes through the cavity in the intake manifold.

NOTE: Work carefully to avoid damaging the fuel pressure pipe.

Route the crankcase ventilation hose through the cavity in the intake manifold.

Install:

- the pipe screw for the crankcase ventilation on the underside of the intake manifold. Use new seal washers. Tighten to **26 Nm**
- the rest of the screws holding the intake manifold to the cylinder head. Tighten to **19 Nm**
- the hose to the canister purge (CP) valve
- the control hose for the turbocharger (TC) by-pass valve
- the brake vacuum hose
- the crankcase ventilation hose to the top of the camshaft cover. Use a new clamp
- the cover over the ignition coils
- the upper timing cover
- the upper engine coolant hose for the engine and radiator. Tighten the clamp
- the screw holding the dip stick pipe to the intake manifold. Connect the connector to the electronic throttle module (ETM)
- the charge air pipe between the throttle body (TB) and the charge air cooler (CAC). Remove the seal. Tighten the clamp.

INSTALLING THE FUEL RAIL

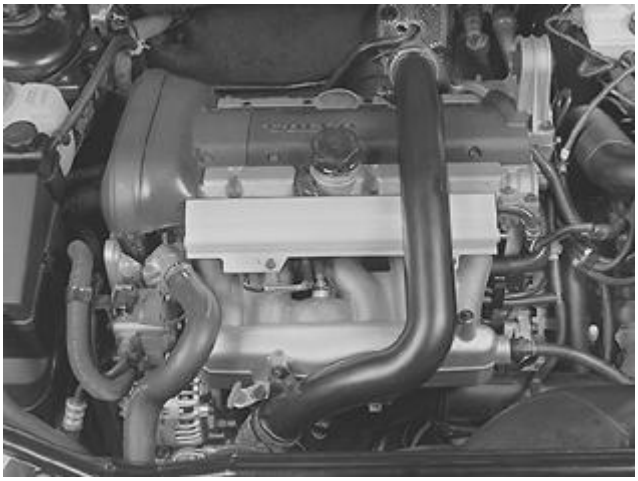

Fig. 68: Fuel Rail And Components
Courtesy of VOLVO CARS CORPORATION

Install:

- the fuel rail. Use new screws. Press the quick-release connector for the fuel pressure line until it clicks. See **FUEL LINE, LOCK**
- the clamp for the injector wiring at the rear of the cylinder head
- the protective cover over the injector connectors
- the charge air pipe over the engine. Tighten the pipe using the three screws on the engine. Tighten the clamps.

INSTALLING COMPONENTS

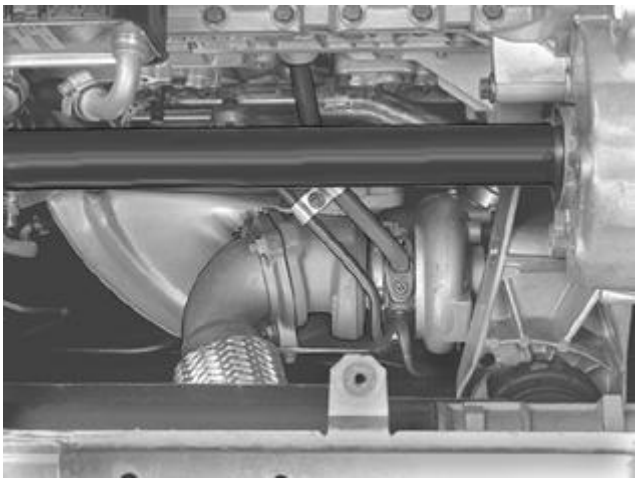

Fig. 69: Identifying Clamp, Pipe Screw, Oil Return Line And Turbocharger
Courtesy of VOLVO CARS CORPORATION

Raise the car. Install:

- the pipe screw that holds the turbocharger (TC) oil pressure pipe to the engine. Use new seal washers. Tighten. See **SUMMARY OF SPECIFIC COMPONENTS AND TIGHTENING TORQUES**
- the turbocharger (TC) oil return line. Use a new gasket and sealing ring. Tighten. See **SUMMARY OF SPECIFIC COMPONENTS AND TIGHTENING TORQUES**
- the clamp between the oil pressure pipe and the oil return line. Tighten the three nuts that hold the front exhaust pipe to the turbocharger (TC). See **SUMMARY OF SPECIFIC COMPONENTS AND TIGHTENING TORQUES** .
- the lower screw for the heat deflector plate over the turbocharger (TC)
- the splash guard under the engine
- the plastic nuts for the hatch in the right fender liner
- the right front wheel. See **INSTALLING WHEELS** .

Fig. 70: Engine Compartment
Courtesy of VOLVO CARS CORPORATION

Lower the car.

Tighten the pipe screw for the turbocharger (TC) oil pressure pipe. See **SUMMARY OF SPECIFIC COMPONENTS AND TIGHTENING TORQUES** .

Install:

- the ground strips between the cylinder head and the firewall
- the engine stabilizer brace between the suspension turrets Clamp the servo hose at the right-hand engine stabilizer brace mounting
- the negative battery lead. First read, see **BATTERY, DISCONNECTING** .

CHECK

Replace the oil and oil filter if necessary.

Check:

- the engine oil level
- the servo oil level
- the coolant level.

Warm up the engine until the thermostat opens.

Check the engine for leaks.

Top up the coolant if necessary.

CYLINDER HEAD (B6294T; 2003-2006)

CYLINDER HEAD/GASKET, REPLACING

Special tools:

see **9995452**

see **9512666**

see **9995454**

see **9995670**

see **9995451**

see **9512050**

see **9995450**

see **9995718**

see **9512767**

REMOVAL

PREPARATIONS

NOTE: **Since the illustrations in this service information are used for different model years and / or models, some variation may occur. However, the essential information in the illustrations is always correct.**

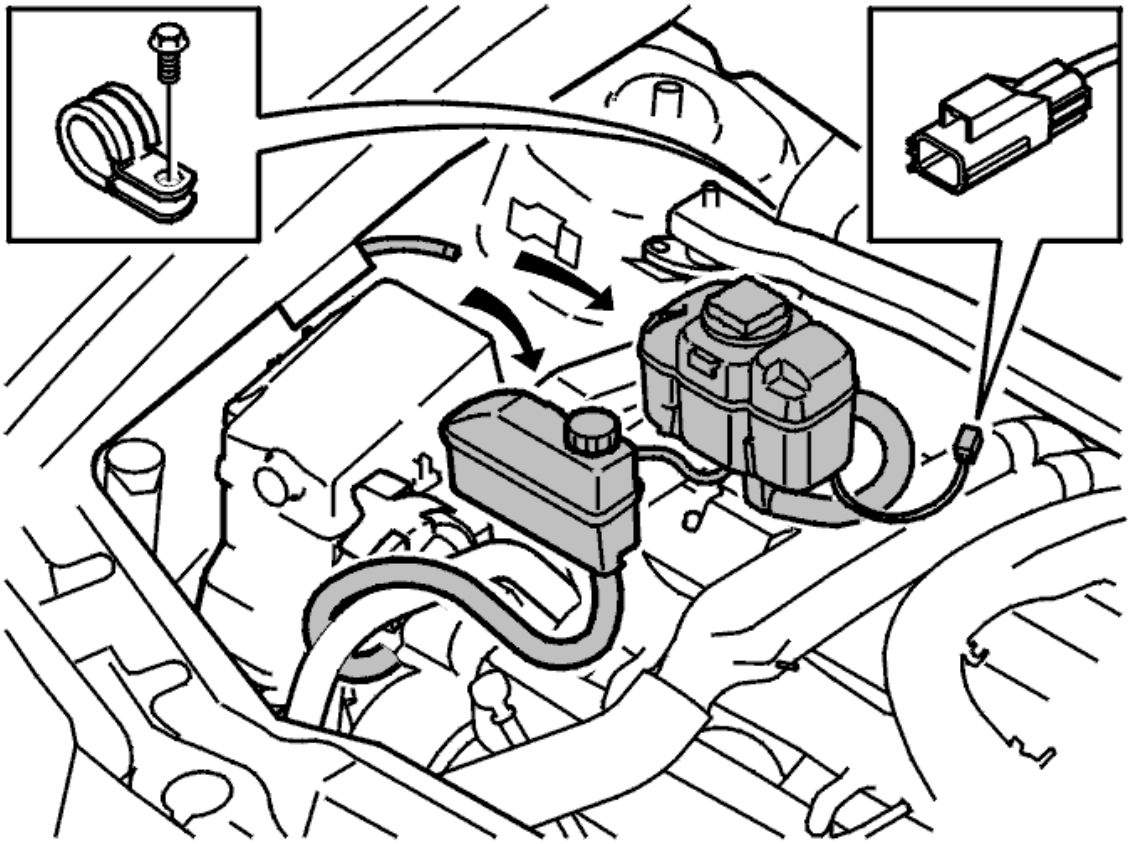

Fig. 71: Identifying Servo Oil Reservoir And Expansion Tank
Courtesy of VOLVO CARS CORPORATION

- Disconnect the battery negative lead. First read, see **BATTERY, DISCONNECTING**
- Remove the radiator breather tube at the expansion tank
- Install lock grip pliers
- Install the cover from the expansion tank.

Lift up the servo reservoir and place it on top of the engine.

NOTE: Make sure that the power steering fluid does not leak from the breather hole in the filler cap.

Seal the hose between the expansion tank and the radiator.

Disconnect the hose at the tank. Lift up the expansion tank and place it on top of engine.

Remove the turbocharger (TC). See **TURBOCHARGER (TC), REPLACING** .

REMOVING COMPONENTS

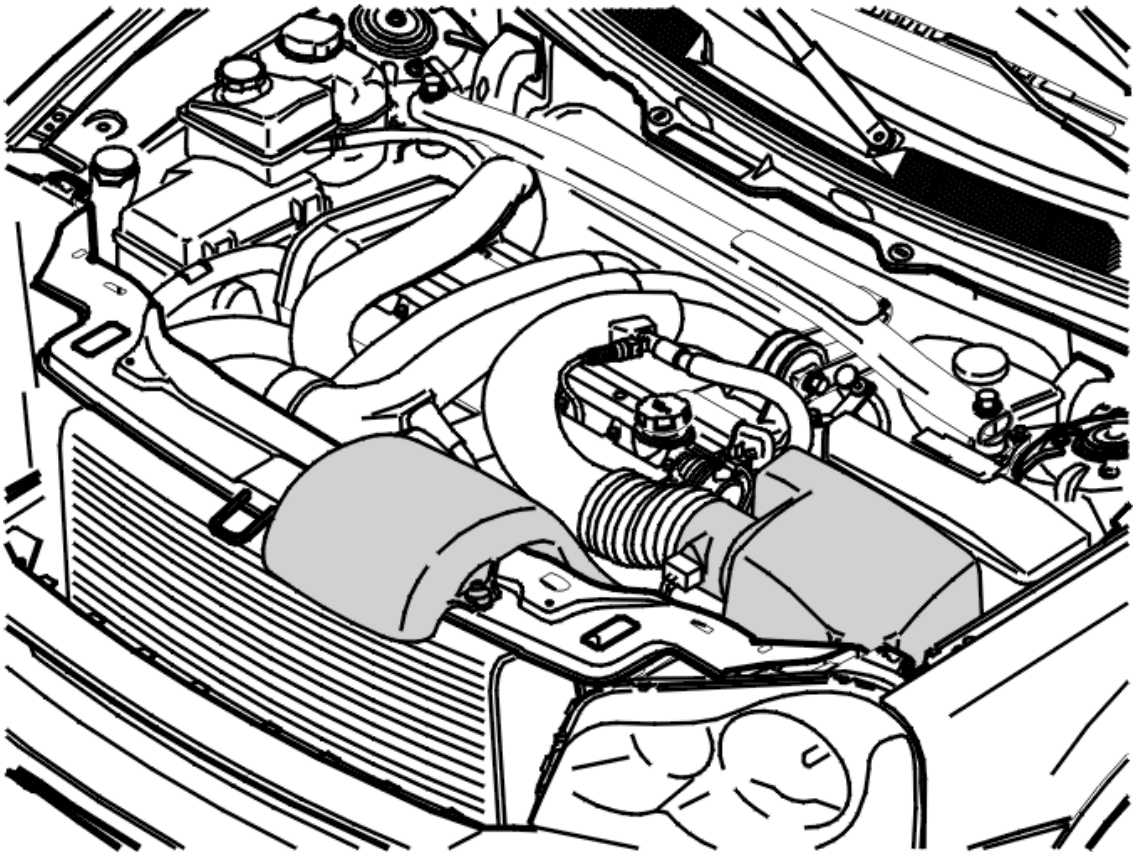

Fig. 72: Identifying Engine Compartment
Courtesy of VOLVO CARS CORPORATION

Remove:

- the ground strip between the cylinder head and the engine
- the upper engine coolant hose between the engine and radiator
- the solenoid valve (turbocharger (TC) control system) from the air cleaner (ACL)
- the air cleaner (ACL) intake from the connection on the front cover plate
- air cleaner (ACL) assembly
- torque rod for cross stay
- the upper timing cover
- the cover over the ignition coils
- the front timing cover. See **TIMING COVER FRONT, REPLACING** .

Relieve the load from the belt tensioner. Remove the auxiliaries belt.

DEPRESSURIZING THE FUEL SYSTEM

Depressurize the fuel system acc. to **DEPRESSURIZING THE FUEL SYSTEM**.

REMOVING THE FUEL RAIL

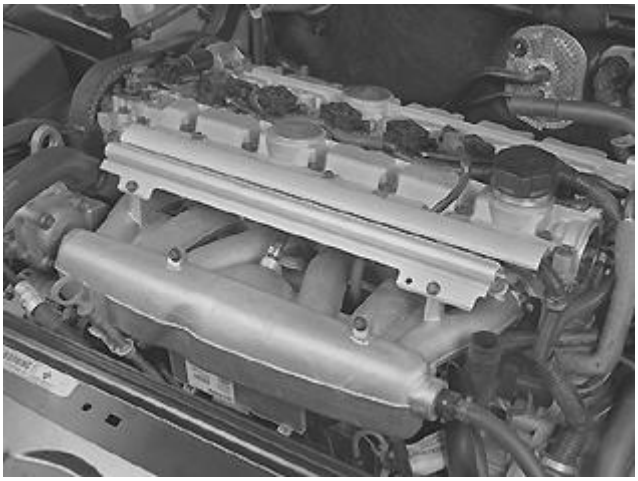

Fig. 73: Removing/Installing Fuel Rail
Courtesy of VOLVO CARS CORPORATION

Remove:

- the brake vacuum hose from the intake manifold
- the charge air pipe from the electronic throttle module
- the dip stick pipe from the intake manifold
- the pipe screw for the crankcase ventilation connection at the intake manifold
- the protective cover over the nozzle connectors
- the fuel rail mounting screws.

Spray universal oil or similar around the injector connectors on the intake manifold. Gently work the fuel rail and injectors loose.

Unplug fuel line's quick-connector under the intake manifold. Use tool see **9512666** . Carefully put the fuel rail to one side.

Remove the EVAP hose from the intake manifold.

REMOVING COMPONENTS

Fig. 74: Camshaft Position (CMP) Sensor Housing, Trigger Wheel, Pipe Screw For Water-Heated Crankcase Ventilation & Clamps
Courtesy of VOLVO CARS CORPORATION

Remove:

- the camshaft position (CMP) sensor housing and trigger wheels
- the pipe screw at the rear edge of the cylinder head for the water heated crankcase ventilation
- the clamps for the high tension wiring and positive cable.

RELEASING THE INLET PIPE FOR THE COOLANT PUMP

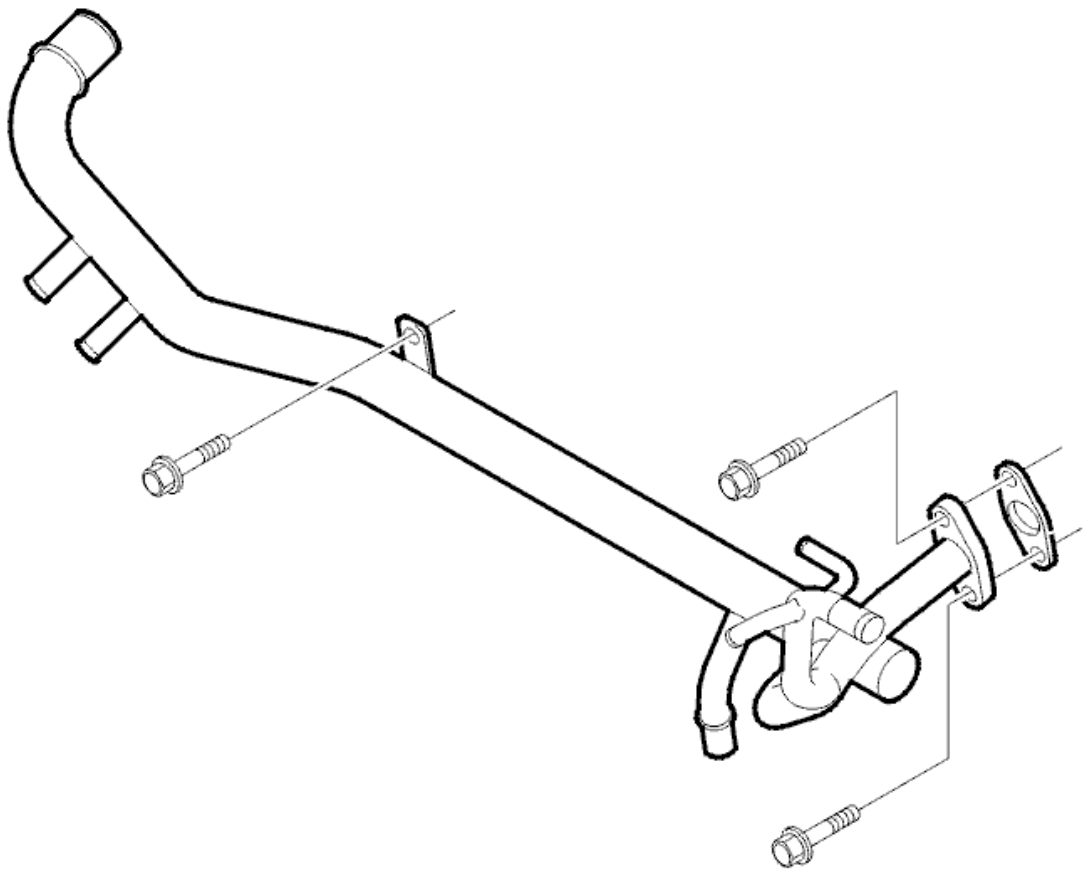

Fig. 75: Viewing Coolant Pump Inlet Pipe
Courtesy of VOLVO CARS CORPORATION

Remove:

- the screw that holds the inlet pipe for the coolant pump on the cylinder block
- the two screws for the connector between the coolant pipe and the bypass channel. Carefully turn the pipe to remove it from the cylinder block.

SETTING UP THE ENGINE

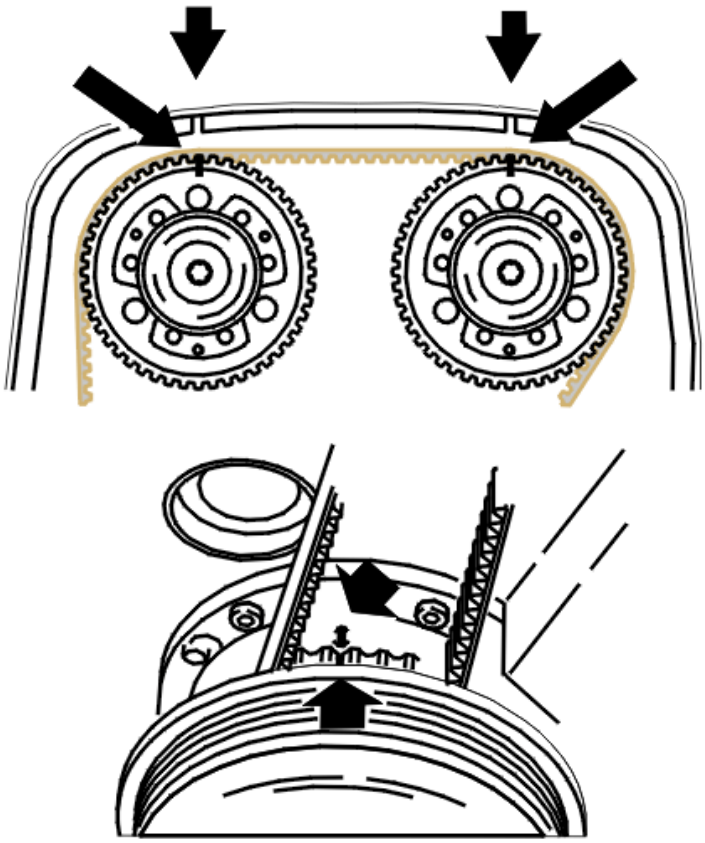

Fig. 76: Identifying Camshafts And Crankshaft Markings
Courtesy of VOLVO CARS CORPORATION

- Remove the nuts from the cover on the fender liner
- Position the upper timing cover
- Turn the crankshaft clockwise until the markings on the crankshaft and camshafts correspond
- Remove the upper timing cover.

REMOVING COMPONENTS

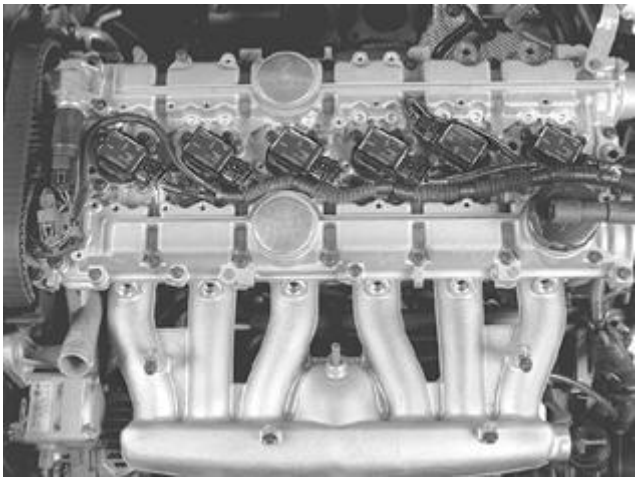

Fig. 77: View of Ignition Coils, Connectors and Ground Terminals
Courtesy of VOLVO CARS CORPORATION

Remove:

- the variable valve timing solenoid connectors
- the connector for the coolant temperature sensor
- the screws for the ignition coils and the two ground terminals.

NOTE: Mark up the ignition coils before removing.

Lift up and place the ignition coils and wiring to one side.

REMOVING THE TIMING BELT

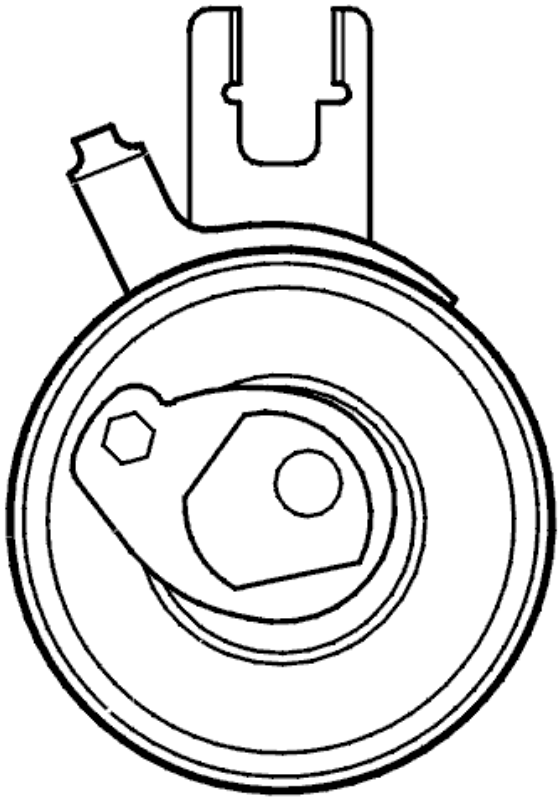

Fig. 78: Identifying Belt Tensioner
Courtesy of VOLVO CARS CORPORATION

Slacken off the center screw for the belt tensioner slightly.

Hold the center screw still. Turn the tensioner eccentric clockwise to **10 o'clock** using a **(6 mm) Allen key** .

Remove the timing belt.

REMOVING THE VARIABLE VALVE TIMING UNIT AND TIMING GEAR PULLEY

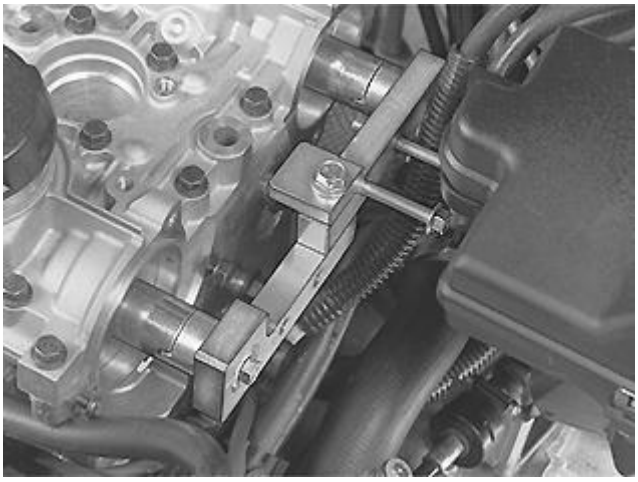

Fig. 79: Camshaft Adjustment Tool 999 5452 At Rear Of Camshafts
Courtesy of VOLVO CARS CORPORATION

Install tool see **9995452** at the rear of the camshafts.

- Remove the center plugs for the variable valve timing units.

NOTE: Collect oil spills using paper under the plugs

- Remove the variable valve timing unit center screws
- Pull or work off the variable valve timing units and timing gear pulley.

Remove tool see **9995452** .

REMOVING THE THERMOSTAT HOUSING

Fig. 80: Removing/Installing Thermostat Housing
Courtesy of VOLVO CARS CORPORATION

Remove:

- the screw for the thermostat housing cable duct
- screws holding the thermostat housing to the cylinder head. Lift out the thermostat housing, gasket and cable duct
- the screw holding the inner timing cover to the cylinder head.

REMOVING THE CAMSHAFT COVER AND CYLINDER HEAD

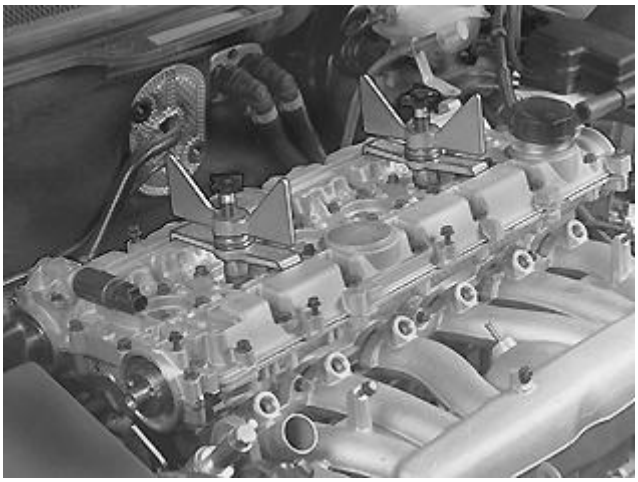

Fig. 81: Removing/Installing Camshaft Cover/Cylinder Head
Courtesy of VOLVO CARS CORPORATION

- spark plugs for cylinders **2 and 5** . Install tool see **9995454** , 2 pcs., leave a **2-3 mm** gap to the camshaft cover. Make sure that the screw in the spark plug well is tightened completely.
- Variable valve timing solenoids
- the screws holding the camshaft cover to the cylinder head.

Fig. 82: Using Pliers 999 5670 To Lift Cover From Cylinder Head
Courtesy of VOLVO CARS CORPORATION

- Use pliers see **9995670** to lift the cover from the cylinder head. Apply the pliers at the stop lugs.
- Start with cylinder 1 and work alternately backward
- Slacken off the wing nuts approximately 2 turns
- Repeat the procedure with the pliers.

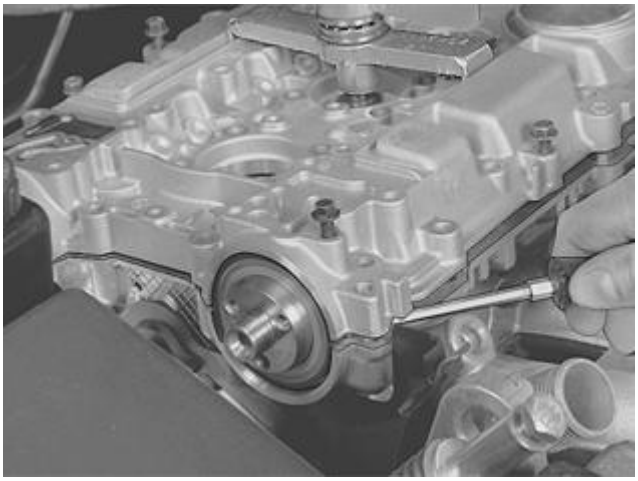

Fig. 83: Identifying Pressing Out Of Camshaft Seals
Courtesy of VOLVO CARS CORPORATION

Carefully press out the front and rear camshaft seals.

Remove the seals.

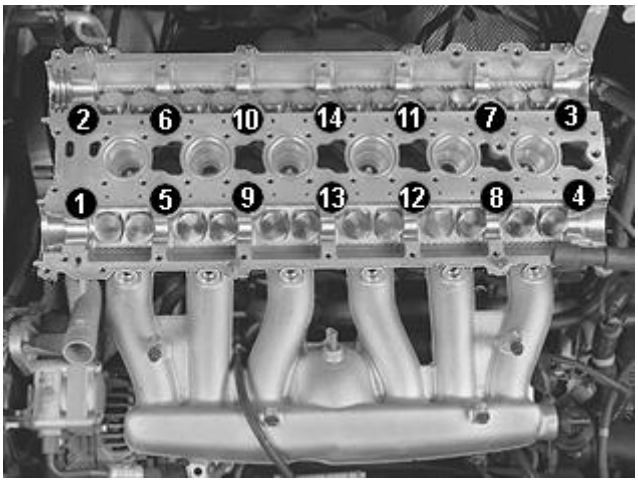

Fig. 84: Cylinder Head Screws Removal Sequence
Courtesy of VOLVO CARS CORPORATION

Remove:

- tools see **9995454**
- the camshaft cover

- the camshafts.

CAUTION: Mark up and position the lifters so that their original positions can be established.

Lift out the valve lifters.

Use a suction cup.

Position the valve lifters on a piece of paper to drain.

- Remove the screws holding the cylinder head on the cylinder block
- Start at the sides and work alternately towards the center (see the illustration)
- Get help to lift off the cylinder head.

NOTE: Do not damage the mating faces.

WHEN REPLACING OR WORKING ON THE CYLINDER HEAD

Remove:

- the intake manifold and gasket
- the coolant outlet pipe.

INSTALLATION

NOTE: For tightening torques, see: TIGHTENING TORQUE .

NOTE: To ensure that there is no exhaust leakage, see: FLANGED JOINT, ASSEMBLING .

CLEANING THE GASKET FACES

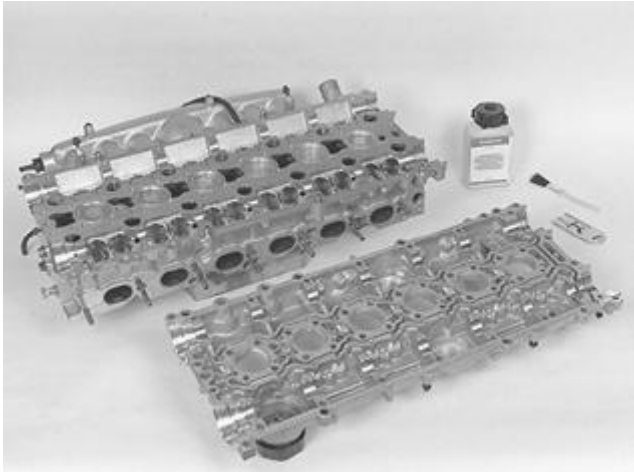

Fig. 85: Cleaning Gasket Faces
Courtesy of VOLVO CARS CORPORATION

Clean the gasket faces for:

- the manifold. Check that the studs are tightened
- the coolant bypass channel
- the coolant outlet pipe
- the intake manifold
- the cylinder block
- camshaft cover.

Blow the oil ducts clean.

NOTE: Use a razor blade or a plastic gasket scraper and gasket solvent 1161 440 . Use a fume hood or extractor when using gasket solvent.

INSTALLING THE CYLINDER HEAD GASKET

CAUTION: Always use new gaskets where the joint has been broken.

ALIGNING THE CRANKSHAFT

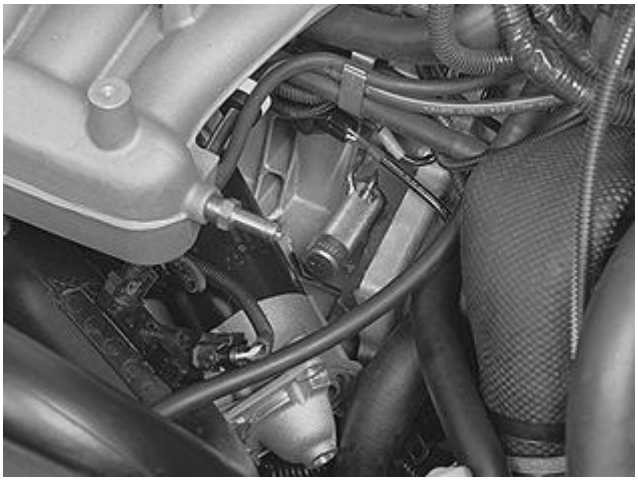

Fig. 86: Identifying Crankshaft Stop Tool 999 5451
Courtesy of VOLVO CARS CORPORATION

- Remove the starter motor mounting screws. Pull out the starter motor and place to one side
- Remove the blind cover plug
- Turn the crankshaft slightly clockwise. Install crankshaft stop see **9995451** . Make sure that it bottoms out against the engine block.
- Turn the crankshaft counter-clockwise until it stops against the crankshaft stop
- Check that the marking on the crankshaft timing gear pulley corresponds with the marking on the oil pump.

INSTALLING THE CYLINDER HEAD

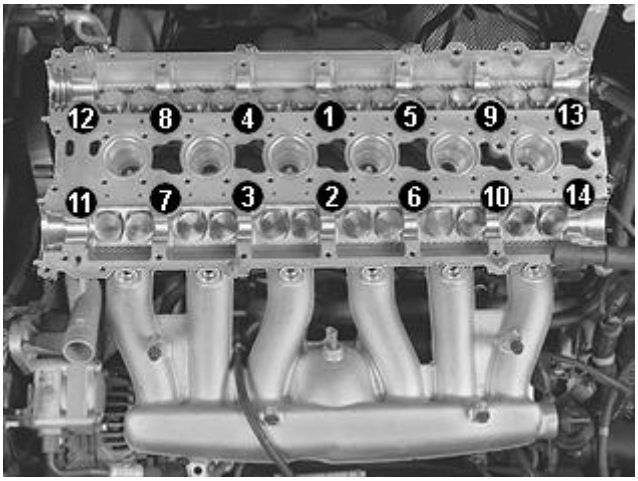

Fig. 87: Cylinder Head Screws Tightening Sequence
Courtesy of VOLVO CARS CORPORATION

Install a new cylinder head gasket.

Install the cylinder head.

Use **new screws** . Lubricate and install all the screws.

Tighten the screws in the order illustrated. See **SUMMARY OF TIGHTENING TORQUES FOR SPECIFIC COMPONENTS** .

Follow the steps.

Use angle gauge see **9512050** .

INSTALLING VALVE LIFTERS AND CAMSHAFTS

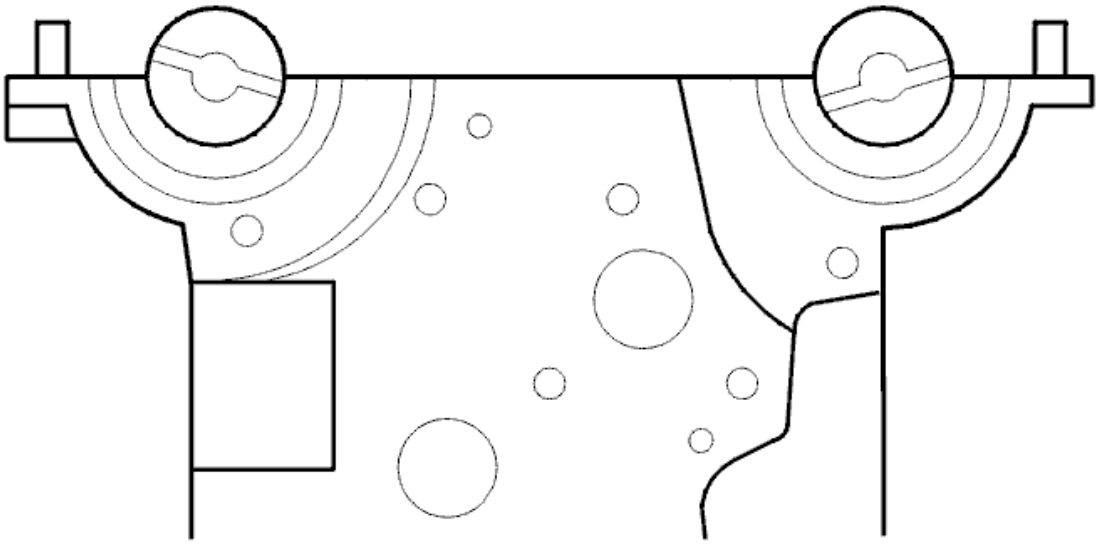

Fig. 88: Identifying Intake And Exhaust Camshafts
Courtesy of VOLVO CARS CORPORATION

When installing a new cylinder head, the valve clearance must be set, see **VALVE CLEARANCE, SETTING / ADJUSTING** .

CAUTION: Make sure that the lifters are in the same position as before.

Lubricate the valve lifter wells and the lifters. Install all the valve lifters.

INSTALLING THE CAMSHAFTS

- Lubricate the camshaft bearing positions
- Install the intake camshaft. Ensure that the groove at the back of the camshaft is above an imaginary center line
- Position the exhaust camshaft. Ensure that the groove at the back of the camshaft is below an imaginary center line.

APPLYING LIQUID GASKET

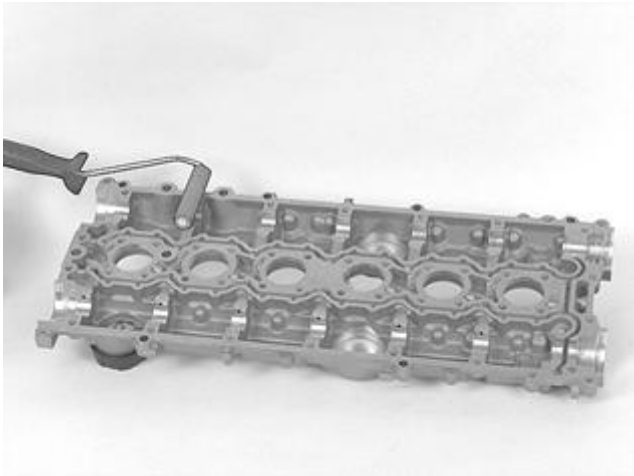

Fig. 89: Applying Liquid Gasket To Camshaft Cover
Courtesy of VOLVO CARS CORPORATION

NOTE: Make sure that no liquid gasket gets into the oil channels.

- Install new O-rings around the spark plug wells at the cylinder head
- Apply liquid gasket **11 61 059** to the camshaft cover
- Use roller see **9512767** . The surface must be completely covered without any excess.

INSTALLING THE CAMSHAFT COVERS

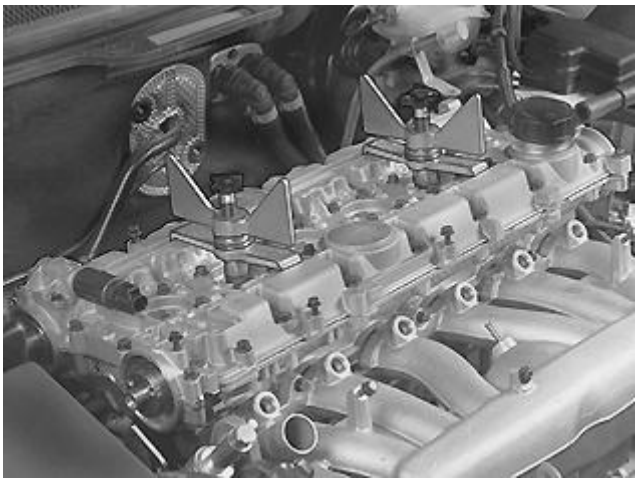

Fig. 90: Removing/Installing Camshaft Cover/Cylinder Head
Courtesy of VOLVO CARS CORPORATION

- Lubricate the camshaft lobes, the camshaft bearing surfaces and the valve lifters
- Install the camshaft cover. Install press tool see **9995454** , 2 pcs.
- Tighten the camshaft cover screws alternately, keeping it parallel to the cylinder head using the press tools
- Install all the screws and tighten
- Install the variable valve timing solenoids using new gaskets
- Remove the press tools
- Install the spark plugs. Tighten. See **SUMMARY OF TIGHTENING TORQUES FOR SPECIFIC COMPONENTS** .

INSTALLING THE REAR CAMSHAFT SEALS

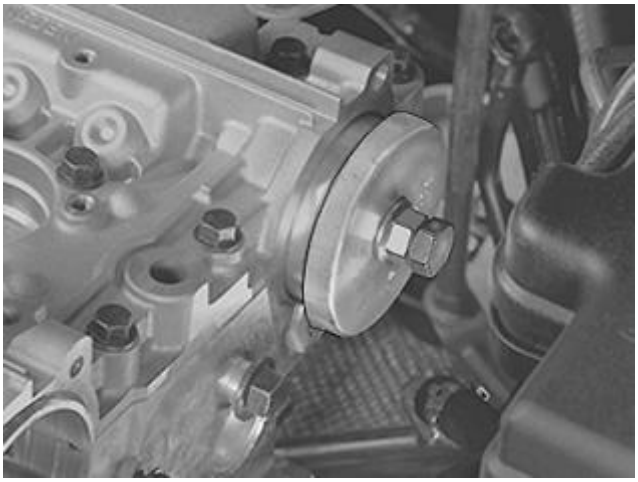

Fig. 91: Rear Camshaft Seal
Courtesy of VOLVO CARS CORPORATION

- Use drift see **9995450** .
- Lubricate the surface of the seal that the camshaft rotates against
- Press in the seal until the drift bottoms out.

NOTE: **If there are wear grooves on the camshaft, the seal can be pressed in another 2 mm by reversing the tool's sleeve.**

SECURING THE CAMSHAFTS

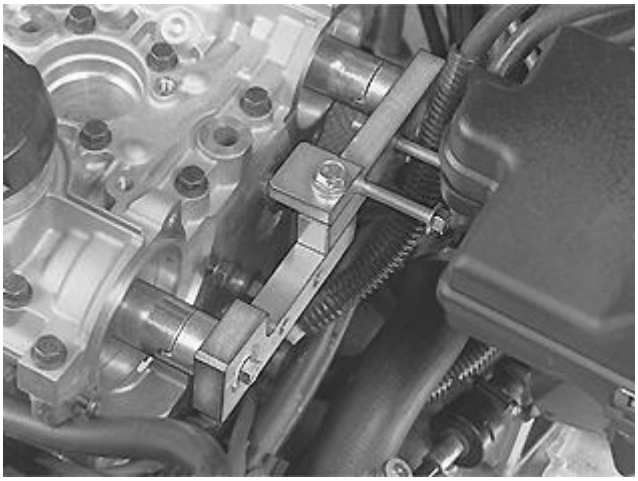

Fig. 92: Camshaft Adjustment Tool 999 5452 At Rear Of Camshafts
Courtesy of VOLVO CARS CORPORATION

Use camshaft tool see **9995452** .

Separate the camshaft adjustment tool into two units.

CAUTION: The camshafts must not be turned more than is listed in the text below. The valves may be damaged.

- Install the exhaust camshaft section of the adjustment tool
- Screw into the rear edge of the camshaft
- Carefully turn the camshaft adjustment tool clockwise (as viewed from the back of the engine) until the camshaft adjustment tool is parallel with the join between the cylinder head and camshaft cover
- Install the intake camshaft section of the adjustment tool
- Screw into the rear edge of the camshaft
- Carefully turn the camshaft adjustment tool counter-clockwise until it is in contact with the exhaust camshaft section of the camshaft adjustment tool
- Screw the adjustment tool sections together into one
- Check that the screws retaining the adjustment tool to the camshafts and the screws holding the tool together are well tightened.

INSTALLING THE FRONT CAMSHAFT SEAL

Fig. 93: Identifying Front Camshaft Seal Tool 9995718
Courtesy of VOLVO CARS CORPORATION

- Use drift see **9995718** .
- Lubricate the surface of the seal that the camshaft rotates against
- Use the mounting screws for the variable valve timing unit
- Tighten the screws until the drift bottoms out.

INSTALLING THE THERMOSTAT HOUSING

Fig. 94: Removing/Installing Thermostat Housing
Courtesy of VOLVO CARS CORPORATION

Install:

- the screw holding the inner timing cover to the cylinder head
- the thermostat housing and cable duct. Use a new gasket
- the screw for the thermostat housing cable duct.

CHECKING THE TENSIONER PULLEY AND IDLER PULLEY

- Spin the idler pulley and listen for noise. If replacing with a new idler pulley, tighten to **24 Nm**
- Spin the tension pulley and listen for noise. When replacing, screw the tension pulley into place using the center screw. Screw in the center screw by hand
- Ensure that the tensioner fork is centered over the cylinder block rib / bracket. Ensure that the Allen hole on the eccentric is at **10 o'clock** .

INSTALLING THE VARIABLE VALVE TIMING (VVT) UNIT ON THE EXHAUST CAMSHAFT

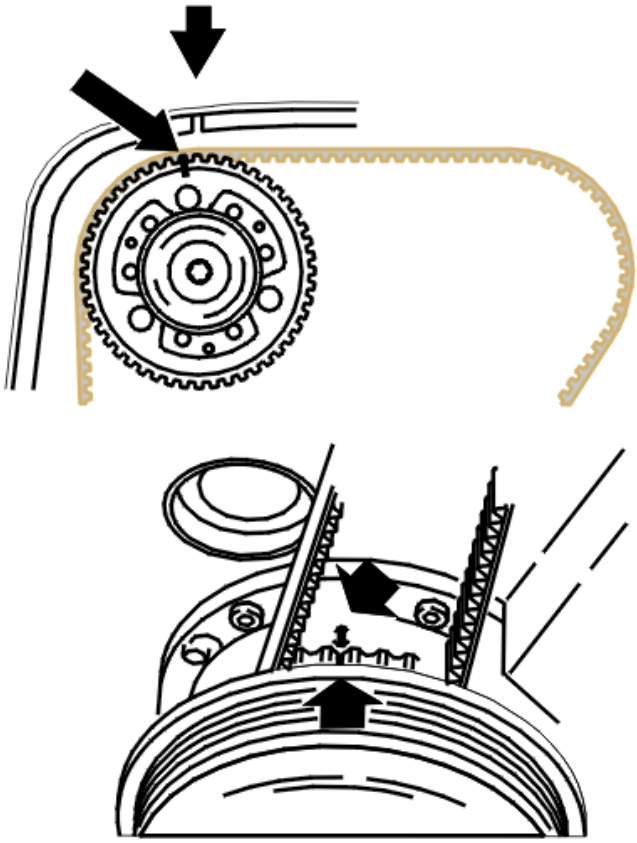

Fig. 95: Identifying Pulley Marking 1 Cog Before Cover Marking
Courtesy of VOLVO CARS CORPORATION

- Slacken off, but do not remove the screws which secure the timing gear pulley to the VVT unit
- Press the variable valve timing unit and timing gear onto the camshaft
- Install the center screw which secures the variable valve timing unit to the camshaft. Tighten slightly
- Turn the variable valve timing unit counter-clockwise as far as it will go. Slacken off the center screw
- Position the upper timing cover
- Turn the timing gear pulley clockwise until the screws at the oval holes are in the limit position. Continue turning clockwise until the timing gear pulley marking is **1 cogs** before the marking on the upper timing cover.

NOTE: Do not turn counter-clockwise during this procedure.

- Check that the timing gear pulley is still in the limit position in the oval holes
- Tighten the center screw in the VVT unit. See **SUMMARY OF TIGHTENING TORQUES FOR SPECIFIC COMPONENTS** . Check that the variable valve timing unit does not rotate when tightening
- Install and tighten the centre plug according to **SUMMARY OF TIGHTENING TORQUES FOR SPECIFIC COMPONENTS** .

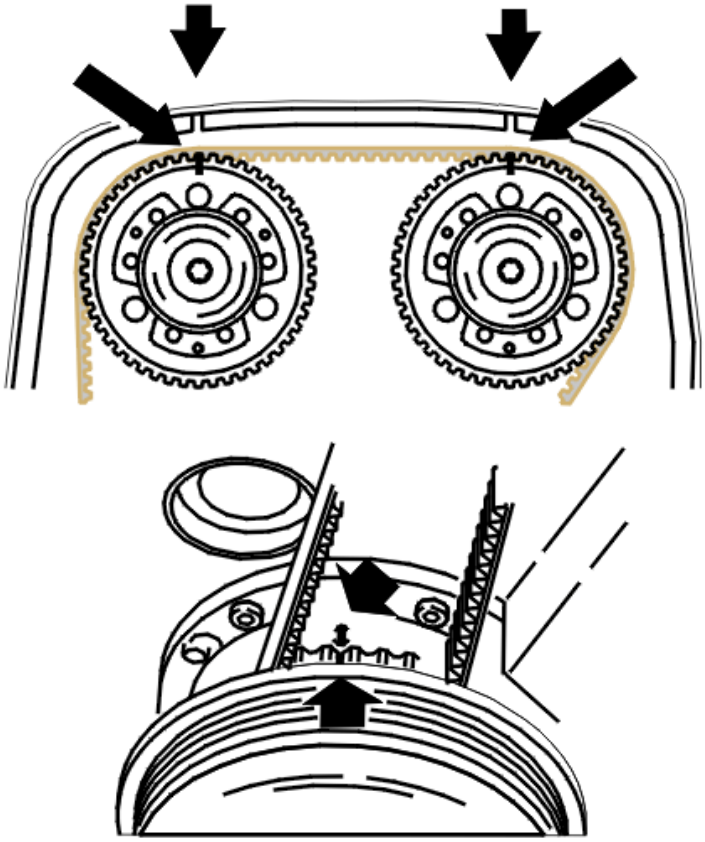

Fig. 96: Identifying Camshafts And Crankshaft Markings
Courtesy of VOLVO CARS CORPORATION

Turn the variable valve timing unit clockwise to the limit position. Turn the timing gear pulley so that the markings correspond.

INSTALLING THE VARIABLE VALVE TIMING (VVT) UNIT ON THE INTAKE CAMSHAFT

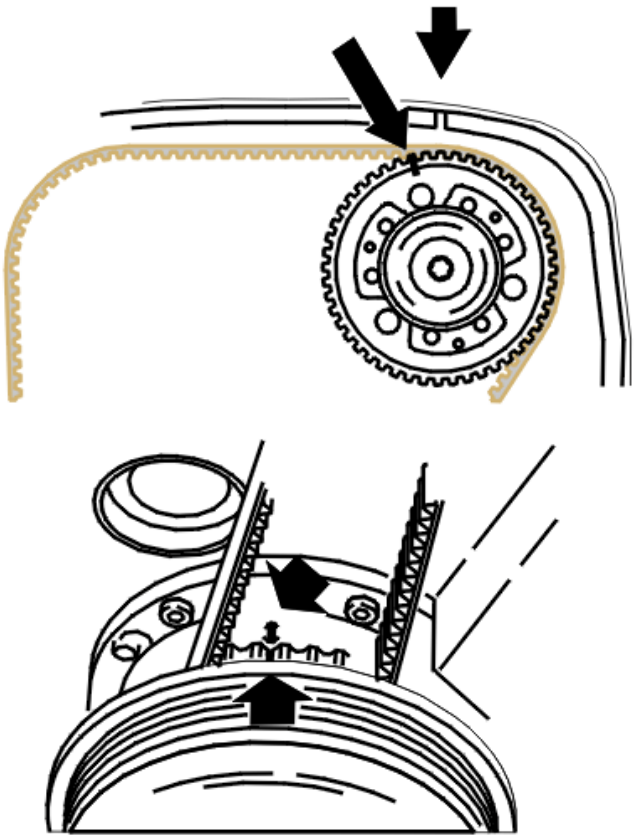

Fig. 97: Identifying Pulley Marking 2 Cogs Before Cover Marking
Courtesy of VOLVO CARS CORPORATION

- Slacken off, but do not remove the screws which secure the timing gear pulley to the VVT unit
- Press the variable valve timing unit / timing gear onto the camshaft
- Install the center screw which secures the variable valve timing unit to the camshaft. Tighten slightly
- Turn the variable valve timing unit counter-clockwise as far as it will go
- Slacken off the center screw
- Turn the timing belt pulley clockwise until the screws at the oval holes are in the end-position. Continue turning clockwise until the timing belt pulley marking is **2 cogs** before the marking on the upper timing casing.

NOTE: Do not turn counter-clockwise during this procedure.

- Check that the timing gear pulley is still in the limit position in the oval holes
- Tighten the center screw in the VVT unit. See **SUMMARY OF TIGHTENING TORQUES FOR SPECIFIC COMPONENTS** . Check that the variable valve timing unit does not rotate when tightening
- Install and tighten the center plug. See **SUMMARY OF TIGHTENING TORQUES FOR SPECIFIC COMPONENTS** .

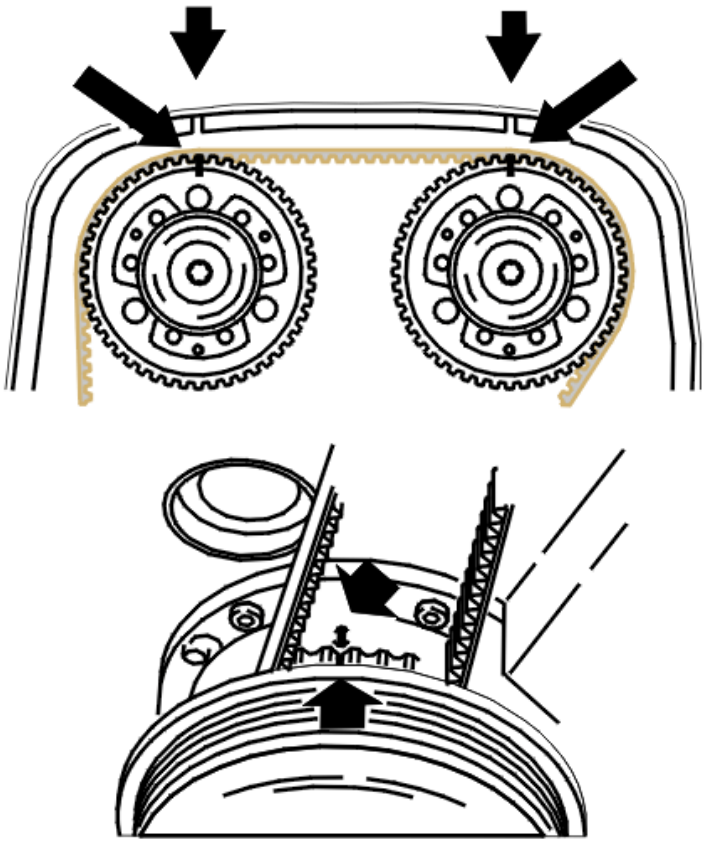

Fig. 98: Identifying Camshafts And Crankshaft Markings
Courtesy of VOLVO CARS CORPORATION

Turn the variable valve timing unit clockwise to the limit position.

Turn the timing gear pulley so that the markings correspond.

FINISHING

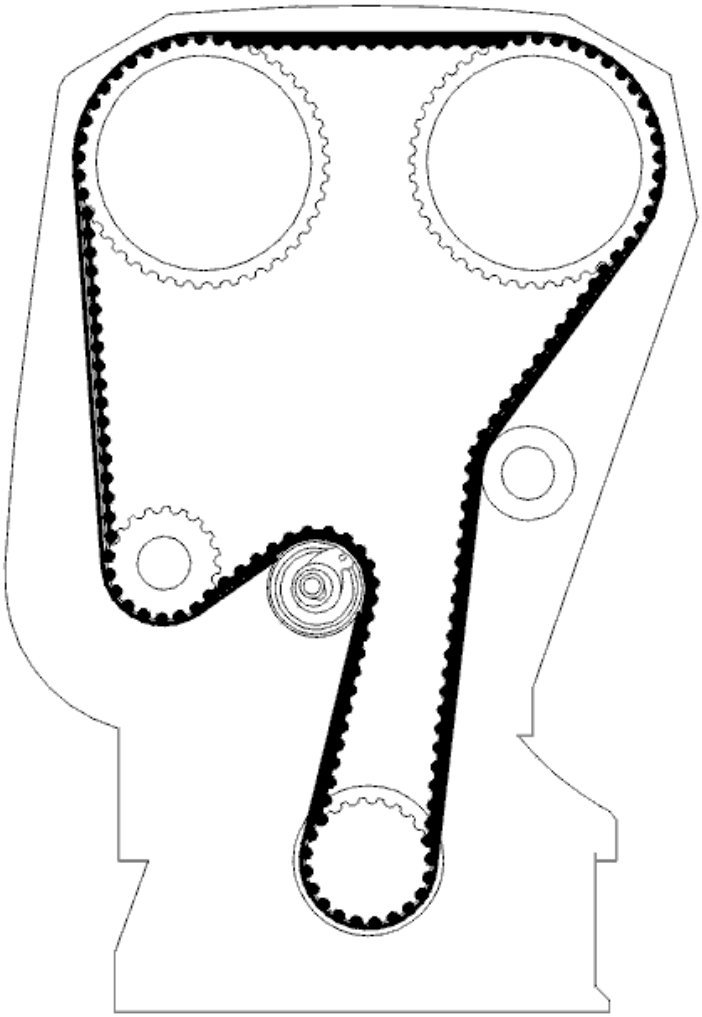

Fig. 99: Identifying Timing Belt Routing
Courtesy of VOLVO CARS CORPORATION

Tighten the timing belt tensioner center screw. Tighten to **5 Nm** .

Install the timing belt in the following order:

- crankshaft
- the idler pulley
- intake cam
- exhaust cam
- water pump
- tension pulley.

The variable valve timing units do not have a return spring and are easily dislodged when reinstalling the timing

belt. Check that the markings correspond

NOTE: Adjust the timing belt pulleys so that the screws do not end up in an end-position in the oval holes.

PREPARATIONS FOR ADJUSTING THE TIMING BELT

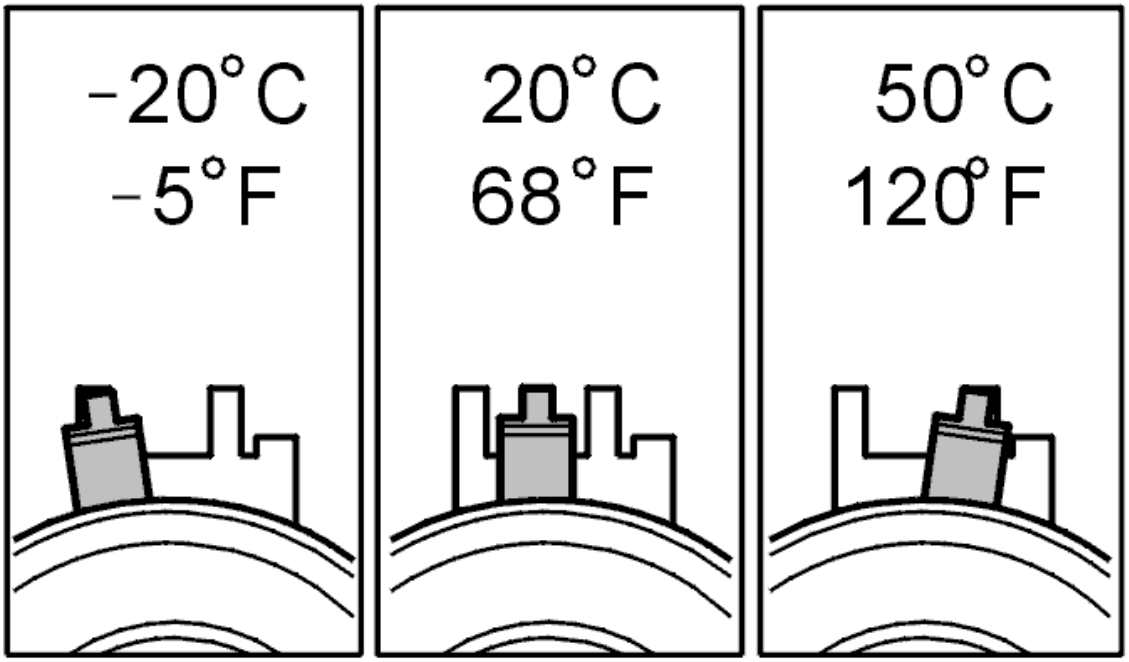

Fig. 100: Identifying Needle Position At Varying Temperatures
Courtesy of VOLVO CARS CORPORATION

This adjustment is to be made with a cold engine. A suitable temperature is approximately **20 °C/68 °F** .

At a higher temperature, for example, with a warm engine or a higher ambient temperature, the needle is further to the right.

The illustration shows the position of the indicator at different engine temperatures.

ADJUSTING THE TIMING BELT

Hold the center screw secure and turn the belt tensioner eccentric clockwise until the tensioner indicator passes the marked position.

Turn the eccentric back so that the indicator reaches the marked position in the center of the window.

Remember to hold the center screw secure at the same time.

Hold the eccentric secure and tighten the center screw. Tighten to **25 Nm** .

Check that the indicator is in the correct position.

Check:

- that the timing gear pulley is not in the limit position in the oval holes
- the timing gear pulley so that the markings line up with the upper timing cover.

Tighten the screws for the timing gear pulleys. See **SUMMARY OF TIGHTENING TORQUES FOR SPECIFIC COMPONENTS** .

REMOVING TOOLS

Remove:

- the camshaft adjustment tools see **9995451**
- the crankshaft stop see **9995452**

Install the plug with a new blind cover plug. Tighten to **40 Nm** .

CHECKING THE MARKINGS AND BELT TENSION

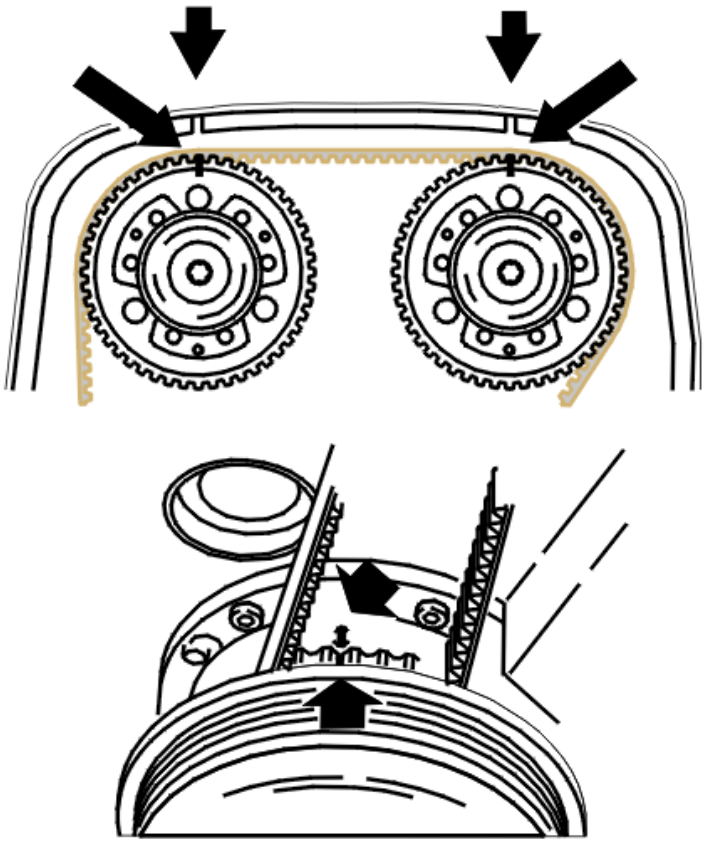

Fig. 101: Identifying Camshafts And Crankshaft Markings
Courtesy of VOLVO CARS CORPORATION

- Press the timing belt to check that the indicator on the tensioner moves easily
- Position the upper timing cover
- Turn the crankshaft two turns. Check that the markings on the crankshaft timing gear pulley and the camshaft timing gear pulley match up with the markings on the oil pump and upper timing cover respectively
- Check that the indicator on the belt tensioner is within the marked position
- Remove the upper timing cover.

INSTALLING COMPONENTS

Fig. 102: Installing Components At Rear Of Cylinder Head
Courtesy of VOLVO CARS CORPORATION

Install:

- the trigger wheel.

CAUTION: Only fits one way, make sure you get it right

- the camshaft position (CMP) sensor housing
- the pipe screw for the water heated crankcase ventilation at the rear of the cylinder head. Use new seal washers. Tighten to **26 Nm** .

Fig. 103: View of Ignition Coils, Connectors and Ground Terminals
Courtesy of VOLVO CARS CORPORATION

Install:

- the ignition coils according to the earlier markings

- the connector for the engine coolant temperature sensor
- the connectors for the variable valve timing solenoids
- the screws for the **2 ground terminals** between ignition coils **1 and 2 and 5 and 6** .

INSTALLING COMPONENTS AT THE INTAKE MANIFOLD

Fig. 104: Installing Intake Manifold Components
Courtesy of VOLVO CARS CORPORATION

Install:

- the starter motor
- the throttle body (TB) connector to the engine wiring
- the charge air pipe to the throttle body (TB). Tighten the clamp
- the brake vacuum hose to the intake manifold
- the pipe screws at the underside of the intake pipe for the water heated crankcase ventilation. Tighten to **26 Nm**
- the dip stick pipe onto the intake manifold.

INSTALLING THE FUEL RAIL

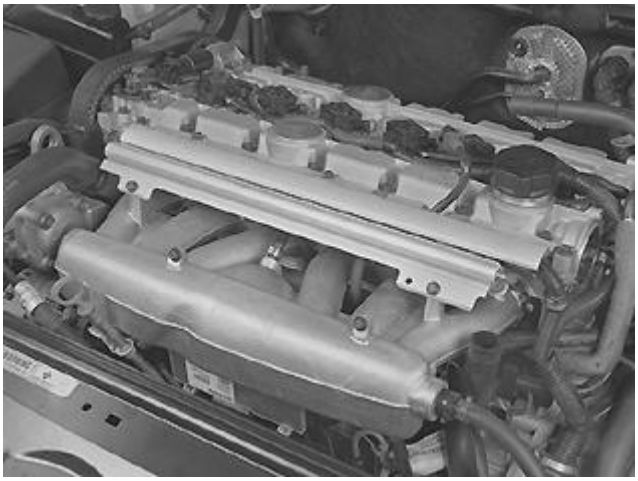

Fig. 105: Removing/Installing Fuel Rail
Courtesy of VOLVO CARS CORPORATION

- the fuel rail. Use **new screws** . Tighten to **10 Nm** . Press the quick-release connector for the fuel pressure line until it clicks
- the clamps that hold the injector wiring and the positive cable to the rear edge of the cylinder head
- the protective cover over the nozzle connectors
- the upper engine coolant hose to the cylinder head and radiator. Tighten the clamp.

INSTALLING THE INTAKE PIPE FOR THE COOLANT PUMP

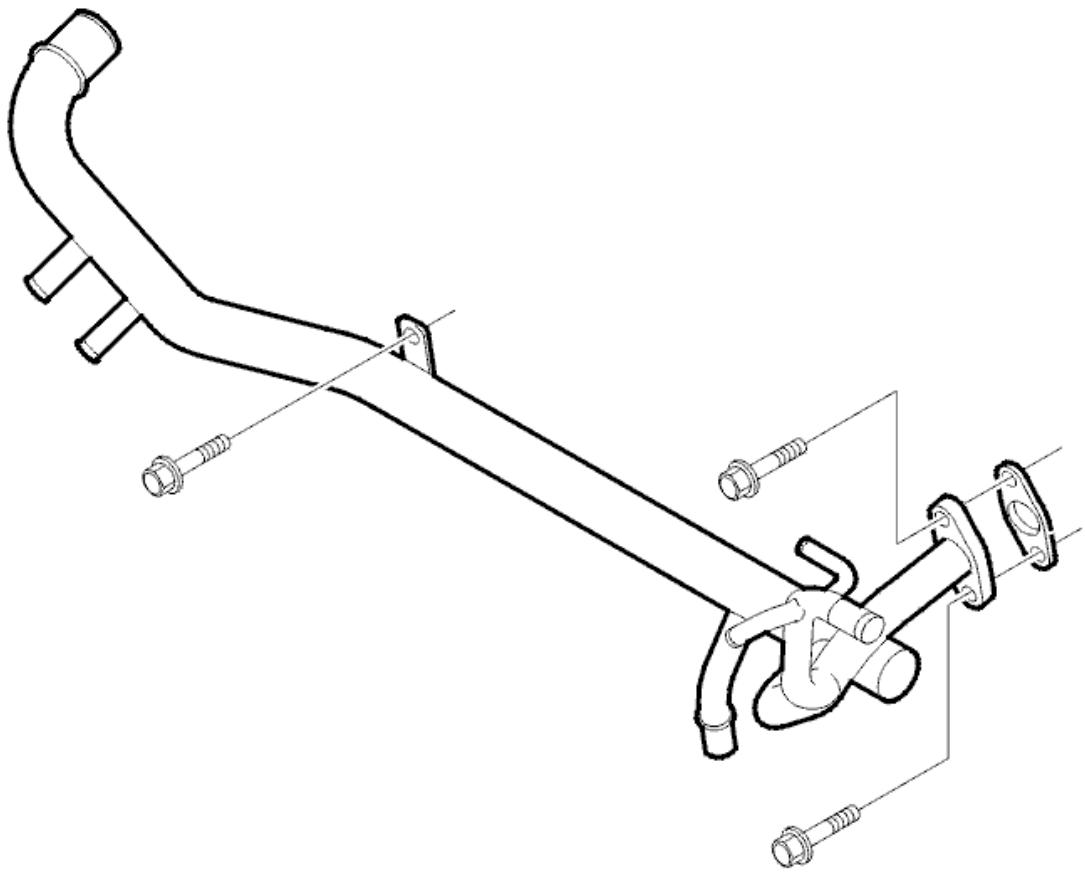

Fig. 106: Viewing Coolant Pump Inlet Pipe
Courtesy of VOLVO CARS CORPORATION

NOTE: Apply thread sealant 1161 056 on the screws.

Install:

- the inlet pipe for the coolant pump to the cylinder head. Use a **new gasket**
- the screw which secures the coolant pump inlet pipe to the cylinder block
- The turbocharger (TC). See **TURBOCHARGER (TC), REPLACING** .

INSTALLING COMPONENTS

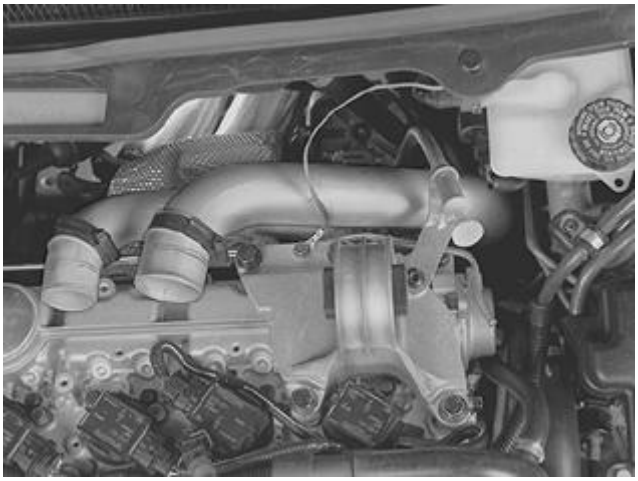

Fig. 107: Installing Identified Components
Courtesy of VOLVO CARS CORPORATION

Install:

- the bracket for the torque rod
- the upper screw securing the automatic transmission dip stick pipe to the engine
- the ground strips between the right frame member and the cylinder head.
- the cable duct on the inside of the right suspension turret
- the front timing cover. See **TIMING COVER FRONT, REPLACING**
- expansion tank. Connect the connector to the coolant level sensor
- the hose to the expansion tank from the radiator. Secure the clamp and remove the lock grip pliers. Connect the connector to the ABS sensor
- the servo reservoir. Ensure that the hoses are correctly positioned.

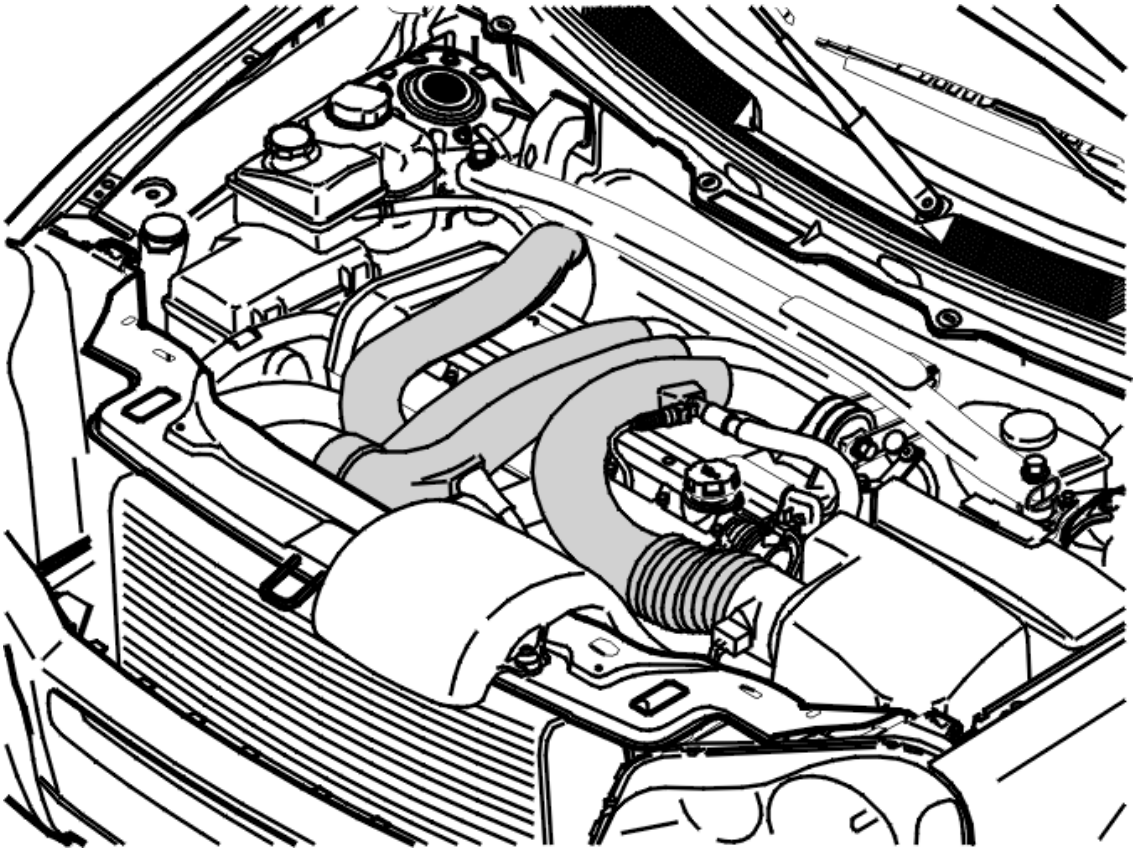

Fig. 108: Identifying Plastic Hoses Between Turbocharger, Charge Air Cooler & Air Cleaner/Turbocharger
Courtesy of VOLVO CARS CORPORATION

Install:

- the upper timing cover
- the cover over the ignition coils
- the plastic intake pipe over the engine. Adjust and tighten the intake pipe at the turbocharger (TC). Tighten the clamps and mounting screws on the plastic pipe
- the plastic charge air pipe over the engine. Tighten the clamps and mounting screws
- the hose between the charge air cooler (CAC) and the plastic charge air pipe over the engine. Tighten the clamps
- the crankcase ventilation hose to the PTC resistor in the plastic intake pipe over the engine. Use a **new clamp**
- the connector for the PTC resistor
- the protective cover over the PTC resistor
- the EVAP hose to the plastic intake pipe
- the air cleaner (ACL) assembly
- the plastic intake pipe to the mass air flow (MAF) sensor. Tighten the clamp
- the connector to the mass air flow (MAF) sensor. Clamp the wiring at the front of the air cleaner (ACL)

- the turbocharger (TC) control valve to the mounting on the air cleaner (ACL)
- the blue marked hose and the turbocharger (TC) control system to the intake manifold
- the red marked hose and turbocharger (TC) control system to the charge air pipe
- the yellow marked hose and turbocharger (TC) control system to the pressure regulators
- the cross stay between the suspension turrets
- the suspension turret covers. Clamp the servo hose to the right mounting on the engine stabilizer brace
- the battery negative lead. Also read, see **BATTERY, DISCONNECTING** .

CHECKING AND TOPPING UP

Replace the oil and oil filter if necessary.

Check:

- the engine oil level
- the servo oil level
- the coolant level.

Warm up the engine until the thermostat opens.

Check:

- the engine for leaks
- the oil level in the transmission
- the coolant level.

Top up if necessary.

CYLINDER HEAD (B8444S; 2005-2011)

CYLINDER HEAD/GASKET, CYLINDER 1, 3, 5 AND 7 (BANK 1), REPLACING

Special tools	
	T9512050 PROTRACTOR **Tool number:** T9512050 **Tool description:** PROTRACTOR **Tool boards:** EU14-1; SV14-1; US14-1

NOTE: **As the illustrations in this service information are used for different model years and / or models, some variation may occur. However, the essential information in the illustrations is always correct.**

PREPARATORY WORK

Disconnect the battery negative cable. See: **BATTERY, DISCONNECTING** .

This work requires that the vehicle be raised. See **JACKING POINTS, BODY** .

Remove:

- the VVT units. See: **VVT UNIT, RIGHT CYLINDER HEAD** and **VVT UNIT, LEFT CYLINDER HEAD**
- the engine cooling fan (FC). See **ENGINE COOLING FAN (FC), REPLACING**
- the temperature sensor, see: **TEMPERATURE SENSOR ENGINE COOLANT, REPLACING** .

EXPOSING

EXPOSING THE CYLINDER HEAD, CYLINDERS 1, 3, 5 AND 7 (BANK 1)

Remove:

- the hose clamp for the upper coolant hose, place the coolant hose to one side.
- the 2 x connectors for the camshaft position (CMP) sensors

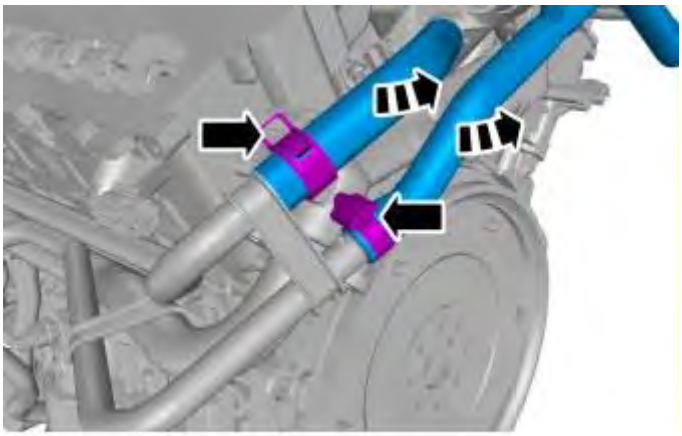

Fig. 109: Removing The Coolant Hoses
Courtesy of VOLVO CARS CORPORATION

Remove the coolant hoses and place them to one side.

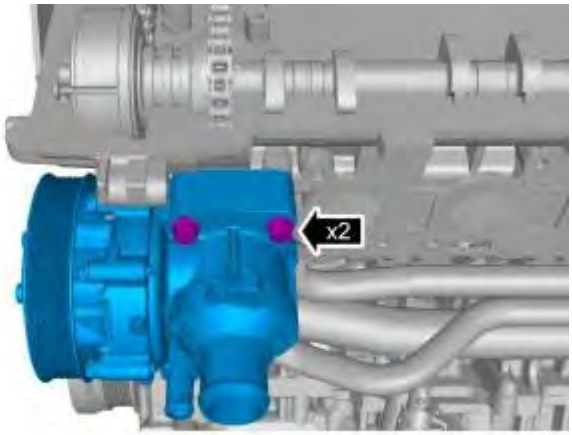

Fig. 110: Removing The 2 X M8 Upper Screws
Courtesy of VOLVO CARS CORPORATION

Remove the 2 x M8 upper screws holding the water pump.

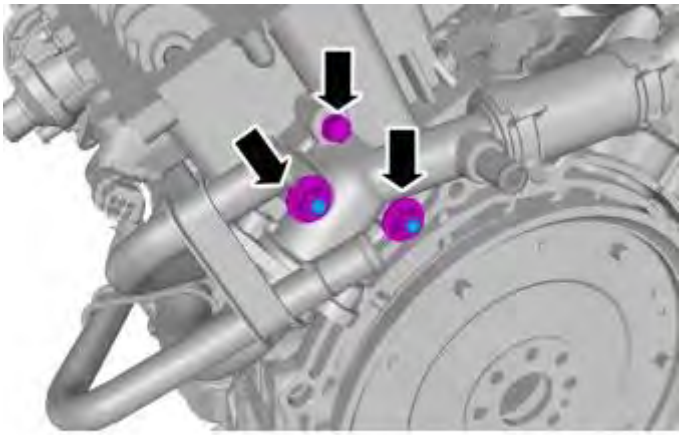

Fig. 111: Locating Water Outlet Screws
Courtesy of VOLVO CARS CORPORATION

Remove:

- the M8 screw.
- the 2 x M8 nuts
- 2 x M8 studs.

REMOVING THE MANIFOLD

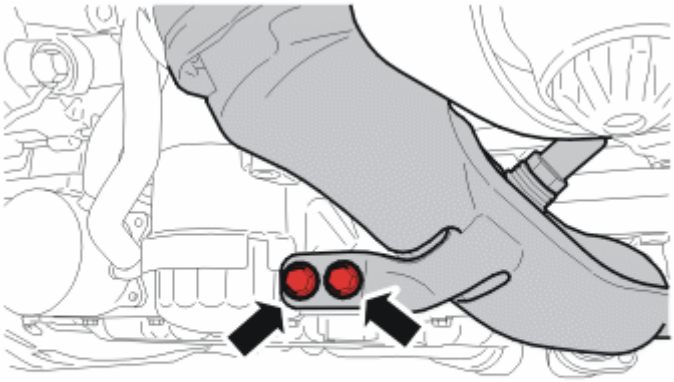

Fig. 112: Install The 2 Bracket Bolts
Courtesy of VOLVO CARS CORPORATION

Remove the 2 x M8 screws holding the bracket to the manifold.

Fig. 113: Removing/Installing The 8 X M8 Nuts
Courtesy of VOLVO CARS CORPORATION

Remove the 8 x M8 nuts holding the flanged joint to the manifold. Discard the gasket.

REMOVAL

WHEN REPLACING OR WORKING ON THE CYLINDER HEAD

Lift out the lifters using a magnet or suction cup. Note positions.

NOTE: Do not damage the mating surfaces.

REMOVING THE CYLINDER HEAD

remove

- the 10 x M12 screws
- the cylinder head. Discard the gasket.
- the gasket in the coolant's "bypass channel".

NOTE: Do not damage the mating surfaces.

CLEANING

Clean and check the gasket faces for:

- the coolant bypass channel
- the intake manifold
- the cylinder block
- camshaft cover.

Carefully blow the oil ducts clean.

INSTALLATION

NOTE: for tightening torques, see:TIGHTENING TORQUE

INSTALLING THE CYLINDER HEAD

Fig. 114: Apply sealing compound 307 57050
Courtesy of VOLVO CARS CORPORATION

NOTE: Check that all studs at the exhaust ports are tightened.

Install:

- a new manifold gasket. Lubricate the studs using paste: 116 1408
- a new cylinder head gasket. Apply sealing compound 307 57050 to both sides. See the illustration.
- the cylinder head
- lubricated screws, use **new** screws.

Tighten the screws in a circle from the inside and outwards. Use protractor: see **9512050** . Tighten. See **SUMMARY OF TIGHTENING TORQUES FOR SPECIFIC COMPONENTS** .

INSTALLING THE VALVE LIFTERS

NOTE: If the cylinder head has been replaced, the valve clearance must be adjusted. See VALVE CLEARANCE, SETTING/ADJUSTING .

Lubricate and install all the valve lifters. For correct location, see earlier notes.

INSTALLING THE MANIFOLD

NOTE: To ensure that there is no exhaust leakage, see: FLANGED JOINT, ASSEMBLING .

Fig. 115: Removing/Installing The 8 X M8 Nuts
Courtesy of VOLVO CARS CORPORATION

Install:

- a **new** gasket
- the exhaust manifold
- the **new** nuts, x 8. Tighten. See: **SUMMARY OF TIGHTENING TORQUES FOR SPECIFIC COMPONENTS** .

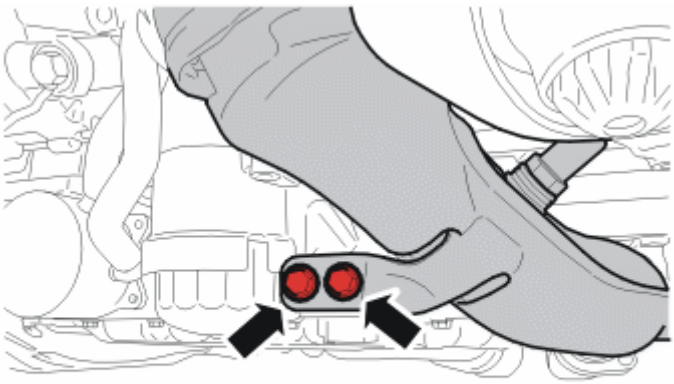

Fig. 116: Install The 2 Bracket Bolts
Courtesy of VOLVO CARS CORPORATION

Install the 2 x M8 screws for the bracket.

INSTALLING COMPONENTS

Install:

- the M8 screw.
- the 2 x M8 nuts
- the 2 x M8 studs. Tighten
- the upper 2 x M8 screws for the water pump.
- 2 x coolant hoses. Tighten the hose clamps
- the upper coolant hose. Tighten the hose clamp

Install:

- the VVT units. See: and, see **VVT UNIT EXHAUST CAMSHAFT, REPLACING**
- the engine cooling fan (FC). See **ENGINE COOLING FAN (FC), REPLACING**
- the temperature sensor. See: **INSTALLATION** .

CYLINDER HEAD/GASKET, CYLINDER 2, 4, 6 AND 8 (BANK 2), REPLACING

Special tools	
	T9512050 PROTRACTOR **Tool number:** T9512050 **Tool description:** PROTRACTOR **Tool boards:** EU14-1; SV14-1; US14-1

NOTE: **As the illustrations in this service information are used for different model years**

and / or models, some variation may occur. However, the essential information in the illustrations is always correct.

PREPARATORY WORK

Disconnect the battery negative cable. See: **BATTERY, DISCONNECTING** .

This work requires the vehicle to be raised. See:

see **JACKING POINTS, BODY** .

EXPOSING

REMOVING THE VARIABLE VALVE TIMING (VVT) UNIT

Remove the VVT units. See: **VVT UNIT, RIGHT CYLINDER HEAD** and **VVT UNIT, LEFT CYLINDER HEAD** .

REMOVING COMPONENTS

Remove the cable harness from the engine bracket by opening the catches for the mounting.

Remove:

- the connector for the camshaft position sensor
- the vacuum valve, place to one side.

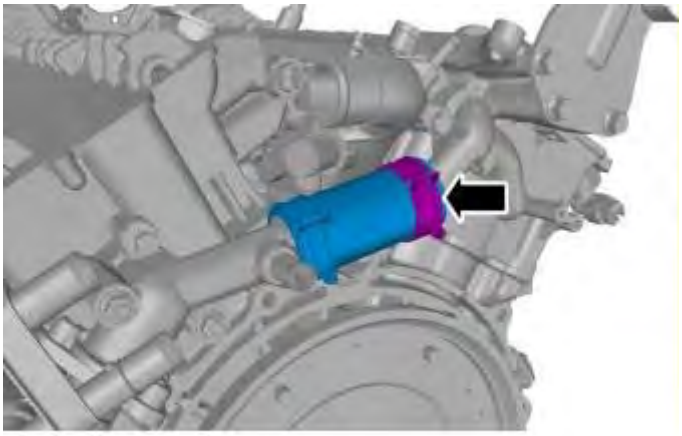

Fig. 117: Identifying The Hose Clip
Courtesy of VOLVO CARS CORPORATION

Remove the hose clip for the coolant hose.

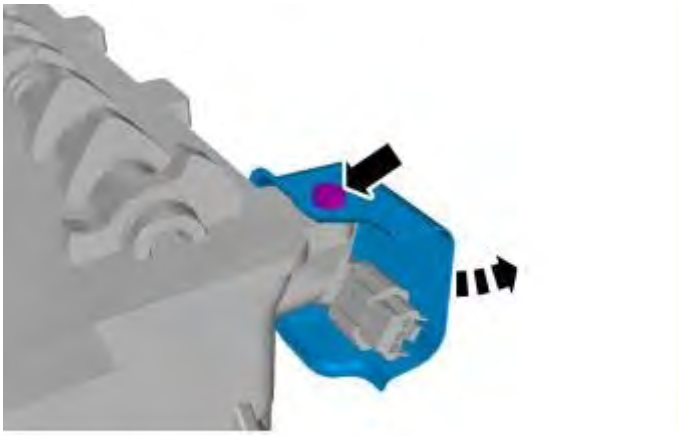

Fig. 118: Identifying Heat Shield
Courtesy of VOLVO CARS CORPORATION

Remove:

- the M6 screw.
- the heat shield.

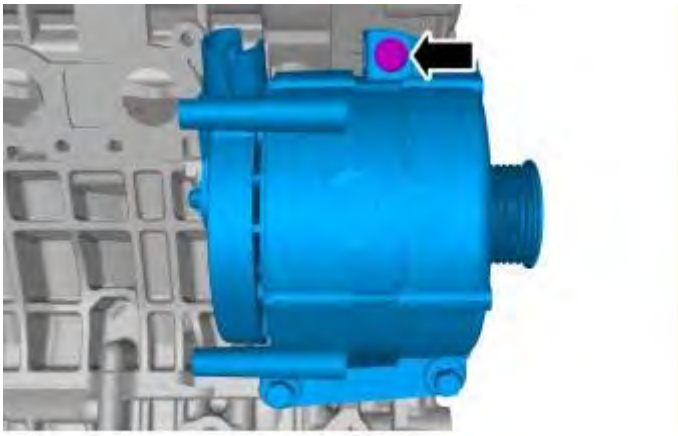

Fig. 119: Removing Alternator Upper Mounting Screw
Courtesy of VOLVO CARS CORPORATION

Remove the M8 upper mounting screw for the alternator.

REMOVING THE MANIFOLD

- the catalytic converter. See : **REMOVAL**

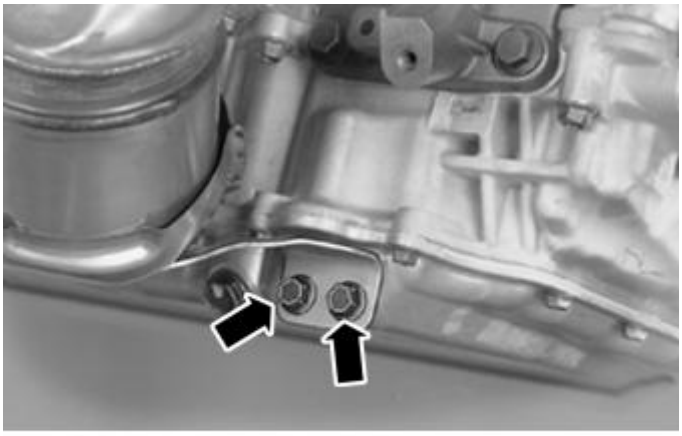

Fig. 120: Remove (2) Bracket Screws
Courtesy of VOLVO CARS CORPORATION

Remove the screws, 2 x M8

Fig. 121: Remove the 8 x Manifold Nuts
Courtesy of VOLVO CARS CORPORATION

Remove the 8 x M8 nuts. Discard the gasket.

REMOVAL

REMOVING THE CYLINDER HEAD

When replacing/working on the cylinder head. Lift out the valve lifters. Use a magnet or suction cup. Note

location.

NOTE: **Be careful so that the contact faces of the parts are not damaged.**

Remove:

- the 10 x M12 screws
- the cylinder head. Discard the gasket.

CLEANING

Clean and check the gasket faces for:

- the coolant bypass channel
- the intake manifold
- the cylinder block
- camshaft cover.

NOTE: **Blow the oil ducts clean.**

INSTALLATION

NOTE: **For tightening torques, see: TIGHTENING TORQUE .**

INSTALLING THE CYLINDER HEAD

NOTE: **Check that all studs at the exhaust ports are tightened. See: SUMMARY OF TIGHTENING TORQUES FOR SPECIFIC COMPONENTS .**

Fig. 122: Apply sealing compound 307 57050
Courtesy of VOLVO CARS CORPORATION

Install new manifold gasket.

Lubricate the studs with paste, part no. 116 1408.

Install:

- new cylinder head gasket. Apply sealing compound 307 57050 on both sides. See the illustration.
- the cylinder head
- lubricated screws, use new screws.

Tighten the screws in a circle from the inside and outwards. Use protractor: see **9512050** . Tighten. See **SUMMARY OF TIGHTENING TORQUES FOR SPECIFIC COMPONENTS** .

INSTALLING THE VALVE LIFTERS

NOTE: If the cylinder head has been replaced, the valve clearance must be adjusted. See VALVE CLEARANCE, SETTING/ADJUSTING .

Install:

- lubricate and install all the valve lifters. For correct location, see earlier notes.

INSTALLING THE MANIFOLD

Fig. 123: Remove the 8 x Manifold Nuts
Courtesy of VOLVO CARS CORPORATION

Install:

- a new gasket
- new nuts, 8 x M8.

Fig. 124: Identifying Bracket
Courtesy of VOLVO CARS CORPORATION

Install:

- the 2 x M8 screws
- the three-way catalytic converter. See: **INSTALLATION** .

INSTALLING COMPONENTS

Install:

- the heat shield
- the connector for the camshaft position sensor
- secure the cable harness on the engine bracket using the catches for the mounting.
- the connector for the camshaft position sensor
- the vacuum valve
- the hose clip for the coolant hose.

INSTALLING VVT-UNITS

Install the VVT units. See: **VVT UNIT EXHAUST CAMSHAFT, REPLACING** .

VALVE COVER/GASKET, REPLACING

Remove the power steering pump. See **POWER STEERING PUMP, REPLACING**

Remove the intake manifold. See **INJECTORS/PULSATION DAMPERS, REPLACING** .

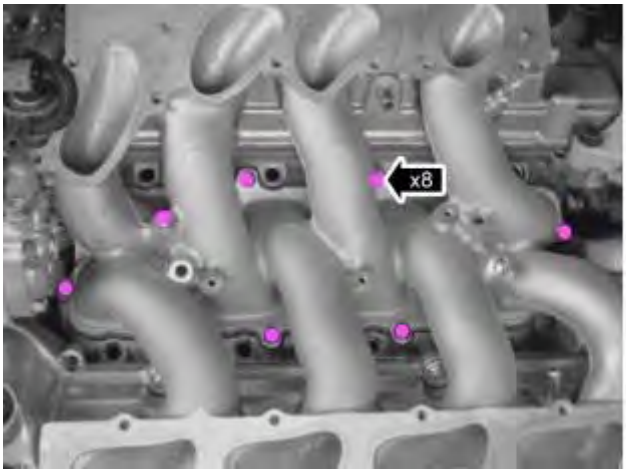

Fig. 125: Identifying Induction Pipe
Courtesy of VOLVO CARS CORPORATION

Induction pipe. See **TIGHTENING TORQUE**

VALVE COVER LEFT.

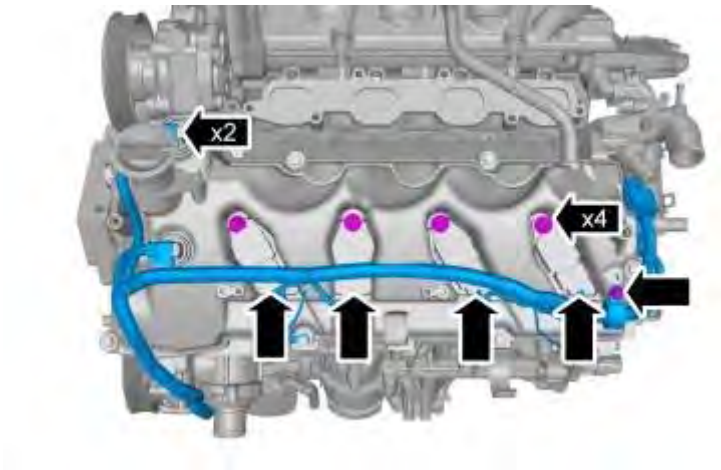

Fig. 126: View Of Valve Cover Left
Courtesy of VOLVO CARS CORPORATION

M6. See **TIGHTENING TORQUE**

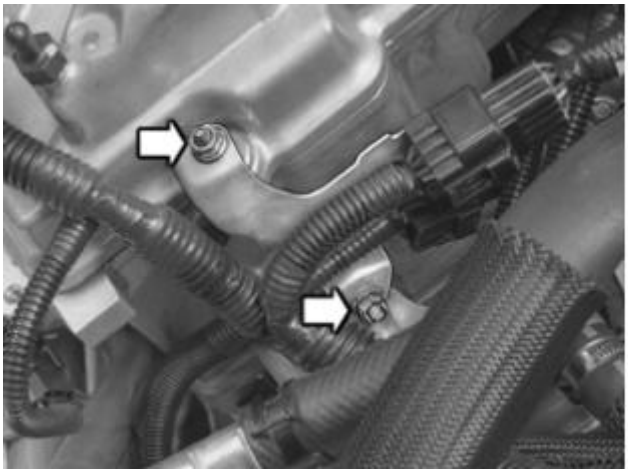

Fig. 127: Locating Bracket
Courtesy of VOLVO CARS CORPORATION

M6. See **TIGHTENING TORQUE**

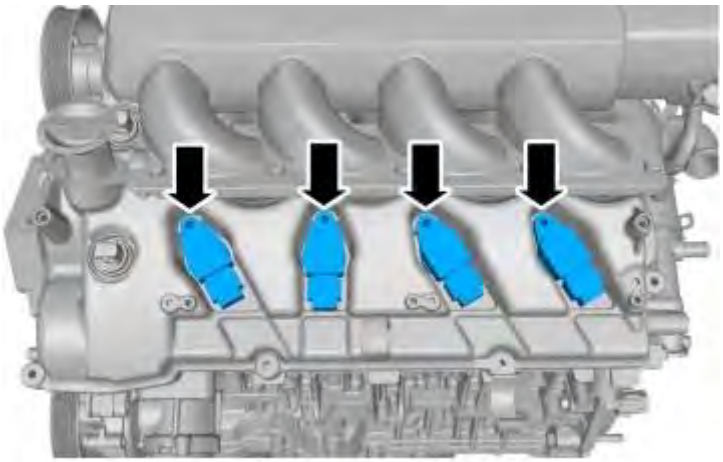

Fig. 128: Identifying Ignition Coils
Courtesy of VOLVO CARS CORPORATION

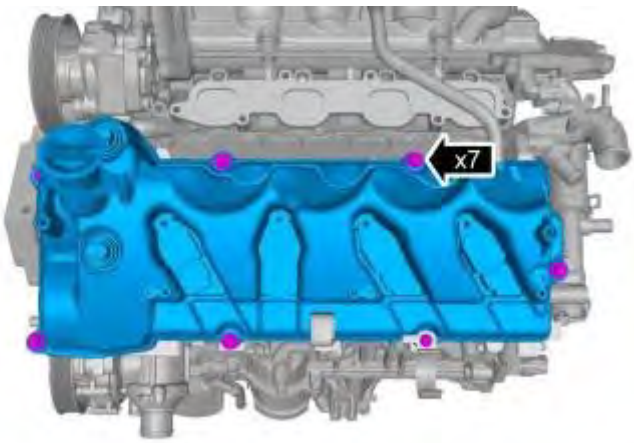

Fig. 129: Removing Screws
Courtesy of VOLVO CARS CORPORATION

M6. See **TIGHTENING TORQUE**

VALVE COVER RIGHT.

Fig. 130: Identifying Bracket
Courtesy of VOLVO CARS CORPORATION

M6. See **TIGHTENING TORQUE**

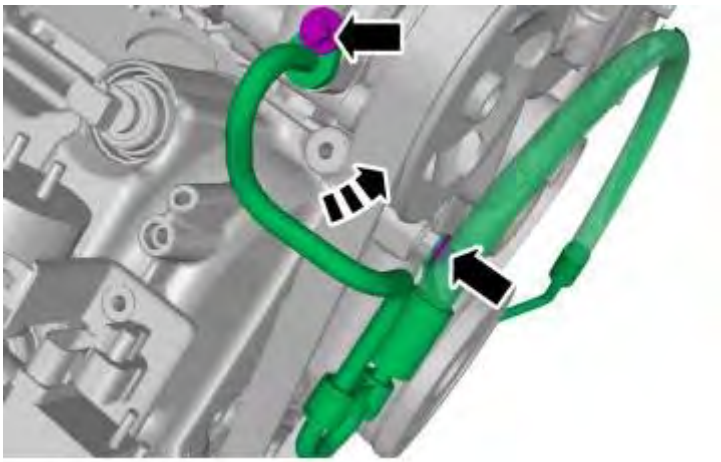

Fig. 131: Removing Pressure Tube
Courtesy of VOLVO CARS CORPORATION

Torque: M6

10 Nm

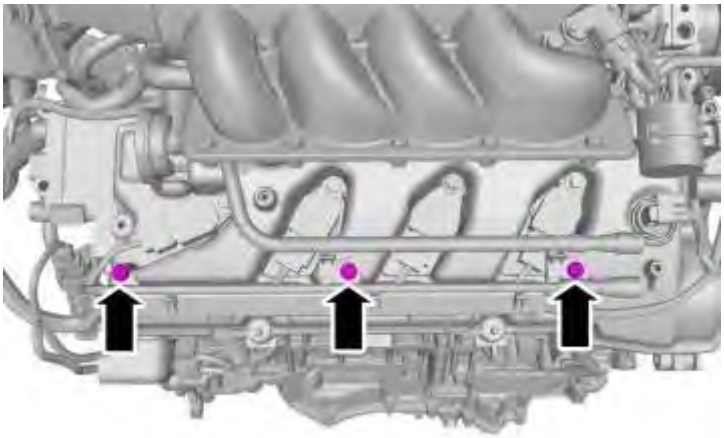

Fig. 132: Identifying Bracket Screws
Courtesy of VOLVO CARS CORPORATION

M6. See **TIGHTENING TORQUE**

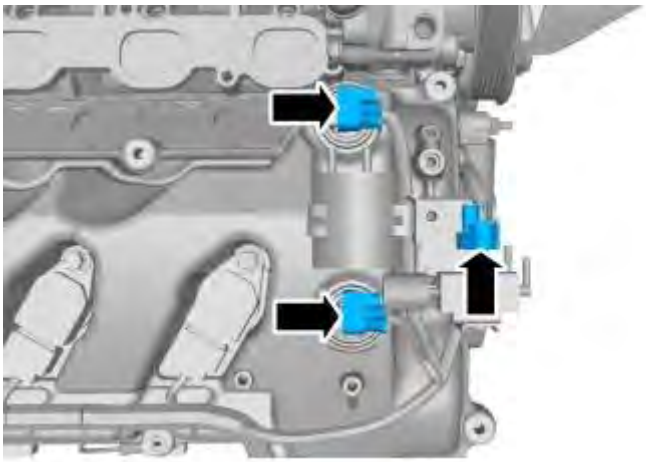

Fig. 133: Removing Connectors
Courtesy of VOLVO CARS CORPORATION

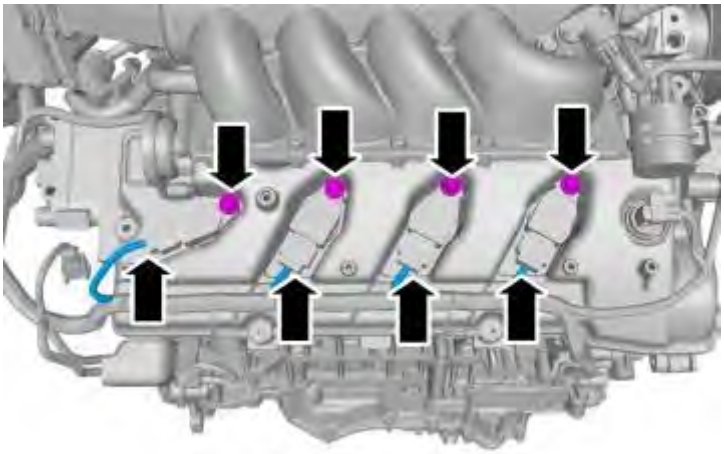

Fig. 134: Identifying Ignition Coil Screws and Connectors
Courtesy of VOLVO CARS CORPORATION

M6. See **TIGHTENING TORQUE**

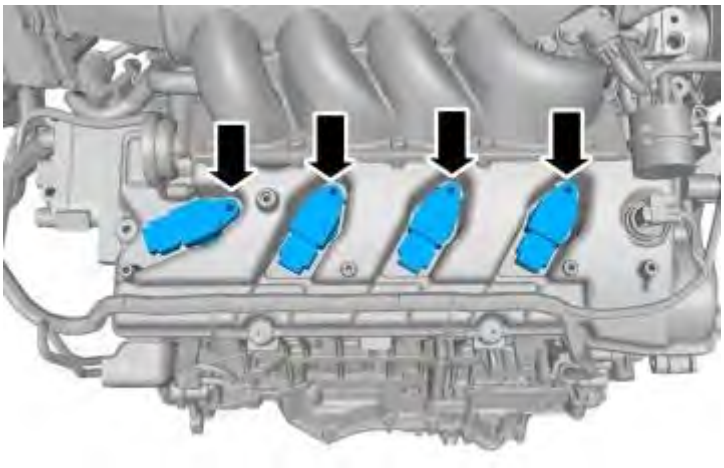

Fig. 135: Identifying Coils
Courtesy of VOLVO CARS CORPORATION

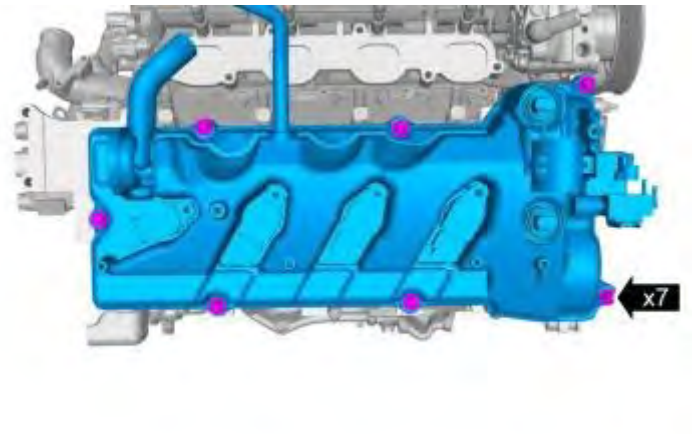

Fig. 136: Identifying 7 Screws
Courtesy of VOLVO CARS CORPORATION

M6. See **TIGHTENING TORQUE**

To install, reverse the removal procedure.

DRIVE TRAIN (B6294T; 2003-2006)

CAMSHAFT SEAL/VARIABLE VALVE TIMING (VVT) UNIT, REPLACING

REMOVING THE FRONT CAMSHAFT SEAL

NOTE: **The illustrations in this service information are used for different model years and / or models. Therefore there may be some variation. However, the essential information in the illustrations is always correct.**

CAUTION: There are a number of versions of the variable valve timing unit. Therefore it is extremely important to always read the information referring to the engine variant/model year to be remedied.

REPLACING THE REAR CAMSHAFT SEAL

See **REMOVAL AND INSTALLATION**.

PREPARATION

Interrupt the current: Disconnect the battery negative lead. First read, see **BATTERY, DISCONNECTING** .

Remove the timing belt from the timing gear pulley for the camshafts. See **TIMING BELT, REPLACING**. Check the tensioner and idler pulleys. See **TIMING BELT, REPLACING**.

Remove the camshaft position (CMP) sensor housings and the trigger wheels.

REMOVING THE VARIABLE VALVE TIMING UNIT / TIMING GEAR PULLEY

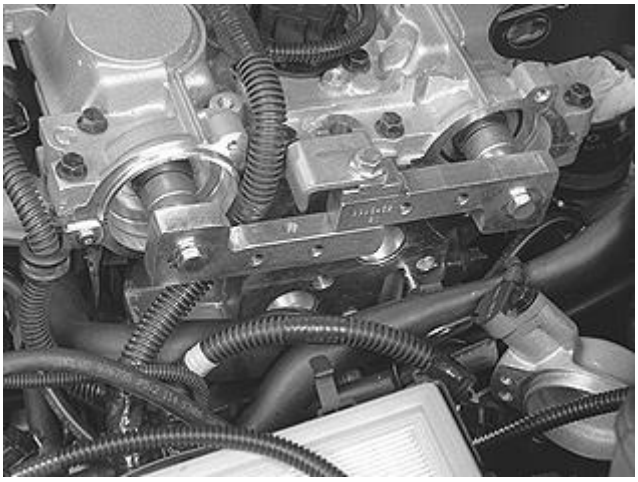

Fig. 137: Camshaft Adjustment Tool 999 5452 Installed
Courtesy of VOLVO CARS CORPORATION

Install adjustment tool see **9995452** at the rear of the camshafts. Screw the adjustment tool sections together into one.

Remove:

- The center plugs for the variable valve timing units (Tx55)
- The center screws for the variable valve timing units (Tx55). Pull or work off the variable valve timing units and timing gear pulleys.

REMOVING THE FRONT CAMSHAFT SEAL

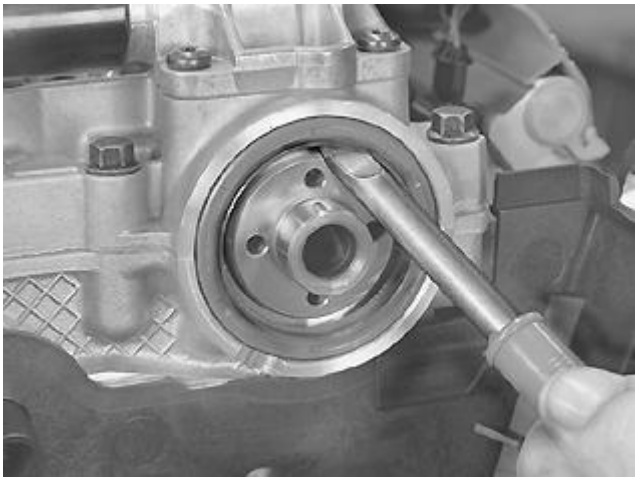

Fig. 138: Identifying Seal And Special Tool 999 5651
Courtesy of VOLVO CARS CORPORATION

Carefully press in tool see **9995651** between the seal and the camshaft. Pry out the seal.

INSTALLING THE FRONT CAMSHAFT SEAL

NOTE: **The purpose of the section, "Installing the VVT unit/timing gear pulley", described here is to ensure that the VVT unit is correctly positioned and to reset the camshaft timing gear pulley to the correct position using the markings made at the factory. This is to ensure that the conditions are correct for any later fault-tracing.**

NOTE: **For tightening torques, see: TIGHTENING TORQUE .**

CLEANING

To clean the shaft journal and mating surface, use emery cloth P/N 951 1024.

NOTE: **When cleaning work around the shaft journal, not in and out. It is essential that any residue from the emery cloth and any other contaminants are completely removed before the new sealing ring is installed.**

INSTALLING THE FRONT CAMSHAFT SEAL

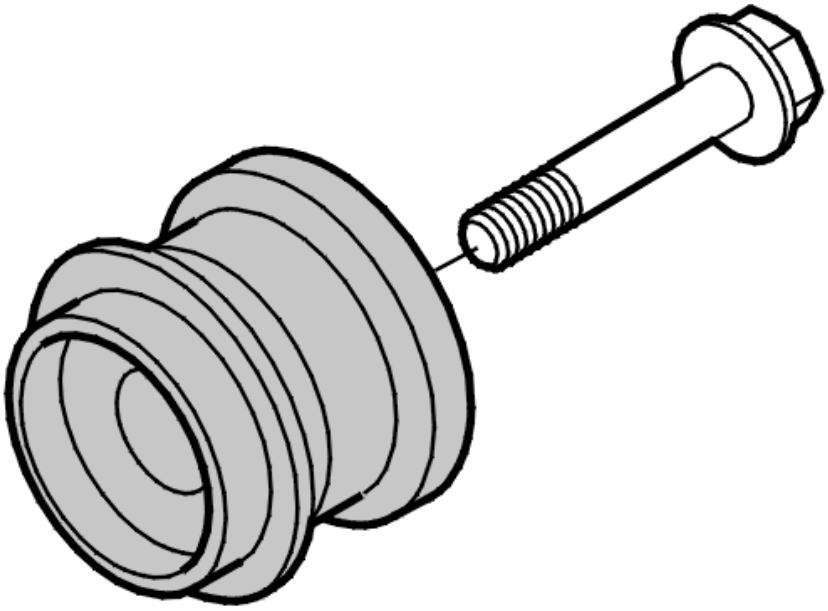

9995718

Fig. 139: Installing Drift 999 5718
Courtesy of VOLVO CARS CORPORATION

Lubricate the surface of the seal that the camshaft rotates against.

Install the camshaft seal. Use drift see **9995718** . Use the mounting screw for the variable valve timing unit. Tighten until the drift bottoms out.

CHECKING AND ADJUSTING THE VARIABLE VALVE TIMING UNIT

Check and adjust the variable valve timing unit. See: **VARIABLE VALVE TIMING UNIT, CHECKING AND ADJUSTING** .

CHECKING THE MARKINGS AND BELT TENSION

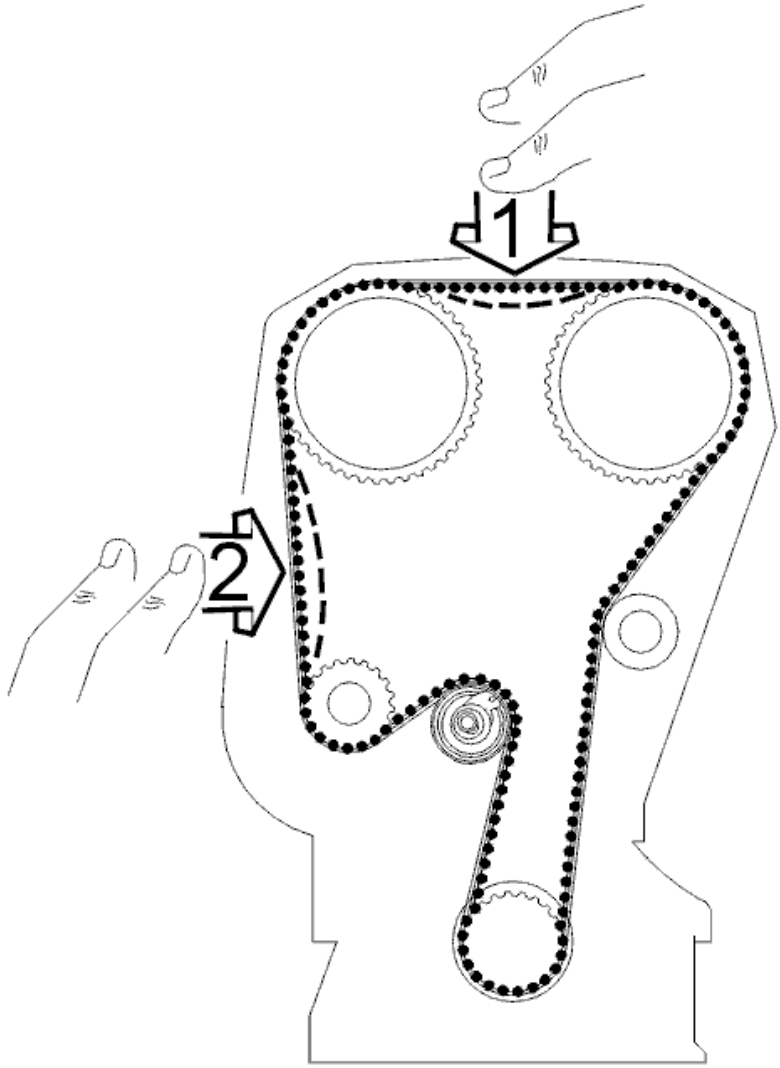

Fig. 140: Checking Timing Belt Tension
Courtesy of VOLVO CARS CORPORATION

Press the timing belt to check that the indicator on the tensioner moves easily. Position the upper timing cover.

Turn the crankshaft 2 **rotations** and check that the markings on the crankshaft and timing gear pulleys correspond. Check that the indicator on the belt tensioner is within the marked position. Remove the upper timing cover.

Install:

- the starter motor. Tighten screws at gearbox. Tighten. See **TIGHTENING TORQUE**
- the trigger wheel. Tighten the screw
- the camshaft position (CMP) sensor housing. Tighten the screws
- the new cover in the rear edge of the camshaft

- the intake pipe between the charge air cooler (CAC) and the electronic throttle module (ETM).

FINISHING

Install the auxiliaries belt around the pulley on the crankshaft.

Install:

- the plastic nuts for the hatch in the right wing liner
- the right front wheel. See **INSTALLING WHEELS** .

Fig. 141: Expansion Tank And Servo Reservoir
Courtesy of VOLVO CARS CORPORATION

Install the front timing cover. See **TIMING COVER FRONT, REPLACING** .

Tension the auxiliaries belt. Check that it is correctly positioned on all pulleys.

Install:

- the expansion tank
- the hose between the expansion tank and the radiator. Remove the lock grip pliers
- the servo reservoir
- the upper timing cover.

Twist the intake pipe for the turbocharger for cylinders 1, 2 and 3 into position. Tighten the clamp. Install the plastic hoses between the turbocharger (TC) and the charge air cooler and between the air cleaner (ACL) and the turbocharger (TC). Tighten the hose clamps.

Fig. 142: Engine And Stabilizer Brace
Courtesy of VOLVO CARS CORPORATION

Install:

- the engine stabiliser brace. Tighten the screws
- the screw holding the engine stabiliser brace to the bracket on the engine. Tighten
- the battery negative lead. Also read, see **BATTERY, DISCONNECTING** .

FINAL CHECK

Check and top up if required:

- coolant level
- the servo fluid level. Test drive the engine.

REMOVAL AND INSTALLATION

PREPARATION

Fig. 143: Engine And Stabilizer Brace
Courtesy of VOLVO CARS CORPORATION

Remove:

- the screw holding the engine stabiliser brace to the bracket on the engine
- the screws holding the engine stabiliser brace to the suspension turrets
- the engine stabiliser brace
- the air cleaner (ACL) cover. Place it to one side
- the camshaft position (CMP) sensor housing and the trigger wheel.

REMOVING THE REAR CAMSHAFT SEAL

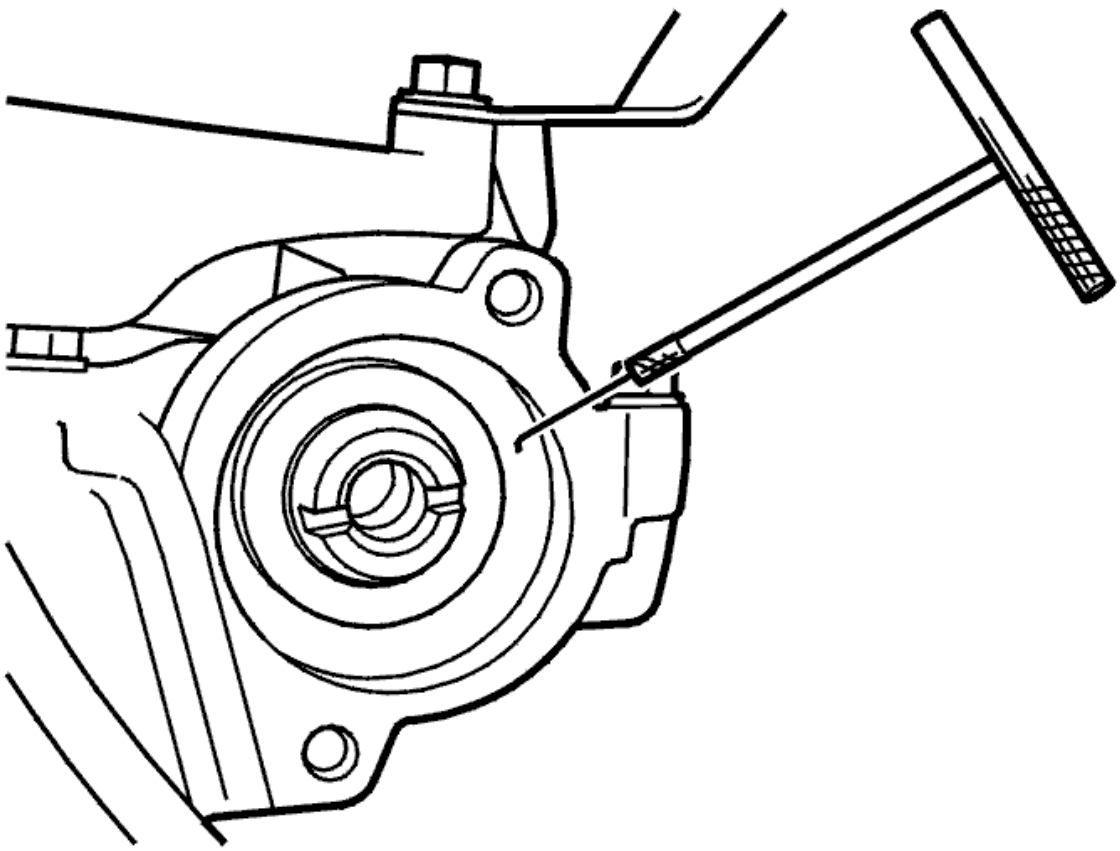

Fig. 144: Identifying Special Tool Extractor 999 5919
Courtesy of VOLVO CARS CORPORATION

Pull out the seal. Use puller see **9995919** . Use emery cloth 951 1024 to clean the shaft journal and mating surface.

NOTE: **When cleaning work around the shaft journal, not in and out. It is essential that any residue from the emery cloth and any other contaminants are completely removed before the new sealing ring is installed.**

Lubricate the surface of the seal that the camshaft rotates against. Install the camshaft seal. Use drift see **9995450** .

NOTE: The seal is normally positioned at the same level as the internally bevelled edge. If the shaft journal is showing signs of wear, the seal can be pressed in a further 2 mm : Turn the drift socket.

FINISHING

NOTE: For tightening torques, see: TIGHTENING TORQUE .

Fig. 145: Engine And Stabilizer Brace
Courtesy of VOLVO CARS CORPORATION

Install:

- the trigger wheel. Tighten the screw
- the camshaft position (CMP) sensor housing. Tighten the screws
- the air cleaner (ACL) cover
- the engine stabiliser brace. Tighten the screws
- the screw holding the engine stabiliser brace to the bracket on the engine. Tighten.

Test drive the engine.

REPLACING THE ACCESSORY DRIVE BELT / BELT TENSIONER

NOTE: Removal steps in this procedure may contain installation details.

PREPARATION

Fig. 146: Pinching Expansion Tank Hose
Courtesy of VOLVO CARS CORPORATION

Lift up servo reservoir and place on top of engine.

NOTE: Ensure that no oil leaks out of the ventilation hole in the cover.

Remove the cover and surround for the distribution box.

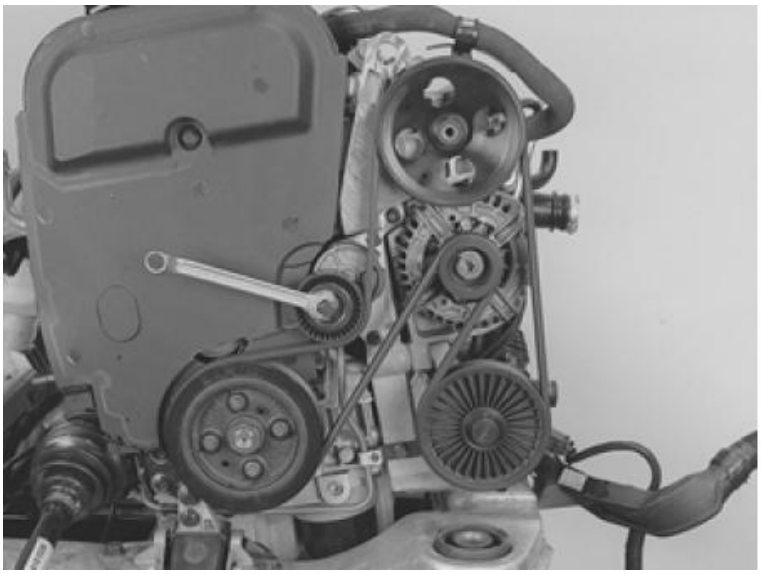

Fig. 147: Removing Auxillary Belt
Courtesy of VOLVO CARS CORPORATION

Use a **14 mm** spanner and turn clockwise as far as possible to relieve the load.

Lift off the belt.

REMOVING THE AUXILIARIES BELT

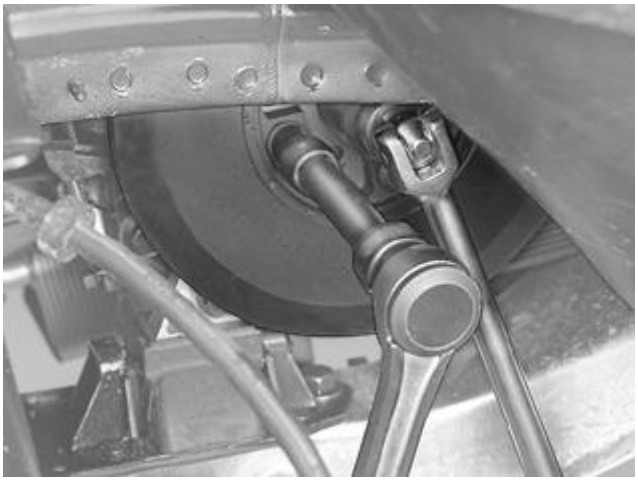

Fig. 148: Identifying Vibration Damper Screws, Counterhold And Crankshaft Central Nut
Courtesy of VOLVO CARS CORPORATION

Raise the vehicle and remove

- the right front wheel
- the plastic nuts from the cover in the wing liner
- the outer section on the oscillation damper. Use the crankshaft's center nut as a counterhold.
- the auxiliaries belt

Tighten, see **SUMMARY OF TIGHTENING TORQUES FOR SPECIFIC COMPONENTS**

REMOVING THE BELT TENSIONER

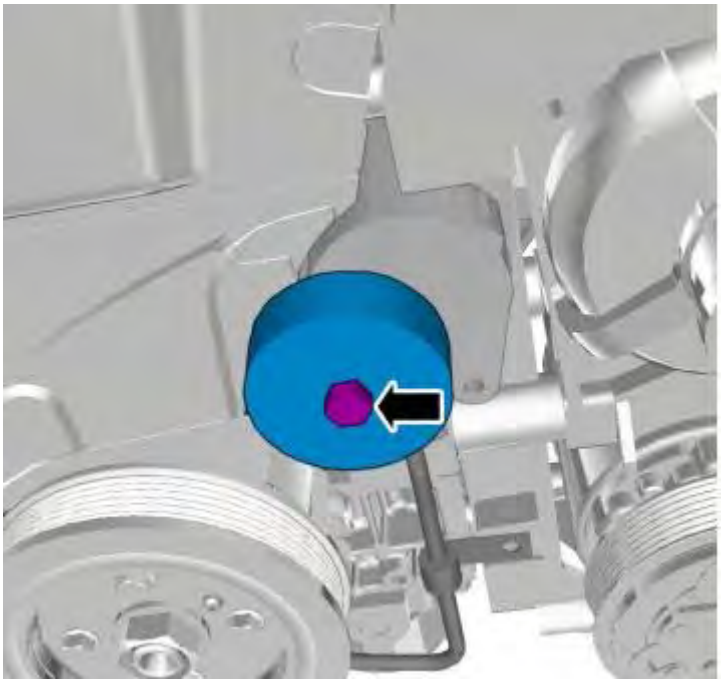

Fig. 149: Removing The Belt Tensioner
Courtesy of VOLVO CARS CORPORATION

Remove the following items:

- the protective cover above the screw
- screw, belt tensioner
- support reel

Tighten, see **TIGHTENING TORQUE**

REMOVING THE BELT TENSIONER

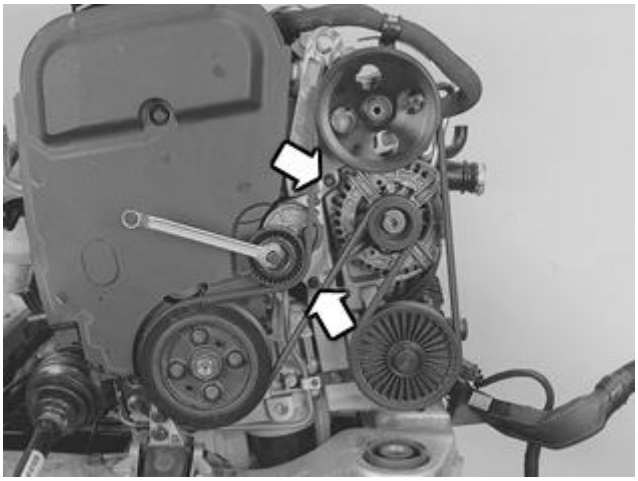

Fig. 150: Belt Tensioner Mounting Screws
Courtesy of VOLVO CARS CORPORATION

Remove belt tensioner mounting screws from auxiliaries belt bracket.

Remove the belt tensioner.

Install a new belt tensioner.

Tighten, see **SUMMARY OF TIGHTENING TORQUES FOR SPECIFIC COMPONENTS**

To install, reverse the removal procedure.

REPLACING THE VARIABLE VALVE TIMING SOLENOID

NOTE: **The illustrations in this service information are used for different model years and / or models. Therefore there may be some variation. However, the essential information in the illustrations is always correct.**

PREPARATIONS

Fig. 151: Engine Compartment Components
Courtesy of VOLVO CARS CORPORATION

Applies only to B6xx4T

Remove the plastic pipes between the turbocharger (TC) and charge air cooler (CAC) and between the air cleaner (ACL) and the turbocharger (TC).

Put them to one side.

Slacken off the clamp for the intake manifold at the turbocharger (TC) for cylinders 1, 2 and 3. Turn the upper section of the manifold towards the firewall.

REMOVING THE VARIABLE VALVE TIMING SOLENOID

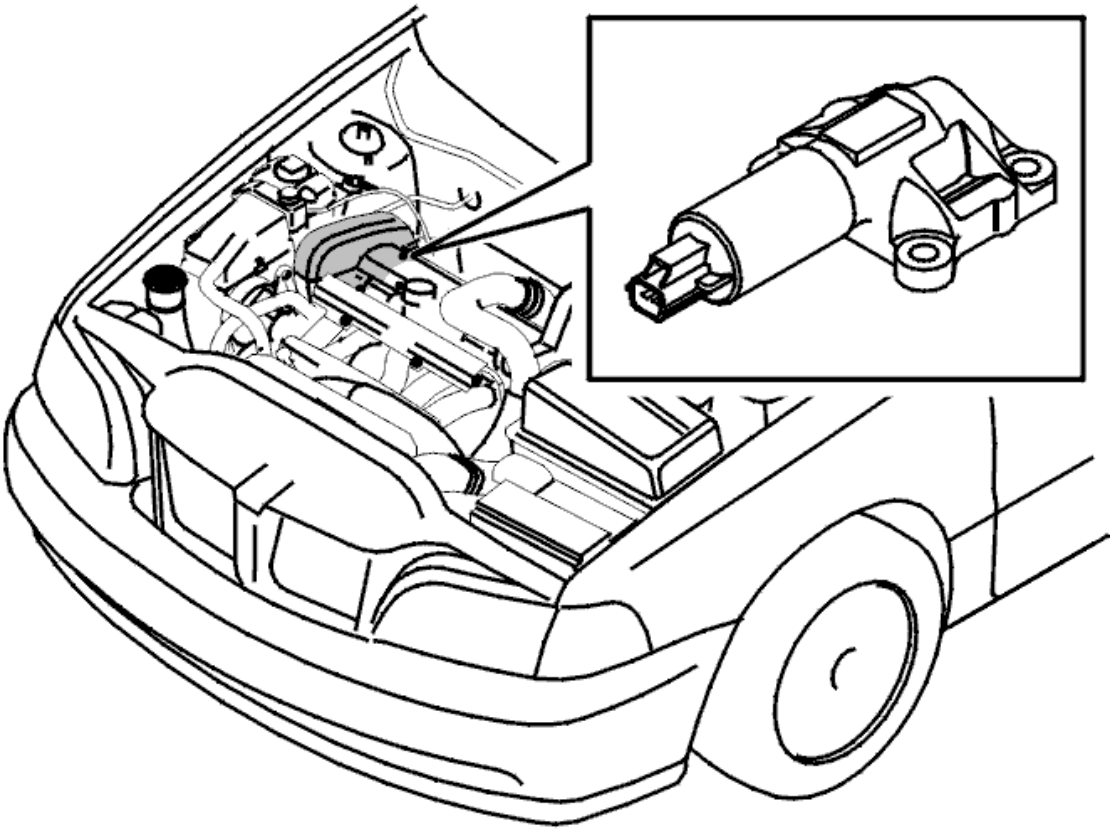

Fig. 152: Identifying Upper Timing Belt Cover
Courtesy of VOLVO CARS CORPORATION

Remove the upper timing belt cover.

NOTE: **Clean the area around the variable valve timing (VVT) solenoid thoroughly to avoid contaminated oil entering the ducts / the variable valve timing (VVT) unit.**

Remove:

- the connector for the check valve
- the screws holding the valve
- the control valve and the gasket.

INSTALLING THE VARIABLE VALVE TIMING SOLENOID

Clean the gasket faces. Note the cleanliness requirements above.

Install a new gasket.

Install:

- a new check valve Tighten the control valve crosswise. Tighten to **10 Nm**

- the connector
- the upper timing belt cover.

FINISHING

Fig. 153: Engine Compartment Components
Courtesy of VOLVO CARS CORPORATION

Applies only to B6xx4T

Turn back the intake manifold for the turbocharger (TC) for cylinders 1, 2, 3 and tighten the clamp.

Install the plastic hoses between the turbocharger (TC) and the charge air cooler and between the air cleaner (ACL) and the turbocharger (TC).

Tighten the hose clamps.

TIMING BELT, REPLACING

Special tools:

see **9995433**

see **9995456**

REMOVAL

NOTE: **Since the illustrations in this service information are used for different model years and/or models, some variation may occur. However, the essential information in the illustrations is always correct.**

PREPARATION

Fig. 154: Engine Compartment Components
Courtesy of VOLVO CARS CORPORATION

CAUTION: Remove the ignition key.

Remove:

- the screw holding the engine stabiliser brace to the bracket on the engine
- the screws holding the engine stabiliser brace to the suspension turrets
- the engine stabiliser brace.

Remove the plastic pipes between the turbocharger (TC) and charge air cooler (CAC) and between the air cleaner (ACL) and turbocharger (TC). Put them to one side.

Remove the clamp from the intake manifold for the turbocharger (TC) for cylinders 1, 2 and 3. Turn the upper section of the pipe towards the bulkhead.

Fig. 155: Pinching Expansion Tank Hose
Courtesy of VOLVO CARS CORPORATION

Relieve the load from the belt tensioner. Remove the auxiliaries belt.

Remove the upper timing belt cover.

Remove the front timing belt cover. See **TIMING COVER FRONT, REPLACING** .

Lift up the servo reservoir and place it on top of the engine.

NOTE: Ensure that the power steering oil does not leak from the breather hole in the filler cap.

Seal the hose between the expansion tank and the radiator. Disconnect the hose at the tank.

Lift up the expansion tank and place it on top of engine.

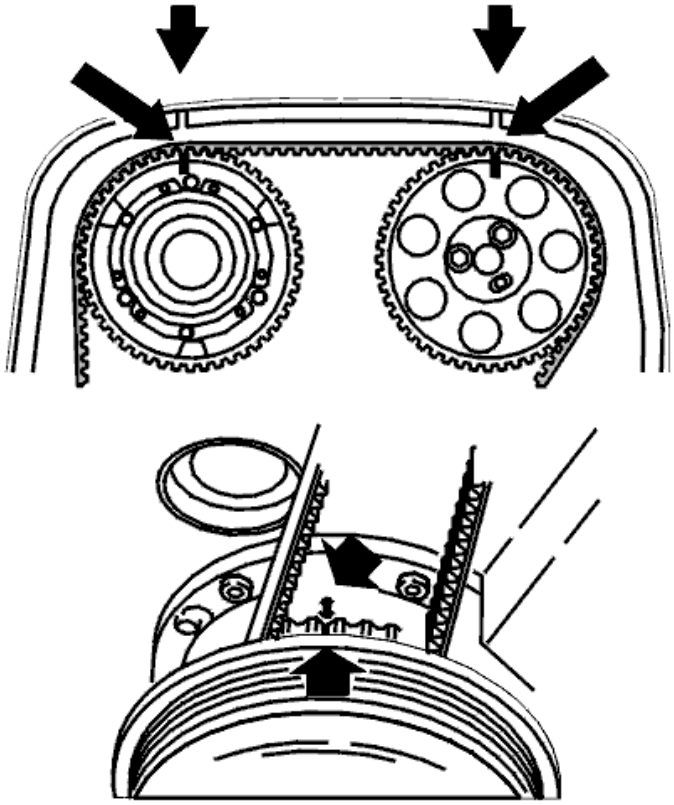

Fig. 156: Crankshaft And Camshafts Markings
Courtesy of VOLVO CARS CORPORATION

Raise the car.

Remove:

- the right front wheel

- the plastic nuts on the cover in the wing liner.

Install the upper timing belt cover.

Turn the crankshaft clockwise until the markings on the crankshaft and camshaft pulleys correspond.

Turn the crankshaft a further 1/4 turn clockwise.

Then turn back counter-clockwise until the markings correspond.

Remove the upper timing belt cover.

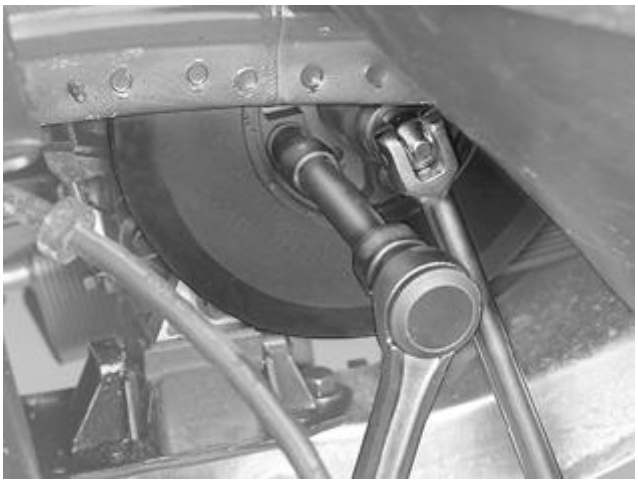

Fig. 157: Identifying Vibration Damper Screws, Counterhold And Crankshaft Central Nut
Courtesy of VOLVO CARS CORPORATION

Remove the 4 vibration damper screws. Counterhold the crankshaft central nut.

Remove:

- the vibration damper
- the auxiliaries belt
- the belt cover behind the crankshaft pulley for the auxiliaries belt.

Spray universal oil or similar around the rubber sleeve on the underside of the oil pump.

Remove the rubber sleeve.

REMOVING THE TIMING BELT

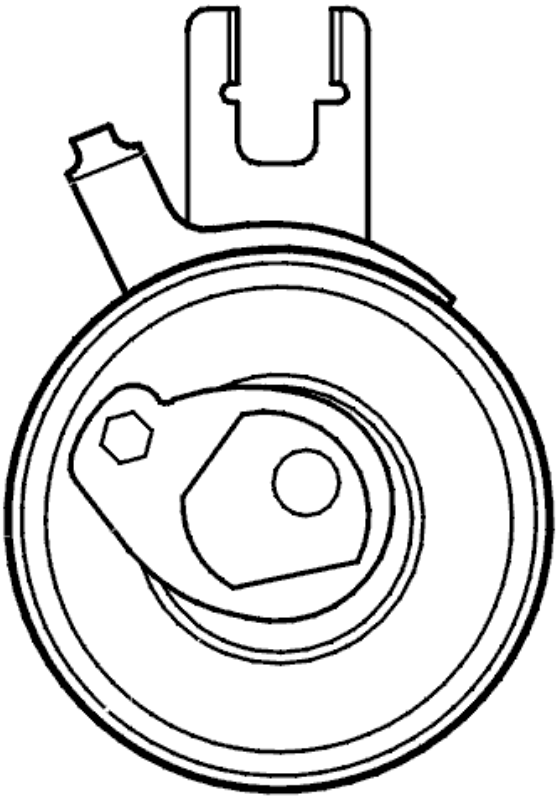

Fig. 158: Identifying Belt Tensioner
Courtesy of VOLVO CARS CORPORATION

Slacken off the belt tensioner

Slacken off the centre screw for the belt tensioner slightly.

Hold the centre screw still. Turn the tensioner eccentric **counter-clockwise** using a 6 mm Allen key. Turn to 10 o'clock.

Unhook and remove the timing belt.

NOTE: The component can be reused unless it has been subjected to abnormal mechanical stress, damage or oil contamination.

CAUTION: The crankshaft or camshafts must not be rotated while the timing belt is removed.

CHECKING THE TENSIONER PULLEY AND IDLER PULLEY

Check bearing wear:

Spin the idler pulley and listen for noise. If replacing with a new idler pulley, tighten to **24 Nm** .

Spin the tension pulley and listen for noise. When replacing, screw the tension pulley into place using the centre screw.

Screw in the centre screw by hand.

Ensure that the tensioner fork is centred over the cylinder block rib / bracket.

Ensure that the Allen hole on the eccentric is at 10 o'clock.

INSTALLATION

INSTALLING THE TIMING BELT

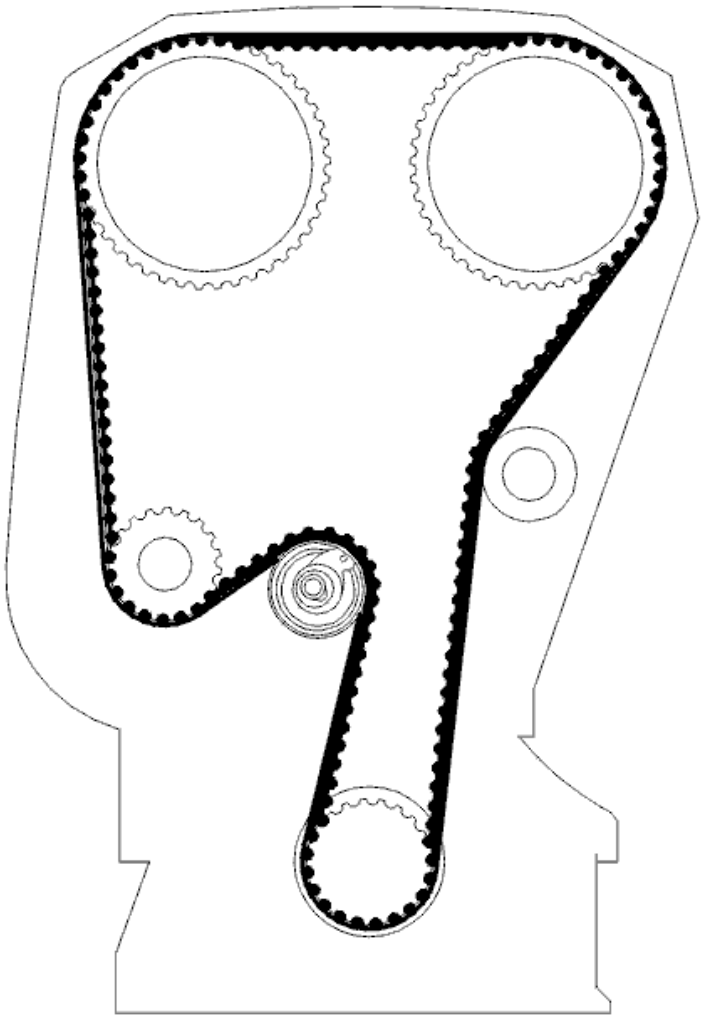

Fig. 159: Identifying Timing Belt Routing
Courtesy of VOLVO CARS CORPORATION

NOTE: **The component can be reused unless it has been subjected to abnormal mechanical stress, damage or oil contamination.**

Install the belt in the following order:

- crankshaft
- the idler pulley
- intake cam
- exhaust cam
- water pump
- tension pulley.

TENSIONING THE TIMING BELT

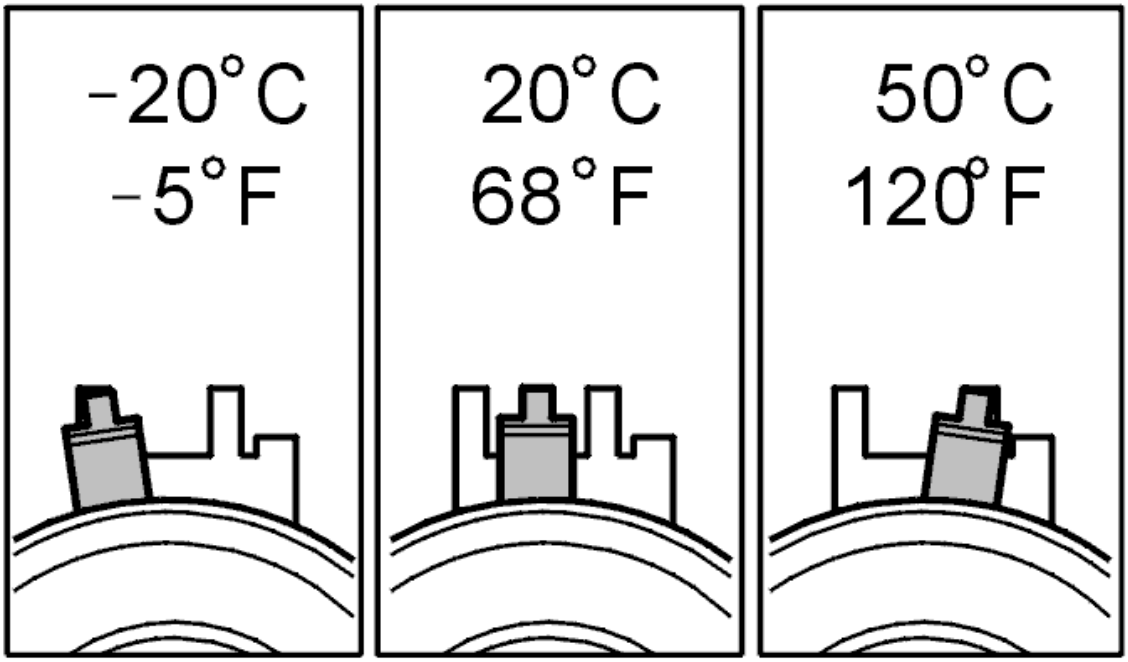

Fig. 160: Identifying Needle Position At Varying Temperatures
Courtesy of VOLVO CARS CORPORATION

This adjustment is done with a cold engine. Suitable temperature is approximately 20 ° C/ 68 ° F.

At a higher temperature, for example with a warm engine or a higher ambient temperature, the needle is farther to the right.

The illustration shows the position of the indicator when aligning the timing belt tensioner at different temperatures.

Carefully turn the crankshaft clockwise until the timing belt is tensioned. The belt must be in tension between the intake camshaft pulley, the idler pulley and the crankshaft.

Hold the belt tensioner centre screw secure. Turn the belt tensioner eccentric **clockwise** until the tensioner indicator passes the marked position.

Then turn the eccentric back so that the indicator reaches the marked position in the centre of the window.

Hold the eccentric secure. Tighten the centre screw to **25 Nm.**

Check that the indicator is in the correct position.

CHECK

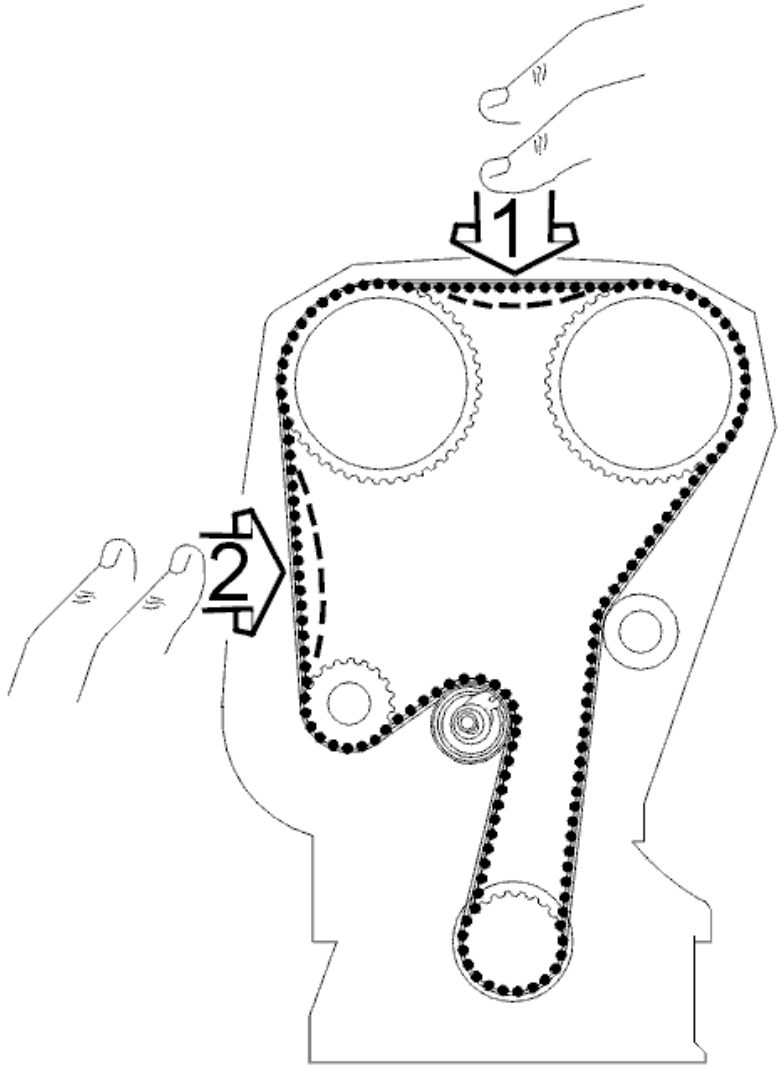

Fig. 161: Checking Timing Belt Tension
Courtesy of VOLVO CARS CORPORATION

Press the belt to check that the indicator on the tensioner moves easily.

Install the upper timing belt cover.

Turn the crankshaft 2 turns. Check that the markings on the crankshaft and camshaft pulley correspond.

Check that the indicator on the belt tensioner is within the marked area.

FINISHING

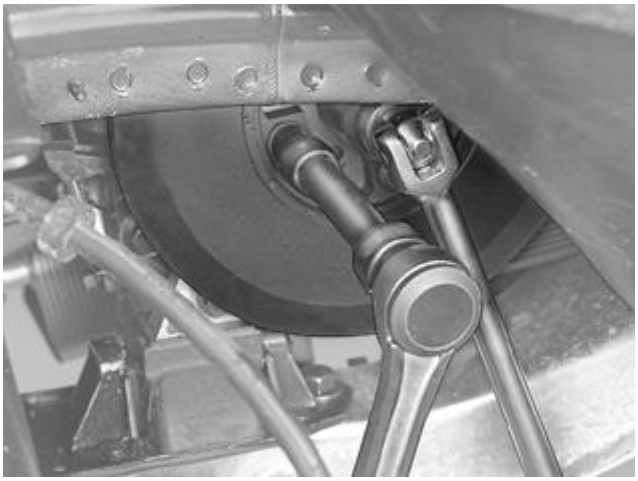

Fig. 162: Identifying Vibration Damper Screws, Counterhold And Crankshaft Central Nut
Courtesy of VOLVO CARS CORPORATION

Install the auxiliaries belt around the pulley on the crankshaft.

Install

- the rubber sleeve on the underside of the oil pump
- the vibration damper. Use **new screws** . Tighten and angle tighten. See **SUMMARY OF TIGHTENING TORQUES FOR SPECIFIC COMPONENTS** . Use the crankshaft centre nut as a counterhold
- the plastic nuts for the cover in the right-hand wing liner
- the right front wheel. See **INSTALLING WHEELS** .

Fig. 163: Expansion Tank And Servo Reservoir
Courtesy of VOLVO CARS CORPORATION

Lower the car.

- Remove the front timing belt cover. See

see **INSTALLING THE FRONT TIMING COVER** .

Tension the auxiliaries belt.

- the expansion tank
- the hose between the expansion tank and the radiator. Remove the lock grip pliers
- the servo reservoir
- the upper timing belt cover.

Twist the intake pipe for the turbocharger for cylinders 1, 2 and 3 into position. Tighten the clamp.

Install the plastic hoses between the turbocharger (TC) and charge air cooler (CAC) and between the air cleaner (ACL) and turbocharger (TC).

Tighten the hose clamps.

Fig. 164: Engine And Stabilizer Brace
Courtesy of VOLVO CARS CORPORATION

- the engine stabiliser brace. Tighten to **50 Nm**
- the screw holding the engine stabiliser brace to the bracket on the engine. Tighten to **80 Nm** .

FINAL CHECK

Check and top up if required

- coolant level
- the servo fluid level.

Test run the engine .

ENGINE MOUNTING (2003-2012)

BUSHING SUB-FRAME, REPLACING (2003-2008)

Special tools:

see **9995575**

see **9995576**

see **9512564**

see **9997018**

see **9997070**

see **9995716**

see **9995460**

see **9995185**

NOTE: **As the illustrations in this service information are used for different model years and / or models, some variation may occur. However, the essential information in the illustrations is always correct.**

IMPORTANT INFORMATION

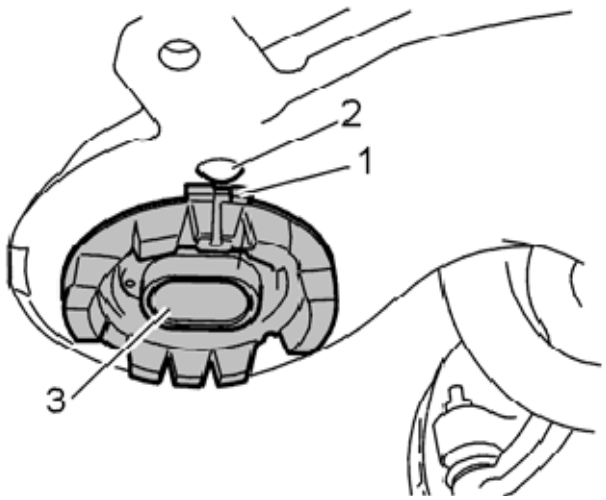

Fig. 165: Identifying Left-Hand Rear Bushing
Courtesy of VOLVO CARS CORPORATION

CAUTION: **The left-hand rear bushing on the sub-frame is a different version to the other three bushings. The hole in the centre of the bushing is oval. The oval must be positioned front-rear with the car.**

HINT: Carry out work using see 9995575 together with see 9995576 or see 9512564 .

PREPARATORY WORK

Remove the engine cover.

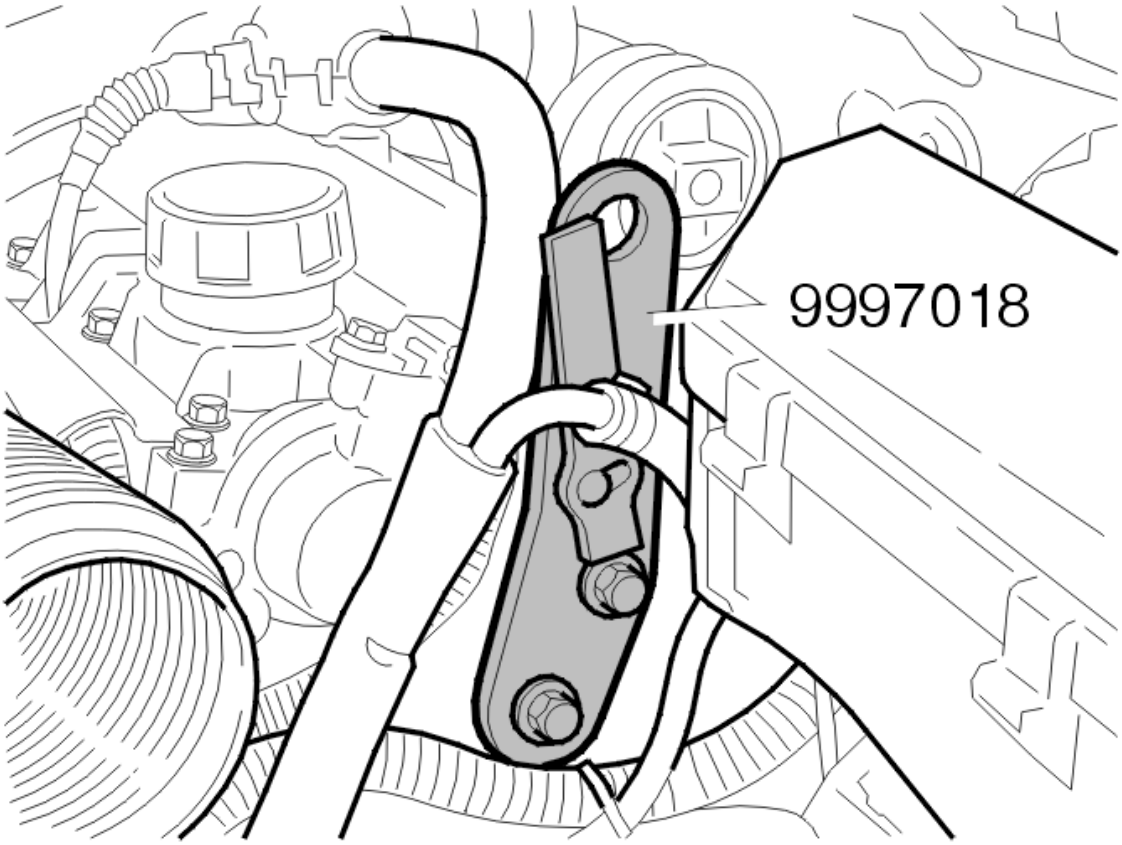

Fig. 166: Installed Lifting Eye
Courtesy of VOLVO CARS CORPORATION

Applies only to six cylinder engines:

Install lifting eye see **9997018** on the left side of the engine at the 2 screws.

Lock the lifting lug using the catch.

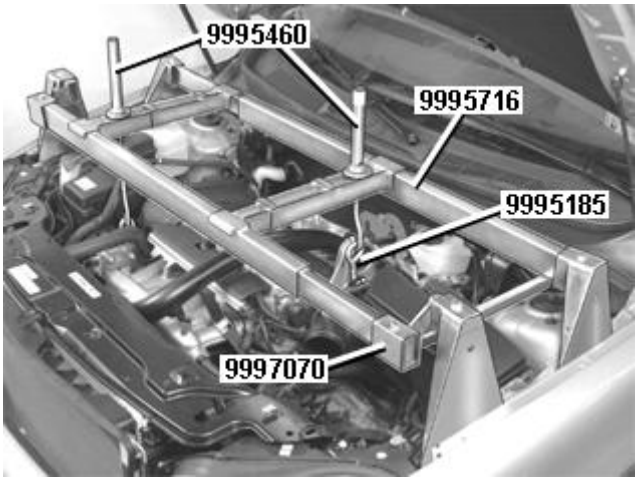

Fig. 167: Identifying Fixture Kit, Lifting Beam And Lifting Hooks
Courtesy of VOLVO CARS CORPORATION

Installing the lifting beams and lifting hooks on the engine lifting lugs.

NOTE: The front lifting beam must be equipped with fixture kit see 9997070 as illustrated.

Position lifting beam see **9995716** on the wheel arch and directly above the engine lifting eyelets on the left and right-hand sides.

Connect lifting hooks see **9995460** on the lifting lugs on the right-hand side of the engine with a clearance of 10 mm.

Applies only to the T6:

Also use lifting lug see **9995185** on the left-hand side of the engine.

Tighten to light contact on the left hand side.

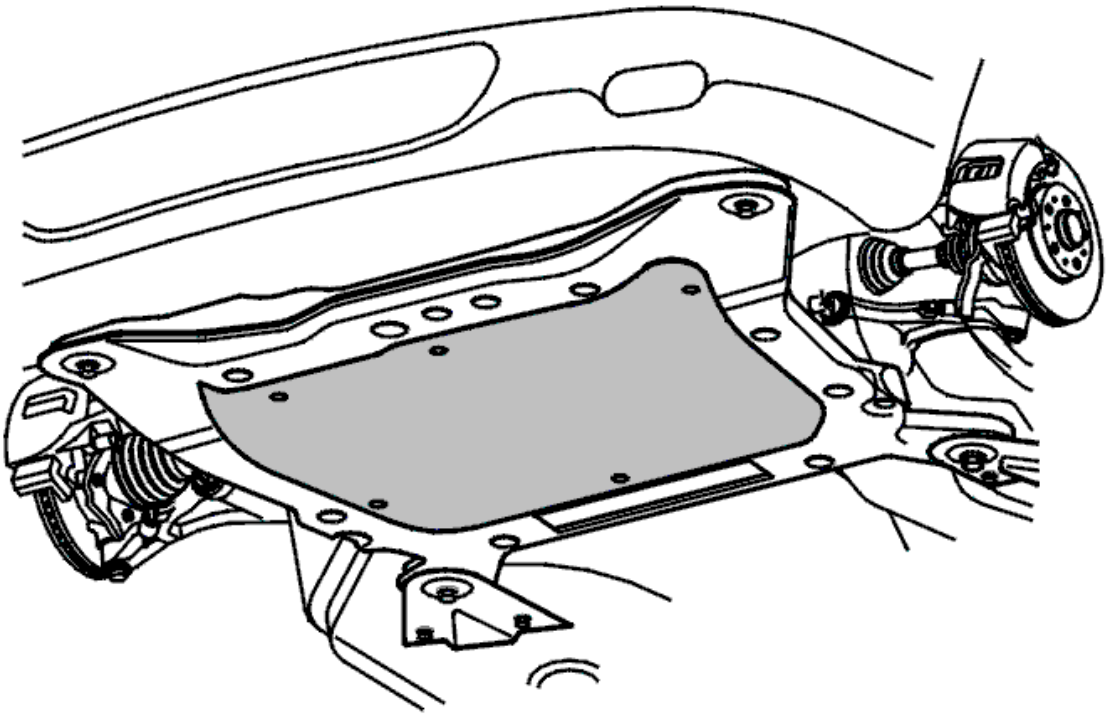

Fig. 168: Identifying Splash Guard Under Engine
Courtesy of VOLVO CARS CORPORATION

Remove:

- the front wheels
- the splash guard under the engine.

REMOVING THE SKID PLATE

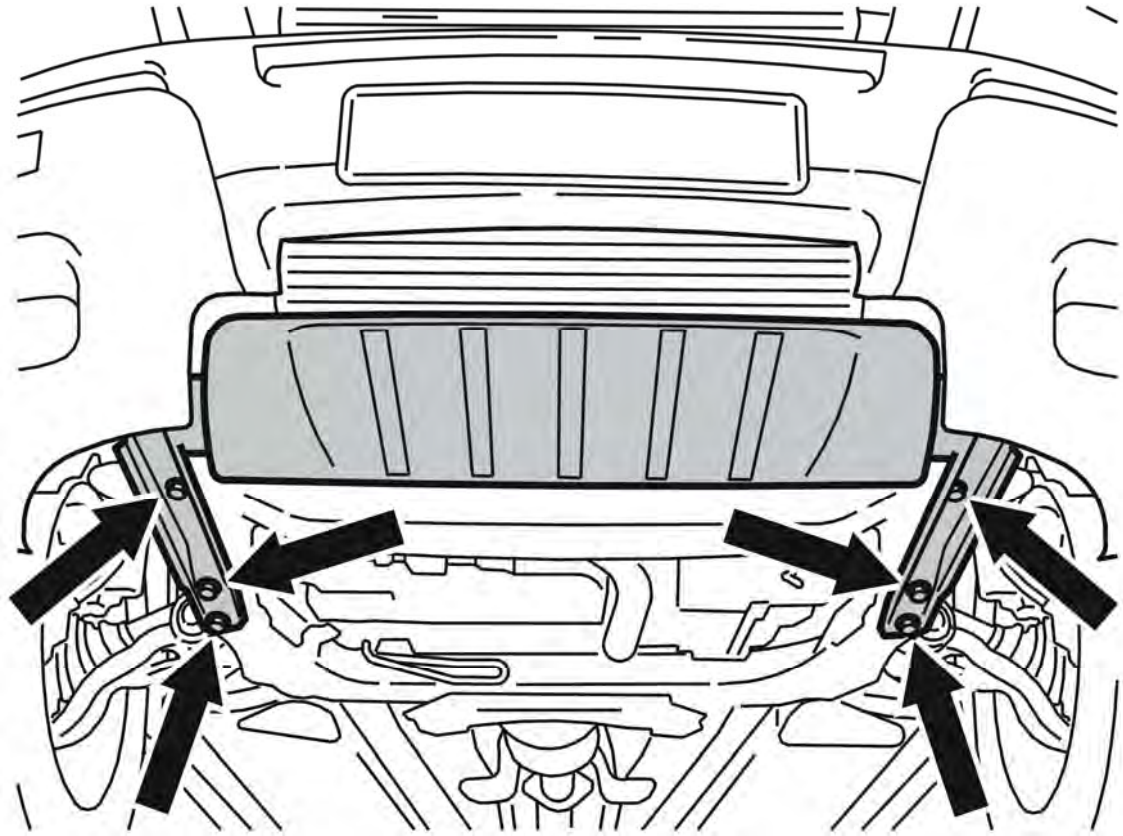

Fig. 169: Splash Guard, Protective Plate And Screws
Courtesy of VOLVO CARS CORPORATION

Remove the 6 screws.

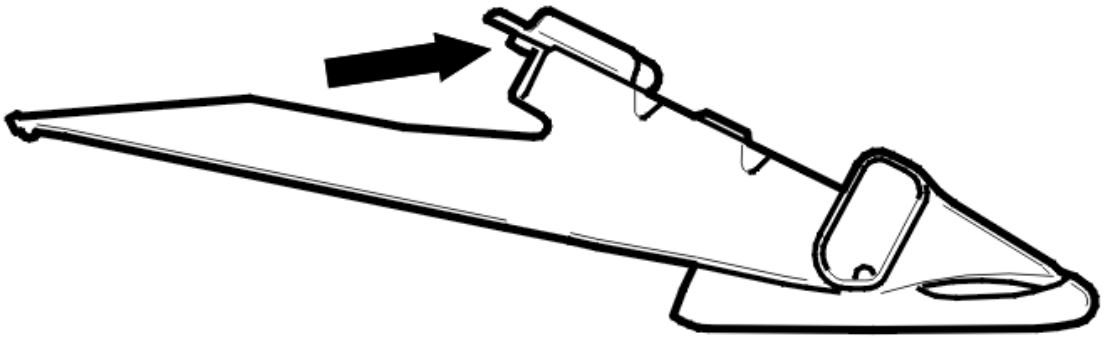

Fig. 170: Identifying Protective Plate
Courtesy of VOLVO CARS CORPORATION

Lift and slide the splash guard forward.

Remove the protective plate.

NOTE: **There is a guide sleeve on the upper mounting for the plate. This must be lifted slightly so that the panel can be slid forward.**

REMOVING COMPONENTS

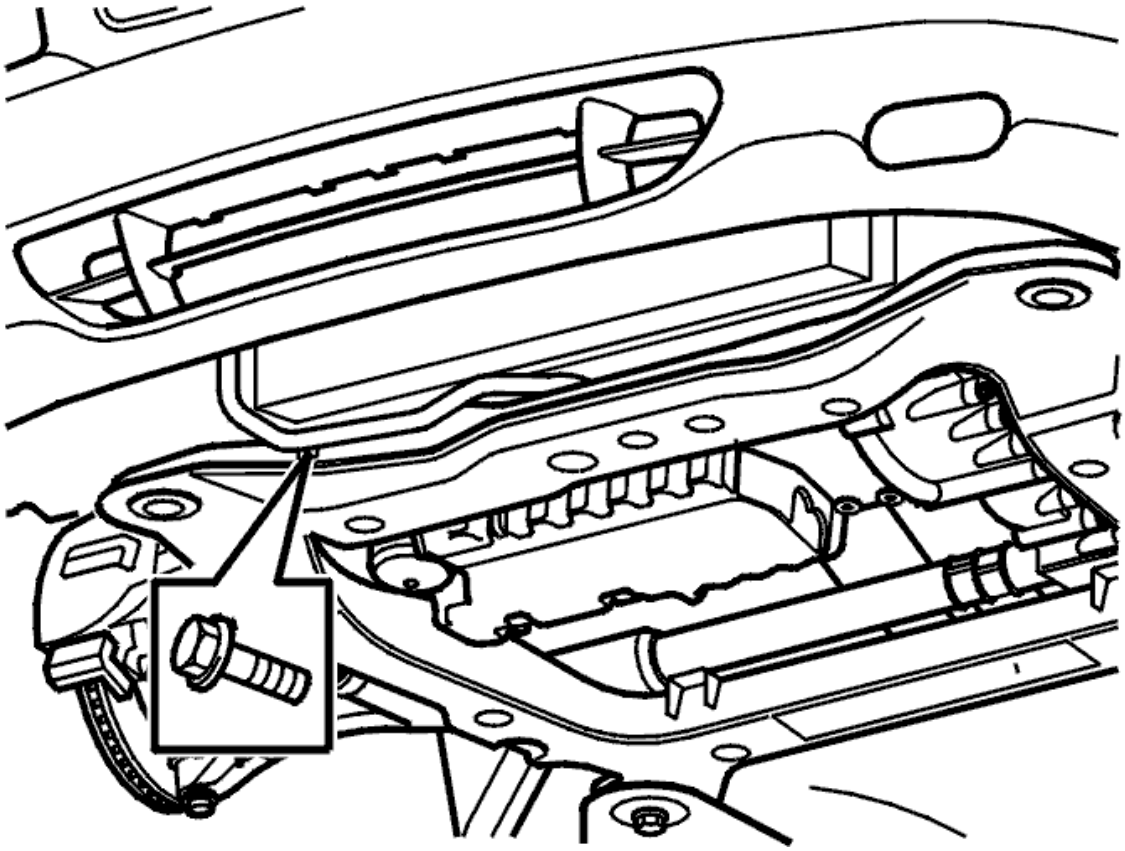

Fig. 171: Identifying Screw For Cable Duct
Courtesy of VOLVO CARS CORPORATION

Remove:

- the screw for the cable duct
- evacuation pipe mounting for the control module box from the sub-frame.

REMOVING THE LOWER SCREW FROM THE FRONT ENGINE PAD

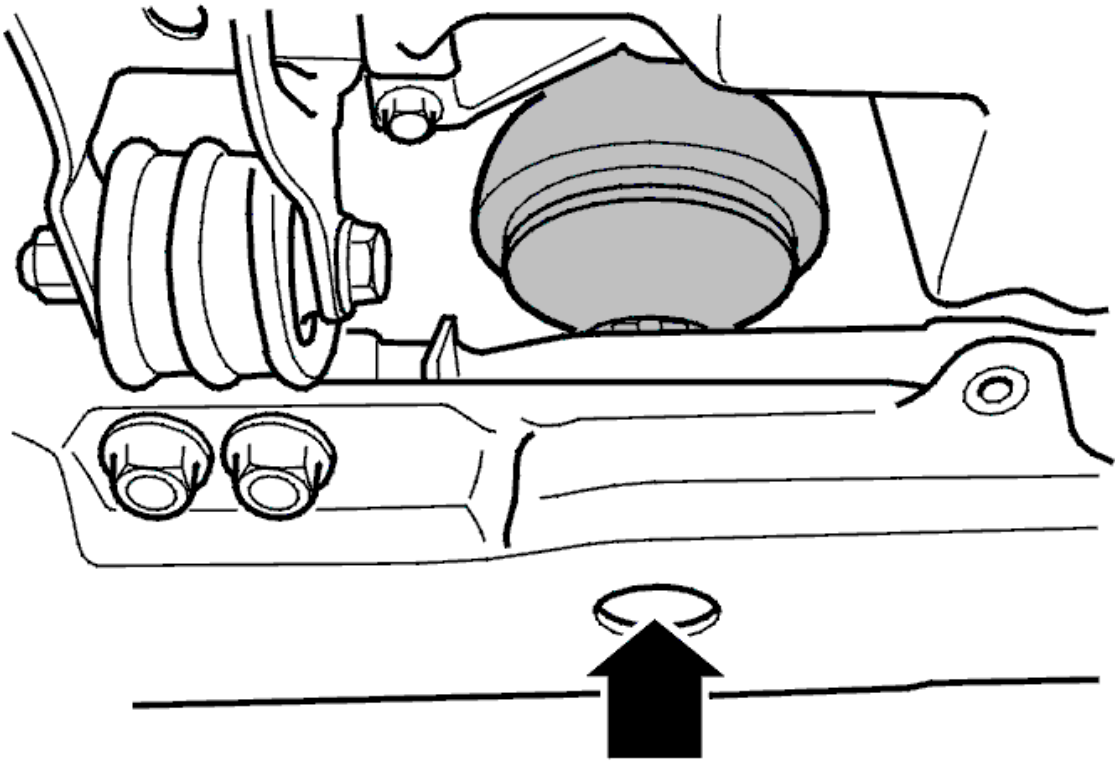

Fig. 172: Front Engine Pad Lower Screw
Courtesy of VOLVO CARS CORPORATION

Remove the lower screw for the front engine pad.

REMOVING THE LOWER TORQUE ROD

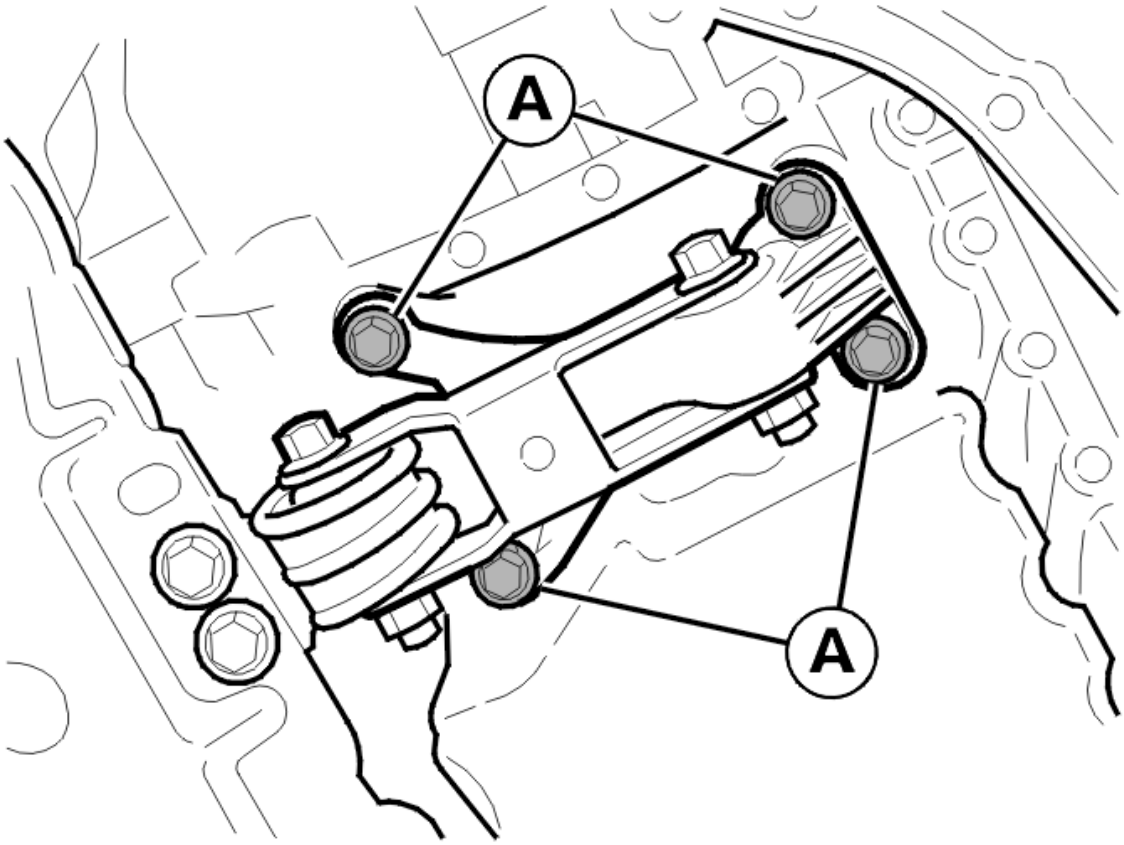

Fig. 173: Identifying Torque Rod To Engine Screws
Courtesy of VOLVO CARS CORPORATION

Remove 4 screws from the lower torque rod (A).

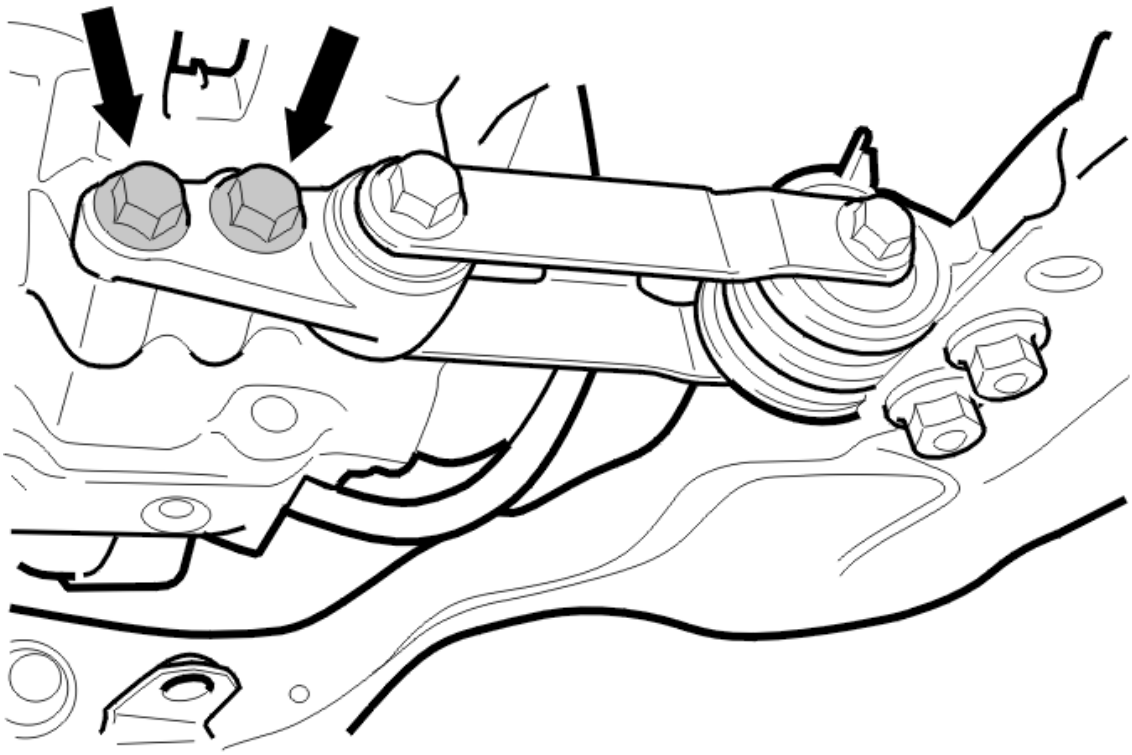

Fig. 174: Identifying Gearbox Bolts
Courtesy of VOLVO CARS CORPORATION

Remove the torque rod screws.

REMOVING THE VIBRATION DAMPER (6-CYLINDER ENGINES ONLY)

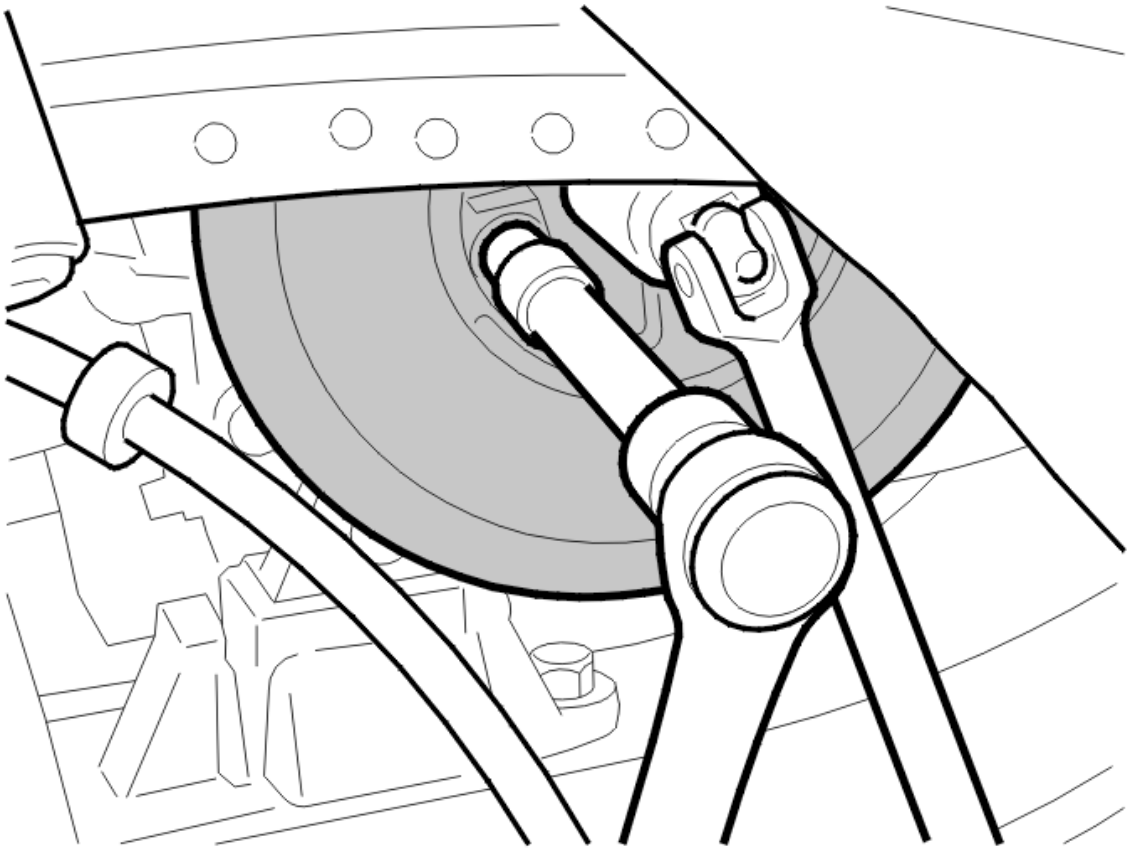

Fig. 175: Counterholding Crankshaft Central Nut
Courtesy of VOLVO CARS CORPORATION

Remove the four vibration damper screws. Counterhold the crankshaft central nut.

Remove:

- the vibration damper
- the auxiliaries belt.

REMOVING THE SCREWS FOR THE RIGHT-HAND ENGINE MOUNTING

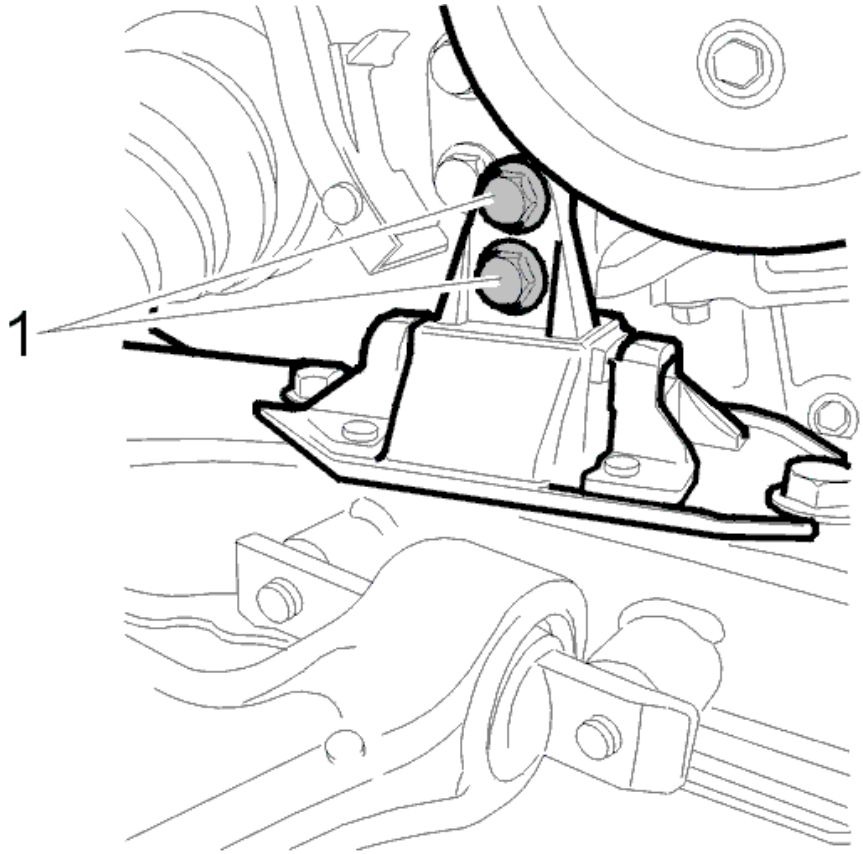

Fig. 176: Identifying Right-Hand Engine Mounting Screws
Courtesy of VOLVO CARS CORPORATION

Remove the screws holding the right-hand engine mounting in the engine.

REMOVING THE NUTS AND SCREW FOR THE STEERING GEAR

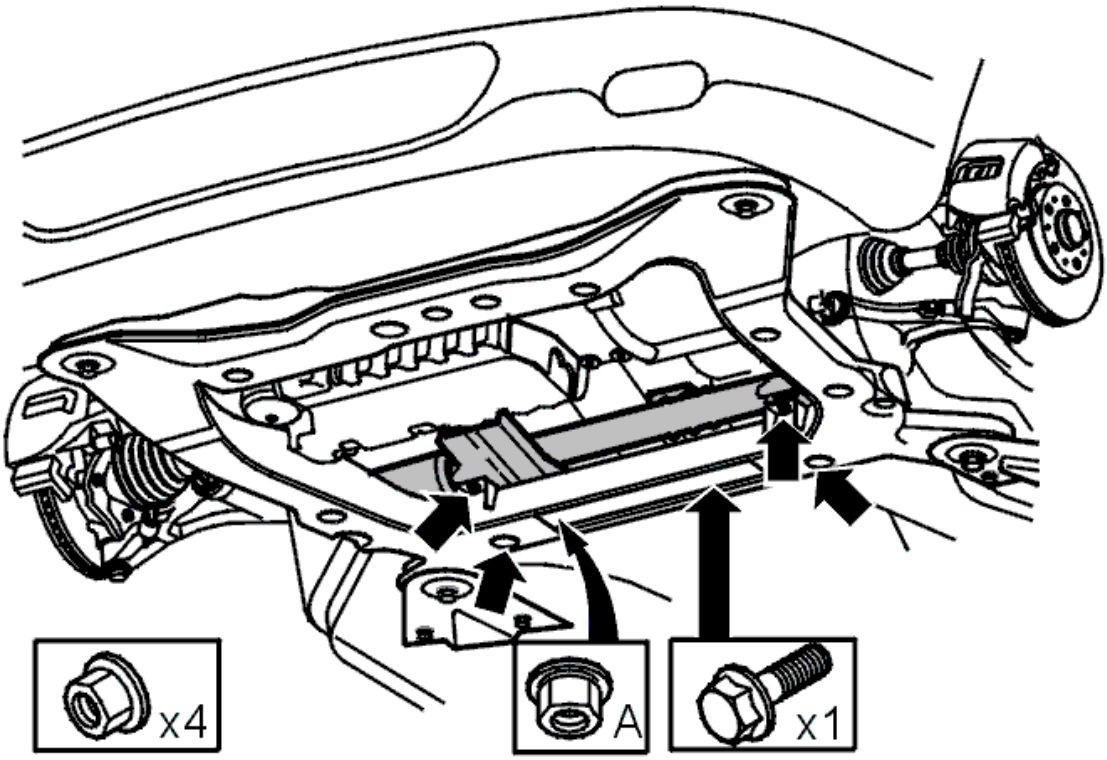

Fig. 177: Identifying Bolt And Nut Holding Steering Gear To Sub-Frame
Courtesy of VOLVO CARS CORPORATION

Remove:

- the four nuts and the screw holding the steering gear
- the nut (A), holding the lower half of the collision protection system. **(Applies only to right-hand drive cars)** .

REMOVING THE DELIVERY LINE FOR THE STEERING GEAR

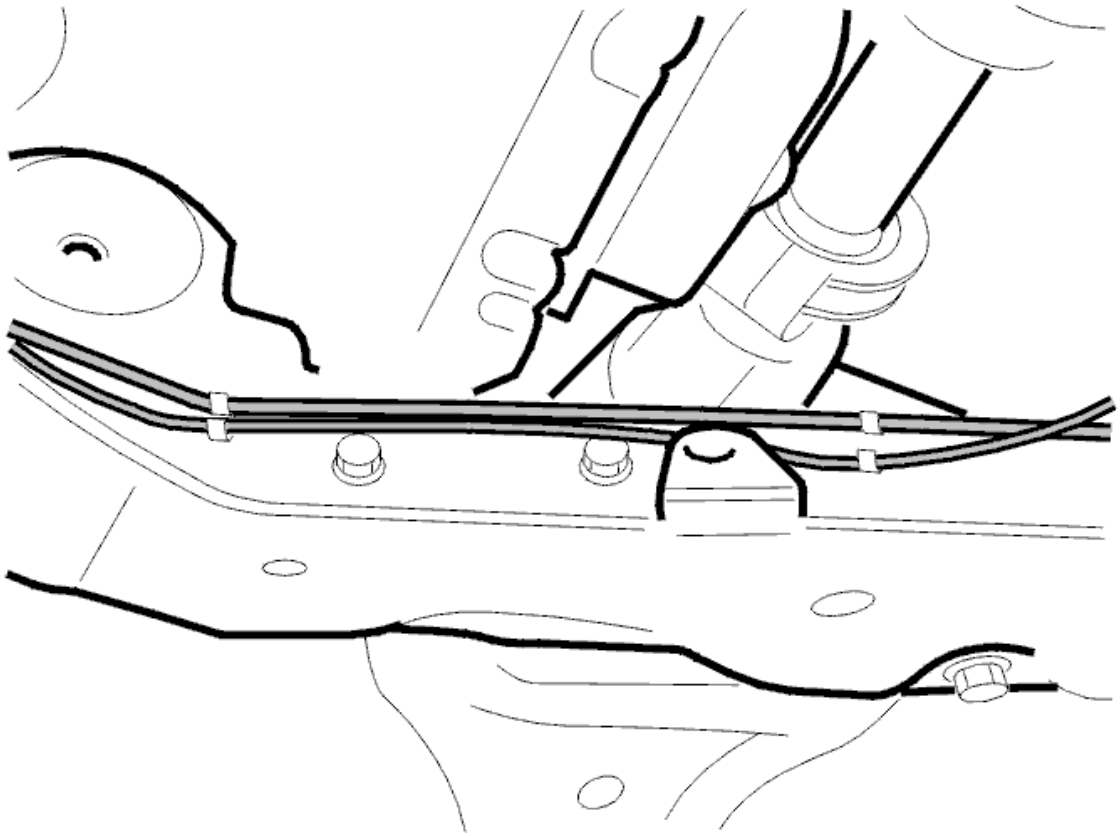

Fig. 178: Identifying Oil Pipe And Clamps For Steering Gear
Courtesy of VOLVO CARS CORPORATION

Remove the delivery line for the steering gear from the snap fastener on the sub-frame. Remove any fuel line to the engine block heater.

LOWERING THE SUB-FRAME

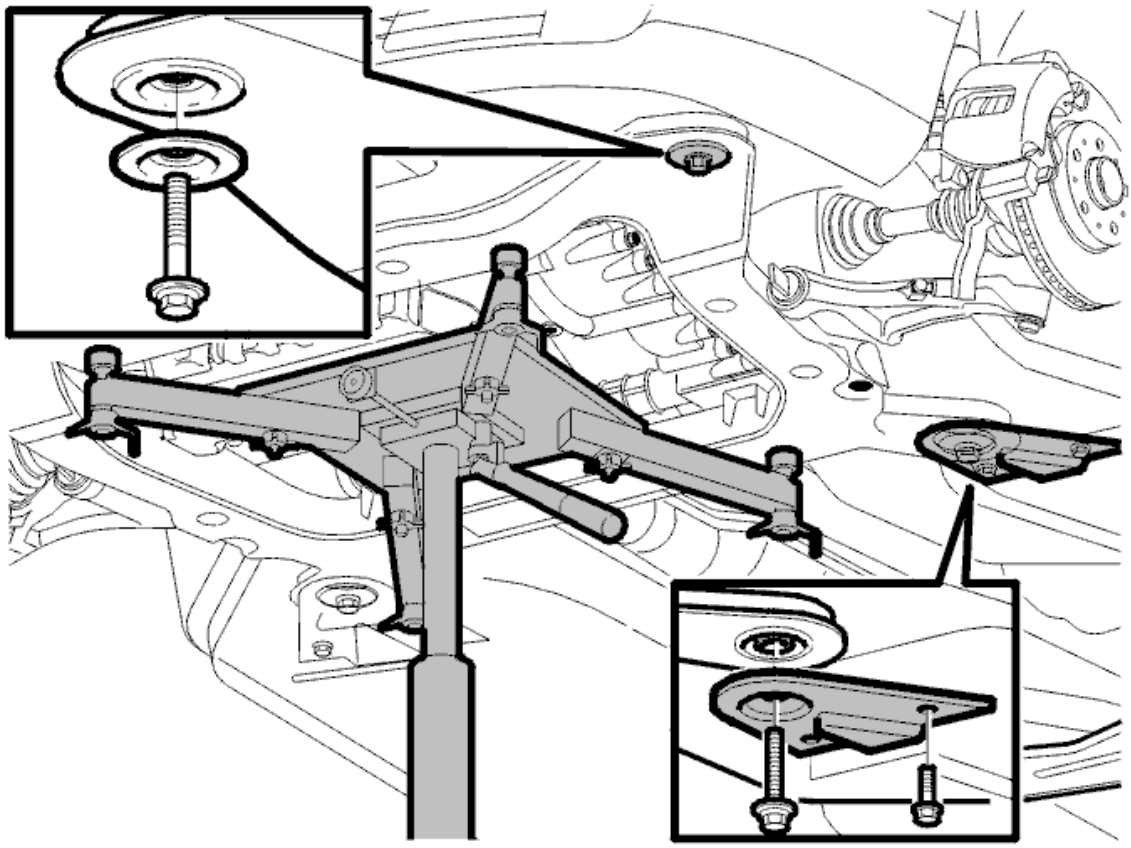

Fig. 179: Identifying Lifting Table, Sub-Frame Brackets, Screws And Washers
Courtesy of VOLVO CARS CORPORATION

Remove and hang the engine block heater (if applicable) on the left front mounting for the sub-frame.

Remove the fuel line for the engine block heater (if applicable) on the sub-frame from the snap fasteners.

Position a lifting table under the sub-frame.

Apply the lifting table so that the load is taken off the sub-frame screws.

Remove the sub-frame screws together with the accompanying brackets and washers.

Carefully lower the sub-frame approximately 50 mm.

NOTE: Ensure that the steering gear screws release from the sub-frame.

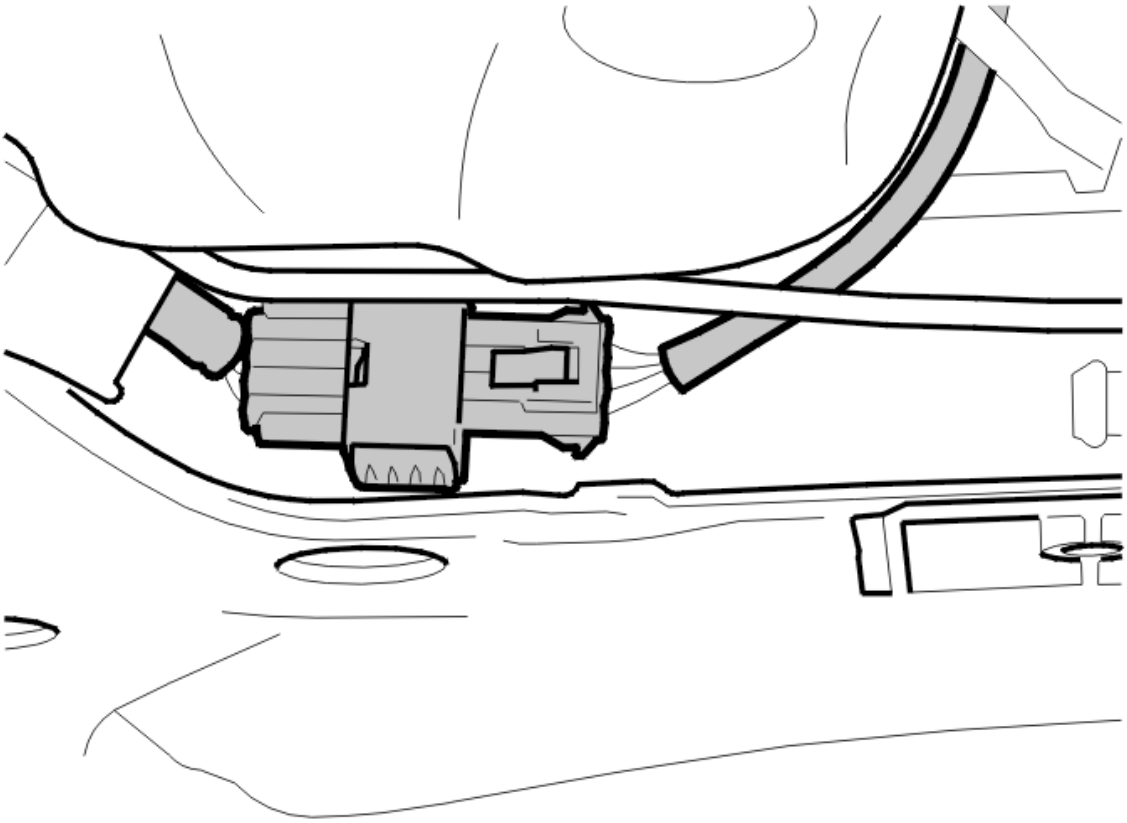

Fig. 180: Identifying Heated Oxygen Sensor (HO2S) Connector
Courtesy of VOLVO CARS CORPORATION

Remove the bracket for the heated oxygen sensor (HO2S) from the sub-frame.

Remove the heated oxygen sensor's wiring from the right side of the **sub-frame (only applies to 6 cylinder engines)** .

Lower the sub-frame a further 40 mm.

PRESSING OUT THE BUSHINGS

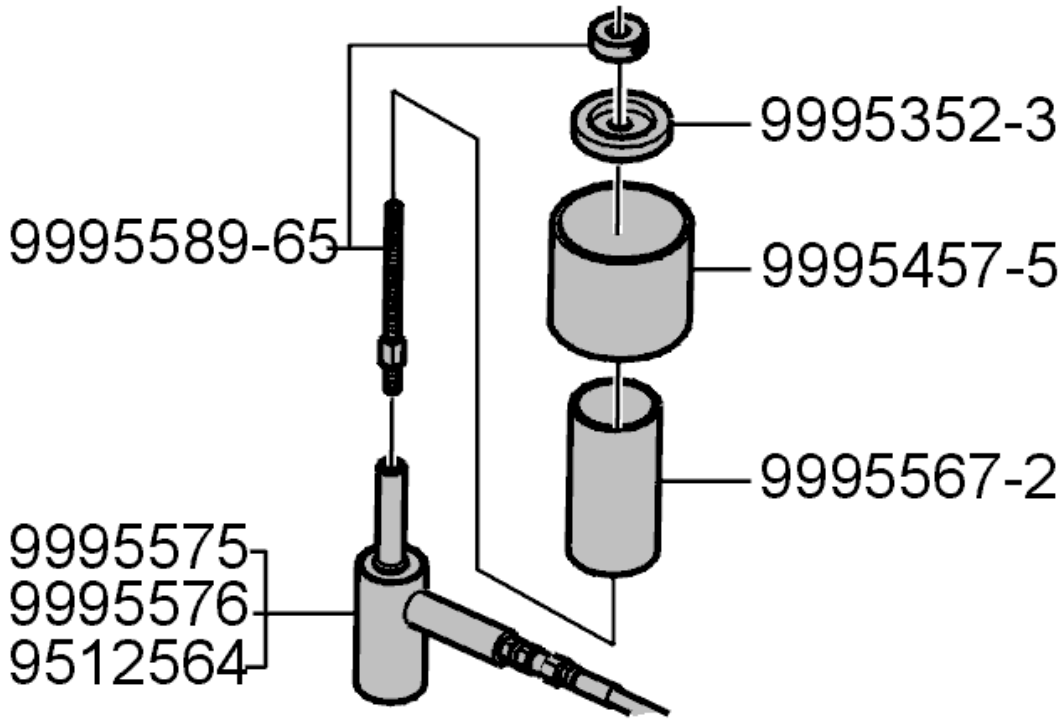

Fig. 181: Identifying Special Tools To Press Bushings
Courtesy of VOLVO CARS CORPORATION

Install the hydraulic tool and press sleeve as illustrated.

Press the bushings out of the sub-frame, see the following illustration.

NOTE: It is arbitrary which of tools see 9995575 , see 9995576 and see 9512564 is used.

MARKING FOR THE BUSHING ON THE SUB-FRAME

Fig. 182: Identifying Marking For The Bushing On The Sub-Frame
Courtesy of VOLVO CARS CORPORATION

Clean the hole for the bushing in the sub-frame.

Press out the bushing by hand.

CAUTION: The markings on the bushing and sub-frame must be positioned opposite each other.

MARKING THE LEFT-HAND REAR BUSHING

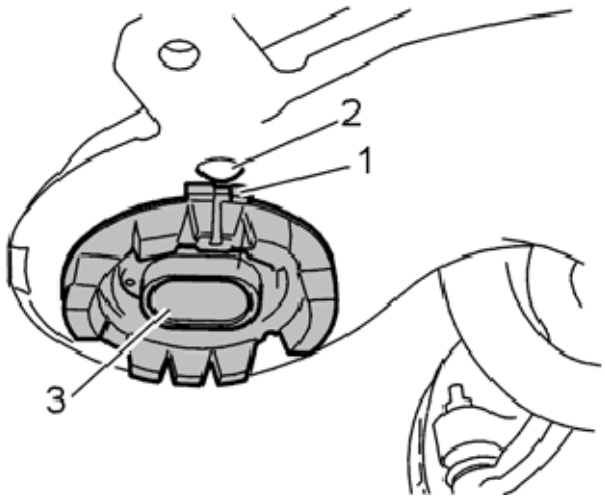

Fig. 183: Identifying Left-Hand Rear Bushing
Courtesy of VOLVO CARS CORPORATION

NOTE: The left-hand rear bushing on the sub-frame is a different version to the other three bushings. The hole in the center of the bushing is oval. The oval must be positioned lengthways to the car, as illustrated.

CAUTION: The markings on the bushing and sub-frame must be positioned opposite each other.

PRESSING IN THE BUSHINGS

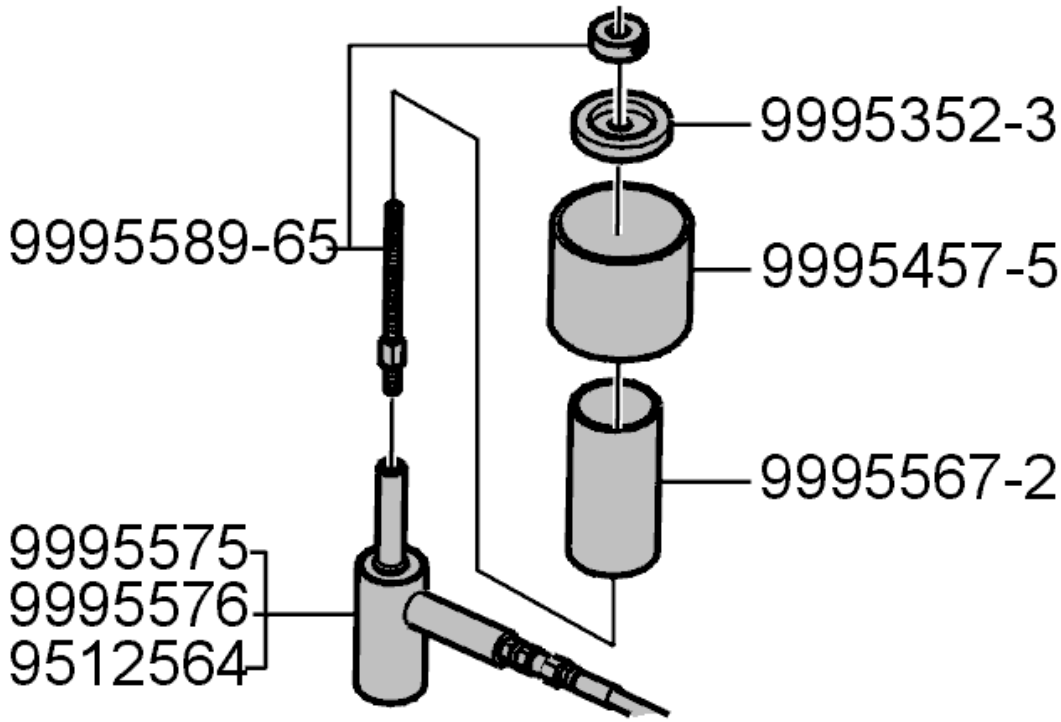

Fig. 184: Identifying Special Tools To Press Bushings
Courtesy of VOLVO CARS CORPORATION

Install the hydraulic tool and press sleeve as illustrated.

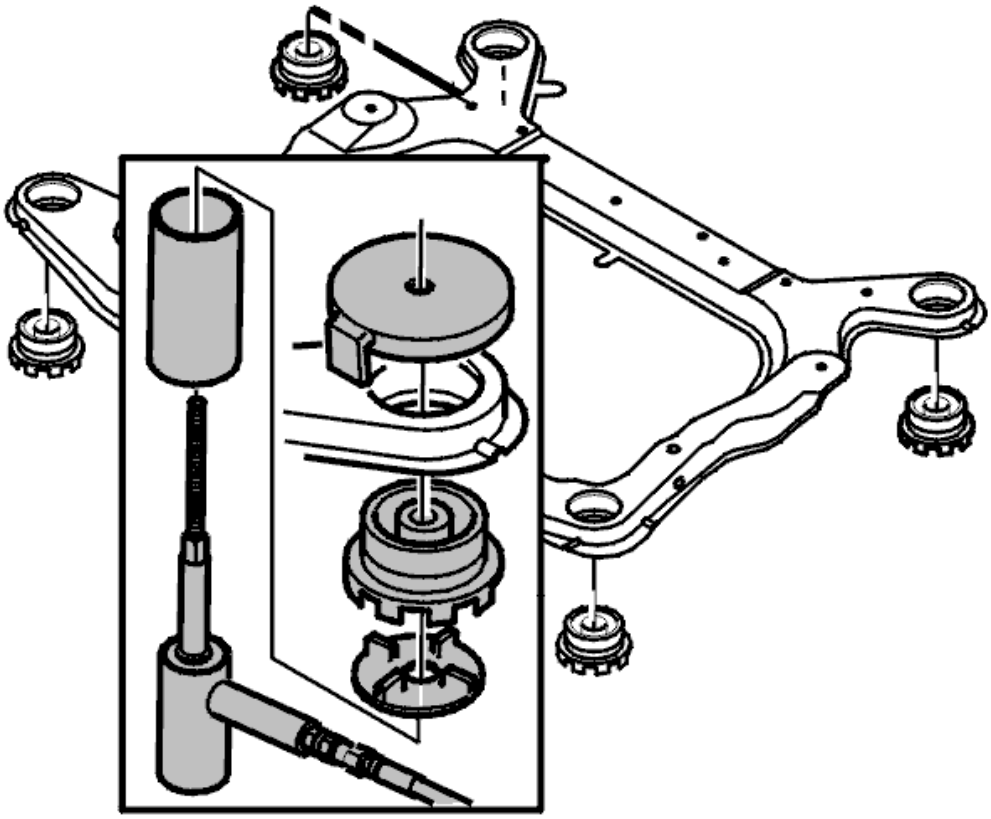

Fig. 185: Identifying Bushings & Sub-Frame Assembly
Courtesy of VOLVO CARS CORPORATION

Press the bushings into the sub-frame, see the following illustration.

NOTE: It is arbitrary which of tools see 9995575 , see 9995576 and see 9512564 is used.

INSTALLING THE WIRING FOR THE HEATED OXYGEN SENSOR (HO2S)

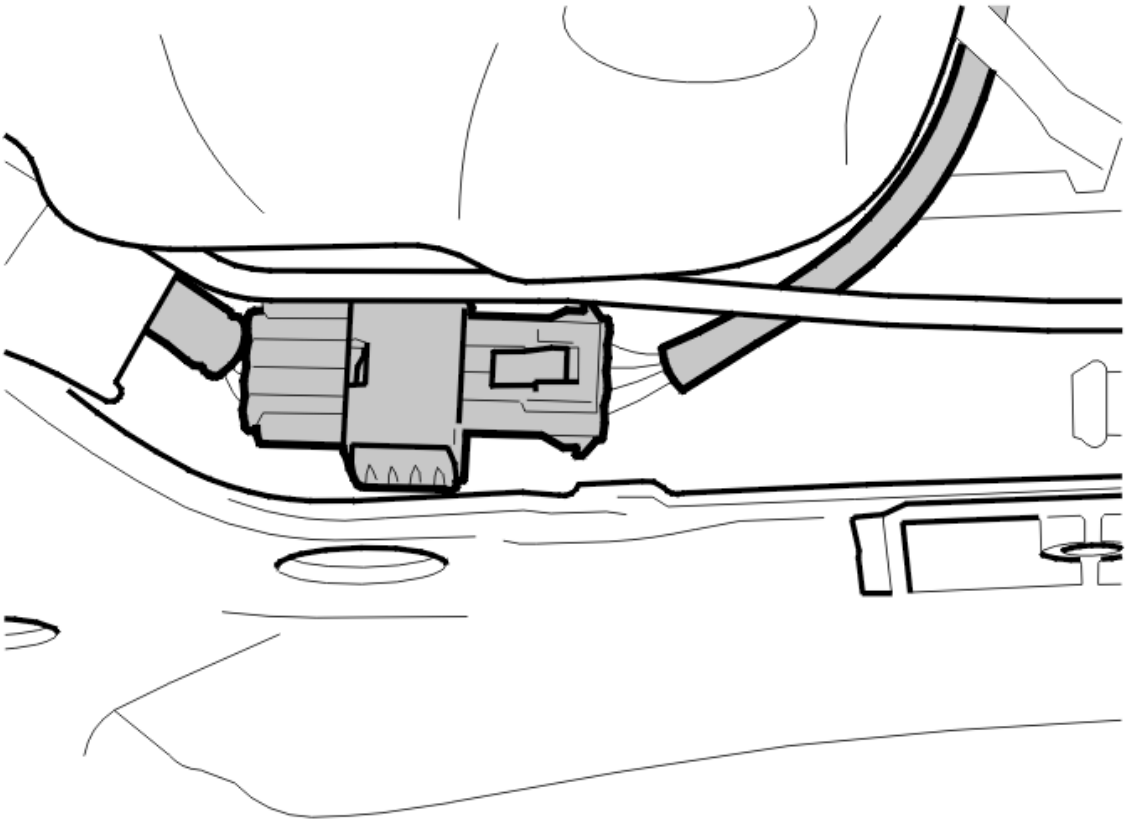

Fig. 186: Identifying Heated Oxygen Sensor (HO2S) Connector
Courtesy of VOLVO CARS CORPORATION

Lift up the sub-frame slightly (approximately 50 mm from the car body).

Install the bracket for the heated oxygen sensor (HO2S) on the sub-frame.

Install the heated oxygen sensor (HO2S) wiring on the right hand side of the sub-frame (**applies to 6- cylinder engines only**).

LIFTING THE SUB-FRAME

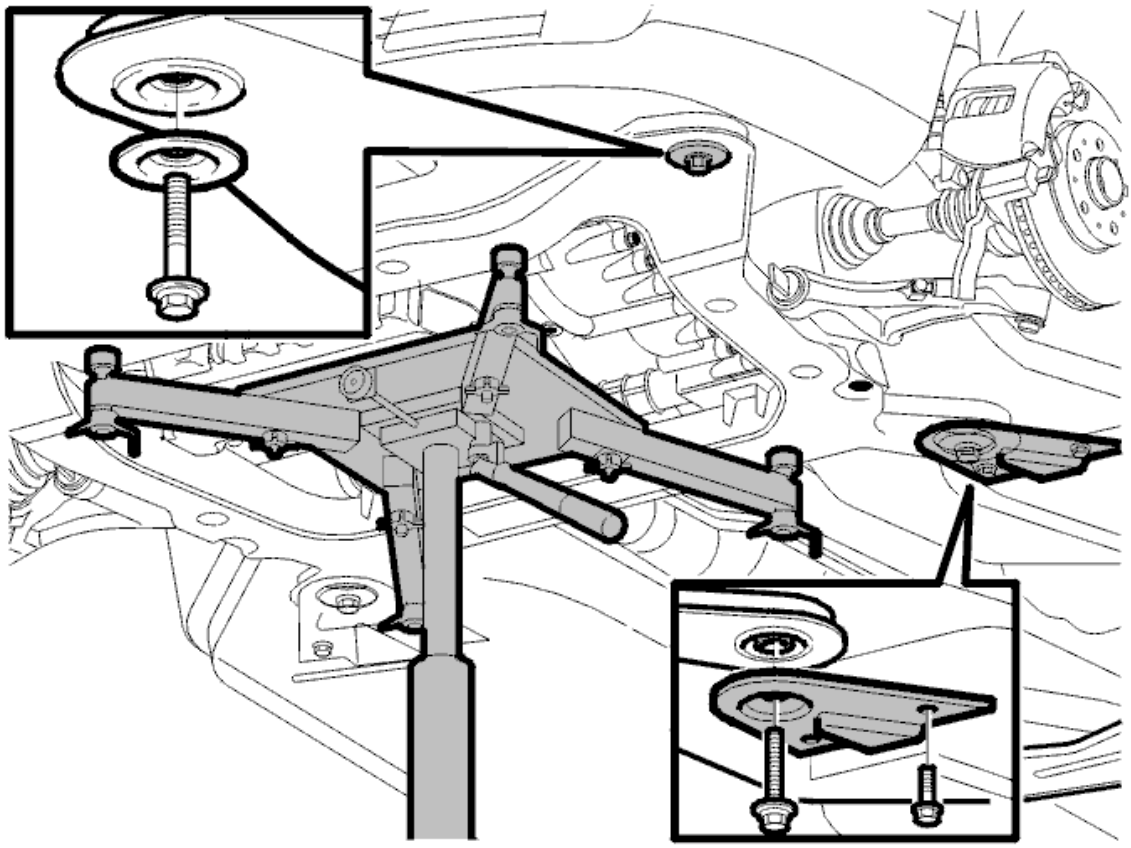

Fig. 187: Identifying Lifting Table, Sub-Frame Brackets, Screws And Washers
Courtesy of VOLVO CARS CORPORATION

Lift the sub-frame up completely.

At the same time locate the mounting screws for the steering gear on the sub-frame.

Loosely install the sub-frame brackets together with the washers.

Install the four screws for the sub-frame. Use new screws. **Do not tighten yet** .

First tighten the screws on the left side of the sub-frame. Tighten to **105 Nm** . Angle tighten to **120°** . Then tighten the right-hand side to the same value as the left side

Finally tighten the bracket screws. Tighten to **50 Nm** . Install the engine block heater (if applicable) on the left front mounting for the sub-frame.

CAUTION: Tighten the left-hand side first. The sub-frame guides are on the left-hand side.

INSTALLING THE NUTS AND SCREW FOR THE STEERING GEAR

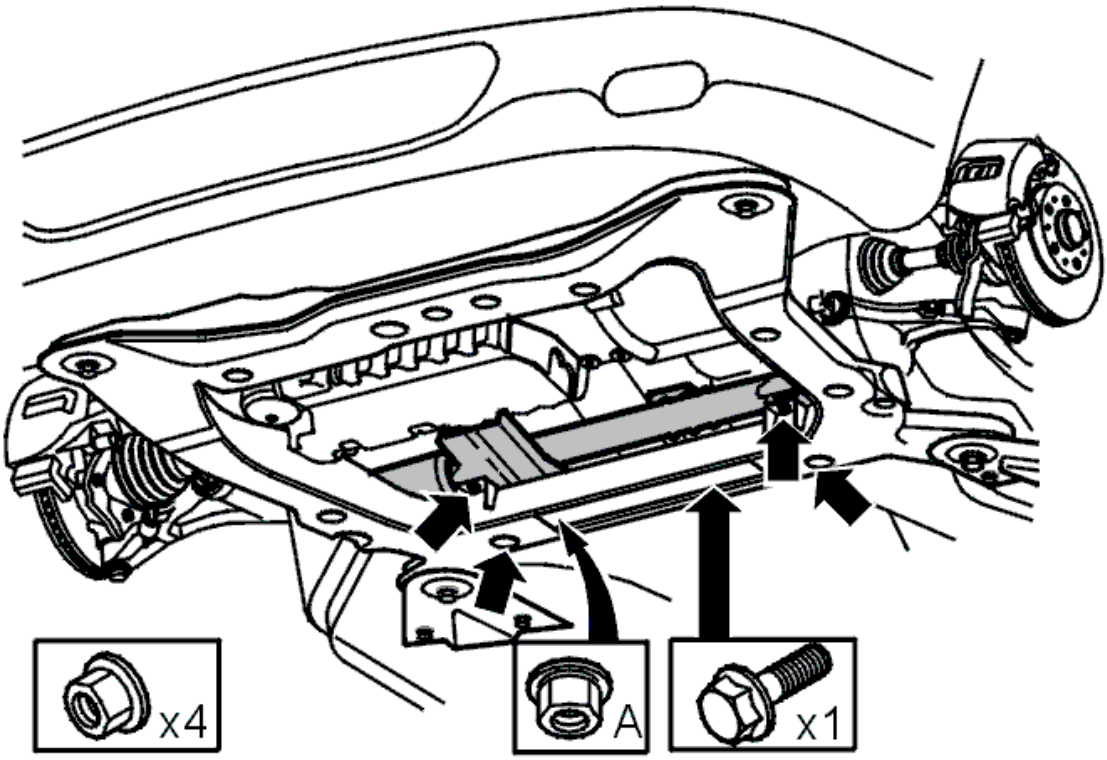

Fig. 188: Identifying Bolt And Nut Holding Steering Gear To Sub-Frame
Courtesy of VOLVO CARS CORPORATION

Install the four nuts and the screw holding the steering gear. Use new nuts and a new screw. Tighten to **50 Nm** .

Applies to right-hand drive cars:

Install nut (A), holding the lower half of the collision protection. Tighten to **50 Nm** .

INSTALLING THE DELIVERY LINE FROM THE STEERING GEAR

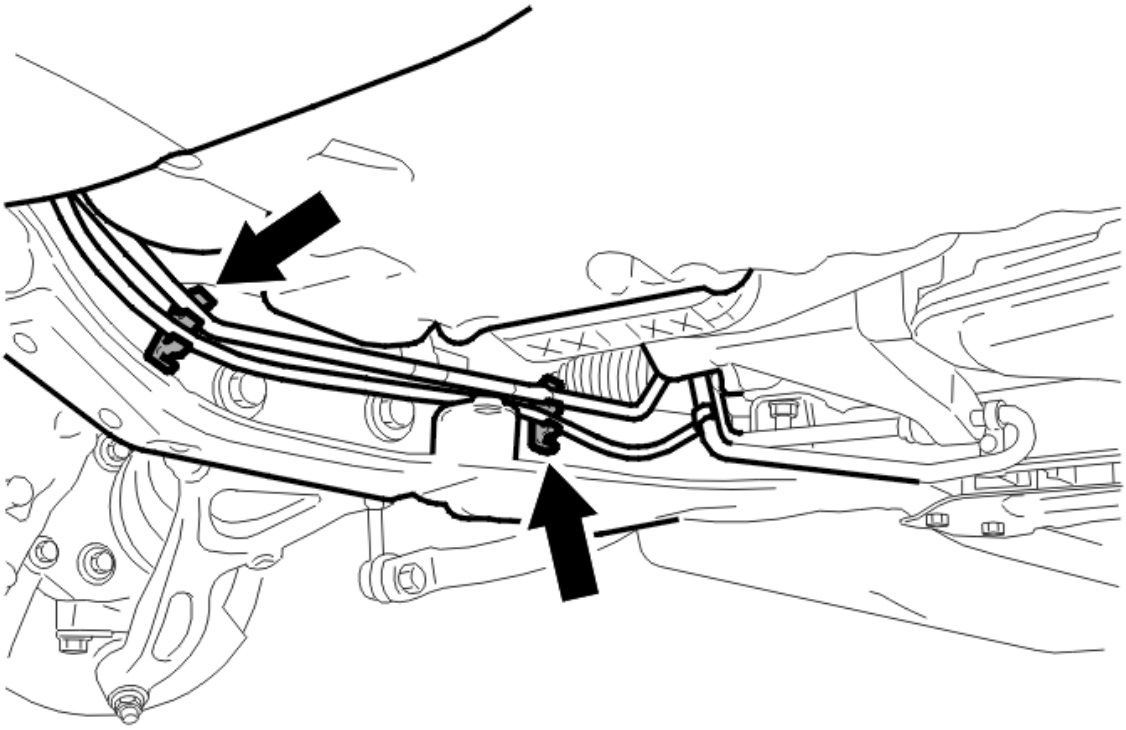

Fig. 189: Identifying Pipes and Screw Clips
Courtesy of VOLVO CARS CORPORATION

Install the delivery line from the steering gear on the mountings on the sub-frame. Install any fuel line for the engine block heater.

INSTALLING THE SCREWS FOR THE ENGINE MOUNTING TO THE ENGINE

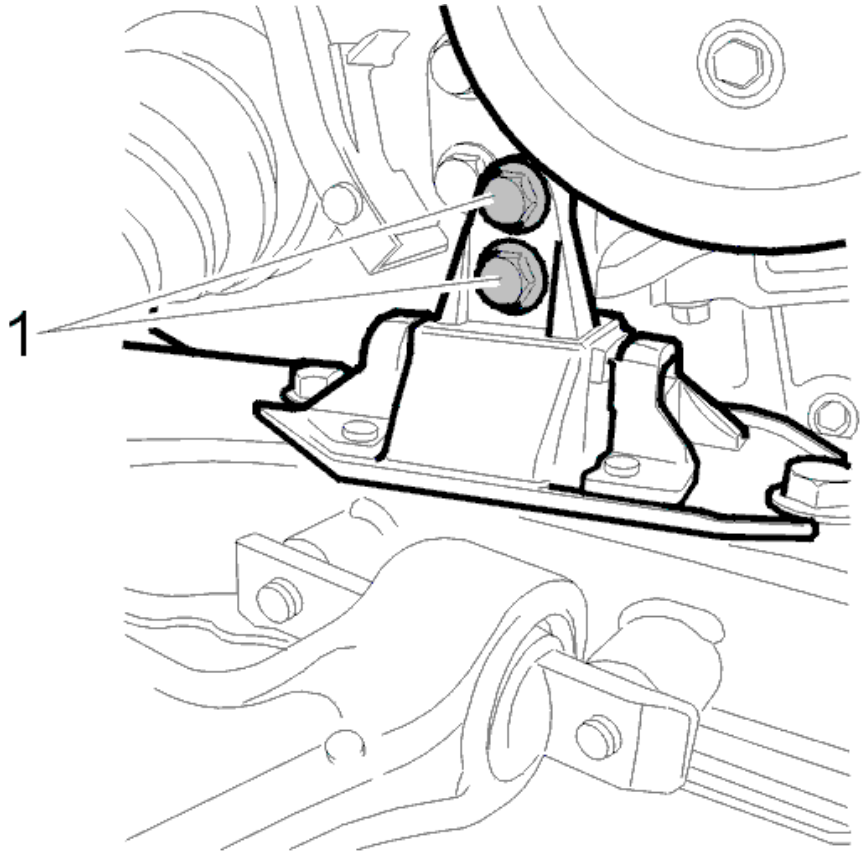

Fig. 190: Identifying Right-Hand Engine Mounting Screws
Courtesy of VOLVO CARS CORPORATION

Reinstall the screws holding the engine mounting to the engine. Tighten to **35 Nm** . Angle-tighten **90°** .

NOTE: Use new screws.

INSTALLING THE VIBRATION DAMPER (6-CYLINDER ENGINES ONLY)

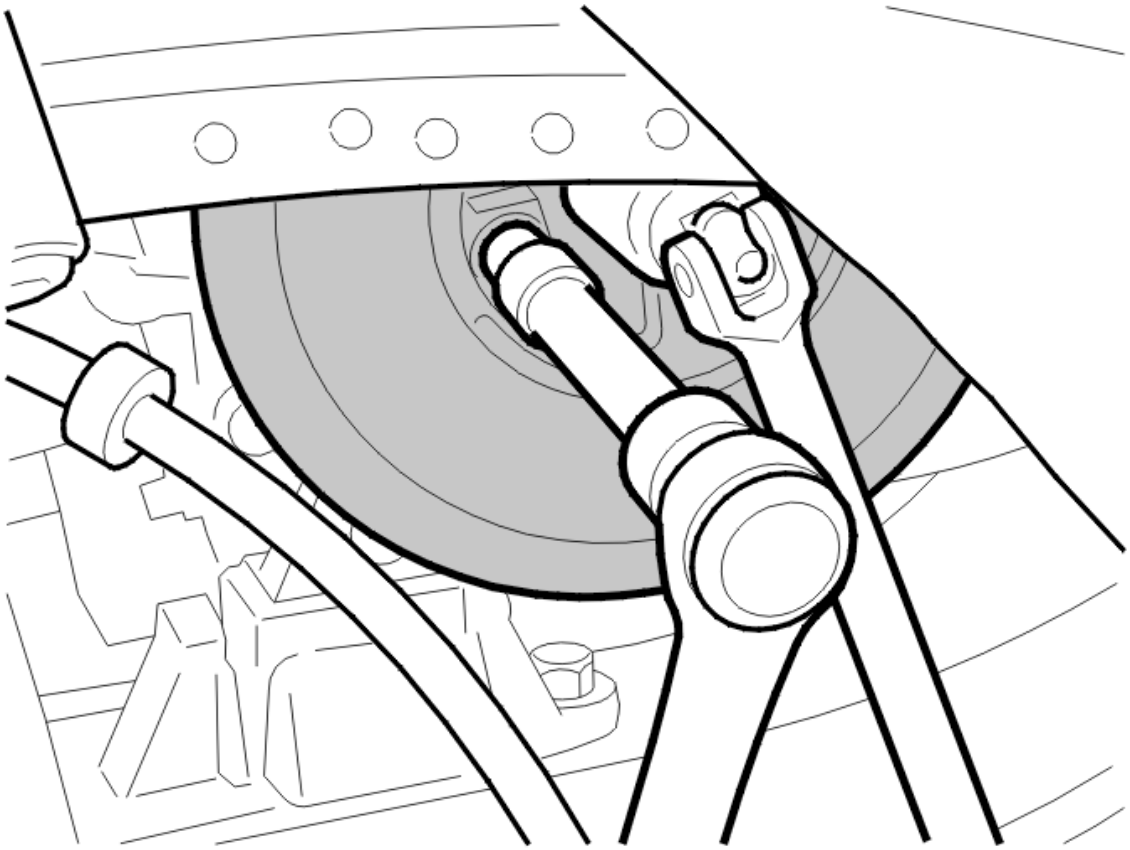

Fig. 191: Counterholding Crankshaft Central Nut
Courtesy of VOLVO CARS CORPORATION

Install the vibration damper using new screws. Tighten to **35 Nm** . Angle-tighten **50°** .

Use the crankshaft center nut as a counterhold.

TIGHTENING THE SCREWS FOR THE LOWER TORQUE ROD

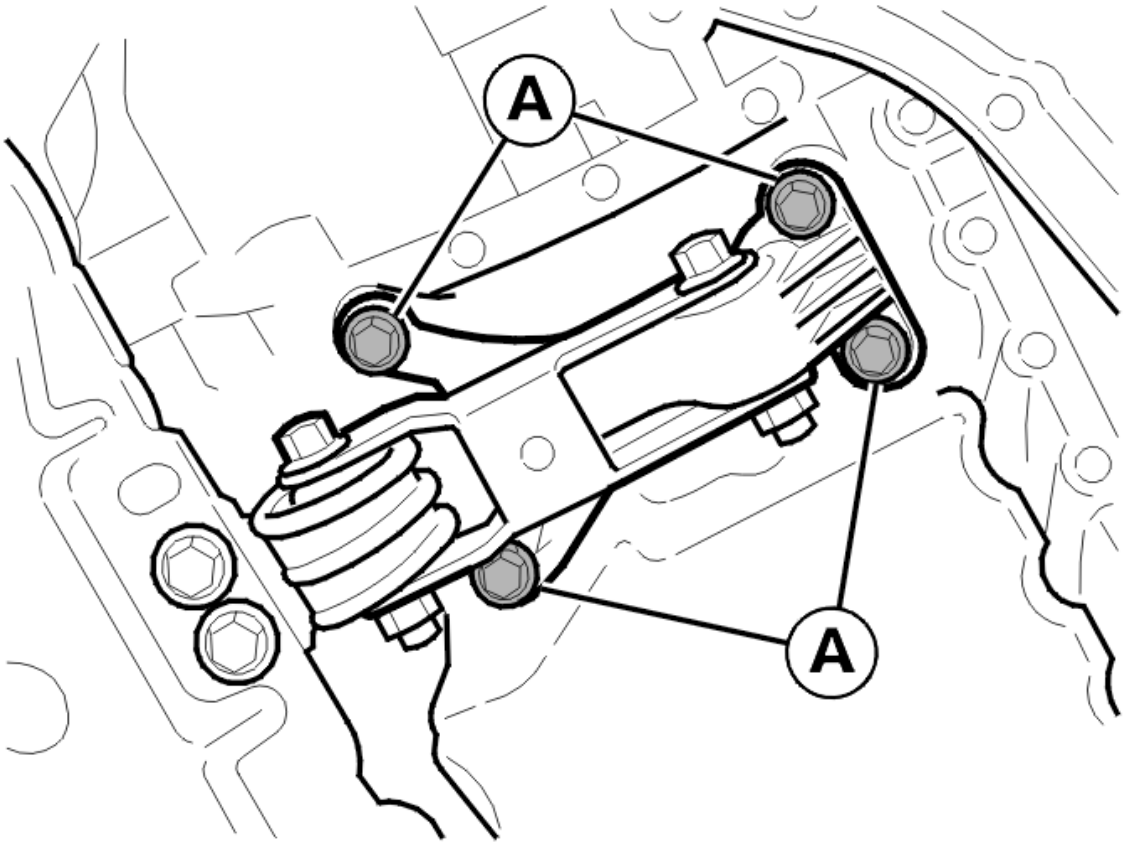

Fig. 192: Identifying Torque Rod To Engine Screws
Courtesy of VOLVO CARS CORPORATION

Tighten the 4 screws (A) for the lower torque rod. Tighten to **50 Nm** .

INSTALLING THE SCREW FOR THE FRONT ENGINE PAD

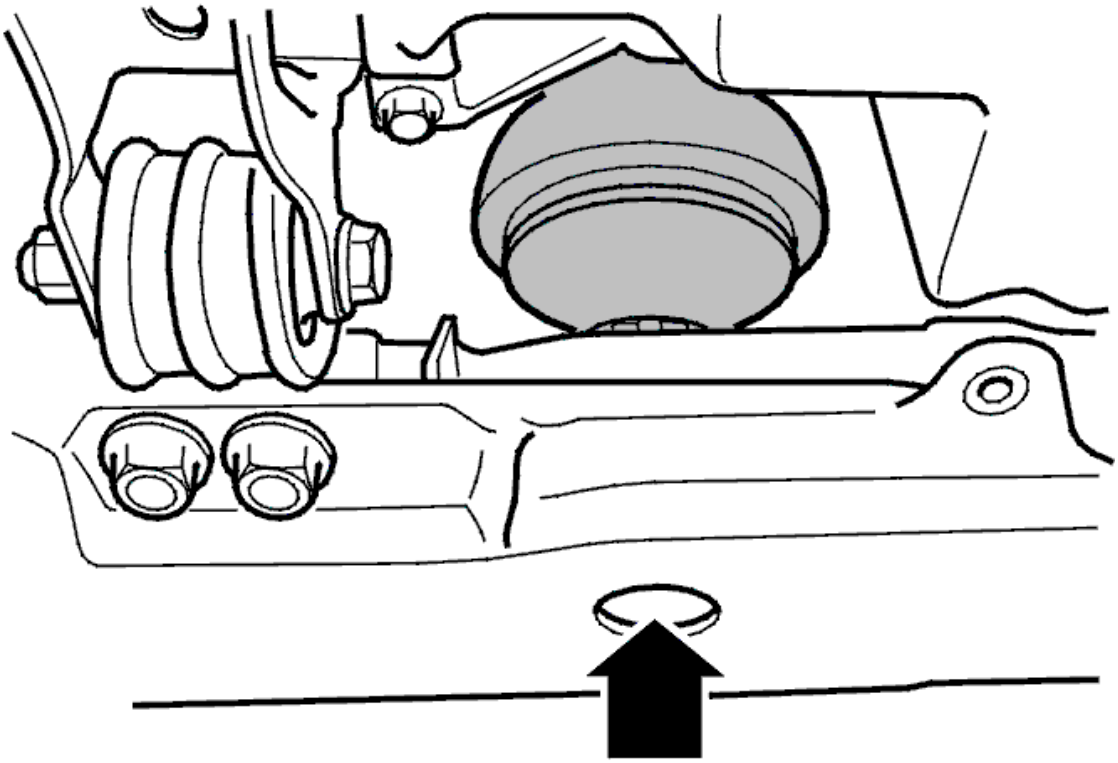

Fig. 193: Front Engine Pad Lower Screw
Courtesy of VOLVO CARS CORPORATION

Install the front engine pad screw. Tighten to **50 Nm** .

See Sub frame, adjustment:**SUBFRAME, ADJUSTING**

INSTALLING THE PROTECTIVE COVER

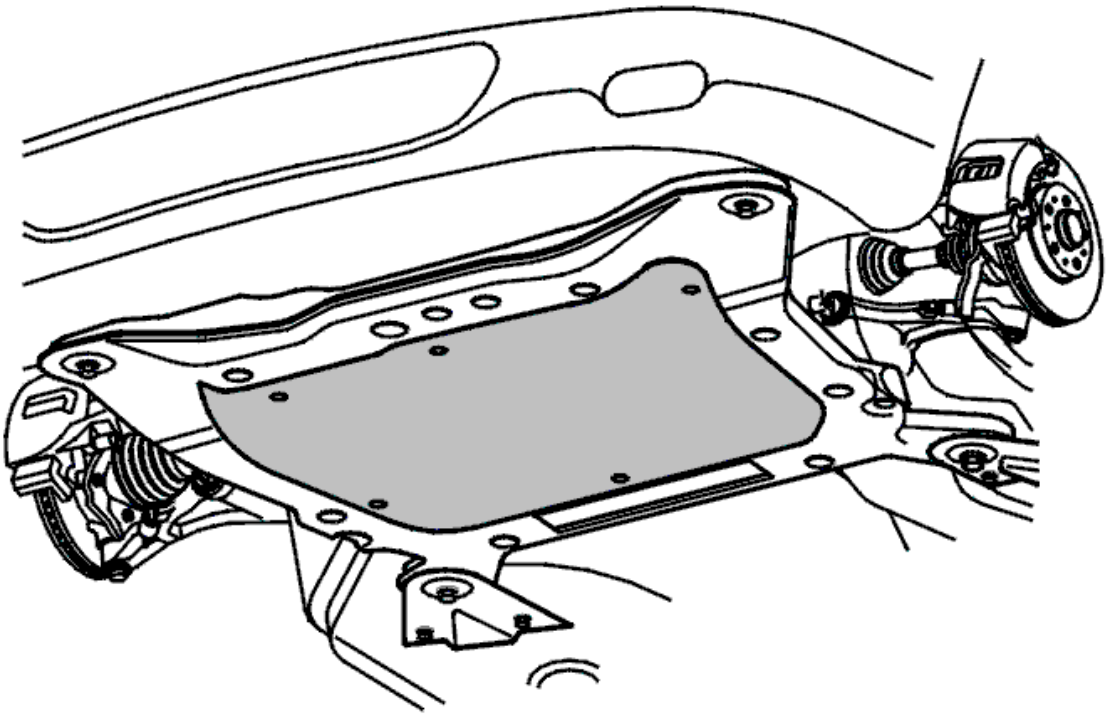

Fig. 194: Identifying Splash Guard Under Engine
Courtesy of VOLVO CARS CORPORATION

Install the splashguard under the engine.

REMOVING LIFTING TOOLS

Remove:

- lifting tool see **9995716** with supplementary kit see **9997070** .
- lifting hooks see **9995460** .

Applies only to the T6:

Remove:

- lifting eye see **9995185**
- lifting eye see **9997018** .

FINISHING

Install the wheels, see **INSTALLING WHEELS** .

Install the engine cover.

REPLACING THE TORQUE ROD

REMOVAL

REMOVING THE TORQUE ROD

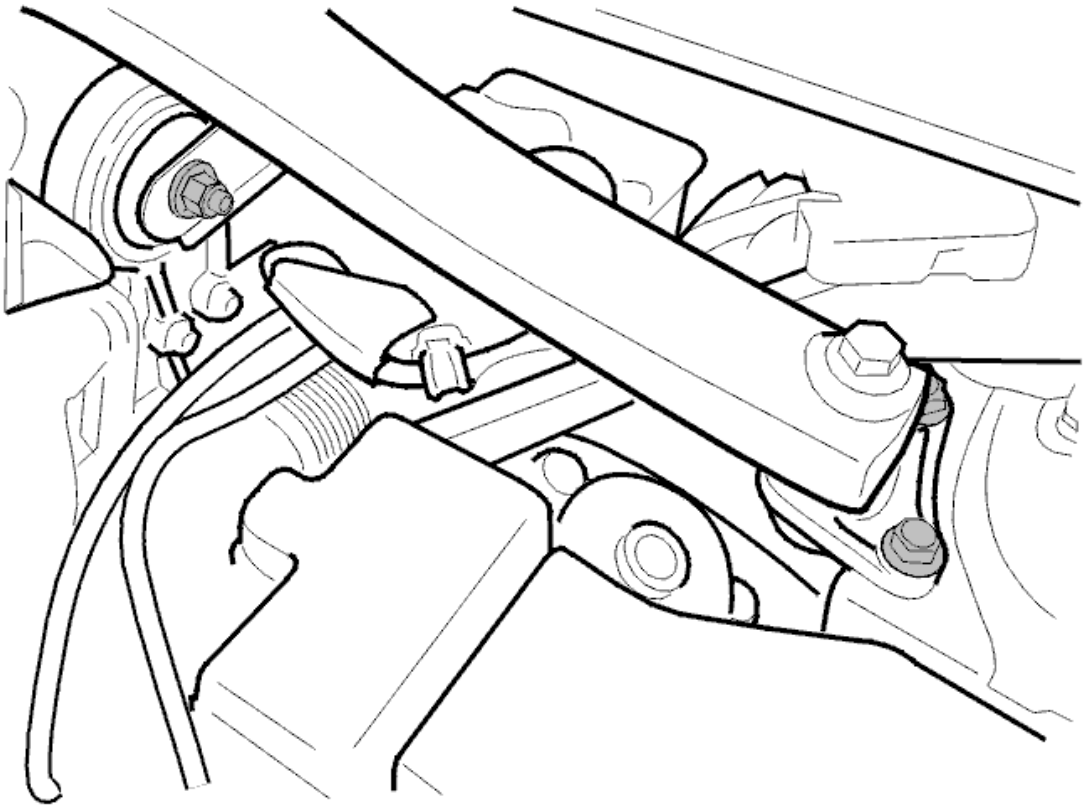

Fig. 195: Engine Compartment Stabilizer (Torque Rod)
Courtesy of VOLVO CARS CORPORATION

Remove

- the screw for the torque rod mounting in the torque control arm and bracket on the engine
- the screws at the suspension turrets
- the torque rod.

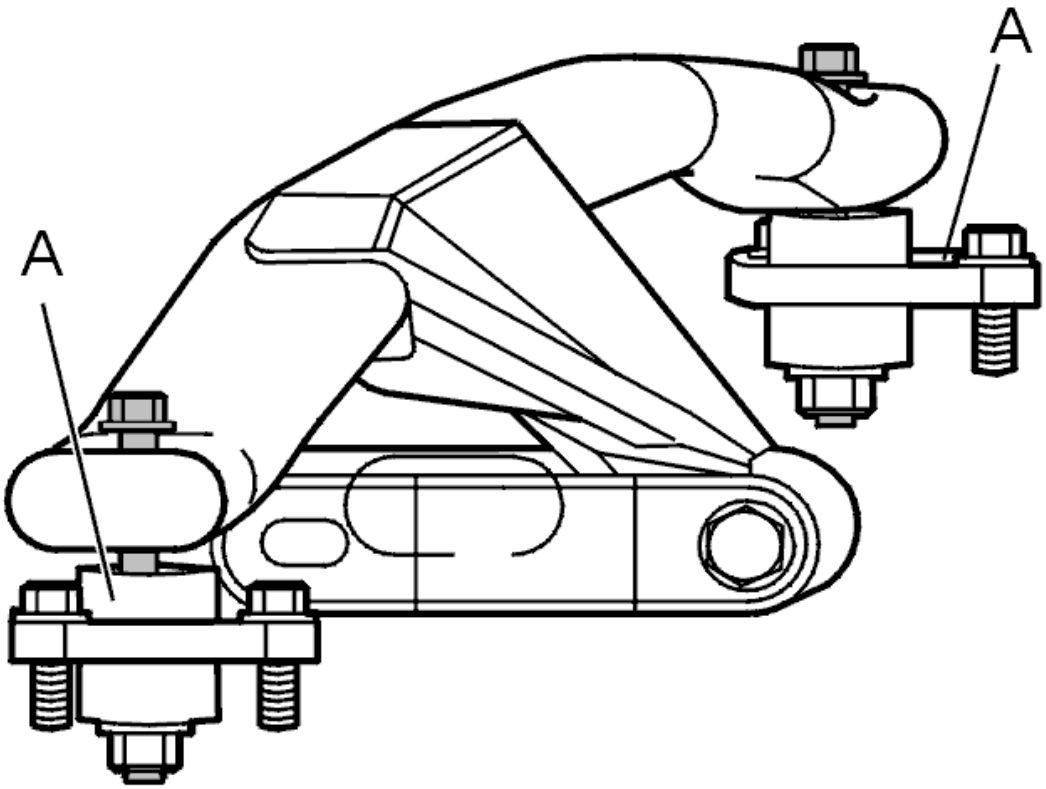

Fig. 196: Identifying Torque Rod And Brackets
Courtesy of VOLVO CARS CORPORATION

Transfer

- the brackets (A) on the left and right-hand sides to the new torque rod. Do not tighten yet.

INSTALLATION

INSTALLING THE TORQUE ROD

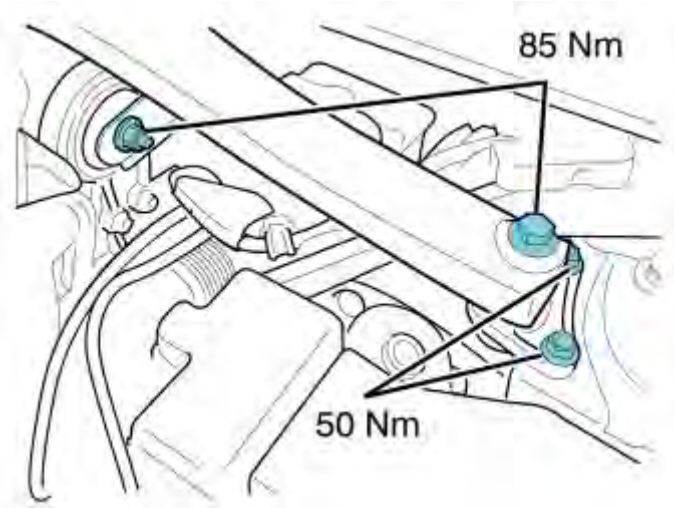

Fig. 197: Identifying Torque Rod And Bolts With Torque Specifications
Courtesy of VOLVO CARS CORPORATION

Install

- the torque rod
- the screws for the brackets at the suspension turrets. Tighten to **50 Nm** .
- the screw and nut for the torque rod mounting in the torque control arm/bracket on the engine. Tighten to **85 Nm** .

Tighten the torque rod to the brackets to **85 Nm** .

ENGINE MOUNTING (B5254T2; 2003-2007)

ENGINE PAD FRONT, REPLACING

Special tools:

see **9995716**

see **9995460**

see **9997070**

NOTE: As the illustrations in this service information are used for different model years and / or models, some variation may occur. However, the essential information in the illustrations is always correct.

PREPARATION

Remove the protective cover over the engine.

REMOVING THE AIR INTAKE

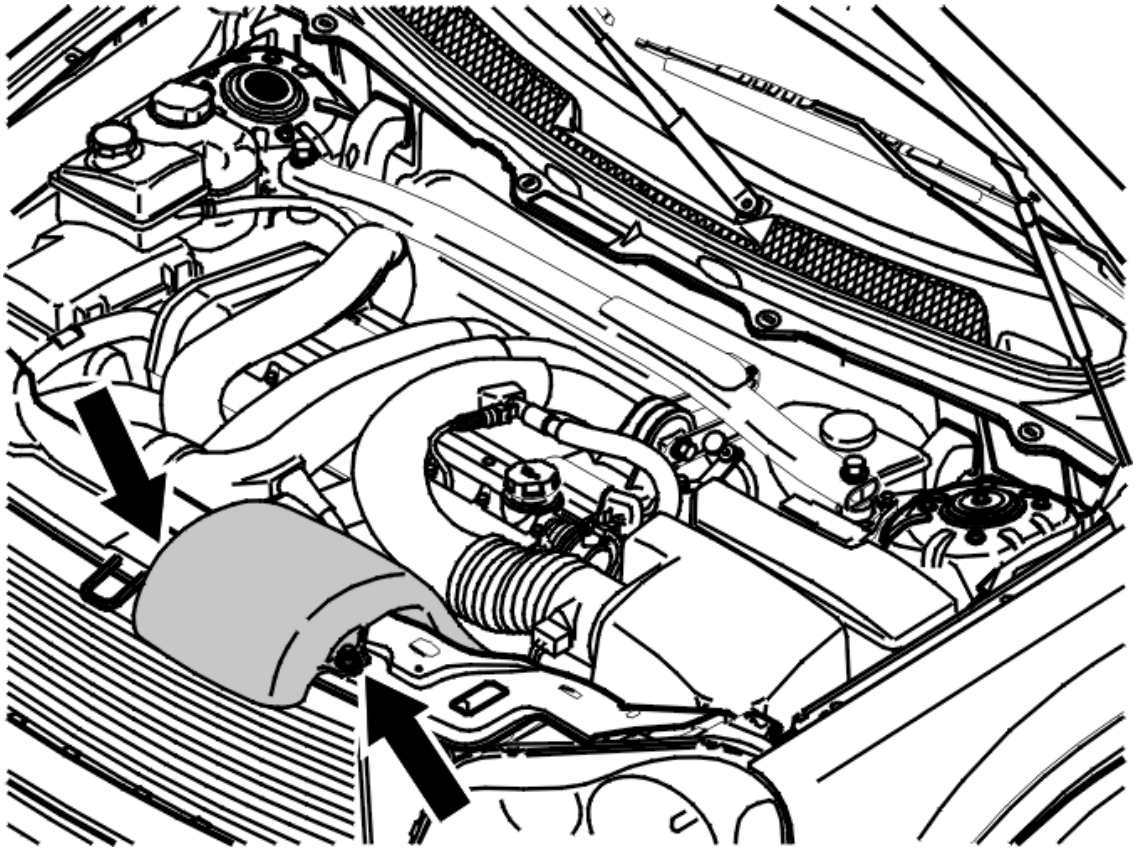

Fig. 198: Removing The Air Intake
Courtesy of VOLVO CARS CORPORATION

Remove:

- the 2 screws
- the air intake.

INSTALLING LIFTING TOOLS

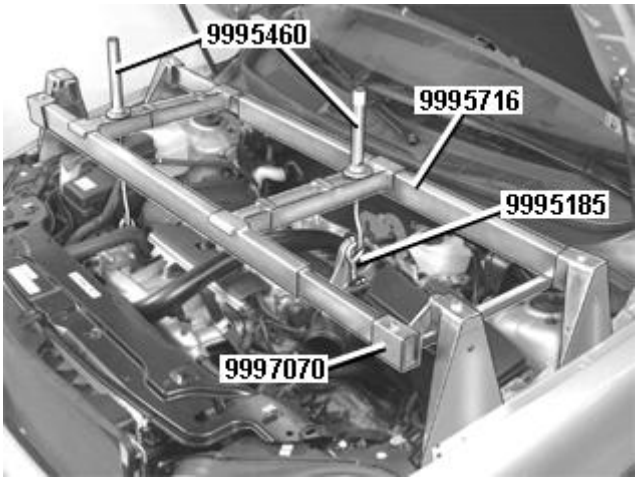

Fig. 199: Identifying Fixture Kit, Lifting Beam And Lifting Hooks
Courtesy of VOLVO CARS CORPORATION

Install lifting tool see **9995716** converted with kit see **9997070** . Install lifting hooks see **9995460** .

Lift the engine to relieve the load on the engine pads.

REMOVING THE LOWER ENGINE PAD SCREW

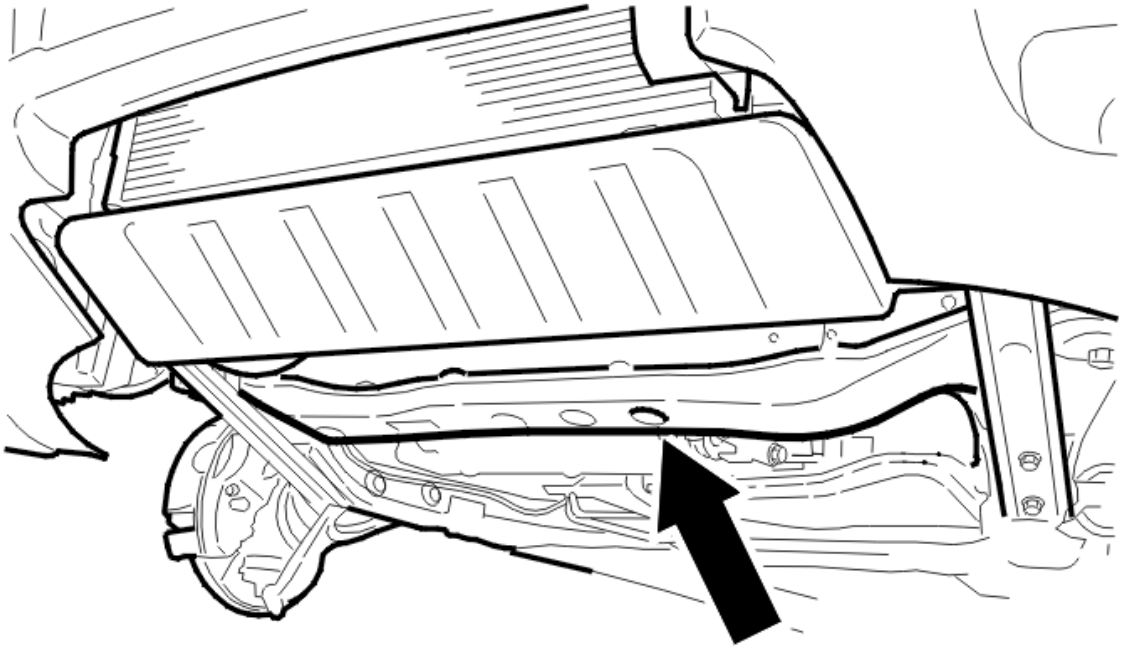

Fig. 200: Locating Lower Engine Pad Bolt
Courtesy of VOLVO CARS CORPORATION

Raise the vehicle.

Remove the screw from the engine pad.

REMOVING THE SCREW FOR THE CABLE DUCT

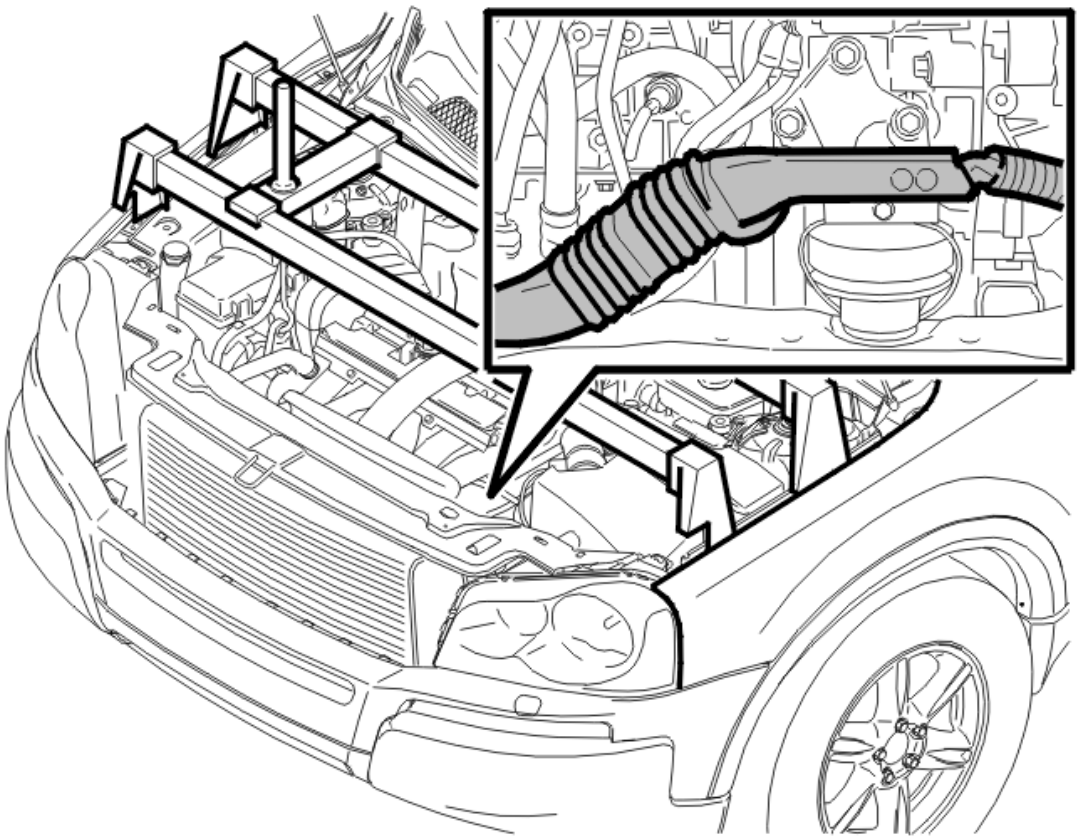

Fig. 201: Identifying The Cable Duct
Courtesy of VOLVO CARS CORPORATION

Remove the screw for the cable duct.

REMOVING THE BRACKET AND ENGINE PAD

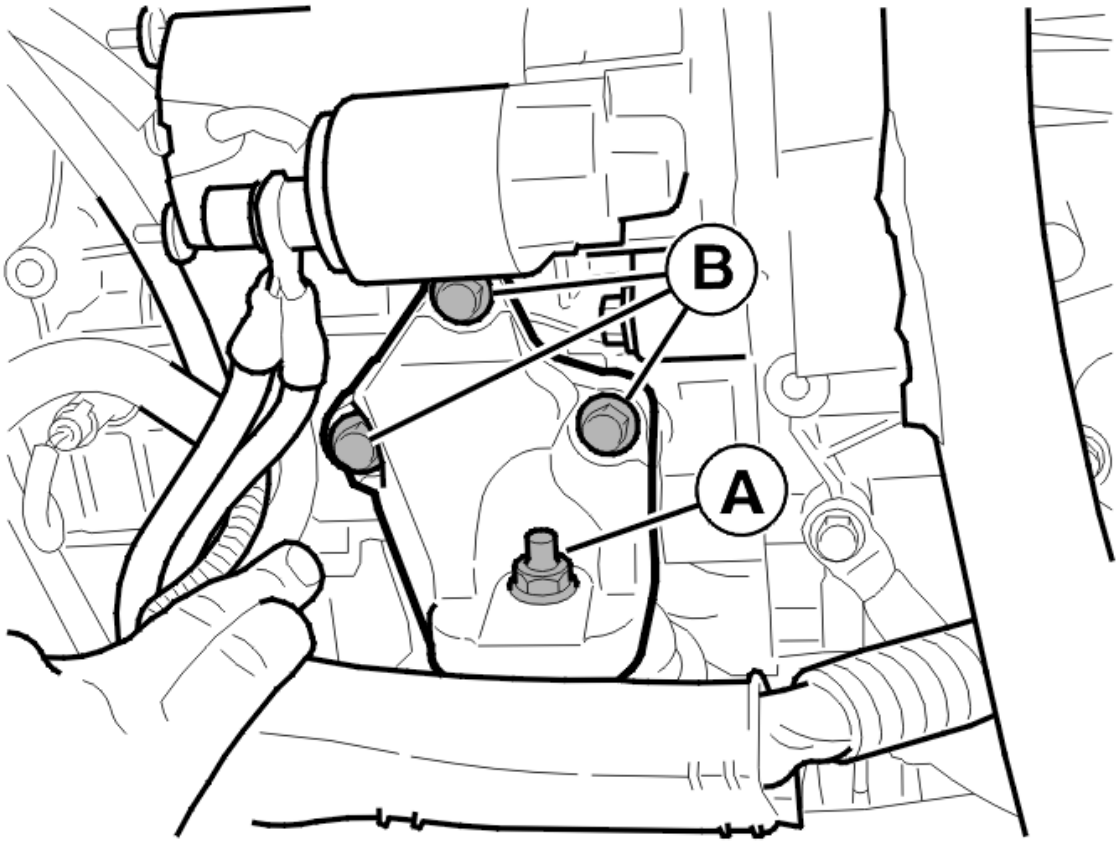

Fig. 202: Locating Bracket And Engine Pad
Courtesy of VOLVO CARS CORPORATION

Remove:

- the nut (A)
- the 3 screws (B)
- the bracket
- the engine pad.

TIGHTENING TORQUE

For tightening torques, see **TIGHTENING TORQUE** .

INSTALLING THE BRACKET AND ENGINE PAD

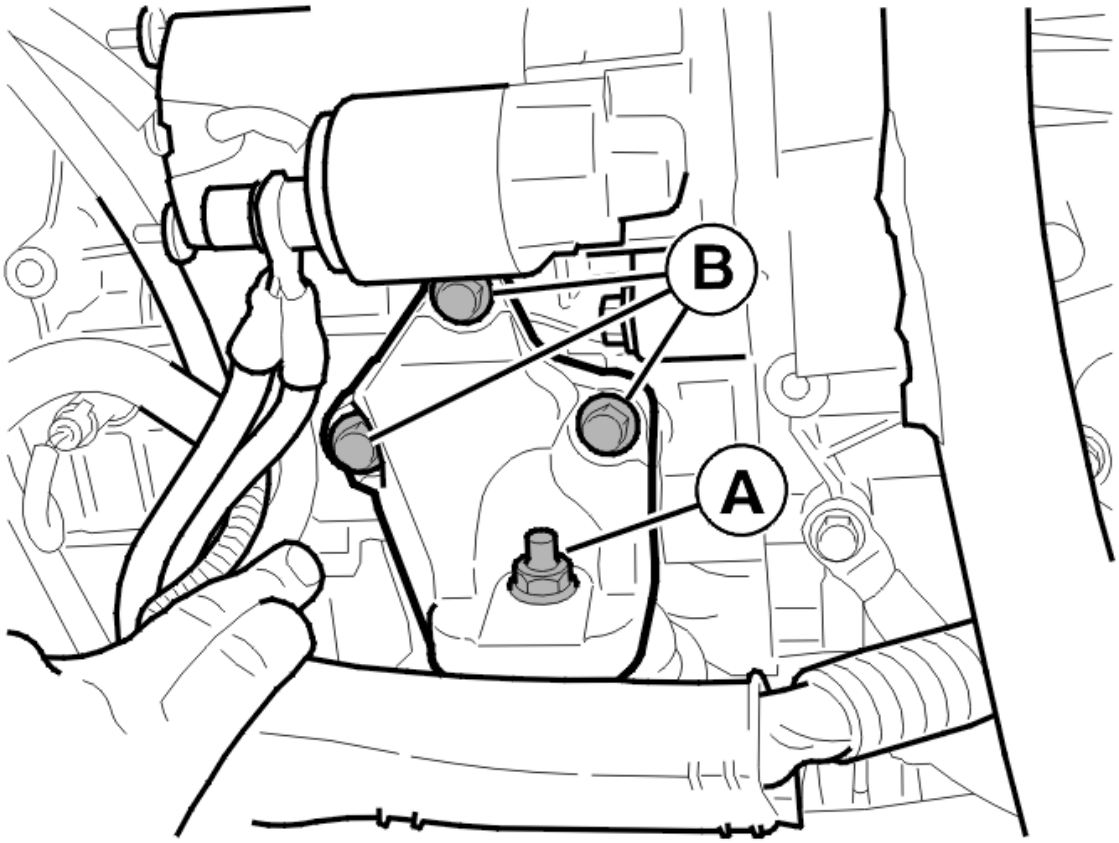

Fig. 203: Locating Bracket And Engine Pad
Courtesy of VOLVO CARS CORPORATION

Install:

- the engine pad
- the screw for the engine pad mounting in the sub-frame. Do not tighten
- the bracket
- the 3 x M10 screws (B)
- the M10 nut (A).

REMOVING LIFTING TOOLS

Remove lifting tool see **9995716** , kit see **9997070** and lifting hooks see **9995460** .

INSTALLING THE SCREW ON THE CABLE CONDUCT

Install the M6 screw for the cable duct mounting in the engine pad bracket.

INSTALLING THE AIR INTAKE

Install:

- the air intake
- the 2 M6 screws.

FINISHING

Tighten the lower M10 screw for the engine pad.

ENGINE PAD REAR, REPLACING

Special tools:

see **9995716**

see **9995460**

see **9995972**

see **9997070**

NOTE: **As the illustrations in this service information are used for different model years and / or models, some variation may occur. However, the essential information in the illustrations is always correct.**

PREPARATION

Remove the engine cover.

STEERING SHAFT JOINT LOWER REMOVING

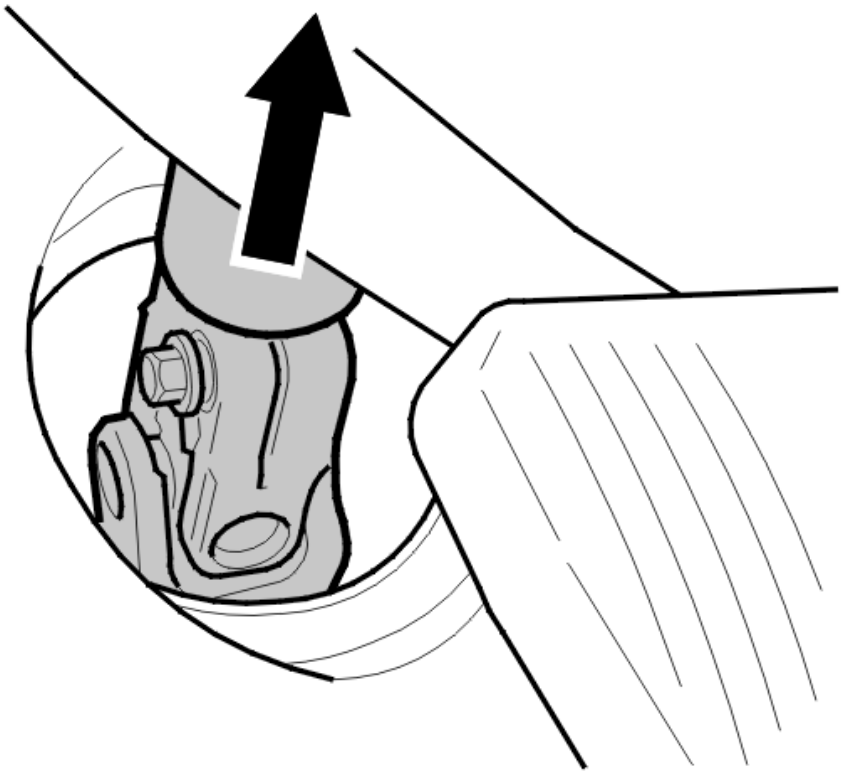

Fig. 204: Identifying Lower Steering Shaft Joint
Courtesy of VOLVO CARS CORPORATION

Fold the floor carpet out of the way.

Bend up the outer section of the steering shaft boot.

Remove the retaining clip around the boot.

Pull the boot up.

Remove:

- the screw securing the mounting for the steering shaft in the joint
- the joint from the steering shaft.

REMOVING THE UPPER TORQUE ROD

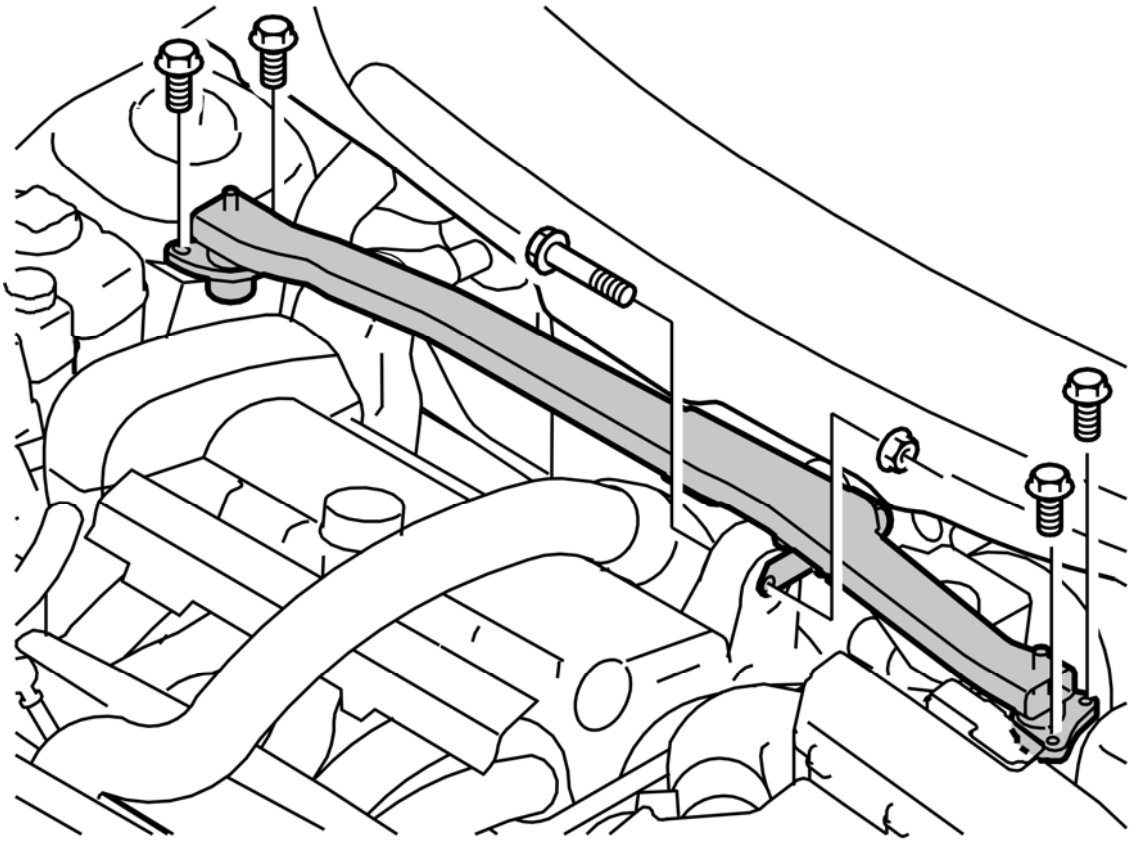

Fig. 205: Identifying Engine Stabilizer Brace And Mounting Screws
Courtesy of VOLVO CARS CORPORATION

Remove:

- the mounting screws for the torque rod
- the screw and nut for the engine mounting and torque rod
- the engine stabilizer brace.

REMOVING THE UPPER NUT FOR THE ENGINE PAD

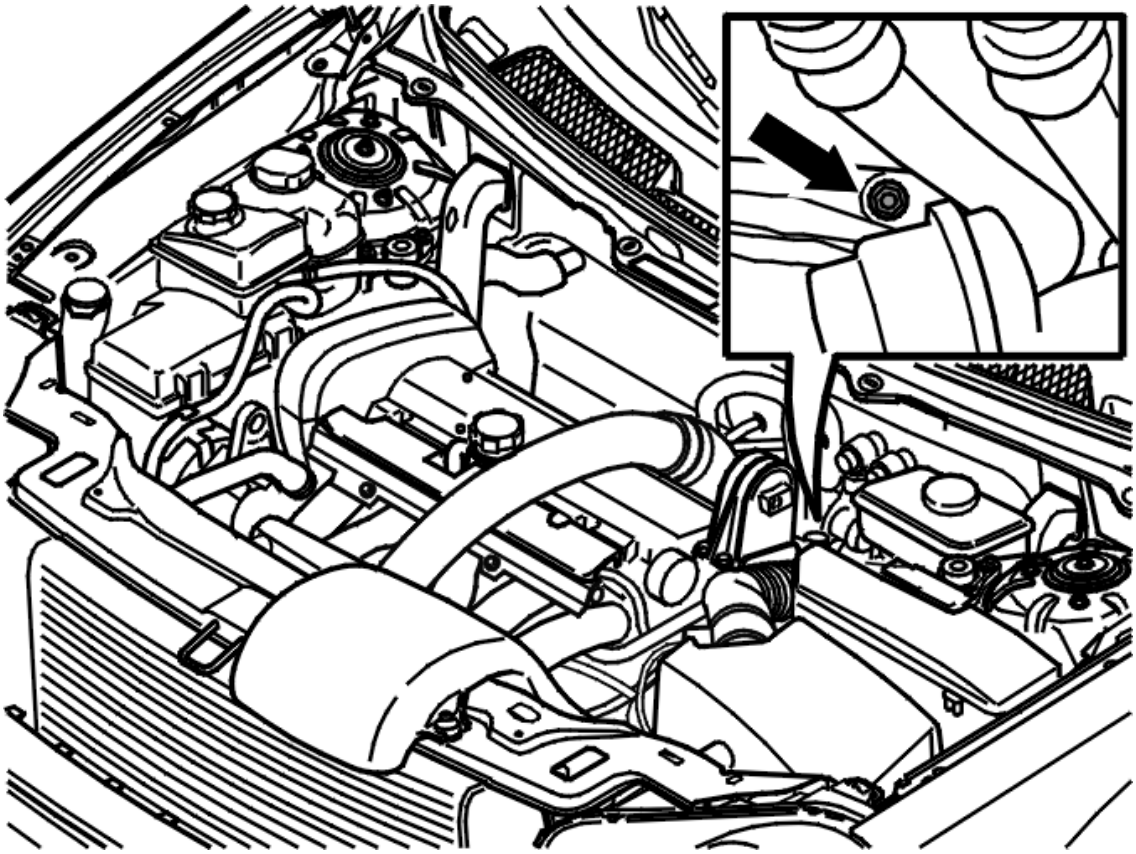

Fig. 206: Locating The Nut
Courtesy of VOLVO CARS CORPORATION

Remove the nut.

INSTALLING LIFTING TOOLS

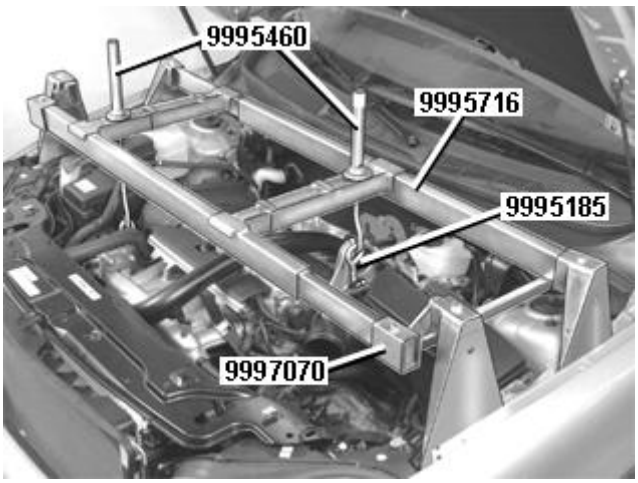

Fig. 207: Identifying Fixture Kit, Lifting Beam And Lifting Hooks
Courtesy of VOLVO CARS CORPORATION

Install lifting tool see **9995716** converted with kit see **9997070** . Install lifting hooks see **9995460** .

Lift the engine to relieve the load on the engine pads.

REMOVING THE RIGHT ENGINE MOUNTING

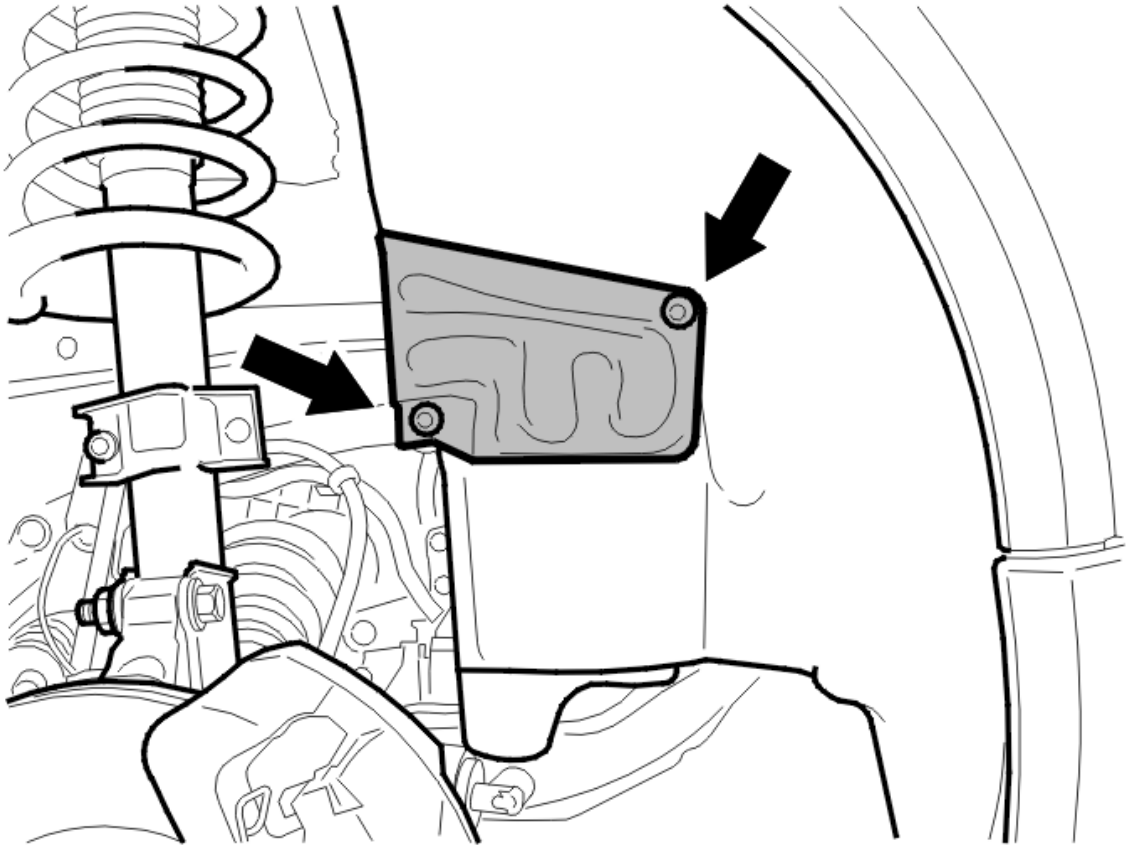

Fig. 208: Identifying Fender Liner Plastic Nuts And Protective Plate
Courtesy of VOLVO CARS CORPORATION

Remove the right-hand front wheel. Detach the right-hand lower front section of the fender liner.

Remove:

- the plastic nuts on the fender liner
- the protective plate.

Bend out the fender liner.

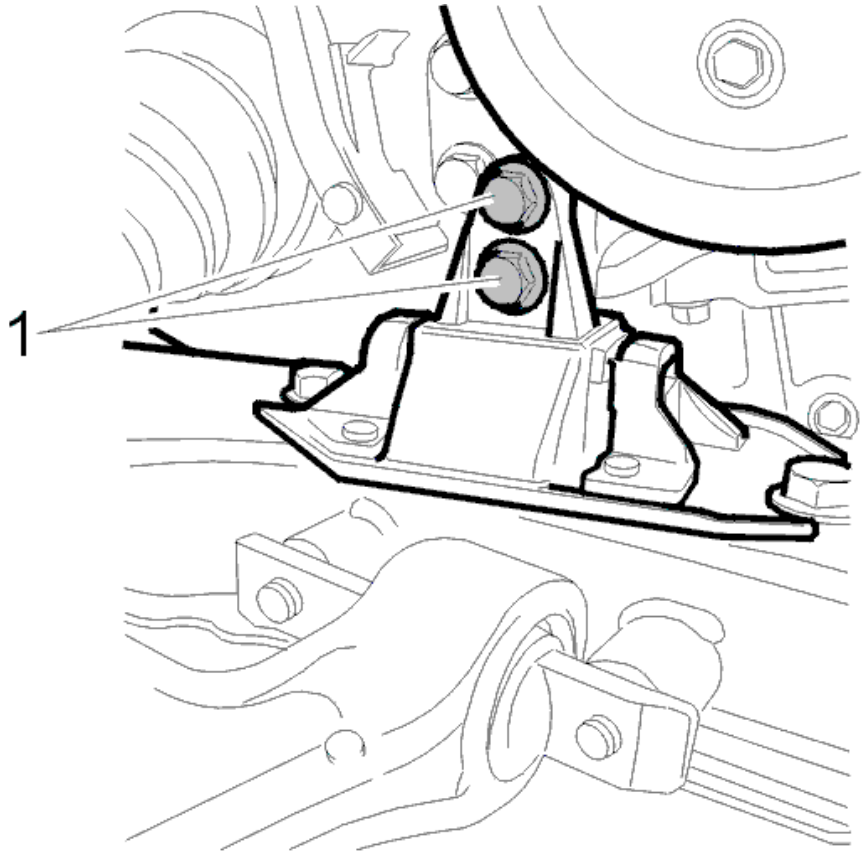

Fig. 209: Identifying Right-Hand Engine Mounting Screws
Courtesy of VOLVO CARS CORPORATION

Remove both the right hand engine mounting screws.

REMOVING THE SPLASH GUARD UNDER ENGINE

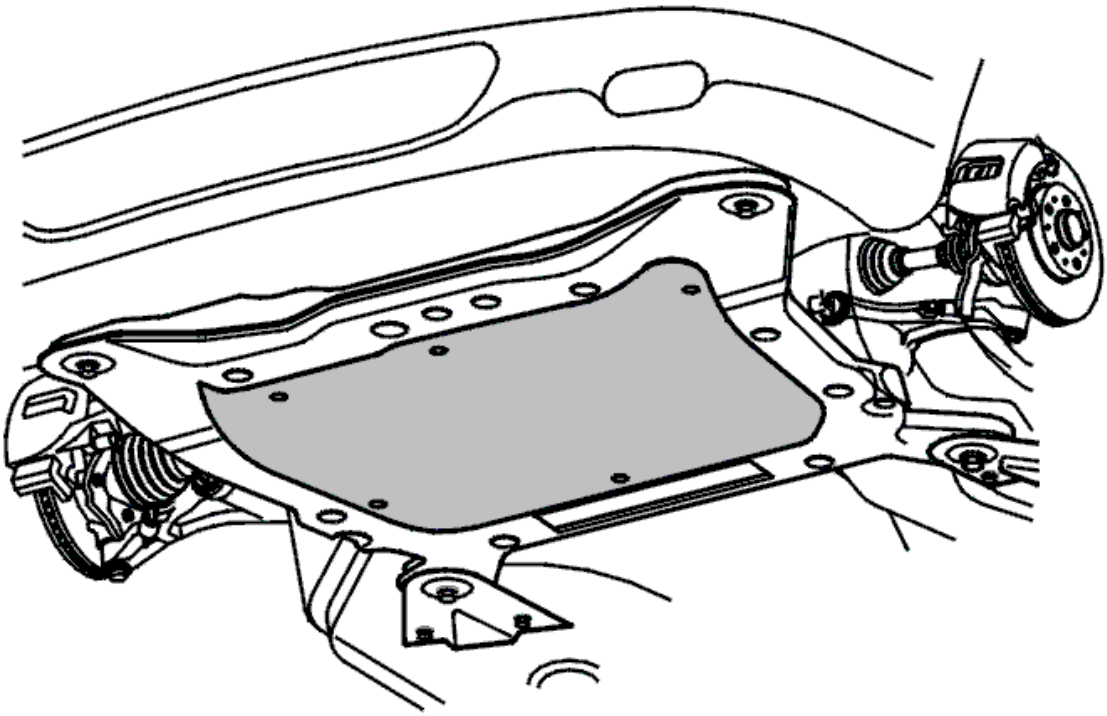

Fig. 210: Identifying Splash Guard Under Engine
Courtesy of VOLVO CARS CORPORATION

Remove the splash guard under the engine.

REMOVING THE SKID PLATE

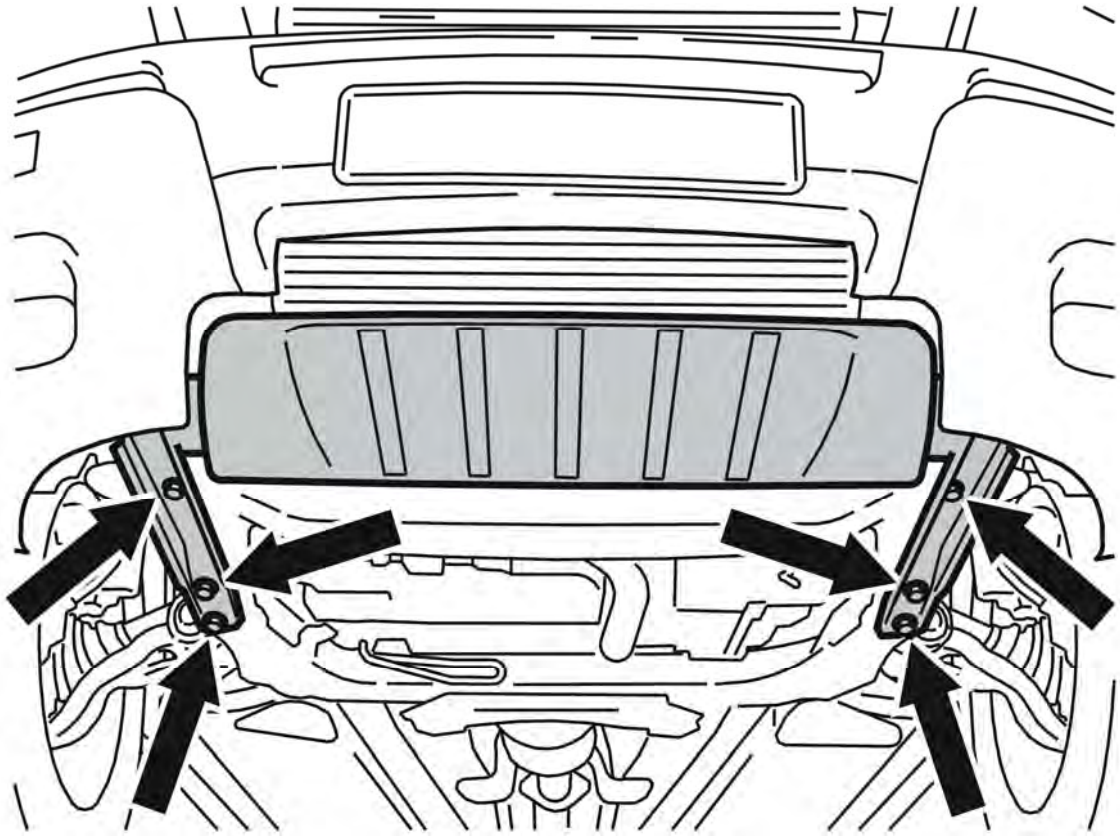

Fig. 211: Splash Guard, Protective Plate And Screws
Courtesy of VOLVO CARS CORPORATION

Remove the 6 screws.

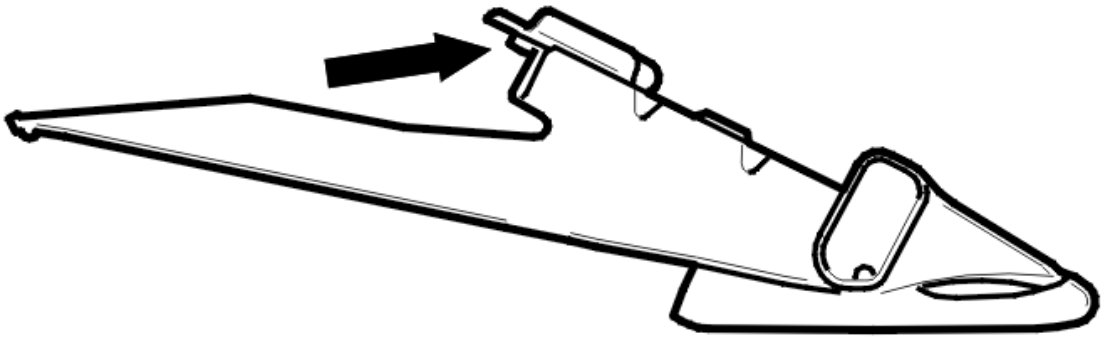

Fig. 212: Identifying Protective Plate
Courtesy of VOLVO CARS CORPORATION

Lift and slide the splash guard forward.

Remove the protective plate.

NOTE: **There is a guide sleeve on the upper mounting for the plate. This must be lifted slightly so that the panel can be slid forward.**

REMOVING THE SIPS MEMBER

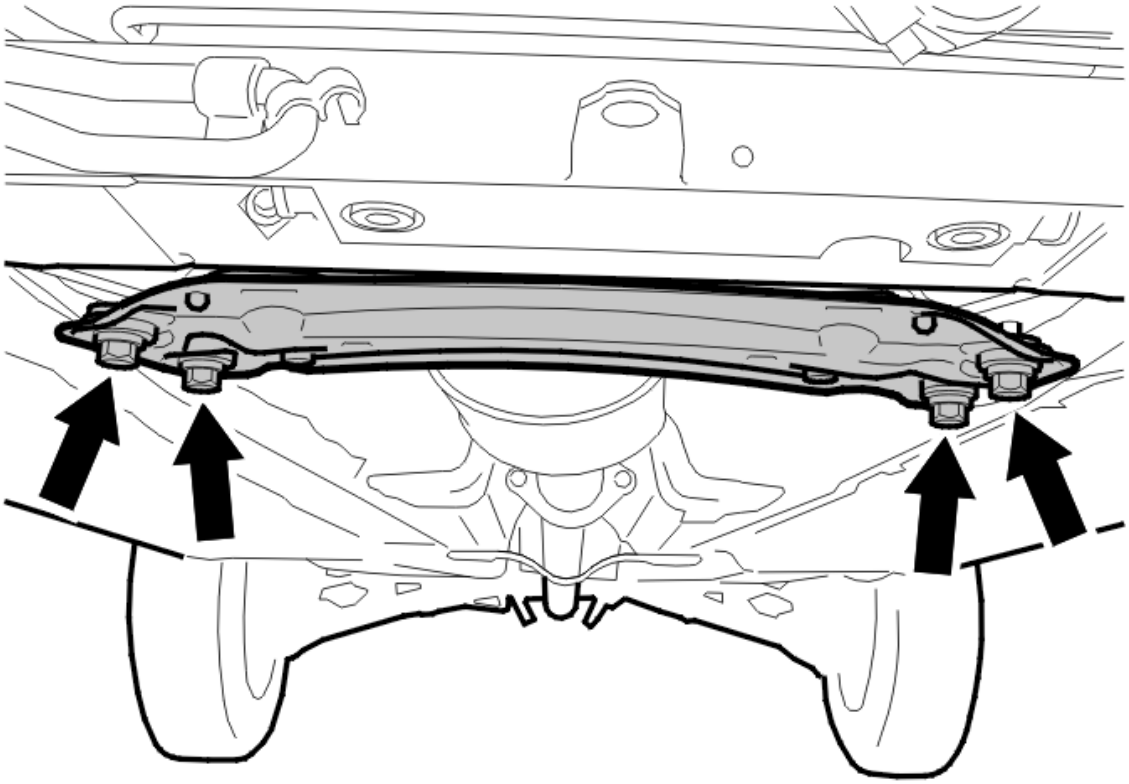

Fig. 213: Identifying SIPS Member
Courtesy of VOLVO CARS CORPORATION

Remove:

- the four mounting screws
- the brake pipe from the snap fastener on the member
- The SIPS member.

REMOVING THE EXHAUST MOUNTING

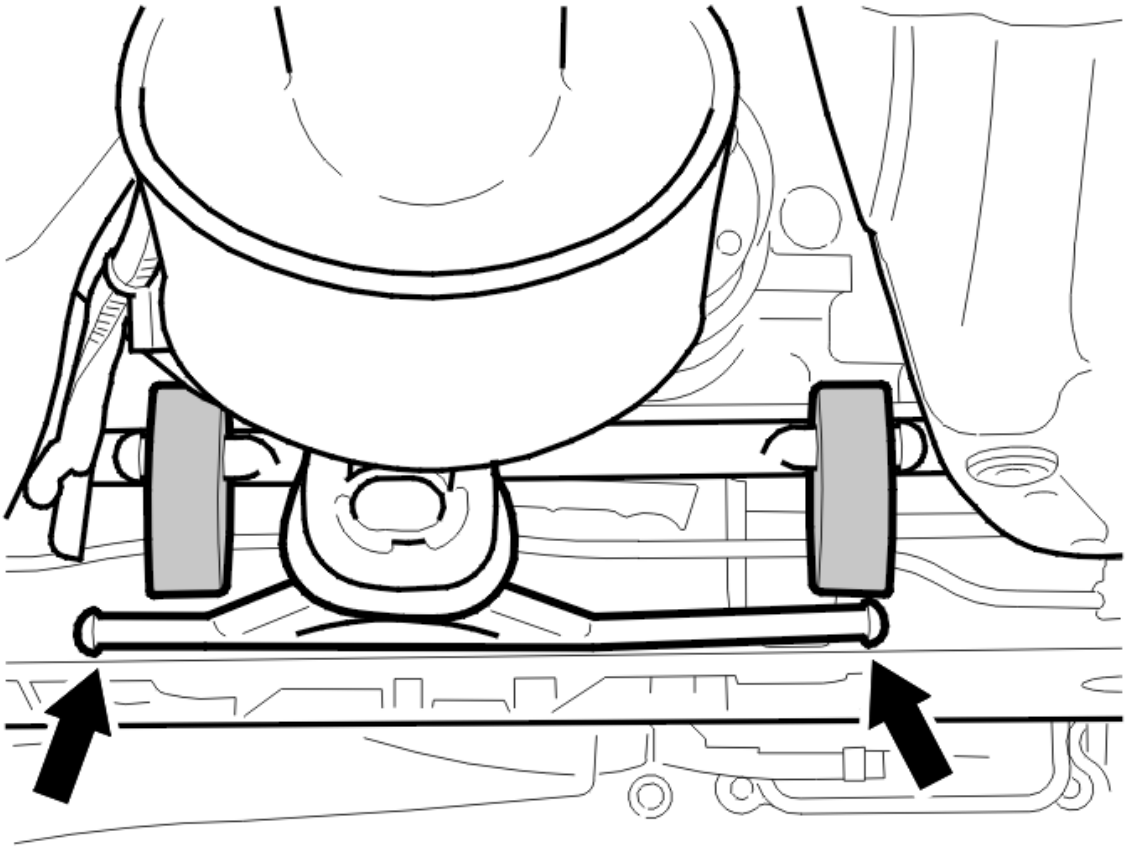

Fig. 214: Identifying Exhaust Pipe Rubber Mountings
Courtesy of VOLVO CARS CORPORATION

Remove the rubber mountings for the exhaust pipe.

REMOVING THE ENGINE PAD SCREW

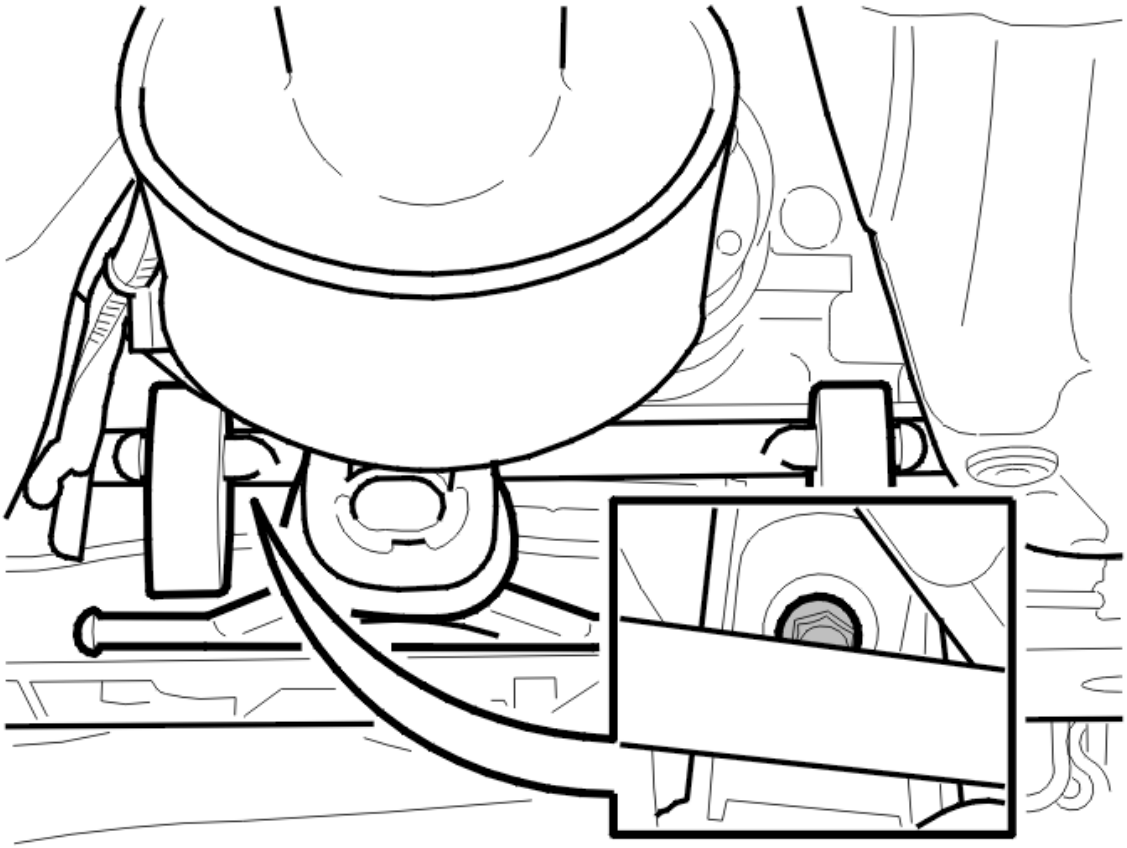

Fig. 215: Locating Engine Pad Screw
Courtesy of VOLVO CARS CORPORATION

Remove the screw for the engine pad mounting in the steering gear.

LOWERING THE SUB-FRAME

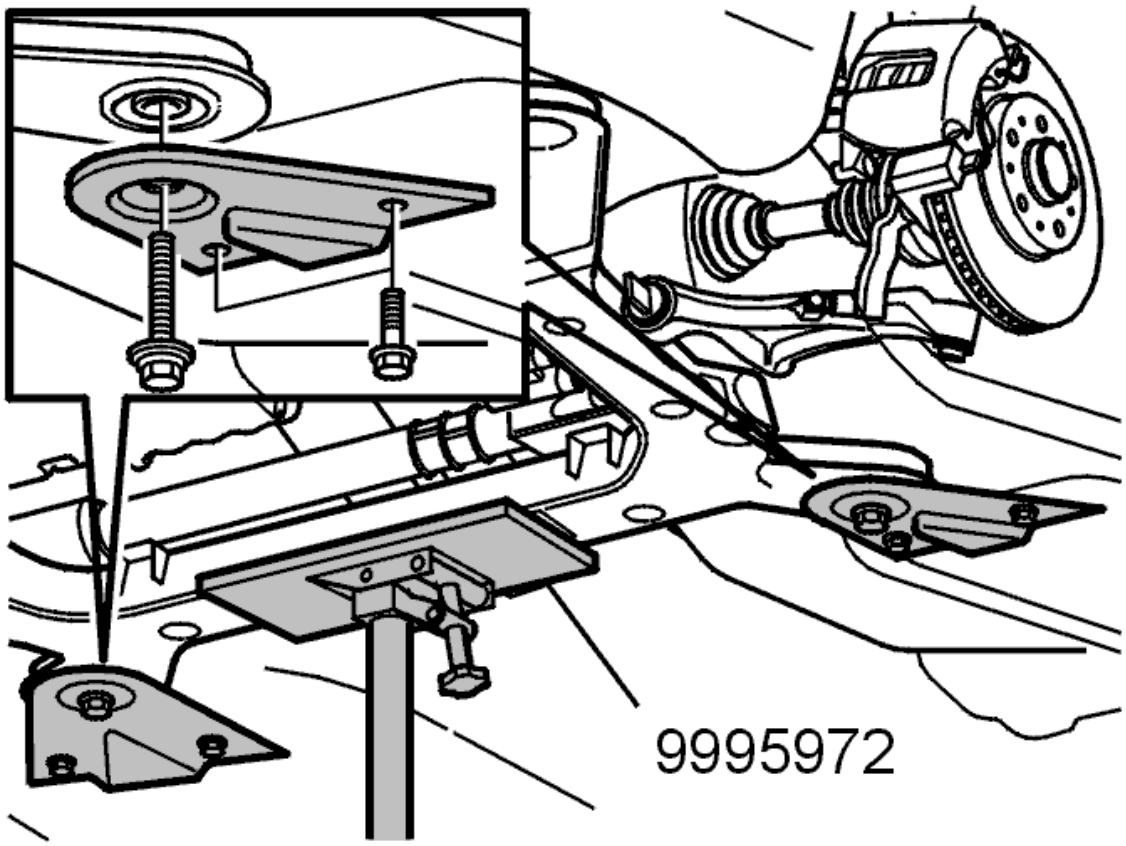

Fig. 216: Identifying Rear Sub-Frame Screws, Brackets & Washers
Courtesy of VOLVO CARS CORPORATION

Position a mobile jack with universal plate see **9995972** at the rear of the sub-frame.

Remove the following on both sides:

- the two screws holding the sub-frame bracket in the body
- the rear screw for the sub-frame with the bracket and washer.

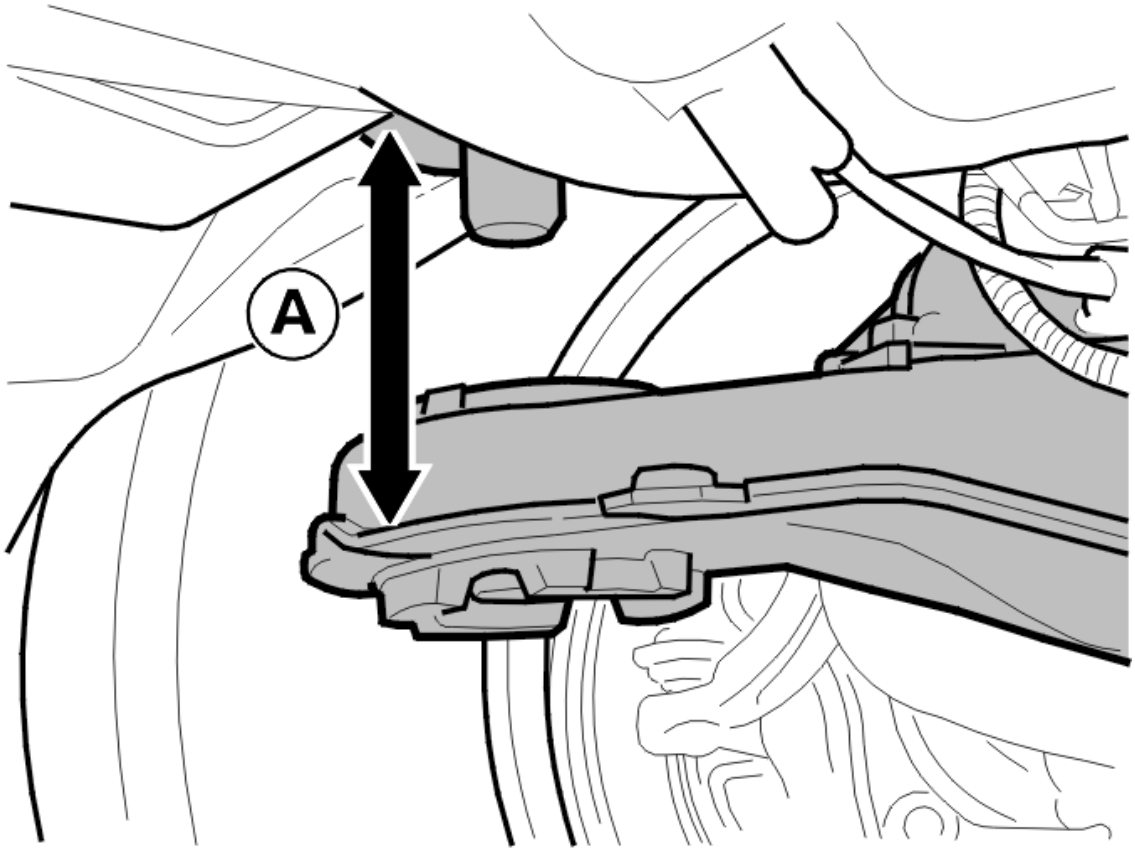

Fig. 217: Lowering The Sub-Frame
Courtesy of VOLVO CARS CORPORATION

Carefully lower the sub-frame until dimension A between the sub-frame and the body is 110 mm.

REMOVING THE ENGINE COVER

Remove the engine pad.

TIGHTENING TORQUE

For correct tightening torques, see **TIGHTENING TORQUE** .

INSTALLING THE ENGINE PAD

Position the engine pad in the upper seat.

NOTE: Ensure that the guide pin for the engine pad locates correctly.

Hold the engine pad in position. Carefully raise the sub-frame.

NOTE: Guide in the steering shaft joint whilst raising the sub-frame.

Install the screw for the engine pad mounting in the steering gear. M10.

INSTALLING THE SUB-FRAME

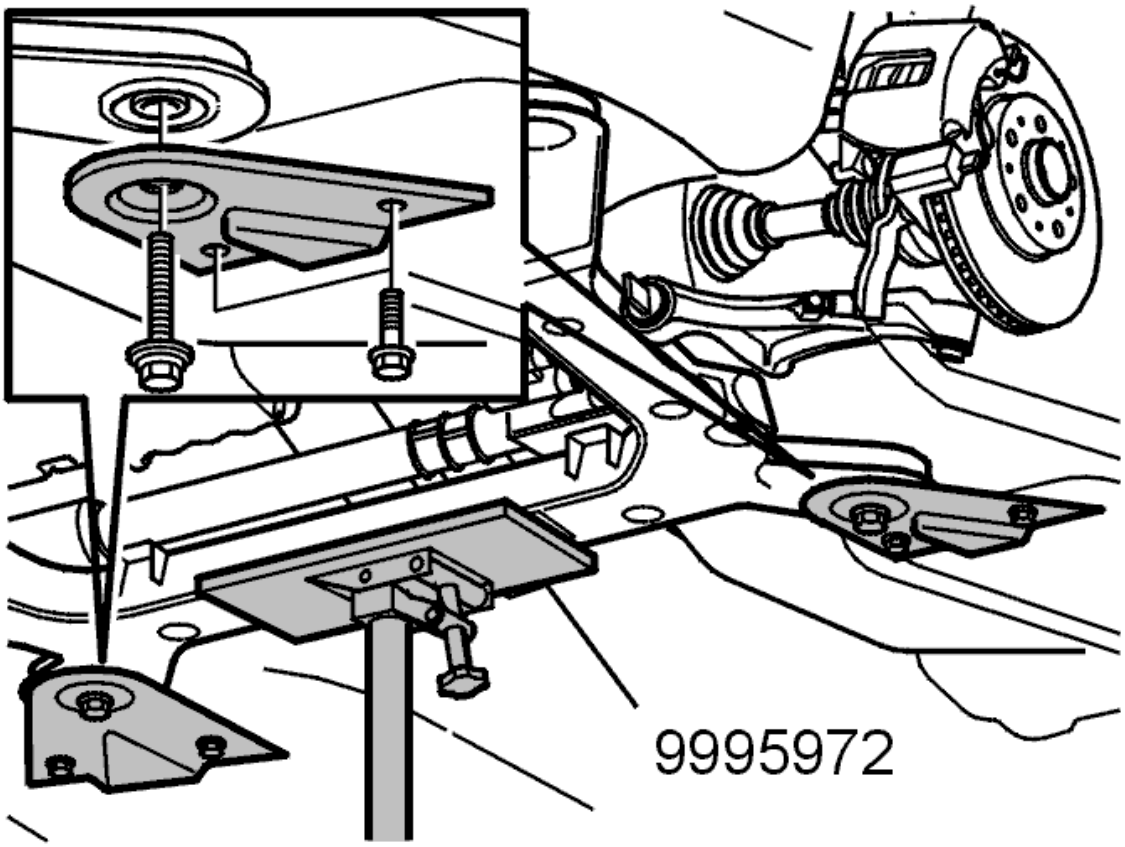

Fig. 218: Identifying Rear Sub-Frame Screws, Brackets & Washers
Courtesy of VOLVO CARS CORPORATION

Install on both sides:

- the bracket
- the two screws for the mounting bracket. M10
- the screw for the sub-frame mounting. Use a new screw.

For tightening torques, see **TIGHTENING TORQUE** .

INSTALLING THE EXHAUST MOUNTING

Install the rubber mountings for the exhaust pipe.

HINT: Use soap solution to facilitate installing the rubber mountings.

INSTALLING THE SIPS MEMBER

Install:

- the brake pipe in the snap fastener on the member
- the SIPS member
- the four screws for the SIPS (side impact protection system) member mounting. M8.

INSTALLING THE SKID PLATE

Move the skid plate up in to the bumper cover strip. Press forwards until the mounting brackets engage in the sub-frame.

Install:

- the six screws. M10
- the splash guard under the engine. M8.

INSTALLING THE RIGHT-HAND ENGINE MOUNTING

Install the two screws for the right-hand engine mounting. Use new screws.

Fold the fender liner back into position

Install:

- the skid plate
- the plastic nuts
- the front wheel. See **INSTALLING WHEELS** .

For tightening torques, see **TIGHTENING TORQUE** .

REMOVING LIFTING TOOLS

Remove lifting tool see **9995716** , kit see **9997070** and lifting hooks see **9995460** .

INSTALLING THE UPPER NUT FOR THE ENGINE PAD

Install a new nut. M10.

HINT: Use a magnetic sleeve or trap the nut using a wad of paper in the sleeve to facilitate installation.

INSTALLING THE UPPER TORQUE ROD

Install:

- the engine stabilizer brace
- the four mounting screws for the torque rod. M10
- the screw and nut for the engine mounting and torque rod. M12.

STEERING SHAFT JOINT LOWER INSTALLING

Install the steering shaft on the lower steering shaft joint.

Install:

- the new screw. M8
- the steering shaft boot and snap ring.

Fold back the carpet.

FINISHING

Install the engine cover.

ENGINE PAD RIGHT, REPLACING (2005-2007)

NOTE: **As the illustrations in this service information are used for different model years and / or models, some variation may occur. However, the essential information in the illustrations is always correct.**

PREPARATION

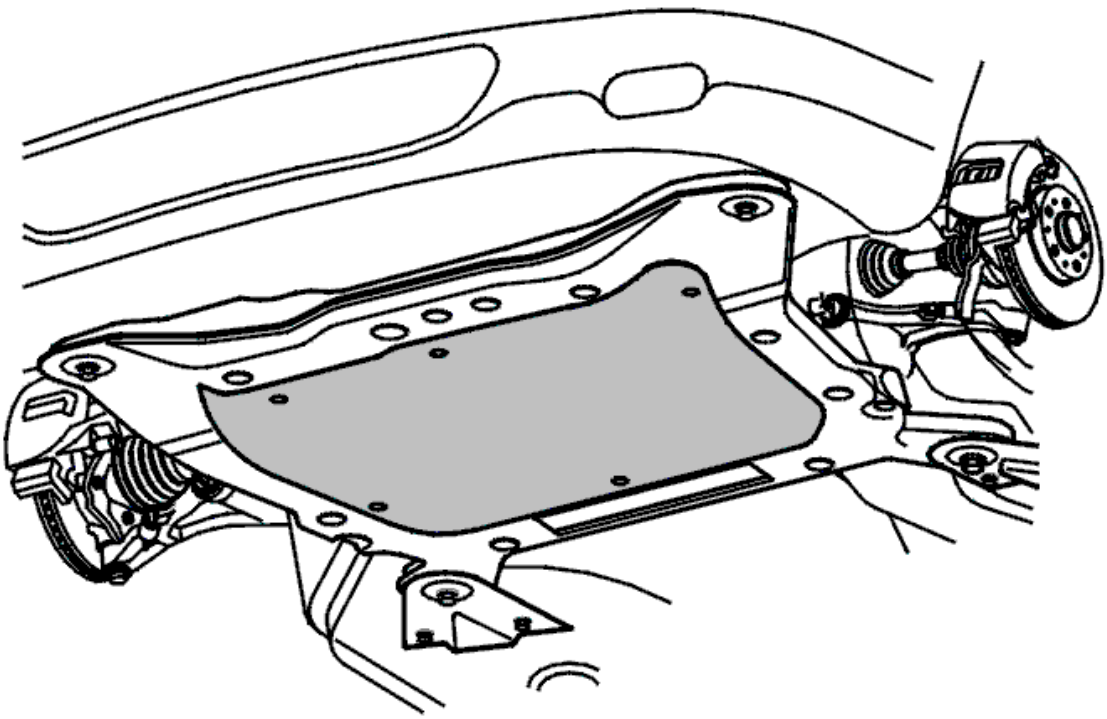

Fig. 219: Identifying Splash Guard Under Engine

Courtesy of VOLVO CARS CORPORATION

Remove:

- the splash guard under the engine
- the right front wheel.

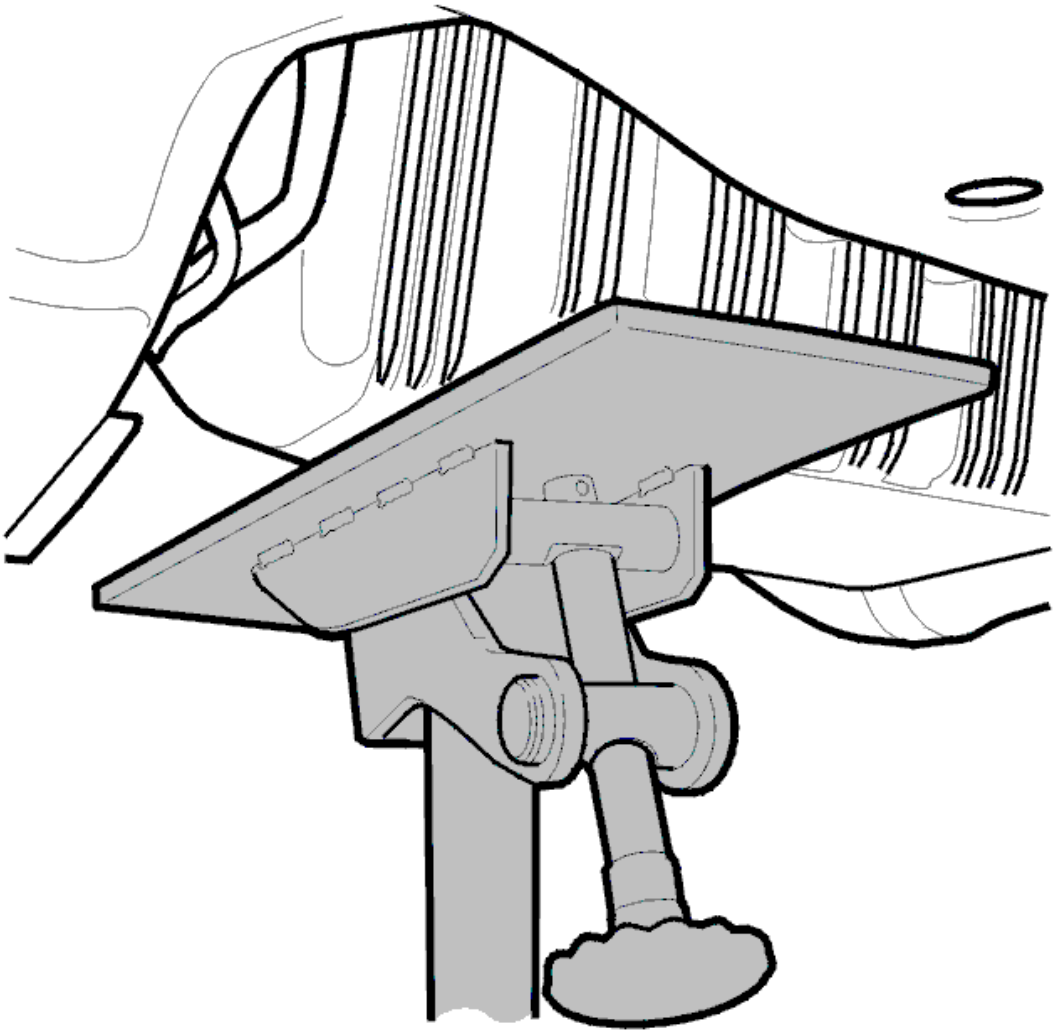

Fig. 220: Identifying Mobile Jack And Special Tool 999 5972
Courtesy of VOLVO CARS CORPORATION

Position a mobile jack with a universal plate see **9995972** under the oil pan on the right side of the engine.

Check that the plate does not catch in the sub-frame.

Carefully lift to relive the load from the engine pad.

DETACHING THE FENDER LINER

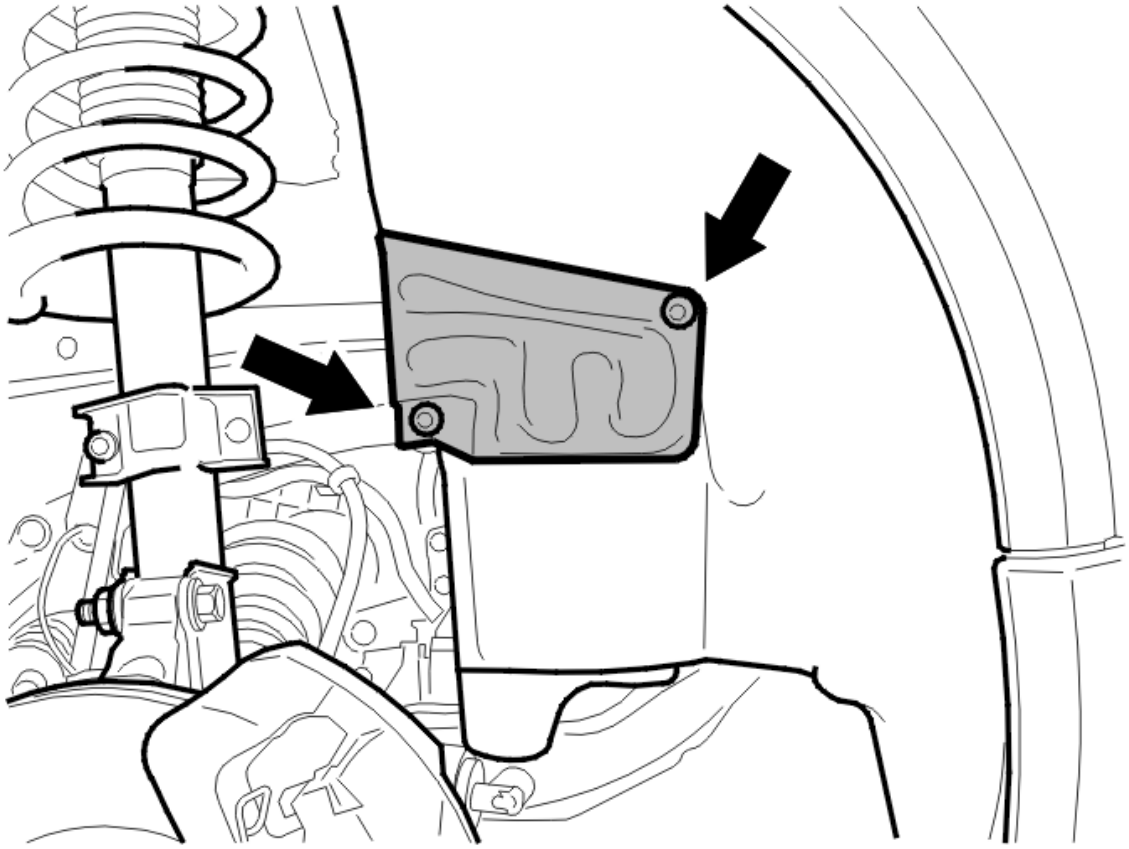

Fig. 221: Identifying Fender Liner Plastic Nuts And Protective Plate
Courtesy of VOLVO CARS CORPORATION

Slacken off the right lower front part of the fender liner.

Remove:

- the plastic nuts on the fender liner
- the protective plate.

Bend out the fender liner.

REMOVING THE VIBRATION DAMPER

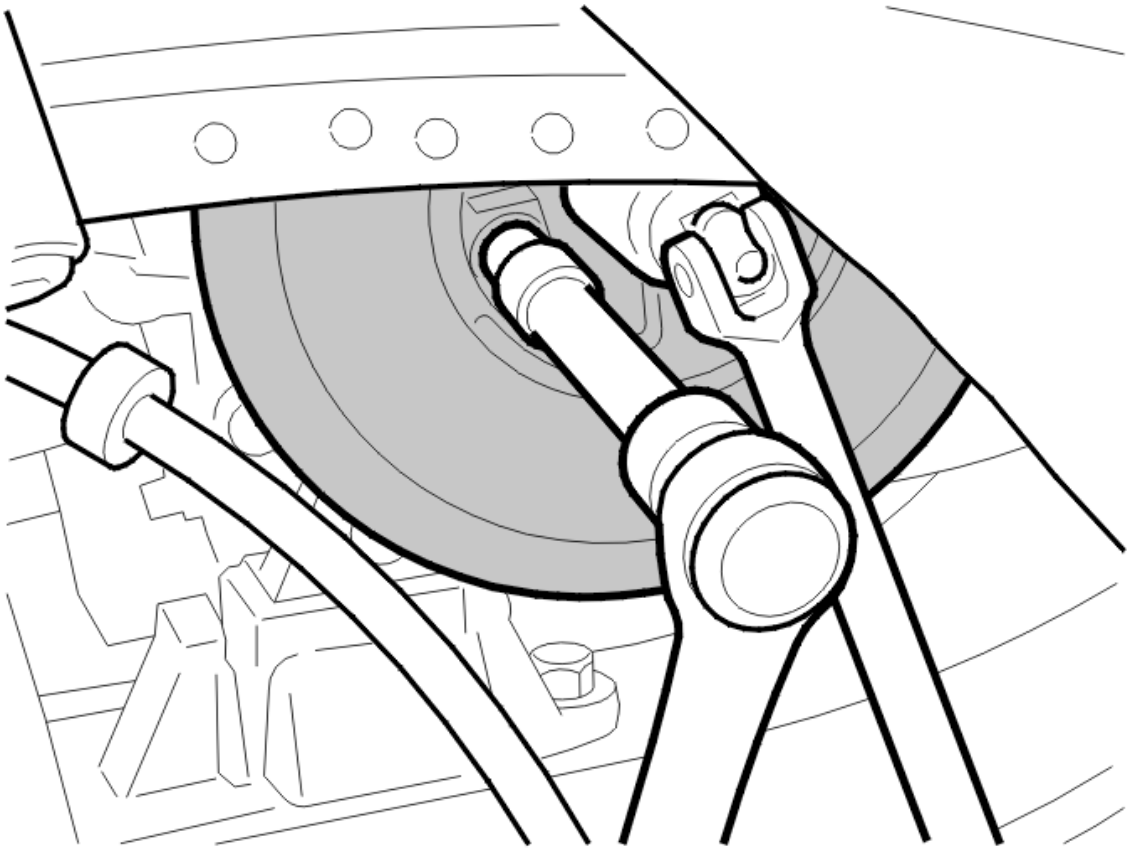

Fig. 222: Counterholding Crankshaft Central Nut
Courtesy of VOLVO CARS CORPORATION

Applies only to 6 cylinder engines:

Remove the four vibration damper screws. Counterhold the crankshaft central nut.

Remove the vibration damper.

REMOVING THE RIGHT-HAND ENGINE MOUNTING

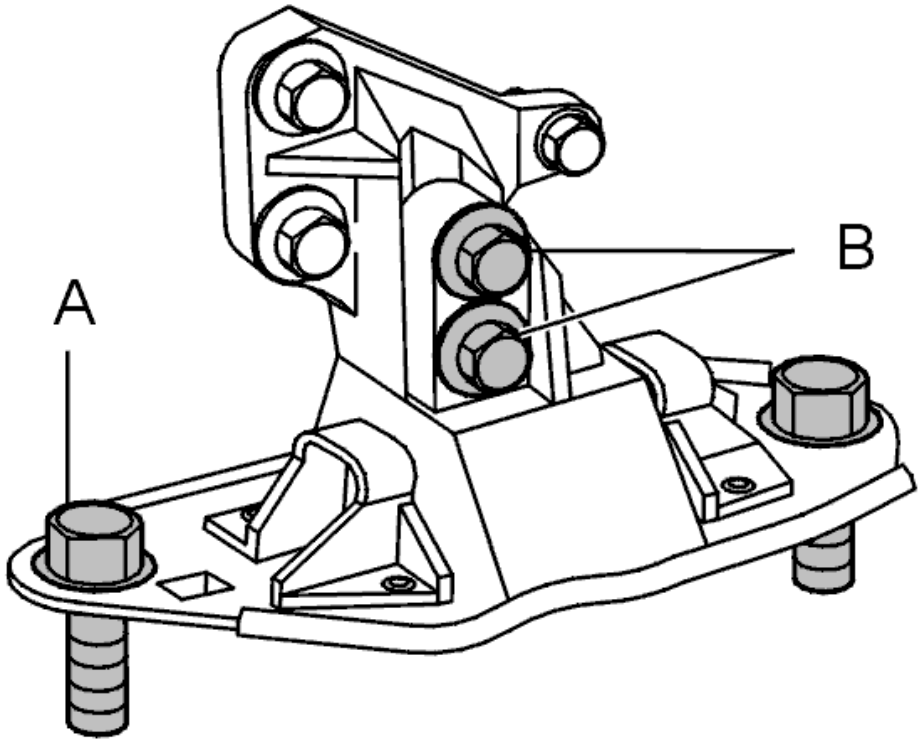

Fig. 223: Engine Mountings Screws
Courtesy of VOLVO CARS CORPORATION

Remove:

- both the screws (A)
- both the screws (B)
- the engine pad.

TIGHTENING TORQUE

For tightening torques, see **TIGHTENING TORQUE** .

INSTALLING THE RIGHT-HAND ENGINE MOUNTING

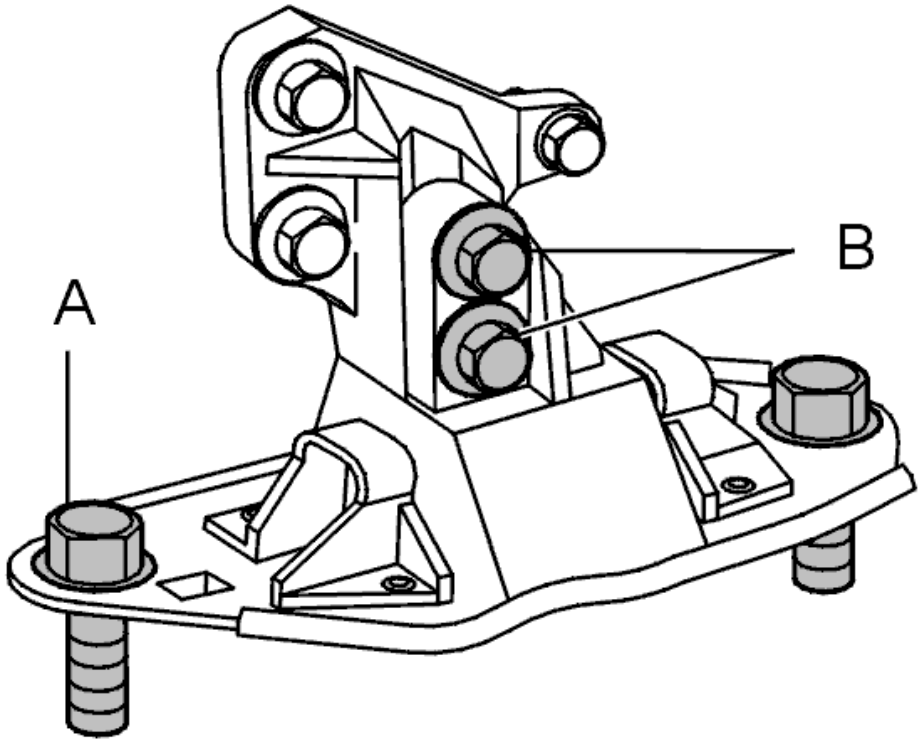

Fig. 224: Engine Mountings Screws
Courtesy of VOLVO CARS CORPORATION

Install:

- the engine pad
- both the screws (A) loosely
- both the screws (B).

Tighten the screws.

For tightening torques, see **TIGHTENING TORQUE** .

Remove the mobile jack.

INSTALLING THE VIBRATION DAMPER

Applies only to 6 cylinder engines:

Install:

- the vibration damper
- the four screws. Counterhold the crankshaft central nut.

For tightening torques, see **TIGHTENING TORQUE** .

INSTALLING THE FENDER LINER

Install:

- the fender liner
- the protective plate
- the plastic nuts on the fender liner.

FINISHING

Install:

- the splash guard under the engine
- the right front wheel. See **INSTALLING WHEELS** .

REPLACING THE ENGINE TORQUE BRACKET

REMOVAL

REMOVING THE TORQUE BRACKET

NOTE: **As the illustrations in this service information are used for different model years and / or models, some variation may occur. However, the essential information in the illustrations is always correct.**

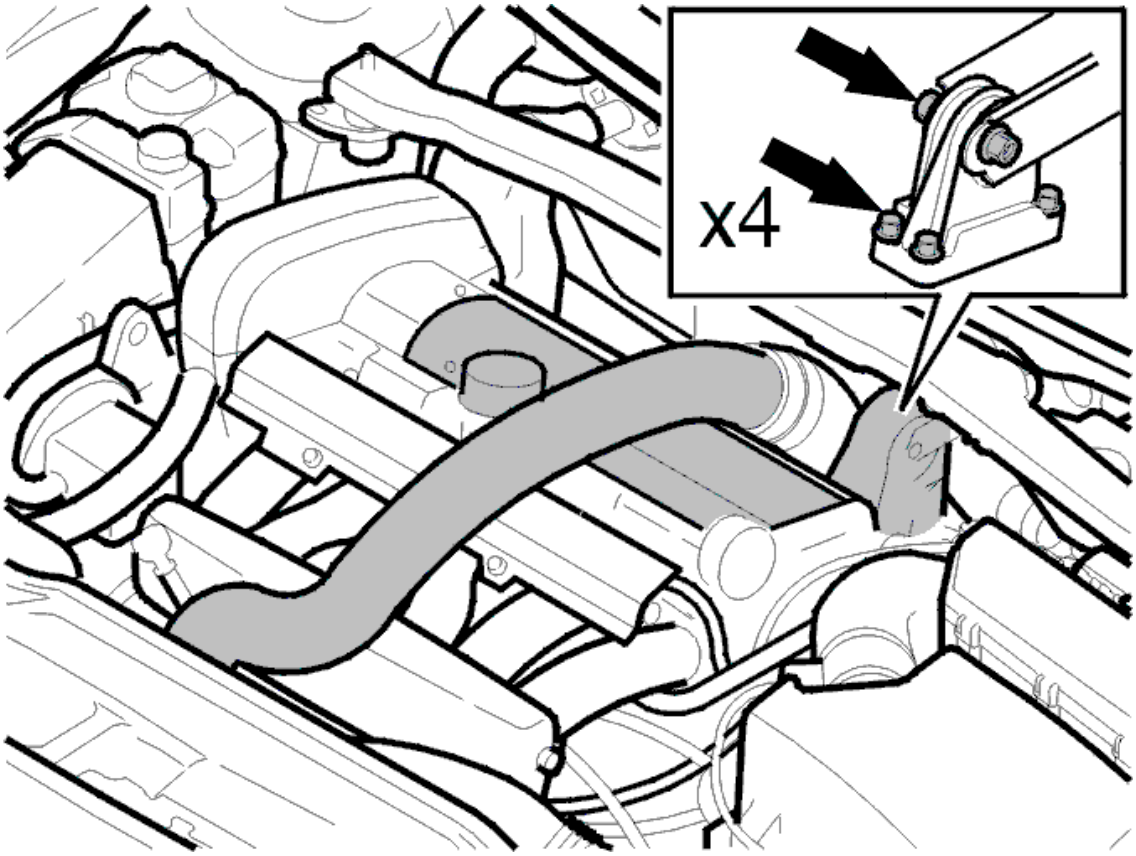

Fig. 225: Identifying Torque Bracket And Screws
Courtesy of VOLVO CARS CORPORATION

Remove

- the engine stabilizer brace
- the charge air pipe (only turbocharged (TC) engines)
- the screw for the dip stick pipe (6 cylinder automatics only)
- the oil filler cap
- the cover over the ignition coils
- the torque bracket.

INSTALLATION

INSTALLING THE TORQUE BRACKET

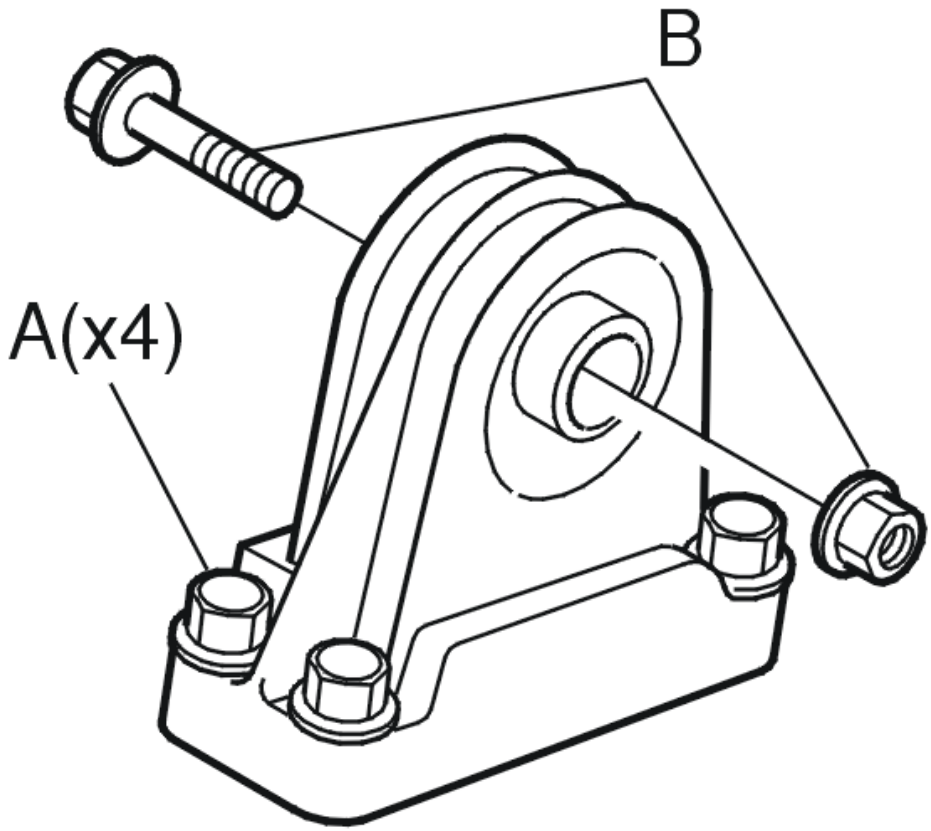

Fig. 226: Identifying Torque Bracket And Screws
Courtesy of VOLVO CARS CORPORATION

Install

- the torque bracket. Tighten the screws (A). Tighten to **50 Nm**
- the screw for the dip stick pipe (6 cylinder automatics only)
- the cover over the ignition coils
- the oil filler cap
- the charge air pipe (only turbocharged (TC) engines)
- the engine stabilizer brace.

Tighten the screws on the suspension turrets. Tighten to **50 Nm** . Tighten the screw in the torque bracket (B). Tighten to **80 Nm** .

SUB-FRAME FRONT, REPLACING (2003-2006)

Special tools:

see **9995716**

see **9995460**

see **9512050**

see **9997062**

see **9997070**

NOTE: **As the illustrations in this service information are used for different model years and / or models, some variation may occur. However, the essential information in the illustrations is always correct.**

PREPARATION

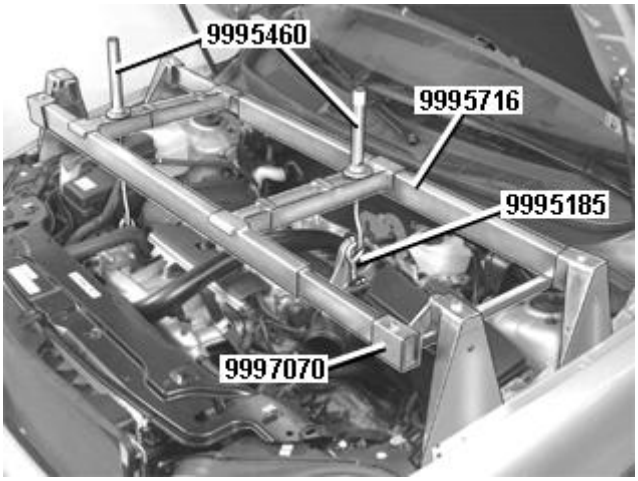

Fig. 227: Identifying Fixture Kit, Lifting Beam And Lifting Hooks
Courtesy of VOLVO CARS CORPORATION

Install lifting tool see **9995716** converted with kit see **9997070** and lifting hooks see **9995460** .

Lift the engine to relieve the load on the engine pads.

Remove the front wheels.

REMOVING THE CLAMP FOR THE SERVO PRESSURE HOSE

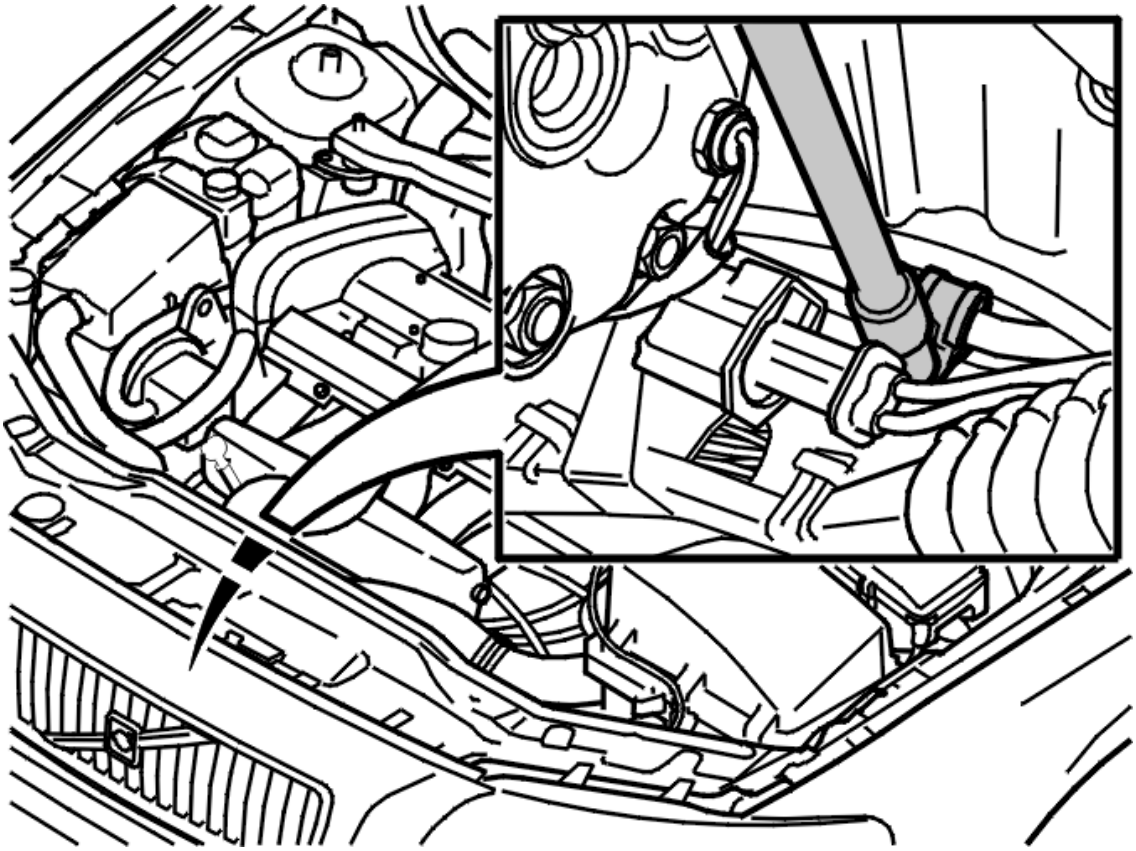

Fig. 228: Clamp On Sub-Frame
Courtesy of VOLVO CARS CORPORATION

Remove the clamp for the servo pressure pipe on the sub frame.

REMOVING THE RIGHT ENGINE MOUNTING

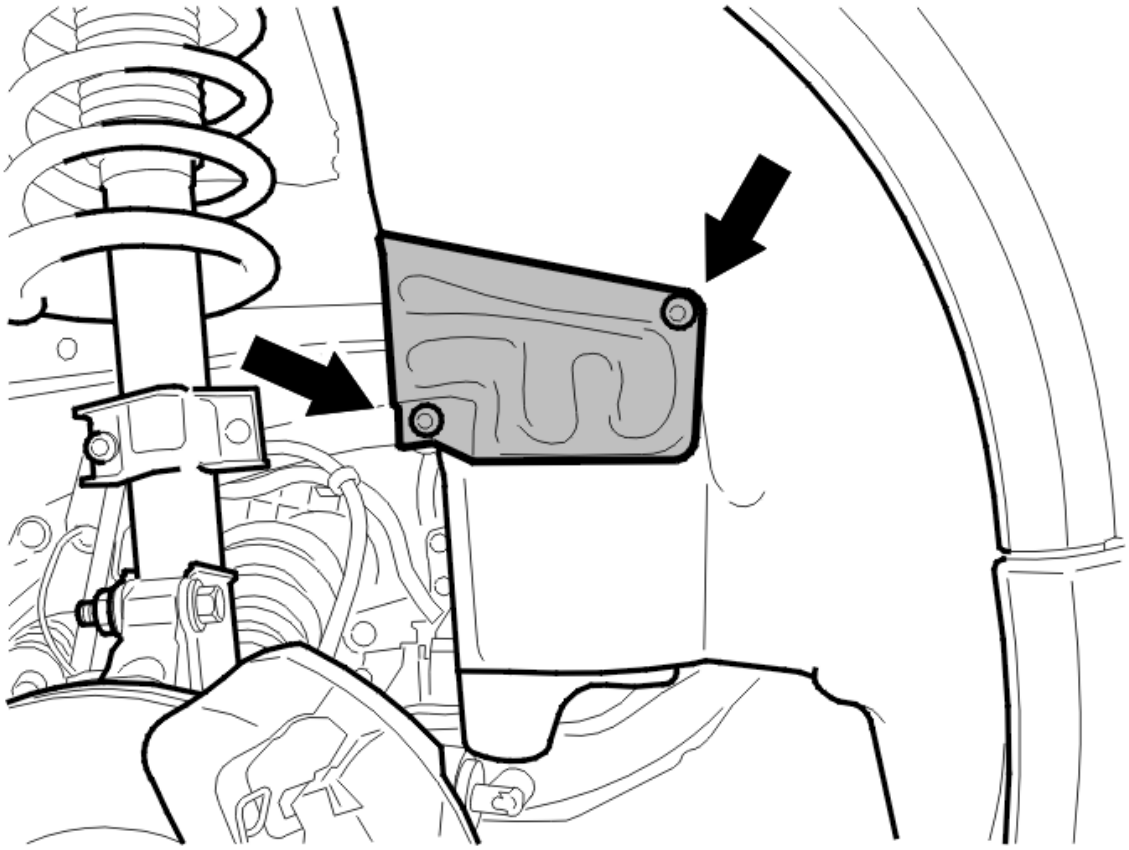

Fig. 229: Identifying Fender Liner Plastic Nuts And Protective Plate
Courtesy of VOLVO CARS CORPORATION

Slacken off the right lower front part of the fender liner.

Remove:

- the plastic nuts on the fender liner
- the protective plate.

Bend out the fender liner.

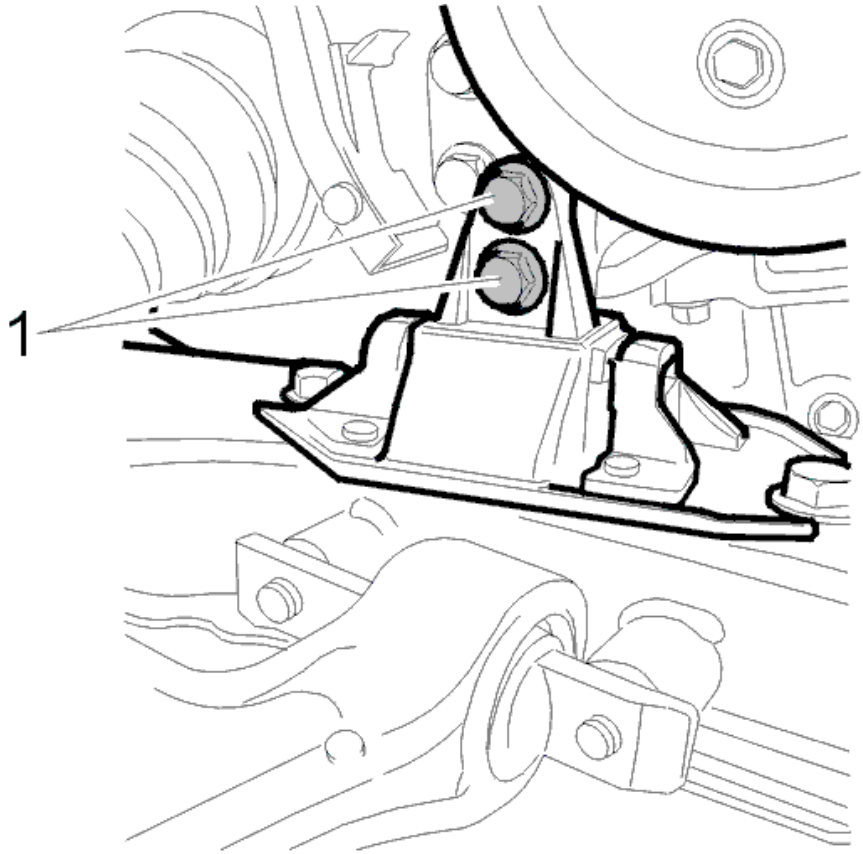

Fig. 230: Identifying Right-Hand Engine Mounting Screws
Courtesy of VOLVO CARS CORPORATION

Remove both the right hand engine mounting screws. (1)

REMOVING THE SPLASH GUARD UNDER ENGINE

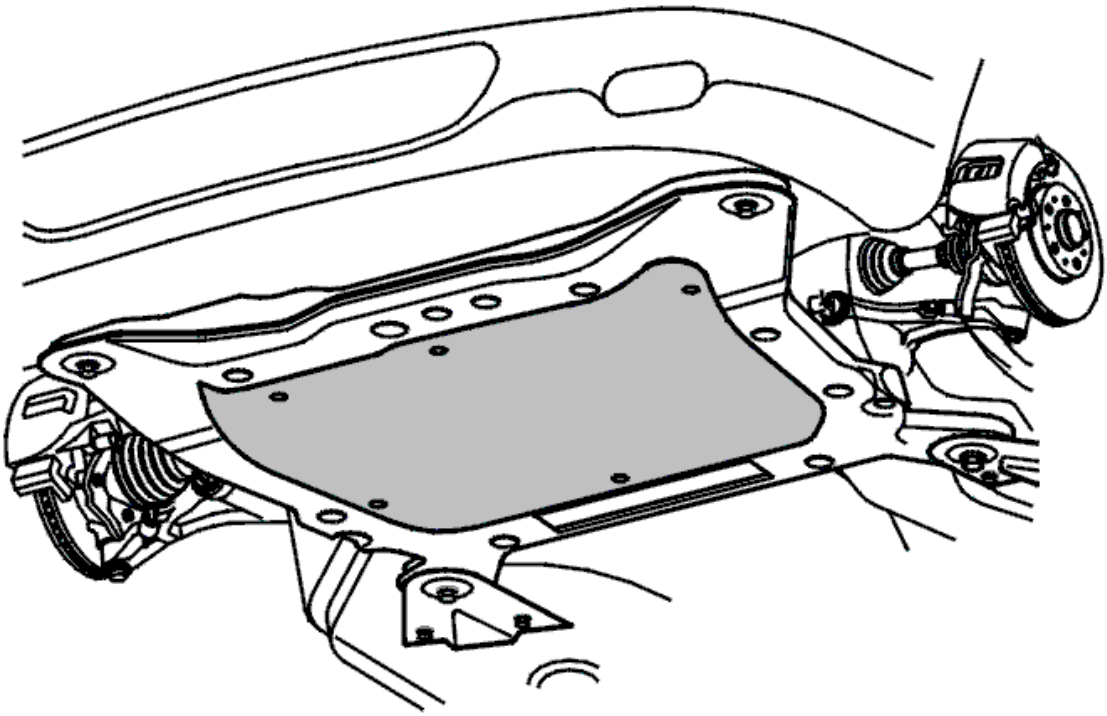

Fig. 231: Identifying Splash Guard Under Engine
Courtesy of VOLVO CARS CORPORATION

Remove the splash guard under the engine.

REMOVING THE SKID PLATE

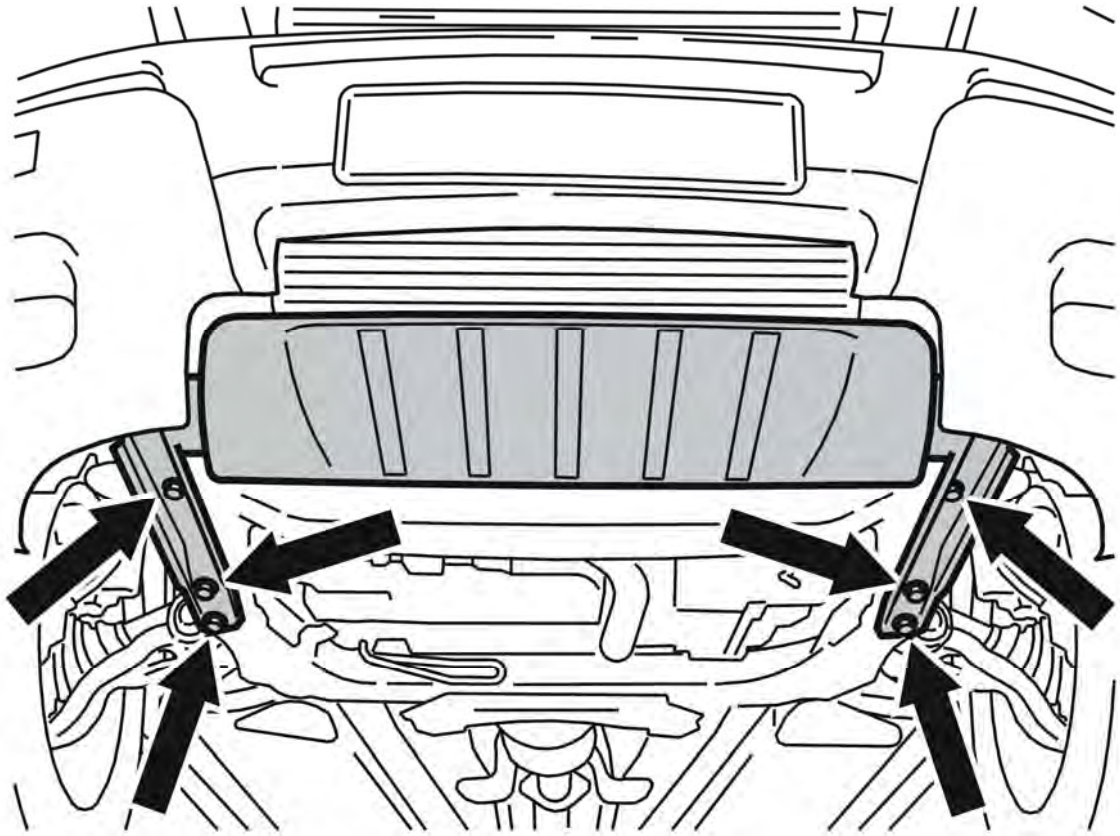

Fig. 232: Splash Guard, Protective Plate And Screws
Courtesy of VOLVO CARS CORPORATION

Remove the 6 screws.

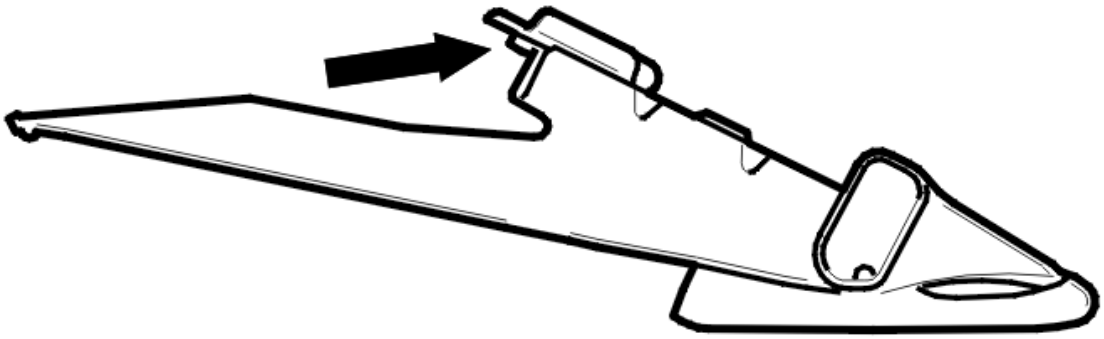

Fig. 233: Identifying Protective Plate
Courtesy of VOLVO CARS CORPORATION

Lift and slide the splash guard forward.

Remove the protective plate.

NOTE: **There is a guide sleeve on the upper mounting for the plate. This must be lifted slightly so that the panel can be slid forward.**

EXPOSING THE SUB-FRAME

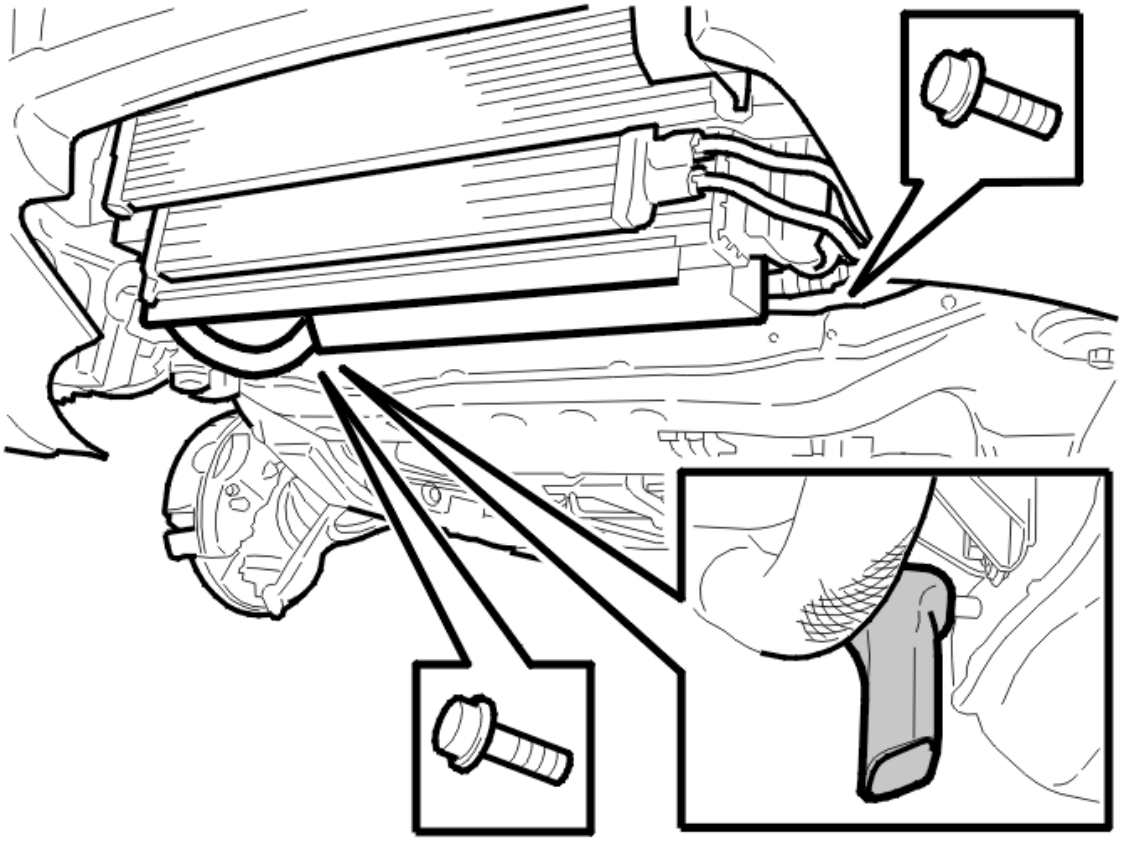

Fig. 234: Identifying Cable Duct Screw And Ground Lead Screw
Courtesy of VOLVO CARS CORPORATION

Remove:

- the screw for the cable duct
- the screw for the ground lead.

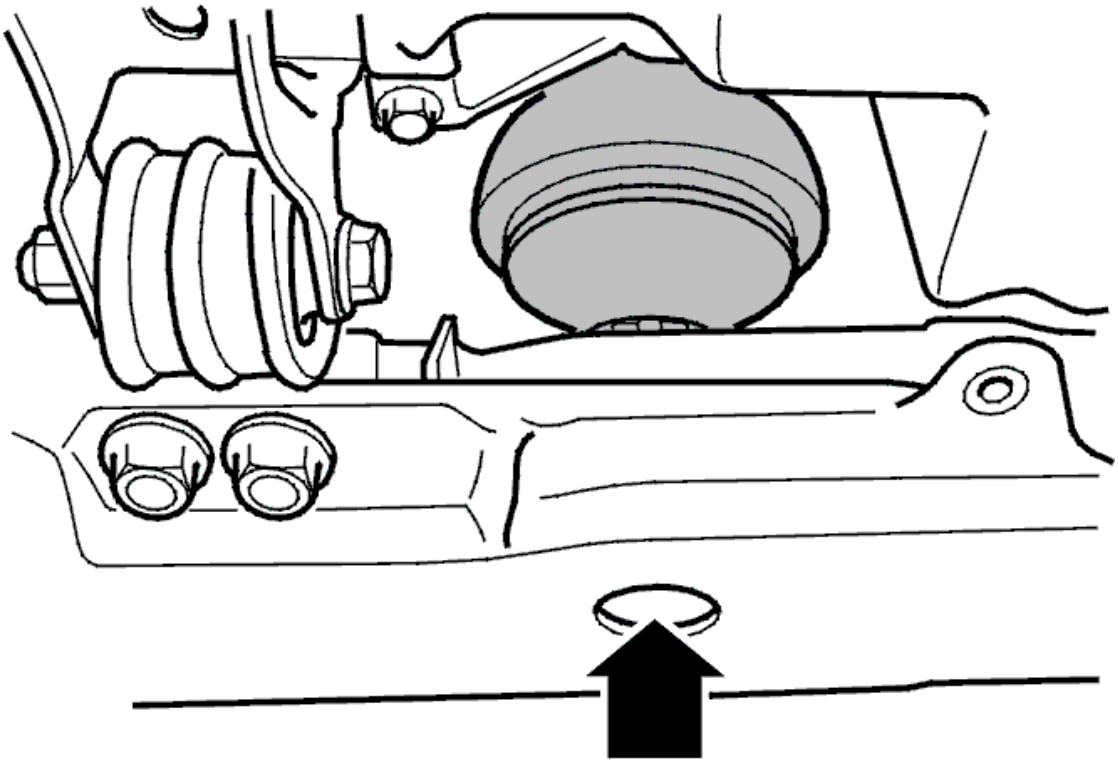

Fig. 235: Front Engine Pad Lower Screw
Courtesy of VOLVO CARS CORPORATION

Remove the screw for the front engine pad.

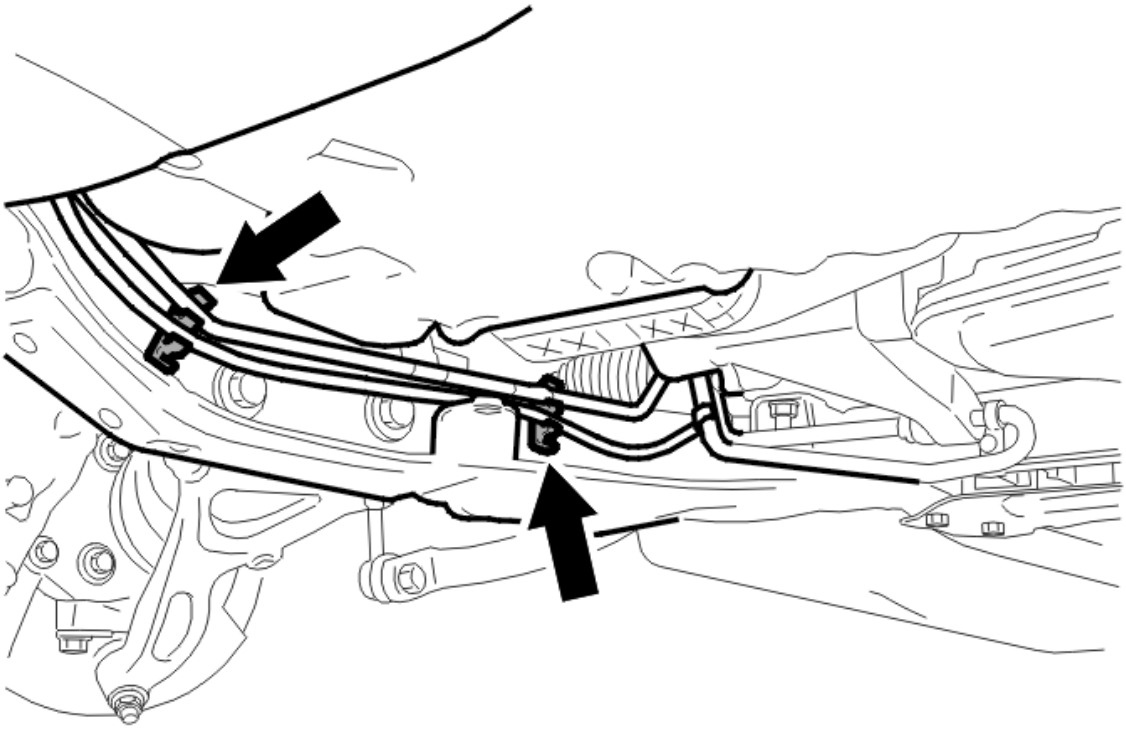

Fig. 236: Identifying Pipes and Screw Clips
Courtesy of VOLVO CARS CORPORATION

Remove:

- the oil pipe for the steering gear from the snap fasteners along the sub-frame
- the screw clip for the steering gear return line
- the fuel line for the engine block heater, if applicable.

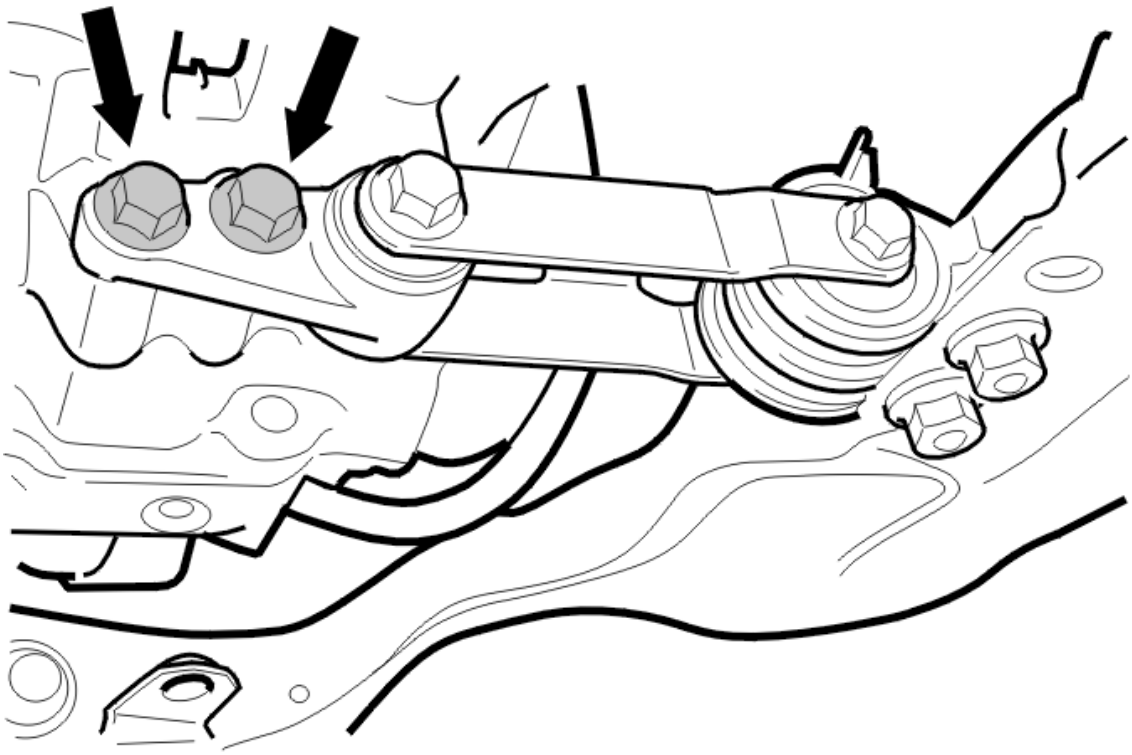

Fig. 237: Identifying Gearbox Bolts
Courtesy of VOLVO CARS CORPORATION

Remove the two screws holding the torque rod at the transmission.

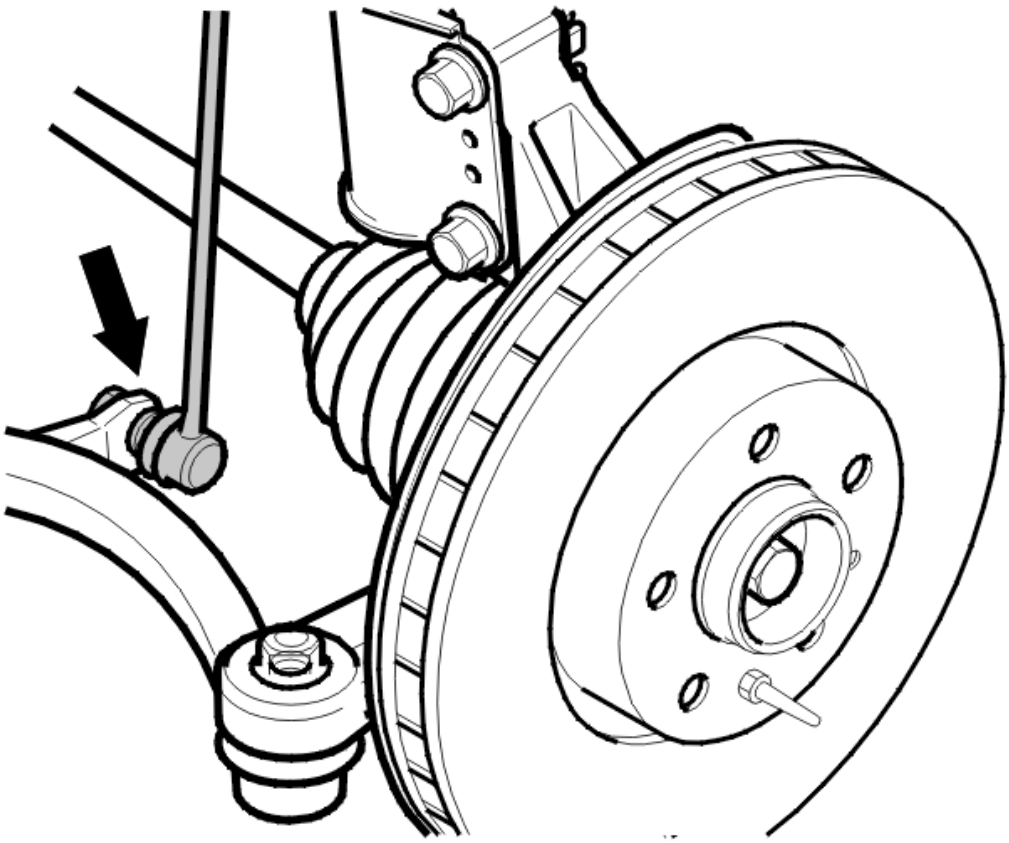

Fig. 238: Identifying Anti-Roll Bar Links
Courtesy of VOLVO CARS CORPORATION

Remove the anti-roll bar links from the anti-roll bar on both sides. Counterhold using a Torx wrench so that the ball joint boot is not damaged.

REMOVING THE DRIVE SHAFT

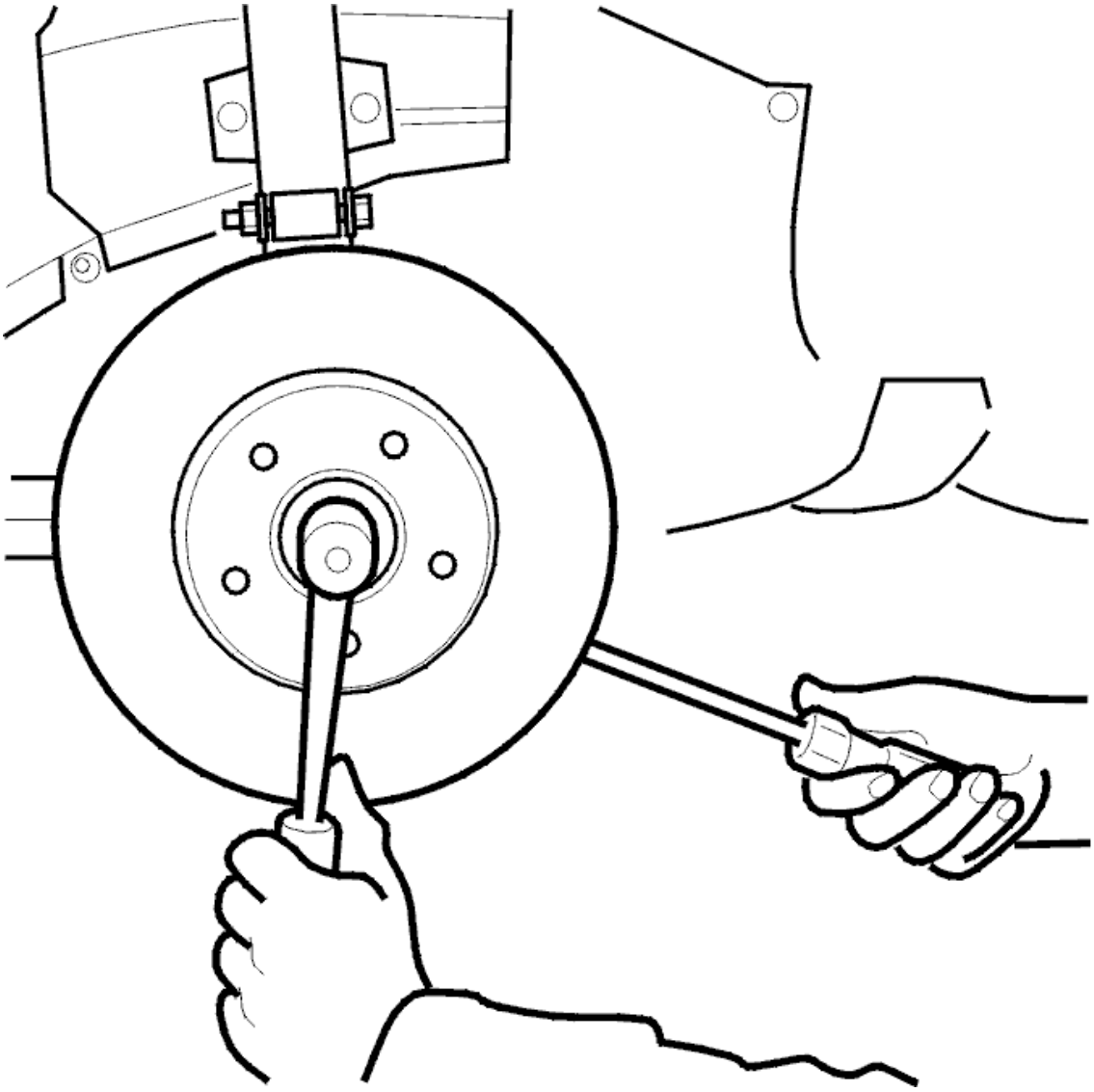

Fig. 239: Identifying Drive Shaft Screw Removal Using Counter Hold On Brake Disc
Courtesy of VOLVO CARS CORPORATION

Remove the screw for the drive shaft. Use a screwdriver as a counterhold on the brake disc.

Knock the end of the drive shaft into the hub. Use a brass drift.

Loosen the ball joint pin from the link arm, see **BALL JOINT, REPLACING** .

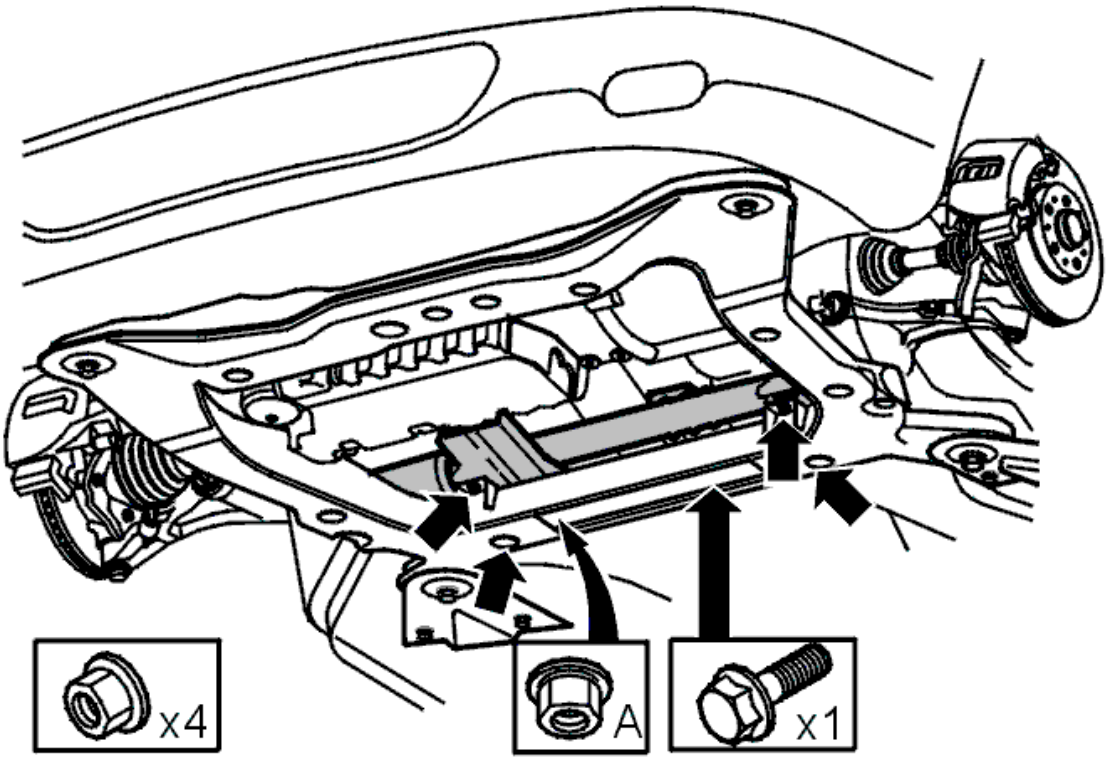

Fig. 240: Identifying Bolt And Nut Holding Steering Gear To Sub-Frame
Courtesy of VOLVO CARS CORPORATION

Remove the four nuts and screws holding the steering gear to the sub-frame.

Remove the power steering line from the clips on the sub-frame.

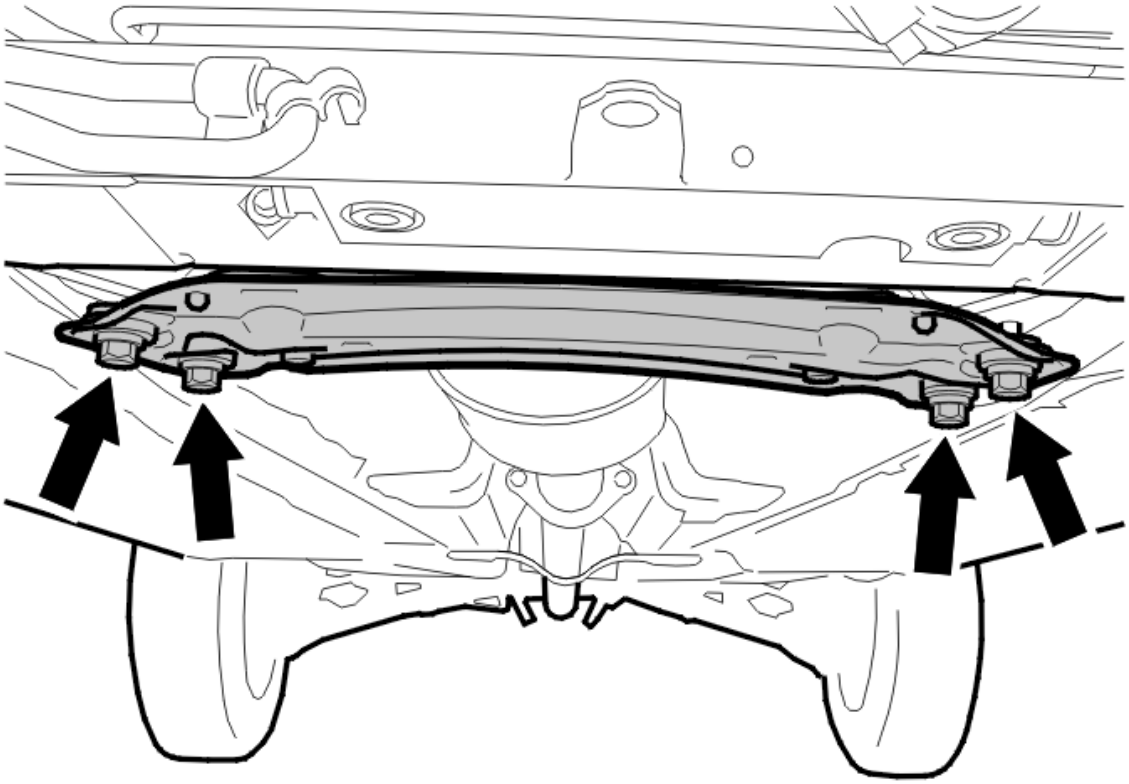

Fig. 241: Identifying SIPS Member
Courtesy of VOLVO CARS CORPORATION

Remove:

- the screw in the mounting for the front SIPS member
- the brake pipe from the snap fastener on the member
- The SIPS member.

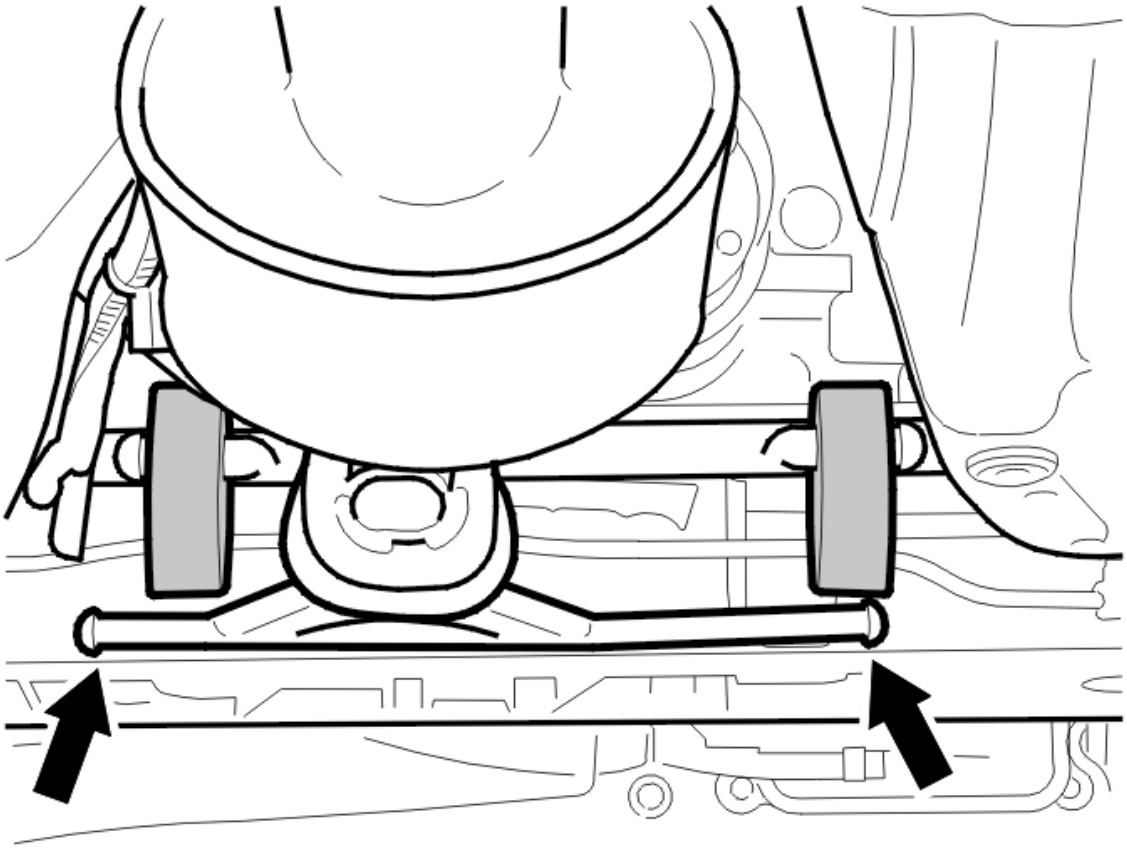

Fig. 242: Identifying Exhaust Pipe Rubber Mountings
Courtesy of VOLVO CARS CORPORATION

Remove the rubber mountings for the exhaust pipe.

REMOVING THE SUB-FRAME

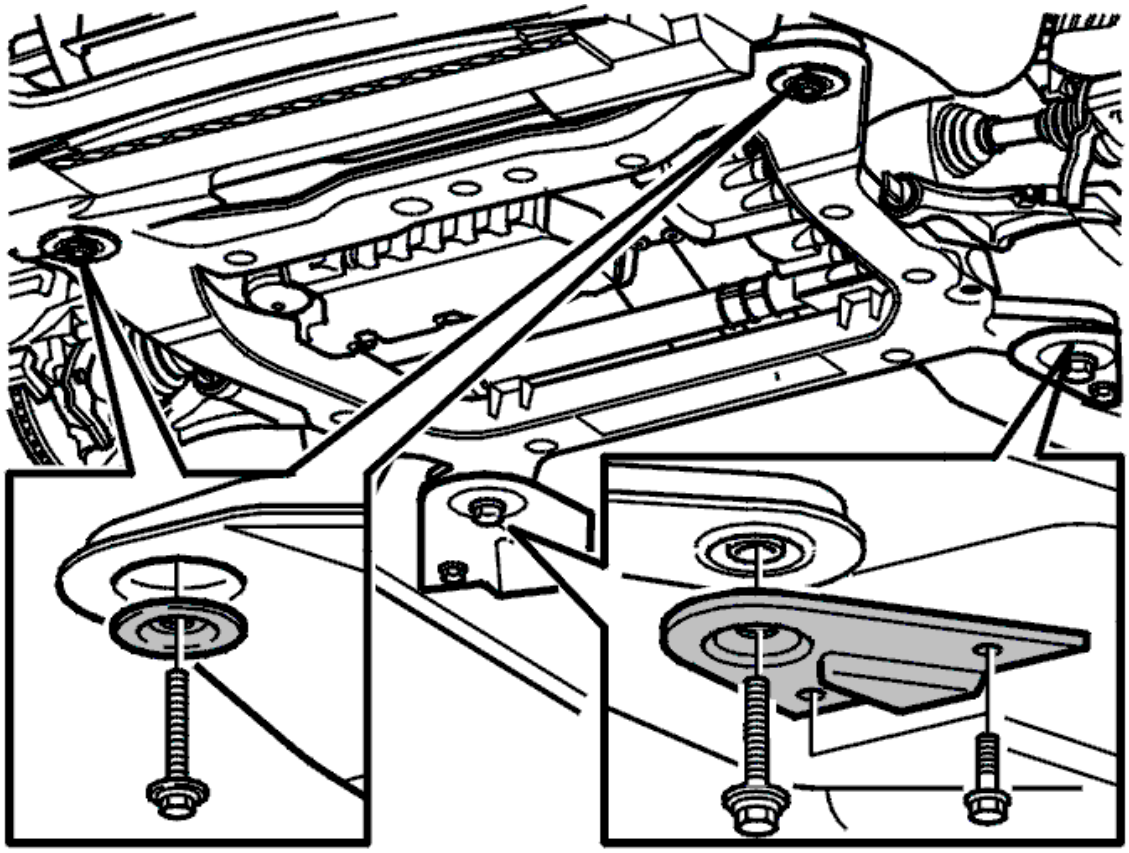

Fig. 243: Identifying Bolts, Washers And Brackets In Sub-Frame
Courtesy of VOLVO CARS CORPORATION

Position a lifting table under the sub-frame

Remove the following on both sides:

- the screws holding the sub-frame brackets in the bodywork
- the screw for the sub-frame mounting.

Hang up the engine block heater secured on the left-hand side of the sub-frame, if applicable.

Carefully lower the sub-frame.

NOTE: Ensure that the brake pipe clears the exhaust pipe mounting when lowering the frame.

NOTE: Ensure that the steering gear screws release from the sub-frame.

TRANSFERRING COMPONENTS

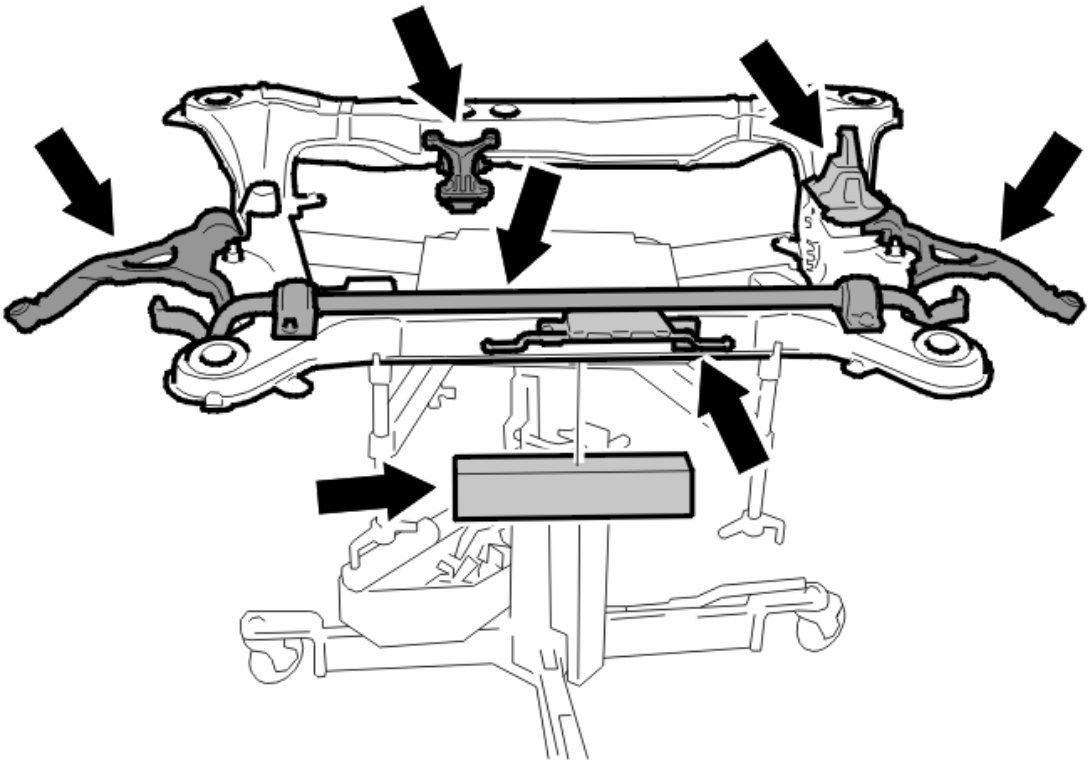

Fig. 244: Identifying Bevel Protractor
Courtesy of VOLVO CARS CORPORATION

Transfer:

- the control arms. Use new screws and new nut. Tighten the front screws. Tighten to **65 Nm** . Angle-tighten **90°** . Use bevel protractor see **9512050** . Tighten the rear screw. Tighten to **105Nm** . Angle-tighten **90°**
- the anti-roll bar. Tighten to **60 Nm**
- the right-hand engine mounting. Tighten the screws. Tighten to **65 Nm** . Angle-tighten **60°**
- the exhaust mounting bracket. Tighten to **50 Nm**
- the shock absorber Tighten to **50 Nm**
- lower torque rod. Tighten to **65 Nm** . Angle-tighten **90°** .

Install new pipe / hose holders.

INSTALLING THE SUB-FRAME

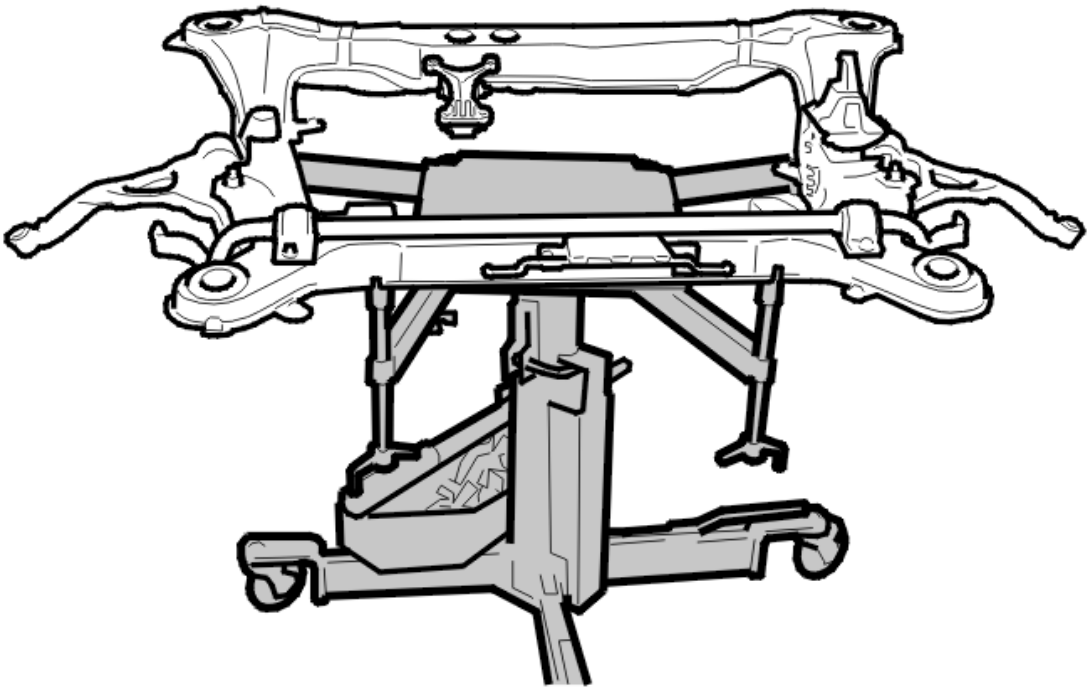

Fig. 245: Identifying Front And Rear Screws To Control Arms
Courtesy of VOLVO CARS CORPORATION

Position the sub-frame on a lifting table.

Carefully lift the sub-frame.

Locate the control arms to the ball joints and the steering gear to its mountings.

HINT: Lubricate the rubber coated clamp for the servo pressure pipe on the sub-frame using a soap solution. Install the screw before raising the sub-frame completely. Do not tighten the screw more than 2 turns as the pipe must be able to slide to the correct position in the clamp whilst raising the sub frame.

NOTE: Ensure that the brake pipe at the exhaust mounting is not trapped when raising the sub frame.

Lift the sub-frame up completely.

Install the four screws in the sub-frame together with the sub-frame brackets and engine block heater, if applicable. Use new screws. Lubricate the screws.

First tighten the screws on the left side of the sub-frame. Tighten to **105 Nm** . Angle tighten to **120°** . Then tighten the right-hand side to the same value.

Finally tighten the screws for the brackets on both sides to **50 Nm** .

see **SUBFRAME, ADJUSTING**

INSTALLING REMOVED COMPONENTS

Install:

- the rubber mountings for the exhaust pipe
- SIPS (side impact protection system) member
- the four screws for the SIPS (side impact protection system) member. Tighten to **24 Nm** .

Install the four nuts and the screw holding the steering gear. Use new nuts and a new screw. Tighten to **50 Nm** .

Clip the cable in position.

Install:

- the ball joints. Use new nuts. Tighten to **80 Nm** . Counterhold using a Torx wrench so that the ball joint boot is not damaged
- the anti-roll bar links. Use new nuts. Tighten to **50 Nm** . Counterhold using a Torx wrench so that the boot is not damaged.

Install:

- the lower torque rod. Tighten the two screws. Tighten to **10 Nm**
- the oil pipe for the steering gear from the snap fasteners along the sub-frame
- the screw clip for the steering gear return line
- the fuel line for the engine block heater, if applicable.
- the screw for the cable duct
- the screw for the ground lead.

INSTALLING THE DRIVE SHAFT

Install new screws on both sides. Use a screwdriver as a counterhold. Tighten to **35Nm** . Angle-tighten **90°** . Use bevel protractor see **9512050** .

INSTALLING THE SKID PLATE

Move the skid plate up into the bumper wraparound.

Press forwards until the mounting brackets engage in the sub frame.

Install the screws. Tighten to **50 Nm** .

Install the splashguard under the engine. Tighten to **24 Nm** .

INSTALLING THE RIGHT-HAND ENGINE MOUNTING

Install the right-hand engine mounting. Use new screws. Tighten to **35 Nm** . Angle-tighten **90°** .

Fold the fender liner back into position.

Install:

- the skid plate
- the plastic nuts
- the front wheels. See **INSTALLING WHEELS**

INSTALLING THE CLAMP FOR THE SERVO PRESSURE HOSE

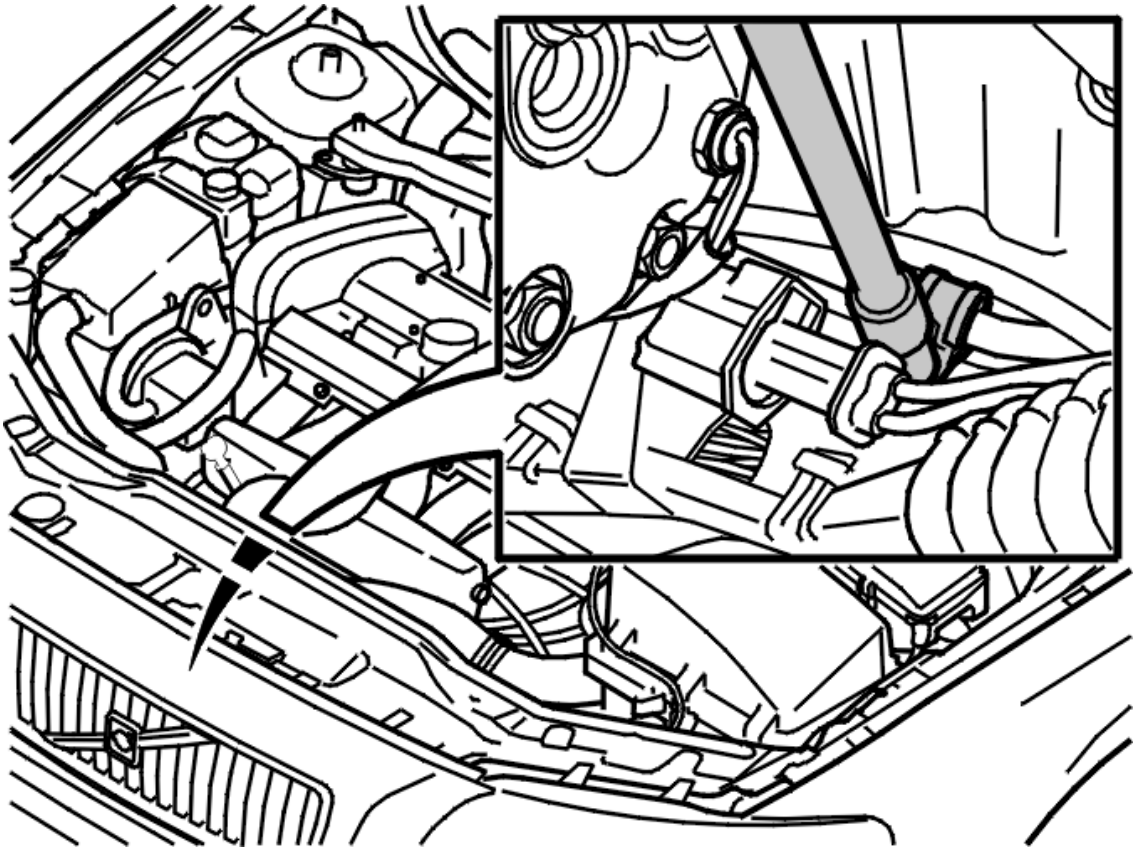

Fig. 246: Clamp On Sub-Frame
Courtesy of VOLVO CARS CORPORATION

Tighten the clamp for the servo pressure pipe on the sub frame. Tighten to **10 Nm** .

REMOVING LIFTING TOOLS

Remove lifting tool see **9995716** , kit see **9997070** and lifting hooks see **9995460** .

FINISHING

Align the wheels. See **WHEEL ALIGNMENT, CHECKING / ADJUSTING** .

SUB-FRAME FRONT, REPLACING (2007)

Special tools:

see **9995716**

see **9995460**

see **9512050**

see **9997062**

see **9997070**

NOTE: **As the illustrations in this service information are used for different model years and / or models, some variation may occur. However, the essential information in the illustrations is always correct.**

PREPARATION

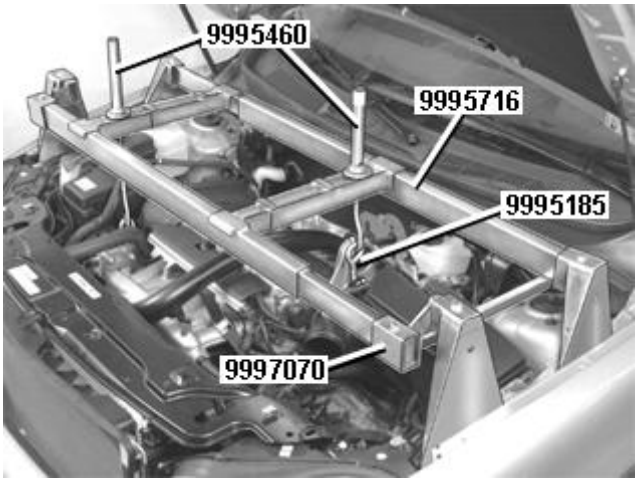

Fig. 247: Identifying Fixture Kit, Lifting Beam And Lifting Hooks
Courtesy of VOLVO CARS CORPORATION

Install lifting tool see **9995716** converted with kit see **9997070** and lifting hooks see **9995460** .

Lift the engine to relieve the load on the engine pads.

Remove the front wheels.

REMOVING THE CLAMP FOR THE SERVO PRESSURE HOSE

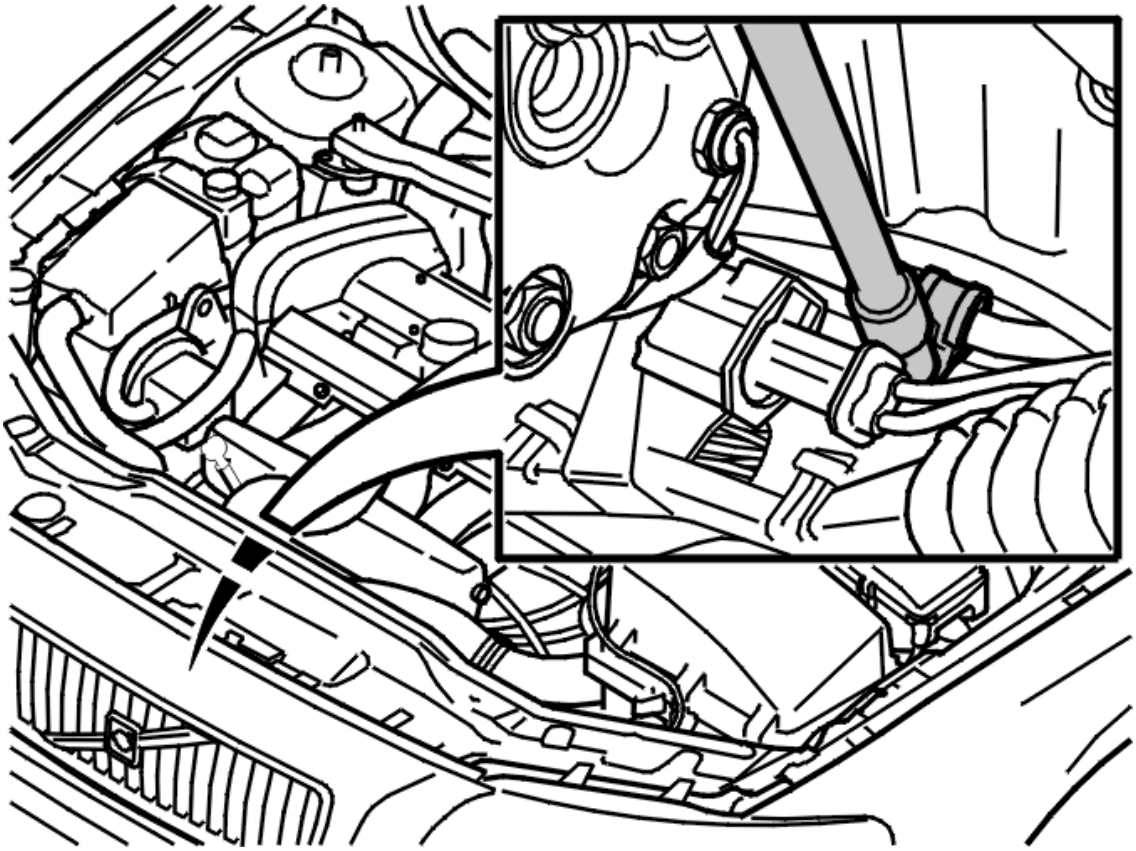

Fig. 248: Clamp On Sub-Frame
Courtesy of VOLVO CARS CORPORATION

Remove the clamp for the servo pressure pipe on the sub frame.

REMOVING THE RIGHT ENGINE MOUNTING

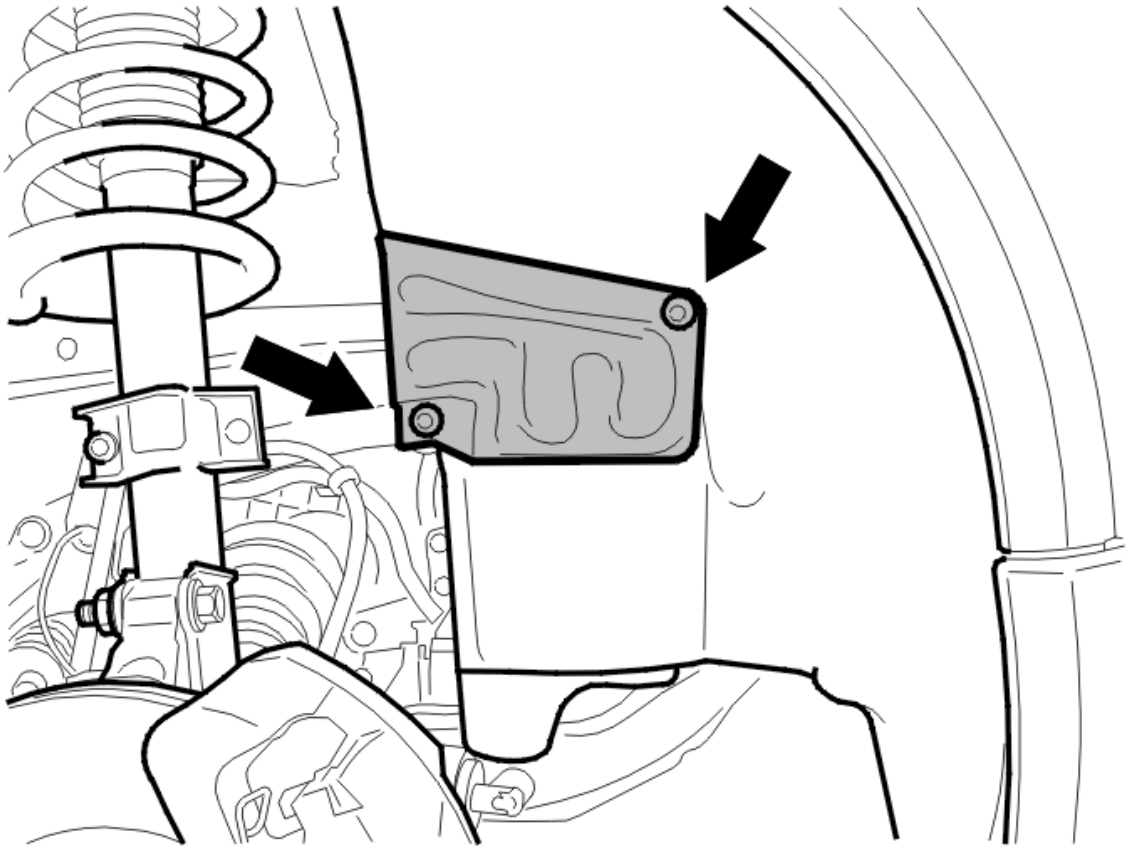

Fig. 249: Identifying Fender Liner Plastic Nuts And Protective Plate
Courtesy of VOLVO CARS CORPORATION

Slacken off the right lower front part of the fender liner.

Remove:

- the plastic nuts on the fender liner
- the protective plate.

Bend out the fender liner.

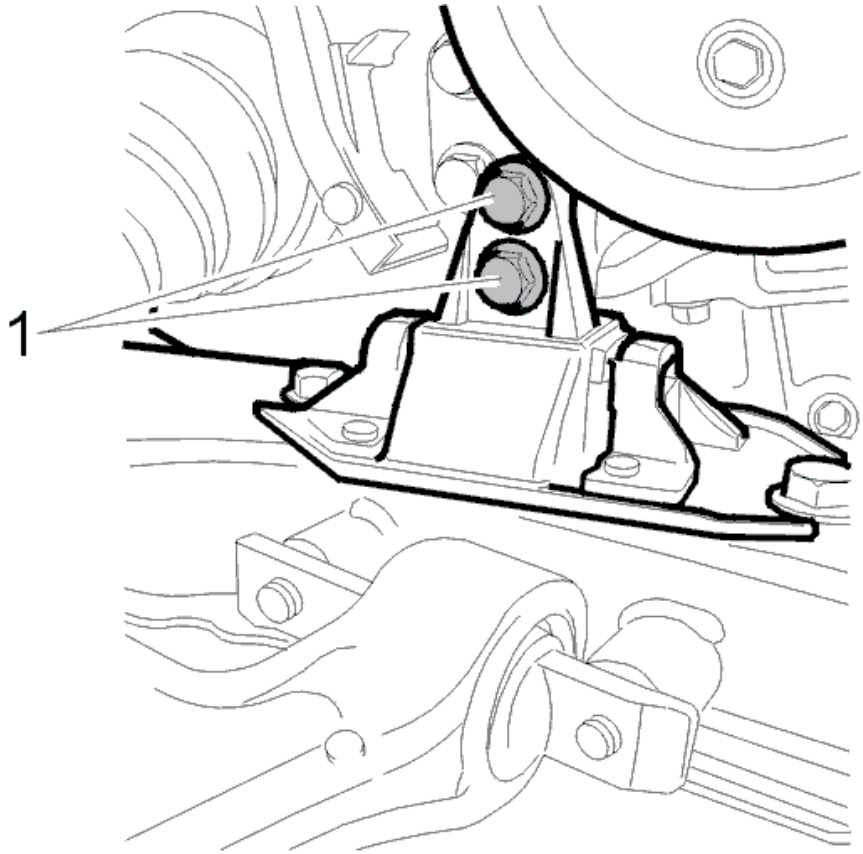

Fig. 250: Identifying Right-Hand Engine Mounting Screws
Courtesy of VOLVO CARS CORPORATION

Remove both the right hand engine mounting screws. (1)

REMOVING THE SPLASH GUARD UNDER ENGINE

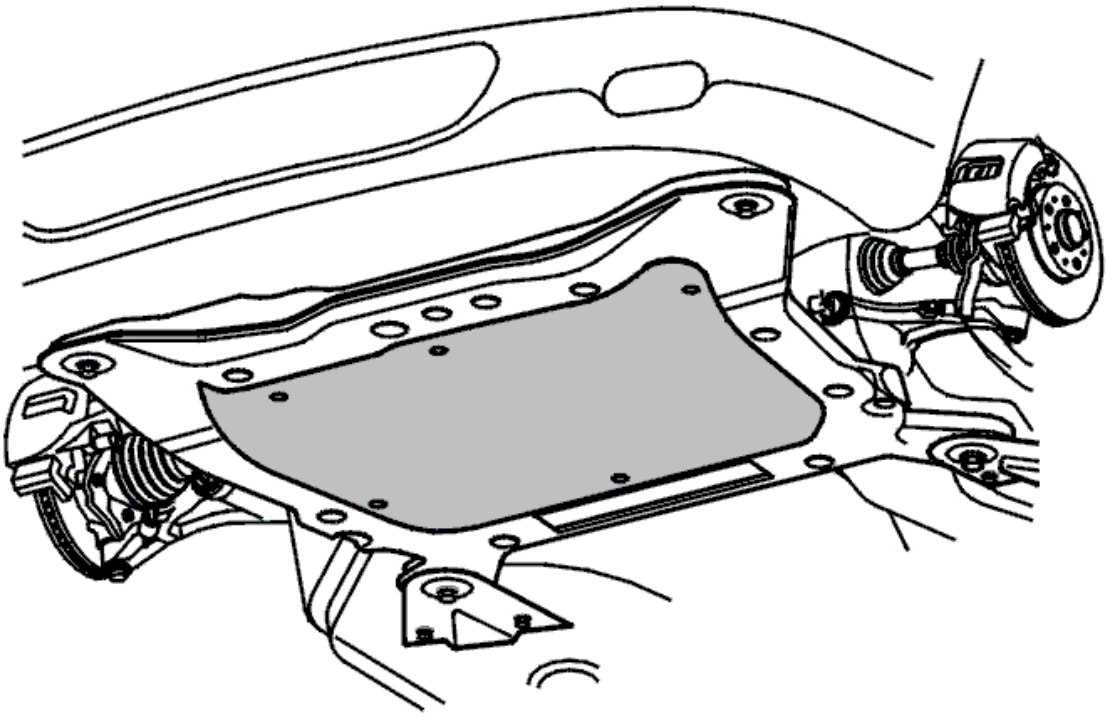

Fig. 251: Identifying Splash Guard Under Engine
Courtesy of VOLVO CARS CORPORATION

Remove the splash guard under the engine.

REMOVING THE SKID PLATE

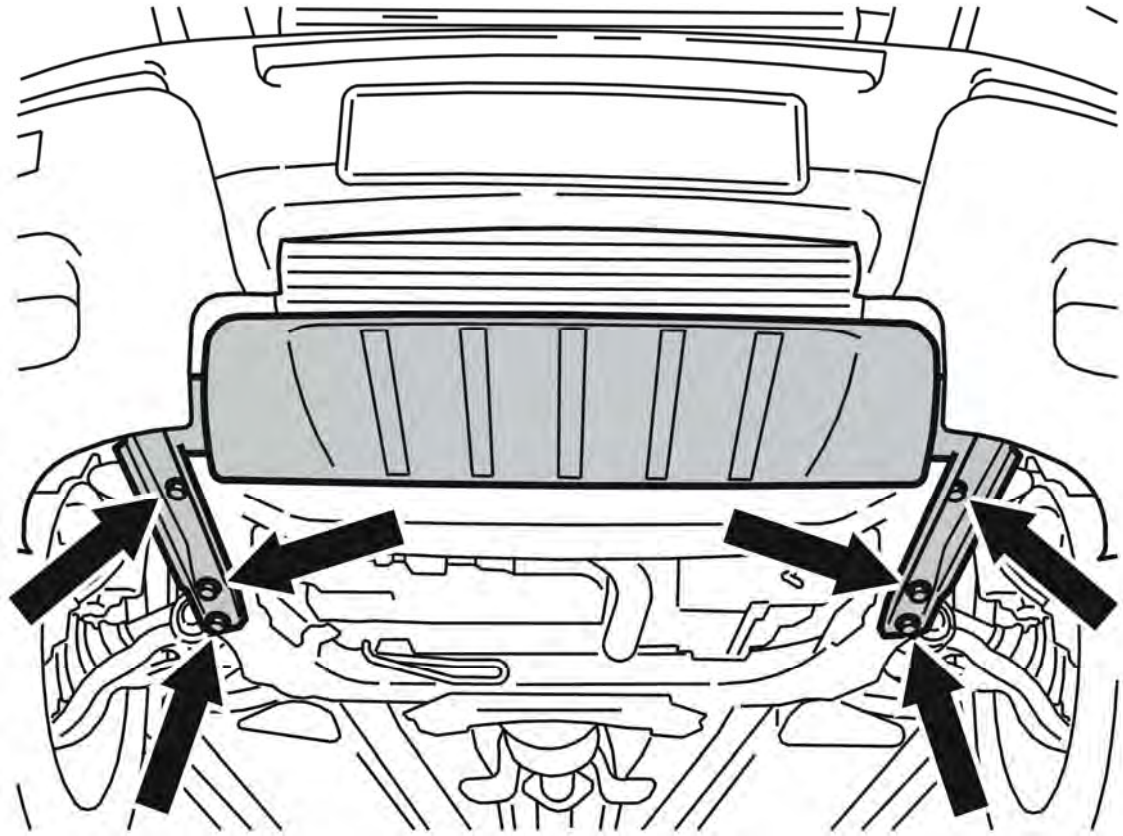

Fig. 252: Splash Guard, Protective Plate And Screws
Courtesy of VOLVO CARS CORPORATION

Remove the 6 screws.

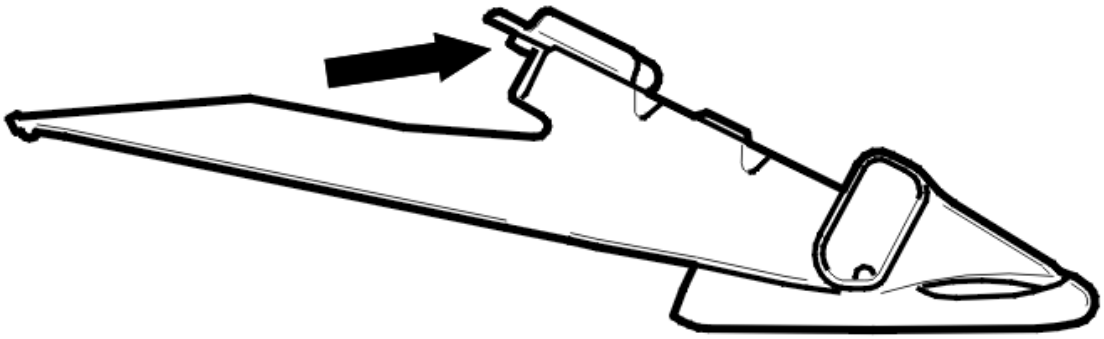

Fig. 253: Identifying Protective Plate
Courtesy of VOLVO CARS CORPORATION

Lift and slide the splash guard forward.

Remove the protective plate.

NOTE: **There is a guide sleeve on the upper mounting for the plate. This must be lifted slightly so that the panel can be slid forward.**

EXPOSING THE SUB-FRAME

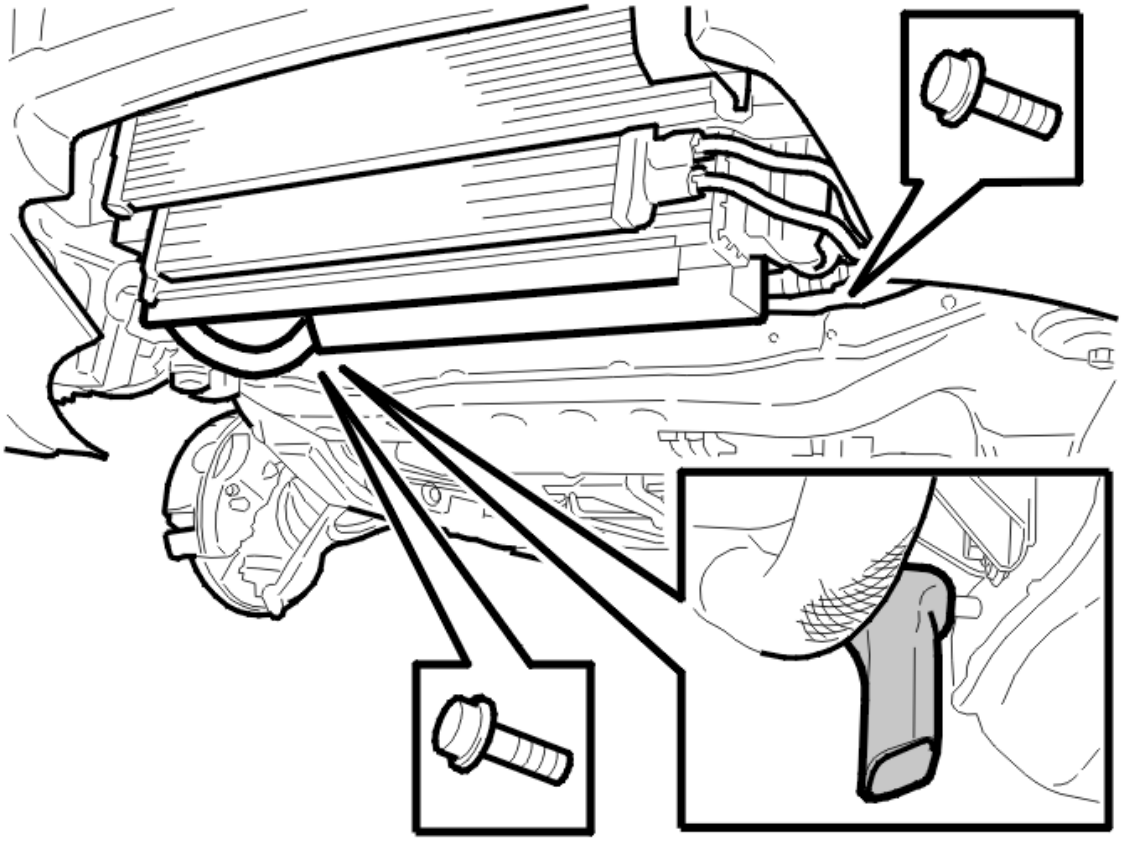

Fig. 254: Identifying Cable Duct Screw And Ground Lead Screw
Courtesy of VOLVO CARS CORPORATION

Remove:

- the screw for the cable duct
- the screw for the ground lead.

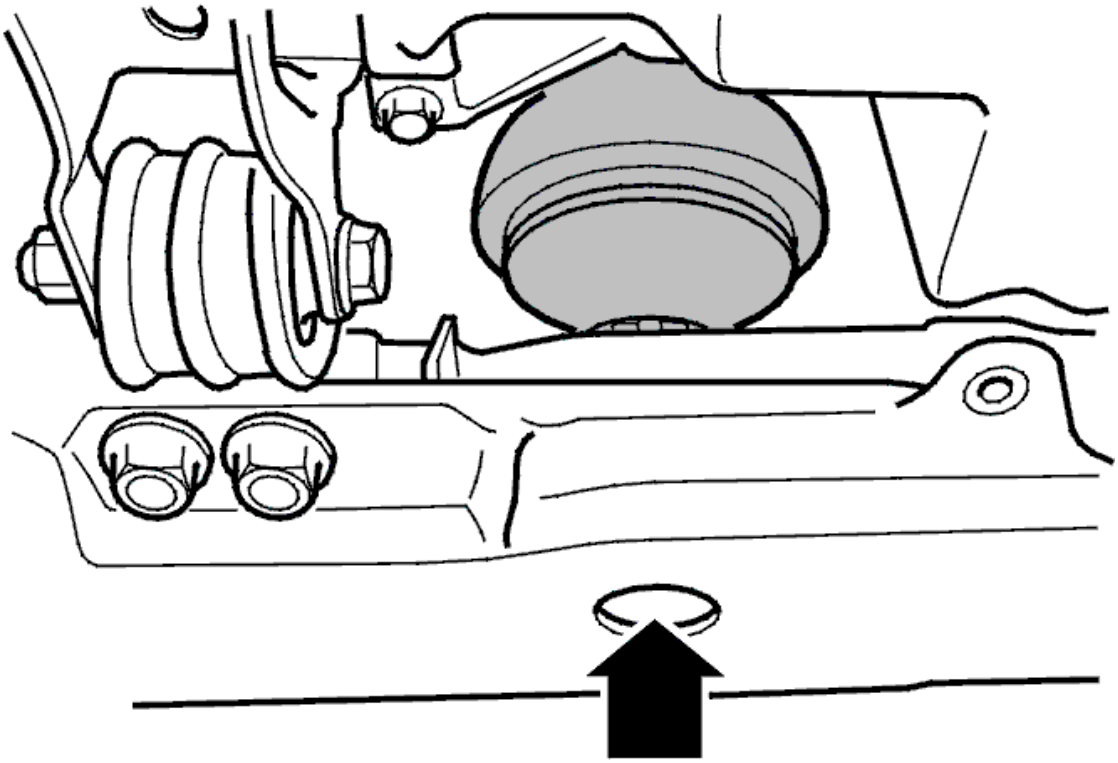

Fig. 255: Front Engine Pad Lower Screw
Courtesy of VOLVO CARS CORPORATION

Remove the screw for the front engine pad.

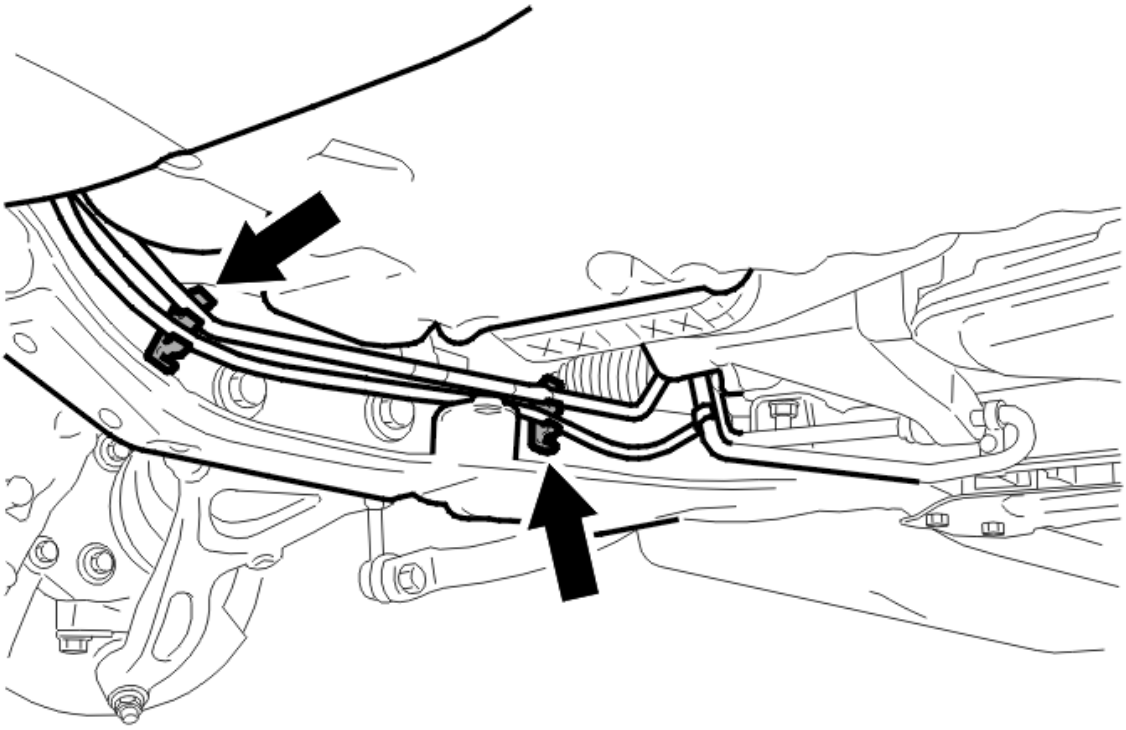

Fig. 256: Identifying Pipes and Screw Clips
Courtesy of VOLVO CARS CORPORATION

Remove:

- the oil pipe for the steering gear from the snap fasteners along the sub-frame
- the screw clip for the steering gear return line
- the fuel line for the engine block heater, if applicable.

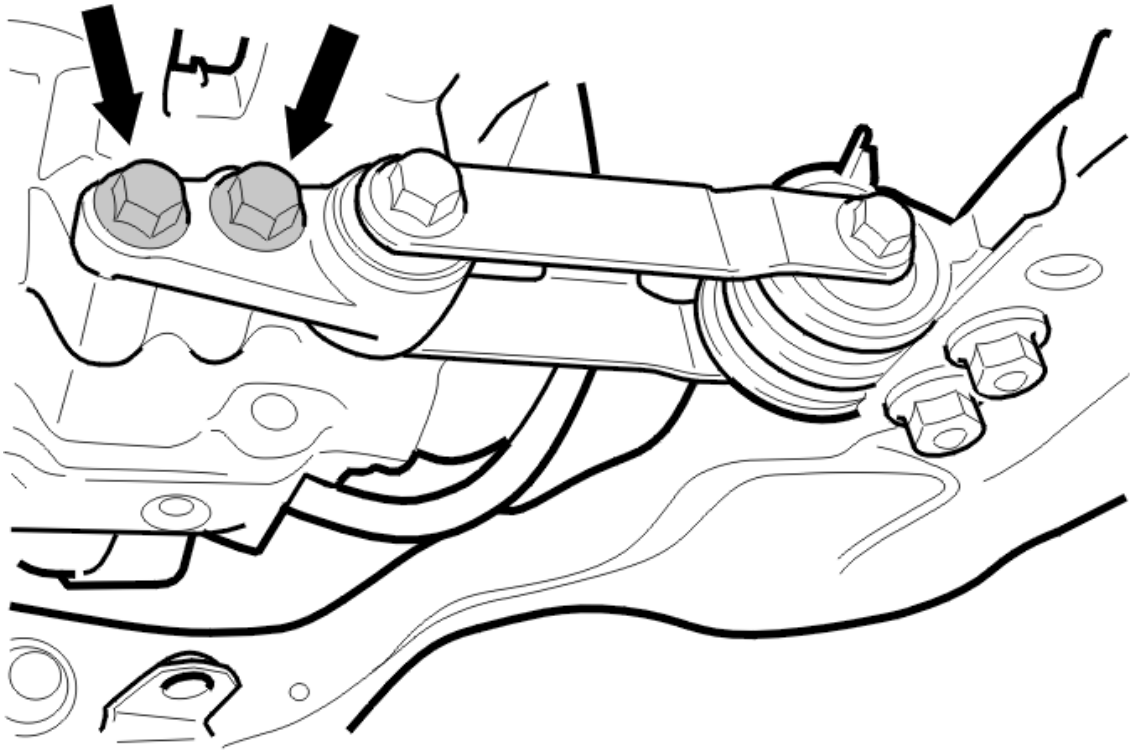

Fig. 257: Identifying Gearbox Bolts
Courtesy of VOLVO CARS CORPORATION

Remove the two screws holding the torque rod at the transmission.

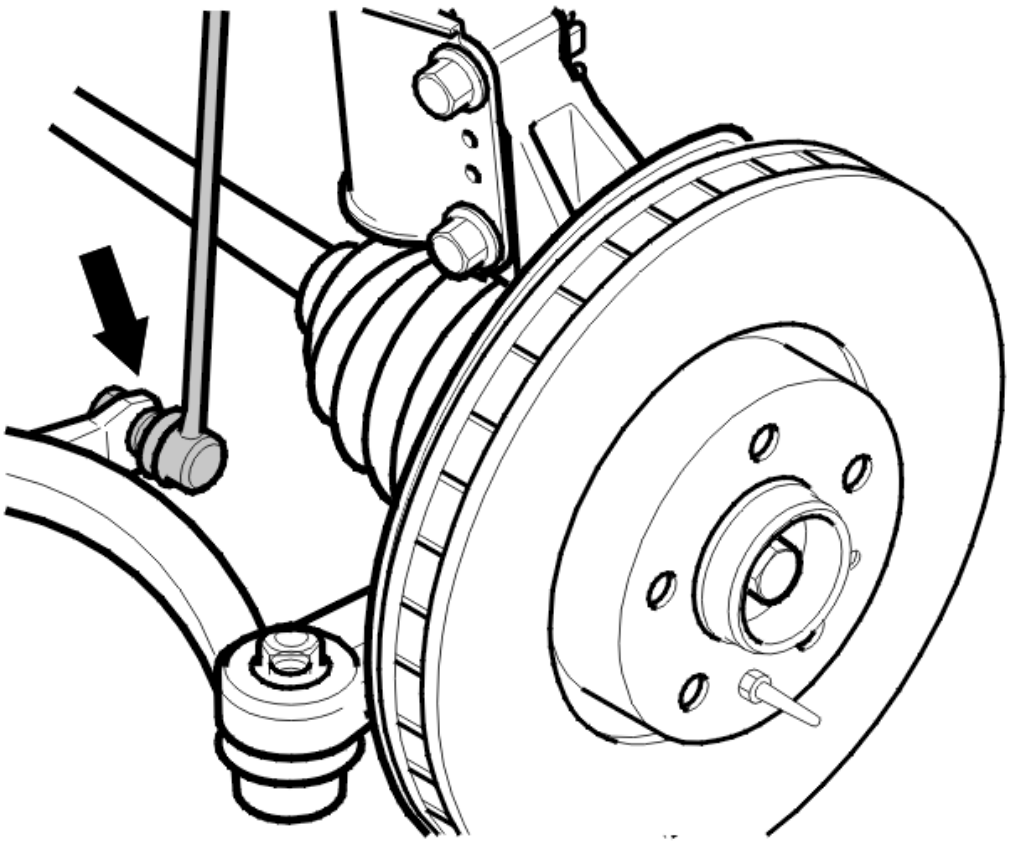

Fig. 258: Identifying Anti-Roll Bar Links
Courtesy of VOLVO CARS CORPORATION

Remove the anti-roll bar links from the anti-roll bar on both sides. Counterhold using a Torx wrench so that the ball joint boot is not damaged.

REMOVING THE DRIVE SHAFT

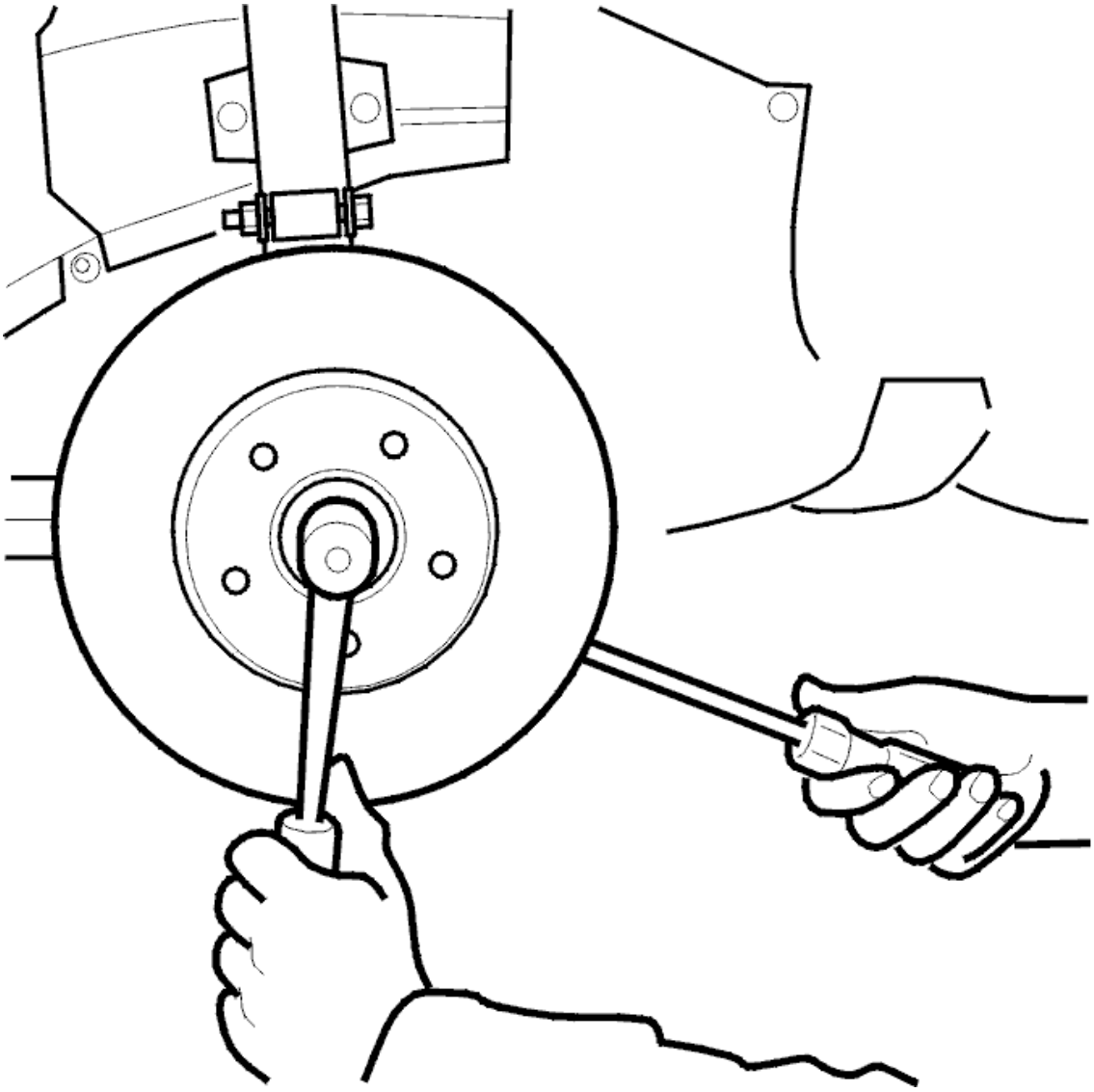

Fig. 259: Identifying Drive Shaft Screw Removal Using Counter Hold On Brake Disc
Courtesy of VOLVO CARS CORPORATION

Remove the screw for the drive shaft. Use a screwdriver as a counterhold on the brake disc.

Knock the end of the drive shaft into the hub. Use a brass drift.

Loosen the ball joint pin from the link arm, see **BALL JOINT, REPLACING** .

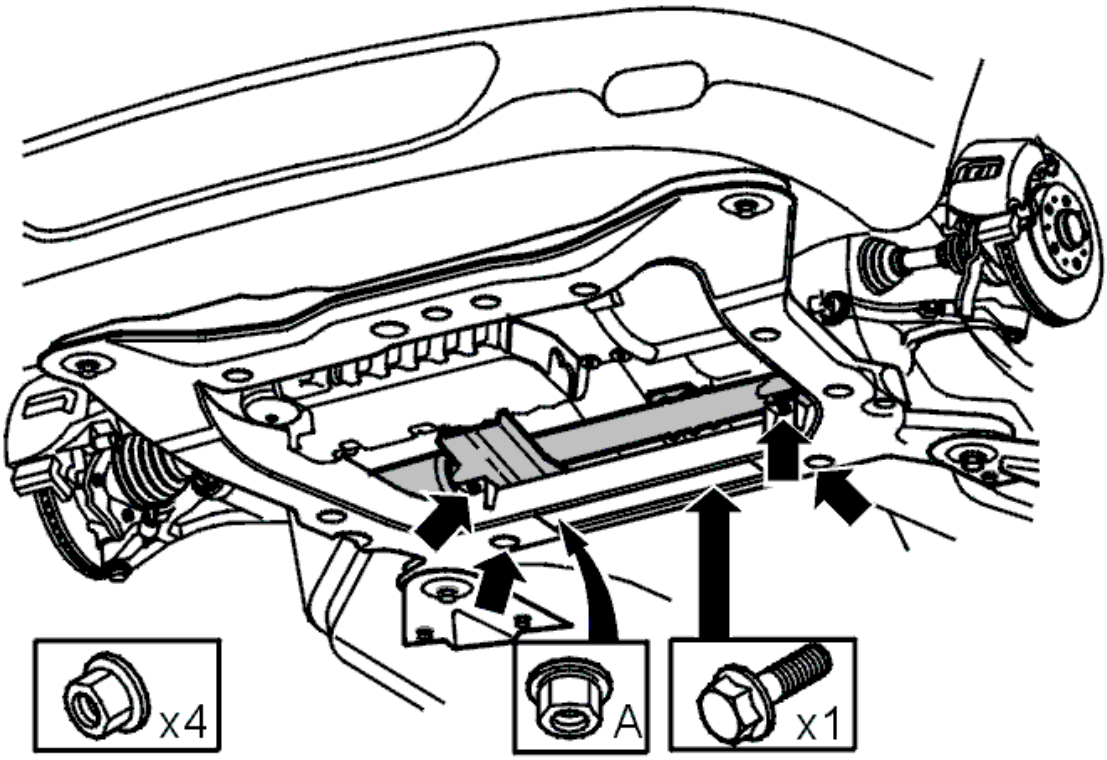

Fig. 260: Identifying Bolt And Nut Holding Steering Gear To Sub-Frame
Courtesy of VOLVO CARS CORPORATION

Remove the four nuts and screws holding the steering gear to the sub-frame.

Remove the power steering line from the clips on the sub-frame.

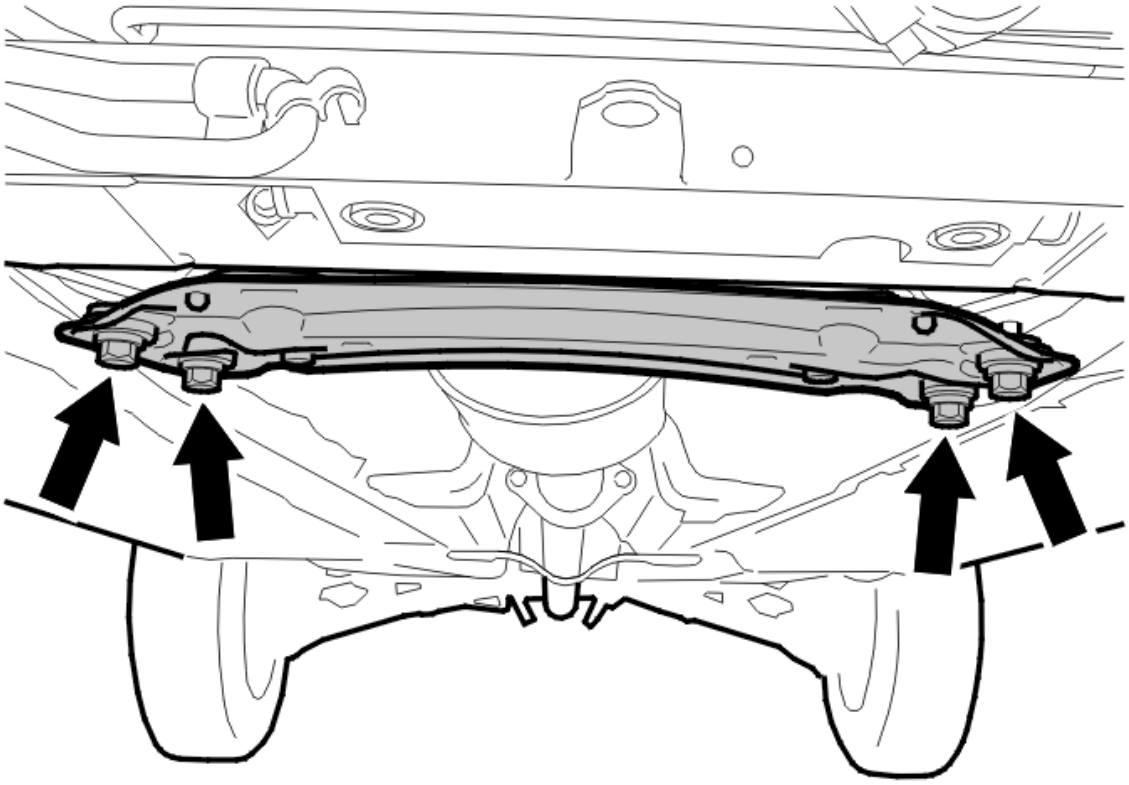

Fig. 261: Identifying SIPS Member
Courtesy of VOLVO CARS CORPORATION

Remove:

- the screw in the mounting for the front SIPS member
- the brake pipe from the snap fastener on the member
- The SIPS member.

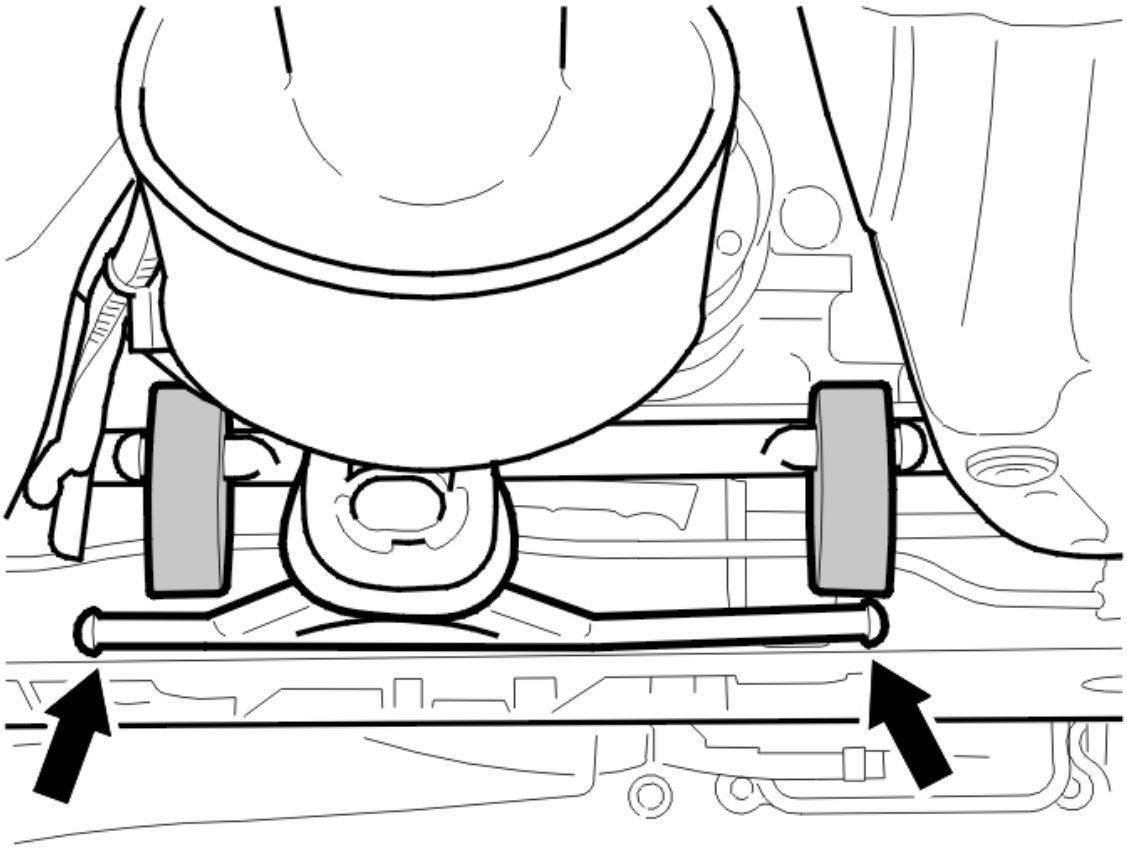

Fig. 262: Identifying Exhaust Pipe Rubber Mountings
Courtesy of VOLVO CARS CORPORATION

Remove the rubber mountings for the exhaust pipe.

REMOVING THE SUB-FRAME

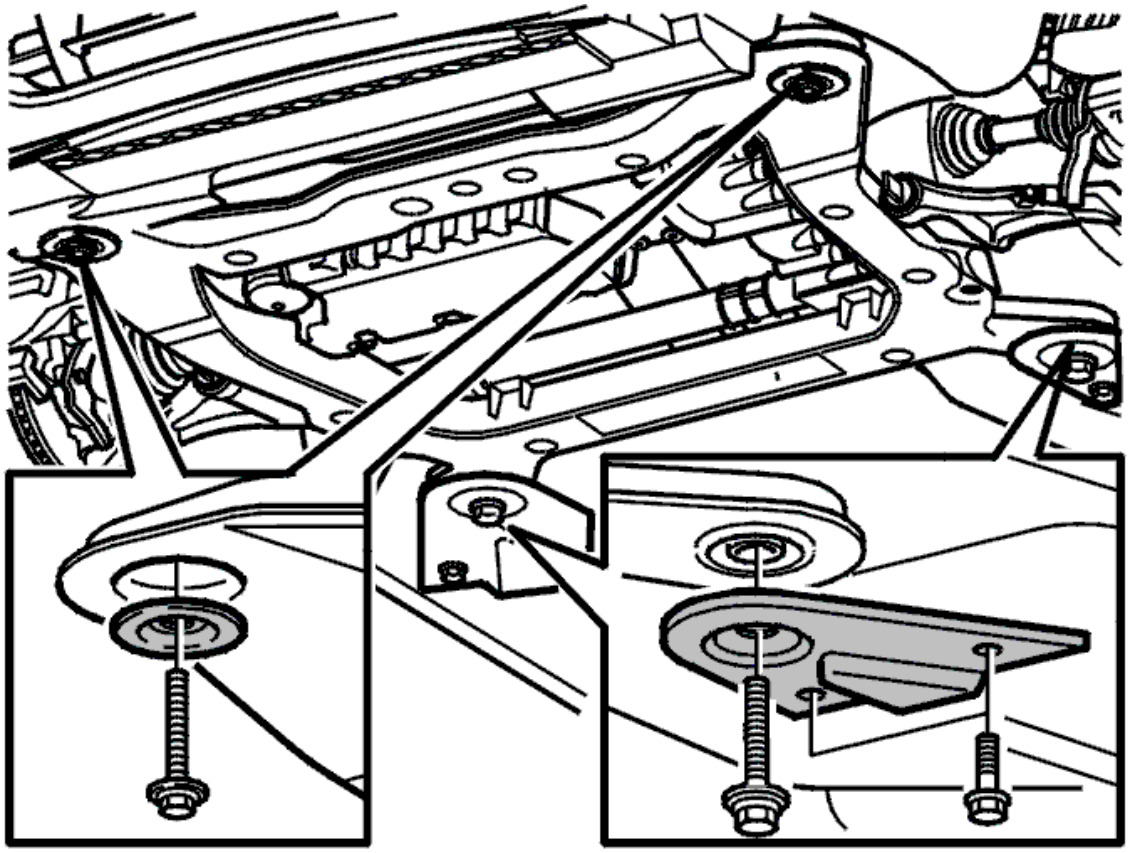

Fig. 263: Identifying Bolts, Washers And Brackets In Sub-Frame
Courtesy of VOLVO CARS CORPORATION

Position a lifting table under the sub-frame

Remove the following on both sides:

- the screws holding the sub-frame brackets in the bodywork
- the screw for the sub-frame mounting.

Hang up the engine block heater secured on the left-hand side of the sub-frame, if applicable.

Carefully lower the sub-frame.

NOTE: Ensure that the brake pipe clears the exhaust pipe mounting when lowering the frame.

NOTE: Ensure that the steering gear screws release from the sub-frame.

TRANSFERRING COMPONENTS

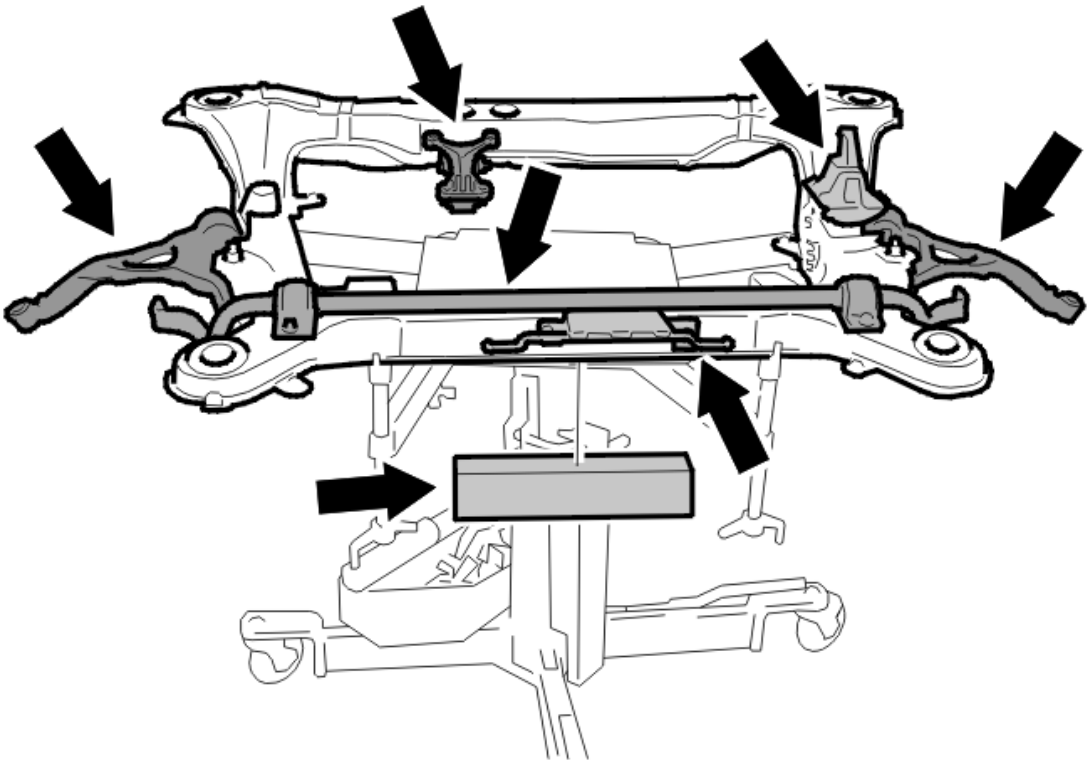

Fig. 264: Identifying Bevel Protractor
Courtesy of VOLVO CARS CORPORATION

Transfer:

- the control arms. Use new screws and new nut. Tighten the front screws. Tighten to **65 Nm** . Angle-tighten **90°** . Use bevel protractor see **9512050** . Tighten the rear screw. Tighten to **105Nm** . Angle-tighten **90°**
- the anti-roll bar. Tighten to **60 Nm**
- the right-hand engine mounting. Tighten the screws. Tighten to **65 Nm** . Angle-tighten **60°**
- the exhaust mounting bracket. Tighten to **50 Nm**
- the shock absorber Tighten to **50 Nm**
- lower torque rod. Tighten to **65 Nm** . Angle-tighten **90°** .

Install new pipe / hose holders.

INSTALLING THE SUB-FRAME

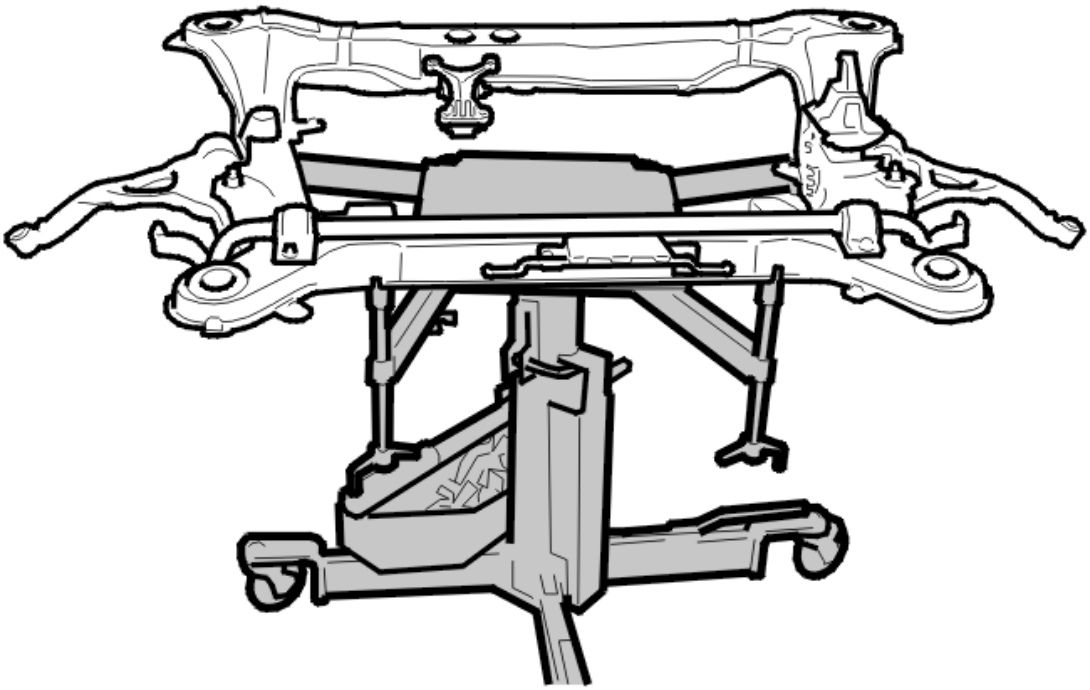

Fig. 265: Identifying Front And Rear Screws To Control Arms
Courtesy of VOLVO CARS CORPORATION

Position the sub-frame on a lifting table.

Carefully lift the sub-frame.

Locate the control arms to the ball joints and the steering gear to its mountings.

HINT: Lubricate the rubber coated clamp for the servo pressure pipe on the sub-frame using a soap solution. Install the screw before raising the sub-frame completely. Do not tighten the screw more than 2 turns as the pipe must be able to slide to the correct position in the clamp whilst raising the sub frame.

NOTE: Ensure that the brake pipe at the exhaust mounting is not trapped when raising the sub frame.

Lift the sub-frame up completely.

Install the four screws in the sub-frame together with the sub-frame brackets and engine block heater, if applicable. Use new screws. Lubricate the screws.

First tighten the screws on the left side of the sub-frame. Tighten to **105 Nm** . Angle tighten to **120°** . Then tighten the right-hand side to the same value.

Finally tighten the screws for the brackets on both sides to **50 Nm** .

see **SUBFRAME, ADJUSTING**

INSTALLING REMOVED COMPONENTS

Install:

- the rubber mountings for the exhaust pipe
- SIPS (side impact protection system) member
- the four screws for the SIPS (side impact protection system) member. Tighten to **24 Nm** .

Install the four nuts and the screw holding the steering gear. Use new nuts and a new screw. Tighten to **50 Nm** .

Clip the cable in position.

Install:

- the ball joints. Use new nuts. Tighten to **80 Nm** . Counterhold using a Torx wrench so that the ball joint boot is not damaged
- the anti-roll bar links. Use new nuts. Tighten to **50 Nm** . Counterhold using a Torx wrench so that the boot is not damaged.

Install:

- the lower torque rod. Tighten the two screws. Tighten to **10 Nm**
- the oil pipe for the steering gear from the snap fasteners along the sub-frame
- the screw clip for the steering gear return line
- the fuel line for the engine block heater, if applicable.
- the screw for the cable duct
- the screw for the ground lead.

INSTALLING THE DRIVE SHAFT

Install new screws on both sides. Use a screwdriver as a counterhold. Tighten to **35Nm** . Angle-tighten **90°** . Use bevel protractor see **9512050** .

INSTALLING THE SKID PLATE

Move the skid plate up into the bumper wraparound.

Press forwards until the mounting brackets engage in the sub frame.

Install the screws. Tighten to **50 Nm** .

Install the splashguard under the engine. Tighten to **24 Nm** .

INSTALLING THE RIGHT-HAND ENGINE MOUNTING

Install the right-hand engine mounting. Use new screws. Tighten to **35 Nm** . Angle-tighten **90°** .

Fold the fender liner back into position.

Install:

- the skid plate
- the plastic nuts
- the front wheels. See **INSTALLING WHEELS**

INSTALLING THE CLAMP FOR THE SERVO PRESSURE HOSE

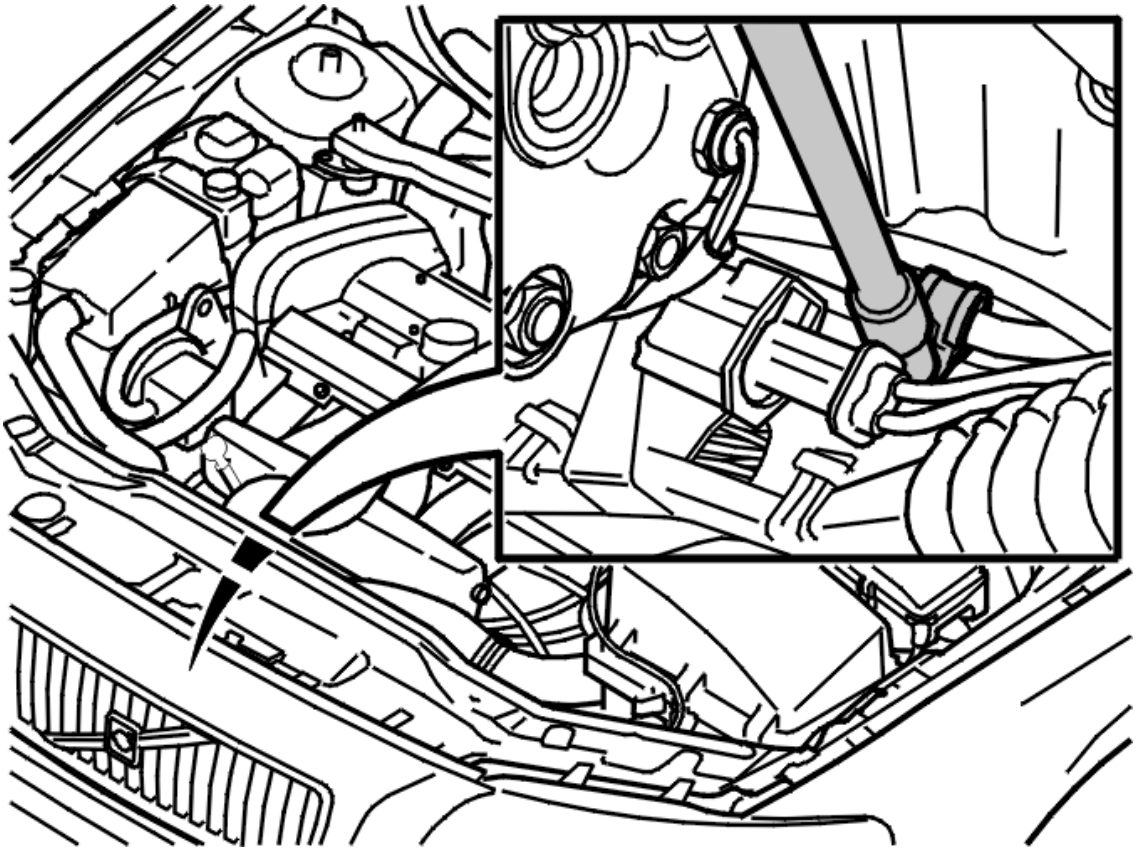

Fig. 266: Clamp On Sub-Frame
Courtesy of VOLVO CARS CORPORATION

Tighten the clamp for the servo pressure pipe on the sub frame. Tighten to **10 Nm** .

REMOVING LIFTING TOOLS

Remove lifting tool see **9995716** , kit see **9997070** and lifting hooks see **9995460** .

FINISHING

Align the wheels. See **WHEEL ALIGNMENT, CHECKING / ADJUSTING** .

TORQUE ROD LOWER, REPLACING

NOTE: **As the illustrations in this service information are used for different model years and / or models, some variation may occur. However, the essential information in the illustrations is always correct.**

PREPARATION

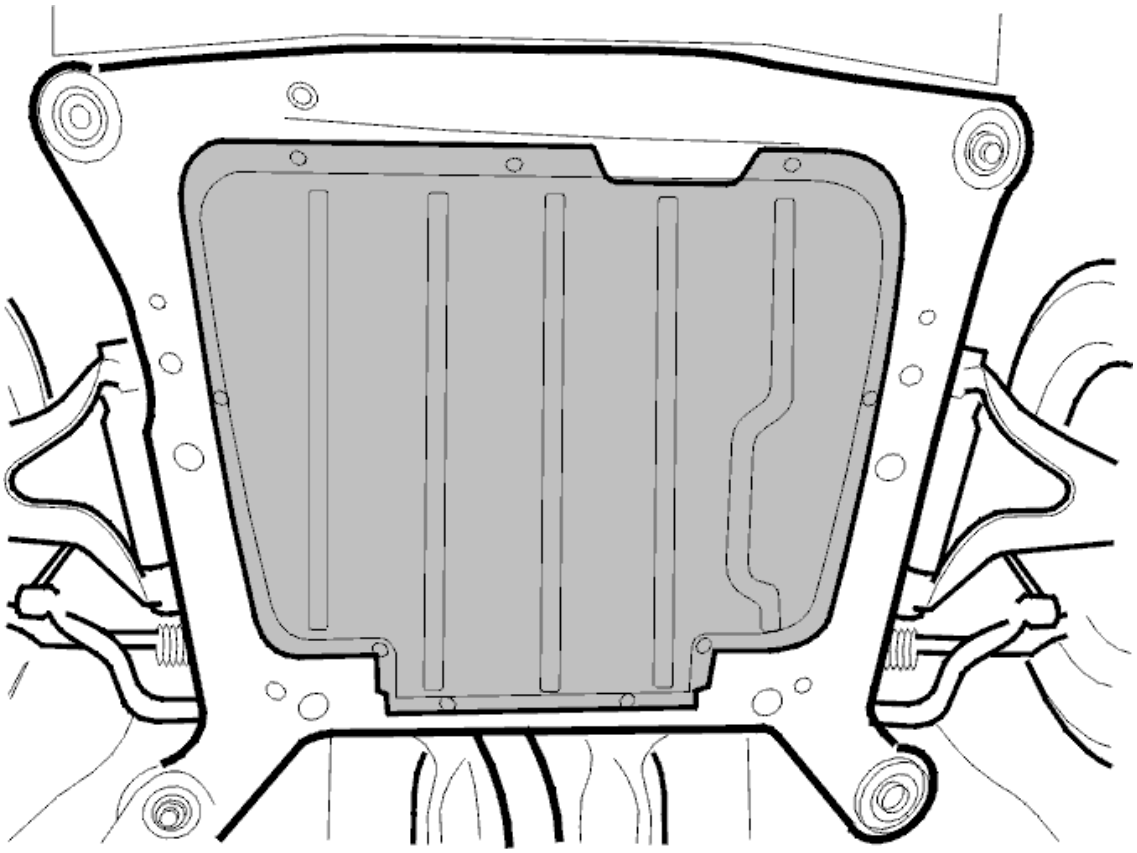

Fig. 267: Removing The Splash Guard
Courtesy of VOLVO CARS CORPORATION

Raise the car.

Remove the splash guard under the engine.

REMOVING THE LOWER TORQUE ROD

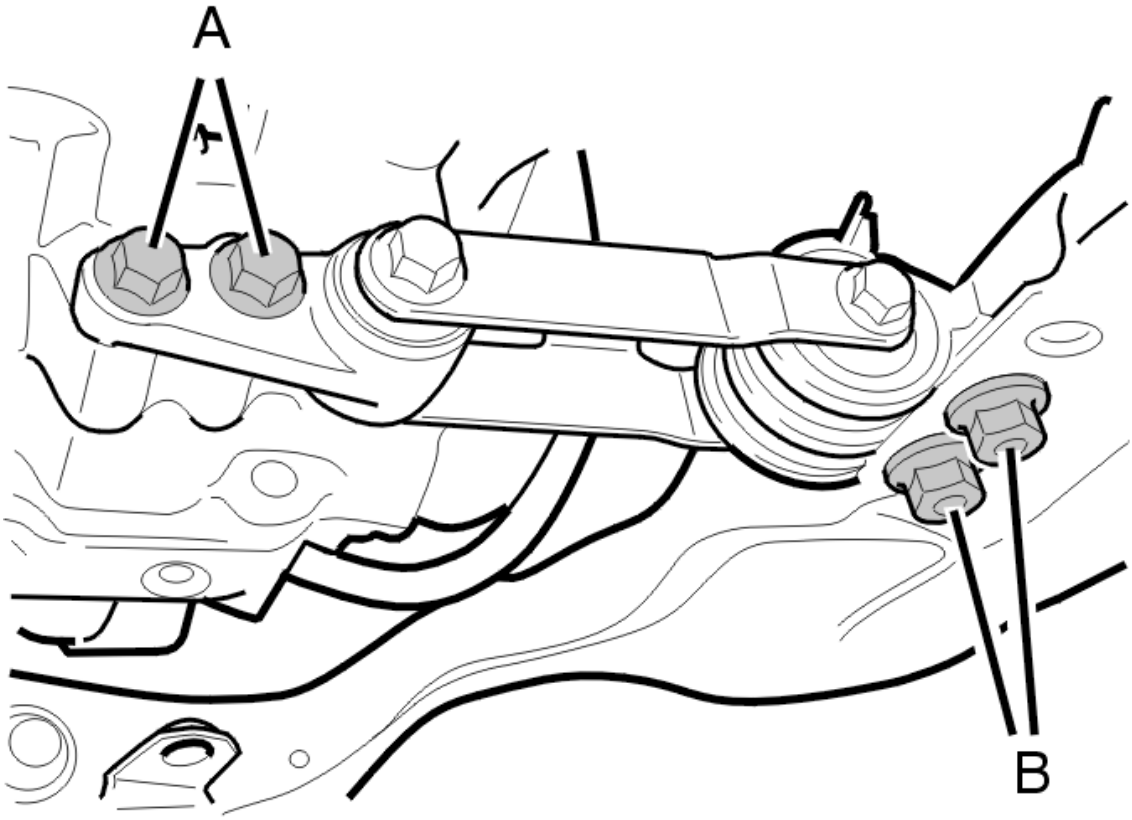

Fig. 268: Installing Lower Torque Rod
Courtesy of VOLVO CARS CORPORATION

Remove:

- the screws (A)
- the nuts (B)
- the engine stabilizer brace.

INSTALLING THE LOWER TORQUE ROD

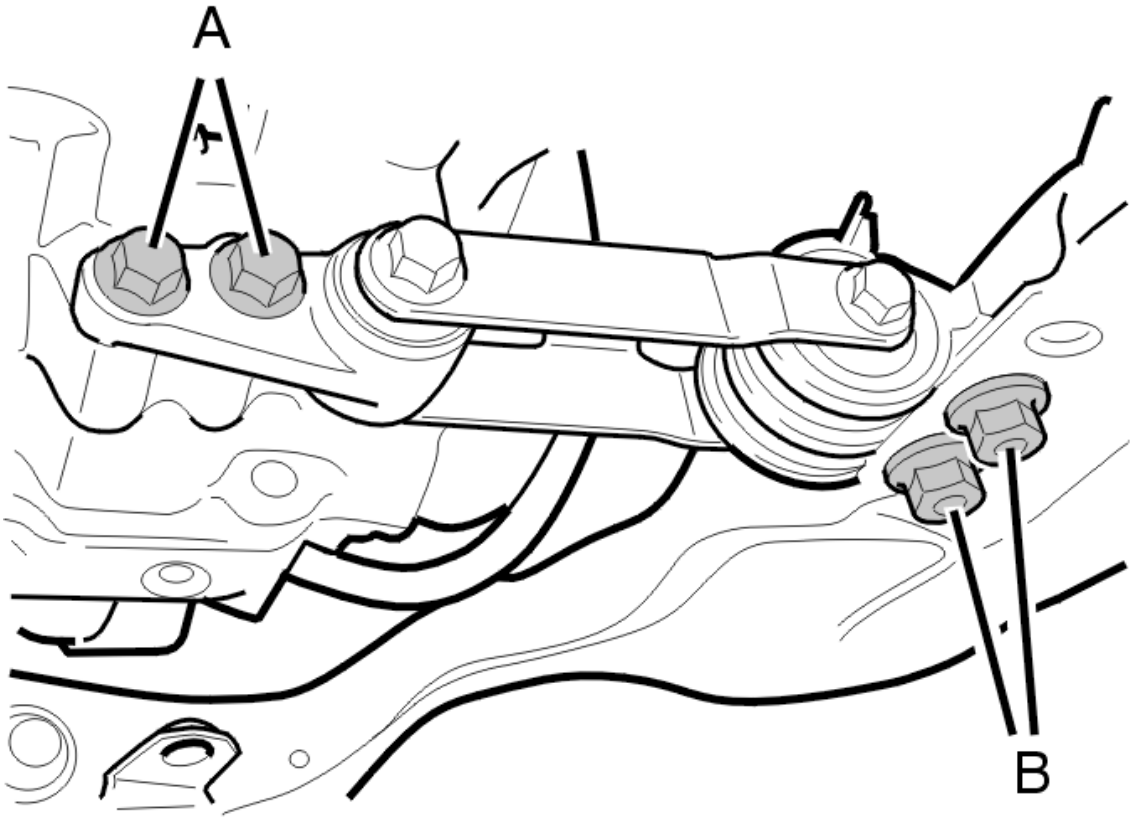

Fig. 269: Installing Lower Torque Rod
Courtesy of VOLVO CARS CORPORATION

Install the strut.

Tighten:

- the screws (A) to the transmission. (M10)
- the nuts (B) against the sub-frame. See **TIGHTENING TORQUE**
- the engine stabilizer brace.

FINISHING

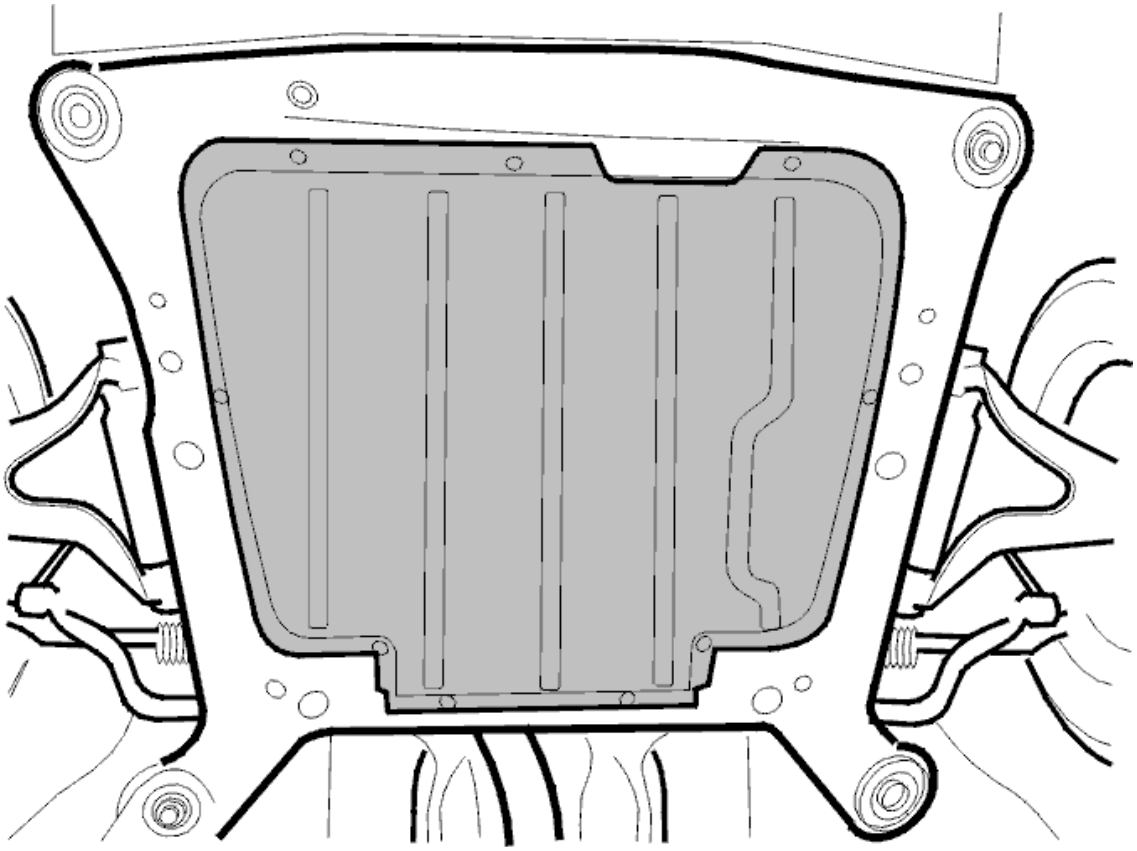

Fig. 270: Removing The Splash Guard
Courtesy of VOLVO CARS CORPORATION

Install the splashguard under the engine.

TIGHTENING TORQUE

see: **TIGHTENING TORQUE**

ENGINE MOUNTING (B6294T; 2003-2006)

ENGINE PAD FRONT, REPLACING

Special tools:

see **9995716**

see **9995460**

see **9997018**

see **9997070**

NOTE: **As the illustrations in this service information are used for different model years and / or models, some variation may occur. However, the essential information in the illustrations is always correct.**

REMOVING THE AIR INTAKE

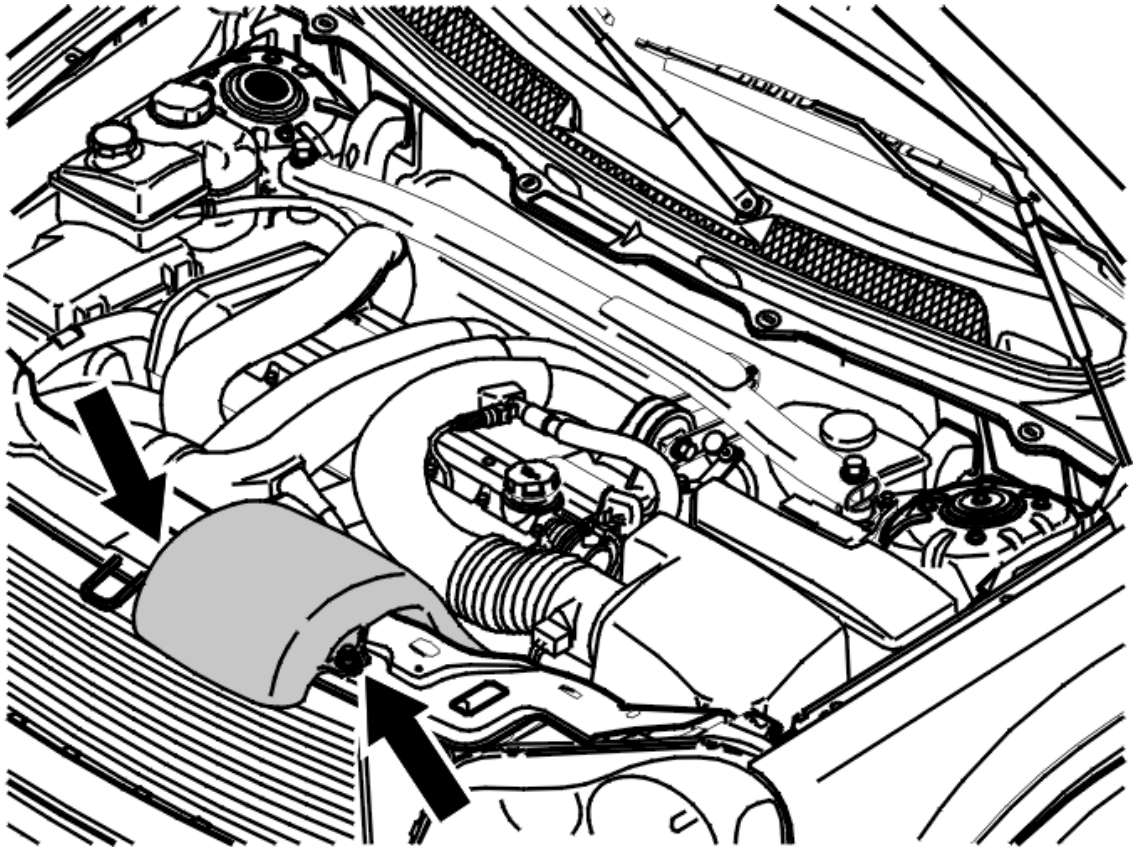

Fig. 271: Removing The Air Intake
Courtesy of VOLVO CARS CORPORATION

Remove:

- the 2 screws
- the air intake.

REMOVING THE CHARGE AIR PIPE

Detach the clamps at the charge air cooler (CAC) and at the electronic throttle unit (ETM). Pull off the pipe and allow it to hang.

REMOVING THE LOWER ENGINE PAD SCREW

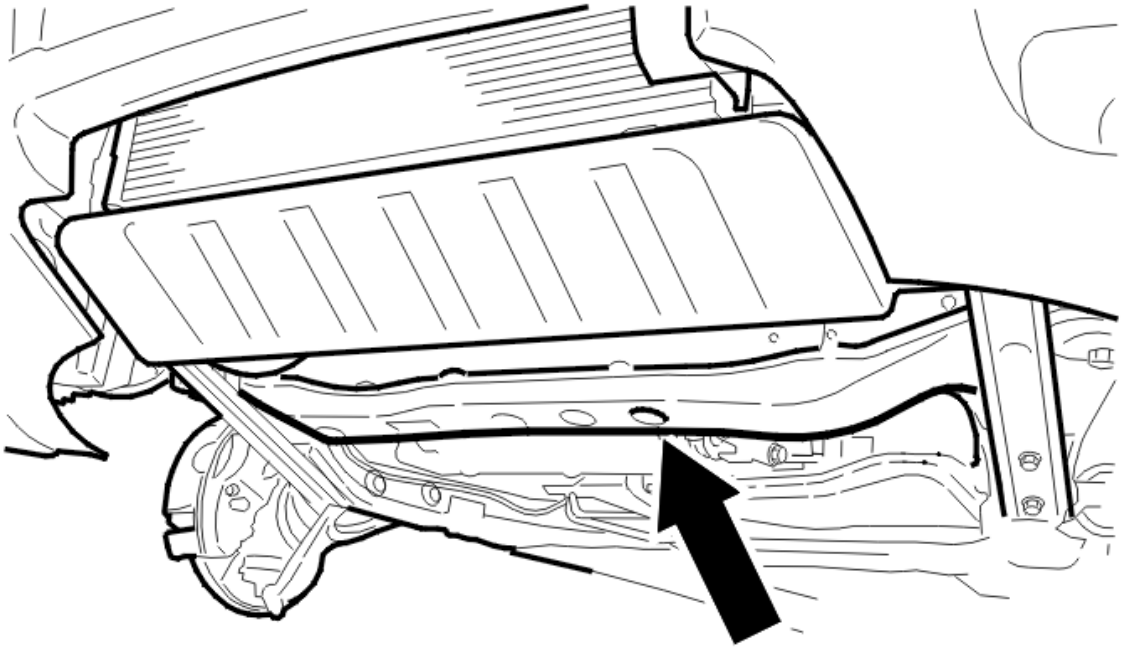

Fig. 272: Locating Lower Engine Pad Bolt
Courtesy of VOLVO CARS CORPORATION

Raise the vehicle.

Remove the screw from the engine pad.

REMOVING THE SCREW FOR THE CABLE DUCT

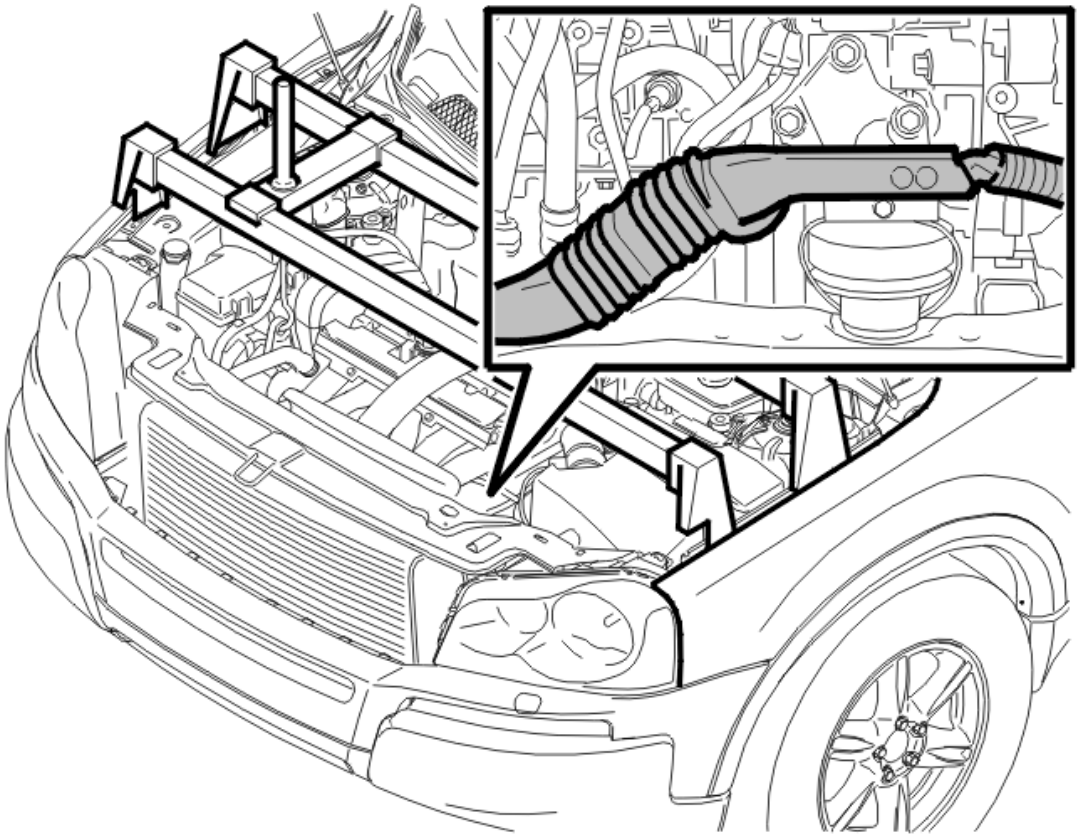

Fig. 273: Identifying The Cable Duct
Courtesy of VOLVO CARS CORPORATION

Remove the screw for the cable duct.

INSTALLING LIFTING TOOLS

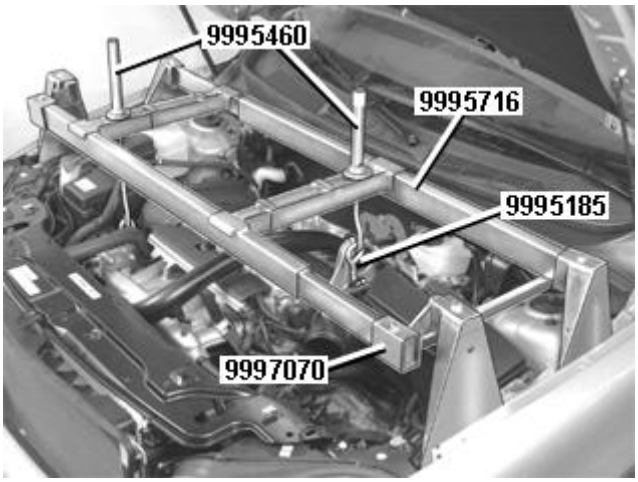

Fig. 274: Identifying Fixture Kit, Lifting Beam And Lifting Hooks
Courtesy of VOLVO CARS CORPORATION

Lower the vehicle.

Install lifting lug see **9997018** on the left hand side of the engine at the 2 screws.

Lock the lifting lug using the snap ring.

Install lifting tool see **9995716** converted with kit see **9997070** . Install lifting hooks see **9995460** .

Lift the engine to relieve the load on the engine pads.

REMOVING THE BRACKET AND ENGINE PAD

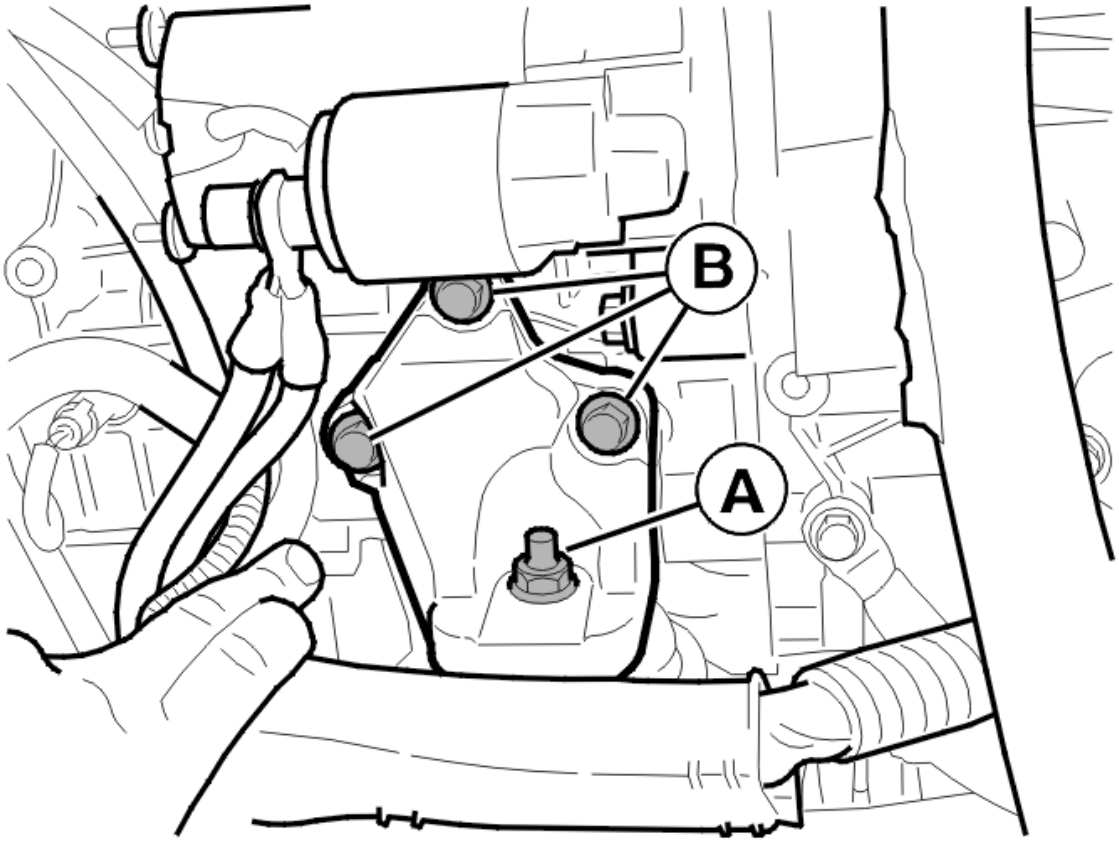

Fig. 275: Locating Bracket And Engine Pad
Courtesy of VOLVO CARS CORPORATION

Remove:

- the nut (A)
- the 3 screws (B)
- the bracket
- the engine pad.

TIGHTENING TORQUE

For tightening torques, see **TIGHTENING TORQUE** .

INSTALLING THE BRACKET AND ENGINE PAD

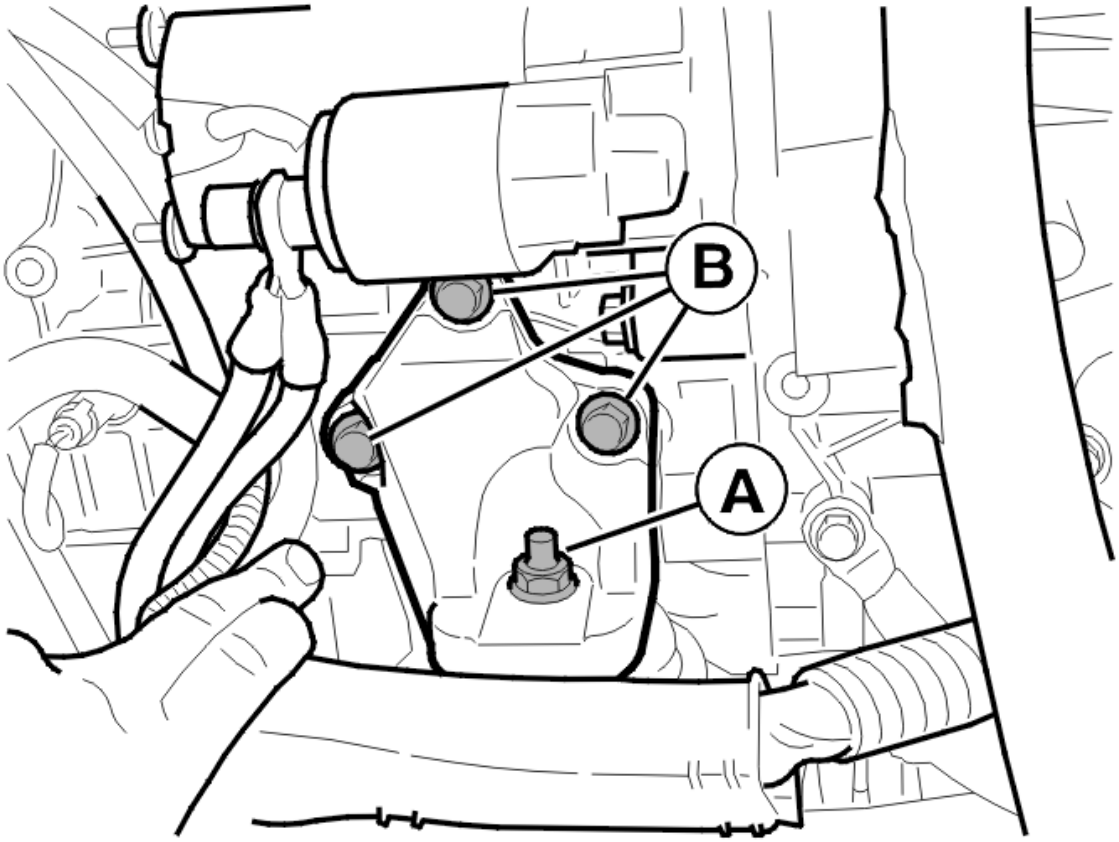

Fig. 276: Locating Bracket And Engine Pad
Courtesy of VOLVO CARS CORPORATION

Install:

- the engine pad
- the screw for the engine pad mounting in the sub-frame. Do not tighten
- the bracket
- the 3 x M10 screws (B)
- the M10 nut (A).

REMOVING LIFTING TOOLS

Remove lifting tool see **9995716** , kit see **9997070** and lifting hooks see **9995460** .

INSTALLING THE SCREW ON THE CABLE CONDUCT

Raise the car.

Install the M6 screw for the cable duct mounting in the engine pad bracket.

Tighten the lower M10 screw for the engine pad.

INSTALLING THE CHARGE AIR PIPE

Lower the car.

Install the charge air pipe and tighten the clamps.

INSTALLING THE AIR INTAKE

Install:

- the air intake
- the two screws. M6.

ENGINE PAD REAR, REPLACING

Special tools:

see **9995716**

see **9995460**

see **9995972**

see **9997018**

see **9997070**

NOTE: **As the illustrations in this service information are used for different model years and / or models, some variation may occur. However, the essential information in the illustrations is always correct.**

STEERING SHAFT JOINT LOWER REMOVING

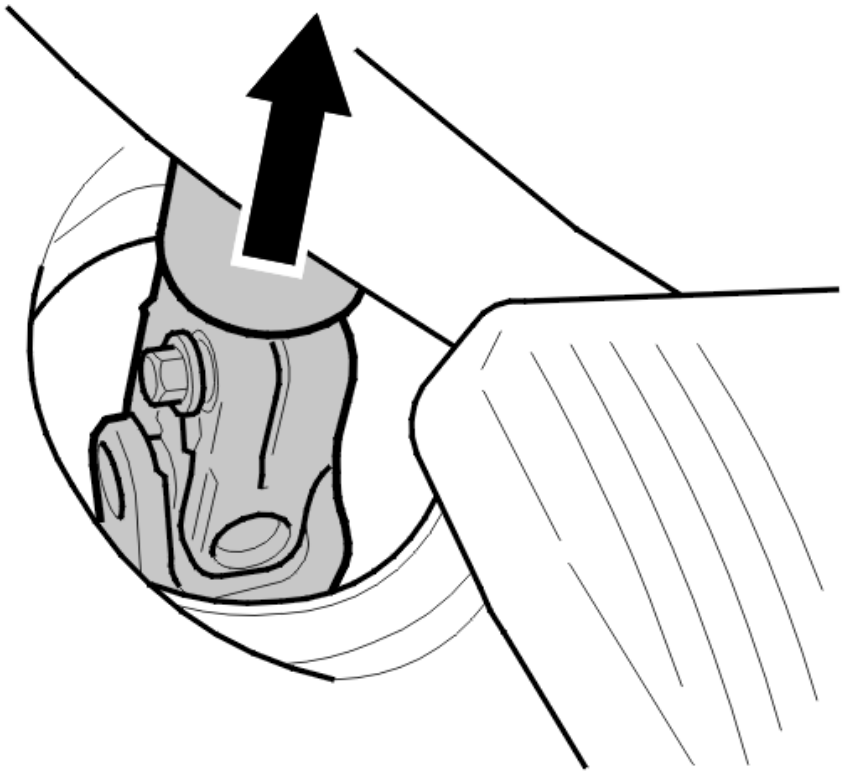

Fig. 277: Identifying Lower Steering Shaft Joint
Courtesy of VOLVO CARS CORPORATION

Fold the floor carpet out of the way.

Bend up the outer section of the steering shaft boot.

Remove the retaining clip around the boot.

Pull the boot up.

Remove:

- the screw securing the mounting for the steering shaft in the joint
- the joint from the steering shaft.

REMOVING THE UPPER TORQUE ROD

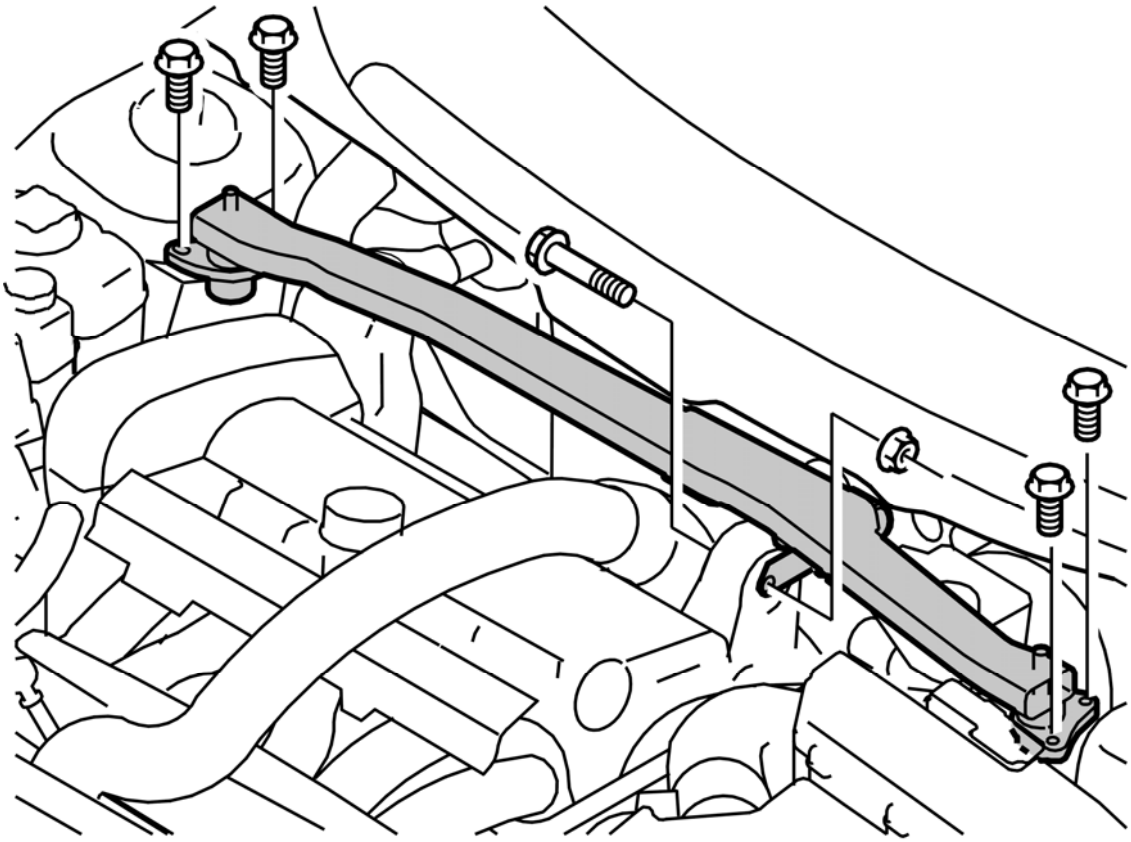

Fig. 278: Identifying Engine Stabilizer Brace And Mounting Screws
Courtesy of VOLVO CARS CORPORATION

Remove:

- the mounting screws for the torque rod
- the screw and nut for the engine mounting and torque rod
- the engine stabilizer brace.

REMOVING THE UPPER NUT FOR THE ENGINE PAD

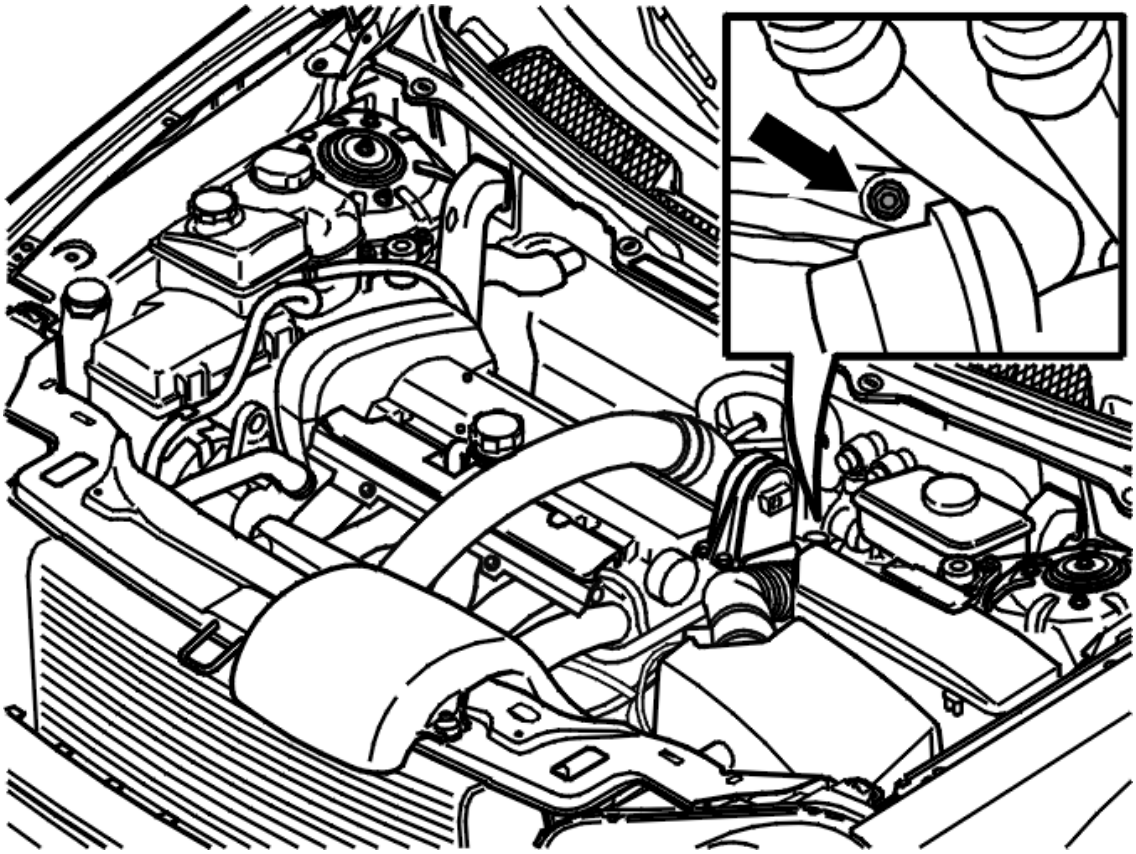

Fig. 279: Locating The Nut
Courtesy of VOLVO CARS CORPORATION

Remove the nut.

INSTALLING LIFTING TOOLS

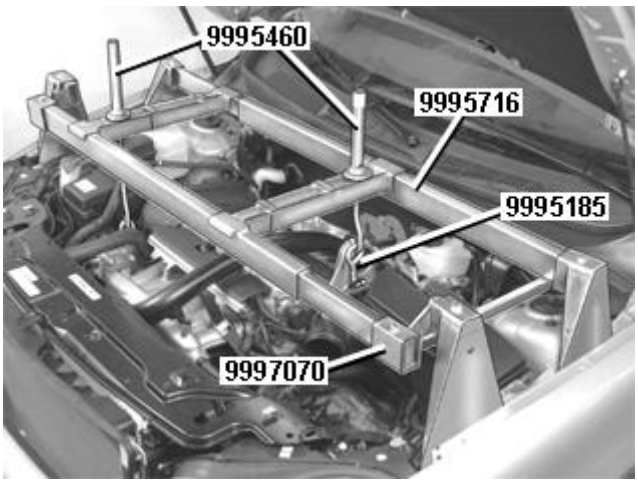

Fig. 280: Identifying Fixture Kit, Lifting Beam And Lifting Hooks
Courtesy of VOLVO CARS CORPORATION

Install lifting lug see **9997018** on the left hand side of the engine at the 2 screws.

Lock the lifting lug using the snap ring.

Install lifting tool see **9995716** converted with kit see **9997070** . Install lifting hooks see **9995460** .

Lift the engine to relieve the load on the engine pads.

REMOVING THE RIGHT ENGINE MOUNTING

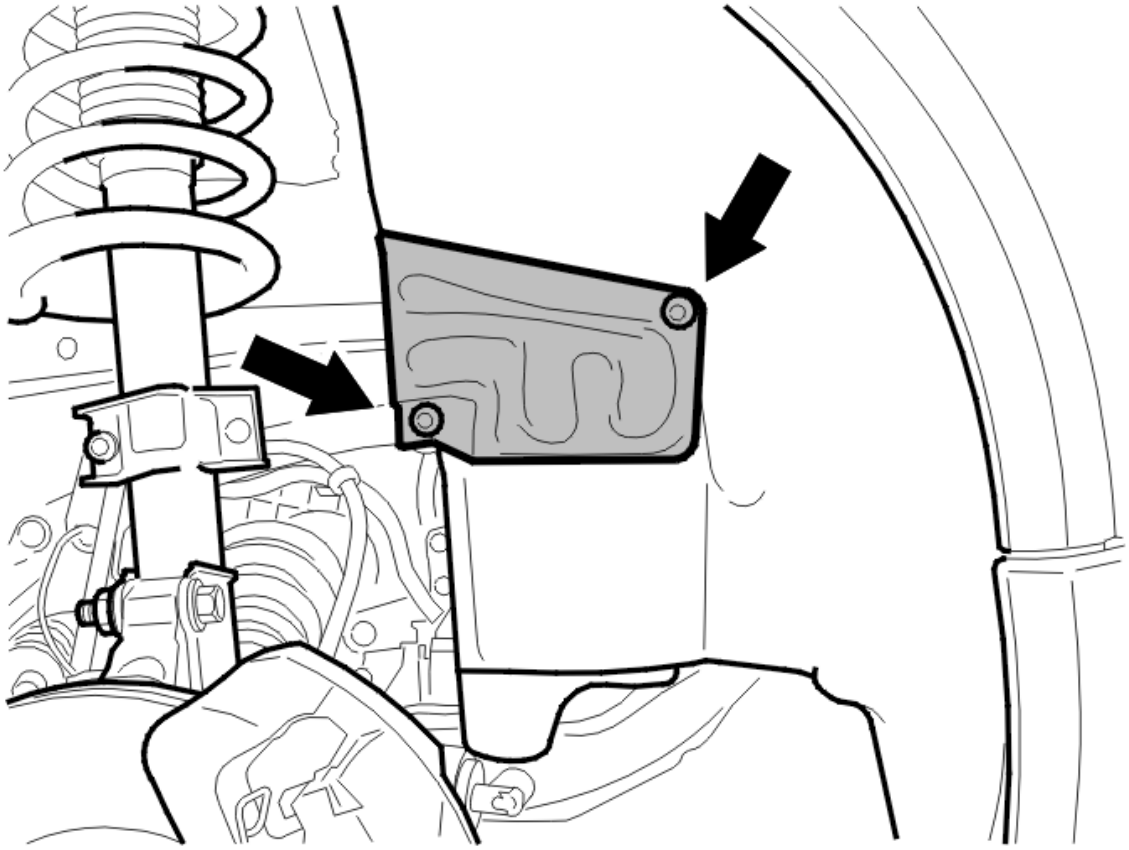

Fig. 281: Identifying Fender Liner Plastic Nuts And Protective Plate
Courtesy of VOLVO CARS CORPORATION

Remove the right front wheel.

Slacken off the right lower front part of the fender liner.

Remove:

- the plastic nuts on the fender liner
- the protective plate.

Bend out the fender liner.

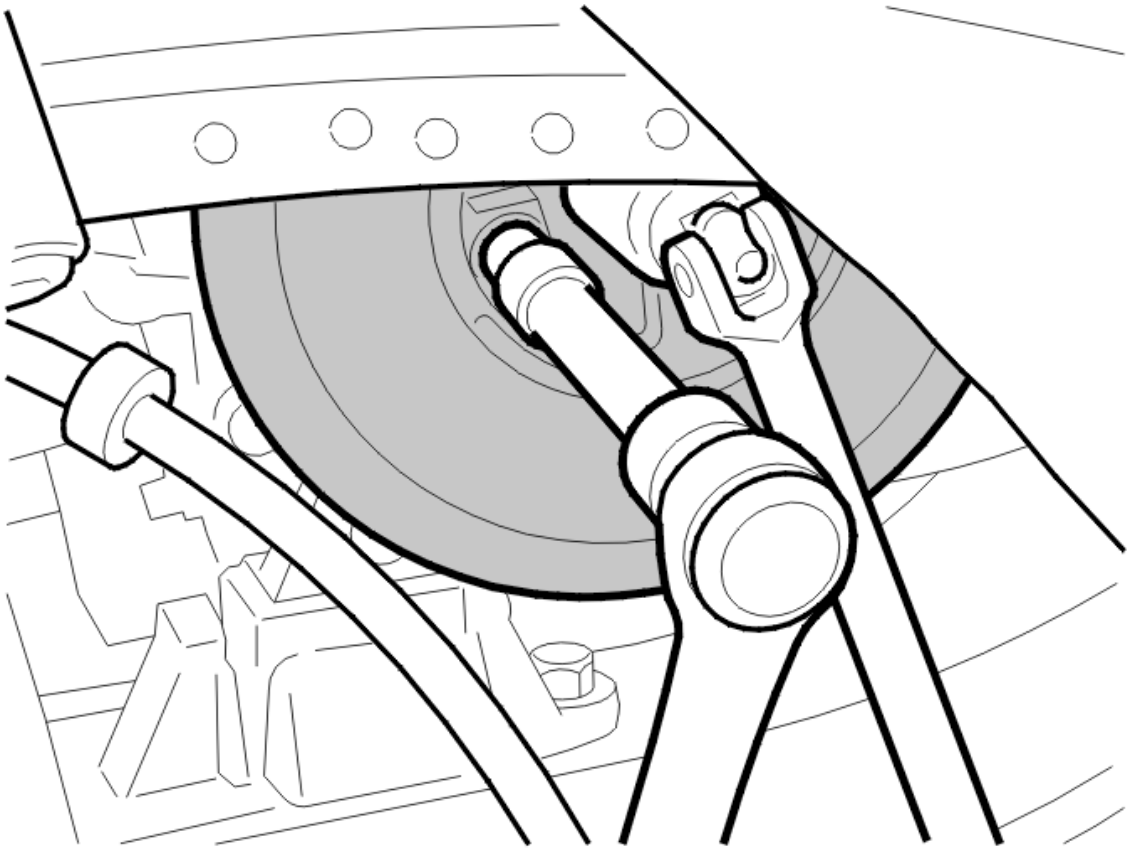

Fig. 282: Counterholding Crankshaft Central Nut
Courtesy of VOLVO CARS CORPORATION

Remove the 4 screws for the vibration damper. Counterhold the crankshaft central nut

Remove the vibration damper.

REMOVING THE SPLASH GUARD UNDER ENGINE

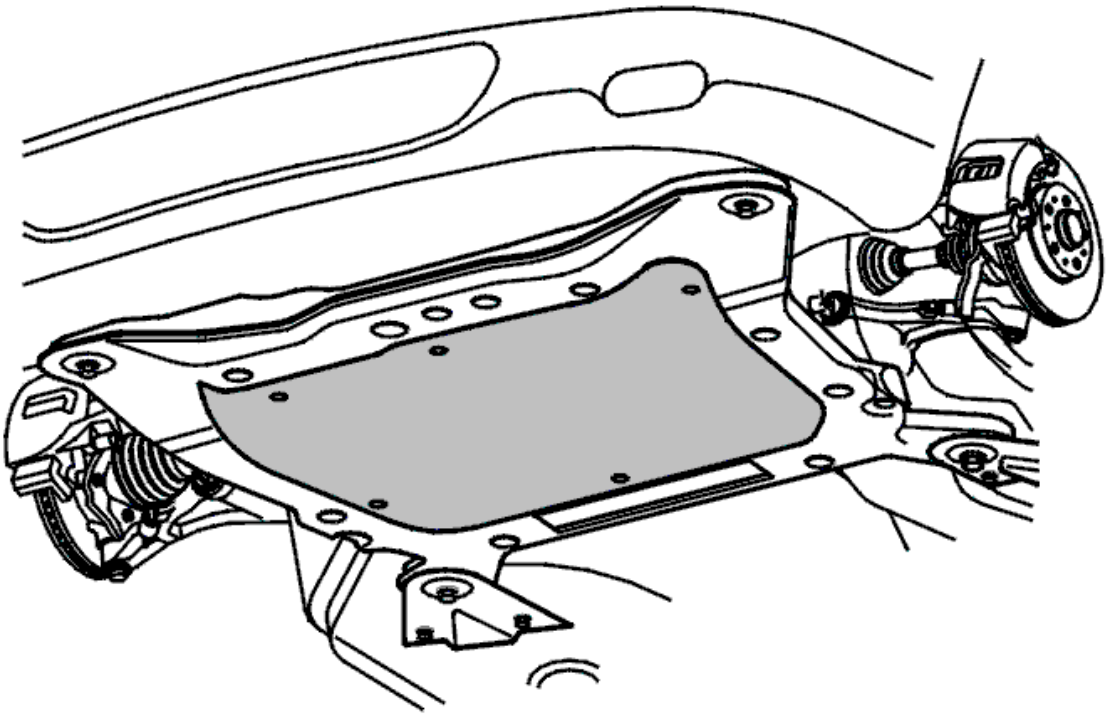

Fig. 283: Identifying Splash Guard Under Engine
Courtesy of VOLVO CARS CORPORATION

Remove the splash guard under the engine.

REMOVING THE SKID PLATE

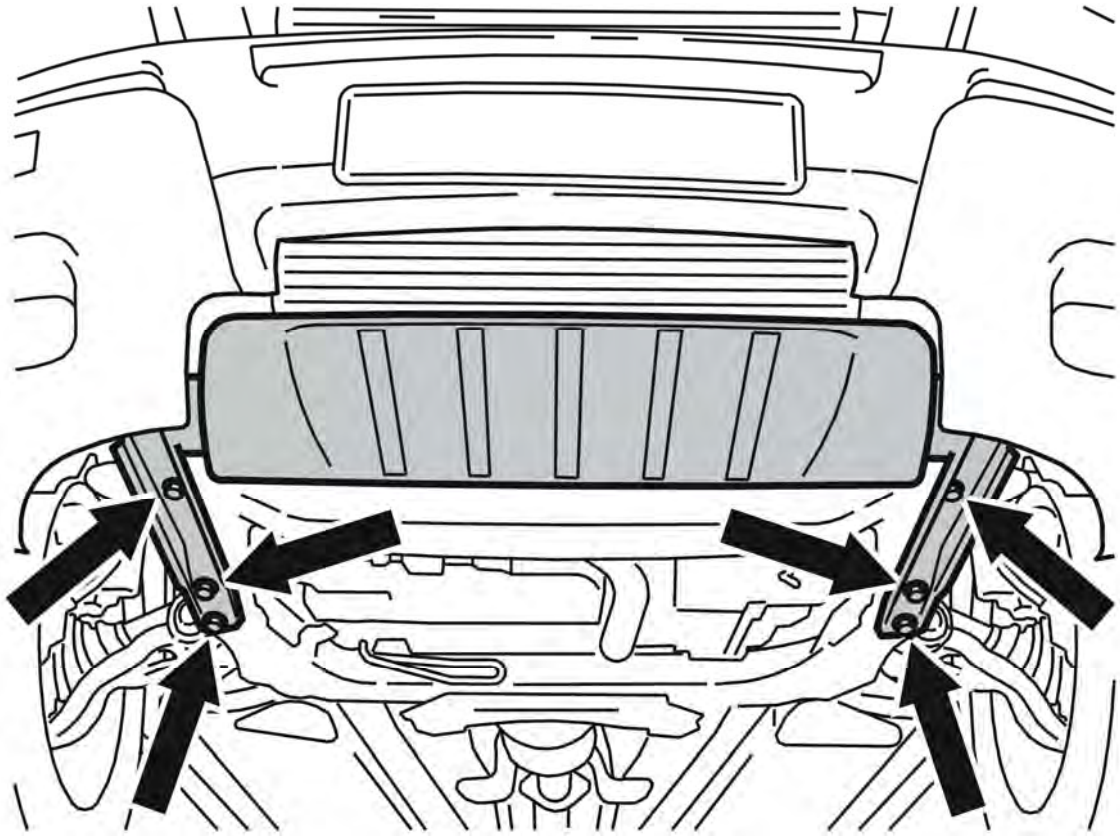

Fig. 284: Splash Guard, Protective Plate And Screws
Courtesy of VOLVO CARS CORPORATION

Remove the 6 screws.

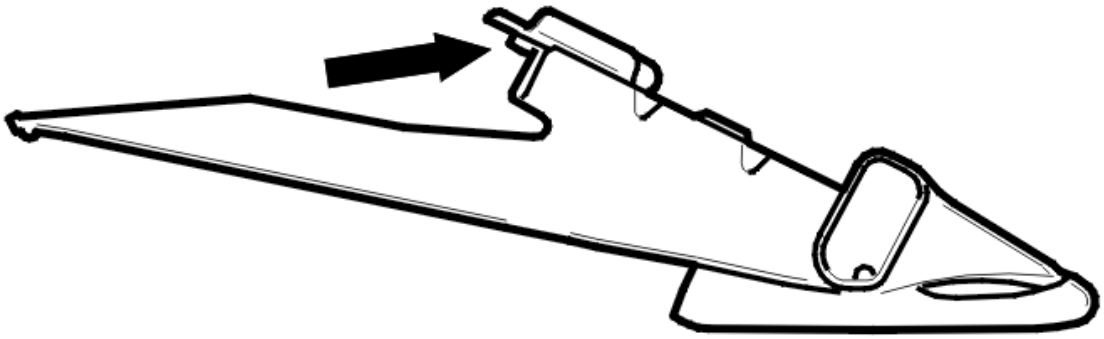

Fig. 285: Identifying Protective Plate
Courtesy of VOLVO CARS CORPORATION

Lift and slide the splash guard forward.

Remove the protective plate.

NOTE: **There is a guide sleeve on the upper mounting for the plate. This must be lifted slightly so that the panel can be slid forward.**

REMOVING THE SIPS MEMBER

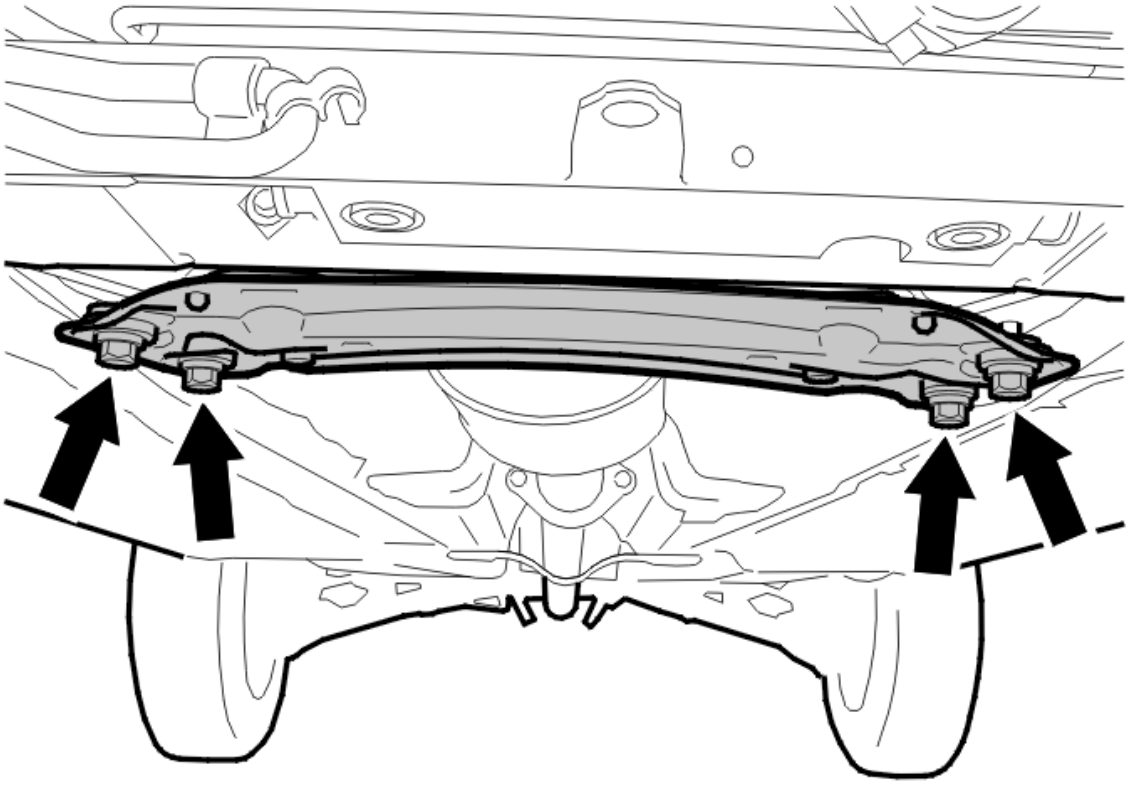

Fig. 286: Identifying SIPS Member
Courtesy of VOLVO CARS CORPORATION

Remove:

- the 4 screws for the mounting
- the brake pipe from the snap fastener on the member
- The SIPS member.

REMOVING THE EXHAUST MOUNTING

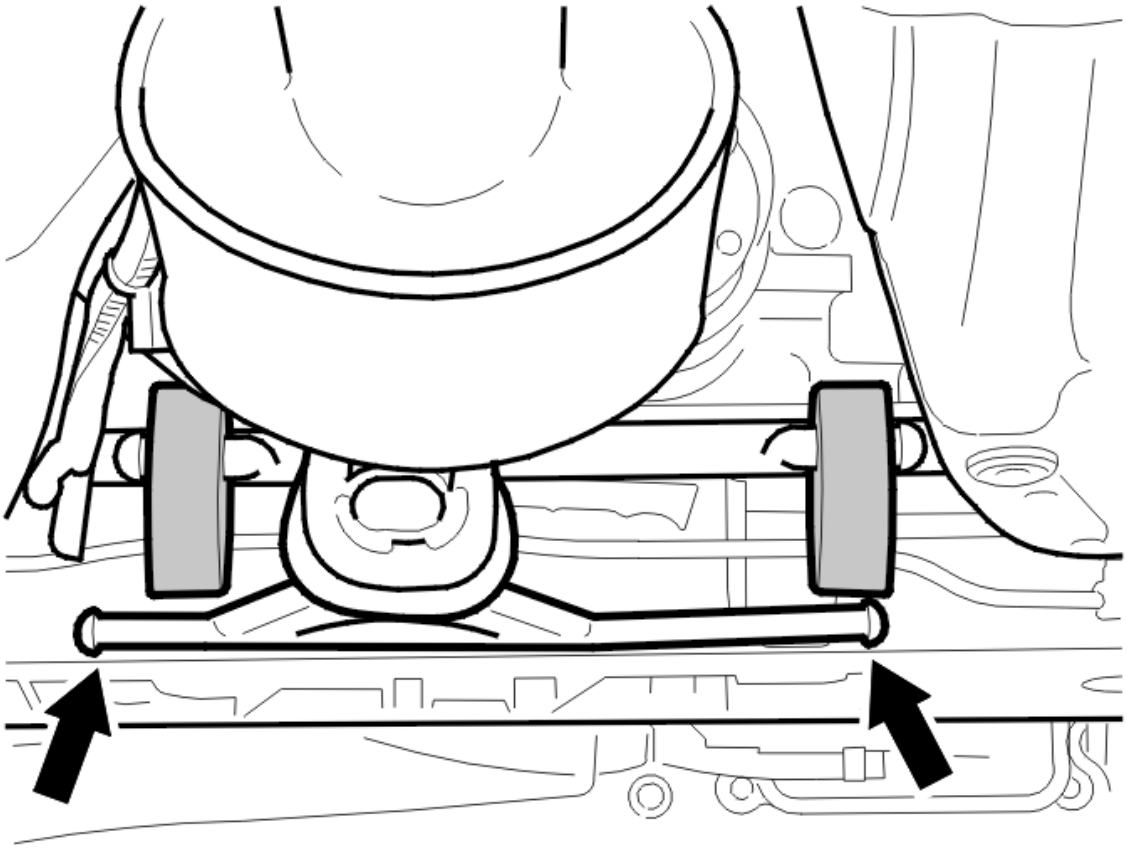

Fig. 287: Identifying Exhaust Pipe Rubber Mountings
Courtesy of VOLVO CARS CORPORATION

Remove the rubber mountings for the exhaust pipe.

REMOVING THE ENGINE PAD SCREW

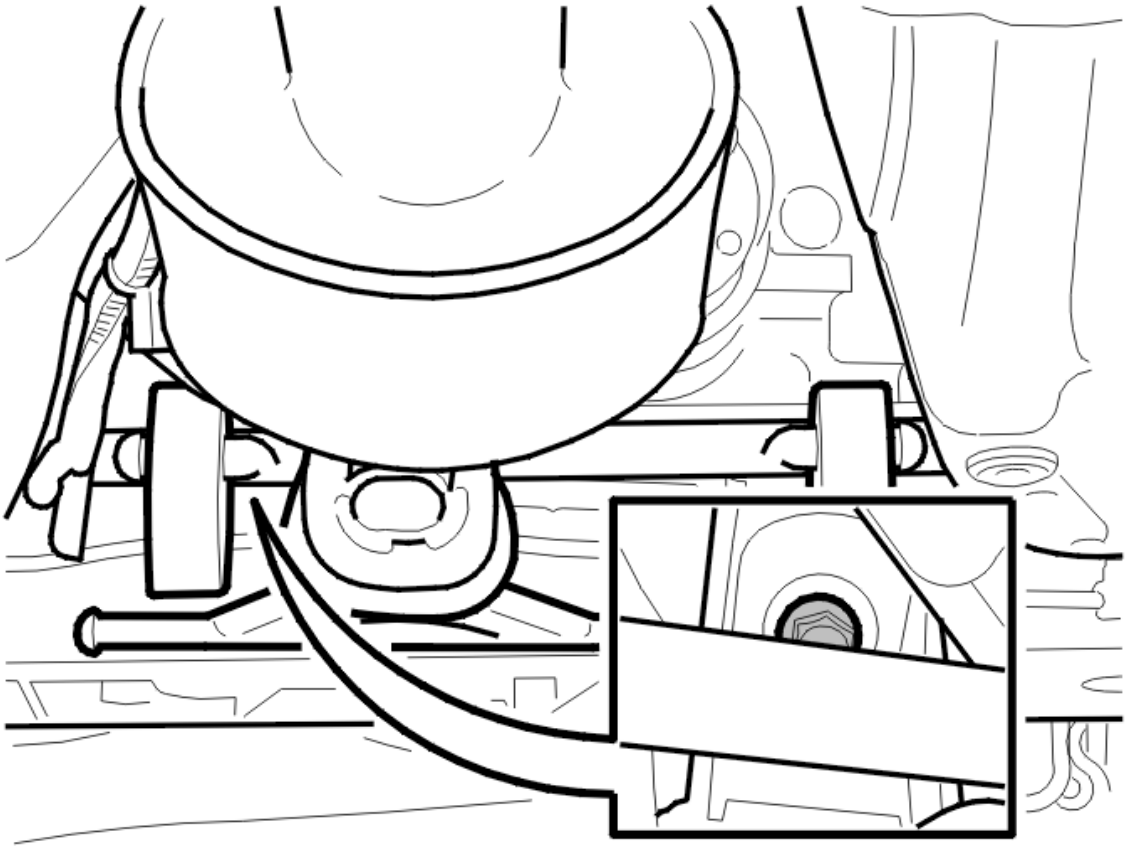

Fig. 288: Locating Engine Pad Screw
Courtesy of VOLVO CARS CORPORATION

Remove the screw for the engine pad mounting in the steering gear.

LOWERING THE SUB-FRAME

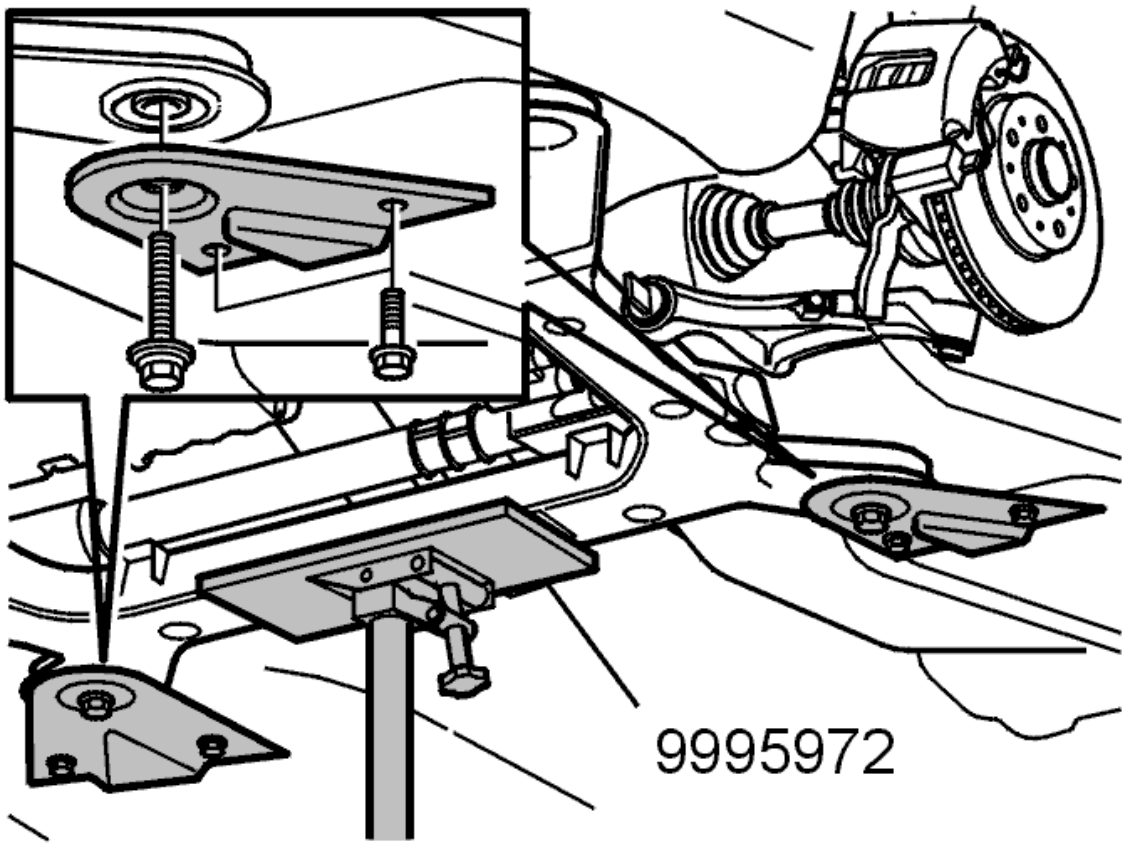

Fig. 289: Identifying Rear Sub-Frame Screws, Brackets & Washers
Courtesy of VOLVO CARS CORPORATION

Position a mobile jack with universal plate see **9995972** at the rear of the sub-frame.

Remove the following on both sides:

- the 2 screws holding the sub-frame bracket in the bodywork
- the rear screw for the sub-frame with the bracket and washer.

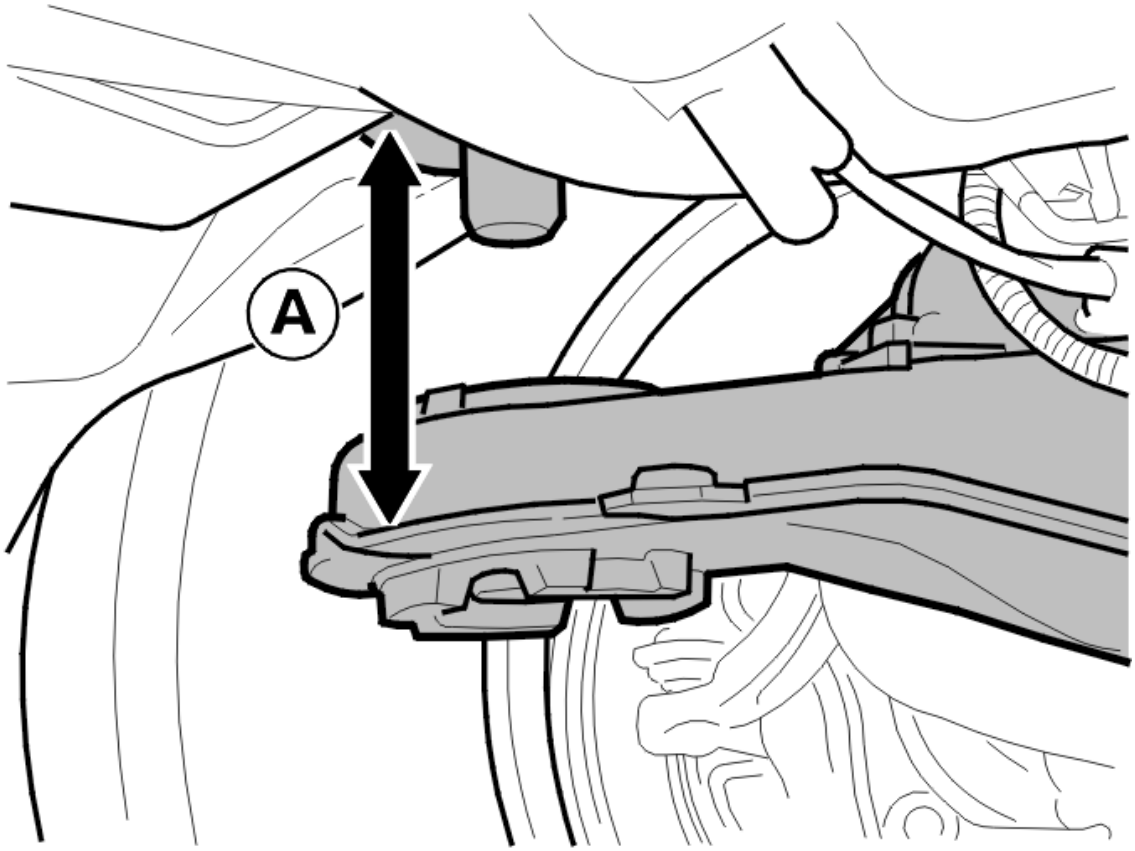

Fig. 290: Lowering The Sub-Frame
Courtesy of VOLVO CARS CORPORATION

Carefully lower the sub-frame until dimension A between the sub-frame and the body is 110 mm.

REMOVING THE ENGINE COVER

Remove the engine pad.

TIGHTENING TORQUE

For tightening torques, see **TIGHTENING TORQUE** .

INSTALLING THE ENGINE PAD

Position the engine pad in the upper seat.

NOTE: Ensure that the guide pin for the engine pad locates correctly.

Hold the engine pad in position. Carefully raise the sub-frame.

Install the new M10 screw for the engine pad mounting in the steering gear.

INSTALLING THE SUB-FRAME

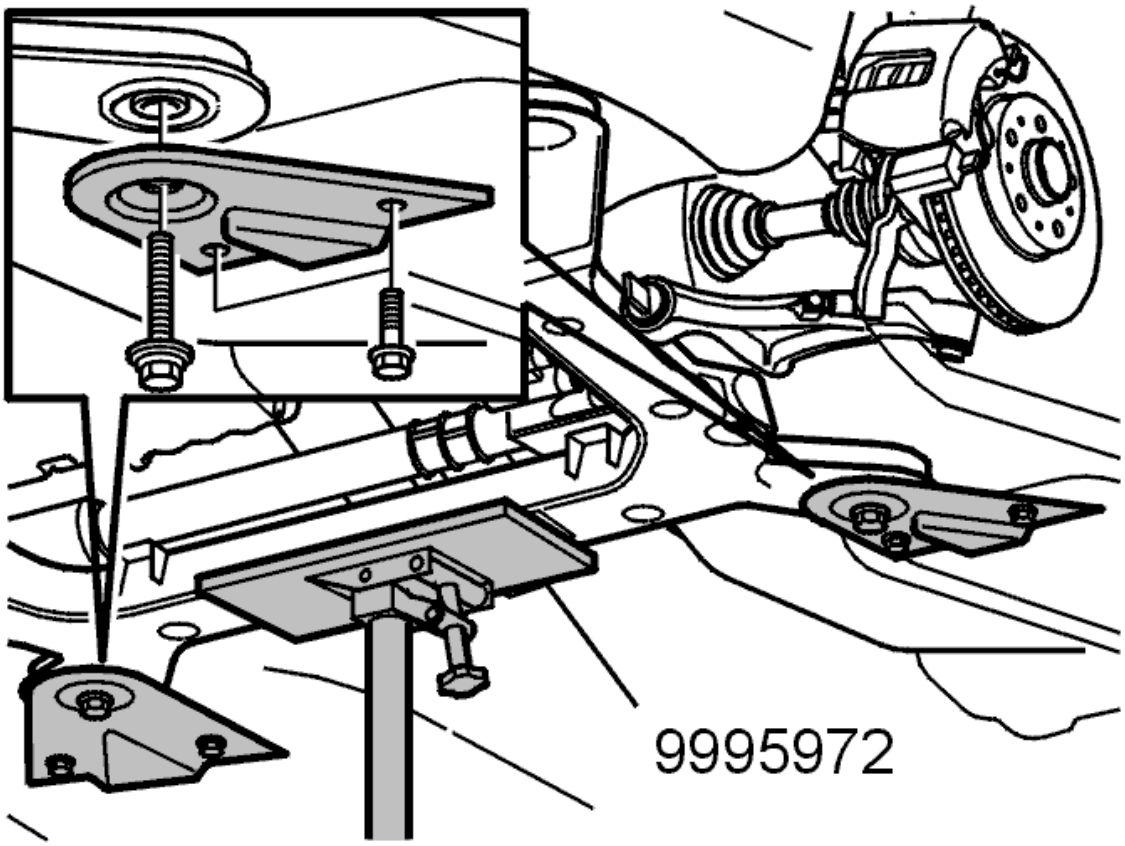

Fig. 291: Identifying Rear Sub-Frame Screws, Brackets & Washers
Courtesy of VOLVO CARS CORPORATION

Install on both sides:

- the bracket
- the 2 x M10 screws for the mounting bracket
- the screw for the sub-frame mounting. Use a new screw.

For tightening torques, see **TIGHTENING TORQUE** .

INSTALLING THE EXHAUST MOUNTING

Install the rubber mountings for the exhaust pipe.

HINT: Use soap solution to facilitate installing the rubber mountings.

INSTALLING THE SIPS MEMBER

Install:

- the brake pipe in the snap fastener on the member
- the SIPS member

- the 4 x M8 screws for the SIPS (side impact protection system) member mounting.

INSTALLING THE SKID PLATE

Move the skid plate up in to the bumper cover strip. Press forwards until the mounting brackets engage in the sub-frame.

Install:

- the 6 x M10 screws
- the splash guard under the engine. M8.

INSTALLING THE RIGHT-HAND ENGINE MOUNTING

Install:

- the 2 x right hand engine mounting screws Use new screws
- the 4 screws for the vibration damper. Use new screws.

Fold the fender liner back into position

Install:

- the skid plate
- the plastic nuts
- the front wheel. See **INSTALLING WHEELS** .

For tightening torques, see **TIGHTENING TORQUE** .

REMOVING LIFTING TOOLS

Remove:

- lifting tool see **9995716** , kit see **9997070** and lifting hooks see **9995460**
- lifting lug 999 7018.

INSTALLING THE UPPER NUT FOR THE ENGINE PAD

Install a new M10 nut.

HINT: Use a magnetic sleeve or trap the nut using a wad of paper in the sleeve to facilitate installation.

INSTALLING THE UPPER TORQUE ROD

Install:

- the engine stabilizer brace
- the 4 x M10 mounting screws for the torque rod
- the M12 screw and nut for the engine mounting and torque rod.

STEERING SHAFT JOINT LOWER INSTALLING

Install the steering shaft on the lower steering shaft joint.

Install:

- the new screw. M8
- the steering shaft boot and snap ring.

Fold back the carpet.

ENGINE PAD RIGHT, REPLACING (2005-2007)

see **ENGINE PAD RIGHT, REPLACING (2005-2007)**

REPLACING THE ENGINE TORQUE BRACKET

see **REPLACING THE ENGINE TORQUE BRACKET**

SUB-FRAME FRONT, REPLACING

Special tools:

see **9997018**

see **9995716**

see **9995460**

see **9512050**

see **9997062**

see **9997070**

NOTE: **As the illustrations in this service information are used for different model years and / or models, some variation may occur. However, the essential information in the illustrations is always correct.**

PREPARATION

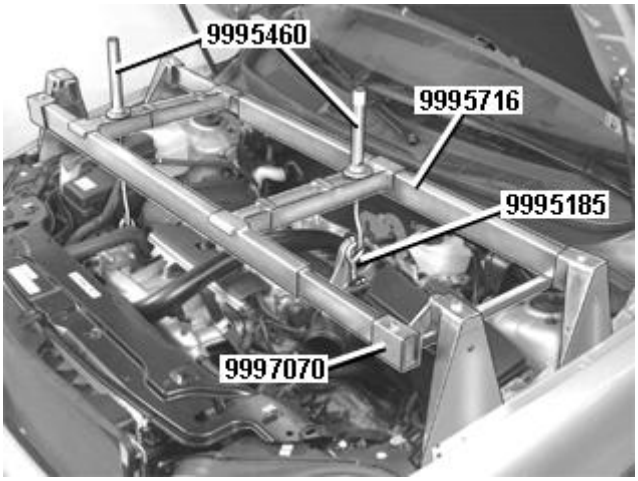

Fig. 292: Identifying Fixture Kit, Lifting Beam And Lifting Hooks
Courtesy of VOLVO CARS CORPORATION

Install lifting lug see **9997018** on the left hand side of the engine at the 2 screws.

Lock the lifting lug using the snap ring.

Install lifting tool see **9995716** converted with kit see **9997070** . Install lifting hooks see **9995460** .

Lift the engine to relieve the load on the engine pads.

Remove the front wheels.

REMOVING THE CLAMP FOR THE SERVO PRESSURE HOSE

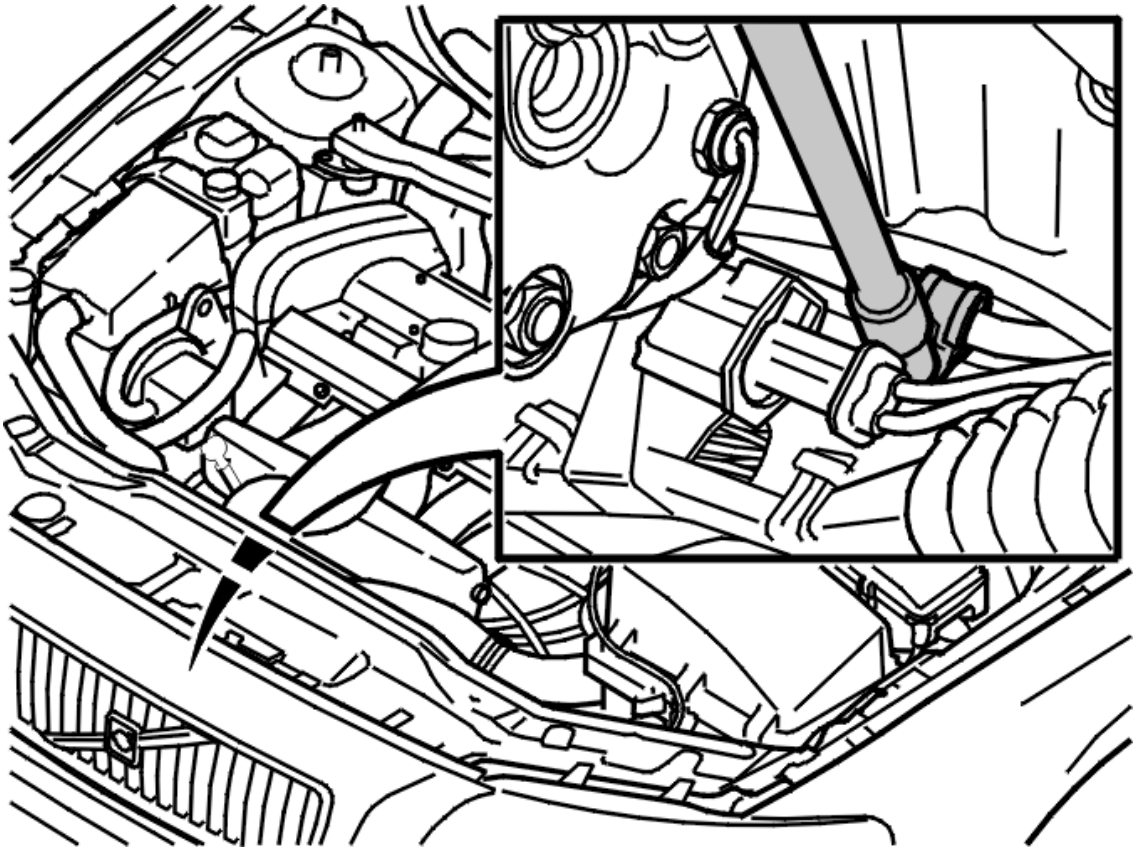

Fig. 293: Clamp On Sub-Frame
Courtesy of VOLVO CARS CORPORATION

Remove the clamp for the servo pressure line on the sub frame.

REMOVING THE RIGHT ENGINE MOUNTING

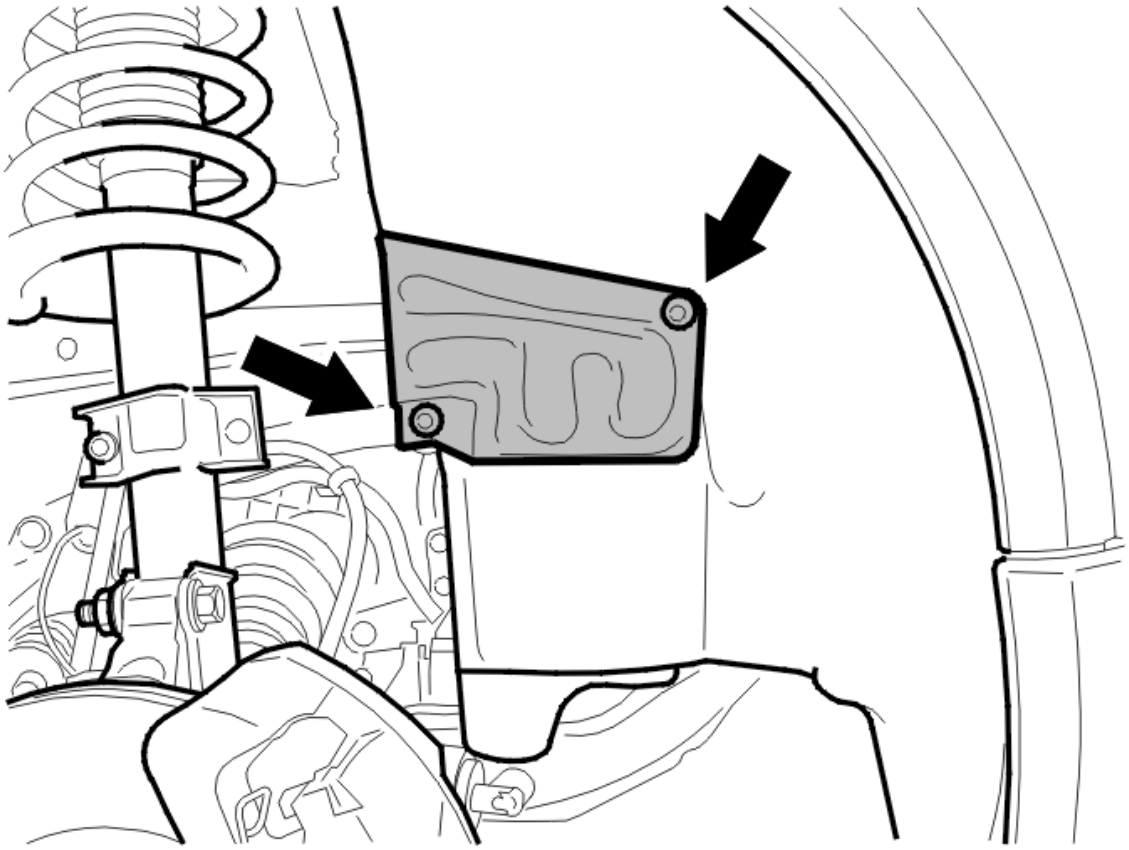

Fig. 294: Identifying Fender Liner Plastic Nuts And Protective Plate
Courtesy of VOLVO CARS CORPORATION

Slacken off the right lower front part of the fender liner.

Remove:

- the plastic nuts on the fender liner
- the protective plate.

Bend out the fender liner.

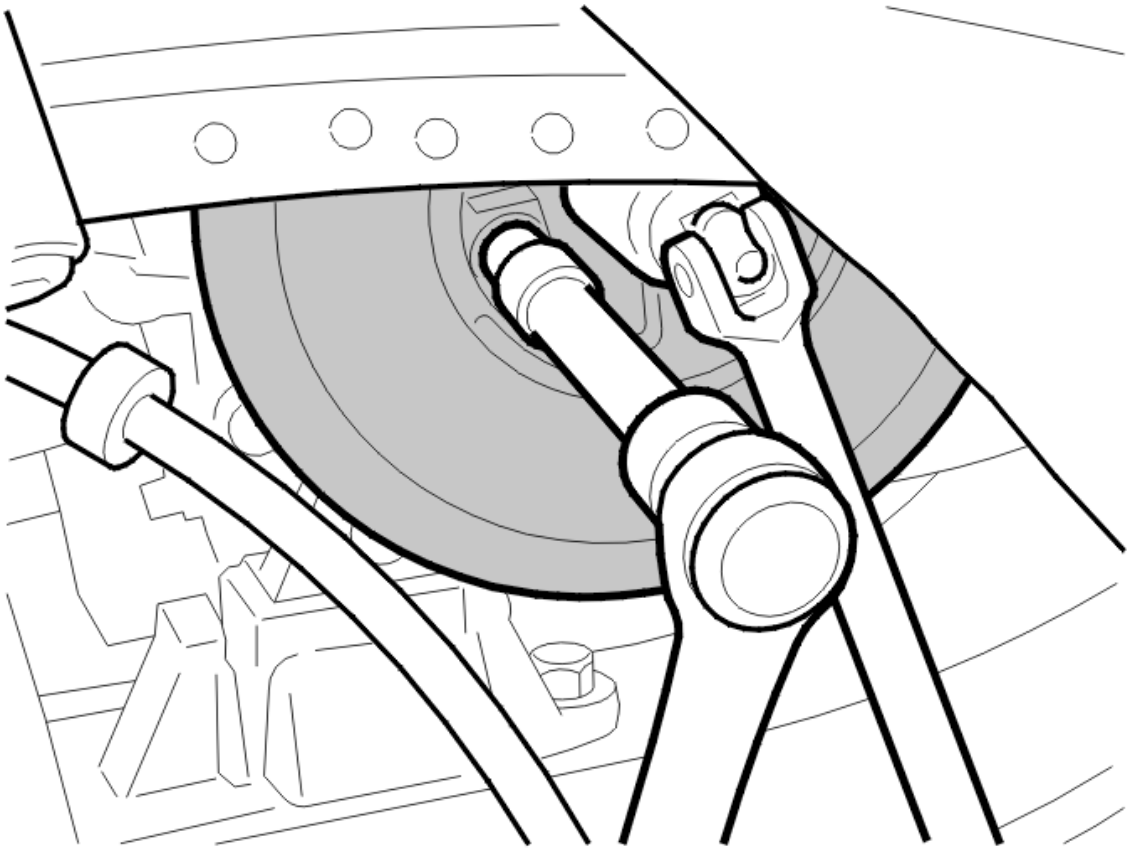

Fig. 295: Counterholding Crankshaft Central Nut
Courtesy of VOLVO CARS CORPORATION

Remove the 4 screws for the vibration damper. Counterhold the crankshaft central nut.

Remove the vibration damper.

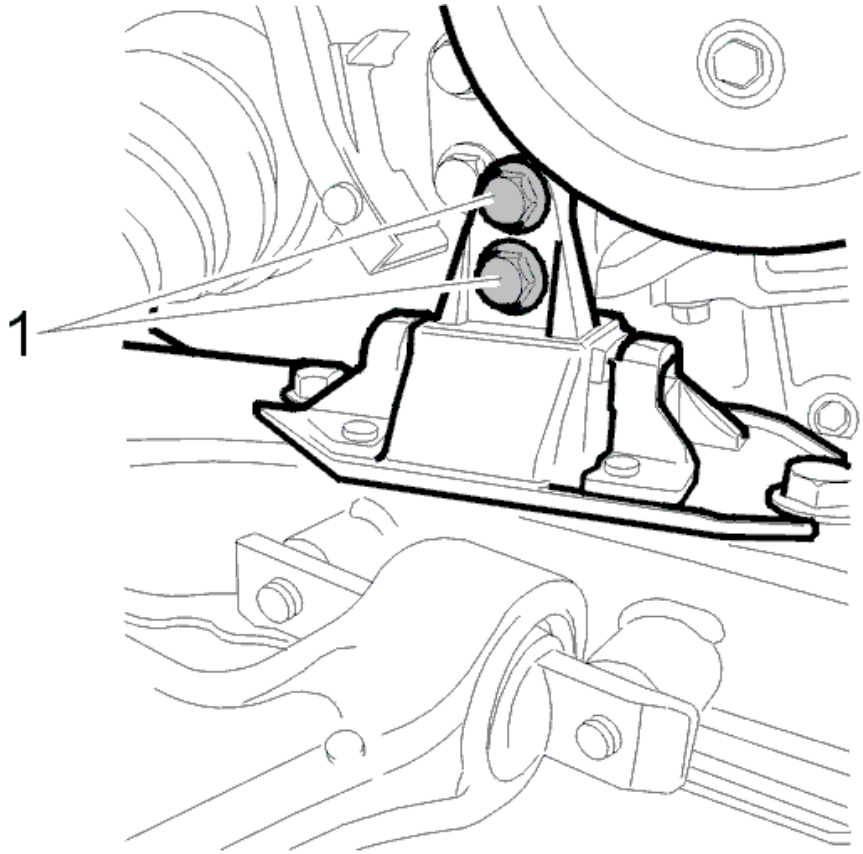

Fig. 296: Identifying Right-Hand Engine Mounting Screws
Courtesy of VOLVO CARS CORPORATION

Remove the 2 screws for the right hand engine mounting. (1)

REMOVING THE SPLASH GUARD UNDER ENGINE

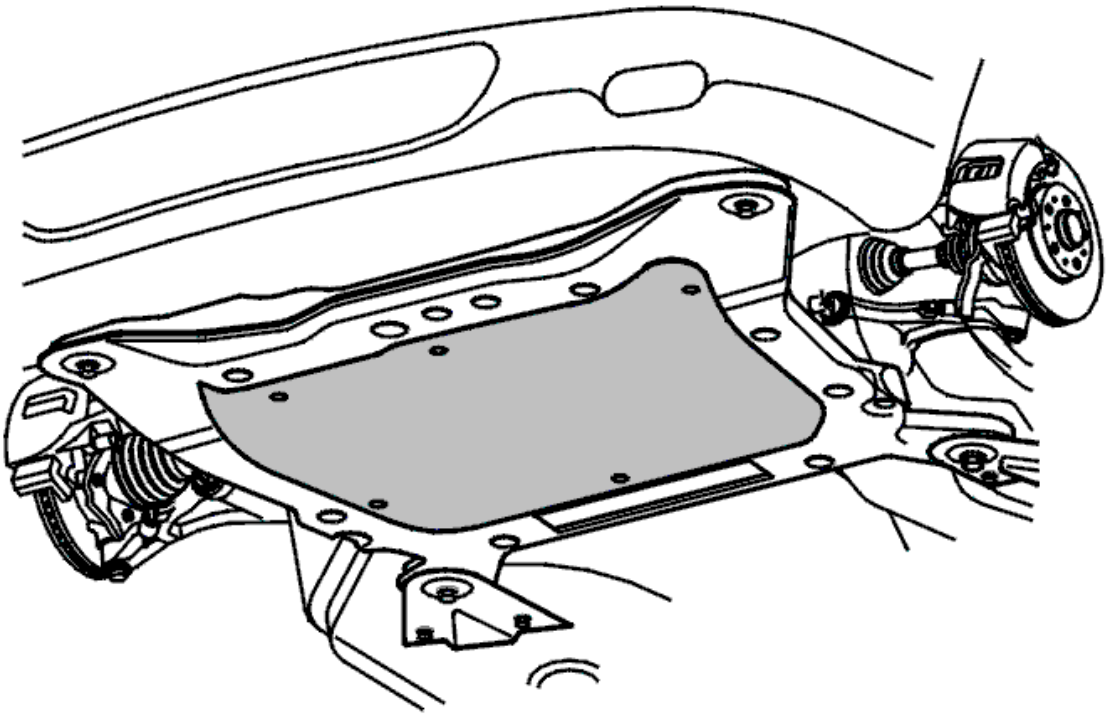

Fig. 297: Identifying Splash Guard Under Engine
Courtesy of VOLVO CARS CORPORATION

Remove the splash guard under the engine.

REMOVING THE SKID PLATE

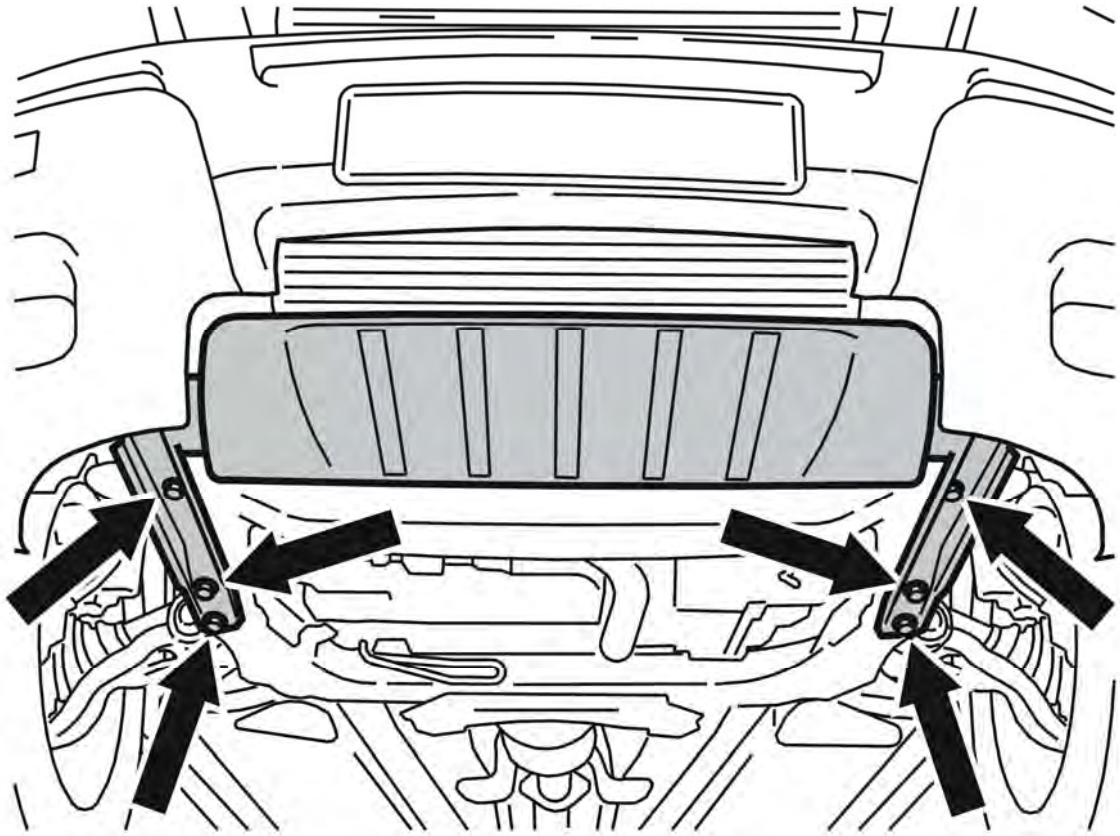

Fig. 298: Splash Guard, Protective Plate And Screws
Courtesy of VOLVO CARS CORPORATION

Remove the 6 screws.

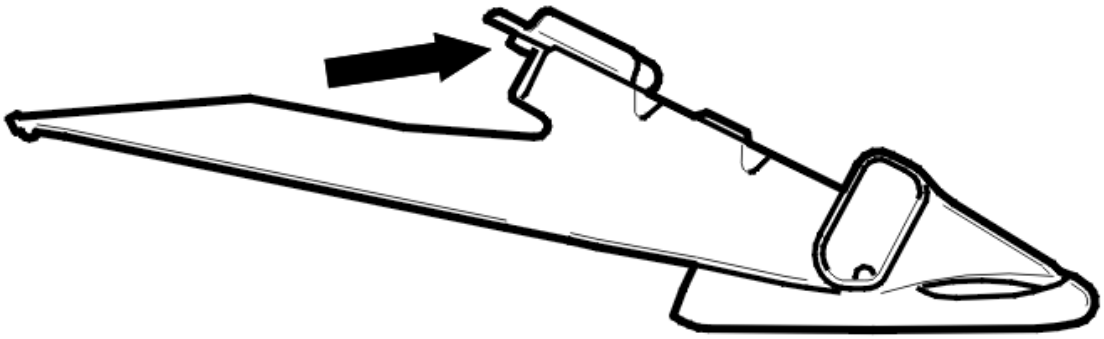

Fig. 299: Identifying Protective Plate
Courtesy of VOLVO CARS CORPORATION

Lift and slide the splash guard forward.

Remove the protective plate.

NOTE: **There is a guide sleeve on the upper mounting for the plate. This must be lifted slightly so that the panel can be slid forward.**

EXPOSING THE SUB-FRAME

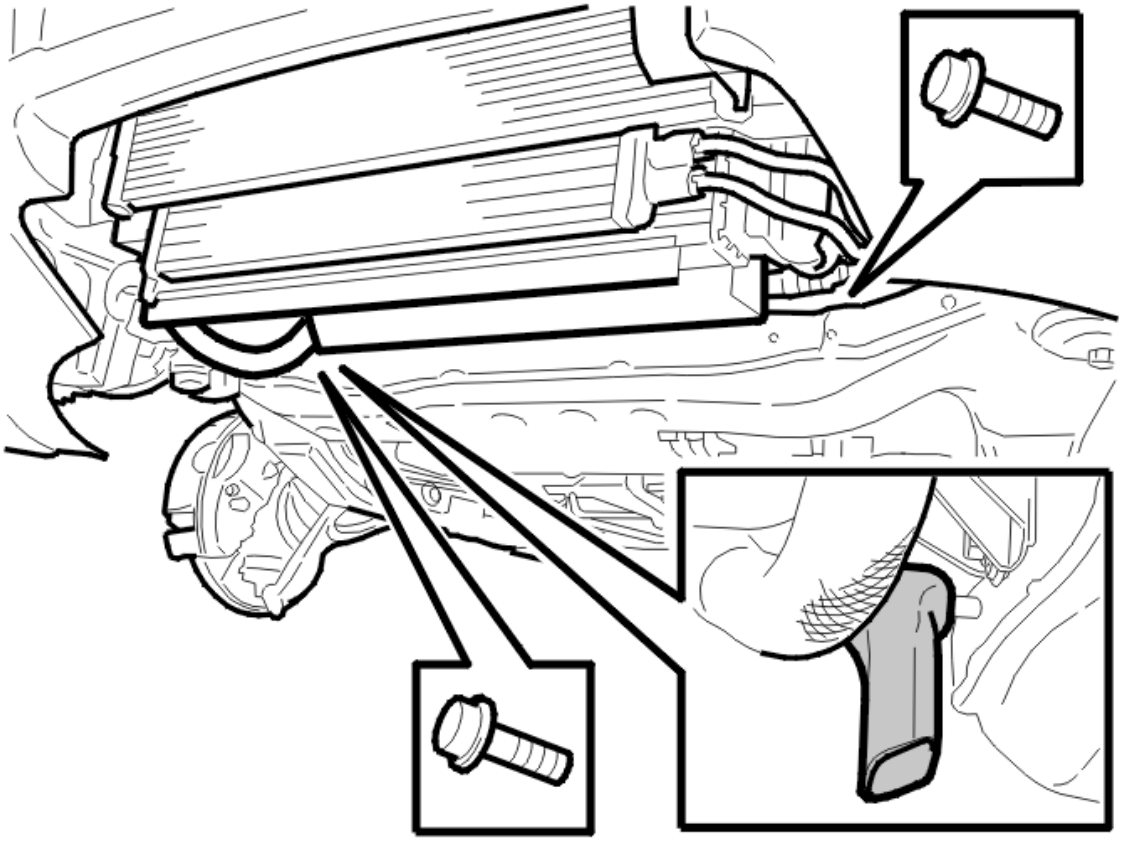

Fig. 300: Identifying Cable Duct Screw And Ground Lead Screw
Courtesy of VOLVO CARS CORPORATION

Remove:

- the screw for the cable duct
- the screw for the ground lead.

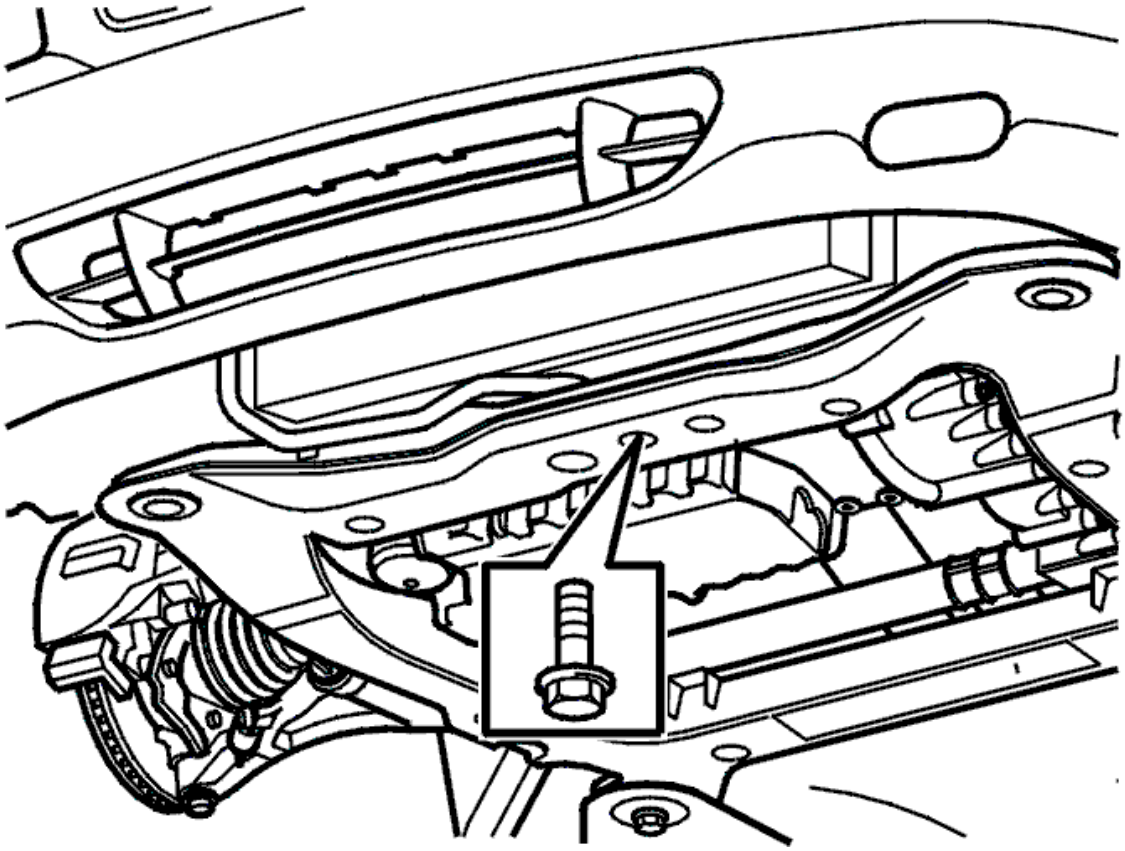

Fig. 301: Front Engine Pad Screw
Courtesy of VOLVO CARS CORPORATION

Remove the screw for the front engine pad.

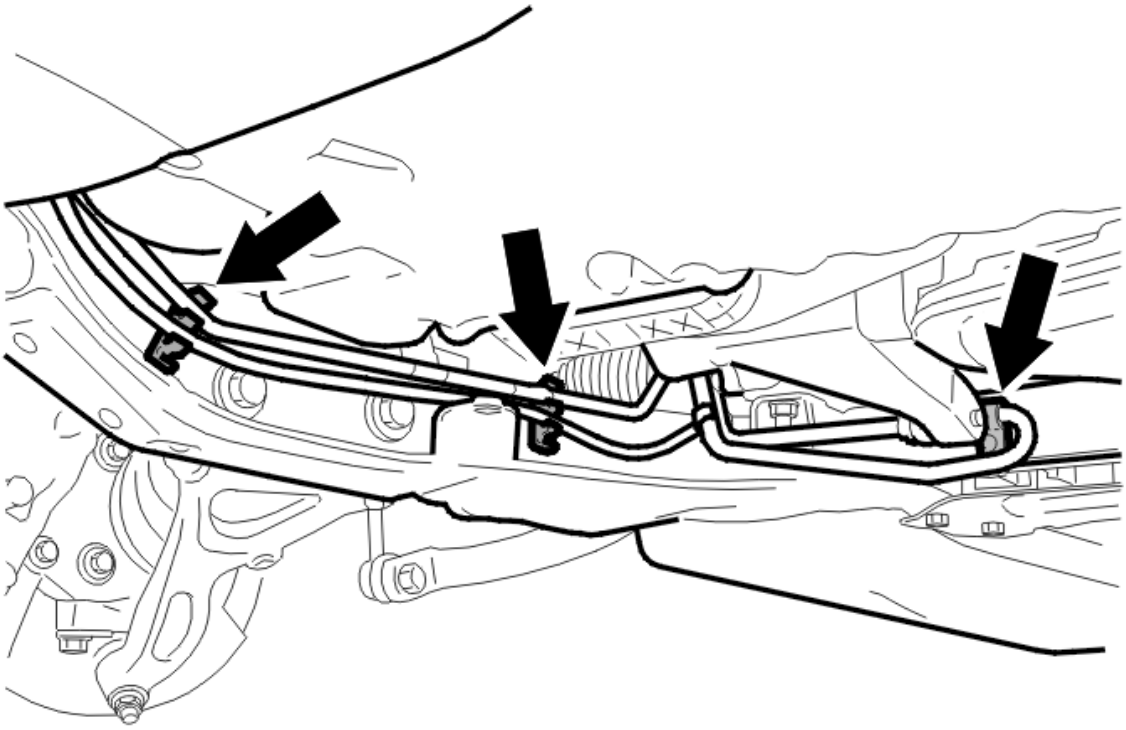

Fig. 302: Identifying Pipes and Screw Clips
Courtesy of VOLVO CARS CORPORATION

Remove:

- the oil pipe for the steering gear from the snap fasteners along the sub-frame
- the screw clip for the steering gear return line
- the fuel line for the engine block heater and the engine block heater (if applicable) on the left side of the sub-frame.

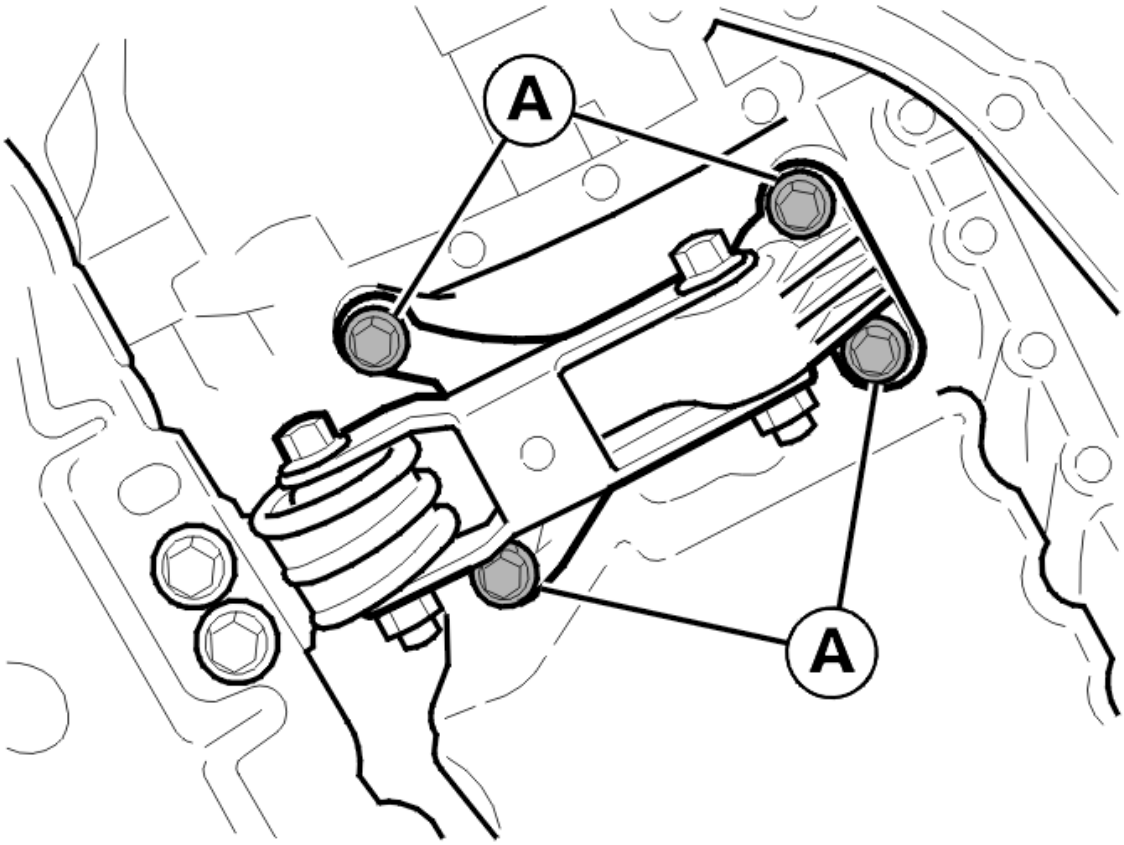

Fig. 303: Identifying Torque Rod To Engine Screws
Courtesy of VOLVO CARS CORPORATION

Remove the 4 screws holding the torque rod to the engine.

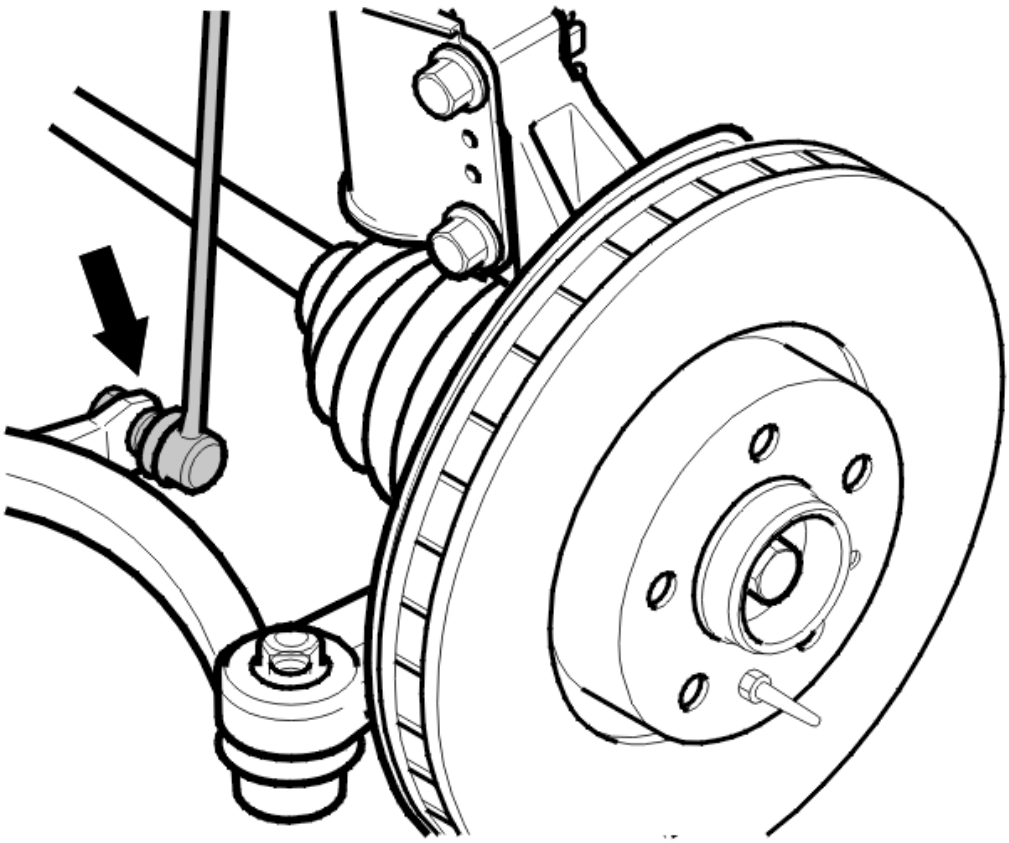

Fig. 304: Identifying Anti-Roll Bar Links
Courtesy of VOLVO CARS CORPORATION

Remove the anti-roll bar links from the anti-roll bar on both sides. Counterhold using a Torx wrench so that the ball joint boot is not damaged.

REMOVING THE DRIVE SHAFT

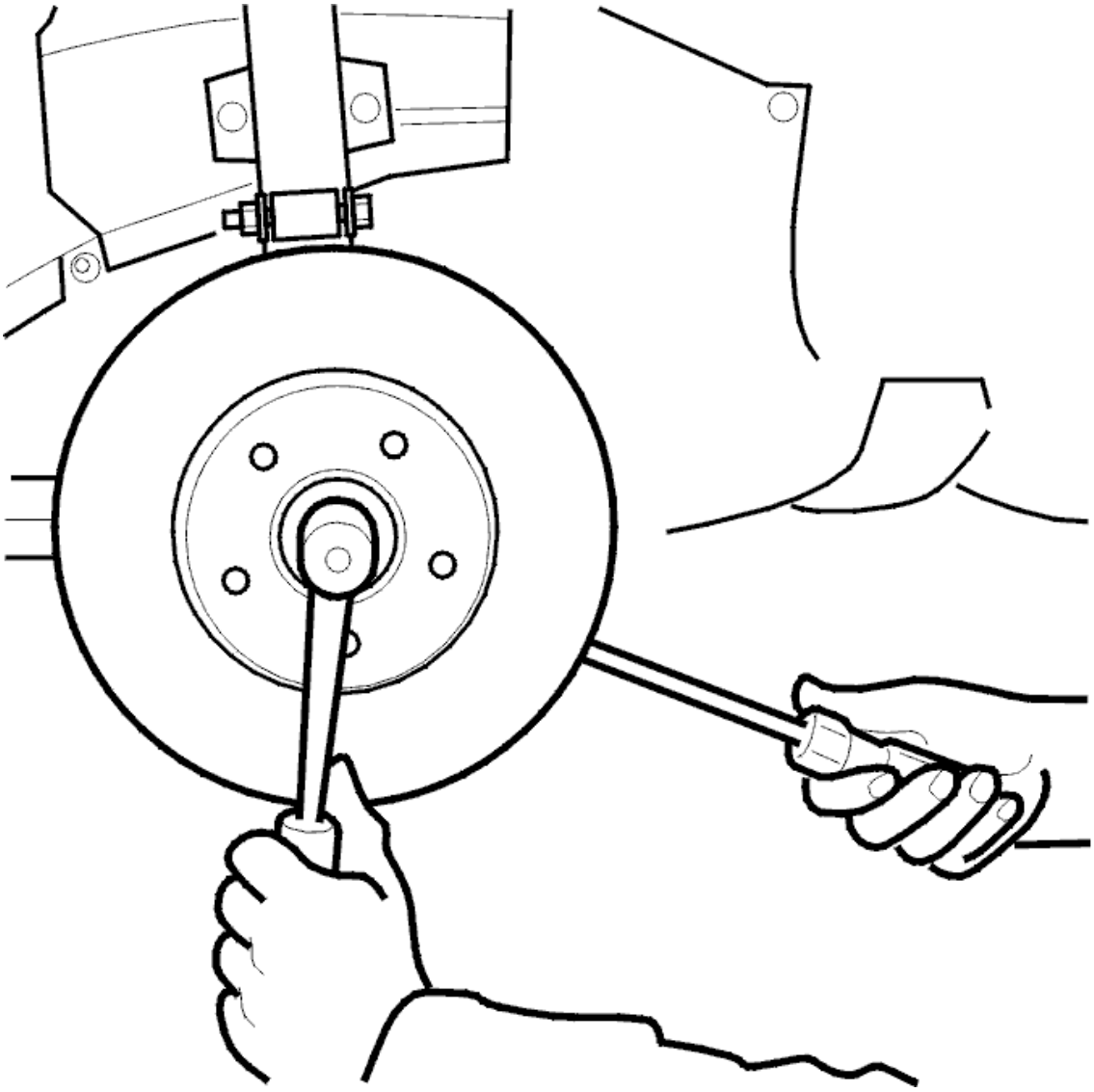

Fig. 305: Identifying Drive Shaft Screw Removal Using Counter Hold On Brake Disc
Courtesy of VOLVO CARS CORPORATION

Remove the screw for the drive shaft. Use a screwdriver as a counterhold on the brake disc.

Knock the end of the drive shaft into the hub. Use a brass drift.

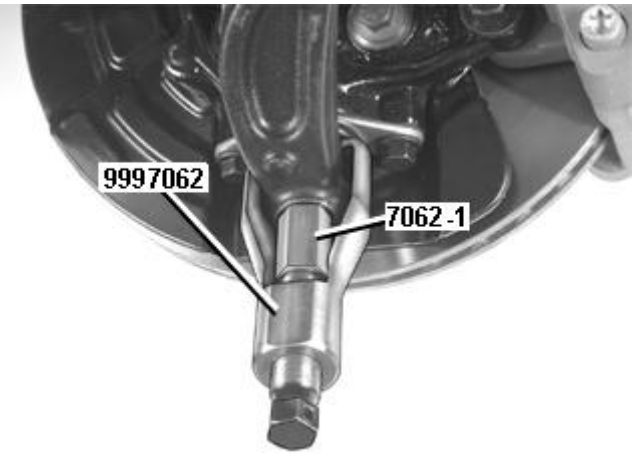

Fig. 306: Disconnecting Ball Joint Pinion From Control Arm Using 999 7062
Courtesy of VOLVO CARS CORPORATION

Disconnect the ball joint pinion from the control arm. Use tool see **9997062** .

Install cap nut **7062-1** on the ball joint pinion.

Tighten the nut against the control arm.

Then turn back one turn to form a gap between the cap nut and the control arm.

Position the extractor on the control arm. Detach the ball joint from the control arm.

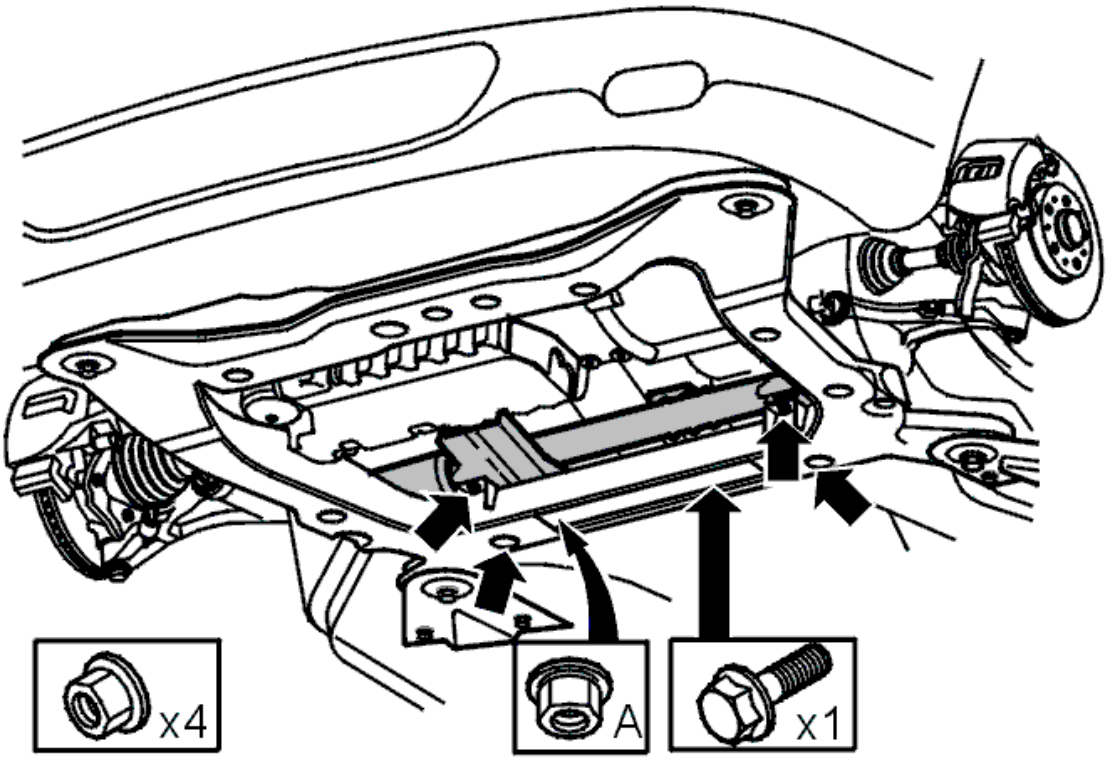

Fig. 307: Identifying Bolt And Nut Holding Steering Gear To Sub-Frame
Courtesy of VOLVO CARS CORPORATION

Remove the 4 nuts and the screw holding the steering gear to the sub-frame.

Remove the power steering line from the clips on the sub-frame.

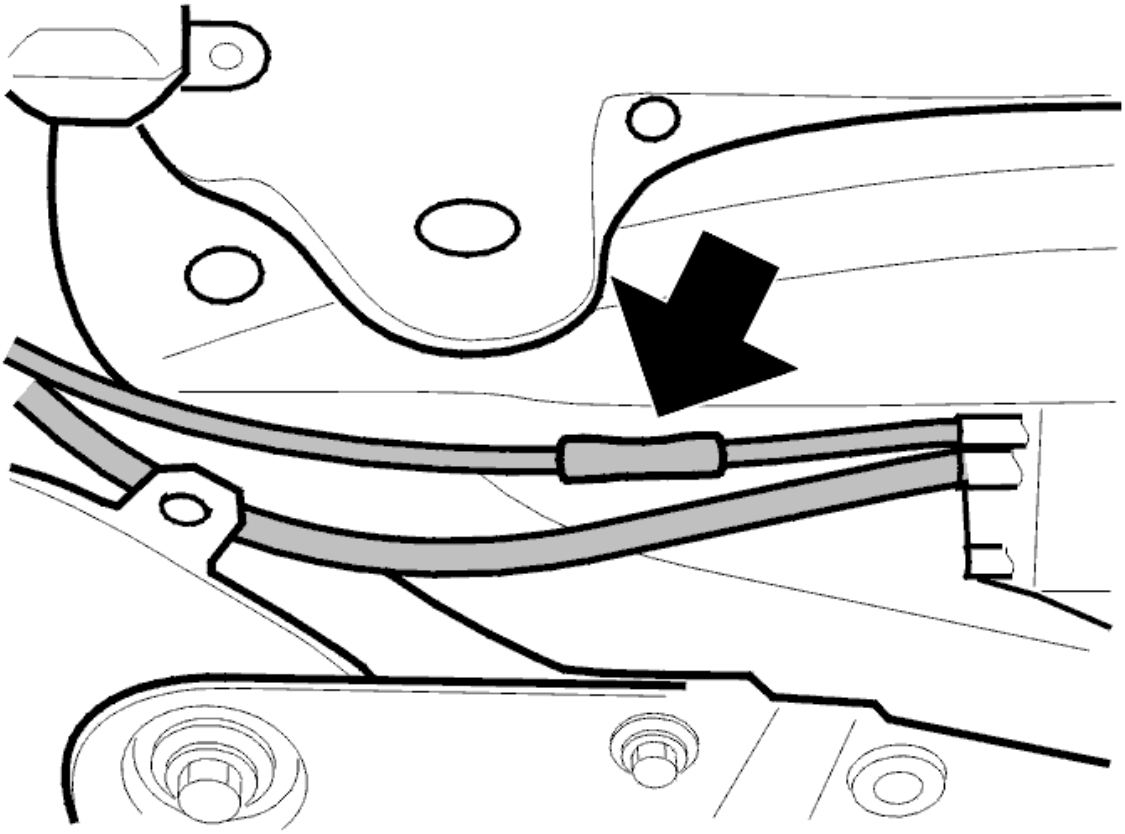

Fig. 308: EVAP Canister Hose
Courtesy of VOLVO CARS CORPORATION

Remove the hose for the EVAP canister in the joint by pulling apart the hose. Route the hose under the anti-roll bar.

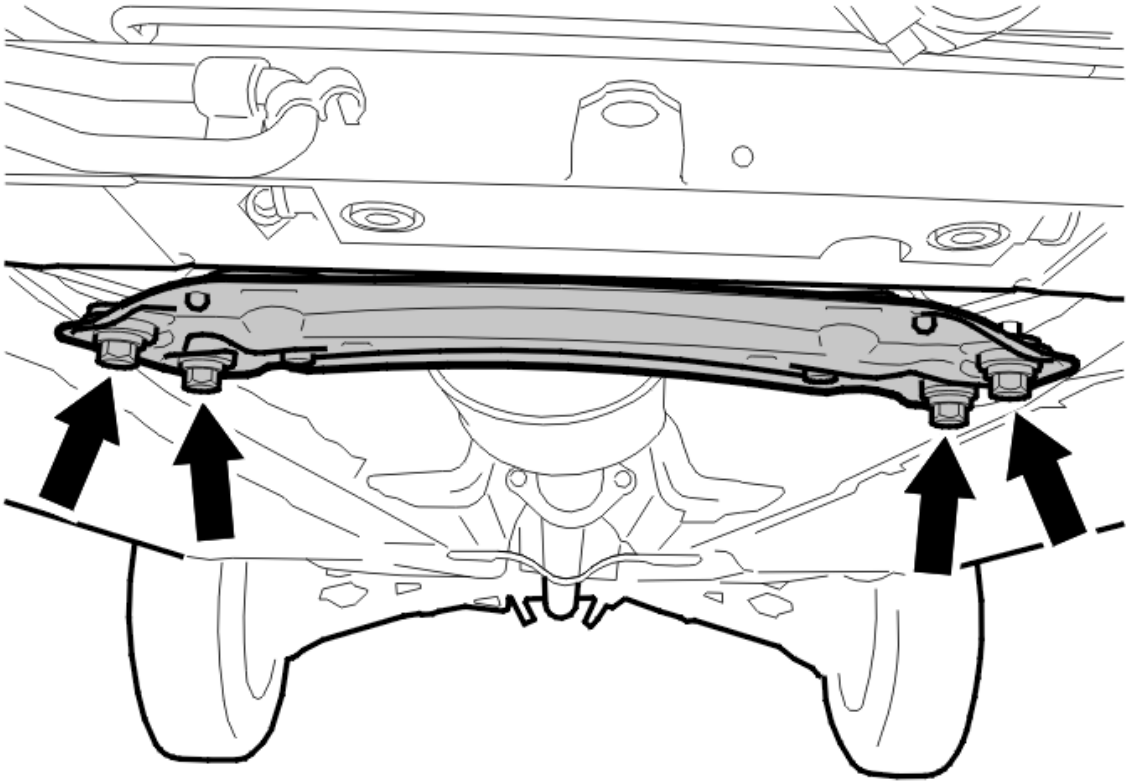

Fig. 309: Identifying SIPS Member
Courtesy of VOLVO CARS CORPORATION

Remove:

- the screw in the mounting for the front SIPS member
- the brake pipe from the snap fastener on the member
- The SIPS member.

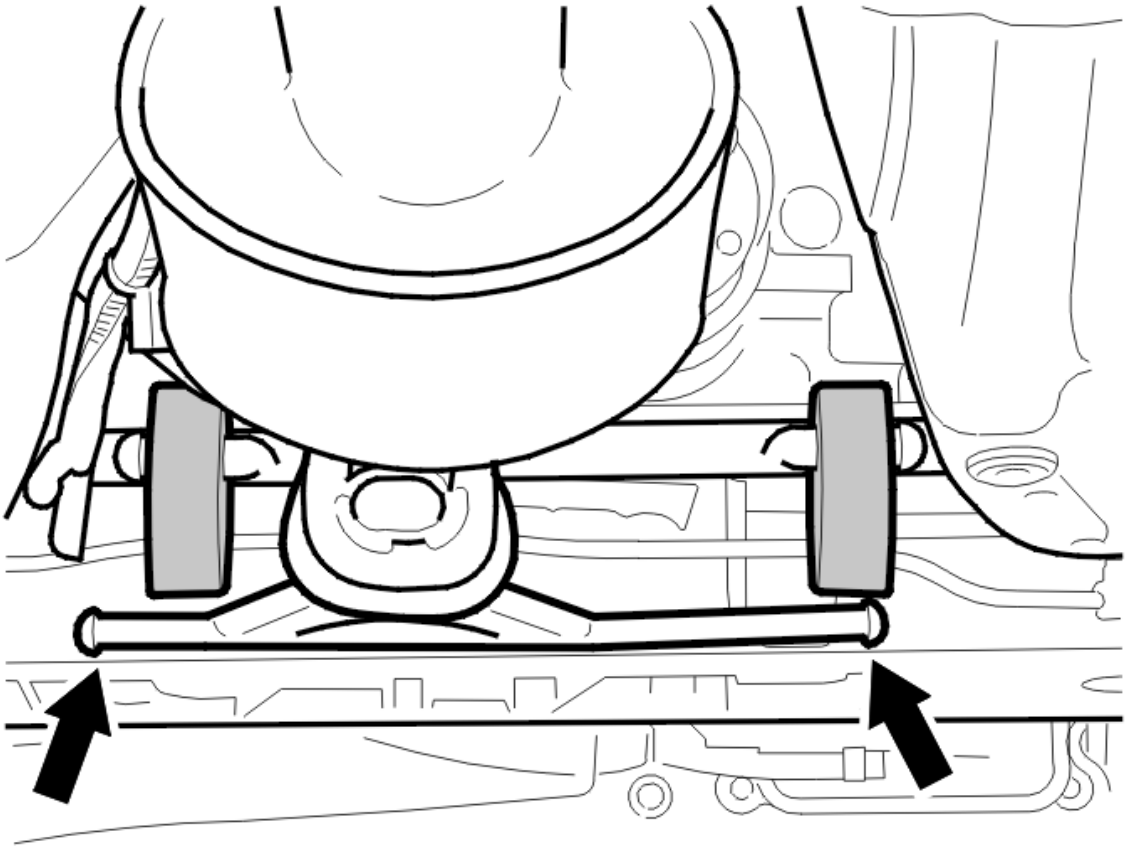

Fig. 310: Identifying Exhaust Pipe Rubber Mountings
Courtesy of VOLVO CARS CORPORATION

Remove the rubber mountings for the exhaust pipe.

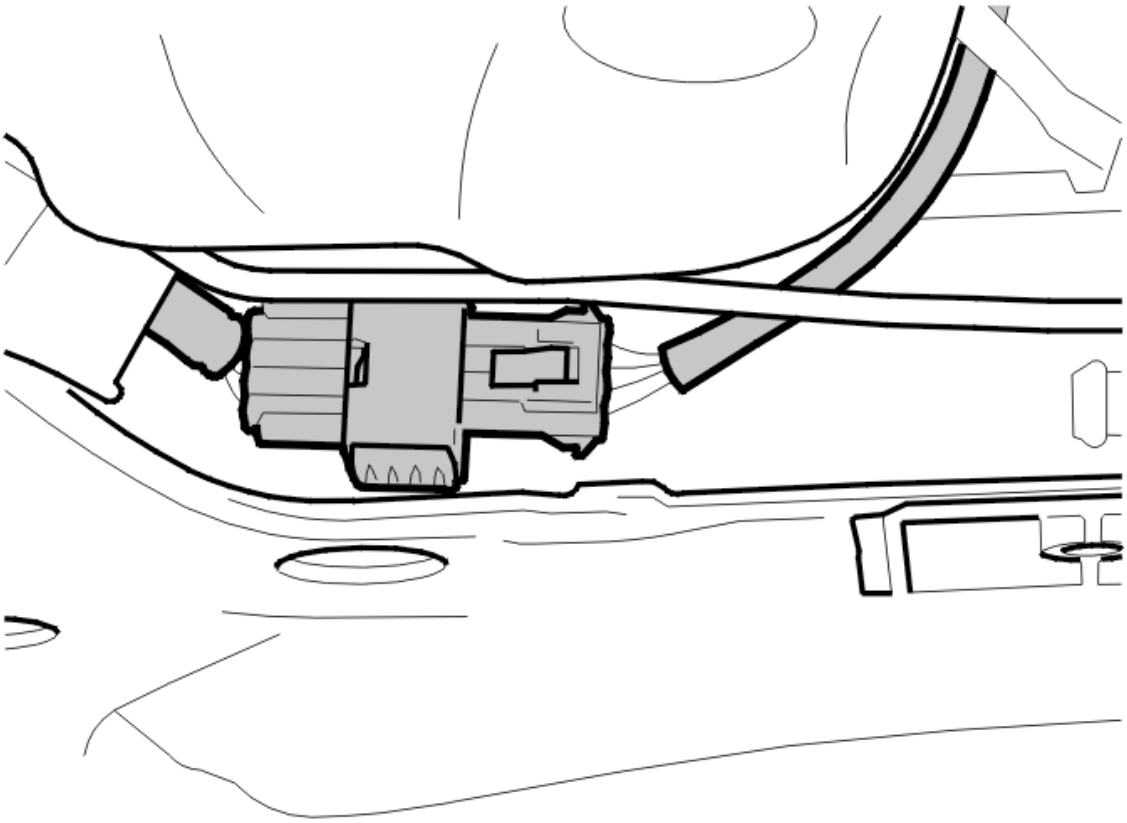

Fig. 311: Identifying Heated Oxygen Sensor (HO2S) Connector
Courtesy of VOLVO CARS CORPORATION

Remove the connector for the heated oxygen sensor (HO2S) from its mounting.

REMOVING THE SUB-FRAME

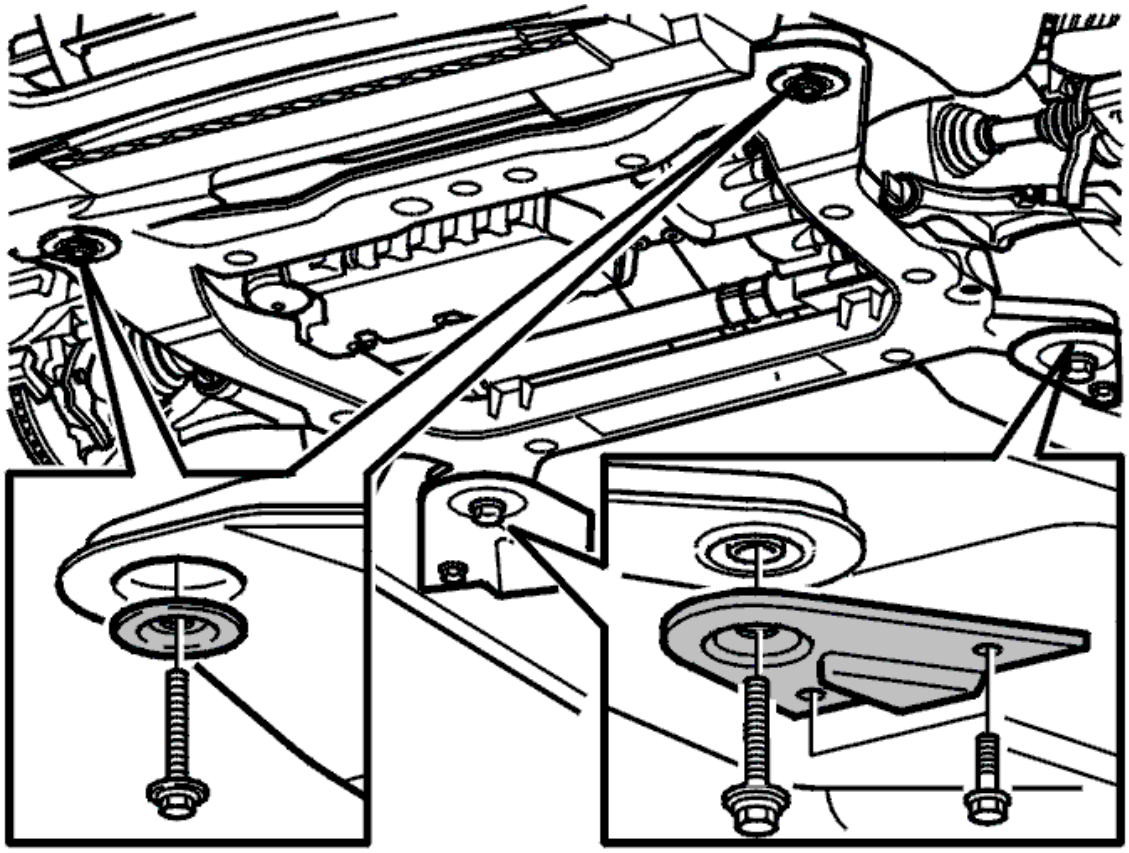

Fig. 312: Identifying Bolts, Washers And Brackets In Sub-Frame
Courtesy of VOLVO CARS CORPORATION

Position a lifting table under the sub-frame

Remove the following on both sides:

- the screws holding the sub-frame brackets in the bodywork
- the screw for the sub-frame mounting.

Carefully lower the sub-frame.

NOTE: Ensure that the brake pipe clears the exhaust pipe mounting when lowering the frame.

NOTE: Ensure that the steering gear screws release from the sub-frame.

TRANSFERRING COMPONENTS

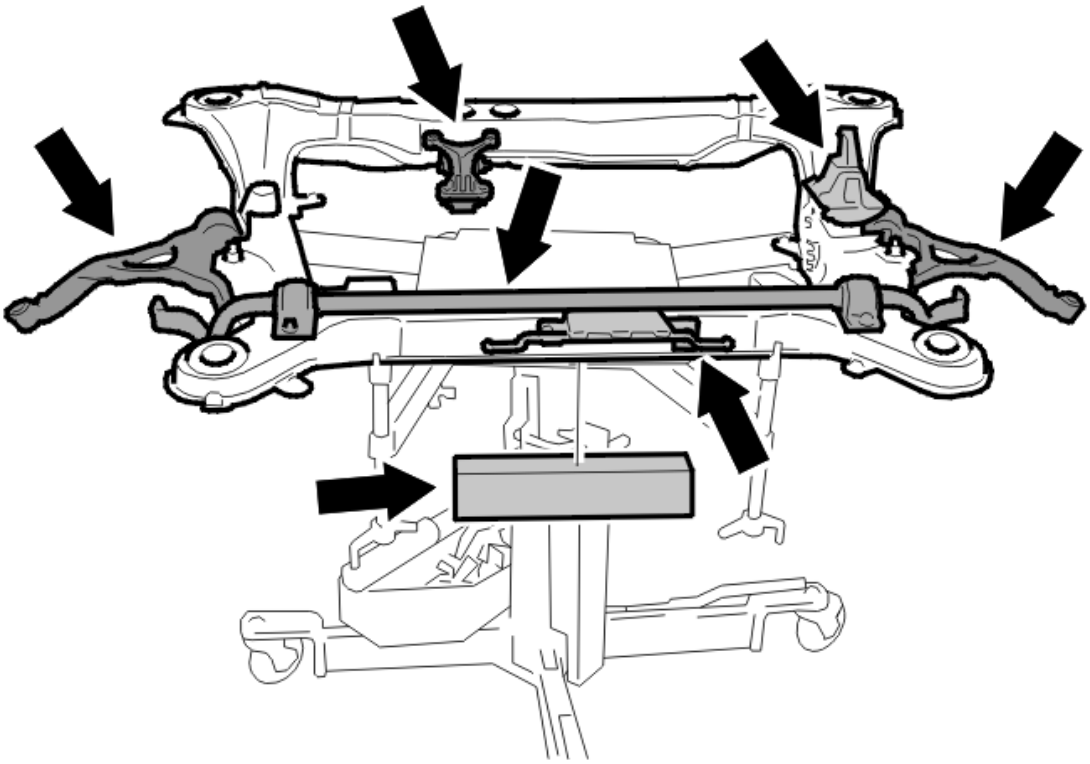

Fig. 313: Identifying Bevel Protractor
Courtesy of VOLVO CARS CORPORATION

Transfer:

- the control arms. Use new screws and new nut. Tighten the front screws. Tighten to **65 Nm** . Angle-tighten **90°** . Use bevel protractor see **9512050** . Tighten the rear screw. Tighten to **105 Nm** . Angle-tighten **90°**
- the anti-roll bar. Tighten to **60 Nm**
- the right-hand engine mounting. Tighten the screws. Tighten to **65 Nm** . Angle-tighten **60°**
- the exhaust mounting bracket. Tighten to **50 Nm**
- the shock absorber Tighten to **50 Nm**
- lower torque rod. Tighten to **65 Nm** . Angle-tighten **90°** .

Install new pipe / hose holders.

INSTALLING THE SUB-FRAME

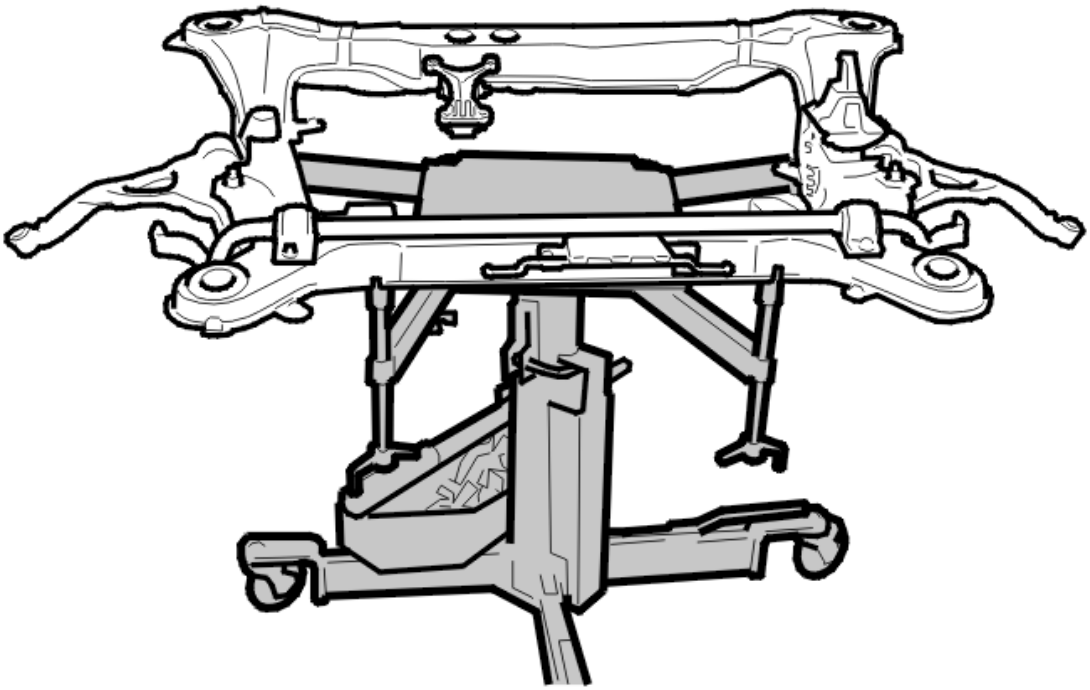

Fig. 314: Identifying Front And Rear Screws To Control Arms
Courtesy of VOLVO CARS CORPORATION

Position the sub-frame on a lifting table.

Carefully lift the sub-frame.

Locate the control arms to the ball joints and the steering gear to its mountings.

HINT: Lubricate the rubber coated clamp for the servo pressure pipe on the sub-frame using a soap solution. Install the screw before raising the sub-frame completely. Do not tighten the screw more than 2 turns as the pipe must be able to slide to the correct position in the clamp whilst raising the sub frame.

NOTE: Ensure that the brake pipe at the exhaust mounting is not trapped when raising the sub frame.

Lift the sub-frame up completely.

Install the four screws in the sub-frame together with the sub-frame brackets and engine block heater, if applicable. Use new screws. Lubricate the screws.

First tighten the screws on the left side of the sub-frame. Tighten to **105 Nm** . Angle tighten to **120°** . Then tighten the right-hand side to the same value.

Finally tighten the screws for the brackets on both sides to **50 Nm** .

INSTALLING REMOVED COMPONENTS

Install:

- the heated oxygen sensor (HO2S) connector
- the rubber mountings for the exhaust pipe
- SIPS (side impact protection system) member
- the four screws for the SIPS (side impact protection system) member. Tighten to **24 Nm** .

Route the hose for the EVAP canister to the correct position and press the joints together

Install the four nuts and the screw holding the steering gear. Use new nuts and a new screw. Tighten to **50 Nm** .

Clip the cable in position.

Install:

- the ball joints. Use new nuts. Tighten to **80 Nm** . Counterhold using a Torx wrench so that the ball joint boot is not damaged
- the anti-roll bar links. Use new nuts. Tighten to **50 Nm** . Counterhold using a Torx wrench so that the boot is not damaged.

Install:

- the lower torque rod. Tighten the two screws. Tighten to **10 Nm**
- the oil pipe for the steering gear from the snap fasteners along the sub-frame
- the screw clip for the steering gear return line
- the engine block heater and the fuel line to the engine block heater if applicable
- the screw for the cable duct
- the screw for the ground lead.

INSTALLING THE DRIVE SHAFT

Install new screws on both sides. Use a screwdriver as a counterhold. Tighten to **35 Nm** . Angle-tighten **90°** . Use bevel protractor see **9512050** .

INSTALLING THE SKID PLATE

Move the skid plate up into the bumper wraparound.

Press forwards until the mounting brackets engage in the sub frame.

Install the screws. Tighten to **50 Nm** .

Install the splashguard under the engine. Tighten to **24 Nm** .

INSTALLING THE RIGHT-HAND ENGINE MOUNTING

Install the right-hand engine mounting. Use new screws. Tighten to **35 Nm** . Angle-tighten **90°** .

Fold the fender liner back into position.

Install:

- the skid plate
- the plastic nuts
- the front wheels. See **INSTALLING WHEELS** .

INSTALLING THE CLAMP FOR THE SERVO PRESSURE HOSE

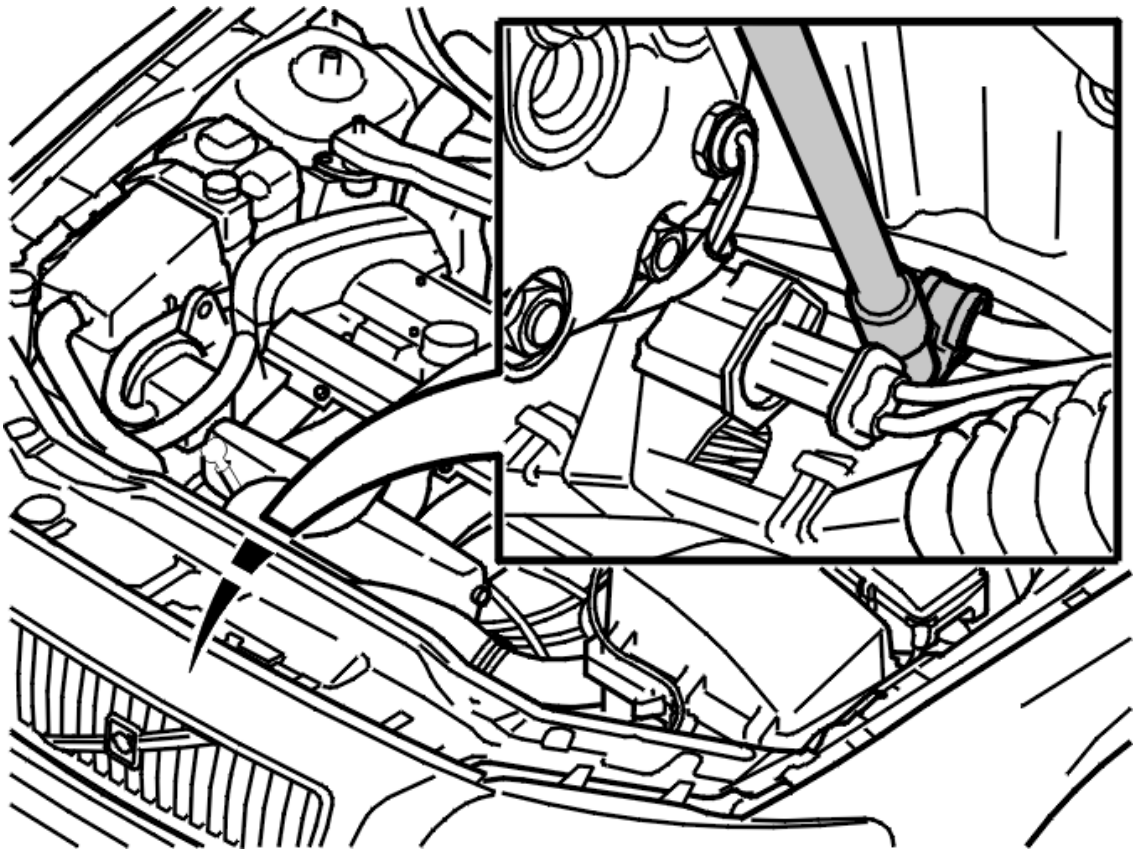

Fig. 315: Clamp On Sub-Frame
Courtesy of VOLVO CARS CORPORATION

Tighten the clamp for the servo pressure pipe on the sub frame. Tighten to **10 Nm** .

REMOVING LIFTING TOOLS

Remove lifting tool see **9995716** , kit see **9997070** , lifting hooks see **9995460** and lifting lug see **9997018** .

Remove

FINISHING

Align the wheels. See **WHEEL ALIGNMENT, CHECKING / ADJUSTING** .

TORQUE ROD LOWER, REPLACING

NOTE: **As the illustrations in this service information are used for different model years and / or models, some variation may occur. However, the essential information in the illustrations is always correct.**

PREPARATION

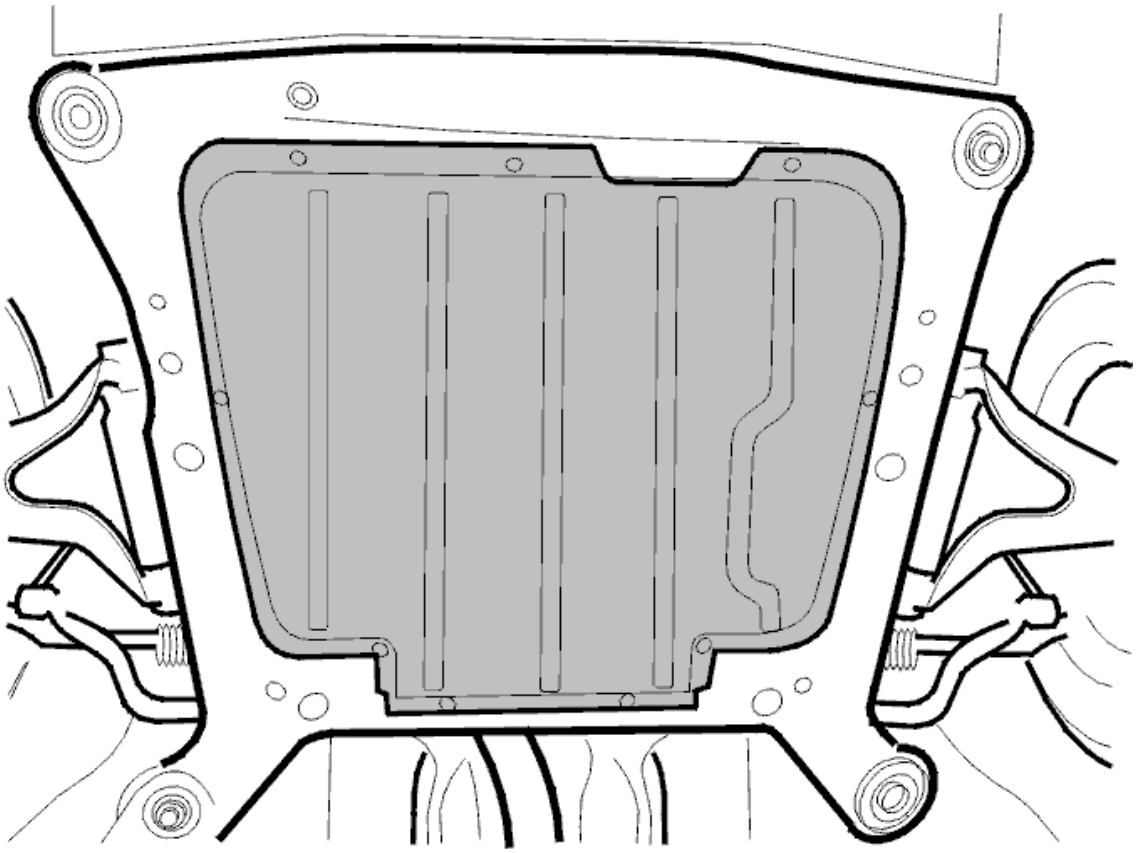

Fig. 316: Removing The Splash Guard
Courtesy of VOLVO CARS CORPORATION

Raise the car.

Remove the splash guard under the engine.

REMOVING THE LOWER TORQUE ROD

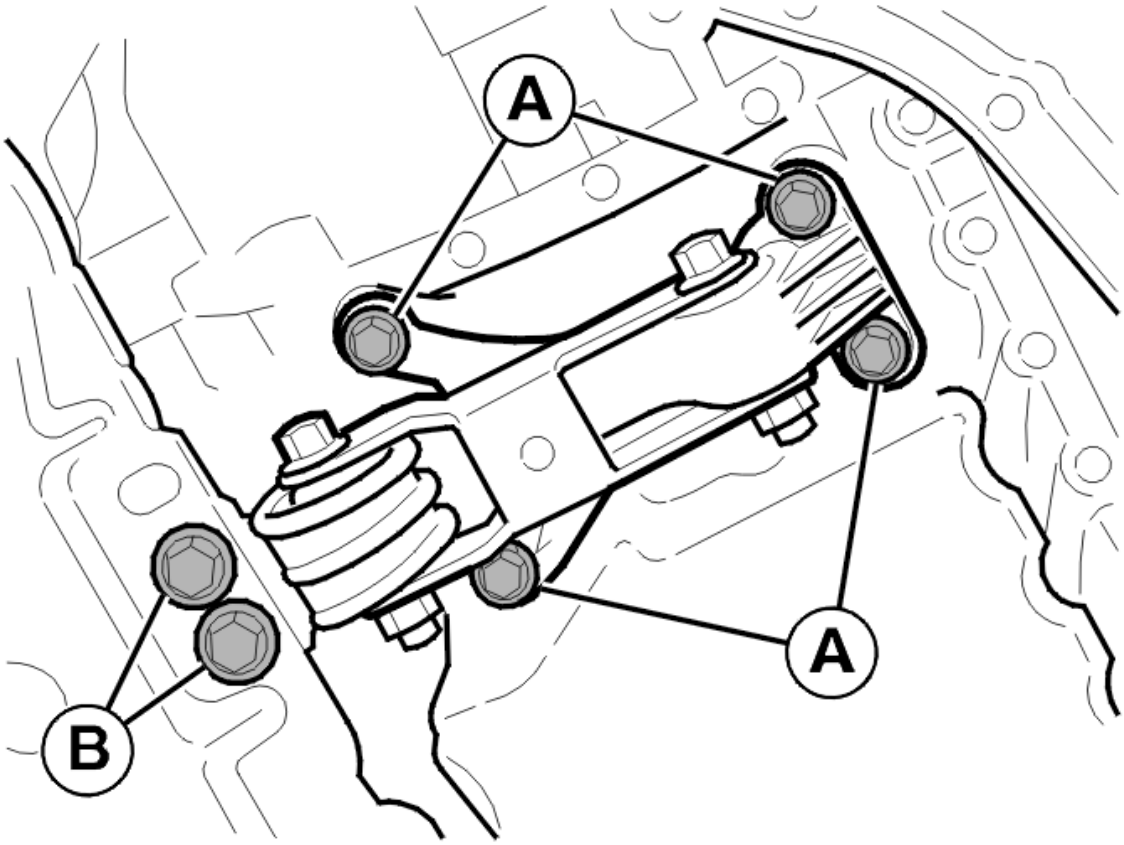

Fig. 317: Installing The Lower Torque Rod
Courtesy of VOLVO CARS CORPORATION

Remove:

- the four screws (A)
- the two nuts (B)
- the engine stabilizer brace.

INSTALLING THE LOWER TORQUE ROD

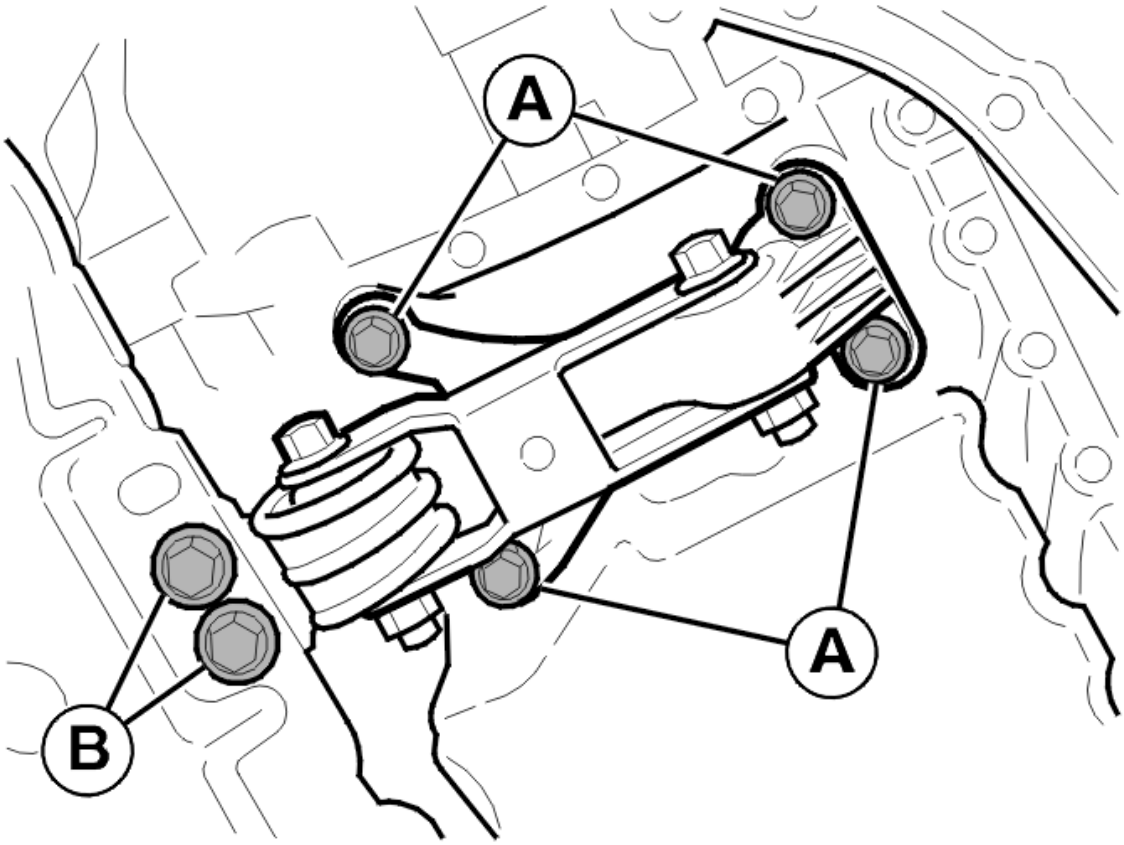

Fig. 318: Installing The Lower Torque Rod
Courtesy of VOLVO CARS CORPORATION

Install the strut.

Tighten:

- the four screws (A) to the engine. (M10)
- the two nuts (B) to the sub-frame. See **TIGHTENING TORQUE**
- the engine stabilizer brace.

FINISHING

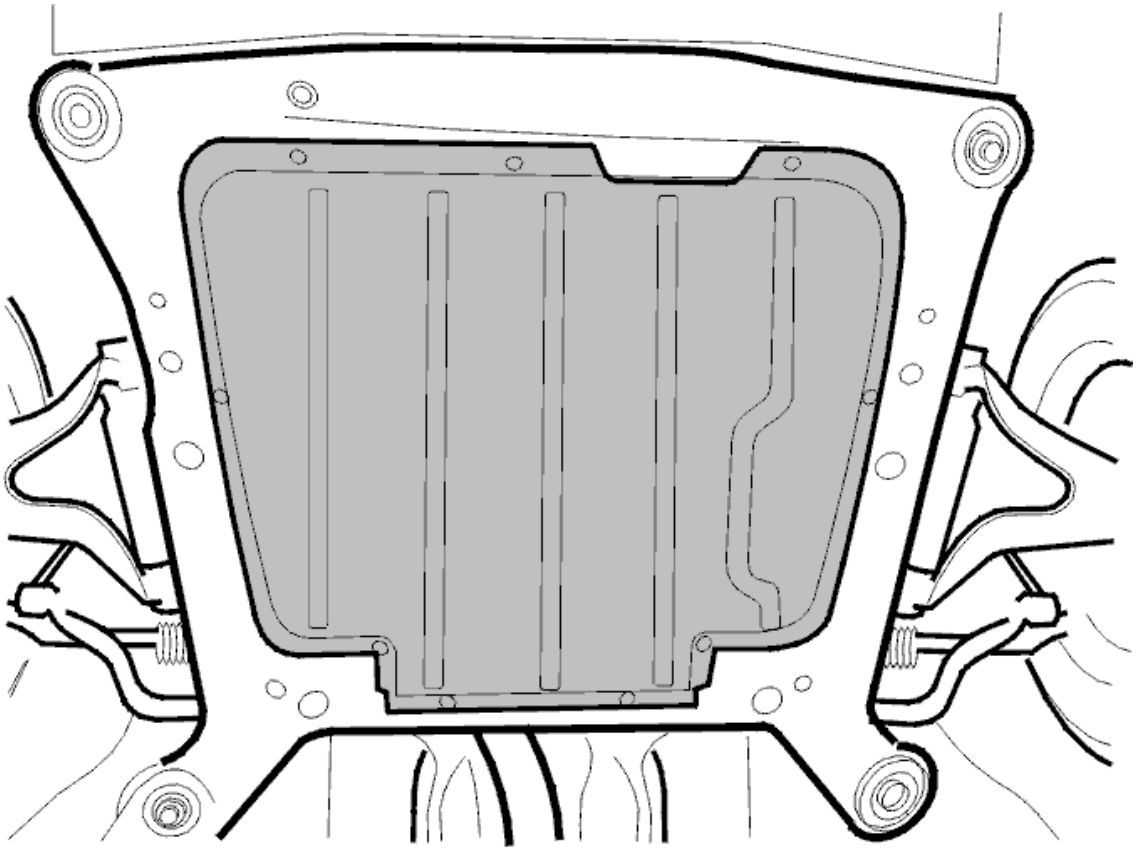

Fig. 319: Removing The Splash Guard
Courtesy of VOLVO CARS CORPORATION

Install the splashguard under the engine.

ENGINE SUSPENSION (2003-2012)

BUSHING SUB-FRAME, REPLACING (2009-2012)

Special tools:

see **9995575**

see **9995576**

see **9512564**

see **9997018**

see **9997070**

see **9995716**

see **9995460**

see **9995185**

NOTE: **As the illustrations in this service information are used for different model years and / or models, some variation may occur. However, the essential information in the illustrations is always correct.**

IMPORTANT INFORMATION

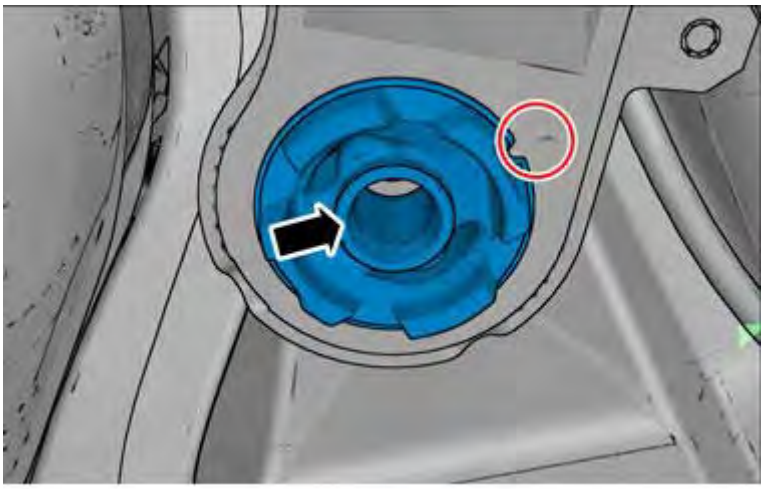

Fig. 320: Identifying The Round Hole
Courtesy of VOLVO CARS CORPORATION

NOTE: **From 2009 onwards the hole in the middle of the bushing is round.**

HINT: Carry out work using see 9995575 together with see 9995576 or see 9512564 .

PREPARATORY WORK

Remove the engine cover.

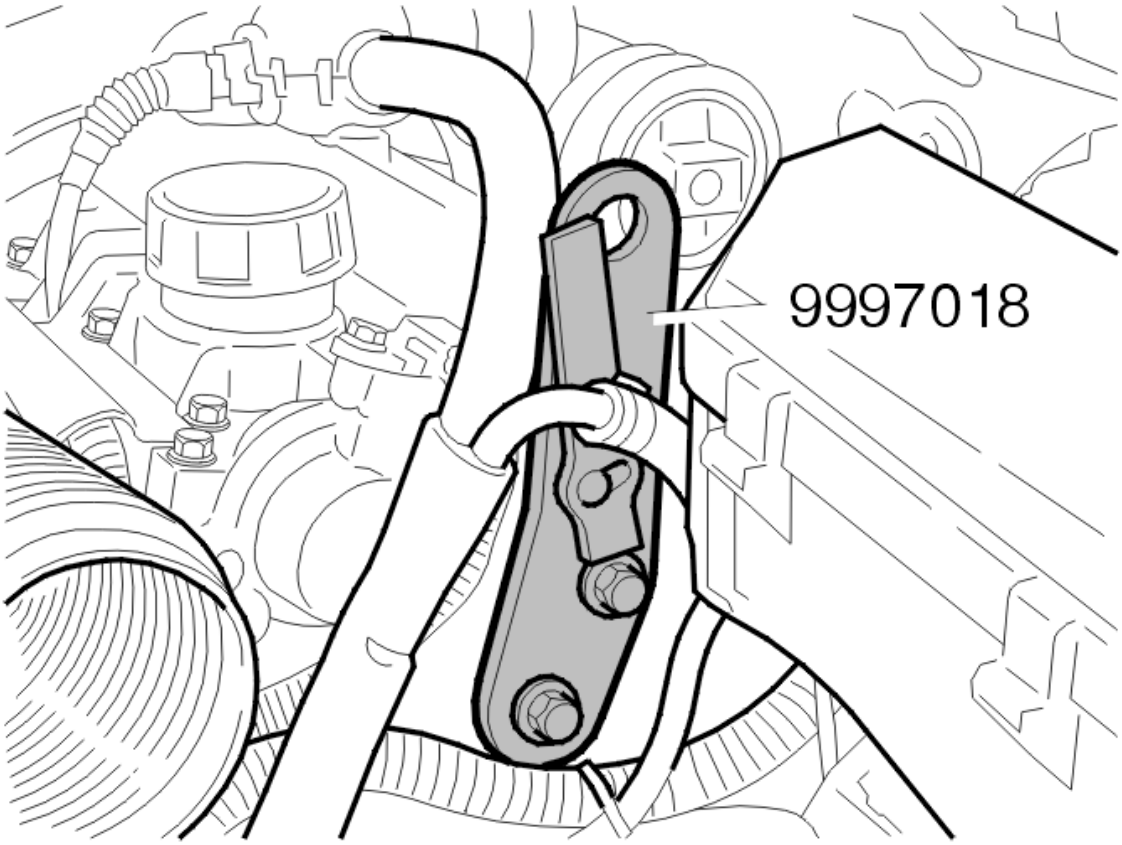

Fig. 321: Installed Lifting Eye
Courtesy of VOLVO CARS CORPORATION

Applies only to six cylinder engines:

Install lifting eye see **9997018** on the left side of the engine at the 2 screws.

Lock the lifting lug using the catch.

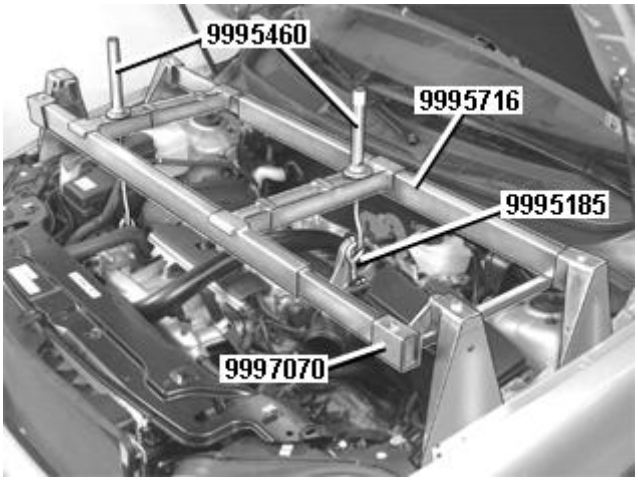

Fig. 322: Identifying Fixture Kit, Lifting Beam And Lifting Hooks

Courtesy of VOLVO CARS CORPORATION

Installing the lifting beams and lifting hooks on the engine lifting lugs.

NOTE: The front lifting beam must be equipped with fixture kit see 9997070 as illustrated.

Position lifting beam see **9995716** on the wheel arch and directly above the engine lifting eyelets on the left and right-hand sides.

Connect lifting hooks see **9995460** on the lifting lugs on the right-hand side of the engine with a clearance of 10 mm.

Applies only to the T6:

Also use lifting lug see **9995185** on the left-hand side of the engine.

Tighten to light contact on the left hand side.

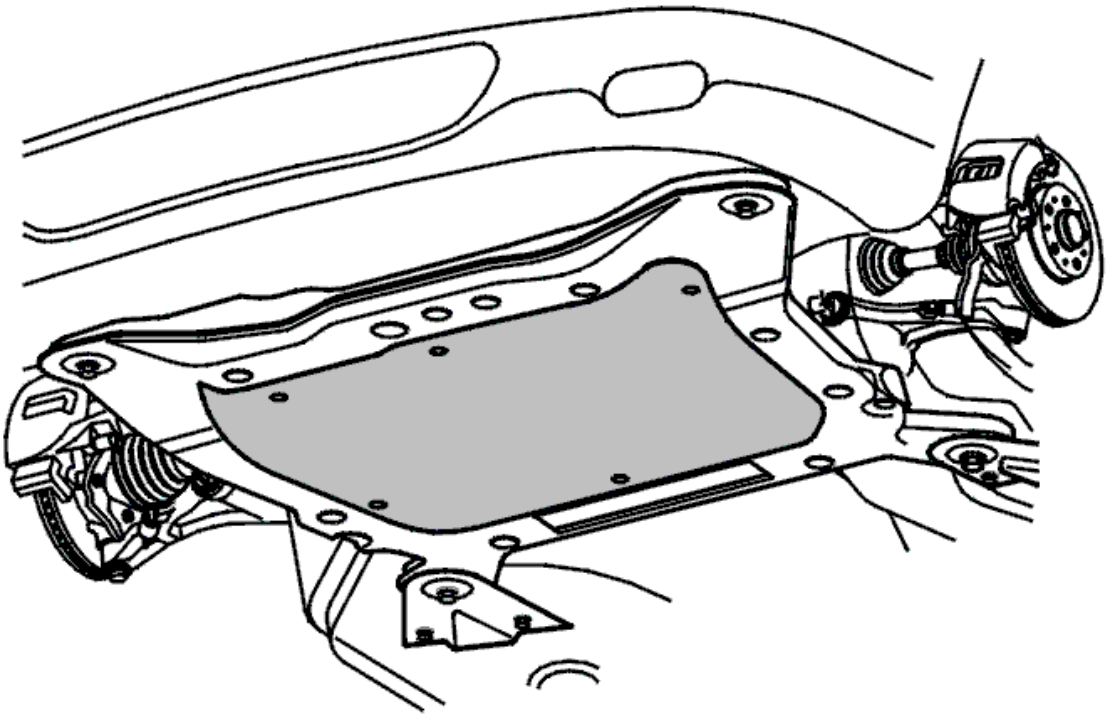

Fig. 323: Identifying Splash Guard Under Engine
Courtesy of VOLVO CARS CORPORATION

Remove:

- the front wheels
- the splash guard under the engine.

REMOVING THE SKID PLATE

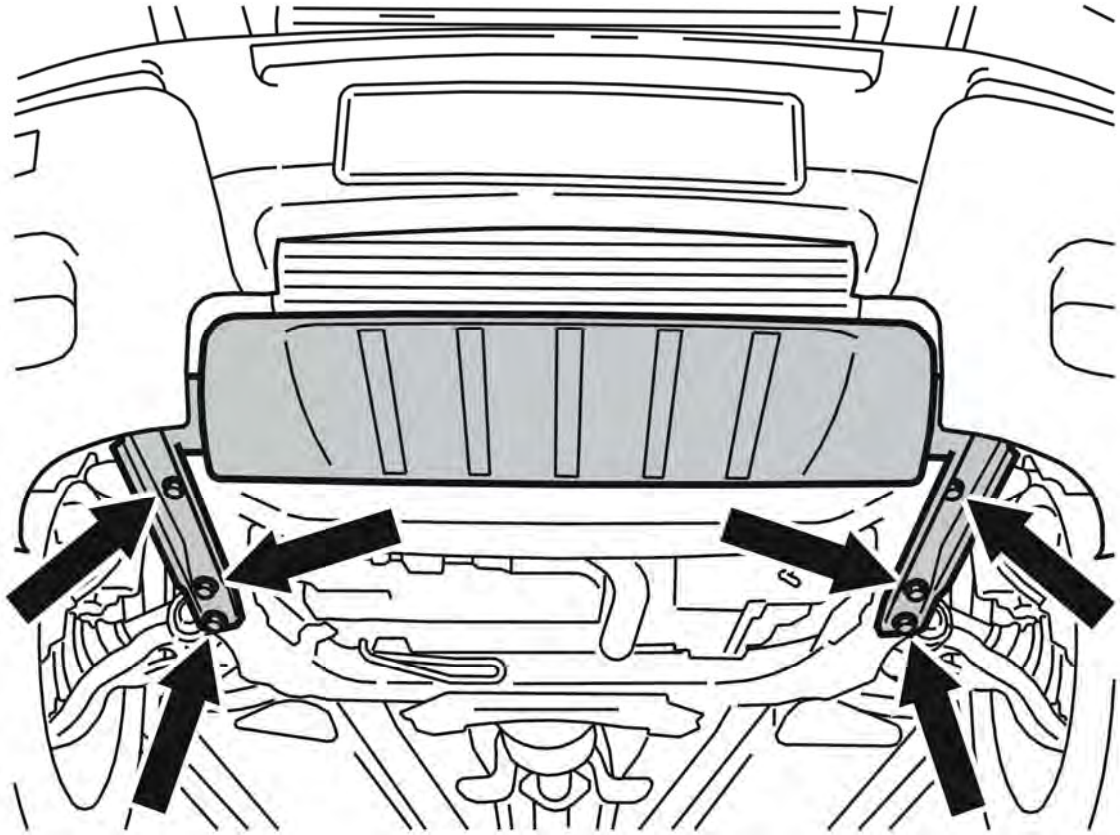

Fig. 324: Splash Guard, Protective Plate And Screws
Courtesy of VOLVO CARS CORPORATION

Remove the 6 screws.

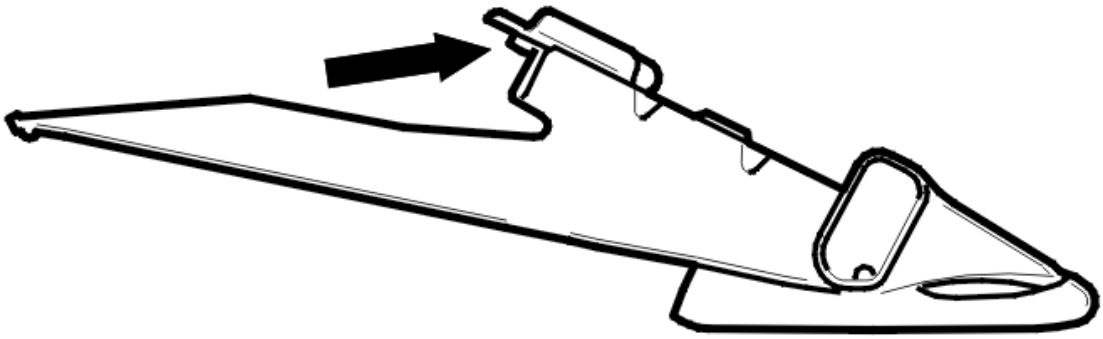

Fig. 325: Identifying Protective Plate
Courtesy of VOLVO CARS CORPORATION

Lift and slide the splash guard forward.

Remove the protective plate.

NOTE: **There is a guide sleeve on the upper mounting for the plate. This must be lifted slightly so that the panel can be slid forward.**

REMOVING COMPONENTS

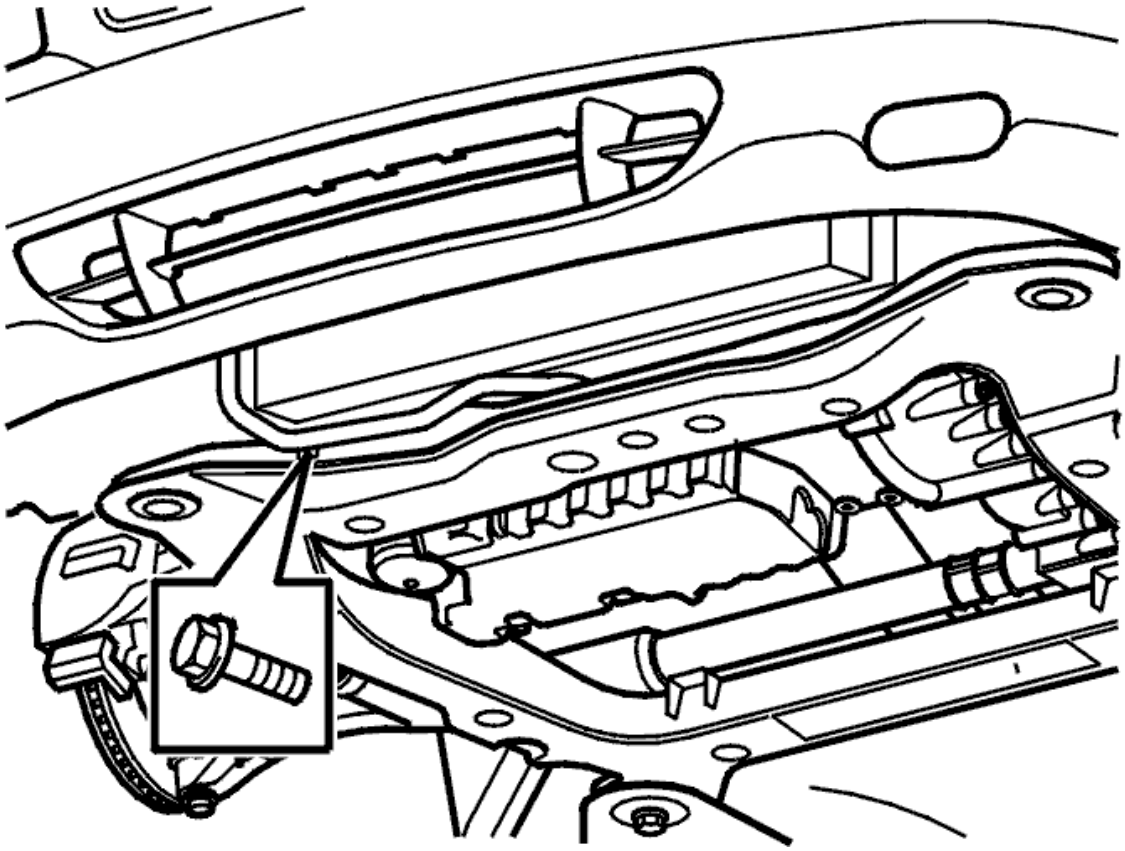

Fig. 326: Identifying Screw For Cable Duct
Courtesy of VOLVO CARS CORPORATION

Remove:

- the screw for the cable duct
- evacuation pipe mounting for the control module box from the sub-frame.

REMOVING THE LOWER SCREW FROM THE FRONT ENGINE PAD

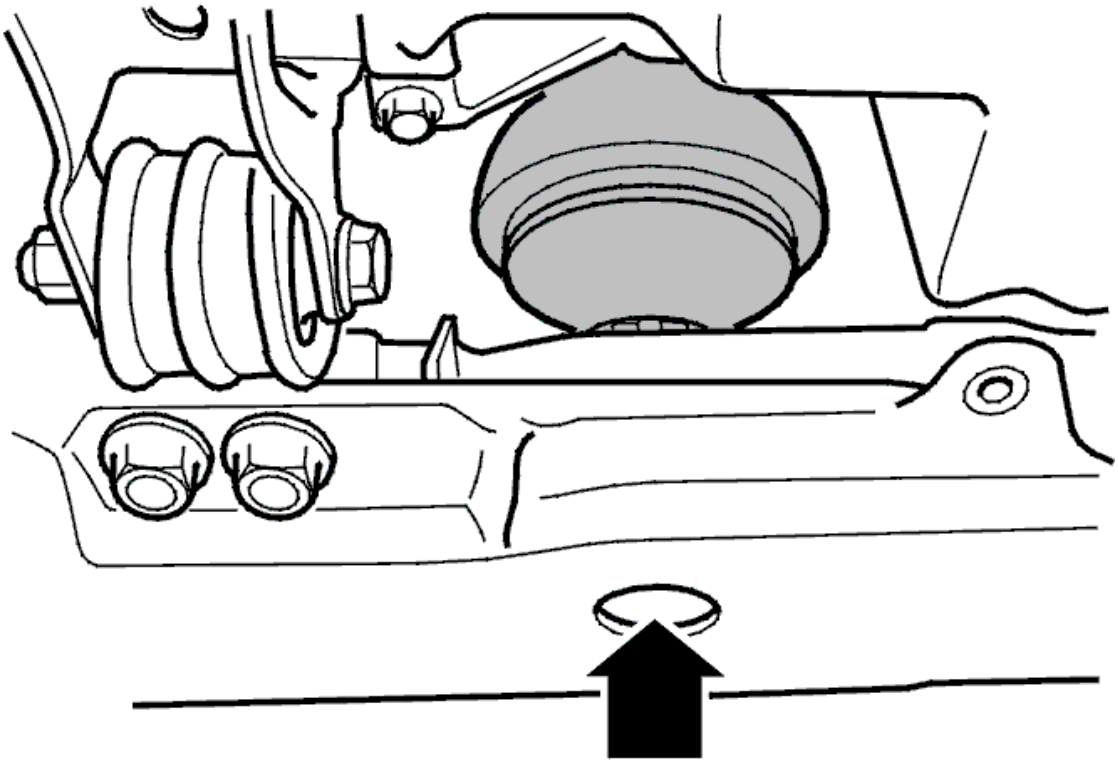

Fig. 327: Front Engine Pad Lower Screw
Courtesy of VOLVO CARS CORPORATION

Remove the lower screw for the front engine pad.

REMOVING THE LOWER TORQUE ROD

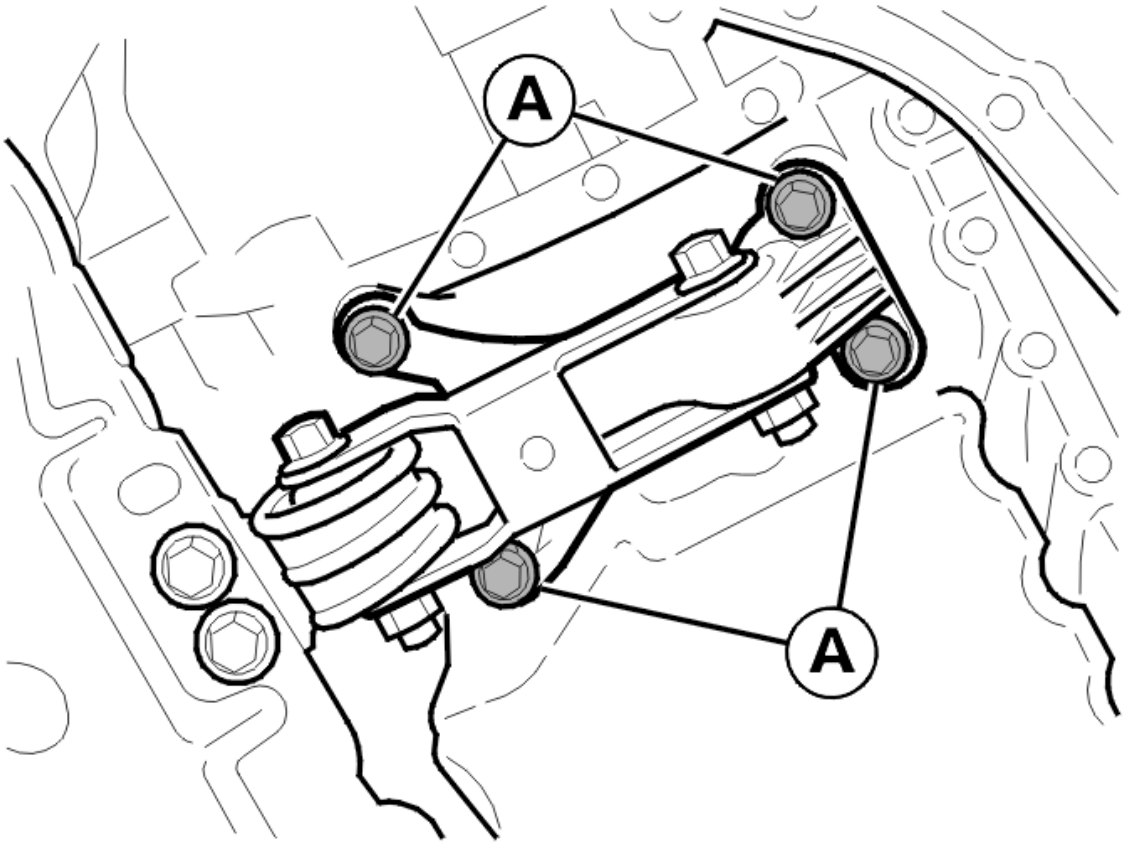

Fig. 328: Identifying Torque Rod To Engine Screws
Courtesy of VOLVO CARS CORPORATION

Remove 4 screws from the lower torque rod (A).

REMOVING THE VIBRATION DAMPER (6-CYLINDER ENGINES ONLY)

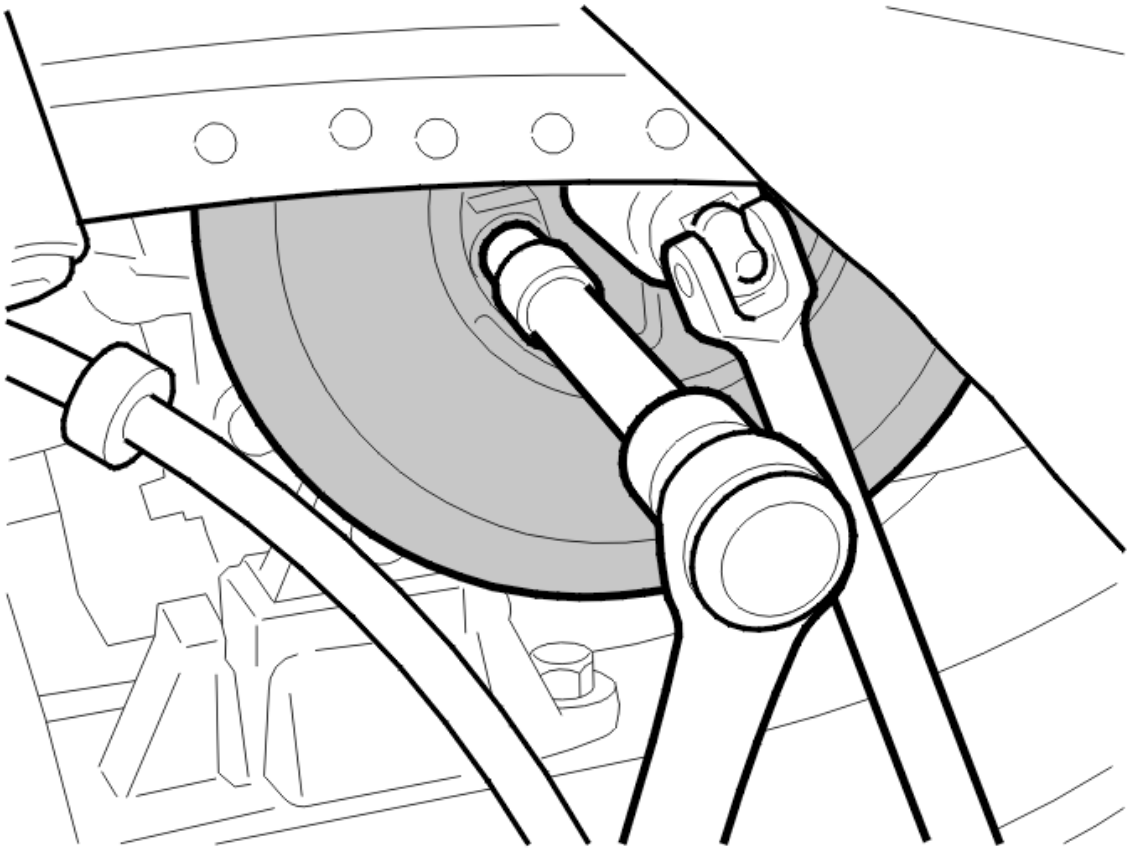

Fig. 329: Counterholding Crankshaft Central Nut
Courtesy of VOLVO CARS CORPORATION

Remove the four vibration damper screws. Counterhold the crankshaft central nut.

Remove:

- the vibration damper
- the auxiliaries belt.

REMOVING THE SCREWS FOR THE RIGHT-HAND ENGINE MOUNTING

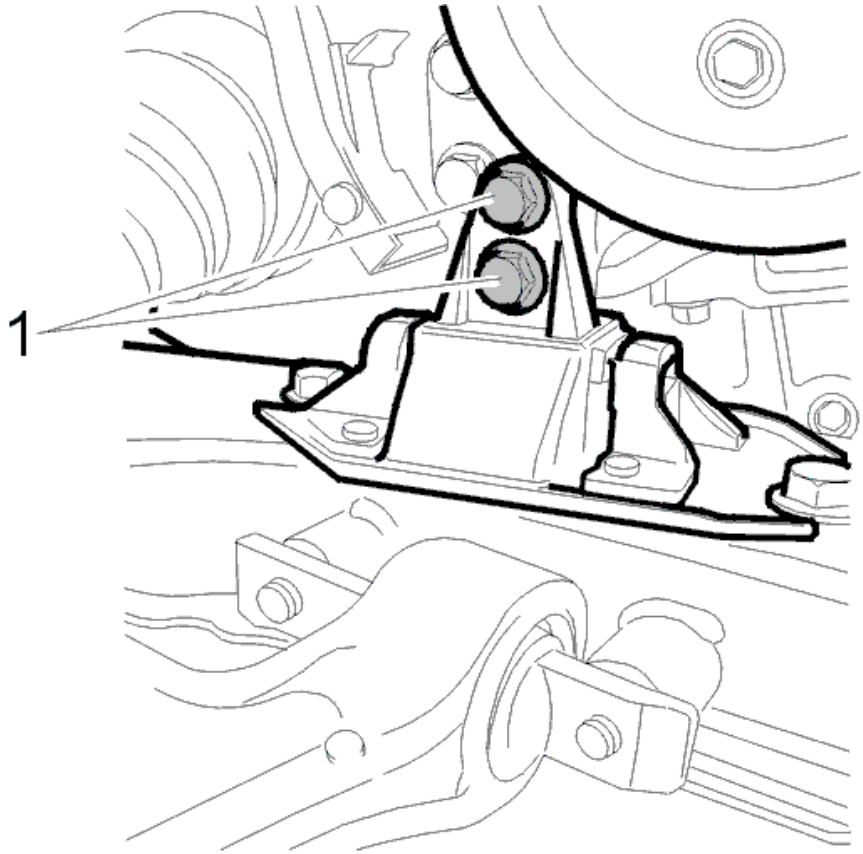

Fig. 330: Identifying Right-Hand Engine Mounting Screws
Courtesy of VOLVO CARS CORPORATION

Remove the screws holding the right-hand engine mounting in the engine.

REMOVING THE NUTS AND SCREW FOR THE STEERING GEAR

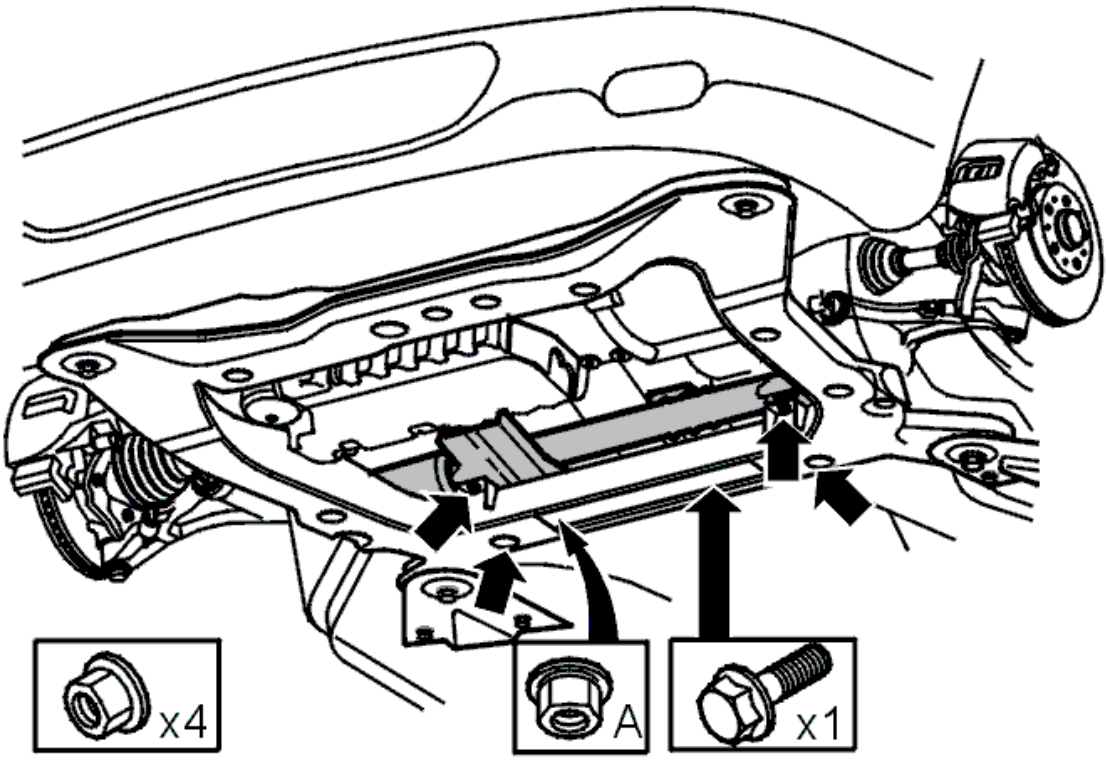

Fig. 331: Identifying Bolt And Nut Holding Steering Gear To Sub-Frame
Courtesy of VOLVO CARS CORPORATION

Remove:

- the four nuts and the screw holding the steering gear
- the nut (A), holding the lower half of the collision protection system. **(Applies only to right-hand drive cars)** .

REMOVING THE DELIVERY LINE FOR THE STEERING GEAR

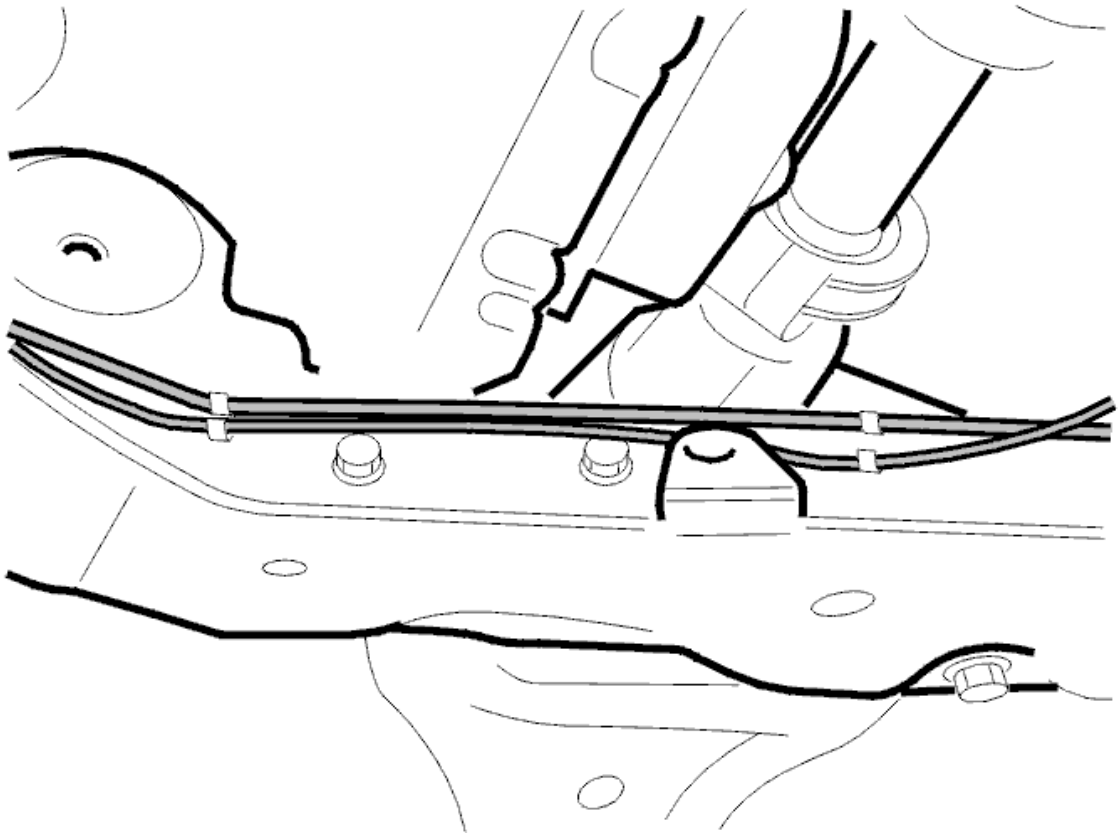

Fig. 332: Identifying Oil Pipe And Clamps For Steering Gear
Courtesy of VOLVO CARS CORPORATION

Remove the delivery line for the steering gear from the snap fastener on the sub-frame. Remove any fuel line to the engine block heater.

LOWERING THE SUB-FRAME

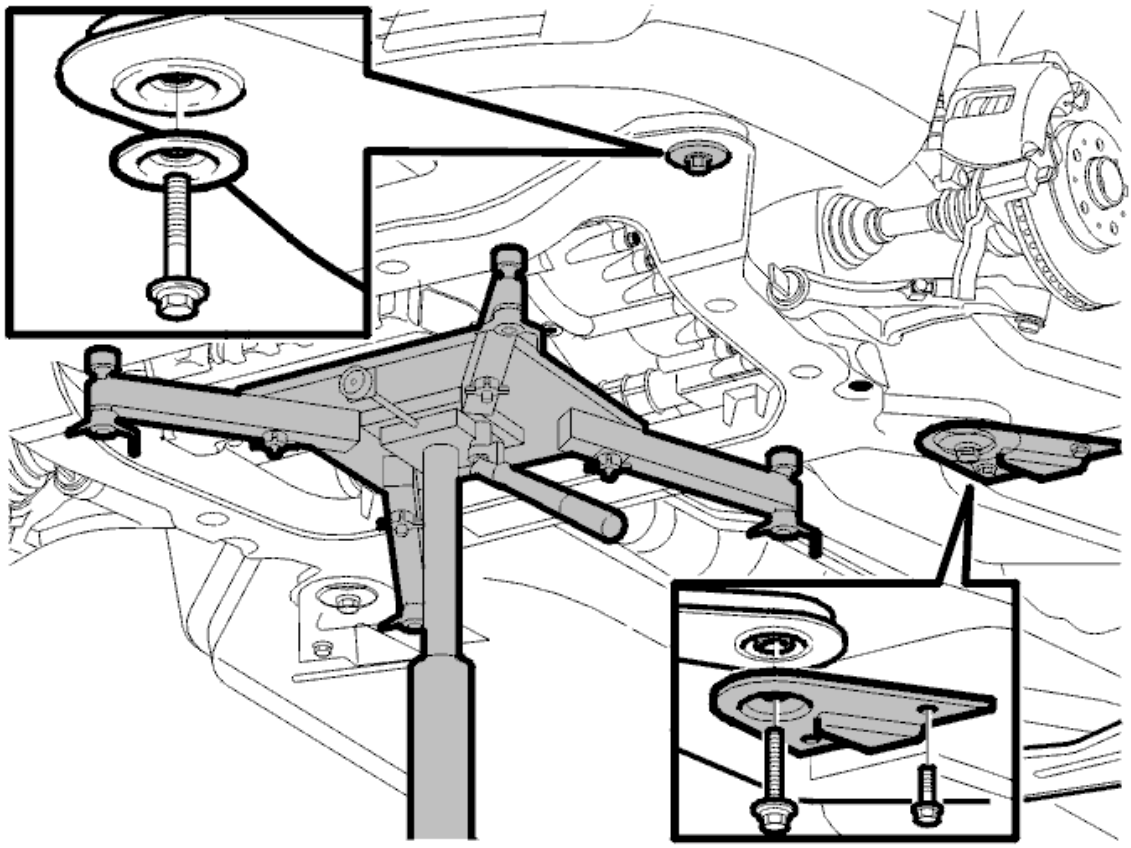

Fig. 333: Identifying Lifting Table, Sub-Frame Brackets, Screws And Washers
Courtesy of VOLVO CARS CORPORATION

Remove and hang the engine block heater (if applicable) on the left front mounting for the sub-frame.

Remove the fuel line for the engine block heater (if applicable) on the sub-frame from the snap fasteners.

Position a lifting table under the sub-frame.

Apply the lifting table so that the load is taken off the sub-frame screws.

Remove the sub-frame screws together with the accompanying brackets and washers.

Carefully lower the sub-frame approximately 50 mm.

NOTE: Ensure that the steering gear screws release from the sub-frame.

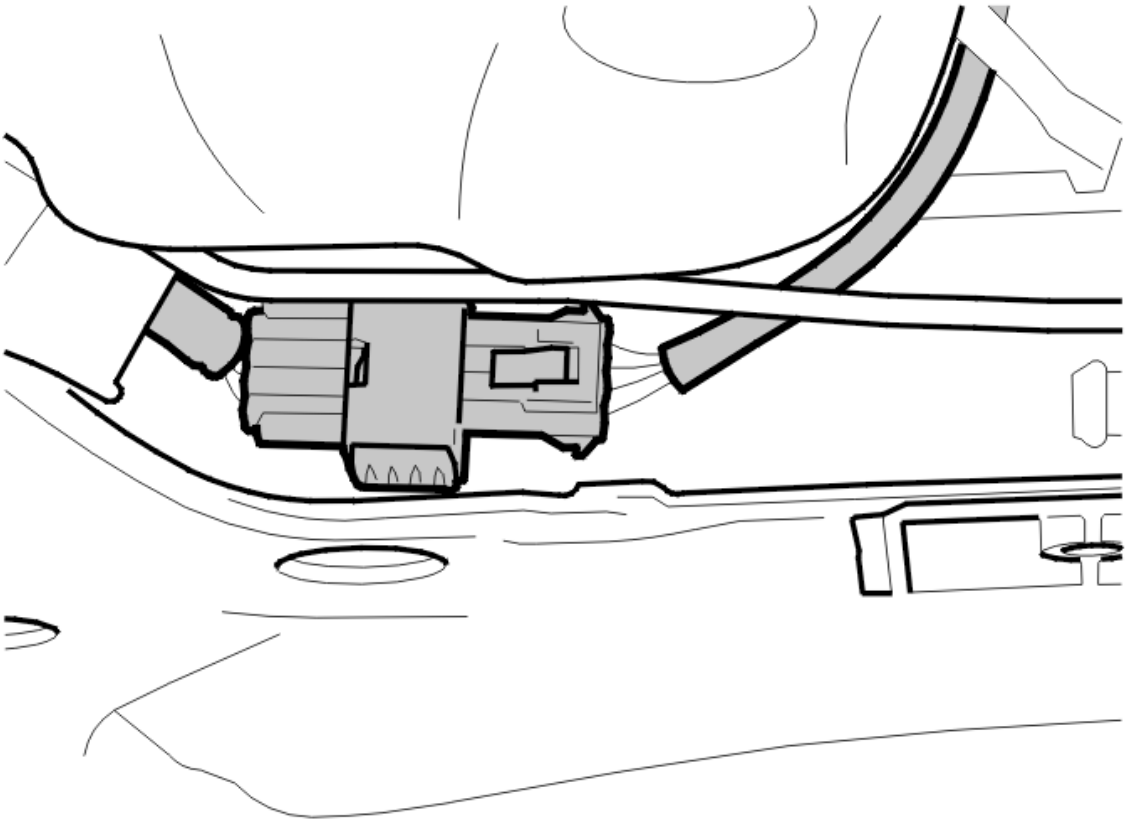

Fig. 334: Identifying Heated Oxygen Sensor (HO2S) Connector
Courtesy of VOLVO CARS CORPORATION

Remove the bracket for the heated oxygen sensor (HO2S) from the sub-frame.

Remove the heated oxygen sensor's wiring from the right side of the **sub-frame (only applies to 6 cylinder engines)** .

Lower the sub-frame a further 40 mm.

PRESSING OUT THE BUSHINGS

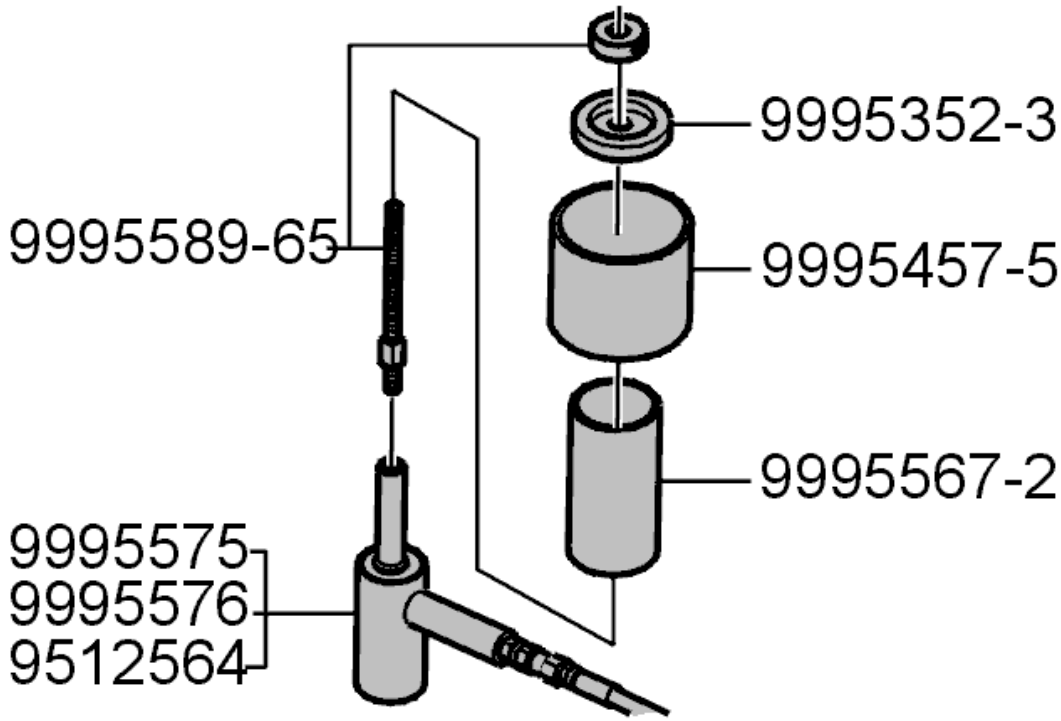

Fig. 335: Identifying Special Tools To Press Bushings
Courtesy of VOLVO CARS CORPORATION

Install the hydraulic tool and press sleeve as illustrated.

Press the bushings out of the sub-frame, see the following illustration.

NOTE: It is arbitrary which of tools see 9995575 , see 9995576 and see 9512564 is used.

MARKING FOR THE BUSHING ON THE SUB-FRAME

Fig. 336: Identifying Marking For The Bushing On The Sub-Frame
Courtesy of VOLVO CARS CORPORATION

Clean the hole for the bushing in the sub-frame.

Press out the bushing by hand.

CAUTION: The markings on the bushing and sub-frame must be positioned opposite each other.

MARKING THE LEFT-HAND REAR BUSHING

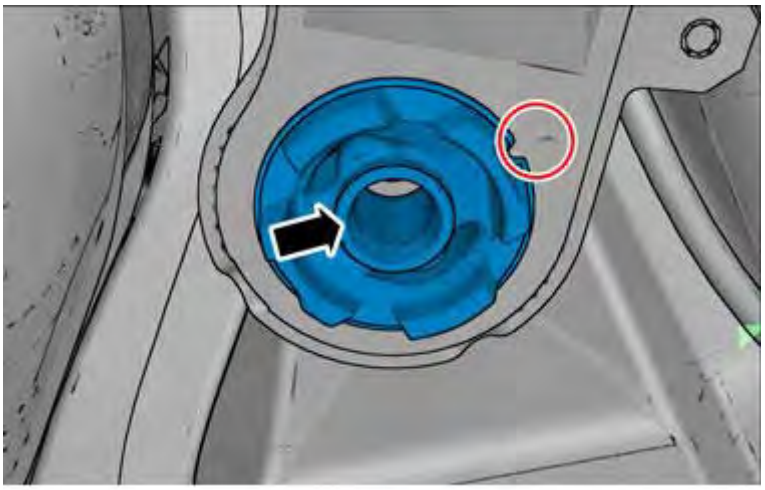

Fig. 337: Identifying The Round Hole
Courtesy of VOLVO CARS CORPORATION

NOTE: From 2009 onwards the hole in the middle of the bushing is round.

CAUTION: The markings on the bushing and sub-frame must be positioned opposite each other.

PRESSING IN THE BUSHINGS

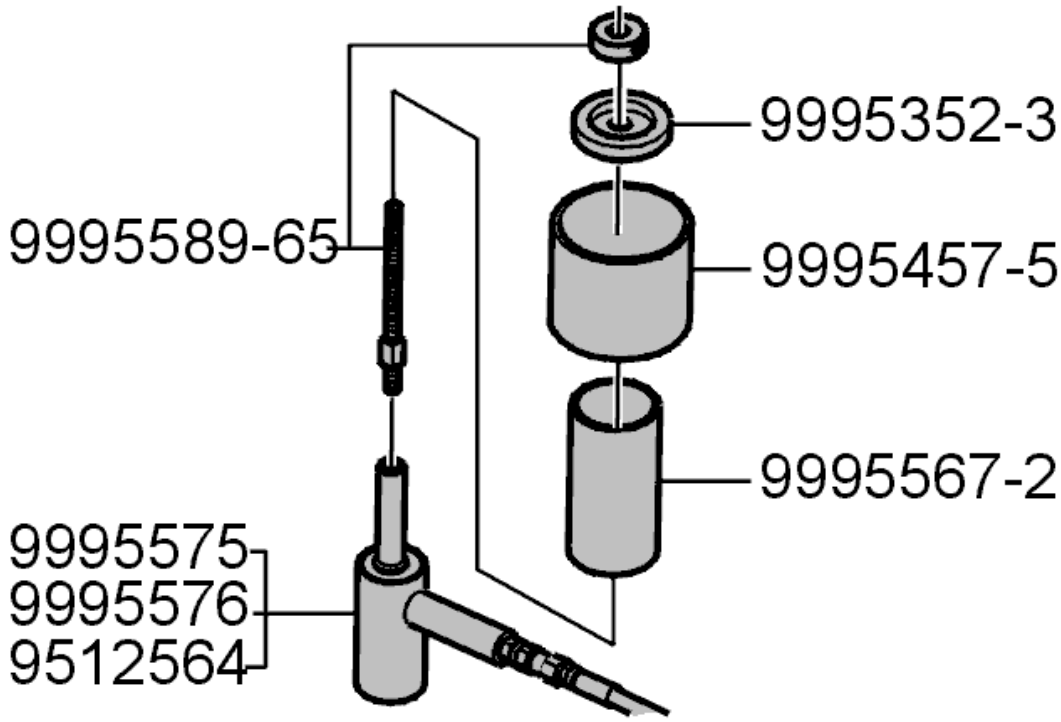

Fig. 338: Identifying Special Tools To Press Bushings
Courtesy of VOLVO CARS CORPORATION

Install the hydraulic tool and press sleeve as illustrated.

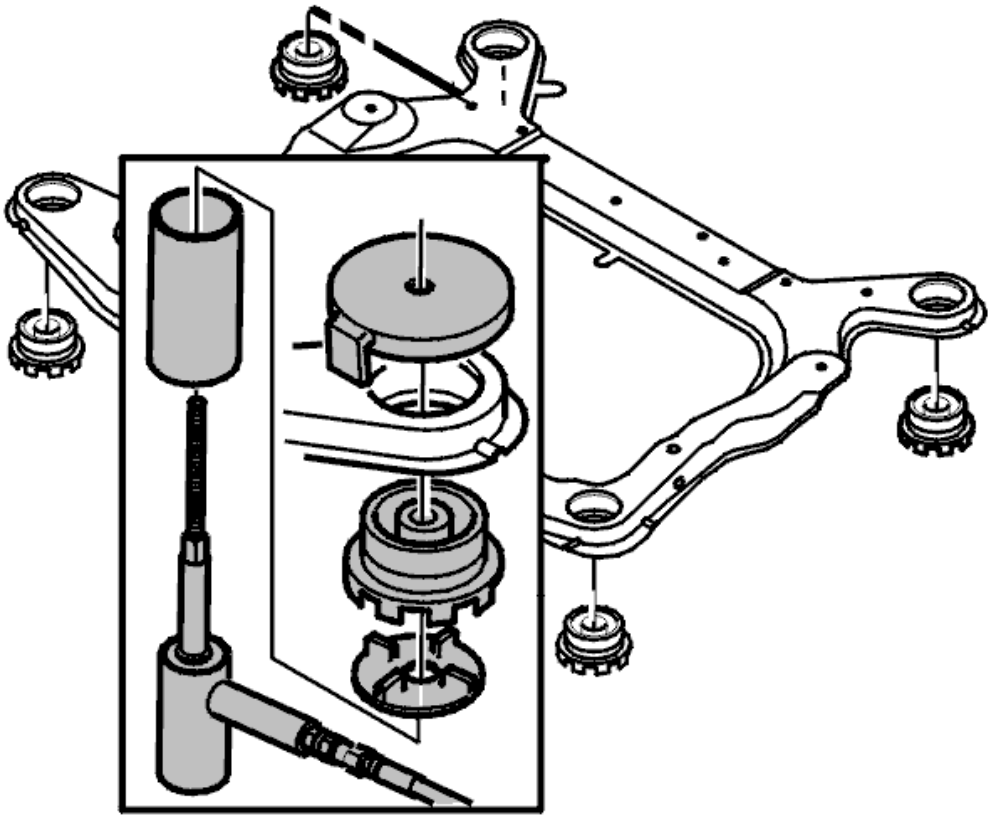

Fig. 339: Identifying Bushings & Sub-Frame Assembly
Courtesy of VOLVO CARS CORPORATION

Press the bushings into the sub-frame, see the following illustration.

NOTE: It is arbitrary which of tools see 9995575 , see 9995576 and see 9512564 is used.

INSTALLING THE WIRING FOR THE HEATED OXYGEN SENSOR (HO2S)

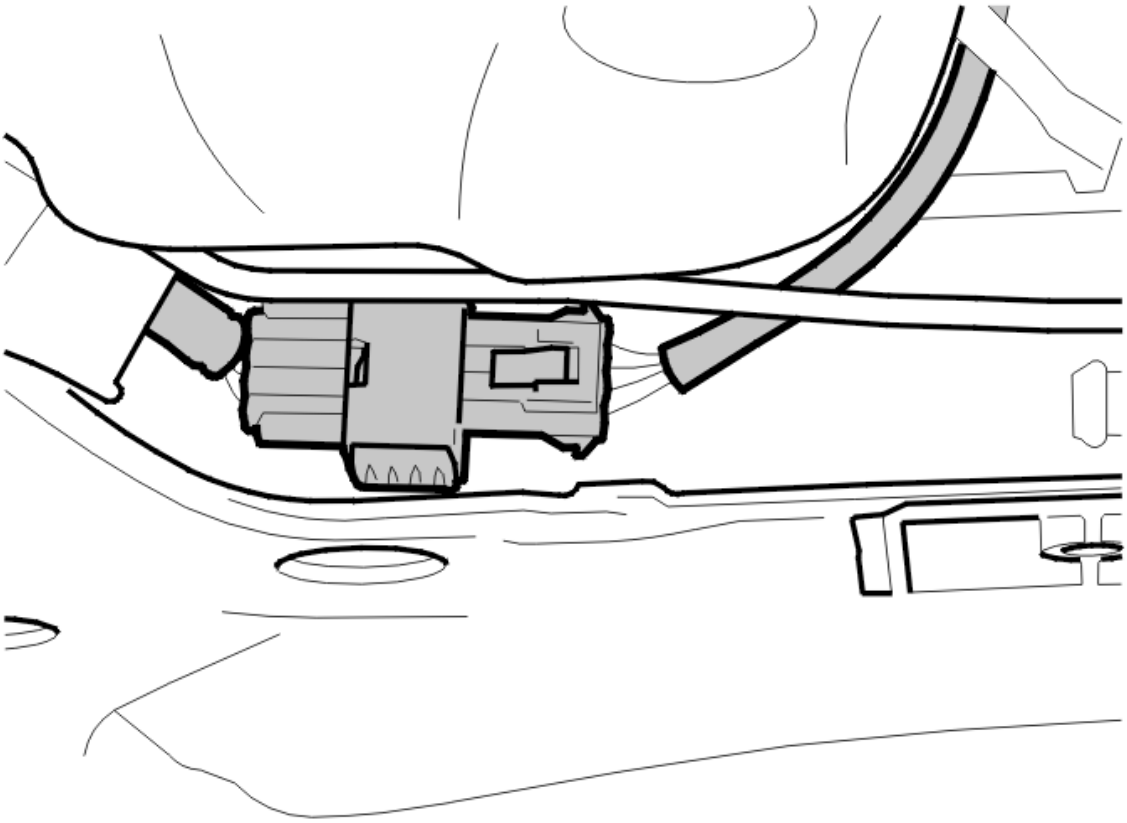

Fig. 340: Identifying Heated Oxygen Sensor (HO2S) Connector
Courtesy of VOLVO CARS CORPORATION

Lift up the sub-frame slightly (approximately 50 mm from the car body).

Install the bracket for the heated oxygen sensor (HO2S) on the sub-frame.

Install the heated oxygen sensor (HO2S) wiring on the right hand side of the sub-frame (**applies to 6- cylinder engines only**).

LIFTING THE SUB-FRAME

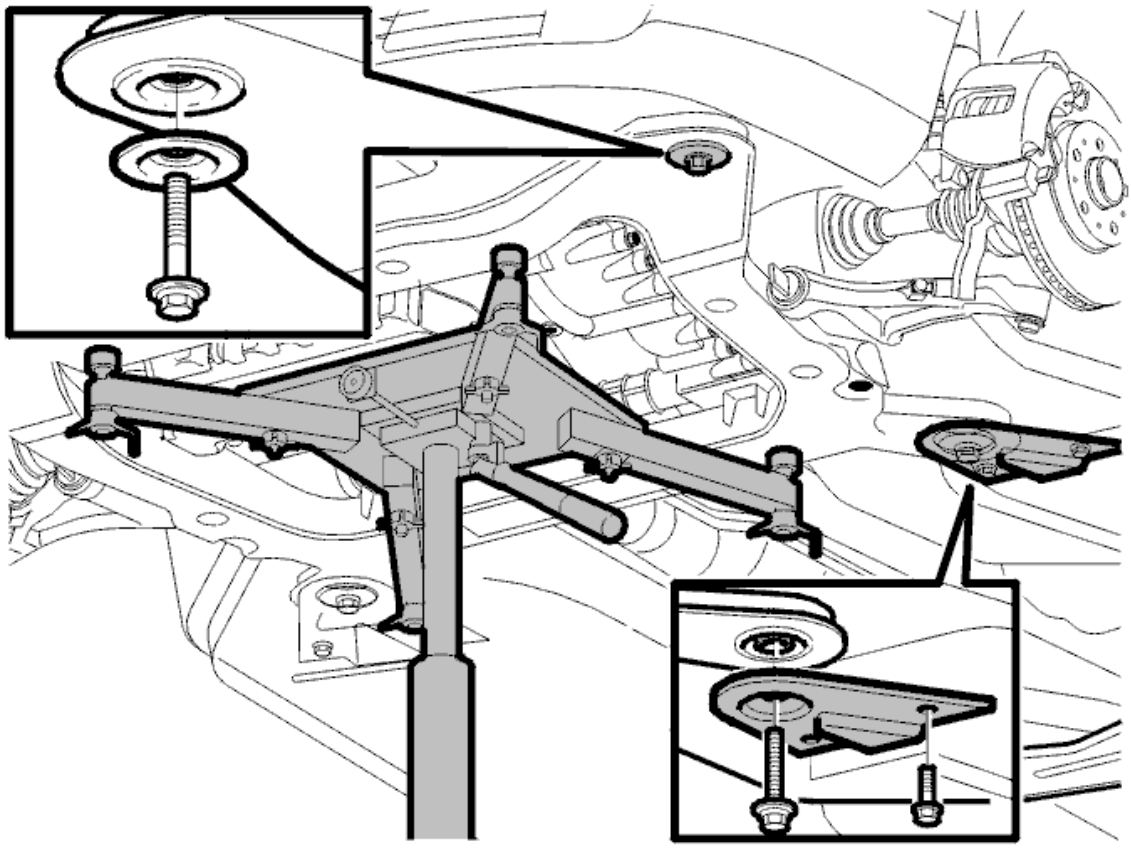

Fig. 341: Identifying Lifting Table, Sub-Frame Brackets, Screws And Washers
Courtesy of VOLVO CARS CORPORATION

Lift the sub-frame up completely.

At the same time locate the mounting screws for the steering gear on the sub-frame.

Loosely install the sub-frame brackets together with the washers.

Install the four screws for the sub-frame. Use new screws. **Do not tighten yet** .

First tighten the screws on the left side of the sub-frame. Tighten to **105 Nm** . Angle tighten to **120°** . Then tighten the right-hand side to the same value as the left side

Finally tighten the bracket screws. Tighten to **50 Nm** . Install the engine block heater (if applicable) on the left front mounting for the sub-frame.

CAUTION: Tighten the left-hand side first. The sub-frame guides are on the left-hand side.

INSTALLING THE NUTS AND SCREW FOR THE STEERING GEAR

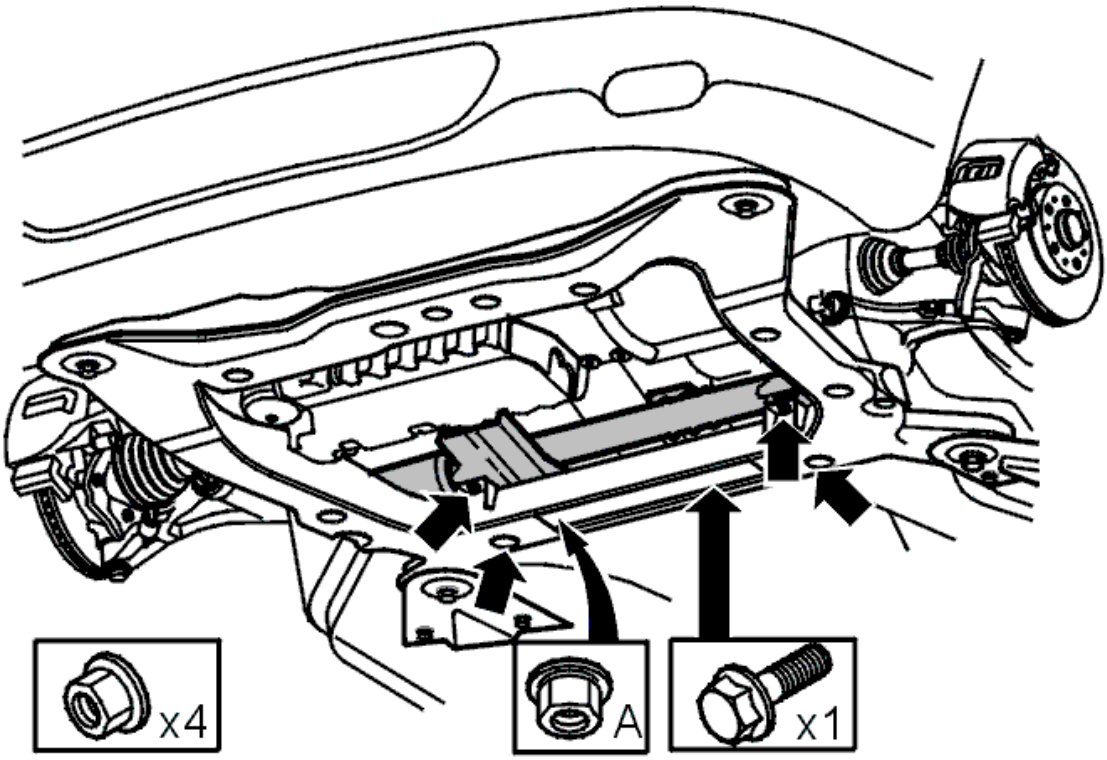

Fig. 342: Identifying Bolt And Nut Holding Steering Gear To Sub-Frame
Courtesy of VOLVO CARS CORPORATION

Install the four nuts and the screw holding the steering gear. Use new nuts and a new screw. Tighten to **50 Nm** .

Applies to right-hand drive cars:

Install nut (A), holding the lower half of the collision protection. Tighten to **50 Nm** .

INSTALLING THE DELIVERY LINE FROM THE STEERING GEAR

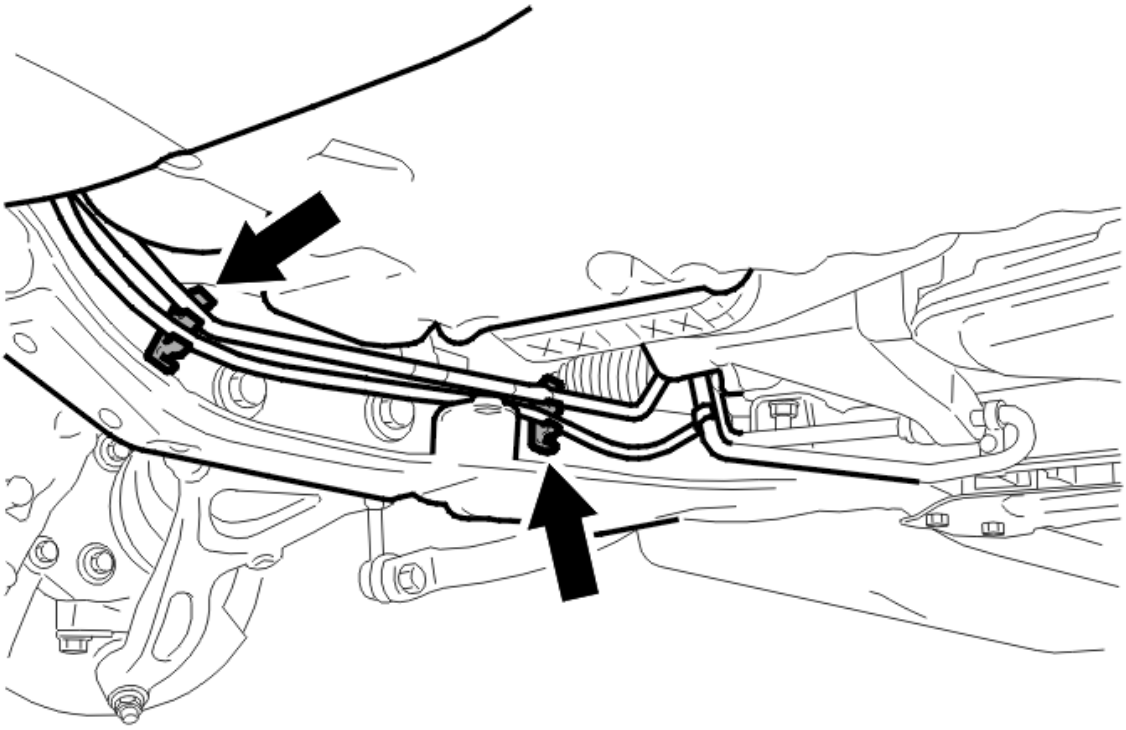

Fig. 343: Identifying Pipes and Screw Clips
Courtesy of VOLVO CARS CORPORATION

Install the delivery line from the steering gear on the mountings on the sub-frame. Install any fuel line for the engine block heater.

INSTALLING THE SCREWS FOR THE ENGINE MOUNTING TO THE ENGINE

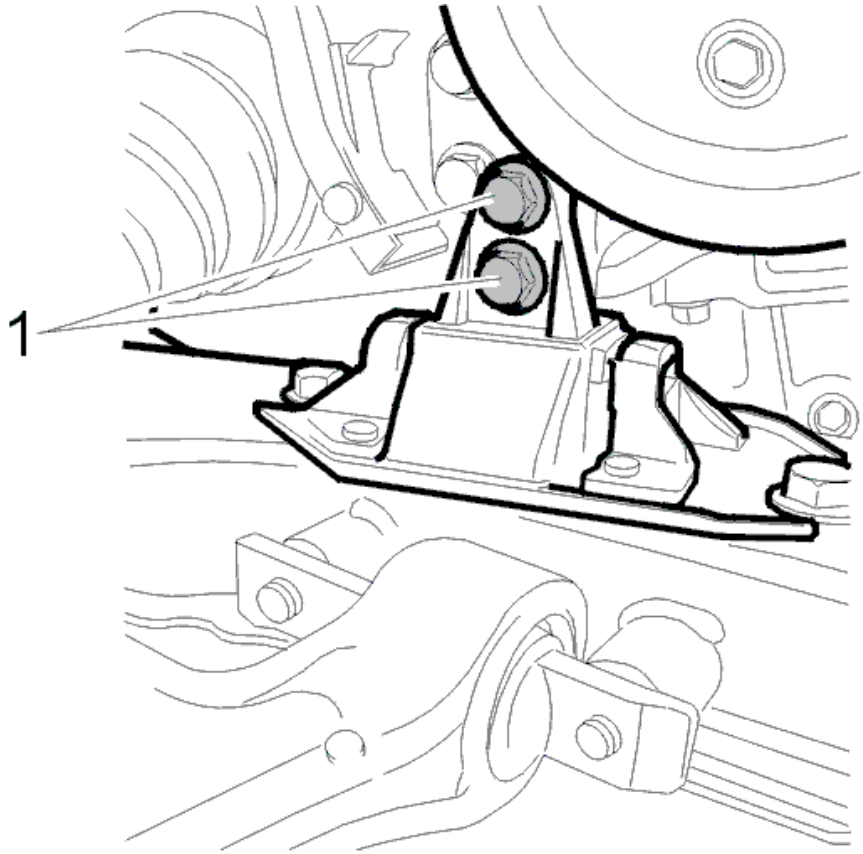

Fig. 344: Identifying Right-Hand Engine Mounting Screws
Courtesy of VOLVO CARS CORPORATION

Reinstall the screws holding the engine mounting to the engine. Tighten to **35 Nm** . Angle-tighten **90°** .

NOTE: Use new screws.

INSTALLING THE VIBRATION DAMPER (6-CYLINDER ENGINES ONLY)

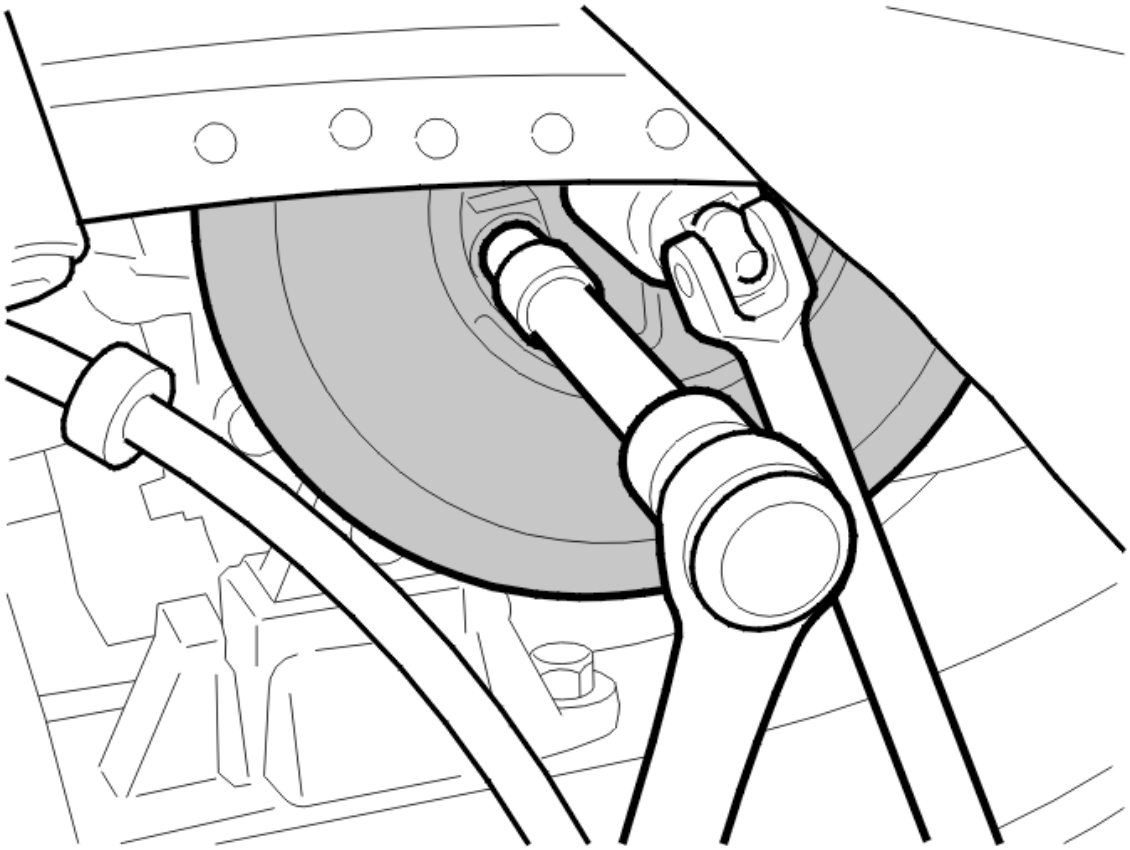

Fig. 345: Counterholding Crankshaft Central Nut
Courtesy of VOLVO CARS CORPORATION

Install the vibration damper using new screws. Tighten to **35 Nm** . Angle-tighten **50°** .

Use the crankshaft center nut as a counterhold.

TIGHTENING THE SCREWS FOR THE LOWER TORQUE ROD

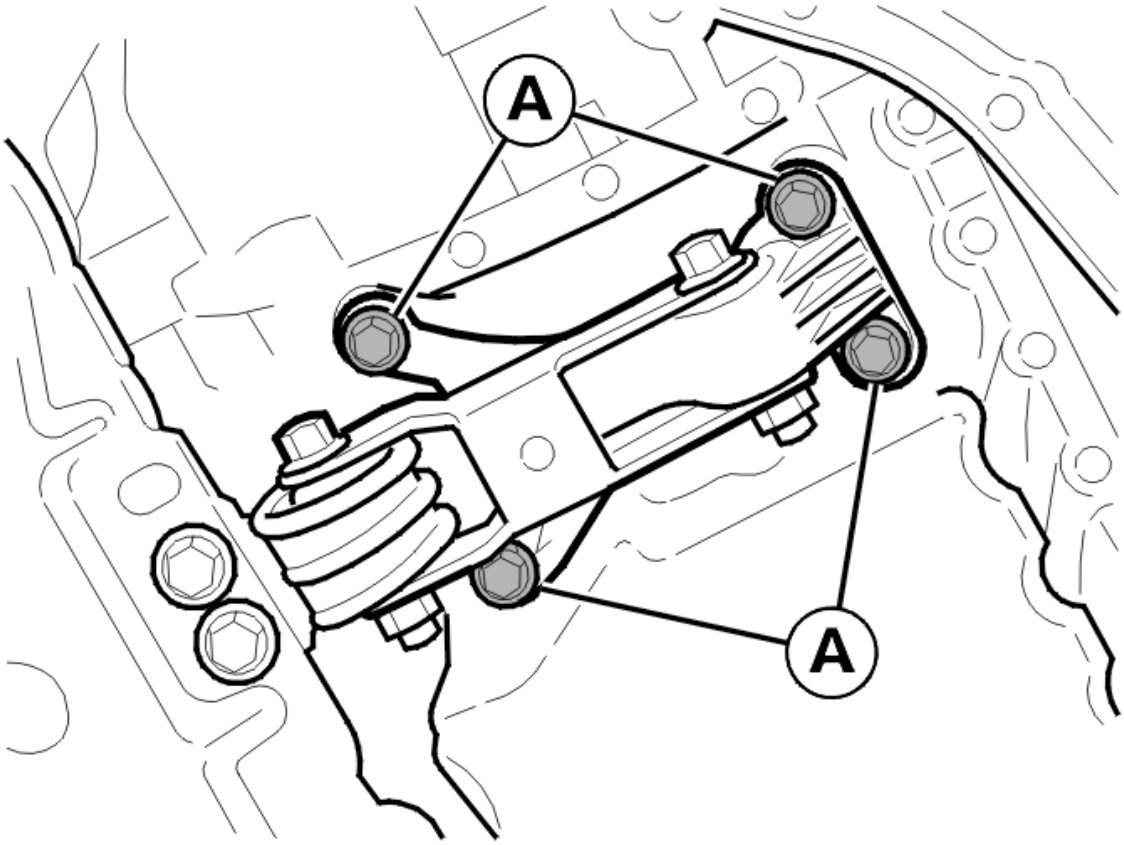

Fig. 346: Identifying Torque Rod To Engine Screws
Courtesy of VOLVO CARS CORPORATION

Tighten the 4 screws (A) for the lower torque rod. Tighten to **50 Nm** .

INSTALLING THE SCREW FOR THE FRONT ENGINE PAD

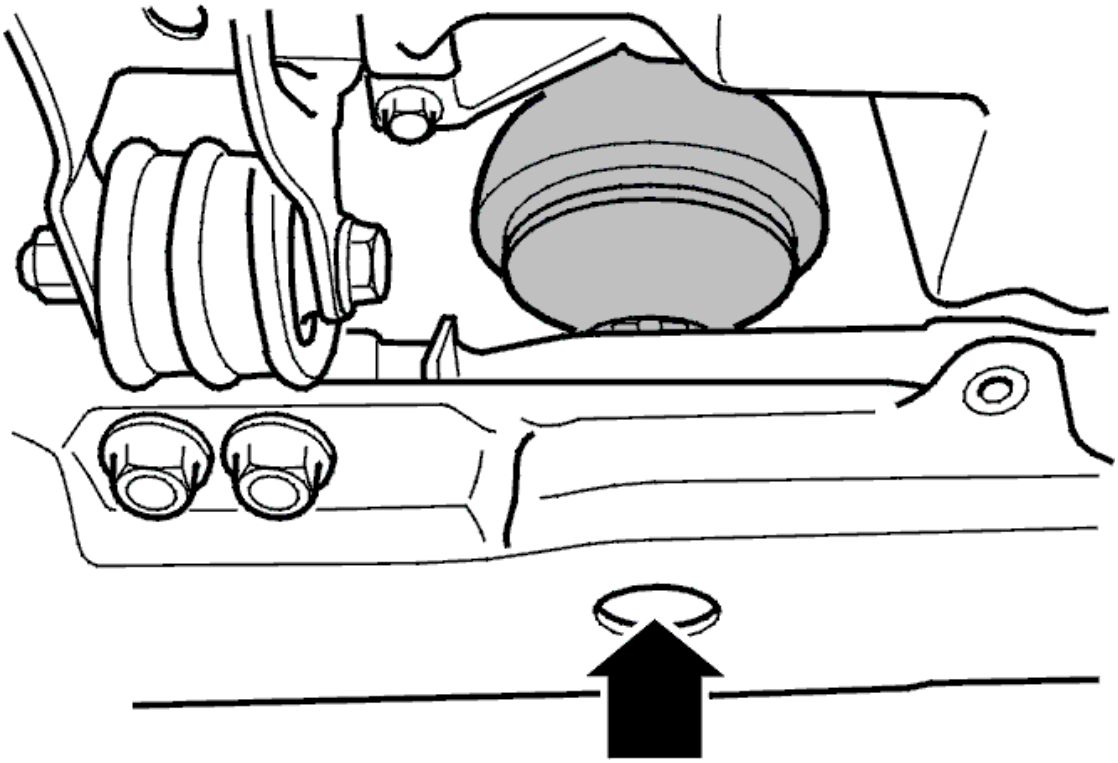

Fig. 347: Front Engine Pad Lower Screw
Courtesy of VOLVO CARS CORPORATION

Install the front engine pad screw. Tighten to **50 Nm** .

See Sub frame, adjustment:**SUBFRAME, ADJUSTING**

INSTALLING THE PROTECTIVE COVER

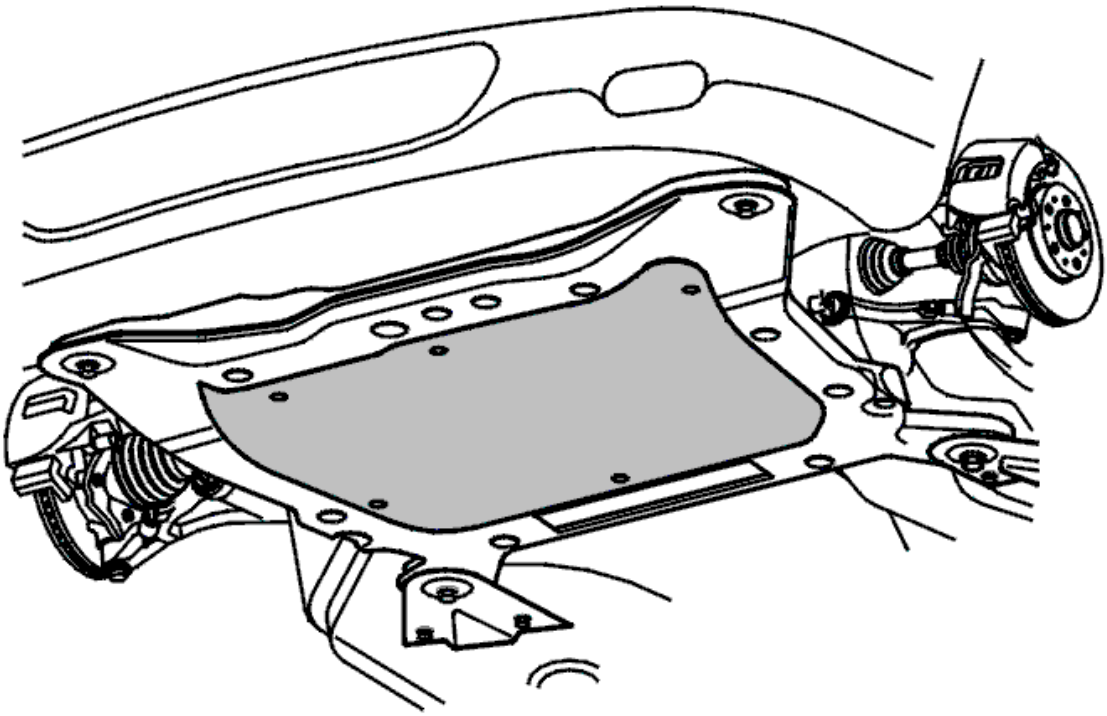

Fig. 348: Identifying Splash Guard Under Engine
Courtesy of VOLVO CARS CORPORATION

Install the splashguard under the engine.

REMOVING LIFTING TOOLS

Remove:

- lifting tool see **9995716** with supplementary kit see **9997070** .
- lifting hooks see **9995460** .

Applies only to the T6:

Remove:

- lifting eye see **9995185**
- lifting eye see **9997018** .

FINISHING

Install the wheels, see **INSTALLING WHEELS** .

Install the engine cover.

BUSHING SUB-FRAME, REPLACING (2003-2008)

see **BUSHING SUB-FRAME, REPLACING (2003-2008)**

REPLACING THE TORQUE ROD

see **REPLACING THE TORQUE ROD**

ENGINE SUSPENSION (B8444S; 2005-2008)

ENGINE MOUNT REAR, REPLACING

Special tools:

see **9997070**

see **9997070**

see **9995460**

NOTE: **The illustrations in this service information are used for different model years and/or models. Some variation may occur. However, the essential information in the illustrations is always correct.**

REMOVAL

PREPARATORY WORK

Remove:

- the oil filler cap
- the upper front engine casing by pulling it straight up. Fit the oil filler cap.

REMOVING THE ENGINE PAD

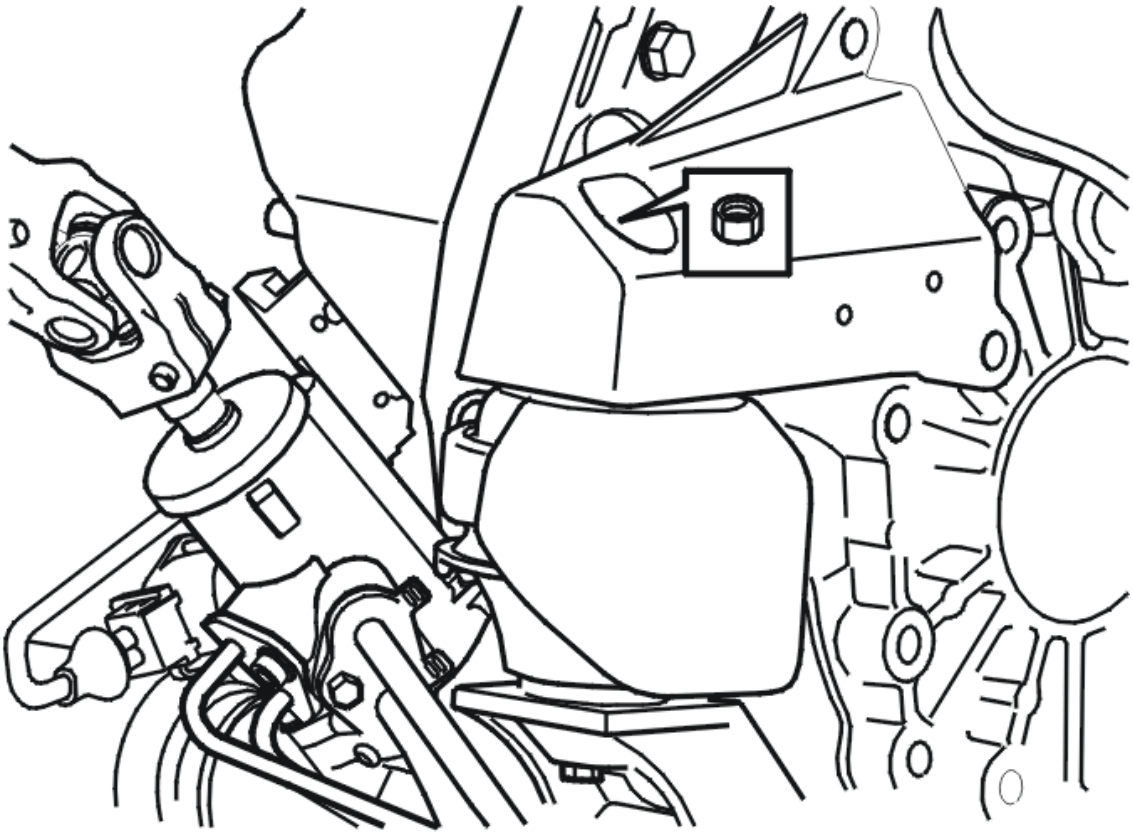

Fig. 349: Identifying Nut
Courtesy of VOLVO CARS CORPORATION

Remove the upper nut for the engine pad.

REMOVING THE BOLTS TO THE TORQUE ROD

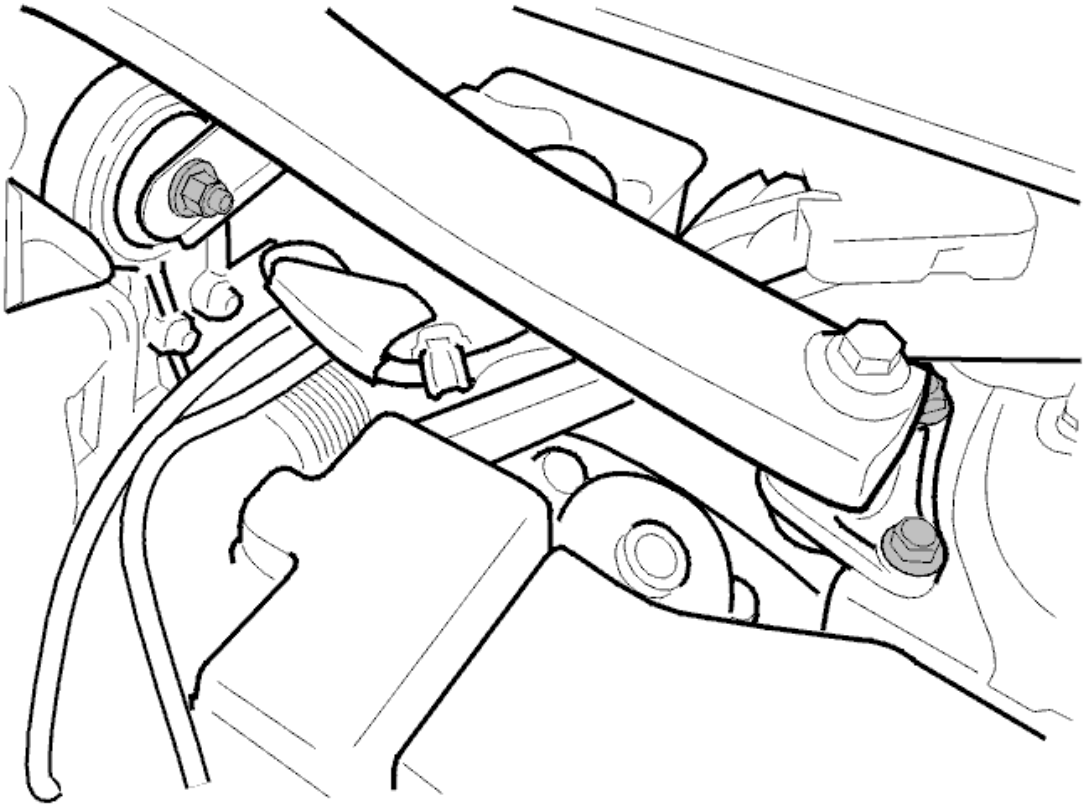

Fig. 350: Engine Compartment Stabilizer (Torque Rod)
Courtesy of VOLVO CARS CORPORATION

Remove the 2 x screws by the suspension turret on both sides.

REMOVING THE PROTECTIVE COVER UNDER THE ENGINE

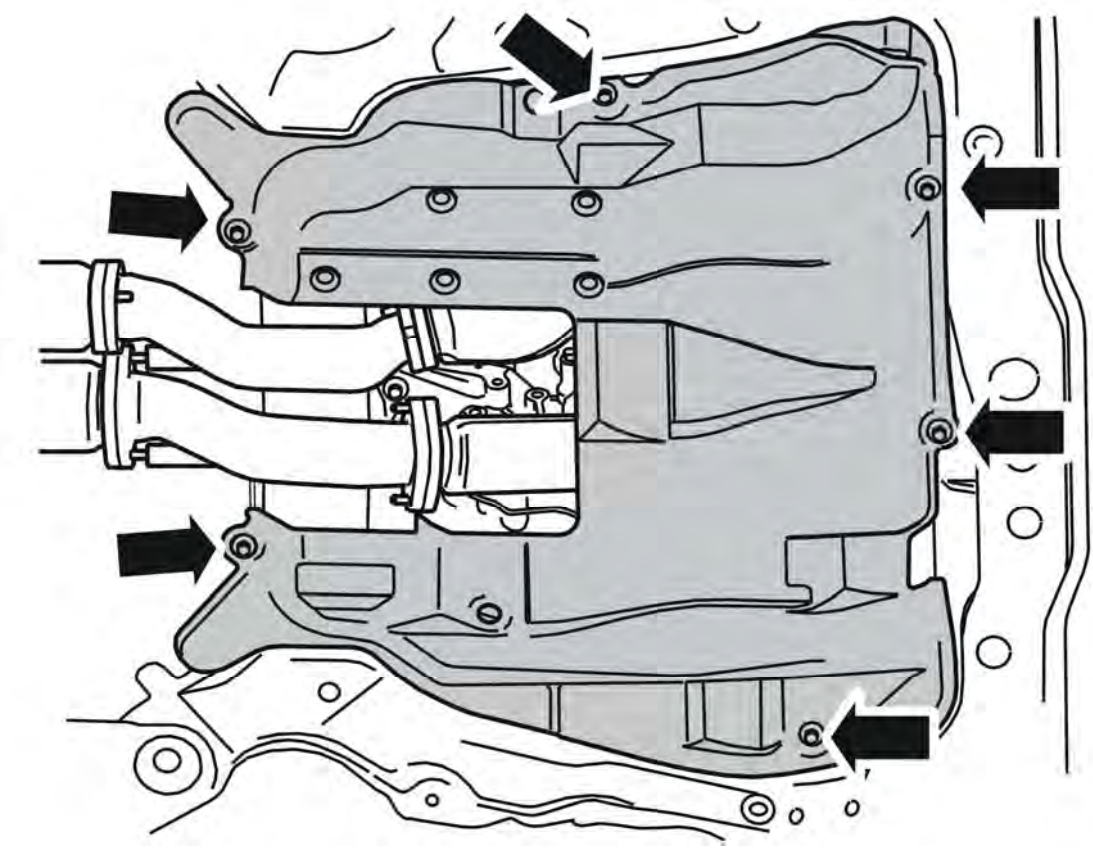

Fig. 351: Identifying the Protective Under Cover
Courtesy of VOLVO CARS CORPORATION

Remove:

- the bolts, x6
- the protective cover under the engine.

REMOVING THE EXHAUST PIPES BETWEEN FRONT AND REAR CATALYTIC CONVERTERS

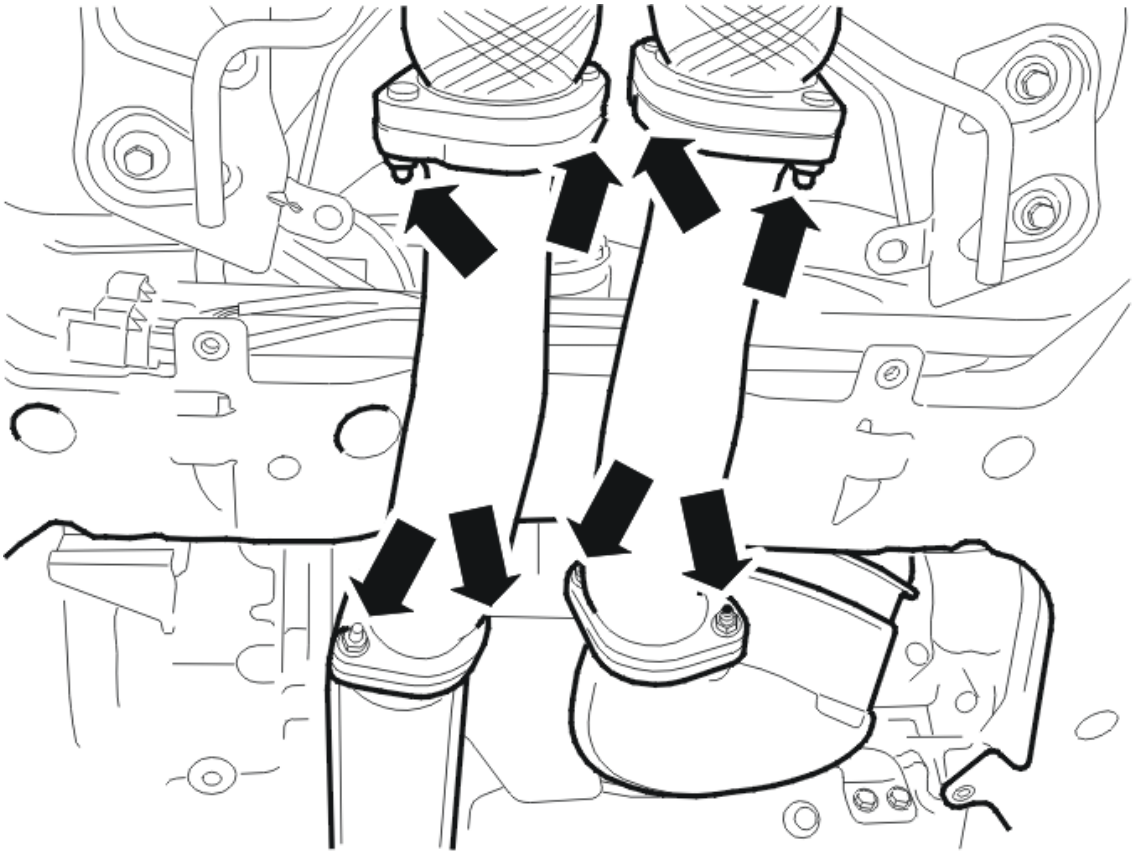

Fig. 352: Removing Exhaust Pipes
Courtesy of VOLVO CARS CORPORATION

Remove:

- both exhaust pipes' nuts
- both exhaust pipes

INSTALLING THE LIFTING TOOL

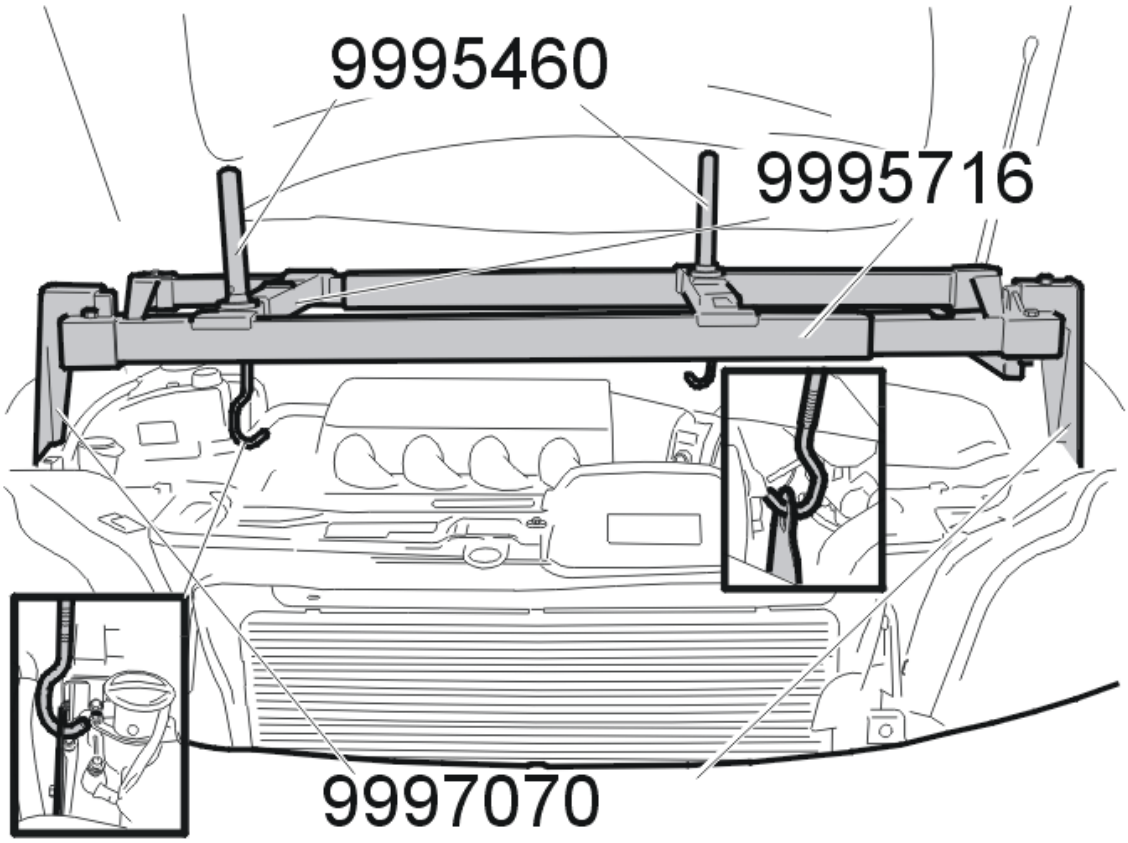

Fig. 353: Installing The Lifting Tool 9995716
Courtesy of VOLVO CARS CORPORATION

Install lifting tool see **9995716** converted with kit see **9997070** and lifting hooks see **9995460** .

CAUTION: Do not raise the engine yet.

CAUTION: When lifting the engine make sure that the lifting eye does not scratch the torque rod. Tape the torque rod and keep it away from the lifting eye.

REMOVING THE ENGINE PAD, CONTINUED

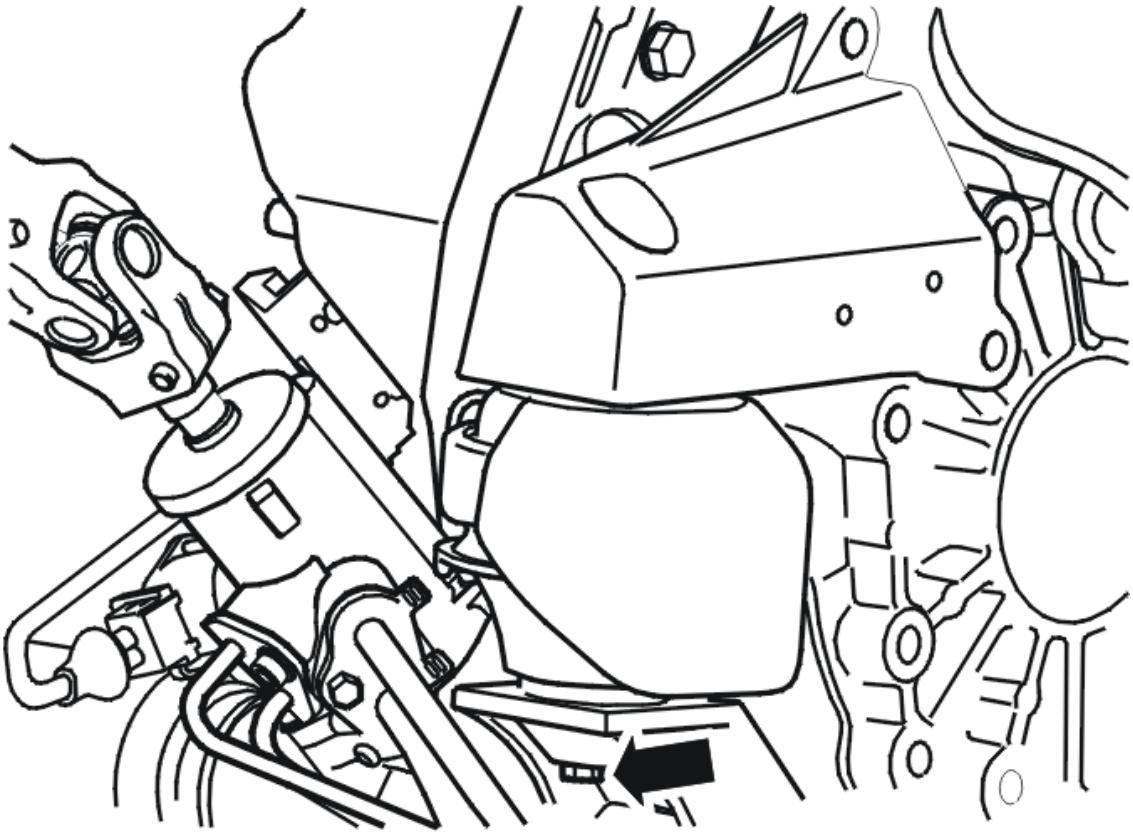

Fig. 354: Removing The Engine Pad
Courtesy of VOLVO CARS CORPORATION

Release the heated oxygen sensor (HO2S) connectors, x2, from the subframe.

Fold the protective plate under the steering gear to one side to gain access to the engine pad's lower screw. Remove the engine pad screw.

Raise the engine on the left-hand side of the vehicle approximately **45 mm** . Remove the engine pad together with the protective plate.

INSTALLATION

INSTALLING THE ENGINE PAD

CAUTION: When lowering the engine ensure that the lifting eye does not scratch the torque rod.

Install the engine pad with the protective plate.

Lower the engine.

Install:

- the M10 lower screw for the engine pad.
- the 2 x heated oxygen sensor (HO2S) connectors on the subframe. Reinstall the protective plate under the steering gear.

INSTALLING THE EXHAUST PIPES BETWEEN FRONT AND REAR CATALYTIC CONVERTERS

NOTE: To ensure that there is no exhaust leakage, see: FLANGED JOINT, ASSEMBLING .

Install:

- both exhaust pipes
- both exhaust pipes' nuts M8.

INSTALLING THE PROTECTIVE COVER UNDER THE ENGINE

Install:

- the protective cover under the engine
- the bolts, M8 x6.

REMOVING THE LIFTING TOOL

Remove the lifting tool: see **9995716** , kit: see **9997070** and lifting hooks: see **9995460** .

INSTALLING THE ENGINE PAD, CONTINUED

Install the M10 upper nut for the engine pad.

FITTING THE BOLTS TO THE TORQUE ROD

Install the 2 x M10 screws, by the suspension turrets on both sides.

FINISHING

Remove the oil filler cap.

Install:

- the upper front engine casing
- the oil filler cap.

ENGINE MOUNT, FRONT, REPLACING

Special tools:

see **9995460**

see **9995716**

see **9997070**

NOTE: **The illustrations in this service information are used for different model years and/or models. Some variation may occur. However, the essential information in the illustrations is always correct.**

REMOVAL

PREPARATORY WORK

Remove:

- the oil filler cap
- the upper engine casing by pulling it straight up. Fit the oil filler cap.

REMOVING THE AIR CLEANER (ACL) INLET PIPE

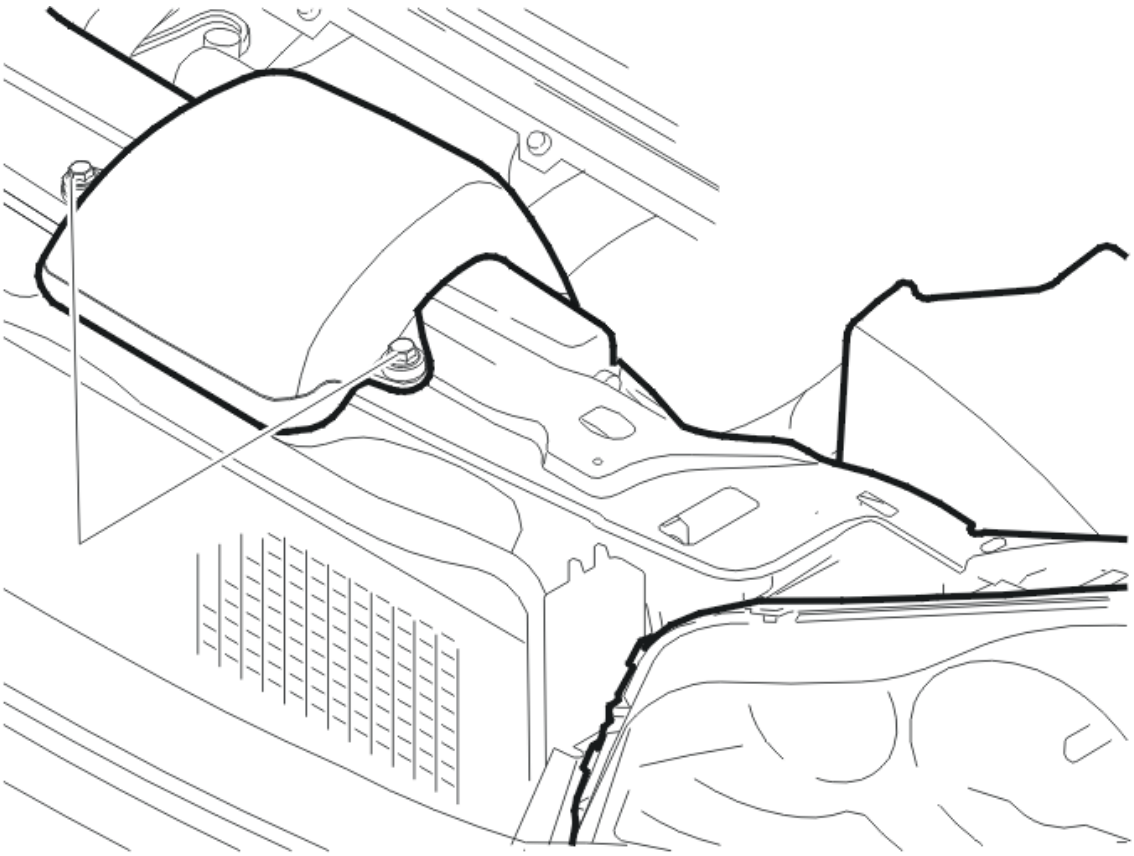

Fig. 355: Identifying Air Cleaner Inlet
Courtesy of VOLVO CARS CORPORATION

Remove:

- the bolts, x2
- the air cleaner (ACL) inlet pipe

REMOVING THE PROTECTIVE COVER UNDER THE ENGINE

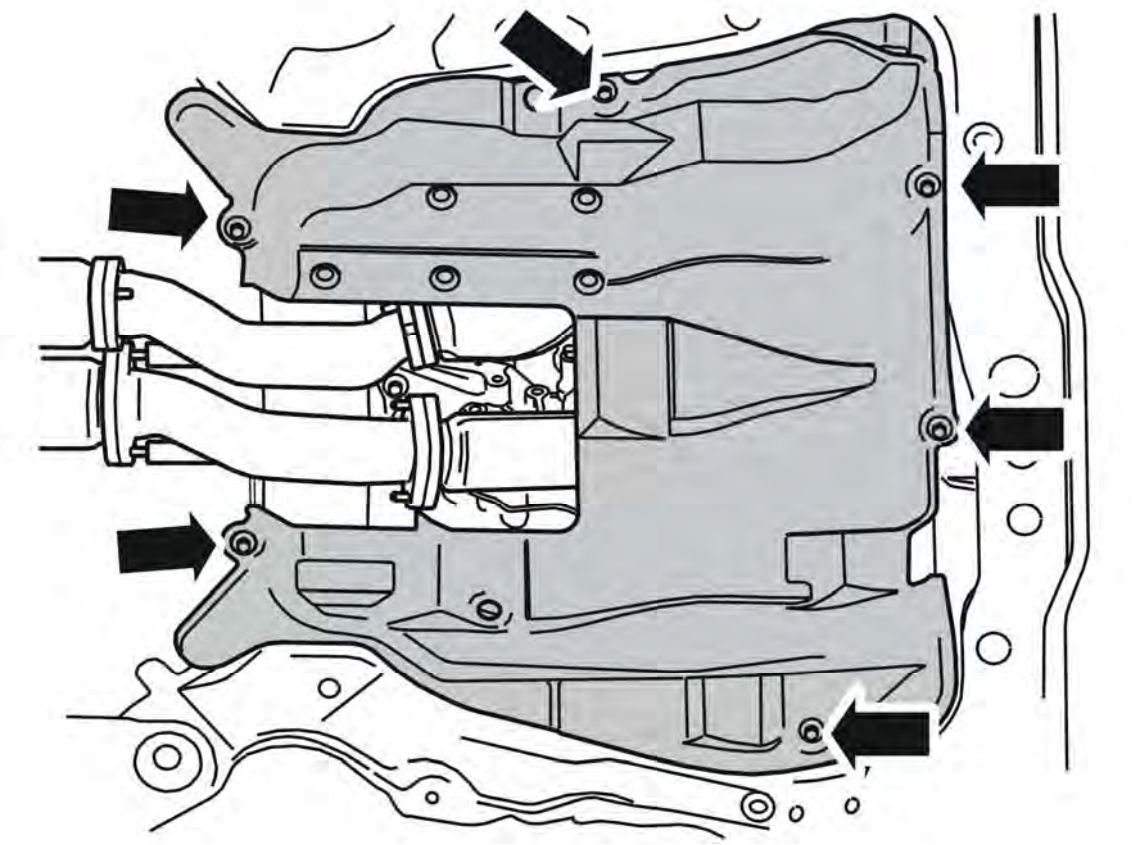

Fig. 356: Identifying the Protective Under Cover
Courtesy of VOLVO CARS CORPORATION

Remove:

- the bolts, x6
- the protective cover under the engine.

REMOVING THE BOLTS TO THE LOWER TORQUE ROD

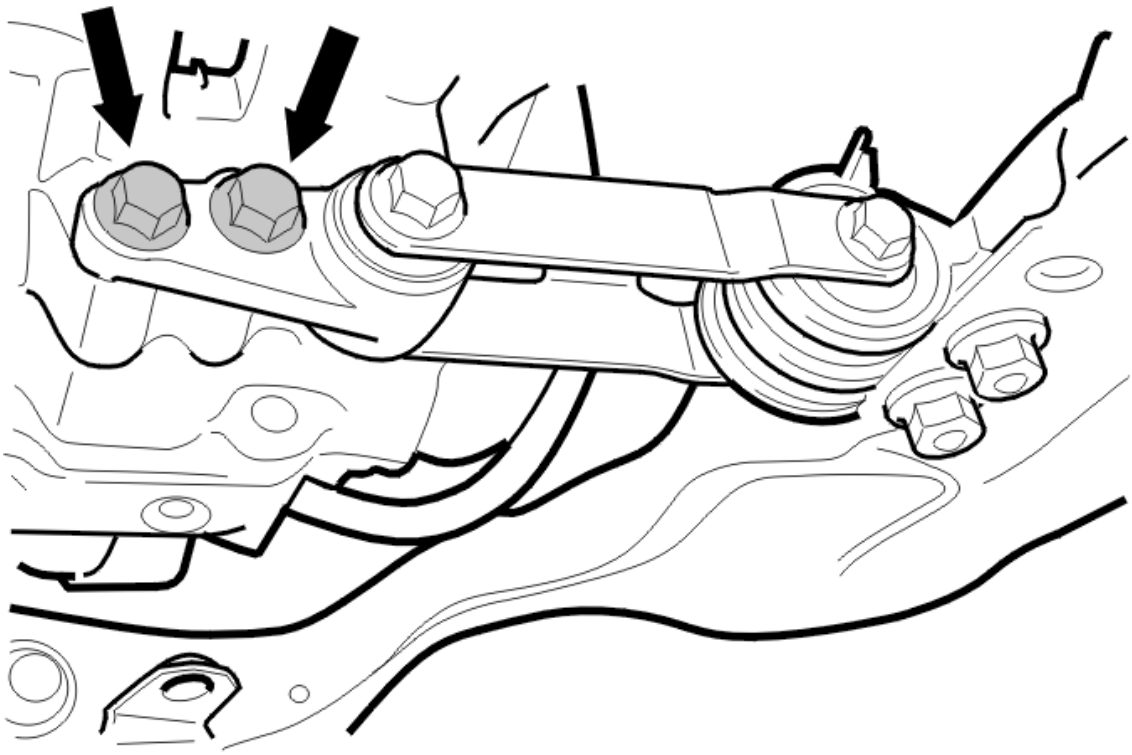

Fig. 357: Identifying Gearbox Bolts
Courtesy of VOLVO CARS CORPORATION

Remove the 2 x transmission screws for the lower torque rod.

REMOVING THE ENGINE PAD

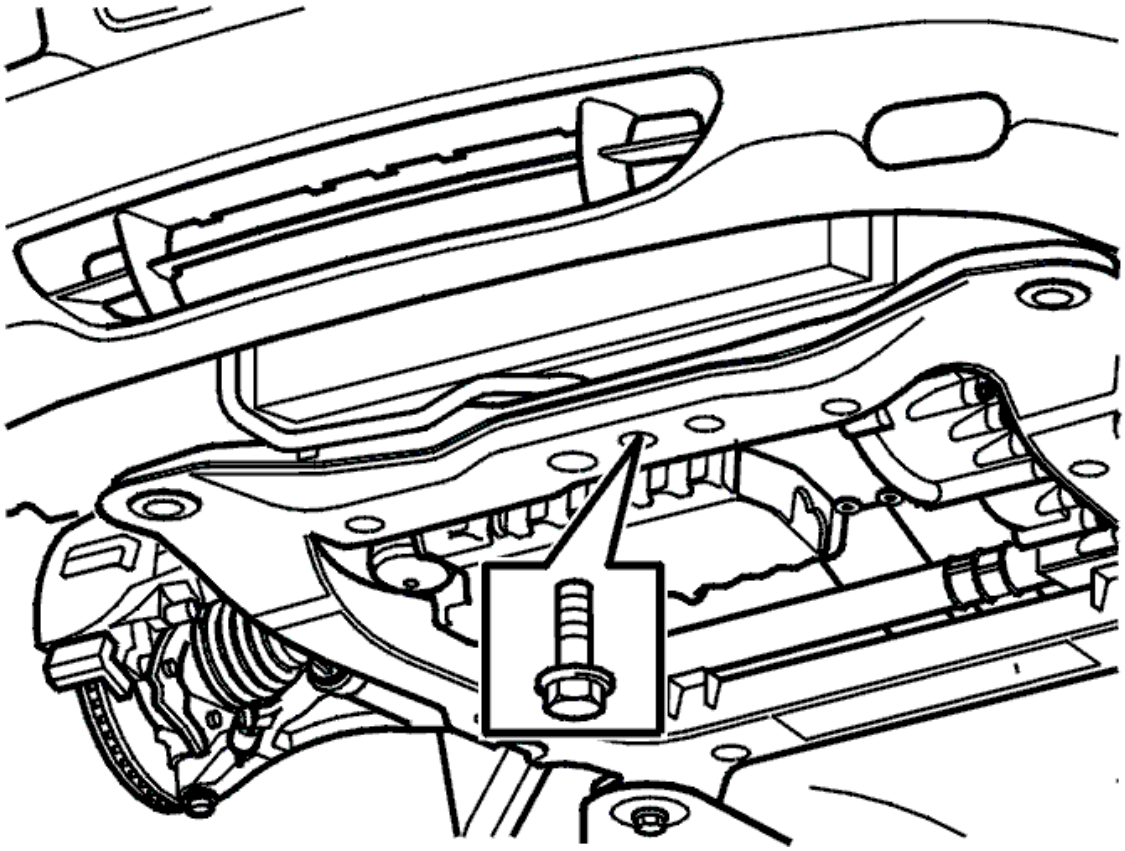

Fig. 358: Front Engine Pad Screw
Courtesy of VOLVO CARS CORPORATION

Remove the lower screw for the engine pad.

REMOVING THE BOLTS TO THE TORQUE ROD

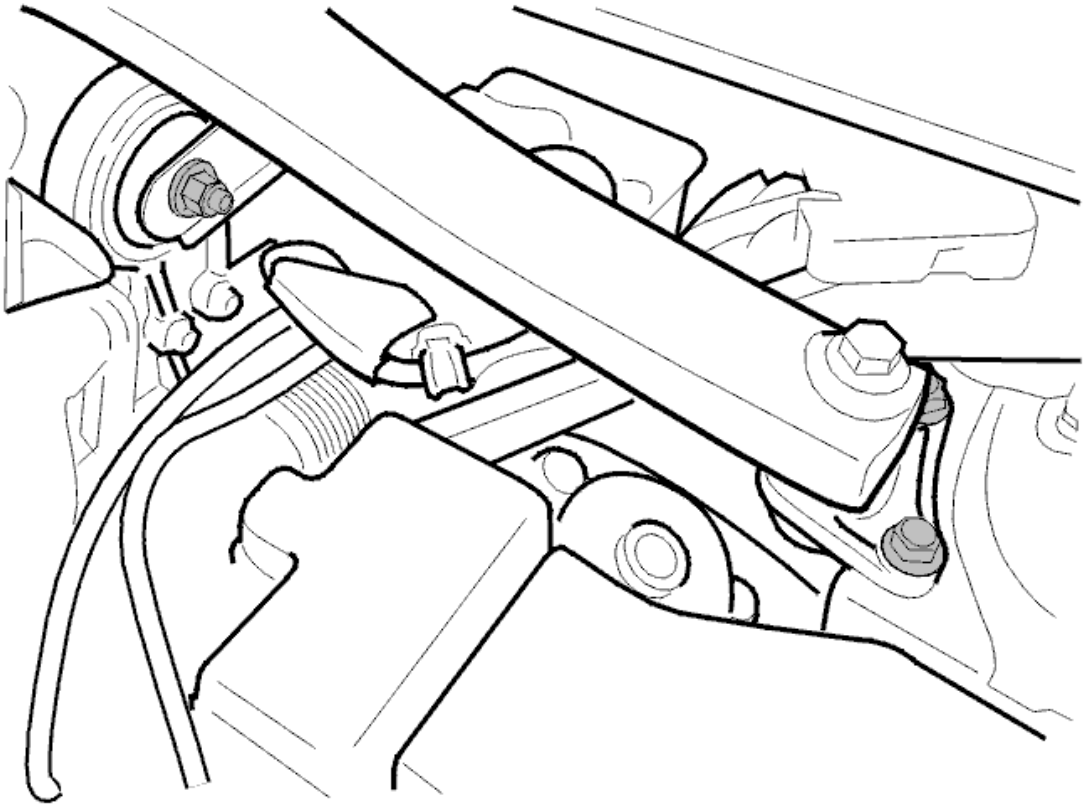

Fig. 359: Engine Compartment Stabilizer (Torque Rod)
Courtesy of VOLVO CARS CORPORATION

Remove the 2 x screws by the suspension turret on both sides.

INSTALLING THE LIFTING TOOL

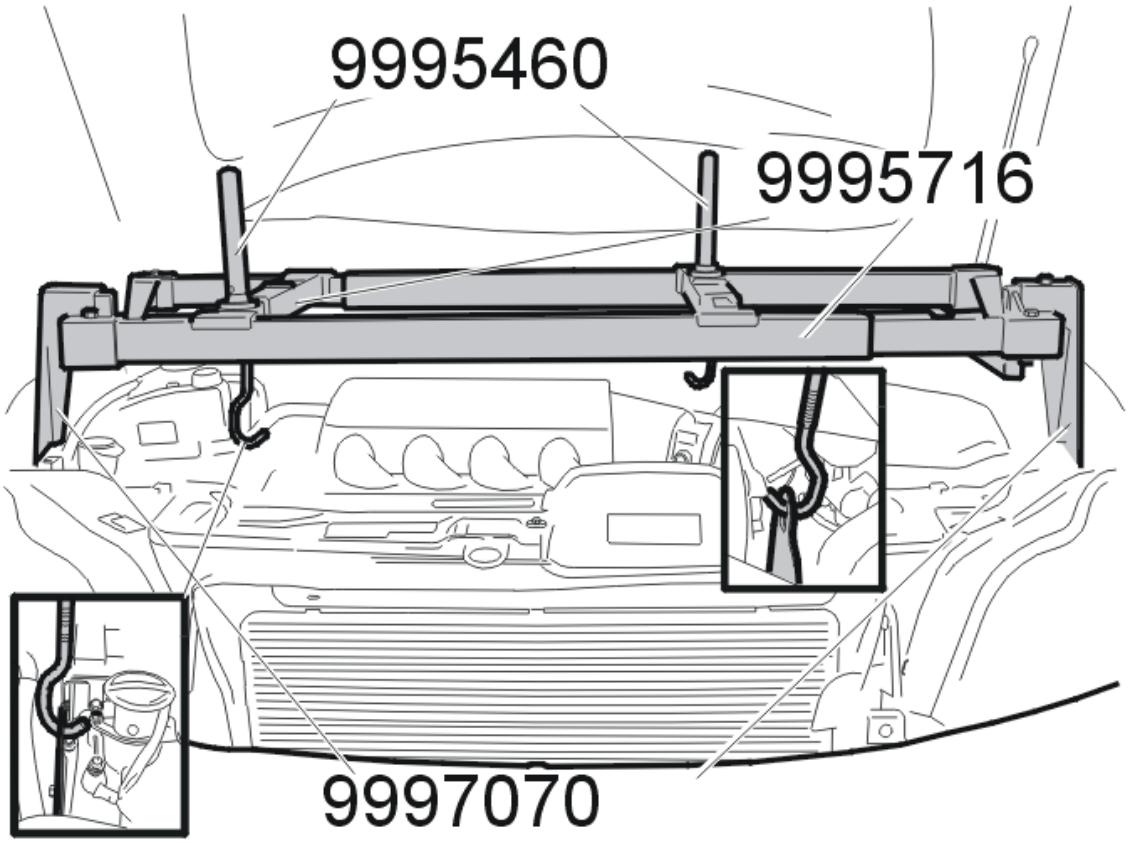

Fig. 360: Installing The Lifting Tool 9995716
Courtesy of VOLVO CARS CORPORATION

CAUTION: When lifting the engine ensure that the lifting eye does not scratch the torque rod. Tape the torque rod and keep it away from the eye.

Install lifting tool see **9995716** converted with kit see **9997070** and lifting hooks see **9995460** . Raise the engine approximately **20 mm** to relieve the load from the engine pad.

REMOVING THE ENGINE PAD, CONTINUED

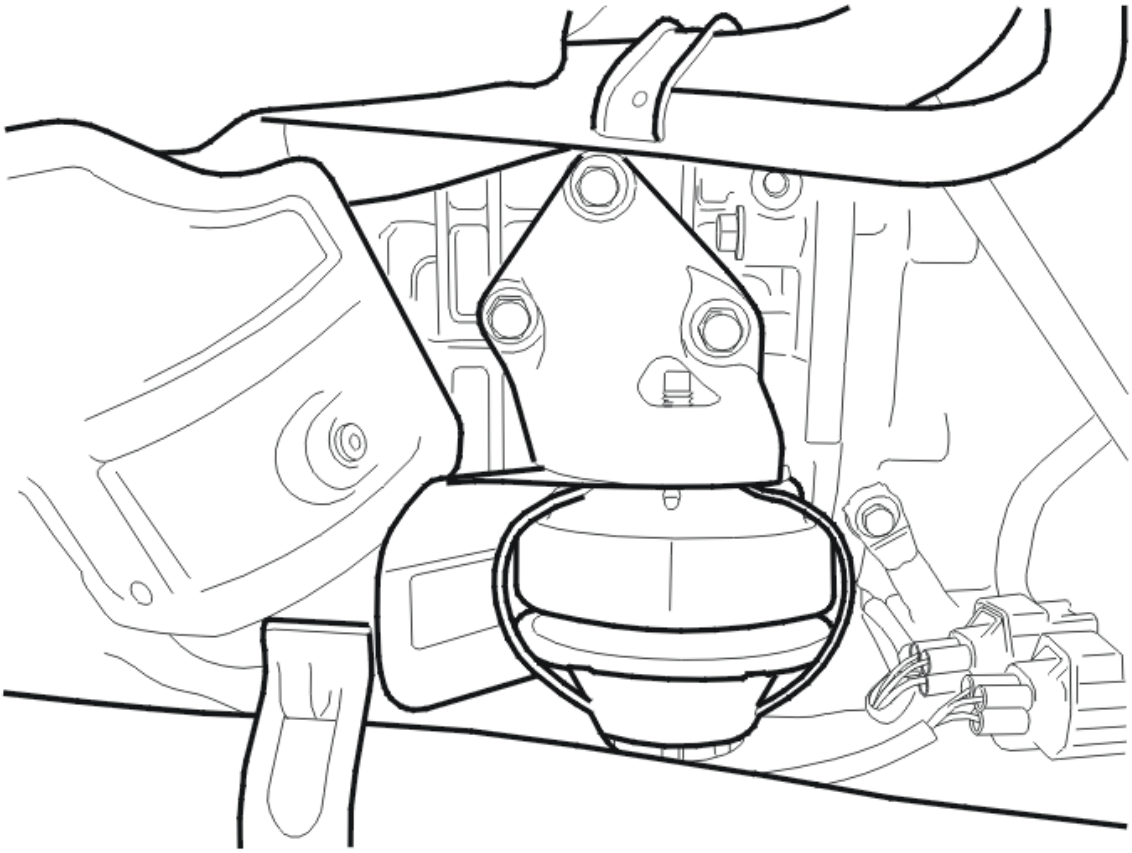

Fig. 361: Identifying Engine Pad
Courtesy of VOLVO CARS CORPORATION

Remove:

- the upper nut to the engine pad, x1
- the bolts to the engine pad bracket, x3
- the bracket
- the engine pad with the protective plate.

INSTALLATION

NOTE: For tightening torques, see: TIGHTENING TORQUE .

INSTALLING THE ENGINE PAD

CAUTION: When lifting the engine ensure that the lifting eye does not scratch the torque rod. Tape the torque rod and keep it away from the eye.

Install:

- the engine pad with the protective plate

- the bracket
- the 3 x screws for the engine pad bracket loosely
- the upper nut for the engine pad loosely. Lower the engine.

Install the lower M10 screw for the engine pad.

FITTING THE BOLTS TO THE LOWER TORQUE ROD

Install the 2 x transmission screws for the lower torque rod. Tighten. See: **SUMMARY OF TIGHTENING TORQUES FOR SPECIFIC COMPONENTS** .

INSTALLING SPLASHGUARD UNDER ENGINE

Install:

- the protective cover under the engine
- the bolts, M8 x6.

REMOVING THE LIFTING TOOL

Remove the lifting tool see **9995716** , kit see **9997070** and lifting hooks see **9995460** .

INSTALLING THE ENGINE PAD, CONTINUED

Tighten:

- the 3 x M10 screws for the engine pad bracket
- the M10 upper nut for the engine pad.

FITTING THE BOLTS TO THE TORQUE ROD

Install the 2 x M10 screws, by the suspension turrets on both sides.

INSTALLING THE AIR CLEANER (ACL) INLET PIPE

Install:

- the air cleaner (ACL) inlet pipe
- the 2 M6 screws.

FINISHING

Remove the oil filler cap.

Install:

- the upper engine cover

- the oil filler cap.

ENGINE PAD, RIGHT, REPLACEMENT

Special tools:

see **9995716**

see **9997070**

see **9995460**

NOTE: **The illustrations in this service information are used for different model years and/or models. Some variation may occur. However, the essential information in the illustrations is always correct.**

PREPARATORY WORK

Remove:

- right-hand front wheel
- the oil filler cap
- the upper engine casing by pulling it straight up.

Fit the oil filler cap.

INSTALLING THE LIFTING TOOL

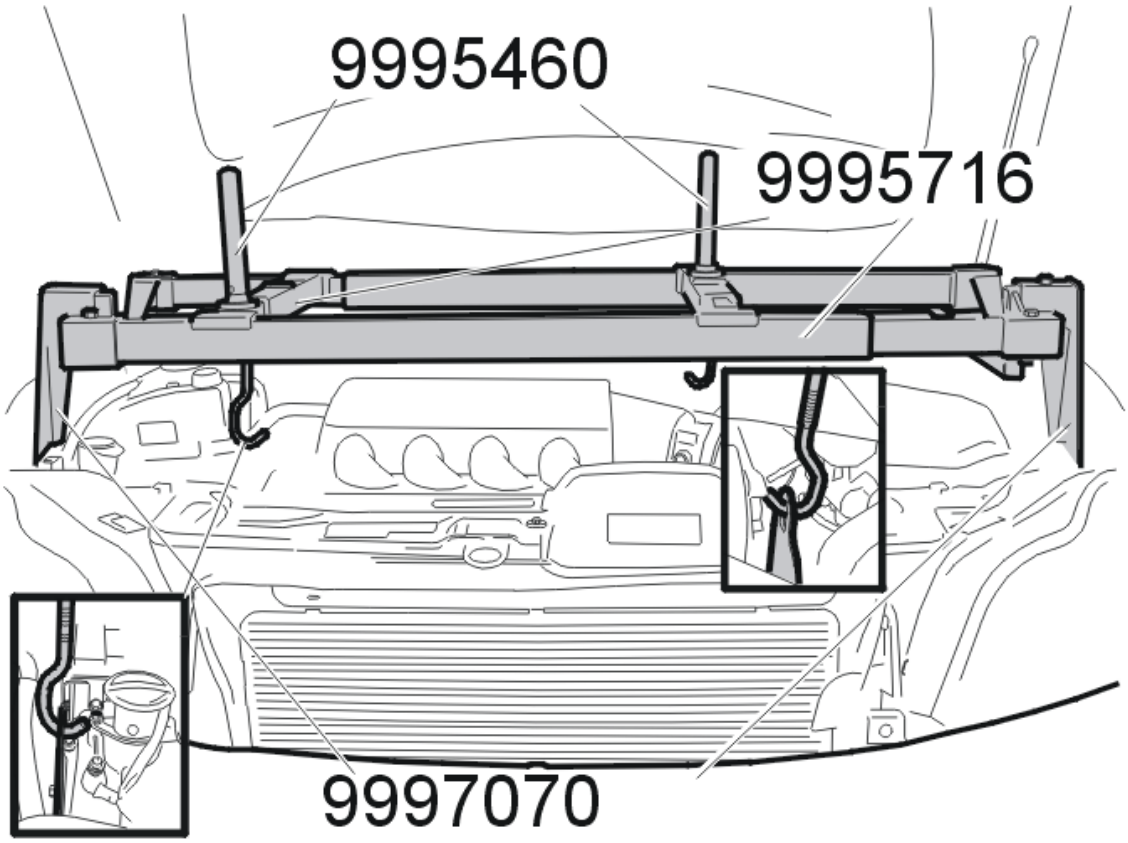

Fig. 362: Installing The Lifting Tool 9995716
Courtesy of VOLVO CARS CORPORATION

NOTE: When lifting the engine make sure that the lifting eye does not scratch the torque rod. Tape the torque rod and keep it away from the eye.

Install: see **9995716** converted with: see **9997070** and lifting hooks: see **9995460** .

Raise the engine slightly on the right-hand side so that the engine pad is unloaded.

REMOVAL

REMOVING THE WING LINER

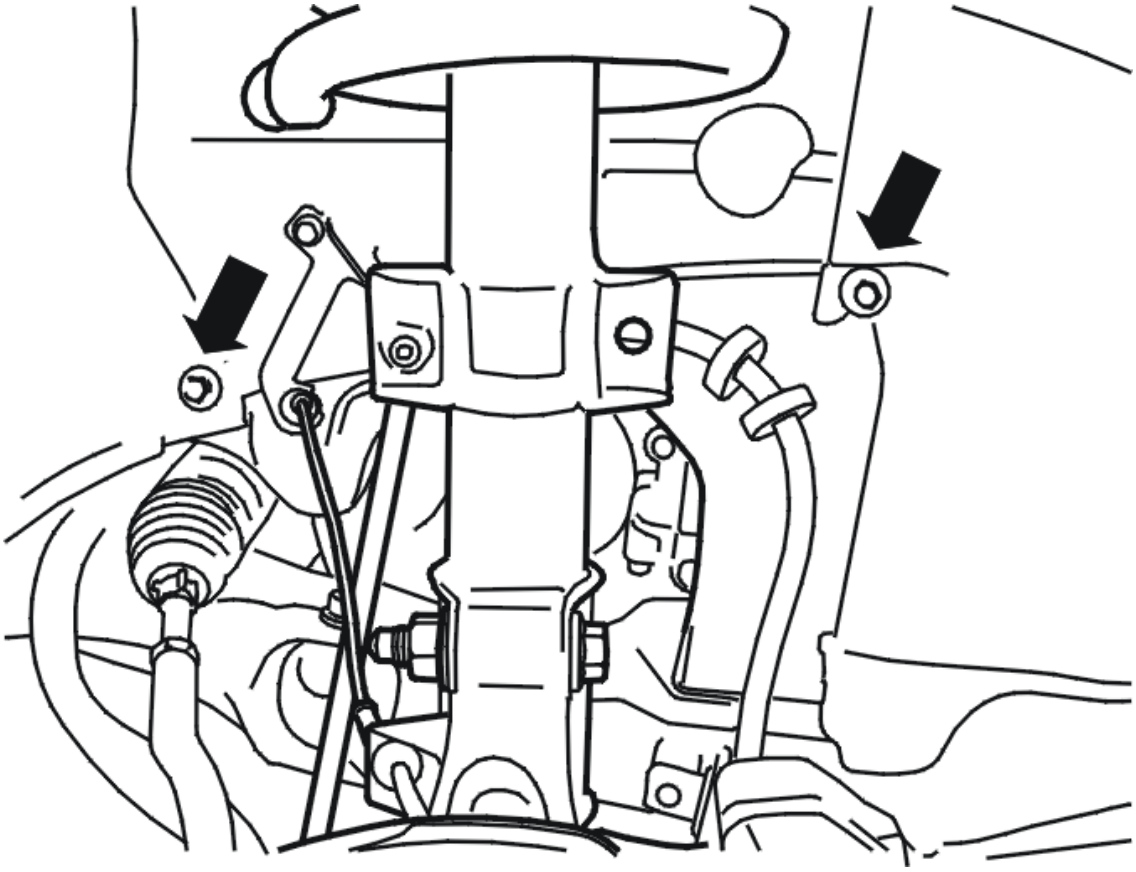

Fig. 363: Identifying Plastic Nuts
Courtesy of VOLVO CARS CORPORATION

Remove:

- the plastic nuts, x2
- the wing liner.

REMOVING THE ENGINE PAD

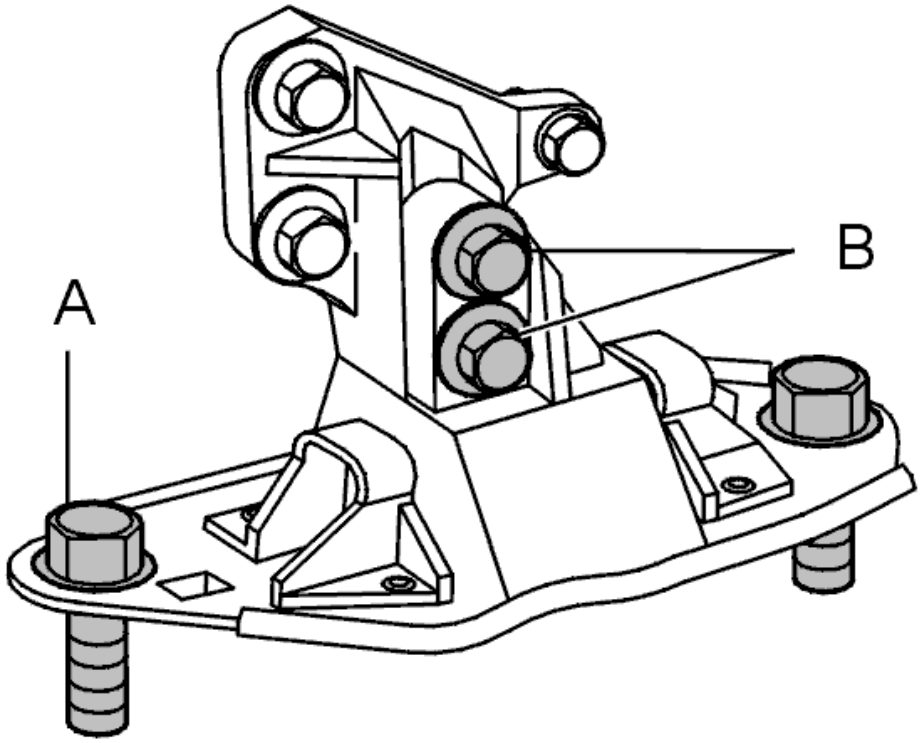

Fig. 364: Engine Mountings Screws
Courtesy of VOLVO CARS CORPORATION

Remove:

- the bolts at **A** , x2.
- the bolts at **B** , x2.
- the engine pad.

INSTALLATION

NOTE: **For tightening torques, see: TIGHTENING TORQUE .**

INSTALLING THE ENGINE PAD

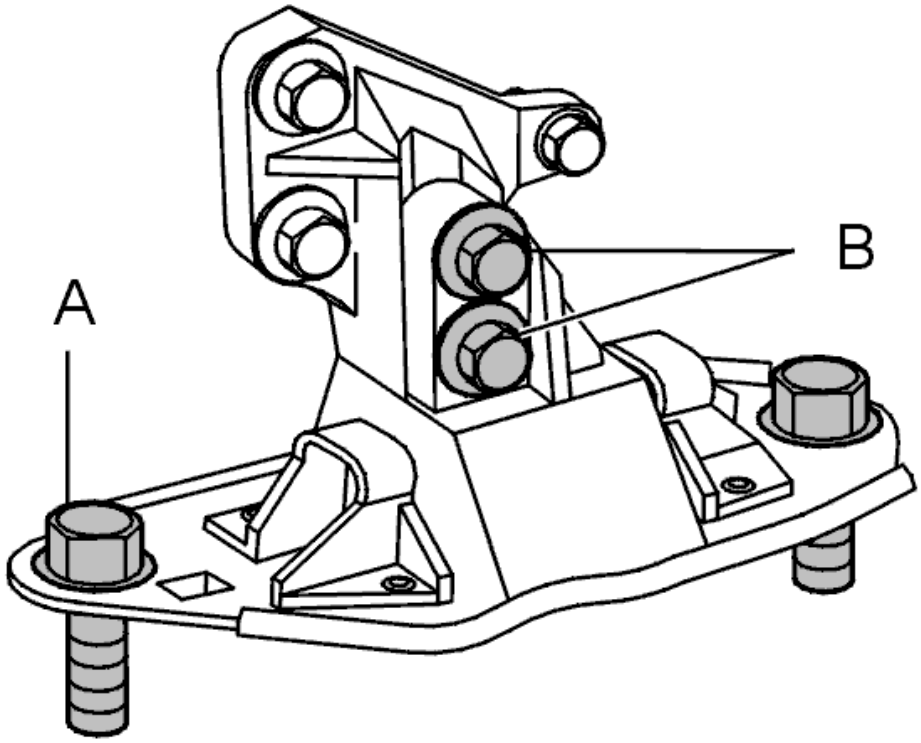

Fig. 365: Engine Mountings Screws
Courtesy of VOLVO CARS CORPORATION

Install:

- the engine pad
- the bolts at **A** loosely, x2.

Lower the engine.

Fit the bolts at **B** , x2.

Tighten:

- the bolts at **A** , x2 in accordance with: **SUMMARY OF TIGHTENING TORQUES FOR SPECIFIC COMPONENTS**
- the bolts at **B** , x2 in accordance with: **SUMMARY OF TIGHTENING TORQUES FOR SPECIFIC COMPONENTS** .

INSTALLING THE WING LINER

Install:

- the wing liner
- the plastic nuts, x2.

FINISHING

REMOVING THE LIFTING TOOL

Remove: see **9995716** , see **9997070** and: see **9995460** .

Remove the oil filler cap.

Install:

- the upper engine casing
- the oil filler cap
- the right-hand front wheel in accordance with: **INSTALLING WHEELS** .

SUB-FRAME FRONT, REPLACING (2005, 2006)

Special tools:

see **9995716**

see **9997070**

see **9995460**

see **9995500**

see **9997062**

see **9997076**

see **9995562**

NOTE: The illustrations in this service information are used for different model years and/or models. Some variation may occur. However, the essential information in the illustrations is always correct.

REMOVAL

PREPARATORY WORK

Remove the front wheels on both sides.

REMOVING THE BOLTS TO THE TORQUE ROD

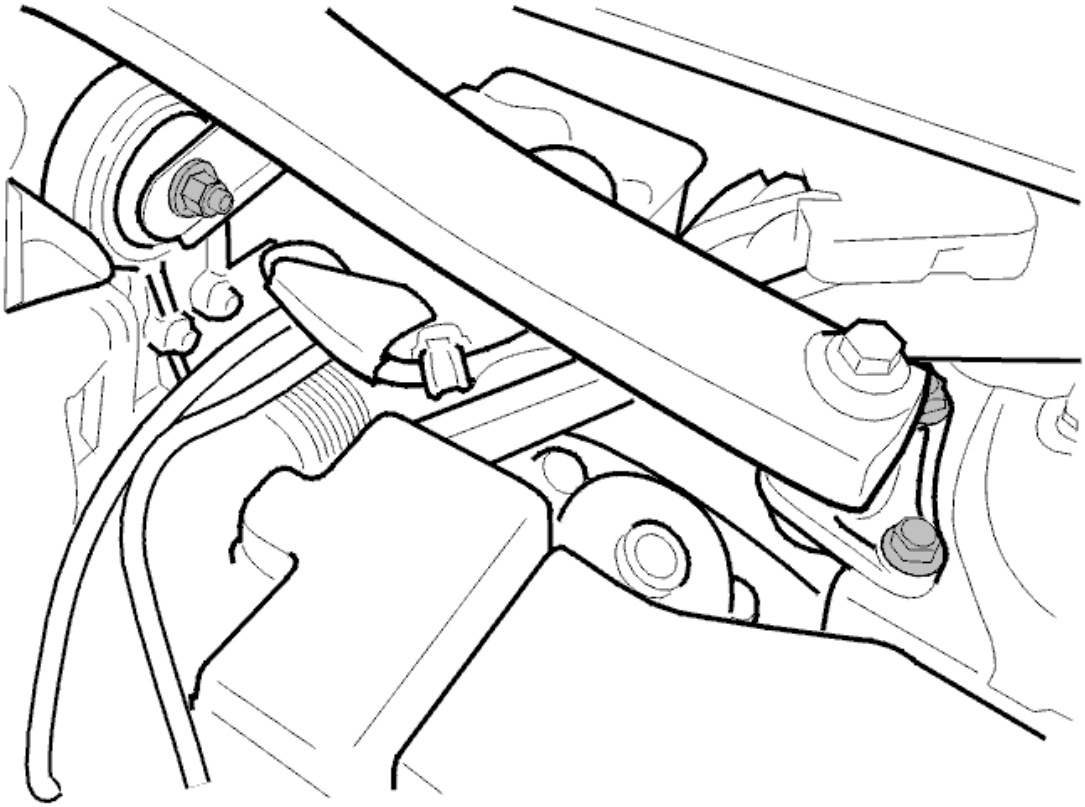

Fig. 366: Engine Compartment Stabilizer (Torque Rod)
Courtesy of VOLVO CARS CORPORATION

Remove the 2 x screws by the suspension turret on both sides.

INSTALLING THE LIFTING TOOL

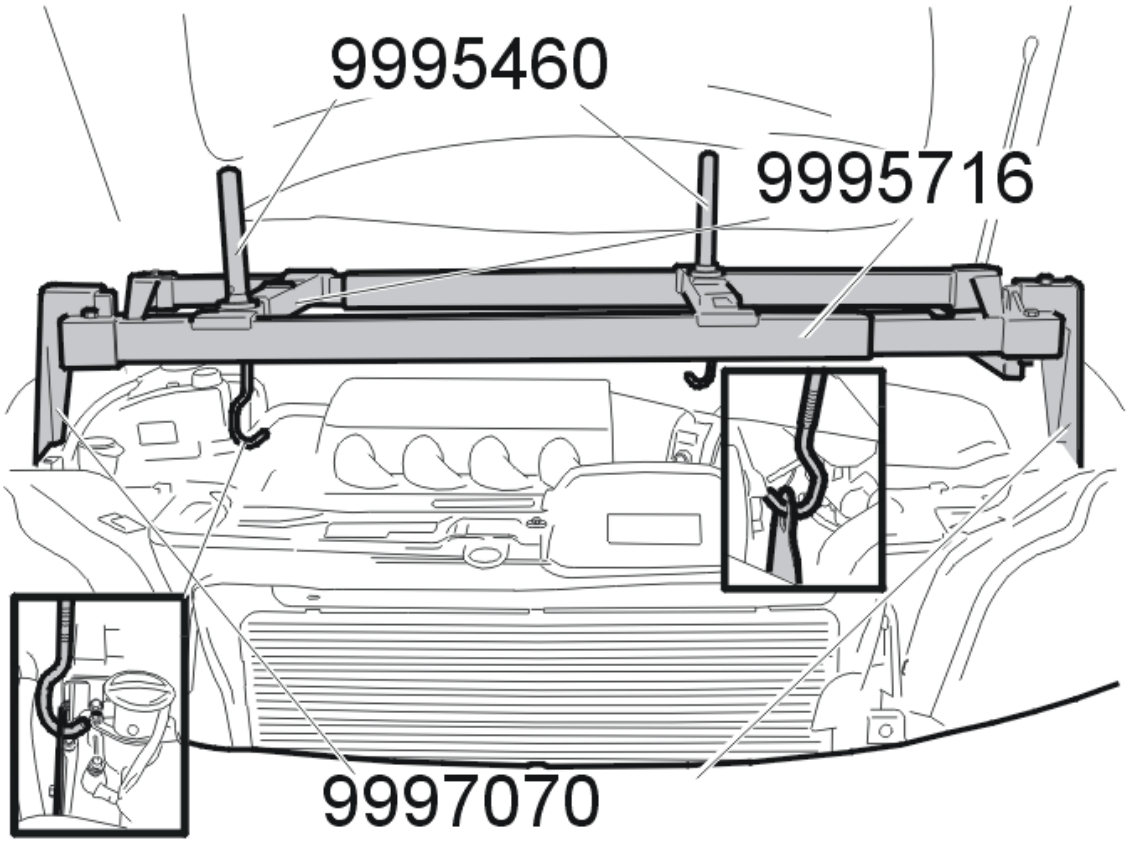

Fig. 367: Installing The Lifting Tool 9995716
Courtesy of VOLVO CARS CORPORATION

Remove:

- the oil filler cap
- the upper front engine casing by pulling it straight up

CAUTION: When lifting the engine ensure that the lifting eye does not scratch the torque rod. Tape the torque rod and keep it away from the eye.

Install:

- the oil filler cap
- the lifting tool: see **9995716** converted with kit see **9997070** and the lifting hooks: see **9995460** . Lift up the engine slightly so that the engine pads are unloaded.

REMOVING THE WING LINER

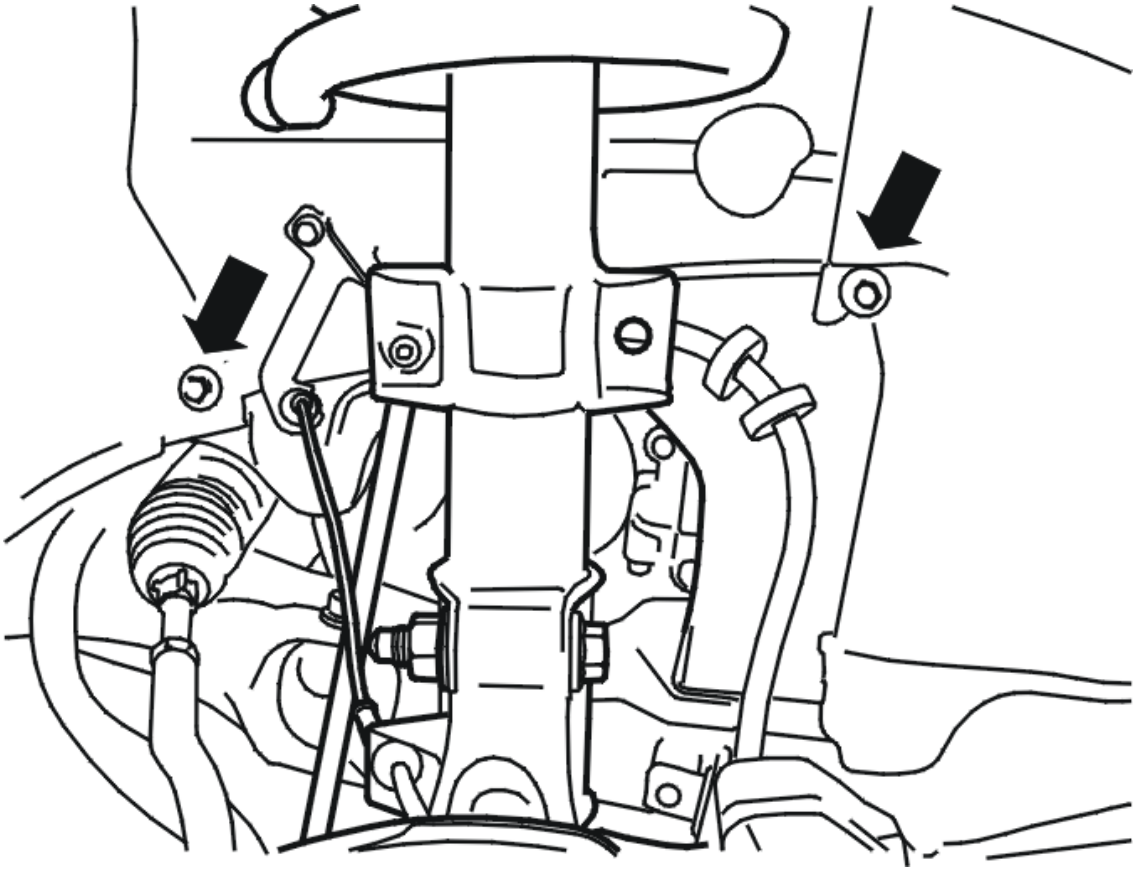

Fig. 368: Identifying Plastic Nuts
Courtesy of VOLVO CARS CORPORATION

Remove:

- the plastic nuts, x2
- the wing liner.

REMOVING THE SCREWS FOR THE RIGHT-HAND ENGINE PAD

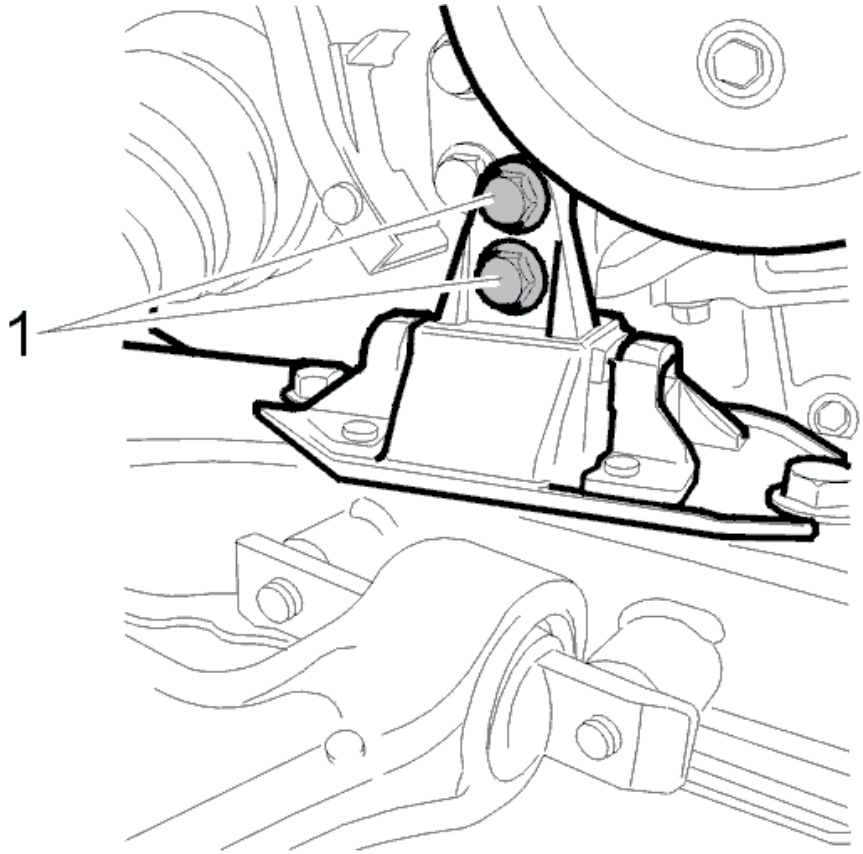

Fig. 369: Identifying Right-Hand Engine Mounting Screws
Courtesy of VOLVO CARS CORPORATION

Remove the bolts (1), x2.

REMOVING THE PROTECTIVE PLATE

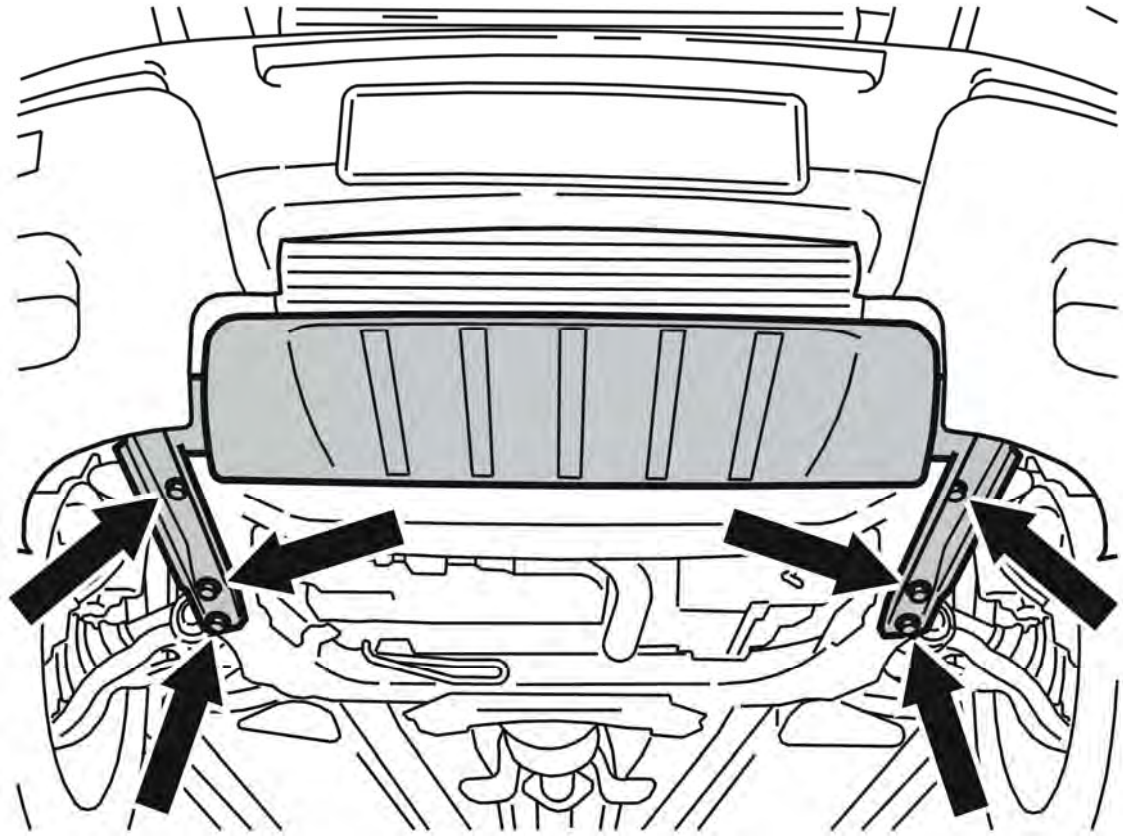

Fig. 370: Splash Guard, Protective Plate And Screws
Courtesy of VOLVO CARS CORPORATION

Remove the 6 screws.

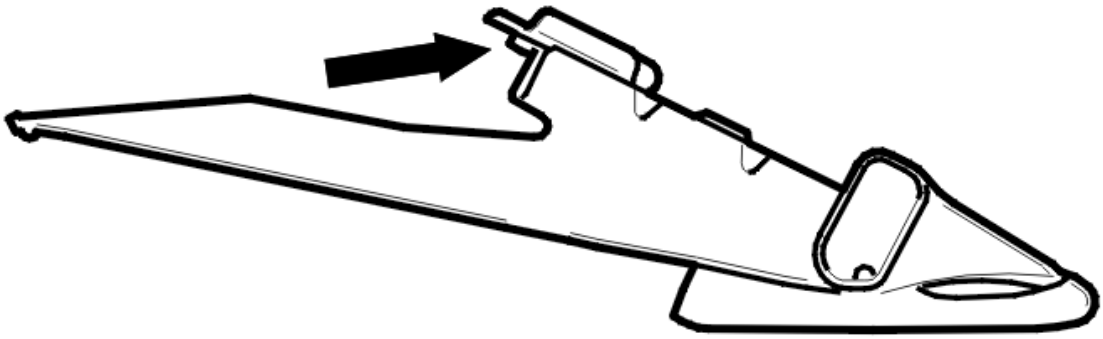

Fig. 371: Identifying Protective Plate
Courtesy of VOLVO CARS CORPORATION

NOTE: There is a guide sleeve on the upper mounting for the plate. This must be lifted slightly so that the panel can be slid forward.

Raise and move the protective plate forward. Remove the protective plate.

REMOVING THE PROTECTIVE COVER UNDER THE ENGINE

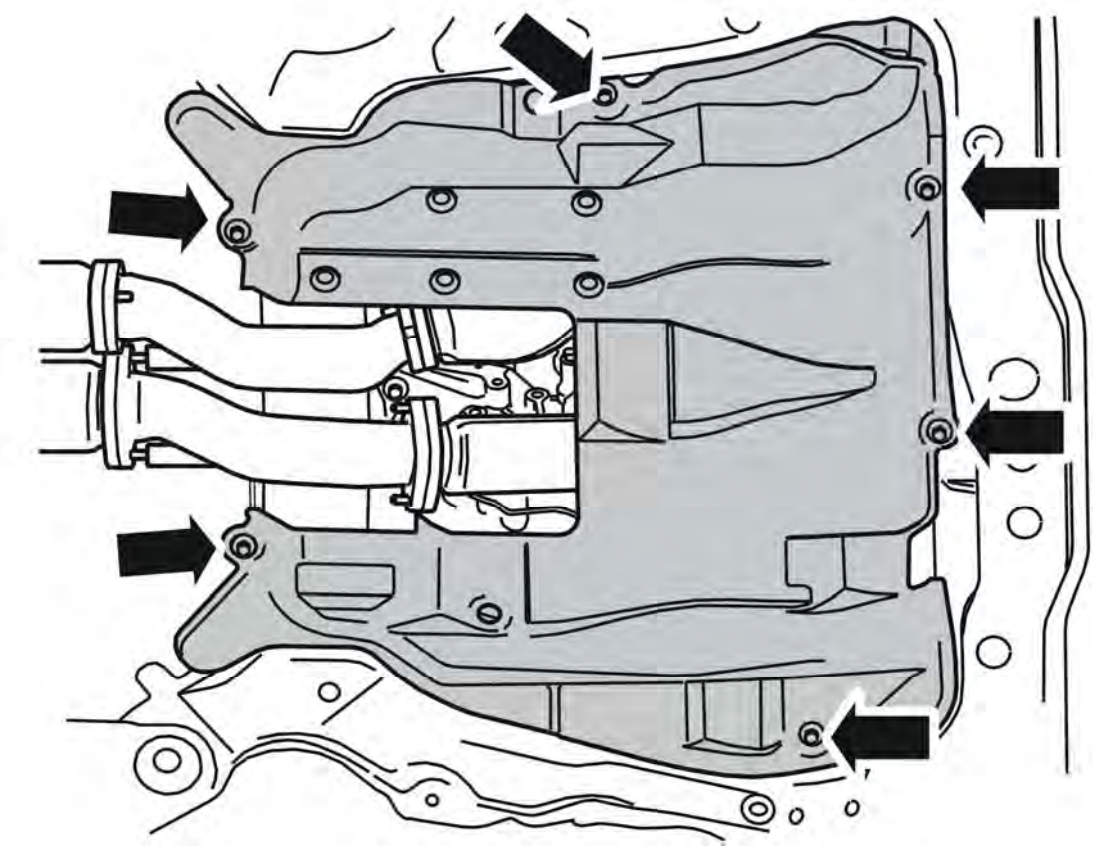

Fig. 372: Identifying the Protective Under Cover
Courtesy of VOLVO CARS CORPORATION

Remove:

- the bolts, x6
- the protective cover under the engine.

REMOVING THE GEARBOX BOLTS TO THE LOWER TORQUE ROD

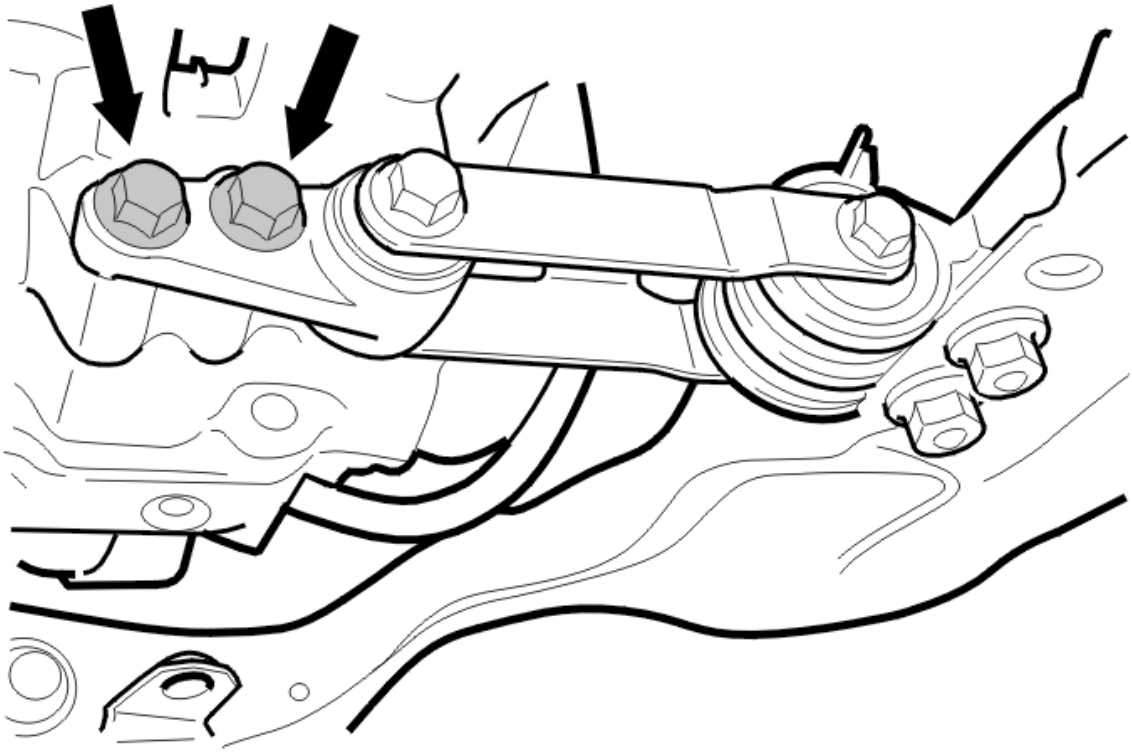

Fig. 373: Identifying Gearbox Bolts
Courtesy of VOLVO CARS CORPORATION

Remove the bolts, x2.

REMOVING THE EXHAUST PIPES BETWEEN FRONT AND REAR CATALYTIC CONVERTERS

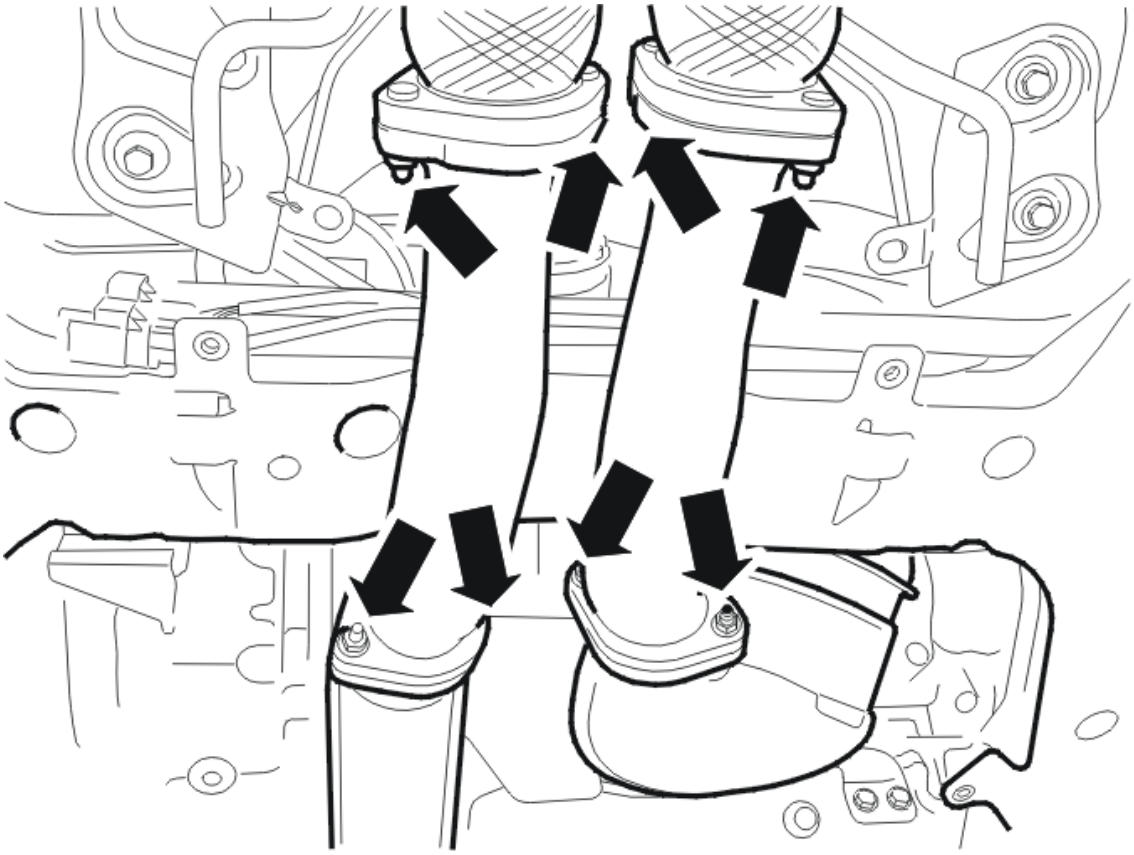

Fig. 374: Removing Exhaust Pipes
Courtesy of VOLVO CARS CORPORATION

Remove:

- both exhaust pipes' nuts
- both exhaust pipes.

REMOVING THE LOWER BOLT TO THE FRONT ENGINE PAD

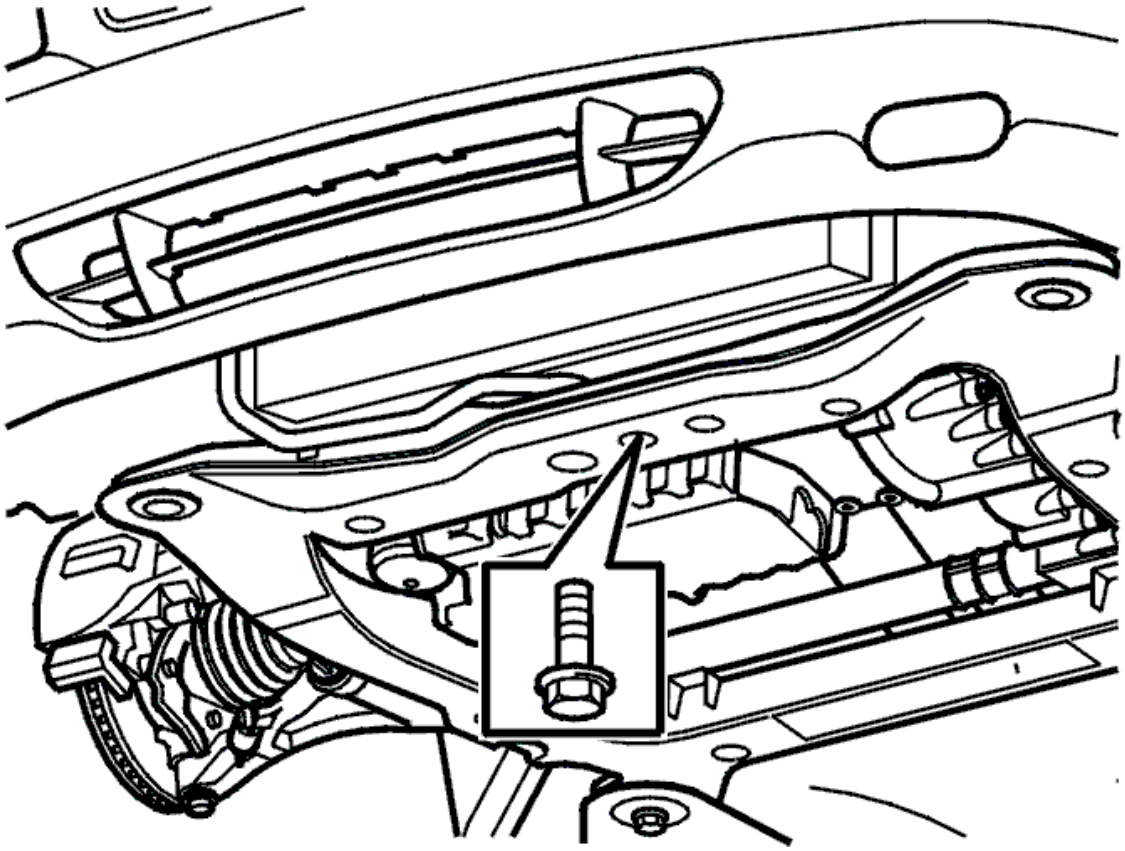

Fig. 375: Front Engine Pad Screw
Courtesy of VOLVO CARS CORPORATION

Remove the lower bolt to the engine pad.

REMOVING THE ANTI-ROLL BAR LINK FROM THE ANTI-ROLL BAR ON BOTH SIDES

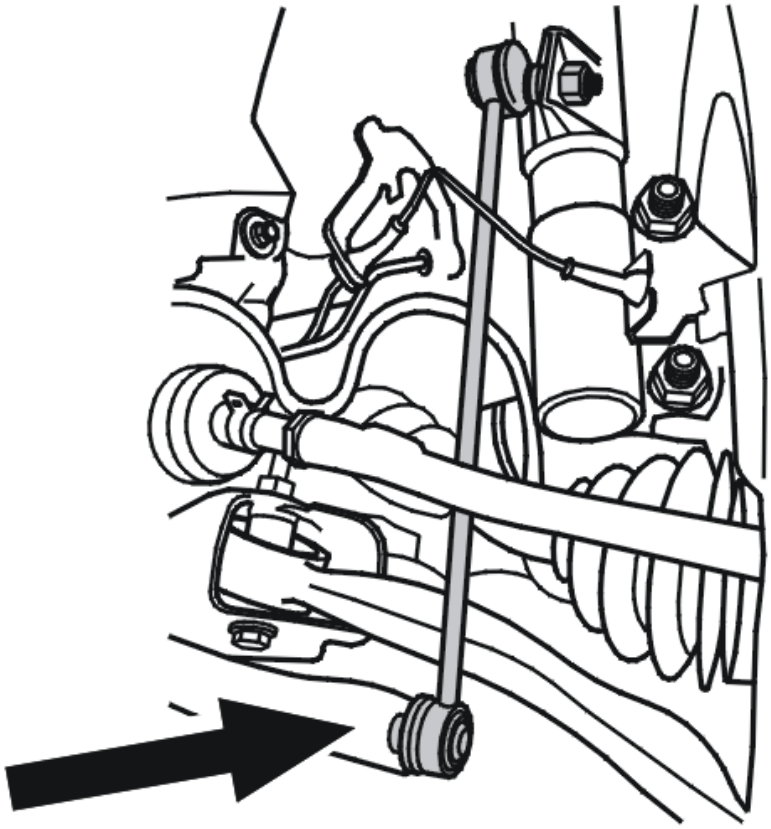

Fig. 376: Identifying Anti-Roll Bar Links
Courtesy of VOLVO CARS CORPORATION

Remove the anti-roll bar links from the anti-roll bar on both sides. Use: see **9995500** and a Torx wrench as counterhold to avoid damaging the rubber gaiter.

REMOVING THE DRIVE SHAFT

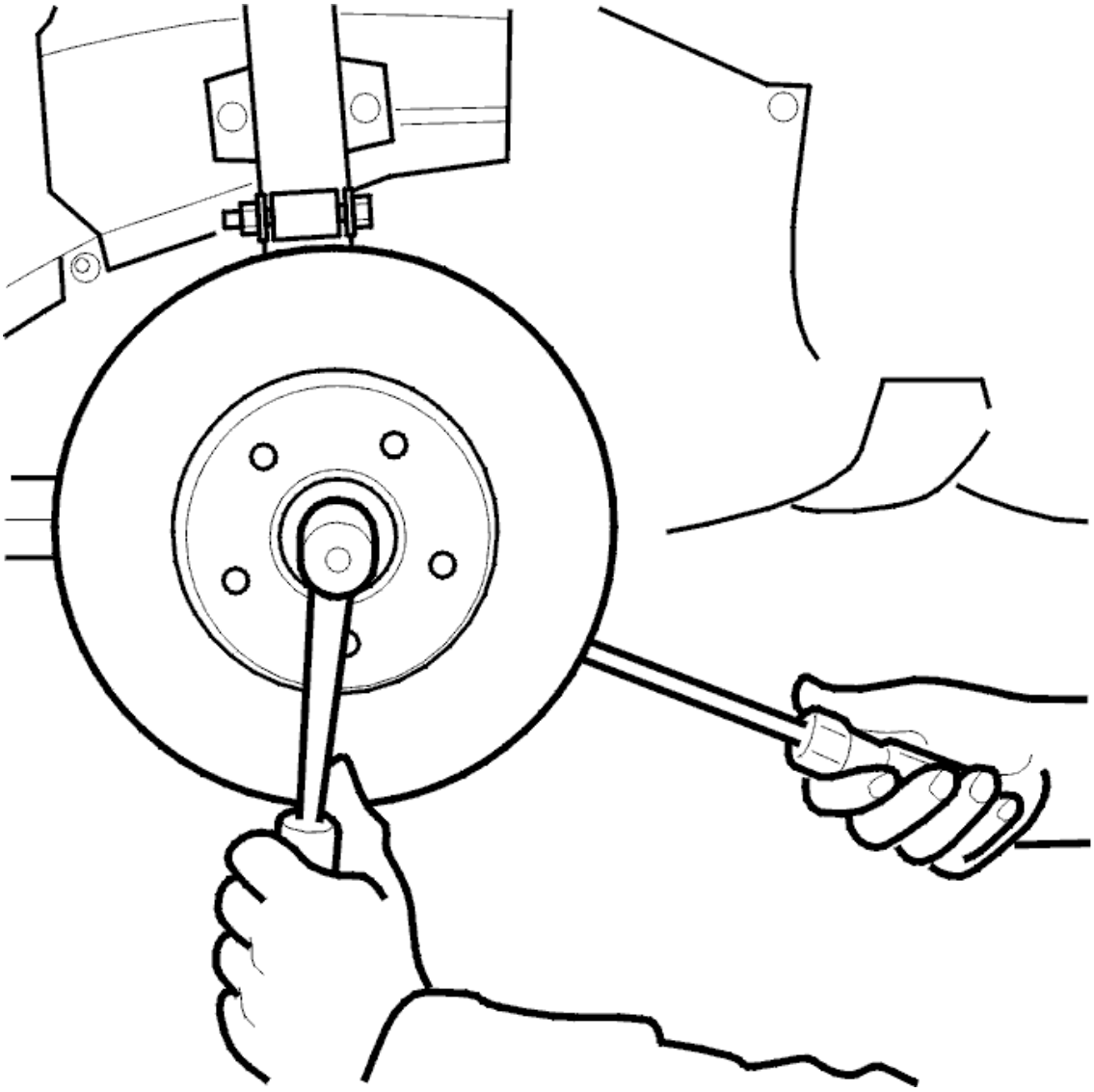

Fig. 377: Identifying Drive Shaft Screw Removal Using Counter Hold On Brake Disc
Courtesy of VOLVO CARS CORPORATION

Remove the bolt for the drive shaft. Use a screwdriver in the brake disc as counterhold. Tap the drive shaft into the hub slightly. Use a brass drift.

REMOVING THE LINK ARM FROM THE WHEEL SPINDLE ON BOTH SIDES

Remove the ball joint according to **BALL JOINT, REPLACING**

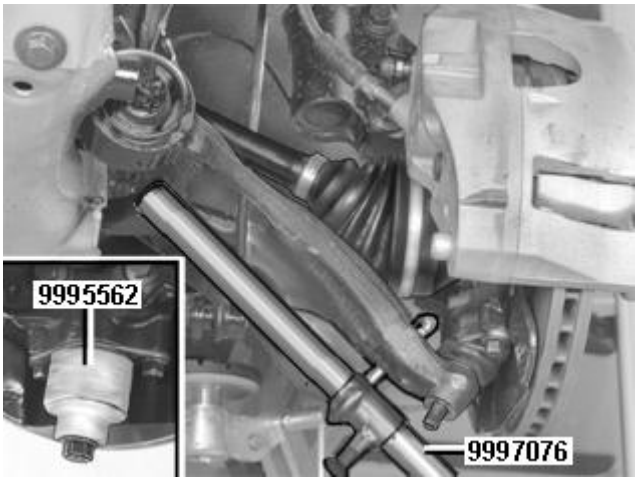

Fig. 378: Identifying Wheel Knuckle, Special Tools 999 7076 And 999 5562
Courtesy of VOLVO CARS CORPORATION

Detach the link arm from the ball joint pin.

Pull down the link arm. Use: see **9997076** and move the wheel spindle to the side, and install the protective sleeve: see **9995562** on the ball joint pin at the same time. Keep it in position using the ball joint nut.

REMOVING THE STEERING GEAR FROM THE SUBFRAME

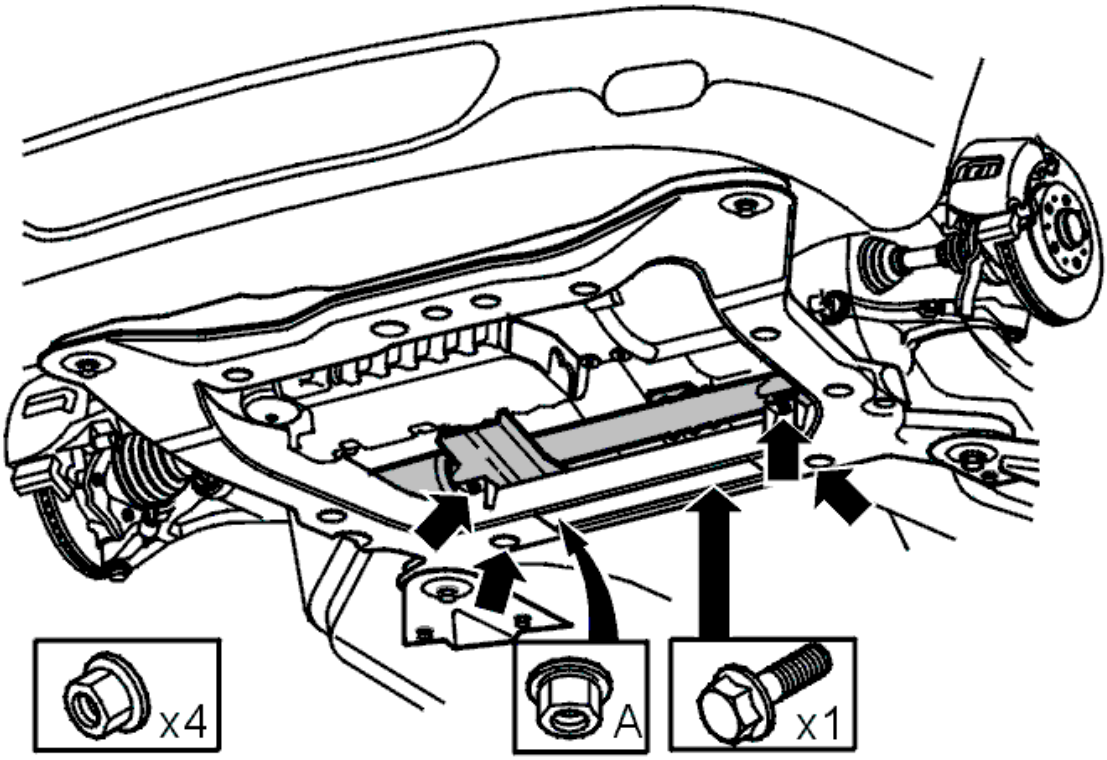

Fig. 379: Identifying Bolt And Nut Holding Steering Gear To Sub-Frame

Courtesy of VOLVO CARS CORPORATION

Remove:

- the nuts, x4
- the bolt, x1.

REMOVING THE SUBFRAME

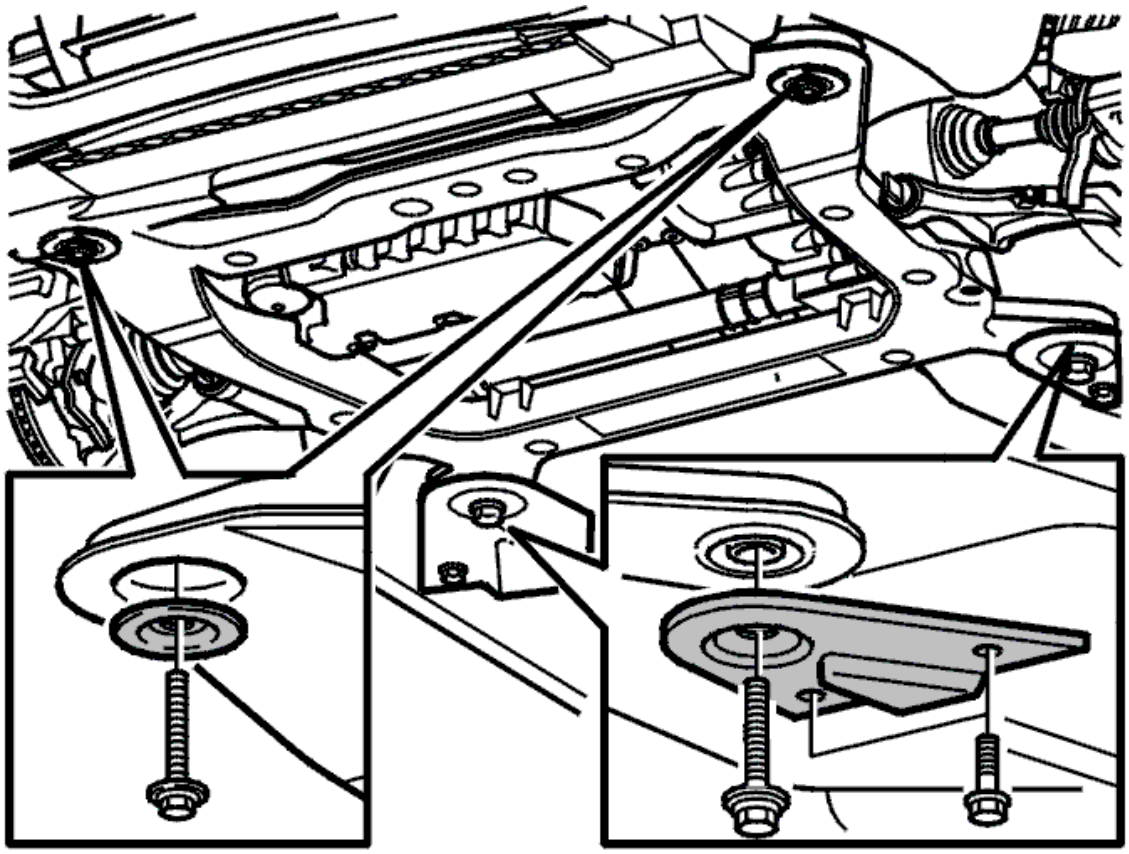

Fig. 380: Identifying Bolts, Washers And Brackets In Sub-Frame
Courtesy of VOLVO CARS CORPORATION

CAUTION: Ensure that no pipes or cables are under load or are trapped when lowering the sub-frame.

Release:

- the 2 x heated oxygen sensor (HO2S) connectors from the rear edge of the subframe
- the heated oxygen sensor (HO2S) connector from the front edge of the subframe.

Remove the bolt to the ground cable bracket on the front edge of the subframe.

Position a lifting table under the subframe.

Remove:

- the bolts to the subframe's brackets at the rear edge
- the bolts to the subframe in the front and rear edge
- the subframe's brackets.

Release the heated oxygen sensor (HO2S) cables from the anti-roll bar.

Remove the lower coolant hose from the bracket on the subframe.

Lower the subframe carefully. Release the oil pipes to the steering gear from the clips on the subframe.

Remove the bolt to the bracket holding the pressure pipe to the steering gear on the subframe.

TRANSFERRING THE COMPONENTS

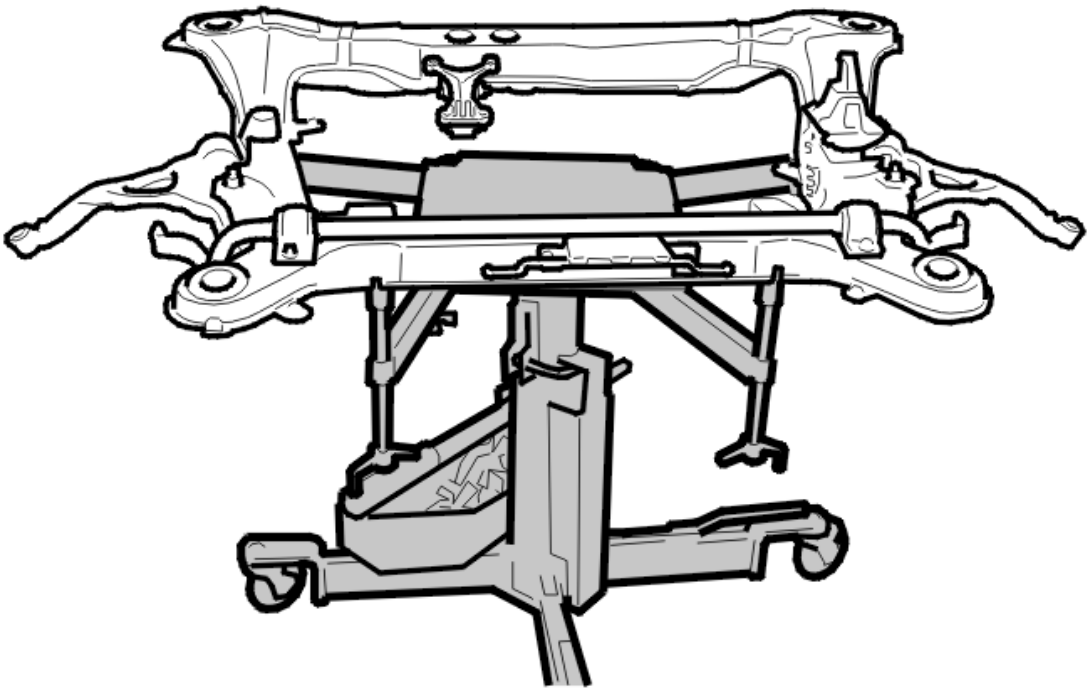

Fig. 381: Identifying Front And Rear Screws To Control Arms
Courtesy of VOLVO CARS CORPORATION

Transfer the link arms on both sides.

Install:

- the 2 x front screws to the control arms. Tighten. See: **SUMMARY OF TIGHTENING TORQUES FOR SPECIFIC COMPONENTS**
- the rear screw to the control arms. Tighten. See **SUMMARY OF TIGHTENING TORQUES FOR SPECIFIC COMPONENTS** .

Transfer the anti-roll bar. Fit the bolts to the anti-roll bar, M10 x4.

Transfer the right-hand engine pad.

Fit the bolts to the engine pad, x2, in accordance with: **SUMMARY OF TIGHTENING TORQUES FOR SPECIFIC COMPONENTS** .

Install a new lower torque rod with the nuts. See **SUMMARY OF TIGHTENING TORQUES FOR SPECIFIC COMPONENTS** .

Install new pipe/hose holder. Transfer the bracket to the lower coolant hose. Install an M6 screw in the bracket.

INSTALLATION

INSTALLING THE SUBFRAME

CAUTION: Ensure that no pipes or cables are loaded or trapped when raising the sub-frame.

see **SUBFRAME, ADJUSTING**

Raise the subframe.

Install:

- the oil pipes to the steering gear in the clips on the subframe
- the bolt, M6, to the bracket holding the pressure pipe to the steering gear on the subframe
- the lower coolant hose in the bracket on the sub-frame.

Install the sub-frame's four screws together with the sub-frame's brackets and engine heater, if installed.

Use new screws. Lube the screws with oil.

Tighten acc. to: **SUMMARY OF TIGHTENING TORQUES FOR SPECIFIC COMPONENTS** . First tighten the screws on the sub-frame's left side, then on the right.

Tighten the screws for the brackets M10.

Install the heated oxygen sensor's cables on the anti-roll bar.

Remove the lifting table.

Install:

- the 2 x heated oxygen sensor (HO2S) connectors on the rear edge of the subframe
- the heated oxygen sensor (HO2S) connector on the front edge of the subframe
- the M6 screw to the ground cable mounting on the front edge of the subframe.

INSTALLING THE STEERING GEAR ON THE SUBFRAME

Install:

- the nuts, M10 x4.
- the M10 screw.

FITTING THE LOWER BOLT TO THE FRONT ENGINE PAD

Install the lower M10 screw for the engine pad.

INSTALLING THE GEARBOX BOLTS TO THE LOWER TORQUE ROD

Fit the bolts, x2. Tighten in accordance with: **SUMMARY OF TIGHTENING TORQUES FOR SPECIFIC COMPONENTS** .

INSTALLING THE EXHAUST PIPES BETWEEN FRONT AND REAR CATALYTIC CONVERTERS

NOTE: **To ensure that there is no exhaust leakage, see: FLANGED JOINT, ASSEMBLING .**

Install:

- both exhaust pipes
- both exhaust pipes' nuts, M8.

INSTALLING THE LINK ARM ON BOTH SIDES

Install:

- the link arm. Use: see **9997076** .
- the nut. Tighten. See **SUMMARY OF TIGHTENING TORQUES FOR SPECIFIC COMPONENTS** . Counterhold using a Torx wrench to prevent damaging the ball joint boot.

INSTALLING THE ANTI-ROLL BAR LINK ON BOTH SIDES

Install:

- the anti-roll bar link
- the nut. Tighten acc. to: **SUMMARY OF TIGHTENING TORQUES FOR SPECIFIC**

COMPONENTS . Use socket see **9995500** and a Torx wrench as a counterhold to prevent damaging the rubber gaiter.

INSTALLING THE DRIVE SHAFT

Fit the bolt on both sides in accordance with: **TIGHTENING TORQUE** .

Use a screwdriver as counterhold.

INSTALLING THE PROTECTIVE COVER UNDER THE ENGINE

Install:

- the protective cover under the engine
- the bolts, M8 x6.

INSTALLING THE PROTECTIVE PLATE

Move the skid plate up into the bumper cover. Press forward until the mounting brackets enter the sub-frame. Install the screws.

FITTING THE BOLTS TO THE RIGHT-HAND ENGINE PAD

Fit the bolts, x2. Tighten in accordance with: **SUMMARY OF TIGHTENING TORQUES FOR SPECIFIC COMPONENTS** .

INSTALLING THE WING LINER

Install:

- the wing liner
- the plastic nuts, x2.

REMOVING THE LIFTING TOOL

Remove the lifting tool see **9995716** , kit: see **9997070** and lifting hooks: see **9995460** .

FITTING THE BOLTS TO THE TORQUE ROD

Install the 2 x M10 screws, by the suspension turret on both sides.

FINISHING

Fit the front wheels on both sides in accordance with: **INSTALLING WHEELS** .

Remove the oil filler cap.

Install:

- the upper front engine casing
- the oil filler cap. Carry out wheel alignment in accordance with: **WHEEL ALIGNMENT, CHECKING / ADJUSTING** .

NOTE: **If the entire subframe has been removed for exposing other units/components, do not perform wheel alignment after installing the subframe.**

SUB-FRAME FRONT, REPLACING (2007, 2008)

Special tools:

see **9995716**

see **9997070**

see **9995460**

see **9995500**

see **9997062**

see **9997076**

see **9995562**

NOTE: **The illustrations in this service information are used for different model years and/or models. Some variation may occur. However, the essential information in the illustrations is always correct.**

REMOVAL

PREPARATORY WORK

Remove the front wheels on both sides.

REMOVING THE BOLTS TO THE TORQUE ROD

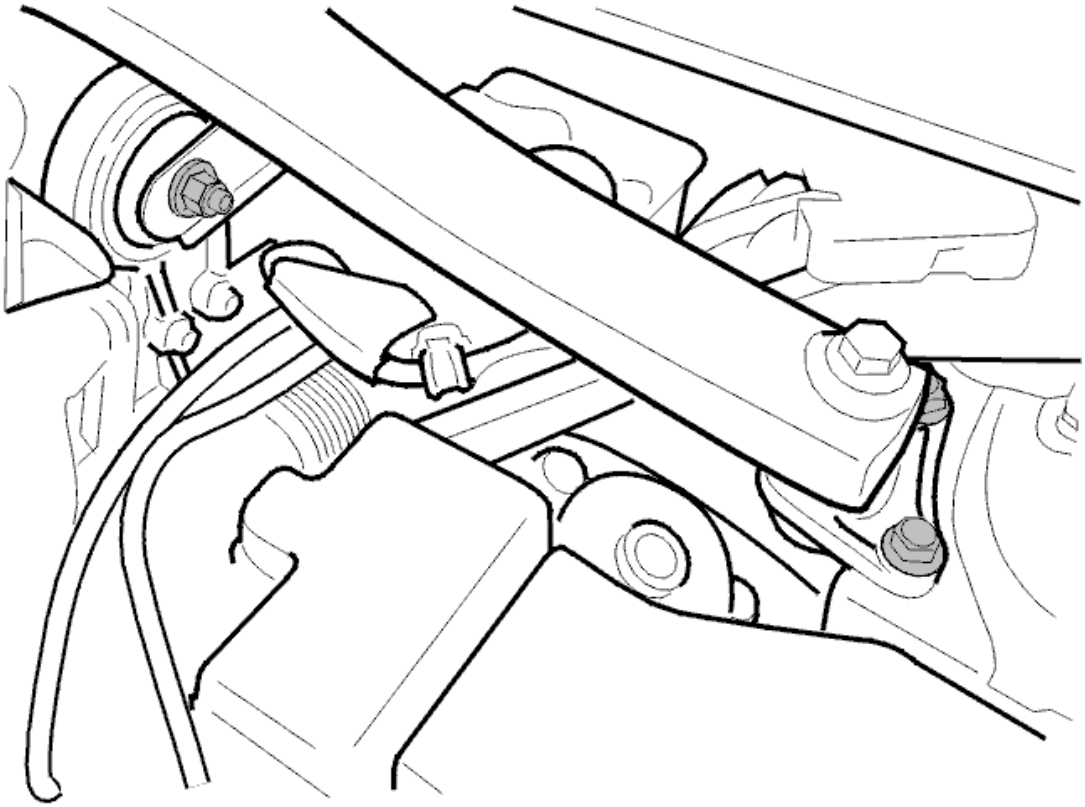

Fig. 382: Engine Compartment Stabilizer (Torque Rod)
Courtesy of VOLVO CARS CORPORATION

Remove the 2 x screws by the suspension turret on both sides.

INSTALLING THE LIFTING TOOL

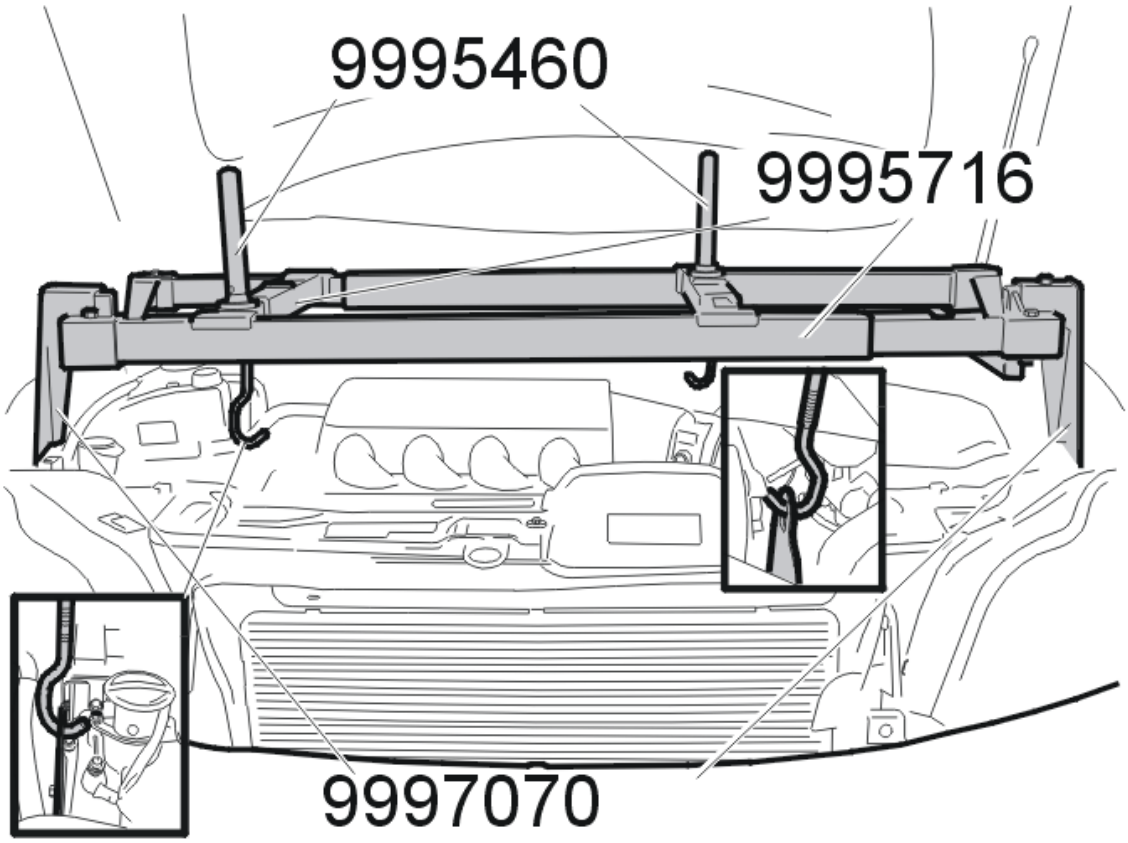

Fig. 383: Installing The Lifting Tool 9995716
Courtesy of VOLVO CARS CORPORATION

Remove:

- the oil filler cap
- the upper front engine casing by pulling it straight up

CAUTION: When lifting the engine ensure that the lifting eye does not scratch the torque rod. Tape the torque rod and keep it away from the eye.

Install:

- the oil filler cap
- the lifting tool: see **9995716** converted with kit see **9997070** and the lifting hooks: see **9995460** . Lift up the engine slightly so that the engine pads are unloaded.

REMOVING THE WING LINER

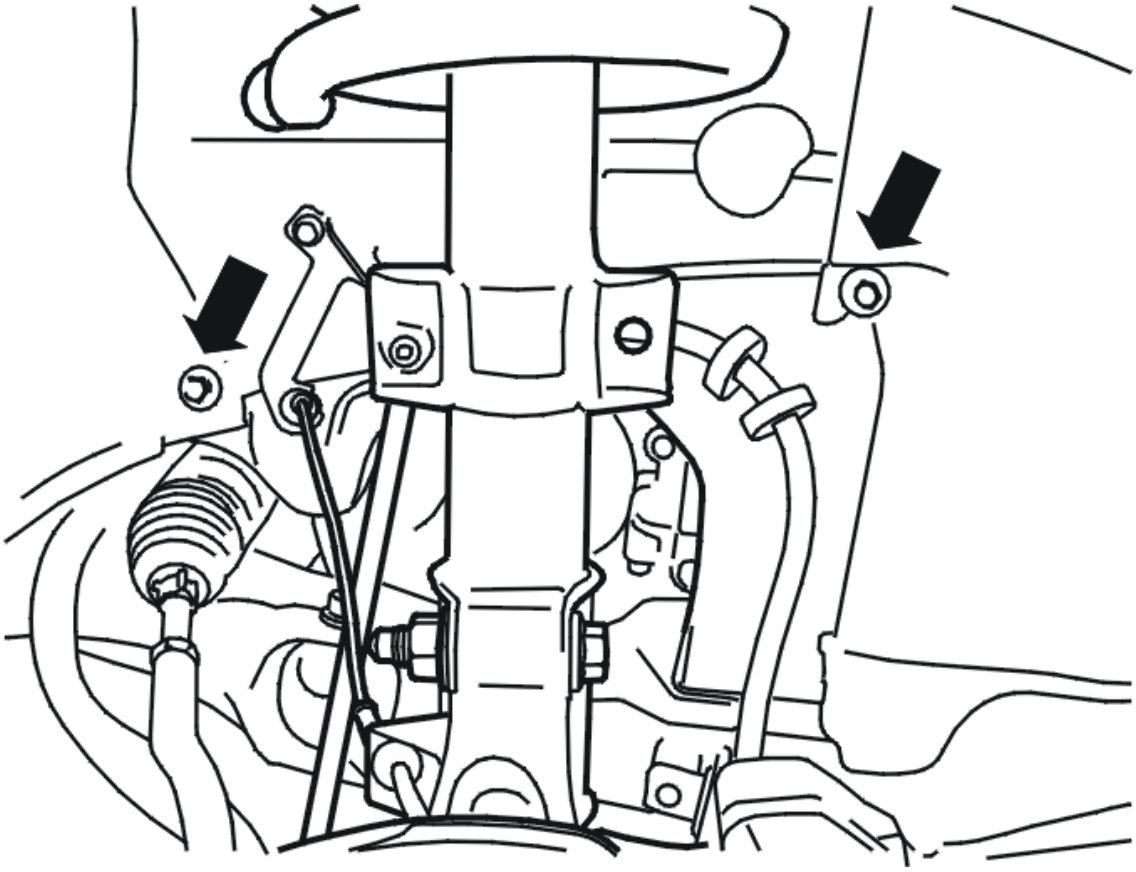

Fig. 384: Identifying Plastic Nuts
Courtesy of VOLVO CARS CORPORATION

Remove:

- the plastic nuts, x2
- the wing liner.

REMOVING THE SCREWS FOR THE RIGHT-HAND ENGINE PAD

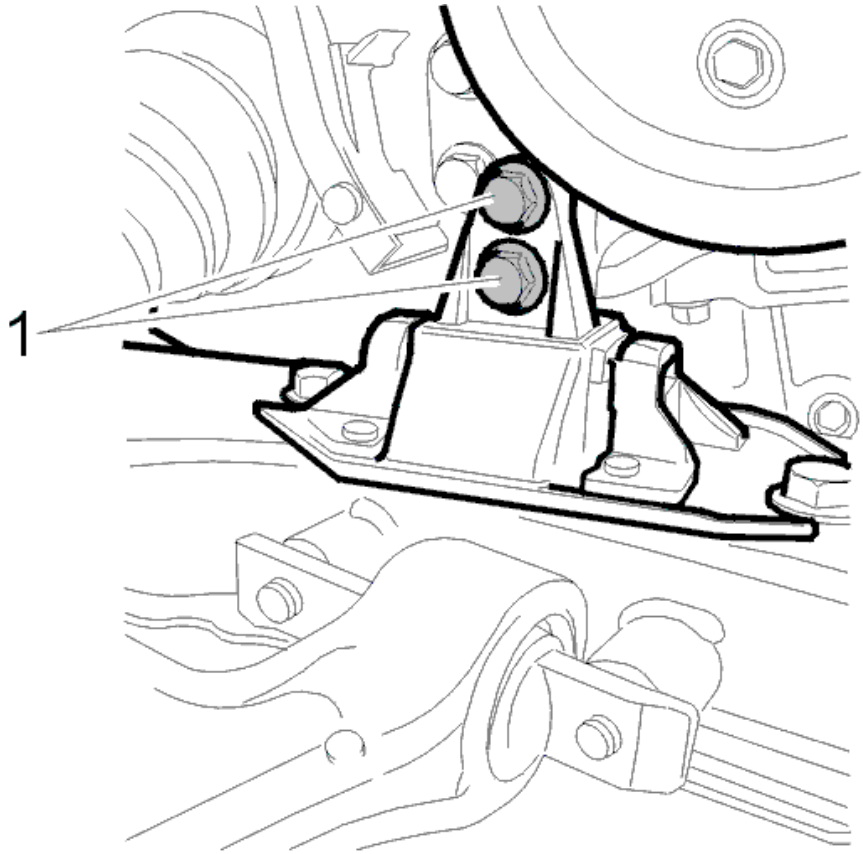

Fig. 385: Identifying Right-Hand Engine Mounting Screws
Courtesy of VOLVO CARS CORPORATION

Remove the bolts (1), x2.

REMOVING THE PROTECTIVE PLATE

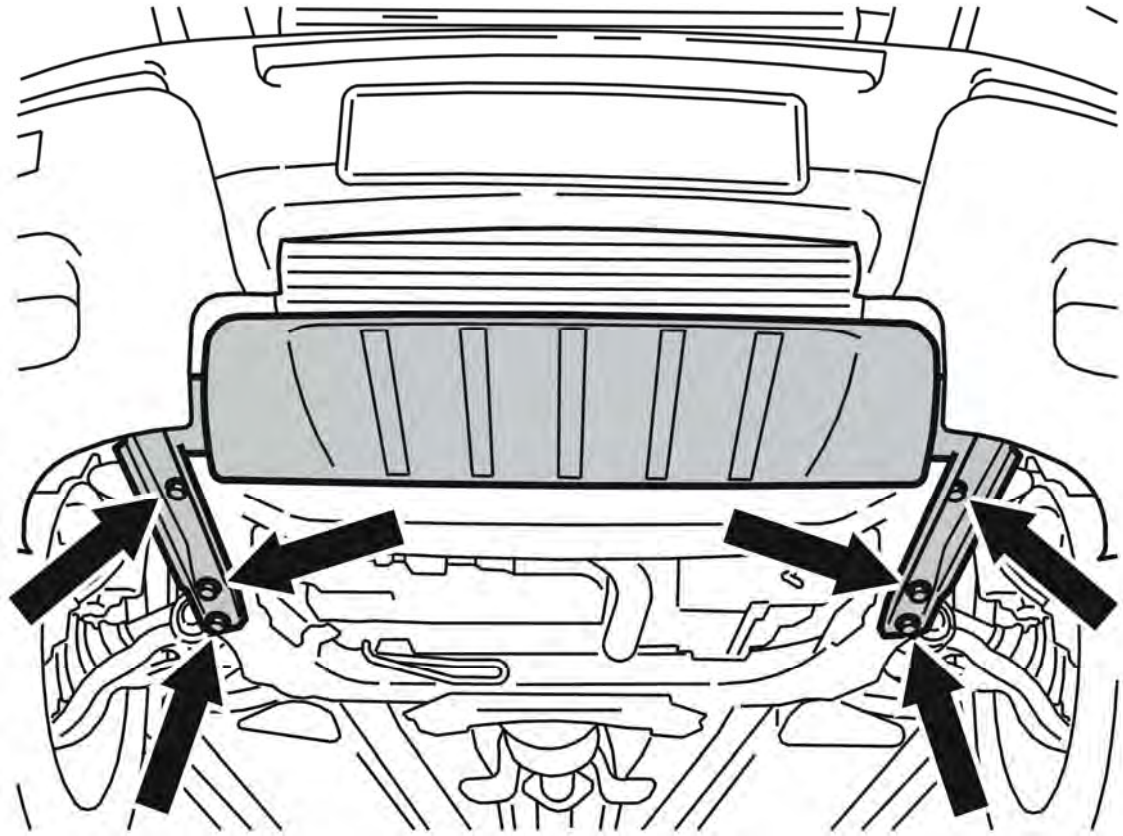

Fig. 386: Splash Guard, Protective Plate And Screws
Courtesy of VOLVO CARS CORPORATION

Remove the 6 screws.

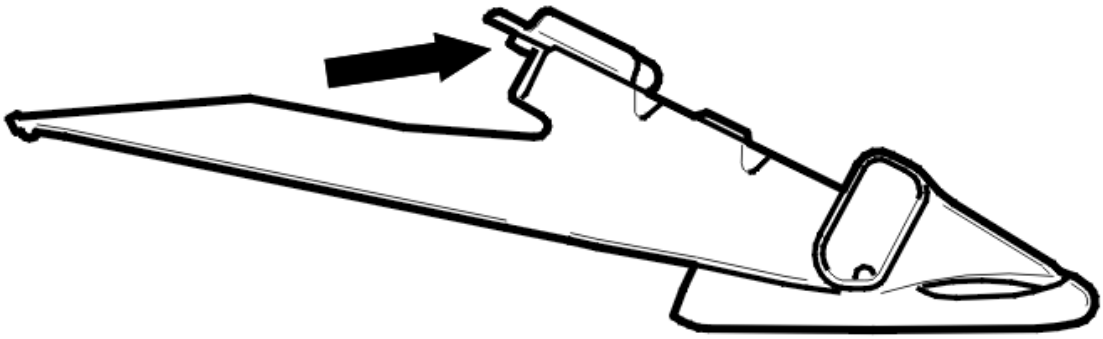

Fig. 387: Identifying Protective Plate
Courtesy of VOLVO CARS CORPORATION

NOTE: There is a guide sleeve on the upper mounting for the plate. This must be lifted slightly so that the panel can be slid forward.

Raise and move the protective plate forward. Remove the protective plate.

REMOVING THE PROTECTIVE COVER UNDER THE ENGINE

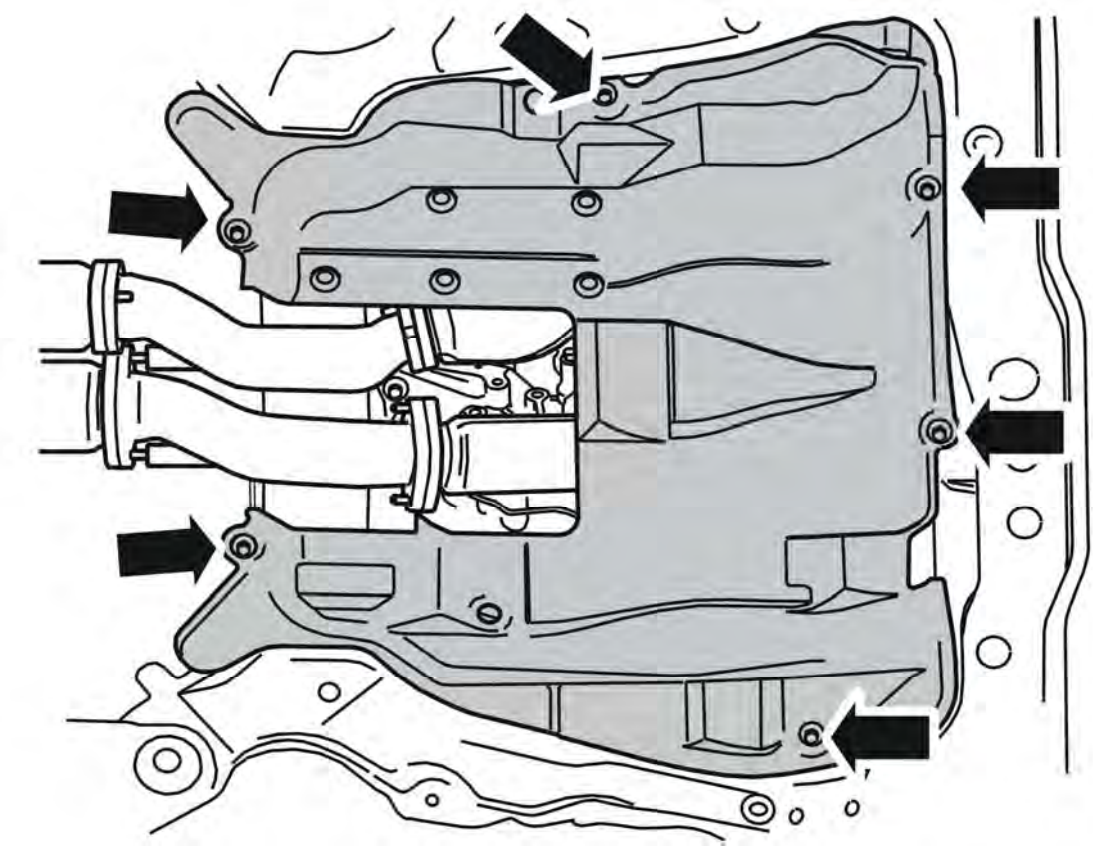

Fig. 388: Identifying the Protective Under Cover
Courtesy of VOLVO CARS CORPORATION

Remove:

- the bolts, x6
- the protective cover under the engine.

REMOVING THE GEARBOX BOLTS TO THE LOWER TORQUE ROD

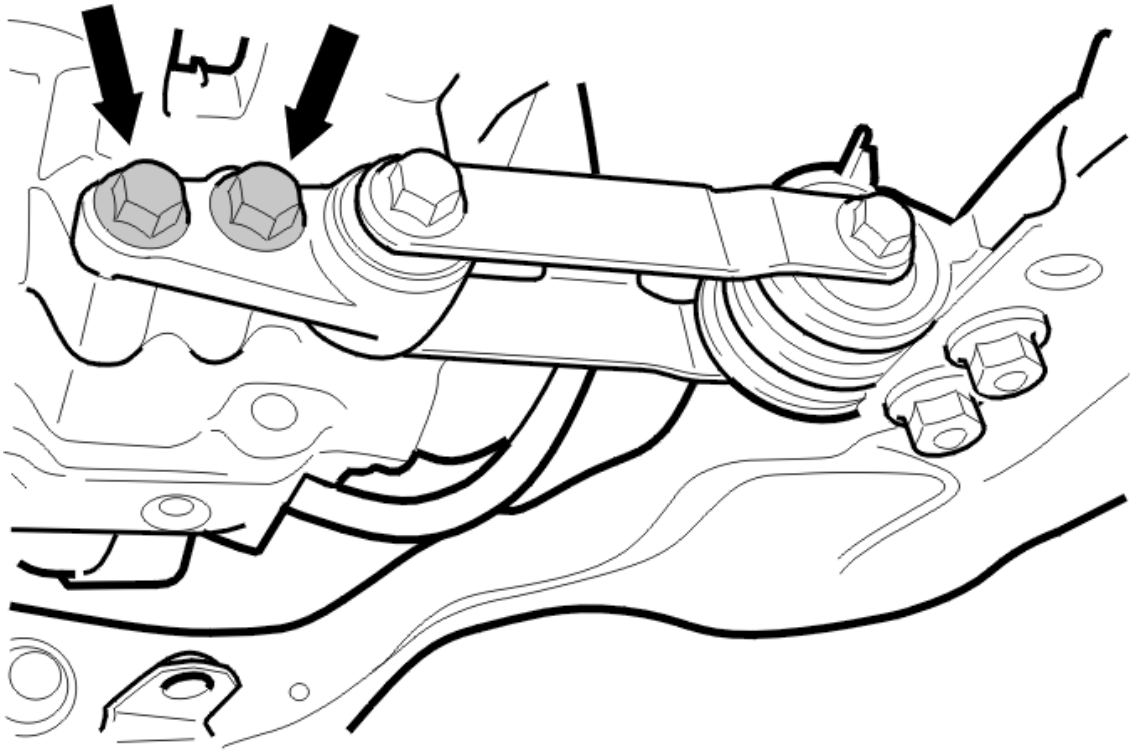

Fig. 389: Identifying Gearbox Bolts
Courtesy of VOLVO CARS CORPORATION

Remove the bolts, x2.

REMOVING THE EXHAUST PIPES BETWEEN FRONT AND REAR CATALYTIC CONVERTERS

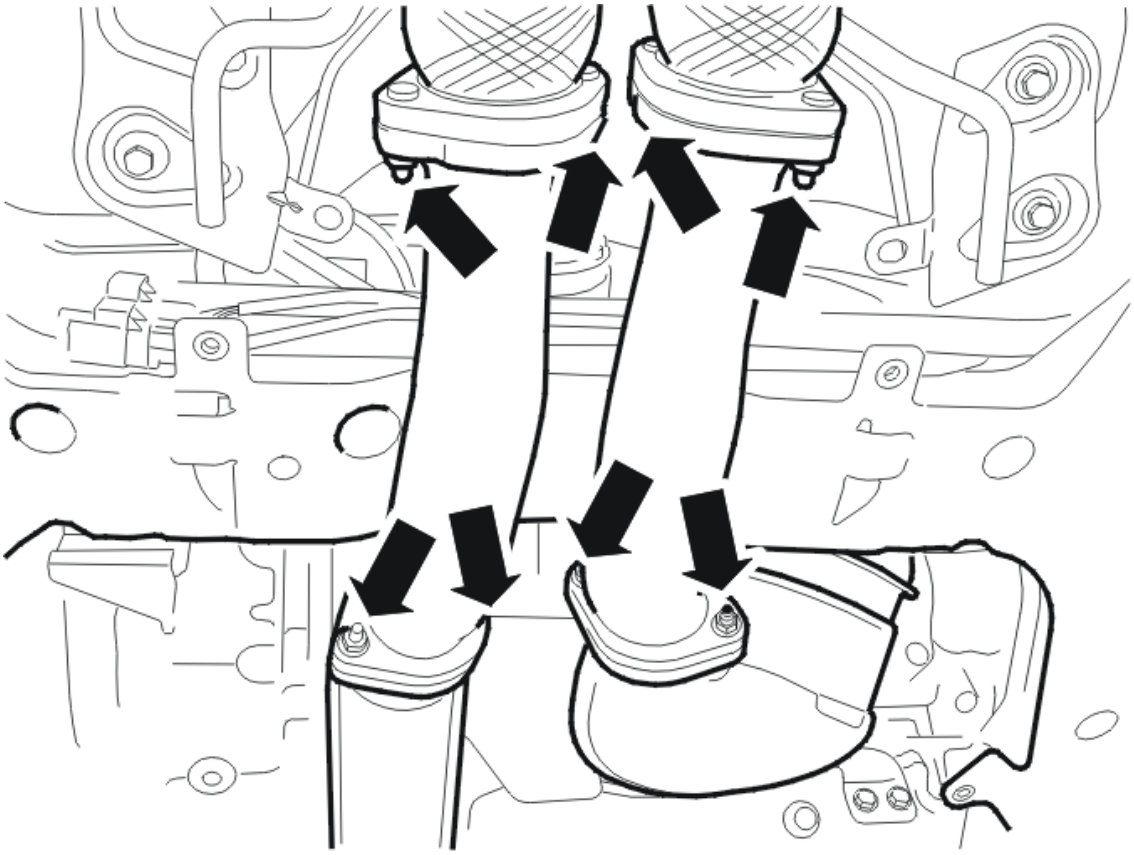

Fig. 390: Removing Exhaust Pipes
Courtesy of VOLVO CARS CORPORATION

Remove:

- both exhaust pipes' nuts
- both exhaust pipes.

REMOVING THE LOWER BOLT TO THE FRONT ENGINE PAD

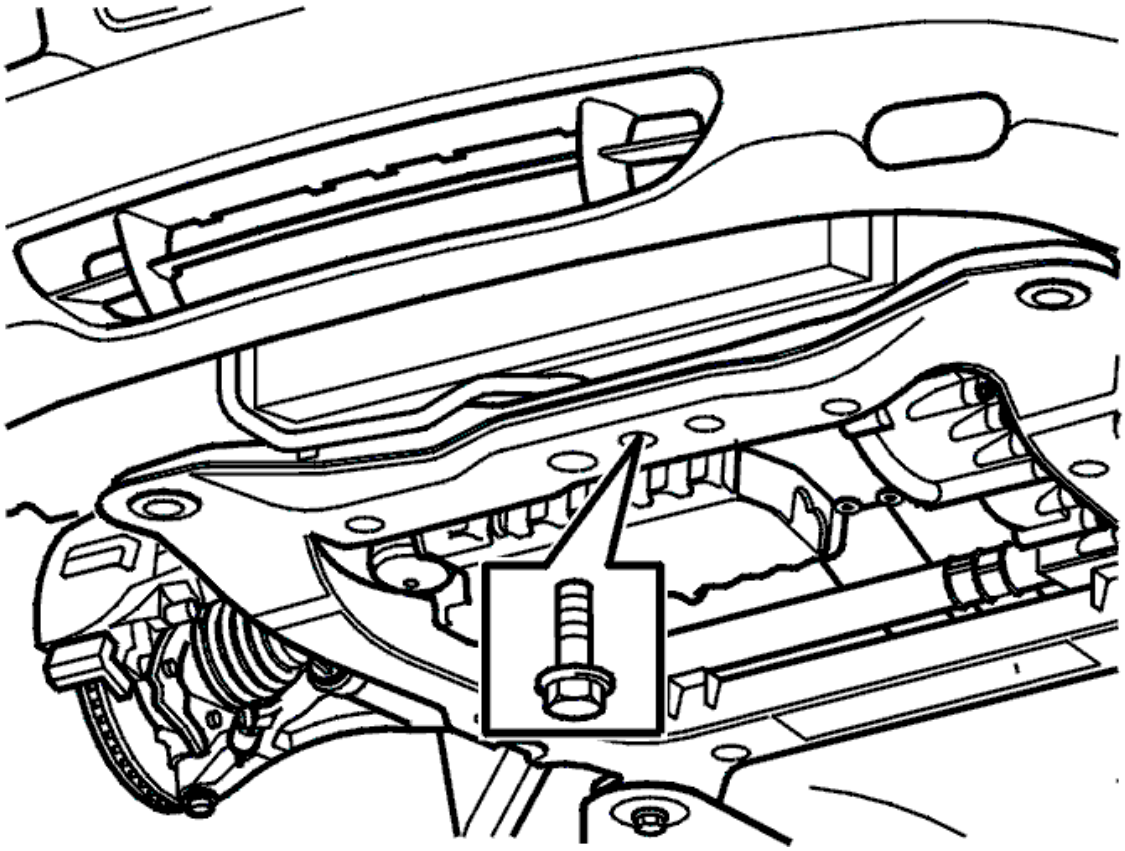

Fig. 391: Front Engine Pad Screw
Courtesy of VOLVO CARS CORPORATION

Remove the lower bolt to the engine pad.

REMOVING THE ANTI-ROLL BAR LINK FROM THE ANTI-ROLL BAR ON BOTH SIDES

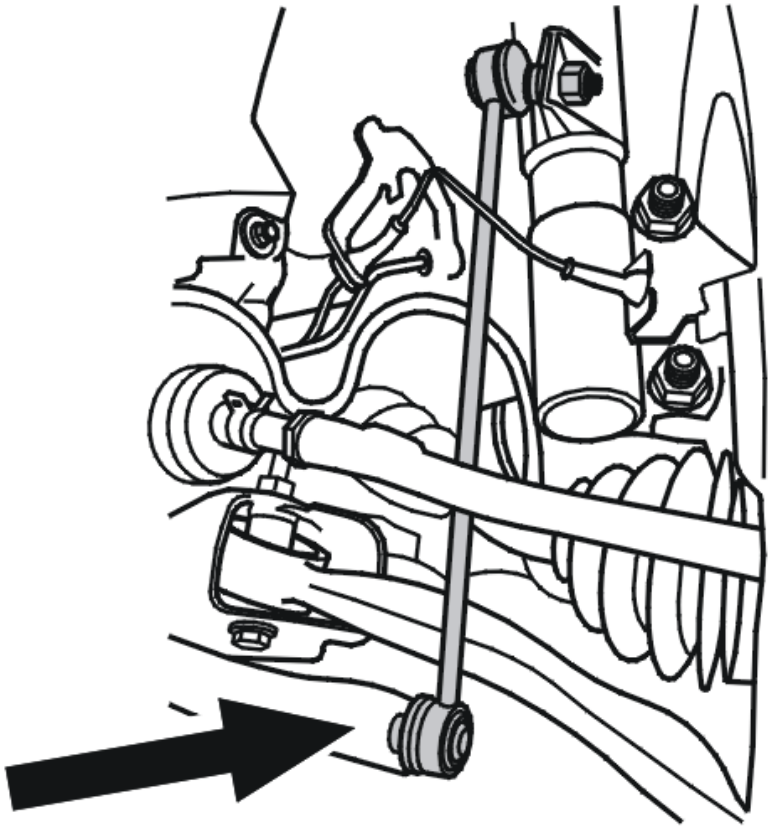

Fig. 392: Identifying Anti-Roll Bar Links
Courtesy of VOLVO CARS CORPORATION

Remove the anti-roll bar links from the anti-roll bar on both sides. Use: see **9995500** and a Torx wrench as counterhold to avoid damaging the rubber gaiter.

REMOVING THE DRIVE SHAFT

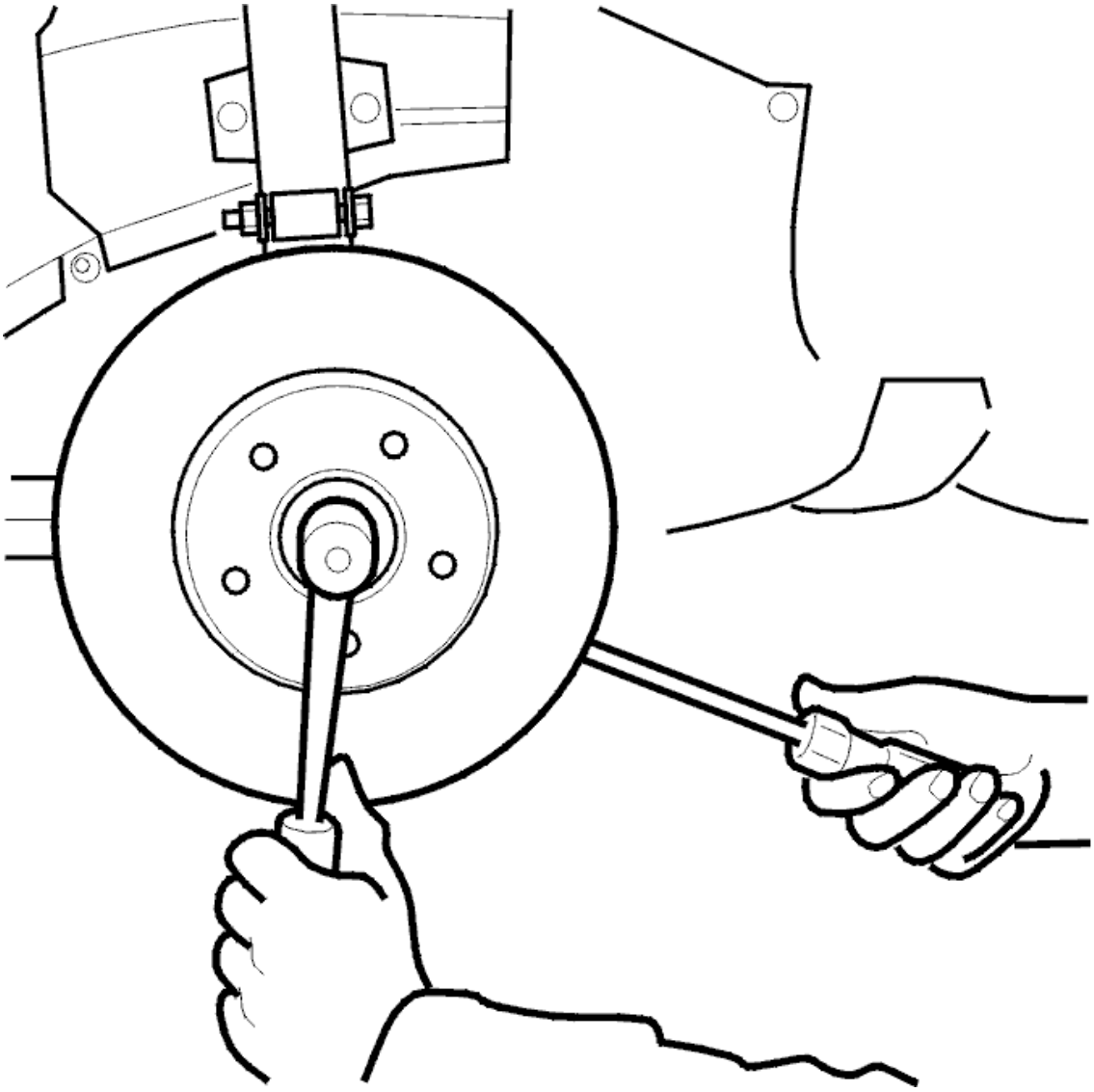

Fig. 393: Identifying Drive Shaft Screw Removal Using Counter Hold On Brake Disc
Courtesy of VOLVO CARS CORPORATION

Remove the bolt for the drive shaft. Use a screwdriver in the brake disc as counterhold. Tap the drive shaft into the hub slightly. Use a brass drift.

REMOVING THE LINK ARM FROM THE WHEEL SPINDLE ON BOTH SIDES

Remove the ball joint according to **BALL JOINT, REPLACING**

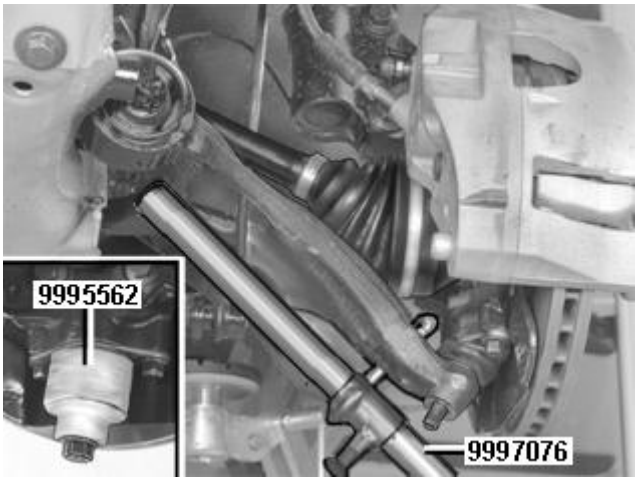

Fig. 394: Identifying Wheel Knuckle, Special Tools 999 7076 And 999 5562
Courtesy of VOLVO CARS CORPORATION

Detach the link arm from the ball joint pin.

Pull down the link arm. Use: see **9997076** and move the wheel spindle to the side, and install the protective sleeve: see **9995562** on the ball joint pin at the same time. Keep it in position using the ball joint nut.

REMOVING THE STEERING GEAR FROM THE SUBFRAME

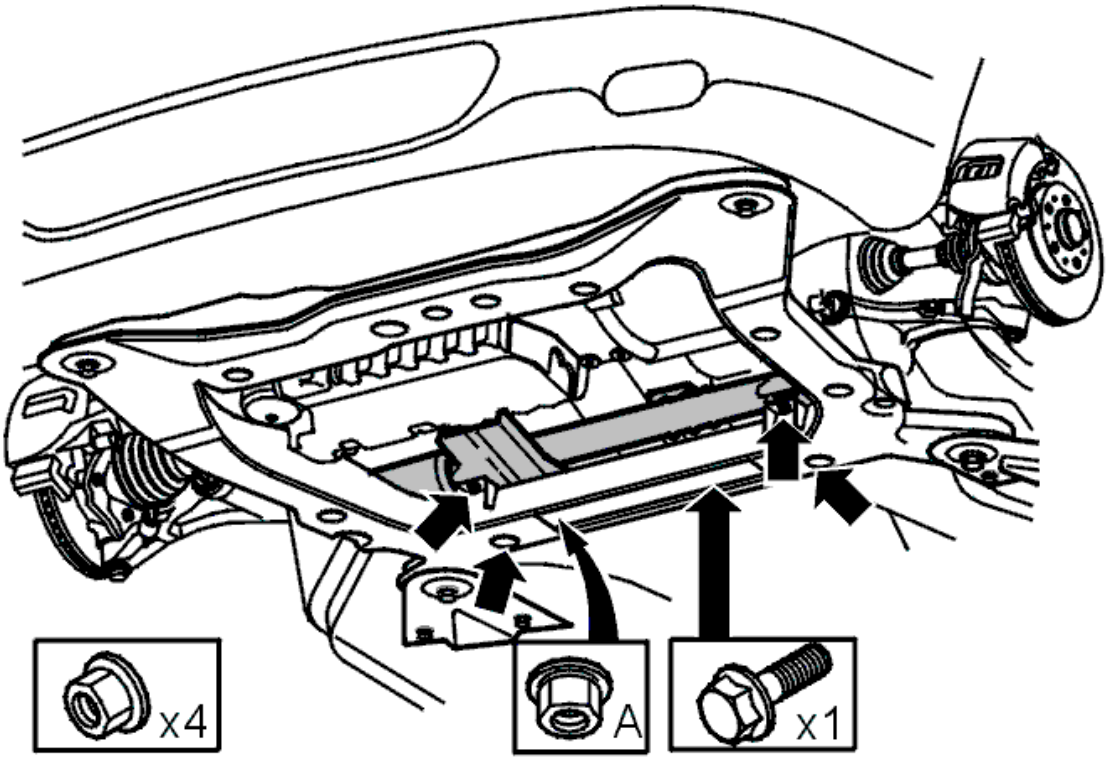

Fig. 395: Identifying Bolt And Nut Holding Steering Gear To Sub-Frame

Courtesy of VOLVO CARS CORPORATION

Remove:

- the nuts, x4
- the bolt, x1.

REMOVING THE SUBFRAME

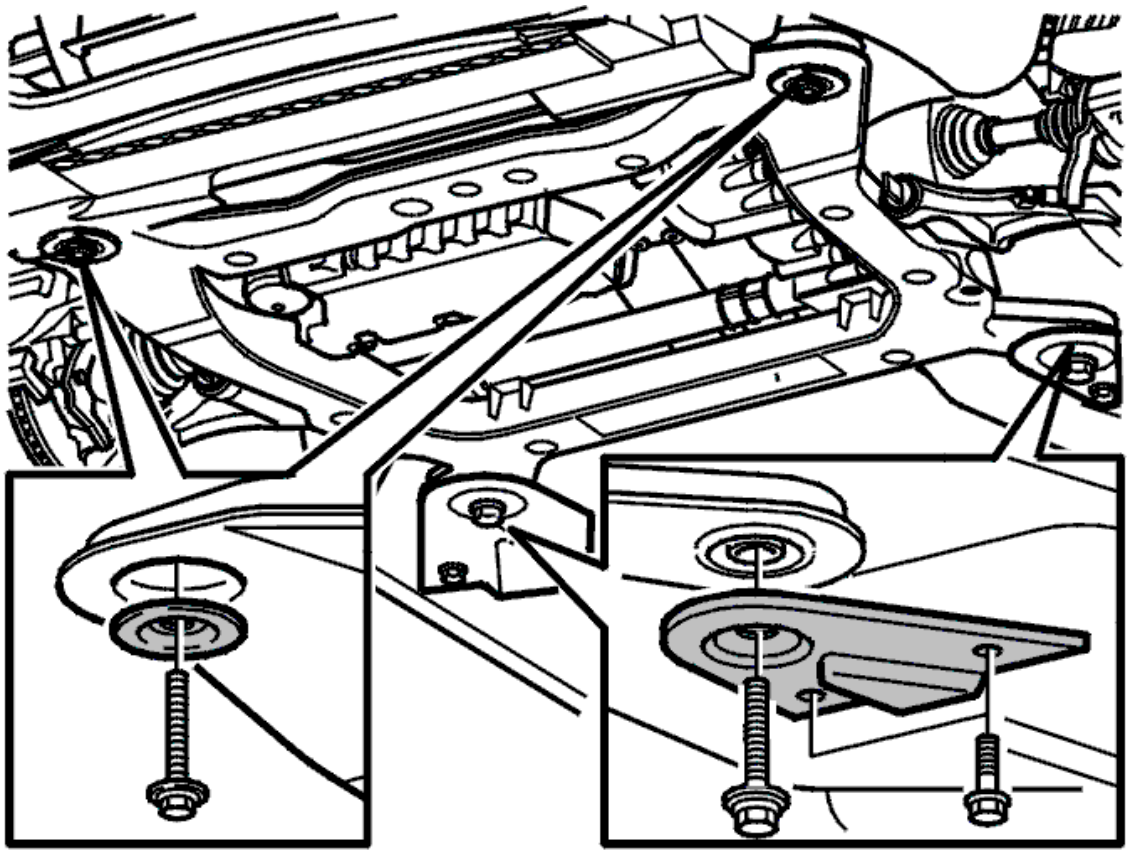

Fig. 396: Identifying Bolts, Washers And Brackets In Sub-Frame
Courtesy of VOLVO CARS CORPORATION

CAUTION: Ensure that no pipes or cables are under load or are trapped when lowering the sub-frame.

Release:

- the 2 x heated oxygen sensor (HO2S) connectors from the rear edge of the subframe
- the heated oxygen sensor (HO2S) connector from the front edge of the subframe.

Remove the bolt to the ground cable bracket on the front edge of the subframe.

Position a lifting table under the subframe.

Remove:

- the bolts to the subframe's brackets at the rear edge
- the bolts to the subframe in the front and rear edge
- the subframe's brackets.

Release the heated oxygen sensor (HO2S) cables from the anti-roll bar.

Remove the lower coolant hose from the bracket on the subframe.

Lower the subframe carefully. Release the oil pipes to the steering gear from the clips on the subframe.

Remove the bolt to the bracket holding the pressure pipe to the steering gear on the subframe.

TRANSFERRING THE COMPONENTS

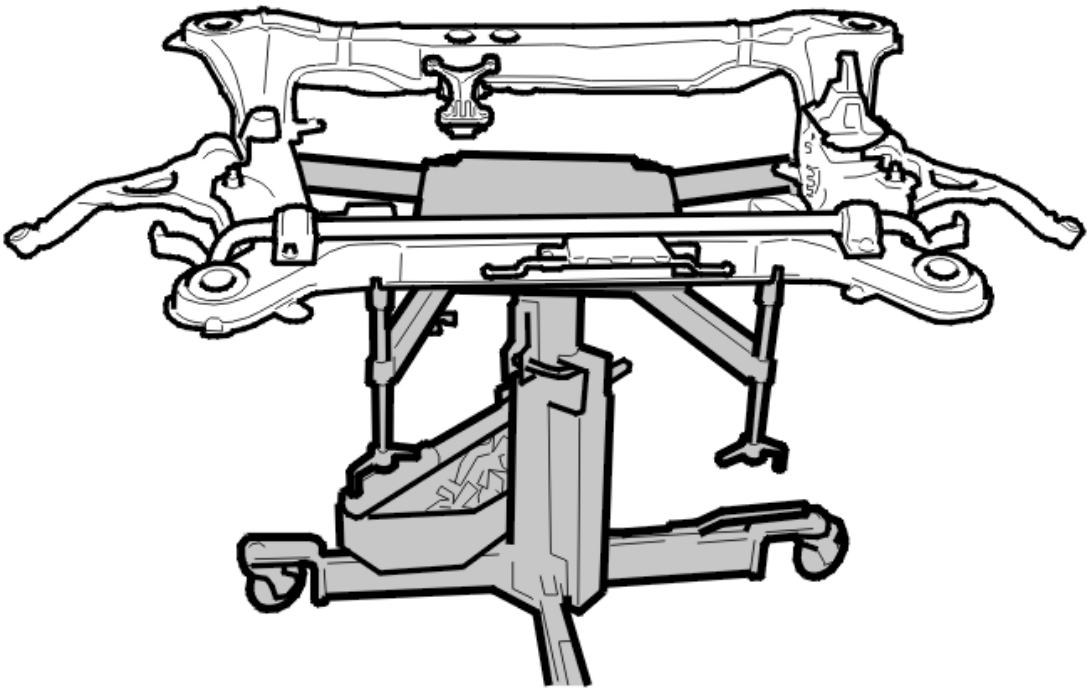

Fig. 397: Identifying Front And Rear Screws To Control Arms
Courtesy of VOLVO CARS CORPORATION

Transfer the link arms on both sides.

Install:

- the 2 x front screws to the control arms. Tighten. See: **SUMMARY OF TIGHTENING TORQUES FOR SPECIFIC COMPONENTS**
- the rear screw to the control arms. Tighten. See **SUMMARY OF TIGHTENING TORQUES FOR SPECIFIC COMPONENTS** .

Transfer the anti-roll bar. Fit the bolts to the anti-roll bar, M10 x4.

Transfer the right-hand engine pad.

Fit the bolts to the engine pad, x2, in accordance with: **SUMMARY OF TIGHTENING TORQUES FOR SPECIFIC COMPONENTS** .

Install a new lower torque rod with the nuts. See **SUMMARY OF TIGHTENING TORQUES FOR SPECIFIC COMPONENTS** .

Install new pipe/hose holder. Transfer the bracket to the lower coolant hose. Install an M6 screw in the bracket.

INSTALLATION

INSTALLING THE SUBFRAME

CAUTION: Ensure that no pipes or cables are loaded or trapped when raising the sub-frame.

see **SUBFRAME, ADJUSTING**

Raise the subframe.

Install:

- the oil pipes to the steering gear in the clips on the subframe
- the bolt, M6, to the bracket holding the pressure pipe to the steering gear on the subframe
- the lower coolant hose in the bracket on the sub-frame.

Install the sub-frame's four screws together with the sub-frame's brackets and engine heater, if installed.

Use new screws. Lube the screws with oil.

Tighten acc. to: **SUMMARY OF TIGHTENING TORQUES FOR SPECIFIC COMPONENTS** . First tighten the screws on the sub-frame's left side, then on the right.

Tighten the screws for the brackets M10.

Install the heated oxygen sensor's cables on the anti-roll bar.

Remove the lifting table.

Install:

- the 2 x heated oxygen sensor (HO2S) connectors on the rear edge of the subframe
- the heated oxygen sensor (HO2S) connector on the front edge of the subframe
- the M6 screw to the ground cable mounting on the front edge of the subframe.

INSTALLING THE STEERING GEAR ON THE SUBFRAME

Install:

- the nuts, M10 x4.
- the M10 screw.

FITTING THE LOWER BOLT TO THE FRONT ENGINE PAD

Install the lower M10 screw for the engine pad.

INSTALLING THE GEARBOX BOLTS TO THE LOWER TORQUE ROD

Fit the bolts, x2. Tighten in accordance with: **SUMMARY OF TIGHTENING TORQUES FOR SPECIFIC COMPONENTS** .

INSTALLING THE EXHAUST PIPES BETWEEN FRONT AND REAR CATALYTIC CONVERTERS

NOTE: **To ensure that there is no exhaust leakage, see: FLANGED JOINT, ASSEMBLING .**

Install:

- both exhaust pipes
- both exhaust pipes' nuts, M8.

INSTALLING THE LINK ARM ON BOTH SIDES

Install:

- the link arm. Use: see **9997076** .
- the nut. Tighten. See **SUMMARY OF TIGHTENING TORQUES FOR SPECIFIC COMPONENTS** . Counterhold using a Torx wrench to prevent damaging the ball joint boot.

INSTALLING THE ANTI-ROLL BAR LINK ON BOTH SIDES

Install:

- the anti-roll bar link
- the nut. Tighten acc. to: **SUMMARY OF TIGHTENING TORQUES FOR SPECIFIC**

COMPONENTS . Use socket see **9995500** and a Torx wrench as a counterhold to prevent damaging the rubber gaiter.

INSTALLING THE DRIVE SHAFT

Fit the bolt on both sides in accordance with: **SUMMARY OF TIGHTENING TORQUES FOR SPECIFIC COMPONENTS** .

Use a screwdriver as counterhold.

INSTALLING THE PROTECTIVE COVER UNDER THE ENGINE

Install:

- the protective cover under the engine
- the bolts, M8 x6.

INSTALLING THE PROTECTIVE PLATE

Move the skid plate up into the bumper cover. Press forward until the mounting brackets enter the sub-frame. Install the screws.

FITTING THE BOLTS TO THE RIGHT-HAND ENGINE PAD

Fit the bolts, x2. Tighten in accordance with: **SUMMARY OF TIGHTENING TORQUES FOR SPECIFIC COMPONENTS** .

INSTALLING THE WING LINER

Install:

- the wing liner
- the plastic nuts, x2.

REMOVING THE LIFTING TOOL

Remove the lifting tool see **9995716** , kit: see **9997070** and lifting hooks: see **9995460** .

FITTING THE BOLTS TO THE TORQUE ROD

Install the 2 x M10 screws, by the suspension turret on both sides.

FINISHING

Fit the front wheels on both sides in accordance with: **INSTALLING WHEELS** .

Remove the oil filler cap.

Install:

- the upper front engine casing
- the oil filler cap. Carry out wheel alignment in accordance with: **WHEEL ALIGNMENT, CHECKING / ADJUSTING** .

NOTE: **If the entire subframe has been removed for exposing other units/components, do not perform wheel alignment after installing the subframe.**

TORQUE BRACKET, ENGINE, REPLACING

REMOVAL AND INSTALLATION

REMOVING THE ENGINE BRACKET

NOTE: **As the illustrations in this service information are used for different model years and / or models, some variation may occur. However, the essential information in the illustrations is always correct.**

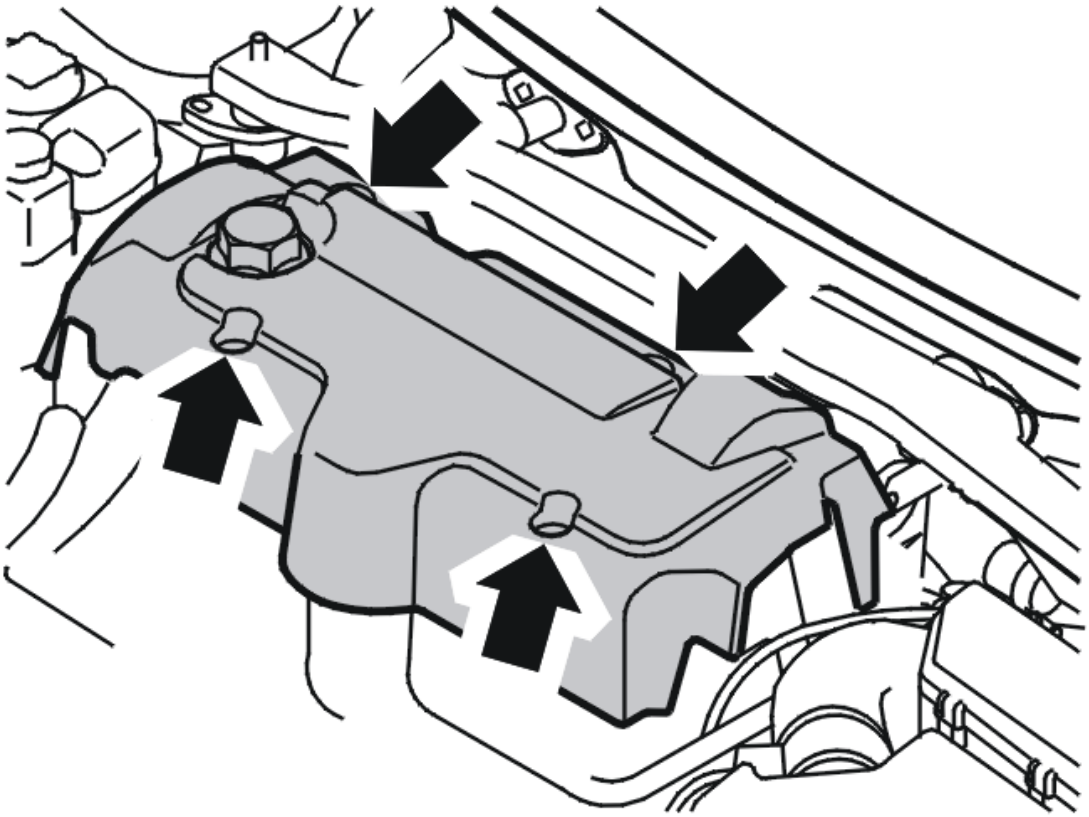

Fig. 398: Removing Engine Cover
Courtesy of VOLVO CARS CORPORATION

Remove:

- the engine cover by pulling it straight up
- the torque rod. See **REPLACING THE TORQUE ROD**
- the bracket for the crankcase ventilation hose
- the lifting lug
- the torque bracket.

INSTALLING THE TORQUE BRACKET

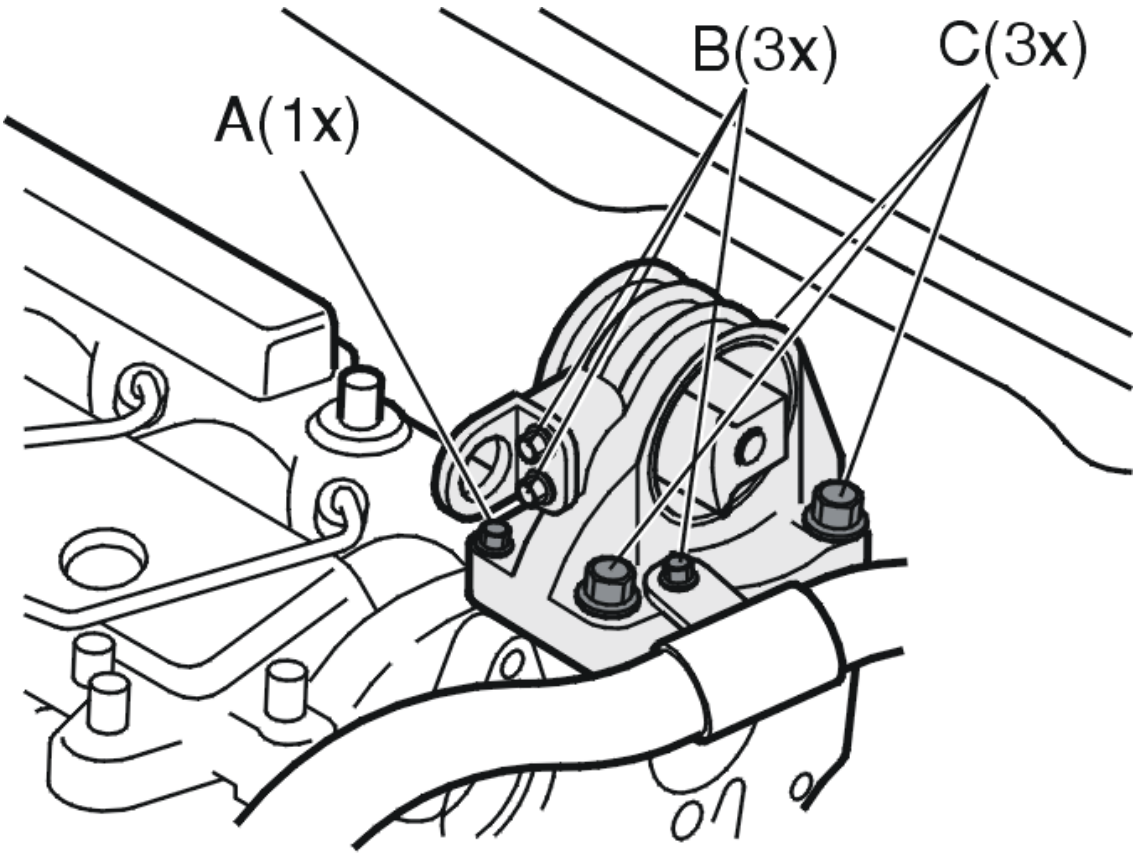

Fig. 399: Installing The Torque Bracket
Courtesy of VOLVO CARS CORPORATION

Remove:

- the torque bracket. Tighten the screw (A). Tighten to17Nm. Tighten the screws (C). Tighten to 50 Nm
- the lifting lug and the bracket for the crankcase ventilation hose. Tighten to 10Nm
- the torque rod. See **INSTALLING THE TORQUE ROD** .

  Tighten the screws on the suspension turret. Tighten to 50 Nm. Tighten the screw in the torque bracket (B). Tighten to 80 Nm

- the engine cover.

REPLACING THE TORQUE ROD

REMOVING THE TORQUE ROD

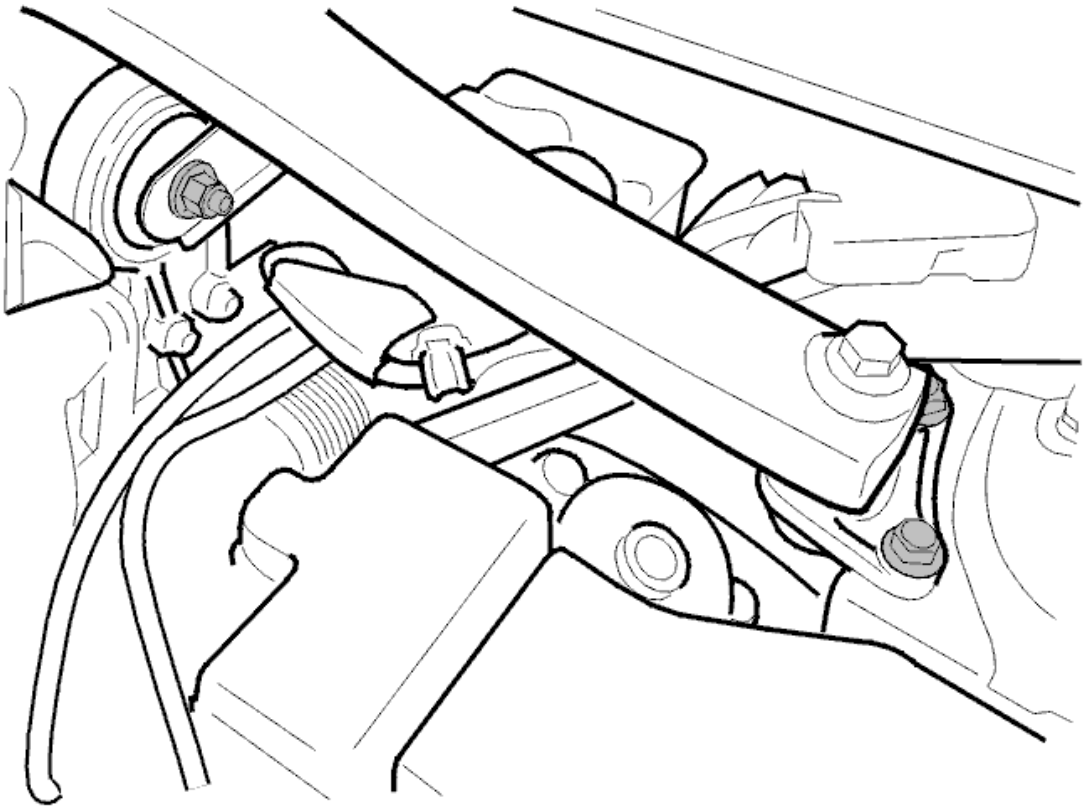

Fig. 400: Engine Compartment Stabilizer (Torque Rod)
Courtesy of VOLVO CARS CORPORATION

Remove

- the protective cover over the engine
- the screw for the torque rod mounting in the torque bracket on the engine
- the screws at the suspension turrets
- the torque rod.

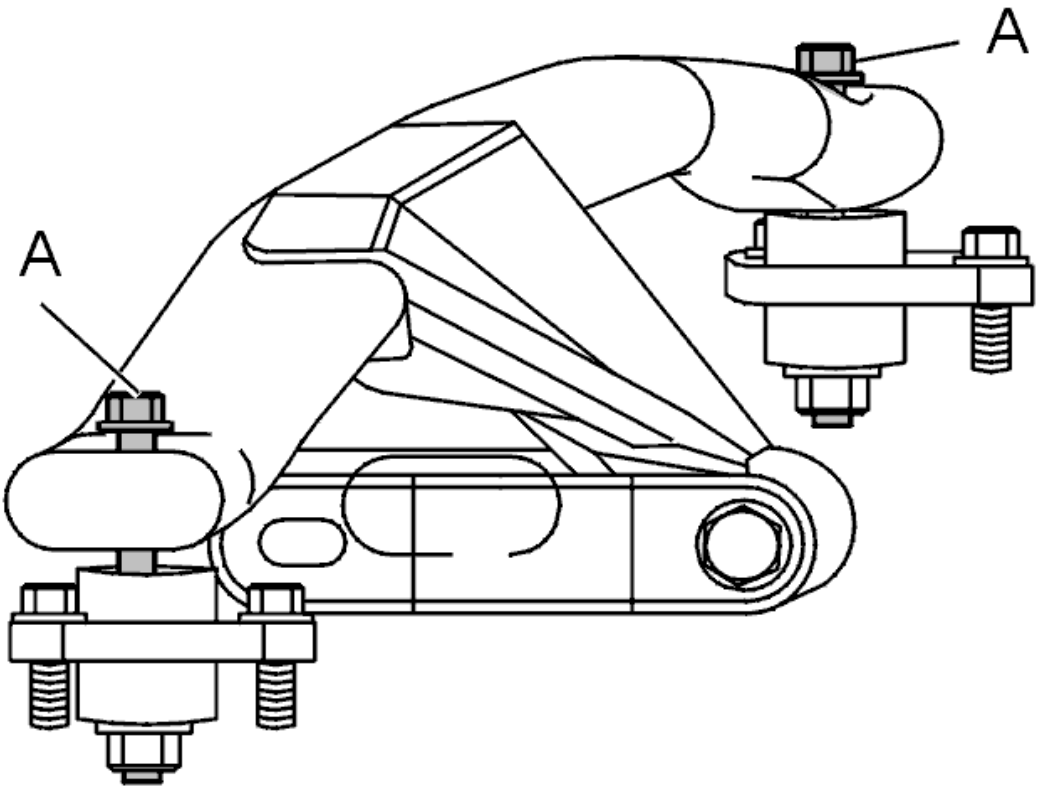

Fig. 401: Identifying Torque Rod And Brackets
Courtesy of VOLVO CARS CORPORATION

Transfer

- the brackets (A) on the left and right-hand sides to the new torque rod. Do not tighten yet.

INSTALLING THE TORQUE ROD

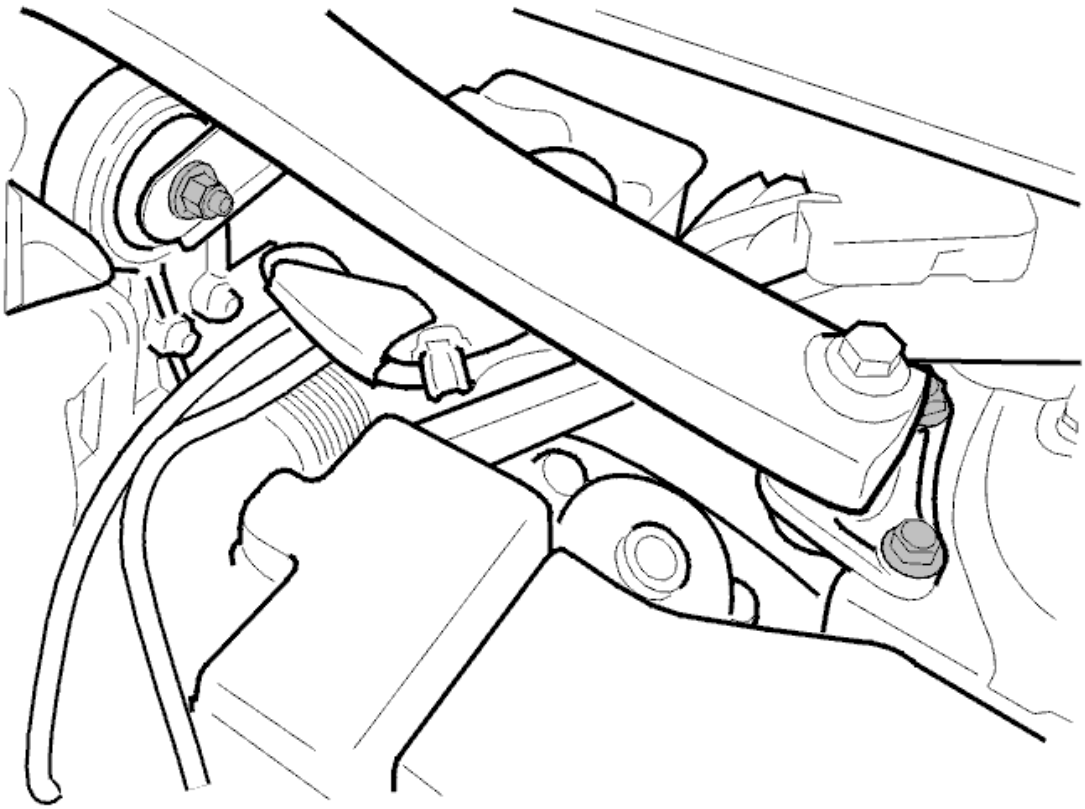

Fig. 402: Engine Compartment Stabilizer (Torque Rod)
Courtesy of VOLVO CARS CORPORATION

Install

- the torque rod
- the screws for the brackets at the suspension turrets. Tighten to **50 Nm**
- the screw and nut for the torque rod mounting in the torque bracket on the engine. Tighten to **80 Nm** .

Tighten the torque rod to the brackets. Tighten to **80 Nm** .

Install the splashguard over the engine.

TORQUE ROD, LOWER, REPLACEMENT

NOTE: The illustrations in this service information are used for different model years and/or models. Some variation may occur. However, the essential information in the illustrations is always correct.

PREPARATORY WORK

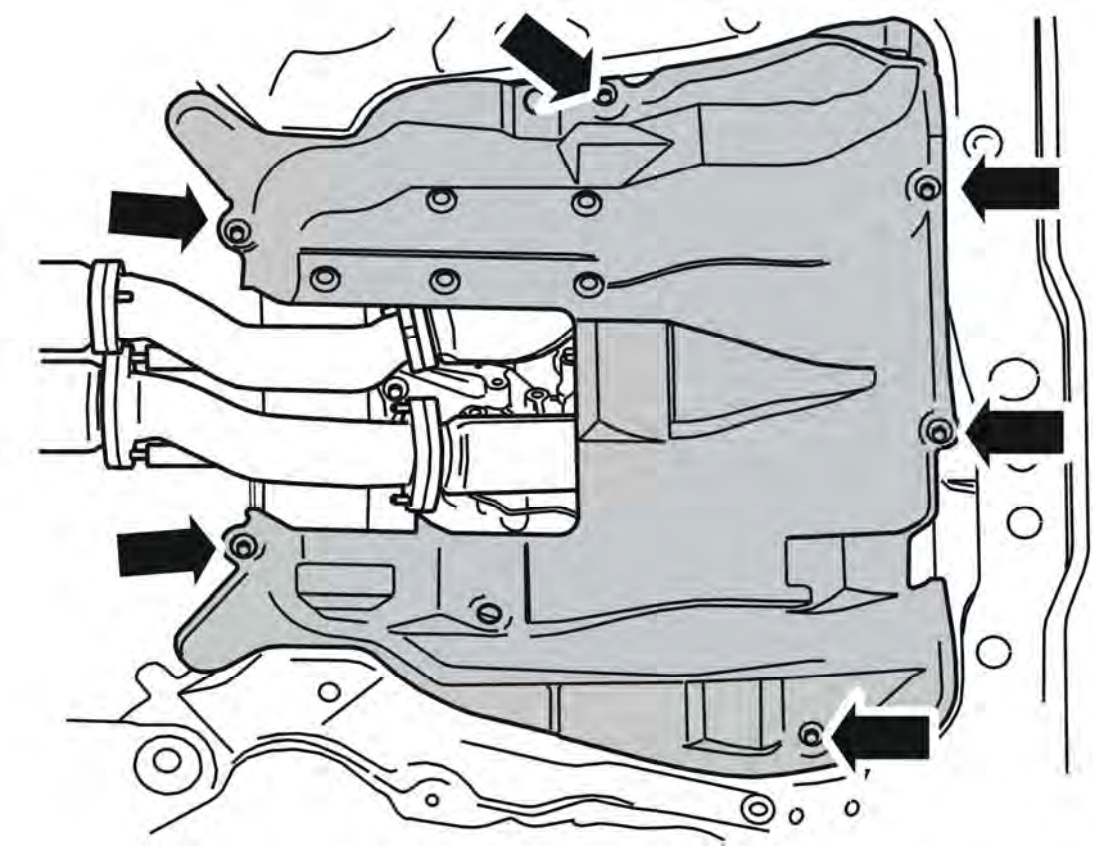

Fig. 403: Identifying the Protective Under Cover
Courtesy of VOLVO CARS CORPORATION

Remove:

- the bolts, x6
- the protective cover under the engine.

REMOVAL

REMOVING THE TORQUE ROD, LOWER

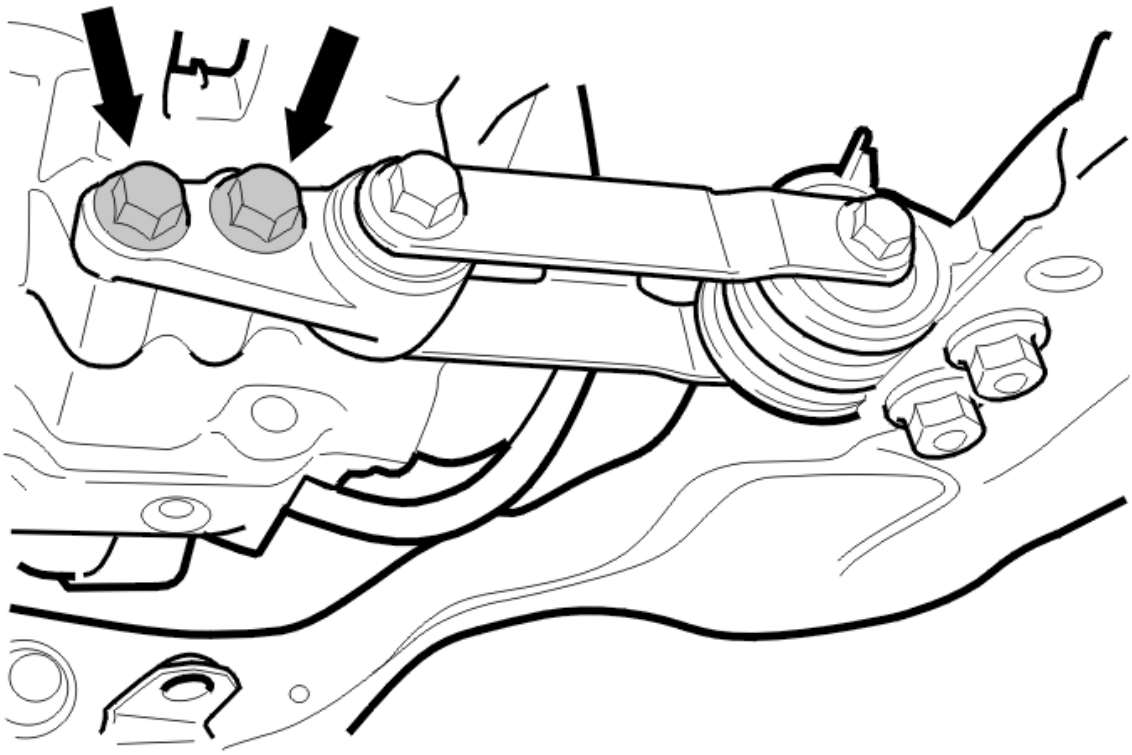

Fig. 404: Identifying Gearbox Bolts
Courtesy of VOLVO CARS CORPORATION

Remove:

- the nuts, x2
- the gearbox bolts, x2
- the torque rod.

INSTALLATION

NOTE: For tightening torques, see: TIGHTENING TORQUE .

INSTALLING THE TORQUE ROD, LOWER

Install:

- the torque rod
- the nuts, x2. Tighten in accordance with: **SUMMARY OF TIGHTENING TORQUES FOR SPECIFIC COMPONENTS**
- the gearbox bolts, x2. Tighten in accordance with: **SUMMARY OF TIGHTENING TORQUES FOR SPECIFIC COMPONENTS** .

FINISHING

Install:

- the protective cover under the engine
- the bolts, x6.

ENGINE SUSPENSION (B8444S; 2009-2011)

ENGINE MOUNT REAR, REPLACING

see **ENGINE MOUNT REAR, REPLACING**

ENGINE MOUNT, FRONT, REPLACING

see **ENGINE MOUNT, FRONT, REPLACING**

ENGINE PAD, RIGHT, REPLACEMENT

see **ENGINE PAD, RIGHT, REPLACEMENT**

TORQUE BRACKET, ENGINE, REPLACING

see **TORQUE BRACKET, ENGINE, REPLACING**

TORQUE ROD, LOWER, REPLACEMENT

see **TORQUE ROD, LOWER, REPLACEMENT**

GEARBOX (B5254T2; 2003-2007)

ENGINE / GEARBOX, REMOVING

Special tools:

see **9995666**

see **9995722**

NOTE: **Since the illustrations in this service information are used for different model years and / or models, some variation may occur. However, the essential information in the illustrations is always correct.**

PREPARATION

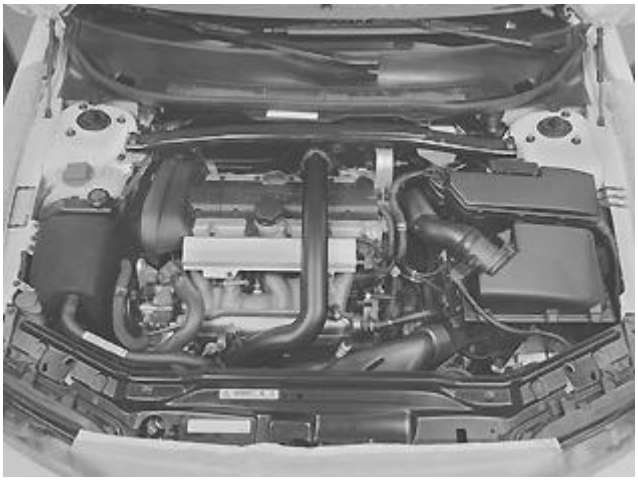

Fig. 405: Engine Compartment Components
Courtesy of VOLVO CARS CORPORATION

Remove:

- the battery negative cable. First read, see **BATTERY, DISCONNECTING**
- the cross stay between the suspension turrets
- the turbocharger control valve from the air cleaner (ACL)
- mass air flow (MAF) sensor connector
- the brake vacuum hose from the air cleaner (ACL)
- the air cleaner (ACL) assembly. Seal the openings in the intake pipe for the turbocharger (TC)
- the plastic charge air pipe above the engine. Seal the opening in the turbocharger (TC)
- the ground strip at the top/rear of the cylinder head.

DRAINING COOLANT

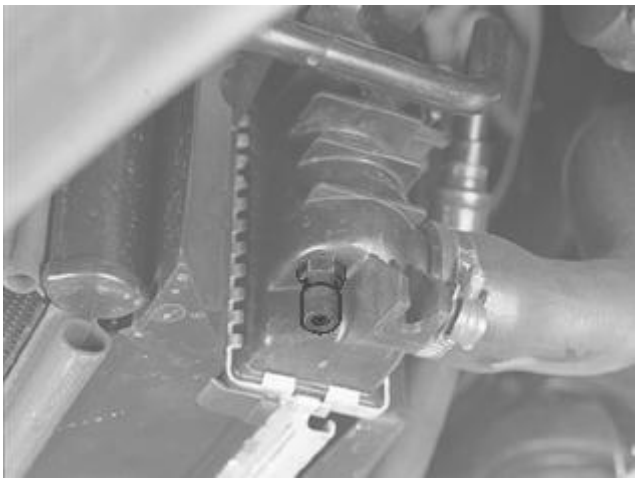

Fig. 406: Identifying Radiator Drain Plug
Courtesy of VOLVO CARS CORPORATION

Position a container under the radiator drain cock.

Drain the coolant.

WARNING: Avoid skin contact with the coolant.

Close the cock.

DEPRESSURIZING THE FUEL SYSTEM

Depressurize the fuel system acc. to:**DEPRESSURIZING THE FUEL SYSTEM**.

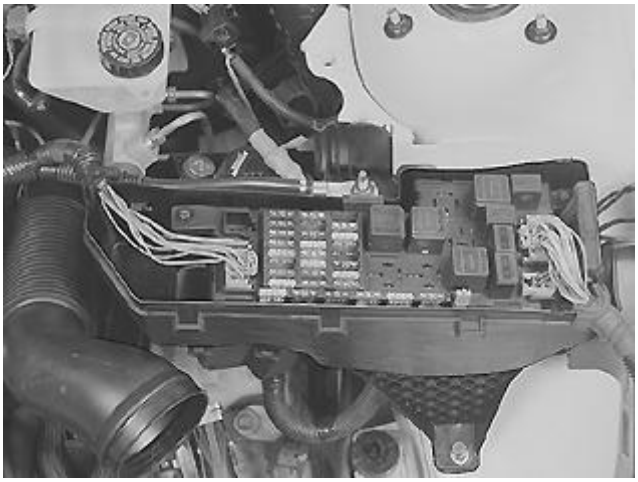

Fig. 407: Central Electrical Unit
Courtesy of VOLVO CARS CORPORATION

Remove:

- the cover over the central electrical unit
- the connector for the engine wiring from the central electrical unit
- the positive lead for the starter motor from the terminal block
- the ground lead at the front frame member.

REMOVAL OF PARTS ON TRANSMISSION

Applies only to cars with automatic transmissions.

Remove:

- the screws for the gearbox cable bracket at the gearbox. Tie up the cable
- separate the gearbox wiring
- the oil cooler hoses for the gearbox. Seal the openings.

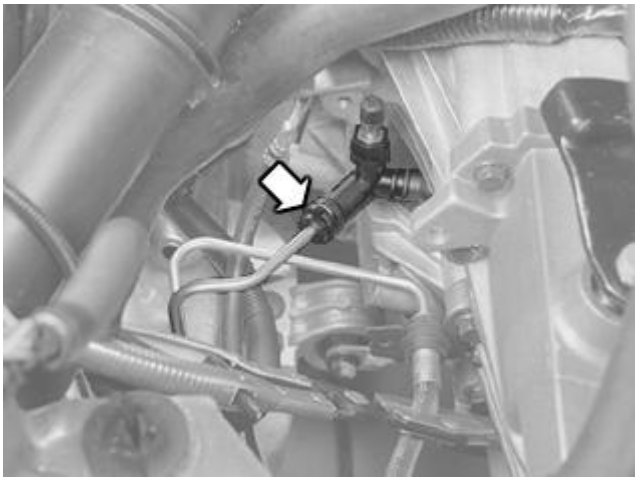

Fig. 408: Brake Fluid Reservoir And Clutch Master Cylinder Hose
Courtesy of VOLVO CARS CORPORATION

Applies only to cars with manual transmissions.

- Block the hose between the brake fluid reservoir and the clutch master cylinder
- Remove the retaining clip from the clutch pipe junction
- Disconnect the pipe from the junction.

NOTE: Seal the openings against impurities. Wipe up any spilled brake fluid.

Fig. 409: Engine Compartment Components - Front
Courtesy of VOLVO CARS CORPORATION

Remove:

- connectors for temperature and pressure sensor in the charge-air cooler
- the rubber hose at the intake for the charge air cooler (CAC)
- the brake vacuum hose at the intake manifold

- the lower engine coolant hose from the engine
- the plastic pipe between the throttle body (TB) and the charge air cooler (CAC)
- the dip stick pipe. Separate the wiring from the front heated oxygen sensor (HO2S). Remove the wiring from the clips and clamps.

REMOVING COMPONENTS

Fig. 410: Expansion Tank
Courtesy of VOLVO CARS CORPORATION

Disconnect the connector for the level sensor in the expansion tank.

Remove:

- the hoses for the heater unit at the terminal in the bulkhead
- the bleed hose for the radiator at the expansion tank
- the ABS line and clips from the power steering hose. Lift up the expansion tank and servo oil reservoir. Place them on top of the engine.

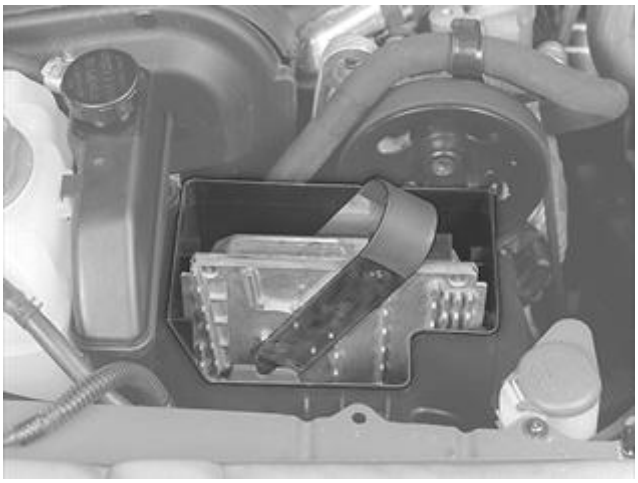

Fig. 411: Engine Control Module

Courtesy of VOLVO CARS CORPORATION

Remove:

- control module unit cover
- the control modules. Use mounting bracket see **9995722**
- the surround for the control module box.

REMOVING THE CONNECTOR WITH CABLE AND CABLE PROTECTOR

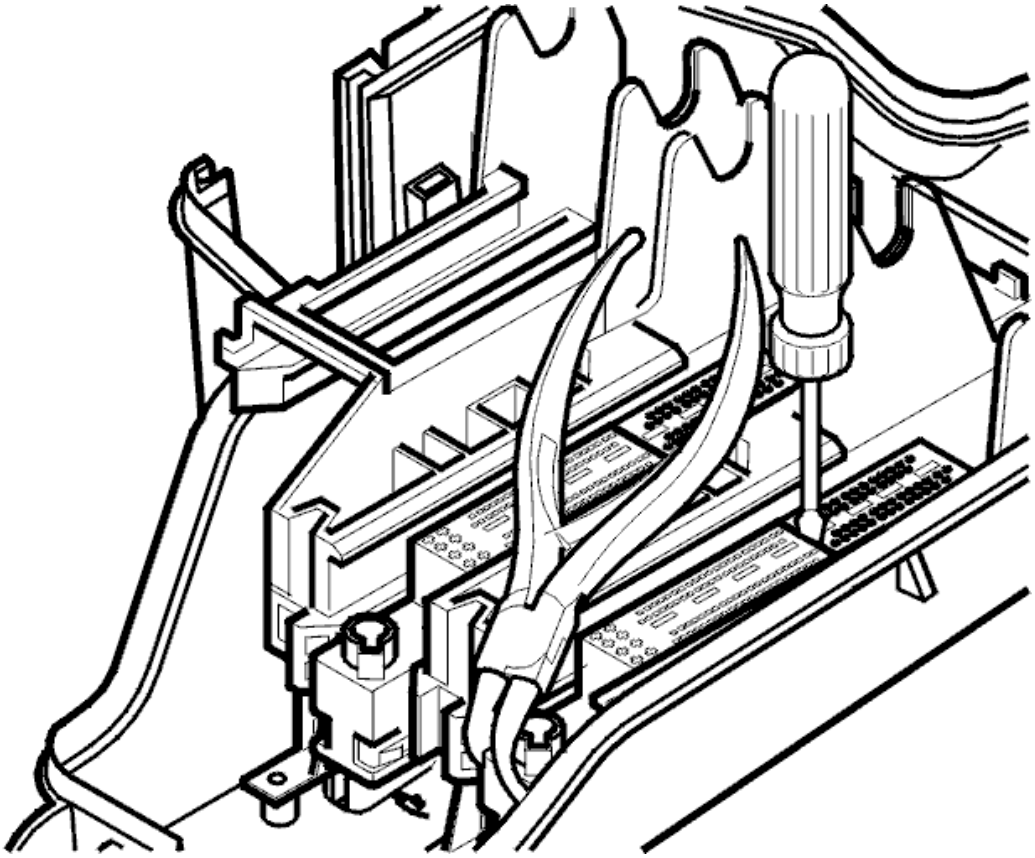

Fig. 412: Disconnecting Connector By Releasing Catches At Front Edge
Courtesy of VOLVO CARS CORPORATION

- Remove the red retaining clip from the connector using a screwdriver
- Disconnect the connector by releasing the catches at the front edge using pliers. Pry out the connector using a screwdriver
- Lift up the connector with the protection underneath and put it to one side
- Remove the ground cable on the right fender liner. Route the cable harness between the front plate and the AC pipe.

DISCONNECTING THE CONNECTOR

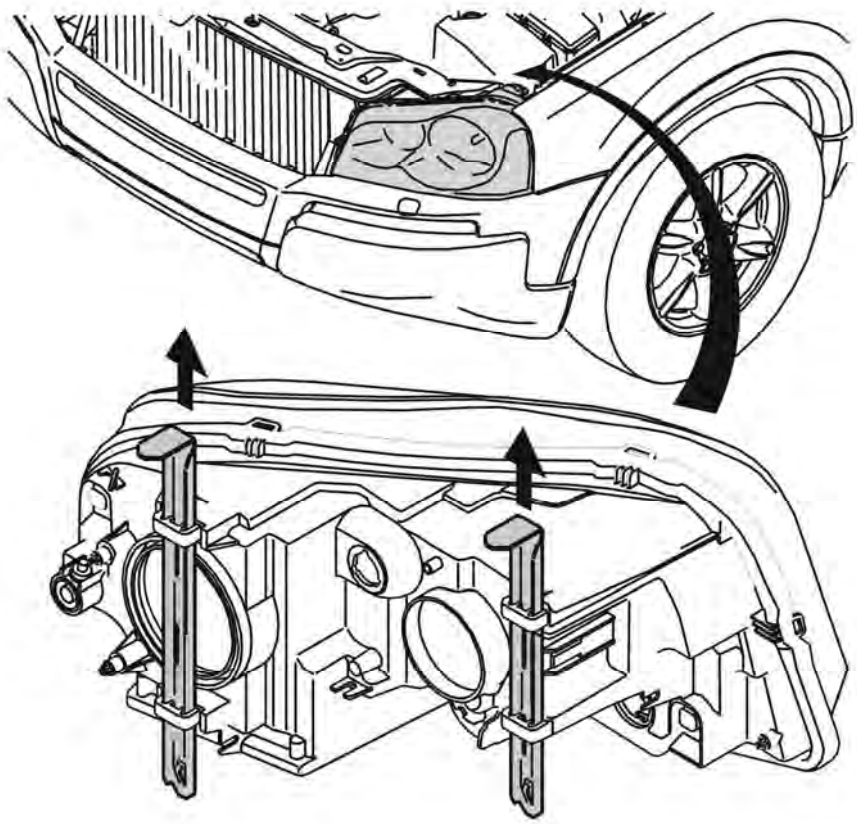

Fig. 413: Pulling Locking Plate Straight Up
Courtesy of VOLVO CARS CORPORATION

Remove:

- the right-hand headlamp by pulling up the two lock facings. Disconnect the wiring and put the wiring to one side
- the connector on the pressostat in the air conditioning (A/C) receiver drier
- the grey connector on the fan shroud. Remove the wiring from the clips and clamps on the fan shroud.

EXPOSING THE AIR CONDITIONING (A/C) COMPRESSOR

Fig. 414: Air Conditioning Compressor
Courtesy of VOLVO CARS CORPORATION

- Remove the upper radiator hose
- Unhook the auxiliaries belt
- Disconnect the one-pin connector for the compressor magnetic clutch
- Remove the four screws holding the air conditioning (A/C) compressor to the engine. Tie up the compressor in the front cover plate.

NOTE: Handle the compressor carefully, make sure that there are no kinks in the AC-pipes.

REMOVING THE LOWER STEERING SHAFT JOINT

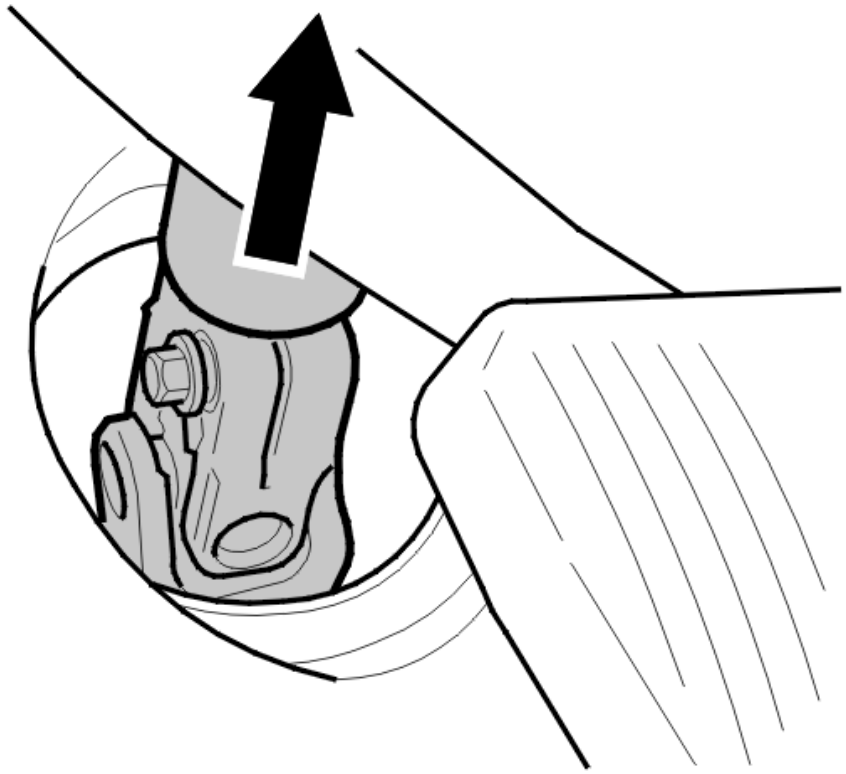

Fig. 415: Identifying Lower Steering Shaft Joint
Courtesy of VOLVO CARS CORPORATION

- Set the front wheels so that they are straight
- Remove the soundproofing panel under the steering wheel. Fold back the floor carpet
- Bend up the outer section of the steering shaft boot
- Remove the retaining clip around the boot. Pull the boot up
- Turn the steering wheel to gain the best possible access to the steering shaft nut
- Remove the ignition key. Activate the steering wheel lock.

CAUTION: Do not move the steering wheel wince the contact reel in the SRS-system may be damaged.

Remove:

- the screw securing the mounting for the steering shaft in the joint
- the joint from the steering shaft by pressing the shaft upwards.

REMOVING COMPONENTS

Raise the car.

Remove:

- the left and right front wheels
- the splash guard under the engine.

REMOVING THE FRONT SPLASH GUARDS

- Remove the 6 screws.
- Lift up and slide the plate forward
- Remove the protective plate.

NOTE: There is a guide sleeve on the upper mounting for the plate, and this must be lifted slightly so that the panel can be slid forward.

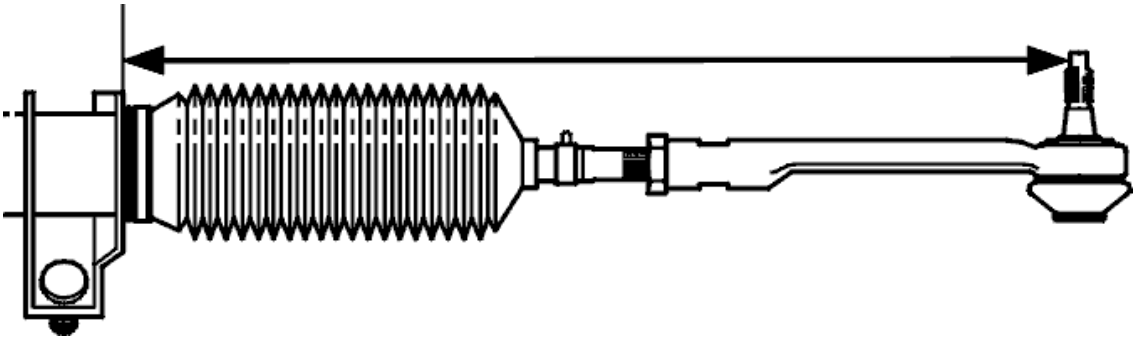

Fig. 416: Identifying Length Of Track Rod
Courtesy of VOLVO CARS CORPORATION

Remove the track rod from the stub axle on the left and right-hand sides.

On one side, measure the length of the track rod in relation to the steering gear housing. Note the measurement.

Fig. 417: Identifying Wheel Hub Assembly And Components
Courtesy of VOLVO CARS CORPORATION

Remove on the left and right-hand sides:

- the link rod from the anti-roll bar
- the sound insulation cover for the drive shaft
- the nut holding the control arm to the ball joint
- the centre screw and the end of the drive shaft.

SEPARATING THE FUEL LINE

Fig. 418: EVAP Line Behind The Rear Right Mounting For The Sub-Frame
Courtesy of VOLVO CARS CORPORATION

NOTE: If an engine block heater is installed, mark the fuel lines.

Separate the quick-release connectors for the fuel pressure line and engine block heater (option).

HINT: Use tool see 9995666 .

Pull apart the EVAP line at the rubber joint behind the rear right mounting for the sub-frame.

REMOVING THE THREE-WAY CATALYTIC CONVERTER (TWC)

Remove the catalytic converter according to **THREE-WAY CATALYTIC CONVERTER (TWC), REPLACING** .

REMOVING THE PROPELLER SHAFT (ALL-WHEEL DRIVE (AWD) ONLY)

Remove the propeller shaft according to **PROPELLER SHAFT, REPLACING** .

LOWERING THE ENGINE AND GEARBOX

Fig. 419: Engine Lifted Using Lifting Table
Courtesy of VOLVO CARS CORPORATION

Use a post hoist with a lifting table and stud guides. Position the lifting table against the sub-frame.

NOTE: **Make sure that the lifting table is centered under the sub-frame for optimal weight distribution. Check that the lifting table is correctly applied against the sub-frame.**

REMOVING THE ENGINE COOLANT HEATER (OPTION)

Remove:

- the bumper cover on the left hand side. Use a weatherstrip tool
- the M8 nut at the top of the left-hand wing liner for the engine coolant heater
- the connector for the engine coolant heater. Press up the engine coolant heater. Lift it out of its upper mounting.

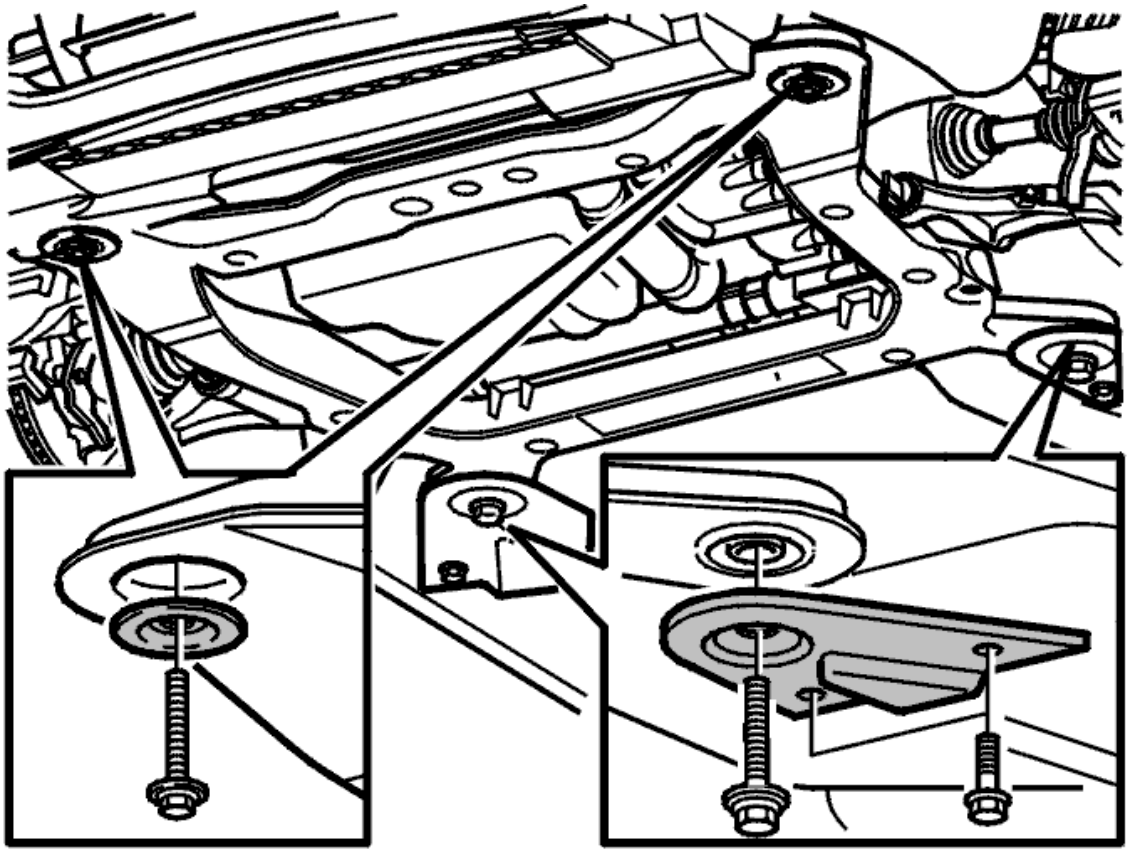

Fig. 420: Identifying Bolts, Washers And Brackets In Sub-Frame
Courtesy of VOLVO CARS CORPORATION

Remove:

- the screws for the sub-frame brackets
- screws in the sub-frame. Lower the engine/transmission unit approx. **15 cm** so that the drive shafts create a horizontal line between hub and the transmission.

CAUTION: Make sure that no hoses, wiring or anything else catches in the engine and transmission unit when it is lowered.

- Unhook the control arms from the ball joint pinion
- Hold the constant velocity joint. Pull the drive shaft off the hub
- Let the drive shafts rest against the control arms
- Turn the engine block heater out of its position
- Check that the air conditioning (A/C) compressor is hanging free. Continue lowering the engine and gearbox unit.

ENGINE/TRANSMISSION, INSTALLING

Special tools:

see **9512050**

see **9995972**

NOTE: **As the illustrations in this service information are used for different model years and / or models, some variation may occur. However, the essential information is always correct.**

NOTE: **For tightening torques, see: TIGHTENING TORQUE .**

NOTE: **To ensure that there is no exhaust leakage, see: FLANGED JOINT, ASSEMBLING .**

INSTALLING THE ENGINE AND TRANSMISSION UNIT

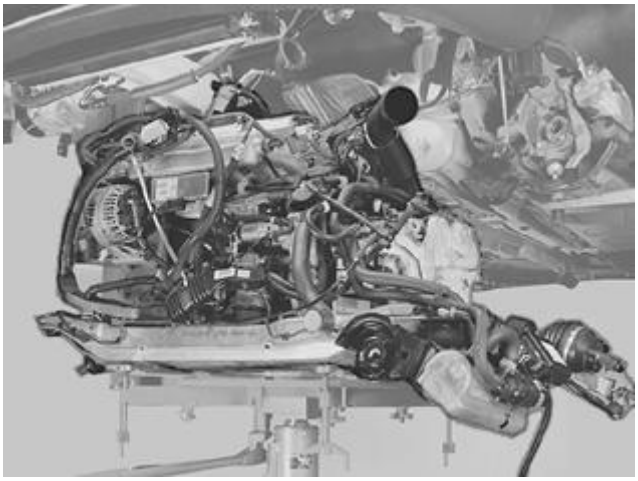

Fig. 421: Identifying Lifting Table, Engine And Transmission
Courtesy of VOLVO CARS CORPORATION

Raise the engine and the transmission unit. Use a lifting table with locating pins.

Stop when the sub-frame is approximately 15 cm below the frame members.

Fig. 422: Drive Shaft And Hub
Courtesy of VOLVO CARS CORPORATION

Install (left and right-hand sides):

- the drive shaft to the hub. Install the center screws. **Do not tighten yet.**
- the ball joint to the control arm. Install the nuts. **Do not tighten yet.**

NOTE: Ensure that the mating surfaces on the ball joints and control arms are clean.

Twist the engine block heater (option) into position. Check that the air conditioning (A/C) compressor is correctly positioned.

Check that the tie rod is in the correct position. Check that the transmission cable is routed between the steering shaft and the firewall.

Align the steering shaft joint with the hole in the firewall.

Lift the engine and transmission unit up to the frame members.

NOTE: Ensure that no hoses, wiring or anything else catches.

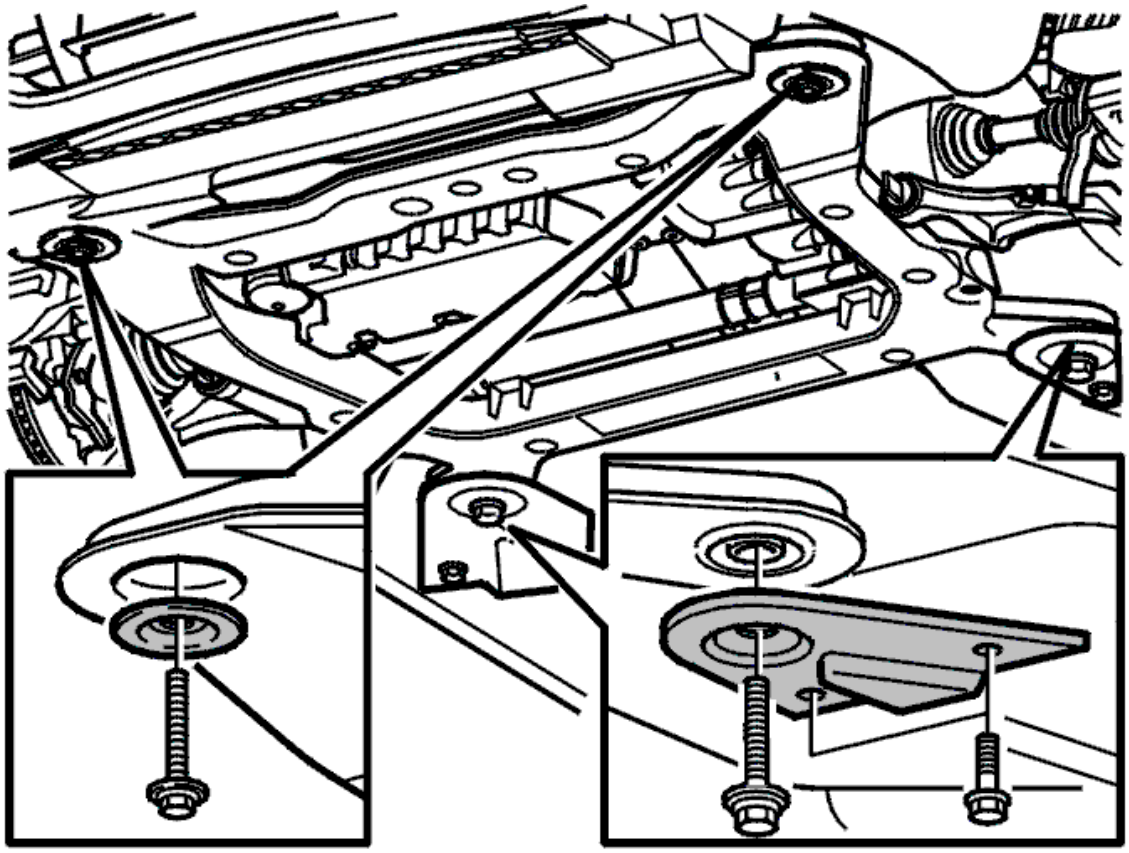

Fig. 423: Identifying Bolts, Washers And Brackets In Sub-Frame
Courtesy of VOLVO CARS CORPORATION

Install:

- new screw in the sub-frame. Lubricate the screws
- the washers at the front edge and the support plates at the rear edge of the sub-frame
- engine coolant heater left front (option).

Tighten the screws for the sub-frame. See **SUMMARY OF SPECIFIC COMPONENTS AND TIGHTENING TORQUES** . Use bevel protractor see **9512050** . Start on the left hand side of the sub-frame. Continue with the right hand side.

Tighten the screws for the brackets at the rear of the sub-frame. Tighten to **50 Nm** .

Remove the lifting table.

CONNECTING FUEL LINES

Fig. 424: EVAP Line Behind The Rear Right Mounting For The Sub-Frame
Courtesy of VOLVO CARS CORPORATION

Connect the quick-release connectors and fuel line to the engine and engine block heater (option). Press the EVAP line together at the rubber joint.

INSTALLING THE ENGINE COOLANT HEATER

Install and tighten the M8 nut in the upper mounting for the engine coolant heater. Connect the connector. Install the front bumper cover.

INSTALLING THE PROPELLER SHAFT

Install the propeller shaft. See **PROPELLER SHAFT, REPLACING** .

INSTALLING THE THREE-WAY CATALYTIC CONVERTER (TWC)

Install the three-way catalytic converter (TWC). See **THREE-WAY CATALYTIC CONVERTER (TWC), REPLACING** .

ASSEMBLING THE SPRING STRUT

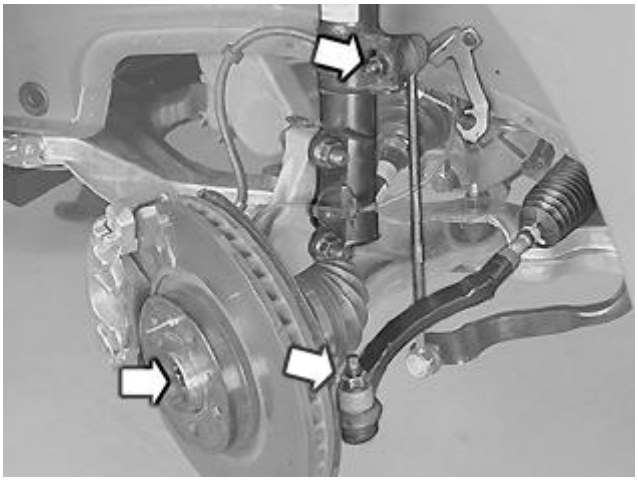

Fig. 425: Control Arms And The Tie Rod
Courtesy of VOLVO CARS CORPORATION

Install:

- the tie rods. Use new nuts. Tighten to **70 Nm**
- the link rod to the anti-roll bar. Use new nuts. Tighten to **50 Nm** . Counterhold using Torx 27
- the bracket for the brake pipe to the body. Tighten
- the nut for the ball joint and control arm. Tighten to **80 Nm** . Counterhold using Torx40
- the center screw in the drive shaft. Tighten to **50 Nm** .

Install:

- the front skid plate
- the lower engine splash guard
- the front wheels. See **INSTALLING WHEELS** .

INSTALLING STEERING SHAFT JOINT

Install the steering shaft joint on the steering gear and steering shaft.

Install:

- the new screw. Tighten to **25 Nm**
- the steering shaft boot and snap ring. Fold back the carpet
- soundproofing panel.

INSTALLING THE AIR CONDITIONING (A/C) COMPRESSOR

Fig. 426: Air Conditioning Compressor
Courtesy of VOLVO CARS CORPORATION

Install the 4 screws whilst the compressor is loose.

Raise the compressor and screw it into place.

NOTE: Handle the compressor carefully. Ensure that there are no kinks in the air conditioning (A/C) pipes.

Connect the one-pin connector to the compressor magnetic clutch.

INSTALLING THE CONNECTOR

Install:

- the connector on the pressostat in the air conditioning (A/C) receiver drier
- the gray connector for the fan shroud
- the wiring in the clips and clamps on the fan shroud
- the connectors for the pressure and temperature sensors on the charge air cooler (CAC)
- the right-hand headlamp using two lock facings.

INSTALLING COMPONENTS

Fig. 427: Expansion Tank
Courtesy of VOLVO CARS CORPORATION

Connect the engine wiring to the control module box.

Install:

- the ground lead to the ground terminal at the right fender edge in the engine compartment
- the auxiliaries belt
- the intermediate piece for the control module box
- the control modules. See **ENGINE CONTROL MODULE (ECM), REPLACING**
- the cover for the control module box
- expansion tank. Connect the radiator breather tube to the expansion tank. Tighten the clamp. Connect the connector for the level sensor in the expansion tank
- servo oil reservoir. Check that the hoses are correctly positioned.

Clamp the ABS cable to the power steering hose.

INSTALLING COMPONENTS ON THE TRANSMISSION

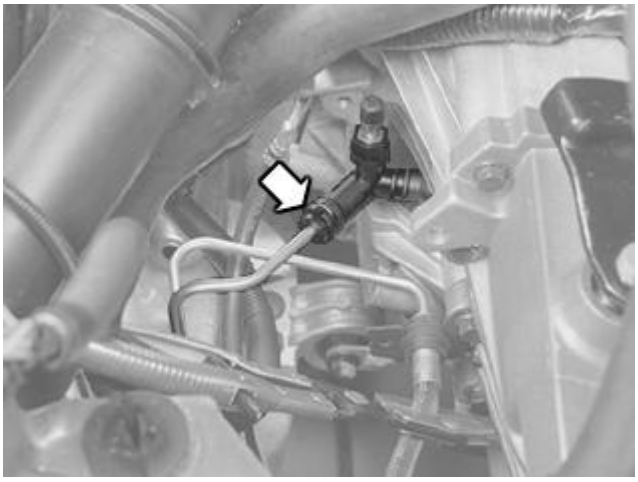

Fig. 428: Brake Fluid Reservoir And Clutch Master Cylinder Hose
Courtesy of VOLVO CARS CORPORATION

Applies to cars with manual transmissions.

Install:

- the pipe junction
- the clutch pipe in the junction. Use a new seal. Ensure that the clip locates in its channel. Remove the hose clip
- the transmission cables.

Bleed the clutch.

Use only Volvo Genuine parts brake fluid DOT 4+.

Applies to automatic transmissions.

Install:

- the transmission cable
- the oil cooler hoses.

INSTALLING COMPONENTS

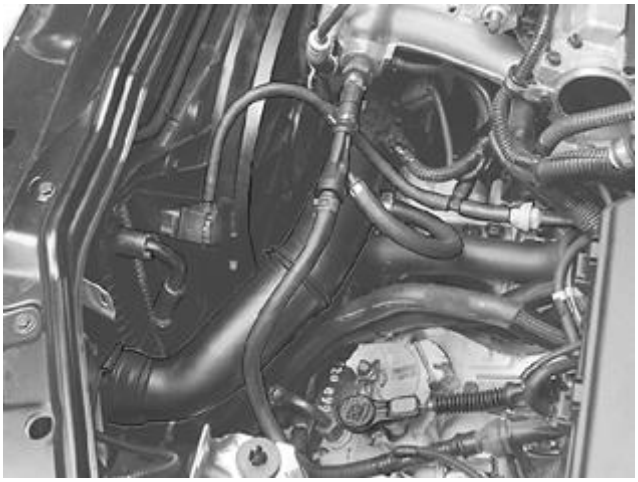

Fig. 429: Coolant Hose, Pipe And Fan
Courtesy of VOLVO CARS CORPORATION

Install:

- the lower and upper coolant hoses for the engine
- the rubber hose on the charge air pipe on the intake for the charge air cooler (CAC)
- the dip stick pipe

- the brake vacuum hose to the intake
- the plastic charge air pipe between the throttle body (TB) and the charge air cooler (CAC). Tighten both the clamps.

HINT: Use a hot air gun to facilitate installation.

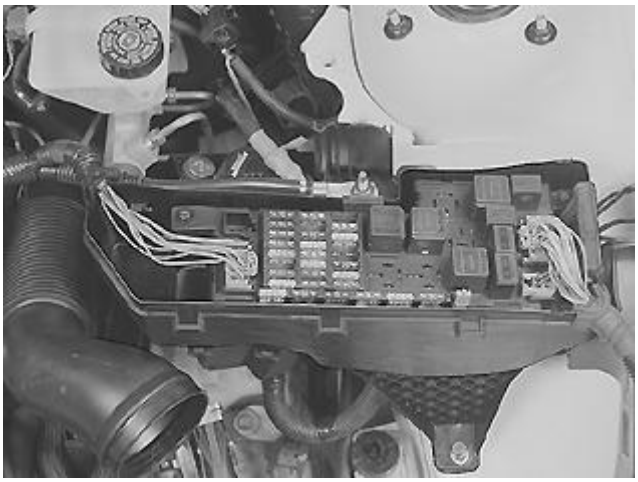

Fig. 430: Central Electrical Unit
Courtesy of VOLVO CARS CORPORATION

Install:

- the connector for the engine wiring to the central electrical unit
- the positive lead for the starter motor to the terminal block
- the cover over the central electrical unit
- the ground lead between the engine and body in the front frame member.

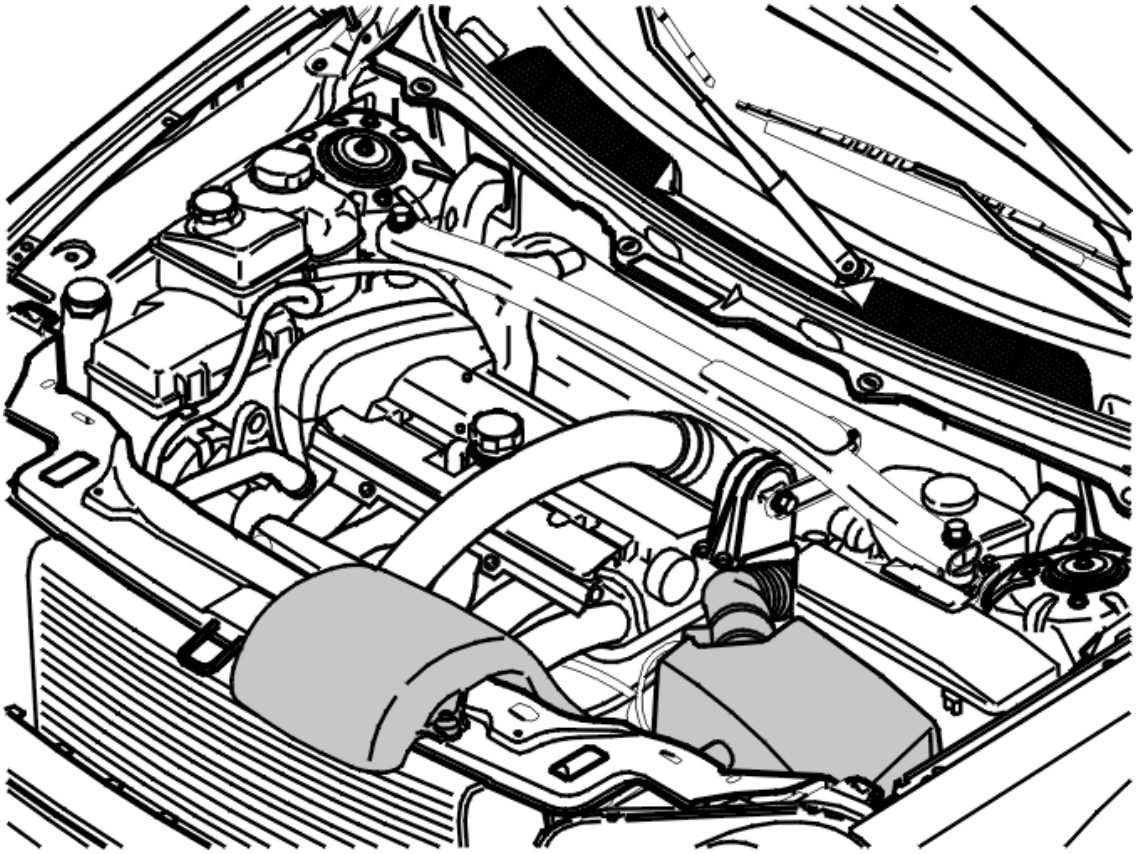

Fig. 431: Air Intake And Air Cleaner Housing
Courtesy of VOLVO CARS CORPORATION

Install:

- the ground strip at the top/rear of the cylinder head
- the plastic charge air pipe over the engine
- air cleaner (ACL) assembly
- the inlet hose for the turbocharger (TC) to the air cleaner (ACL)
- mass air flow (MAF) sensor connector
- the turbocharger control valve on the air cleaner (ACL)
- the brake vacuum hose in the clamp on the air cleaner (ACL) housing
- the intake pipe between the front cover plate and the air cleaner (ACL)
- the engine stabilizer brace between the suspension turrets
- the battery negative lead. First read, see **BATTERY, DISCONNECTING** .

FINAL CHECK

Install:

- coolant

- engine oil
- power steering fluid.

- Start the engine
- Warm up the engine until the thermostat opens
- Check for leakage
- Check the oil and coolant levels. Adjust if necessary
- Check the transmission oil level (automatic transmissions only). Top up if necessary.

TRANSAXLE (B6294T; 2003-2006)

ENGINE/TRANSAXLE, INSTALLING

Special tools:

see **9512050**

NOTE: **For tightening torques, see TIGHTENING TORQUE**

NOTE: **To ensure that there is no exhaust leakage, see: FLANGED JOINT, ASSEMBLING**

INSTALLING THE ENGINE AND TRANSMISSION UNIT

NOTE: **The illustrations in this service information are used for different model years and/or models. Some variation may occur. However, the essential information in the illustrations is always correct.**

Fig. 432: Engine Lifted Using Lifting Table
Courtesy of VOLVO CARS CORPORATION

CAUTION: Ensure that no hoses, wiring or other components catch or become trapped during lifting.

CAUTION: Do not damage the brake pipe running to the right front wheel.

NOTE: Make sure that the mating surfaces on the ball joints and control arms are clean.

Lift the engine and transmission unit. Use a lifting table.

Stop the lift approximately **15 cm** before the sub-frame reaches the frame members.

- Install (on both sides) the drive shaft to the hub.
- Lift the three-way catalytic converter (TWC) up into position. Connect the exhaust system to the rear flange. Use a **new gasket** . Install **new nuts** loosely.

NOTE: The catalyst cannot be raised after the engine has been raised to its correct position.

Continue raising the engine until it is only **approximately 50 mm** from its correct position.

CAUTION: Guide the lower steering shaft into the hole in the firewall.

Align the ball joint in the control arm.

INSTALLING THE SUB-FRAME

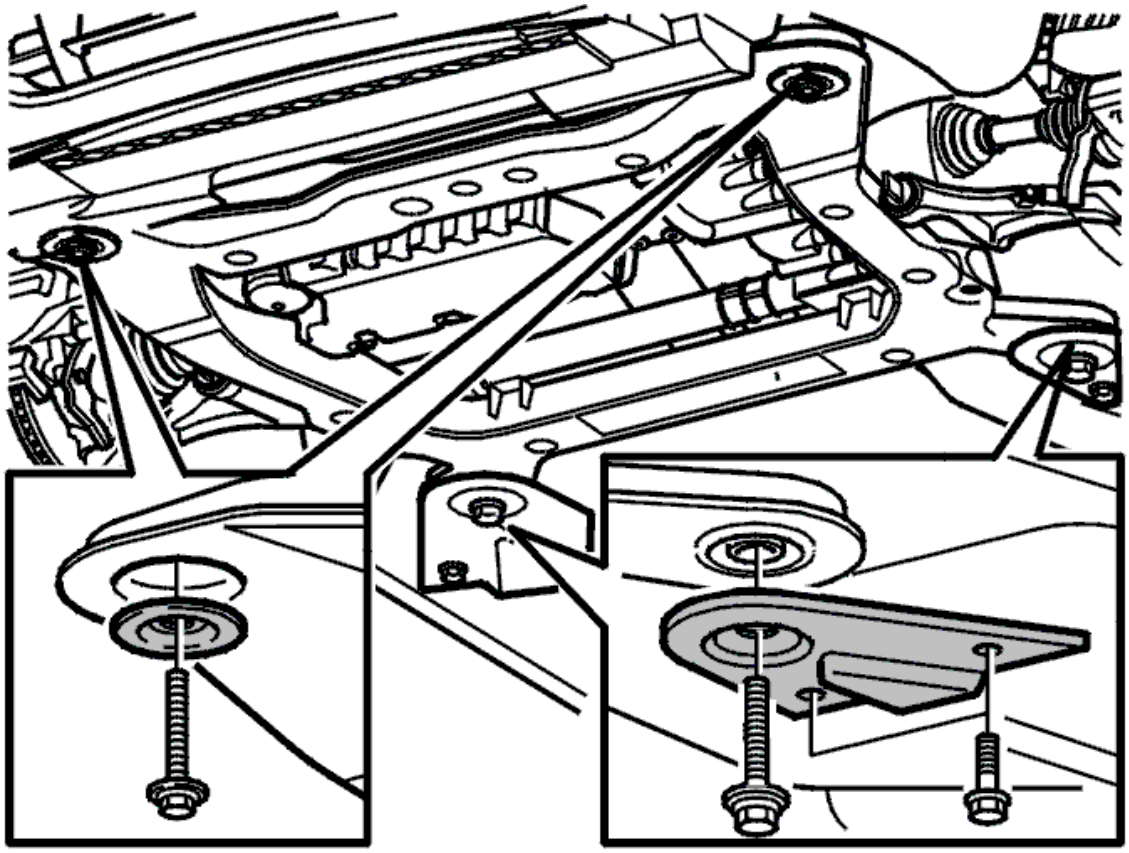

Fig. 433: Identifying Bolts, Washers And Brackets In Sub-Frame
Courtesy of VOLVO CARS CORPORATION

- Install the inner pipe on the compressor in the climate control unit. Use a new O-ring
- Raise the sub-frame toward the frame members until it makes contact.
- Install **new screws** in the subframe. Lubricate the screw threads.
- Install the washers in the front edge and support plates at the rear edge of the subframe.
- First tighten the screws on the left side of the sub-frame. Tighten to **SUMMARY OF TIGHTENING TORQUES FOR SPECIFIC COMPONENTS** . Use bevel protractor see **9512050**
- Then tighten the screws on the right-hand side of the subframe to the same value.
- Tighten the brackets. Tighten to **50 Nm** .
- Remove the lifting table.

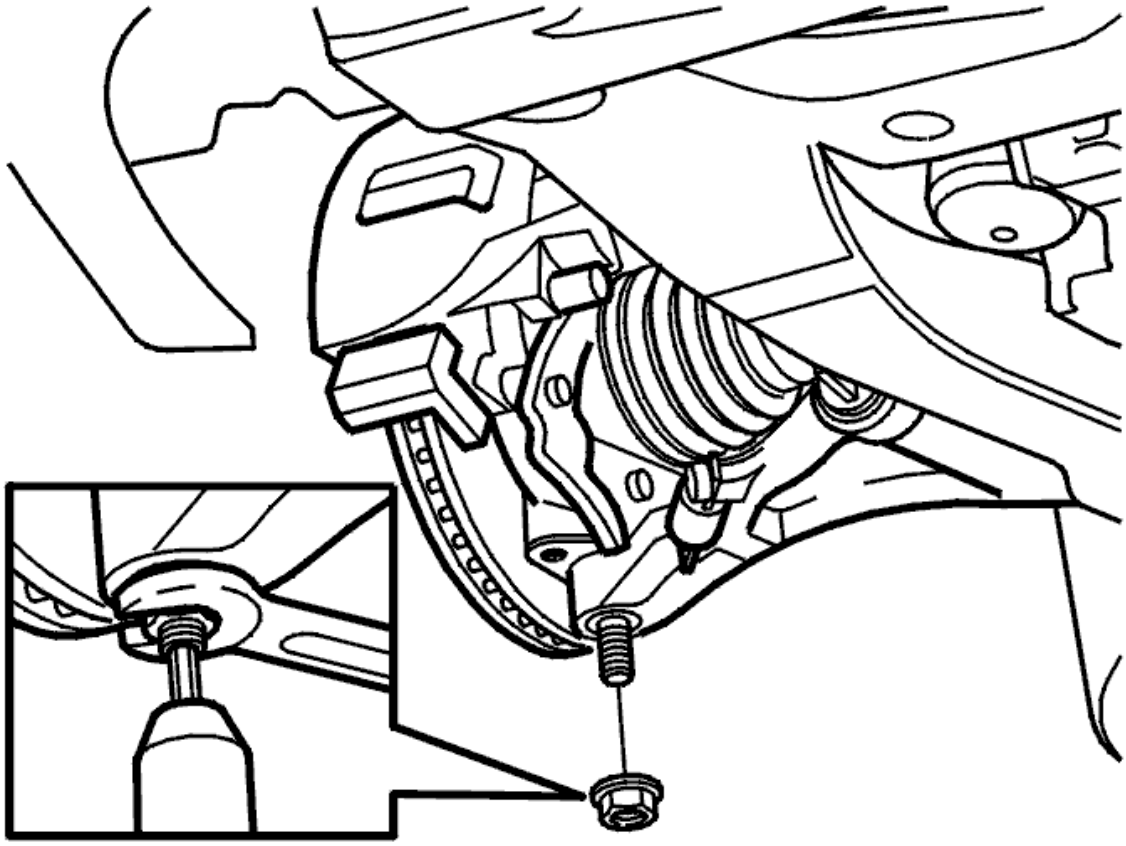

Fig. 434: Ball Joints Nuts
Courtesy of VOLVO CARS CORPORATION

Tighten the ball joint and control arm. Tighten to **80 Nm** . Counterhold using **Torx 40** so that the ball joint boot does not rotate.

Install:

- the anti-roll bar links. Use **new locknuts** . Tighten to **50 Nm** .
- **new center screws** for the drive shafts. Tighten to **50 Nm** .

INSTALLING TRACK RODS

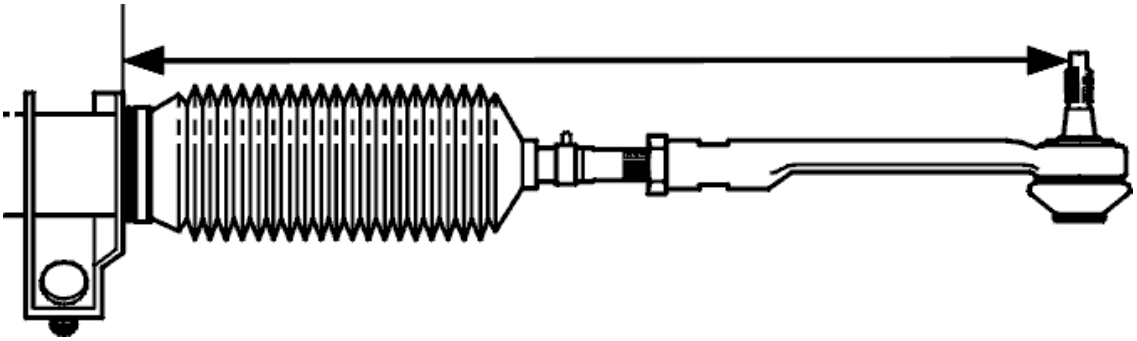

Fig. 435: Identifying Length Of Track Rod

Courtesy of VOLVO CARS CORPORATION

Install the tie rod using the marking made during removal. Use **new locknuts** . Tighten to **70 Nm** .

INSTALLING COMPONENTS

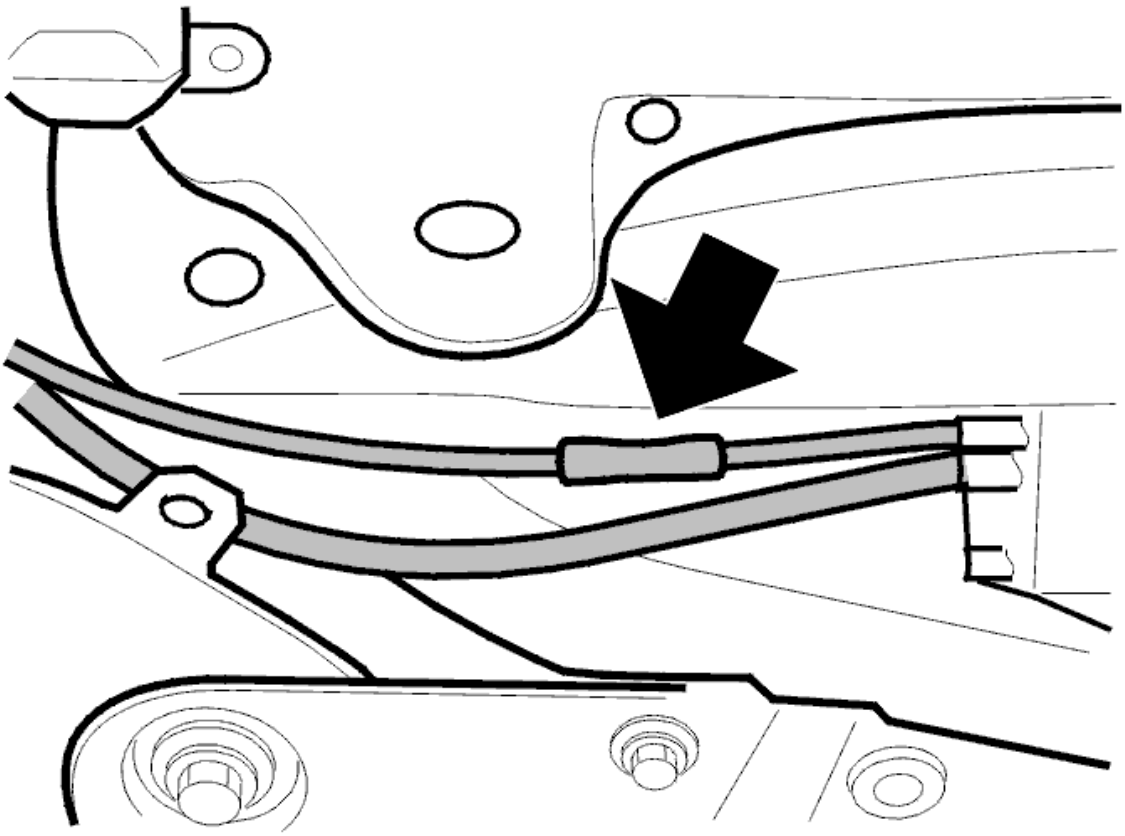

Fig. 436: EVAP Canister Hose
Courtesy of VOLVO CARS CORPORATION

- Connect the fuel line to the engine
- Connect the evaporative emission system (EVAP) line at the right rear sub-frame mounting.

- Install the oil cooler hoses on the transmission
- Install the propeller shaft. See **PROPELLER SHAFT, REPLACING** and **REPLACING THE BEVEL GEAR/CHAIN HOUSING**
- Lower the car
- Pull up and align the three-way catalytic converter (TWC) against the turbocharger (TC).
- Lubricate the threads using copper paste **116 1408** . Install **new nuts** loosely.
- Lower the car.

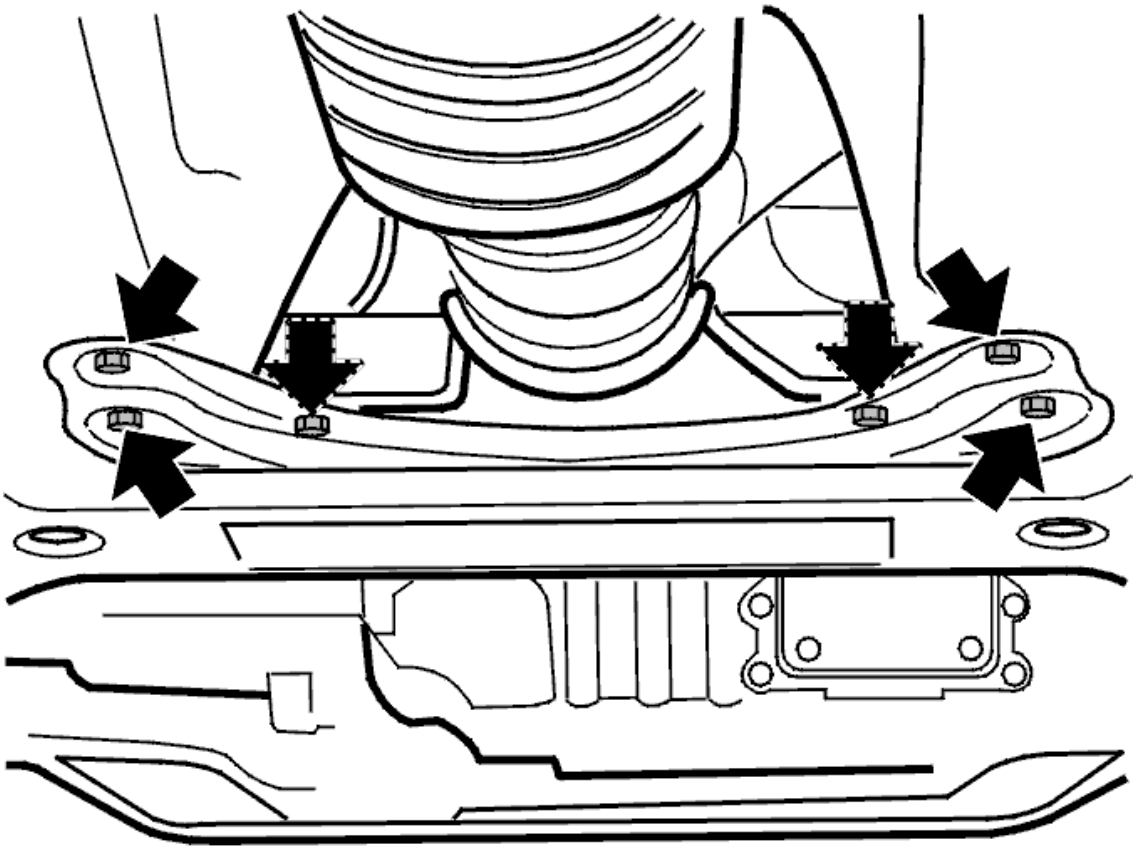

Fig. 437: Exhaust Pipe Bracket Screws
Courtesy of VOLVO CARS CORPORATION

- Install the front SIPS member. Press the brake pipe into place in the member.
- Hook the rubber mounting for the three-way catalytic converter (TWC) in the bracket on the sub-frame
- Connect the connector to the rear probe. Secure the wiring as before.

Tighten the screwed joint between the three-way catalytic converter (TWC) and the exhaust system. Tighten to **24 Nm** .

INSTALLING THE STEERING WHEEL SHAFT JOINT

Install:

- the steering shaft joint on the steering gear and steering shaft
- a **new screw** . Tighten to **25 Nm**
- the steering shaft boot and snap ring. Fold back the carpet.

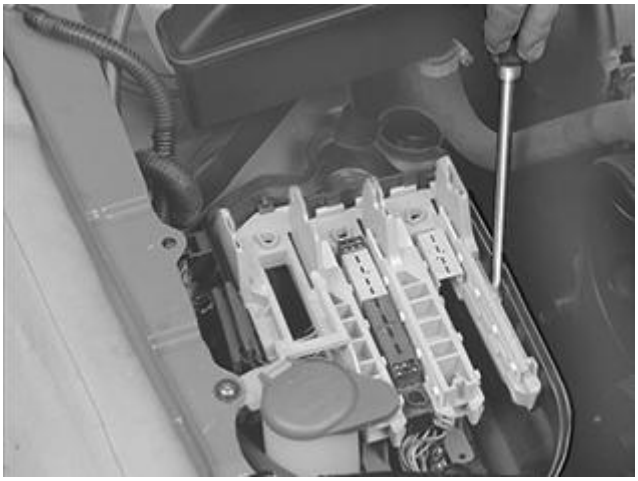

Fig. 438: Prying Out Connector Plate
Courtesy of VOLVO CARS CORPORATION

Connect the engine and transmission wiring connectors to the control module box base plate.

Press the base plate into place in the lower section of the control module box.

Install:

- the climate control unit pipe at the frame member inside the control unit box. Use a new O-ring
- the cable from the engine wiring for the sensor on the receiver to the right of the radiator
- the front right headlamp.

INSTALLING THE CONTROL MODULE

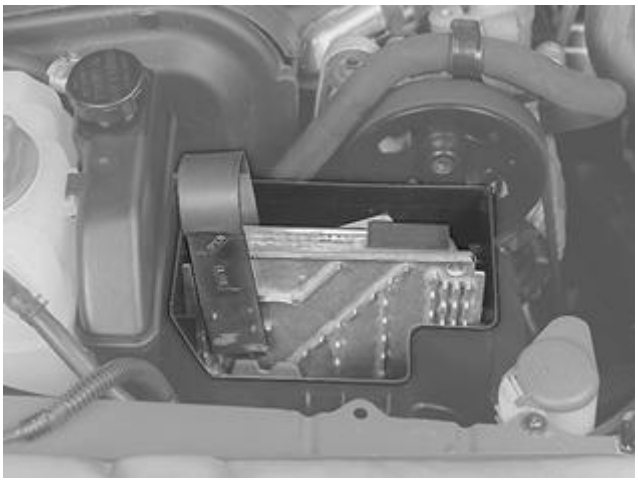

Fig. 439: Locating Engine Control Module
Courtesy of VOLVO CARS CORPORATION

- Install the intermediate section. Align the ventilation pipe in the rear edge of the control module box
- Press the control modules down carefully. Lock into place using mounting bracket see **9995722**

- Press the cover into place. Screw the ground lead into place on the fender liner.

INSTALLING COMPONENTS

Fig. 440: Expansion Tank And Servo Reservoir
Courtesy of VOLVO CARS CORPORATION

Install:

- the connector for the expansion tank from the engine compartment wiring
- the hose from the engine to the expansion tank
- the breather tube from the radiator
- the expansion tank
- the servo reservoir
- the upper radiator hose.

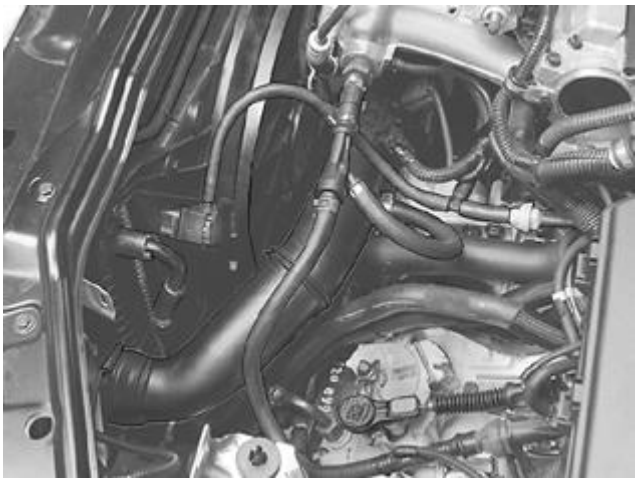

Fig. 441: Coolant Hose, Pipe And Fan
Courtesy of VOLVO CARS CORPORATION

Install the plastic pipe between the charge air cooler (CAC) and the throttle module.

HINT: Use a hot-air gun to facilitate installation of the pipe.

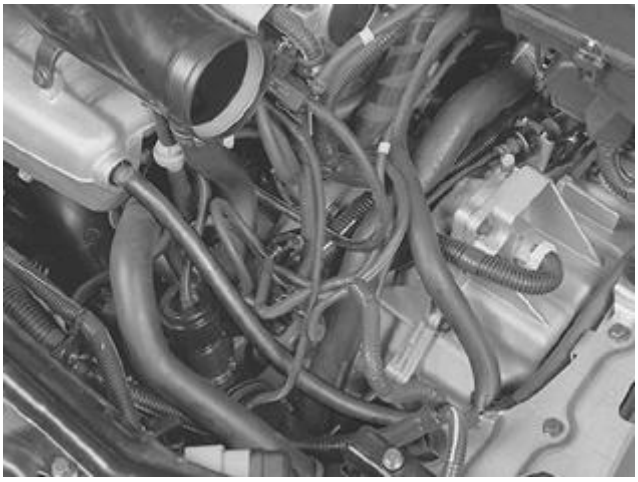

Fig. 442: Installing Identified Components
Courtesy of VOLVO CARS CORPORATION

Install:

- the connector for the sensor on the charge air cooler (CAC)
- the ground lead from the engine to the car body
- the vacuum hose to the intake and power brake booster
- the connectors for the transaxle
- the transaxle cable to the transaxle
- the rear radiator hose
- the connector to the fusebox
- the battery lead to the terminal block on the fusebox.

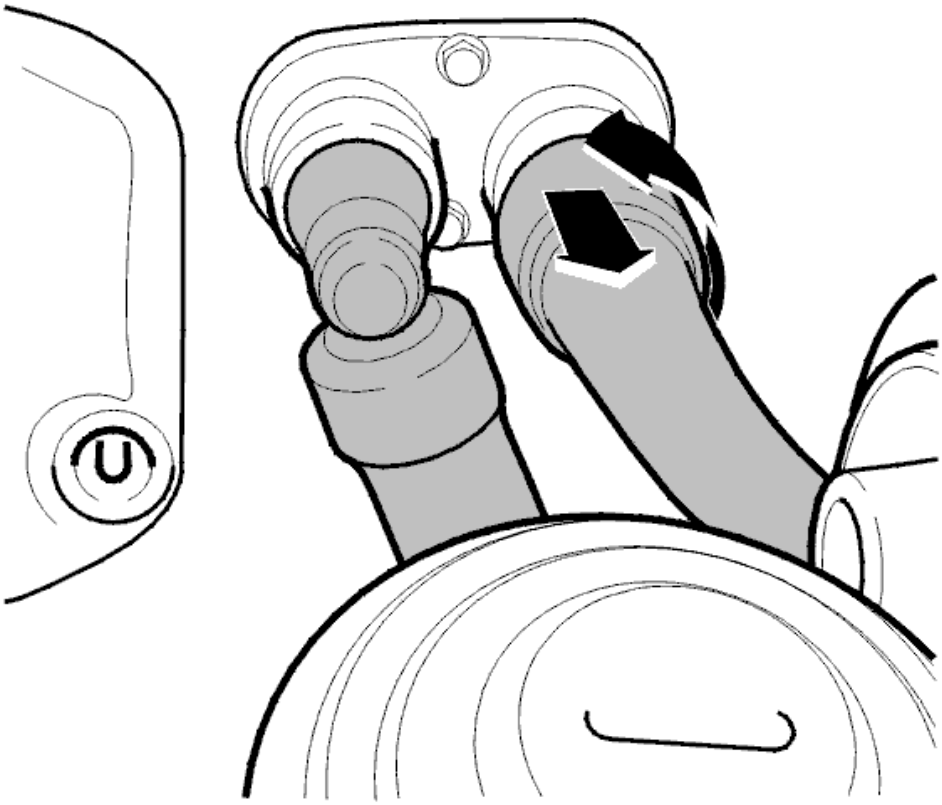

Fig. 443: Identifying Front Section Of Terminal And Hose
Courtesy of VOLVO CARS CORPORATION

Install:

- the radiator hoses on the heater unit. They are coded and will only connect to the correct sleeve connector
- the ground strip between the engine and the car body.

INSTALLING THE HEATED OXYGEN SENSOR

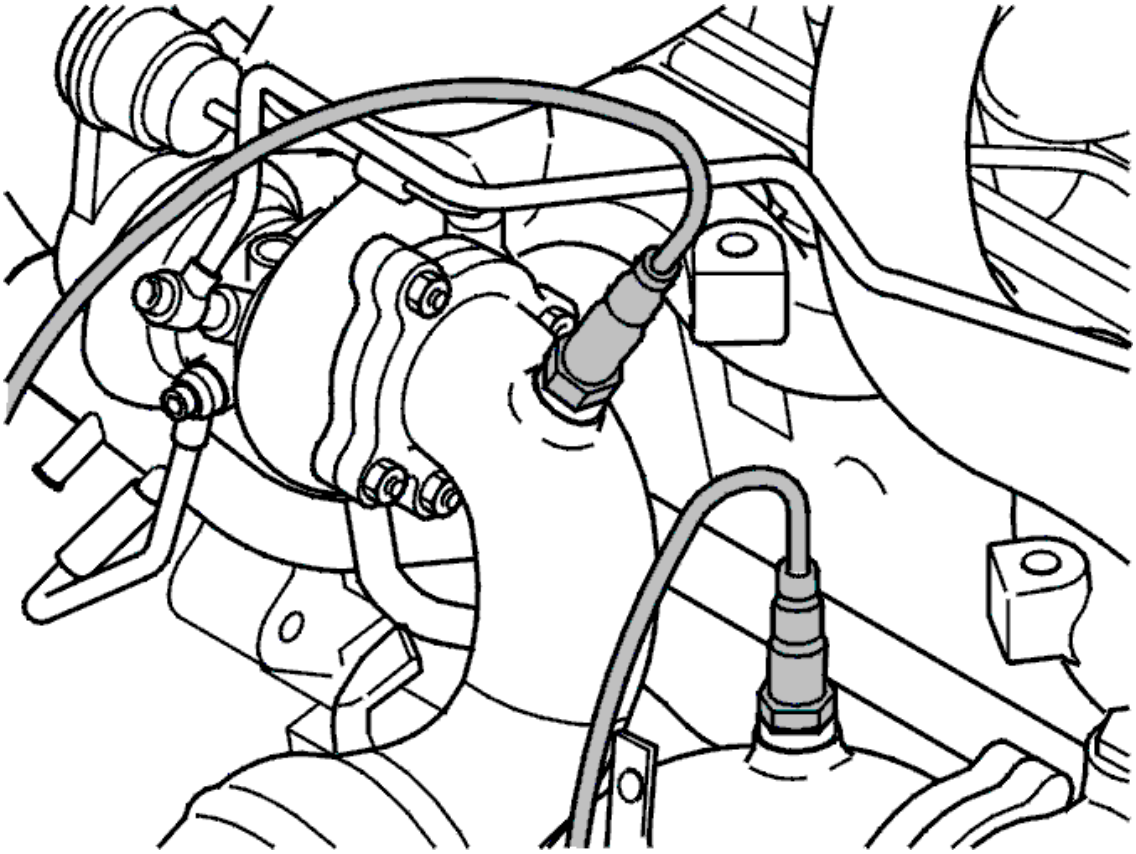

Fig. 444: Heated Oxygen Sensors
Courtesy of VOLVO CARS CORPORATION

Tighten the three-way catalytic converter (TWC) to the turbocharger (TC). Use **new nuts** . Tighten to **24 Nm** .

- Install the upper heated oxygen sensors (HO2S) using the marks made during removal. Lubricate the threads. Use copper paste 116 1408. Tighten to **45 Nm**
- Lower the wiring down to the probes. Secure the wiring in the clips and clamps as before. Connect the wiring
- Install the heat deflector plates.

INSTALLING COMPONENTS CONTINUED

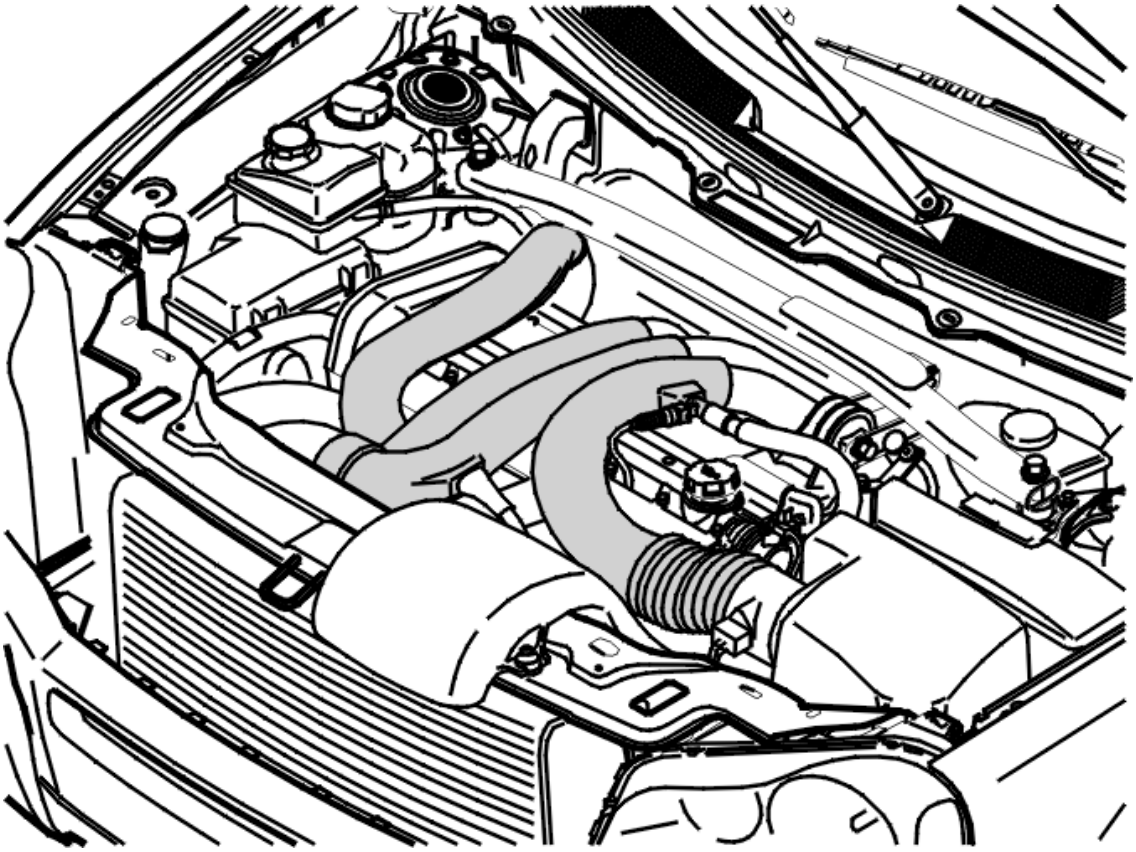

Fig. 445: Identifying Plastic Hoses Between Turbocharger, Charge Air Cooler & Air Cleaner/Turbocharger
Courtesy of VOLVO CARS CORPORATION

Install:

- the charge air pipes on the turbocharger (TC)
- the plastic charge air pipe over the engine
- air cleaner (ACL) assembly
- the connector for mass air flow sensor
- the turbocharger control valve on the air cleaner (ACL)
- the intake manifold to the air cleaner (ACL)
- the engine stabilizer brace between the suspension turrets.

Tighten the screws on the suspension turrets. Tighten to **50 Nm** . Tighten the screw in the torque bracket. Tighten to **80 Nm** .

INSTALLING THE BATTERY LEAD

Install the battery negative lead. First read, see **BATTERY, DISCONNECTING**

FINAL CHECKS

- Fill with coolant. The coolant volume is **approximately 7.2 liters** . Top up the engine oil
- Start the engine.
- Warm up the engine until the thermostat opens.
- Check for leakage.
- Check the oil and coolant levels. Adjust if necessary.
- Applies to cars with automatic transaxle: Check the transaxle fluid level.

FINISHING

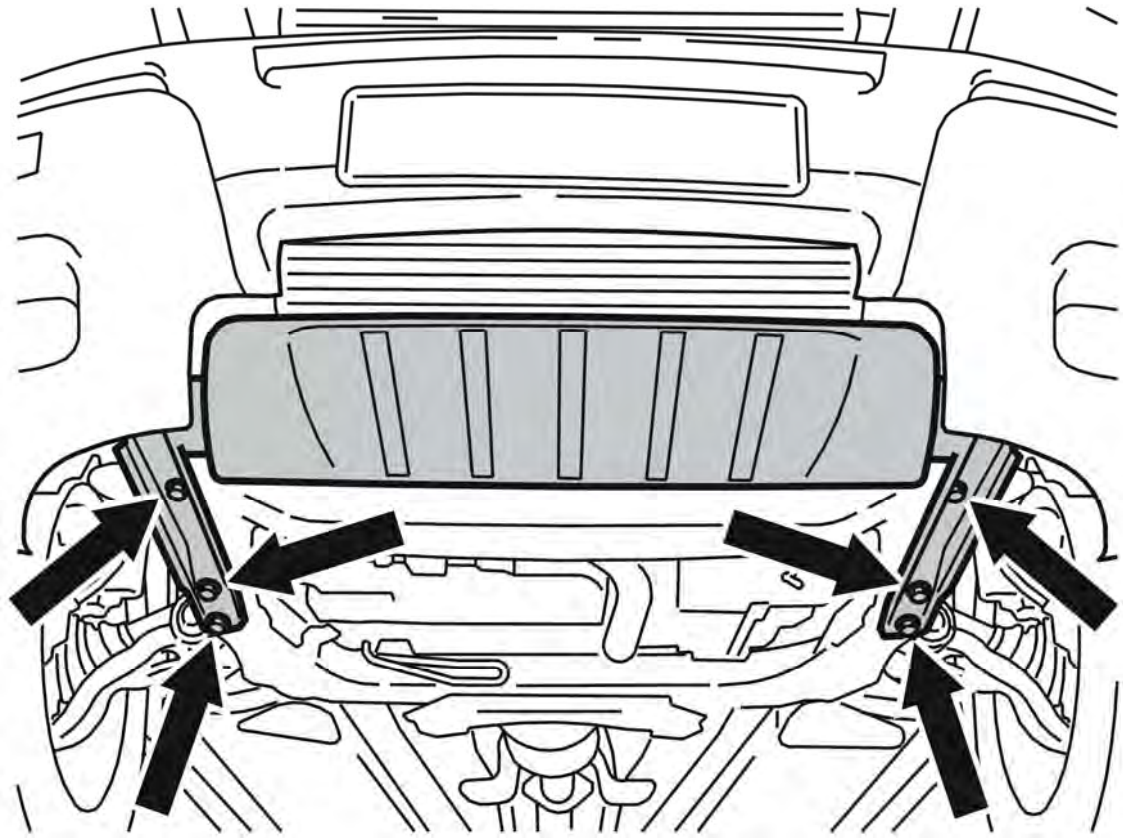

Fig. 446: Splash Guard, Protective Plate And Screws
Courtesy of VOLVO CARS CORPORATION

Install:

- the splash guard under the engine
- the front skid plate on the sub-frame
- the front wheels. See **INSTALLING WHEELS**

ENGINE/TRANSAXLE, REMOVING

Special tools:

see **9995543**

see **9995722**

see **9995259**

PREPARATION

NOTE: **Since the illustrations in this service information are used for different model years and/or models, some variation may occur. However, the essential information in the illustrations is always correct.**

Remove:

- Remove the cable from the battery negative terminal. First read, see **BATTERY, DISCONNECTING**
- The expansion tank cap.

DRAINING THE REFRIGERANT FROM THE CLIMATE CONTROL UNIT

See **REFRIGERANT, DRAINING**

REMOVING THE PROTECTIVE PLATE

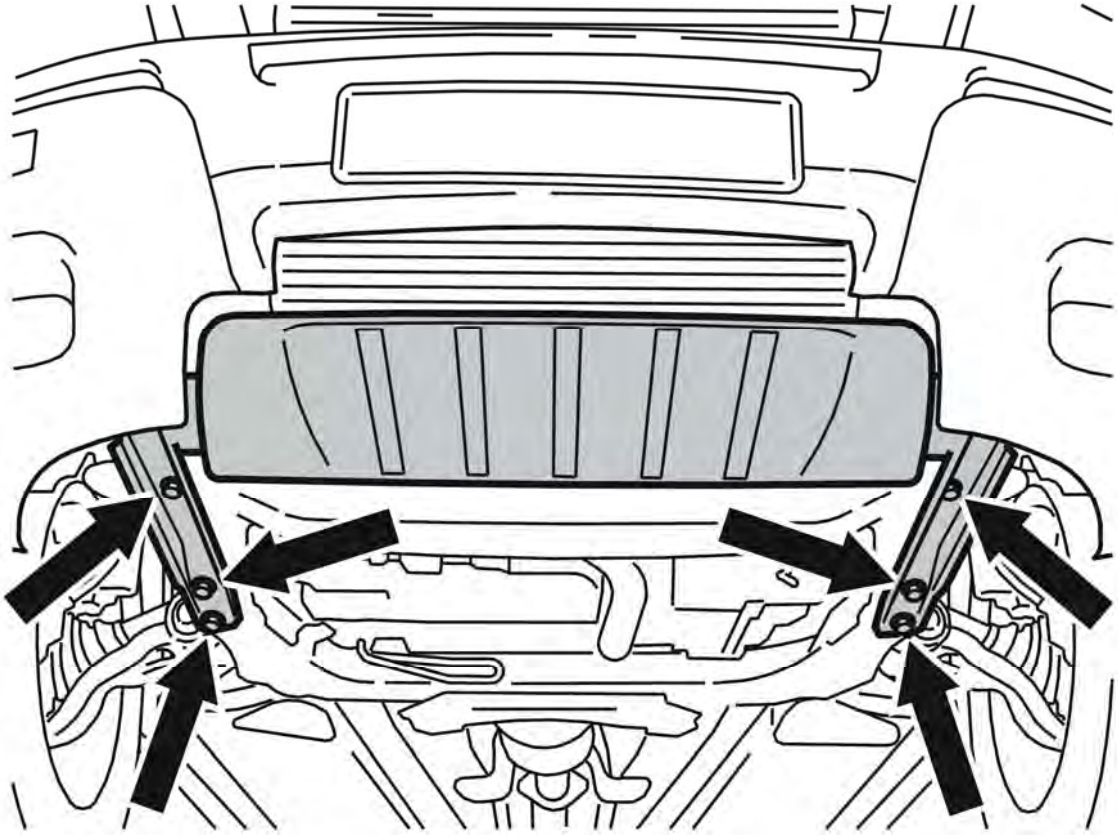

Fig. 447: Splash Guard, Protective Plate And Screws
Courtesy of VOLVO CARS CORPORATION

NOTE: There is a guide sleeve on the upper mounting for the plate. This must be lifted slightly so that the panel can be slid forward.

Remove the 6 screws.

Lift and slide the splash guard forward.

Remove the protective plate.

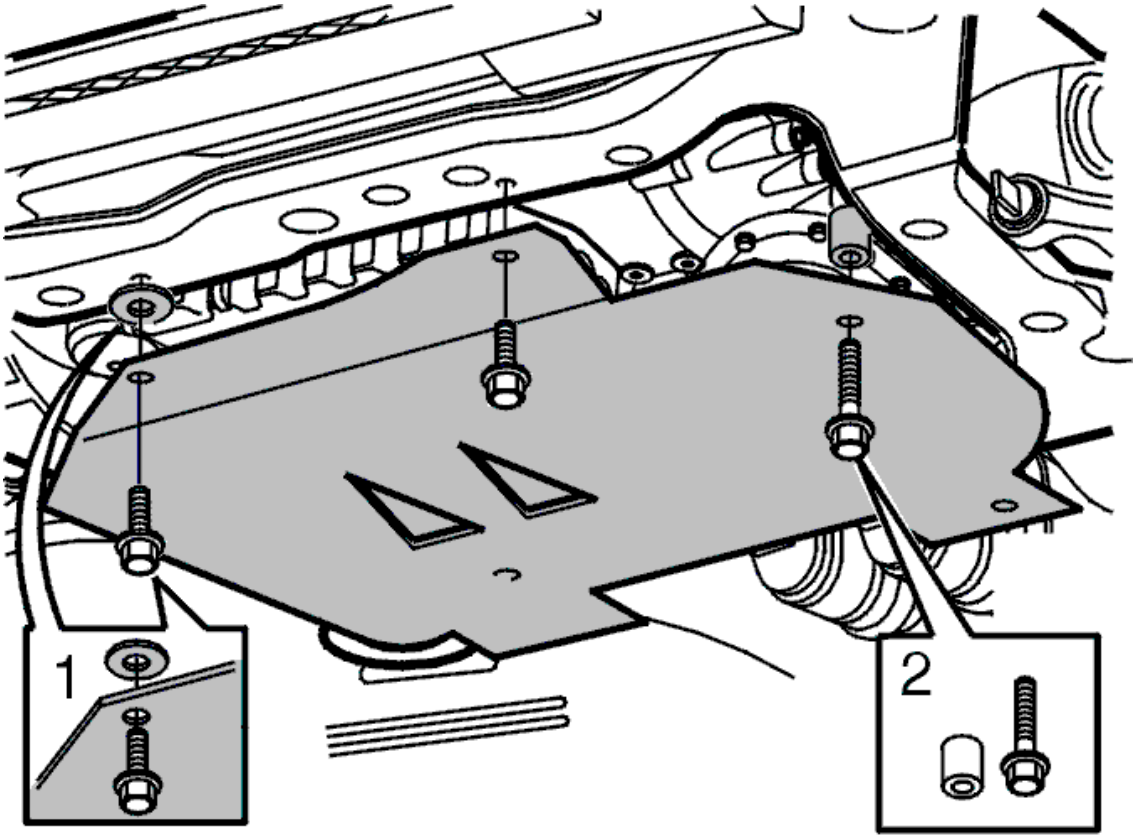

Fig. 448: Identifying Splash Guard
Courtesy of VOLVO CARS CORPORATION

- Remove the splash guard under the engine.
- Disconnect the connectors for the heated oxygen sensors. Remove the wiring from the clips and tie straps.
- Connect a hose to the engine coolant drain cock.
- Drain the coolant into a clean container. Close the cock.

REMOVAL OF CHARGE AIR PIPE

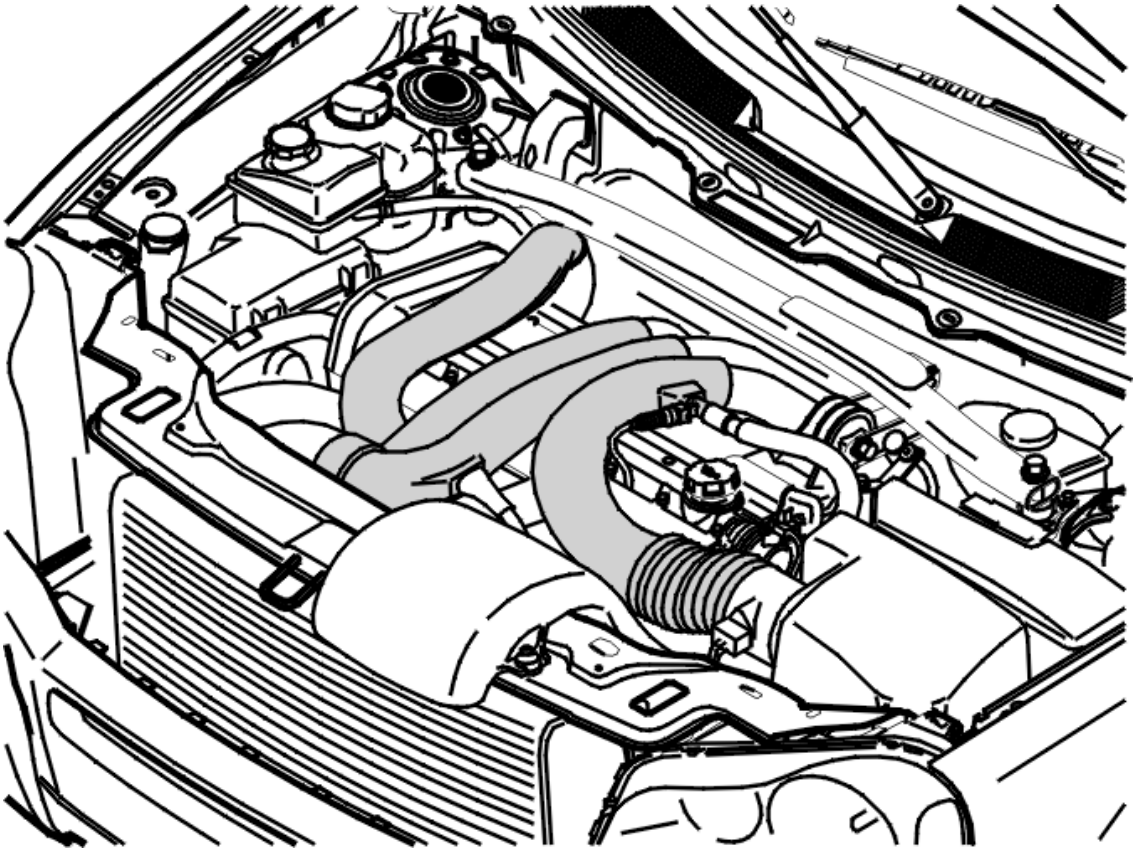

Fig. 449: Identifying Plastic Hoses Between Turbocharger, Charge Air Cooler & Air Cleaner/Turbocharger
Courtesy of VOLVO CARS CORPORATION

Remove:

- the screw for the engine stabilizer brace mounting on the engine
- the cross stay between the suspension turrets
- the plastic charge air pipe over the engine
- the charge air pipes which connect to the turbocharger (TC). Seal the openings
- the air cleaner (ACL).

REMOVING HEATED OXYGEN SENSORS (HO2S)

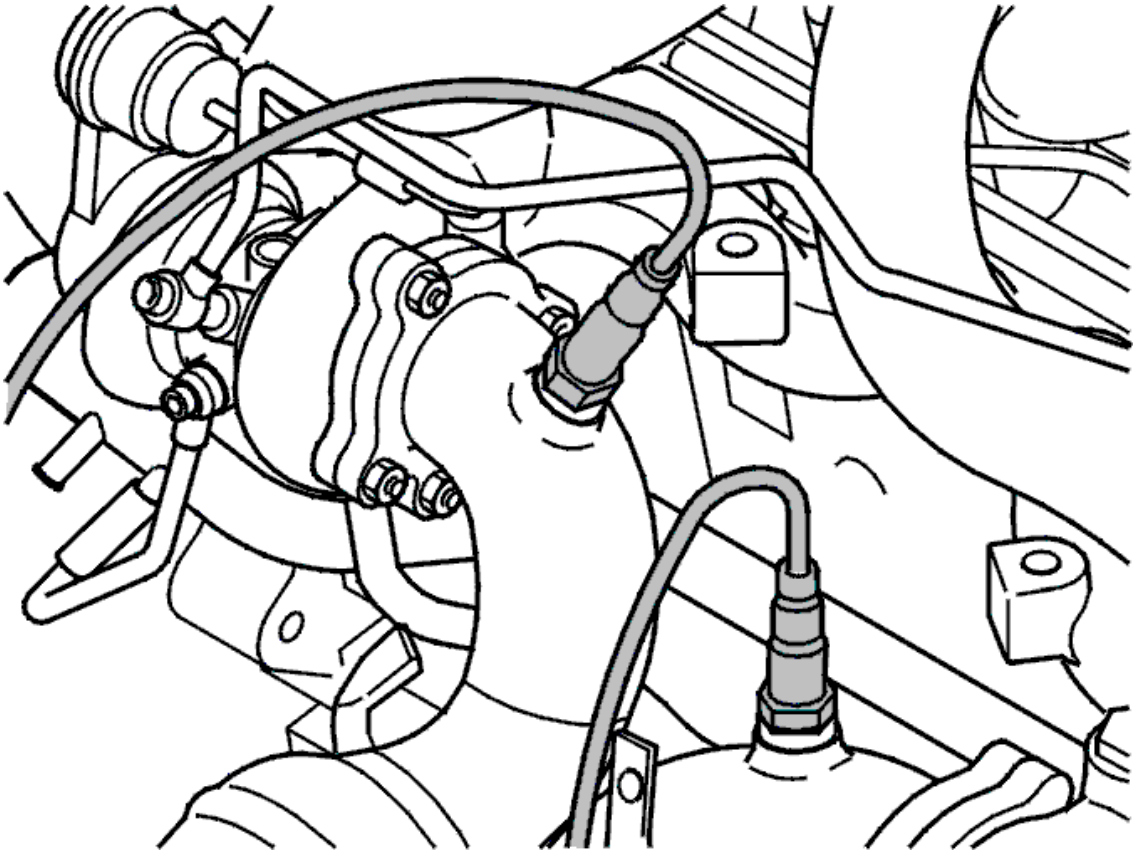

Fig. 450: Heated Oxygen Sensors
Courtesy of VOLVO CARS CORPORATION

NOTE: Note the position of the probes to make it easier to reinstall them. If they are mixed up, diagnostic trouble codes may be stored.

Slide the wiring for the front catalyst monitor sensors upwards and unscrew them from the catalyst. Use tool see **9995543**

REMOVING HEAT DEFLECTOR PLATES

- Remove the heat deflector plates from the turbocharger (TC)
- Remove the nuts from the flange between the turbocharger (TC) and the three-way catalytic converter (TWC).

  HINT: Use easing oil on the stud bolts.

- Separate the connections. Unhook the three-way catalytic converter (TWC)
- Remove the ground strip between the engine and bodywork which is positioned above the turbocharger (TC) for cylinders 1, 2 and 3.

REMOVING COMPONENTS

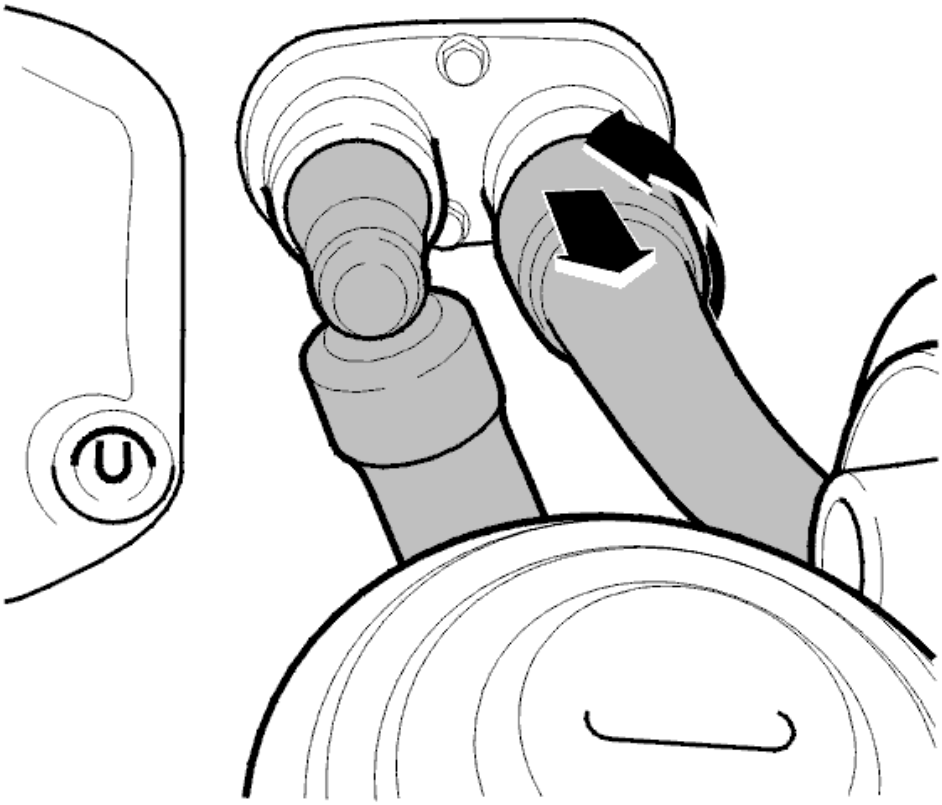

Fig. 451: Identifying Front Section Of Terminal And Hose
Courtesy of VOLVO CARS CORPORATION

Remove both the hoses for the heater unit on the bulkhead. Clean up any spilled glycol using paper.

Remove:

- the battery lead from the terminal block at the fusebox
- the connector in the fuse box.

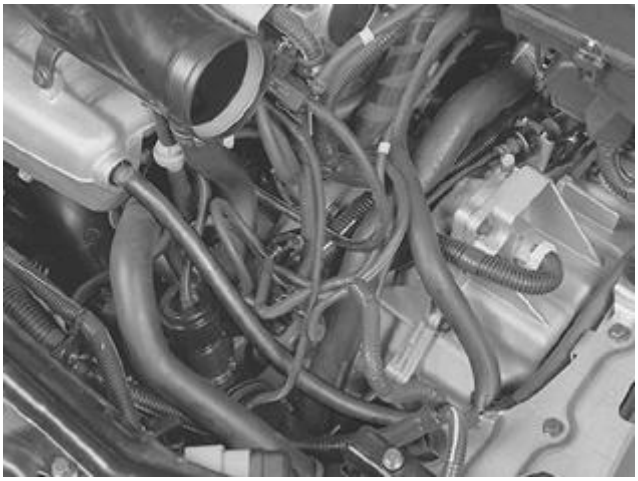

Fig. 452: Installing Identified Components
Courtesy of VOLVO CARS CORPORATION

Remove:

- the rear radiator hose at the transaxle
- the gear selector cable from the transaxle
- the connector for the input speed sensor on the transaxle
- the connector on the transaxle
- the vacuum hose on the intake for the servo unit
- the connector on the sensor in the charge air cooler (CAC)
- the ground lead from the engine to the car body (detach in the car body).

Remove the charge air pipe on the intake between the throttle module and the charge air cooler.

HINT: If necessary use a hot air gun to loosen the pipe.

Detach the upper radiator hoses on the engine.

- Lift the power steering reservoir. Place it on top of the engine.

NOTE: Make sure that no oil leaks out from the reservoir through the ventilation holes in the cover.

- Remove the coolant expansion tank. Slacken off the hose clamp on the hose to the engine. Disconnect the connector
- Remove the radiator breather tube by the expansion tank. Put the expansion tank to one side.

REMOVING CONTROL MODULES

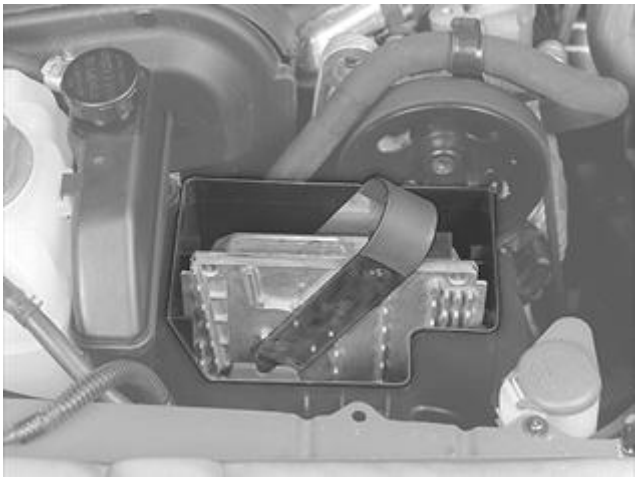

Fig. 453: Engine Control Module
Courtesy of VOLVO CARS CORPORATION

Remove:

- the cover from the distribution box
- control modules using tool see **9995722**
- the surround from the distribution box.

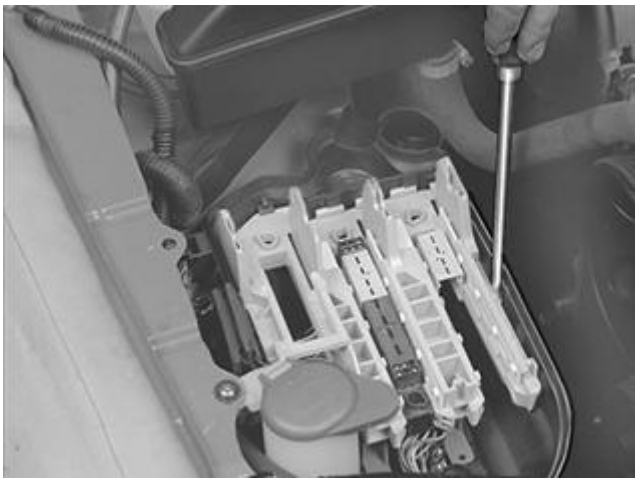

Fig. 454: Prying Out Connector Plate
Courtesy of VOLVO CARS CORPORATION

Pry out the connector plate from the lower section of the control module box and pull the connectors of the engine and transmission wiring from the plate.

Detach the ground lead on the wing liner.

CAUTION: Seal the openings.

Separate the climate control unit pipe at the frame member inside the central electrical unit.

REMOVING HEADLAMP

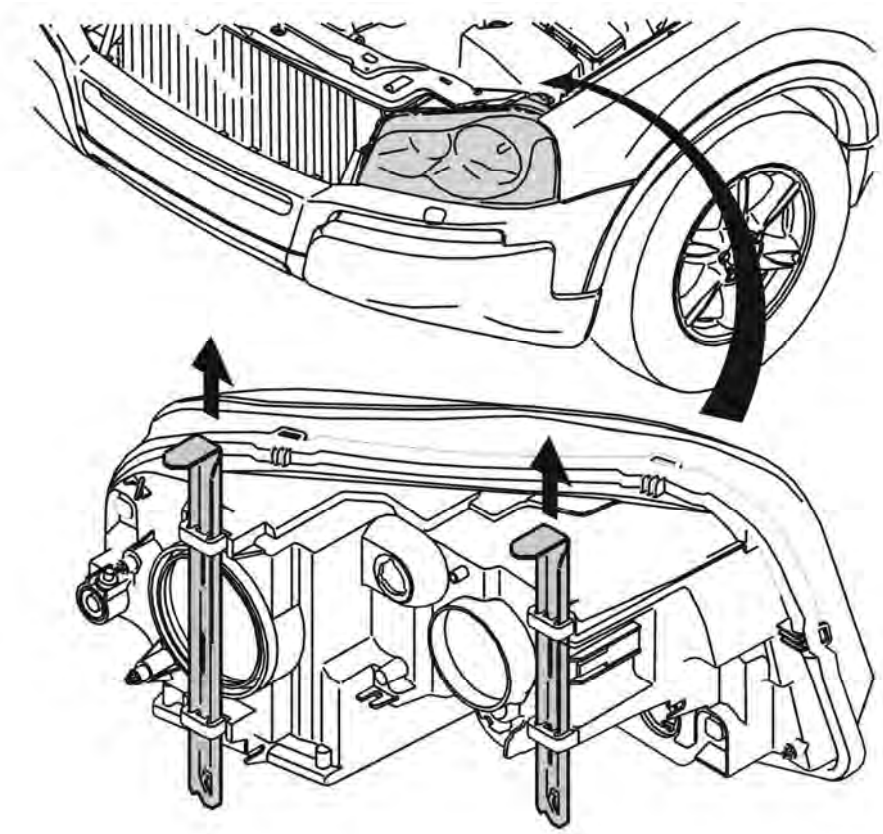

Fig. 455: Pulling Locking Plate Straight Up
Courtesy of VOLVO CARS CORPORATION

Remove the right-hand headlamp by pulling the 2 lock facings on the lamp straight up. Then carefully pull the headlamp forward. Disconnect the connector and lift out the headlamp.

Disconnect the connector from the sensor on the accumulator. Pull the wiring through to the engine compartment.

REMOVING THE LOWER STEERING SHAFT JOINT

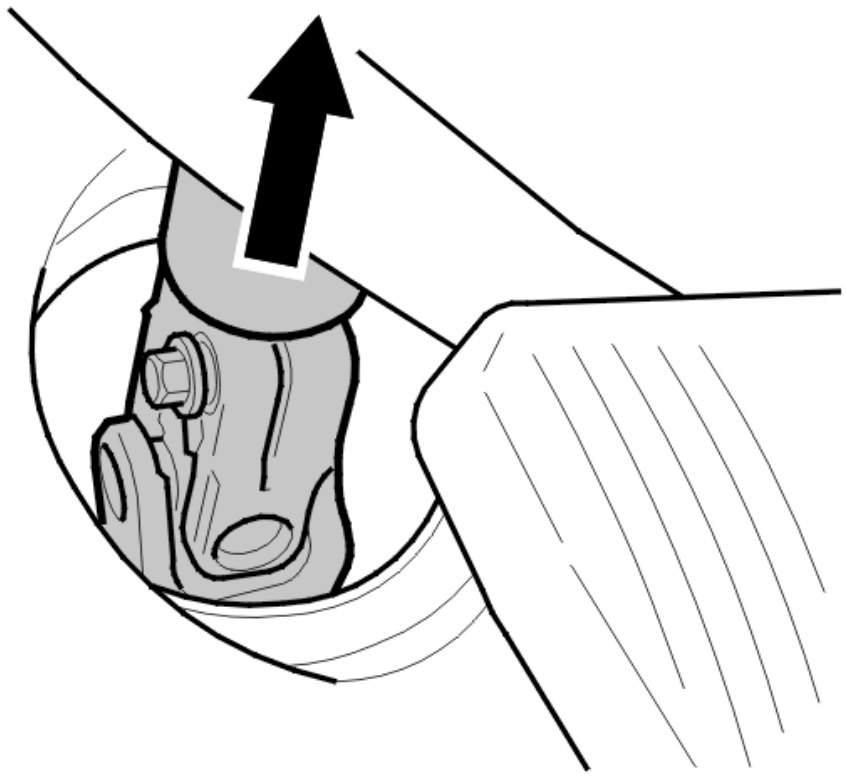

Fig. 456: Identifying Lower Steering Shaft Joint
Courtesy of VOLVO CARS CORPORATION

Set the front wheels so that they are straight

- Fold the floor carpet out of the way.
- Bend up the outer section of the steering shaft boot.
- Remove the retaining clip around the boot.
- Pull the boot up.
- Turn the steering wheel to gain the best possible access to the steering shaft nut.
- Remove the ignition key. Activate the steering wheel lock.

CAUTION: Do not move the steering wheel since the contact reel in the SRS-system may be damaged.

Remove:

- the screw securing the mounting for the steering shaft in the joint
- the joint from the steering shaft by pressing the shaft upwards.

NOTE: Clean and spray the exposed threads with rustproofing agent before beginning

removal.

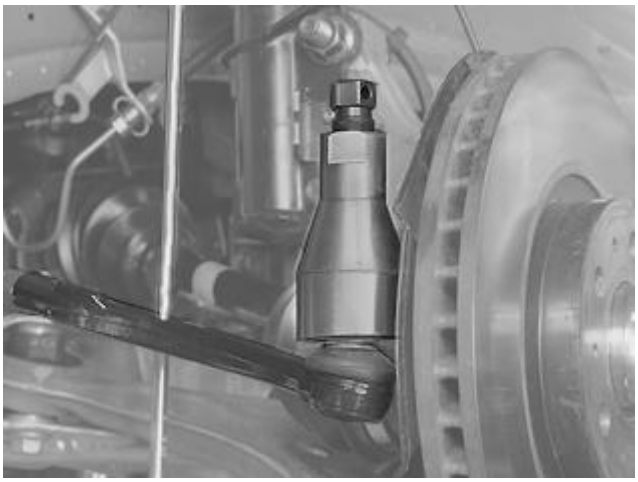

Fig. 457: Identifying Steering Arm Track Rod End
Courtesy of VOLVO CARS CORPORATION

Carry out the following operations on the left and right-hand sides.

Remove:

- the front wheel
- the track rod ends from the steering arm. Use puller see **9995259**
- the screw holding the drive shaft to the hub.
- the nut of the ball joint/link arm.
- the nut for the anti-roll bar.

NOTE: Counterhold using Torx 40 so that the ball joint boot does not turn when the nut is removed.

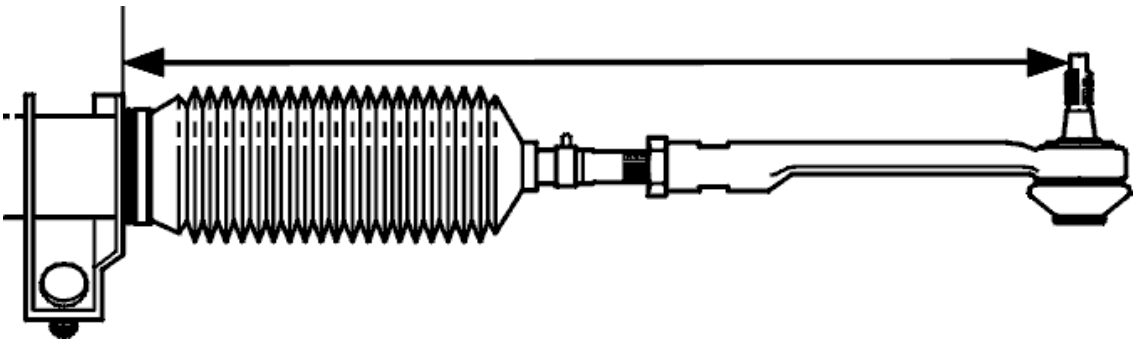

Fig. 458: Identifying Length Of Track Rod
Courtesy of VOLVO CARS CORPORATION

CAUTION: The steering shaft must not be turned. The contact reel in the SRS-system may be damaged.

On one side, measure the length of the track rod in relation to the steering gear housing. Note the measurement.

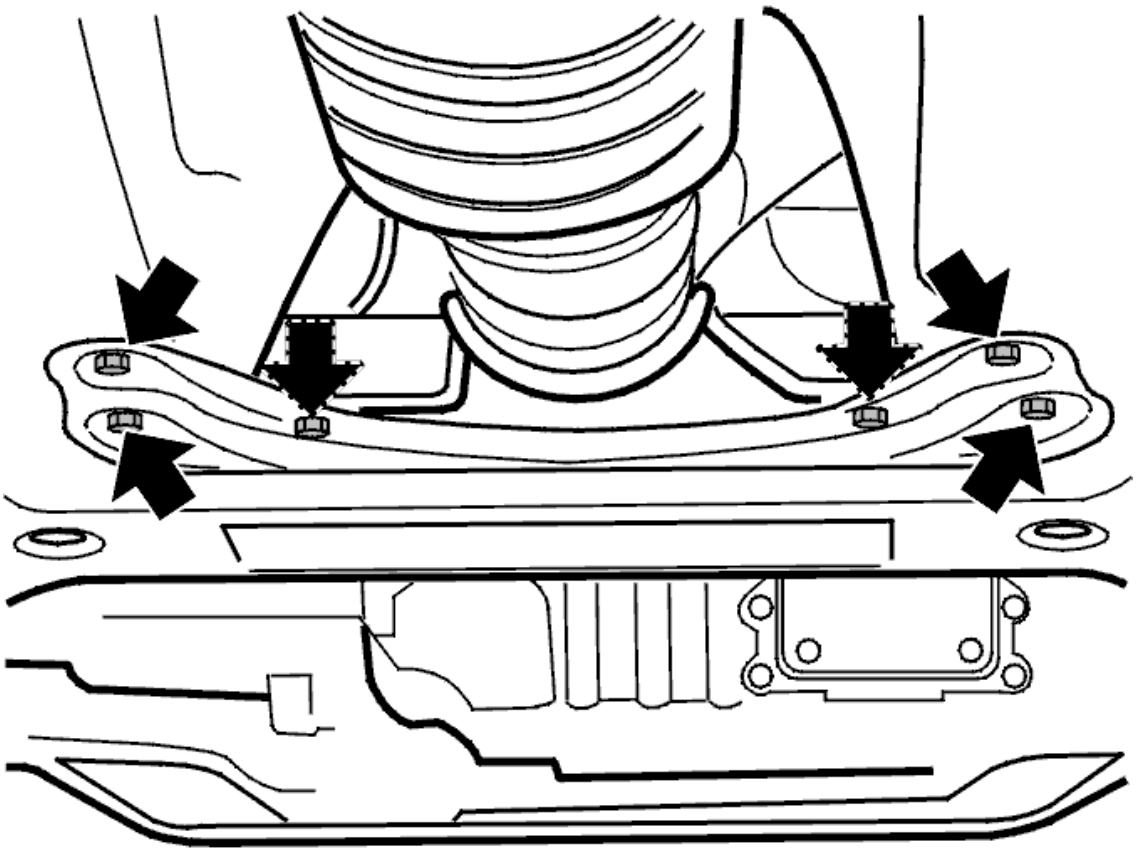

Fig. 459: Exhaust Pipe Bracket Screws
Courtesy of VOLVO CARS CORPORATION

- Disconnect the brake pipe from the clips on the front SIPS member.
- Remove the 4 screws for the front SIPS member
- Remove the member.
- Unhook the three-way catalytic converter (TWC) from the rubber mounting.

PAY ATTENTION TO THE FOLLOWING WHEN REMOVING PROPELLER SHAFT

Follow instructions. See **PROPELLER SHAFT, SPECIAL INFORMATION**

REMOVING THE PROPELLER SHAFT

Remove:

- the tie straps from the wiring for the rear probe. Separate the probe wiring
- the nut for the flange between the three-way catalytic converter (TWC) and exhaust system
- the propeller shaft. See **PROPELLER SHAFT, REPLACING** and **REPLACING THE BEVEL**

GEAR/CHAIN HOUSING

DRAINING THE FUEL LINE

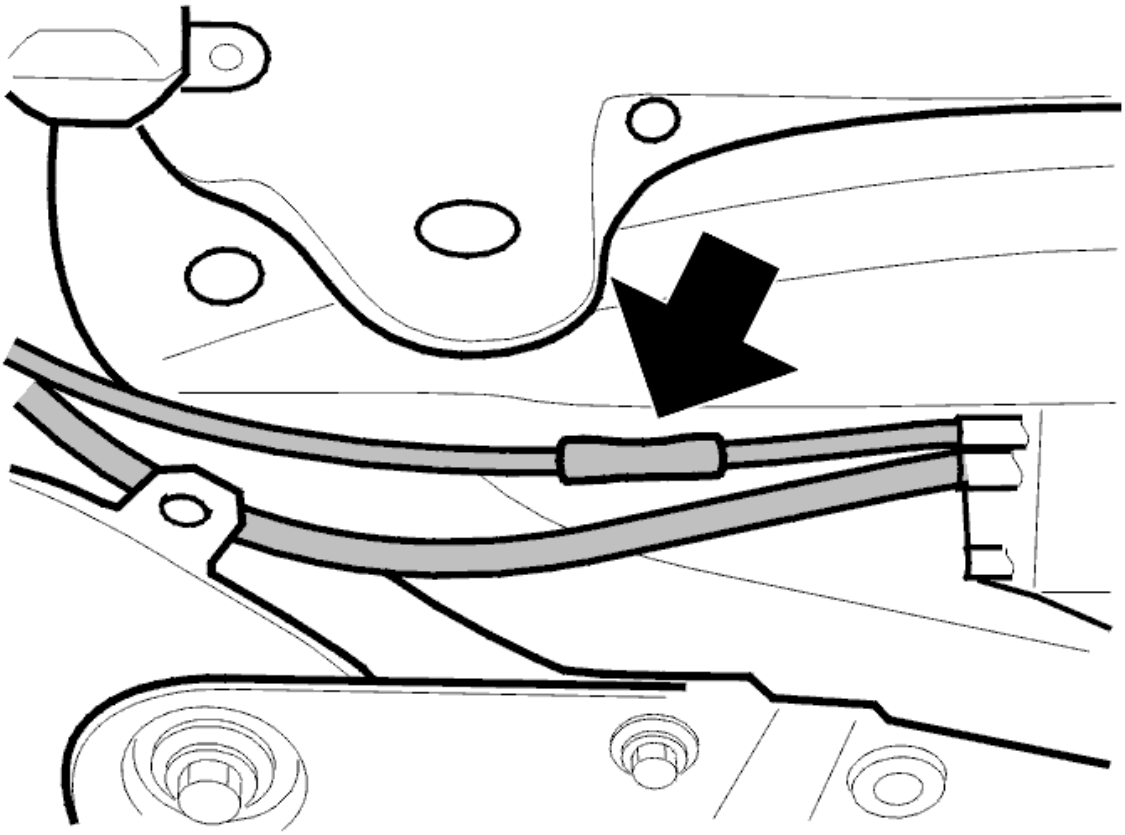

Fig. 460: EVAP Canister Hose
Courtesy of VOLVO CARS CORPORATION

- Depressurize the fuel system acc. to **DEPRESSURIZING THE FUEL SYSTEM**.
- Disconnect the fuel line quick-release connector at the engine

  Seal the openings against dirt.

- Put the line to the side.
- Separate the EVAP canister cable at the rear right sub-frame mounting
- Remove the transaxle oil cooling hoses from the gearbox. Seal the openings.

LOWERING THE ENGINE/TRANSMISSION UNIT

Fig. 461: Engine Lifted Using Lifting Table
Courtesy of VOLVO CARS CORPORATION

CAUTION: Make sure that the lifting table is properly centred under the engine.

Position a lifting table under the sub-frame. Secure the table against the sub-frame.

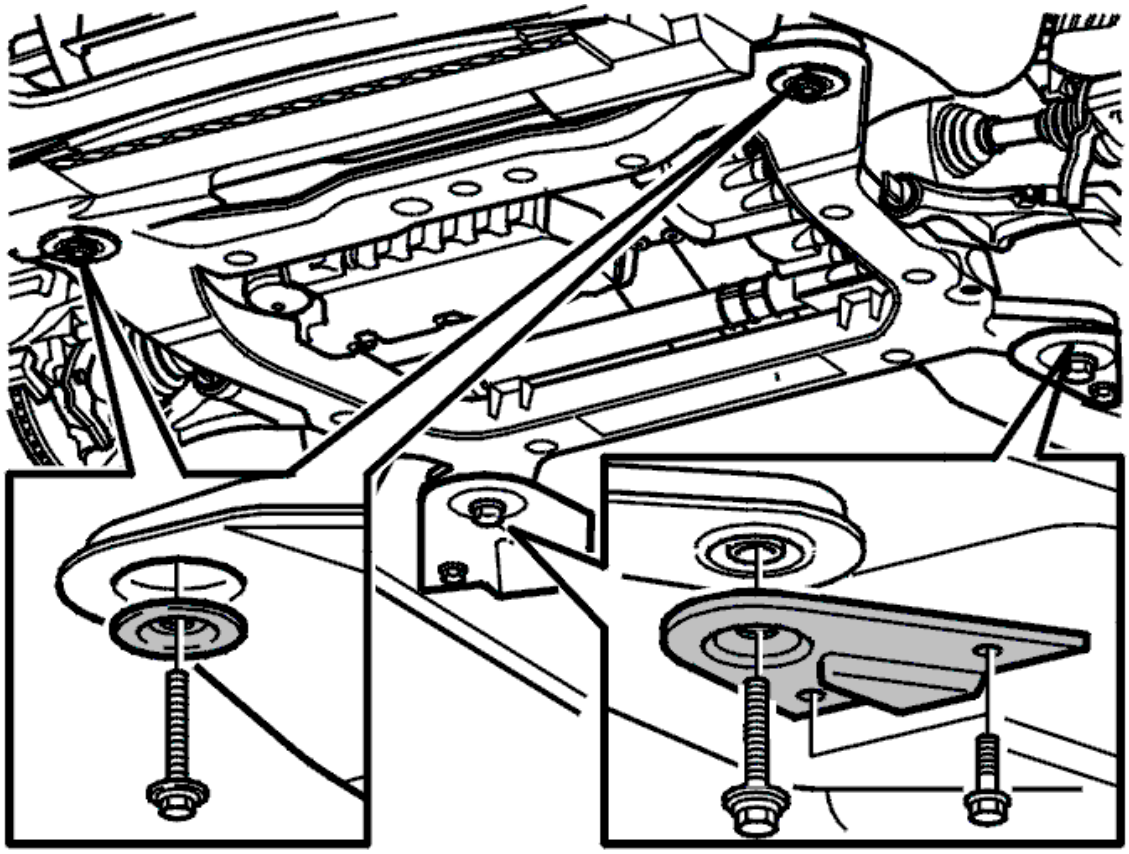

Fig. 462: Identifying Bolts, Washers And Brackets In Sub-Frame
Courtesy of VOLVO CARS CORPORATION

CAUTION: Do not damage the brake pipe that runs across the propeller shaft tunnel.

Remove:

- the screws of the subframe brackets.
- the screws for the sub-frame. Lower the engine and gearbox approximately **15 cm** so that the drive shafts describe a horizontal line between the hub and gearbox.

NOTE: Take great care that no hoses, wiring, or anything else catches in the engine/transmission unit when it is lowered.

Unhook the link arms from the ball joint pin.

Remove the drive shafts from the wheel hubs.

NOTE: Do not pull on the drive shafts. They do not have axial locks.

Do not damage the ABS-wiring.

Do not damage the brake pipe.

Let the drive shafts rest against the control arms. Lower the three-way catalytic converter (TWC).

Continue lowering until the hose for the compressor in the climate control unit is accessible. Detach the inner hose for the climate control unit. Seal the openings. Continue lowering the unit.

ACCESSORIES AND BODY, CAB

Exterior Trim, Glass, Weatherstrips - Cleaning, Inspection and Adjustment

HEATED WINDOW GRID WIRE

CHECK

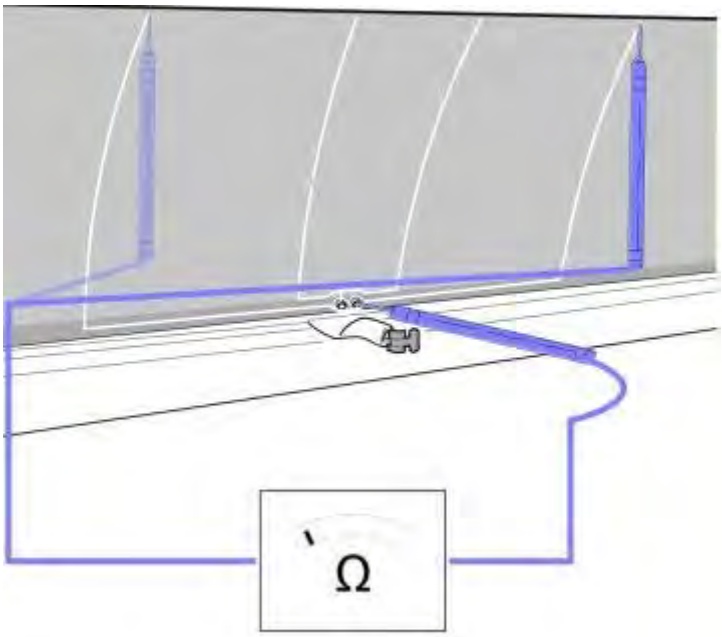

Fig. 1: Heated Window Grid Wire Check (1 Of 3)
Courtesy of VOLVO CARS CORPORATION

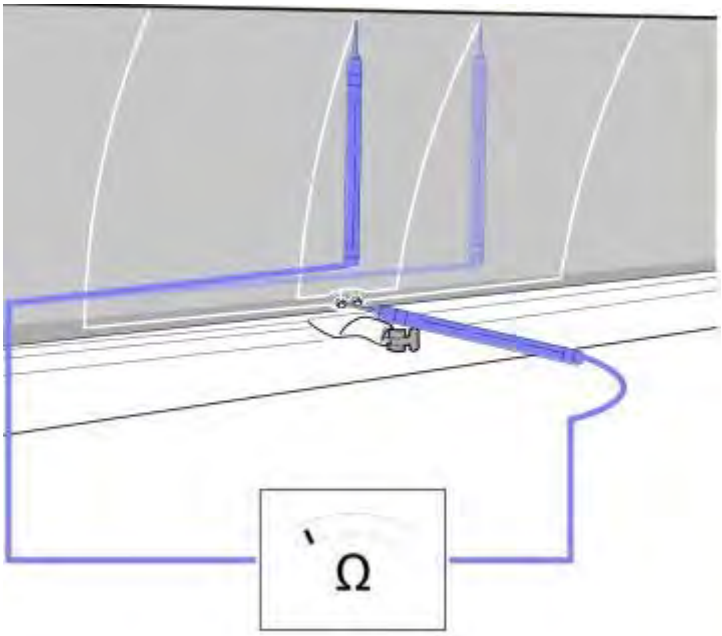

Fig. 2: Heated Window Grid Wire Check (2 Of 3)
Courtesy of VOLVO CARS CORPORATION

Perform cable window pane, see **HEATED WINDOW GRID WIRE**

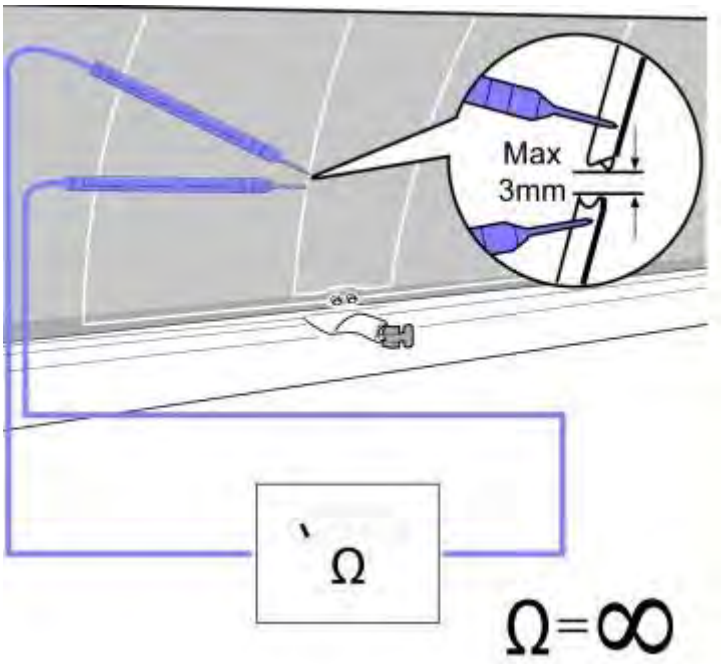

Fig. 3: Heated Window Grid Wire Check (3 Of 3)
Courtesy of VOLVO CARS CORPORATION

ACCESSORIES AND EQUIPMENT

Exterior Trim, Glass, Weatherstrips - General Information

GLASS AND SEALING MOLDING FOR WINDSCREEN AND REAR WINDOW

WINDSCREEN, REPAIR

GENERAL INFORMATION

WARNING: Before using the product, make sure to read and understand the Material Safety Data Sheet supplied by the manufacturer or supplier.

WARNING: Wear safety goggles and protective gloves.

NOTE: Always follow the relevant supplier's recommendations.

NOTE: Do not mix products from different suppliers.

See information about bonded windows, general safety information. Refer to **BONDED WINDOW, GENERAL SAFETY INFORMATION**

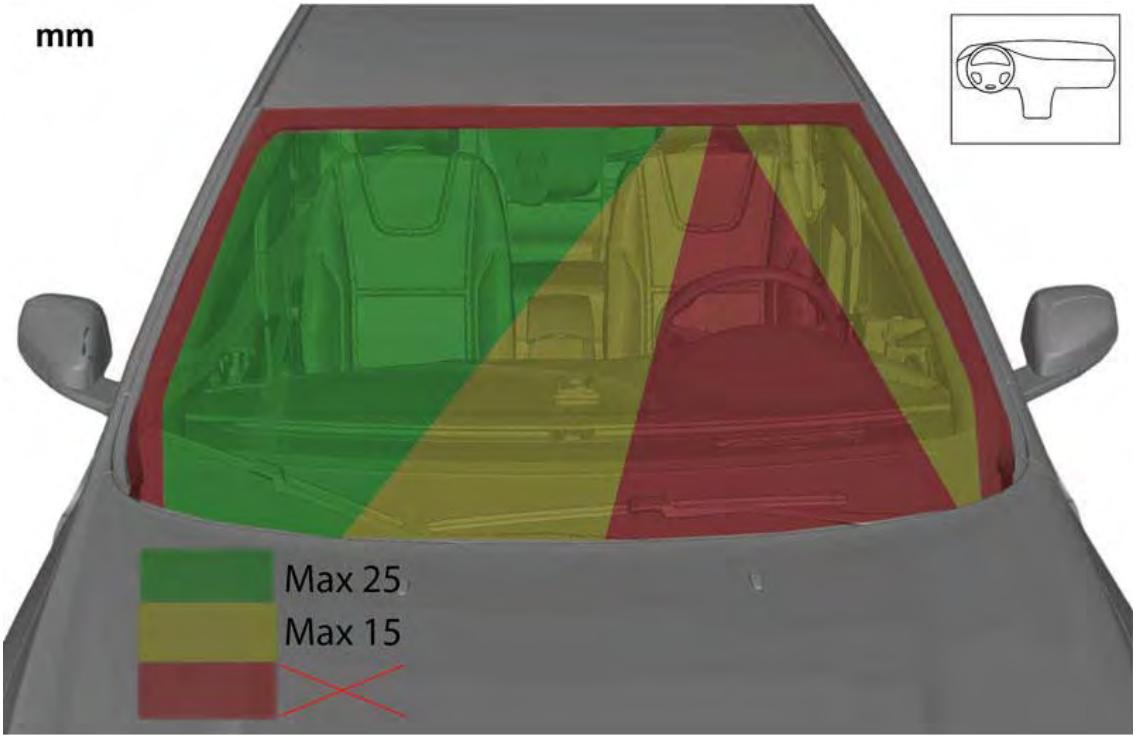

Fig. 1: Identifying Bonded Window Glass Thicknesses

Courtesy of VOLVO CARS CORPORATION

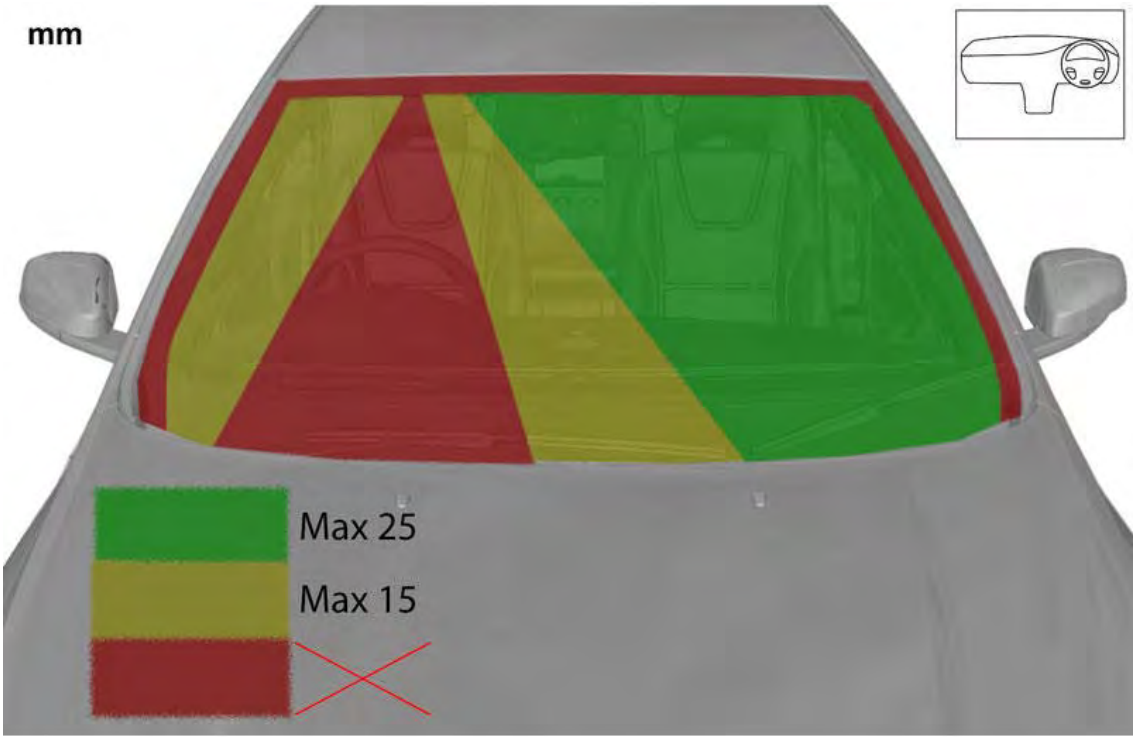

Fig. 2: Window Chip Repair Procedure (2 of 17))
Courtesy of VOLVO CARS CORPORATION

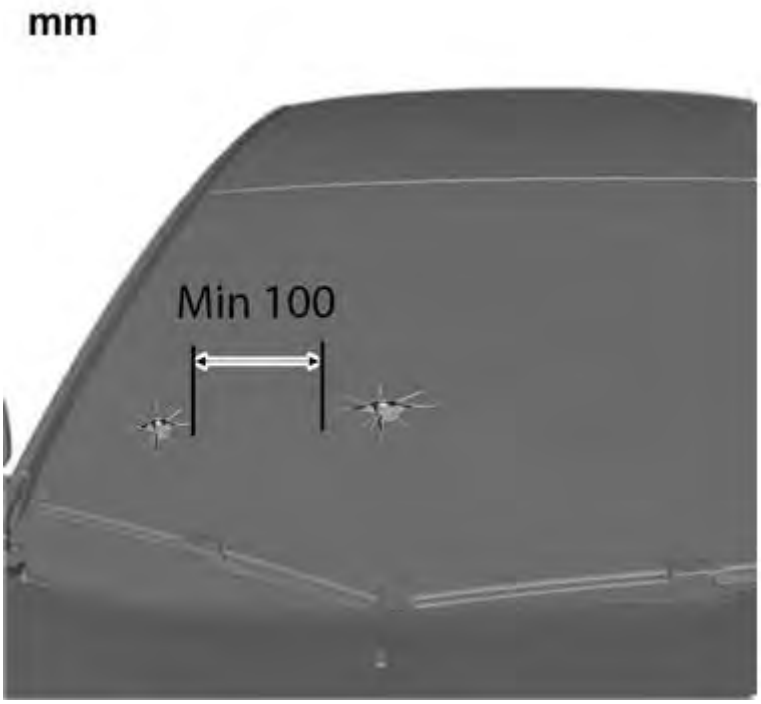

Fig. 3: Identifying Minimum Distance Between Damages On Window Glass
Courtesy of VOLVO CARS CORPORATION

Minimum distance between damaged areas in the pane of glass is 100 mm.

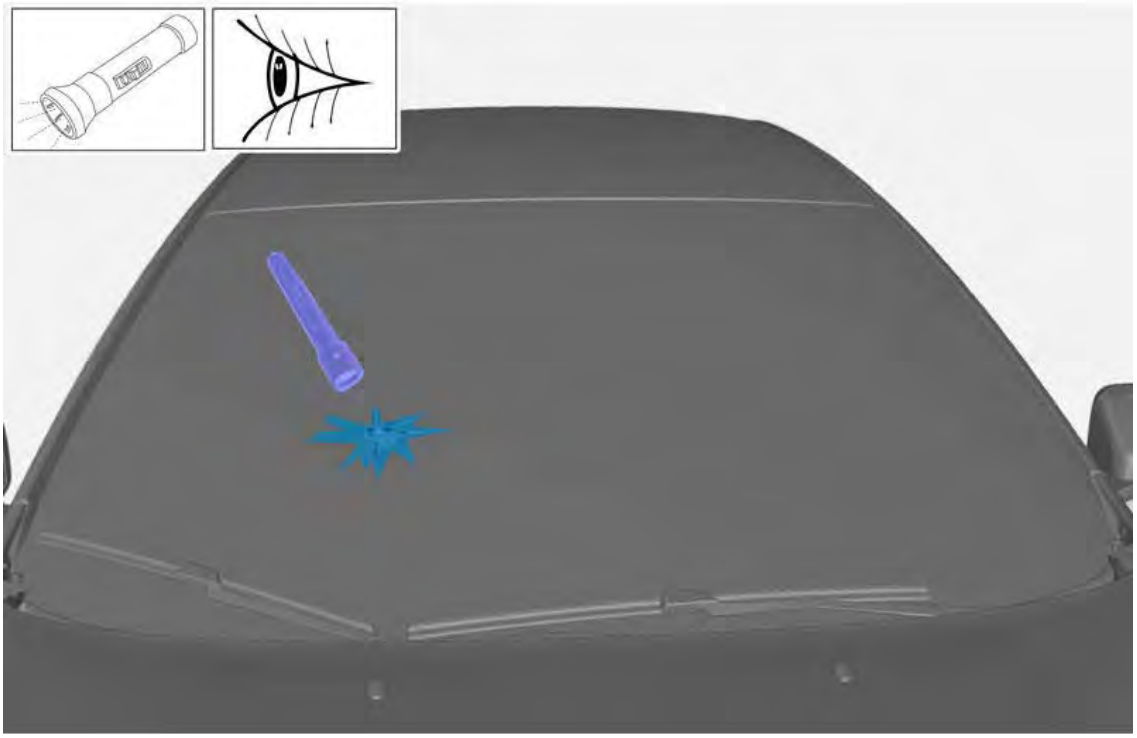

Fig. 4: Identifying Visual Inspection Of Damaged Window Glass
Courtesy of VOLVO CARS CORPORATION

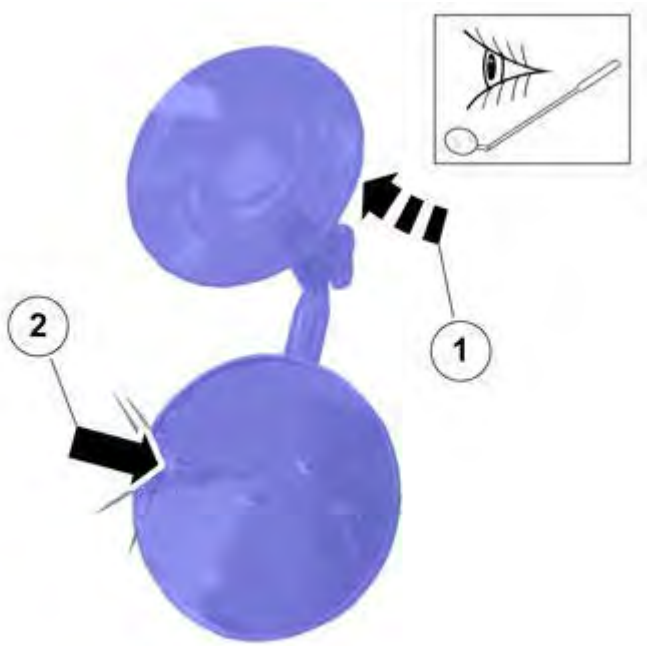

Fig. 5: Identifying Alignment And Application Of Window Glass Drill Kit
Courtesy of VOLVO CARS CORPORATION

Fig. 6: Identifying Drill To Create Repair Hole
Courtesy of VOLVO CARS CORPORATION

Fig. 7: Cleaning Drill Hole To Remove Glass Chips
Courtesy of VOLVO CARS CORPORATION

Fig. 8: Identifying Repair Tool Placed On Window Glass
Courtesy of VOLVO CARS CORPORATION

Center the tool and apply resin filler according to the manufacturer's instructions.

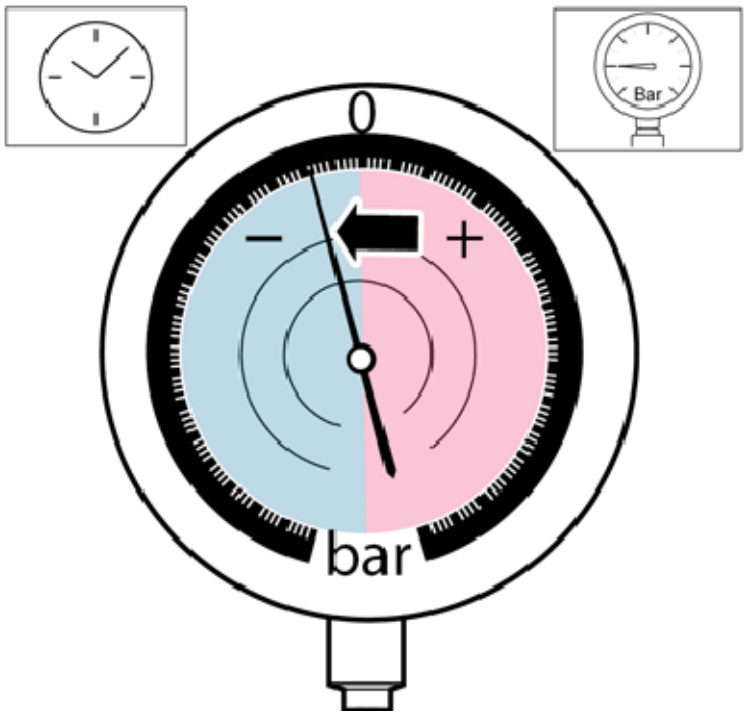

Fig. 9: Identifying Applied Vacuum Measured On Gauge And Repair Time
Courtesy of VOLVO CARS CORPORATION

Create a vacuum using the tool and allow the resin filler to run out into the damaged area.

Fig. 10: Identifying Heat Applied To Repair
Courtesy of VOLVO CARS CORPORATION

Heat the pane of glass from the inside and rub the window by hand to remove any air from the damaged area and help the resin filler flow out.

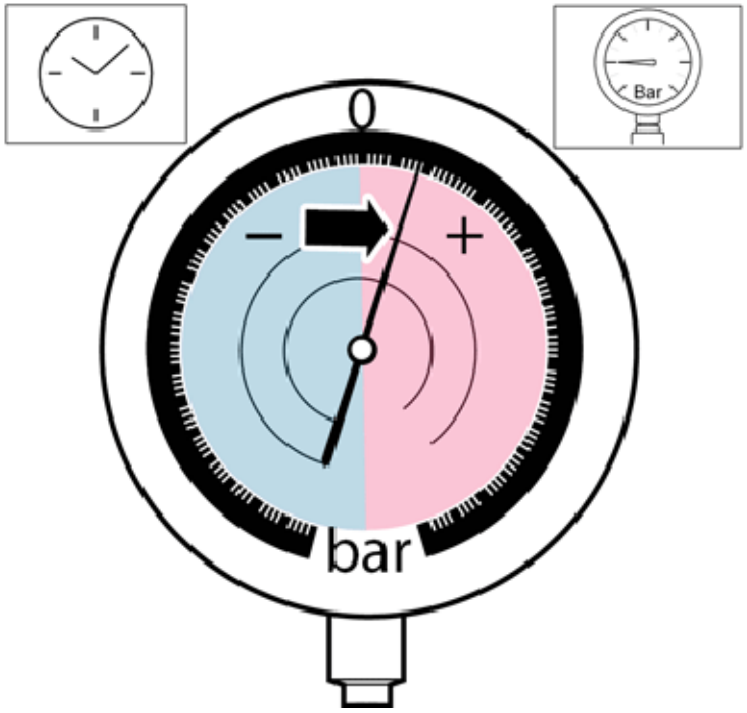

Fig. 11: Identifying Applied Pressured Measured On Gauge And Repair Time
Courtesy of VOLVO CARS CORPORATION

Create an overpressure using the tool and allow the resin filler to run out into the damaged area.

Fig. 12: Identifying Heat Applied To Repair
Courtesy of VOLVO CARS CORPORATION

Heat the pane of glass from the inside and rub the window by hand to remove any air from the damaged area and help the resin filler flow out.

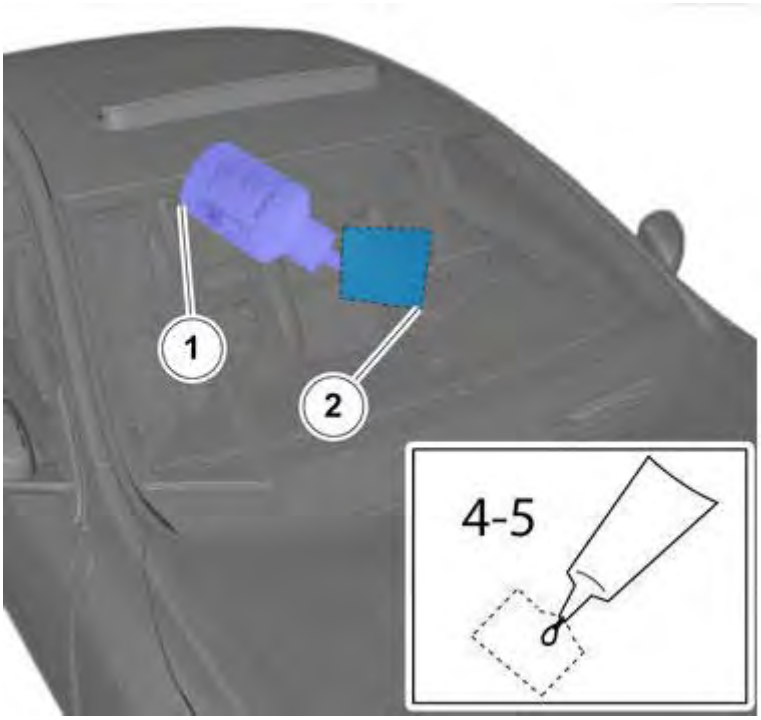

Fig. 13: Identifying Resin Filler Applied To Damaged Area On Plastic Film
Courtesy of VOLVO CARS CORPORATION

Apply resin filler directly to the damaged area. Apply a plastic film to keep the resin filler in place.

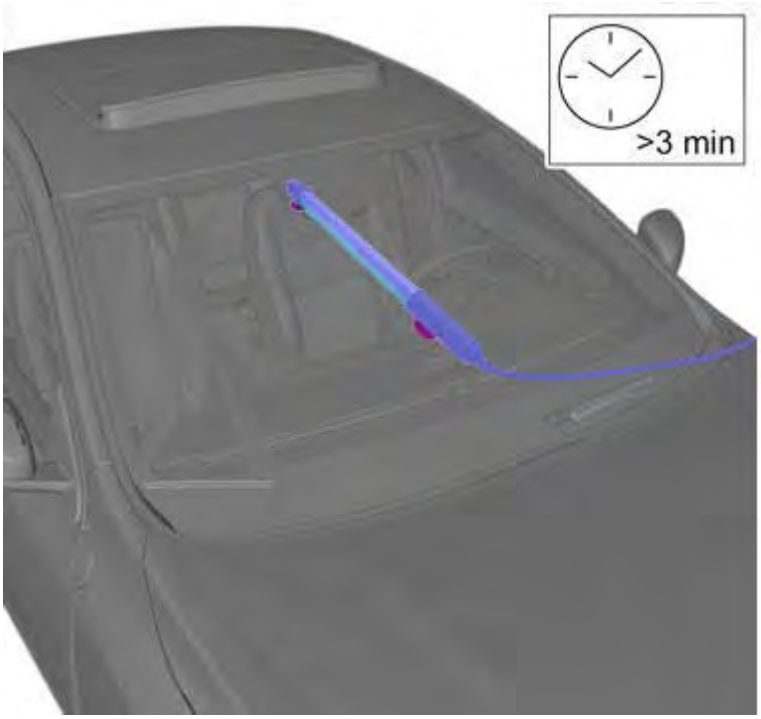

Fig. 14: Identifying UV Light To Cure Resin Filler
Courtesy of VOLVO CARS CORPORATION

Use UV light to cure the resin filler.

Fig. 15: Identifying Razor To Peel Away Plastic Film
Courtesy of VOLVO CARS CORPORATION

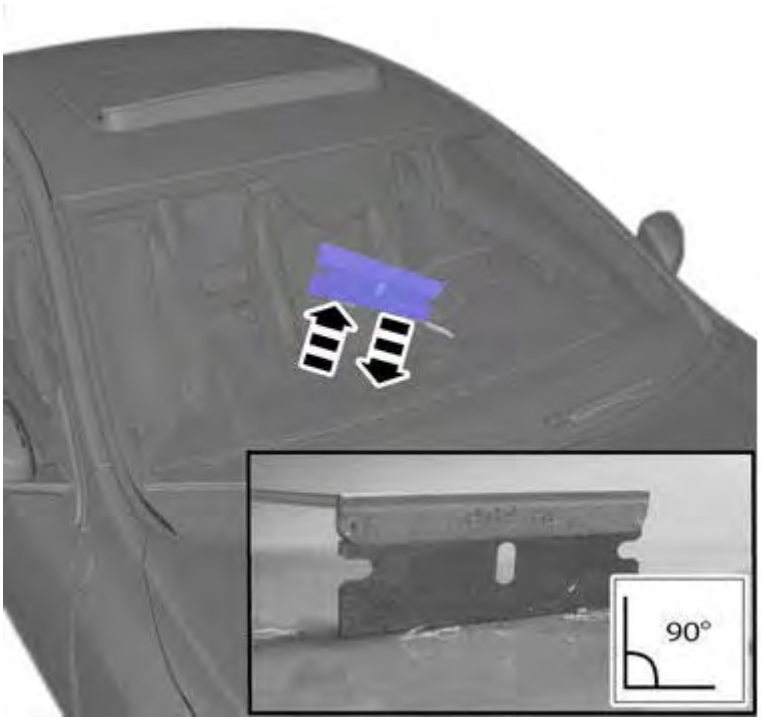

Fig. 16: Using Razor On Repaired Window Surface
Courtesy of VOLVO CARS CORPORATION

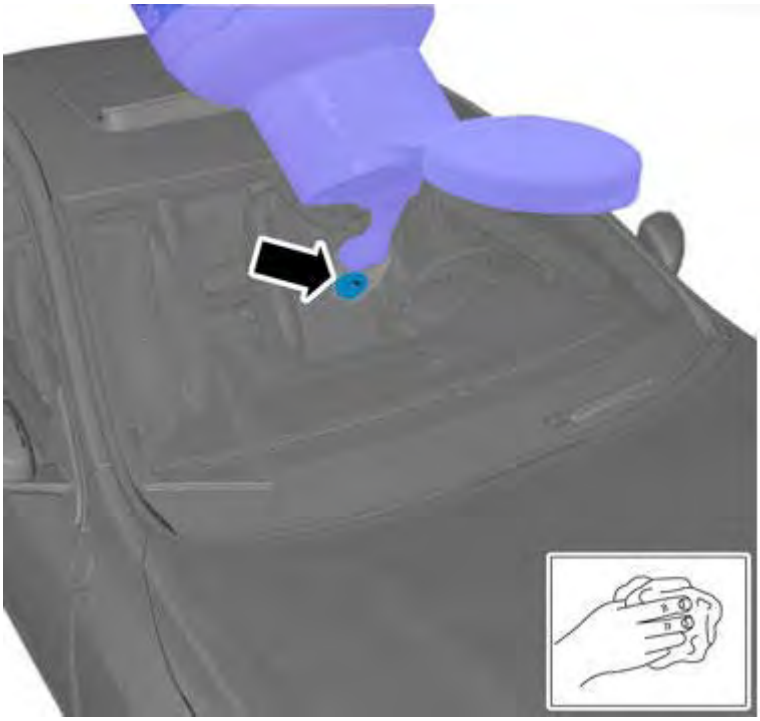

Fig. 17: Identifying Application Of Window Polish
Courtesy of VOLVO CARS CORPORATION

Polish with polish.

ACCESSORIES AND BODY, CAB

Exterior Trim, Glass, Weatherstrips - General Safety Information

GLASS AND SEALING MOLDING FOR WINDSCREEN AND REAR WINDOW

BONDED WINDOW, GENERAL SAFETY INFORMATION

HANDLING

WARNING: **INHALED : Polyurethane (PU) adhesive can cause asthma like symptoms. Isocyanate vapor from primer or PU adhesive can cause allergies in the respiratory tract.**

WARNING: **INHALED : Persons having a respiratory allergy may have an allergic reaction when handling polyurethane (PU) adhesive.**

WARNING: **Cured polyurethane (PU) adhesive can degrade if subjected to high temperatures. Isocyanide compounds can be released when grinding or welding in close proximity to cured PU adhesive.**

WARNING: **Use a fresh air mask.**

WARNING: **Wear protective gloves.**

ACCESSORIES AND BODY, CAB

Exterior Trim, Glass, Weatherstrips - Installation Instructions, Accessories

ALUMINUM DOOR SILL TRIM STRIP (2005-2011)

ALUMINUM DOOR SILL TRIM STRIP

REMOVE / INSTALL

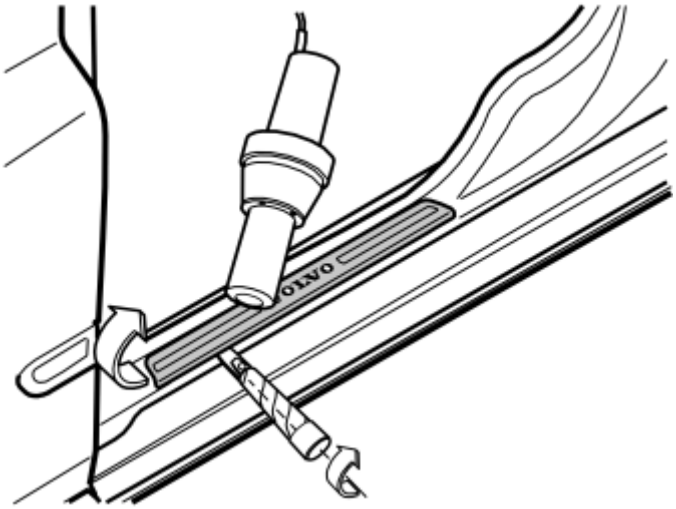

Fig. 1: Heating Door Sill Trim Strip Using Hot-Air Gun
Courtesy of VOLVO CARS CORPORATION

- Clean the door sills where the new door sill trim strips are to be installed
- Heat the door sill trim strip using a hot-air gun to approximately 60°C. At the same time detach the door sill trim strip. Use a plastic weatherstrip tool. Do not damage the painted surfaces.

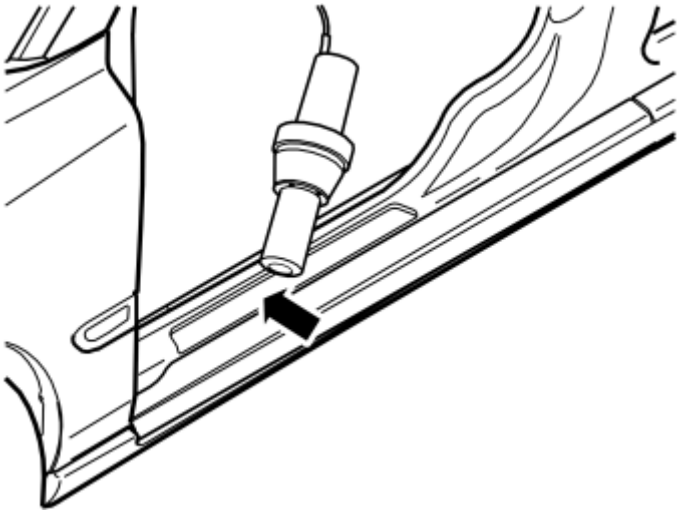

Fig. 2: Heat & Remove Remaining Pieces Of Tape

Courtesy of VOLVO CARS CORPORATION

- Heat and remove the remaining pieces of tape.

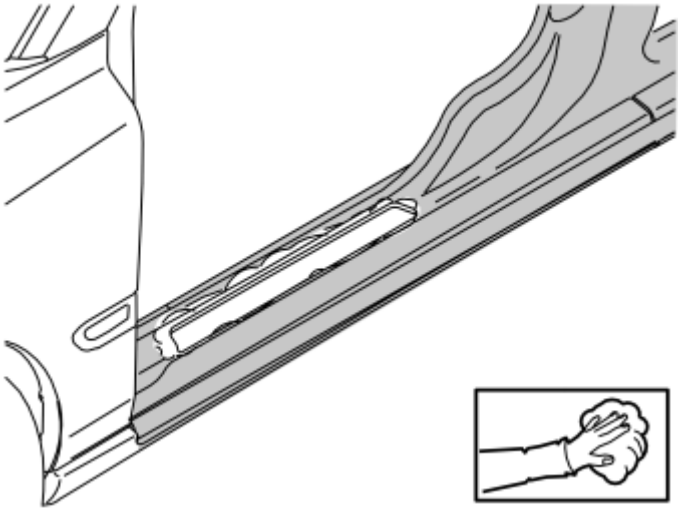

Fig. 3: Cleaning Surfaces Where New Door Trim Strip Is To Be Installed
Courtesy of VOLVO CARS CORPORATION

- Clean the surfaces where the new door trim strip is to be installed. Use a mixture of 30 % windscreen washer fluid and 70% water. Wipe dry.

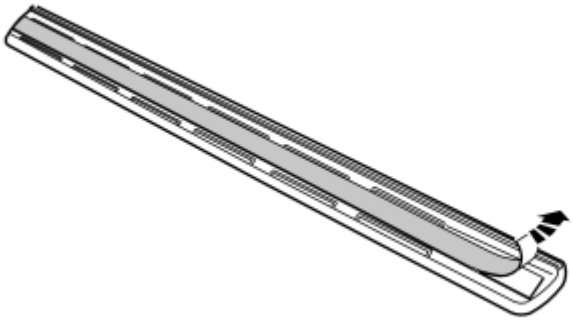

Fig. 4: Identifying Small Piece Of Masking Tape Pulled Off Of Sill Trim
Courtesy of VOLVO CARS CORPORATION

- Take the door sill trim strip from the kit. Pull off a small piece of masking tape.

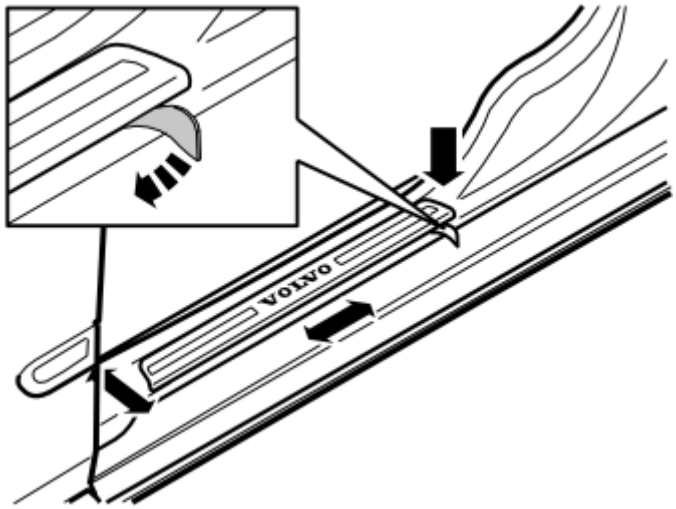

Fig. 5: Identifying Position And Alignment Of Door Sill Trim Strip
Courtesy of VOLVO CARS CORPORATION

- Carefully position and align the door sill trim strip in place of the old door sill trim strip
- Press the front edge so that the tape adheres
- Pull off the masking tape whilst maintaining the position of the door sill trim strip. Press the trim after removing the masking tape.

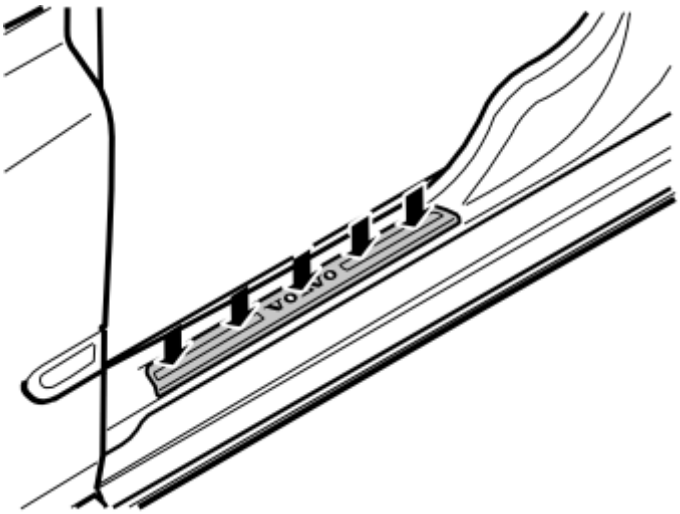

Fig. 6: Identifying Door Sill Trim Strip Secured In Position
Courtesy of VOLVO CARS CORPORATION

- Secure the door sill trim strip securely in position. Use a pressure of 2 kg/cm^2 along the entire length of the door sill trim strip.

NOTE: **Work must be carried out at a temperature of at least 20°C (68°F). Leave the car indoors for 2 hours after carrying out the work. Do not wash the car for 48 hours.**

RUNNING BOARD (2003-2011)

RUNNING BOARD

REMOVE / INSTALL

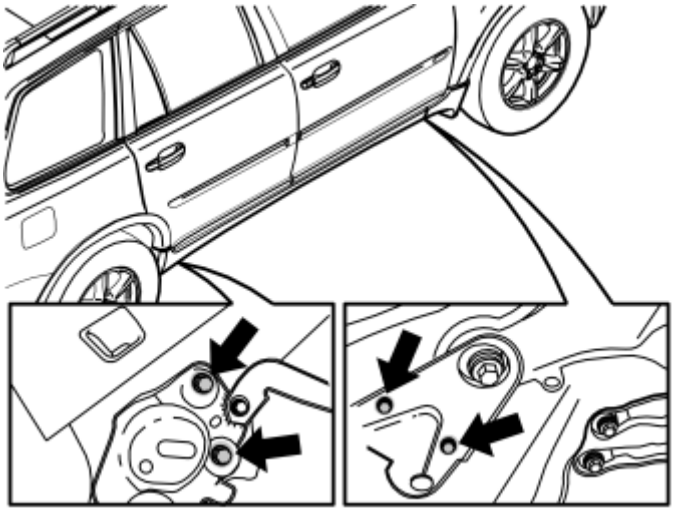

Fig. 7: Identifying Running Board
Courtesy of VOLVO CARS CORPORATION

- Wash clean under the door sills, in front of the rear wheels and behind the front wheels, on the right and left-hand sides.
- Raise the car.

NOTE: Ensure that the lifting tool does not block the location where the Running board is to be attached.

- Remove the two M10 screws from the front bottom flange and the two M12 screws at the rear, on the right and left-hand sides. Place the screws to one side, they will not be reused.
- Clean the mating surfaces, where the Running board is to be attached, from dirt and any underseal.

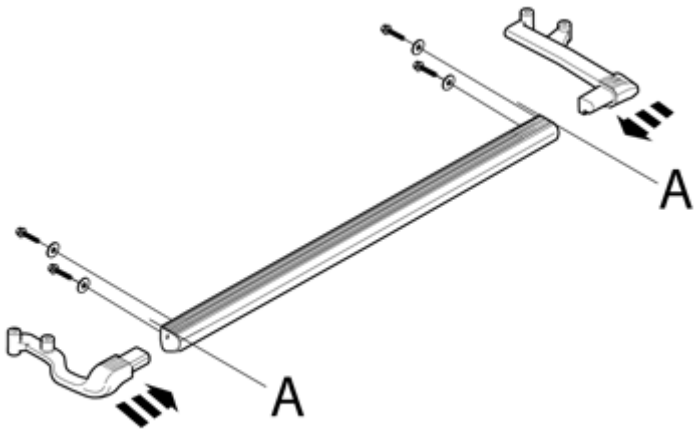

Fig. 8: View Of Aluminum Profile And Mounting Brackets
Courtesy of VOLVO CARS CORPORATION

- Take an aluminum profile, one mounting for each, four M8 screws and washers from the kit. Install the mountings in the aluminum profile as illustrated and screw in the four M8 screws. Check that there is no play between the aluminum profile and the mounting brackets at (A). Torque tighten the M8 screws to **25 Nm (19 lbf. ft)** .
- Perform the same for the other aluminum profile.

INSTALL

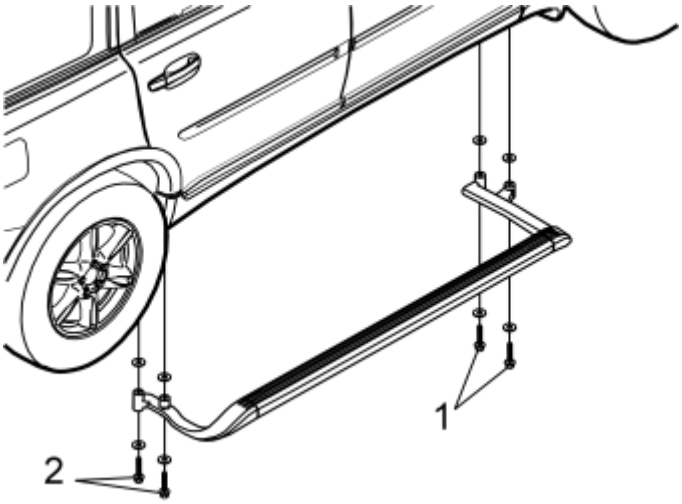

Fig. 9: View Of Installing Running Boards
Courtesy of VOLVO CARS CORPORATION

HINT: It is recommended that two people help when installing the Running board.

- Install the Running board with the M10 (1) and M12 (2) screws with relevant washers.

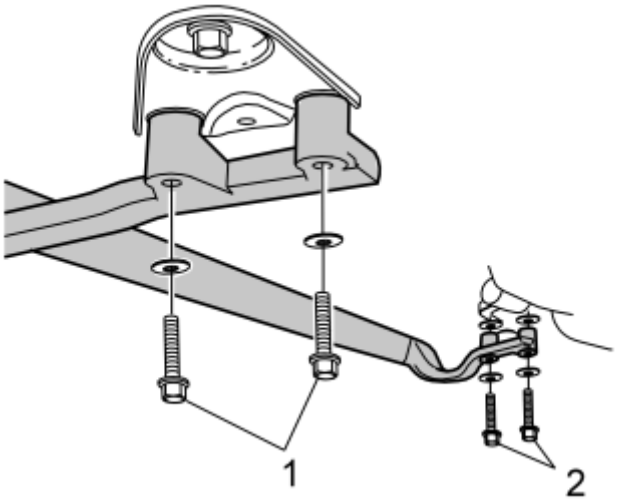

Fig. 10: Identifying Running Board Mounting Screws
Courtesy of VOLVO CARS CORPORATION

- Tighten the M10 (1) screws to **50 Nm (37.5 lbf. ft)** and the M12 (2) to **80 Nm (60 lbf. ft)** .

RUNNING BOARD, FOOT STEP

NOTE: **During installation the underlying surface must be kept at a temperature of at least +15°C (59°F).**

Do not wash the car within 48 hours after installation is completed.

Allow the car to remain inside for at least two hours after installation is completed if outside temperature is less than +15°C (59°F).

PREPARATION

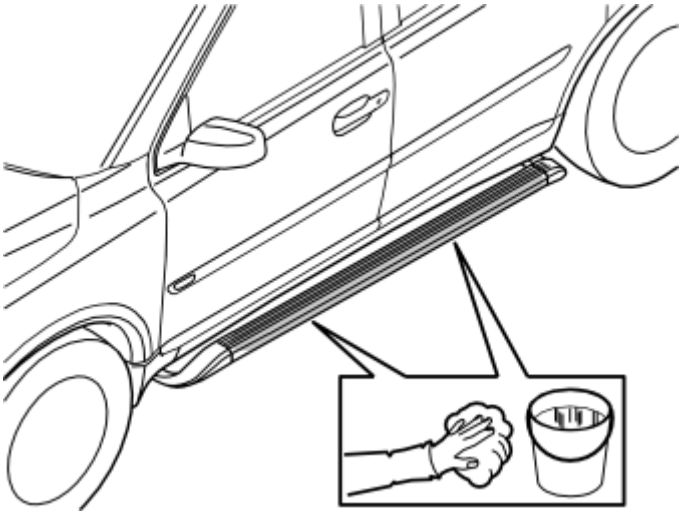

Fig. 11: Wash Running Board
Courtesy of VOLVO CARS CORPORATION

- Wash the "Running board" clean on the top and along the sides.
- Wipe dry.

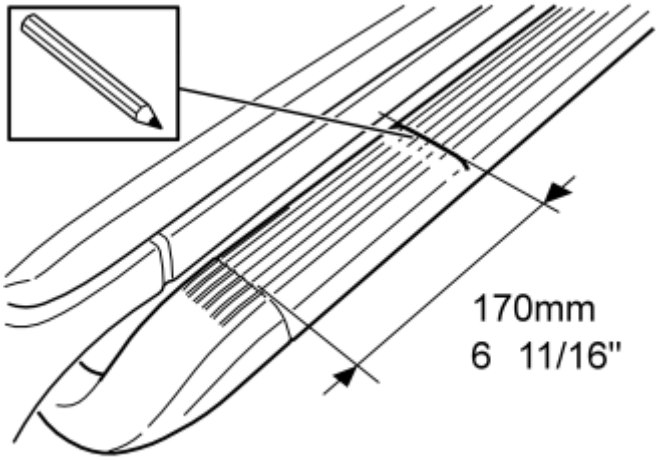

Fig. 12: Measuring Front Joint Running Board
Courtesy of VOLVO CARS CORPORATION

- Measure **170 mm (6 11/16")** from the front joint between the "Running board" profile and the mounting as illustrated.
- Mark with pencil.

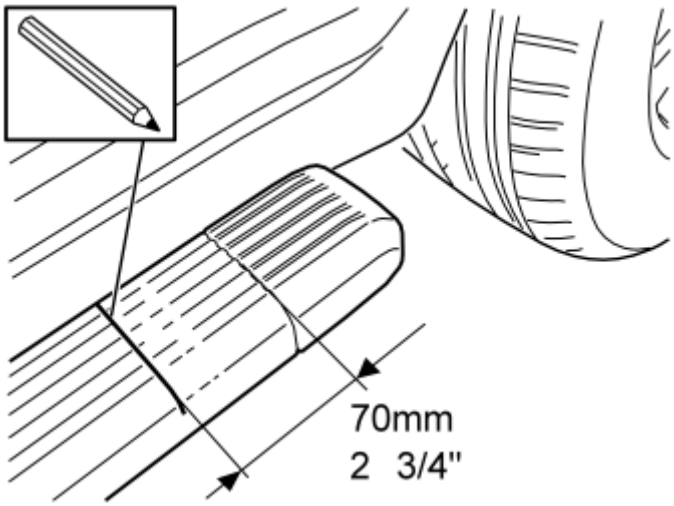

Fig. 13: Measuring Rear Joint Running Board
Courtesy of VOLVO CARS CORPORATION

- Measure **70 mm (2 3/4")** from the rear joint between the "Running board" profile and the mounting as illustrated.
- Mark with pencil.

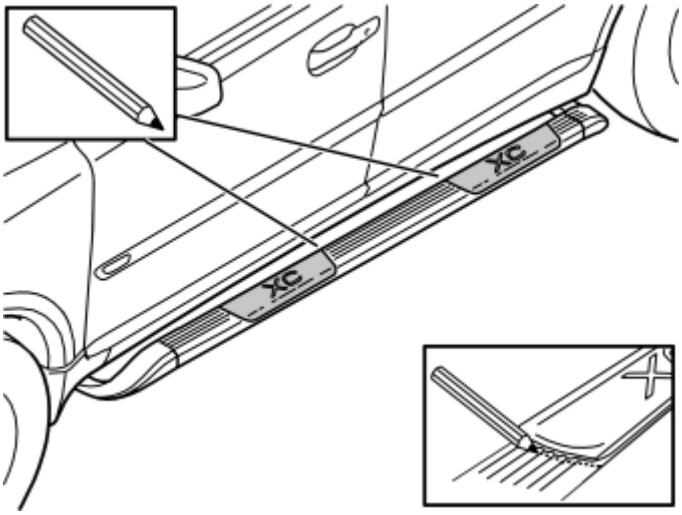

Fig. 14: View Of Aligned Foot Steps
Courtesy of VOLVO CARS CORPORATION

- Align the foot steps to the "Running board" with the outer edge at the pencil markings and in toward the center of the "Running board" as illustrated.
- Check that the foot step is correctly aligned and draw around it with a whiteboard pen.

INSTALL

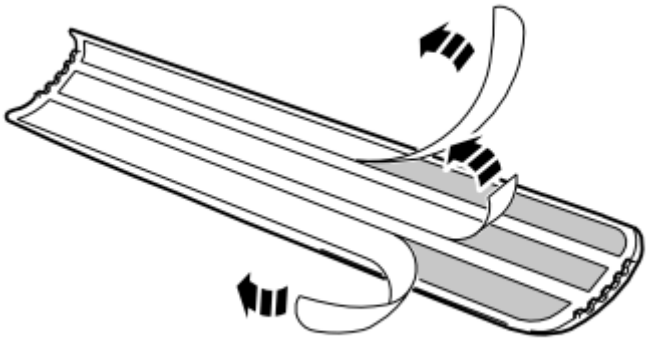

Fig. 15: View Of Foot Step Protective Strips
Courtesy of VOLVO CARS CORPORATION

- Remove the protective film from the three strips of tape.

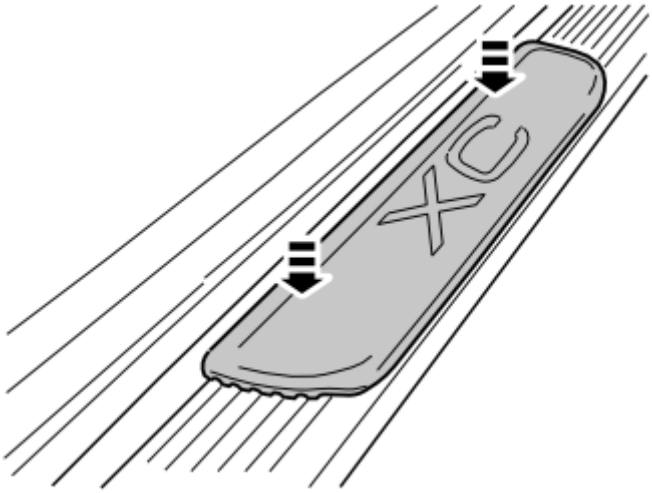

Fig. 16: Applying Foot Step Above Running Board
Courtesy of VOLVO CARS CORPORATION

- Hold the foot step slightly above the "Running board", inside the markings drawn. Align the foot step in relation to the "Running board" and check that the cut-outs in the foot step are opposite the raised areas in the "Running board".
- Lower the foot step and press it firmly into the "Running board".

NOTE: Take care with the fit as the tape on the underside of the foot step adheres immediately on contact with the surface.

- Repeat the above for both sides and for all foot steps.
- Wash away the markings.

DECOR PANEL, EXTERIOR (2006-2011)

NOTE: Do not do the work at a temperature below 20°C (68°F).

INSTALLING THE DECOR PANEL

DOOR MIRRORS

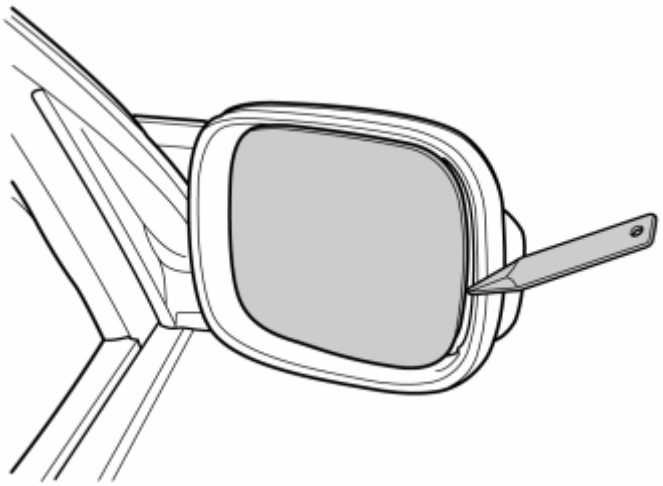

Fig. 17: Pry Loose The Mirror Glass With Weatherstrip
Courtesy of VOLVO CARS CORPORATION

- Carefully pry loose the mirror glass using a weatherstrip tool.

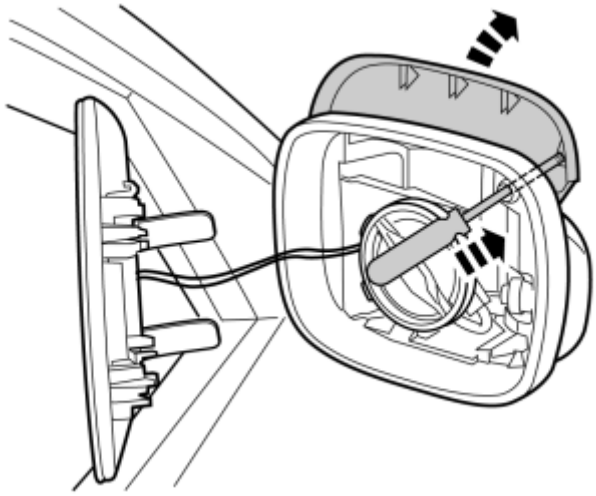

Fig. 18: Pry Out Mirror With Screwdriver
Courtesy of VOLVO CARS CORPORATION

- Carefully pry out the mirror cover using a small screwdriver.

NOTE: Do not damage the wiring for the mirror glass or the damper blade.

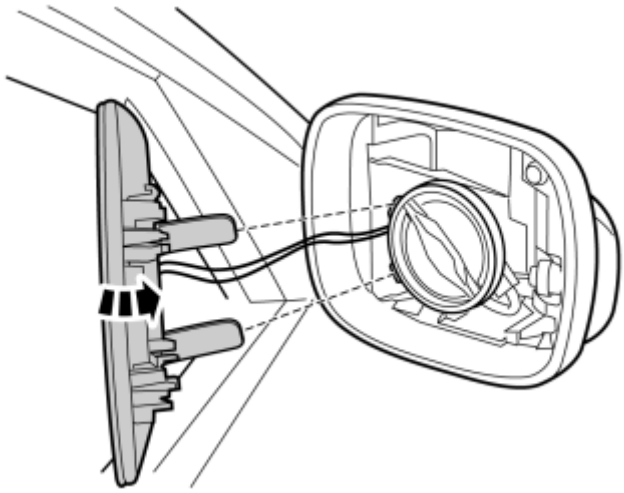

Fig. 19: Reinstall The Mirror Glass
Courtesy of VOLVO CARS CORPORATION

- Reinstall the mirror glass.

NOTE: Ensure that the damper blade fits in its cradle.

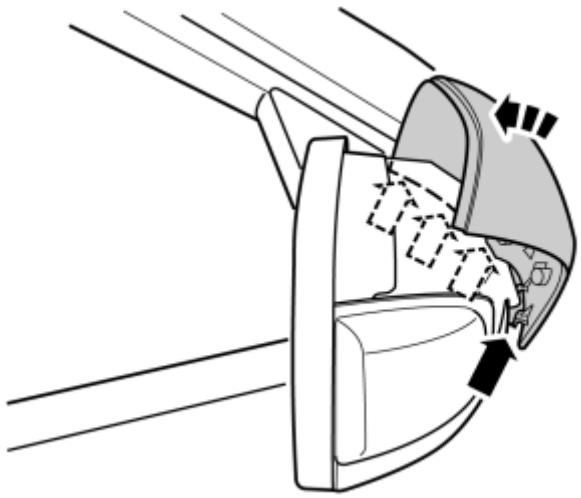

Fig. 20: Install The New Cover
Courtesy of VOLVO CARS CORPORATION

- Install the new cover.
- Repeat the steps for the other mirror.

REAR SIDE WINDOW

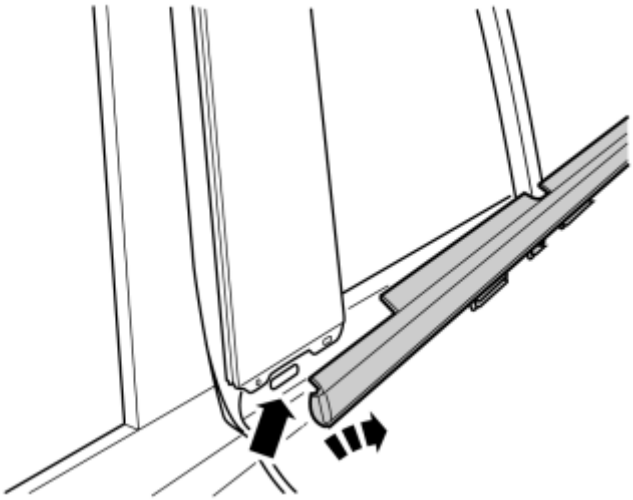

Fig. 21: Lift Up Rear End Of Weatherstrip On Rear Doors
Courtesy of VOLVO CARS CORPORATION

- Lift up the rear end of the weatherstrip on the rear doors so that the hooks release. Lift it up further and turn it out from the window.

NOTE: Take care not to bend the metal strip.

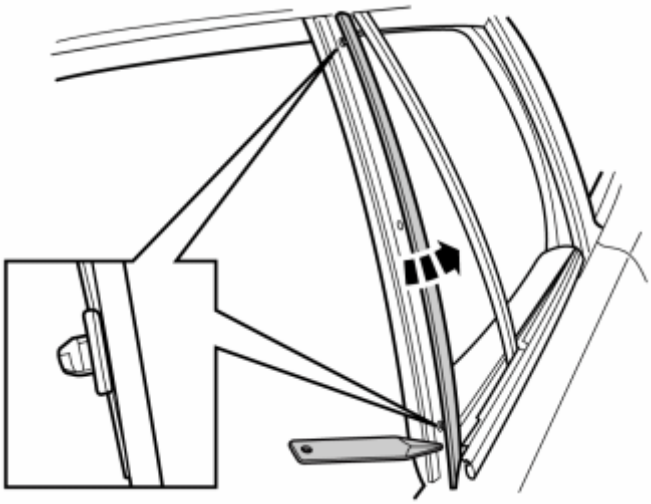

Fig. 22: View Of Rear Edge Panel
Courtesy of VOLVO CARS CORPORATION

- Carefully pry off the panel at the rear edge using a weatherstrip tool until the two clips at the top and bottom release.

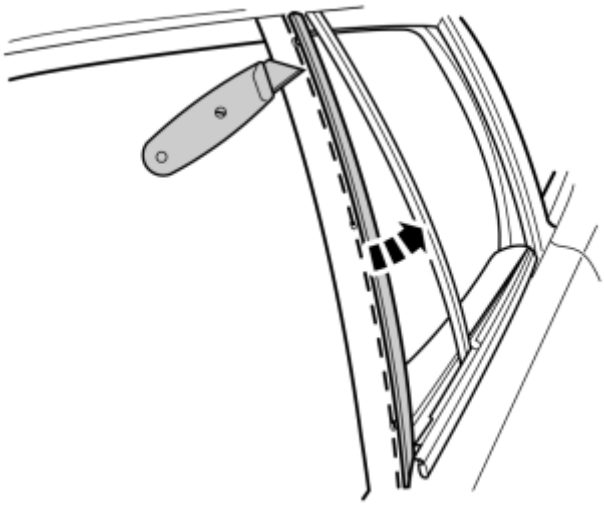

Fig. 23: Cutting Off The Panel's Front Edge
Courtesy of VOLVO CARS CORPORATION

- Turn the panel out at the rear edge so that the tape at the front edge can be cut off.
- Now carefully cut off the panels front edge from the tape from the top and down.

NOTE: Place the piece against the panel to prevent cutting through the paint.

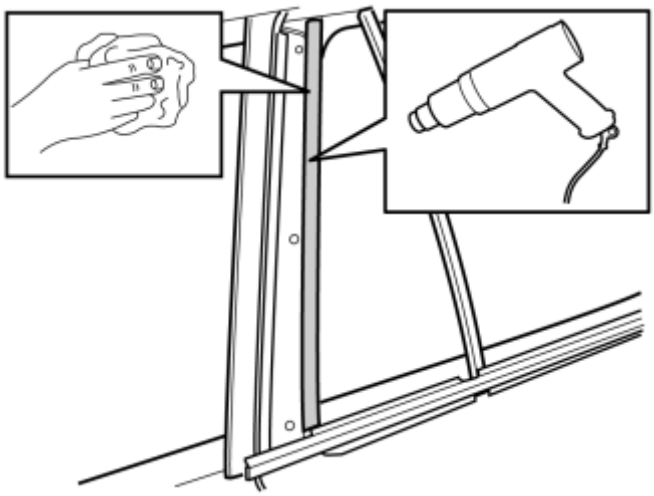

Fig. 24: View Of Tape Removal With Hot Air Gun
Courtesy of VOLVO CARS CORPORATION

- Remove the remaining pieces of tape. Use a hot air gun to soften the tape.

NOTE: Do not damage the rubber strip when using the hot air gun.

- Clean the marked surface using isopropanol and wipe dry.

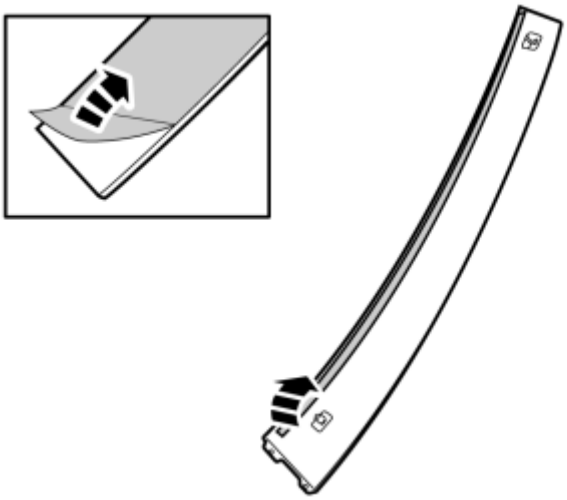

Fig. 25: Identifying The Decor Panel Protective Tape
Courtesy of VOLVO CARS CORPORATION

- Remove the protective tape from the decor panel.

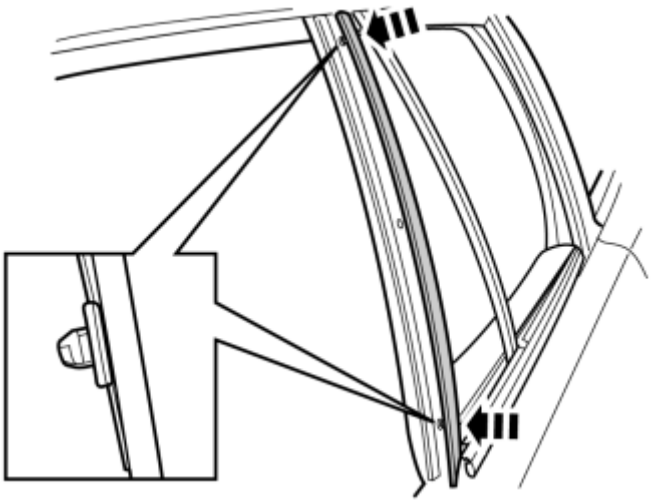

Fig. 26: View Of Positioning Panel Clips Into Holes
Courtesy of VOLVO CARS CORPORATION

- Position the panel clips in the holes in the door arch and press into place.

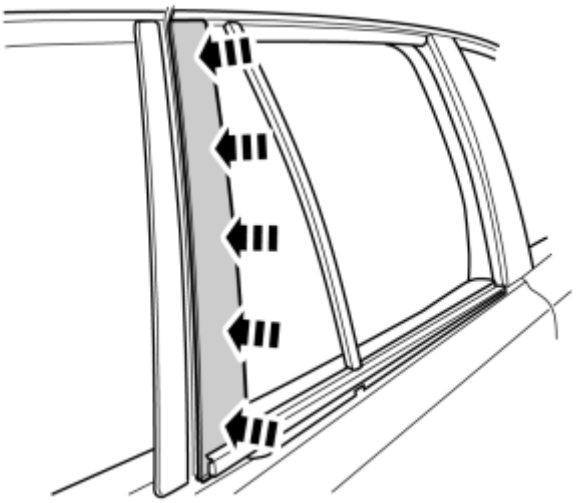

Fig. 27: View Of Decor Strip Firmly Onto The Clips And Tape
Courtesy of VOLVO CARS CORPORATION

- Press the decor strip firmly onto the clips and tape.

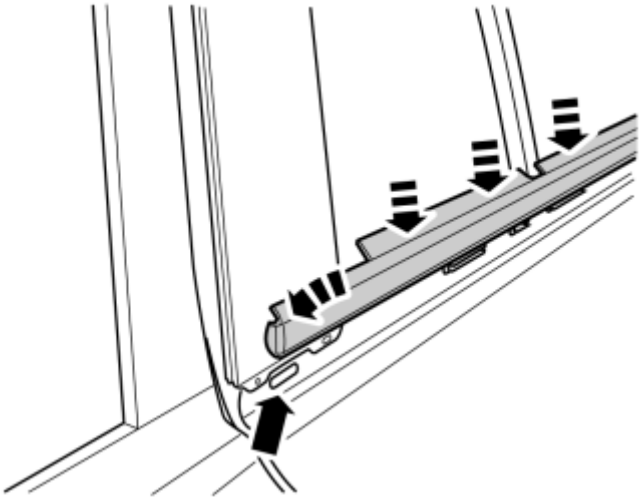

Fig. 28: View Of Pressing Weatherstrip Into Place
Courtesy of VOLVO CARS CORPORATION

- Press the weatherstrip into place. Ensure that the hook at the rear edge engages in the hole in the door arch.
- Repeat the steps for the other side window.

BUMPER COVER

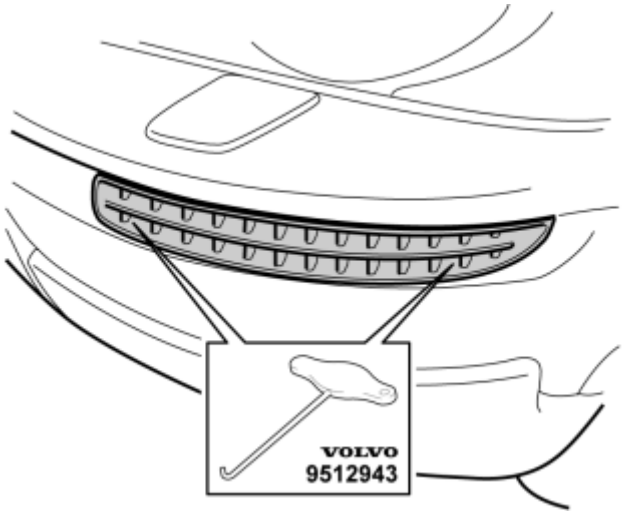

Fig. 29: View Of Bumper Cover Grille
Courtesy of VOLVO CARS CORPORATION

- Remove the bumper cover grille on both sides by carefully pulling them off using tool **part no. 9512943** .

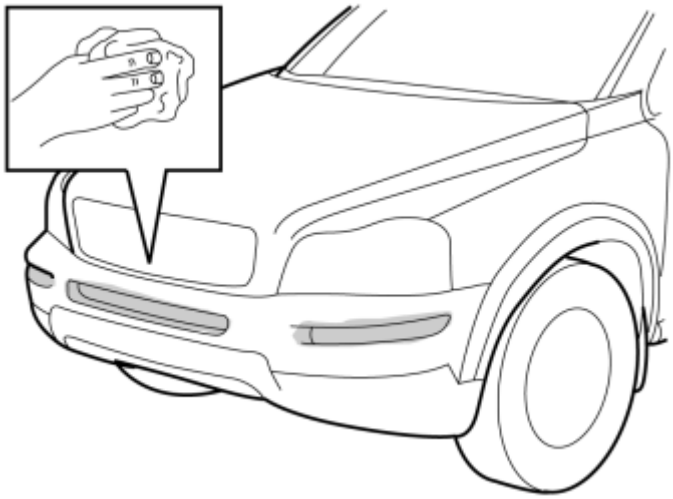

Fig. 30: Clean The Bumper Cover
Courtesy of VOLVO CARS CORPORATION

- Clean the bumper cover where the decor moldings are to be secured.

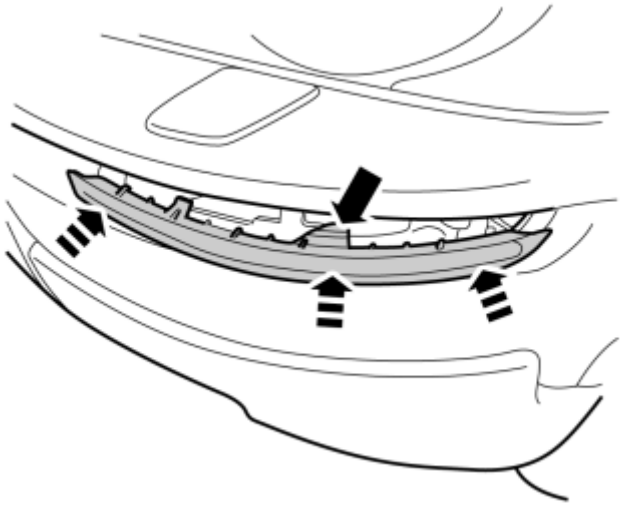

Fig. 31: Pressing Decor Panel Into Place
Courtesy of VOLVO CARS CORPORATION

- Align the decor panel in the cut-out and press it into place. Ensure that all hooks engage.
- Repeat the operation on the other side.

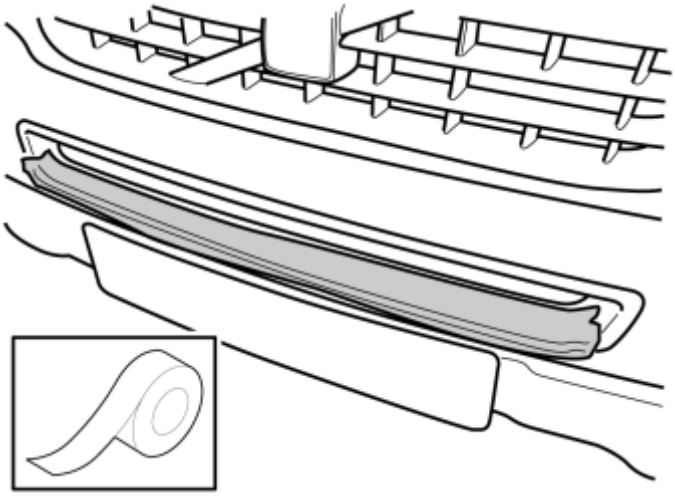

Fig. 32: View Of Protective Tape Along Lower Edge Of Center Grill
Courtesy of VOLVO CARS CORPORATION

- Apply a piece of tape as protection along the lower edge of the central grille.

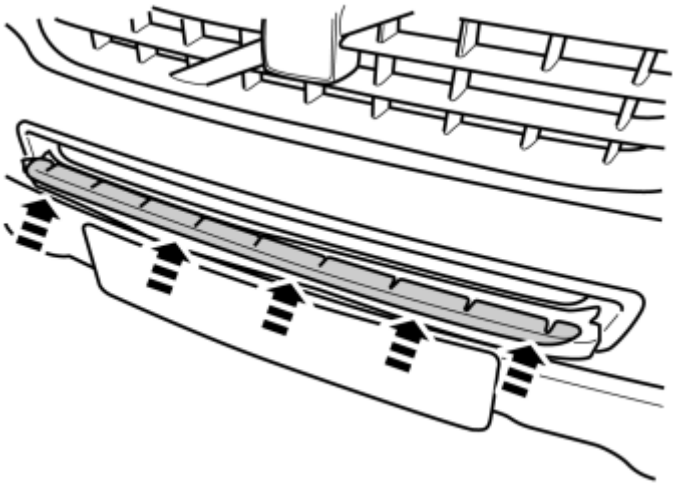

Fig. 33: Identifying Long Decor Molding
Courtesy of VOLVO CARS CORPORATION

- Take a long decor molding from the kit. Place the upper side of the long horizontal plate in the grille and secure it.

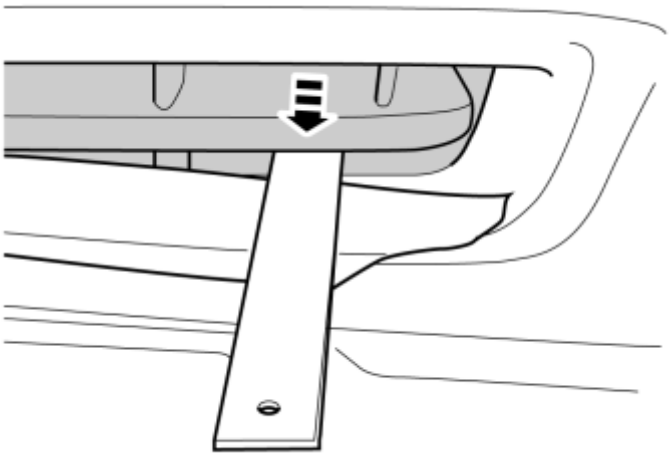

Fig. 34: View Of Lower Side Of The Plate Using A Weatherstrip Tool
Courtesy of VOLVO CARS CORPORATION

- Hold the lower side of the plate using a weatherstrip tool and at the same time press the upper side of the decor molding until the catches engage the plate. A click should be clearly heard.
- Repeat this along the entire decor molding.
- Remove the tape strip.

TAIL LAMP

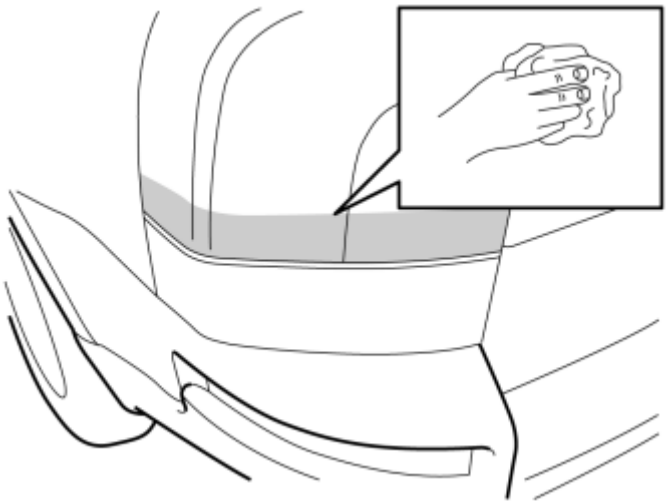

Fig. 35: Clean The Lower Edge Of The Tail Lamp
Courtesy of VOLVO CARS CORPORATION

- Clean the lower edge of the tail lamp using isopropanol. Wipe dry.

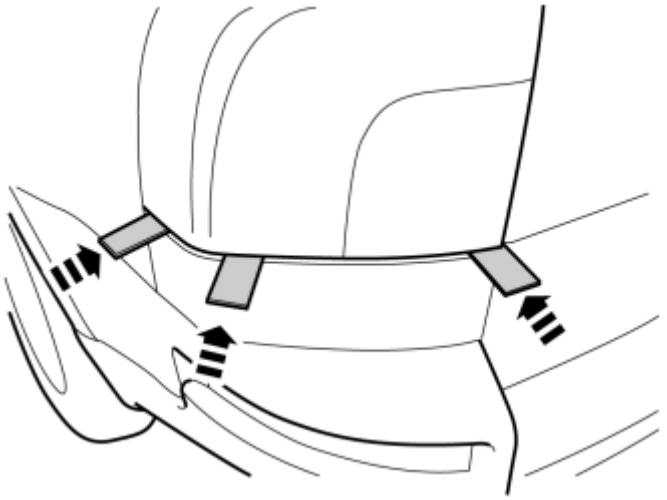

Fig. 36: View Of Cardboard Between Lower Edge Of Tail Lamp
Courtesy of VOLVO CARS CORPORATION

- Cut off a few pieces of cardboard and insert them between the lower edge of the tail lamp and the panel.

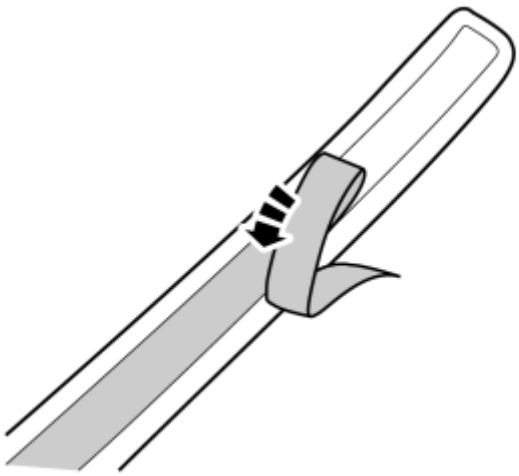

Fig. 37: View Of Decor Molding Tail Lamp Tape
Courtesy of VOLVO CARS CORPORATION

- Take one of the decor moldings for the tail lamp from the kit. Remove a small piece of protective tape from the longer part of the molding.

Illustration A

Fig. 38: View Of Molding Against Tail Lamp
Courtesy of VOLVO CARS CORPORATION

- Position the molding against the tail lamp and the cardboard pieces so that the angled corner of the molding aligns with the corner of the tail lamp (1).
- Press the molding against the tail lamp where the tape was removed (2).

Illustration B

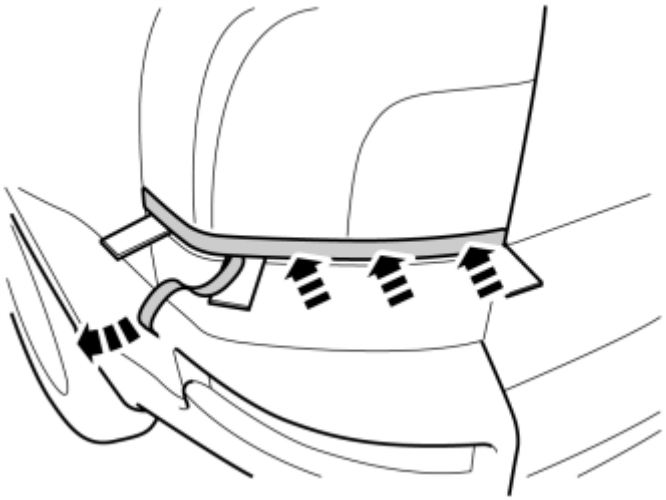

Fig. 39: Pulling Off Protective Tape From Molding
Courtesy of VOLVO CARS CORPORATION

- Hold the molding in position against the cardboard pieces and then pull off the protective tape at the same time as pressing the molding down.

  Continue until the entire molding has been secured in place.

- Remove the cardboard pieces.

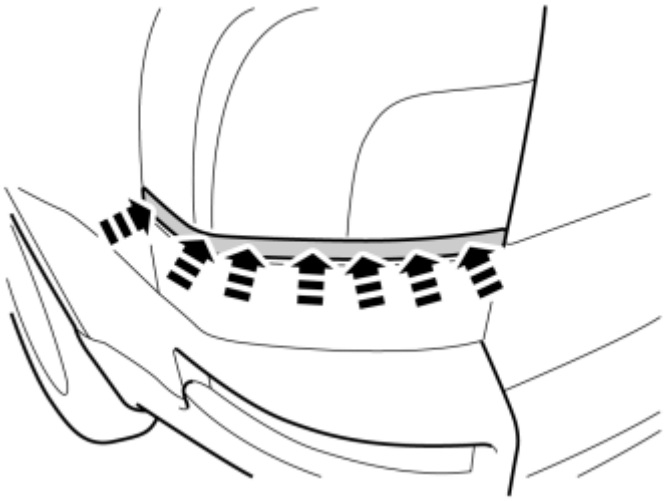

Fig. 40: View Of Securing The Molding Properly On The Tail Lamp
Courtesy of VOLVO CARS CORPORATION

- Now secure the molding properly on the tail lamp along its entire length.
- Repeat the steps for the other tail lamp.

GRILLE, FRONT (2003-2009)

GRILLE, FRONT

PREPARATION

Fig. 41: Identifying Engine Hood
Courtesy of VOLVO CARS CORPORATION

- Open the engine hood.

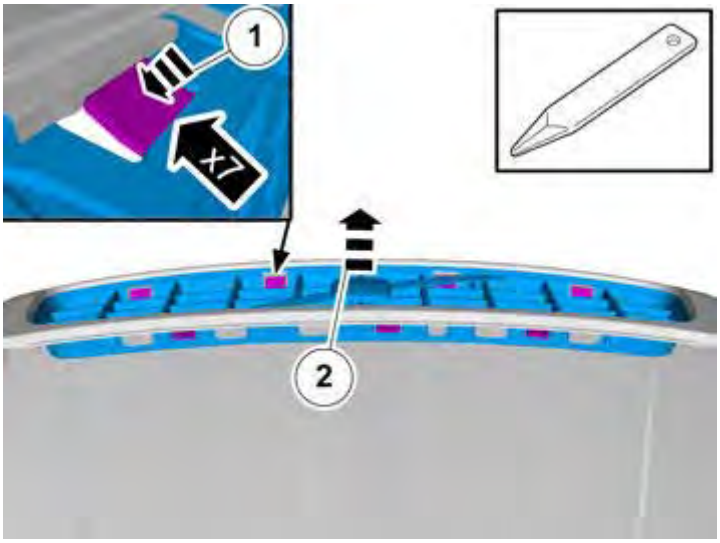

Fig. 42: Identifying Mounting Hooks
Courtesy of VOLVO CARS CORPORATION

- Release the mounting hooks and pull out the grille.

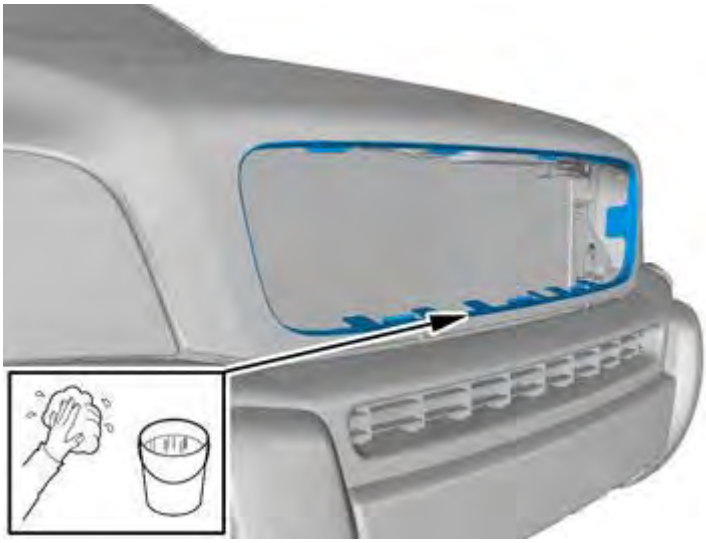

Fig. 43: Cleaning Old Grille Location
Courtesy of VOLVO CARS CORPORATION

- Clean the area where the old grille was located.

INSTALL

Fig. 44: Installing New Grill
Courtesy of VOLVO CARS CORPORATION

- Take a new grille from the kit. Ensure that all catches engage.

MIRROR, COVER (2007-2011)

MIRROR, COVER

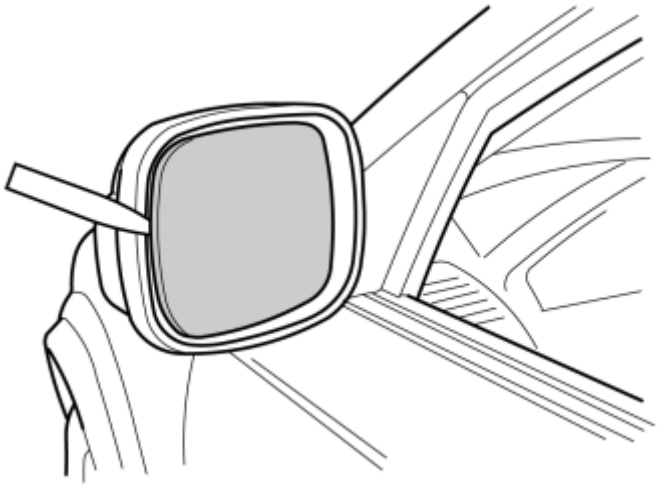

Fig. 45: Identifying Pry Tool To Remove Mirror Glass
Courtesy of VOLVO CARS CORPORATION

- Carefully pry off the mirror glass.

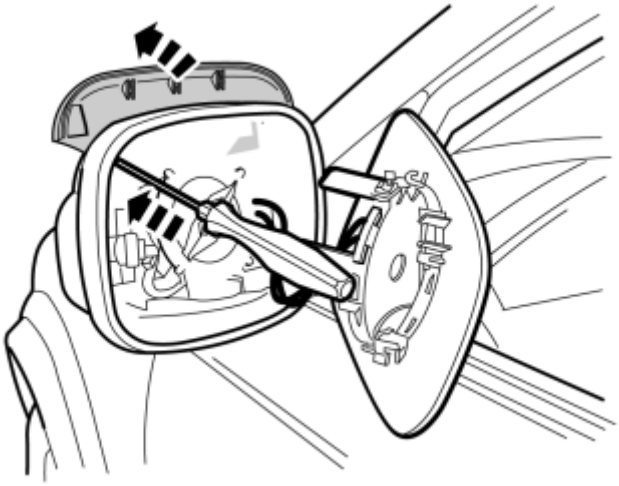

Fig. 46: Identifying Removal Of Mirror Cover
Courtesy of VOLVO CARS CORPORATION

- Press out the mirror's cover using a small screwdriver.
- Remove the cover. New cover is included in the kit.

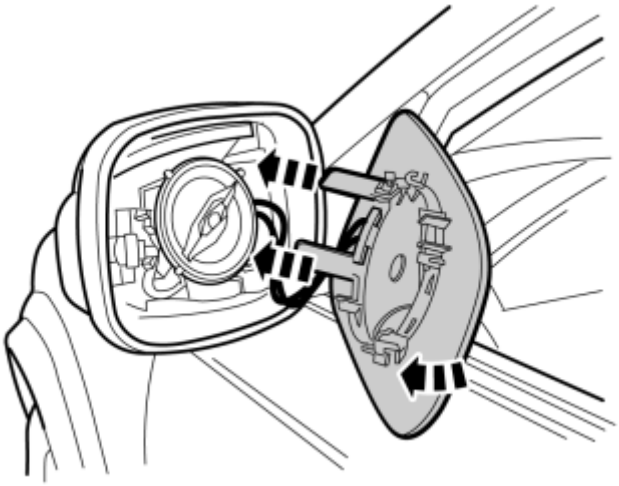

Fig. 47: Identifying Mirror Glass
Courtesy of VOLVO CARS CORPORATION

- Make sure that the damper blades end up in their grooves.
- Carefully press the mirror glass into place.

A, B, and C

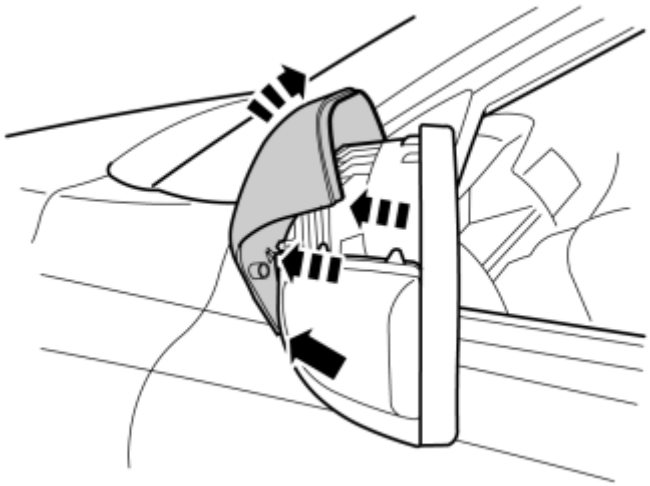

Fig. 48: Installation Of Mirror Cover (1 Of 3)
Courtesy of VOLVO CARS CORPORATION

- Press the new cover on the mirror. Press all the way around so that all catches engage.
- Repeat on the car's other side.

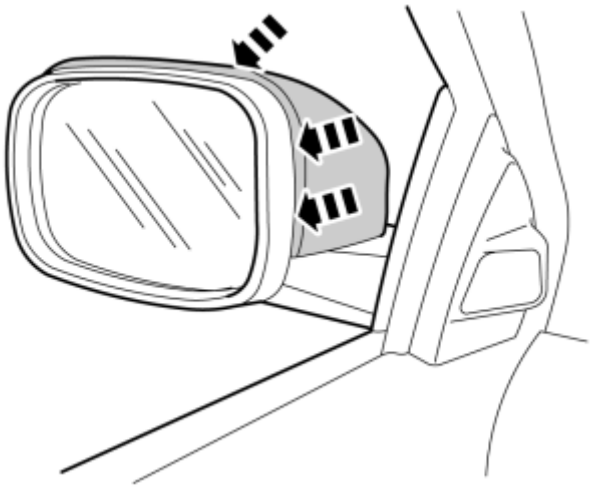

Fig. 49: Identifying Catches
Courtesy of VOLVO CARS CORPORATION

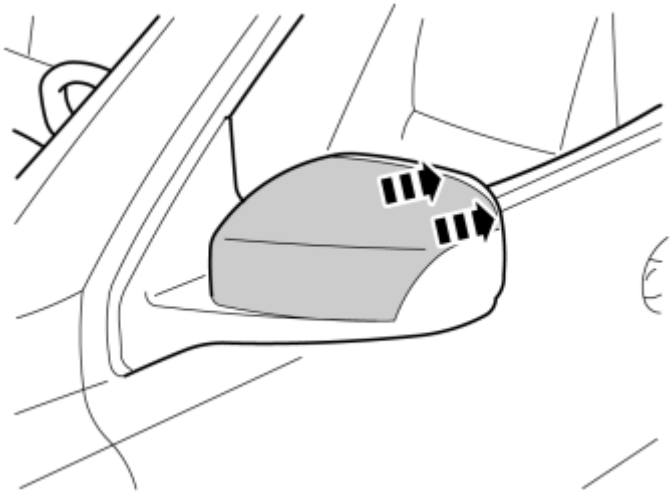

Fig. 50: Pressing In Cover
Courtesy of VOLVO CARS CORPORATION

MIRRORS, FOLDABLE (2009-2011)

MIRRORS, FOLDABLE

PREPARATIONS

Fig. 51: Identifying Ignition Switch Turned To Position 0
Courtesy of VOLVO CARS CORPORATION

- Turn the ignition key to position 0.

NOTE: **Wait at least three minutes before unplugging the connectors or removing other electrical equipment.**

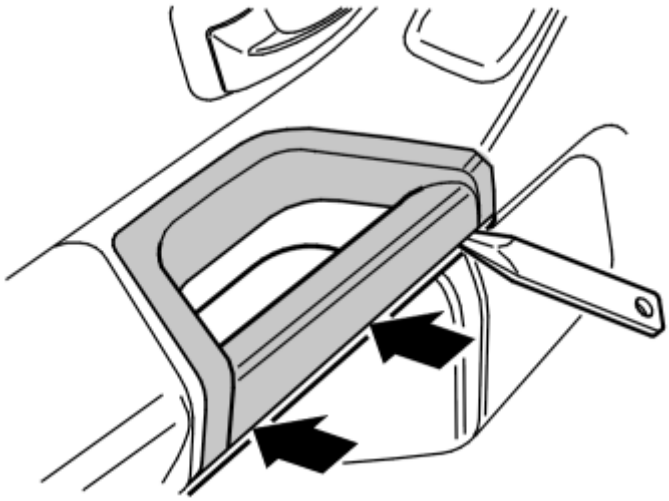

Fig. 52: Pry Off The Handle Using A Weatherstrip Tool
Courtesy of VOLVO CARS CORPORATION

- Carefully pry off the handle using a weatherstrip tool. Start on one side.

Illustration A

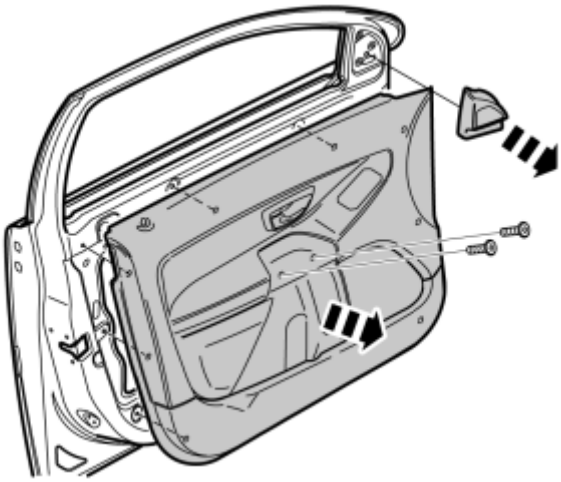

Fig. 53: Identifying Door Panel Screws
Courtesy of VOLVO CARS CORPORATION

- Carefully pry off the panel at the front edge of the side window.
- Remove the two screws holding the door panel.
- Carefully pull off the door panel. It is secured by surrounding clips.

Illustration B

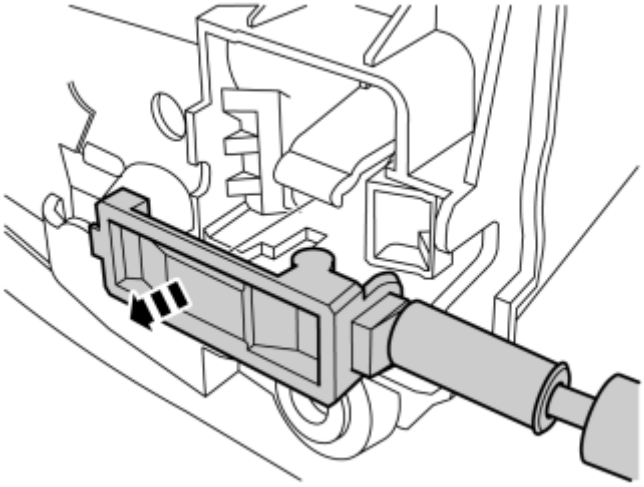

Fig. 54: View Of Handle Wire Connector
Courtesy of VOLVO CARS CORPORATION

- Detach the wire from the opening handle and disconnect the connectors.

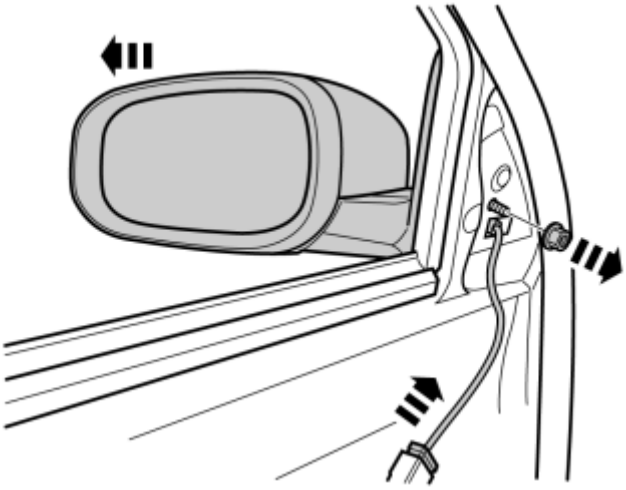

Fig. 55: Identifying Removal Of Door Mirror Nut
Courtesy of VOLVO CARS CORPORATION

- Remove the nut, disconnect the connector and remove the mirror.

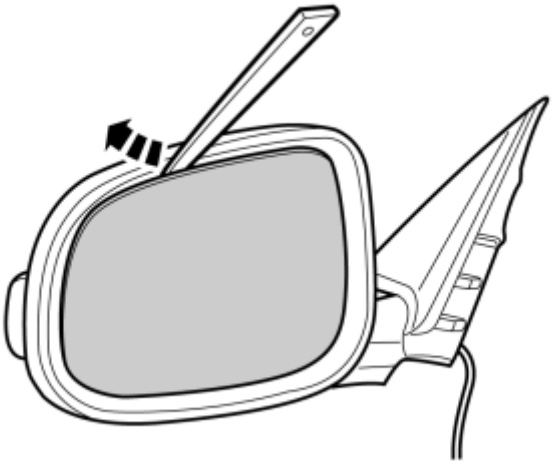

Fig. 56: Identifying Removal Of Door Mirror Glass
Courtesy of VOLVO CARS CORPORATION

- Carefully pry off the mirror glass.

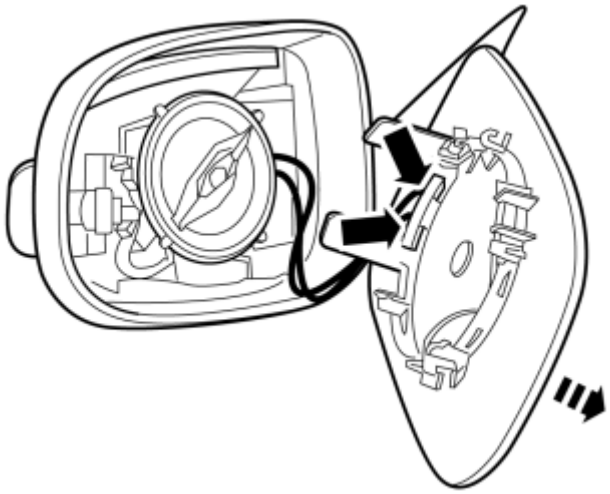

Fig. 57: Disconnecting Mirror Glass Cables
Courtesy of VOLVO CARS CORPORATION

- Carefully disconnect the two cables from the mirror glass. The glass will be reused.

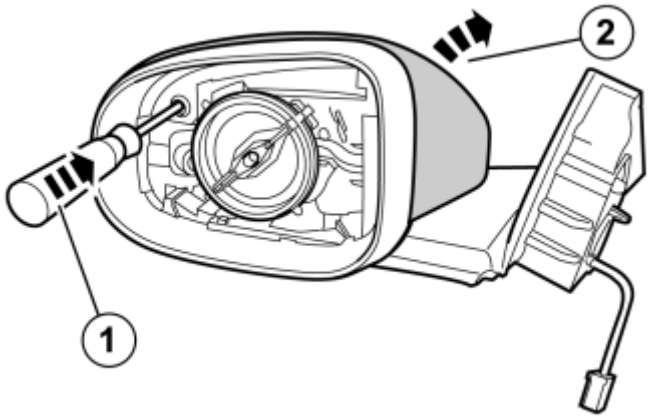

Fig. 58: Identifying Removal Of Door Mirror Cover
Courtesy of VOLVO CARS CORPORATION

- Press the mirror cover out using a small screwdriver. The cover is to be reused.

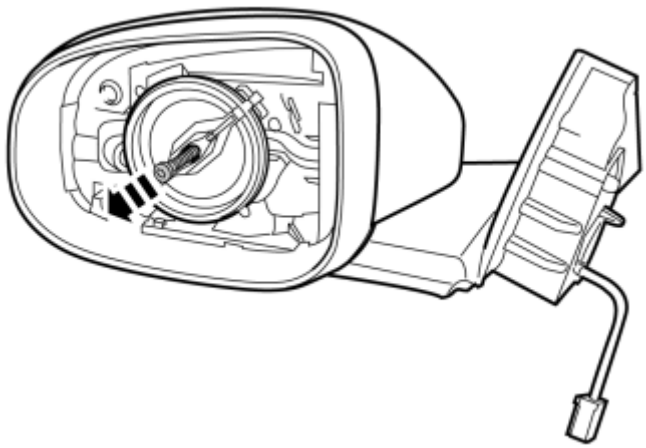

Fig. 59: Identifying Removal Of Mirror Motor Screw
Courtesy of VOLVO CARS CORPORATION

- Remove the screw holding the mirror motor.

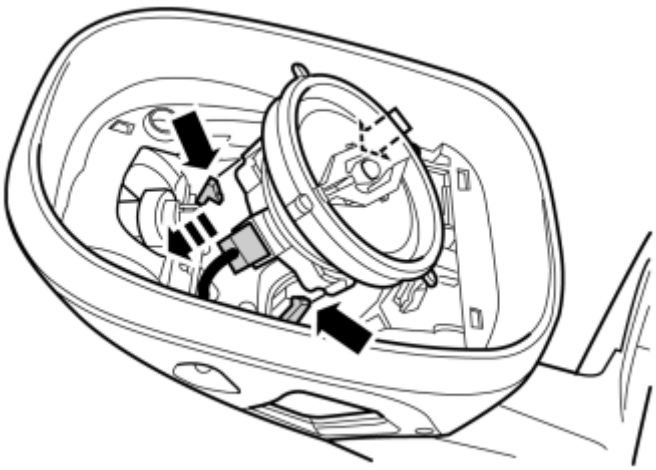

Fig. 60: Identifying Removal Of Mirror Motor
Courtesy of VOLVO CARS CORPORATION

- Detach the motor by carefully prying up the catches at the side and underneath using a small screwdriver.
- Unhook the motor from the remaining catches and disconnect the connector. The motor is to be reused.

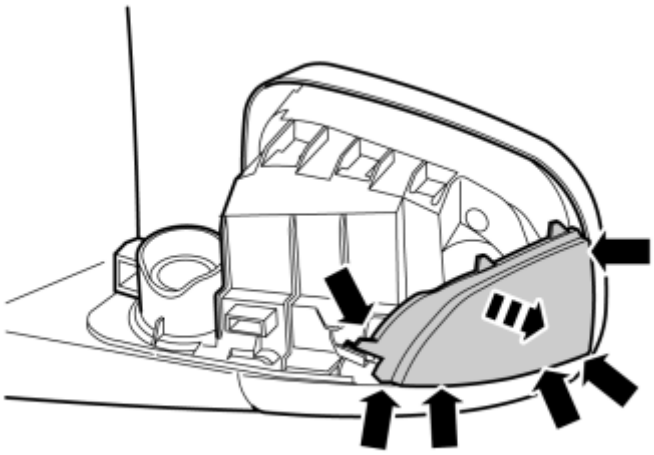

Fig. 61: Identifying Indicator Lamp From The Mirror Housing
Courtesy of VOLVO CARS CORPORATION

- Carefully detach the indicator lamp from the mirror housing. It is secured by surrounding catches.

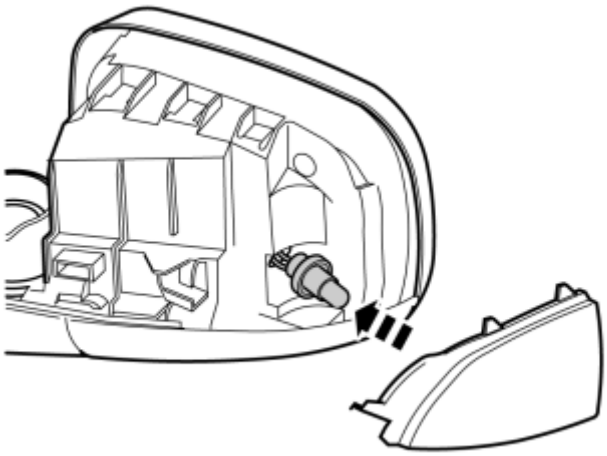

Fig. 62: Identifying Bulb Socket From Indicator Lamp
Courtesy of VOLVO CARS CORPORATION

- Detach the socket with the bulb from the indicator lamp. The indicator lamp is to be reused.

INSTALLATION

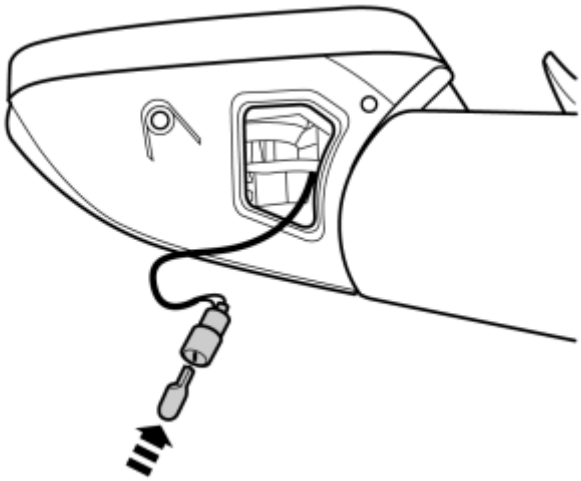

Fig. 63: Identifying Installation Of Bulb
Courtesy of VOLVO CARS CORPORATION

- Take a new mirror housing, bulb and lamp lens for ground lighting from the kit.
- Take out the cable with bulb holder from the mirror. Press a bulb into the holder.

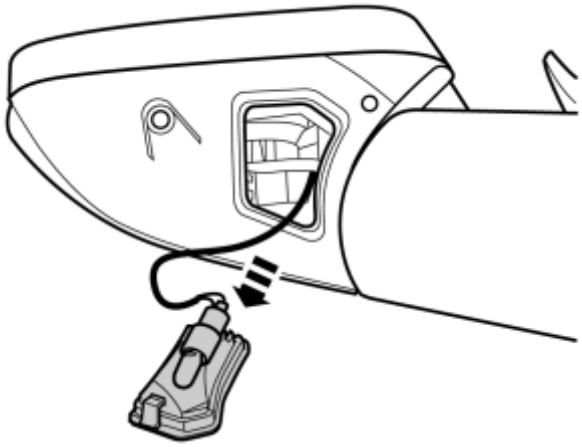

Fig. 64: Identifying Installation Of Bulb Holder With Bulb
Courtesy of VOLVO CARS CORPORATION

- Install the socket with bulb into the lamp lens.

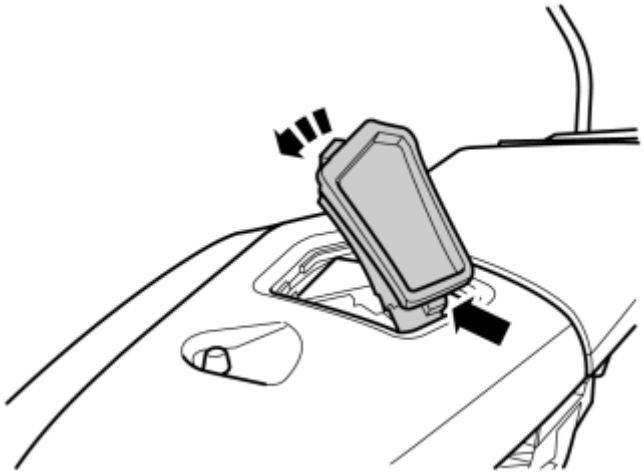

Fig. 65: Identifying Installation Of Lamp Glass
Courtesy of VOLVO CARS CORPORATION

- Install the ground lighting in the mirror housing.

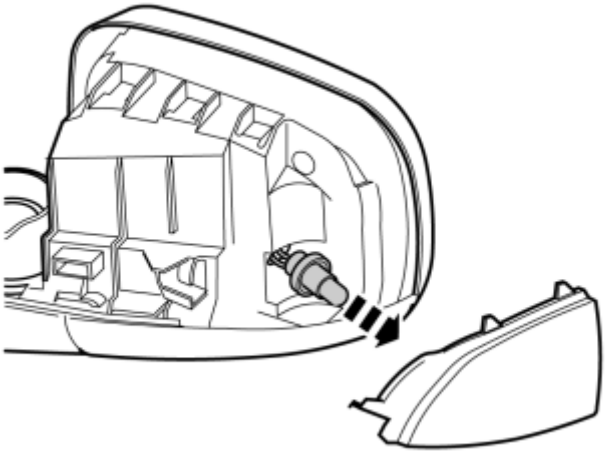

Fig. 66: Identifying Indicator Lamp Bulb
Courtesy of VOLVO CARS CORPORATION

- Press the socket with the bulb into the indicator lamp.

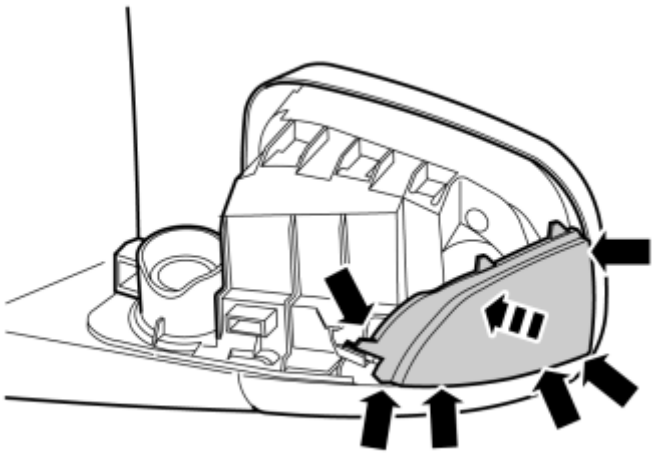

Fig. 67: Reinstall The Indicator Lamp
Courtesy of VOLVO CARS CORPORATION

- Reinstall the indicator lamp in the mirror housing.

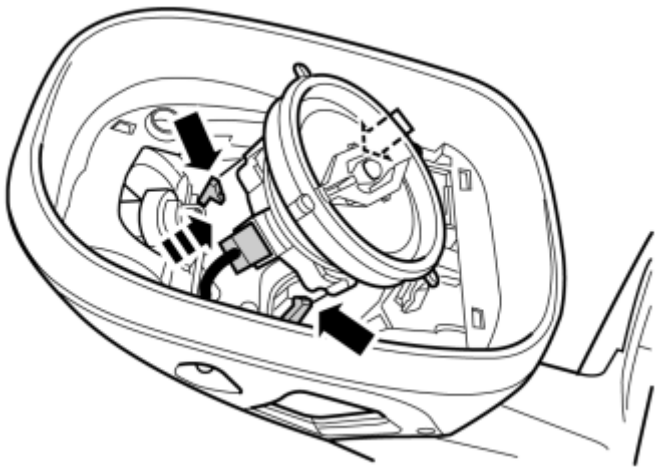

Fig. 68: Identifying Installation Of Mirror Motor
Courtesy of VOLVO CARS CORPORATION

- Connect the connector and install the mirror motor in the mirror housing. Ensure that all catches engage.

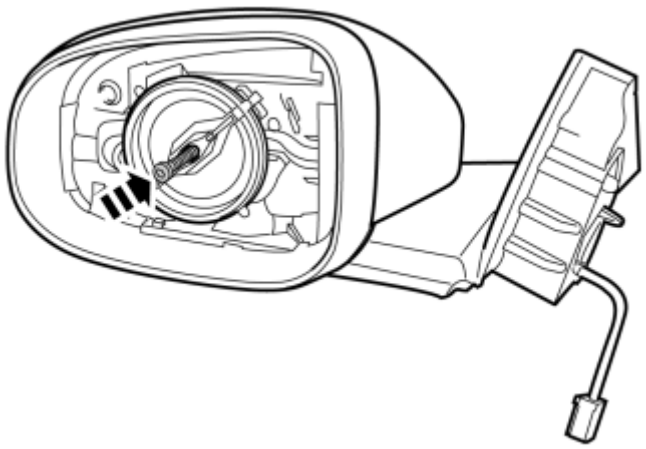

Fig. 69: Identifying Installation Of Mirror Motor Screw
Courtesy of VOLVO CARS CORPORATION

- Install the screw to the mirror motor and tighten.

Illustration A

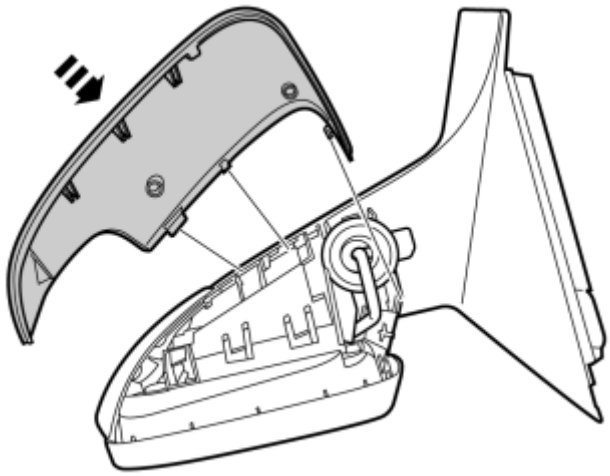

Fig. 70: Identifying Installation Of Door Mirror Cover (1 Of 3)
Courtesy of VOLVO CARS CORPORATION

Illustration B

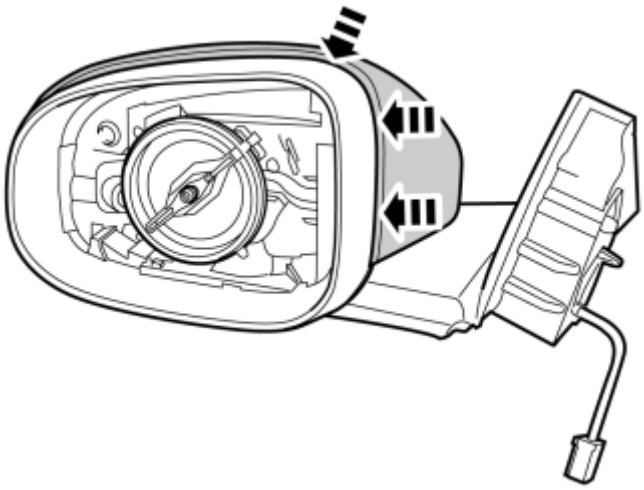

Fig. 71: Identifying Installation Of Door Mirror Cover (2 Of 3)
Courtesy of VOLVO CARS CORPORATION

Illustration C

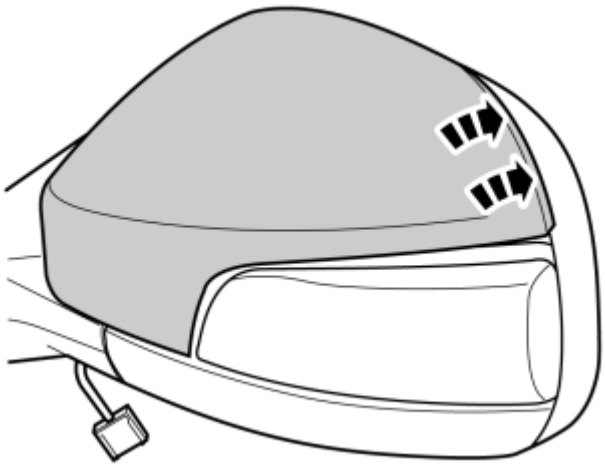

Fig. 72: Identifying Installation Of Door Mirror Cover (3 Of 3)
Courtesy of VOLVO CARS CORPORATION

- Press the old cover into the mirror housing. Press all the way around so that all catches engage.

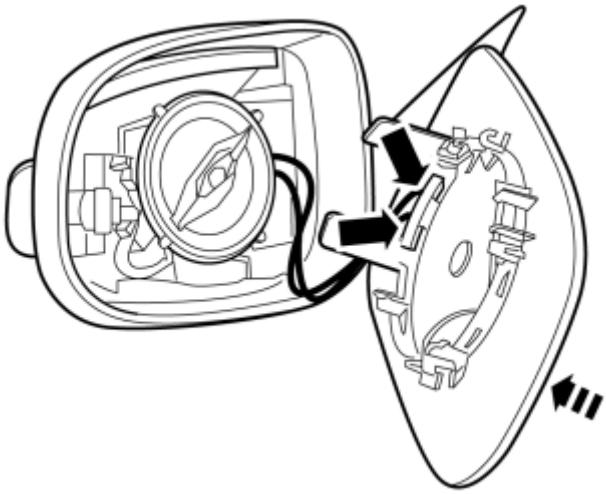

Fig. 73: Connecting Mirror Glass Cables
Courtesy of VOLVO CARS CORPORATION

- Connect the wiring to the old mirror glass.
- Ensure that the white damper blades align in their grooves.
- Press the mirror glass into place.

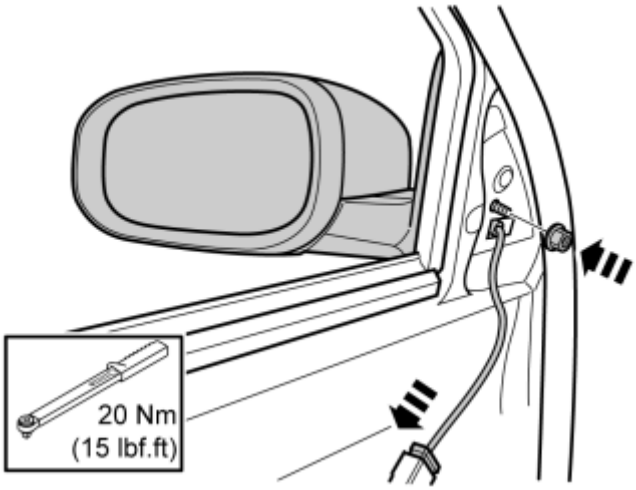

Fig. 74: Identifying Installation Of Door Mirror
Courtesy of VOLVO CARS CORPORATION

- Install the new mirror.

Illustration A

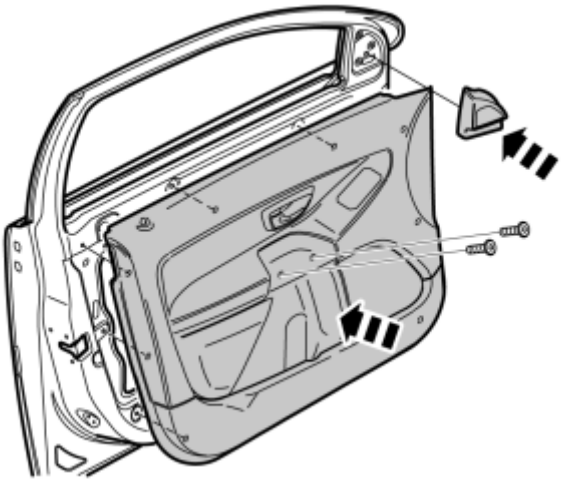

Fig. 75: Install Door Panel Screws
Courtesy of VOLVO CARS CORPORATION

Illustration B

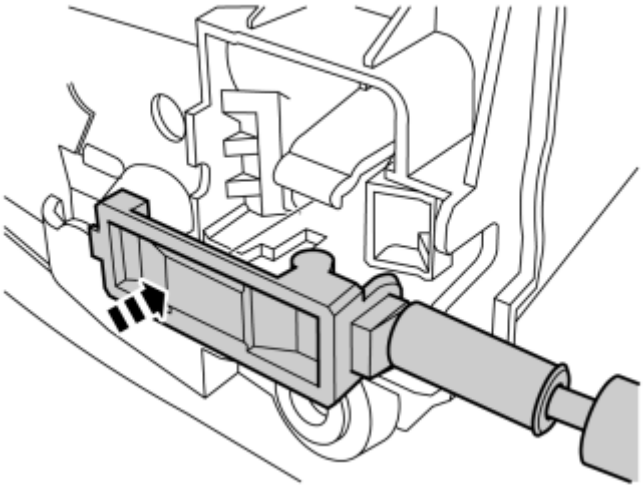

Fig. 76: Installing Door Handle
Courtesy of VOLVO CARS CORPORATION

- Check that the clips around the panel are intact and correctly positioned, they are detachable.
- Connect the connectors and the wire to the opening handle.
- Align the clips in the holes in the door frame carefully and press securely.
- Tighten the panel using the two screws, tightening torque **10 Nm (7.5 lbf. ft.)**
- Secure the panel at the front edge of the side window.

Illustration A

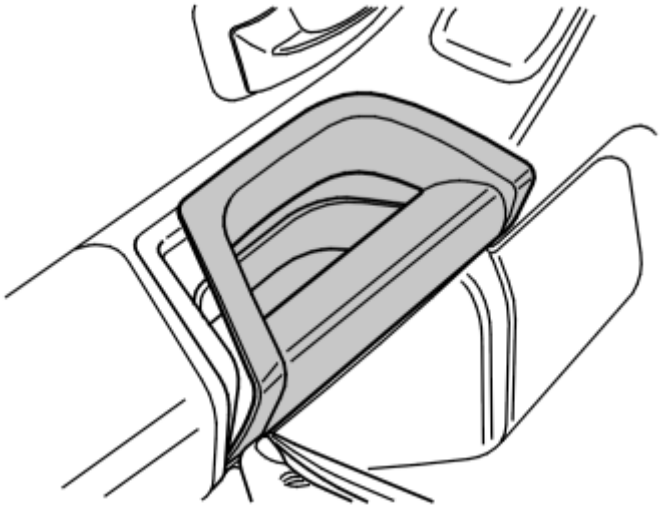

Fig. 77: Securing Front Edge Of Handle
Courtesy of VOLVO CARS CORPORATION

- First secure the front edge of the handle.

Illustration B

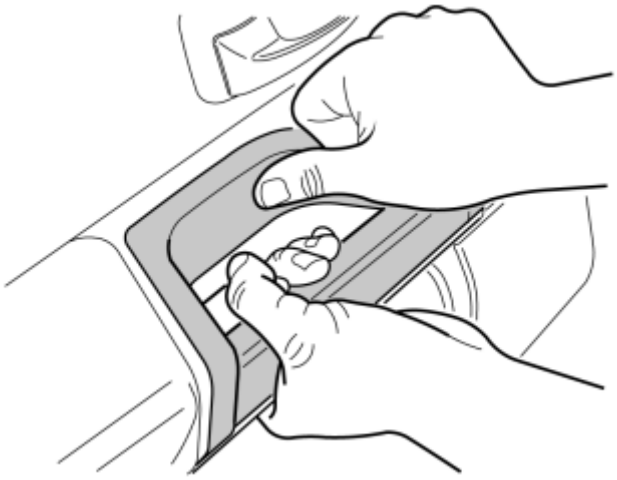

Fig. 78: Press Handle On Both Sides
Courtesy of VOLVO CARS CORPORATION

- Then hold the handle and press on both sides.

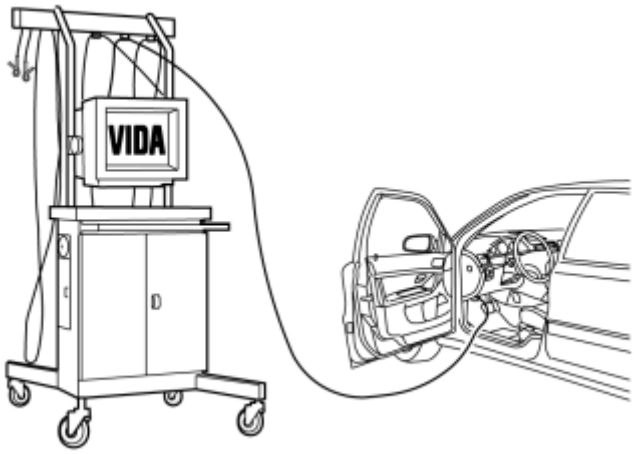

Fig. 79: Identifying VIDA (Service Information) To Program Software
Courtesy of VOLVO CARS CORPORATION

- Download the software for the accessory's function following the service information in VIDA (Volvo scan tool).

ACCESSORIES AND BODY, CAB

Exterior Trim, Glass, Weatherstrips - Overhaul Instructions

HEATED WINDOW GRID WIRE

Materials	
Designation	**Part number**
Window cleaner	
Conductive paint	1161441

RECONDITIONING

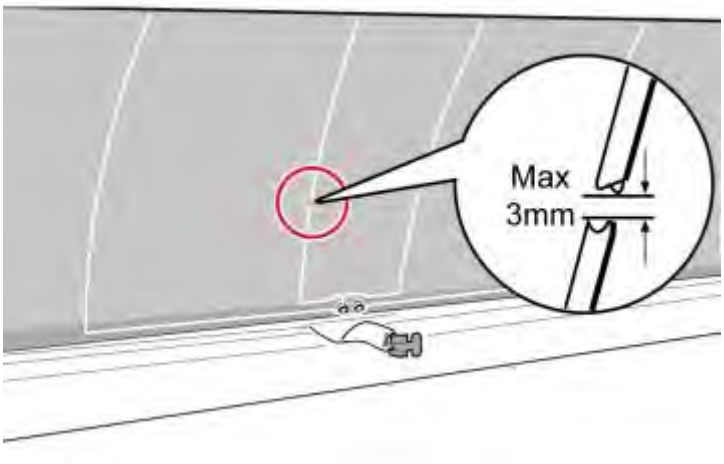

Fig. 1: Identifying Heated Window Grid Wire Measurements
Courtesy of VOLVO CARS CORPORATION

NOTE: **If the specified value is exceeded, a new component must be installed.**

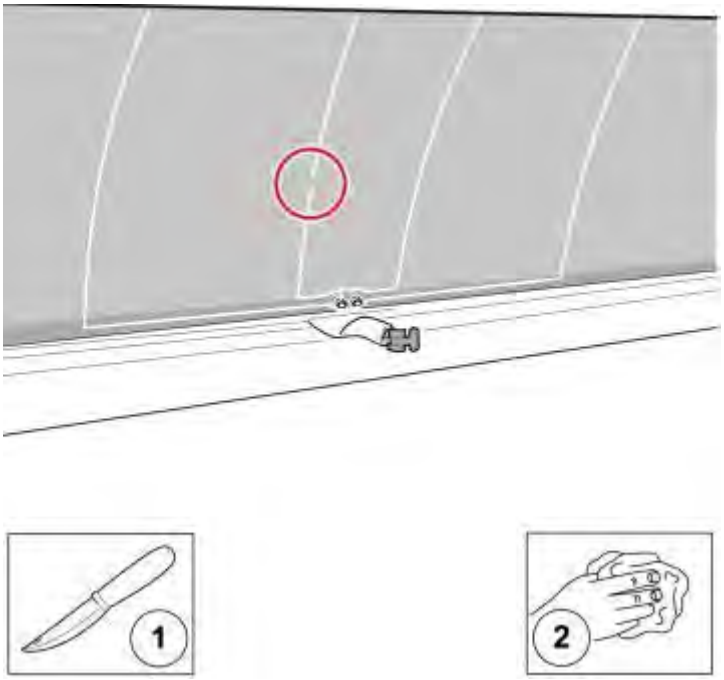

Fig. 2: Cleaning Heated Window Grid Wire
Courtesy of VOLVO CARS CORPORATION

Use: Window cleaner,

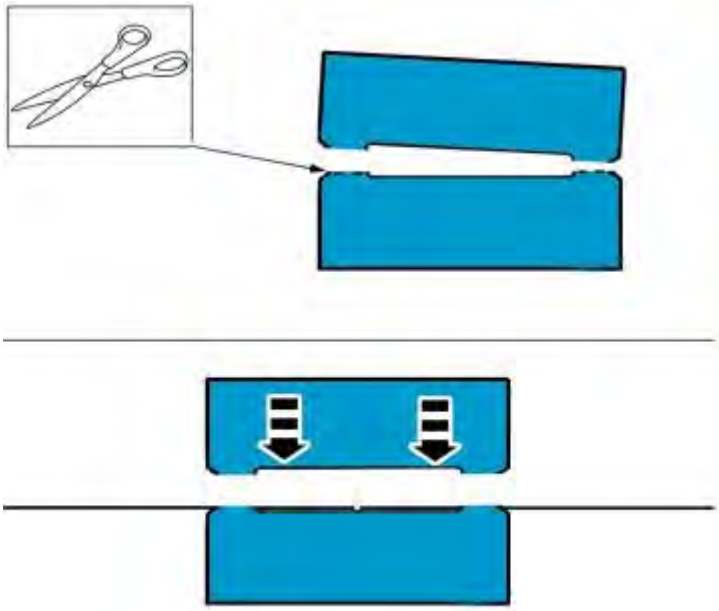

Fig. 3: Identifying Repair Tape
Courtesy of VOLVO CARS CORPORATION

Use: Conductive paint, 1161441

Fig. 4: Reconditioning Heated Window Grid Wire (4 Of 7)
Courtesy of VOLVO CARS CORPORATION

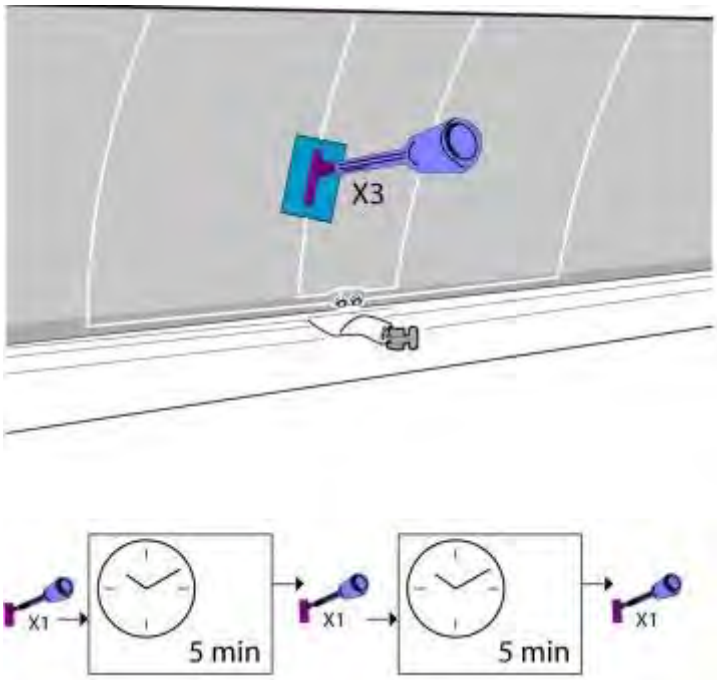

Fig. 5: Identifying Reconditioning Of Heated Window Grid Wire
Courtesy of VOLVO CARS CORPORATION

Use: Conductive paint, 1161441

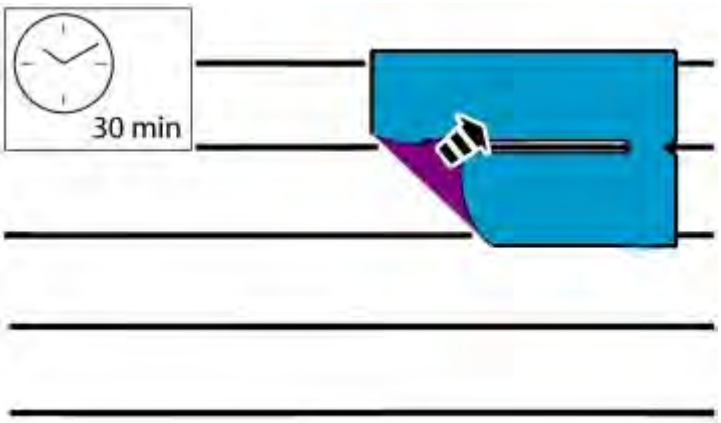

Fig. 6: Identifying Repair Tape Removal
Courtesy of VOLVO CARS CORPORATION

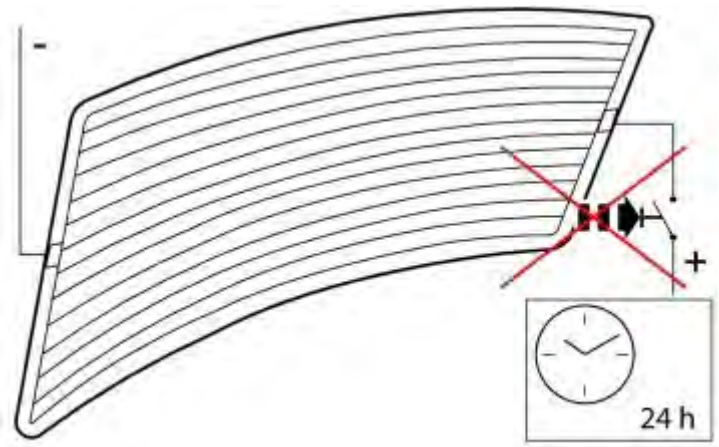

Fig. 7: Identifying Wire Repair Precaution
Courtesy of VOLVO CARS CORPORATION

ACCESSORIES AND BODY, CAB

Exterior Trim, Glass, Weatherstrips - Removal, Replacement And Installation

DOOR MIRRORS (2003-2006)

REAR VIEW MIRROR, REPLACING

REMOVE

NOTE: **As the illustrations in this service information are used for different model years and / or models, some variation may occur. However, the essential information in the illustrations is always correct.**

DOOR MIRROR

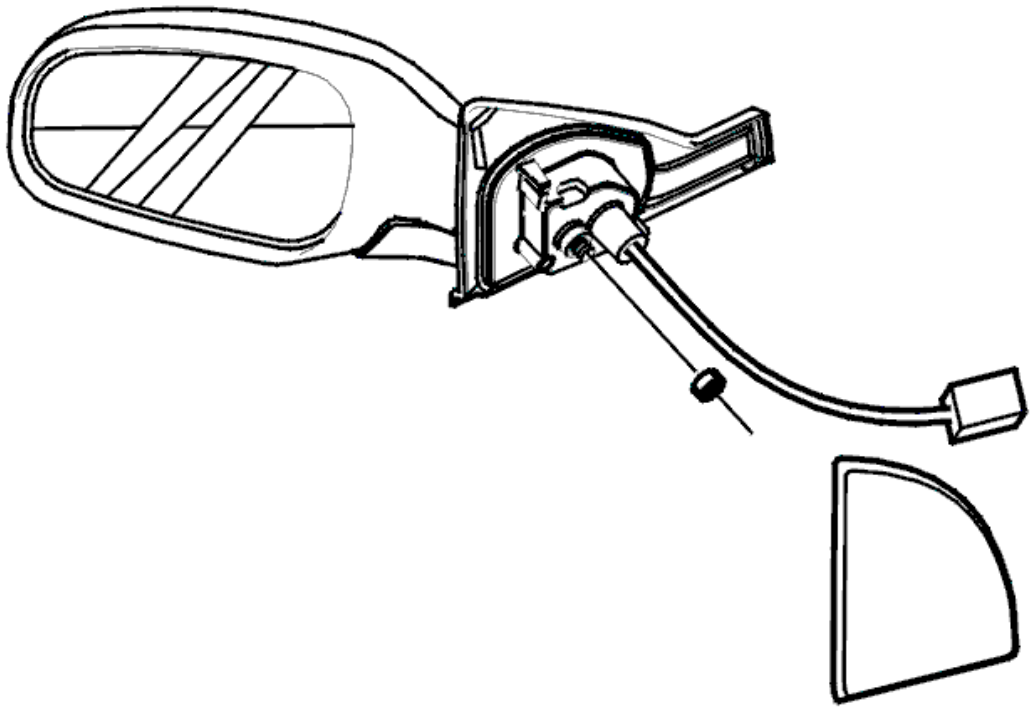

Fig. 1: Identifying Nut And Rear View Mirror
Courtesy of VOLVO CARS CORPORATION

Remove:

- the cover
- the door panel. See **PANEL FRONT SIDE DOOR, REPLACING** .

Separate the connector.

Remove:

- a nut
- the rear view mirror.

REMOVE MIRROR GLASS

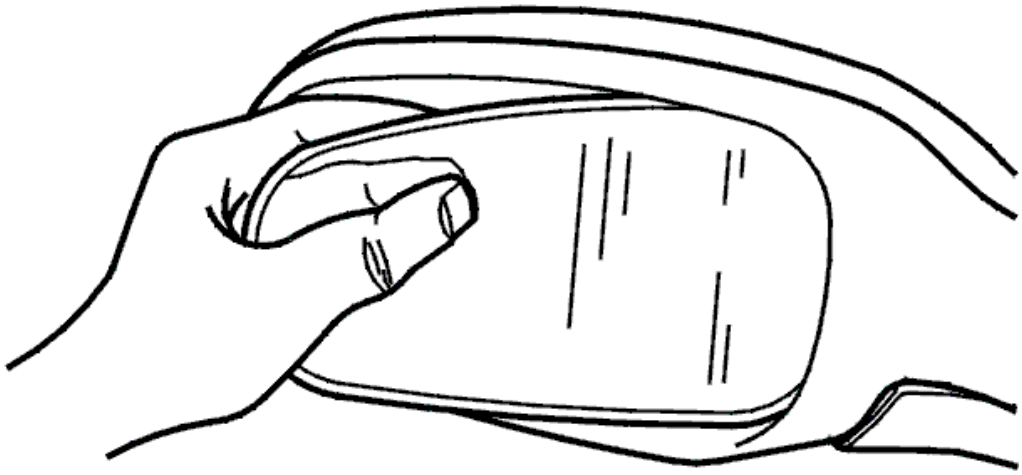

Fig. 2: Folding Mirror Glass Forwards And Inwards
Courtesy of VOLVO CARS CORPORATION

Fold the mirror glass forwards and inwards as shown in the illustration.

Grasp and pull the mirror glass lengthways until it releases.

Work the glass out.

Disconnect the terminal pins from the mirror glass.

REMOVE ELECTRIC MOTOR

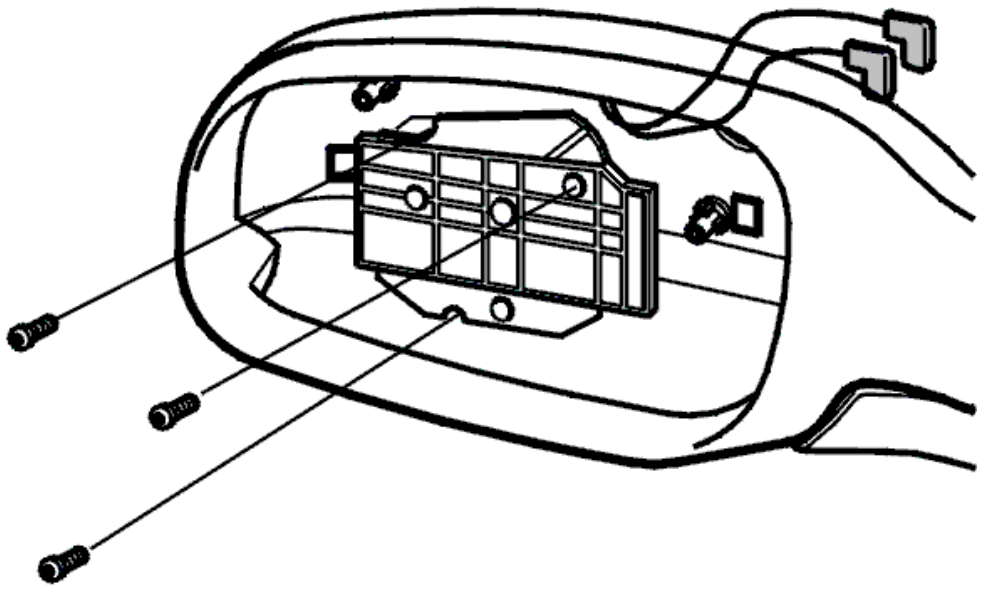

Fig. 3: Identifying Mirror Glass, Screws, And Connectors
Courtesy of VOLVO CARS CORPORATION

Remove:

- the mirror glass
- three screws.

Separate the connectors.

NOTE: Note the positions of the connectors.

INSTALL

INSTALL ELECTRIC MOTOR

Install:

- the connectors
- the three screws
- the mirror glass.

INSTALLING MIRROR GLASS

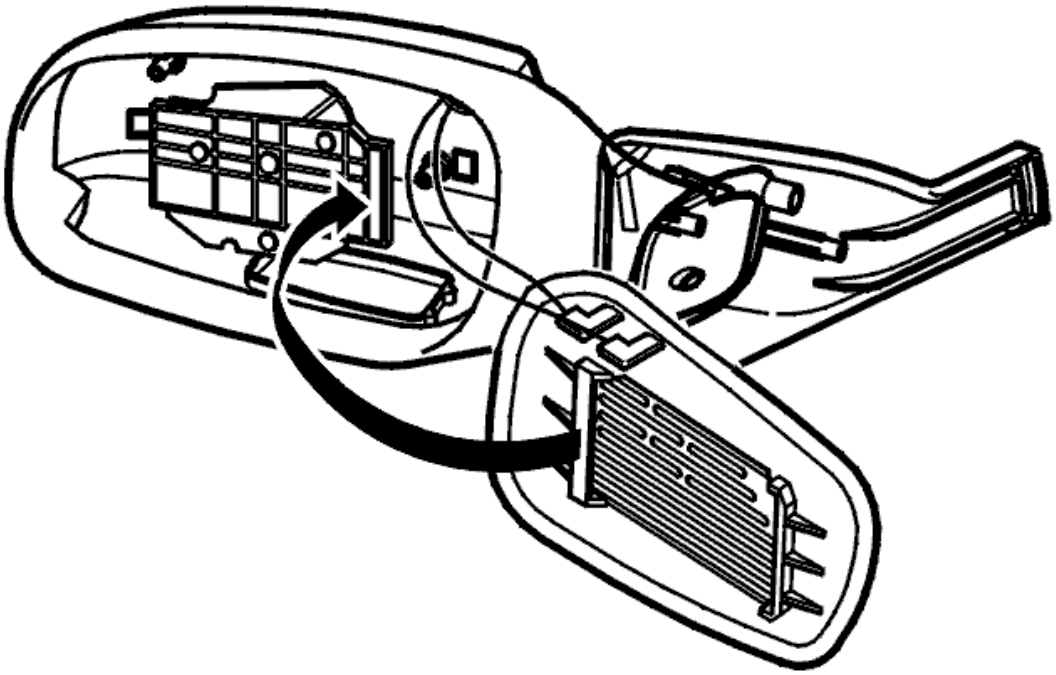

Fig. 4: Hooking Mirror Glass Into Inner Mounting
Courtesy of VOLVO CARS CORPORATION

Install the terminal pins.

Fold out the mirror mounting on the motor.

Hook the mirror glass into the inner mounting.

Press the mirror glass into place.

INSTALLING DOOR MIRROR

Install:

- the door mirror
- the nut
- the connector
- the door panel. See **PANEL FRONT SIDE DOOR, REPLACING**
- the cover.

DOOR MIRRORS (2007-2011)

COVER, EXTERNAL MIRROR

REMOVE

Loosen the mirror glass, see **MIRROR, REAR VIEW MIRROR**

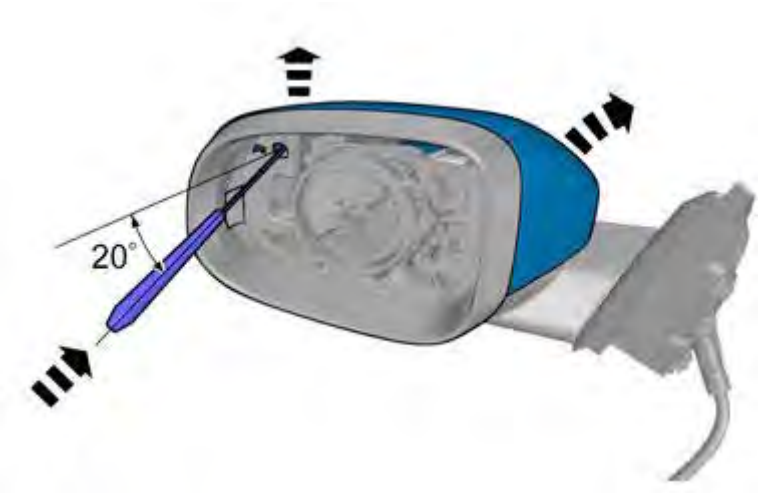

Fig. 5: Detach The External Rear View Mirror Cover
Courtesy of VOLVO CARS CORPORATION

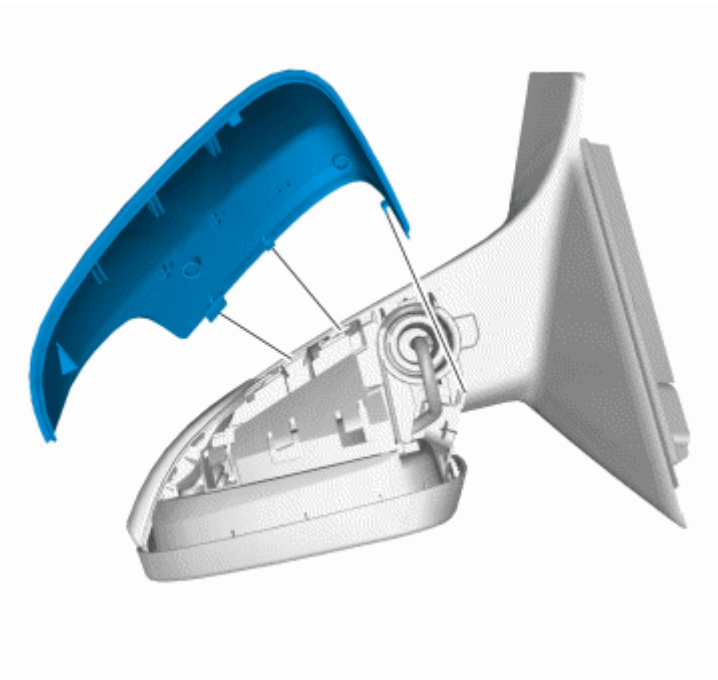

Fig. 6: Identifying Rear View Mirror Cover Installation
Courtesy of VOLVO CARS CORPORATION

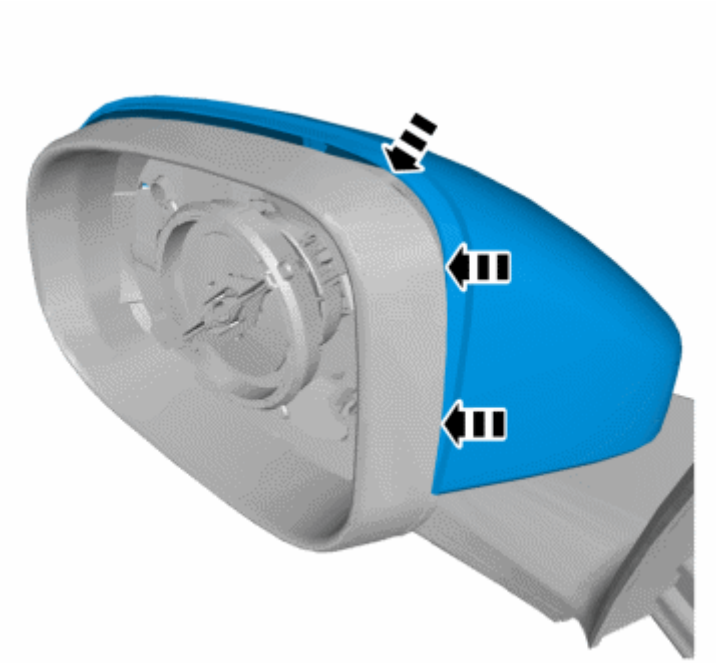

Fig. 7: Identifying Rear View Mirror Cover Installation (1 Of 2)
Courtesy of VOLVO CARS CORPORATION

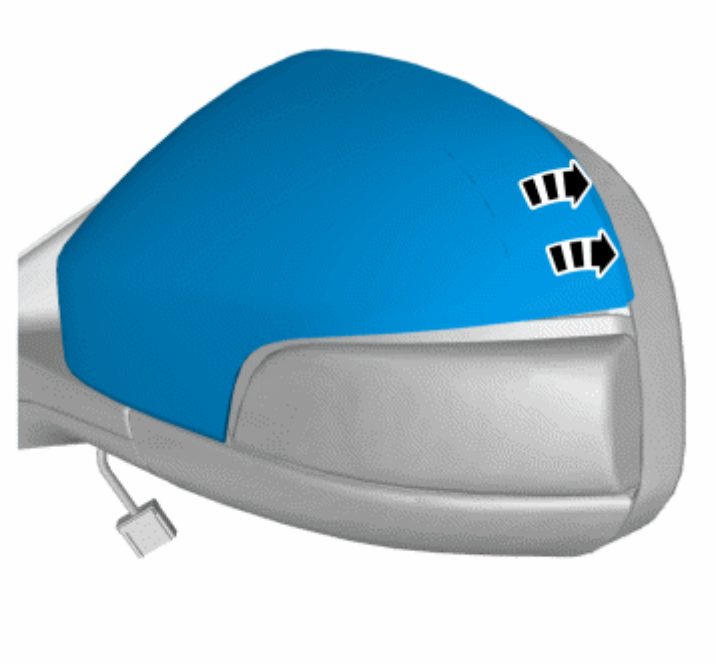

Fig. 8: Identifying Rear View Mirror Cover Installation (2 Of 2)
Courtesy of VOLVO CARS CORPORATION

INSTALL

Install the mirror glass, see **MIRROR, REAR VIEW MIRROR**

MIRROR, REAR VIEW MIRROR

REMOVE

Fig. 9: Identifying Removal Of Rear View Mirror Glass (1 of 2)
Courtesy of VOLVO CARS CORPORATION

Fig. 10: Identifying Removal Of Rear View Mirror Glass (2 of 2)
Courtesy of VOLVO CARS CORPORATION

MOTOR, EXTERNAL MIRROR

REMOVE

Remove the mirror, see **MIRROR, REAR VIEW MIRROR**

Fig. 11: Identifying Rear View Mirror Motor
Courtesy of VOLVO CARS CORPORATION

REAR VIEW MIRROR EXTERNAL

NOTE: Removal steps in this procedure may contain installation details.

REMOVE

Remove the door panel. See **PANEL FRONT SIDE DOOR, REPLACING** .

Fig. 12: Identifying Rear View Mirror Trim Panel Removal
Courtesy of VOLVO CARS CORPORATION

Torque: Rear view mirror to front door

20 Nm

INSTALL

Install in the reverse order.

EXTERNAL BADGES (2004-2011)

BADGE (2009-2011)

NOTE: Removal steps in this procedure may contain installation details.

Fig. 13: Identifying Badges To Be Removed
Courtesy of VOLVO CARS CORPORATION

REMOVE

Handling. See **COMPONENTS WITH DOUBLE-SIDED TAPE**

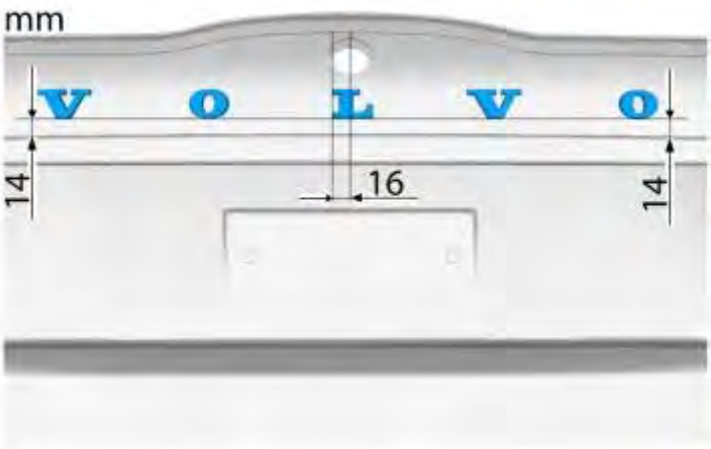

Fig. 14: View Of Badge Placement (1 of 4)
Courtesy of VOLVO CARS CORPORATION

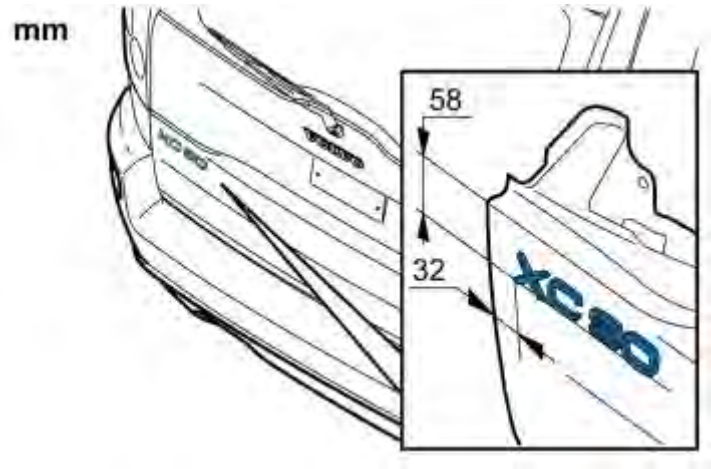

Fig. 15: View Of Badge Placement (2 of 4)
Courtesy of VOLVO CARS CORPORATION

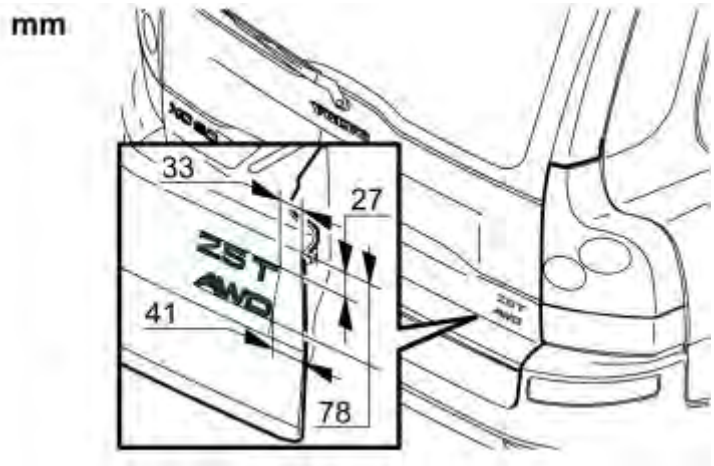

Fig. 16: View Of Badge Placement (3 of 4)
Courtesy of VOLVO CARS CORPORATION

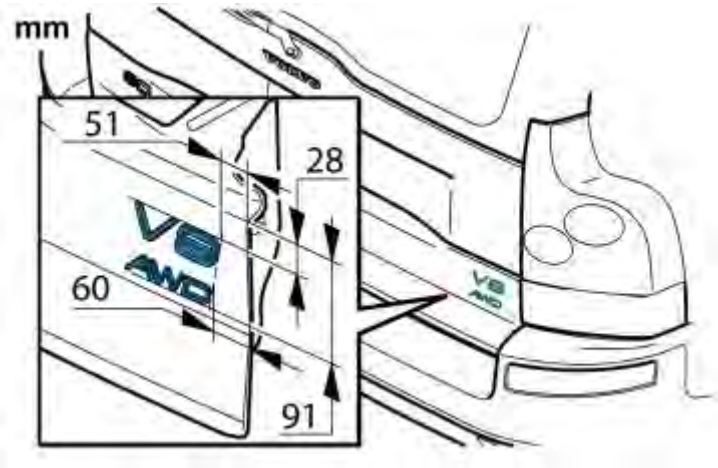

Fig. 17: View Of Badge Placement (4 of 4)
Courtesy of VOLVO CARS CORPORATION

BADGE RADIATOR MASKING (2009-2011)

NOTE: Removal steps in this procedure may contain installation details.

REMOVAL

Remove bumper. See **CASING BUMPER FRONT, REPLACING**

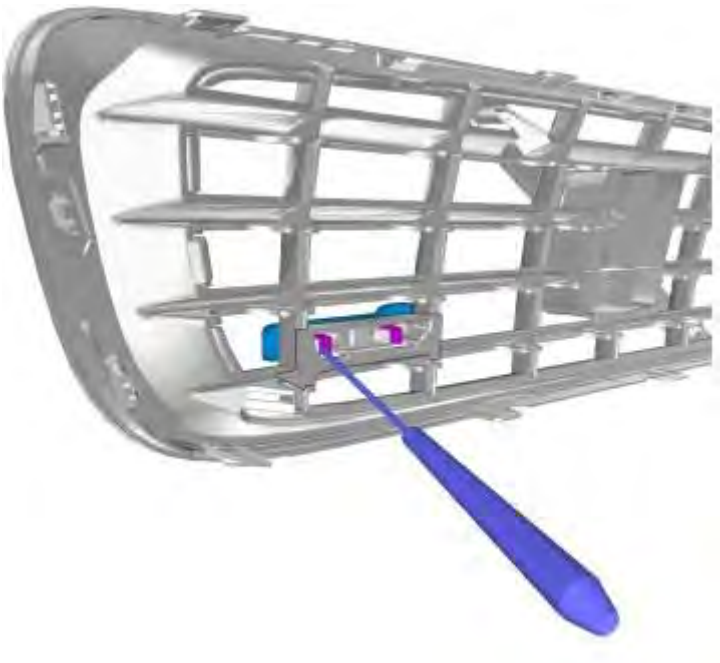

Fig. 18: Identifying Removal Of Radiator Grill Emblem (1 Of 2)
Courtesy of VOLVO CARS CORPORATION

Fig. 19: Identifying Removal Of Radiator Grill Emblem (2 Of 2)
Courtesy of VOLVO CARS CORPORATION

INSTALL

To install, reverse the removal procedure.

BADGE, FRONT FENDER (2009-2011)

REMOVE

NOTE: Removal steps in this procedure may contain installation details.

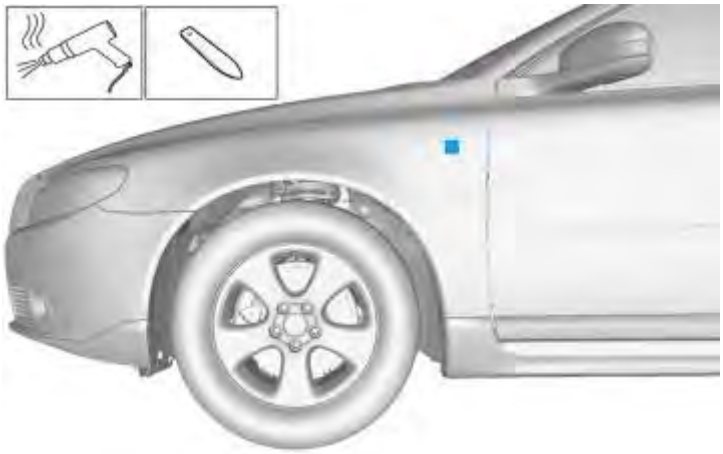

Fig. 20: View Of Front Fender Badge Removal
Courtesy of VOLVO CARS CORPORATION

HANDLING

Handling.

see **COMPONENTS WITH DOUBLE-SIDED TAPE**

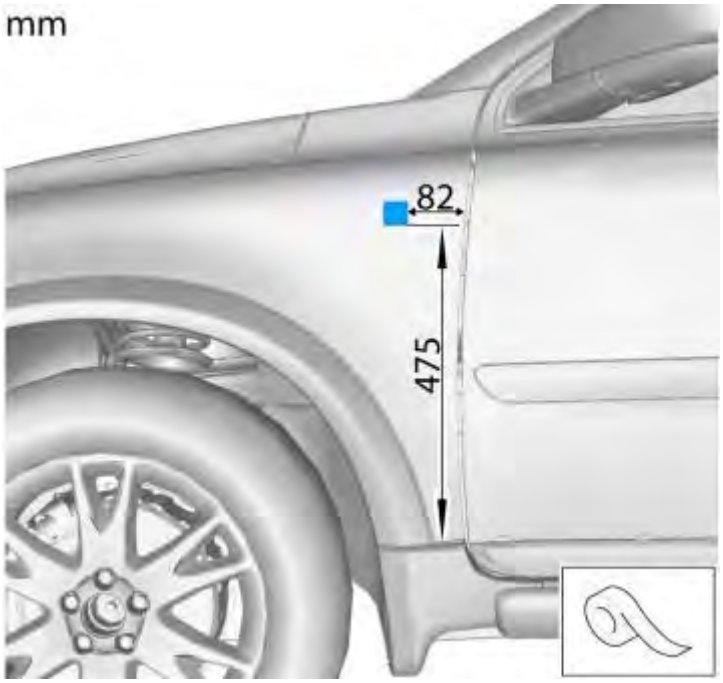

Fig. 21: Identifying Front Fender Badge Placement
Courtesy of VOLVO CARS CORPORATION

DECAL JUBILEE CAR, REPLACING (2006-2011)

see **DECAL JUBILEE CAR, REPLACING (2006-2011)**

EMBLEM (EXECUTIVE/PREMIER), REPLACEMENT

see **EMBLEM (EXECUTIVE/PREMIER), REPLACEMENT**

REAR WINDOW MOLDING (2007-2011)

see **REAR WINDOW MOLDING (2007-2011)**

SILL PANEL SPORT (2007-2011)

see **SILL PANEL SPORT (2007-2011)**

EXTERNAL REAR BADGE (B8444S; 2007-2008)

BADGE REAR, REPLACING

NOTE: **The illustrations in this service information are used for different model years and/or models. Some variation may occur. However, the essential information in the illustrations is always correct.**

REMOVAL

REMOVING THE BADGE

Heat the badge carefully. Use a hot-air gun.

Carefully lift up one edge of the badge.

CAUTION: Do not damage the vehicle's paintwork.

Remove:

- the badge
- any tape residue.

INSTALLATION

INSTALLING THE BADGE

Ensure that the vehicle is at least at room temperature (above +20 °C).

Wash the area for the badge. Use a mixture of 50% isopropanol and 50% water.

Wipe dry using a clean lint-free cloth or similar.

CAUTION: In order for the badge to secure, the surface must be completely clean and free from dust and grease.

Remove the backing from the tape.

NOTE: Leave the foil in place.

Guide the badge into the position indicated in the dimensions. Press the whole badge to ensure the tape is in good contact with the base.

Use the following measurements:

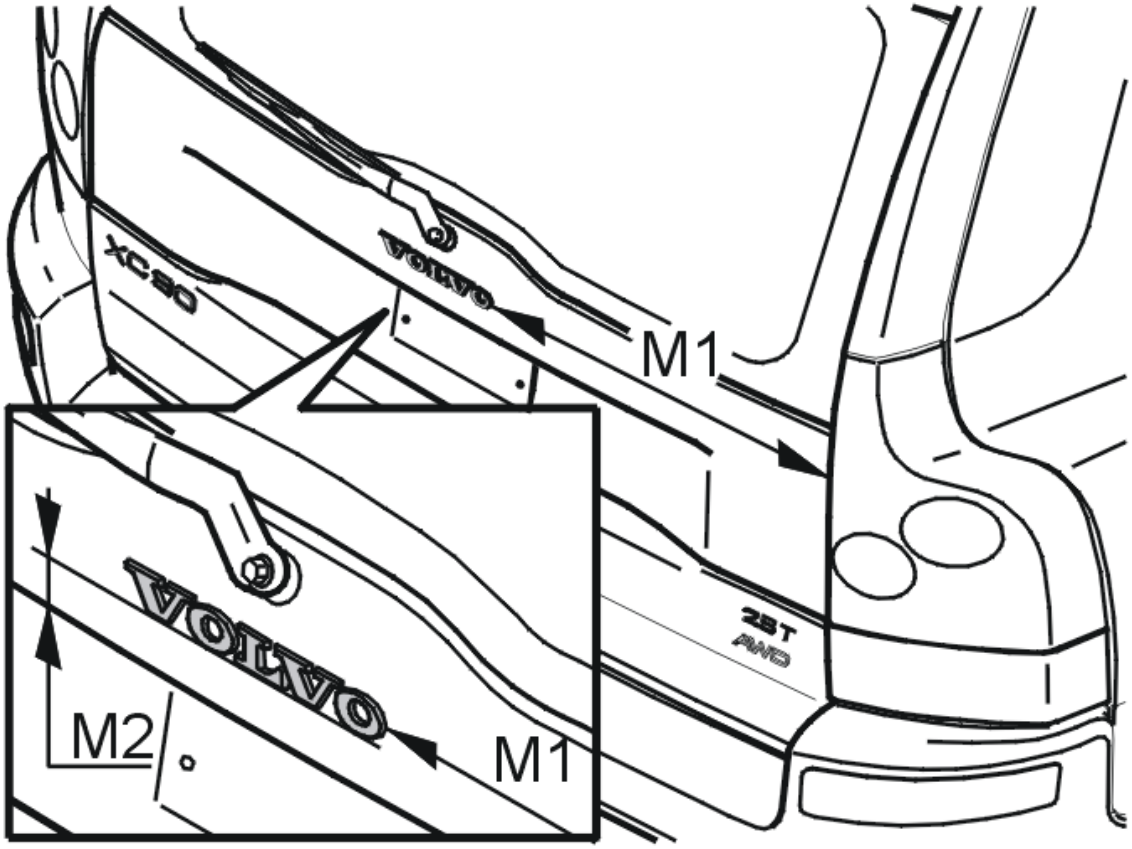

Fig. 22: Identifying Volvo Badge
Courtesy of VOLVO CARS CORPORATION

Volvo badge

M1 = 538 ± 1.5 mm

M2 = 26 ± 1 mm

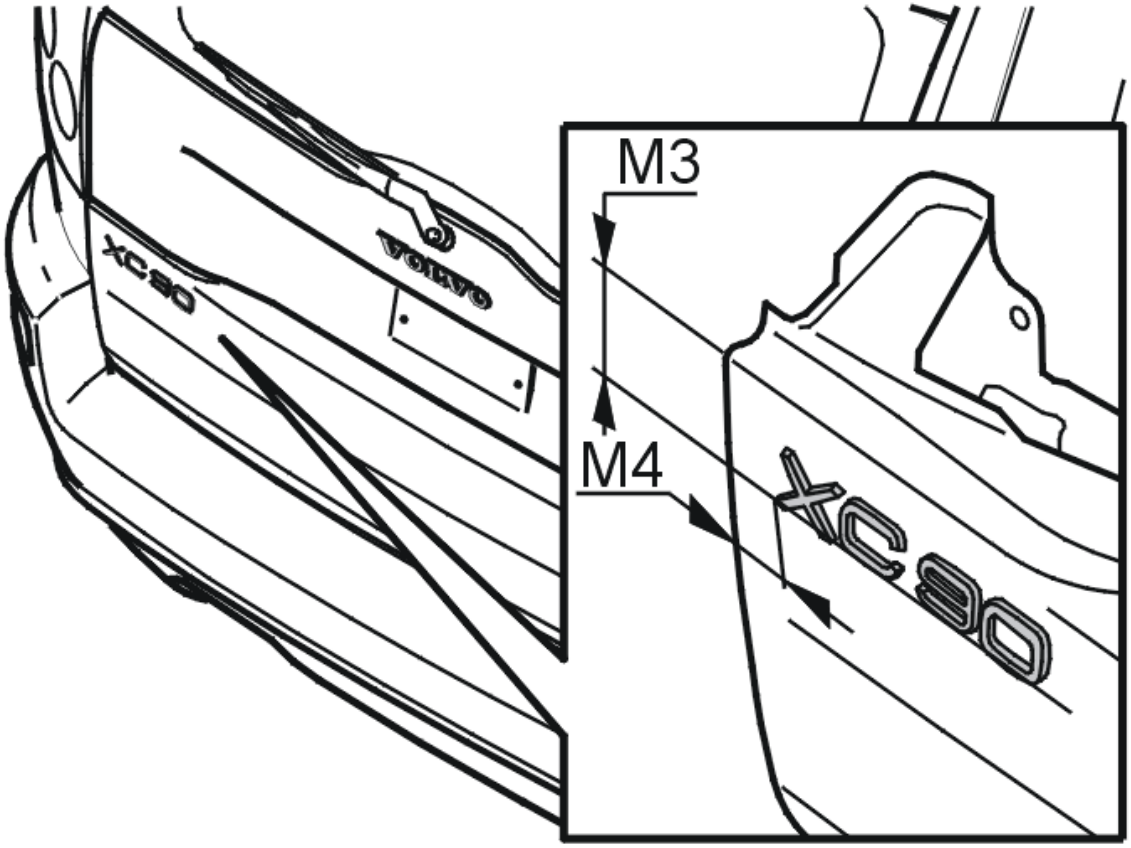

Fig. 23: Identifying Model designation Badge
Courtesy of VOLVO CARS CORPORATION

Model designation

M3 = 57.5 ± 1 mm

M4 = 32.5 ± 1 mm

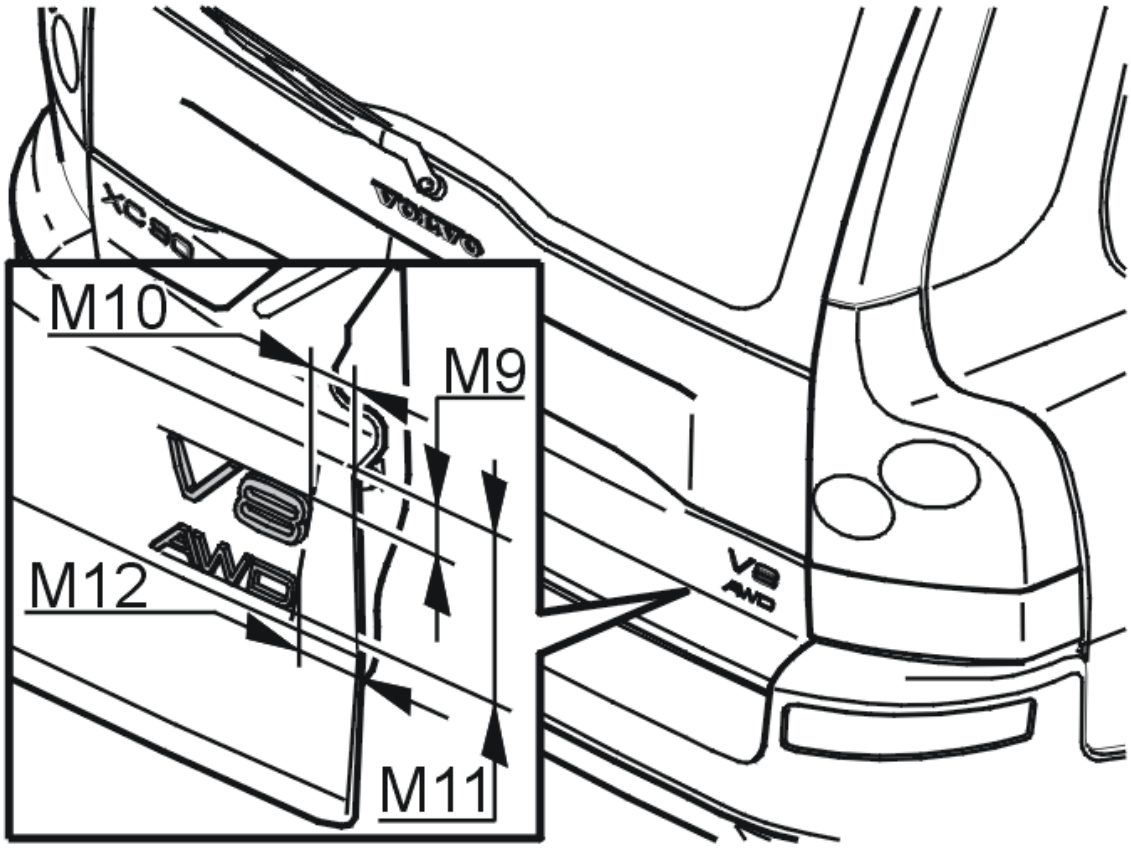

Fig. 24: Identifying Engine Designation Badge
Courtesy of VOLVO CARS CORPORATION

Engine designation

M9 = 27.5±1 mm

M10 = 51 ± 2 mm

M11 = 91 ± 1 mm

M12 = 60 ± 2 mm

Check that the edges of the badge are against the base. There must be no gaps.

Remove the securing foil.

NOTE: **Do not wash the car for 72 hours to ensure optimal adhesion. It gradually increases.**

EXTERNAL TRIM COMPONENTS, EMBLEM, REFLEX (2004-2011)

DECAL JUBILEE CAR, REPLACING (2006-2011)

NOTE: **As the illustrations in this service information are used for different model years and / or models, some variation may occur. However, the essential information in the illustrations is always correct.**

REMOVING THE DECAL FROM THE JUBILEE CAR

Carefully heat the decal. Use a hot-air gun.

Carefully lift one edge of the decal using a weatherstrip tool.

CAUTION: Do not damage the car paintwork.

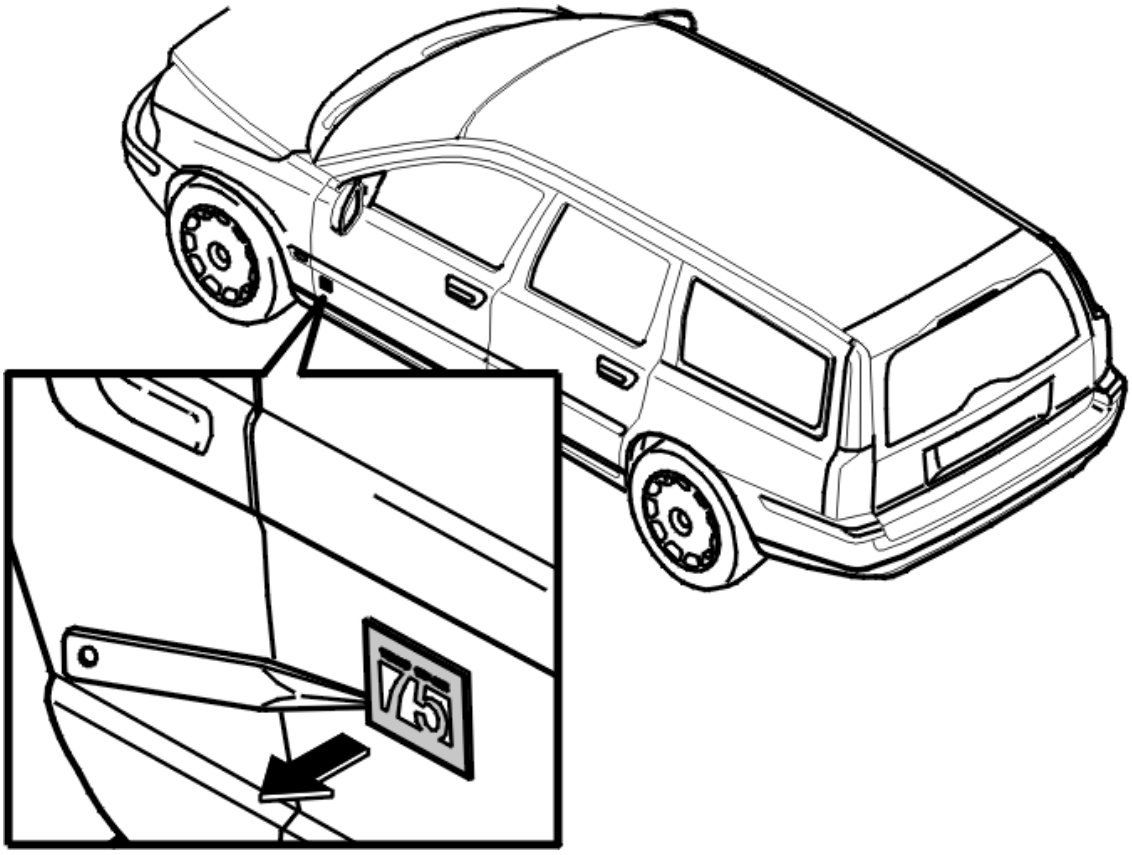

Fig. 25: Identifying Edge Of Decal Raised With Weatherstrip Tool
Courtesy of VOLVO CARS CORPORATION

Remove:

- the decal
- any tape residue.

INSTALLING THE DECAL ON JUBILEE CARS

NOTE: Always use a new decal.

The temperature of the surface to which the decal will be attached must be at least +20 °C.

Wash the area for the badge. Use a 50/50 mixture of isopropanol and water.

Wipe clean and dry using a lint-free cloth.

NOTE: In order for the decal to secure, the surface must be clean and free of dust and grease.

Remove the backing from the decal.

Guide the decal into the position indicated in the dimensions. Press the whole decal to ensure the tape is in good contact with the base and to work out any air bubbles.

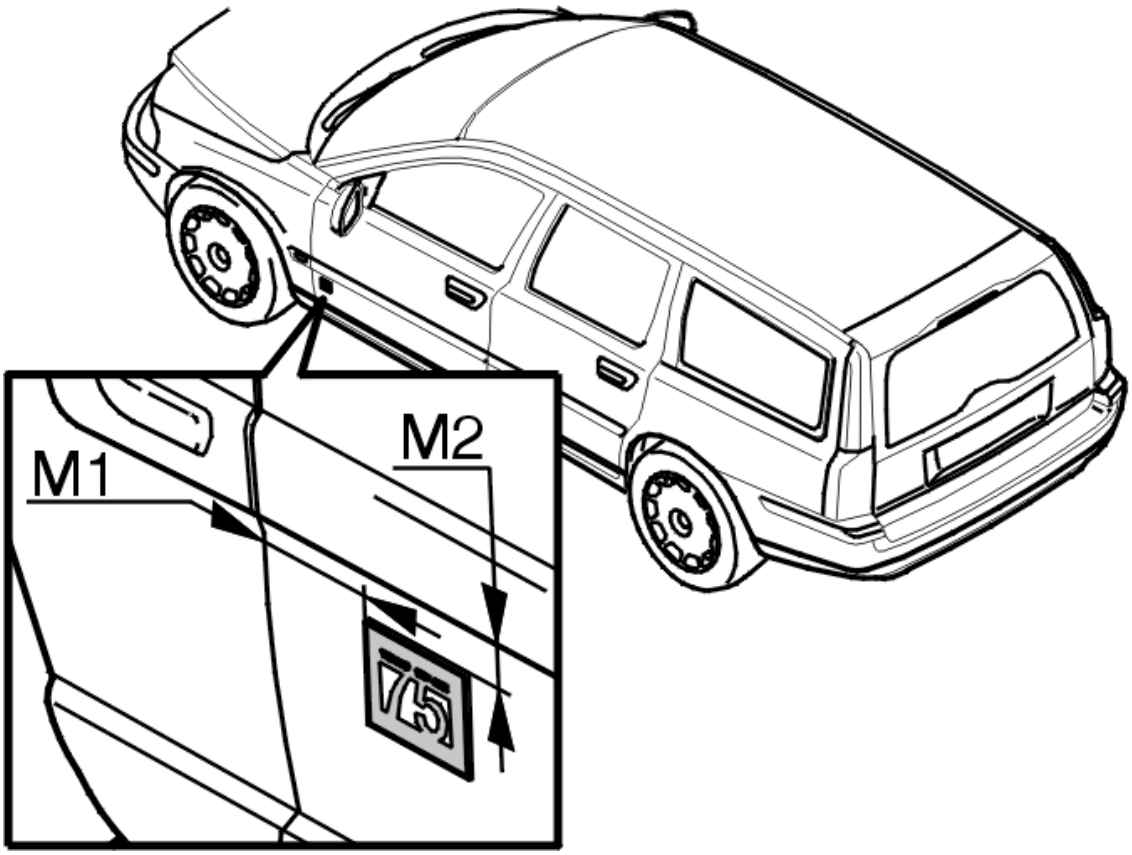

Fig. 26: Identifying Decal Mounting Location
Courtesy of VOLVO CARS CORPORATION

Use the following measurements:

M1 = 67±1 mm, from the front door edge

M2 = 35±1 mm, from the lower edge of the trim molding

Check that the edge of the decal is in contact with the surface and properly secured.

NOTE: To ensure optimal adhesion, do not wash the car for 72 hours.

EMBLEM (EXECUTIVE/PREMIER), REPLACEMENT

NOTE: The illustrations in this service information are used for different model years and/or models. Some variation may occur. However, the essential information in the illustrations is always correct.

REMOVAL

REMOVING THE BADGE

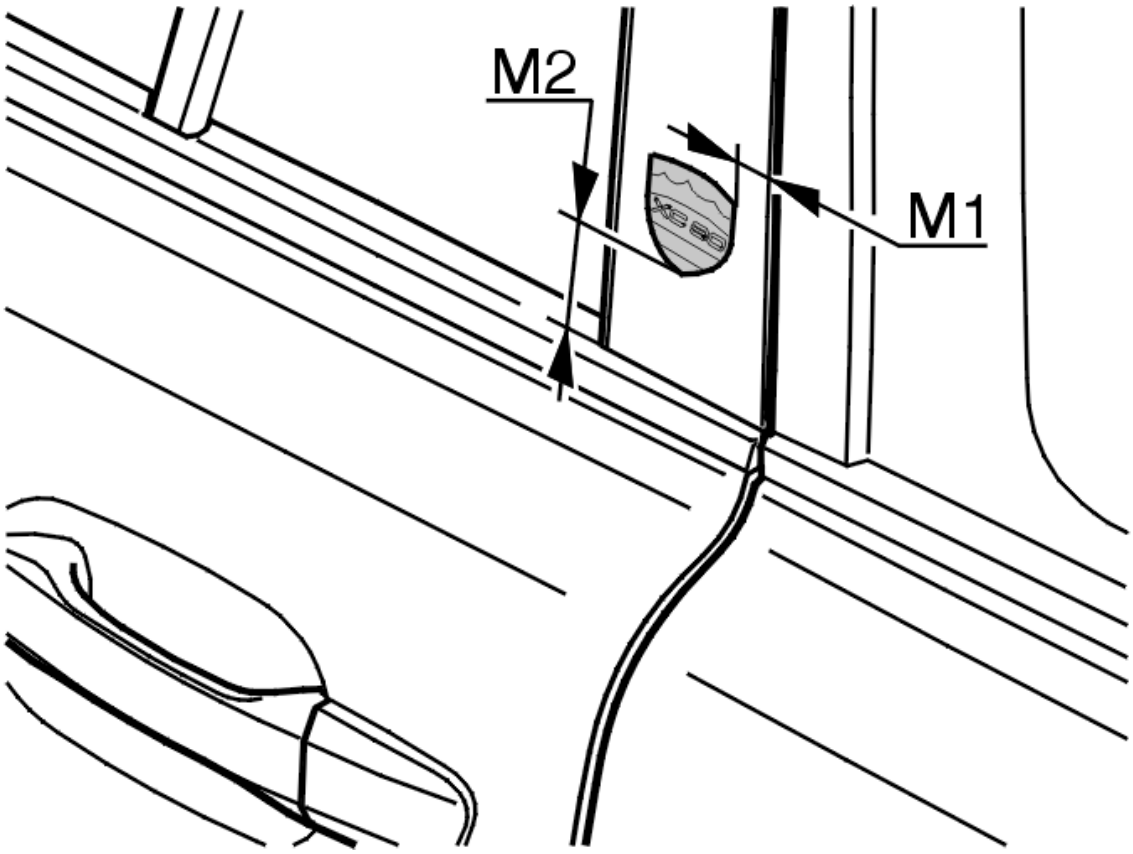

Fig. 27: Identifying Badge Location
Courtesy of VOLVO CARS CORPORATION

CAUTION: Do not damage the car paintwork.

Use a hot-air gun to carefully heat up the badge.

Carefully lift up one edge of the badge.

Remove:

- the badge
- any tape residue.

INSTALLATION

INSTALLING THE BADGE

NOTE: To ensure optimal adhesion, do not wash the car for 72 hours.

NOTE: In order for the badge to secure, the surface must be clean and free of dust and grease. Guide the badge into the position indicated in the dimensions. Press the whole badge to ensure the tape is in good contact with the base. Check that the edges of the badge are against the base.

Use the following dimensions for the executive badge:

M1 = 15+/-1 mm (0.59") M2 = 42+/-1 mm (1.65")	

Ensure that the car is at least at room temperature (>20°C). Wash the area for the badge. Use a 50/50 mixture of isopropanol and water.

Wipe clean and dry using a lint-free cloth.

REAR WINDOW MOLDING (2007-2011)

Materials:	
Designation	**Part number**
Cleaning agent	9192 678-2

Fig. 28: View Of Rear Window Molding
Courtesy of VOLVO CARS CORPORATION

FINISHING

Fig. 29: Cleaning Agent, 9192 678-2
Courtesy of VOLVO CARS CORPORATION

CAUTION: Make sure that the mating surfaces are clean.

Use: Cleaning agent, 9192 678-2 , x 3.

CAUTION: Make sure that all mating faces are free of moisture.

CAUTION: Apply even pressure along the entire component.

NOTE: **Make sure that the mating faces are at a minimum temperature of 16 °C (60.8 ° F).**

NOTE: **Make sure that the customer is advised not to wash the vehicle within the next 72 hours.**

SILL PANEL SPORT (2007-2011)

NOTE: **Removal steps in this procedure may contain installation details.**

REMOVE

Remove the front and rear wheels.

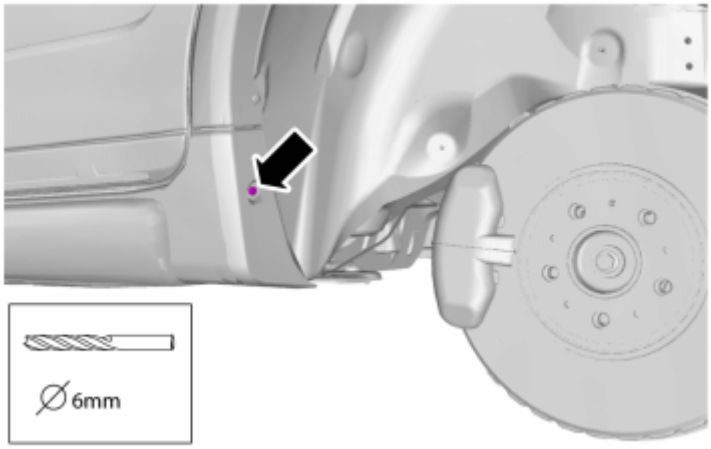

Fig. 30: Identifying Sill Panel Sport Rivet Location (1 of 3)
Courtesy of VOLVO CARS CORPORATION

Fig. 31: Identifying Sill Panel Sport Rivet Location (2 of 3)
Courtesy of VOLVO CARS CORPORATION

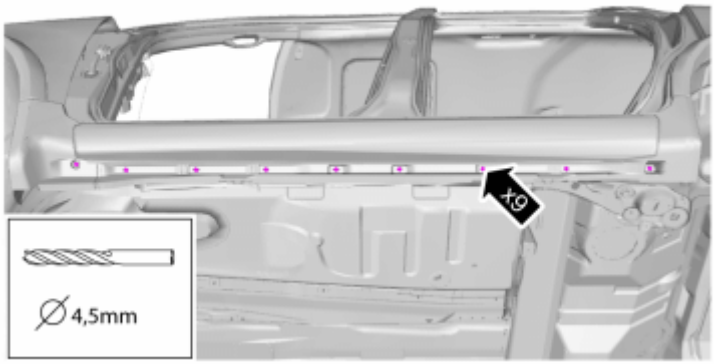

Fig. 32: Identifying Sill Panel Sport Rivet Location (3 of 3)
Courtesy of VOLVO CARS CORPORATION

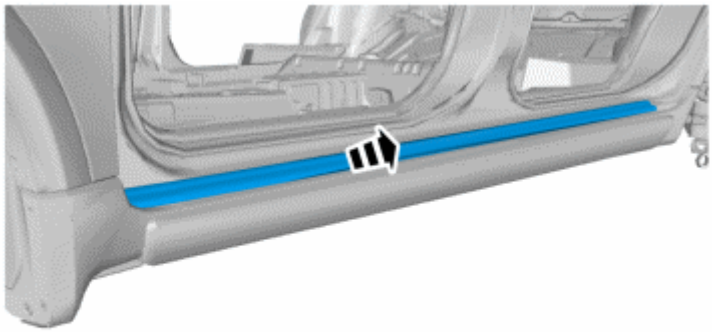

Fig. 33: Identifying Sill Panel
Courtesy of VOLVO CARS CORPORATION

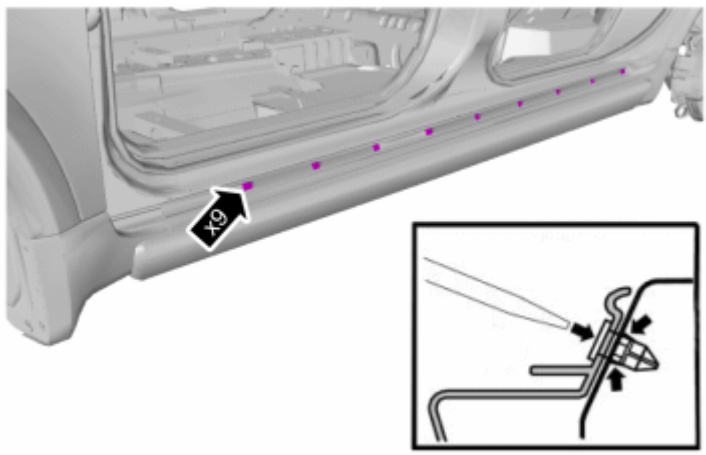

Fig. 34: Identifying Sill Panel Clips/Rivets (1 of 2)
Courtesy of VOLVO CARS CORPORATION

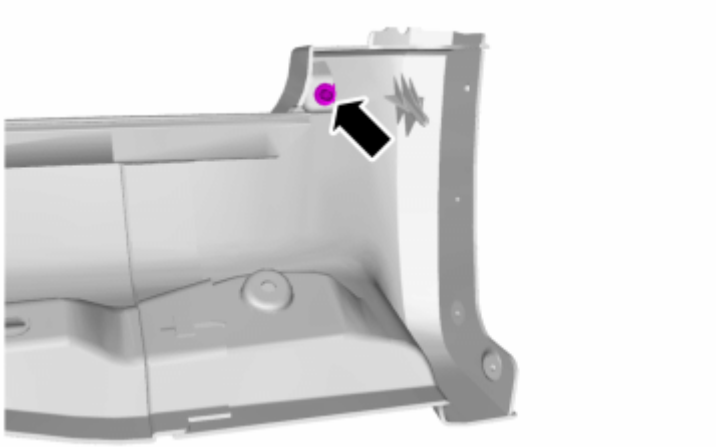

Fig. 35: Identifying Sill Panel Clips/Rivets (2 of 2)
Courtesy of VOLVO CARS CORPORATION

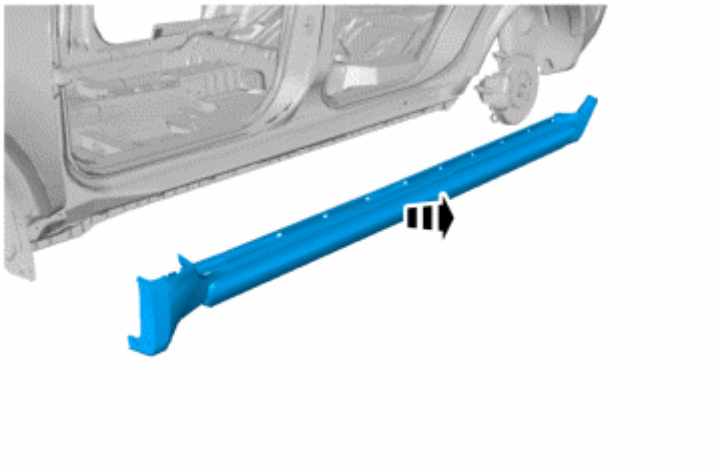

Fig. 36: Removing Sill
Courtesy of VOLVO CARS CORPORATION

INSTALL

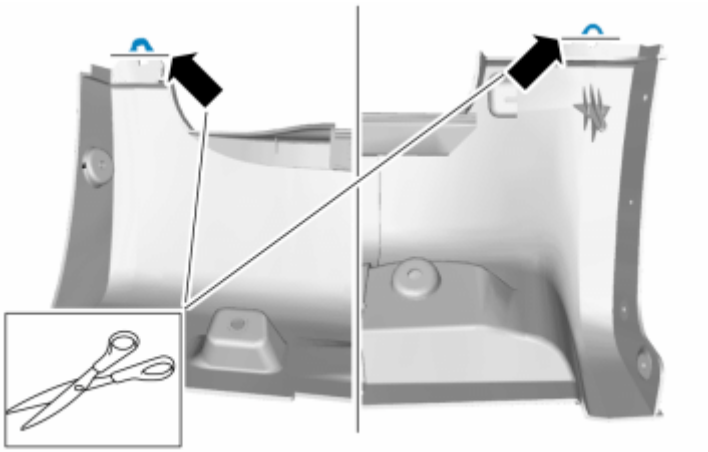

Fig. 37: View Of Trim Locations
Courtesy of VOLVO CARS CORPORATION

Install in reverse order.

GLASS AND WEATHER-STRIP FOR WINDSCREEN AND REAR WINDSCREEN (2003-2005)

COWL, REPLACING

NOTE: **As the illustrations in this service information are used for different model years and / or models, some variation may occur. However, the essential information in the illustrations is always correct.**

REMOVING THE PLENUM CHAMBER

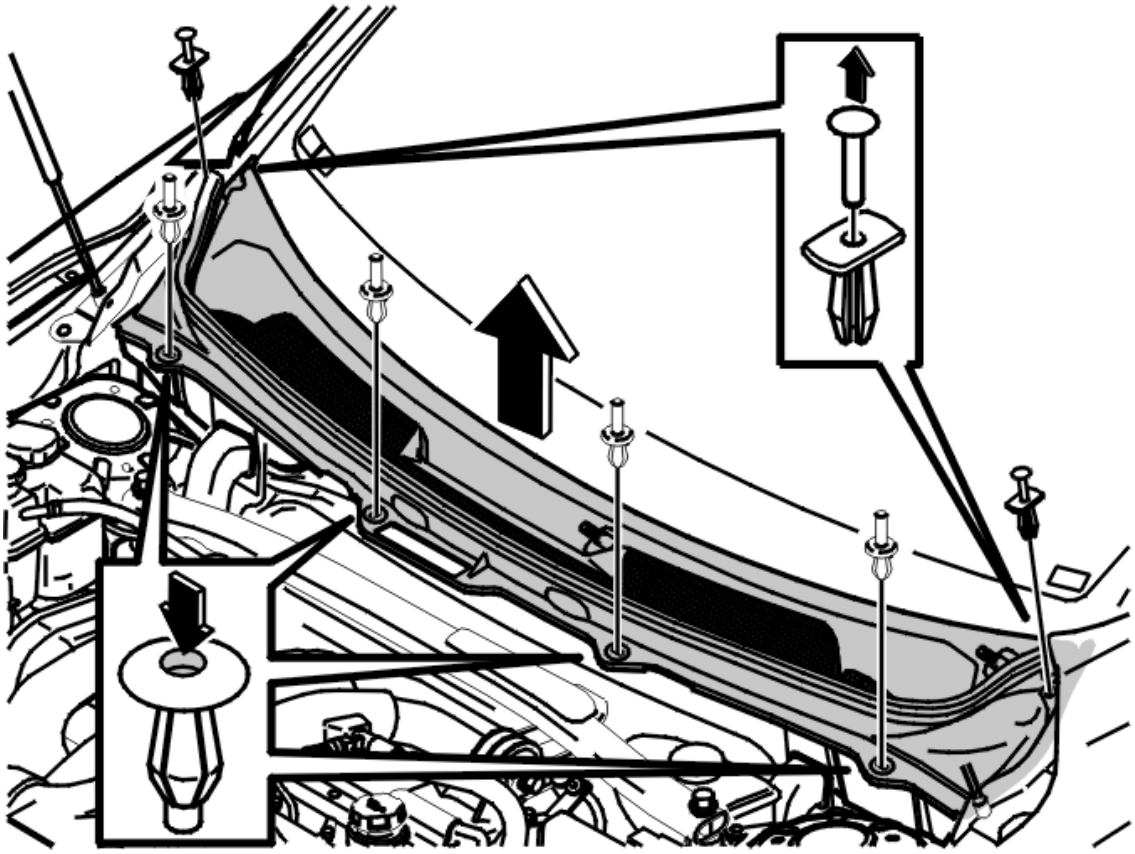

Fig. 38: Identifying Clips
Courtesy of VOLVO CARS CORPORATION

Remove:

- the windshield wipers. See **WIPER ARM / BLADE WINDSHIELD, REPLACING**
- the 6 clips.

Press the center section of the rivet head on the four front clips.

Lift up the center section of the other two clips.

Lift out the cowl.

INSTALLING THE PLENUM CHAMBER

Install the cowl.

NOTE: **Check that the guide clips underneath the cowl are in the correct position in relation to the windshield.**

Install:

- the 6 clips
- the windshield wipers. See **WIPER ARM / BLADE WINDSHIELD, REPLACING** .

TAILGATE WINDSHIELD, REPLACING

see **TAILGATE WINDSHIELD, REPLACING**

WINDSCREEN, REPLACING

Special tools	
	T9512925 ROLLOUT 2000 (FOR GLASS REMOVAL) **Tool number:** T9512925 **Tool description:** ROLLOUT 2000 (FOR GLASS REMOVAL) **Tool boards:**
	T9512335 GLASS LIFTER x2 (REPLACES 9986030) **Tool number:** T9512335 **Tool description:** GLASS LIFTER x2 (REPLACES 9986030) **Tool boards:**
	T9814022 Oven 220V Shuko **Tool number:** T9814022 **Tool description:** Oven 220V Shuko **Tool boards:**
	T9814023 Oven 220V UK **Tool number:** T9814023 **Tool description:** Oven 220V UK **Tool boards:**
	T9814024 Oven 110V US **Tool number:** T9814024 **Tool description:** Oven 110V US **Tool boards:**
	T9814019 Adhesive gun 220V Shuko

	Tool number: T9814019 **Tool description:** Adhesive gun 220V Shuko **Tool boards:**
	T9814020 Adhesive gun 220V UK **Tool number:** T9814020 **Tool description:** Adhesive gun 220V UK **Tool boards:**
	T9814021 Adhesive gun 110V US **Tool number:** T9814021 **Tool description:** Adhesive gun 110V US **Tool boards:**

Materials	
Designation	**Part number**
Cleaning agent	1161721
Adhesive kit	31298559

REMOVAL

NOTE: Make sure that the vehicle is standing on a level surface.

See information about bonded windows, general safety information, see **BONDED WINDOW, GENERAL SAFETY INFORMATION**

See information about bonded windows, general information. See **BONDED WINDOW GENERAL, INFORMATION**

Remove the following components:

- plenum chamber. See **COWL, REPLACING**
- rain sensor. See **RAIN SENSOR**

WARNING: Wear safety goggles.

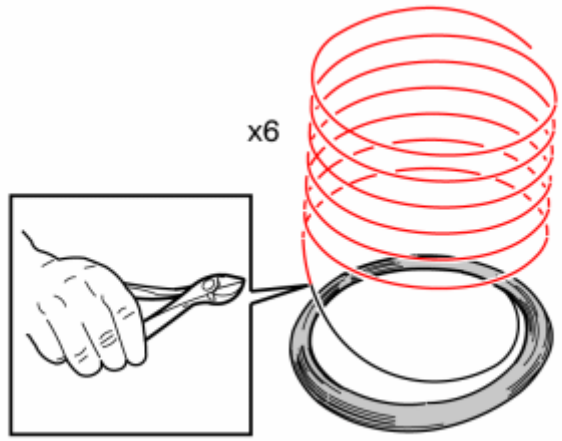

Fig. 39: Cutting Cable
Courtesy of VOLVO CARS CORPORATION

see **9512925**

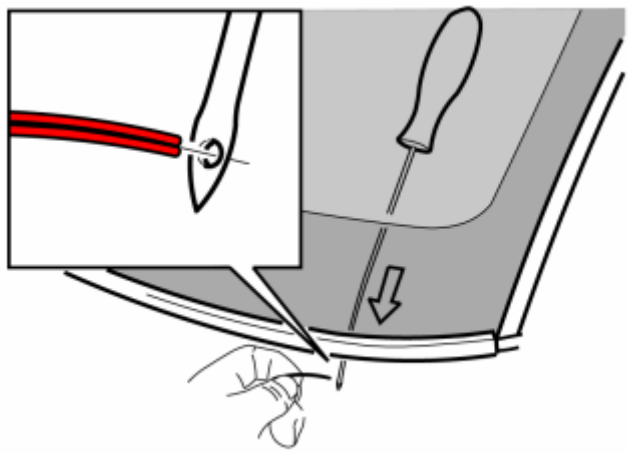

Fig. 40: Inserting Cable with Special Tool
Courtesy of VOLVO CARS CORPORATION

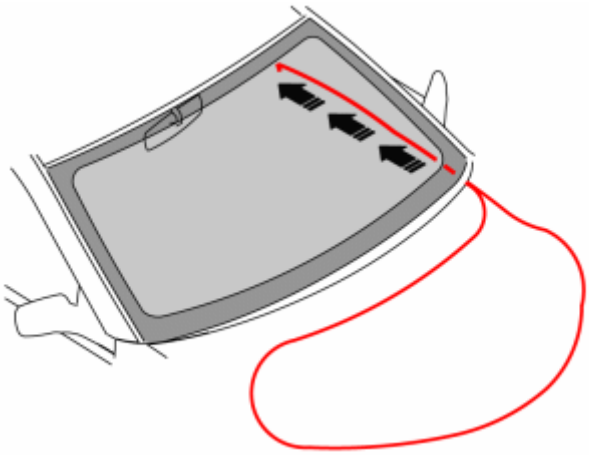

Fig. 41: Identifying Cable Pulled Through Gap Under Windshield
Courtesy of VOLVO CARS CORPORATION

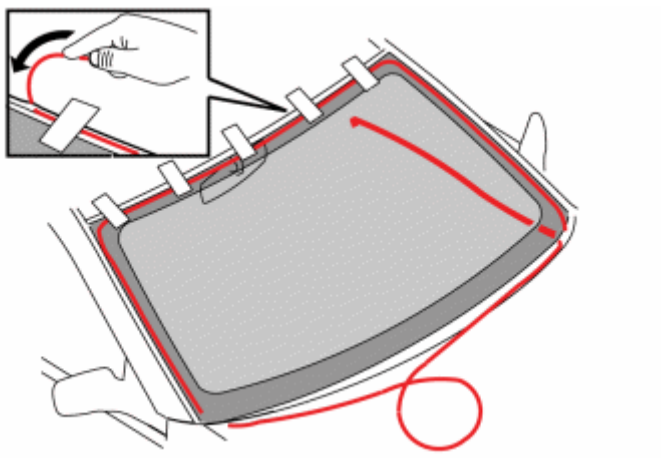

Fig. 42: Identifying Cable Taped On Surface Of Windshield
Courtesy of VOLVO CARS CORPORATION

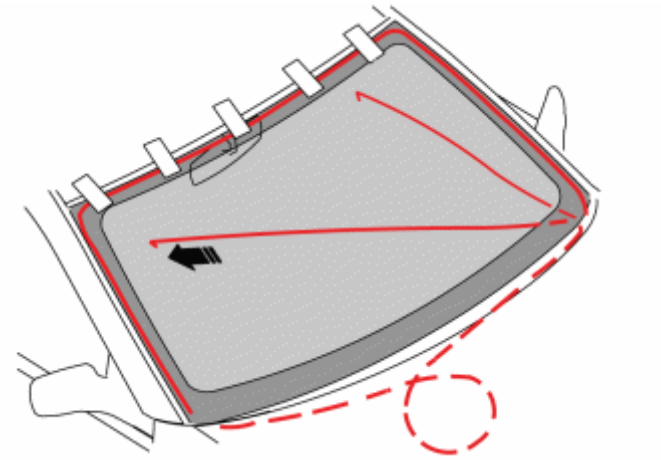

Fig. 43: Identifying Excess Cable Pulled Through Gap Under Windshield
Courtesy of VOLVO CARS CORPORATION

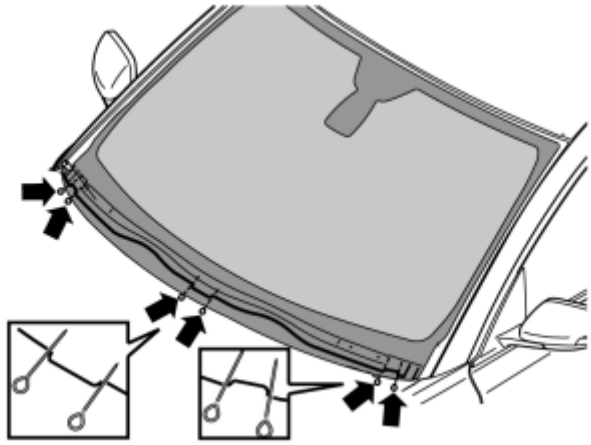

Fig. 44: Identifying Cable Placed Under Windshield
Courtesy of VOLVO CARS CORPORATION

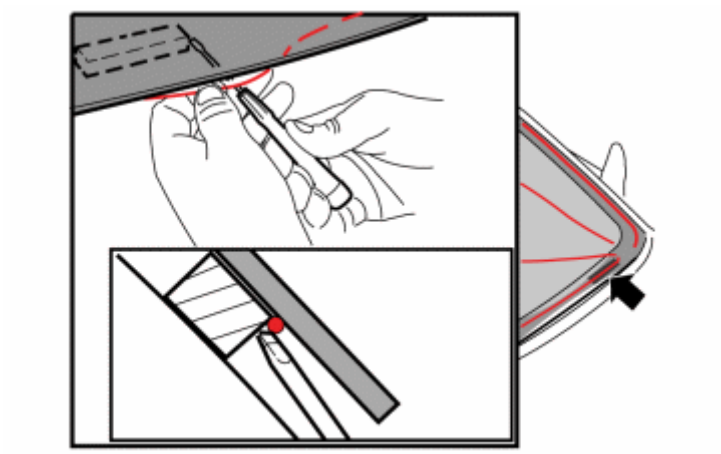

Fig. 45: Identifying Placement Of Cable Under Windshield
Courtesy of VOLVO CARS CORPORATION

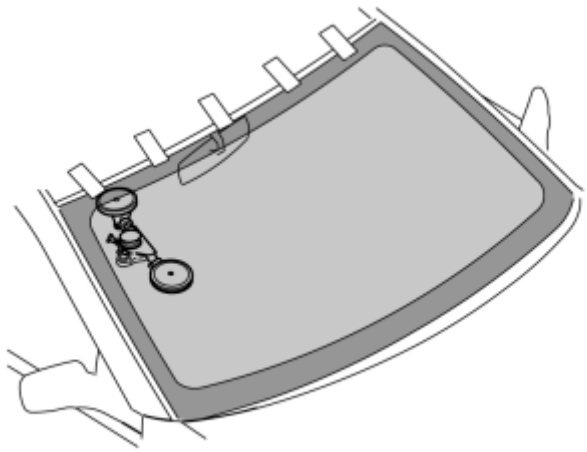

Fig. 46: Identifying Application Of #1 Suction Cup Glass Lifter / Roll Out Tool 9512925
Courtesy of VOLVO CARS CORPORATION

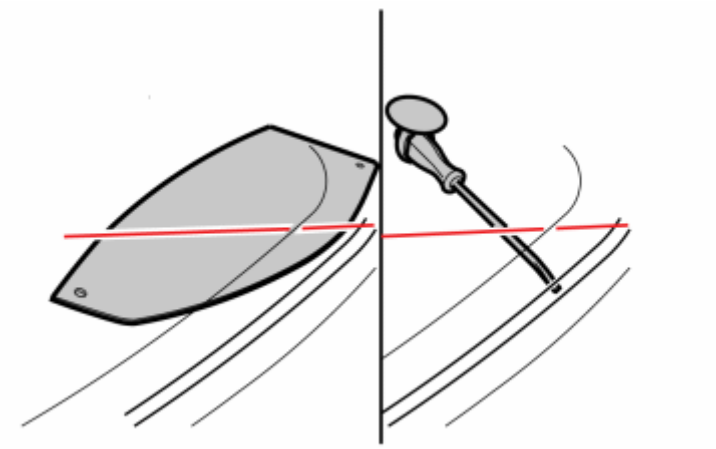

Fig. 47: Ensuring Components Are Protected
Courtesy of VOLVO CARS CORPORATION

CAUTION: Make sure that the components are protected.

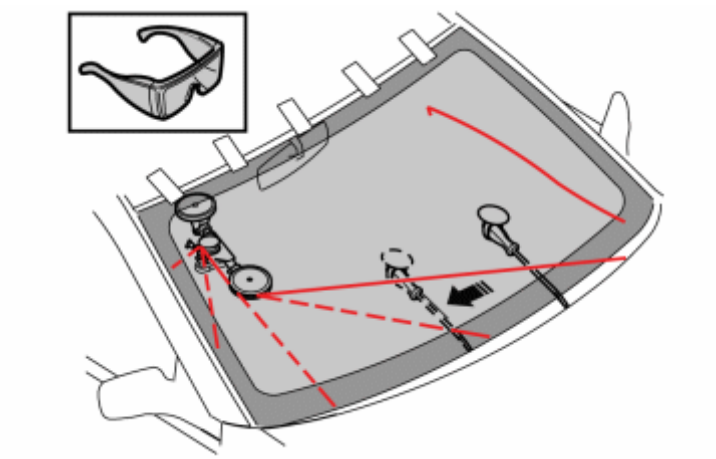

Fig. 48: Identifying Cable End Pulled Under Weatherstrip And Around Windshield With Roll Out Tool 9512925
Courtesy of VOLVO CARS CORPORATION

WARNING: Wear safety goggles.

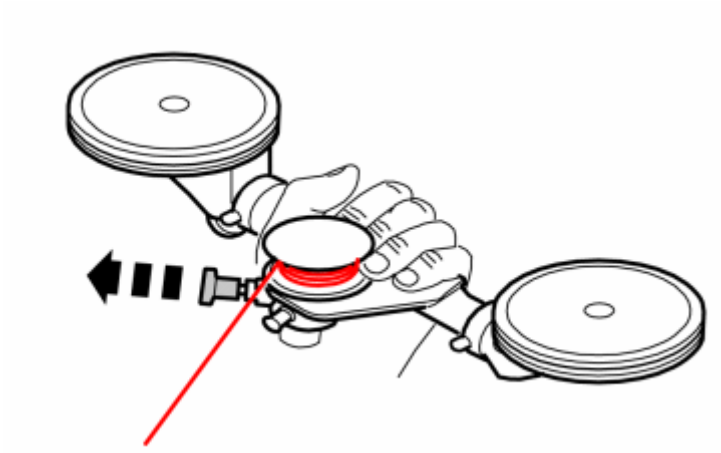

Fig. 49: Applying Roll Out Tool 9512925
Courtesy of VOLVO CARS CORPORATION

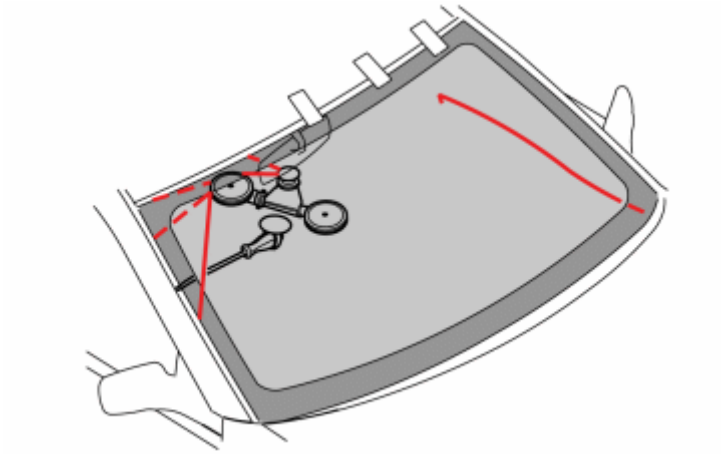

Fig. 50: Identifying Repositioned #1 Roll Out Tool 9512925 Around Windshield
Courtesy of VOLVO CARS CORPORATION

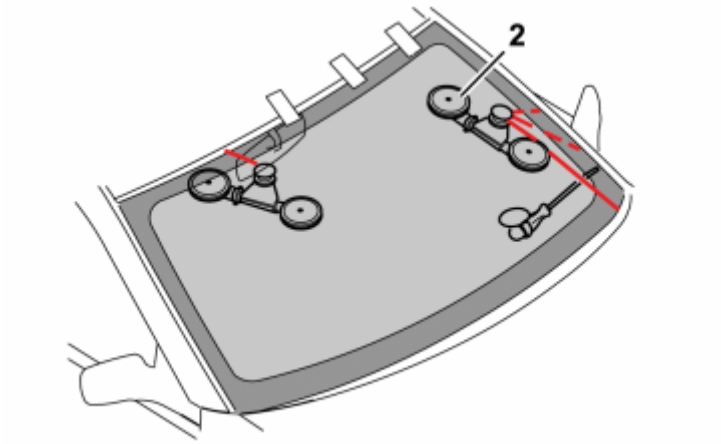

Fig. 51: Identifying Application Of Second Roll Out Tool 9512925
Courtesy of VOLVO CARS CORPORATION

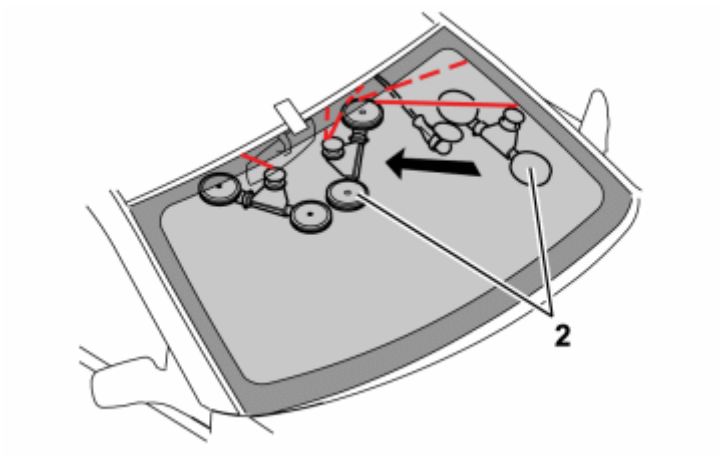

Fig. 52: Identifying Repositioned #2 Roll Out Tool 9512925 Around Windshield
Courtesy of VOLVO CARS CORPORATION

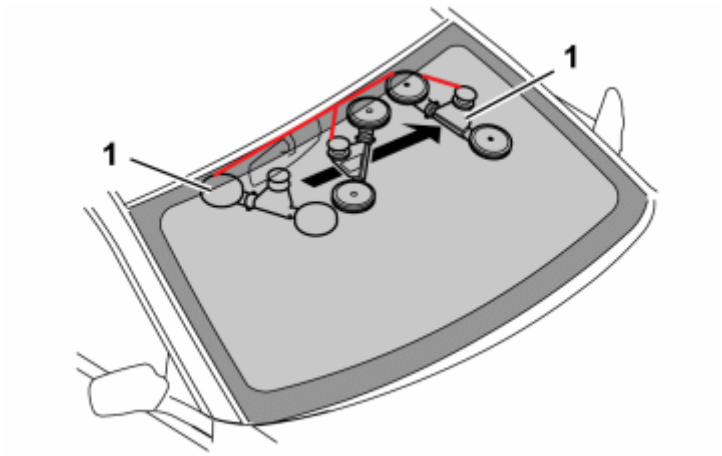

Fig. 53: Identifying Repositioned #1 Roll Out Tool 9512925 Around Windshield
Courtesy of VOLVO CARS CORPORATION

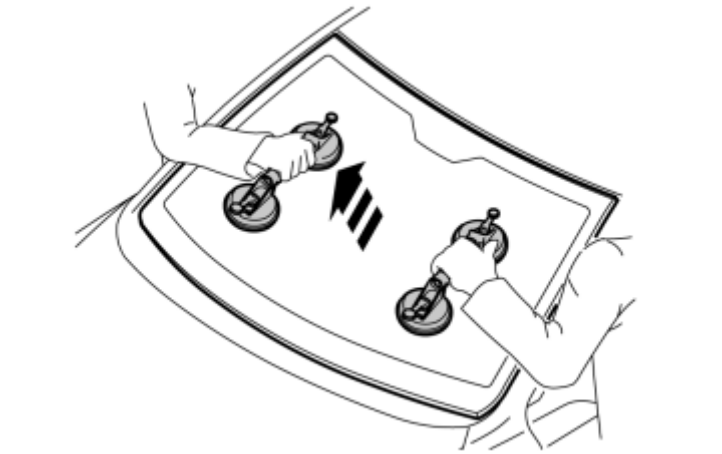

Fig. 54: Lifting Glass with Assistant
Courtesy of VOLVO CARS CORPORATION

see **9512335**

INSTALLATION

See information about bonded windows, general safety information. See **BONDED WINDOW, GENERAL SAFETY INFORMATION**

See information about bonded windows, general information. See **BONDED WINDOW GENERAL, INFORMATION**

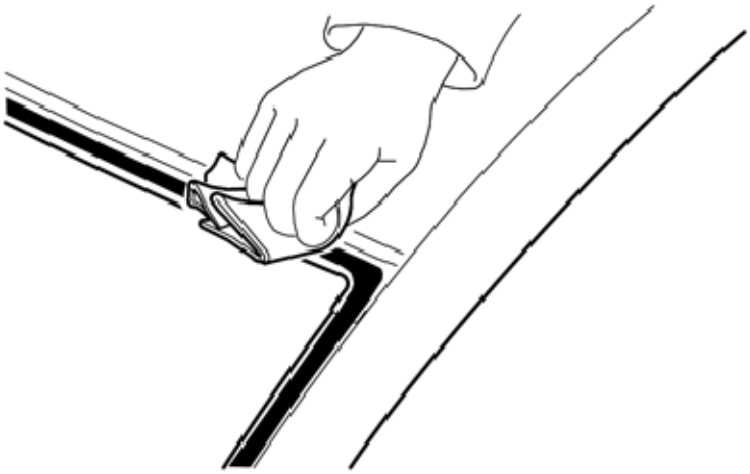

Fig. 55: Applying H Cleaner, 1161436-9
Courtesy of VOLVO CARS CORPORATION

Use: H Cleaner, 1161436-9

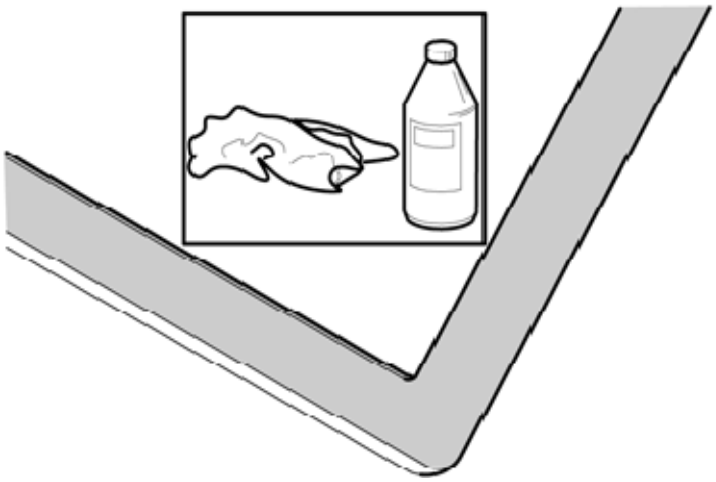

Fig. 56: Applying H Cleaner, 1161436-9
Courtesy of VOLVO CARS CORPORATION

Use: H Cleaner, 1161436-9

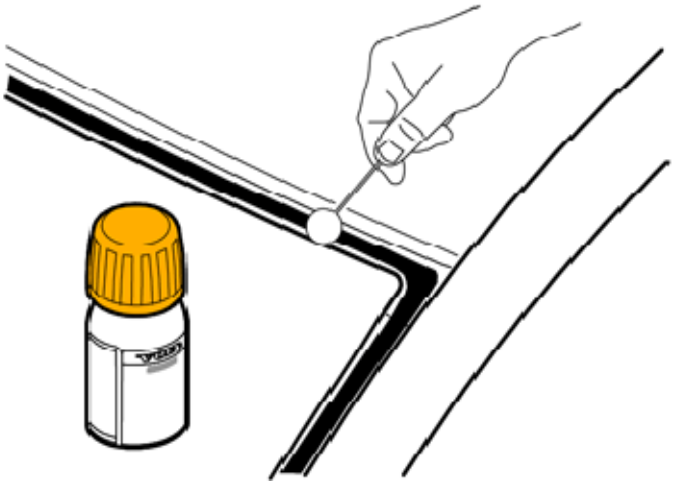

Fig. 57: Applying H Cleaner, 1161436-9 (1 Of 2)
Courtesy of VOLVO CARS CORPORATION

Fig. 58: Applying H Cleaner, 1161436-9 (2 Of 2)
Courtesy of VOLVO CARS CORPORATION

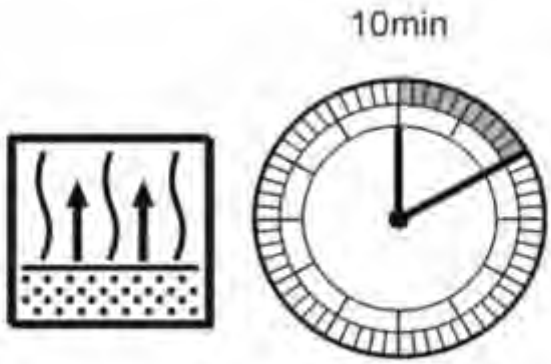

Fig. 59: Drying Time 10 Min.
Courtesy of VOLVO CARS CORPORATION

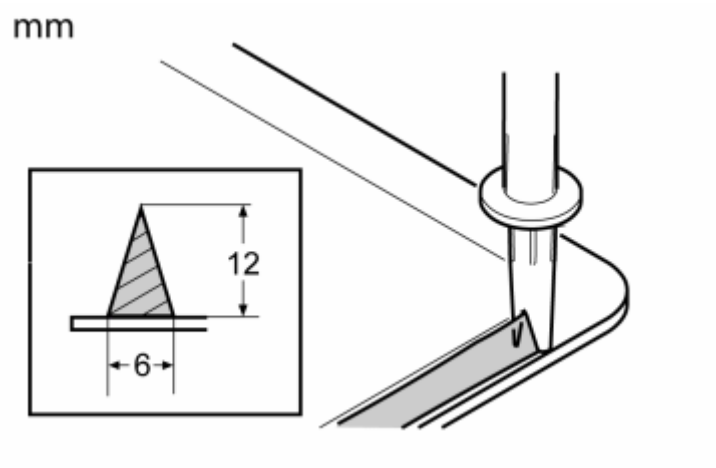

Fig. 60: Adhesive kit, 31298559
Courtesy of VOLVO CARS CORPORATION

see **9814022** see **9814023** see **9814024** see **9814019** see **9814020** see **9814021** **Use:** Adhesive kit, 31298559

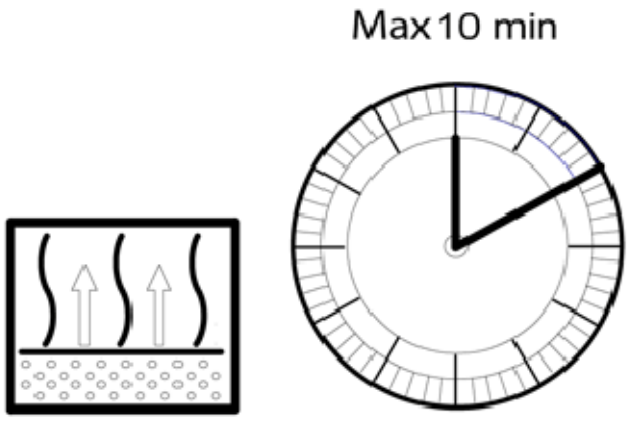

Fig. 61: Identifying Ten Minute Requirement To Allow Cleaner To Evaporate
Courtesy of VOLVO CARS CORPORATION

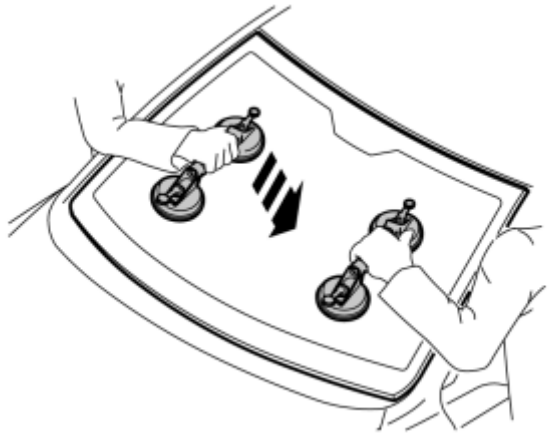

Fig. 62: Lifting Out Windshield With Roll Out Tools 9512925
Courtesy of VOLVO CARS CORPORATION

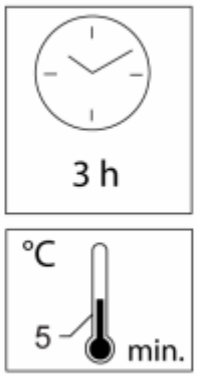

Fig. 63: Identifying Time And Temperature Requirements For Adhesive To Dry
Courtesy of VOLVO CARS CORPORATION

WARNING: **Wait for the specified time at the specified temperature before moving the car.**

Install the following items:

- plenum chamber. See **COWL, REPLACING**
- rain sensor. See **RAIN SENSOR**

GLASS AND WEATHER-STRIP FOR WINDSCREEN AND REAR WINDSCREEN (2006-2011)

COWL, REPLACING

NOTE: **As the illustrations in this service information are used for different model years and / or models, some variation may occur. However, the essential information in the illustrations is always correct.**

REMOVING THE PLENUM CHAMBER

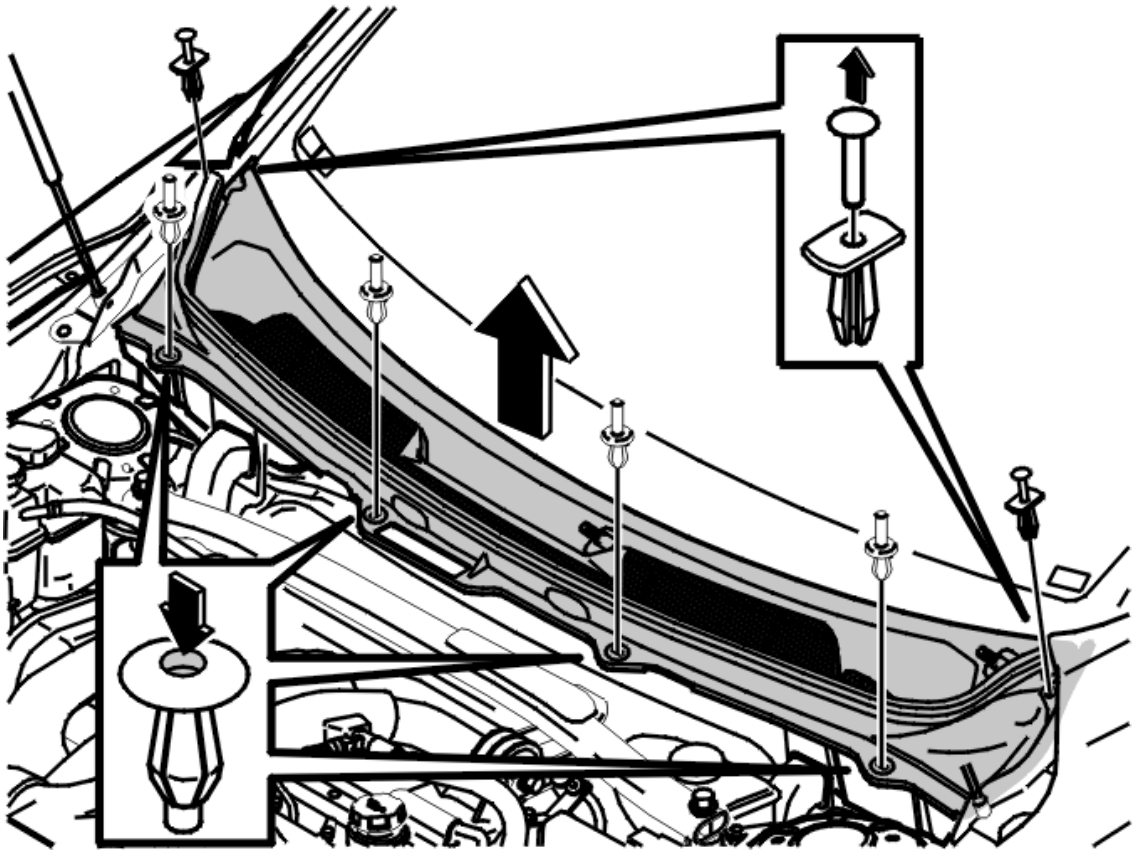

Fig. 64: Identifying Clips
Courtesy of VOLVO CARS CORPORATION

Remove:

- the windscreen wipers. See **WIPER ARM / BLADE WINDSHIELD, REPLACING**
- the 6 clips.

Press in the center of the rivet head. Remove the four front clips.

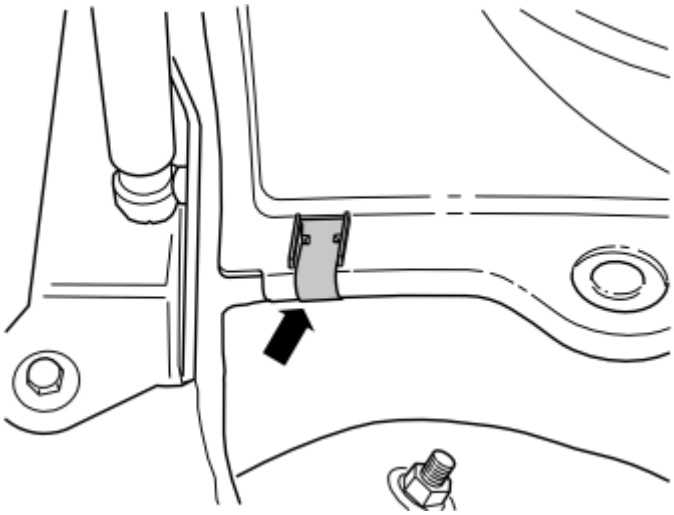

Fig. 65: Identifying Outer Clip(s) Removal
Courtesy of VOLVO CARS CORPORATION

Remove both the outer clips.

Lift out the cowl.

INSTALL PLENUM CHAMBER

Install in the reverse order.

NOTE: **Check that the guide clips underneath the cowl are in the correct position in relation to the windscreen.**

TAILGATE WINDSHIELD, REPLACING

Special tools:

see **9512337**

see **9512925**

NOTE: **The illustrations in this service information are used for different model years and / or models. Some variation may occur. However, the essential information in the illustrations is always correct.**

REMOVING THE REAR WINDSHIELD

Remove:

- the stop lamp
- the panels. See **PANEL, TAILGATE, REPLACING**

- the tailgate wiper. See **TAILGATE WIPER ARM / BLADE, REPLACING** .

Disconnect the heating cables for the rear windshield.

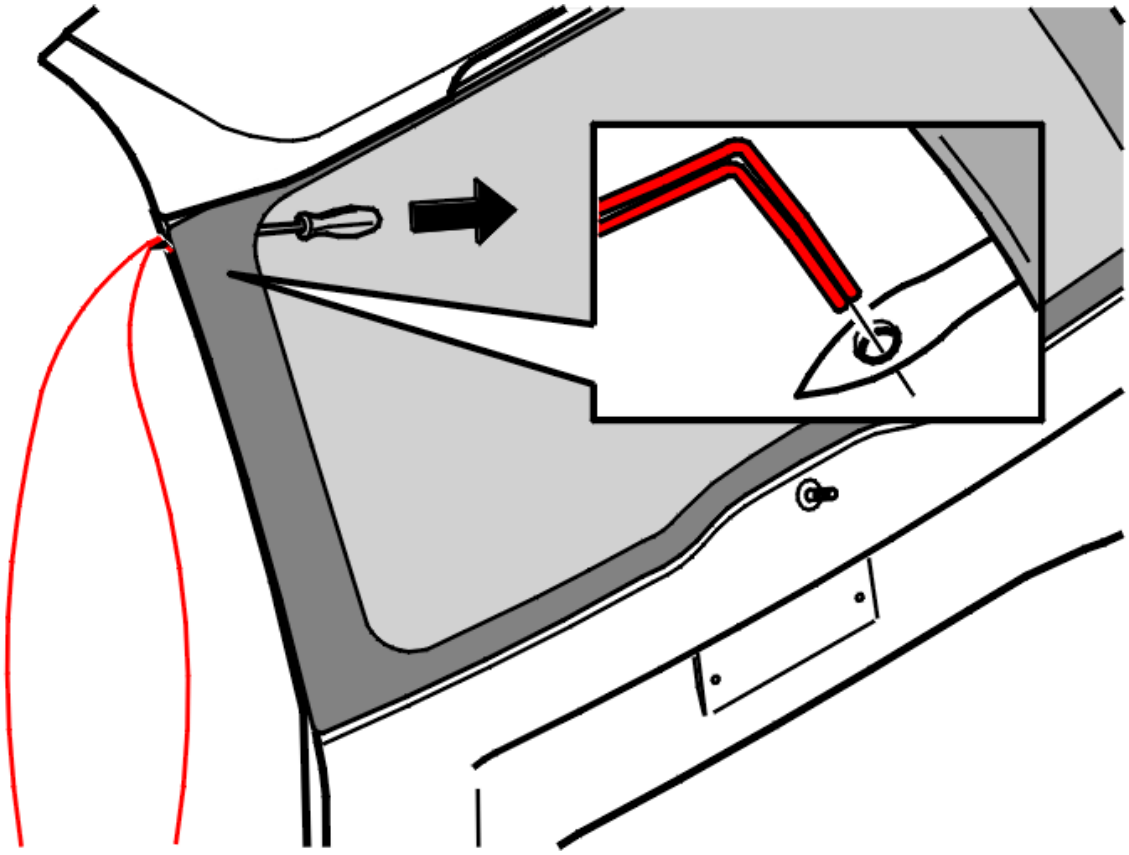

Fig. 66: View Of Wire Inserter In The Upper Left-Hand Corner
Courtesy of VOLVO CARS CORPORATION

Insert a wire inserter in the upper left-hand corner as shown in the illustration.

Cut off approximately four meters of wire from the roll.

Secure the wire and pull the ends approximately 50 cm into the car.

Pull the wire around and downwards so it forms an eyelet around the outside of the windshield.

Check that the wire is at the bottom against the bead of adhesive.

Stretch the wire so it is still in position at the bottom. Pull in the excess from one end of the wire.

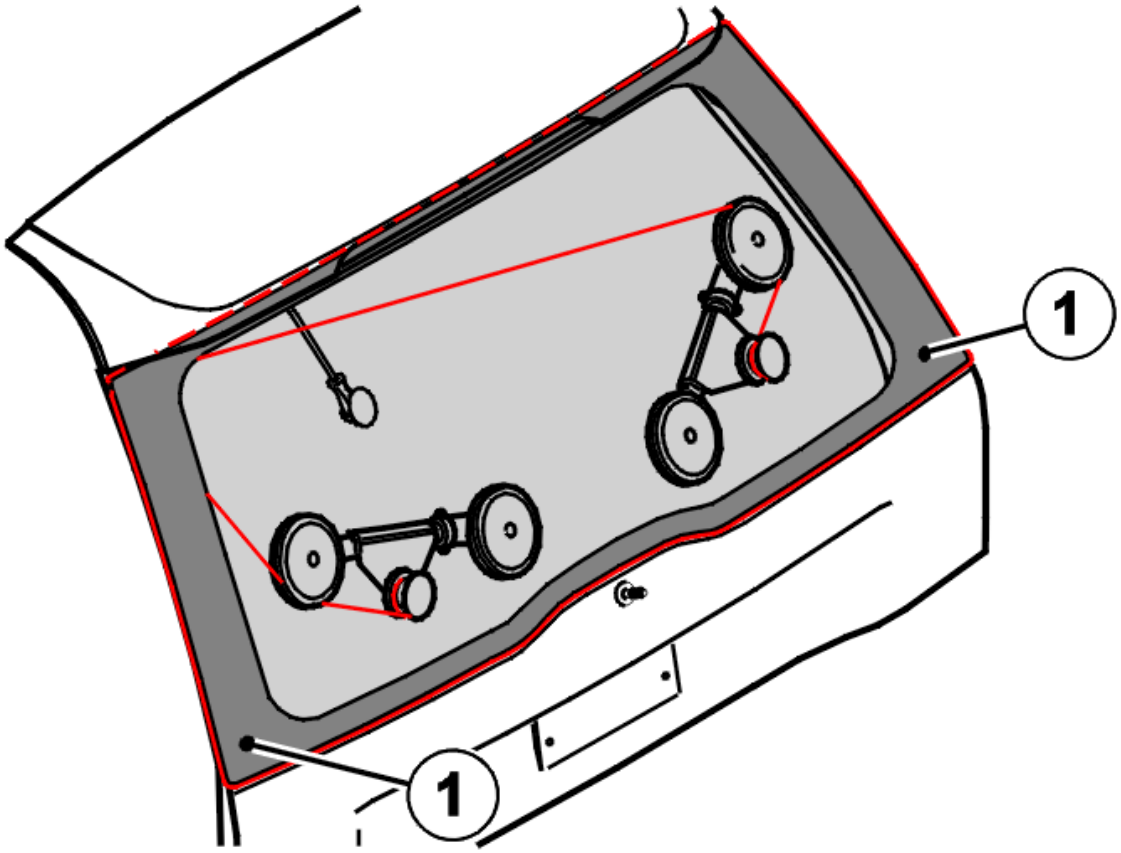

Fig. 67: View Of Wire Against Locating Pins
Courtesy of VOLVO CARS CORPORATION

Position the winches as shown in the illustration. Secure the long end of the wire in the right-hand winch. Raise about 20 cm.

Check that the loose end of the wire is not slipping.

Secure the other end of the wire to the left winch.

Wind in the wire using both the winches until the wire is against the locating pins at (1).

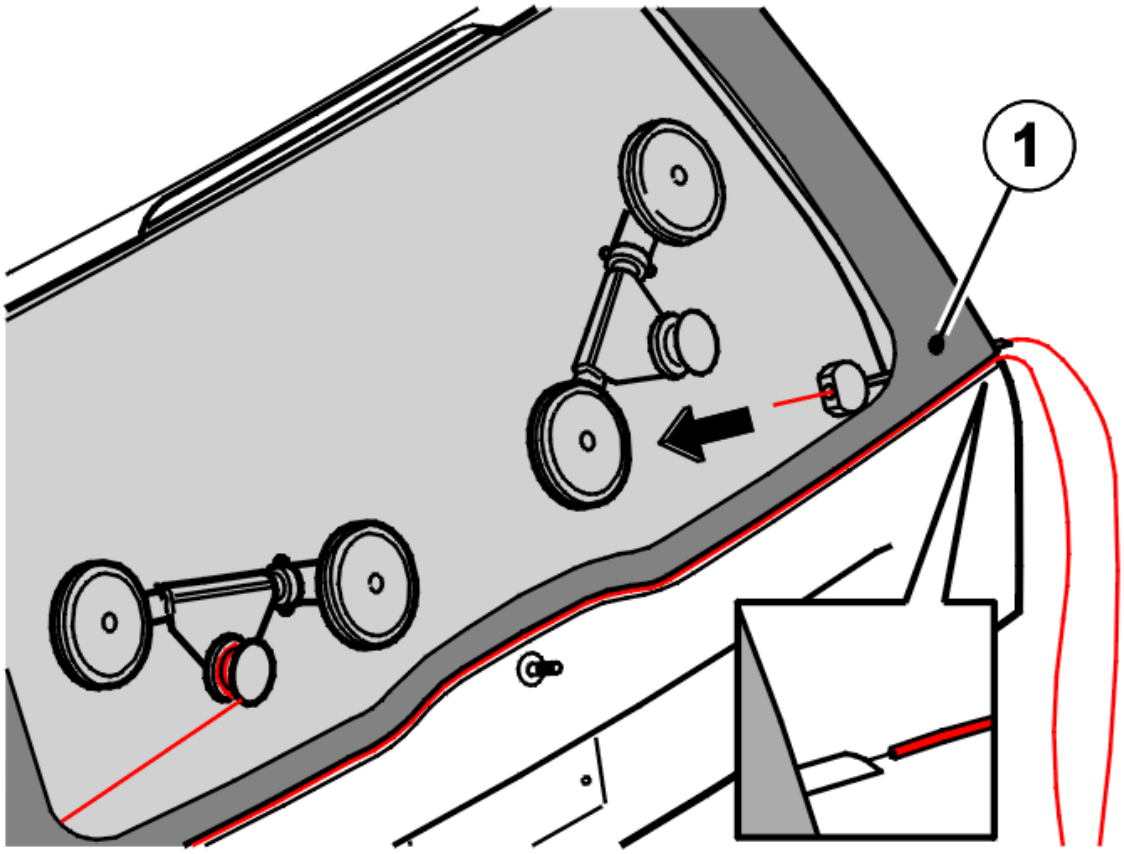

Fig. 68: Identifying Wire From The Right-Hand Winch
Courtesy of VOLVO CARS CORPORATION

In order to clear the locating pin, detach the wire from the right-hand winch and insert it on the other side of the locating pin (2).

Remove the wire from the right-hand winch and pull the wire out on the outside.

Press in the needle (special tool see **9512337**) below the locating pin.

Insert the wire through the hole in the needle. Pull out the needle.

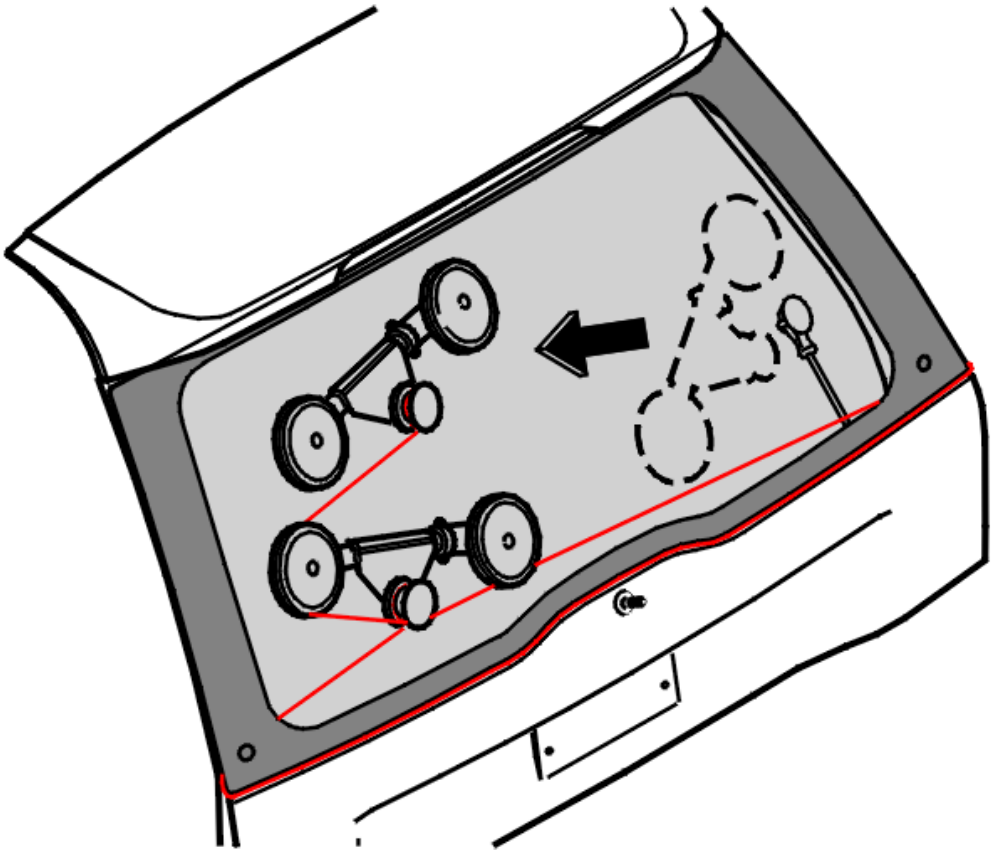

Fig. 69: Identifying Right-Hand Winch To Its New Position
Courtesy of VOLVO CARS CORPORATION

Move the right-hand winch to its new position (see the illustration). Wind in the rest of the wire.

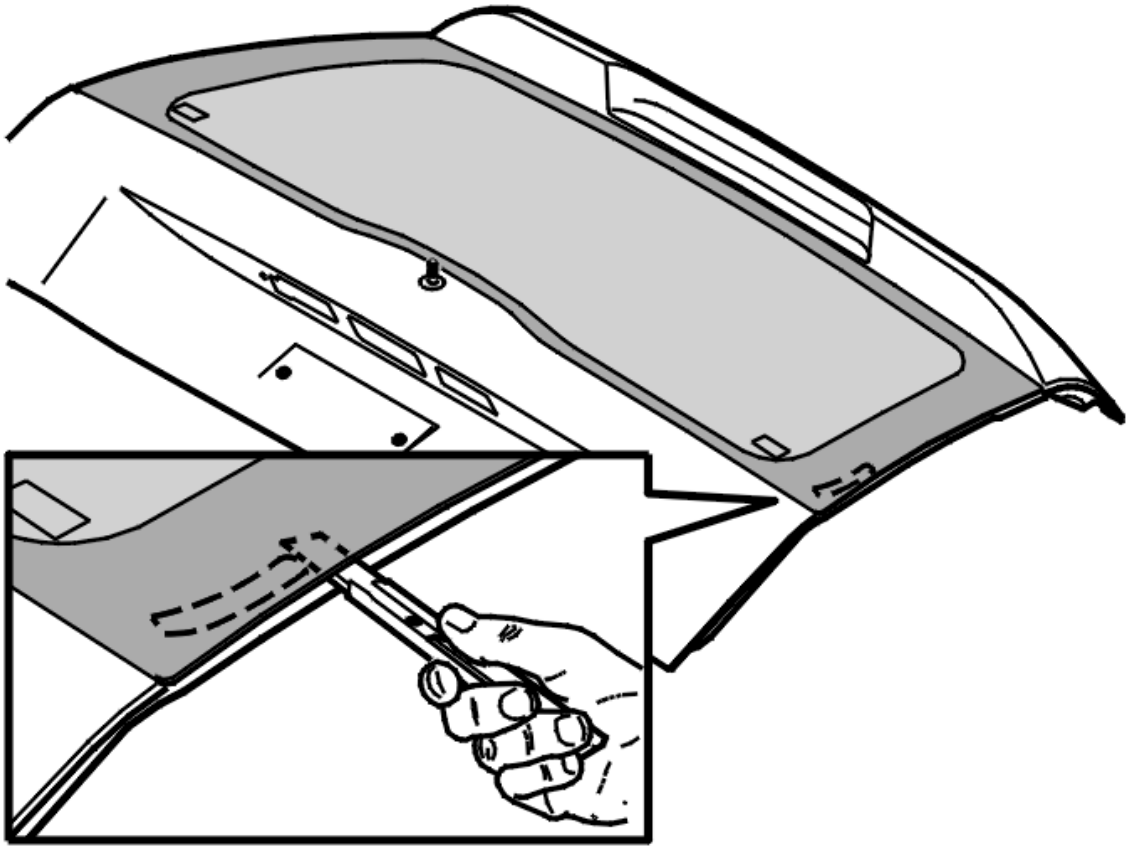

Fig. 70: Identifying PUR Bead Cutting
Courtesy of VOLVO CARS CORPORATION

The window is now only secured by a small amount of the PUR bead at the right-hand locating pin.

Use a knife to cut through the final part of the bead.

INSTALLING THE REAR WINDSHIELD IN THE TAILGATE

Always ensure that a side window is open so that the bonded window does not jump out of position when a door is closed.

When working with PUR adhesive on the body flange, see **PUR ON BODY FLANGE** .

Clean the area on the window to which PUR adhesive is to be applied with cleaner-H (black cap).

Apply glass activator (yellow cork) and glass primer (green cork) to the same surface. Use plenty of glass primer, but do not let it run.

Let the primer dry until the surface is matte.

Apply PUR rim activator (blue cork) to the remaining PUR bead on the tailgate if the windshield has been removed for more than eight hours.

Apply adhesive to the tailgate.

NOTE: **The top of the windshield must be position first so that it clears the projecting section of the tailgate.**

Press the window into place by hand.

Check that the window is aligned with the door.

Secure with tape.

WINDSCREEN, REPLACING

Special tools	
	T9512925 ROLLOUT 2000 (FOR GLASS REMOVAL) **Tool number:** T9512925 **Tool description:** ROLLOUT 2000 (FOR GLASS REMOVAL) **Tool boards:**
	T9512335 GLASS LIFTER x2 (REPLACES 9986030) **Tool number:** T9512335 **Tool description:** GLASS LIFTER x2 (REPLACES 9986030) **Tool boards:**
	T9814022 Oven 220V Shuko **Tool number:** T9814022 **Tool description:** Oven 220V Shuko **Tool boards:**
	T9814024 Oven 110V US **Tool number:** T9814024 **Tool description:** Oven 110V US **Tool boards:**
	T9814019 Adhesive gun 220V Shuko **Tool number:** T9814019 **Tool description:** Adhesive gun 220V Shuko **Tool boards:**
	T9814020 Adhesive gun 220V UK **Tool number:** T9814020 **Tool description:** Adhesive gun 220V UK **Tool boards:**
	T9814021 Adhesive gun 110V US **Tool number:** T9814021 **Tool description:** Adhesive gun 110V US **Tool boards:**

Materials	
Designation	**Part number**

Cleaning agent	1161721
Adhesive kit	31298559

REMOVAL

NOTE: Make sure that the vehicle is standing on a level surface.

See information about bonded windows, general safety information, see **BONDED WINDOW, GENERAL SAFETY INFORMATION**

See information about bonded windows, general information. See **BONDED WINDOW GENERAL, INFORMATION**

Remove the following components:

- plenum chamber. See **COWL, REPLACING**
- rain sensor. See **RAIN SENSOR**

WARNING: Wear safety goggles.

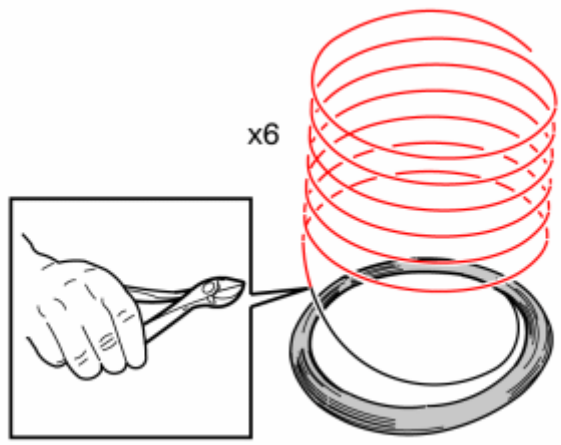

Fig. 71: Cutting Cable
Courtesy of VOLVO CARS CORPORATION

see **9512925**

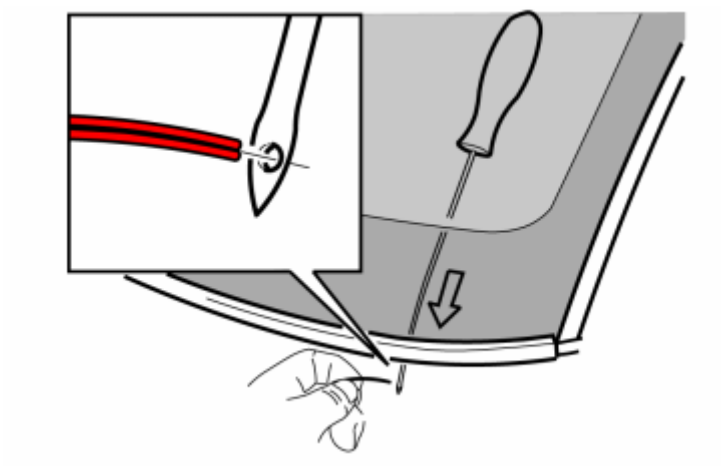

Fig. 72: Inserting Cable with Special Tool
Courtesy of VOLVO CARS CORPORATION

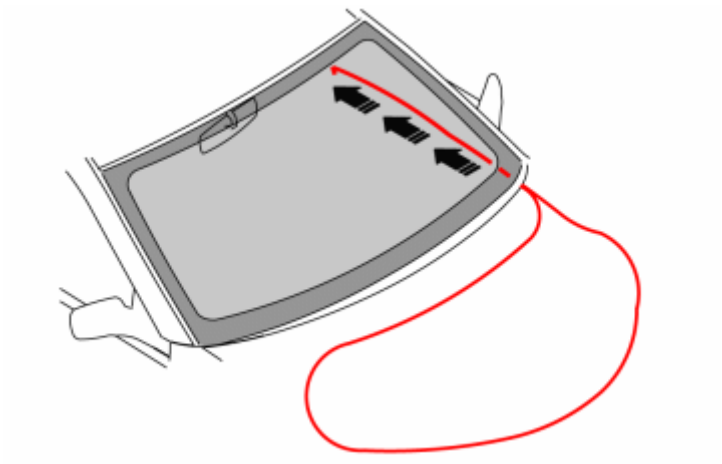

Fig. 73: Identifying Cable Pulled Through Gap Under Windshield
Courtesy of VOLVO CARS CORPORATION

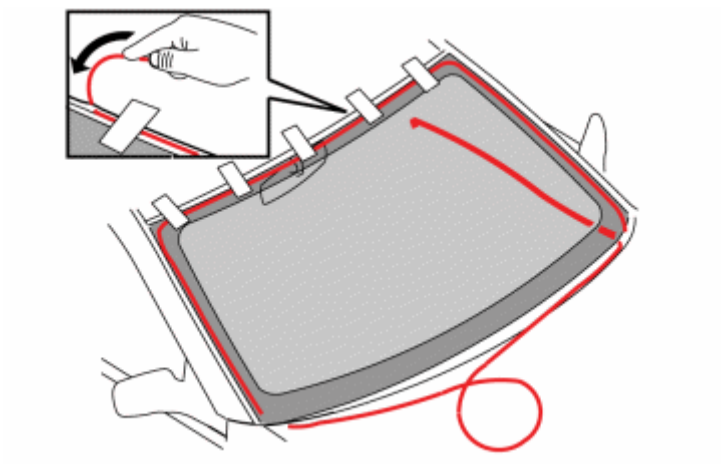

Fig. 74: Identifying Cable Taped On Surface Of Windshield
Courtesy of VOLVO CARS CORPORATION

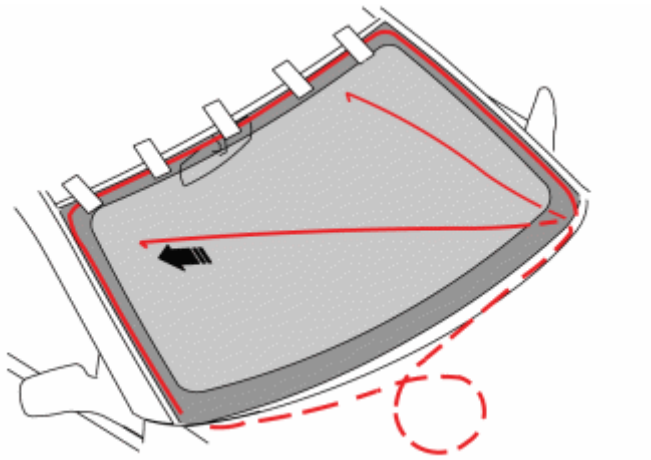

Fig. 75: Identifying Excess Cable Pulled Through Gap Under Windshield
Courtesy of VOLVO CARS CORPORATION

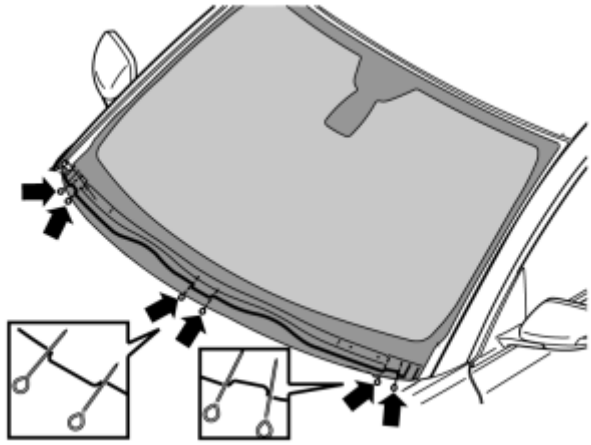

Fig. 76: Identifying Cable Placed Under Windshield
Courtesy of VOLVO CARS CORPORATION

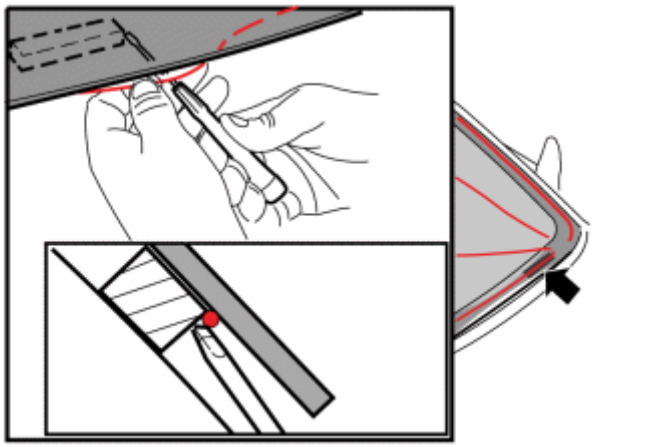

Fig. 77: Identifying Placement Of Cable Under Windshield
Courtesy of VOLVO CARS CORPORATION

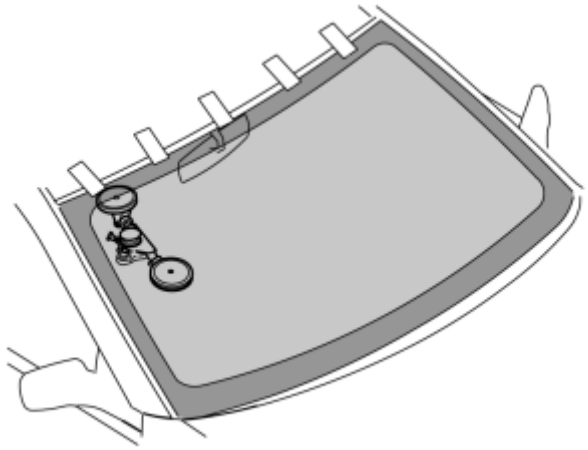

Fig. 78: Identifying Application Of #1 Suction Cup Glass Lifter / Roll Out Tool 9512925
Courtesy of VOLVO CARS CORPORATION

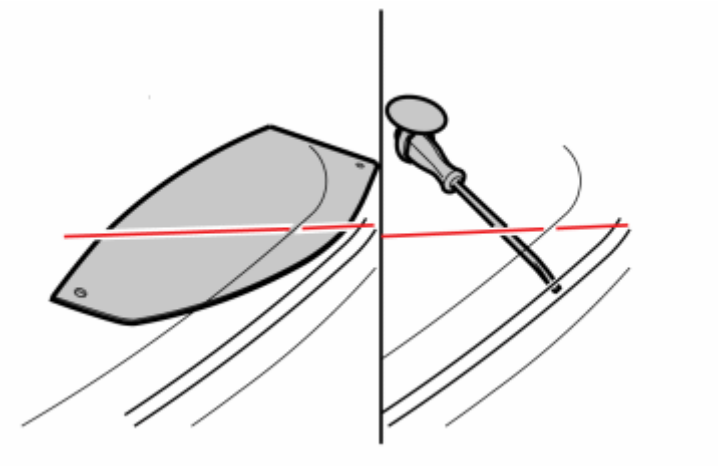

Fig. 79: Ensuring Components Are Protected
Courtesy of VOLVO CARS CORPORATION

CAUTION: Make sure that the components are protected.

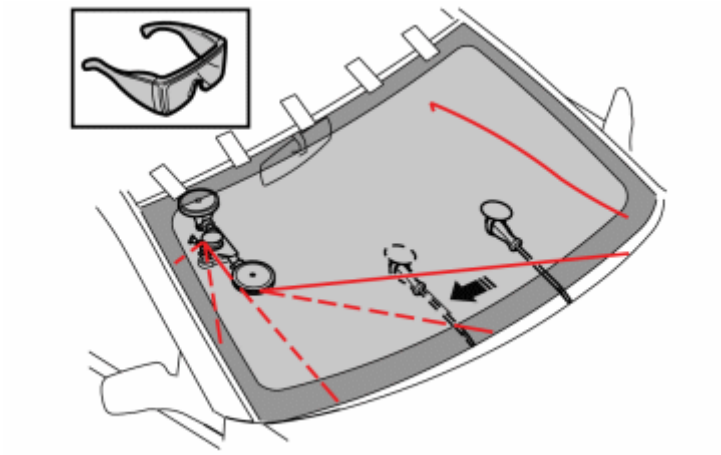

Fig. 80: Identifying Cable End Pulled Under Weatherstrip And Around Windshield With Roll Out Tool 9512925
Courtesy of VOLVO CARS CORPORATION

WARNING: Wear safety goggles.

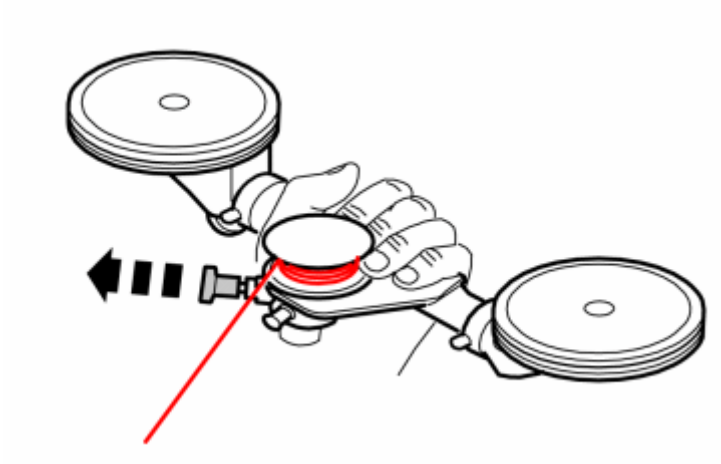

Fig. 81: Applying Roll Out Tool 9512925
Courtesy of VOLVO CARS CORPORATION

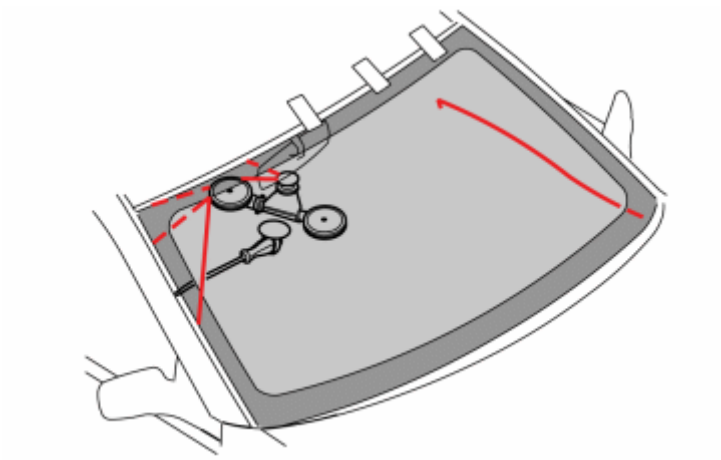

Fig. 82: Identifying Repositioned #1 Roll Out Tool 9512925 Around Windshield
Courtesy of VOLVO CARS CORPORATION

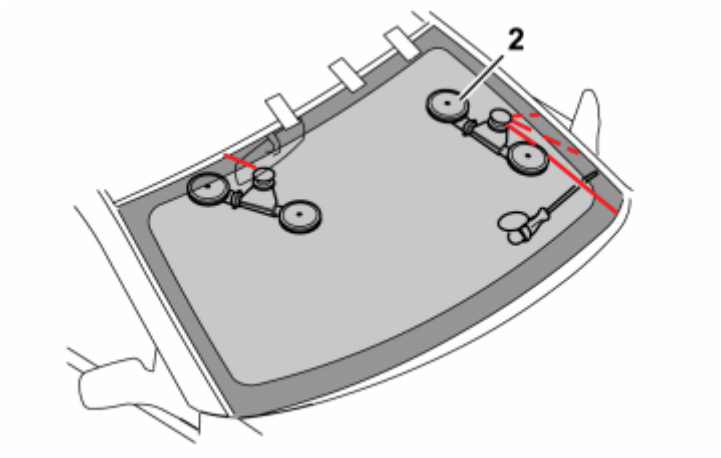

Fig. 83: Identifying Application Of Second Roll Out Tool 9512925
Courtesy of VOLVO CARS CORPORATION

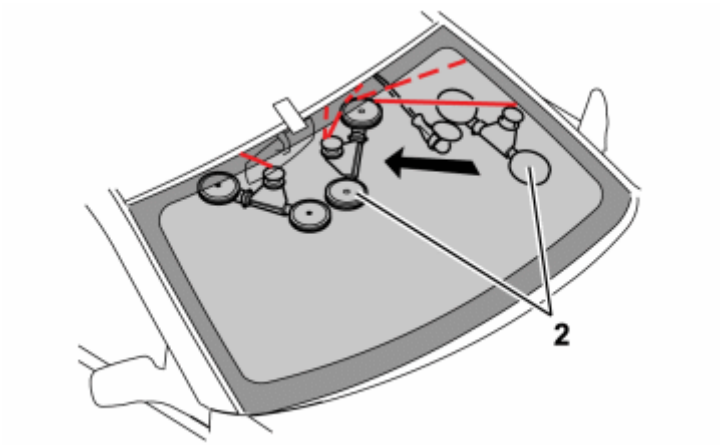

Fig. 84: Identifying Repositioned #2 Roll Out Tool 9512925 Around Windshield
Courtesy of VOLVO CARS CORPORATION

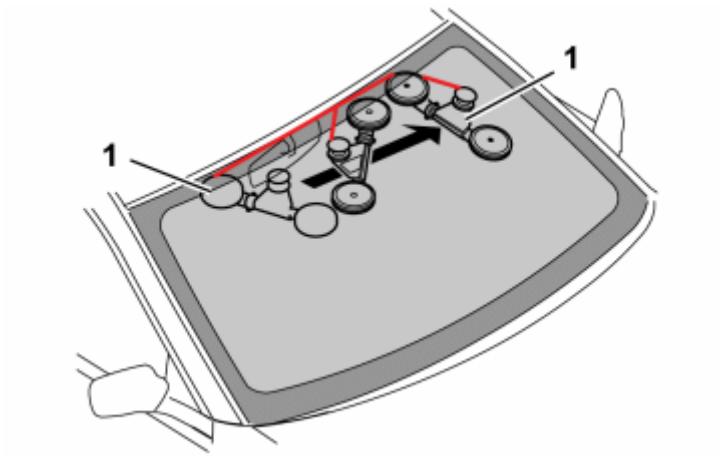

Fig. 85: Identifying Repositioned #1 Roll Out Tool 9512925 Around Windshield
Courtesy of VOLVO CARS CORPORATION

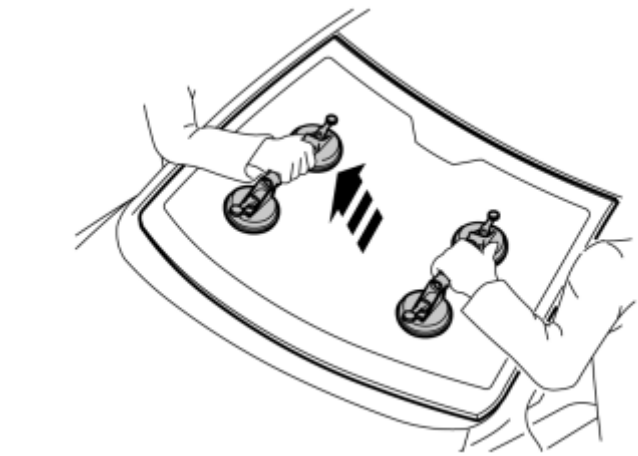

Fig. 86: Lifting Glass with Assistant
Courtesy of VOLVO CARS CORPORATION

see **9512335**

INSTALLATION

See information about bonded windows, general safety information. See **BONDED WINDOW, GENERAL SAFETY INFORMATION**

See information about bonded windows, general information. See **BONDED WINDOW GENERAL, INFORMATION**

Fig. 87: Applying H Cleaner, 1161436-9
Courtesy of VOLVO CARS CORPORATION

Use: H Cleaner, 1161436-9

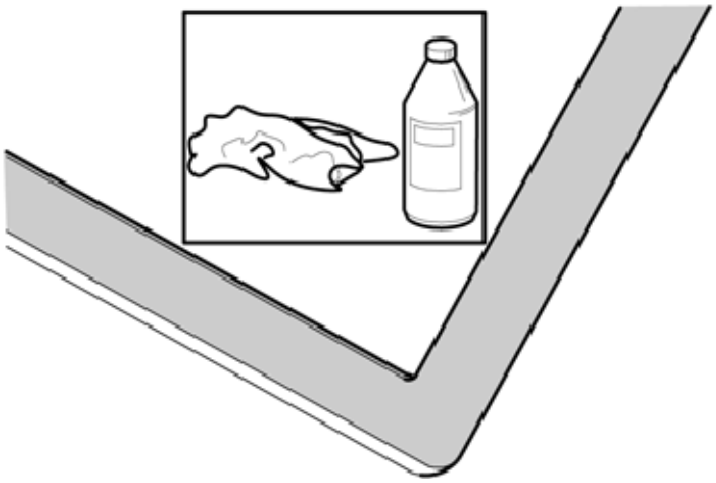

Fig. 88: Applying H Cleaner, 1161436-9
Courtesy of VOLVO CARS CORPORATION

Use: H Cleaner, 1161436-9

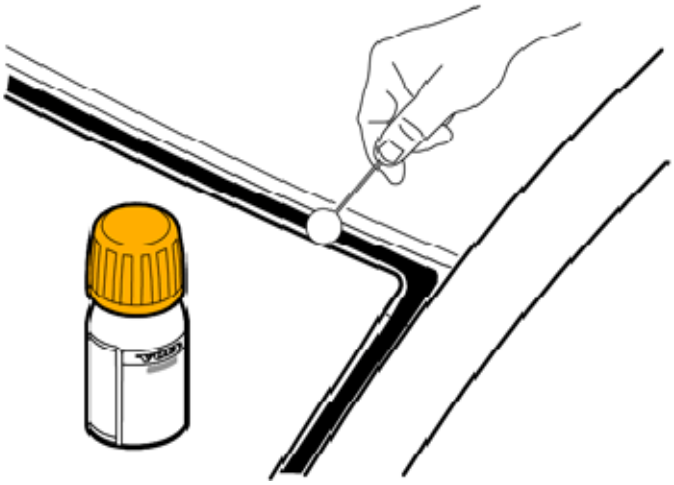

Fig. 89: Applying H Cleaner, 1161436-9 (1 Of 2)
Courtesy of VOLVO CARS CORPORATION

Fig. 90: Applying H Cleaner, 1161436-9 (2 Of 2)
Courtesy of VOLVO CARS CORPORATION

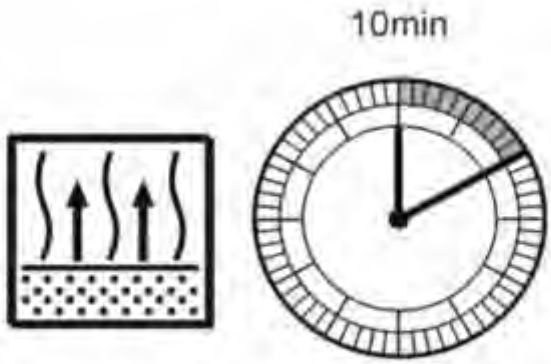

Fig. 91: Drying Time 10 Min.
Courtesy of VOLVO CARS CORPORATION

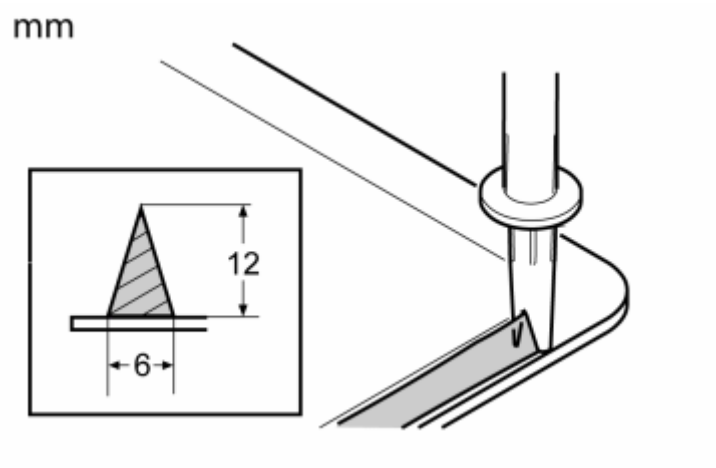

Fig. 92: Adhesive kit, 31298559
Courtesy of VOLVO CARS CORPORATION

see **9814022** see **9814023** see **9814024** see **9814019** see **9814020** see **9814021** **Use:** Adhesive kit, 31298559

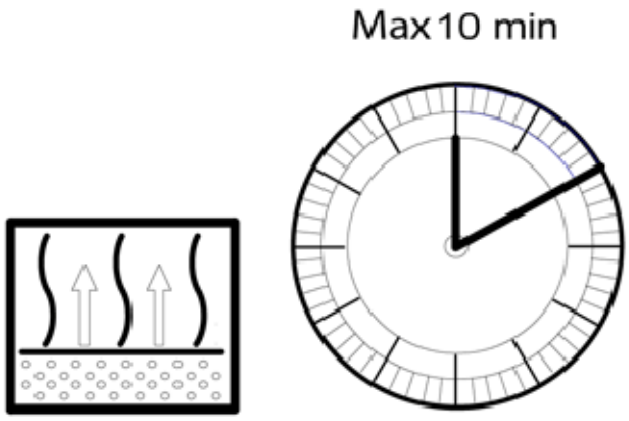

Fig. 93: Identifying Ten Minute Requirement To Allow Cleaner To Evaporate
Courtesy of VOLVO CARS CORPORATION

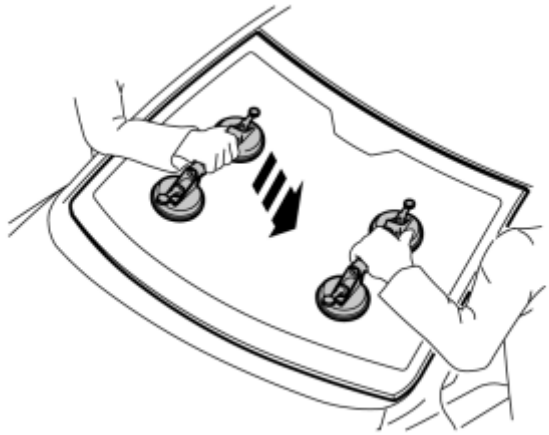

Fig. 94: Lifting Out Windshield With Roll Out Tools 9512925
Courtesy of VOLVO CARS CORPORATION

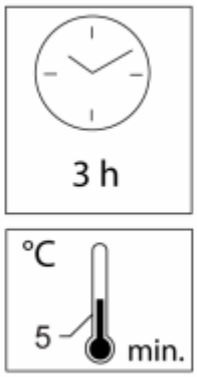

Fig. 95: Identifying Time And Temperature Requirements For Adhesive To Dry
Courtesy of VOLVO CARS CORPORATION

WARNING: **Wait for the specified time at the specified temperature before moving the car.**

Install the following items:

- plenum chamber. See **COWL, REPLACING**
- rain sensor. See **RAIN SENSOR**

GLASS FOR SIDE DOORS AND WINDOWS (2003-2011)

SIDE WINDOW REAR, REPLACING

Special tools:

see **9512925**

NOTE: **As the illustrations in this service information are used for different model years and / or models, some variation may occur. However, the essential information in the illustrations is always correct.**

REMOVING THE REAR SIDE WINDOW

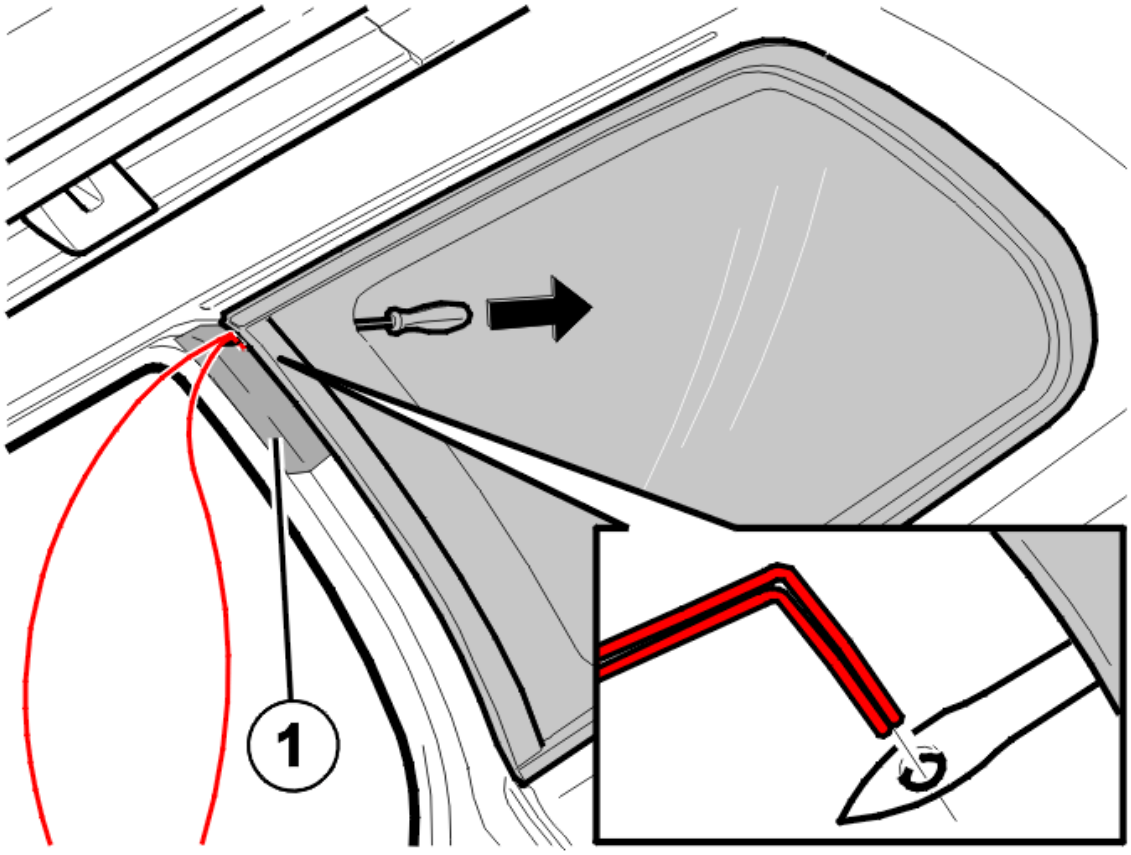

Fig. 96: Identifying Wire Inserter In The Upper Front Corner
Courtesy of VOLVO CARS CORPORATION

Slide in a piece of tape into the PUR bead (1).

Insert a wire inserter in the upper front corner as shown in the illustration.

Cut off approximately four meters of wire from the roll.

Secure the wire and pull the ends approximately 50 cm into the car.

Pull the wire around and downwards so it forms an eyelet around the outside of the windshield.

Check that the wire is at the bottom against the bead of adhesive.

Stretch the wire so it is still in position at the bottom. Pull in the excess from one end of the wire.

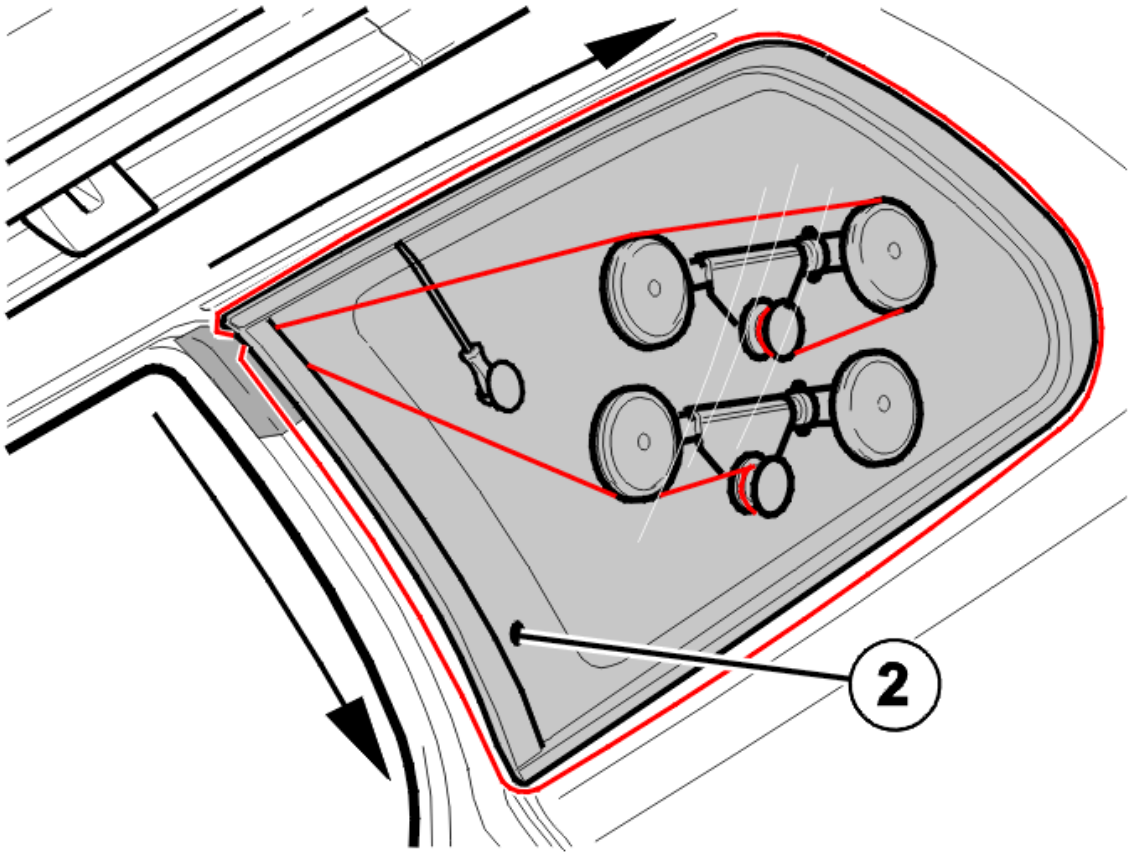

Fig. 97: Secure The Long End Of The Wire In The Upper Winch
Courtesy of VOLVO CARS CORPORATION

Secure the long end of the wire in the upper winch. Raise about 20 cm.

Check that the loose end of the wire is not slipping.

Secure the other end of the wire in the lower winch.

Use both winches to wind in the wire as much as possible.

Protect the interior trim using the parabolic chisel when the wire is fed in.

Either move the lower winch forward so that the final section of the wire can be winched in, or angle out the window and cut using the extractor knife.

INSTALLING REAR SIDE WINDOWS

The rear door must always be open.

Always ensure that a side window is open so that the bonded window does not jump out of position when a door is closed.

When working with PUR adhesive on the body flange, see **PUR ON BODY FLANGE** .

Clean the area on the window to which PUR adhesive is to be applied with cleaner-H (black cap).

Apply glass activator (yellow cork) and glass primer (green cork) to the same surface. Use plenty of glass primer, but do not let it run.

Let the primer dry until the surface is matte.

Apply PUR rim activator (blue cork) to the remaining PUR bead on the tailgate if the windshield has been removed for more than eight hours.

Apply adhesive to the body flange on the old PUR bead.

Press the window into place by hand.

Check that the window is aligned with the door.

Secure with tape.

WINDOW FRONT SIDE DOOR, REPLACE

NOTE: **As the illustrations in this service information are used for different model years and / or models, some variation may occur. However, the essential information in the illustrations is always correct.**

REMOVING THE WINDOW FROM THE FRONT SIDE DOOR

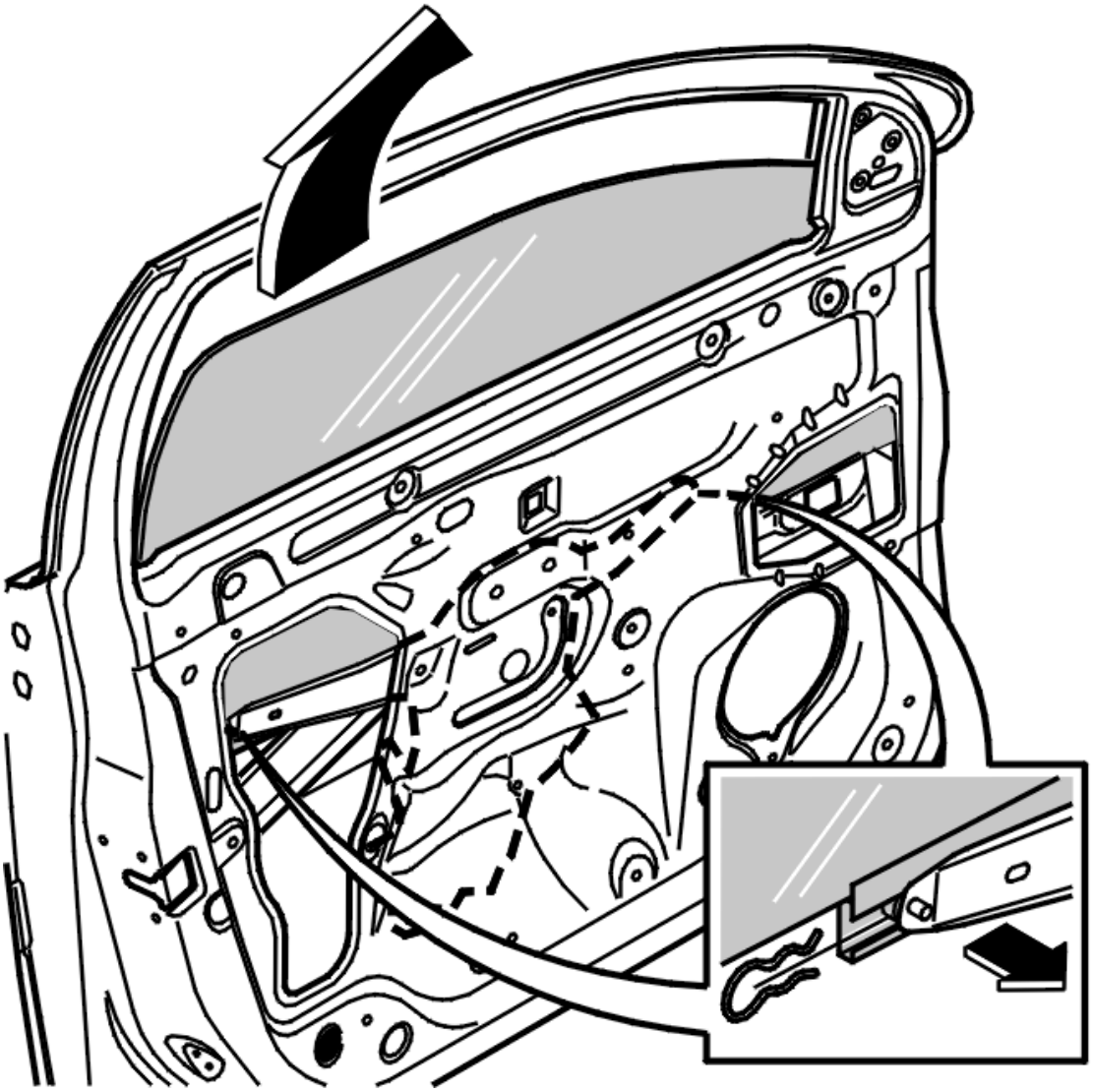

Fig. 98: Identifying Window Removal
Courtesy of VOLVO CARS CORPORATION

Wind down the window half way.

NOTE: **The mechanism is correctly positioned for removal when the holes in the mechanism and in the arm are opposite each other.**

Remove:

- the panel. See **PANEL FRONT SIDE DOOR, REPLACING**
- the soundproofing
- the weatherstrip at the bottom of the inside of the window
- the metal clip from the slide
- the ball joint from the clip in the window mounting.

Insert a screwdriver. Pry until the clip and ball joint snap free.

Angle out the window.

INSTALLING THE WINDOW IN THE FRONT SIDE DOOR

Lift the window into the door.

Press the window mounting into place against the lift mechanism.

Install:

- the 2 metal clips for the slide
- the weatherstrip at the bottom of the inside of the window
- the soundproofing
- the panel. See **PANEL FRONT SIDE DOOR, REPLACING** .

Clean the window.

WINDOW REAR SIDE DOOR, REPLACING

NOTE: **As the illustrations in this service information are used for different model years and / or models, some variation may occur. However, the essential information in the illustrations is always correct.**

METHOD CONTENT

This method consists of:

- see **WINDOW REAR SIDE DOOR, REPLACING**
- see **FIXED WINDOW REAR SIDE DOOR, REPLACING**.

WINDOW REAR SIDE DOOR, REPLACING

REMOVING THE WINDOW FROM THE REAR SIDE DOOR

Lower the window completely.

Remove:

- the panel. See: **PANEL REAR SIDE DOOR, REPLACING**
- the speaker as described in, see **LOUDSPEAKER, REAR SIDE DOOR, REPLACING**
- the soundproofing

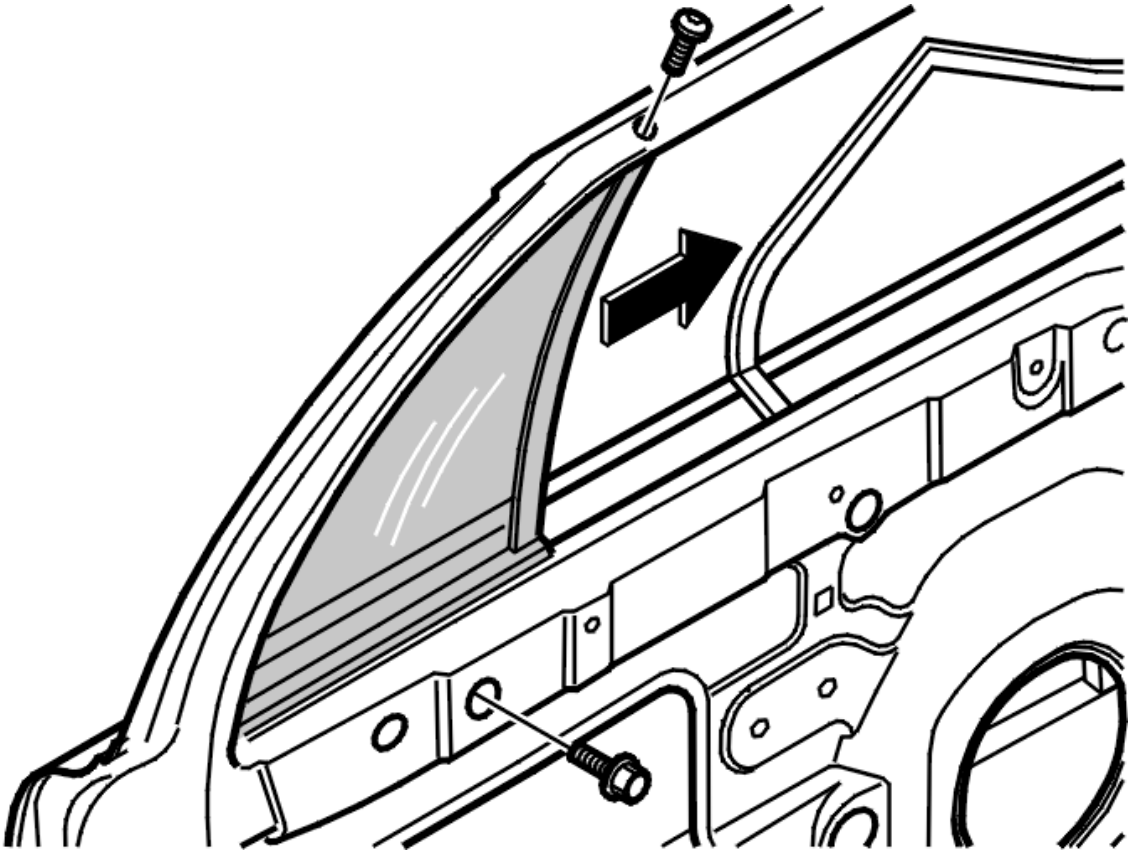

Fig. 99: View Of Fixed Window In The Rear Side Door Screws
Courtesy of VOLVO CARS CORPORATION

- the fixed window in the rear side door
- the 2 screws
- the weatherstrip in the door frame
- the weatherstrip at the bottom edge of the inside of the side window.

Slide/angle the glass unit forward.

Lift out the glass unit.

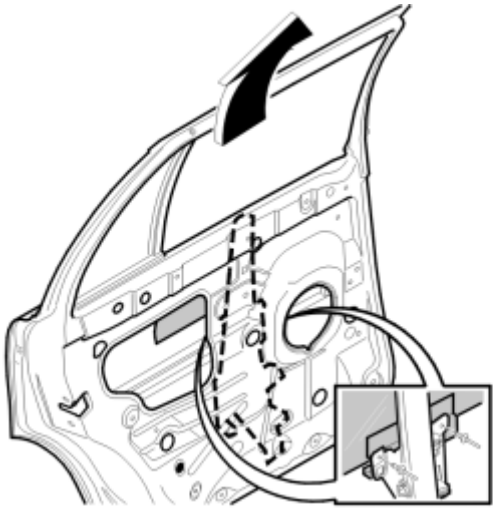

Fig. 100: View Of Side Window To The Half Open Position
Courtesy of VOLVO CARS CORPORATION

Raise the side window to the half open position.

Remove the 2 x rivets where the window is connected to the lift mechanism.

Lift out the side window.

INSTALLING THE WINDOW IN THE REAR SIDE DOOR

NOTE: For tightening torques, see: TIGHTENING TORQUE .

Install:

- the side window
- the 2 x rivets where the window is connected to the lift mechanism.

Lower the window completely.

HINT: Use a little soap when installing the glass unit.

CAUTION: Guide the fixed window/glass unit towards the side window at installation.

Install the fixed window/glass unit.

Pull the fixed glass backwards towards the door arch.

Install:

- the 1 x M5 screw in the door arch and tighten

- the 1 x M6 screw in the door and tighten
- the weatherstrip in the door frame
- the weatherstrip at the bottom edge of the inside of the side window
- the soundproofing
- the speaker as described in, see **LOUDSPEAKER, REAR SIDE DOOR, REPLACING**
- the panel. See **PANEL REAR SIDE DOOR, REPLACING** .

Clean the window.

FIXED WINDOW REAR SIDE DOOR, REPLACING

REMOVING THE FIXED WINDOW FROM THE REAR SIDE DOOR

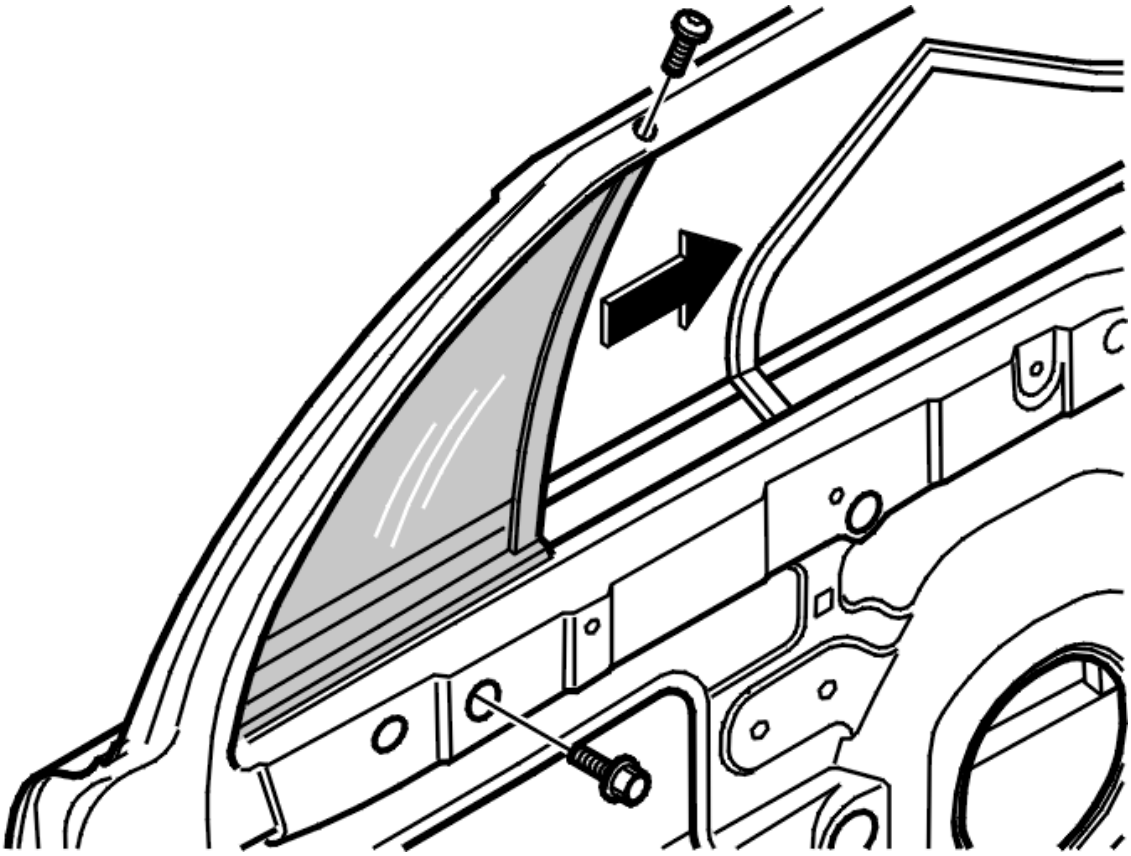

Fig. 101: View Of Fixed Window In The Rear Side Door Screws
Courtesy of VOLVO CARS CORPORATION

Remove:

- the side window. See **REMOVING THE WINDOW FROM THE REAR SIDE DOOR**
- the 2 screws.

Slide the glass unit forward.

Lift out the glass unit.

INSTALLING THE FIXED WINDOW IN THE REAR SIDE DOOR

NOTE: For tightening torques, see: TIGHTENING TORQUE .

HINT: Use a little soap when installing the glass unit.

Install:

- the glass unit
- the 1 x M5 screw in the door arch and tighten
- the 1 x M6 screw in the door and tighten
- the side window as described in, see **INSTALLING THE WINDOW IN THE REAR SIDE DOOR**.

Clean the window.

OUTER TRIM DETAILS, EMBLEMS, REFLECTIVE STRIPS (2003-2004)

BADGES, REAR, REPLACING

As the illustrations in this service information are used for different model years and / or models, some variation may occur. However, the essential information in the illustrations is always correct.

REMOVING THE BADGE

NOTE: Do not damage the car paintwork.

Remove:

- the badge
- any tape residue.

Use a hot-air gun to carefully heat up the badge.

Carefully lift up one edge of the badge.

INSTALLING THE BADGE

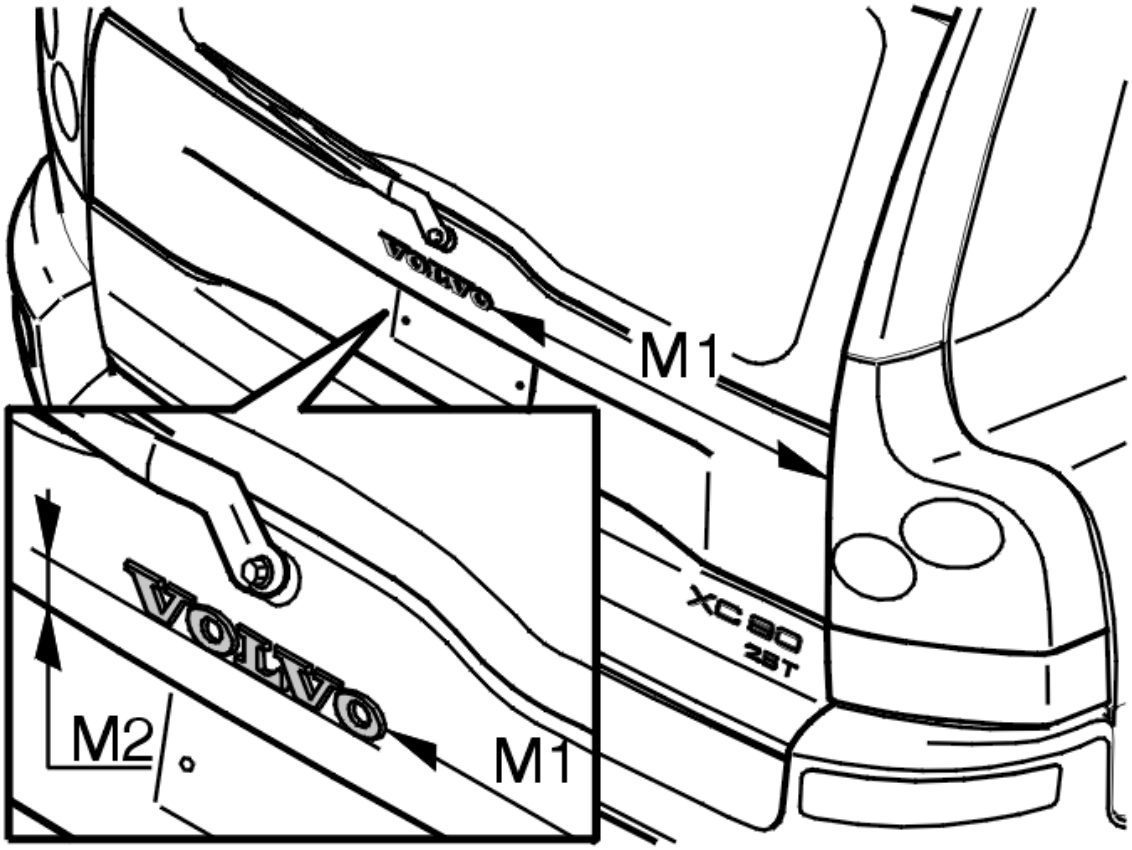

Fig. 102: Identifying Badge (1 of 2)
Courtesy of VOLVO CARS CORPORATION

Use the following dimensions for the Volvo badge:

M1 = 538±1.5 mm (21.18")

M2 = 26±1 mm (1.02")

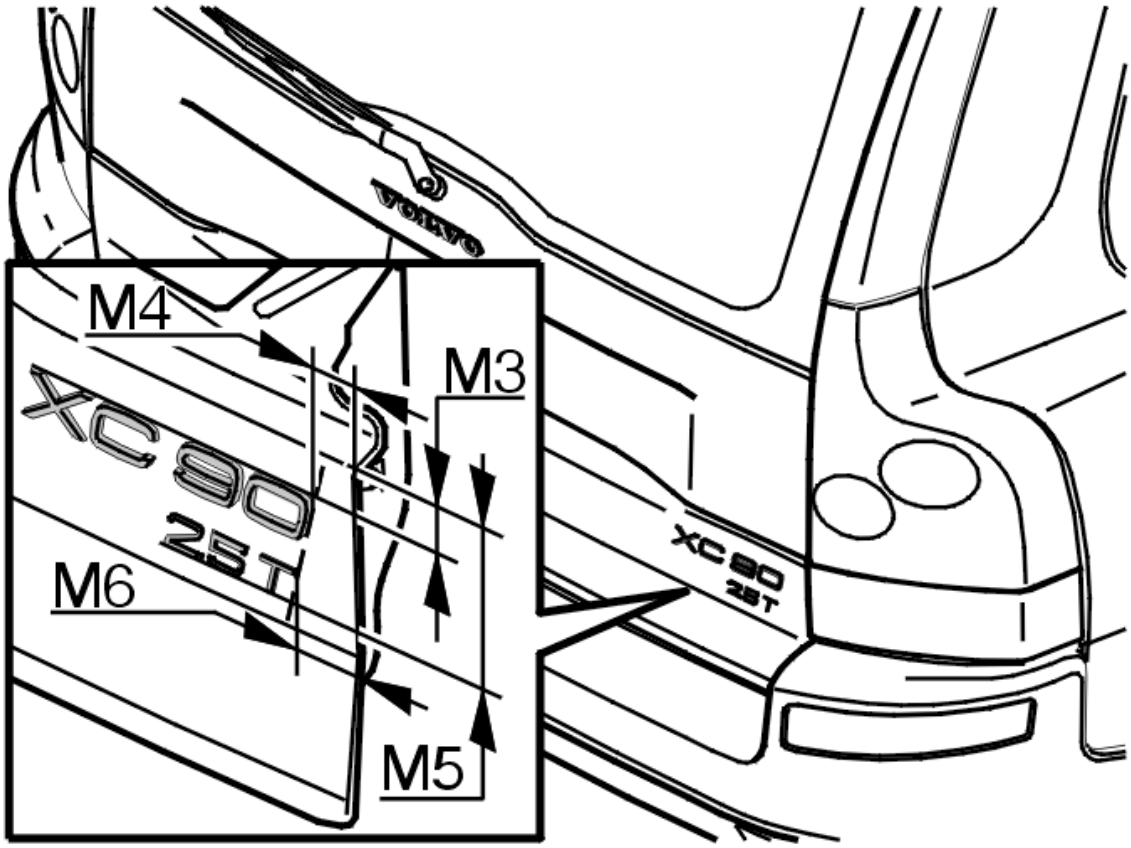

Fig. 103: Identifying Badge (2 of 2)
Courtesy of VOLVO CARS CORPORATION

Use the following dimensions for the model designation:

M3 = 27±1 mm (1.06")

M4 = 33±1 mm (1.30")

M5 = 90±1 mm (3.54")

M6 = 41±1 mm (1.61")

Ensure that the car is at least at room temperature (<20°C).

Wash the area for the badge. Use a 50/50 mixture of isopropanol and water.

Wipe clean and dry using a lint-free cloth.

NOTE: **In order for the badge to secure, the surface must be clean and free of dust and grease.**

Remove the protective film from the tape.

NOTE: Leave the foil in place.

Guide the badge into the position indicated in the dimensions. Press the whole badge to ensure the tape is in good contact with the base.

Check that the edges of the badge are against the base.

NOTE: To ensure optimal adhesion, do not wash the car for 72 hours.

DOOR MOLDING LOWER FRONT SIDE DOOR, REPLACING

Special tools:

see **9512942**

see **9512949**

NOTE: The illustrations in this service information are used for different model years and/or models. Some variation may occur. However, the essential information in the illustrations is always correct.

REMOVING THE LOWER TRIM FROM THE FRONT SIDE DOOR

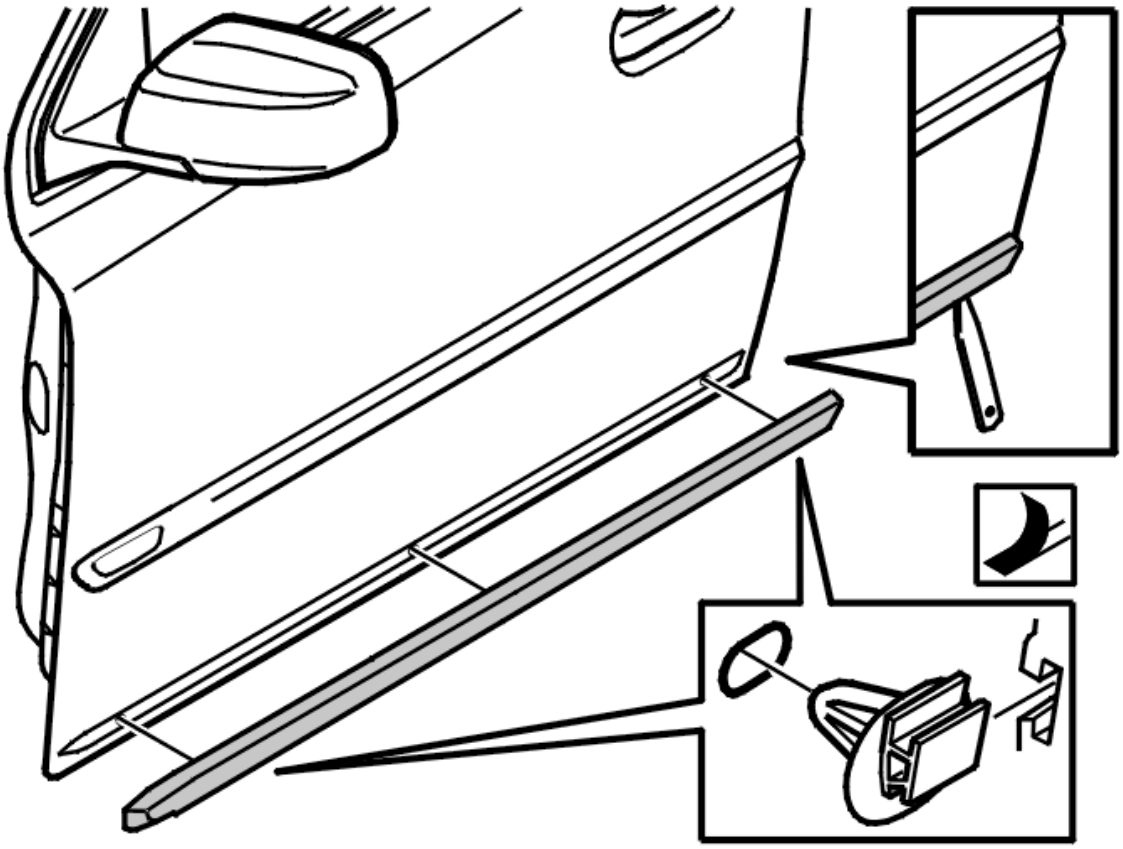

Fig. 104: Identifying Front Side Door Lower Trim
Courtesy of VOLVO CARS CORPORATION

Remove:

- the molding at the lower edge
- two clips.

Remove:

- the trim.

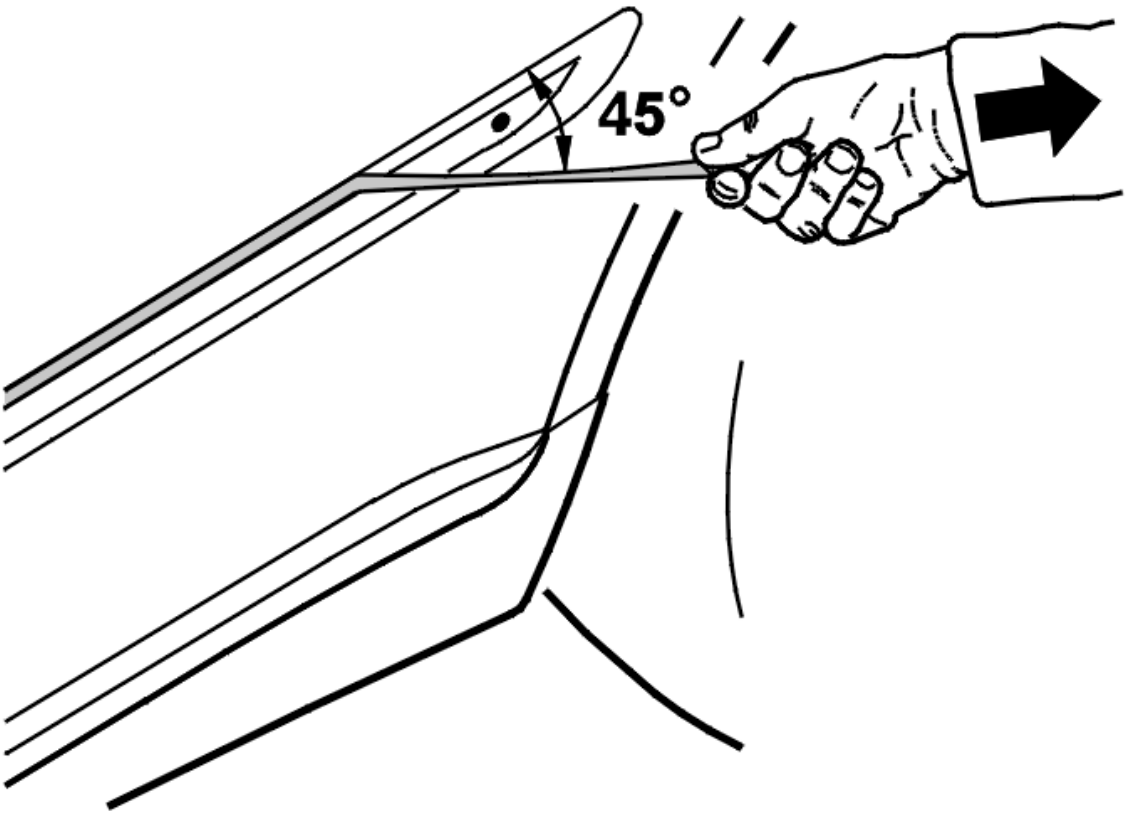

Fig. 105: Removing Tape Residue
Courtesy of VOLVO CARS CORPORATION

- any tape residue. Use: see **9512942** and: see **9512949** .

INSTALLING THE LOWER TRIM FOR THE FRONT SIDE DOOR

NOTE: The car must be at least room temperature, above 20 °C.

Wash the area for the molding. Use a 50/50 mixture of isopropanol and water.

Wipe dry using a clean lint-free cloth.

Remove the backing from the tape.

NOTE: Use new clips.

Locate the locating pins and clips for the molding in the holes.

Press down along the entire length of the molding to ensure the tape is in contact with the door.

NOTE: To ensure optimal adhesion, do not wash the car for 72 hours.

DOOR MOLDING LOWER REAR SIDE DOOR, REPLACING

Special tools:

see **9512942**

see **9512949**

NOTE: The illustrations in this service information are used for different model years and/or models. Some variation may occur. However, the essential information in the illustrations is always correct.

REMOVING THE LOWER TRIM FROM THE REAR SIDE DOOR

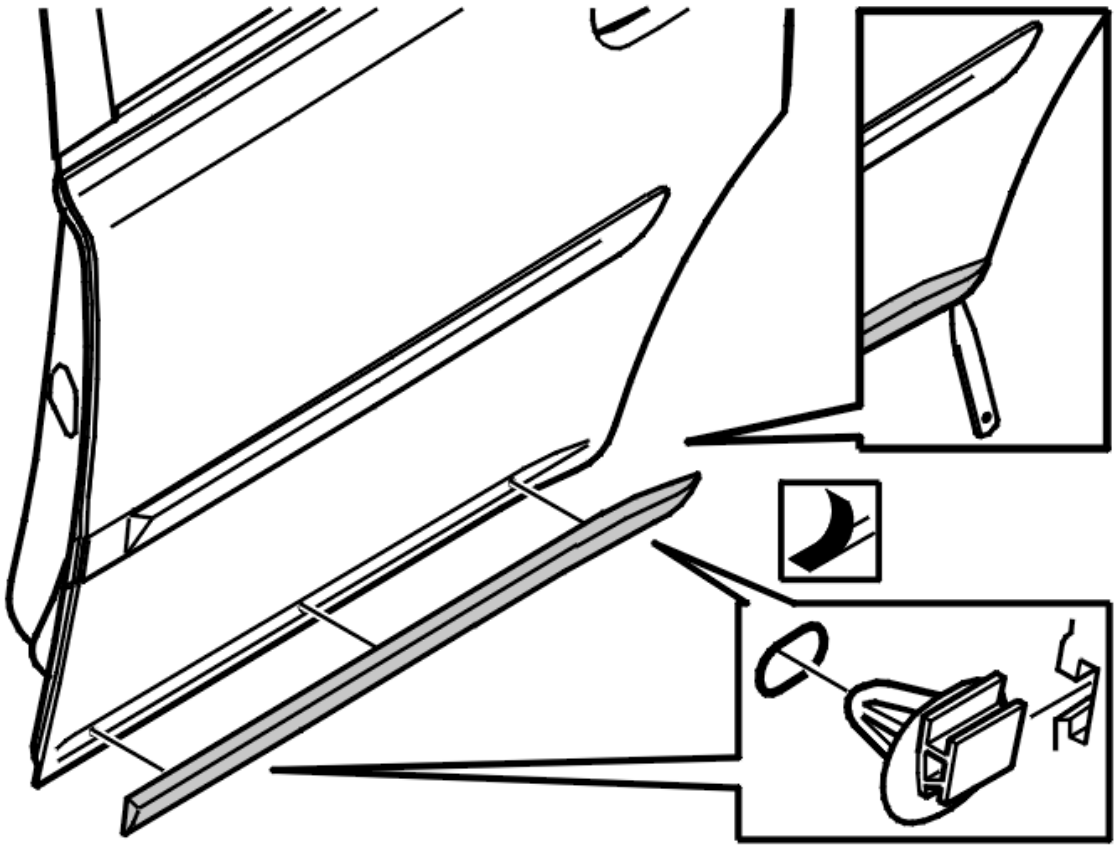

Fig. 106: Identifying Rear Side Door Lower Trim
Courtesy of VOLVO CARS CORPORATION

Remove:

- the molding at the lower edge
- two clips.

Remove:

- the trim.

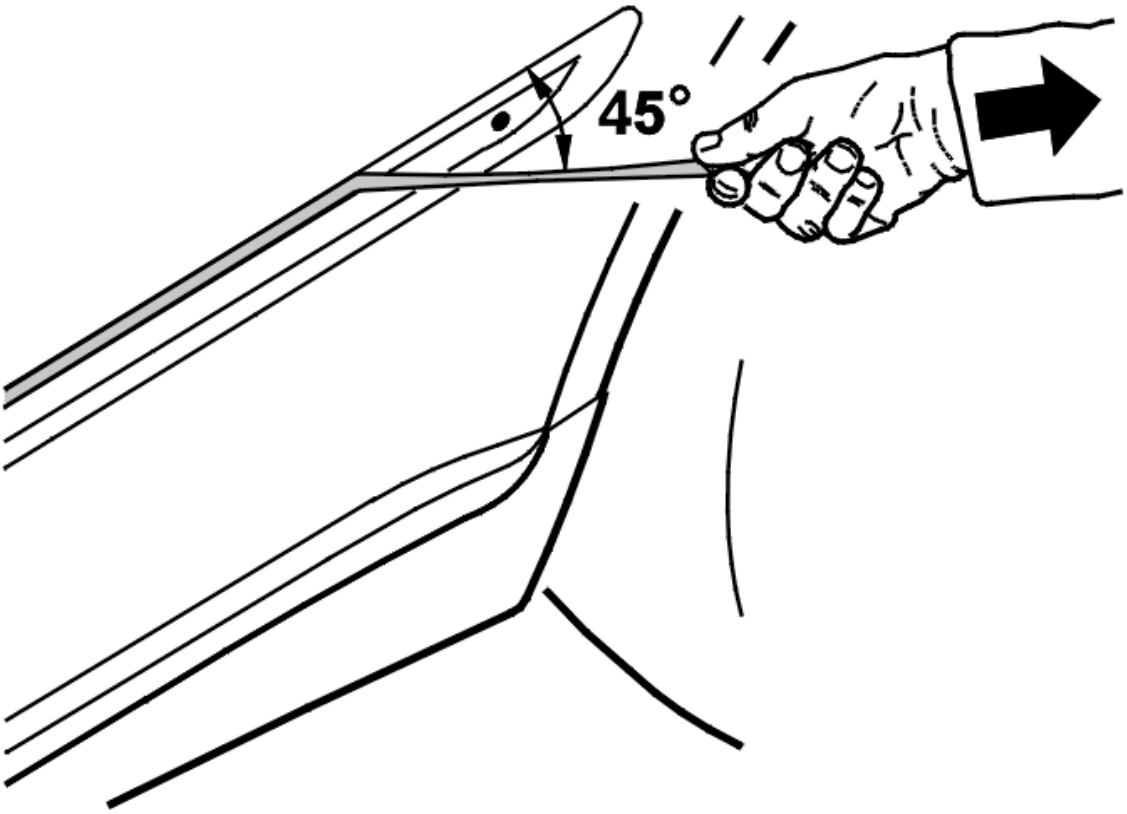

Fig. 107: Removing Tape Residue
Courtesy of VOLVO CARS CORPORATION

- any tape residue. Use: see **9512942** and: see **9512949** .

INSTALLING THE LOWER TRIM ON THE REAR SIDE DOOR

NOTE: The car must be at least room temperature, above 20 °C.

Wash the area for the molding. Use a 50/50 mixture of isopropanol and water.

Wipe dry using a clean lint-free cloth.

Remove the backing from the tape.

NOTE: Use new clips.

Locate the locating pins and clips for the molding in the holes.

Press down along the entire length of the molding to ensure the tape is in contact with the door.

NOTE: To ensure optimal adhesion, do not wash the car for 72 hours.

DOOR SILL FRONT, REPLACING

NOTE: **As the illustrations in this service information are used for different model years and / or models, some variation may occur. However, the essential information in the illustrations is always correct.**

REMOVING THE FRONT DOOR SILL

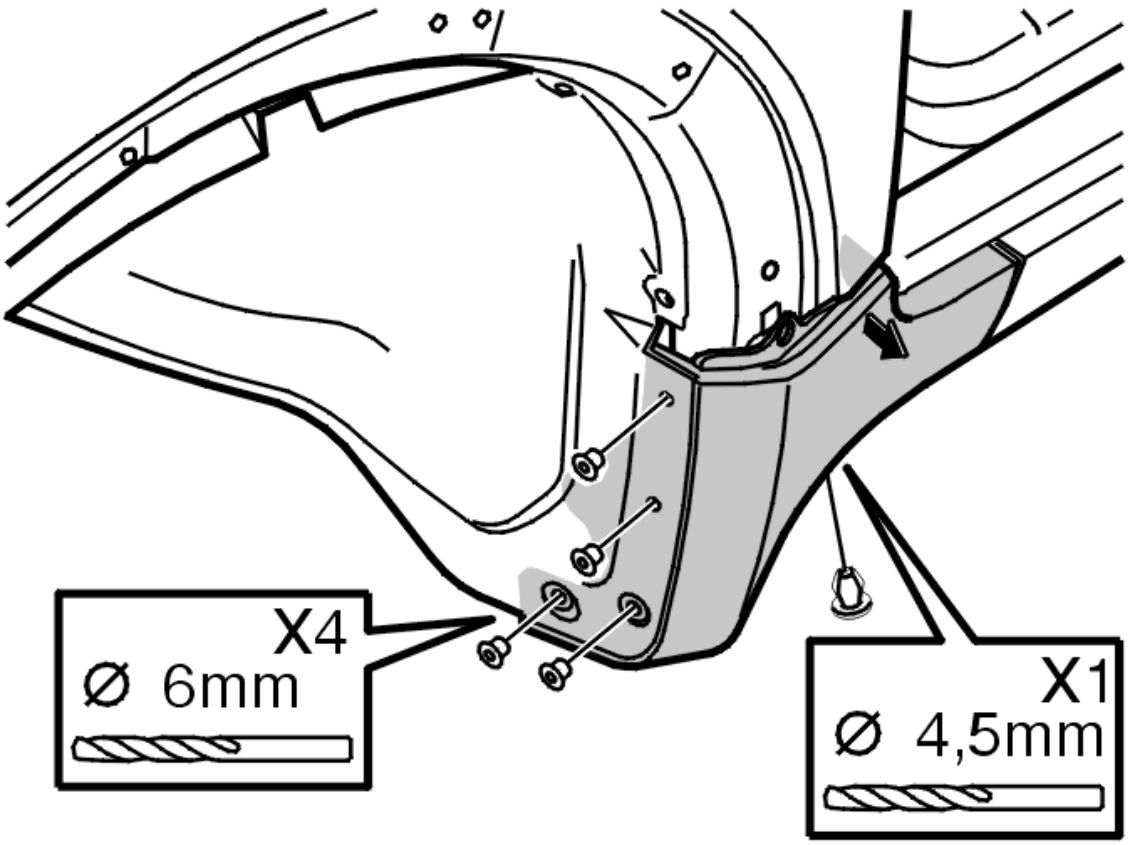

Fig. 108: View Of Front Fender Extension
Courtesy of VOLVO CARS CORPORATION

Remove:

- the front fender extension. See **FENDER EXTENSION, REPLACING**
- the 4 rivets. See **REMOVING RIVET**
- 1 clip at the bottom edge of the door sill.

Release the hidden clip.

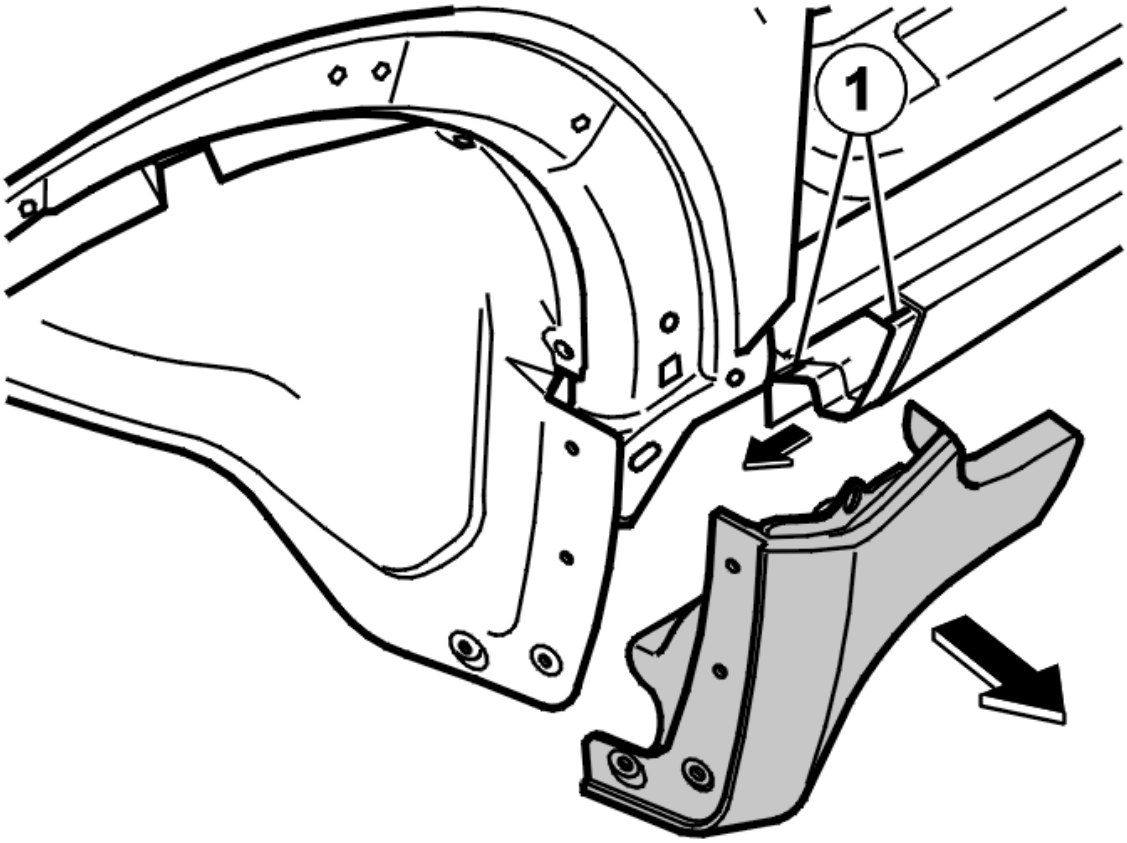

Fig. 109: Pull The Front Door Sill Forwards And Outwards
Courtesy of VOLVO CARS CORPORATION

Pull the front door sill forwards and outwards.

Note the 1 hidden clip and the guides (1) for the rear door sill.

INSTALLING THE FRONT DOOR SILL

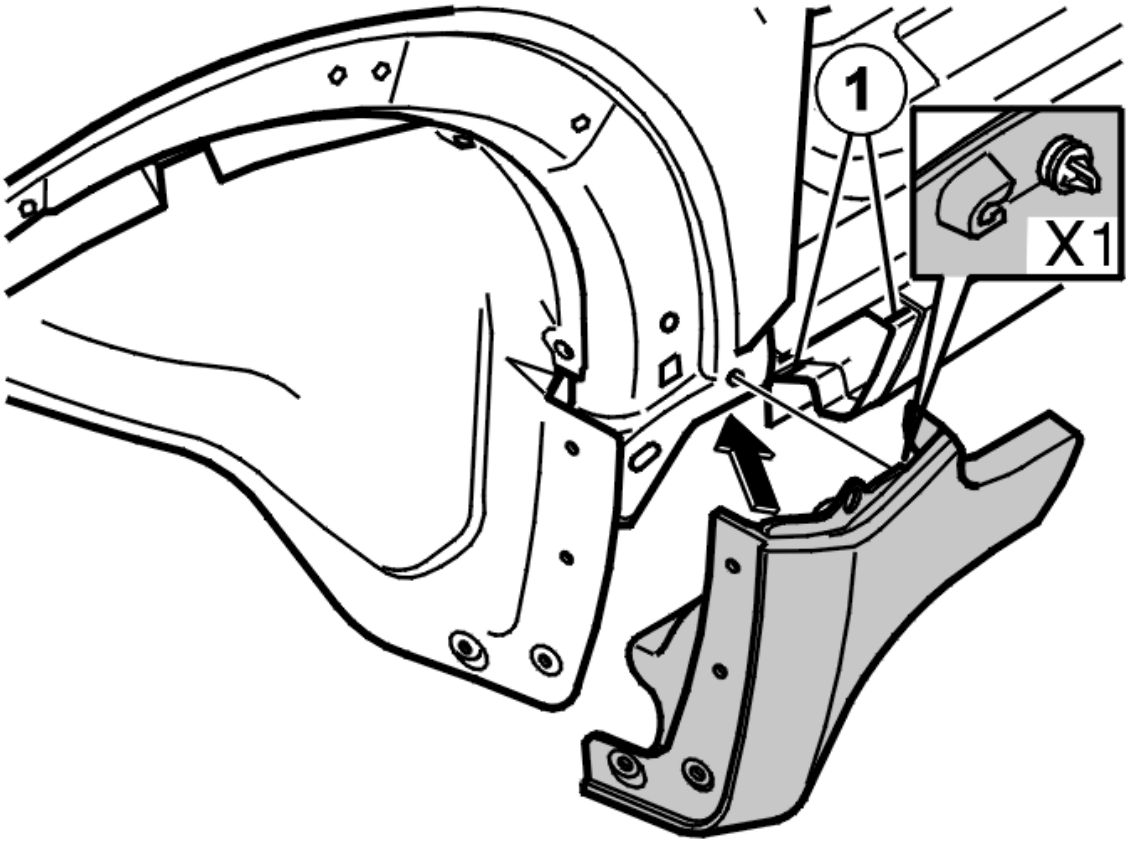

Fig. 110: View Of Rear Door Sill Guides
Courtesy of VOLVO CARS CORPORATION

Install the front door sill and press the hidden clip into place.

NOTE: Check that the guides (1) for the rear door sill are correctly positioned.

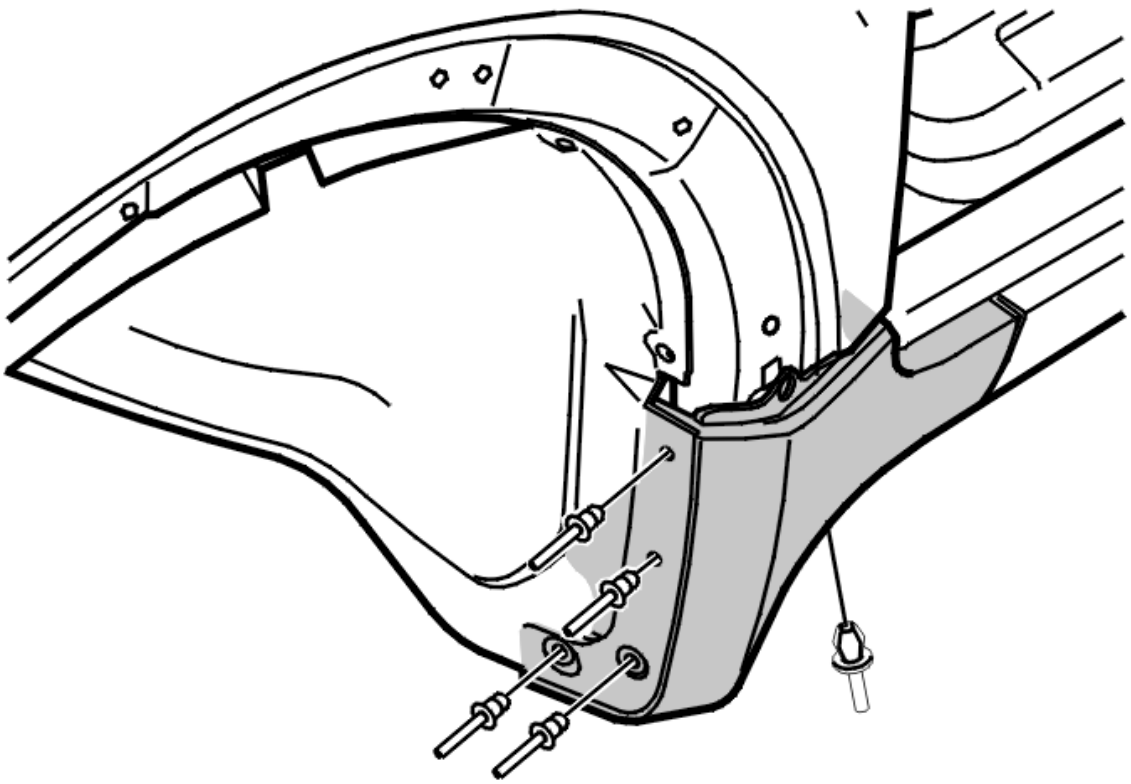

Fig. 111: View Of Blind Rivets And Bottom Clip
Courtesy of VOLVO CARS CORPORATION

Install:

- the 1 clip at the bottom edge
- the 4 blind rivets
- the front fender extension. See **FENDER EXTENSION, REPLACING** .

DOOR SILL REAR, REPLACING

NOTE: **As the illustrations in this service information are used for different model years and / or models, some variation may occur. However, the essential information in the illustrations is always correct.**

PREPARATIONS

Remove:

- the rear wheel
- the rear fender extension. See **FENDER EXTENSION, REPLACING** .

REMOVING THE REAR DOOR SILL

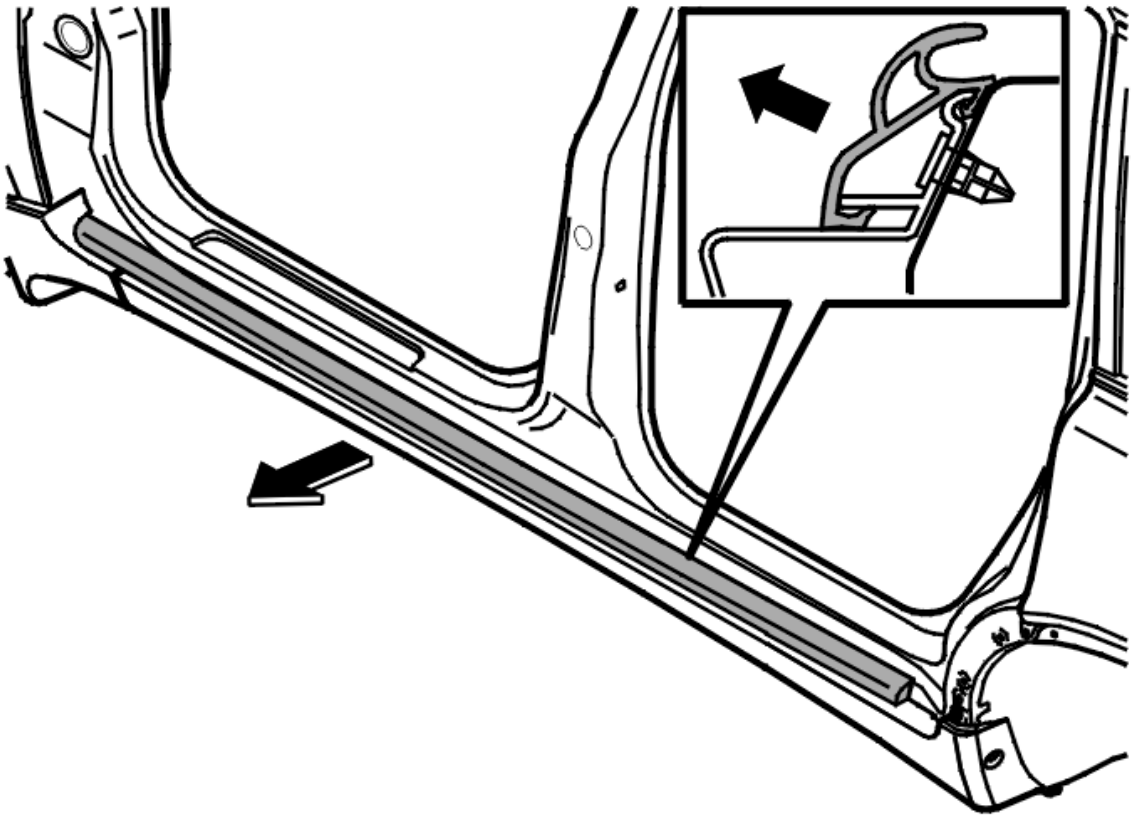

Fig. 112: View Of Rubber Strip
Courtesy of VOLVO CARS CORPORATION

Remove:

- the rubber strip.

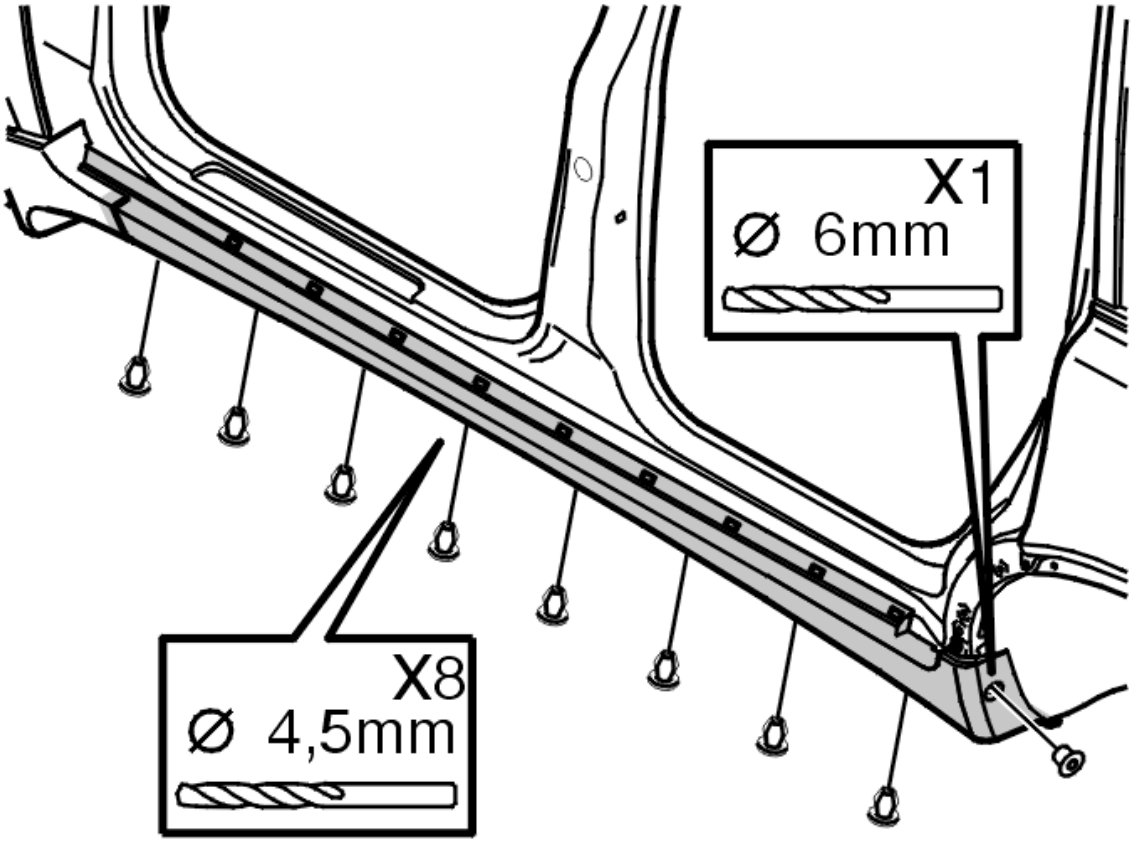

Fig. 113: Locating Rear Door Sill Clips
Courtesy of VOLVO CARS CORPORATION

- the 1 rivet. See **REMOVING RIVET**
- the 8 clips at the bottom edge of the door sill.

HINT: Drill out the center pin using a 4.5 mm drill bit.

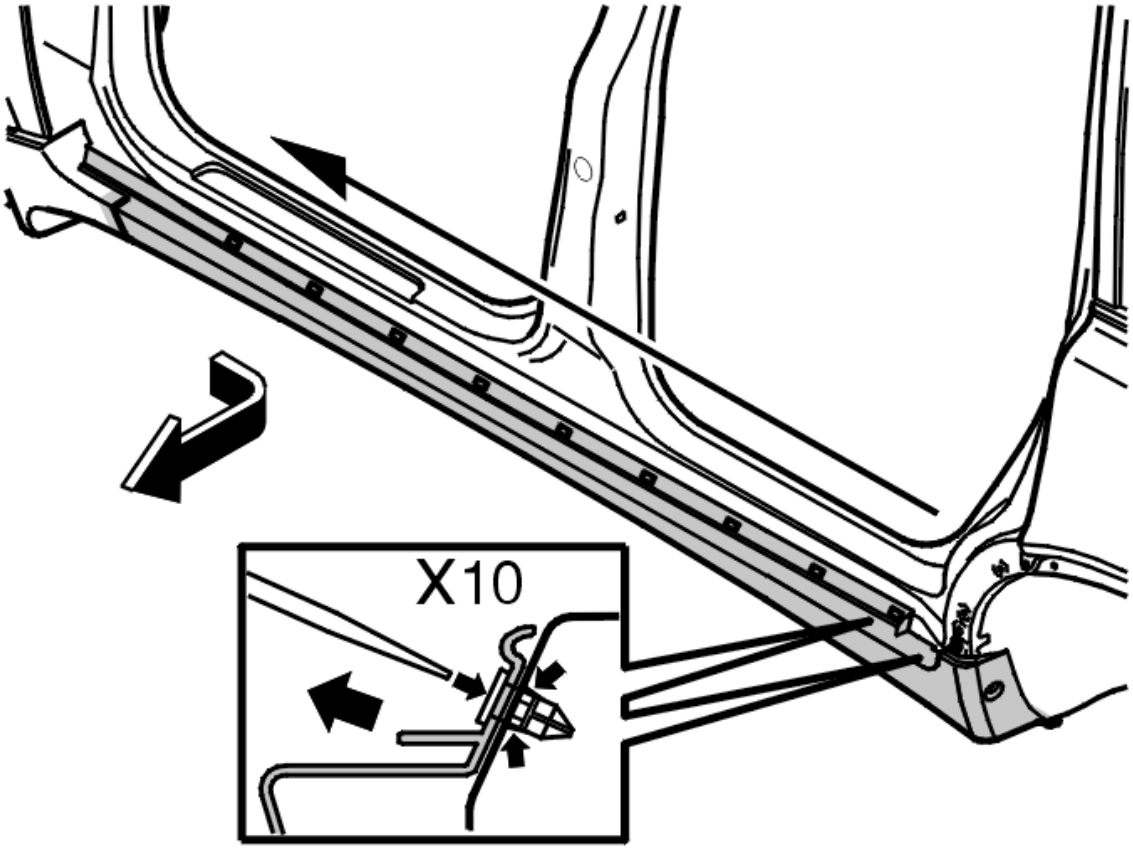

Fig. 114: View Of Door Sill Clips
Courtesy of VOLVO CARS CORPORATION

Remove the 10 clips at the top edge of the door sill.

HINT: Remove the clips working from the back and forwards.

HINT: Insert a large flat bladed screwdriver in the clip to release it.

Pull the door sill backwards to release it.

INSTALLING THE REAR DOOR SILL

NOTE: Use new clips if the old ones are damaged.

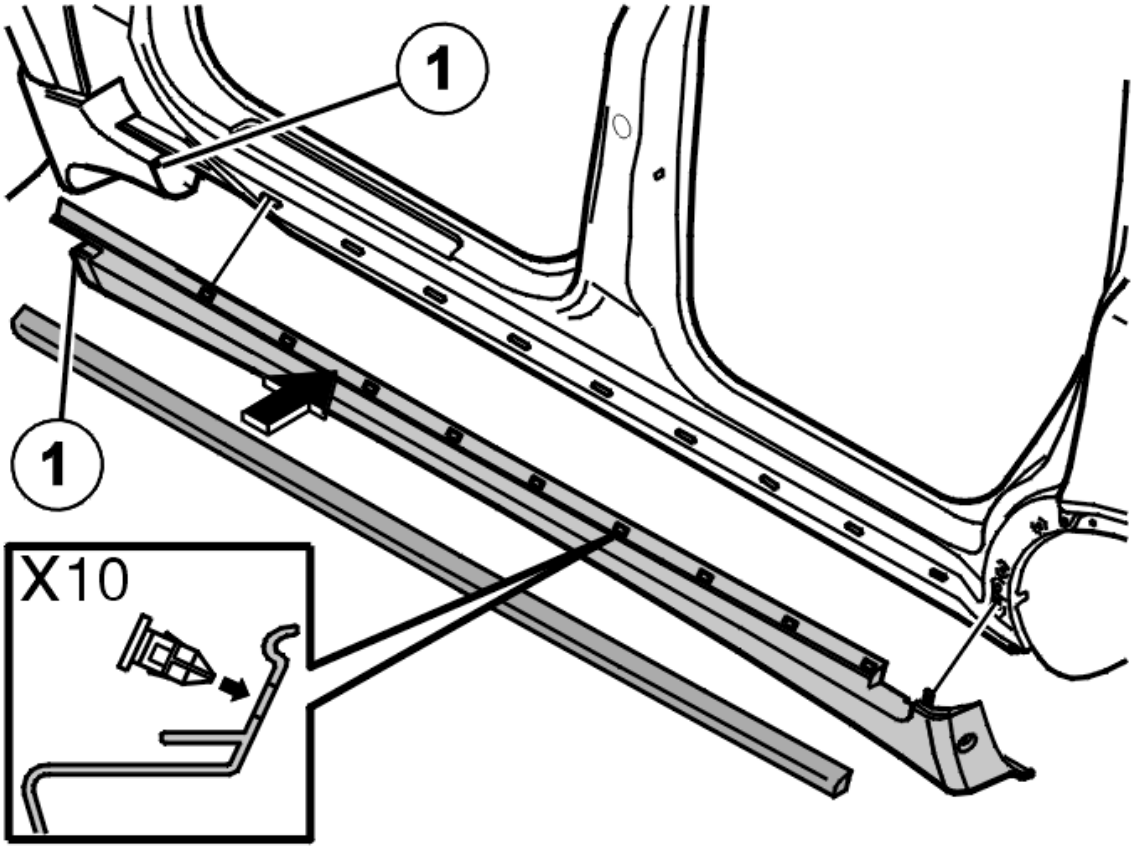

Fig. 115: Installing Rear Door Sill Clips
Courtesy of VOLVO CARS CORPORATION

Install:

- the 10 clips at the bottom edge of the door sill
- the rubber strip.

NOTE: **Ensure that the guides (1) are correctly positioned against the front door sill.**

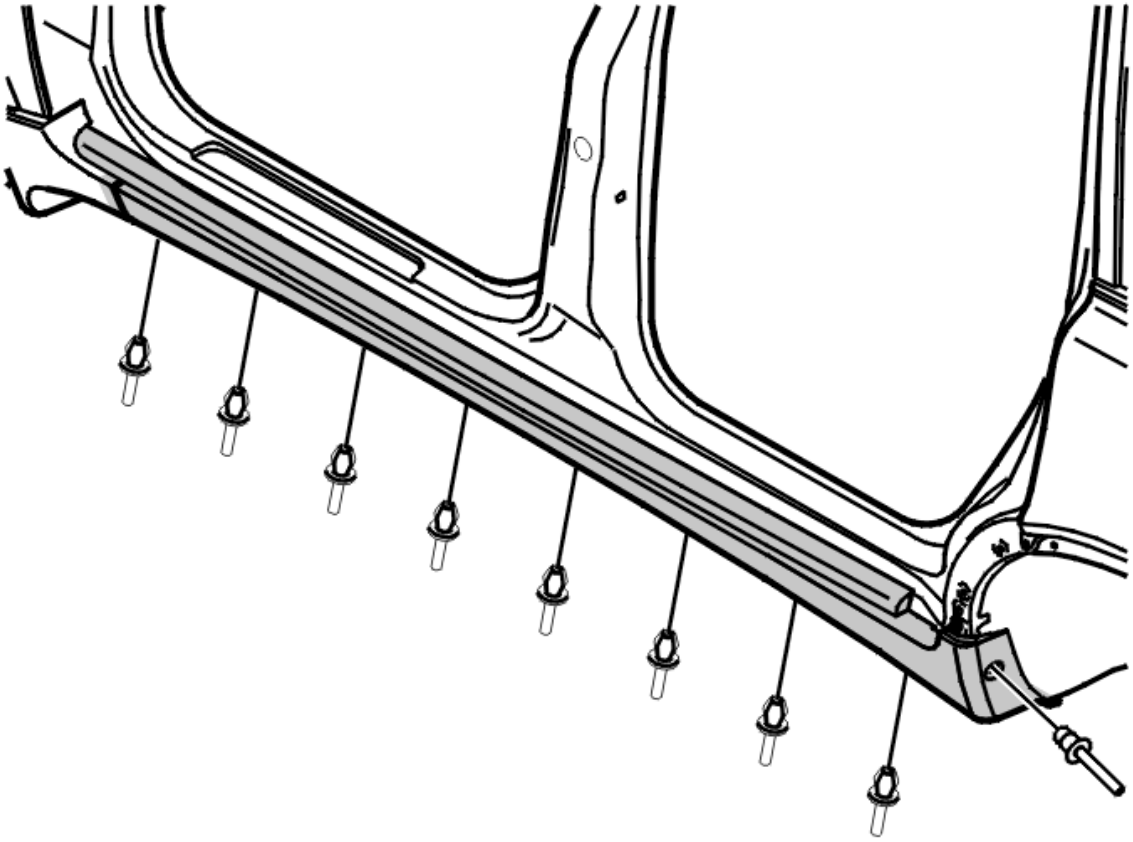

Fig. 116: View Of Door Sill Blind Rivets
Courtesy of VOLVO CARS CORPORATION

Install:

- the 8 clips at the bottom edge of the door sill
- 1 blind rivet
- the rear fender extension. See **FENDER EXTENSION, REPLACING**
- the rear wheel.

TRIM MOLDING, REPLACING

Special tools:

see **9512942**

see **9512949**

NOTE: **As the illustrations in this service information are used for different model years and / or models, some variation may occur. However, the essential information in the illustrations is always correct.**

REMOVING THE FRONT TRIM MOLDING

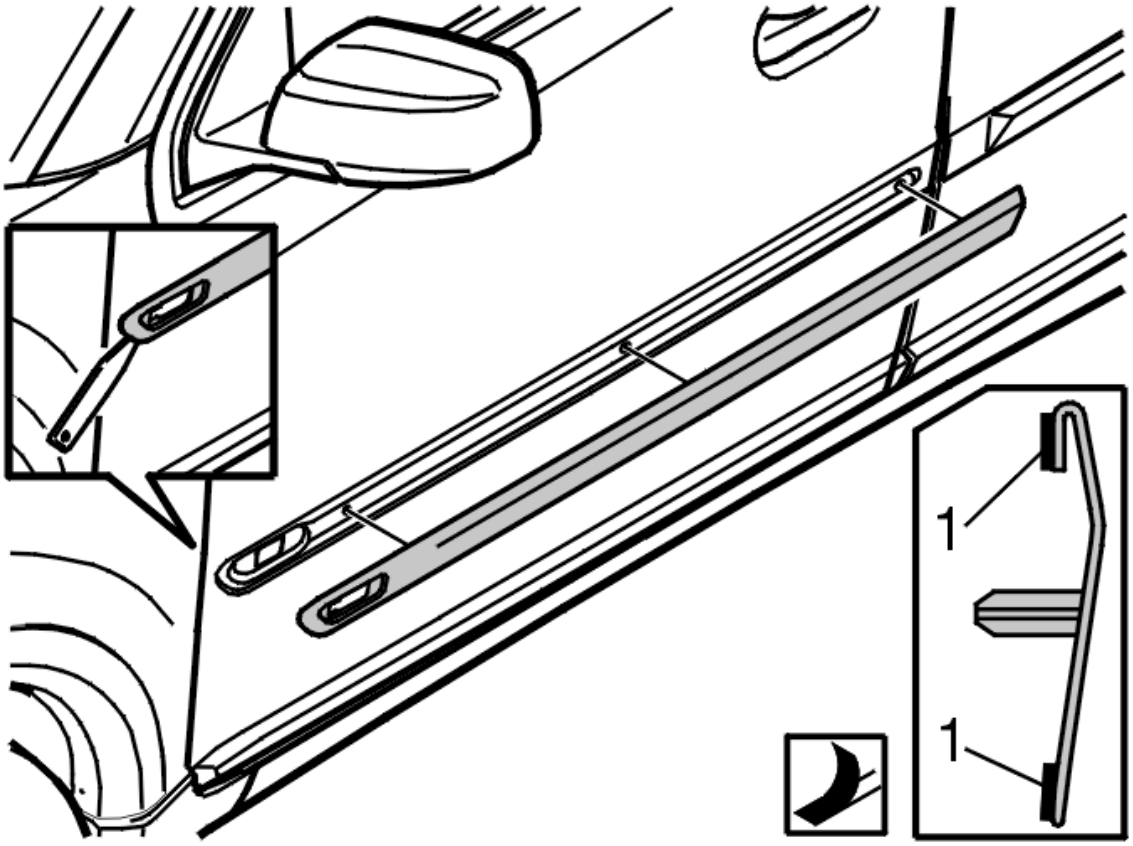

Fig. 117: Identifying Removal Of Front Trim Molding
Courtesy of VOLVO CARS CORPORATION

Remove:

- the side turn signal flasher. See **SIDE TURN SIGNAL FLASHER, REPLACING**
- the trim molding
- any tape residue. Use: see **9512942** and: see **9512949** .

REMOVING THE REAR TRIM MOLDING

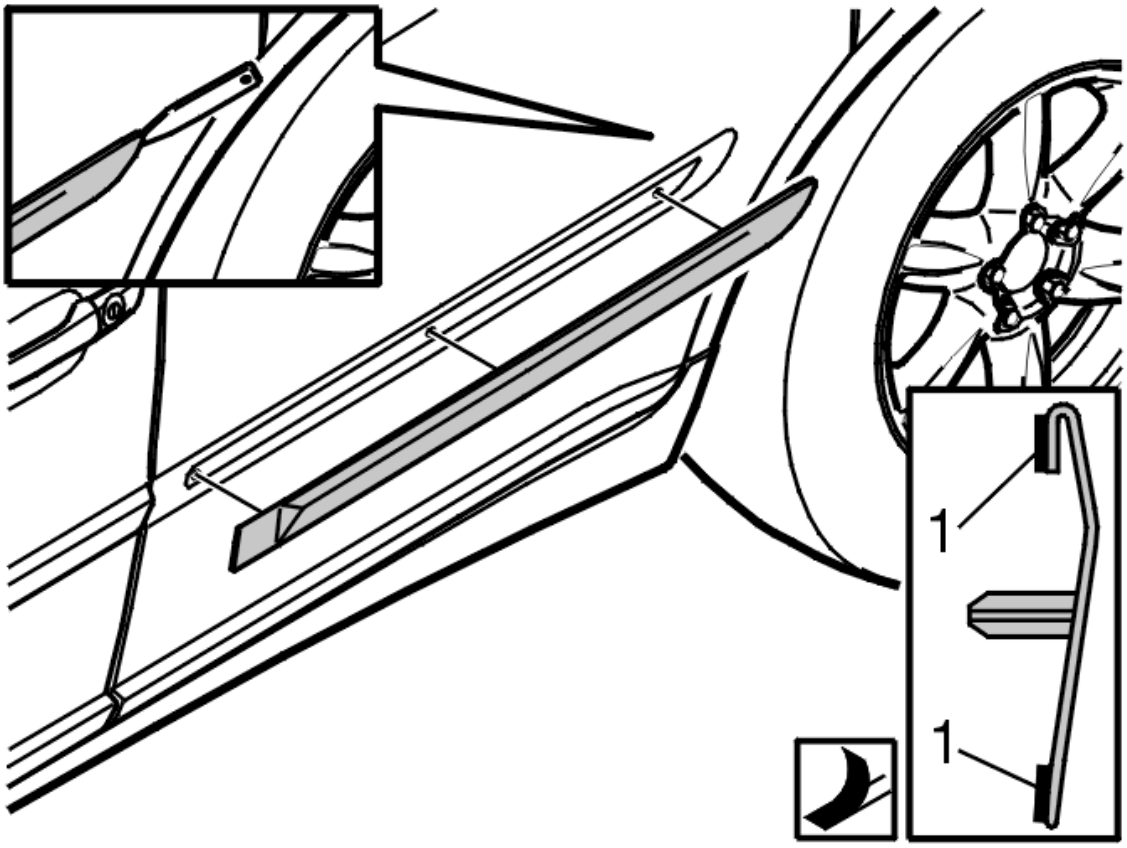

Fig. 118: Identifying Removal Of Rear Trim Molding
Courtesy of VOLVO CARS CORPORATION

Remove:

- the trim molding.

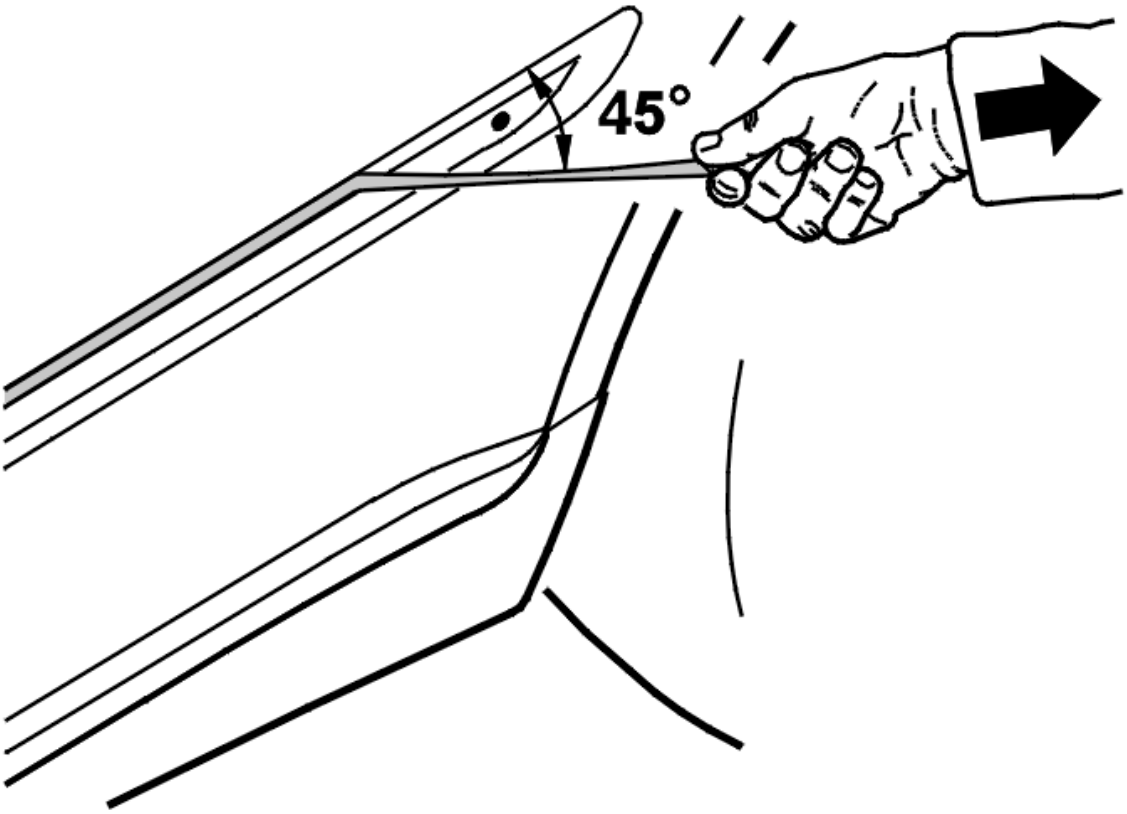

Fig. 119: Removing Tape Residue
Courtesy of VOLVO CARS CORPORATION

- any tape residue. Use: see **9512942** and: see **9512949** .

INSTALLING THE FRONT AND REAR TRIM MOLDINGS

NOTE: The car must be at least room temperature, above 20 °C.

Wash the area for the molding. Use a 50/50 mixture of isopropanol and water.

Wipe dry using a clean lint-free cloth.

Remove the backing from the tape.

Locate the locating pins for the molding in the holes.

Press down along the entire length of the molding to ensure the tape is in contact with the door.

Applies to the front molding: Install the side turn signal flasher. See **SIDE TURN SIGNAL FLASHER, REPLACING** .

NOTE: To ensure optimal adhesion, do not wash the car for 72 hours.

TRIM STRIP DOOR ARCH REAR SIDE DOOR, REPLACING

NOTE: The illustrations in this service information are used for different model years and/or models. Some variation may occur. However, the essential information in the illustrations is always correct.

PREPARATORY WORK

REMOVING DOOR PANELS

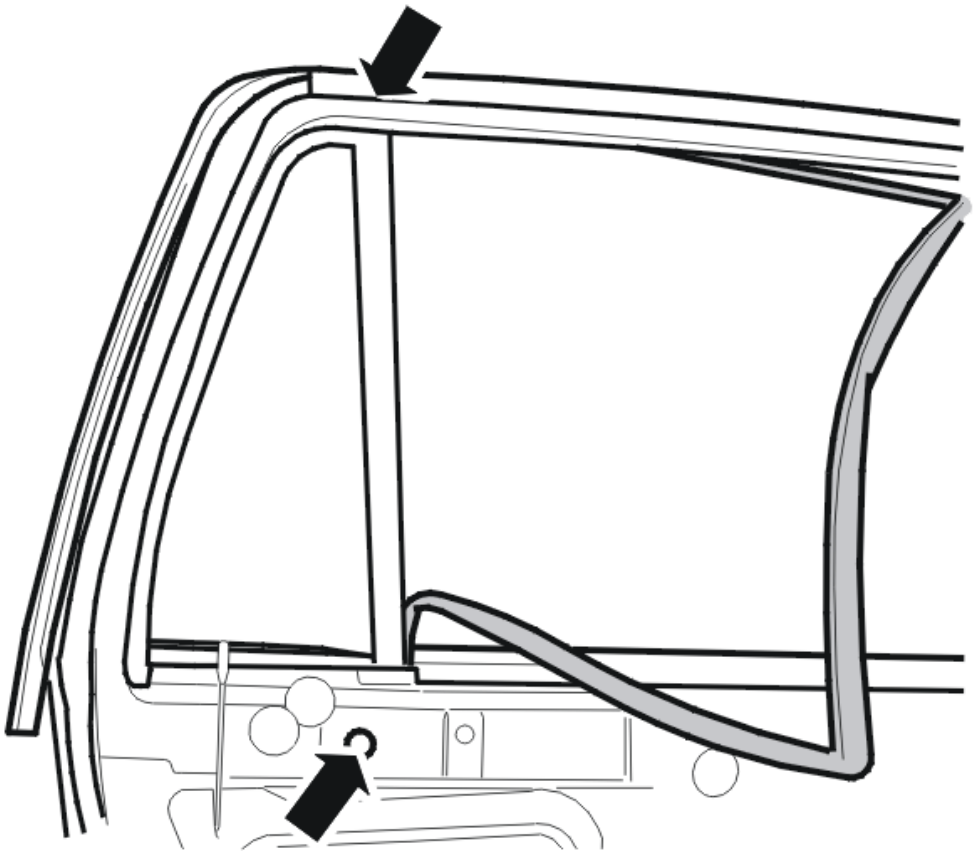

Fig. 120: Identifying Door Arch Weatherstrip
Courtesy of VOLVO CARS CORPORATION

Open the window.

Pull out the weatherstrip from the door arch. Allow the weatherstrip to hang loosely on the inside of the door.

Remove:

- the door panel. See: **PANEL REAR SIDE DOOR, REPLACING**
- the 2 x screws holding the side glass, as shown in the illustration.

REMOVAL

REMOVING THE TRIM STRIP DOOR ARCH

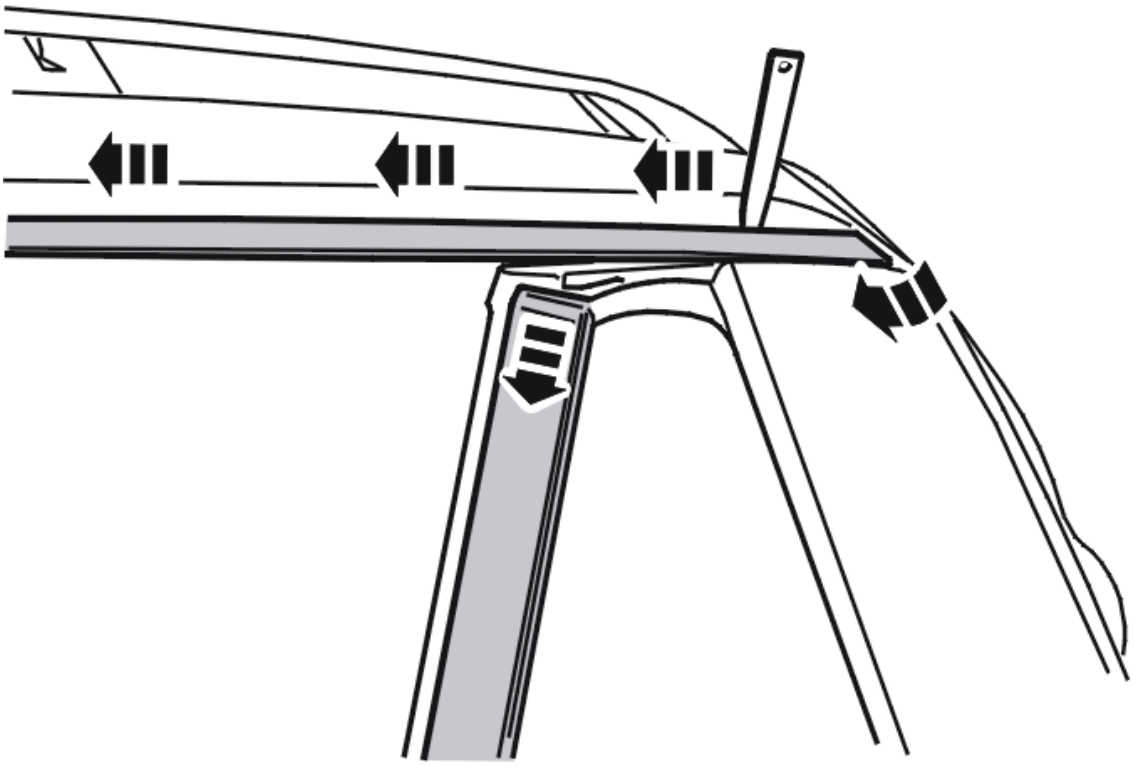

Fig. 121: Detach Trip Strip With Weather Strip
Courtesy of VOLVO CARS CORPORATION

NOTE: The quarter window may be hard to remove.

Press the fixed side glass down approximately 10 mm.

Fold up the rear end of the trim strip.

Detach the trim strip from the tape on the door arch. Use a weatherstrip tool.

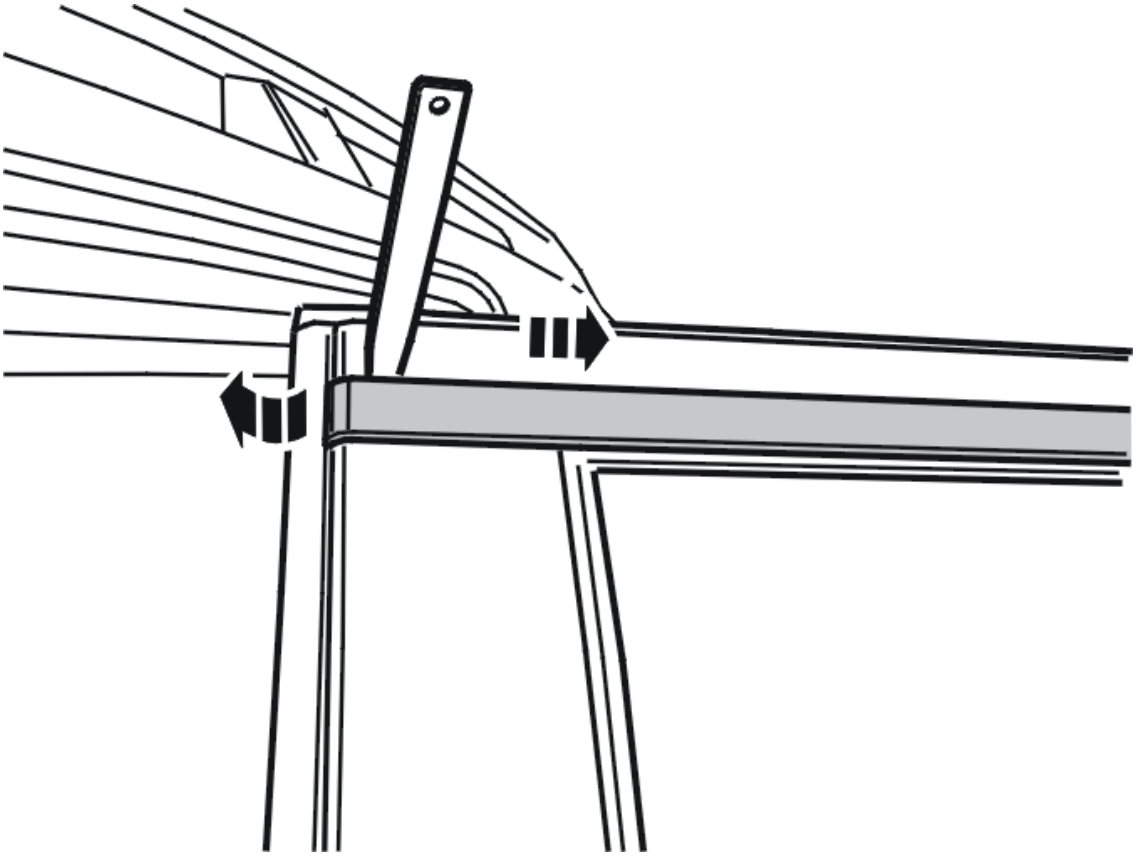

Fig. 122: Detach The Trim Strip From The Tape On The Door Arch
Courtesy of VOLVO CARS CORPORATION

Fold up the front end of the trim strip.

Detach the trim strip from the tape on the door arch. Use a weatherstrip tool.

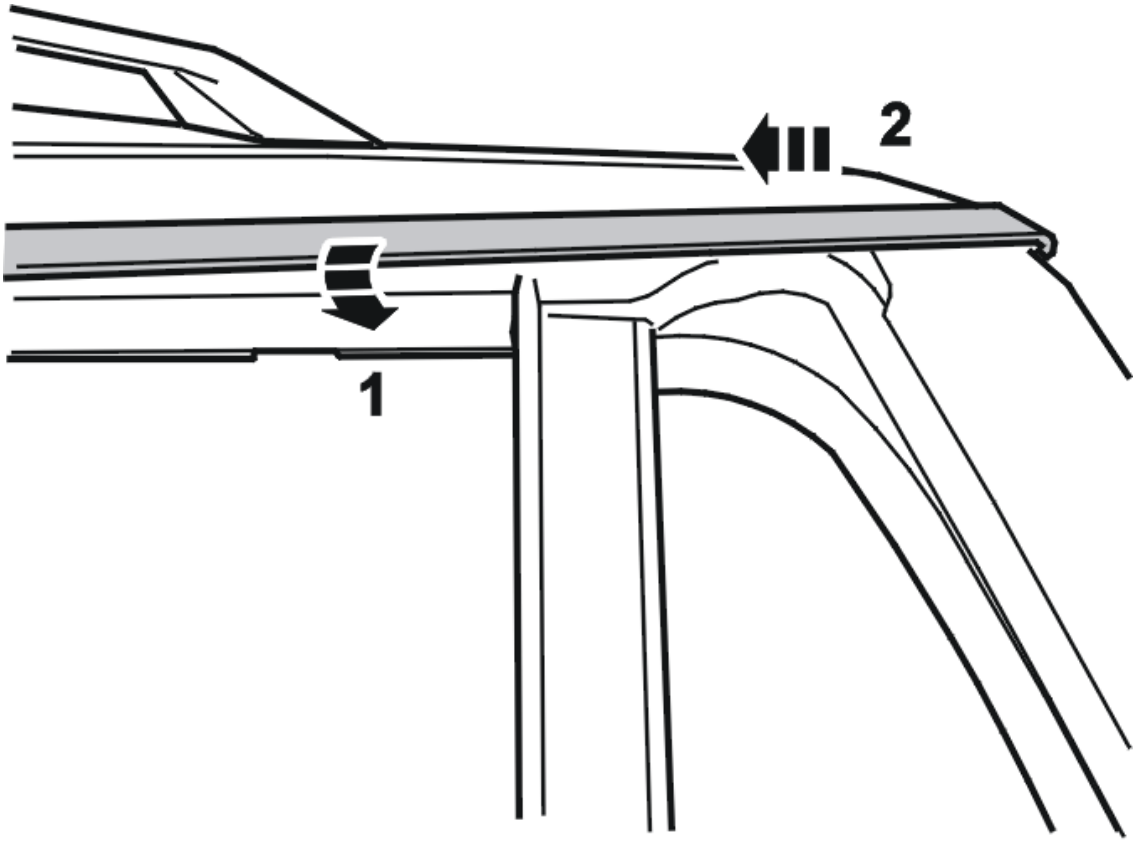

Fig. 123: Tape The Trim Strip Off The Door Arch
Courtesy of VOLVO CARS CORPORATION

CAUTION: Use a plastic wedge or similar as a shim to prevent damaging the paintwork.

Tape the trim strip off the door arch (1).

Pull out the trim strip (2).

INSTALLATION

INSTALLING THE TRIM STRIP DOOR ARCH

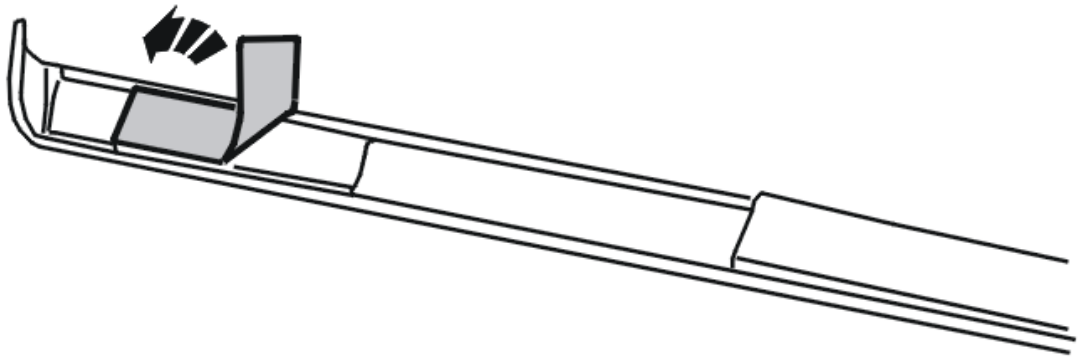

Fig. 124: View Of Protective Foil Protecting The Tape
Courtesy of VOLVO CARS CORPORATION

Clean any remaining tape from the door arch.

Fold up a piece of the protective foil protecting the tape at both ends of the trim strip.

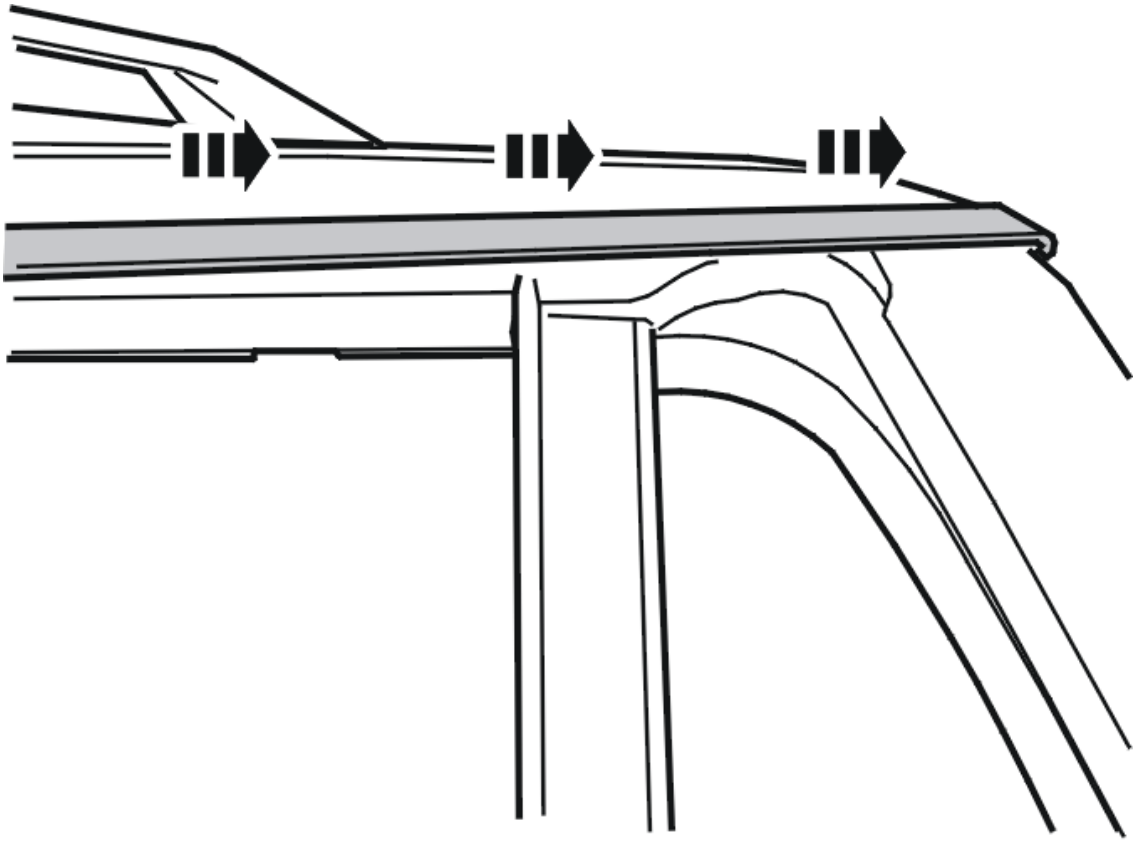

Fig. 125: View Of Trim Strip Over Fixed Quarter Window
Courtesy of VOLVO CARS CORPORATION

Slide the trim strip in over the fixed quarter window.

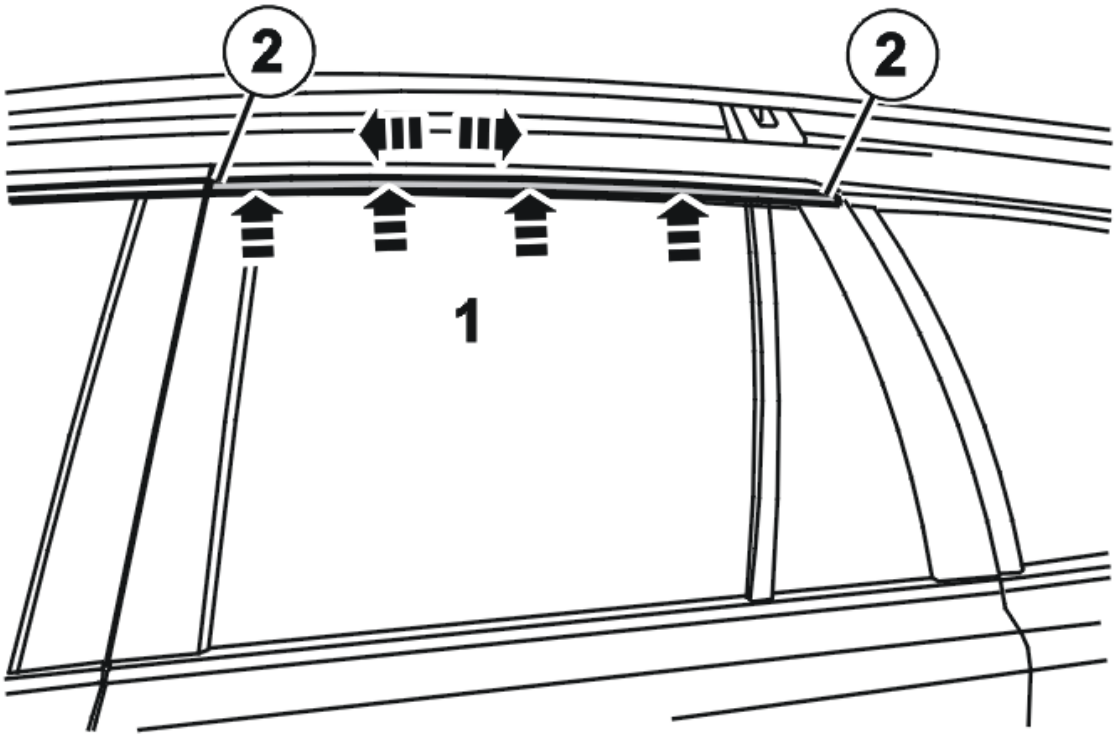

Fig. 126: Press Trim Strip Into Place On The Door Arch
Courtesy of VOLVO CARS CORPORATION

Press the trim strip into place on the door arch (1).

Align the ends of the trim strip on the upper edge of the door arch.

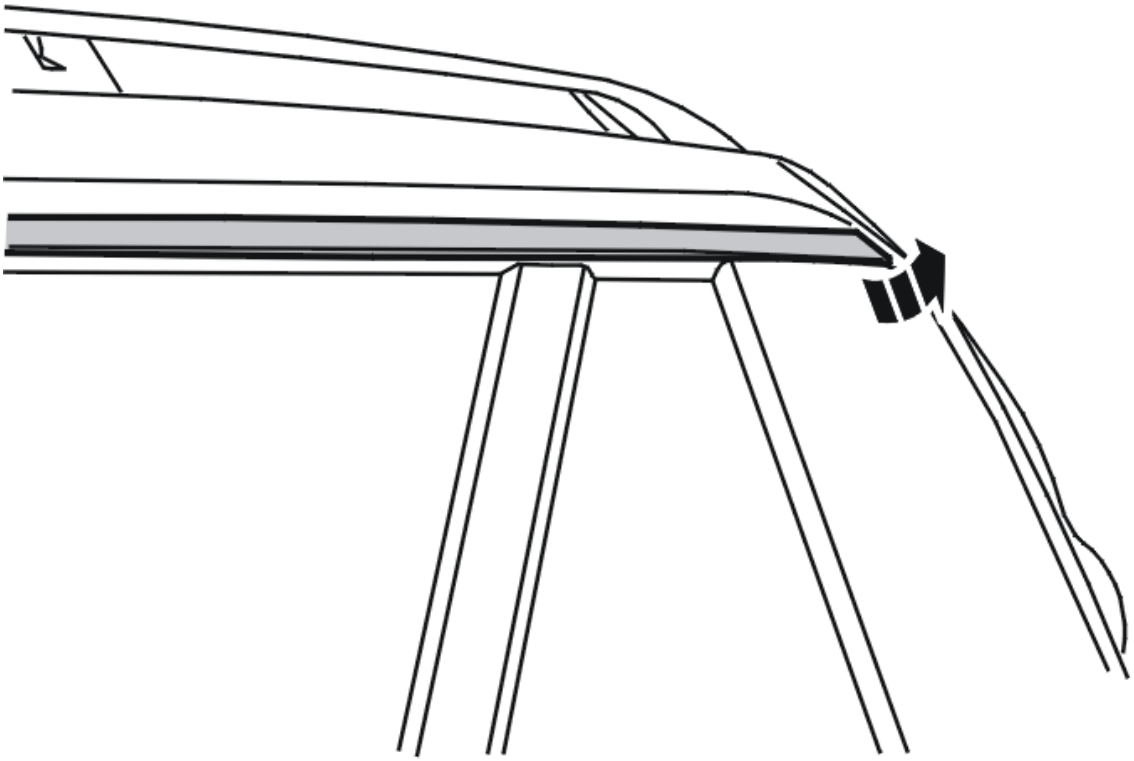

Fig. 127: Folding In Ends Of The Trim Strip
Courtesy of VOLVO CARS CORPORATION

Pull off the protective foil at both ends of the trim strip.

Align the strip opposite the trim panel. Press securely.

Finish by folding in the ends of the trim strip.

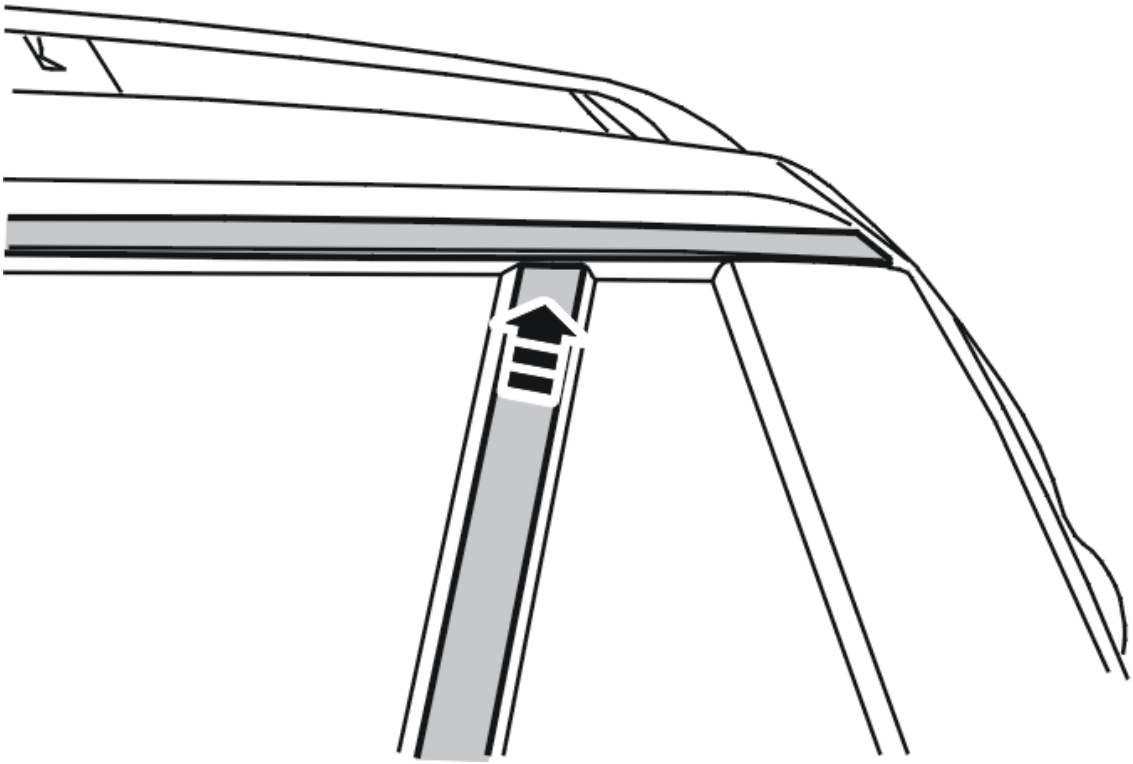

Fig. 128: View Of Fixed Quarter Window Up Against The Trim Strip
Courtesy of VOLVO CARS CORPORATION

Slide the fixed quarter window up against the trim strip.

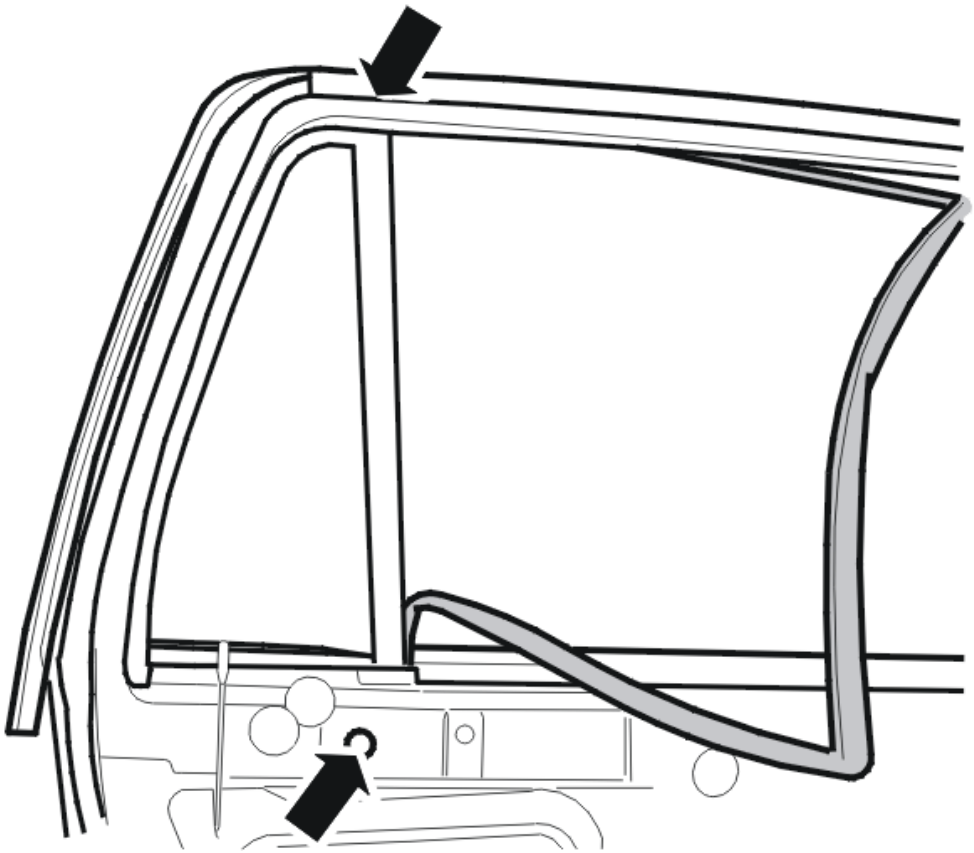

Fig. 129: Identifying Door Arch Weatherstrip
Courtesy of VOLVO CARS CORPORATION

Install the 2 screws for the fixed quarter window. See the illustration. Tighten.

FINISHING

INSTALLING THE DOOR PANEL

Install:

- the door panel. See: **PANEL REAR SIDE DOOR, REPLACING**
- the weatherstrip in the door arch.

Close the window.

TRIM STRIP DOOR ARCH SIDE DOOR, REPLACING

NOTE: **The illustrations in this service information are used for different model years and/or models. Some variation may occur. However, the essential information in the illustrations is always correct.**

PREPARATORY WORK

REMOVING THE DOOR MIRROR

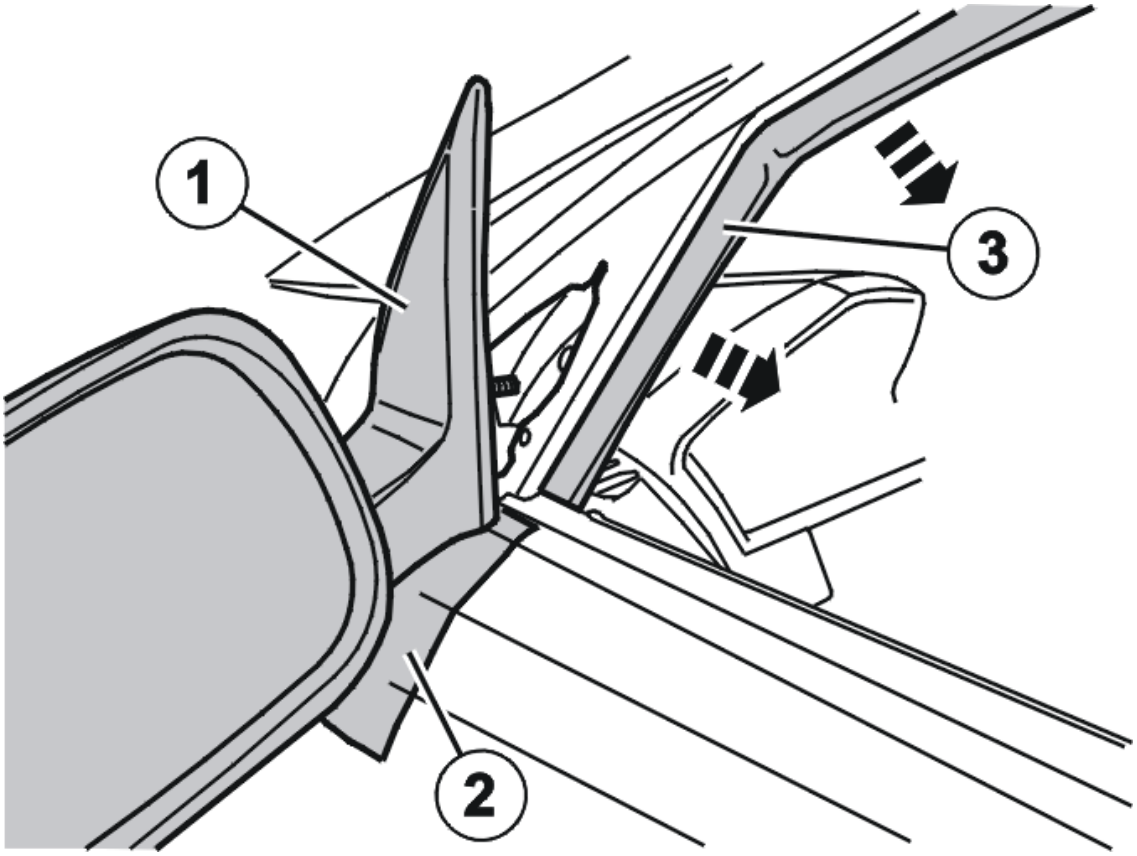

Fig. 130: View Of Removing Door Mirror
Courtesy of VOLVO CARS CORPORATION

Open the window.

Remove the door mirror. First remove the cover on the inside of the door and slacken off the nut. Allow the door mirror (1) to hang loose outside the door.

HINT: Apply tape between the door mirror and the door (2) to prevent scratches.

Pull out the weatherstrip (3) from the door arch. Allow the weatherstrip to hang loosely on the inside of the door.

REMOVAL

REMOVING THE TRIM STRIP DOOR ARCH

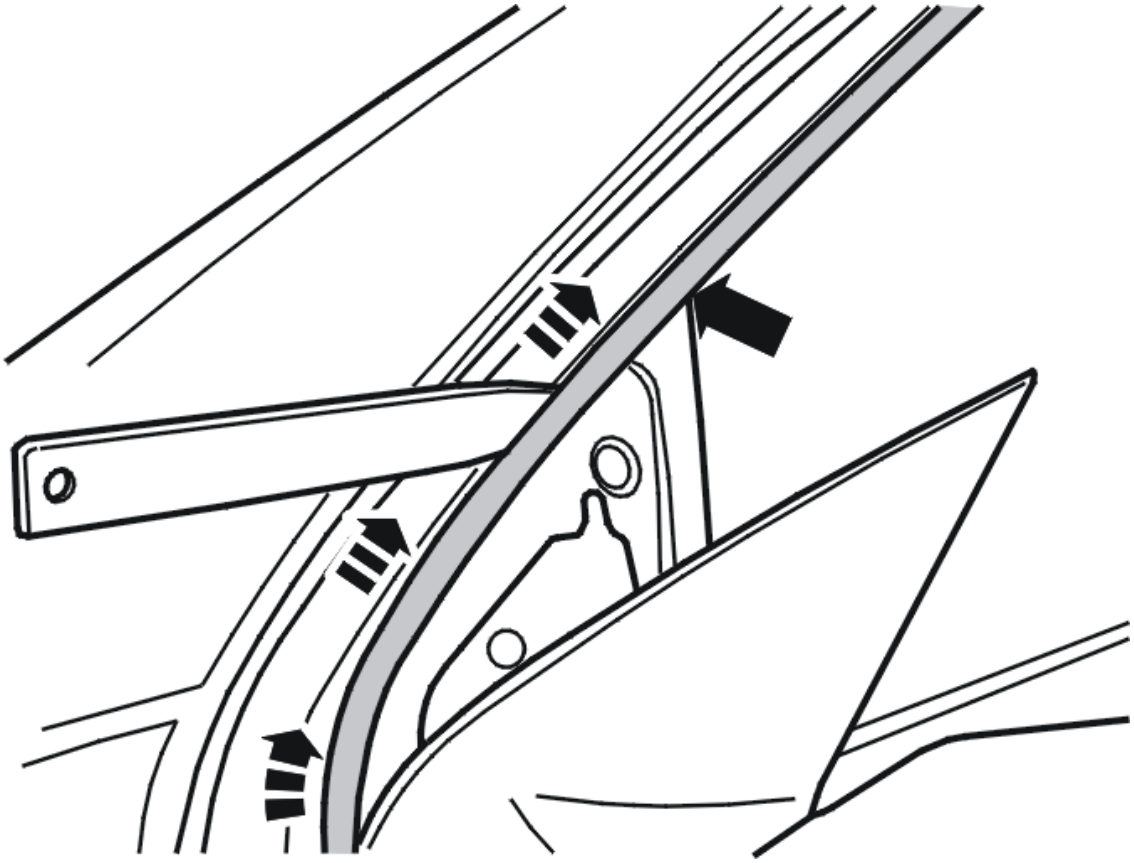

Fig. 131: View Of Trim Strip Removal With Weatherstrip Tool
Courtesy of VOLVO CARS CORPORATION

Remove the trim strip. Use a weatherstrip tool.

To release the tape from the door arch, start from the bottom and carefully pry upwards. (The end of the tape is in the joint between the rear view mirror and the side window.)

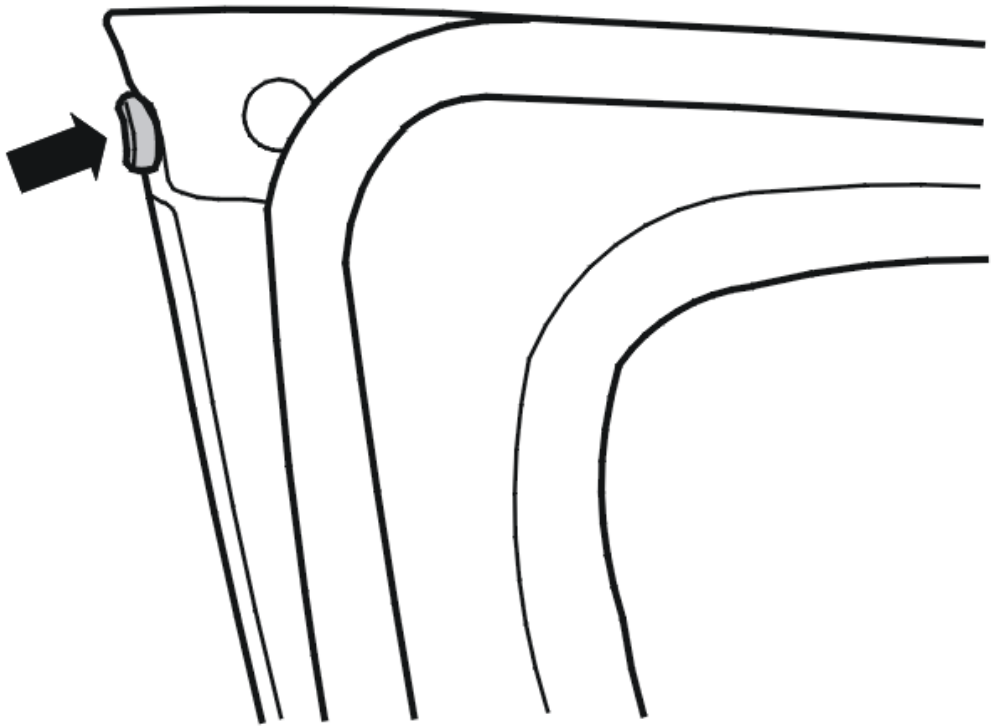

Fig. 132: Identifying Upper Rear Edge Of The Door Trim Strip
Courtesy of VOLVO CARS CORPORATION

Fold up the end of the trim strip in the upper rear edge of the door.

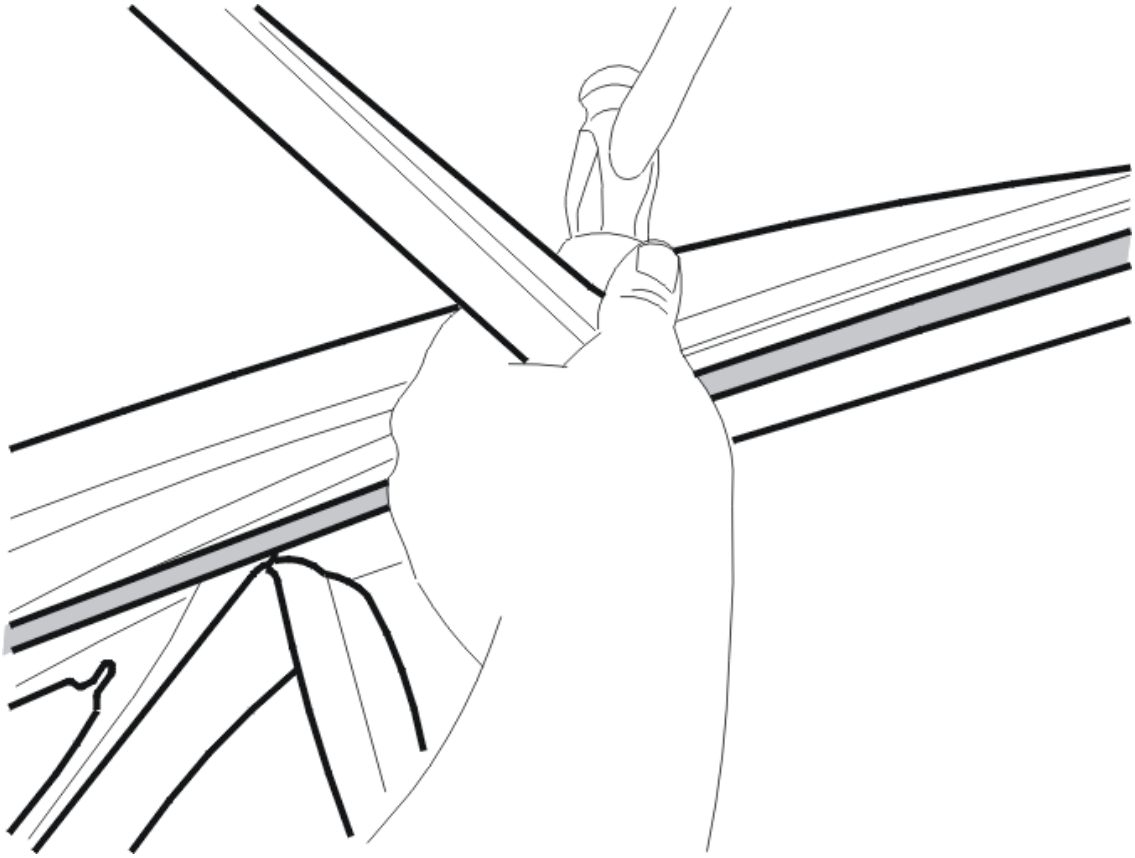

Fig. 133: View Of Removal Of Trim Strip From The Door Arch
Courtesy of VOLVO CARS CORPORATION

CAUTION: Use a plastic wedge or similar as a shim to prevent damaging the paintwork.

Remove the trim strip from the door arch.

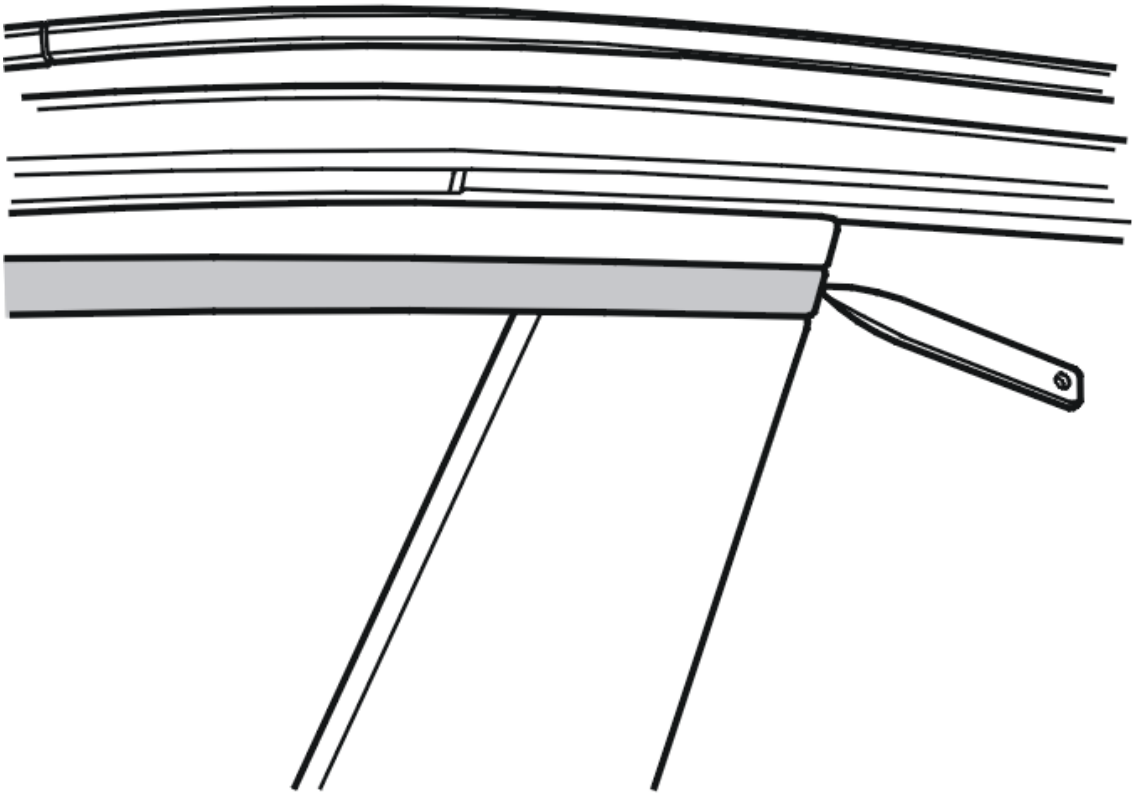

Fig. 134: Detach The Trim Strip From The Tape On The Rear Edge Of The Door Arch
Courtesy of VOLVO CARS CORPORATION

Detach the trim strip from the tape on the rear edge of the door arch. Use a weatherstrip tool.

INSTALLATION

INSTALLING THE TRIM STRIP DOOR ARCH

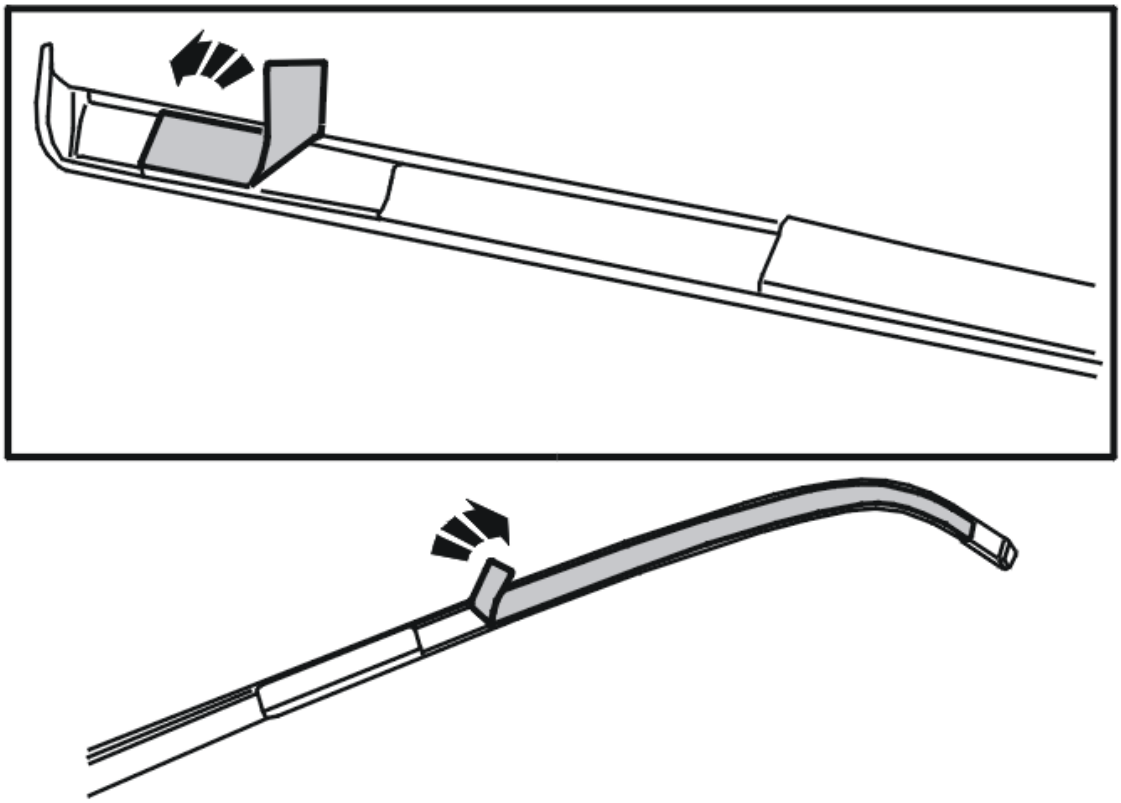

Fig. 135: Identifying Trim Strip Protective Tape
Courtesy of VOLVO CARS CORPORATION

Clean any remaining tape from the door arch.

Fold up a piece of the protective foil protecting the tape at both ends of the trim strip.

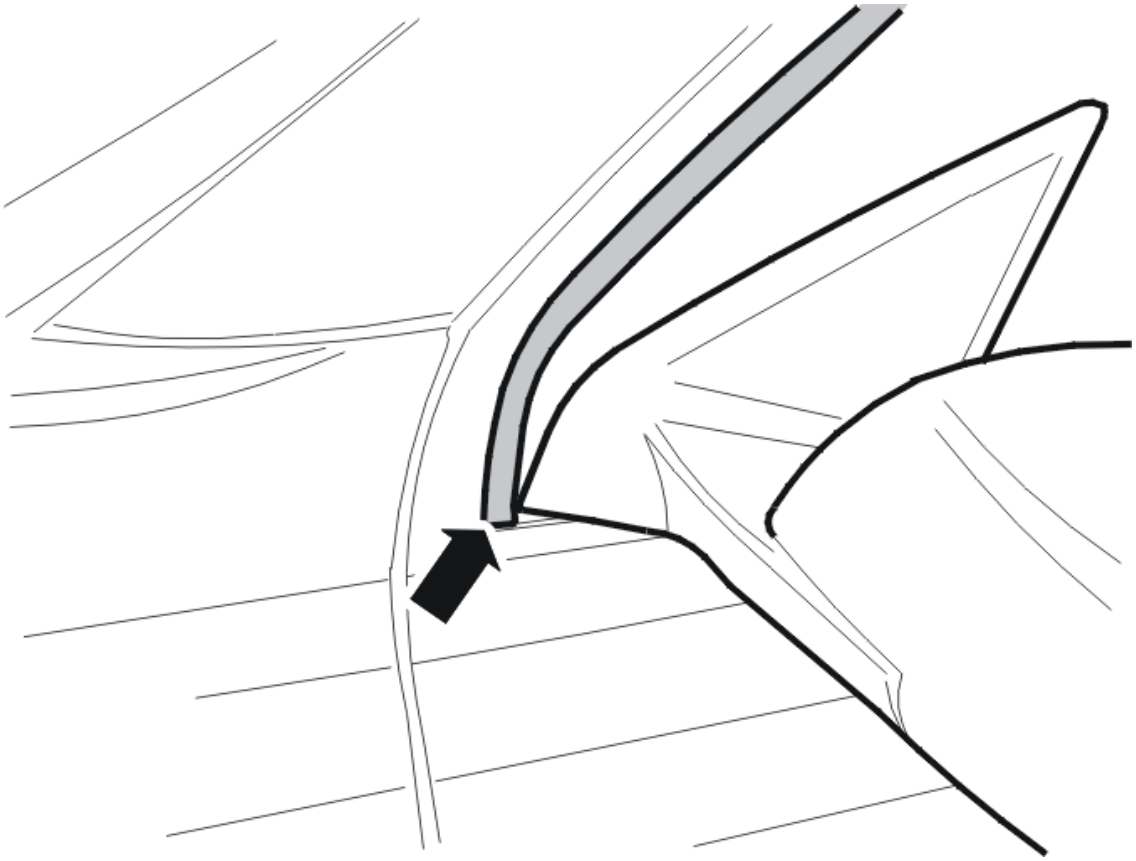

Fig. 136: Align The Strip Against The Door Arch
Courtesy of VOLVO CARS CORPORATION

Align the strip against the door arch.

NOTE: **The trim strip must be positioned on the inside of the weatherstrip.**

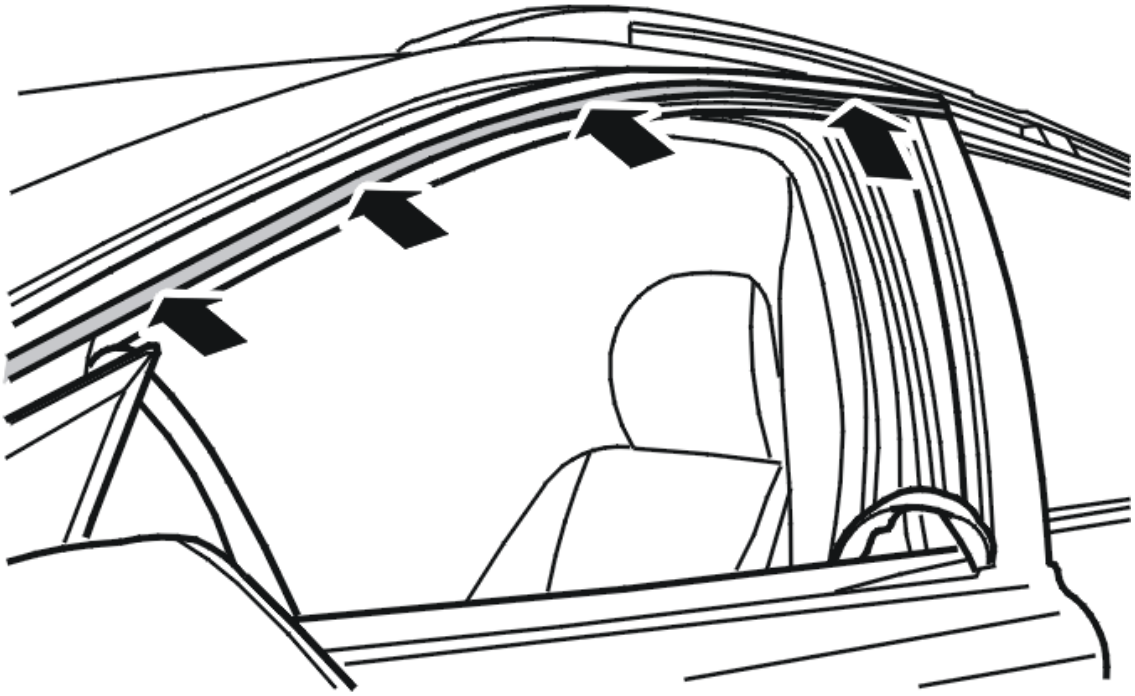

Fig. 137: Press The Trim Strip Into Place On The Door Arch
Courtesy of VOLVO CARS CORPORATION

Press the trim strip into place on the door arch.

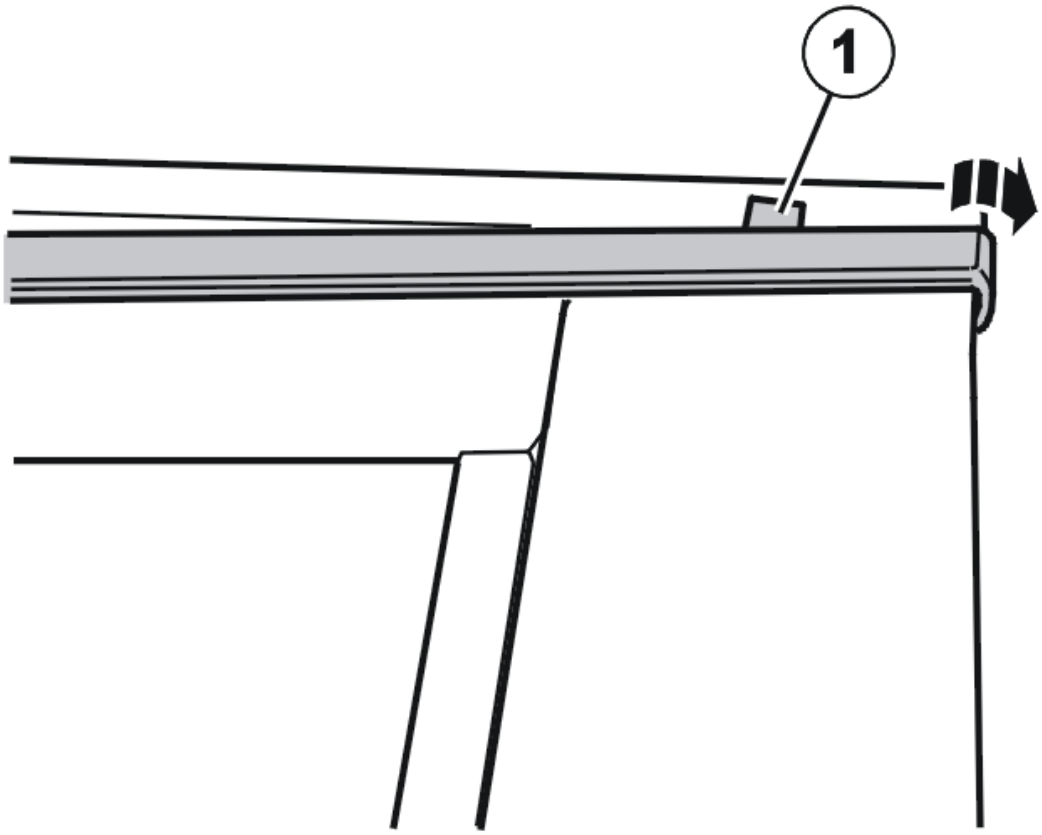

Fig. 138: Pull Off The Protective Foil At Both Ends
Courtesy of VOLVO CARS CORPORATION

Pull off the protective foil at both ends (1) of the trim strip.

Align the strip opposite the trim panel. Press securely.

Finish by folding the end of the trim strip around the door arch.

FINISHING

INSTALLING THE DOOR MIRROR

Install the door mirror.

Remove the tape from the door.

Reinstall the weatherstrip in the door frame.

Close the window.

TRIM STRIP REAR SIDE WINDOW, REPLACING

Special tools:

see **9814071**

see **9512841**

NOTE: **As the illustrations in this service information are used for different model years and / or models, some variation may occur. However, the essential information in the illustrations is always correct.**

REMOVAL

REMOVING THE TRIM STRIP REAR SIDE WINDOW

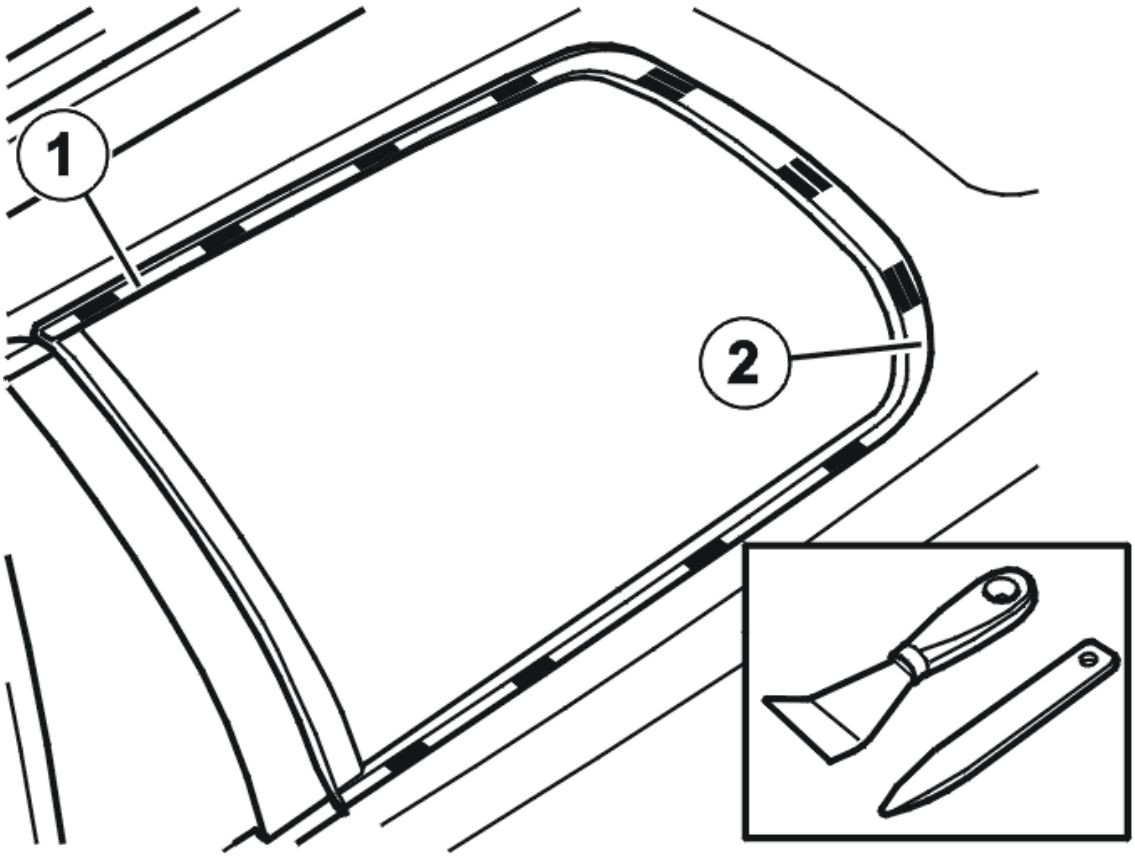

Fig. 139: View Of Upper Molding 10 Clips
Courtesy of VOLVO CARS CORPORATION

The upper molding is secured by 10 clips.

In addition the molding is bonded at (1) and taped at (2). See the illustration.

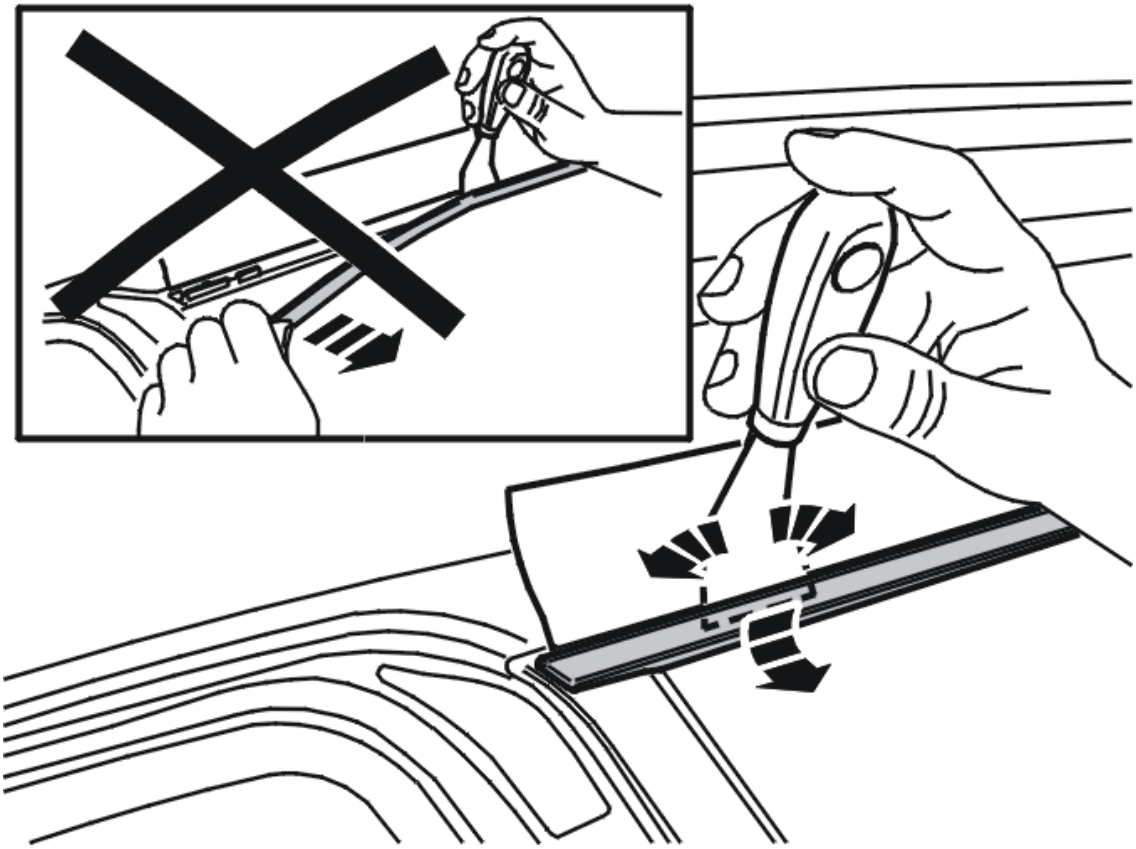

Fig. 140: Cut Off Adhesive With Bent Putty Knife
Courtesy of VOLVO CARS CORPORATION

Protect the body side using masking tape, P/N 951 1069.

Hold the molding straight.

Cut off the adhesive. Insert a bent putty knife down by each clip and break the adhesive outwards. Move the masking tape.

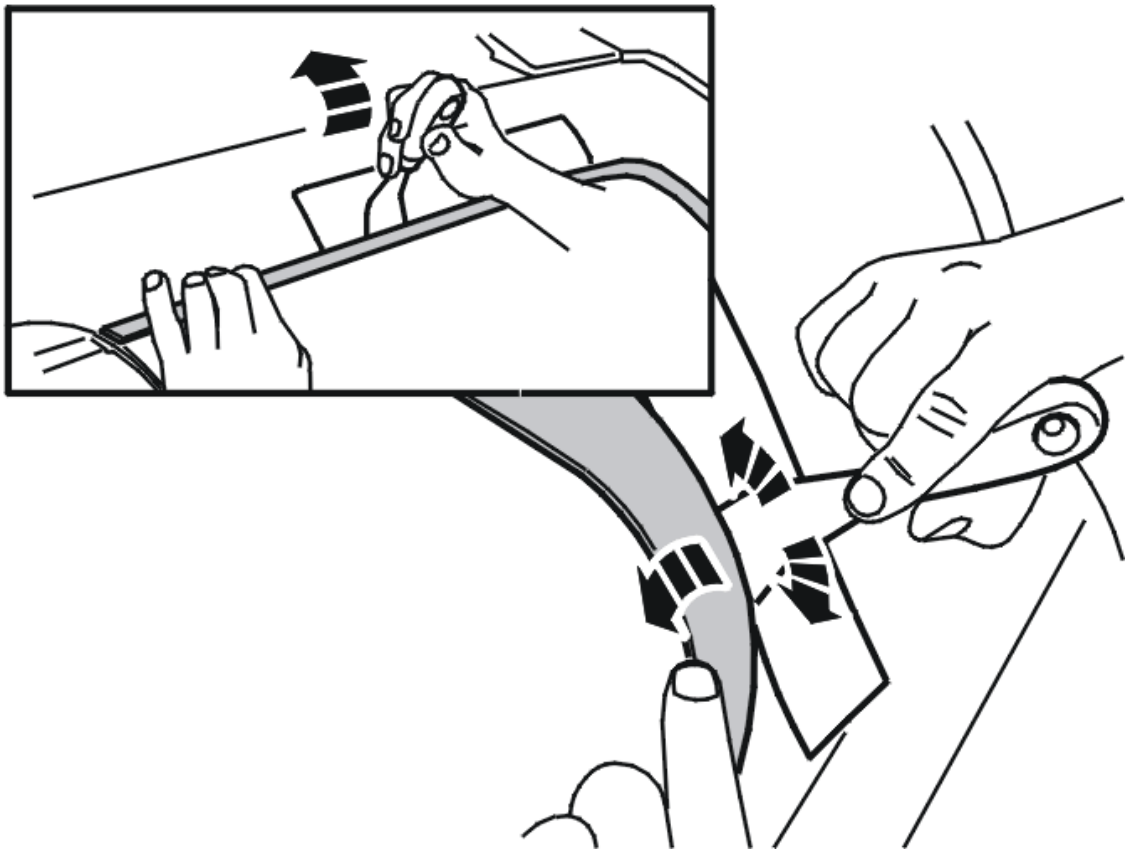

Fig. 141: View Of Lower Corner Tape
Courtesy of VOLVO CARS CORPORATION

Cut off the tape in the lower corner.

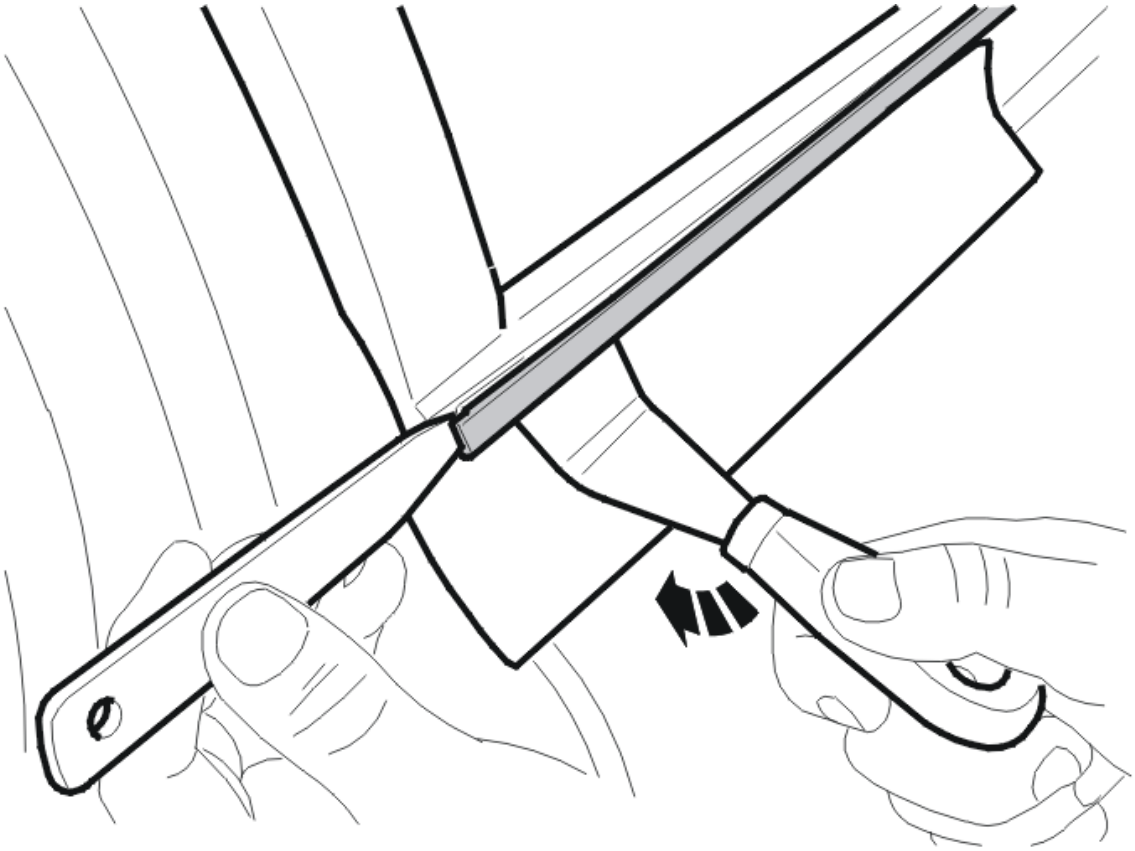

Fig. 142: Break Off Tape From Underneath
Courtesy of VOLVO CARS CORPORATION

Insert the weatherstrip tool see **9814071** in the end of the molding.

Use the putty knife and break off from underneath.

Remove the first 2 clips

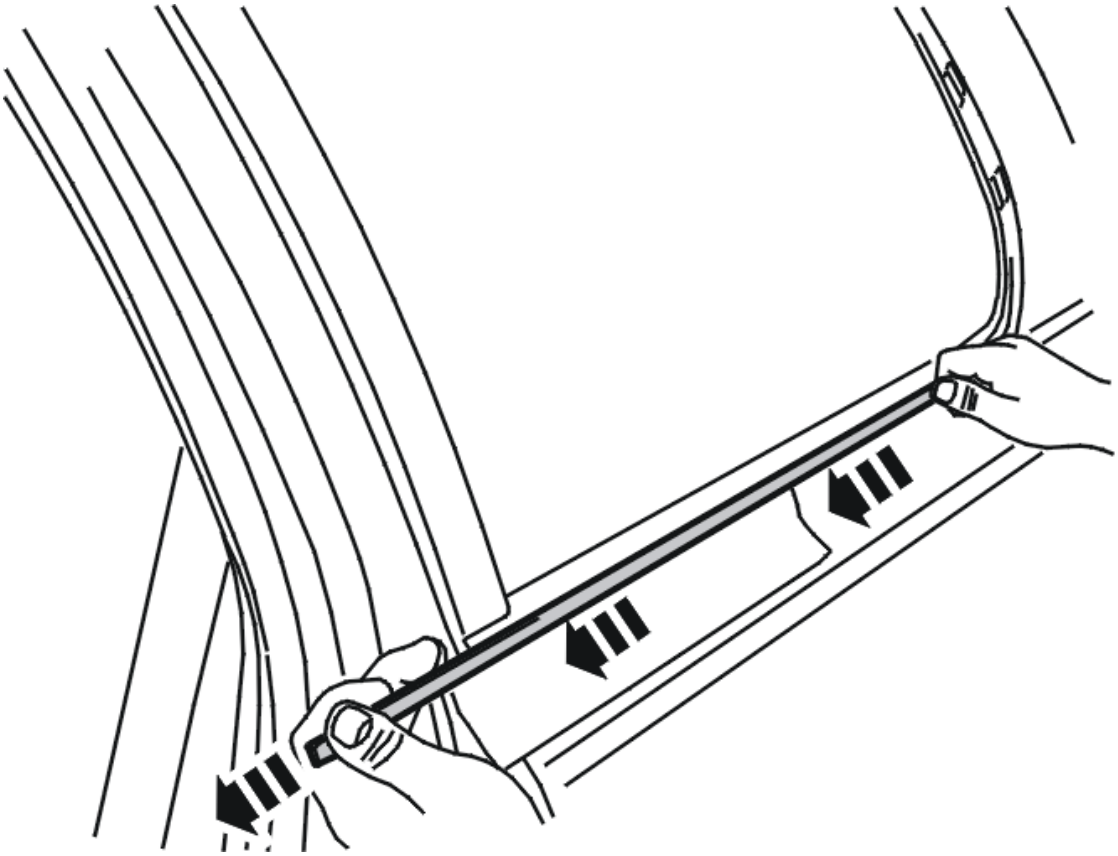

Fig. 143: Pull The Weatherstrip Off Forwards
Courtesy of VOLVO CARS CORPORATION

Pull the weatherstrip off forwards.

INSTALLATION

INSTALLING THE TRIM STRIP REAR SIDE WINDOW

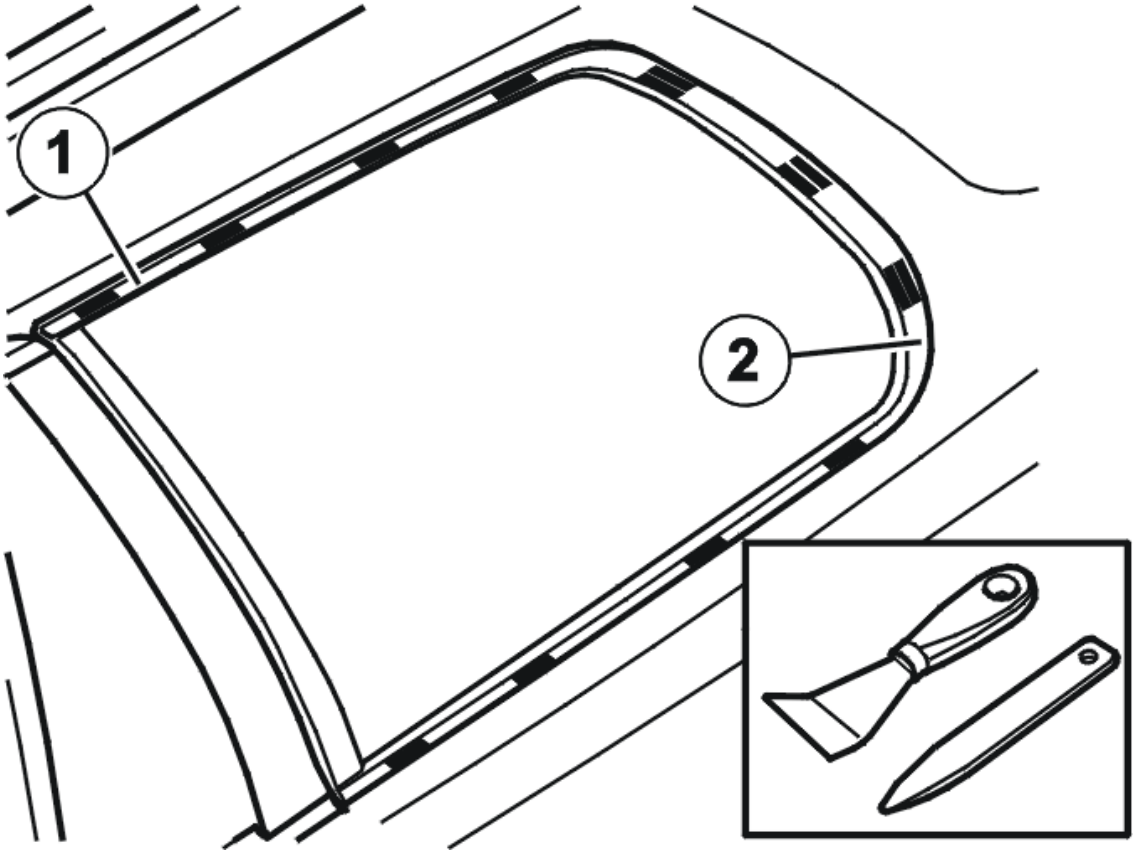

Fig. 144: View Of Upper Molding 10 Clips
Courtesy of VOLVO CARS CORPORATION

Check that the clips are intact.

Clean the molding area. Use "Cleaner H" or cleaning alcohol.

Apply adhesive P/N 116 1767 at (1) and (2).

Press the weatherstrip into place.

If necessary, apply double-sided adhesive tape or position a suction clamp see **9512841** at (2) to hold the molding while the adhesive cures.

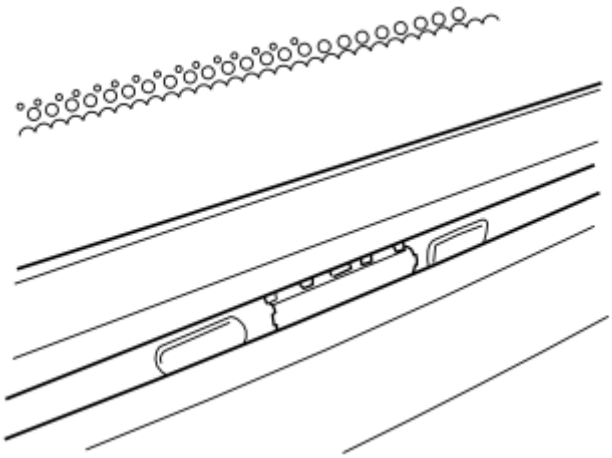

Fig. 145: Identifying Four Lower Clips At The Fixed Quarter Window
Courtesy of VOLVO CARS CORPORATION

NOTE: Replacing the four lower clips at the fixed quarter window.

Install the 4 x new clips at each position.

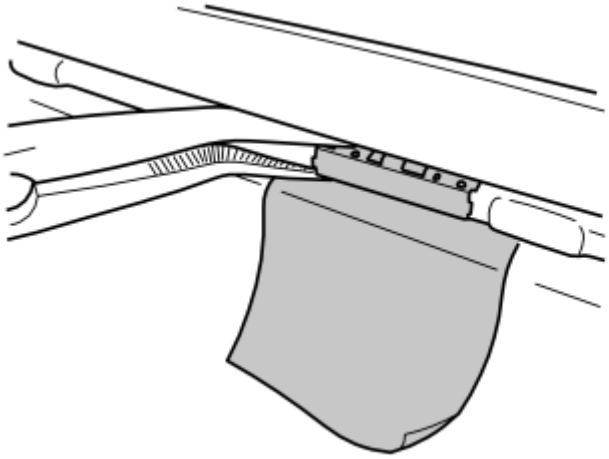

Fig. 146: View Of Rubber Molding Clip
Courtesy of VOLVO CARS CORPORATION

Install a piece of tape to protect the paint.

Use bent long-nosed pliers and clamp the clip securely to the rubber molding, see illustration.

Install the molding as shown in the illustration above.

OUTER TRIM DETAILS, EMBLEMS, REFLECTIVE STRIPS (B5254T2; B6294T; 2005)

BADGE REAR, REPLACING

see **BADGE REAR, REPLACING**

OUTER TRIM DETAILS, EMBLEMS, REFLECTIVE STRIPS (B5254T2; B6294T; 2006)

BADGE REAR, REPLACING

NOTE: The illustrations in this service information are used for different model years and/or models. Some variation may occur. However, the essential information in the illustrations is always correct.

REMOVAL

REMOVING THE BADGE

Heat the badge carefully. Use a hot-air gun.

Carefully lift up one edge of the badge.

CAUTION: Do not damage the vehicle paintwork.

Remove:

- the badge
- any tape residue.

INSTALLATION

INSTALLING THE BADGE

Ensure that the vehicle is at least at room temperature (above 20 °C).

Wash the area for the badge. Use a mixture of 50% isopropanol and 50% water.

Wipe dry using a clean lint-free cloth or similar.

CAUTION: In order for the badge to secure, the surface must be clean and free of dust and grease.

Remove the backing from the tape.

NOTE: Leave the foil in place.

Guide the badge into the position indicated in the dimensions. Press the whole badge to ensure the tape is in

good contact with the base.

Use the following measurements:

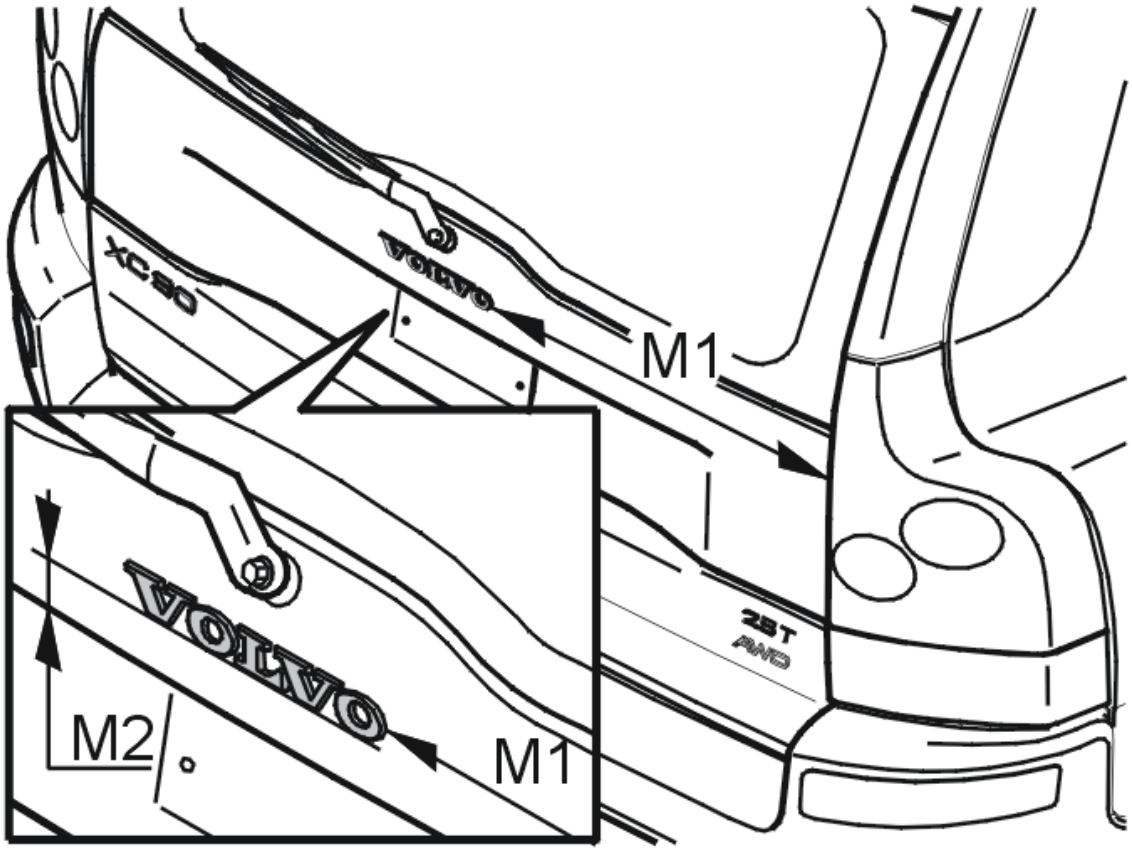

Fig. 147: Identifying Volvo Badge
Courtesy of VOLVO CARS CORPORATION

Volvo badge

M1 = 538 ± 1.5 mm

M2 = 26 ± 1 mm

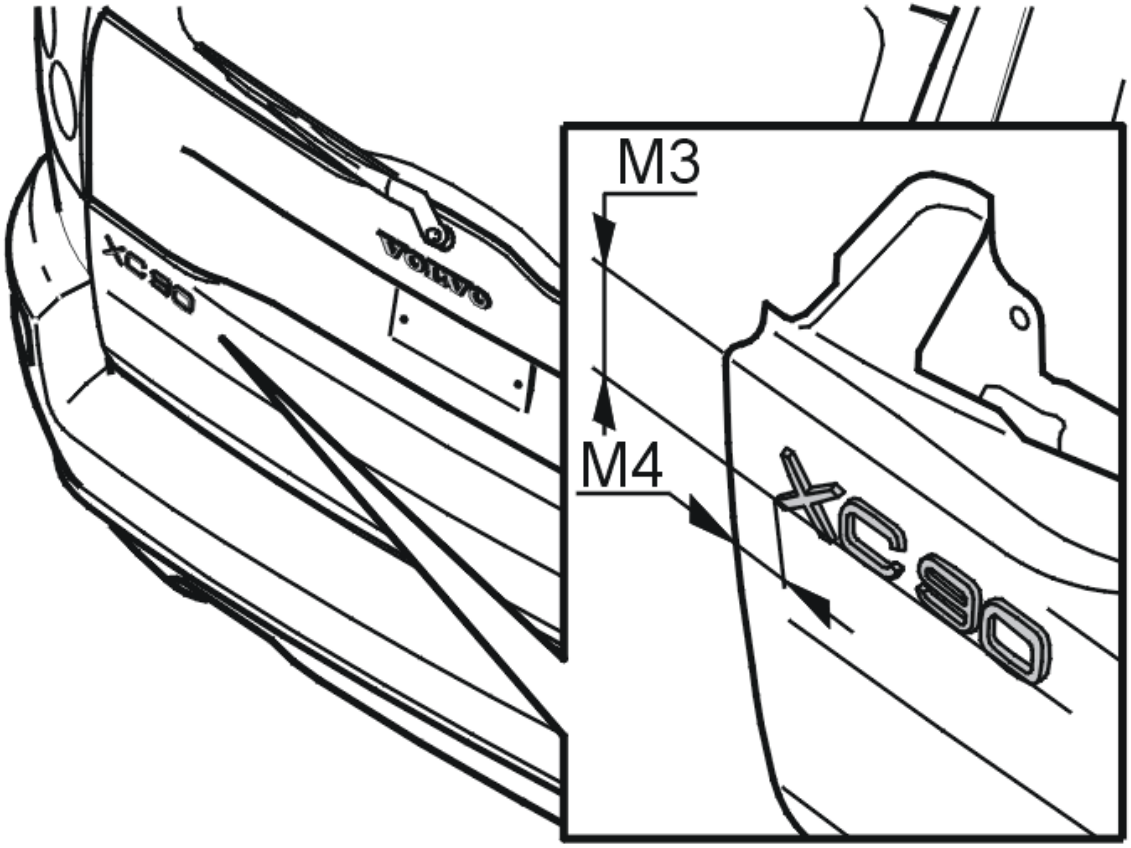

Fig. 148: Identifying Model designation Badge
Courtesy of VOLVO CARS CORPORATION

Model designation

M3 = 57.5 ± 1 mm

M4 = 32.5 ± 1 mm

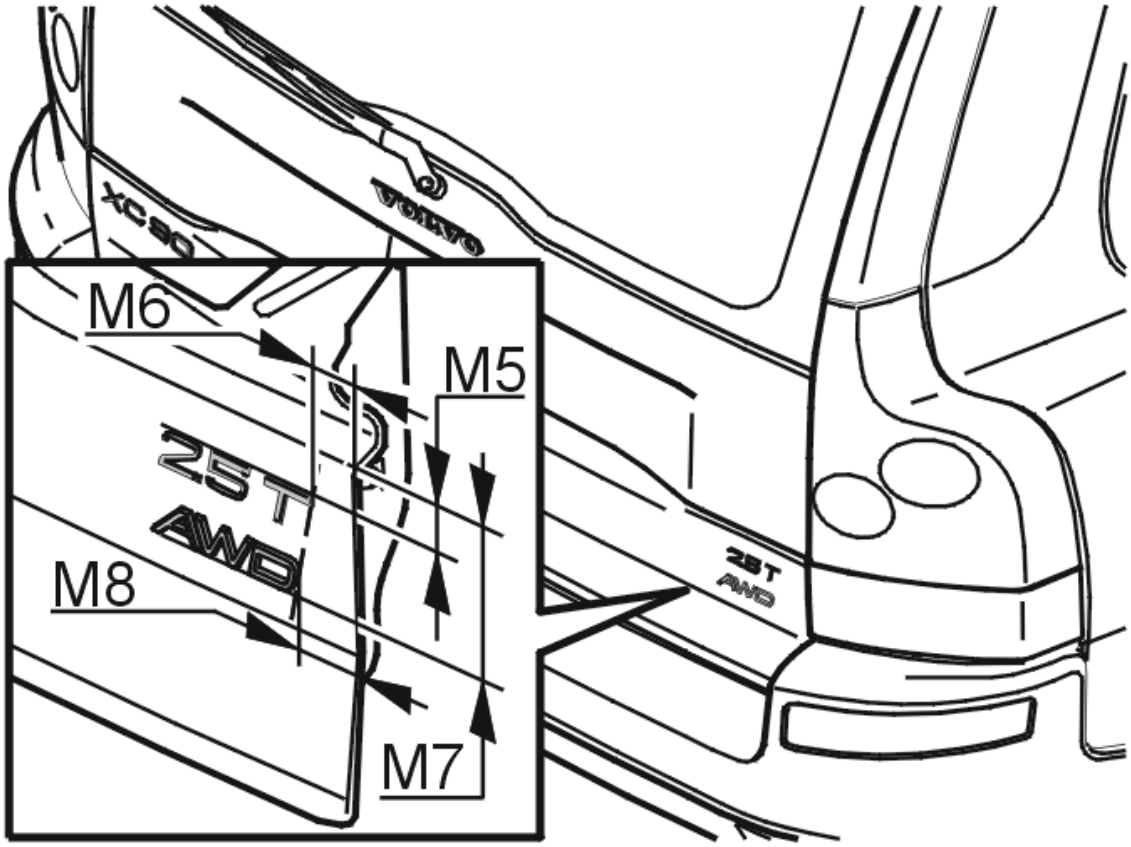

Fig. 149: Identifying Engine Designation Badge
Courtesy of VOLVO CARS CORPORATION

Engine designation

M5 = 27±1 mm

M6 = 33±2 mm

M7 = 78.5±1 mm

M8 = 41±2 mm

Check that the edges of the badge are against the base. There must be no gaps.

Remove the securing foil.

NOTE: **To ensure optimal adhesion, do not wash the car for 72 hours. It gradually increases.**

OUTER TRIM DETAILS, EMBLEMS, REFLECTIVE STRIPS (EXECUTIVE; 2008-2011)

TRIM STRIP, REAR LAMP CLUSTER

Materials:	
Designation	**Part number**
Cleaning agent	9192678-2

REMOVE

NOTE: Removal steps in this procedure may contain installation details.

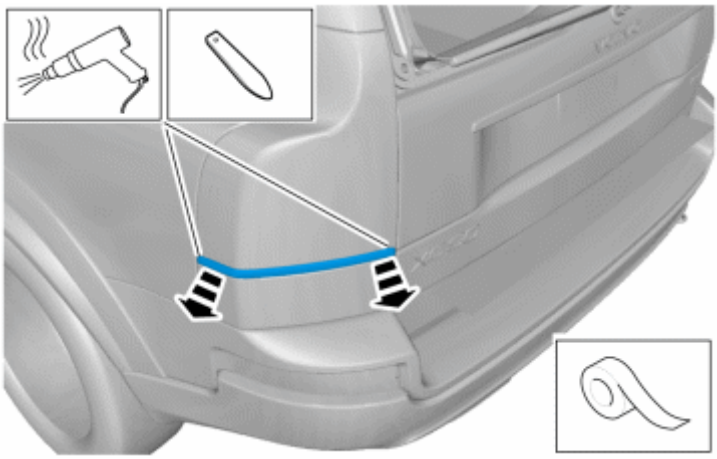

Fig. 150: View Of Rear Lamp Cluster Trim Strip
Courtesy of VOLVO CARS CORPORATION

CAUTION: Do not damage the vehicle paintwork.

CAUTION: Make sure that the mating faces are at a minimum temperature of +20°C.

CAUTION: Make sure that the mating faces are clean and free of foreign material.

Use: Cleaning agent, 9192678-2

CAUTION: Make sure that the mating surfaces are dry.

CAUTION: Apply even pressure along the entire component.

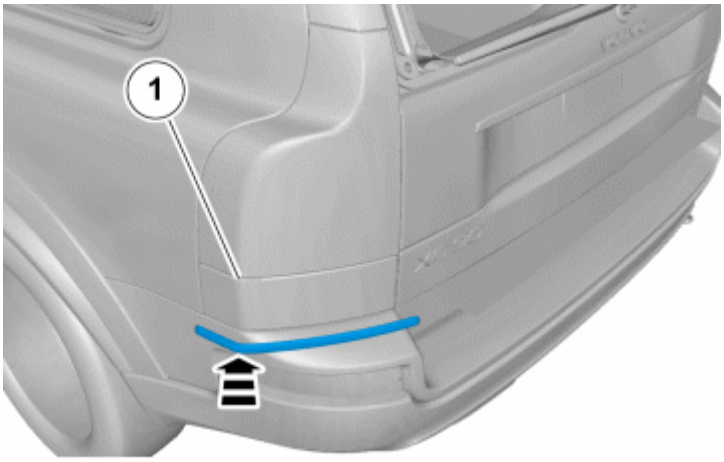

Fig. 151: Make Sure That The Tape Has Not Detached From The Edges Of The Component
Courtesy of VOLVO CARS CORPORATION

CAUTION: Make sure that the tape has not detached from the edges of the component.

CAUTION: Make sure that the customer is advised not to wash the vehicle within the next 72 hours.

SEALS AND WEATHER-STRIP FOR DOORS, TAILGATE (2003-2011)

SILL TRIM PANEL, REPLACING

NOTE: As the illustrations in this service information are used for different model years and / or models, some variation may occur. However, the essential information in the illustrations is always correct.

SILL TRIM PANEL FRONT SIDE DOOR

REMOVING THE SILL TRIM PANEL FROM THE FRONT SIDE DOOR

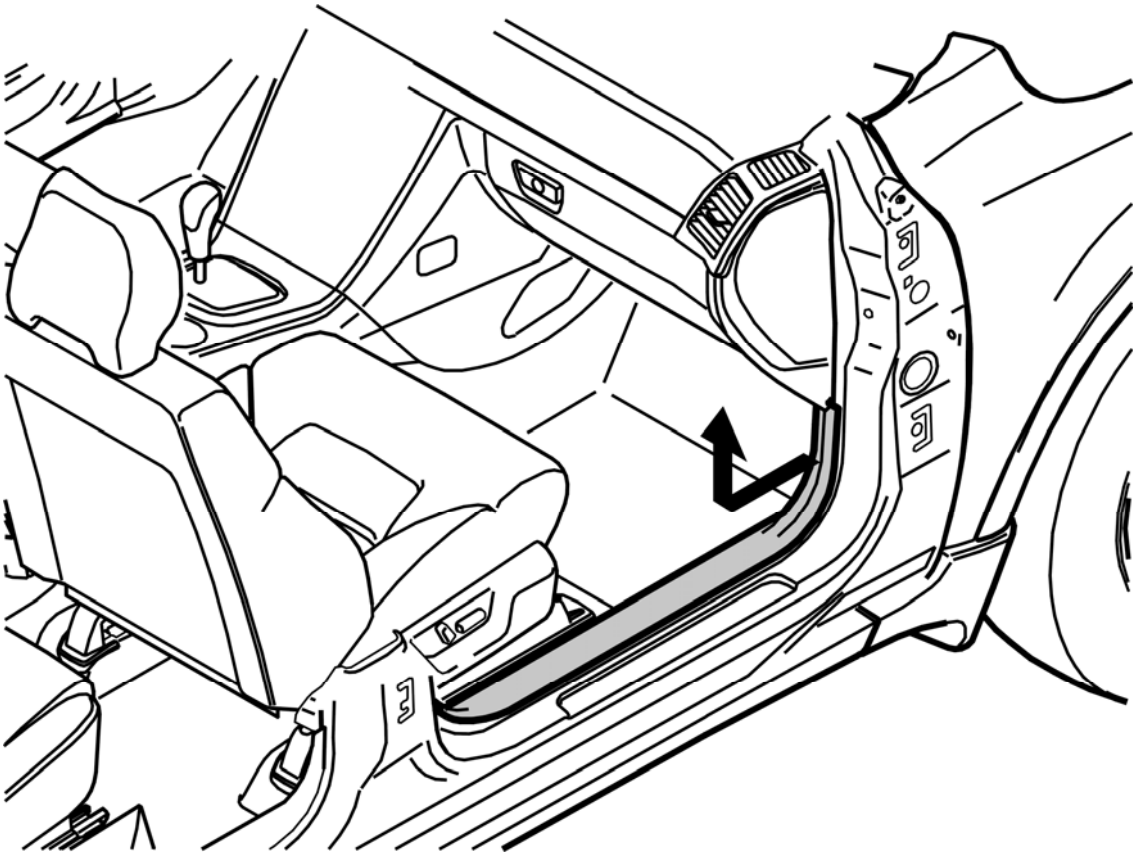

Fig. 152: Identifying Sill Trim Panel Removal
Courtesy of VOLVO CARS CORPORATION

Pull the sill trim panel straight up.

Pull out the sill trim panel at the front and rear edges.

INSTALLING THE SILL TRIM PANEL FOR THE FRONT SIDE DOOR

Insert the sill trim panel at the rear edge.

Press the sill trim panel into place at the front edge.

Press the sill trim panel straight down.

SILL TRIM PANEL REAR SIDE DOOR

REMOVING THE SILL TRIM PANEL FROM THE REAR SIDE DOOR

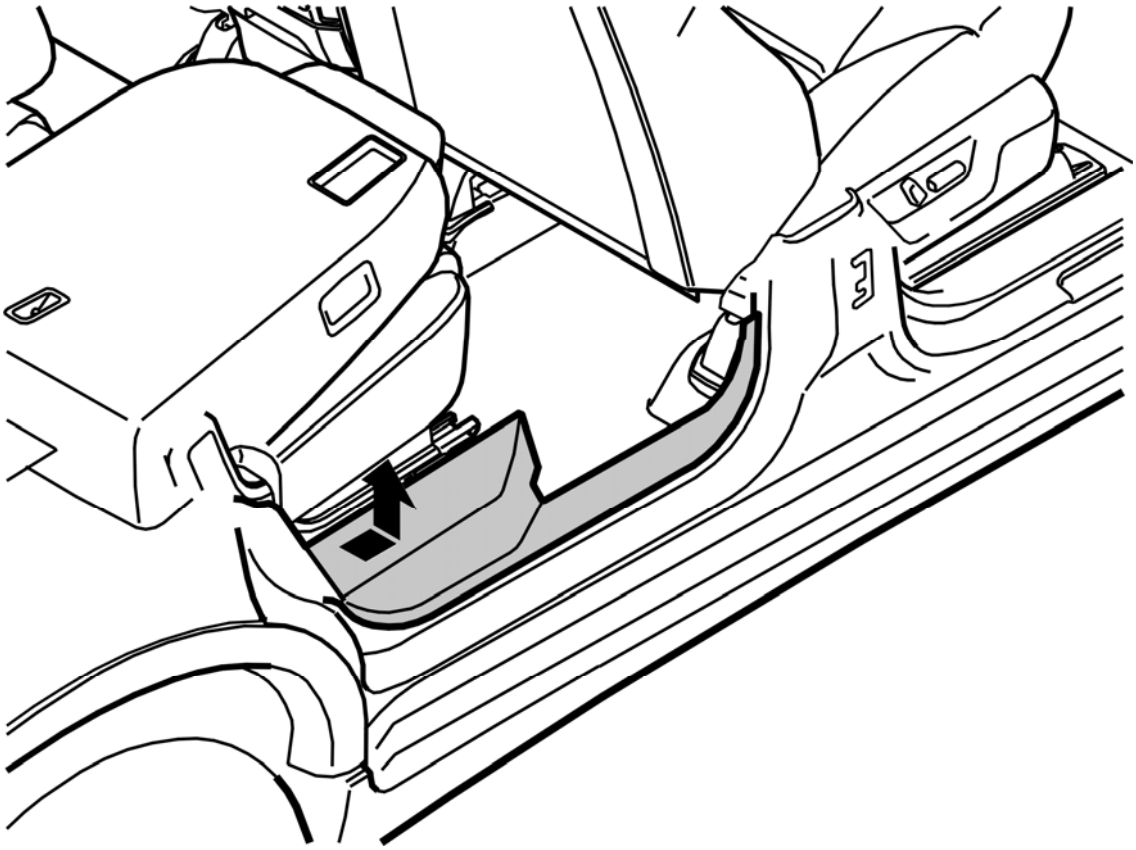

Fig. 153: Identifying Sill Trim Panel Removal
Courtesy of VOLVO CARS CORPORATION

Remove the end mounting. See **END MOUNTINGS REAR (SECOND ROW), REPLACING** .

Pull up the sill trim panel at the rear edge.

Angle the sill trim panel out from the B post panel.

INSTALLING THE SILL TRIM PANEL FOR THE REAR SIDE DOOR

Insert the front edge of the sill trim panel into the B post panel.

Press the sill trim panel into place.

Install the end mounting. See **END MOUNTINGS REAR (SECOND ROW), REPLACING** .

COVER

REMOVING THE COVER FROM THE LOWER EDGE OF THE B POST

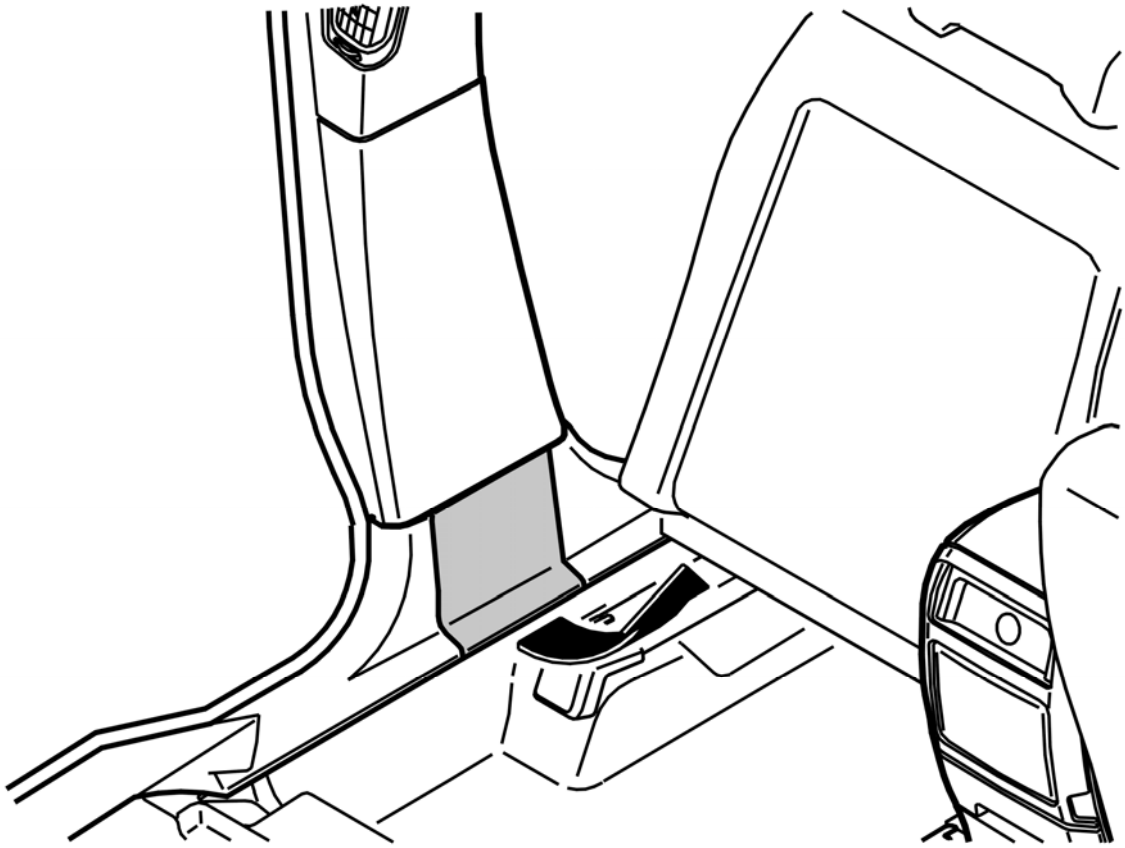

Fig. 154: Identifying Removal Of Cover From Lower Edge Of B Post
Courtesy of VOLVO CARS CORPORATION

Remove:

- the front sill trim panel. See **REMOVING THE SILL TRIM PANEL FROM THE FRONT SIDE DOOR**
- the rear sill trim panel. See **REMOVING THE SILL TRIM PANEL FROM THE REAR SIDE DOOR**
- the cover.

INSTALLING THE COVER AT THE LOWER EDGE OF THE B POST

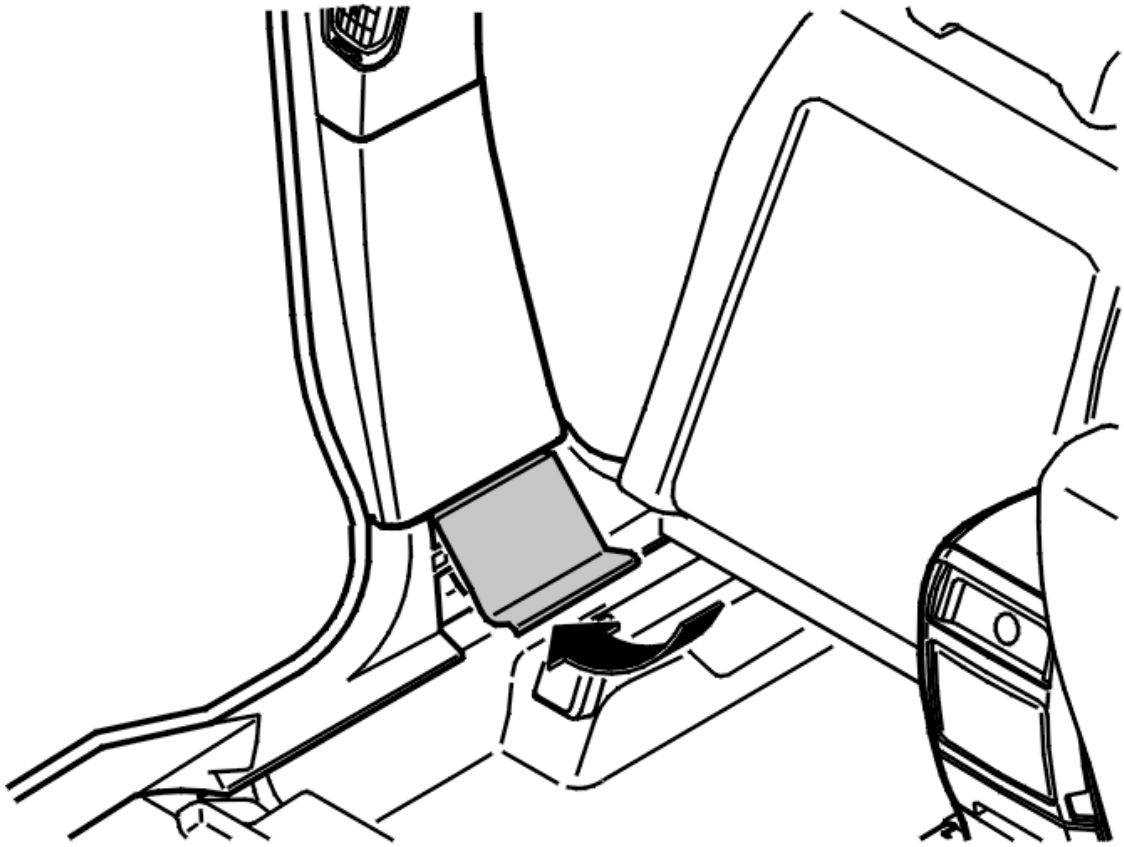

Fig. 155: Identifying Cover Installed To Lower Edge Of B Post
Courtesy of VOLVO CARS CORPORATION

Install:

- the cover at the bottom edge of the B post
- the front sill trim panel. See **INSTALLING THE SILL TRIM PANEL FOR THE FRONT SIDE DOOR**
- the rear sill trim panel. See **INSTALLING THE SILL TRIM PANEL FOR THE REAR SIDE DOOR**.

ELECTRICAL

Volvo - XC90 - 2008

IDENTIFICATION

WARNING: Vehicles are equipped with air bag supplemental restraint system. Before attempting ANY repairs involving steering column, instrument panel or related components, see AIR BAG SAFETY PRECAUTIONS and DISABLING & ACTIVATING AIR BAG SYSTEM in appropriate AIR BAG RESTRAINT SYSTEMS article.

CAUTION: When battery is disconnected, vehicle computer and memory systems may lose memory data. Driveability problems may exist until computer systems have completed a relearn cycle.

ENGINE COMPARTMENT

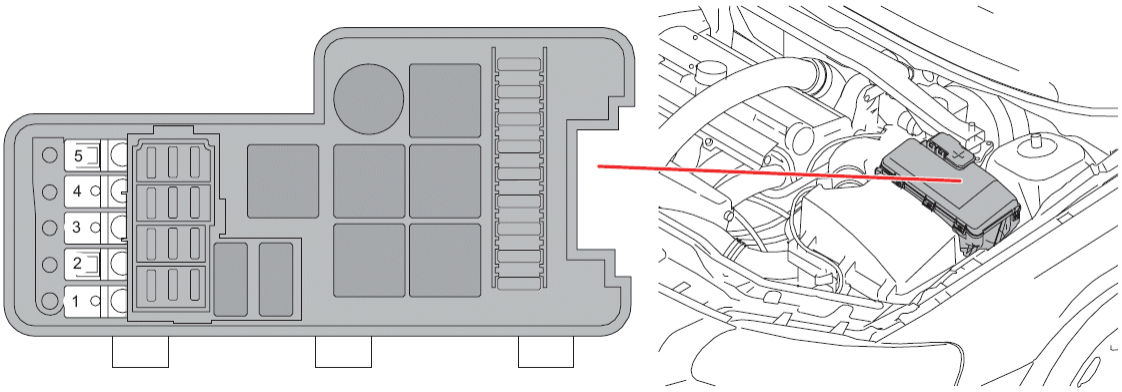

Fig. 1: Identifying Engine Compartment Fuse Block (11A)
Courtesy of VOLVO CARS OF NORTH AMERICA.

Engine Compartment Fuse Assignments (11A)

Fuse No.	Module No.	Fuse Function	Amperage
1	4/109	Glow plug control module (GCU)	60
	20/22-26	Glow plug	--
2	6/29	Motor, cooling fan	60
3	-	-	--
4	-	-	--
5	-	-	--

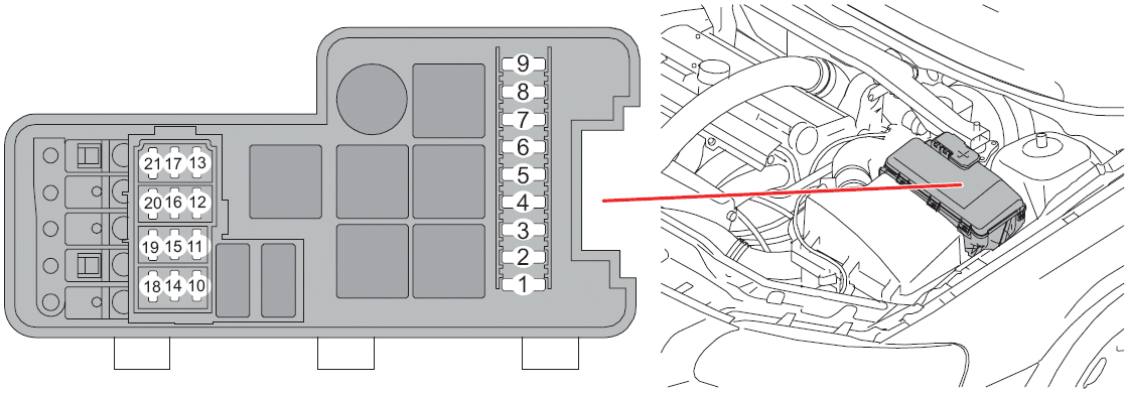

Fig. 2: Identifying Engine Compartment Fuse Block (11B)
Courtesy of VOLVO CARS OF NORTH AMERICA.

Engine Compartment Fuse Assignments (11B)

Fuse No.	Module No.	Fuse Function	Amperage
1	4/16	Brake Control Module (BCM)	30
2	4/16	Brake Control Module (BCM)	30
3	6/104	High pressure headlight washer	35
4	6/35	Fuel pump, auxiliary heater	25
	6/73	Coolant pump, auxiliary heater	--
	9/30	Auxiliary heater	--
5	54/8	Connector cable harness extra lights, 30-feed	20
6	6/25	starter motor	35
7	2/90	Relay, windshield wiper, low/high speed	25
	2/91	Relay, intermittent wiping	--
	6/1	Windshield wiper motor	--
8	4/83	Fuel pump control module	15
	6/33	Fuel pump	--
9	4/28	Transmission Control Module (TCM) (TF-80SC/TF-80SC AWD)	15
10	4/46	Engine Control Module (ECM) (Diesel)	20
	20/3-8	Spark plug and ignition coil (not 8-cyl.)	--
	20/14	Condenser, ignition coils (8-cyl.)	--
	20/46-53	Spark plug with ignition coil (8-cyl.)	--
11	6/44	Cooling fan, electrics box, engine compartment	10
	7/51	Accelerator pedal sensor	--
	8/3	Electromagnetic clutch, climate control system	--
12	7/17	Mass airflow sensor (MAF) (Diesel)	5
	4/46	Engine Control Module (ECM) (Gas, not 8-cyl.)	15
	7/17	Mass airflow sensor (MAF) (Gas, not 8-cyl.)	--
	8/6-11	Injectors (Gas, not 8-cyl.)	--
	8/146-153	Injection valves (8-cyl.)	--

13	4/46	Engine Control Module (ECM) (5-cyl. normally aspirated/8-cyl.)	10
	4/50	Electronic Throttle Module (ETM) (Bi-Fuel)	--
	6/120	Throttle body motor (5-cyl. normally aspirated/8-cyl.)	--
	6/139	Upper actuating motor, intake manifold	--
	6/140	Lower actuating motor, intake manifold	--
	8/98	Control valve, fuel pressure (Diesel)	--
	8/111	High-pressure solenoid valve (Diesel)	--
14	7//15	Heated oxygen sensor (Diesel)	10
	4/46	Engine Control Module (ECM) (Bi-Fuel)	20
	7//15	Heated oxygen sensor, front	--
	7/82	Heated oxygen sensor, diagnosis 1	--
	7/103	Heated oxygen sensor 3	--
	7/15	Front heated oxygen sensor, bank 2 (8-cyl.)	--
	7/82	Front heated oxygen sensor, bank 1 (8-cyl.)	--
	7/103	Rear heated oxygen sensor, bank 2 (8-cyl.)	--
	7/104	Rear heated oxygen sensor, bank 1 (8-cyl.)	--
15	6/67	Pump, fuel leakage control	10
	6/105	Fuel distributor gas (Bi-Fuel)	--
	8/18	EVAP valve	--
	8/19	Solenoid, variable valve timing intake	--
	8/28	Turbo control valve	--
	8/75	Valve, fuel cut-off DFCO	--
	8/81	Solenoid, variable valve timing exhaust	--
	9/32	PTC resistor - air preheating	--
	8/125	Variable valve lifter, front plane (6-cyl.)	15
	8/126	Variable valve lifter, rear plane (6-cyl.)	--
	4/46	Engine Control Module (ECM) (8-cyl.)	--
	6/67	Pump, fuel leakage control (8-cyl.)	--
	7/17	Mass air flow sensor (MAF) (8-cyl.)	--
	8/3	Electromagnetic clutch, climate control system (8-cyl.)	--
	8/18	EVAP valve (8-cyl.)	--
	8/19	Solenoid, variable valve timing, intake, bank 2 (8-cyl.)	--
	8/81	Solenoid, variable valve timing, exhaust, bank 2 (8-cyl.)	--
	8/107	Valve, variable intake (8-cyl.)	--
	8/117	Solenoid, variable valve timing, intake, bank 1 (8-cyl.)	--
	8/118	Solenoid, variable valve timing, exhaust, bank 1 (8-	--

		cyl.)	
	4/109	Glow plug control module (GCU)	--
	6/143	Regulator motor, turbo (Diesel)	--
	8/64	Solenoid valve, engine pad (Diesel)	--
	8/113	Bypass valve, EGR cooling (Diesel)	--
	8/120	EGR valve (Diesel)	--
16	10/1	Left front lamp housing, daytime running lights	20
	10/70	Left-hand low beam	--
17	10/2	Right front lamp housing, daytime running lights	20
	10/66	Right-hand low beam	--
19	2/32	Main relay, engine management system	5
	4/46	Engine Control Module (ECM)	--
20	10/11	Front left running/parking light	15
	10/12	Front right running/parking light	--
	10/71	Side running light, front left	--
	10/73	Side running light, front right	--

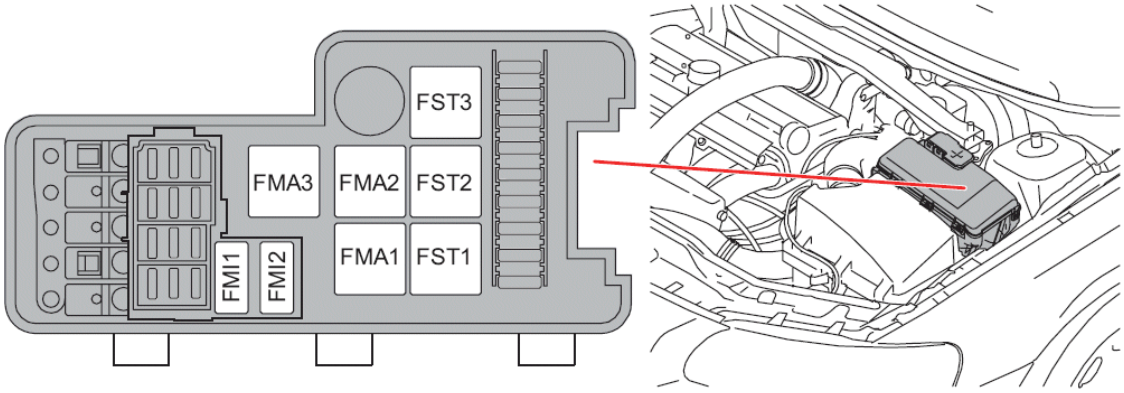

Fig. 3: Identifying Engine Compartment Relay Block
Courtesy of VOLVO CARS OF NORTH AMERICA.

Engine Compartment Relay Block Assignments

Relay No.	Module No.	Relay Function
FMA1	2/35	Starter motor
FMA3	2/32	Engine management system Main relay
FMI2	2/22	Climate control system
FST1	2/90	Windshield wiper, low/high speed
FST2	2/91	Intermittent wiping
FST3	2/182	High pressure headlight washer motor

Accessory Relay Assignments

Position	Module No.	Relay Function
Engine Compartment	2/64	Auxiliary Light (Accessory)

Front Member	2/192	Electric Engine Heater

PASSENGER COMPARTMENT

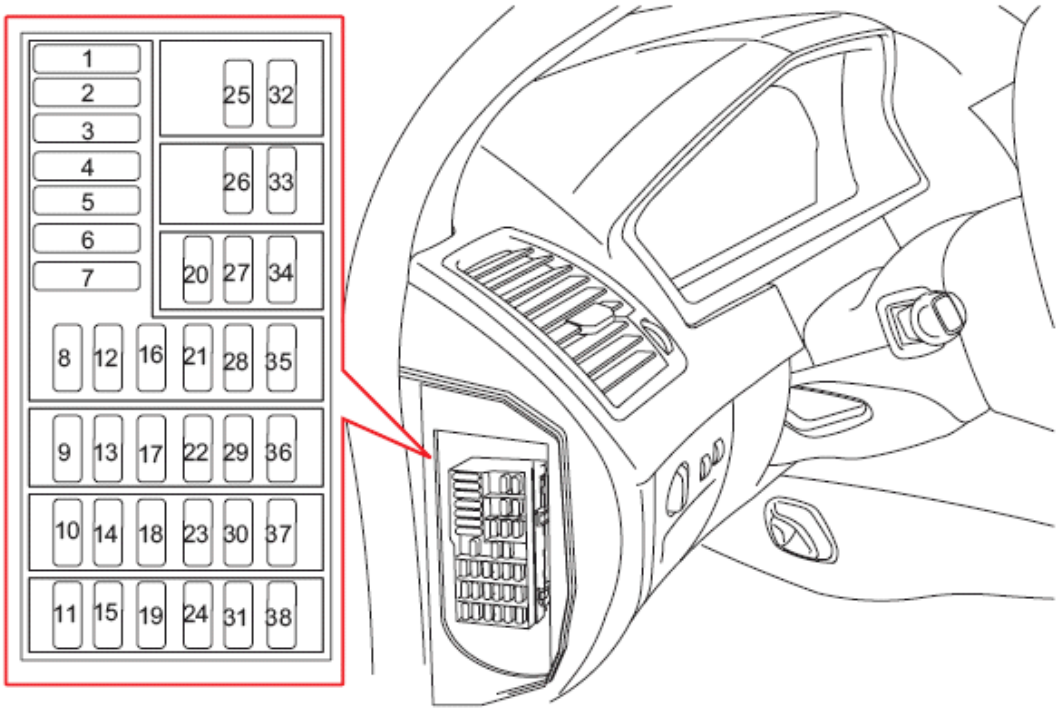

Fig. 4: Identifying Passenger Compartment Fuse Box (11C)
Courtesy of VOLVO CARS OF NORTH AMERICA.

Passenger Compartment Fuse Assignments (11C)

Fuse No.	Module No.	Fuse Function	Amperage
1	6/28	Motor, passenger compartment fan	30
2	16/105	Audio Module (AUD)	30
3	4/52	Power Seat Module (PSM)	25
	6/16	Driver seat motor, backrest angle	--
	6/17	Driver seat motor, up/down front edge	--
	6/18	Driver seat motor, up/down rear edge	--
	6/19	Driver seat motor, forward/backward	--
4	6/20	Passenger seat motor, forward/backward	25
	6/64	Passenger seat motor, backrest angle	--
	6/65	Passenger seat motor, up/down front edge	--
	6/66	Passenger seat motor, up/down rear edge	--
5	3/74	Left front door lock unit	25
	3/126	Driver/Passenger Door Module (DDM)/(PDM)	--
	6/58	Front left power window motor	--

	6/62	Left power exterior rearview mirror	--
	9/33	Left heated exterior rearview mirror	--
	10/148	Left exterior rearview mirror lighting	--
6	3/75	Lock unit, right front door	25
	3/127	Passenger/Driver Door Module (PDM)/(DDM)	--
	6/60	Front right power window motor	--
	6/63	Right power exterior rearview mirror	--
	9/34	Right heated exterior rearview mirror	--
	10/149	Right exterior rearview mirror lighting	--
8	16/1	Integrated Audio Module (IAM)	15
	16/109	DVD player/control module	--
9	4/124	Accessory USB unit (AUU)	10
	16/46	Multimedia display	--
	16/108	Multimedia Module (MMM)	--
	16/109	DVD player/control module	--
	16/139	Global Positioning System Module (GPS)	--
	16/145	Remote Digital Audio Receiver (RDAR)	--
	54/112	Connector, Infotainment cable harness, 30-feed	--
10	3/111	Light Switch Module (LSM)	5
	3/254	Steering Wheel Module (SWM)	--
	4/68	Steering Wheel Angle Sensor Module (SAS)	--
	17/13	Data link connector	--
11	3/157	Switch airbag passenger side	7.5
	4/9	Supplemental Restraint System module (SRS)	--
	4/28	Transmission Control Module (TCM)	--
	4/46	Engine Control Module (ECM)	--
	4/56	Central Electronic Module (CEM)	--
	4/58	Rear Electronic Module (REM)	--
	11O/1	Fuse 1 in spare fuse holder 11O, passenger compartment	--
	11O/2	Fuse 2 in spare fuse holder 11O, passenger compartment	--
	16/65	Antenna ring/ignition switch lighting	--
12	3/117	Ceiling light switch unit	10
	4/33	Sun Roof Module (SRM)	--
	4/70	Upper Electronic Module (UEM)	--
	4/76	Remote controlled garage door opener	--
	7/149	Rain Sensor Module (RSM)	--
	10/114	Left-hand vanity mirror lighting	--
	10/115	Right-hand vanity mirror lighting	--
	10/150	Rear reading light	--
	10/172	Reading light, third row of seats	--
13	4/70	Upper Electronic Module (UEM)	15

	6/15	Sunroof motor	--
14	16/60	Phone Module (PHM)	5

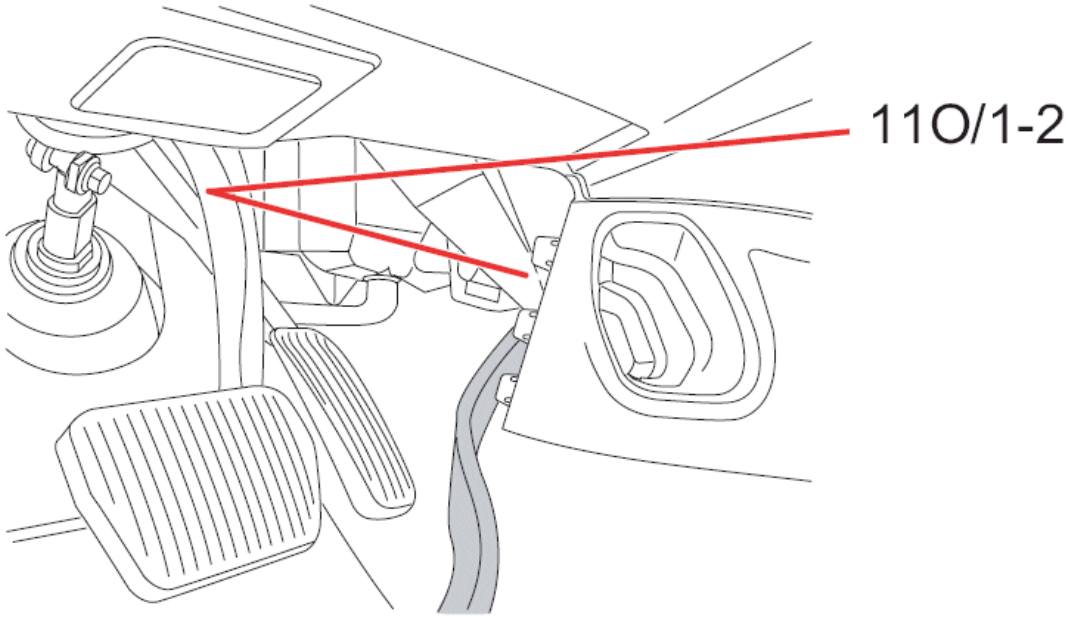

Fig. 5: Identifying Passenger Compartment Extra Fuse Holder (11O/1-2)
Courtesy of VOLVO CARS OF NORTH AMERICA.

Passenger Compartment Extra Fuse Holder (11O/1-2) Assignments

Fuse No.	Function	Amperage
1	Alcolock	5
	Alcolock	--
2	Alcolock	5

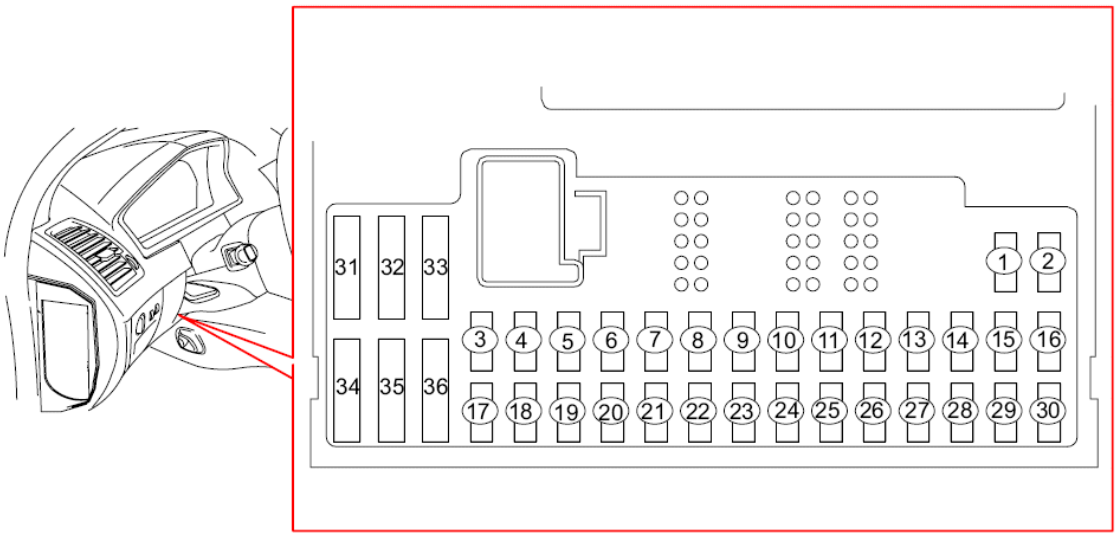

Fig. 6: Identifying Passenger Compartment Fuse Box (Central Electronic Module - CEM)
Courtesy of VOLVO CARS OF NORTH AMERICA.

Passenger Compartment Fuse (Central Electronic Module - CEM) Assignments

Fuse No.	Module No.	Fuse Function	Amperage
F1	9/13	Seat Heating Module (SHM), right-hand	15
F2	9/12	Seat Heating Module (SHM), left-hand	15
F3	16/10	Horn	15
F5	16/46	Multimedia display	10
	16/94	Infotainment Control Module (ICM)	--
	16/105	Audio Module (AUD)	--
	16/108	Multimedia Module (MMM)	--
	16/109	DVD player/control module	--
	54/112	Connector, Infotainment cable harness, extended D-feed	--
F8	16/35	Siren Control Module (SCM)	5
F9	3/9	Contact brake light	5
F10	3/112	Climate Control Module (CCM)	10
	4/7	Combustion Preheater Module (CPM)	--
	4/52	Power Seat Module (PSM)	--
	5/1	Driver Information Module (DIM)	--
	6/48	Damper Motor Module (DMM), recirculation	--
	6/69	Damper Motor Module (DMM), ventilation/floor/defroster	--
	6/95	Damper Motor Module (DMM), temperature, left-hand side	--
	6/96	Damper Motor Module (DMM), temperature, right-hand side	--
	6/102	Damper Motor Module (DMM), defroster	--
	6/103	Damper Motor Module (DMM), floor/ventilation	--
	7/93	Occupant Weight Sensor (OWS)	--
	7/159	Air Quality Sensor (AQS)	--
F11	9/1	Outlet 12V front	15
	9/25	Outlet 12V rear	--
F15	4/16	Brake Control Module (BCM)	5
F16	4/99	Electronic power steering control module	10
	4/118	Headlight Control Module (HCM)	--
	6/38	Motor, left headlight adjustment	--
	6/39	Motor, right headlight adjustment	--
	10/1	Left front lamp housing, Bi-Xenon	--
	10/2	Right front lamp housing, Bi-Xenon	--
F17	10/5	Fog light, front left	7.5

F18	10/6	Fog light, front right	7.5
F20	6/113	Coolant pump (8-cyl.)	5
F21	3/156	Gear Selector Module (GSM)	10
	4/28	Transmission Control Module (TCM)	--
	8/36	Solenoid shift lock	--
	8/134	Solenoid, reverse interlock, manual	--
F22	10/68	High beam, left	10
F23	10/64	High beam, right	10
F28	3/27	Switch unit, power passenger seat	5
	16/109	DVD player/control module	--
F29	6/31	Feed pump, ejectors	7.5
	8/88	Solenoid, fuel tank, rear (Bi-Fuel)	--
	8/89	Solenoid, fuel tank, front left (Bi-Fuel)	--
	8/90	Solenoid, fuel tank, front right (Bi-Fuel)	--
F30	27/3	Left Camera Module (LCM)	5
	27/4	Right Camera Module (RCM)	--
F33	6/114	Vacuum pump	20
F34	6/127	Washer motor	15

Accessory Relay Assignments

Position	Module No.	Relay Function
By the climate control system	2/71	Cellular Phone, handsfree
	2/240	Alcolock relay, wake-up
	2/241	Alcolock relay, interior lighting
Left-hand rear door	2/138	Deadlock relay, left-hand rear door
Right-hand rear door	2/139	Deadlock relay, right-hand rear door

TRUNK

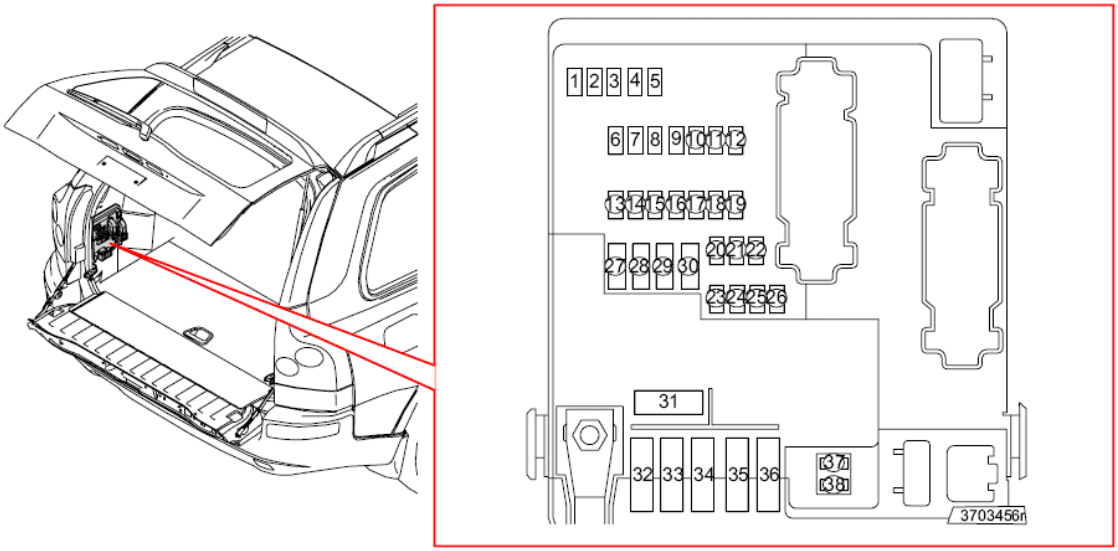

Fig. 7: Identifying Cargo Compartment Fuse Box (Rear Electronic Module - REM)
Courtesy of VOLVO CARS OF NORTH AMERICA.

Cargo Compartment Fuse (Rear Electronic Module - REM) Assignments

Fuse No.	Module No.	Fuse Function	Amperage
F1	10/48	Reversing light, right	10
	10/55	Reversing light, left	--
	54/98	Connector, cable harness, rear seat entertainment, reverse gear signal	--
F2	10/3	License plate lighting	20
	10/19	Brake light extra	--
	10/44	Tail light 1, right	--
	10/46	Fog light, rear right	--
	10/51	Tail light 1, left	--
	10/53	Fog light, rear left	--
	10/173	Cargo compartment lighting, tailgate	--
F3	4/78	Accessory Electronic Module (AEM)	15
	4/106	Control module, remote parking heater start	--
F5	4/58	Rear Electronic Module (REM)	10
F6	16/82	DVD player roof mounted	7.5
	54/98	Connector, rear seat entertainment cable harness, 30-feed	--
F7	17/39	13-pin outlet, tow hitch cable harness	15
F8	17/19	12V outlet, cargo compartment	15
F9	2/139	Deadlock relay, right-hand rear door	20
	3/86	Power window switch, right rear door	--
	6/93	Motor, rear right power window	--
F10	2/138	Deadlock relay, left-hand rear door	20
	3/85	Power window switch, left rear door	--

	6/92	Motor, rear left power window	--
F13	8/85	Thermostatic switch and fuel filter heating	15
F14	6/76	Climate control system, rear	15
	16/79	Subwoofer Module (SUB)	--
F19	6/32	Rear window wiper motor	15
F20	17/38	7-pin outlet, tow hitch cable harness	20
	17/39	13-pin outlet, tow hitch cable harness	--
F21	-	Spare	10
F23	4/82	Differential Electronic Module (DEM)	7.5
F26	4/86	Parking Assistance Module (PAM)	5
F27	-	Main fuse for F20, F21, F23, F24, F26	30
F28	3/76	Lock unit, left rear door	15
	3/77	Lock unit, right rear door	--
	3/78	Lock unit, tailgate	--
	6/37	Lock motor, fuel filler flap	--
F29	4/110	Trailer Module • Running light • Left-hand direction indicator	25
	26/4	Converter, direction indicators & brake lights, USA • Running light • Left-hand direction indicator	--
F30	4/110	Trailer Module • Brake lights • Fog lights • Right-hand direction indicator	25
F31	-	Main fuse for F37-F38	40
F37	9/2	Heated rear window	20
F38	9/2	Heated rear window	20

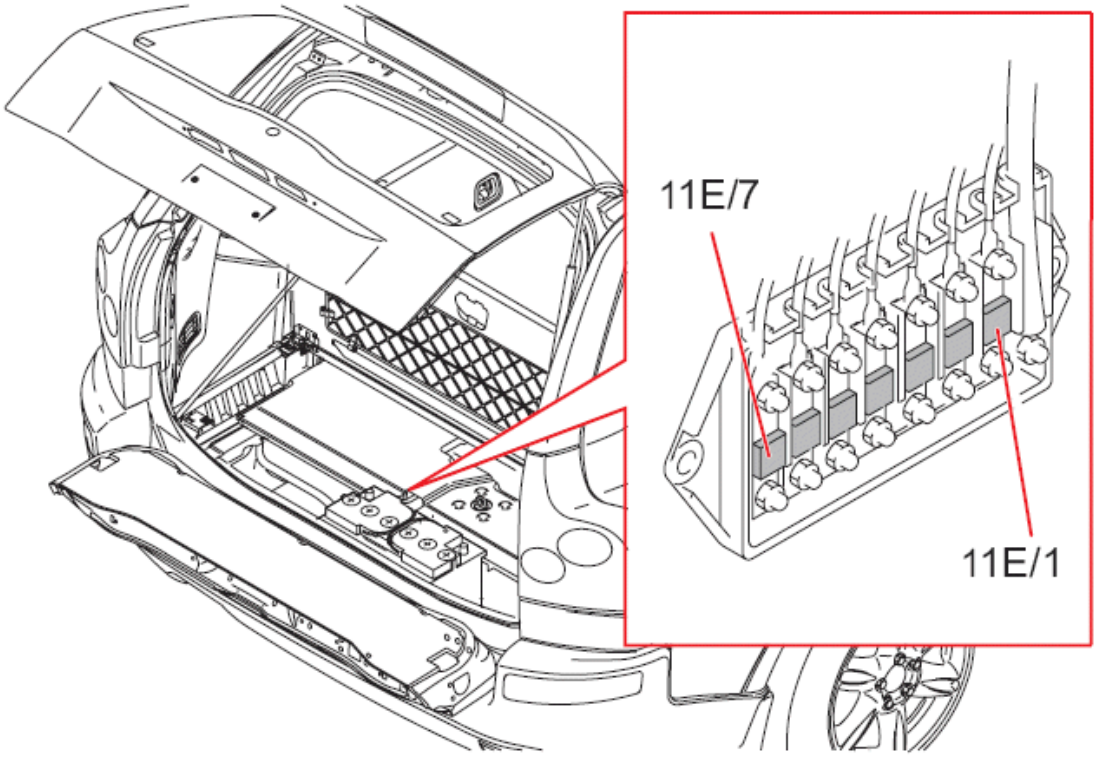

Fig. 8: Identifying Cargo Compartment Fuse Box (11E)
Courtesy of VOLVO CARS OF NORTH AMERICA.

Cargo Compartment Fuse Assignments (11E)

Fuse No.	Module No.	Fuse Function	Amperage
1	4/58	Rear Electronic Module (REM)	60
	-	Main fuse for: F1-F38 in REM	--
2	11M/1	Fuse 1 in spare fuse holder 11M in cargo compartment	40
4	4/56	Central Electronic Module (CEM)	50
	-	Main fuse for: F1-F2, F11, F13-F16, F26-F30, F33 in CEM	--
5	4/56	Central Electronic Module (CEM)	50
	-	Main fuse for: F3, F5-F10, F17-F23, F31-F32, F34 in CEM	--
6	11C/1, 3-6	Fuses 1 & 3-6 in passenger compartment fuse box 11C	50
7	11C/2, 9-14	Fuses 2 & 9-14 in passenger compartment fuse box 11C	50

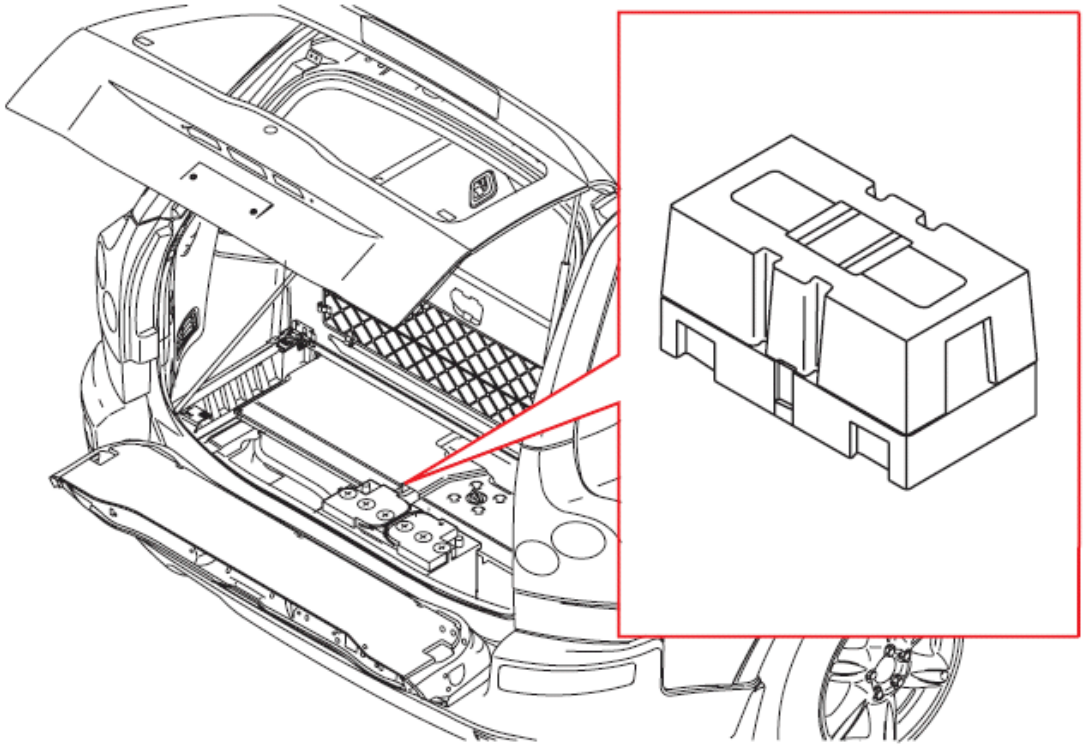

Fig. 9: Identifying Cargo Compartment Fuse Box (11L)
Courtesy of VOLVO CARS OF NORTH AMERICA.

Cargo Compartment Fuse Assignments (11L)

Fuse No.	Module No.	Fuse Function	Amperage
1	11B/9	Fuse 9 in engine compartment fuse box 11B	50
	11B/10-15	Fuses 10-15 in engine compartment fuse box 11B	--

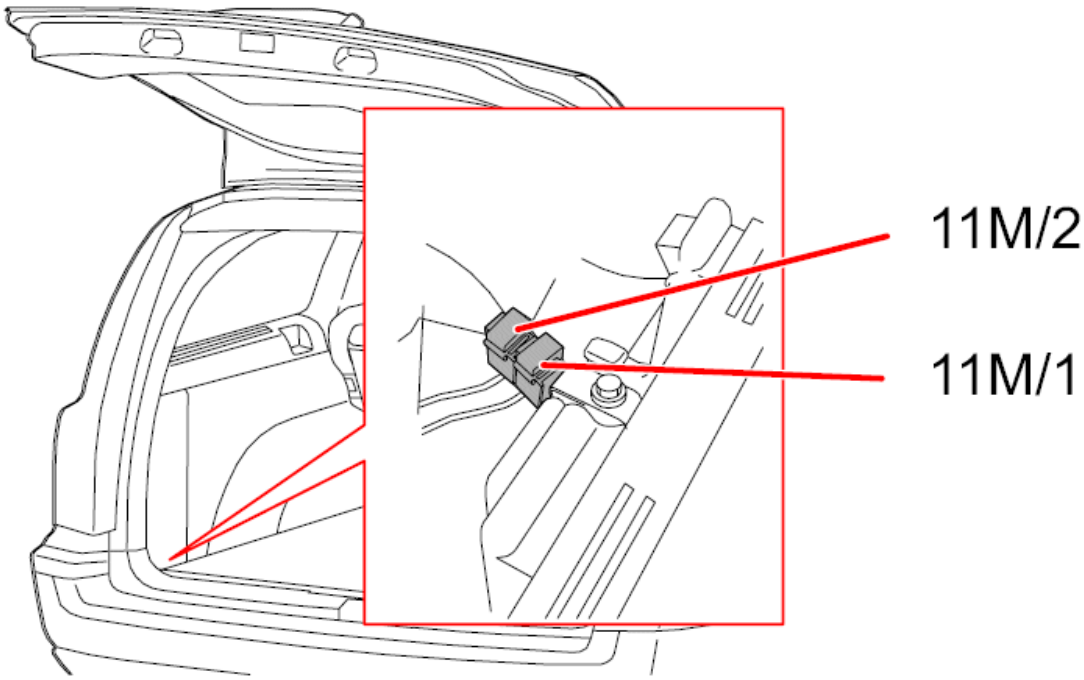

Fig. 10: Identifying Cargo Compartment Fuse Box (Spare Fuse Holder 11M)
Courtesy of VOLVO CARS OF NORTH AMERICA.

Identifying Cargo Compartment Fuse Assignments (Spare Fuse Holder 11M)

Fuse No.	Module No.	Function	Amperage
1	16/82	DVD player / control module, 30-feed	10
	16/122	Rear Audio Separation module (RAS), 30-feed	--
2	16/82	DVD player / control module, X-feed	5

Accessory Relay Assignments

Position	Module No.	Relay Function
Cargo Compartment	2/191	Remote parking heater start, radio signal

ACCESSORIES AND EQUIPMENT

General - Cleaning, Inspection And Adjustment

NOISE

NOISE, LOCALIZING

Special tools	
	T9814108 CHASSIS EAR **Tool number:** T9814108 **Tool description:** CHASSIS EAR **Tool boards:**

see **9814108**

Read the manual that is supplied with the instrument.

Position the microphone at the location where the noise is suspected to orginate. Attach the transmitters securely.

Drive the vehicle, listen to one duct at a time. Note where the noise is most clear.

Move one or more of the microphones to successively encircle the noise.

LEAK DETECTION

PASSENGER COMPARTMENT LEAK DETECTION

Special tools	
	981 4107 Leak detector **Tool number:** 981 4107 **Tool description:** Leak detector **Tool boards:** 08

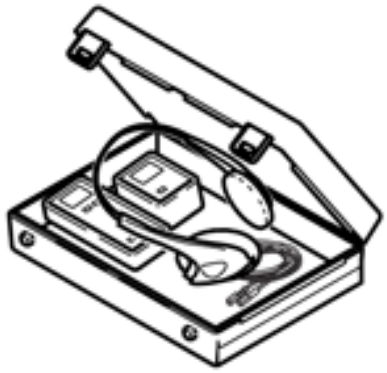

LEAK DETECTION

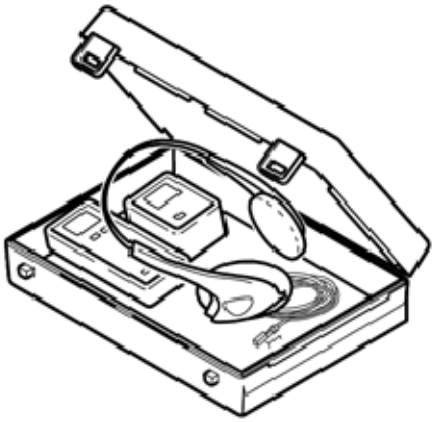

Fig. 1: Identifying Leak Detector 981 4107
Courtesy of VOLVO CARS CORPORATION

see **9814107**

NOTE: Always follow the manufacturer's instructions when handling the equipment.

SURFACE TREATMENT MATERIAL

PAINT, POLISHING

Materials	
Designation	**Part Number**
Polishing agent	US, Asia: 3M 05927
Polishing agent	EU: 3M 80349
Polishing agent	Japan: 3M 05939
Polishing top	US, Asia: 3M 05703

Polishing top	EU: 3M 50390
Polishing top	Japan: 3M 05755
Drying cloth	US, Asia: 3M 06016
Drying cloth	EU: 3M 50400
Drying cloth	Japan: 3M 05351
Cleaning agent	1161721
UV-light	US, Asia: 3M 16400
UV-light	EU: 3M 16407
UV-light	Japan: 3M 16400
Polishing top	US, Asia: 3M 05738
Polishing top	EU: 3M 09550
Polishing top	Japan: 3M 05766
Polishing agent	US, Asia: 3M 06068
Polishing agent	EU: 3M 50383
Polishing agent	Japan: 3M 05969
Polishing top	US, Asia: 3M 05733
Polishing top	EU: 3M 50388
Polishing top	Japan: 3M 05734
Drying cloth	US, Asia: 3M 06020
Drying cloth	EU: 3M 50486

ADJUSTMENT

See information on paint, grinding, and polishing. Refer to **PAINT, SANDING AND POLISHING**

Follow instructions for polishing system. Refer to **POLISHING SYSTEM**

Fig. 2: Identifying Polishing Compound And Tool
Courtesy of VOLVO CARS CORPORATION

1. **Use:** Polishing agent, US, Asia: 3M 05927

Use: Polishing agent, EU: 3M 80349

Use: Polishing agent, Japan: 3M 05939

2. **Use:** Polishing top, US, Asia: 3M 05703

   Use: Polishing top, EU: 3M 50390

   Use: Polishing top, Japan: 3M 05755

CLEANING

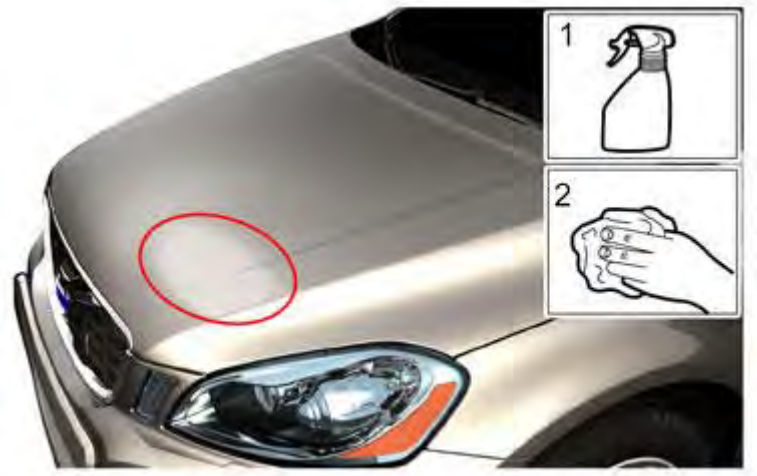

Fig. 3: Identifying Cleaning Materials
Courtesy of VOLVO CARS CORPORATION

1. **Use:** Cleaning agent, 1161721
2. **Use:** Drying cloth, US, Asia: 3M 06016

   Use: Drying cloth, EU: 3M 50400

   Use: Drying cloth, Japan: 3M 05351

CHECK

Fig. 4: Identifying Heating Device
Courtesy of VOLVO CARS CORPORATION

Use: UV-light, US, Asia: 3M 16400

Use: UV-light, EU: 3M 16407

Use: UV-light, Japan: 3M 16400

If the defects cannot be removed by polishing only, follow instructions for sanding.

Perform paint job, grinding, see **PAINT, SANDING**

ADJUSTMENT

Fig. 5: Identifying Polishing Compound And Tool
Courtesy of VOLVO CARS CORPORATION

1. **Use:** Polishing agent, US, Asia: 3M 05927

Use: Polishing agent, EU: 3M 80349

Use: Polishing agent, Japan: 3M 05939

2. **Use:** Polishing top, US, Asia: 3M 05738

   Use: Polishing top, EU: 3M 09550

   Use: Polishing top, Japan: 3M 05766

CLEANING

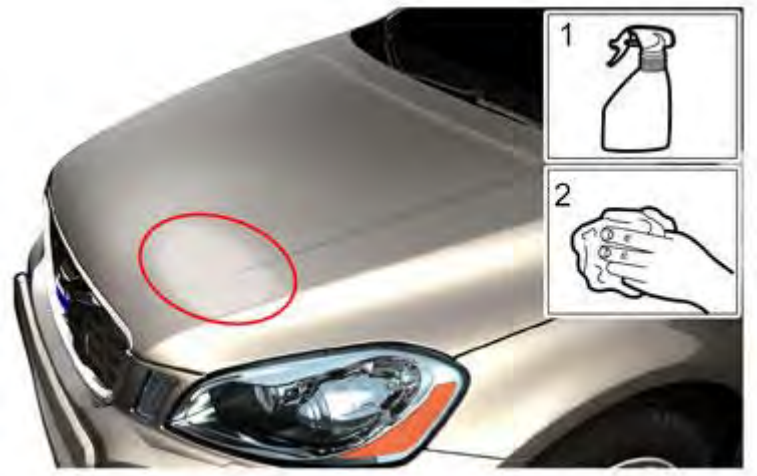

Fig. 6: Identifying Cleaning Materials
Courtesy of VOLVO CARS CORPORATION

1. **Use:** Cleaning agent, 1161721
2. **Use:** Drying cloth, US, Asia: 3M 06016

   Use: Drying cloth, EU: 3M 50400

   Use: Drying cloth, Japan: 3M 05351

CHECK

Fig. 7: Identifying Heating Device
Courtesy of VOLVO CARS CORPORATION

Use: UV-light, US, Asia: 3M 16400

Use: UV-light, EU: 3M 16407

Use: UV-light, Japan: 3M 16400

ADJUSTMENT

Fig. 8: Identifying Materials
Courtesy of VOLVO CARS CORPORATION

1. **Use:** Polishing agent, US, Asia: 3M 06068

   Use: Polishing agent, EU: 3M 50383

   Use: Polishing agent, Japan: 3M 05969

2. **Use:** Polishing top, US, Asia: 3M 05733

   Use: Polishing top, EU: 3M 50388

   Use: Polishing top, Japan: 3M 05734

CLEANING

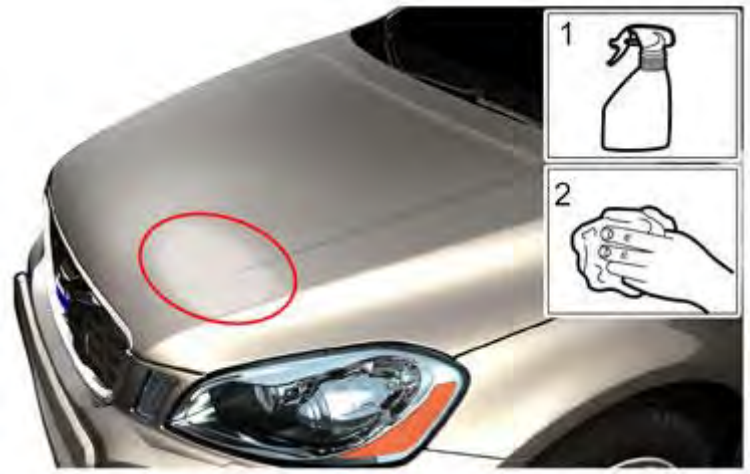

Fig. 9: Identifying Cleaning Materials
Courtesy of VOLVO CARS CORPORATION

1. **Use:** Cleaning agent, 1161721
2. **Use:** Drying cloth, US, Asia: 3M 06020

   Use: Drying cloth, EU: 3M 50486

   Use: Drying cloth, Japan: 3M 05351

CHECK

Fig. 10: Identifying Heating Device
Courtesy of VOLVO CARS CORPORATION

Use: UV-light, US, Asia: 3M 16400

Use: UV-light, EU: 3M 16407

Use: UV-light, Japan: 3M 16400

Check that all defects are gone.

Check the surface in open sunlight if possible

PAINT, SANDING

Materials	
Designation	**Part Number**
Sand paper P1500	US, Asia: 3M 00950
Sand paper P1500	EU: 3M 50238/62011
Sand paper P1500	Japan: 3M O/D DF2 1500
Cleaning agent	1161721
Drying cloth	US, Asia: 3M 06016
Drying cloth	EU: 3M 50400
Drying cloth	Japan: 3M 05351
Water	-
Sand paper P3000	US, Asia: 3M 02085
Sand paper P3000	EU: 3M 50414
Sand paper P3000	Japan: 3M 02034

ADJUSTMENT

Fig. 11: Identifying Sanding Tool
Courtesy of VOLVO CARS CORPORATION

Use: Sand paper P1500, US, Asia: 3M 00950

Use: Sand paper P1500, EU: 3M 50238/62011

Use: Sand paper P1500, Japan: 3M O/D DF2 1500

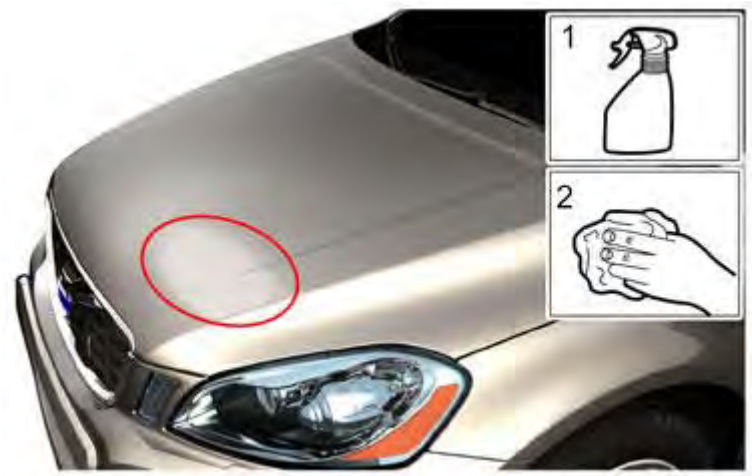

Fig. 12: Identifying Cleaning Materials
Courtesy of VOLVO CARS CORPORATION

1. **Use:** Cleaning agent, 1161721
2. **Use:** Drying cloth, US, Asia: 3M 06016

   Use: Drying cloth, EU: 3M 50400

   Use: Drying cloth, Japan: 3M 05351

Fig. 13: Identifying Sanding Tool
Courtesy of VOLVO CARS CORPORATION

Use: Water,

Use: Sand paper P3000, US, Asia: 3M 02085

Use: Sand paper P3000, EU: 3M 50414

Use: Sand paper P3000, Japan: 3M 02034

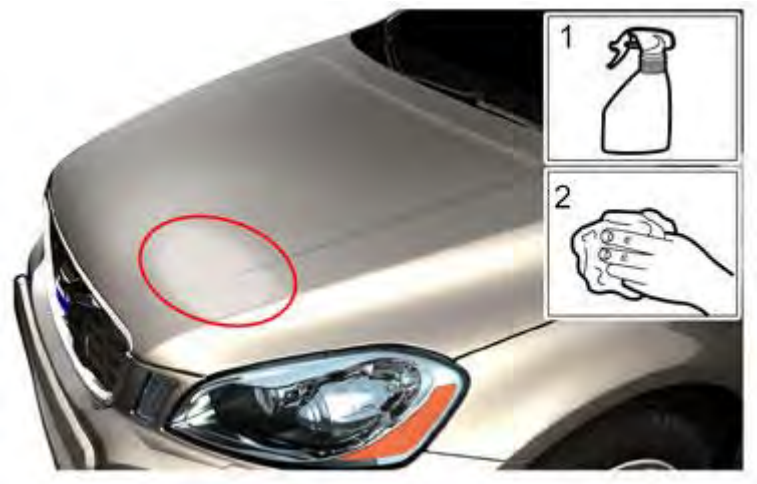

Fig. 14: Identifying Cleaning Materials
Courtesy of VOLVO CARS CORPORATION

1. **Use:** Cleaning agent, 1161721

   See information on paint, grinding, and polishing, see **PAINT, SANDING AND POLISHING**

2. **Use:** Drying cloth, US, Asia: 3M 06016

   Use: Drying cloth, EU: 3M 50400

   Use: Drying cloth, Japan: 3M 05351

Perform paint job, polishing, see **PAINT, POLISHING**

RECONDITIONING/CAR CARE

CAR CARE KIT, SMALL SIZE

WARNING: Wear safety goggles and protective gloves.

WARNING: Before using the product, make sure to read and understand the Material Safety Data Sheet supplied by the manufacturer or supplier.

NOTE: Always follow the relevant supplier's recommendations.

NOTE: Do not mix products from different suppliers.

EXTERNAL CLEANING

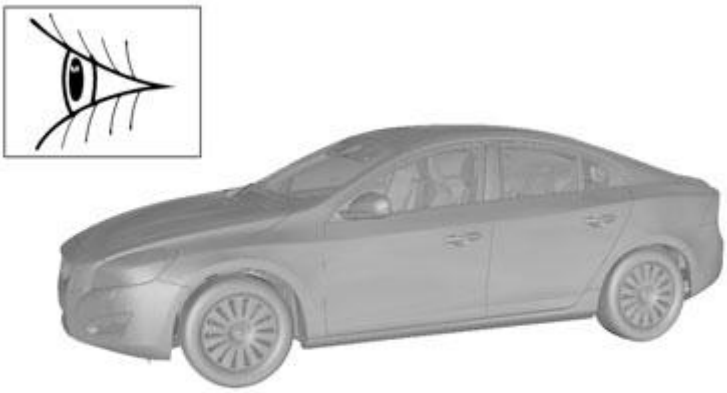

Fig. 15: External Cleaning
Courtesy of VOLVO CARS CORPORATION

1. Rinse with clean water.
2. Degreasing
3. Rim cleaning
4. Rinse with clean water.
5. Shampooing
6. Rinse with clean water.
7. Wiping with soft cloth or shammy-leather.
8. Inspection

CAR CARE KIT, MEDIUM SIZE

WARNING: Wear safety goggles and protective gloves.

WARNING: Before using the product, make sure to read and understand the Material Safety Data Sheet supplied by the manufacturer or supplier.

NOTE: Always follow the relevant supplier's recommendations.

NOTE: Do not mix products from different suppliers.

EXTERNAL CLEANING

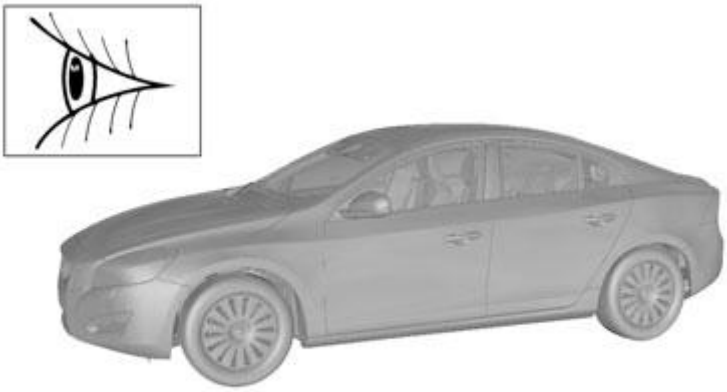

Fig. 16: External Cleaning
Courtesy of VOLVO CARS CORPORATION

1. Rinse with clean water.
2. Degreasing
3. Removing tar.
4. Removing bugs.
5. Rim cleaning
6. Rinse with clean water.
7. Shampooing
8. Rinse with clean water.
9. Wiping with soft cloth or shammy-leather.
10. Inspection

INTERNAL CLEANING

Fig. 17: Internal Cleaning
Courtesy of VOLVO CARS CORPORATION

1. Vacuuming the interior.
2. Vacuuming the trunk.
3. Cleaning floor mats.
4. Cleaning all glass windows, in and out.
5. Wiping off Dashboard, Center console, Tresholds and Door frames.
6. Inspection

CAR CARE KIT, LARGE SIZE

WARNING: Wear safety goggles and protective gloves.

WARNING: Before using the product, make sure to read and understand the Material Safety Data Sheet supplied by the manufacturer or supplier.

NOTE: Always follow the relevant supplier's recommendations.

NOTE: Do not mix products from different suppliers.

EXTERNAL CLEANING

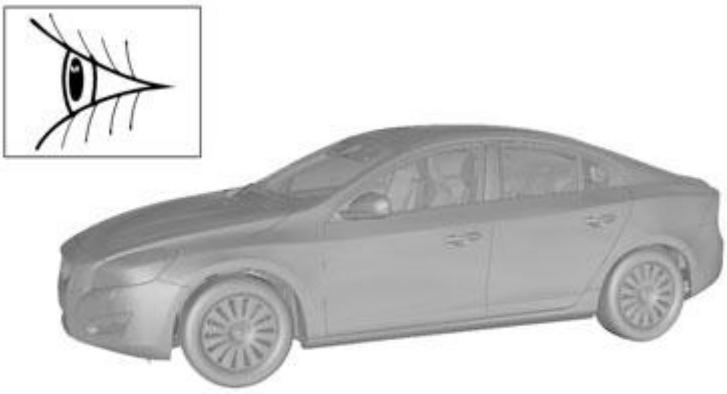

Fig. 18: External Cleaning
Courtesy of VOLVO CARS CORPORATION

1. Rinse with clean water.
2. Degreasing
3. Removing tar.
4. Removing bugs.
5. Rim cleaning
6. Rinse with clean water.
7. Shampooing
8. Rinse with clean water.
9. Wiping with soft cloth or shammy-leather.
10. Masking
11. Rubbing
12. Waxing
13. Tire care
14. Care of plastics
15. Inspection

INTERNAL CLEANING

Fig. 19: Internal Cleaning
Courtesy of VOLVO CARS CORPORATION

1. Vacuuming the interior.
2. Vacuuming the trunk.
3. Cleaning floor mats.
4. Cleaning all glass windows, in and out.
5. Wiping off Dashboard, Center console, Tresholds and Door frames.
6. Cleaning with cleaning tool (TORNADOR).
7. Inspection

ACCESSORIES AND BODY, CAB

General - Design and Function

CAR BODY (2003-2011)

CAR BODY

see **CAR BODY**

INTERIOR (2003-2011)

INTERIOR

see **INTERIOR**

ACCESSORIES AND EQUIPMENT

General - General Information

TAPE INFORMATION

COMPONENTS WITH DOUBLE-SIDED TAPE

REMOVAL OF TAPED COMPONENTS

To remove taped components, use a hot-air gun in combination with a weatherstrip tool and manual force. Do not damage the underlying components or paint.

REMOVAL OF TAPE RESIDUE

To remove the tape residue, the following is recommended:

- mechanically; finger tip or nail
- chemically; isopropanol/water 50/50 or white spirit + paper
- tool; Grinder, T9512942.

CLEANING

Always clean the tape surface before application using a mixture of isopropanol/water 50/50 or paper towel, part no. 9192678-2.

Both the surface of the tape and components must be dry and free of dirt, grease, finger marks and water/condensation.

INSTALLATION OF TAPED COMPONENTS

The following criteria must be met to reduce the risk of recurring repairs.

Ensure that:

- the surfaces maintain a temperature of at least +20°C
- the correct installation pressure is used on the taped components. The recommended pressure is approx. 35-50 N/cm^2 , which corresponds to thumb pressure. (The surface of a pushed down thumb corresponds to approx. 1 cm^2). Use scales to determine the correct application pressure. Place your hand/thumb or application roller on the scales and press until the scales show between 3.5 and 5.0 kg. Remember that the palm of your hand or application roller has a larger surface area than your thumb.
- the tape is compressed to half its original thickness for 2-3 seconds to activate the tape adhesive and obtain a maximum application area.
- that there are no gaps along the length of the tape. Do not pull the tape and try not to lift the taped components to check for any gaps. This results in poor adhesion.

IN THE EVENT OF REPEATED TAPE SLIPPAGE IN THE SAME PLACE

Use cotton buds and clear paint primer part no. 1161 727.

Carefully lift the component at the point of tape slippage and apply the primer to the painted surface using a cotton bud.

The paint primer has an "open time". Press the component into place, at least 5 mins after applying the primer and within 30 mins.

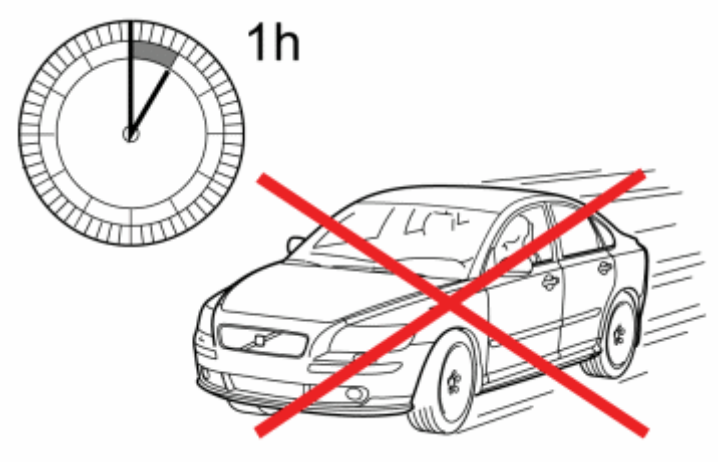

Fig. 1: Do Not Drive Vehicle Within 1 Hour Of Application
Courtesy of VOLVO CARS CORPORATION

Do not drive the vehicle with the new components within 1 hour of application.

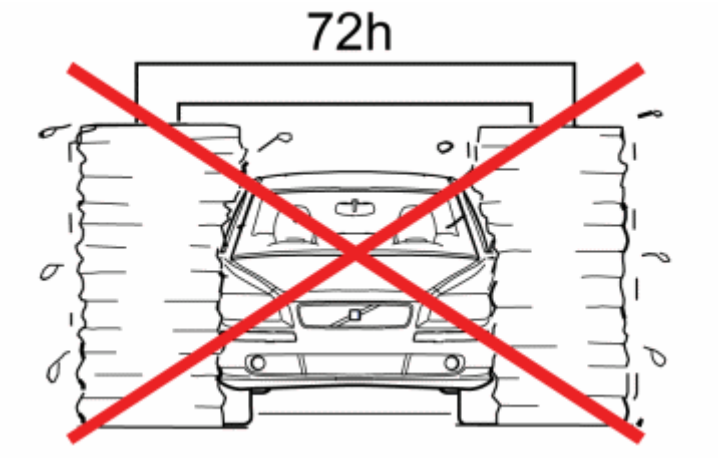

Fig. 2: Do Not Wash Car For Next 72 Hours
Courtesy of VOLVO CARS CORPORATION

CAUTION: Make sure that the customer is advised not to wash the vehicle within the next 72 hours.

SURFACE TREATMENT MATERIAL

PAINT

PAINTWORK

Volvo Cars and our recommended paint suppliers have a long collaboration within the aftermarket. The collaboration is multifaceted. One is to maintain a market-leading level of quality in connection with repairs of Volvo Cars. Another is to jointly develop and run the parties and authorized workshops, efficiency and profitability.

The paint products that are approved by Volvo to use have undergone Volvo's very stringent requirements and quality tests. To ensure the right quality level, it is imperative that all warranty repairs are performed using the paint products that are approved within the established collaboration PIA - Paint Information Aftersales. For the same quality reasons it is recommended, of course, that the approved products are used for all paint repairs.

VOLVO CARS PREFERRED SUPPLIERS

- Sikkens
- Glasurit and R-M
- DuPont Refinish, Spies Hecker and Standox
- Nexa Autocolor and PPG
- Sherwin-Williams

POLISHING SYSTEM

GENERAL INFORMATION

A three-step polishing system has been developed by Volvo to rectify any paint defects on new vehicles.

A two-step sanding procedure has been developed to be followed by the polishing procedure.

Training, supplies as well as advice will be provided by the manufacturer 3M.

WARNING: Always follow the manufacturer's instructions for the correct servicing unit operating procedure.

Use polishing machine adjustable between 1000 RPM and 3000 RPM.

ACCESSORIES AND EQUIPMENT

General - Removal, Replacement And Installation

REMOVAL WORK FOR PANEL REPAIRS

FRONT SECTION, EXPOSING

Remove the components listed below.

- the emergency hood opener. See **HOOD, EMERGENCY OPENING**
- the hood catch. See **HOOD CATCH, REPLACING**
- the hood catch cable. See **CABLE HOOD CATCH, REPLACING**
- the front fender. See **FRONT WING, REPLACING**
- the windshield. See **WINDSCREEN, REPLACING**
- the front bumper cover strip. See **CASING BUMPER FRONT, REPLACING**
- the wiper. See **RECEIVER DRIER, REPLACING** (-2005) or **RECEIVER DRIER, REPLACING** (2006-)
- the condenser. See **CONDENSER, REPLACING** (-2005) or **CONDENSER, REPLACING** (2006-)
- the control module for the engine coolant heater. See **CONTROL MODULE ENGINE COOLANT HEATER, REPLACING**
- the dashboard. See **DASHBOARD, REPLACING**
- the steering column covers. See **REPLACING THE STEERING COLUMN COVERS**
- the front seat belt. See **SEAT BELT FRONT, REPLACING**
- the rear seat belt. See **SEAT BELT REAR, REPLACING**
- the steering wheel module (SRS). See **AIRBAG DRIVER'S SIDE (SRS), REPLACING**
- the passenger airbag module (SRS). See **AIRBAG PASSENGER (SRS), REPLACING**
- the headlamps. See **HEADLIGHT/BULB, REPLACING** (2003-2006) and **HEADLIGHT/BULB, REPLACING** (2007-2012)
- the integrated relay/fusebox in the engine compartment. See **INTEGRATED RELAY/FUSEBOX IN ENGINE COMPARTMENT**
- the central electrical unit in the engine compartment. See **CENTRAL ELECTRICAL UNIT ENGINE COMPARTMENT, REPLACING** (gasoline engines)
- the front sub-frame. See **SUB-FRAME FRONT, REPLACING**
- the wheel spindle. See **STUB AXLE, REPLACING**
- the engine. See **ENGINE/GEARBOX, REMOVING** (B5XXT), **ENGINE/TRANSAXLE, REMOVING** (B6XXT) or **ENGINE/TRANSMISSION, REMOVING** (D5XX4T). For installation, see **ENGINE/TRANSMISSION, INSTALLING** (B5XXT), see **ENGINE/TRANSAXLE, INSTALLING** (B6XXT) or **ENGINE/TRANSMISSION, INSTALLING** (D5XX4T).

CENTRAL ELECTRICAL UNIT ENGINE COMPARTMENT, REPLACING

REMOVAL

PREPARATORY WORK

NOTE: **As the graphics in this service information are used for different model years and/or models, some variation may occur. However, the essential information in the graphics is always correct.**

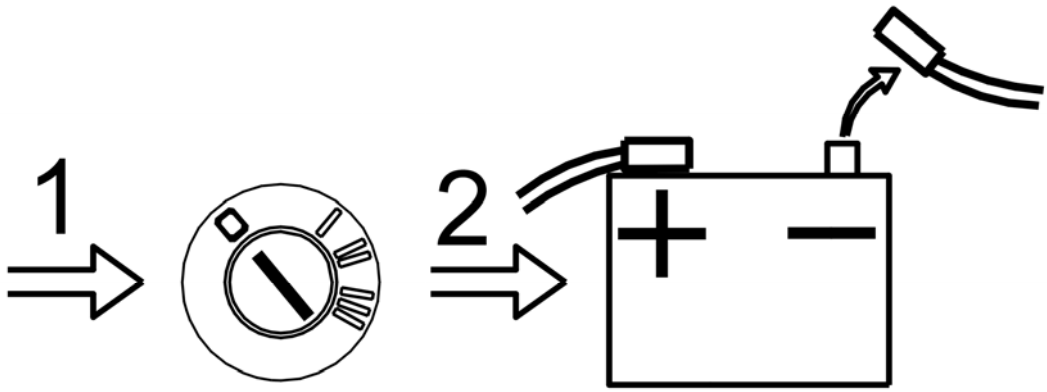

Fig. 1: Disconnecting Battery Negative Cable
Courtesy of VOLVO CARS CORPORATION

- Disconnect the battery negative lead. See **BATTERY, REPLACING** . Also, see **BATTERY, DISCONNECTING**
- Remove the power steering fluid and coolant reservoirs. Lift up and move to one side
- Remove the cover from the central electrical unit
- Remove the engine control module (ECM) see **ENGINE CONTROL MODULE (ECM), REPLACING** . Remove the transmission control module (TCM) **TRANSMISSION CONTROL MODULE (TCM), REPLACING** .

REMOVING THE CENTRAL ELECTRICAL UNIT

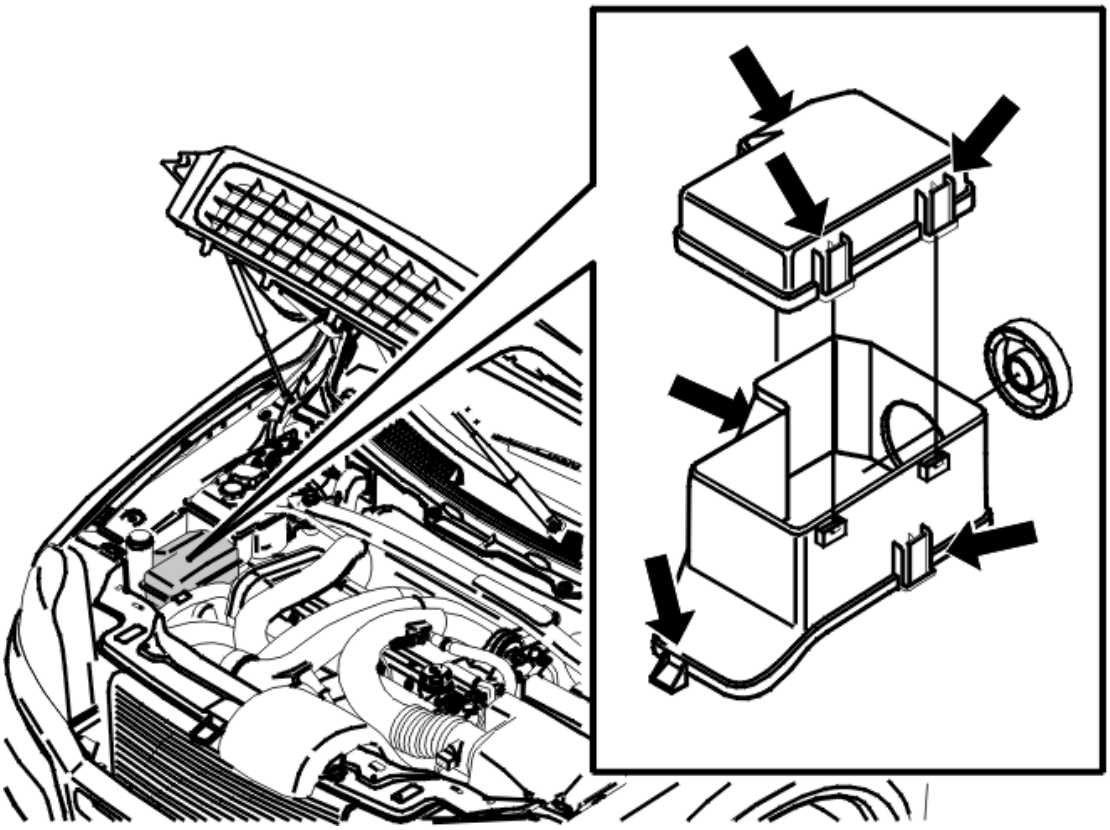

Fig. 2: Identifying Central Electrical Unit And Clips
Courtesy of VOLVO CARS CORPORATION

Release the 3 clips.

Remove:

- intermediate section
- the engine cooling fan (FC) if applicable
- the 2 screws for the connector holder at the front edge. Disconnect the retaining clips for the connector holder using a screwdriver. Pull up the contact holder and the rubber grommet
- the screw at the rear edge of the bottom piece
- the tie straps for the cables
- the bottom section by pulling it backwards until the hook releases.

REMOVING THE CONNECTOR

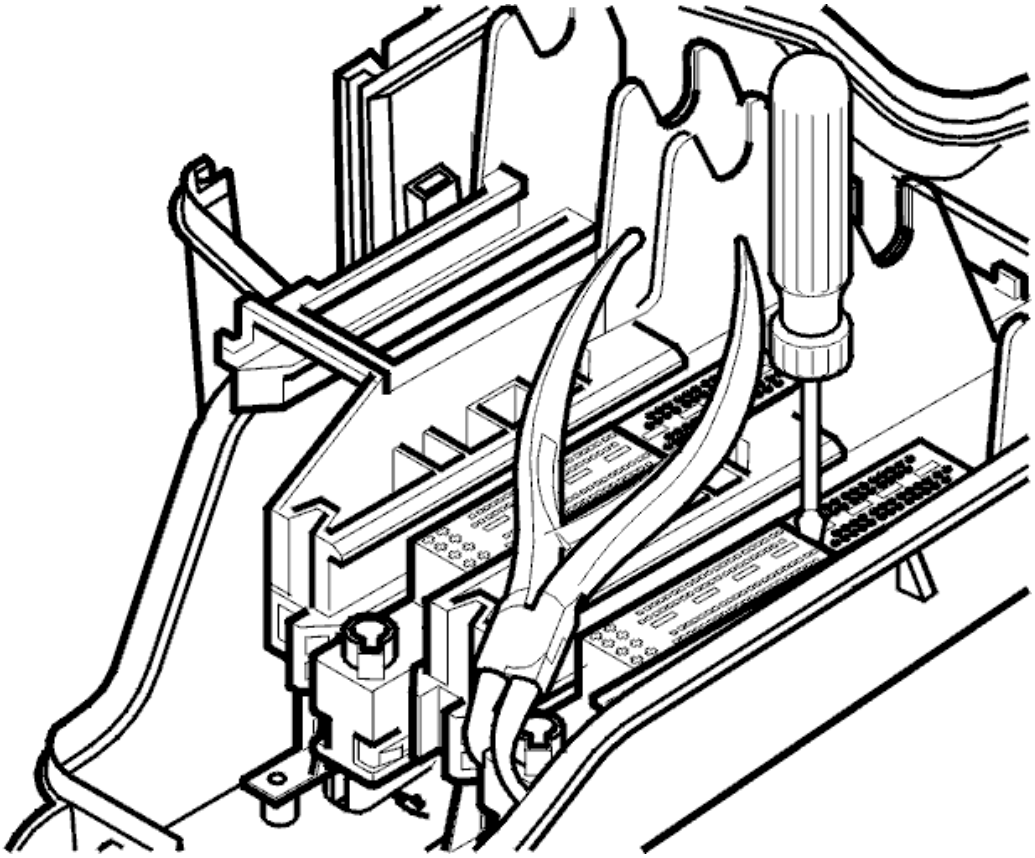

Fig. 3: Disconnecting Connector By Releasing Catches At Front Edge
Courtesy of VOLVO CARS CORPORATION

- Remove the tie straps from the cables
- Disconnect the connector by releasing the locks on the front edge
- Pull out and remove the connector.

INSTALLATION

NOTE: For tightening torques, see TIGHTENING TORQUE .

INSTALLING THE CONNECTOR

Press the connector into the holder.

CENTRAL ELECTRICAL UNIT, INSTALLING

Install:

- the tie straps for the cables
- the bottom section. Hook into place at the front edge
- the screw in the rear edge. Tighten

- the connector holder. Press into the catch.

NOTE: The rubber grommet

- the screws
- the engine cooling fan (FC) if applicable
- the intermediate section. Check that all 3 clips have engaged.

FINISHING WORK

Install:

- see **ENGINE CONTROL MODULE (ECM), REPLACING** and **TRANSMISSION CONTROL MODULE (TCM), REPLACING**
- the cover for the central electrical unit
- the battery negative pole. Also, see **BATTERY, DISCONNECTING** .

ENGINE/TRANSMISSION, REMOVING

Special tools:

see **9995722**

REMOVAL

NOTE: As the graphics in this service information are used for different model years and / or models, some variation may occur. However, the essential information in the graphics is always correct.

SAFETY

CAUTION: Take great care to avoid causing sparks when working on the fuel system. See SAFETY REGULATIONS FOR HANDLING FUEL .

REMOVING COMPONENTS

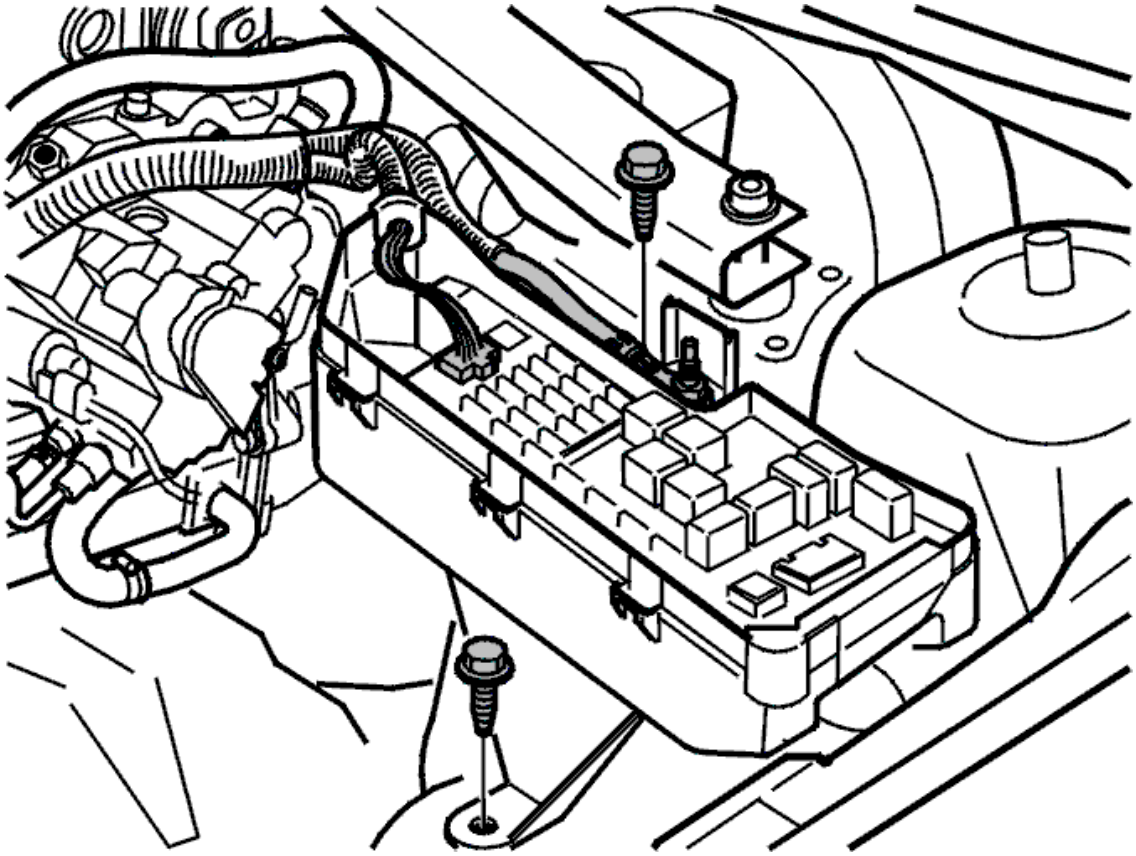

Fig. 4: Identifying Positive Lead For Starter Motor, Connector For Engine Cable Harness And Cover Over Central Electrical Unit
Courtesy of VOLVO CARS CORPORATION

Remove:

- the battery negative lead. First read, see **BATTERY, DISCONNECTING**
- the engine stabilizer brace between the suspension turrets
- the engine cover by pulling it straight up
- the cover over the central electrical unit
- the connector for the engine cable harness from the central electrical unit
- the positive lead for the starter motor from the terminal block
- the connector on the mass air flow (MAF) sensor
- the turbocharger control valve from the air cleaner (ACL). Disconnect the connector
- the intake pipe between the air cleaner (ACL) and the front cover plate
- the hose and hose clamp for the turbocharger (TC) inlet hose
- air cleaner (ACL) assembly
- the gear selector cables
- the ground lead between the engine and the left-hand frame member
- separate the transmission wiring

- the brake vacuum sensor on the vacuum pump.

DRAINING COOLANT

CAUTION: Avoid skin contact with the coolant. Close the cock.

Position a container under the radiator drain cock.

Drain the coolant.

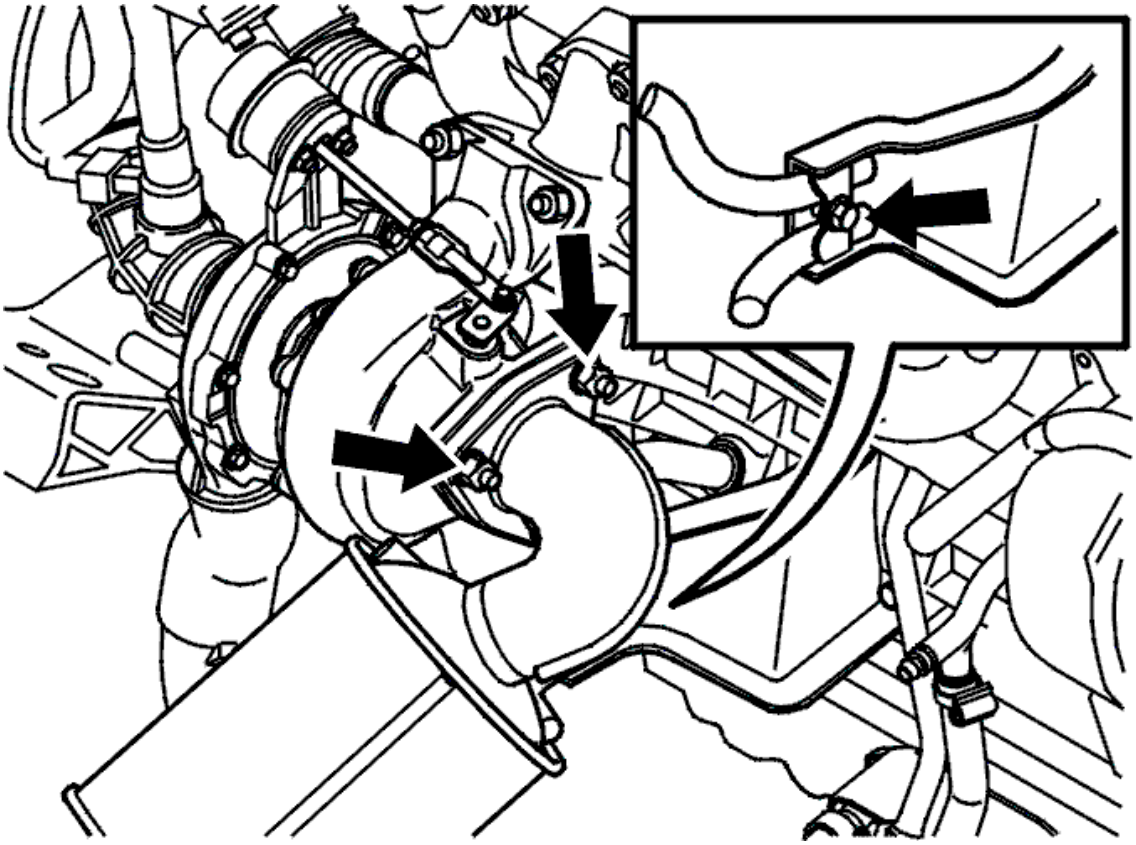

Fig. 5: Identifying Screw For Front Exhaust Pipe And Support Bracket
Courtesy of VOLVO CARS CORPORATION

Remove:

- the screw for the front exhaust pipe and support bracket
- the 3 nuts that hold the front exhaust pipe to the turbocharger (TC).

  HINT: Tie up the front exhaust pipe at the right suspension turret

- the front SIPS member

- the propeller shaft. See **PROPELLER SHAFT, REPLACING** .

CAUTION: Mark the flange in relation to the propeller shaft joint.

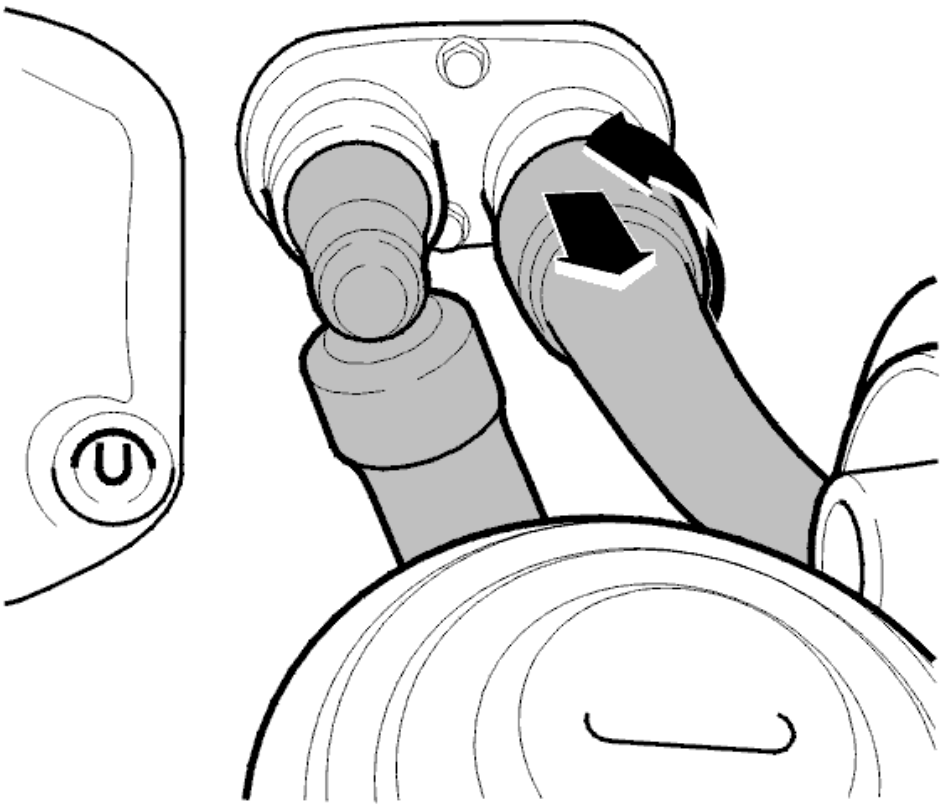

Fig. 6: Identifying Front Section Of Terminal And Hose
Courtesy of VOLVO CARS CORPORATION

Remove:

- the passenger compartment heater hoses
- the engine coolant hose between the expansion tank and the engine
- the ABS line and clips from the power steering hose. Lift the power steering reservoir. Place it on top of the engine.

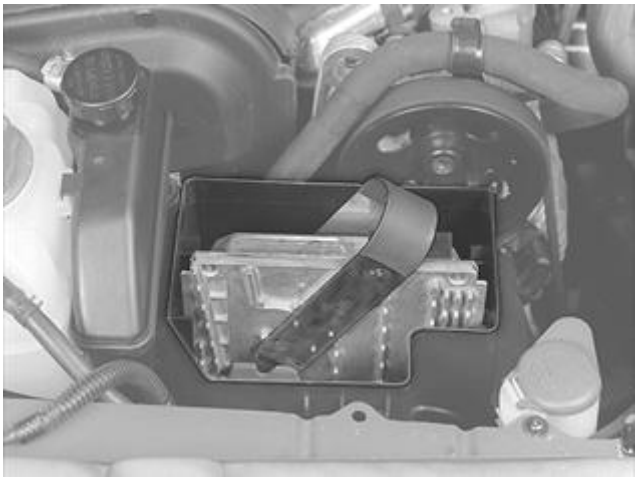

Fig. 7: Engine Control Module
Courtesy of VOLVO CARS CORPORATION

Remove:

- the cover for the control module box
- the control modules. Use mounting bracket see **9995722**
- the surround for the control module box.

REMOVING THE CONNECTOR, CABLE AND CABLE SLEEVE

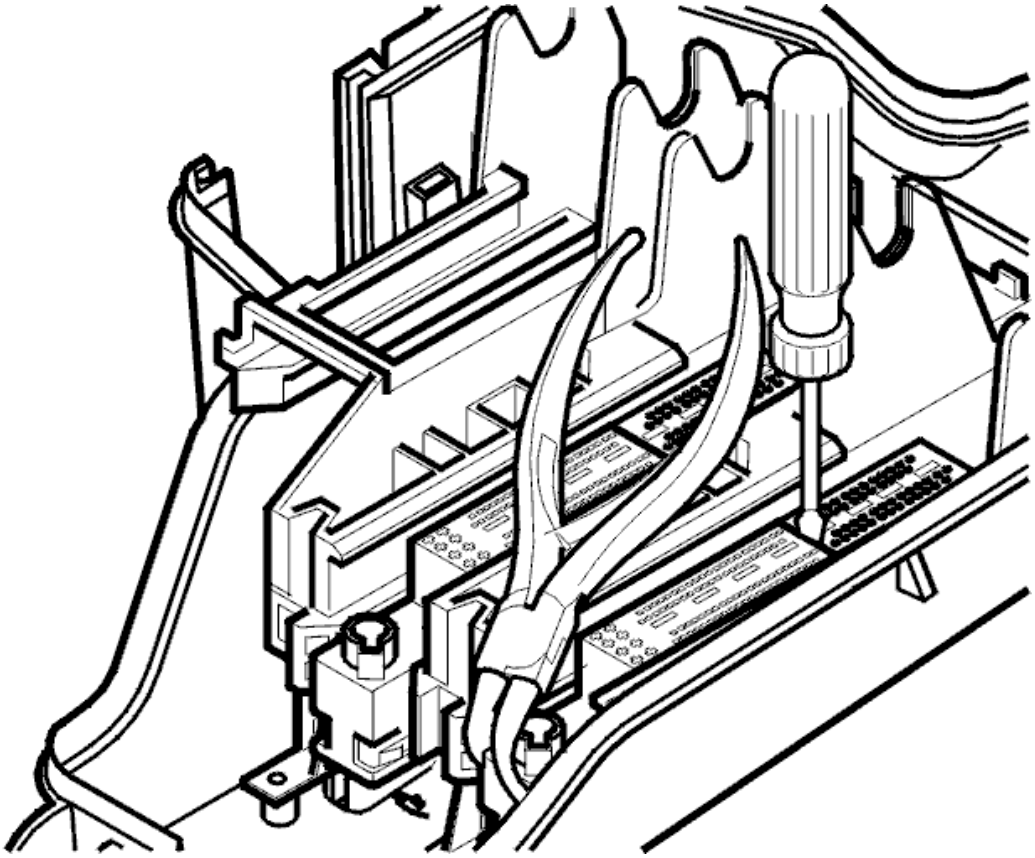

Fig. 8: Disconnecting Connector By Releasing Catches At Front Edge
Courtesy of VOLVO CARS CORPORATION

- Remove the red retaining clip from the connector using a screwdriver
- Disconnect the connector by releasing the catches at the front edge using pliers. Gently pry out the connector using a screwdriver
- Lift the connector up and out with the protection underneath and put it to one side
- Remove the ground lead from the right-hand fender liner
- Pull out the wiring between the front cover plate and the air conditioning (A/C) pipe.

DISCONNECTING THE CONNECTOR

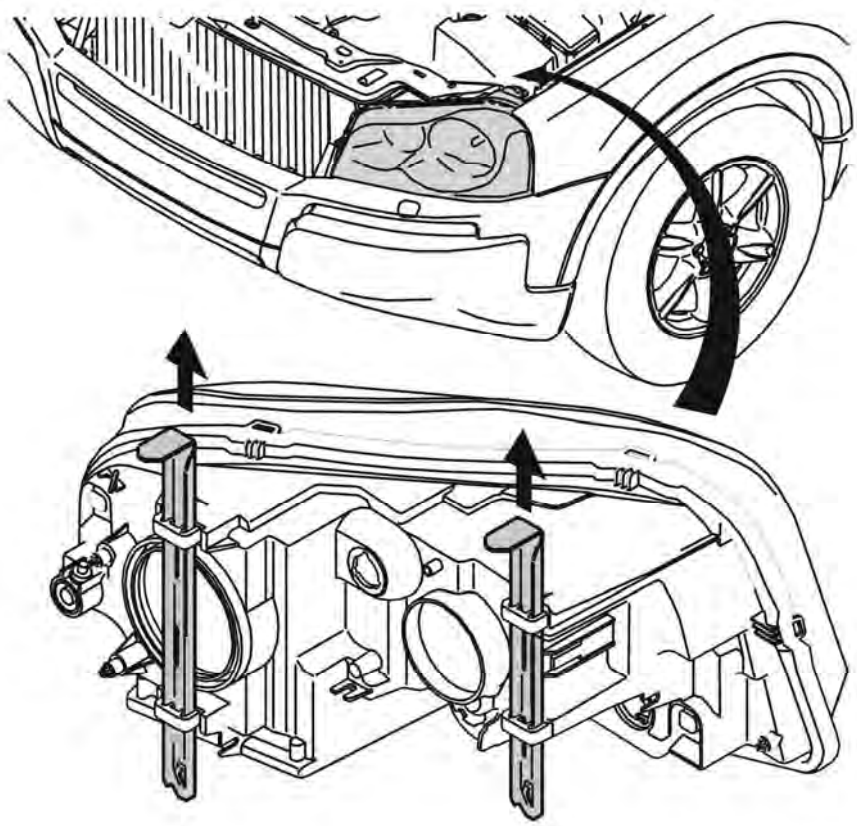

Fig. 9: Pulling Locking Plate Straight Up
Courtesy of VOLVO CARS CORPORATION

Remove:

- the right-hand headlamp by pulling up the two lock facings straight up and disconnecting the wiring. Place the headlamp to one side
- the connector for the air conditioning (A/C) receiver drier
- the gray connector for the fan shroud
- the connectors for the pressure and temperature sensors on the charge air cooler (CAC)
- the charge air pipes between the engine and charge air cooler
- the upper coolant hose on the engine. Push to one side
- the lower coolant hose from the radiator
- the oil coolant hoses from the oil cooler.

CAUTION: Seal the openings.

EXPOSING THE AIR CONDITIONING (A/C) COMPRESSOR

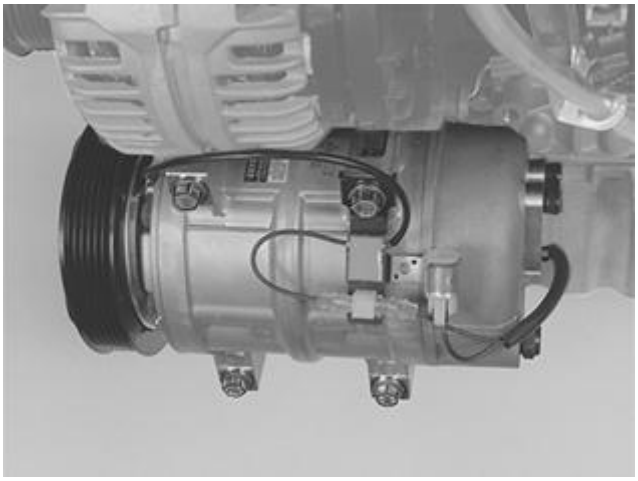

Fig. 10: AC Compressor
Courtesy of VOLVO CARS CORPORATION

CAUTION: Handle the compressor and its air conditioning (A/C) pipe with care.

- Unhook the auxiliaries belt
- Disconnect the one-pin connector for the compressor magnetic clutch
- Remove the 4 screws holding the compressor to the engine
- Tie up the compressor in the front cover plate.

REMOVING THE LOWER STEERING SHAFT JOINT

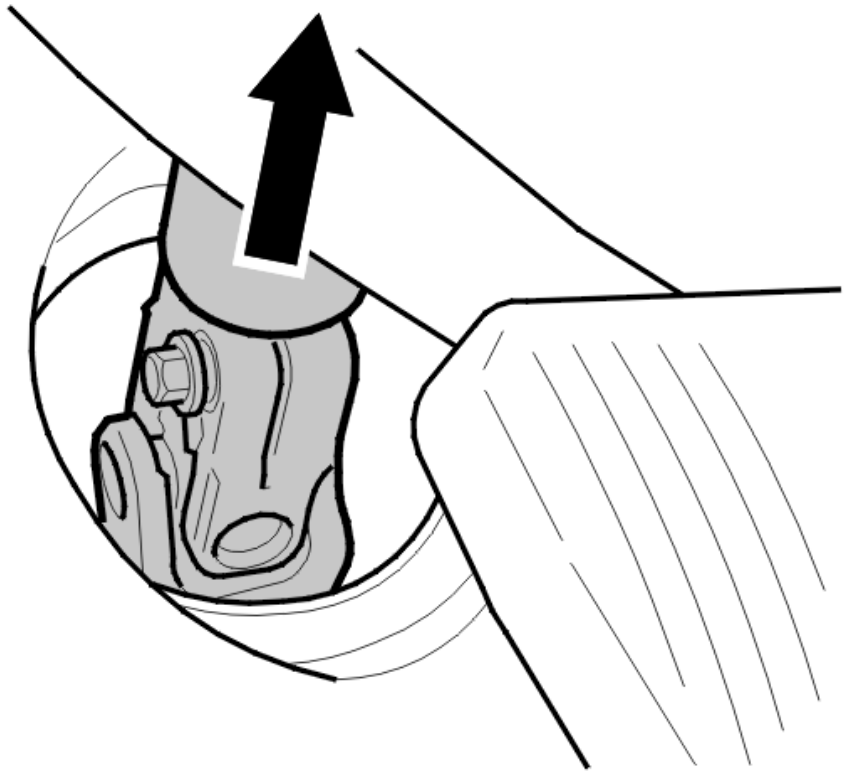

Fig. 11: Identifying Lower Steering Shaft Joint
Courtesy of VOLVO CARS CORPORATION

- Remove the soundproofing panel under the steering wheel
- Fold back the floor carpet
- Bend up the outer section of the steering shaft boot
- Remove the retaining clip around the boot
- Pull the boot up
- Turn the steering wheel to gain the best possible access to the steering shaft nut
- Remove the ignition key. Activate the steering wheel lock.

CAUTION: Do not move the steering wheel. The contact reel in the SRS (supplemental restraint system) could be damaged.

- Remove the screw from the joint in the mounting for the steering shaft
- Remove the joint from the steering shaft by pressing the shaft upwards.

REMOVING COMPONENTS

Raise the car.

Remove:

- the left and right front wheels
- the splash guard under the engine.

REMOVING THE FRONT SPLASH GUARDS

- Remove the 6 screws
- Lift up and slide the plate forward
- Remove the protective plate.

NOTE: There is a guide sleeve on the upper mounting for the plate. This must be lifted slightly so that the panel can be slid forward.

REMOVING COMPONENTS CONTINUED

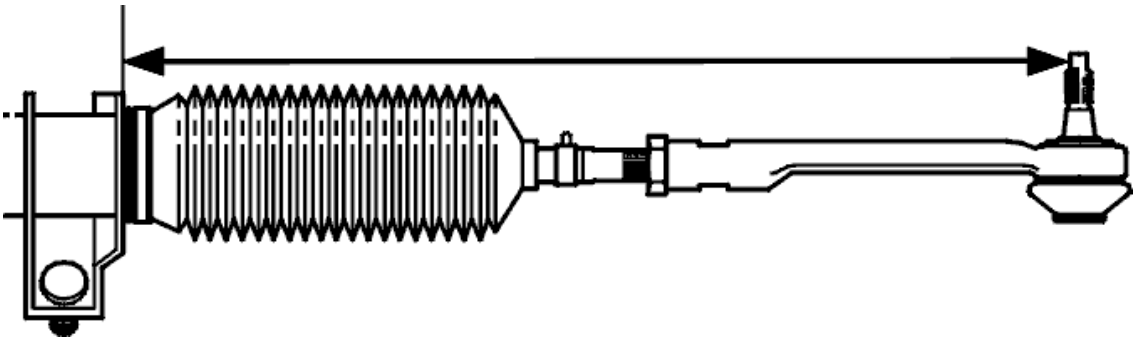

Fig. 12: Identifying Length Of Track Rod In Relation To Steering Gear Housing
Courtesy of VOLVO CARS CORPORATION

Remove the tie rod from the wheel spindle. On one side, measure the length of the tie rod in relation to the steering gear housing. Note the measurement.

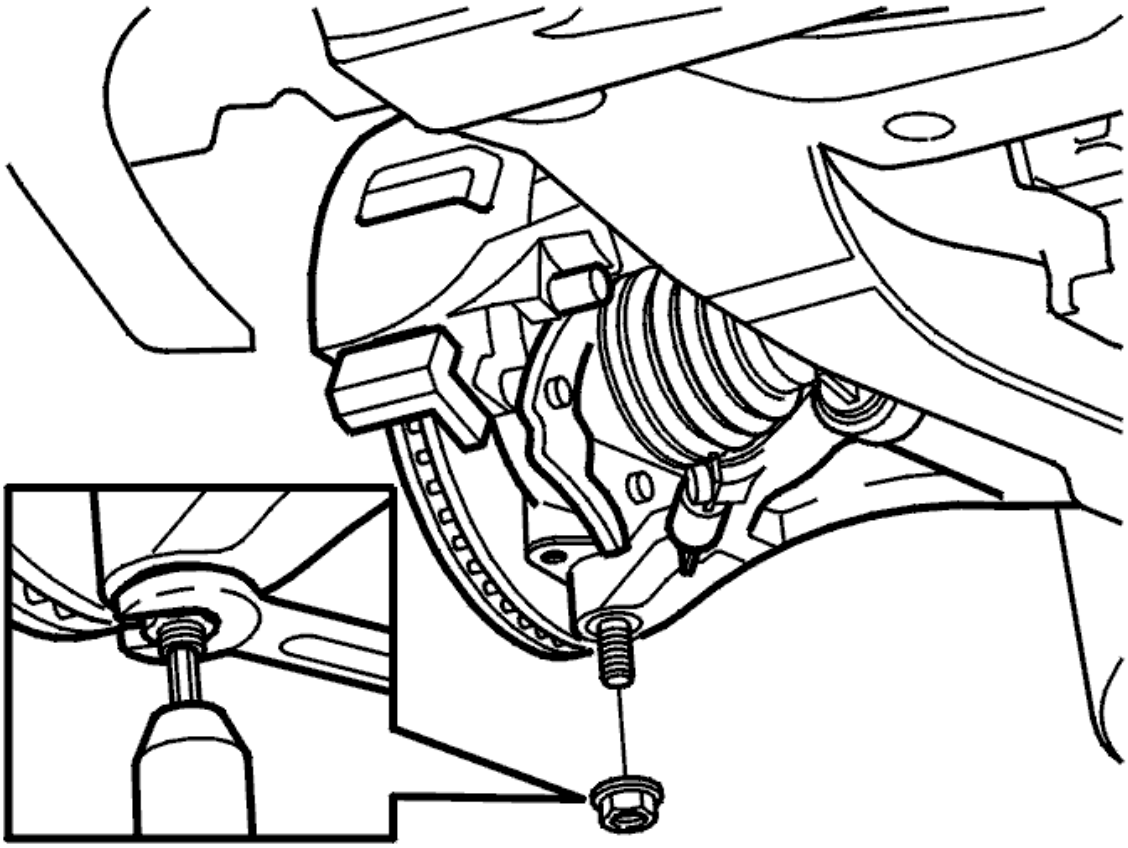

Fig. 13: Ball Joint Nut
Courtesy of VOLVO CARS CORPORATION

Remove:

- the link rod from the anti-roll bar
- the sound insulation cover for the drive shaft
- the nut holding the control arm to the ball joint
- the center screw and the end of the drive shaft.

SEPARATING THE FUEL LINE

NOTE: Use paper to collect any spilled fuel.

Separate the quick-release connectors for the fuel lines to the engine and engine block heater. Also, see **FUEL SYSTEM, QUICK-RELEASE CONNECTORS**.

LOWERING THE ENGINE AND THE TRANSMISSION

Fig. 14: Engine Lifted Using Lifting Table
Courtesy of VOLVO CARS CORPORATION

NOTE: **Ensure that the lifting table is centered under the sub-frame for optimal weight distribution. Check that the lifting table is correctly applied against the sub-frame.**

Use a post hoist with a lifting table and stud guides.

Secure the lifting table against the sub-frame.

REMOVING THE ENGINE COOLANT HEATER

Remove:

- the bumper cover on the left hand side. Use a weatherstrip tool
- **M8** nut at the top of the left-hand fender liner for the engine coolant heater
- the connector for the engine coolant heater.

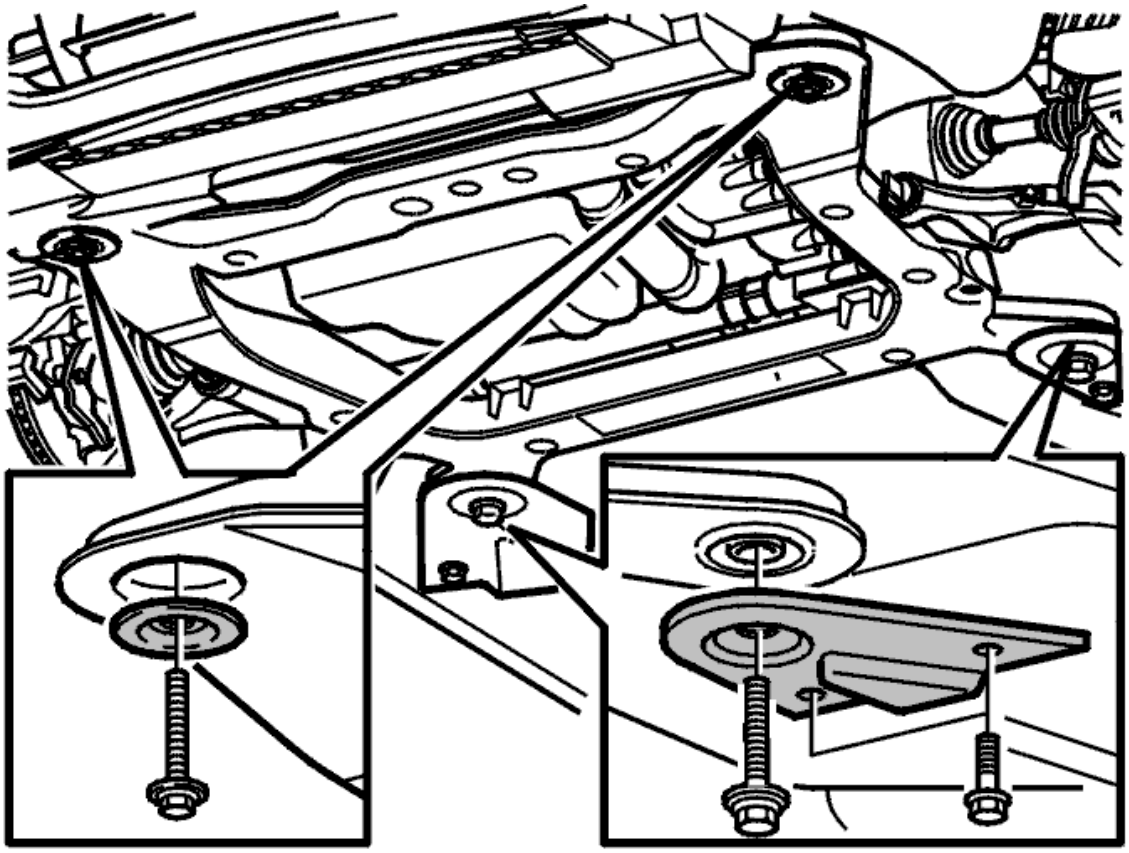

Fig. 15: Identifying Bolts, Washers And Brackets In Sub-Frame
Courtesy of VOLVO CARS CORPORATION

Remove:

- the screws for the sub-frame brackets
- the screws for the sub-frame.

CAUTION: Ensure that no hoses, wiring or other components catch when the engine and transmission unit are lowered.

Lower the engine and transmission approximately **15 cm** so that the drive shafts describe a horizontal line between the hub and transmission.

- Unhook the control arms from the ball joint pinion
- Hold the constant velocity joint. Pull the drive shaft off the hub
- Let the drive shafts rest against the control arms
- Turn the engine block heater out of its position
- Check that the air conditioning (A/C) compressor is hanging free
- Continue lowering the engine and transmission unit.

ENGINE/TRANSMISSION, INSTALLING

Special tools:

see **9512050**

see **9995722**

INSTALLATION

NOTE: **As the graphics in this service information are used for different model years and / or models, some variation may occur. However, the essential information in the graphics is always correct.**

INSTALLING THE ENGINE AND TRANSMISSION

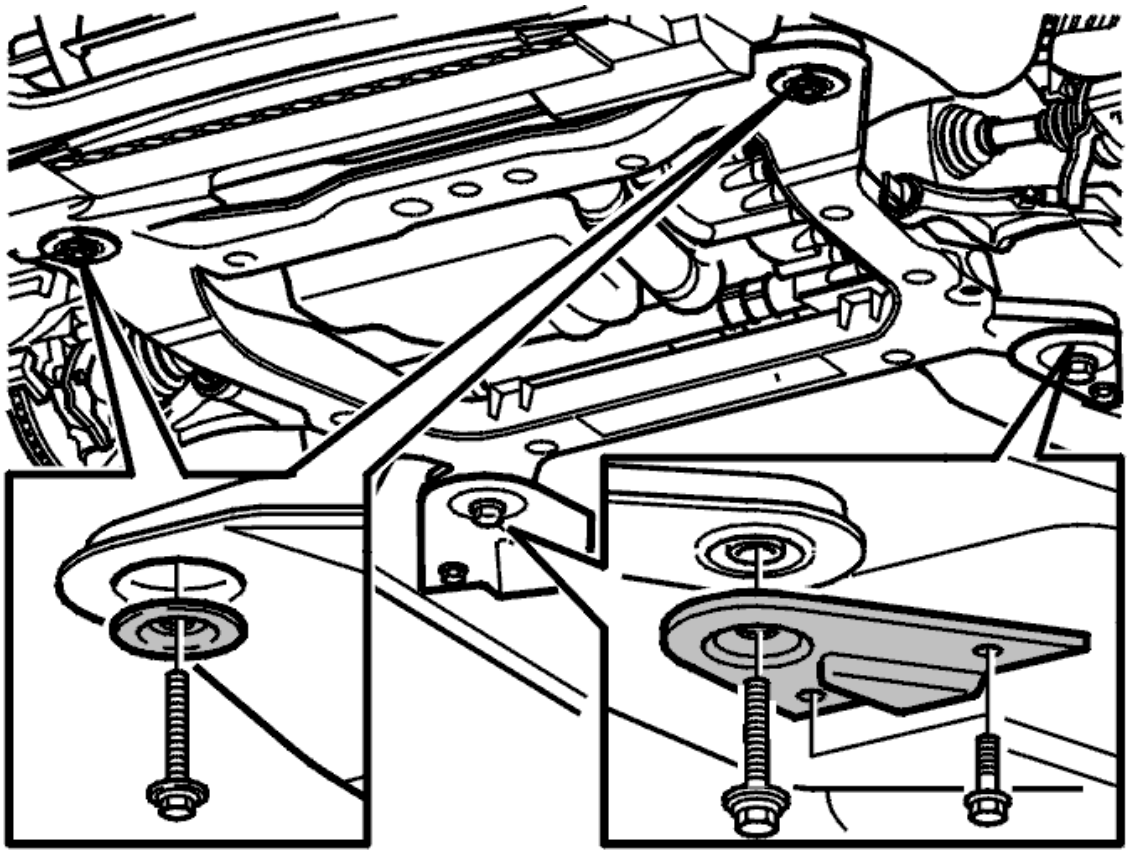

Fig. 16: Identifying Bolts, Washers And Brackets In Sub-Frame
Courtesy of VOLVO CARS CORPORATION

- Raise the engine and the transmission unit
- Use a lifting table with locating pins
- Stop when the sub-frame is approximately **15 cm** below the frame members.

Fig. 17: Drive Shaft And Hub
Courtesy of VOLVO CARS CORPORATION

CAUTION: Ensure that the mating surfaces on the ball joints and control arms are clean.

Install:

- the drive shaft to the hub. Install the center screws. Do not tighten yet
- the ball joint to the control arm. Install the nuts. Do not tighten yet.

- Hang the engine coolant heater in position. Check that the air conditioning (A/C) compressor is correctly positioned
- Align the steering shaft joint with the hole in the firewall
- Lift the engine and transmission unit up to the frame members.

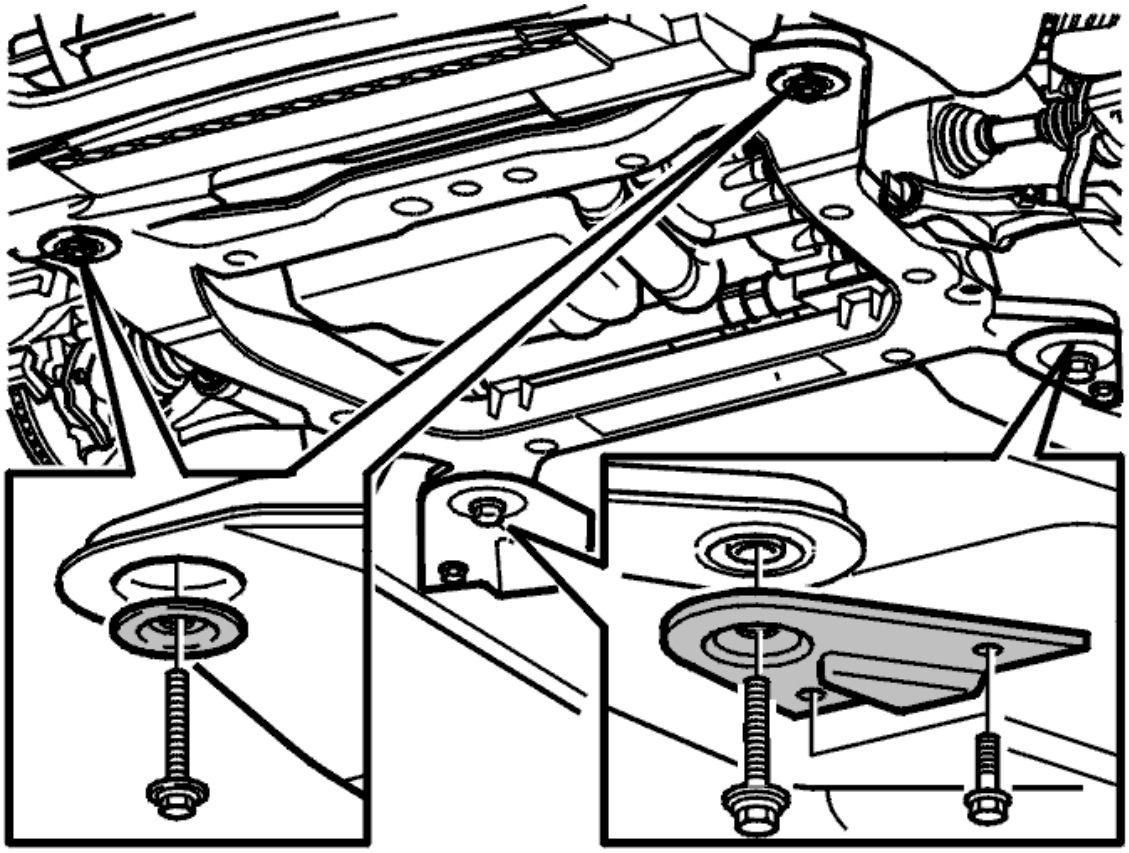

Fig. 18: Identifying Bolts, Washers And Brackets In Sub-Frame
Courtesy of VOLVO CARS CORPORATION

- Install new screws in the sub-frame. Lubricate the screws
- install washers at the front edge and engine coolant heater and the support plates at the rear edge of the sub-frame
- Tighten the screws for the sub-frame. Tighten to **105 Nm** . Angle-tighten **120°** . Use bevel protractor see **9512050**
- Start on the left hand side of the sub-frame. Continue with the right hand side. Tighten the screws for the brackets at the rear of the sub-frame. Tighten to **50 Nm** . Remove the lifting table.

CONNECTING FUEL LINES

Connect the quick-release connector and the fuel line to:

- the motor
- the engine block heater. Use lubricant **1161580** . Also, see **FUEL SYSTEM, QUICK-RELEASE CONNECTORS**.

INSTALLING THE ENGINE COOLANT HEATER

Install and tighten the **M8** nut in the upper mounting for the engine coolant heater. Connect the connector.

Install the front bumper cover strip.

ASSEMBLING THE SPRING STRUT

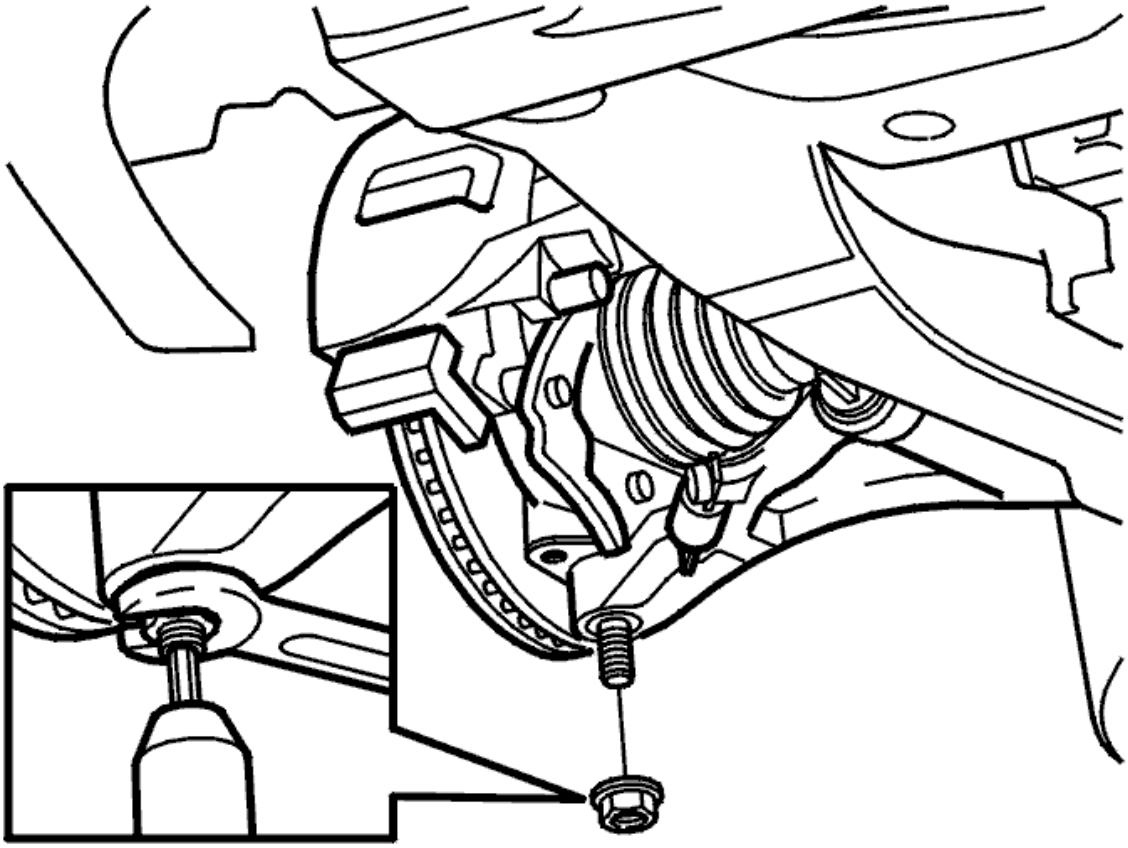

Fig. 19: Ball Joint Nut
Courtesy of VOLVO CARS CORPORATION

Tighten:

- the nut for the ball joint and control arm. Tighten to **80 Nm** . Counterhold with **Torx 40**
- the center screw in the drive shaft. Tighten to **50 Nm** .

Install:

- the sound insulation cover for the drive shaft
- the tie rods using the markings made during removal. Tighten to **70 Nm**
- the link rod to the anti-roll bar. Use new nuts. Tighten to **50 Nm** . Counterhold with **Torx 27** .

Install the front protective plate.

Install the front wheels. See **INSTALLING WHEELS** .

INSTALLING STEERING SHAFT JOINT

Install:

- the steering shaft joint on the steering gear and steering shaft
- the new screw. Tighten to **25 Nm**
- the steering shaft boot and snap ring. Fold back the carpet
- soundproofing panel.

INSTALLING THE AIR CONDITIONING (A/C) COMPRESSOR

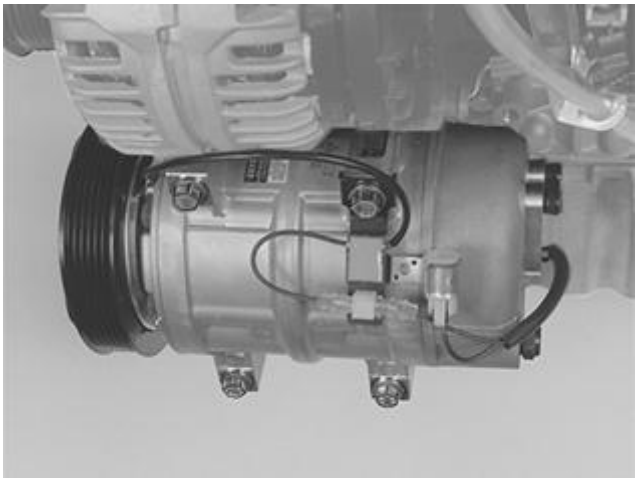

Fig. 20: AC Compressor
Courtesy of VOLVO CARS CORPORATION

CAUTION: Handle the compressor carefully.

Connect the one-pin connector to the compressor magnetic clutch.

Install the auxiliaries belt.

Connect the connectors to:

- the pressure and temperature sensors on the charge air cooler (CAC)
- the fan shroud
- the pressure switch (Pressostat) on the drier bottle
- the right-hand headlamp.

Install the right-hand headlamp using the two lock facings.

INSTALL THE ENGINE WIRING IN THE DISTRIBUTION BOX

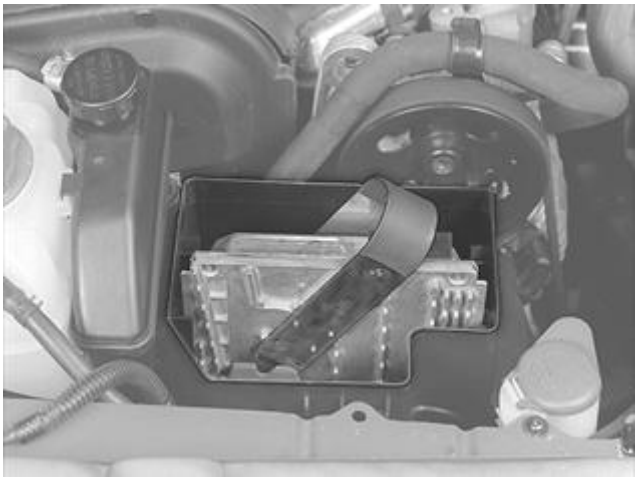

Fig. 21: Engine Control Module
Courtesy of VOLVO CARS CORPORATION

Connect the engine and transmission wiring connectors to the control module box base plate.

Press the base plate into place in the lower section of the control module box. Install the surround on the distribution box.

INSTALLING CONTROL MODULES

- Check that no pins or sockets are damaged on the connector
- Carefully press the control module down into the grooves on the inside of the control module box. Press to the limit position
- Insert tool see **9995722** around the control module
- Move the upper section of the tool forwards as far as it will go. Pull up the tool
- Press the cover into place over the control modules
- Check that the air ducts are correctly positioned
- The ground lead to the body on the right-hand fender liner.

Install:

- the engine coolant hose between the engine and expansion tank
- the ABS line using the clips for the power steering line
- The servo reservoir
- the passenger compartment heating hoses
- the propeller shaft. See **PROPELLER SHAFT, REPLACING** .

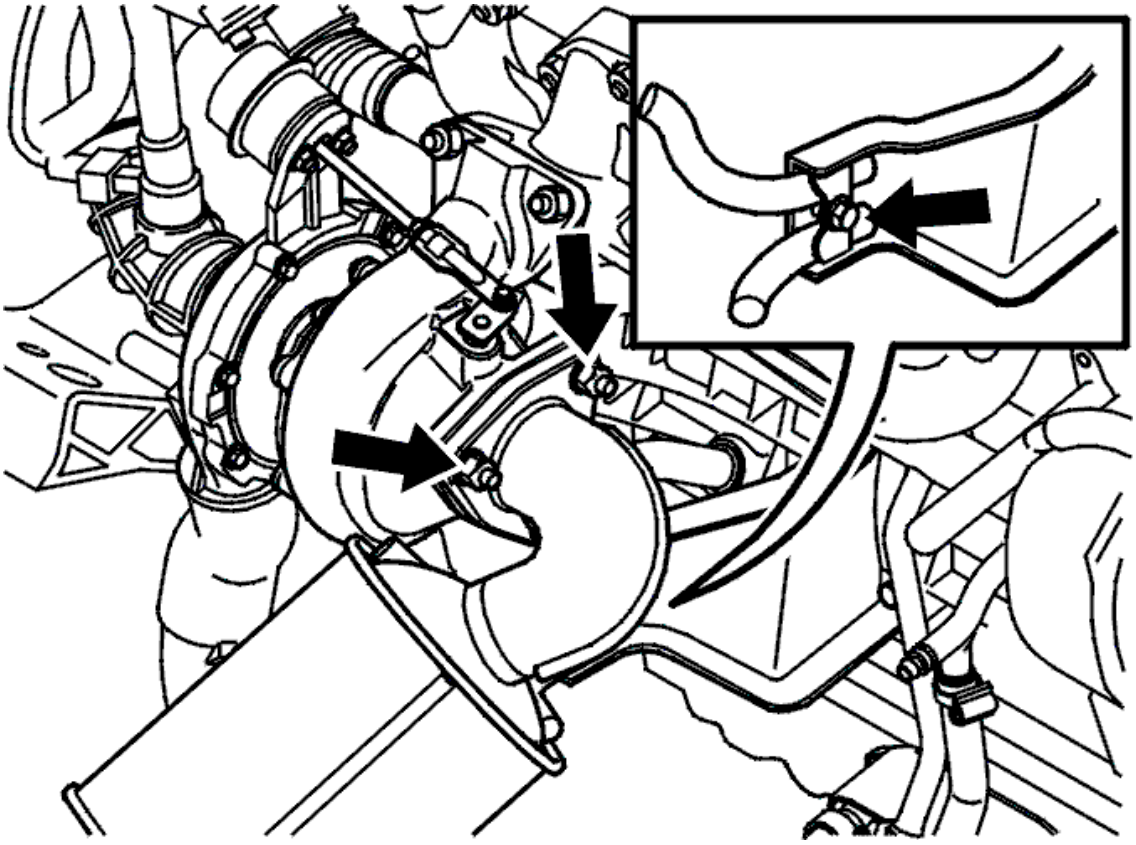

Fig. 22: Identifying Screw For Front Exhaust Pipe And Support Bracket
Courtesy of VOLVO CARS CORPORATION

Install:

- the screw for the front exhaust pipe and support bracket
- the 3 nuts that hold the front exhaust pipe to the turbocharger (TC).

WARNING: **Avoid skin contact with the paste.**

Lubricate the studs on the turbocharger (TC). Use paste **116 1408** .

NOTE: Avoid skin contact with the paste.

INSTALLING COMPONENTS

Install:

- the gear selector cables
- the wiring for the transmission
- the ground lead between the engine and the frame member on the left-hand side

- the brake vacuum hose to the vacuum pump on the engine
- the charge air hoses
- the engine coolant hoses
- the oil cooler hoses to the transmission.

NOTE: Remove any seals

- the air cleaner (ACL)
- the hose between the air cleaner (ACL) and the turbocharger (TC)
- The solenoid valve for the engine pads on the air cleaner (ACL)
- the intake pipe between the front cover plate and the air cleaner (ACL) housing.

Connect the connectors.

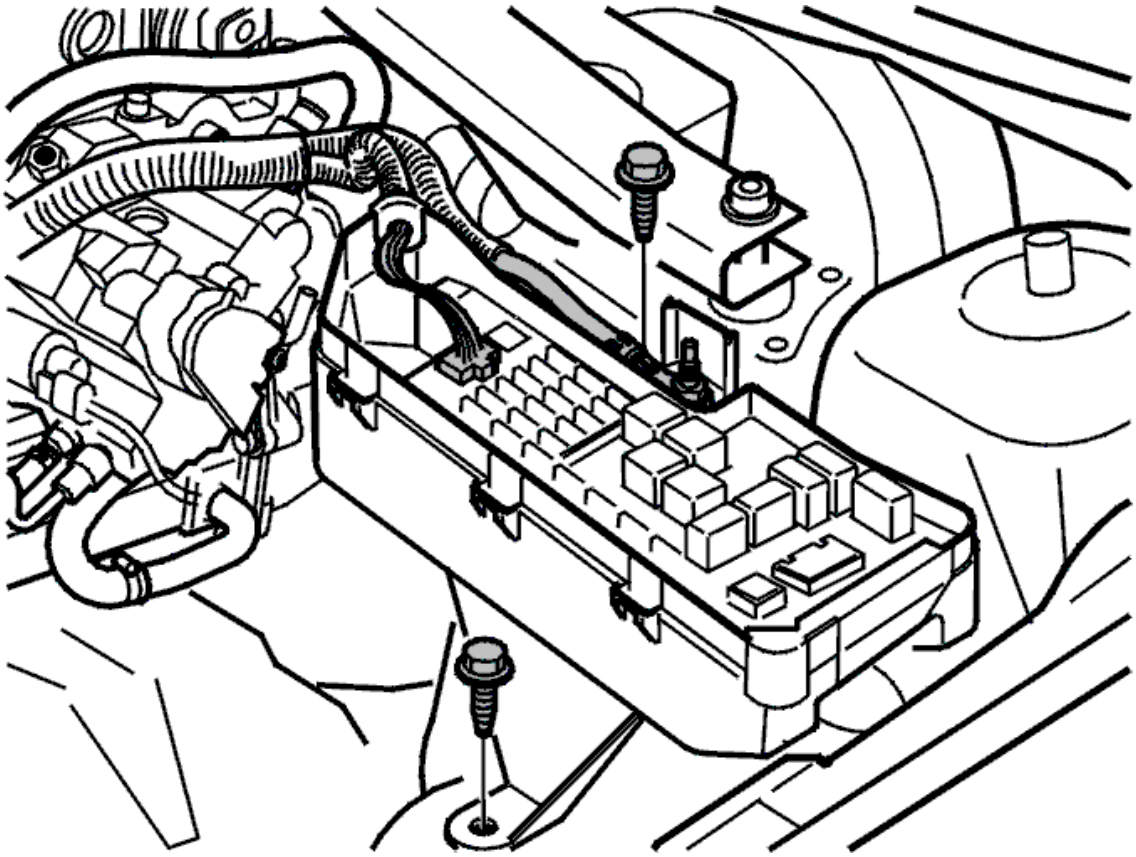

Fig. 23: Identifying Positive Lead For Starter Motor, Connector For Engine Cable Harness And Cover Over Central Electrical Unit
Courtesy of VOLVO CARS CORPORATION

Install:

- the positive lead for the starter motor to the terminal block

- the connector for the engine cable harness in the central electrical unit
- the cover over the central electrical unit.

FINISHING

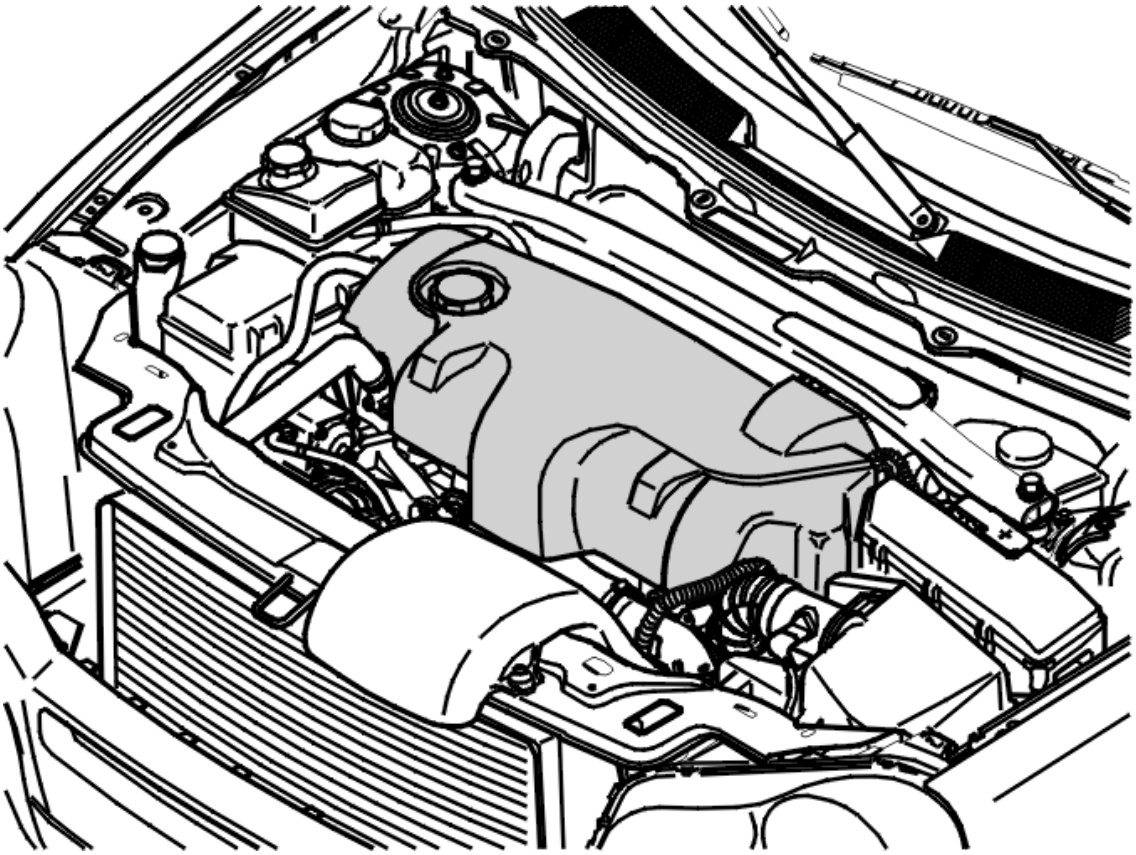

Fig. 24: Identifying Engine Cover
Courtesy of VOLVO CARS CORPORATION

Install:

- the engine cover
- the engine stabilizer brace between the suspension turrets
- a new tie strap for the servo hose
- the cable to the battery negative terminal. First read, see **BATTERY, DISCONNECTING** .

Top up and check the engine oil and engine coolant.

FUNCTION TEST

CAUTION: To prevent damage to the engine fuel injection pump, the tank pump must be activated for 80 seconds by turning the ignition key to position 2.

Run the engine at fast idle speed until the thermostat opens.

Ensure that the heater control in the passenger compartment is at the maximum position. Check the engine for leaks.

Top up the coolant if necessary. Install the lower engine cover.

FUEL SYSTEM, QUICK-RELEASE CONNECTORS

Special tools:

9995666

9512666

NOTE: The illustrations in this service information are used for different model years and/or models. Some variation may occur. However, the essential information in the illustrations is always correct.

There are different types of quick-release connector in the fuel system. Special tools are required for some connectors (see below).

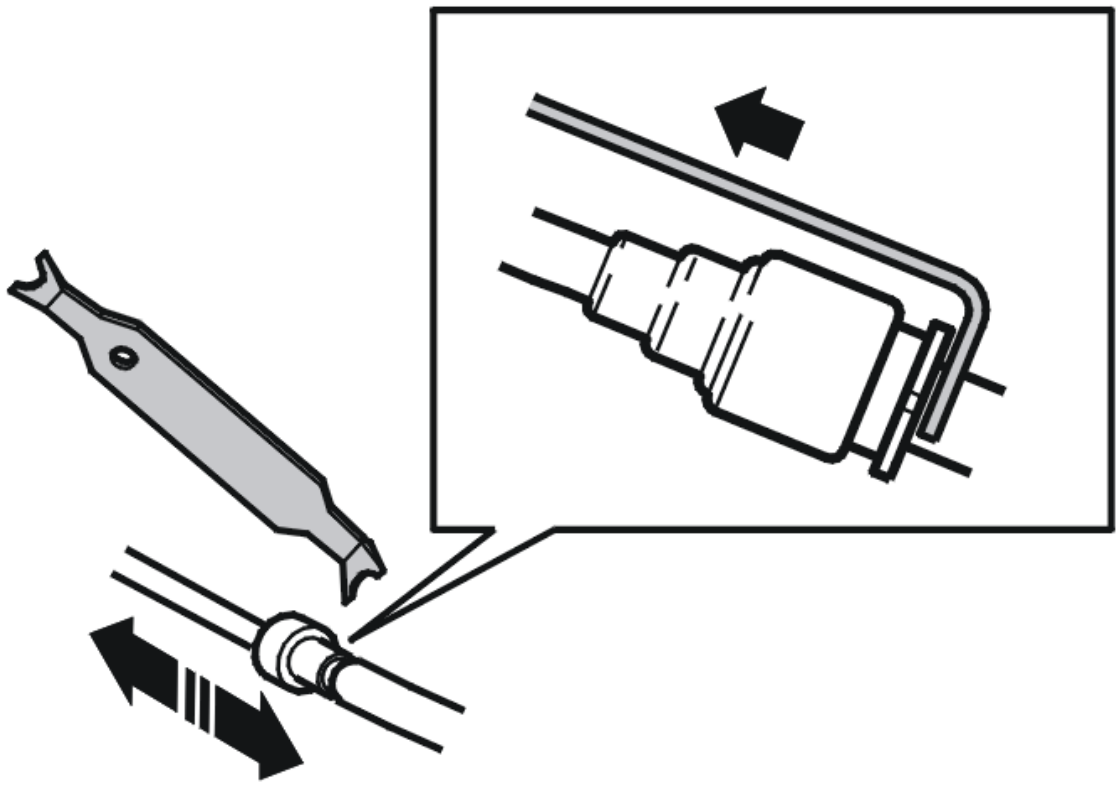

Fig. 25: Identifying Catch And Special Tool 9995666

If the catch appears as illustrated, special tool **9995666** must be used to press in the catch.

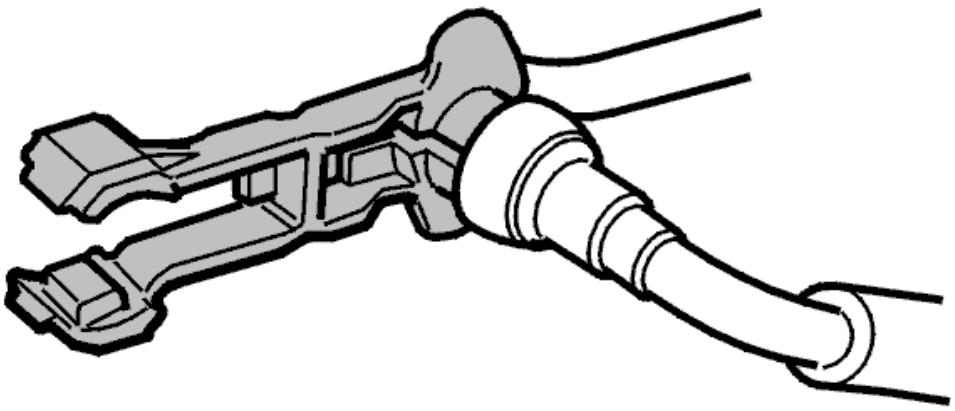

Fig. 26: Identifying Catch And Special Tool 9512666

If the connector has an internal catch, special tool **9512666** must be used.

REAR SECTION, EXPOSING

Remove the listed components.

- the tailgate. See **TAILGATE, REPLACING**
- the lock unit for the fuel tank filler cover. See **LOCK UNIT FUEL TANK FILLER COVER, REPLACING**
- the rear side window. See **SIDE WINDOW REAR, REPLACING**
- the seat frame. See **SEAT FRAME (THIRD ROW), REPLACING**
- the side panel in the cargo compartment. See **SIDE PANEL CARGO COMPARTMENT, REPLACEMENT**
- the headlining. See **HEADLINING, REPLACING**
- the rear bumper cover. See **CASING BUMPER REAR, REPLACING**
- the tail lamp. See **BULB TAIL LAMP/STOP LAMP/BACK-UP LAMP/FOG LAMP, REPLACING**
- the fuel tank. See **FUEL TANK, REPLACING** (AWD) or **FUEL TANK, REPLACING** (non AWD).

ROOF SECTION, EXPOSING

Remove the listed components.

- the sun roof. See **SUN ROOF, REPLACING**
- the panel for the antenna module. See **COVER ANTENNA MODULE, REPLACING**
- the windshield. See **WINDSCREEN, REPLACING** and **WINDSCREEN, REPLACING**
- the rear side window. See **SIDE WINDOW REAR, REPLACING**
- the cantrail panel. See **PANEL CANTRAIL, REPLACING**
- the headlining. See **HEADLINING, REPLACING**
- the roof rack/rails. See **RAILS, REPLACING**
- the antenna unit. See **RECEIVER AM/FM (ATM), REPLACING**

SIDE SECTION, EXPOSING

Remove the listed components.

- the front side door. See **SIDE DOOR FRONT, REPLACING**
- the rear side door. See **SIDE DOOR REAR, REPLACING**
- the sill trim panel. See **SILL TRIM PANEL, REPLACING**
- the A-post panel. See **PANEL A-POST, REPLACING**
- the B-post panel. See **PANEL B-POST, REPLACING**
- the C-post panel. See **PANEL C-POST, REPLACING**
- The D-post panel. See **PANEL D-POST, REPLACING**
- the seat. See **REMOVING THE FRONT SEAT** and **INSTALLING THE FRONT SEAT** (-2004) or **FRONT SEAT, REPLACING** (2005-)
- the seat frame. See **SEAT FRAME (THIRD ROW), REPLACING** .

ACCESSORIES AND EQUIPMENT

Interior - Cleaning, Inspection And Adjustment

OCCUPANT WEIGHT SENSOR (OWS) (2005-12)

OCCUPANT WEIGHT SENSOR (OWS), CHECKING

NOTE: **The graphics in this service information are used for different model years and/or models. Some variation may occur. However, the essential information in the graphics is always correct.**

SYSTEM DESCRIPTION

SYSTEM DESCRIPTION OF THE OCCUPANT WEIGHT SENSOR (OWS)

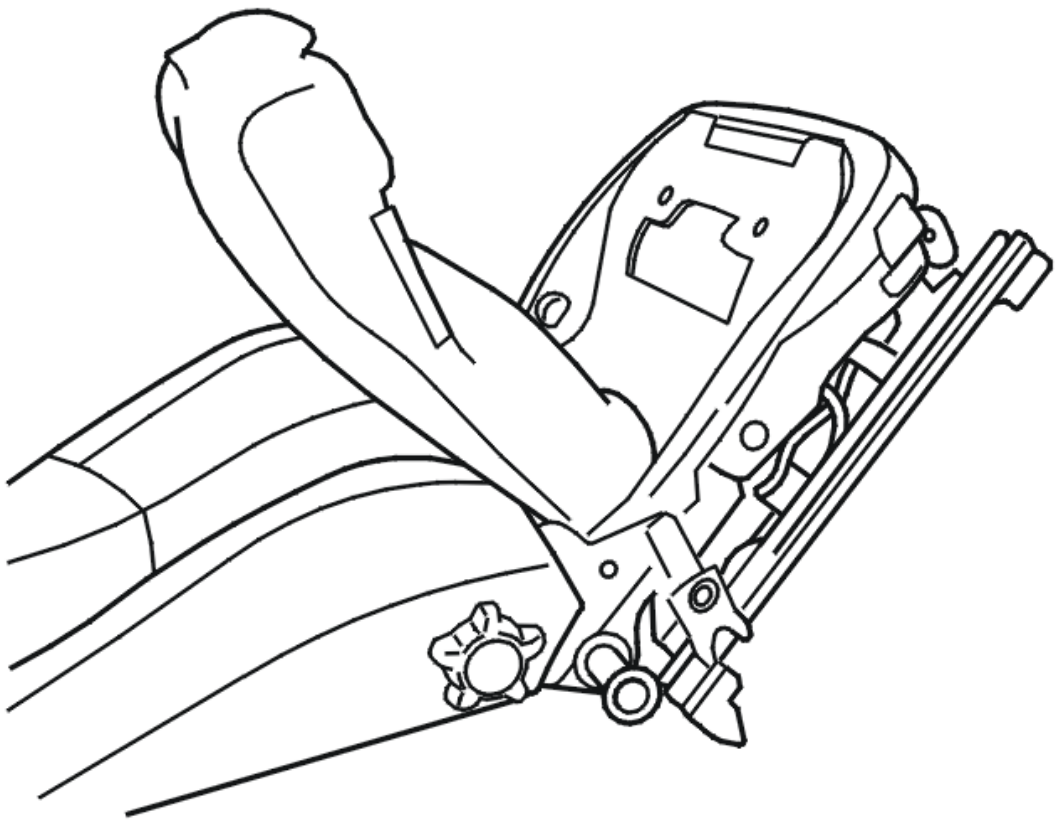

Fig. 1: Identifying Front Passenger Seat Cushion
Courtesy of VOLVO CARS CORPORATION

The occupant weight sensor (OWS) has a pressure sensor/cushion filled with silicone located under the front seat cushion of the passenger seat.

CAUTION: Silicon can:

- damage surrounding materials
- interfere with the functions of electrical components
- make the application of paint and adhesive difficult.

CHECK

Any leakage from the occupant weight sensor (OWS) can be detected by a visual check of the passenger seat and surrounding area. Sticky transparent stains in the area may indicate silicone leakage.

Leakage can also be detected when handling the passenger seat.

The SRS (supplemental restraint system) indicator lamp in the combined instrument panel is activated when approximately 30% of the silicone has leaked out of the pressure sensor/ cushion. The capacity is approximately 500 g silicone.

CHECKING FOR LEAKAGE

Remove the front passenger seat. See **FRONT SEAT, REPLACING** .

Take the front seat to a secluded location in the workshop, away from the body and paint shop.

Remove the pressure sensor/cushion. See **REMOVING THE OCCUPANT WEIGHT SENSOR (OWS)** .

Check if the pressure sensor/cushion is sticky anywhere; If this is the case, silicone is leaking.

CAUTION: The leaking pressure sensor/cushion must be placed in a plastic bag and sealed with tape. The plastic bag must be disposed of according to the workshop procedure for silicone waste.

CORRECTIVE ACTION

CORRECTIVE ACTION IN EVENT OF LEAKAGE

Clean/decontaminate after silicone leakage. See **OCCUPANT WEIGHT SENSOR (OWS), CLEANING**.

CORRECTIVE ACTION IN THE EVENT OF NON-LEAKING PRESSURE SENSOR, CUSHION

Install the pressure sensor/cushion. See **INSTALLING THE OCCUPANT WEIGHT SENSOR (OWS)** .

CAUTION: Store the ID number for the occupant weight sensor (OWS). See VIDA vehicle communication.

WARNING: Calibrate the Occupant weight sensor (OWS). See VIDA vehicle communication.

OCCUPANT WEIGHT SENSOR (OWS), CLEANING

NOTE: The graphics in this service information are used for different model years and/or models. Some variation may occur. However, the essential information in the graphics is always correct.

CLEANING/DECONTAMINATION

CLEANING AFTER LEAKAGE

Use Volvos cleaning agent "Cleaner H", P/N 1161 436-9 (see the Volvo chemicals catalog), and a clean lint-free cloth or similar to clean the vehicle and the seat.

WARNING: Follow the instructions on the safety sheet when using "Cleaner H". Use suitable gloves and protective goggles. Wash your hands after using "Cleaner H".

Use sawdust to absorb and remove any silicon dropped on the workshop floor or other surfaces. Sweep up the sawdust with the silicon into a plastic bag.

CAUTION: The plastic bag must be disposed of according to the workshop procedure for flammable waste.

Clean the equipment and surfaces using cleaner H and paper wipes.

CLEANING COMPONENTS

The following components must always be inspected after contamination by silicon and cleaned if contaminated:

- the seat cushion upholstery
- the backrest cushion upholstery
- the metal structure of the base
- the cable harness and connectors under the passenger seat
- the electrical components under the passenger seat
- the floor carpet on the passenger side
- the floor carpet behind the passenger seat.

REPLACING COMPONENTS

The following components must always be replaced if silicon leakage is confirmed:

- pressure sensor/silicon cushion, the foam rubber (seat cushion) and the occupant weight sensor (OWS). See **REPLACING THE OCCUPANT WEIGHT SENSOR (OWS)** .

FINISHING

HANDLING THE WASTE

All materials used for cleaning and decontamination must be disposed of according to the workshop procedure for flammable waste.

STORING THE ID NUMBER FOR THE OCCUPANT WEIGHT SENSOR (OWS)

CAUTION: Store the ID number for the occupant weight sensor (OWS).

CALIBRATING THE OCCUPANT WEIGHT SENSOR (OWS)

WARNING: Calibrate the Occupant weight sensor (OWS).

CARGO COMPARTMENT FLOOR SUPPORT/BASE PLATE FRONT, MODIFYING (2003-04)

NOTE: The graphics in this service information are used for different model years and/or models. Some variation may occur. However, the essential information in the graphics is always correct.

PREPARATORY WORK

IMPORTANT INFORMATION

NOTE: This method only applies to 5 seat vehicles.

When the support for the floor in the cargo compartment, but not the front base plate, is replaced, the new, higher support for the floor in the cargo compartment must be modified. The same applies to the front base plate, if installed on an old support for the floor in the cargo compartment.

REPLACING THE SUPPORT FOR THE FLOOR IN THE CARGO COMPARTMENT OR FRONT BASE PLATE

To replace the support for the cargo compartment floor, see **CARGO FLOOR SUPPORT, 5 SEATER VERSION, REPLACING** .

To replace the front base plate, lift the old base plate. Carry out the necessary modifications to the new plate and install the new base plate.

MODIFYING

MODIFYING THE SUPPORT FOR THE CARGO COMPARTMENT FLOOR

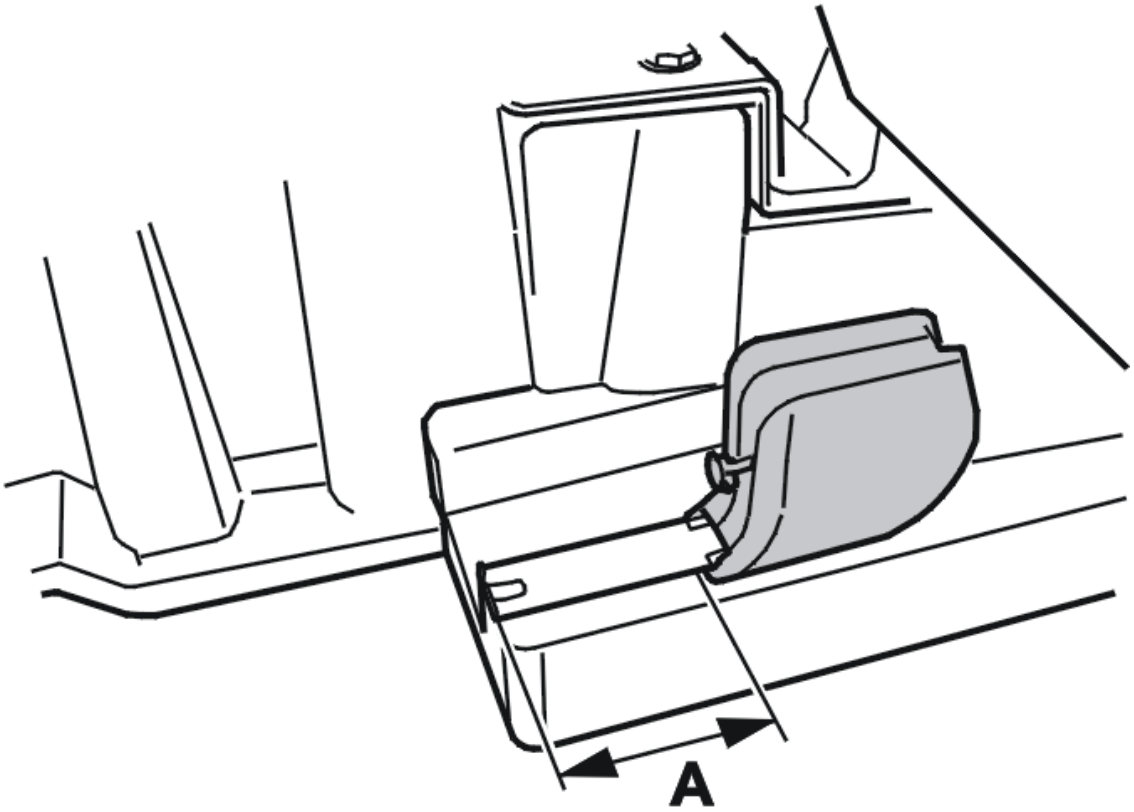

Fig. 2: Identifying Distance A
Courtesy of VOLVO CARS CORPORATION

A = 50 mm, measure inwards from the outer edge of the flange.

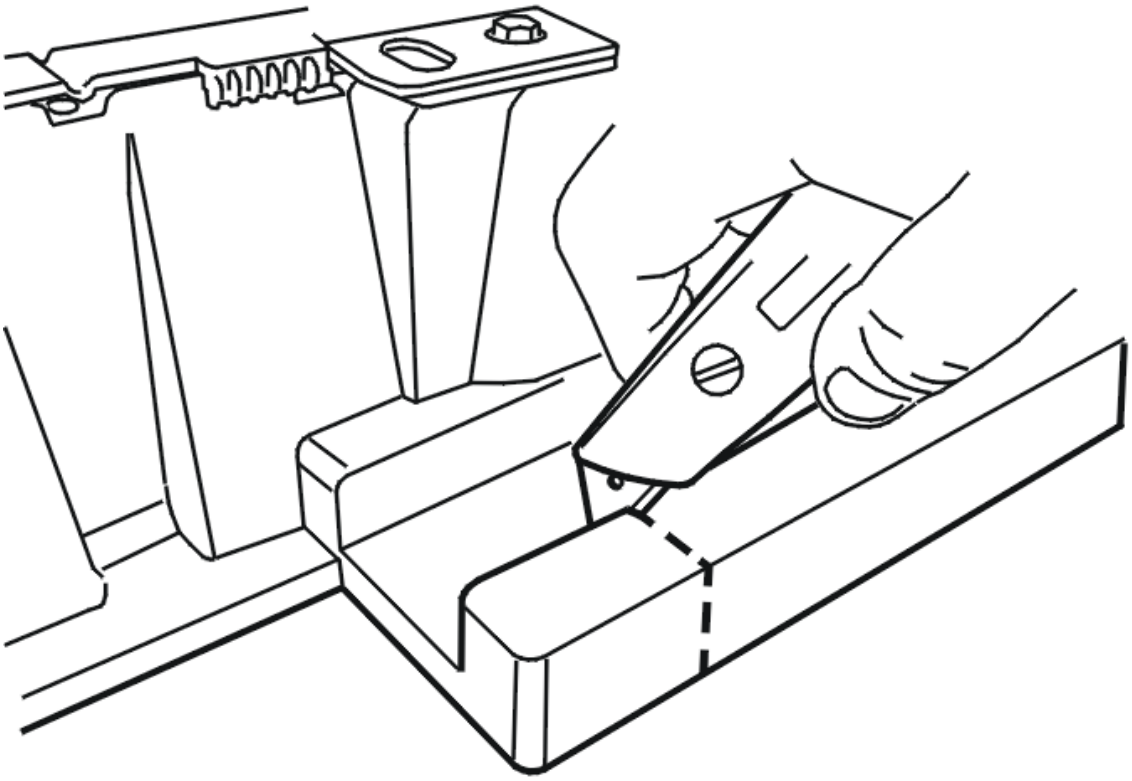

Fig. 3: Cutting Out Marked Section
Courtesy of VOLVO CARS CORPORATION

Cut-out the marked section as shown. First cut across then along the flange. Remove the section.

CAUTION: Do not cut a hole in the carpet.

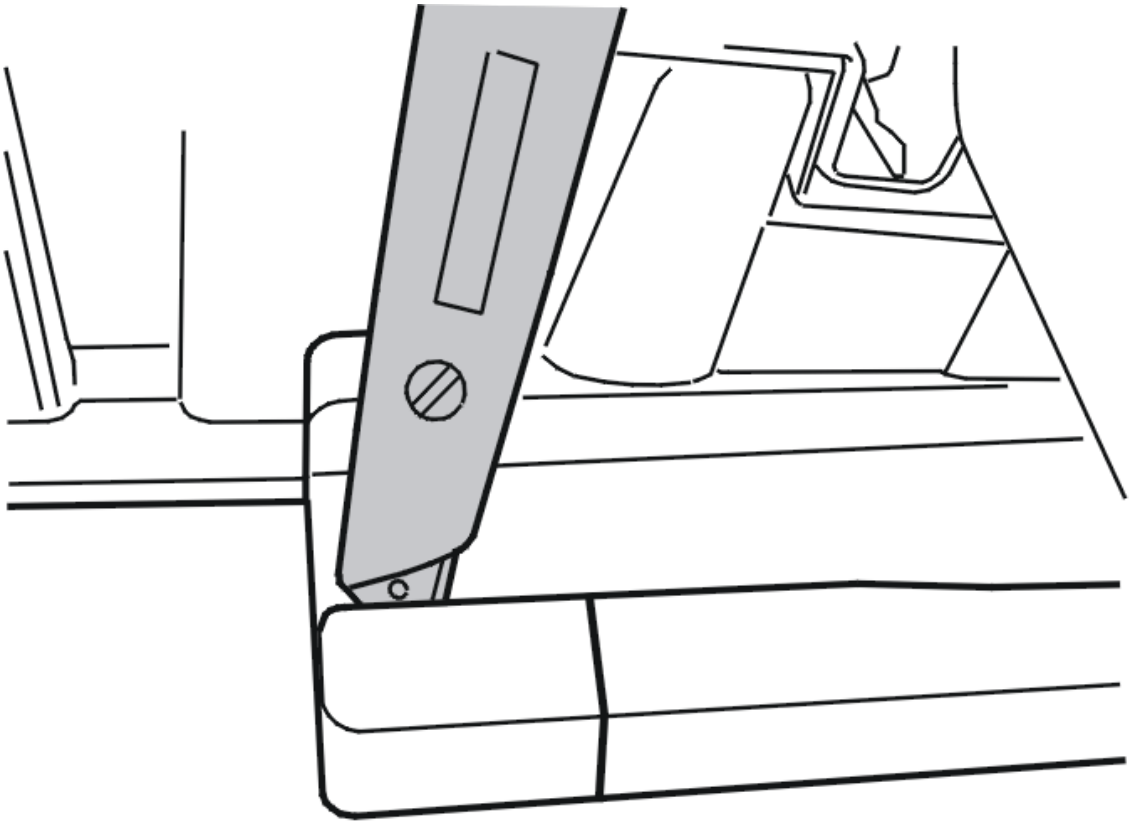

Fig. 4: Removing Marked Section
Courtesy of VOLVO CARS CORPORATION

MODIFYING THE FRONT BASE PLATE FOR THE BELTS

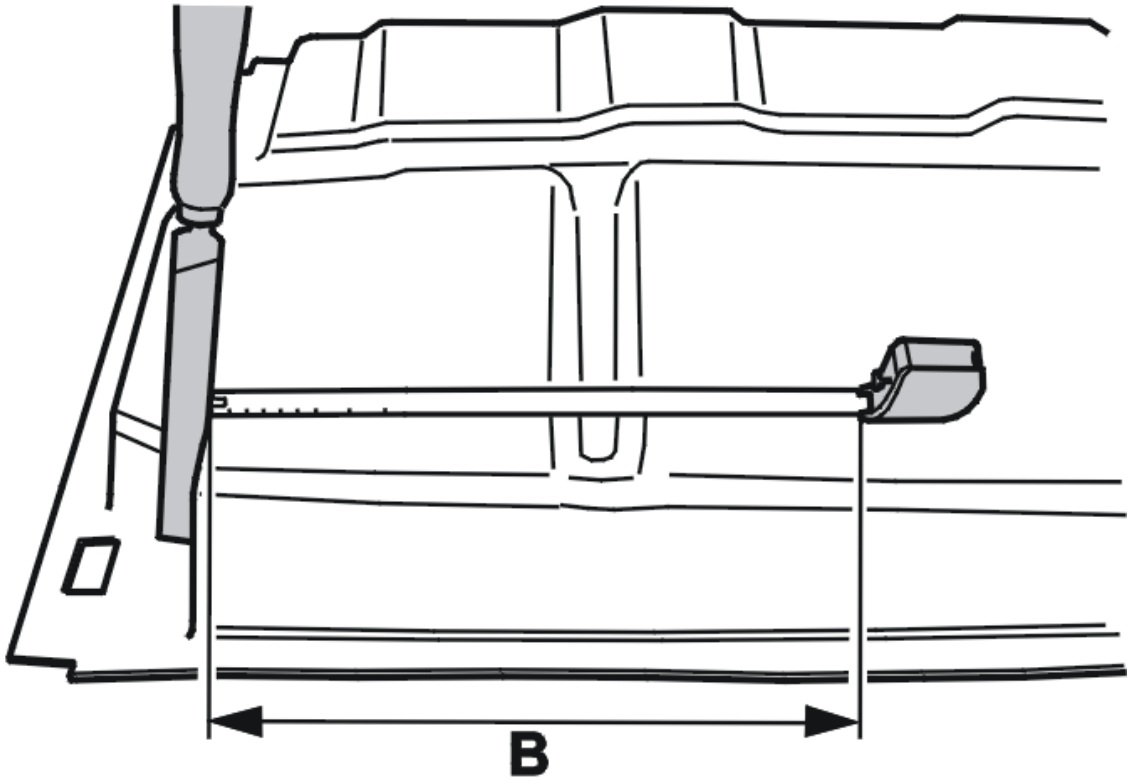

Fig. 5: Identifying Distance B
Courtesy of VOLVO CARS CORPORATION

Make markings for the center of the holes according to the following graphics.

HINT: Use a straight tool against the edge to facilitate measuring.

B = 760 mm, measure from the left edge.

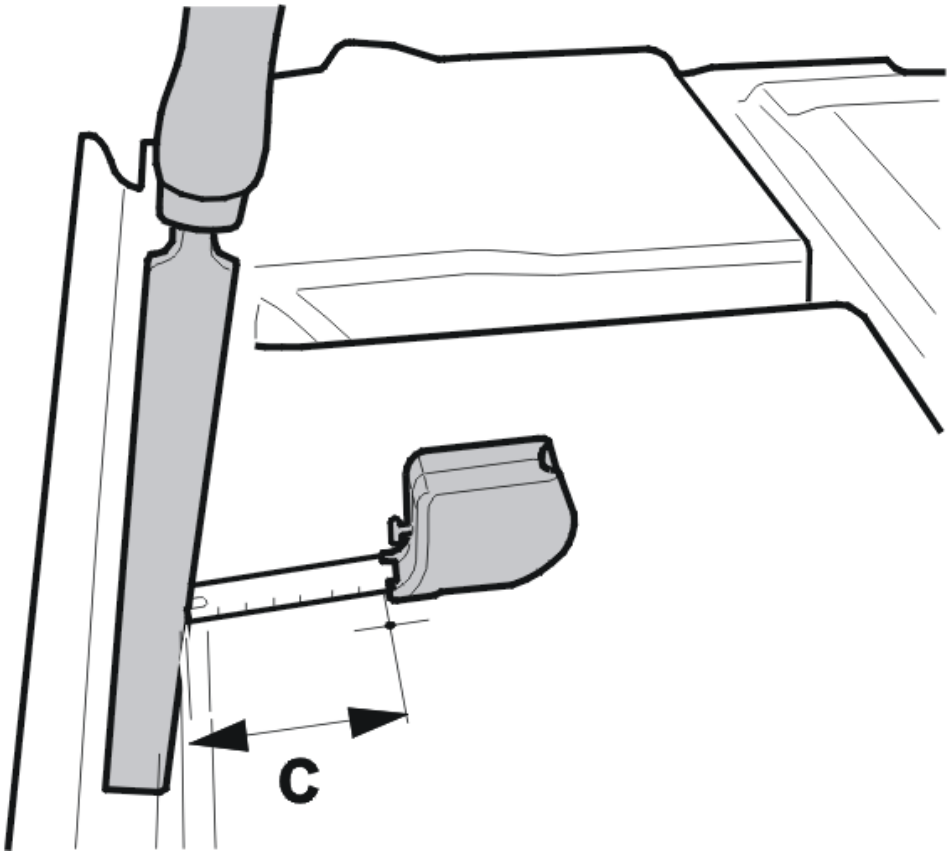

Fig. 6: Identifying Distance C
Courtesy of VOLVO CARS CORPORATION

C = 75 mm, measure from the front edge.

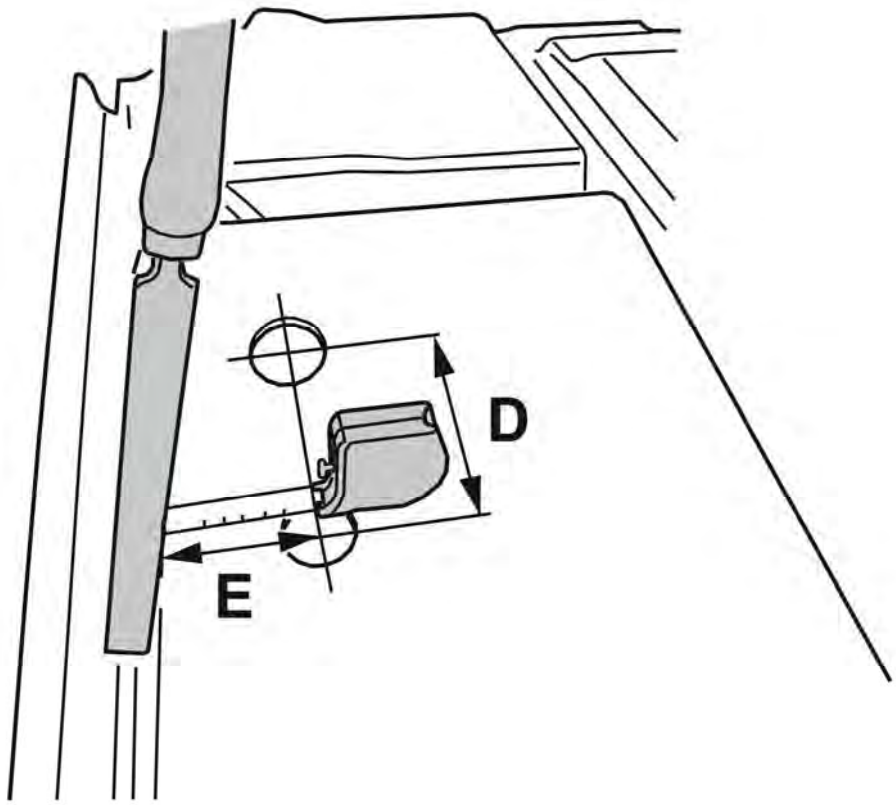

Fig. 7: Identifying Distance D And E
Courtesy of VOLVO CARS CORPORATION

D = 100 mm, measure from the marking for the first hole center.

E = 75 mm, measure from the front edge.

Cut out two 50 mm circular holes.

MODIFYING THE FRONT BASE PLATE FOR INSTALLING THE HANDLE

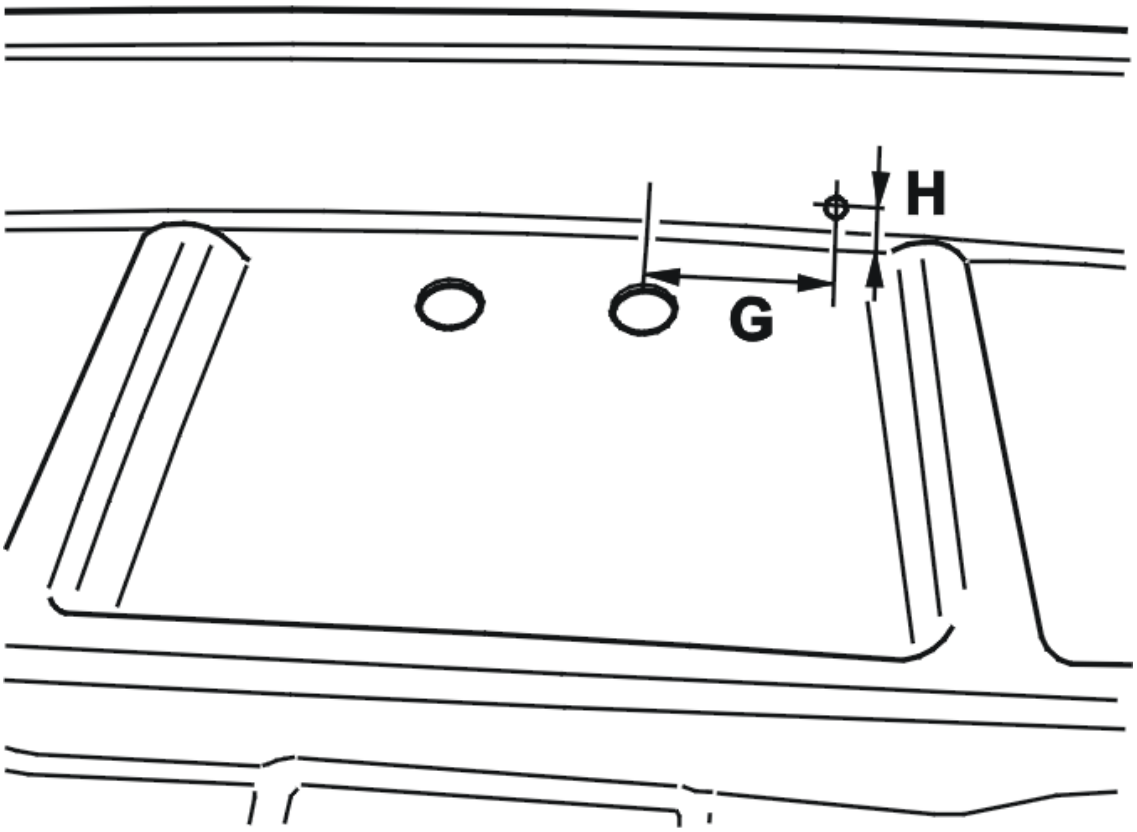

Fig. 8: Identifying Distance G And H
Courtesy of VOLVO CARS CORPORATION

G = 105 mm.

H = 13 mm, measure from the bottom of the base plate.

Drill a 10 mm hole.

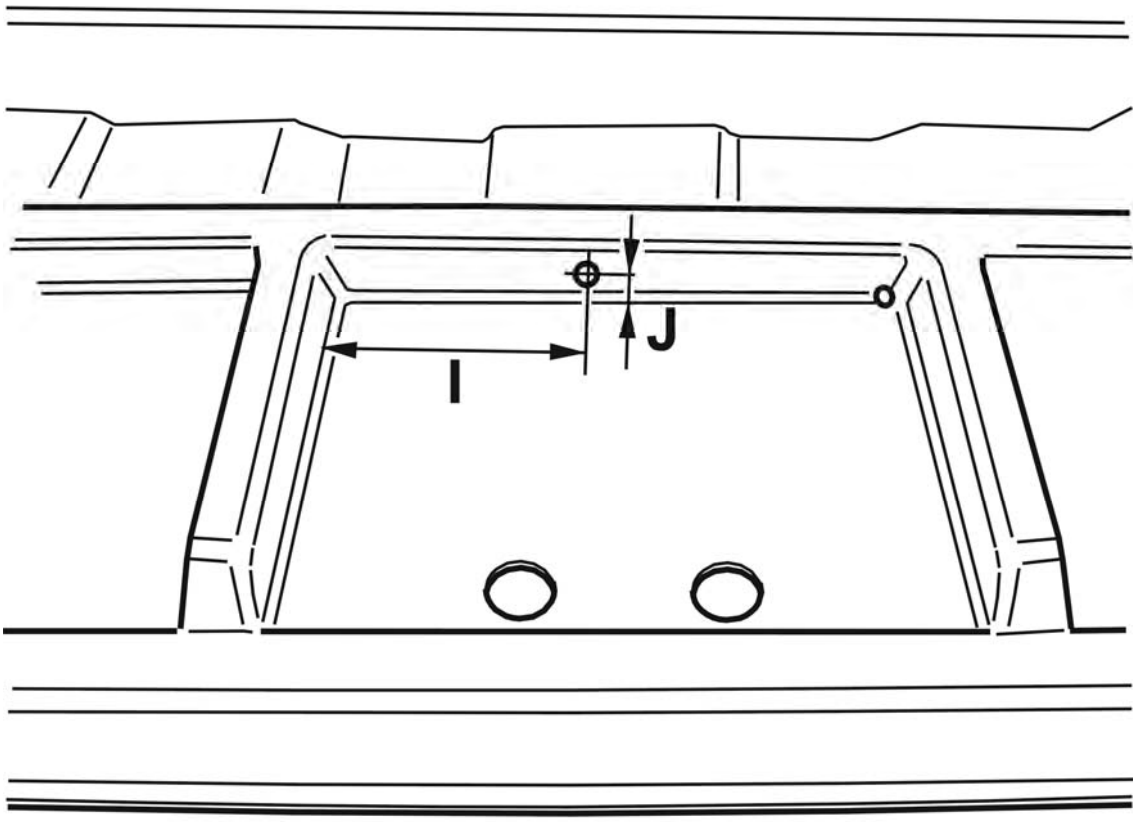

Fig. 9: Identifying Distance I And J
Courtesy of VOLVO CARS CORPORATION

I = 160 mm, measure from the lower left-hand corner.

J = 16 mm, measure from the bottom of the base plate.

Drill a 15 mm hole.

SEATS (2003-12)

CLEANING UPHOLSTERY

The vehicle's upholstery, like the rest of the components, care in the form of regular maintenance. Cleaning and impregnation must be repeated at regular intervals, one to four times a year (more often if needed), so that the upholstery retains its clean look. This is just as important for textile and leather upholsteries of all colours.

TREATMENT

Volvo Cars has developed environment-adapted systems for cleaning and impregnating upholsteries included in the range and are available for all Volvo Cars workshops. Perform cleaning and impregnation according to instructions supplied with the product for textile and leather care.

KEEP IN MIND:

- The upholstery must be vacuum-cleaned thoroughly before starting treatment to prevent including impurities, e. g., small stones, during cleaning.
- The upholstery must be allowed to dry between cleaning and impregnating according to the supplied instructions.
- The upholstery must be allowed to dry after impregnating.

PRODUCTS

You can read about the environment-adapted systems developed by Volvo Cars in the chemical catalogue in the section interior care. Perform cleaning and impregnation according to instructions supplied with the product for textile and leather care.

Fig. 10: Cleaning Materials For Textile Upholstery
Courtesy of VOLVO CARS CORPORATION

For textile upholstery. **Use:** Textile care, 9510250

Fig. 11: Cleaning Materials For Leather Upholstery
Courtesy of VOLVO CARS CORPORATION

For leather upholstery. **Use:** Leather care, 9510251

CUSTOMER CONTACT

Refer to care and service in the owner's manual as well as to the folder supplied in vehicles featuring leather upholstery from and incl. model year 2008.

After some time in use the leather's natural appearance will be more or less evident, depending on the leather's surface structure. This is natural aging of the leather and shows that it is a natural product.

POINT OUT ESPECIALLY:

- The upholstery requires regular maintenance to retrain its qualities, one to four times a year (more often if needed).
- Sharp objects and Velcro straps may damage the vehicle's upholstery.
- Materials that colour, e. g., jeans and suede, etc., may discolour the vehicle's upholstery.
- Never use powerful solvents. These may damage both textile, vinyl, and leather upholstery.

ACCESSORIES AND BODY, CAB

Interior - Design and Function

POWER SEAT MODULE (2003-2004)

DESIGN

see **DESIGN**

DOWNLOADING SOFTWARE AND REPLACING THE CONTROL MODULE

see **DOWNLOADING SOFTWARE AND REPLACING THE CONTROL MODULE**

FUNCTION

see **FUNCTION**

POWER SEAT MODULE DIAGNOSTIC FUNCTIONS

see **POWER SEAT MODULE DIAGNOSTIC FUNCTIONS**

SYSTEM OVERVIEW

see **SYSTEM OVERVIEW**

POWER SEAT MODULE (PSM) (2005-2011)

DESIGN

see **DESIGN**

DIAGNOSTIC FUNCTIONS

see **DIAGNOSTIC FUNCTIONS**

DOWNLOADING SOFTWARE AND REPLACING THE CONTROL MODULE

see **DOWNLOADING SOFTWARE AND REPLACING THE CONTROL MODULE**

FUNCTION

see **FUNCTION**

SYSTEM OVERVIEW

see **SYSTEM OVERVIEW**

ACCESSORIES AND EQUIPMENT

Interior - Diagnostic Trouble Codes and Associated Procedures

PSM-0001: HALL SENSOR 1. FAULTY SIGNAL. INTERMITTENT FAULT (2003-12)

DIAGNOSTIC TROUBLE CODE (DTC) INFORMATION

Condition

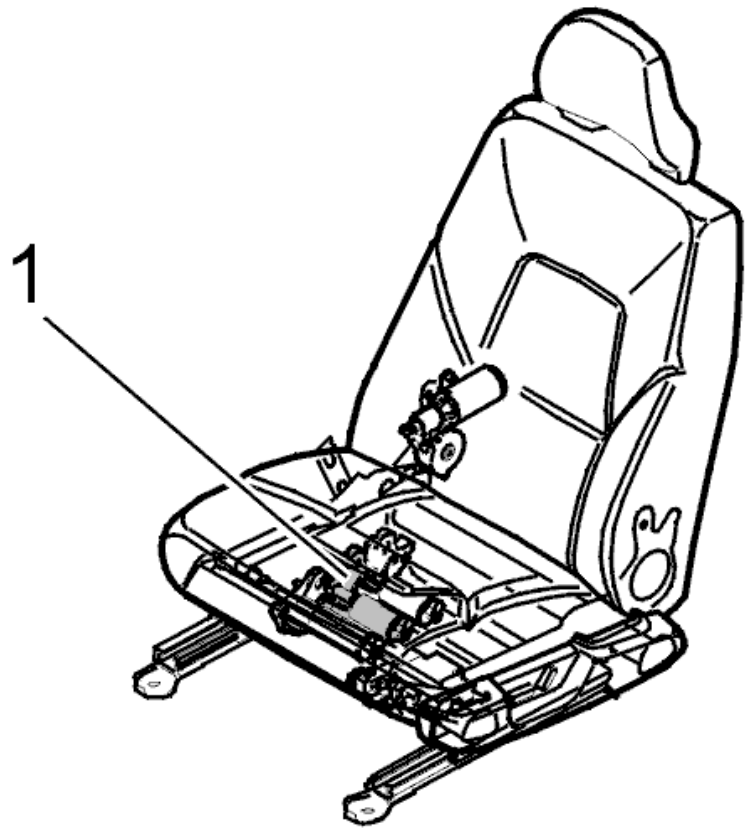

Fig. 1: Identifying Power Seat Motor Location
Courtesy of VOLVO CARS CORPORATION

Motor 1 controls the seat front-rear adjustment. Motor 1 must be activated before the diagnostic trouble code (DTC) can be detected. Diagnostic trouble code (DTC) PSM-0001 is stored if no Hall sensor pulse is detected when motor 1 is activated and in operation.

Possible Source

- Defective Hall sensor in motor 1.
- Short-circuit to supply voltage or ground in the signal cable.
- Open-circuit in the signal cable to the Hall sensor.

Fault symptom[s]

- Automatic seat control does not function (automatic control of other motors functioning as normal).

FAULTY SIGNAL. INTERMITTENT FAULT

CHECKING CABLE

Check the power seat module (PSM) and motor connector for contact resistance and oxidation according to **CONTACT RESISTANCE AND OXIDATION** and loose connections according to **LOOSE CONNECTIONS (TERMINALS)** .

The Hall sensor is integrated in the motor.

Check the wiring between the power seat module (PSM) and the sensor according to the table below for an intermittent open-circuit according to **OPEN-CIRCUIT, INTERMITTENT FAULTS** , an intermittent short-circuit to ground according to **SHORT-CIRCUIT TO GROUND, INTERMITTENT FAULTS** and an intermittent short-circuit to supply voltage according to **SHORT-CIRCUIT TO SUPPLY VOLTAGE, INTERMITTENT FAULTS** .

DTC	Covers motor	Terminal	Terminal
PSM-0001	M1	#3E	#4E
PSM-0002	M2	#3D	#4D
PSM-0003	M3	#7E	#8E
PSM-0004	M4	#11E	#12E

Other information:

- To connect the breakout box, see **CONNECTING THE BREAKOUT BOX, POWER SEAT MODULE (PSM)** .
- For information on signals, refer to **OUTPUT SIGNALS TO THE MOTORS** .

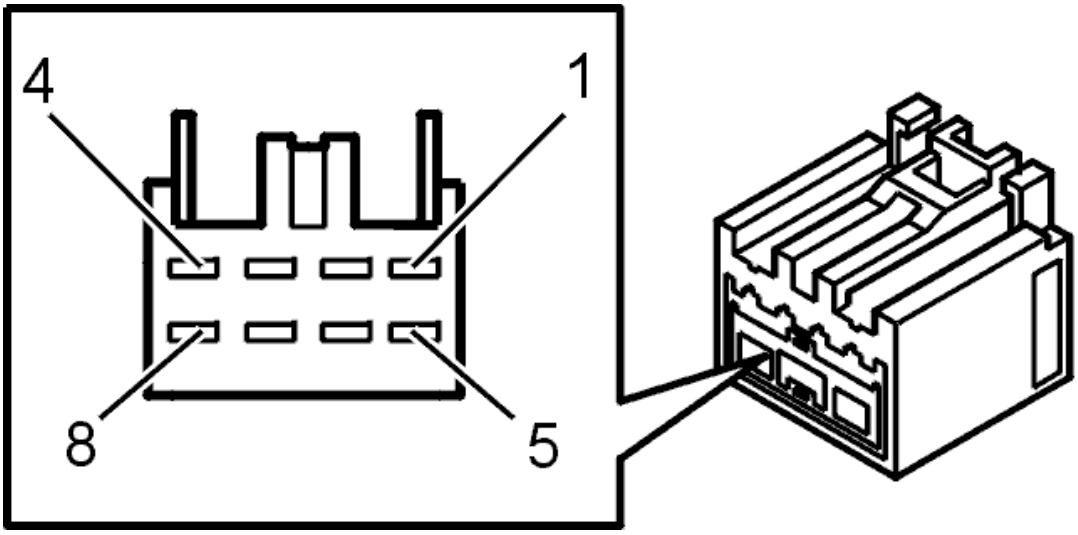

Fig. 2: Connector, Black (8-Pin)
Courtesy of VOLVO CARS CORPORATION

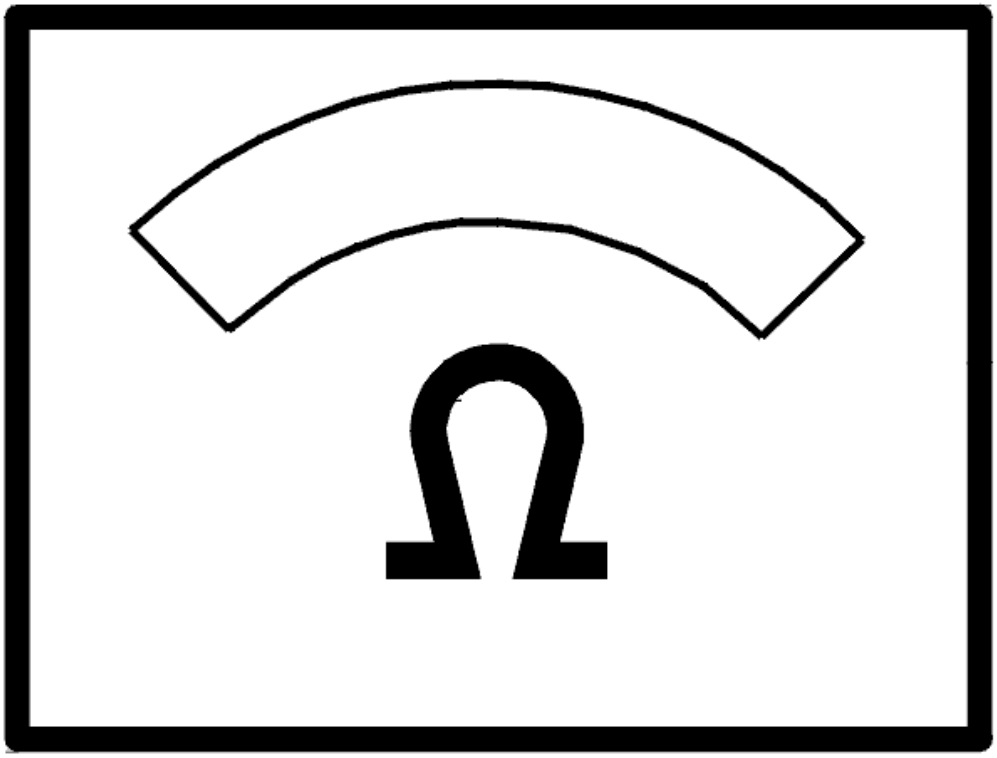

Fig. 3: Identifying Ohmmeter
Courtesy of VOLVO CARS CORPORATION

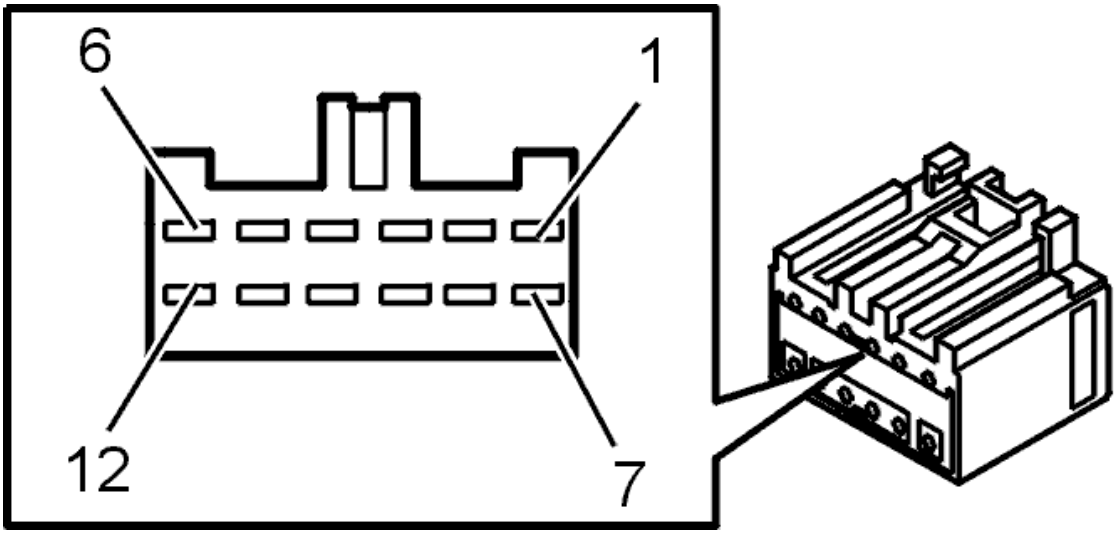

Fig. 4: Audio Control Module (AUM)/External Amplifier To Loudspeakers, Gray Connector
Courtesy of VOLVO CARS CORPORATION

PSM-0001: HALL SENSOR 1. FAULTY SIGNAL. PERMANENT FAULT (2003-2012)

DIAGNOSTIC TROUBLE CODE (DTC) INFORMATION

see **DIAGNOSTIC TROUBLE CODE (DTC) INFORMATION**

FAULTY SIGNAL. PERMANENT FAULT

CHECKING THE HALL SENSOR SIGNAL

HINT: The motor should be activated when the check is carried out.

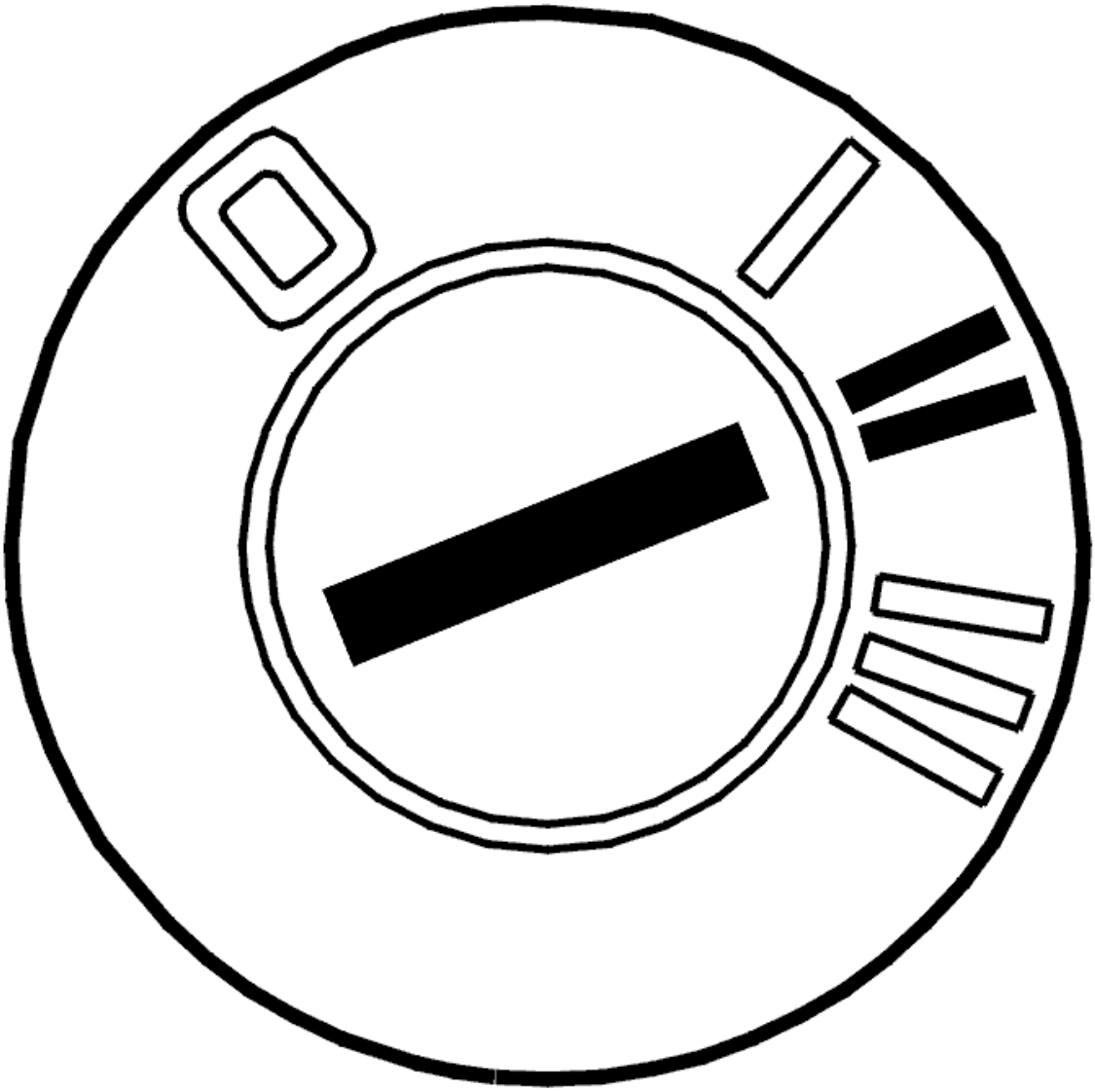

Fig. 5: Identifying Ignition ON
Courtesy of VOLVO CARS CORPORATION

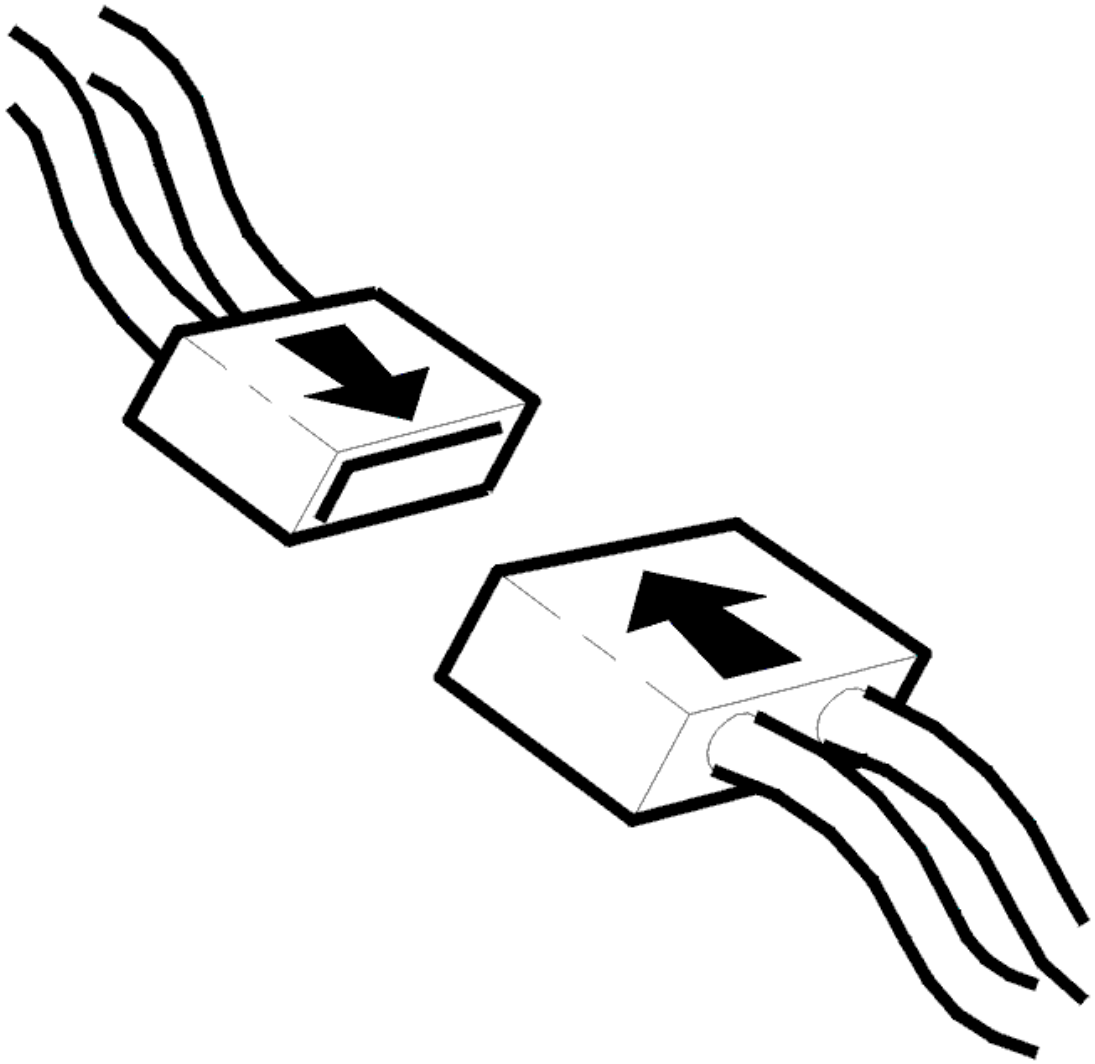

Fig. 6: Connecting Connector
Courtesy of VOLVO CARS CORPORATION

- Reconnect components, connectors etc.
- Ignition on.

  Read off value.

  Check whether the power seat module (PSM) receives the signal from the Hall sensor. Operate the relevant seat motor and check whether the value counts upwards and downwards as the seat is moved in each direction.

  The value should count up or down depending on seat operation.

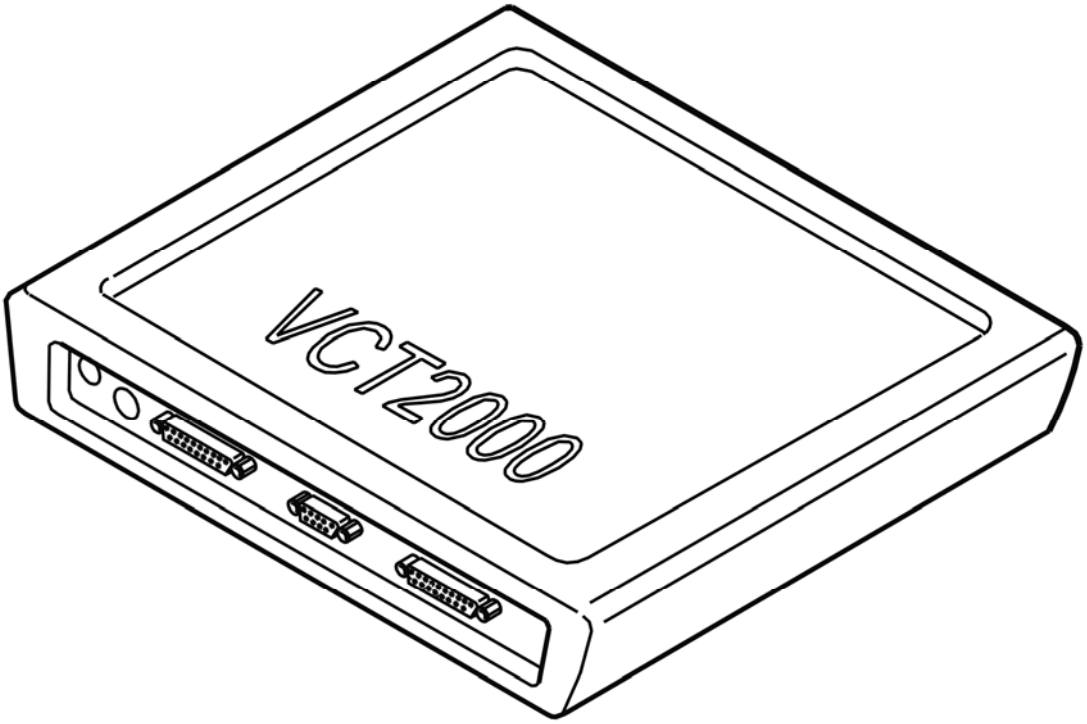

Fig. 7: Identifying VCT2000 Diagnostic Tool Symbol In VIDA
Courtesy of VOLVO CARS CORPORATION

Is the function OK?

- **YES**

  OKAY: Troubleshooting has been completed.

- **NO**

  Refer to **CHECKING WIRING AND COMPONENTS**

CHECKING WIRING AND COMPONENTS

Check the cable between the power seat module (PSM) #3E and the Hall sensor, and the cable between the power seat module (PSM) #4E and the Hall sensor for an open-circuit according to **OPEN-CIRCUIT, PERMANENT FAULTS** , a short-circuit to ground according to **SHORT-CIRCUIT TO GROUND, PERMANENT FAULTS** and a short-circuit to supply voltage according to **SHORT-CIRCUIT TO SUPPLY VOLTAGE. PERMANENT FAULTS** .

Check hall sensor and replace if necessary.

HINT: The sensor should generate a pulsed signal.

Remedy as necessary.

Other information

- To connect the breakout box, see **CONNECTING THE BREAKOUT BOX, POWER SEAT MODULE (PSM)** .
- For information on signals, refer to **CONNECTOR, BLACK (12-PIN)** .

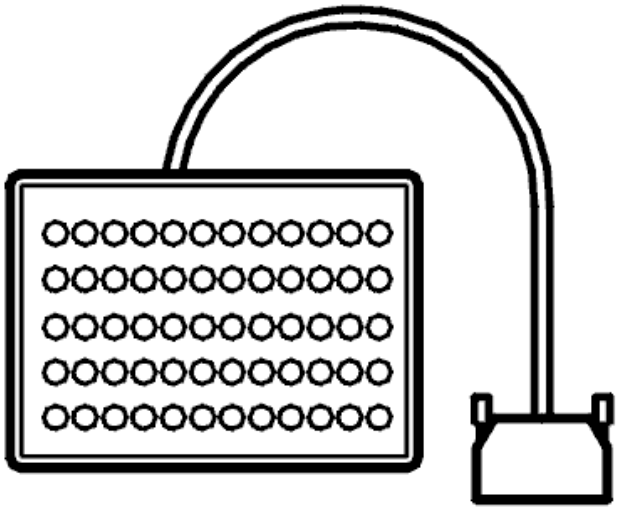

Fig. 8: Breakout Box
Courtesy of VOLVO CARS CORPORATION

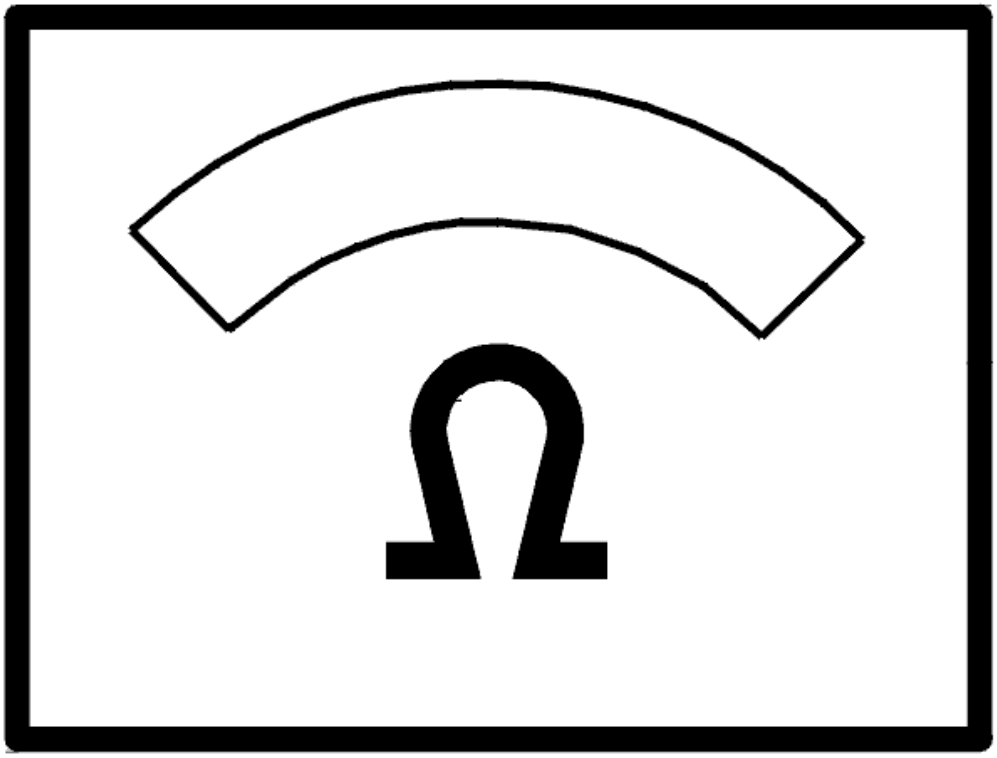

Fig. 9: Identifying Ohmmeter
Courtesy of VOLVO CARS CORPORATION

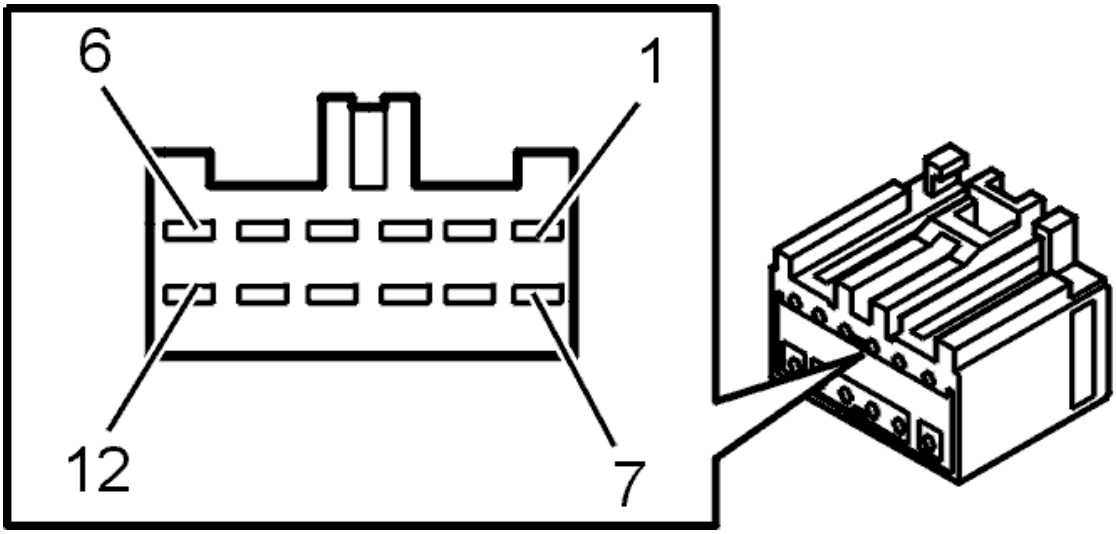

Fig. 10: Audio Control Module (AUM)/External Amplifier To Loudspeakers, Gray Connector
Courtesy of VOLVO CARS CORPORATION

- **Continue**

  Refer to **VERIFICATION**

VERIFICATION

HINT: The motor should be activated when the check is carried out.

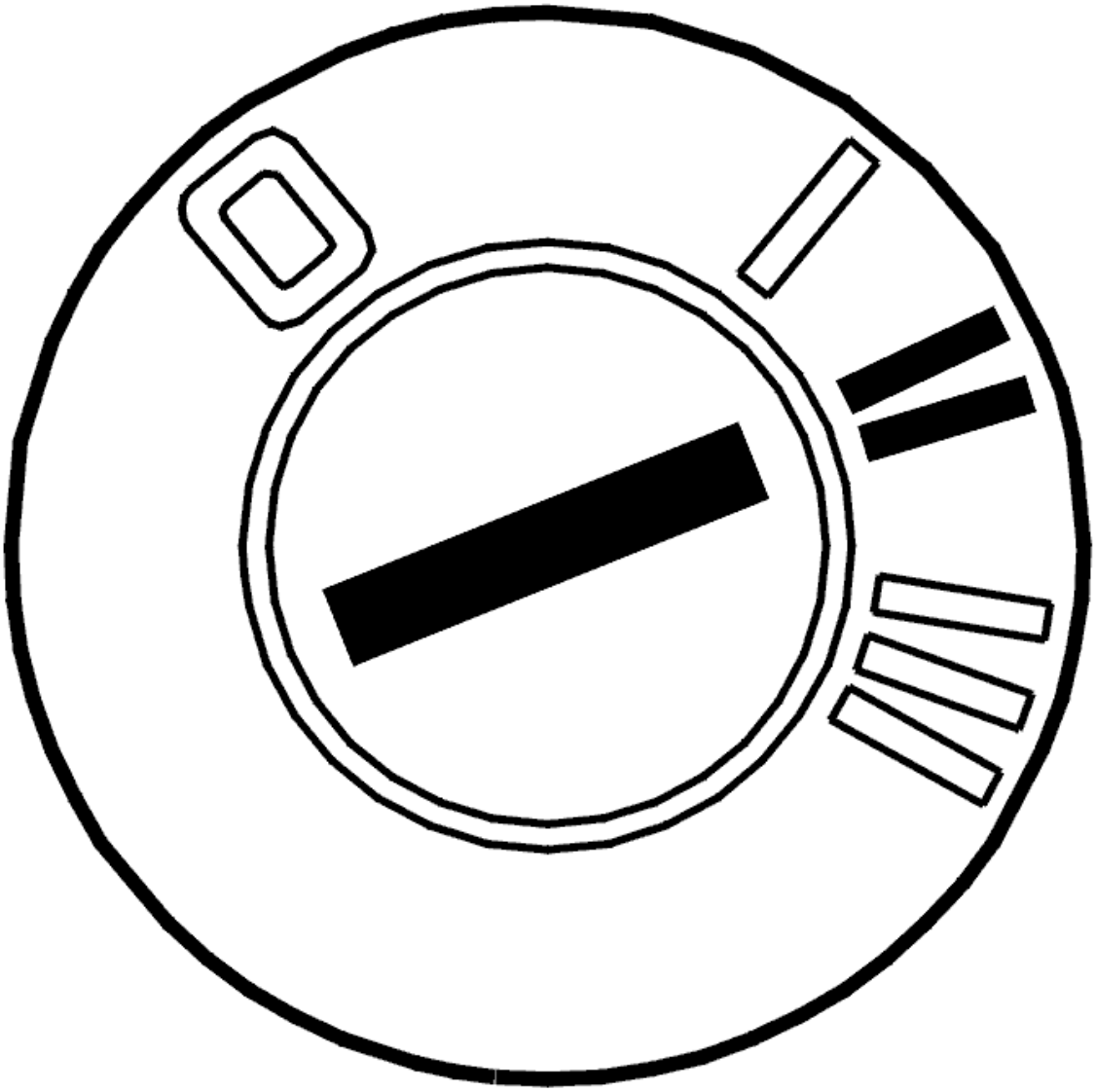

Fig. 11: Identifying Ignition ON
Courtesy of VOLVO CARS CORPORATION

- Ignition on.

  Read off value.

  The Hall sensor must generate a pulsed signal and the power seat module (PSM) should count up or down depending on the movement of the seat.

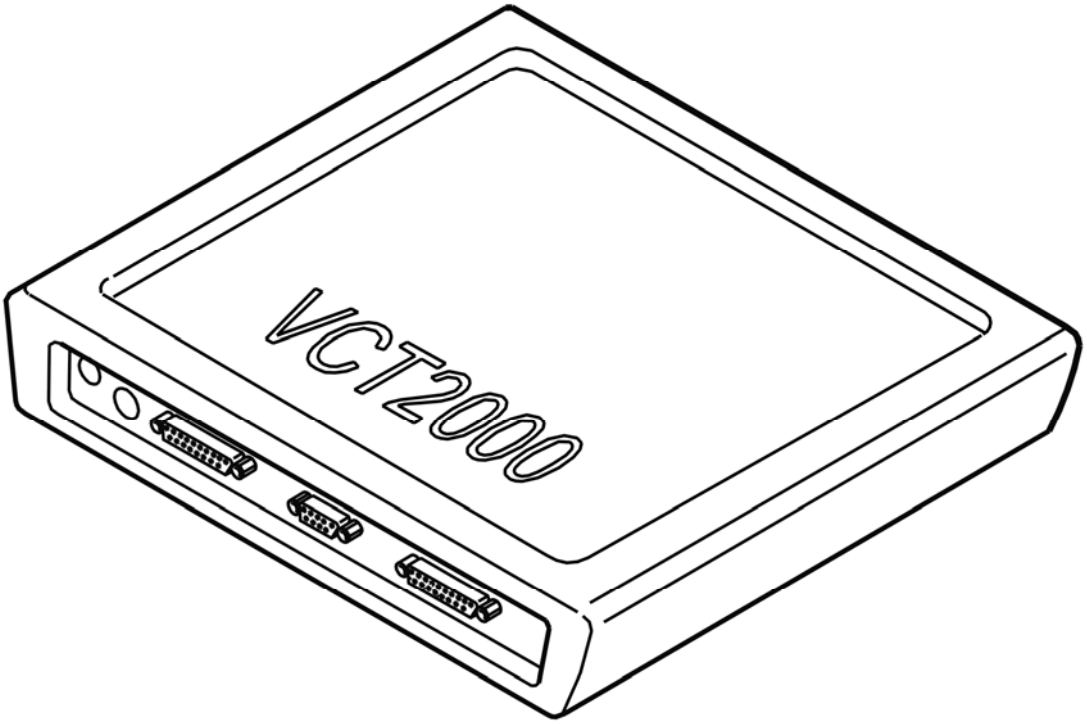

Fig. 12: Identifying VCT2000 Diagnostic Tool Symbol In VIDA
Courtesy of VOLVO CARS CORPORATION

Is the function OK?

- **YES**

  OKAY: Troubleshooting has been completed.

- **NO**

  Refer to **INFORMATION**

INFORMATION

FAULT-TRACING INFORMATION

The fault should have been detected and remedied. As this is not the case fault-tracing has failed.

Exit fault-tracing for this diagnostic trouble code (DTC) or make another attempt.

PSM-0002: HALL SENSOR 2. FAULTY SIGNAL. INTERMITTENT FAULT (2003-12)

DIAGNOSTIC TROUBLE CODE (DTC) INFORMATION

Condition

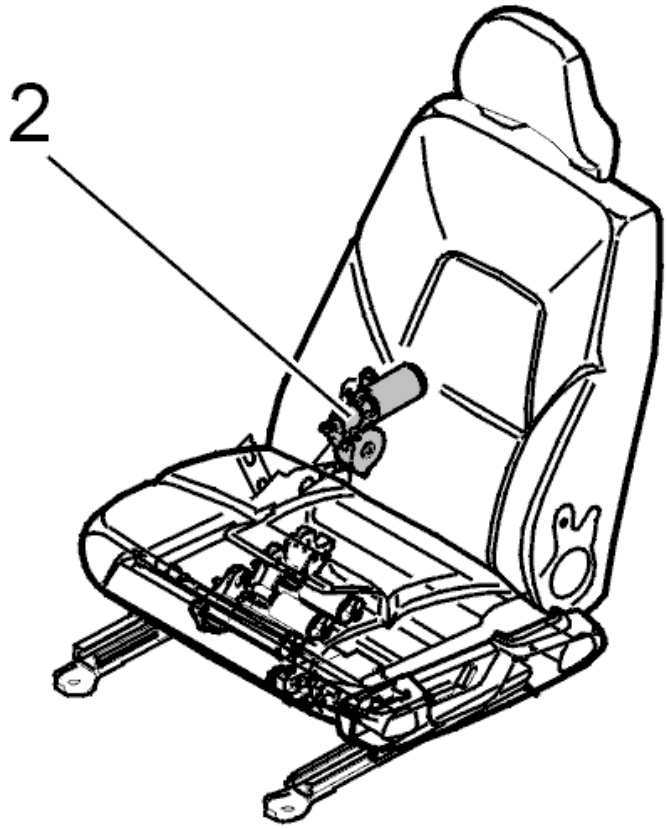

Fig. 13: Identifying Power Seat Backrest Rake Motor
Courtesy of VOLVO CARS CORPORATION

Motor 2 controls backrest rake. Motor 2 must be activated before the diagnostic trouble code (DTC) can be detected. Diagnostic trouble code (DTC) PSM-0002 is stored if no Hall sensor pulse is detected when motor 2 is activated and in operation.

Possible Source

- Defective Hall sensor in motor 2.
- Short-circuit to supply voltage or ground in the signal cable.
- Open-circuit in the signal cable to the Hall sensor.

Fault symptom[s]

- Automatic seat control does not function (automatic control of other motors functioning as normal).

FAULTY SIGNAL. INTERMITTENT FAULT

see **FAULTY SIGNAL. INTERMITTENT FAULT**

PSM-0002: HALL SENSOR 2. FAULTY SIGNAL. PERMANENT FAULT (2003-12)

DIAGNOSTIC TROUBLE CODE (DTC) INFORMATION

see **DIAGNOSTIC TROUBLE CODE (DTC) INFORMATION**

FAULTY SIGNAL. PERMANENT FAULT

CHECKING HALL SENSOR SIGNAL

HINT: The motor should be activated when the check is carried out.

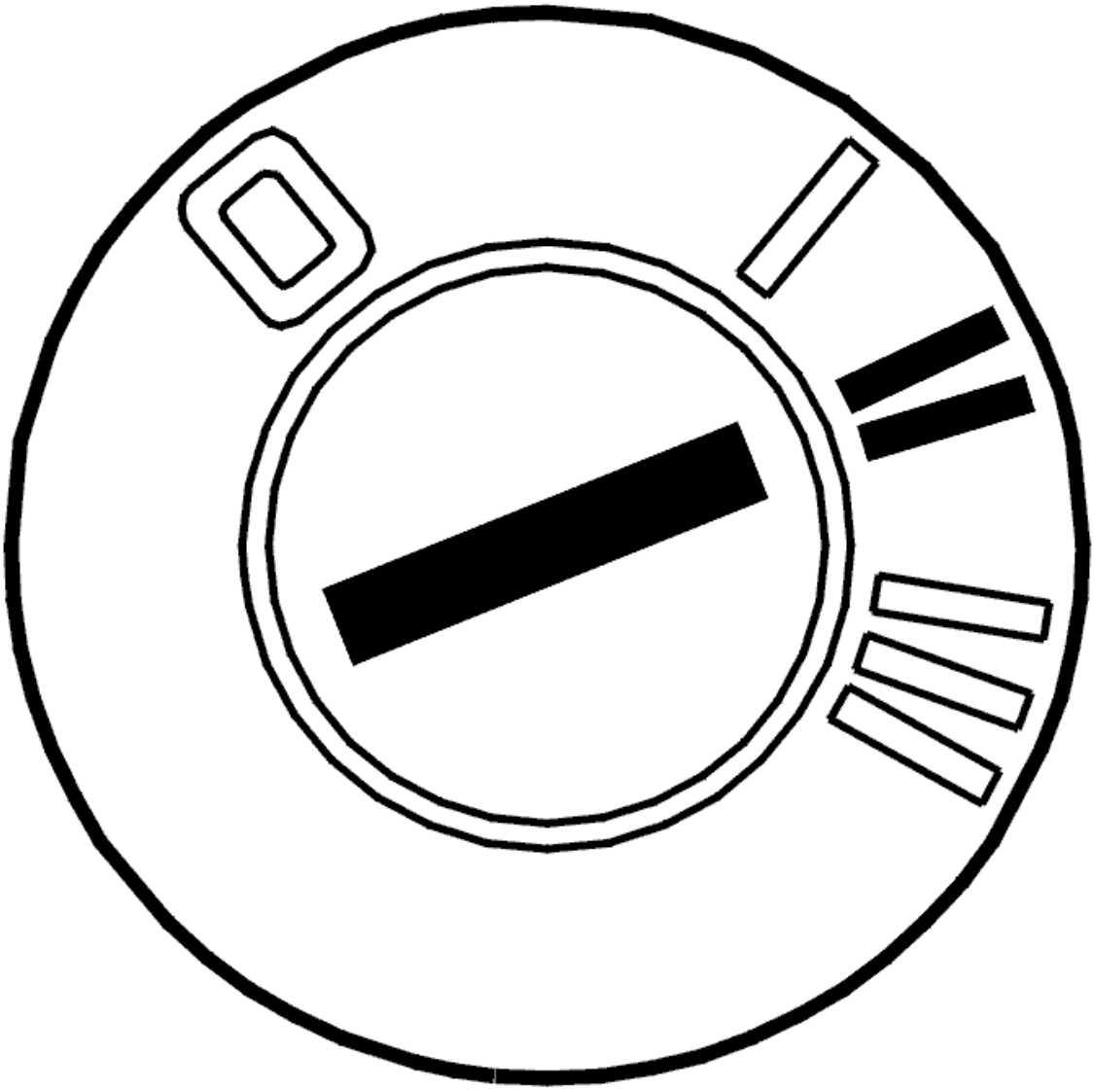

Fig. 14: Identifying Ignition ON
Courtesy of VOLVO CARS CORPORATION

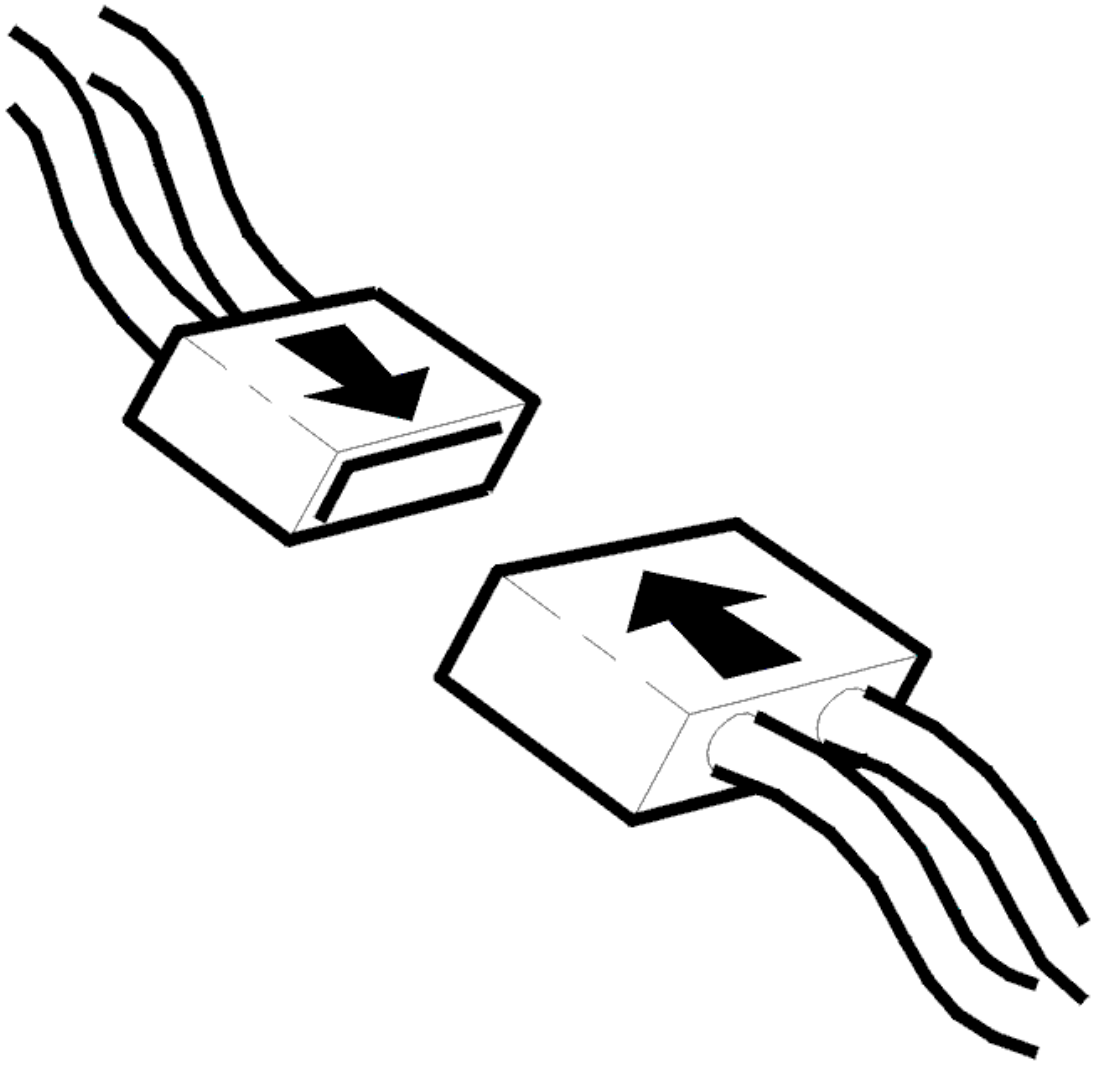

Fig. 15: Connecting Connector
Courtesy of VOLVO CARS CORPORATION

- Reconnect components, connectors etc.
- Ignition on.

  Read off value.

  Check whether the power seat module (PSM) receives the signal from the Hall sensor. Operate the relevant seat motor and check whether the value counts upwards and downwards as the seat is moved in each direction.

  The value should count up or down depending on seat operation.

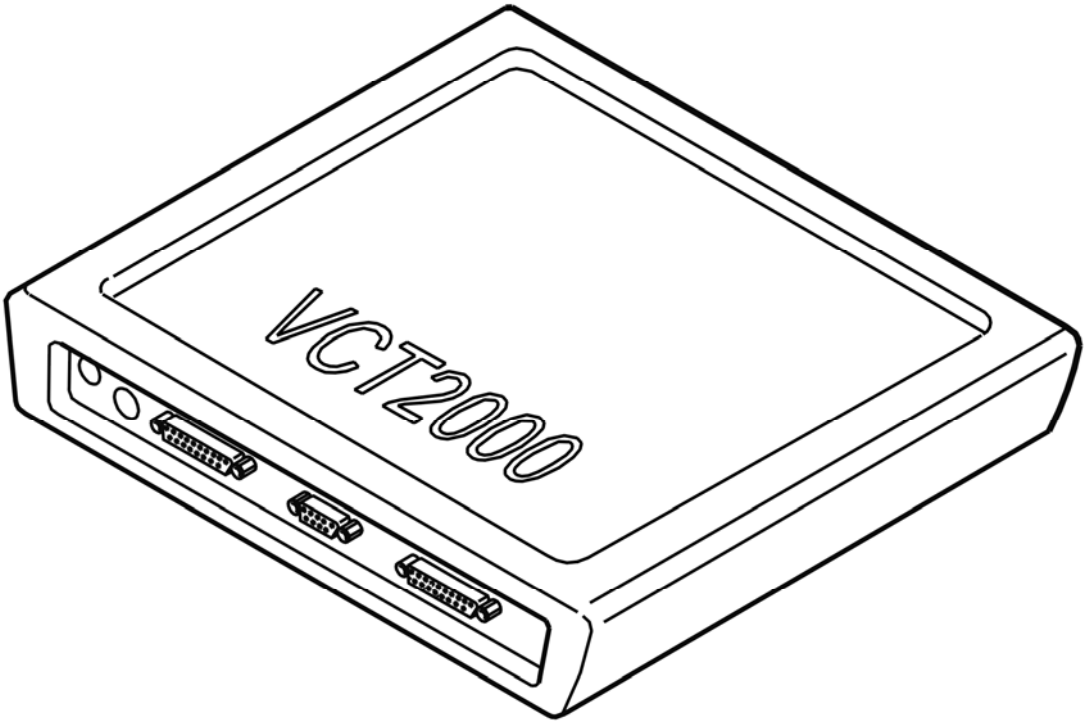

Fig. 16: Identifying VCT2000 Diagnostic Tool Symbol In VIDA
Courtesy of VOLVO CARS CORPORATION

Is the function OK?

- **YES**

  OKAY: Troubleshooting has been completed.

- **NO**

  Refer to **CHECKING CABLES AND COMPONENTS**

CHECKING CABLES AND COMPONENTS

Check the cable between the power seat module (PSM) #3D and the Hall sensor, and the cable between the power seat module (PSM) #4D and the Hall sensor for an open-circuit according to **OPEN-CIRCUIT, PERMANENT FAULTS** , a short-circuit to ground according to **SHORT-CIRCUIT TO GROUND, PERMANENT FAULTS** and a short-circuit to supply voltage according to **SHORT-CIRCUIT TO SUPPLY VOLTAGE. PERMANENT FAULTS** .

Check hall sensor and replace if necessary.

HINT: The sensor should generate a pulsed signal.

Remedy as necessary.

Other information

- To connect the breakout box, see **CONNECTING THE BREAKOUT BOX, POWER SEAT MODULE (PSM)** .
- For information on signals, refer to **OUTPUT SIGNALS TO THE MOTORS** .

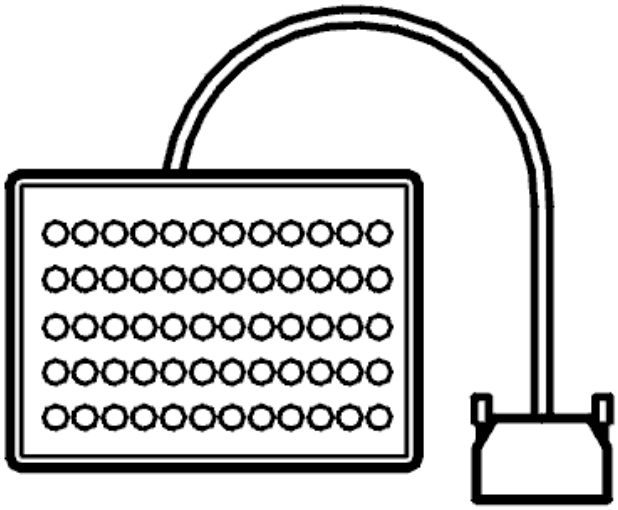

Fig. 17: Breakout Box
Courtesy of VOLVO CARS CORPORATION

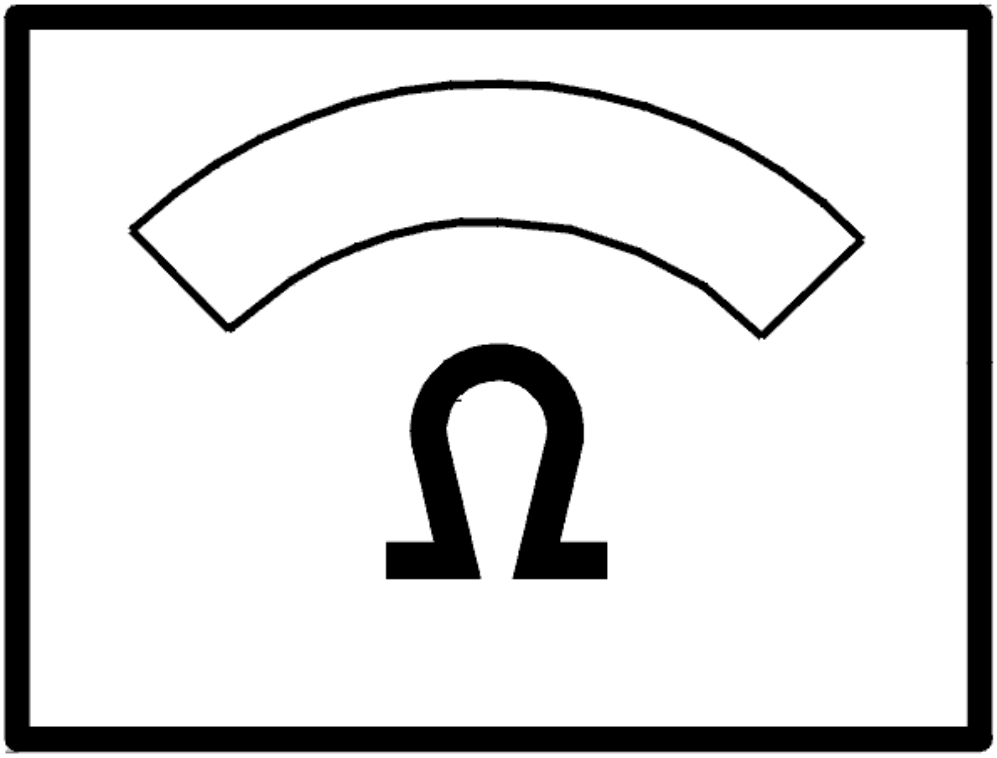

Fig. 18: Identifying Ohmmeter
Courtesy of VOLVO CARS CORPORATION

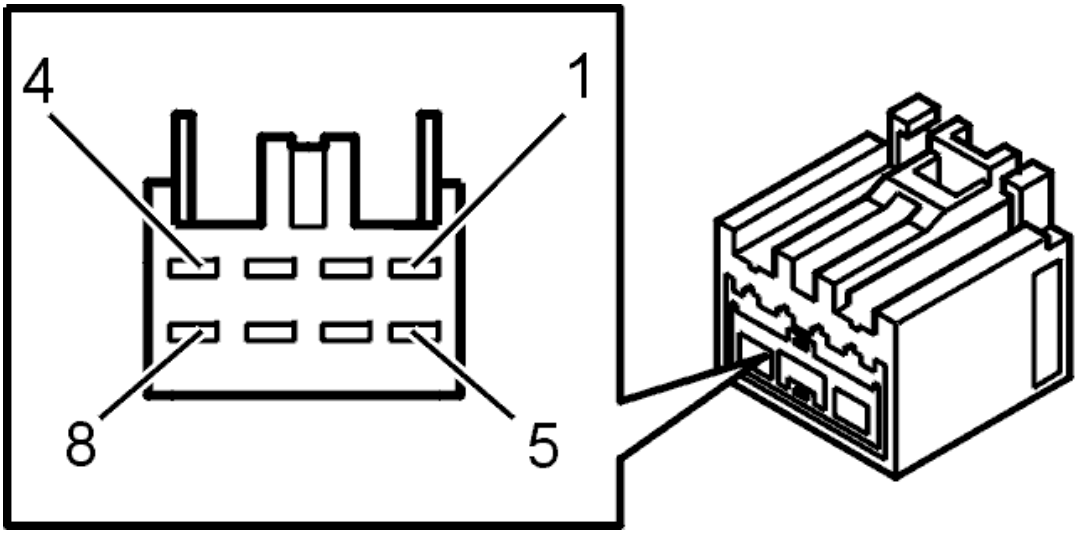

Fig. 19: Connector, Black (8-Pin)
Courtesy of VOLVO CARS CORPORATION

- **Continue**

  Refer to **VERIFICATION**

VERIFICATION

HINT: The motor should be activated when the check is carried out.

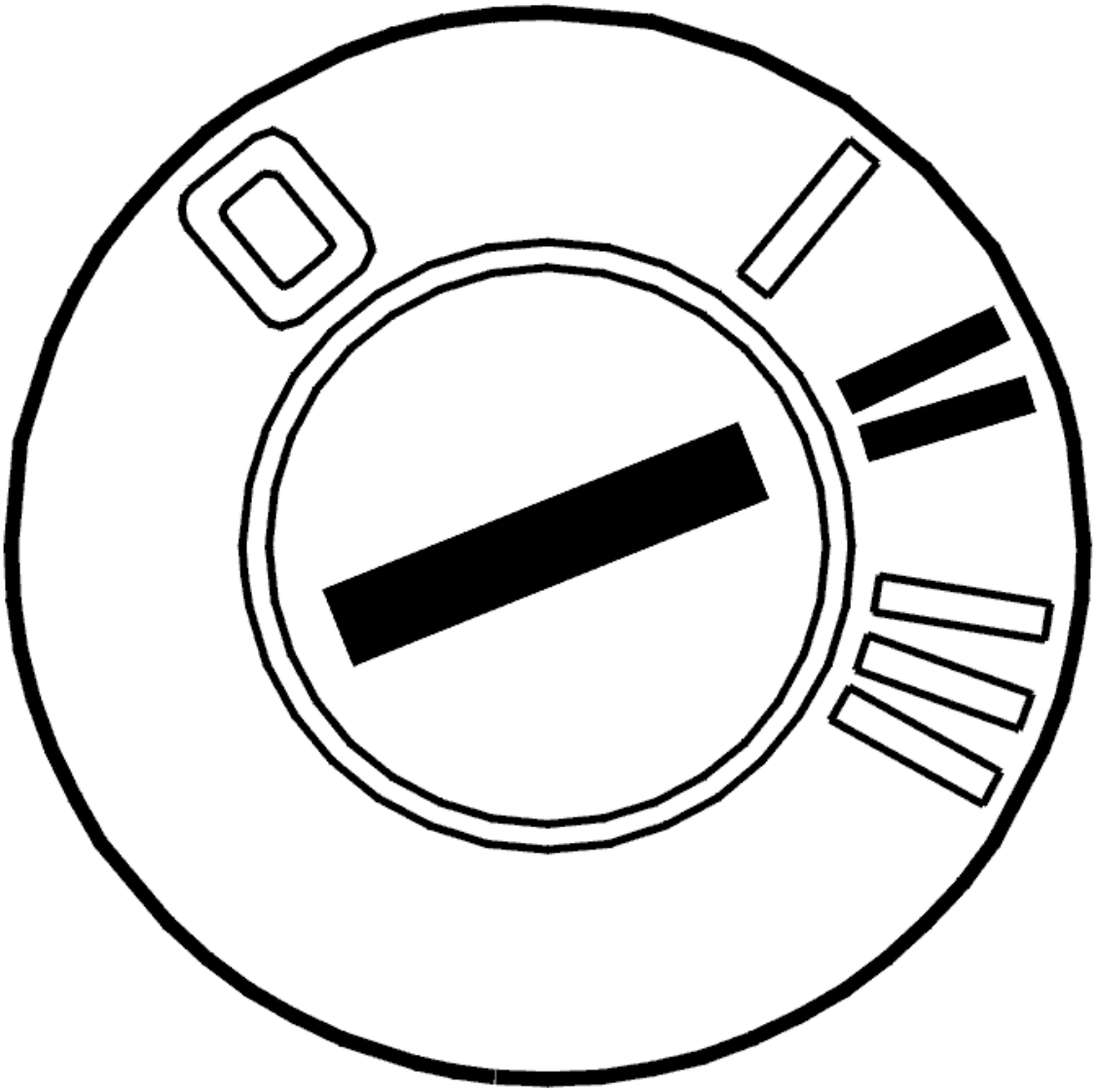

Fig. 20: Identifying Ignition ON
Courtesy of VOLVO CARS CORPORATION

- Ignition on.

  Read off value.

  The Hall sensor must generate a pulsed signal and the power seat module (PSM) should count up or down depending on the movement of the seat.

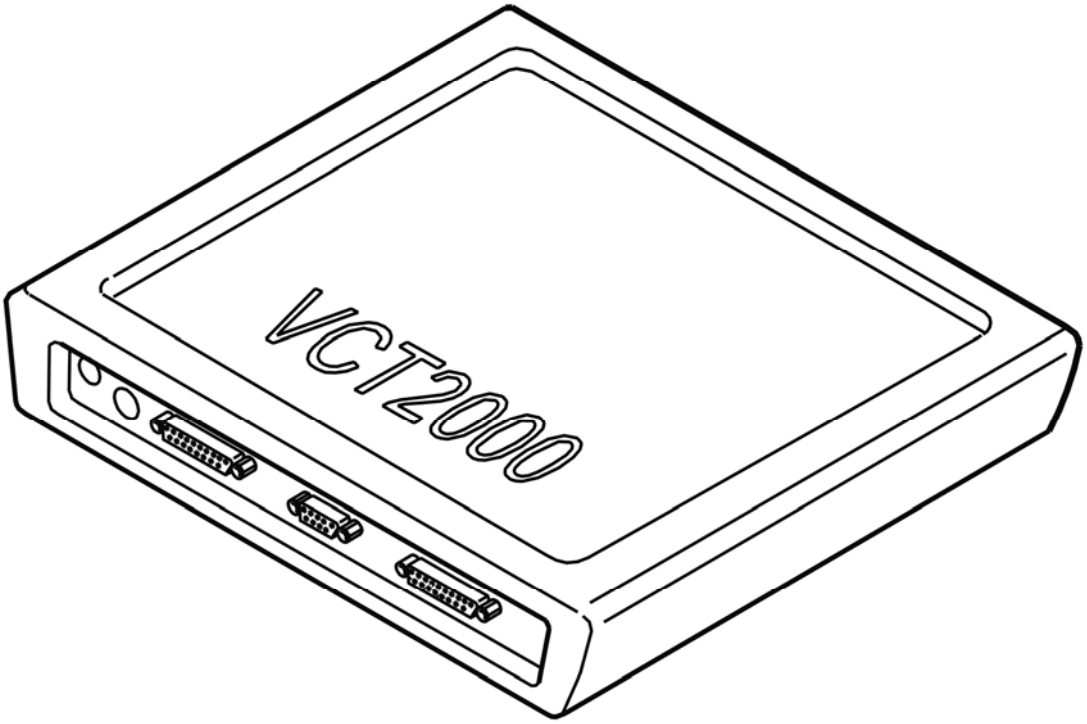

Fig. 21: Identifying VCT2000 Diagnostic Tool Symbol In VIDA
Courtesy of VOLVO CARS CORPORATION

Is the function OK?

- **YES**

  OKAY: Troubleshooting has been completed.

- **NO**

  Refer to **INFORMATION**

INFORMATION

FAULT-TRACING INFORMATION

The fault should have been detected and remedied. As this is not the case fault-tracing has failed.

Exit fault-tracing for this diagnostic trouble code (DTC) or make another attempt.

PSM-0003: HALL SENSOR 3. FAULTY SIGNAL. INTERMITTENT FAULT (2003-12)

DIAGNOSTIC TROUBLE CODE (DTC) INFORMATION

Condition

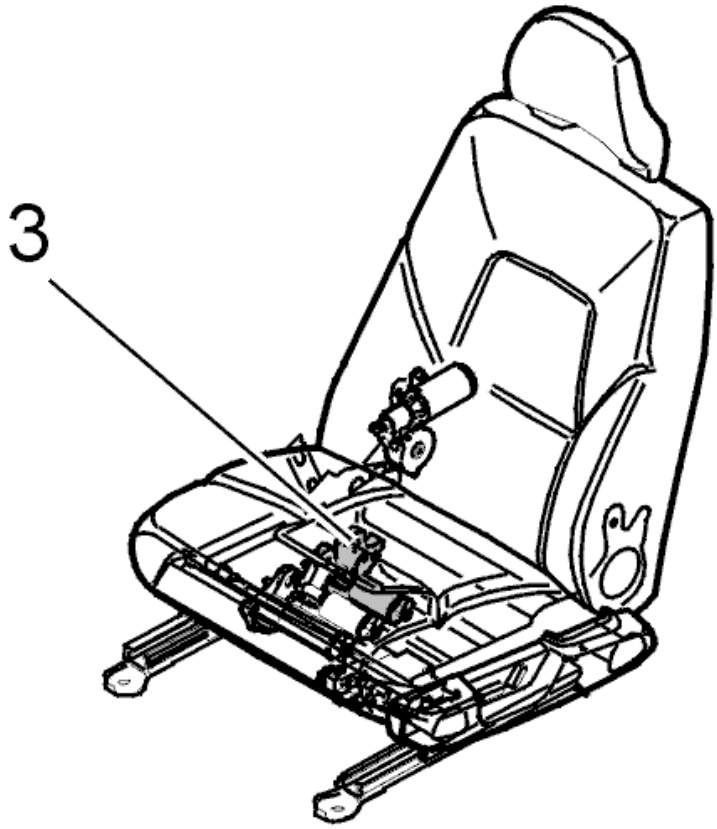

Fig. 22: Identifying Power Seat Rear Edge Seat Height Motor
Courtesy of VOLVO CARS CORPORATION

Motor 3 controls the rear edge seat height. Motor 3 must be activated before the diagnostic trouble code (DTC) can be detected. Diagnostic trouble code (DTC) PSM-0003 is stored if no Hall sensor pulse is detected when motor 3 is activated and in operation.

Possible Source

- Defective Hall sensor in motor 3.
- Short-circuit to supply voltage or ground in the signal cable.
- Open-circuit in the signal cable to the Hall sensor.

Fault symptom[s]

- Automatic seat control does not function (automatic control of other motors functioning as normal).

FAULTY SIGNAL. INTERMITTENT FAULT

see **FAULTY SIGNAL. INTERMITTENT FAULT**

PSM-0003: HALL SENSOR 3. FAULTY SIGNAL. PERMANENT FAULT (2003-12)

DIAGNOSTIC TROUBLE CODE (DTC) INFORMATION

see **DIAGNOSTIC TROUBLE CODE (DTC) INFORMATION**

FAULTY SIGNAL. PERMANENT FAULT

CHECKING THE HALL SENSOR SIGNAL

HINT: The motor should be activated when the check is carried out.

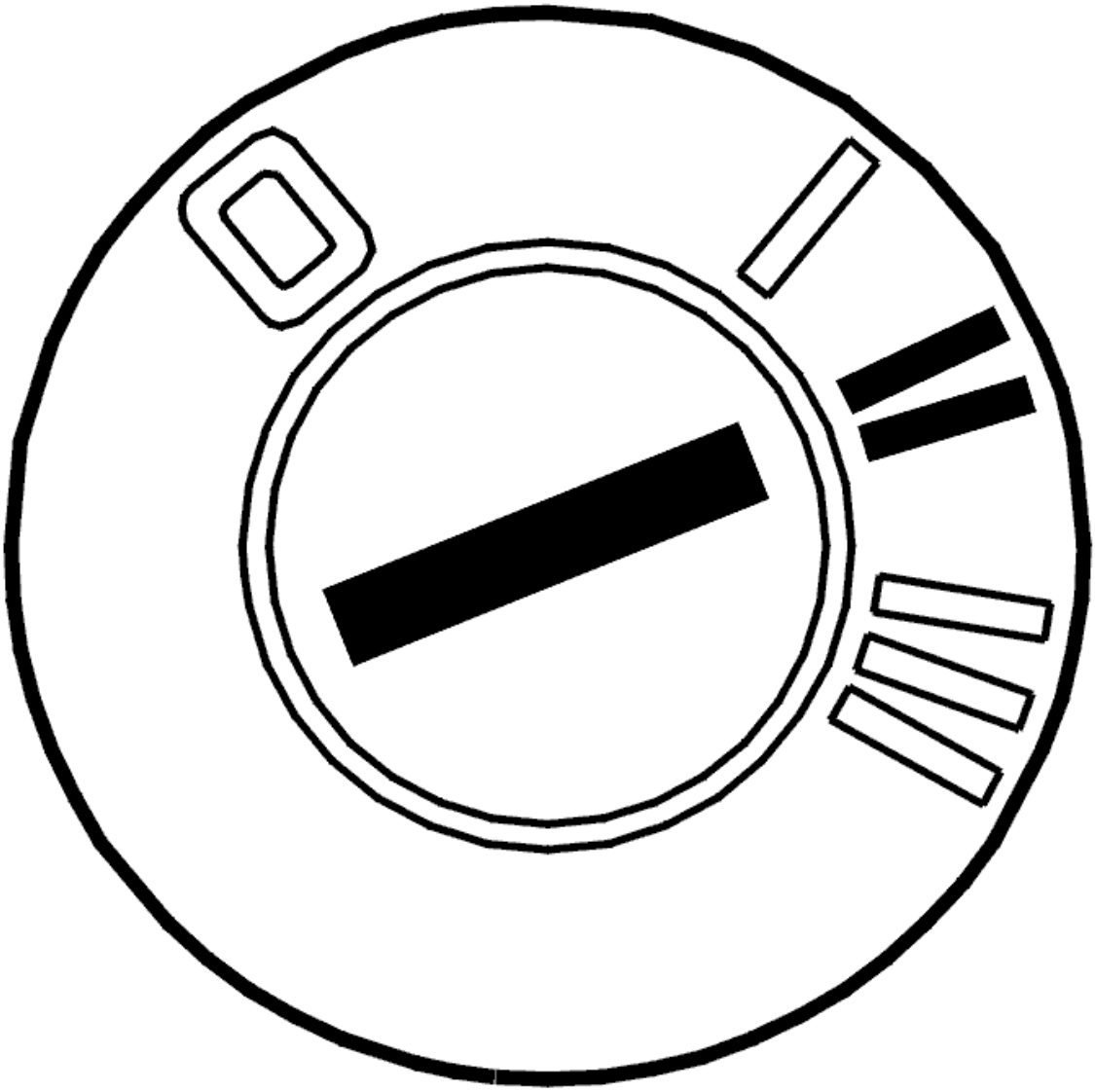

Fig. 23: Identifying Ignition ON
Courtesy of VOLVO CARS CORPORATION

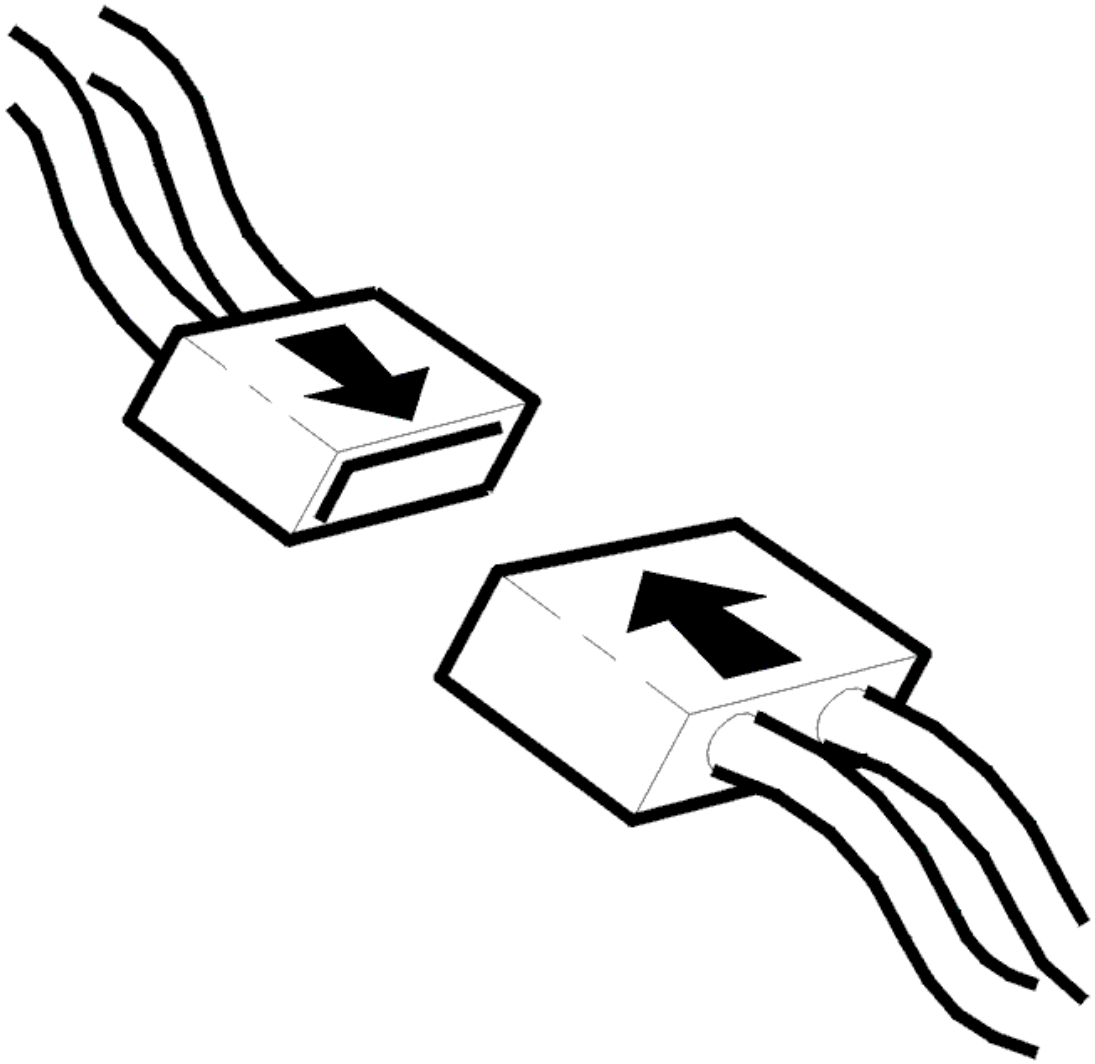

Fig. 24: Connecting Connector
Courtesy of VOLVO CARS CORPORATION

- Reconnect components, connectors etc.
- Ignition on.

  Read off value.

  Check whether the power seat module (PSM) receives the signal from the Hall sensor. Operate the relevant seat motor and check whether the value counts upwards and downwards as the seat is moved in each direction. The value should count up or down depending on seat operation.

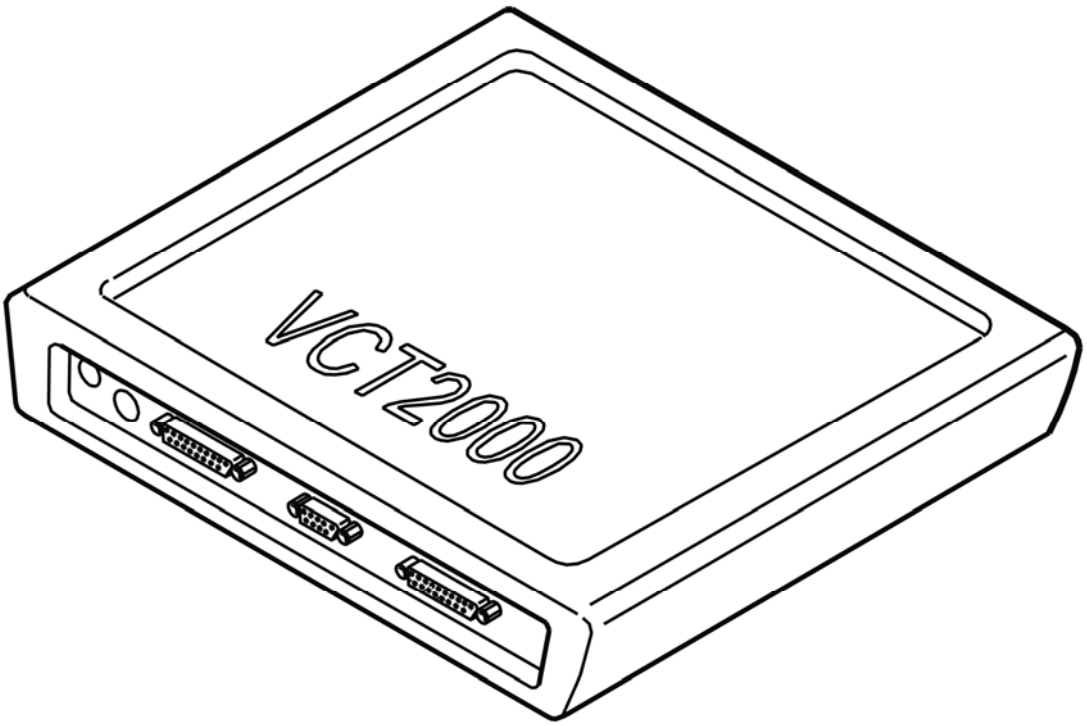

Fig. 25: Identifying VCT2000 Diagnostic Tool Symbol In VIDA
Courtesy of VOLVO CARS CORPORATION

Is the function OK?

- **YES**

  OKAY: Troubleshooting has been completed.

- **NO**

  Refer to **CHECKING WIRING AND COMPONENTS**

CHECKING WIRING AND COMPONENTS

Check the cable between the power seat module (PSM) #7E and the Hall sensor, and the cable between the power seat module (PSM) #8E and the Hall sensor for an open-circuit according to **OPEN-CIRCUIT, PERMANENT FAULTS** , a short-circuit to ground according to **SHORT-CIRCUIT TO GROUND, PERMANENT FAULTS** and a short-circuit to supply voltage according to **SHORT-CIRCUIT TO SUPPLY VOLTAGE. PERMANENT FAULTS** .

Check hall sensor and replace if necessary.

HINT: The sensor should generate a pulsed signal.

Remedy as necessary.

Other information

- To connect the breakout box, see **CONNECTING THE BREAKOUT BOX, POWER SEAT MODULE (PSM)** .
- For information on signals, refer to **CONNECTOR, BLACK (12-PIN)** .

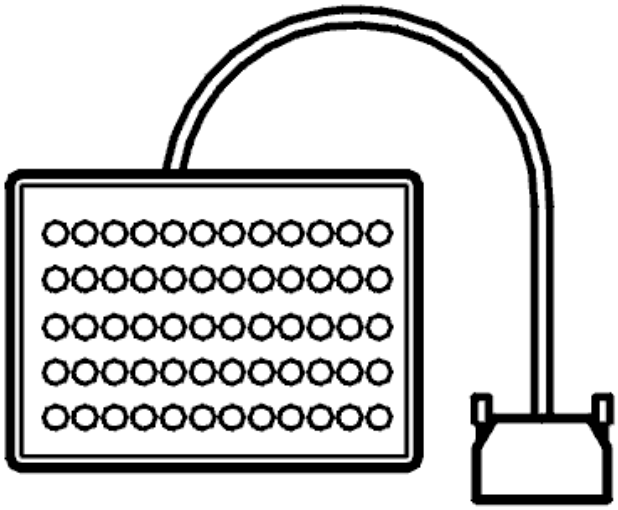

Fig. 26: Breakout Box
Courtesy of VOLVO CARS CORPORATION

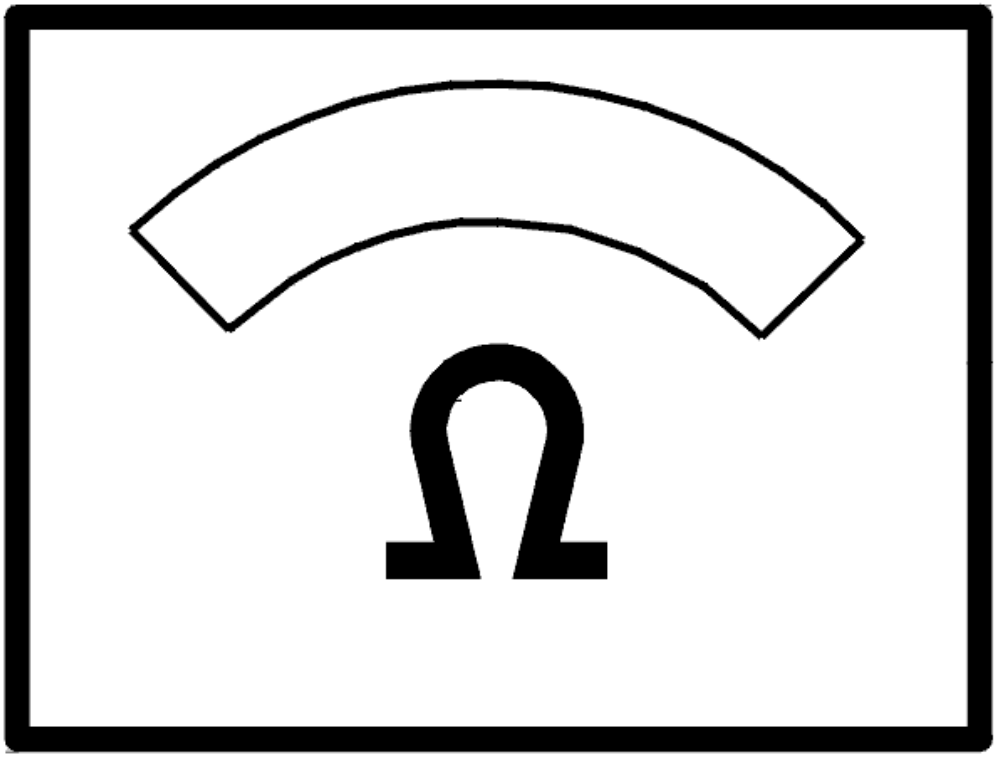

Fig. 27: Identifying Ohmmeter
Courtesy of VOLVO CARS CORPORATION

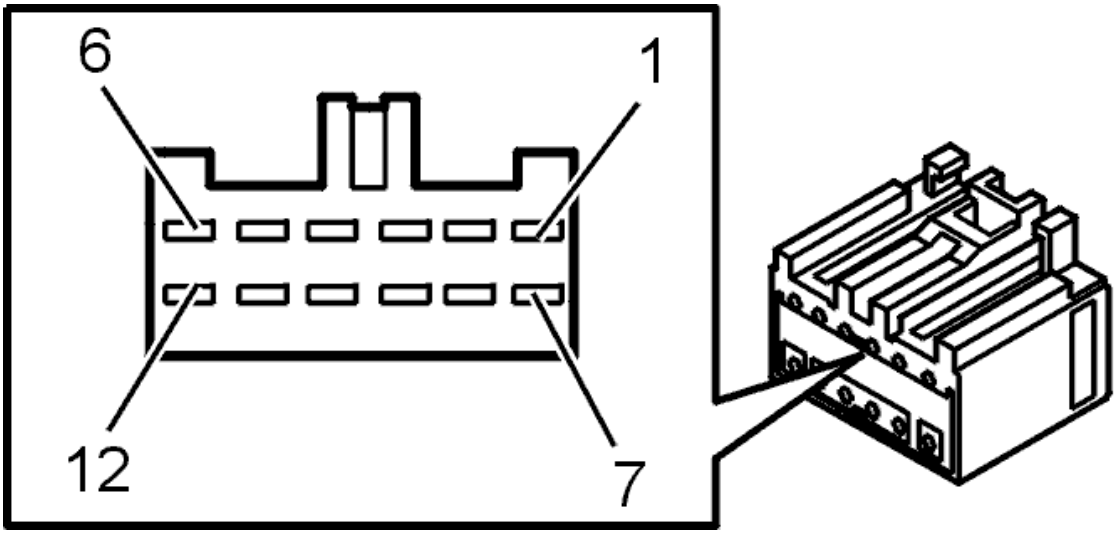

Fig. 28: Audio Control Module (AUM)/External Amplifier To Loudspeakers, Gray Connector
Courtesy of VOLVO CARS CORPORATION

- **Continue**

  Refer to **VERIFICATION**

VERIFICATION

HINT: The motor should be activated when the check is carried out.

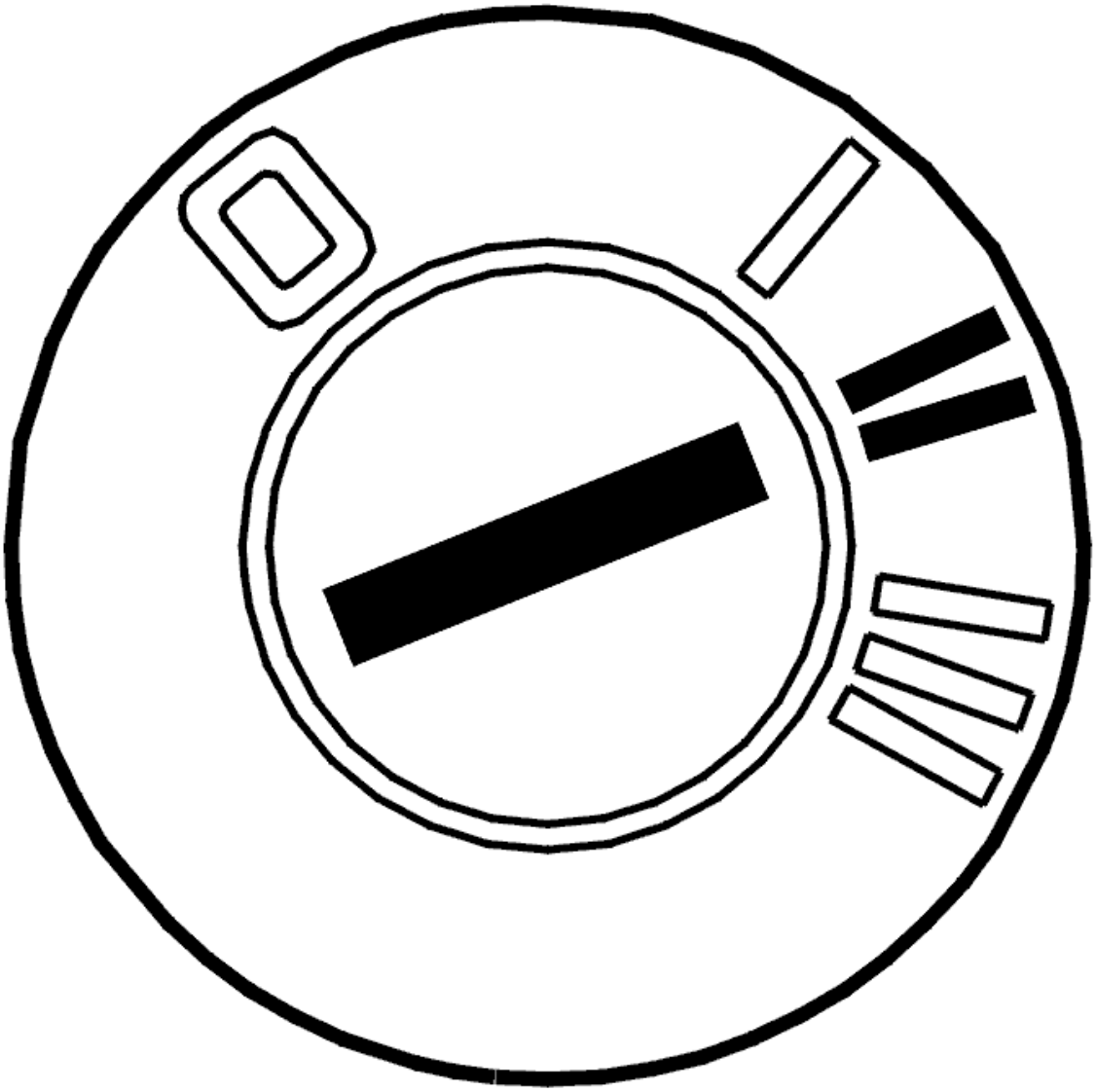

Fig. 29: Identifying Ignition ON
Courtesy of VOLVO CARS CORPORATION

- Ignition on.

  Read off value.

  The Hall sensor must generate a pulsed signal and the power seat module (PSM) should count up or down depending on the movement of the seat.

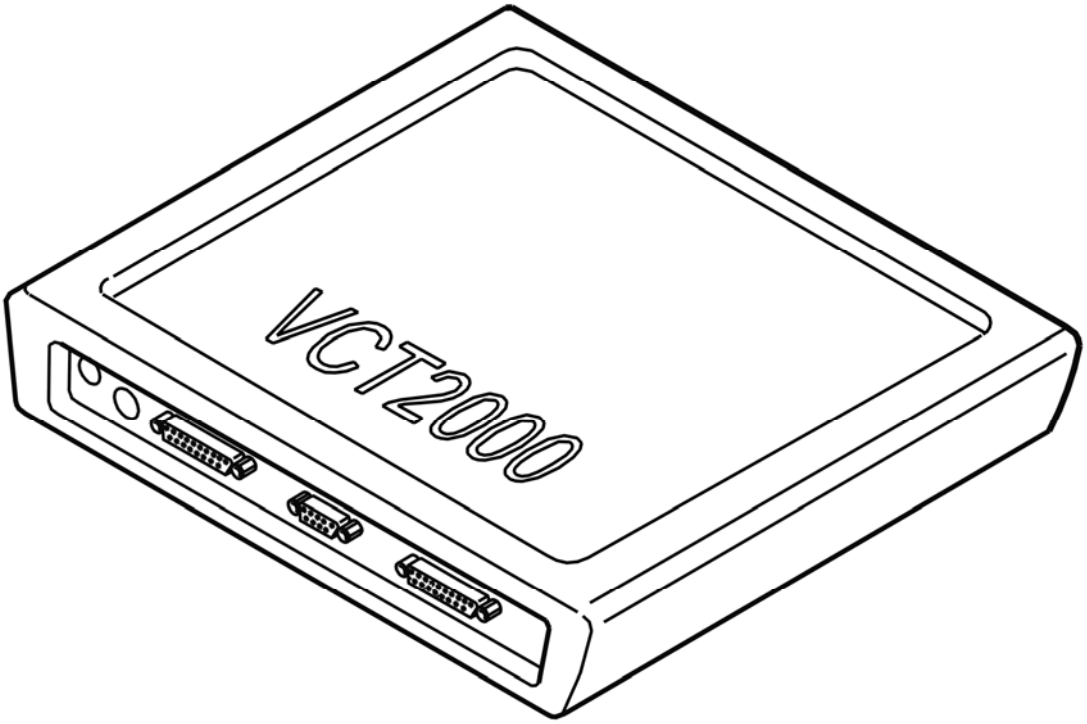

Fig. 30: Identifying VCT2000 Diagnostic Tool Symbol In VIDA
Courtesy of VOLVO CARS CORPORATION

Is the function OK?

- **YES**

  OKAY: Troubleshooting has been completed.

- **NO**

  Refer to **INFORMATION**

INFORMATION

FAULT-TRACING INFORMATION

The fault should have been detected and remedied. As this is not the case fault-tracing has failed.

Exit fault-tracing for this diagnostic trouble code (DTC) or make another attempt.

PSM-0004: HALL SENSOR 4. FAULTY SIGNAL. INTERMITTENT FAULT (2003-12)

DIAGNOSTIC TROUBLE CODE (DTC) INFORMATION

Condition

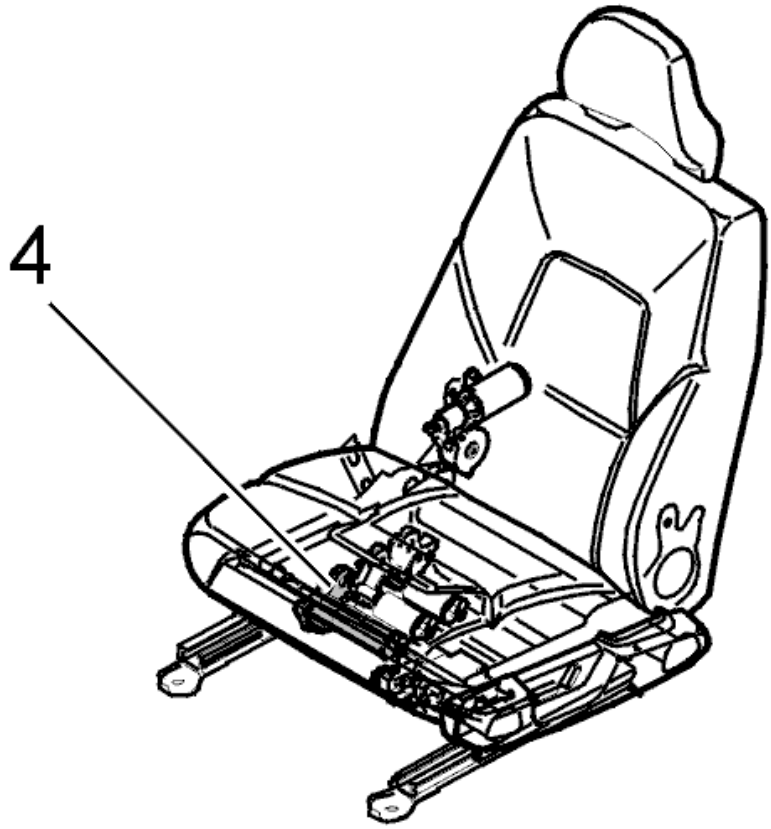

Fig. 31: Identifying Power Seat Front Edge Height Motor
Courtesy of VOLVO CARS CORPORATION

Motor 4 controls seat front edge height. Motor 4 must be activated before the diagnostic trouble code (DTC) can be detected. Diagnostic trouble code (DTC) PSM-0004 is stored if no Hall sensor pulse is detected when motor 4 is activated and in operation.

Possible Source

- Defective Hall sensor in motor 4.
- Short-circuit to supply voltage or ground in the signal cable.
- Open-circuit in the signal cable to the Hall sensor.

Fault symptom[s]

- Automatic seat control does not function (automatic control of other motors functioning as normal).

FAULTY SIGNAL. INTERMITTENT FAULT

see **FAULTY SIGNAL. INTERMITTENT FAULT**

PSM-0004: HALL SENSOR 4. FAULTY SIGNAL. PERMANENT FAULT (2003-12)

DIAGNOSTIC TROUBLE CODE (DTC) INFORMATION

see **DIAGNOSTIC TROUBLE CODE (DTC) INFORMATION**

FAULTY SIGNAL. PERMANENT FAULT

CHECKING HALL SENSOR SIGNAL

HINT: The motor should be activated when the check is carried out.

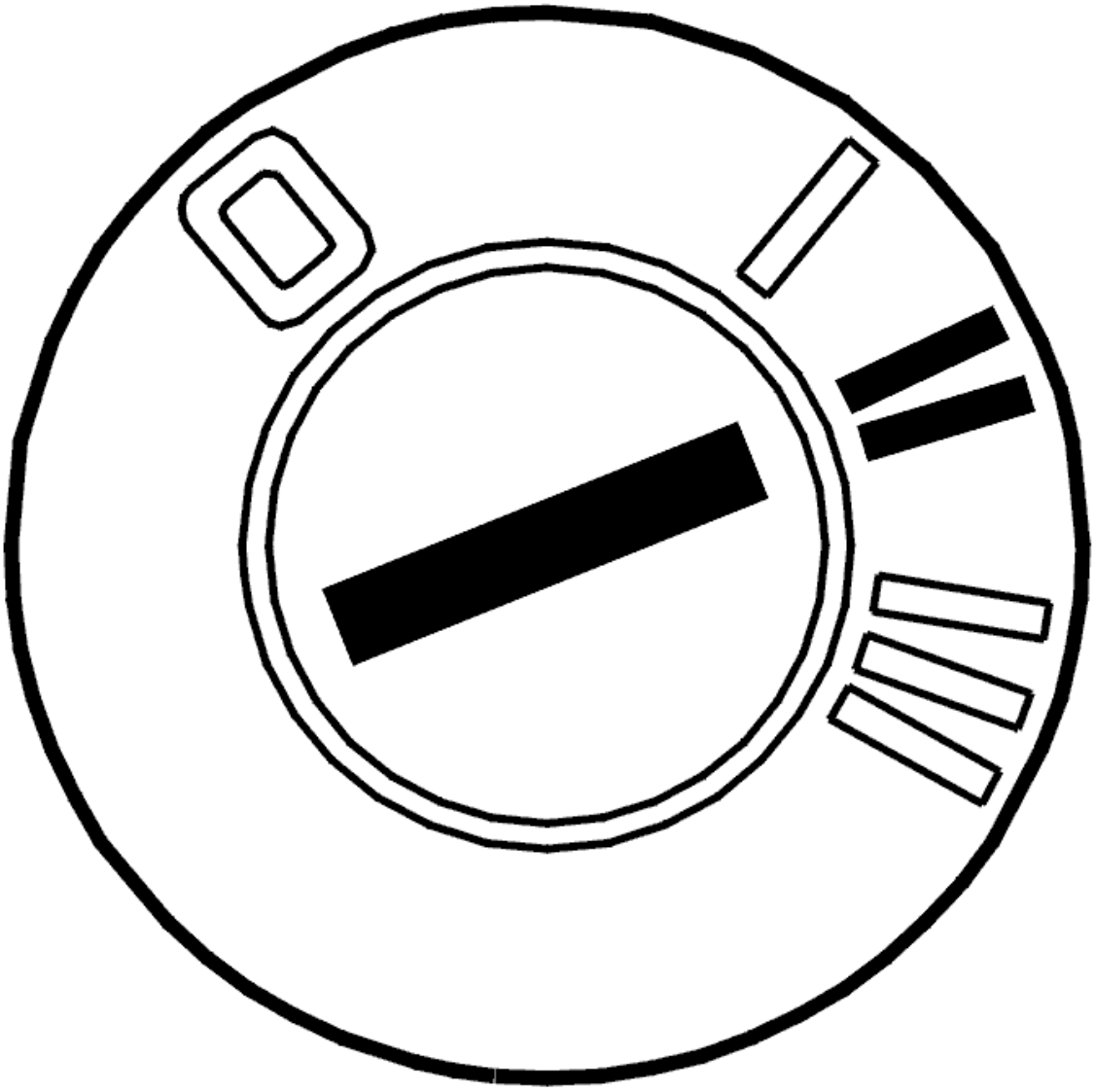

Fig. 32: Identifying Ignition ON
Courtesy of VOLVO CARS CORPORATION

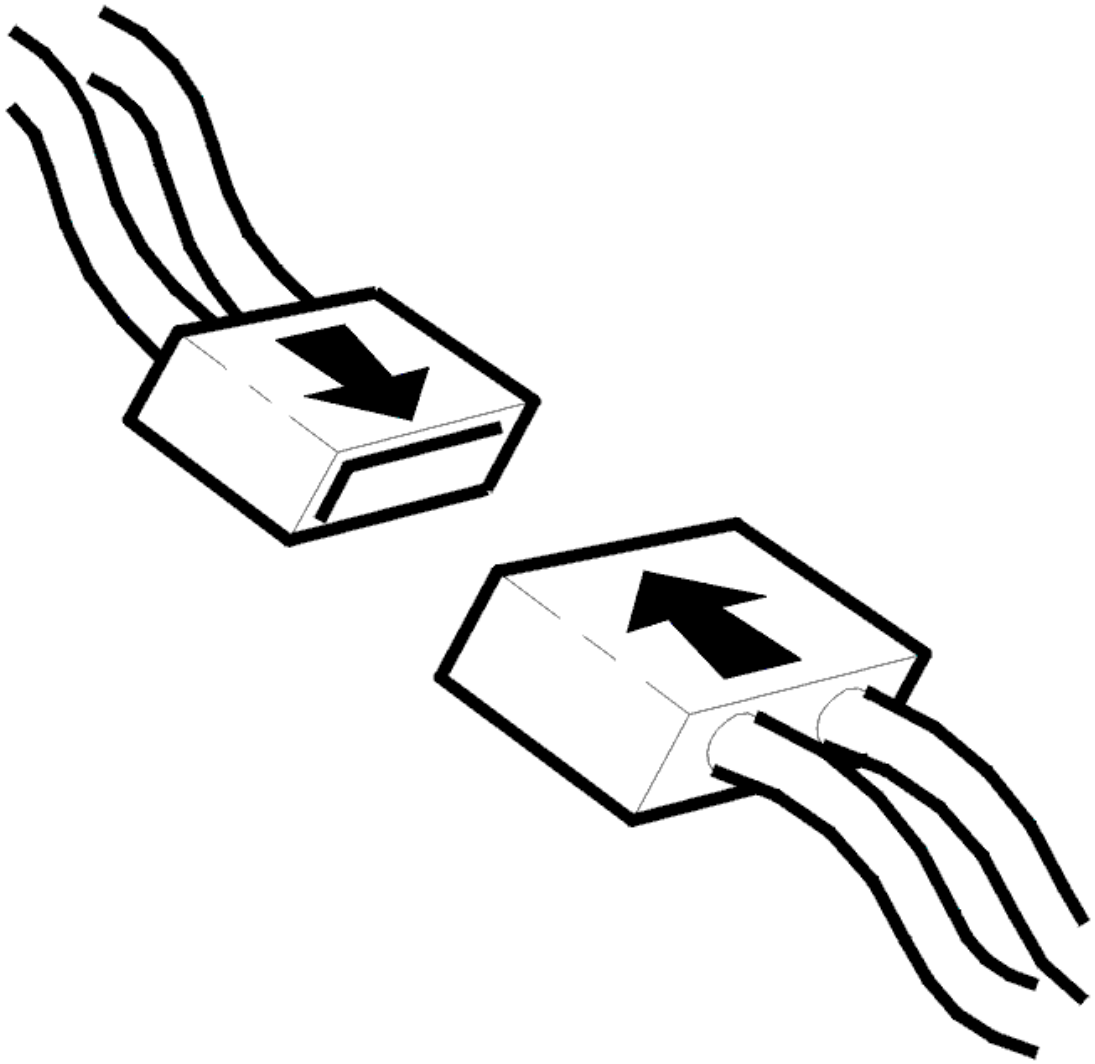

Fig. 33: Connecting Connector
Courtesy of VOLVO CARS CORPORATION

- Reconnect components, connectors etc.
- Ignition on.

  Read off value.

  Check whether the power seat module (PSM) receives the signal from the Hall sensor. Operate the relevant seat motor and check whether the value counts upwards and downwards as the seat is moved in each direction.

  The value should count up or down depending on seat operation.

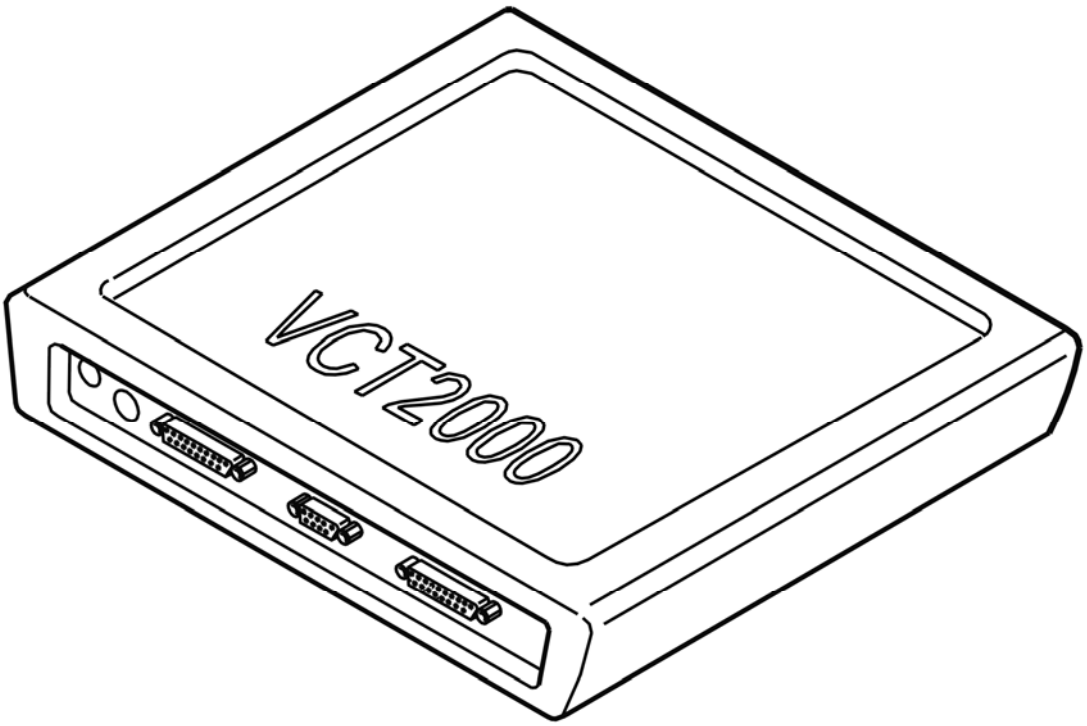

Fig. 34: Identifying VCT2000 Diagnostic Tool Symbol In VIDA
Courtesy of VOLVO CARS CORPORATION

Is the function OK?

- **YES**

  OKAY: Troubleshooting has been completed.

- **NO**

  Refer to **CHECKING WIRING AND COMPONENTS**

CHECKING WIRING AND COMPONENTS

Check the cable between the power seat module (PSM) #3D and the Hall sensor, and the cable between the power seat module (PSM) #4D and the Hall sensor for an open-circuit according to **OPEN-CIRCUIT, PERMANENT FAULTS** , a short-circuit to ground according to **SHORT-CIRCUIT TO GROUND, PERMANENT FAULTS** and a short-circuit to supply voltage according to **SHORT-CIRCUIT TO SUPPLY VOLTAGE. PERMANENT FAULTS** .

Check hall sensor and replace if necessary.

HINT: The sensor should generate a pulsed signal.

Remedy as necessary.

Other information

- To connect the breakout box, see **CONNECTING THE BREAKOUT BOX, POWER SEAT MODULE (PSM)** .
- For information on signals, refer to **OUTPUT SIGNALS TO THE MOTORS** .

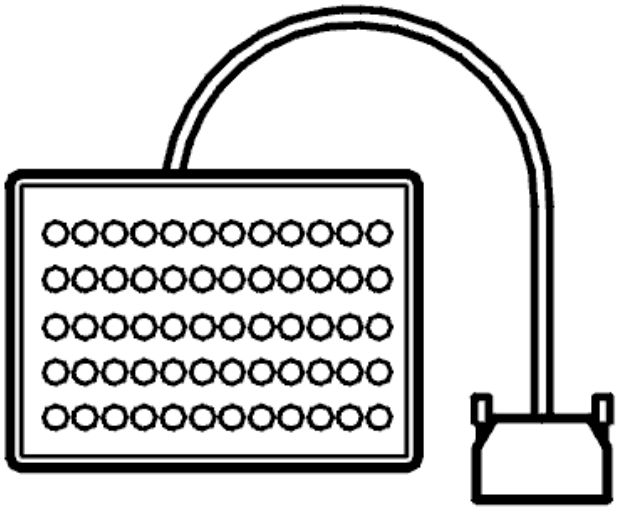

Fig. 35: Breakout Box
Courtesy of VOLVO CARS CORPORATION

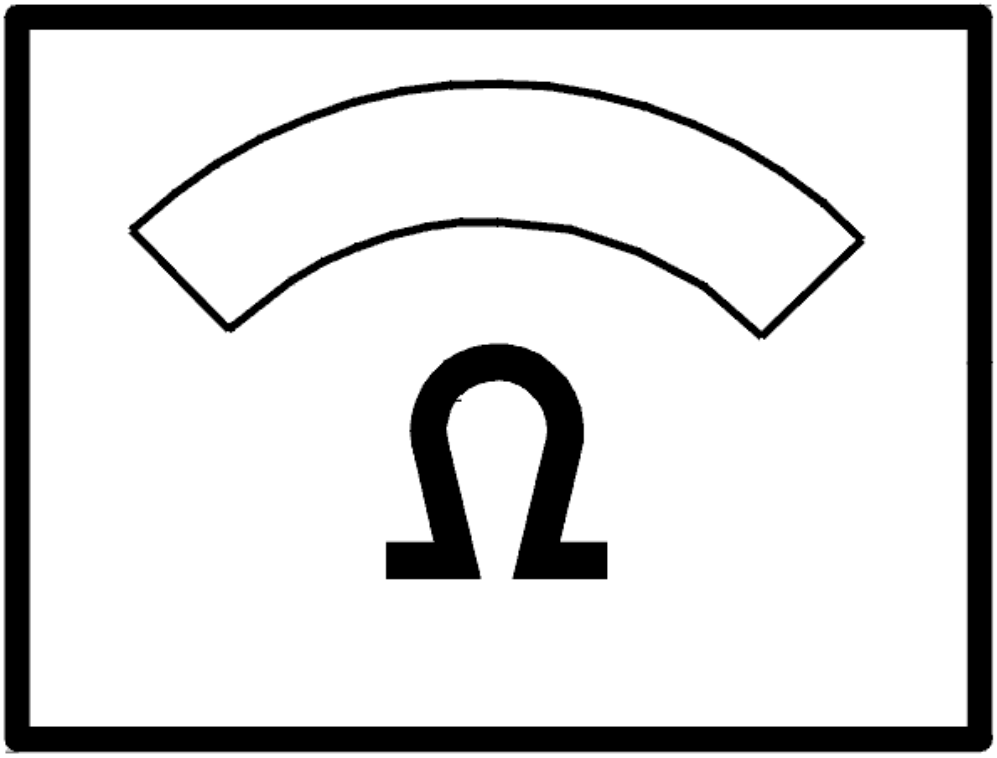

Fig. 36: Identifying Ohmmeter
Courtesy of VOLVO CARS CORPORATION

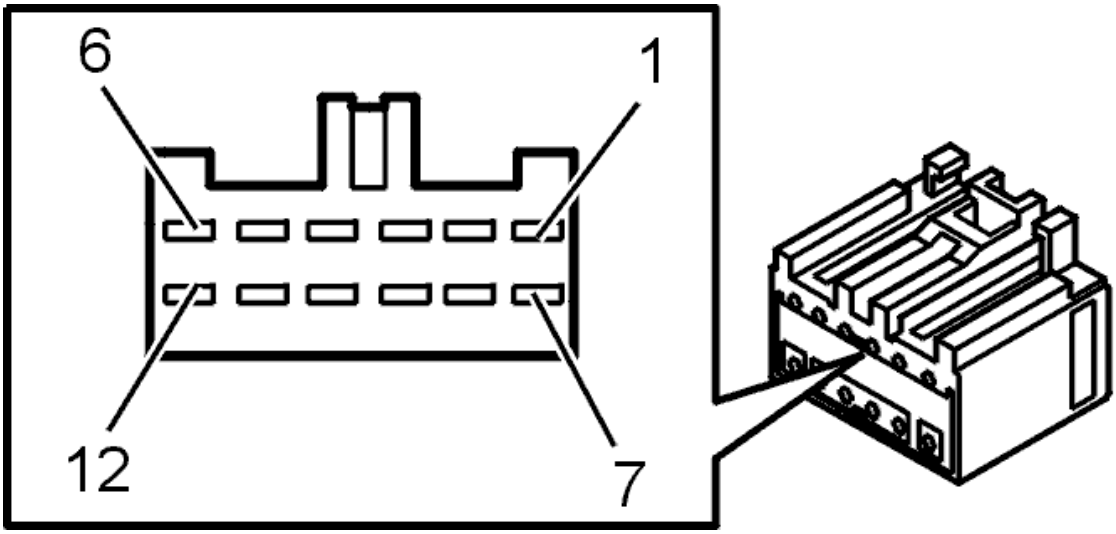

Fig. 37: Audio Control Module (AUM)/External Amplifier To Loudspeakers, Gray Connector
Courtesy of VOLVO CARS CORPORATION

- **Continue**

  Refer to **VERIFICATION**

VERIFICATION

HINT: The motor should be activated when the check is carried out.

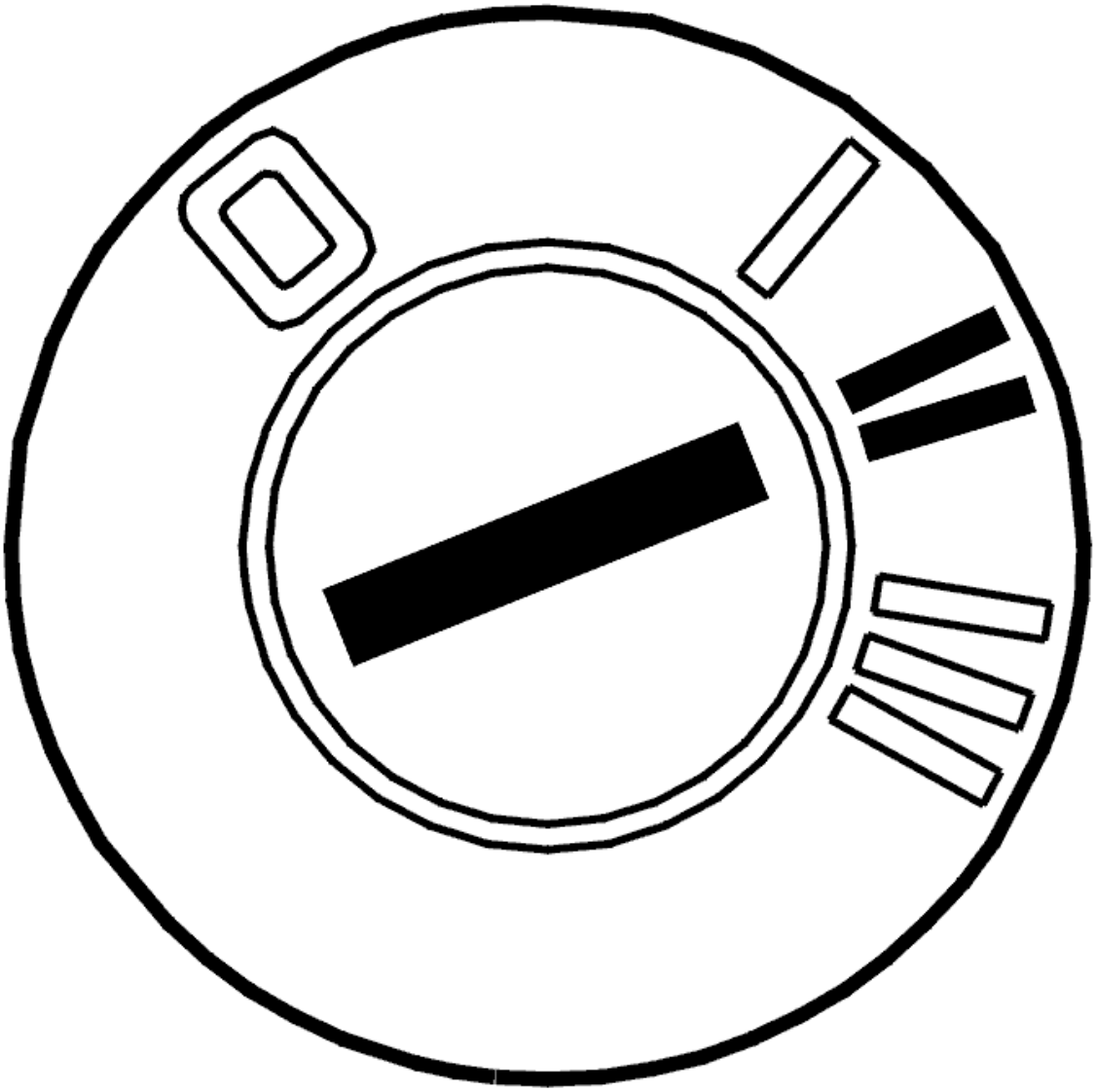

Fig. 38: Identifying Ignition ON
Courtesy of VOLVO CARS CORPORATION

- Ignition on.

  Read off value.

  The Hall sensor must generate a pulsed signal and the power seat module (PSM) should count up or down depending on the movement of the seat.

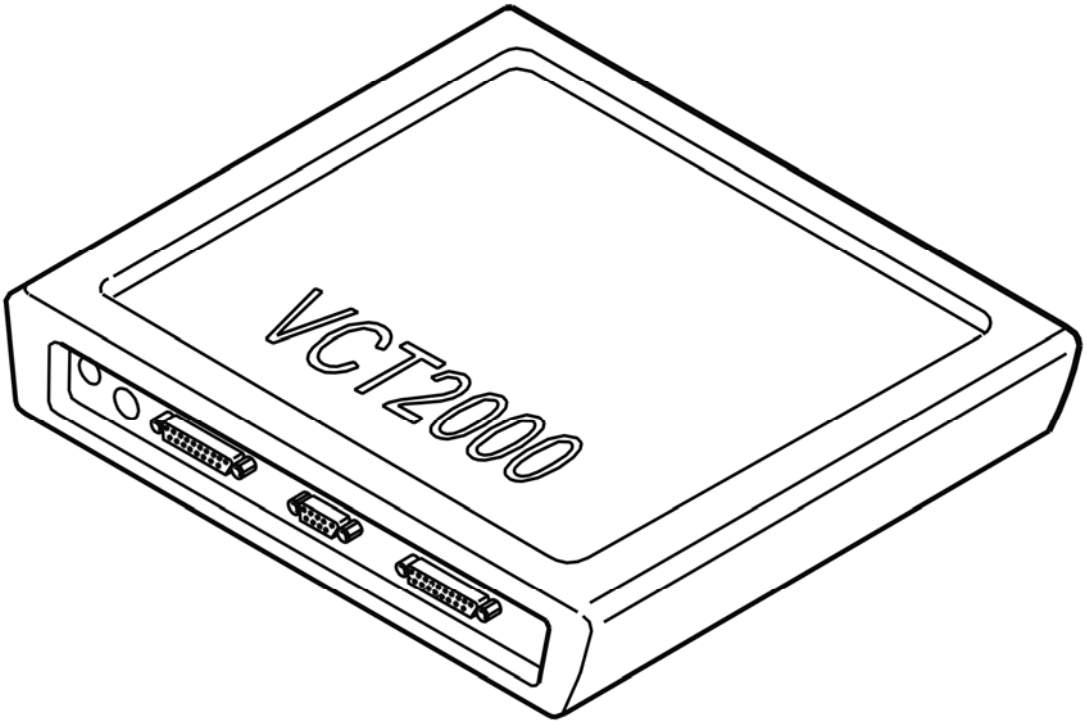

Fig. 39: Identifying VCT2000 Diagnostic Tool Symbol In VIDA
Courtesy of VOLVO CARS CORPORATION

Is the function OK?

- **YES**

  OKAY: Troubleshooting has been completed.

- **NO**

  Refer to **INFORMATION**

INFORMATION

FAULT-TRACING INFORMATION

The fault should have been detected and remedied. As this is not the case fault-tracing has failed.

Exit fault-tracing for this diagnostic trouble code (DTC) or make another attempt.

PSM-0019: MEMORY FUNCTION 1. INTERNAL FAULT. INTERMITTENT FAULT (2003-12)

DIAGNOSTIC TROUBLE CODE (DTC) INFORMATION

Condition

The power seat module (PSM) can store a seat setting in memory position 1. Memory button 1 must be activated for the diagnostic trouble code (DTC) to be detected. Diagnostic trouble code (DTC) PSM-0019 is stored if the power seat module (PSM) detects that the setting in memory position 1 does not correspond with a calculated check sum.

Possible Source

- Memory position 1 not stored.
- Memory position incorrectly stored.

Fault symptom[s]

- Memory button does not function.

INTERNAL FAULT. INTERMITTENT FAULT

FAULT-TRACING INFORMATION

Internal fault in the power seat module (PSM). Replace the power seat module (PSM). See **POWER SEAT MODULE (PSM), REPLACING** (2005-2012) or **POWER SEAT MODULE (PSM), REPLACING** (2003-2004).

PSM-0019: MEMORY FUNCTION 1. INTERNAL FAULT. PERMANENT FAULT (2003-2012)

DIAGNOSTIC TROUBLE CODE (DTC) INFORMATION

see **DIAGNOSTIC TROUBLE CODE (DTC) INFORMATION**

INTERNAL FAULT. PERMANENT FAULT

CHECKING SEAT FUNCTION

Program in seat position 1.

Move seat to another position.

Attempt to move the seat to memory position 1.

Does the memory function correctly?

- **YES**

OKAY: Troubleshooting has been completed.

- **NO**

  Refer to **CHECKING THE CONTROL PANEL**

CHECKING THE CONTROL PANEL

Check whether the signal from the control panel is received by the power seat module (PSM).

To read off the input signal to the power seat module (PSM) for memory button 1, select Mem 1 from the menu.

Read off the value.

HINT: When checking the control panel, check if the resistance between terminal #6C and the terminal pin is 0 ohms.

Button	Measure at:
Memory button 1	#2C

Other information

- To connect the breakout box, see **CONNECTING THE BREAKOUT BOX, POWER SEAT MODULE (PSM)**
- For information about signals, see **INPUT SIGNALS FROM THE CONTROL PANEL** .

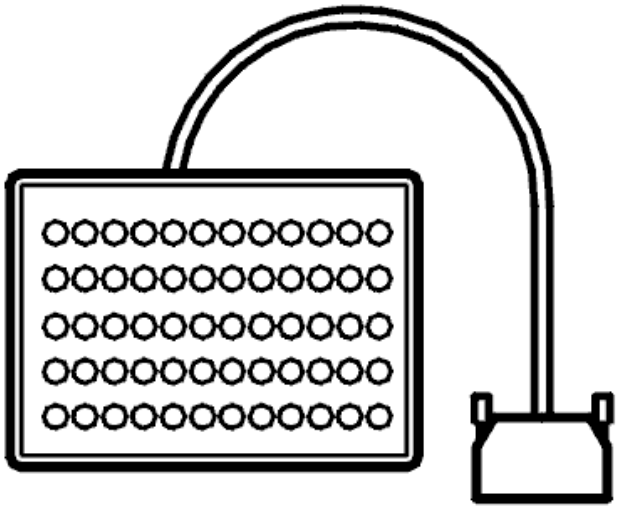

Fig. 40: Breakout Box
Courtesy of VOLVO CARS CORPORATION

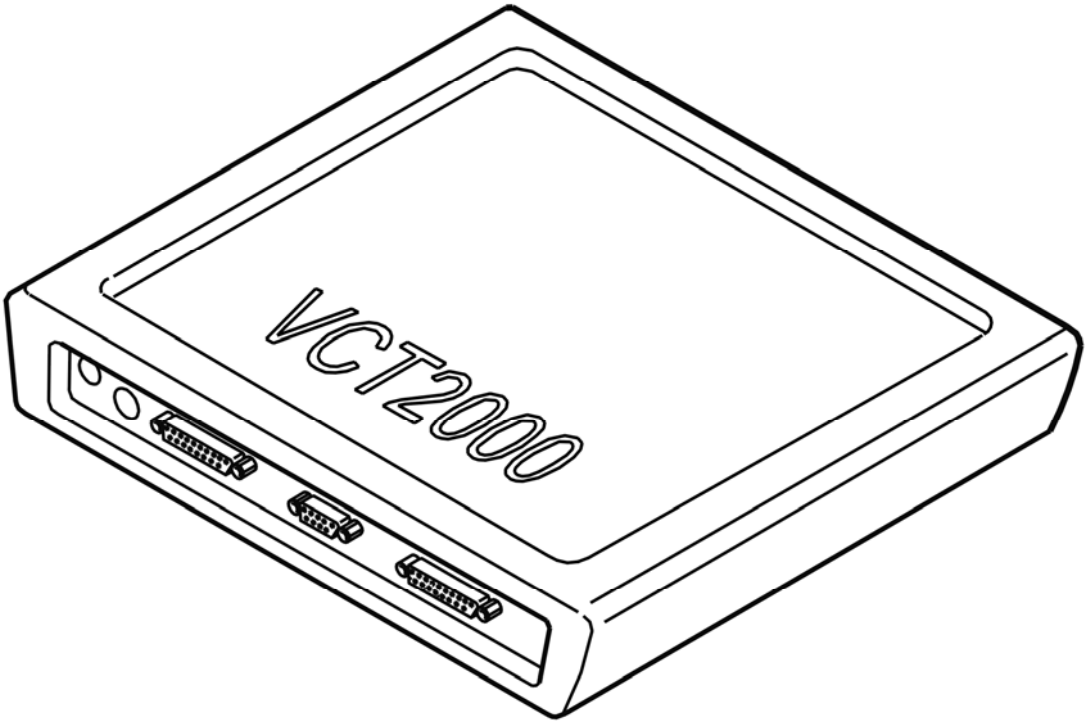

Fig. 41: Identifying VCT2000 Diagnostic Tool Symbol In VIDA
Courtesy of VOLVO CARS CORPORATION

Does the value change?

- **YES**

  Refer to **CHECKING THE MEMORY IN THE POWER SEAT MODULE (PSM)**

- **NO**

  Refer to **REPLACING THE COMPONENT**

REPLACING THE COMPONENT

Replace the control panel:

- See **SIDE PANEL, REPLACING** (-2004) or **SIDE PANEL FRONT SEAT, REPLACING** (2005-).
- **Continue**

  Refer to **VERIFICATION**

CHECKING THE MEMORY IN THE POWER SEAT MODULE (PSM)

The power seat module (PSM) has detected a fault in the memory. Try programming in a new seat position. If this does not work, the actual seat position can be compared with the programmed seat position.

As soon as the memory has been programmed the actual value should be the same as the programmed value.

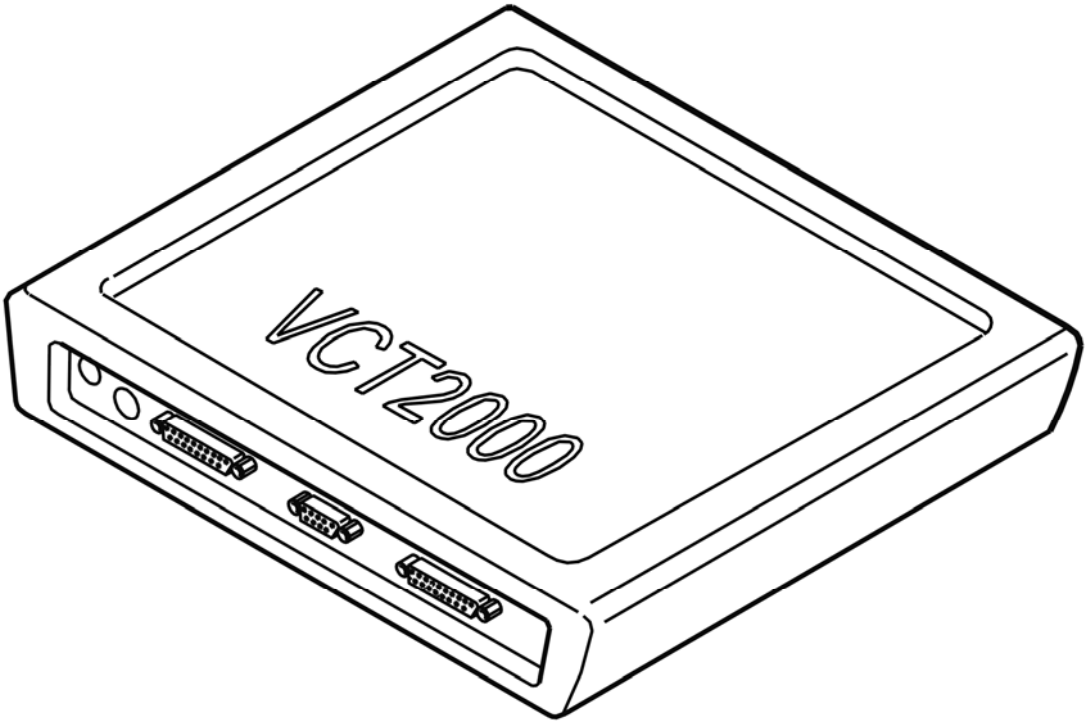

Fig. 42: Identifying VCT2000 Diagnostic Tool Symbol In VIDA
Courtesy of VOLVO CARS CORPORATION

Does the memory function correctly?

- **YES**

  Refer to **VERIFICATION**

- **NO**

  Refer to **REPLACING THE COMPONENT**

REPLACING THE COMPONENT

Replace the power seat module (PSM) according to **POWER SEAT MODULE (PSM), REPLACING** (2005-2012) or **POWER SEAT MODULE (PSM), REPLACING** (2003-2004).

- **Continue**

Refer to **VERIFICATION**

VERIFICATION

HINT: After carrying out the repair, check that the fault has been remedied.

The check is performed by checking the diagnostic trouble code (DTC) status.

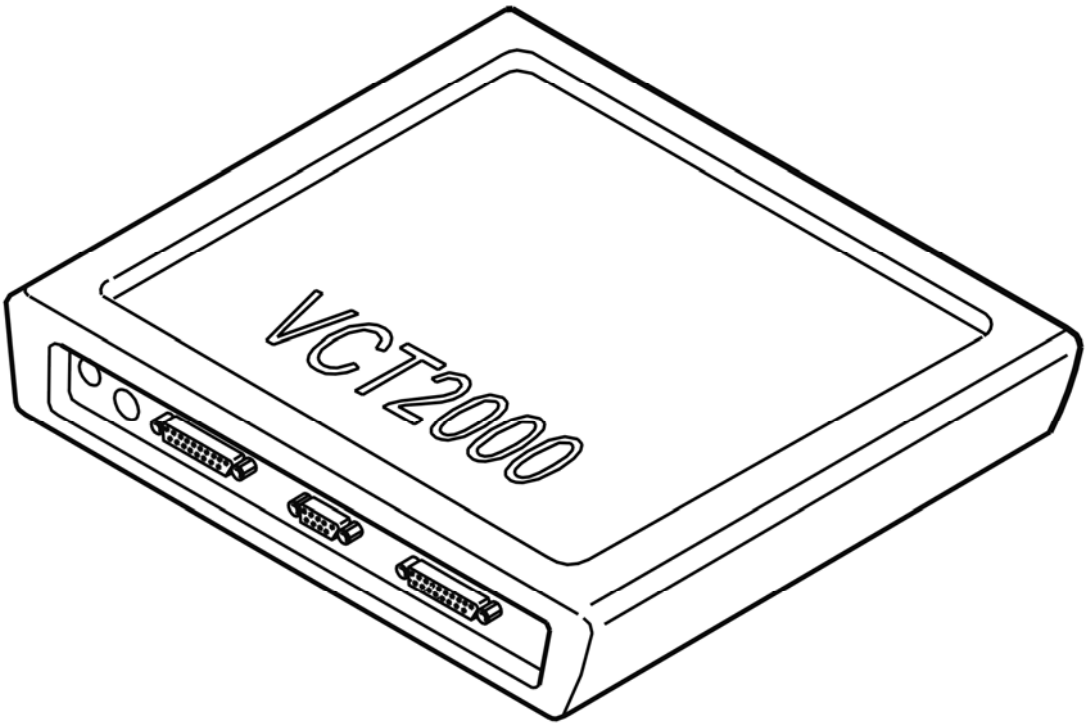

Fig. 43: Identifying VCT2000 Diagnostic Tool Symbol In VIDA
Courtesy of VOLVO CARS CORPORATION

Is the diagnostic trouble code (DTC) now intermittent?

- **YES**

  OKAY: Troubleshooting has been completed.

- **NO**

  Refer to **INFORMATION**

INFORMATION

FAULT-TRACING INFORMATION

The fault should have been detected and remedied. As this is not the case fault-tracing has failed.

Exit fault-tracing for this diagnostic trouble code (DTC) or make another attempt.

PSM-001A: MEMORY FUNCTION 2. INTERNAL FAULT. INTERMITTENT FAULT (2003-12)

DIAGNOSTIC TROUBLE CODE (DTC) INFORMATION

Condition

The power seat module (PSM) can store a seat setting in memory position 2. Memory button 2 must be activated for the diagnostic trouble code (DTC) to be detected. Diagnostic trouble code (DTC) PSM-001A is stored if the power seat module (PSM) detects that the setting in memory position 2 does not correspond with a calculated check sum.

Possible Source

- Memory position 2 not stored.
- Memory position incorrectly stored.

Fault symptom[s]

- Memory function 2 does not function.

INTERNAL FAULT. INTERMITTENT FAULT

see **INTERNAL FAULT. INTERMITTENT FAULT**

PSM-001A: MEMORY FUNCTION 2. INTERNAL FAULT. PERMANENT FAULT (2003-2012)

DIAGNOSTIC TROUBLE CODE (DTC) INFORMATION

see **DIAGNOSTIC TROUBLE CODE (DTC) INFORMATION**

INTERNAL FAULT. PERMANENT FAULT

CHECKING SEAT FUNCTION

Program in seat position 2.

Move seat to another position.

Attempt to move the seat to memory position 2.

Does the memory function correctly?

- **YES**

  OKAY: Troubleshooting has been completed.

- **NO**

  Refer to **CHECKING THE CONTROL PANEL**

CHECKING THE CONTROL PANEL

Check whether the signal from the control panel is received by the power seat module (PSM).

To read off the input signal to the power seat module (PSM) for memory button 2, select Mem 2 from the menu.

Read off the value.

HINT: When checking the control panel, check if the resistance between terminal #6C and the terminal pin is 0 ohms.

Button	Measure at:
Memory button 2	#1C

Other information

- To connect the breakout box, see **CONNECTING THE BREAKOUT BOX, POWER SEAT MODULE (PSM)**
- For information about signals, see **INPUT SIGNALS FROM THE CONTROL PANEL** .

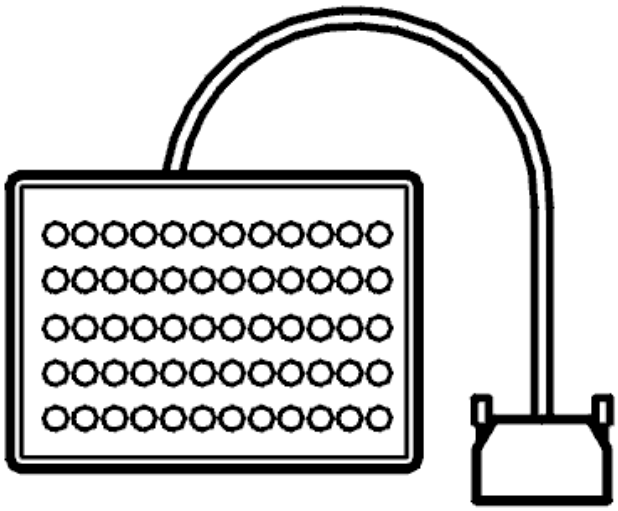

Fig. 44: Breakout Box
Courtesy of VOLVO CARS CORPORATION

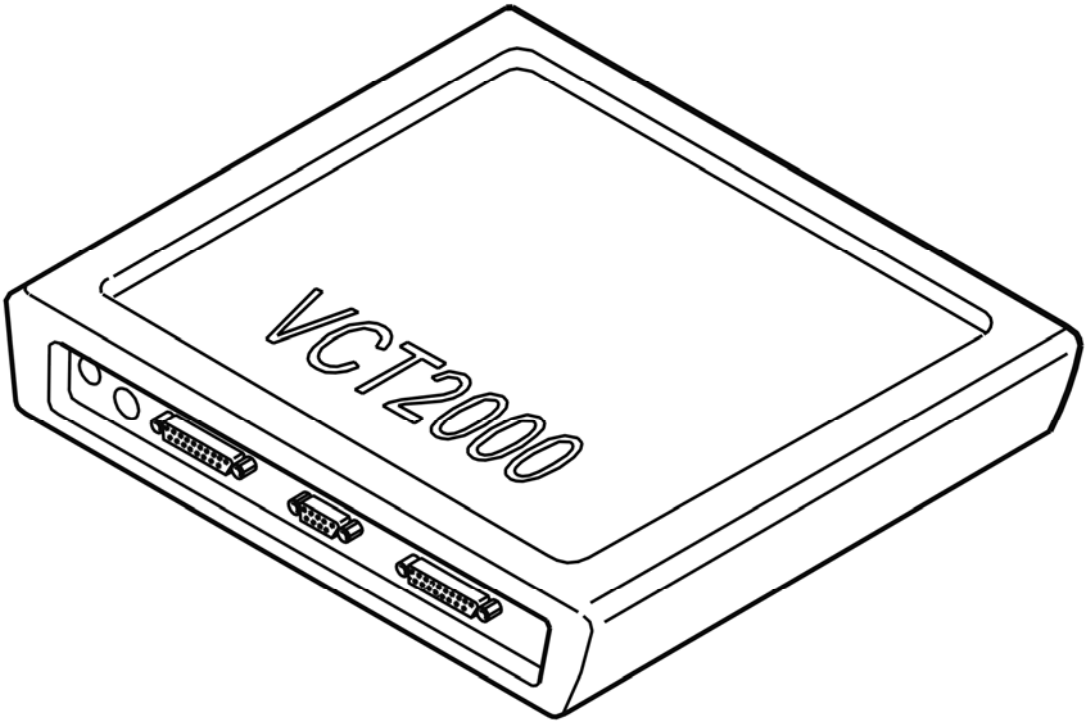

Fig. 45: Identifying VCT2000 Diagnostic Tool Symbol In VIDA
Courtesy of VOLVO CARS CORPORATION

Does the value change?

- **YES**

  Refer to **CHECKING THE MEMORY IN THE POWER SEAT MODULE (PSM)**

- **NO**

  Refer to **REPLACING THE COMPONENT**

REPLACING THE COMPONENT

Replace the control panel. See **SIDE PANEL, REPLACING** (-2004) or **SIDE PANEL FRONT SEAT, REPLACING** (2005-).

- **Continue**

  Refer to **VERIFICATION**

CHECKING THE MEMORY IN THE POWER SEAT MODULE (PSM)

The power seat module (PSM) has detected a fault in the memory. Try programming in a new seat position. If this does not work, the actual seat position can be compared with the programmed seat position.

As soon as the memory has been programmed the actual value should be the same as the programmed value.

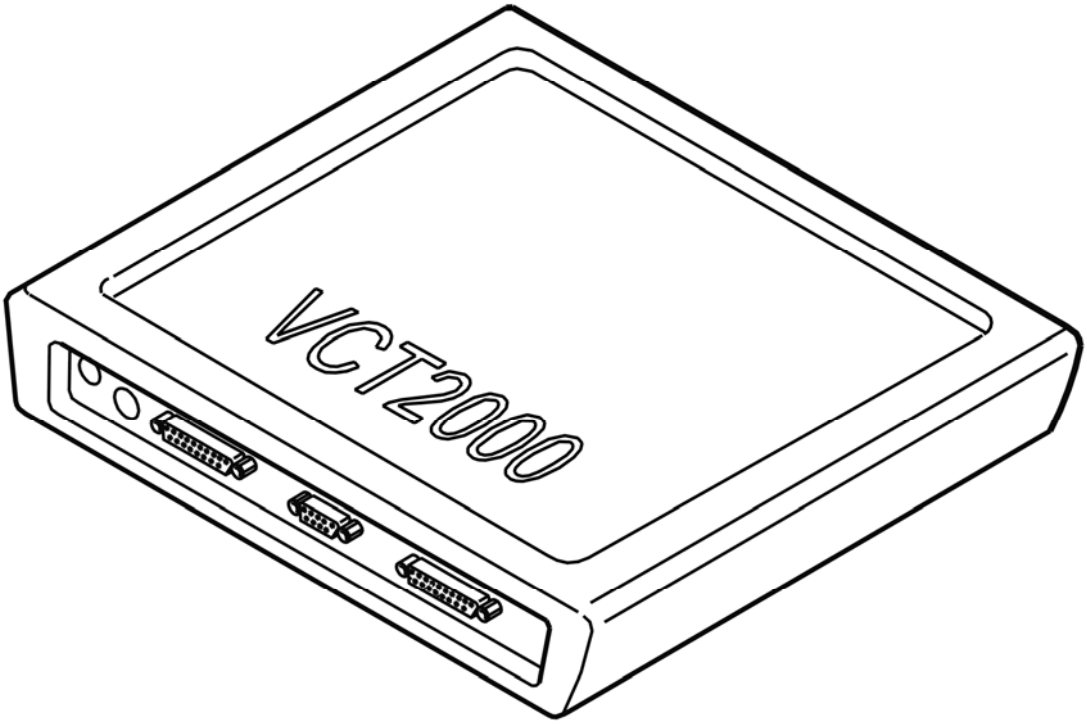

Fig. 46: Identifying VCT2000 Diagnostic Tool Symbol In VIDA
Courtesy of VOLVO CARS CORPORATION

Does the memory function correctly?

- **YES**

  Refer to **VERIFICATION**

- **NO**

  Refer to **REPLACING THE COMPONENT**

REPLACING THE COMPONENT

Replace the power seat module (PSM) according to **POWER SEAT MODULE (PSM), REPLACING** (2005-2012) or **POWER SEAT MODULE (PSM), REPLACING** (2003-2004)..

- **Continue**

Refer to **VERIFICATION**

VERIFICATION

HINT: After carrying out the repair, check that the fault has been remedied.

The check is performed by checking the diagnostic trouble code (DTC) status.

Activate button

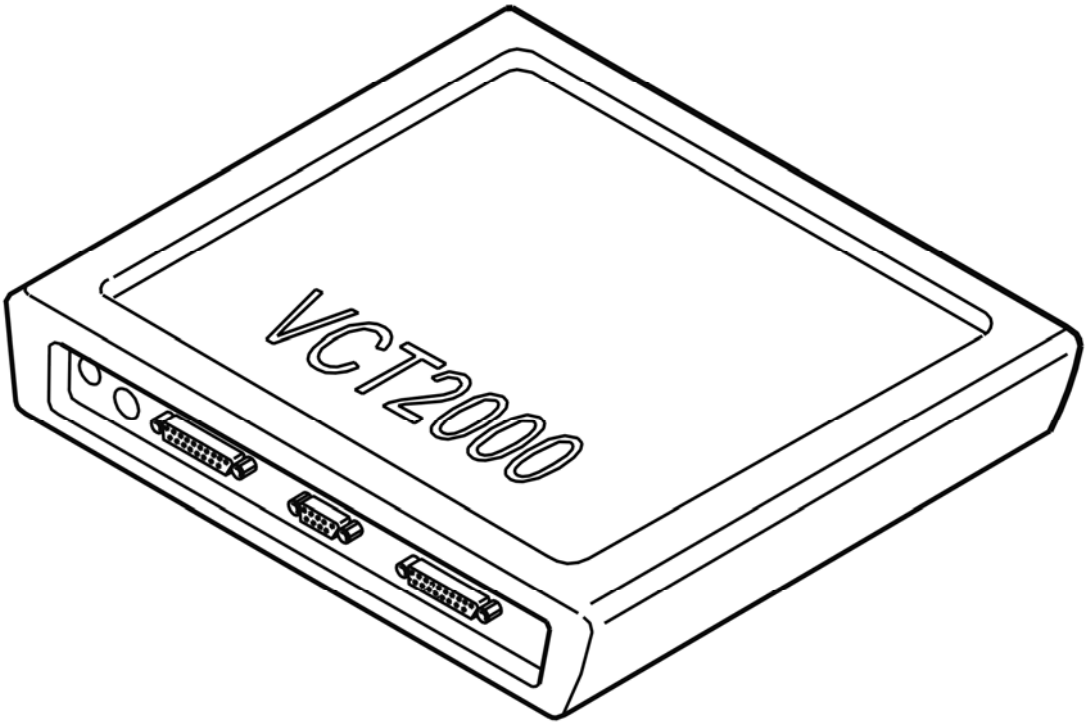

Fig. 47: Identifying VCT2000 Diagnostic Tool Symbol In VIDA
Courtesy of VOLVO CARS CORPORATION

Is the diagnostic trouble code (DTC) now intermittent?

- **YES**

  OKAY: Troubleshooting has been completed.

- **NO**

  Refer to **INFORMATION**

INFORMATION

FAULT-TRACING INFORMATION

The fault should have been detected and remedied. As this is not the case fault-tracing has failed.

Exit fault-tracing for this diagnostic trouble code (DTC) or make another attempt.

PSM-001B: MEMORY FUNCTION 3. INTERNAL FAULT. INTERMITTENT FAULT (2003-12)

DIAGNOSTIC TROUBLE CODE (DTC) INFORMATION

Condition

The power seat module (PSM) can store a seat setting in memory position 3. Memory button 3 must be activated for the diagnostic trouble code (DTC) to be detected. Diagnostic trouble code (DTC) PSM-001B is stored if the power seat module (PSM) detects that the setting in memory position 3 does not correspond with a calculated check sum.

Possible Source

- Memory position 3 not stored.
- Memory position incorrectly stored.

Fault symptom[s]

- Memory function 3 does not function.

INTERNAL FAULT. INTERMITTENT FAULT

see **INTERNAL FAULT. INTERMITTENT FAULT**

PSM-001B: MEMORY FUNCTION 3. INTERNAL FAULT. PERMANENT FAULT (2003-2012)

DIAGNOSTIC TROUBLE CODE (DTC) INFORMATION

see **DIAGNOSTIC TROUBLE CODE (DTC) INFORMATION**

INTERNAL FAULT. PERMANENT FAULT

CHECKING SEAT FUNCTION

Program in seat position 3.

Move seat to another position.

Attempt to move the seat to memory position 3.

Does the memory function correctly?

- **YES**

  OKAY: Troubleshooting has been completed.

- **NO**

  Refer to **CHECKING THE CONTROL PANEL**

CHECKING THE CONTROL PANEL

Check whether the signal from the control panel is received by the power seat module (PSM).

To read off the input signal to the power seat module (PSM) for memory button 3, select Mem 3 from the menu.

Read off the value.

HINT: When checking the control panel, check if the resistance between terminal #6C and the terminal pin is 0 ohms.

Button	Measure at:
Memory button 3	#16C

Other information

- To connect the breakout box, see **CONNECTING THE BREAKOUT BOX, POWER SEAT MODULE (PSM)**
- For information about signals, see **INPUT SIGNALS FROM THE CONTROL PANEL** .

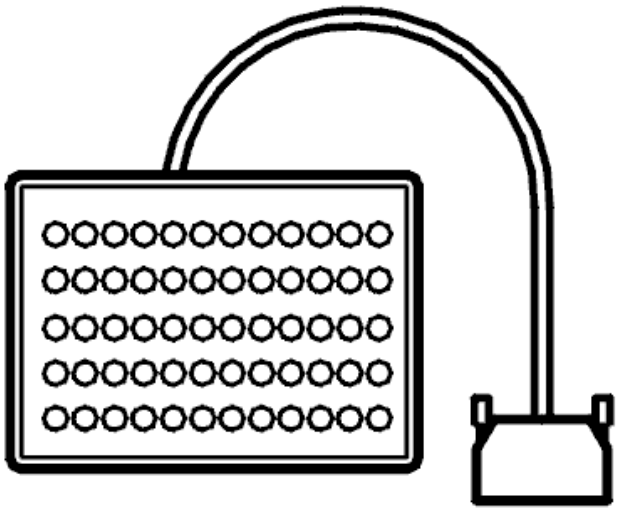

Fig. 48: Breakout Box
Courtesy of VOLVO CARS CORPORATION

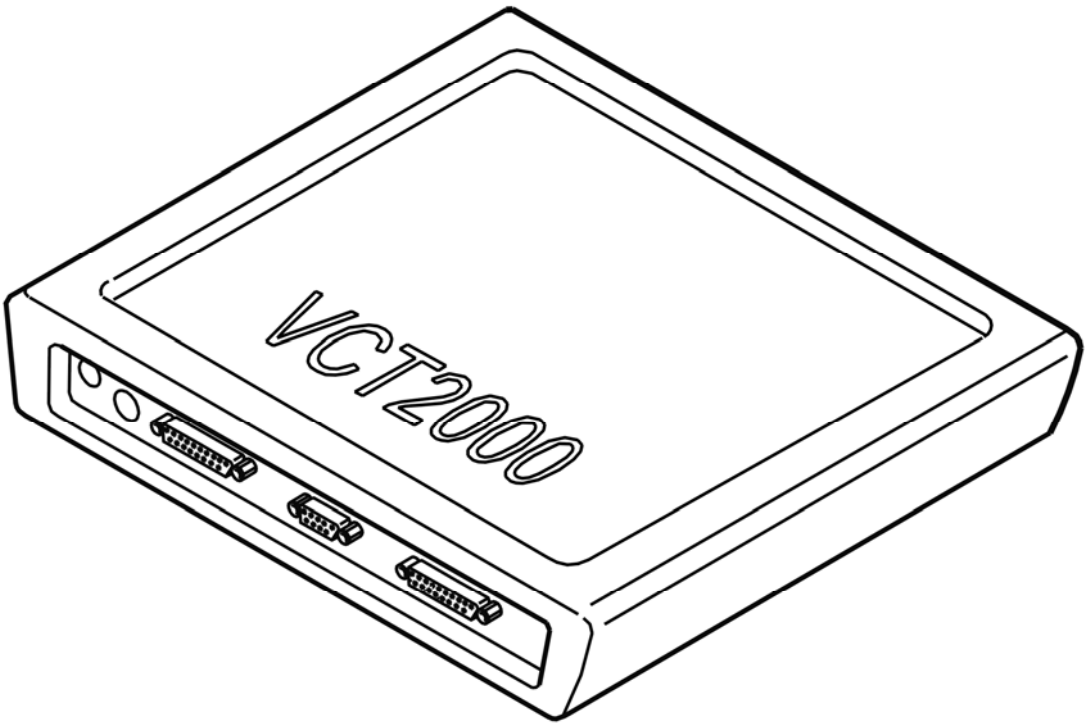

Fig. 49: Identifying VCT2000 Diagnostic Tool Symbol In VIDA
Courtesy of VOLVO CARS CORPORATION

Does the value change?

- **YES**

  Refer to **CHECKING THE MEMORY IN THE POWER SEAT MODULE (PSM)**

- **NO**

  Refer to **REPLACING THE COMPONENT**

REPLACING THE COMPONENT

Replace the control panel. See **SIDE PANEL, REPLACING** (-2004) or **SIDE PANEL FRONT SEAT, REPLACING** (2005-).

- **Continue**

  Refer to **VERIFICATION**

CHECKING THE MEMORY IN THE POWER SEAT MODULE (PSM)

The power seat module (PSM) has detected a fault in the memory. Try programming in a new seat position. If this does not work, the actual seat position can be compared with the programmed seat position.

As soon as the memory has been programmed the actual value should be the same as the programmed value.

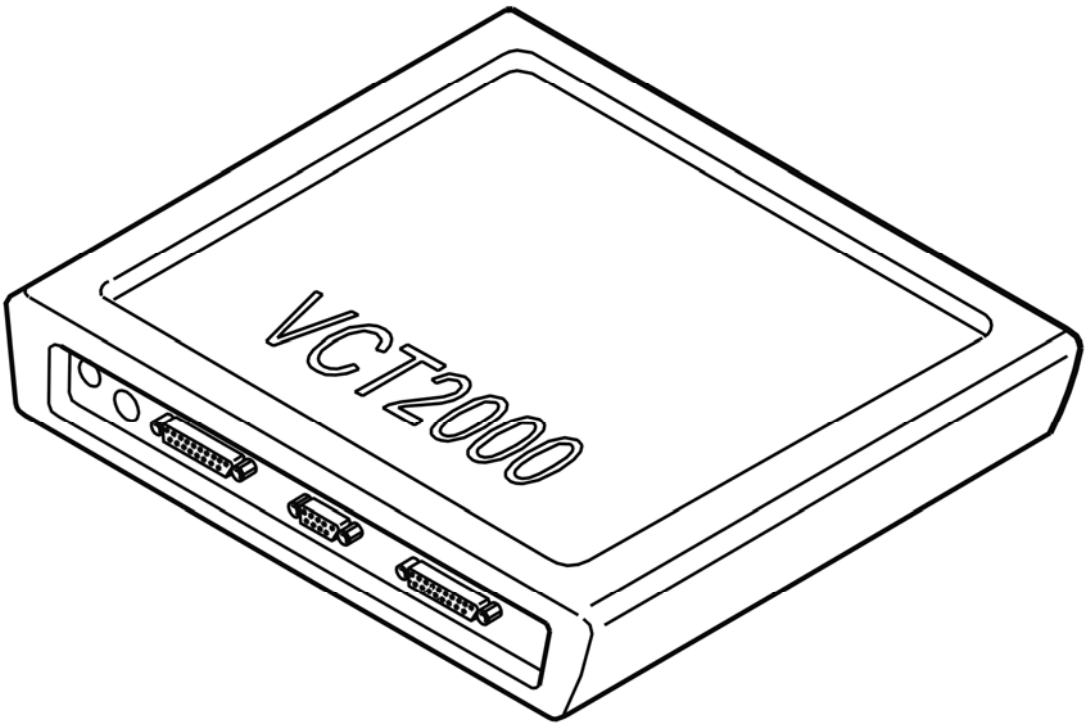

Fig. 50: Identifying VCT2000 Diagnostic Tool Symbol In VIDA
Courtesy of VOLVO CARS CORPORATION

Does the memory function correctly?

- **YES**

  Refer to **VERIFICATION**

- **NO**

  Refer to **REPLACING THE COMPONENT**

REPLACING THE COMPONENT

Replace the power seat module (PSM) according to **POWER SEAT MODULE (PSM), REPLACING** (2005-12) or **POWER SEAT MODULE (PSM), REPLACING** (2003-04).

- **Continue**

  Refer to **VERIFICATION**

VERIFICATION

HINT: After carrying out the repair, check that the fault has been remedied.

The check is performed by checking the diagnostic trouble code (DTC) status.

Activate button

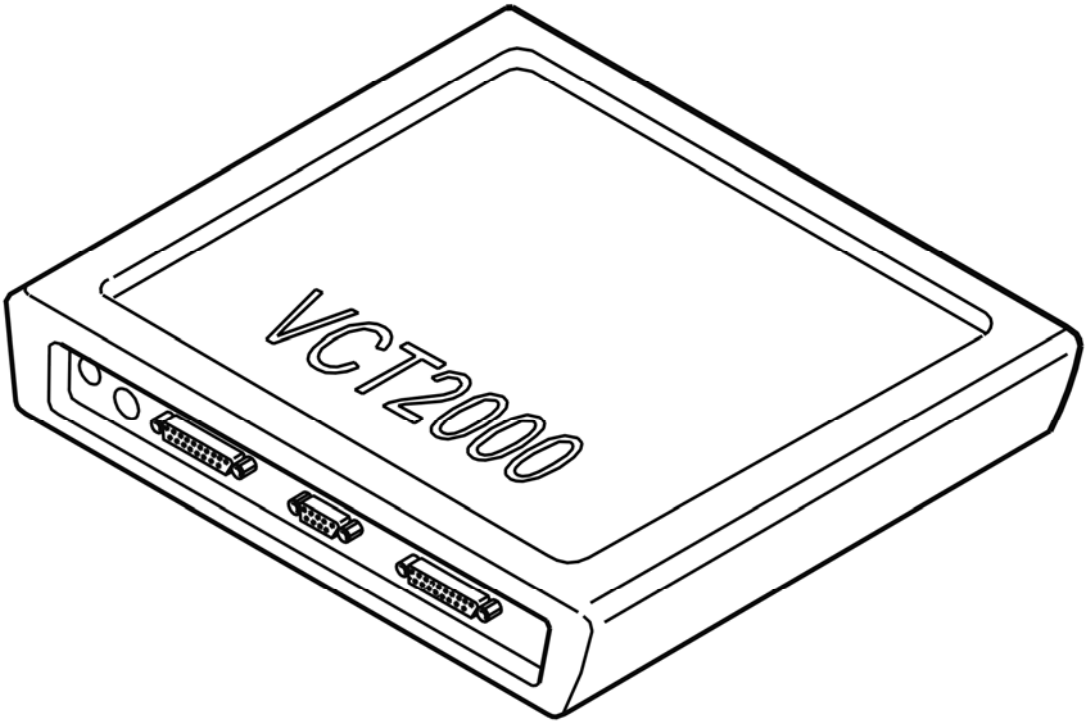

Fig. 51: Identifying VCT2000 Diagnostic Tool Symbol In VIDA
Courtesy of VOLVO CARS CORPORATION

Is the diagnostic trouble code (DTC) now intermittent?

- **YES**

  OKAY: Troubleshooting has been completed.

- **NO**

Refer to **INFORMATION**

INFORMATION

FAULT-TRACING INFORMATION

The fault should have been detected and remedied. As this is not the case fault-tracing has failed.

Exit fault-tracing for this diagnostic trouble code (DTC) or make another attempt.

PSM-001C: CONTROL PANEL. SIGNAL MISSING. INTERMITTENT FAULT (2003-12)

DIAGNOSTIC TROUBLE CODE (DTC) INFORMATION

Condition

Diagnostic trouble code (DTC) PSM-001C is stored if the power seat module (PSM) registers an open-circuit in the LH/RH detection.

Possible Source

- Control panel not connected.
- Defective control panel.
- Open-circuit in the control circuit (LH/RH).

Fault symptom[s]

- The seat does not function at all via the control panel.

SIGNAL MISSING. INTERMITTENT FAULT

CHECKING CONTROL PANEL TERMINALS

Check that the control panel is correctly connected to the seat.

Check the control circuit between the power seat module (PSM) #4C and #5C. Check for an open-circuit. See **OPEN-CIRCUIT, INTERMITTENT FAULTS** .

Remedy as necessary.

Other information

- To connect the breakout box, see **CONNECTING THE BREAKOUT BOX, POWER SEAT MODULE (PSM)**
- For information about signals, see **INPUT SIGNALS FROM THE CONTROL PANEL** .

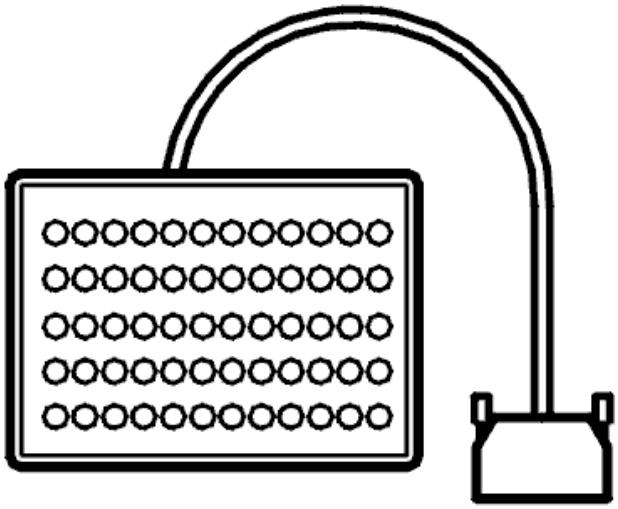

Fig. 52: Breakout Box
Courtesy of VOLVO CARS CORPORATION

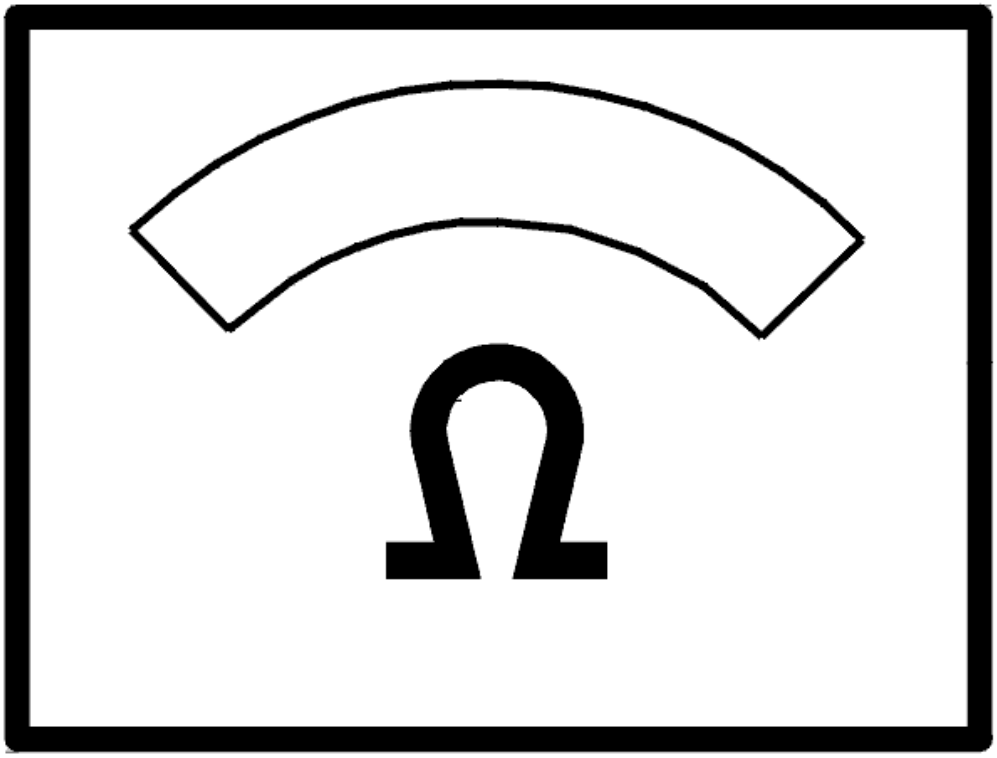

Fig. 53: Identifying Ohmmeter
Courtesy of VOLVO CARS CORPORATION

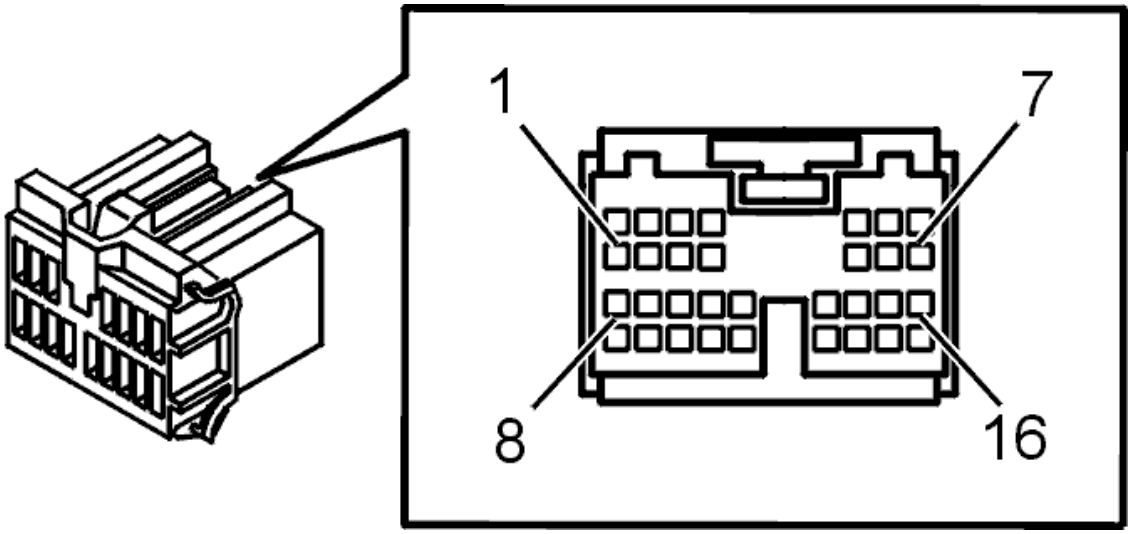

Fig. 54: Connector, Green (16-Pin)
Courtesy of VOLVO CARS CORPORATION

Was a fault detected?

- **YES**

  OKAY: Troubleshooting has been completed.

- **NO**

  Refer to **REPLACING COMPONENT**

REPLACING COMPONENT

Try a new control panel.

Other information:

- For information about signals, see **SIGNAL SPECIFICATION, POWER SEAT MODULE**
- To access or replace the control panel, see **SIDE PANEL, REPLACING** (-2004) or **SIDE PANEL FRONT SEAT, REPLACING** (2005-).

PSM-001C: CONTROL PANEL. SIGNAL MISSING. PERMANENT FAULT (2003-12)

DIAGNOSTIC TROUBLE CODE (DTC) INFORMATION

see **DIAGNOSTIC TROUBLE CODE (DTC) INFORMATION**

SIGNAL MISSING. PERMANENT FAULT

CHECKING CONTROL PANEL TERMINALS

Check that the control panel is correctly connected to the seat.

Check the control circuit between #C4 and #C5. Check for an open-circuit. See **OPEN-CIRCUIT, PERMANENT FAULTS** .

Remedy as necessary

Other information:

- To connect the breakout box, see **CONNECTING THE BREAKOUT BOX, POWER SEAT MODULE (PSM)**
- For information about signals, see **INPUT SIGNALS FROM THE CONTROL PANEL** .

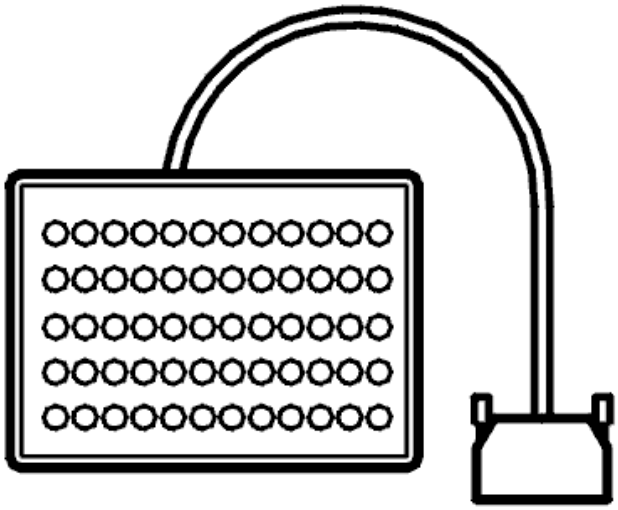

Fig. 55: Breakout Box
Courtesy of VOLVO CARS CORPORATION

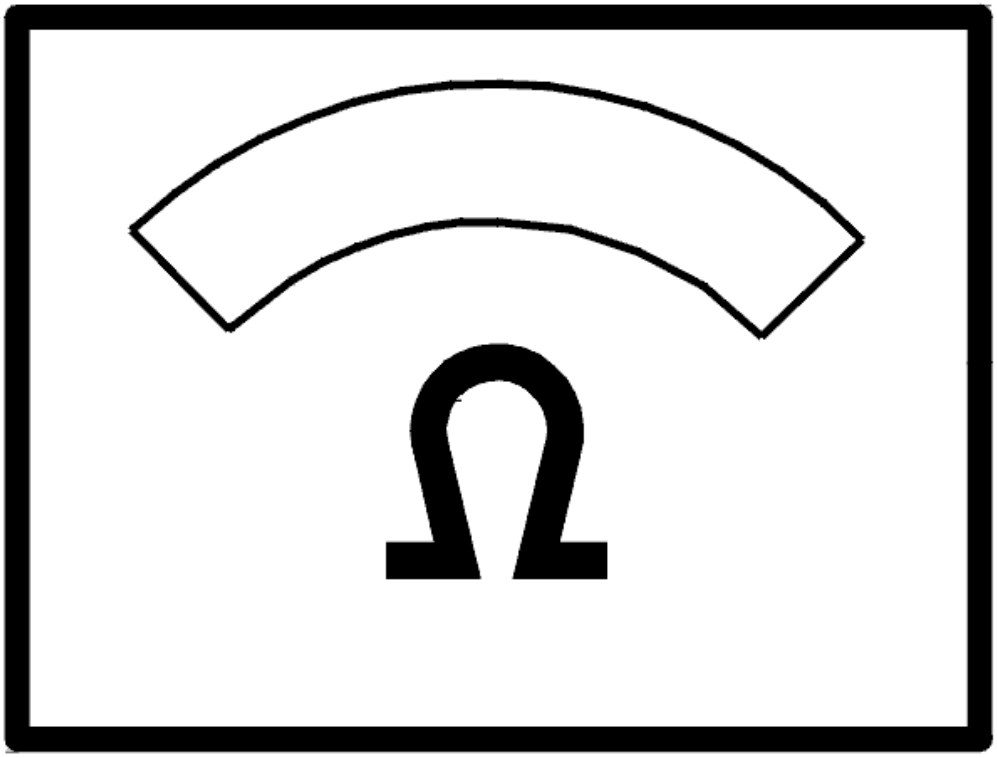

Fig. 56: Identifying Ohmmeter
Courtesy of VOLVO CARS CORPORATION

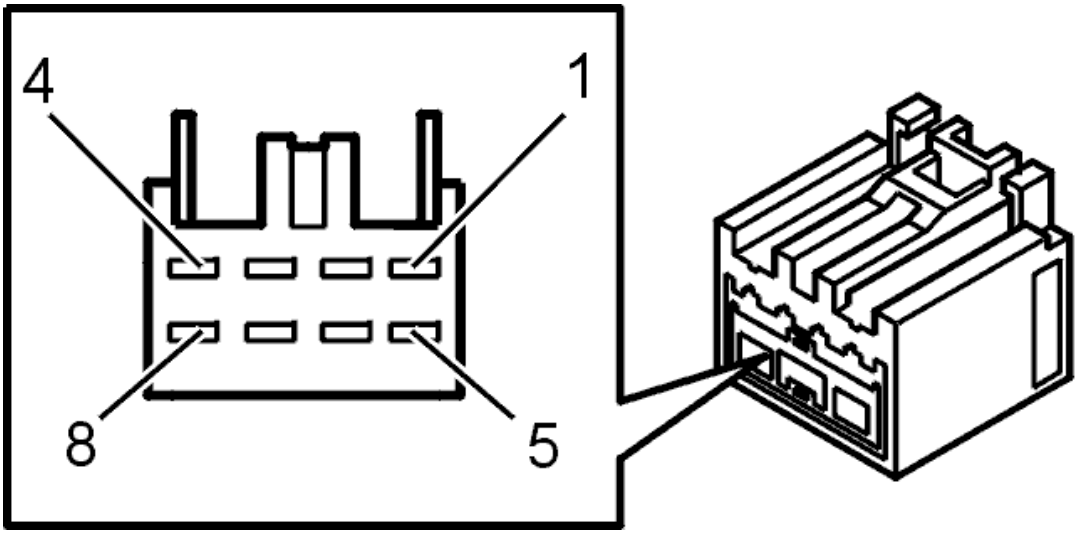

Fig. 57: Connector, Black (8-Pin)
Courtesy of VOLVO CARS CORPORATION

Was a fault detected?

- **YES**

  OKAY: Troubleshooting has been completed.

- **NO**

  Refer to **REPLACING THE COMPONENT**

REPLACING THE COMPONENT

Replace the control panel. See **SIDE PANEL, REPLACING** (-2004) or **SIDE PANEL FRONT SEAT, REPLACING** (2005-).

PSM-001D: CONTROL MODULE, RELAY. INTERNAL FAULT. INTERMITTENT FAULT (2003-12)

DIAGNOSTIC TROUBLE CODE (DTC) INFORMATION

Condition

Diagnostic trouble code (DTC) PSM-001D is stored if the power seat module (PSM) registers a fault in the main relay or in the power supply.

Possible Source

- Defective power seat module (PSM).
- No power supply to the motors.

Fault symptom[s]

- The seat does not function at all.

INTERNAL FAULT. INTERMITTENT FAULT

CHECKING SUPPLY

Check passenger compartment fuse 4 (11C/4:2)

Check the cable between the power seat module (PSM) terminal #A1 and passenger compartment fuse 4 (11C/4:2). Check for contact resistance and oxidation. See **CONTACT RESISTANCE AND OXIDATION** .

If the fuse has blown fault-trace for an intermittent short-circuit to ground. See **SHORT-CIRCUIT TO GROUND, INTERMITTENT FAULTS**

Check the connector

Check passenger compartment fuse 24 (11C/24:2)

Check the cable between power seat supply relay (2/29) #3 and passenger compartment fuse 24 (11C/24:2). Check for an intermittent short-circuit to ground. See **SHORT-CIRCUIT TO GROUND, INTERMITTENT FAULTS** . Check for contact resistance and oxidation. See **CONTACT RESISTANCE AND OXIDATION** .

Check that the relay is not is defective.

Check the cable between the power seat module (PSM) #B1 and power seat supply relay (2/29) #1. Check for an intermittent short-circuit to ground. See **SHORT-CIRCUIT TO GROUND, INTERMITTENT FAULTS** . Check for contact resistance and oxidation. See **CONTACT RESISTANCE AND OXIDATION** .

Remedy as necessary.

Other information:

- To connect the breakout box, see **CONNECTING THE BREAKOUT BOX, POWER SEAT MODULE (PSM)**
- For information about signals, see **SIGNAL SUPPLY** .

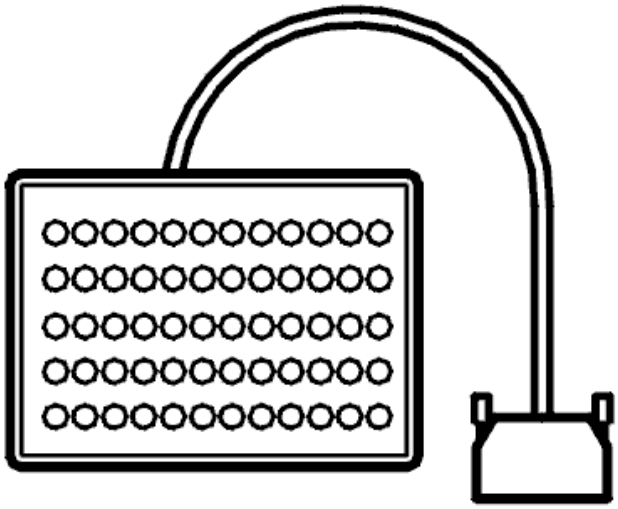

Fig. 58: Breakout Box
Courtesy of VOLVO CARS CORPORATION

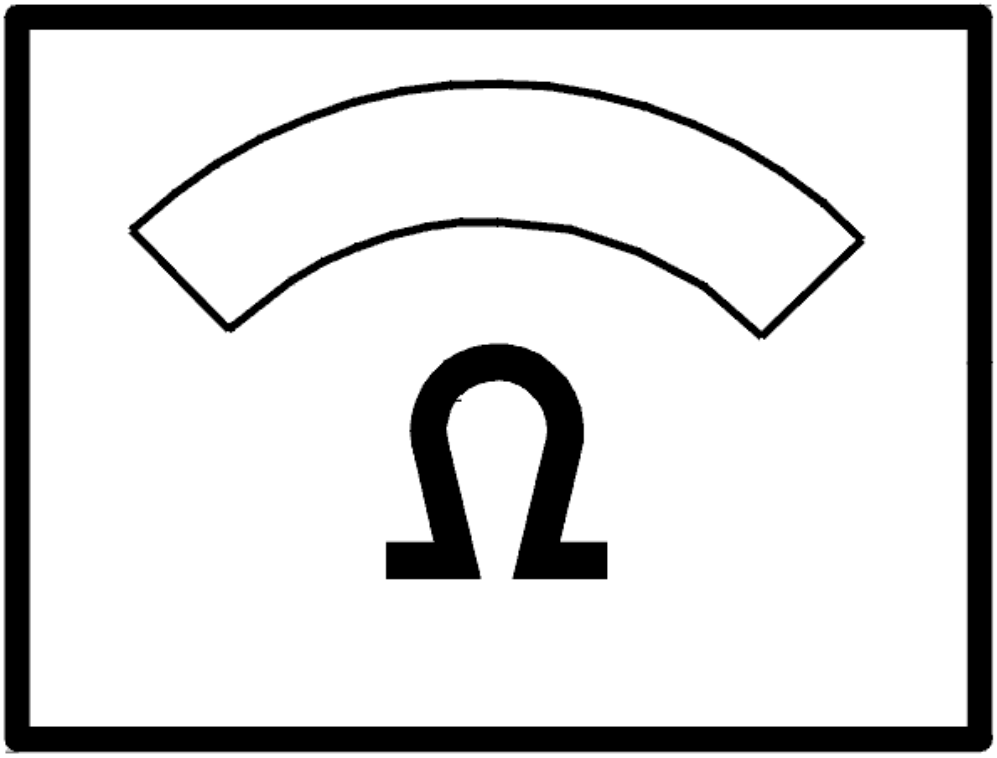

Fig. 59: Identifying Ohmmeter
Courtesy of VOLVO CARS CORPORATION

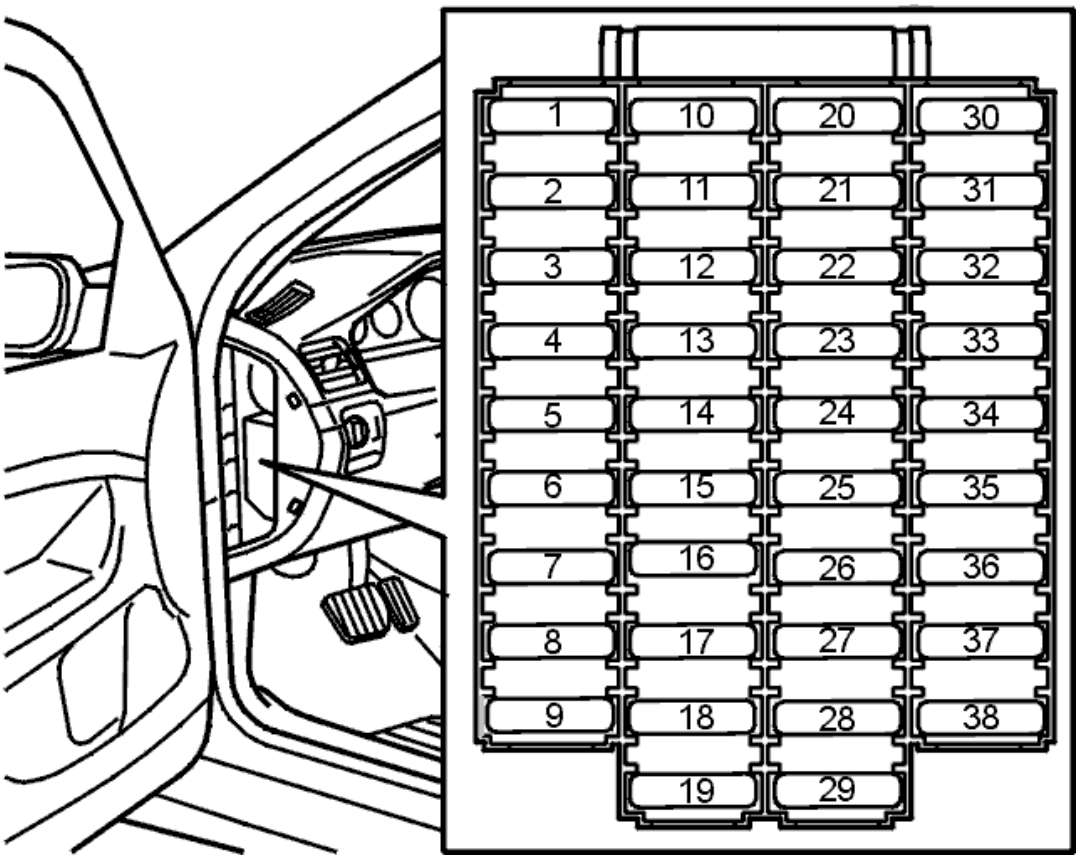

Fig. 60: Fuse Holder (Passenger Compartment)
Courtesy of VOLVO CARS CORPORATION

Was a fault detected?

- **YES**

  Refer to **INFORMATION**

- **NO**

  Refer to **REPLACING THE COMPONENT**

REPLACING THE COMPONENT

An internal relay in the power seat module (PSM) has stuck in active position.

Try to activate the motor.

Check the supply to the control modules.

If no faults were found, try a new power seat module (PSM).

Other information:

- For information about replacing the control module, see **POWER SEAT MODULE (PSM), REPLACING** (2005-12) or **POWER SEAT MODULE (PSM), REPLACING** (2003-04).

INFORMATION

FAULT-TRACING INFORMATION

If the fault is intermittent, do not verify fault-tracing if the fault does not recur.

It is possible to view the information again, or leave fault-tracing for this diagnostic trouble code (DTC).

PSM-001D: CONTROL MODULE, RELAY. INTERNAL FAULT. PERMANENT FAULT (2003-12)

DIAGNOSTIC TROUBLE CODE (DTC) INFORMATION

see **DIAGNOSTIC TROUBLE CODE (DTC) INFORMATION**

INTERNAL FAULT. PERMANENT FAULT

CHECKING SUPPLY

Check passenger compartment fuse 4 (11C/4:2).

Check the cable between the power seat module (PSM) connector #A1 and passenger compartment fuse 4 (11C/4:2). Check for an open-circuit. See **OPEN-CIRCUIT, PERMANENT FAULTS**

If the fuse has blown, fault-trace for a short-circuit to ground. See **SHORT-CIRCUIT TO GROUND, PERMANENT FAULTS** .

Check connector (54/24:1)

Check passenger compartment fuse 24 (11C/24:2)

Check the cable between power seat module (PSM) supply relay (2/29) #3 and passenger compartment fuse 24 (11C/24:2). Check for a short-circuit to ground. See **SHORT-CIRCUIT TO GROUND, PERMANENT FAULTS** . Check for an open-circuit. See **OPEN-CIRCUIT, PERMANENT FAULTS** .

Check that the relay is not defective.

Check the cable between the power seat module (PSM) connector terminal #B1 and power seat supply relay (2/29) #1. Check for a short-circuit to ground. See **SHORT-CIRCUIT TO GROUND, PERMANENT FAULTS** . Check for an open-circuit. See **OPEN-CIRCUIT, PERMANENT FAULTS** .

Remedy as necessary.

Other information

- To connect the breakout box, see **CONNECTING THE BREAKOUT BOX, POWER SEAT MODULE (PSM)**
- For information about signals, see **SIGNAL SPECIFICATION, POWER SEAT MODULE** .

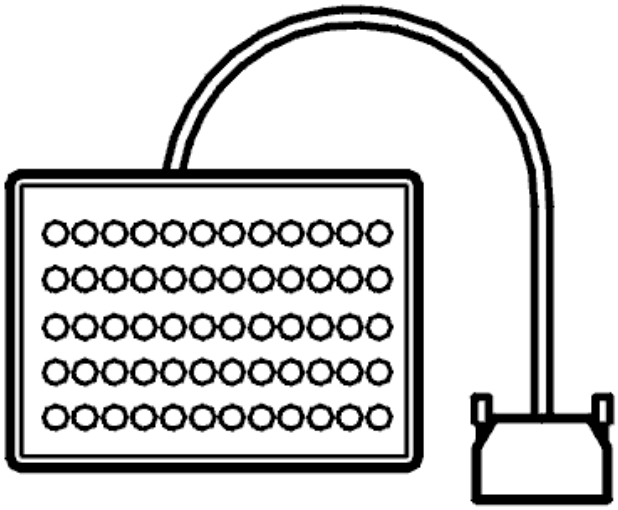

Fig. 61: Breakout Box
Courtesy of VOLVO CARS CORPORATION

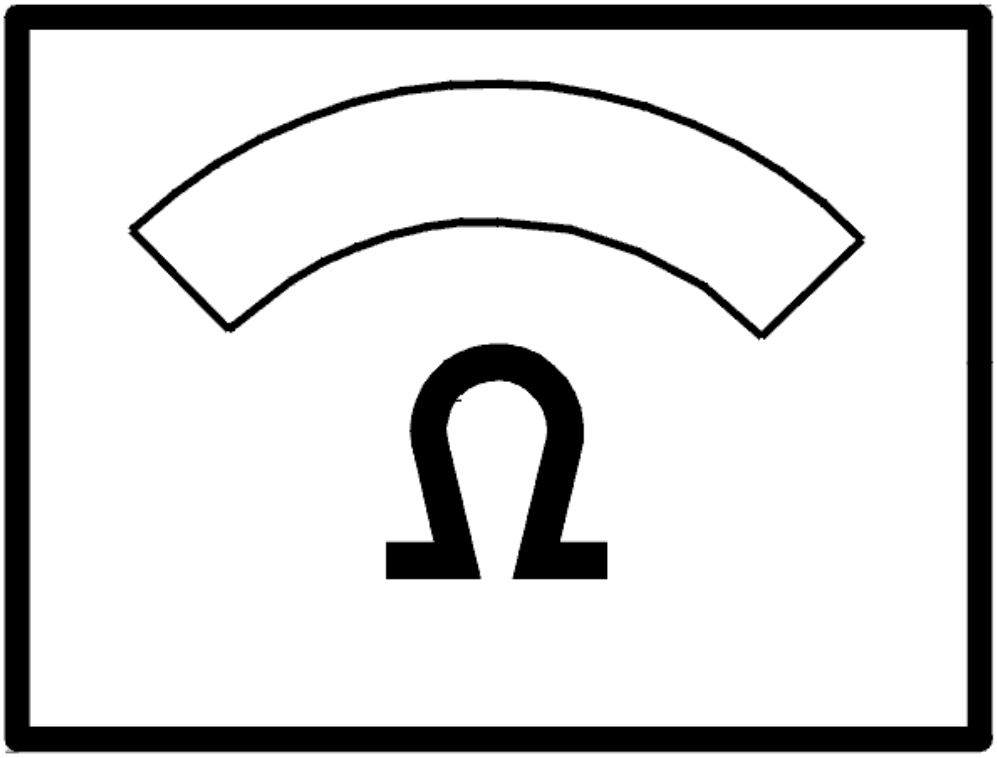

Fig. 62: Identifying Ohmmeter
Courtesy of VOLVO CARS CORPORATION

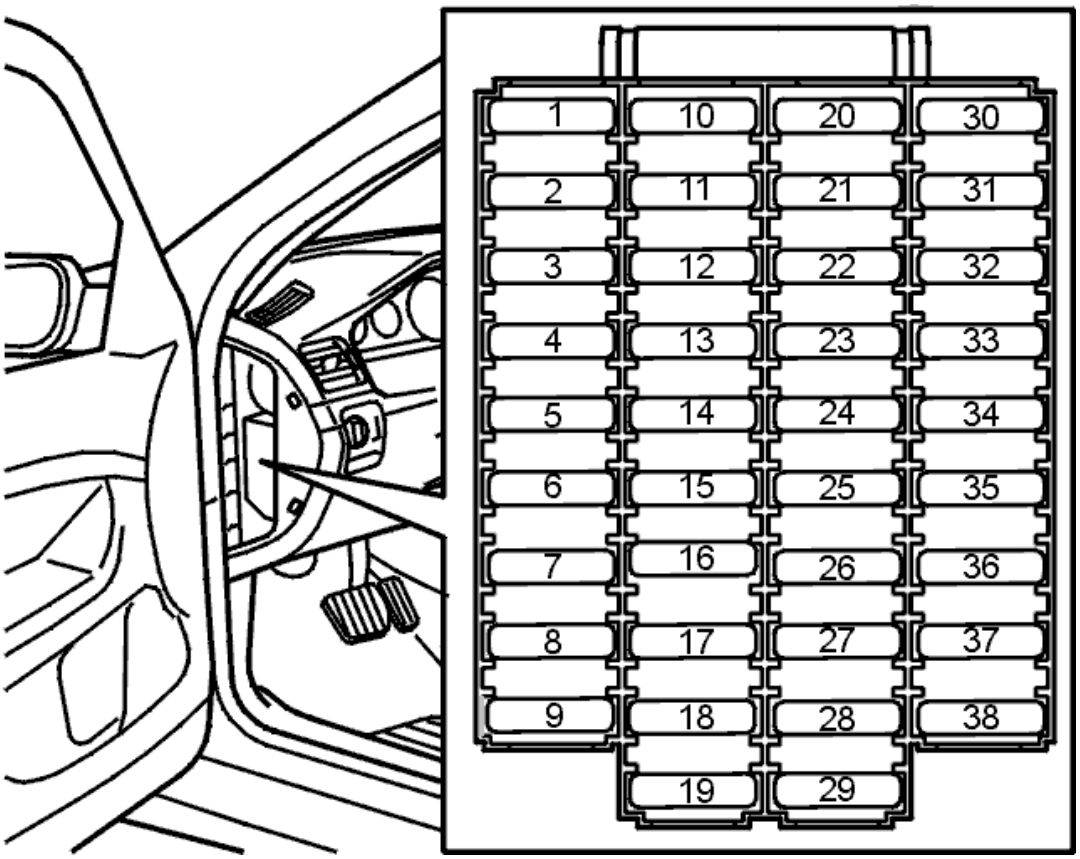

Fig. 63: Fuse Holder (Passenger Compartment)
Courtesy of VOLVO CARS CORPORATION

Were any faults found?

- **YES**

  OKAY: Troubleshooting has been completed.

- **NO**

  Refer to **REPLACE/PROGRAM COMPONENT**

REPLACE/PROGRAM COMPONENT

An internal relay in the power seat module (PSM) is defective.

Reprogram the power seat module (PSM).

Other information

- For further information about programming and replacing the power seat module (PSM), see **POWER SEAT MODULE (PSM), REPLACING** (2005-12) or **POWER SEAT MODULE (PSM), REPLACING** (2003-04).

PSM-001E: BATTERY VOLTAGE. SIGNAL TOO LOW. INTERMITTENT FAULT (2003-12)

DIAGNOSTIC TROUBLE CODE (DTC) INFORMATION

Condition

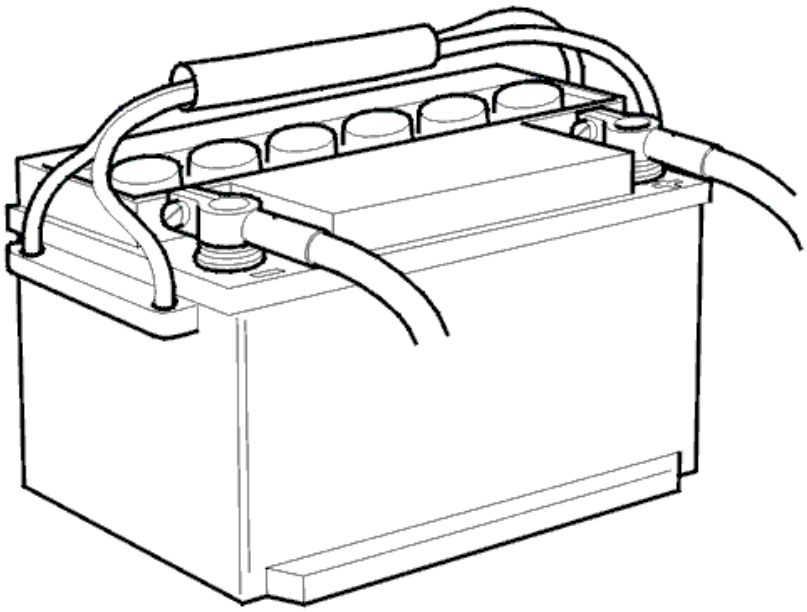

Fig. 64: Identifying Battery
Courtesy of VOLVO CARS CORPORATION

The voltage to the power seat module (PSM) is too low in relation to the voltage in the central electronic module (CEM). Diagnostic trouble code (DTC) PSM-001E is stored if the voltage is more than 2.5 V under the CEM voltage.

Possible Source

- Supply voltage too low.

Fault symptom[s]

- The seat does not function at all.

SIGNAL TOO LOW. INTERMITTENT FAULT

CHECKING SUPPLY

Check the cable between power seat module (PSM) #A1 and the fusebox in passenger compartment 4 (11C/4:2) for contact resistance and oxidation according to **CONTACT RESISTANCE AND OXIDATION** , and loose connections according to **LOOSE CONNECTIONS (TERMINALS)** .

Check connector (54/24:1) for contact resistance and oxidation according to **CONTACT RESISTANCE AND OXIDATION** , and loose connections according to **LOOSE CONNECTIONS (TERMINALS)** .

Check fuse no. 24 (11C/24:2) in passenger compartment fusebox for contact resistance and oxidation according to **CONTACT RESISTANCE AND OXIDATION** , and loose connections according to **LOOSE CONNECTIONS (TERMINALS)** .

Check the cable between power seat supply relay (2/29) #3 and fuse no. 24 (11C/24:2) in the passenger compartment fusebox for an intermittent short-circuit to ground according to **SHORT-CIRCUIT TO GROUND, INTERMITTENT FAULTS** , or for contact resistance and oxidation according to **CONTACT RESISTANCE AND OXIDATION** , and loose connections according to **LOOSE CONNECTIONS (TERMINALS)** .

Check that the relay is not defective; check for contact resistance and oxidation according to **CONTACT RESISTANCE AND OXIDATION** , and loose connections according to **LOOSE CONNECTIONS (TERMINALS)** .

Check the cable between the power seat module (PSM) #B1 and power seat supply relay (2/29) #1 for an intermittent short-circuit to ground according to **SHORT-CIRCUIT TO GROUND, INTERMITTENT FAULTS** , or for contact resistance and oxidation according to **CONTACT RESISTANCE AND OXIDATION** , and loose connections according to **LOOSE CONNECTIONS (TERMINALS)** .

Remedy as necessary.

Other information:

- To connect the breakout box, see **CONNECTING THE BREAKOUT BOX, POWER SEAT MODULE (PSM)** .
- For information on signals, refer to **SIGNAL SPECIFICATION, POWER SEAT MODULE** .

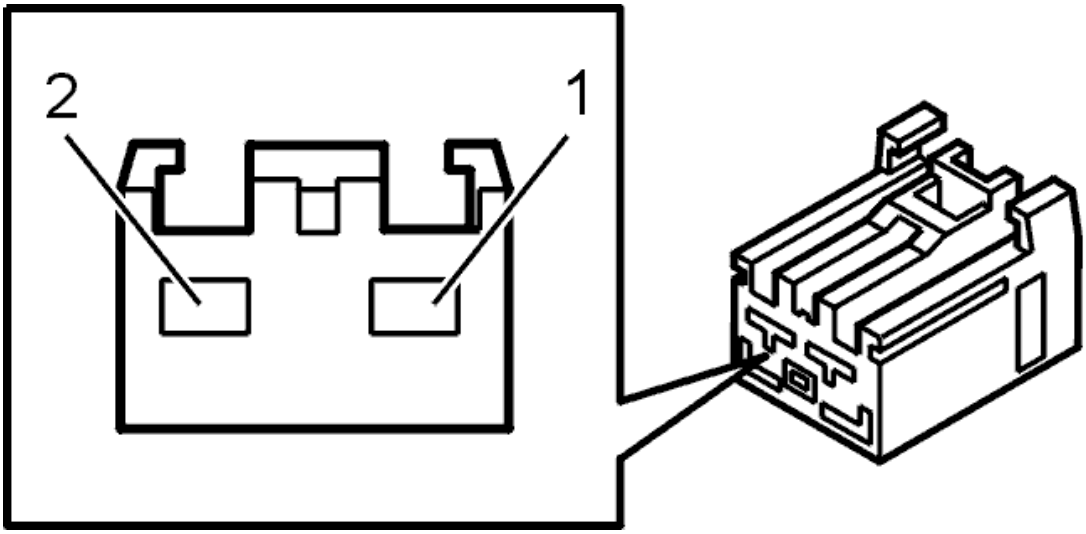

Fig. 65: Connector, Black (2-Pin)
Courtesy of VOLVO CARS CORPORATION

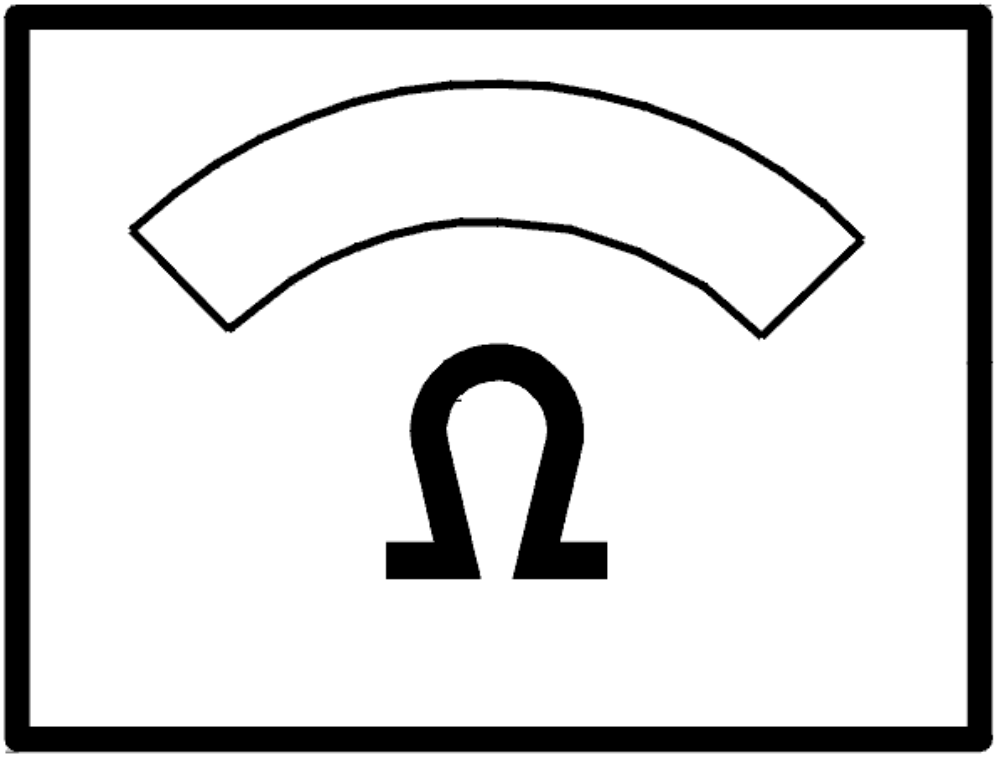

Fig. 66: Identifying Ohmmeter
Courtesy of VOLVO CARS CORPORATION

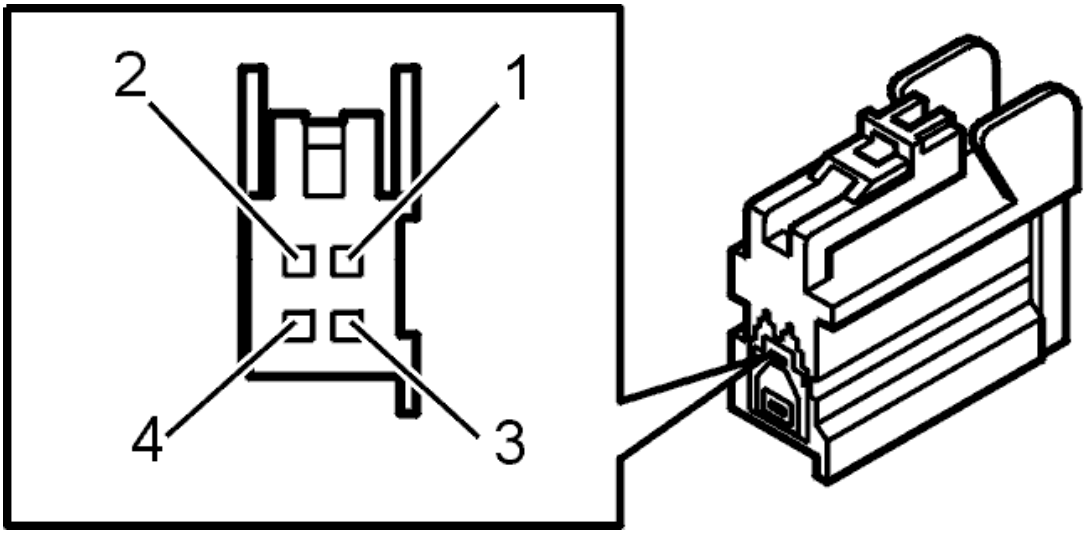

Fig. 67: Connector, Black (4-Pin)
Courtesy of VOLVO CARS CORPORATION

PSM-001E: BATTERY VOLTAGE. SIGNAL TOO LOW. PERMANENT FAULT (2003-12)

DIAGNOSTIC TROUBLE CODE (DTC) INFORMATION

see **DIAGNOSTIC TROUBLE CODE (DTC) INFORMATION**

SIGNAL TOO LOW. PERMANENT FAULT

CHECKING VOLTAGE LEVEL

Read of the voltage level in the control modules.

NOTE: None of the motors should be operating when reading off.

The levels between the central electronic module (CEM) and the power seat module (PSM) should not deviate by more than a maximum of one volt. A small difference as a result of contact resistance is acceptable.

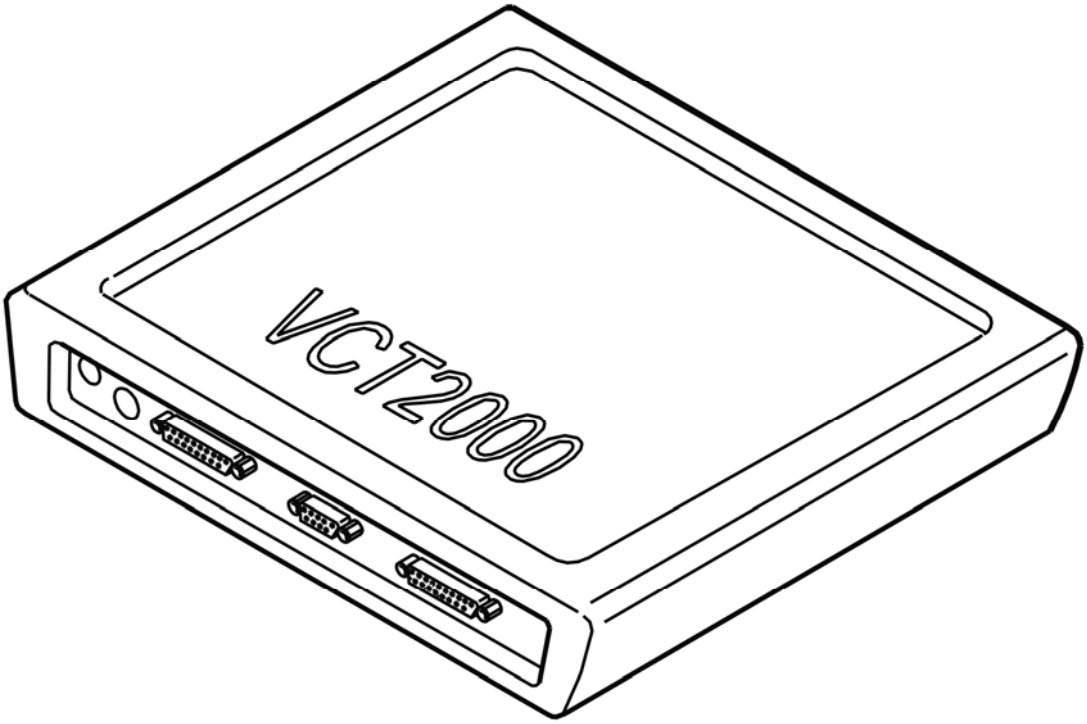

Fig. 68: Identifying VCT2000 Diagnostic Tool Symbol In VIDA
Courtesy of VOLVO CARS CORPORATION

Are the voltage levels OK?

- **YES**

  Refer to **FAULT-TRACING INFORMATION**

- **NO**

  Refer to **CHECKING SUPPLY**

FAULT-TRACING INFORMATION

The fault is not currently present but has been previously.

CHECKING SUPPLY

Check passenger compartment fuse 4 (11C/4:2)

Check the cable between the power seat module (PSM) connector #A1 and passenger compartment fuse 4 (11C/4:2) for an open-circuit according to **OPEN-CIRCUIT, PERMANENT FAULTS** .

If the fuse has blown fault-trace for a short-circuit to ground according to **SHORT-CIRCUIT TO GROUND, PERMANENT FAULTS** .

Check the connector.

Check passenger compartment fuse 24 (11C/24:2)

Check the cable between power seat module (PSM) supply relay (2/29) #3 and passenger compartment fuse 24 (11C/24:2) for a short-circuit to ground according to **SHORT-CIRCUIT TO GROUND, PERMANENT FAULTS** or open-circuit according to **OPEN-CIRCUIT, PERMANENT FAULTS** .

Check that the relay is not is defective.

Check cable between power seat module (PSM) connector #B1 and power seat module (PSM) supply relay (2/29) #1 for a short-circuit to ground according to **SHORT-CIRCUIT TO GROUND, PERMANENT FAULTS** or open-circuit according to **OPEN-CIRCUIT, PERMANENT FAULTS** .

Remedy as necessary.

Other information:

- To connect the breakout box, see **CONNECTING THE BREAKOUT BOX, POWER SEAT MODULE (PSM)** .
- For information about signals and connectors, see **SIGNAL SPECIFICATION, POWER SEAT MODULE** .

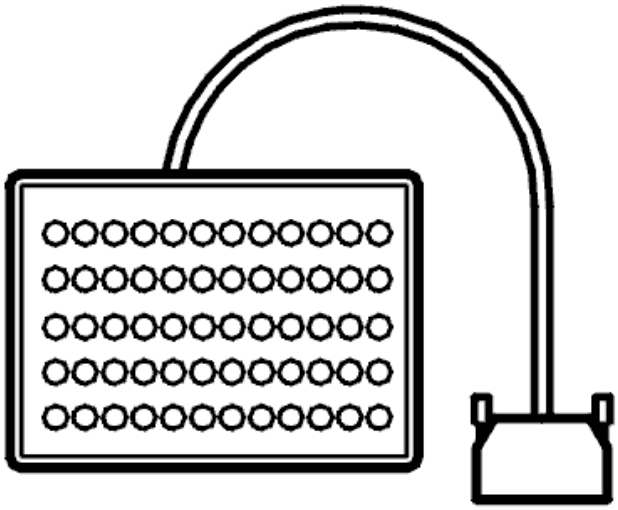

Fig. 69: Breakout Box
Courtesy of VOLVO CARS CORPORATION

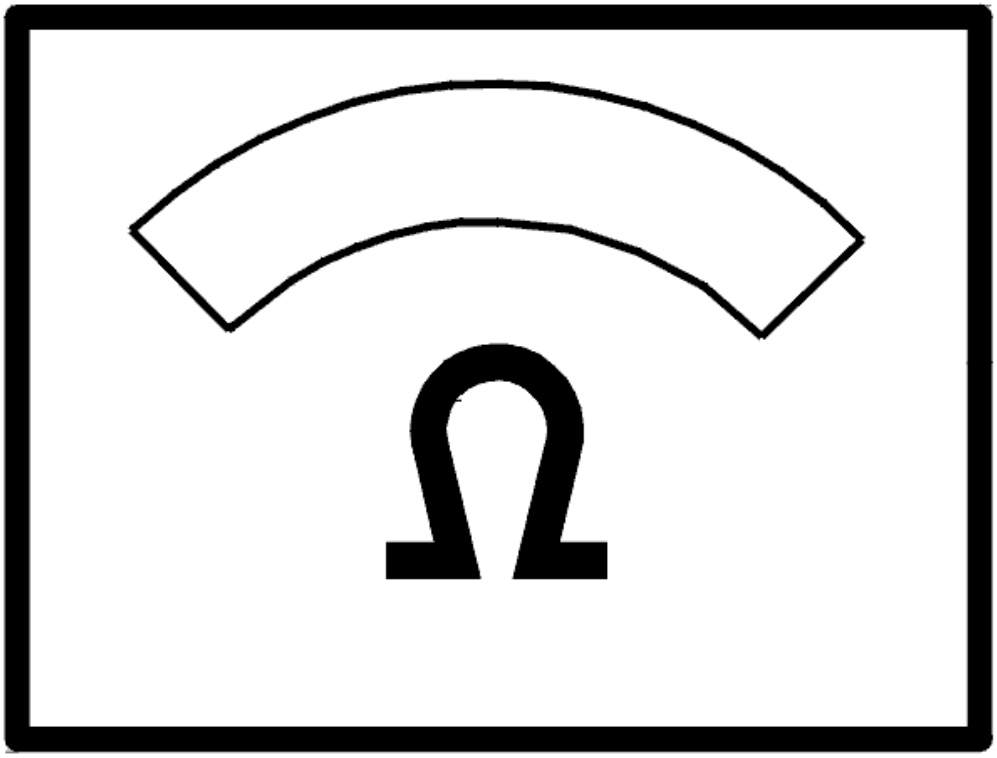

Fig. 70: Identifying Ohmmeter
Courtesy of VOLVO CARS CORPORATION

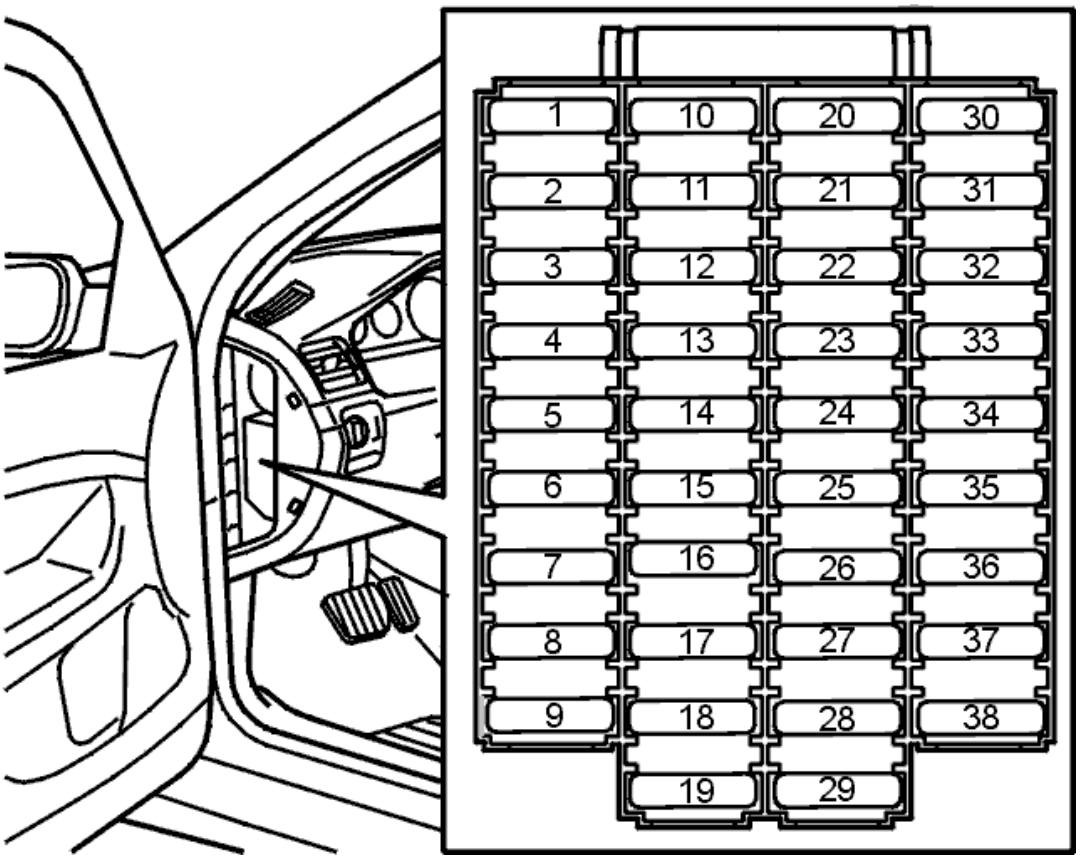

Fig. 71: Fuse Holder (Passenger Compartment)
Courtesy of VOLVO CARS CORPORATION

PSM-0020: FRONT-REAR ADJUSTMENT CONTROL, M1+. TOO SLOW. INTERMITTENT FAULT (2003-12)

DIAGNOSTIC TROUBLE CODE (DTC) INFORMATION

Condition

The M1+ button must be activated before the diagnostic trouble code (DTC) can be detected. Diagnostic trouble code (DTC) PSM-0020 is stored if button M1+ has been activated for longer than 60 seconds.

Possible Source

- Button M1+ has jammed in the depressed position.
- Defective control panel.

Fault symptom[s]

- The operation button does not function.

TOO-LONG: TIME. INTERMITTENT FAULT

CHECKING CONTROL PANEL

Check the power seat module (PSM) and the control panel connectors. Check for intermittent short-circuit to ground. See **SHORT-CIRCUIT TO GROUND, INTERMITTENT FAULTS** . Check for contact resistance and oxidation. See **CONTACT RESISTANCE AND OXIDATION** . Check for loose connections. See **LOOSE CONNECTIONS (TERMINALS)** .

Remedy as necessary.

Other information:

- To connect the breakout box, see **CONNECTING THE BREAKOUT BOX, POWER SEAT MODULE (PSM)**
- For information about signals, see **SIGNAL SPECIFICATION, POWER SEAT MODULE** .

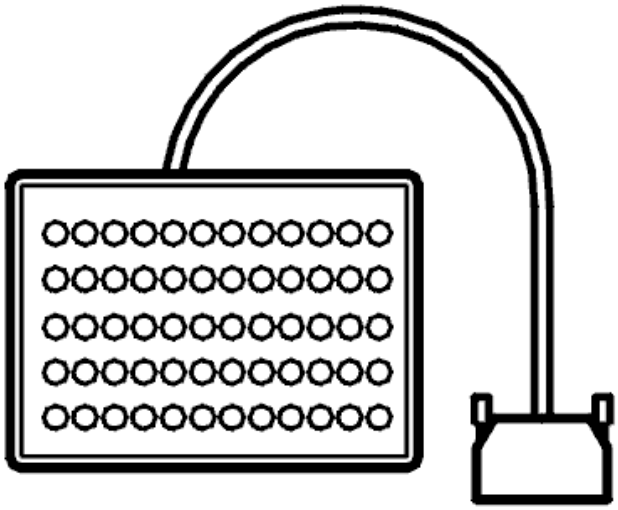

Fig. 72: Breakout Box
Courtesy of VOLVO CARS CORPORATION

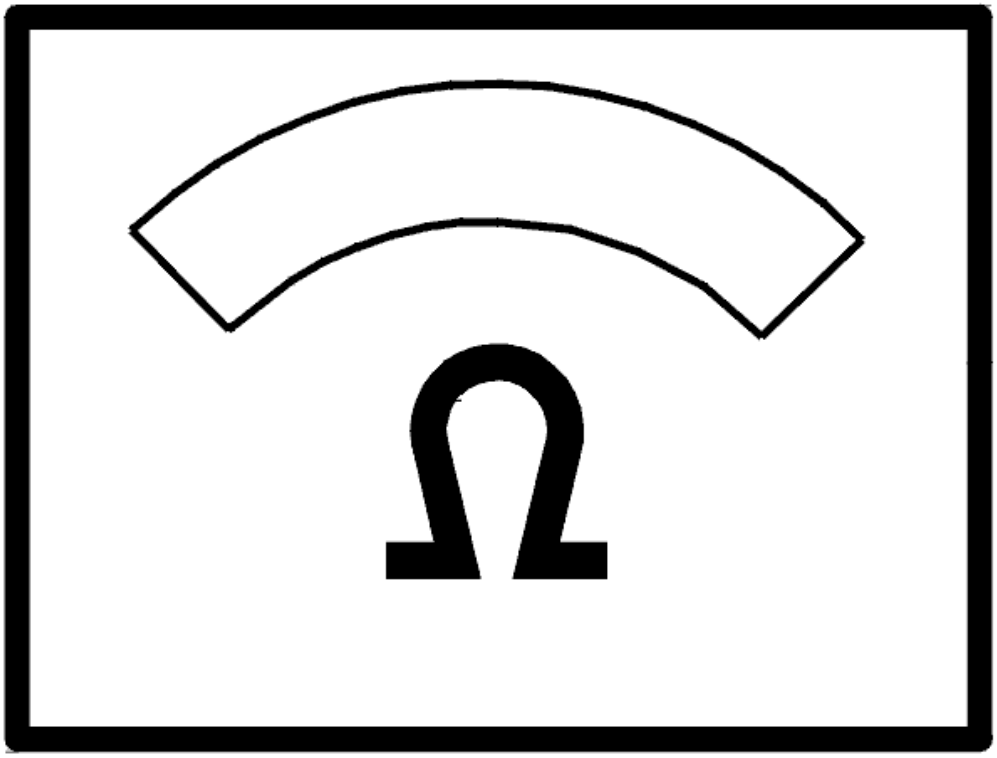

Fig. 73: Identifying Ohmmeter
Courtesy of VOLVO CARS CORPORATION

PSM-0020: FRONT-REAR ADJUSTMENT CONTROL, M1+. TOO SLOW. PERMANENT FAULT (2003-12)

DIAGNOSTIC TROUBLE CODE (DTC) INFORMATION

see **DIAGNOSTIC TROUBLE CODE (DTC) INFORMATION**

TOO-LONG: TIME. PERMANENT FAULT

CHECKING INPUTS

Check the function of the control panel buttons.

HINT: The value should change when the button is activated.

Replace the control panel if the power seat control module (PSM) does not receive any signal.

Other information:

- To access or replace the control panel:
  - See **SIDE PANEL, REPLACING** (-2004) or **SIDE PANEL FRONT SEAT, REPLACING** (2005-).
- To connect the breakout box, see **CONNECTING THE BREAKOUT BOX, POWER SEAT MODULE (PSM)**
- For information about signals, see **SIGNAL SPECIFICATION, POWER SEAT MODULE** .

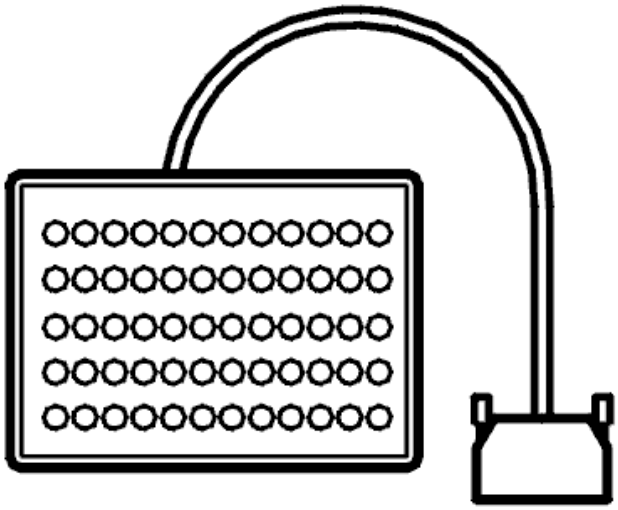

Fig. 74: Breakout Box
Courtesy of VOLVO CARS CORPORATION

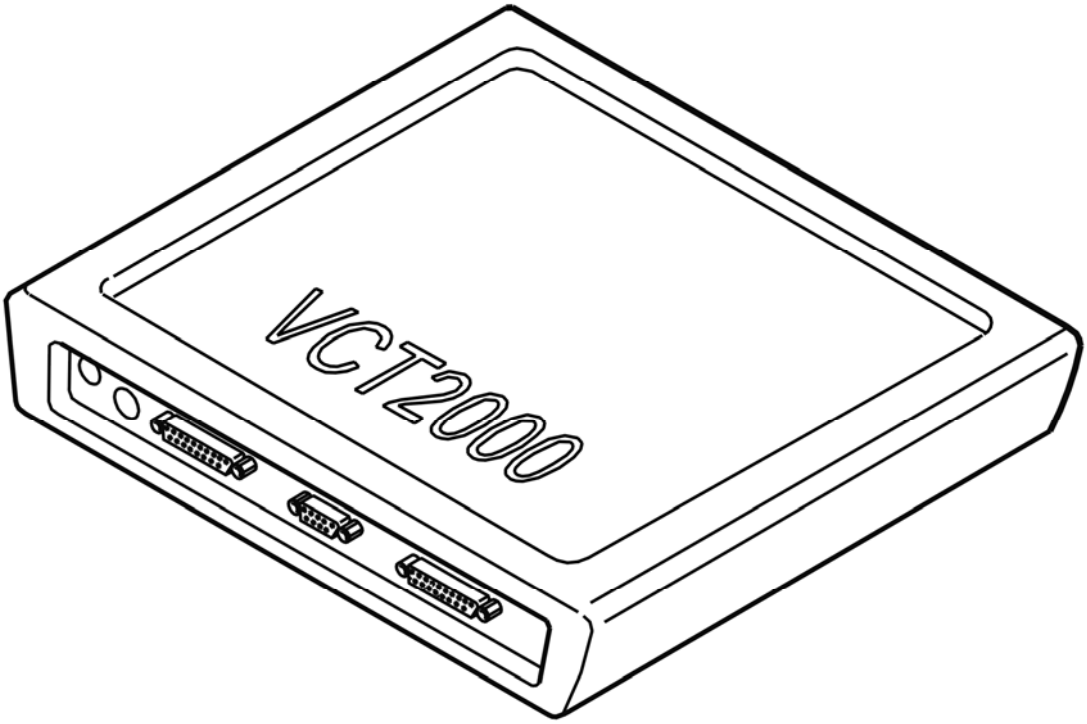

Fig. 75: Identifying VCT2000 Diagnostic Tool Symbol In VIDA
Courtesy of VOLVO CARS CORPORATION

PSM-0021: FRONT-REAR ADJUSTMENT CONTROL, M1- TOO SLOW. INTERMITTENT FAULT (2003-12)

DIAGNOSTIC TROUBLE CODE (DTC) INFORMATION

Condition

The M1- button must be activated before the diagnostic trouble code (DTC) can be detected. Diagnostic trouble code (DTC) PSM-0021 is stored if button M1- has been activated for longer than 60 seconds.

Possible Source

- Button M1- has jammed in the depressed position.
- Defective control panel.

Fault symptom[s]

- The operation button does not function.

TOO-LONG: TIME. INTERMITTENT FAULT

see **TOO LONG TIME. INTERMITTENT FAULT**

PSM-0021: FRONT-REAR ADJUSTMENT CONTROL, M1-. TOO SLOW. PERMANENT FAULT (2003-12)

DIAGNOSTIC TROUBLE CODE (DTC) INFORMATION

see **DIAGNOSTIC TROUBLE CODE (DTC) INFORMATION**

TOO-LONG: TIME. PERMANENT FAULT

see **TOO LONG TIME. PERMANENT FAULT**

PSM-0022: BACKREST ADJUSTMENT CONTROL, M2+. TOO SLOW. INTERMITTENT FAULT (2003-12)

DIAGNOSTIC TROUBLE CODE (DTC) INFORMATION

Condition

The M2+ button must be activated before the diagnostic trouble code (DTC) can be detected. Diagnostic trouble code (DTC) PSM-0022 is stored if button M2+ has been activated for longer than 60 seconds.

Possible Source

- Button M2+ has jammed in the depressed position.
- Defective control panel.

Fault symptom[s]

- The operation button does not function.

TOO-LONG: TIME. INTERMITTENT FAULT

see **TOO LONG TIME. INTERMITTENT FAULT**

PSM-0022: BACKREST ADJUSTMENT CONTROL, M2+. TOO SLOW. PERMANENT FAULT (2003-12)

DIAGNOSTIC TROUBLE CODE (DTC) INFORMATION

see **DIAGNOSTIC TROUBLE CODE (DTC) INFORMATION**

TOO-LONG: TIME. PERMANENT FAULT

see **TOO LONG TIME. PERMANENT FAULT**

PSM-0023: BACKREST ADJUSTMENT CONTROL, M2-. TOO SLOW. INTERMITTENT FAULT (2003-12)

DIAGNOSTIC TROUBLE CODE (DTC) INFORMATION

Condition

The M2- button must be activated before the diagnostic trouble code (DTC) can be detected. Diagnostic trouble code (DTC) PSM-0023 is stored if button M2- has been activated for longer than 60 seconds.

Possible Source

- Button M2- has jammed in the depressed position.
- Defective control panel.

Fault symptom[s]

- The operation button does not function.

TOO-LONG: TIME. INTERMITTENT FAULT

see **TOO LONG TIME. INTERMITTENT FAULT**

PSM-0023: BACKREST ADJUSTMENT CONTROL, M2-. TOO SLOW. PERMANENT FAULT (2003-12)

DIAGNOSTIC TROUBLE CODE (DTC) INFORMATION

see **DIAGNOSTIC TROUBLE CODE (DTC) INFORMATION**

TOO-LONG: TIME. PERMANENT FAULT

see **TOO LONG TIME. PERMANENT FAULT**

PSM-0024: REAR EDGE ADJUSTMENT CONTROL, M3+. TOO SLOW. INTERMITTENT FAULT (2003-12)

DIAGNOSTIC TROUBLE CODE (DTC) INFORMATION

Condition

The M3+ button must be activated before the diagnostic trouble code (DTC) can be detected. Diagnostic trouble code (DTC) PSM-0024 is stored if button M3+ has been activated for longer than 60 seconds.

Possible Source

- Button M3+ has jammed in the depressed position.
- Defective control panel.

Fault symptom[s]

- The operation button does not function.

TOO-LONG: TIME. INTERMITTENT FAULT

see **TOO LONG TIME. INTERMITTENT FAULT**

PSM-0024: REAR EDGE ADJUSTMENT CONTROL, M3+. TOO SLOW. PERMANENT FAULT (2003-12)

DIAGNOSTIC TROUBLE CODE (DTC) INFORMATION

see **DIAGNOSTIC TROUBLE CODE (DTC) INFORMATION**

TOO-LONG: TIME. PERMANENT FAULT

see **TOO LONG TIME. PERMANENT FAULT**

PSM-0025: REAR EDGE ADJUSTMENT CONTROL, M3-. TOO SLOW. INTERMITTENT FAULT (2003-12)

DIAGNOSTIC TROUBLE CODE (DTC) INFORMATION

Condition

The M3- button must be activated before the diagnostic trouble code (DTC) can be detected. Diagnostic trouble code (DTC) PSM-0025 is stored if button M3- has been activated for longer than 60 seconds.

Possible Source

- Button M3- has jammed in the depressed position.
- Defective control panel.

Fault symptom[s]

- The operation button does not function.

TOO-LONG: TIME. INTERMITTENT FAULT

see **TOO LONG TIME. INTERMITTENT FAULT**

PSM-0025: REAR EDGE ADJUSTMENT CONTROL, M3-. TOO SLOW. PERMANENT FAULT (2003-12)

DIAGNOSTIC TROUBLE CODE (DTC) INFORMATION

see **DIAGNOSTIC TROUBLE CODE (DTC) INFORMATION**

TOO-LONG: TIME. PERMANENT FAULT

see **TOO LONG TIME. PERMANENT FAULT**

PSM-0026: FRONT EDGE ADJUSTMENT CONTROL, M4+. TOO SLOW. INTERMITTENT FAULT (2003-12)

DIAGNOSTIC TROUBLE CODE (DTC) INFORMATION

Condition

The M4+ button must be activated before the diagnostic trouble code (DTC) can be detected. Diagnostic trouble code (DTC) PSM-0026 is stored if button M4+ has been activated for longer than 60 seconds.

Possible Source

- Button M4+ has jammed in the depressed position.
- Defective control panel.

Fault symptom[s]

- The operation button does not function.

TOO-LONG: TIME. INTERMITTENT FAULT

see **TOO LONG TIME. INTERMITTENT FAULT**

PSM-0026: FRONT EDGE ADJUSTMENT CONTROL, M4+. TOO SLOW. PERMANENT FAULT (2003-12)

DIAGNOSTIC TROUBLE CODE (DTC) INFORMATION

see **DIAGNOSTIC TROUBLE CODE (DTC) INFORMATION**

TOO-LONG: TIME. PERMANENT FAULT

see **TOO LONG TIME. PERMANENT FAULT**

PSM-0027: FRONT EDGE ADJUSTMENT CONTROL, M4-. TOO SLOW. INTERMITTENT FAULT (2003-12)

DIAGNOSTIC TROUBLE CODE (DTC) INFORMATION

Condition

The M4- button must be activated before the diagnostic trouble code (DTC) can be detected. Diagnostic trouble code (DTC) PSM-0027 is stored if button M4- has been activated for longer than 60 seconds.

Possible Source

- Button M4- has jammed in the depressed position.
- Defective control panel.

Fault symptom[s]

- The operation button does not function.

TOO-LONG: TIME. INTERMITTENT FAULT

see **TOO LONG TIME. INTERMITTENT FAULT**

PSM-0027: FRONT EDGE ADJUSTMENT CONTROL, M4-. TOO SLOW. PERMANENT FAULT (2003-12)

DIAGNOSTIC TROUBLE CODE (DTC) INFORMATION

see **DIAGNOSTIC TROUBLE CODE (DTC) INFORMATION**

TOO-LONG: TIME. PERMANENT FAULT

see **TOO LONG TIME. PERMANENT FAULT**

PSM-0028: OPERATING BUTTON, MEMORY 1. TOO SLOW. INTERMITTENT FAULT (2003-12)

DIAGNOSTIC TROUBLE CODE (DTC) INFORMATION

Condition

Memory button 1 must be activated before the diagnostic trouble code (DTC) can be detected. Diagnostic trouble code (DTC) PSM-0028 is stored if memory button 1 has been activated for longer than 60 seconds.

Possible Source

- Memory button 1 is jammed in the depressed position.
- Defective control panel.

Fault symptom[s]

- Button 1 does not function.

TOO-LONG: TIME. INTERMITTENT FAULT

see **TOO LONG TIME. INTERMITTENT FAULT**

PSM-0028: OPERATING BUTTON, MEMORY 1. TOO SLOW. PERMANENT FAULT (2003-12)

DIAGNOSTIC TROUBLE CODE (DTC) INFORMATION

see **DIAGNOSTIC TROUBLE CODE (DTC) INFORMATION**

TOO-LONG: TIME. PERMANENT FAULT

see **TOO LONG TIME. PERMANENT FAULT**

PSM-0029: OPERATING BUTTON, MEMORY 2. TOO SLOW. INTERMITTENT FAULT (2003-12)

DIAGNOSTIC TROUBLE CODE (DTC) INFORMATION

Condition

Memory button 2 must be activated before the diagnostic trouble code (DTC) can be detected. Diagnostic trouble code (DTC) PSM-0029 is stored if memory button 2 has been activated for longer than 60 seconds.

Possible Source

- Memory button 2 is jammed in the depressed position.
- Defective control panel.

Fault symptom[s]

- Button 2 does not function.

TOO-LONG: TIME. INTERMITTENT FAULT

see **TOO LONG TIME. INTERMITTENT FAULT**

PSM-0029: OPERATING BUTTON, MEMORY 2. TOO SLOW. PERMANENT FAULT (2003-12)

DIAGNOSTIC TROUBLE CODE (DTC) INFORMATION

see **DIAGNOSTIC TROUBLE CODE (DTC) INFORMATION**

TOO-LONG: TIME. PERMANENT FAULT

see **TOO LONG TIME. PERMANENT FAULT**

PSM-002A: OPERATING BUTTON, MEMORY 3. TOO SLOW. INTERMITTENT FAULT (2003-12)

DIAGNOSTIC TROUBLE CODE (DTC) INFORMATION

Condition

Memory button 3 must be activated before the diagnostic trouble code (DTC) can be detected. Diagnostic trouble code (DTC) PSM-002A is stored if button 3 has been activated for longer than 60 seconds.

Possible Source

- Memory button 3 is jammed in the depressed position.
- Defective control panel.

Fault symptom[s]

- Button 3 does not function.

TOO-LONG: TIME. INTERMITTENT FAULT

see **TOO LONG TIME. INTERMITTENT FAULT**

PSM-002A: OPERATING BUTTON, MEMORY 3. TOO SLOW. PERMANENT FAULT (2003-12)

DIAGNOSTIC TROUBLE CODE (DTC) INFORMATION

see **DIAGNOSTIC TROUBLE CODE (DTC) INFORMATION**

TOO-LONG: TIME. PERMANENT FAULT

see **TOO LONG TIME. PERMANENT FAULT**

PSM-002B: MEMORY BUTTON. TOO SLOW. INTERMITTENT FAULT (2003-12)

DIAGNOSTIC TROUBLE CODE (DTC) INFORMATION

Condition

The MEM memory button must be activated before the diagnostic trouble code (DTC) can be detected. Diagnostic trouble code (DTC) PSM-002B is stored if a memory button has been activated for longer than 60 seconds.

Possible Source

- A memory button has jammed in the pressed in position.
- Defective control panel.

Fault symptom[s]

- The memory button does not function.

TOO-LONG: TIME. INTERMITTENT FAULT

see **TOO LONG TIME. INTERMITTENT FAULT**

PSM-002B: MEMORY BUTTON. TOO SLOW. PERMANENT FAULT (2003-12)

DIAGNOSTIC TROUBLE CODE (DTC) INFORMATION

see **DIAGNOSTIC TROUBLE CODE (DTC) INFORMATION**

TOO-LONG: TIME. PERMANENT FAULT

see **TOO LONG TIME. PERMANENT FAULT**

PSM-002C: BUTTON COMBINATION NOT PERMISSIBLE, M1+ AND M1-. FAULTY SIGNAL. INTERMITTENT FAULT (2003-12)

DIAGNOSTIC TROUBLE CODE (DTC) INFORMATION

Condition

Diagnostic trouble code (DTC) PSM-002C is stored if M1+ and M1- are activated at the same time.

Possible Source

- Faulty control panel operation.

- Defective control panel.
- Defective power seat module (PSM).

Fault symptom[s]

- Power seat does not function at all.

FAULT-TRACING INFORMATION

see **FAULT-TRACING INFORMATION**

PSM-002C: BUTTON COMBINATION NOT PERMISSIBLE, M1+ AND M1-. FAULTY SIGNAL. PERMANENT FAULT (2003-12)

DIAGNOSTIC TROUBLE CODE (DTC) INFORMATION

see **DIAGNOSTIC TROUBLE CODE (DTC) INFORMATION**

FAULTY SIGNAL. PERMANENT FAULT

CHECKING THE CONTROL PANEL

Check if the signal from the control panel is received by the power seat module (PSM).

Read off the value.

HINT: When checking the control panel, check if the resistance between #6C and the terminal pin is 0 ohms.

Other information:

- To connect the breakout box, see **CONNECTING THE BREAKOUT BOX, POWER SEAT MODULE (PSM)**
- For information about signals, see **INPUT SIGNALS FROM THE CONTROL PANEL** .

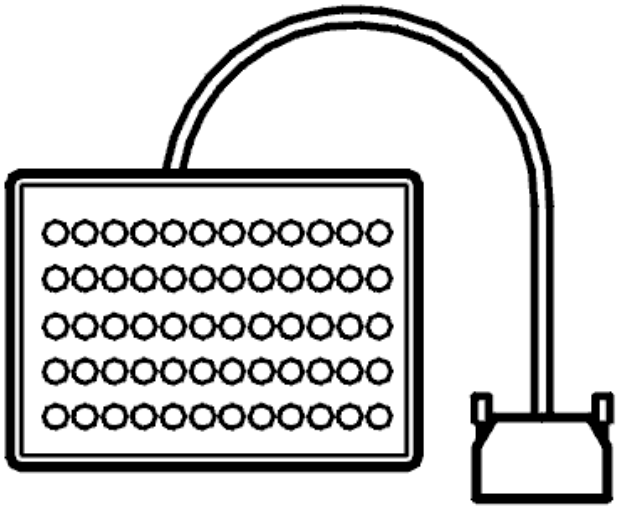

Fig. 76: Breakout Box
Courtesy of VOLVO CARS CORPORATION

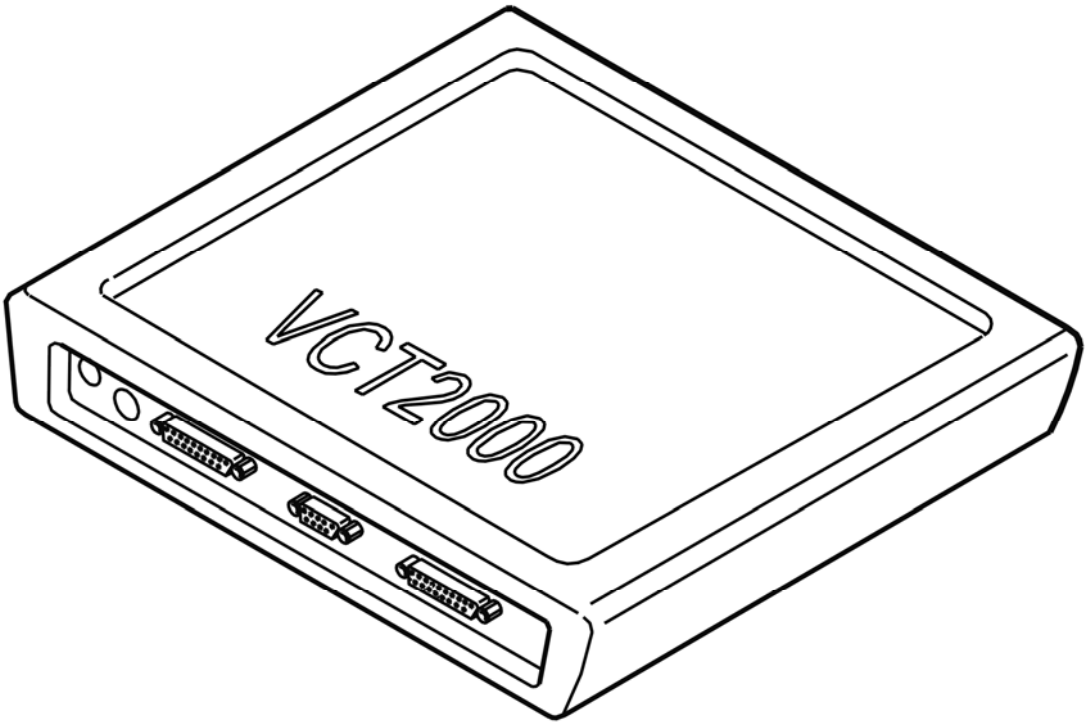

Fig. 77: Identifying VCT2000 Diagnostic Tool Symbol In VIDA
Courtesy of VOLVO CARS CORPORATION

Does the value change?

- **YES**

OKAY: Troubleshooting has been completed.

- **NO**

  Refer to **REPLACING THE CONTROL PANEL**

REPLACING THE CONTROL PANEL

Replace the control panel. See **SIDE PANEL, REPLACING** (-2004) or **SIDE PANEL FRONT SEAT, REPLACING** (2005-).

- **Continue**

  Refer to **VERIFICATION**

VERIFICATION

HINT: After carrying out the repair it is important to check that the fault is no longer present.

HINT: Read off the value.

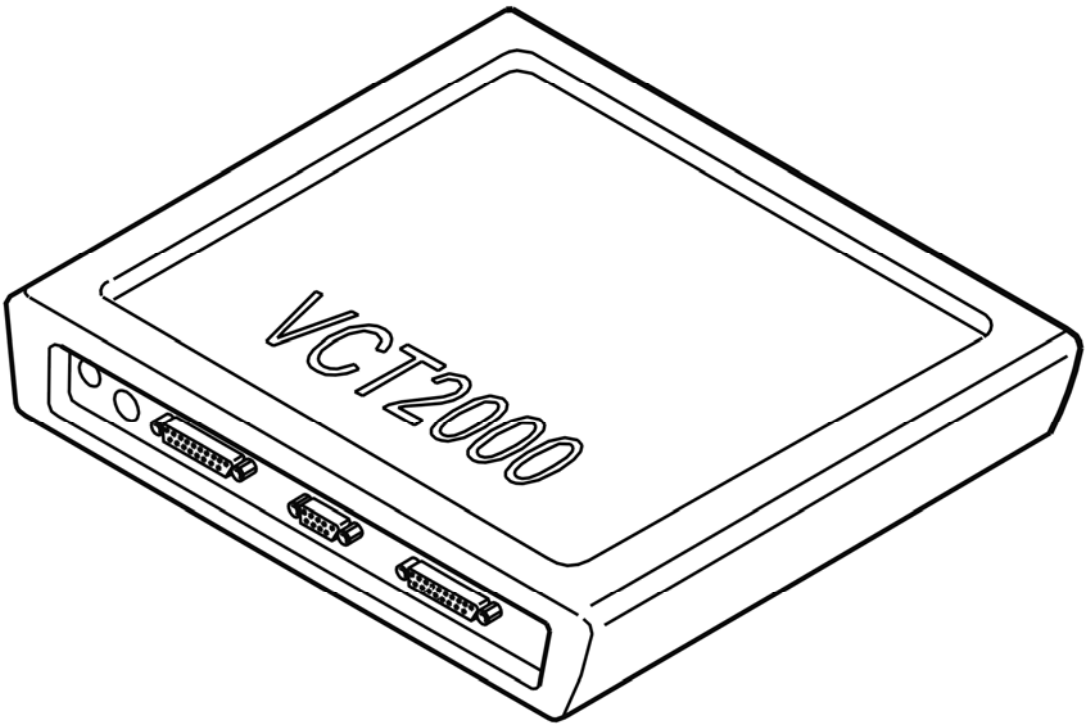

Fig. 78: Identifying VCT2000 Diagnostic Tool Symbol In VIDA
Courtesy of VOLVO CARS CORPORATION

Does the motor now operate as it should?

- **YES**

  OKAY: Troubleshooting has been completed.

- **NO**

  Refer to **INFORMATION**

INFORMATION

FAULT-TRACING INFORMATION

The fault should have been detected and remedied. As this is not the case fault-tracing has failed.

Exit fault-tracing for this diagnostic trouble code (DTC) or make another attempt.

PSM-002D: BUTTON COMBINATION NOT PERMISSIBLE, M2+ AND M2-. FAULTY SIGNAL. INTERMITTENT FAULT (2003-12)

DIAGNOSTIC TROUBLE CODE (DTC) INFORMATION

Condition

Diagnostic trouble code (DTC) PSM-002D is stored if M2+ and M2- are activated at the same time.

Possible Source

- Faulty control panel operation.
- Defective control panel.
- Defective power seat module (PSM).

Fault symptom[s]

- Power seat does not function at all.

FAULT-TRACING INFORMATION

see **FAULT-TRACING INFORMATION**

PSM-002D: BUTTON COMBINATION NOT PERMISSIBLE, M2+ AND M2-. FAULTY SIGNAL. PERMANENT FAULT (2003-12)

DIAGNOSTIC TROUBLE CODE (DTC) INFORMATION

see **DIAGNOSTIC TROUBLE CODE (DTC) INFORMATION**

FAULTY SIGNAL. PERMANENT FAULT

see **FAULTY SIGNAL. PERMANENT FAULT**

PSM-002E: BUTTON COMBINATION NOT PERMISSIBLE, M3+ AND M3-. FAULTY SIGNAL. INTERMITTENT FAULT (2003-12)

DIAGNOSTIC TROUBLE CODE (DTC) INFORMATION

Condition

Diagnostic trouble code (DTC) PSM-002E is stored if M3+ and M3- are activated at the same time.

Possible Source

- Faulty control panel operation.
- Defective control panel.
- Defective power seat module (PSM).

Fault symptom[s]

- Power seat does not function at all.

FAULT-TRACING INFORMATION

see **FAULT-TRACING INFORMATION**

PSM-002E: BUTTON COMBINATION NOT PERMISSIBLE, M3+ AND M3-. FAULTY SIGNAL. PERMANENT FAULT (2003-12)

DIAGNOSTIC TROUBLE CODE (DTC) INFORMATION

see **DIAGNOSTIC TROUBLE CODE (DTC) INFORMATION**

FAULTY SIGNAL. PERMANENT FAULT

see **FAULTY SIGNAL. PERMANENT FAULT**

PSM-002F: BUTTON COMBINATION NOT PERMISSIBLE, M4+ AND M4-. FAULTY SIGNAL. INTERMITTENT FAULT (2003-12)

DIAGNOSTIC TROUBLE CODE (DTC) INFORMATION

Condition

Diagnostic trouble code (DTC) PSM-002F is stored if M4+ and M4- are activated at the same time.

Possible Source

- Faulty control panel operation.
- Defective control panel.
- Defective power seat module (PSM).

Fault symptom[s]

- Power seat does not function at all.

FAULT-TRACING INFORMATION

see **FAULT-TRACING INFORMATION**

PSM-002F: BUTTON COMBINATION NOT PERMISSIBLE, M4+ AND M4-. FAULTY SIGNAL. PERMANENT FAULT (2003-12)

DIAGNOSTIC TROUBLE CODE (DTC) INFORMATION

see **DIAGNOSTIC TROUBLE CODE (DTC) INFORMATION**

FAULTY SIGNAL. PERMANENT FAULT

see **FAULTY SIGNAL. PERMANENT FAULT**

PSM-0030: FRONT-REAR ADJUSTMENT, MOTOR 1 (M1+). SIGNAL MISSING. INTERMITTENT FAULT (2003-12)

DIAGNOSTIC TROUBLE CODE (DTC) INFORMATION

Condition

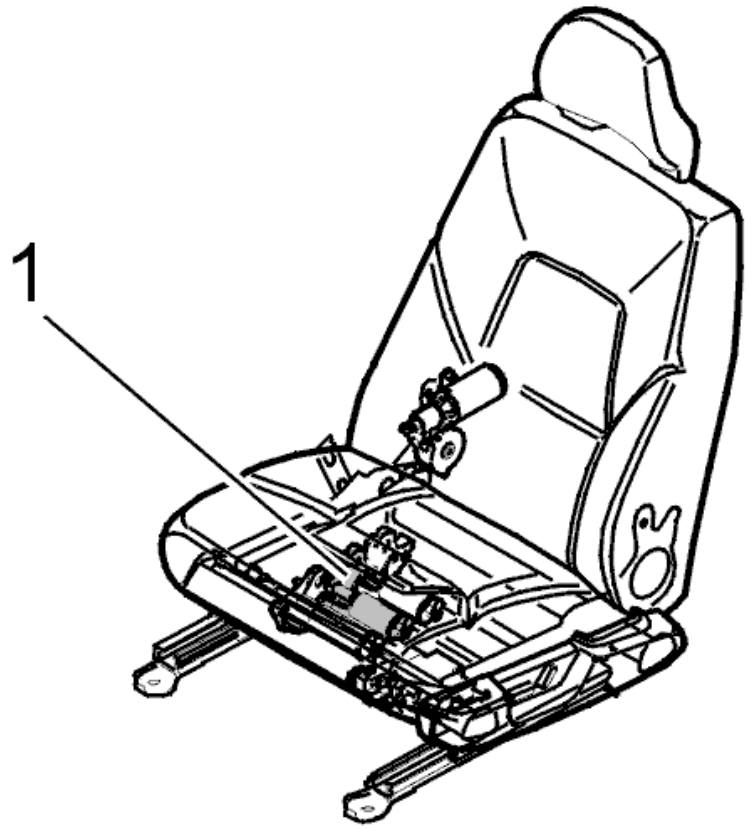

Fig. 79: Identifying Power Seat Motor Location
Courtesy of VOLVO CARS CORPORATION

Motor 1 controls the seat front-rear adjustment. Motor 1 must be activated before the diagnostic trouble code (DTC) can be detected. Diagnostic trouble code (DTC) PSM-0030 is stored if the motor 1 does not run despite M1+ being activated and the power seat module registering +12 V on the M1+ signal cable.

Possible Source

- Open-circuit in signal cable M1+.
- Blown fuse (11C/4).

Fault symptom[s]

- Seat front-rear adjustment does not operate.

SIGNAL MISSING. INTERMITTENT FAULT

CHECKING CABLE

Check the cable between the power seat module (PSM) and the motor for an open-circuit according to **OPEN-CIRCUIT, INTERMITTENT FAULTS** .

Remedy as necessary.

Other information:

- To connect the breakout box, see **CONNECTING THE BREAKOUT BOX, POWER SEAT MODULE (PSM)** .
- For information about signals, see **SIGNAL SPECIFICATION, POWER SEAT MODULE** .

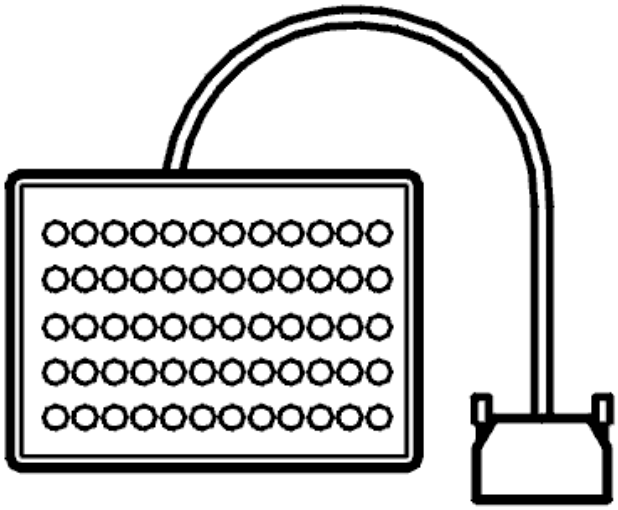

Fig. 80: Breakout Box
Courtesy of VOLVO CARS CORPORATION

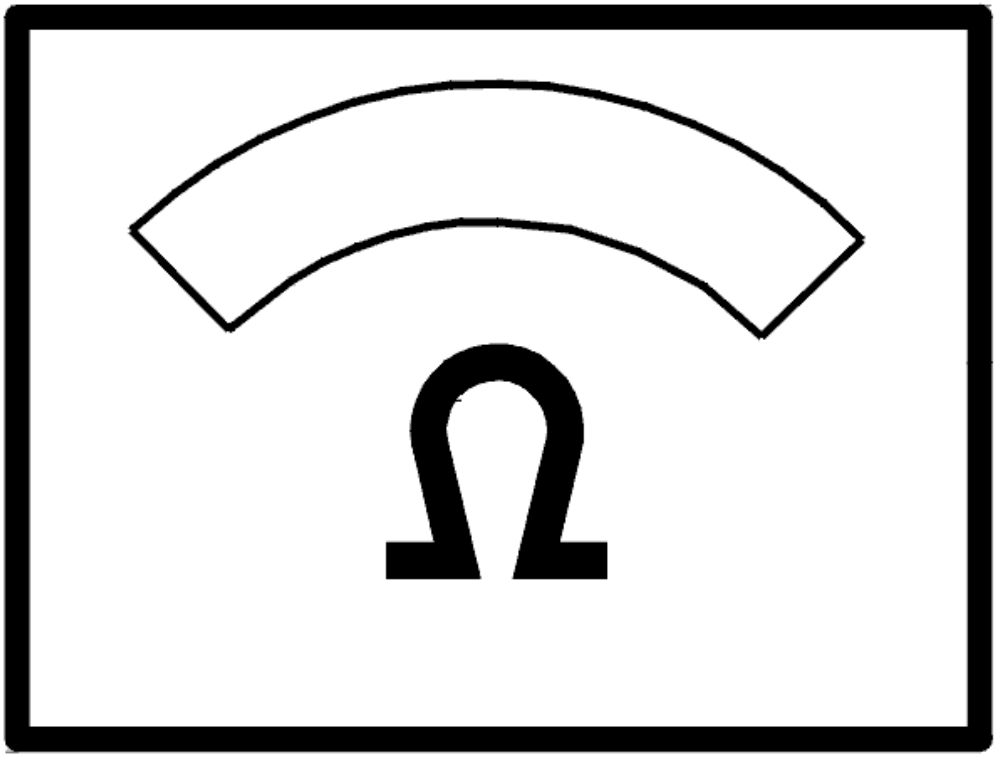

Fig. 81: Identifying Ohmmeter
Courtesy of VOLVO CARS CORPORATION

PSM-0030: FRONT-REAR ADJUSTMENT, MOTOR 1 (M1+). SIGNAL MISSING. PERMANENT FAULT (2003-12)

DIAGNOSTIC TROUBLE CODE (DTC) INFORMATION

see **DIAGNOSTIC TROUBLE CODE (DTC) INFORMATION**

SIGNAL MISSING. PERMANENT FAULT

CHECKING WIRING

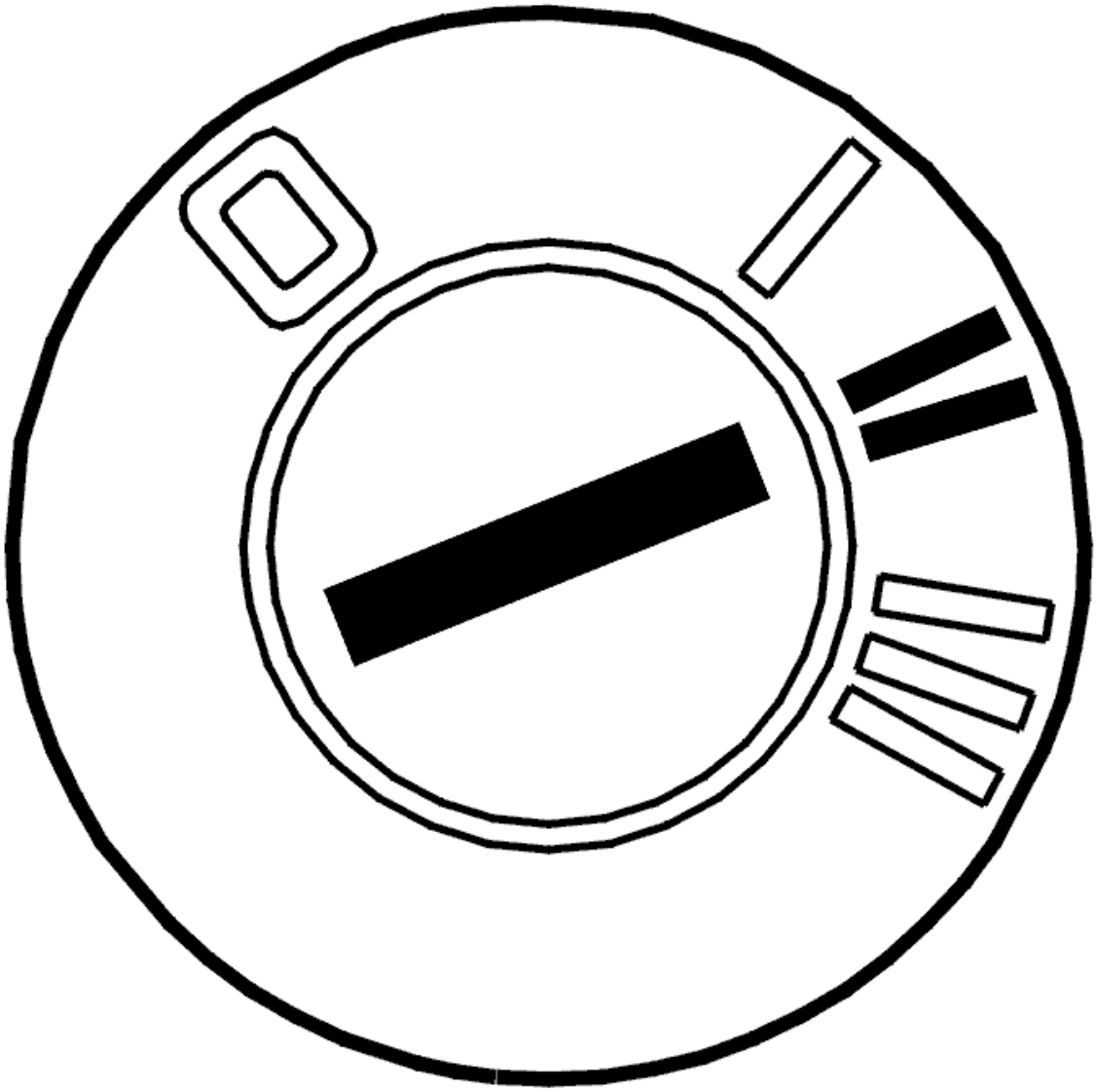

Fig. 82: Identifying Ignition ON
Courtesy of VOLVO CARS CORPORATION

- Ignition on
- Try to activate the motor.

HINT: The resistance between #1E and #2E must be approximately 0 ohms.

Check the cable between the power seat module (PSM) #1E and the motor. Check for an open-circuit. See **OPEN-CIRCUIT, PERMANENT FAULTS** .

Remedy as necessary.

If no fault is found, try replacing the motor.

Other information:

- To access or replace the motor, see **ELECTRIC MOTOR CUSHION, REPLACING** (-2004) or **ELECTRIC MOTOR CUSHION, REPLACING** (2005-)
- To connect the breakout box, see **CONNECTING THE BREAKOUT BOX, POWER SEAT MODULE (PSM)**
- For information about signals, see **CONNECTOR, BLACK (12-PIN)** .

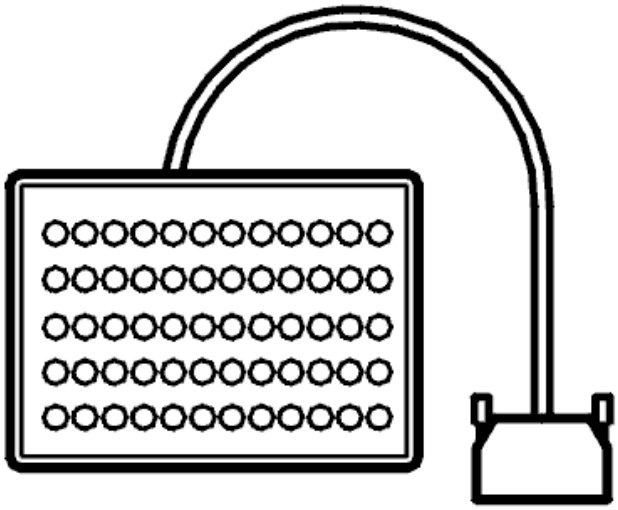

Fig. 83: Breakout Box
Courtesy of VOLVO CARS CORPORATION

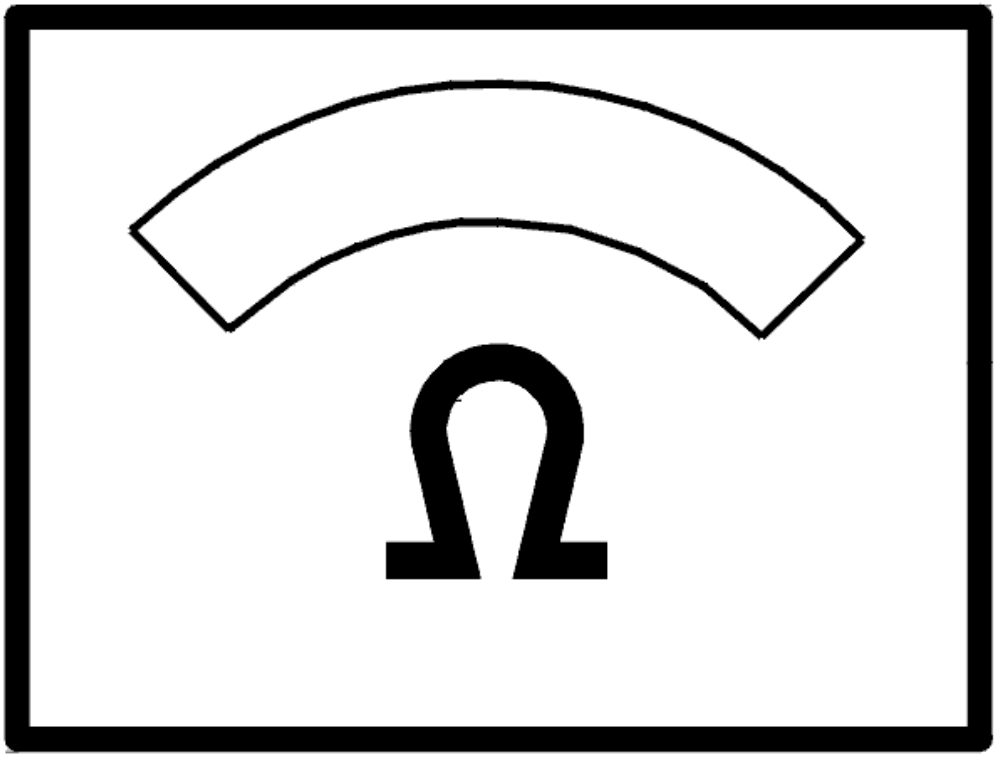

Fig. 84: Identifying Ohmmeter
Courtesy of VOLVO CARS CORPORATION

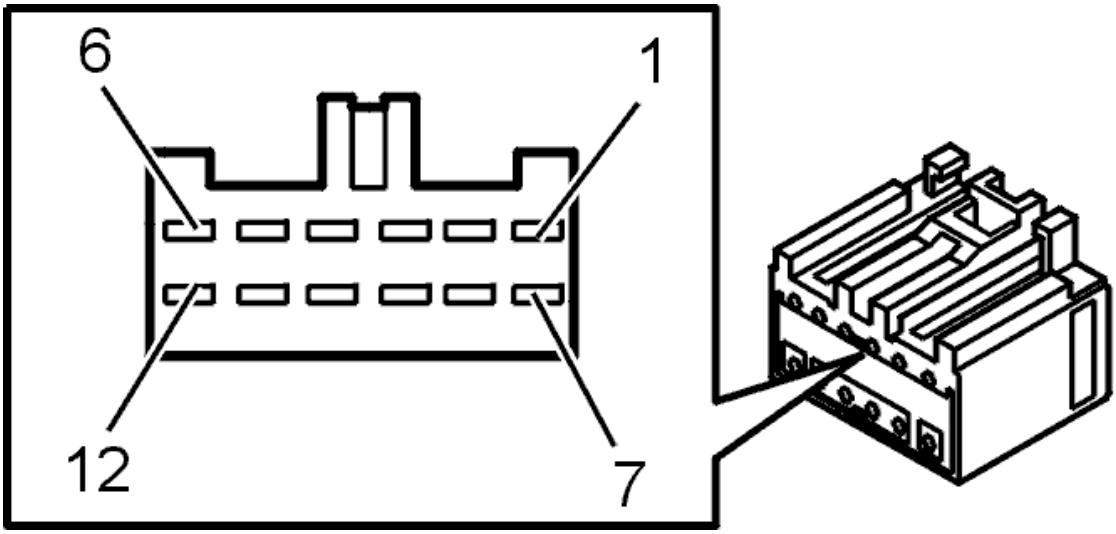

Fig. 85: Audio Control Module (AUM)/External Amplifier To Loudspeakers, Gray Connector
Courtesy of VOLVO CARS CORPORATION

- **Continue**

  Refer to **VERIFICATION**

VERIFICATION

Activate the motor.

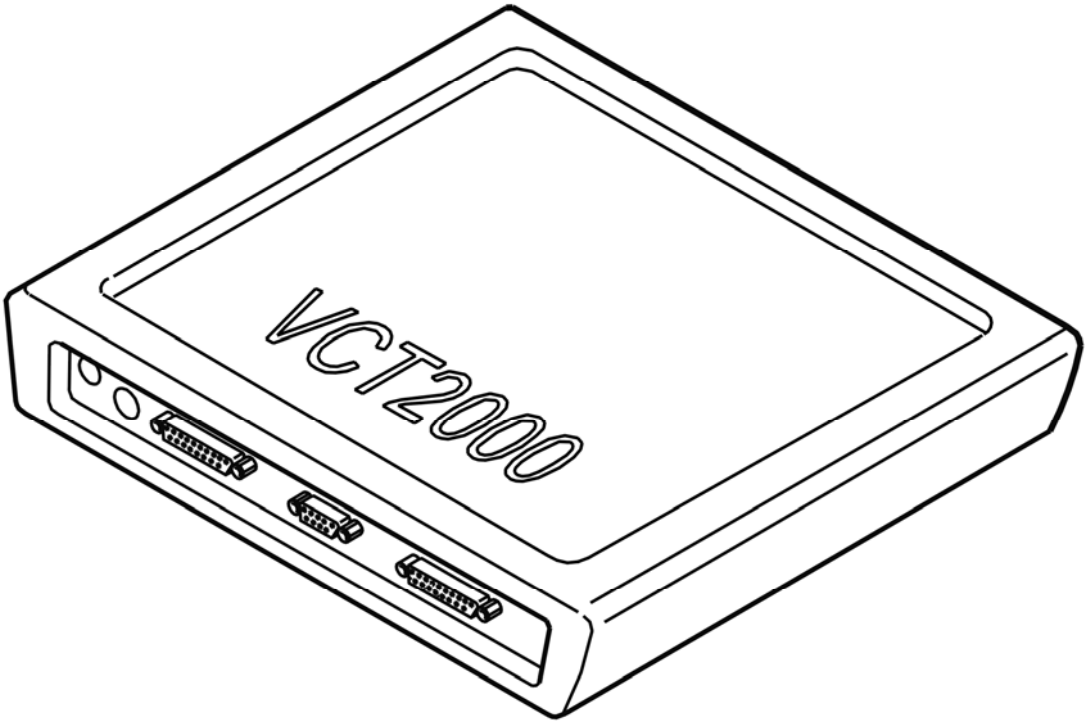

Fig. 86: Identifying VCT2000 Diagnostic Tool Symbol In VIDA
Courtesy of VOLVO CARS CORPORATION

Does the motor operate as it should?

- **YES**

  OKAY: Troubleshooting has been completed.

- **NO**

  Refer to **INFORMATION**

INFORMATION

FAULT-TRACING INFORMATION

The fault should have been detected and remedied. As this is not the case fault-tracing has failed.

Exit fault-tracing for this diagnostic trouble code (DTC) or make another attempt.

PSM-0031: FRONT-REAR ADJUSTMENT, MOTOR 1 (M1-). SIGNAL MISSING. INTERMITTENT FAULT (2003-12)

DIAGNOSTIC TROUBLE CODE (DTC) INFORMATION

Condition

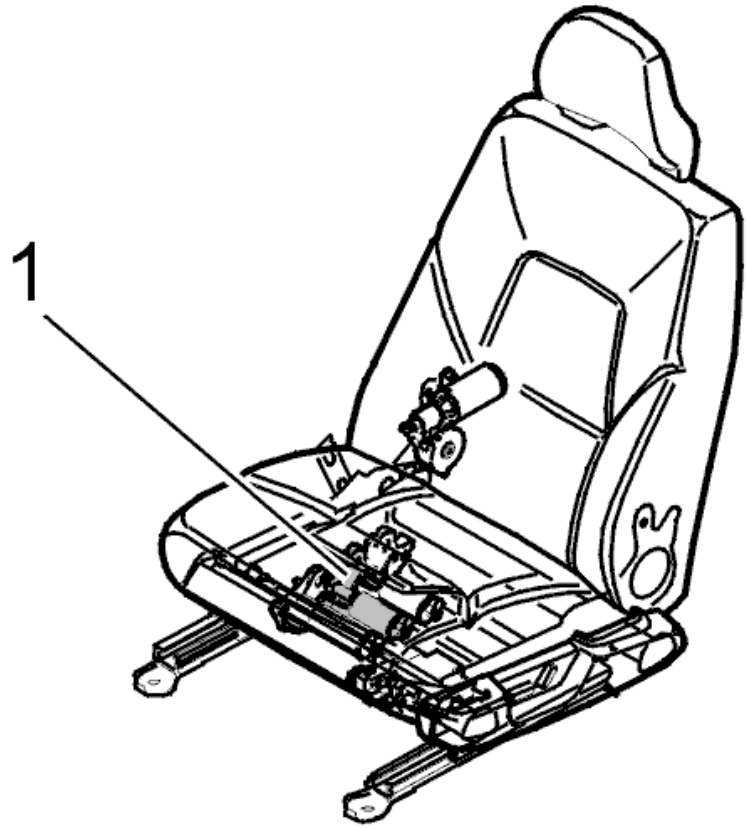

Fig. 87: Identifying Power Seat Motor Location
Courtesy of VOLVO CARS CORPORATION

Motor 1 controls the seat front-rear adjustment. Motor 1 must be activated before the diagnostic trouble code (DTC) can be detected. Diagnostic trouble code (DTC) PSM-0031 is stored if the motor 1 does not run despite M1- being activated and the power seat module registering +12 V on the M1- signal cable.

Possible Source

- Open-circuit in signal cable M1-.
- Blown fuse (11C/4).

Fault symptom[s]

- Seat front-rear adjustment does not operate.

SIGNAL MISSING. INTERMITTENT FAULT

see **SIGNAL MISSING. INTERMITTENT FAULT**

PSM-0031: FRONT-REAR ADJUSTMENT, MOTOR 1 (M1-). SIGNAL MISSING. PERMANENT FAULT (2003-12)

DIAGNOSTIC TROUBLE CODE (DTC) INFORMATION

see **DIAGNOSTIC TROUBLE CODE (DTC) INFORMATION**

SIGNAL MISSING. PERMANENT FAULT

CHECKING THE CABLE

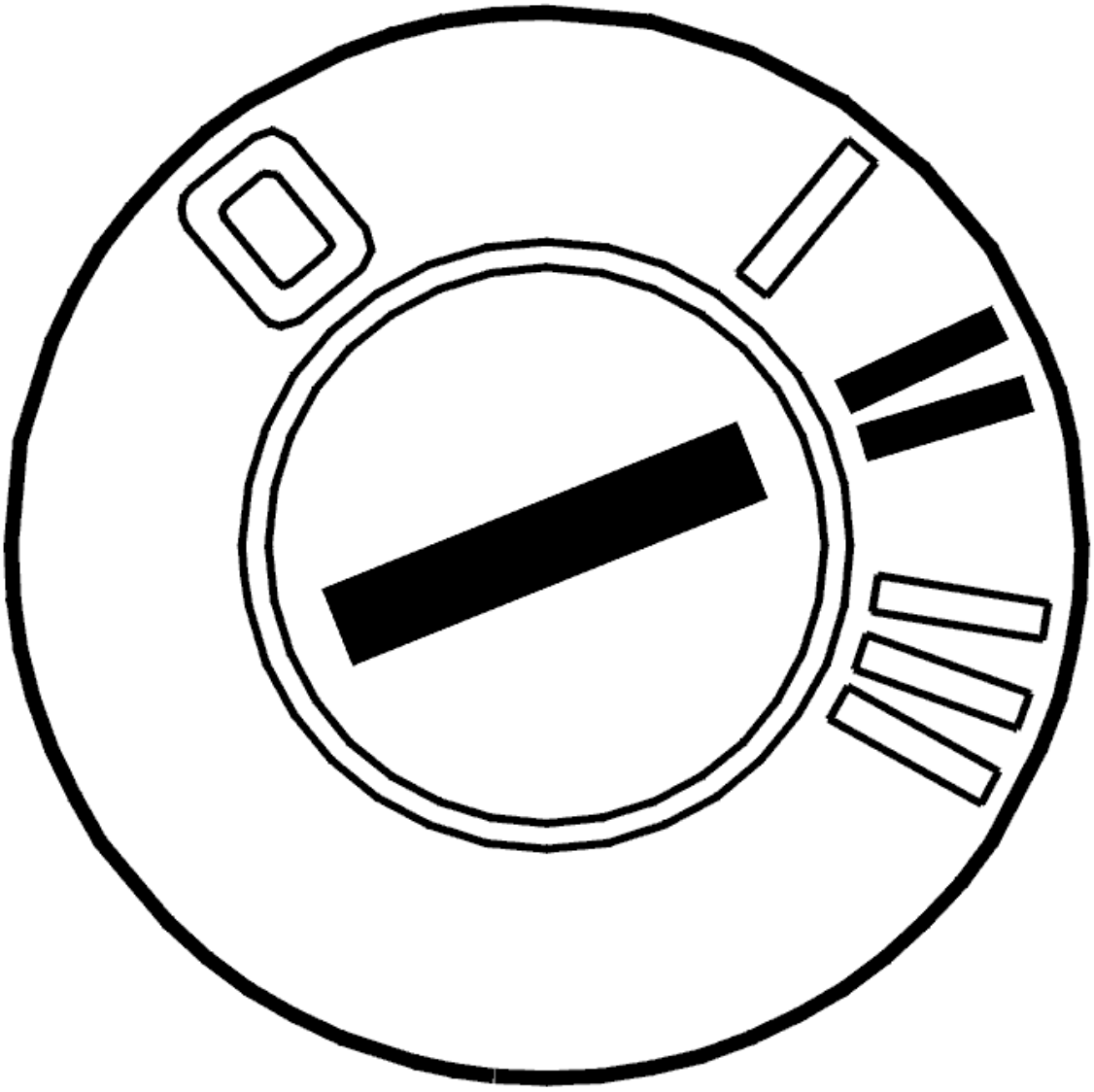

Fig. 88: Identifying Ignition ON
Courtesy of VOLVO CARS CORPORATION

- Ignition on

- Try to activate the motor.

HINT: The resistance between #1E and #2E must be approximately 0 ohms.

Check the cable between the power seat module (PSM) #2E and the motor. Check for an open-circuit. See **OPEN-CIRCUIT, PERMANENT FAULTS** .

Remedy as necessary.

If no fault is found, try replacing the motor.

Other information:

- To access or replace the motor, see **ELECTRIC MOTOR CUSHION, REPLACING** (-2004) or **ELECTRIC MOTOR CUSHION, REPLACING** (2005-)
- To connect the breakout box, see **CONNECTING THE BREAKOUT BOX, POWER SEAT MODULE (PSM)**
- For information about signals, see **CONNECTOR, BLACK (12-PIN)** .

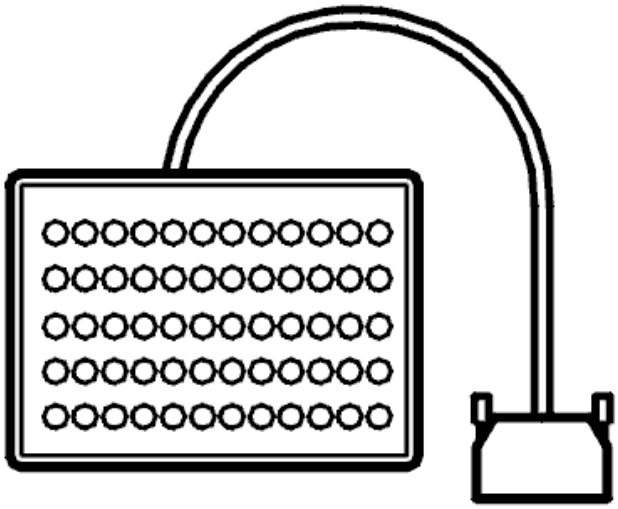

Fig. 89: Breakout Box
Courtesy of VOLVO CARS CORPORATION

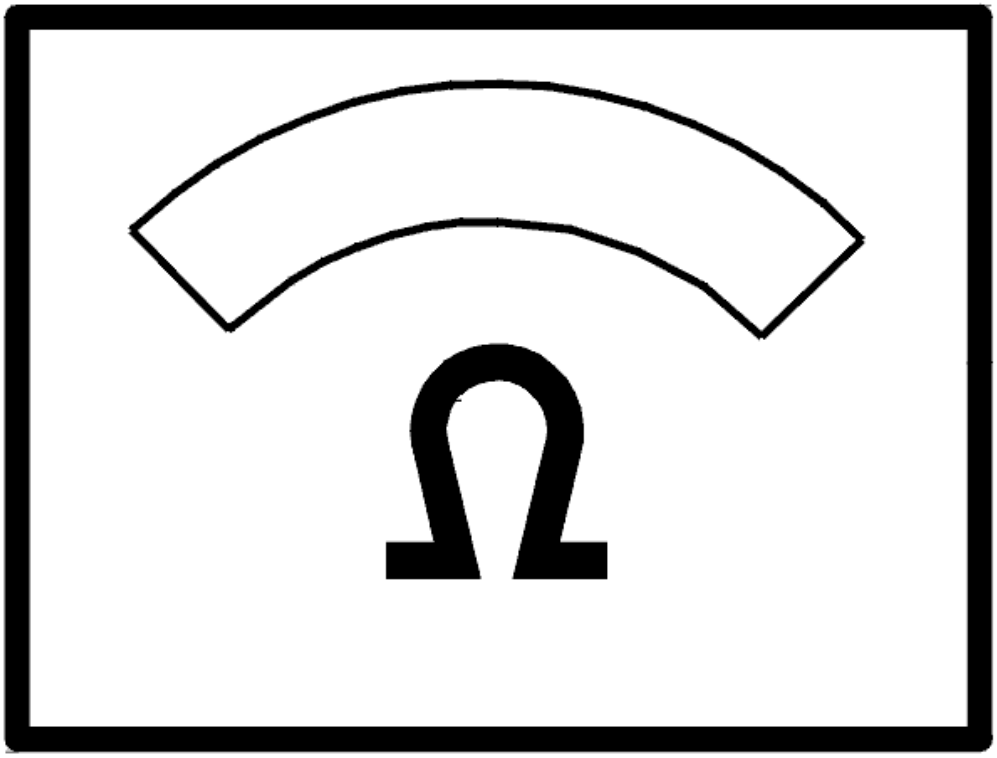

Fig. 90: Identifying Ohmmeter
Courtesy of VOLVO CARS CORPORATION

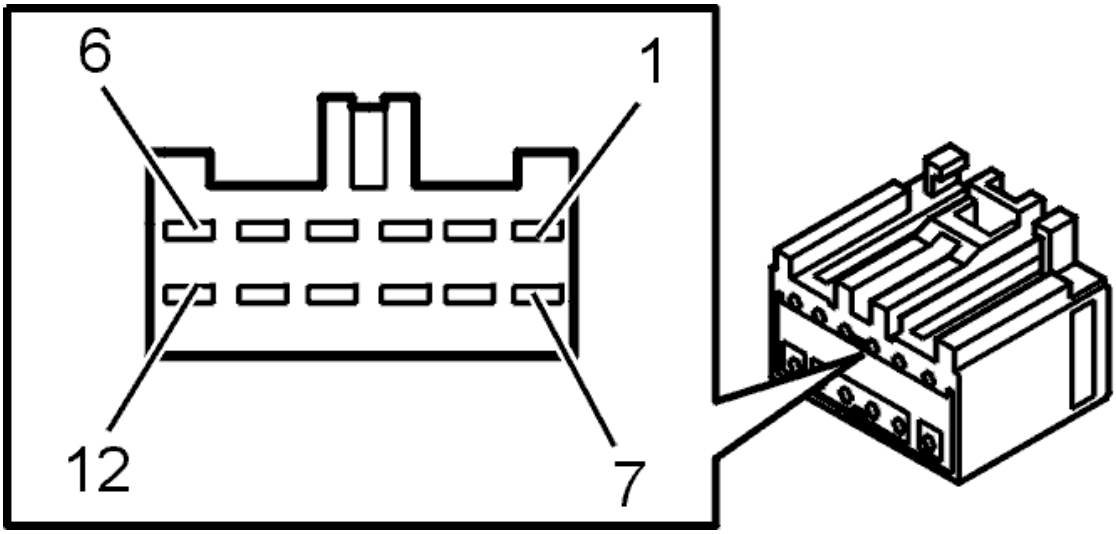

Fig. 91: Audio Control Module (AUM)/External Amplifier To Loudspeakers, Gray Connector
Courtesy of VOLVO CARS CORPORATION

- **Continue**

  Refer to **VERIFICATION**

VERIFICATION

Activate the motor.

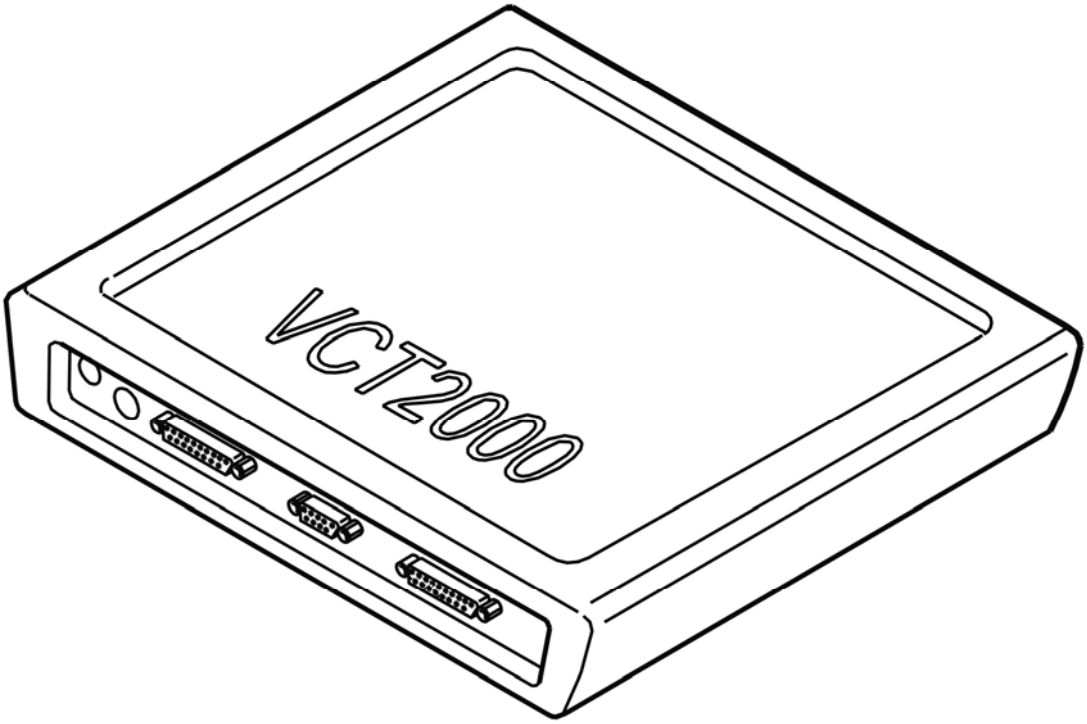

Fig. 92: Identifying VCT2000 Diagnostic Tool Symbol In VIDA
Courtesy of VOLVO CARS CORPORATION

Does the motor operate as it should?

- **YES**

  OKAY: Troubleshooting has been completed.

- **NO**

  Refer to **INFORMATION**

INFORMATION

FAULT-TRACING INFORMATION

The fault should have been detected and remedied. As this is not the case fault-tracing has failed.

Exit fault-tracing for this diagnostic trouble code (DTC) or make another attempt.

PSM-0032: BACKREST, MOTOR 2 (M2+). SIGNAL MISSING. INTERMITTENT FAULT (2003-12)

DIAGNOSTIC TROUBLE CODE (DTC) INFORMATION

Condition

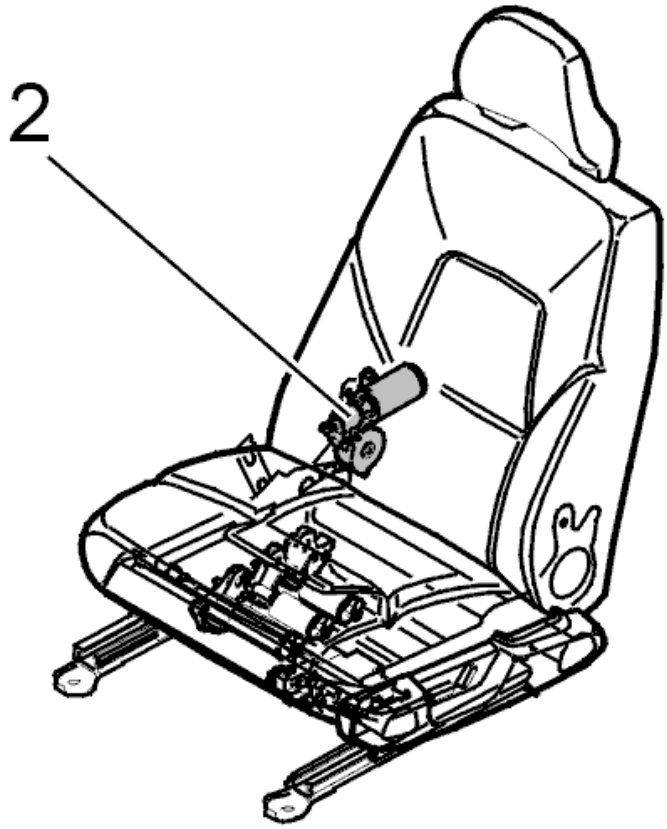

Fig. 93: Identifying Power Seat Backrest Rake Motor
Courtesy of VOLVO CARS CORPORATION

Motor 2 controls the backrest rake. Motor 2 must be activated before the diagnostic trouble code (DTC) can be detected. Diagnostic trouble code (DTC) PSM-0032 is stored if motor 2 does not run despite M2+ being activated and the power seat module registering +12 V on the M2+ signal cable.

Possible Source

- Open-circuit in signal cable M2+.
- Blown fuse (11C/4).

Fault symptom[s]

- The angle of the backrest cannot be adjusted.

SIGNAL MISSING. INTERMITTENT FAULT

see **SIGNAL MISSING. INTERMITTENT FAULT**

PSM-0032: BACKREST, MOTOR 2 (M2+). SIGNAL MISSING. PERMANENT FAULT (2003-12)

DIAGNOSTIC TROUBLE CODE (DTC) INFORMATION

see **DIAGNOSTIC TROUBLE CODE (DTC) INFORMATION**

SIGNAL MISSING. PERMANENT FAULT

CHECKING THE CABLE

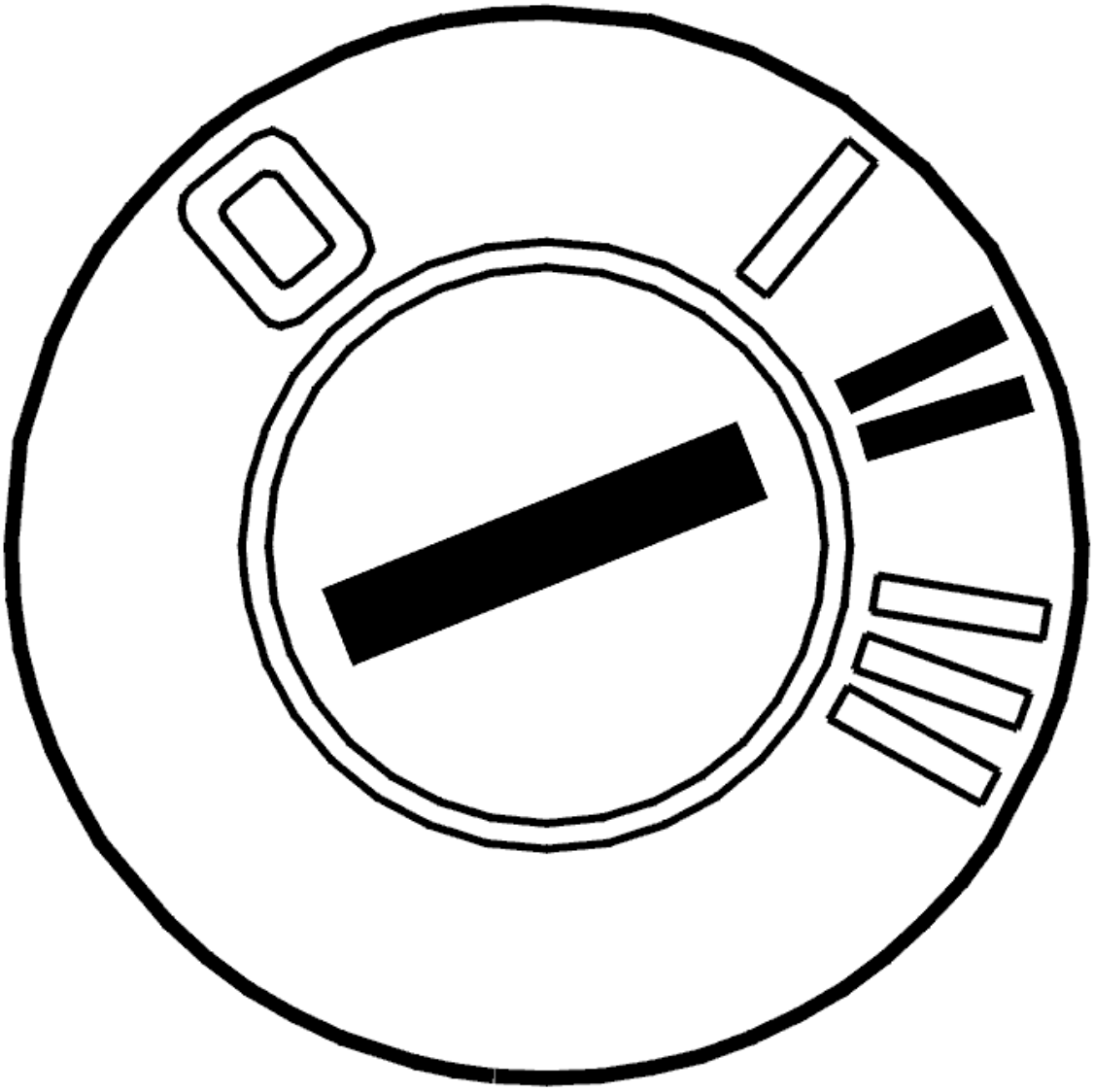

Fig. 94: Identifying Ignition ON
Courtesy of VOLVO CARS CORPORATION

- Ignition on.

- Try to activate the motor.

HINT: The resistance between #1D and #2D must be approximately 0 ohms.

Check the cable between the power seat module (PSM) #1D and the motor for an open-circuit according to **OPEN-CIRCUIT, PERMANENT FAULTS** .

Remedy as necessary.

If no fault is found, try replacing the motor.

Other information:

- To connect the breakout box, see **CONNECTING THE BREAKOUT BOX, POWER SEAT MODULE (PSM)** .
- For information about signals, see **OUTPUT SIGNALS TO THE MOTORS** .

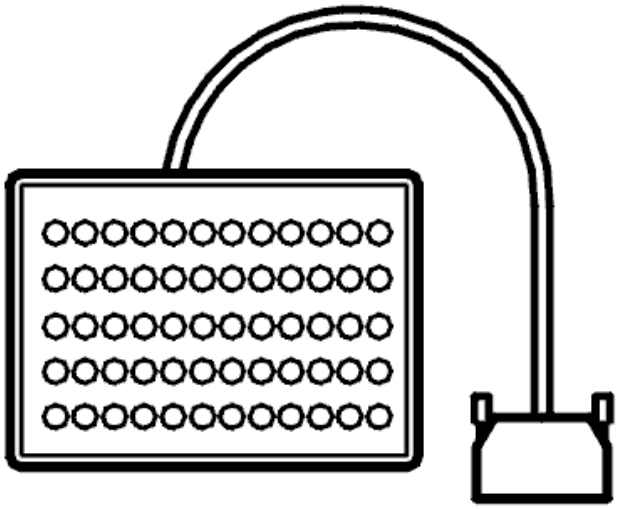

Fig. 95: Breakout Box
Courtesy of VOLVO CARS CORPORATION

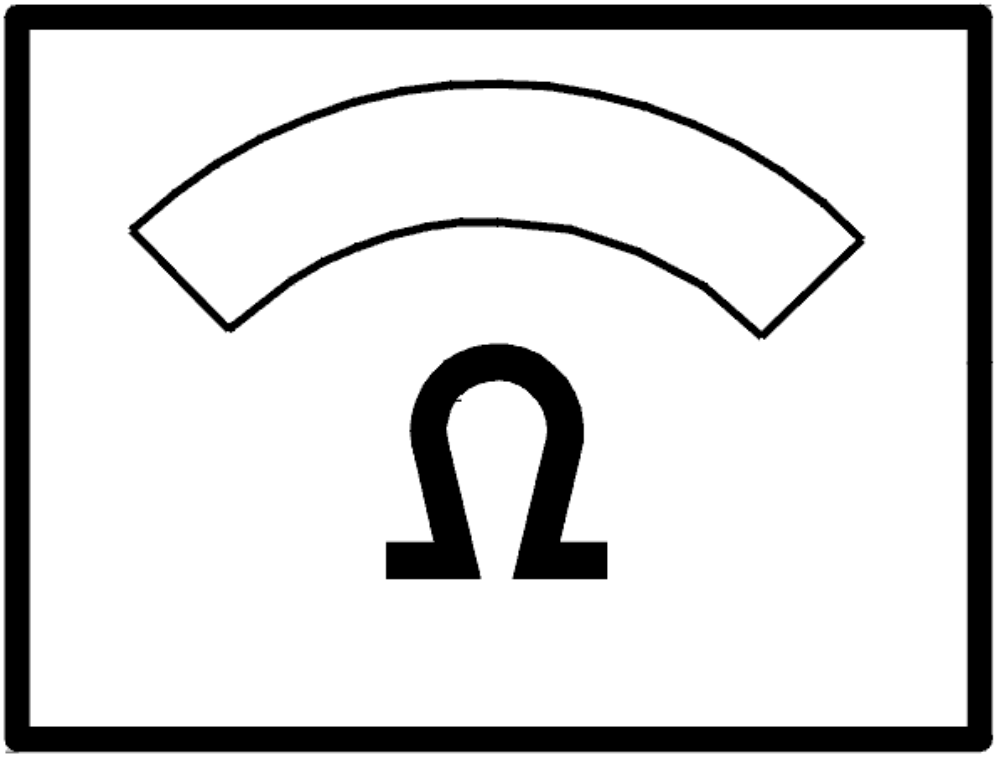

Fig. 96: Identifying Ohmmeter
Courtesy of VOLVO CARS CORPORATION

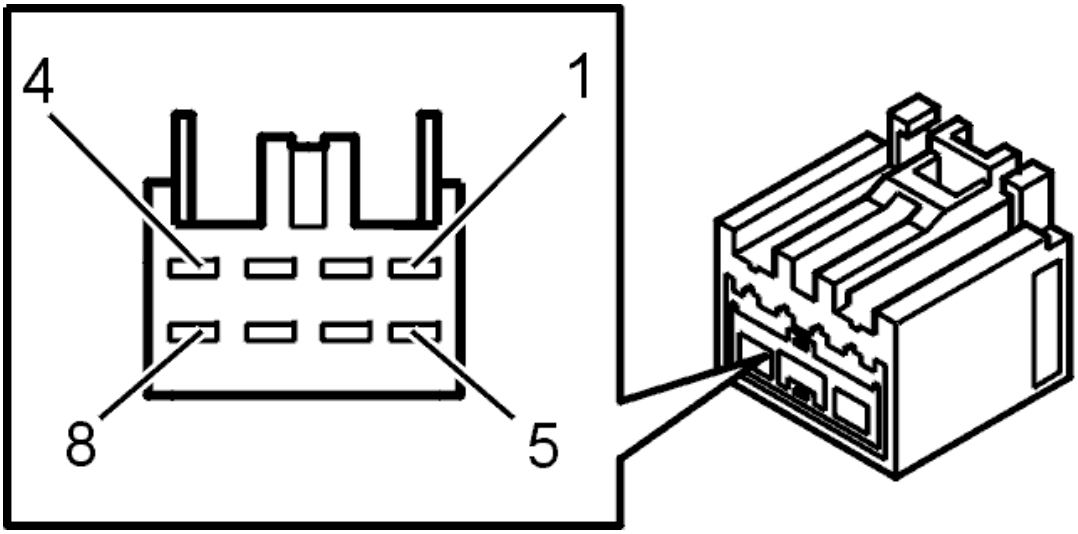

Fig. 97: Connector, Black (8-Pin)
Courtesy of VOLVO CARS CORPORATION

- **Continue**

  Refer to **VERIFICATION**

VERIFICATION

Activate the motor.

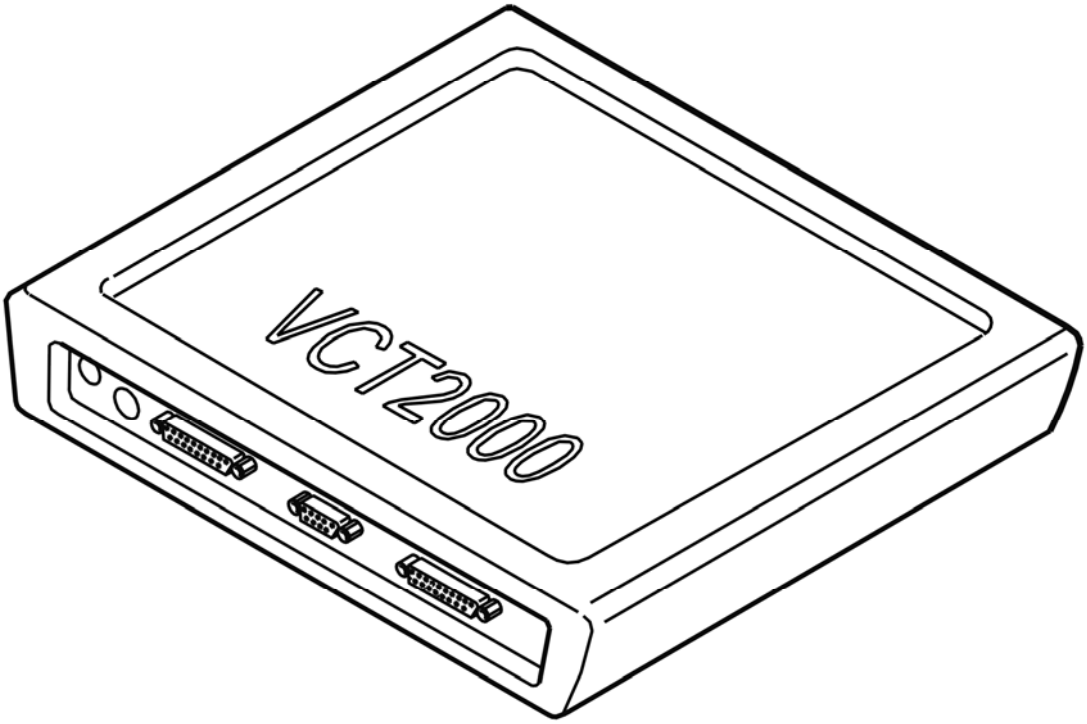

Fig. 98: Identifying VCT2000 Diagnostic Tool Symbol In VIDA
Courtesy of VOLVO CARS CORPORATION

Does the motor operate as it should?

- **YES**

  OKAY: Troubleshooting has been completed.

- **NO**

  Refer to **INFORMATION**

INFORMATION

FAULT-TRACING INFORMATION

The fault should have been detected and remedied. As this is not the case fault-tracing has failed.

Exit fault-tracing for this diagnostic trouble code (DTC) or make another attempt.

PSM-0033: BACKREST, MOTOR 2 (M2-). SIGNAL MISSING. INTERMITTENT FAULT (2003-12)

DIAGNOSTIC TROUBLE CODE (DTC) INFORMATION

Condition

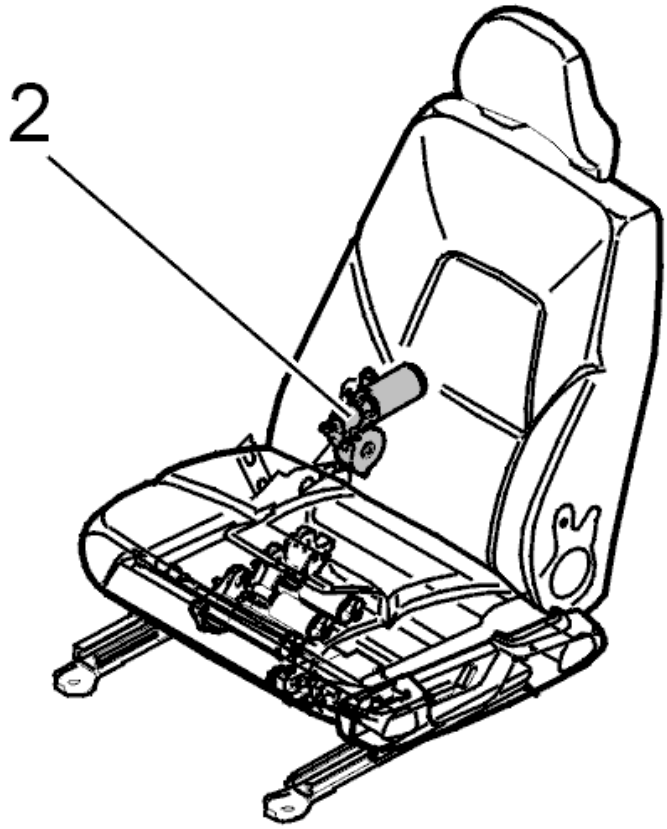

Fig. 99: Identifying Power Seat Backrest Rake Motor
Courtesy of VOLVO CARS CORPORATION

Motor 2 controls the backrest rake. Motor 2 must be activated before the diagnostic trouble code (DTC) can be detected. Diagnostic trouble code (DTC) PSM-0033 is stored if motor 2 does not run despite M2- being activated and the power seat module registering +12 V on the M2- signal cable.

Possible Source

- Open-circuit in signal cable M2-.
- Blown fuse (11C/4).

Fault symptom[s]

- The angle of the backrest cannot be adjusted.

SIGNAL MISSING. INTERMITTENT FAULT

see **SIGNAL MISSING. INTERMITTENT FAULT**

PSM-0033: BACKREST, MOTOR 2 (M2-). SIGNAL MISSING. PERMANENT FAULT (2003-12)

DIAGNOSTIC TROUBLE CODE (DTC) INFORMATION

see **DIAGNOSTIC TROUBLE CODE (DTC) INFORMATION**

SIGNAL MISSING. PERMANENT FAULT

CHECKING THE CABLE

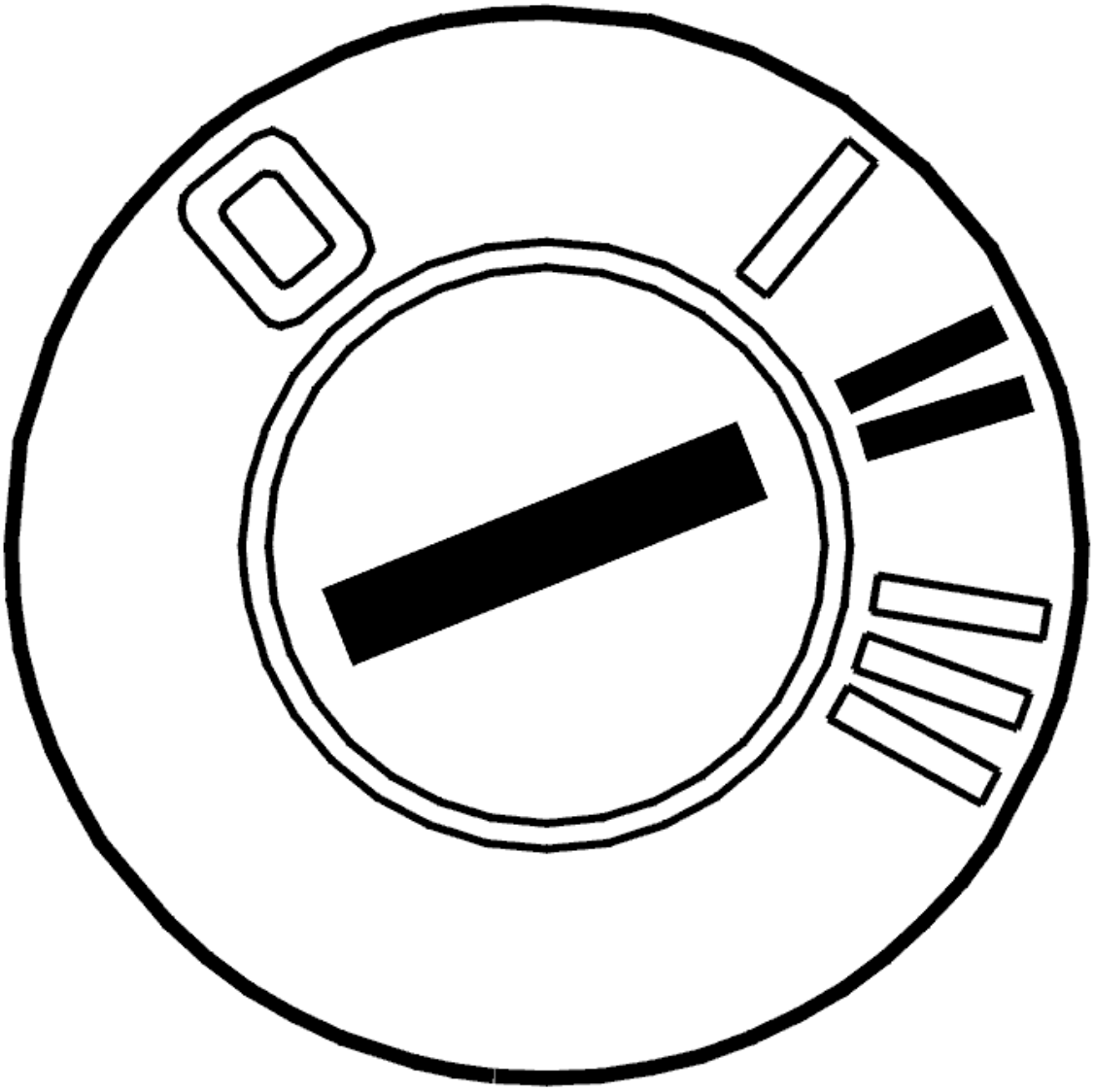

Fig. 100: Identifying Ignition ON
Courtesy of VOLVO CARS CORPORATION

- Ignition on.

- Try to activate the motor.

HINT: The resistance between #1D and #2D must be approximately 0 ohms.

Check the cable between the power seat module (PSM) #2D and the motor for an open-circuit according to **OPEN-CIRCUIT, PERMANENT FAULTS** .

Remedy as necessary.

If no fault is found try replacing the motor.

Other information:

- To connect the breakout box, see **CONNECTING THE BREAKOUT BOX, POWER SEAT MODULE (PSM)** .
- For information about signals, see **OUTPUT SIGNALS TO THE MOTORS** .

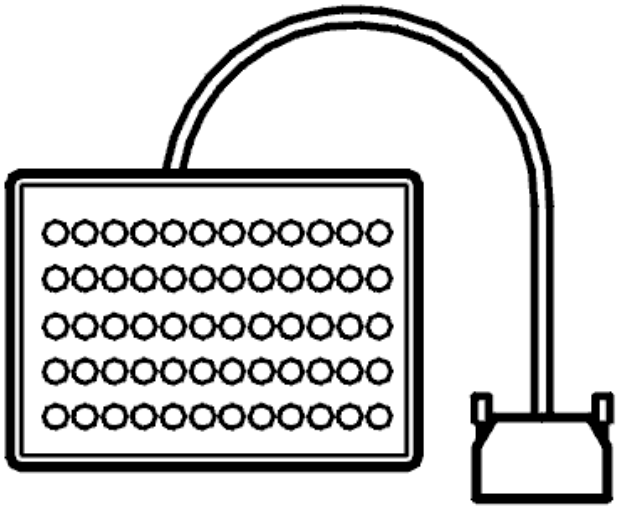

Fig. 101: Breakout Box
Courtesy of VOLVO CARS CORPORATION

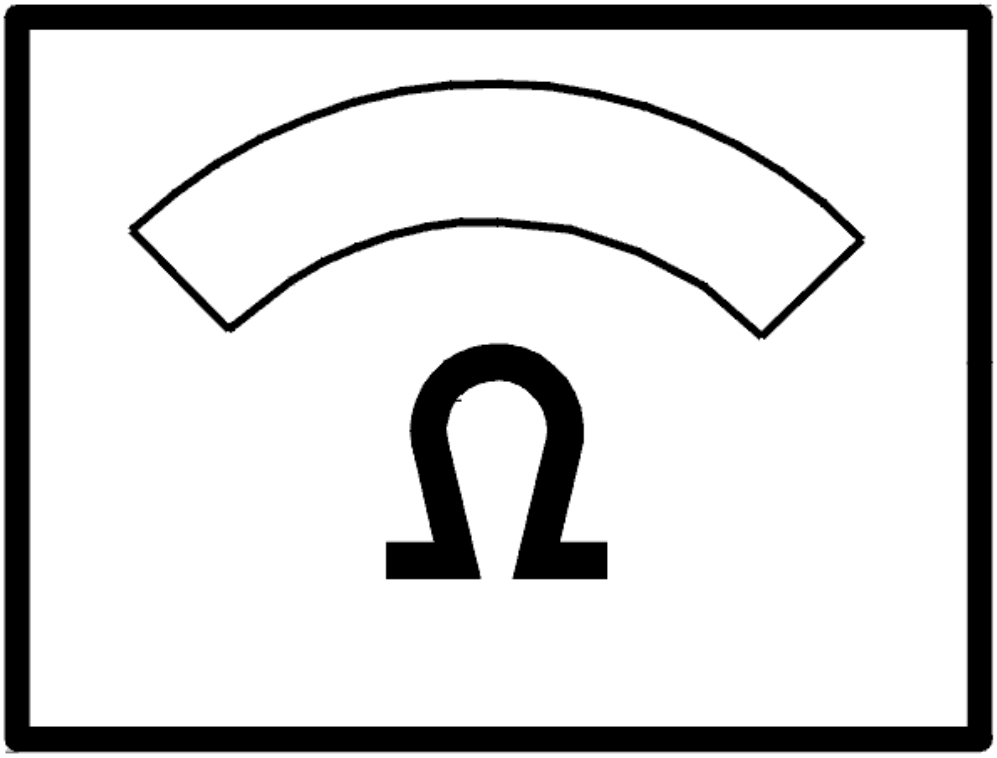

Fig. 102: Identifying Ohmmeter
Courtesy of VOLVO CARS CORPORATION

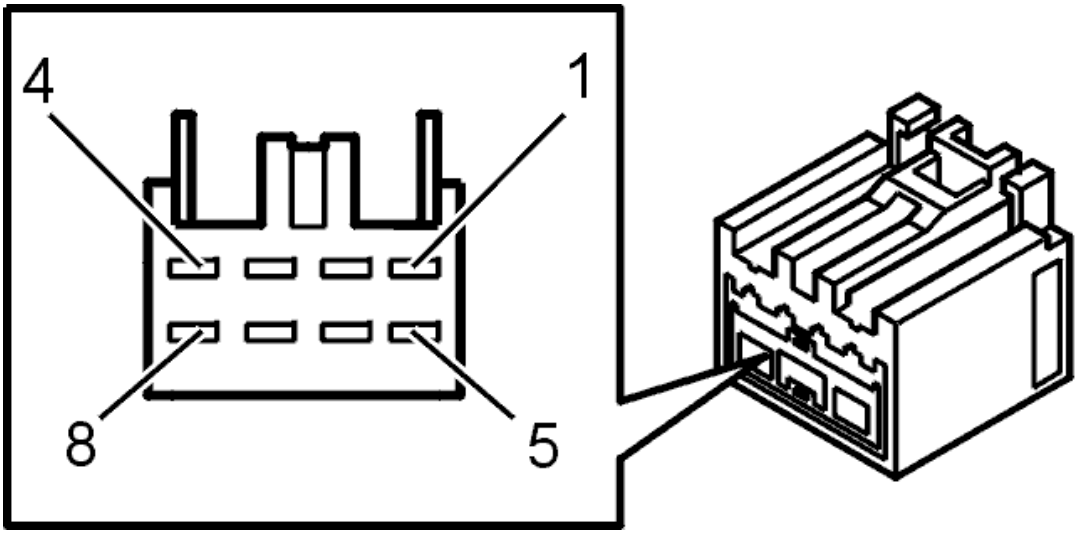

Fig. 103: Connector, Black (8-Pin)
Courtesy of VOLVO CARS CORPORATION

- **Continue**

  Refer to **VERIFICATION**

VERIFICATION

Activate the motor.

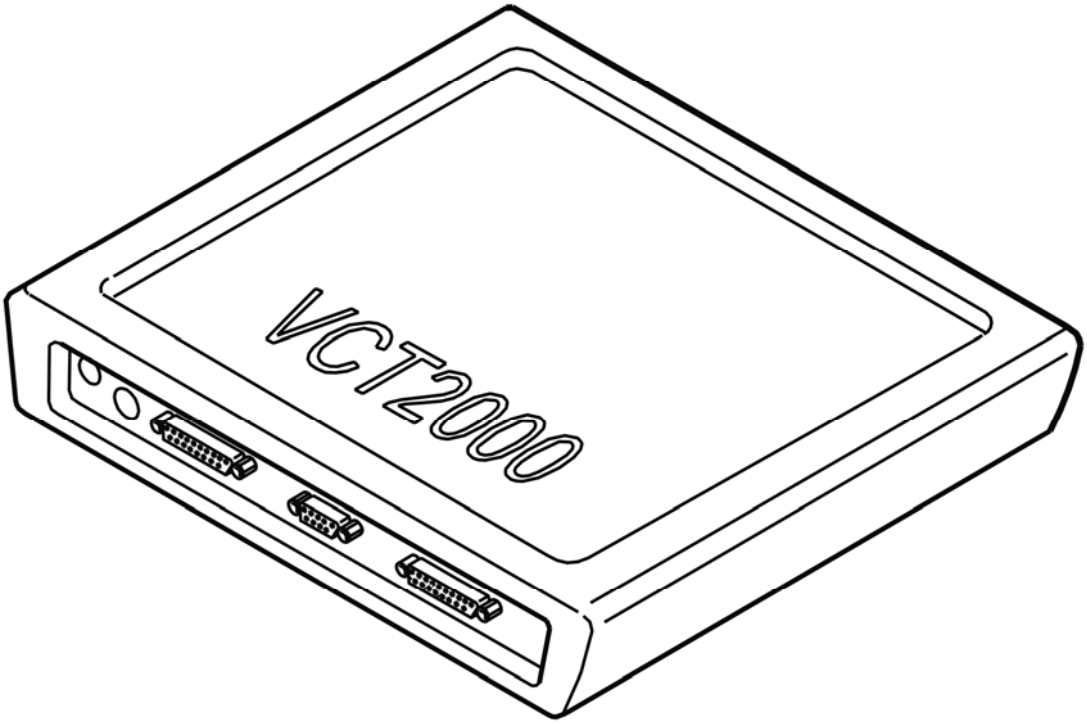

Fig. 104: Identifying VCT2000 Diagnostic Tool Symbol In VIDA
Courtesy of VOLVO CARS CORPORATION

Does the motor operate as it should?

- **YES**

  OKAY: Troubleshooting has been completed.

- **NO**

  Refer to **INFORMATION**

INFORMATION

FAULT-TRACING INFORMATION

The fault should have been detected and remedied. As this is not the case fault-tracing has failed.

Exit fault-tracing for this diagnostic trouble code (DTC) or make another attempt.

PSM-0034: SEAT REAR EDGE, MOTOR 3 (M3+). SIGNAL MISSING. INTERMITTENT FAULT (2003-12)

DIAGNOSTIC TROUBLE CODE (DTC) INFORMATION

Condition

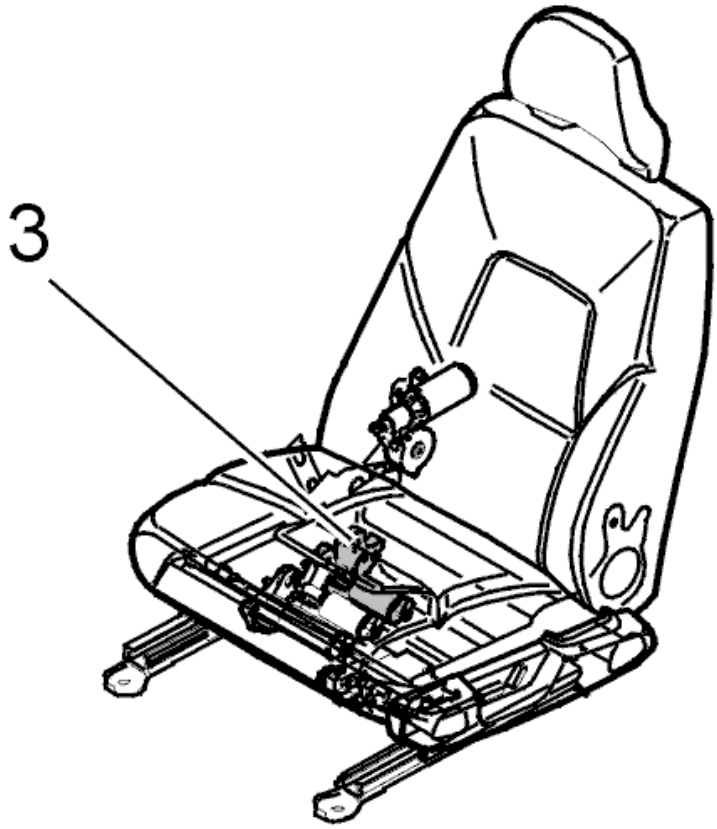

Fig. 105: Identifying Power Seat Rear Edge Seat Height Motor
Courtesy of VOLVO CARS CORPORATION

Motor 3 controls the height of the rear edge of the seat. Motor 3 must be activated before the diagnostic trouble code (DTC) can be detected. Diagnostic trouble code (DTC) PSM-0034 is stored if motor 3 does not run despite M3+ being activated and the power seat module registering +12 V on the M3+ signal cable.

Possible Source

- Open-circuit in signal cable M3+.
- Blown fuse (11C/4).

Fault symptom[s]

- The height of the rear edge of the seat cannot be adjusted.

SIGNAL MISSING. INTERMITTENT FAULT

see **SIGNAL MISSING. INTERMITTENT FAULT**

PSM-0034: SEAT REAR EDGE, MOTOR 3 (M3+). SIGNAL MISSING. PERMANENT FAULT (2003-12)

DIAGNOSTIC TROUBLE CODE (DTC) INFORMATION

see **DIAGNOSTIC TROUBLE CODE (DTC) INFORMATION**

SIGNAL MISSING. PERMANENT FAULT

CHECKING THE CABLE

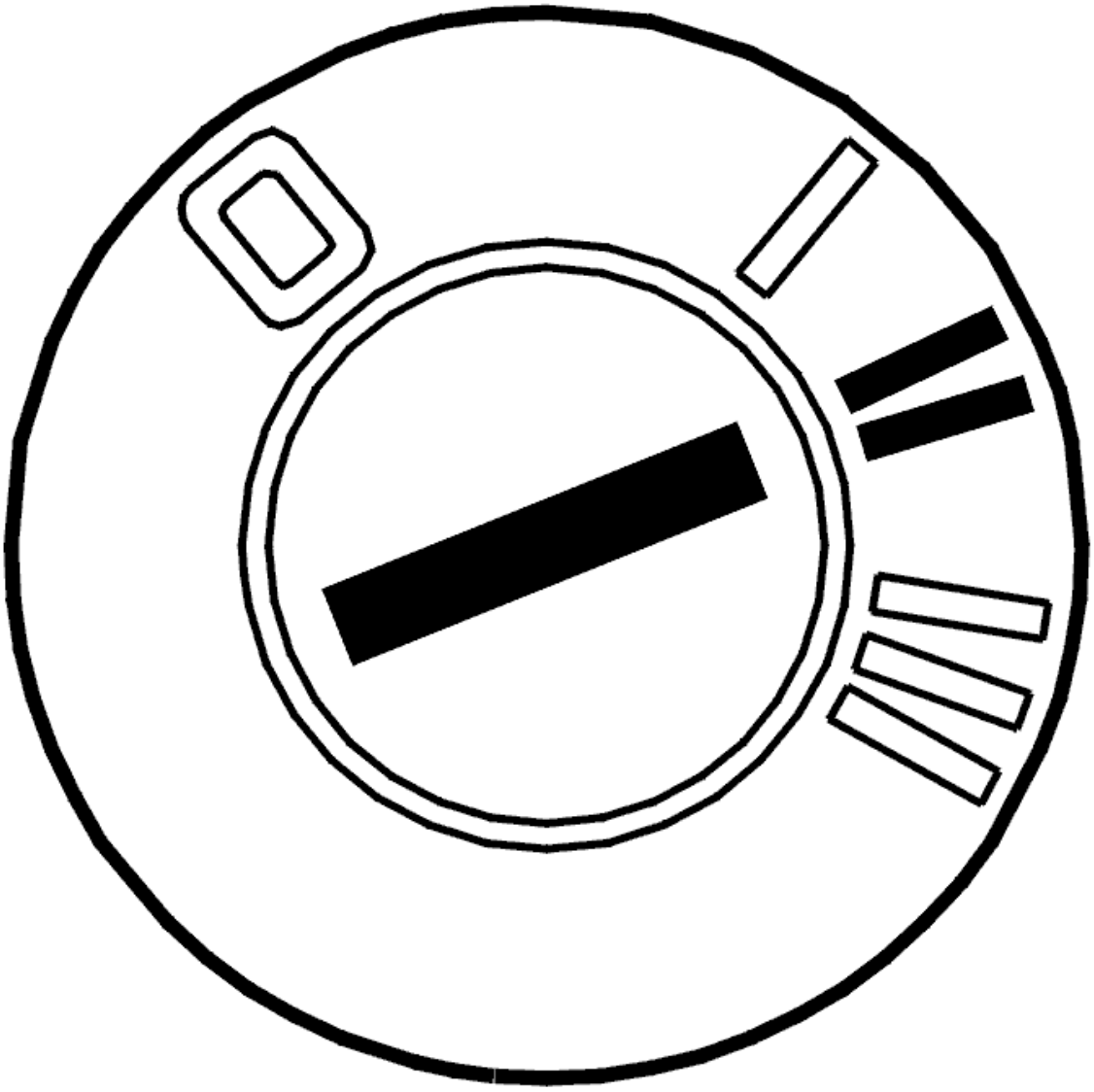

Fig. 106: Identifying Ignition ON
Courtesy of VOLVO CARS CORPORATION

- Ignition on

- Try to activate the motor.

HINT: The resistance between terminals #5E and #6E must be approximately 0 ohms.

Check the cable between the power seat module (PSM) terminal #5E and the motor. Check for an open-circuit. See **OPEN-CIRCUIT, PERMANENT FAULTS** .

Remedy as necessary.

If no fault is found try replacing the motor.

Other information:

- To access or replace the motor, see **ELECTRIC MOTOR CUSHION, REPLACING** (-2004) or **ELECTRIC MOTOR CUSHION, REPLACING** (2005-).
- To connect the breakout box, see **CONNECTING THE BREAKOUT BOX, POWER SEAT MODULE (PSM)**
- For information about signals, see **CONNECTOR, BLACK (12-PIN)** .

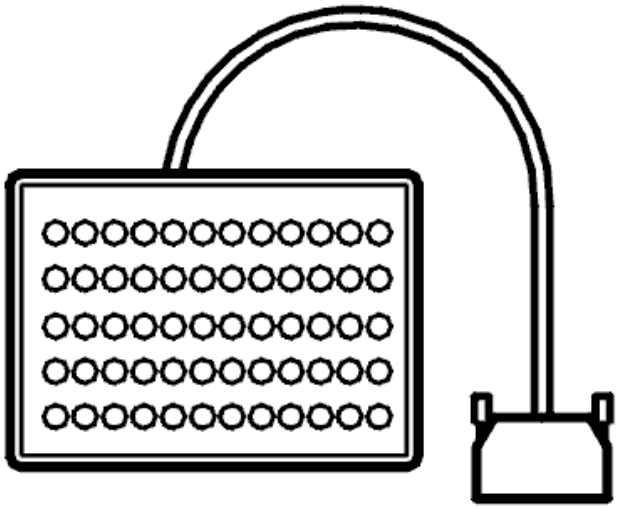

Fig. 107: Breakout Box
Courtesy of VOLVO CARS CORPORATION

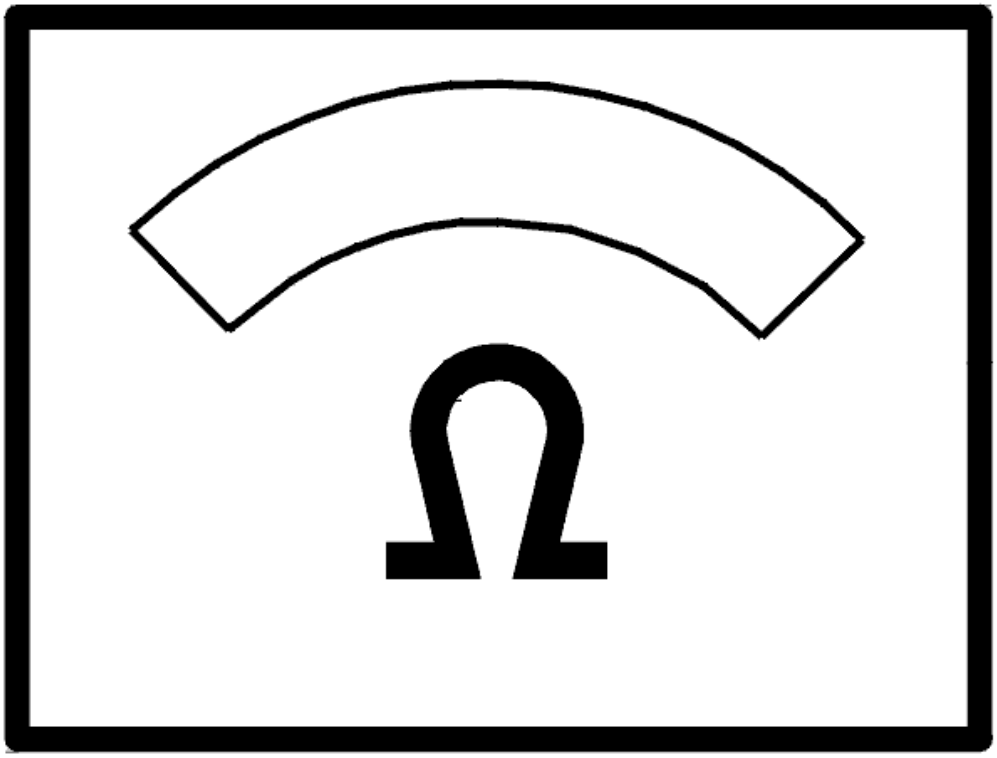

Fig. 108: Identifying Ohmmeter
Courtesy of VOLVO CARS CORPORATION

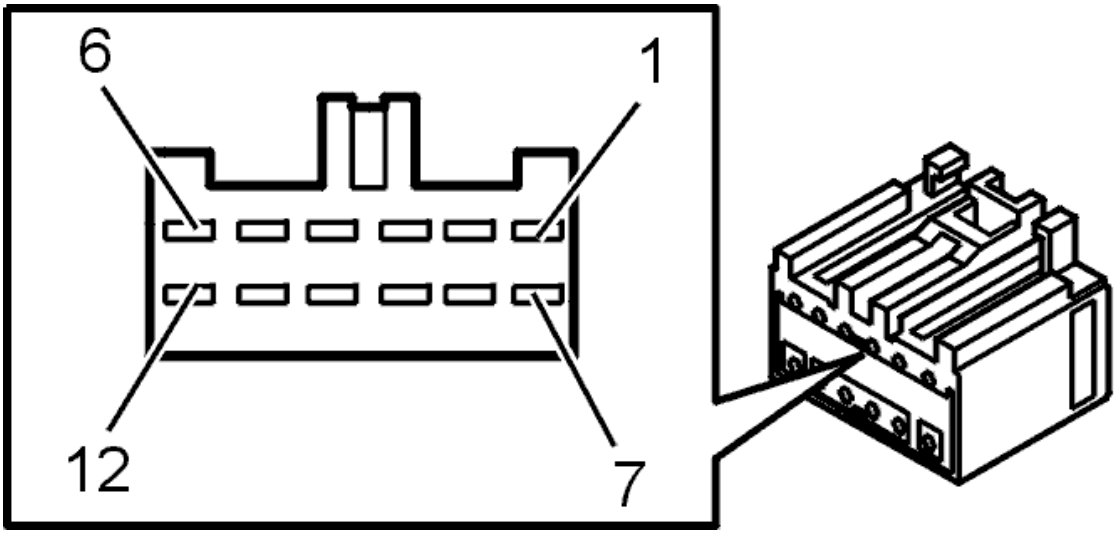

Fig. 109: Audio Control Module (AUM)/External Amplifier To Loudspeakers, Gray Connector
Courtesy of VOLVO CARS CORPORATION

- **Continue**

  Refer to **VERIFICATION**

VERIFICATION

Activate the motor.

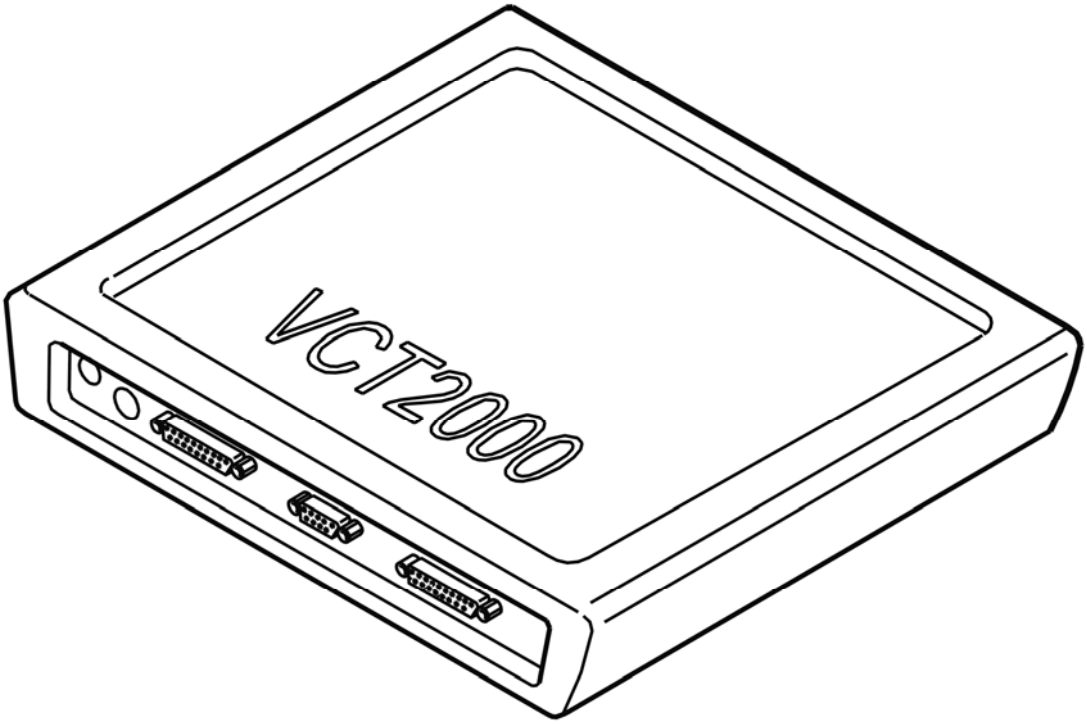

Fig. 110: Identifying VCT2000 Diagnostic Tool Symbol In VIDA
Courtesy of VOLVO CARS CORPORATION

Does the motor operate as it should?

- **YES**

  OKAY: Troubleshooting has been completed.

- **NO**

  Refer to **INFORMATION**

INFORMATION

FAULT-TRACING INFORMATION

The fault should have been detected and remedied. As this is not the case fault-tracing has failed.

Exit fault-tracing for this diagnostic trouble code (DTC) or make another attempt.

PSM-0035: SEAT REAR EDGE, MOTOR 3 (M3-). SIGNAL MISSING. INTERMITTENT FAULT (2003-12)

DIAGNOSTIC TROUBLE CODE (DTC) INFORMATION

Condition

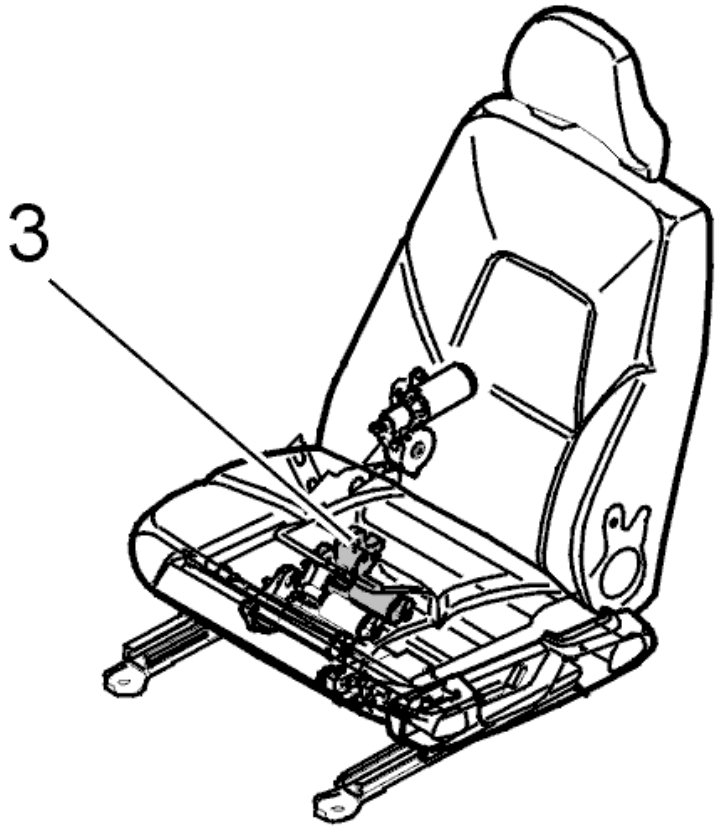

Fig. 111: Identifying Power Seat Rear Edge Seat Height Motor
Courtesy of VOLVO CARS CORPORATION

Motor 3 controls the height of the rear edge of the seat. Motor 3 must be activated before the diagnostic trouble code (DTC) can be detected. Diagnostic trouble code (DTC) PSM-0035 is stored if motor 3 does not run despite M3- being activated and the power seat module registering +12 V on the M3- signal cable.

Possible Source

- Open-circuit on signal cable M3-.
- Blown fuse (11C/4).

Fault symptom[s]

- The height of the rear edge of the seat cannot be adjusted.

SIGNAL MISSING. INTERMITTENT FAULT

see **SIGNAL MISSING. INTERMITTENT FAULT**

PSM-0035: SEAT REAR EDGE, MOTOR 3 (M3-). SIGNAL MISSING. PERMANENT FAULT (2003-12)

DIAGNOSTIC TROUBLE CODE (DTC) INFORMATION

see **DIAGNOSTIC TROUBLE CODE (DTC) INFORMATION**

SIGNAL MISSING. PERMANENT FAULT

CHECKING THE CABLE

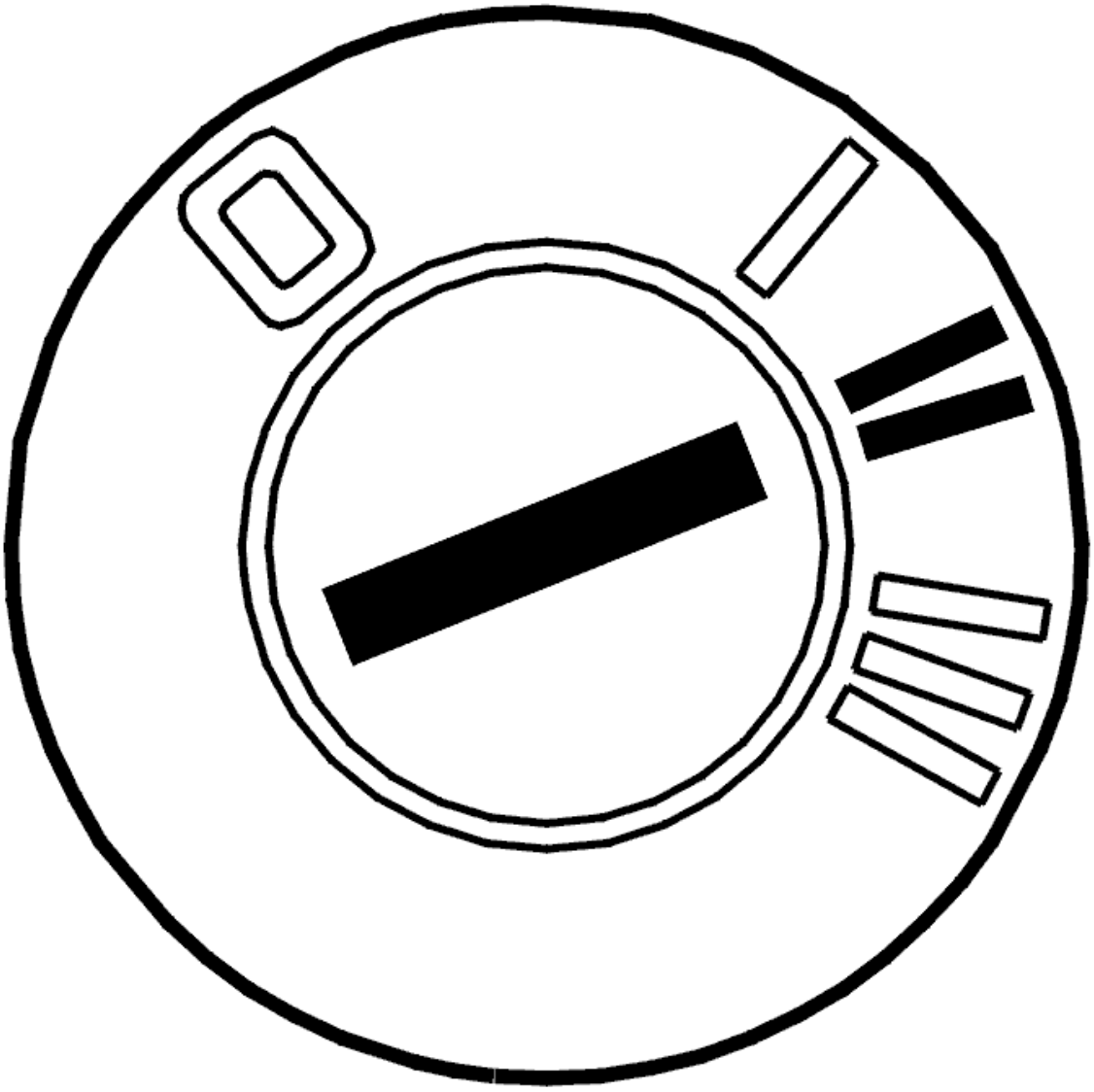

Fig. 112: Identifying Ignition ON
Courtesy of VOLVO CARS CORPORATION

- Ignition on

- Try to activate the motor.

HINT: The resistance between terminals #5E and #6E must be approximately 0 ohms.

Check the cable between the power seat module (PSM) terminal #6E and the motor. Check for an open-circuit. See **OPEN-CIRCUIT, PERMANENT FAULTS** .

Remedy as necessary.

If no fault is found try replacing the motor.

Other information:

- To access or replace the motor, see **ELECTRIC MOTOR CUSHION, REPLACING** (-2004) or **ELECTRIC MOTOR CUSHION, REPLACING** (2005-)
- To connect the breakout box, see **CONNECTING THE BREAKOUT BOX, POWER SEAT MODULE (PSM)**
- For information about signals, see **CONNECTOR, BLACK (12-PIN)** .

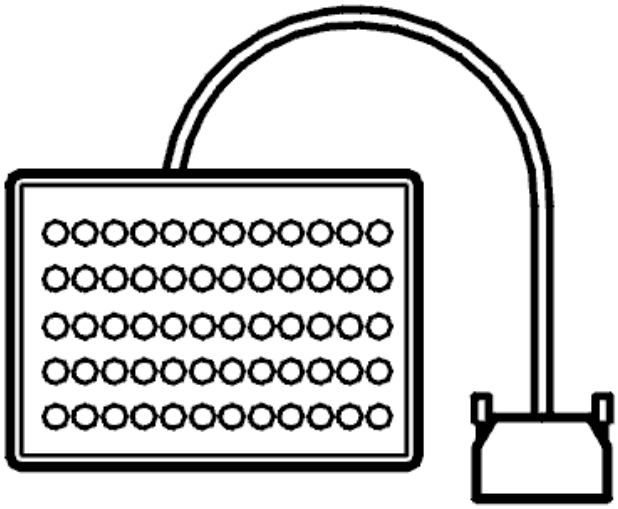

Fig. 113: Breakout Box
Courtesy of VOLVO CARS CORPORATION

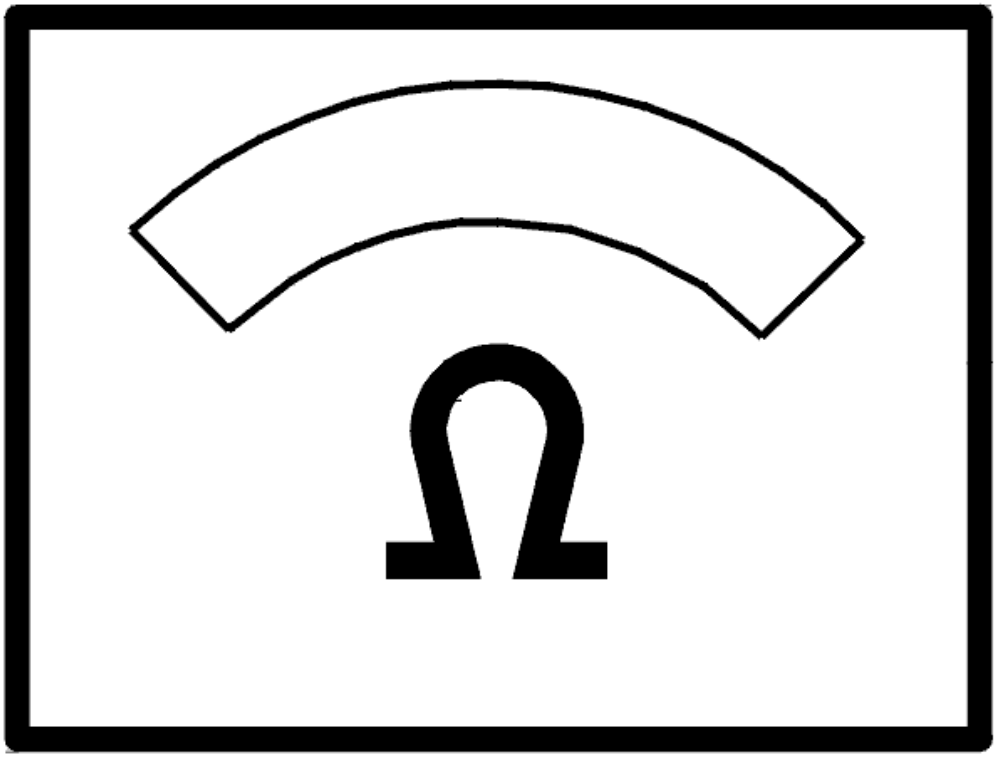

Fig. 114: Identifying Ohmmeter
Courtesy of VOLVO CARS CORPORATION

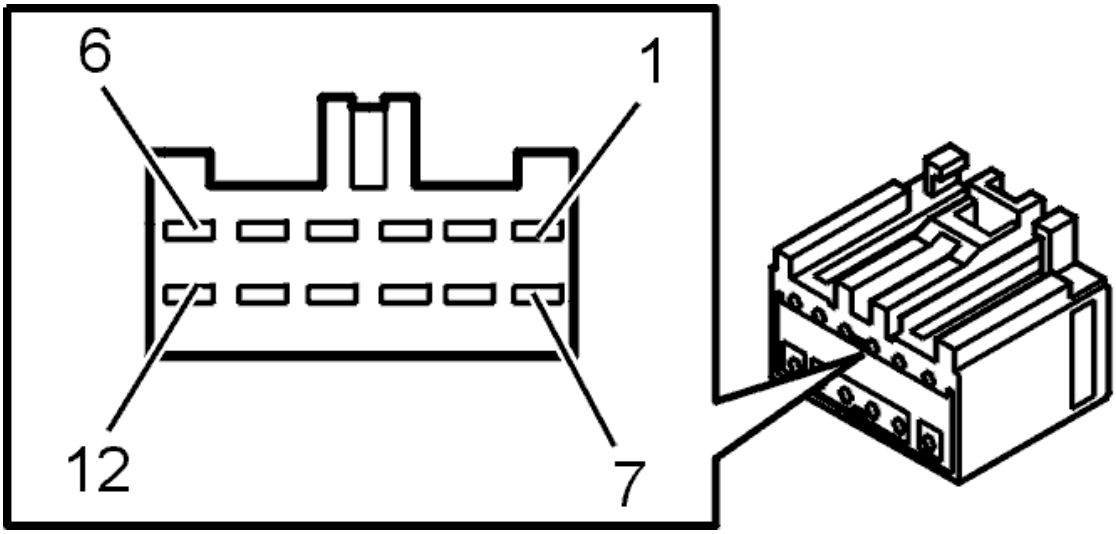

Fig. 115: Audio Control Module (AUM)/External Amplifier To Loudspeakers, Gray Connector
Courtesy of VOLVO CARS CORPORATION

- **Continue**

  Refer to **VERIFICATION**

VERIFICATION

Activate the motor.

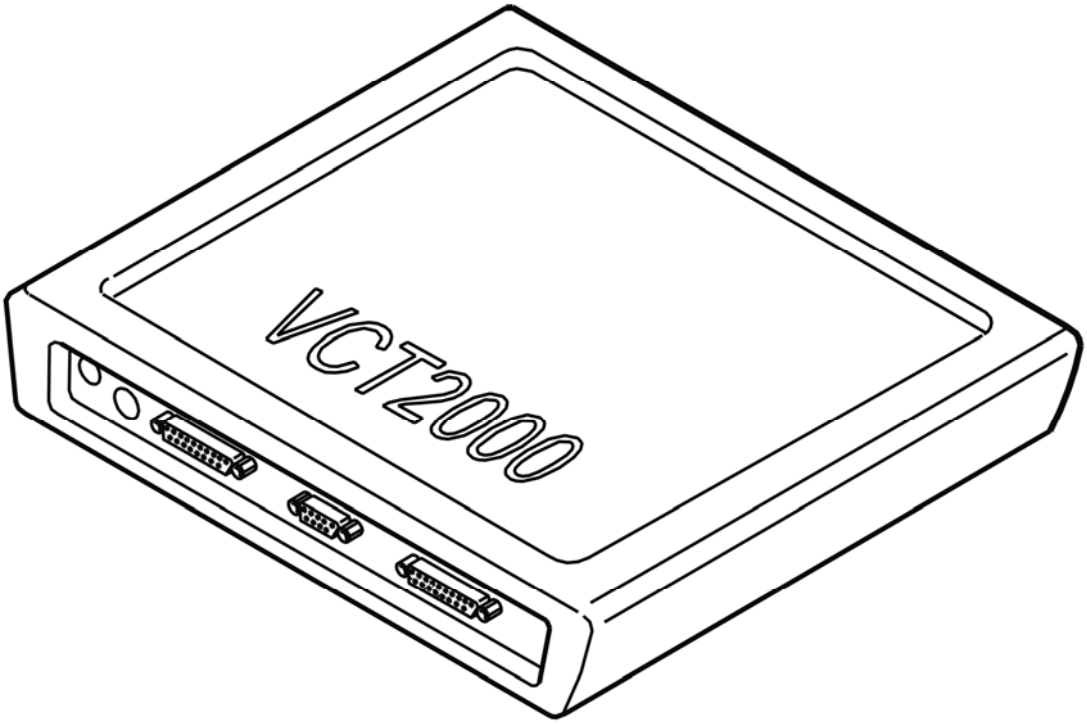

Fig. 116: Identifying VCT2000 Diagnostic Tool Symbol In VIDA
Courtesy of VOLVO CARS CORPORATION

Does the motor operate as it should?

- **YES**

  OKAY: Troubleshooting has been completed.

- **NO**

  Refer to **INFORMATION**

INFORMATION

FAULT-TRACING INFORMATION

The fault should have been detected and remedied. As this is not the case fault-tracing has failed.

Exit fault-tracing for this diagnostic trouble code (DTC) or make another attempt.

PSM-0036: SEAT FRONT EDGE, MOTOR 4 (M4+). SIGNAL MISSING. INTERMITTENT FAULT (2003-12)

DIAGNOSTIC TROUBLE CODE (DTC) INFORMATION

Condition

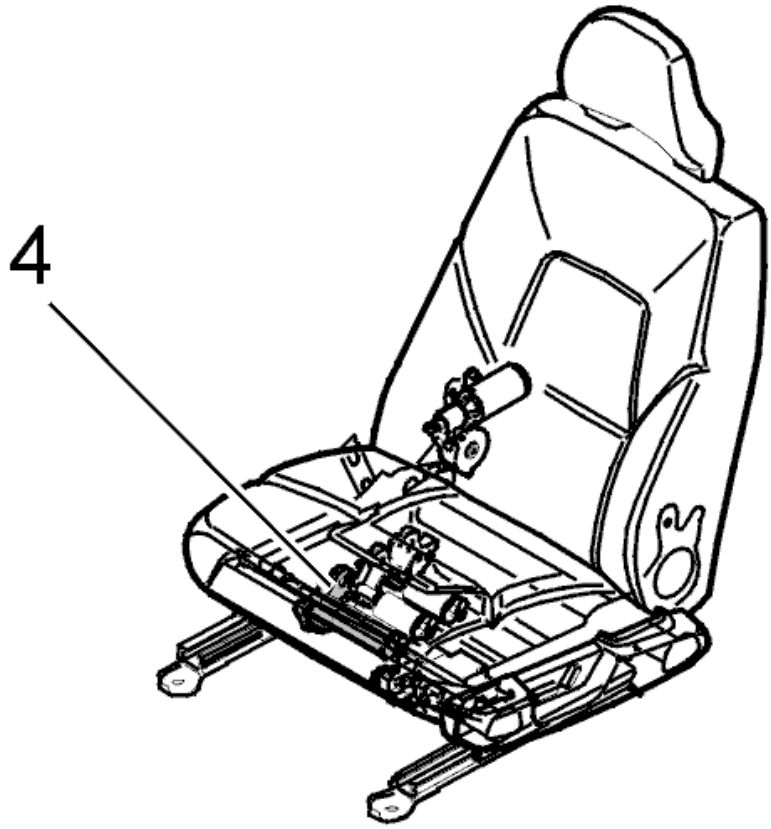

Fig. 117: Identifying Power Seat Front Edge Height Motor
Courtesy of VOLVO CARS CORPORATION

Motor 4 controls the height of the front edge of the seat. Motor 4 must be activated before the diagnostic trouble code (DTC) can be detected. Diagnostic trouble code (DTC) PSM-0036 is stored if motor 4 does not run despite M4+ being activated and the power seat module registering +12 V on the M4+ signal cable.

Possible Source

- Open-circuit in signal cable M4+.
- Blown fuse (11C/4).

Fault symptom[s]

- The height of the front edge of the seat cannot be adjusted.

SIGNAL MISSING. INTERMITTENT FAULT

see **SIGNAL MISSING. INTERMITTENT FAULT**

PSM-0036: SEAT FRONT EDGE, MOTOR 4 (M4+). SIGNAL MISSING. PERMANENT FAULT (2003-12)

DIAGNOSTIC TROUBLE CODE (DTC) INFORMATION

see **DIAGNOSTIC TROUBLE CODE (DTC) INFORMATION**

SIGNAL MISSING. PERMANENT FAULT

CHECKING THE CABLE

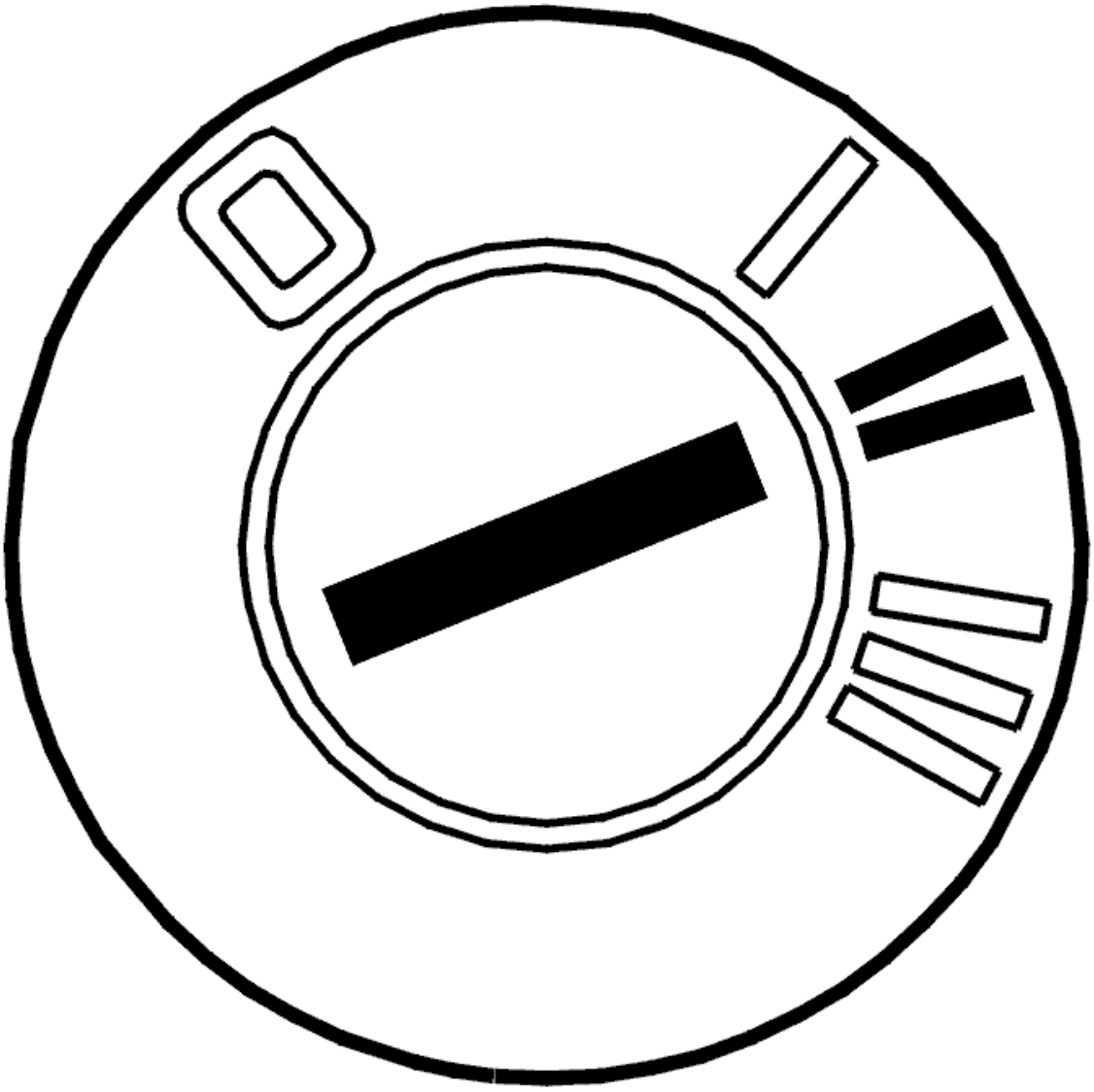

Fig. 118: Identifying Ignition ON
Courtesy of VOLVO CARS CORPORATION

- Ignition on

- Try to activate the motor.

HINT: The resistance between terminals #9E and #10E must be approximately 0 ohms.

Check the cable between the power seat module (PSM) #9E and the motor. Check for an open-circuit. See **OPEN-CIRCUIT, PERMANENT FAULTS** .

Remedy as necessary.

If no fault is found try replacing the motor.

Other information:

- To access or replace the motor, see **ELECTRIC MOTOR CUSHION, REPLACING** (-2004) or **ELECTRIC MOTOR CUSHION, REPLACING** (2005-)
- To connect the breakout box, see **CONNECTING THE BREAKOUT BOX, POWER SEAT MODULE (PSM)**
- For information about signals, see **CONNECTOR, BLACK (12-PIN)** .

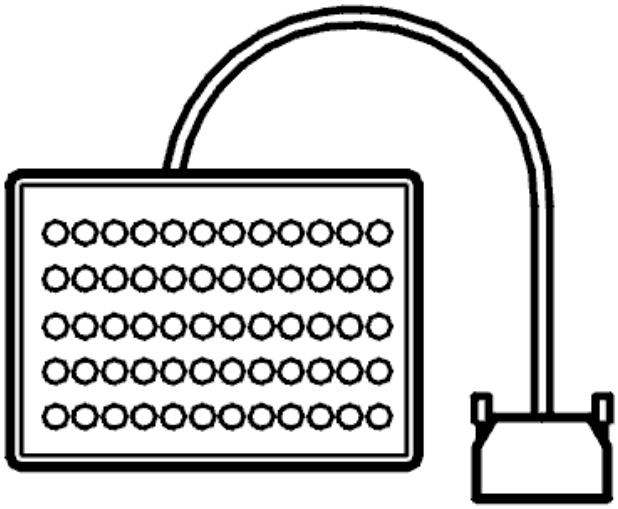

Fig. 119: Breakout Box
Courtesy of VOLVO CARS CORPORATION

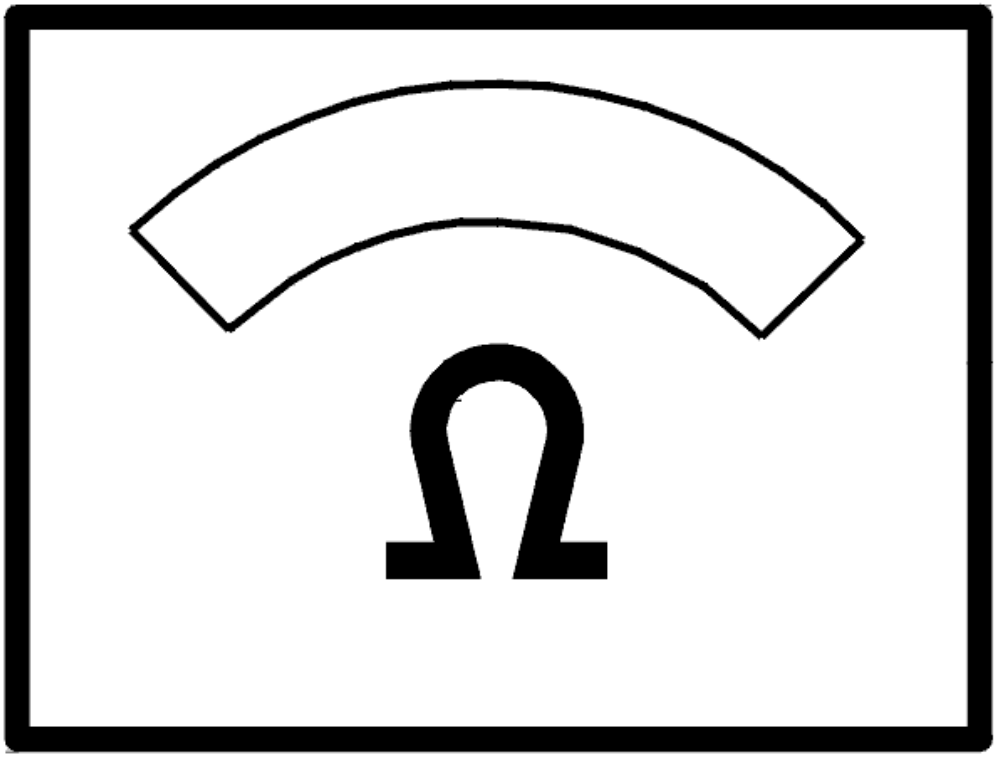

Fig. 120: Identifying Ohmmeter
Courtesy of VOLVO CARS CORPORATION

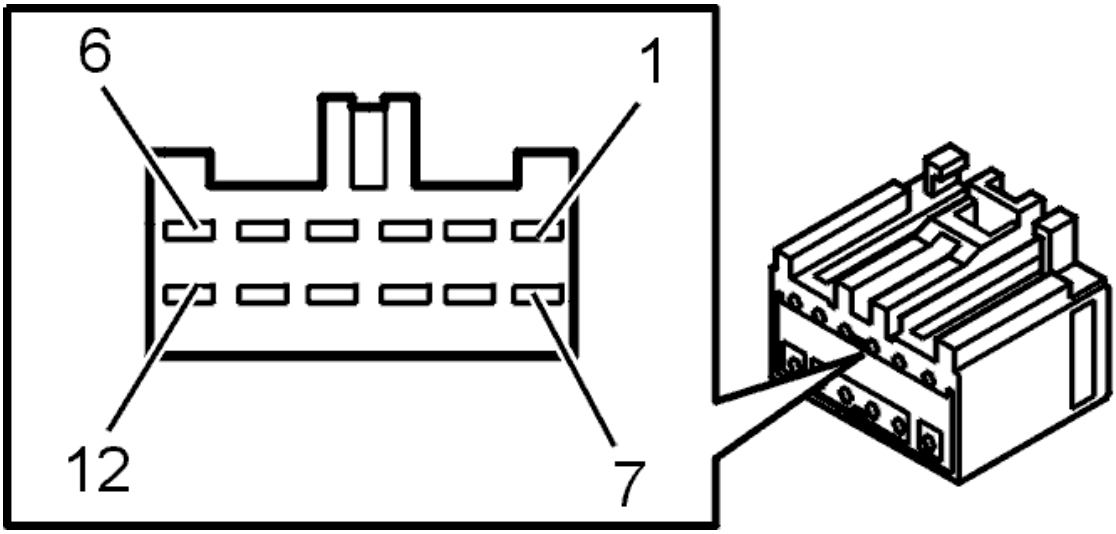

Fig. 121: Audio Control Module (AUM)/External Amplifier To Loudspeakers, Gray Connector
Courtesy of VOLVO CARS CORPORATION

- **Continue**

  Refer to **VERIFICATION**

VERIFICATION

Activate the motor.

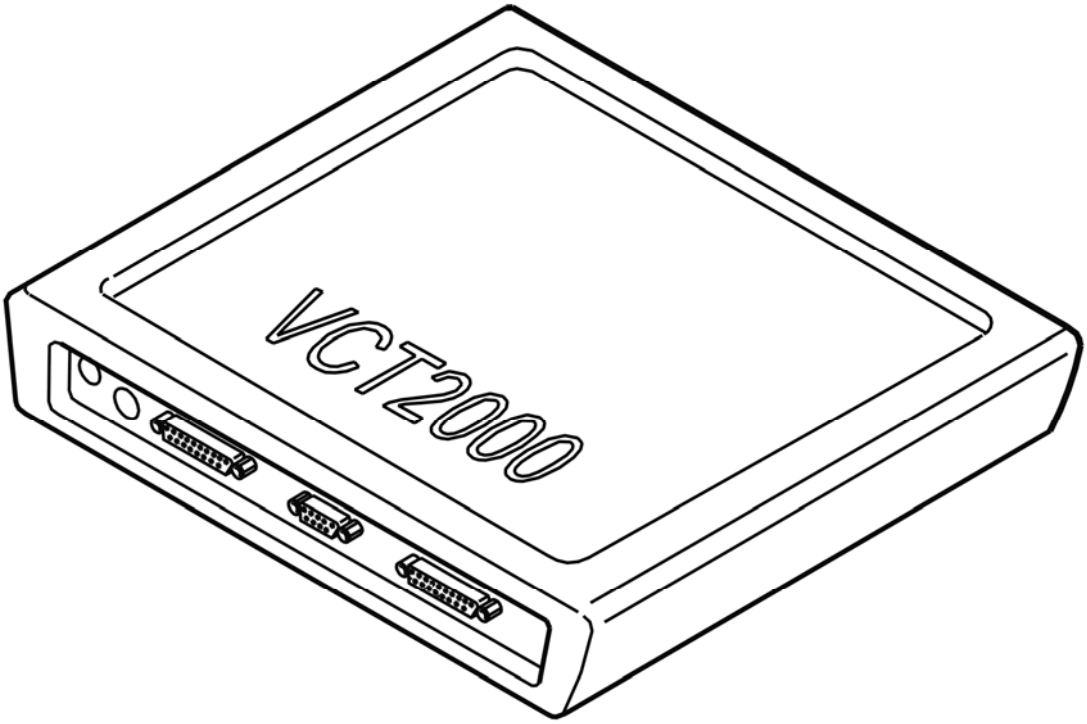

Fig. 122: Identifying VCT2000 Diagnostic Tool Symbol In VIDA
Courtesy of VOLVO CARS CORPORATION

Does the motor operate as it should?

- **YES**

  OKAY: Troubleshooting has been completed.

- **NO**

  Refer to **INFORMATION**

INFORMATION

FAULT-TRACING INFORMATION

The fault should have been detected and remedied. As this is not the case fault-tracing has failed.

Exit fault-tracing for this diagnostic trouble code (DTC) or make another attempt.

PSM-0037: SEAT FRONT EDGE, MOTOR 4 (M4-). SIGNAL MISSING. INTERMITTENT FAULT (2003-12)

DIAGNOSTIC TROUBLE CODE (DTC) INFORMATION

Condition

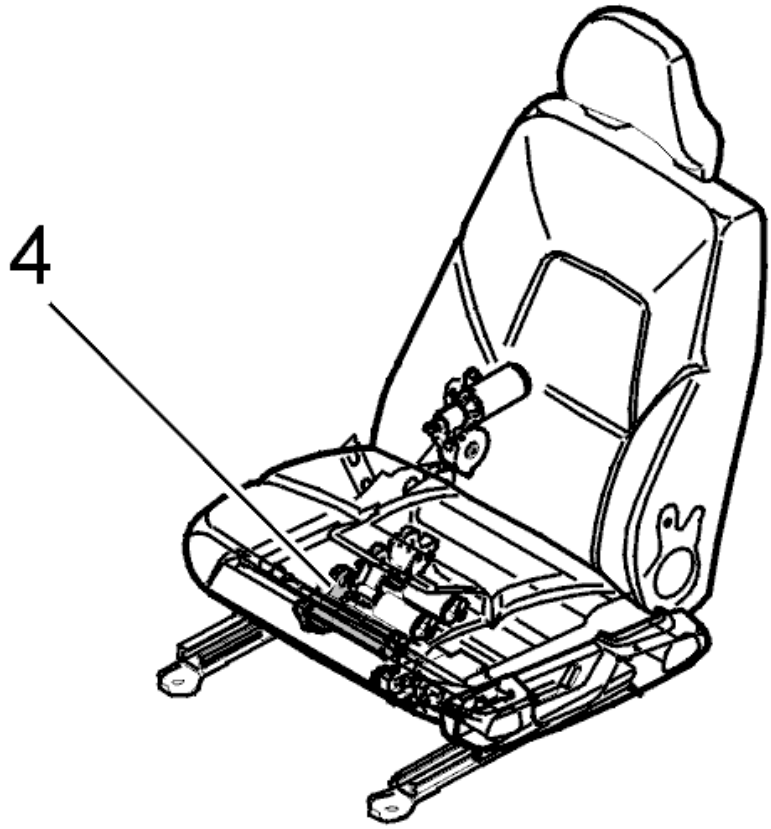

Fig. 123: Identifying Power Seat Front Edge Height Motor
Courtesy of VOLVO CARS CORPORATION

Motor 4 controls the height of the front edge of the seat. Motor 4 must be activated before the diagnostic trouble code (DTC) can be detected. Diagnostic trouble code (DTC) PSM-0036 is stored if motor 4 does not run despite M4+ being activated and the power seat module registering +12 V on the M4+ signal cable.

Possible Source

- Open-circuit in signal cable M4+.
- Blown fuse (11C/4).

Fault symptom[s]

- The height of the front edge of the seat cannot be adjusted.

SIGNAL MISSING. INTERMITTENT FAULT

see **SIGNAL MISSING. INTERMITTENT FAULT**

PSM-0037: SEAT FRONT EDGE, MOTOR 4 (M4-). SIGNAL MISSING. PERMANENT FAULT (2003-12)

DIAGNOSTIC TROUBLE CODE (DTC) INFORMATION

see **DIAGNOSTIC TROUBLE CODE (DTC) INFORMATION**

SIGNAL MISSING. PERMANENT FAULT

CHECKING THE CABLE

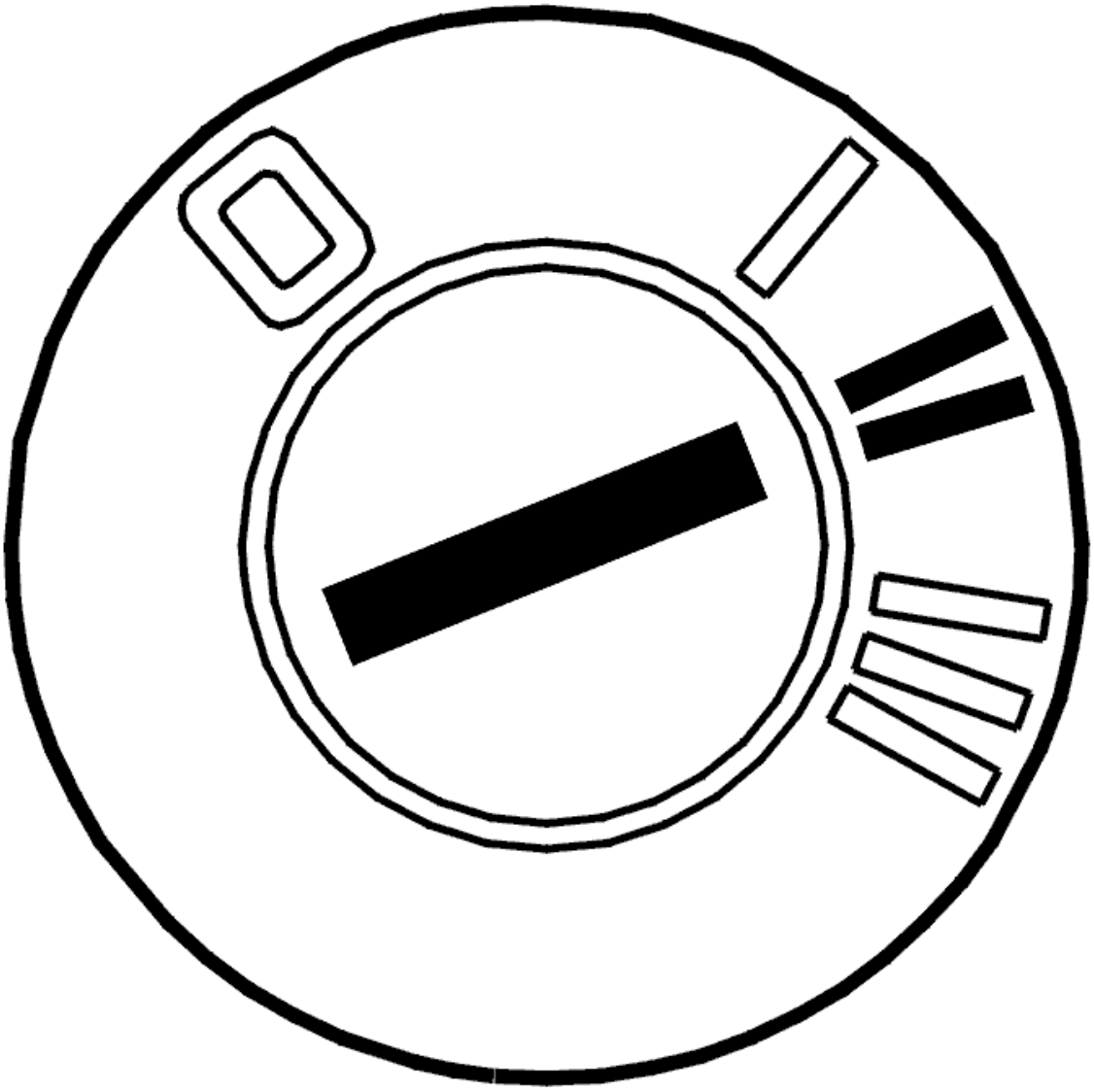

Fig. 124: Identifying Ignition ON
Courtesy of VOLVO CARS CORPORATION

- Ignition on

- Try to activate the motor.

HINT: The resistance between terminals #9E and #10E must be approximately 0 ohms.

Check the cable between the power seat module (PSM) terminal #10E and the motor. Check for an open-circuit. See **OPEN-CIRCUIT, PERMANENT FAULTS** .

Remedy as necessary.

If no fault is found try replacing the motor.

Other information:

- To access or replace the motor, see **ELECTRIC MOTOR CUSHION, REPLACING** (-2004) or **ELECTRIC MOTOR CUSHION, REPLACING** (2005-)
- To connect the breakout box, see **CONNECTING THE BREAKOUT BOX, POWER SEAT MODULE (PSM)**
- For information about signals, see **CONNECTOR, BLACK (12-PIN)** .

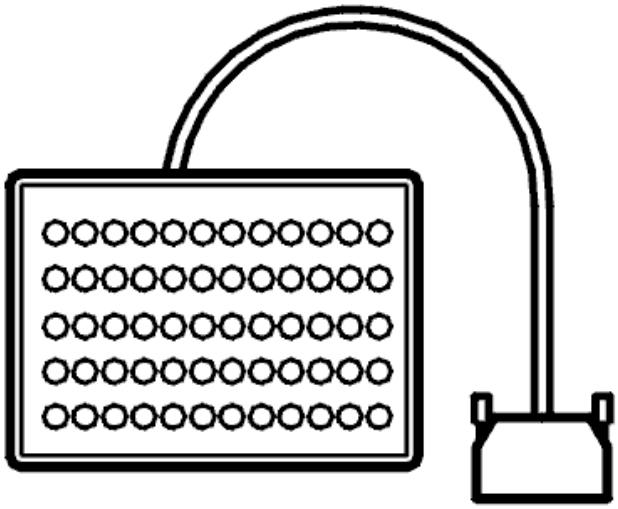

Fig. 125: Breakout Box
Courtesy of VOLVO CARS CORPORATION

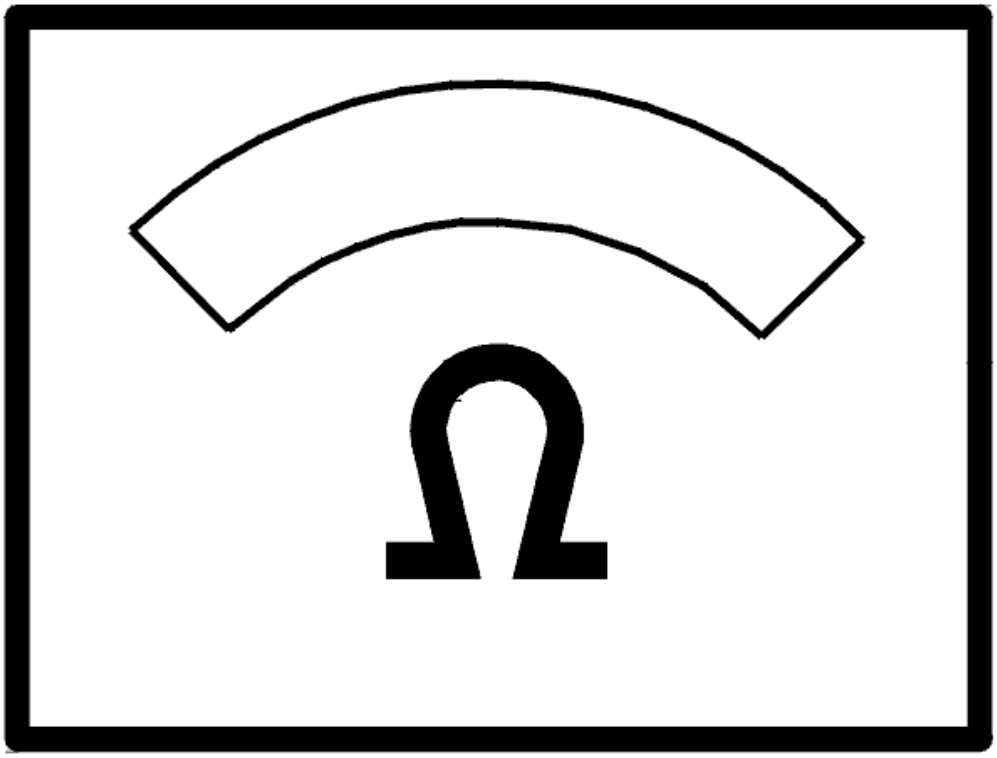

Fig. 126: Identifying Ohmmeter
Courtesy of VOLVO CARS CORPORATION

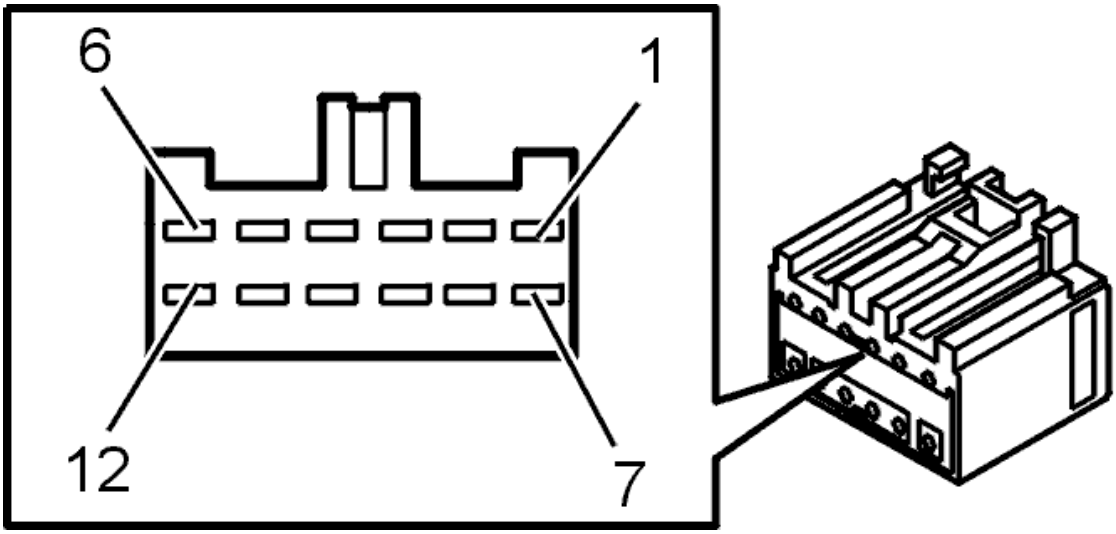

Fig. 127: Audio Control Module (AUM)/External Amplifier To Loudspeakers, Gray Connector
Courtesy of VOLVO CARS CORPORATION

- **Continue**

  Refer to **VERIFICATION**

VERIFICATION

Activate the motor.

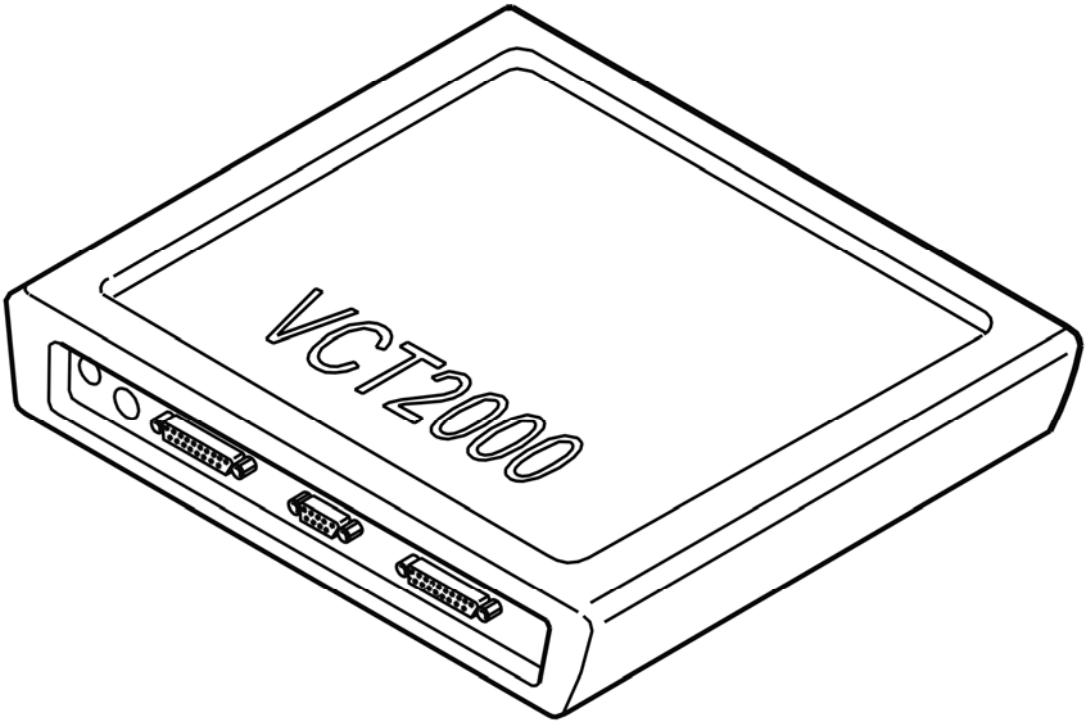

Fig. 128: Identifying VCT2000 Diagnostic Tool Symbol In VIDA
Courtesy of VOLVO CARS CORPORATION

Does the motor operate as it should?

- **YES**

  OKAY: Troubleshooting has been completed.

- **NO**

  Refer to **INFORMATION**

INFORMATION

FAULT-TRACING INFORMATION

The fault should have been detected and remedied. As this is not the case fault-tracing has failed.

Exit fault-tracing for this diagnostic trouble code (DTC) or make another attempt.

PSM-0038: WRONG SOFTWARE (2003-12)

DIAGNOSTIC TROUBLE CODE (DTC) INFORMATION

Condition

No conditions.

Possible Source

- Software fault in the control module
- Defective control module.

Fault symptom[s]

- Seat operation does not function
- Symptoms may be missing.

FAULT-TRACING INFORMATION

see **FAULT-TRACING INFORMATION**

PSM-003A: HALL SENSOR 1. FAULTY SIGNAL. INTERMITTENT FAULT (2003-12)

DIAGNOSTIC TROUBLE CODE (DTC) INFORMATION

Condition

Motor 1 must be switched off before the diagnostic trouble code (DTC) can be detected. Diagnostic trouble code (DTC) PSM-003A is stored if the power seat module (PSM) detects Hall sensor pulses when M1 is switched off.

Possible Source

- Defective Hall sensor 1.
- Internal fault in the power seat module (PSM).

Fault symptom[s]

- Automatic seat operation does not function.

FAULTY SIGNAL. INTERMITTENT FAULT

CHECKING INPUT SIGNAL

When the seat is operated there should be a pulsed signal between pins according to the table.

DTC	Component	Terminal	Connector
PSM-003A	Hall sensor 1	#3, #4	E

PSM-003B	Hall sensor 2	#3, #4	D
PSM-003C	Hall sensor 3	#7, #8	E
PSM-003D	Hall sensor 4	#11, #12	E

Other information:

- To connect the breakout box, see **CONNECTING THE BREAKOUT BOX, POWER SEAT MODULE (PSM)** .
- For information on signals, refer to **OUTPUT SIGNALS TO THE MOTORS** .

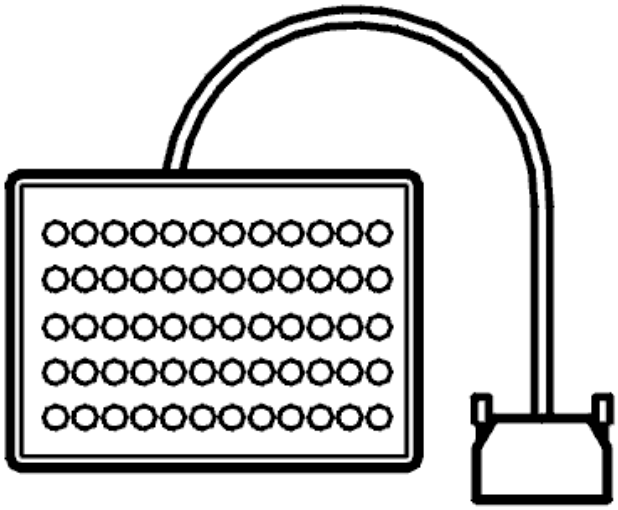

Fig. 129: Breakout Box
Courtesy of VOLVO CARS CORPORATION

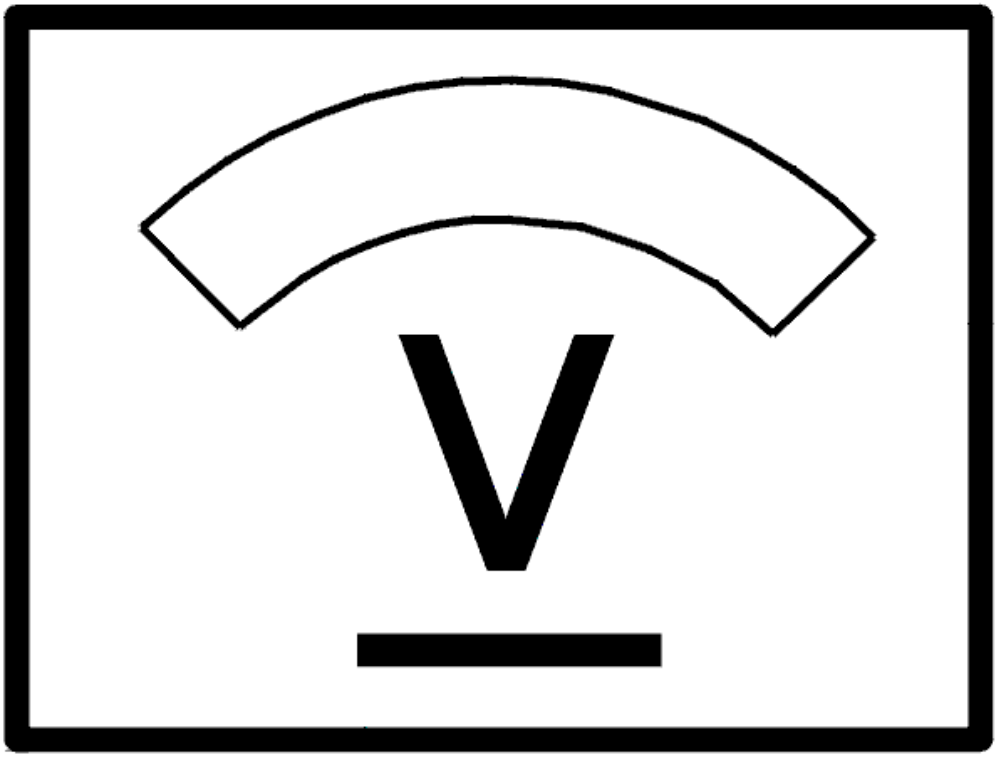

Fig. 130: Identifying Voltage Display
Courtesy of VOLVO CARS CORPORATION

PSM-003A: HALL SENSOR 1. FAULTY SIGNAL. PERMANENT FAULT (2003-12)

DIAGNOSTIC TROUBLE CODE (DTC) INFORMATION

see **DIAGNOSTIC TROUBLE CODE (DTC) INFORMATION**

FAULTY SIGNAL. PERMANENT FAULT

CHECKING INPUT SIGNAL

Read off the value for Hall sensor 1.

The value should not change when the seat is not affected.

HINT: If the value counts up or down there may be a fault in the sensor, an intermittent short-circuit to supply voltage or an internal fault in the power seat module (PSM).

Remedy as necessary.

Other information:

- To access Hall sensor 1, see **FRONT-REAR ADJUSTMENT MOTOR**.
- To connect the breakout box, see **CONNECTING THE BREAKOUT BOX, POWER SEAT MODULE (PSM)** .
- For information on signals, refer to **SIGNAL SPECIFICATION, POWER SEAT MODULE** .

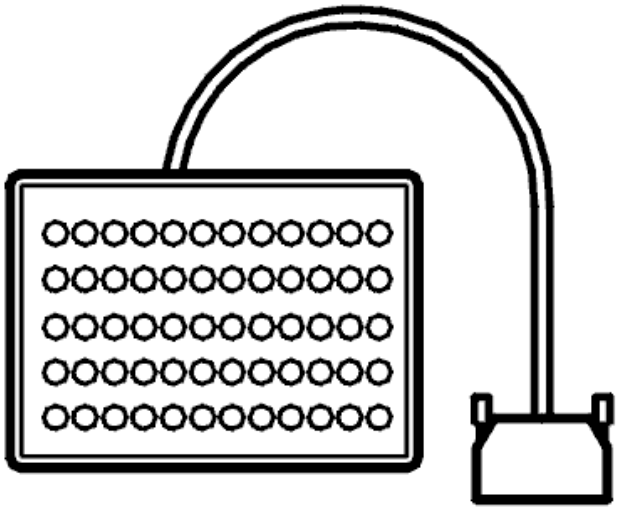

Fig. 131: Breakout Box
Courtesy of VOLVO CARS CORPORATION

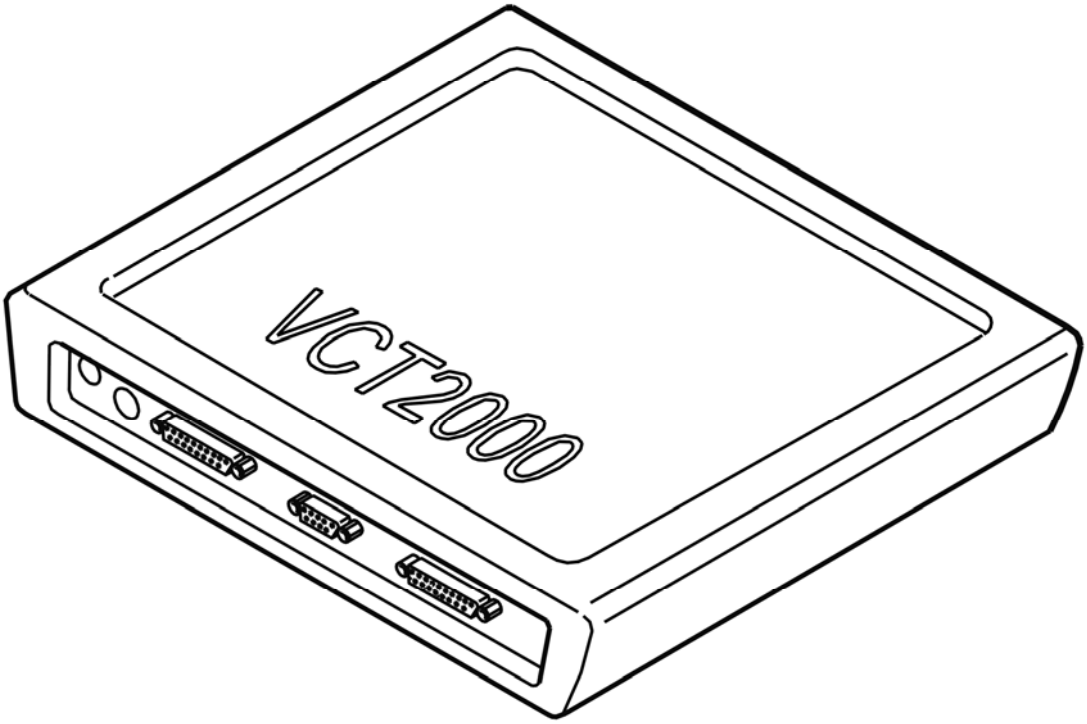

Fig. 132: Identifying VCT2000 Diagnostic Tool Symbol In VIDA
Courtesy of VOLVO CARS CORPORATION

FRONT-REAR ADJUSTMENT MOTOR

REPLACING THE FRONT-REAR ADJUSTMENT MOTOR

For first generation power seats, replace the front-rear adjustment motor. See or, see **ELECTRIC MOTOR FRONT-REAR ADJUSTMENT, REPLACING** (2005-).

For second generation power seats, replace the front-rear adjustment motor. See **ELECTRIC MOTOR FRONT-REAR ADJUSTMENT, REPLACING** (2005-).

PSM-003B: HALL SENSOR 2. FAULTY SIGNAL. INTERMITTENT FAULT (2003-12)

DIAGNOSTIC TROUBLE CODE (DTC) INFORMATION

Condition

Motor 2 must be switched off before the diagnostic trouble code (DTC) can be detected. Diagnostic trouble code (DTC) PSM-003B is stored if the power seat module (PSM) detects Hall sensor pulses when M2 is switched off.

Possible Source

- Defective Hall sensor 2.

Fault symptom[s]

- Automatic seat operation does not function.

FAULTY SIGNAL. INTERMITTENT FAULT

see **FAULTY SIGNAL. INTERMITTENT FAULT**

PSM-003B: HALL SENSOR 2. FAULTY SIGNAL. PERMANENT FAULT (2003-12)

DIAGNOSTIC TROUBLE CODE (DTC) INFORMATION

see **DIAGNOSTIC TROUBLE CODE (DTC) INFORMATION**

FAULTY SIGNAL. PERMANENT FAULT

CHECKING INPUT SIGNAL

Read off the value for Hall sensor 2.

The value should not change when the seat is not affected.

HINT: If the value counts up or down there may be a fault in the sensor, an intermittent short-circuit to supply voltage or an internal fault in the power seat module (PSM).

Remedy as necessary.

Other information:

- To connect the breakout box, see **CONNECTING THE BREAKOUT BOX, POWER SEAT MODULE (PSM)** .
- For information on signals, refer to **SIGNAL SPECIFICATION, POWER SEAT MODULE** .

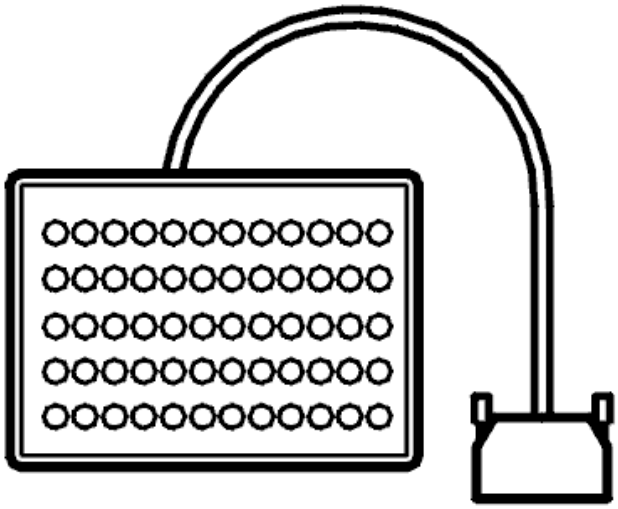

Fig. 133: Breakout Box
Courtesy of VOLVO CARS CORPORATION

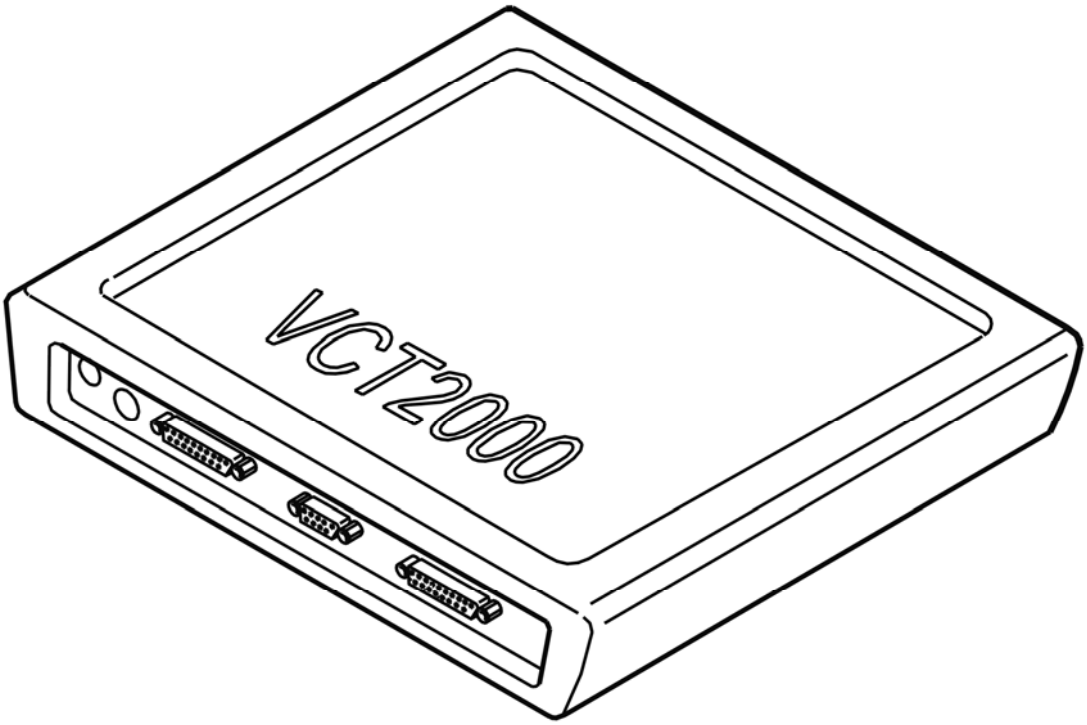

Fig. 134: Identifying VCT2000 Diagnostic Tool Symbol In VIDA
Courtesy of VOLVO CARS CORPORATION

PSM-003C: HALL SENSOR 3. FAULTY SIGNAL. INTERMITTENT FAULT (2003-12)

DIAGNOSTIC TROUBLE CODE (DTC) INFORMATION

Condition

Motor 3 must be switched off before the diagnostic trouble code (DTC) can be detected. Diagnostic trouble code (DTC) PSM-003C is stored if the power seat module (PSM) detects Hall sensor pulses when M3 is switched off.

Possible Source

- Defective Hall sensor 3.

Fault symptom[s]

- Automatic seat operation does not function.

FAULTY SIGNAL. INTERMITTENT FAULT

see **FAULTY SIGNAL. INTERMITTENT FAULT**

PSM-003C: HALL SENSOR 3. FAULTY SIGNAL. PERMANENT FAULT (2003-12)

DIAGNOSTIC TROUBLE CODE (DTC) INFORMATION

see **DIAGNOSTIC TROUBLE CODE (DTC) INFORMATION**

FAULTY SIGNAL. PERMANENT FAULT

CHECKING INPUT SIGNAL

Read off the value for Hall sensor 3.

The value should not change when the seat is not affected.

HINT: If the value counts up or down there may be a fault in the sensor, an intermittent short-circuit to supply voltage or an internal fault in the power seat module (PSM).

Remedy as necessary.

Other information:

- To access Hall sensor 2, see **HEIGHT ADJUSTMENT MOTOR, REAR**.
- To connect the breakout box, see **CONNECTING THE BREAKOUT BOX, POWER SEAT MODULE (PSM)** .
- For information on signals, refer to **SIGNAL SPECIFICATION, POWER SEAT MODULE** .

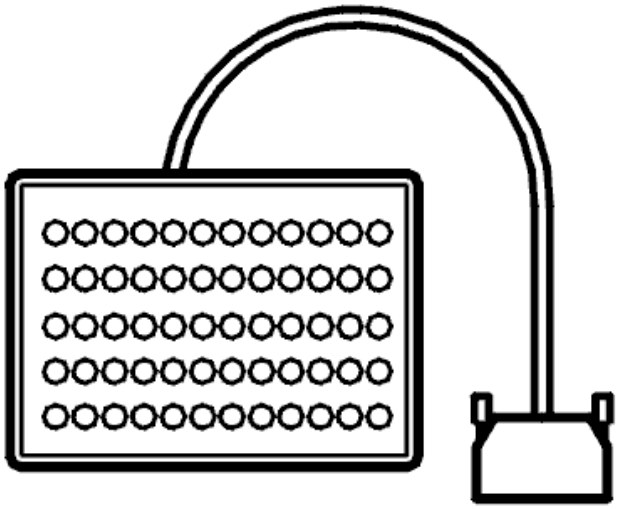

Fig. 135: Breakout Box
Courtesy of VOLVO CARS CORPORATION

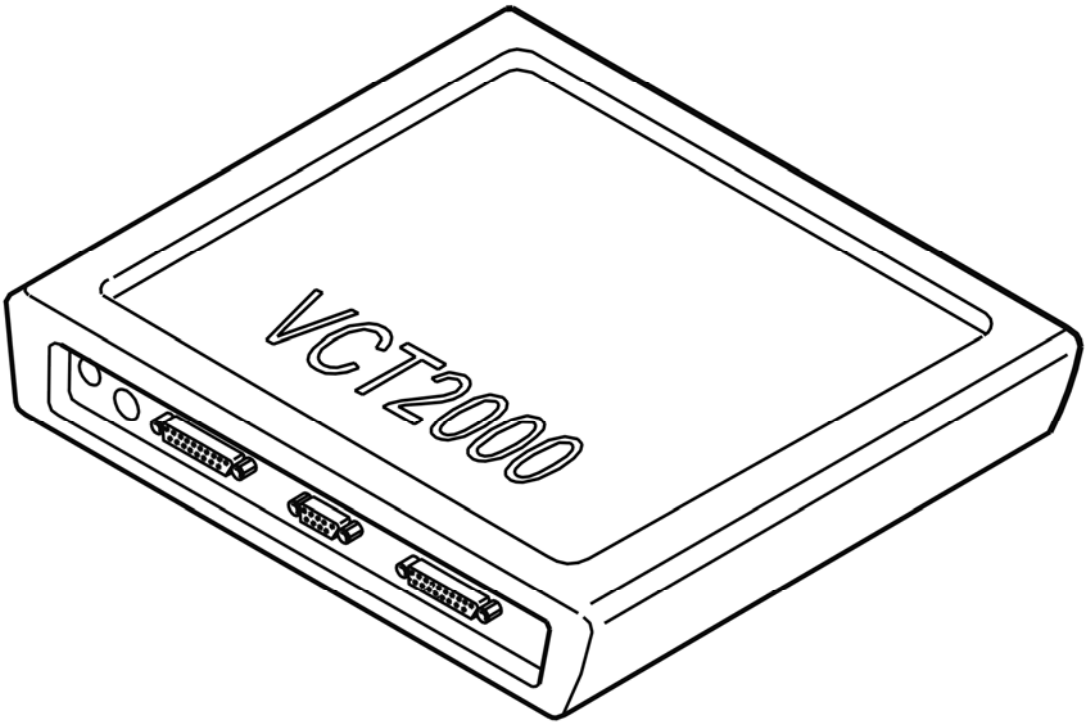

Fig. 136: Identifying VCT2000 Diagnostic Tool Symbol In VIDA
Courtesy of VOLVO CARS CORPORATION

HEIGHT ADJUSTMENT MOTOR, REAR

REPLACING THE MOTOR FOR REAR HEIGHT ADJUSTMENT

For first generation power seats, replace the rear height adjustment motor. See **REAR HEIGHT ADJUSTMENT MOTOR** (-2004) or **ELECTRIC MOTOR REAR HEIGHT ADJUSTMENT, REPLACING** (2005-).

For second generation power seats, replace the rear height adjustment motor. See **HEIGHT ADJUSTMENT MOTOR, FRONT / REAR** (-2004) or **ELECTRIC MOTOR REAR HEIGHT ADJUSTMENT, REPLACING** (2005-).

PSM-003D: HALL SENSOR 4. FAULTY SIGNAL. INTERMITTENT FAULT (2003-12)

DIAGNOSTIC TROUBLE CODE (DTC) INFORMATION

Condition

Motor 4 must be switched off before the diagnostic trouble code (DTC) can be detected. Diagnostic trouble code (DTC) PSM-003D is stored if the power seat module (PSM) detects Hall sensor pulses when M4 is switched off.

Possible Source

- Defective Hall sensor 4.

Fault symptom[s]

- Automatic seat operation does not function.

FAULTY SIGNAL. INTERMITTENT FAULT

see **FAULTY SIGNAL. INTERMITTENT FAULT**

PSM-003D: HALL SENSOR 4. FAULTY SIGNAL. PERMANENT FAULT (2003-12)

DIAGNOSTIC TROUBLE CODE (DTC) INFORMATION

see **DIAGNOSTIC TROUBLE CODE (DTC) INFORMATION**

FAULTY SIGNAL. PERMANENT FAULT

CHECKING INPUT SIGNAL

Read off the value for Hall sensor 4.

The value should not change when the seat is not affected.

HINT: If the value counts up or down there may be a fault in the sensor, an intermittent short-circuit to supply voltage or an internal fault in the power seat module (PSM).

Remedy as necessary.

Other information:

- To access Hall sensor 4, see **HEIGHT ADJUSTMENT MOTOR, FRONT**.
- To connect the breakout box, see **CONNECTING THE BREAKOUT BOX, POWER SEAT MODULE (PSM)** .
- For information on signals, refer to **SIGNAL SPECIFICATION, POWER SEAT MODULE** .

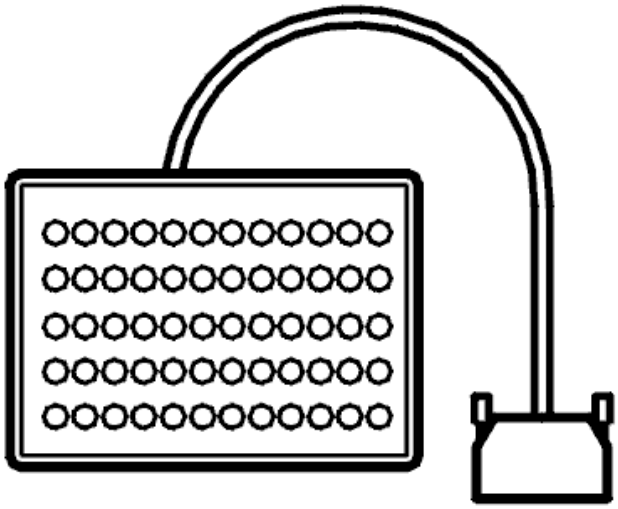

Fig. 137: Breakout Box
Courtesy of VOLVO CARS CORPORATION

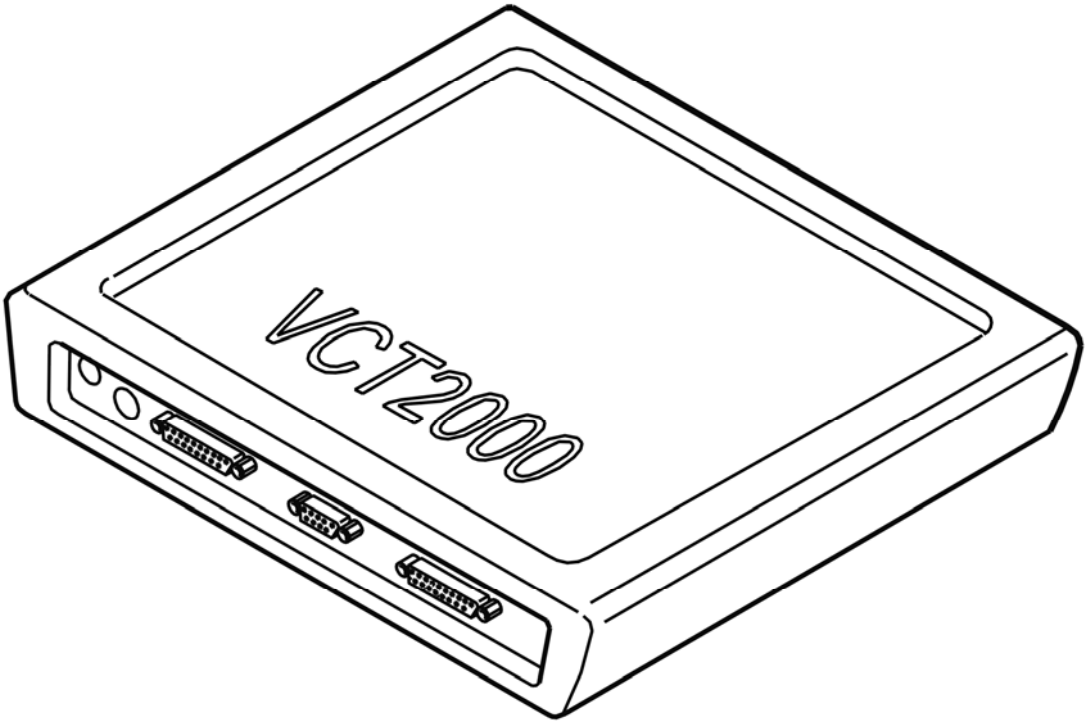

Fig. 138: Identifying VCT2000 Diagnostic Tool Symbol In VIDA
Courtesy of VOLVO CARS CORPORATION

HEIGHT ADJUSTMENT MOTOR, FRONT

REPLACING THE MOTOR FOR FRONT HEIGHT ADJUSTMENT

For first generation power seats, replace the height adjustment motor. See **THE MOTOR FOR FRONT HEIGHT ADJUSTMENT** (-2004) or **ELECTRIC MOTOR FRONT HEIGHT ADJUSTMENT, REPLACING** (2005-).

For second generation power seats, replace the front height adjustment motor. See **HEIGHT ADJUSTMENT MOTOR, FRONT/REAR** (-2004) or **ELECTRIC MOTOR FRONT HEIGHT ADJUSTMENT, REPLACING** (2005-).

PSM-E001: CONTROL MODULE COMMUNICATION. FAULTY COMMUNICATION (2003-12)

DIAGNOSTIC TROUBLE CODE (DTC) INFORMATION PSM-E001

Condition

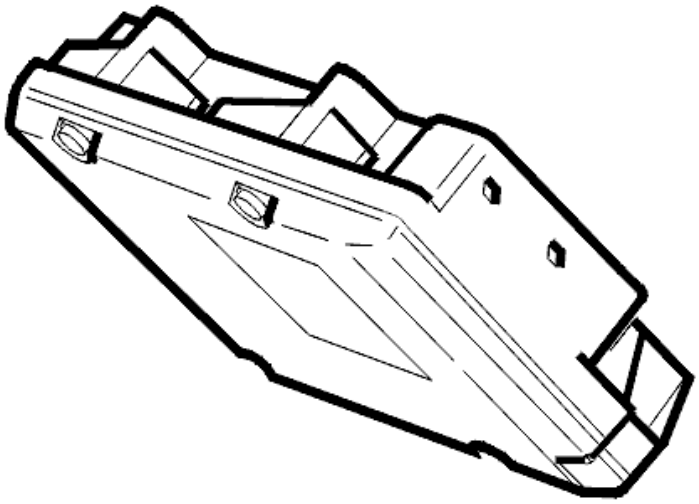

Fig. 139: Brake Control Module
Courtesy of VOLVO CARS CORPORATION

The control modules transmit and receive information via a standardized serial communication method - CAN (Controller Area Network). The diagnostic trouble code (DTC) is stored if the control module registers serious interference (CAN communication blocked).

NOTE: In the event of system communication problems, it is not possible to communicate with the control module. Therefore it will only be possible to read off the fault if it is intermittent.

Substitute Value

- The control module shuts itself off ("bus-off")

  HINT: The control module will remain shut off until the power supply is broken (15, 30, X). When the power supply is connected the control module will make a new attempt to communicate.

Possible Source

- Short-circuit between Control area network (CAN) wiring
- Open-circuit in the control area network (CAN) wiring
- Internal fault in the control module

- Internal fault in another control module in the same part of the Control area network (CAN).

Fault symptom[s]

- Power seat with memory function does not operate at all
- Automatic seat/door mirror operation does not function.

FAULTY COMMUNICATION

see **FAULTY COMMUNICATION**

PSM-E003: CONFIGURATION FAULT. FAULTY CONFIGURATION (2003-12)

DIAGNOSTIC TROUBLE CODE (DTC) INFORMATION PSM-E003

Condition

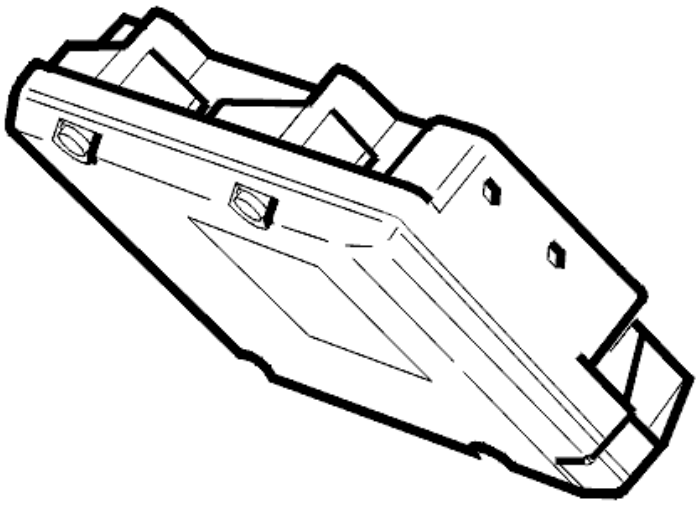

Fig. 140: Brake Control Module
Courtesy of VOLVO CARS CORPORATION

The control module compares its configuration ID with the signal configuration transmitted on the control area network (CAN) by the central electronic module (CEM). If the configuration IDs do not correspond the fault code is stored. The diagnostic trouble code (DTC) is also stored if the communication between the control

module and the central electronic module (CEM) is interrupted.

NOTE: **In the event of open-circuit in both the control area network (CAN) cables, it is not possible to communicate with the control module. Therefore it will only be possible to read off the diagnostic trouble code (DTC) if this type of fault is intermittent. When the diagnostic trouble code (DTC) is stored, the control module responds to the diagnostic command, however normal control area network (CAN) communication does not work. ("Expulsion mode")**

Substitute Value

- None.

Possible Source

- Faulty control area network (CAN) configuration ID. (The node is not intended for this car, for example a used control module with different software/hardware.)
- Open-circuit in the control area network (CAN) wiring between the control module and the central electrical module (CEM).

Fault symptom[s]

- Power seat with memory function does not operate at all
- Automatic seat/door mirror operation does not function.

FAULTY CONFIGURATION (2003)

see **FAULTY CONFIGURATION**

FAULTY CONFIGURATION (2004)

see **FAULTY CONFIGURATION**

FAULTY CONFIGURATION (2005-2012)

see **FAULTY CONFIGURATION**

PSM-XXXX: UNKNOWN DIAGNOSTIC TROUBLE CODE (DTC) FOR THE CURRENT CONTROL MODULE VERSION (2003-12)

UNKNOWN DIAGNOSTIC TROUBLE CODE (DTC) FOR THE CURRENT CONTROL MODULE VERSION

READING OFF DIAGNOSTIC TROUBLE CODES (DTCS)

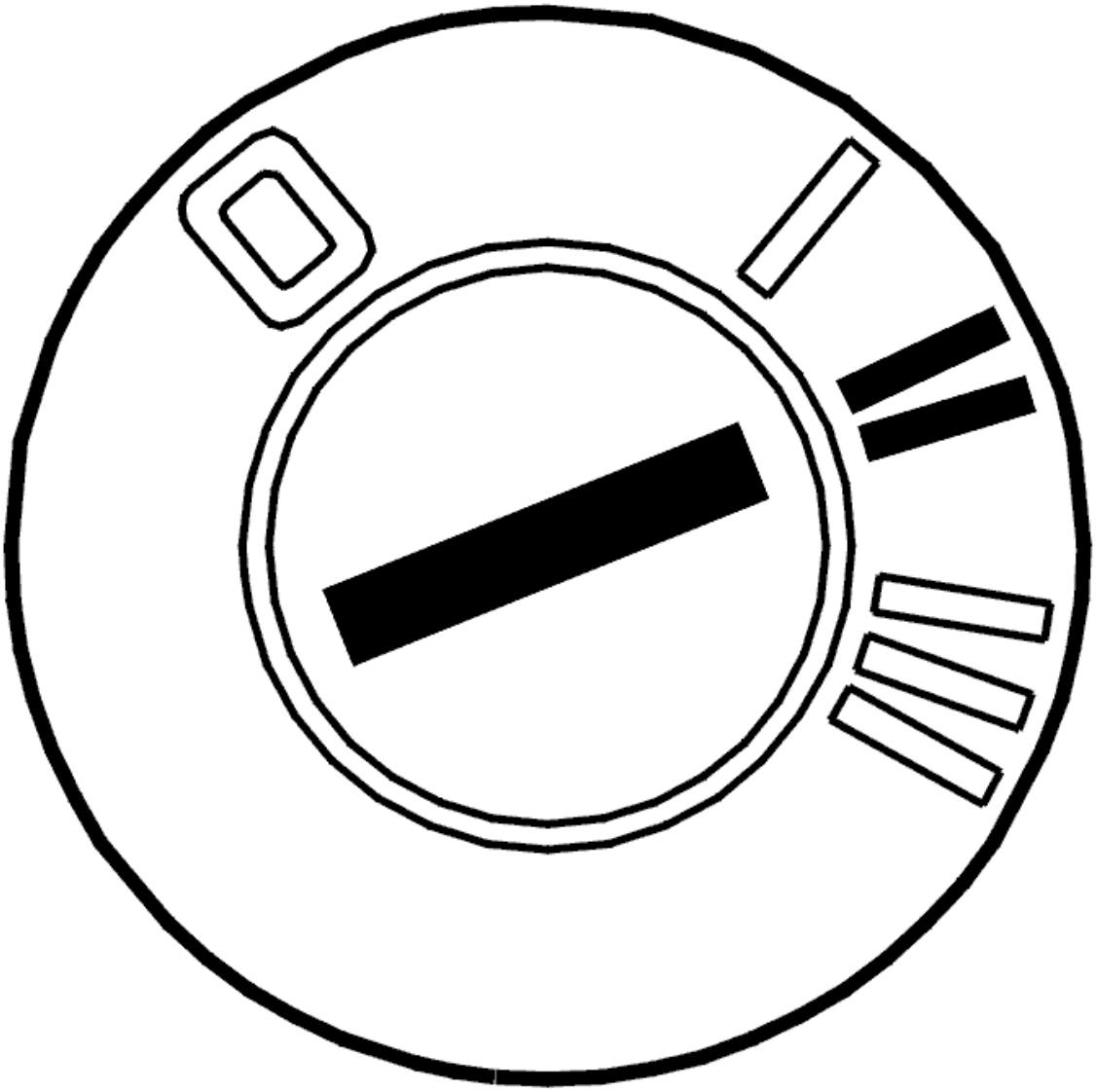

Fig. 141: Identifying Ignition ON
Courtesy of VOLVO CARS CORPORATION

- Ignition on.

  Read off the diagnostic trouble code (DTC) that is stored in the car.

  Make a note of the code. Report the code to VIDA customer support.

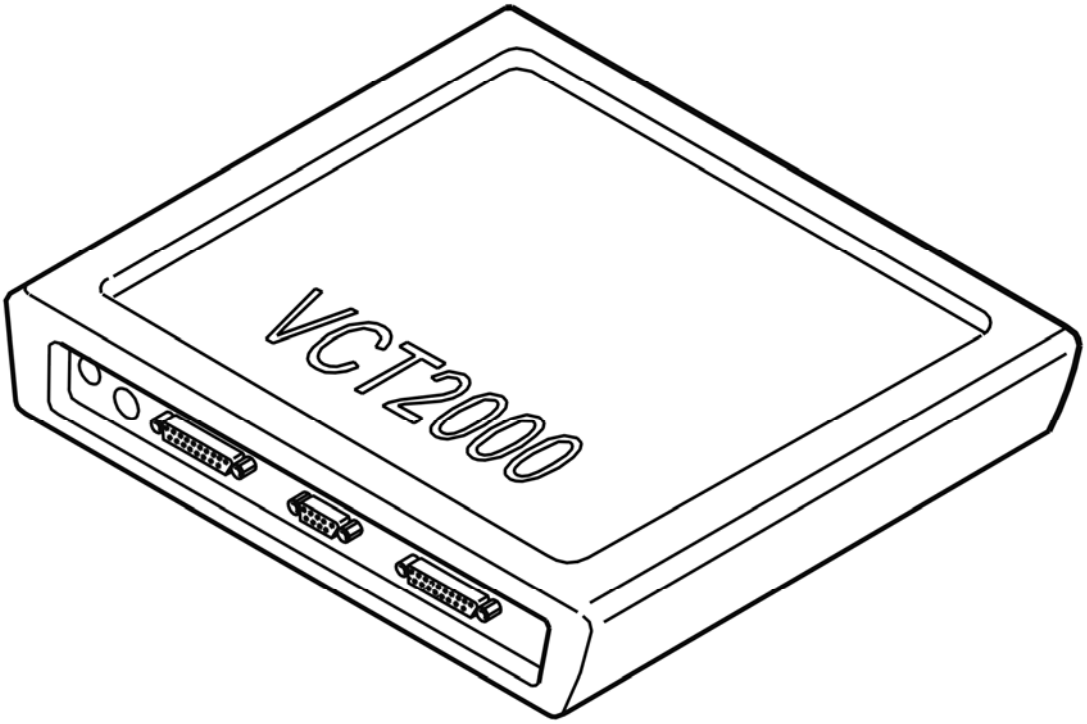

Fig. 142: Identifying VCT2000 Diagnostic Tool Symbol In VIDA
Courtesy of VOLVO CARS CORPORATION

ACCESSORIES AND EQUIPMENT

Interior - General Diagnostics And Tests

, POWER SEATS, CHECKING GROUND TERMINALS

CHECKING GROUND POINTS

CONNECTING TEST BOX

Connect test box, as described in, see **CONNECTING THE BREAKOUT BOX, POWER SEAT MODULE (PSM)**.

- **Continue**

  Refer to **CHECKING GROUND POINTS**

CHECKING GROUND POINTS

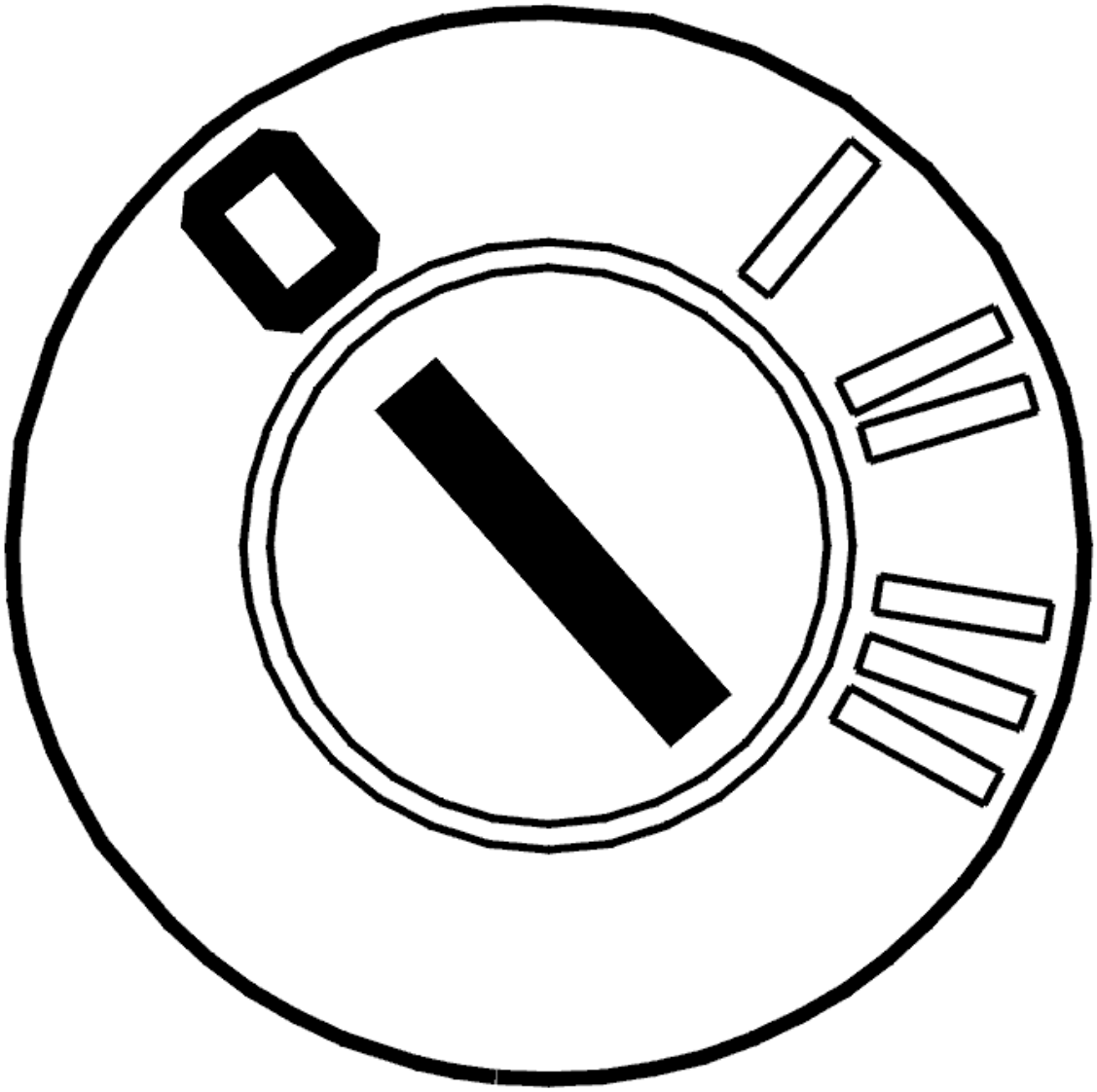

Fig. 1: Identifying Ignition OFF
Courtesy of VOLVO CARS CORPORATION

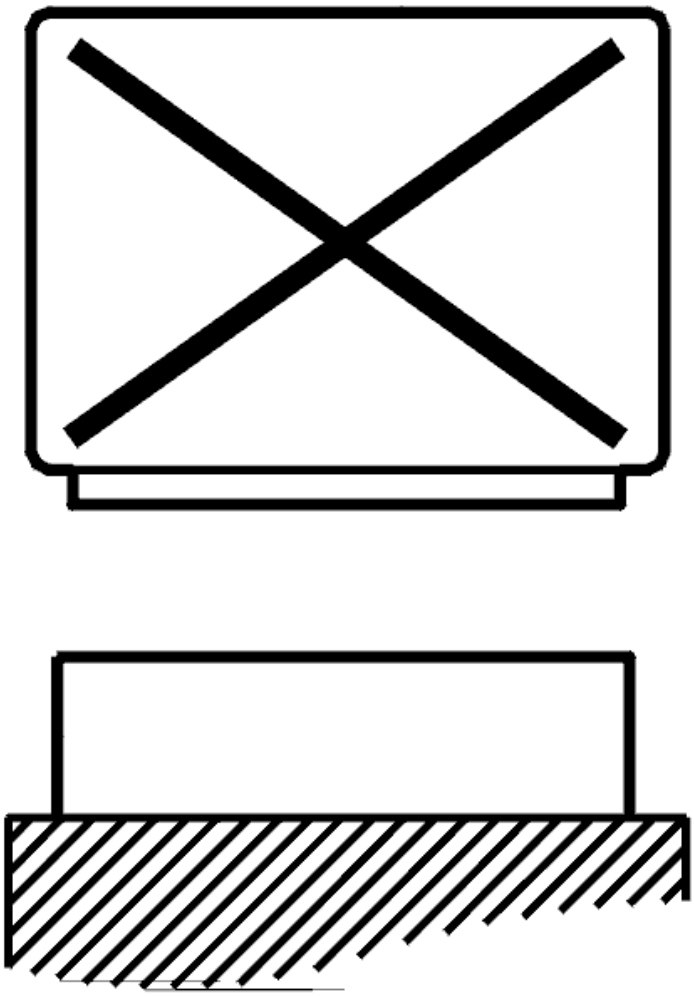

Fig. 2: Disconnecting Control Unit
Courtesy of VOLVO CARS CORPORATION

- Ignition off.
- Control unit disconnected.
- Switch off all battery loadings such as courtesy lighting and radio.

  Connect an ohmmeter between the battery negative lead and 14 on the test box.

  The ohmmeter should display 0.

  Additional information

  - For information on signals, see **SIGNAL SPECIFICATION, POWER SEAT MODULE** .

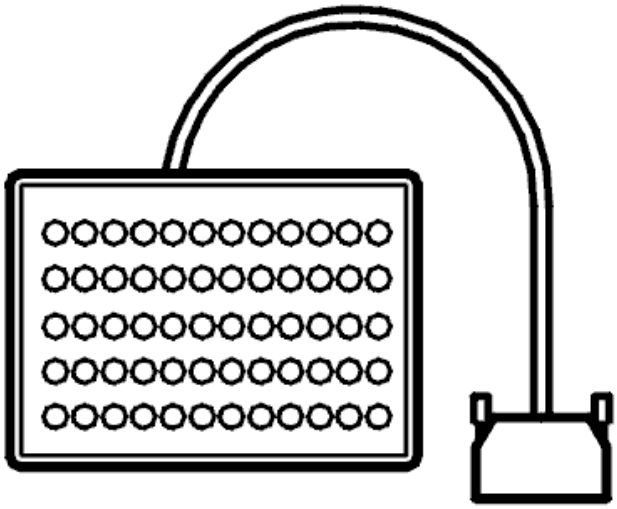

Fig. 3: Breakout Box
Courtesy of VOLVO CARS CORPORATION

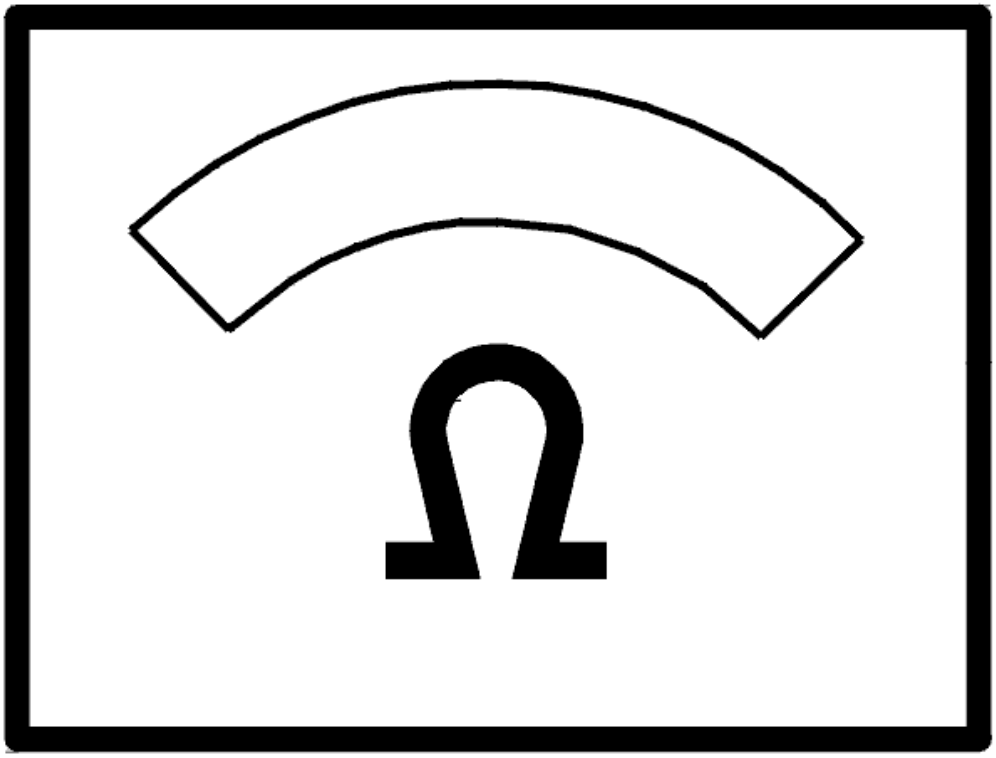

Fig. 4: Identifying Ohmmeter
Courtesy of VOLVO CARS CORPORATION

Is the value OK?

- **YES**

  OKAY: Troubleshooting has been completed.

- **NO**

  Refer to **CHECKING FOR OPEN CIRCUITS, CONTACT RESISTANCE AND OXIDATION**

CHECKING FOR OPEN CIRCUITS, CONTACT RESISTANCE AND OXIDATION

Check the ground points 53/500, 53/501, 53/510 and 53/511 for an open circuit, as described in, see **OPEN-**

CIRCUIT, INTERMITTENT FAULTS and for **CONTACT RESISTANCE AND OXIDATION** .

Additional information

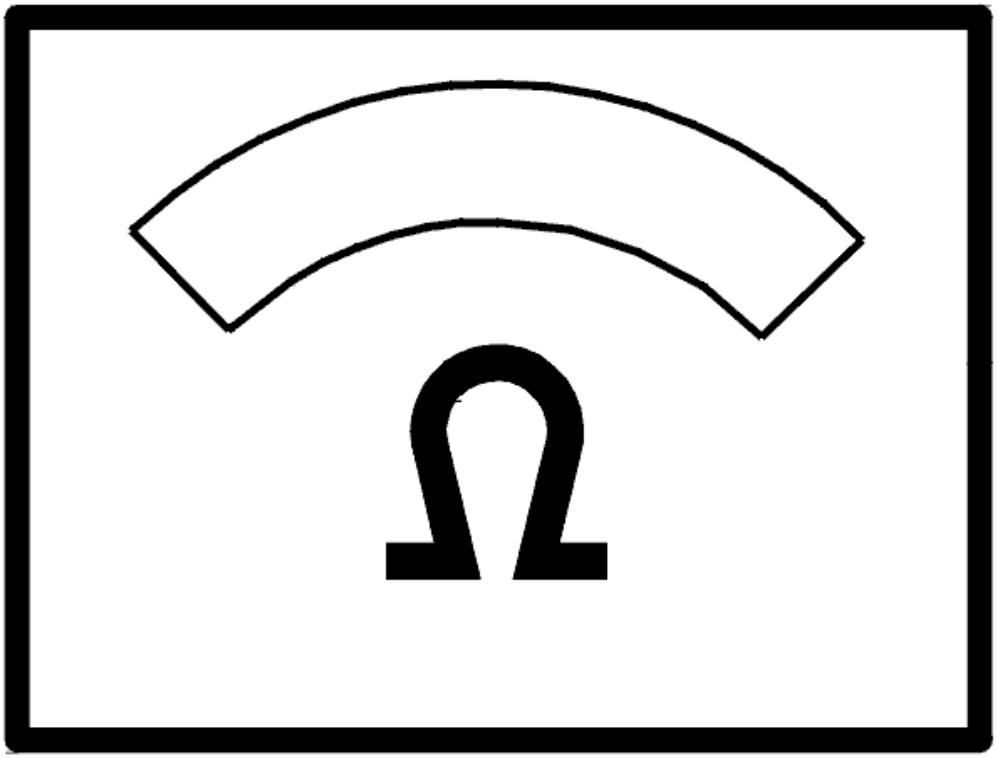

Fig. 5: Identifying Ohmmeter
Courtesy of VOLVO CARS CORPORATION

- **Continue**

  Refer to **VERIFICATION**

VERIFICATION

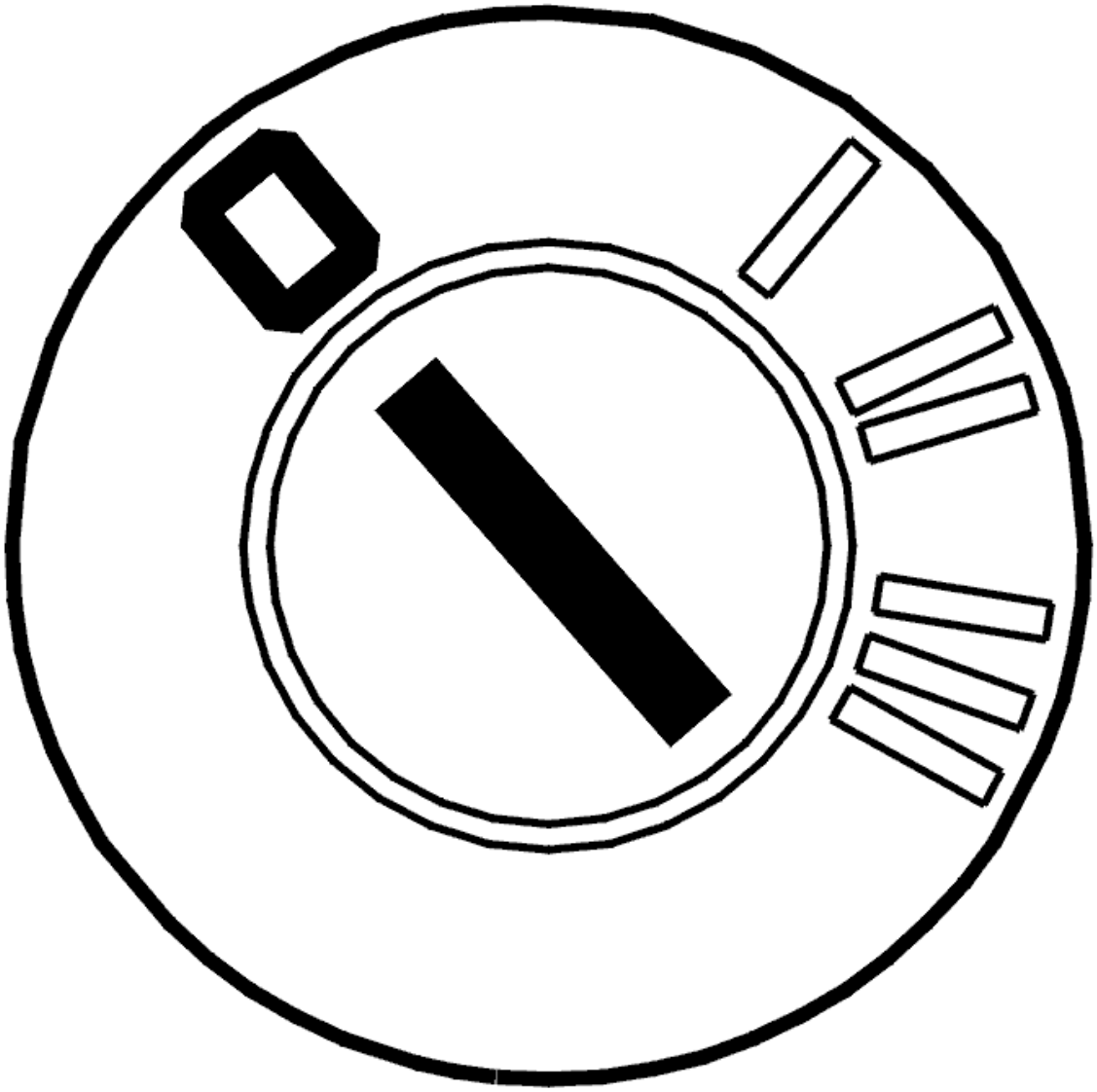

Fig. 6: Identifying Ignition OFF
Courtesy of VOLVO CARS CORPORATION

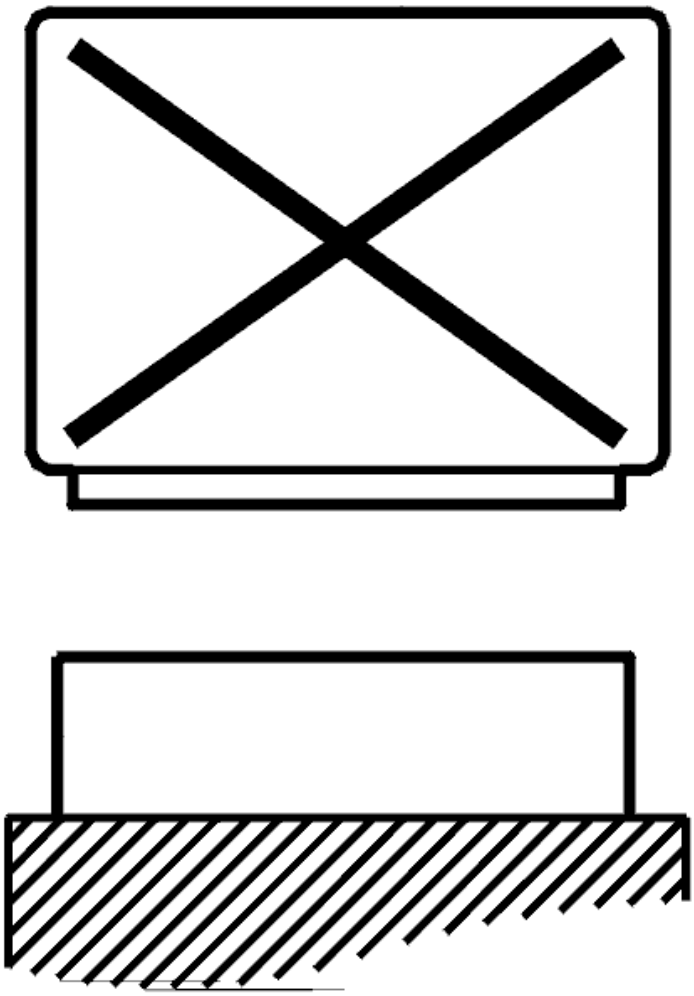

Fig. 7: Disconnecting Control Unit
Courtesy of VOLVO CARS CORPORATION

- Ignition off.
- Control unit disconnected.
- Switch off all battery loadings such as courtesy lighting and radio.

  Connect an ohmmeter between the battery negative terminal and power seat module (PSM) ground wires on the test box (2A and 4B).

  Additional information

  - For information on signals, see **SIGNAL SPECIFICATION, POWER SEAT MODULE** .

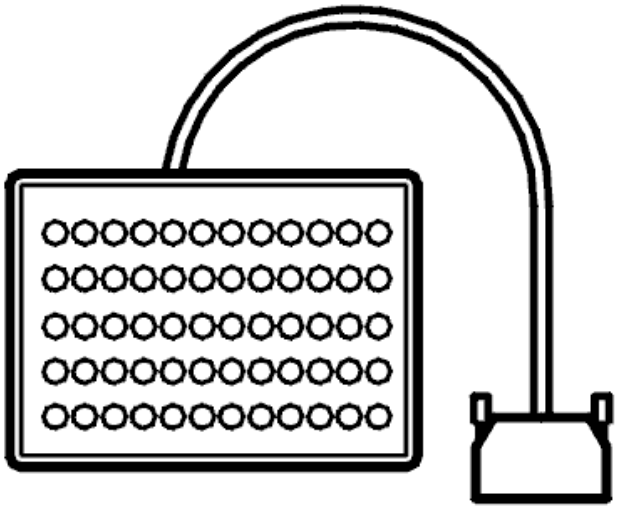

Fig. 8: Breakout Box
Courtesy of VOLVO CARS CORPORATION

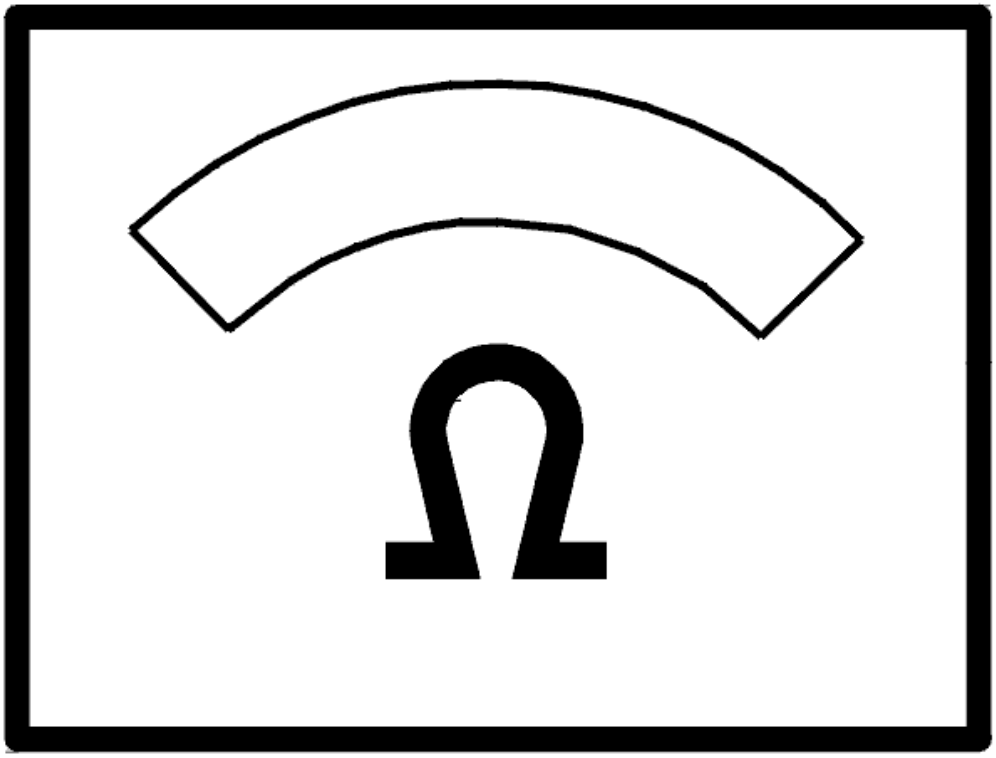

Fig. 9: Identifying Ohmmeter
Courtesy of VOLVO CARS CORPORATION

Is the value OK?

- **YES**

  OKAY: Troubleshooting has been completed.

- **NO**

  Refer to **INFORMATION**

INFORMATION

FAULT-TRACING INFORMATION

The fault should have been detected and remedied. As this is not the case fault-tracing has failed.

Exit fault-tracing for this diagnostic trouble code (DTC) or make another attempt.

CONNECTING THE BREAKOUT BOX

CONNECTING THE BREAKOUT BOX, POWER SEAT MODULE (PSM)

Special tools:

see **9511463**

see **9511428**

see **9511499**

see **9511507**

CONNECTING THE BREAKOUT BOX

- Ignition off
- Remove passenger compartment fuse 24 (11C/24) and passenger compartment fuse 4 (11C/4)
- Remove the power seat module (PSM).
  - See **POWER SEAT MODULE (PSM), REPLACING** (-2004) or **POWER SEAT MODULE (PSM), REPLACING** (2005-).
- Disconnect the module connectors.

There are two adapters for the power seat:

Connect adapter see **9511463** to control module connector C to take readings from the connector.

Connect adapter see **9511507** to control module connectors A, B, D and E. Connect breakout box see **9511428** and one or two cables see **9511499** to the adapters.

Disconnect the breakout box in reverse order.

For further information about signals and other values, see **SIGNAL SPECIFICATION, POWER SEAT MODULE** .

ACCESSORIES AND BODY, CAB

Interior - Overhaul Instructions

FRONT SEAT (2005-2008)

CONNECTOR ELECTRIC MOTOR BACKREST ANGLE

Operation Number(s):

RECONDITIONING

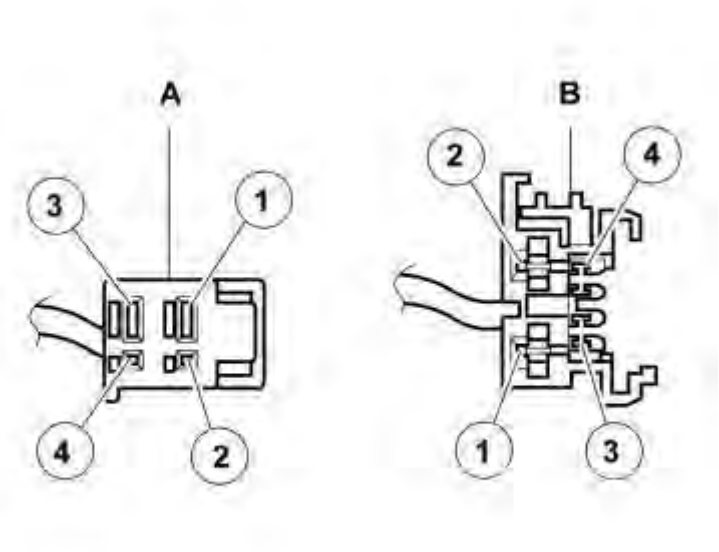

Fig. 1: Identifying Connector
Courtesy of VOLVO CARS CORPORATION

Carry out splicing of wire. See **JOINING THE CABLES**

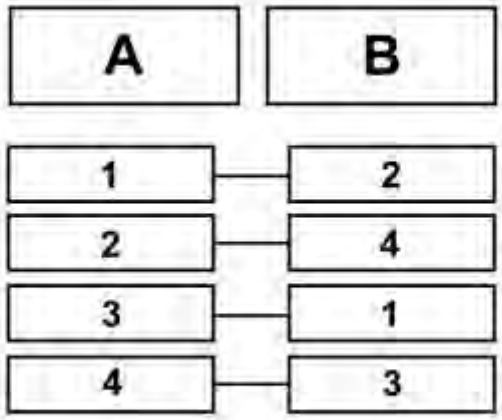

Fig. 2: Identifying Block Diagram Of Connections
Courtesy of VOLVO CARS CORPORATION

ACCESSORIES AND BODY, CAB

Interior - Removal, Replacement And Installation

CHILD CAR SAFETY (2003-2012)

BOOSTER CUSHION, REPLACING

REPLACING

As the illustrations in this service information are used for different model years and / or models, some variation may occur. However, the essential information in the illustrations is always correct.

PREPARATIONS

Remove:

- the battery lead. See **BATTERY, DISCONNECTING**
- the center seat from the car. See **REMOVING THE CENTER SEAT (SECOND ROW)**.

REMOVING BOOSTER CUSHIONS

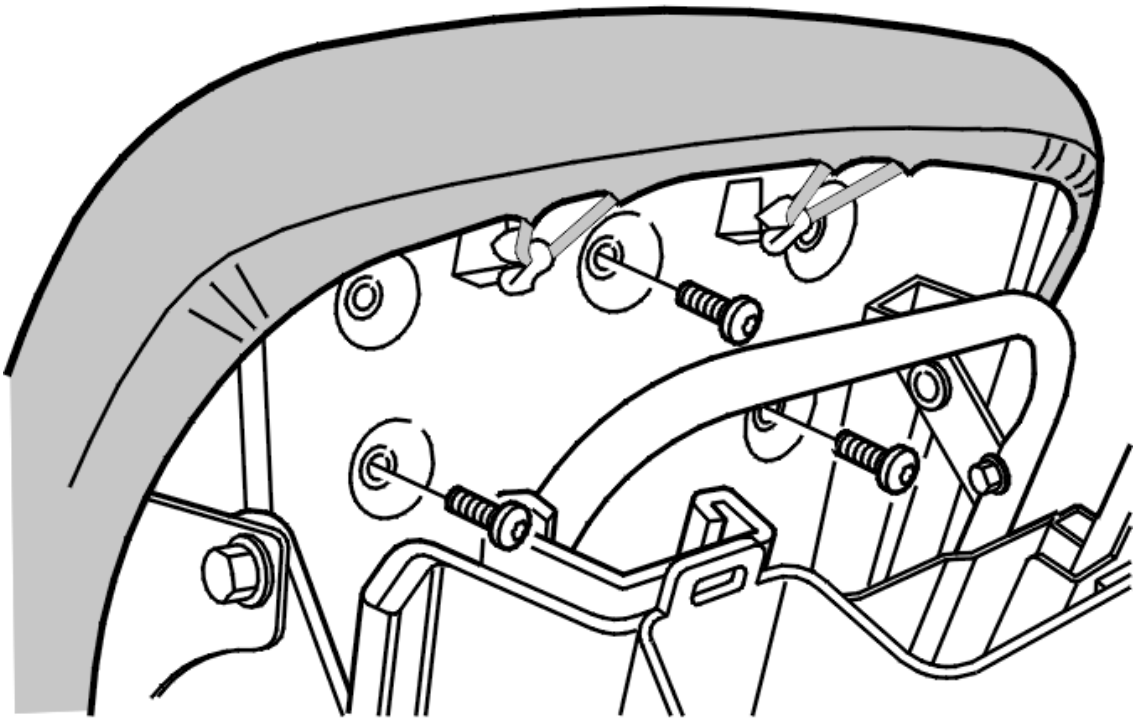

Fig. 1: M6 Screws
Courtesy of VOLVO CARS CORPORATION

Remove the 3 M6 screws.

Fold the booster cushion forward.

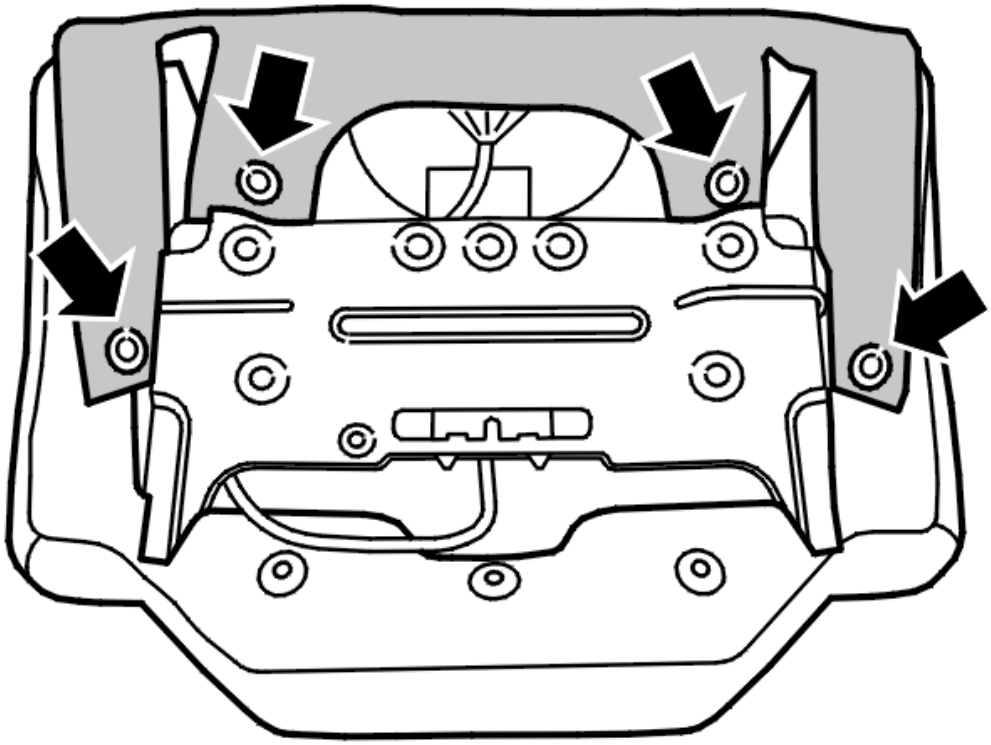

Fig. 2: Clips
Courtesy of VOLVO CARS CORPORATION

Remove the 4 clips.

INSTALLING BOOSTER CUSHIONS

NOTE: For tightening torques, see TIGHTENING TORQUE .

Install:

- the booster cushion
- the 4 clips
- the 3 M6 screws. Tighten.

UPHOLSTERY BOOSTER CUSHION, REPLACING

REPLACING

As the illustrations in this service information are used for different model years and / or models, some variation may occur. However, the essential information in the illustrations is always correct.

Included in this method are methods for:

- the upholstery for the booster cushion. See **UPHOLSTERY BOOSTER CUSHION, REPLACING**
- the seat cushion upholstery for the rear booster cushion. See **UPHOLSTERY SEAT CUSHION BOOSTER CUSHION REAR, REPLACING**.

UPHOLSTERY BOOSTER CUSHION, REPLACING

REMOVING BOOSTER CUSHION UPHOLSTERY

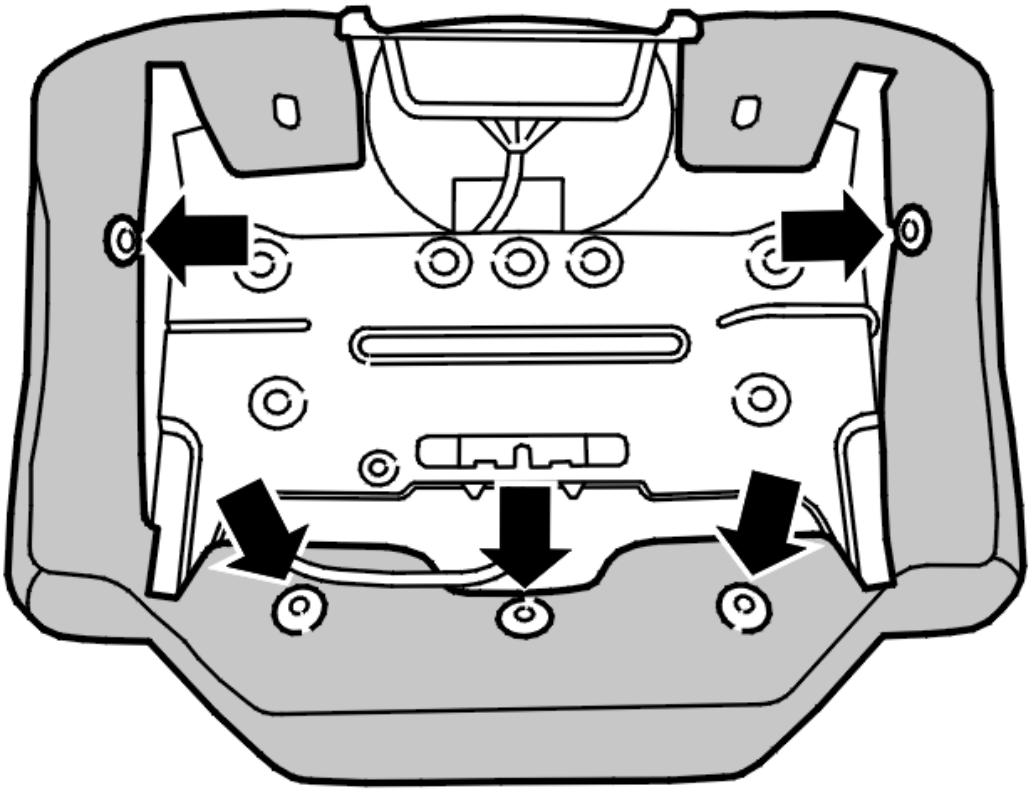

Fig. 3: Booster Cushion Clips
Courtesy of VOLVO CARS CORPORATION

Remove:

- the booster cushion. See **BOOSTER CUSHION, REPLACING**
- the 5 clips.

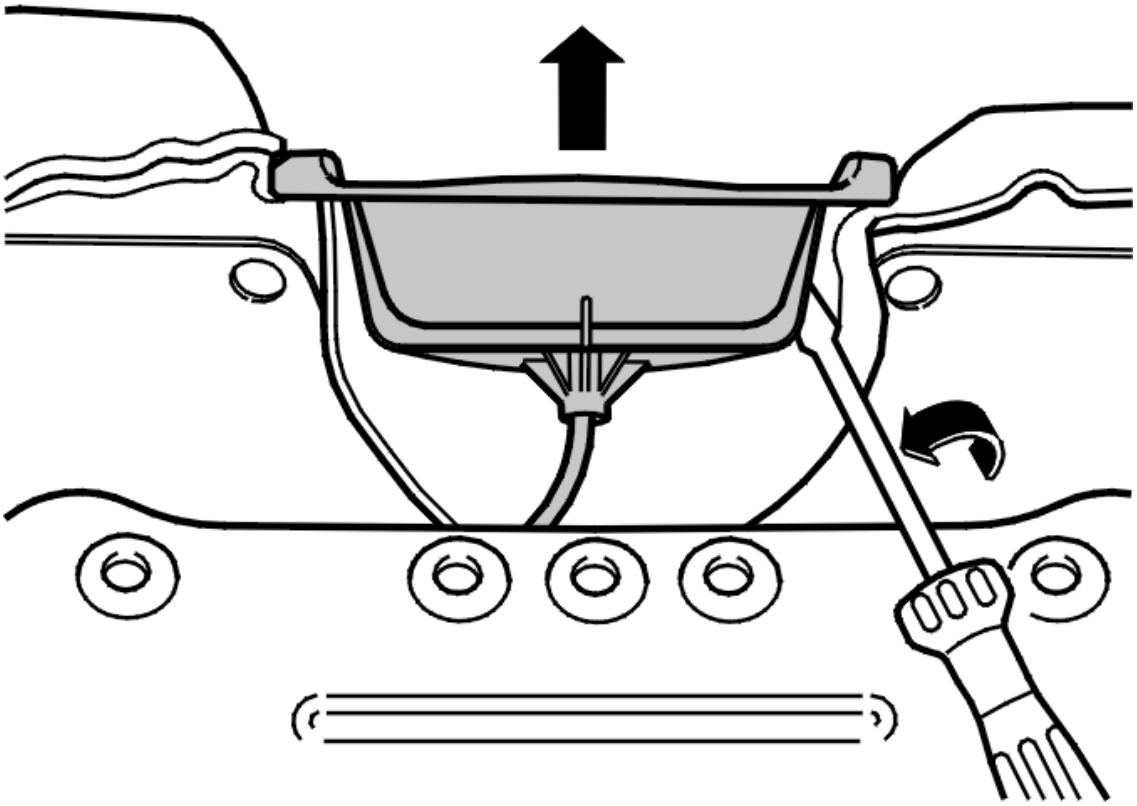

Fig. 4: Removing Upholstery Booster Cushion
Courtesy of VOLVO CARS CORPORATION

Release the opening handle.

Slide off the upholstery / cushion.

INSTALLING BOOSTER CUSHION UPHOLSTERY

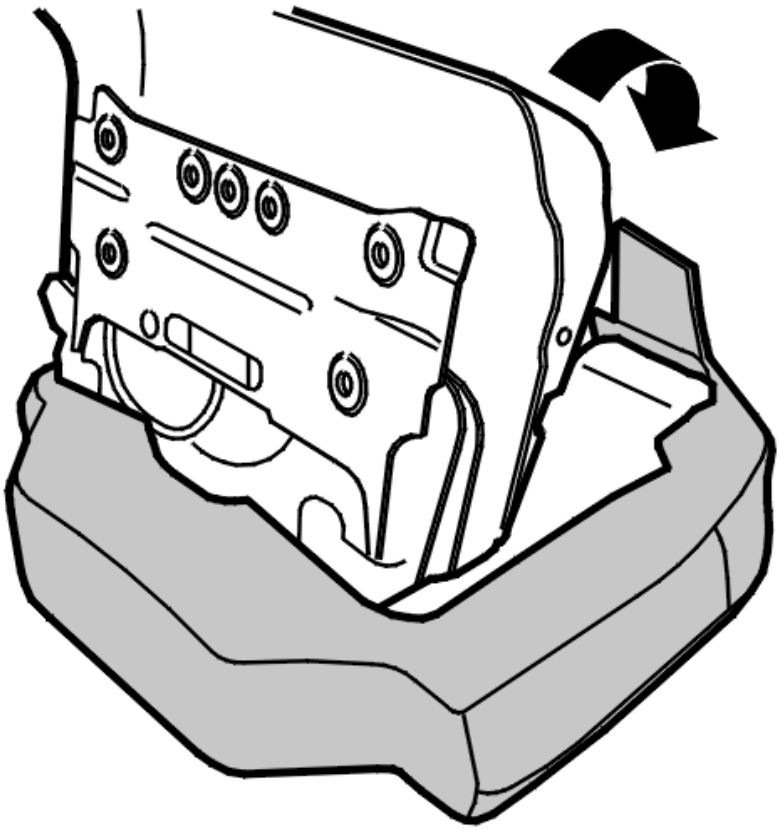

Fig. 5: Installing Booster Cushion Upholstery
Courtesy of VOLVO CARS CORPORATION

Install the upholstery / cushion.

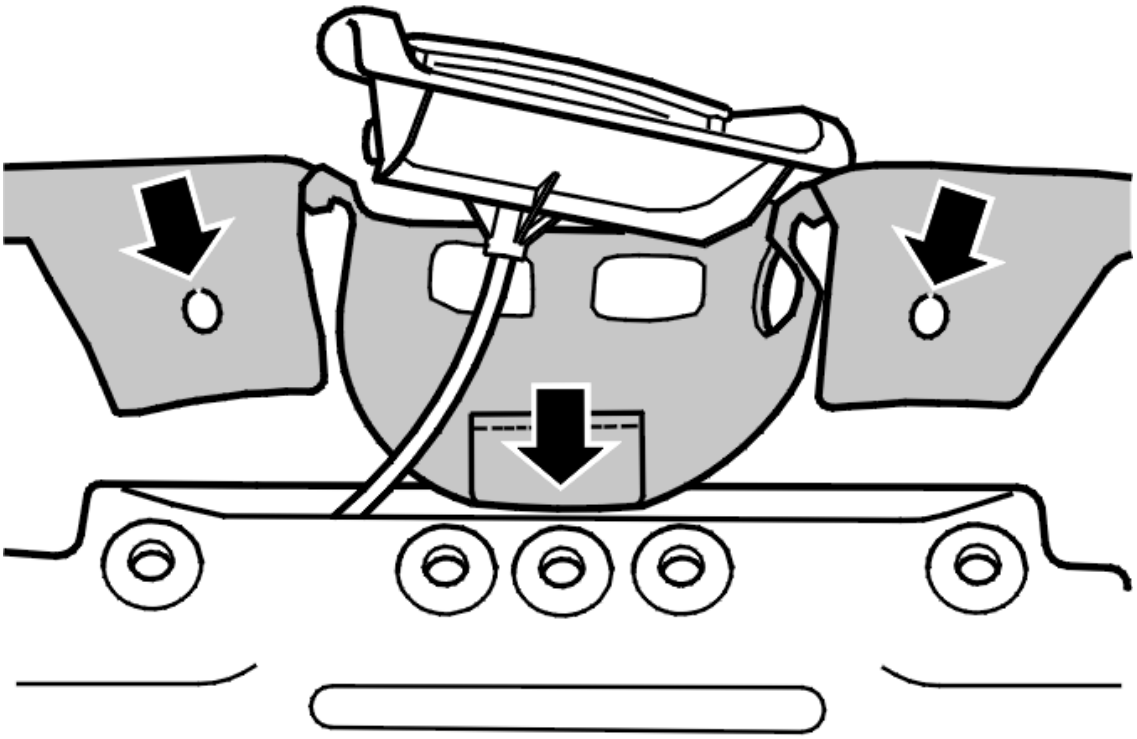

Fig. 6: Installing Upholstery
Courtesy of VOLVO CARS CORPORATION

Start sliding on the upholstery with the weatherstrip at the opening handle.

Continue with the upholstery over the metal tabs.

Install:

- the opening handle
- the 5 clips
- the booster cushion. See **BOOSTER CUSHION, REPLACING**.

UPHOLSTERY SEAT CUSHION BOOSTER CUSHION REAR, REPLACING

REMOVING THE SEAT CUSHION UPHOLSTERY FROM THE REAR BOOSTER CUSHION

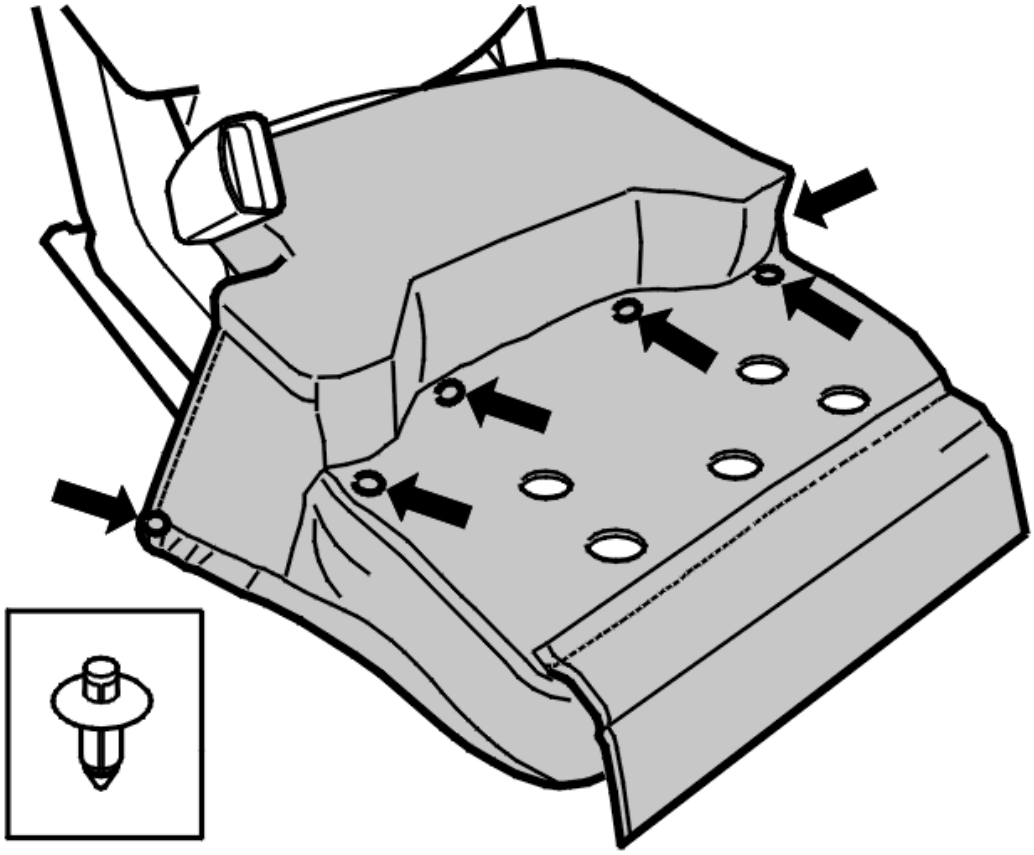

Fig. 7: Booster Cushion
Courtesy of VOLVO CARS CORPORATION

Remove:

- the booster cushion. See **BOOSTER CUSHION, REPLACING**
- the 6 clips.

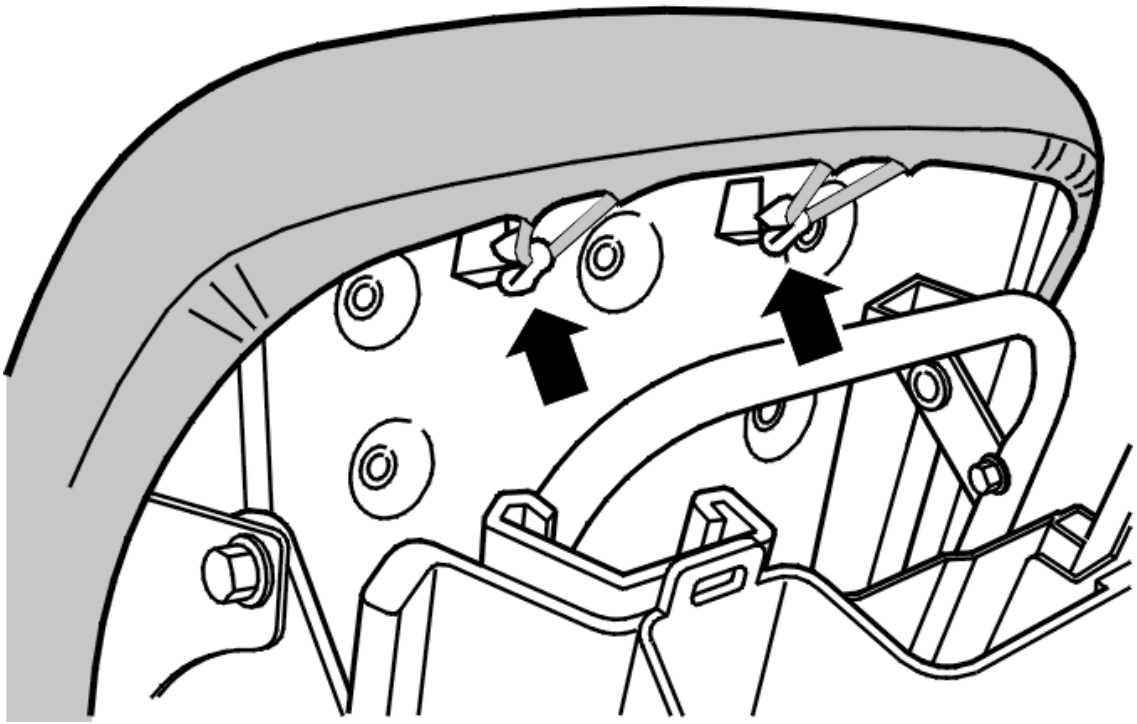

Fig. 8: Hooks
Courtesy of VOLVO CARS CORPORATION

- the 2 hooks.

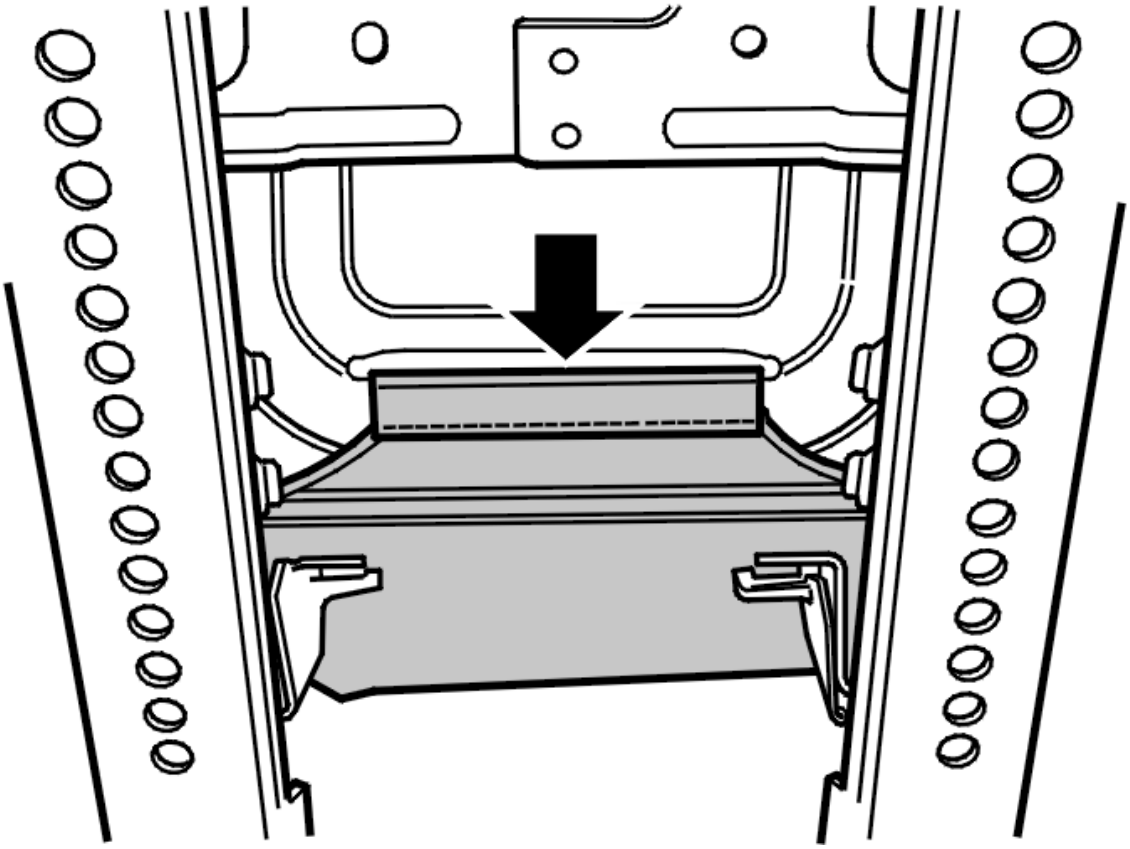

Fig. 9: Weatherstrip
Courtesy of VOLVO CARS CORPORATION

Detach the weatherstrip at the rear edge of the seat cushion.

Remove:

- the upholstery / cushion from the seat frame
- the upholstery from the cushion.

INSTALLING THE SEAT CUSHION UPHOLSTERY FOR THE REAR BOOSTER CUSHION

Install:

- the upholstery for the cushion
- the upholstery / cushion on the seat frame
- the weatherstrip
- the 2 hooks
- the 6 clips
- the booster cushion. See **BOOSTER CUSHION, REPLACING**.

DOOR, SIDE, PARCEL SHELF, CARGO SHELF (2003-2012)

PANEL A-POST, REPLACING

REPLACING

As the illustrations in this service information are used for different model years and / or models, some variation may occur. However, the essential information in the illustrations is always correct.

REMOVING THE A-POST PANEL

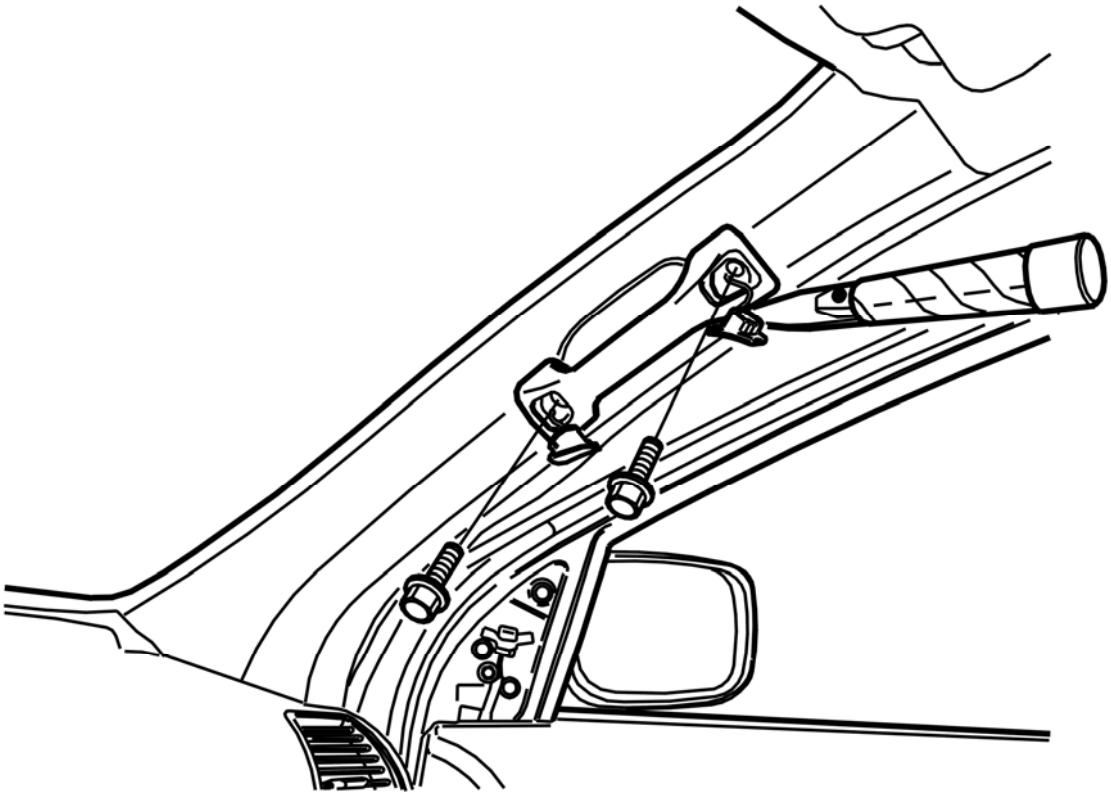

Fig. 10: Removing The A-Post Panel
Courtesy of VOLVO CARS CORPORATION

Remove:

- the door weather strip
- the 2 covers and handles
- the 2 screws.

Pull the panel inwards into the car.

Lift the panel upwards.

INSTALLING THE A-POST PANEL

NOTE: **For tightening torques, see TIGHTENING TORQUE .**

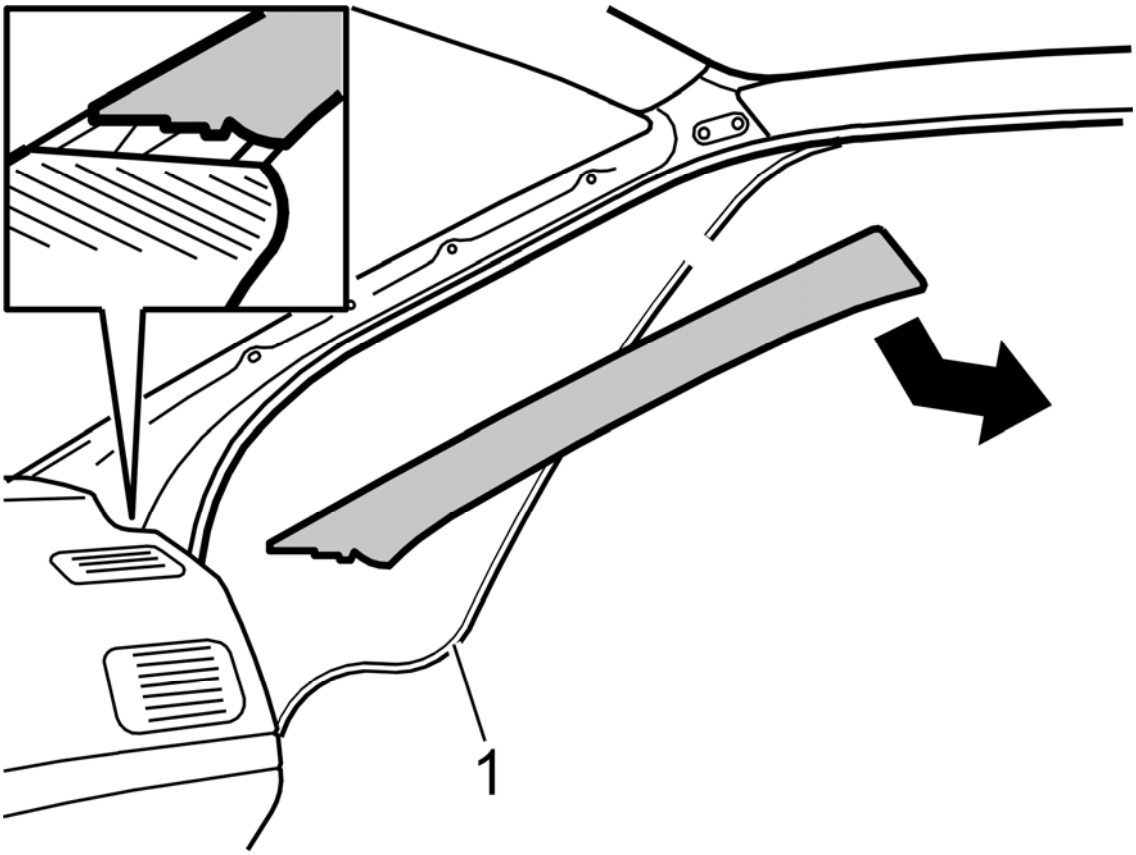

Fig. 11: Installing The A-Post Panel
Courtesy of VOLVO CARS CORPORATION

Insert the A-post panel at the bottom edge.

Press the A-post panel into place.

Install:

- the 2 M5 screws. Tighten
- the 2 covers and the handles.

PANEL B-POST, REPLACING

REPLACING

As the illustrations in this service information are used for different model years and / or models, some variation may occur. However, the essential information in the illustrations is always correct.

REMOVING THE B-POST PANEL

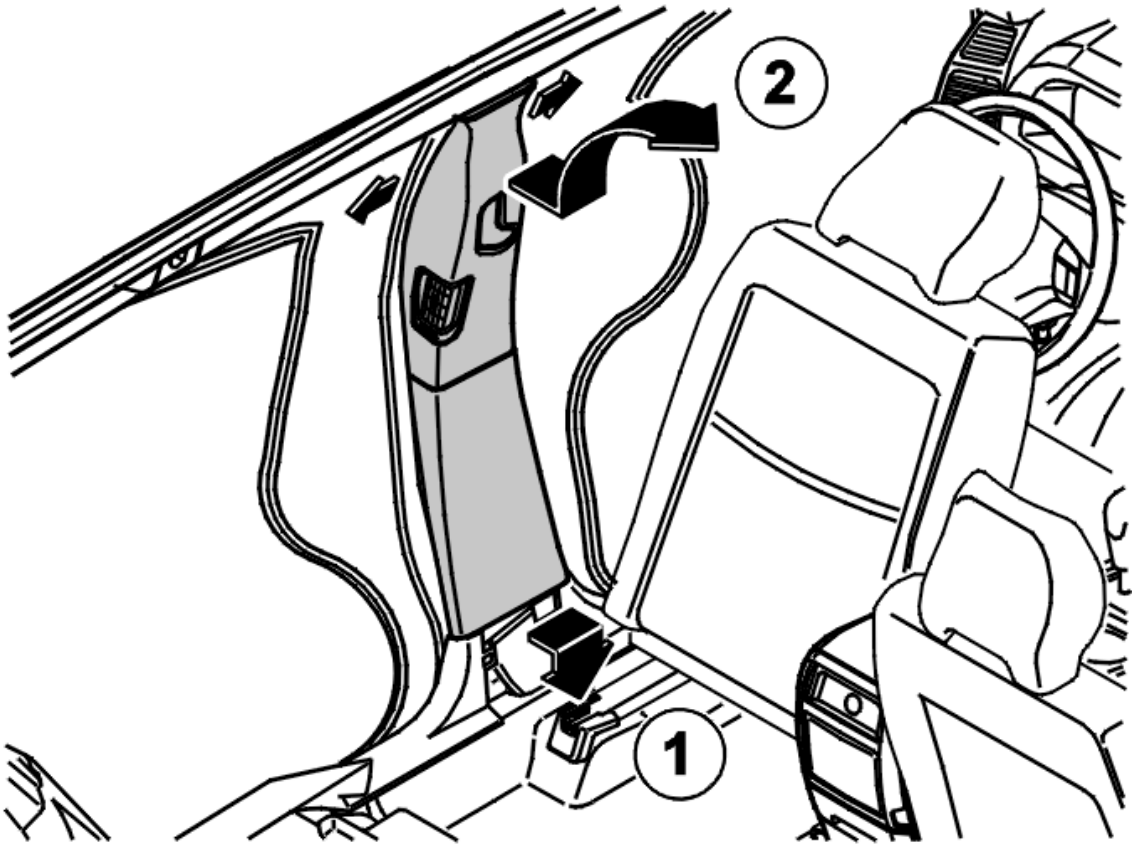

Fig. 12: Removing The B-Post Panel
Courtesy of VOLVO CARS CORPORATION

Move the seat as far forward as possible. Fold the backrest forward.

Remove:

- the door weather strip
- the end mounting. See **END MOUNTING, REPLACING**
- the panel. See **SILL TRIM PANEL, REPLACING** .

Pull the lower part of the B-post panel inwards into the car.

Pull straight downwards. Press the steel clips outwards on both sides. Release the insert at the top.

Lift upwards so that the panel releases from the air duct.

Remove the seat belt cover.

Thread the seat belt through the panel.

INSTALLING THE B-POST PANEL

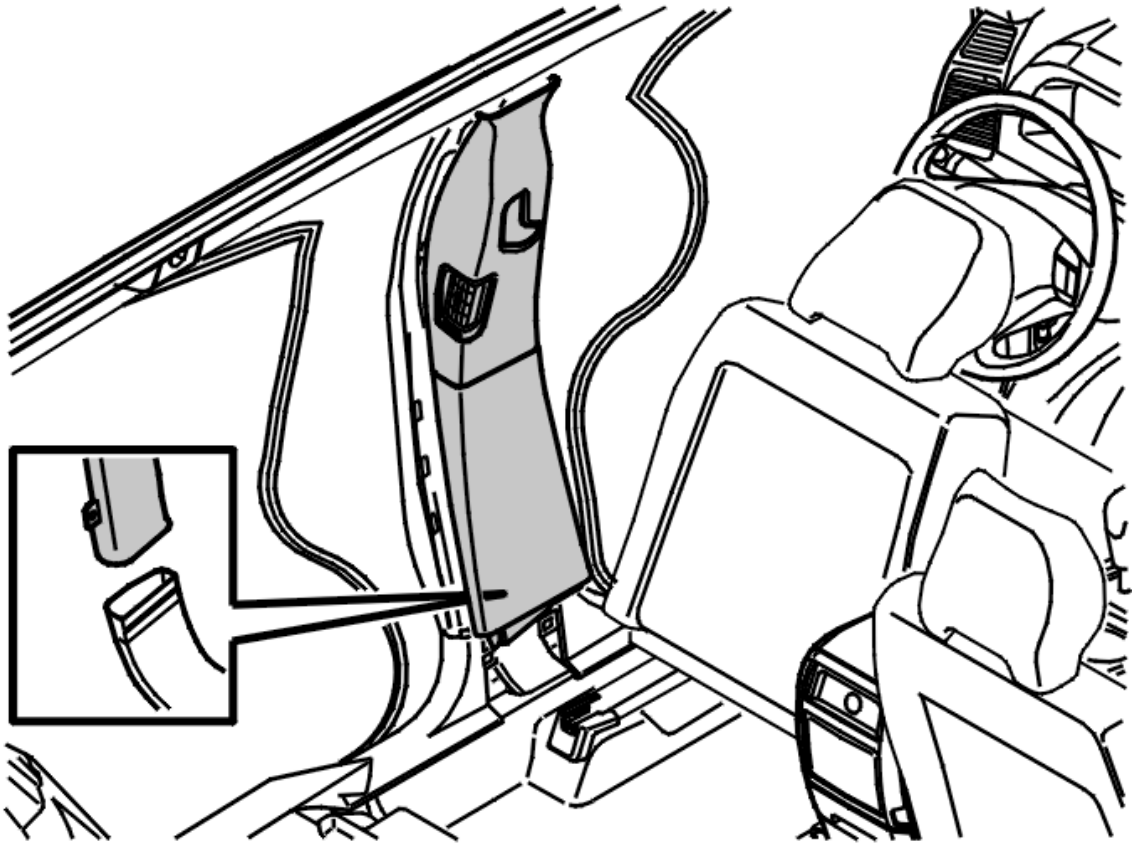

Fig. 13: Installing The B-Post Panel
Courtesy of VOLVO CARS CORPORATION

Thread the seat belt through the panel.

Install the seat belt cover.

Press the panel into place against the lower section of the air duct.

Insert the insert at the top.

Press the panel into place.

Install:

- the steel clips at the top on both sides
- the end mounting. See **END MOUNTING, REPLACING**
- the panel. See **SILL TRIM PANEL, REPLACING**
- the door weather strip.

Check the function of the seat belt. See **SEAT BELT FUNCTION, CHECK** .

PANEL CANTRAIL, REPLACING

REPLACING

As the illustrations in this service information are used for different model years and / or models, some variation may occur. However, the essential information in the illustrations is always correct.

REMOVING THE CANTRAIL PANEL

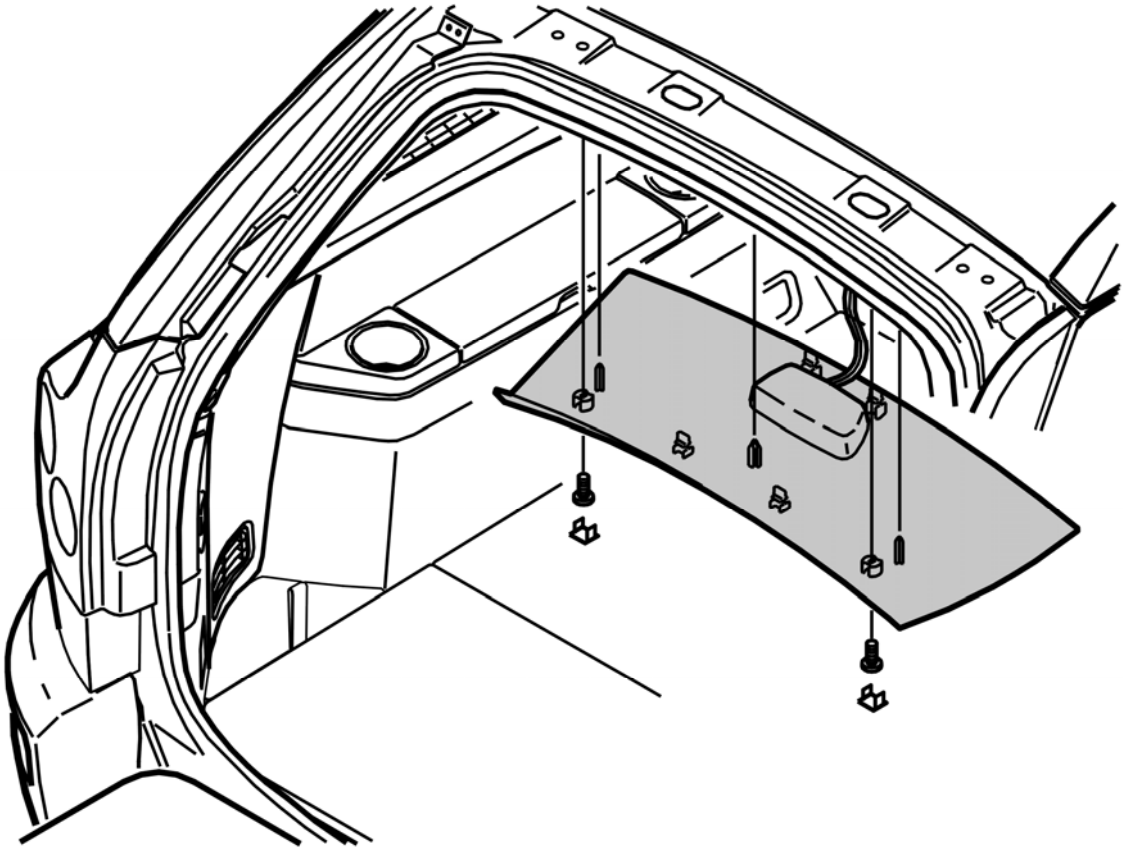

Fig. 14: Identifying Cantrail Panel And Screws
Courtesy of VOLVO CARS CORPORATION

Remove:

- the 2 covers
- the 2 screws.

Pull the panel downwards and backwards.

Remove the bulb.

INSTALLING THE CANTRAIL PANEL

Install the lamp.

Insert the panel and press it into place.

Install:

- the 2 screws. Tighten
- the 2 covers.

PANEL C-POST, REPLACING

REPLACING

As the illustrations in this service information are used for different model years and / or models, some variation may occur. However, the essential information in the illustrations is always correct.

REMOVING THE C-POST PANEL

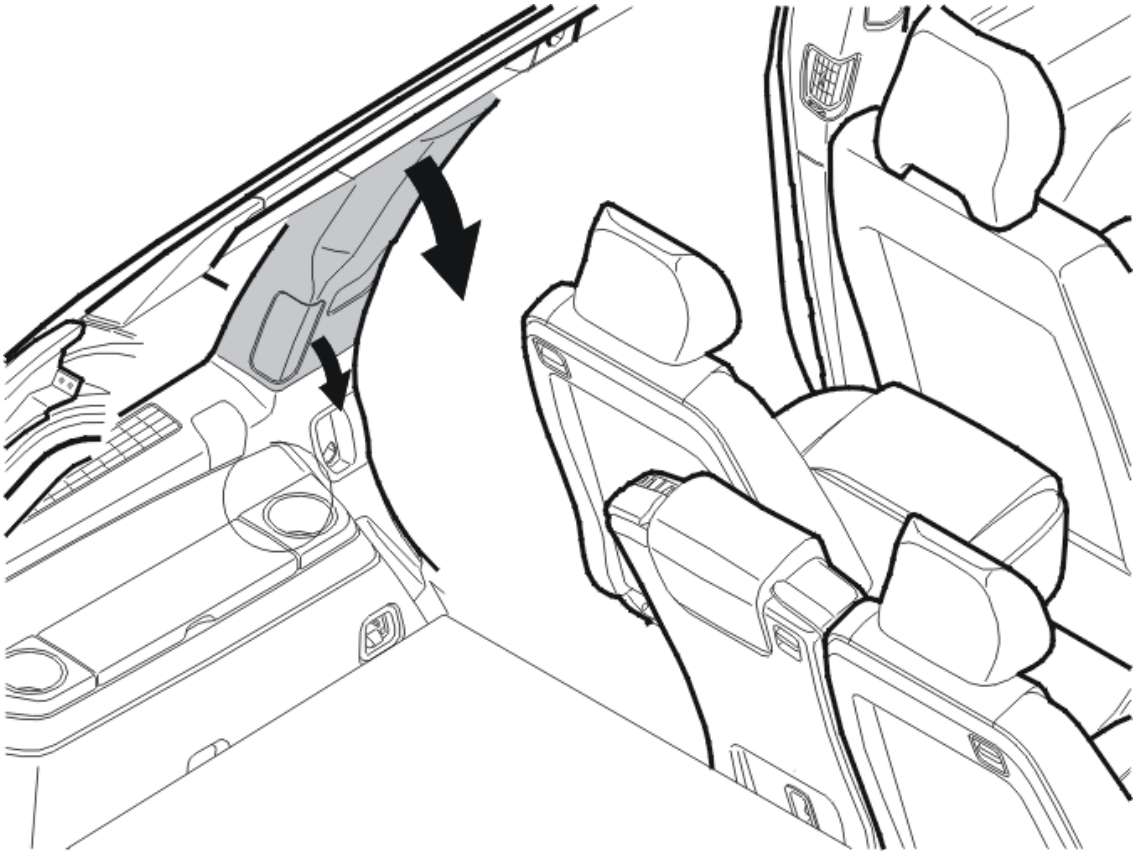

Fig. 15: Removing C-Post Panel
Courtesy of VOLVO CARS CORPORATION

Remove:

- the weatherstrip
- the panel
- the seat belt cover
- the end mounting. See **END MOUNTING, REPLACING** .

Pull the seat belt out through the panel.

Remove the panel by pulling it straight into the car.

Press the panel upwards so that the air duct releases.

INSTALLING THE C-POST PANEL

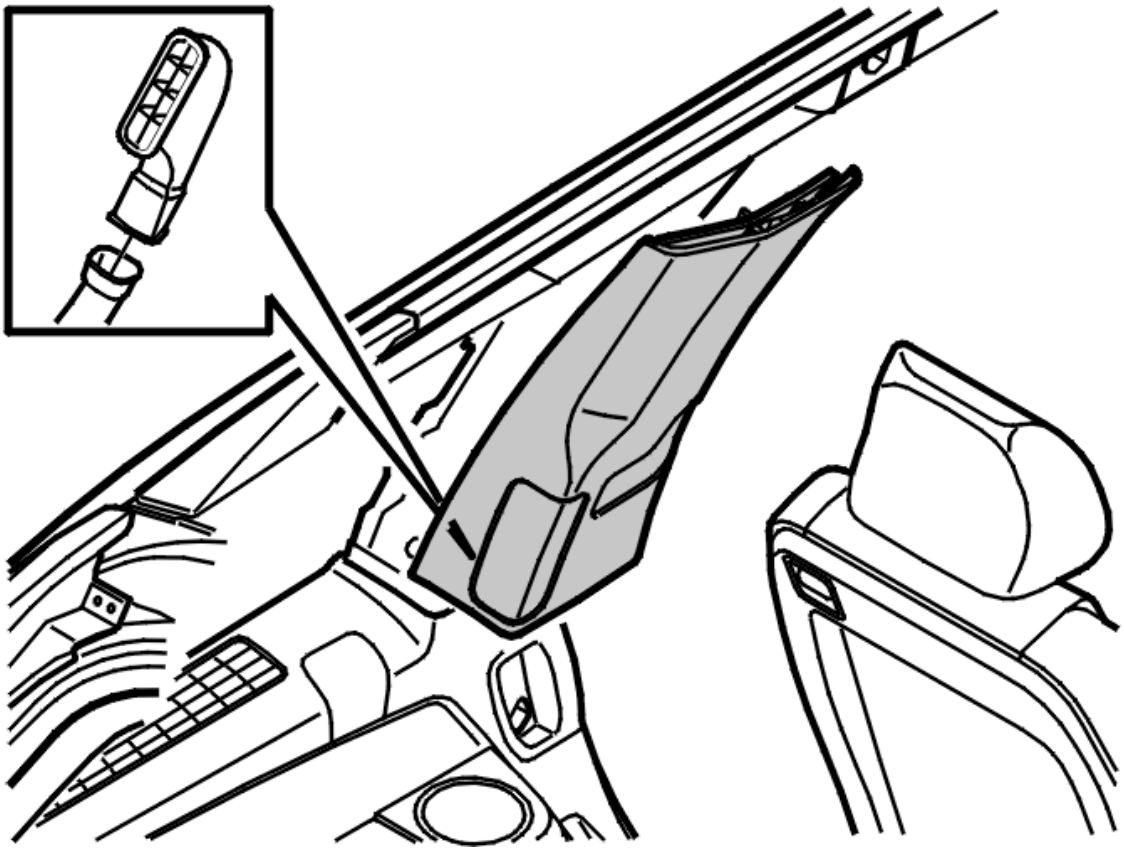

Fig. 16: Installing C-Post Panel
Courtesy of VOLVO CARS CORPORATION

Thread the seat belt through the panel.

Install:

- the end mounting. See **END MOUNTING, REPLACING**
- the seat belt cover.

Align the panel with the air duct.

Press the panel into place.

Install the weatherstrip.

PANEL D-POST, REPLACING

REPLACING

As the illustrations in this service information are used for different model years and / or models, some variation may occur. However, the essential information in the illustrations is always correct.

REMOVING THE D-POST PANEL

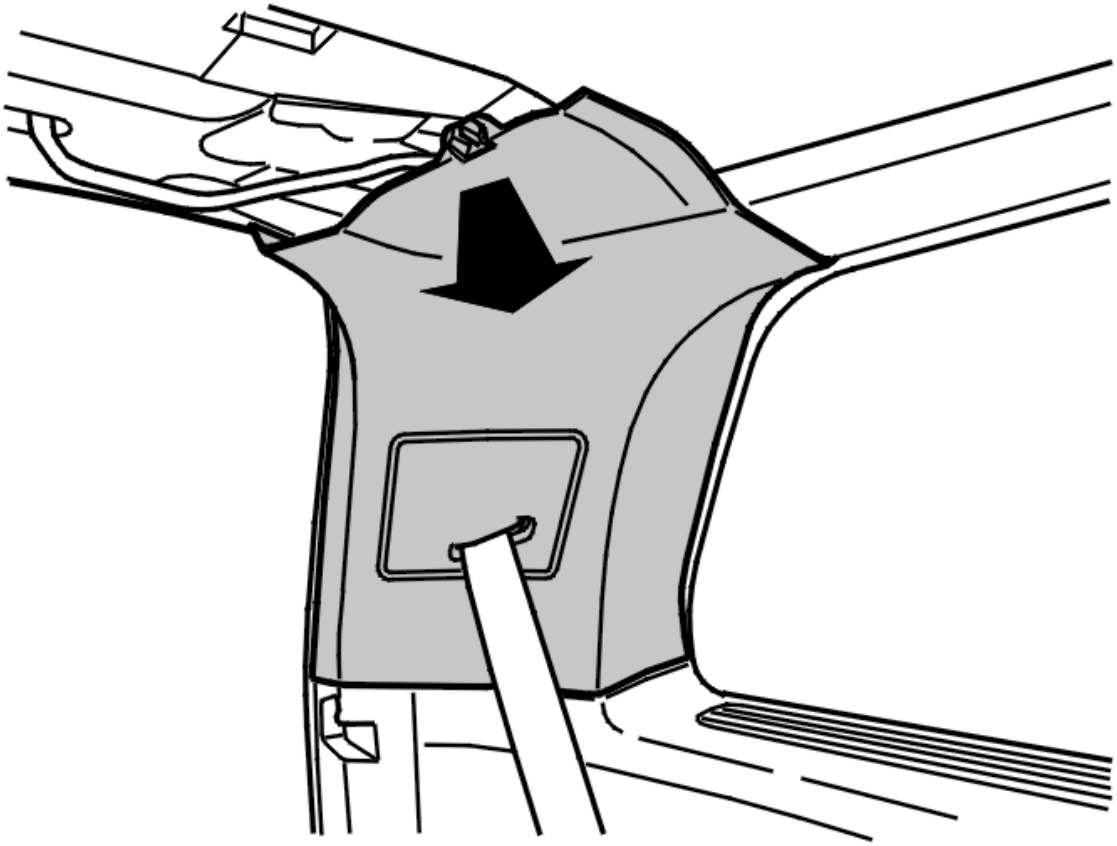

Fig. 17: Removing D-Post Panel
Courtesy of VOLVO CARS CORPORATION

Remove the cantrail panel. See **PANEL CANTRAIL, REPLACING**.

Pull off the inner upper edge of the D post panel.

Pull the D post panel inwards into the car.

Remove:

- the connector (if there is a loudspeaker)
- the end mounting. See **END MOUNTING, REPLACING** (applies only to seven seater versions)
- the seat belt cover (applies only to seven seater versions).

Insert the seat belt through the D post panel (applies only to seven seater versions).

INSTALLING THE D-POST PANEL

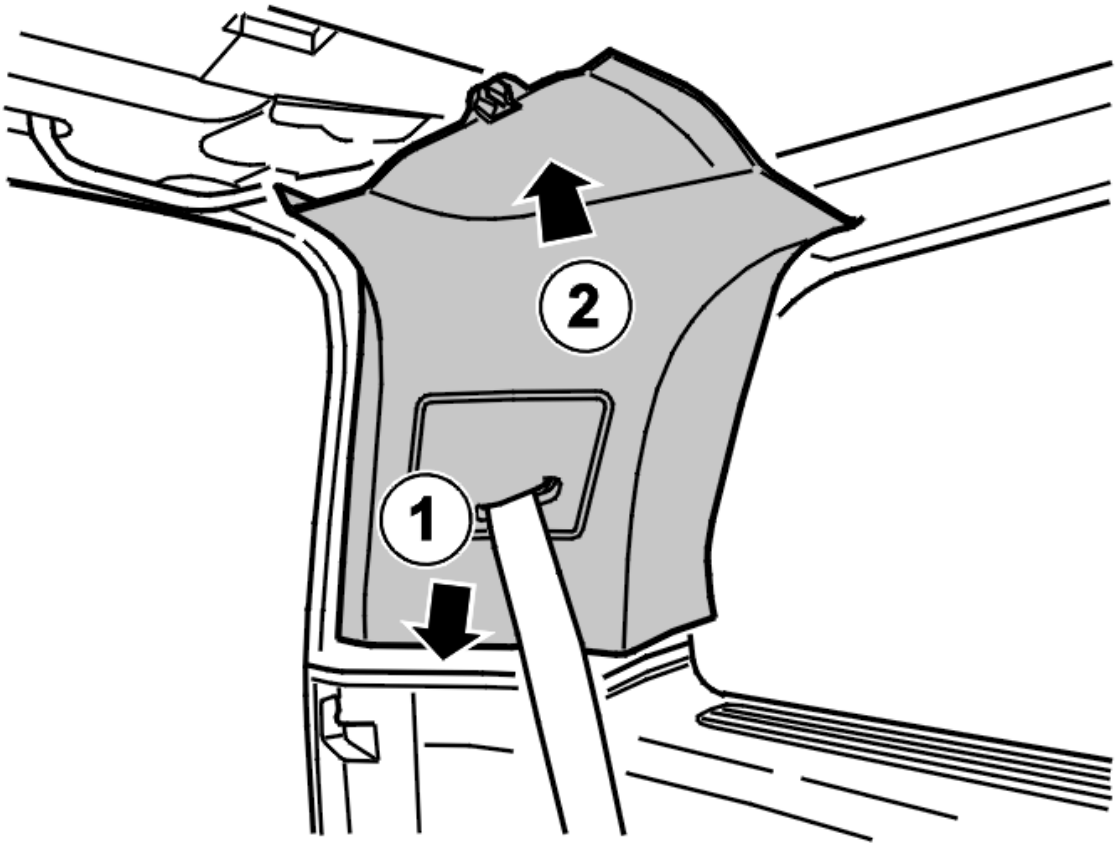

Fig. 18: Installing D-Post Panel
Courtesy of VOLVO CARS CORPORATION

Insert the seat belt through the D post panel (applies only to seven seater versions).

Install:

- the seat belt cover (applies only to seven seater versions)
- the end mounting. See **END MOUNTING, REPLACING** (applies only to seven seater versions)
- the connector (if there is a loudspeaker).

Align the panel with the side upholstery in the cargo compartment (1).

Press the D-post panel into place starting at the top (2).

Install the cantrail panel. See **PANEL CANTRAIL, REPLACING**.

PANEL FRONT SIDE DOOR, REPLACING

REPLACING

As the illustrations in this service information are used for different model years and / or models, some variation may occur. However, the essential information in the illustrations is always correct.

PREPARATIONS

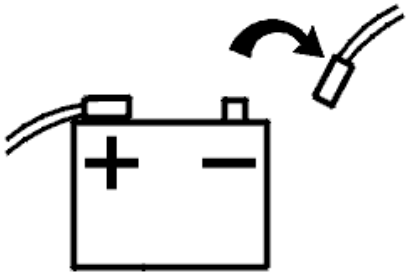

Fig. 19: Disconnecting Battery Lead
Courtesy of VOLVO CARS CORPORATION

Remove the battery lead. See **BATTERY, DISCONNECTING** .

REMOVING THE PANEL FROM THE FRONT DOOR

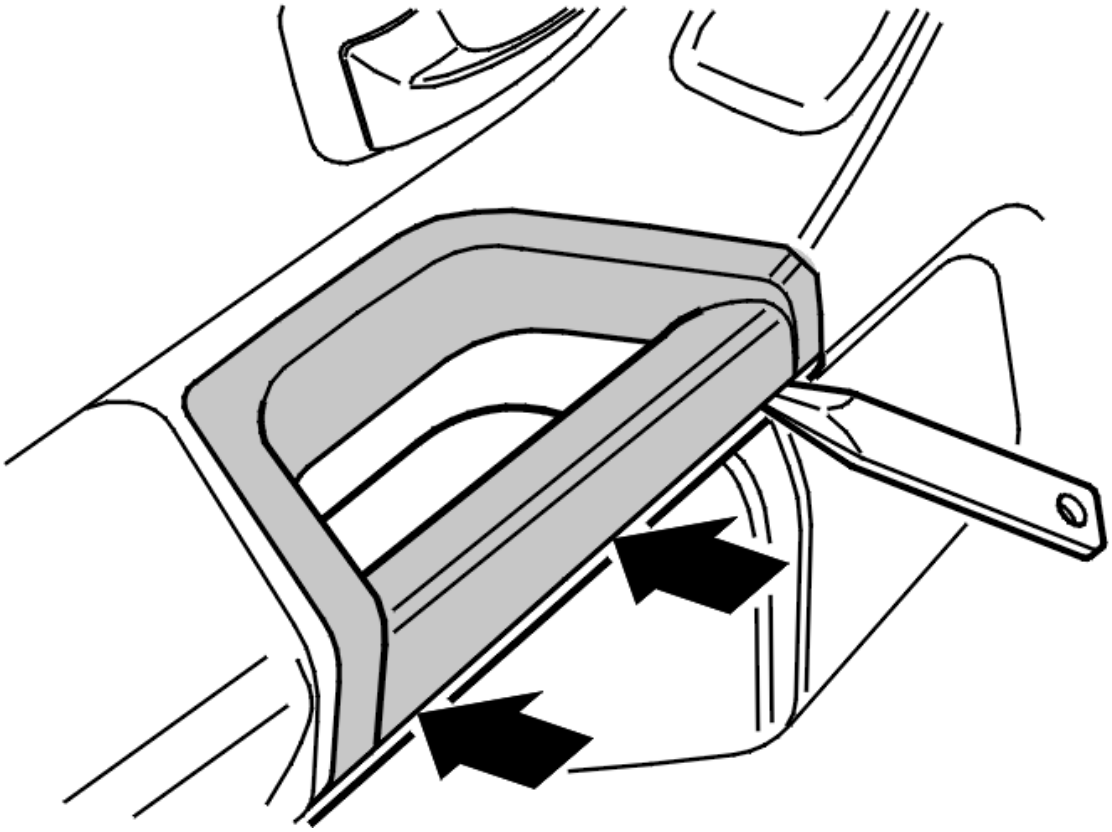

Fig. 20: Removing Front Door Handle Using Weatherstrip Tool

Courtesy of VOLVO CARS CORPORATION

Remove the handle using a weatherstrip tool. Start from one side.

Remove:

- the cover at the base of the door mirror
- the 2 screws.

Pull off the panel.

Remove:

- the connectors
- the cable. See **CABLE, INTERNAL HANDLE, FRONT SIDE DOOR, REPLACING** .

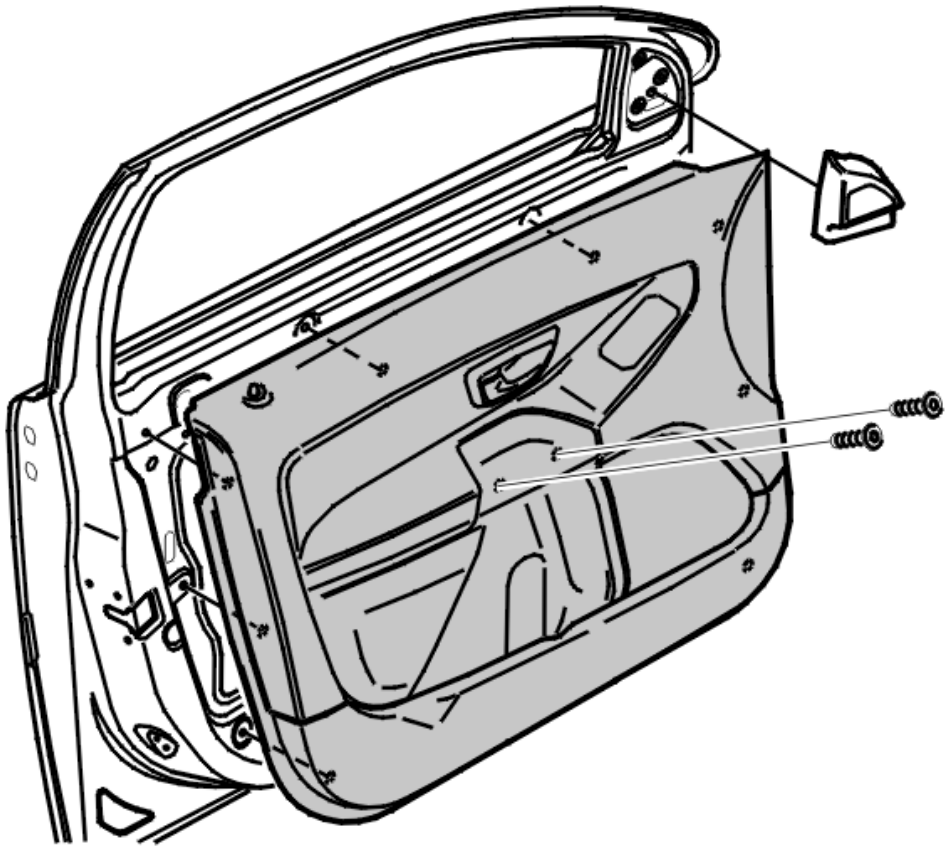

Fig. 21: Identifying Front Door Panel And Screws
Courtesy of VOLVO CARS CORPORATION

TRANSFERRING COMPONENTS FOR EXTRA ARMREST (IF INSTALLED)

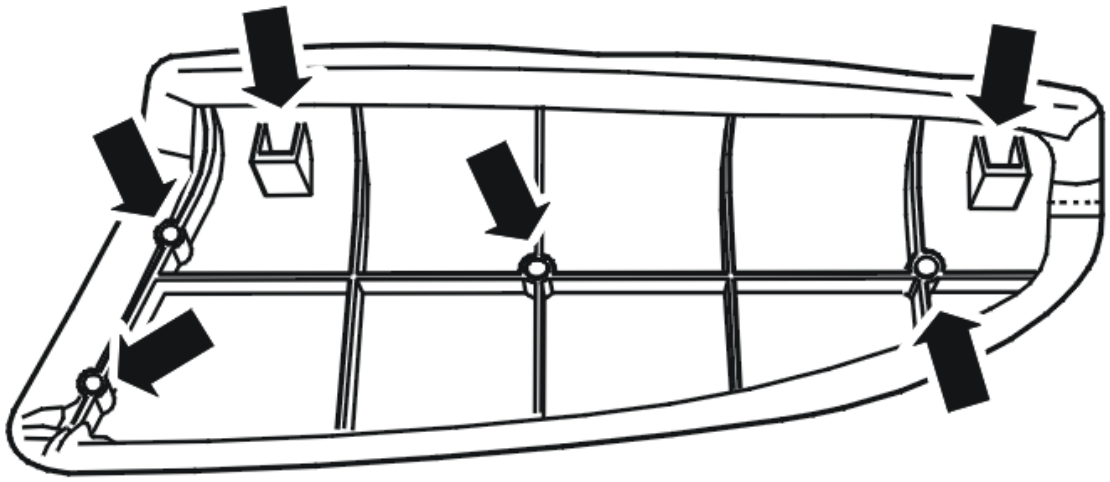

Fig. 22: Identifying Locations For Applying Marking Paint
Courtesy of VOLVO CARS CORPORATION

Apply marking paint to the spots indicated in the illustration.

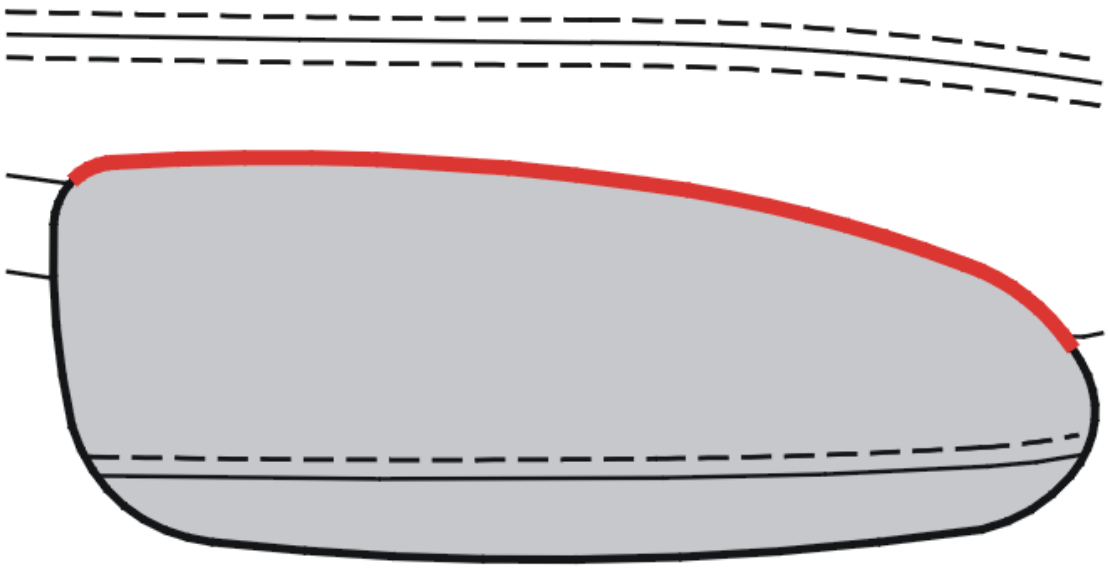

Fig. 23: Identifying Armrest
Courtesy of VOLVO CARS CORPORATION

Guide the armrest into place and follow the door panel radius (see marking on illustration) without pressing the armrest against the door panel.

Once the armrest is in the correct position, press the armrest against the door panel to mark the holes.

Remove the armrest from the door panel.

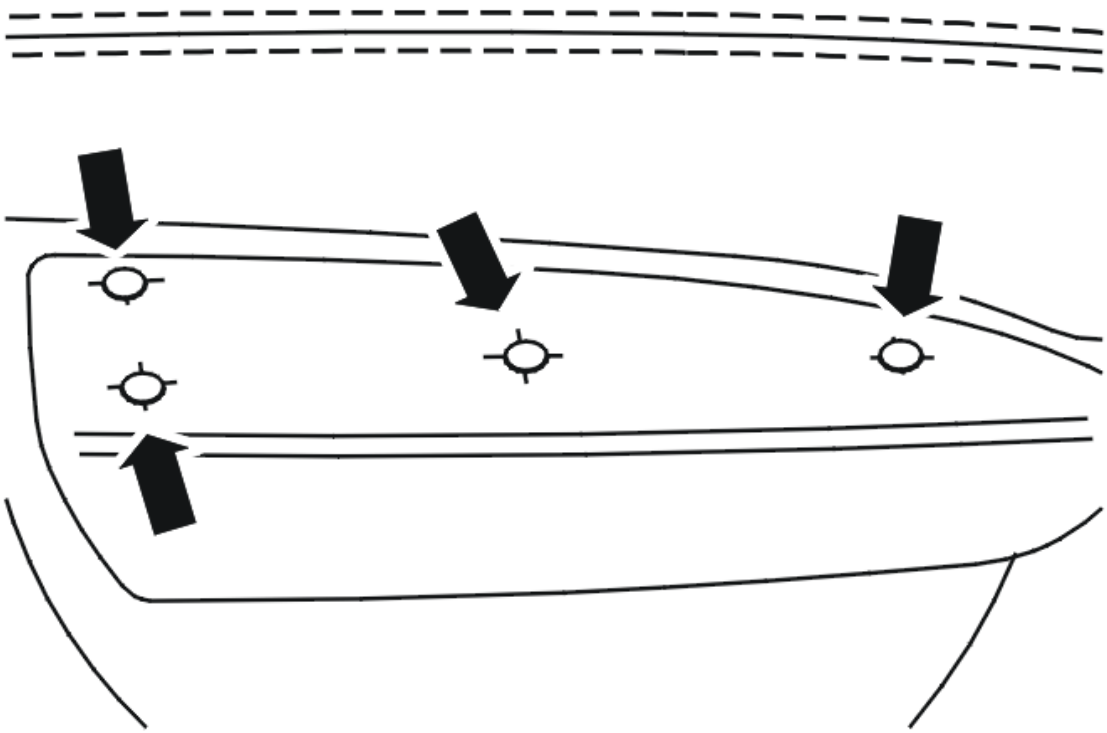

Fig. 24: Identifying Marked Spots For Drilling
Courtesy of VOLVO CARS CORPORATION

Drill the marked spots using a 10 mm drill bit.

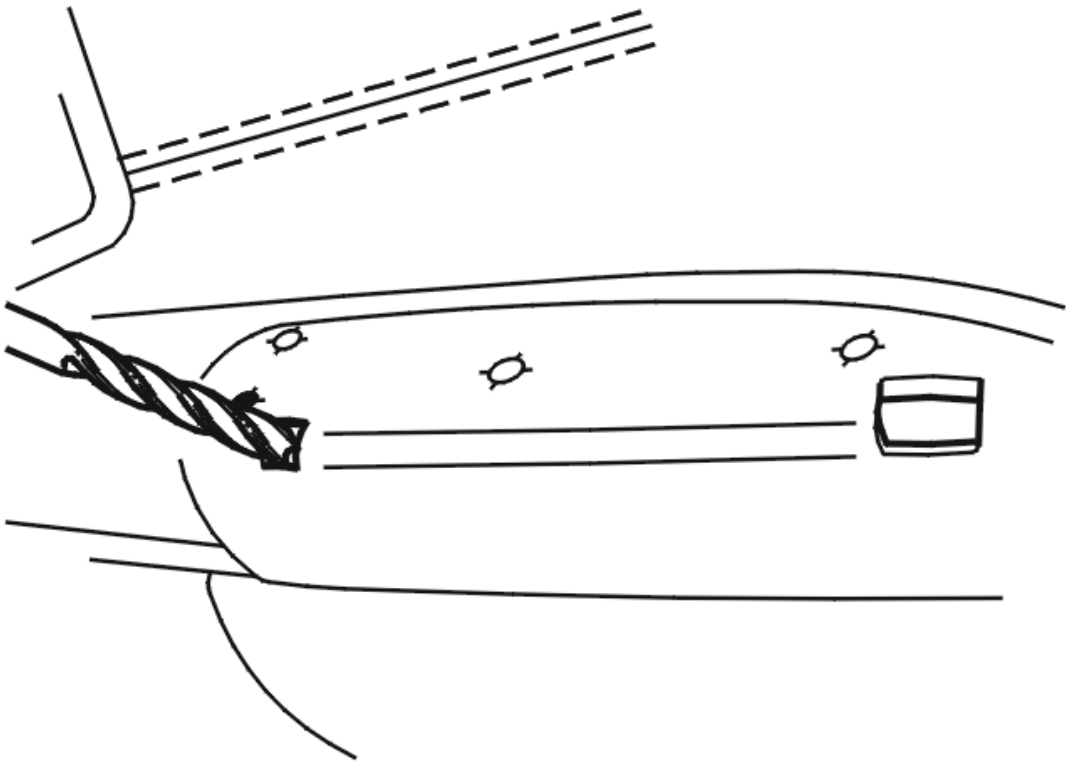

Fig. 25: Drilling Holes For Armrest Guides
Courtesy of VOLVO CARS CORPORATION

Drill the holes for the armrest guides. Use a 10 mm drill bit and drill at a 45 degree angle from the door panel.

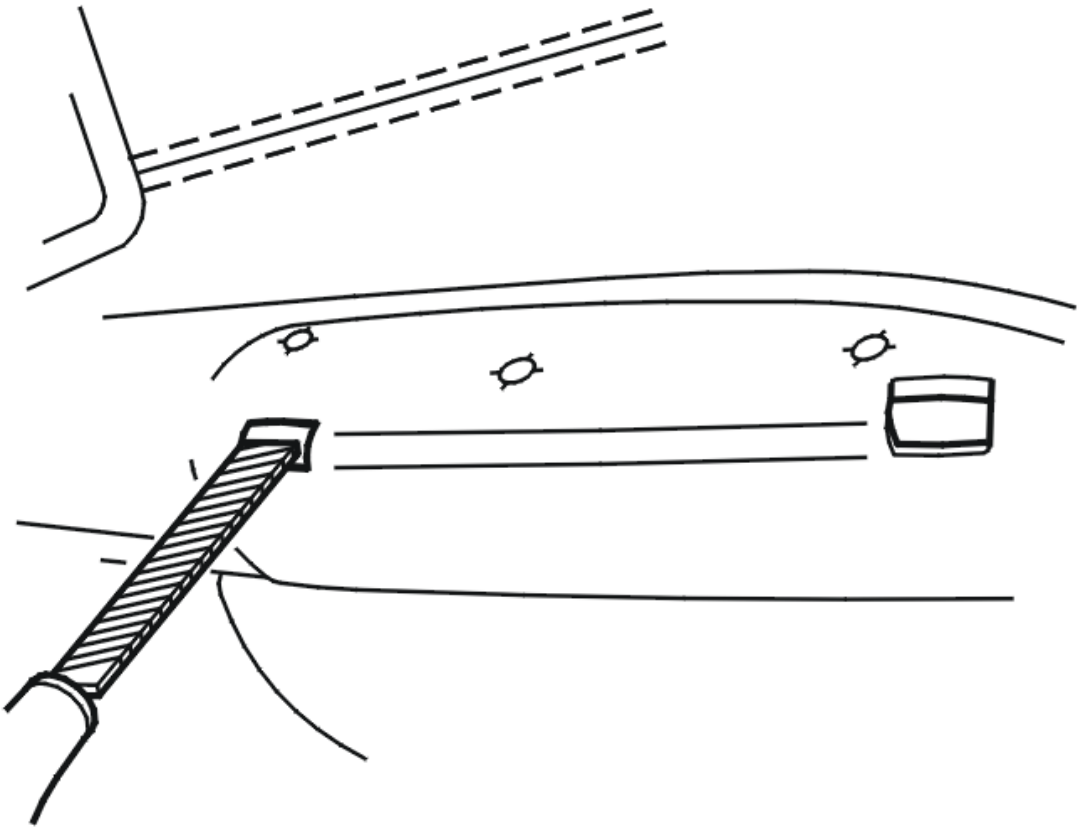

Fig. 26: Finishing Holes With File
Courtesy of VOLVO CARS CORPORATION

Then continue working the holes with a file. Hole width should be 20 mm.

Test mount the armrest on the door panel. If necessary, use the file to make adjustments so that the armrest fits well against the door panel.

Install the armrest on the door panel with 4 flat washers (P/N 960 138) and 4 screws (P/N 979 187).

INSTALLING THE PANEL ON THE FRONT DOOR

NOTE: For tightening torques, see TIGHTENING TORQUE .

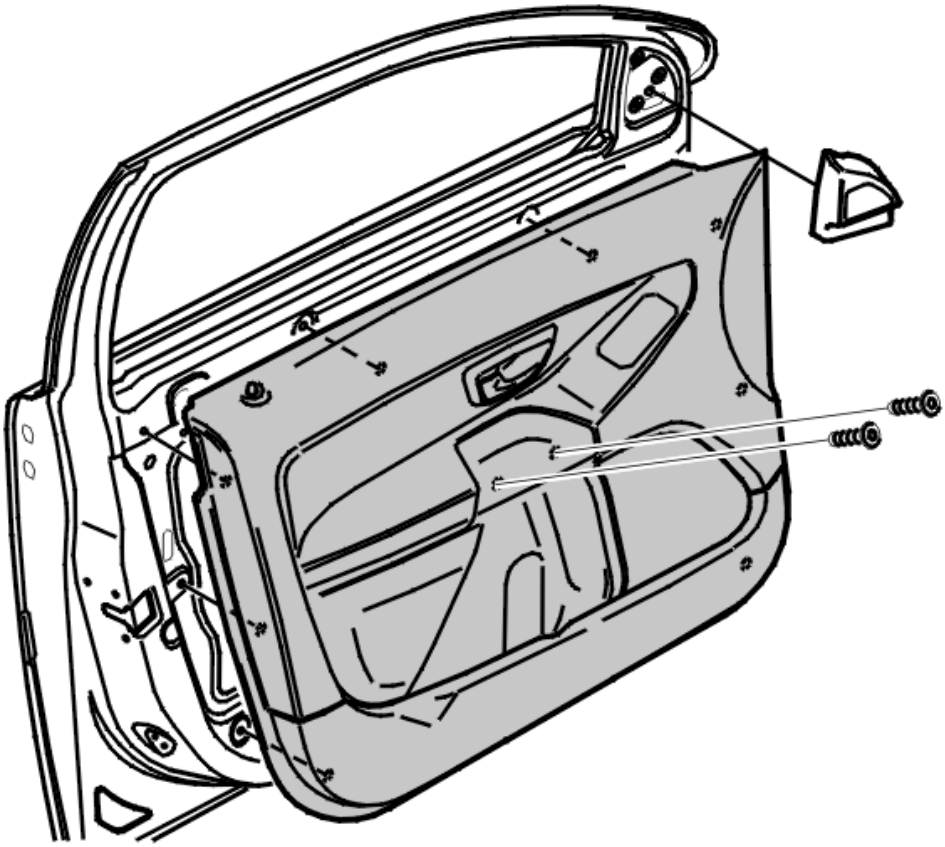

Fig. 27: Identifying Front Door Panel And Screws
Courtesy of VOLVO CARS CORPORATION

Install:

- the cable. See **CABLE, INTERNAL HANDLE, FRONT SIDE DOOR, REPLACING**
- the connectors.

Press the panel into place.

NOTE: **Align the panel so that the clips are in the correct position. The panel clips can be separated.**

Install:

- the 2 M6 screws. Tighten
- the cover at the base of the door mirror
- the handle.

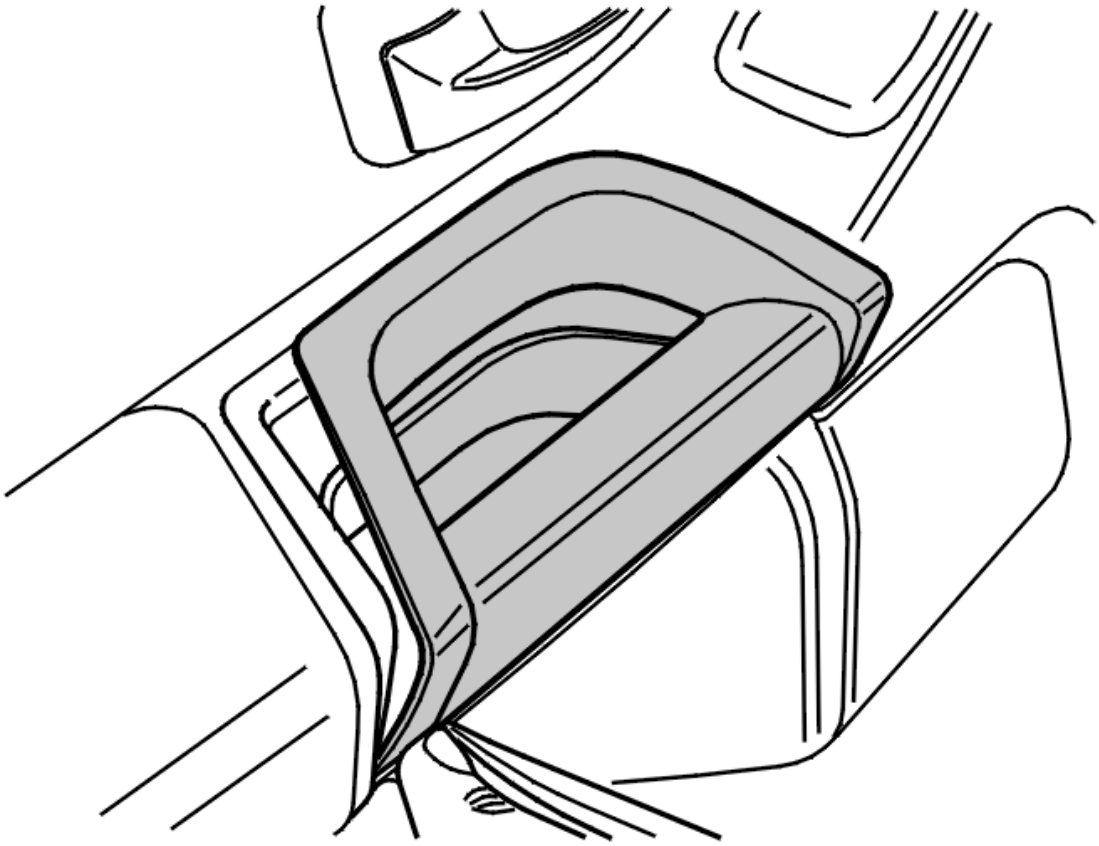

Fig. 28: Pressing Front Edge Of Handle Into Position
Courtesy of VOLVO CARS CORPORATION

Press the front edge of the handle into position.

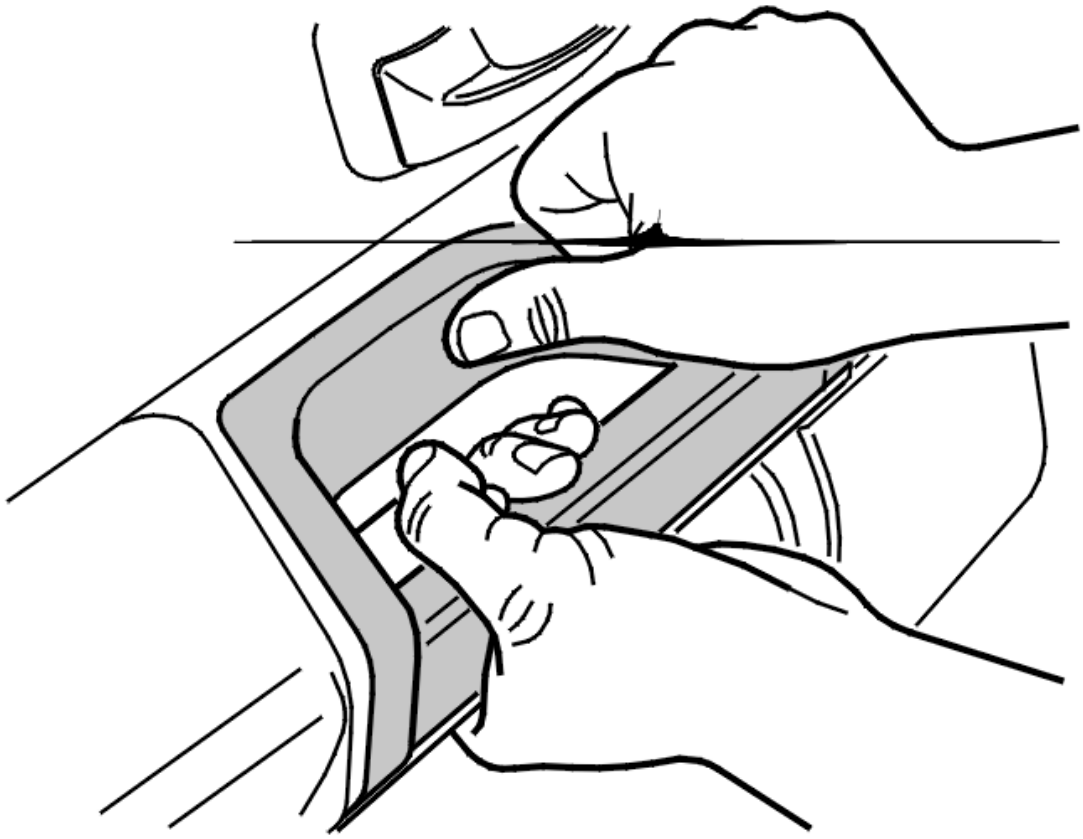

Fig. 29: Holding Handle In Position And Pressing In Both Sides
Courtesy of VOLVO CARS CORPORATION

Hold the handle in position and press in both sides.

PANEL REAR SIDE DOOR, REPLACING

REPLACING

As the illustrations in this service information are used for different model years and / or models, some variation may occur. However, the essential information in the illustrations is always correct.

PREPARATIONS

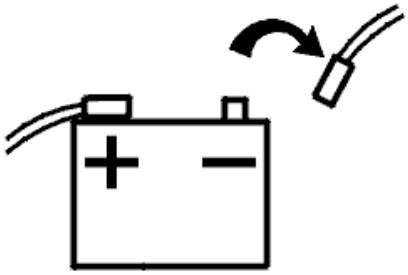

Fig. 30: Disconnecting Battery Lead
Courtesy of VOLVO CARS CORPORATION

Remove the battery lead. See **BATTERY, DISCONNECTING** .

REMOVING THE REAR SIDE DOOR PANEL

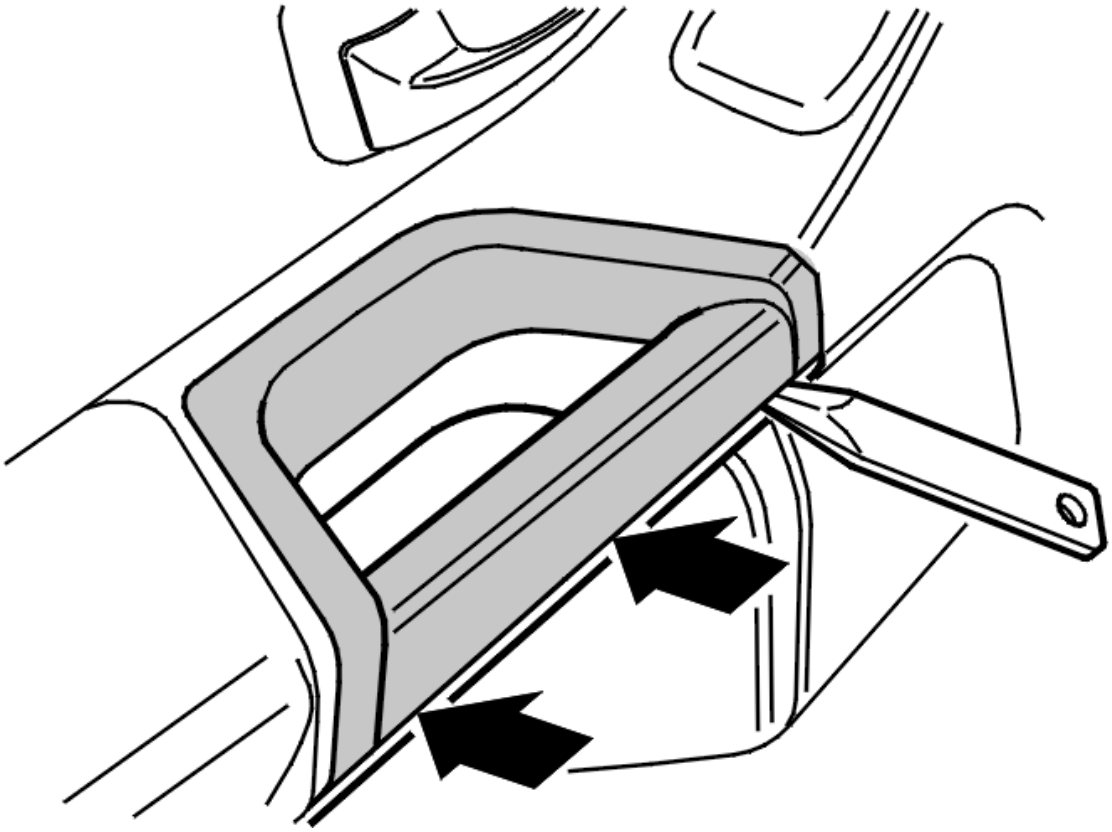

Fig. 31: Removing Front Door Handle Using Weatherstrip Tool
Courtesy of VOLVO CARS CORPORATION

Remove the handle using a weatherstrip tool. Start from one side.

Remove the 2 screws

Pull off the panel.

Remove:

- the connectors
- the cable. See **CABLE, INTERNAL HANDLE, REAR SIDE DOOR, REPLACING** .

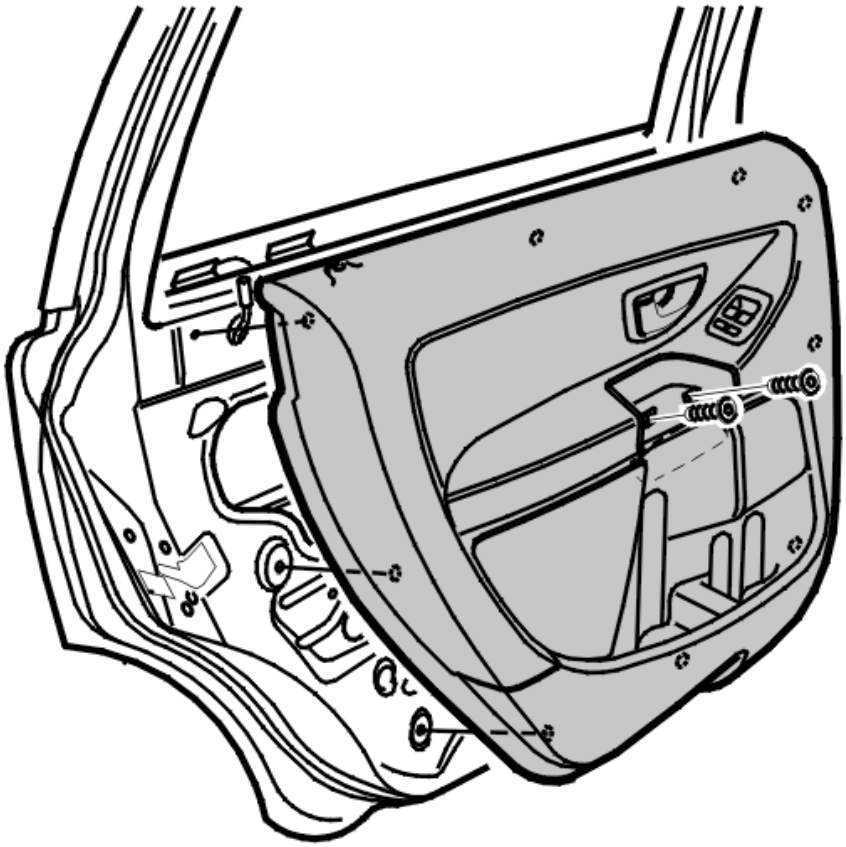

Fig. 32: Identifying Rear Side Door Panel And Screws
Courtesy of VOLVO CARS CORPORATION

INSTALLING THE REAR SIDE DOOR PANEL

NOTE: **For tightening torques, see TIGHTENING TORQUE .**

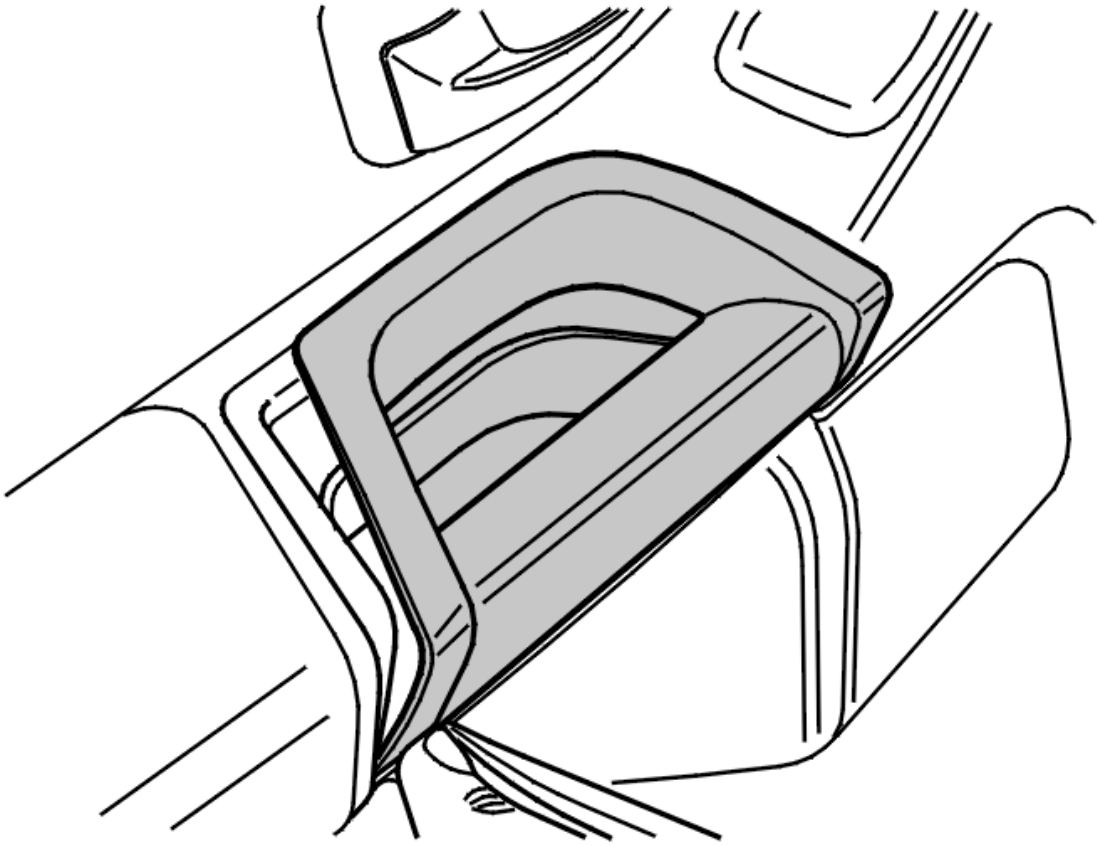

Fig. 33: Pressing Front Edge Of Handle Into Position
Courtesy of VOLVO CARS CORPORATION

Install:

- the cable. See **CABLE, INTERNAL HANDLE, REAR SIDE DOOR, REPLACING**
- the connectors.

Press the panel into place.

NOTE: Align the panel so that the clips are in the correct position. The panel clips can be separated.

Install:

- the 2 M6 screws. Tighten
- the handle.

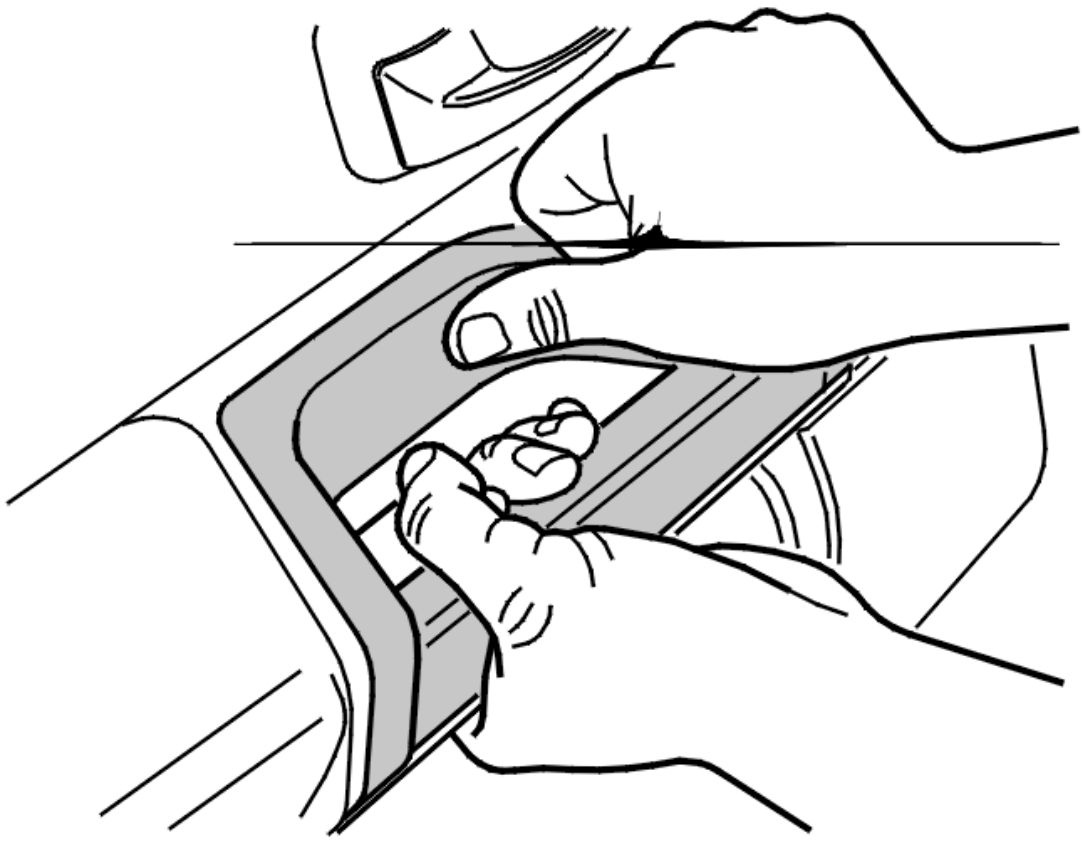

Fig. 34: Holding Handle In Position And Pressing In Both Sides
Courtesy of VOLVO CARS CORPORATION

Hold the handle in position and press in both sides.

PANEL, TAILGATE, REPLACING

As the illustrations in this service information are used for different model years and / or models, some variation may occur. However, the essential information in the illustrations is always correct.

Included in this method are methods for:

- the upper tailgate panel. See **PANEL TAILGATE UPPER, REPLACING**
- the lower tailgate panel. See **PANEL TAILGATE LOWER, REPLACING**.

PANEL TAILGATE UPPER, REPLACING

REMOVING THE UPPER TAILGATE PANEL

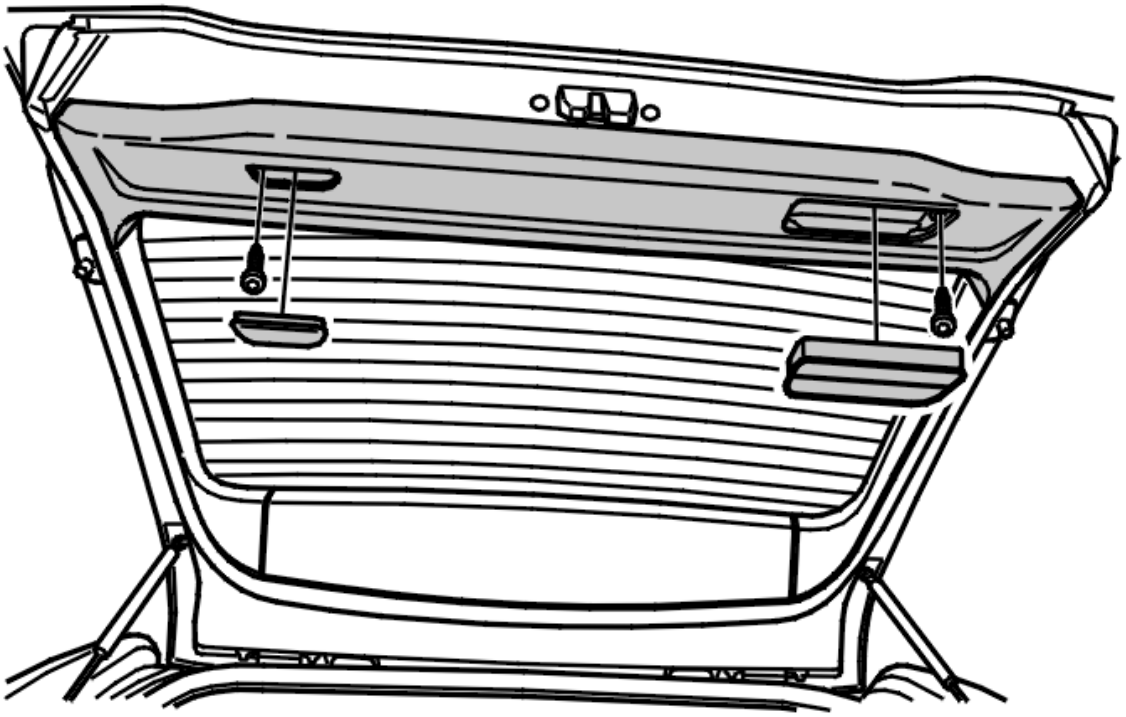

Fig. 35: Removing The Upper Tailgate Panel
Courtesy of VOLVO CARS CORPORATION

Remove:

- the frame around the opening handle
- the lamp
- the 2 screws.

Pull off the panel.

INSTALLING THE UPPER TAILGATE PANEL

NOTE: For tightening torques, see TIGHTENING TORQUE .

Pull the cable harness through the panel.

Align and press the panel into place.

Install:

- the 2 M5 screws. Tighten
- the lamp

- the frame around the opening handle.

REMOVING THE WINDOW FRAME PANEL FROM THE UPPER TAILGATE

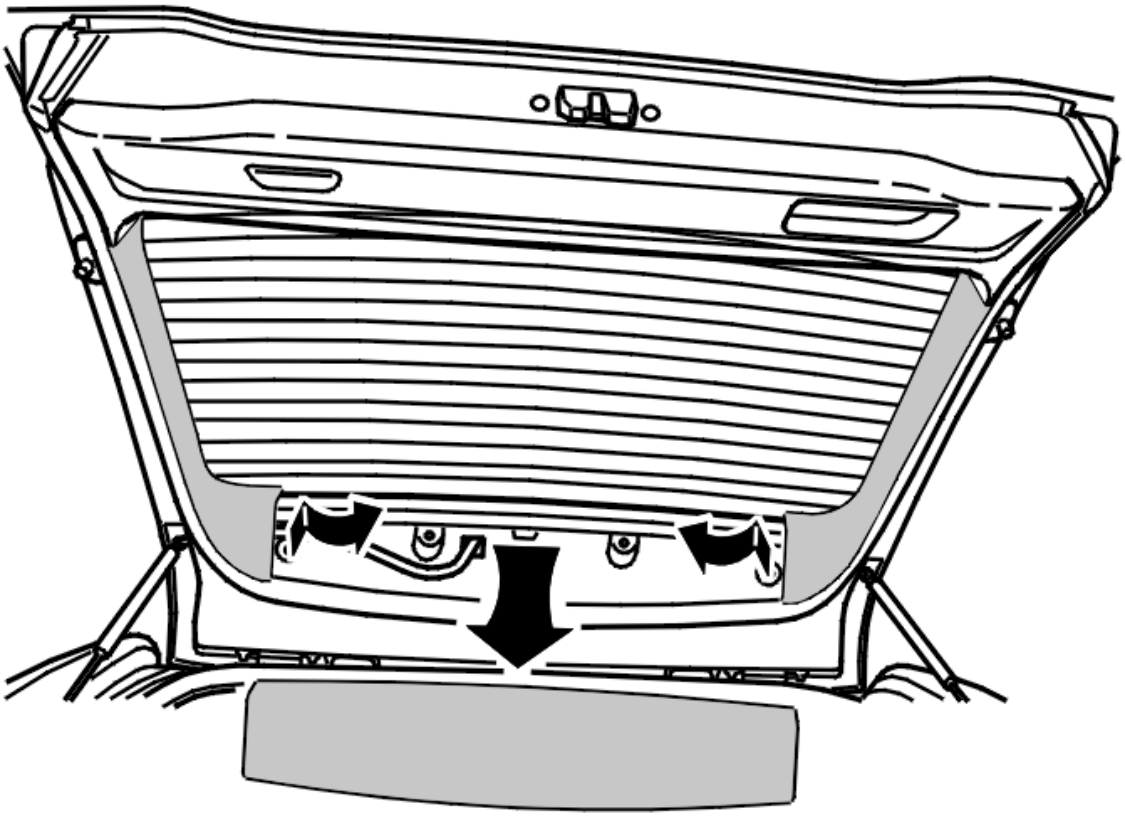

Fig. 36: Removing The Window Frame Panel From The Upper Tailgate
Courtesy of VOLVO CARS CORPORATION

Remove:

- the center panel
- the 2 side panels.

INSTALLING THE WINDOW FRAME PANEL IN THE UPPER TAILGATE

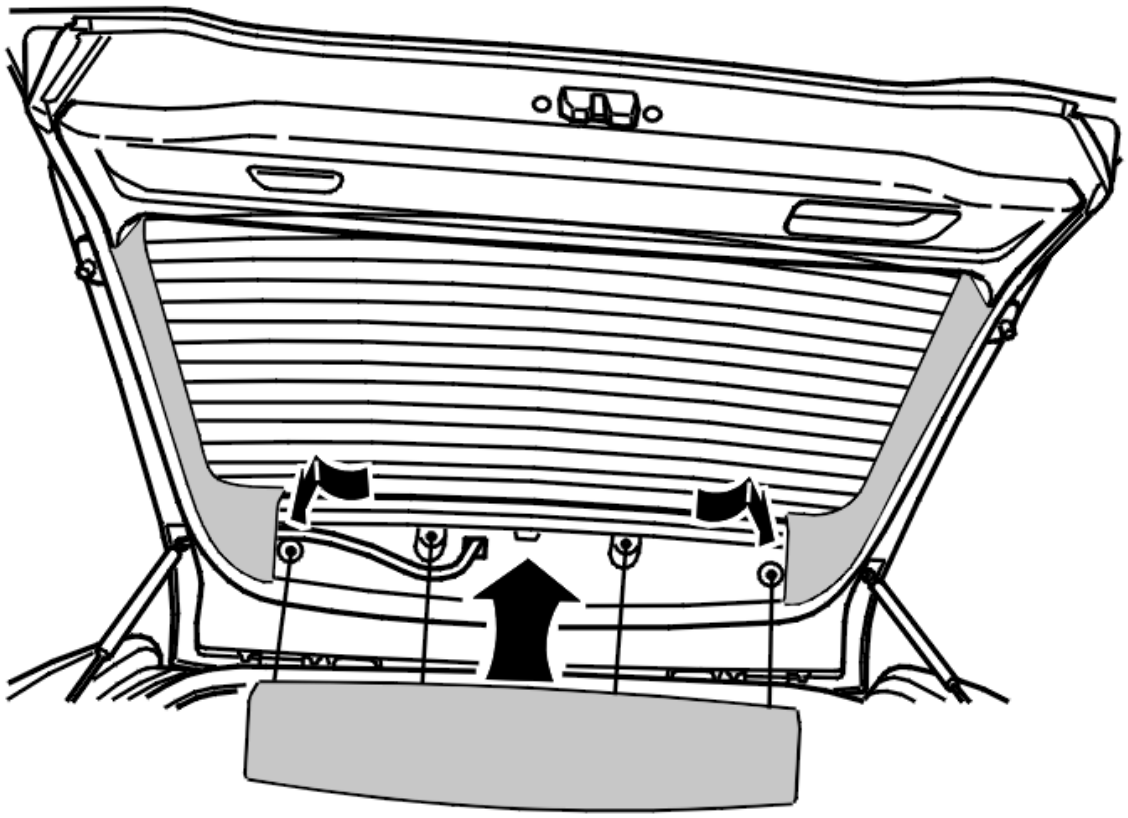

Fig. 37: Installing Window Frame Panel In The Upper Tailgate
Courtesy of VOLVO CARS CORPORATION

Install:

- the 2 side panels
- the center panel.

PANEL TAILGATE LOWER, REPLACING

REMOVING THE LOWER TAILGATE PANEL

Lift up the spring-loaded panel.

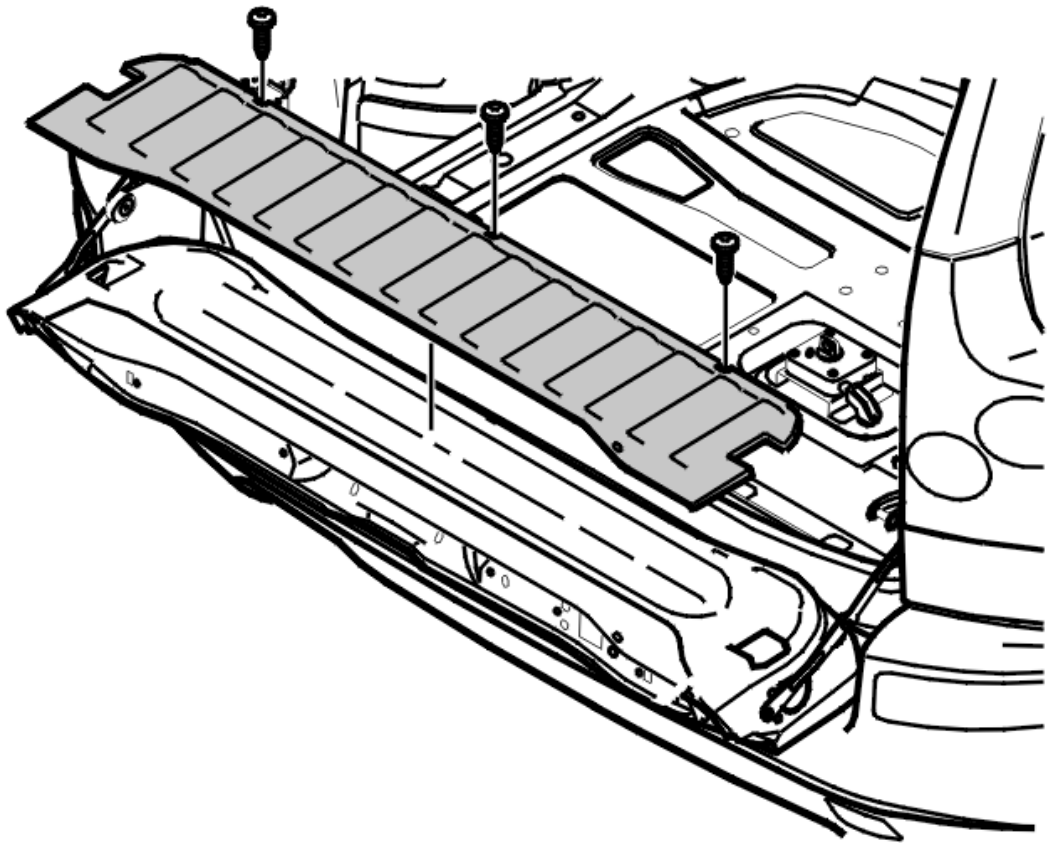

Fig. 38: Removing Tailgate Panel
Courtesy of VOLVO CARS CORPORATION

Remove:

- the 3 screws
- the panel.

INSTALLING THE LOWER TAILGATE PANEL

Install:

- the panel
- the 3 screws. Tighten.

REMOVING THE UPPER PANEL FROM THE LOWER TAILGATE

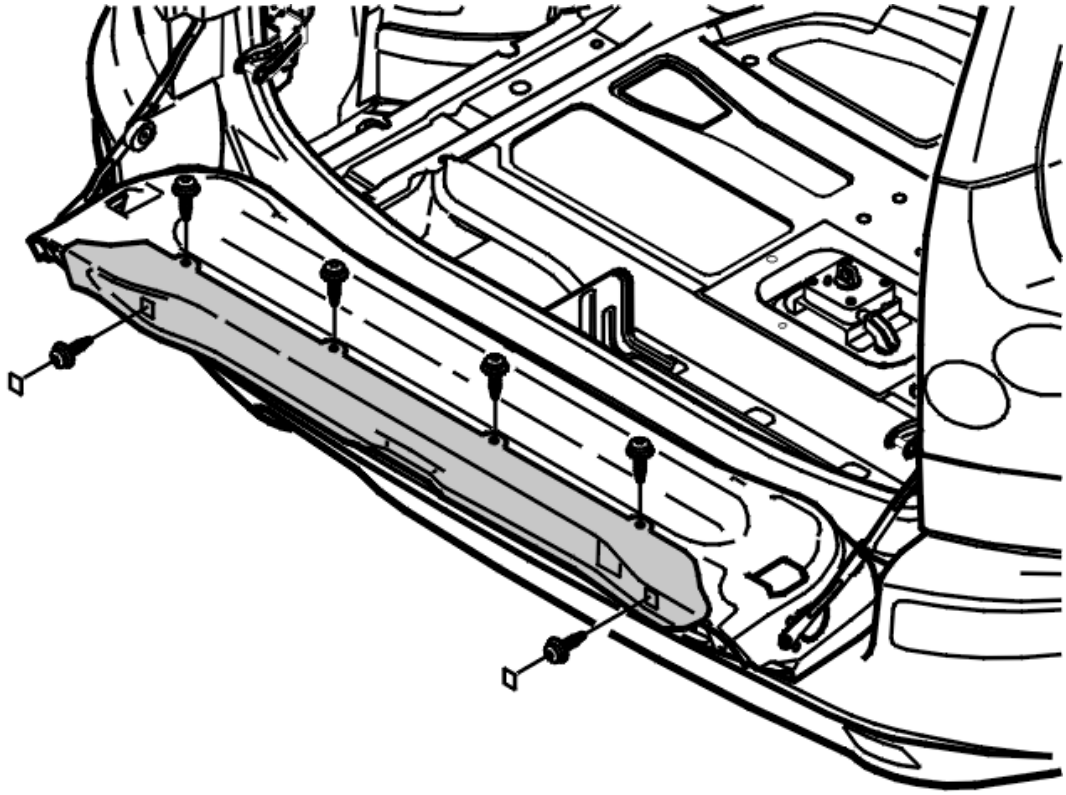

Fig. 39: Removing The Upper Panel From The Lower Tailgate
Courtesy of VOLVO CARS CORPORATION

Remove:

- the panel. See **REMOVING THE LOWER TAILGATE PANEL**
- the 2 outer covers
- the 6 screws
- the panel.

INSTALLING THE UPPER PANEL IN THE LOWER TAILGATE

Install:

- the panel
- the 6 screws. Tighten
- the 2 outer covers
- the panel. See **INSTALLING THE LOWER TAILGATE PANEL**.

FRONT SEAT, DRIVER'S SEAT (2003)

CONTROL MODULE HEATER PAD, REPLACING

see **CONTROL MODULE HEATER PAD, REPLACING**

ELECTRIC MOTOR BACKREST CUSHION, REPLACING

see **ELECTRIC MOTOR BACKREST CUSHION, REPLACING**

ELECTRIC MOTOR CUSHION, REPLACING

see **ELECTRIC MOTOR CUSHION, REPLACING**

HEATER PAD BACKREST AND CUSHION, REPLACING

see **HEATER PAD BACKREST AND CUSHION, REPLACING**

LUMBAR SUPPORT BACKREST CUSHION, REPLACING

see **LUMBAR SUPPORT BACKREST CUSHION, REPLACING**

POWER SEAT MODULE (PSM), REPLACING

see **POWER SEAT MODULE (PSM), REPLACING**

SEAT RAILS, REPLACING

see **SEAT RAILS, REPLACING**

SIDE PANEL, REPLACING

see **SIDE PANEL, REPLACING**

UPHOLSTERY BACK REST, REPLACING

see **UPHOLSTERY BACK REST, REPLACING**

UPHOLSTERY SEAT CUSHION, REPLACING

REPLACING

As the illustrations in this service information are used for different model years and / or models, some variation may occur. However, the essential information in the illustrations is always correct.

REMOVING THE SEAT CUSHION UPHOLSTERY

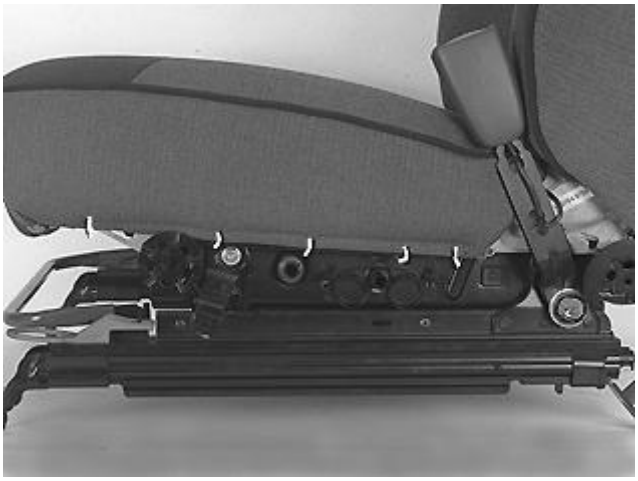

Fig. 40: 5 Half Moon Clips From Each Side Of Underside Cushion
Courtesy of VOLVO CARS CORPORATION

Remove:

- the front seat. See **REMOVING THE FRONT SEAT**
- five half moon clips each side of the lower edge of the cushion.

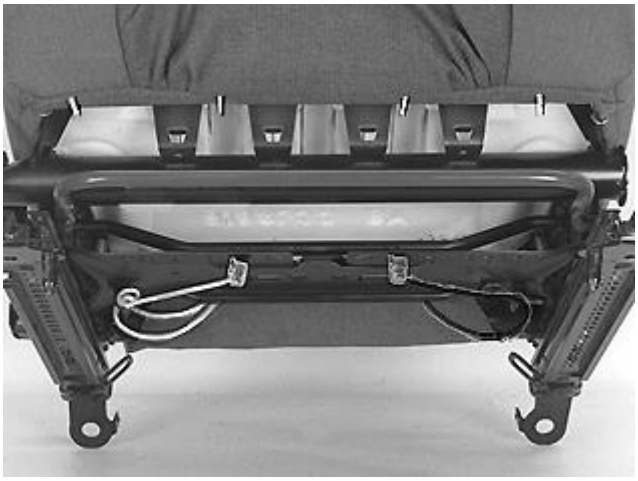

Fig. 41: 4 Half Moon Clips From Underside Cushion
Courtesy of VOLVO CARS CORPORATION

- four half moon clips from the front edge of the seat cushion.

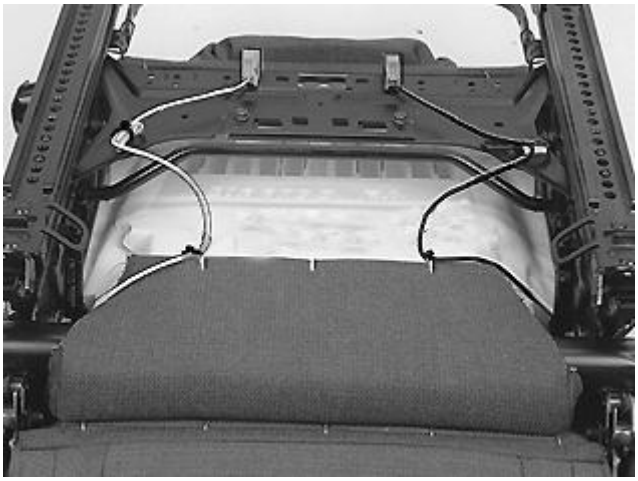

Fig. 42: 3 Half Moon Clips From Rear Edge Of Underside
Courtesy of VOLVO CARS CORPORATION

- the half moon clips from the underneath of the rear edge.

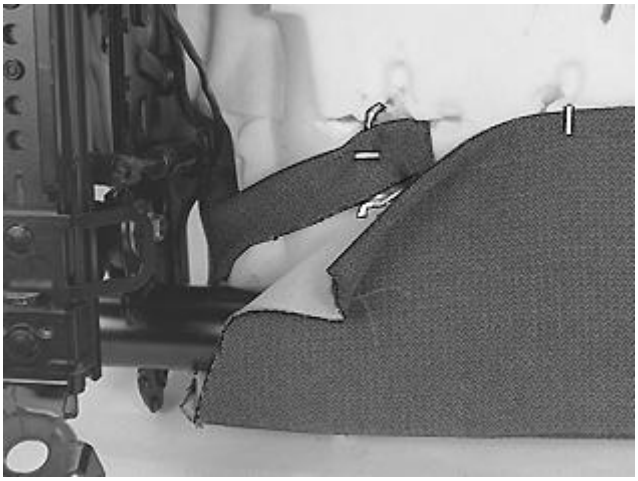

Fig. 43: Identifying Half Moon Clips On Sides And At Rib
Courtesy of VOLVO CARS CORPORATION

- one half moon clip from each side. The bottom of the half moon clip is in the spring.

Fig. 44: Folding Up Upholstery
Courtesy of VOLVO CARS CORPORATION

Fold up the upholstery.

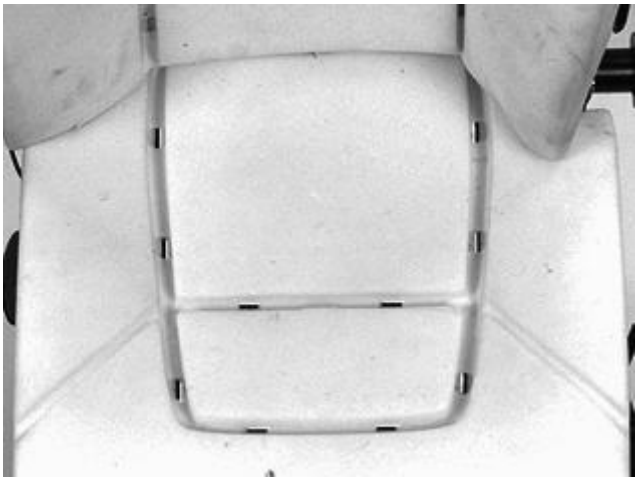

Fig. 45: Identifying Half Moon Clips From Each Front-Rear Channel
Courtesy of VOLVO CARS CORPORATION

Remove:

- three half moon clips from each front-rear channel
- two half moon clips per front-rear channel.

Replace the upholstery.

INSTALLING SEAT CUSHION UPHOLSTERY

NOTE: Accurately measure and mount the upholstery before securing it.

Install:

- two half moon clips per front-rear channel
- three half moon clips on each front-rear channel.

Pull the upholstery down.

Install:

- one half moon clip underneath each side
- the half moon clips on the underneath of the rear edge
- four half moon clips in the front edge of the seat cushion
- five half moon clips underneath each side of the cushion
- the front seat. See **INSTALLING THE FRONT SEAT**.

WHIPLASH UNIT, REPLACING

see **WHIPLASH UNIT, REPLACING**

FRONT SEAT, DRIVER'S SEAT (2004)

CONTROL MODULE HEATER PAD, REPLACING

REPLACING

As the illustrations in this service information are used for different model years and / or models, some variation may occur. However, the essential information in the illustrations is always correct.

REMOVING THE HEATER PAD CONTROL MODULE

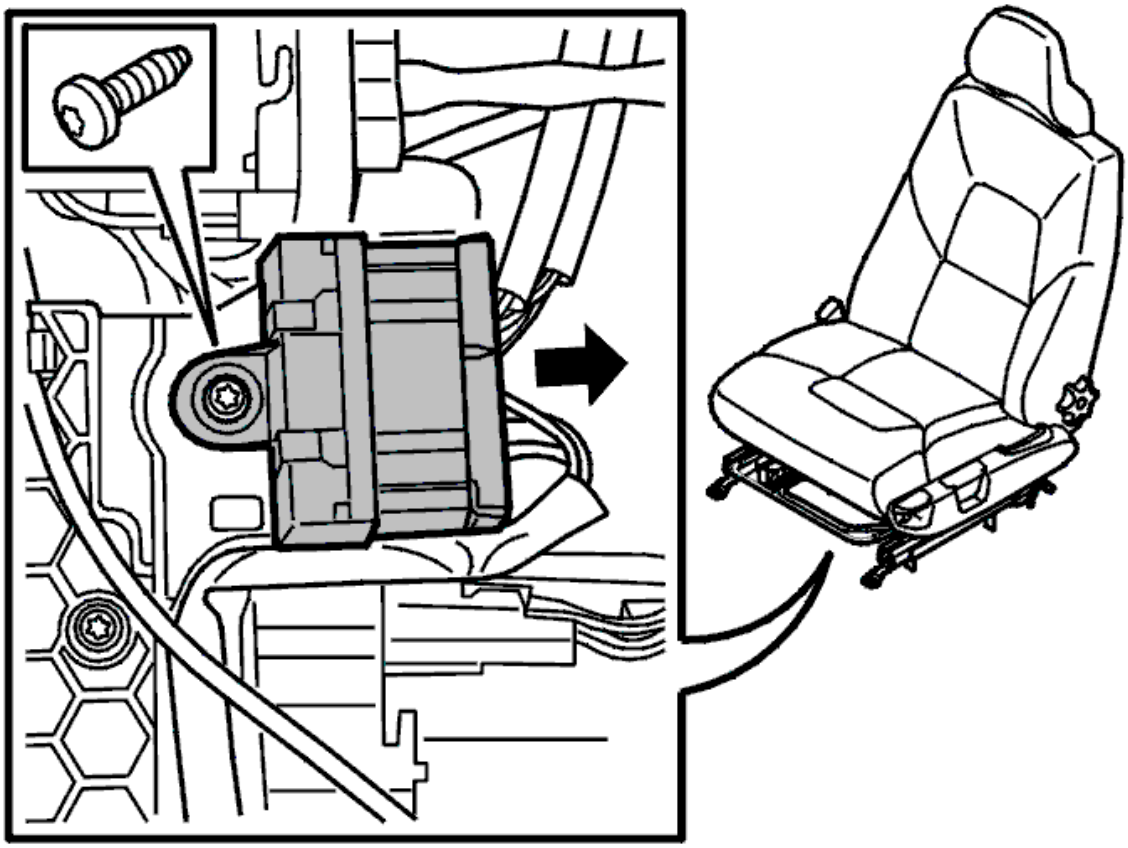

Fig. 46: Heater Pad Control Module
Courtesy of VOLVO CARS CORPORATION

Remove:

- the seat. See **REMOVING THE FRONT SEAT**
- 1 screw
- the connector
- the control module.

INSTALLING THE HEATER PAD CONTROL MODULE

Install:

- the control module
- the connector
- 1 screw. Tighten
- the seat. See **INSTALLING THE FRONT SEAT**.

ELECTRIC MOTOR BACKREST CUSHION, REPLACING

Special tools:

see **1158962**

REPLACING

As the illustrations in this service information are used for different model years and / or models, some variation may occur. However, the essential information in the illustrations is always correct.

PREPARATIONS

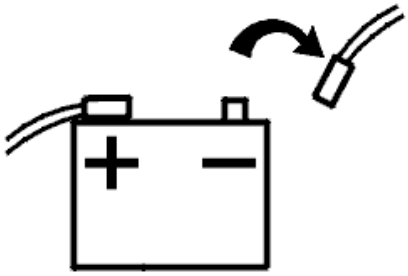

Fig. 47: Disconnecting Battery Lead
Courtesy of VOLVO CARS CORPORATION

Remove the battery lead. See **BATTERY, DISCONNECTING** .

REMOVING THE ELECTRIC MOTOR FOR THE BACKREST CUSHION

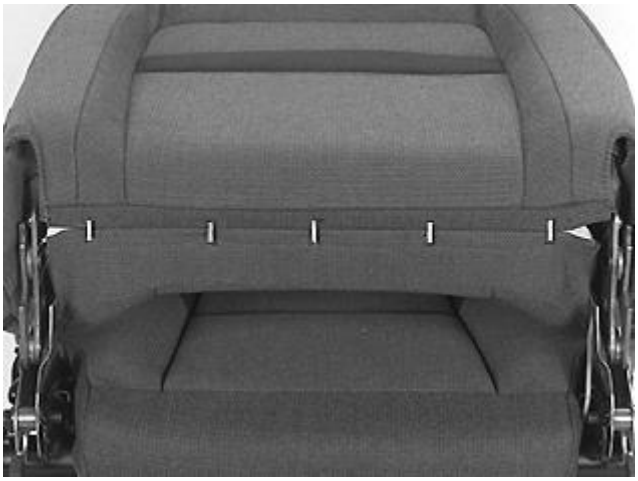

Fig. 48: Five Half Moon Clips At Bottom Edge Of Backrest
Courtesy of VOLVO CARS CORPORATION

Remove:

- the front seat. See **REMOVING THE FRONT SEAT**
- the 5 half moon clips.

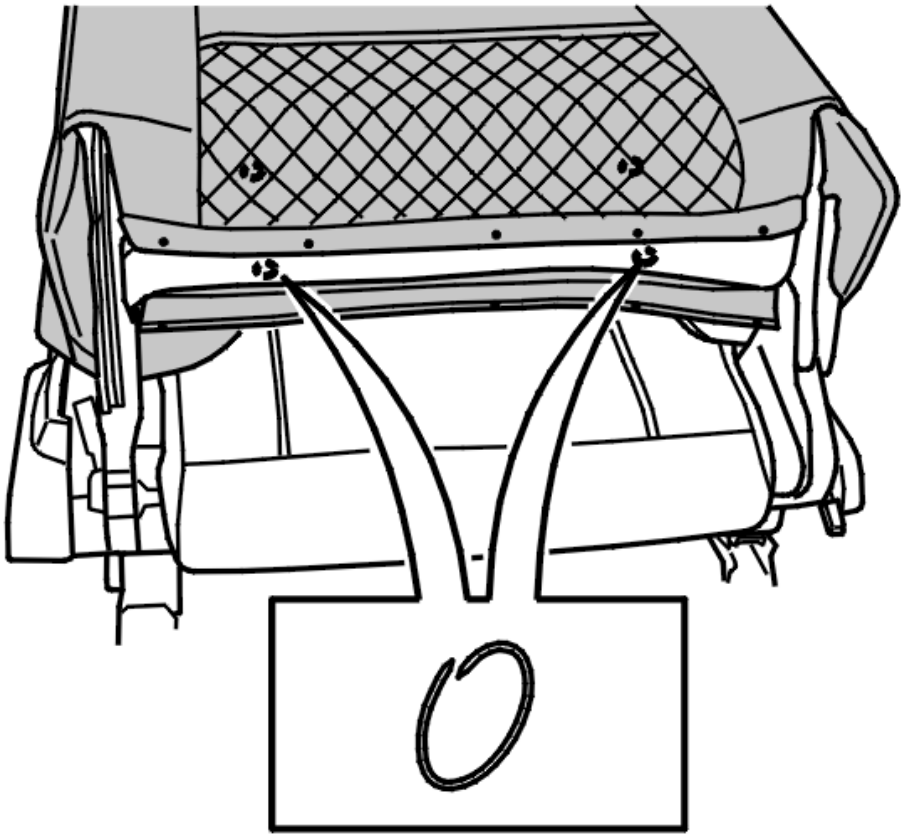

Fig. 49: Identifying Two Half Moon Clips On Each Front-Rear Channel
Courtesy of VOLVO CARS CORPORATION

- the 4 half moon clips.

Remove the upholstery up to the first lateral channel. There are two half moon clips on each front-rear channel.

Pull up the upholstery on the backrest cushion.

Be careful with the plastic frame.

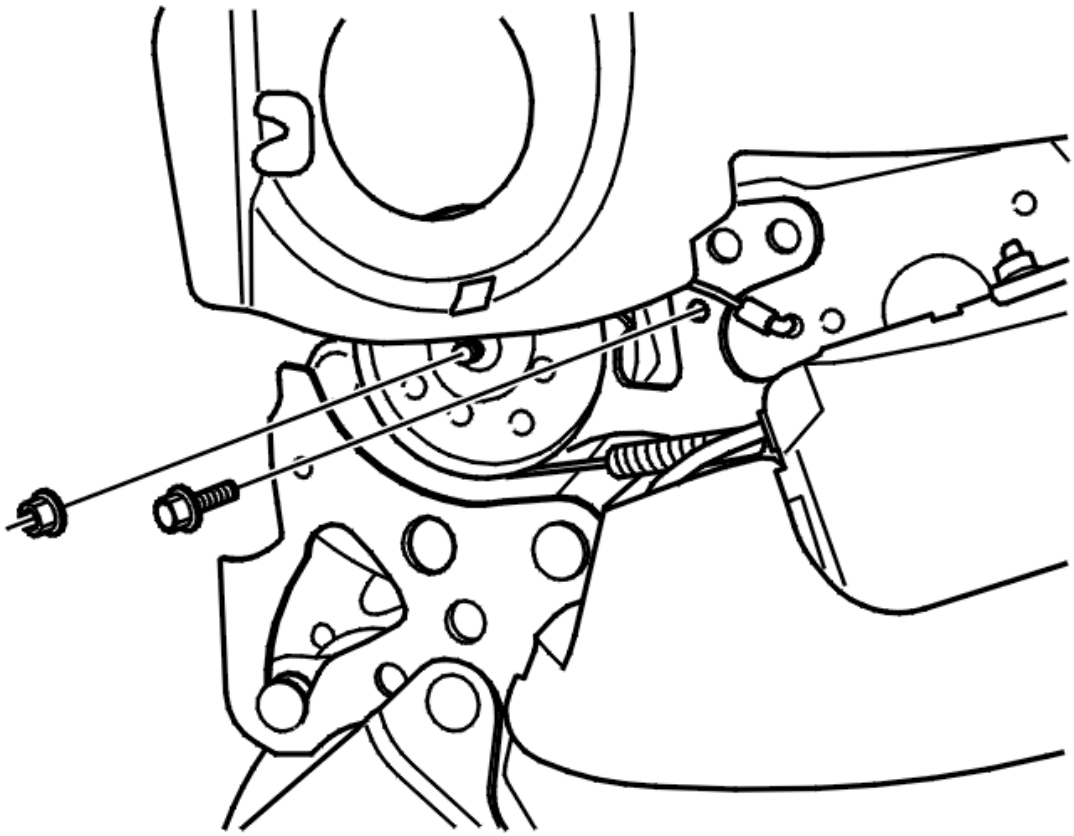

Fig. 50: Identifying Screw For Shaft And Nut For Electric Motor
Courtesy of VOLVO CARS CORPORATION

Remove:

- the 1 screw for the shaft
- the 1 nut for the electric motor.

Pull out the shaft so that the electric motor is released.

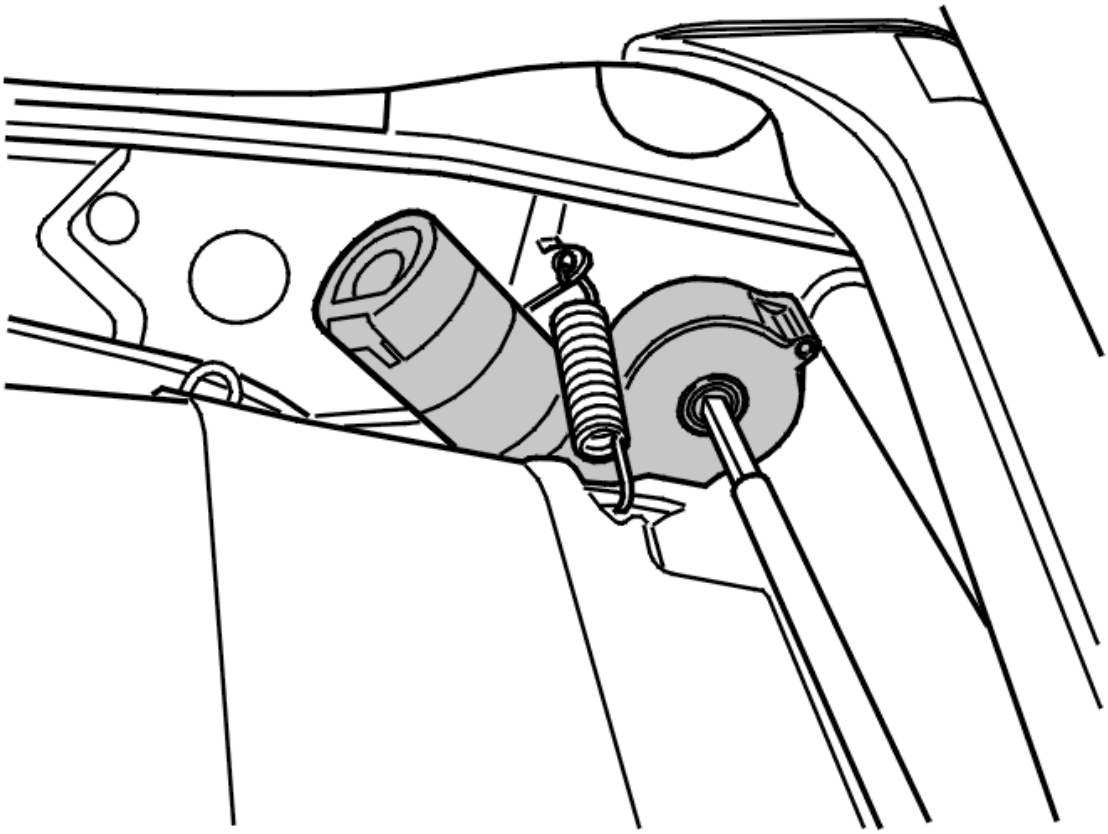

Fig. 51: Identifying Spring Between Cushion And Electric Motor
Courtesy of VOLVO CARS CORPORATION

Remove:

- the spring between the cushion and the electric motor
- the 3 tie straps
- the connector under the seat.

HINT: Note the routing of the wiring to make it easier to reinstall.

INSTALL THE ELECTRIC MOTOR FOR THE BACKREST CUSHION

NOTE: For tightening torques, see TIGHTENING TORQUE .

Install:

- the electric motor. Press the shaft through the motor to secure it
- the 1 M6 screw for the electric motor. Tighten
- the 1 M6 screw for the shaft. Tighten
- the spring.

Route the wiring.

Connect the connector.

Pull down upholstery.

Install:

- the 4 half moon clips. Use special tool see **1158962**
- the 3 tie straps
- the 5 half moon clips. Use special tool see **1158962**
- the front seat. See **INSTALLING THE FRONT SEAT**.

ELECTRIC MOTOR CUSHION, REPLACING

REPLACING

As the illustrations in this service information are used for different model years and / or models, some variation may occur. However, the essential information in the illustrations is always correct.

PREPARATIONS

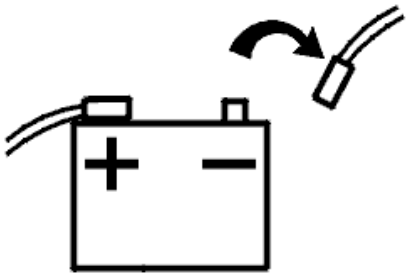

Fig. 52: Disconnecting Battery Lead
Courtesy of VOLVO CARS CORPORATION

Remove:

- the battery lead. See **BATTERY, DISCONNECTING**
- the front seat. See **REMOVING THE FRONT SEAT**.

HINT: Use the seat tilt mechanism and fold the backrest all the way forward. Then turn the seat upside down to make it easier to access the electric motor.

Included in this method are methods for:

- the rear electric motor. See **REAR ELECTRIC MOTOR CUSHION, REPLACING**
- the front electric motor. See **FRONT ELECTRIC MOTOR CUSHION, REPLACING**.

REAR ELECTRIC MOTOR CUSHION, REPLACING

REMOVING THE REAR ELECTRIC MOTOR FOR THE SEAT CUSHION

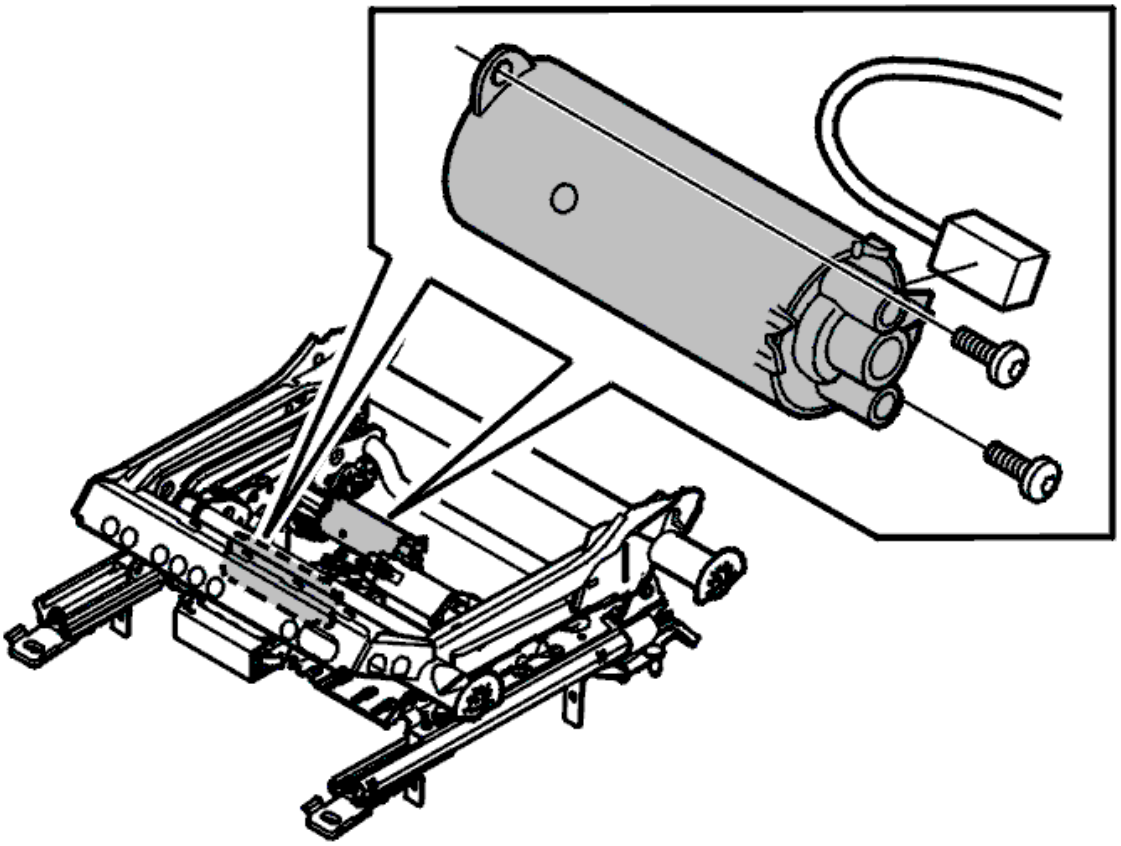

Fig. 53: Front Height Adjustment Motor
Courtesy of VOLVO CARS CORPORATION

Remove:

- the connector
- the 2 screws
- the electric motor. Carefully pull it straight out.

INSTALLING THE REAR ELECTRIC MOTOR FOR THE SEAT CUSHION

NOTE: For tightening torques, see TIGHTENING TORQUE .

Install the electric motor.

NOTE: Do not damage the shaft.

Install:

- the 2 M5 screws. Tighten
- the connector
- the front seat. See **INSTALLING THE FRONT SEAT**
- the battery lead. See **BATTERY, DISCONNECTING** .

FRONT ELECTRIC MOTOR CUSHION, REPLACING

REMOVING THE FRONT ELECTRIC MOTOR FOR THE SEAT CUSHION

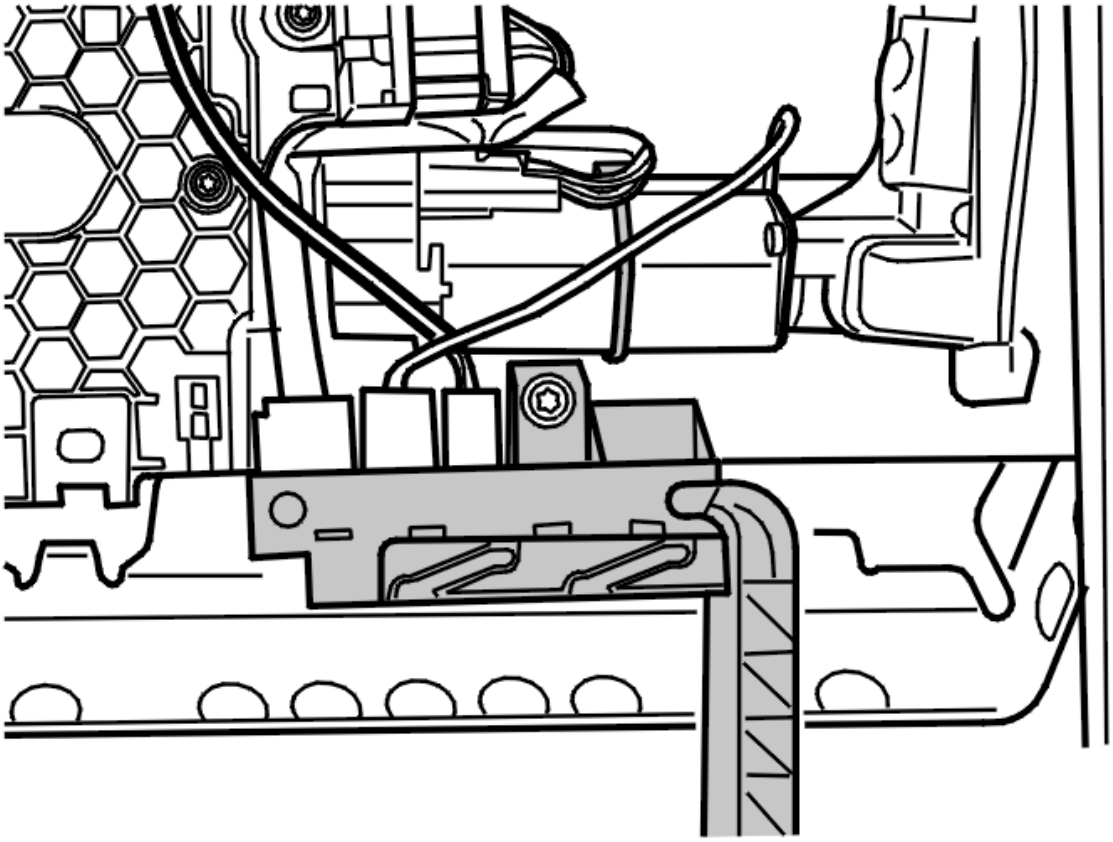

Fig. 54: Removing The Front Electric Motor For The Seat Cushion
Courtesy of VOLVO CARS CORPORATION

Remove:

- the 6 connectors
- the 1 screw for the connection bracket.

Remove the plastic clip around the electric motor.

Remove the plastic plate by the electric motor.

NOTE: The plastic plate is firmly positioned so considerable force is required to

remove it.

HINT: Grasp the center of the plastic plate and pull it straight out of the seat so that it bends. Then work out the plate.

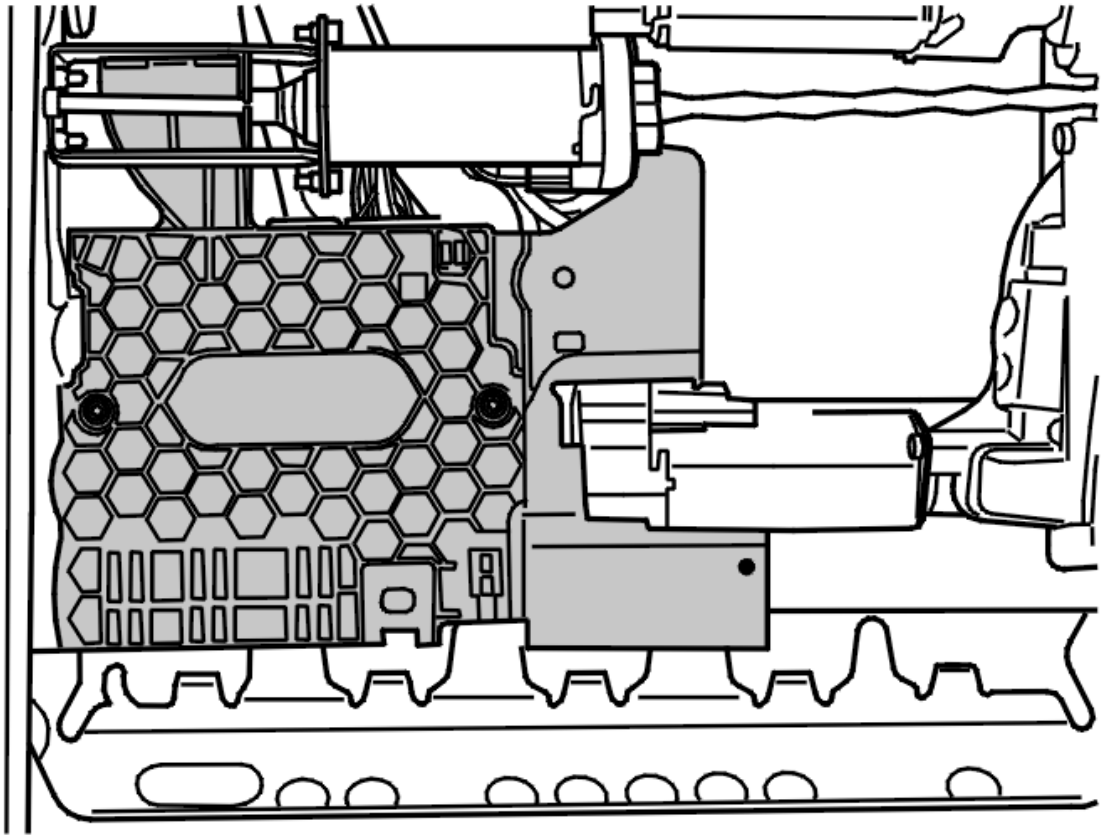

Fig. 55: Identifying Electric Motor Location
Courtesy of VOLVO CARS CORPORATION

Remove:

- the 2 screws
- the electric motor. Pull it carefully straight out.

INSTALLING THE FRONT ELECTRIC MOTOR FOR THE SEAT CUSHION

NOTE: For tightening torques, see TIGHTENING TORQUE .

Install the electric motor.

NOTE: Do not damage the shaft.

Install:

- the 2 M5 screws
- the plastic plate.

HINT: Start by guiding in the hook at the seat rail.

NOTE: Considerable force is required to bend the plastic plate into position.

Install:

- the 6 connectors
- the screw for the connection bracket.

NOTE: Ensure that all the connectors are intact and correctly connected.

Install:

- the front seat. See **INSTALLING THE FRONT SEAT**
- the battery lead. See **BATTERY, DISCONNECTING** .

HEATER PAD BACKREST AND CUSHION, REPLACING

Special tools:

see **1158962**

REPLACING

The illustrations in this service information are used for different model years and / or models. Some variation may occur. However, the essential information in the illustrations is always correct.

PREPARATIONS

Remove the seat. See **REMOVING THE FRONT SEAT**.

NOTE: The old heating pad must be removed before a new one is installed. A new heater pad must not be bonded over the old pad.

NOTE: Read through the entire method before beginning work.

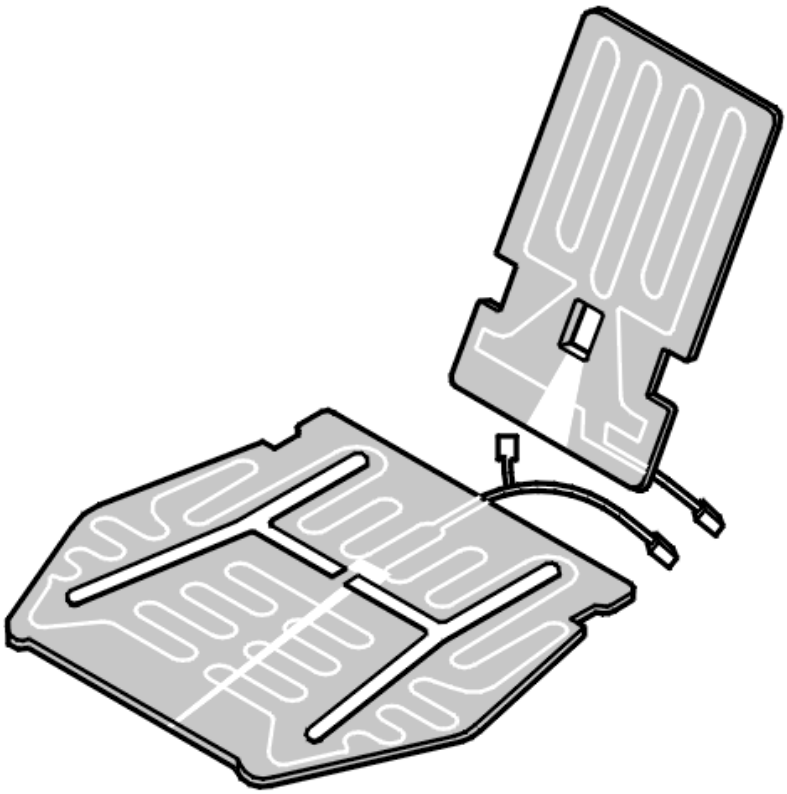

Fig. 56: Different Types Of Heater Pads (1 Of 8)
Courtesy of VOLVO CARS CORPORATION

The following heater pad versions are available:

- heater pad and seat belt reminder
- heater pad only
- seat belt reminder only.

REMOVING THE HEATER PAD FROM THE BACKREST AND CUSHION

REMOVING UPHOLSTERY

Remove the upholstery. See **UPHOLSTERY SEAT CUSHION, REPLACING** or **UPHOLSTERY BACK REST, REPLACING** (2003) or **UPHOLSTERY SEAT CUSHION, REPLACING** (2004-).

NOTE: Cut off the half moon clips and remove any remaining parts of the clips.

NOTE: Do not bend the upholstery rods more than is necessary to detach the upholstery. Straighten the rods before reinstalling the upholstery.

REMOVING OLD HEATER PADS

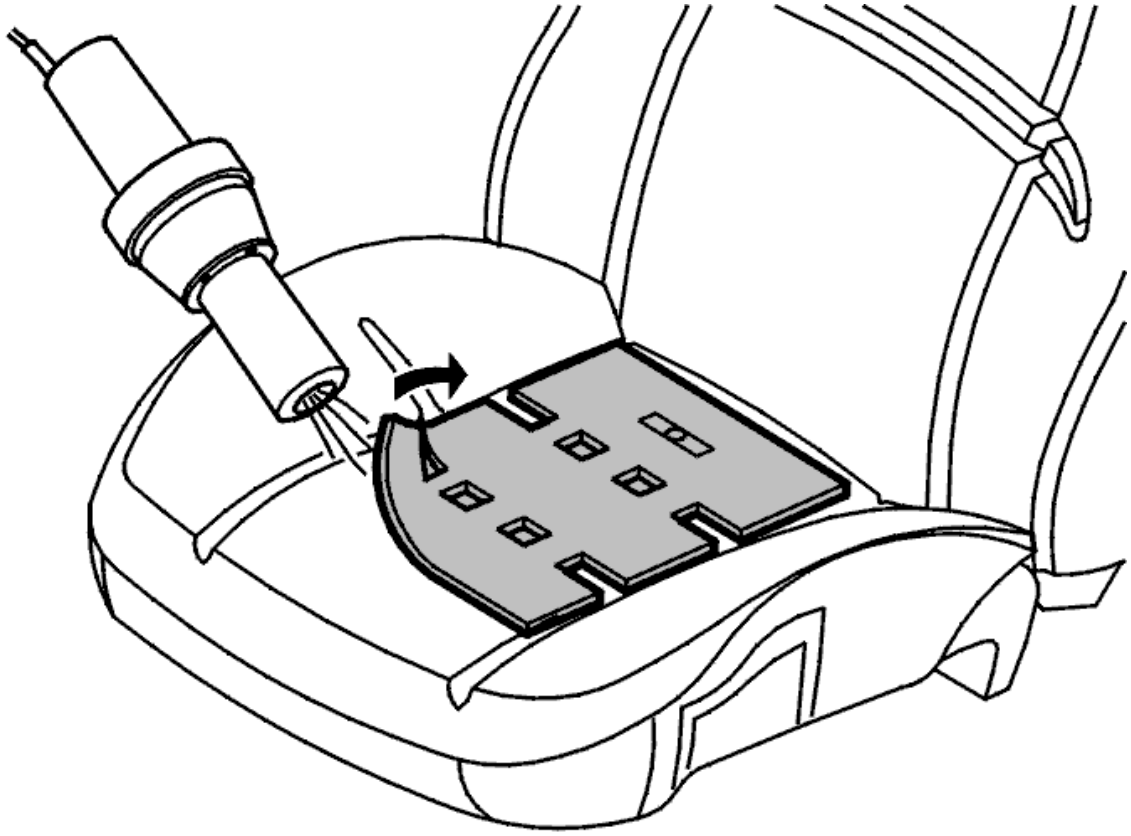

Fig. 57: Heating Heater Pad
Courtesy of VOLVO CARS CORPORATION

Carefully heat the old heater pad to remove it.

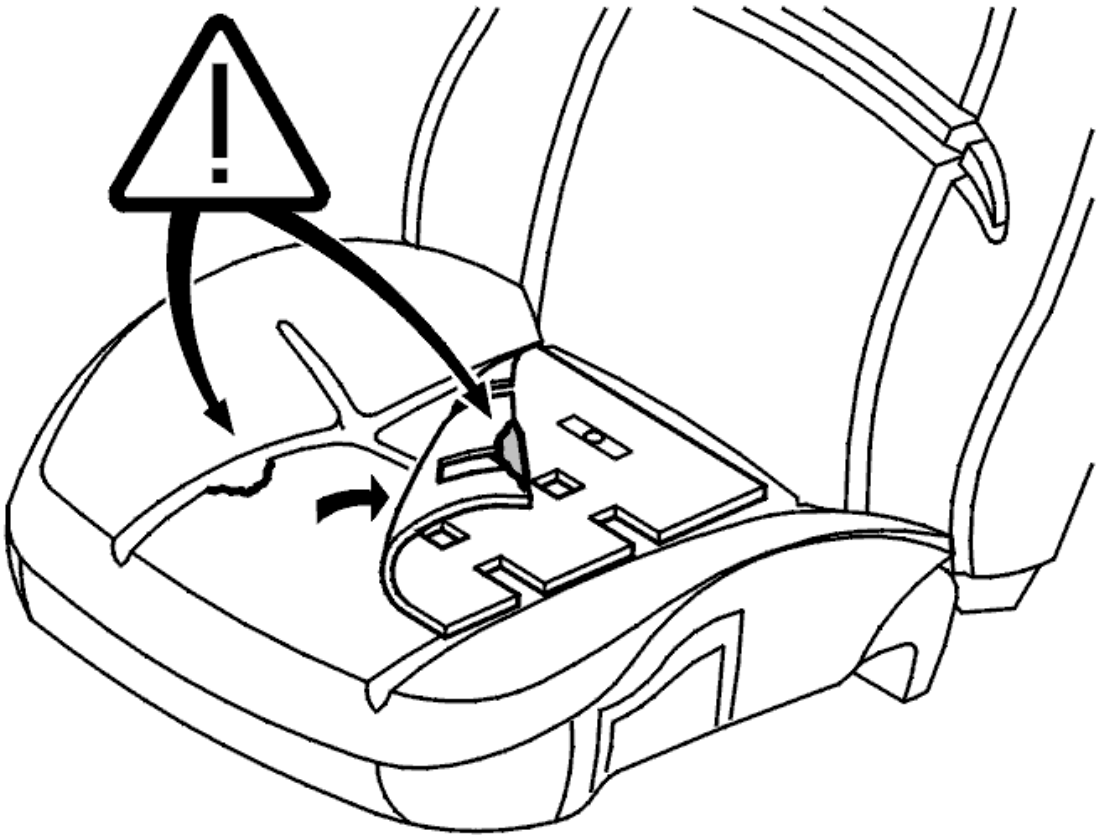

Fig. 58: Damaging Foam Filling
Courtesy of VOLVO CARS CORPORATION

NOTE: **Ensure that the foam filling is not damaged when removing the heater pad. Ensure that the pad is detached from the foam filling. This is to prevent functionality problems when the new heater pad is installed.**

NOTE: **Damaged foam filling must be replaced. This to guarantee function. This also applies if there are cracks in the backrest or seat frame.**

INSTALLING THE HEATER PAD ON THE BACKREST AND CUSHION

INSTALLING NEW HEATER PADS

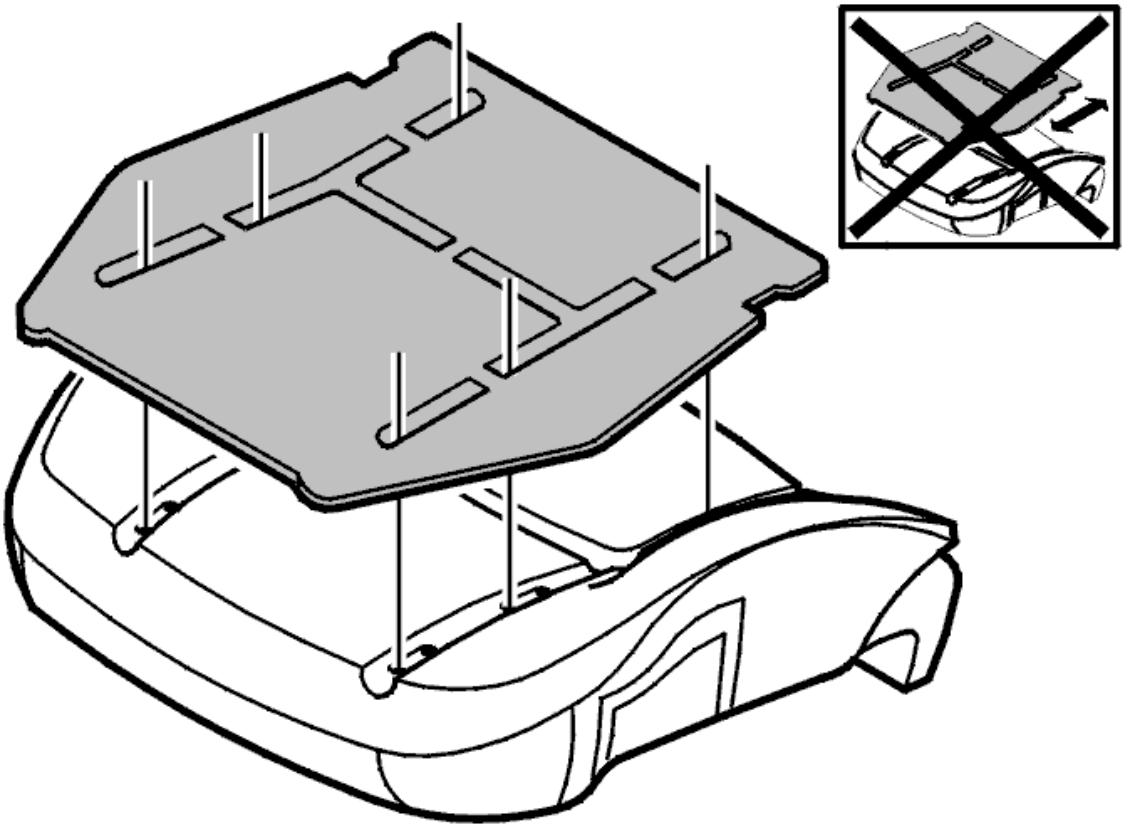

Fig. 59: Identifying Heater Pad Position
Courtesy of VOLVO CARS CORPORATION

NOTE: **The heater pad must be correctly positioned so that the when the half moon clips are secured they are not too close to the heating loops or the surface of the heater pad.**

Position the heater pad in the correct position. Do not remove the backing from the adhesive surfaces.

Secure one half of the heater pad. Fold up the other half.

Pull the backing (or part of the backing) off the adhesive surface closest to the center of the section of the heater pad that is bent up.

Carefully bring the adhesive surface down onto the foam filling. Work with small sections at a time. Start from the center and work out towards the edges.

Continue in the same way with the other adhesive surfaces.

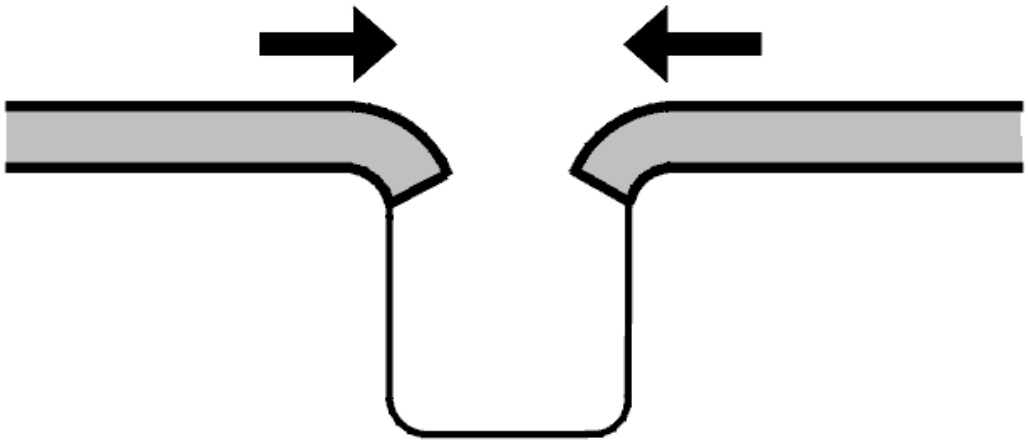

Fig. 60: End Of The Pad Not Up On Flat Surface
Courtesy of VOLVO CARS CORPORATION

If the heater pad terminates at the channel, position it as illustrated.

NOTE: The end of the pad must not be up on the flat surface.

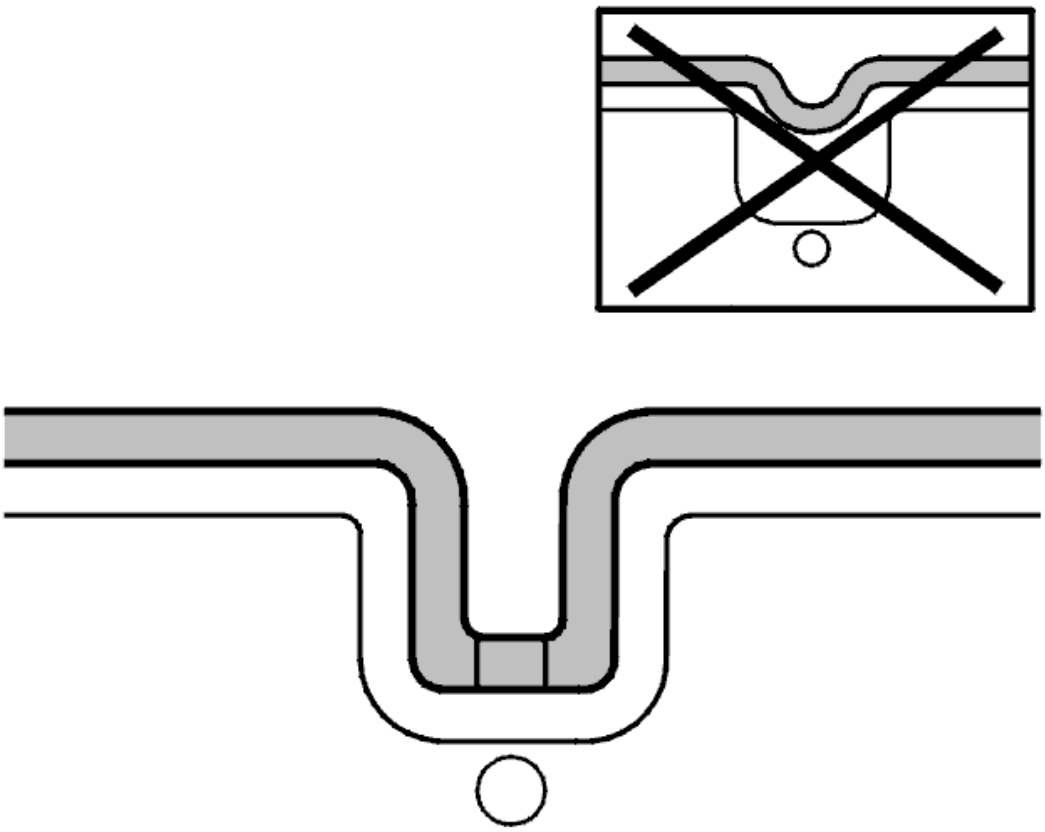

Fig. 61: Identifying Proper Pad Fill Position
Courtesy of VOLVO CARS CORPORATION

If the heater pad is the type where the pad and/or cable is placed in the channel, the pad must follow the foam filling as illustrated. If not, the pad and/or cable may be loaded and damage the pad. The type of seam on the upholstery may cause wear in the long term.

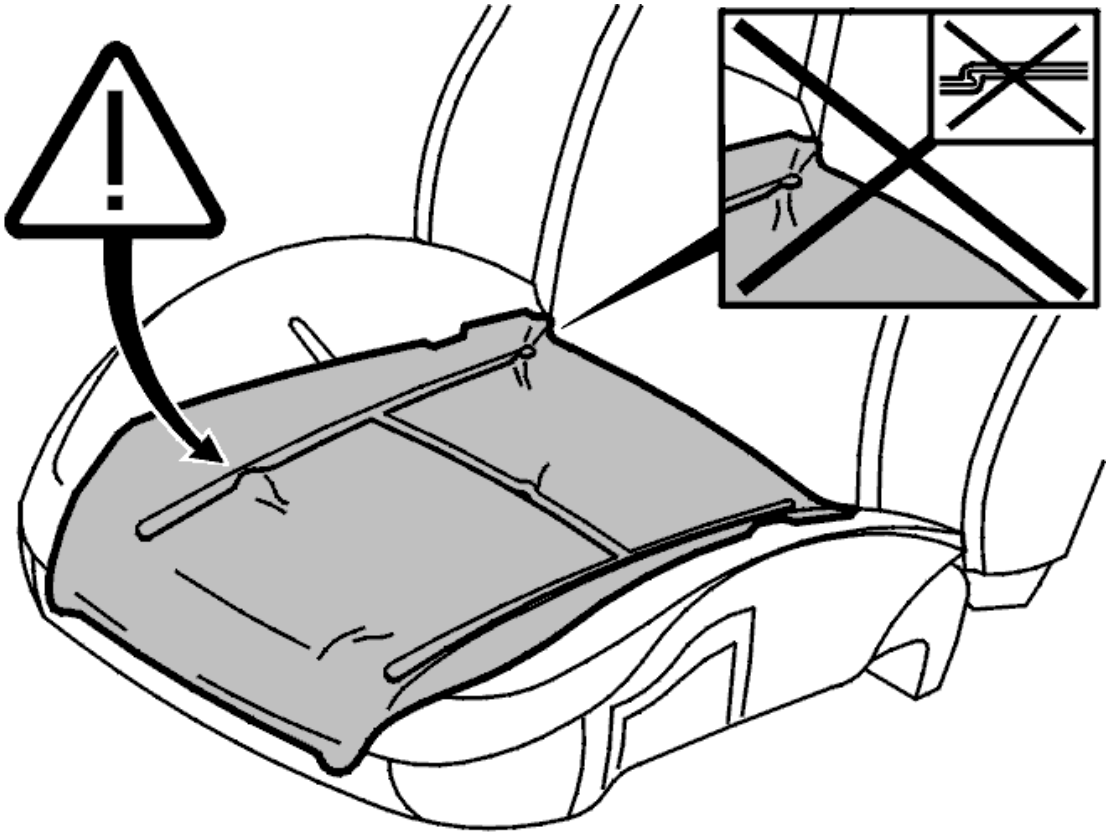

Fig. 62: Bubbles And Kinks Increase Risk Of Damage To Pad
Courtesy of VOLVO CARS CORPORATION

NOTE: **There must not be any bubbles or kinks when the heater pad is bonded to the foam filling. This increases the risk of damage to the pad during use. This applies to the entire surface, but to the heating wires in particular.**

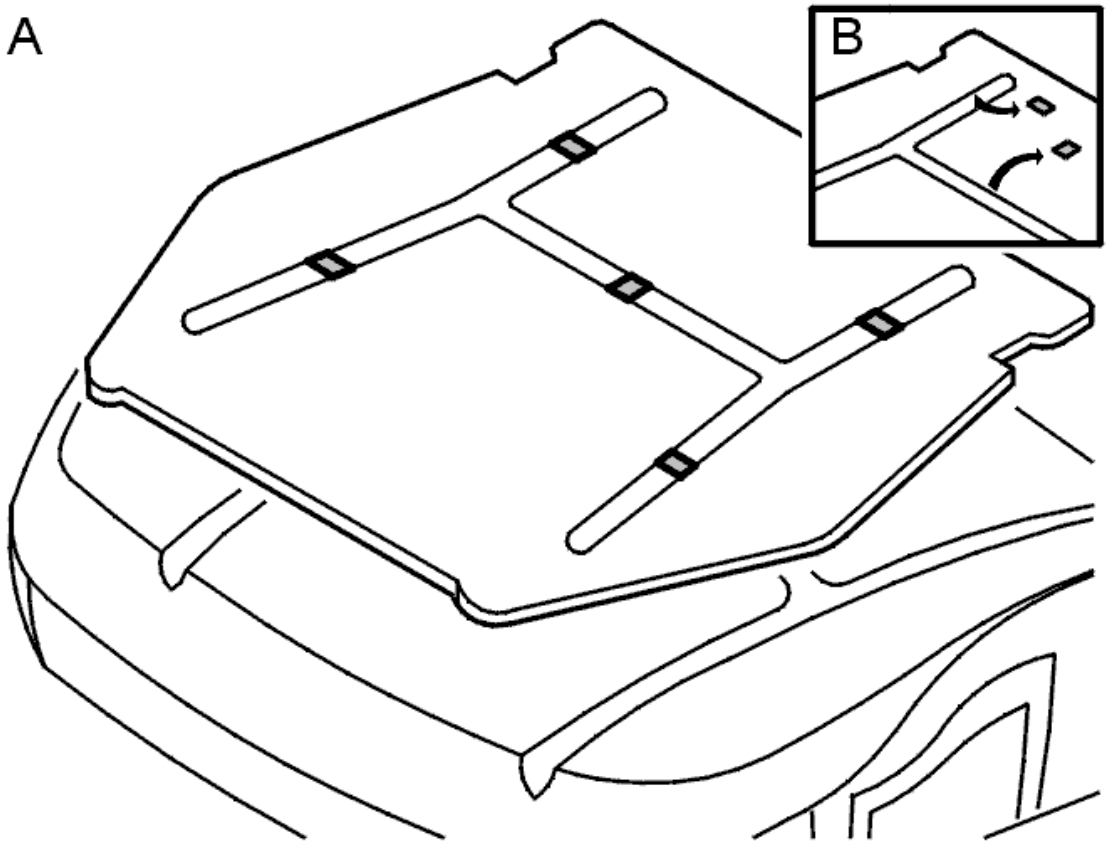

Fig. 63: Locating Positional Straps To Be Cut Apart
Courtesy of VOLVO CARS CORPORATION

When the heater pad has been bonded into place the positional straps (shaded in the illustration) must be cut apart. This only applies to those types of heater pads that have positional straps.

NOTE: The positional straps must not be cut before bonding is complete.

INSTALLING UPHOLSTERY

Before securing the upholstery, check the following:

- that any remnants of the half moon clips have been removed
- that the rods (steel or plastic wire in the pockets inside the upholstery) are in position and not protruding outside the pleats
- that the rods or the rod pleats are not bent or in contact with the heater pad. Adjust if necessary
- that the seam and the rods and pleats are positioned in the channel so that they are not in contact with the heater pad
- that the plastic wires are the correct length and cannot affect the function of the heater pad.

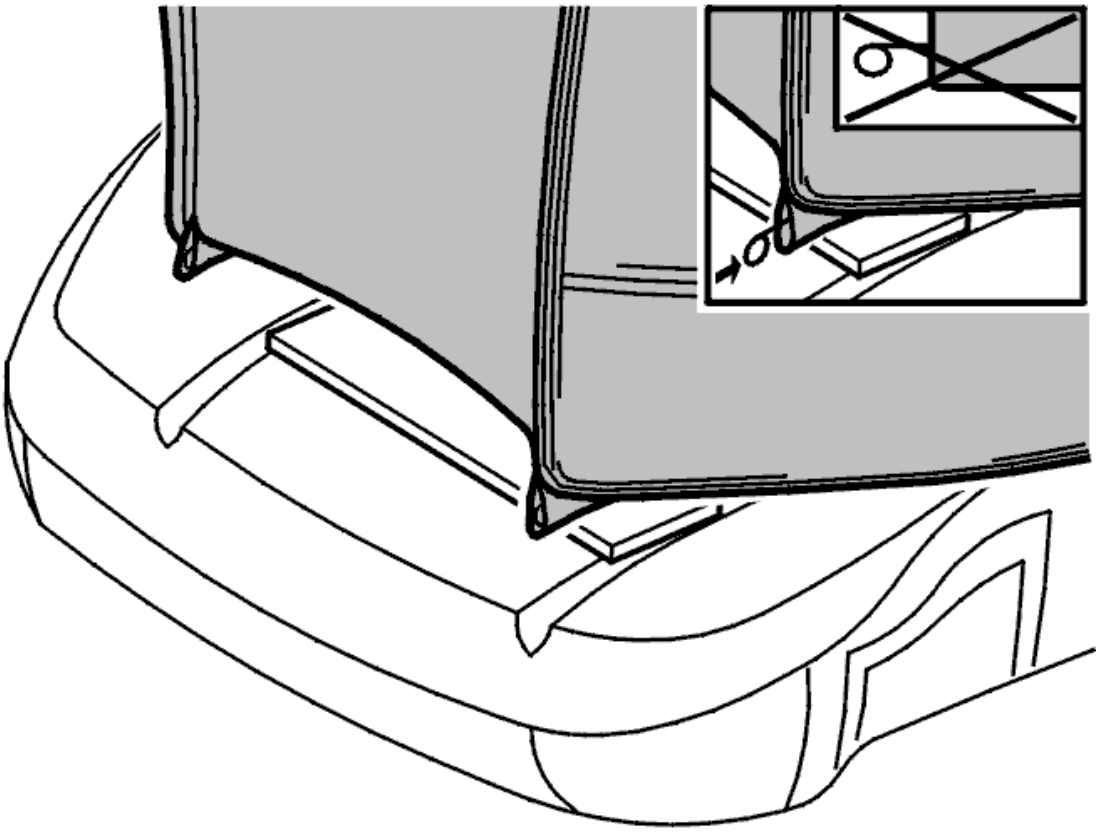

Fig. 64: Identifying Installed Upholstery
Courtesy of VOLVO CARS CORPORATION

Install the upholstery. See **UPHOLSTERY SEAT CUSHION, REPLACING** or **UPHOLSTERY BACK REST, REPLACING** (2003) or **UPHOLSTERY SEAT CUSHION, REPLACING** (2004-).

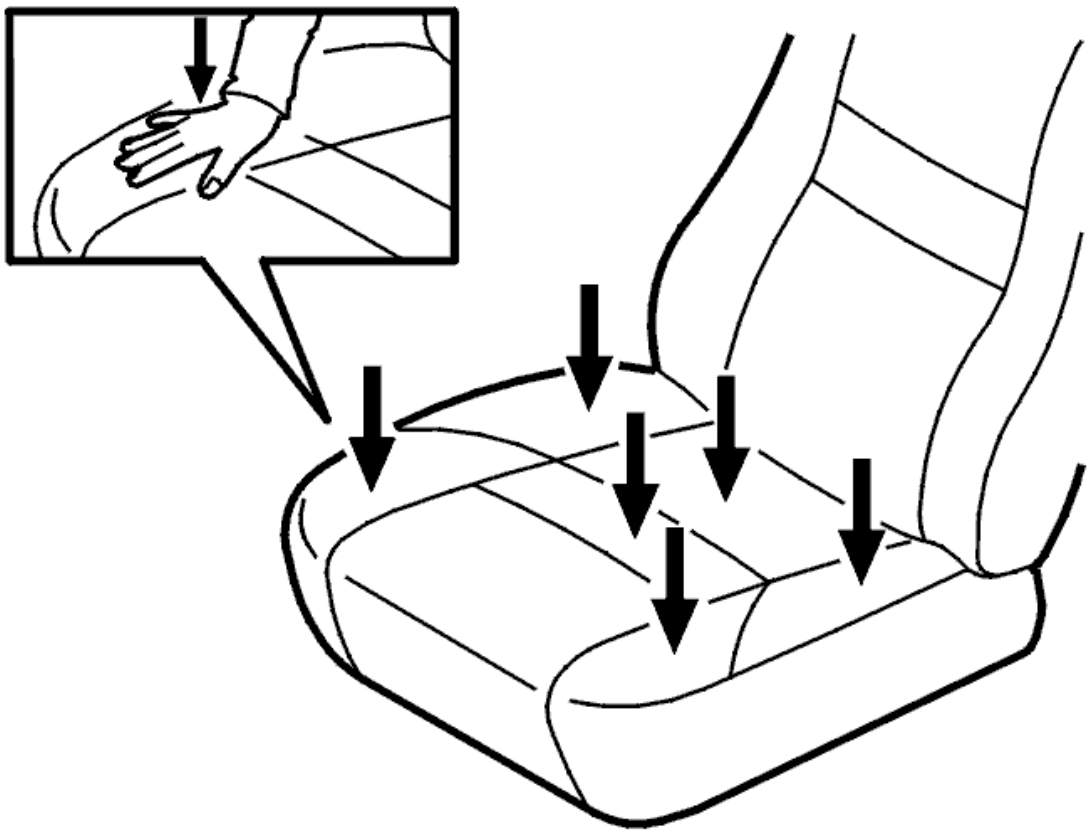

Fig. 65: Identifying Tested Bonding
Courtesy of VOLVO CARS CORPORATION

Testing the bonding

This test can be performed either with the upholstery completely removed or with it partially in position.

Press at those points illustrated. Check that the heater pad follows the compression of the cushion.

There must be no kinks or other defects in the heater pad when it is pressed.

Function test:

Start the seat heater and check the function.

NOTE: This test is not possible if the ambient temperature is too high.

Install the seat. See **INSTALLING THE FRONT SEAT**.

LUMBAR SUPPORT BACKREST CUSHION, REPLACING

REPLACING

As the illustrations in this service information are used for different model years and / or models, some variation may occur. However, the essential information in the illustrations is always correct.

PREPARATIONS

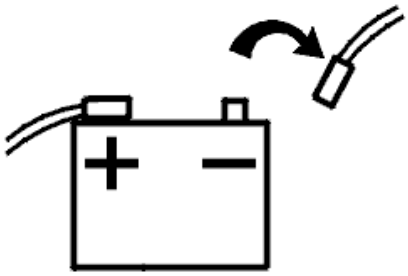

Fig. 66: Disconnecting Battery Lead
Courtesy of VOLVO CARS CORPORATION

Remove:

- the battery lead. See **BATTERY, DISCONNECTING**
- the front seat. See **REMOVING THE FRONT SEAT**.

REMOVING LUMBAR SUPPORT FROM THE BACKREST CUSHION

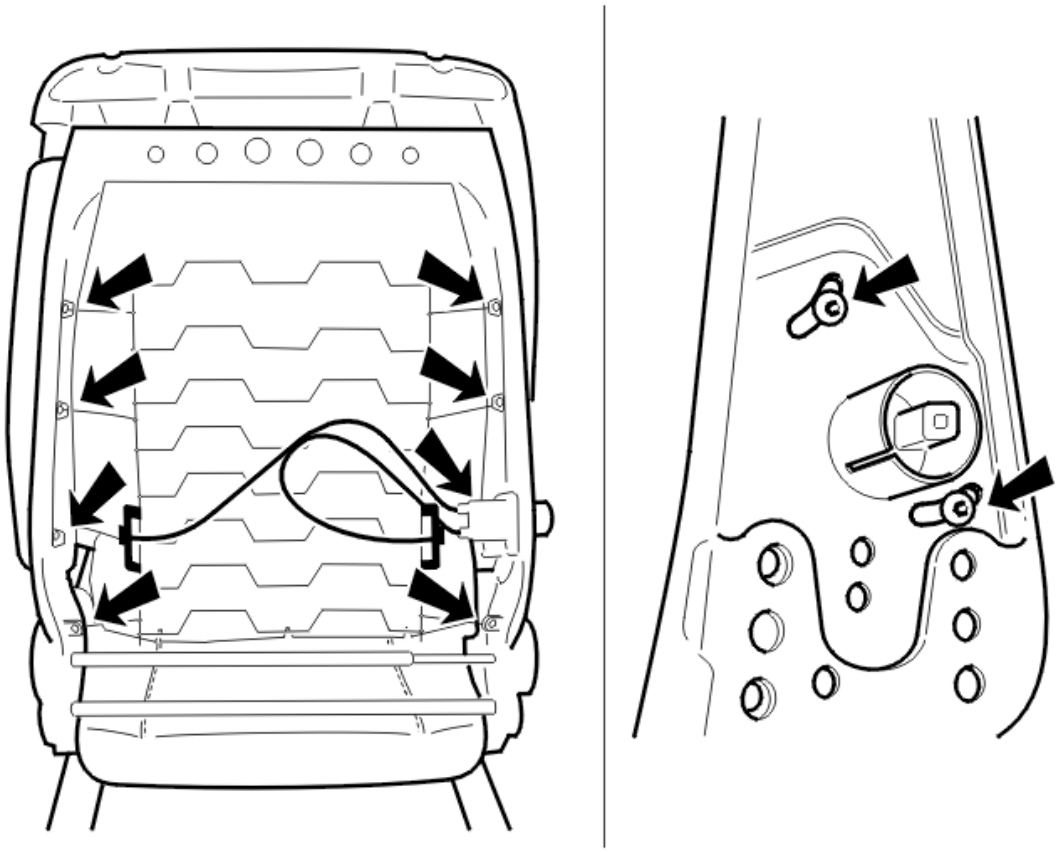

Fig. 67: Identifying Backrest Mounting Screws And Hooks
Courtesy of VOLVO CARS CORPORATION

Remove:

- the backrest cushion upholstery. See **REMOVING BACKREST CUSHION UPHOLSTERY**
- the lumbar support knob.

Slacken off the tension in lumbar support.

Carefully remove the cover.

Pull the lumbar support knob straight out.

Remove:

- the 2 mounting screws on the side of the backrest
- the 6 hooks on both sides.

Detach the 2 mechanical cables on both sides.

Remove the lumbar support.

INSTALLING THE LUMBAR SUPPORT IN THE BACKREST CUSHION

NOTE: For tightening torques, see TIGHTENING TORQUE .

Install:

- the lumbar support
- the 2 mechanical cables on both sides
- the 6 hooks on both sides
- the 2 mounting screws. Tighten
- the backrest cushion upholstery. See **INSTALLING BACKREST CUSHION UPHOLSTERY**
- the lumbar support knob
- the cover.

Tension the lumbar support.

Install:

- the front seat. See **INSTALLING THE FRONT SEAT**
- the battery lead. See **BATTERY, DISCONNECTING** .

POWER SEAT MODULE (PSM), REPLACING

REMOVING THE POWER SEAT MODULE (PSM)

Raise the seat to its highest position.

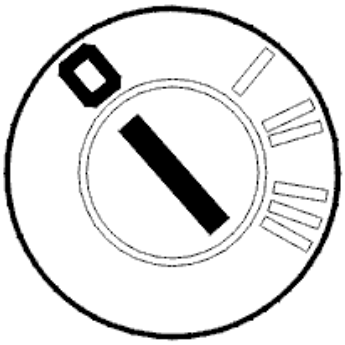

Fig. 68: Identifying Ignition In Off Position
Courtesy of VOLVO CARS CORPORATION

Remove the seat from the car. See **REMOVING THE FRONT SEAT**.

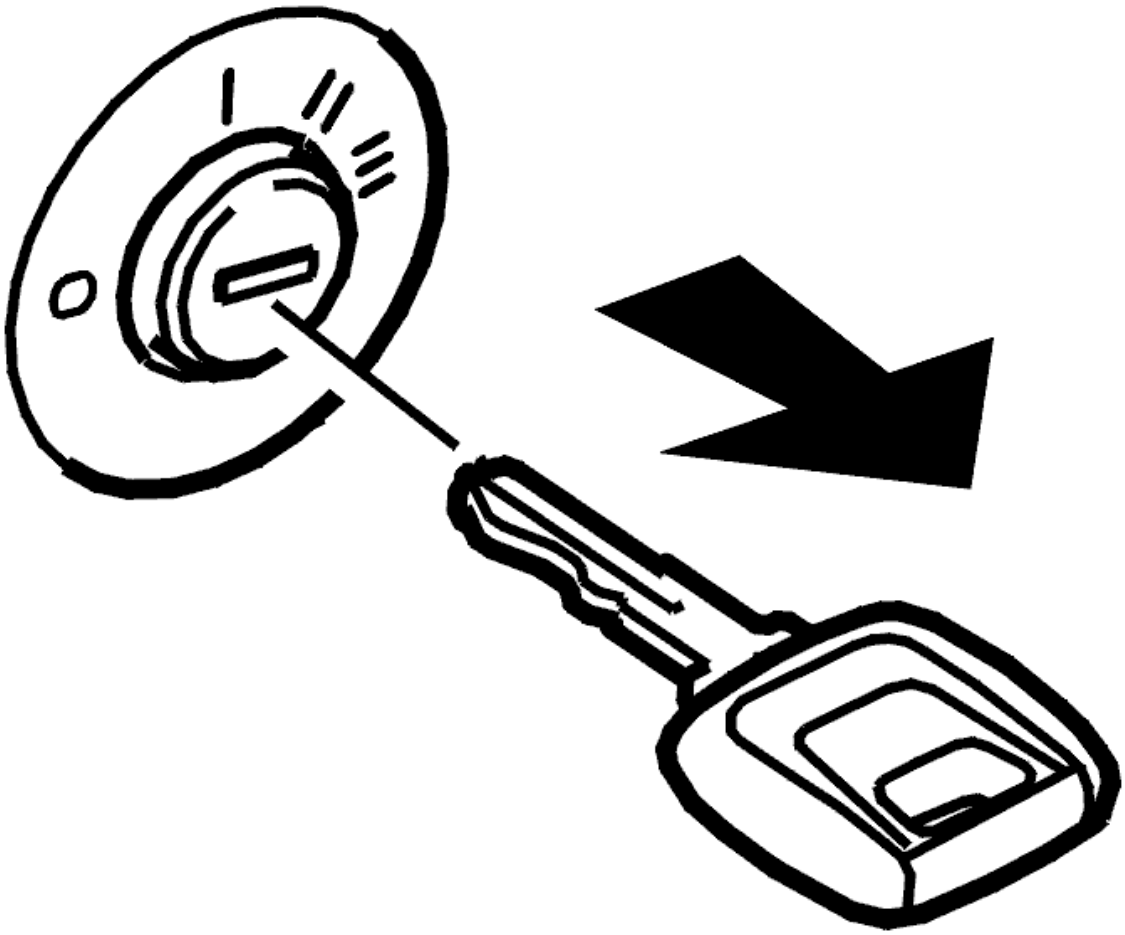

Fig. 69: Identifying Ignition Key Off
Courtesy of VOLVO CARS CORPORATION

Remove the key. The key must be removed to ensure that the ignition is not switched on by mistake.

Wait one minute before starting work.

Remove the 2 screws.

Disconnect the connector.

Remove the control module.

INSTALLING THE POWER SEAT MODULE (PSM)

Install:

- the control module
- the connector
- the 2 screws. Tighten
- the key
- the front seat. See **INSTALLING THE FRONT SEAT**.

ORDERING SOFTWARE

Order the software. See 9438271 .

FINISHING

Check that no diagnostic trouble codes have been stored during the repair.

Test operate the seat. Check all the functions.

SEAT RAILS, REPLACING

REPLACING

The illustrations in this service information are used for different model years and/or models. Some variation may occur. However, the essential information in the illustrations is always correct.

SEAT RAIL MANUAL SEAT, REPLACING

REMOVING SEAT RAILS FOR MANUAL SEATS

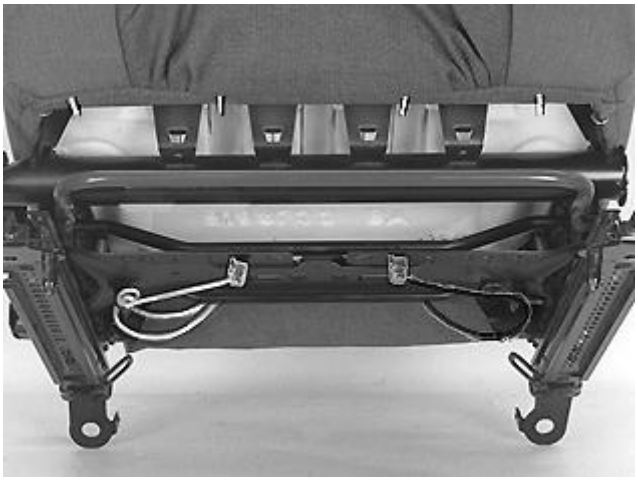

Fig. 70: 4 Half Moon Clips From Underside Cushion
Courtesy of VOLVO CARS CORPORATION

Remove:

- the front seat. See **REMOVING THE FRONT SEAT**

- the seat belt buckle. See **BUCKLE SEAT BELT FRONT, REPLACING**
- the connectors and wiring harness from the cross stay.

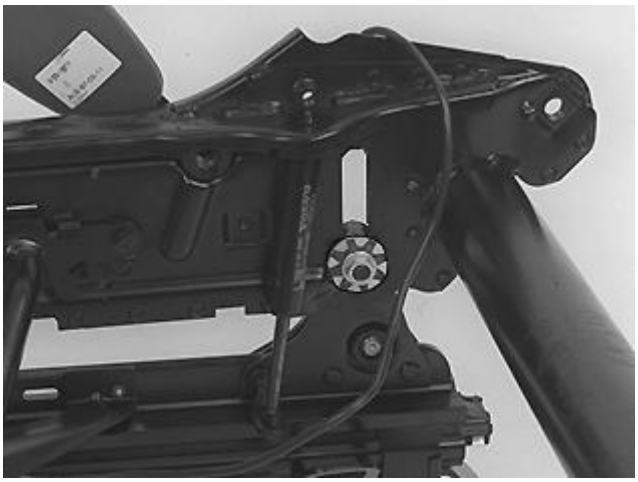

Fig. 71: Identifying Nut And Washers For Rear Height Adjuster Mounting
Courtesy of VOLVO CARS CORPORATION

- the 2 screwed joints from the cross stay.

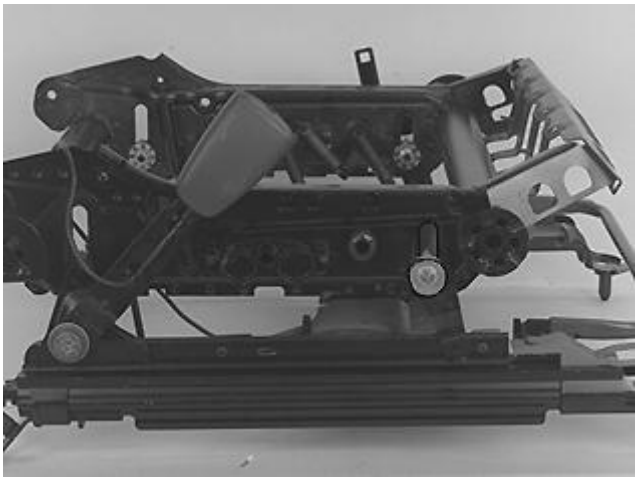

Fig. 72: Identifying Nut For Front Height Adjuster Mounting
Courtesy of VOLVO CARS CORPORATION

- 1 screw from the front mounting.

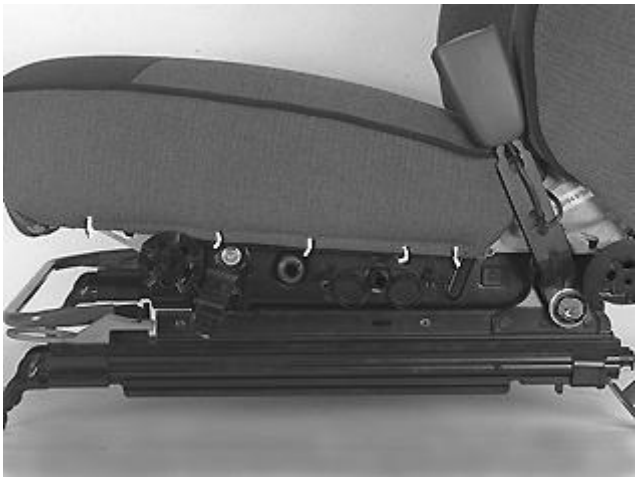

Fig. 73: 5 Half Moon Clips From Each Side Of Underside Cushion
Courtesy of VOLVO CARS CORPORATION

- the outer nut.

Pull straight out.

Angle the rail and the seat base so that they come apart.

INSTALLING SEAT RAILS FOR MANUAL SEATS

For tightening torques, see **GENERAL TIGHTENING TORQUE** .

Install:

- a new seat rail
- the outer M8 nut, x 1. Tighten
- 1 M8 screw for the front mounting for the height adjuster. Tighten
- the 2 M8 screwed joints. Tighten.

SEAT RAIL POWER SEAT, REPLACING

REMOVING THE SEAT RAILS FOR POWER SEATS

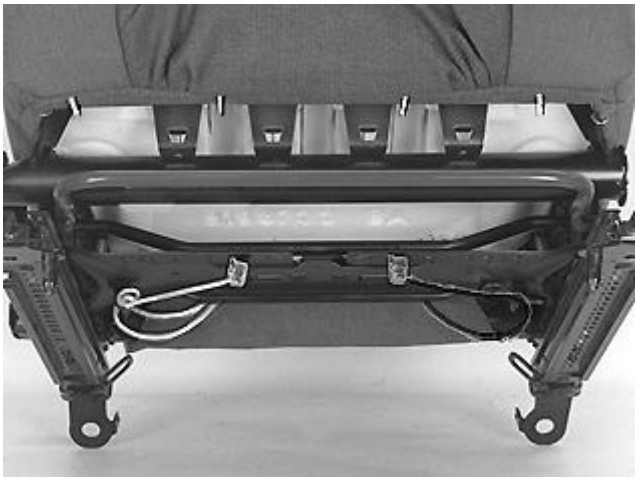

Fig. 74: 4 Half Moon Clips From Underside Cushion
Courtesy of VOLVO CARS CORPORATION

Remove:

- the front seat. See **REMOVING THE FRONT SEAT**
- the seat belt buckle. See **BUCKLE SEAT BELT FRONT, REPLACING**
- the connectors and wiring harness from the cross stay.

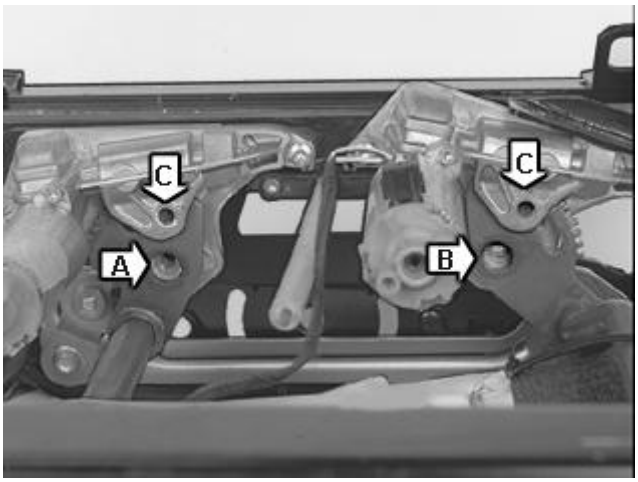

Fig. 75: Identifying Stud Screws And Height Adjustment Motor Screws
Courtesy of VOLVO CARS CORPORATION

- the 2 stud screws (A) and (B)
- the seat rail.

ASSEMBLING COMPONENTS

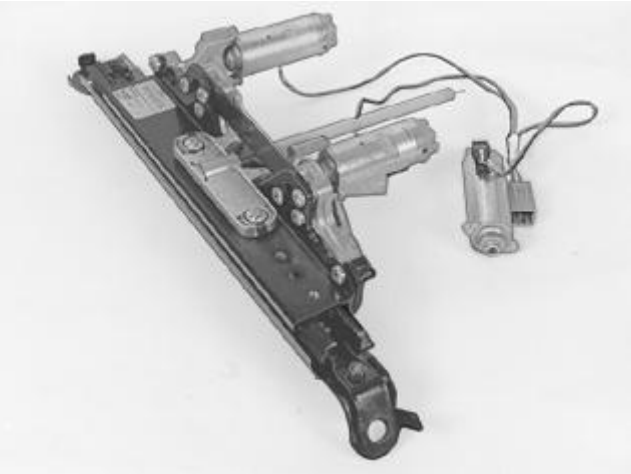

Fig. 76: Identifying Seat Rail
Courtesy of VOLVO CARS CORPORATION

HINT: When replacing the seat rail or power seat gear, it is easier to assemble the following components so that they form a single unit before they are reinstalled on the front seat.

Remove:

- the seat rail
- the spacer plate
- the gear
- the motors.

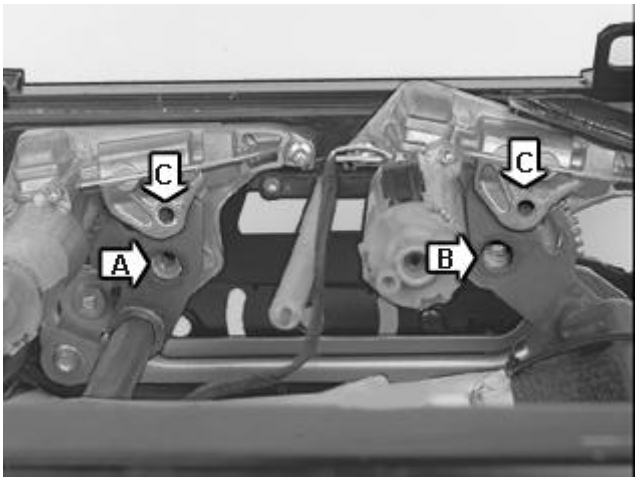

Fig. 77: Identifying Stud Screws And Height Adjustment Motor Screws
Courtesy of VOLVO CARS CORPORATION

Pull up the height adjustment levers to the highest position.

Align the seat rail assembly.

Check that the screws (C) are all the way in their channels.

Check that screw holes (A) are aligned so that the stud screws go in easily.

Tighten:

- the screwed joint (A) halfway
- the screwed joint (B)
- the screwed joint (A) completely.

INSTALLING THE SEAT RAILS FOR POWER SEATS

Install:

- a new or adjusted seat rail
- the 2 M6 stud screws. Tighten
- the connectors and wiring harness from the cross stay
- the front seat. See **INSTALLING THE FRONT SEAT**.

SIDE PANEL, REPLACING

REPLACING

As the illustrations in this service information are used for different model years and / or models, some variation may occur. However, the essential information in the illustrations is always correct.

SIDE PANEL MANUAL SEAT, REPLACING

REMOVING THE SIDE PANEL FROM MANUAL SEATS

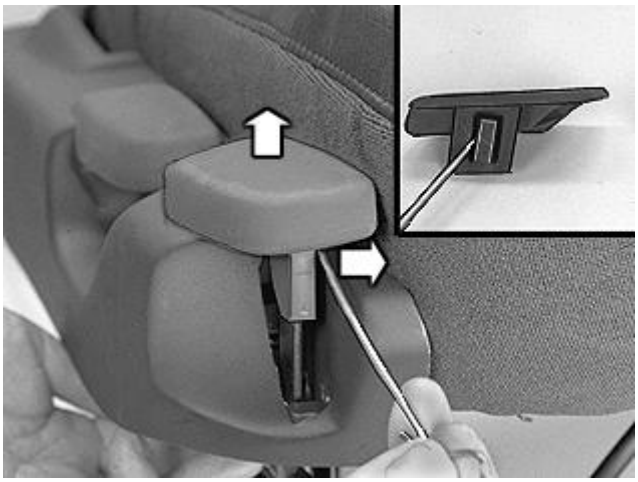

Fig. 78: Identifying Screwdriver Inserted At Rear Of Handle
Courtesy of VOLVO CARS CORPORATION

Remove the two handles for the height adjustment levers.

Insert a screwdriver at the rear of the handle.

Release the catches.

Pull upwards.

Fig. 79: Identifying Front Edge Of Panel Pulled Upwards And Backwards
Courtesy of VOLVO CARS CORPORATION

Pull the front edge of the panel upwards.

Pull the panel backwards.

INSTALLING THE SIDE PANEL ON MANUAL SEATS

Install:

- the panel
- the handles on the height adjustment levers.

SIDE PANEL POWER SEAT, REPLACING

REMOVING THE SIDE PANEL FROM POWER SEATS

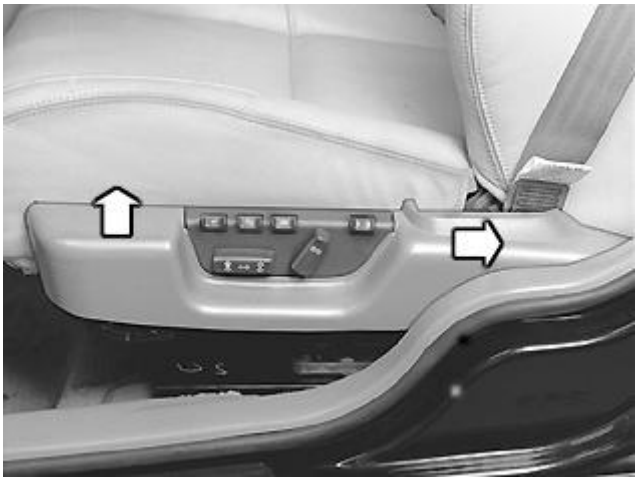

Fig. 80: Identifying Front Edge Of Side Panel Lifted And Pulled Backwards
Courtesy of VOLVO CARS CORPORATION

Remove:

- the two tie straps under the seat
- the connector.

Pull the front edge of the panel upwards.

Pull the panel backwards.

INSTALLING THE SIDE PANEL ON POWER SEATS

Install:

- the panel
- the connector
- new tie straps.

UPHOLSTERY BACK REST, REPLACING

As the illustrations in this service information are used for different model years and / or models, some variation may occur. However, the essential information in the illustrations is always correct.

REPLACING

REMOVING THE FRONT SEAT

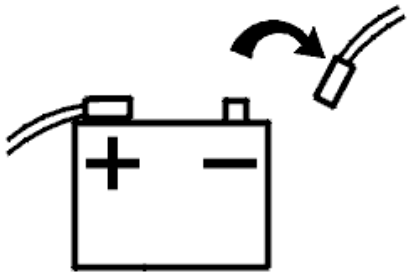

Fig. 81: Disconnecting Battery Lead
Courtesy of VOLVO CARS CORPORATION

Remove the battery lead. See **BATTERY, DISCONNECTING** .

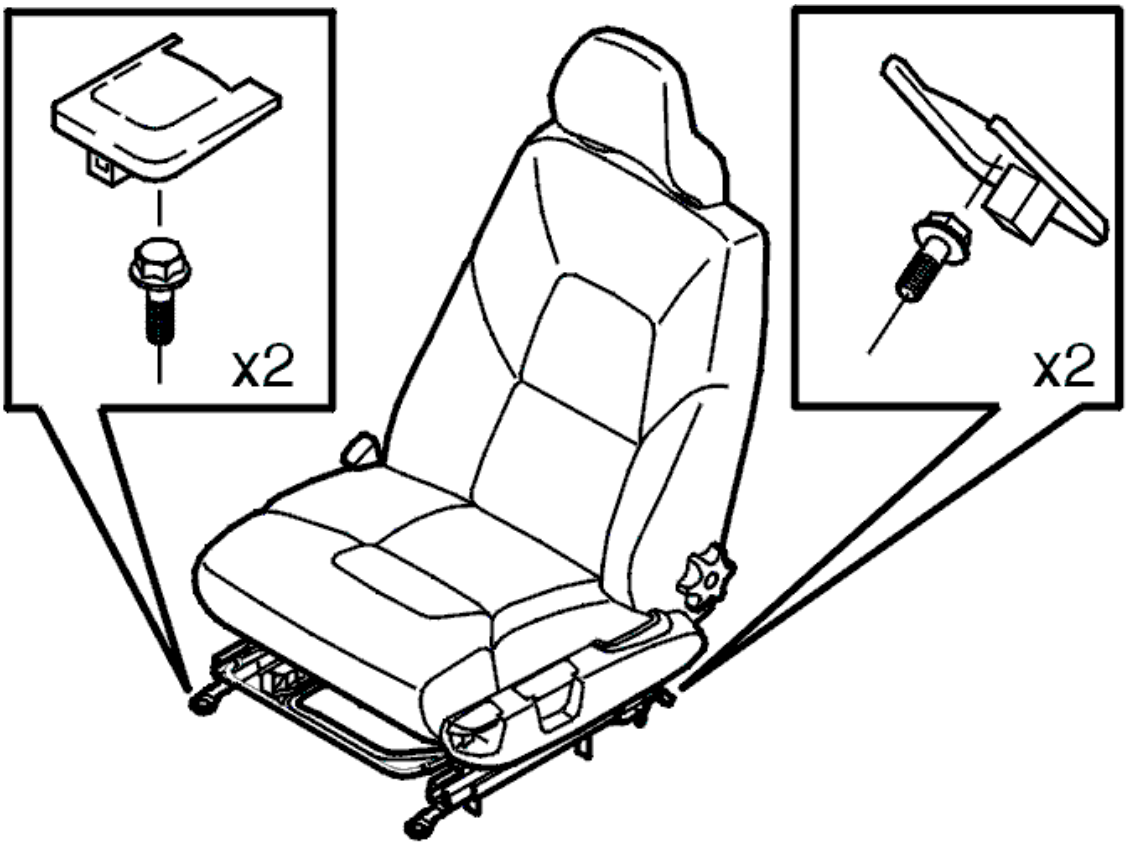

Fig. 82: Locating Seat Side Pieces And Screws
Courtesy of VOLVO CARS CORPORATION

Remove:

- the four side pieces over the screws for the seat. Pull the front side pieces straight forward and the rear side pieces backwards and upwards to detach them
- four screws.

- the side panel. See **SIDE PANEL, REPLACING**
- the seat belt from the seat
- the connector.

Disconnect any remaining connectors.

Remove the seat.

To prevent electric static discharge problems:

When removing a seat with a SIPS (side impact protection system) module from a car, the seat must be grounded. This is due to the danger of static electricity.

Detach the chair from its screwed joint. Do **not** lift the seat out of the car yet.

Strip a long cable at both ends. Secure one end to the rear mounting on the chair. Secure the other end in the car or in the car hoist.

REMOVING BACKREST CUSHION UPHOLSTERY

Remove the lumbar support knob.

Slacken off the tension in lumbar support.

Carefully remove the cover.

Pull the lumbar support knob straight out.

Remove the backrest adjustment knob (manual seats only). Pull the knob straight out.

Fold the backrest or position the backrest in the forward angled position.

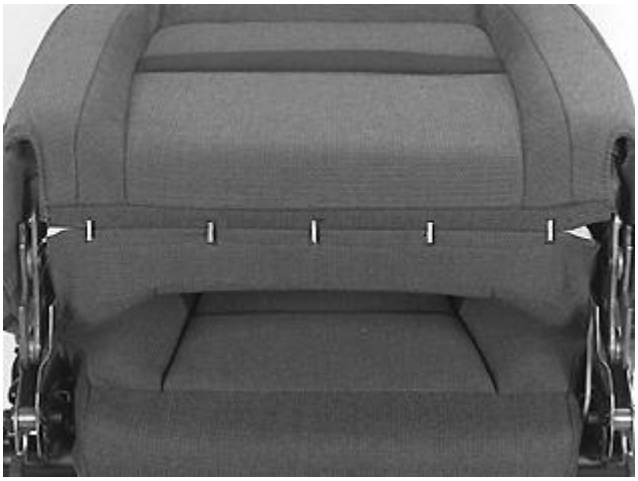

Fig. 83: Five Half Moon Clips At Bottom Edge Of Backrest

Courtesy of VOLVO CARS CORPORATION

Remove the five half moon clips at the bottom edge of the backrest.

Remove the upholstery from the seat up to the first lateral channel. There are two half moon clips on each front-rear channel.

Remove the upholstery completely.

Fig. 84: Half Moon Clips In First Lateral Channel & Upper Channel
Courtesy of VOLVO CARS CORPORATION

Remove:

- one half moon clip from each front-rear channel
- three half moon clips in the first lateral channel
- two half moon clips in the upper channel.

Fig. 85: Identifying Spring
Courtesy of VOLVO CARS CORPORATION

Release the two elastic attachments in the inside / reverse of the backrest.

Fig. 86: Identifying Three Half Moon Clips From Inside Of Reverse Of Backrest
Courtesy of VOLVO CARS CORPORATION

Remove the three half moon clips from the inside of the reverse of the backrest.

Pull off all the upholstery.

INSTALLING

INSTALLING BACKREST CUSHION UPHOLSTERY

NOTE: For tightening torques, see GENERAL TIGHTENING TORQUE .

Install:

- the upholstery on the backrest
- the three half moon clips on the inside of the reverse of the backrest
- the two elastic attachments in the inside of the reverse of the backrest
- one half moon clip in each side of the front-rear channels.

Install the upholstery up to the first lateral channel. There must be two half moon clips per each front-rear channel.

Install the upholstery all the way down.

Install five half moon clips at the bottom edge of the backrest.

Fold the backrest to the normal position.

Install:

- the backrest adjustment knob. Push the knob straight in
- the lumbar support knob
- the cover.

Tension the lumbar support.

INSTALLING THE FRONT SEAT

Install:

- the seat in the car
- the connector
- the seat belt
- the side panel. See **SIDE PANEL, REPLACING**
- any remaining connectors
- the 4 M10 screws. Tighten.

Remove the ground lead (if applicable).

Install:

- the four side pieces on the seat
- the battery lead. See **BATTERY, DISCONNECTING** .

UPHOLSTERY SEAT CUSHION, REPLACING

Special tools:

see **1158962**

NOTE: **The illustrations in this service information are used for different model years and / or models. Some variation may occur. However, the essential information in the illustrations is always correct.**

PREPARATORY WORK

Remove:

- the battery lead. See **BATTERY, DISCONNECTING**
- the front seat. See **REMOVING THE FRONT SEAT**.

REMOVING THE SEAT CUSHION UPHOLSTERY

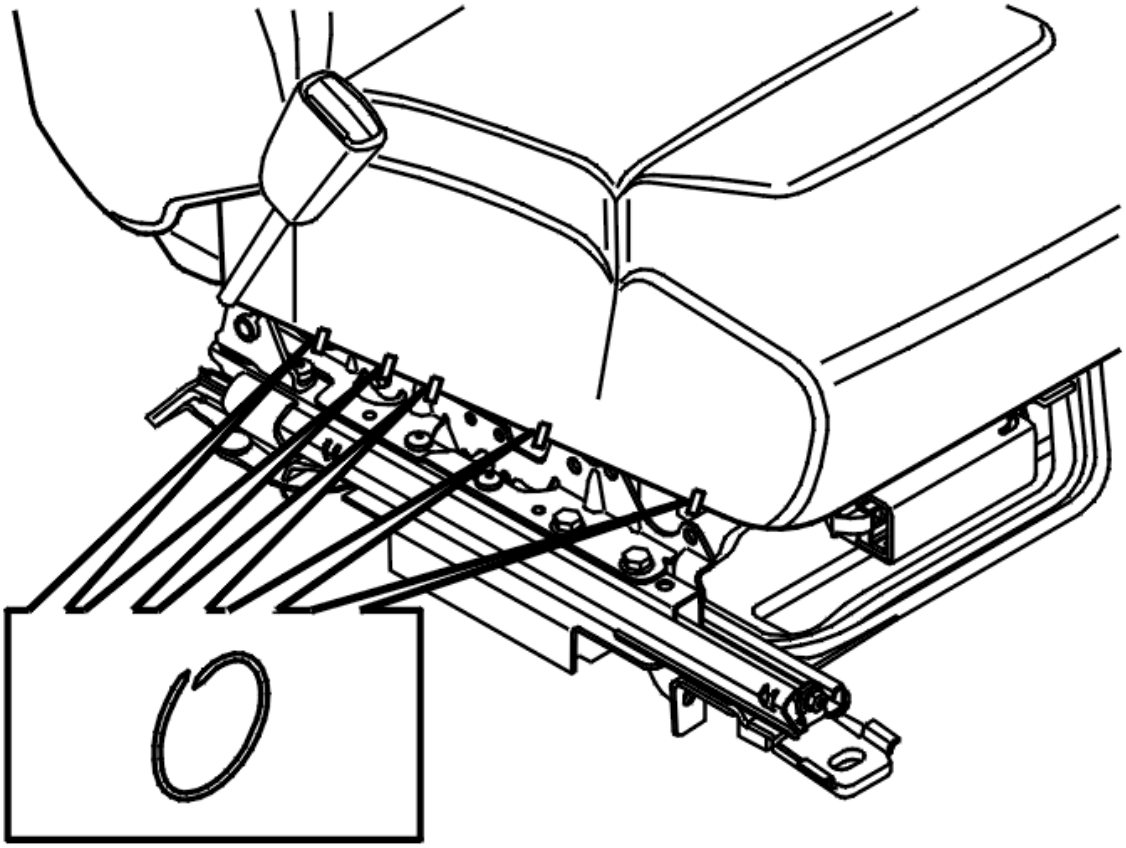

Fig. 87: Half Moon Clips From Lower Edge Of Seat Cushion
Courtesy of VOLVO CARS CORPORATION

Remove:

- the half moon clips, 5 per side, from the lower edge of the seat cushion.

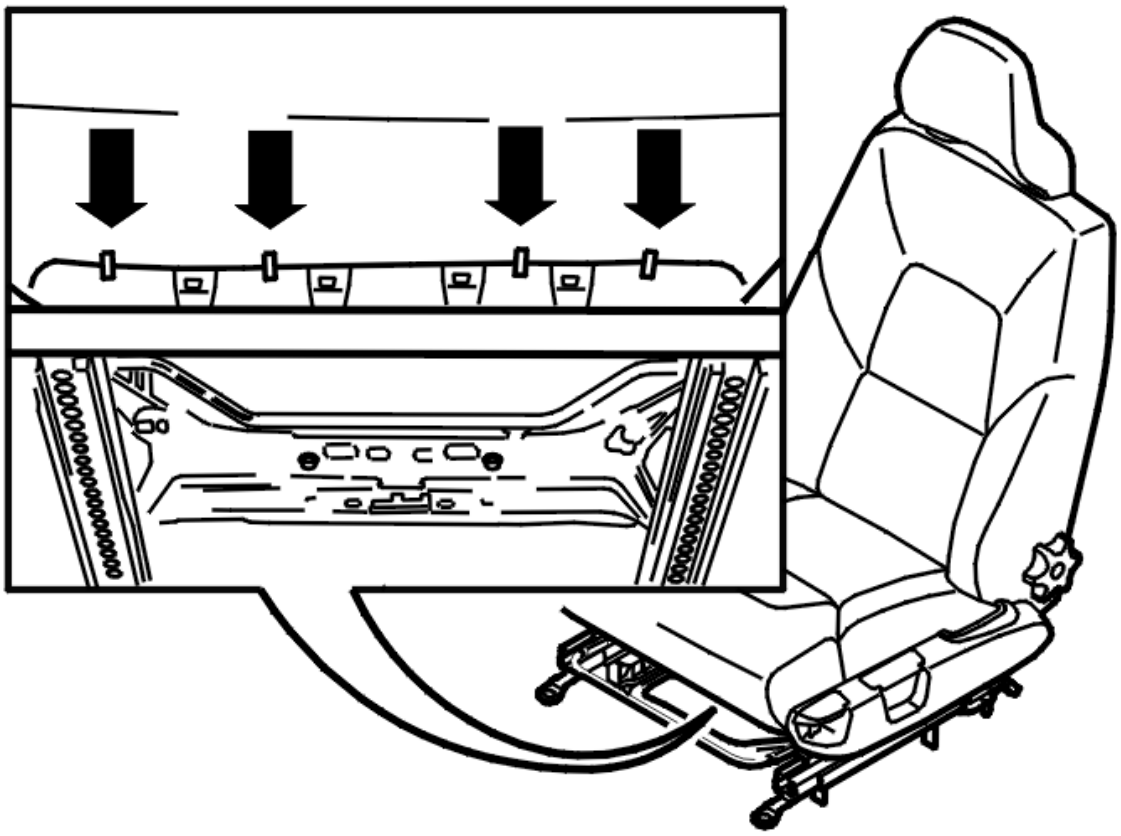

Fig. 88: Half Moon Clips From Front Edge Of Seat Cushion
Courtesy of VOLVO CARS CORPORATION

- the half moon clips, 4 per side, from the front edge of the seat cushion.

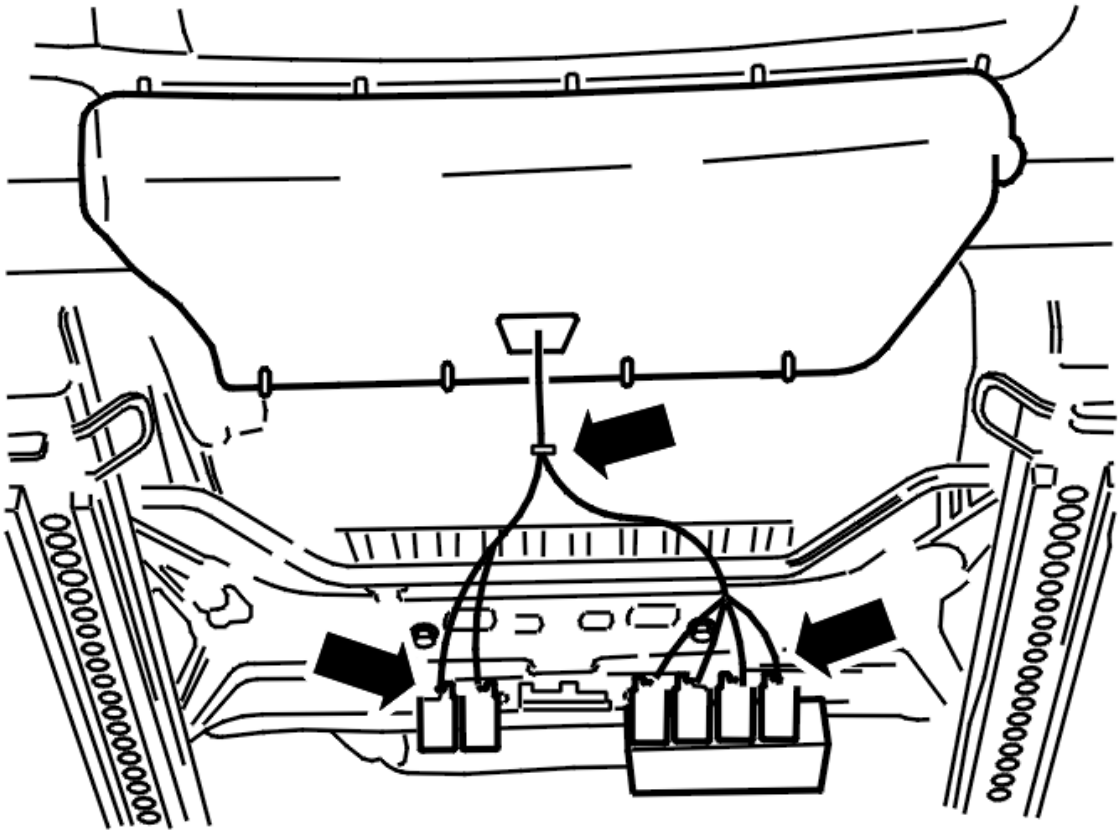

Fig. 89: Identifying Tie Straps Around Cable Harness
Courtesy of VOLVO CARS CORPORATION

- all the connectors
- the tie straps around the cable harness.

Thread each connector individually through the hole in the seat cushion upholstery.

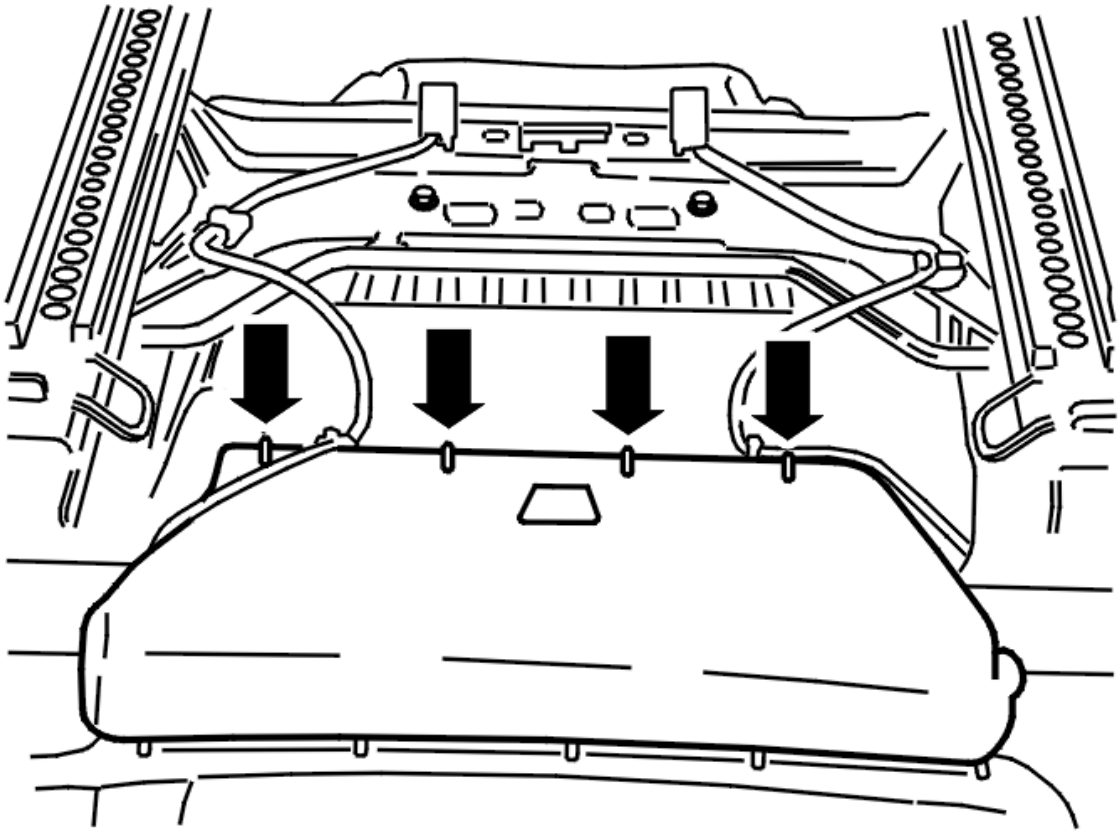

Fig. 90: Half Moon Clips From Underside Of Rear Edge
Courtesy of VOLVO CARS CORPORATION

Remove:

- the half moon clips, 4, from the underside of the rear edge.

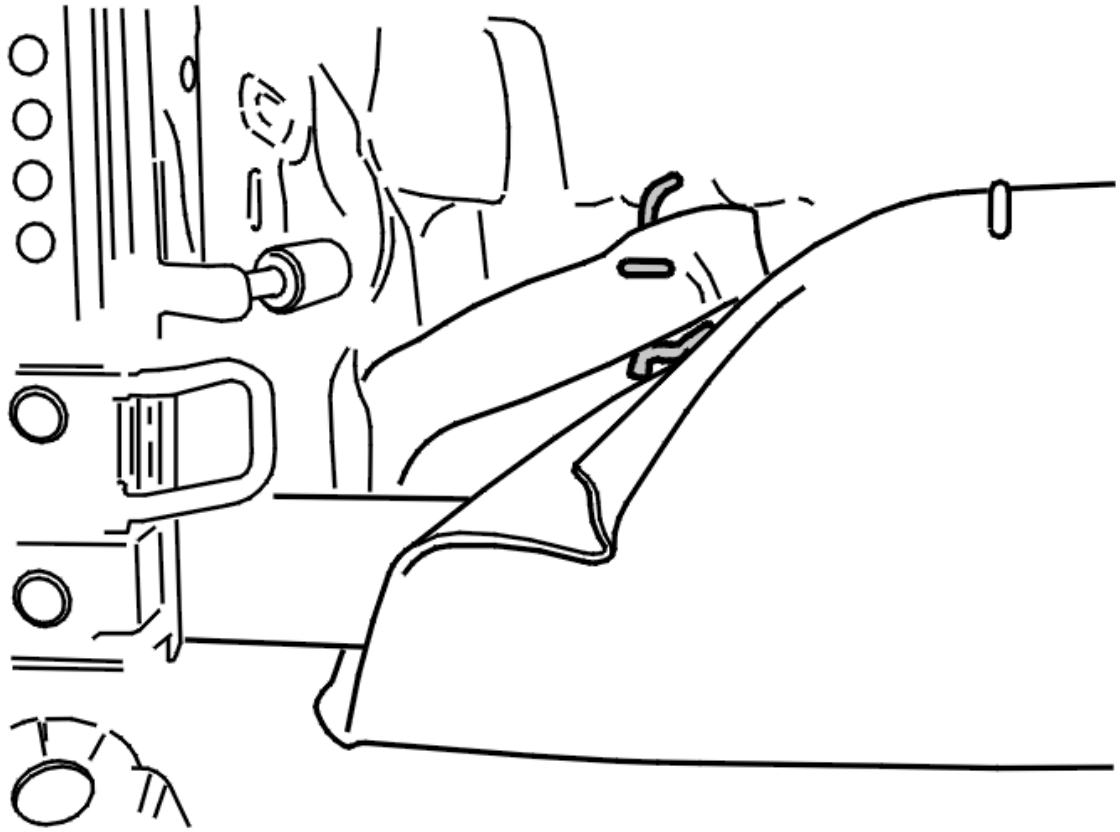

Fig. 91: Bottoms Of Half Moon Clips Are Located In Spring
Courtesy of VOLVO CARS CORPORATION

- the half moon clips, 1 on each side. The bottoms of the half moon clips are located in the spring.

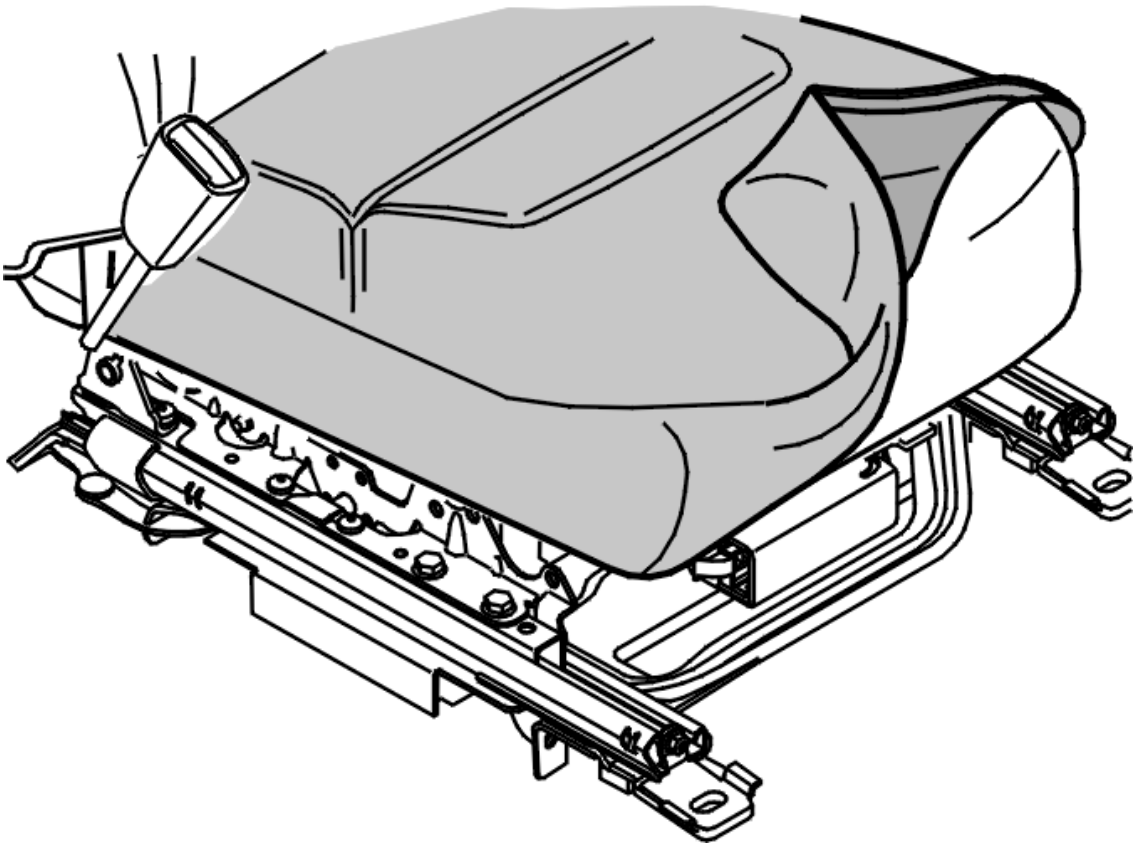

Fig. 92: Folding Up Upholstery
Courtesy of VOLVO CARS CORPORATION

Fold up the upholstery.

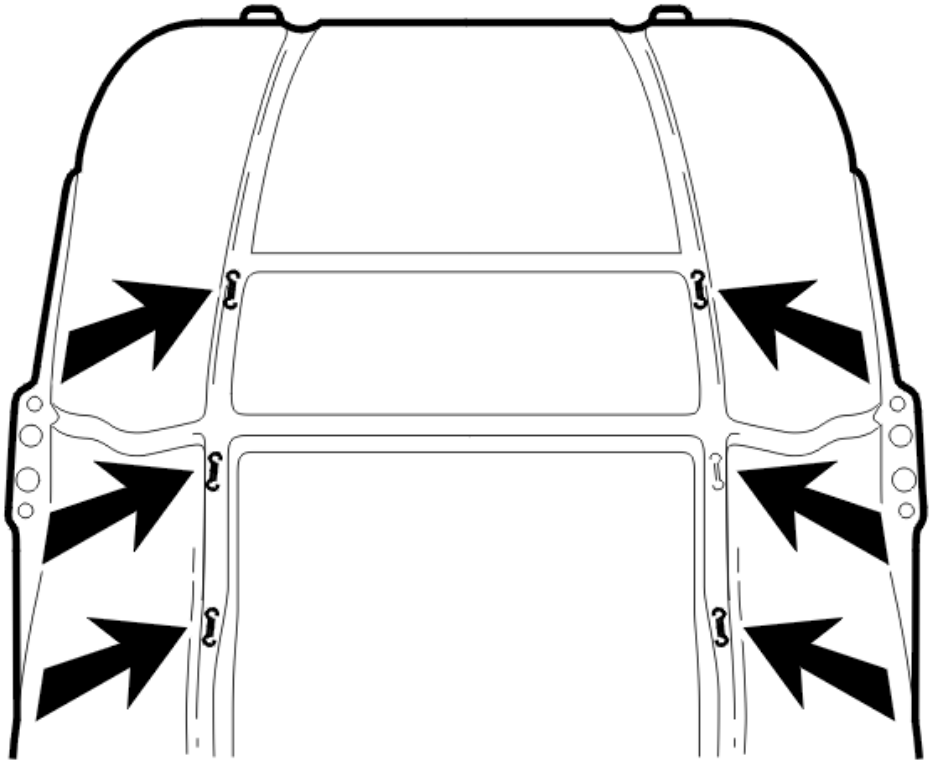

Fig. 93: Half Moon Clips On Each Front-Rear Channel
Courtesy of VOLVO CARS CORPORATION

Remove:

- the half moon clips, 3 on each front-rear channel.

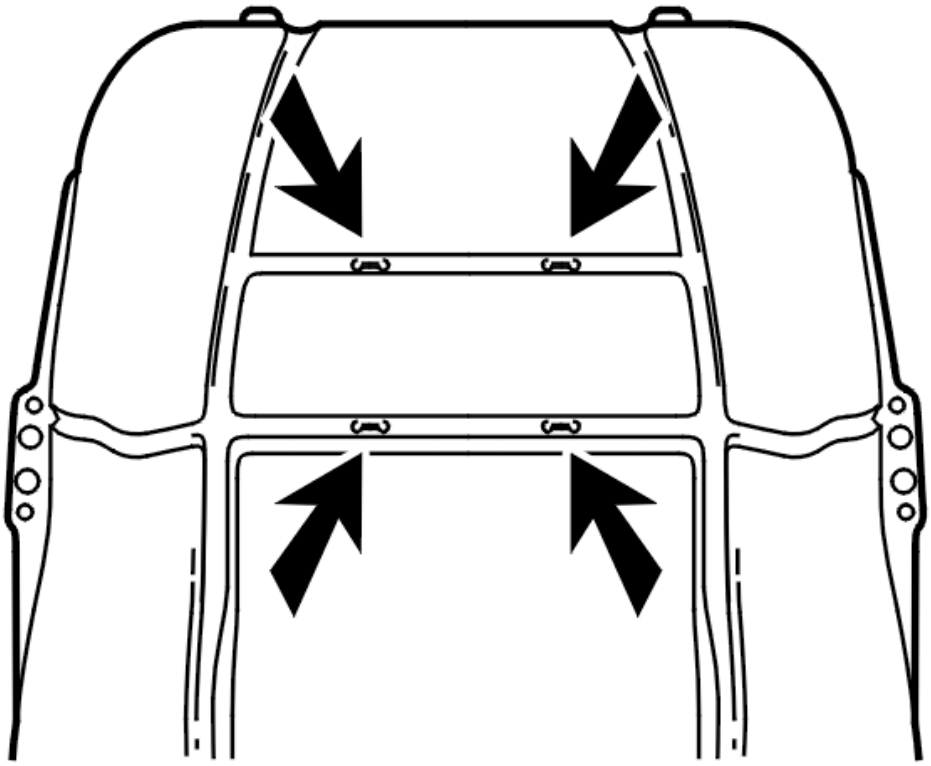

Fig. 94: Half Moon Clips On Each Lateral Channel
Courtesy of VOLVO CARS CORPORATION

- the half moon clips, 2 on each lateral channel.

Replace the upholstery.

INSTALLING SEAT CUSHION UPHOLSTERY

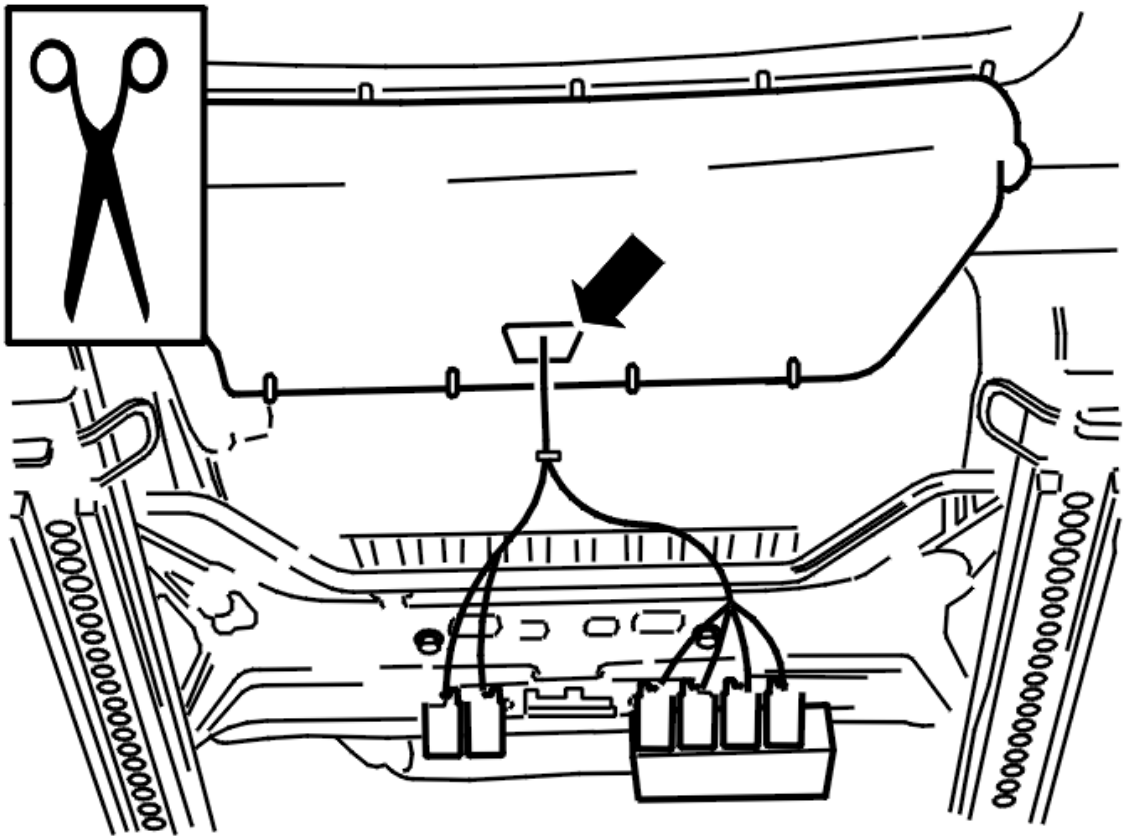

Fig. 95: Identifying Hole Cut In New Upholstery For Cable Harness
Courtesy of VOLVO CARS CORPORATION

NOTE: **A new hole for the cable harness must be cut in the new upholstery. Use the old upholstery as a template.**

Accurately measure and position the upholstery before securing it.

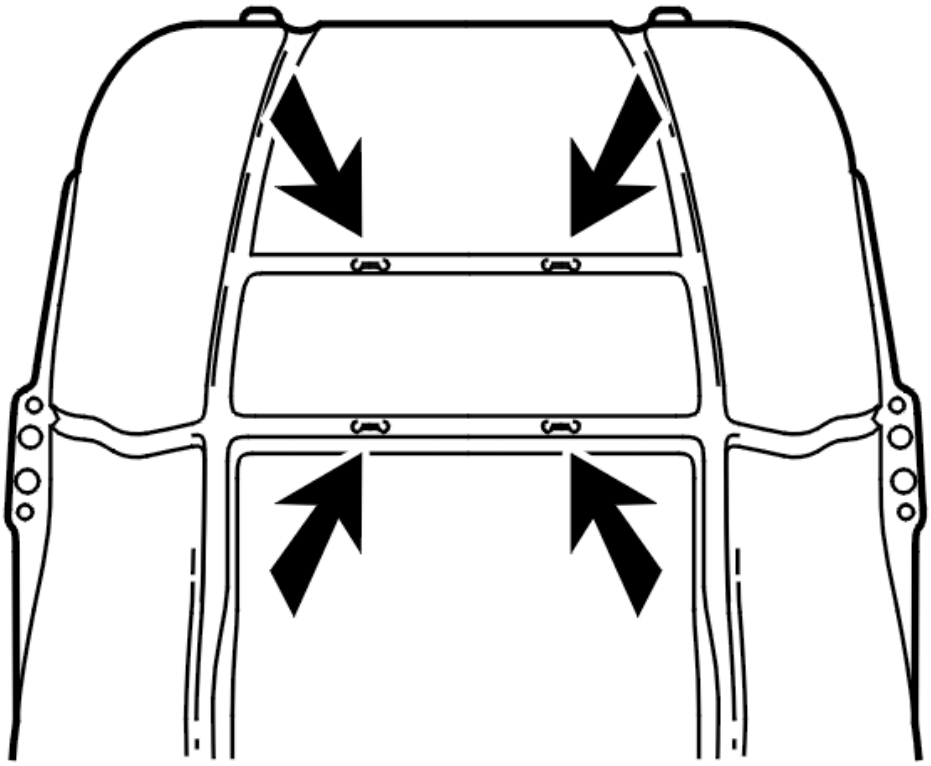

Fig. 96: Half Moon Clips On Each Lateral Channel
Courtesy of VOLVO CARS CORPORATION

Install:

- the half moon clips, 2 on each lateral channel. Use special tool see **1158962** .

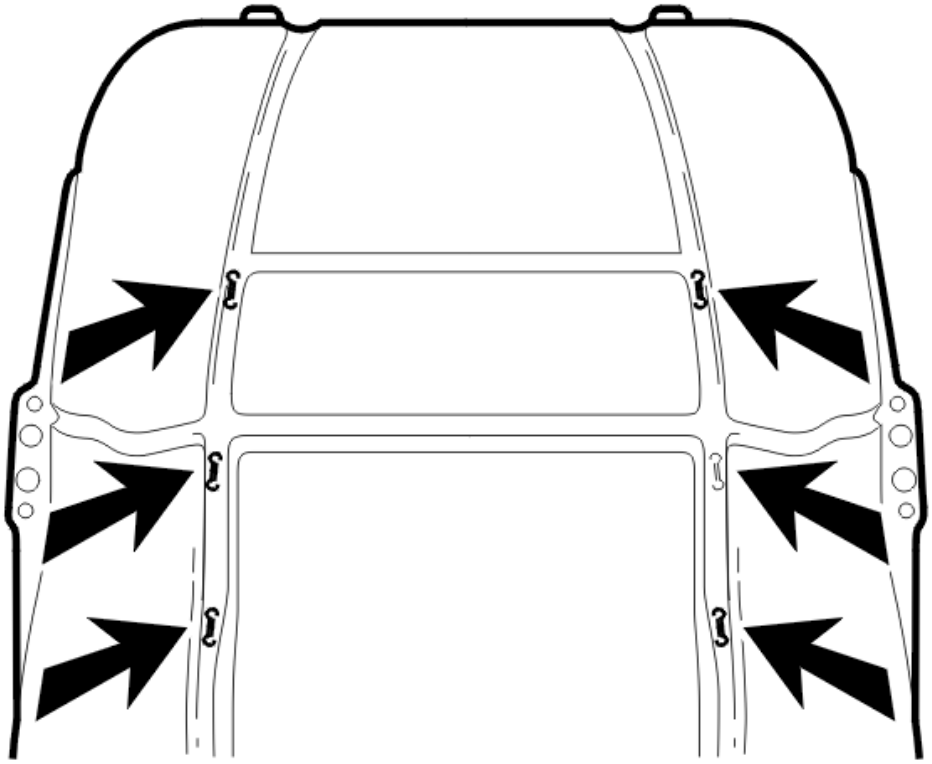

Fig. 97: Half Moon Clips On Each Front-Rear Channel
Courtesy of VOLVO CARS CORPORATION

- the half moon clips, 3 on each front-rear channel.

Pull the upholstery down.

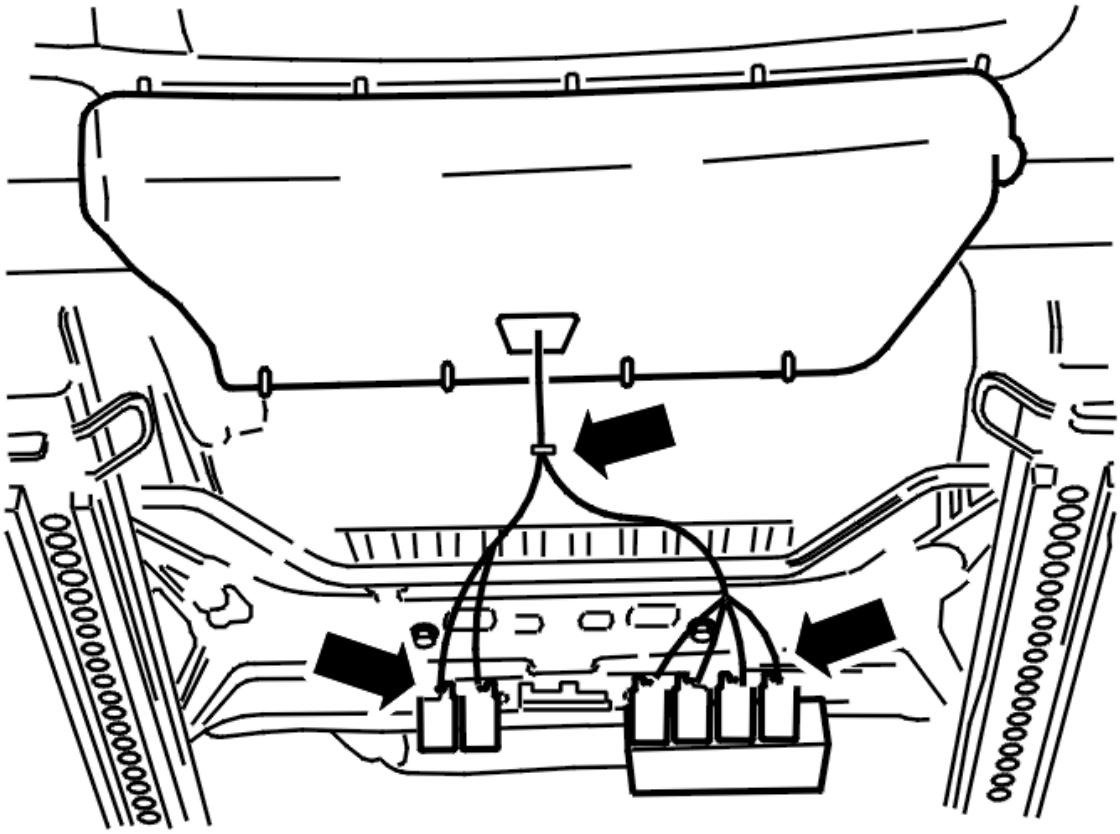

Fig. 98: Identifying Tie Straps Around Cable Harness
Courtesy of VOLVO CARS CORPORATION

Install:

- the half moon clips, 1 on each side, on the underside
- the half moon clips, 4 at the front edge of the seat cushion.

Thread the connectors through the hole in the upholstery.

Secure the connectors.

Secure the cable harness using tie straps.

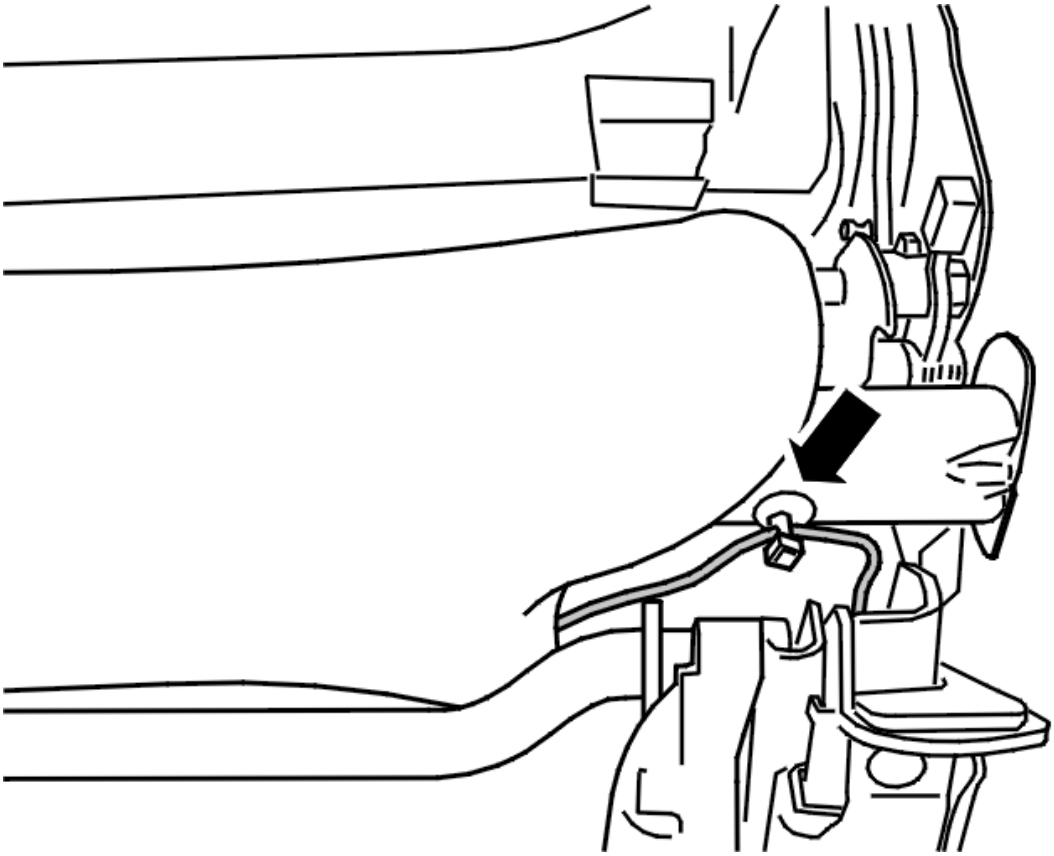

Fig. 99: Half Moon Clips On Underside Of Rear Edge
Courtesy of VOLVO CARS CORPORATION

NOTE: Note how the clip is located and how the wiring is routed.

Install:

- the half moon clips, 4, on the underside of the rear edge
- the half moon clips, 5 on each side, in the lower edge of the seat cushion.

FINISHING

Install the front seat. See **INSTALLING THE FRONT SEAT**.

WHIPLASH UNIT, REPLACING

REPLACING

As the illustrations in this service information are used for different model years and / or models, some variation may occur. However, the essential information in the illustrations is always correct.

PREPARATIONS

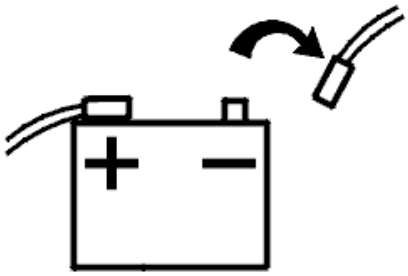

Fig. 100: Disconnecting Battery Lead
Courtesy of VOLVO CARS CORPORATION

Remove the battery lead. See **BATTERY, DISCONNECTING** .

REMOVING THE WHIPLASH UNIT

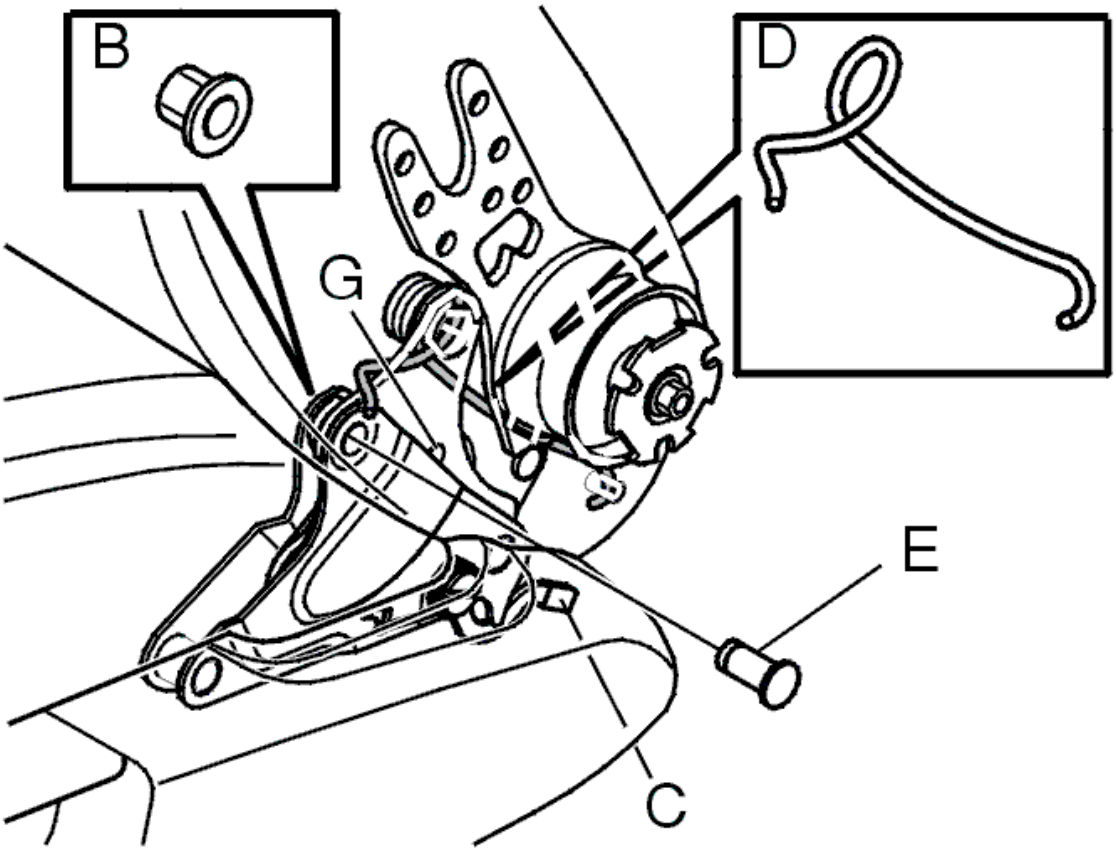

Fig. 101: Identifying Lumbar Support Adjustment Knob Components
Courtesy of VOLVO CARS CORPORATION

Remove the front seat. See **REMOVING THE FRONT SEAT**.

Fold the backrest forwards. Use the adjustment mechanism (C).

Remove the 5 half moon clips at the lower edge of the backrest cushion

Remove the spring (D) at the rear edge of the seat.

WARNING: Be careful when detaching the spring.

HINT: Use a pipe wrench or similar when detaching the spring so that it does not damage the upholstery or fingers.

Remove:

- the screw (E), 1 per side
- the nut (B), 1 per side.

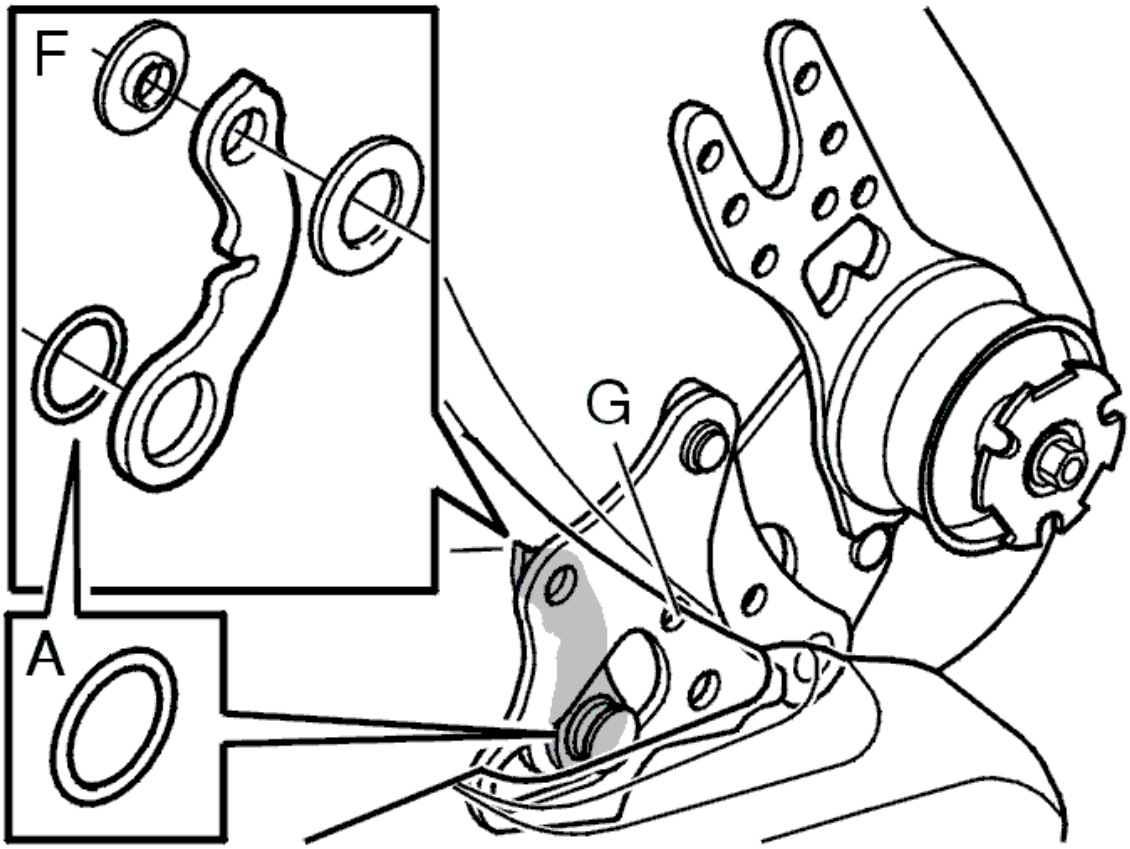

Fig. 102: Deformation Element, Plastic Washers And O-Ring
Courtesy of VOLVO CARS CORPORATION

Pull apart the backrest and seat cushion so that the whiplash element is released.

Remove the whiplash element by twisting it and angling it out.

NOTE: The whiplash unit can only be removed from a particular position.

HINT: Note the position of the friction washers before disassembly.

Remove:

- the deformation element (F) and the 2 friction washers
- the O-ring (A).

Replace the whiplash unit.

INSTALLING THE WHIPLASH UNIT

Install:

- a new whiplash unit
- new plastic washers if the old ones are damaged.

NOTE: The plastic washers must be positioned correctly.

Install:

- a new O-ring if the old one is damaged
- the screws and nuts, 1 screwed joint per side. Tighten. See **SUMMARY OF TIGHTENING TORQUES FOR SPECIFIC COMPONENTS**
- the spring.

HINT: Stand behind the seat with the backrest cushion completely folded forward. Grasp the rear end of the spring using a pipe wrench and pull the spring into position.

NOTE: The end of the spring must be greased to stop it from making noise.

Check that the indicator is intact and that the whiplash unit is correctly positioned.

Install:

- the front seat. See **INSTALLING THE FRONT SEAT**
- the battery lead. See **BATTERY, DISCONNECTING** .

FRONT SEAT, DRIVER'S SEAT (2005-2012)

COLLISION PROTECTION UNIT FROM BEHIND FRONT SEAT (2007-2012)

REMOVING

NOTE: Removal steps in this procedure may contain installation details.

Only applies to vehicle with fixed backrest.

Remove the front seat according to: **FRONT SEAT, REPLACING**.

Fig. 103: Accessing Collision Protection Unit From Behind Front Seat (1 Of 24)
Courtesy of VOLVO CARS CORPORATION

CAUTION: The operation must be performed on both sides of the seat.

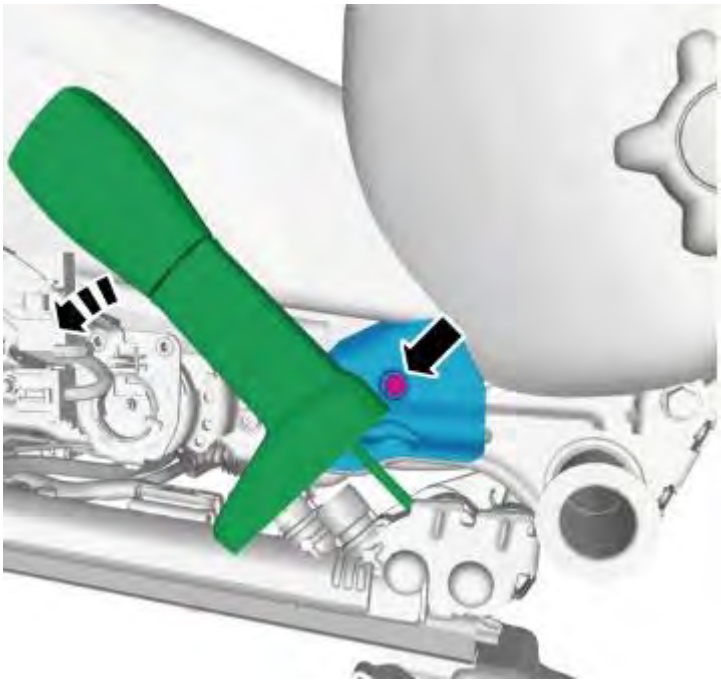

Fig. 104: Accessing Collision Protection Unit From Behind Front Seat (2 Of 24)
Courtesy of VOLVO CARS CORPORATION

NOTE: On both sides.

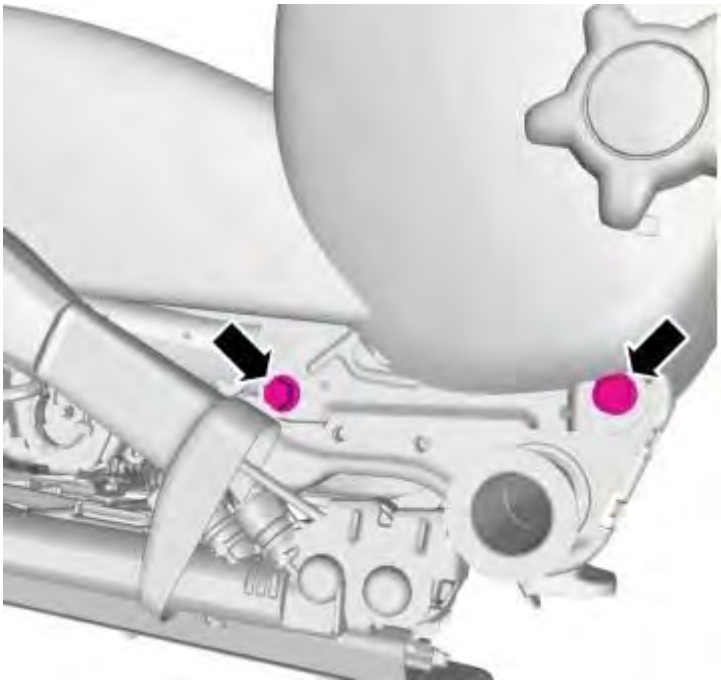

Fig. 105: Accessing Collision Protection Unit From Behind Front Seat (3 Of 24)
Courtesy of VOLVO CARS CORPORATION

NOTE: On both sides.

Torque: Backrest cushion to seat cushion

45 Nm

.

Loosen and fold aside the backrest cushion's upholstery according to: **UPHOLSTERY BACK REST, REPLACING (2009-2012)**.

Fig. 106: Accessing Collision Protection Unit From Behind Front Seat (4 Of 24)
Courtesy of VOLVO CARS CORPORATION

WARNING: **Be extra careful when handling the compressed spring.**

Fig. 107: Accessing Collision Protection Unit From Behind Front Seat (5 Of 24)
Courtesy of VOLVO CARS CORPORATION

Torque: Fitting bolt, hinge

18 Nm

.

Torque: Hinge bracket to backrest

9 Nm

.

Fig. 108: Accessing Collision Protection Unit From Behind Front Seat (6 Of 24)
Courtesy of VOLVO CARS CORPORATION

Fig. 109: Accessing Collision Protection Unit From Behind Front Seat (7 Of 24)
Courtesy of VOLVO CARS CORPORATION

Fig. 110: Accessing Collision Protection Unit From Behind Front Seat (8 Of 24)
Courtesy of VOLVO CARS CORPORATION

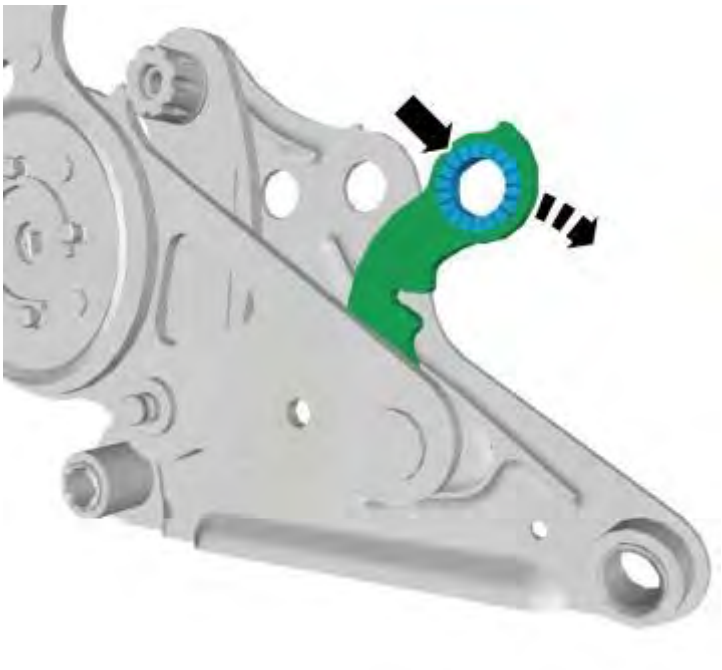

Fig. 111: Accessing Collision Protection Unit From Behind Front Seat (9 Of 24)
Courtesy of VOLVO CARS CORPORATION

Fig. 112: Accessing Collision Protection Unit From Behind Front Seat (10 Of 24)
Courtesy of VOLVO CARS CORPORATION

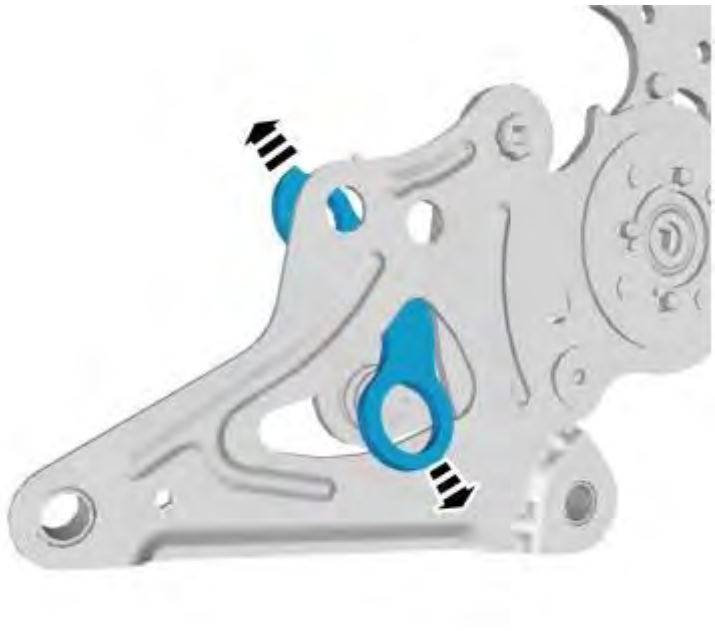

Fig. 113: Accessing Collision Protection Unit From Behind Front Seat (11 Of 24)
Courtesy of VOLVO CARS CORPORATION

Fig. 114: Accessing Collision Protection Unit From Behind Front Seat (12 Of 24)
Courtesy of VOLVO CARS CORPORATION

REPLACING

Only applies to vehicle with foldable backrest.

Remove the front seat according to: **FRONT SEAT, REPLACING**.

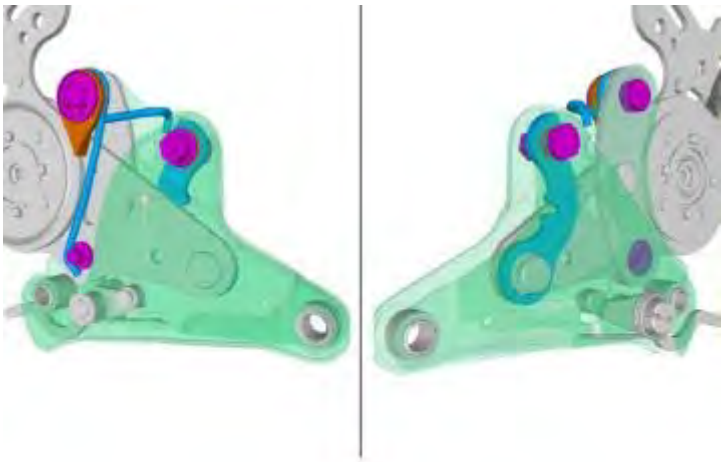

Fig. 115: Accessing Collision Protection Unit From Behind Front Seat (13 Of 24)

Courtesy of VOLVO CARS CORPORATION

CAUTION: The operation must be performed on both sides of the seat.

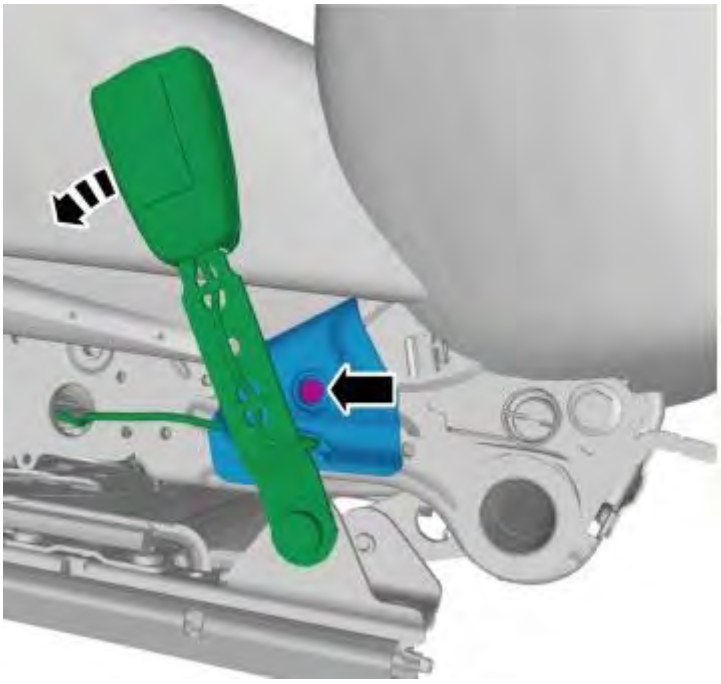

Fig. 116: Accessing Collision Protection Unit From Behind Front Seat (14 Of 24)
Courtesy of VOLVO CARS CORPORATION

NOTE: On both sides.

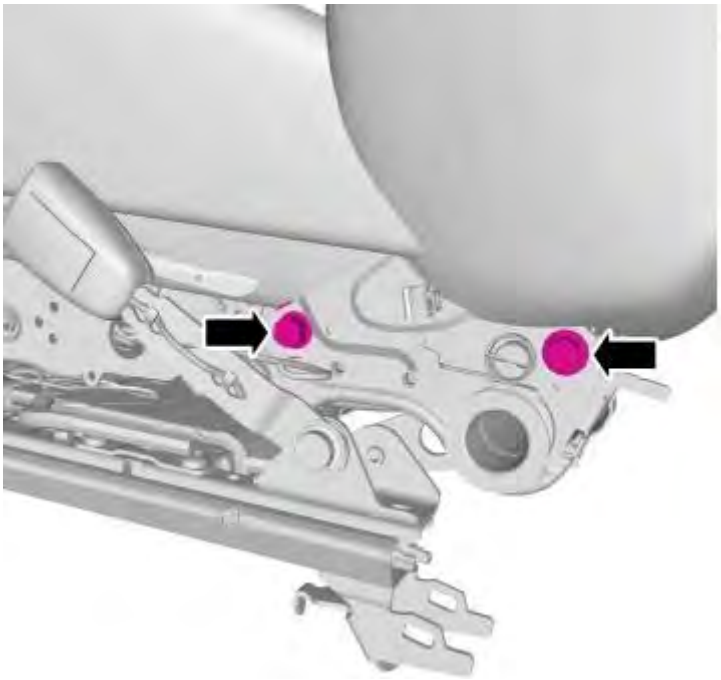

Fig. 117: Accessing Collision Protection Unit From Behind Front Seat (15 Of 24)
Courtesy of VOLVO CARS CORPORATION

NOTE: On both sides.

Torque: Backrest cushion to seat cushion

45 Nm

.

Loosen and fold aside the backrest cushion's upholstery according to: **UPHOLSTERY BACK REST, REPLACING (2009-2012)**.

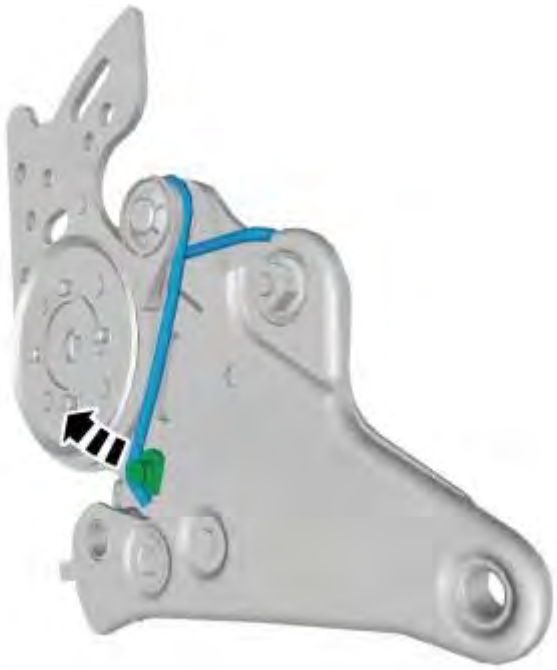

Fig. 118: Accessing Collision Protection Unit From Behind Front Seat (16 Of 24)
Courtesy of VOLVO CARS CORPORATION

WARNING: **Be extra careful when handling the compressed spring.**

Fig. 119: Accessing Collision Protection Unit From Behind Front Seat (17 Of 24)
Courtesy of VOLVO CARS CORPORATION

Torque: Fitting bolt, hinge

18 Nm

.

Fig. 120: Accessing Collision Protection Unit From Behind Front Seat (18 Of 24)
Courtesy of VOLVO CARS CORPORATION

Fig. 121: Accessing Collision Protection Unit From Behind Front Seat (19 Of 24)

Courtesy of VOLVO CARS CORPORATION

Fig. 122: Accessing Collision Protection Unit From Behind Front Seat (20 Of 24)
Courtesy of VOLVO CARS CORPORATION

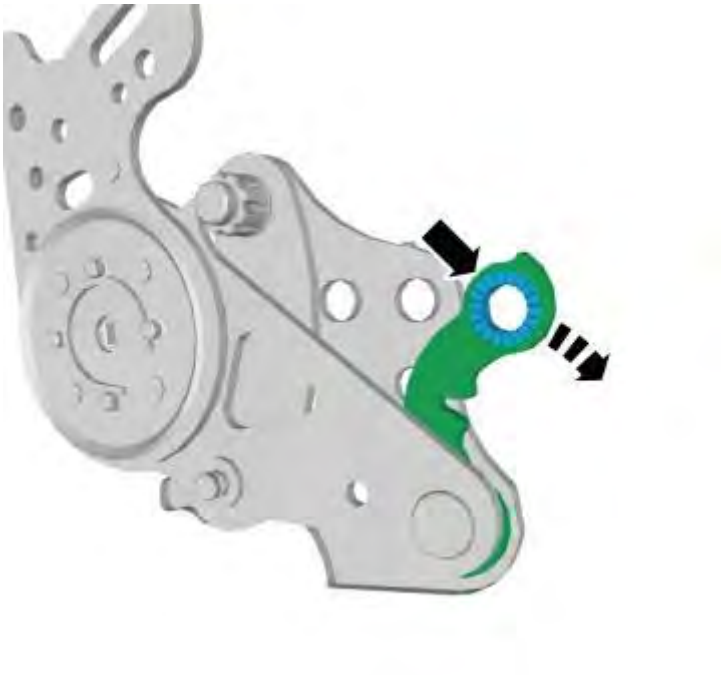

Fig. 123: Accessing Collision Protection Unit From Behind Front Seat (21 Of 24)
Courtesy of VOLVO CARS CORPORATION

Fig. 124: Accessing Collision Protection Unit From Behind Front Seat (22 Of 24)
Courtesy of VOLVO CARS CORPORATION

Fig. 125: Accessing Collision Protection Unit From Behind Front Seat (23 Of 24)
Courtesy of VOLVO CARS CORPORATION

Fig. 126: Accessing Collision Protection Unit From Behind Front Seat (24 Of 24)
Courtesy of VOLVO CARS CORPORATION

INSTALLATION

To install, reverse the removal procedure

ELECTRIC MOTOR BACKREST CUSHION, REPLACING

NOTE: **The illustrations in this service information are used for different model years and/or models. Some variation may occur. However, the essential information in the illustrations is always correct.**

REMOVAL

REMOVING THE ELECTRIC MOTOR FOR THE BACKREST CUSHION

Remove the front seat. See: **FRONT SEAT, REPLACING**.

Detach and pull up the upholstery. See: **UPHOLSTERY BACK REST, REPLACING (2009-2012)**.

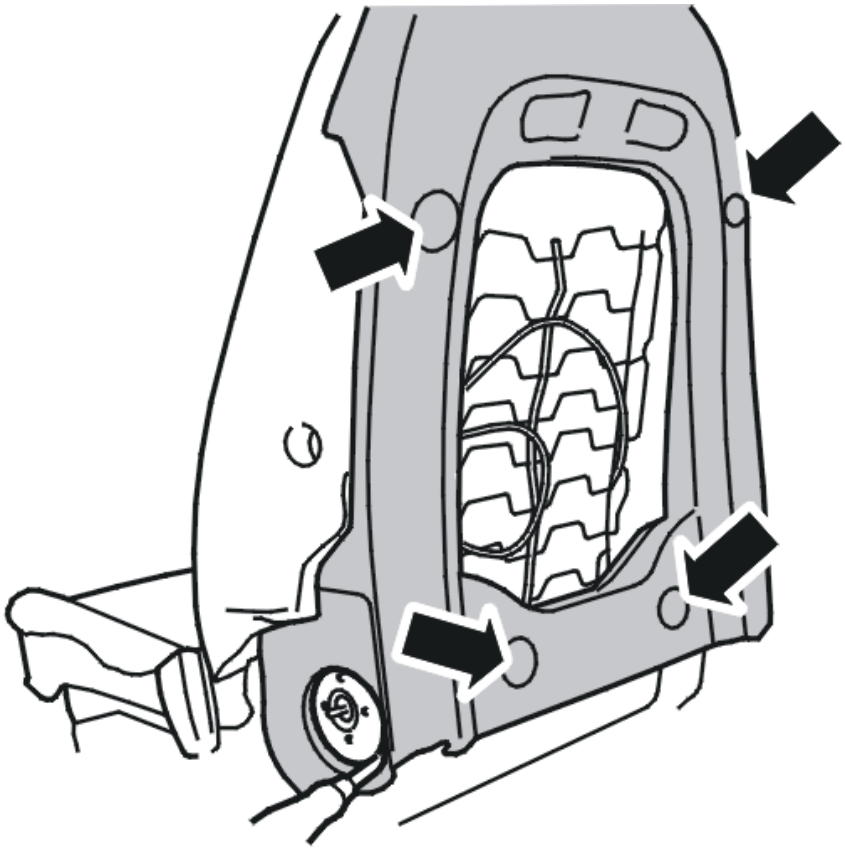

Fig. 127: Locating Protective Pad Clips
Courtesy of VOLVO CARS CORPORATION

Remove the black protective pad from the reverse of the backrest cushion. It is secured by 4 clips.

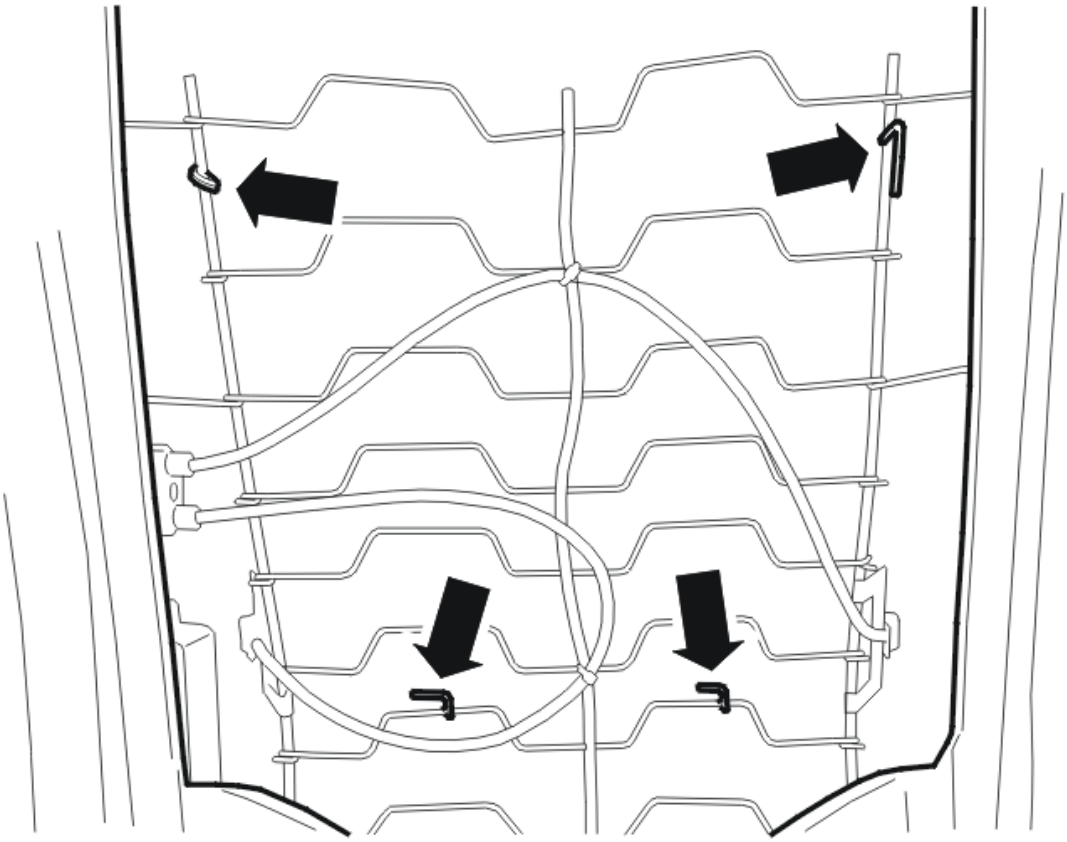

Fig. 128: Foam Rubber Cushion Half Moon Clips
Courtesy of VOLVO CARS CORPORATION

Cut off the 4 x half moon clips on the foam rubber cushion. Fold the cushion to one side.

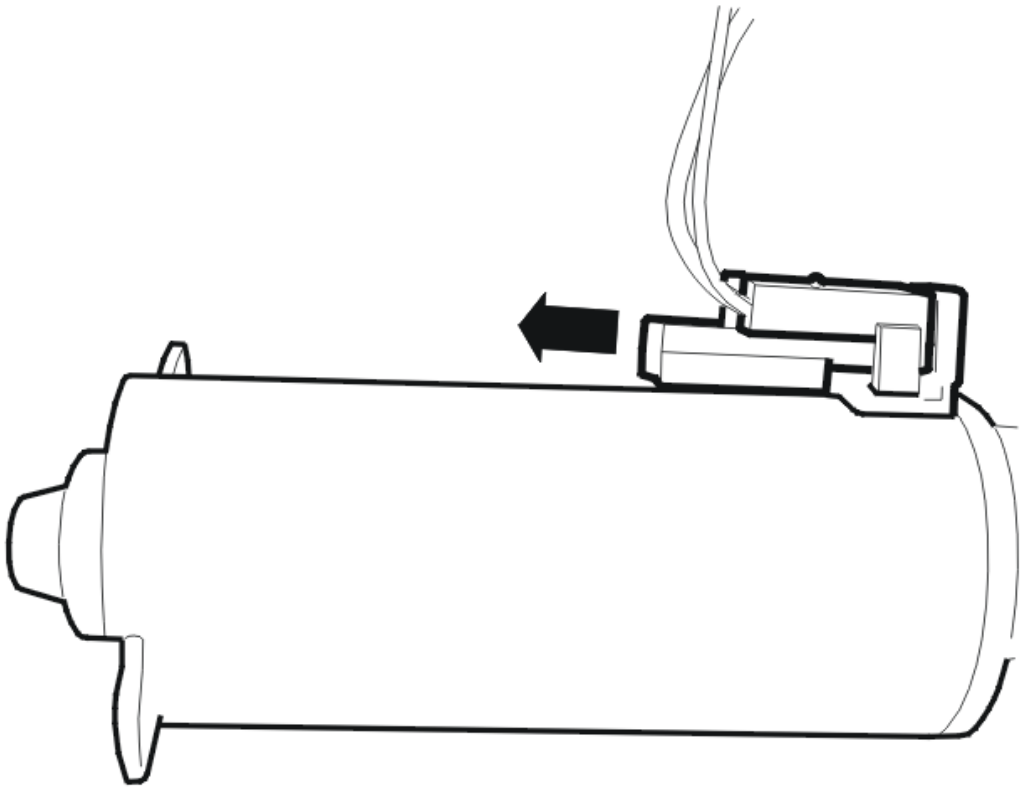

Fig. 129: Identifying Connector Removal
Courtesy of VOLVO CARS CORPORATION

Remove:

- the M6 nut on the side where the electric motor is located. Pull out the shaft
- the screw for the electric motor
- the connector by pushing it backwards.

INSTALLATION

NOTE: For tightening torques, see: TIGHTENING TORQUE .

INSTALL THE ELECTRIC MOTOR

Insert the shaft and hang the motor on it.

Install:

- the connector
- the screw
- 1 x M6 nut

- the backrest cushion
- the 4 x half moon clips
- the protective pad
- the upholstery. See: **UPHOLSTERY BACK REST, REPLACING (2009-2012)**
- the front seat. See: **FRONT SEAT, REPLACING**.

ELECTRIC MOTOR CUSHION, REPLACING

NOTE: **The illustrations in this service information are used for different model years and/or models. Some variation may occur. However, the essential information in the illustrations is always correct.**

INFORMATION

METHOD CONTENT

This method consists of:

- see **ELECTRIC MOTOR FRONT HEIGHT ADJUSTMENT, REPLACING**
- see **ELECTRIC MOTOR REAR HEIGHT ADJUSTMENT, REPLACING**
- see **ELECTRIC MOTOR FRONT-REAR ADJUSTMENT, REPLACING**.

ELECTRIC MOTOR FRONT HEIGHT ADJUSTMENT, REPLACING

REMOVING THE ELECTRIC MOTOR FRONT HEIGHT ADJUSTMENT

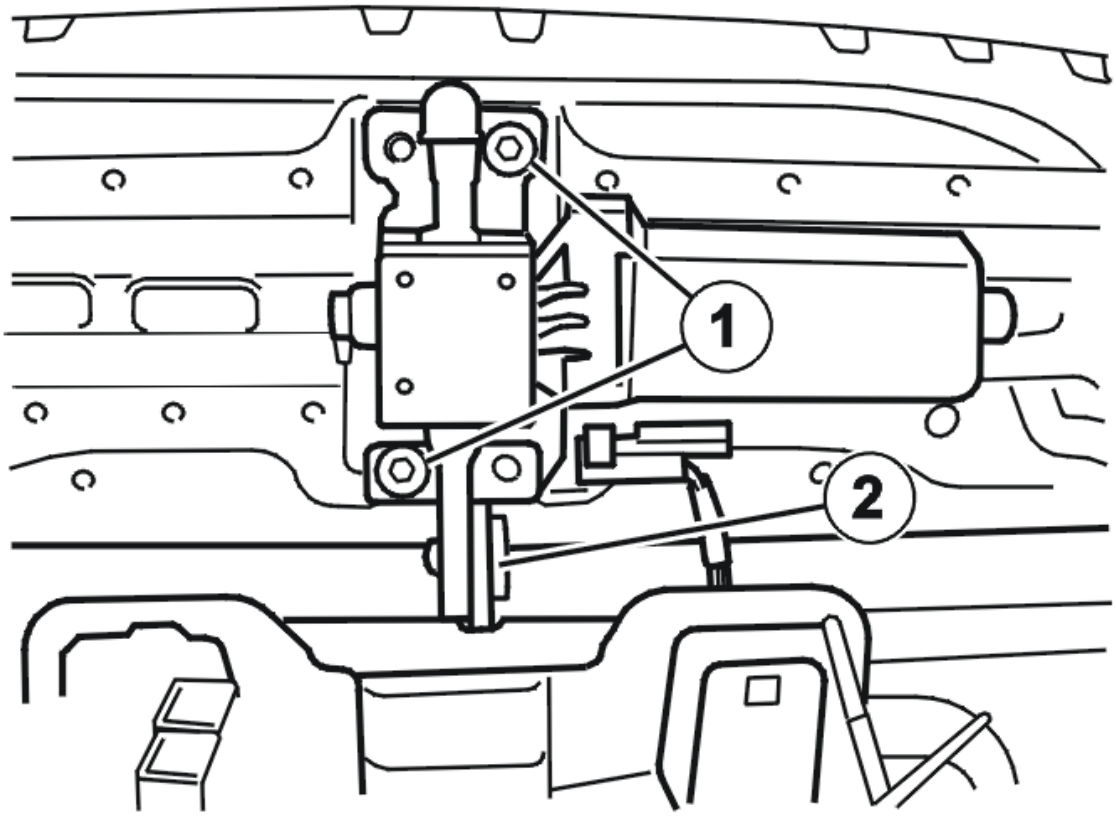

Fig. 130: Identifying M6 & M8 Screws
Courtesy of VOLVO CARS CORPORATION

Remove:

- the front seat. See: **FRONT SEAT, REPLACING**
- the 1 M6 screws (2)
- the M8 screw (2).

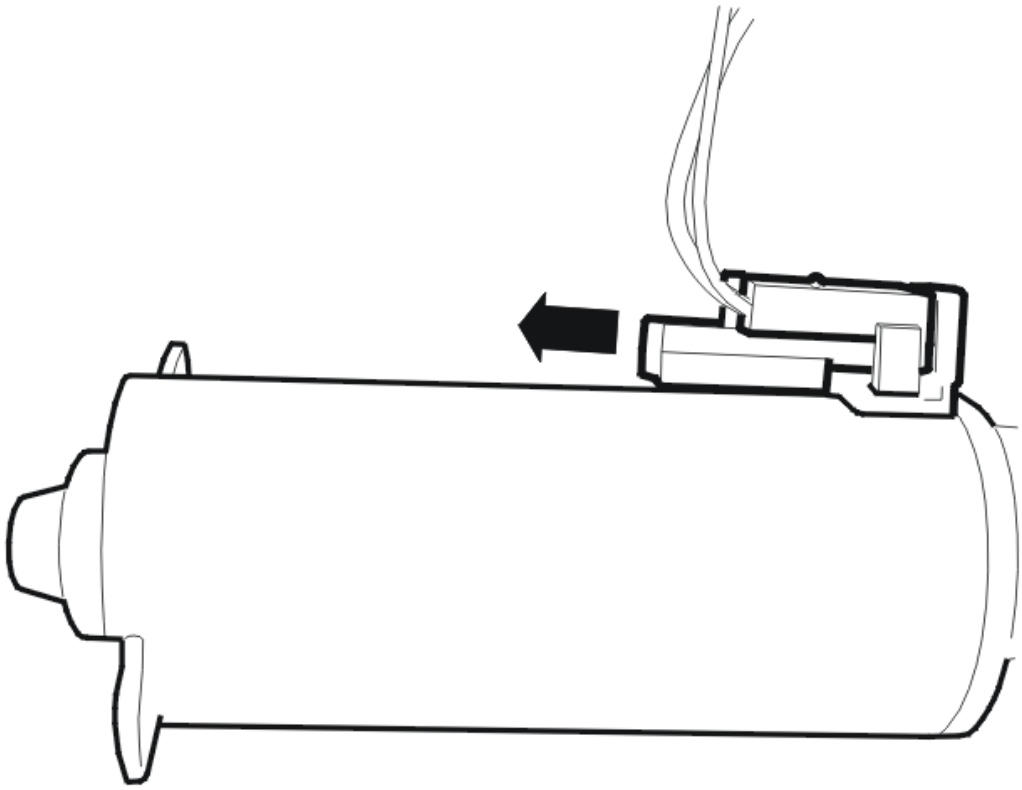

Fig. 131: Identifying Connector Removal
Courtesy of VOLVO CARS CORPORATION

Remove the connector by sliding it to one side.

INSTALLING THE ELECTRIC MOTOR FRONT HEIGHT ADJUSTMENT

NOTE: For tightening torques, see: TIGHTENING TORQUE .

Install:

- the connector
- the electric motor
- the 2 M6 screws
- the 1 M8 screw
- the front seat. See: **FRONT SEAT, REPLACING**.

ELECTRIC MOTOR REAR HEIGHT ADJUSTMENT, REPLACING

REMOVING THE ELECTRIC MOTOR REAR HEIGHT ADJUSTMENT

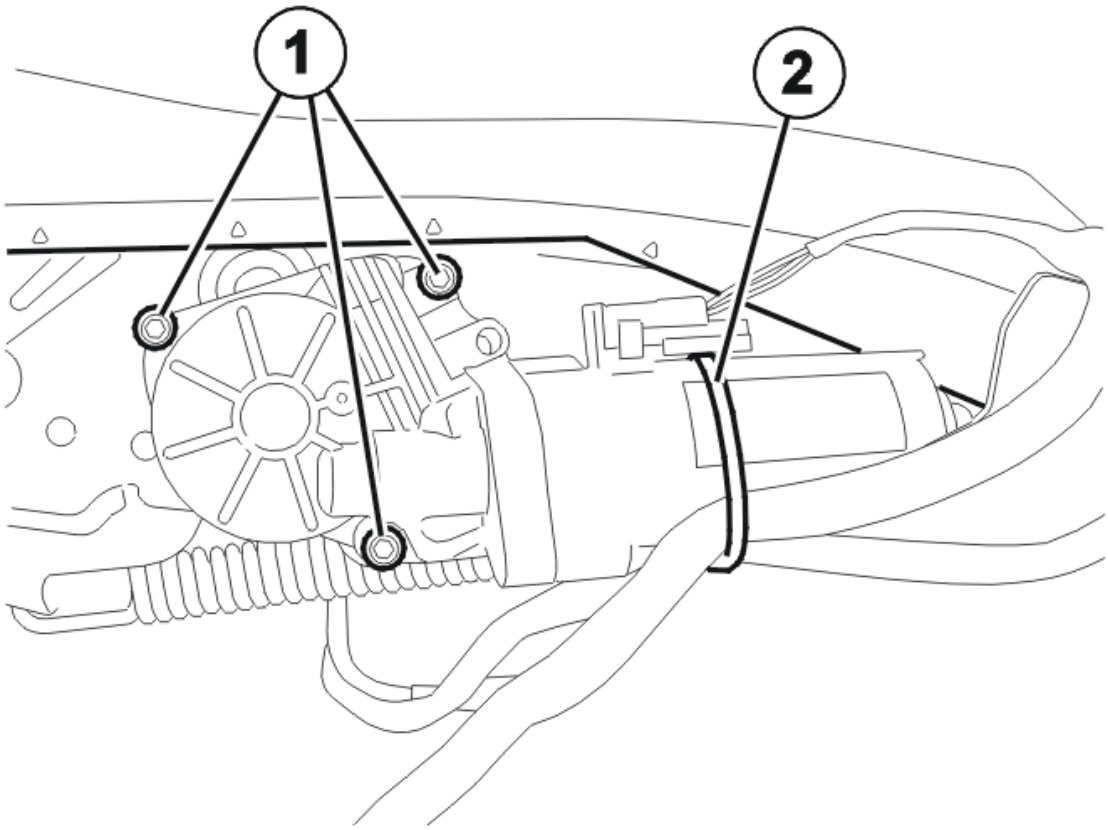

Fig. 132: Electric Motor Rear Height Adjustment
Courtesy of VOLVO CARS CORPORATION

Raise the seat to the uppermost position.

Remove:

- the side panel. See: **SIDE PANEL FRONT SEAT, REPLACING**
- the tie strap (2)
- the 3 screws (1).

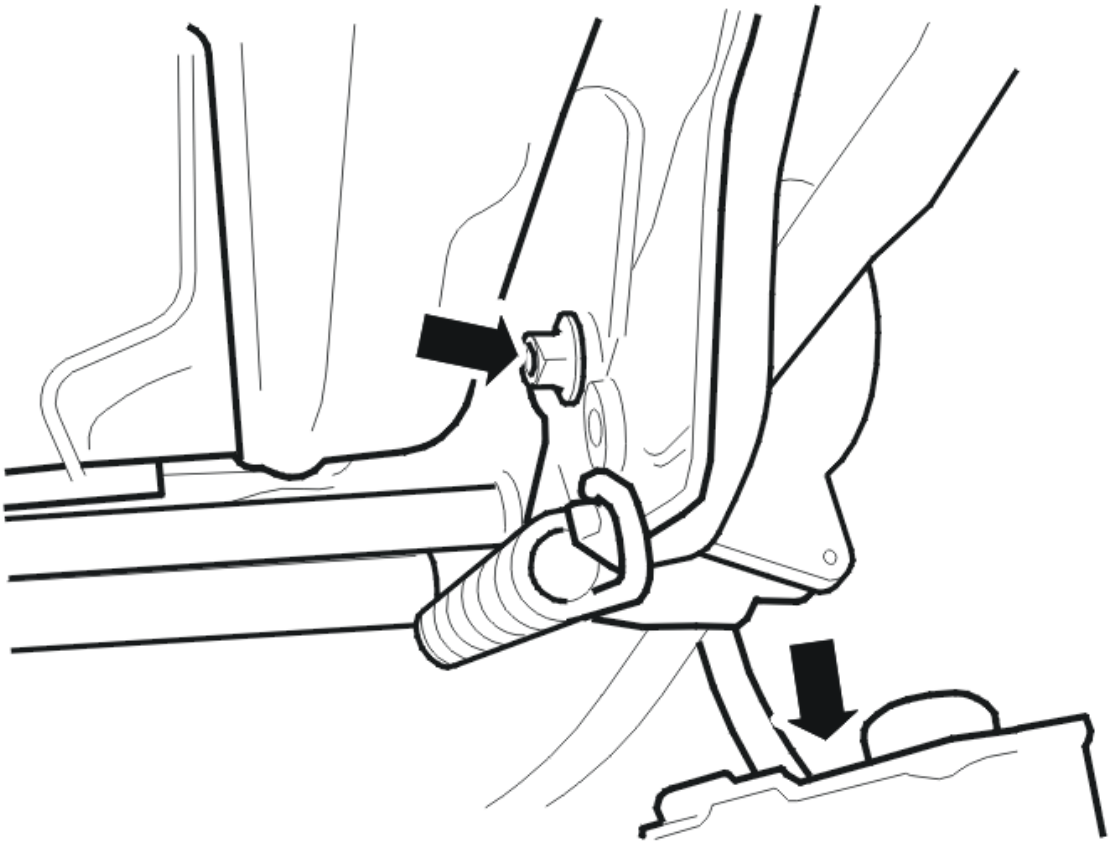

Fig. 133: Identifying M6 Screw & Electric Motor
Courtesy of VOLVO CARS CORPORATION

- the 1 M6 screw
- the electric motor.

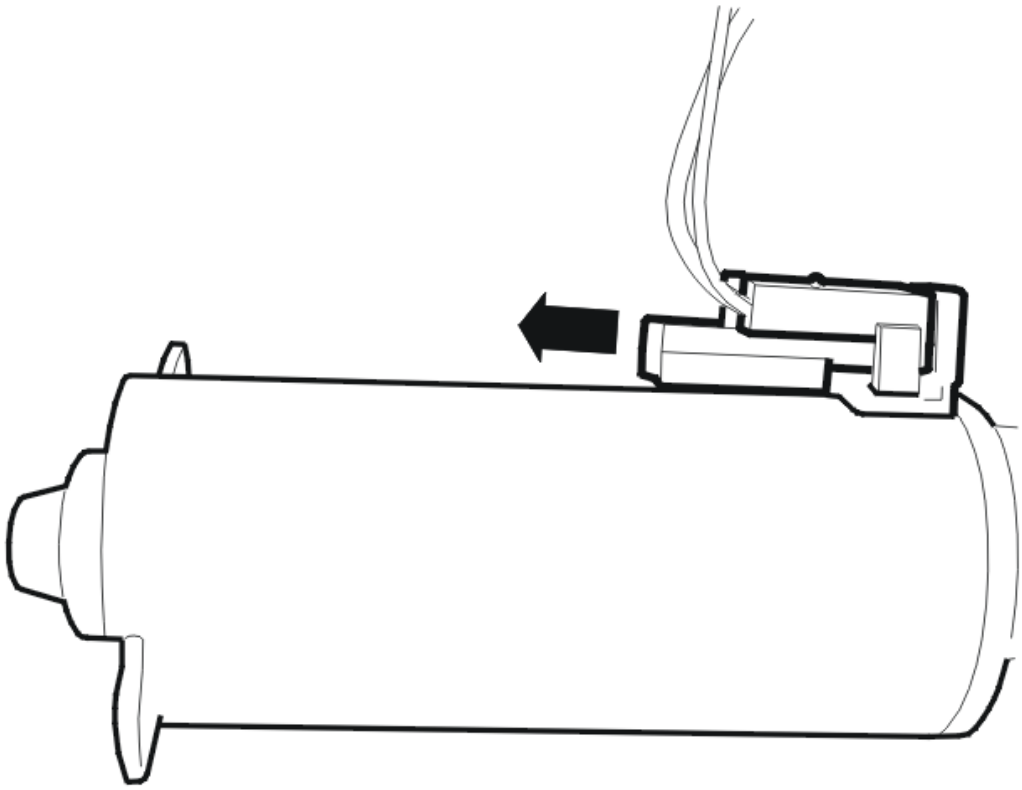

Fig. 134: Identifying Connector Removal
Courtesy of VOLVO CARS CORPORATION

Remove the connector by sliding it to one side.

INSTALLING THE ELECTRIC MOTOR REAR HEIGHT ADJUSTMENT

NOTE: For tightening torques, see: TIGHTENING TORQUE .

Install:

- the connector
- the electric motor
- the 3 M6 screws
- the 1 M6 screw
- the tie strap
- the side panel. See: **SIDE PANEL FRONT SEAT, REPLACING**.

ELECTRIC MOTOR FRONT-REAR ADJUSTMENT, REPLACING

REMOVING ELECTRIC MOTOR FRONT-REAR ADJUSTMENT

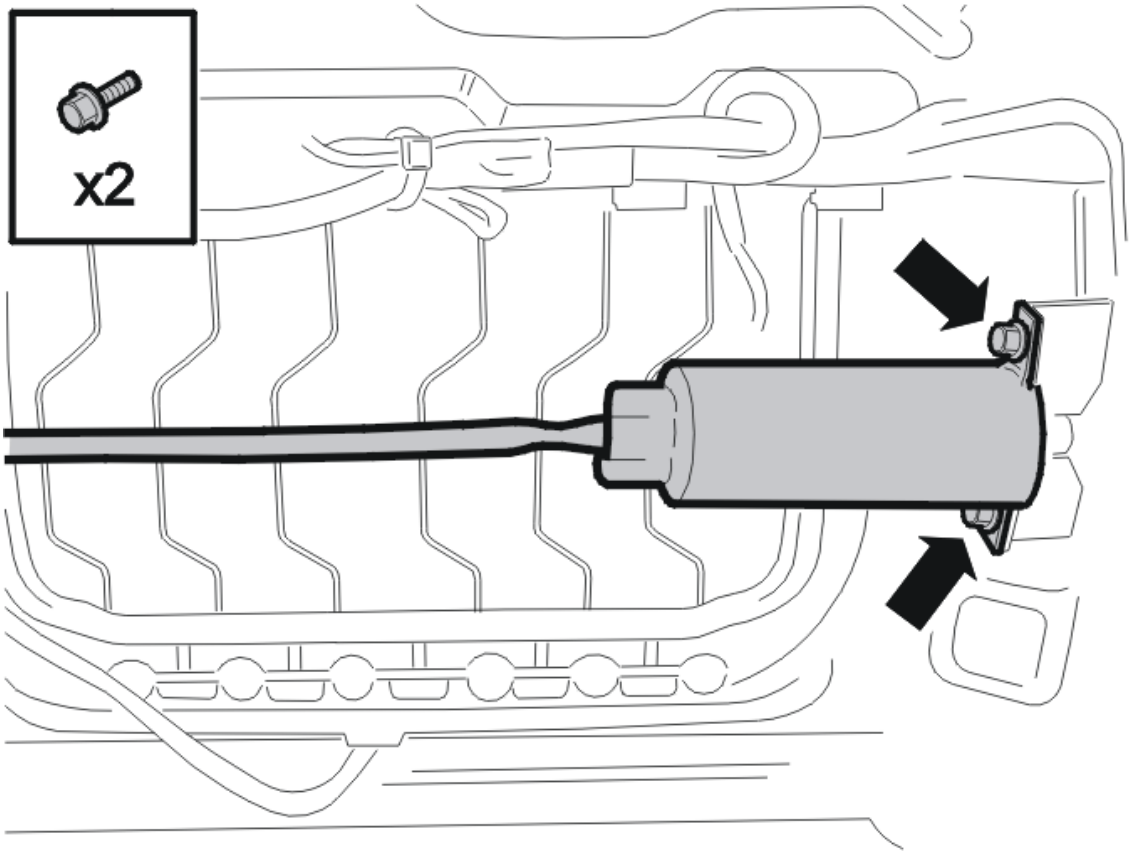

Fig. 135: Electric Motor And Mechanical Cables
Courtesy of VOLVO CARS CORPORATION

Remove:

- the front seat. See: **FRONT SEAT, REPLACING**
- the 2 M5 screws
- the electric motor and the mechanical cables.

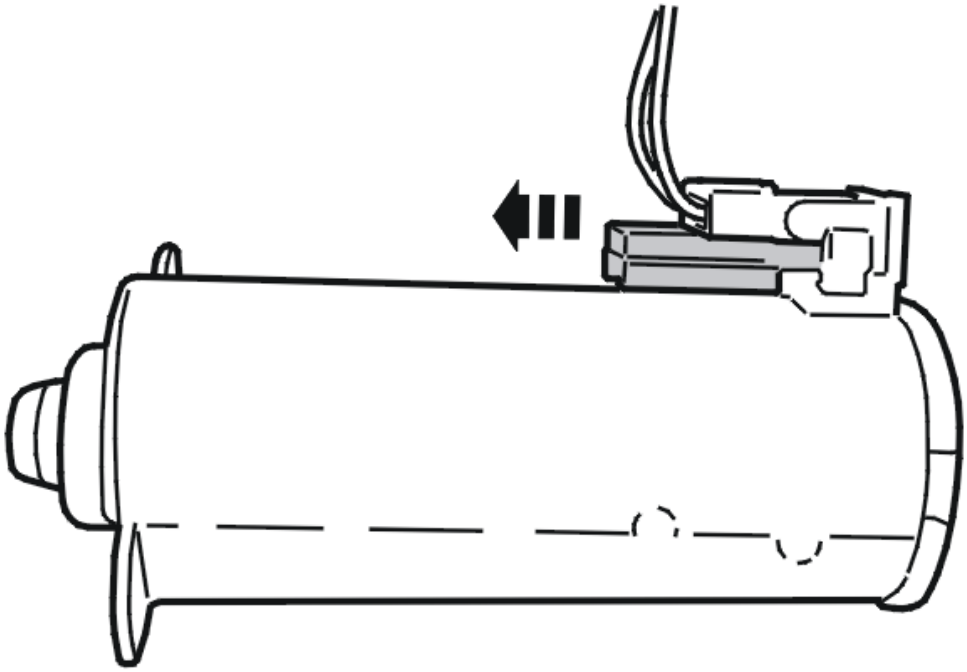

Fig. 136: Identifying Connector Removal
Courtesy of VOLVO CARS CORPORATION

Remove the connector by sliding it straight backwards.

INSTALLING THE ELECTRIC MOTOR FRONT-REAR ADJUSTMENT

NOTE: For tightening torques, see: TIGHTENING TORQUE .

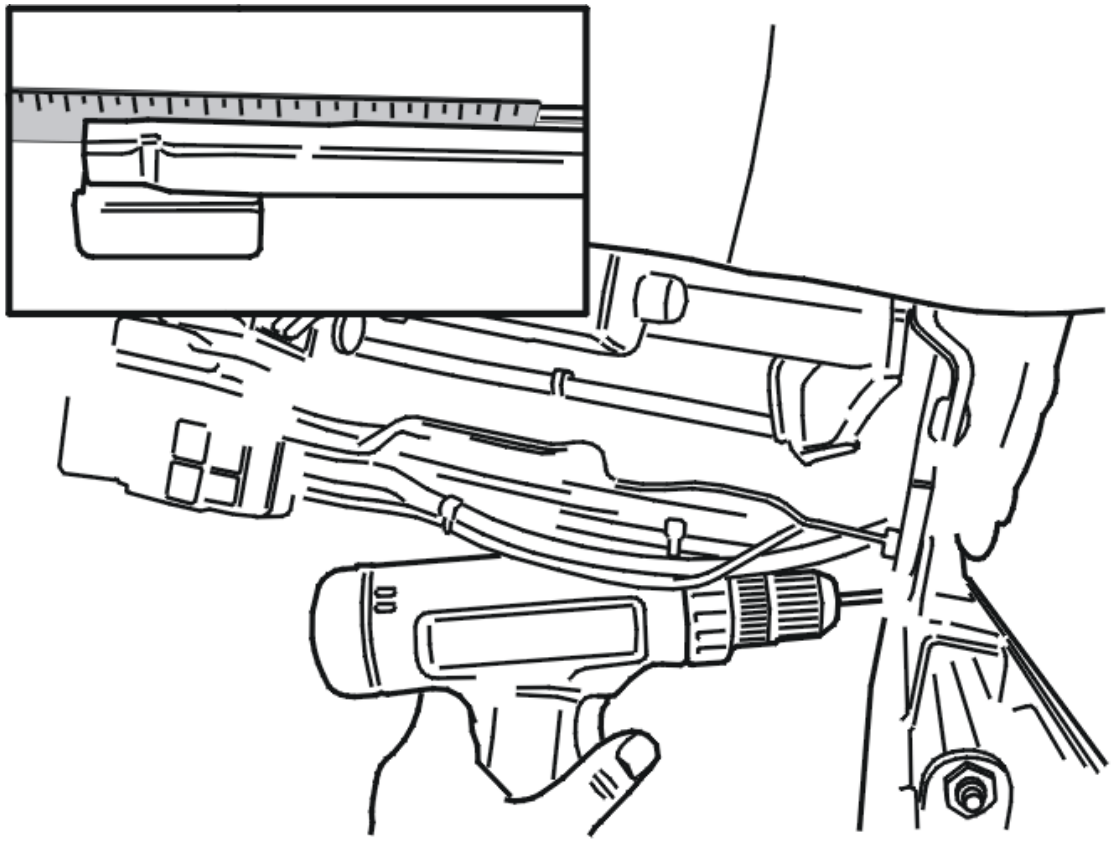

Fig. 137: Securing Short Mechanical Cable In A Power Screwdriver And Screw Until Rails Are Equal
Courtesy of VOLVO CARS CORPORATION

HINT: If the distance between the two rails differs, secure the short mechanical cable in a power screwdriver and screw until the rails are equal.

Install:

- the connector
- the electric motor and the mechanical cables
- the 2 M5 screws
- the front seat. See: **FRONT SEAT, REPLACING**.

ELECTRIC MOTOR, BACKREST RAKE (2009-2012)

Operation Number(s):

REMOVING

NOTE: Removal steps in this procedure may contain installation details.

Remove the backrest padding. See **UPHOLSTERY BACK REST, REPLACING (2009-2012)**

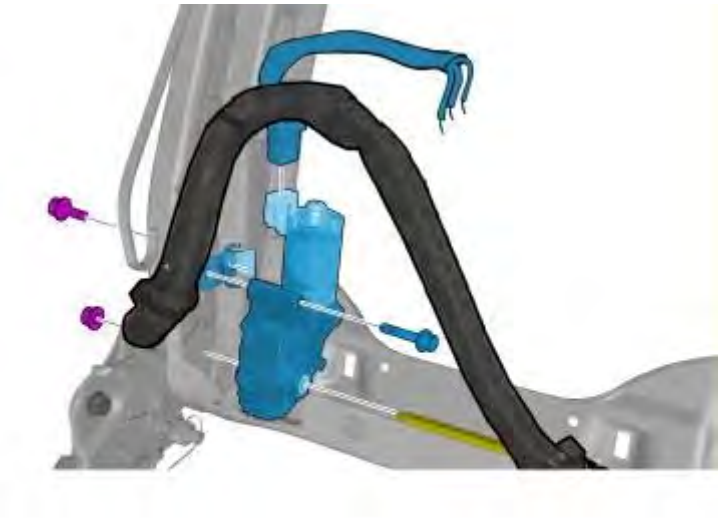

Fig. 138: Back Motor
Courtesy of VOLVO CARS CORPORATION

INSTALLING

To install, reverse the removal procedure.

FRONT SEAT, REPLACING

NOTE: **The illustrations in this service information are used for different model years and/or models. Some variation may occur. However, the essential information in the illustrations is always correct.**

PREPARATORY WORK

IGNITION OFF

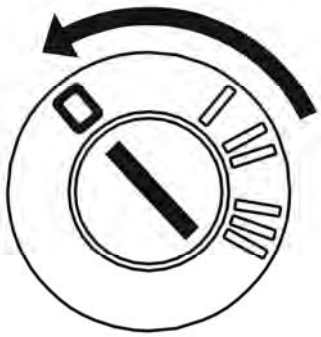

Fig. 139: Identifying Ignition In OFF Position
Courtesy of VOLVO CARS CORPORATION

Ignition off.

REMOVAL

REMOVING THE FRONT SEAT

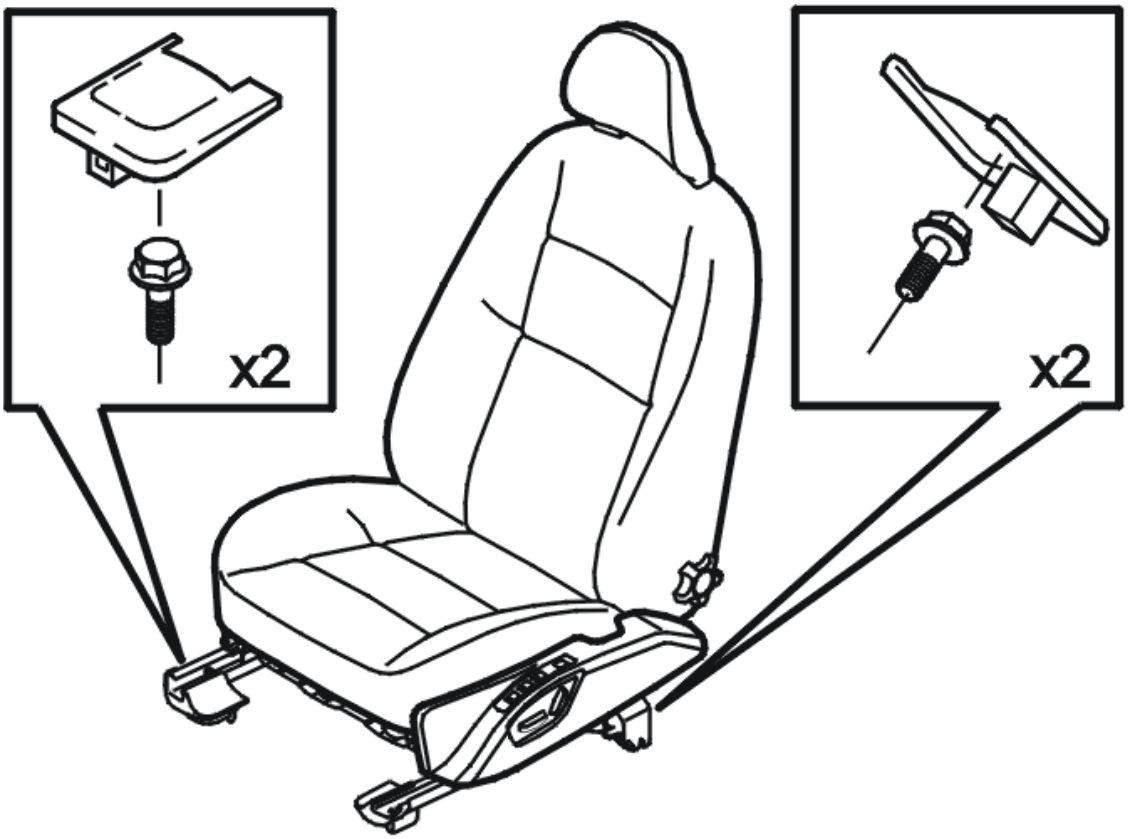

Fig. 140: Front Seat Side Panel & Front Screws For Seat
Courtesy of VOLVO CARS CORPORATION

Remove:

- the 2 panels located above the front screws for the seat
- the 4 x M10 screws
- the front seat side panel. See: **SIDE PANEL FRONT SEAT, REPLACING**
- the end mounting. See: **END MOUNTING FRONT, REPLACING**
- the screw. Remove the connector under the seat.

Lift out the seat.

CAUTION: Two people are required for this procedure to prevent damage to the interior trim or the seat.

INSTALLATION

NOTE: For tightening torques, see: TIGHTENING TORQUE .

INSTALLING THE FRONT SEAT

Install the seat.

CAUTION: Two people are required for this procedure to prevent damage to the interior trim or the seat.

Install:

- the connector using the screw
- the 4 x M10 screws
- the 2 panels
- the end mounting. See: **END MOUNTING FRONT, REPLACING**
- the side panel. See: **SIDE PANEL FRONT SEAT, REPLACING**.

HEATER PAD BACKREST AND CUSHION, REPLACING

NOTE: The illustrations in this service information are used for different model years and/or models. Some variation may occur. However, the essential information in the illustrations is always correct.

PREPARATORY WORK

REMOVING THE FRONT SEAT AND IMPORTANT INFORMATION

Remove the front seat. See: **FRONT SEAT, REPLACING**.

CAUTION: Remove the old heater pad before installing the new one. A new heater pad must not be bonded over the old pad.

NOTE: Read through the entire method before beginning work.

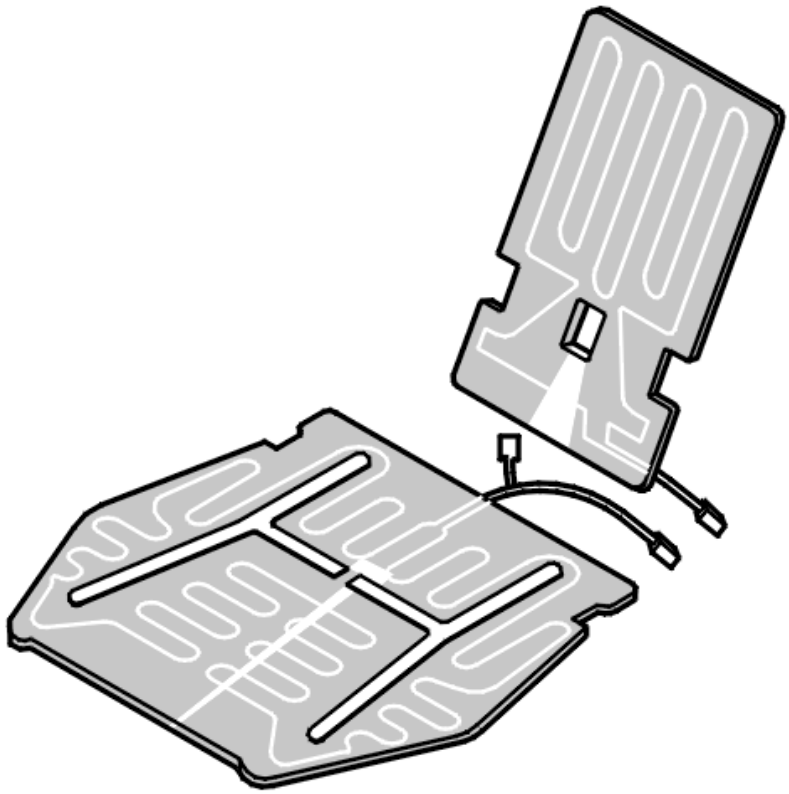

Fig. 141: Different Types Of Heater Pads (1 Of 8)
Courtesy of VOLVO CARS CORPORATION

The following heater pad versions are available:

- heater pad and seat belt reminder
- heater pad only
- seat belt reminder only.

REMOVAL

REMOVING UPHOLSTERY

Remove:

- the seat cushion upholstery. See: **UPHOLSTERY SEAT CUSHION, REPLACING**
- the backrest cushion upholstery. See: **UPHOLSTERY BACK REST, REPLACING (2009-2012)**.

NOTE: Cut the half moon clips. Remove any remaining parts of the clips.

NOTE: Do not bend the upholstery rods more than is necessary to detach the upholstery. Straighten the rods before reinstalling the upholstery.

REMOVING HEATER PAD

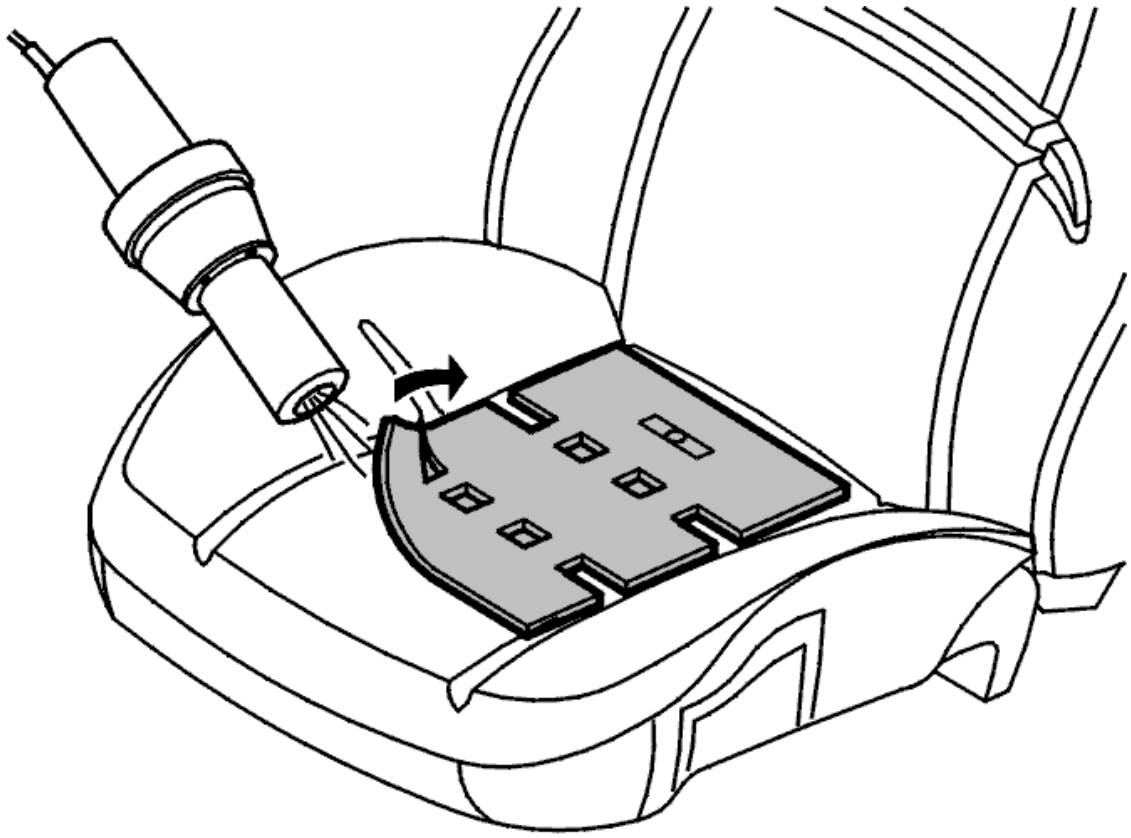

Fig. 142: Heating Heater Pad
Courtesy of VOLVO CARS CORPORATION

Carefully heat the heater pad to remove it.

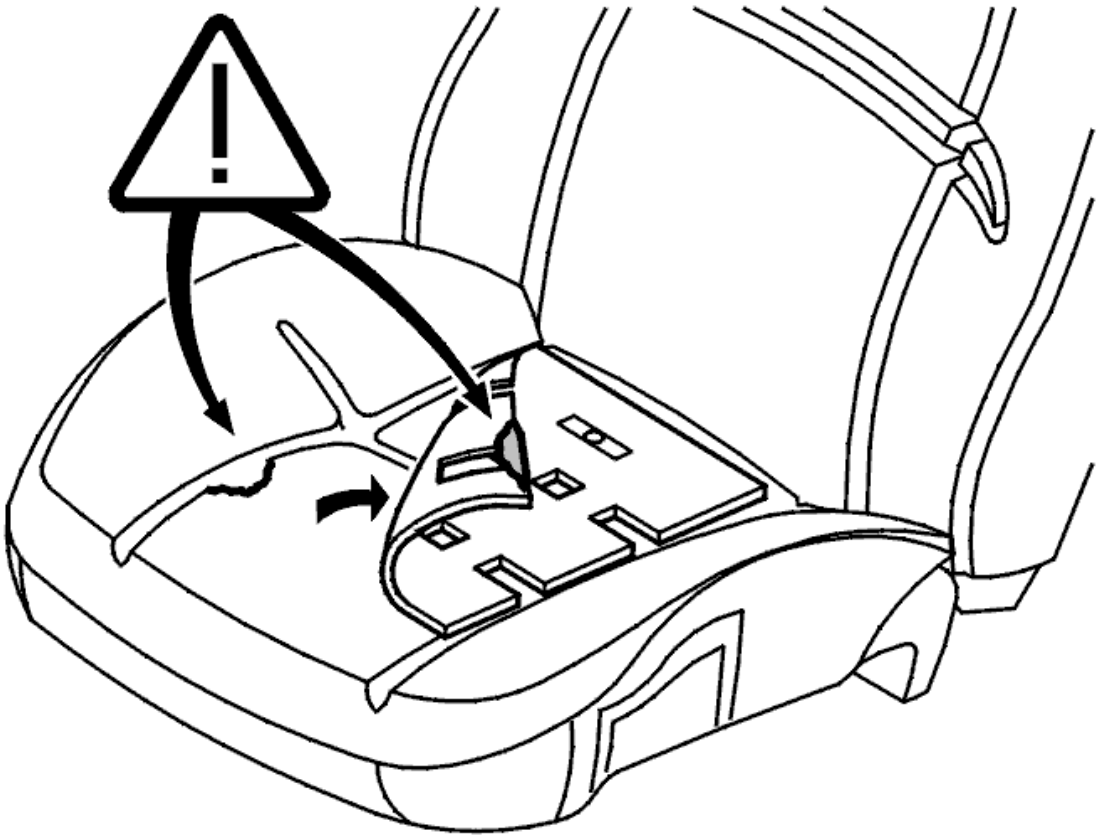

Fig. 143: Damaging Foam Filling
Courtesy of VOLVO CARS CORPORATION

NOTE: **Ensure that the foam filling is not damaged when removing the heater pad. Ensure that the pad is detached from the foam filling. This is to prevent functionality problems when the new heater pad is installed.**

NOTE: **Damaged foam filling must be replaced. This to guarantee function. This also applies if there are cracks in the backrest or seat frame.**

INSTALLATION

INSTALLING HEATER PADS

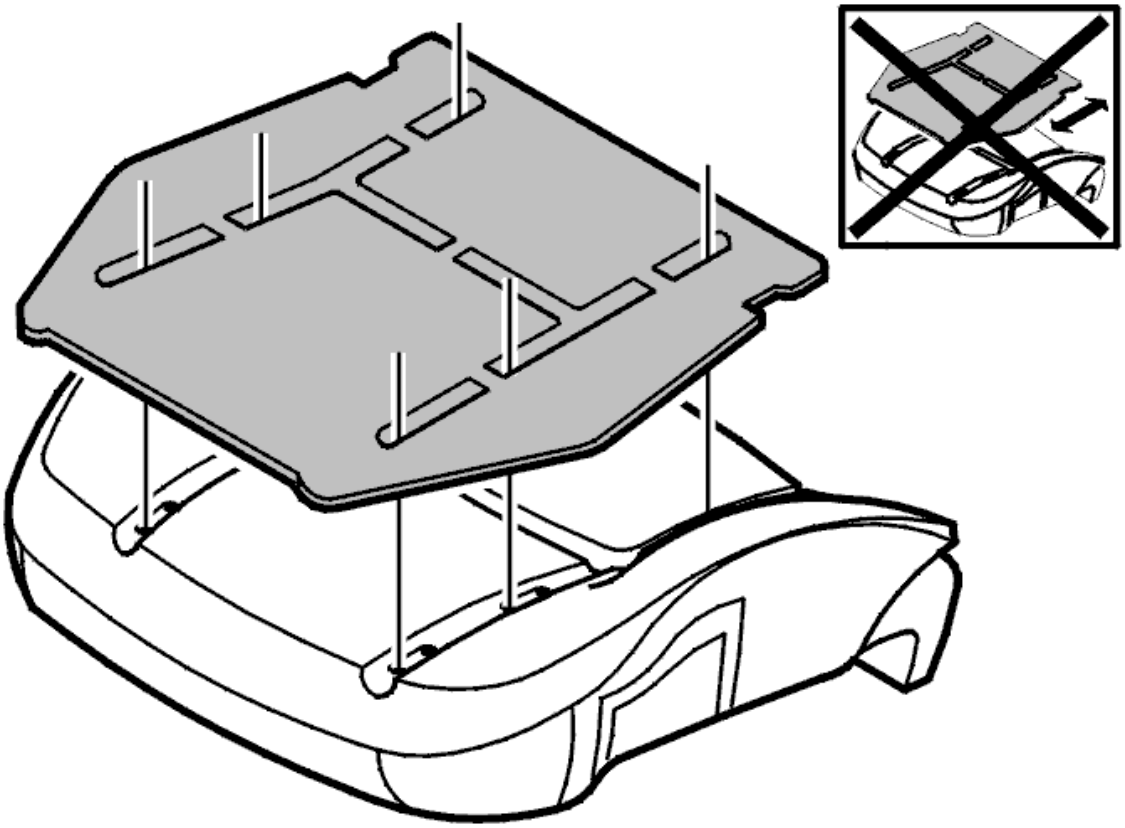

Fig. 144: Identifying Heater Pad Position
Courtesy of VOLVO CARS CORPORATION

CAUTION: The heater pad must be correctly positioned so that the when the half moon clips are secured they are not too close to the heating loops or the surface of the heater pad.

Position the heater pad in the correct position. Do not remove the backing from the adhesive surfaces.

Secure one half of the heater pad. Fold up the other half.

Pull the backing (or part of the backing) off the adhesive surface closest to the center of the section of the heater pad that is bent up.

Carefully bring the adhesive surface down onto the foam filling. Work with small sections at a time. Start from the center and work out towards the edges.

Continue in the same way with the other adhesive surfaces.

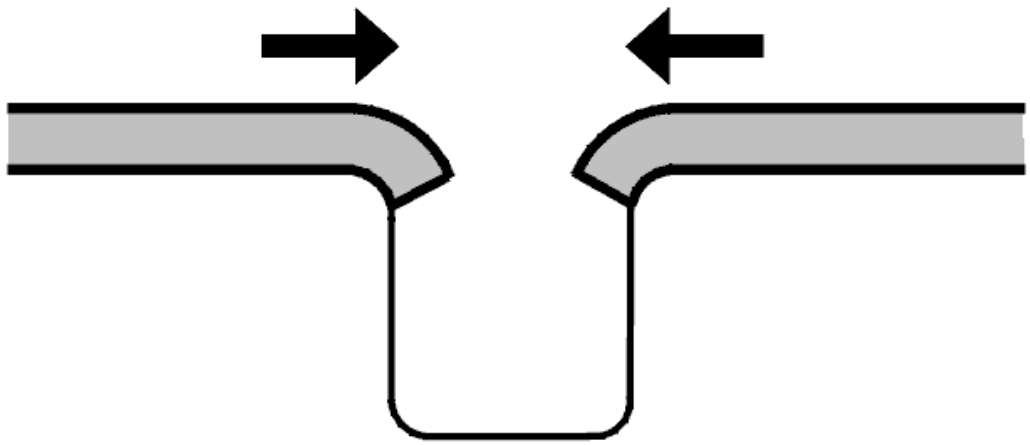

Fig. 145: End Of The Pad Not Up On Flat Surface
Courtesy of VOLVO CARS CORPORATION

If the heater pad terminates at the channel, position it as illustrated.

NOTE: The end of the pad must not be up on the flat surface.

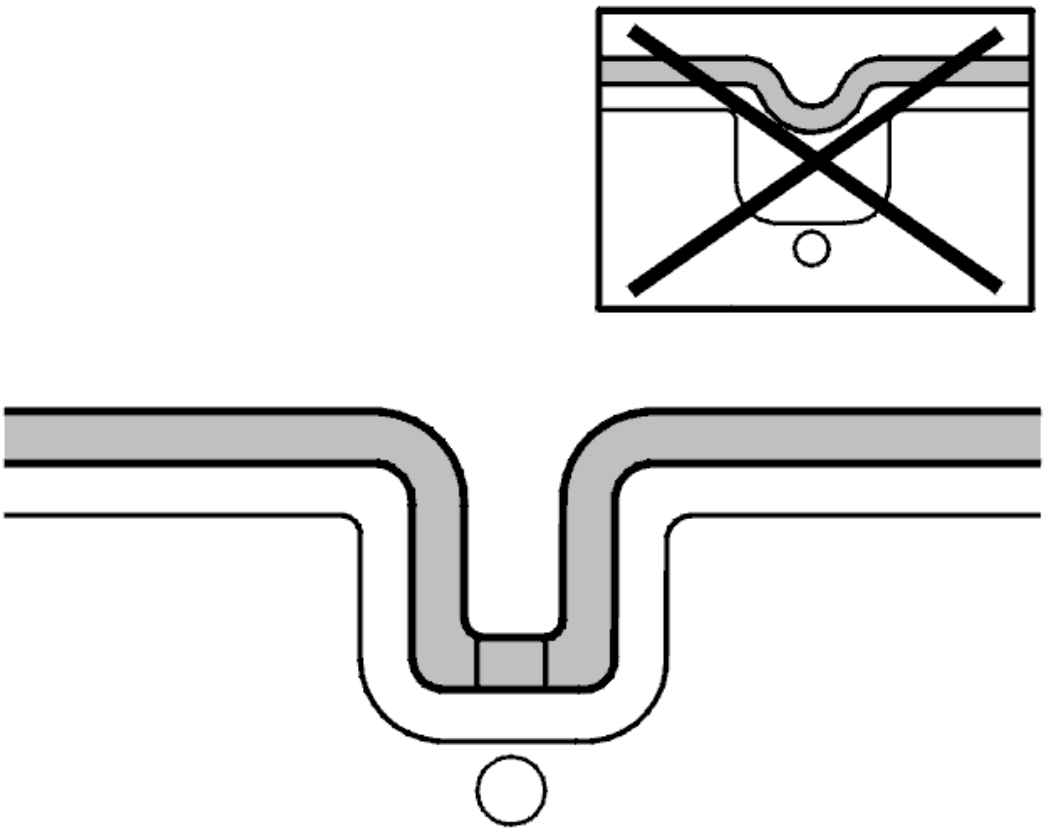

Fig. 146: Identifying Proper Pad Fill Position
Courtesy of VOLVO CARS CORPORATION

If the heater pad is the type where the pad and/or cable is placed in the channel, the pad must follow the foam filling as illustrated. If not, the pad and/or cable may be loaded and damage the pad. The type of seam on the upholstery may cause wear in the long term.

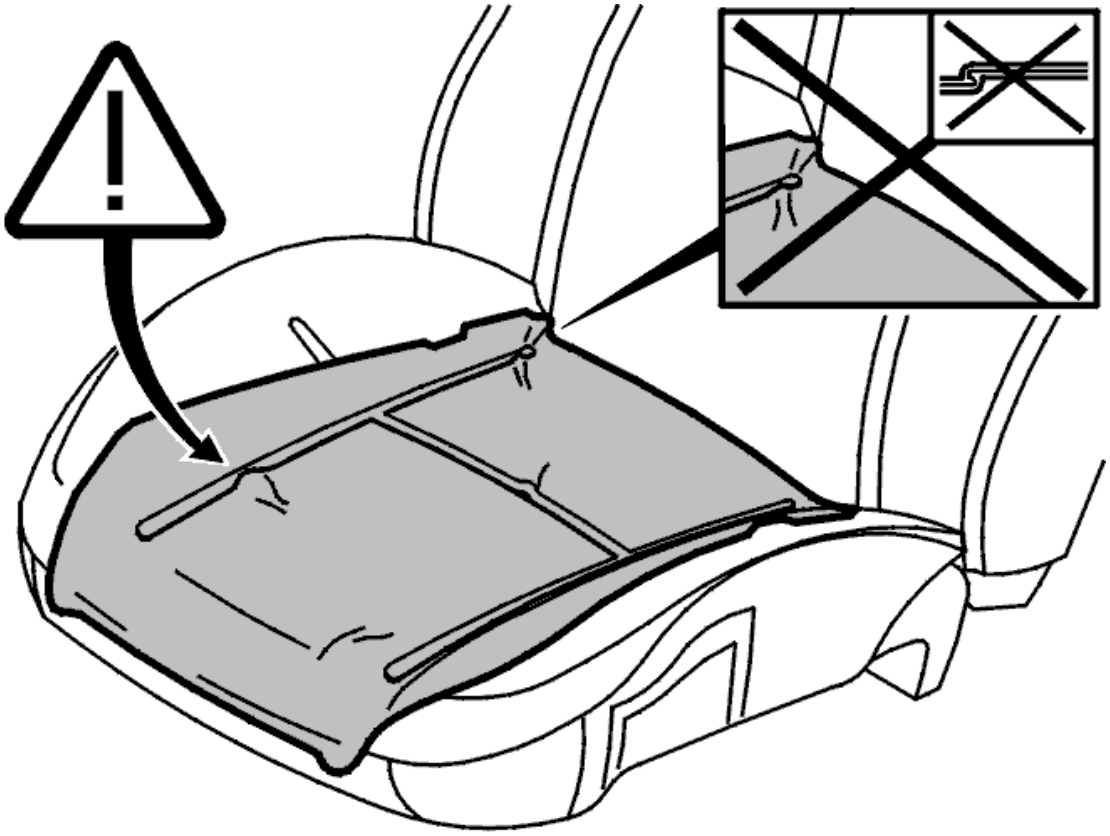

Fig. 147: Bubbles And Kinks Increase Risk Of Damage To Pad
Courtesy of VOLVO CARS CORPORATION

CAUTION: There must not be any bubbles or kinks when the heater pad is bonded to the foam filling. This increases the risk of damage to the pad during use. This applies to the entire surface, but to the heating wires in particular.

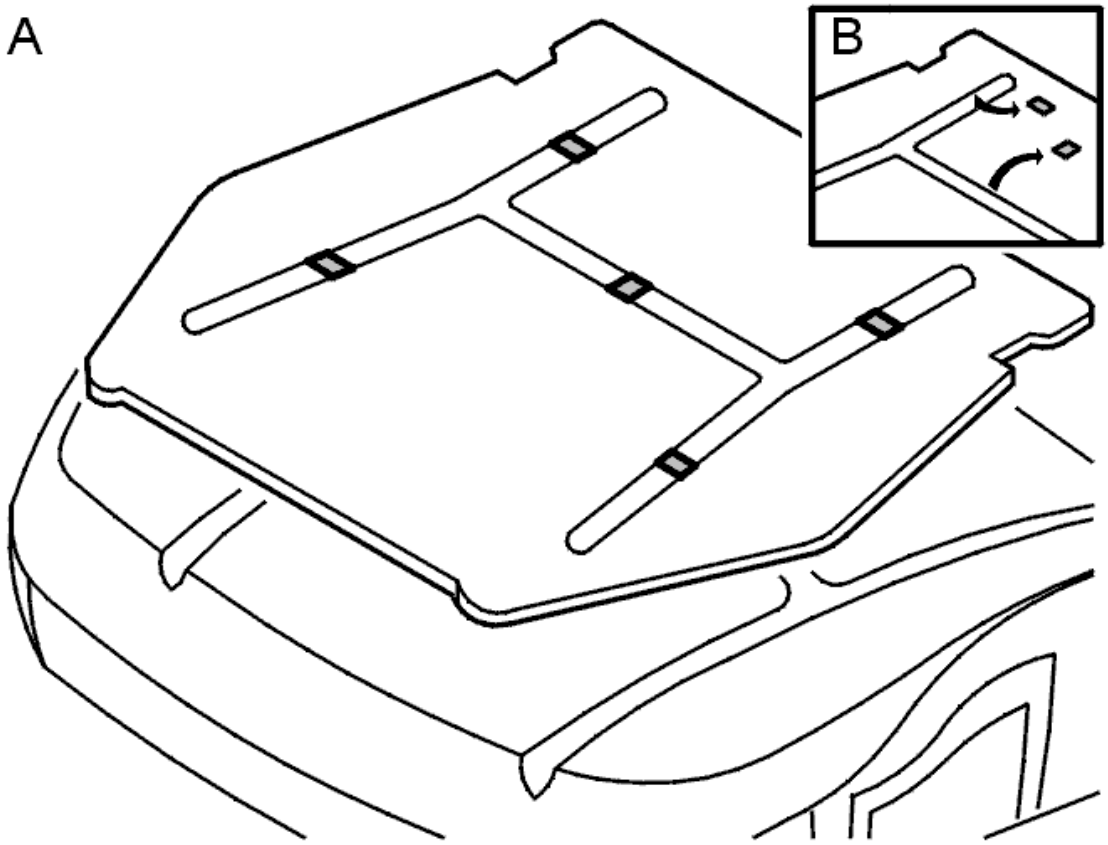

Fig. 148: Locating Positional Straps To Be Cut Apart
Courtesy of VOLVO CARS CORPORATION

When the heater pad has been bonded into place the positional straps (gray in the illustration) must be cut apart. This only applies to those types of heater pads that have positional straps.

NOTE: The positional straps must not be cut before bonding is complete.

CHECKING BONDING

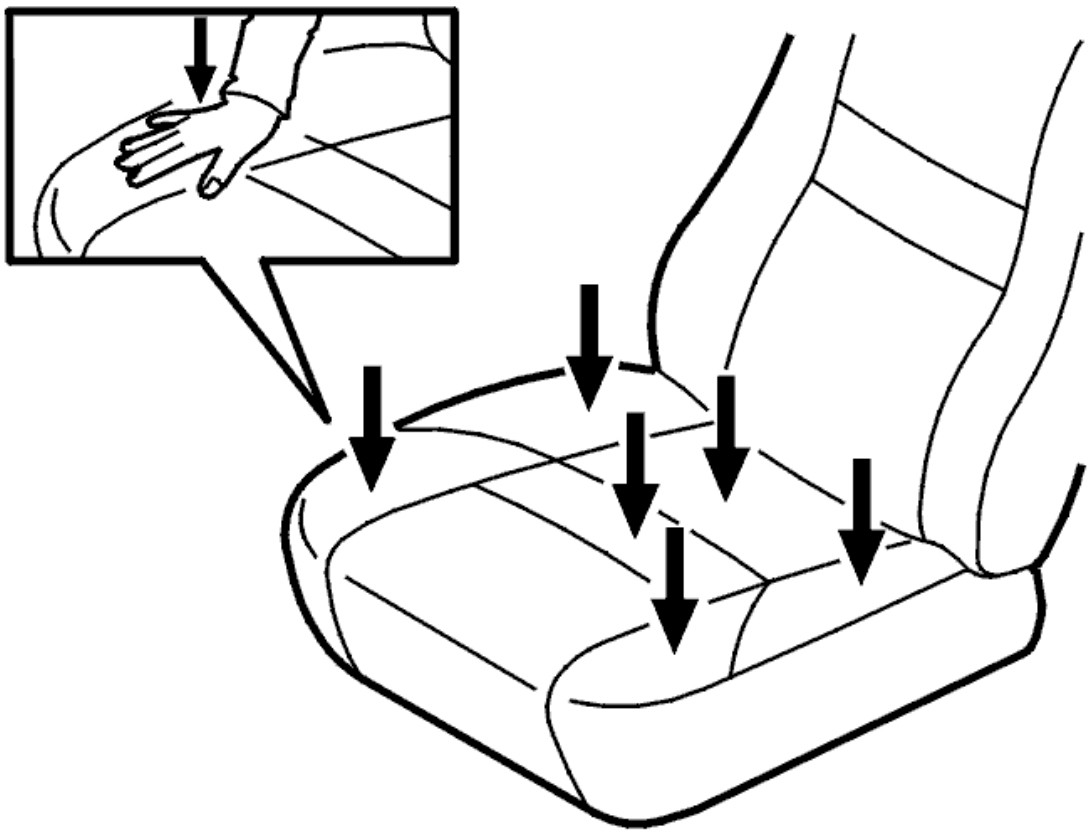

Fig. 149: Identifying Tested Bonding
Courtesy of VOLVO CARS CORPORATION

This check can be performed either with the upholstery completely removed or with it partially in position.

Press at those points illustrated. Check that the heater pad follows the compression of the cushion.

There must be no kinks or other defects in the heater pad when it is pressed.

INSTALLING UPHOLSTERY AND FRONT SEAT

Install:

- the seat cushion upholstery. See: **UPHOLSTERY SEAT CUSHION, REPLACING**
- the backrest cushion upholstery. See: **UPHOLSTERY BACK REST, REPLACING (2009-2012)**
- the front seat. See: **FRONT SEAT, REPLACING**.

FINISHING

TEST THE FUNCTION OF THE HEATER PAD

Start the seat heater and check the function.

NOTE: **This check is not possible if the ambient temperature is too high.**

LUMBAR SUPPORT BACKREST CUSHION, REPLACING

NOTE: **The illustrations in this service information are used for different model years and/or models. Some variation may occur. However, the essential information in the illustrations is always correct.**

REMOVAL

REMOVING THE LUMBAR SUPPORT

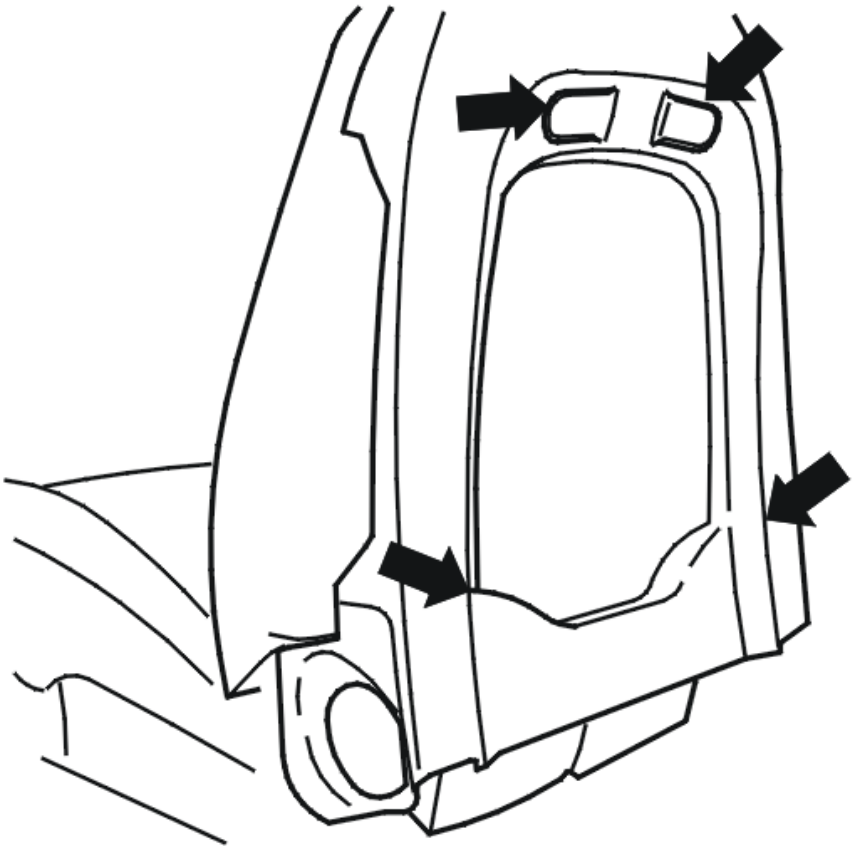

Fig. 150: Backrest Cushion Upholstery
Courtesy of VOLVO CARS CORPORATION

Remove:

- the front seat. See: **FRONT SEAT, REPLACING**
- the backrest cushion upholstery. See: **UPHOLSTERY BACK REST, REPLACING (2009-2012)**
- the protective pad. It is secured with 4 hidden clips.

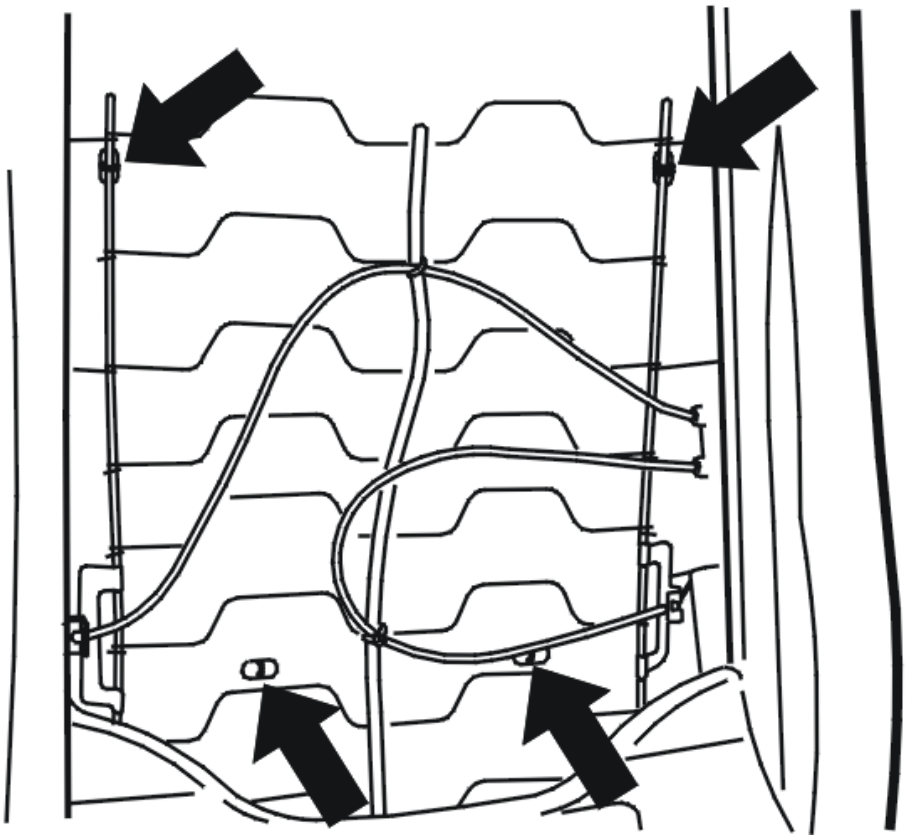

Fig. 151: Identifying Backrest Padding Half-Moon Clips
Courtesy of VOLVO CARS CORPORATION

- the 4 x half moon clips. Remove the padding from the backrest.

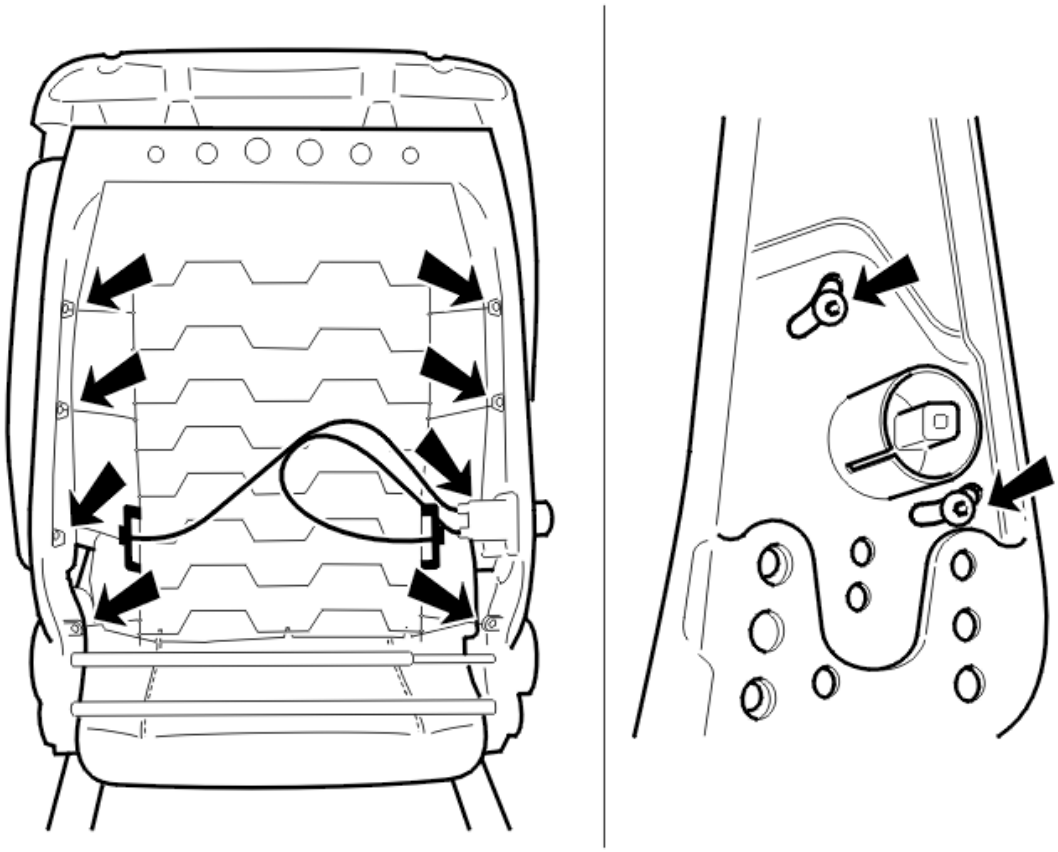

Fig. 152: Identifying Backrest Mounting Screws And Hooks
Courtesy of VOLVO CARS CORPORATION

- the 2 x mounting screws from the side of the backrest
- the hooks, 3 on each side.

Detach the mechanical cables, 1 on each side.

Remove the lumbar support.

INSTALLATION

NOTE: For tightening torques, see: TIGHTENING TORQUE .

INSTALLING THE LUMBAR SUPPORT

Install:

- the lumbar support
- the 2 mounting screws. Tighten
- the mechanical cables, 1 on each side
- the hooks, 3 on each side

- the padding using the 4 half moon clips
- the protective pad
- the backrest cushion upholstery. See: **UPHOLSTERY BACK REST, REPLACING (2009-2012)**.

Tension the lumbar support.

Install the front seat. See: **FRONT SEAT, REPLACING**.

OCCUPANT WEIGHT SENSOR (OWS), REPLACING

see **OCCUPANT WEIGHT SENSOR (OWS), REPLACING**

POWER SEAT MODULE (PSM), REPLACING

see **POWER SEAT MODULE (PSM), REPLACING**

SEAT HEATING MODULE (SHM), REPLACING

see **SEAT HEATING MODULE (SHM), REPLACING**

SEAT RAILS FRONT SEAT, REPLACING

see **SEAT RAILS FRONT SEAT, REPLACING**

SEAT TRACK SENSOR (STS), REPLACING (2009-2012)

see **SEAT TRACK SENSOR (STS), REPLACING (2009-2012)**

SIDE PANEL FRONT SEAT, REPLACING

see **SIDE PANEL FRONT SEAT, REPLACING**

UPHOLSTERY BACK REST, REPLACING (2009-2012)

see **UPHOLSTERY BACK REST, REPLACING (2009-2012)**

UPHOLSTERY SEAT CUSHION, REPLACING

see **UPHOLSTERY SEAT CUSHION, REPLACING**

WHIPLASH UNIT, REPLACING (2009-2012)

see **WHIPLASH UNIT, REPLACING (2009-2012)**

OCCUPANT WEIGHT SENSOR (OWS), REPLACING

NOTE: **The illustrations in this service information are used for different model years and/or models. Some variation may occur. However, the essential information in**

the illustrations is always correct.

INFORMATION

IMPORTANT INFORMATION

CAUTION: In the event of suspected silicone leakage, see. See OCCUPANT WEIGHT SENSOR (OWS), CHECKING .

CAUTION: The entire system must be replaced when replacing the occupant weight sensor (OWS). This is because the occupant weight sensor (OWS) components are calibrated to each other by the manufacturer. The occupant weight sensor (OWS), foam (seat cushion) and a pressure sensor/cushion filled with silicone are included in the system.

REPLACING THE OCCUPANT WEIGHT SENSOR (OWS)

REMOVING THE OCCUPANT WEIGHT SENSOR (OWS)

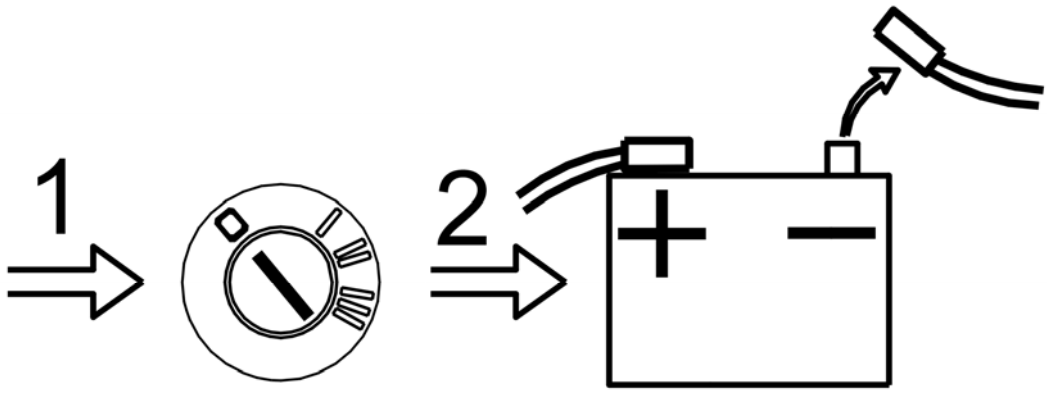

Fig. 153: Disconnecting Battery Negative Cable
Courtesy of VOLVO CARS CORPORATION

Ignition off.

Disconnect the battery negative lead. See: **BATTERY, DISCONNECTING** .

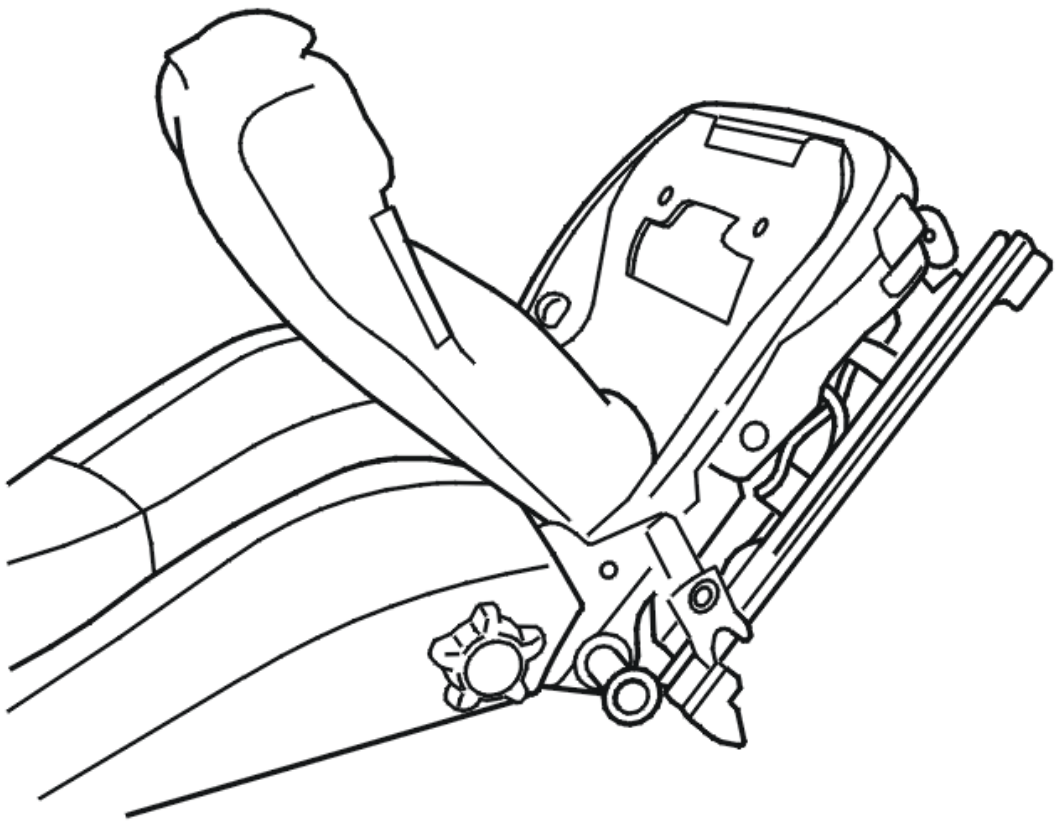

Fig. 154: Identifying Front Passenger Seat Cushion
Courtesy of VOLVO CARS CORPORATION

Remove the seat cushion upholstery: **UPHOLSTERY SEAT CUSHION, REPLACING**.

Place the seat on its back. Fold up the upholstery. Remove the seat cushion.

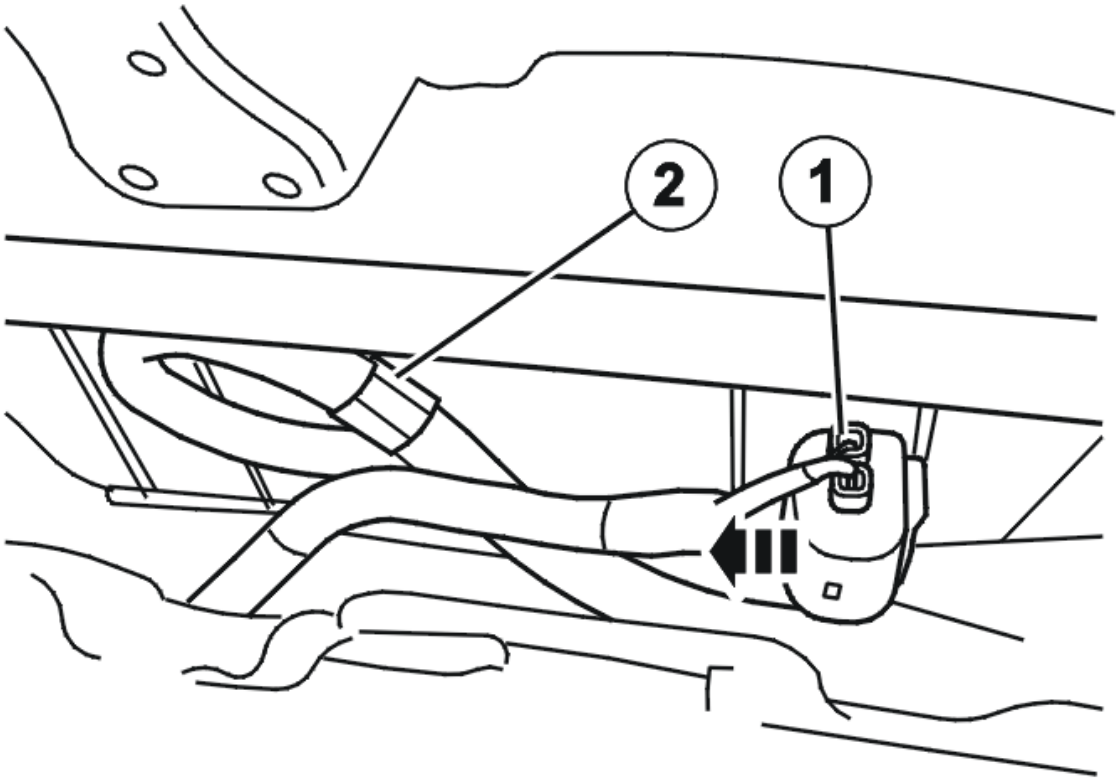

Fig. 155: Identifying Pressure Sensor Connector and Clip/Holder
Courtesy of VOLVO CARS CORPORATION

Remove:

- the pressure sensor/silicone cushion (1) from the bracket
- the clip/holder (2) for the cable harness.

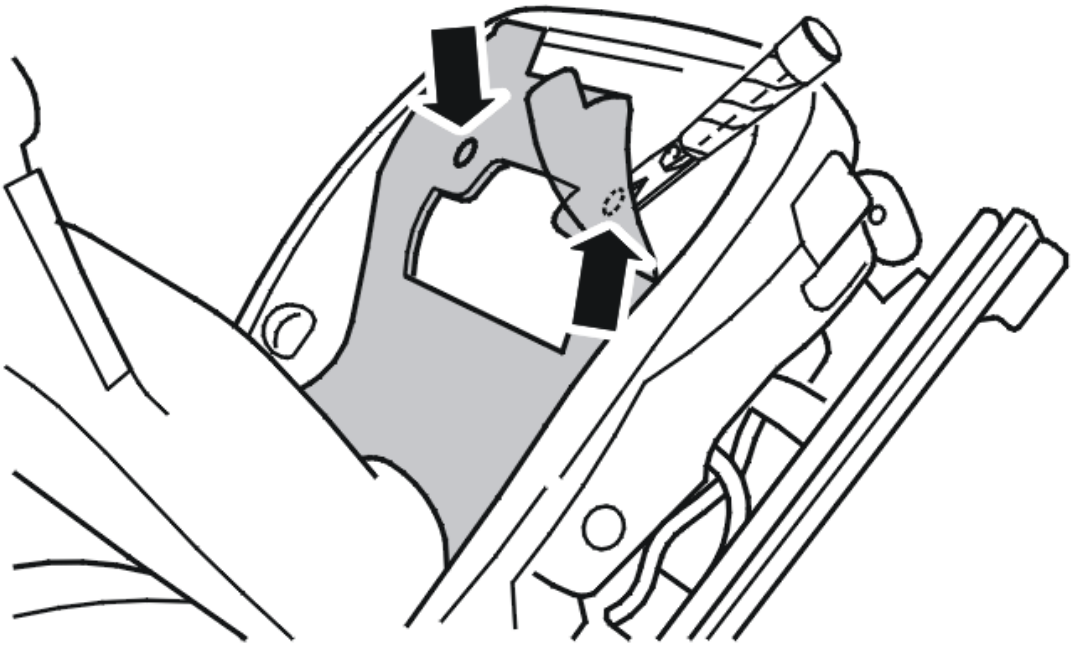

Fig. 156: Removing Pressure Sensor/Silicone Cushion
Courtesy of VOLVO CARS CORPORATION

- the 2 clips.

CAUTION: Remove the clips by bending the seat base nearest to the clips. Failure to do so may result in silicone leakage.

Remove the pressure sensor/silicone cushion.

CAUTION: Handle the pressure sensor/silicone cushion with care.

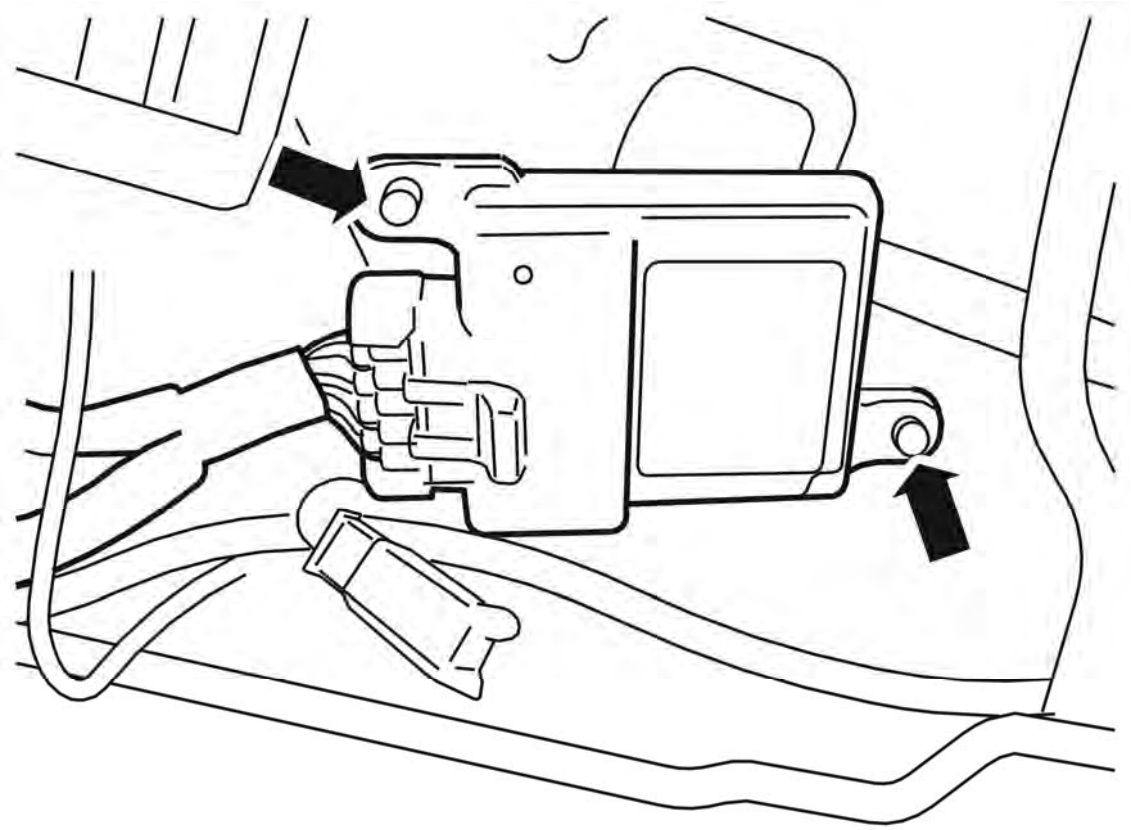

Fig. 157: Identifying Connectors From The Multi-Connector
Courtesy of VOLVO CARS CORPORATION

Remove:

- the 2 screws under the seat
- the connector at the end mounting
- the connectors from the multi-connector.

INSTALLING THE OCCUPANT WEIGHT SENSOR (OWS)

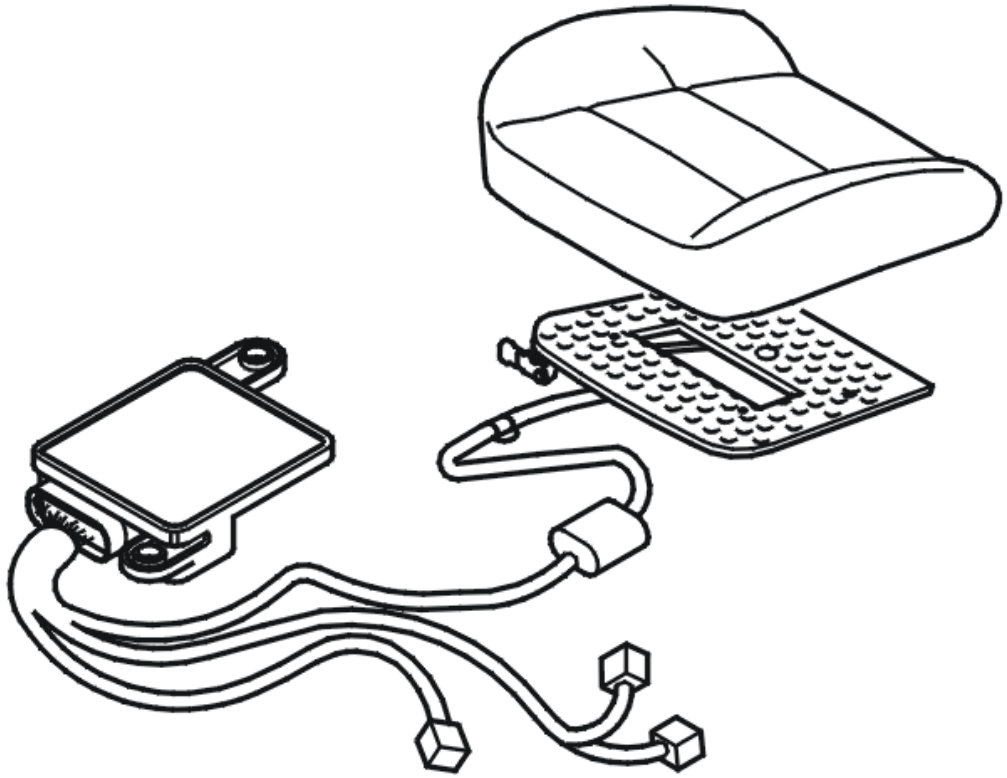

Fig. 158: Installing The Occupant Weight Sensor (OWS)
Courtesy of VOLVO CARS CORPORATION

NOTE: Insert the cable harness and the occupant weight sensor through the seat base.

Install:

- the 2 screws. Tighten
- the connector at the end mounting
- the connectors on the multi-connector
- the pressure sensor/silicone cushion on the bracket under the seat. Secure the silicone hose in the clip/holder
- the pressure sensor/silicone cushion using 2 clips
- the seat cushion. Fold down and secure the upholstery. See: **UPHOLSTERY SEAT CUSHION, REPLACING**
- the battery negative lead. See: **BATTERY, DISCONNECTING** .

FINISHING

STORING THE ID NUMBER FOR THE OCCUPANT WEIGHT SENSOR (OWS)

CAUTION: Store the ID number for the occupant weight sensor (OWS). This requires

VIDA (Volvo scan tool) vehicle communication.

CALIBRATING THE OCCUPANT WEIGHT SENSOR (OWS)

WARNING: Calibrate the Occupant weight sensor (OWS). This requires VIDA (Volvo scan tool) vehicle communication.

POWER SEAT MODULE (PSM), REPLACING

NOTE: The illustrations in this service information are used for different model years and/or models. Some variation may occur. However, the essential information in the illustrations is always correct.

REMOVAL

REMOVING THE POWER SEAT MODULE (PSM)

Raise the seat to its highest position.

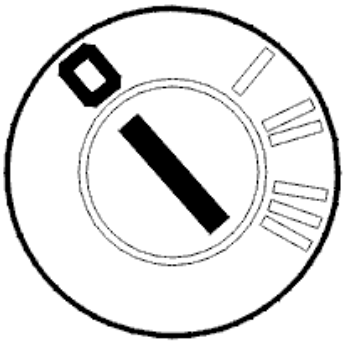

Fig. 159: Identifying Ignition In Off Position
Courtesy of VOLVO CARS CORPORATION

Lift the seat out of the vehicle. See: **FRONT SEAT, REPLACING**.

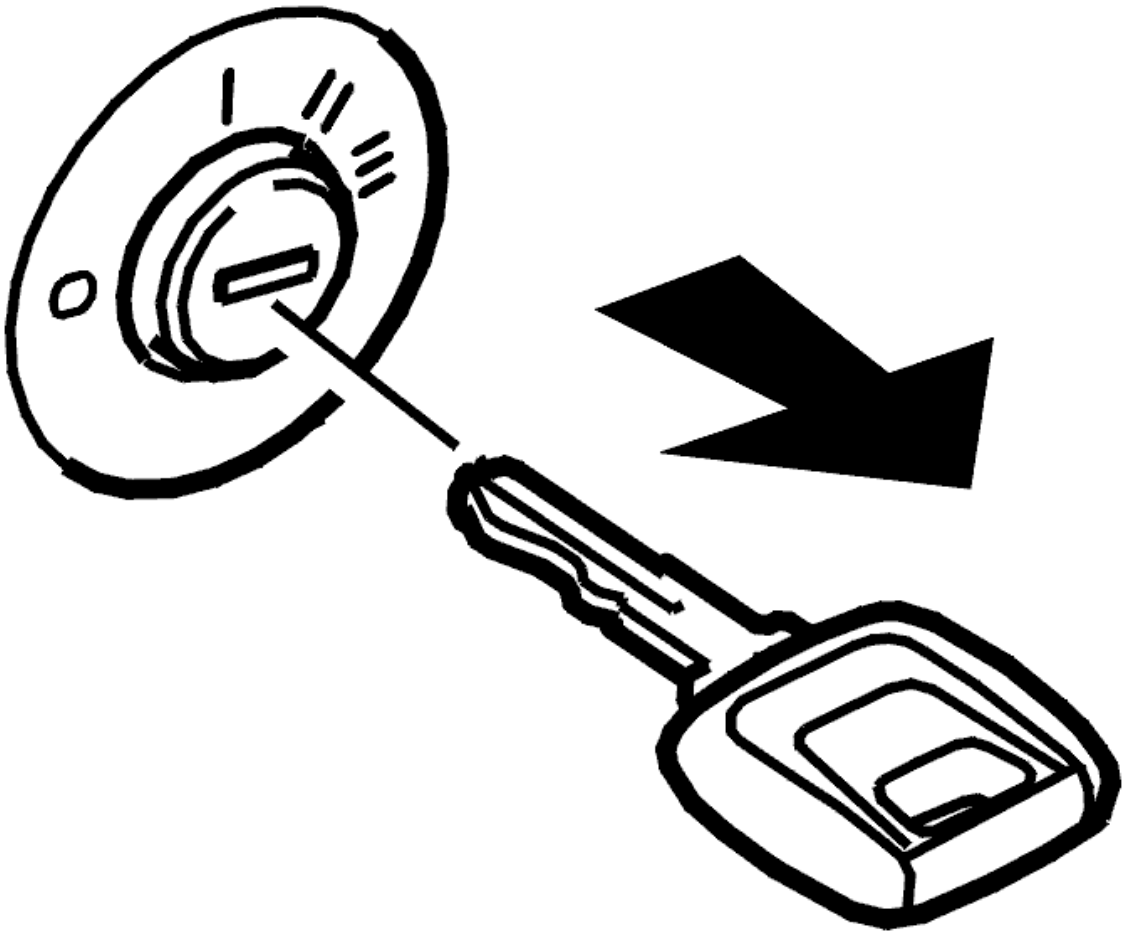

Fig. 160: Identifying Ignition Key Off
Courtesy of VOLVO CARS CORPORATION

Remove the key. The key must be removed to ensure that the ignition is not switched on by mistake.

Wait one minute before starting work.

Remove the 2 screws.

Disconnect the connector.

Remove the control module.

INSTALLATION

INSTALLING THE POWER SEAT MODULE (PSM)

Install:

- the control module
- the connector
- the 2 screws. Tighten
- the key
- the front seat as described in, see **FRONT SEAT, REPLACING**.

FINISHING

ORDERING SOFTWARE

Order software. See: 9438271 .

FINISHING

Check that no diagnostic trouble codes have been stored during the repair.

Test operate the seat. Check all the functions.

SEAT HEATING MODULE (SHM), REPLACING

NOTE: **The illustrations in this service information are used for different model years and/or models. Some variation may occur. However, the essential information in the illustrations is always correct.**

PREPARATORY WORK

IGNITION OFF

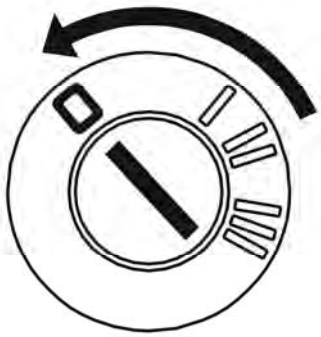

Fig. 161: Identifying Ignition In OFF Position
Courtesy of VOLVO CARS CORPORATION

Move the seat to its uppermost position.

Ignition off.

REMOVAL

REMOVING THE SEAT HEATING MODULE (SHM)

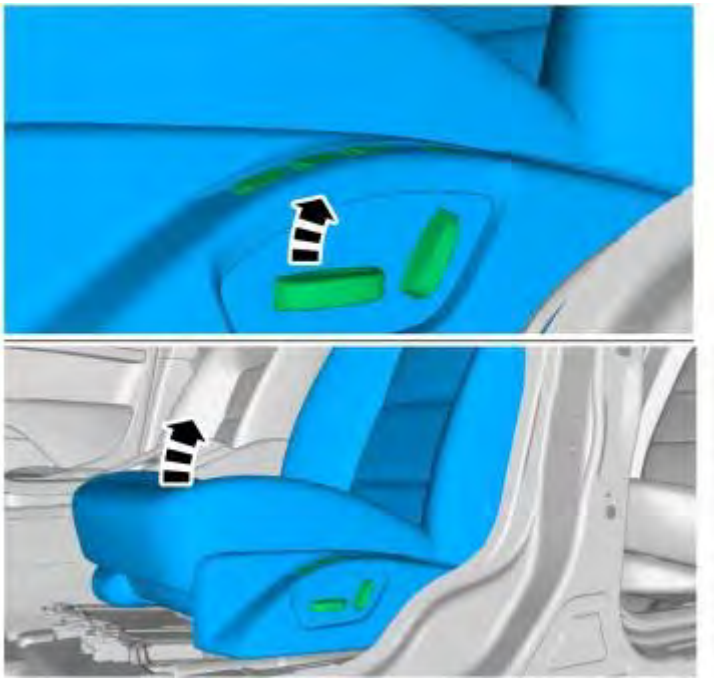

Fig. 162: Identifying Driver Seat And Control Button
Courtesy of VOLVO CARS CORPORATION

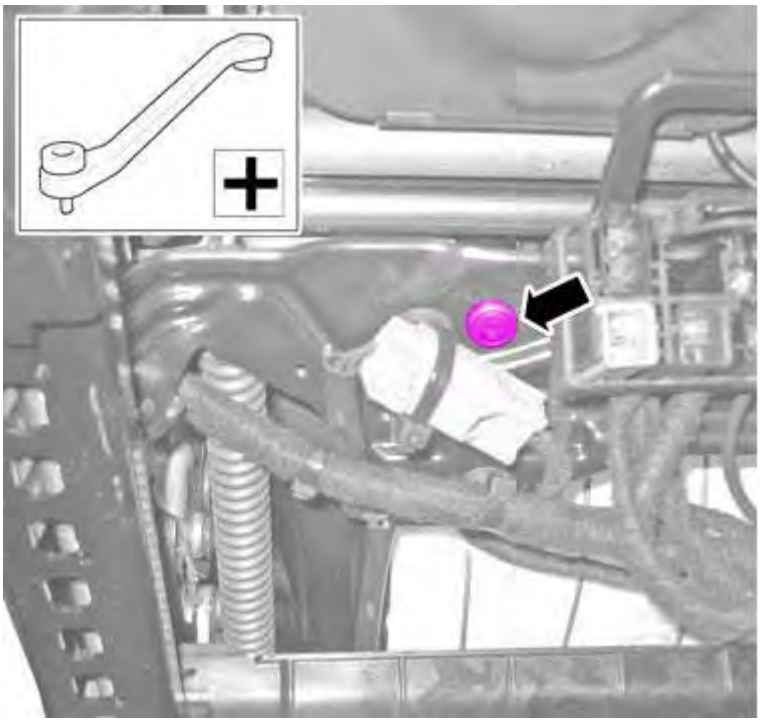

Fig. 163: Identifying Screw
Courtesy of VOLVO CARS CORPORATION

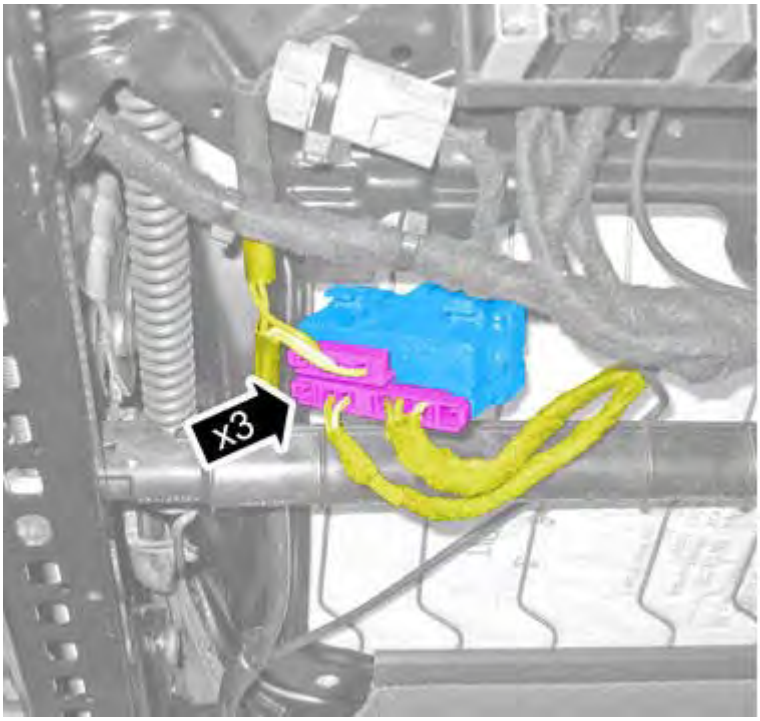

Fig. 164: Identifying Seat Heating Module Connectors
Courtesy of VOLVO CARS CORPORATION

INSTALLATION

To install, reverse the removal procedure.

SEAT RAILS FRONT SEAT, REPLACING

NOTE: **The illustrations in this service information are used for different model years and/or models. Some variation may occur. However, the essential information in the illustrations is always correct.**

REMOVAL

REMOVING THE SEAT RAILS

Remove:

- the front seat. See: **FRONT SEAT, REPLACING**
- the seat belt buckle. See: **BUCKLE SEAT BELT FRONT, REPLACING**
- the motor for front-rear adjustment. See: **ELECTRIC MOTOR CUSHION, REPLACING**.

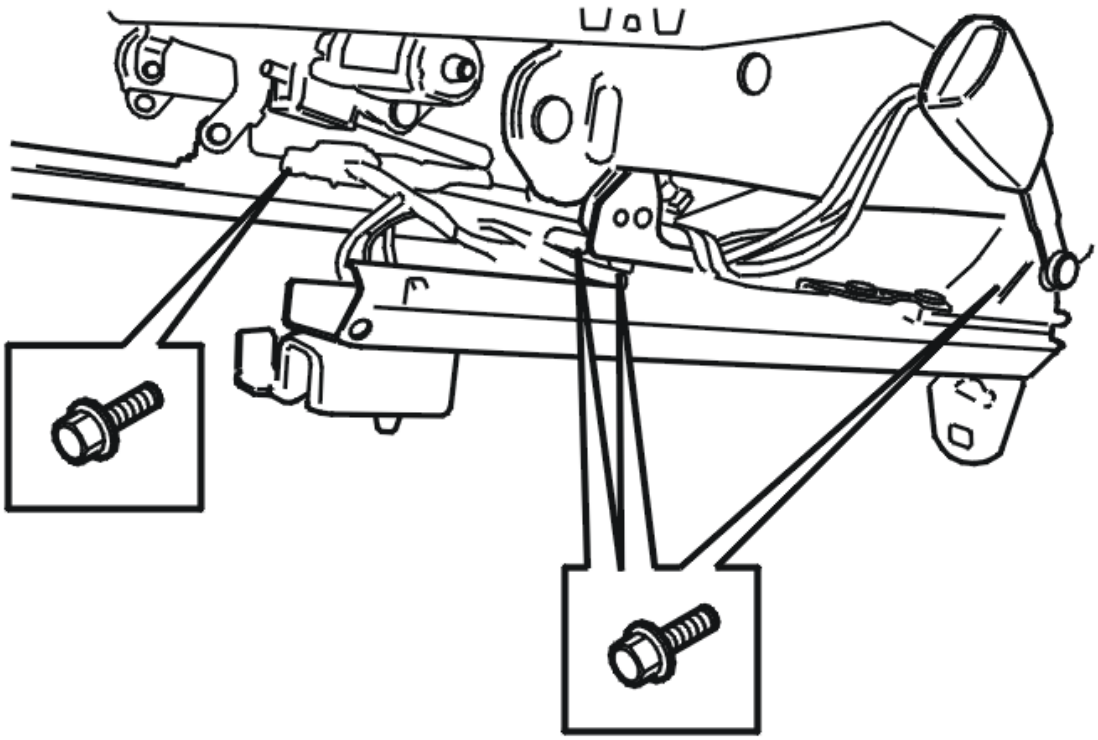

Fig. 165: Locating 4 x M8 Stud Screws
Courtesy of VOLVO CARS CORPORATION

- 4 x M8 stud screws.
- the 4 rivets. See: **REMOVING RIVET**
- seat rails.

INSTALLATION

NOTE: For tightening torques, see: TIGHTENING TORQUE .

INSTALLING THE SEAT RAILS

Install:

- 4 rivets
- seat rails.

NOTE: Apply a drop of locking fluid before installing the stud screws.

Install:

- 4 x M8 stud screws. Tighten
- the seat belt buckle. See: **BUCKLE SEAT BELT FRONT, REPLACING**
- the motor for front-rear adjustment. See: **ELECTRIC MOTOR CUSHION, REPLACING**
- the front seat. See: **FRONT SEAT, REPLACING**.

SEAT TRACK SENSOR (STS), REPLACING (2009-2012)

NOTE: The illustrations in this service information are used for different model years and/or models. Some variation may occur. However, the essential information in the illustrations is always correct.

PREPARATORY WORK

REMOVING THE FRONT SEAT

Remove the front seat. See: **FRONT SEAT, REPLACING**.

REMOVAL

REMOVING SEAT TRACK SENSOR (STS)

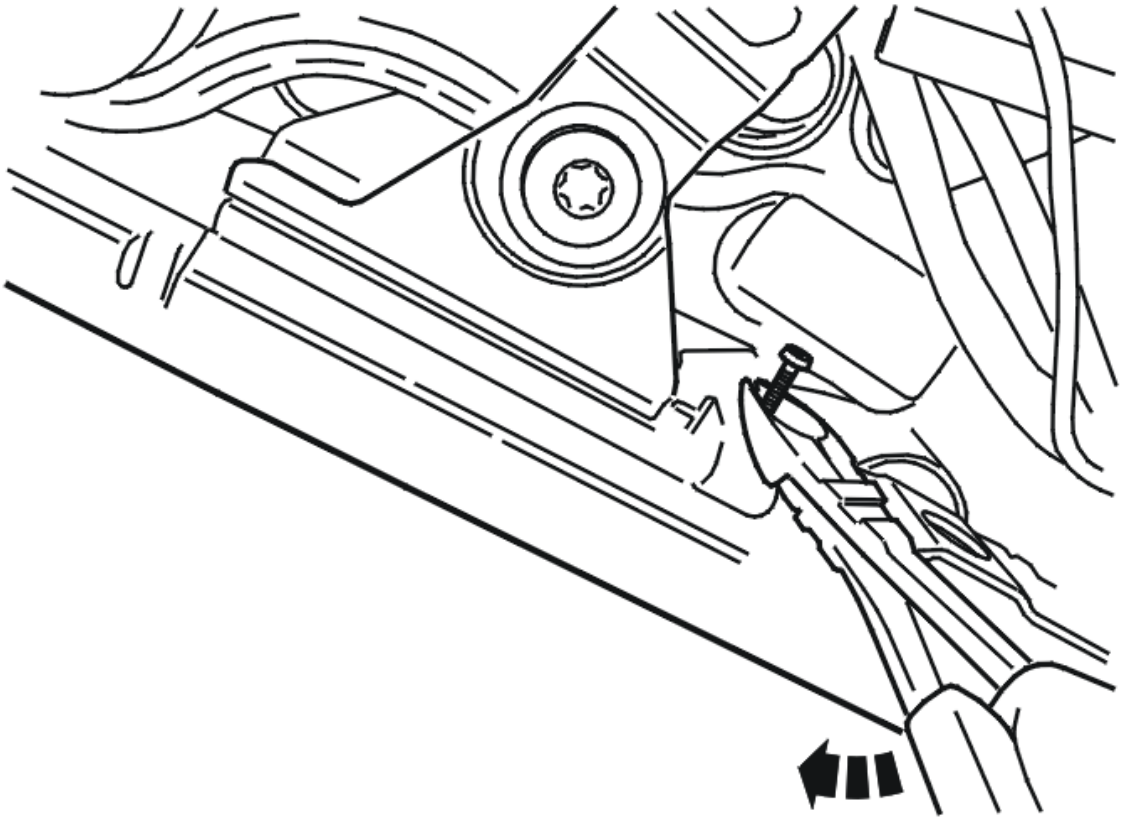

Fig. 166: Identifying Removal Of Locking Pin For Sensor
Courtesy of VOLVO CARS CORPORATION

Remove the locking pin for the sensor.

HINT: Screw a small panel screw into the locking pin. Use cutting pliers to pull it out.

Remove the seat track sensor (STS).

NOTE: Make a note of how the wiring is routed.

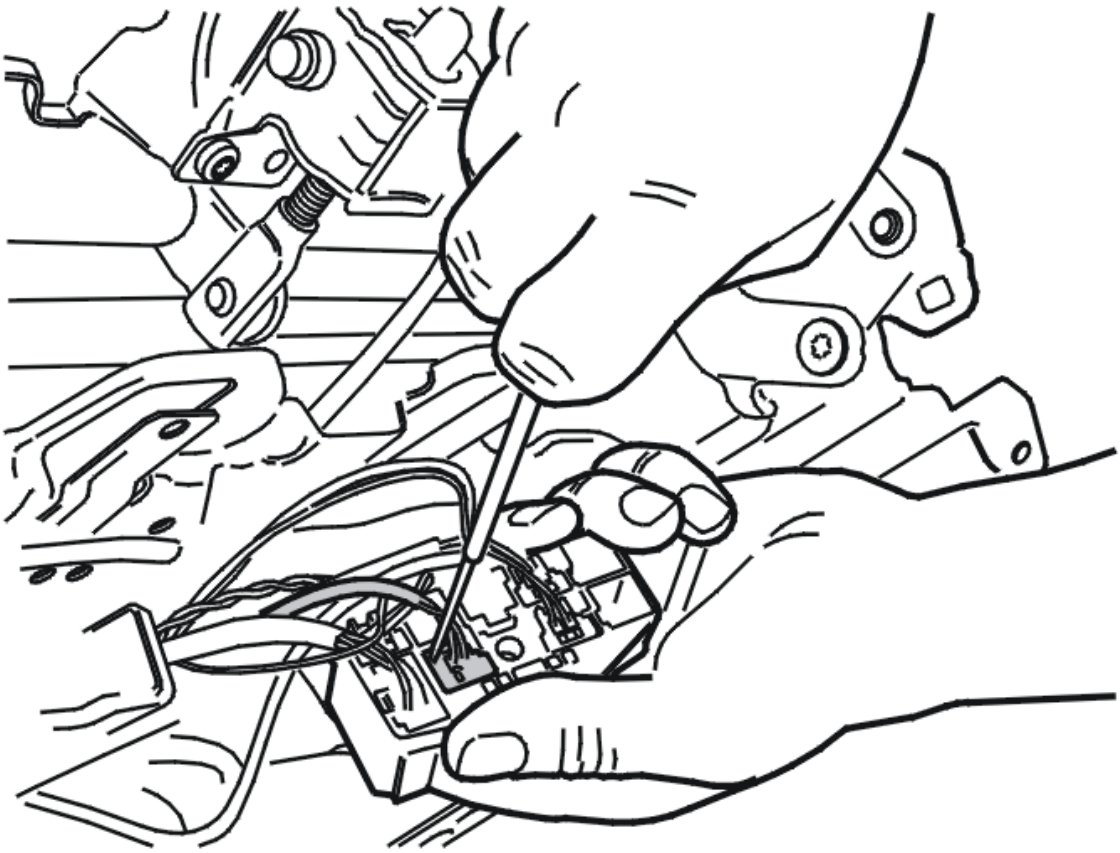

Fig. 167: Removing Seat Track Sensor
Courtesy of VOLVO CARS CORPORATION

Bend the catch for the connector to one side. Press out the connector. Remove the connector.

INSTALLATION

INSTALLING THE SEAT TRACK SENSOR (STS)

Install:

- the sensor
- the snap ring
- the connector.

CAUTION: Route the wiring as noted earlier. Route the wiring so that it does not rub and is not pinched.

Install the front seat. See: **FRONT SEAT, REPLACING**.

SIDE PANEL FRONT SEAT, REPLACING

NOTE: The illustrations in this service information are used for different model years and/or models. Some variation may occur. However, the essential information in the illustrations is always correct.

INFORMATION

METHOD CONTENT

This method consists of:

- see **SIDE PANEL POWER FRONT SEAT, REPLACING**
- see **SIDE PANEL, MECHANICAL FRONT SEAT, REPLACING**.

SIDE PANEL POWER FRONT SEAT, REPLACING

REMOVING THE SIDE PANEL POWER FRONT SEAT

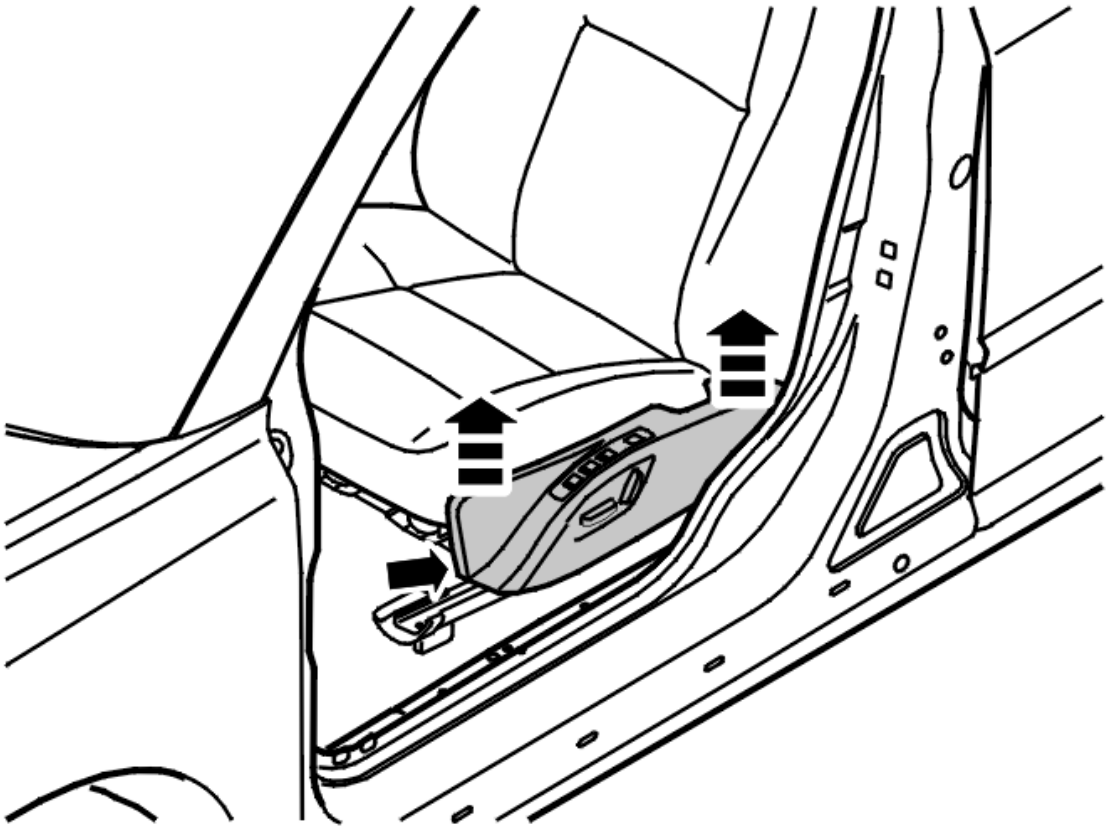

Fig. 168: First Pull Up Front Edge Of Side Panel & Then Pull Up Rear Edge Of Side Panel
Courtesy of VOLVO CARS CORPORATION

Remove:

- the battery negative lead. See: **BATTERY, DISCONNECTING**
- the screw at the front edge of the side panel.

Pull the side panel up to detach it from the seat. First pull up the front edge of the side panel. Then pull up the rear edge of the side panel.

Remove:

- the 3 tie straps
- the connector under the seat cushion
- the 3 screws. Remove the control panel from the side panel.

INSTALLING THE SIDE PANEL, POWER FRONT SEAT

Install:

- the control panel using the 3 screws. Tighten
- the connector under the seat cushion

- the 3 tie straps.

Press the side panel into place on the seat.

Install:

- the screw at the front edge of the side panel. Tighten
- the battery lead. See: **BATTERY, DISCONNECTING** .

SIDE PANEL, MECHANICAL FRONT SEAT, REPLACING

REMOVING THE SIDE PANEL, MECHANICAL FRONT SEAT

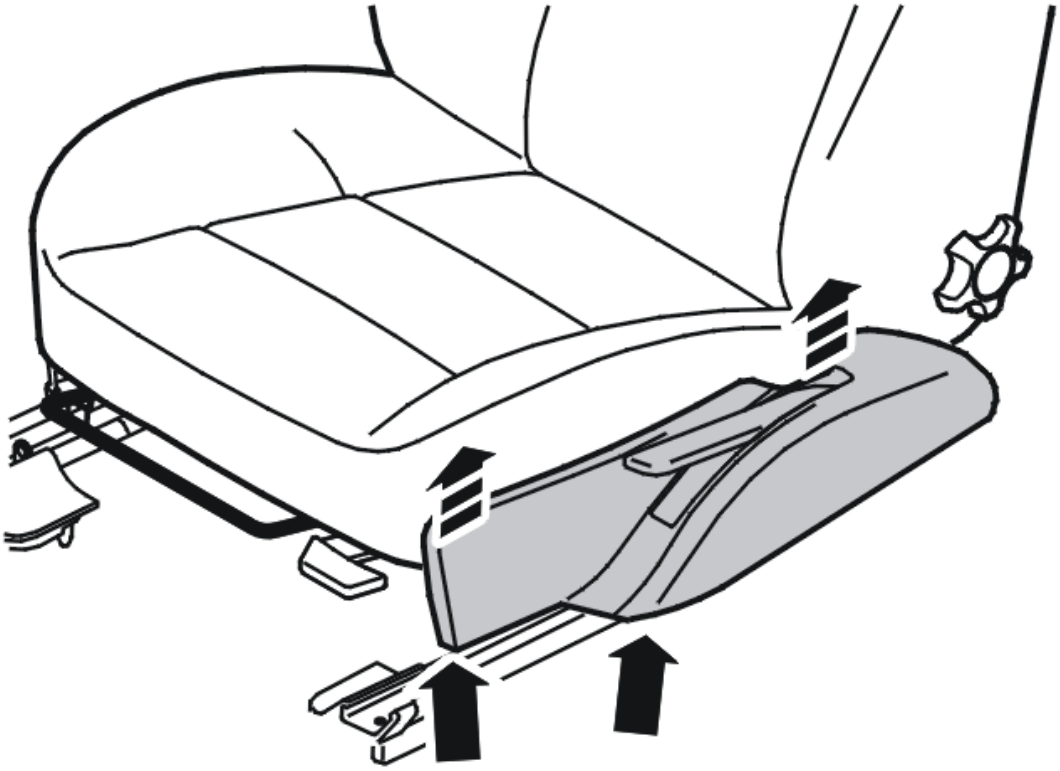

Fig. 169: First Pull Up Front Edge Of Side Panel & Then Pull Up Rear Edge Of Side Panel
Courtesy of VOLVO CARS CORPORATION

HINT: Pump up the seat cushion to the highest position.

Remove the screw at the front edge of the side panel.

HINT: Lift up the side panel at the front edge to access the screw for the handle.

Remove the screw for the handle. Pull the handle off.

Pull the side panel up to detach it from the seat. First pull up the front edge of the side panel. Then pull up the rear edge of the side panel.

INSTALLING THE SIDE PANEL, MECHANICAL FRONT SEAT

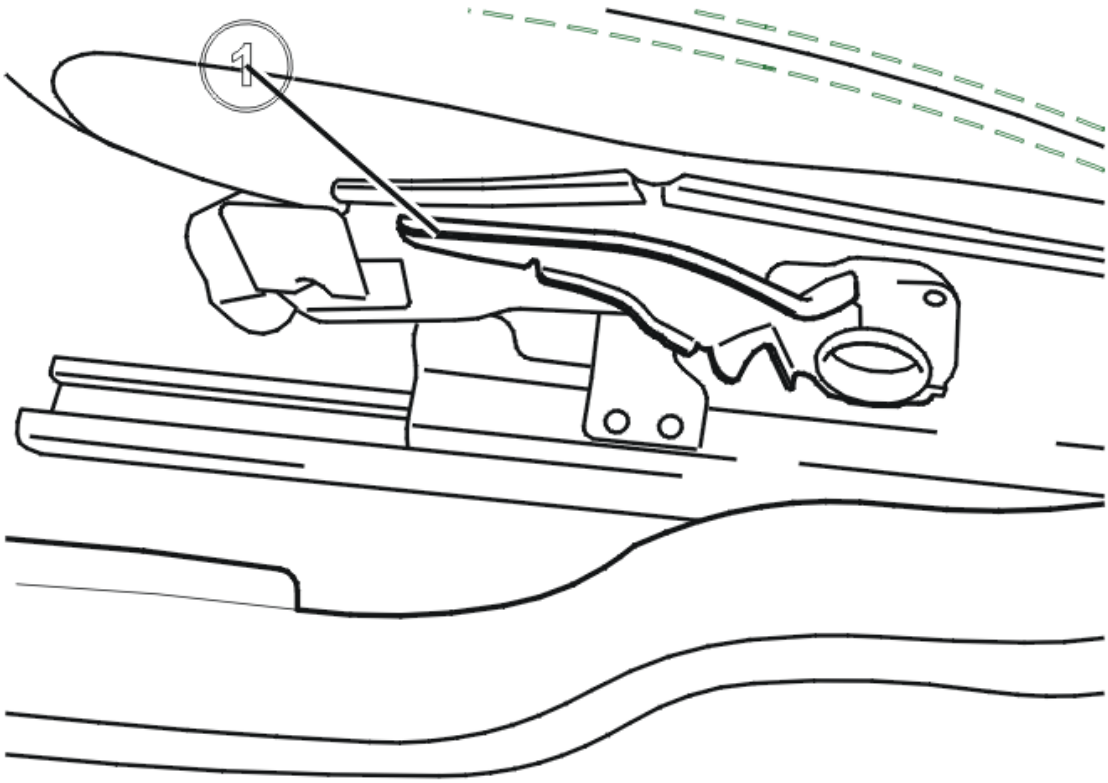

Fig. 170: Identifying Side Panel On Rail For Handle
Courtesy of VOLVO CARS CORPORATION

Thread the side panel on the rail (1) for the handle.

Install the handle using 1 screw. Tighten.

Press the side panel into place.

Install the screw at the front edge of the side panel. Tighten.

Lower the seat cushion.

UPHOLSTERY BACK REST, REPLACING (2009-2012)

Special tools:

see **1158962**

NOTE: **The illustrations in this service information are used for different model years and/or models. Some variation may occur. However, the essential information in the illustrations is always correct.**

REMOVAL

REMOVING BACKREST CUSHION UPHOLSTERY

Remove the front seat. See: **FRONT SEAT, REPLACING**.

Slacken off the tension in lumbar support.

Carefully detach the cover for the lumbar support adjustment knob. Pull the lumbar support adjustment knob straight out.

Press down the 2 catches on the bottom edge of the protective pad. Press through the upholstery.

Lift the head restraint upwards while the catches are pressed in.

Remove the head restraint.

If the front seat is manually operated, remove the backrest adjustment knob. Pull the knob straight out.

Fold the backrest cushion backwards if it can be folded. If the backrest cushion cannot be folded, position it in the forward angled position.

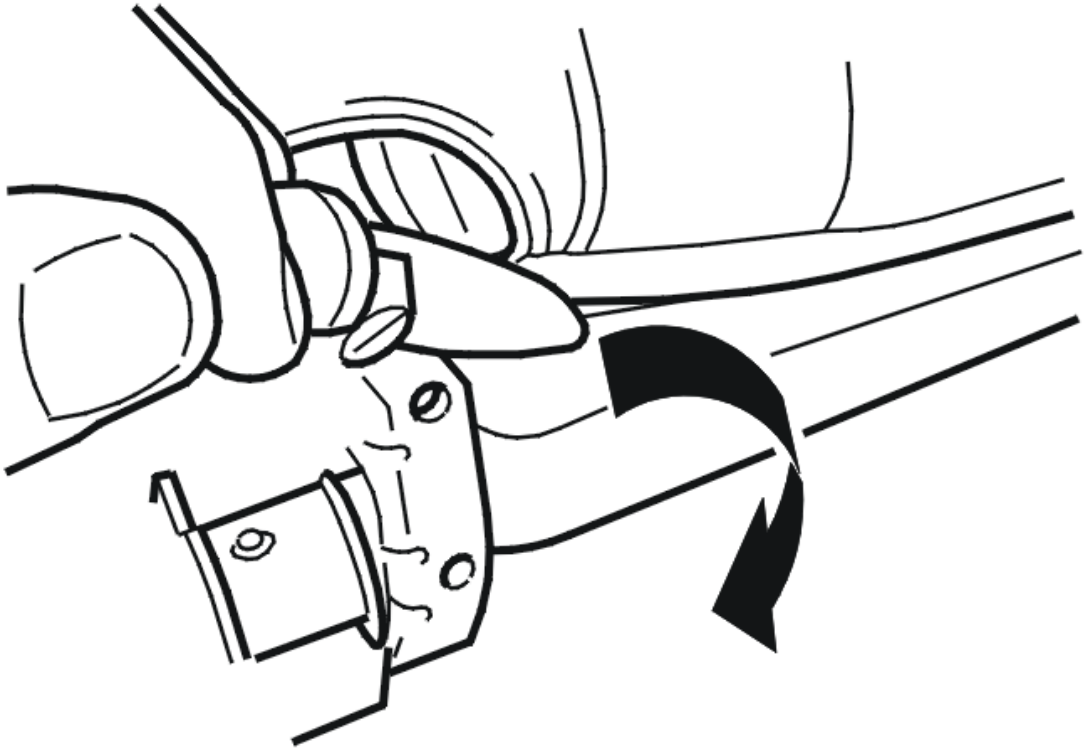

Fig. 171: Identifying Upholstery
Courtesy of VOLVO CARS CORPORATION

Remove the upholstery. Start at the bottom edge and continue upwards along the entire backrest cushion. Cut off the 12 x half moon clips as the upholstery is pulled up on the front.

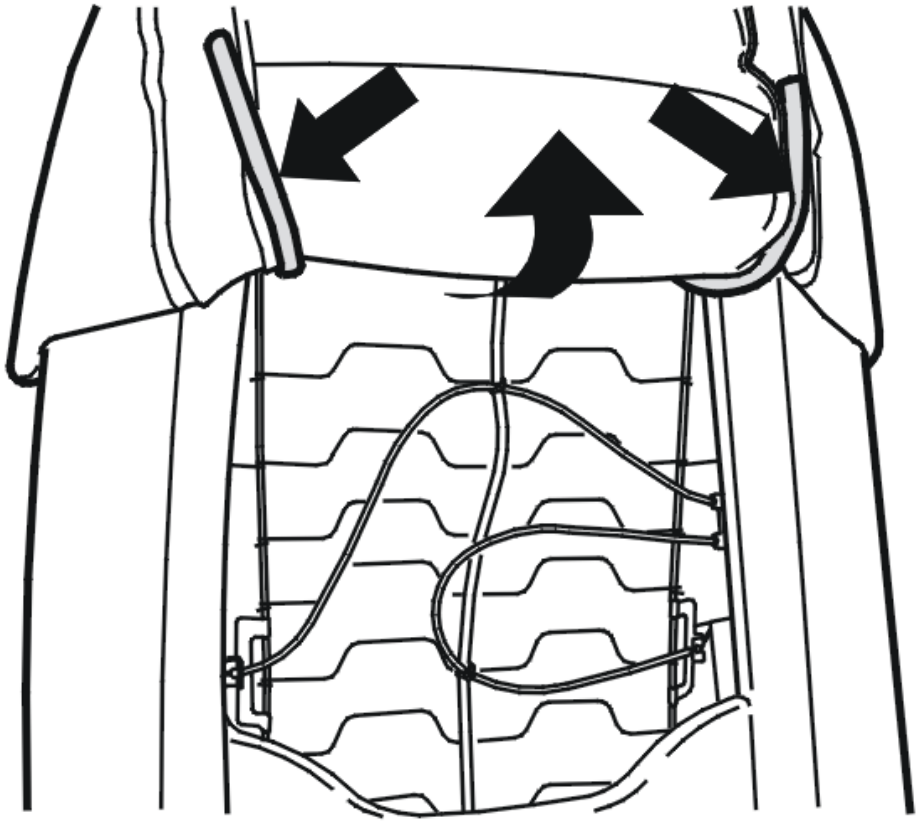

Fig. 172: Identifying Velcro Seam
Courtesy of VOLVO CARS CORPORATION

Unhook the Velcro seam on the reverse. Remove the upholstery.

INSTALLATION

INSTALLING BACKREST CUSHION UPHOLSTERY

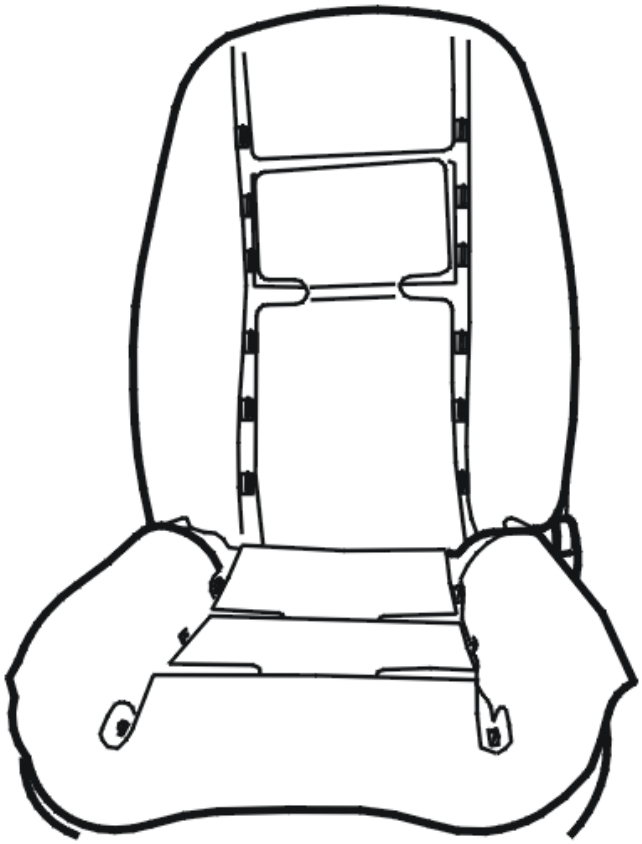

Fig. 173: Identifying Upholstery Threaded Over Backrest Cushion
Courtesy of VOLVO CARS CORPORATION

Thread the upholstery over the backrest cushion. Secure the half moon clips as the upholstery is pulled down. Use: see **1158962** .

Install:

- the Velcro seam on the reverse of the backrest cushion
- the upholstery at the bottom edge
- the lumbar support adjustment knob and its cover
- the backrest adjustment knob (if applicable).

Install the head restraint. Press the head restraint down until the catches engage.

NOTE: **Lift in the head restraint. Check that the head restraint cannot be moved upwards.**

Install the front seat. See: **FRONT SEAT, REPLACING**.

UPHOLSTERY SEAT CUSHION, REPLACING

NOTE: **The illustrations in this service information are used for different model years and/or models. Some variation may occur. However, the essential information in the illustrations is always correct.**

PREPARATORY WORK

REMOVING THE FRONT SEAT

Remove the front seat. See: **FRONT SEAT, REPLACING**.

REMOVAL

REMOVING THE SEAT CUSHION UPHOLSTERY

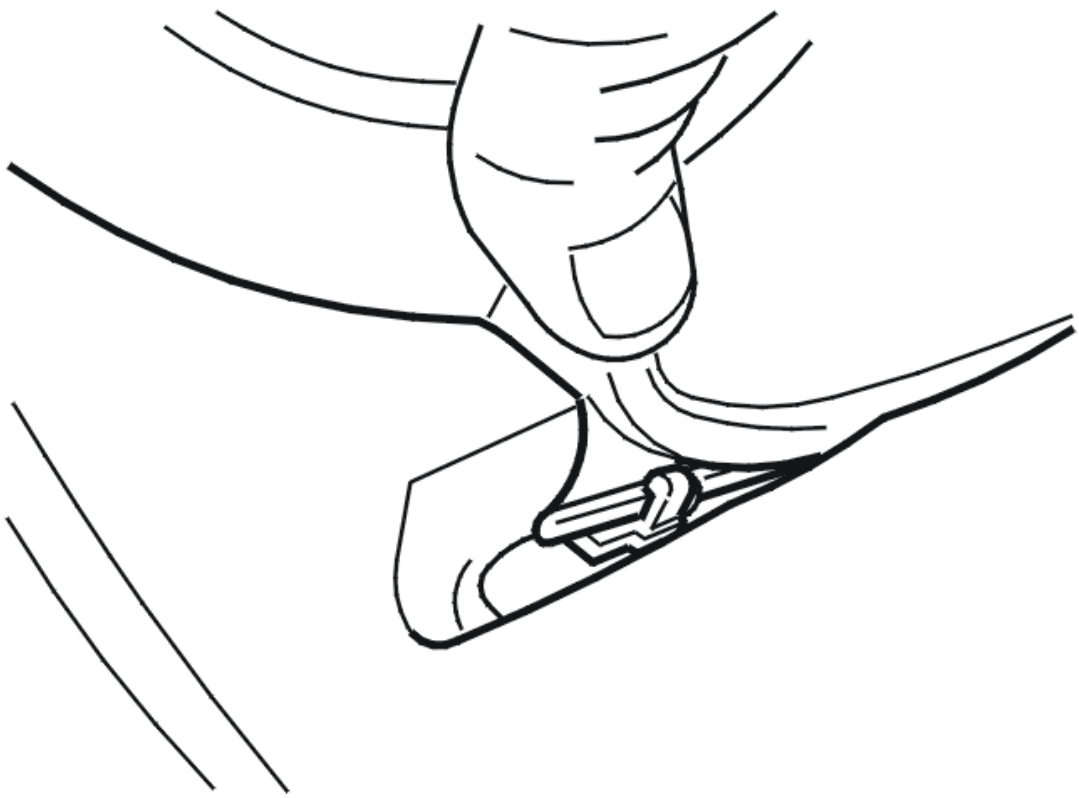

Fig. 174: Identifying Upholstery Clip
Courtesy of VOLVO CARS CORPORATION

Unhook the upholstery from around the seat frame.

Lift up the upholstery.

Unclip the upholstery from the seat cushion.

INSTALLATION

INSTALLING SEAT CUSHION UPHOLSTERY

Snap the upholstery into place on the seat cushion.

Pull down the upholstery. Hook the upholstery into place around the seat frame.

Install the front seat. See: **FRONT SEAT, REPLACING**.

WARNING: If the car is equipped with an occupant weight sensors (OWS), this must always be calibrated if the upholstery has been removed or replaced. This requires VIDA (Volvo scan tool) vehicle communication.

WHIPLASH UNIT, REPLACING (2009-2012)

Special tools:

see **9512943**

NOTE: The illustrations in this service information are used for different model years and/or models. Some variation may occur. However, the essential information in the illustrations is always correct.

INFORMATION

METHOD CONTENT

This method consists of:

- Whiplash unit non-folding seat, replacing
- Whiplash unit folding seat, replacing.

WHIPLASH UNIT NON-FOLDING SEAT, REPLACING

IMPORTANT INFORMATION

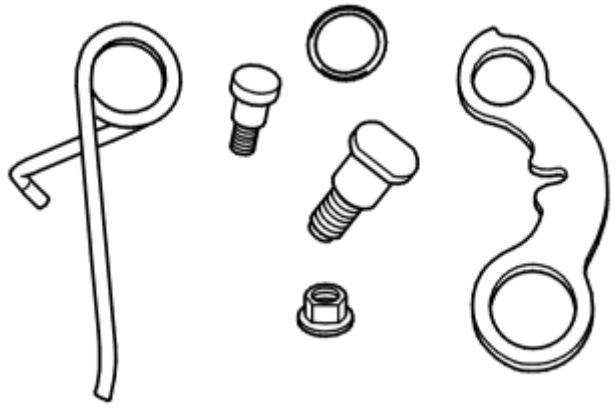

Fig. 175: Components For Non-Folding Seat
Courtesy of VOLVO CARS CORPORATION

Always replace on both sides of the seat, and replace all components included in the repair kit.

The illustration only shows components for non-folding seats and for one side.

The procedure shows replacement on one side of the seat.

PREPARATORY WORK

REMOVING THE FRONT SEAT

Remove the front seat. See: **FRONT SEAT, REPLACING**.

REMOVAL

REMOVING THE WHIPLASH UNIT ON NON-FOLDING SEATS

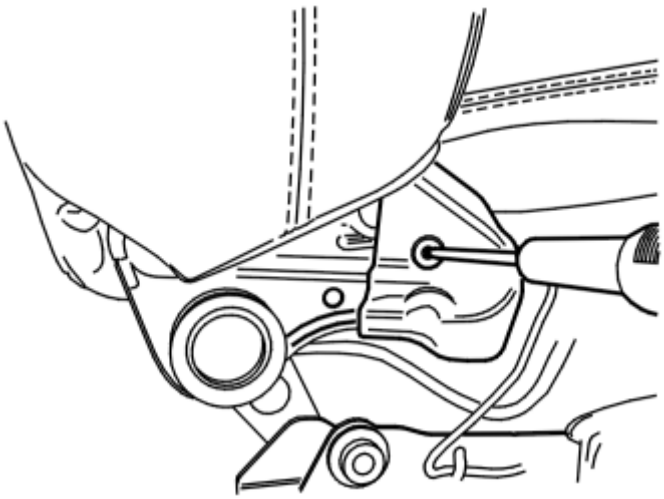

Fig. 176: Detaching Cover Over Screws On Side Of Seat
Courtesy of VOLVO CARS CORPORATION

Remove the side panel from the seat and place to one side.

Detach the cover over the screws on the side of the seat.

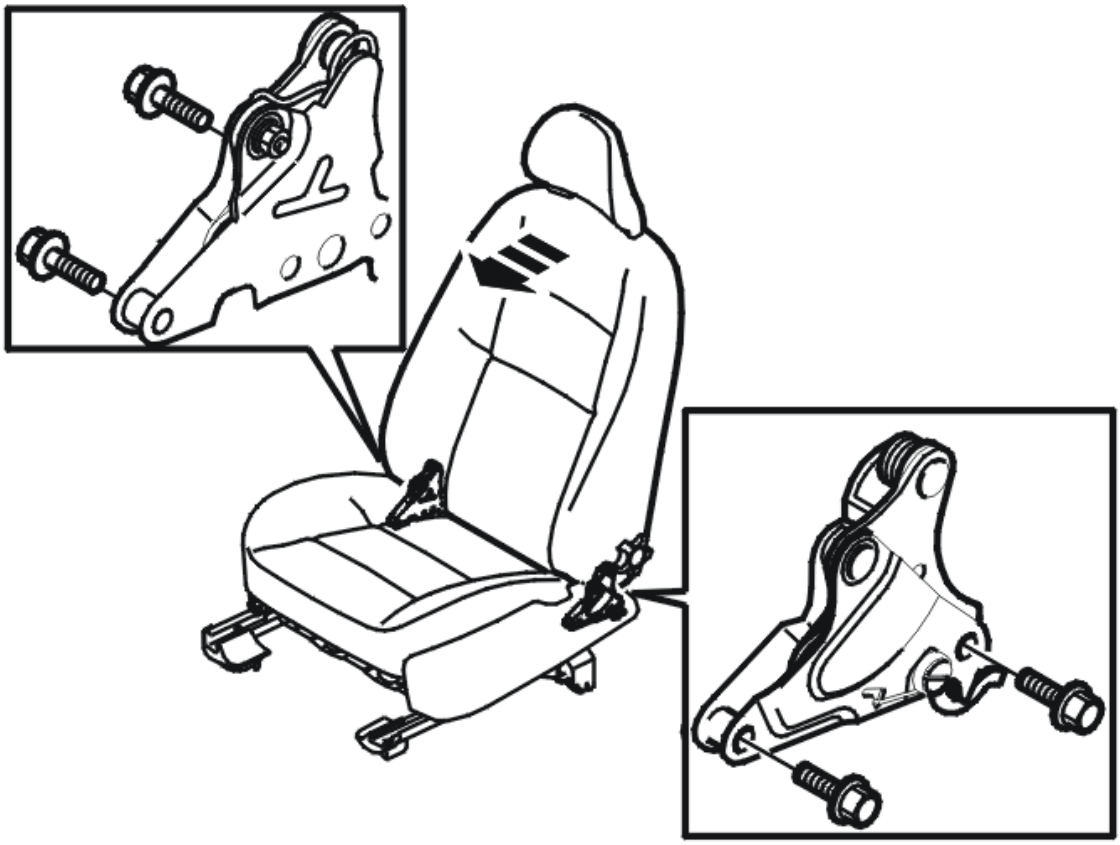

Fig. 177: Identifying Screws Holding Backrest Cushion
Courtesy of VOLVO CARS CORPORATION

Remove the 4 screws holding the backrest cushion.

Lay down the backrest cushion on the seat cushion.

Fig. 178: Releasing Folding Mechanism
Courtesy of VOLVO CARS CORPORATION

Detach the backrest upholstery at the bottom edge. See: **UPHOLSTERY BACK REST, REPLACING (2009-2012)**.

Release the folding mechanism.

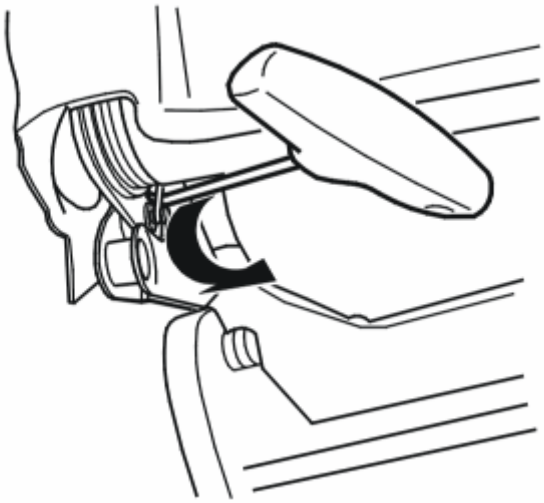

Fig. 179: Identifying Spring And Stop
Courtesy of VOLVO CARS CORPORATION

Lift the spring off the stop using see **9512943** .

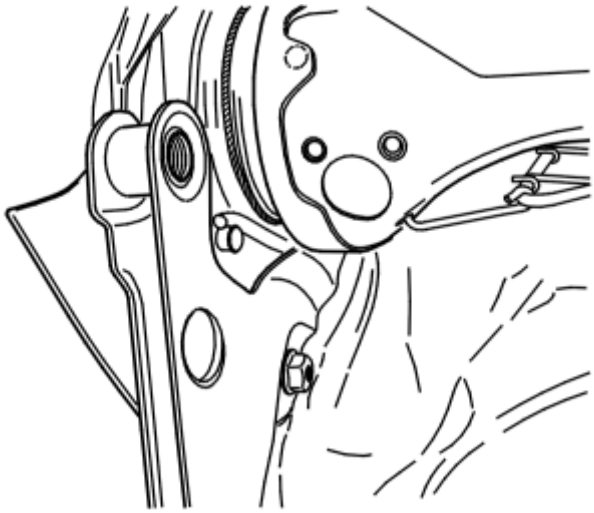

Fig. 180: Identifying Whiplash Element
Courtesy of VOLVO CARS CORPORATION

Pull the entire whiplash unit down to release one end of the whiplash element.

Remove the nut and the shaft.

NOTE: Note the location of the bushing.

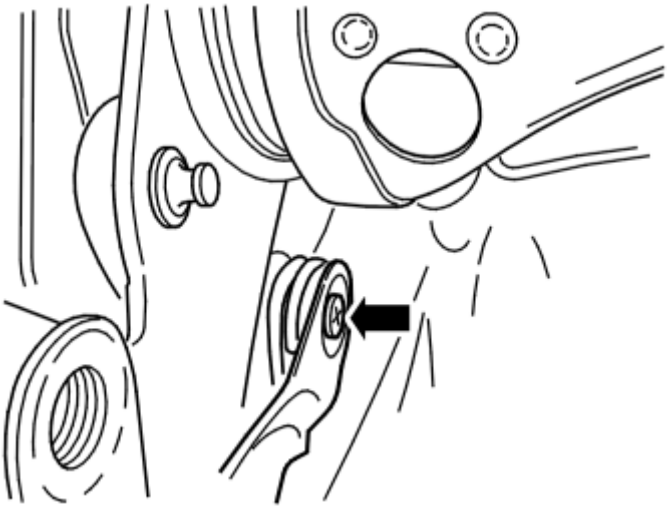

Fig. 181: Identifying Upper Screw
Courtesy of VOLVO CARS CORPORATION

Slacken off and remove the upper screw.

Detach the bracket and remove the spring.

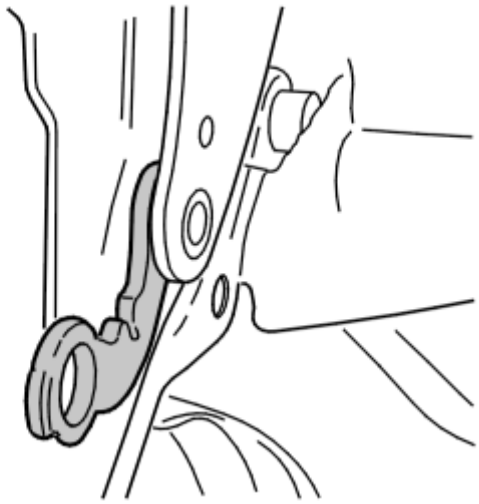

Fig. 182: Identifying Whiplash Element
Courtesy of VOLVO CARS CORPORATION

Angle out and remove the whiplash element.

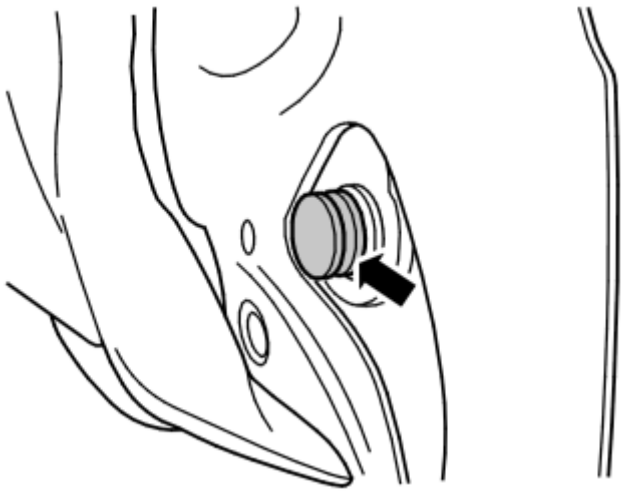

Fig. 183: Identifying Rubber Gasket
Courtesy of VOLVO CARS CORPORATION

Replace the rubber gasket with a new one.

INSTALLATION

NOTE: For tightening torques, see: TIGHTENING TORQUE .

INSTALLING THE WHIPLASH UNIT ON NON-FOLDING SEATS

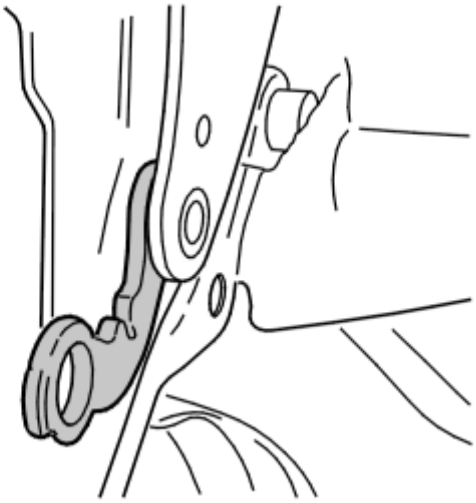

Fig. 184: Identifying Whiplash Element
Courtesy of VOLVO CARS CORPORATION

Install a **new** whiplash element.

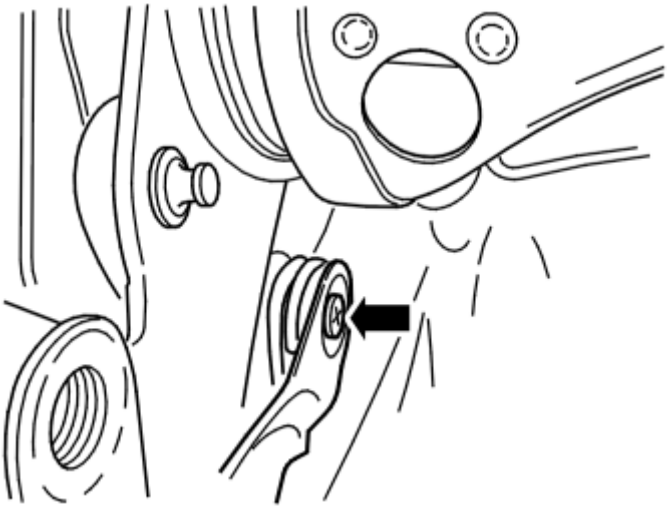

Fig. 185: Identifying Upper Screw
Courtesy of VOLVO CARS CORPORATION

Install:

- a new spring
- the bracket
- a new Torx screw and tighten. See: **SUMMARY OF TIGHTENING TORQUES FOR SPECIFIC COMPONENTS**

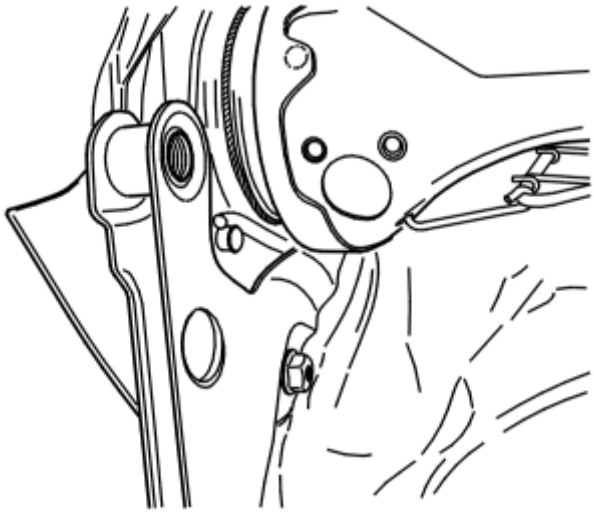

Fig. 186: Identifying Whiplash Element
Courtesy of VOLVO CARS CORPORATION

Install:

- the shaft
- the bushing
- the lock nut; tighten the M8 screw and the nut. See: **SUMMARY OF TIGHTENING TORQUES FOR SPECIFIC COMPONENTS** .

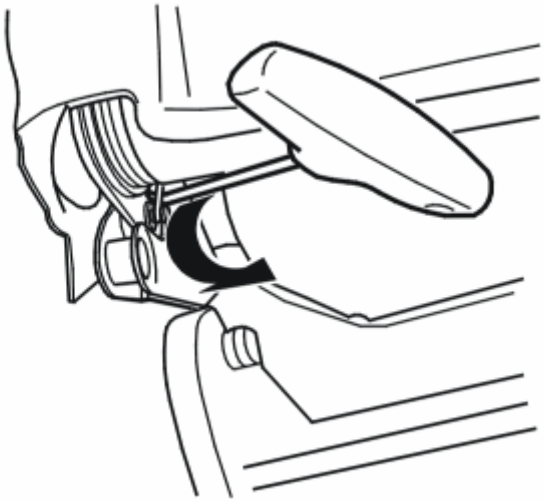

Fig. 187: Identifying Spring And Stop
Courtesy of VOLVO CARS CORPORATION

Slide the entire whiplash unit up towards the backrest frame.

Hook on the spring using see **9512943** .

Reinstall the upholstery.

Install:

- the 4 x M10 screws for the backrest frame
- the cover
- the side panel.

FINISHING

INSTALLING THE FRONT SEAT

Install the front seat. See: **FRONT SEAT, REPLACING**.

WHIPLASH UNIT FOLDING SEAT, REPLACING

IMPORTANT INFORMATION

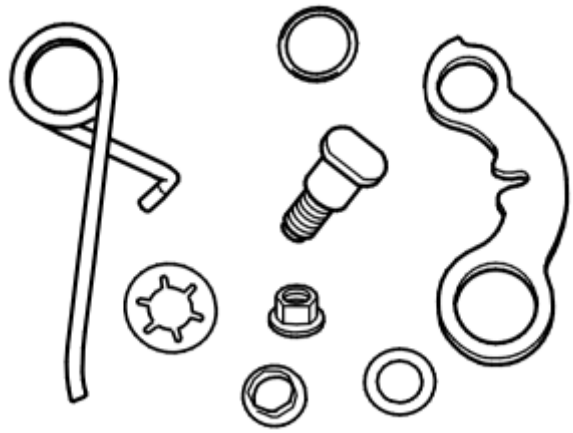

Fig. 188: Components For Folding Seats
Courtesy of VOLVO CARS CORPORATION

Always replace on both sides of the seat, and replace all components included in the repair kit.

The illustration only shows components for folding seats and for one side.

The procedure shows replacement on one side of the seat.

PREPARATORY WORK

REMOVING THE FRONT SEAT

Remove the front seat. See: **FRONT SEAT, REPLACING**.

REMOVAL

REMOVING THE WHIPLASH UNIT ON FOLDING SEATS

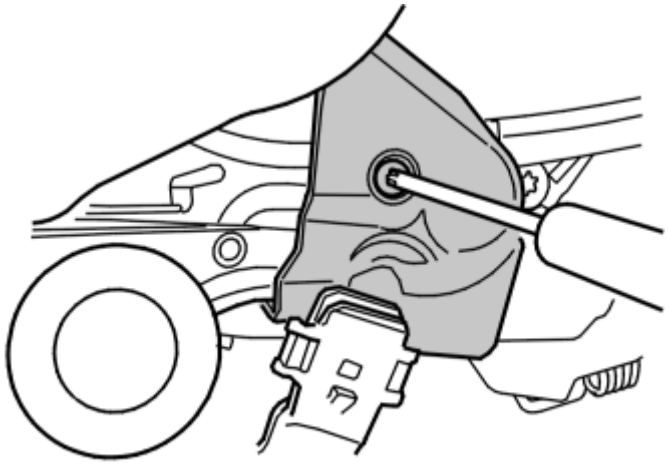

Fig. 189: Identifying Screws Cover
Courtesy of VOLVO CARS CORPORATION

Remove the side panel from the seat and place to one side.

Detach the cover over the screws on the side of the seat.

Release the catches on the reverse of the seat.

Fold the backrest cushion forwards.

Detach the backrest upholstery at the bottom edge. See: **UPHOLSTERY BACK REST, REPLACING (2009-2012)**.

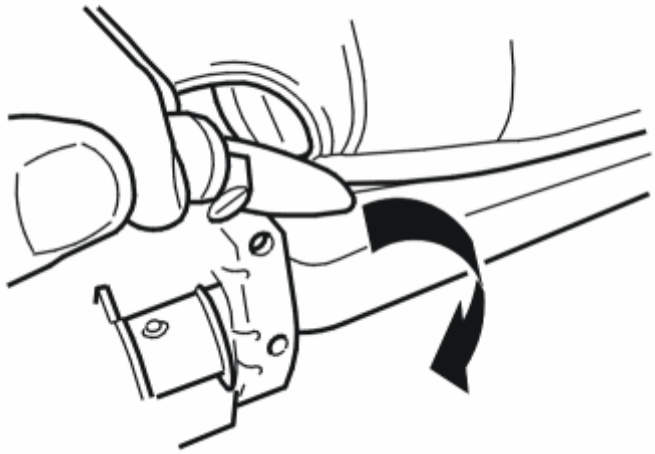

Fig. 190: Releasing Folding Mechanism
Courtesy of VOLVO CARS CORPORATION

Release the folding mechanism.

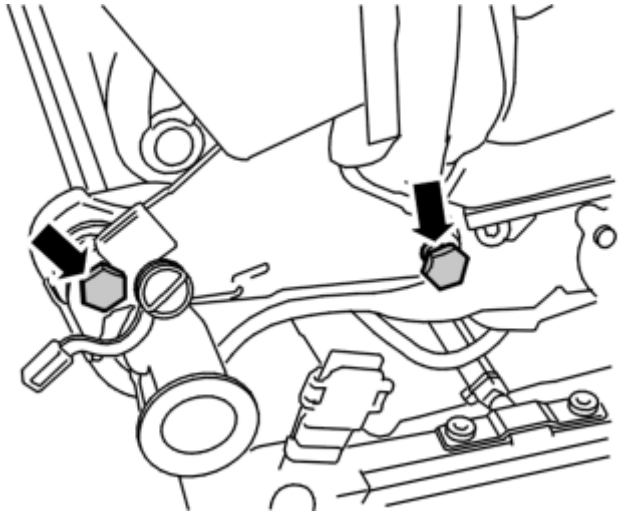

Fig. 191: Backrest Cushion Screws
Courtesy of VOLVO CARS CORPORATION

Remove the 4 screws holding the backrest cushion.

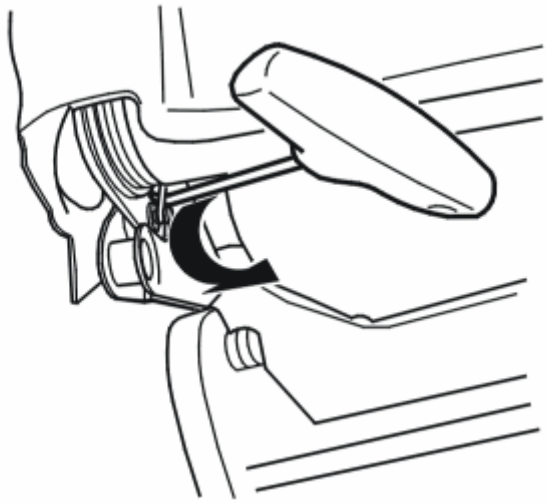

Fig. 192: Identifying Spring And Stop
Courtesy of VOLVO CARS CORPORATION

Lift the spring off the stop using see **9512943** .

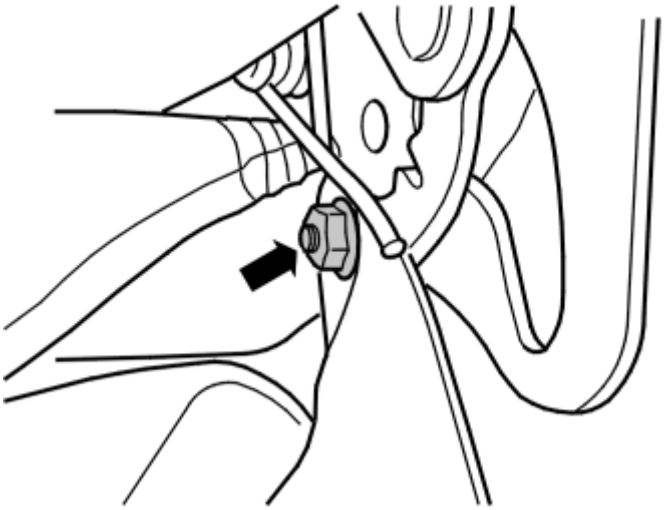

Fig. 193: Identifying Nut And Shaft
Courtesy of VOLVO CARS CORPORATION

Remove the nut and the shaft.

NOTE: Note the position of the 2 x bushings.

Fig. 194: Identifying Locking Washer
Courtesy of VOLVO CARS CORPORATION

Remove the locking washer at the spring.

HINT: Use cutting nippers to facilitate removal of the locking washer. Then remove the spring.

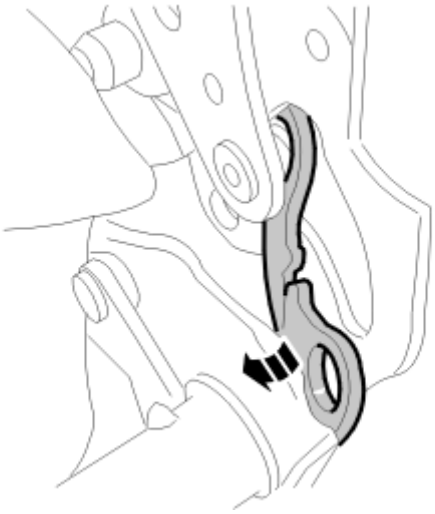

Fig. 195: Identifying Whiplash Element
Courtesy of VOLVO CARS CORPORATION

Angle out and remove the whiplash element.

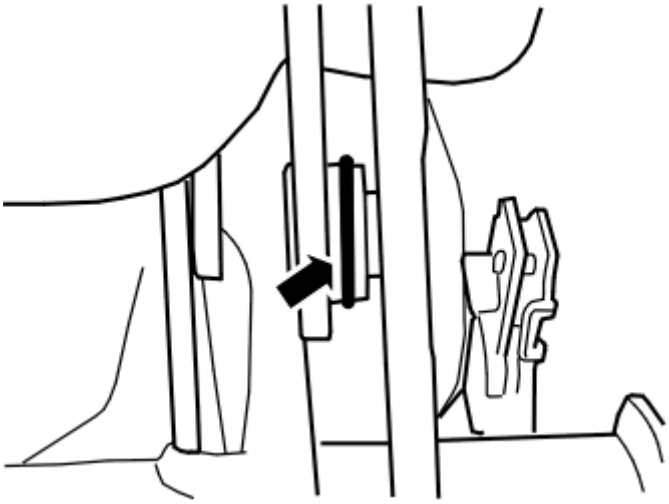

Fig. 196: Identifying Rubber Gasket
Courtesy of VOLVO CARS CORPORATION

Remove and replace the rubber gasket with a new one.

INSTALLATION

NOTE: For tightening torques, see: TIGHTENING TORQUE .

INSTALLING THE WHIPLASH UNIT ON FOLDING SEATS

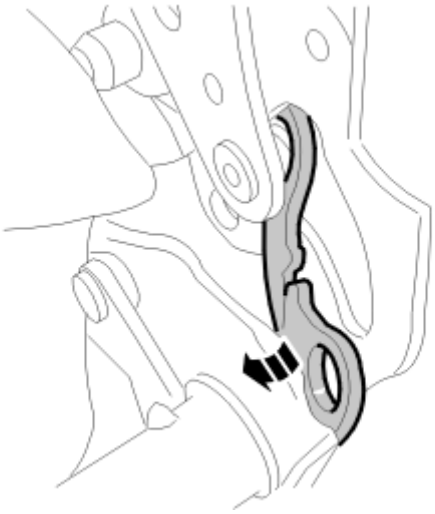

Fig. 197: Identifying Whiplash Element
Courtesy of VOLVO CARS CORPORATION

Install a **new** whiplash element.

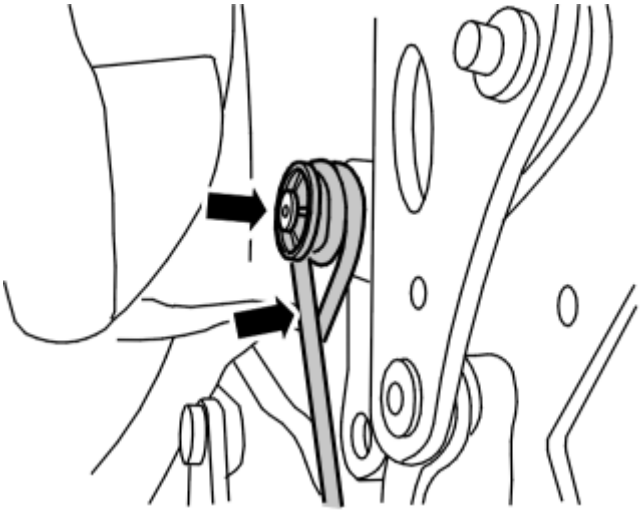

Fig. 198: Identifying Spring And Locking Washer
Courtesy of VOLVO CARS CORPORATION

Install:

- a new spring
- the locking washer.

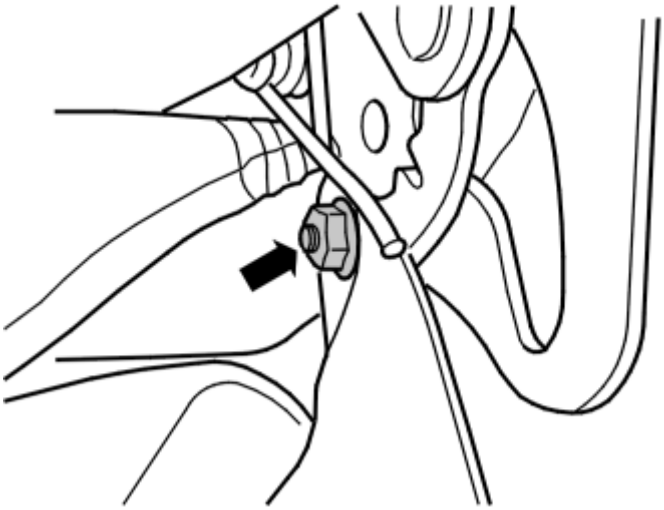

Fig. 199: Identifying Nut And Shaft
Courtesy of VOLVO CARS CORPORATION

Install:

- the shaft
- the bushings
- the lock nut, tighten the M8 screw and the nut. See: **SUMMARY OF TIGHTENING TORQUES FOR SPECIFIC COMPONENTS** .

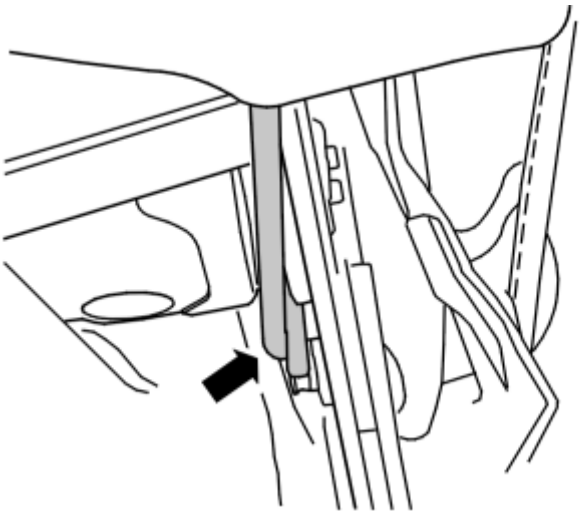

Fig. 200: Identifying Whiplash Unit
Courtesy of VOLVO CARS CORPORATION

Slide the entire whiplash unit up towards the backrest frame.

Hook on the spring using see **9512943** .

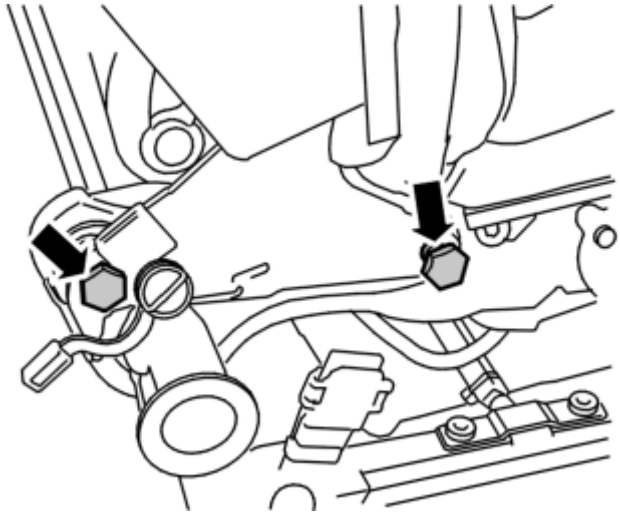

Fig. 201: Backrest Cushion Screws
Courtesy of VOLVO CARS CORPORATION

Reinstall the upholstery.

Install:

- the 4 x M10 screws for the backrest frame
- the cover
- the side panel.

FINISHING

INSTALLING THE FRONT SEAT

Install the front seat. See: **FRONT SEAT, REPLACING**.

FRONT SEAT, DRIVER'S SEAT (EXECUTIVE; 2009-2011)

BLOWER FRONT SEAT BACKREST.

NOTE: Removal steps in this procedure may contain installation details.

Remove the upholstery, see **UPHOLSTERY BACK REST, REPLACING (2009-2012)**

Fig. 202: Identifying Installation Clips
Courtesy of VOLVO CARS CORPORATION

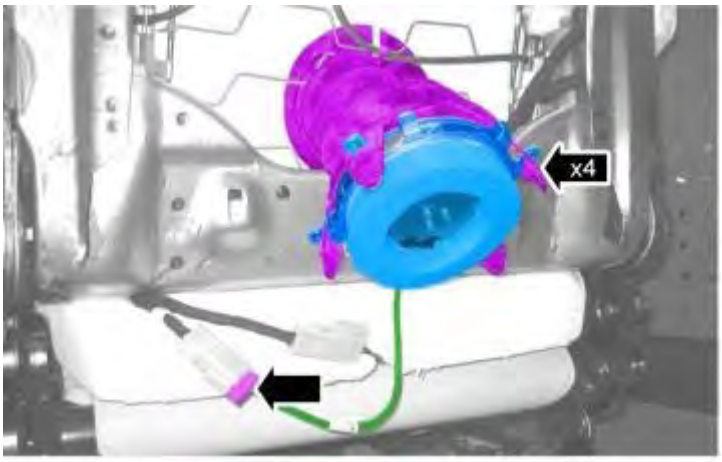

Fig. 203: Identifying Component Connections
Courtesy of VOLVO CARS CORPORATION

INSTALLATION

To install, reverse the removal procedure.

BLOWER FRONT SEAT CUSHION

NOTE: Removal steps in this procedure may contain installation details.

Remove front seat, see **FRONT SEAT, REPLACING**

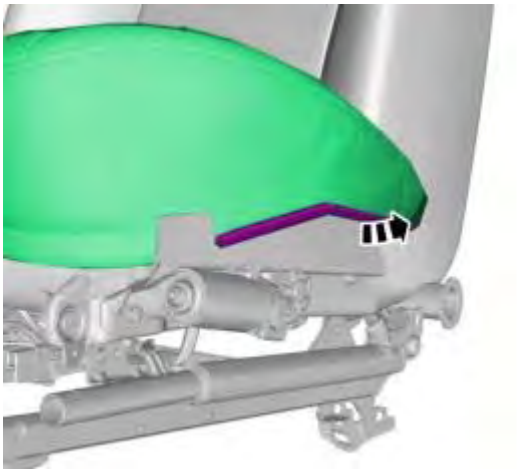

Fig. 204: Identifying Assembly Components (1 of 4)
Courtesy of VOLVO CARS CORPORATION

NOTE: On both sides.

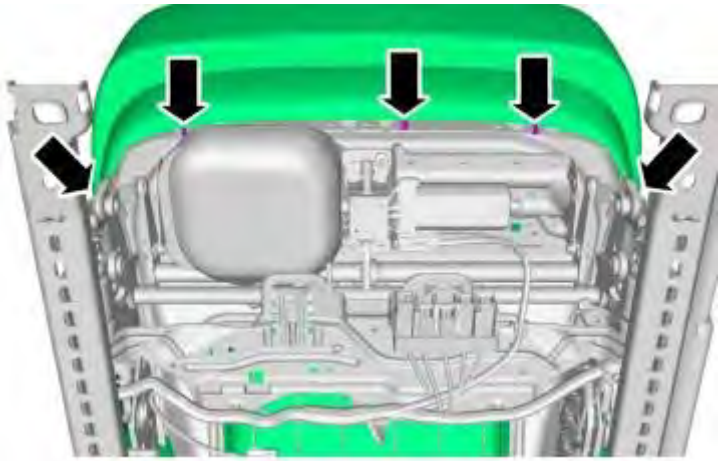

Fig. 205: Identifying Assembly Components (2 of 4)
Courtesy of VOLVO CARS CORPORATION

Fig. 206: Identifying Assembly Components (3 of 4)
Courtesy of VOLVO CARS CORPORATION

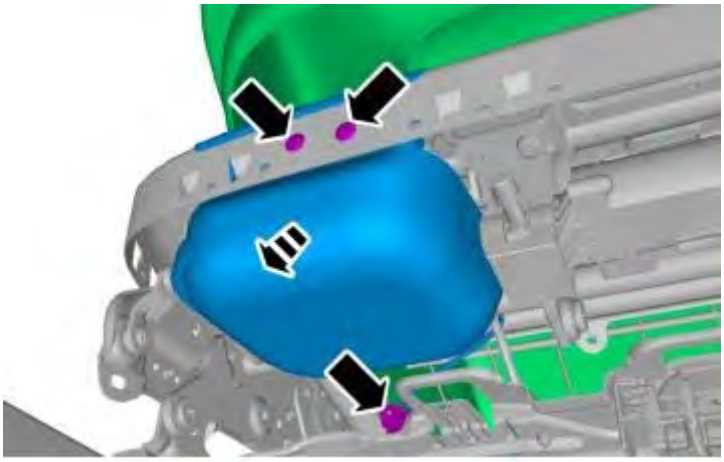

Fig. 207: Identifying Assembly Components (4 of 4)
Courtesy of VOLVO CARS CORPORATION

WARNING: **In vehicles equipped with a "Front passenger weight sensor" the sensor must always be calibrated when the upholstery has been removed or replaced. See VIDA (Volvo Scan Tool) Vehicle communication.**

COMPRESSOR LUMBAR SUPPORT PNEUMATIC

NOTE: Removal steps in this procedure may contain installation details.

Fold up the seat at the front edge. See **FRONT SEAT, REPLACING**

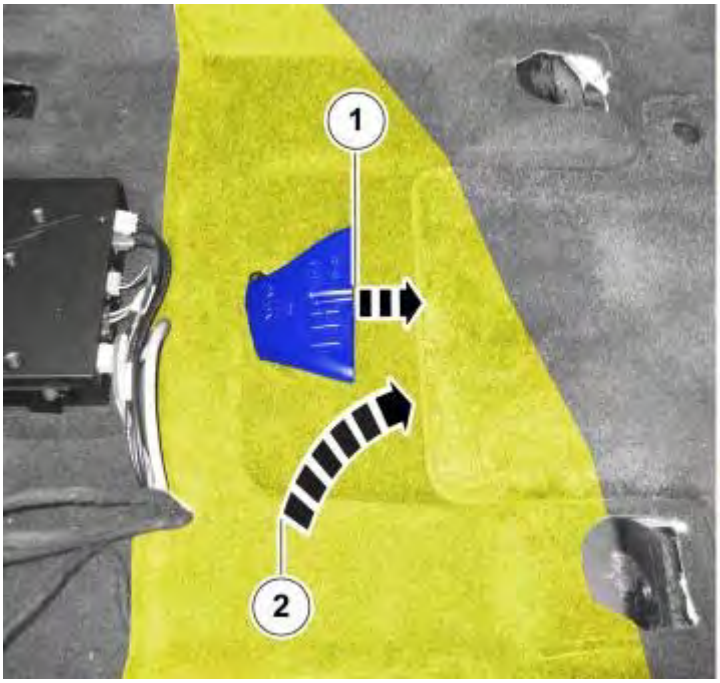

Fig. 208: Air Duct Positioning
Courtesy of VOLVO CARS CORPORATION

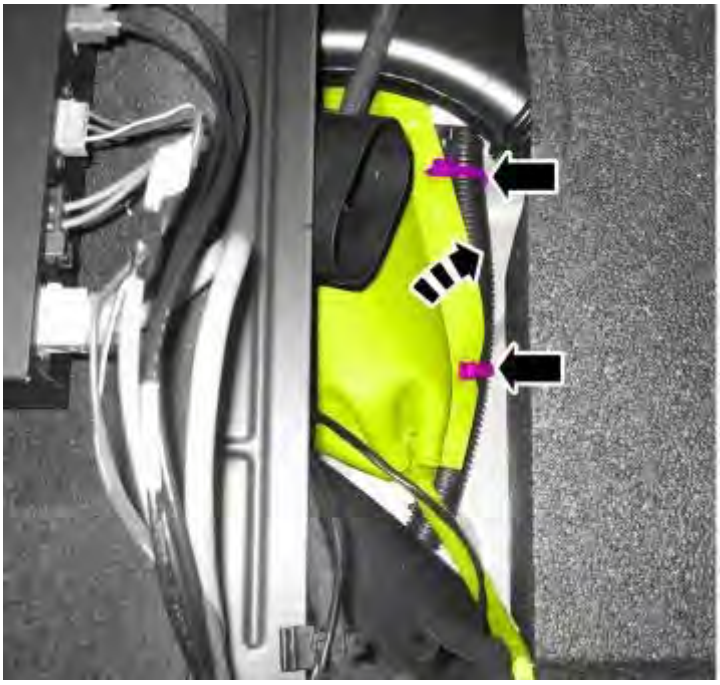

Fig. 209: Identifying Cable Ties
Courtesy of VOLVO CARS CORPORATION

Fig. 210: Installing Component Protective Covering
Courtesy of VOLVO CARS CORPORATION

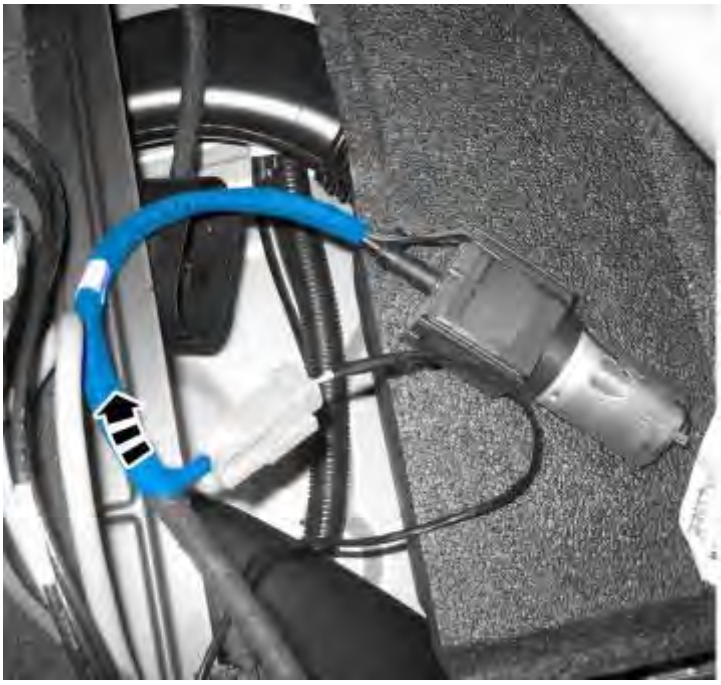

Fig. 211: Cable Insulation
Courtesy of VOLVO CARS CORPORATION

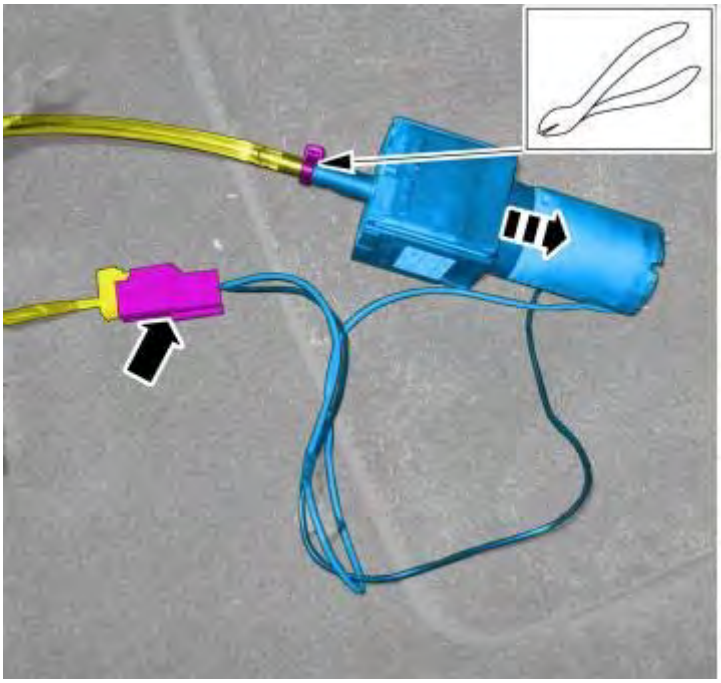

Fig. 212: Removing Component Connections
Courtesy of VOLVO CARS CORPORATION

INSTALLATION

To install, reverse the removal procedure.

CONTROL MODULE LUMBAR SUPPORT PNEUMATIC

NOTE: Removal steps in this procedure may contain installation details.

Loosen and fold up upholstery. See **UPHOLSTERY BACK REST, REPLACING (2009-2012)**

Fig. 213: Back Rest Insulation Cover
Courtesy of VOLVO CARS CORPORATION

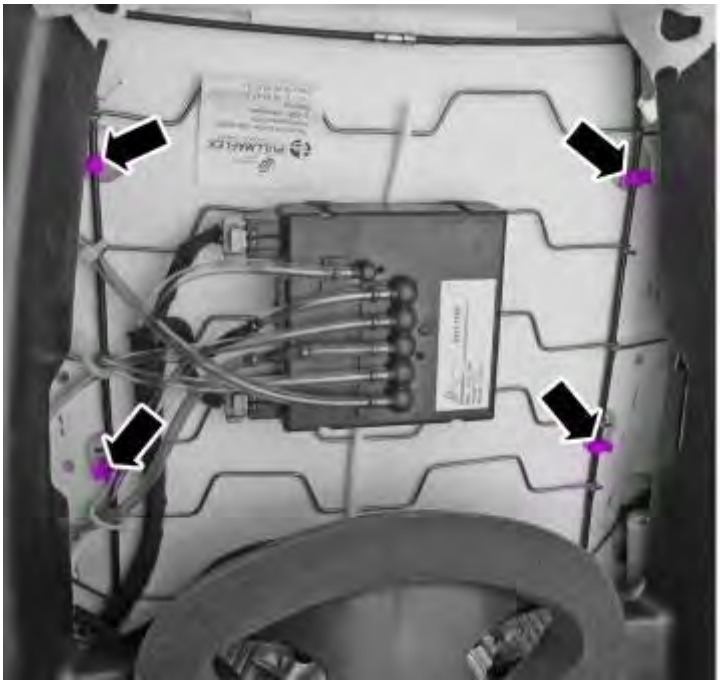

Fig. 214: Retaining Clips
Courtesy of VOLVO CARS CORPORATION

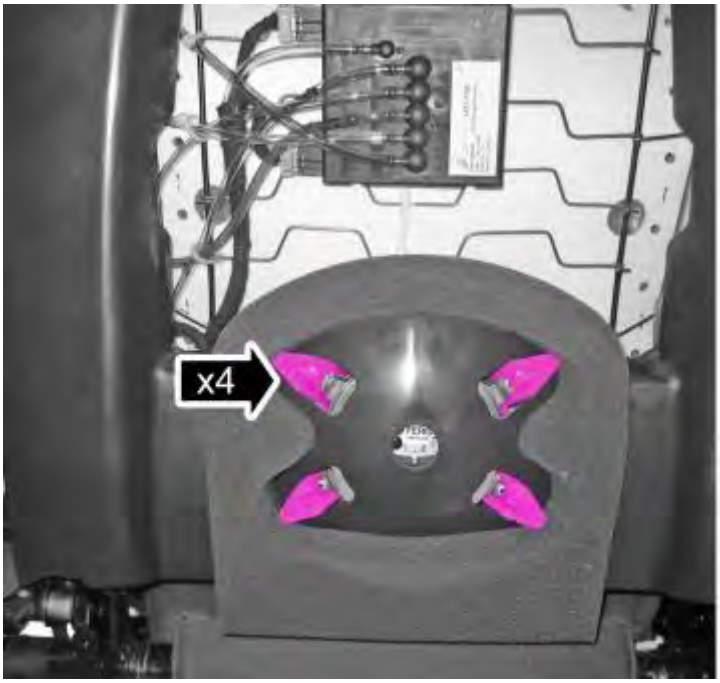

Fig. 215: Identifying Installation Clips
Courtesy of VOLVO CARS CORPORATION

Fig. 216: Back Rest Positioning
Courtesy of VOLVO CARS CORPORATION

Fig. 217: Identifying Cable Routing
Courtesy of VOLVO CARS CORPORATION

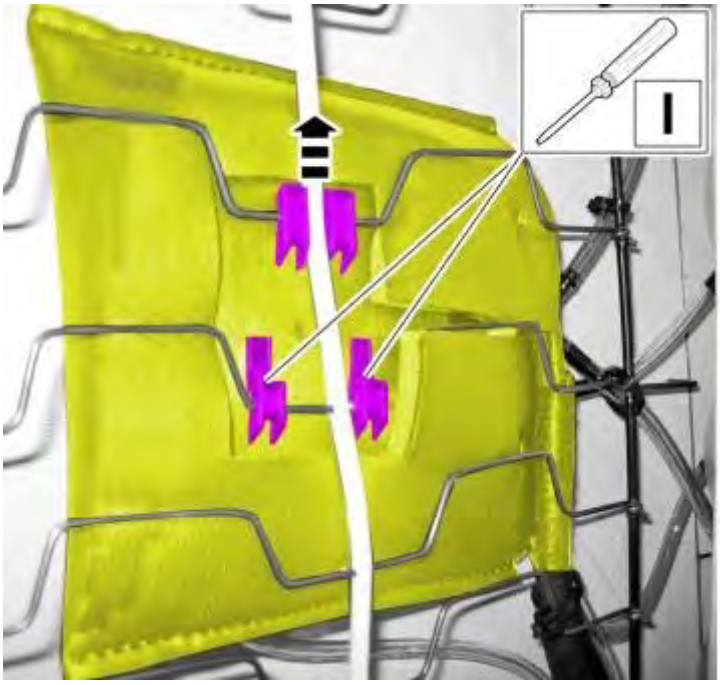

Fig. 218: Identifying Retaining Clips
Courtesy of VOLVO CARS CORPORATION

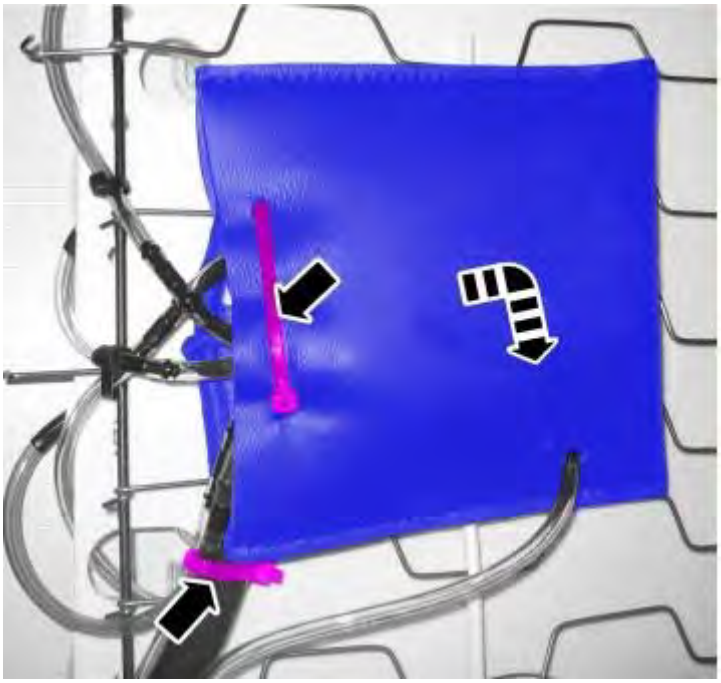

Fig. 219: Installing Protective Covering
Courtesy of VOLVO CARS CORPORATION

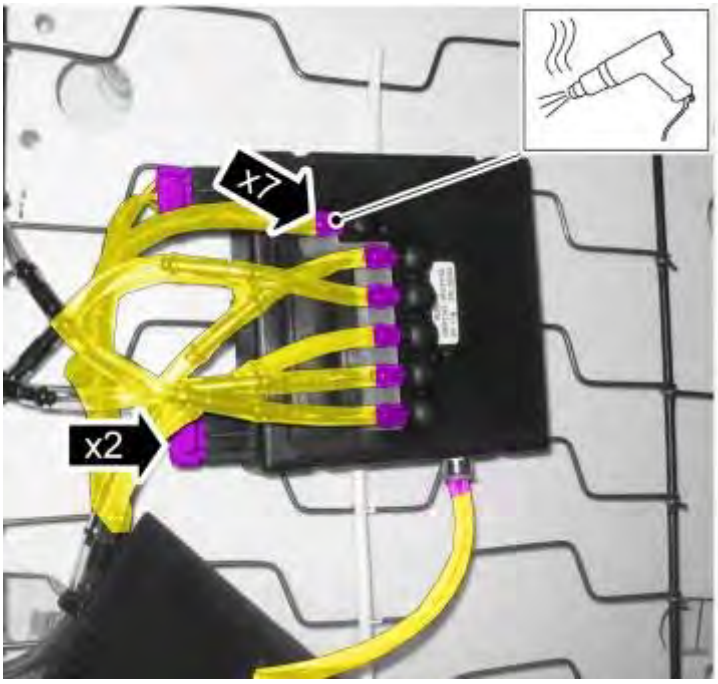

Fig. 220: Soldering Components Connections
Courtesy of VOLVO CARS CORPORATION

CAUTION: Note the position of each cable.

INSTALLATION

To install, reverse the removal procedure.

LUMBAR SUPPORT PNEUMATIC

NOTE: Removal steps in this procedure may contain installation details.

Loosen and fold up upholstery. See **UPHOLSTERY BACK REST, REPLACING (2009-2012)**

Fig. 221: Back Rest Insulation Cover
Courtesy of VOLVO CARS CORPORATION

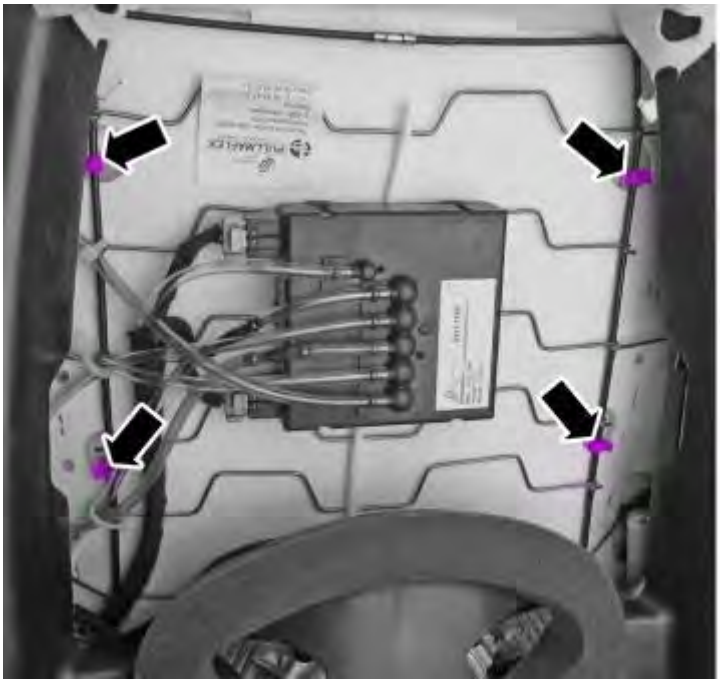

Fig. 222: Retaining Clips
Courtesy of VOLVO CARS CORPORATION

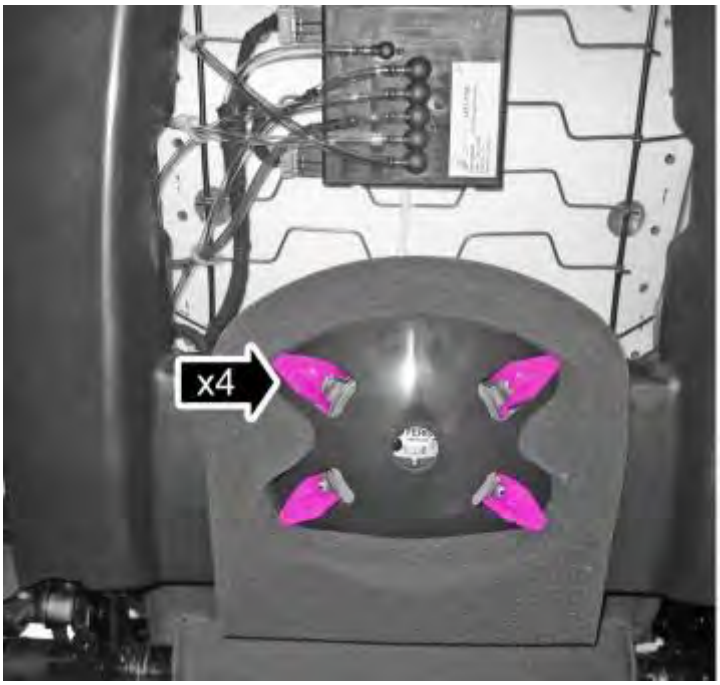

Fig. 223: Identifying Assembly Clips
Courtesy of VOLVO CARS CORPORATION

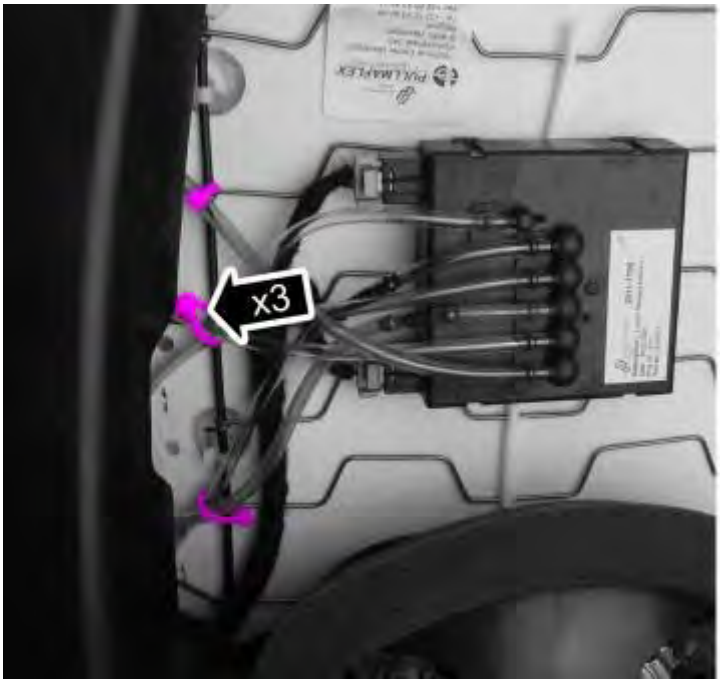

Fig. 224: Identifying Cable Ties
Courtesy of VOLVO CARS CORPORATION

Fig. 225: Positioning Of Back Rest
Courtesy of VOLVO CARS CORPORATION

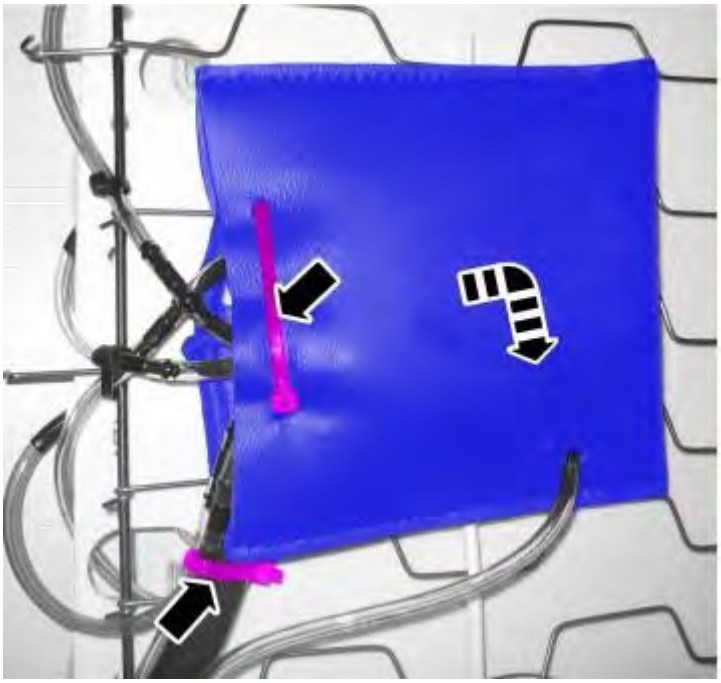

Fig. 226: Installing Protective Covering
Courtesy of VOLVO CARS CORPORATION

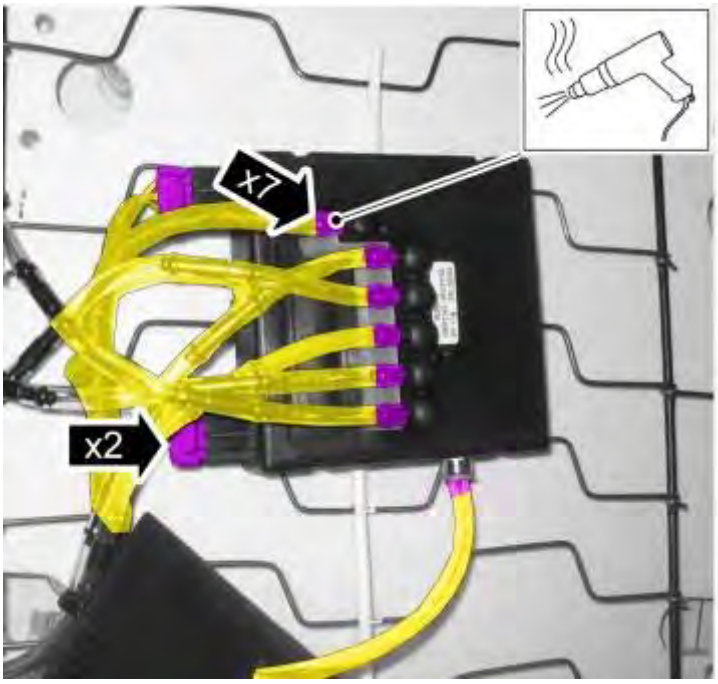

Fig. 227: Soldering Components Connections
Courtesy of VOLVO CARS CORPORATION

CAUTION: Note the position of each cable.

Fig. 228: Identifying Cable Routing
Courtesy of VOLVO CARS CORPORATION

INSTALLATION

To install, reverse the removal procedure.

UPHOLSTERY BACK REST, REPLACING (2009-2012)

see **UPHOLSTERY BACK REST, REPLACING (2009-2012)**

FRONT SEAT, DRIVERS SEAT, SEAT BENCH TYPE (2009-2012)

HEAD RESTRAINT FRONT SEAT

Materials	
Designation	**Part number**
Draw string	9459316
Draw string	3533976

REMOVAL

NOTE: Removal steps in this procedure may contain installation details.

Fig. 229: Removing Head Restraint
Courtesy of VOLVO CARS CORPORATION

Fig. 230: Locating Draw String
Courtesy of VOLVO CARS CORPORATION

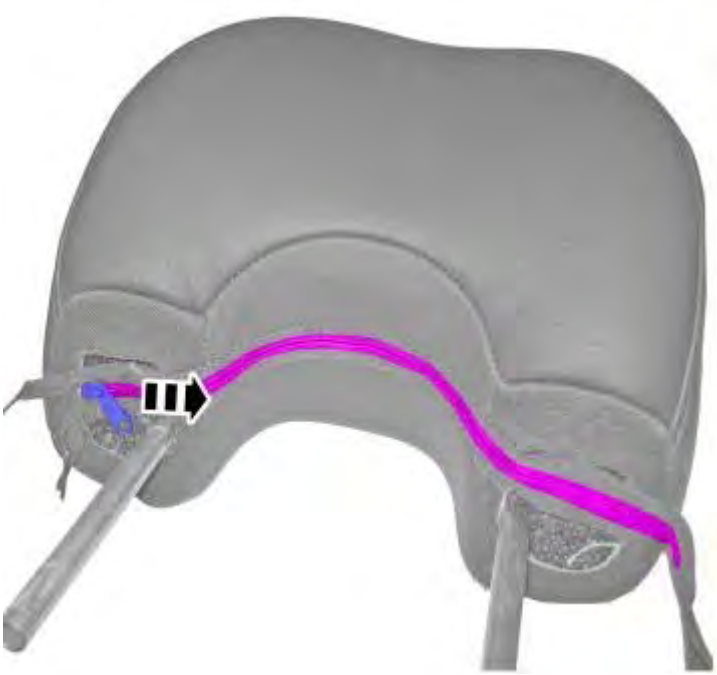

Fig. 231: Draw string, 3533976
Courtesy of VOLVO CARS CORPORATION

Use: Draw string, 9459316

Use: Draw string, 3533976

Fig. 232: Removing Head Restraint Upholstery
Courtesy of VOLVO CARS CORPORATION

VEHICLES WITH REAR PASSENGER ENTERTAINMENT SYSTEM (RSE)

Fig. 233: Identifying Head Restraint Release
Courtesy of VOLVO CARS CORPORATION

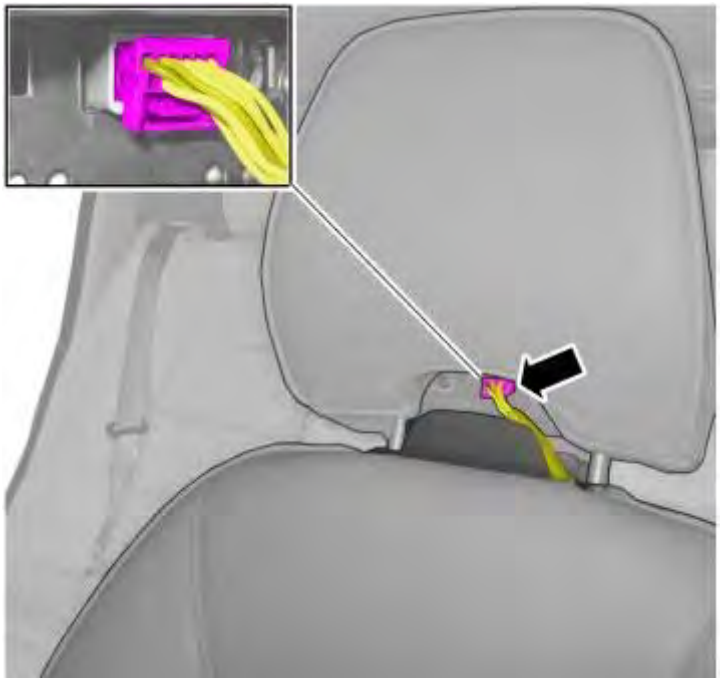

Fig. 234: Identifying Connectors
Courtesy of VOLVO CARS CORPORATION

Fig. 235: Remove in Direction of Arrow
Courtesy of VOLVO CARS CORPORATION

Fig. 236: View of Screws
Courtesy of VOLVO CARS CORPORATION

Fig. 237: Removing Rear Passenger Entertainment System (RSE)
Courtesy of VOLVO CARS CORPORATION

Fig. 238: Identifying Clips
Courtesy of VOLVO CARS CORPORATION

Fig. 239: Removing Head Restraint Upholstery
Courtesy of VOLVO CARS CORPORATION

ALL VEHICLES

INSTALLATION

To install, reverse the removal procedure.

INTERIOR (NON-SEAT) UPHOLSTERY (2003-2008)

CARGO FLOOR SUPPORT, REPLACING

As the illustrations in this service information are used for different model years and / or models, some variation may occur. However, the essential information in the illustrations is always correct.

Included in this method are methods for:

- cargo floor support, 5 seater version. See **CARGO FLOOR SUPPORT, 5 SEATER VERSION, REPLACING**
- cargo floor support, 7 seater version. See **CARGO FLOOR SUPPORT, 7 SEATER VERSION, REPLACING**.

CARGO FLOOR SUPPORT, 5 SEATER VERSION, REPLACING

REMOVING THE CARGO FLOOR SUPPORT, 5 SEATER VERSION

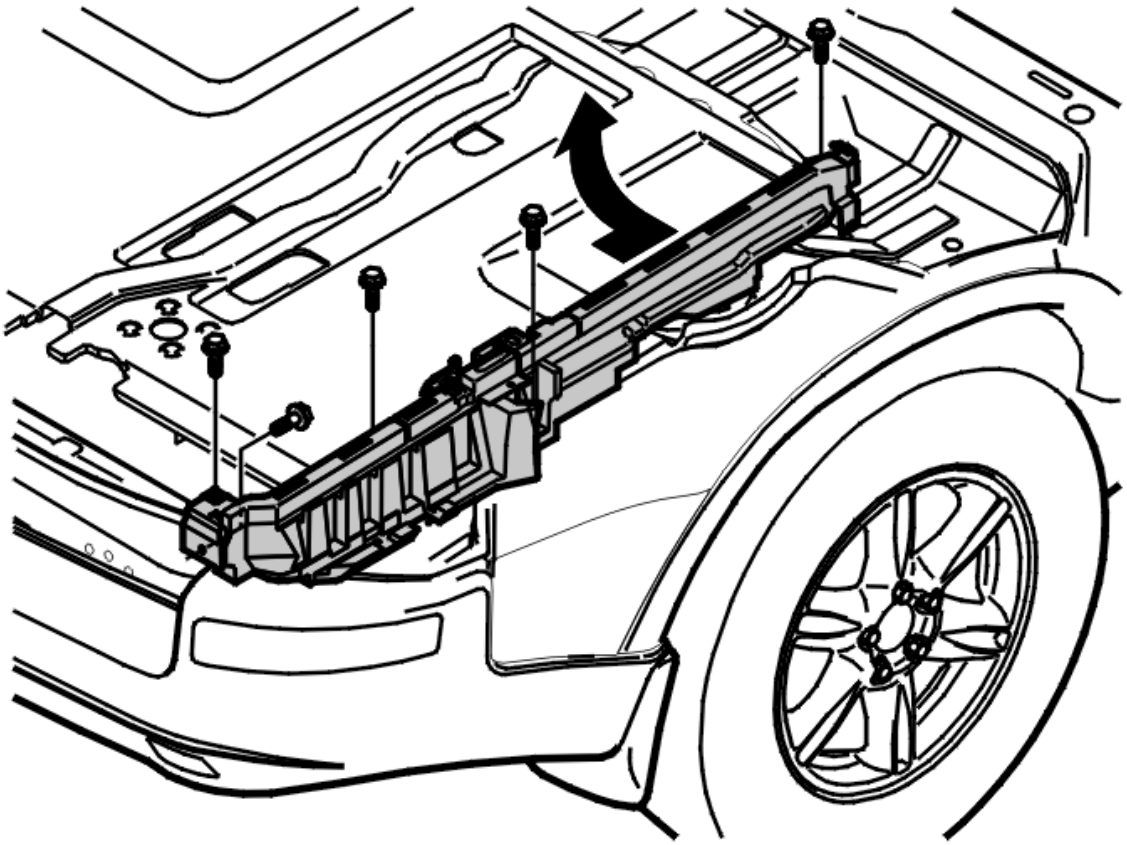

Fig. 240: Removing The Cargo Floor Support
Courtesy of VOLVO CARS CORPORATION

Remove:

- the rear floor hatch
- the front floor hatch
- the outer floor hatch
- the front and the rear storage compartments
- the jack
- the 2 screws for the rear mounting
- the 3 screws.

Press the cargo floor support forward.

Fold up the inside.

Lift out the cargo floor support.

INSTALLING THE CARGO FLOOR SUPPORT, 5 SEATER VERSION

NOTE: For tightening torques, see TIGHTENING TORQUE .

Fold in the cargo floor support.

Install:

- the 2 M6 screws for the rear mounting Tighten
- the 3 M6 screws. Tighten
- the jack
- the outer floor hatch
- the front and the rear storage compartments
- the front floor hatch
- the rear floor hatch.

CARGO FLOOR SUPPORT, 7 SEATER VERSION, REPLACING

REMOVING THE CARGO FLOOR SUPPORT, 7 SEATER VERSION

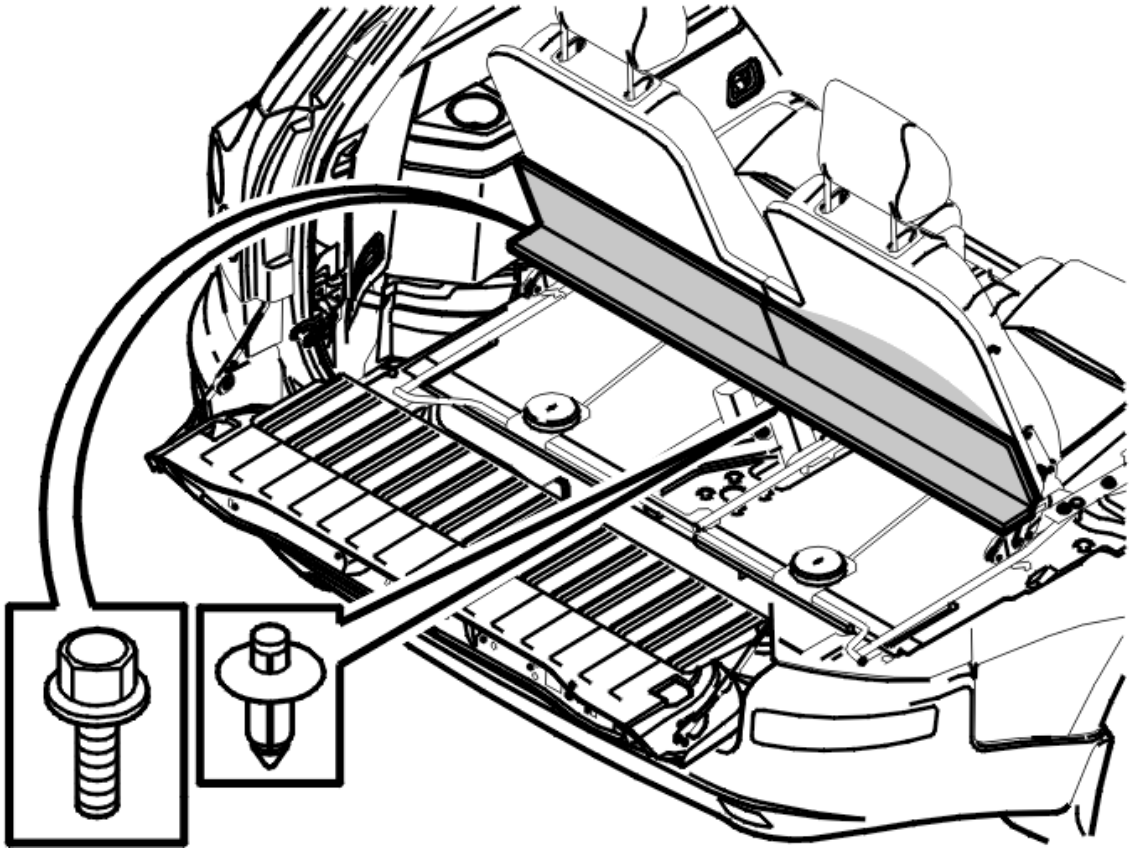

Fig. 241: Removing Floor Hatches
Courtesy of VOLVO CARS CORPORATION

Remove:

- the rear floor hatch

- the outer floor hatch
- the front floor hatch.

To remove the cargo floor support on the left and right-hand sides: Only remove the 1 outer M6 screw and the clip in the center of the floor hatch.

HINT: Insert the handle of a screwdriver between the front floor hatch and the side panel in the cargo compartment to make it easier to access the outer screw.

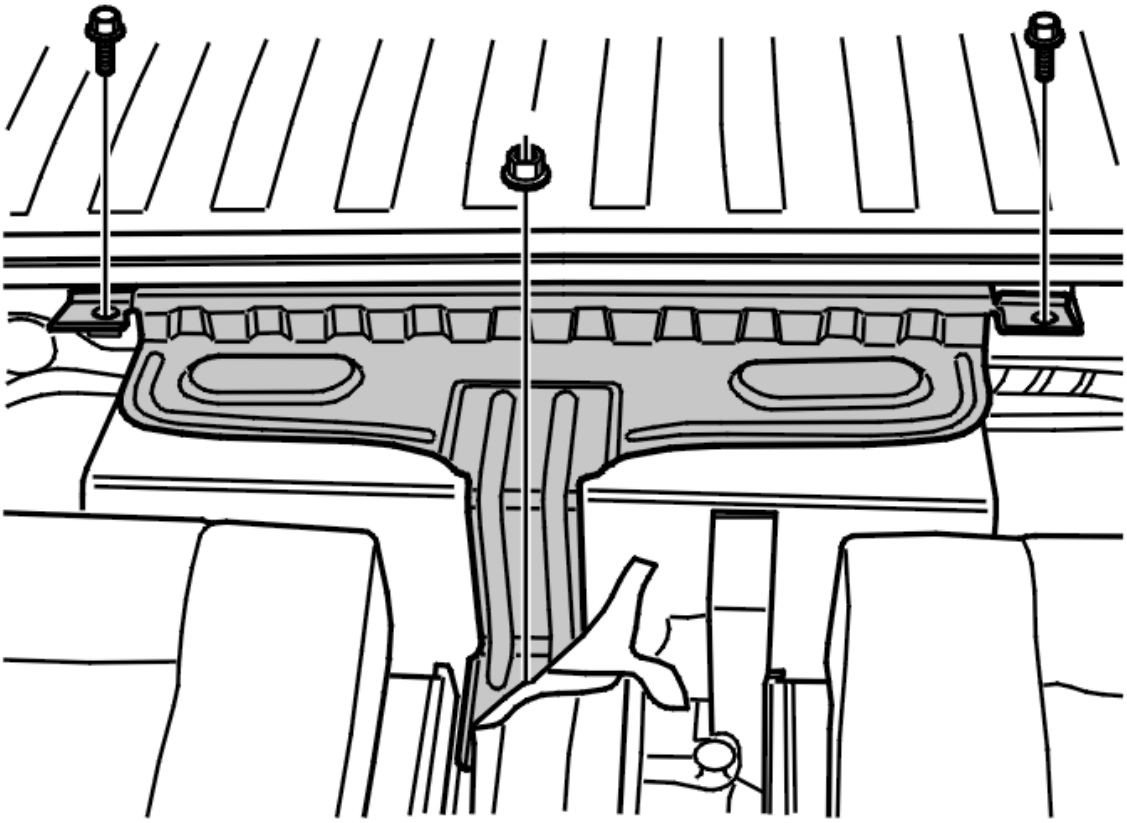

Fig. 242: Removing Battery Bracket
Courtesy of VOLVO CARS CORPORATION

Remove:

- the battery bracket
- the 2 screws
- 1 nut.

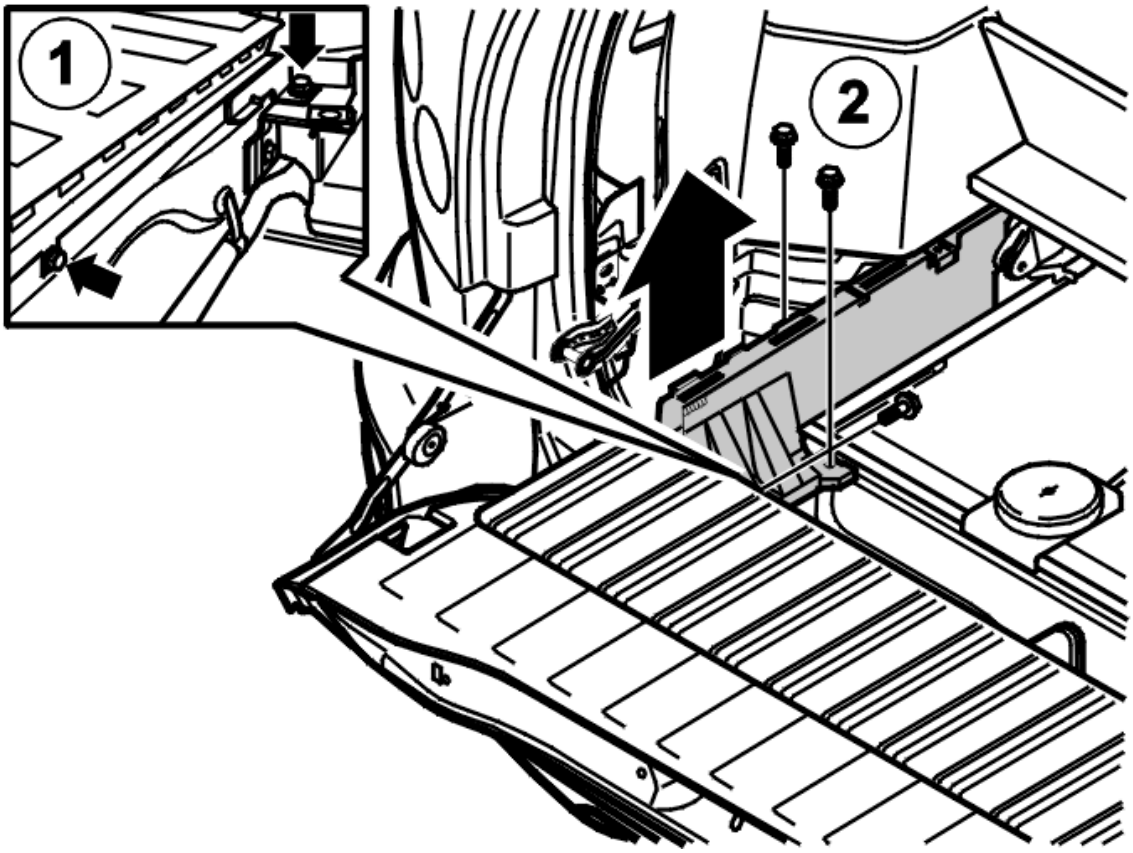

Fig. 243: Removing Cargo Floor Support
Courtesy of VOLVO CARS CORPORATION

To remove the cargo floor support on the left and right-hand sides: Only remove the outer mountings on the left and right-hand sides of the flap.

Remove:

- the 2 screws
- the 3 screws.

Lift out the cargo floor support.

INSTALLING THE CARGO FLOOR SUPPORT, 7 SEATER VERSION

NOTE: For tightening torques, see TIGHTENING TORQUE .

Install:

- the cargo floor support
- the 3 M6 screws. Tighten
- the outer mountings on each side of the flap

- the 2 M6 screws. Tighten
- the battery bracket
- the 2 M8 screws. Tighten
- 1 M8 nut. Tighten
- the front load floor
- 1 M6 screw. Tighten
- the 1 clip
- the outer floor hatch
- the rear floor hatch.

CLOTHES HOLDER HEAD RESTRAINT FRONT SEAT

NOTE: The illustrations in this service information are used for different model years and/or models. Some variation may occur. However, the essential information in the illustrations is always correct.

PREPARATORY WORK

ORDERING ZIP FASTENER CATCH

NOTE: A zip fastener catch is required to carry out this work. This is not included with the upholstery but is ordered separately.

REMOVAL

REMOVING CLOTHES HOLDER, HEAD RESTRAINTS

Press down the 2 catches in the underside of the protective pad. Press through the upholstery.

Lift the head restraint upwards while the catches are pressed in.

Remove the head restraint.

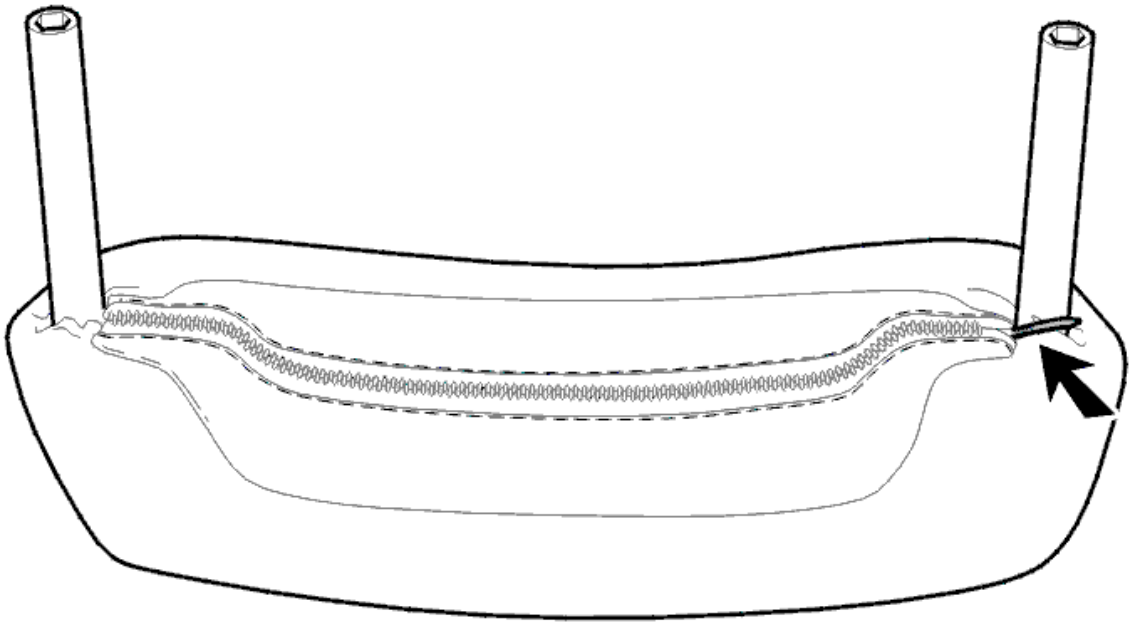

Fig. 244: Cutting Upholstery At Zip Fastener
Courtesy of VOLVO CARS CORPORATION

Remove the 2 staples locking the zip fastener.

Open the zip fastener by pulling it apart with your fingers.

Remove:

- upholstery
- the shear fabric

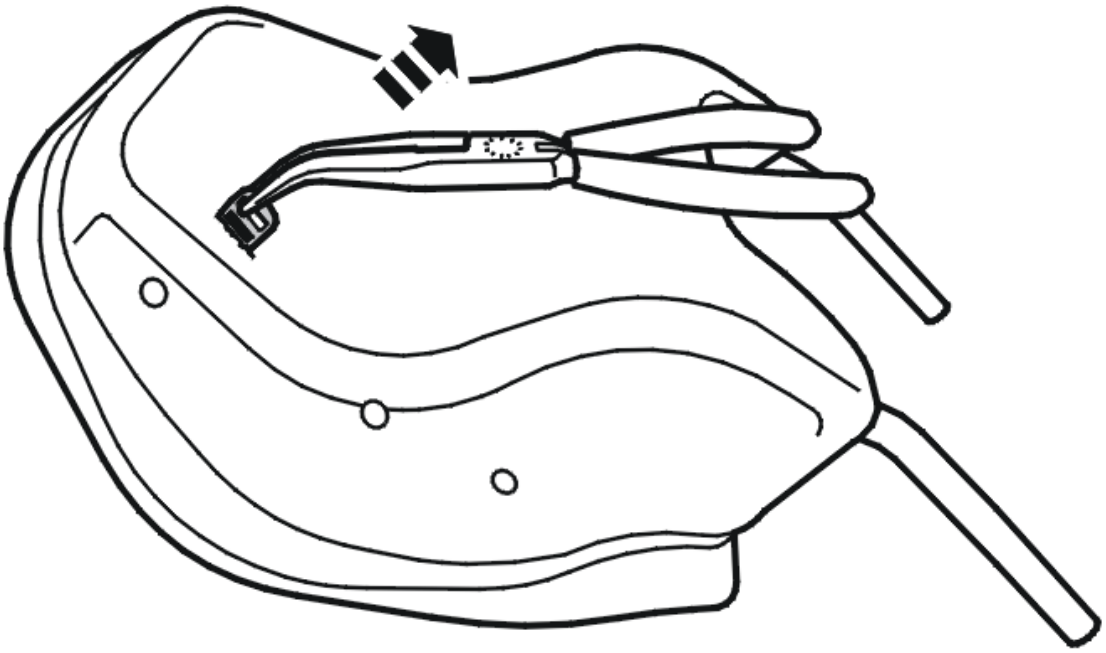

Fig. 245: Identifying Retaining Clip And Round-Nose Pliers
Courtesy of VOLVO CARS CORPORATION

Pull the retaining clip (1) straight out. Remove the retaining clip.

HINT: Use round-nose pliers.

NOTE: If the plastic frame is damaged when pulling out the retaining clip, bond using rapid bonding adhesive.

INSTALLATION

INSTALLING CLOTHES HOLDER HEAD RESTRAINTS

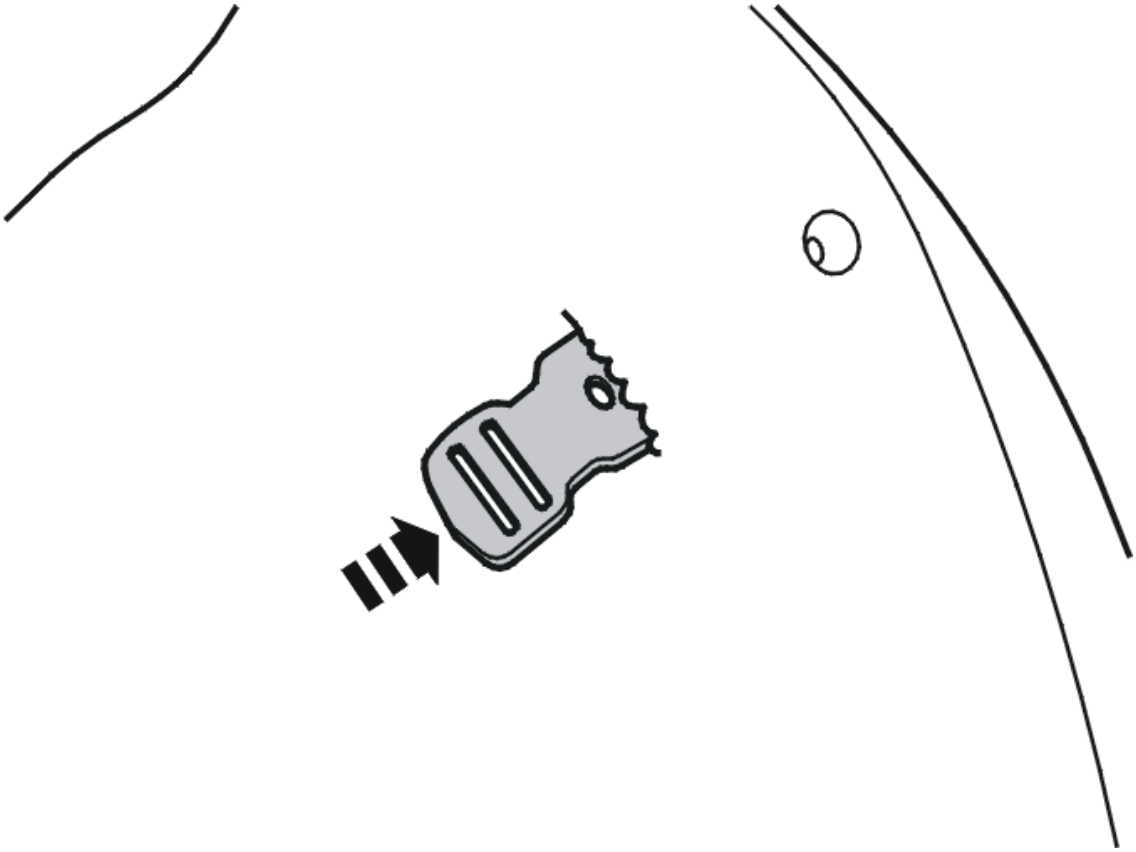

Fig. 246: Identifying New Retaining Clip
Courtesy of VOLVO CARS CORPORATION

Insert a **new** retaining clip.

NOTE: Ensure that the clips are correctly located. See the illustration.

Install:

- the sheer fabric
- upholstery

HINT: Heat up the upholstery slightly before installation to make it more elastic.

Ensure that the hole in the upholstery is directly opposite the hole in the clothes holder.

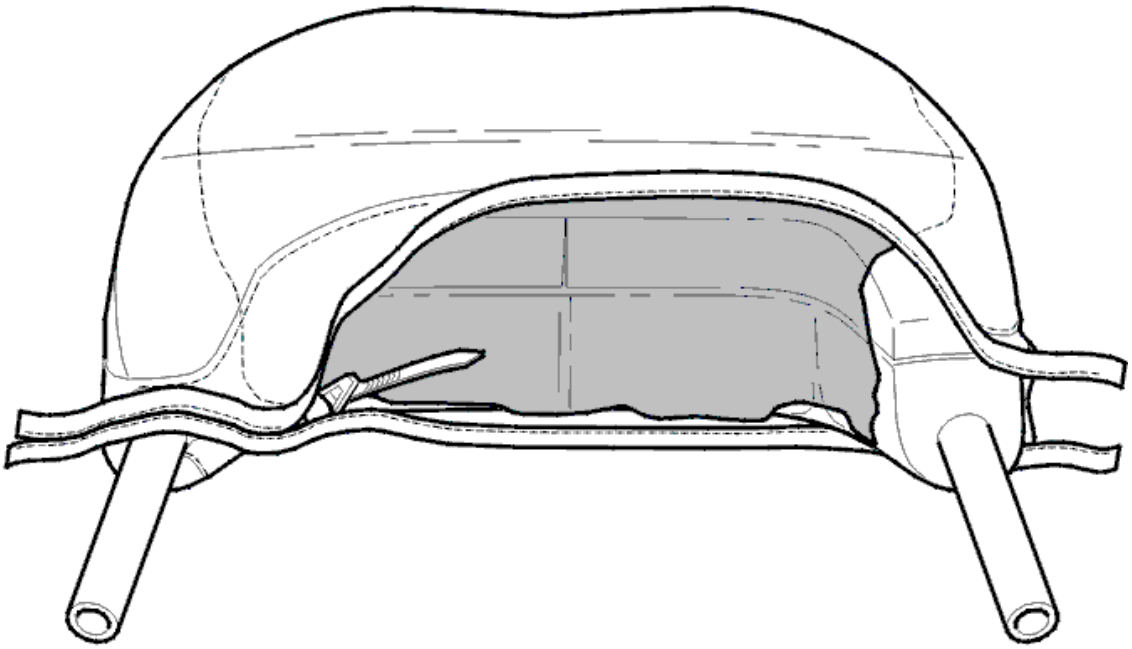

Fig. 247: Closing Zip Fastener
Courtesy of VOLVO CARS CORPORATION

Use a zip fastener catch to close the zip fastener.

NOTE: **Ensure that all seams are correctly positioned and the padding is not kinked under the upholstery.**

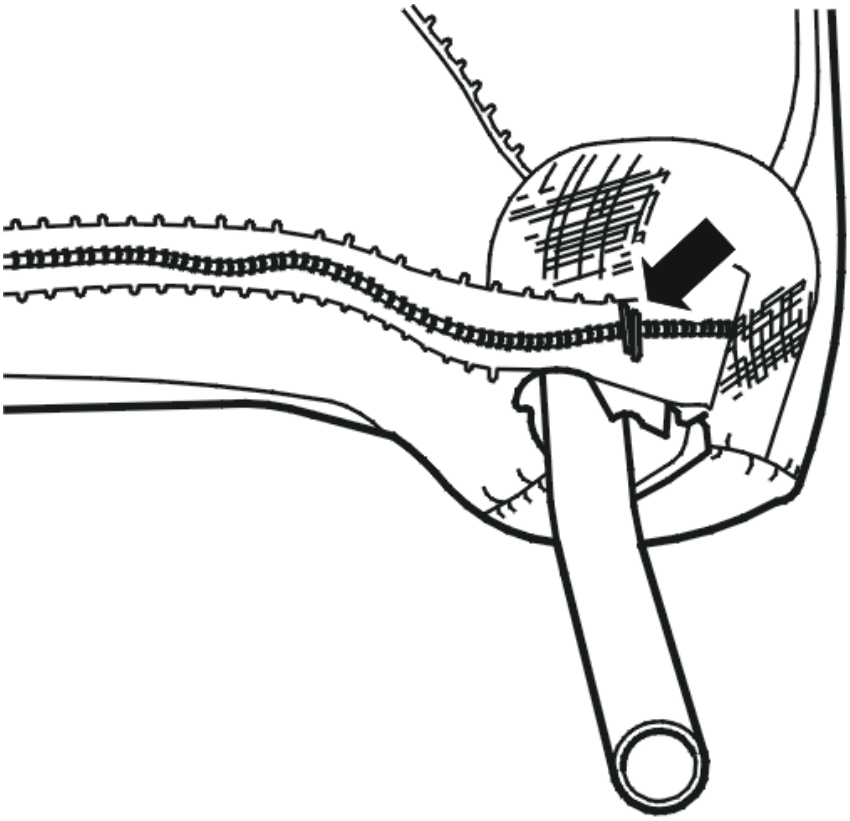

Fig. 248: Identifying Zip Fastener Stapled Together At Both Ends
Courtesy of VOLVO CARS CORPORATION

Staple the zip fastener together at both ends.

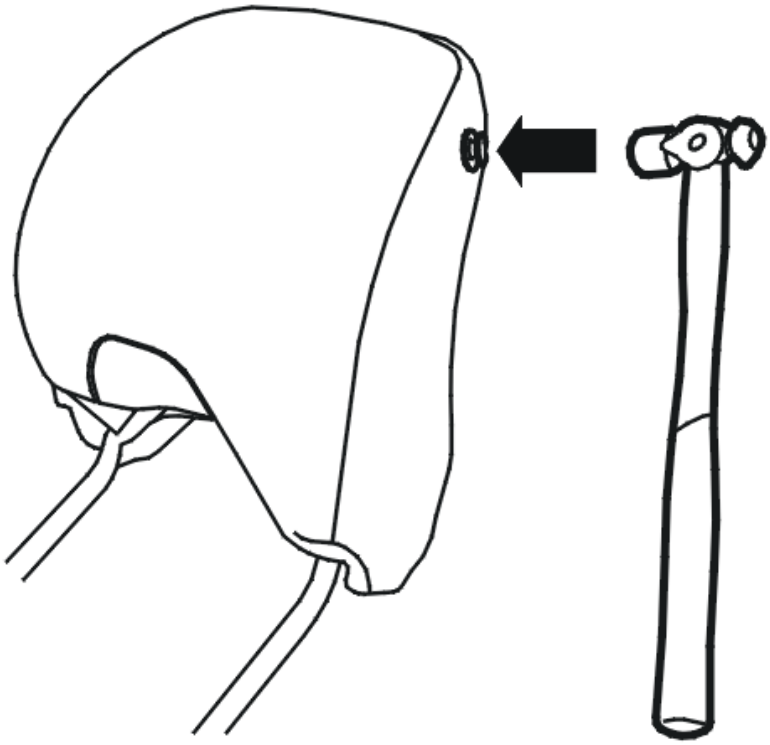

Fig. 249: Identifying Clothes Holder Installation With Hammer
Courtesy of VOLVO CARS CORPORATION

Install and press the clothes holder into place.

HINT: Tap it gently using a hammer to ensure it is properly secured.

Install the head restraint. Press the head restraint down until the catches engage.

NOTE: Lift in the head restraint. Check that it cannot be moved upwards.

FLOOR HATCH FRONT, REPLACING

NOTE: The illustrations in this service information are used for different model years and/or models. Some variation may occur. However, the essential information in the illustrations is always correct.

PREPARATORY WORK

REMOVING COMPONENTS AND IMPORTANT INFORMATION

This method only applies to 7 seat vehicles.

NOTE: **On vehicles with belts, the female mounting must be transferred or a new one installed on the new floor hatch. See VIDA Replacement part information.**

Slide in and fold down the third row of the seats and backrest cushions.

Remove the cargo compartment side panels on both sides. See: **SIDE PANEL CARGO COMPARTMENT (SEVEN SEATER VERSION), REPLACEMENT**. It does not need to be removed.

Remove the rear floor hatch. See: **FLOOR HATCH REAR, REPLACING**.

REMOVAL

REMOVING THE FRONT FLOOR HATCH

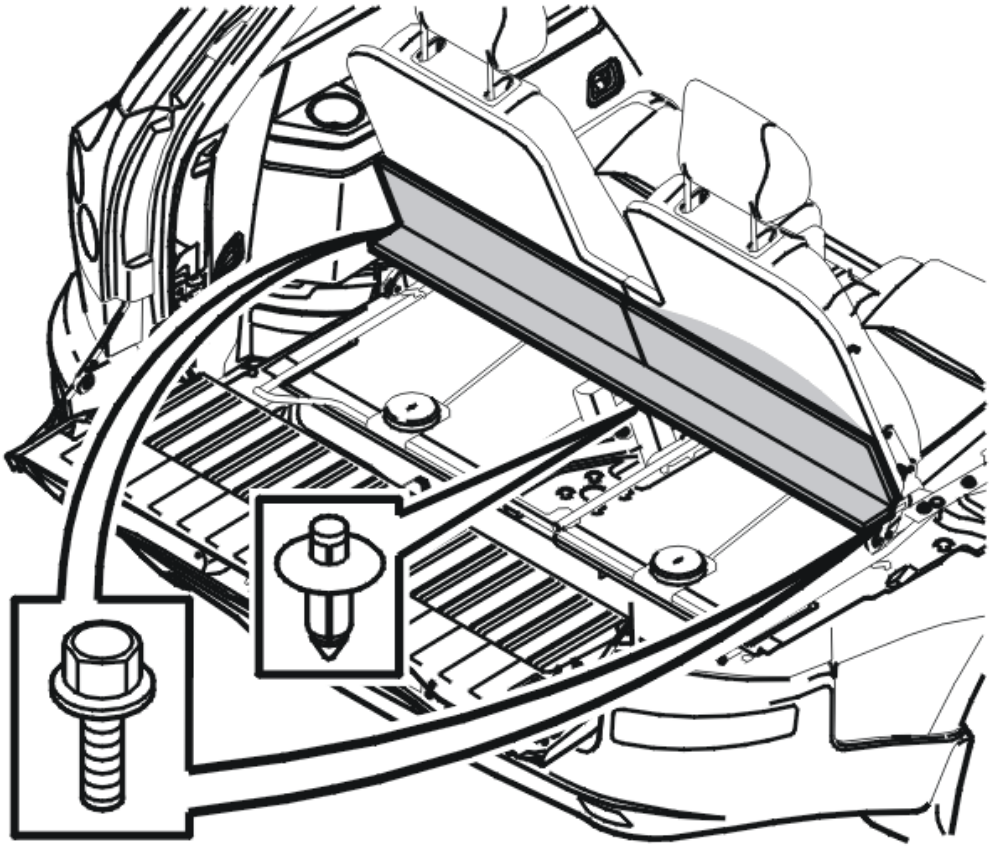

Fig. 250: Identifying Assembly Screws and Bolts
Courtesy of VOLVO CARS CORPORATION

Lift the side panels slightly to access the outer screws. The side panels are in the guides on both sides of the front floor hatch.

Remove:

- the 2 screws

- the press clip.

Lift out the front floor hatch.

TRANSFERRING COMPONENTS

TRANSFERRING THE BELT

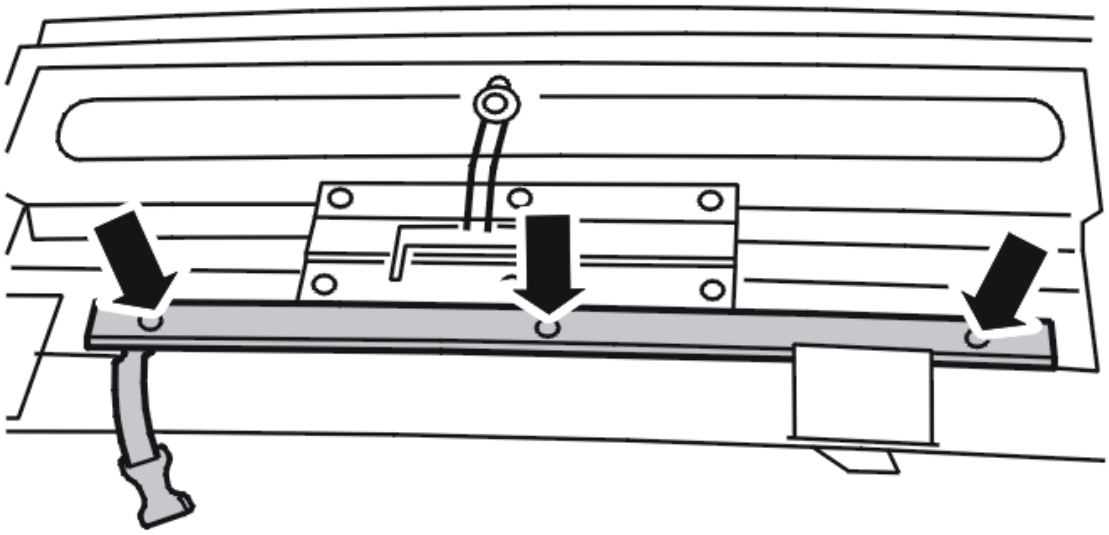

Fig. 251: Removing Belt
Courtesy of VOLVO CARS CORPORATION

Remove the 3 screws in the reinforcement member on the removed floor hatch.

Lift up and the reinforcement member. Remove the belt.

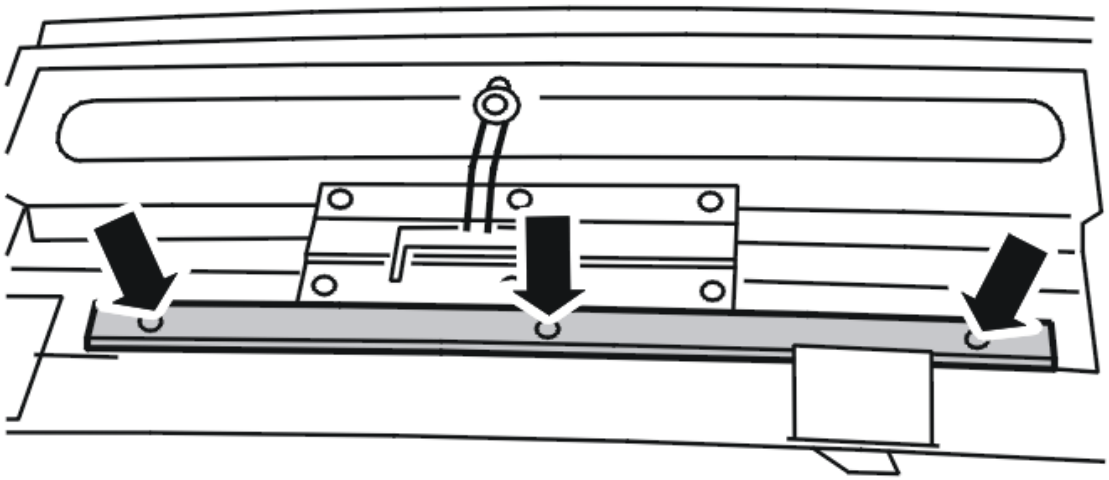

Fig. 252: Removing Reinforcement Member
Courtesy of VOLVO CARS CORPORATION

Remove the 3 screws in the reinforcement member on the new floor hatch.

Lift out the reinforcement member.

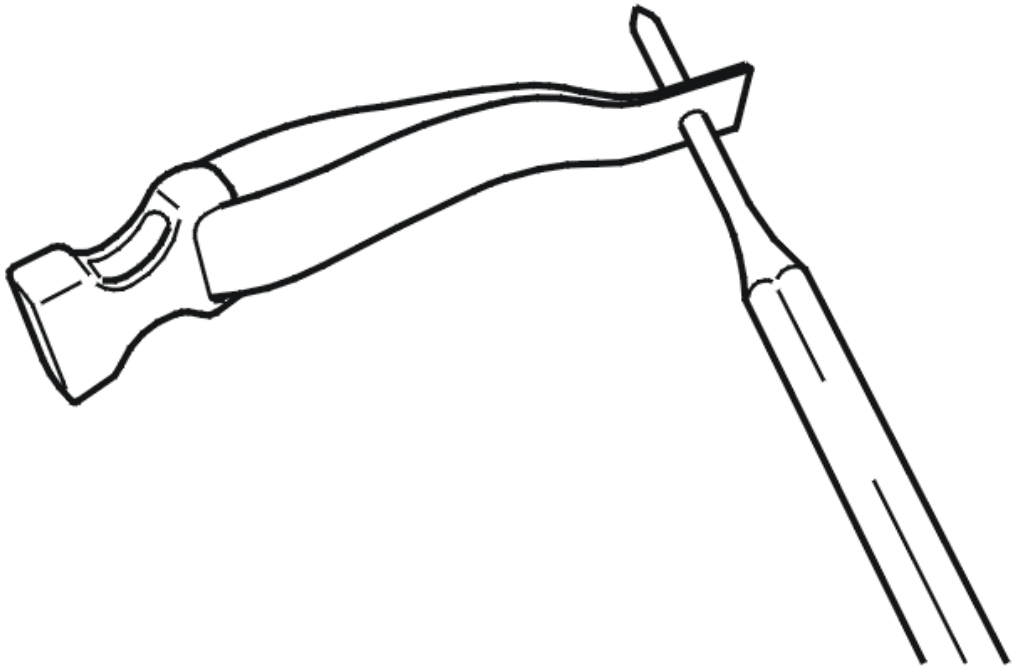

Fig. 253: Making Hole In Belt
Courtesy of VOLVO CARS CORPORATION

Use a **5 mm awl** . Make a hole in the belt **approximately 10 mm** from the upper end. See the illustration.

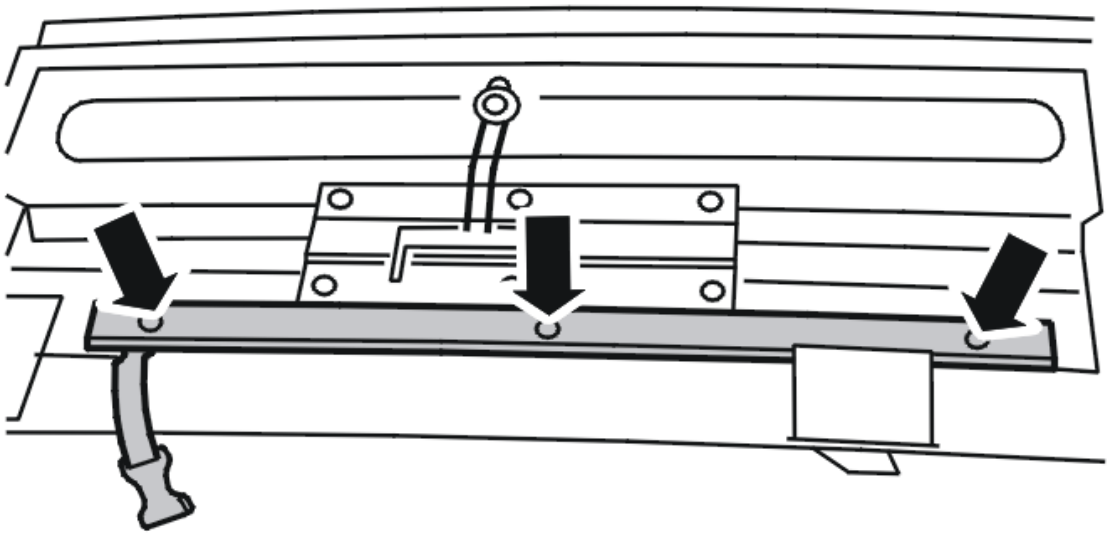

Fig. 254: Positioning Belt
Courtesy of VOLVO CARS CORPORATION

Position the belt between the floor hatch and the reinforcement member.

Install the 3 screws. Tighten.

INSTALLATION

INSTALLING THE FRONT FLOOR HATCH

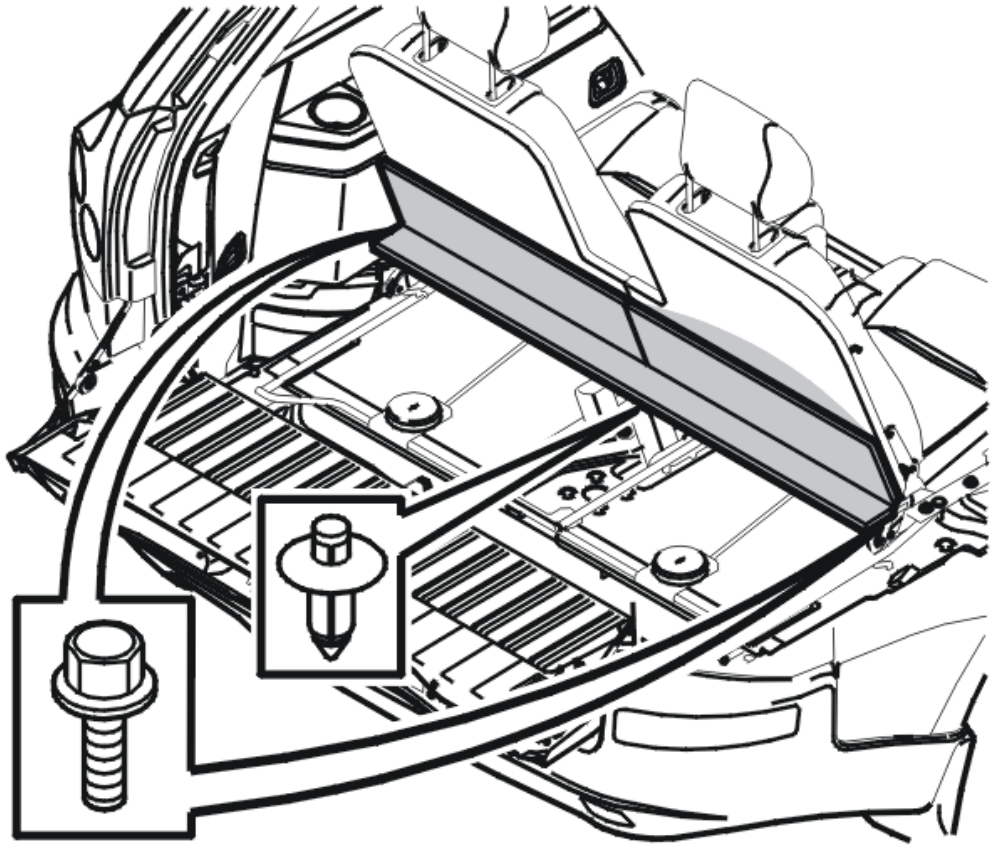

Fig. 255: Installing The Front Floor Hatch
Courtesy of VOLVO CARS CORPORATION

Install the floor hatch in the vehicle.

Install:

- the press clip
- the 2 screws. Tighten. See: **SUMMARY OF TIGHTENING TORQUES FOR SPECIFIC COMPONENTS**
- the side panels. See: **SIDE PANEL CARGO COMPARTMENT (SEVEN SEATER VERSION), REPLACEMENT**.

NOTE: Ensure that the side panels align in the guides on both sides of the floor hatch.

FLOOR HATCH REAR, REPLACING

NOTE: The illustrations in this service information are used for different model years and/or models. Some variation may occur. However, the essential information in the illustrations is always correct.

PREPARATORY WORK

IMPORTANT INFORMATION

This method only applies to 7 seat vehicles.

NOTE: On vehicles with belts, a male mounting must be installed on the new floor hatch. See VIDA Replacement part information.

REMOVAL

REMOVING THE REAR FLOOR HATCH

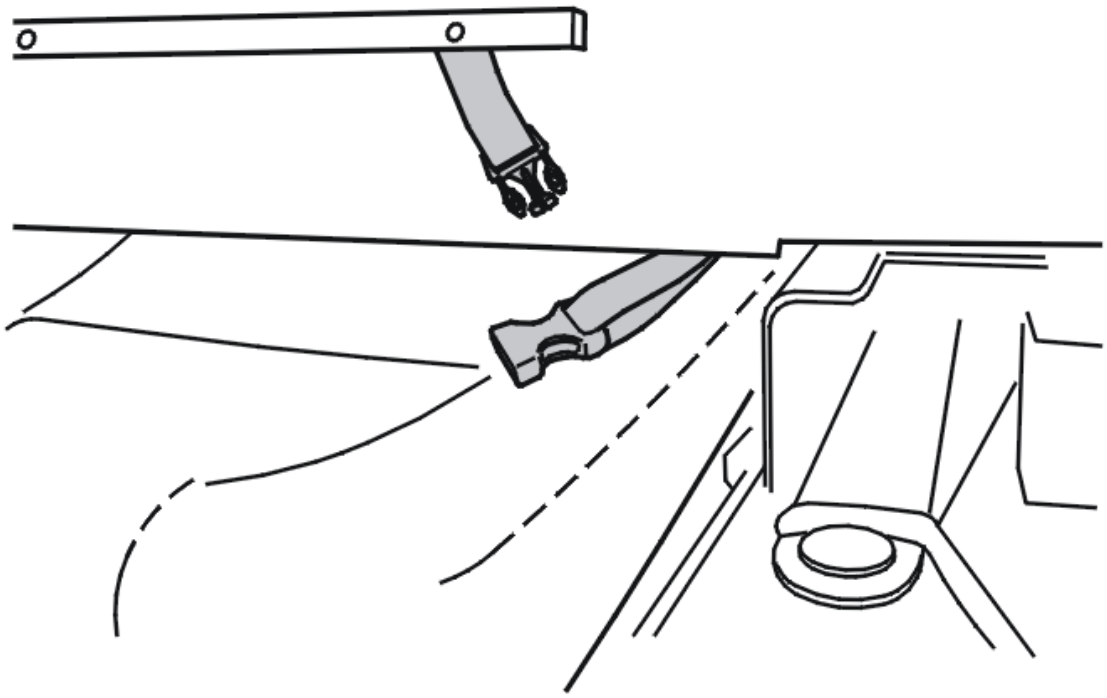

Fig. 256: Removing Reinforcement Member
Courtesy of VOLVO CARS CORPORATION

Fold up the floor hatch.

Separate the belt at the catch (1).

Remove the floor hatch.

TRANSFERRING COMPONENTS

TRANSFERRING THE BELT

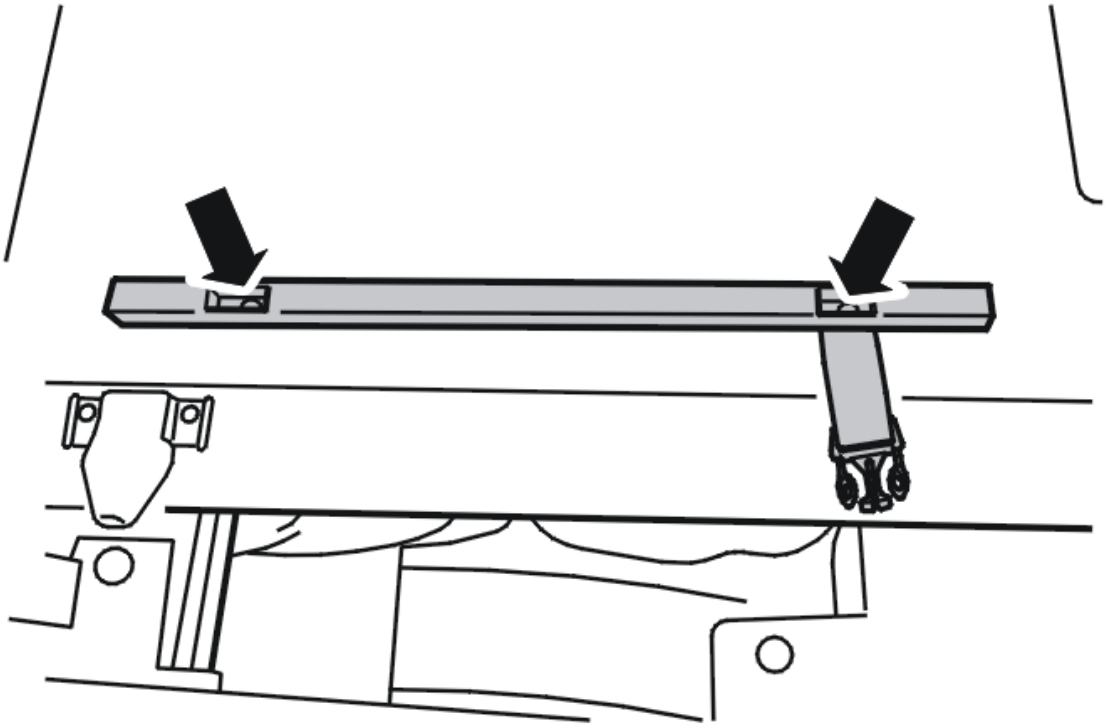

Fig. 257: Reinforcement Member
Courtesy of VOLVO CARS CORPORATION

Remove the 2 screws in the reinforcement member on the removed floor hatch.

Lift up and the reinforcement member. Remove the belt.

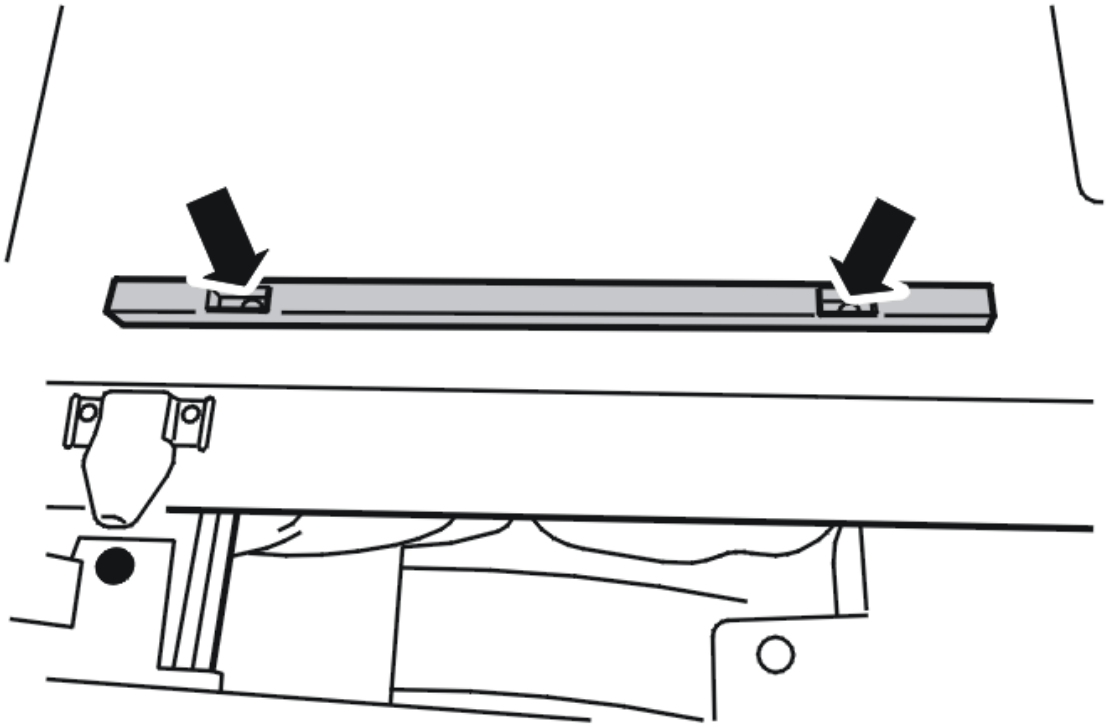

Fig. 258: Reinforcement Member
Courtesy of VOLVO CARS CORPORATION

Remove the 2 screws in the reinforcement member on the new floor hatch.

Lift out the reinforcement member.

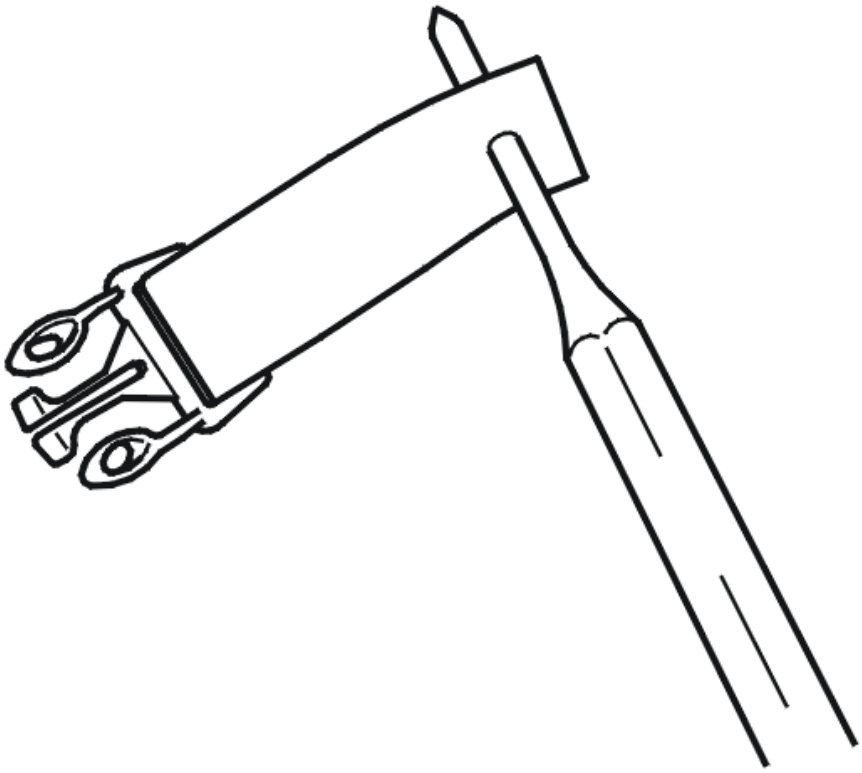

Fig. 259: Making Hole In Belt
Courtesy of VOLVO CARS CORPORATION

Use a **5 mm awl** . Make a hole in the belt **approximately 10 mm** from the upper end. See the illustration.

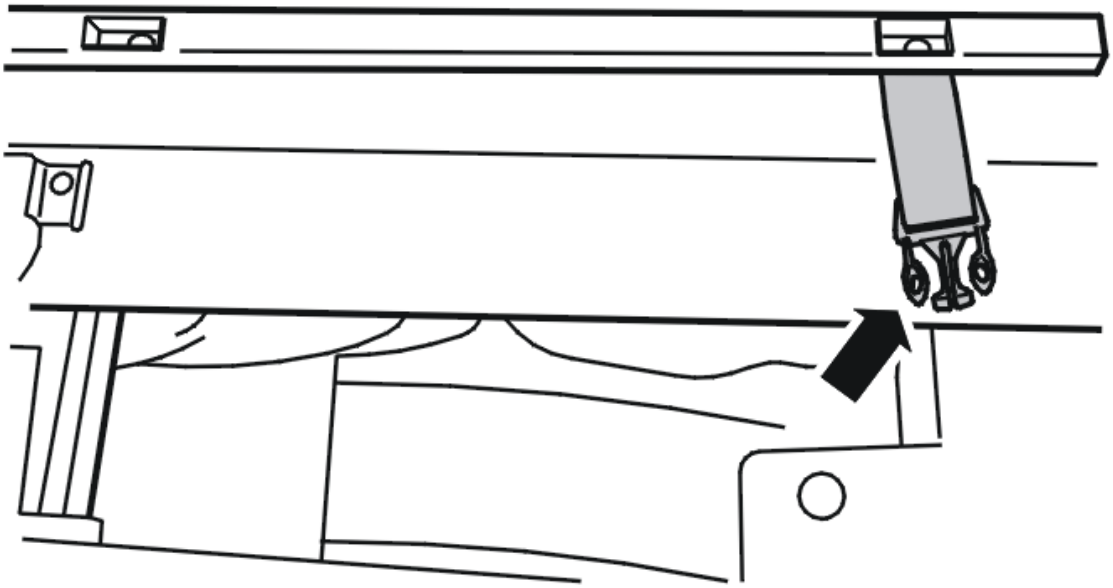

Fig. 260: Belt Clip
Courtesy of VOLVO CARS CORPORATION

Position the belt between the floor hatch and the reinforcement member.

Install the 2 screws. Tighten.

INSTALLATION

INSTALLING THE REAR FLOOR HATCH

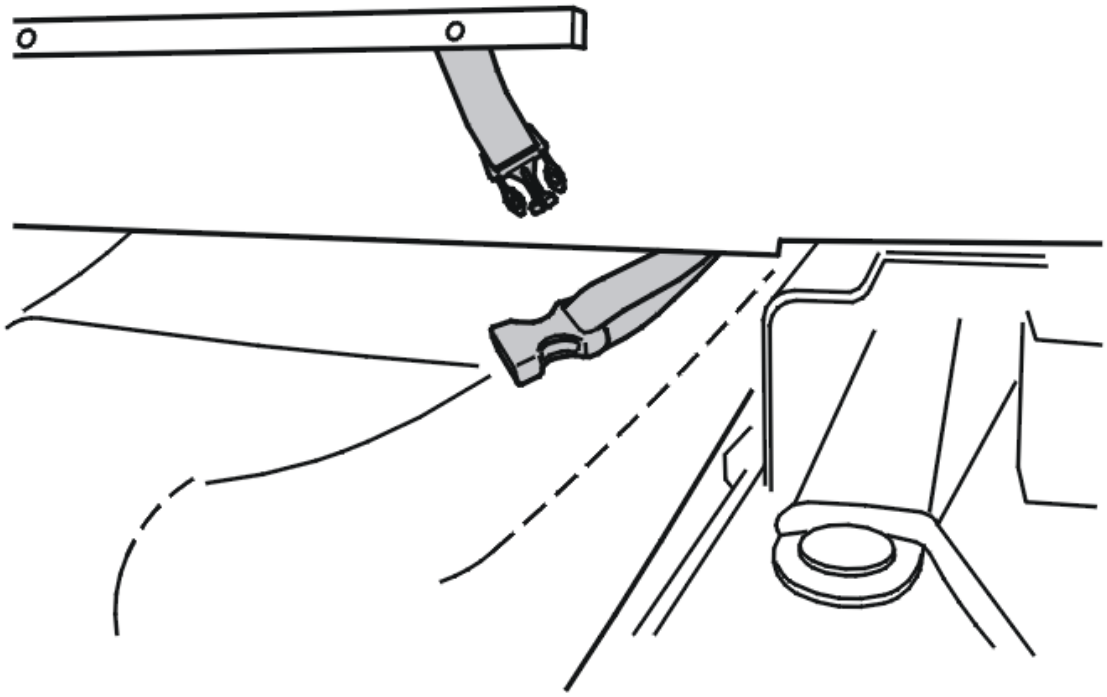

Fig. 261: Installing The Rear Floor Hatch
Courtesy of VOLVO CARS CORPORATION

Install the floor hatch in the vehicle.

Assemble the catch with the belt (1).

Fold down the floor hatch.

HEADLINING, REPLACING

Special tools	
	T9814116 Hole saw **Tool number:** T9814116 **Tool description:** Hole saw **Tool boards:**

NOTE: **The illustrations in this service information are used for different model years and/or models. Some variation may occur. However, the essential information in the illustrations is always correct.**

PREPARATORY WORK

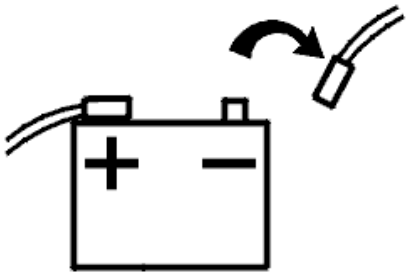

Fig. 262: Disconnecting Battery Lead
Courtesy of VOLVO CARS CORPORATION

Remove the battery cable, see **BATTERY, DISCONNECTING** .

Fold down all the backrests on the rear seat.

Remove all the door weather strips from the roof down to the door sill.

REMOVING THE HEADLINING

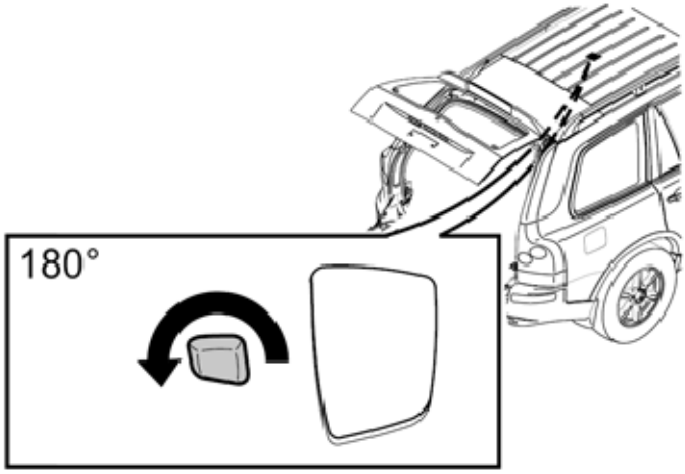

Fig. 263: Identifying Headlining Assembly Retainer
Courtesy of VOLVO CARS CORPORATION

Remove:

- the sun visors, see **SUN VISOR, REPLACING**
- the roof module, see **UPPER ELECTRONIC MODULE (UEM)/REARVIEW MIRROR, REPLACING**
- the grab handles
- the mounting for the cargo net
- the rear reading lamp, see **BULB, READING LAMP, REAR, REPLACING**
- the connector for the rear reading lamp

- the roof clip.
- Rear intrusion sensor, see **REAR INTRUSION SENSOR**

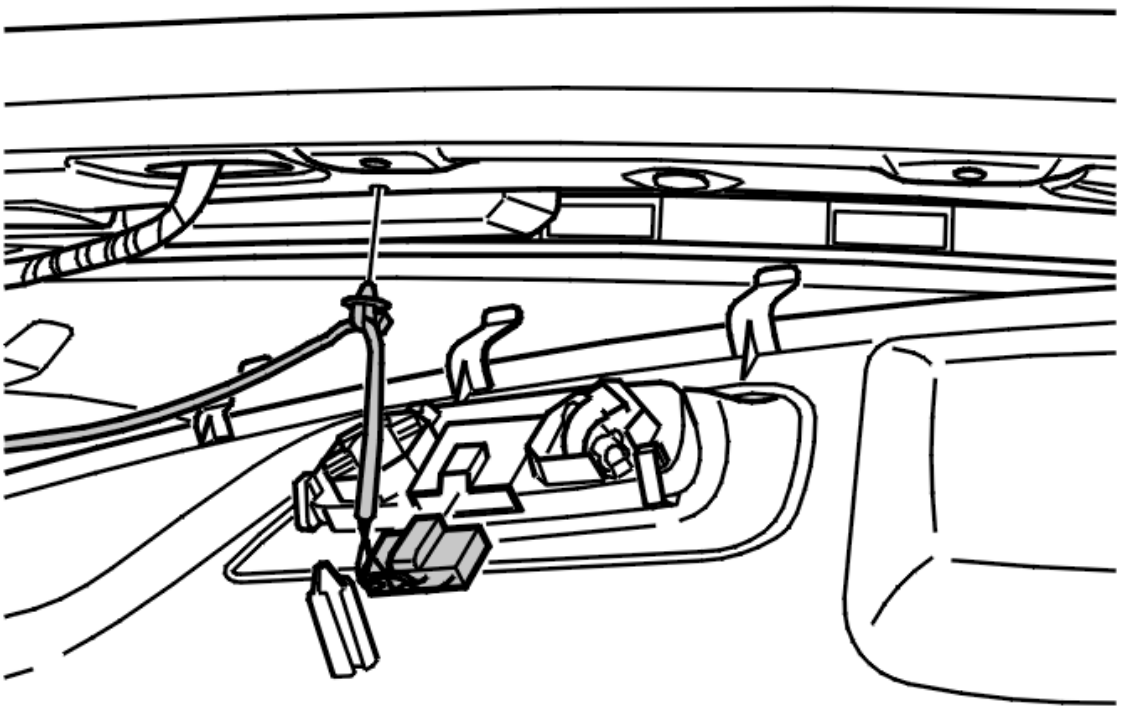

Fig. 264: Identifying Reading Lamp Cable And Clips
Courtesy of VOLVO CARS CORPORATION

- cantrail panel, see **PANEL CANTRAIL, REPLACING**.

Detach and fold down:

- D-pillar panel, see **PANEL D-POST, REPLACING**
- C-pillar panel, see **PANEL C-POST, REPLACING**.

HINT: Leave the headlining hanging from the B-posts.

Remove the A-pillar panel, see **PANEL A-POST, REPLACING**.

Remove the washer hose at the lower corner by the right-hand A-post.

Detach the washer hose at the trunk lid.

NOTE: There is a risk spillage.

Remove the clips from the cable for the reading lamp.

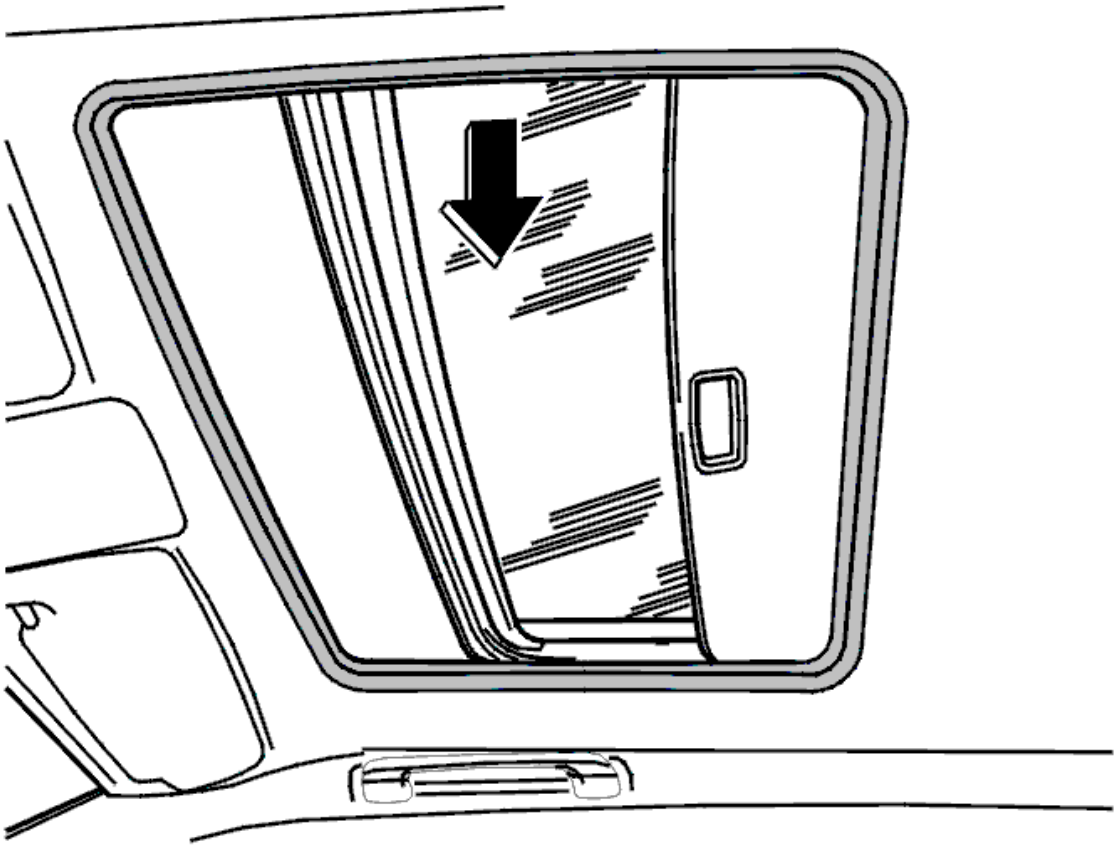

Fig. 265: Identifying Sunroof Surround
Courtesy of VOLVO CARS CORPORATION

Cars equipped with sun roofs:

Remove the molding around the sun roof.

Pull the molding inwards into the car. Start at the short side so that the corners release.

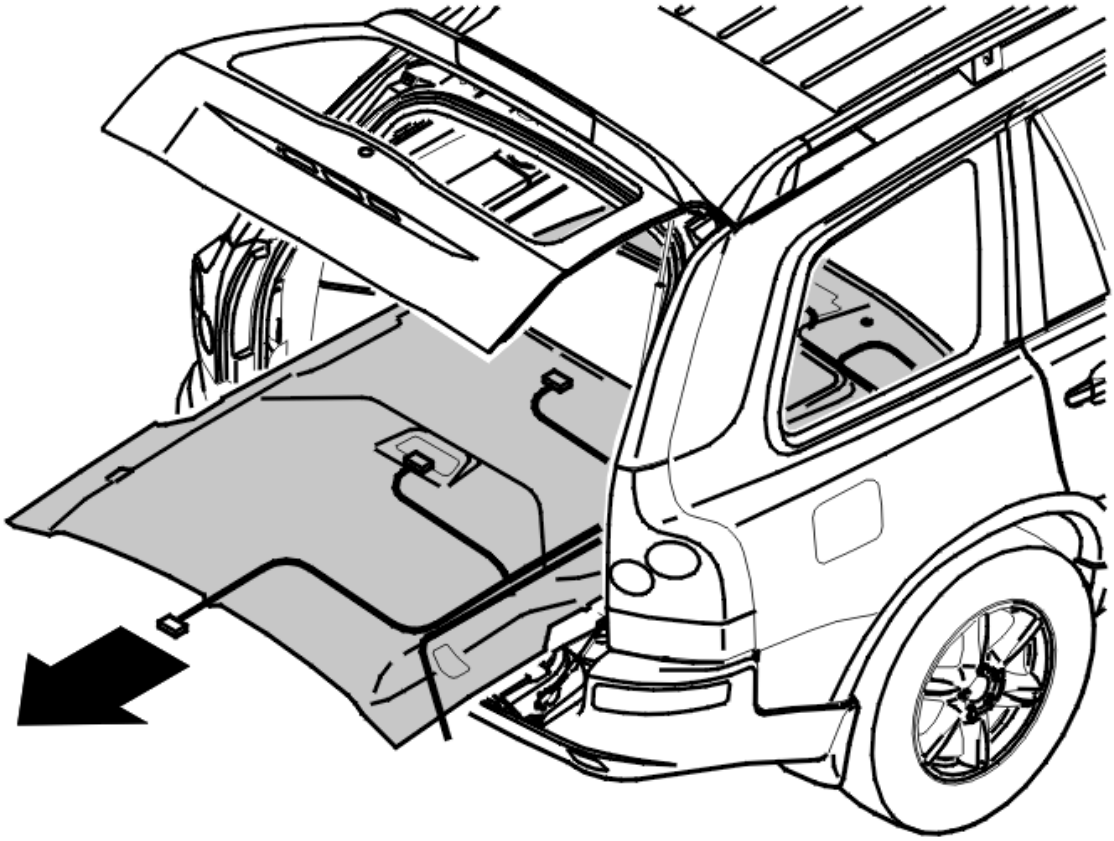

Fig. 266: Pulling Headlining Out Through Tailgate
Courtesy of VOLVO CARS CORPORATION

Carefully detach the headlining from the B-posts.

Pull the headlining out through the tailgate at an angle.

HINT: Try to keep the headlining as close to the floor as possible.

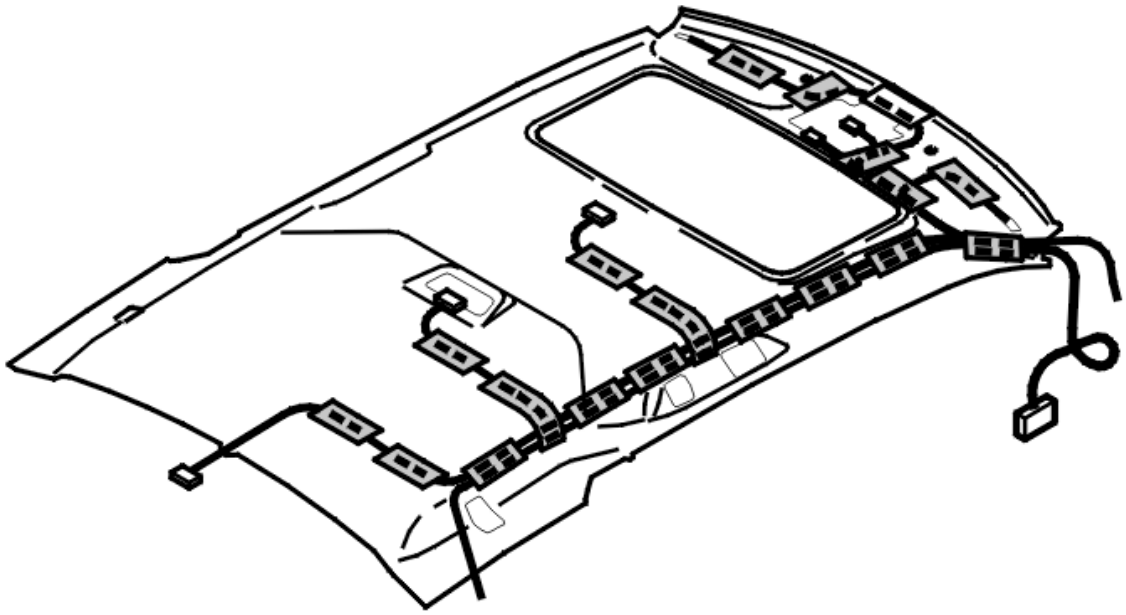

Fig. 267: Identifying Cable Harness Routing On Headlining
Courtesy of VOLVO CARS CORPORATION

NOTE: **Use tape (P/N 944 1891) to secure the cable harness to the new headlining. Tape the entire cable harness to the headlining so that it is secure.**

INSTALLING THE HEADLINING

Vehicles with Headliner Cellular Phone Microphone

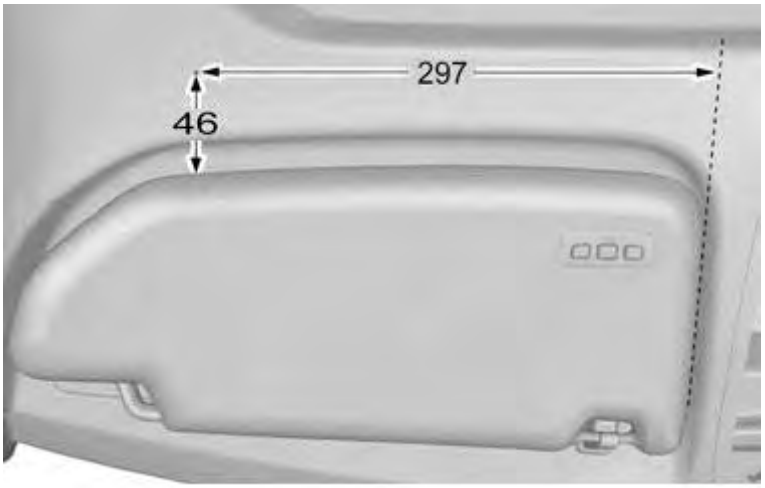

Fig. 268: Identifying Measurement
Courtesy of VOLVO CARS CORPORATION

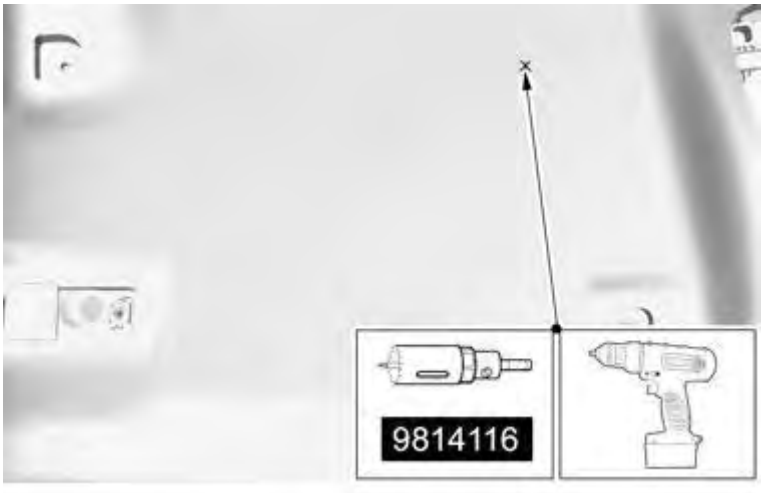

Fig. 269: Identifying Hole Saw Special Tool For Headlining Installation
Courtesy of VOLVO CARS CORPORATION

see **9814116**

Fig. 270: Identifying Pass-Through Hole For Cable
Courtesy of VOLVO CARS CORPORATION

Fig. 271: Identifying Angle Measurement
Courtesy of VOLVO CARS CORPORATION

NOTE: **For tightening torques, see TIGHTENING TORQUE**

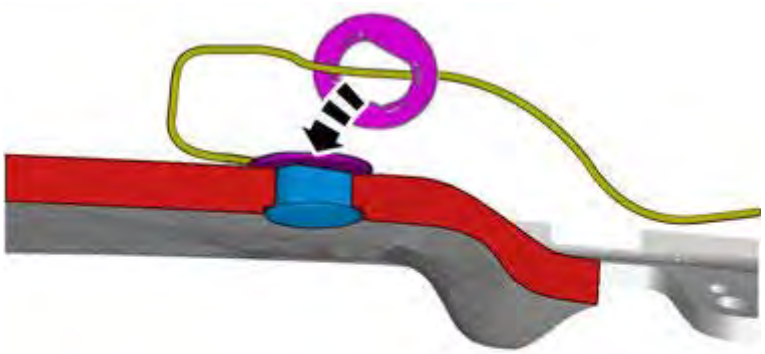

Fig. 272: Identifying Cable Clip
Courtesy of VOLVO CARS CORPORATION

- the clips to the cable for the reading lamp
- the washer hose at the tailgate
- the washer hose at the A-post
- A-pillar panel. See **PANEL A-POST, REPLACING**
- C-pillar panel. See **PANEL C-POST, REPLACING**
- D-pillar panel. See **PANEL D-POST, REPLACING**
- Cantrail panel. See **PANEL CANTRAIL, REPLACING**
- the roof clip.
- the connector for the rear reading lamp

- the rear reading lamp, see **BULB, READING LAMP, REAR, REPLACING**
- the mounting for the cargo net
- the grab handle
- the roof module, see **UPPER ELECTRONIC MODULE (UEM)/REARVIEW MIRROR, REPLACING**
- the sun visors. See **SUN VISOR, REPLACING**

CAUTION: Do not damage or trap any cables when installing the sun visors.

Connect the battery lead. See **BATTERY, DISCONNECTING**

SIDE PANEL CARGO COMPARTMENT, REPLACEMENT

NOTE: The illustrations in this service information are used for different model years and/or models. Some variation may occur. However, the essential information in the illustrations is always correct.

SIDE PANEL CARGO COMPARTMENT (SEVEN SEATER VERSION), REPLACEMENT

REMOVING THE SIDE PANEL CARGO COMPARTMENT (SEVEN SEATER VERSION)

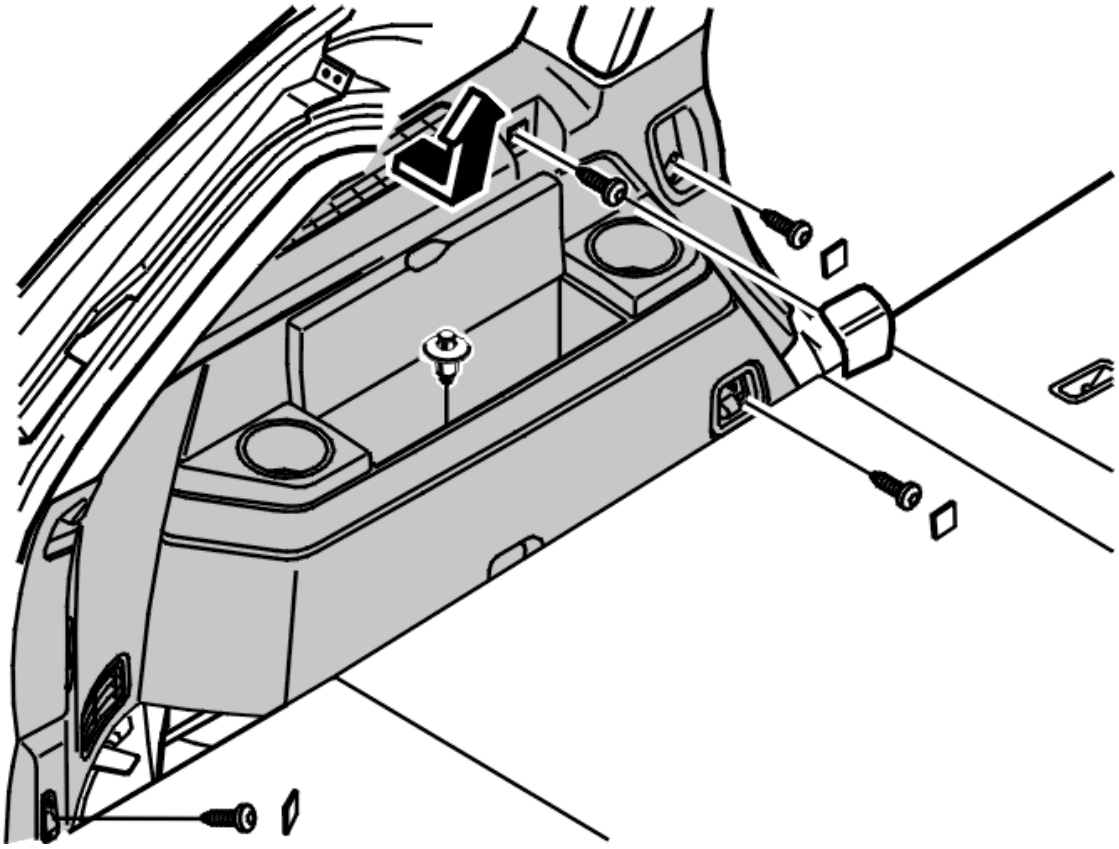

Fig. 273: Identifying Side Panel Cargo Compartment And Screws
Courtesy of VOLVO CARS CORPORATION

Remove:

- the outer cargo compartment floor
- the compartment in the rear edge of the side panel
- four covers
- four screws
- one clip
- any air conditioning (A/C) controls.

Detach the lower edges of the C and D panels.

Pull off the side panel and place it to one side.

TRANSFERRING COMPONENTS

When replacing the side panel with air conditioning (A/C) controls with a new side panel, the old air conditioning (A/C) controls must be transferred to the new side panel.

NOTE: On vehicles up to and including chassis number 134247, the following adjustment must be carried out on the transferred air conditioning (A/C) controls.

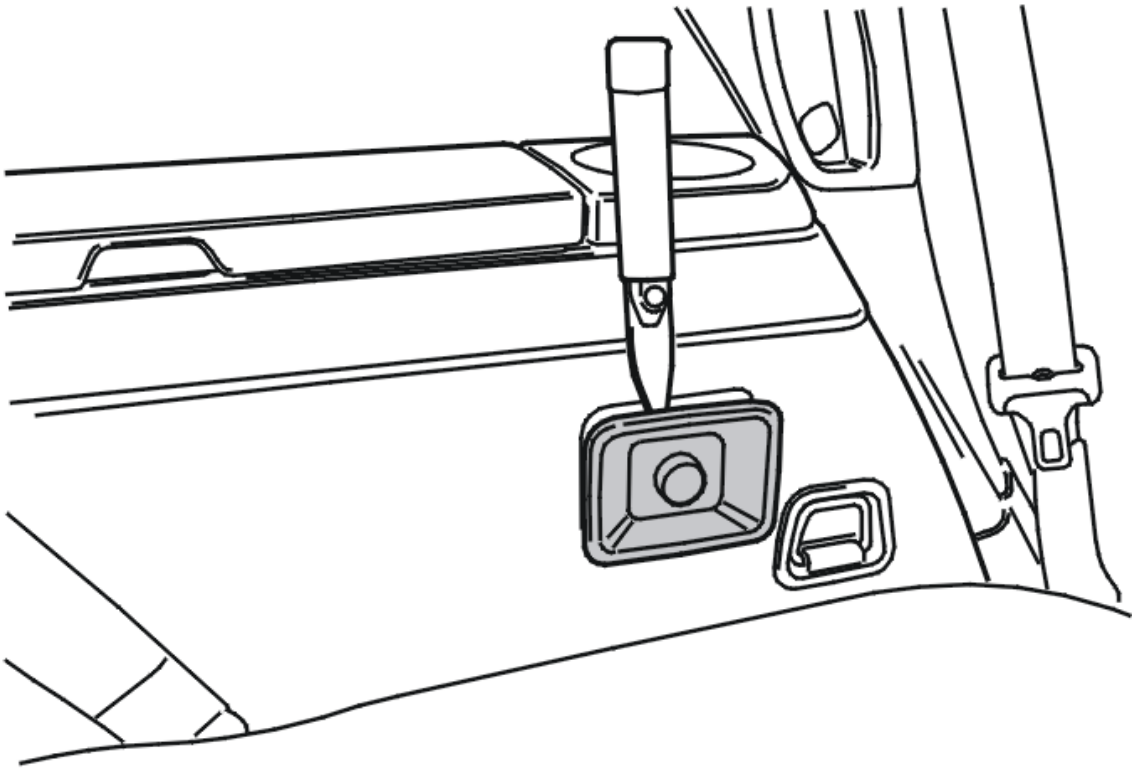

Fig. 274: Identifying Removal Of A/C Controls From Side Panel
Courtesy of VOLVO CARS CORPORATION

Remove the air conditioning (A/C) controls from the side panel.

Disconnect the connector on the reverse.

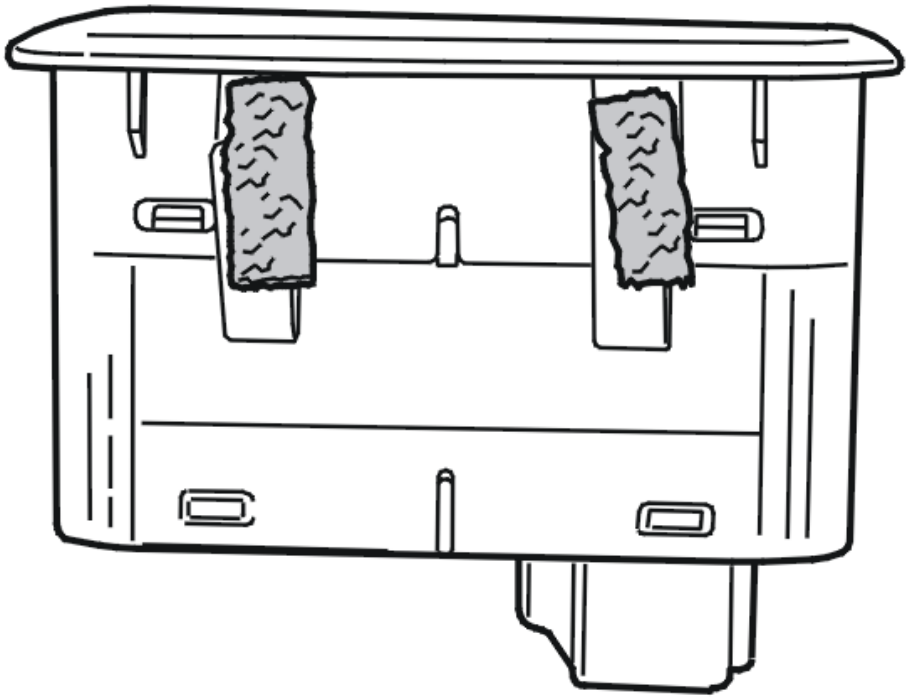

Fig. 275: Identifying Felt Material
Courtesy of VOLVO CARS CORPORATION

Cut six 8 x 20 mm pieces of felt material with P/N 116 1691.

Apply two pieces of felt to the top of each lug.

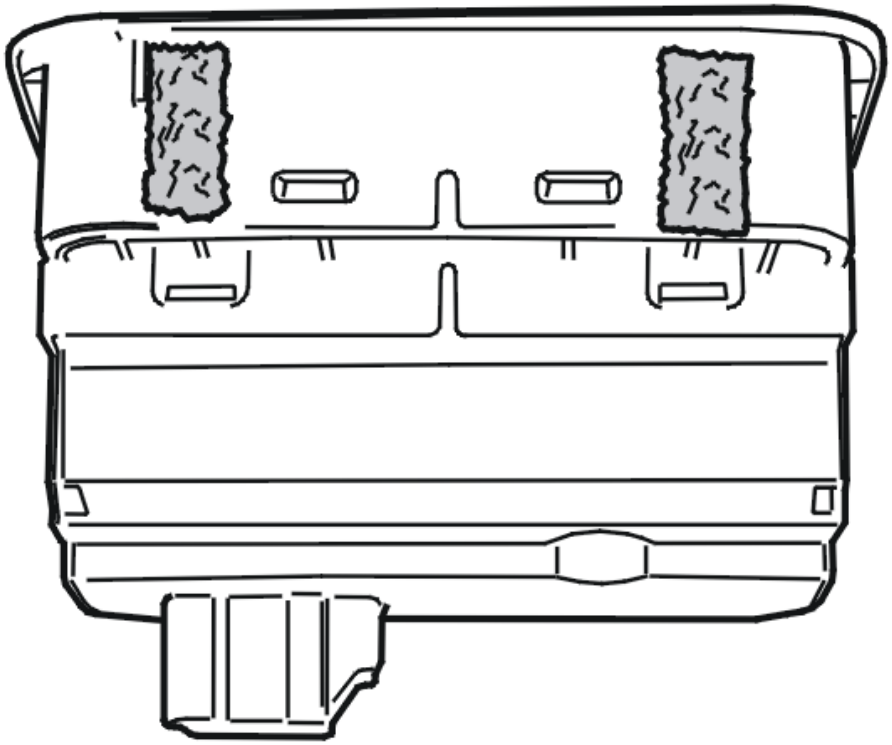

Fig. 276: Identifying Felt Material
Courtesy of VOLVO CARS CORPORATION

Apply a piece of felt to the bottom of each lug.

INSTALLING THE SIDE PANEL CARGO COMPARTMENT (SEVEN SEATER VERSION)

NOTE: For tightening torques, see TIGHTENING TORQUE .

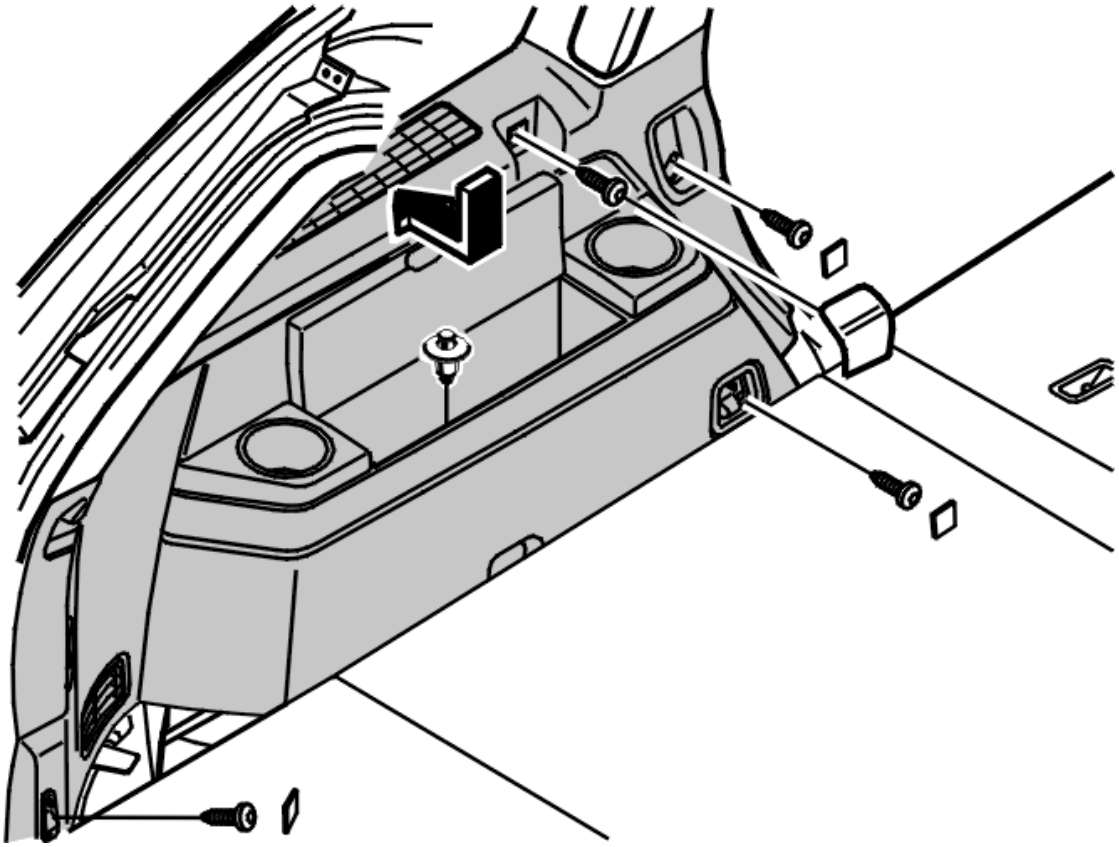

Fig. 277: Identifying Side Panel Cargo Compartment And Screws
Courtesy of VOLVO CARS CORPORATION

Lift the side panel.

NOTE: **If the vehicle is equipped with rear air conditioning (A/C) the cable harness for the air conditioning (A/C) controls must be routed through the hole for the air conditioning (A/C) controls on the side panel.**

NOTE: **The front edge of the side panel must protrude in front of the sill trim panel of the rear side door.**

Secure:

- the side panel
- the C and D panels at the lower edges.

Install:

- any air conditioning (A/C) controls
- the clip
- the 2 x M8 (load securing eyes) screws. Tighten

- the 2 x covers
- the 2 x M6 screws (the upper mountings). Tighten
- the 2 x covers
- the compartment in the rear edge of the side panel
- the outer cargo compartment floor.

SIDE PANEL CARGO COMPARTMENT (FIVE SEATER VERSION), REPLACEMENT

REMOVING THE SIDE PANEL CARGO COMPARTMENT (FIVE SEATER VERSION)

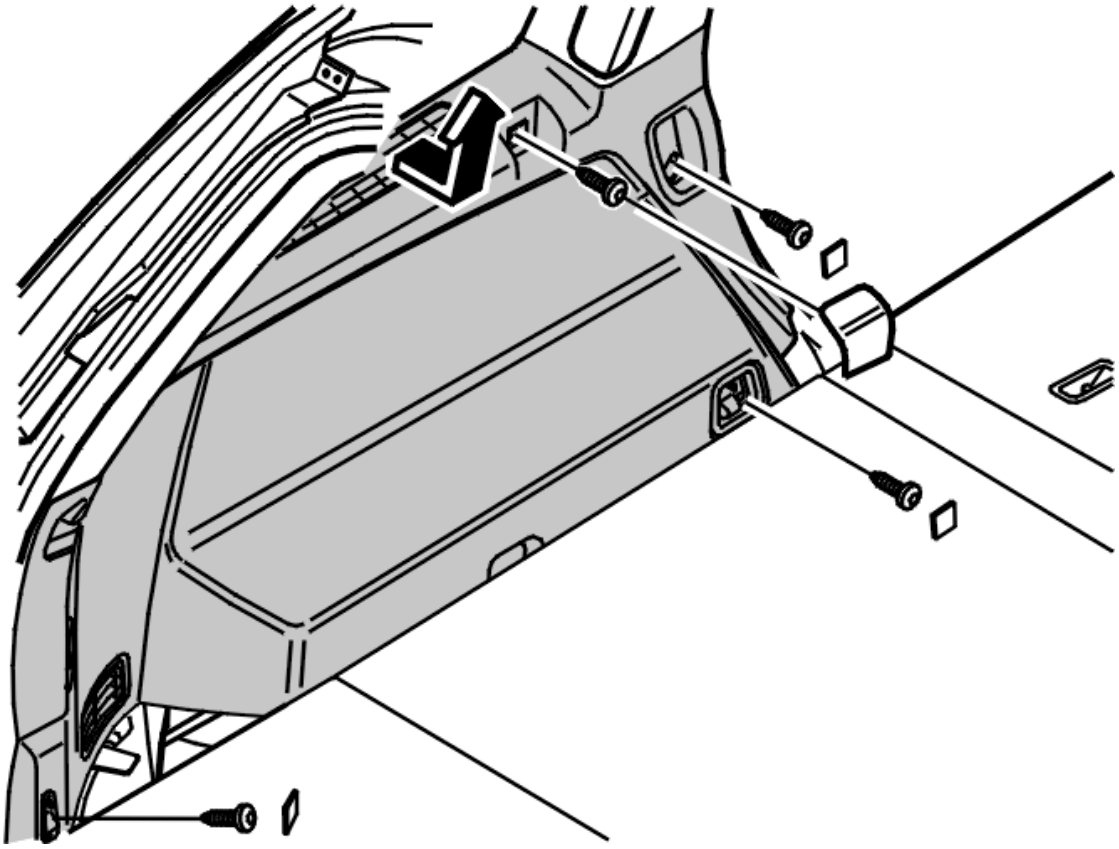

Fig. 278: Identifying Side Panel Cargo Compartment And Screws
Courtesy of VOLVO CARS CORPORATION

Remove:

- the outer cargo compartment floor
- the compartment in the rear edge of the side panel
- four covers
- four screws.

Detach the lower edges of the C and D panels.

Pull off the side panel and place it to one side.

INSTALLING THE SIDE PANEL CARGO COMPARTMENT (FIVE SEATER VERSION)

NOTE: For tightening torques, see TIGHTENING TORQUE .

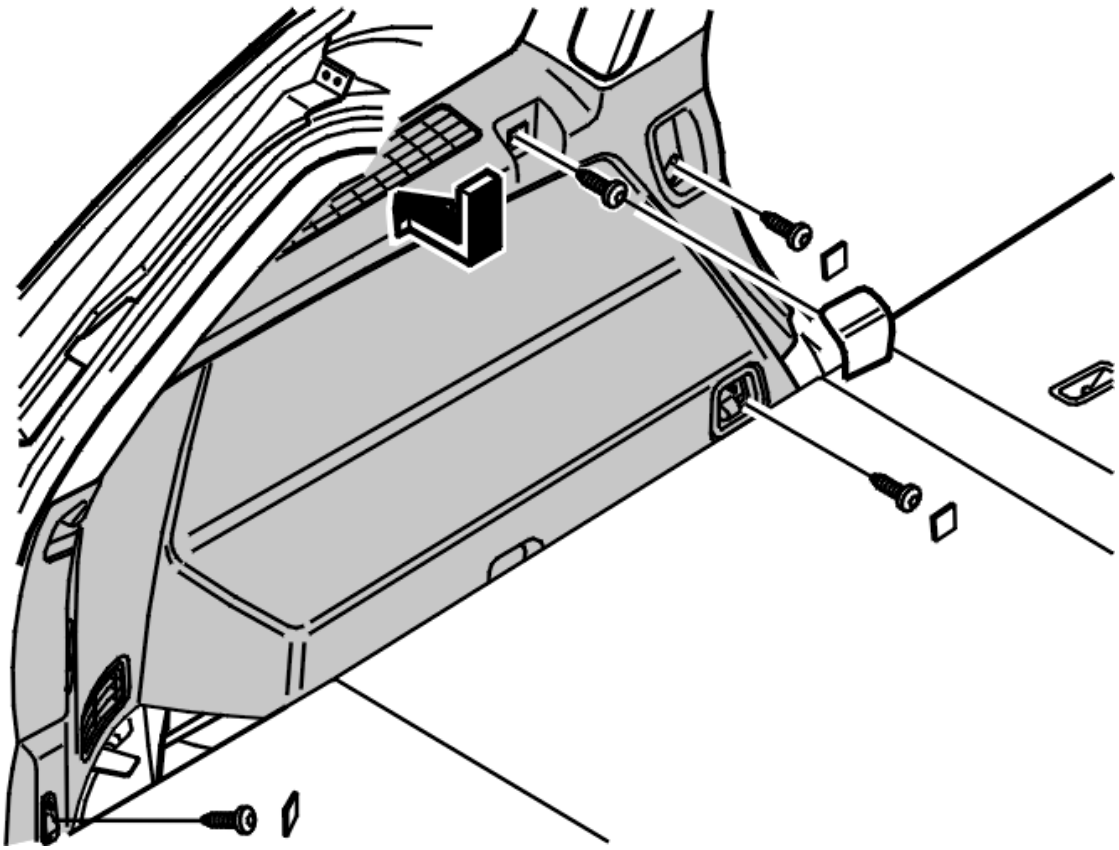

Fig. 279: Identifying Side Panel Cargo Compartment And Screws
Courtesy of VOLVO CARS CORPORATION

Lift the side panel.

NOTE: The front edge of the side panel must protrude in front of the sill trim panel of the rear side door.

Secure:

- the side panel
- the C and D panels at the lower edges.

Install:

- the 2 x M8 (load securing eyes) screws. Tighten
- the 2 x covers

- the 2 x M6 screws (the upper mountings). Tighten
- the 2 x covers
- the compartment in the rear edge of the side panel
- the outer cargo compartment floor.

SOUNDPROOFING PANEL, REPLACING

REPLACING

As the illustrations in this service information are used for different model years and / or models, some variation may occur. However, the essential information in the illustrations is always correct.

SOUNDPROOFING PANEL PASSENGER SIDE, REPLACING

REMOVING THE PASSENGER SIDE SOUNDPROOFING PANEL

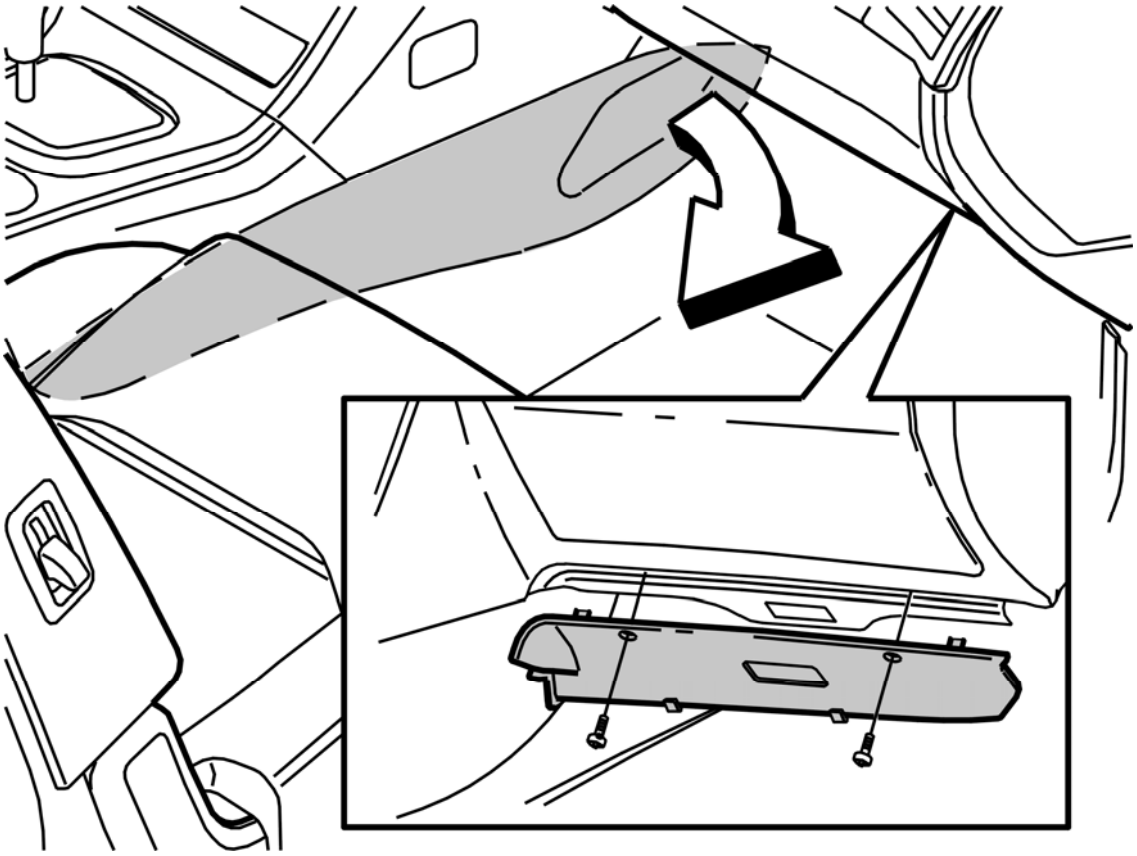

Fig. 280: Identifying Center Console Panel And Soundproofing Panel
Courtesy of VOLVO CARS CORPORATION

Remove:

- the side panel
- the 2 screws

- the soundproofing panel.

INSTALLING THE SOUNDPROOFING PANEL ON THE PASSENGER SIDE

Install:

- the soundproofing panel
- the 2 screws. Tighten
- side panel.

SOUNDPROOFING PANEL DRIVER'S SIDE, REPLACING

REMOVING THE SOUNDPROOFING PANEL ON THE DRIVER'S SIDE

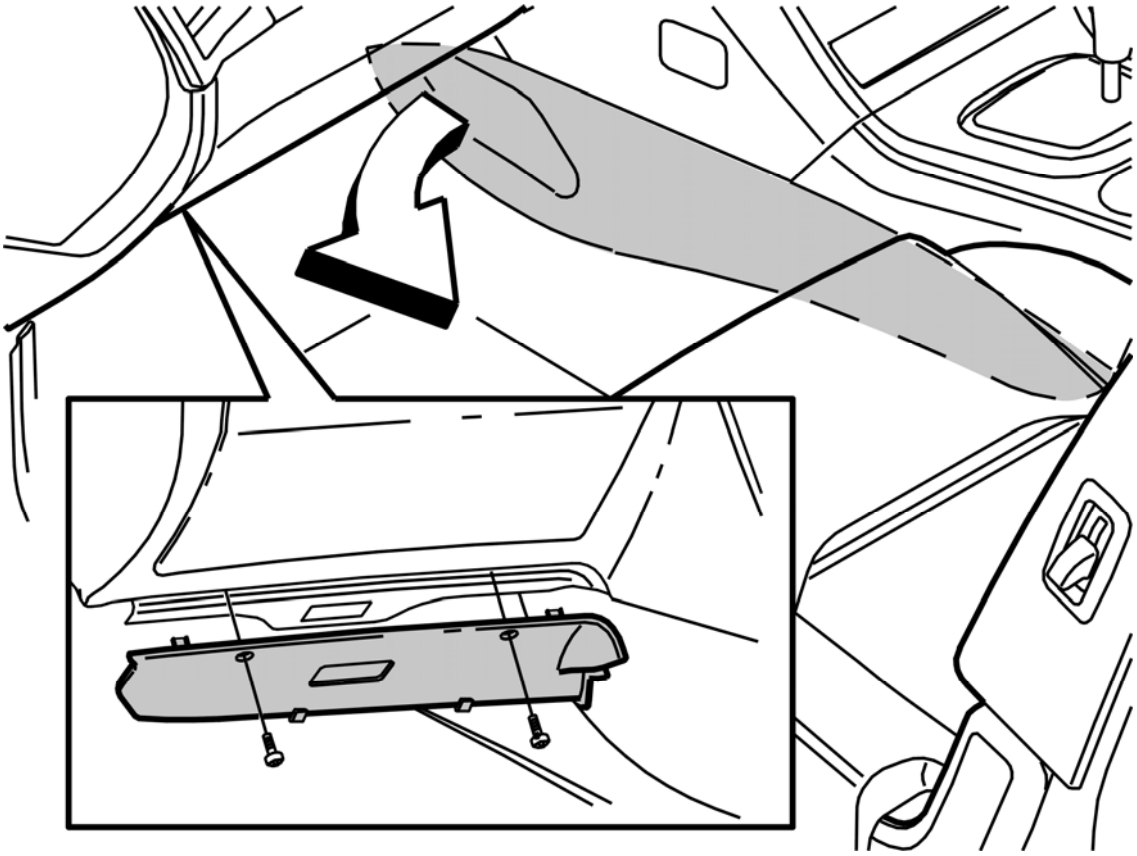

Fig. 281: Identifying Center Console Panel And Soundproofing Panel
Courtesy of VOLVO CARS CORPORATION

Remove:

- the side panel
- the 2 screws
- the soundproofing panel.

INSTALLING THE SOUNDPROOFING PANEL ON THE DRIVER'S SIDE

Install:

- the soundproofing panel
- the 2 screws. Tighten
- side panel.

HEAD RESTRAINT FRONT SEAT

Fig. 282: Identifying Catches At Bottom Of Protective Pad And Head Restraint
Courtesy of VOLVO CARS CORPORATION

Press the two catches at the bottom of the protective pad downwards.

Press through the upholstery.

Lift the head restraint upwards while the catches are pressed in.

Press down head restraint until the catches lock.

NOTE: **Check by lifting the head restraint.**

It should not be possible to move it upwards.

UPHOLSTERY HEAD RESTRAINT FRONT

NOTE: **The illustrations in this service information are used for different model years and/or models. Some variation may occur. However, the essential information in the illustrations is always correct.**

Preparations

NOTE: **To carry out this work a zip fastener is required. This is not included in the upholstery but is ordered separately. 6 mm zip fastener part number: 3533976 is used and in some cases zip fastener 4 mm, part number: 9459316**

REMOVING UPHOLSTERY

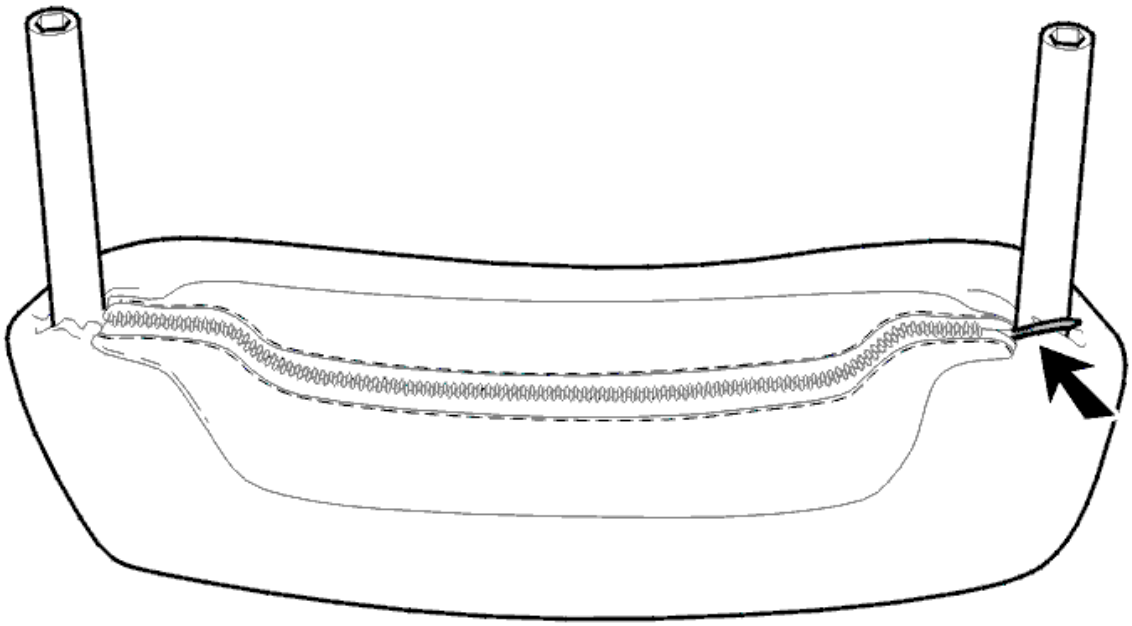

Fig. 283: Cutting Upholstery At Zip Fastener
Courtesy of VOLVO CARS CORPORATION

Remove the head restraint. See **HEAD RESTRAINT FRONT SEAT**.

Cut the upholstery at the zip fastener.

Remove the upholstery.

INSTALLING UPHOLSTERY

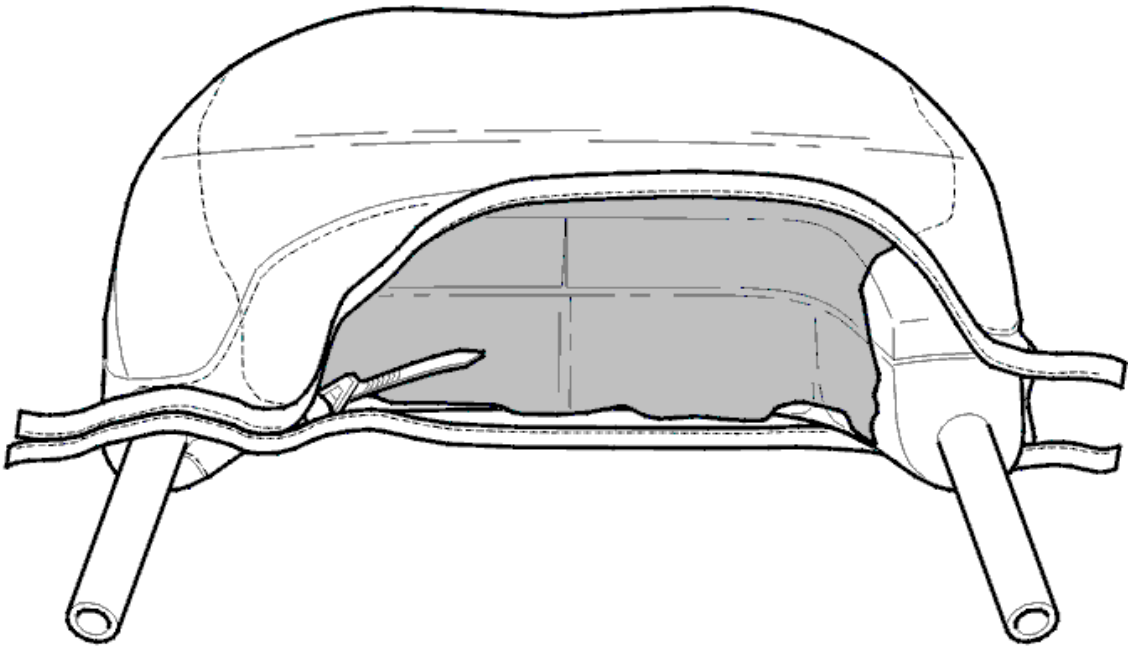

Fig. 284: Closing Zip Fastener
Courtesy of VOLVO CARS CORPORATION

Install the upholstery.

Close the zip fastener.

NOTE: **Ensure that all seams are correctly positioned and the padding is not kinked under the upholstery.**

HEAD RESTRAINT FRONT SEAT

Fig. 285: Identifying Catches At Bottom Of Protective Pad And Head Restraint
Courtesy of VOLVO CARS CORPORATION

Press the two catches at the bottom of the protective pad downwards.

Press through the upholstery.

Lift the head restraint upwards while the catches are pressed in.

Press down head restraint until the catches lock.

NOTE: Check by lifting the head restraint.

It should not be possible to move it upwards.

UPHOLSTERY HEAD RESTRAINT OUTER REAR SEAT, REPLACING

Fig. 286: Head Restraint Cover
Courtesy of VOLVO CARS CORPORATION

INSTALLATION

To install, reverse the removal procedure.

INTERIOR (NON-SEAT) UPHOLSTERY (2009-2012)

CARGO FLOOR SUPPORT, REPLACING

see **CARGO FLOOR SUPPORT, REPLACING**

CLOTHES HOLDER HEAD RESTRAINT FRONT SEAT

NOTE: Removal steps in this procedure may contain installation details.

CLOTHES HOLDER HEAD RESTRAINT FRONT SEAT

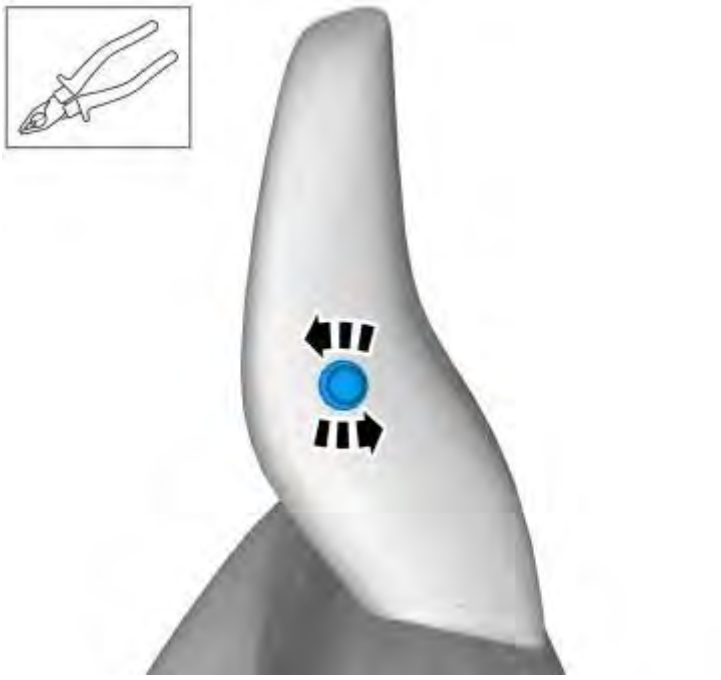

Fig. 287: Clothes Holder Head Restraint Front Seat
Courtesy of VOLVO CARS CORPORATION

INSTALLATION

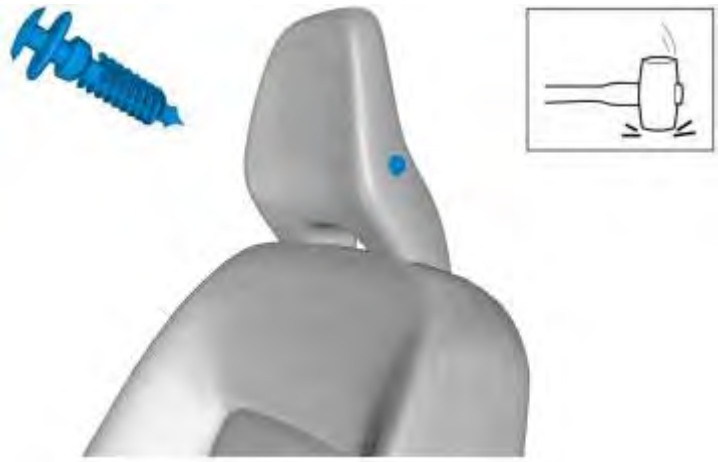

Fig. 288: Installing Assembly Screw
Courtesy of VOLVO CARS CORPORATION

To install, reverse the removal procedure.

FLOOR HATCH FRONT, REPLACING

see **FLOOR HATCH FRONT, REPLACING**

FLOOR HATCH REAR, REPLACING

see **FLOOR HATCH REAR, REPLACING**

HEADLINING, REPLACING

see **HEADLINING, REPLACING**

HEAD RESTRAINT UPHOLSTERY THIRD ROW OF SEATS (2011, 2012)

Fig. 289: Removing Head Restraint (1 of 2)
Courtesy of VOLVO CARS CORPORATION

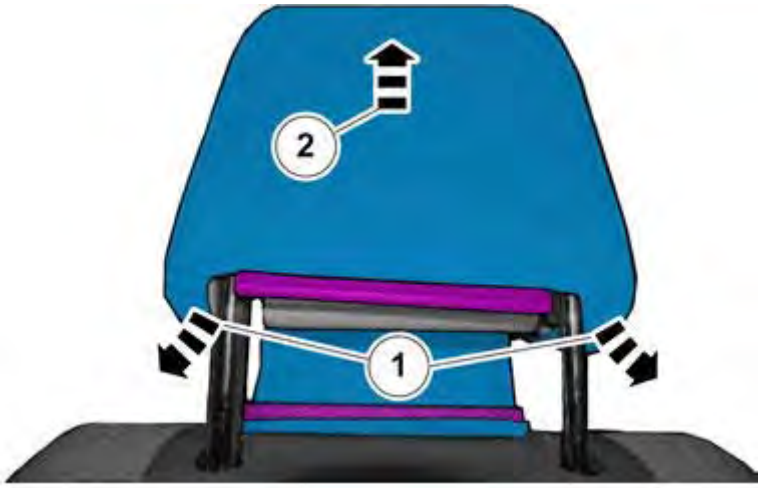

Fig. 290: Removing Head Restraint (2 of 2)
Courtesy of VOLVO CARS CORPORATION

UPHOLSTERY HEAD RESTRAINT FRONT

see **UPHOLSTERY HEAD RESTRAINT FRONT**

UPHOLSTERY HEAD RESTRAINT OUTER REAR SEAT, REPLACING

see **UPHOLSTERY HEAD RESTRAINT OUTER REAR SEAT, REPLACING**

SIDE PANEL CARGO COMPARTMENT, REPLACEMENT

see **SIDE PANEL CARGO COMPARTMENT, REPLACEMENT**

SOUNDPROOFING PANEL, REPLACING

see **SOUNDPROOFING PANEL, REPLACING**

REAR SEAT, PASSENGER SEAT (2003)

SEAT FRAME (THIRD ROW), REPLACING

REPLACING

As the illustrations in this service information are used for different model years and / or models, some variation may occur. However, the essential information in the illustrations is always correct.

PREPARATIONS

Remove the battery lead. See **BATTERY, DISCONNECTING** .

Fold down the seats in the second row.

Slide in the seat cushions on the third row.

REMOVING THE SEAT FRAME (THIRD ROW)

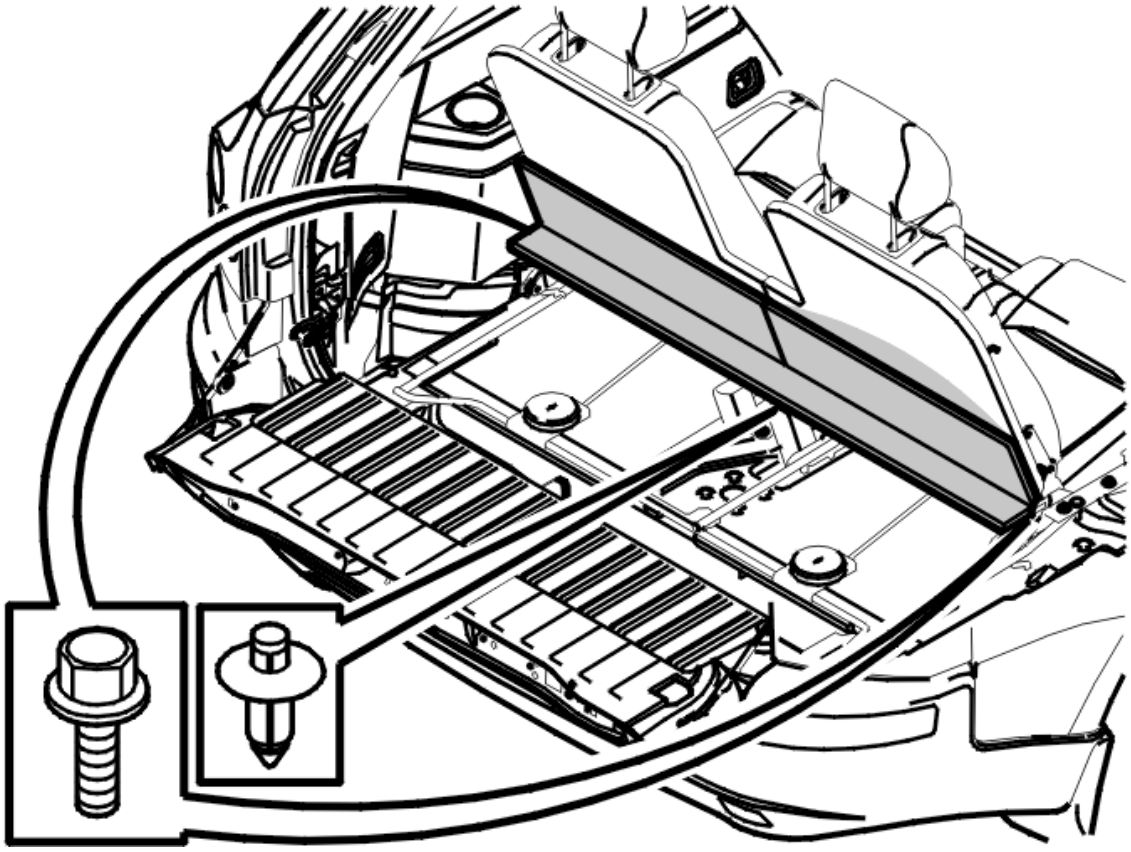

Fig. 291: Removing The Seat Frame
Courtesy of VOLVO CARS CORPORATION

Remove:

- the rear cargo compartment floor
- the jack
- the holder for the jack
- the side panel in the cargo compartment. See **SIDE PANEL CARGO COMPARTMENT, REPLACEMENT**
- the front cargo compartment floor.

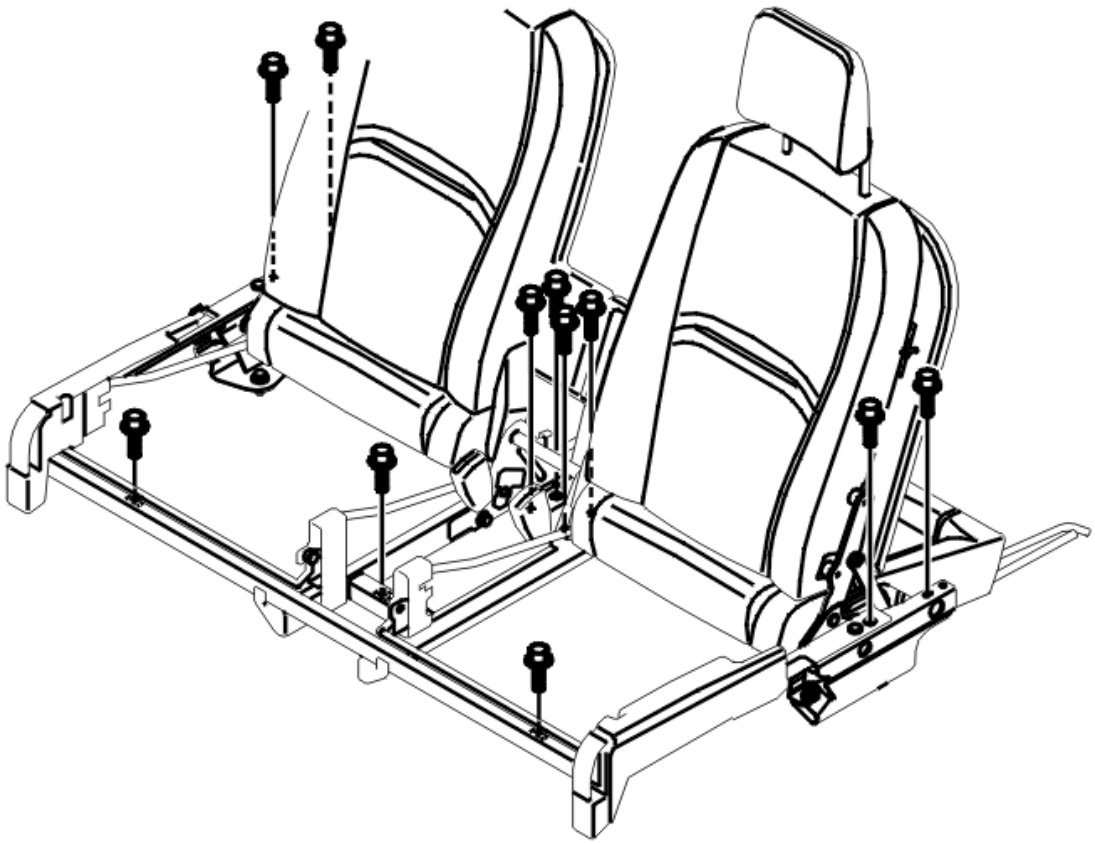

Fig. 292: Seating Frame Bolts
Courtesy of VOLVO CARS CORPORATION

- the 3 front screws for the frame.

Fold up the rubber mat in the center storage compartment.

Remove:

- the 4 center screws for the frame
- the outer screws for the frame, 2 each side.

Pull the seat cushions forwards.

Remove the cargo floor support. See **CARGO FLOOR SUPPORT, REPLACING**.

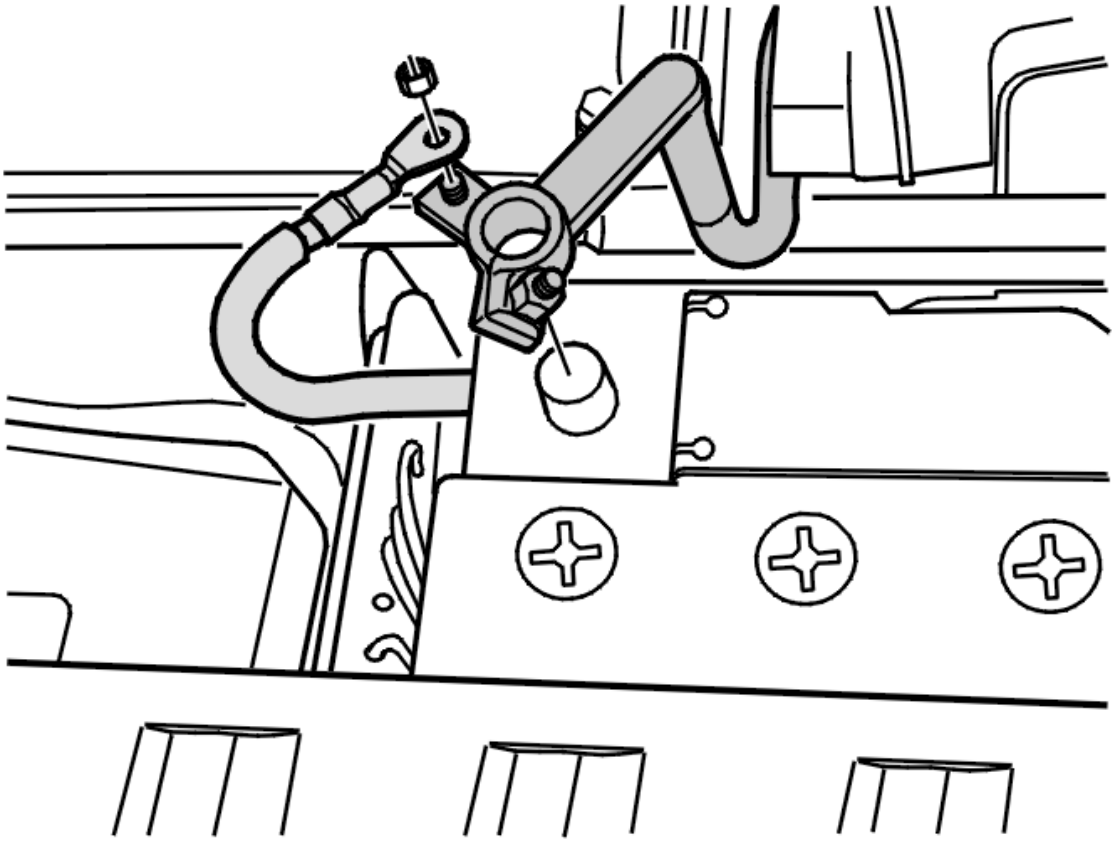

Fig. 293: Disconnecting Positive Battery Cable
Courtesy of VOLVO CARS CORPORATION

Disconnect the positive lead from the battery.

Separate the connector at the positive terminal.

Note how the battery lead is routed by the seat frame.

Slide in the seat cushions and fold down the seat backs.

Lift out the seat frame.

NOTE: Two people are required for this operation. Angle the seat frame during removal.

INSTALLING THE SEAT FRAME (THIRD ROW)

NOTE: For tightening torques, see TIGHTENING TORQUE .

Lift in the seat frame.

NOTE: Ensure that the battery lead is not trapped.

Fold up the seat backs.

Install:

- the 3 M10 front screws for the frame. Tighten
- the 4 M10 center screws for the frame
- the 4 M10 outer screws for the frame
- the cargo floor support. See **CARGO FLOOR SUPPORT, REPLACING**.

Fold down the backrests.

Install:

- the front cargo compartment floor with 2 M6 screws and 1 clip. Tighten
- the side panel in the cargo compartment. See **SIDE PANEL CARGO COMPARTMENT, REPLACEMENT**
- the holder for the jack
- the jack
- the rear cargo compartment floor.

SERVICE CLIPS, INSTALLING

see **SERVICE CLIPS, INSTALLING**

UPHOLSTERY BACKREST CUSHION (THIRD ROW), REPLACING

see **UPHOLSTERY BACKREST CUSHION (THIRD ROW), REPLACING**

UPHOLSTERY BACKREST CUSHION CENTER (SECOND ROW), REPLACING

see **UPHOLSTERY BACKREST CUSHION CENTER (SECOND ROW), REPLACING**

UPHOLSTERY BACKREST CUSHION OUTER (SECOND ROW)

see **UPHOLSTERY BACKREST CUSHION OUTER (SECOND ROW)**

UPHOLSTERY SEAT CUSHION (THIRD ROW), REPLACING

see **UPHOLSTERY SEAT CUSHION (THIRD ROW), REPLACING**

UPHOLSTERY SEAT CUSHION CENTER (SECOND ROW), REPLACING

see **UPHOLSTERY SEAT CUSHION CENTER (SECOND ROW), REPLACING**

UPHOLSTERY SEAT CUSHION OUTER (SECOND ROW), REPLACING

see **UPHOLSTERY SEAT CUSHION OUTER (SECOND ROW), REPLACING**

REAR SEAT, PASSENGER SEAT (2004-2012)

RELAY HEATER PAD REAR SEAT, REPLACING

REPLACING

PREPARATORY WORK

Remove the rear seat side cushion. See **INTERIOR PANELS, SEATS AND UPHOLSTERY - REMOVAL, REPLACEMENT AND INSTALLATION** .

REMOVING THE RELAY

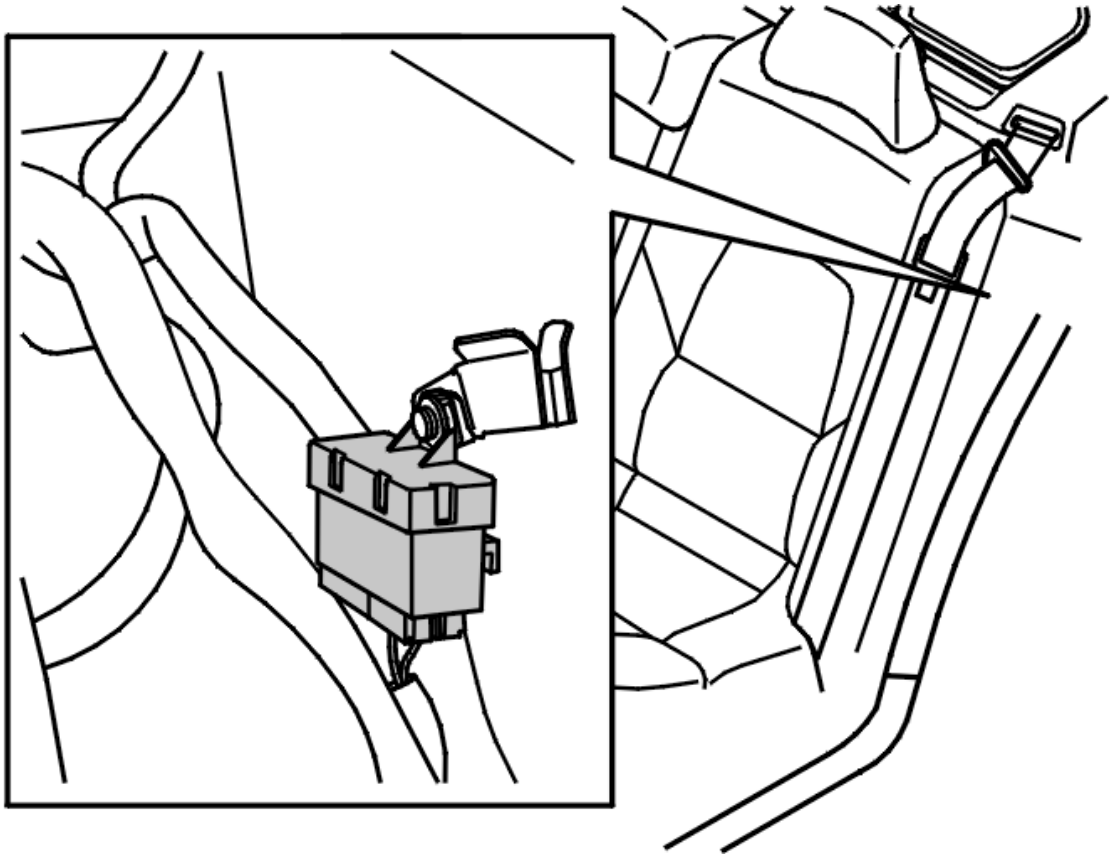

Fig. 294: Relay Connector
Courtesy of VOLVO CARS CORPORATION

Disconnect the relay connectors.

Remove the screw and the relay.

INSTALLING THE RELAY

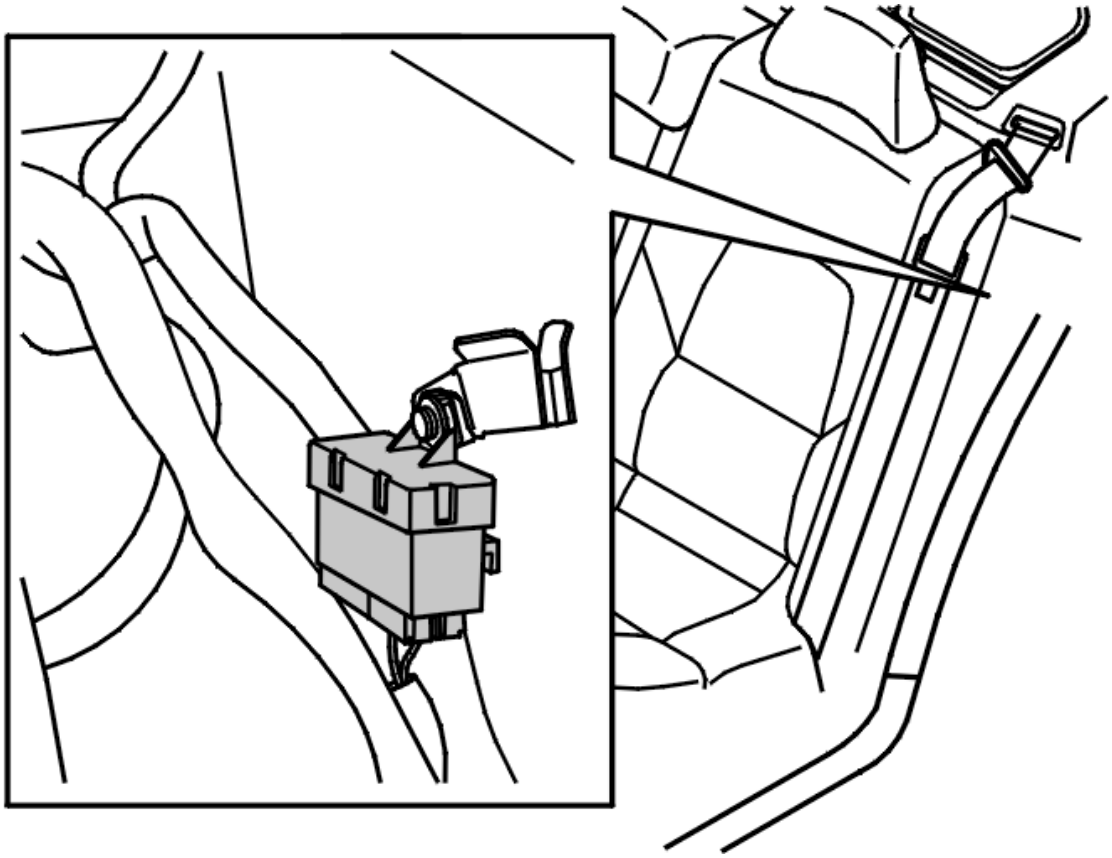

Fig. 295: Relay Connector
Courtesy of VOLVO CARS CORPORATION

Install the relay and the screw.

Connect the relay connectors.

FINISHING

Install the rear seat side cushion. See **INTERIOR PANELS, SEATS AND UPHOLSTERY - REMOVAL, REPLACEMENT AND INSTALLATION** .

SIDE CUSHION

REPLACING THE SIDE CUSHION

Remove the cushion according to **CUSHION** .

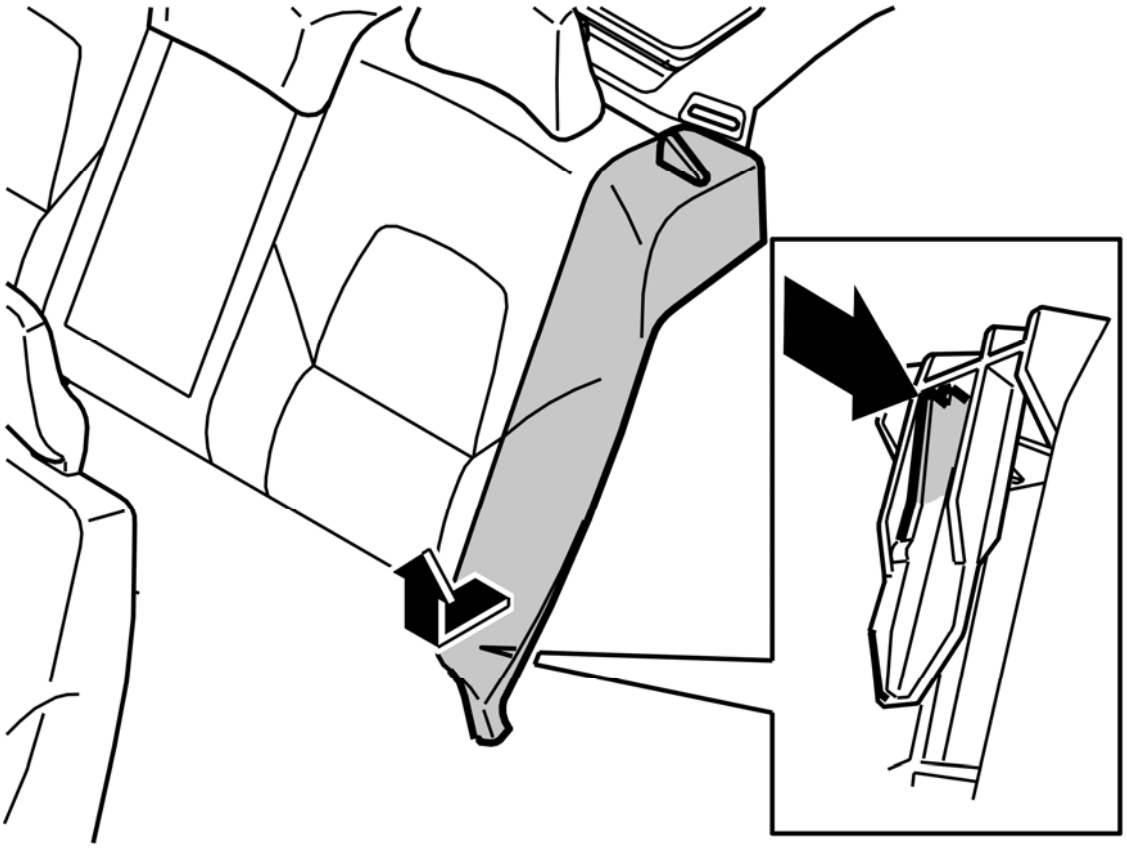

Fig. 296: Identifying Side Cushion
Courtesy of VOLVO CARS CORPORATION

Unthread the belt from the belt guide.

Insert a hand down the side of the lower section of the side cushion.

Release the catches while lifting the side cushion.

INSTALLATION

Install in reverse order.

SEAT FRAME (THIRD ROW), REPLACEMENT

PREPARATORY WORK

Disconnect the battery negative lead. See: **BATTERY, DISCONNECTING** .

Fold down the seats in the second row.

Slide in the seat cushions on the third row.

REMOVAL

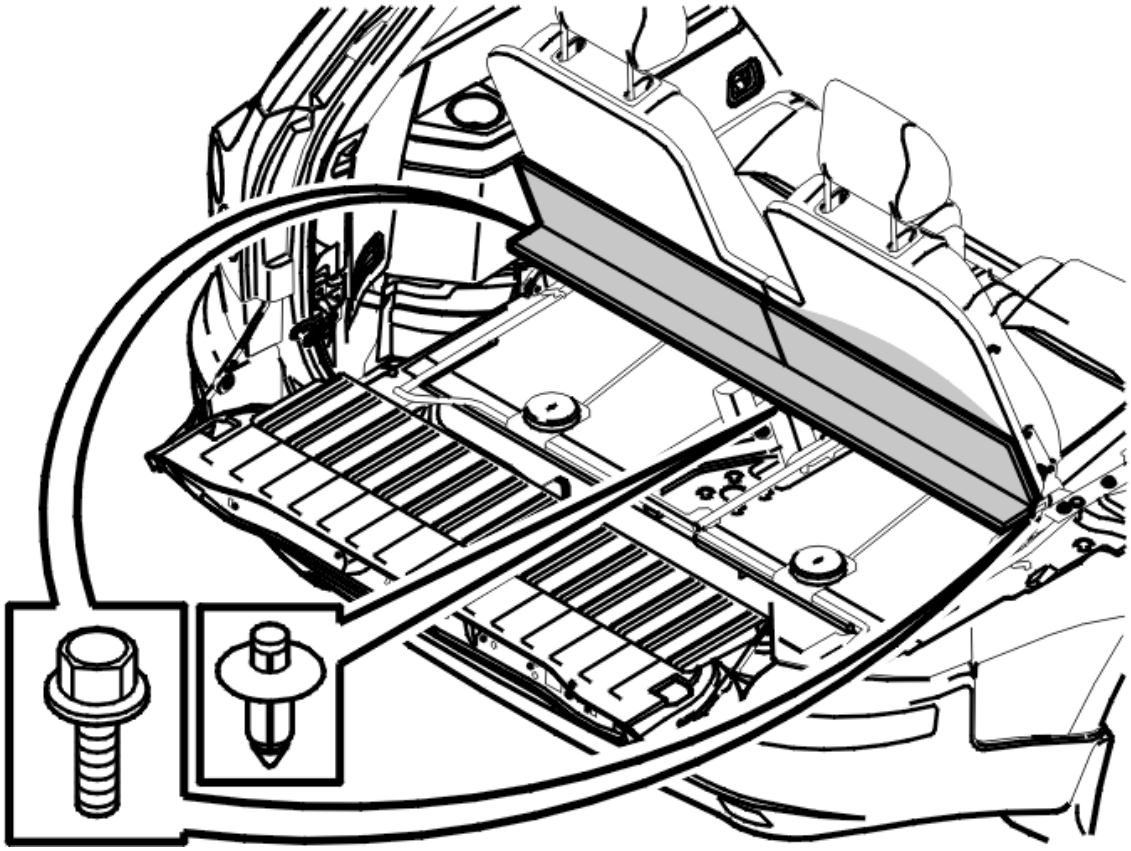

Fig. 297: Installation Screws And Bolts
Courtesy of VOLVO CARS CORPORATION

Remove:

- the rear cargo compartment floor
- the jack
- the battery bracket

NOTE: Leave the plastic cover over the battery in place to avoid any short-circuits.

Remove:

- the holder for the jack
- the side panel in the cargo compartment. See **SIDE PANEL CARGO COMPARTMENT, REPLACEMENT**
- the front cargo compartment floor.

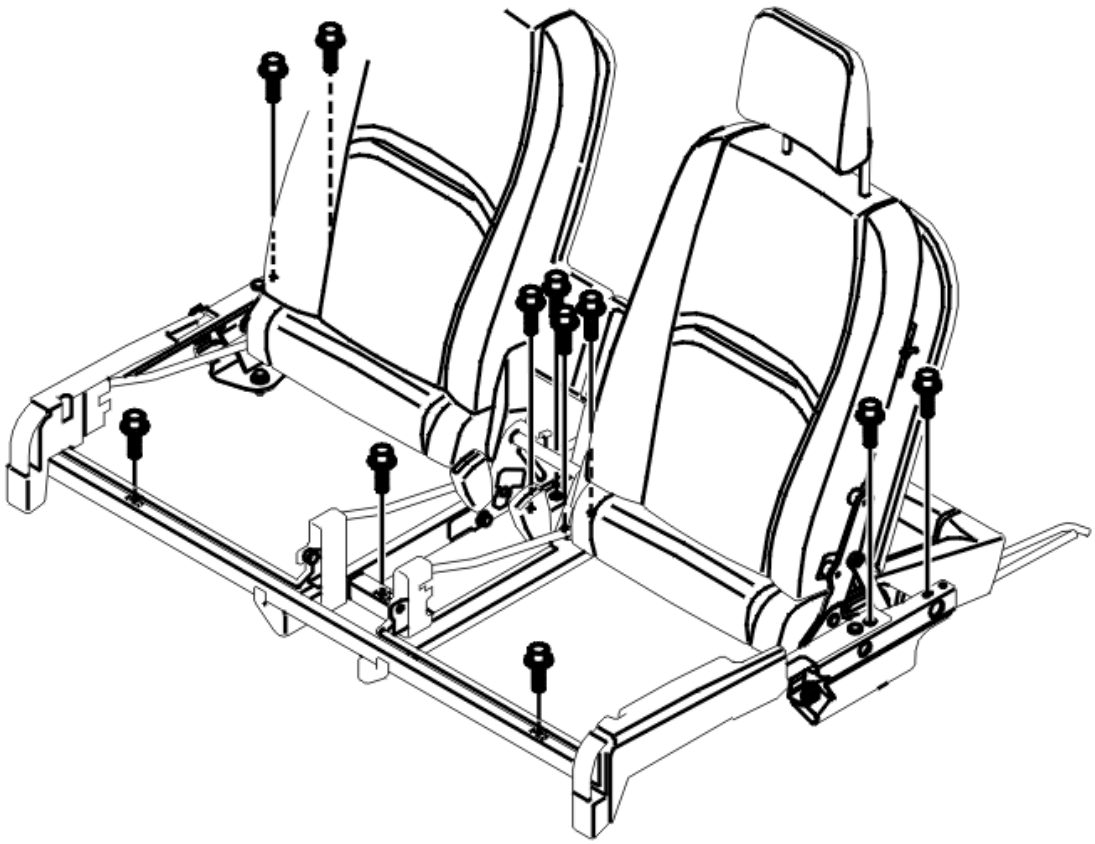

Fig. 298: Seat Frame Bolts
Courtesy of VOLVO CARS CORPORATION

Remove:

- the 3 front screws for the frame.

Fold up the rubber mat in the center storage compartment.

Remove:

- the 4 x center screws for the frame
- the outer screws for the frame, 2 each side.

Pull the seat cushions forwards.

Remove the cargo floor support. See **CARGO FLOOR SUPPORT, REPLACING**.

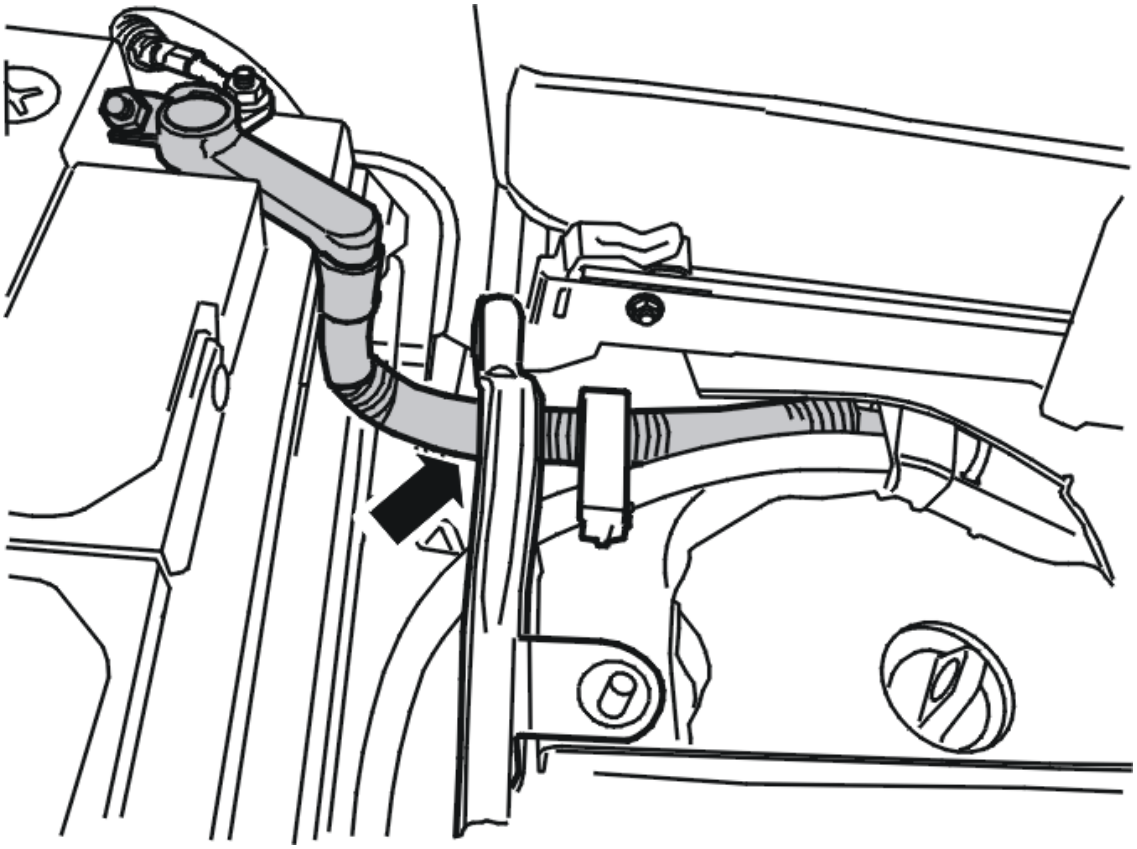

Fig. 299: Cable Retaining Bracket
Courtesy of VOLVO CARS CORPORATION

Note how the battery lead is routed by the seat frame.

Slide in the seat cushions and fold down the seat backs.

NOTE: **Two people are required for this operation. Angle the seat frame during removal.**

Lift out the seat frame.

INSTALLATION

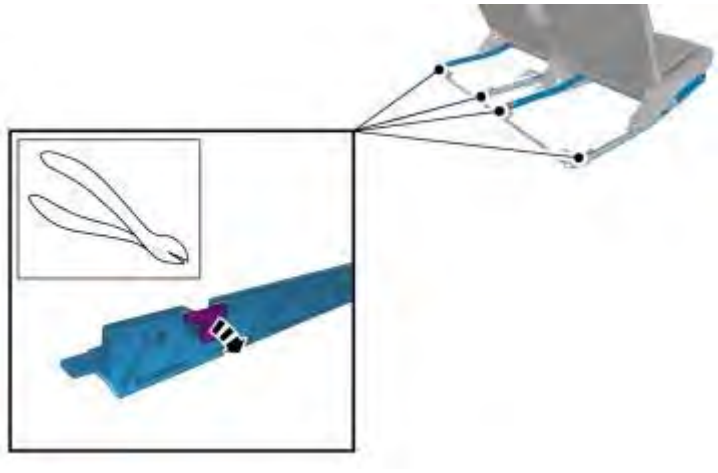

Fig. 300: Installing Service Clips
Courtesy of VOLVO CARS CORPORATION

Modify when replacing seat track.

NOTE: For tightening torques, see: TIGHTENING TORQUE .

Lift in the seat frame.

NOTE: Ensure that the battery cable is not trapped.

Fold up the seat backs.

Install:

- the 3 M10 front screws for the frame. Tighten
- the 4 M10 center screws for the frame
- the 4 M10 outer screws for the frame
- the cargo floor support. See **CARGO FLOOR SUPPORT, REPLACING**.

Fold down the backrests.

Install:

- the front cargo compartment floor with 2 M6 screws and 1 clip. Tighten
- the side panel in the cargo compartment. See **SIDE PANEL CARGO COMPARTMENT, REPLACEMENT**
- the holder for the jack
- the jack
- the battery bracket using 3 x M8 screws
- the rear cargo compartment floor.

SERVICE CLIPS, INSTALLING

NOTE: **The illustrations in this service information are used for different model years and/or models. Some variation may occur. However, the essential information in the illustrations is always correct.**

INSTALLING SERVICE CLIPS

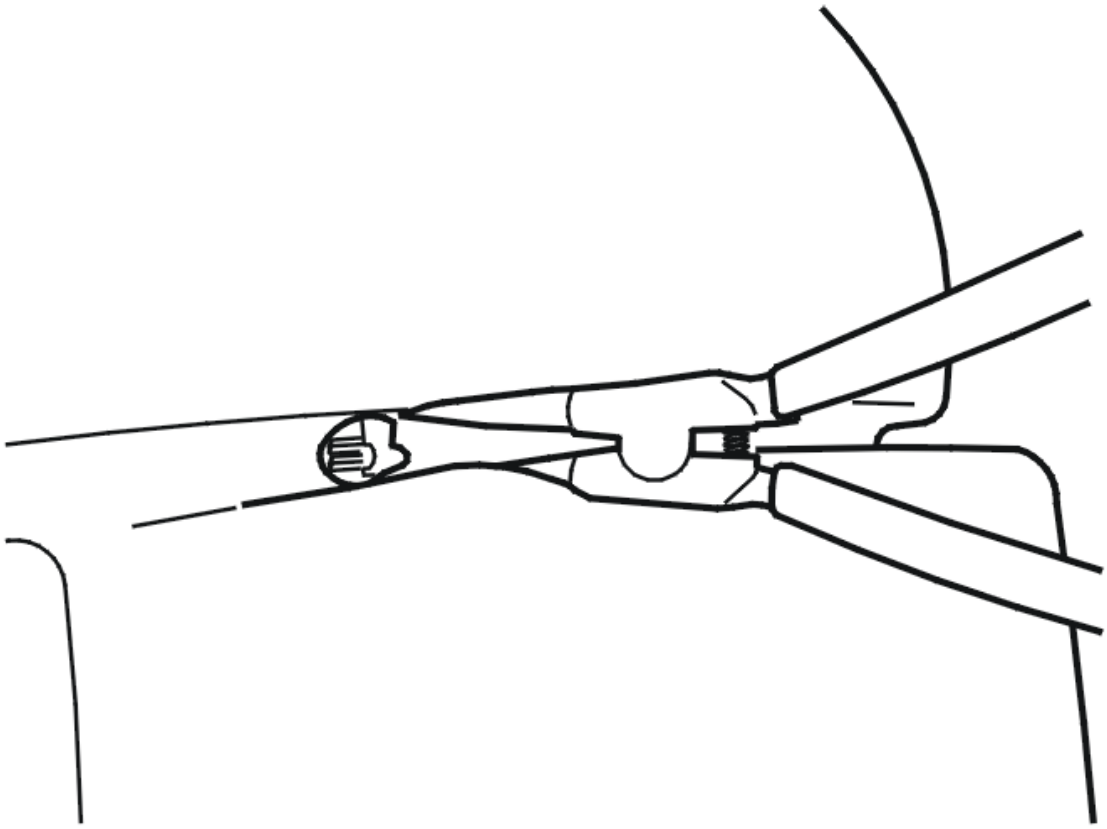

Fig. 301: Installing Service Clip (1 Of 3)
Courtesy of VOLVO CARS CORPORATION

Fold apart the foam rubber slightly on one side of the clip.

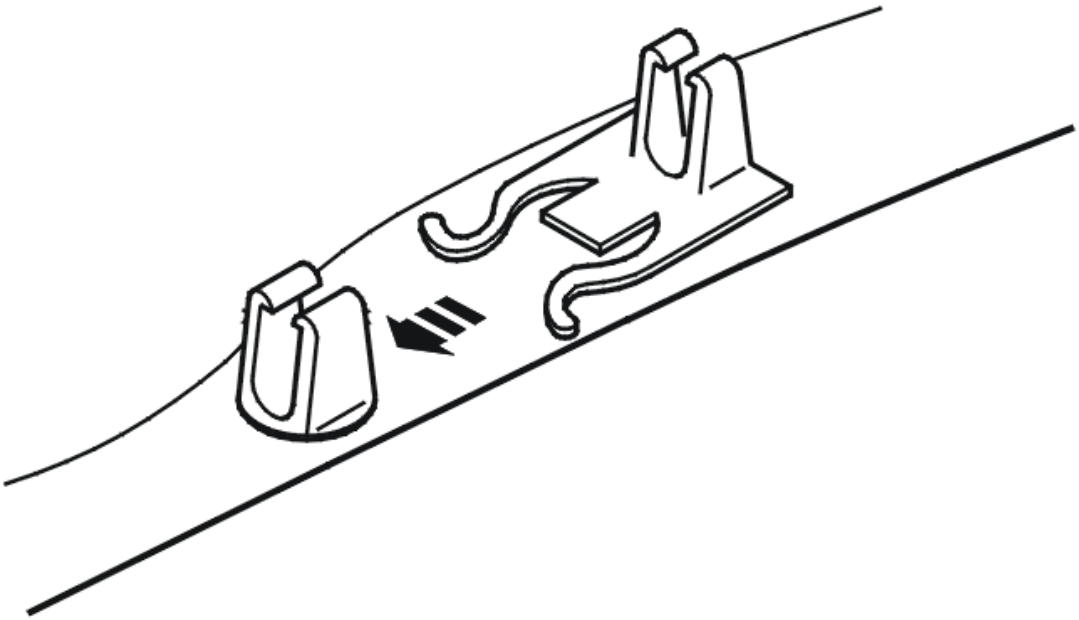

Fig. 302: Installing Service Clip (2 Of 3)
Courtesy of VOLVO CARS CORPORATION

Take the service clip and press it into place under the flange on the old clip.

Check that it is fitted in line with the old clip and that it ends up in position.

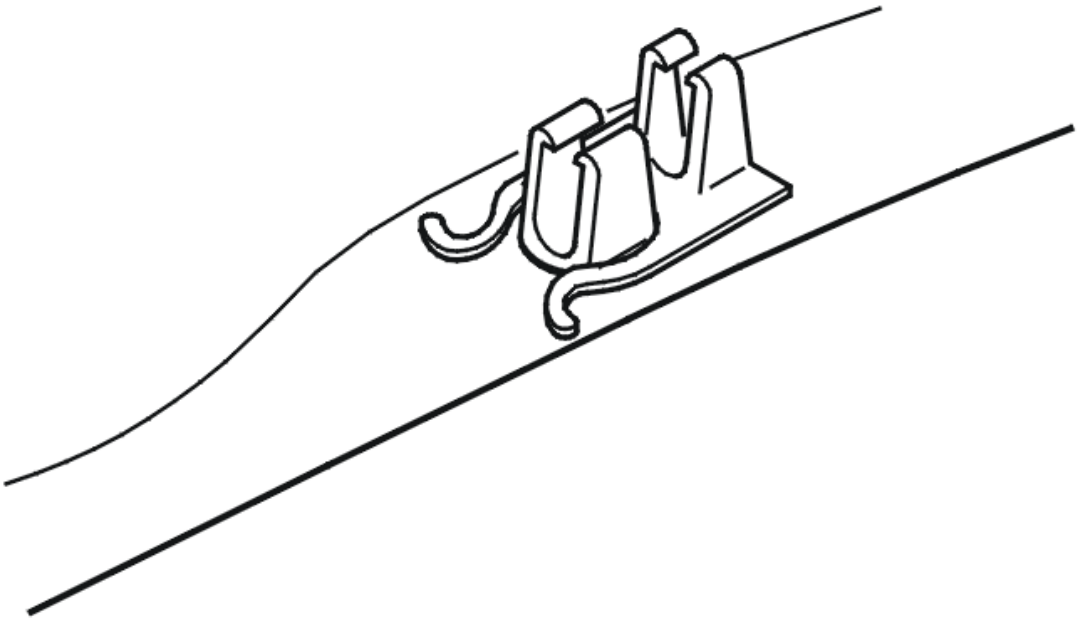

Fig. 303: Installing Service Clip (3 Of 3)
Courtesy of VOLVO CARS CORPORATION

Fold back the foam rubber.

UPHOLSTERY BACKREST CUSHION (THIRD ROW), REPLACING

REPLACING

As the illustrations in this service information are used for different model years and / or models, some variation may occur. However, the essential information in the illustrations is always correct.

PREPARATIONS

Fold down the backrest.

Fold the cargo compartment floor up.

REMOVING THE BACKREST CUSHION UPHOLSTERY (THIRD ROW)

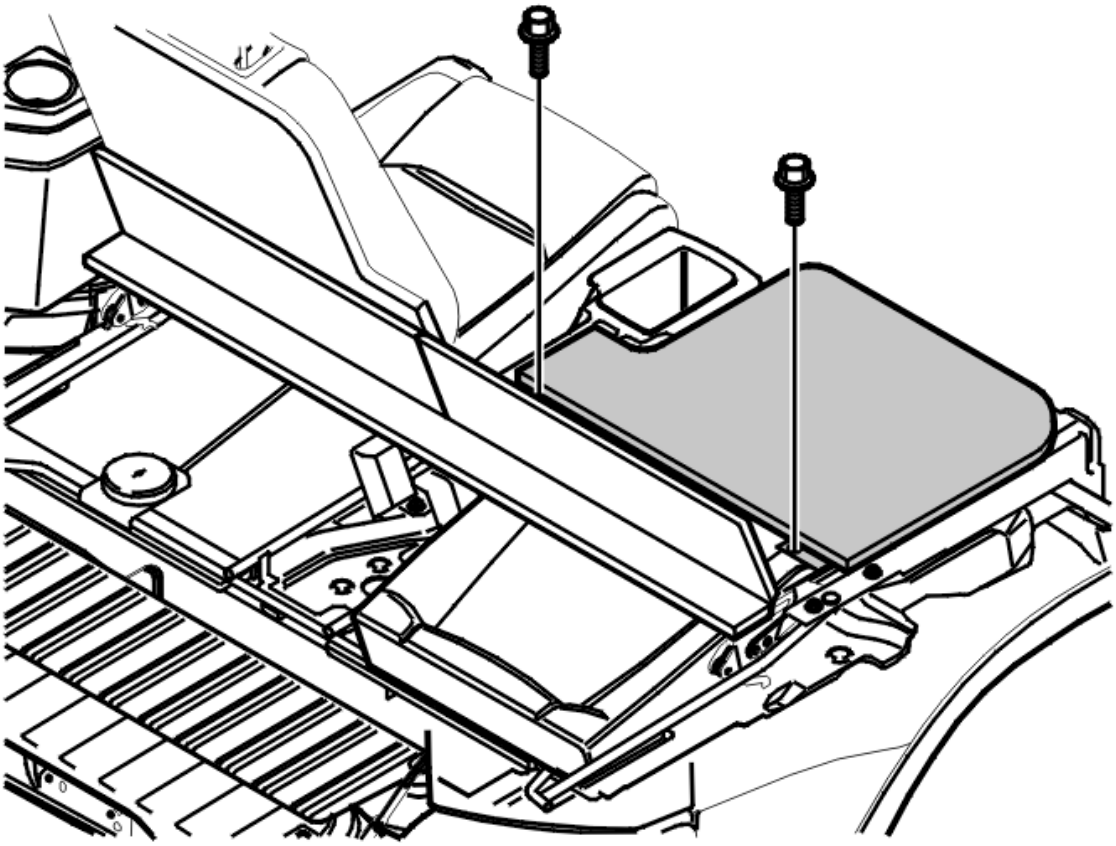

Fig. 304: Backrest Screws
Courtesy of VOLVO CARS CORPORATION

Remove the 2 screws.

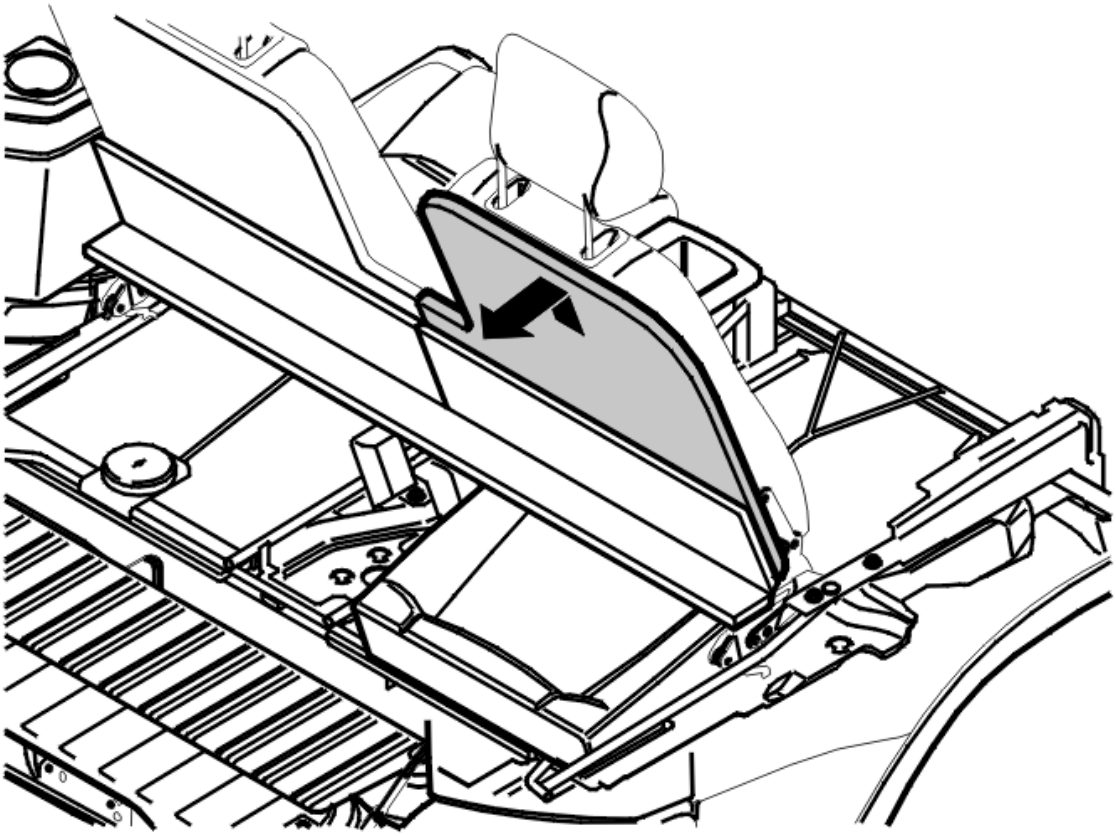

Fig. 305: Pull Backrest Upwards And Outwards
Courtesy of VOLVO CARS CORPORATION

Fold the backrest up.

Remove:

- backrest. Pull upwards and outwards.

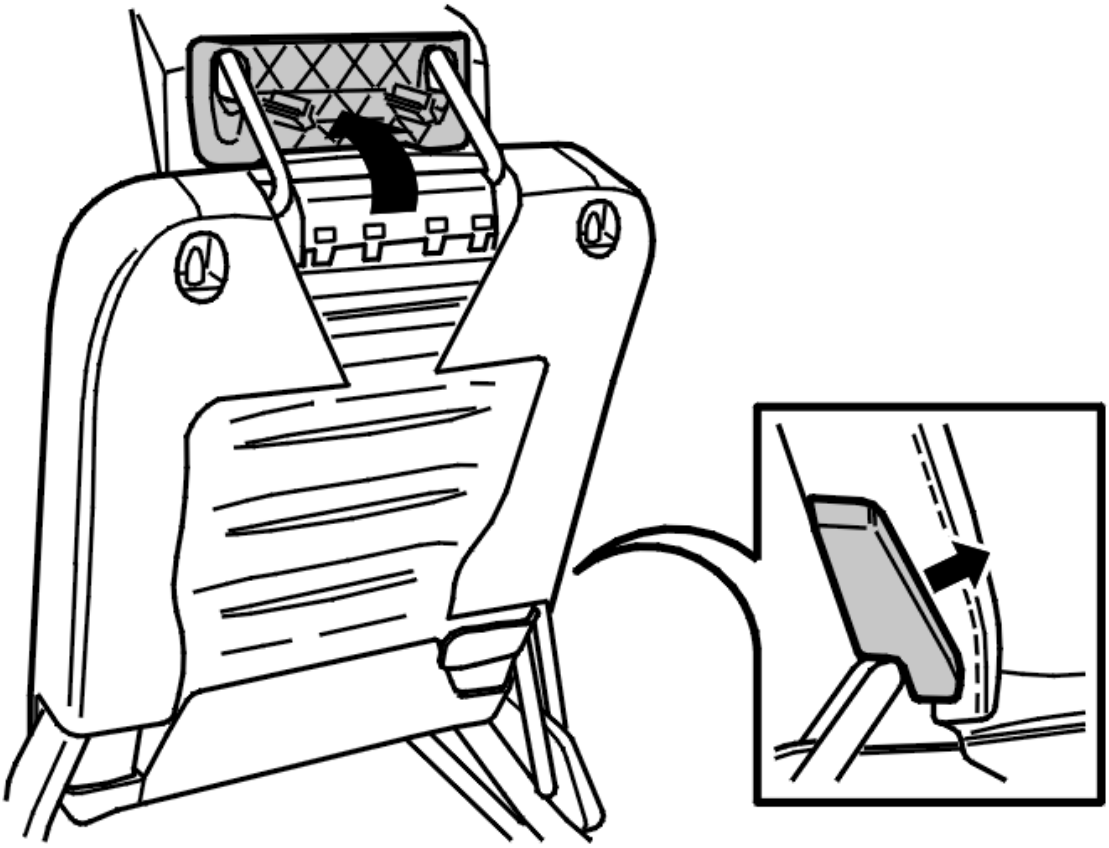

Fig. 306: Side Piece At Head Restraint & Backrest
Courtesy of VOLVO CARS CORPORATION

- the side piece at the head restraint
- the side piece at the side of the backrest.

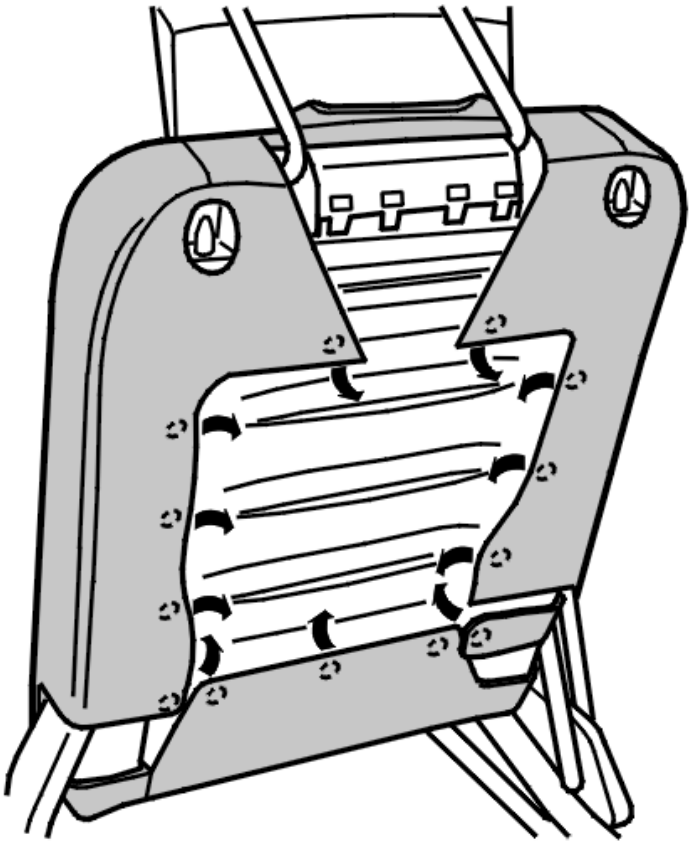

Fig. 307: Upholstery From Back Panel
Courtesy of VOLVO CARS CORPORATION

Remove the upholstery from the back panel. The upholstery is secured at 13 mounting points.

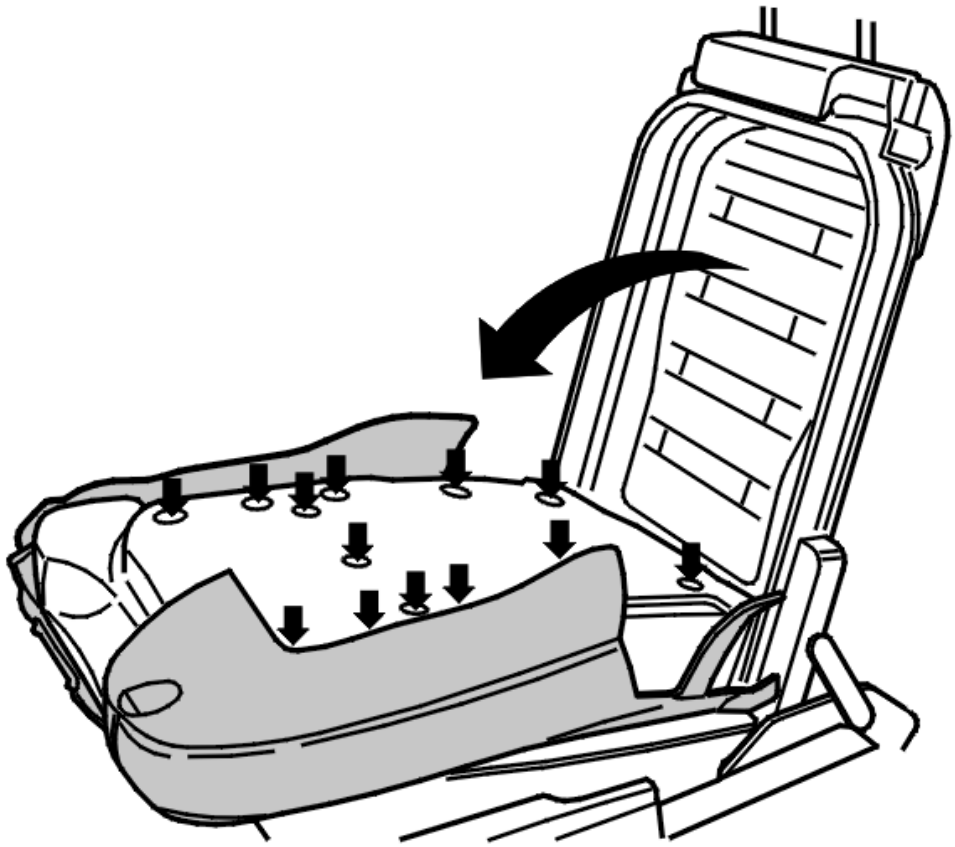

Fig. 308: Upholstery/Foam From Seat Frame
Courtesy of VOLVO CARS CORPORATION

Remove:

- the upholstery/foam from the seat frame
- the upholstery from the foam.

INSTALLING THE BACKREST CUSHION UPHOLSTERY (THIRD ROW)

NOTE: For tightening torques, see TIGHTENING TORQUE .

Install:

- the upholstery on the foam
- the upholstery/foam on the backrest frame.

Hook the upholstery onto the back panel.

Install the back by securing and pressing downwards.

Fold down the backrest.

Install the 2 M6 screws. Tighten

Fold the backrest up.

Install:

- the side piece at the head restraint
- the side piece at the side of the backrest.

UPHOLSTERY BACKREST CUSHION CENTER (SECOND ROW), REPLACING

REPLACING

The illustrations in this service information are used for different model years and/or models. Some variation may occur. However, the essential information in the illustrations is always correct.

REMOVING THE CENTER SEAT (SECOND ROW)

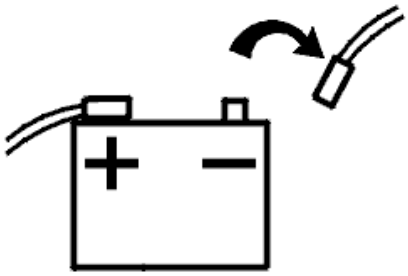

Fig. 309: Disconnecting Battery Lead
Courtesy of VOLVO CARS CORPORATION

Remove:

- the battery lead according to: **BATTERY, DISCONNECTING**
- the outer seat according to: **REMOVING THE OUTER SEAT (SECOND ROW)**.

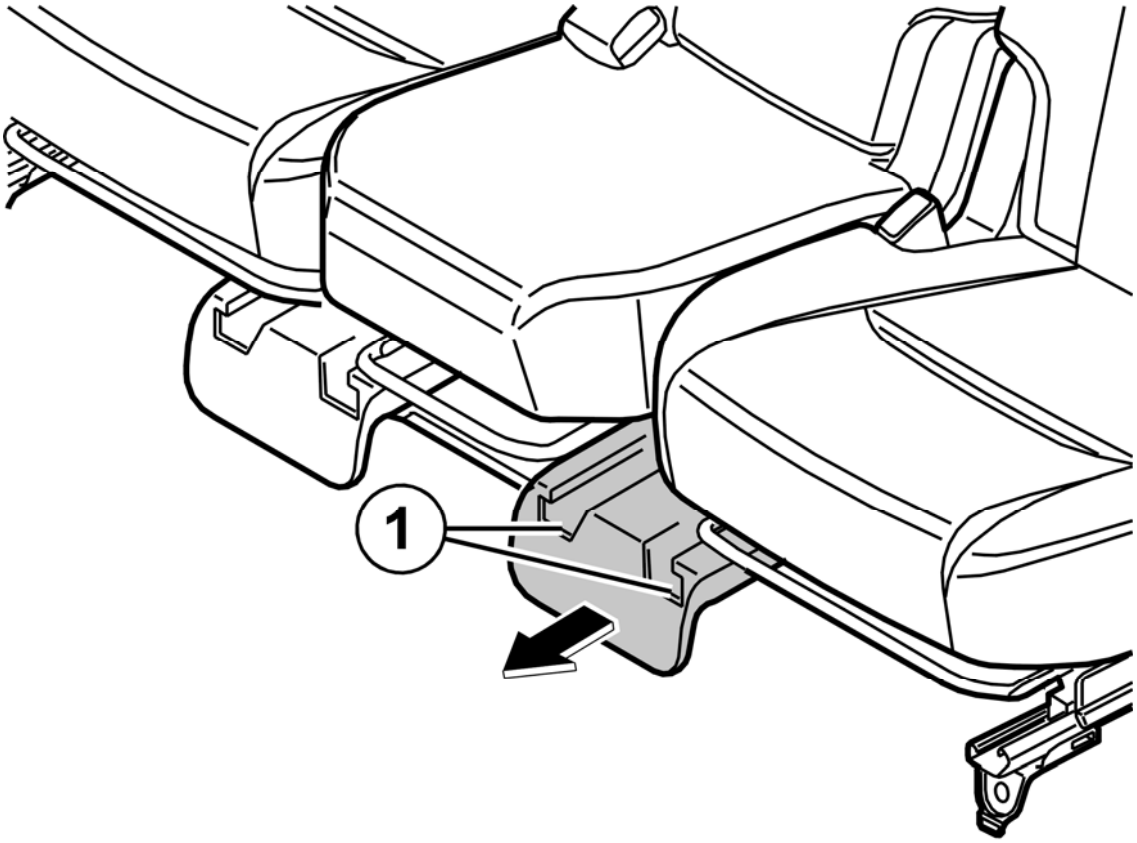

Fig. 310: Identifying Removal Of Front Side Pieces
Courtesy of VOLVO CARS CORPORATION

Disconnect the connector under the seat.

Remove the 4 side pieces on the seat over the screws.

Pull the front side pieces straight forward to detach them.

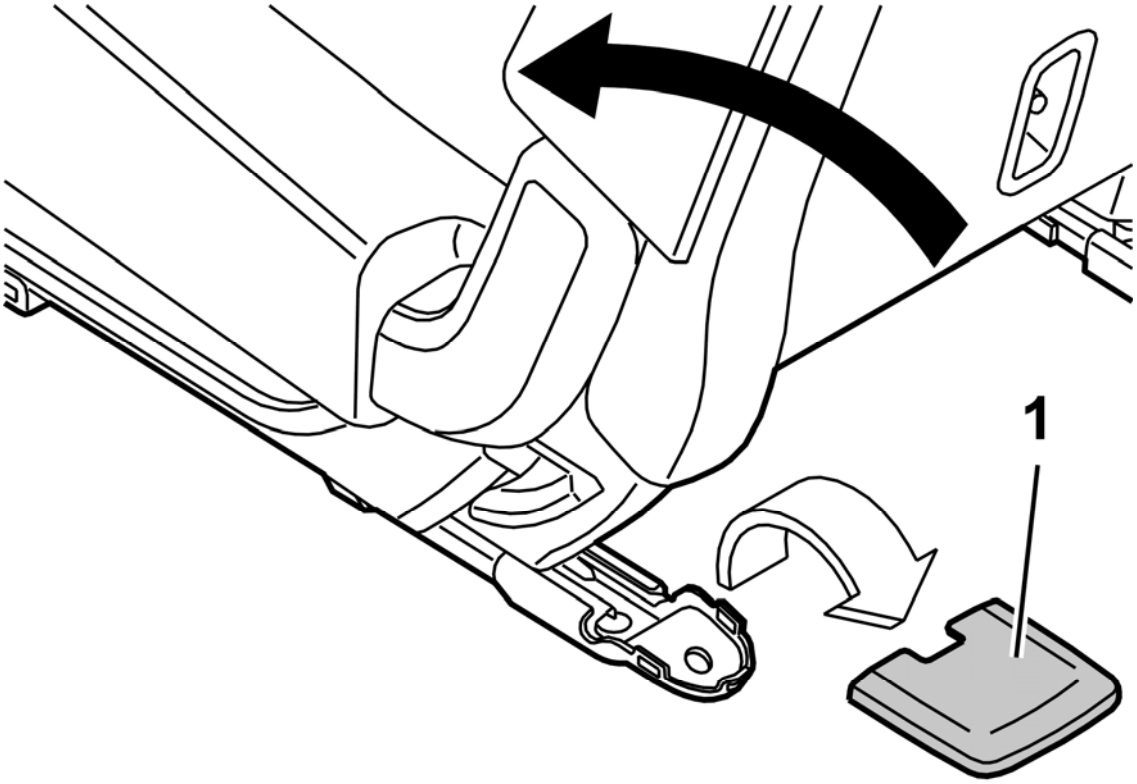

Fig. 311: Identifying Removal Of Rear Side Pieces
Courtesy of VOLVO CARS CORPORATION

Pull the rear side pieces upwards to detach them.

Remove the 4 screws.

Lift out the seat.

REMOVING THE UPHOLSTERY FROM THE CENTER BACKREST CUSHION (SECOND ROW)

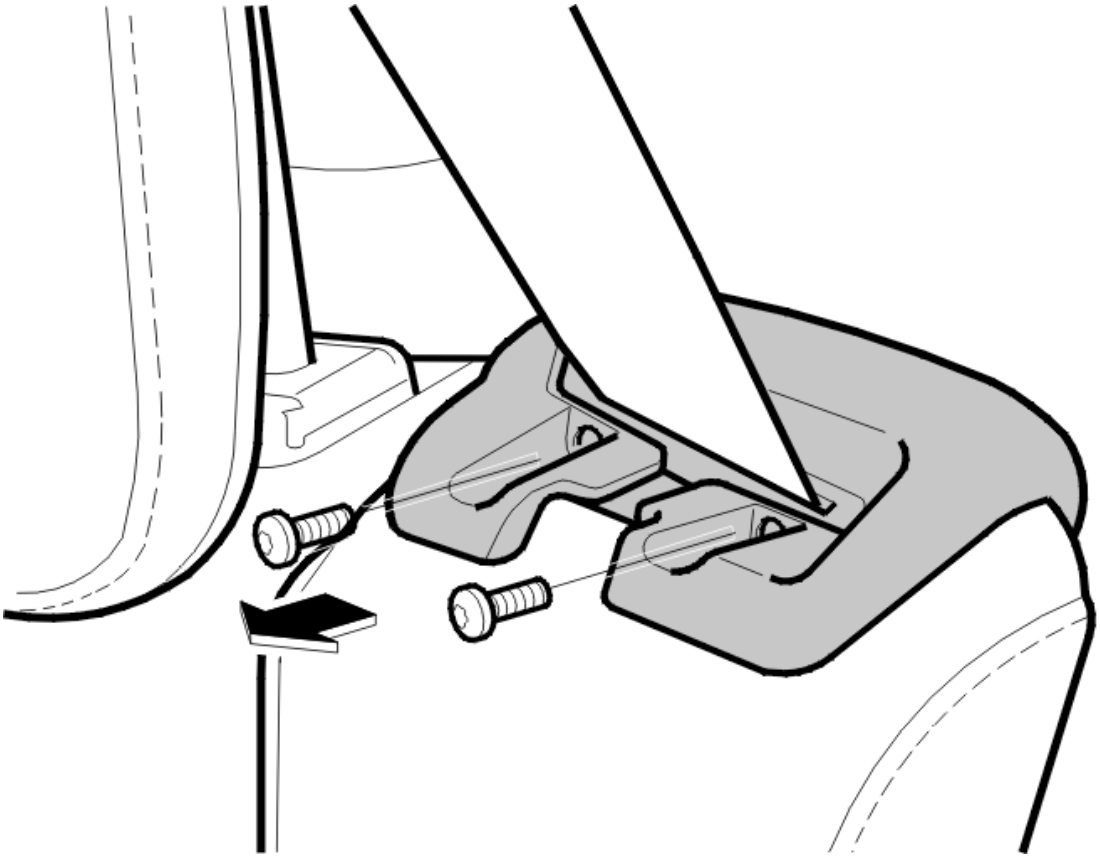

Fig. 312: Identifying Screws For Seat Belt Bracket
Courtesy of VOLVO CARS CORPORATION

Remove:

- the head restraint
- the 2 screws for the seat belt bracket.

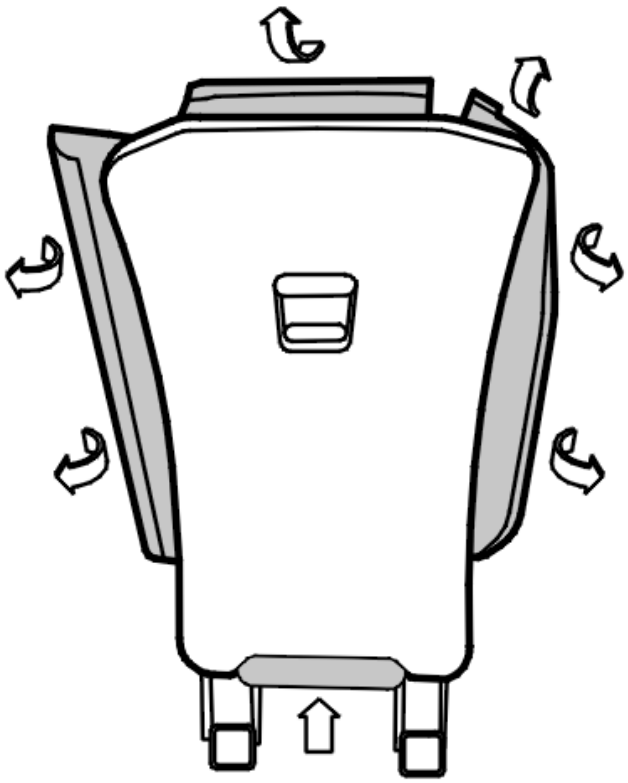

Fig. 313: Folding Out Weatherstrip From Channel In Rear Section
Courtesy of VOLVO CARS CORPORATION

Fold out the weatherstrip from the channel in the rear section.

Remove the upholstery.

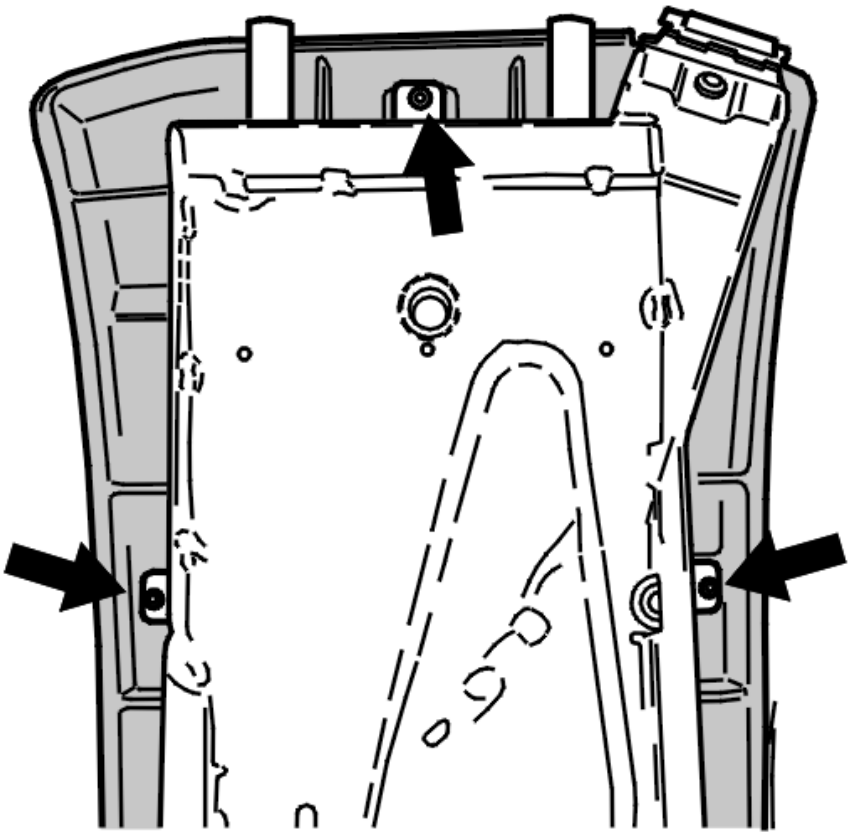

Fig. 314: Folding Up Upholstery
Courtesy of VOLVO CARS CORPORATION

Fold up the upholstery.

Remove:

- the 3 screws
- the rear section.

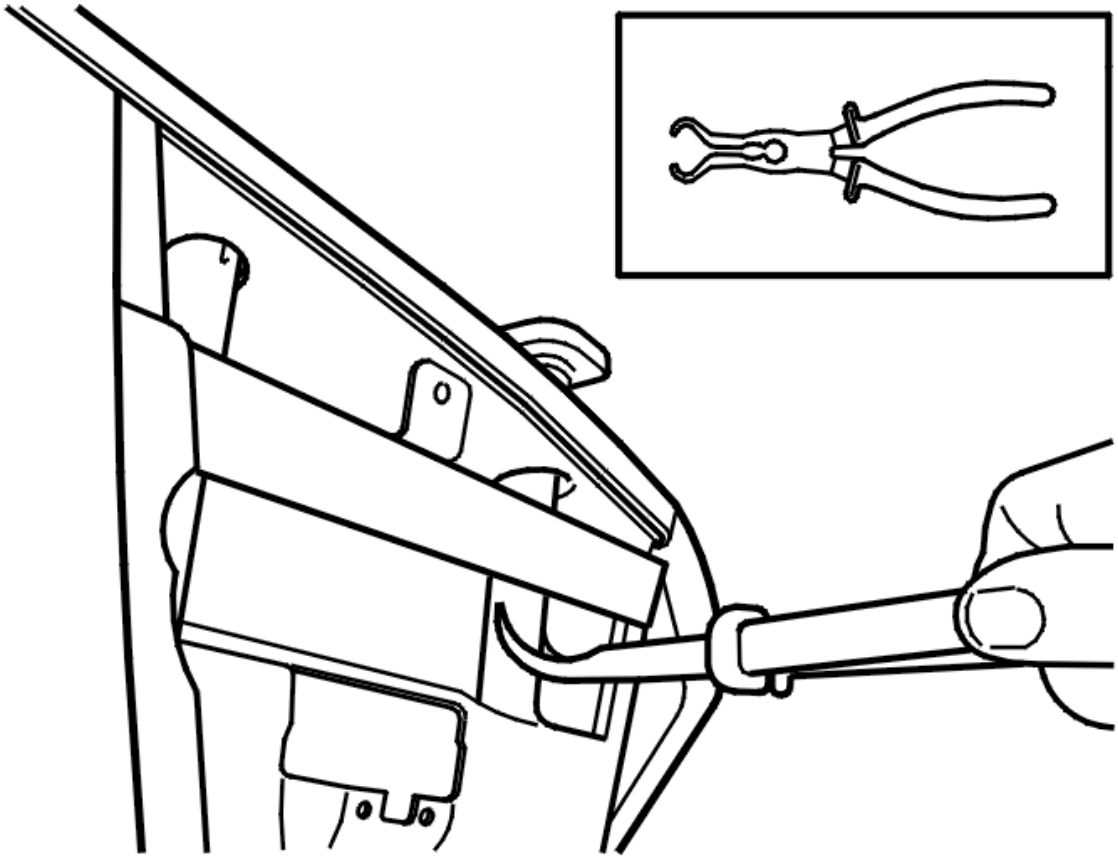

Fig. 315: Pulling Guide Sleeves Straight Up
Courtesy of VOLVO CARS CORPORATION

- the guide sleeves for the head restraint.

Press in the catches.

Pull the guide sleeves straight up.

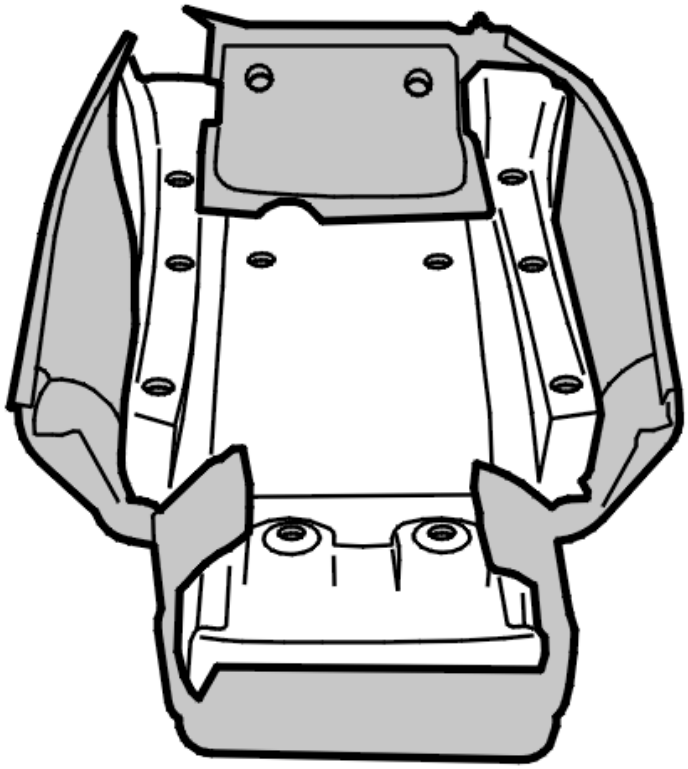

Fig. 316: Detaching Upholstery From Clip In Cushion
Courtesy of VOLVO CARS CORPORATION

Remove:

- the upholstery / cushion from the seat frame
- the upholstery from the cushion.

Detach the upholstery from the clip in the cushion.

INSTALLING SERVICE CLIPS

Install the service clips according to: **SERVICE CLIPS, INSTALLING**

INSTALLING THE UPHOLSTERY ON THE CENTER BACKREST CUSHION (SECOND ROW)

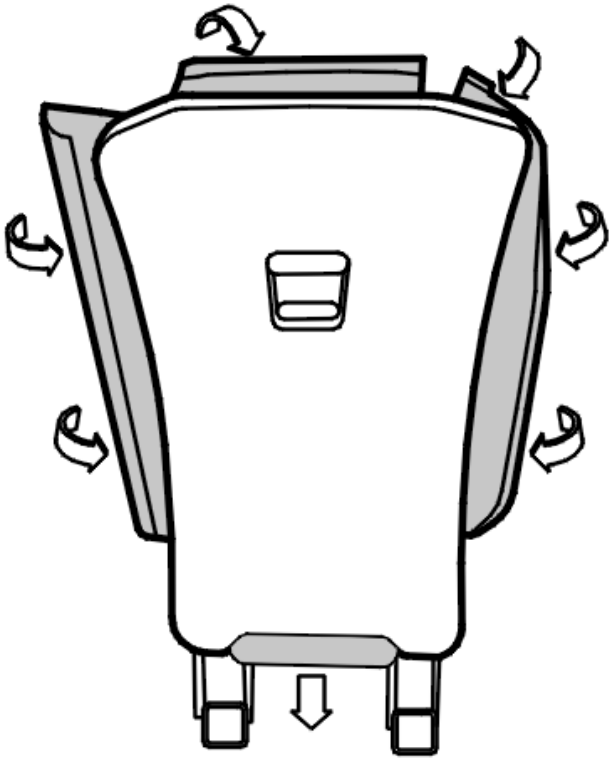

Fig. 317: Folding In Weatherstrip Into Channel In Rear Section
Courtesy of VOLVO CARS CORPORATION

Install:

- the upholstery for the cushion
- the rear section on the backrest frame
- the 3 screws. Tighten
- the upholstery / cushion on the backrest frame.

Fold in the weatherstrip into the channel in the rear section.

Start with the upper molding, then the lower molding and finally the moldings on the sides.

Install:

- the guide sleeves for the head restraint
- the bracket for the seat belt
- the 2 screws. Tighten
- the head restraint.

INSTALLING THE CENTER SEAT (SECOND ROW)

Lift in the seat.

Install:

- the connector under the seat
- the 4 M10 screws. Tighten
- the side pieces over the screws
- the outer seat according to: **INSTALLING THE OUTER SEAT (SECOND ROW)**.

UPHOLSTERY BACKREST CUSHION OUTER (SECOND ROW)

The illustrations in this service information are used for different model years and/or models. Some variation may occur. However, the essential information in the illustrations is always correct.

REMOVING THE OUTER SEAT (SECOND ROW)

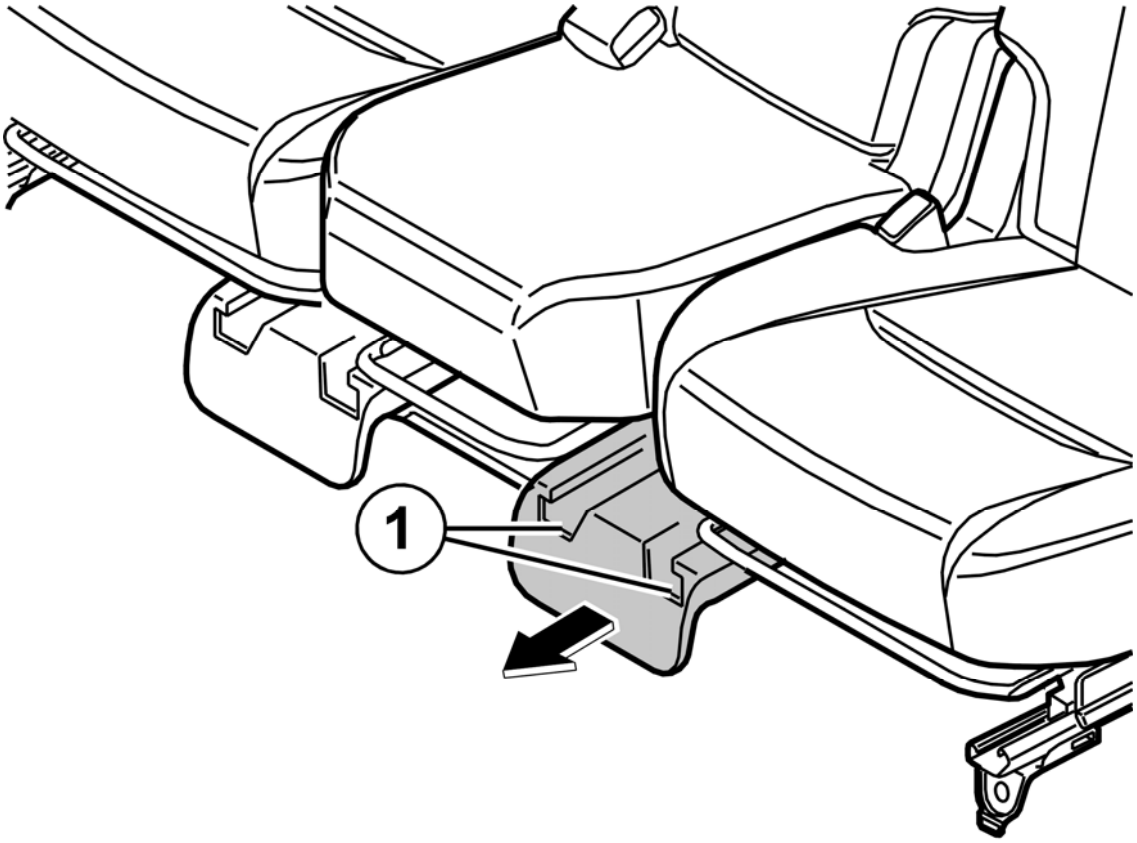

Fig. 318: Identifying Removal Of Front Side Pieces
Courtesy of VOLVO CARS CORPORATION

Disconnect the side pieces from the seat.

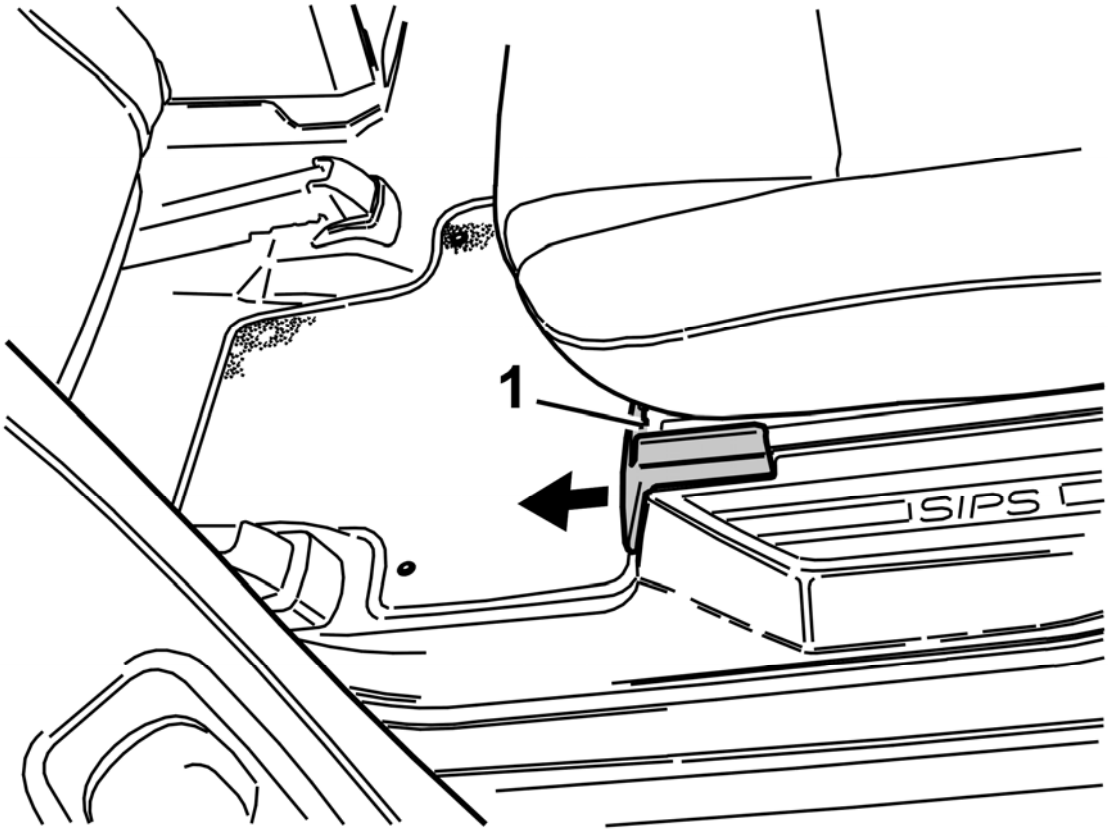

Fig. 319: Identifying Side Pieces And Seat
Courtesy of VOLVO CARS CORPORATION

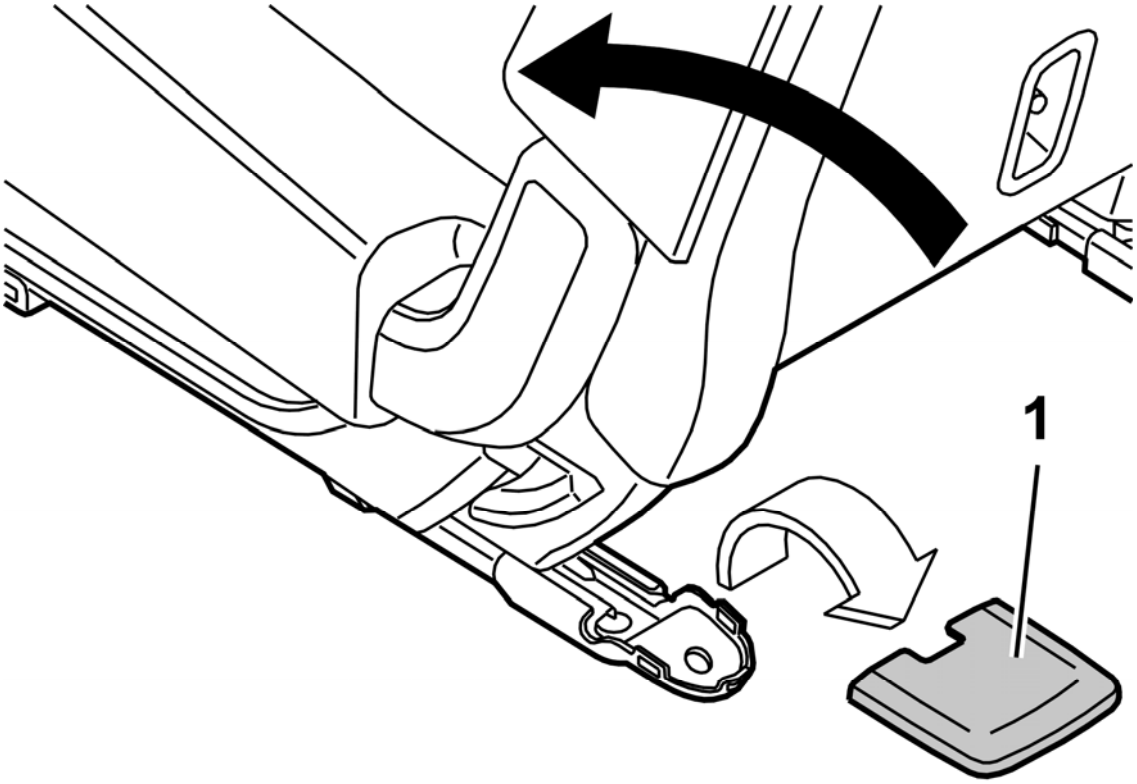

Fig. 320: Identifying Removal Of Rear Side Pieces
Courtesy of VOLVO CARS CORPORATION

Remove the 4 screws.

Lift out the seat.

REMOVING THE UPHOLSTERY FROM THE OUTER BACKREST CUSHION (SECOND ROW)

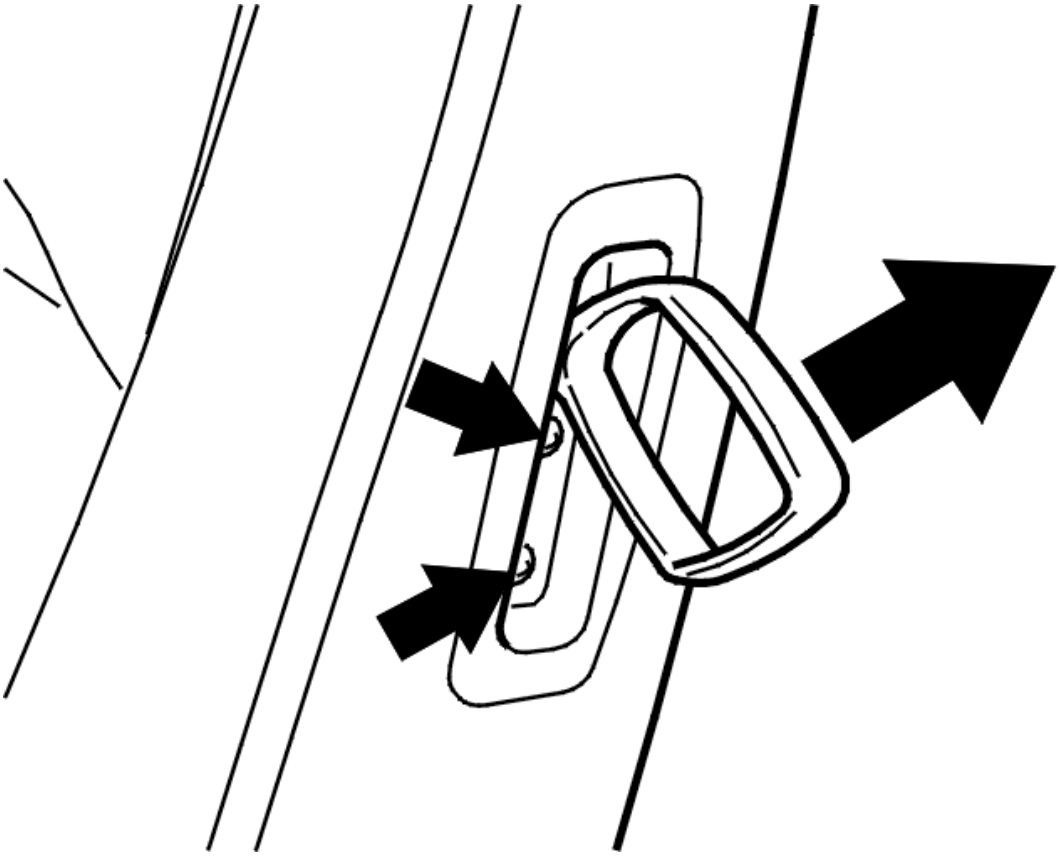

Fig. 321: Panel For Grab Handle
Courtesy of VOLVO CARS CORPORATION

Remove:

- the 2 screws
- the grab handle
- the panel for the grab handle.

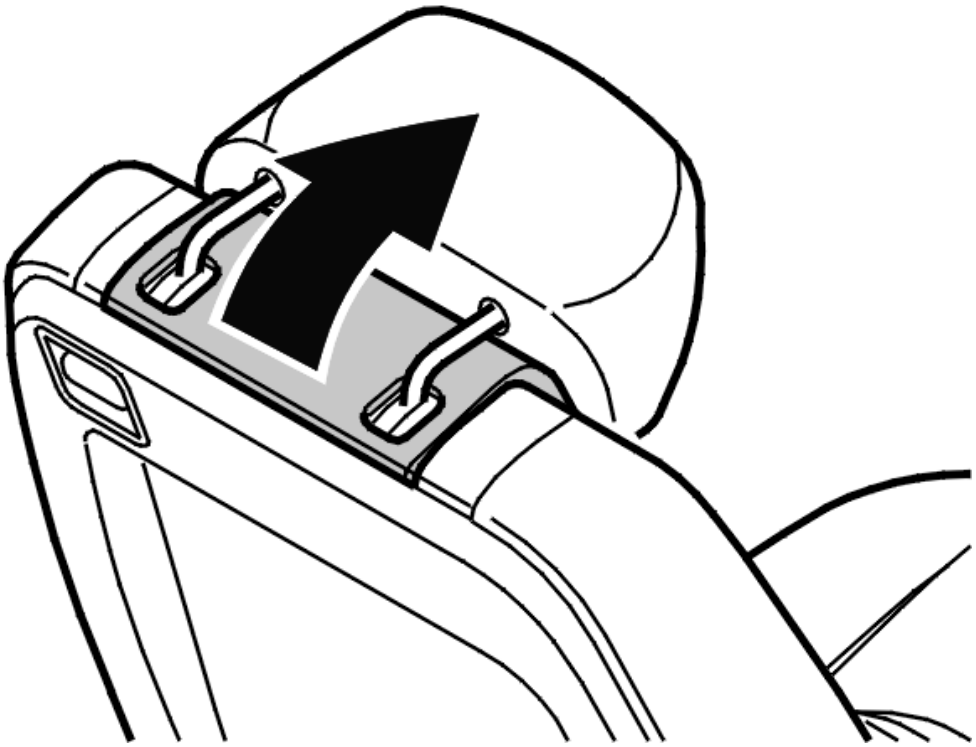

Fig. 322: Folding Down Head Restraint
Courtesy of VOLVO CARS CORPORATION

Fold down the head restraint.

Remove:

- the head restraint panel.

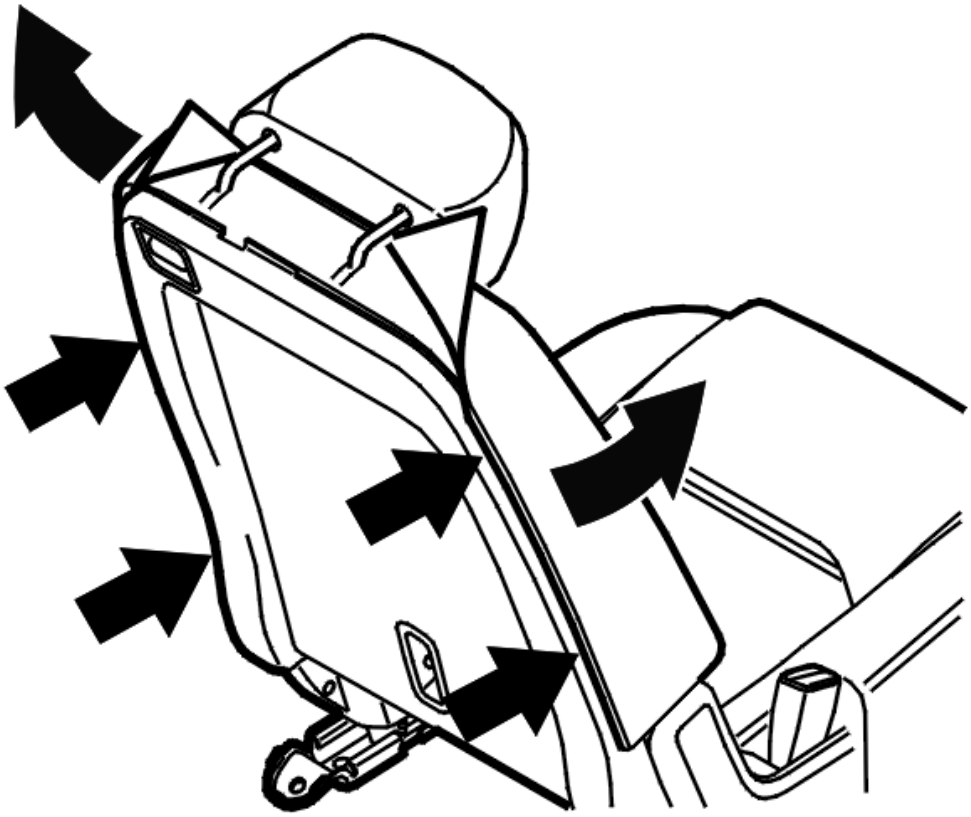

Fig. 323: Folding Out Weatherstrip From Channel In Rear Section
Courtesy of VOLVO CARS CORPORATION

- the upholstery from the rear section.

Fold out the weatherstrip from the channel in the rear section.

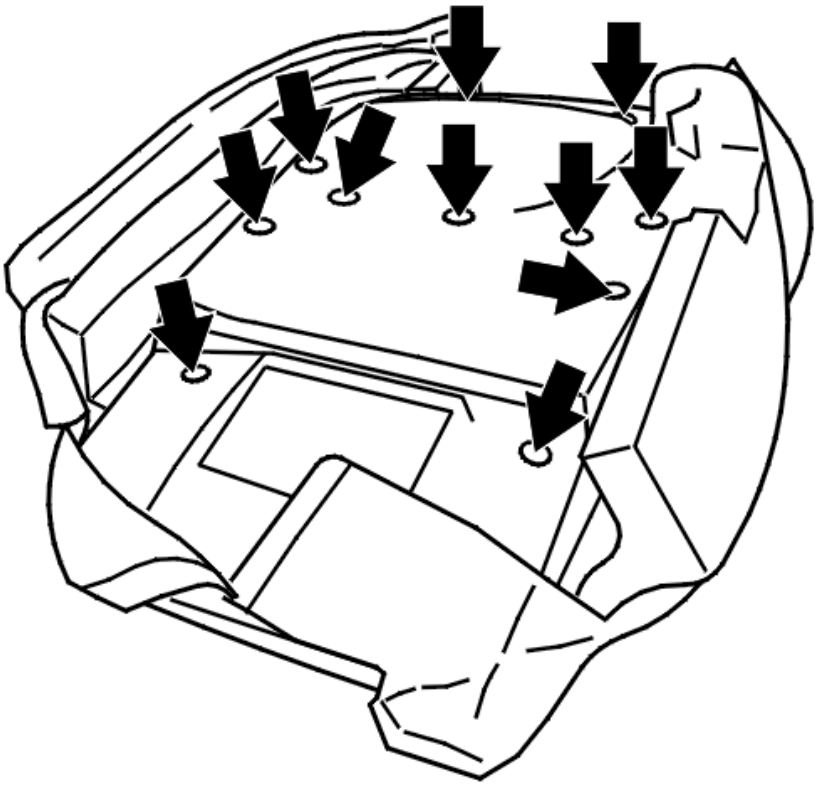

Fig. 324: Detaching Upholstery From Clip In Cushion
Courtesy of VOLVO CARS CORPORATION

Remove:

- the upholstery / cushion from the seat frame
- the upholstery from the cushion.

Detach the upholstery from the clip in the cushion.

INSTALLING SERVICE CLIPS

Install the service clips according to:**SERVICE CLIPS, INSTALLING**

INSTALLING THE UPHOLSTERY ON THE OUTER BACKREST CUSHION (SECOND ROW)

NOTE: For tightening torques, see:TIGHTENING TORQUE .

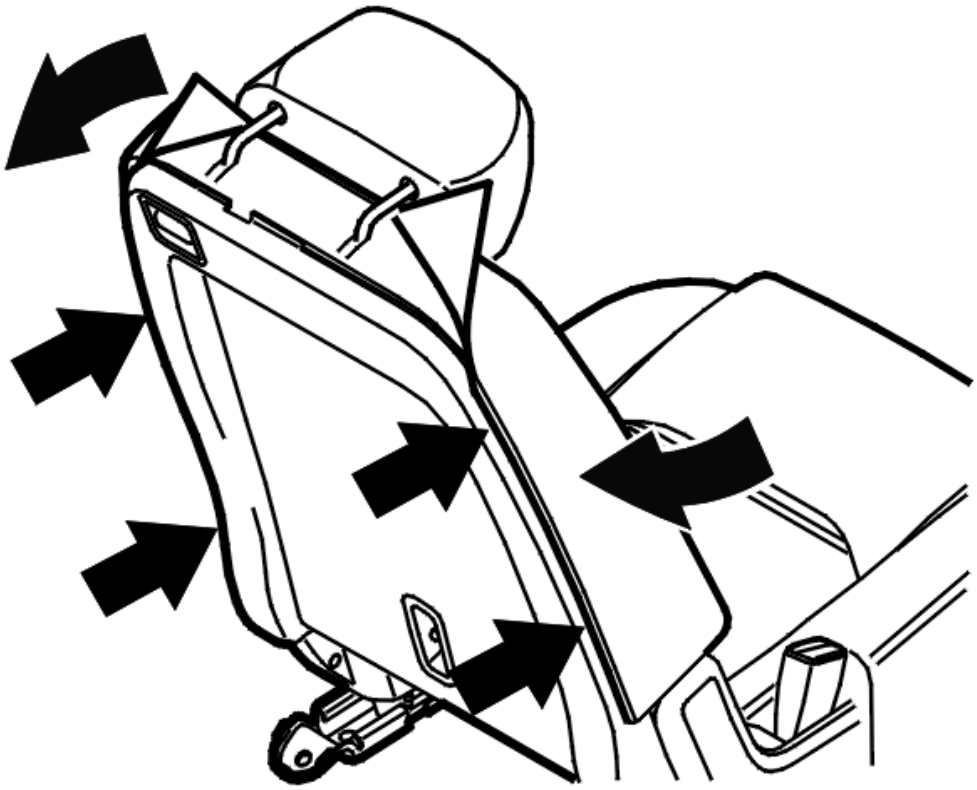

Fig. 325: Folding In Weatherstrip Into Channel In Rear Section
Courtesy of VOLVO CARS CORPORATION

Install:

- the upholstery for the cushion
- the upholstery / cushion on the backrest frame.

Fold in the weatherstrip into the channel in the rear section.

Start with the lower weatherstrip, continue with the weatherstrip at the head restraint and finish with the weatherstrips on the sides.

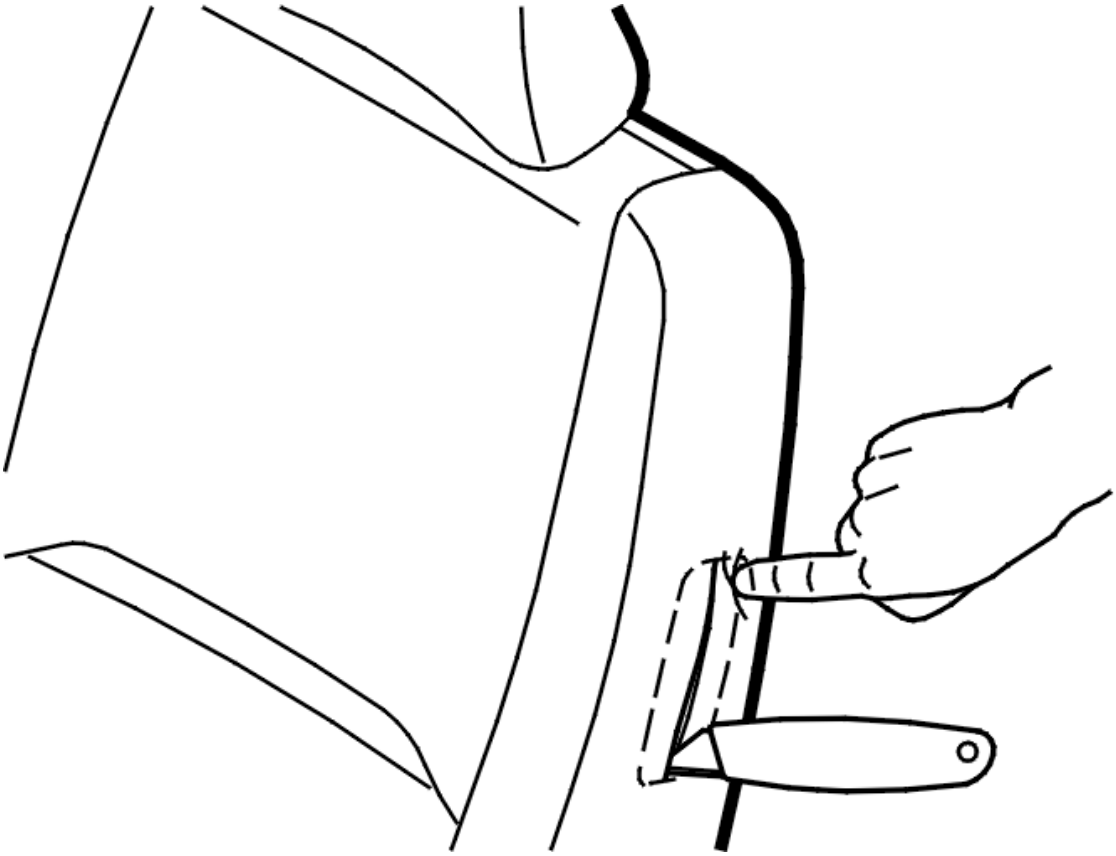

Fig. 326: Cutting New Groove For Grab Handle
Courtesy of VOLVO CARS CORPORATION

NOTE: When replacing the upholstery for the backrest cushion, a new groove must be cut for the grab handle.

Feel behind the upholstery and locate the bracket on the inside. Carefully cut through the upholstery as illustrated. Be extra careful at the ends.

Install:

- the head restraint panel.
- the panel for the grab handle
- 1 screw. Tighten
- the grab handle
- 1 screw. Tighten.

INSTALLING THE OUTER SEAT (SECOND ROW)

Lift in the seat.

Install:

- the 4 M10 screws. Tighten
- the side pieces on the seat.

UPHOLSTERY SEAT CUSHION (THIRD ROW), REPLACING

REPLACING

As the illustrations in this service information are used for different model years and / or models, some variation may occur. However, the essential information in the illustrations is always correct.

PREPARATIONS

Move the seats on the second row as far forward as possible. Fold down the backrests half way.

REMOVING THE SEAT CUSHION UPHOLSTERY (THIRD ROW)

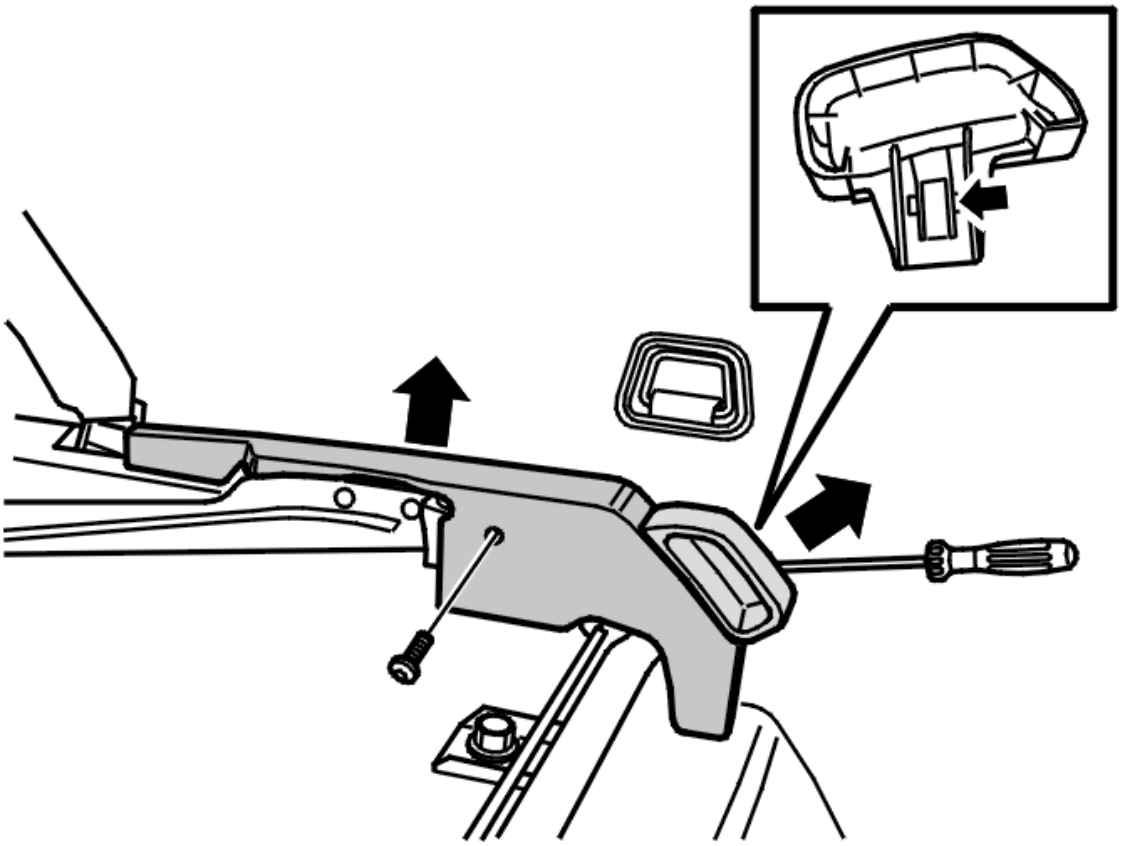

Fig. 327: Removing Outer Panel (Secured With One Screw)
Courtesy of VOLVO CARS CORPORATION

Remove:

- the handle (release the catch)
- the outer panel (secured with one screw). Pull straight up.

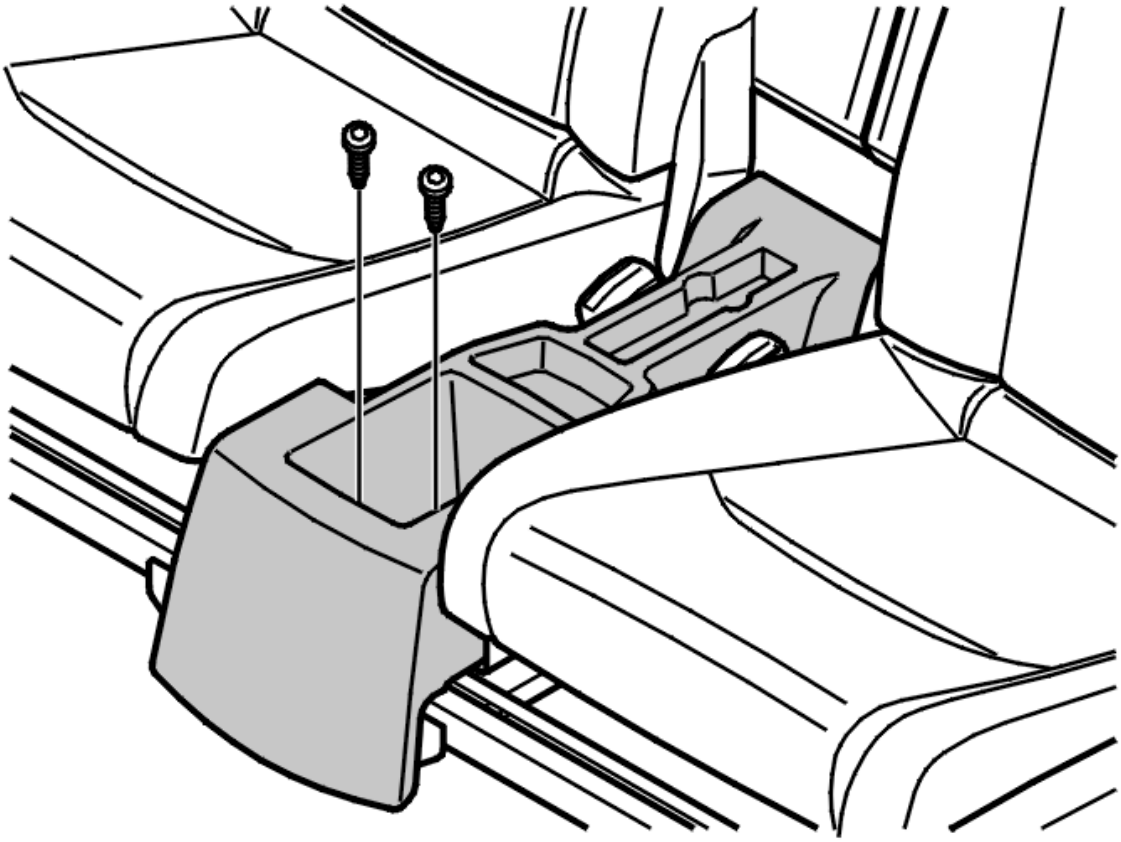

Fig. 328: Identifying Center Storage Compartment With Two Screws
Courtesy of VOLVO CARS CORPORATION

- the center storage compartment (secured with two screws).

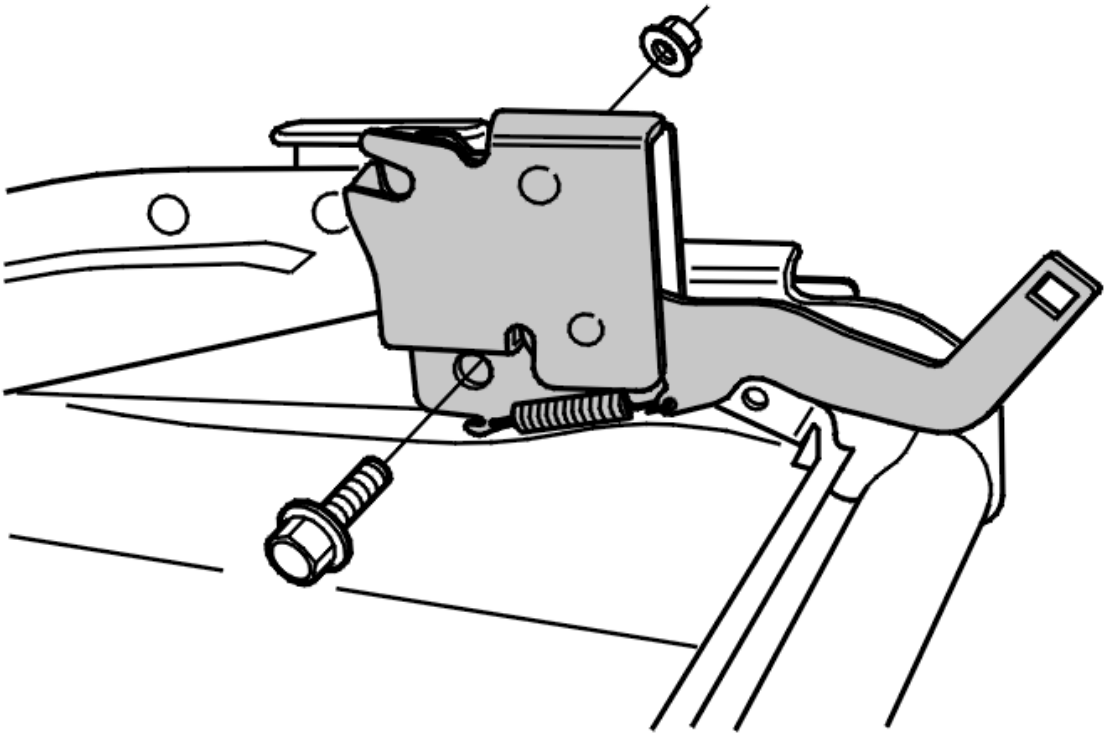

Fig. 329: Nut, Screw & Outer Lock
Courtesy of VOLVO CARS CORPORATION

- 1 nut
- 1 screw
- the outer lock.

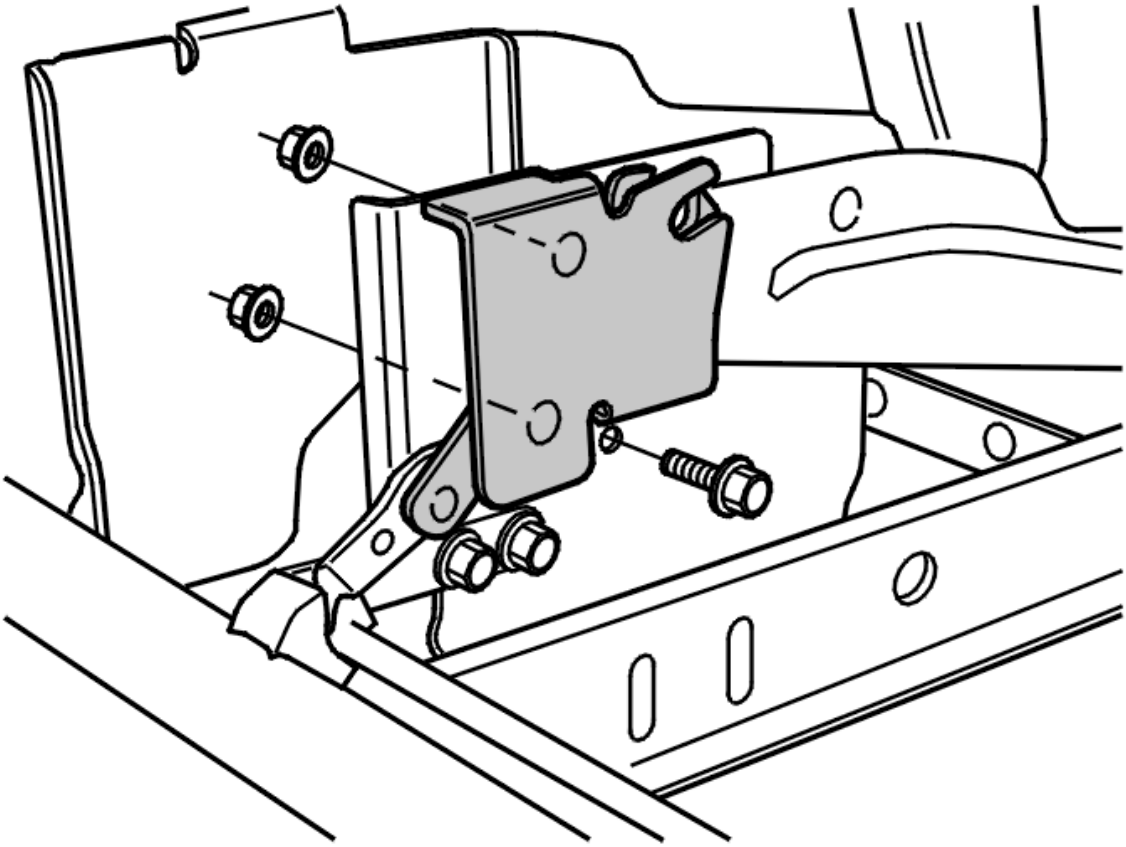

Fig. 330: Nuts, Screw & Inner Lock
Courtesy of VOLVO CARS CORPORATION

- 1 screw
- the 2 nuts
- the inner lock.

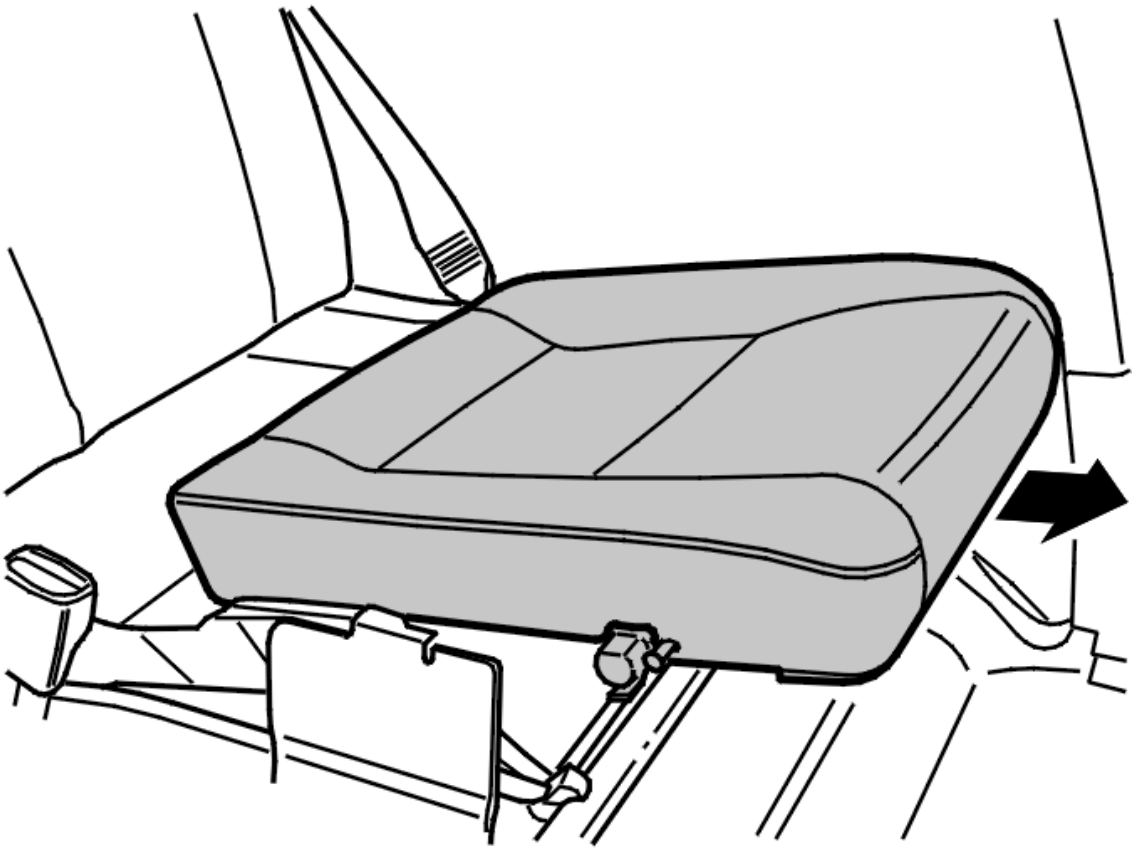

Fig. 331: Pulling Out Seat Cushion
Courtesy of VOLVO CARS CORPORATION

Pull out the seat cushion.

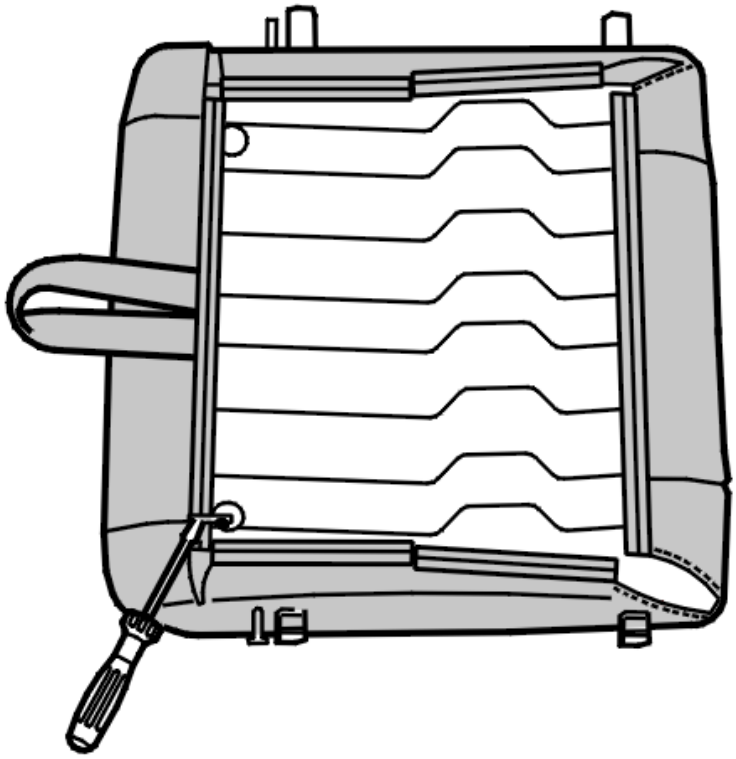

Fig. 332: Detaching Weatherstrips On Underneath Of Seat Cushion
Courtesy of VOLVO CARS CORPORATION

Detach the weatherstrips on the underneath of the seat cushion.

HINT: Use a small groove-cut chisel.

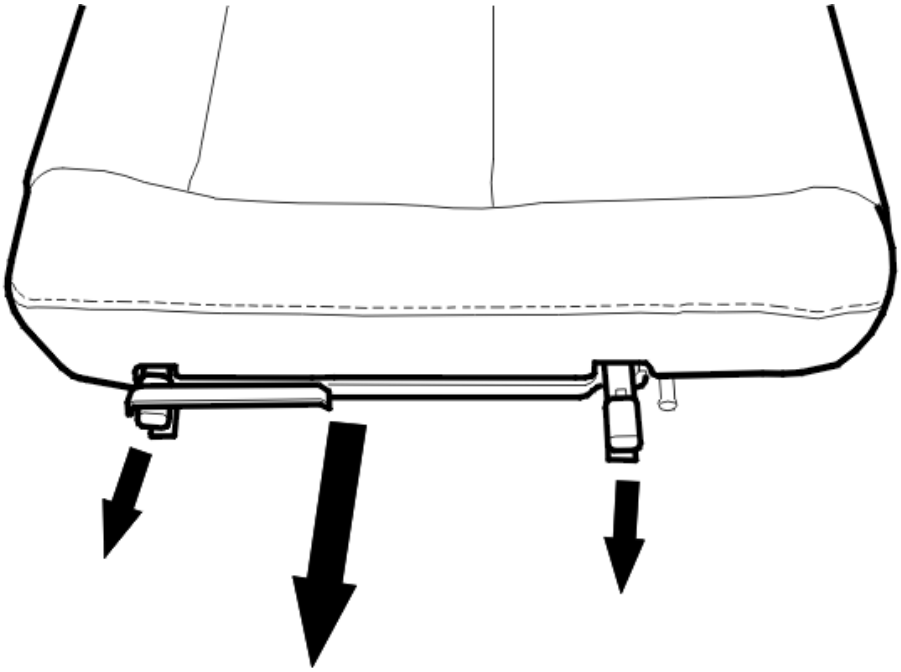

Fig. 333: Sliders On Each Side Of Guide Rail
Courtesy of VOLVO CARS CORPORATION

- the 2 sliders on each side
- the guide rail.

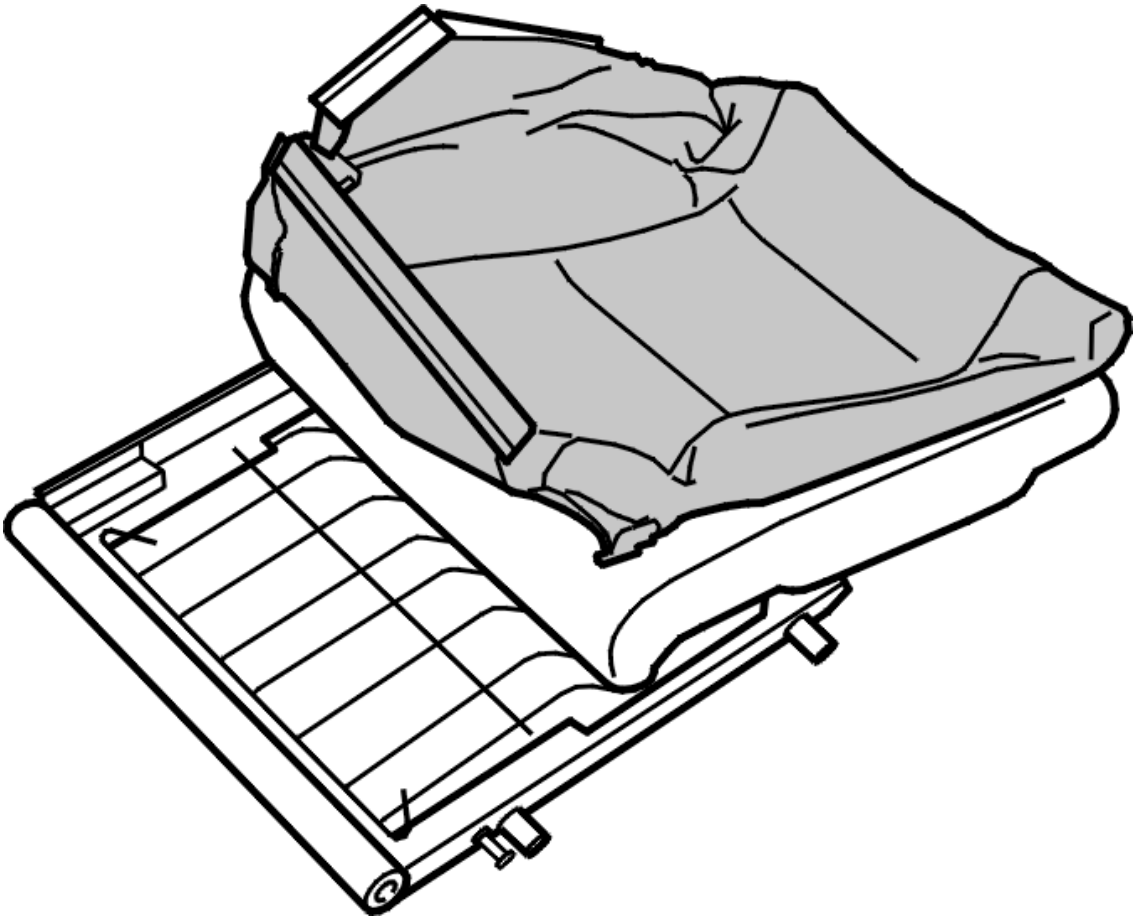

Fig. 334: Removing Upholstery From Cushion By Releasing Clips
Courtesy of VOLVO CARS CORPORATION

- the upholstery / cushion from the seat frame
- the upholstery from the cushion by releasing the 14 clips.

INSTALLING THE SEAT CUSHION UPHOLSTERY (THIRD ROW)

NOTE: For tightening torques, see TIGHTENING TORQUE .

Install:

- the upholstery on the cushion using the 14 clips
- the cushion / upholstery on the seat frame.

HINT: Start with the small weatherstrips in the corners.

Install:

- the guide rail
- the slider

- the seat cushion on the seat frame
- the outer lock
- 1 M6 nut
- the 2 M6 screws. Tighten
- the inner lock
- 2 M6 nuts
- 1 M6 screw. Tighten
- the center storage compartment
- the 2 M5 screws. Tighten
- the outer bracket. Press into place
- 1 M6 screw. Tighten.

UPHOLSTERY SEAT CUSHION CENTER (SECOND ROW), REPLACING

REPLACING

As the illustrations in this service information are used for different model years and / or models, some variation may occur. However, the essential information in the illustrations is always correct.

PREPARATIONS

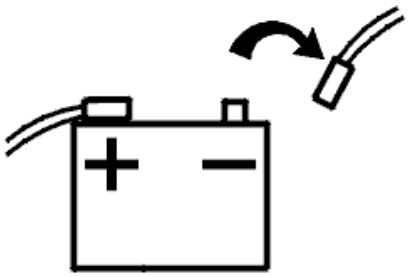

Fig. 335: Disconnecting Battery Lead
Courtesy of VOLVO CARS CORPORATION

Remove:

- the battery lead. See **BATTERY, DISCONNECTING**
- the center seat. See **REMOVING THE CENTER SEAT (SECOND ROW)**.

REMOVING THE UPHOLSTERY FROM THE CENTER SEAT CUSHION (SECOND ROW)

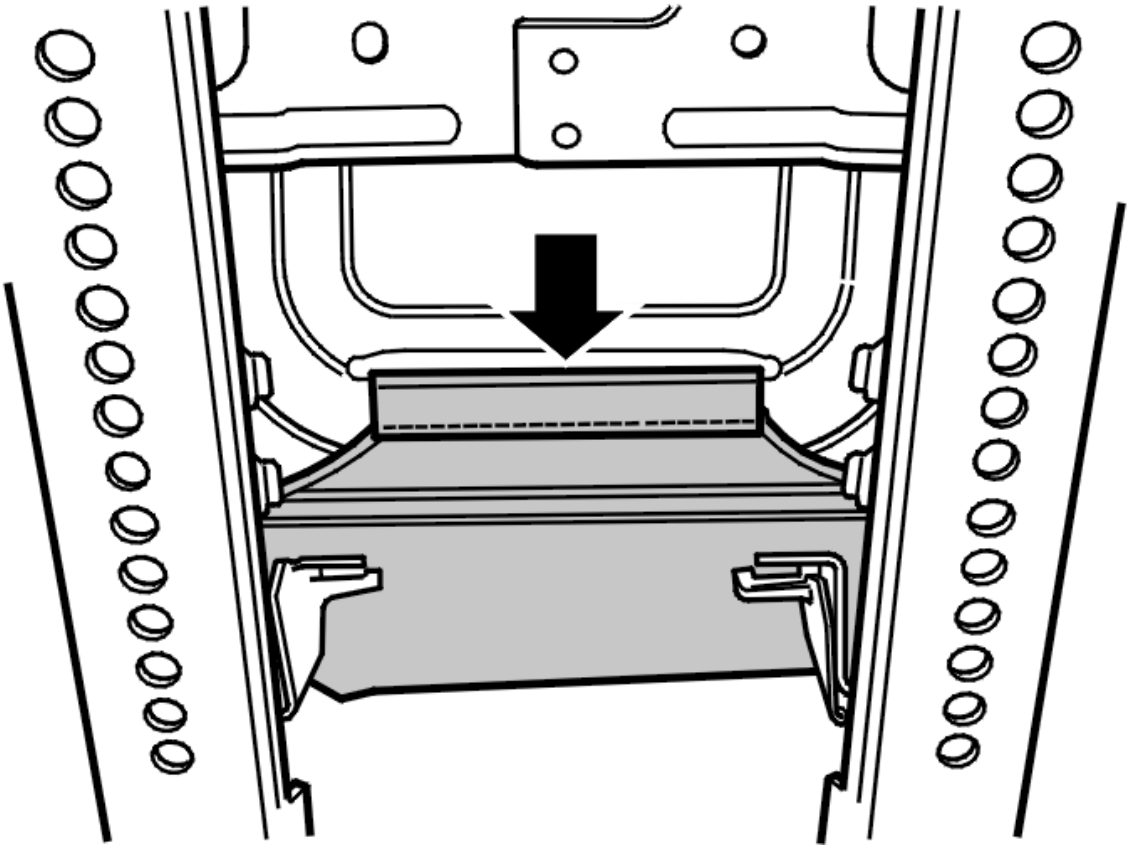

Fig. 336: Weatherstrip
Courtesy of VOLVO CARS CORPORATION

Detach the weatherstrip.

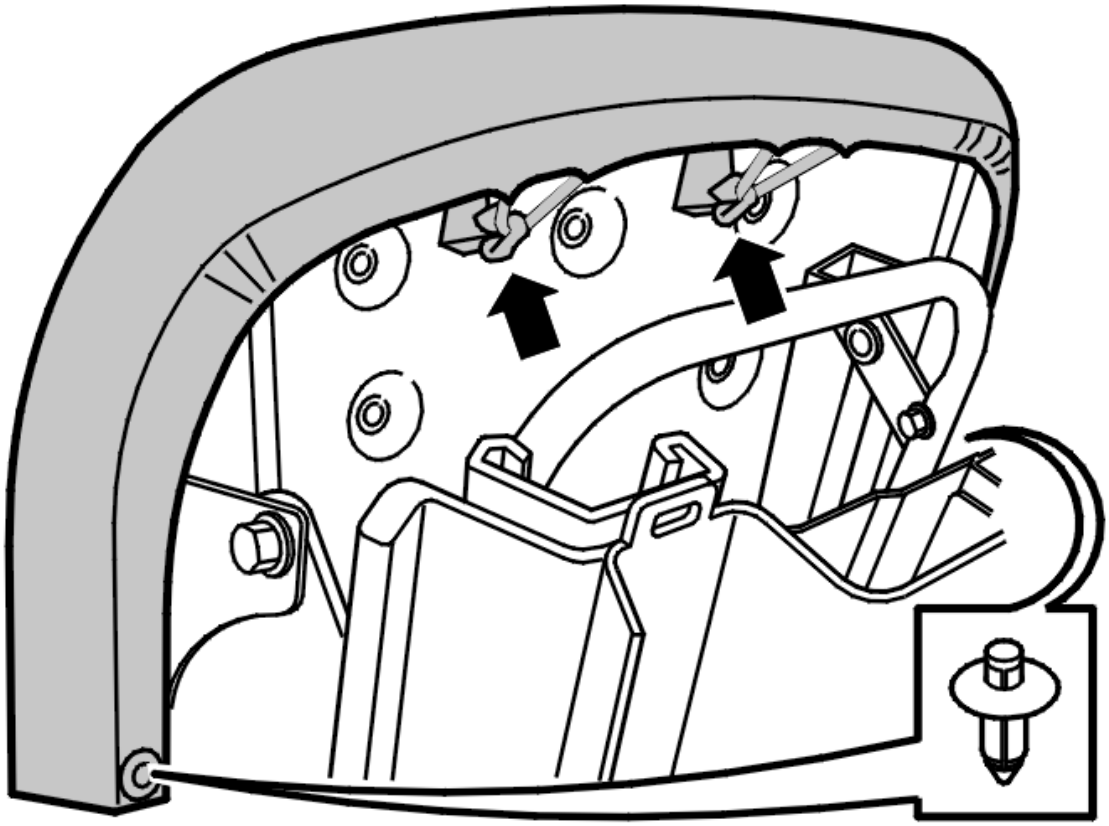

Fig. 337: Hooks & Clips
Courtesy of VOLVO CARS CORPORATION

Remove:

- the 2 hooks
- the 2 clips.

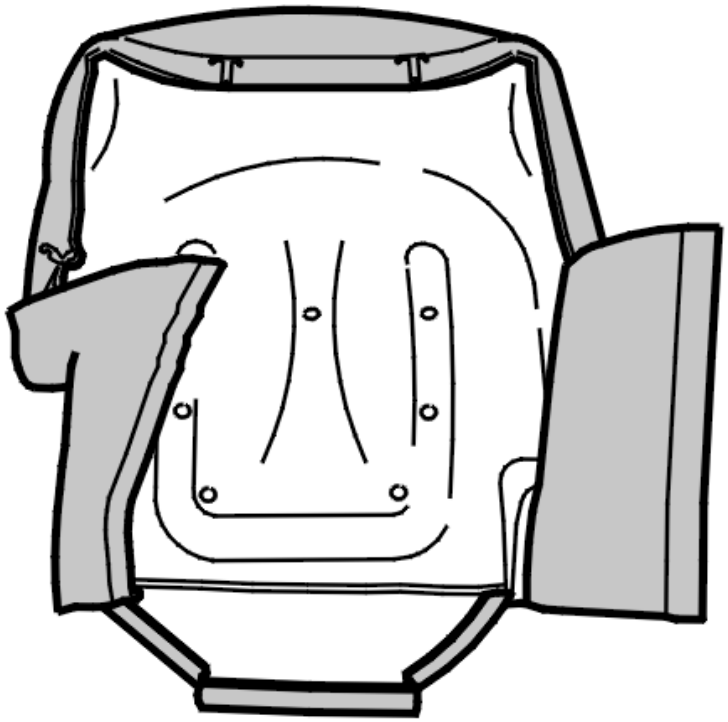

Fig. 338: Upholstery Cushion From Seat Frame
Courtesy of VOLVO CARS CORPORATION

- the upholstery / cushion from the seat frame
- the upholstery from the cushion.

Detach the upholstery from the clips in the cushion.

INSTALLING THE UPHOLSTERY ON THE CENTER SEAT CUSHION (SECOND ROW)

Install:

- the upholstery for the cushion
- the upholstery / cushion on the seat frame
- the 2 hooks
- the 2 clips
- the weatherstrip
- the center seat. See **INSTALLING THE CENTER SEAT (SECOND ROW)**.

UPHOLSTERY SEAT CUSHION OUTER (SECOND ROW), REPLACING

REPLACING

The illustrations in this service information are used for different model years and/or models. Some variation may occur. However, the essential information in the illustrations is always correct.

PREPARATIONS

Remove the seat. See **REMOVING THE OUTER SEAT (SECOND ROW)**.

REMOVING THE UPHOLSTERY FROM THE OUTER SEAT CUSHION (SECOND ROW)

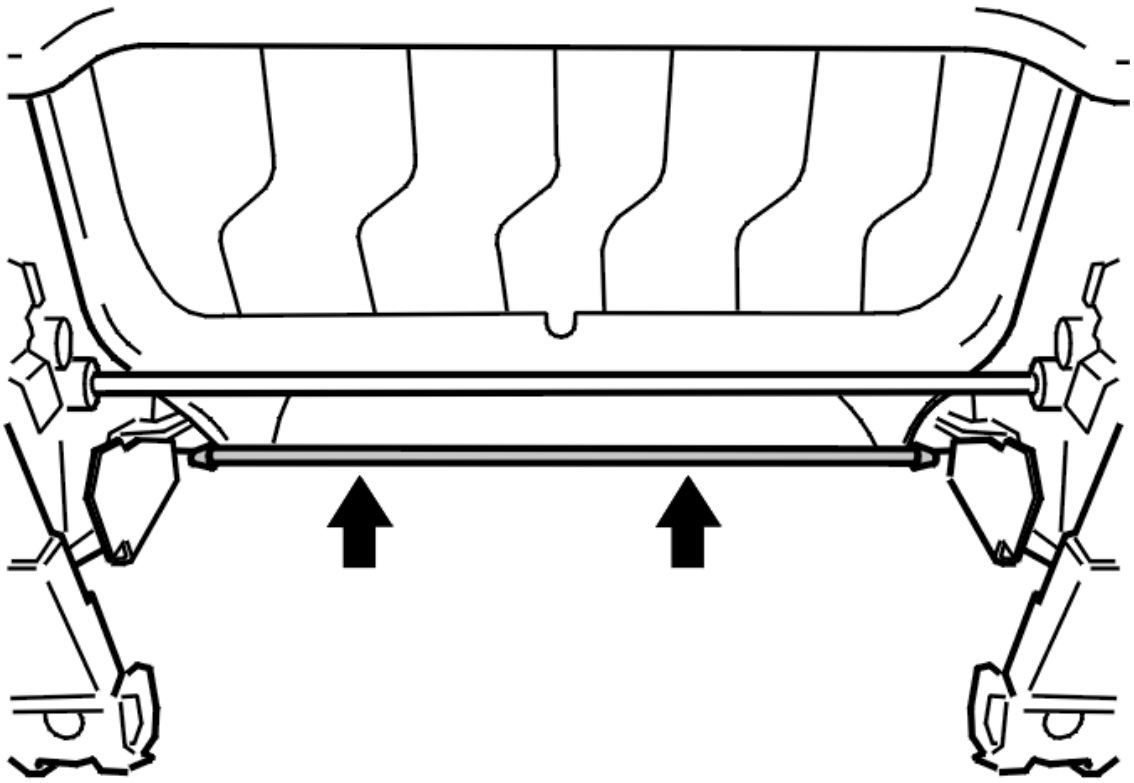

Fig. 339: Weatherstrip
Courtesy of VOLVO CARS CORPORATION

Remove:

- the weatherstrip.

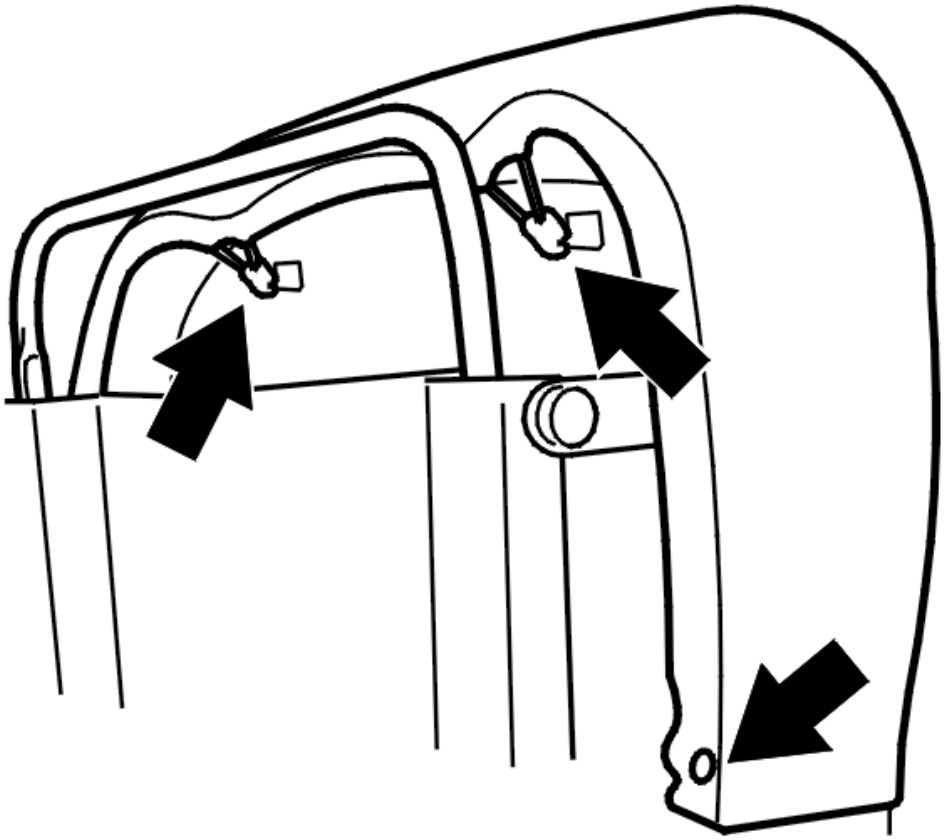

Fig. 340: Hooks & Clips (One On Each Side)
Courtesy of VOLVO CARS CORPORATION

- the 2 hooks
- the 2 clips (one on each side).

Fold up the upholstery.

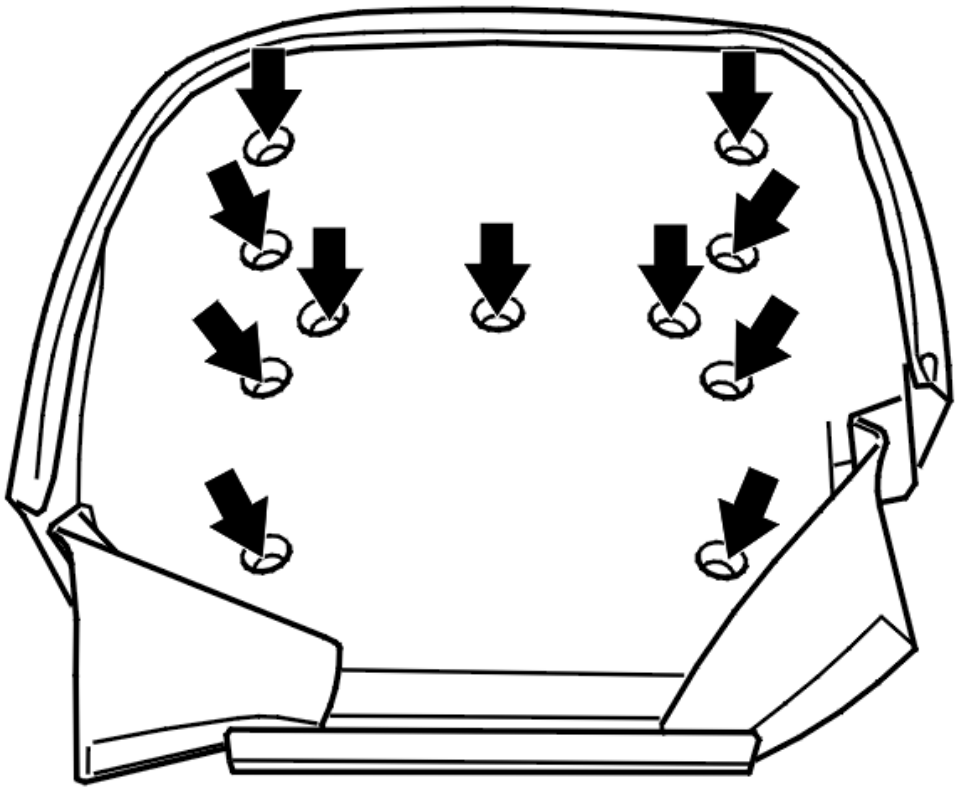

Fig. 341: Detaching Upholstery From Clips In Cushion
Courtesy of VOLVO CARS CORPORATION

Remove:

- the upholstery / cushion from the seat frame
- the upholstery from the cushion.

Detach the upholstery from the clips in the cushion.

INSTALLING SERVICE CLIPS

Install the service clips according to: **SERVICE CLIPS, INSTALLING**

INSTALLING THE UPHOLSTERY ON THE OUTER SEAT CUSHION (SECOND ROW), REPLACING

Install:

- the upholstery for the cushion
- the upholstery / cushion on the seat frame
- the weatherstrip.
- the 2 hooks
- the 2 clips (one on each side).

INSTALLING THE OUTER SEAT (SECOND ROW)

NOTE: For tightening torques, see TIGHTENING TORQUE .

Install:

- the seat. See **INSTALLING THE OUTER SEAT (SECOND ROW)**
- the side pieces on the seat.

ACCESSORIES AND EQUIPMENT

Interior - Specifications, Electrical/Electronic

SIGNAL DESCRIPTION

SIGNAL SPECIFICATION, POWER SEAT MODULE

CONNECTING THE BREAKOUT BOX AND CHECKING THE GROUND TERMINALS

It is important that the breakout box is connected according to **CONNECTING THE BREAKOUT BOX, POWER SEAT MODULE (PSM)** and the ground terminals are checked according to **CHECKING GROUND POINTS** to before the readings are taken.

POWER SUPPLY

CONNECTOR, BLACK (2-PIN)

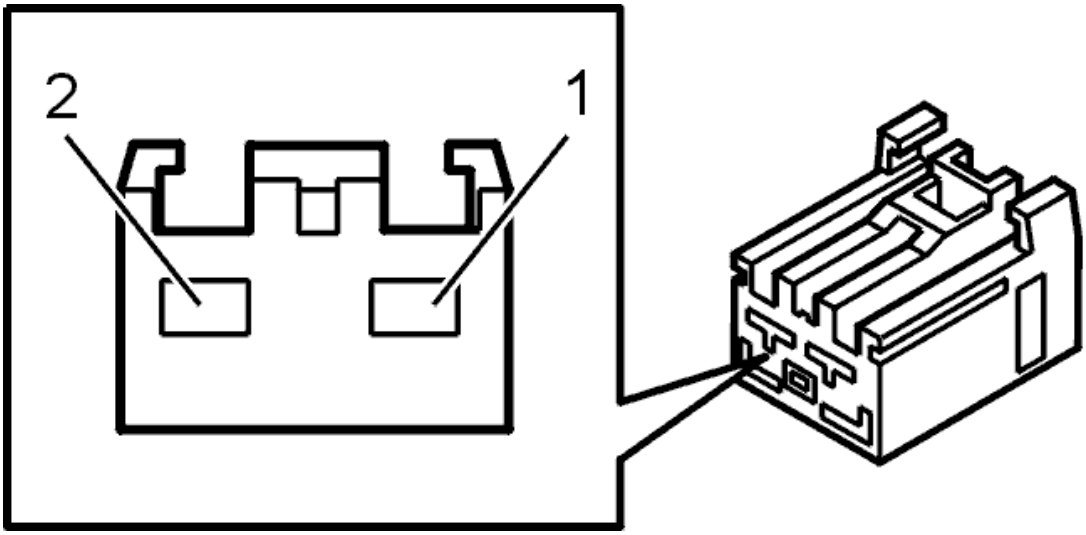

Fig. 1: Connector, Black (2-Pin)
Courtesy of VOLVO CARS CORPORATION

Before taking any readings, read, see **CONNECTING THE BREAKOUT BOX AND CHECKING THE GROUND TERMINALS**.

Terminals A1-A2 correspond to terminals 45-46 on the breakout box.

Terminal	Terminal on the breakout box	Signal	Ignition on	Idling	Other
#A1	#45	Battery supply (30), power	U = Ubat	U = Ubat	Passenger compartment fuse 4
#A2	#46	Ground supply	U = Ulow	U = Ulow	-

		(31), power			

SIGNAL SUPPLY

CONNECTOR, BLACK (4-PIN)

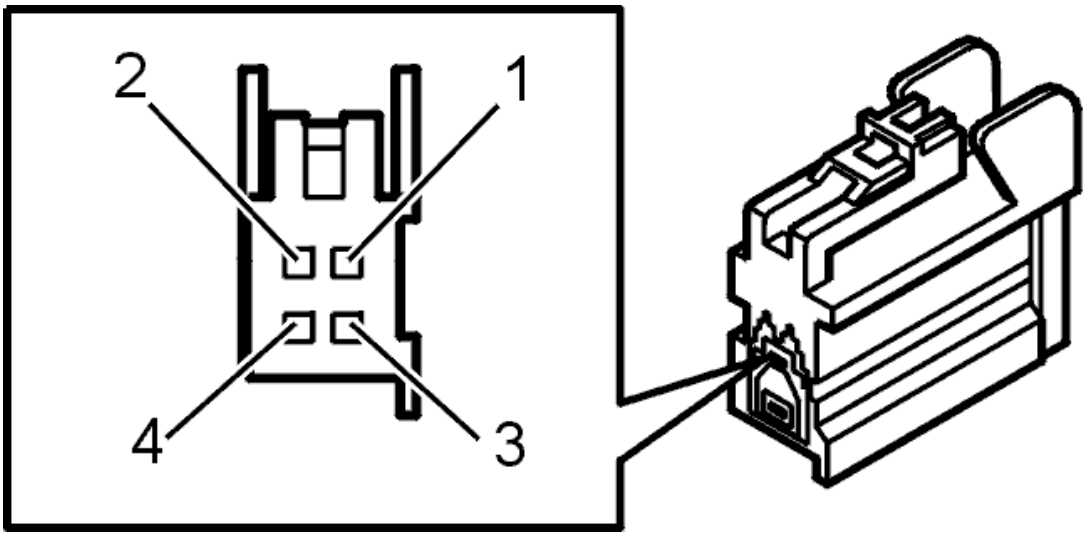

Fig. 2: Connector, Black (4-Pin)
Courtesy of VOLVO CARS CORPORATION

Before taking any readings, read, see **CONNECTING THE BREAKOUT BOX AND CHECKING THE GROUND TERMINALS**.

Terminals B1-B4 correspond to terminals 39-42 on the breakout box.

Terminal	Terminal on the breakout box	Signal type	Ignition on	Idling	Other
#B1	#39	Signal supply (Ext X)	U = Ubat	U = Ubat	Passenger compartment fuse 24
#B2	#40	Control modules communication cable (CAN H)	U=1.5-2.0 V	U=1.5-2.0 V	-
#B3	#41	Control modules communication cable (CAN L)	U=1.5-2.0 V	U=1.5-2.0 V	-
#B4	#42	Ground supply (31)	U = Ulow	U = Ulow	-

INPUT SIGNALS FROM THE CONTROL PANEL

CONNECTOR, GREEN (16-PIN)

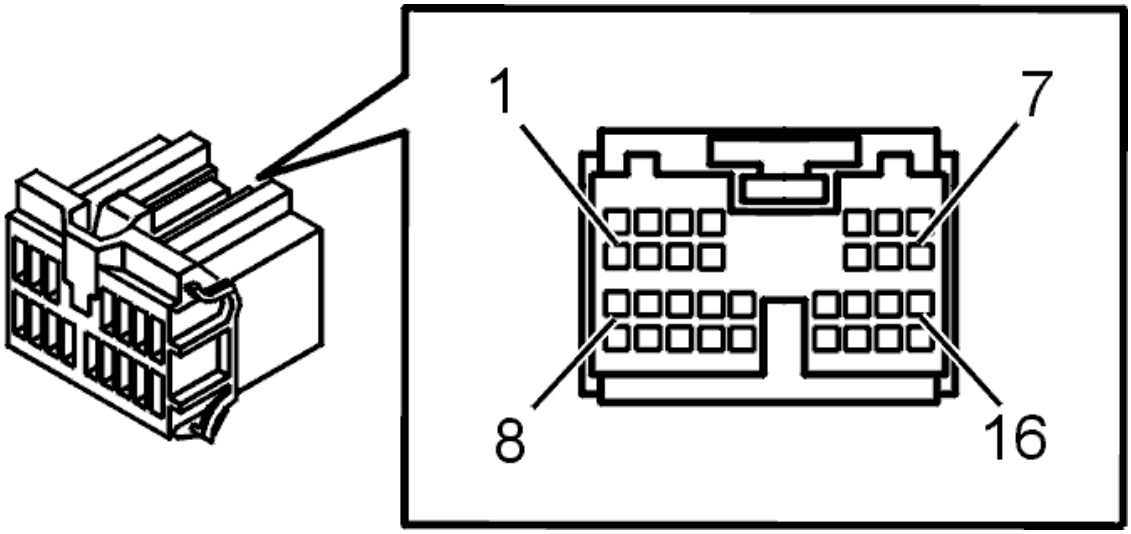

Fig. 3: Connector, Green (16-Pin)
Courtesy of VOLVO CARS CORPORATION

Before taking any readings, read, see **CONNECTING THE BREAKOUT BOX AND CHECKING THE GROUND TERMINALS**.

Terminals C1-C16 correspond to terminals 25-40 on the breakout box.

Terminal	Terminal on the breakout box	Signal type	Not operated	During operation	Other
#C1	#25	Memory button 2 (2)	U= 5 V	U = Ulow	-
#C2	#26	Memory button 1 (1)	U= 5 V	U = Ulow	-
#C3	#27	Programming button	U= 5 V	U = Ulow	-
#C4	#28	Control panel connected control circuit (LH/RH IP)	U =1.5-2.0 V	U =1.5-2.0 V	With the control panel connected
#C5	#29	Control panel connected to control circuit (LH/RH OP)	U =1.5-2.0 V	U =1.5-2.0 V	With the control panel connected
#C6	#30	Control panel ground lead (R31)	U = Ulow	U = Ulow	-
#C7	#31	Control panel ground lead (R31)	U = Ulow	U = Ulow	-
#C8	#32	Control signal (R1+), front-rear adjustment forward	U = Ubat	U = Ulow	-
#C9	#33	Control signal (R1-), front-rear adjustment backward	U = Ubat	U = Ulow	-
#C10	#34	Control signal (R2+),	U = Ubat	U = Ulow	-

		backrest forward			
#C11	#35	Control signal (R2-), backrest backward	U = Ubat	U = Ulow	-
#C12	#36	Control signal (R3+), rear height adjustment upwards	U = Ubat	U = Ulow	-
#C13	#37	Control signal (R3-), rear height adjustment downward	U = Ubat	U = Ulow	-
#C14	#38	Control signal (R4+), front height adjustment upwards	U = Ubat	U = Ulow	-
#C15	#39	Control signal (R4-), front height adjustment downward	U= 5 V	U = Ulow	-
#C16	#40	Memory button 3 (3)	U= 5 V	U = Ulow	-

OUTPUT SIGNALS TO THE MOTORS

CONNECTOR, BLACK (8-PIN)

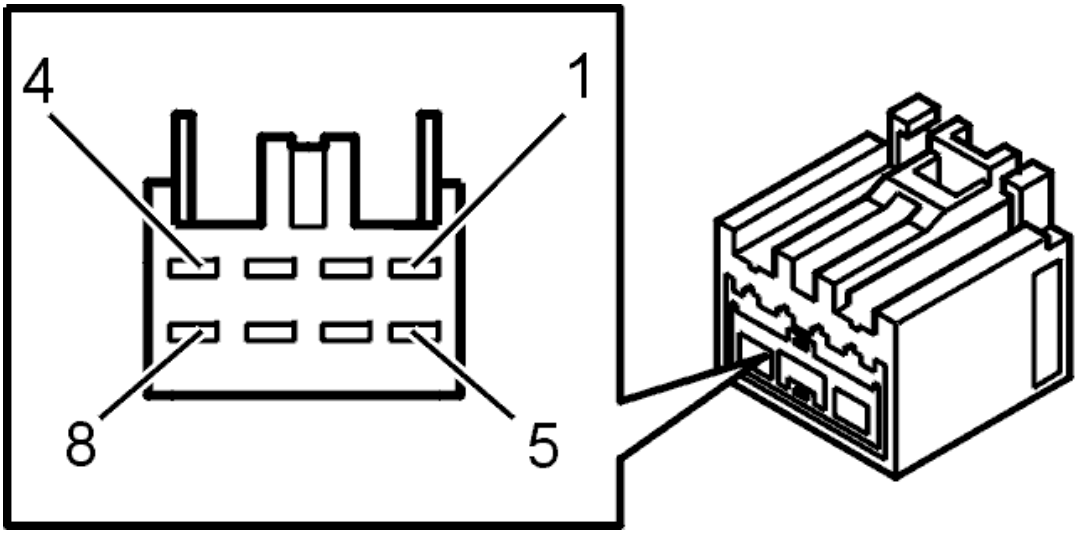

Fig. 4: Connector, Black (8-Pin)
Courtesy of VOLVO CARS CORPORATION

Before taking any readings, read, see **CONNECTING THE BREAKOUT BOX AND CHECKING THE GROUND TERMINALS**.

Terminals D1-D8 correspond to terminals 29-36 on the breakout box.

Terminal	Terminal on	Signal type	Not operated	During	Other

	the breakout box			operation	
#D1	#29	Positive power supply (M2+), front backrest motor	U = Ulow	U = Ubat	-
#D2	#30	Negative supply (M2-), rear backrest motor	U = Ulow	U = Ubat	-
#D3	#31	Signal (H2+), hall sensor 2	U = Ubat	A pulsed signal with duty = 50% f<= 100 Hz	One pulse/engine revolution High pulse value: Ubat Low pulse value: 7.0-9.0 V (60-70% of Ubat
#D4	#32	Signal ground (H2G), hall sensor 2	U = Ulow	U = Ulow	-
#D5	#33	-	-	-	-
#D6	#34	-	-	-	-
#D7	#35	-	-	-	-
#D8	#36	-	-	-	-

CONNECTOR, BLACK (12-PIN)

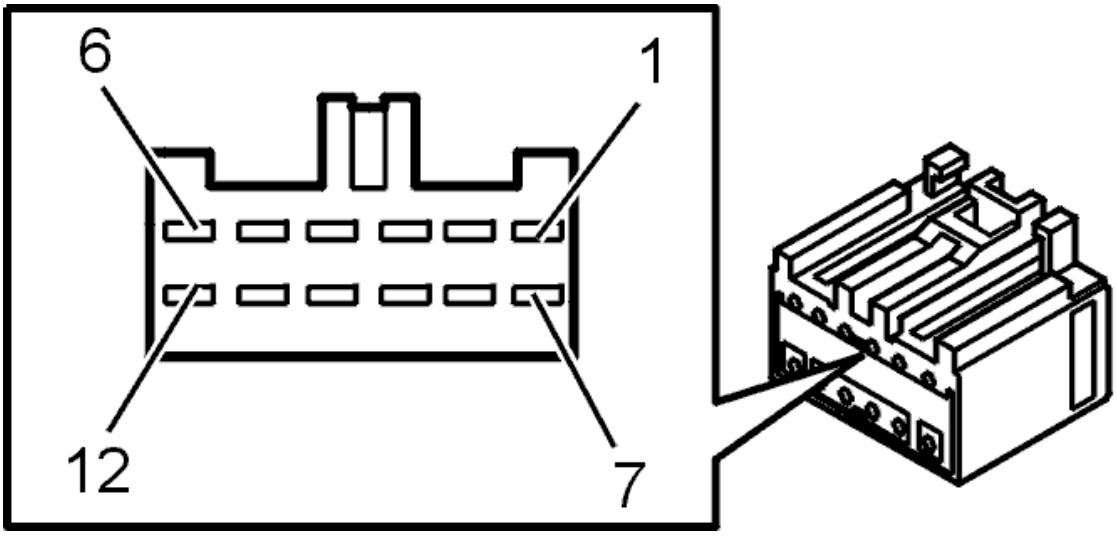

Fig. 5: Audio Control Module (AUM)/External Amplifier To Loudspeakers, Gray Connector
Courtesy of VOLVO CARS CORPORATION

Before taking any readings, read, see **CONNECTING THE BREAKOUT BOX AND CHECKING THE GROUND TERMINALS**.

Terminals E1-E12 correspond to terminals 15-26 on the breakout box.

Terminal	Terminal on the breakout box	Signal type	Not operated	During operation	Other
#E1	#15	Positive power supply (M1+), motor for front-rear adjustment, forward	U = Ulow	U = Ubat	-
#E2	#16	Negative supply (M1-), motor for front-rear adjustment, back	U = Ulow	U = Ubat	-
#E3	#17	Signal (H1+), hall sensor 1	U = Ubat	A pulsed signal with duty = 50% f<= 100 Hz	One pulse/engine revolution High pulse value: Ubat Low pulse value: 7.0-9.0 V (60-70% of Ubat
#E4	#18	Signal ground (H1G), hall sensor 1	U = Ulow	U = Ulow	-
#E5	#19	Positive power supply (M3+), motor for rear height adjustment, up	U = Ulow	U = Ubat	-
#E6	#20	Negative supply (M3-), motor for rear height adjustment, down	U = Ulow	U = Ubat	-
#E7	#21	Signal (H3+), hall sensor 3	U = Ubat	A pulsed signal with duty = 50% f<= 100 Hz	One pulse/engine revolution High pulse value: Ubat Low pulse value: 7.0-9.0 V (60-70% of Ubat
#E8	#22	Signal ground (H3G), hall sensor 3	U = Ulow	U = Ulow	-
#E9	#23	Positive power supply (M4+), motor for front	U = Ulow	U = Ubat	-

		height adjustment, down			
#E10	#24	Negative supply (M4-), front height adjustment motor down	U = Ulow	U = Ubat	-
#E11	#25	Signal (H4+), hall sensor 4	U = Ubat	A pulsed signal with duty = 50% f<= 100 Hz	One pulse/engine revolution High pulse value: Ubat Low pulse value: 7.0-9.0 V (60-70% of Ubat
#E12	#26	Signal ground (H4S), hall sensor 4	U = Ulow	U = Ulow	-

ACCESSORIES AND EQUIPMENT

Interior - Specifications, Other

READING OFF EXTENDED DIAGNOSTIC TROUBLE CODE (DTC) INFORMATION, POWER SEAT MODULE (2003-12)

READING OFF EXTENDED DIAGNOSTIC TROUBLE CODE (DTC) INFORMATION, POWER SEATS

CONTENTS

Select type of description.

- see **FROZEN VALUES IN THE POWER SEAT MODULE, DESCRIPTION**
- see **COUNTERS, DESCRIPTION**
- see **STATUS IDENTIFIER, DESCRIPTION**

FROZEN VALUES IN THE POWER SEAT MODULE, DESCRIPTION

EXPLANATION

Not all the parameters described need to be implemented in the control module. This varies from system to system.

Frozen values are parameter values that are stored when a diagnostic trouble code (DTC) is stored.

BATTERY VOLTAGE, VALUE

Measurement range: 0-25.5 V

Normal value when the generator (GEN) is charging: 13.0-14.5 V

DISTANCE, VALUE

Measurement range: 0-1048575 km

The value indicates the total mileage of the car at the time the diagnostic trouble code (DTC) was stored.

PASSENGER COMPARTMENT TEMPERATURE, VALUE

Measurement range: -60 to +195°C

OUTSIDE TEMPERATURE, VALUE

Measurement range: -128 to +127.75°C

ENGINE RUNNING, STATUS

The status displays whether the engine was running when the diagnostic trouble code (DTC) was stored.

No = the engine was not running

Yes = the engine was running

TIME, VALUE

The value displays the time that has passed since the diagnostic trouble code (DTC) was stored.

CONTROL PANEL, MEMORY BUTTON 1

Indicates whether the button for memory button 1 was activated when the diagnostic trouble code (DTC) was stored.

CONTROL PANEL, MEMORY BUTTON 2

Indicates whether the button for memory button 2 was activated when the diagnostic trouble code (DTC) was stored.

CONTROL PANEL, MEMORY BUTTON 3

Indicates whether the button for memory button 3 was activated when the diagnostic trouble code (DTC) was stored.

CONTROL PANEL, PROGRAMMING BUTTON

Indicates whether the button for programming memory functions was activated when the diagnostic trouble code (DTC) was stored.

CONTROL PANEL, FRONT-REAR ADJUSTMENT FORWARD (M1+)

Indicates whether the button controlling forward front-rear adjustment was activated when the diagnostic trouble code (DTC) was stored.

CONTROL PANEL, FRONT-REAR ADJUSTMENT BACKWARD (M1-)

Indicates whether the button controlling backward front-rear adjustment was activated when the diagnostic trouble code (DTC) was stored.

CONTROL PANEL, BACKREST ADJUSTMENT FORWARD (M2+)

Indicates whether the button controlling forward backrest adjustment was activated when the diagnostic trouble code (DTC) was stored.

CONTROL PANEL, BACKREST ADJUSTMENT BACKWARD (M2-)

Indicates whether the button controlling backward backrest adjustment was activated when the diagnostic trouble code (DTC) was stored.

CONTROL PANEL, REAR HEIGHT ADJUSTMENT FORWARD (M3+)

Indicates whether the button controlling upward rear height adjustment was activated when the diagnostic trouble code (DTC) was stored.

CONTROL PANEL, REAR HEIGHT ADJUSTMENT BACKWARD (M3-)

Indicates whether the button controlling downward rear height adjustment was activated when the diagnostic trouble code (DTC) was stored.

CONTROL PANEL, FRONT HEIGHT ADJUSTMENT FORWARD (M4+)

Indicates whether the button controlling upward front height adjustment was activated when the diagnostic trouble code (DTC) was stored.

CONTROL PANEL, REAR HEIGHT ADJUSTMENT BACKWARD (M4-)

Indicates whether the button controlling downward front height adjustment was activated when the diagnostic trouble code (DTC) was stored.

ACCESSORIES AND EQUIPMENT

Interior - Symptom Related Diagnostic Procedures

CHECKING BATTERY VOLTAGE

CHECKING BATTERY VOLTAGE

CHECKING SUPPLY

Check passenger compartment fuse 4 (11C/4:2).

Check the cable between power seat connector A terminal 1 and passenger compartment fuse 4 (11C/4:2) for an open-circuit according to **OPEN-CIRCUIT, PERMANENT FAULTS** and also check the connector (54/24:1) for an open-circuit according to **OPEN-CIRCUIT, PERMANENT FAULTS**.

If the fuse has blown fault-trace for a short-circuit to ground according to **SHORT-CIRCUIT TO GROUND, PERMANENT FAULTS**.

Check passenger compartment fuse 24 (11C/24:2).

Check the cable between power seat supply relay (2/29) terminal 3 and passenger compartment fuse 24 (11C/24:2) for an open-circuit according to **OPEN-CIRCUIT, PERMANENT FAULTS**.

If the fuse has blown fault-trace for a short-circuit to ground according to **SHORT-CIRCUIT TO GROUND, PERMANENT FAULTS**.

Check that the relay is not defective.

Check cable between power seat supply relay (2/29) terminal 1 and power seat connector B terminal 1 for a short-circuit to ground, see **SHORT-CIRCUIT TO GROUND, PERMANENT FAULTS** and an open-circuit according to **OPEN-CIRCUIT, PERMANENT FAULTS** and also check connector (54/24:2).

Check cable between power seat connector B terminal 4 and ground and the cable between power seat connector A terminal 2 and ground for a short-circuit to supply voltage, see **SHORT-CIRCUIT TO SUPPLY VOLTAGE. PERMANENT FAULTS** and an open-circuit according to **OPEN-CIRCUIT, PERMANENT FAULTS**.

Remedy as necessary.

Other information:

- For information about connectors/signals, see **SIGNAL SPECIFICATION, POWER SEAT MODULE** .
- Breakout box connection, refer to **CONNECTING THE BREAKOUT BOX, POWER SEAT MODULE (PSM)** .

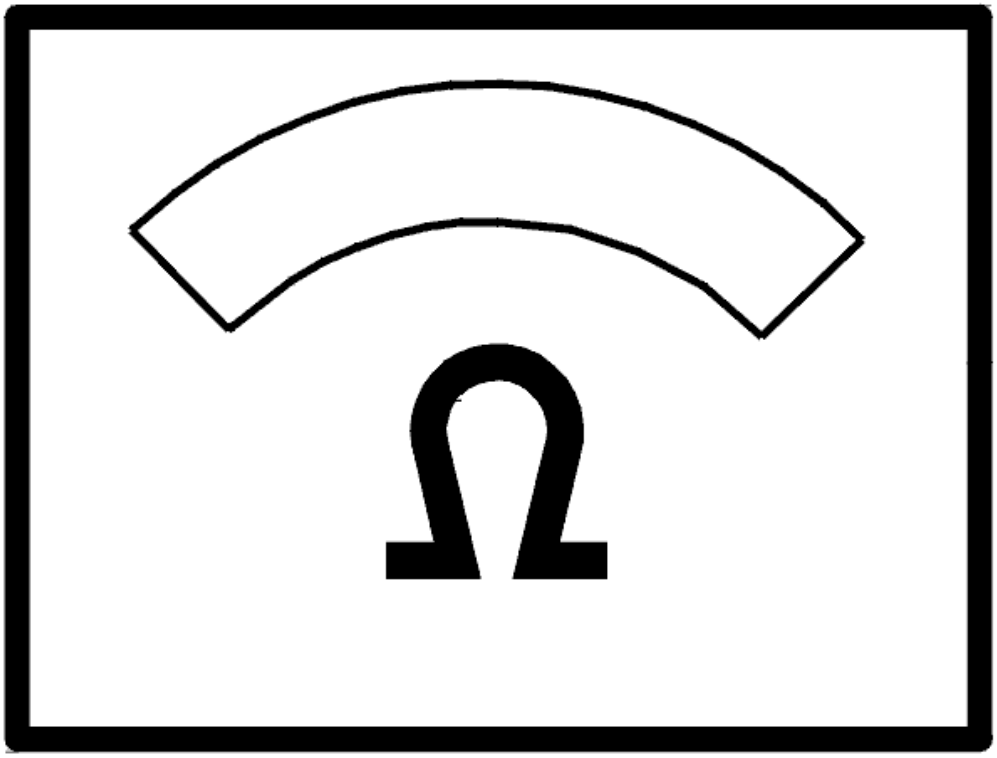

Fig. 1: Identifying Ohmmeter
Courtesy of VOLVO CARS CORPORATION

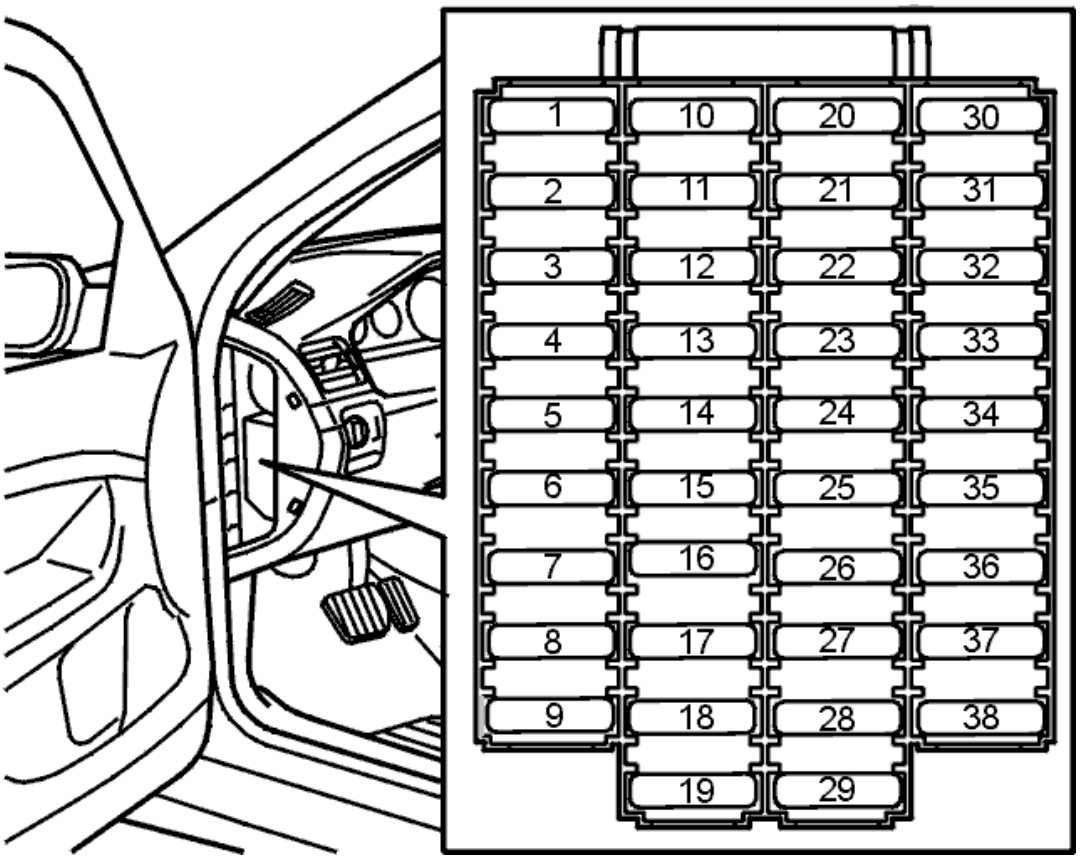

Fig. 2: Fuse Holder (Passenger Compartment)
Courtesy of VOLVO CARS CORPORATION

FAULT-TRACING INFORMATION

Condition

Possible Source

- Burnt out fuse
- Open-circuit
- Short-circuit to ground
- Short-circuit to supply voltage.

Fault symptom[s]

- The seat does not function at all.

CHECKING CONTROL BUTTONS

CHECKING THE CONTROL BUTTONS

CHECKING THE CONTROL PANEL

Check if the signal from the control panel is received by the control module.

Read off the value.

HINT: When checking the control panel, check if the resistance between terminal #6C and the terminal pin is 0 ohms. OFF is displayed when there is a short-circuit to supply voltage. ON is displayed when there is a short-circuit to ground.

When operated, the value should oscillate between ON and OFF.

Other information:

- For information about signals, see **INPUT SIGNALS FROM THE CONTROL PANEL**
- To connect the breakout box, see **CONNECTING THE BREAKOUT BOX, POWER SEAT MODULE (PSM)** .

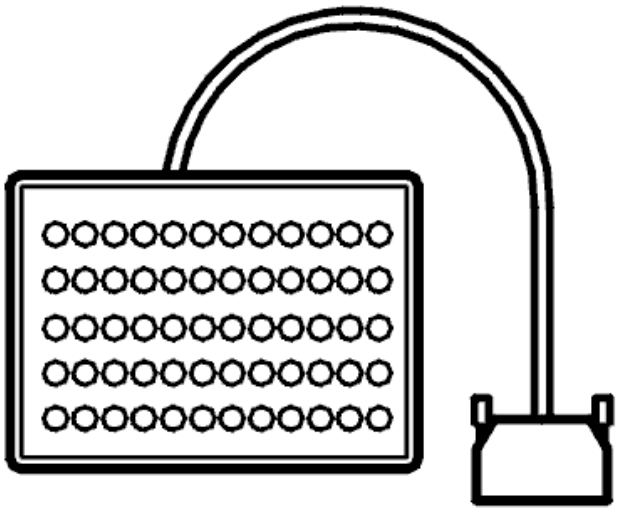

Fig. 3: Breakout Box
Courtesy of VOLVO CARS CORPORATION

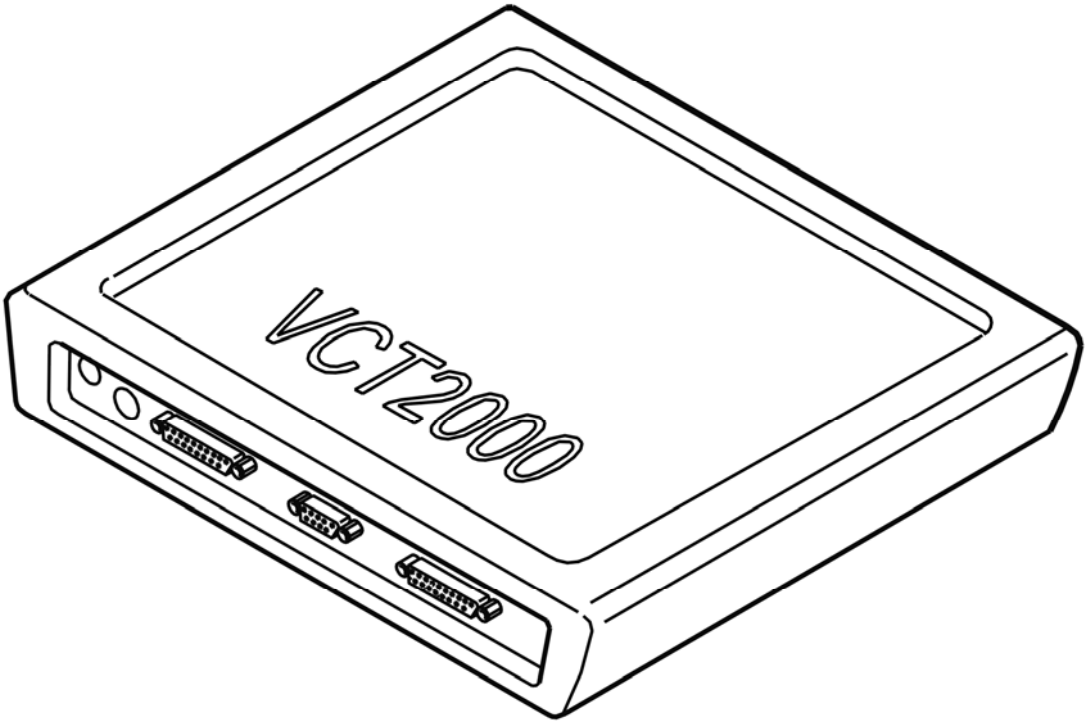

Fig. 4: Identifying VCT2000 Diagnostic Tool Symbol In VIDA
Courtesy of VOLVO CARS CORPORATION

Does the value change?

- **YES**

  OKAY: Troubleshooting has been completed.

- **NO**

  Refer to **REPLACE THE CONTROL PANEL**

REPLACE THE CONTROL PANEL

Replace the control panel. See **SIDE PANEL, REPLACING** (-2004) or **SIDE PANEL FRONT SEAT, REPLACING** (2005-).

FAULT-TRACING INFORMATION

Condition

No diagnostic trouble codes (DTCs) stored.

Possible Source

- Open-circuit
- Short-circuit to ground
- Short-circuit to supply voltage

Fault symptom[s]

- Automatic seat operation does not function.

CHECKING CURRENT VALUES

CHECKING CURRENT VALUES

NOTE: **It is extremely important that the current level for short-circuit detection is not exceeded if a diagnostic trouble code (DTC) has been generated. If the customer complains that the seat does not function properly at high load or in extreme climates, it is possible to change the maximum current level to the motors.**

Select which motor you wish to program:

1. Motor 1. Refer to **PROGRAMMING A MOTOR**.
2. Motor 2. Refer to **PROGRAMMING A MOTOR**.
3. Motor 3. Refer to **PROGRAMMING A MOTOR**.
4. Motor 4. Refer to **PROGRAMMING A MOTOR**

PROGRAMMING A MOTOR

Read the current level for short-circuit detection and, if necessary, program the current level of the blocked motor by clicking the VCT 2000 symbol.

1. Program another motor. Refer to **CHECKING CURRENT VALUES**.
2. Exit. Troubleshooting has been completed.

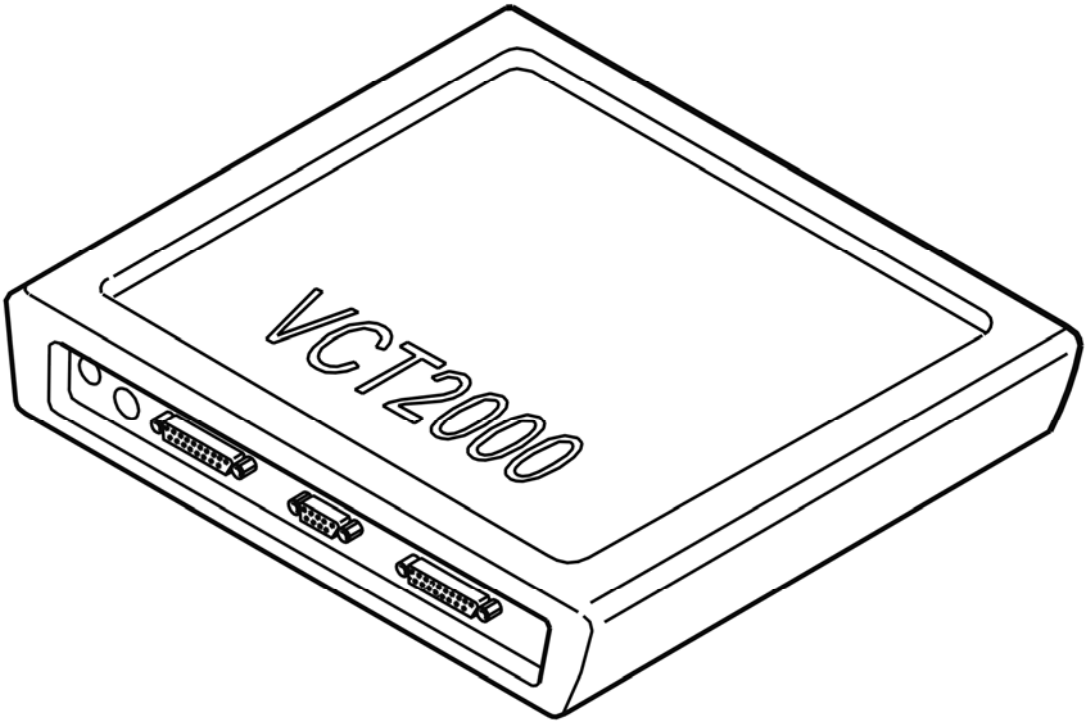

Fig. 5: Identifying VCT2000 Diagnostic Tool Symbol In VIDA
Courtesy of VOLVO CARS CORPORATION

PROGRAMMING A MOTOR

Read the current level for short-circuit detection and, if necessary, program the current level of the blocked motor by clicking the VCT 2000 symbol.

1. Program another motor. Refer to **CHECKING CURRENT VALUES**.
2. Exit. Troubleshooting has been completed.

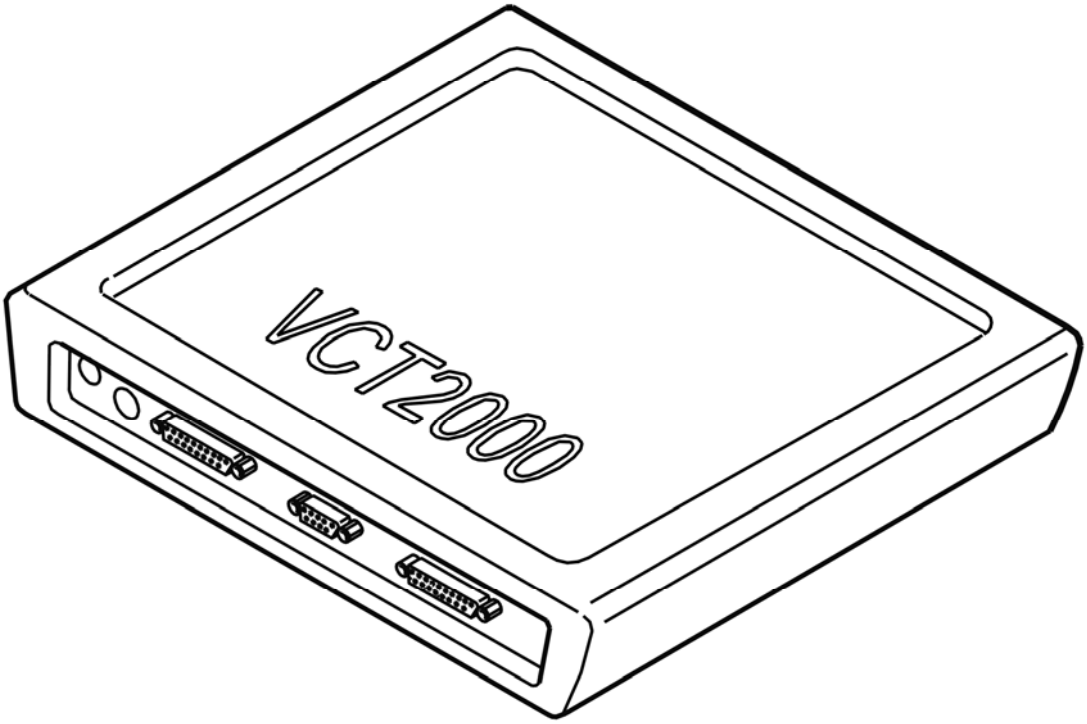

Fig. 6: Identifying VCT2000 Diagnostic Tool Symbol In VIDA
Courtesy of VOLVO CARS CORPORATION

PROGRAMMING A MOTOR

Read the current level for short-circuit detection and, if necessary, program the current level of the blocked motor by clicking the VCT 2000 symbol.

1. Program another motor. Refer to **CHECKING CURRENT VALUES**.
2. Exit. Troubleshooting has been completed.

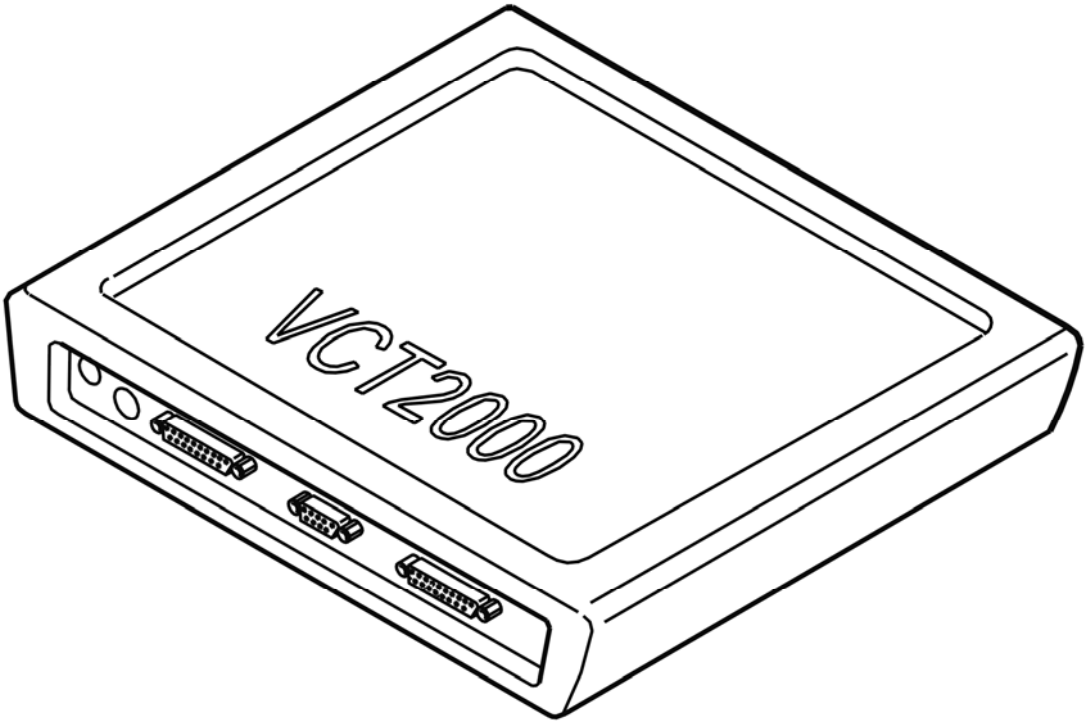

Fig. 7: Identifying VCT2000 Diagnostic Tool Symbol In VIDA
Courtesy of VOLVO CARS CORPORATION

PROGRAMMING A MOTOR

Read the current level for short-circuit detection and, if necessary, program the current level of the blocked motor by clicking the VCT 2000 symbol.

1. Program another motor. Refer to **CHECKING CURRENT VALUES**.
2. Exit. Troubleshooting has been completed.

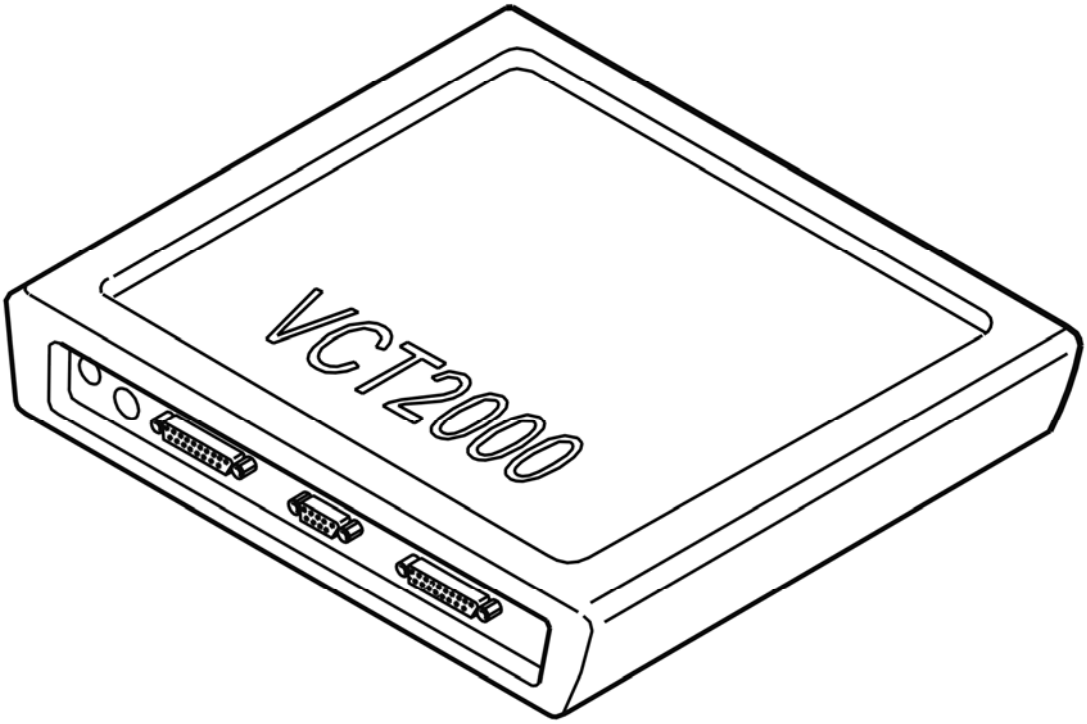

Fig. 8: Identifying VCT2000 Diagnostic Tool Symbol In VIDA
Courtesy of VOLVO CARS CORPORATION

CHECKING GROUND LEAD TO CONTROL PANEL

CHECKING GROUND LEAD TO CONTROL PANEL

HINT: None of the control buttons work if there is an open-circuit in the cable.

Check the cable between connector C terminal #6 and ground and terminal #7 and ground. Check for an open-circuit. See **OPEN-CIRCUIT, PERMANENT FAULTS**. Check for a short-circuit to supply voltage. See **SHORT-CIRCUIT TO SUPPLY VOLTAGE. PERMANENT FAULTS**.

Remedy as necessary.

If no fault is found in the wiring replace control panel.

Other information:

- To replace the control panel, see **SIDE PANEL, REPLACING** (-2004) or **SIDE PANEL FRONT SEAT, REPLACING** (2005-)
- For information about connectors/signals, see **INPUT SIGNALS FROM THE CONTROL PANEL** .

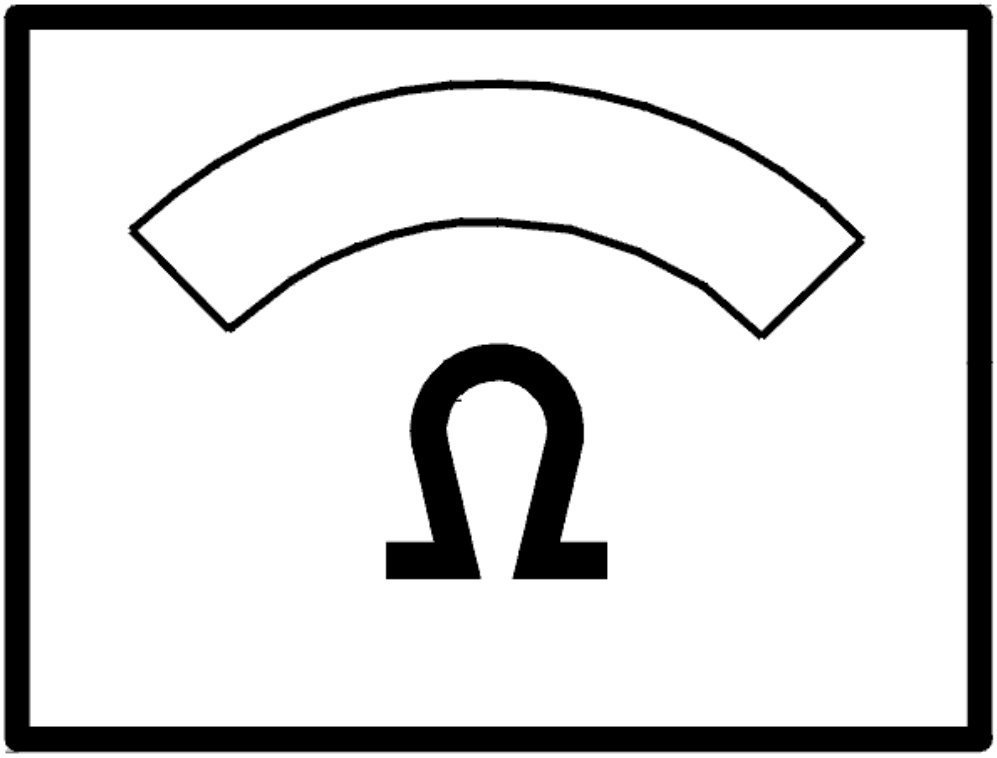

Fig. 9: Identifying Ohmmeter
Courtesy of VOLVO CARS CORPORATION

FAULT-TRACING INFORMATION

Condition

Possible Source

- Open-circuit
- Short-circuit to ground
- Short-circuit to supply voltage.

Fault symptom[s]

- Automatic seat operation does not function.

CHECKING PROGRAMMED SEAT VALUES

CHECKING PROGRAMMED SEAT VALUES

The actual values of the seat can be read off and compared with the programmed seat position. The control module derives both the present value and the programmed value from the number of motor revolutions. The control module stores one value per motor.

Memories 1, 2 or 3 can be read off.

Select the memory you wish to compare with the present seat position

1. Memory 1. Refer to **CHECKING PROGRAMMED SEAT VALUES (MEMORY 1)**.
2. Memory 2. Refer to **CHECKING PROGRAMMED SEAT VALUES (MEMORY 2)**.
3. Memory 3. Refer to **CHECKING PROGRAMMED SEAT VALUES (MEMORY 3)**

CHECKING PROGRAMMED SEAT VALUES (MEMORY 1)

If there are no programmed positions there need not be a fault with the seat.

Read off programmed values.

Operate the seat and reprogram the memory.

Compare the current position with the programmed position for each motor.

HINT: If all the values are zero it means that the seat is already in a programmed position. When programming the program value is changed to the present value.

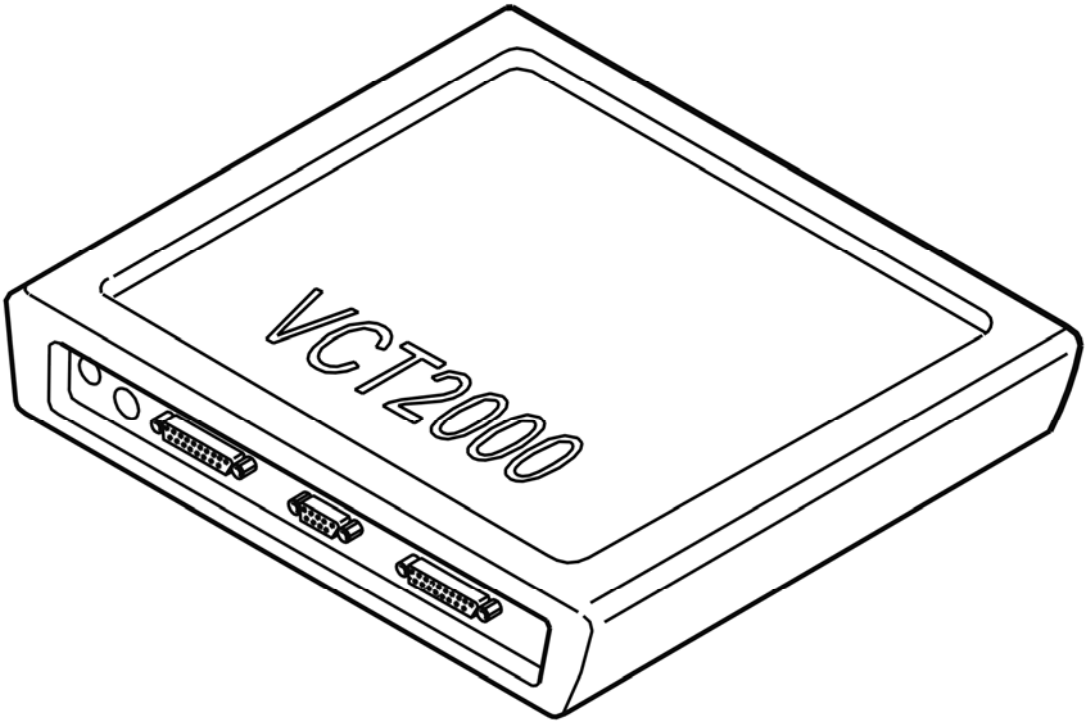

Fig. 10: Identifying VCT2000 Diagnostic Tool Symbol In VIDA
Courtesy of VOLVO CARS CORPORATION

Does the memory function correctly?

- **YES**

  OKAY: Troubleshooting has been completed.

- **NO**

  Refer to **REPLACING/PROGRAMMING THE CONTROL MODULE**

CHECKING PROGRAMMED SEAT VALUES (MEMORY 2)

If there are no programmed positions there need not be a fault with the seat.

Read off programmed values.

Operate the seat and reprogram the memory.

Compare the current position with the programmed position for each motor.

HINT: If all the values are zero it means that the seat is already in a programmed position. When

programming the program value is changed to the present value.

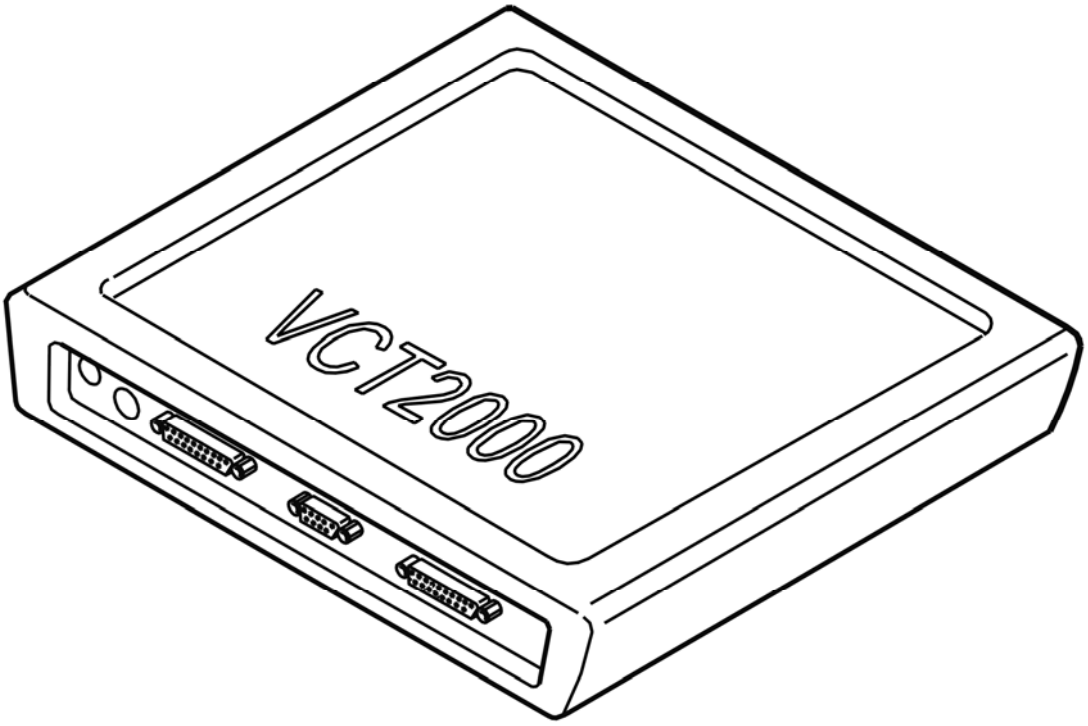

Fig. 11: Identifying VCT2000 Diagnostic Tool Symbol In VIDA
Courtesy of VOLVO CARS CORPORATION

Does the memory function correctly?

- **YES**

  OKAY: Troubleshooting has been completed.

- **NO**

  Refer to **REPLACING/PROGRAMMING THE CONTROL MODULE**

CHECKING PROGRAMMED SEAT VALUES (MEMORY 3)

If there are no programmed positions there need not be a fault with the seat.

Read off programmed values.

Operate the seat and reprogram the memory.

Compare the current position with the programmed position for each motor.

HINT: If all the values are zero it means that the seat is already in a programmed position. When programming the program value is changed to the present value.

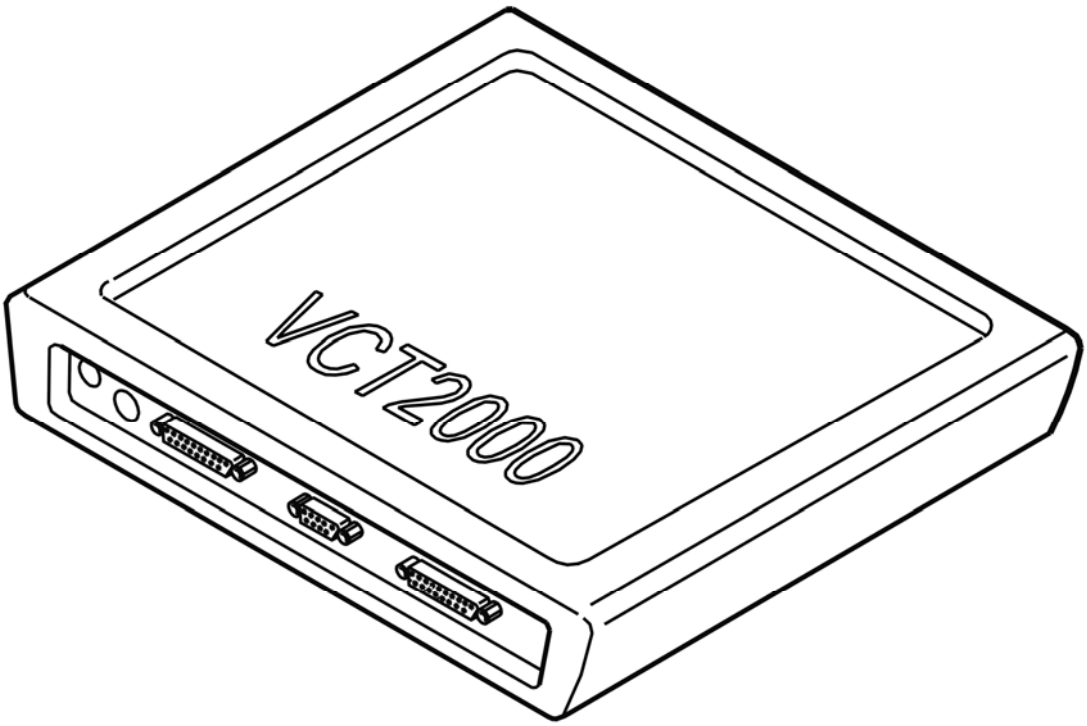

Fig. 12: Identifying VCT2000 Diagnostic Tool Symbol In VIDA
Courtesy of VOLVO CARS CORPORATION

Does the memory function correctly?

- **YES**

  OKAY: Troubleshooting has been completed.

- **NO**

  Refer to **REPLACING/PROGRAMMING THE CONTROL MODULE**

REPLACING/PROGRAMMING THE CONTROL MODULE

Replace/reprogram the control module. See **POWER SEAT MODULE (PSM), REPLACING** (-2004) or **POWER SEAT MODULE (PSM), REPLACING** (2005-).

FAULT-TRACING INFORMATION

Condition

No diagnostic trouble codes (DTCs) are stored in the power seat module.

Possible Source

- A power cut to the seat has erased the seat memory.

Fault symptom[s]

- Automatic seat operation does not function.

CHECKING SUPPLY GROUND LEAD

CHECKING SUPPLY GROUND LEAD

CHECKING WIRING AND COMPONENTS

Check ground leads between power seat and ground according to table below for an open-circuit according to **OPEN-CIRCUIT, PERMANENT FAULTS**.

Check connector.

Fault-trace for a short-circuit to supply voltage if the fuses have blown according to **SHORT-CIRCUIT TO SUPPLY VOLTAGE. PERMANENT FAULTS**.

Connector/Pin	Designation	Connector
B/4	Ground supply (31)	(54/24:12)
A/2	ground supply (31), power	(54/24:7)

Other information:

- For information about connectors/signals, see **SIGNAL SPECIFICATION, POWER SEAT MODULE** .

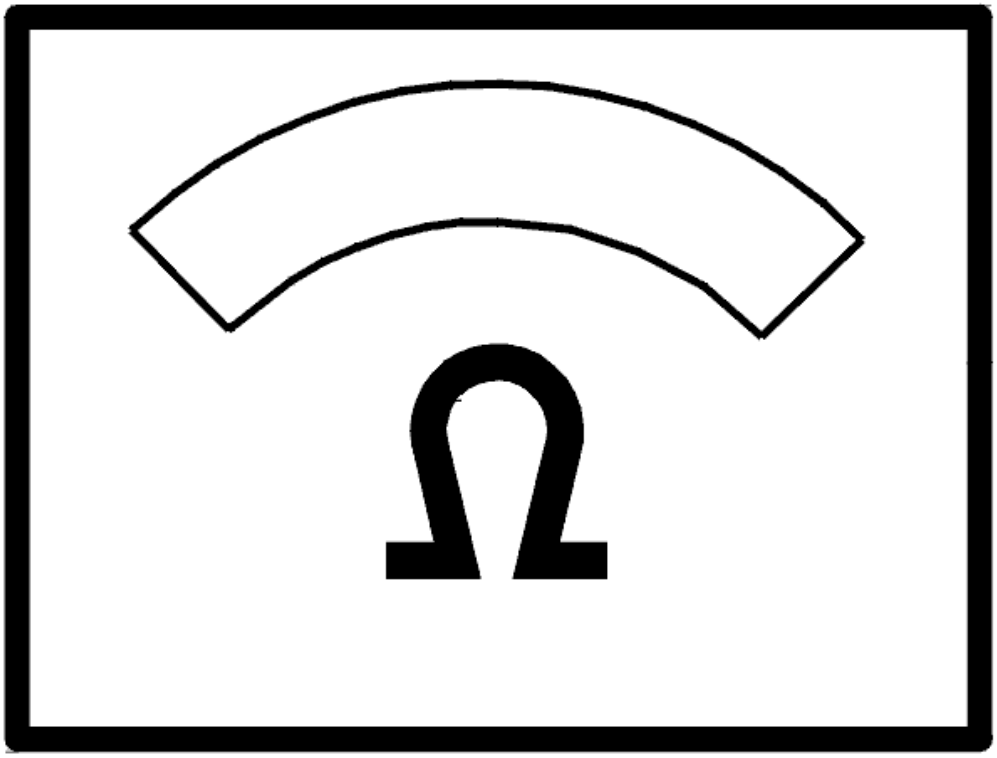

Fig. 13: Identifying Ohmmeter
Courtesy of VOLVO CARS CORPORATION

OPEN-CIRCUIT, PERMANENT FAULTS

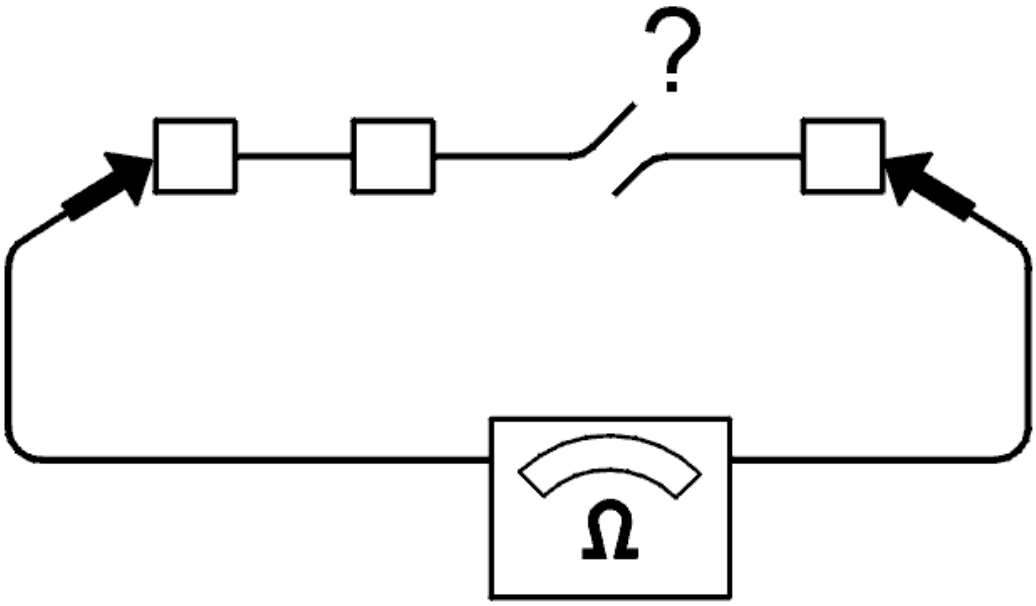

Fig. 14: Checking For Open Circuit
Courtesy of VOLVO CARS CORPORATION

An open-circuit in a cable is indicated by a loss of one or more functions.

Chafed and broken cables or terminals that have come loose are common causes of faults in electrical systems.

Checks:

- Disconnect the connectors at both ends of the cable.

Connect an ohmmeter between the ends of the cable.

The ohmmeter should read approximately 0 ohms if there is no open-circuit in the cable.

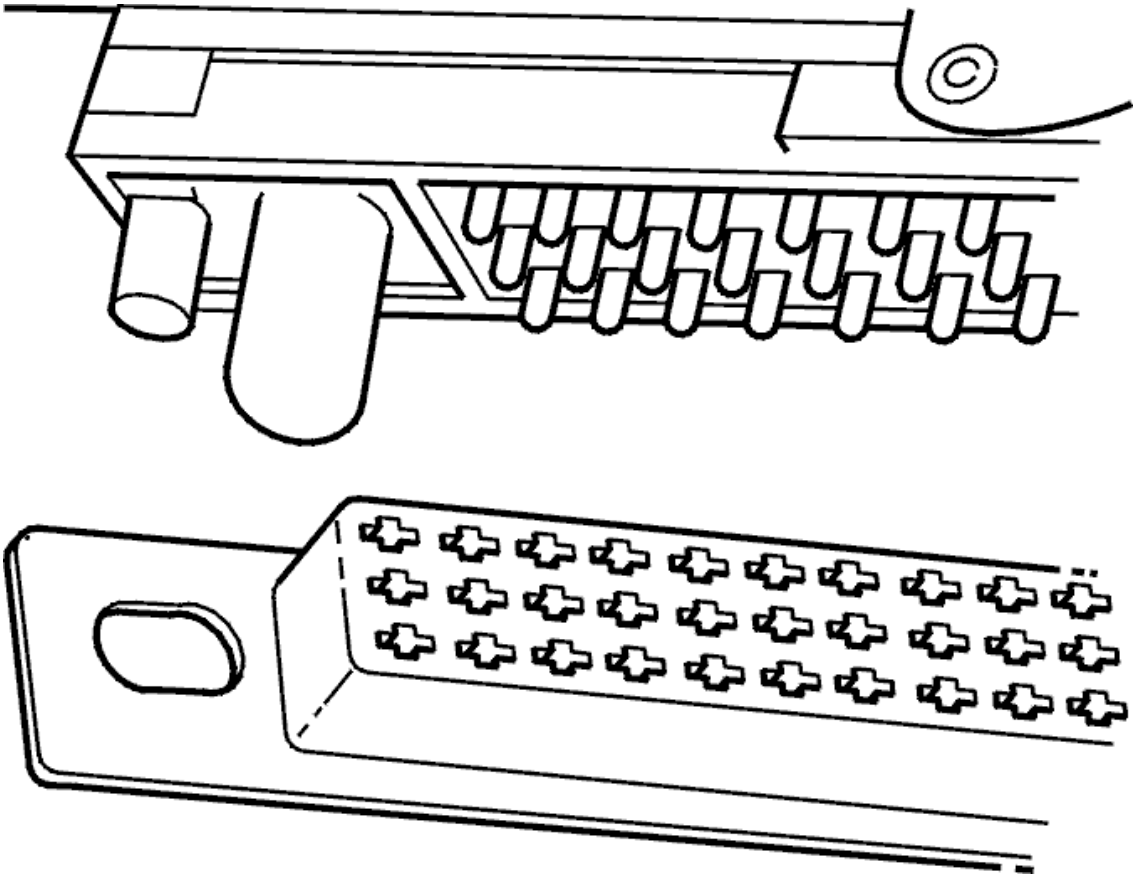

Fig. 15: Identifying Control Module Installation
Courtesy of VOLVO CARS CORPORATION

Always check the control module and control module box connectors to ensure that their pins and sockets are not bent or damaged, as this can cause faults.

SHORT-CIRCUIT TO SUPPLY VOLTAGE. PERMANENT FAULTS

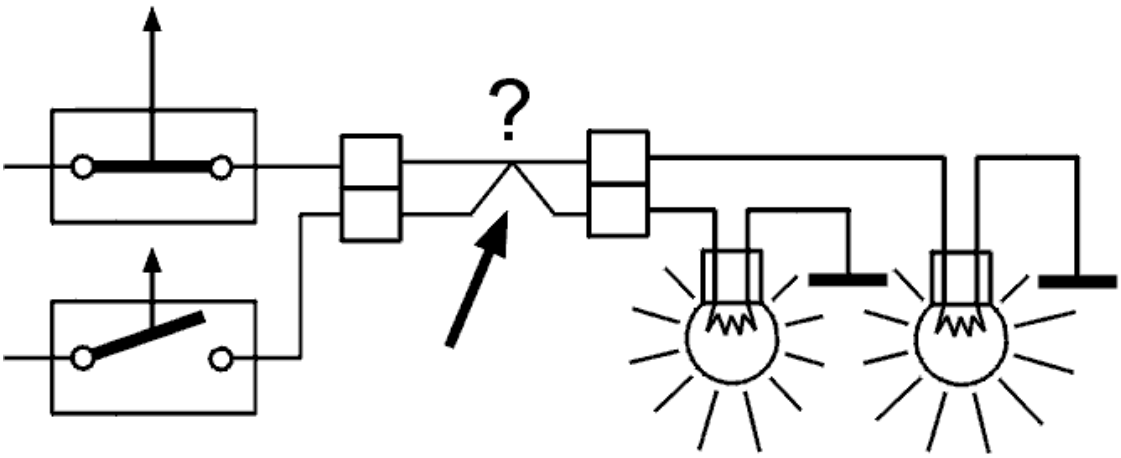

Fig. 16: Checking For Short Circuit
Courtesy of VOLVO CARS CORPORATION

A short-circuit between a cable and supply voltage is often indicated by the loss of a function or a fuse blowing when voltage is passed through the cable.

Checks:

- Use a voltmeter to take readings at various points in the circuit while operating switches and sensors.

Voltmeter readings will depend on which circuit is tested and the status of switches and sensors. Use the wiring diagram to determine the correct voltage in the circuit.

Use an ohmmeter between the suspect cables to detect short-circuits between them.

The ohmmeter should read infinite resistance between cables not connected to each other in the circuit.

SHORT-CIRCUIT TO GROUND, PERMANENT FAULTS

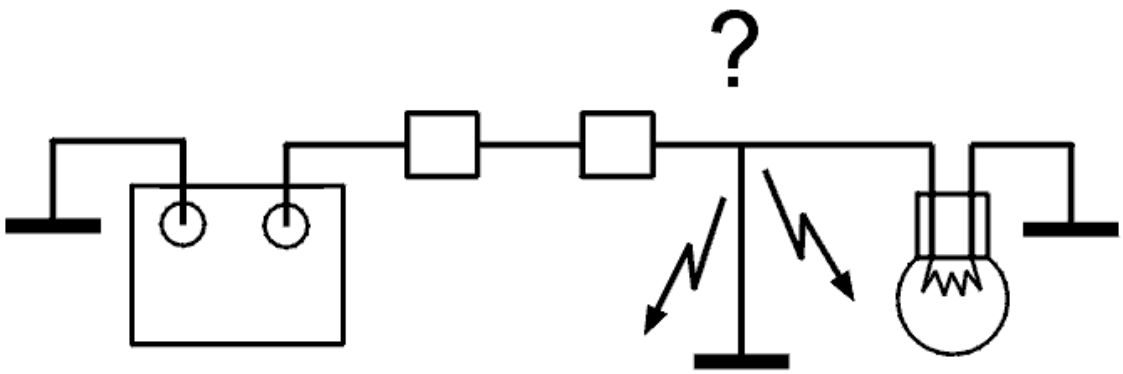

Fig. 17: Checking For Short Circuit To Ground
Courtesy of VOLVO CARS CORPORATION

A short-circuit between a live cable and ground is often indicated by the loss of a function or a fuse blowing when a current is passed through the cable.

Checks:

- Activate all switches and sensors in the circuit. Check whether the fuse blows
- Disconnect the connectors in the circuit to ensure that they do not affect readings.

Use an ohmmeter to take a resistance reading between the cable and ground.

The ohmmeter should read infinite resistance if no components are connected.

FAULT-TRACING INFORMATION

Condition

Possible Source

- Open-circuit in the ground lead.

Fault symptom[s]

- The seat does not function at all.

ACCESSORIES AND BODY, CAB

Interior - Symptom Verification

SEAT UPHOLSTERY/PADDING/LOOSE, POOR FIT, WARPED, WRINKLED OR SOFT/HARD

SYMPTOM AND FUNCTION DESCRIPTION

NOTE: The symptom should always be verified together with the customer.

The following tips may be of help to decide if the symptom is due to a product feature or if continued troubleshooting is needed.

HINT: There may be some wrinkles in the upholstery.

ACCESSORIES AND EQUIPMENT

Interior Equipment - Cleaning, Inspection And Adjustment

INTERIOR EQUIPMENT (2005-12)

COOL BOX/CENTER CONSOLE, ADJUSTING

NOTE: **The graphics in this service information are used for different model years and/or models. Some variation may occur. However, the essential information in the graphics is always correct.**

REMOVAL

NOTE: **When replacing the center console on vehicles with a cool box/armrest, a cut-out must be made in the rear section of the center console.**

ADJUSTING THE CENTER CONSOLE WITH COOL BOX

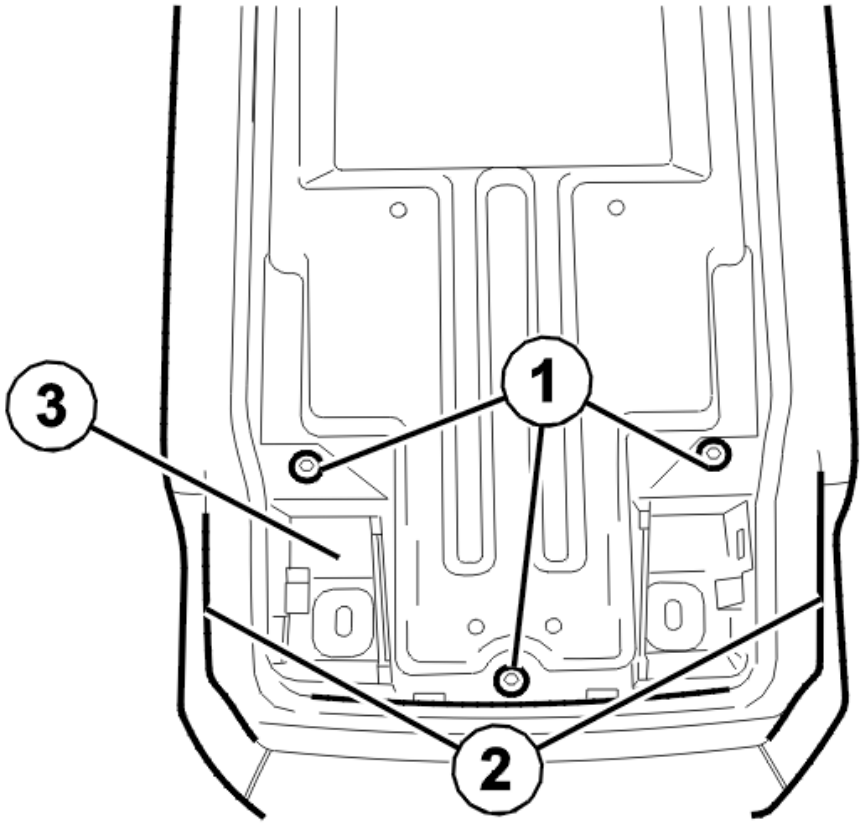

Fig. 1: Identifying Plate And Screws
Courtesy of VOLVO CARS CORPORATION

Remove:

- the 3 screws on top (1)
- the 2 screws on the side (2). Detach the plate. (3).

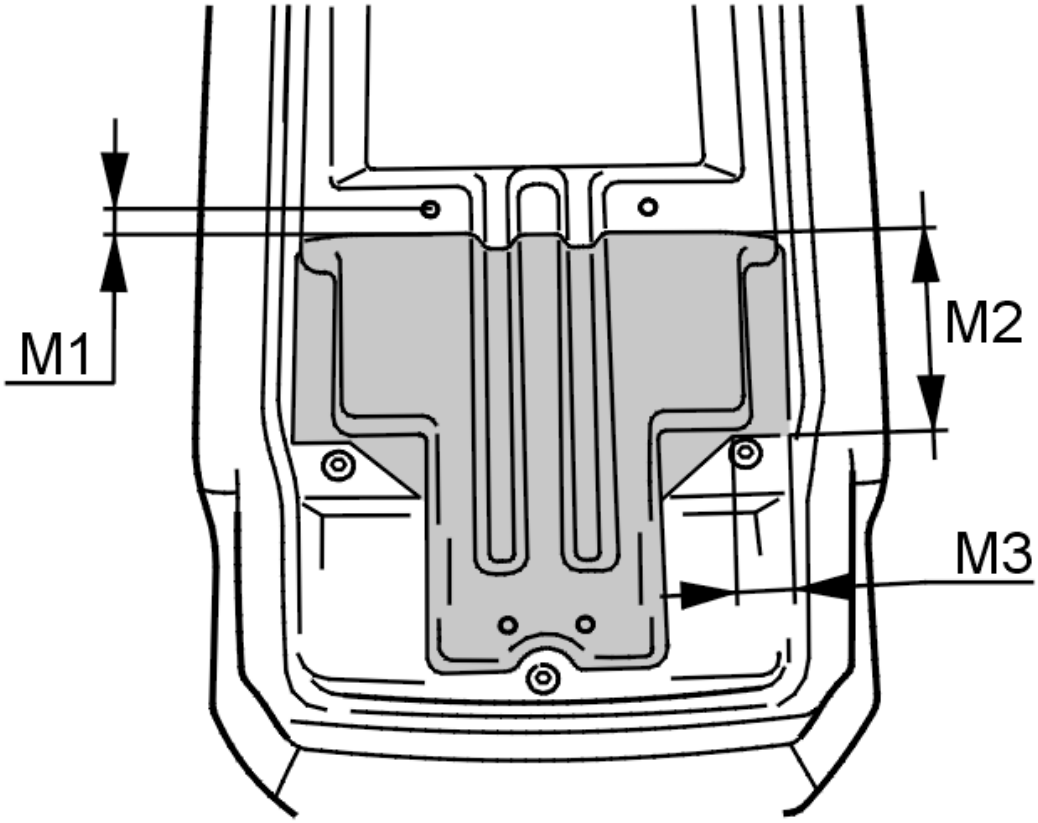

Fig. 2: Identifying Dimension M1, M2 And M3
Courtesy of VOLVO CARS CORPORATION

Saw off the marked area.

M1 = **10 mm** (Measure from the center of the hole to the edge of the marked area)
M2 = **62 mm**
M3 = **24 mm**

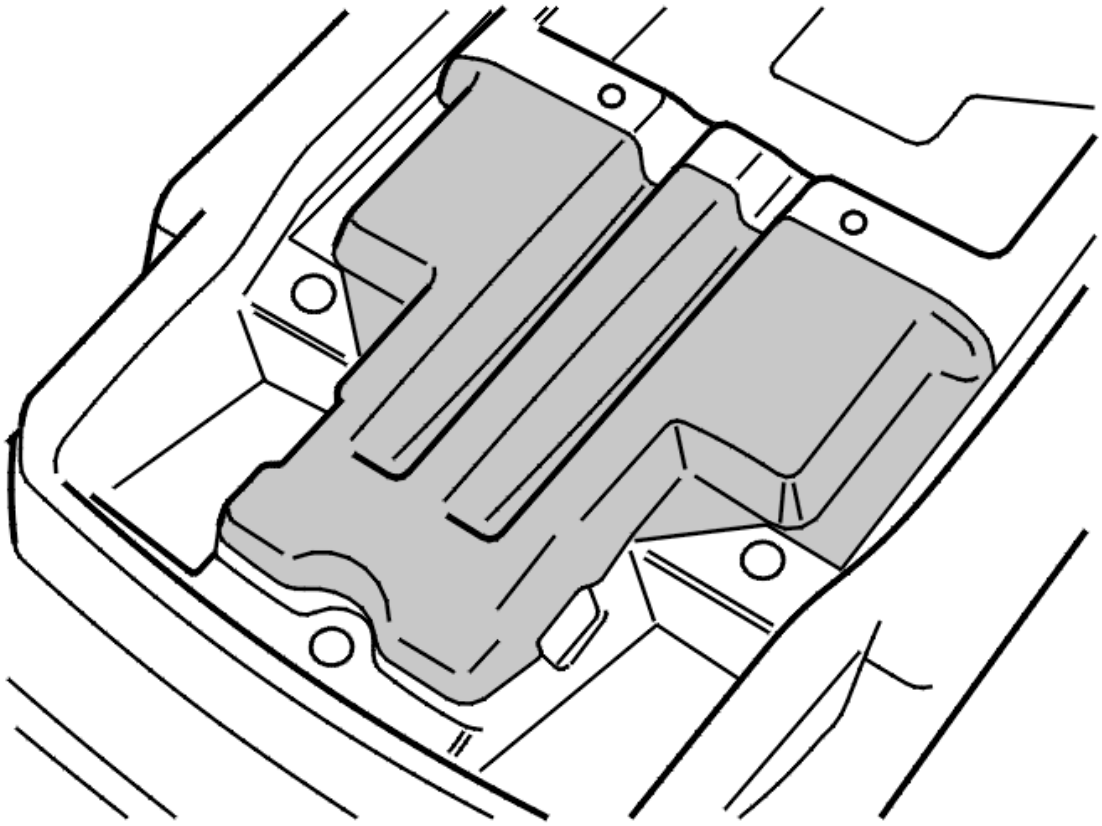

Fig. 3: Identifying Center Console (Right-Hand Side)
Courtesy of VOLVO CARS CORPORATION

Seen from the right-hand side.

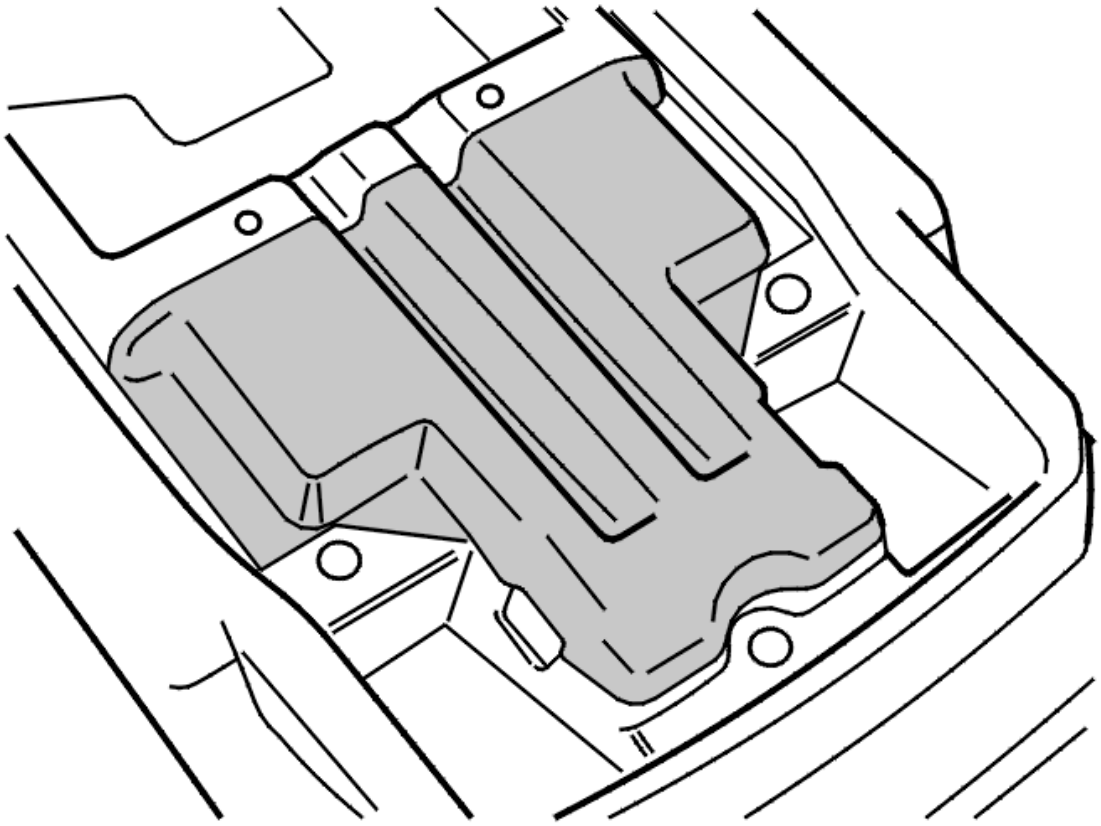

Fig. 4: Identifying Center Console (Left-Hand Side)
Courtesy of VOLVO CARS CORPORATION

Seen from the left-hand side.

INSTALLATION

INSTALLING THE CENTER TUNNEL CONSOLE

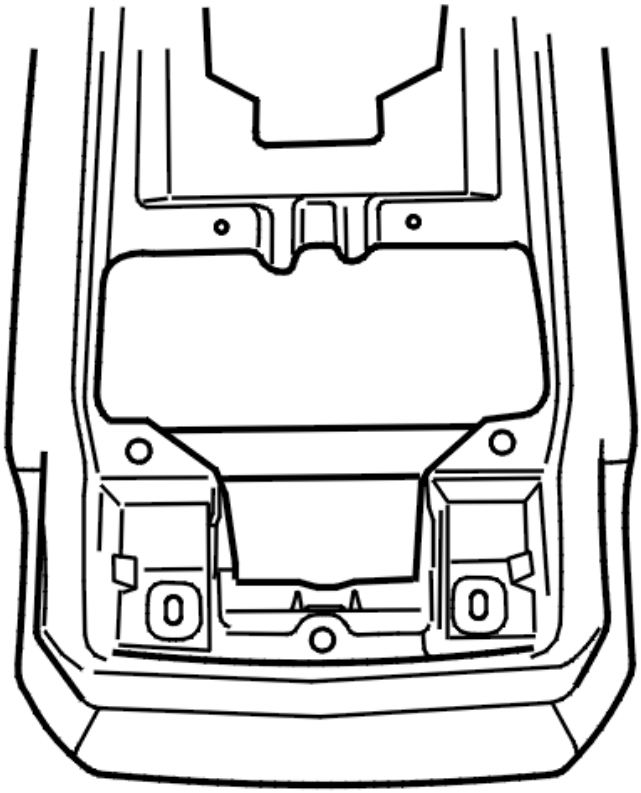

Fig. 5: Identifying Center Tunnel Console
Courtesy of VOLVO CARS CORPORATION

Smooth off the sawn edges.

Install:

- the metal brackets
- the 3 screws on the top. Tighten
- the center tunnel console. See **CENTER CONSOLE, REPLACING**

INTERIOR EQUIPMENT (EXECUTIVE; PREMIER; 2004)

COOL BOX/CENTER CONSOLE, ADJUSTING

see **COOL BOX/CENTER CONSOLE, ADJUSTING**

SEAT BELTS AND OTHER RETENTION SYSTEMS (2003-04)

SEAT BELT FUNCTION, CHECK

NOTE: As the graphics in this service information are used for different model years

and/or models, some variation may occur. However, the essential information in the graphics is always correct.

CHECKING THE FUNCTION OF THE SEATBELT

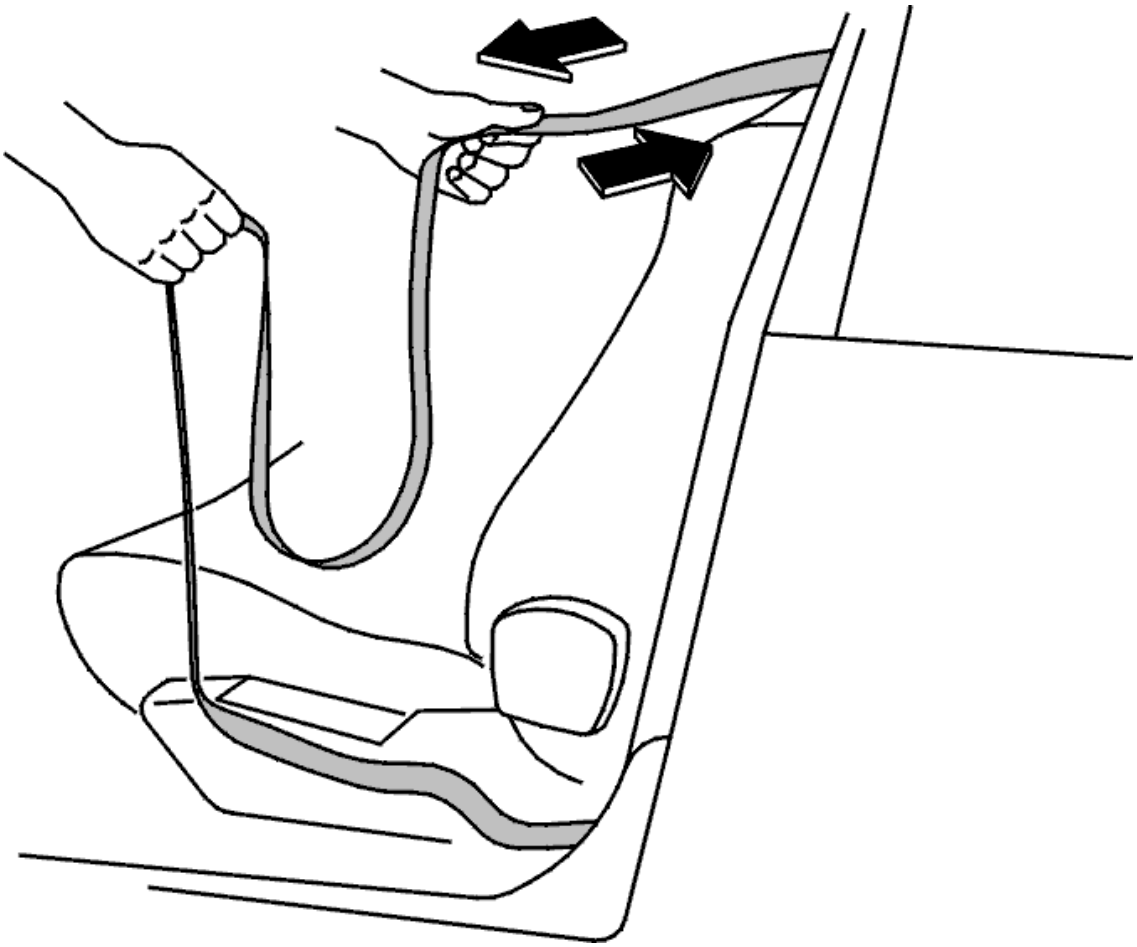

Fig. 6: Identifying Pulling And Jerking Belt Repeatedly To Check Function
Courtesy of VOLVO CARS CORPORATION

Check that the seat belt (inertia) reel inhibits seat belt movement correctly.

Pull and jerk the belt repeatedly to check the function.

SEAT BELT TENSIONER, CHECKING

NOTE: **The graphics in this service information are used for different model years and / or models. Some variation may occur. However, the essential information in the graphics is always correct.**

CHECKING THE SEAT BELT TENSIONER

CAUTION: When replacing deployed seat belt tensioners, seat belt buckles and end mountings must always be replaced.

Seat belt tensioners can be checked in two different ways:

1. Check for any diagnostic trouble codes (DTCs) using VIDA
2. Physical check as follows.

NOTE: Third row seat belt tensioners cannot be checked physically, only via VIDA (Volvo scan tool).

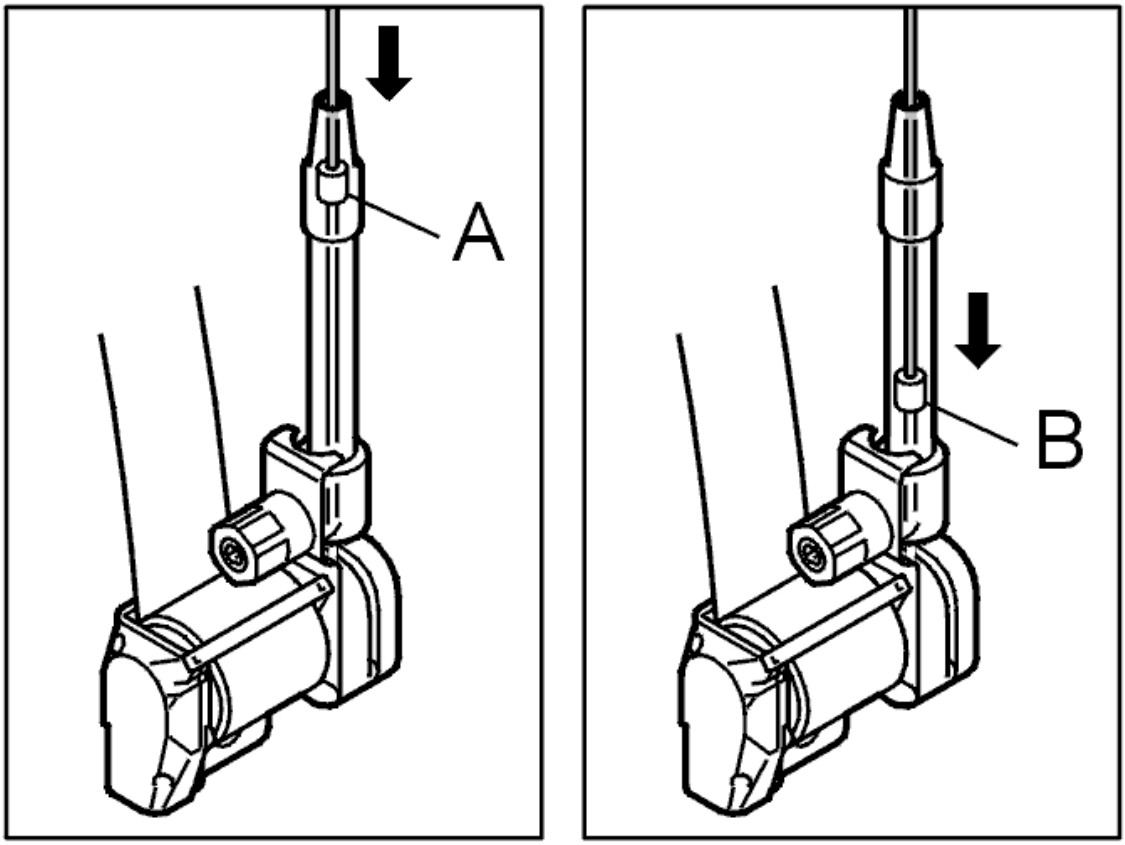

Fig. 7: Identifying Piston Positions
Courtesy of VOLVO CARS CORPORATION

Insert a wire in the pipe on the seat belt tensioner as shown.

Check the piston position in the seat belt tensioner.

Piston position A:

The seat belt tensioner has deployed. Replace both the seat belt (inertia) reels and the seat belt tensioners. See **SEAT BELT FRONT, REPLACING** .

Piston position B:

The seat belt tensioner has not deployed. No corrective action is required.

NOTE: If any airbag has deployed, all seat belts and tensioners must be replaced.

SUPPLEMENTARY RESTRAINT SYSTEM (SRS), INSPECTION

NOTE: As the graphics in this service information are used for different model years and/or models, some variation may occur. However, the essential information in the graphics is always correct.

INSPECTING THE SRS (SUPPLEMENTAL RESTRAINT SYSTEM)

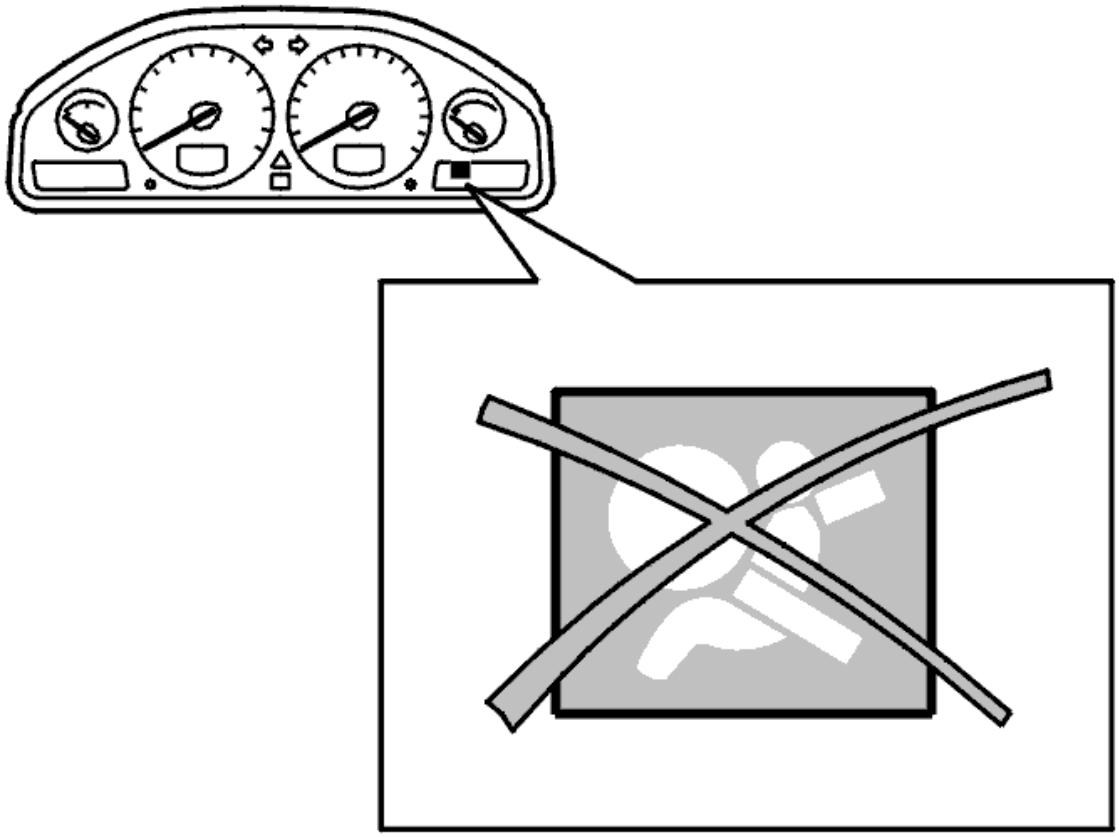

Fig. 8: Identifying SRS Indicator Lamp
Courtesy of VOLVO CARS CORPORATION

The ignition must be in position II.

Install the battery negative lead.

Check that the SRS indicator lamp is not defective by turning the key to position II.

The SRS indicator lamp must light and go out after approximately seven seconds.

Check that the SRS indicator lamp in the combined instrument panel is not constantly lit. Fault-trace the supplementary restraint system (SRS) if the lamp is constantly lit.

WHIPLASH UNIT, CHECKING

NOTE: **As the graphics in this service information are used for different model years and/or models, some variation may occur. However, the essential information in the graphics is always correct.**

NOTE: **The WHIPS unit must be checked after every collision.**

NOTE: **The graphic shows the left end mounting. The right end mounting is the mirror image.**

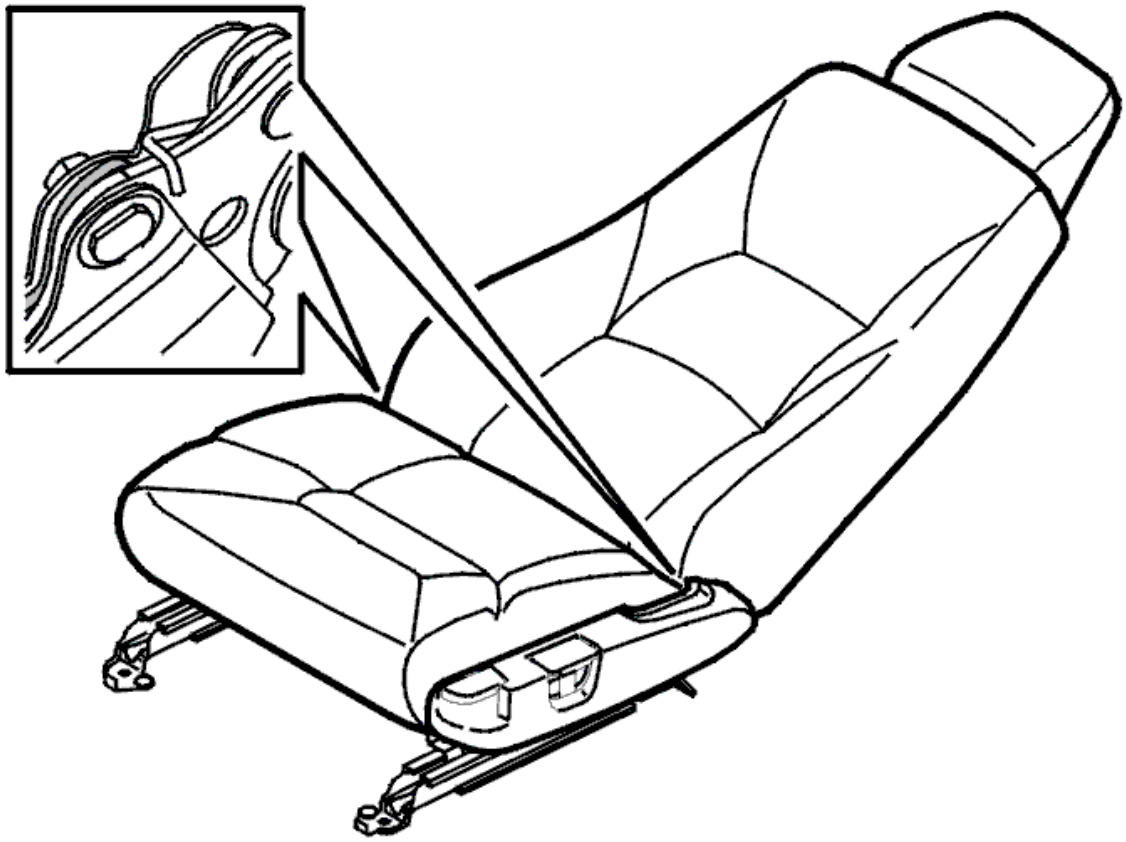

Fig. 9: Backrest Folded Back
Courtesy of VOLVO CARS CORPORATION

The nut always faces the center of the seat.

(A) = reference mark. Always the second outermost section of the WHIPS mounting.

(B) = deformation element in the WHIPS mounting.

Fold the backrest backwards.

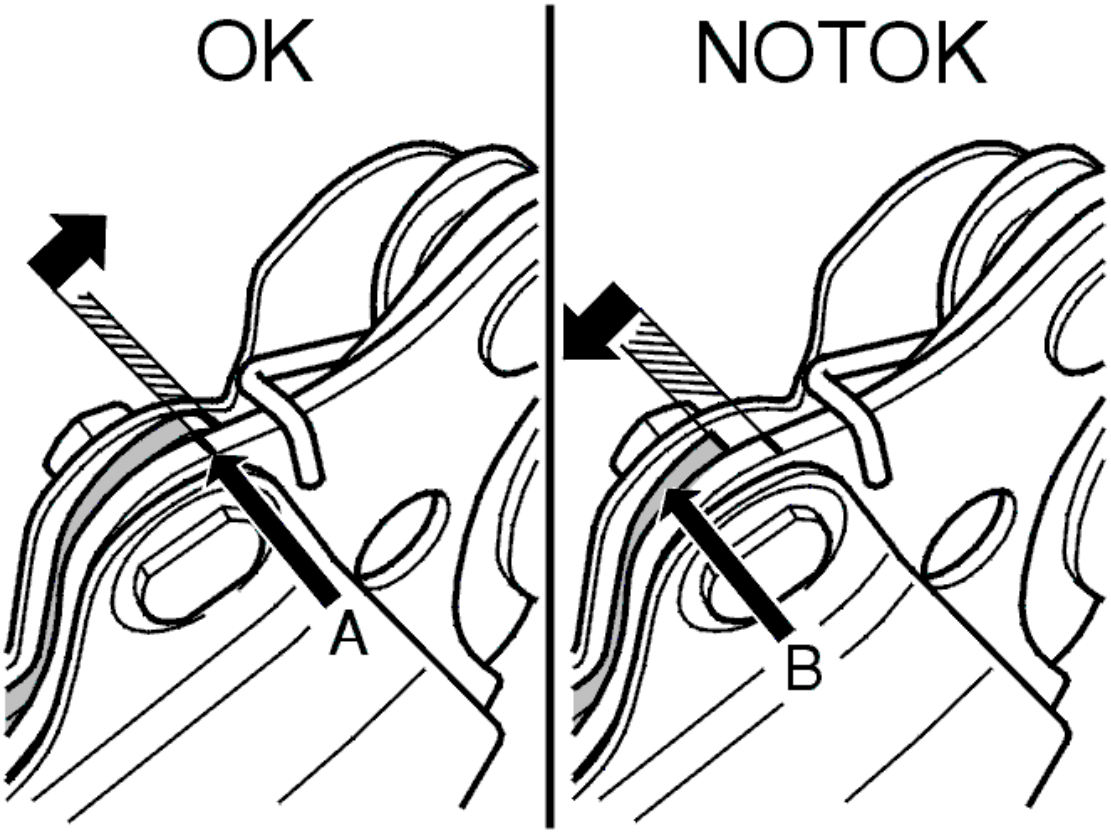

Fig. 10: Checking That Marking/Edge Of Deformation Element Is Not In Front Of Reference Mark
Courtesy of VOLVO CARS CORPORATION

Check that the marking/edge of the deformation element (B) is not in front of the reference mark (A) as shown.

If the deformation section (B) is in front of the reference mark (A), the deformation element must be replaced. See **WHIPLASH UNIT, REPLACING** .

NOTE: The deformation element must always be replaced if it is deformed.

NOTE: Always check both the right and left-hand sides of both the front seats.

SEAT BELTS AND OTHER RETENTION SYSTEMS (2005-06)

CONTACT REEL DRIVER MODULE, RESETTING

NOTE: The graphics in this service information are used for different model years and/or models. Some variation may occur. However, the essential information in

the graphics is always correct.

PREPARATIONS

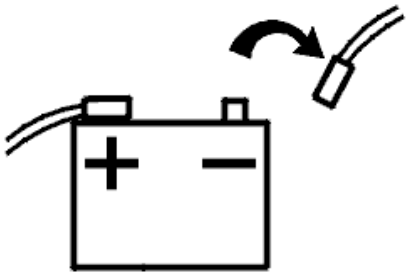

Fig. 11: Disconnecting Battery Lead
Courtesy of VOLVO CARS CORPORATION

Remove:

- battery cable. See **BATTERY, DISCONNECTING**
- the steering wheel according to **STEERING WHEEL, REPLACING** .

RELEASE CONTACT REEL

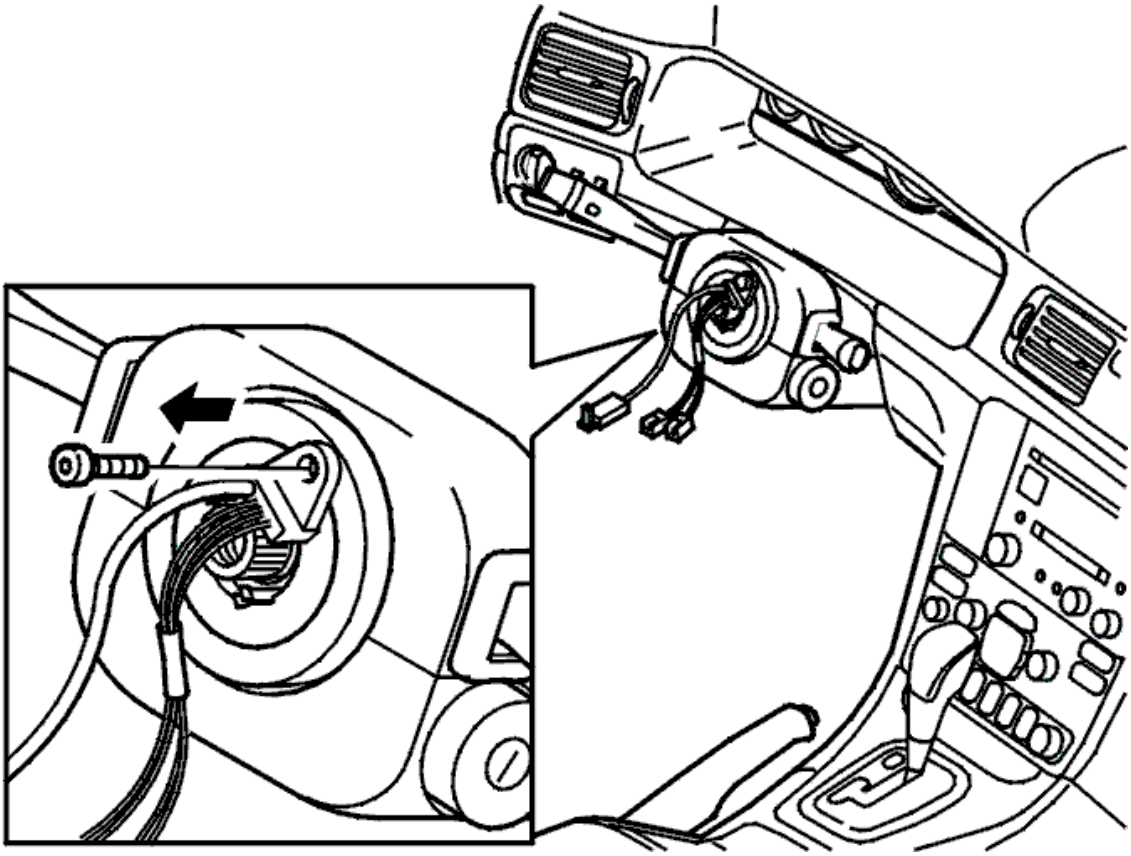

Fig. 12: Identifying Removal Of One Torx 20 Screw
Courtesy of VOLVO CARS CORPORATION

Remove one screw (Torx 20).

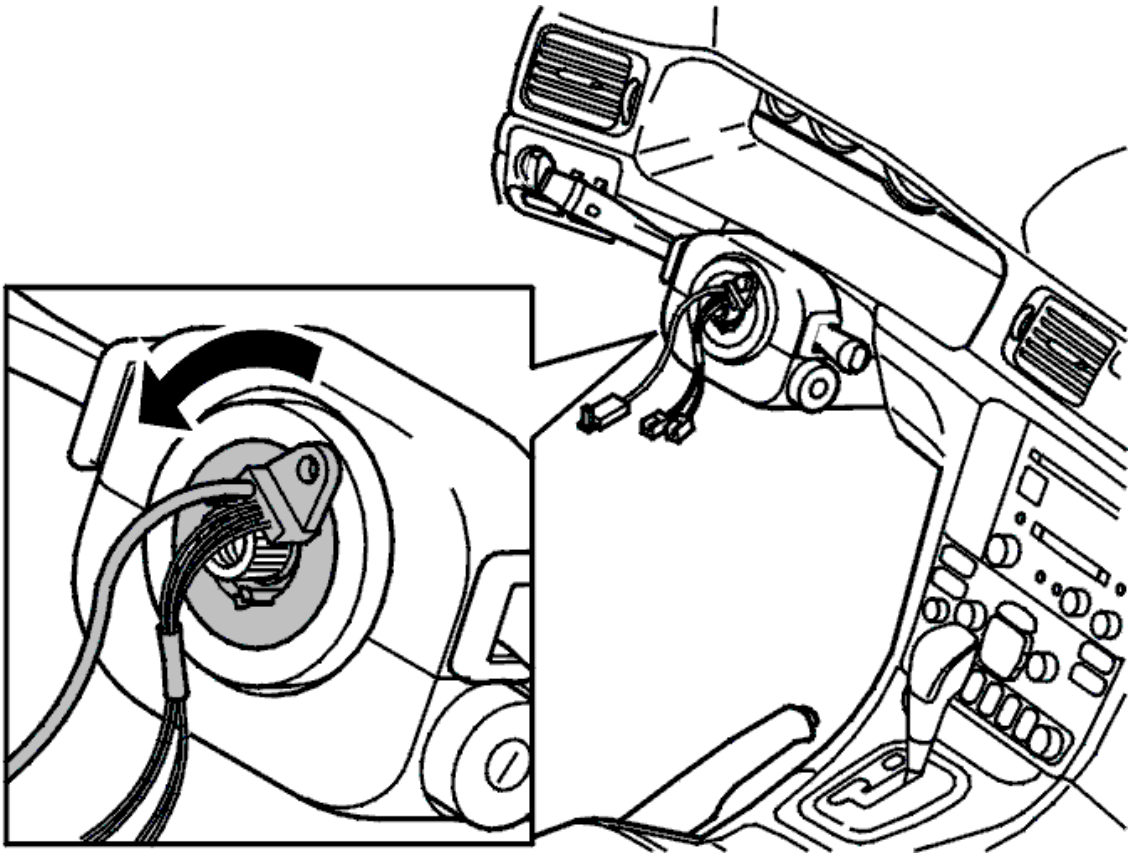

Fig. 13: Identifying Contact Reel Turned Counter-Clockwise Two Entire Turns
Courtesy of VOLVO CARS CORPORATION

Turn the contact reel counter-clockwise to the end-position.

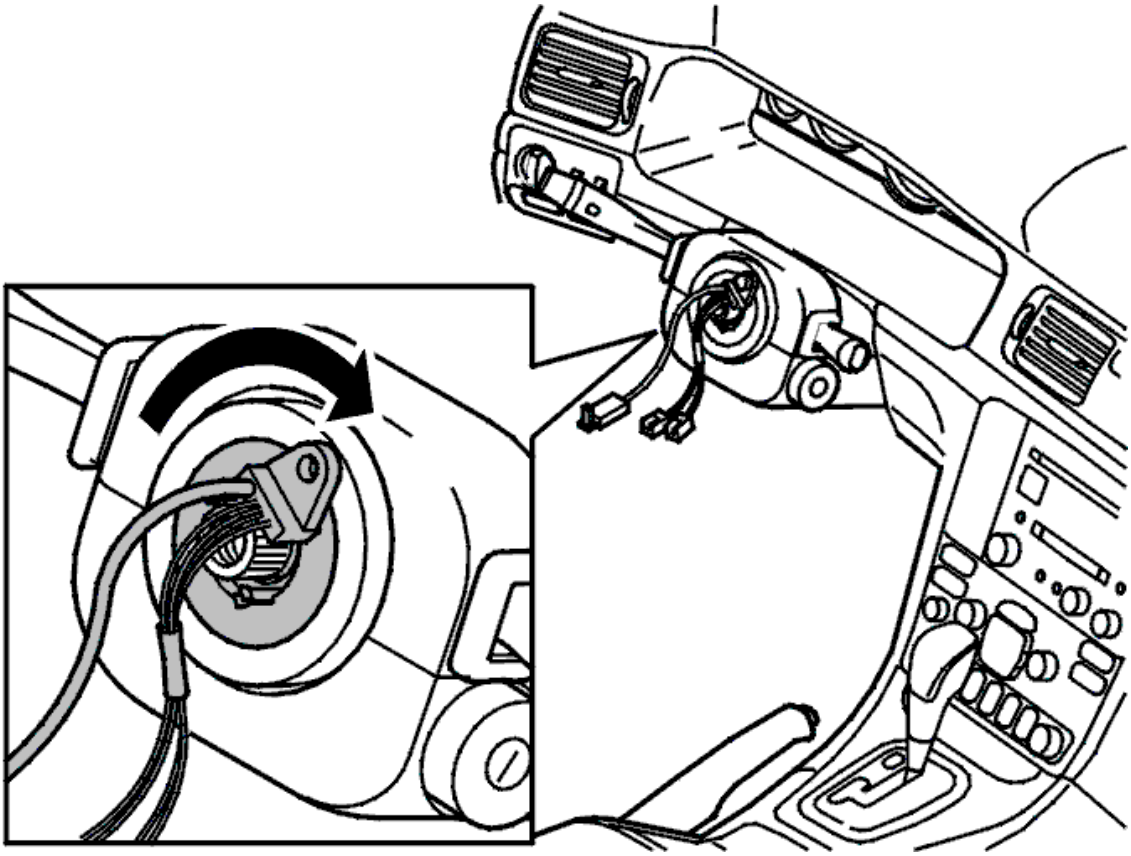

Fig. 14: Identifying Contact Reel Turned Clockwise To Limit Position
Courtesy of VOLVO CARS CORPORATION

Turn the contact reel clockwise two complete revolutions. Then turn clockwise until the screw hole is in position "one o'clock" as shown.

NOTE: On later car models, the yellow marking must also be visible in the window.

SECURE CONTACT REEL

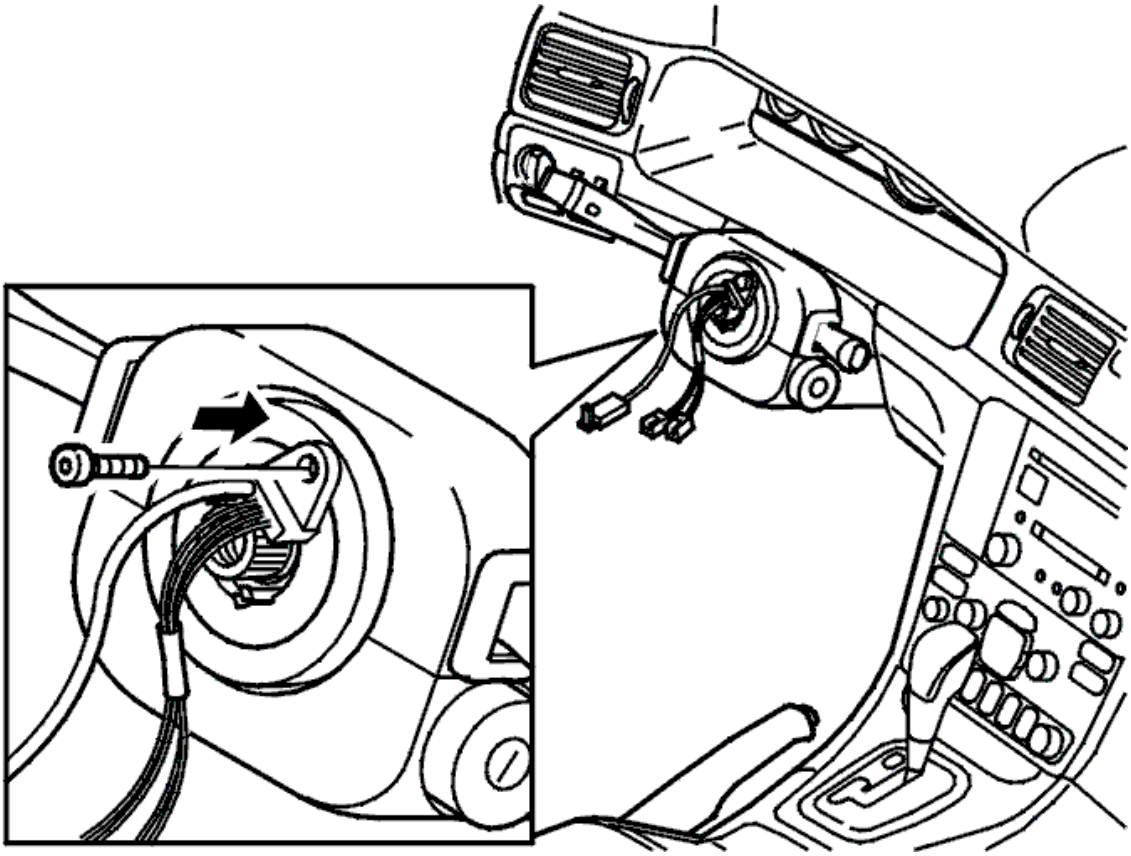

Fig. 15: Identifying Installation Of Screw
Courtesy of VOLVO CARS CORPORATION

Install the screw when the contact reel is in its lock position.

The contact reel is now reset and locked (secured).

INSTALLATION

Install:

- the steering wheel according to **STEERING WHEEL, REPLACING**
- the battery cable according to **BATTERY, DISCONNECTING** .

SEAT BELT FUNCTION, CHECK

see **SEAT BELT FUNCTION, CHECK**

SEAT BELT TENSIONER, CHECKING

see **SEAT BELT TENSIONER, CHECKING**

SUPPLEMENTARY RESTRAINT SYSTEM (SRS), INSPECTION

see **SUPPLEMENTARY RESTRAINT SYSTEM (SRS), INSPECTION**

WHIPLASH UNIT, CHECKING

NOTE: The graphics in this service information are used for different model years and/or models. Some variation may occur. However, the essential information in the graphics is always correct.

METHOD CONTENT

This method consists of:

- see **NON-RECLINING SEAT**
- see **RECLINING SEAT**

NON-RECLINING SEAT

CHECKING NON-RECLINING SEAT

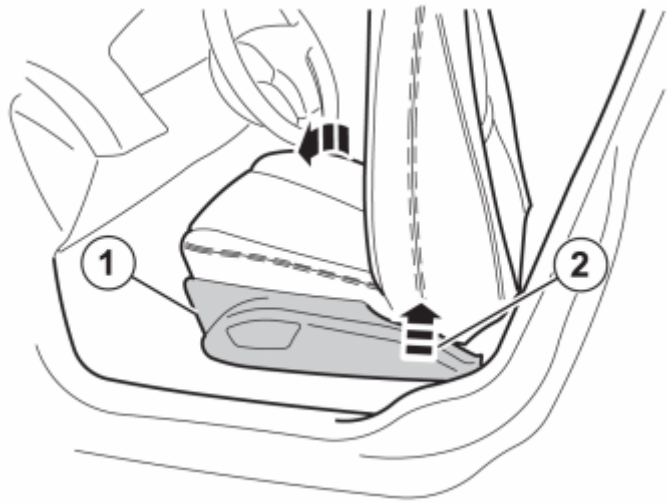

Fig. 16: Identifying Side Panel's Leading Edge And Trailing Edge
Courtesy of VOLVO CARS CORPORATION

Run/push ahead the seat.

Raise the seat maximally at the trailing edge

Remove the screw on the inside at the side panel's leading edge (1).

Pull the side panel straight up at the trailing edge (2).

Fold aside the side panel.

Fig. 17: Identifying Seat Belt Fitting And Catch
Courtesy of VOLVO CARS CORPORATION

Loosen the seatbelt from the seatbelt fitting by pressing in the catch.

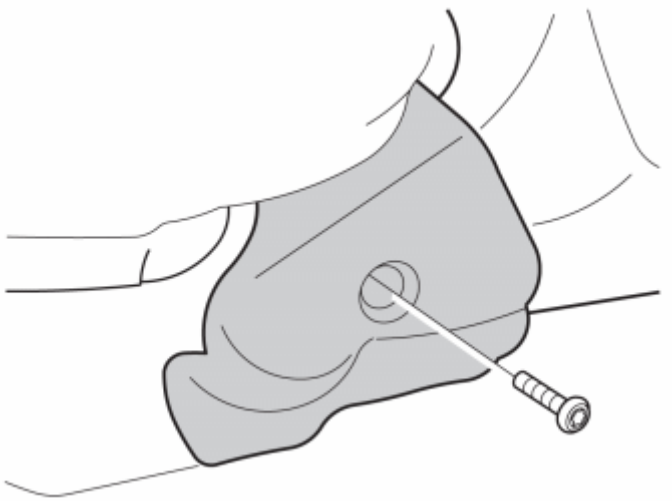

Fig. 18: Identifying Screw And Protective Cover
Courtesy of VOLVO CARS CORPORATION

Remove:

- the screw
- the protective cover.

Check the whiplash unit by the rivet on the side of the seat.

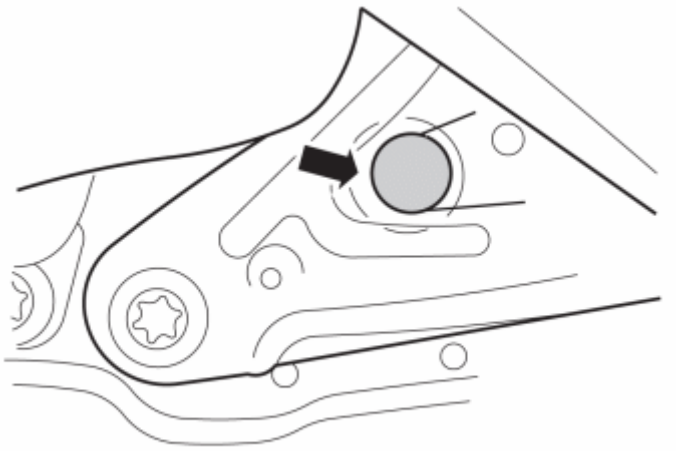

Fig. 19: Identifying Whiplash Unit Rivet
Courtesy of VOLVO CARS CORPORATION

If there is no visible space between the rivet and the fitting, then the whiplash unit is functional.

Install in the reverse order.

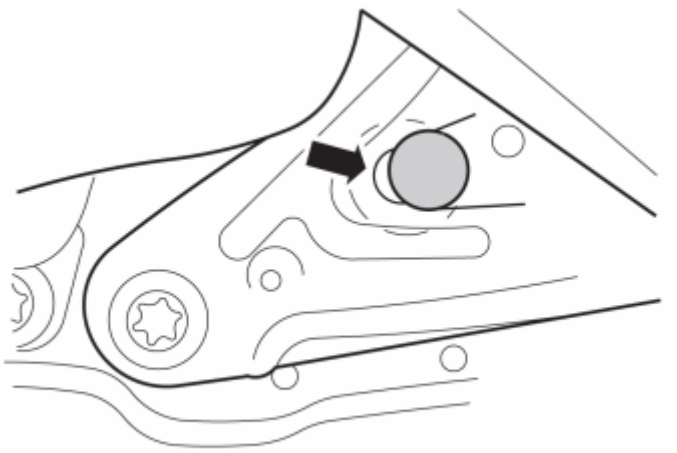

Fig. 20: Identifying Visible Space Between Rivet And Fitting
Courtesy of VOLVO CARS CORPORATION

If there is a visible space between the rivet and the fitting, then the whiplash elements on both sides of the seat shall be replaced acc. to **WHIPLASH UNIT, REPLACING (2009-12)** .

RECLINING SEAT

CHECKING RECLINING SEAT

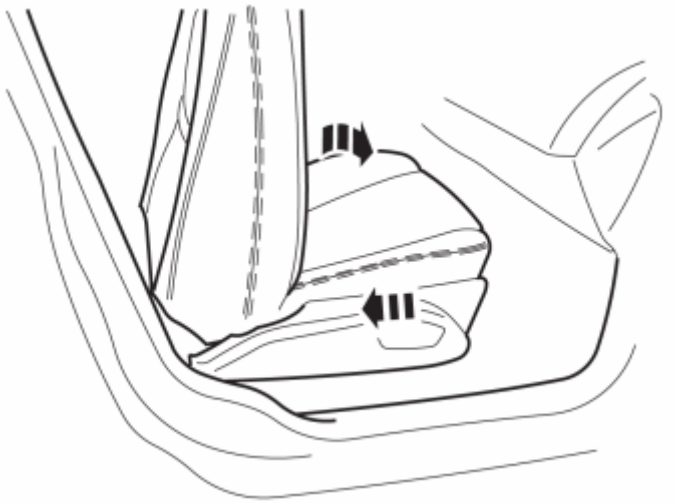

Fig. 21: Identifying Reclining Seat
Courtesy of VOLVO CARS CORPORATION

Run/push the seat to its rearmost position.

Run/screw the seat to its forward position.

Fold the seat back completely forward.

Run/screw the seat back backwards so that the seat rises at the trailing edge.

Check the whiplash unit by the rivet in the seat's trailing edge.

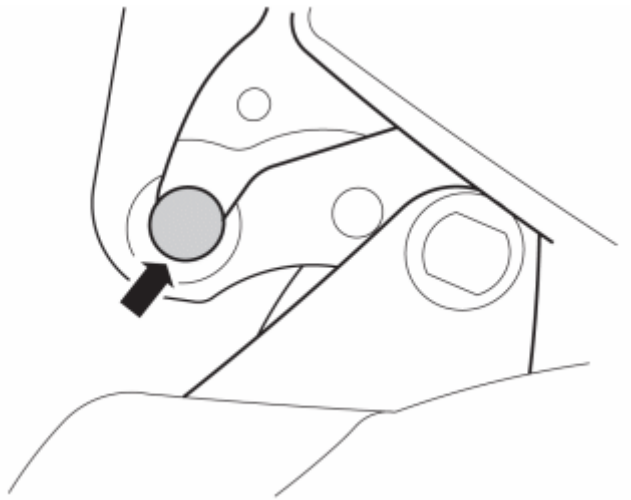

Fig. 22: Identifying Whiplash Unit Rivet
Courtesy of VOLVO CARS CORPORATION

If there is no visible space between the rivet and the fitting, then the whiplash unit is functional.

Install in the reverse order.

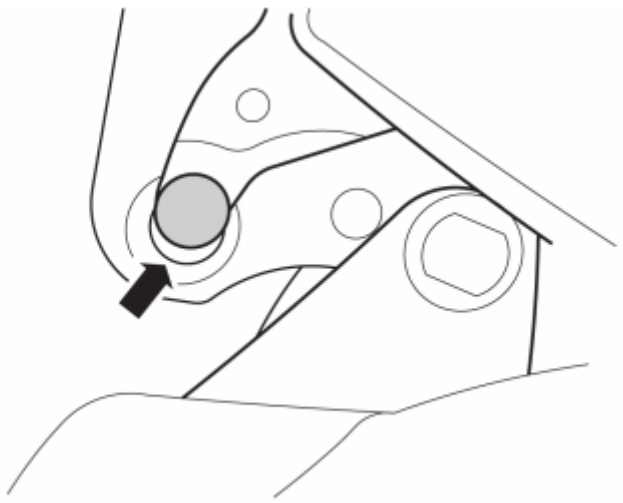

Fig. 23: Identifying Visible Space Between Rivet And Fitting
Courtesy of VOLVO CARS CORPORATION

If there is a visible space between the rivet and the fitting, then the whiplash elements on both sides of the seat shall be replaced acc. to **WHIPLASH UNIT, REPLACING (2009-12)** .

SEAT BELTS AND OTHER RETENTION SYSTEMS (2007-12)

COLLISION PROTECTION UNIT FROM BEHIND FRONT SEAT CHECK

Fig. 24: Identifying Front Seat
Courtesy of VOLVO CARS CORPORATION

Only applies to vehicle with fixed backrest.

Remove the following items:

- Side panel. See **SIDE PANEL FRONT SEAT, REPLACING**
- end-plate. See **END MOUNTING, REPLACING** .

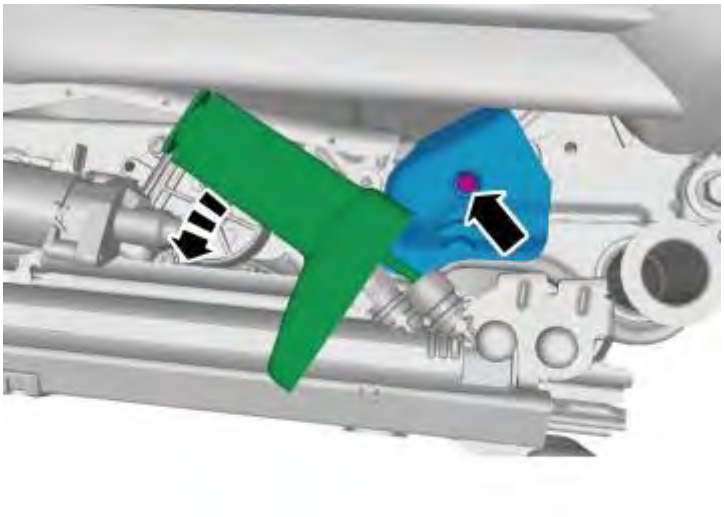

Fig. 25: Identifying Front Seat Rivet
Courtesy of VOLVO CARS CORPORATION

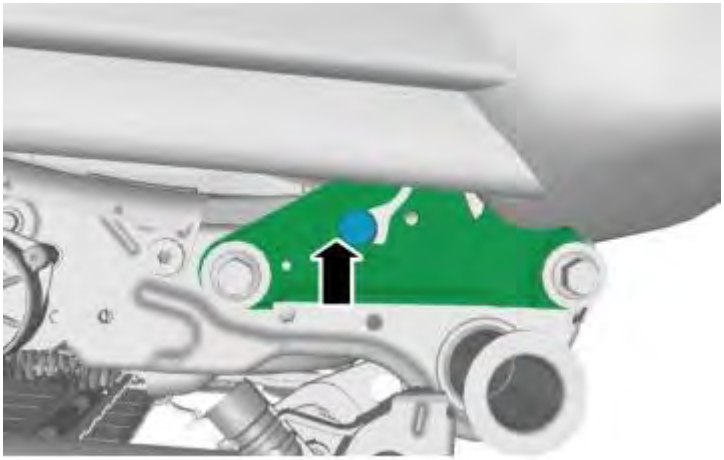

Fig. 26: Identifying Front Seat Rivet And End-Plate
Courtesy of VOLVO CARS CORPORATION

CAUTION: The operation must be performed on both sides of the seat.

CAUTION: No visible space may be seen between the rivet and end-plate.

Fig. 27: Identifying Visible Space Between Rivet And End-Plate
Courtesy of VOLVO CARS CORPORATION

In case of visible space between the rivet and end-plate, the rear end collision module for front seat shall be replaced, see **COLLISION PROTECTION UNIT FROM BEHIND FRONT SEAT (2007-12)** .

Fig. 28: Identifying Front Seat Backrest
Courtesy of VOLVO CARS CORPORATION

Only applies to vehicle with foldable backrest.

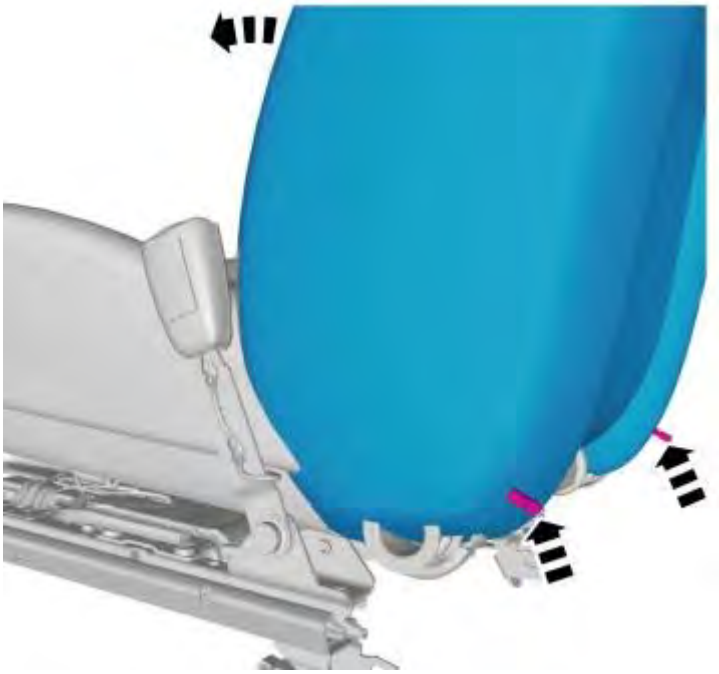

Fig. 29: Identifying Backrest Angle
Courtesy of VOLVO CARS CORPORATION

Adjust the backrest angle until the unit is visible.

Fig. 30: Identifying Rivet And End-Plate
Courtesy of VOLVO CARS CORPORATION

CAUTION: The operation must be performed on both sides of the seat.

CAUTION: No visible space may be seen between the rivet and end-plate.

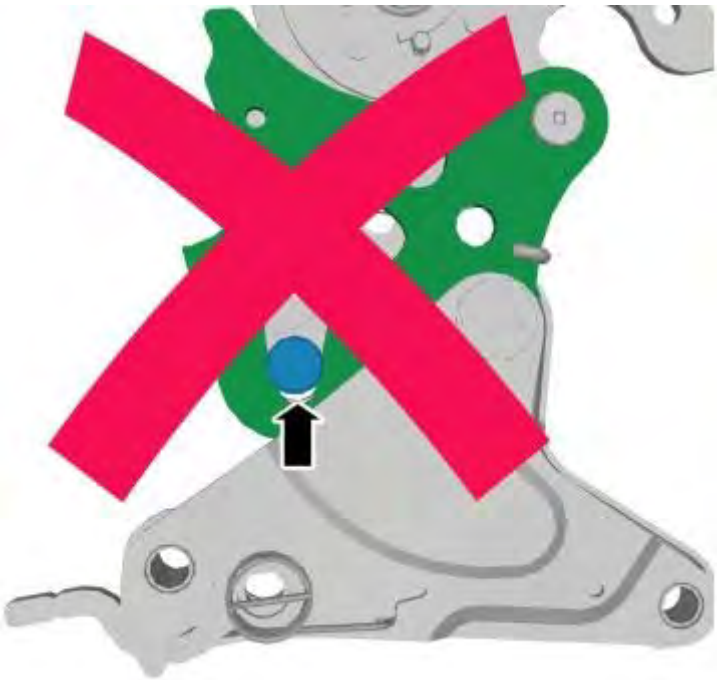

Fig. 31: Identifying Visible Space Between Rivet And End-Plate
Courtesy of VOLVO CARS CORPORATION

CAUTION: In case of visible space between the rivet and end-plate, the rear end collision module for front seat shall be replaced, see COLLISION PROTECTION UNIT FROM BEHIND FRONT SEAT (2007-12)

To install, reverse the removal procedure

CONTACT REEL DRIVER MODULE, RESETTING

see **CONTACT REEL DRIVER MODULE, RESETTING**

SEAT BELT FUNCTION, CHECK

see **SEAT BELT FUNCTION, CHECK**

SEAT BELT TENSIONER, CHECKING

see **SEAT BELT TENSIONER, CHECKING**

SUPPLEMENTARY RESTRAINT SYSTEM (SRS), INSPECTION

see **SUPPLEMENTARY RESTRAINT SYSTEM (SRS), INSPECTION**

INTERIOR EQUIPMENT (2007-12)

COMPASS, CALIBRATION

SETTING THE GEOGRAPHICAL AREA

Switch on the ignition.

Fig. 32: Identifying Compass Button
Courtesy of VOLVO CARS CORPORATION

Press in the button for at least 3 seconds. The figure for the set range (1-15) is then displayed.

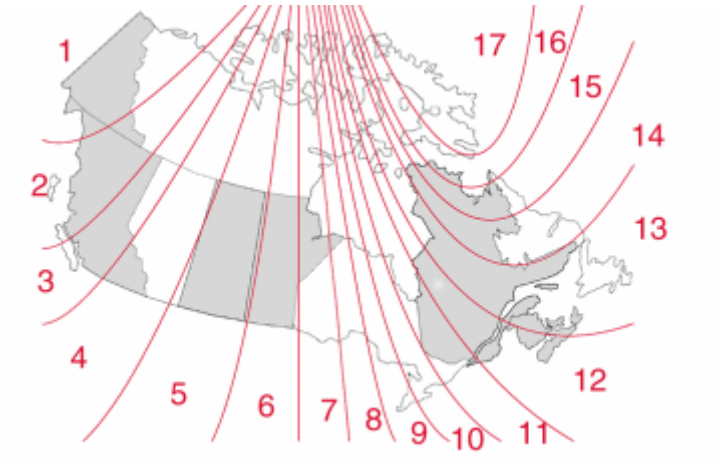

Fig. 33: Identifying Canada
Courtesy of VOLVO CARS CORPORATION

Fig. 34: Identifying USA
Courtesy of VOLVO CARS CORPORATION

CALIBRATING THE COMPASS

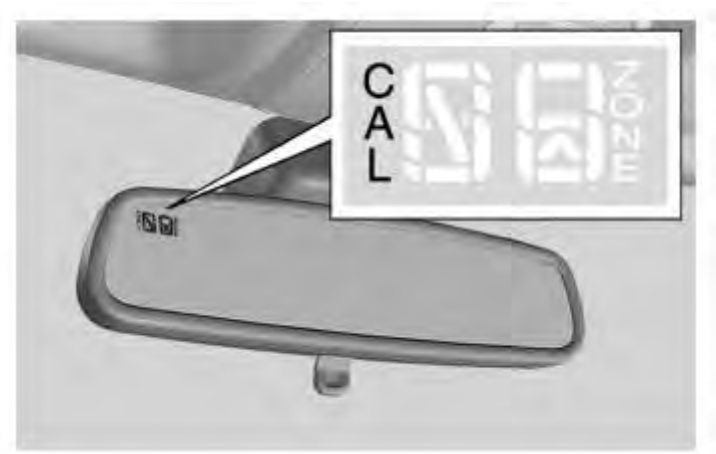

Fig. 35: Identifying Compass (CAL)
Courtesy of VOLVO CARS CORPORATION

NOTE: The compass must be calibrated when the rear view mirror is replaced or when CAL appears in the display.

Find a large open space, free of traffic.

Start the vehicle.

Press in the button for at least 6 seconds. **CAL** should appear in the display.

Then drive at a maximum of 8 km/h in a circle (2-3 times) until the compass direction is displayed in the display again.

CALIBRATING THE SPECIAL TOOL (2003-04)

CALIBRATION

Special tools:

see **9511506**

see **9513022**

see **9988695**

see **9194732**

see **8618437**

It is important that the special tool is operating correctly when fault-tracing and inspecting the SRS system. A defective special tool will cause the on-board diagnostic (OBD) system to give false readings and will make fault-tracing and checking more difficult.

Ensure that the special tool is fault free by calibrating it or checking it before use.

Calibrate tools see **9511506** , see **9513022** or see **9988695** as follows:

- Use an ohmmeter to read off the resistance in the special tool
- Connect the ohmmeter test probes to the terminal pin on the special tool
- The ohmmeter must read between 1.8 and 2.5 ohms
- If the ohmmeter gives a different reading or if the tool is damaged, scrap the tool and replace it with a new one.

Check tools see **9194732** and see **8618437** by carrying out visual checks. If damaged, discard the tool and replace with a new one.

ACCESSORIES AND BODY, CAB

Interior Equipment - Diagnostic Trouble Codes and Associated Procedures

SRS-0135: BELT TENSIONER 3RD ROW LEFT. CIRCUIT FAULT (2003-2012)

DIAGNOSTIC TROUBLE CODE (DTC) INFORMATION SRS-0135

Condition

NOTE: **If there are other diagnostic trouble codes, that indicate the same component, stored in the Supplemental restraint system module (SRS) then these shall be taken care of first.**

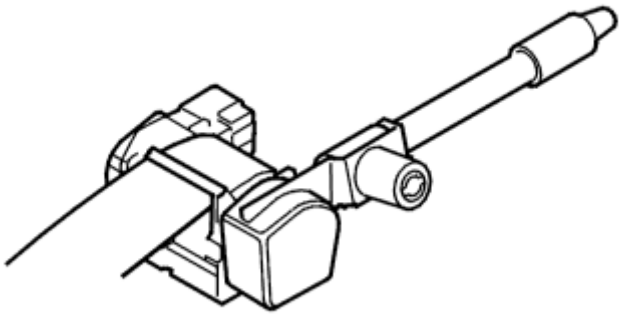

Fig. 1: Identifying Seat Belt Tensioner
Courtesy of VOLVO CARS CORPORATION

The Supplemental restraint system module (SRS) checks the circuit for the seat belt tensioner, 3rd row left.

The diagnostic trouble code (DTC) is stored if the control module detects that:

- There is interference in the circuit.
- Contact with the impact protection's ignition part is interrupted.

The control module's test for the diagnostic trouble code (DTC) starts in the event of:

- Ignition position I, II and III. Only during start-up of the supplemental restraint system.

NOTE: **The control module can only detect the fault once the test has been started and the diagnostic trouble code (DTC) is stored when the conditions are met.**

Substitute Value

- None.

Possible Source

- Contact resistance, oxidation or poor contact in connections.
- Damaged supplemental restraint system module (SRS).

Fault symptom[s]

- The SRS indicator lamp is lit.

CIRCUIT ERROR

CHECKING THE WIRING

Fig. 2: Identifying Ignition In Off Position
Courtesy of VOLVO CARS CORPORATION

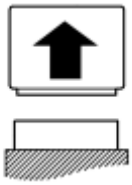

Fig. 3: Identifying Microphone Connectors
Courtesy of VOLVO CARS CORPORATION

- Ignition off, wait for 15 seconds.
- Disconnect the connector from the left-hand 3rd row seat belt tensioner.
- Disconnect the connector for Supplemental restraint system module (SRS).

> WARNING: **Under no circumstances use an ohmmeter or other live measuring instrument to take readings on a disconnected non-deployed seat belt tensioner. This could deploy the seat belt tensioner**

Check connectors for damage to pins and connections.

Check the connectors. Check for loose connections. Check for contact resistance. Check for oxidation.

Also check other connectors and terminals that connect the wiring between the Supplemental restraint

system module (SRS) and the seat belt tensioner.

Check the cable. Check for loose connections. Check for an open-circuit. Check for a short-circuit to ground. Check for a short-circuit to supply voltage.

Take readings between:

- Supplemental restraint system module (SRS) terminal #12A/12(12) and the connector to seat belt tensioner. 3rd row, left, terminal #1.
- Supplemental restraint system module (SRS) terminal #12A/12(12) and the connector to seat belt tensioner. 3rd row, left, terminal #1.

Remedy as necessary.

Other information

- For model year 2003-2004, see **CONNECTING THE BREAKOUT BOX** or for model year 2005-, see **CONNECTING THE BREAKOUT BOX**
- For -2004, see **SIGNAL SPECIFICATION** or for model year 2005-, see **SIGNAL SPECIFICATION**
- see **SEAT BELT FRONT, REPLACING** or **SEAT BELT REAR, REPLACING**
- see **SUPPLEMENTAL RESTRAINT SYSTEM MODULE (SRS), REPLACING**
- see **CHECKING WIRING AND TERMINALS**
- see **CABLE HARNESS SRS SYSTEM, REPAIR**

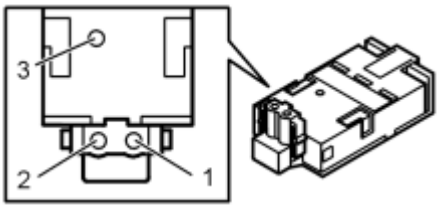

Fig. 4: Identifying Airbag Driver Stage Connector Terminals
Courtesy of VOLVO CARS CORPORATION

- **Continue**

  See: **REPLACING THE CONTROL MODULE**

REPLACING THE CONTROL MODULE

NOTE: Troubleshooting on connectors and wiring must be done before the control module may be replaced.

Since the malfunction may result in internal functions in the Supplemental restraint system module (SRS) not working, the control module must be replaced.

Other information

- see **SUPPLEMENTAL RESTRAINT SYSTEM MODULE (SRS), REPLACING**

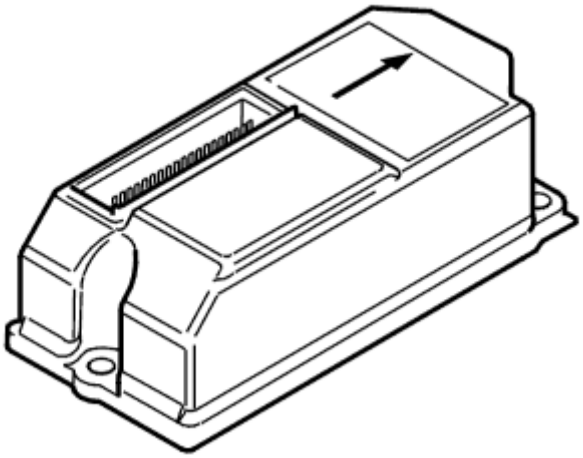

Fig. 5: Identifying Supplemental Restraint System Module (SRS)
Courtesy of VOLVO CARS CORPORATION

- **Continue**

  See: **INFORMATION**

INFORMATION

FAULT-TRACING INFORMATION

In case of this defect, troubleshooting is not followed by verification.

The information can be displayed again or the fault-tracing for this fault can be interrupted.

SRS-0136: BELT TENSIONER 3RD ROW RIGHT. CIRCUIT FAULT (2003-2012)

DIAGNOSTIC TROUBLE CODE (DTC) INFORMATION SRS-0136

Condition

NOTE: **If there are other diagnostic trouble codes, that indicate the same component, stored in the Supplemental restraint system module (SRS) then these shall be taken care of first.**

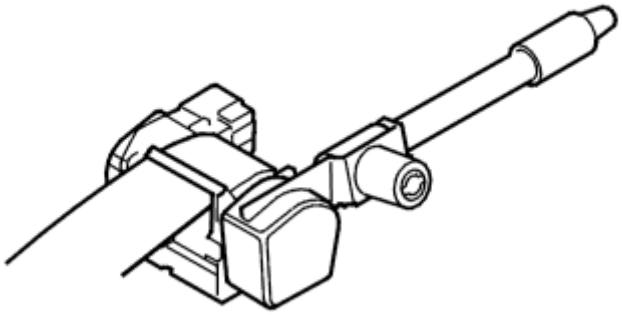

Fig. 6: Identifying Seat Belt Tensioner
Courtesy of VOLVO CARS CORPORATION

The Supplemental restraint system module (SRS) checks the circuit for the seat belt tensioner, 3rd row right.

The diagnostic trouble code (DTC) is stored if the control module detects that:

- There is interference in the circuit.
- Contact with the impact protection's ignition part is interrupted.

The control module's test for the diagnostic trouble code (DTC) starts in the event of:

- Ignition position I, II and III. Only during start-up of the supplemental restraint system.

NOTE: The control module can only detect the fault once the test has been started and the diagnostic trouble code (DTC) is stored when the conditions are met.

Substitute Value

- None.

Possible Source

- Contact resistance, oxidation or poor contact in connections.
- Damaged supplemental restraint system module (SRS).

Fault symptom[s]

- The SRS indicator lamp is lit.

CIRCUIT ERROR

CHECKING THE WIRING

Fig. 7: Identifying Ignition In Off Position
Courtesy of VOLVO CARS CORPORATION

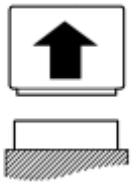

Fig. 8: Identifying Microphone Connectors
Courtesy of VOLVO CARS CORPORATION

- Ignition off, wait for 15 seconds.
- Disconnect the connector from the right-hand 3rd row seat belt tensioner.
- Disconnect the connector for Supplemental restraint system module (SRS).

WARNING: Under no circumstances use an ohmmeter or other live measuring instrument to take readings on a disconnected non-deployed seat belt tensioner. This could deploy the seat belt tensioner

Check connectors for damage to pins and connections.

Check the connectors. Check for loose connections. Check for contact resistance. Check for oxidation.

Also check other connectors and terminals that connect the wiring between the Supplemental restraint system module (SRS) and the seat belt tensioner.

Check the cable. Check for loose connections. Check for an open-circuit. Check for a short-circuit to ground. Check for a short-circuit to supply voltage.

Take readings between:

- Supplemental restraint system module (SRS) terminal #13C/69(9) and the connector to seat belt tensioner. 3rd row, right, terminal #1.
- Supplemental restraint system module (SRS) #14C/70(10) and the connector to seat belt tensioner. 3rd row, right, #3.

Remedy as necessary.

Other information

- For model year 2003-2004, see **CONNECTING THE BREAKOUT BOX** or for model year 2005-, see **CONNECTING THE BREAKOUT BOX**
- For -2004, see **SIGNAL SPECIFICATION** or for model year 2005-, see **SIGNAL SPECIFICATION**
- see **SEAT BELT FRONT, REPLACING** or **SEAT BELT REAR, REPLACING**
- see **SUPPLEMENTAL RESTRAINT SYSTEM MODULE (SRS), REPLACING**
- see **CHECKING WIRING AND TERMINALS**
- see **CABLE HARNESS SRS SYSTEM, REPAIR**

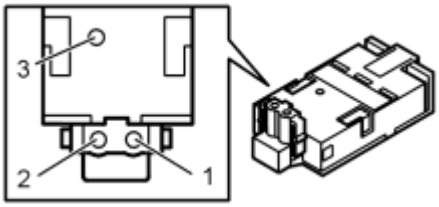

Fig. 9: Identifying Airbag Driver Stage Connector Terminals
Courtesy of VOLVO CARS CORPORATION

- **Continue**

See: **REPLACING THE CONTROL MODULE**

REPLACING THE CONTROL MODULE

NOTE: Troubleshooting on connectors and wiring must be done before the control module may be replaced.

Since the malfunction may result in internal functions in the Supplemental restraint system module (SRS) not working, the control module must be replaced.

Other information

- see **SUPPLEMENTAL RESTRAINT SYSTEM MODULE (SRS), REPLACING**

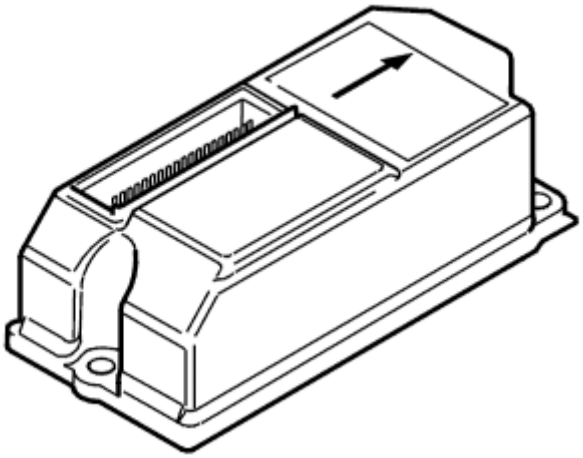

Fig. 10: Identifying Supplemental Restraint System Module (SRS)
Courtesy of VOLVO CARS CORPORATION

- **Continue**

  See: **INFORMATION**

INFORMATION

FAULT-TRACING INFORMATION

In case of this defect, troubleshooting is not followed by verification.

The information can be displayed again or the fault-tracing for this fault can be interrupted.

SRS-0137: INFLATABLE CURTAIN REAR LEFT. CIRCUIT FAULT (2003-2012)

DIAGNOSTIC TROUBLE CODE (DTC) INFORMATION SRS-0137

Condition

NOTE: **If there are other diagnostic trouble codes, that indicate the same component, stored in the Supplemental restraint system module (SRS) then these shall be taken care of first.**

Fig. 11: Identifying Inflatable Curtain
Courtesy of VOLVO CARS CORPORATION

The Supplemental restraint system module (SRS) checks the circuit for the inflatable curtain, left rear.

The diagnostic trouble code (DTC) is stored if the control module detects that:

- There is interference in the circuit.
- Contact with the impact protection's ignition part is interrupted.

The control module's test for the diagnostic trouble code (DTC) starts in the event of:

- Ignition position I, II and III. Only during start-up of the supplemental restraint system.

NOTE: The control module can only detect the fault once the test has been started and the diagnostic trouble code (DTC) is stored when the conditions are met.

Substitute Value

- None.

Possible Source

- Contact resistance, oxidation or poor contact in connections.
- Damaged supplemental restraint system module (SRS).

Fault symptom[s]

- The SRS indicator lamp is lit.

CIRCUIT ERROR

CHECKING THE WIRING

Fig. 12: Identifying Ignition In Off Position
Courtesy of VOLVO CARS CORPORATION

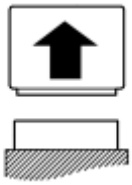

Fig. 13: Identifying Microphone Connectors
Courtesy of VOLVO CARS CORPORATION

- Ignition off, wait for 15 seconds.
- Disconnect the connector from the rear left-hand inflatable curtain.
- Disconnect the connector for Supplemental restraint system module (SRS).

> WARNING: **Under no circumstances use an ohmmeter or other live measuring instrument to take readings on a disconnected, non-deployed, pyrotechnical inflatable curtain. This could deploy the inflatable curtain**

Check connectors for damage to pins and connections.

Check the connectors. Check for loose connections. Check for contact resistance. Check for oxidation.

Also check other connectors and terminals that connect the wiring between the Supplemental restraint system module (SRS) and the inflatable curtain.

Check the cable. Check for loose connections. Check for an open-circuit. Check for a short-circuit to ground. Check for a short-circuit to supply voltage.

Take readings between:

- Supplemental restraint system module (SRS) terminal #14A/14(14) and the connector to air curtain, left, rear, terminal #1.
- Supplemental restraint system module (SRS) terminal #13A/13(13) and the connector to air curtain, left, rear, terminal #3.

Remedy as necessary.

Other information

- For model year 2003-2004, see **CONNECTING THE BREAKOUT BOX** or for model year 2005-, see **CONNECTING THE BREAKOUT BOX**
- For -2004, see **SIGNAL SPECIFICATION** or for model year 2005-, see **SIGNAL SPECIFICATION**
- see **IC (INFLATABLE CURTAIN) MODULE, REPLACING**
- see **SUPPLEMENTAL RESTRAINT SYSTEM MODULE (SRS), REPLACING**
- see **CHECKING WIRING AND TERMINALS**
- see **CABLE HARNESS SRS SYSTEM, REPAIR**

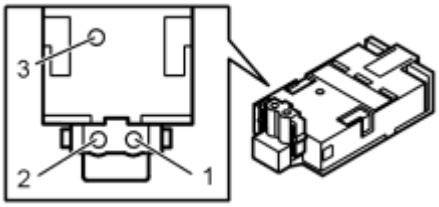

Fig. 14: Identifying Airbag Driver Stage Connector Terminals
Courtesy of VOLVO CARS CORPORATION

- **Continue**

See: **REPLACING THE CONTROL MODULE**

REPLACING THE CONTROL MODULE

NOTE: Troubleshooting on connectors and wiring must be done before the control module may be replaced.

Since the malfunction may result in internal functions in the Supplemental restraint system module (SRS) not working, the control module must be replaced.

Other information

- see **SUPPLEMENTAL RESTRAINT SYSTEM MODULE (SRS), REPLACING**

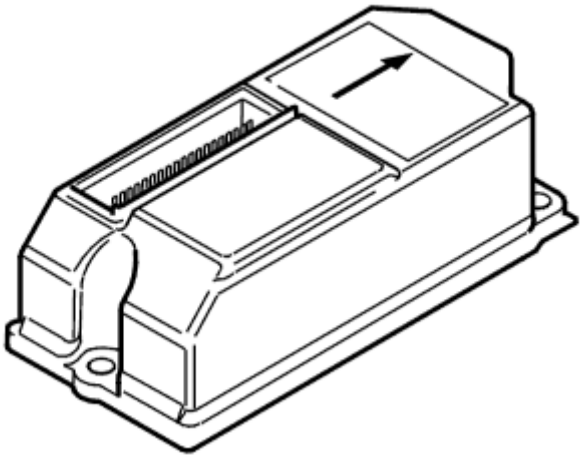

Fig. 15: Identifying Supplemental Restraint System Module (SRS)
Courtesy of VOLVO CARS CORPORATION

- **Continue**

  See: **INFORMATION**

INFORMATION

FAULT-TRACING INFORMATION

In case of this defect, troubleshooting is not followed by verification.

The information can be displayed again or the fault-tracing for this fault can be interrupted.

SRS-0138: INFLATABLE CURTAIN REAR RIGHT. CIRCUIT FAULT (2003-2012)

DIAGNOSTIC TROUBLE CODE (DTC) INFORMATION SRS-0138

Condition

NOTE: **If there are other diagnostic trouble codes, that indicate the same component, stored in the Supplemental restraint system module (SRS) then these shall be taken care of first.**

Fig. 16: Identifying Inflatable Curtain
Courtesy of VOLVO CARS CORPORATION

The Supplemental restraint system module (SRS) checks the circuit for the inflatable curtain, right rear.

The diagnostic trouble code (DTC) is stored if the control module detects that:

- There is interference in the circuit.
- Contact with the impact protection's ignition part is interrupted.

The control module's test for the diagnostic trouble code (DTC) starts in the event of:

- Ignition position I, II and III. Only during start-up of the supplemental restraint system.

NOTE: The control module can only detect the fault once the test has been started and the diagnostic trouble code (DTC) is stored when the conditions are met.

Substitute Value

- None.

Possible Source

- Contact resistance, oxidation or poor contact in connections.
- Damaged supplemental restraint system module (SRS).

Fault symptom[s]

- The SRS indicator lamp is lit.

CIRCUIT ERROR

CHECKING THE WIRING

Fig. 17: Identifying Ignition In Off Position
Courtesy of VOLVO CARS CORPORATION

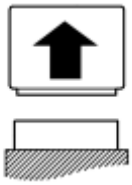

Fig. 18: Identifying Microphone Connectors
Courtesy of VOLVO CARS CORPORATION

- Ignition off, wait for 15 seconds.
- Disconnect the connector from the rear right-hand inflatable curtain.
- Disconnect the connector for Supplemental restraint system module (SRS).

> WARNING: **Under no circumstances use an ohmmeter or other live measuring instrument to take readings on a disconnected, non-deployed, pyrotechnical inflatable curtain. This could deploy the inflatable curtain**

Check connectors for damage to pins and connections.

Check the connectors. Check for loose connections. Check for contact resistance. Check for oxidation.

Also check other connectors and terminals that connect the wiring between the Supplemental restraint system module (SRS) and the inflatable curtain.

Check the cable. Check for loose connections. Check for an open-circuit. Check for a short-circuit to ground. Check for a short-circuit to supply voltage.

Take readings between:

- The Supplemental restraint system module (SRS) terminal #11C/67(7) and the connector to the air curtain, right rear, terminal #1.
- The Supplemental restraint system module (SRS) terminal #12C/68(8) and the connector to the air curtain, right rear, terminal #3.

Remedy as necessary.

Other information

- For model year 2003-2004, see **CONNECTING THE BREAKOUT BOX** or for model year 2005-, see **CONNECTING THE BREAKOUT BOX**
- For -2004, see **SIGNAL SPECIFICATION** or for model year 2005-, see **SIGNAL SPECIFICATION**
- see **IC (INFLATABLE CURTAIN) MODULE, REPLACING**
- see **SUPPLEMENTAL RESTRAINT SYSTEM MODULE (SRS), REPLACING**
- see **CHECKING WIRING AND TERMINALS**
- see **CABLE HARNESS SRS SYSTEM, REPAIR**

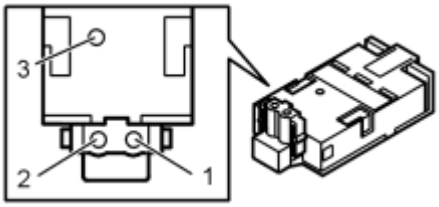

Fig. 19: Identifying Airbag Driver Stage Connector Terminals
Courtesy of VOLVO CARS CORPORATION

- **Continue**

See: **REPLACING THE CONTROL MODULE**

REPLACING THE CONTROL MODULE

NOTE: Troubleshooting on connectors and wiring must be done before the control module may be replaced.

Since the malfunction may result in internal functions in the Supplemental restraint system module (SRS) not working, the control module must be replaced.

Other information

- see **SUPPLEMENTAL RESTRAINT SYSTEM MODULE (SRS), REPLACING**

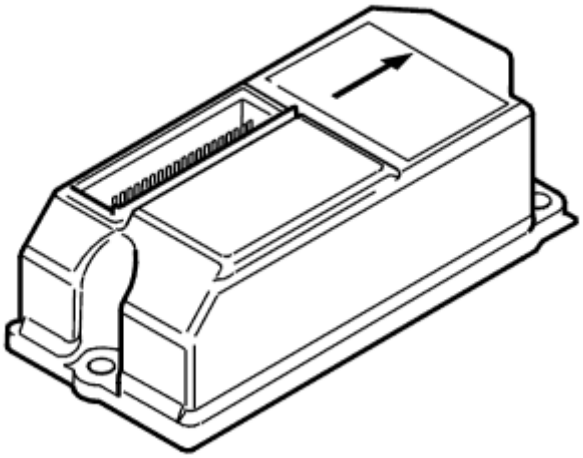

Fig. 20: Identifying Supplemental Restraint System Module (SRS)
Courtesy of VOLVO CARS CORPORATION

- **Continue**

  See: **INFORMATION**

INFORMATION

FAULT-TRACING INFORMATION

In case of this defect, troubleshooting is not followed by verification.

The information can be displayed again or the fault-tracing for this fault can be interrupted.

SRS-0139: ADAPTIVE STEERING COLUMN. CIRCUIT FAULT (2003-2012)

DIAGNOSTIC TROUBLE CODE (DTC) INFORMATION SRS-0139

Condition

NOTE: **If there are other diagnostic trouble codes, that indicate the same component, stored in the Supplemental restraint system module (SRS) then these shall be taken care of first.**

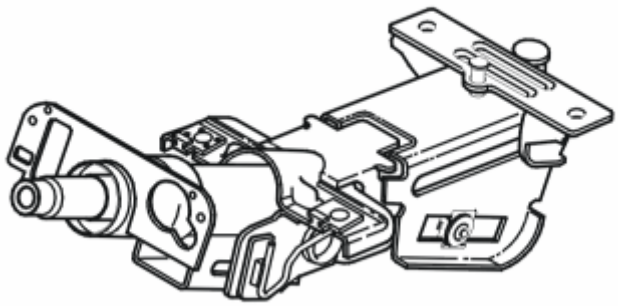

Fig. 21: Identifying Adaptive Steering Column
Courtesy of VOLVO CARS CORPORATION

The Supplemental restraint system module (SRS) checks the circuit for the adaptive steering column.

The diagnostic trouble code (DTC) is stored if the control module detects that:

- There is interference in the circuit.
- Contact with the impact protection's ignition part is interrupted.

The control module's test for the diagnostic trouble code (DTC) starts in the event of:

- Ignition position I, II and III. Only during start-up of the supplemental restraint system.

NOTE: The control module can only detect the fault once the test has been started and the diagnostic trouble code (DTC) is stored when the conditions are met.

Substitute Value

- None.

Possible Source

- Contact resistance, oxidation or poor contact in connections.
- Damaged supplemental restraint system module (SRS).

Fault symptom[s]

- The SRS indicator lamp is lit.

CIRCUIT ERROR

CHECKING THE WIRING

Fig. 22: Identifying Ignition In Off Position
Courtesy of VOLVO CARS CORPORATION

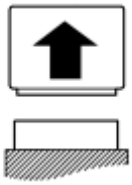

Fig. 23: Identifying Microphone Connectors
Courtesy of VOLVO CARS CORPORATION

- Ignition off, wait for 15 seconds.
- Disconnect the connector from the adaptive steering column.
- Disconnect the connector for Supplemental restraint system module (SRS).

WARNING: **Under no circumstances use an ohmmeter or other live measuring instrument to take readings on a disconnected non-deployed adaptive steering column. The adaptive steering column could deploy**

Check connectors for damage to pins and connections.

Check the connectors. Check for loose connections. Check for contact resistance. Check for oxidation.

Also check other connectors and terminals that connect the wiring between the Supplemental restraint system module (SRS) and the adaptive steering column.

Check the cable. Check for loose connections. Check for an open-circuit. Check for a short-circuit to ground. Check for a short-circuit to supply voltage.

Take readings between:

- Supplemental restraint system module (SRS) terminal #16B/44(44) and the connector to adaptive steering column terminal #1.
- Supplemental restraint system module (SRS) terminal #15B/43(43) and the connector to adaptive steering column terminal #3.

Remedy as necessary.

Other information

- For model year 2003-2004, see **CONNECTING THE BREAKOUT BOX** or for model year 2005-, see **CONNECTING THE BREAKOUT BOX**
- For -2004, see **SIGNAL SPECIFICATION** or for model year 2005-, see **SIGNAL SPECIFICATION**
- see **STEERING COLUMN, REPLACING**
- see **SUPPLEMENTAL RESTRAINT SYSTEM MODULE (SRS), REPLACING**
- see **CHECKING WIRING AND TERMINALS**
- see **CABLE HARNESS SRS SYSTEM, REPAIR**

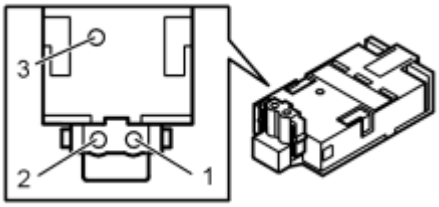

Fig. 24: Identifying Airbag Driver Stage Connector Terminals
Courtesy of VOLVO CARS CORPORATION

- **Continue**

See: **REPLACING THE CONTROL MODULE**

REPLACING THE CONTROL MODULE

NOTE: Troubleshooting on connectors and wiring must be done before the control module may be replaced.

Since the malfunction may result in internal functions in the Supplemental restraint system module (SRS) not working, the control module must be replaced.

Other information

- see **SUPPLEMENTAL RESTRAINT SYSTEM MODULE (SRS), REPLACING**

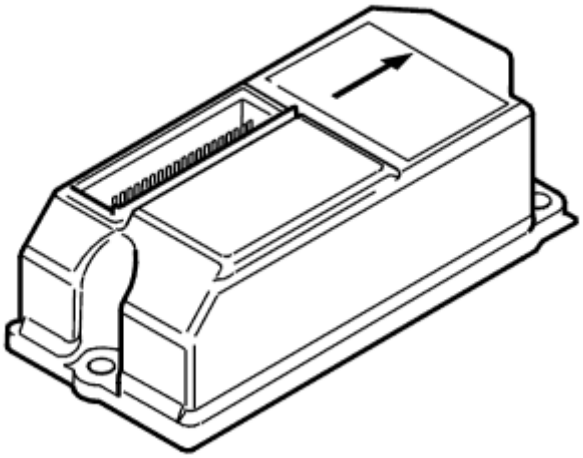

Fig. 25: Identifying Supplemental Restraint System Module (SRS)
Courtesy of VOLVO CARS CORPORATION

- **Continue**

  See: **INFORMATION**

INFORMATION

FAULT-TRACING INFORMATION

In case of this defect, troubleshooting is not followed by verification.

The information can be displayed again or the fault-tracing for this fault can be interrupted.

SRS-013A: CONTROL MODULE. INTERNAL FAULT (2003-2012)

DIAGNOSTIC TROUBLE CODE (DTC) INFORMATION SRS-013A

Condition

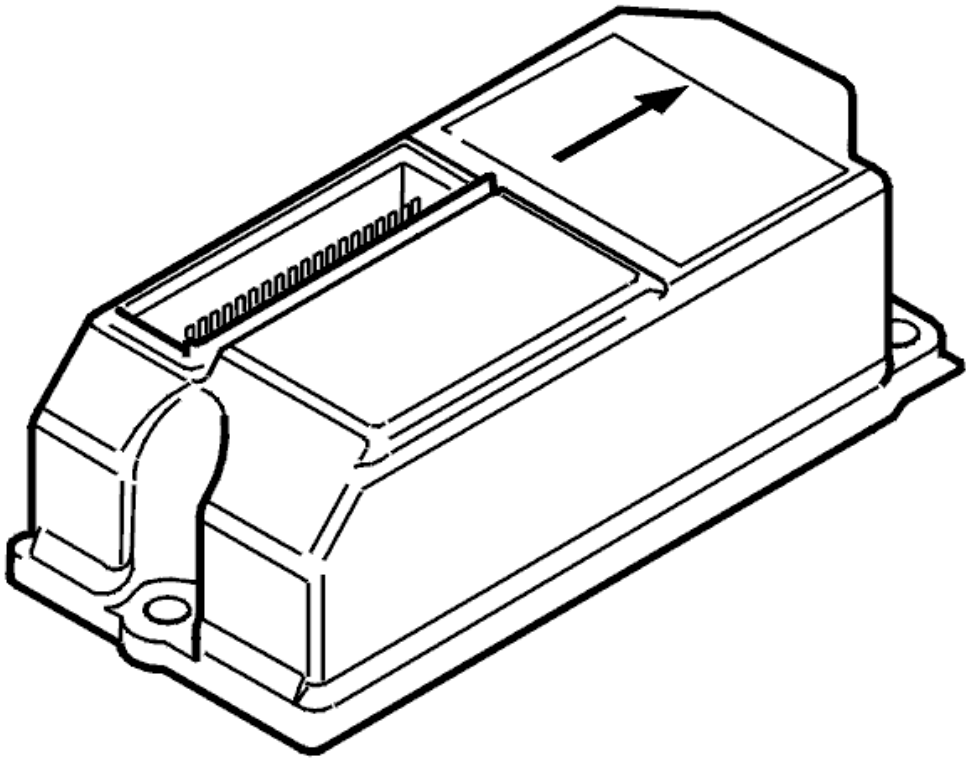

Fig. 26: Identifying SRS Control Module
Courtesy of VOLVO CARS CORPORATION

Diagnostic trouble code (DTC) SRS-013A is stored if the Supplemental Restraint System Module (SRS) registers an internal fault.

Diagnostic trouble code (DTC) SRS-013A can only be diagnosed when you switch from ignition position 0 to ignition positions I, II or III.

Substitute Value

- None.

Possible Source

- Internal fault in the SRS control module.

Fault symptom[s]

- The SRS indicator lamp is lit.

WARNING: **There is a risk that the SRS system will not function if this diagnostic trouble code (DTC) is stored.**

NOTE: **In the event of an internal fault, the diagnostic trouble code (DTC) must not be erased. The SRS control module must be returned to Volvo according to standard procedures.**

INTERNAL FAULT

INTERNAL FAULT

The SRS control module has registered an internal fault.

CAUTION: A new SRS control module is delivered without software. The control module must be programmed in order to function after replacement.

For further information about programming and replacing the SRS control module, see **SUPPLEMENTAL RESTRAINT SYSTEM MODULE (SRS), REPLACING** .

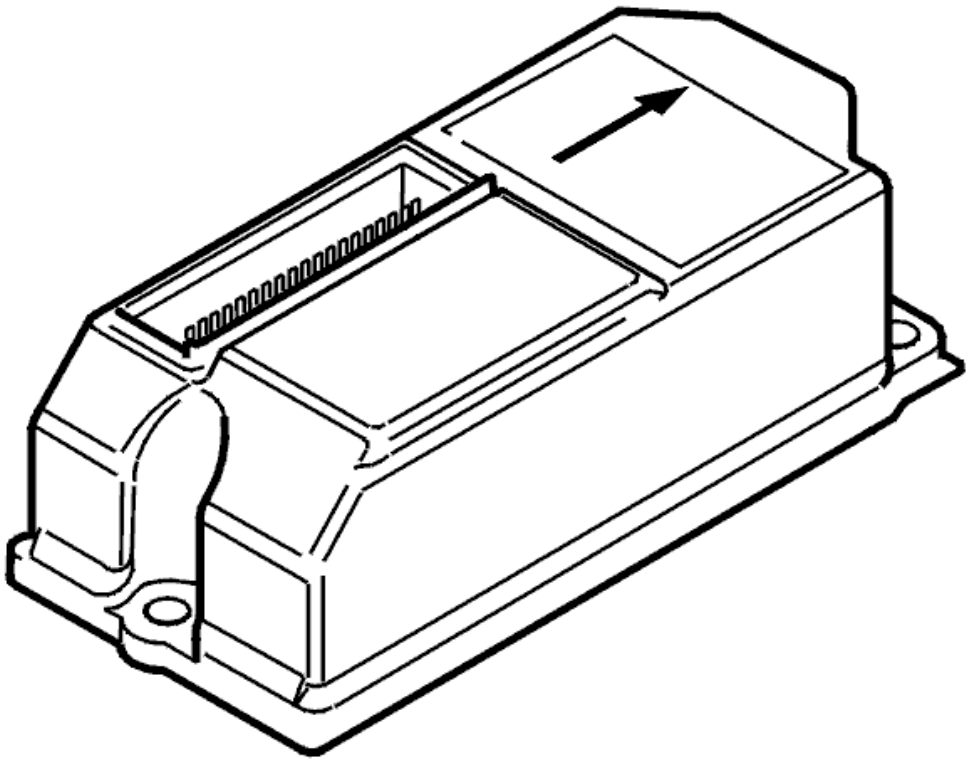

Fig. 27: Identifying SRS Control Module
Courtesy of VOLVO CARS CORPORATION

SRS-013B: CONTROL MODULE. INTERNAL FAULT (2003-2012)

DIAGNOSTIC TROUBLE CODE (DTC) INFORMATION SRS-013B

Condition

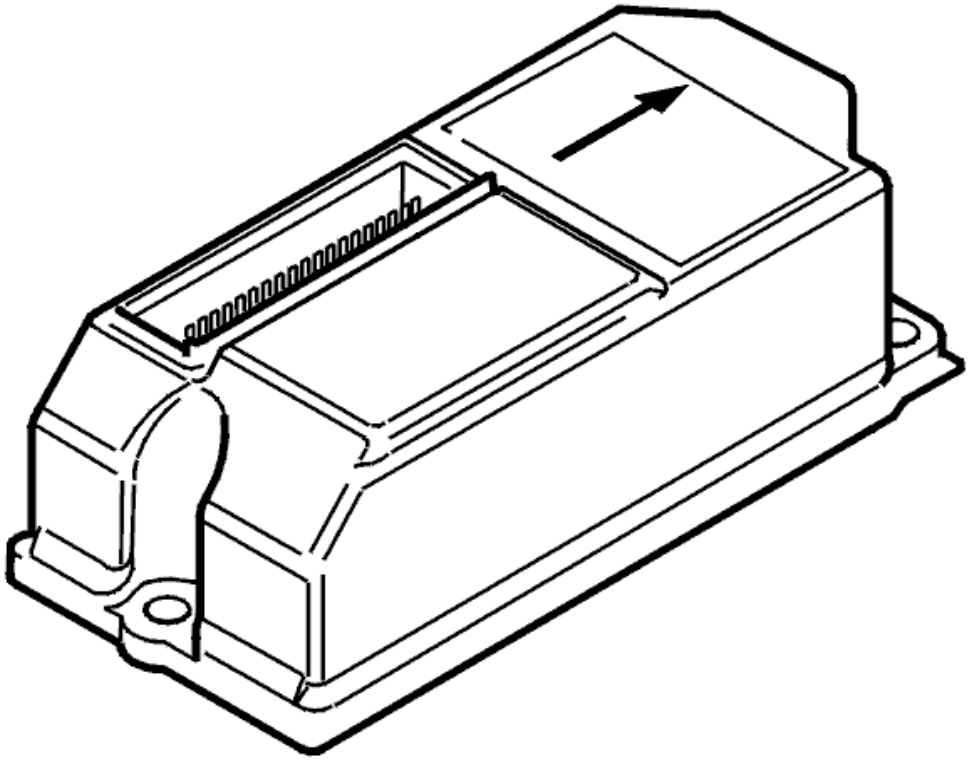

Fig. 28: Identifying SRS Control Module
Courtesy of VOLVO CARS CORPORATION

Diagnostic trouble code (DTC) SRS-013B is stored if the Supplemental Restraint System Module (SRS) registers an internal fault.

Diagnostic trouble code (DTC) SRS-013B can only be diagnosed when you switch from ignition position 0 to ignition positions I, II or III.

Substitute Value

- None.

Possible Source

- Internal fault in the supplemental restraint system module (SRS)
- Weak battery in the vehicle when programming a control module.

Fault symptom[s]

- The SRS indicator lamp is lit.

WARNING: There is a risk that the SRS system will not function if this diagnostic trouble code (DTC) is stored.

INTERNAL FAULT

INTERNAL FAULT

NOTE: This diagnostic trouble code (DTC) may be stored after programming one of the vehicle control modules. If this has occurred, the control module must only be reprogrammed. The control module must not be replaced.

The battery must be fully charged before reprogramming is carried out

If the diagnostic trouble code (DTC) has been stored previously, the entire control module must be replaced.

The supplemental restraint system module (SRS) has registered an internal fault.

CAUTION: A new supplemental restraint system module (SRS) is delivered without software. The control module must be programmed in order to function after replacement.

For further information about programming and replacing the supplemental restraint system module (SRS):**SUPPLEMENTAL RESTRAINT SYSTEM MODULE (SRS), REPLACING**

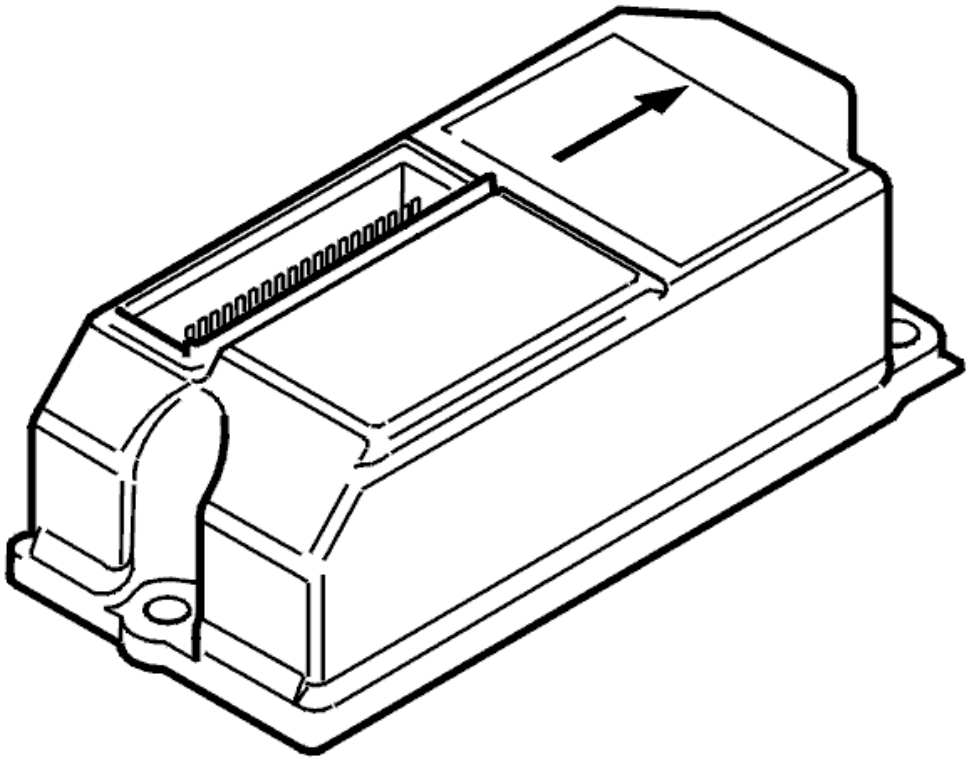

Fig. 29: Identifying SRS Control Module
Courtesy of VOLVO CARS CORPORATION

SRS-020C: AOS. CONFIGURATION FAULT (2003-2004)

DIAGNOSTIC TROUBLE CODE (DTC) INFORMATION SRS-020C

Condition

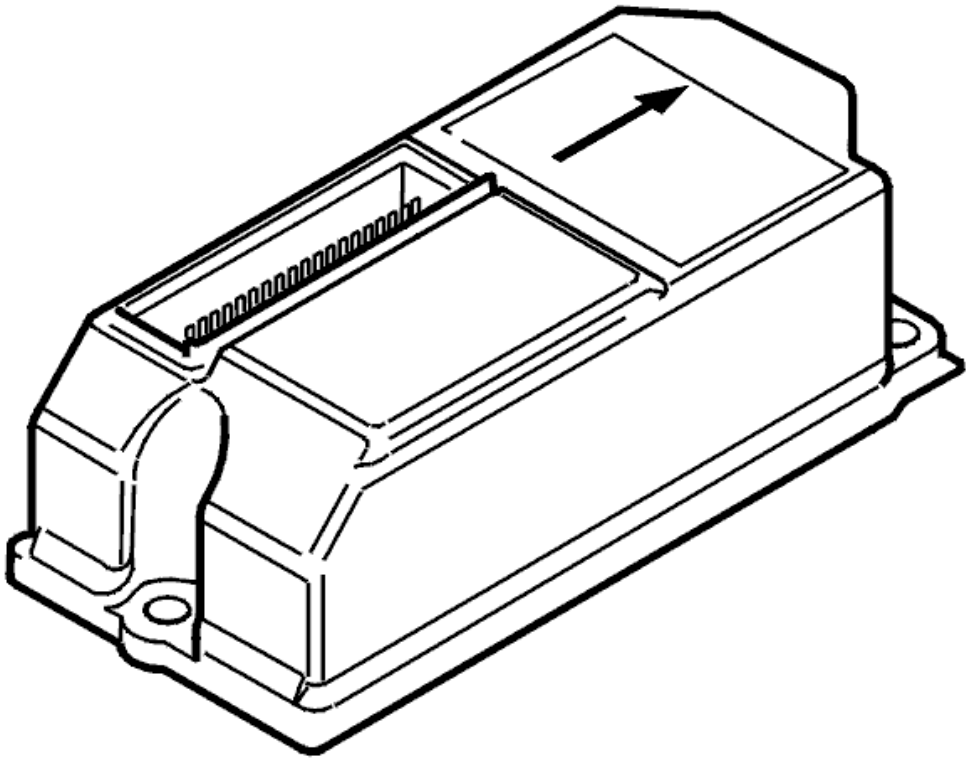

Fig. 30: Identifying SRS Control Module
Courtesy of VOLVO CARS CORPORATION

The Supplemental Restraint System Module (SRS) checks the signal in the control area network (CAN) bus.

Diagnostic trouble code (DTC) SRS-020C is stored if the parameter file in the Supplemental Restraint System Module (SRS) and in the central electronic module (CEM) (car config) for the parameter "with or without AOS" do not correspond.

Diagnostic trouble code (DTC) SRS-020C can be diagnosed in ignition positions I, II or III.

Substitute Value

- None.

Possible Source

- Incorrect car configurations in the central electronic module (CEM) or incorrect parameter files in the SRS system
- Car configurations in the central electronic module (CEM) or parameter files in the SRS system.

Fault symptom[s]

- The SRS indicator lamp is lit.

CONFIGURATION FAULT

CHECKING THE COMPONENT

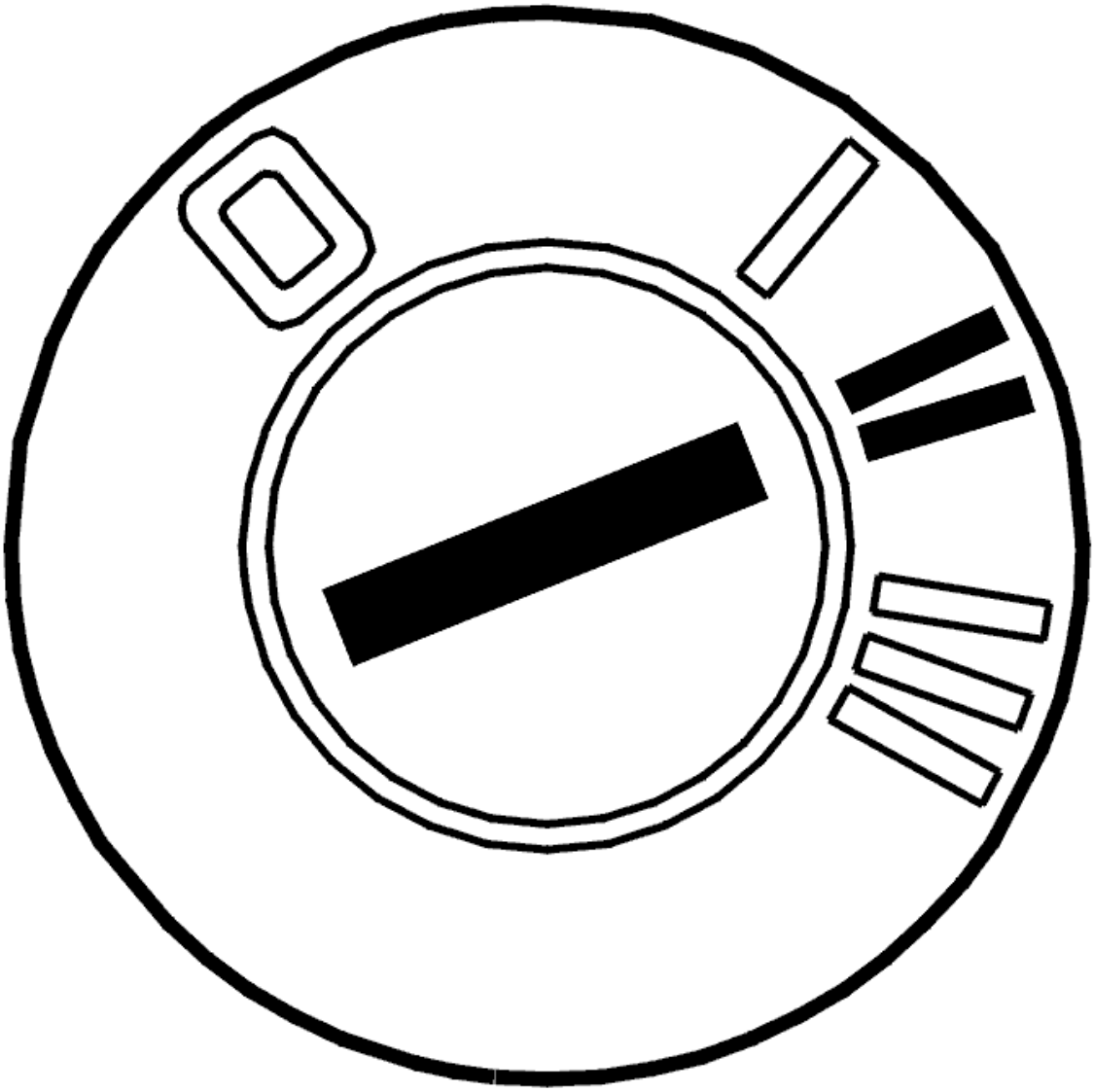

Fig. 31: Identifying Ignition ON
Courtesy of VOLVO CARS CORPORATION

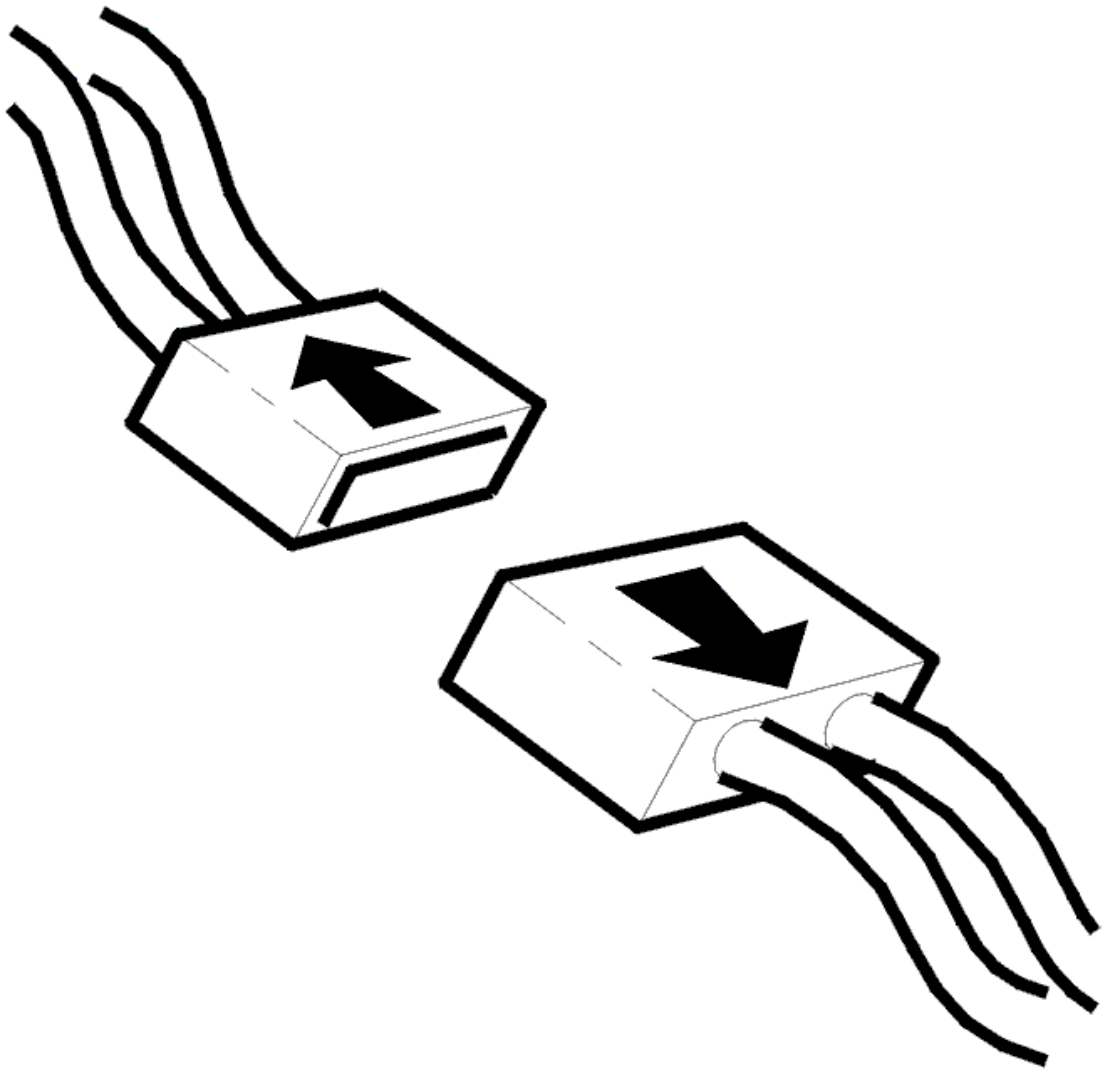

Fig. 32: Disconnecting Connector
Courtesy of VOLVO CARS CORPORATION

- Switch on the ignition. Wait 20 seconds.

  Read off the parameter "with or without AOS" for the central electronic module (CEM) and for the Supplemental Restraint System Module (SRS). Check that the parameter value is the same for the central electronic module (CEM) as for the Supplemental Restraint System Module (SRS).

  If the parameter value is not the same for the Supplemental Restraint System Module (SRS) as for the central electronic module (CEM). Note the difference for reporting purposes.

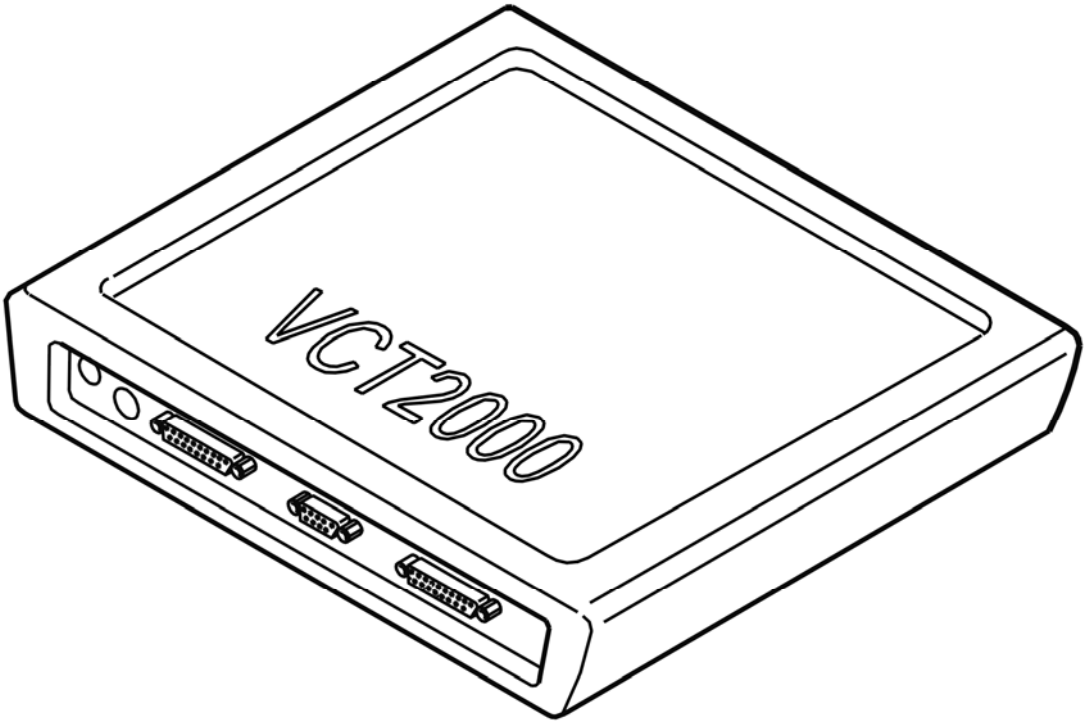

Fig. 33: Identifying VCT2000 Diagnostic Tool Symbol In VIDA
Courtesy of VOLVO CARS CORPORATION

SRS-0210: FRONT RIGHT FRONT IMPACT SENSOR. FAULTY SIGNAL (2003-2012)

DIAGNOSTIC TROUBLE CODE (DTC) INFORMATION SRS-0210

Condition

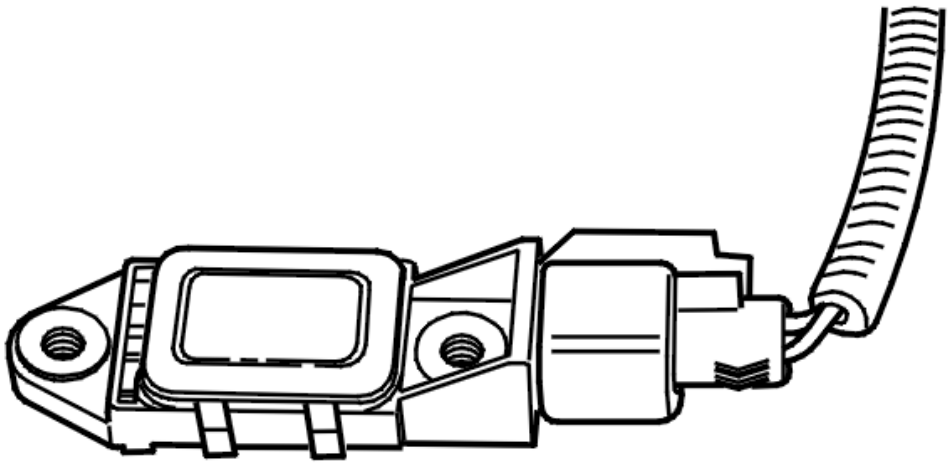

Fig. 34: Identifying Front Right Front Impact Sensor
Courtesy of VOLVO CARS CORPORATION

The Supplemental Restraint System Module (SRS) checks the signal from the front right front impact sensor.

Diagnostic trouble code (DTC) SRS-0210 is stored if the control module registers an incorrect signal, i. e. that the signal in the signal cable is too low or too high for longer than 10 seconds.

Diagnostic trouble code (DTC) SRS-0210 can be diagnosed in ignition positions I, II or III.

Substitute Value

- None.

Possible Source

- Short-circuit to supply voltage in the signal cable between the front right front impact sensor and the Supplemental Restraint System Module (SRS)
- Short-circuit to ground in the signal cable between the front right front impact sensor and the Supplemental Restraint System Module (SRS)
- Short-circuit to supply voltage in the connector
- Short-circuit to ground in the connector
- Short-circuit to ground in the connector

- Short-circuit between signal cables to the front impact sensor from the Supplemental Restraint System Module (SRS)
- Short-circuit in the front impact sensor (defective front impact sensor).

Fault symptom[s]

- The SRS indicator lamp is lit.

FAULTY SIGNAL

CHECKING THE COMPONENT

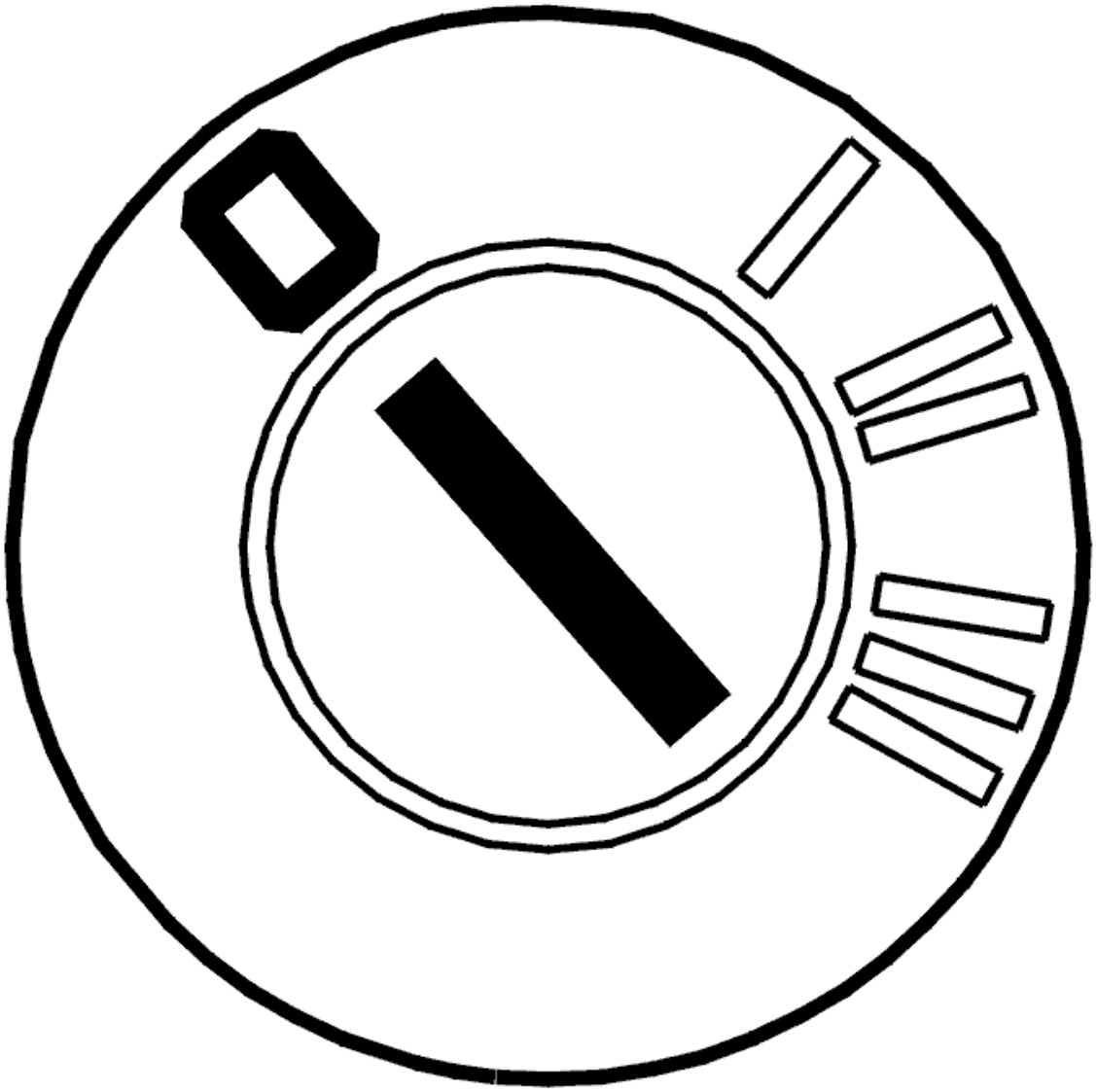

Fig. 35: Identifying Ignition OFF
Courtesy of VOLVO CARS CORPORATION

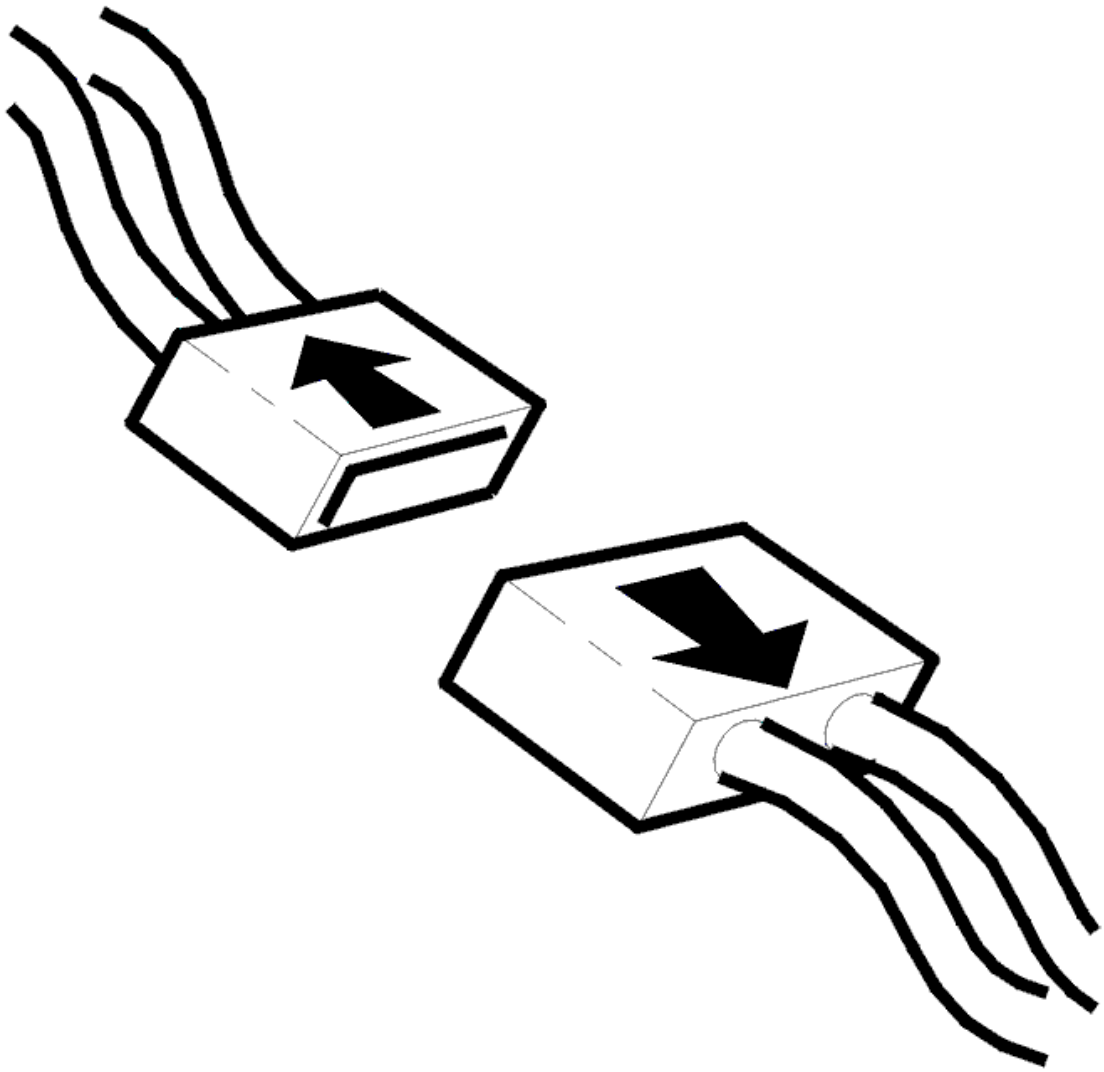

Fig. 36: Disconnecting Connector
Courtesy of VOLVO CARS CORPORATION

- Ignition off
- Disconnect the connector from the front right front impact sensor.

  Check the female and male parts of the connectors for the Supplemental Restraint System Module (SRS) and the front impact sensor. The cable terminals must not be damaged or pressed back.

  Check the signal cable between the Supplemental Restraint System Module (SRS) terminals #21B (49), #20B (48) and terminals #1 and #2 on the front impact sensor. Check for a short-circuit to supply voltage. Check for a short-circuit to ground

  Check the resistance in the signal cable between terminals #21B (49) and #20B (48) for the Supplemental Restraint System Module (SRS). The resistance must be infinite.

If no fault is found, replace the front collision sensor.

Remedy as necessary.

Other information:

- To access or replace the front impact sensor, see **COLLISION SENSOR FRONT, REPLACING**
- For information about signals, see **SIGNAL SPECIFICATION**
- For information about the repair of SRS wiring, see **CABLE HARNESS SRS SYSTEM, REPAIR**
- see **CHECKING WIRING AND TERMINALS** .

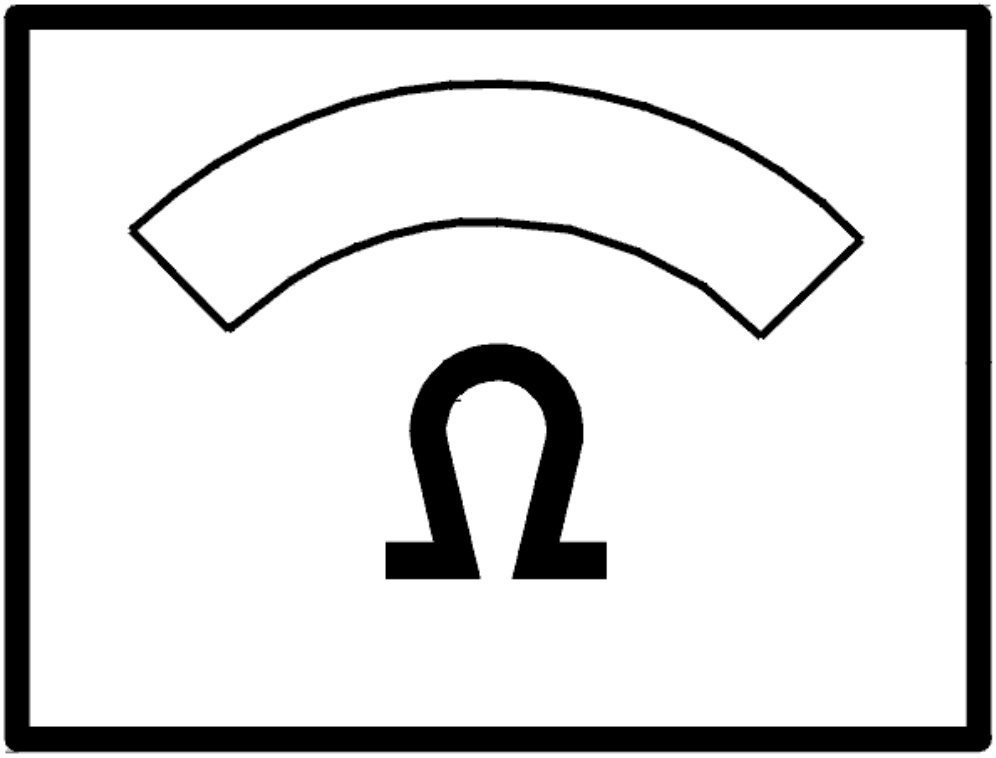

Fig. 37: Identifying Ohm Meter
Courtesy of VOLVO CARS CORPORATION

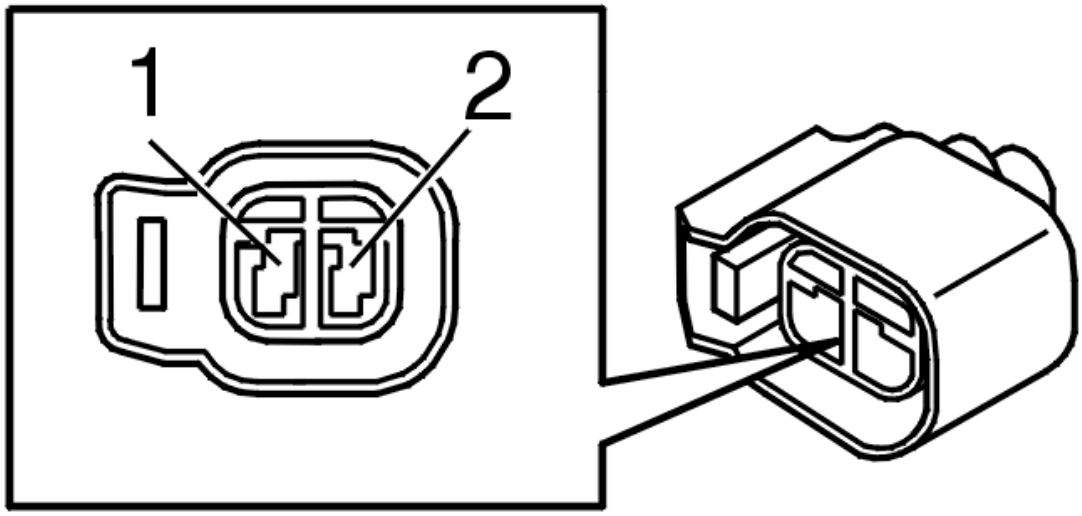

Fig. 38: Identifying Front Impact Sensor Connector Terminals
Courtesy of VOLVO CARS CORPORATION

- **Continue**

  See: **VERIFICATION**

INFORMATION

FAULT-TRACING INFORMATION

The fault should have been detected and remedied. As this is not the case fault-tracing has failed.

Exit fault-tracing for this diagnostic trouble code (DTC) or make another attempt.

VERIFICATION

VERIFICATION

HINT: After carrying out the repair, check that the fault has been remedied.

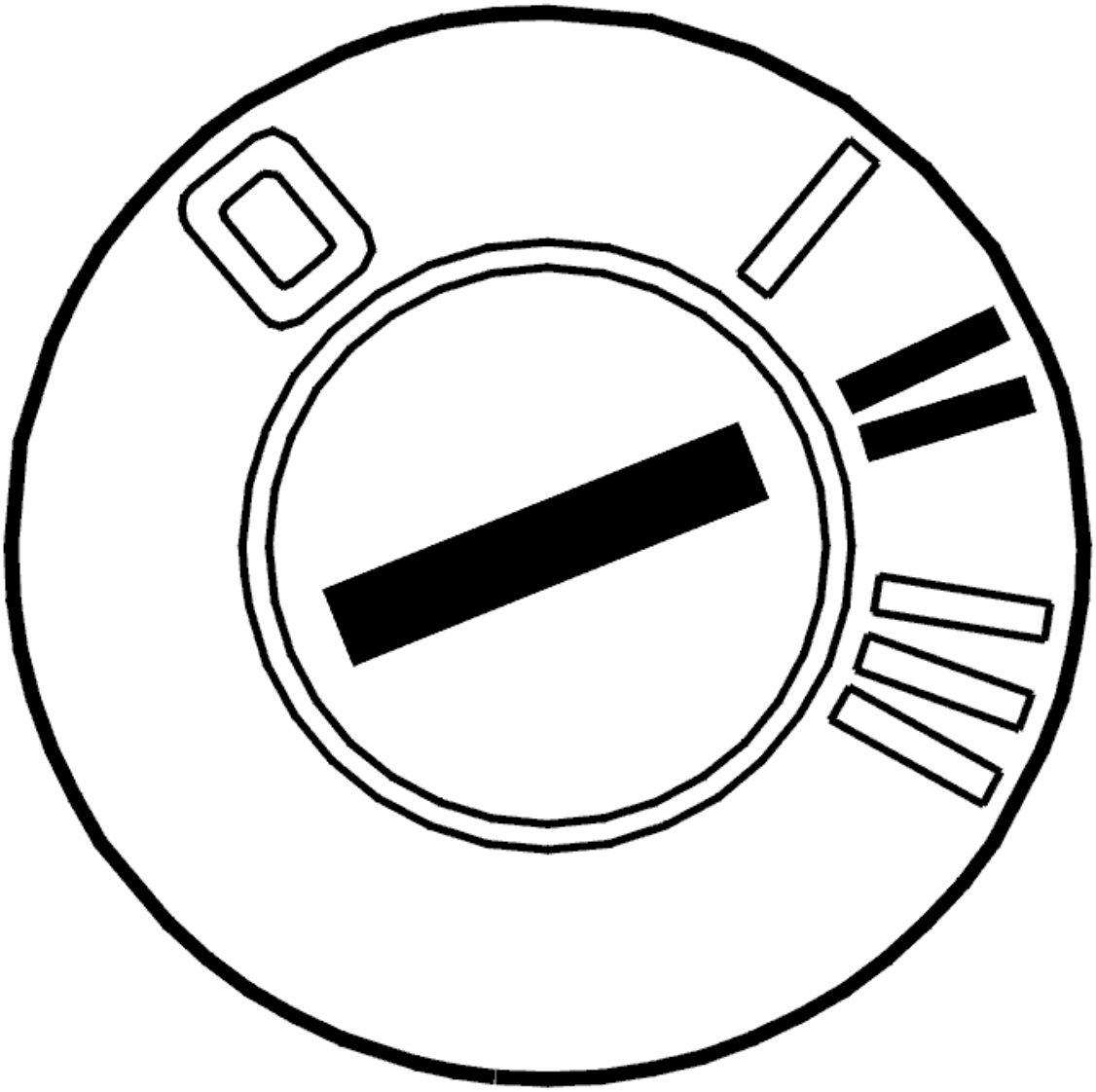

Fig. 39: Identifying Ignition ON
Courtesy of VOLVO CARS CORPORATION

- Ignition off
- Disconnect the battery negative lead
- Reinstall the connectors, components etc.
- Ignition on
- Connect the battery negative lead.

WARNING: There must not be anyone inside the passenger compartment when the battery is connected.

- Read off diagnostic trouble codes (DTCs).

The fault is no longer present if the diagnostic trouble code (DTC) status is intermittent.

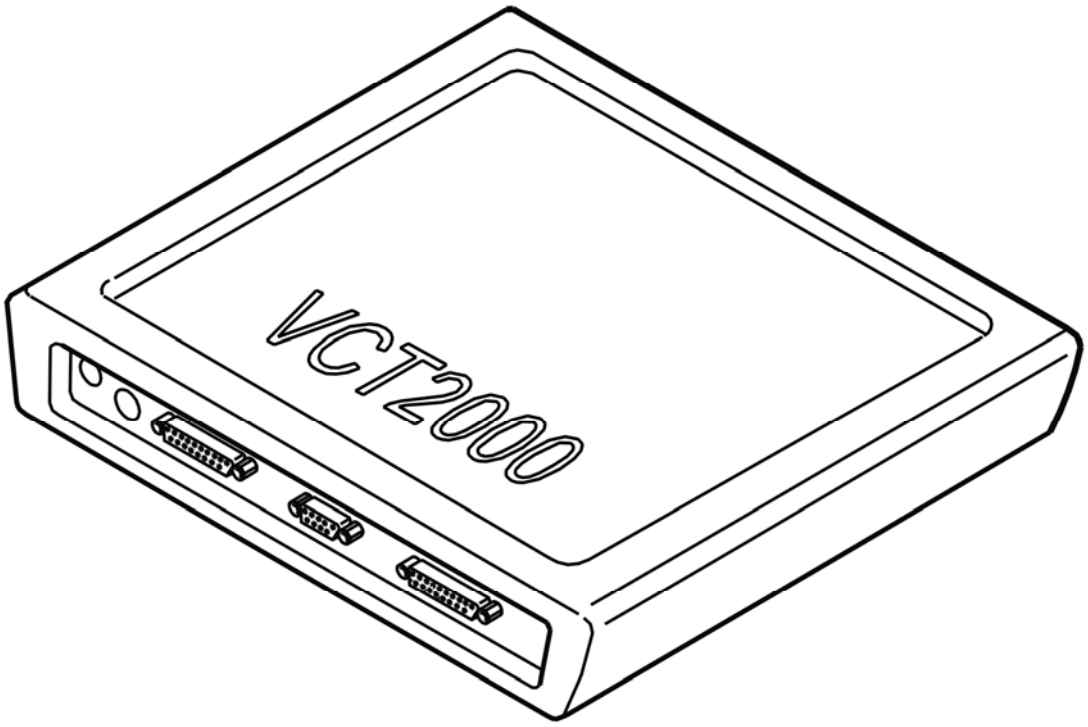

Fig. 40: Identifying VCT2000 Diagnostic Tool Symbol In VIDA
Courtesy of VOLVO CARS CORPORATION

Is the diagnostic trouble code (DTC) intermittent?

- **YES**

  VERIFIED: Troubleshooting has been completed.

- **NO**

  See: **INFORMATION**

SRS-0211: FRONT RIGHT FRONT IMPACT SENSOR. COMMUNICATION FAULT (2003-2012)

DIAGNOSTIC TROUBLE CODE (DTC) INFORMATION SRS-0211

Condition

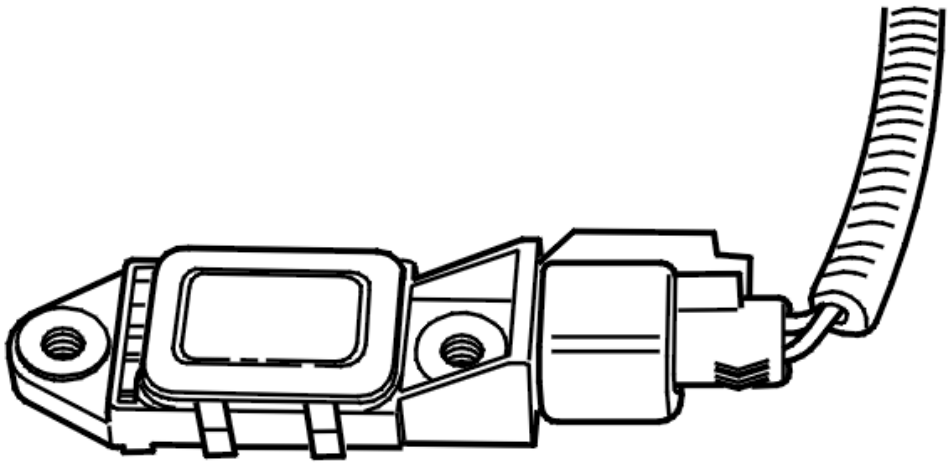

Fig. 41: Identifying Front Right Front Impact Sensor
Courtesy of VOLVO CARS CORPORATION

The Supplemental Restraint System Module (SRS) checks the signal from the front right front impact sensor.

Diagnostic trouble code (DTC) SRS-0211 is stored if the control module registers a communication fault in the signal cable for longer than 10 seconds.

Diagnostic trouble code (DTC) SRS-0211 can be diagnosed in ignition positions I, II or III.

Substitute Value

- None.

Possible Source

- Contact resistance or open-circuit in the signal cable between the front right front impact sensor and the Supplemental Restraint System Module (SRS)
- Open-circuit in the front impact sensor (defective front impact sensor).

Fault symptom[s]

- The SRS indicator lamp is lit.

COMMUNICATION FAULT

CHECKING THE COMPONENT

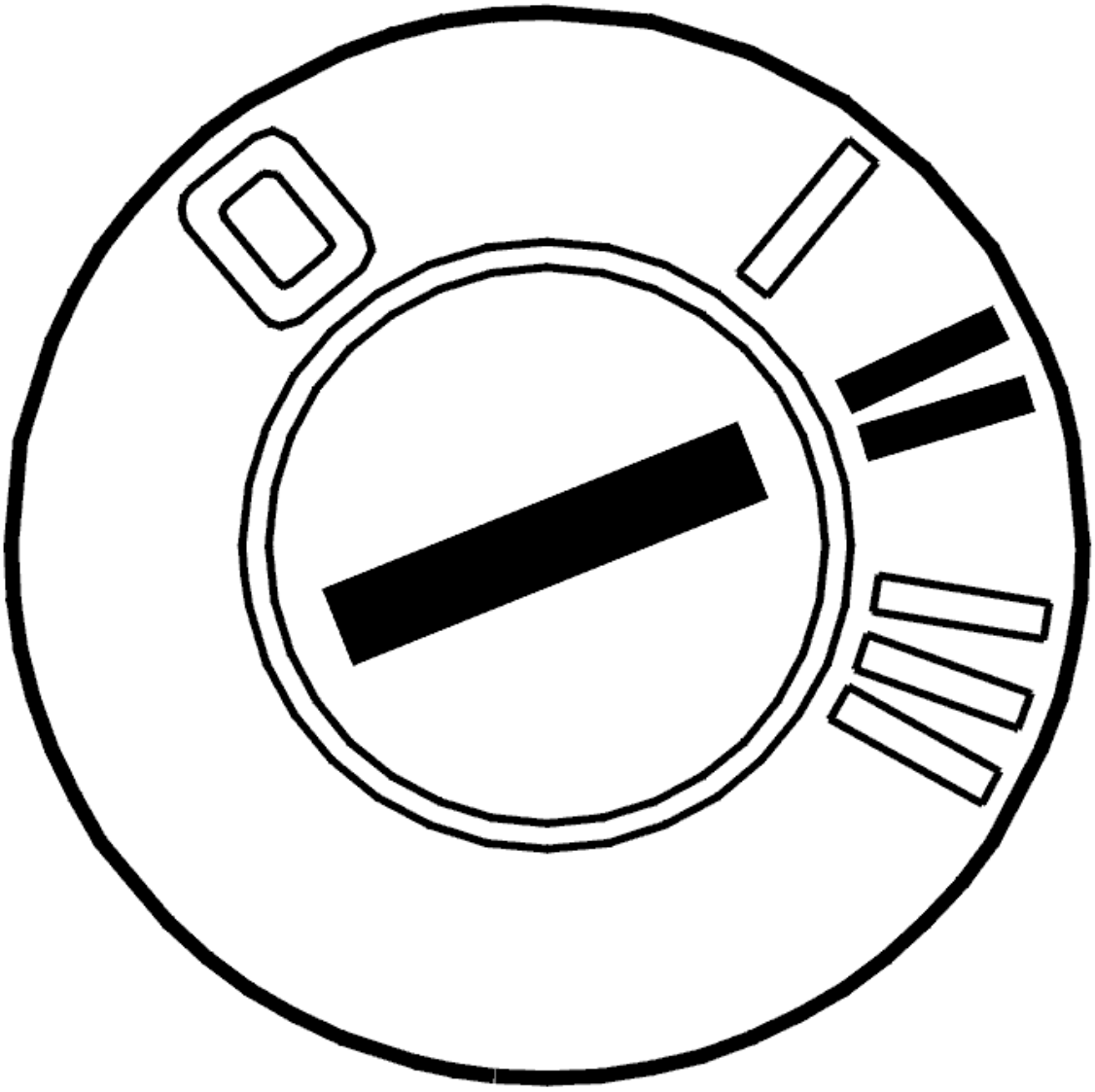

Fig. 42: Identifying Ignition ON
Courtesy of VOLVO CARS CORPORATION

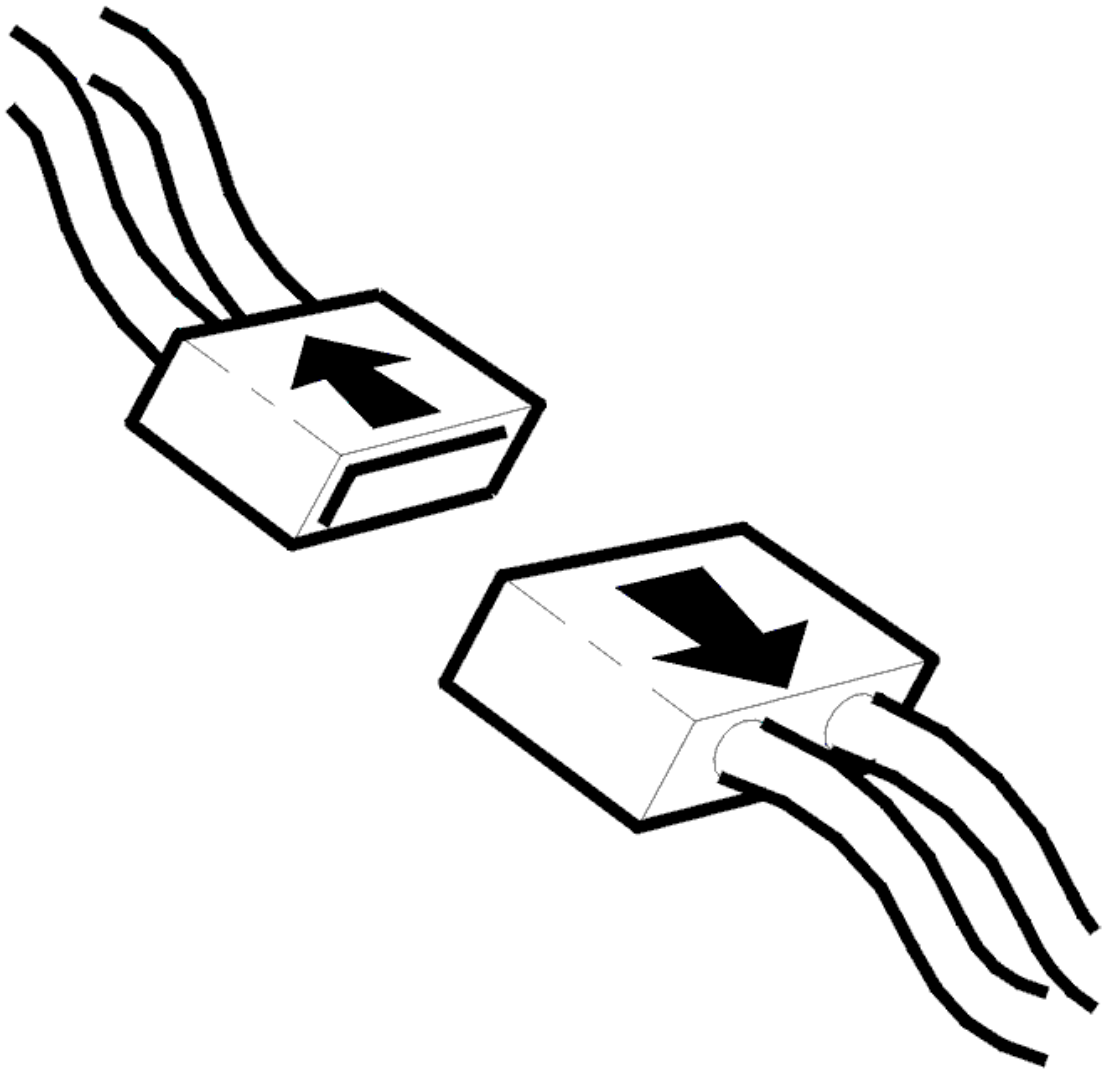

Fig. 43: Disconnecting Connector
Courtesy of VOLVO CARS CORPORATION

- Ignition off
- Disconnect the connector from the front right front impact sensor.

  Check the female and male parts of the connectors for the Supplemental Restraint System Module (SRS) and the front impact sensor. The cable terminals must not be damaged, pressed back or oxidized.

  Connect special tool see **9512887** to the front impact sensor.

  Check the resistance between terminal #21B (49) and #20B(48) on the Supplemental Restraint System Module (SRS). The resistance should be 10Kohms.

  Remedy as necessary.

Other information:

- To access or replace the front impact sensor, see **COLLISION SENSOR FRONT, REPLACING**
- For information about signals, see **SIGNAL SPECIFICATION**
- For information about the repair of SRS wiring, see **CABLE HARNESS SRS SYSTEM, REPAIR**
- see **CHECKING WIRING AND TERMINALS** .

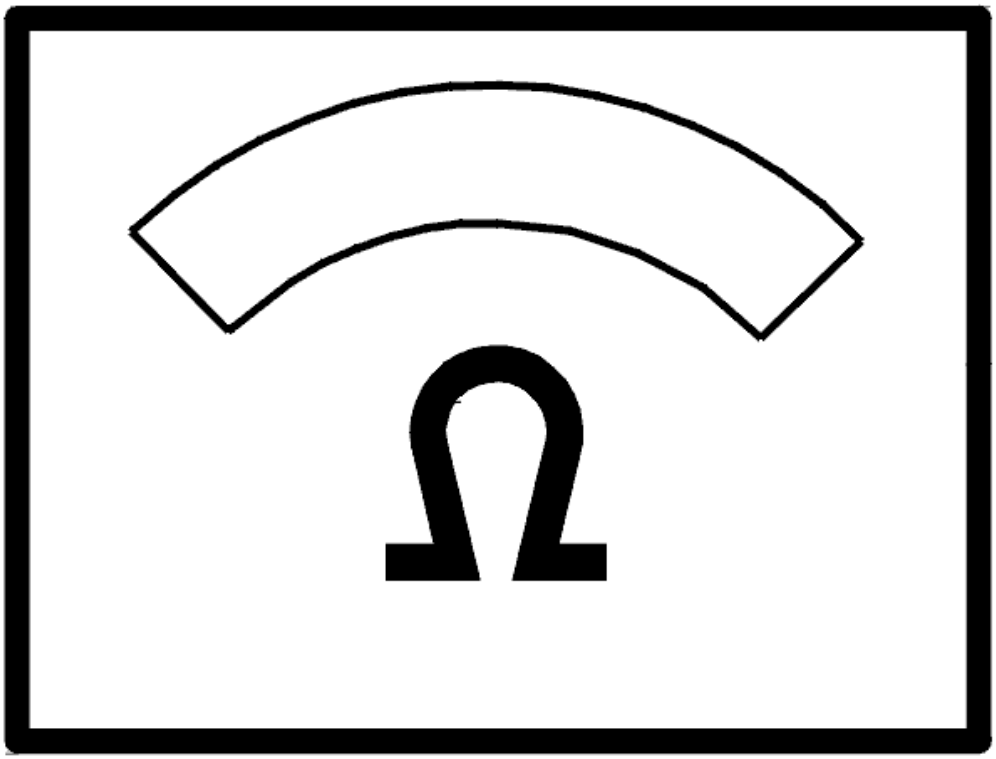

Fig. 44: Identifying Ohm Meter
Courtesy of VOLVO CARS CORPORATION

Is the correct resistance value displayed?

- **NO**

See: **CHECKING THE COMPONENT**

- **YES**

  See: **VERIFICATION**

CHECKING THE COMPONENT

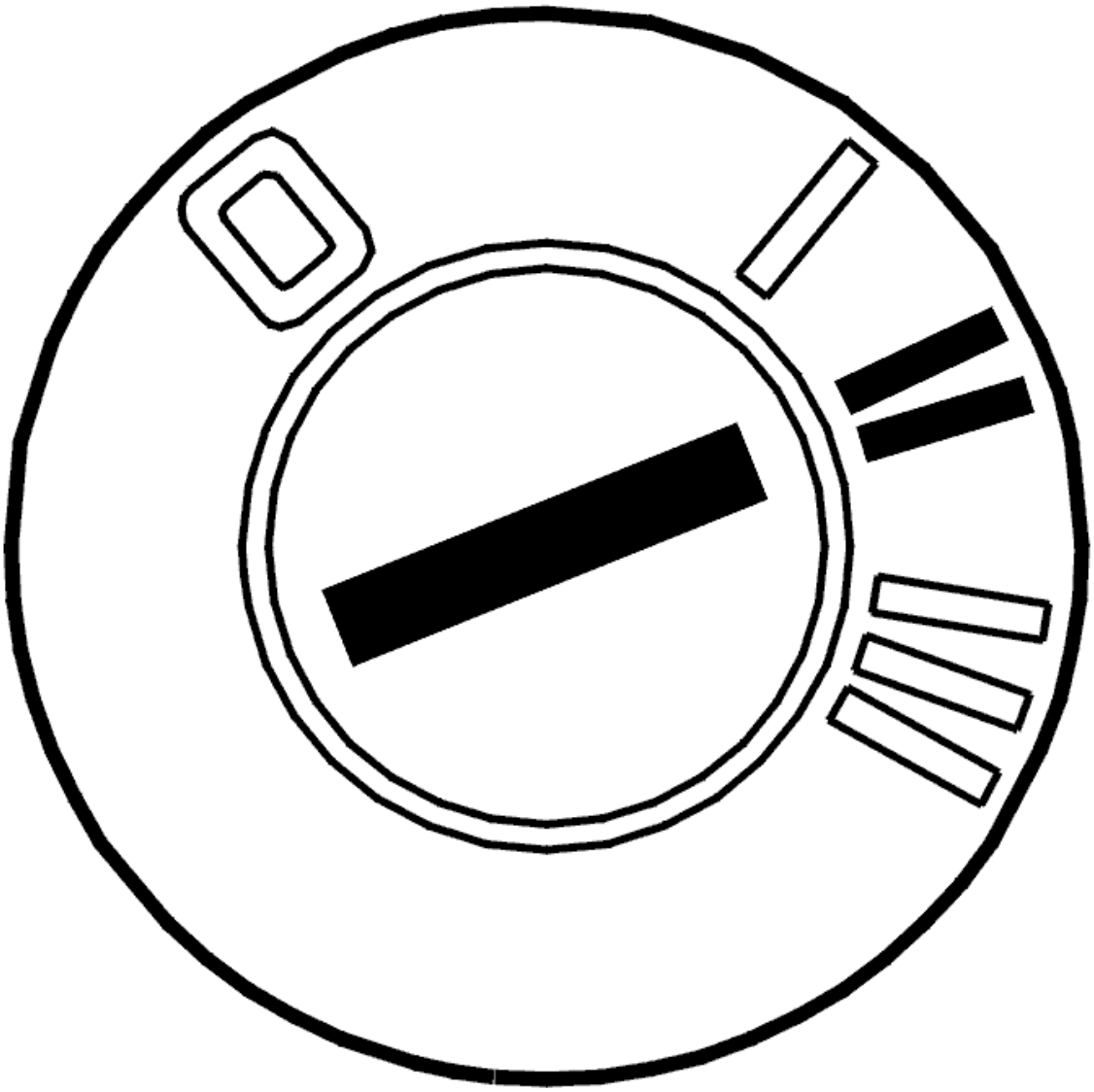

Fig. 45: Identifying Ignition ON
Courtesy of VOLVO CARS CORPORATION

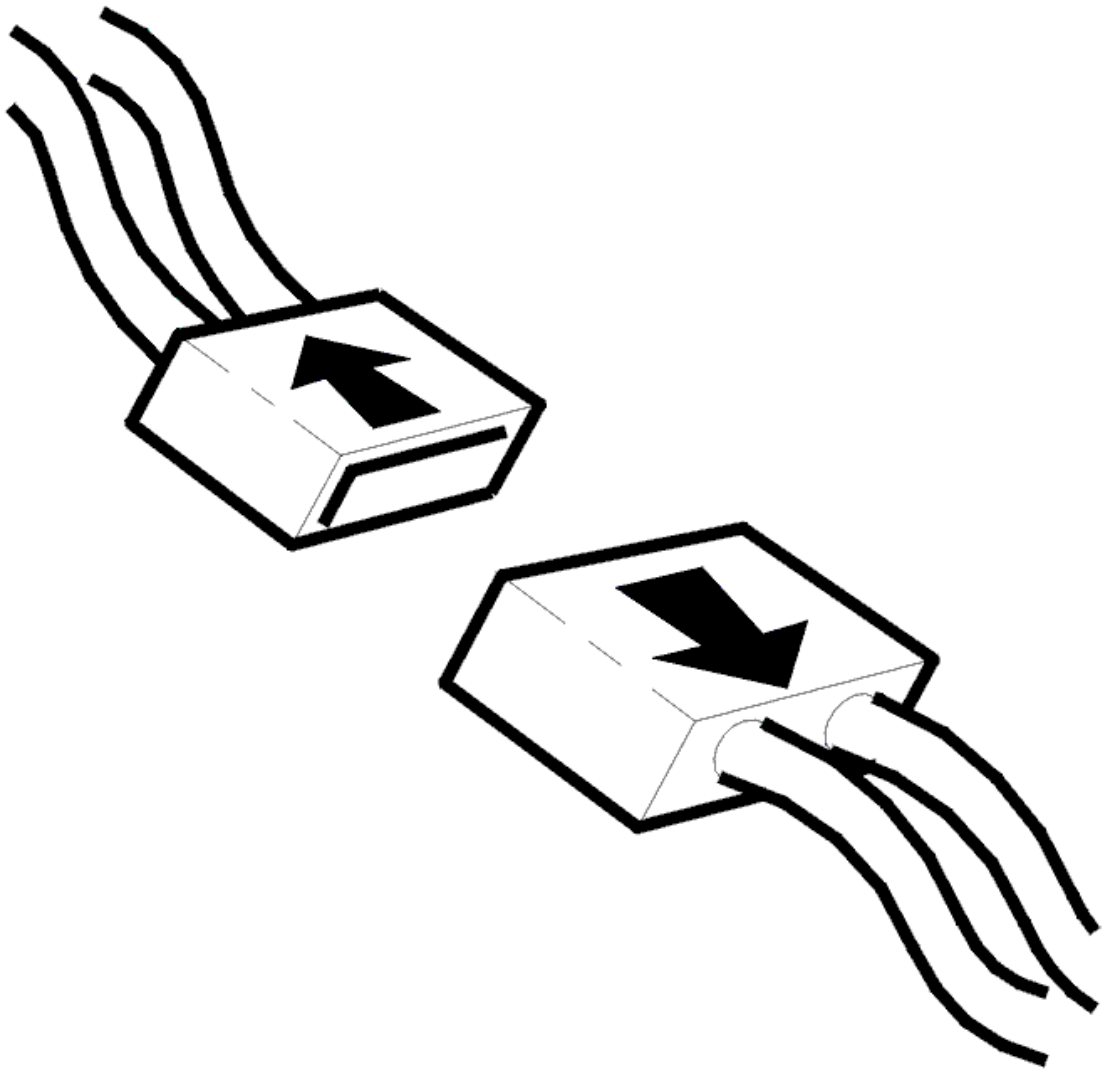

Fig. 46: Disconnecting Connector
Courtesy of VOLVO CARS CORPORATION

- Ignition off
- Disconnect special tool see **9512887** from the front impact sensor.

  Check the female and male parts of the connectors for the Supplemental Restraint System Module (SRS) and the front impact sensor. The cable terminals must not be damaged, pressed back or oxidized.

  Check the cable between the Supplemental Restraint System Module (SRS) terminal #21B (49) and front right front impact sensor #1. Check for an open-circuit.

  Check the cable between the Supplemental Restraint System Module (SRS) terminal #20B (48) and front right front impact sensor #2. Check for an open-circuit.

  Remedy as necessary.

Other information:

- To access or replace the front impact sensor, see **COLLISION SENSOR FRONT, REPLACING**
- For information about signals, see **SIGNAL SPECIFICATION**
- For information about the repair of SRS wiring, see **CABLE HARNESS SRS SYSTEM, REPAIR**
- see **CHECKING WIRING AND TERMINALS** .

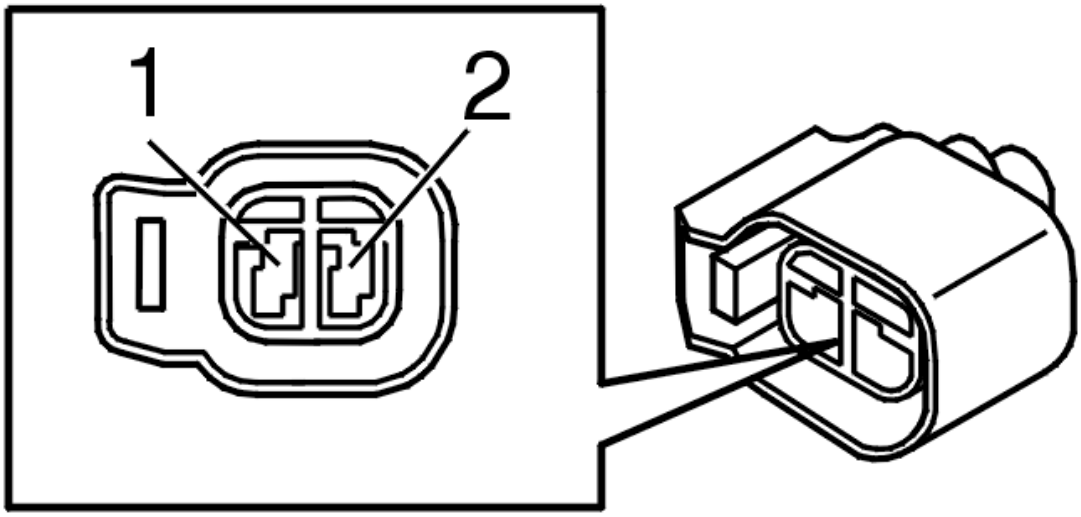

Fig. 47: Identifying Front Impact Sensor Connector Terminals
Courtesy of VOLVO CARS CORPORATION

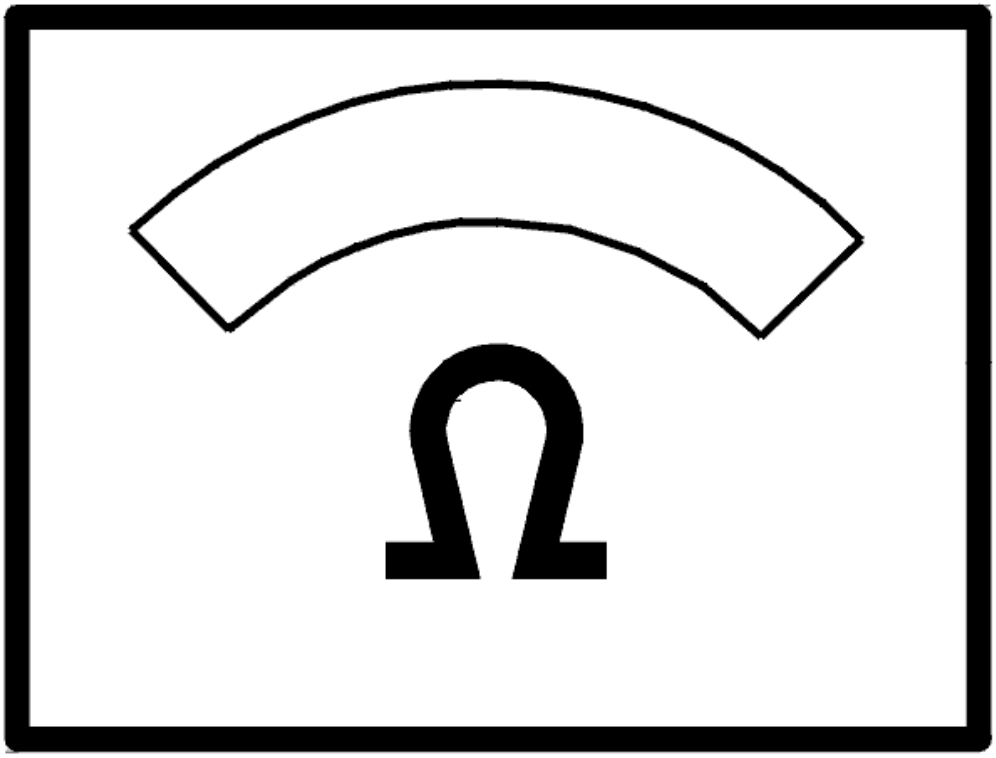

Fig. 48: Identifying Ohm Meter
Courtesy of VOLVO CARS CORPORATION

- **Continue**

  See: **VERIFICATION**

INFORMATION

FAULT-TRACING INFORMATION

The fault should have been detected and remedied. As this is not the case fault-tracing has failed.

Exit fault-tracing for this diagnostic trouble code (DTC) or make another attempt.

VERIFICATION

VERIFICATION

HINT: After carrying out the repair, check that the fault has been remedied.

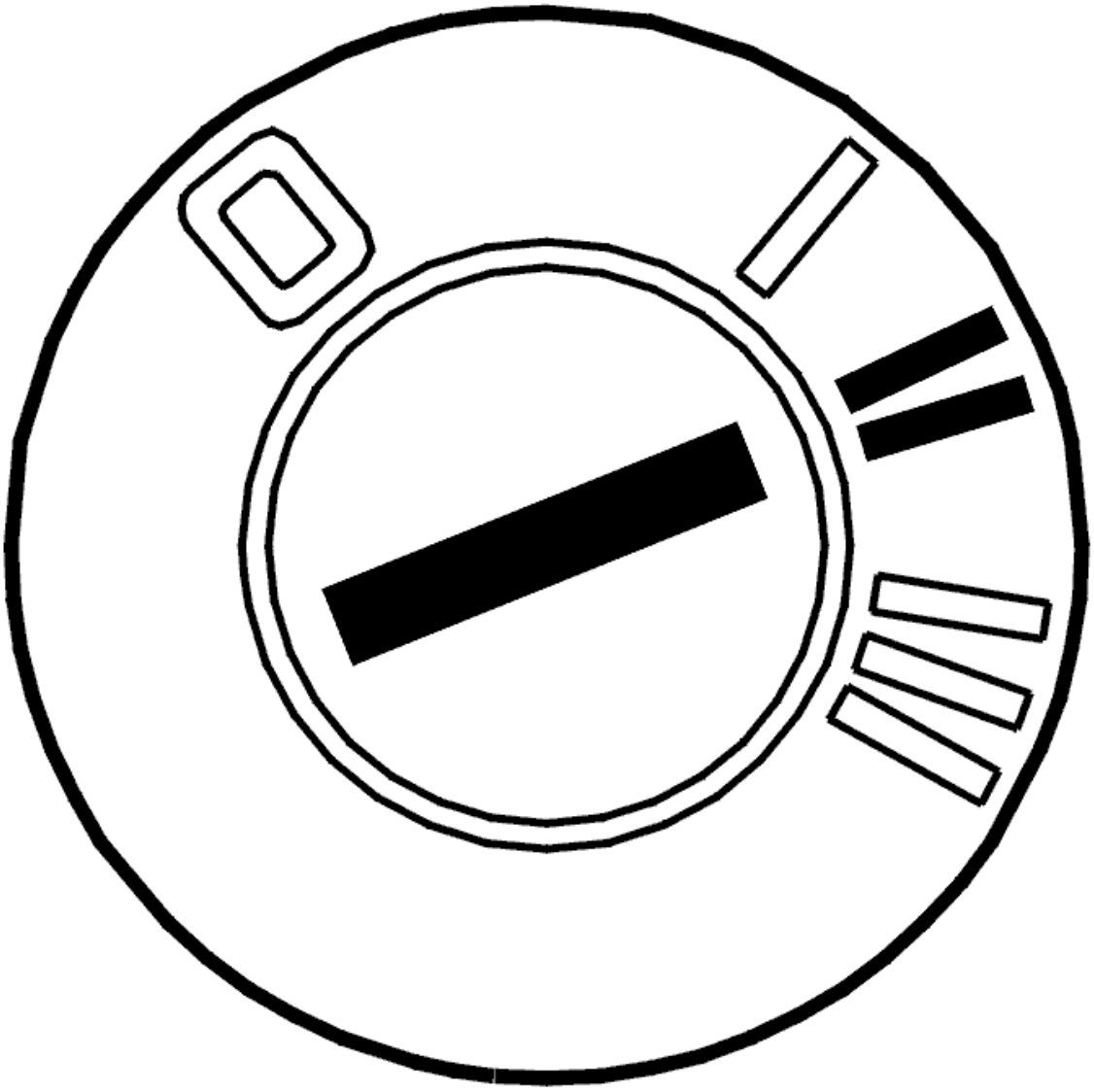

Fig. 49: Identifying Ignition ON
Courtesy of VOLVO CARS CORPORATION

- Ignition off
- Disconnect the battery negative lead
- Reinstall the connectors, components etc.
- Ignition on
- Connect the battery negative lead.

WARNING: **There must not be anyone inside the passenger compartment when the battery is connected.**

- Read off diagnostic trouble codes (DTCs).

  The fault is no longer present if the diagnostic trouble code (DTC) status is intermittent.

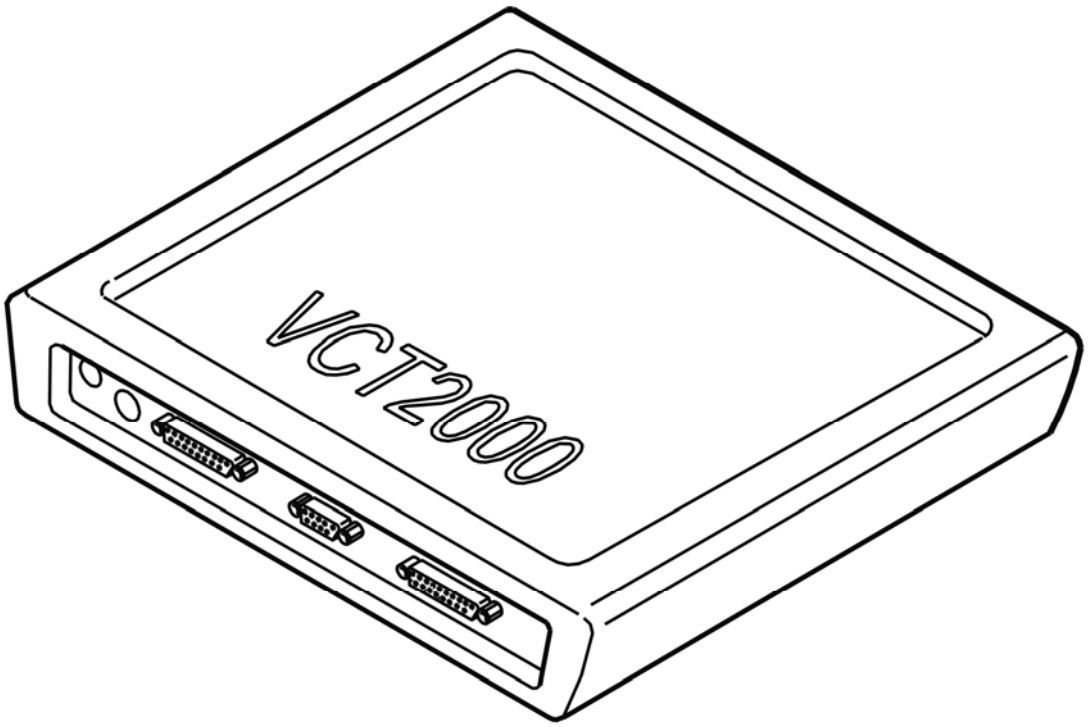

Fig. 50: Identifying VCT2000 Diagnostic Tool Symbol In VIDA
Courtesy of VOLVO CARS CORPORATION

Is the diagnostic trouble code (DTC) intermittent?

- **YES**

  VERIFIED: Troubleshooting has been completed.

- **NO**

  See: **INFORMATION**

SRS-0212: FRONT RIGHT FRONT IMPACT SENSOR. FAULTY IDENTIFICATION (2003-2012)

DIAGNOSTIC TROUBLE CODE (DTC) INFORMATION SRS-0212

Condition

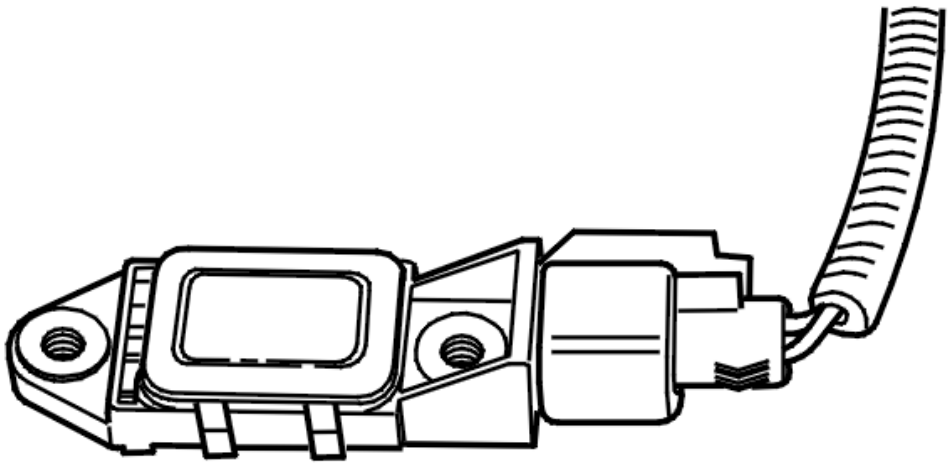

Fig. 51: Identifying Front Right Front Impact Sensor
Courtesy of VOLVO CARS CORPORATION

The Supplemental Restraint System Module (SRS) checks the signal from the front right front impact sensor.

Diagnostic trouble code (DTC) SRS-00212 is stored if the control module registers an incorrect identification of signal in the signal cable for longer than 10 seconds.

Diagnostic trouble code (DTC) SRS-0212 can be diagnosed in ignition positions I, II or III.

Substitute Value

- None.

Possible Source

- Faulty front impact sensor installed in the Supplemental Restraint System Module (SRS)
- The signal between the front impact sensor and the Supplemental Restraint System Module (SRS) has been affected by electrical interference. This causes the front impact sensor to respond with an incorrect identification signal.

Fault symptom[s]

- The SRS indicator lamp is lit.

INCORRECT IDENTIFICATION

REPLACING THE COMPONENT

Supplemental Restraint System Module (SRS) has registered that an incorrect front impact sensor model has been installed.

If this fault occurs, replace the front right front impact sensor. Check against the replacement parts catalogue which front impact sensor model is used in the relevant Supplemental Restraint System Module (SRS).

In the event of a permanent fault, replace the front impact sensor. See **COLLISION SENSOR FRONT, REPLACING** .

Remedy as necessary.

SRS-0213: FRONT RIGHT FRONT IMPACT SENSOR. INTERNAL FAULT (2003-2012)

DIAGNOSTIC TROUBLE CODE (DTC) INFORMATION SRS-0213

Condition

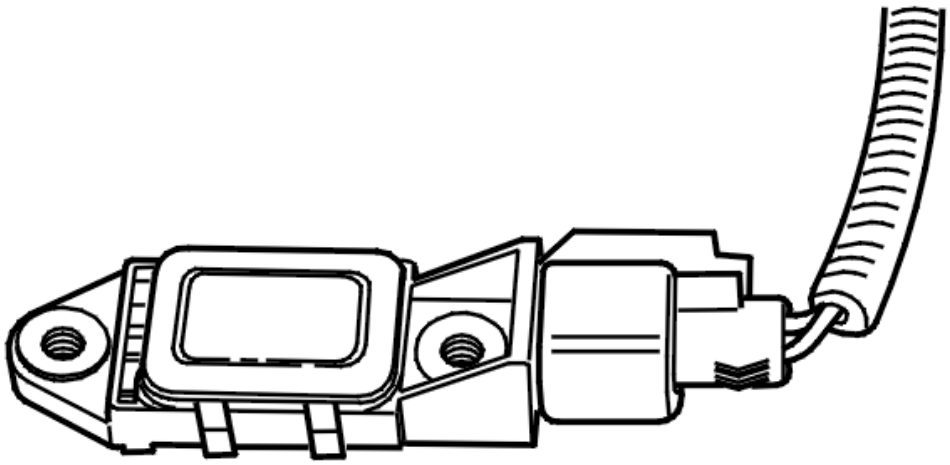

Fig. 52: Identifying Front Right Front Impact Sensor
Courtesy of VOLVO CARS CORPORATION

The Supplemental Restraint System Module (SRS) checks the signal from the front right front impact sensor.

Diagnostic trouble code (DTC) SRS-0213 is stored if the control module registers an internal fault in the front right front impact sensor.

Diagnostic trouble code (DTC) SRS-0213 can be diagnosed in ignition positions I, II or III.

Substitute Value

- None.

Possible Source

- Internal fault in the front right front impact sensor.

Fault symptom[s]

- The SRS indicator lamp is lit.

INTERNAL FAULT

INTERNAL FAULT

The control module has registered an internal fault in the front right front impact sensor.

In the event of a permanent and intermittent fault, replace the front impact sensor. See **COLLISION SENSOR FRONT, REPLACING** .

Remedy as necessary.

SRS-0214: FRONT RIGHT FRONT IMPACT SENSOR. CONFIGURATION FAULT (2003-2012)

DIAGNOSTIC TROUBLE CODE (DTC) INFORMATION SRS-0214

Condition

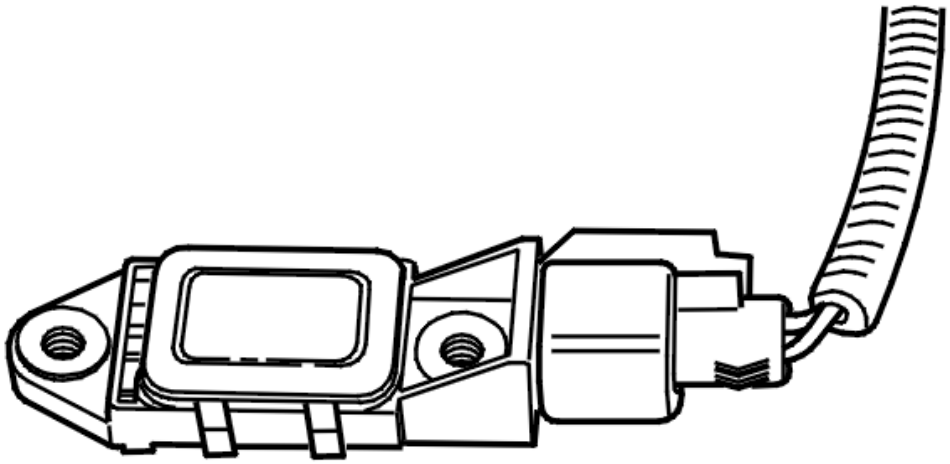

Fig. 53: Identifying Front Right Front Impact Sensor
Courtesy of VOLVO CARS CORPORATION

The Supplemental Restraint System Module (SRS) checks the signal from the front right front impact sensor.

Diagnostic trouble code (DTC) SRS-0214 is stored if the resistance in the signal cable wiring circuit is lower than 10 ohms for longer than 10 seconds.

Diagnostic trouble code (DTC) SRS-0214 can be diagnosed in ignition positions I, II or III.

Substitute Value

- None.

Possible Source

- If the Supplemental Restraint System Module (SRS) identifies that a front right front impact sensor is installed, despite the control module being programmed that a front impact sensor is not installed.

Fault symptom[s]

- The SRS indicator lamp is lit.

FAULT-TRACING

see **FAULT-TRACING**

SRS-0215: FRONT RIGHT FRONT IMPACT SENSOR. CROSS-CONNECTED (2003-2012)

DIAGNOSTIC TROUBLE CODE (DTC) INFORMATION SRS-0215

Condition

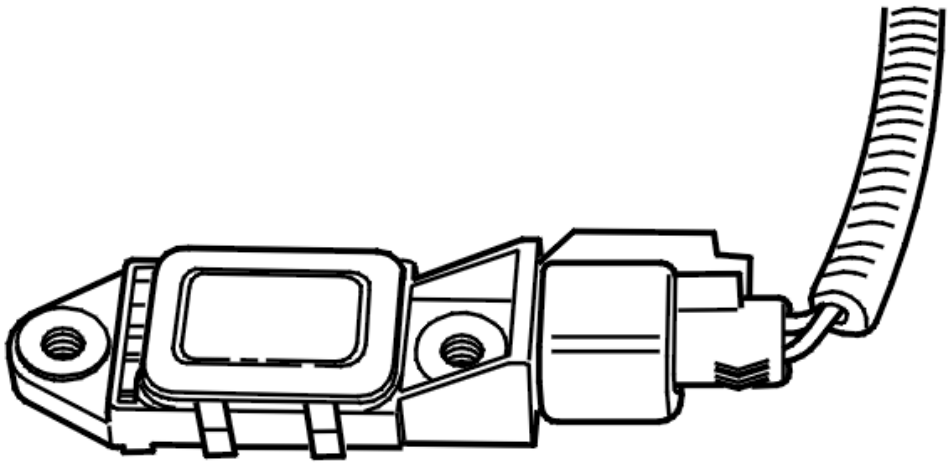

Fig. 54: Identifying Front Right Front Impact Sensor
Courtesy of VOLVO CARS CORPORATION

The Supplemental Restraint System Module (SRS) checks the signal from the front right front impact sensor.

Diagnostic trouble code (DTC) SRS-0215 is stored if the control module registers that the signal cable is cross-connected.

The diagnostic trouble code (DTC) can only be diagnosed when the ignition is switched on (12 V). In other words, the diagnostic trouble code (DTC) can only be diagnosed when the ignition is switched from position 0 to positions I, II or III.

Substitute Value

- None.

Possible Source

- Incorrect connection of the signal cables between the front right front impact sensor and the Supplemental Restraint System Module (SRS). The signal cables are reversed between the two terminal pins in the front impact sensor or in the Supplemental Restraint System Module (SRS)
- Incorrect repair of SRS wiring. The signal cables to the two terminal pins on the front impact sensor have been reversed.

Fault symptom[s]

- The SRS indicator lamp is lit.

CROSS-CONNECTED

CHECKING COMPONENTS AND WIRING

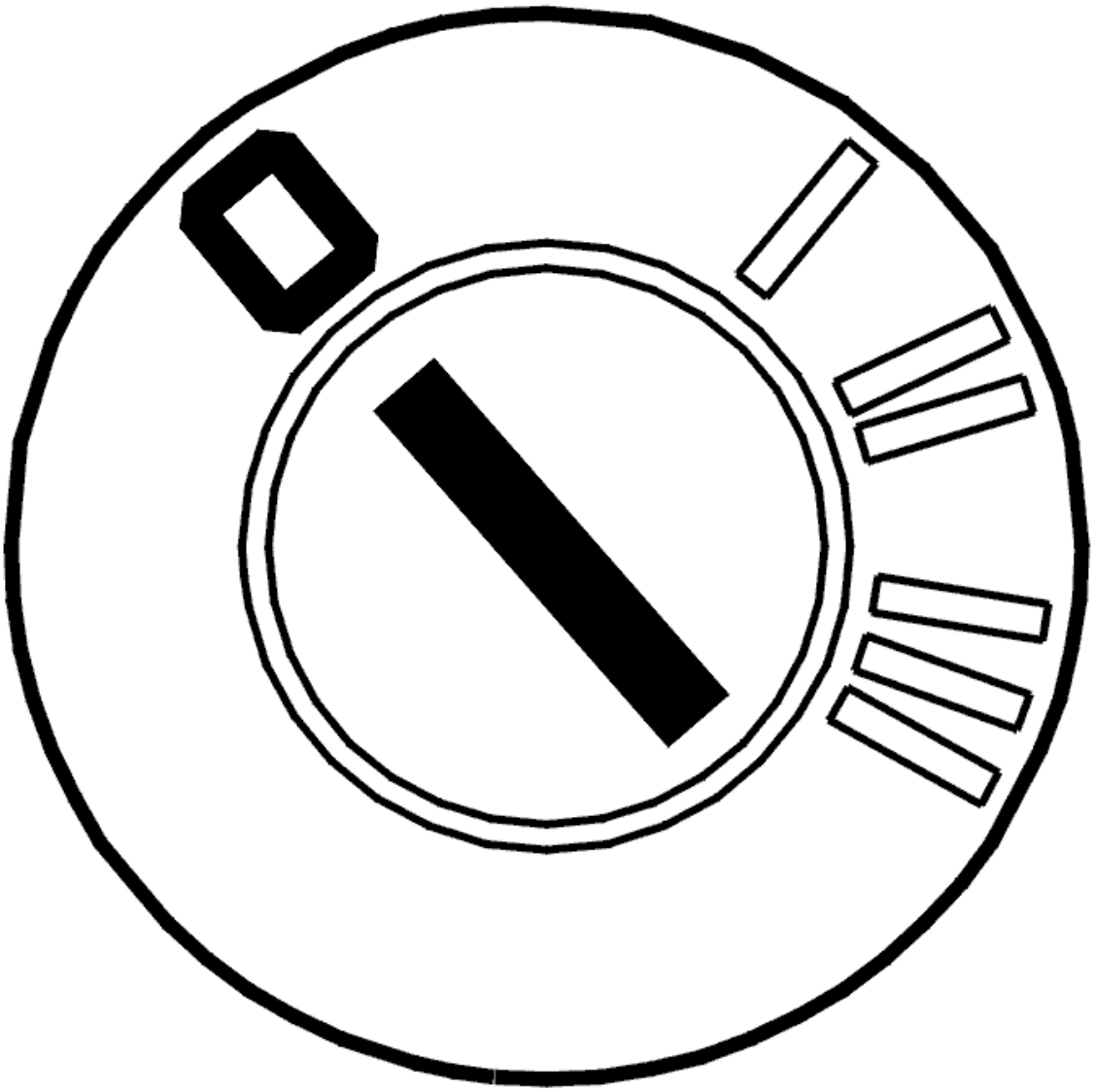

Fig. 55: Identifying Ignition OFF
Courtesy of VOLVO CARS CORPORATION

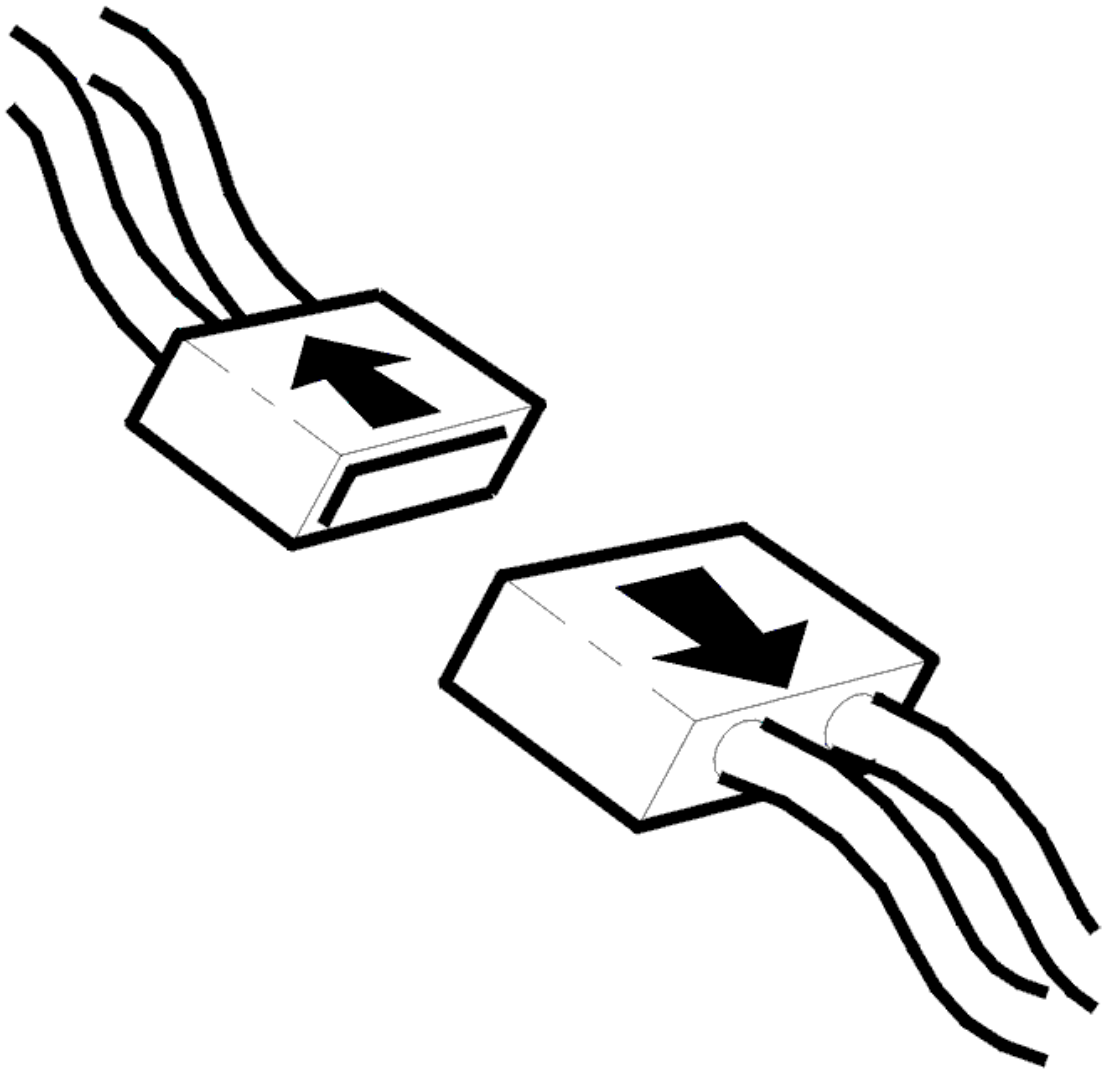

Fig. 56: Disconnecting Connector
Courtesy of VOLVO CARS CORPORATION

- Ignition off
- Disconnect the connector from the front right front impact sensor.

  Check the signal cable between the Supplemental Restraint System Module (SRS) terminal #21B (49) and the front impact sensor #1. Check for an open-circuit.

  Check the signal cable between the Supplemental Restraint System Module (SRS) terminal #20B (48) and the front impact sensor #2. Check for an open-circuit.

  Check the resistance between the Supplemental Restraint System Module (SRS) terminal #21B (49) and the front impact sensor #2. The resistance should be infinite.

  Check the resistance between the Supplemental Restraint System Module (SRS) terminal #20B (48) and

the front impact sensor #1. The resistance should be infinite.

HINT: If repairs have been carried out on the wiring, these signal cables may have been reversed. Check that connections between the Supplemental Restraint System Module (SRS) and the front impact sensor are correct.

Remedy as necessary.

Other information:

- To access and replace the SRS control module and connector, see **SUPPLEMENTAL RESTRAINT SYSTEM MODULE (SRS), REPLACING**
- To connect the breakout box, see **CONNECTING THE BREAKOUT BOX**
- To access or replace the front right front impact sensor, see **COLLISION SENSOR FRONT, REPLACING**
- For information about the repair of SRS wiring, see **CABLE HARNESS SRS SYSTEM, REPAIR**
- For information about signals, see **SIGNAL SPECIFICATION**
- see **CHECKING WIRING AND TERMINALS** .

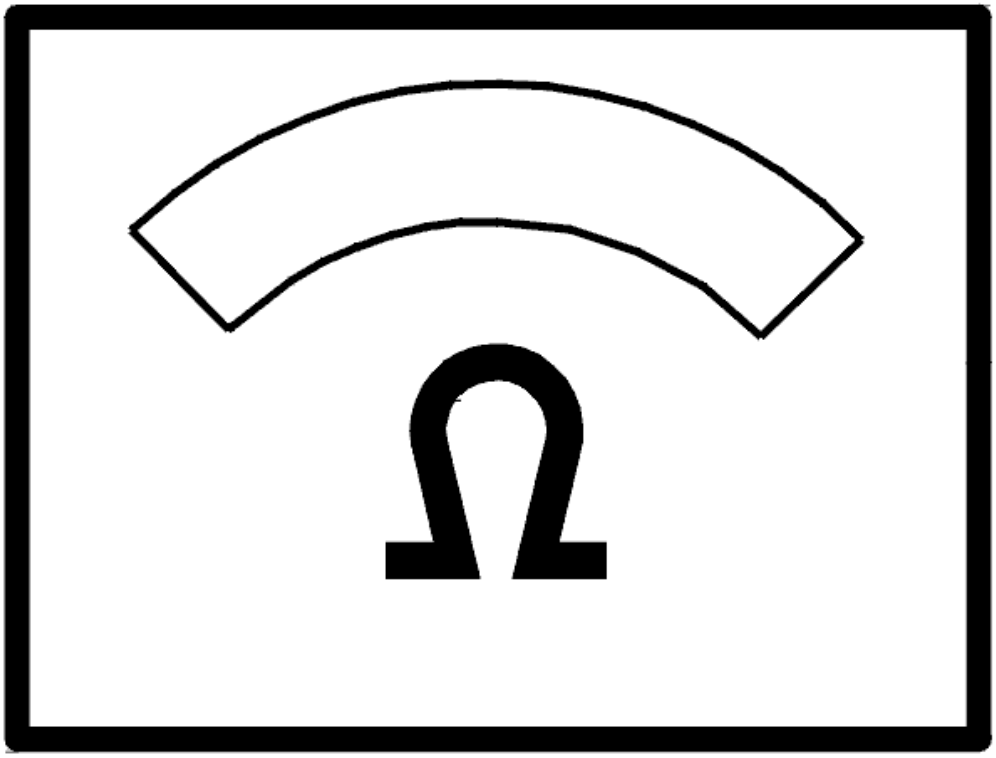

Fig. 57: Identifying Ohm Meter
Courtesy of VOLVO CARS CORPORATION

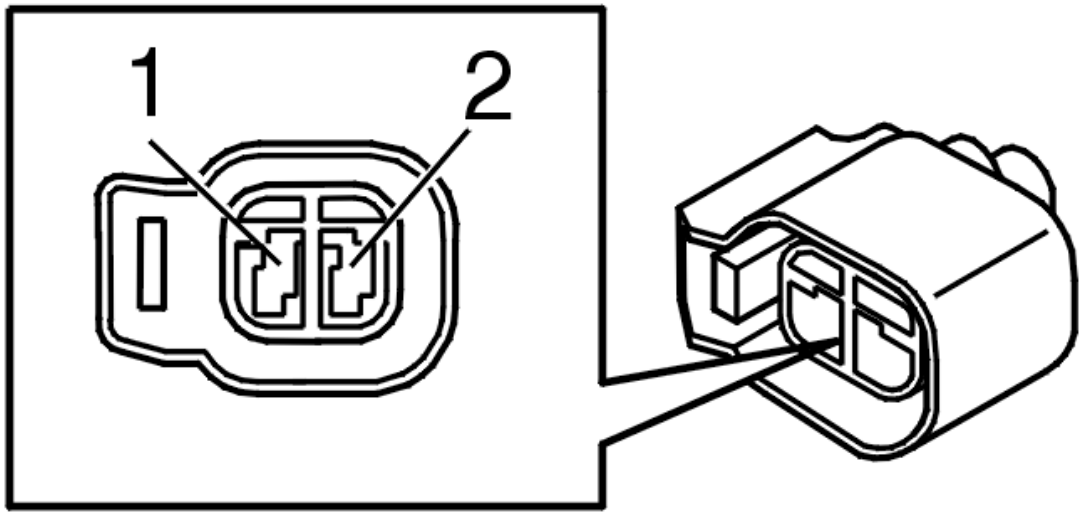

Fig. 58: Identifying Front Impact Sensor Connector Terminals
Courtesy of VOLVO CARS CORPORATION

- **Continue**

  See: **VERIFICATION**

VERIFICATION

VERIFICATION

HINT: After carrying out the repair, check that the fault has been remedied.

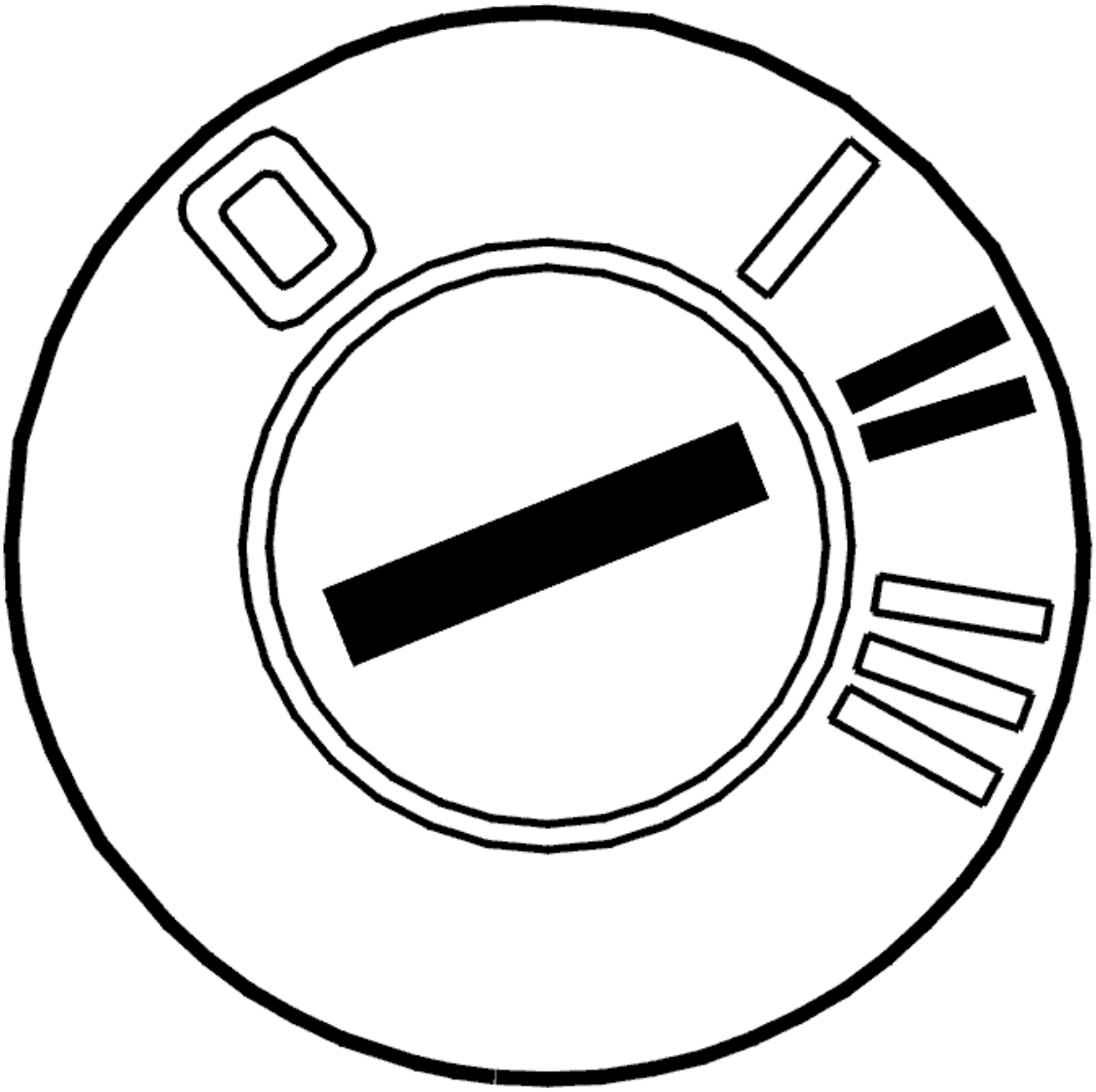

Fig. 59: Identifying Ignition ON
Courtesy of VOLVO CARS CORPORATION

- Ignition off
- Disconnect the battery negative lead
- Reinstall the connectors, components etc.
- Ignition on
- Connect the battery negative lead.

WARNING: There must not be anyone inside the passenger compartment when the battery is connected.

- Read off diagnostic trouble codes (DTCs).

The fault is no longer present if the diagnostic trouble code (DTC) status is intermittent.

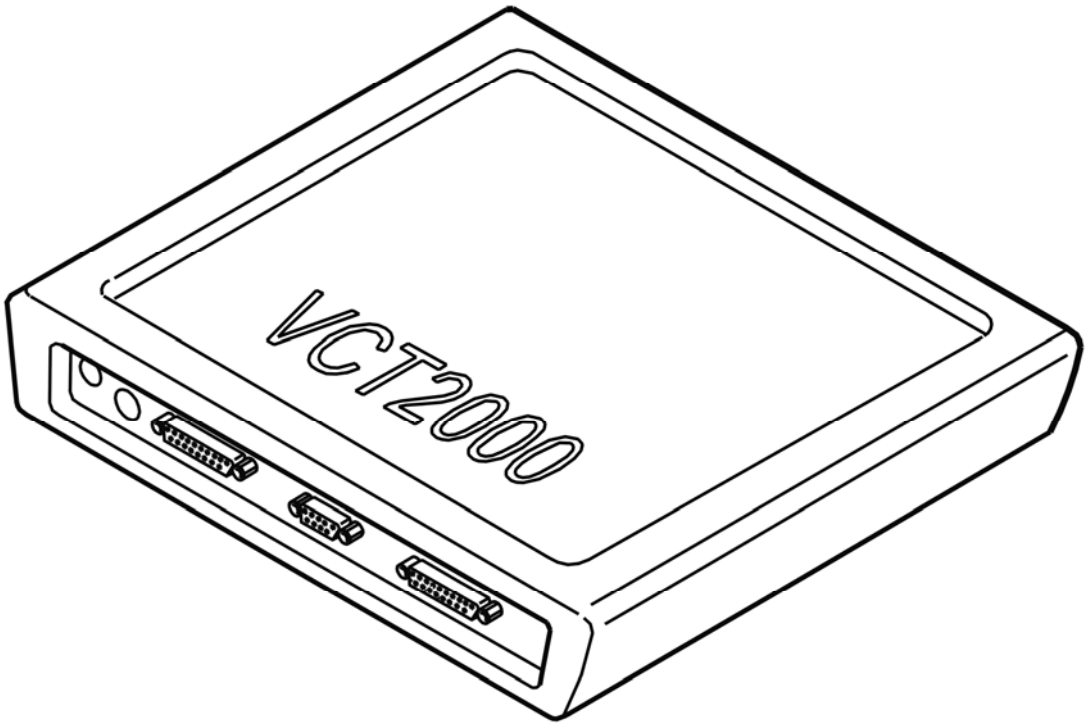

Fig. 60: Identifying VCT2000 Diagnostic Tool Symbol In VIDA
Courtesy of VOLVO CARS CORPORATION

Is the diagnostic trouble code (DTC) intermittent?

- **YES**

  VERIFIED: Troubleshooting has been completed.

- **NO**

  See: **INFORMATION**

INFORMATION

FAULT-TRACING INFORMATION

The fault should have been detected and remedied. As this is not the case fault-tracing has failed.

Exit fault-tracing for this diagnostic trouble code (DTC) or make another attempt.

SRS-0218: FRONT LEFT FRONT IMPACT SENSOR. FAULTY SIGNAL (2003-

2012)

DIAGNOSTIC TROUBLE CODE (DTC) INFORMATION SRS-0218

Condition

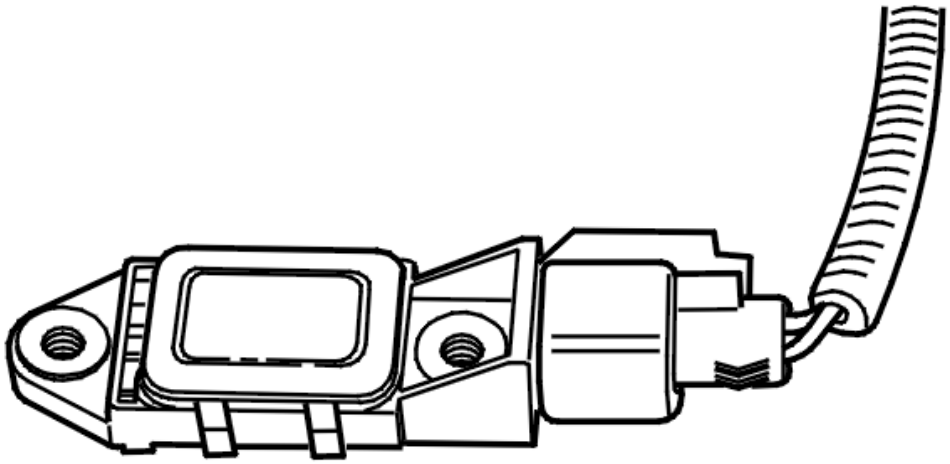

Fig. 61: Identifying Front Right Front Impact Sensor
Courtesy of VOLVO CARS CORPORATION

The Supplemental Restraint System Module (SRS) checks the signal from the front left front impact sensor.

Diagnostic trouble code (DTC) SRS-0218 is stored if the control module registers an incorrect signal, i. e. that the signal in the signal cable is too low or too high for longer than 10 seconds.

Diagnostic trouble code (DTC) SRS-0218 can be diagnosed in ignition positions I, II or III.

Substitute Value

- None.

Possible Source

- Short-circuit to supply voltage in the signal cable between the front left front impact sensor and the

Supplemental Restraint System Module (SRS)

- Short-circuit to ground in the signal cable between the front impact sensor and the Supplemental Restraint System Module (SRS)
- Short-circuit to supply voltage in the connector
- Short-circuit to ground in the connector
- Short-circuit between signal cables to the front impact sensor from the Supplemental Restraint System Module (SRS)
- Short-circuit in the front impact sensor (defective front impact sensor).

Fault symptom[s]

- The SRS indicator lamp is lit.

FAULTY SIGNAL

CHECKING THE COMPONENT

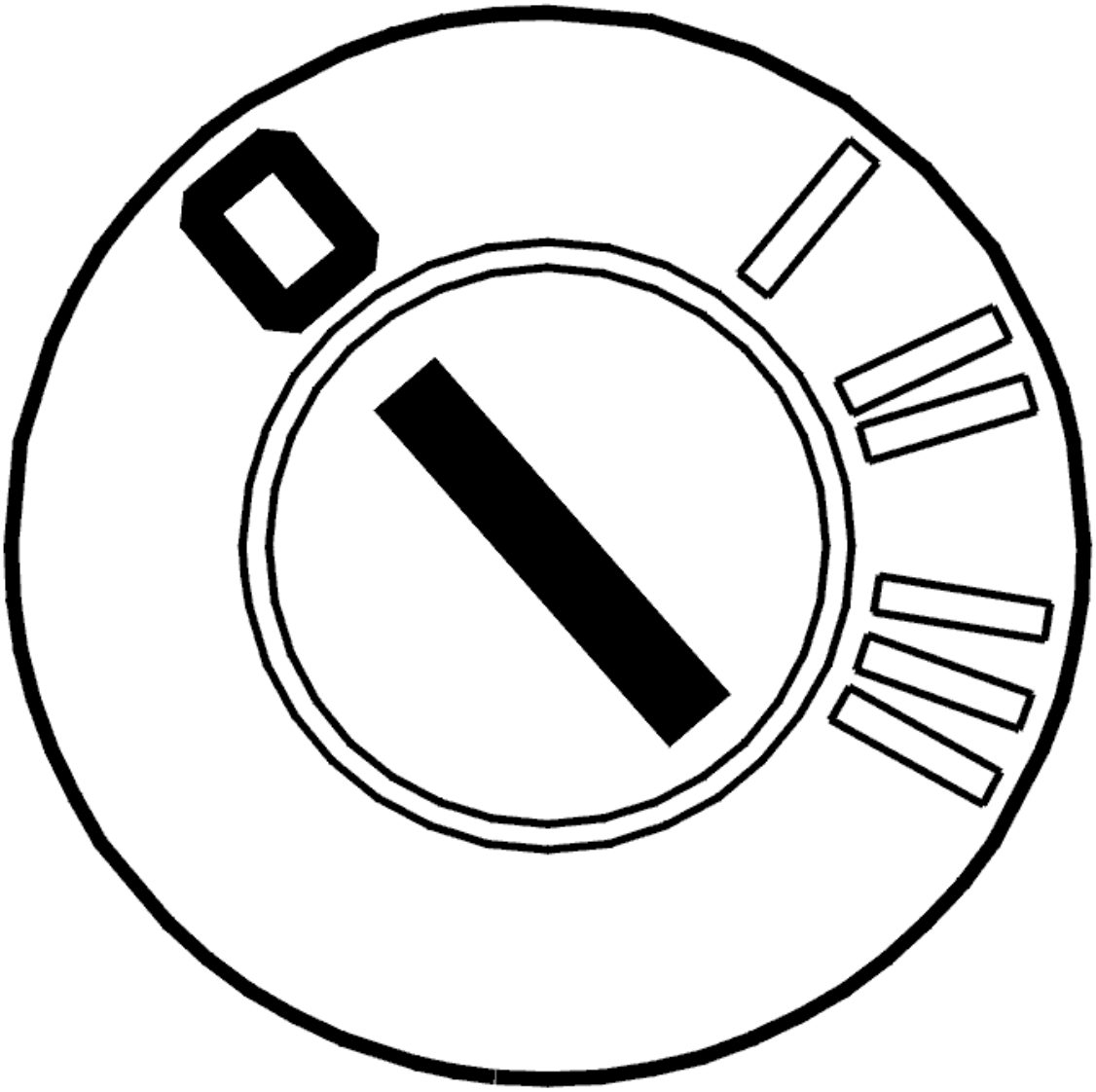

Fig. 62: Identifying Ignition OFF
Courtesy of VOLVO CARS CORPORATION

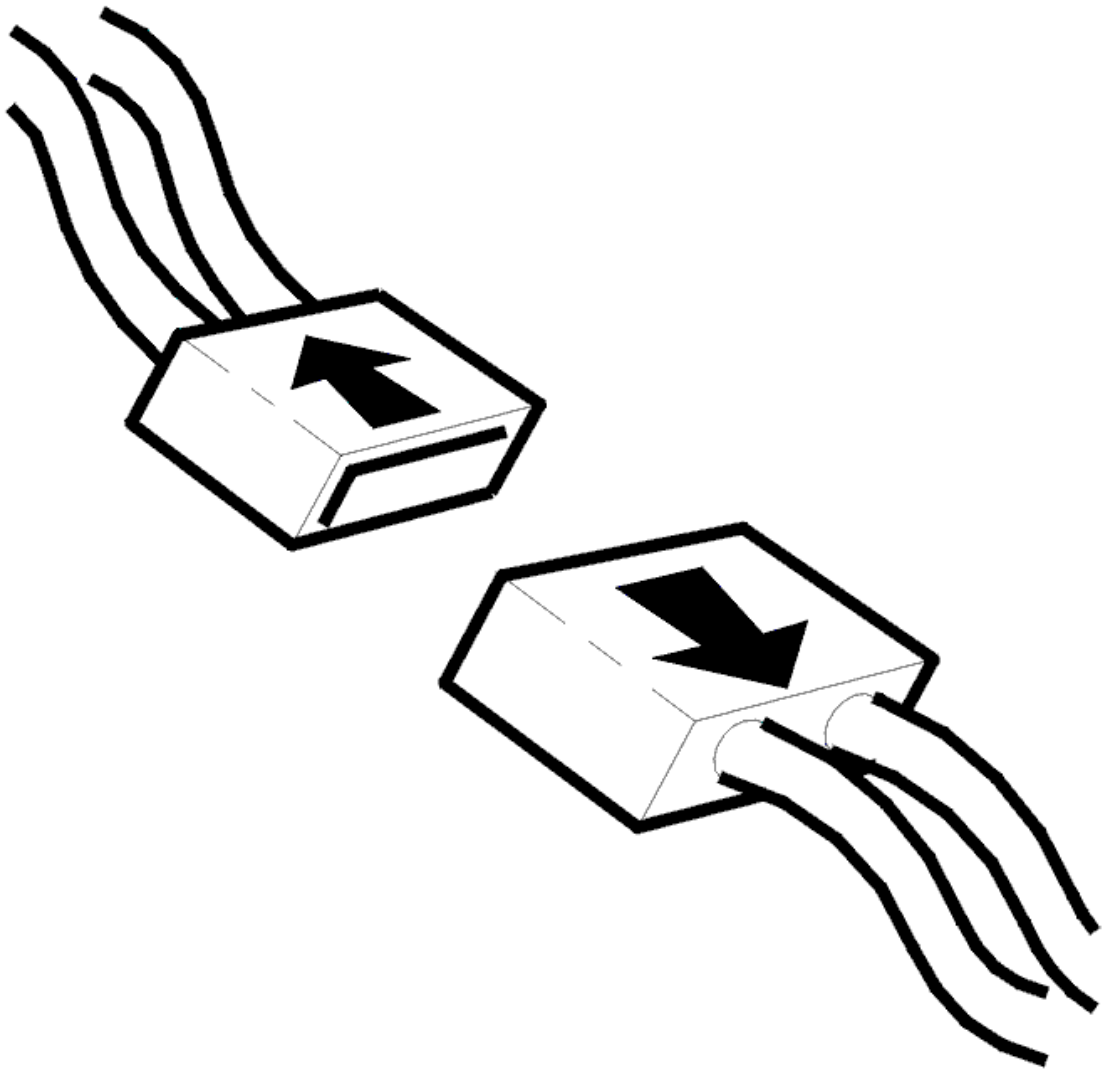

Fig. 63: Disconnecting Connector
Courtesy of VOLVO CARS CORPORATION

- Ignition off
- Disconnect the connector from the front left front impact sensor.

  Check the female and male parts of the connectors for the Supplemental Restraint System Module (SRS) and the front impact sensor. The cable terminals must not be damaged or pressed back.

  Check the cable between the Supplemental Restraint System Module (SRS) terminal #19B (47), #18B (46) and connector terminals #2 and #1 on the front left front impact sensor. Check for a short-circuit to supply voltage. Check for a short-circuit to ground.

  Check the resistance in the signal cable between terminals #19B (47) and #18B (46) for the Supplemental Restraint System Module (SRS). The resistance must be infinite.

If no fault is found, replace the front collision sensor.

Remedy as necessary.

Other information:

- To access or replace the front impact sensor, see **COLLISION SENSOR FRONT, REPLACING**
- For information about signals, see **SIGNAL SPECIFICATION**
- For information about the repair of SRS wiring, see **CABLE HARNESS SRS SYSTEM, REPAIR**
- see **CHECKING WIRING AND TERMINALS** .

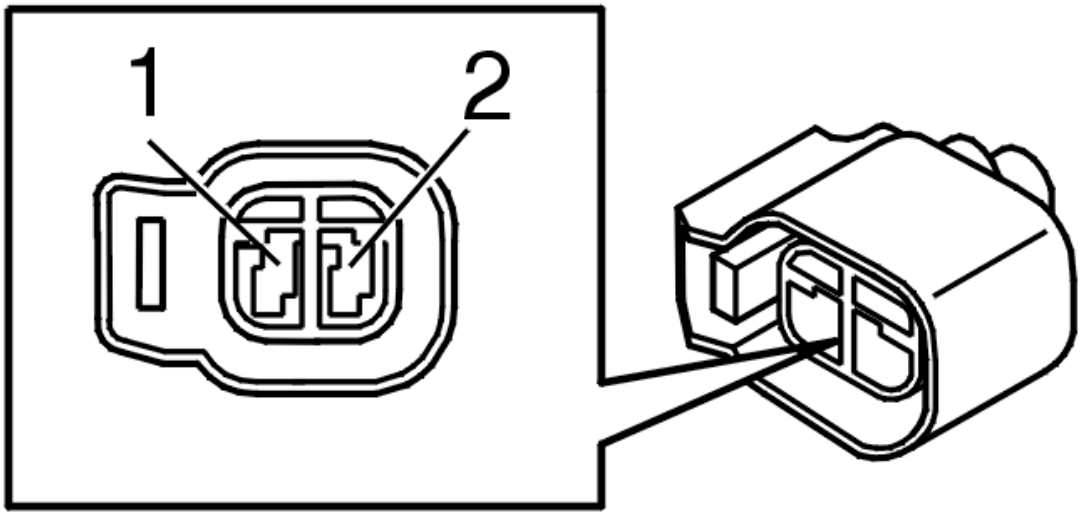

Fig. 64: Identifying Front Impact Sensor Connector Terminals
Courtesy of VOLVO CARS CORPORATION

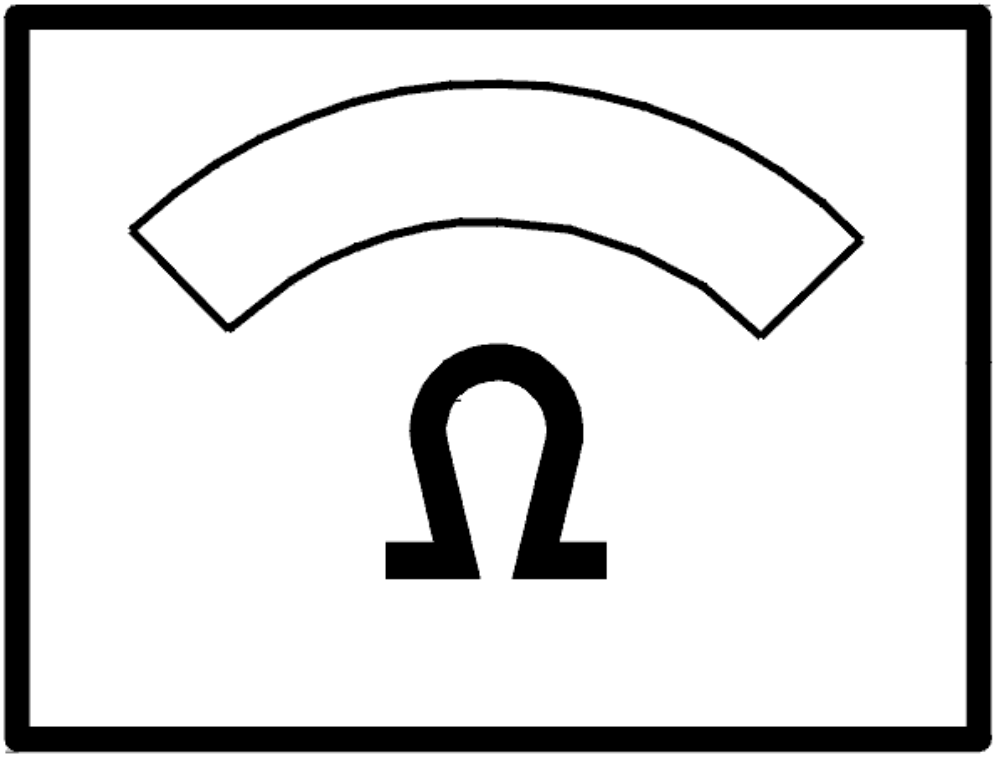

Fig. 65: Identifying Ohm Meter
Courtesy of VOLVO CARS CORPORATION

- **Continue**

  See: **VERIFICATION**

INFORMATION

FAULT-TRACING INFORMATION

The fault should have been detected and remedied. As this is not the case fault-tracing has failed.

Exit fault-tracing for this diagnostic trouble code (DTC) or make another attempt.

VERIFICATION

VERIFICATION

HINT: After carrying out the repair, check that the fault has been remedied.

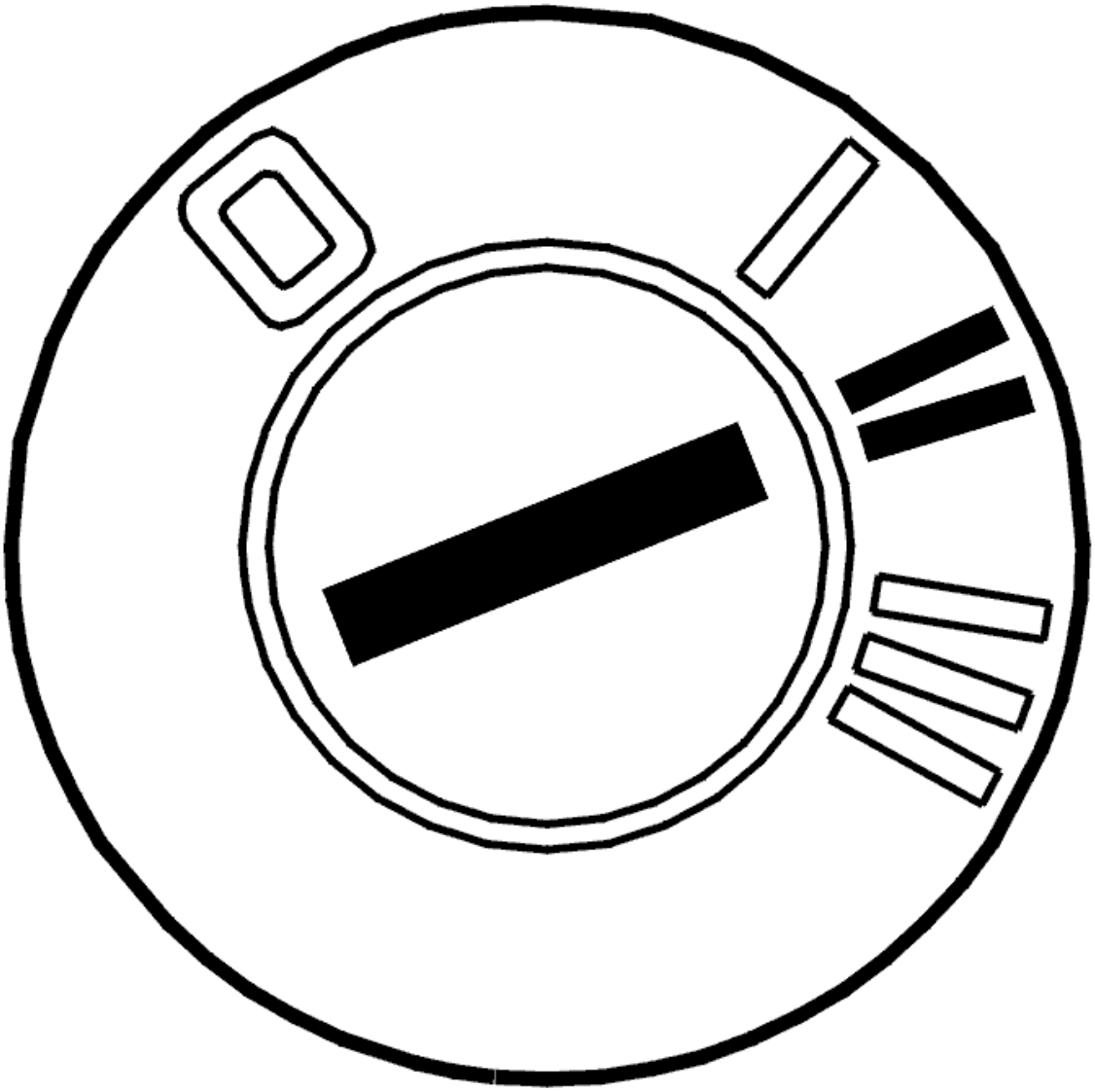

Fig. 66: Identifying Ignition ON
Courtesy of VOLVO CARS CORPORATION

- Ignition off
- Disconnect the battery negative lead
- Reinstall the connectors, components etc.
- Ignition on
- Connect the battery negative lead.

WARNING: **There must not be anyone inside the passenger compartment when the battery is connected.**

- Read off diagnostic trouble codes (DTCs).

  The fault is no longer present if the diagnostic trouble code (DTC) status is intermittent.

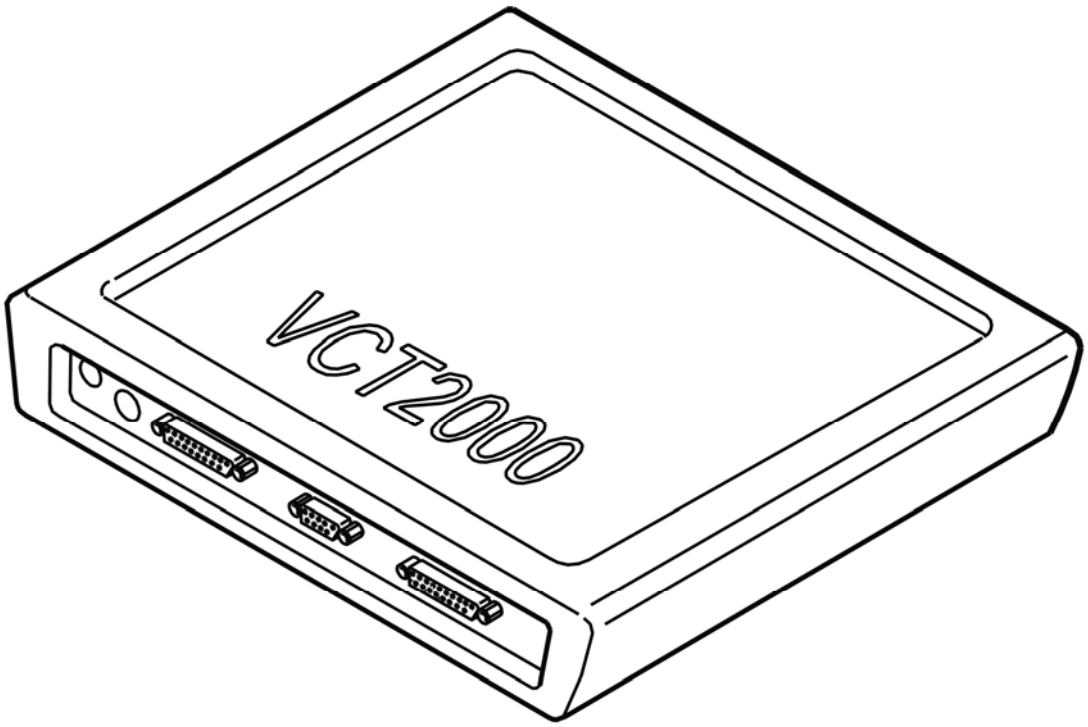

Fig. 67: Identifying VCT2000 Diagnostic Tool Symbol In VIDA
Courtesy of VOLVO CARS CORPORATION

Is the diagnostic trouble code (DTC) intermittent?

- **YES**

  VERIFIED: Troubleshooting has been completed.

- **NO**

  See: **INFORMATION**

SRS-0219: FRONT LEFT FRONT IMPACT SENSOR COMMUNICATION FAULT (2003-2012)

DIAGNOSTIC TROUBLE CODE (DTC) INFORMATION SRS-0219

Condition

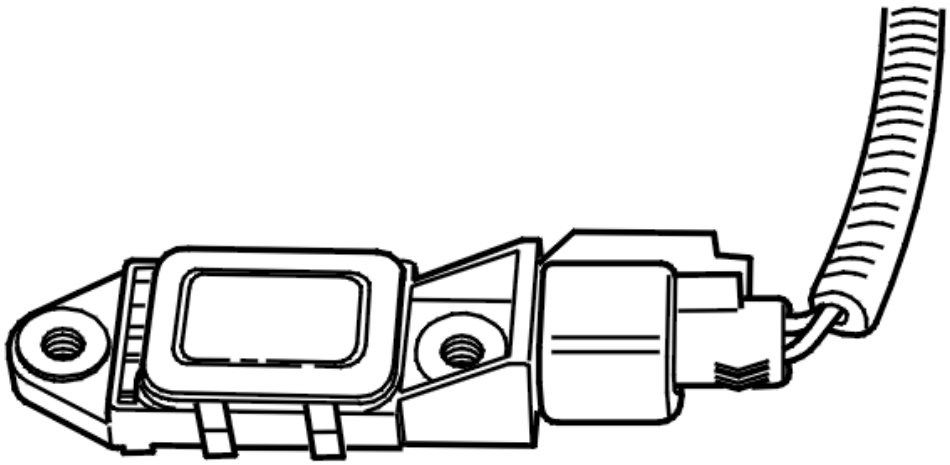

Fig. 68: Identifying Front Right Front Impact Sensor
Courtesy of VOLVO CARS CORPORATION

The Supplemental Restraint System Module (SRS) checks the signal from the front left front impact sensor.

Diagnostic trouble code (DTC) SRS-0219 is stored if the control module registers a communication fault in the signal cable for longer than 10 seconds.

Diagnostic trouble code (DTC) SRS-0219 can be diagnosed when the ignition is on.

Substitute Value

- None.

Possible Source

- Contact resistance or open-circuit in the signal cable between the front left front impact sensor and the Supplemental Restraint System Module (SRS)
- Open-circuit in the front impact sensor (defective front impact sensor).

Fault symptom[s]

- The SRS indicator lamp is lit.

COMMUNICATION FAULT

CHECKING THE COMPONENT

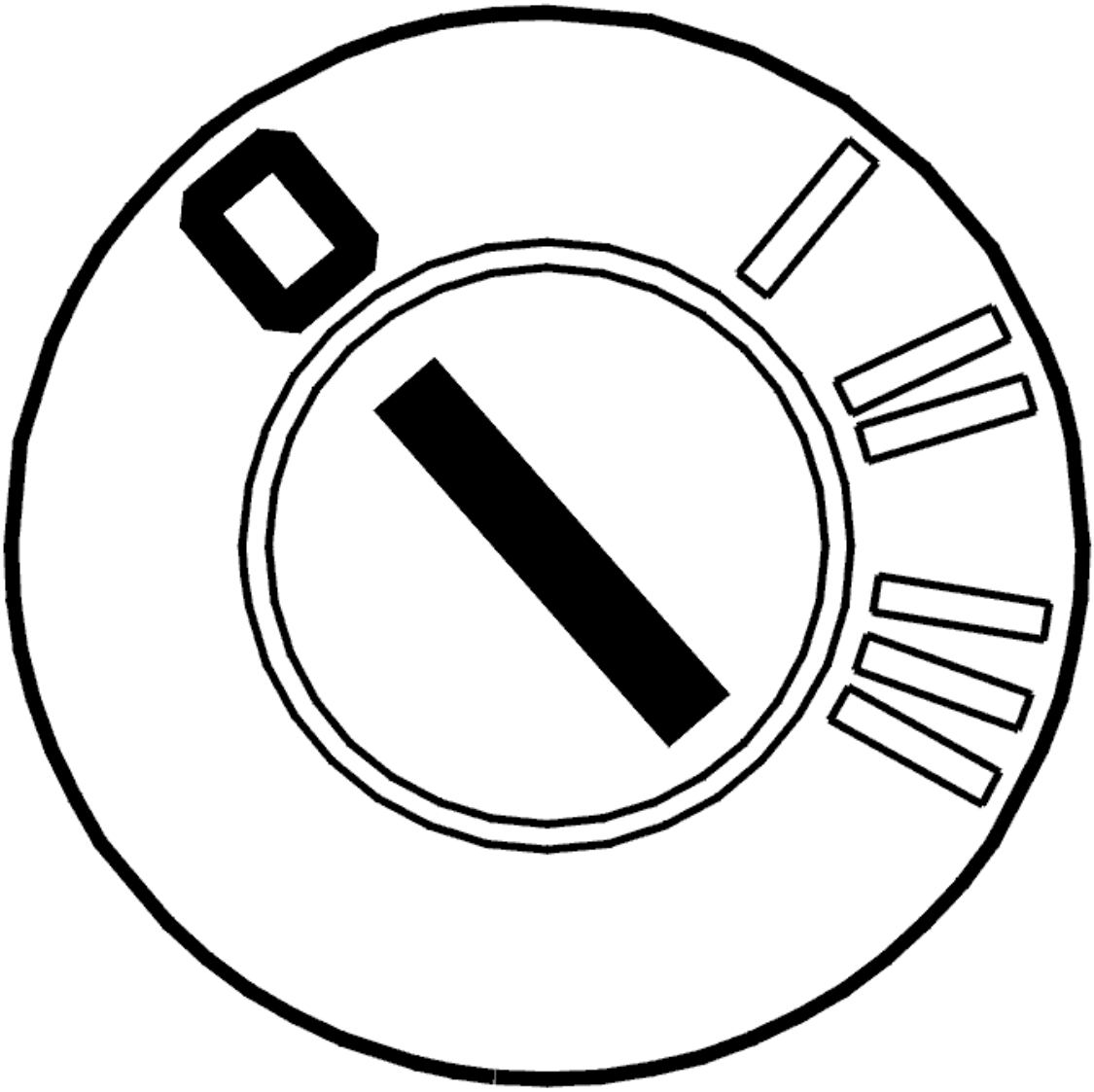

Fig. 69: Identifying Ignition OFF
Courtesy of VOLVO CARS CORPORATION

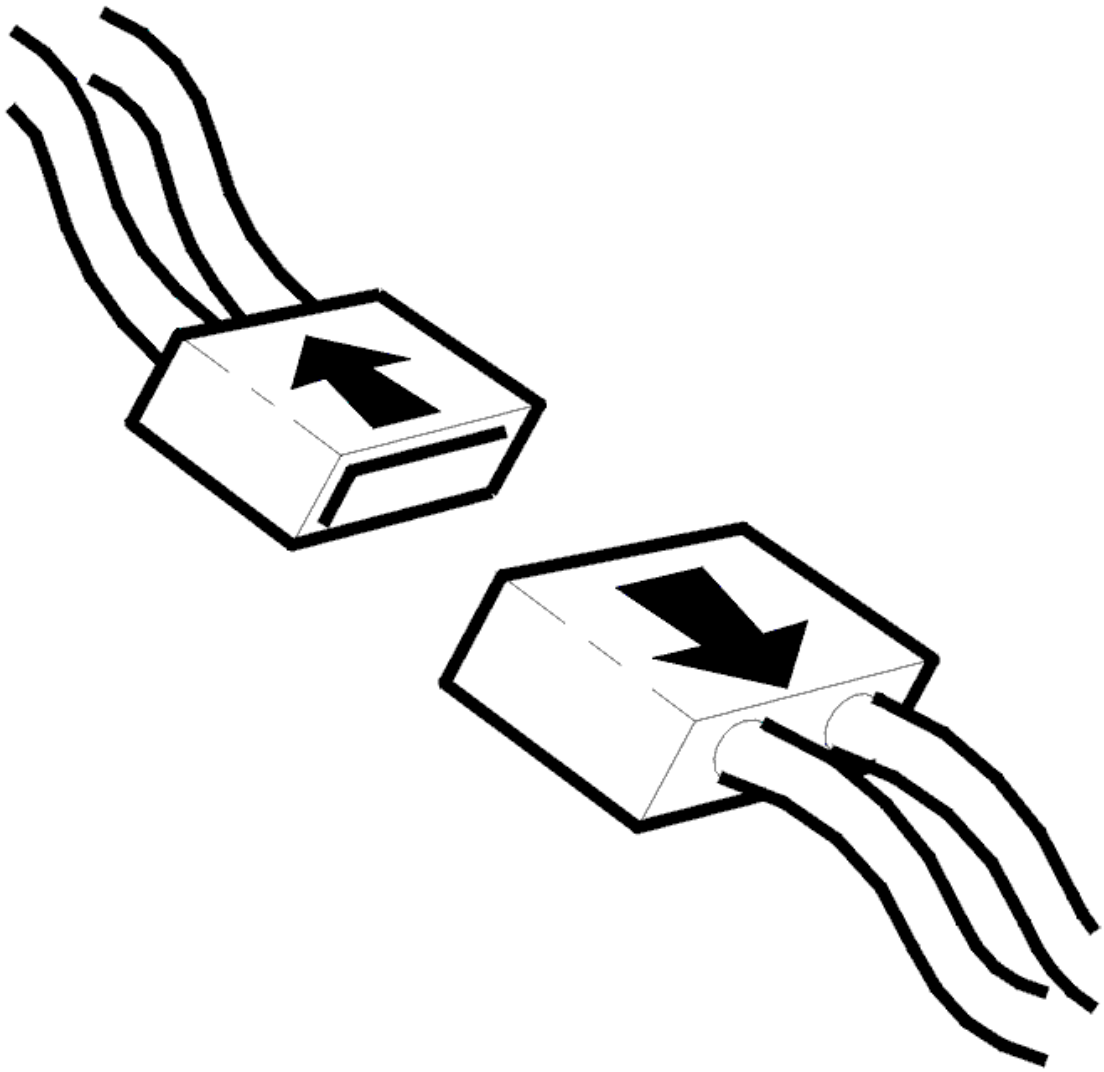

Fig. 70: Disconnecting Connector
Courtesy of VOLVO CARS CORPORATION

- Ignition off
- Disconnect the connector from the front left front impact sensor.

  Check the female and male parts of the connectors for the Supplemental Restraint System Module (SRS) and the front impact sensor. The cable terminals must not be damaged, pressed back or oxidized.

  Connect special tool see **9512887** to the front impact sensor.

  Check the resistance between terminal #19B (47) and #18B(46) on the Supplemental Restraint System Module (SRS). The resistance should be 10Kohms.

  HINT: If the fault is permanent and no fault is found, replace the front impact sensor.

Remedy as necessary.

Other information:

- To access or replace the front impact sensor, see **COLLISION SENSOR FRONT, REPLACING**
- For information about signals, see **SIGNAL SPECIFICATION**
- For information about the repair of SRS wiring, see **CABLE HARNESS SRS SYSTEM, REPAIR**
- see **CHECKING WIRING AND TERMINALS** .

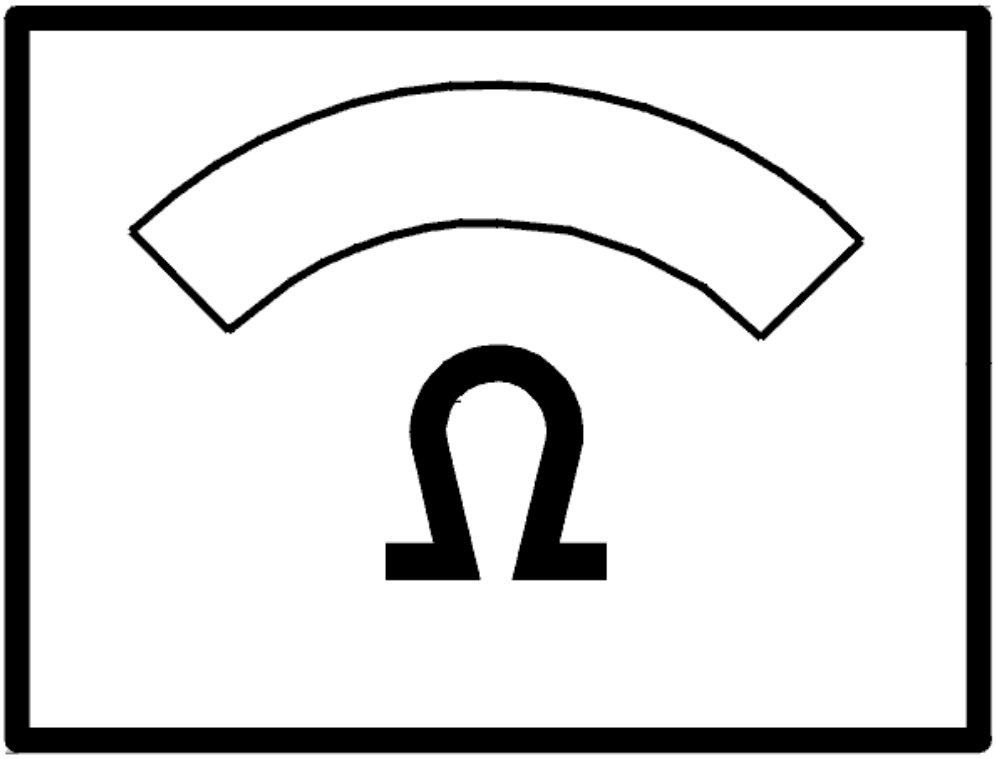

Fig. 71: Identifying Ohm Meter
Courtesy of VOLVO CARS CORPORATION

Is the correct resistance value displayed?

- **YES**

  See: **VERIFICATION**

- **NO**

  See: **CHECKING THE COMPONENT**

CHECKING THE COMPONENT

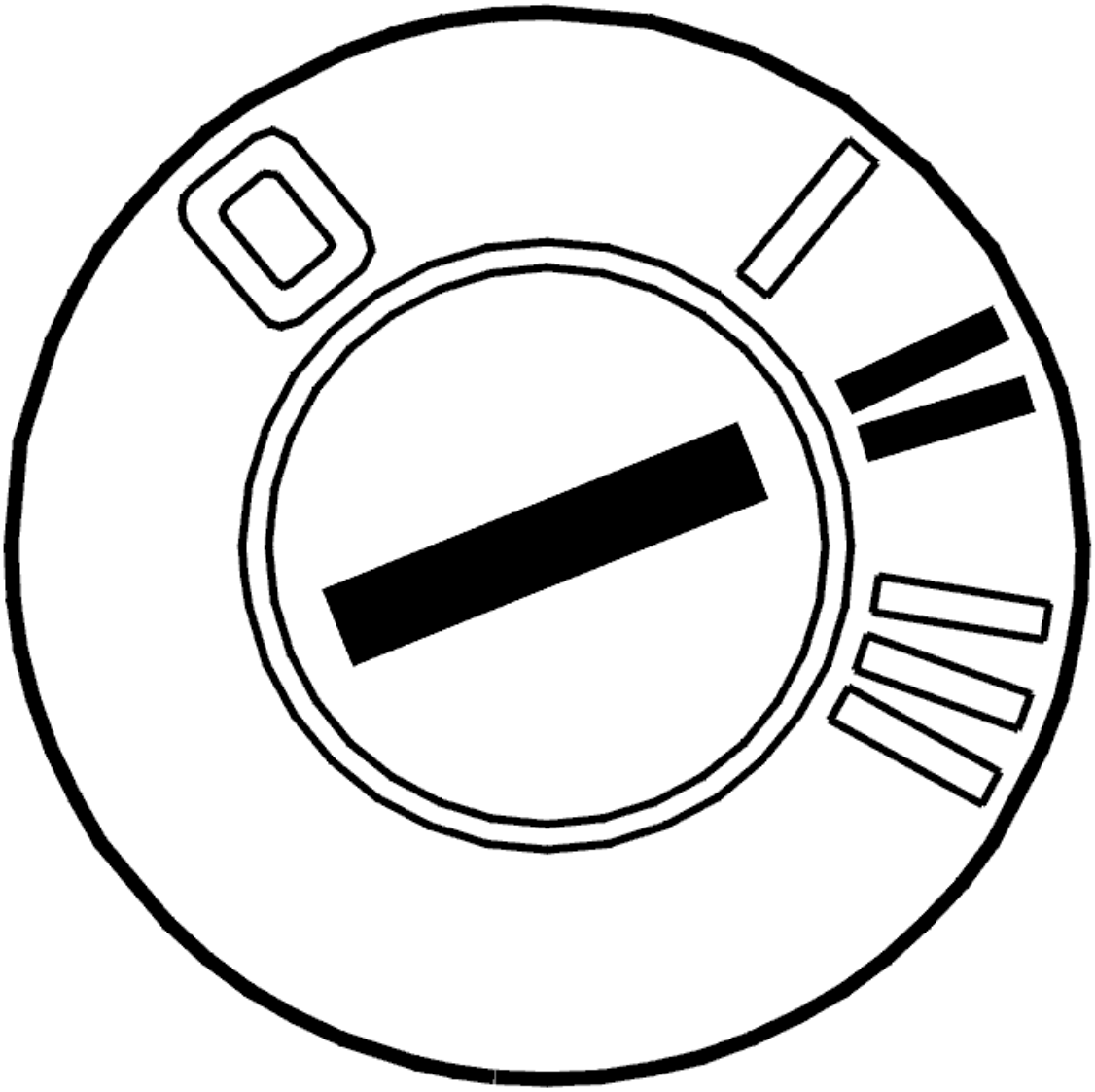

Fig. 72: Identifying Ignition ON
Courtesy of VOLVO CARS CORPORATION

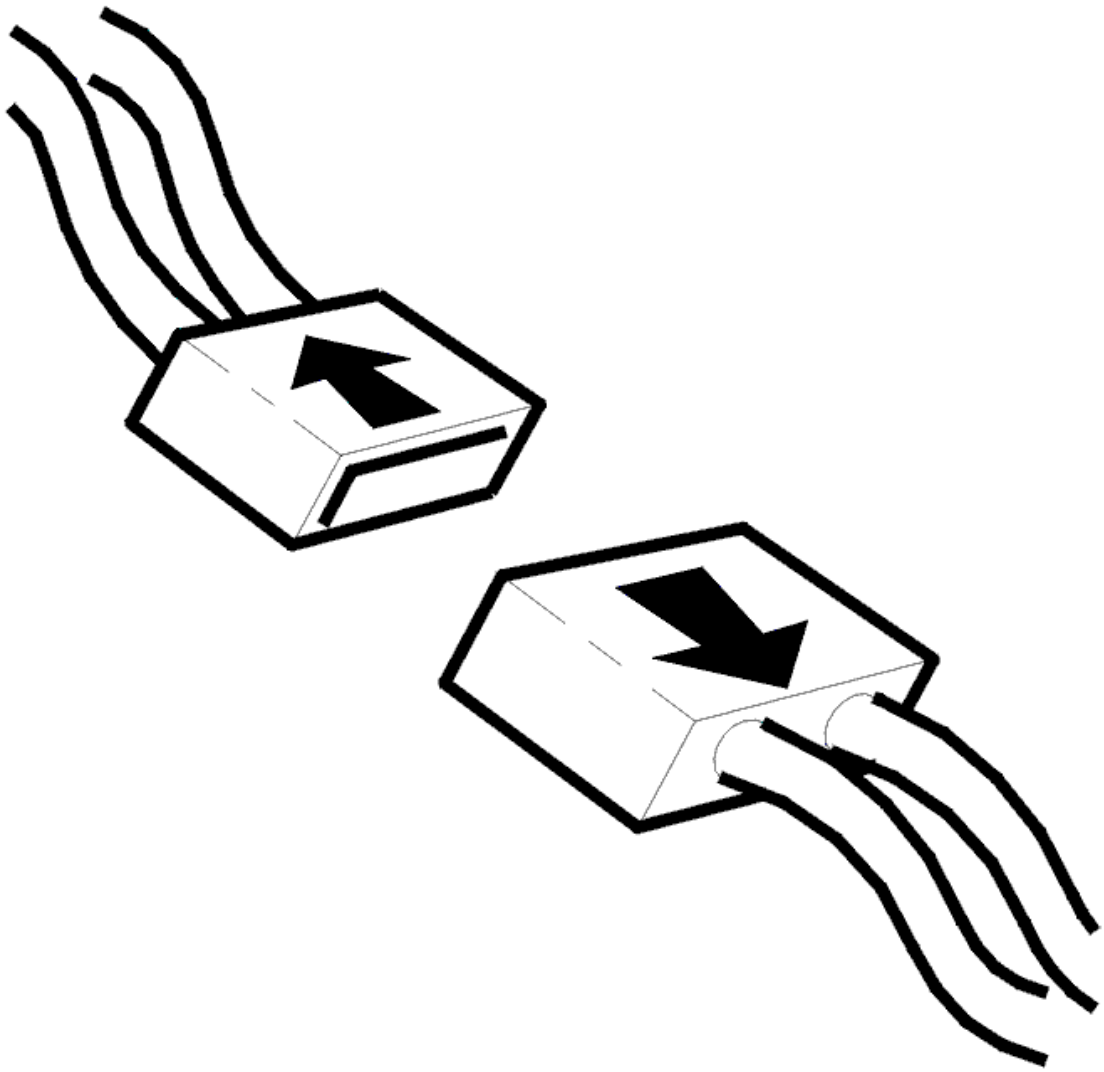

Fig. 73: Disconnecting Connector
Courtesy of VOLVO CARS CORPORATION

- Ignition off
- Disconnect the special tool see **9512887** from the front left front impact sensor.

  Check the female and male parts of the connectors for the Supplemental Restraint System Module (SRS) and the front impact sensor. The cable terminals must not be damaged, pressed back or oxidized.

  Check the cable between the Supplemental Restraint System Module (SRS) terminal #19B (47) and front impact sensor #2 left front. Check for an open-circuit.

  Check the cable between the Supplemental Restraint System Module (SRS) terminal #18B (46) and front impact sensor #1 left front. Check for an open-circuit.

  Remedy as necessary.

Other information:

- To access or replace the front impact sensor, see **COLLISION SENSOR FRONT, REPLACING**
- For information about signals, see **SIGNAL SPECIFICATION**
- For information about the repair of SRS wiring, see **CABLE HARNESS SRS SYSTEM, REPAIR**
- see **CHECKING WIRING AND TERMINALS** .

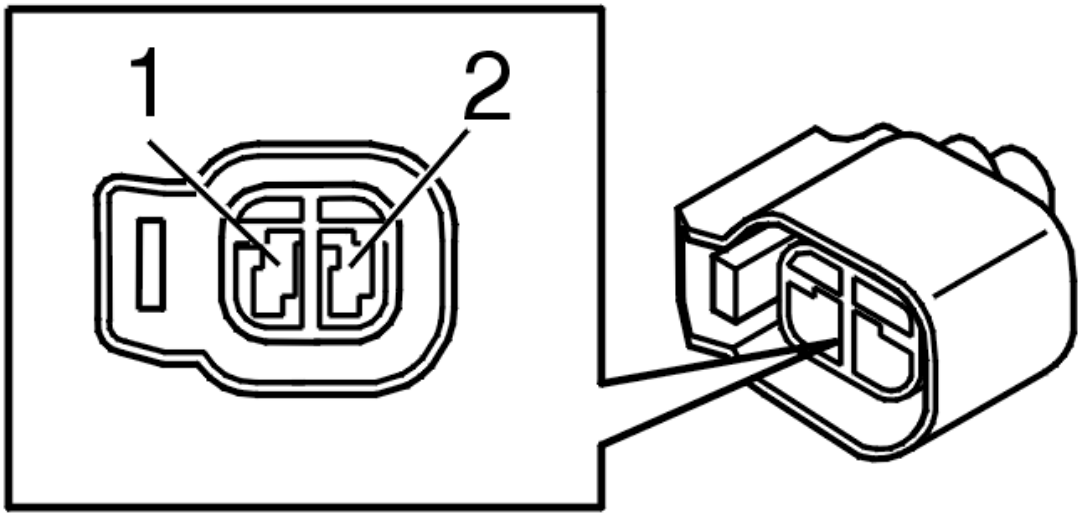

Fig. 74: Identifying Front Impact Sensor Connector Terminals
Courtesy of VOLVO CARS CORPORATION

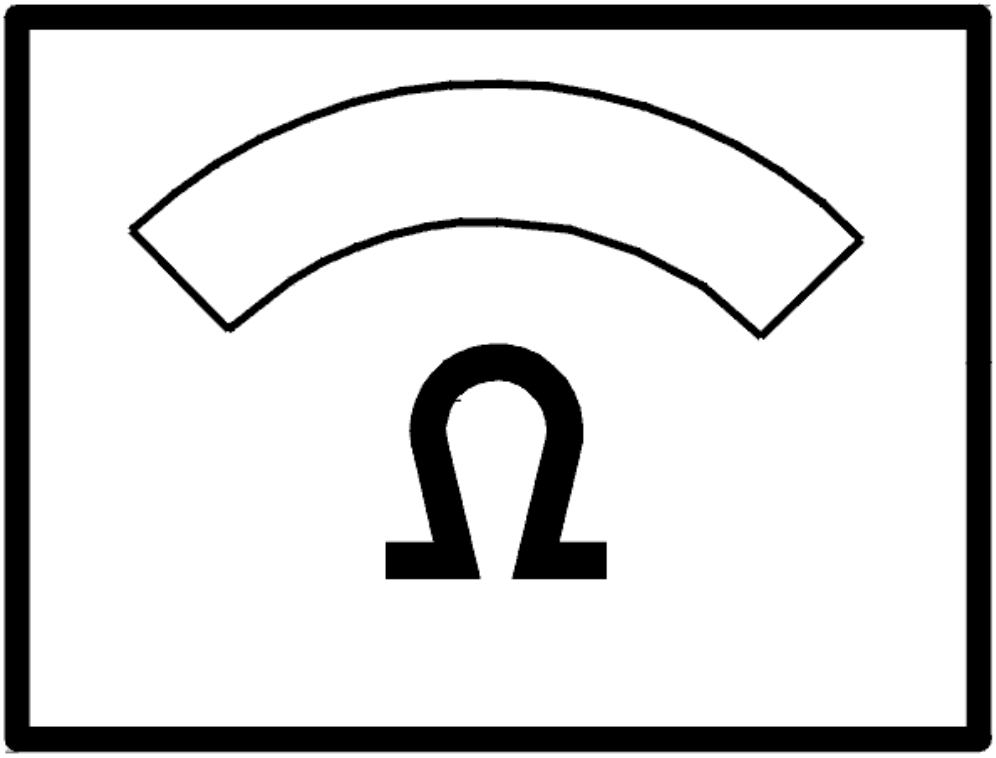

Fig. 75: Identifying Ohm Meter
Courtesy of VOLVO CARS CORPORATION

- **Continue**

  See: **VERIFICATION**

INFORMATION

FAULT-TRACING INFORMATION

The fault should have been detected and remedied. As this is not the case fault-tracing has failed.

Exit fault-tracing for this diagnostic trouble code (DTC) or make another attempt.

VERIFICATION

VERIFICATION

HINT: After carrying out the repair, check that the fault has been remedied.

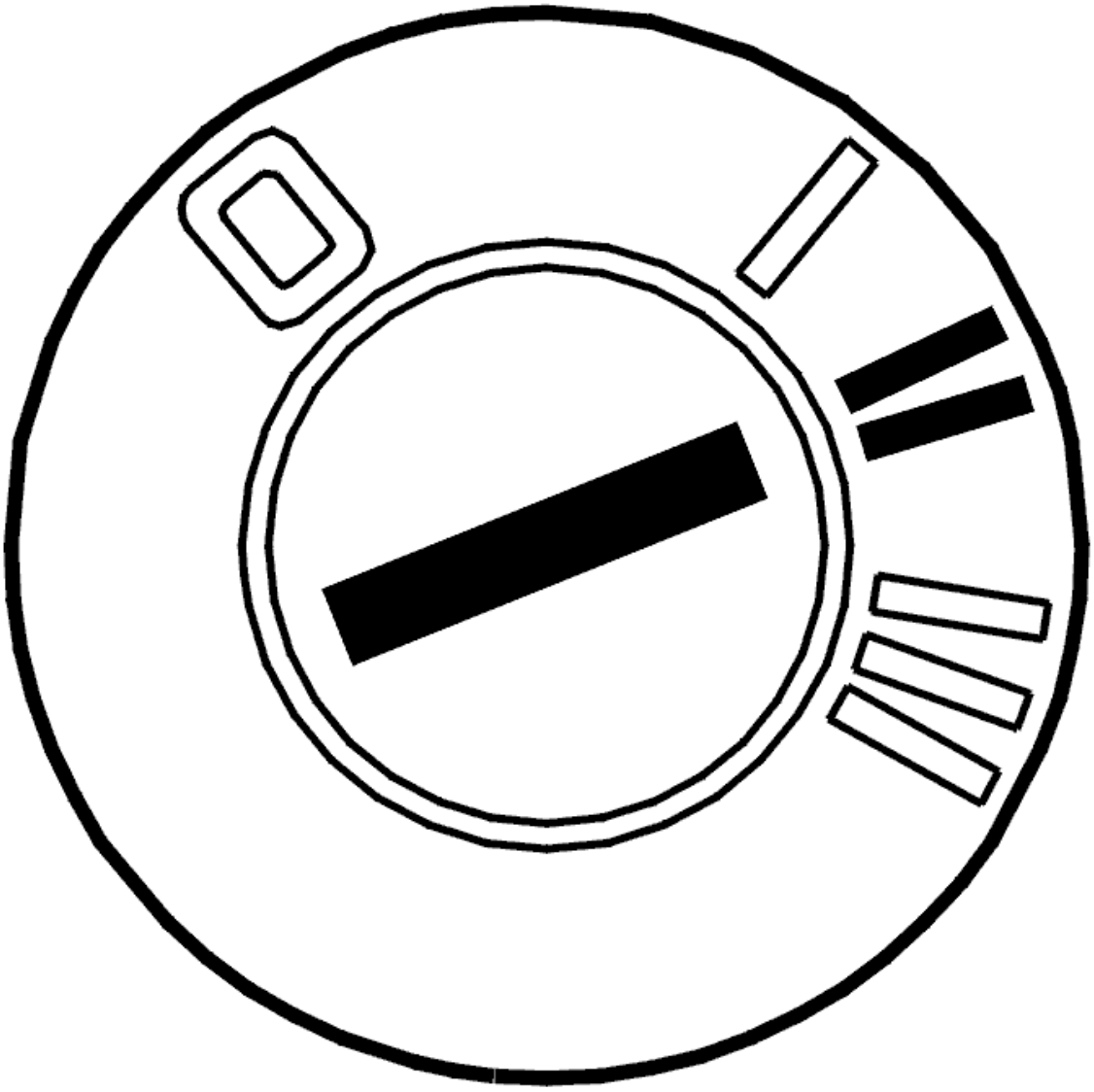

Fig. 76: Identifying Ignition ON
Courtesy of VOLVO CARS CORPORATION

- Ignition off
- Disconnect the battery negative lead
- Reinstall the connectors, components etc.
- Ignition on
- Connect the battery negative lead.

WARNING: **There must not be anyone inside the passenger compartment when the battery is connected.**

- Read off diagnostic trouble codes (DTCs).

  The fault is no longer present if the diagnostic trouble code (DTC) status is intermittent.

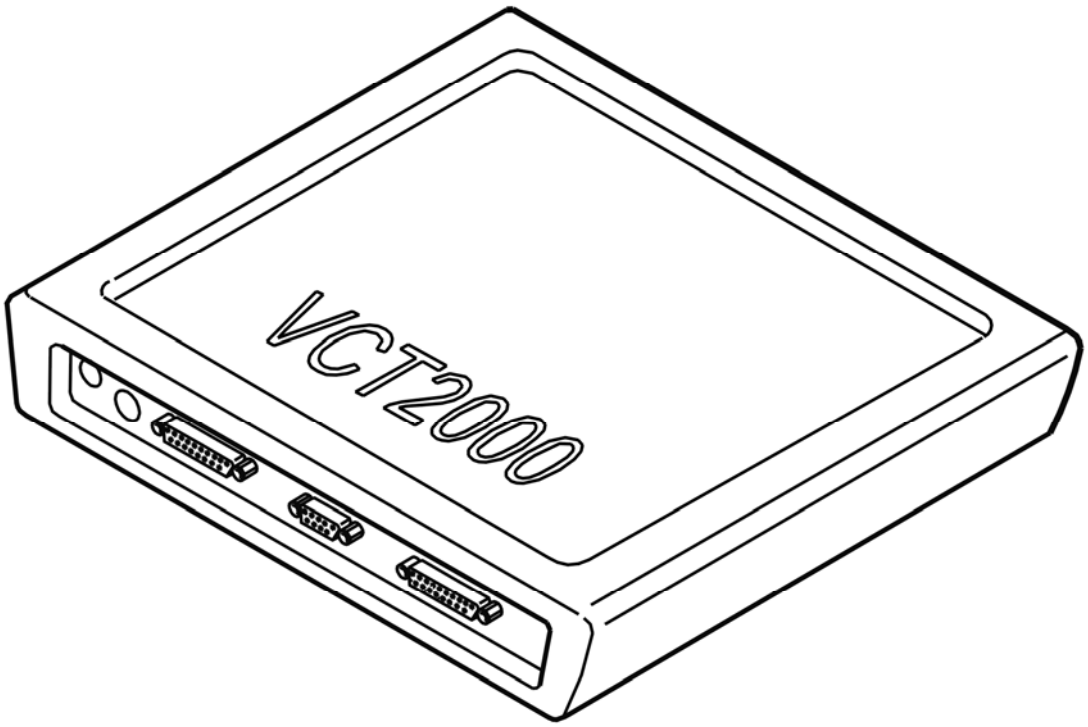

Fig. 77: Identifying VCT2000 Diagnostic Tool Symbol In VIDA
Courtesy of VOLVO CARS CORPORATION

Is the diagnostic trouble code (DTC) intermittent?

- **YES**

  VERIFIED: Troubleshooting has been completed.

- **NO**

  See: **INFORMATION**

SRS-021A: FRONT LEFT FRONT IMPACT SENSOR. FAULTY IDENTIFICATION (2003-2012)

DIAGNOSTIC TROUBLE CODE (DTC) INFORMATION SRS-021A

Condition

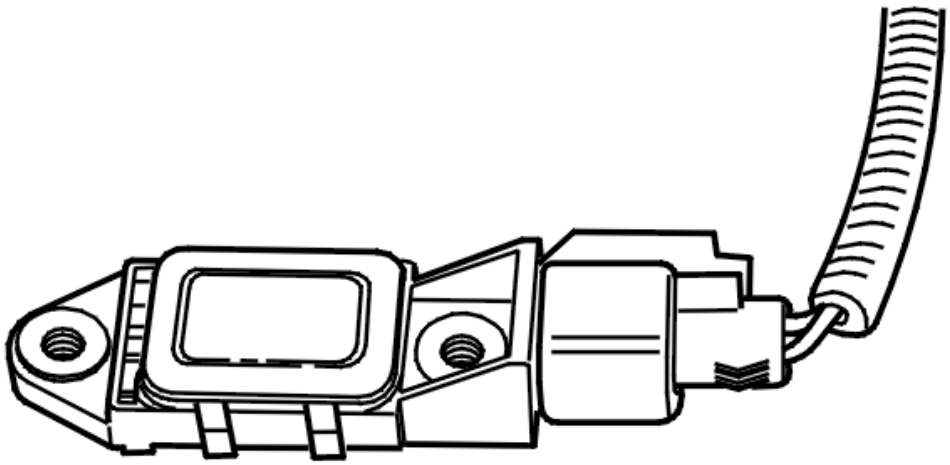

Fig. 78: Identifying Front Right Front Impact Sensor
Courtesy of VOLVO CARS CORPORATION

The Supplemental Restraint System Module (SRS) checks the signal from the front left front impact sensor.

Diagnostic trouble code (DTC) SRS-0021A is stored if the control module registers an incorrect identification signal in the signal cable for longer than 10 seconds.

Diagnostic trouble code (DTC) SRS-021A can be diagnosed in ignition positions I, II or III.

Substitute Value

- None.

Possible Source

- Faulty front impact sensor installed in the Supplemental Restraint System Module (SRS)
- The signal between the front impact sensor and the Supplemental Restraint System Module (SRS) has been affected by electrical interference. This causes the front impact sensor to respond with an incorrect identification signal.

Fault symptom[s]

- The SRS indicator lamp is lit.

FAULTY IDENTIFICATION

CHECKING THE COMPONENT

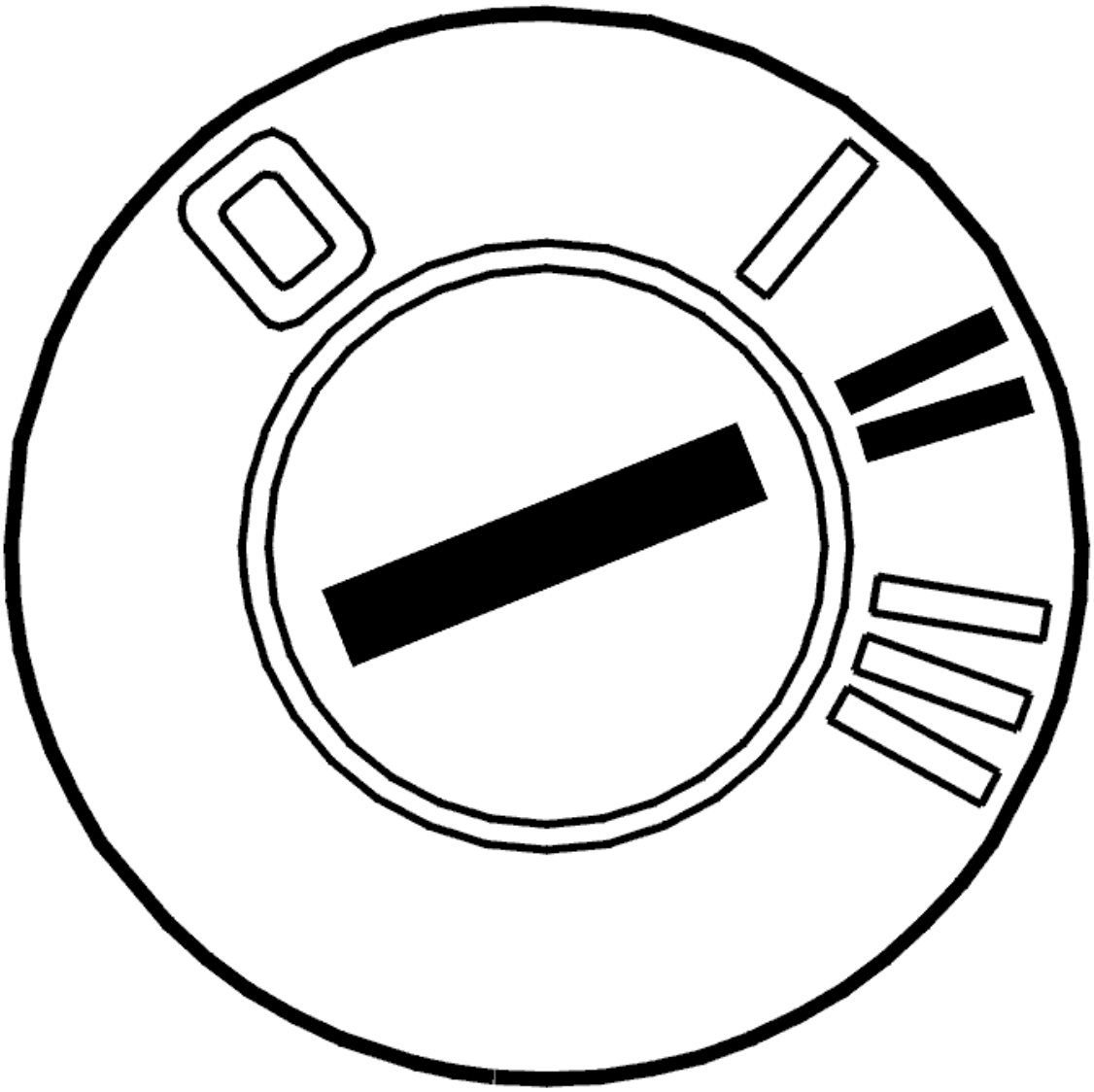

Fig. 79: Identifying Ignition ON
Courtesy of VOLVO CARS CORPORATION

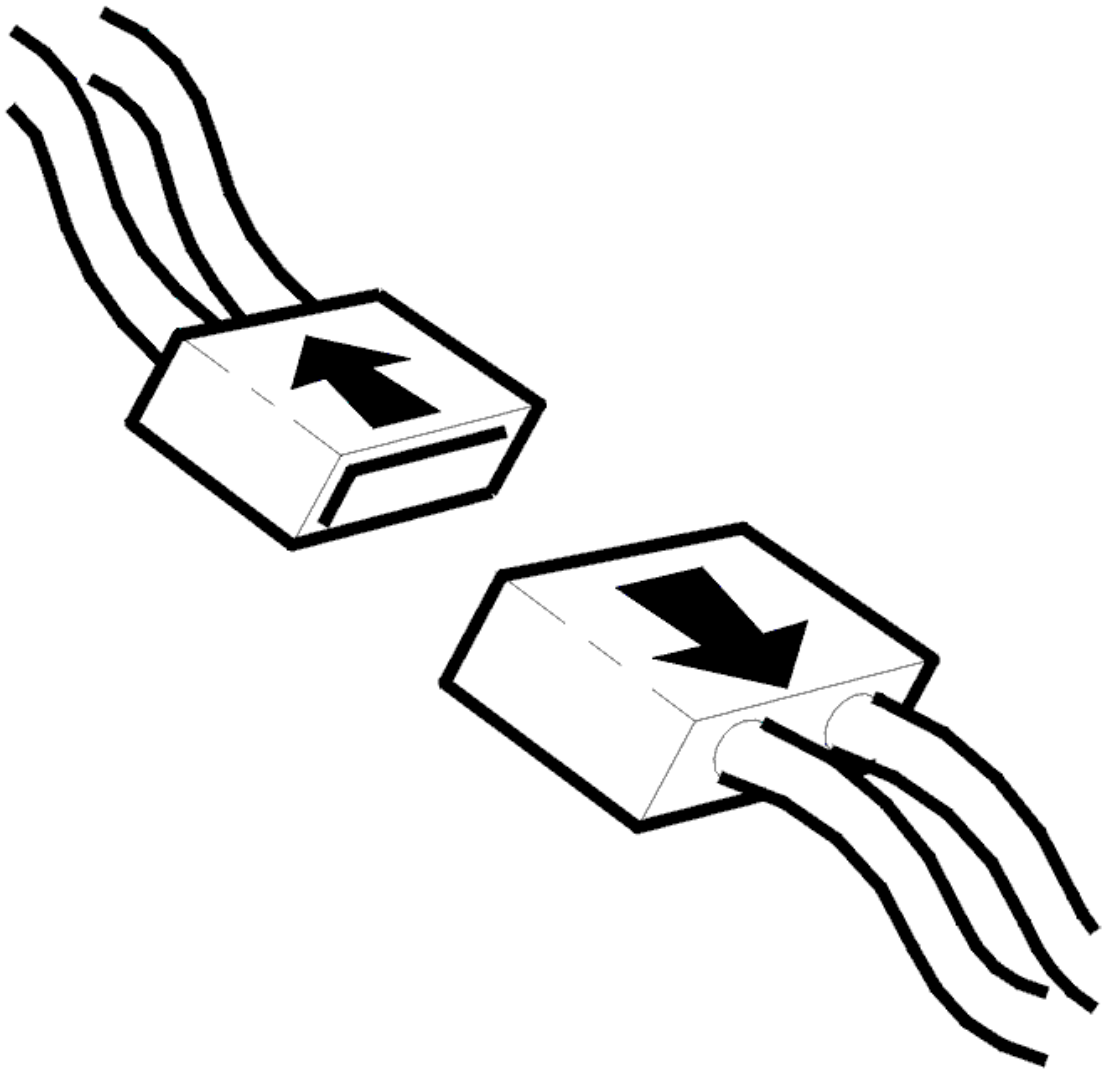

Fig. 80: Disconnecting Connector
Courtesy of VOLVO CARS CORPORATION

- Ignition off for 10 seconds
- Switch on the ignition. Wait 10 seconds.

  Read off diagnostic trouble codes (DTCs).

  If the diagnostic trouble code (DTC) is intermittent, the fault has been eliminated.

  Other information:

  - To access or replace the front impact sensor, see **COLLISION SENSOR FRONT, REPLACING** .

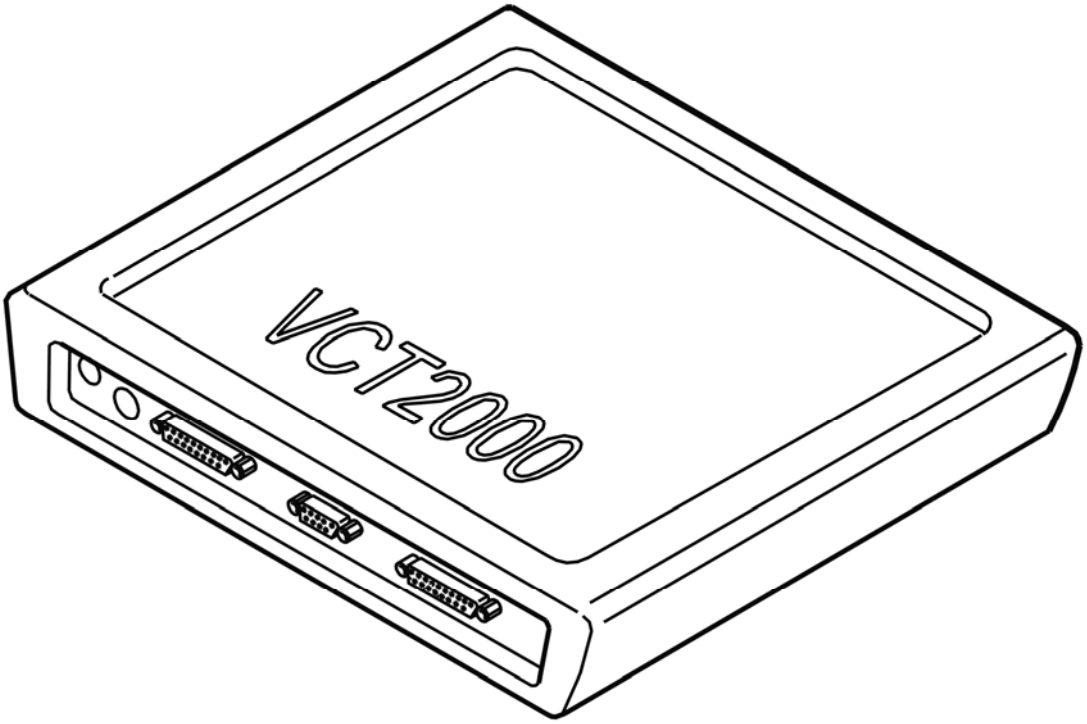

Fig. 81: Identifying VCT2000 Diagnostic Tool Symbol In VIDA
Courtesy of VOLVO CARS CORPORATION

Is the diagnostic trouble code (DTC) intermittent?

- **NO**

  See: **CHECKING THE COMPONENT**

- **YES**

  OKAY: Troubleshooting has been completed.

CHECKING THE COMPONENT

Supplemental Restraint System Module (SRS) has registered that an incorrect front impact sensor model has been installed.

If this fault occurs, replace the front left front impact sensor. Check against the replacement parts catalogue which front impact sensor model is used in the relevant Supplemental Restraint System Module (SRS)

In the event of a permanent fault, replace the front impact sensor.

Remedy as necessary.

Other information:

- To access or replace the front impact sensor, see **COLLISION SENSOR FRONT, REPLACING** .
- **Continue**

  See: **VERIFICATION**

INFORMATION

FAULT-TRACING INFORMATION

The fault should have been detected and remedied. As this is not the case fault-tracing has failed.

Exit fault-tracing for this diagnostic trouble code (DTC) or make another attempt.

VERIFICATION

VERIFICATION

HINT: After carrying out the repair, check that the fault has been remedied.

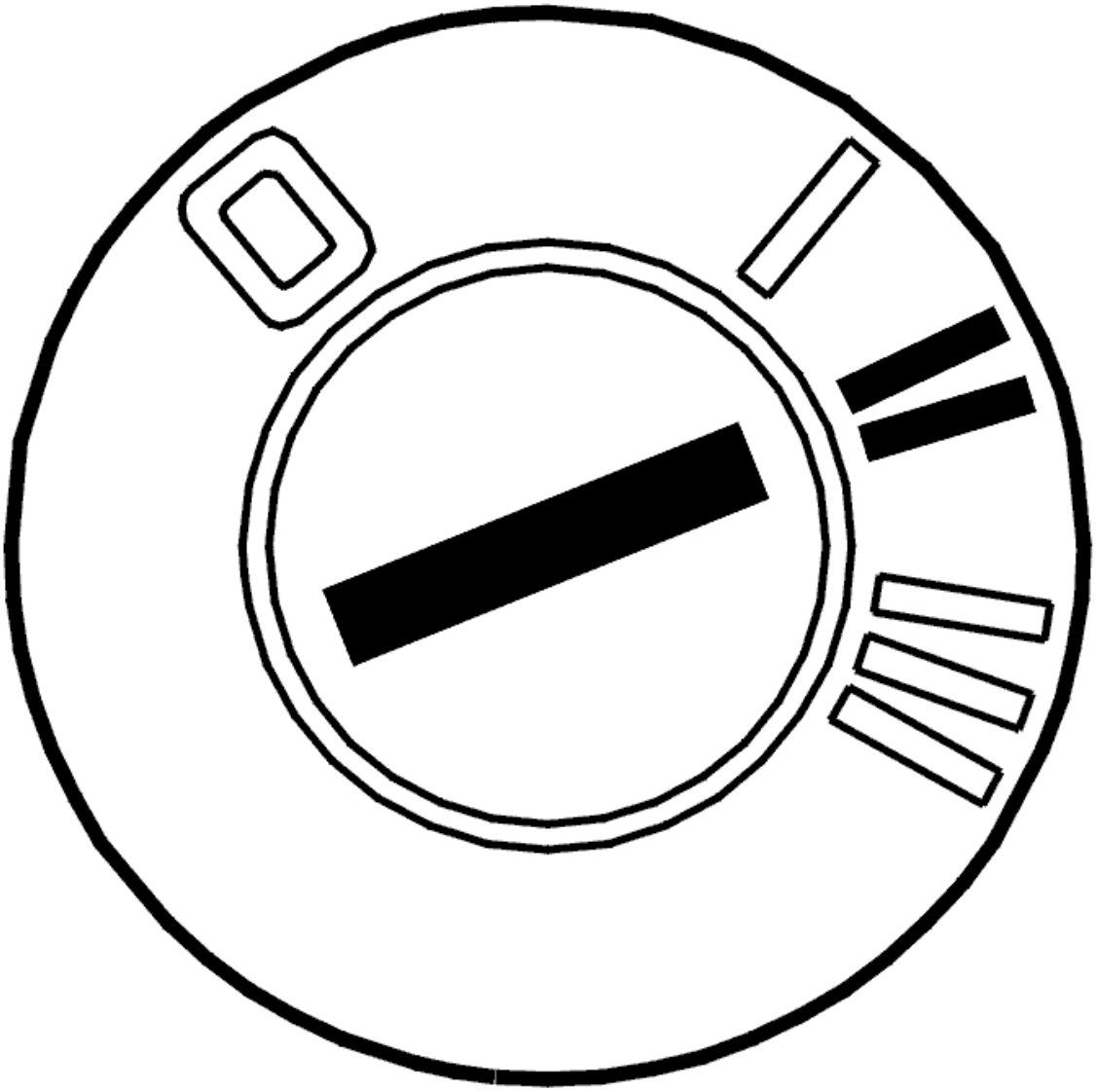

Fig. 82: Identifying Ignition ON
Courtesy of VOLVO CARS CORPORATION

- Ignition off
- Disconnect the battery negative lead
- Reinstall the connectors, components etc.
- Ignition on
- Connect the battery negative lead.

WARNING: **There must not be anyone inside the passenger compartment when the battery is connected.**

- Read off diagnostic trouble codes (DTCs).

The fault is no longer present if the diagnostic trouble code (DTC) status is intermittent.

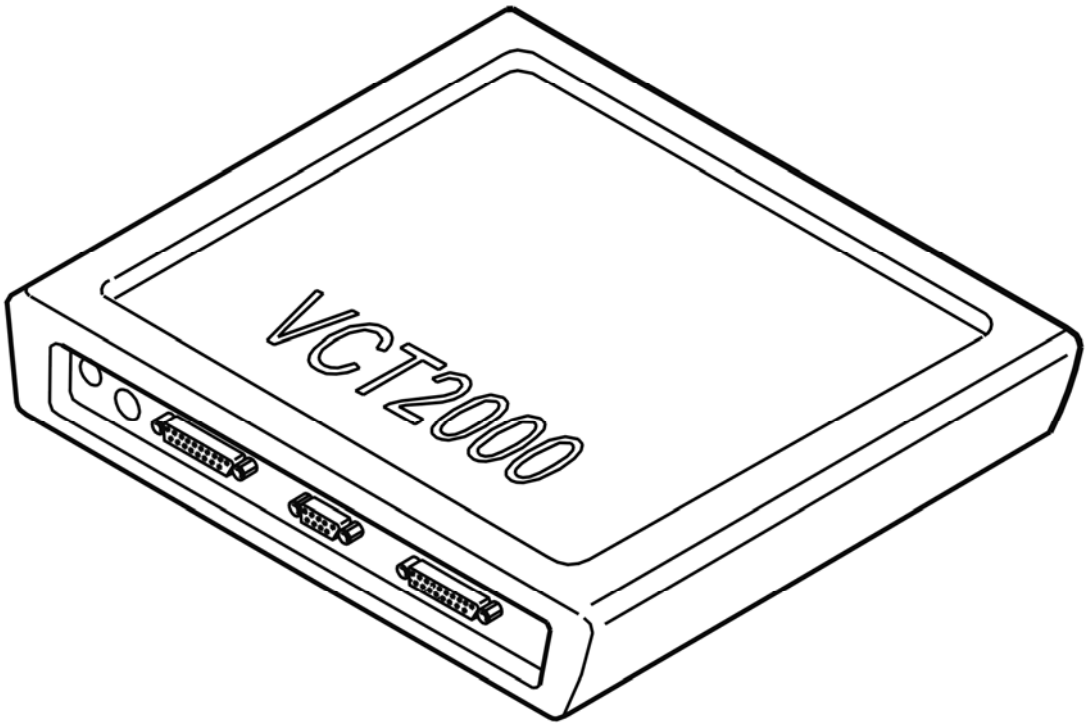

Fig. 83: Identifying VCT2000 Diagnostic Tool Symbol In VIDA
Courtesy of VOLVO CARS CORPORATION

Is the diagnostic trouble code (DTC) intermittent?

- **YES**

  VERIFIED: Troubleshooting has been completed.

- **NO**

  See: **INFORMATION**

SRS-021B: FRONT LEFT FRONT IMPACT SENSOR. INTERNAL FAULT (2003-2012)

DIAGNOSTIC TROUBLE CODE (DTC) INFORMATION SRS-021B

Condition

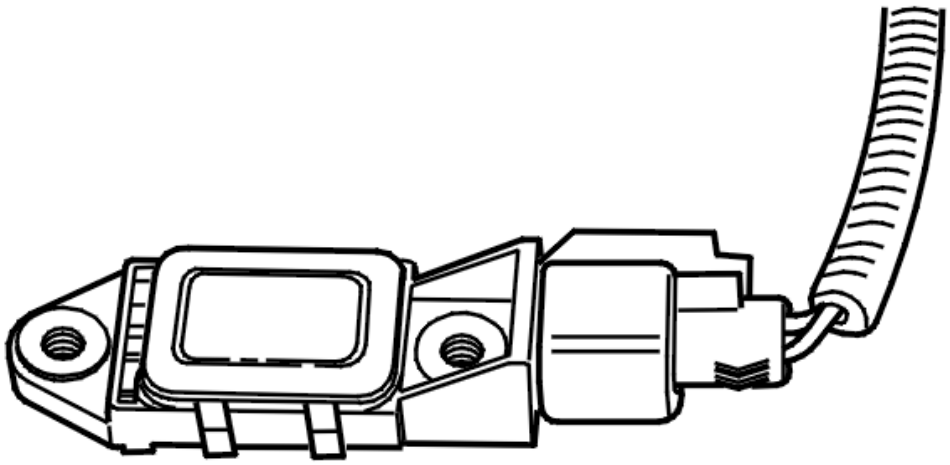

Fig. 84: Identifying Front Right Front Impact Sensor
Courtesy of VOLVO CARS CORPORATION

The Supplemental Restraint System Module (SRS) checks the signal from the front left front impact sensor.

Diagnostic trouble code (DTC) SRS-021B is stored if the control module registers an internal fault in the front impact sensor.

Diagnostic trouble code (DTC) SRS-021B can be diagnosed in ignition positions I, II or III.

Substitute Value

- None.

Possible Source

- Internal fault in the front impact sensor.

Fault symptom[s]

- The SRS indicator lamp is lit.

INTERNAL FAULT

INTERNAL FAULT

An internal fault has been registered in the front left front impact sensor.

In the event of permanent and intermittent faults, replace the front left front impact sensor. See **COLLISION SENSOR FRONT, REPLACING** .

Remedy as necessary.

SRS-021C: FRONT LEFT FRONT IMPACT SENSOR. CONFIGURATION FAULT (2003-2012)

DIAGNOSTIC TROUBLE CODE (DTC) INFORMATION SRS-021C

Condition

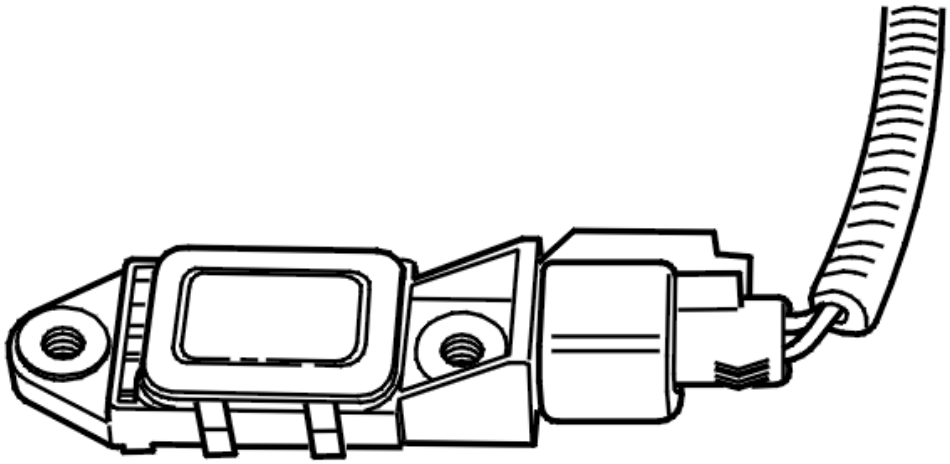

Fig. 85: Identifying Front Right Front Impact Sensor
Courtesy of VOLVO CARS CORPORATION

The Supplemental Restraint System Module (SRS) checks the signal from the front left front impact sensor.

Diagnostic trouble code (DTC) SRS-021C is stored if the resistance in the signal cable wiring circuit is lower than 10 ohms for longer than 10 seconds.

Diagnostic trouble code (DTC) SRS-021C can be diagnosed in ignition positions I, II or III.

Substitute Value

- None.

Possible Source

- If the Supplemental Restraint System Module (SRS) identifies that a front impact sensor is installed, despite the control module being programmed that a front left front impact sensor is not installed.

Fault symptom[s]

- The SRS indicator lamp is lit.

FAULT-TRACING

see **FAULT-TRACING**

SRS-021D: FRONT LEFT FRONT IMPACT SENSOR. CROSS-CONNECTED (2003-2012)

DIAGNOSTIC TROUBLE CODE (DTC) INFORMATION SRS-021D

Condition

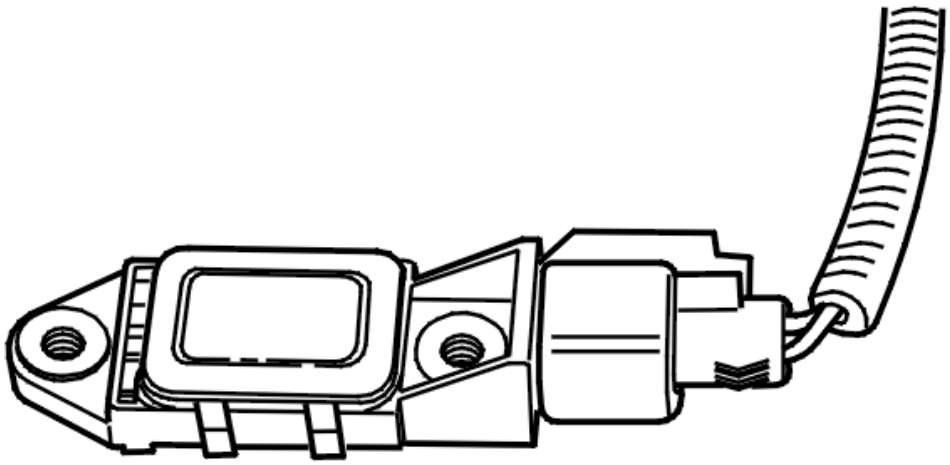

Fig. 86: Identifying Front Right Front Impact Sensor
Courtesy of VOLVO CARS CORPORATION

The Supplemental Restraint System Module (SRS) checks the signal from the front left front impact sensor.

Diagnostic trouble code (DTC) SRS-021D is stored if the Supplemental Restraint System Module (SRS) registers that the signal cable is cross-connected

The diagnostic trouble code (DTC) can only be diagnosed when the ignition is switched on (12 V). In other words, the diagnostic trouble code (DTC) can only be diagnosed when the ignition is switched from position 0 to positions I, II or III.

Substitute Value

- None.

Possible Source

- Incorrect connection of the signal cables between the front left front impact sensor and the Supplemental Restraint System Module (SRS). The signal cables are reversed between the two terminal pins in the side impact sensor or in the Supplemental Restraint System Module (SRS)
- Incorrect repair of SRS wiring. The signal cables to the two terminal pins on the front impact sensor have been reversed.

Fault symptom[s]

- The SRS indicator lamp is lit.

CROSS-CONNECTED

CHECKING COMPONENTS AND WIRING

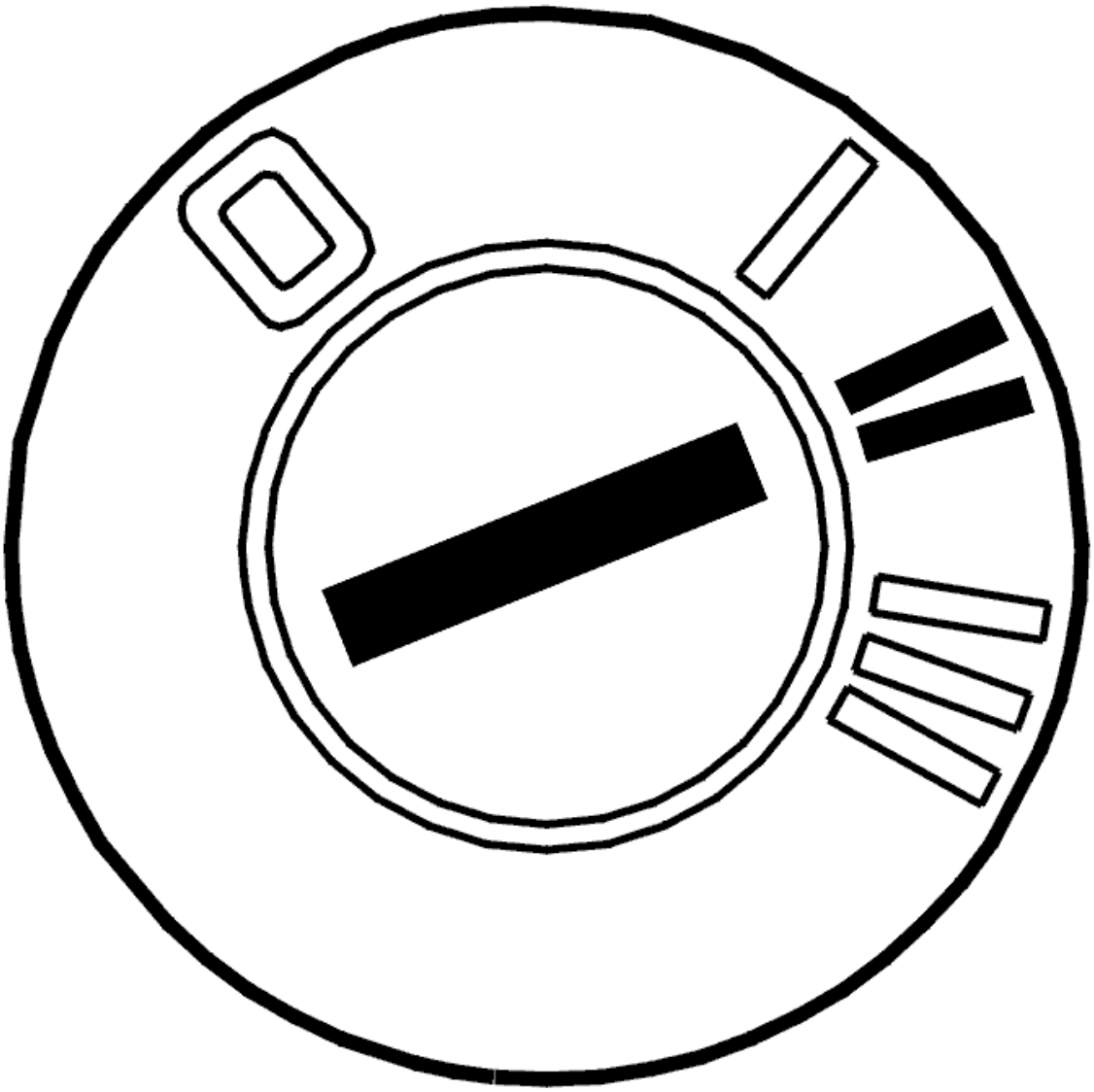

Fig. 87: Identifying Ignition ON
Courtesy of VOLVO CARS CORPORATION

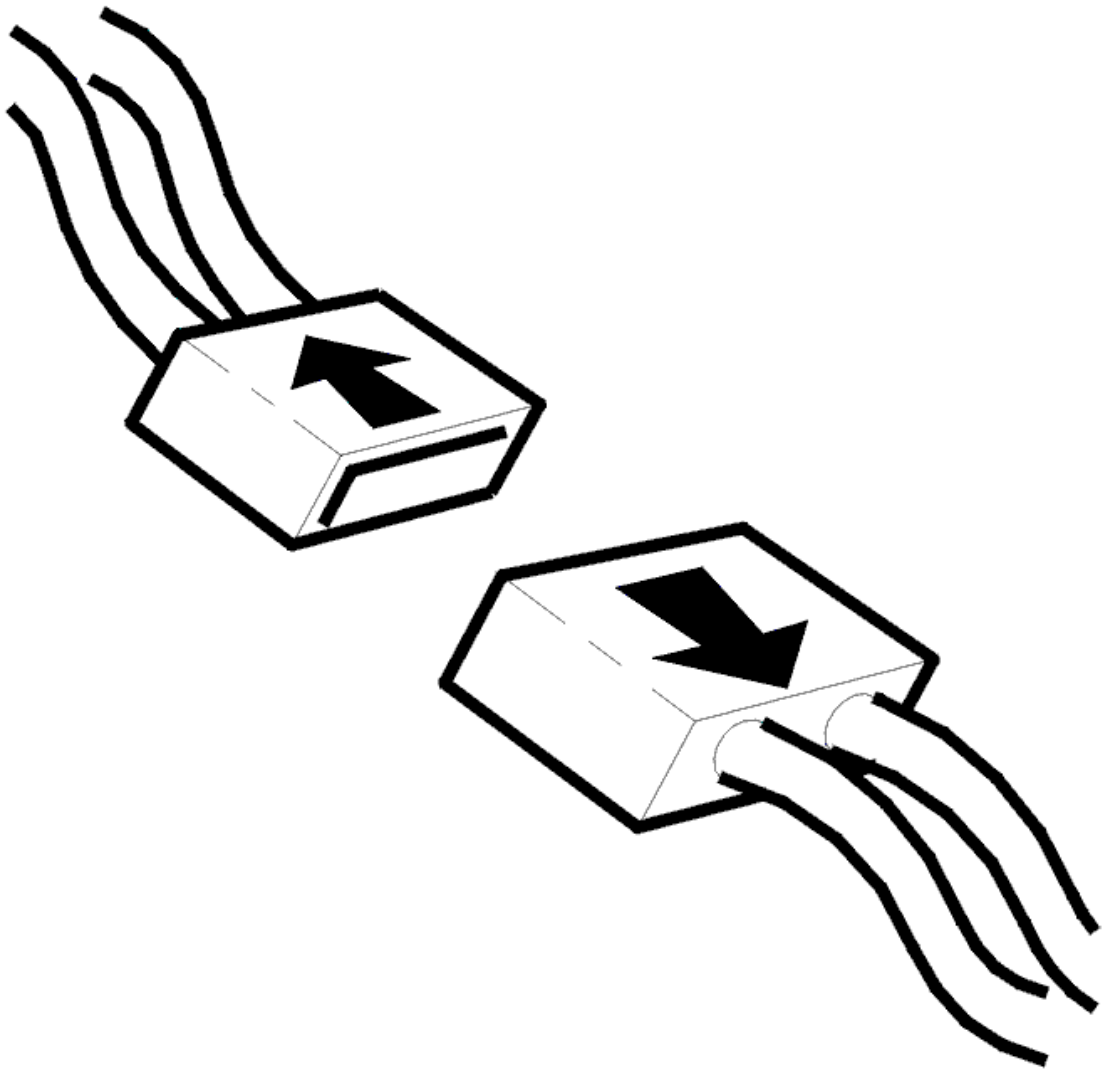

Fig. 88: Disconnecting Connector
Courtesy of VOLVO CARS CORPORATION

- Ignition off
- Disconnect the connector from the front left front impact sensor.

  Check the signal cable between the Supplemental Restraint System Module (SRS) terminal #19B (47) and the front impact sensor #2. Check for an open-circuit

  Check the signal cable between the Supplemental Restraint System Module (SRS) terminal #18B (46) and the front impact sensor #1. Check for an open-circuit.

  Check the resistance between the Supplemental Restraint System Module (SRS) terminal #19B (47) and the front impact sensor #1. The resistance should be infinite.

  Check the resistance between the Supplemental Restraint System Module (SRS) terminal #18B (46) and

the front impact sensor #2. The resistance should be infinite.

HINT: If repairs have been carried out on the wiring, these signal cables may have been reversed. Check that connections between the Supplemental Restraint System Module (SRS) and the front impact sensor are correct.

Remedy as necessary.

Other information:

- To access and replace the SRS control module and connector, see **SUPPLEMENTAL RESTRAINT SYSTEM MODULE (SRS), REPLACING**
- To connect the breakout box, see **CONNECTING THE BREAKOUT BOX**
- To access or replace the front impact sensor, see **COLLISION SENSOR FRONT, REPLACING**
- For information about the repair of SRS wiring, see **CABLE HARNESS SRS SYSTEM, REPAIR**
- For information about signals, see **SIGNAL SPECIFICATION**
- see **CHECKING WIRING AND TERMINALS** .

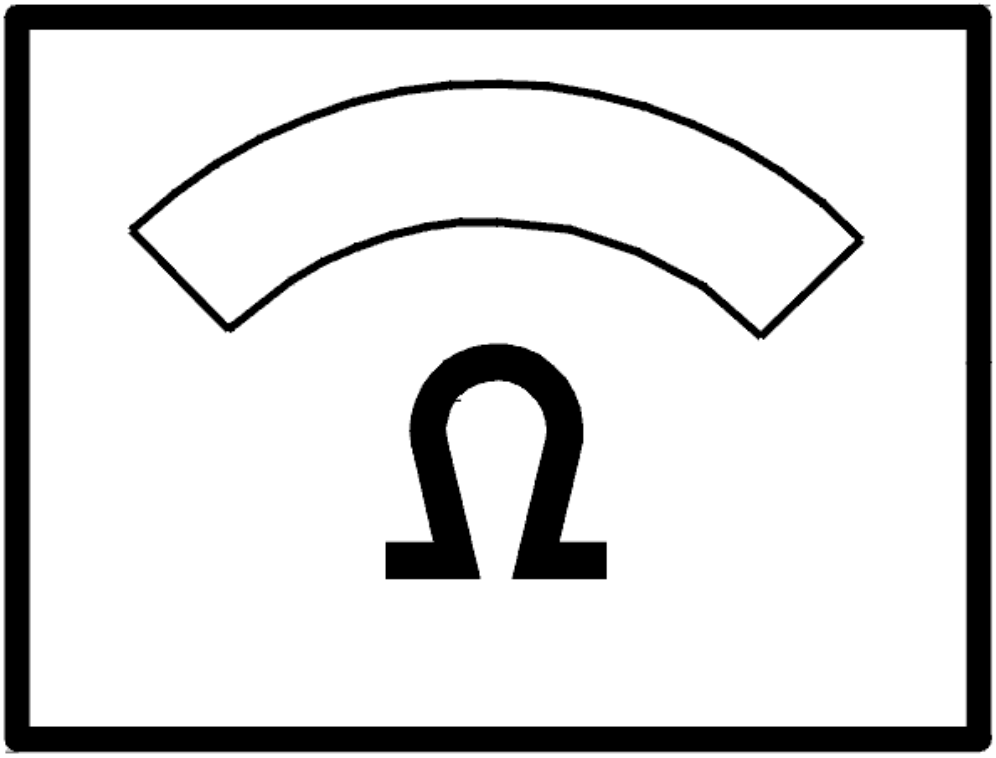

Fig. 89: Identifying Ohm Meter
Courtesy of VOLVO CARS CORPORATION

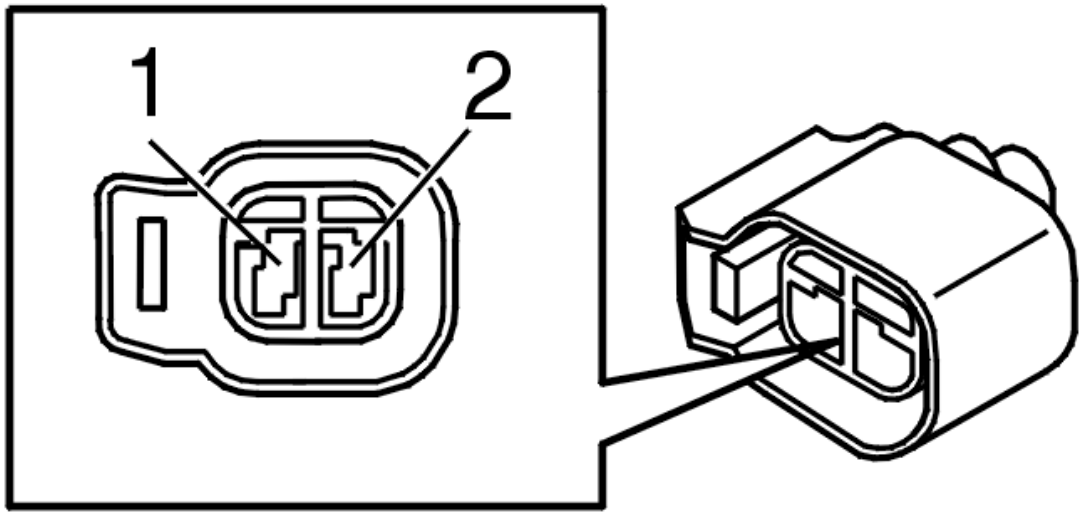

Fig. 90: Identifying Front Impact Sensor Connector Terminals
Courtesy of VOLVO CARS CORPORATION

- **Continue**

  See: **VERIFICATION**

VERIFICATION

VERIFICATION

HINT: After carrying out the repair, check that the fault has been remedied.

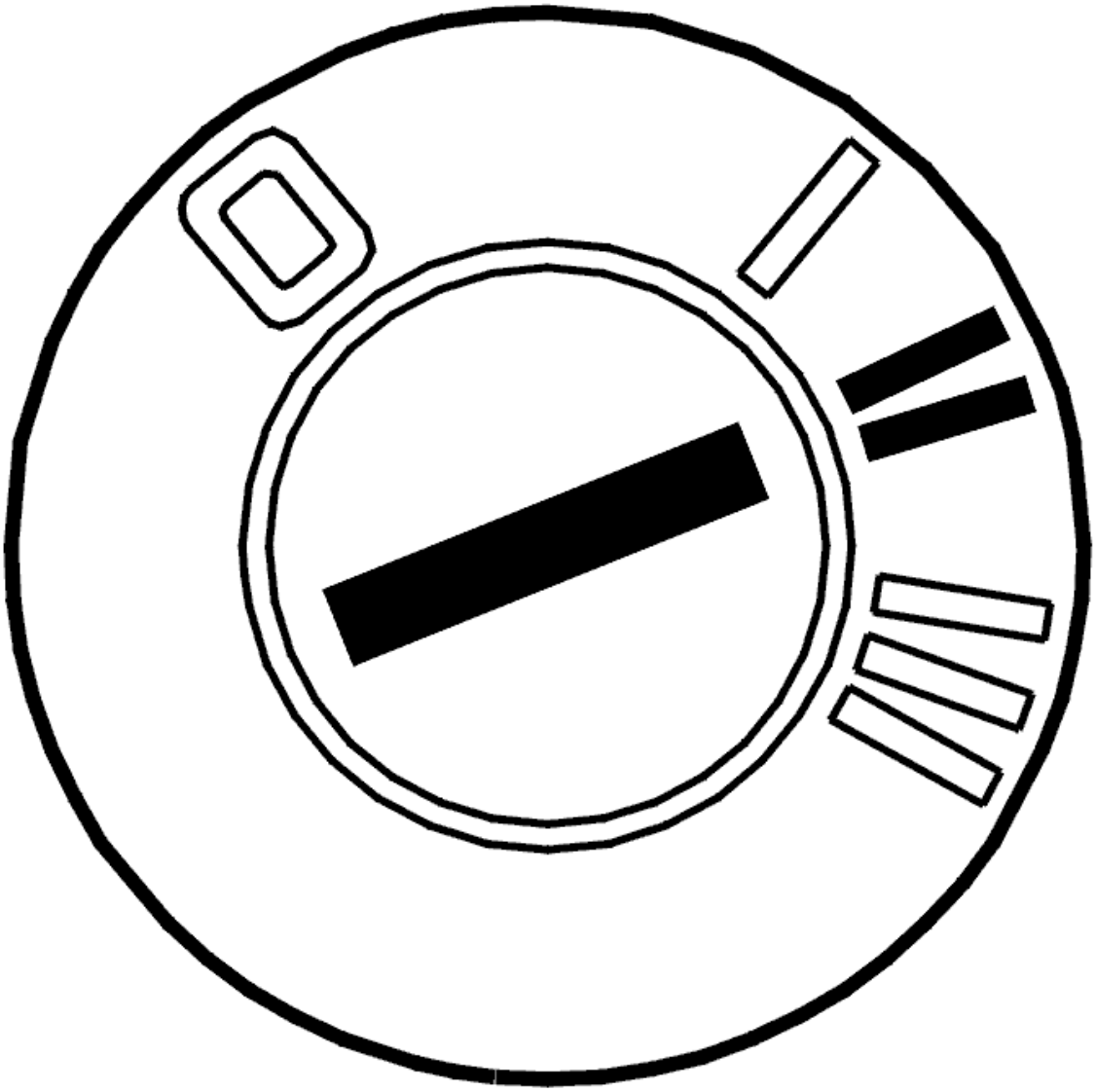

Fig. 91: Identifying Ignition ON
Courtesy of VOLVO CARS CORPORATION

- Ignition off
- Disconnect the battery negative lead
- Reinstall the connectors, components etc.
- Ignition on
- Connect the battery negative lead.

WARNING: There must not be anyone inside the passenger compartment when the battery is connected.

- Read off diagnostic trouble codes (DTCs).

The fault is no longer present if the diagnostic trouble code (DTC) status is intermittent.

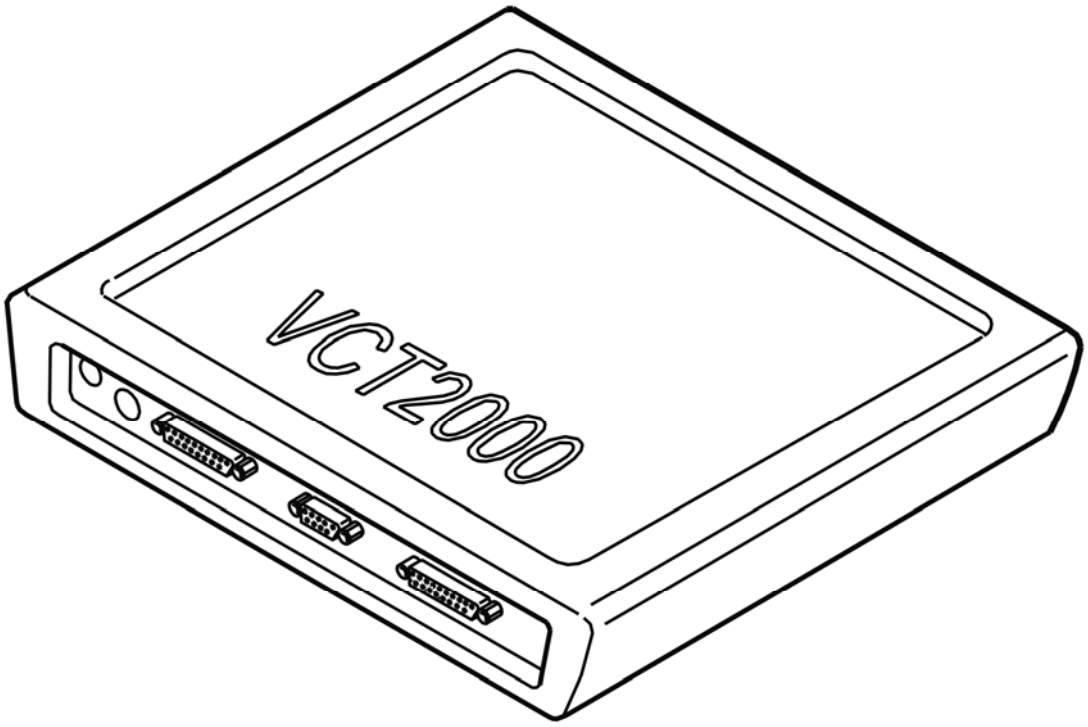

Fig. 92: Identifying VCT2000 Diagnostic Tool Symbol In VIDA
Courtesy of VOLVO CARS CORPORATION

Is the diagnostic trouble code (DTC) intermittent?

- **YES**

  VERIFIED: Troubleshooting has been completed.

- **NO**

  See: **INFORMATION**

INFORMATION

FAULT-TRACING INFORMATION

The fault should have been detected and remedied. As this is not the case fault-tracing has failed.

Exit fault-tracing for this diagnostic trouble code (DTC) or make another attempt.

SRS-0220: CAN SIGNAL. SIGNAL MISSING (2005-2012)

DIAGNOSTIC TROUBLE CODE (DTC) INFORMATION SRS-0220

Condition

The supplemental restraint system module (SRS) checks signals on the CAN network between the supplemental restraint system module (SRS) and the central electronic module (CEM).

The diagnostic trouble code (DTC) is stored if the control module registers that there is no signal about the position of the front seats on the CAN network.

The diagnostic trouble code (DTC) can be diagnosed in ignition positions I, II and III.

Substitute Value

- None.

Possible Source

- Open-circuit in the control area network (CAN)
- Fault in the central electronic module (CEM)
- Fault in the seat position sensor.

Fault symptom[s]

- The SRS indicator lamp is lit.

SIGNAL MISSING

CHECKING COMPONENTS AND WIRING

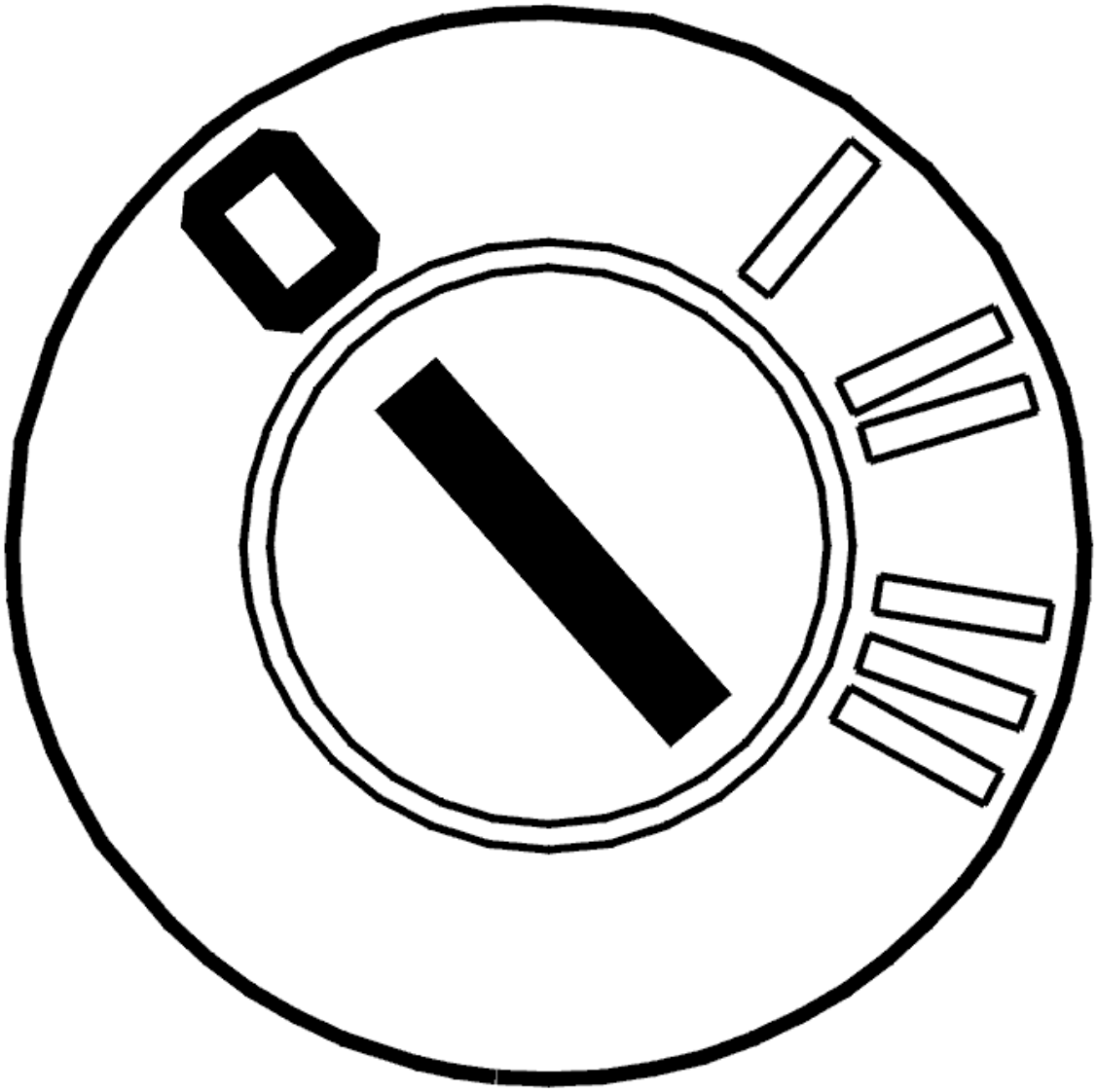

Fig. 93: Identifying Ignition OFF
Courtesy of VOLVO CARS CORPORATION

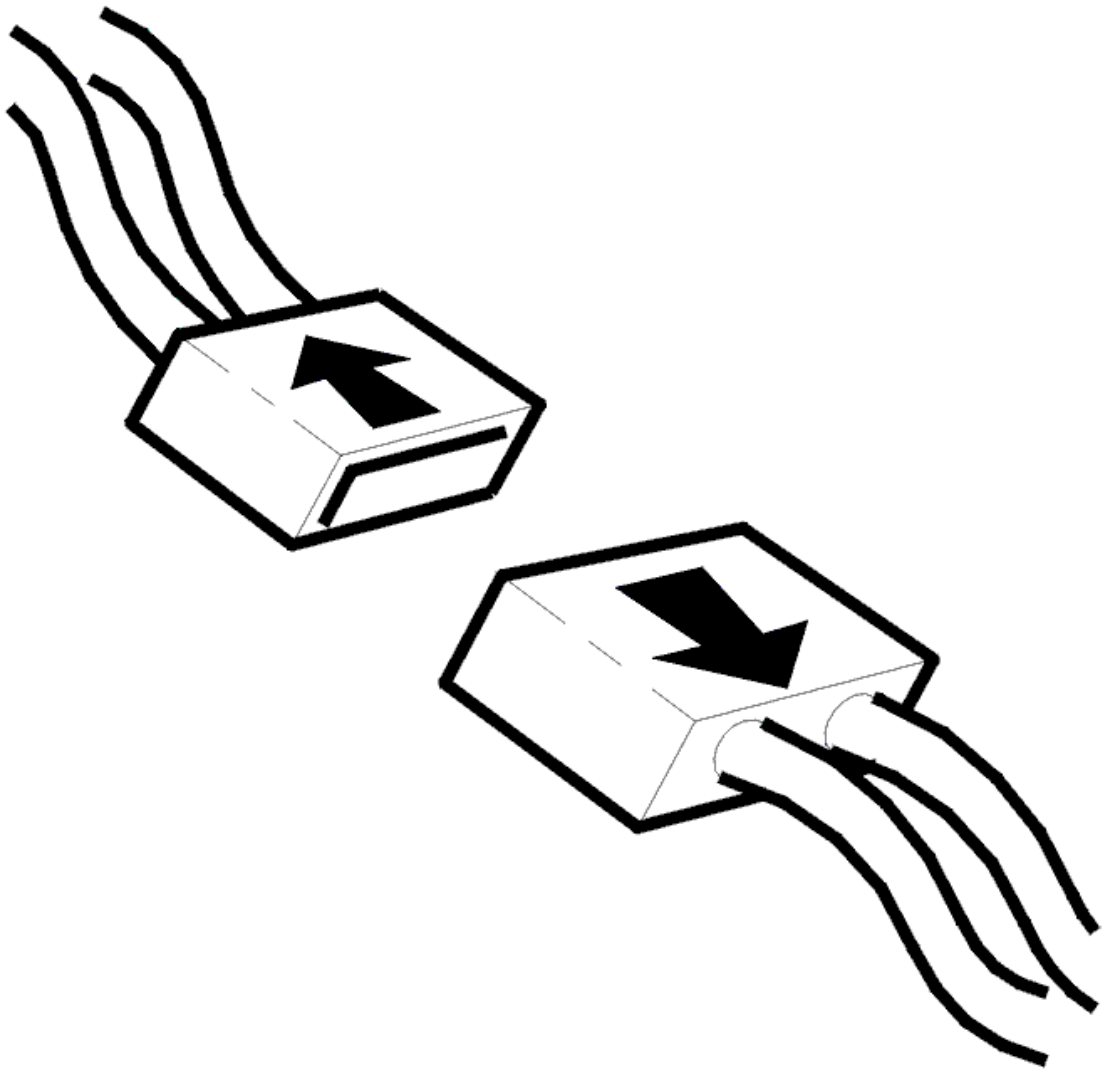

Fig. 94: Disconnecting Connector
Courtesy of VOLVO CARS CORPORATION

- Switch off the ignition. Wait 10 seconds
- Disconnect the connector from the supplemental restraint system module (SRS)
- Disconnect connector D from the central electronic module (CEM).

CAUTION: Do not touch the terminal pins in the supplemental restraint system module (SRS) and the central electronic module (CEM). There is a risk of static discharge. This could damage the supplemental restraint system module (SRS) and the central electronic module (CEM).

Check the connectors for the supplemental restraint system module (SRS) and the central electronic module (CEM). Check for damage to pins and terminals in the connectors. Check for contact resistance.

Remedy as necessary.

Check the CAN cable between the supplemental restraint system module (SRS) and the central electronic module (CEM). Check for an open-circuit.

Remedy as necessary.

If no fault is found, continue fault-tracing from the central electronic module (CEM).

Other information

- see **CONNECTING THE BREAKOUT BOX**
- For -2004, see **SIGNAL SPECIFICATION** or for model year 2005-, see **SIGNAL SPECIFICATION**
- see **SUPPLEMENTAL RESTRAINT SYSTEM MODULE (SRS), REPLACING**
- For -2004, see: **CENTRAL ELECTRONIC MODULE (CEM), REPLACING**
- For 2005-, see: **CENTRAL ELECTRONIC MODULE (CEM), REPLACING** .
- To fault-trace the control area network (CAN), see: **SIGNAL MISSING**
- see **CABLE HARNESS SRS SYSTEM, REPAIR**
- see **CHECKING WIRING AND TERMINALS**

- **Continue**

  See: **VERIFICATION**

VERIFICATION

VERIFICATION

HINT: After carrying out the repair, check that the fault has been remedied.

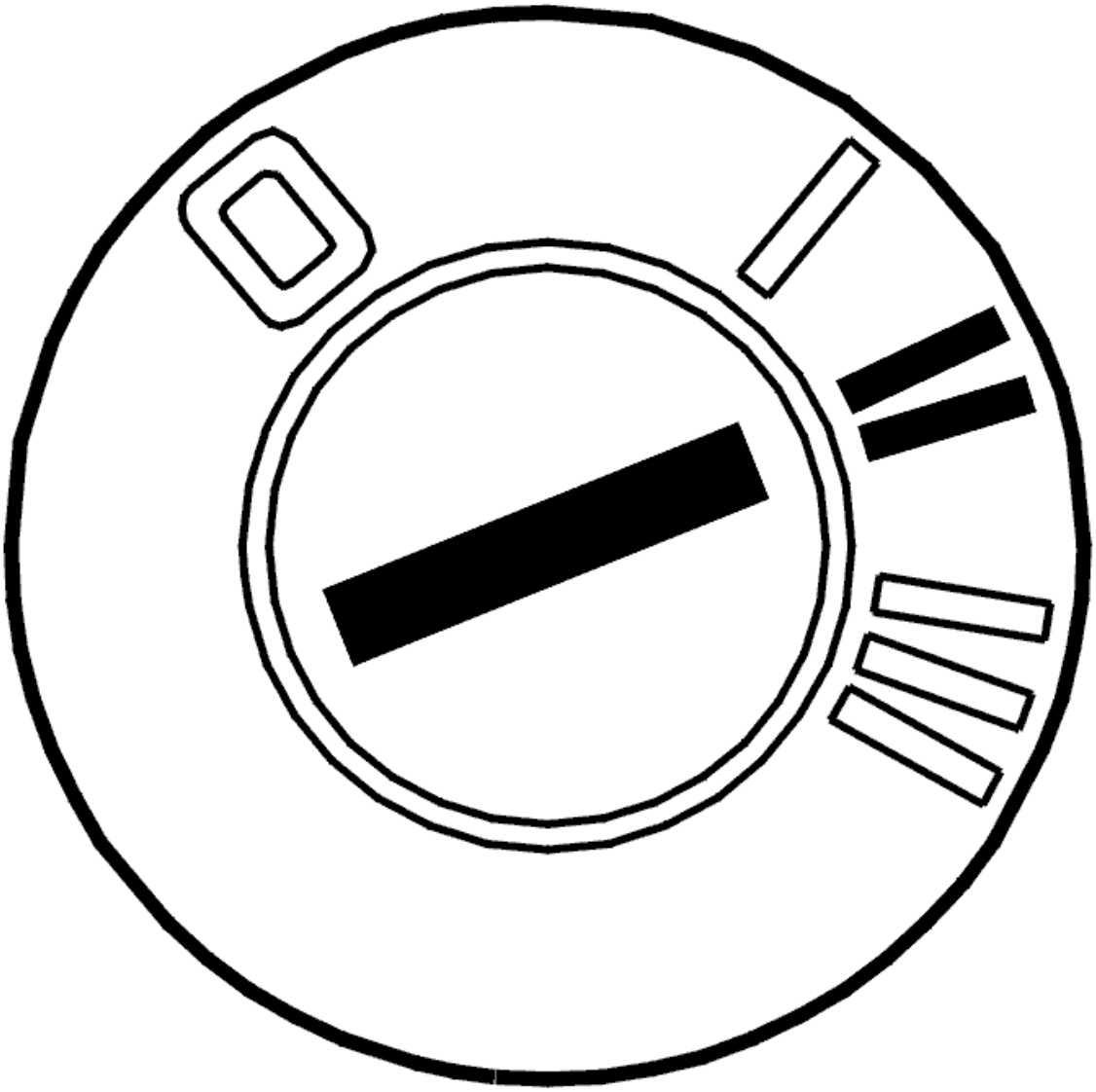

Fig. 95: Identifying Ignition ON
Courtesy of VOLVO CARS CORPORATION

- Ignition off
- Disconnect the battery negative lead
- Reinstall the connectors, components etc.
- Ignition on
- Connect the battery negative lead.

WARNING: **There must not be anyone inside the passenger compartment when the battery is connected.**

- Read off diagnostic trouble codes (DTCs).

The fault is no longer present if the diagnostic trouble code (DTC) status is intermittent.

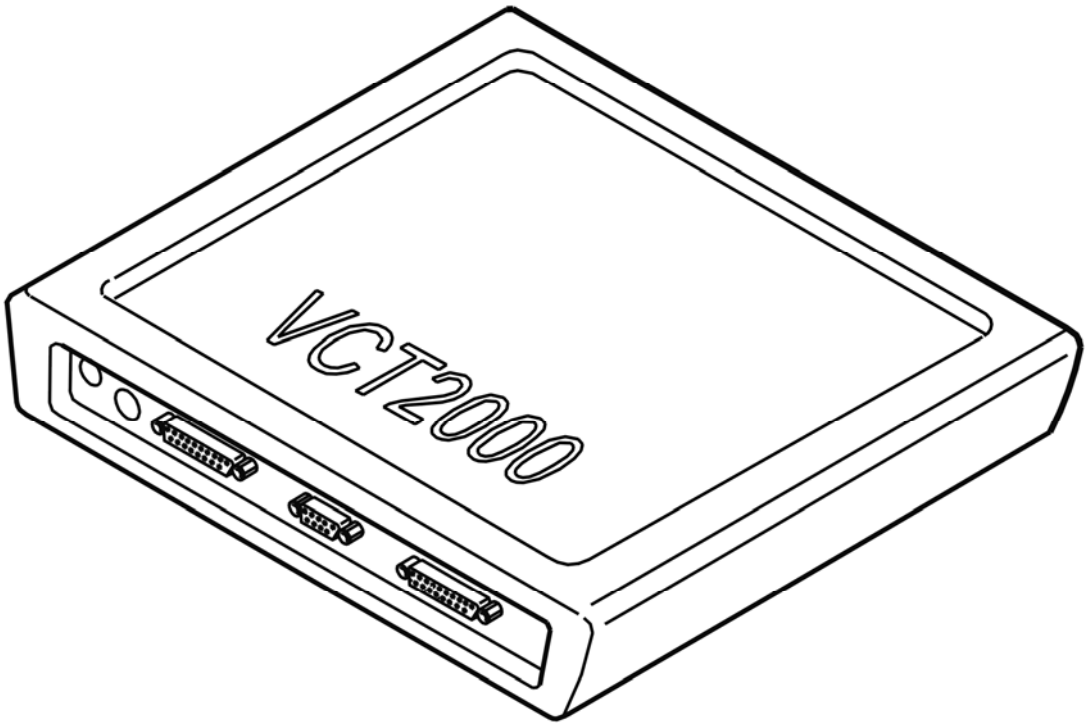

Fig. 96: Identifying VCT2000 Diagnostic Tool Symbol In VIDA
Courtesy of VOLVO CARS CORPORATION

Is the diagnostic trouble code (DTC) intermittent?

- **YES**

  VERIFIED: Troubleshooting has been completed.

- **NO**

  See: **INFORMATION**

INFORMATION

FAULT-TRACING INFORMATION

The fault should have been detected and remedied. As this is not the case fault-tracing has failed.

Exit fault-tracing for this diagnostic trouble code (DTC) or make another attempt.

SRS-0221: CAN SIGNAL. DIAGNOSTIC TROUBLE CODE (DTC) IN THE

CENTRAL ELECTRONIC MODULE (CEM) (2005-2012)

DIAGNOSTIC TROUBLE CODE (DTC) INFORMATION SRS-0221

Condition

The supplemental restraint system module (SRS) checks signals on the CAN network between the supplemental restraint system module (SRS) and the central electronic module (CEM).

The diagnostic trouble code (DTC) is stored if the supplemental restraint system module (SRS) receives a signal indicating that a diagnostic trouble code (DTC) for the SRS system has been stored in the central electronic module (CEM).

The diagnostic trouble code (DTC) can be diagnosed in ignition positions I, II and III.

Substitute Value

- None.

Possible Source

- A diagnostic trouble code (DTC) for the seat position sensor has been stored in the central electronic module (CEM).

Fault symptom[s]

- The SRS indicator lamp is lit.

DIAGNOSTIC TROUBLE CODE (DTC) IN THE CENTRAL ELECTRONIC MODULE (CEM)

FAULT-TRACING INFORMATION

Fault-trace the central electronic module (CEM) to check the driver's seat position sensor.

SRS-0222: CAN SIGNAL. DIAGNOSTIC TROUBLE CODE (DTC) IN THE CENTRAL ELECTRONIC MODULE (CEM) (2005-2012)

DIAGNOSTIC TROUBLE CODE (DTC) INFORMATION SRS-0222

Condition

The supplemental restraint system module (SRS) checks signals on the CAN network between the supplemental restraint system module (SRS) and the central electronic module (CEM).

The diagnostic trouble code (DTC) is stored if the supplemental restraint system module (SRS) receives a signal indicating that a diagnostic trouble code (DTC) for the SRS system has been stored in the central electronic module (CEM).

The diagnostic trouble code (DTC) can be diagnosed in ignition positions I, II and III.

Substitute Value

- None.

Possible Source

- A diagnostic trouble code (DTC) for the passenger seat position sensor has been stored in the central electronic module (CEM).

Fault symptom[s]

- The SRS indicator lamp is lit.

DIAGNOSTIC TROUBLE CODE (DTC) IN THE CENTRAL ELECTRONIC MODULE (CEM)

FAULT-TRACING INFORMATION

Fault-trace the central electronic module (CEM) to check the passenger seat position sensor.

SRS-0223: CAN SIGNAL. SIGNAL MISSING (2005-2012)

DIAGNOSTIC TROUBLE CODE (DTC) INFORMATION SRS-0223

Condition

The supplemental restraint system module (SRS) checks signals on the CAN network between the supplemental restraint system module (SRS) and the central electronic module (CEM).

The diagnostic trouble code (DTC) is stored if the control module registers that there is no signal for the configuration of the switch for the passenger airbag.

The diagnostic trouble code (DTC) can only be diagnosed when the ignition is switched on (12 V). In other words, the diagnostic trouble code (DTC) can only be diagnosed when the ignition is switched from position 0 to positions I, II or III.

Substitute Value

- None.

Possible Source

- Open-circuit in the control area network (CAN)
- Fault in the central electronic module (CEM).

Fault symptom[s]

- The SRS indicator lamp is lit.

SIGNAL MISSING

CHECKING COMPONENTS AND WIRING

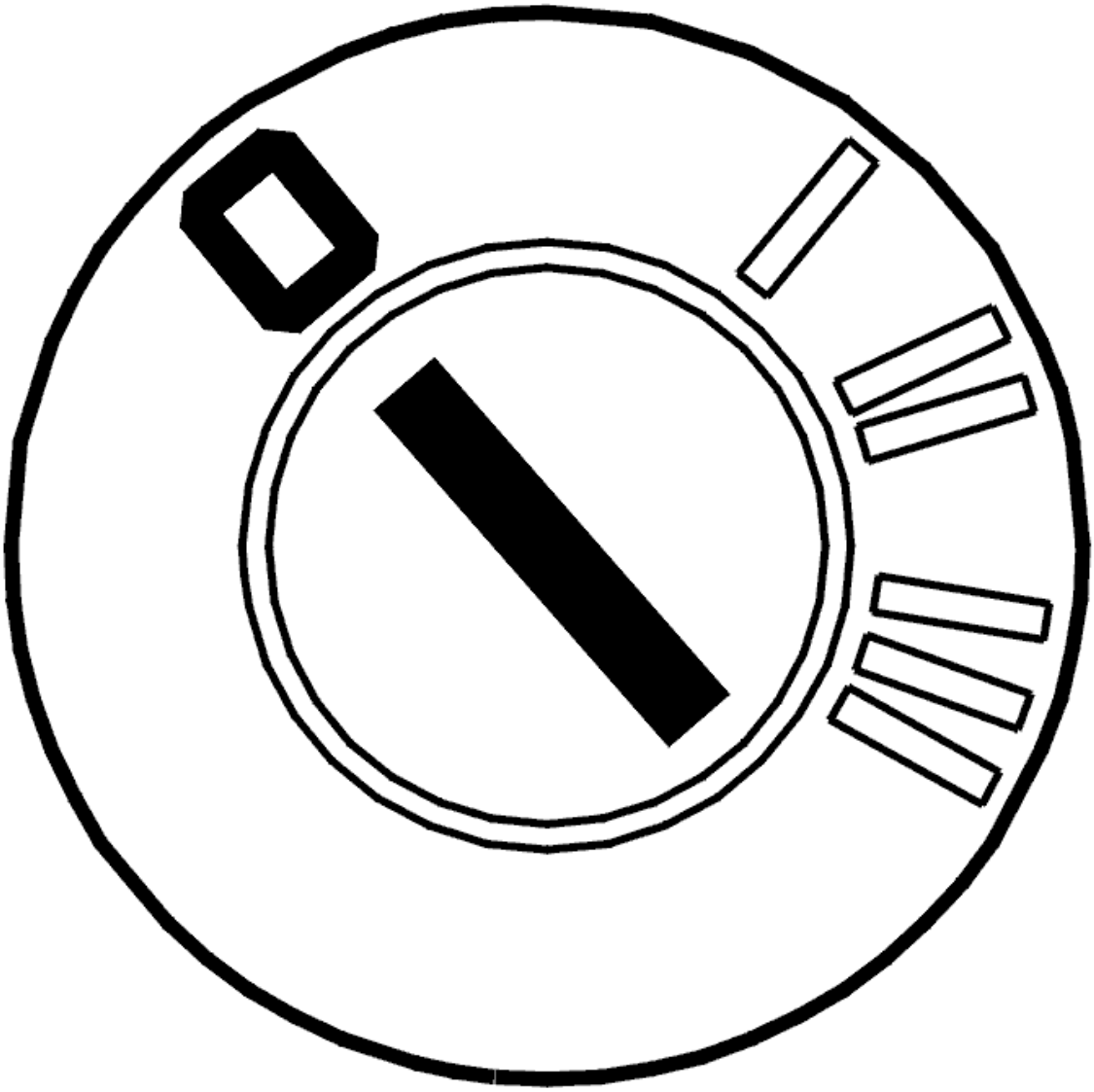

Fig. 97: Identifying Ignition OFF
Courtesy of VOLVO CARS CORPORATION

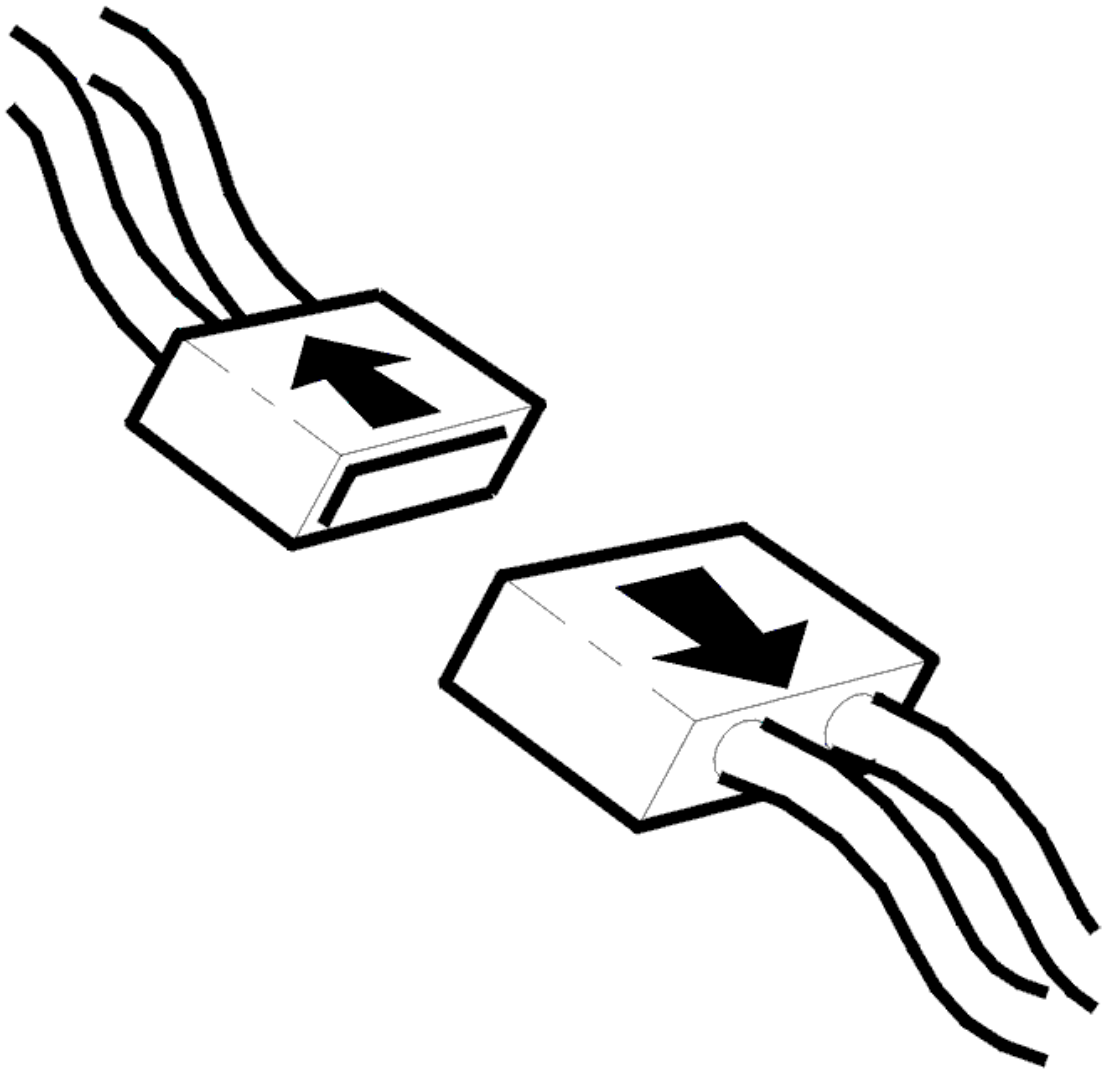

Fig. 98: Disconnecting Connector
Courtesy of VOLVO CARS CORPORATION

- Switch off the ignition. Wait 10 seconds
- Disconnect the connector from the supplemental restraint system module (SRS)
- Disconnect connector D from the central electronic module (CEM).

CAUTION: Do not touch the terminal pins in the supplemental restraint system module (SRS) and the central electronic module (CEM). There is a risk of static discharge. This could damage the supplemental restraint system module (SRS) and the central electronic module (CEM).

Check the connectors for the supplemental restraint system module (SRS) and the central electronic module (CEM). Check for damage to pins and terminals in the connectors. Check for contact resistance.

Remedy as necessary.

Check the CAN cable between the supplemental restraint system module (SRS) and the central electronic module (CEM). Check for an open-circuit.

Remedy as necessary.

If no fault is found, continue fault-tracing from the central electronic module (CEM).

Other information

- see **CONNECTING THE BREAKOUT BOX**
- For -2004, see **SIGNAL SPECIFICATION** or for model year 2005-, see **SIGNAL SPECIFICATION**
- see **SUPPLEMENTAL RESTRAINT SYSTEM MODULE (SRS), REPLACING**
- For -2004, see: **CENTRAL ELECTRONIC MODULE (CEM), REPLACING**
- For 2005-, see: **CENTRAL ELECTRONIC MODULE (CEM), REPLACING** .
- To fault-trace the control area network (CAN), see: **SIGNAL MISSING**
- see **CABLE HARNESS SRS SYSTEM, REPAIR**
- see **CHECKING WIRING AND TERMINALS**

- **Continue**

  See: **VERIFICATION**

VERIFICATION

VERIFICATION

HINT: After carrying out the repair, check that the fault has been remedied.

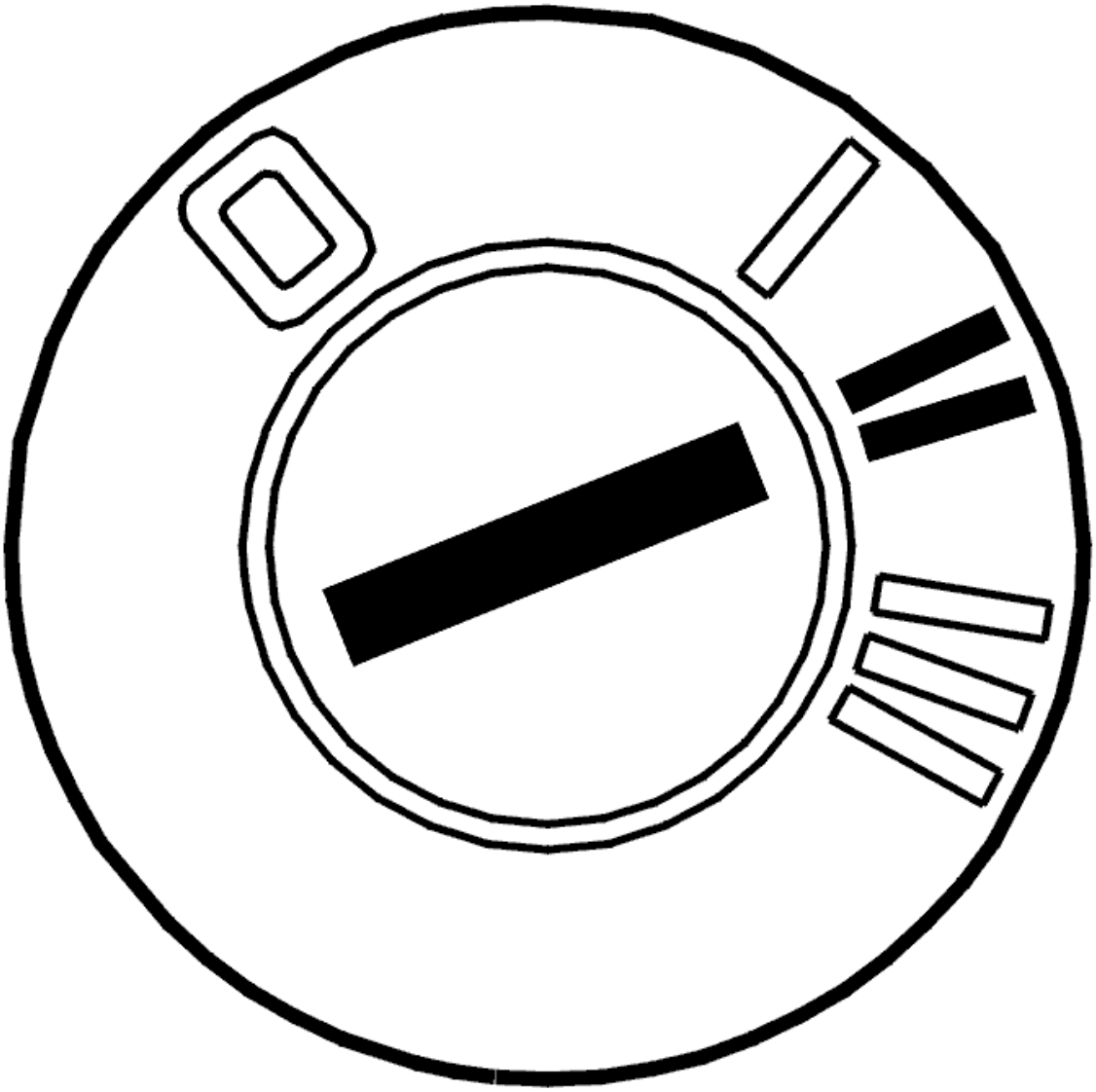

Fig. 99: Identifying Ignition ON
Courtesy of VOLVO CARS CORPORATION

- Ignition off
- Disconnect the battery negative lead
- Reinstall the connectors, components etc.
- Ignition on
- Connect the battery negative lead.

WARNING: There must not be anyone inside the passenger compartment when the battery is connected.

- Read off diagnostic trouble codes (DTCs).

The fault is no longer present if the diagnostic trouble code (DTC) status is intermittent.

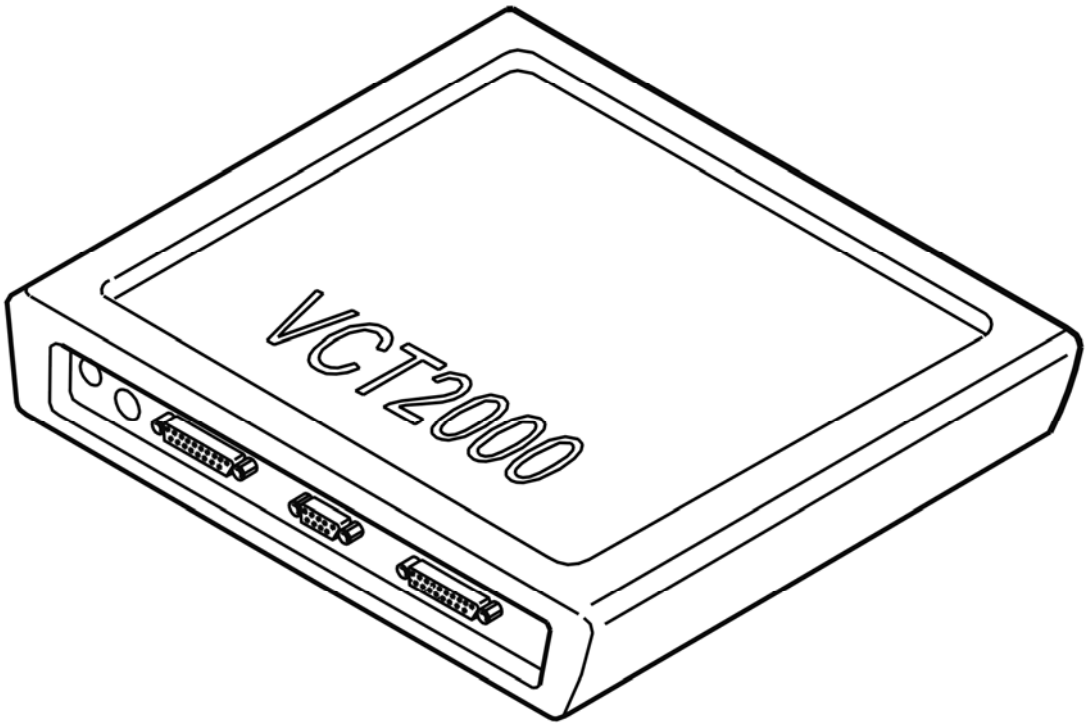

Fig. 100: Identifying VCT2000 Diagnostic Tool Symbol In VIDA
Courtesy of VOLVO CARS CORPORATION

Is the diagnostic trouble code (DTC) intermittent?

- **YES**

  VERIFIED: Troubleshooting has been completed.

- **NO**

  See: **INFORMATION**

INFORMATION

FAULT-TRACING INFORMATION

The fault should have been detected and remedied. As this is not the case fault-tracing has failed.

Exit fault-tracing for this diagnostic trouble code (DTC) or make another attempt.

SRS-0224: CAN SIGNAL. CONFIGURATION FAULT (2005-2012)

DIAGNOSTIC TROUBLE CODE (DTC) INFORMATION SRS-0224

Condition

The supplemental restraint system module (SRS) checks messages regarding vehicle configuration on the CAN network between the supplemental restraint system module (SRS) and the central electronic module (CEM).

The diagnostic trouble code (DTC) is stored if the control module registers a configuration fault for the switch for the passenger airbag.

The diagnostic trouble code (DTC) can only be diagnosed when the ignition is switched on (12 V). In other words, the diagnostic trouble code (DTC) can only be diagnosed when the ignition is switched from position 0 to positions I, II or III.

Substitute Value

- None.

Possible Source

- The supplemental restraint system module (SRS) and the central electronic module (CEM) have different configurations for the switch for the passenger airbag.

Fault symptom[s]

- The SRS indicator lamp is lit.

CONFIGURATION FAULT

CHECKING THE COMPONENT

CAUTION: Do not touch the terminal pins in the supplemental restraint system module (SRS) and the central electronic module (CEM). There is a risk of static discharge. This could damage the supplemental restraint system module (SRS) and the central electronic module (CEM).

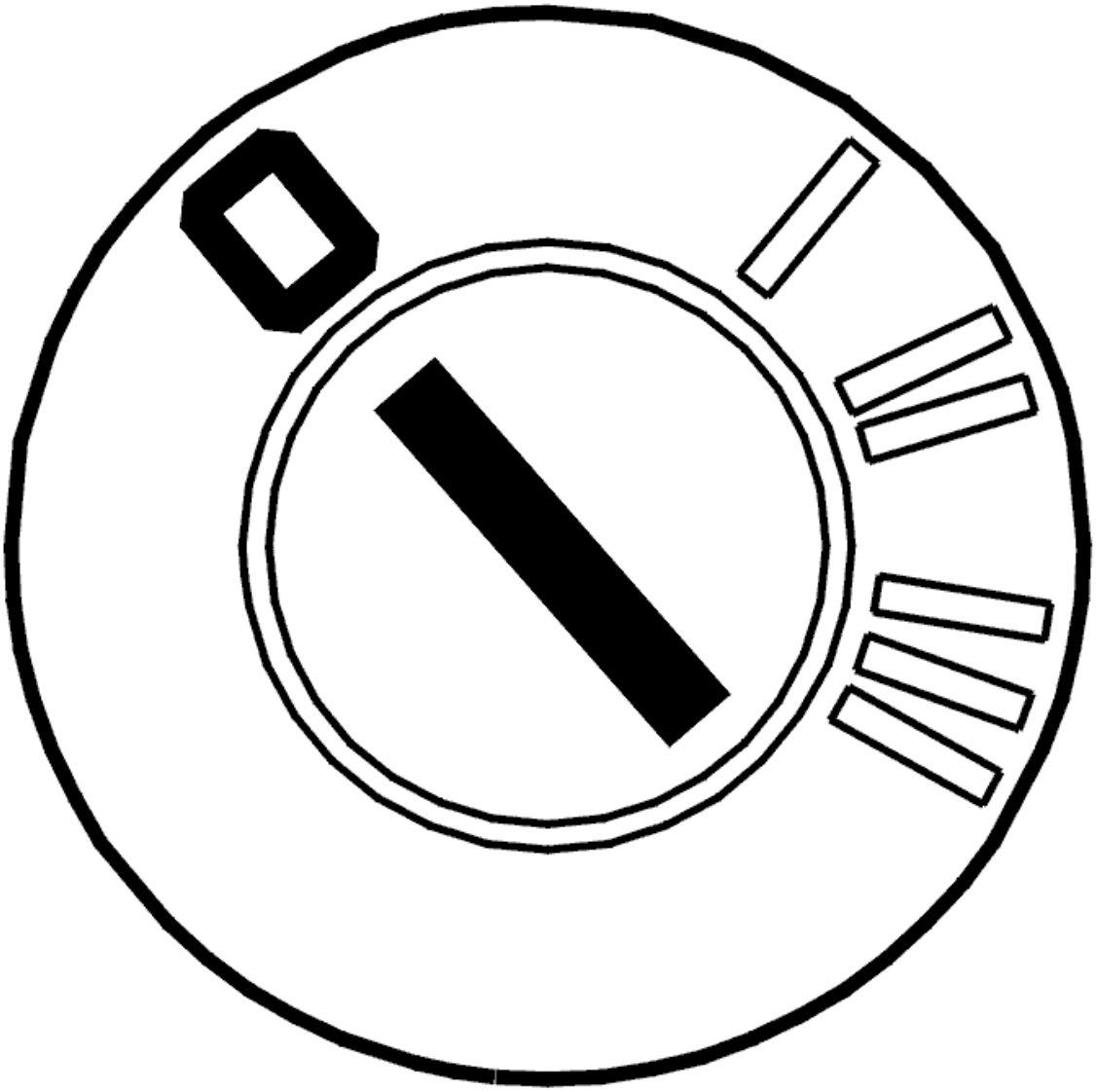

Fig. 101: Identifying Ignition OFF
Courtesy of VOLVO CARS CORPORATION

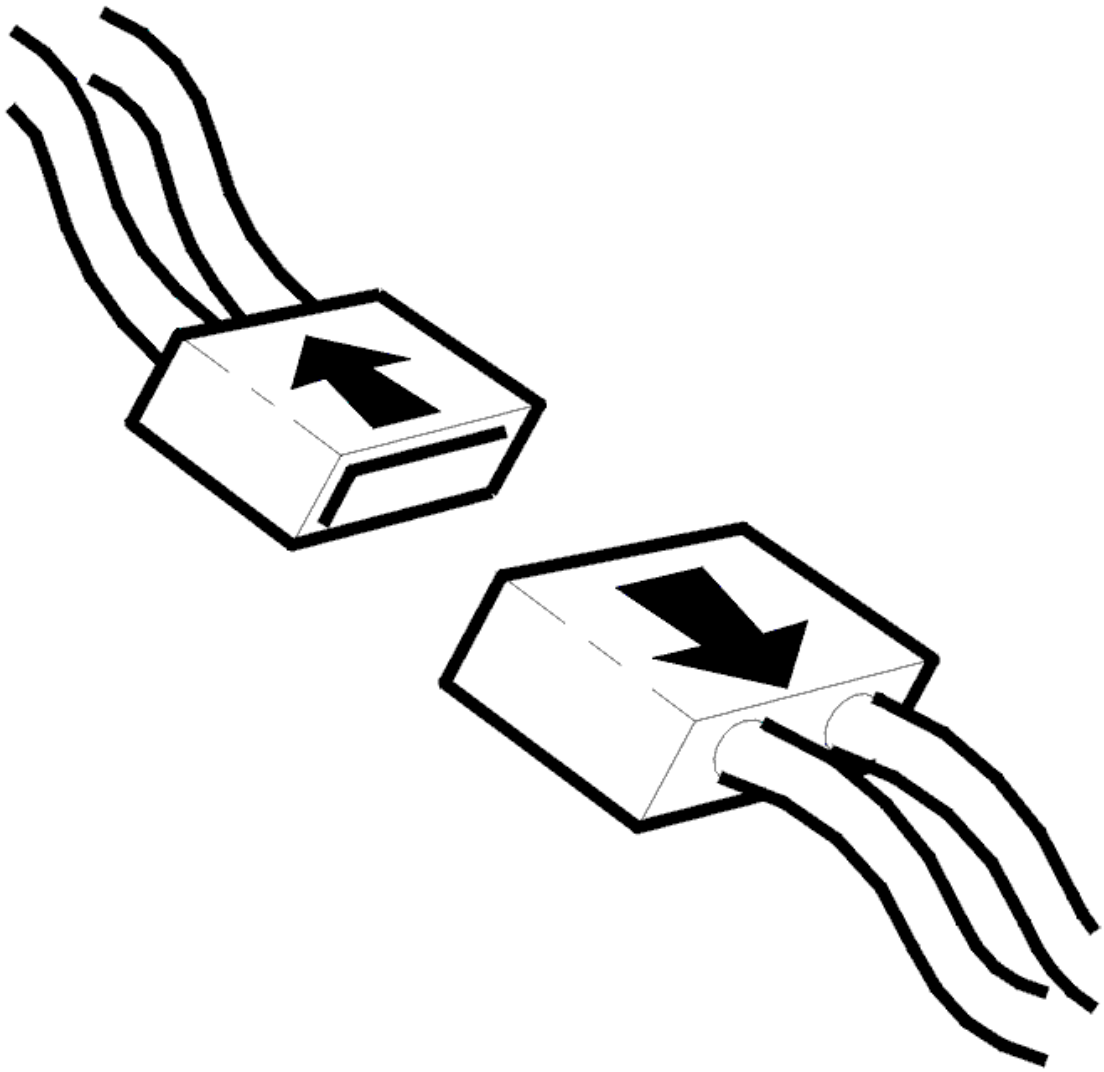

Fig. 102: Disconnecting Connector
Courtesy of VOLVO CARS CORPORATION

- Switch off the ignition. Wait 10 seconds
- Disconnect the connector from the supplemental restraint system module (SRS)
- Disconnect connector D from the central electronic module (CEM).

  Check the connectors for the supplemental restraint system module (SRS) and the central electronic module (CEM). Check for damage to pins and terminals in the connectors. Also check the wiring.

  Remedy as necessary.

  Check what type of crash safety equipment the central electronic module (CEM) and the supplemental restraint system module (SRS) are programmed for.

- Connect the connector for the supplemental restraint system module (SRS)
- Connect the connector for the central electronic module (CEM)
- Switch on the ignition. Wait 10 seconds
- Read off using the VCT2000 (or appropriate scan tool).

As part of the check, a comparison is performed regarding whether the control modules are programmed for the following:

- Switch for passenger airbag.

If the control modules are programmed for different types of crash safety equipment:

Check whether the crash safety equipment that does not correspond in the comparison between the control modules is installed in the vehicle.

Remedy faulty equipment and/or download new software into the incorrectly programmed control module.

Other information

- see **CONNECTING THE BREAKOUT BOX**
- For -2004, see **SIGNAL SPECIFICATION** or for model year 2005-, see **SIGNAL SPECIFICATION**
- In order to access or replace the supplemental restraint system module (SRS) and the connectors, or to download new software in the supplemental restraint system module (SRS), see: **SUPPLEMENTAL RESTRAINT SYSTEM MODULE (SRS), REPLACING**
- For -2004, see: **CENTRAL ELECTRONIC MODULE (CEM), REPLACING**
- For 2005-, see: **CENTRAL ELECTRONIC MODULE (CEM), REPLACING** .
- see **CHECKING WIRING AND TERMINALS**

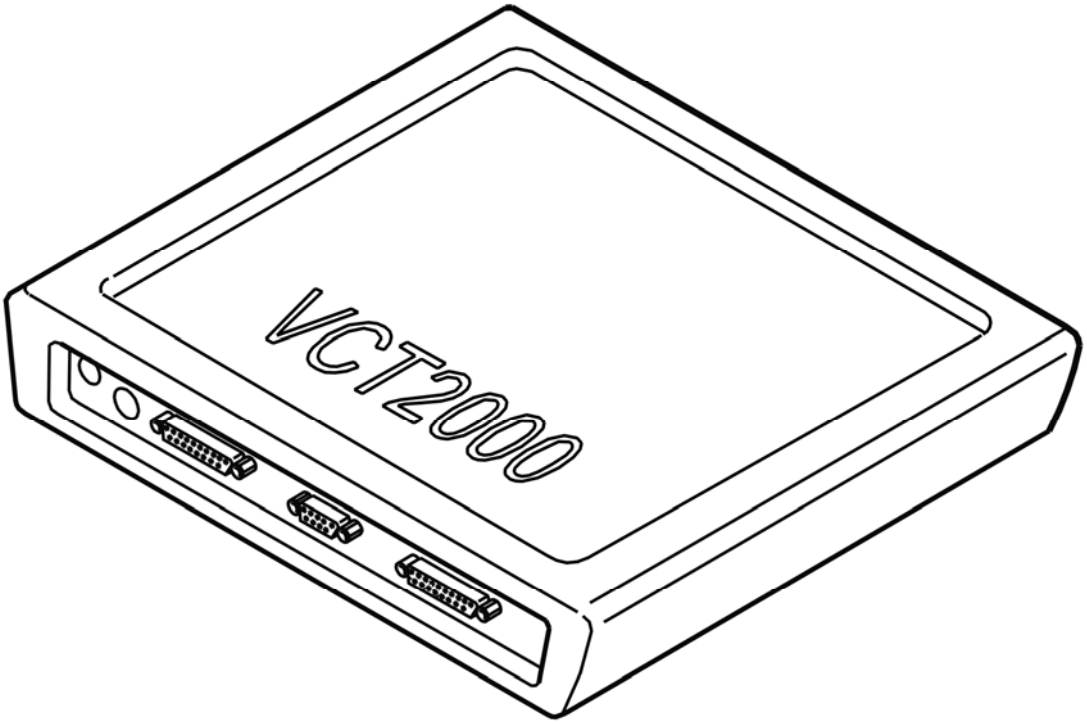

Fig. 103: Identifying VCT2000 Diagnostic Tool Symbol In VIDA
Courtesy of VOLVO CARS CORPORATION

- **Continue**

  See: **VERIFICATION**

VERIFICATION

VERIFICATION

HINT: After carrying out the repair, check that the fault has been remedied.

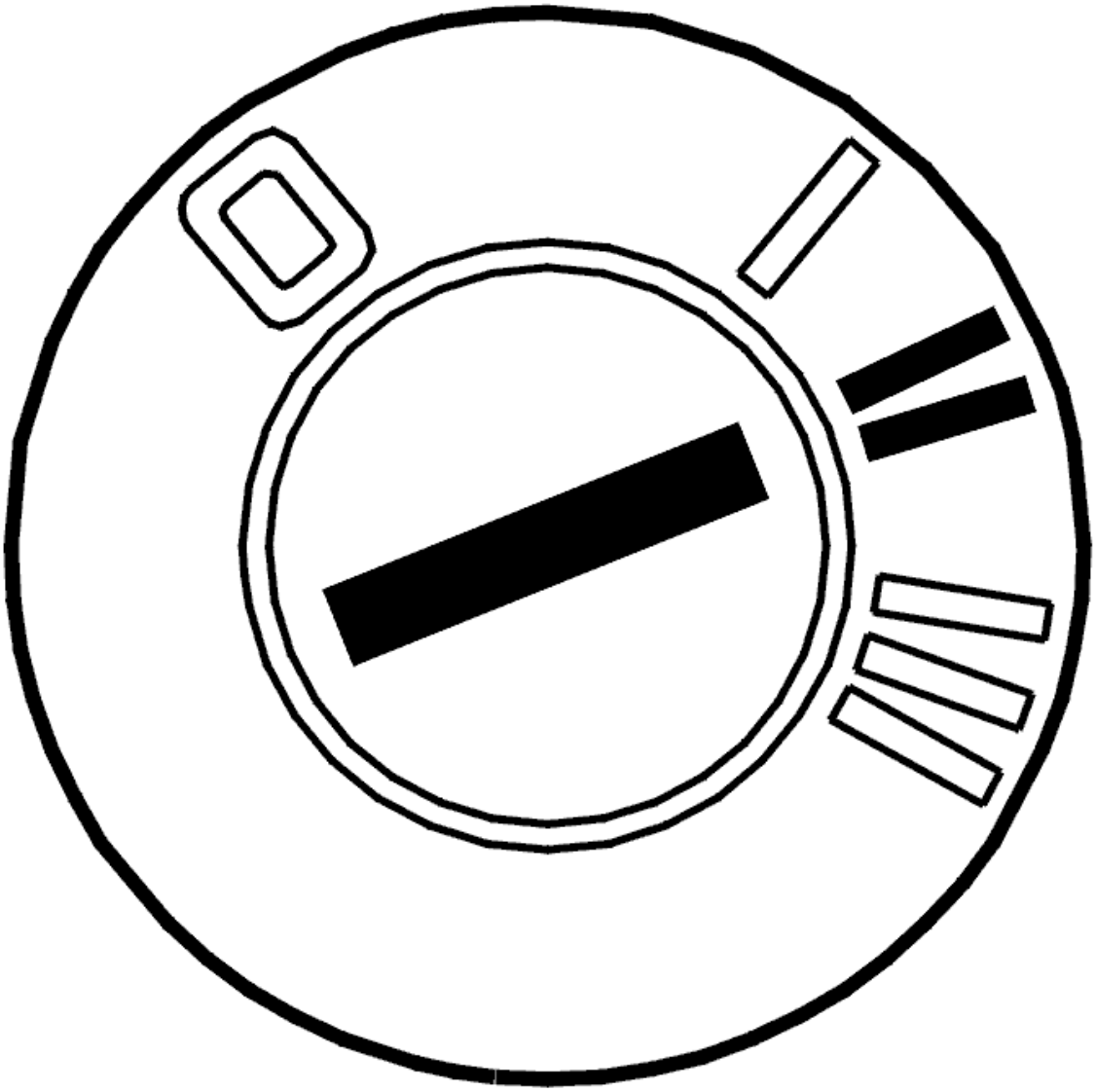

Fig. 104: Identifying Ignition ON
Courtesy of VOLVO CARS CORPORATION

- Ignition off
- Disconnect the battery negative lead
- Reinstall the connectors, components etc.
- Ignition on
- Connect the battery negative lead.

WARNING: There must not be anyone inside the passenger compartment when the battery is connected.

- Read off diagnostic trouble codes (DTCs).

The fault is no longer present if the diagnostic trouble code (DTC) status is intermittent.

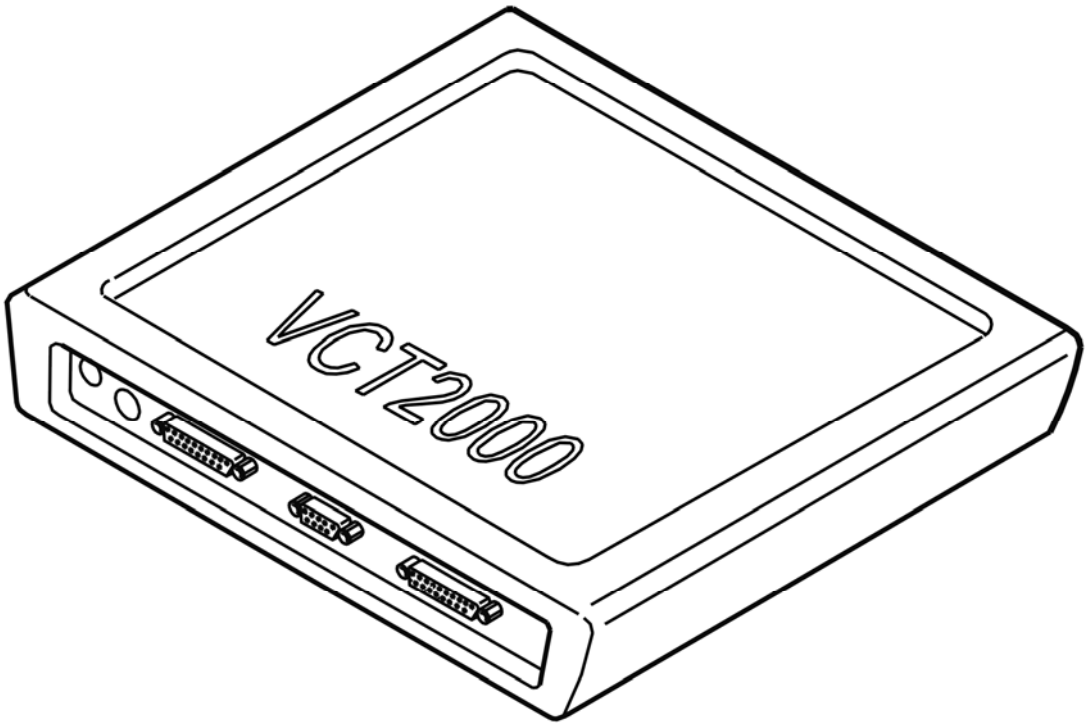

Fig. 105: Identifying VCT2000 Diagnostic Tool Symbol In VIDA
Courtesy of VOLVO CARS CORPORATION

Is the diagnostic trouble code (DTC) intermittent?

- **YES**

  VERIFIED: Troubleshooting has been completed.

- **NO**

  See: **INFORMATION**

INFORMATION

FAULT-TRACING INFORMATION

The fault should have been detected and remedied. As this is not the case fault-tracing has failed.

Exit fault-tracing for this diagnostic trouble code (DTC) or make another attempt.

SRS-0225: CAN SIGNAL. CONFIGURATION FAULT (2005-2012)

DIAGNOSTIC TROUBLE CODE (DTC) INFORMATION SRS-0225

Condition

The supplemental restraint system module (SRS) checks messages regarding vehicle configuration on the CAN network between the supplemental restraint system module (SRS) and the central electronic module (CEM).

The diagnostic trouble code (DTC) is stored if the control module registers a configuration fault for the occupant weight sensor (OWS).

The diagnostic trouble code (DTC) can only be diagnosed when the ignition is switched on (12 V). In other words, the diagnostic trouble code (DTC) can only be diagnosed when the ignition is switched from position 0 to positions I, II or III.

Substitute Value

- None.

Possible Source

- The supplemental restraint system module (SRS) and the central electronic module (CEM) have different configurations for the occupant weight sensor (OWS).

Fault symptom[s]

- The SRS indicator lamp is lit.

CONFIGURATION FAULT

CHECKING THE COMPONENT

CAUTION: Do not touch the terminal pins in the supplemental restraint system module (SRS) and the central electronic module (CEM). There is a risk of static discharge. This could damage the supplemental restraint system module (SRS) and the central electronic module (CEM).

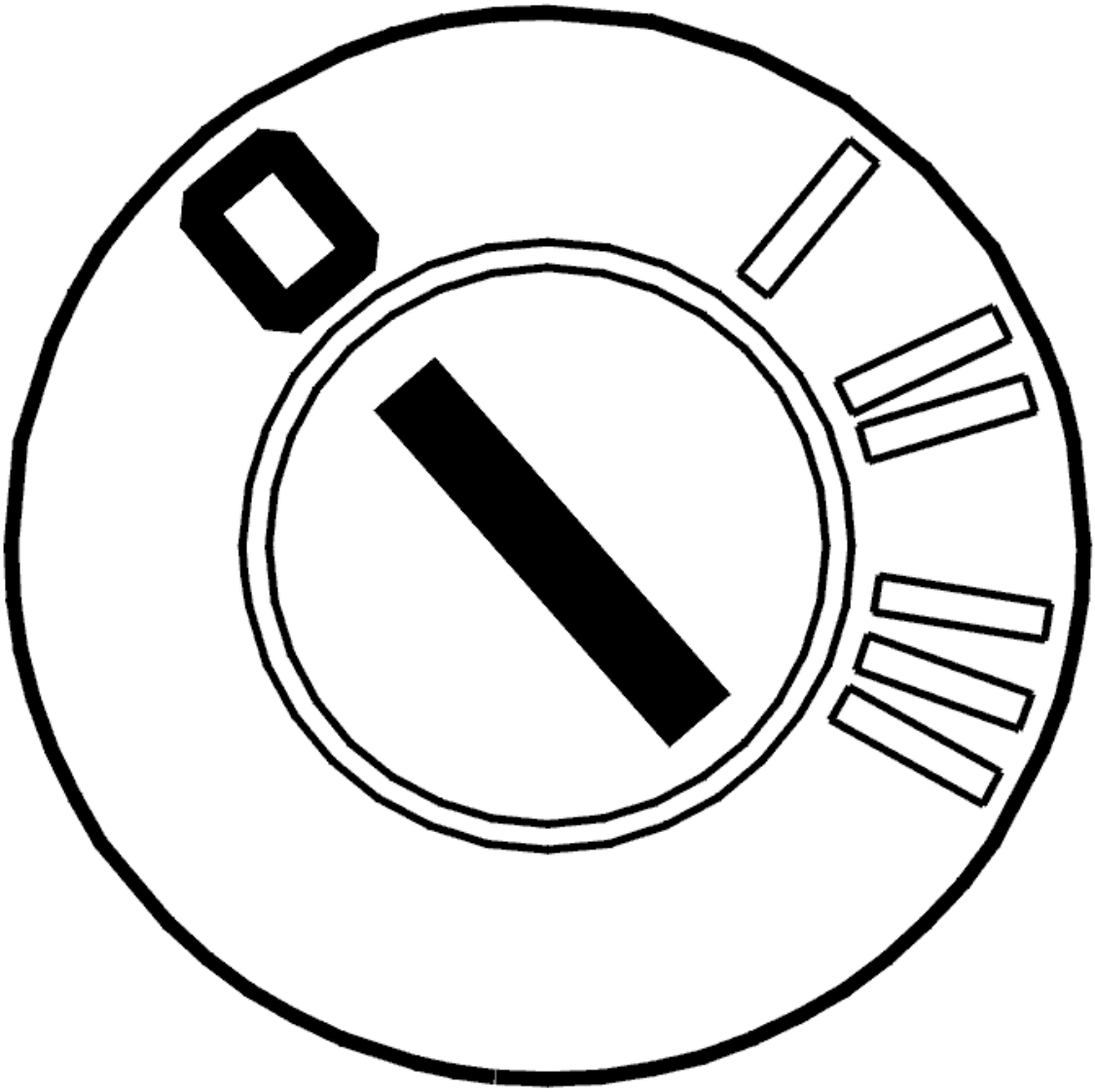

Fig. 106: Identifying Ignition OFF
Courtesy of VOLVO CARS CORPORATION

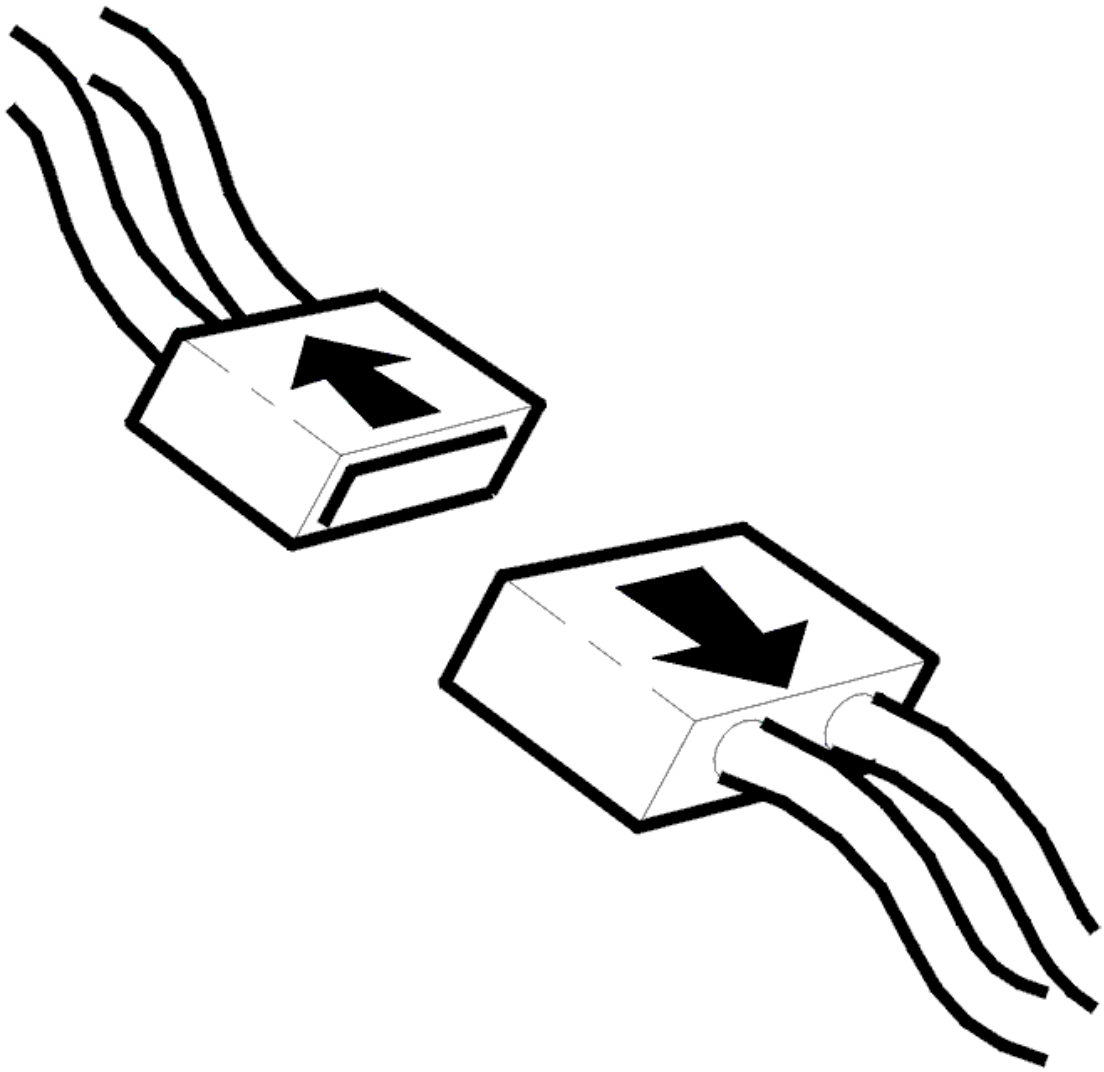

Fig. 107: Disconnecting Connector
Courtesy of VOLVO CARS CORPORATION

- Switch off the ignition. Wait 10 seconds
- Disconnect the connector from the supplemental restraint system module (SRS)
- Disconnect connector D from the central electronic module (CEM).

  Check the connectors for the supplemental restraint system module (SRS) and the central electronic module (CEM). Check for damage to pins and terminals in the connectors. Also check the wiring.

  Remedy as necessary.

  Check what type of crash safety equipment the central electronic module (CEM) and the supplemental restraint system module (SRS) are programmed for.

- Connect the connector for the supplemental restraint system module (SRS)
- Connect the connector for the central electronic module (CEM)
- Switch on the ignition. Wait 10 seconds
- Read off using the VCT2000 (or appropriate scan tool).

As part of the check, a comparison is performed regarding whether the control modules are programmed for the following:

- Occupant weight sensor (OWS).

If the control modules are programmed for different types of crash safety equipment:

Check whether the crash safety equipment that does not correspond in the comparison between the control modules is installed in the vehicle.

Remedy faulty equipment and/or download new software into the incorrectly programmed control module.

Other information

- see **CONNECTING THE BREAKOUT BOX**
- For -2004, see **SIGNAL SPECIFICATION** or for model year 2005-, see **SIGNAL SPECIFICATION**
- see **SUPPLEMENTAL RESTRAINT SYSTEM MODULE (SRS), REPLACING**
- For -2004, see: **CENTRAL ELECTRONIC MODULE (CEM), REPLACING**
- For 2005-, see: **CENTRAL ELECTRONIC MODULE (CEM), REPLACING** .
- see **CHECKING WIRING AND TERMINALS**

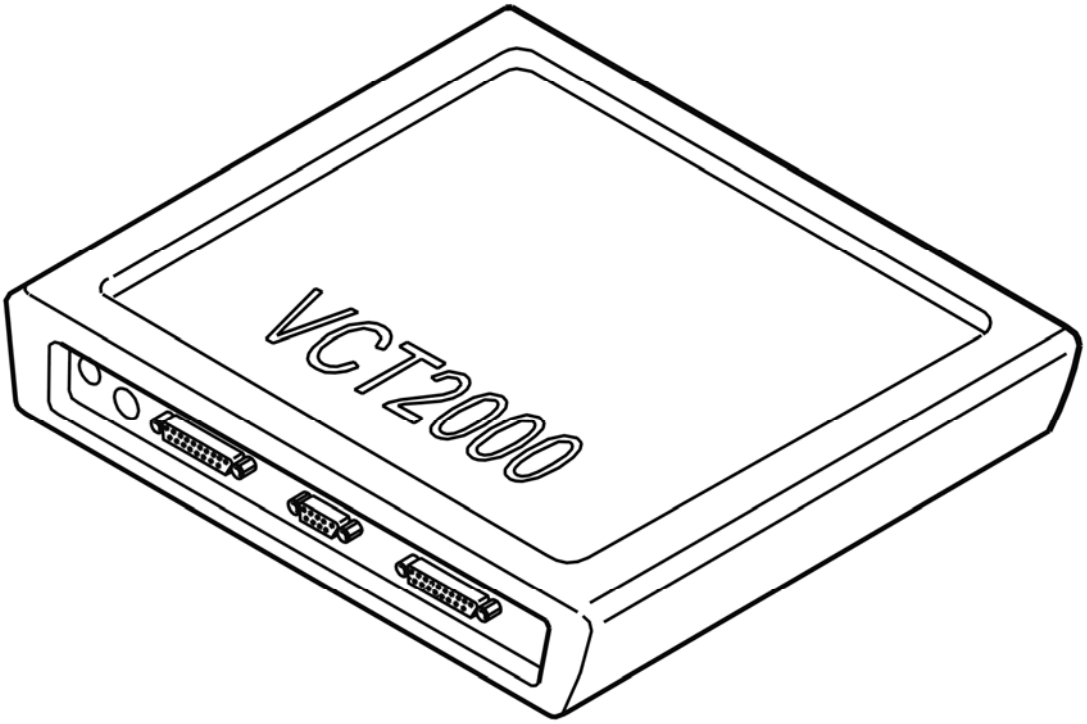

Fig. 108: Identifying VCT2000 Diagnostic Tool Symbol In VIDA
Courtesy of VOLVO CARS CORPORATION

- **Continue**

  See: **VERIFICATION**

VERIFICATION

VERIFICATION

HINT: After carrying out the repair, check that the fault has been remedied.

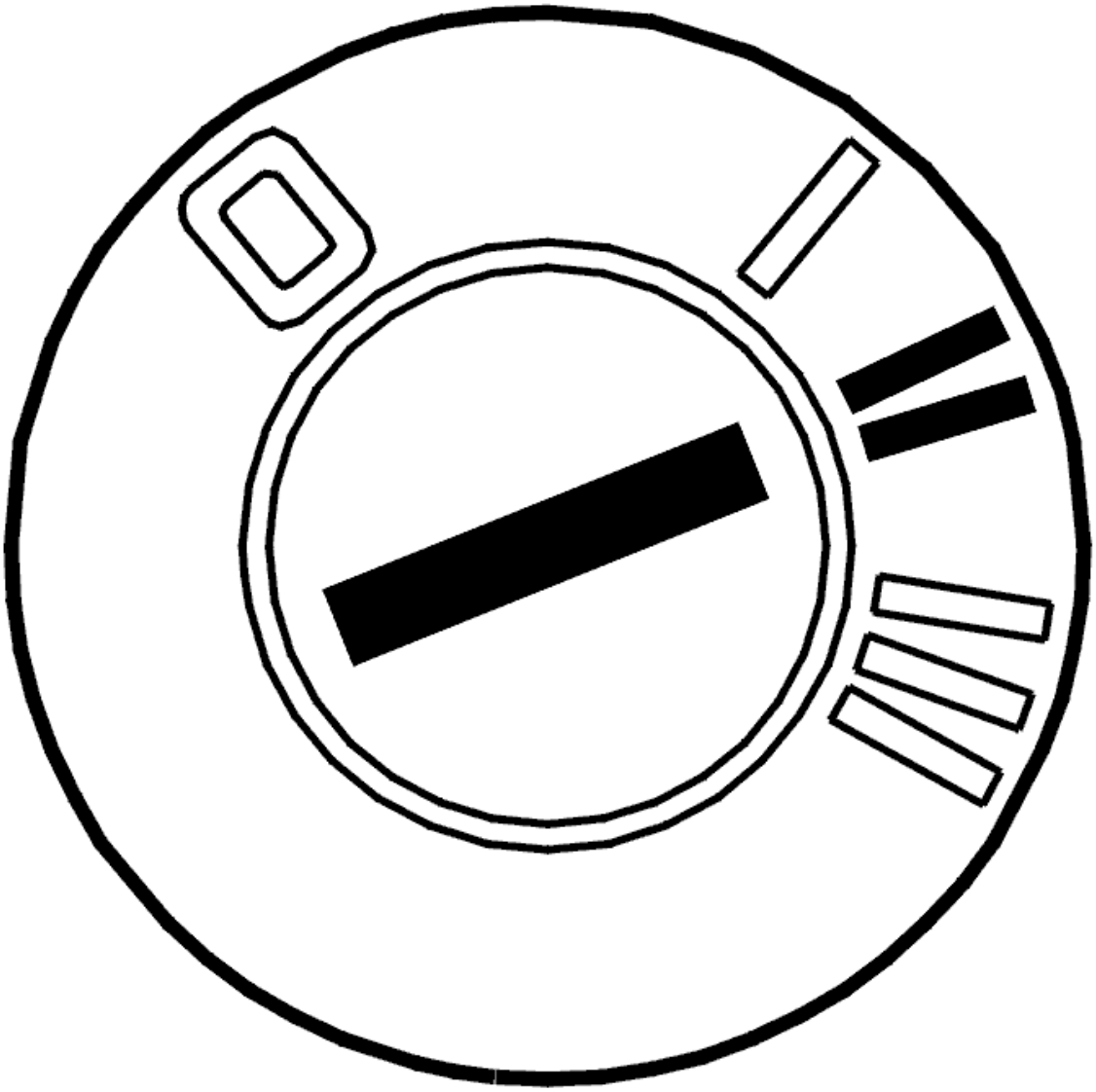

Fig. 109: Identifying Ignition ON
Courtesy of VOLVO CARS CORPORATION

- Ignition off
- Disconnect the battery negative lead
- Reinstall the connectors, components etc.
- Ignition on
- Connect the battery negative lead.

WARNING: **There must not be anyone inside the passenger compartment when the battery is connected.**

- Read off diagnostic trouble codes (DTCs).

The fault is no longer present if the diagnostic trouble code (DTC) status is intermittent.

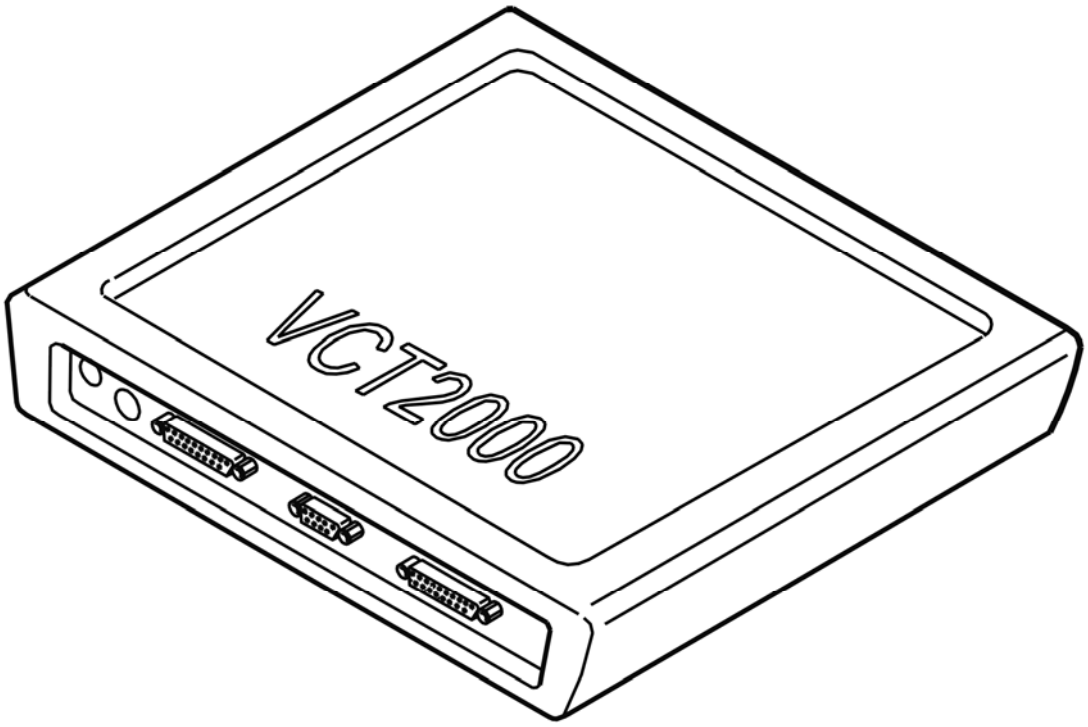

Fig. 110: Identifying VCT2000 Diagnostic Tool Symbol In VIDA
Courtesy of VOLVO CARS CORPORATION

Is the diagnostic trouble code (DTC) intermittent?

- **YES**

  VERIFIED: Troubleshooting has been completed.

- **NO**

  See: **INFORMATION**

INFORMATION

FAULT-TRACING INFORMATION

The fault should have been detected and remedied. As this is not the case fault-tracing has failed.

Exit fault-tracing for this diagnostic trouble code (DTC) or make another attempt.

SRS-0228: CONTROL MODULE. PROGRAMMING ERROR (2005-2012)

DIAGNOSTIC TROUBLE CODE (DTC) INFORMATION SRS-0228

Condition

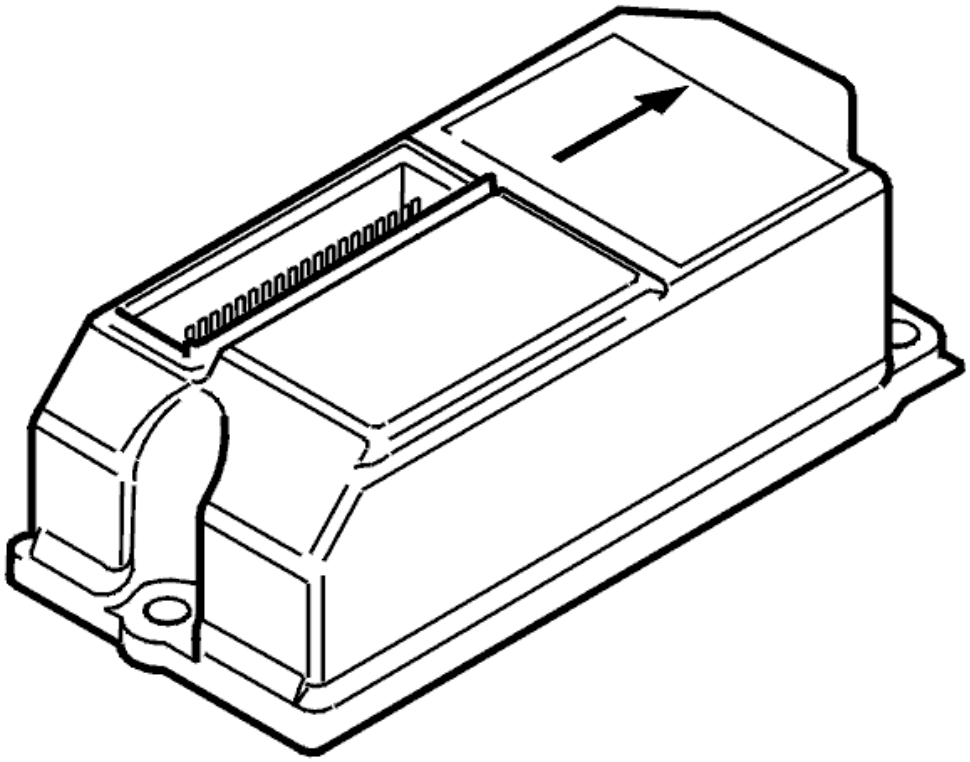

Fig. 111: Identifying SRS Control Module
Courtesy of VOLVO CARS CORPORATION

The supplemental restraint system module (SRS) checks internal functions in the control module.

The diagnostic trouble code (DTC) is stored if the control module registers a programming fault.

The diagnostic trouble code (DTC) can only be diagnosed when the ignition is switched on (12 V). In other words, the diagnostic trouble code (DTC) can only be diagnosed when the ignition is switched from position 0 to positions I, II or III.

Substitute Value

- None.

Possible Source

- Programming fault in the supplemental restraint system module (SRS)
- Incorrect control module installed in the vehicle. The control module is not intended for this model.

Fault symptom[s]

- The SRS indicator lamp is lit.

PROGRAMMING ERROR

CHECKING THE COMPONENT

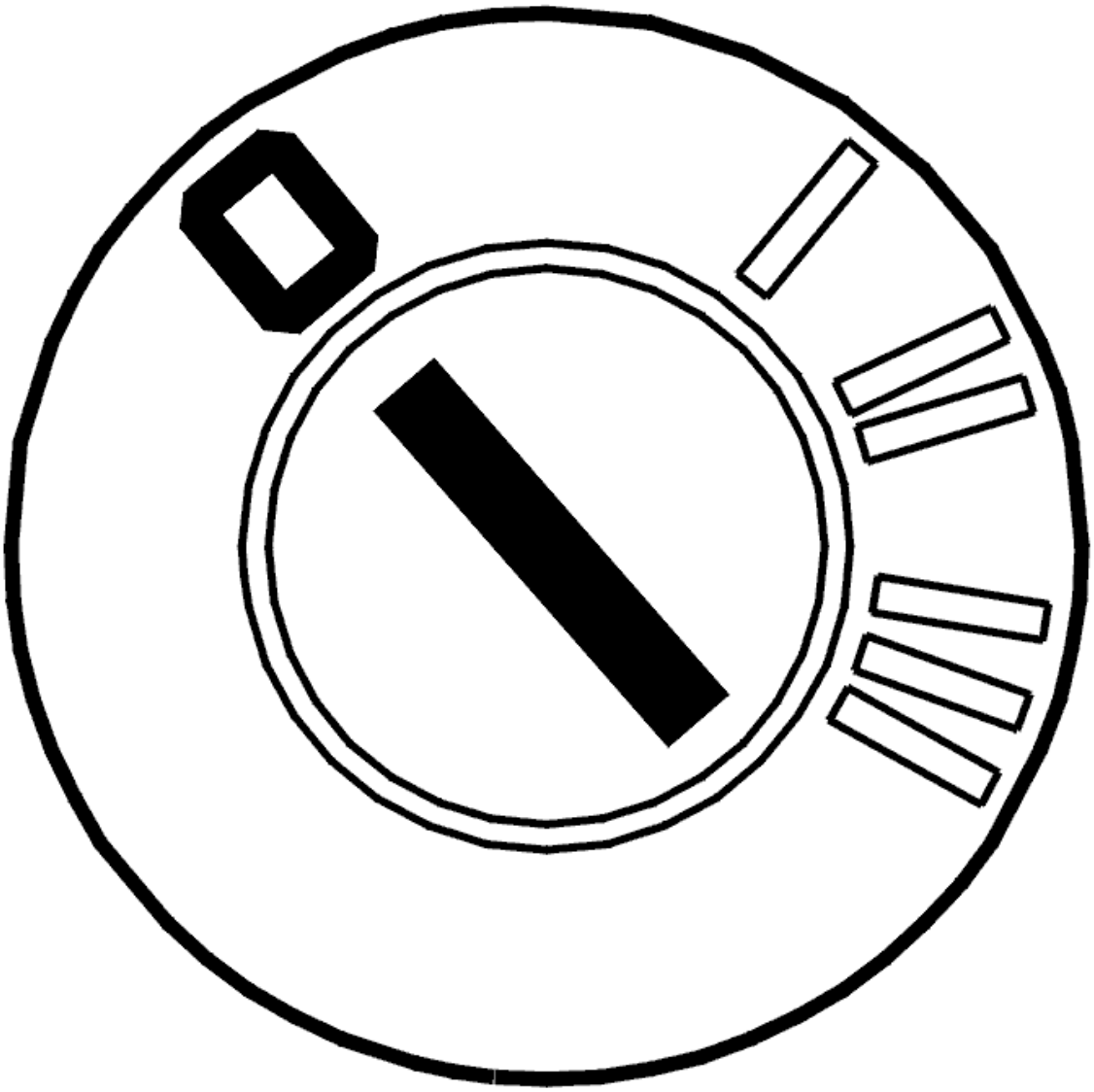

Fig. 112: Identifying Ignition OFF
Courtesy of VOLVO CARS CORPORATION

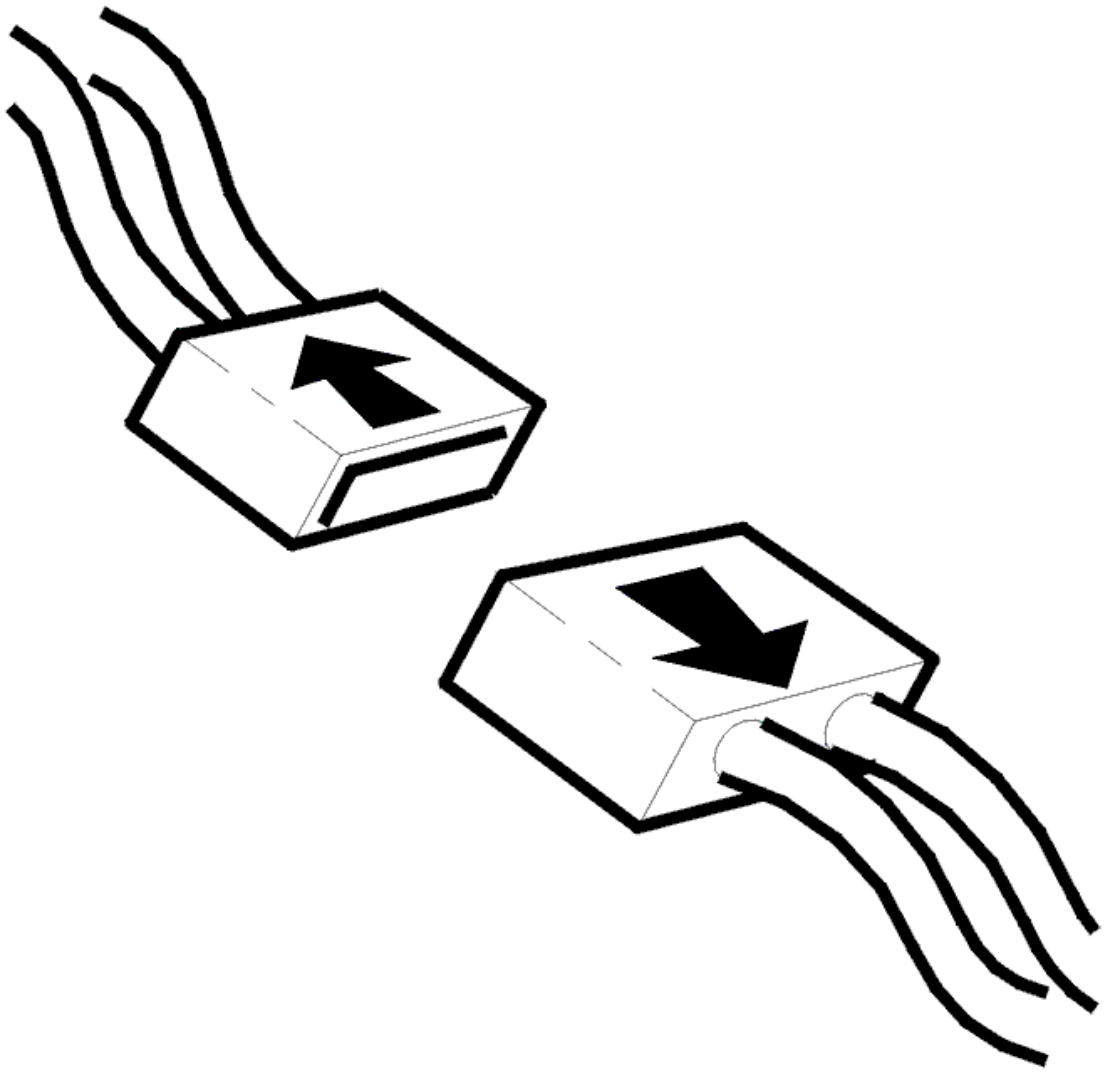

Fig. 113: Disconnecting Connector
Courtesy of VOLVO CARS CORPORATION

- Ignition off. Wait for 1 minute
- Switch on the ignition. Wait 10 seconds.

  Try to reprogram the supplemental restraint system module (SRS).

  Replace the supplemental restraint system module (SRS) if it cannot be reprogrammed.

  Other information

  - see **SUPPLEMENTAL RESTRAINT SYSTEM MODULE (SRS), REPLACING**

- **Continue**

See: **INFORMATION**

INFORMATION

FAULT-TRACING INFORMATION

In case of this defect, troubleshooting is not followed by verification.

The information can be displayed again or the fault-tracing for this fault can be interrupted.

SRS-0230: SWITCH FOR THE PASSENGER AIRBAG. SIGNAL TOO LOW OR SIGNAL MISSING (2005-2012)

DIAGNOSTIC TROUBLE CODE (DTC) INFORMATION SRS-0230

Condition

Fig. 114: Identifying Passenger Airbag Switch
Courtesy of VOLVO CARS CORPORATION

The supplemental restraint system module (SRS) checks the signal from the switch for the passenger airbag.

The diagnostic trouble code (DTC) is stored if the control module registers that the voltage in the signal cable is

too low.

The diagnostic trouble code (DTC) can be diagnosed in ignition positions I, II and III.

Substitute Value

- None.

Possible Source

- Short-circuit to ground in the signal cable or in the connectors between the supplemental restraint system module (SRS) and the switch for the passenger airbag
- Open-circuit in the signal cable or in the connectors between the supplemental restraint system module (SRS) and the switch for the passenger airbag.

Fault symptom[s]

- The SRS indicator lamp is lit.

SIGNAL TOO LOW OR SIGNAL MISSING

CHECKING COMPONENTS AND WIRING

CAUTION: Do not touch the terminal pins in the supplemental restraint system module (SRS). There is a risk of static discharge. This could damage the supplemental restraint system module (SRS).

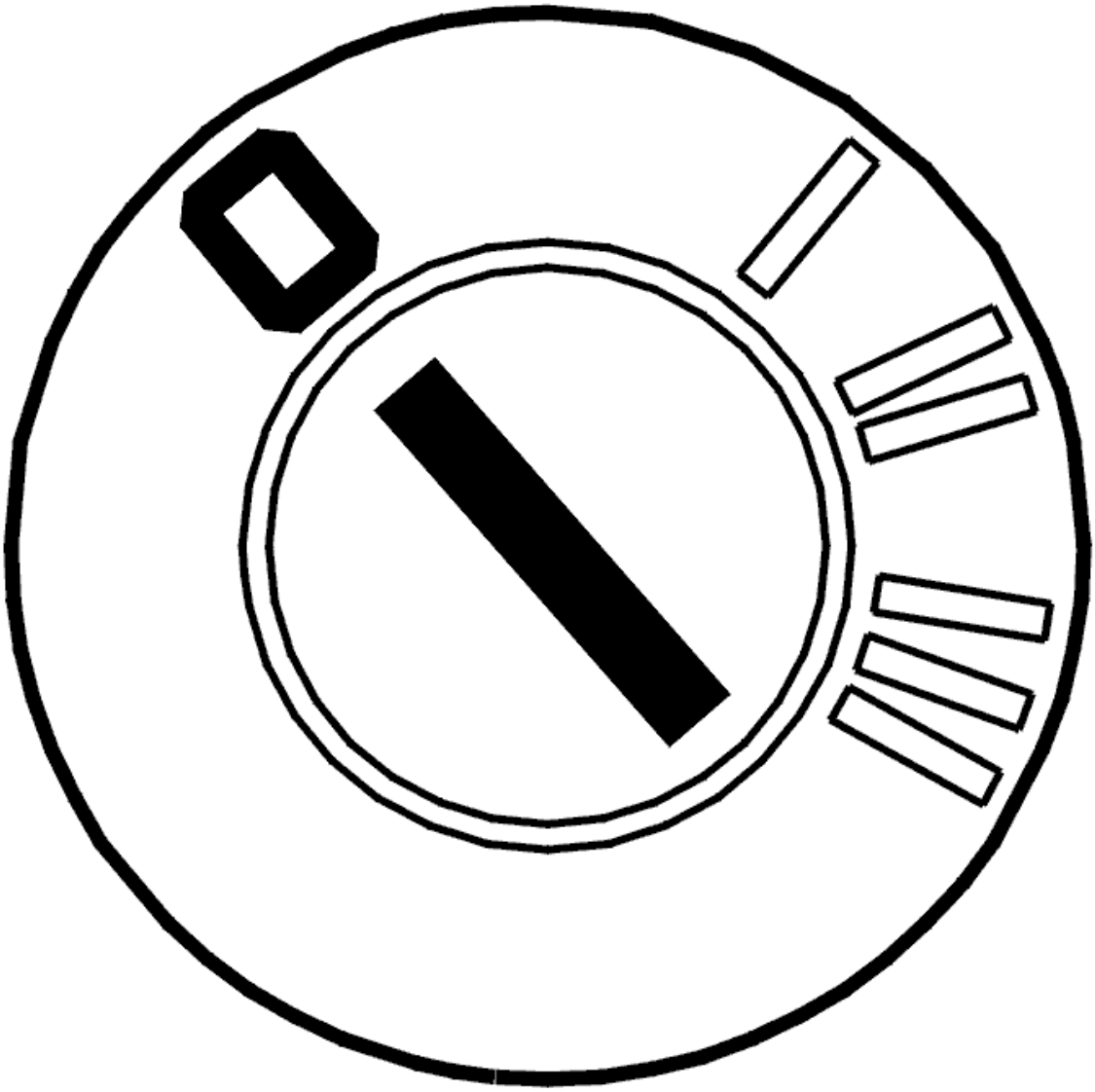

Fig. 115: Identifying Ignition OFF
Courtesy of VOLVO CARS CORPORATION

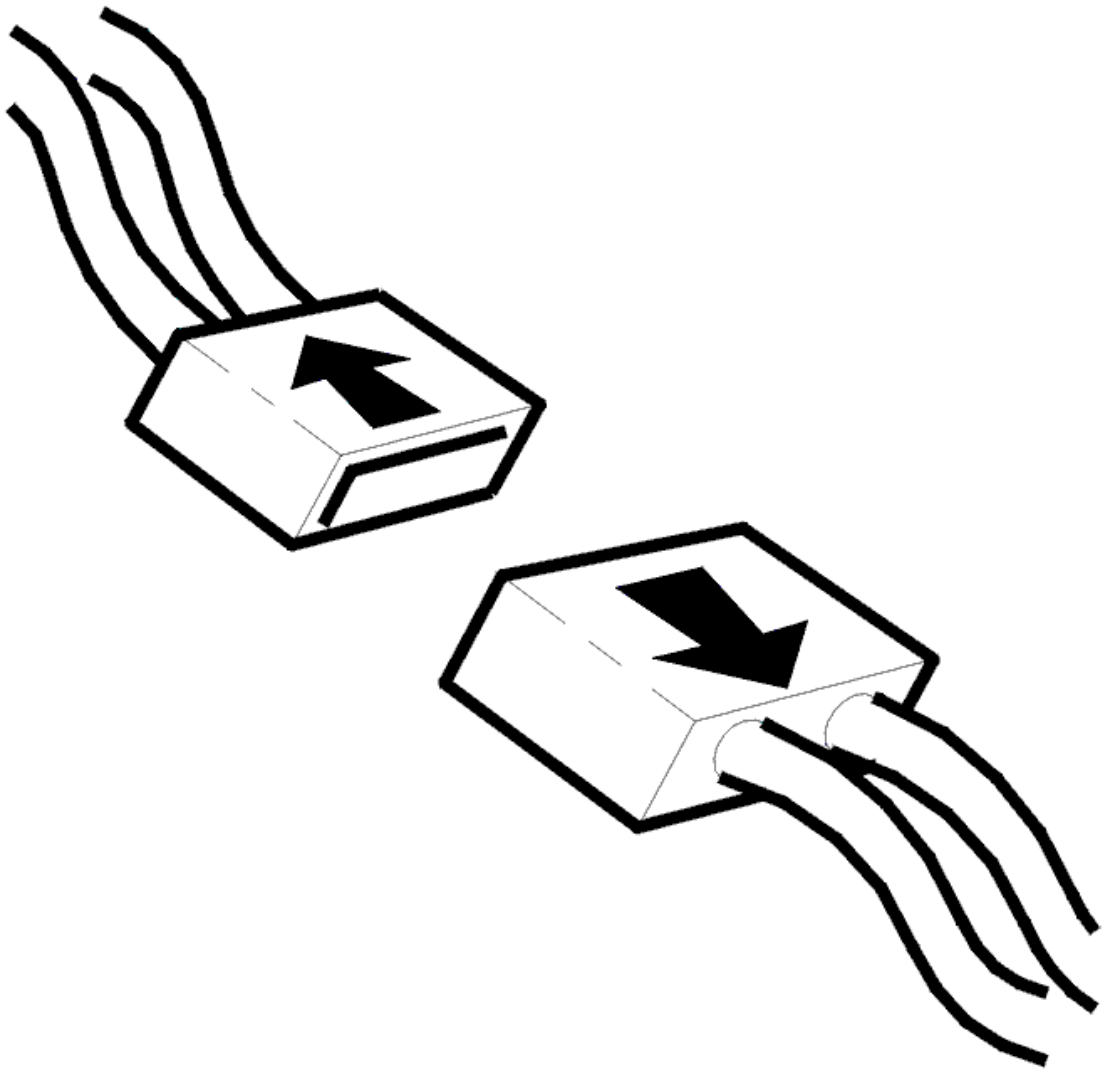

Fig. 116: Disconnecting Connector
Courtesy of VOLVO CARS CORPORATION

- Switch off the ignition. Wait 10 seconds
- Disconnect the connector from the switch for the passenger airbag
- Disconnect the connector from the supplemental restraint system module (SRS).

  Check the connectors for the switch and the supplemental restraint system module (SRS). Check for damage to pins and terminals in the connectors.

  Remedy as necessary.

  Check the cable between the supplemental restraint system module (SRS) and the switch connector. Check for an open-circuit. Check for a short-circuit to ground.

Check the cable between:

- Supplemental restraint system module (SRS) terminal #45 and switch connector terminal #4
- Supplemental restraint system module (SRS) terminal #50 and switch connector terminal #5.

Remedy as necessary.

Check the power supply cables between the ignition switch and the switch. Check for an open-circuit. Check for a short-circuit to ground.

Check the cable between:

- Ignition switch connector terminal #6 (X-supply) and terminal #1 on the switch connector
- Ignition switch connector terminal #1 (15-supply) and terminal #2 on the switch connector.

Remedy as necessary.

Other information

- see **CONNECTING THE BREAKOUT BOX**
- For -2004, see **SIGNAL SPECIFICATION** or for model year 2005-, see **SIGNAL SPECIFICATION**
- see **SUPPLEMENTAL RESTRAINT SYSTEM MODULE (SRS), REPLACING**
- To access or replace the switch for the passenger airbag and the connectors, see: **CONTACT BREAKER PASSENGER AIRBAG (SRS), REPLACING**
- see **CABLE HARNESS SRS SYSTEM, REPAIR**
- see **CHECKING WIRING AND TERMINALS**

- **Continue**

  See: **VERIFICATION**

VERIFICATION

VERIFICATION

HINT: After carrying out the repair, check that the fault has been remedied.

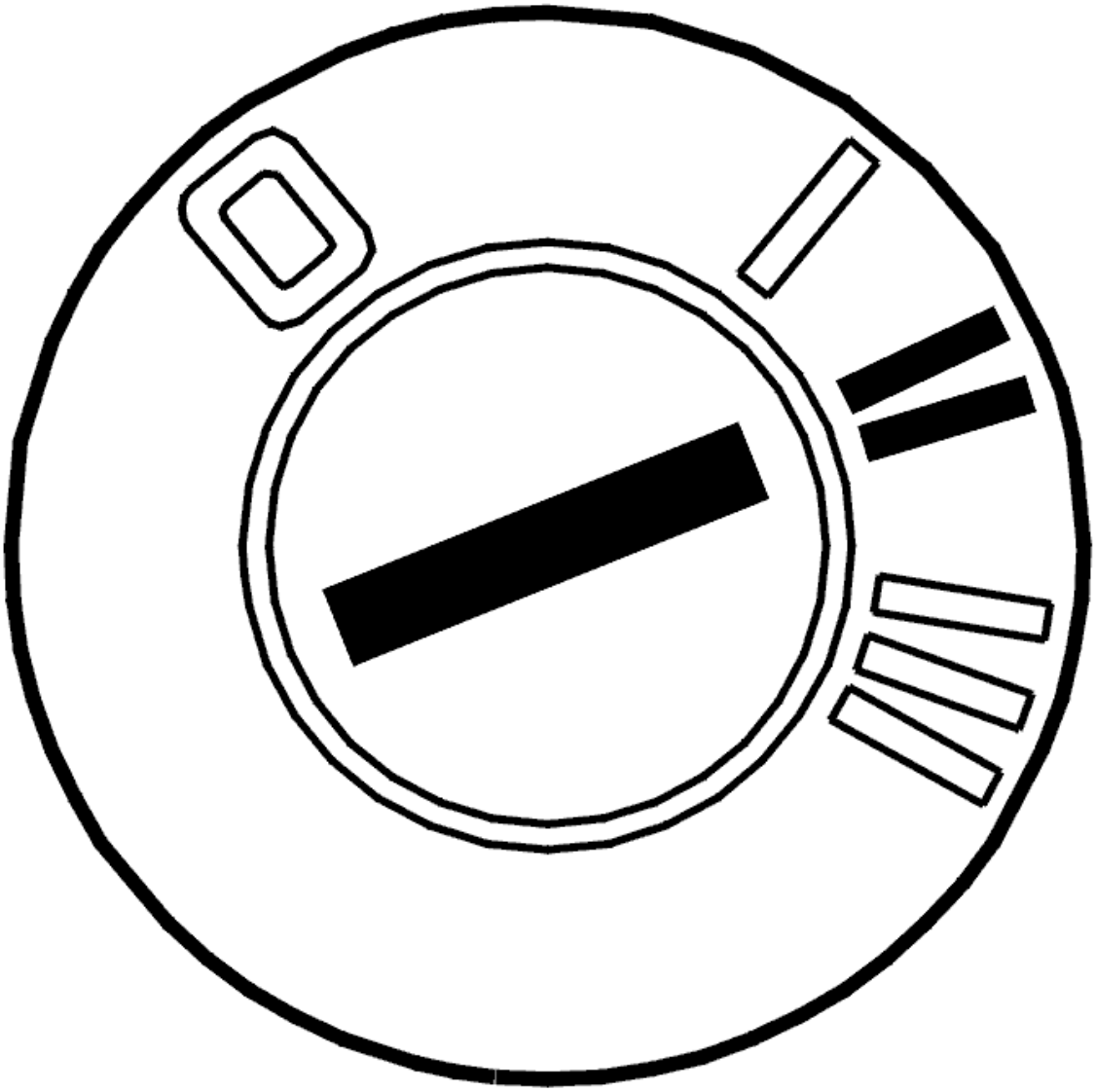

Fig. 117: Identifying Ignition ON
Courtesy of VOLVO CARS CORPORATION

- Ignition off
- Disconnect the battery negative lead
- Reinstall the connectors, components etc.
- Ignition on
- Connect the battery negative lead.

> **WARNING: There must not be anyone inside the passenger compartment when the battery is connected.**

- Read off diagnostic trouble codes (DTCs).

The fault is no longer present if the diagnostic trouble code (DTC) status is intermittent.

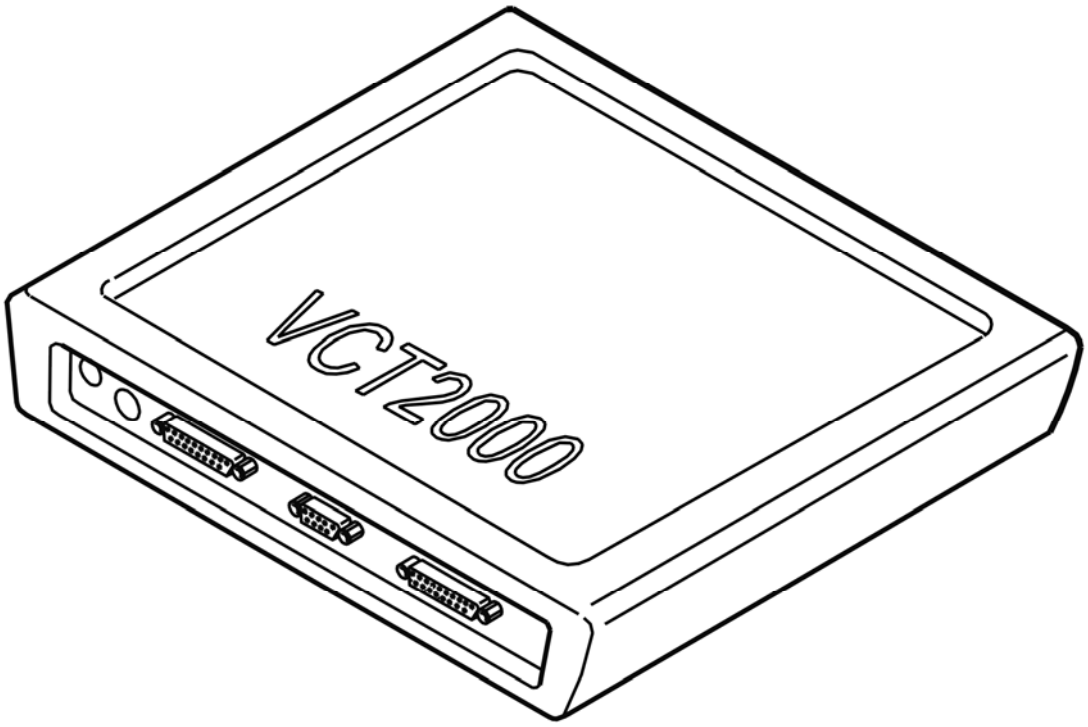

Fig. 118: Identifying VCT2000 Diagnostic Tool Symbol In VIDA
Courtesy of VOLVO CARS CORPORATION

Is the diagnostic trouble code (DTC) intermittent?

- **YES**

  VERIFIED: Troubleshooting has been completed.

- **NO**

  See: **INFORMATION**

INFORMATION

FAULT-TRACING INFORMATION

The fault should have been detected and remedied. As this is not the case fault-tracing has failed.

Exit fault-tracing for this diagnostic trouble code (DTC) or make another attempt.

SRS-0231: SWITCH FOR THE PASSENGER AIRBAG. SIGNAL TOO LOW OR

SIGNAL MISSING (2005-2012)

DIAGNOSTIC TROUBLE CODE (DTC) INFORMATION SRS-0231

Condition

Fig. 119: Identifying Passenger Airbag Switch
Courtesy of VOLVO CARS CORPORATION

The supplemental restraint system module (SRS) checks the signal from the switch for the passenger airbag.

The diagnostic trouble code (DTC) is stored if the control module registers that the voltage in the signal cable is too low.

The diagnostic trouble code (DTC) can be diagnosed in ignition positions I, II and III.

Substitute Value

- None.

Possible Source

- Short-circuit to ground in the signal cable or in the connectors between the supplemental restraint system

module (SRS) and the switch for the passenger airbag
- Open-circuit in the signal cable or in the connectors between the supplemental restraint system module (SRS) and the switch for the passenger airbag.

Fault symptom[s]

- The SRS indicator lamp is lit.

SIGNAL TOO LOW OR SIGNAL MISSING

CHECKING COMPONENTS AND WIRING

CAUTION: Do not touch the terminal pins in the supplemental restraint system module (SRS). There is a risk of static discharge. This could damage the supplemental restraint system module (SRS).

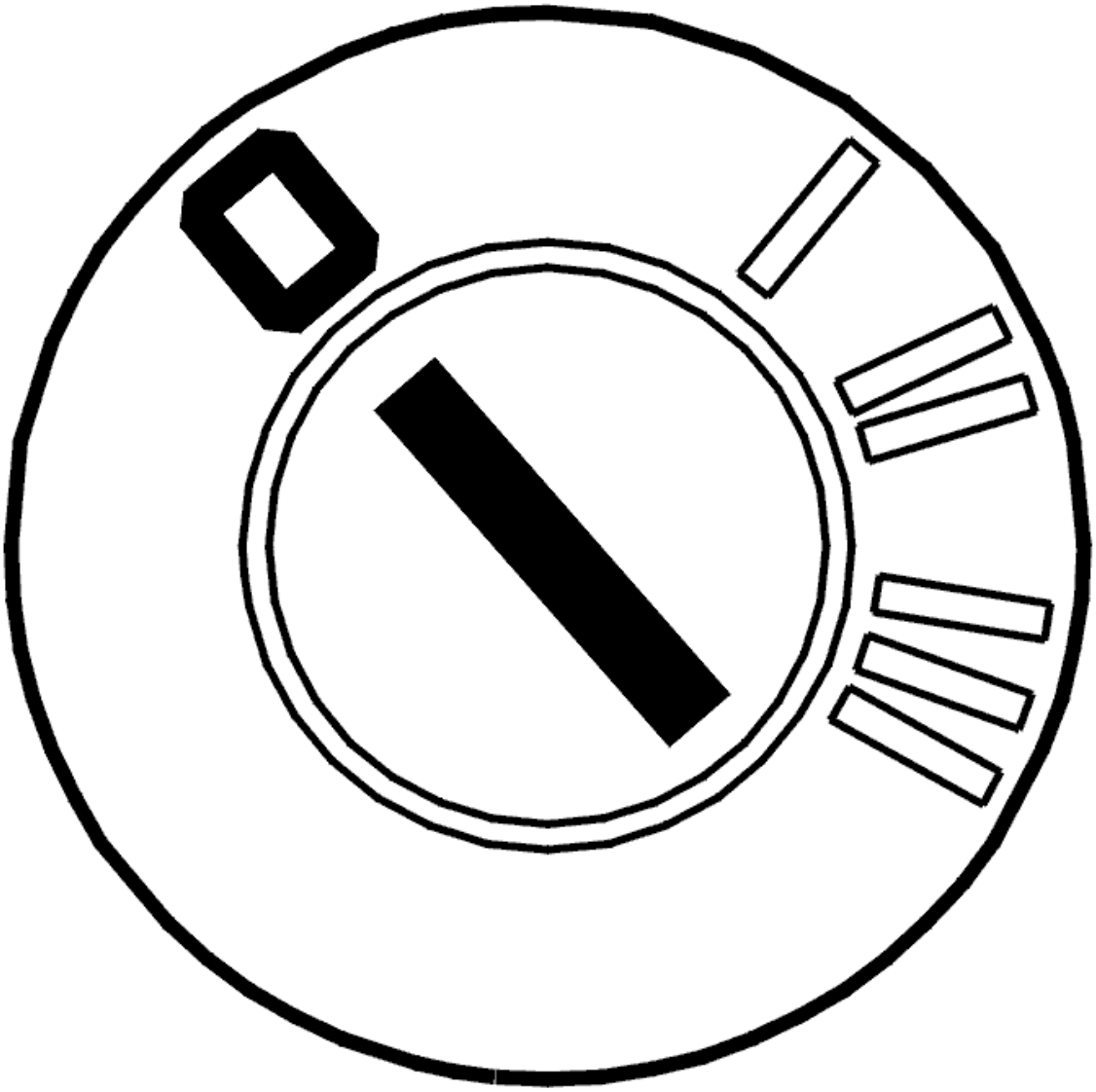

Fig. 120: Identifying Ignition OFF
Courtesy of VOLVO CARS CORPORATION

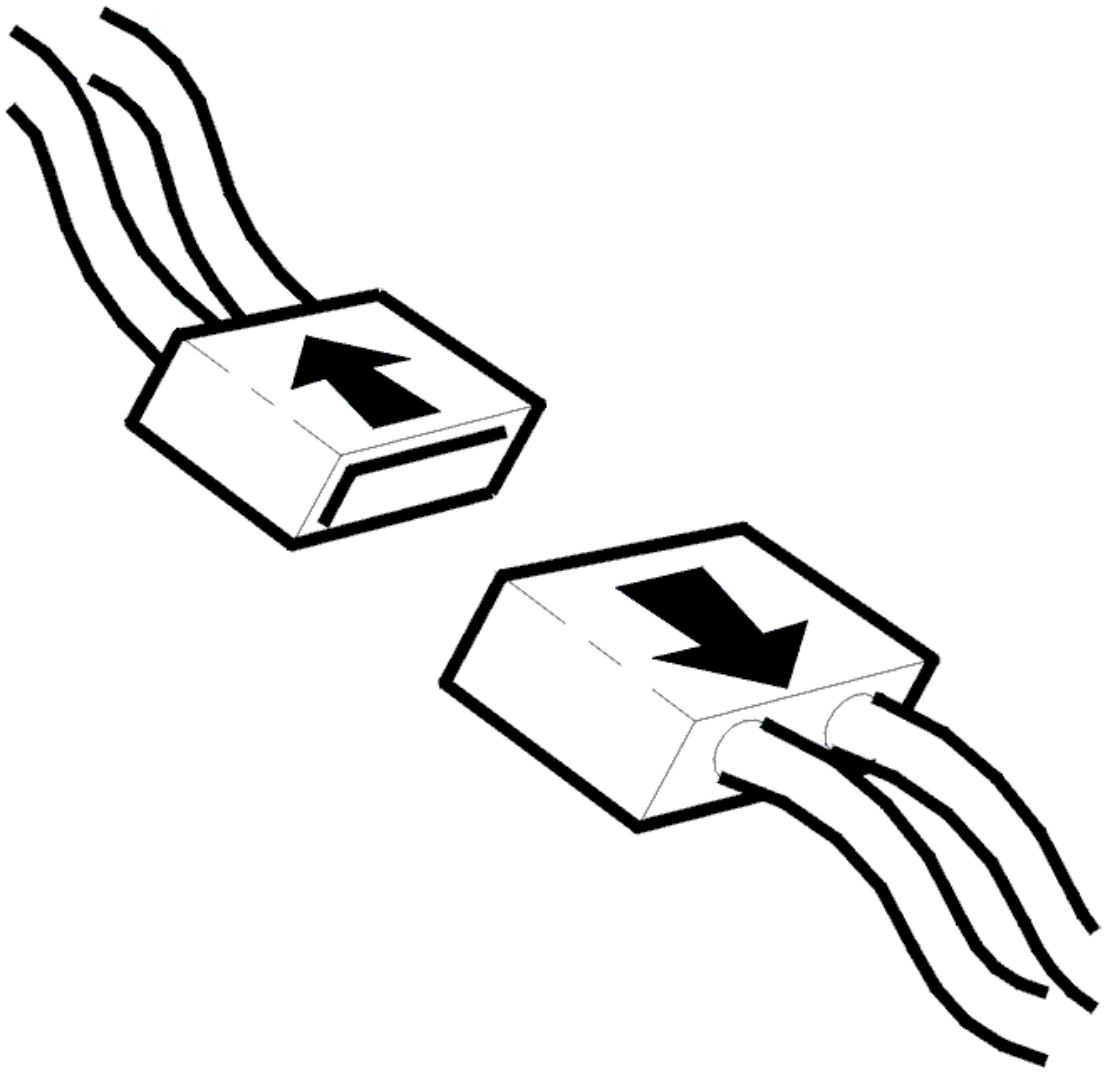

Fig. 121: Disconnecting Connector
Courtesy of VOLVO CARS CORPORATION

- Switch off the ignition. Wait 10 seconds
- Disconnect the connector from the switch for the passenger airbag
- Disconnect the connector from the supplemental restraint system module (SRS).

  Check the connectors for the switch and the supplemental restraint system module (SRS). Check for damage to pins and terminals in the connectors.

  Remedy as necessary.

Check the cable between the supplemental restraint system module (SRS) and the switch connector. Check for an open-circuit. Check for a short-circuit to ground.

Check the cable between:

- Supplemental restraint system module (SRS) terminal #45 and switch connector terminal #4
- Supplemental restraint system module (SRS) terminal #50 and switch connector terminal #5.

Remedy as necessary.

Check the power supply cables between the ignition switch and the switch. Check for an open-circuit. Check for a short-circuit to ground.

Check the cable between:

- Ignition switch connector terminal #6 (X-supply) and terminal #1 on the switch connector
- Ignition switch connector terminal #1 (15-supply) and terminal #2 on the switch connector.

Remedy as necessary.

Other information

- see **CONNECTING THE BREAKOUT BOX**
- For -2004, see **SIGNAL SPECIFICATION** or for model year 2005-, see **SIGNAL SPECIFICATION**
- see **SUPPLEMENTAL RESTRAINT SYSTEM MODULE (SRS), REPLACING**
- To access or replace the switch for the passenger airbag and the connectors, see: **CONTACT BREAKER PASSENGER AIRBAG (SRS), REPLACING**
- see **CABLE HARNESS SRS SYSTEM, REPAIR**
- see **CHECKING WIRING AND TERMINALS**

- **Continue**

  See: **VERIFICATION**

VERIFICATION

VERIFICATION

HINT: After carrying out the repair, check that the fault has been remedied.

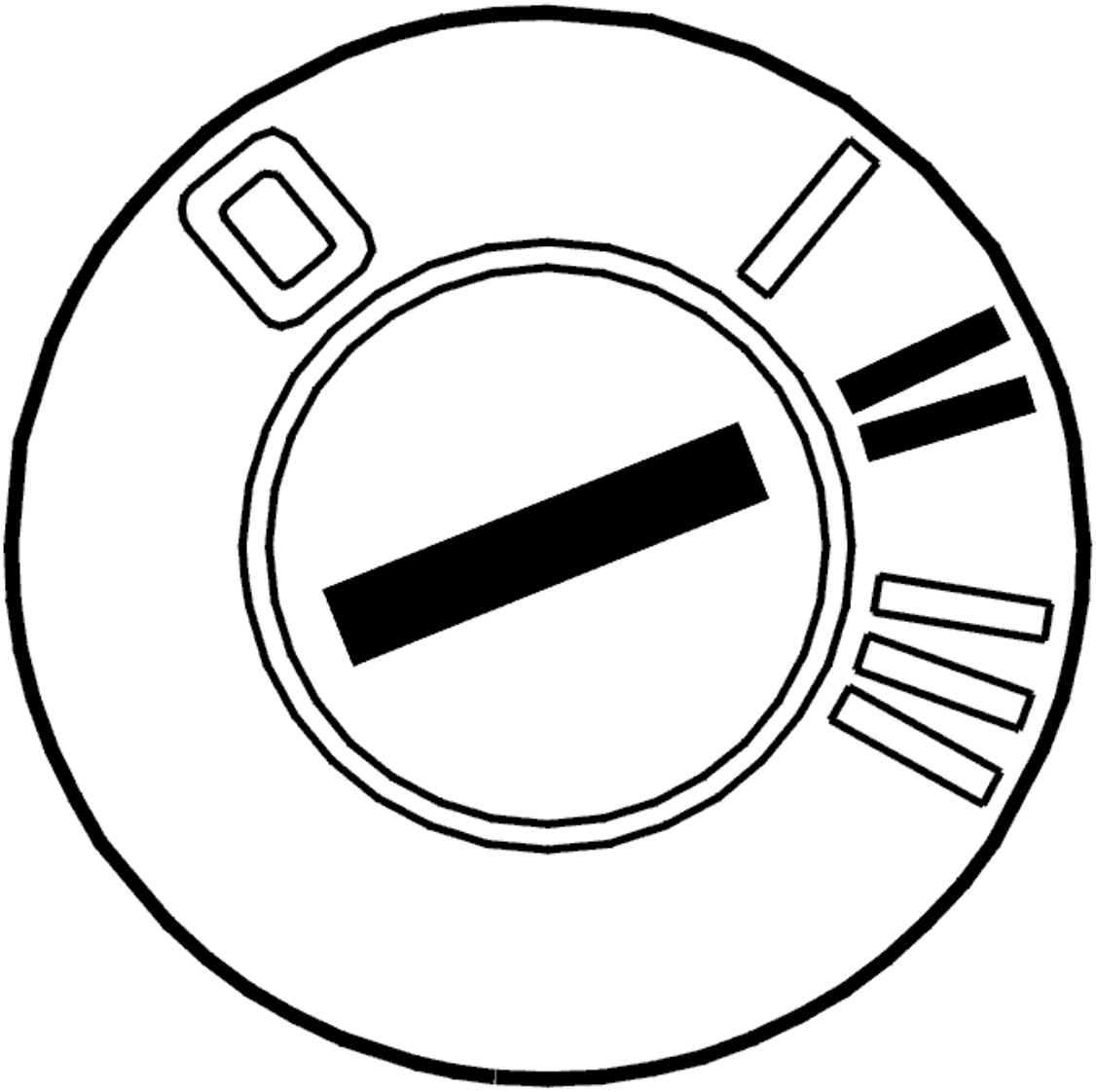

Fig. 122: Identifying Ignition ON
Courtesy of VOLVO CARS CORPORATION

- Ignition off
- Disconnect the battery negative lead
- Reinstall the connectors, components etc.
- Ignition on
- Connect the battery negative lead.

WARNING: There must not be anyone inside the passenger compartment when the battery is connected.

- Read off diagnostic trouble codes (DTCs).

The fault is no longer present if the diagnostic trouble code (DTC) status is intermittent.

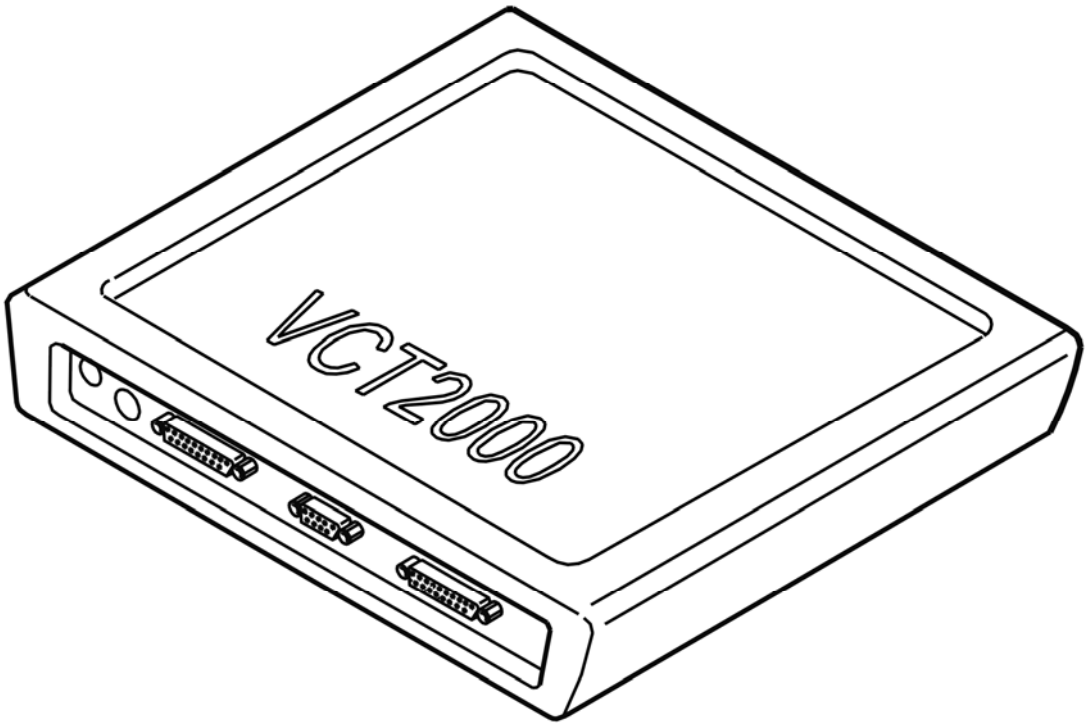

Fig. 123: Identifying VCT2000 Diagnostic Tool Symbol In VIDA
Courtesy of VOLVO CARS CORPORATION

Is the diagnostic trouble code (DTC) intermittent?

- **YES**

  VERIFIED: Troubleshooting has been completed.

- **NO**

  See: **INFORMATION**

INFORMATION

FAULT-TRACING INFORMATION

The fault should have been detected and remedied. As this is not the case fault-tracing has failed.

Exit fault-tracing for this diagnostic trouble code (DTC) or make another attempt.

SRS-0232: SWITCH FOR THE PASSENGER AIRBAG. INCORRECT

MEASUREMENT RANGE (2005-2012)

DIAGNOSTIC TROUBLE CODE (DTC) INFORMATION SRS-0232

Condition

Fig. 124: Identifying Passenger Airbag Switch
Courtesy of VOLVO CARS CORPORATION

The supplemental restraint system module (SRS) checks the signal from the switch for the passenger airbag.

The diagnostic trouble code (DTC) is stored if the control module registers that the voltage in the signal cable is outside the measurement range.

The diagnostic trouble code (DTC) can be diagnosed in ignition positions I, II and III.

Substitute Value

- None.

Possible Source

- Incorrect voltage level in the signal cable between the supplemental restraint system module (SRS) and

the switch for the passenger airbag.

Fault symptom[s]

- The SRS indicator lamp is lit.

INCORRECT MEASUREMENT RANGE

REPLACING THE COMPONENT

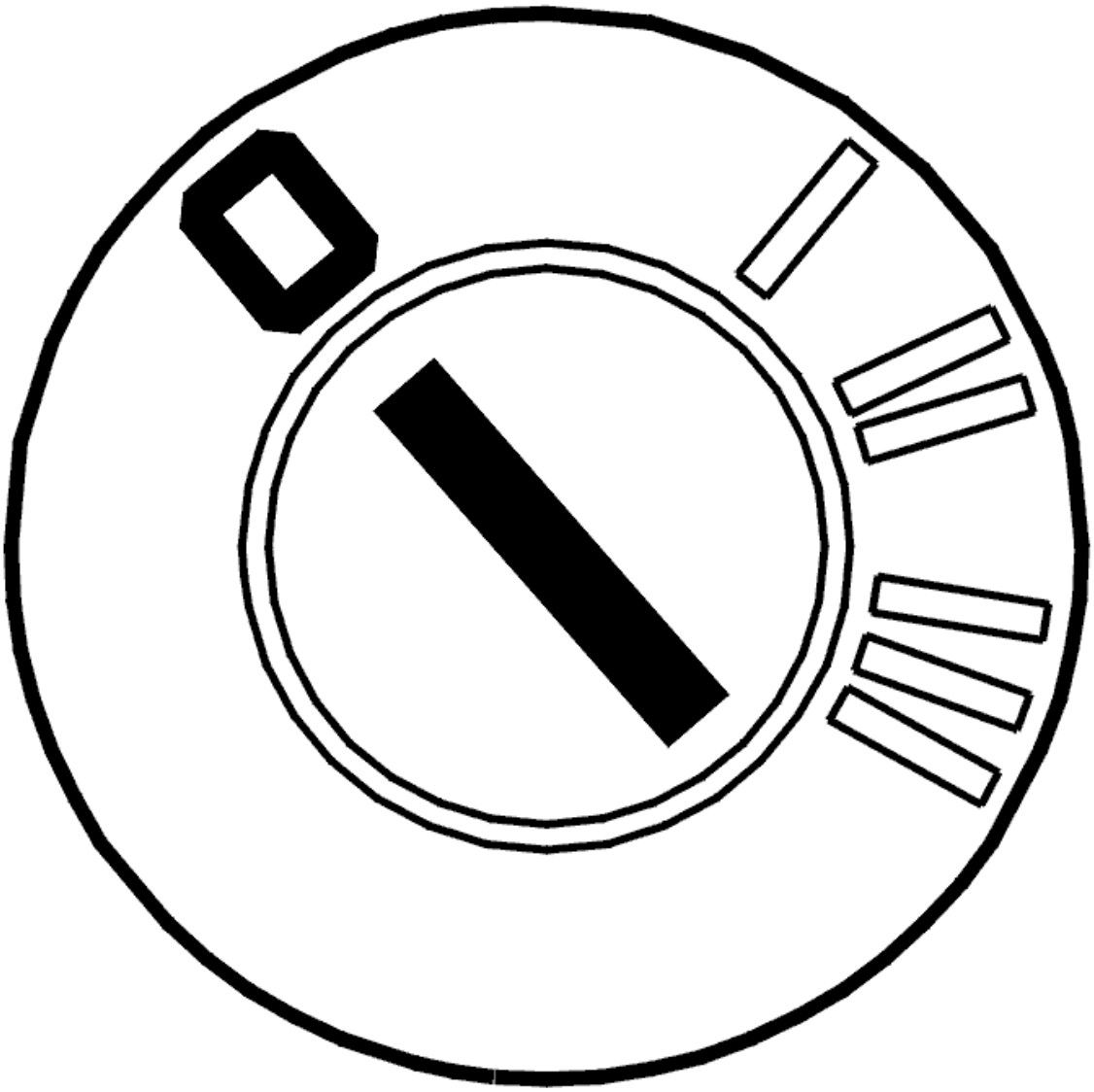

Fig. 125: Identifying Ignition OFF
Courtesy of VOLVO CARS CORPORATION

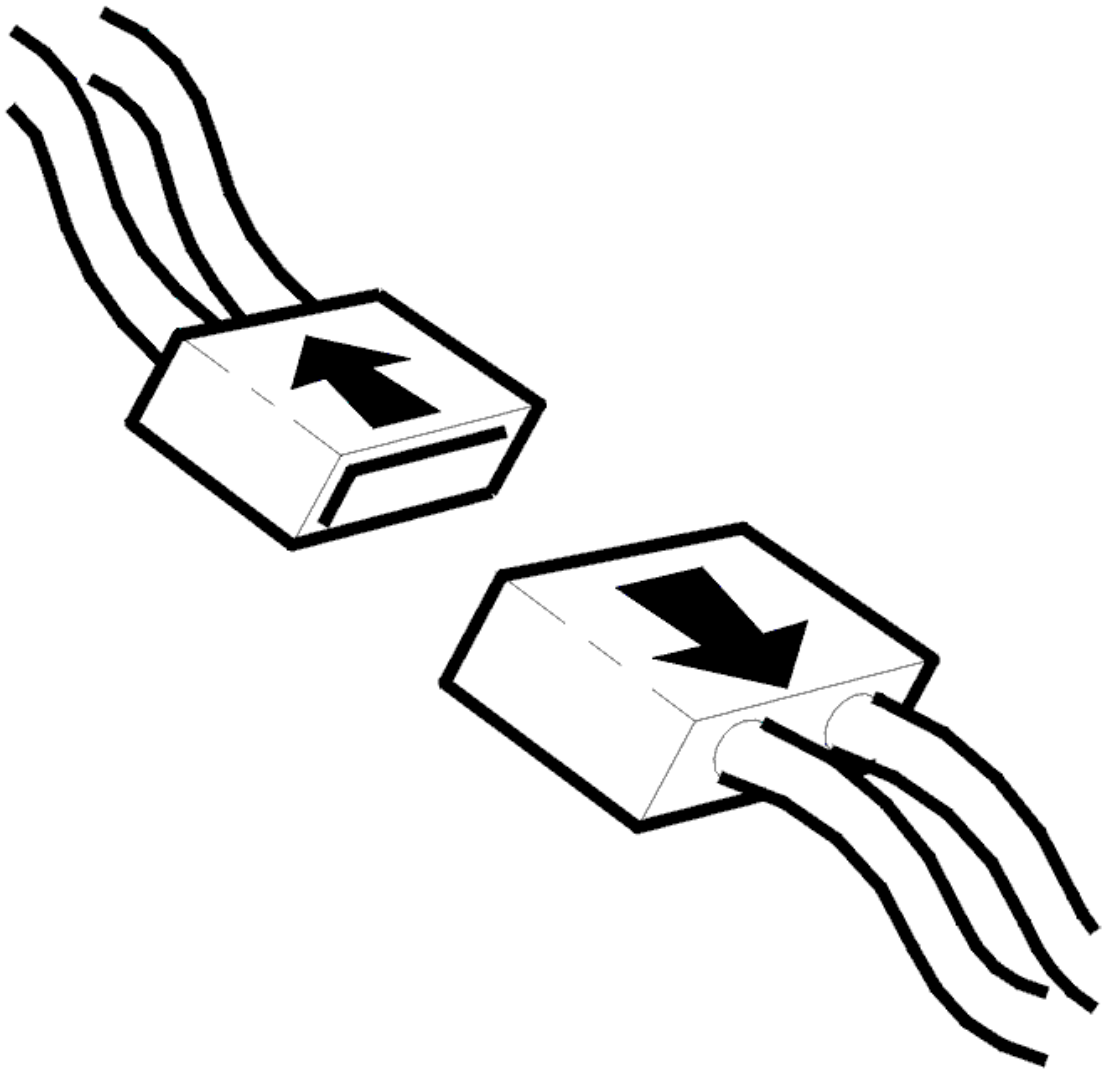

Fig. 126: Disconnecting Connector
Courtesy of VOLVO CARS CORPORATION

- Ignition off.

  Replace the switch for the passenger airbag.

  Other information

  - see **CONTACT BREAKER PASSENGER AIRBAG (SRS), REPLACING**

- **Continue**

  See: **VERIFICATION**

VERIFICATION

VERIFICATION

HINT: After carrying out the repair, check that the fault has been remedied.

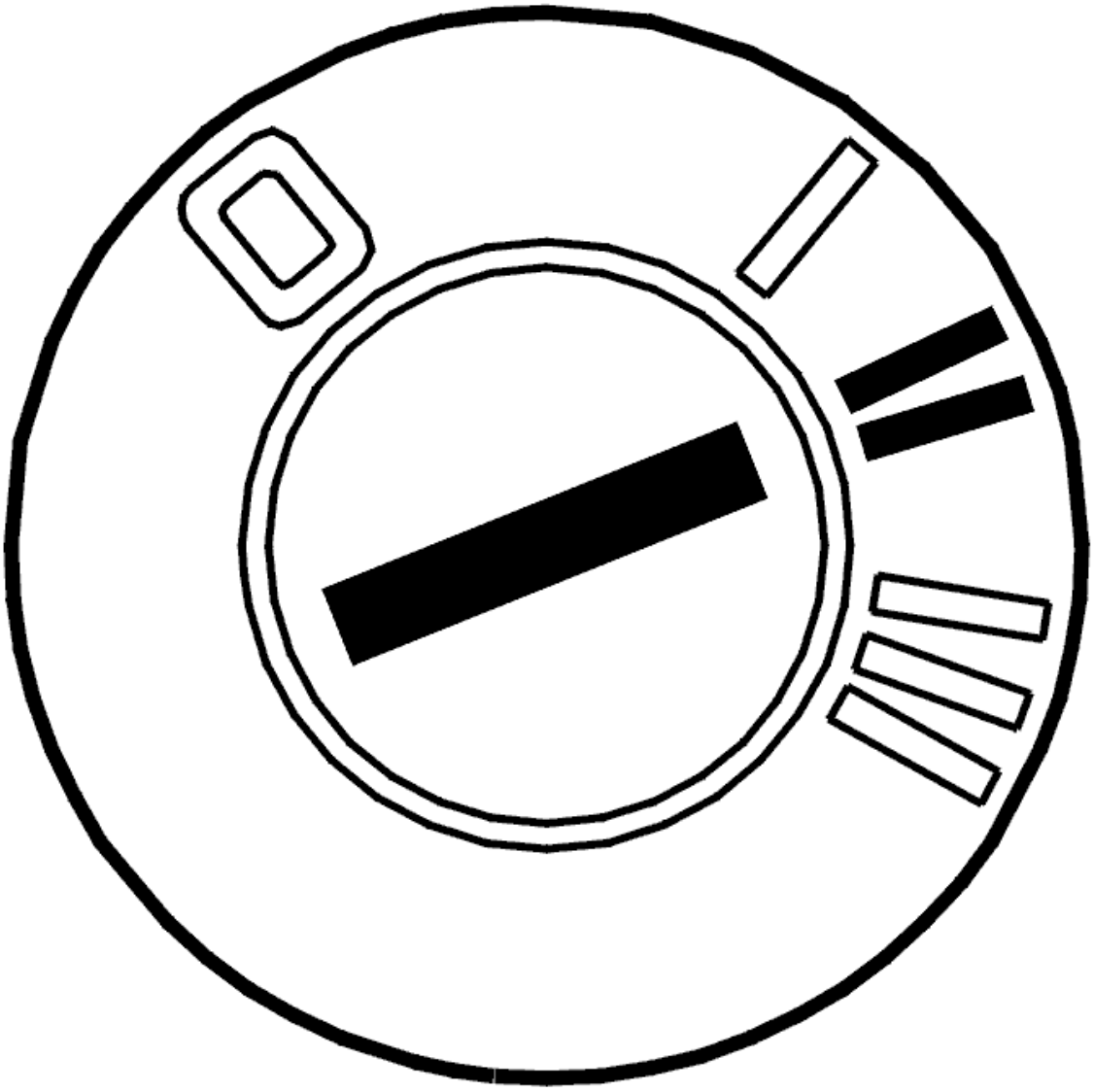

Fig. 127: Identifying Ignition ON
Courtesy of VOLVO CARS CORPORATION

- Ignition off
- Disconnect the battery negative lead
- Reinstall the connectors, components etc.
- Ignition on
- Connect the battery negative lead.

WARNING: **There must not be anyone inside the passenger compartment when the battery is connected.**

- Read off diagnostic trouble codes (DTCs).

  The fault is no longer present if the diagnostic trouble code (DTC) status is intermittent.

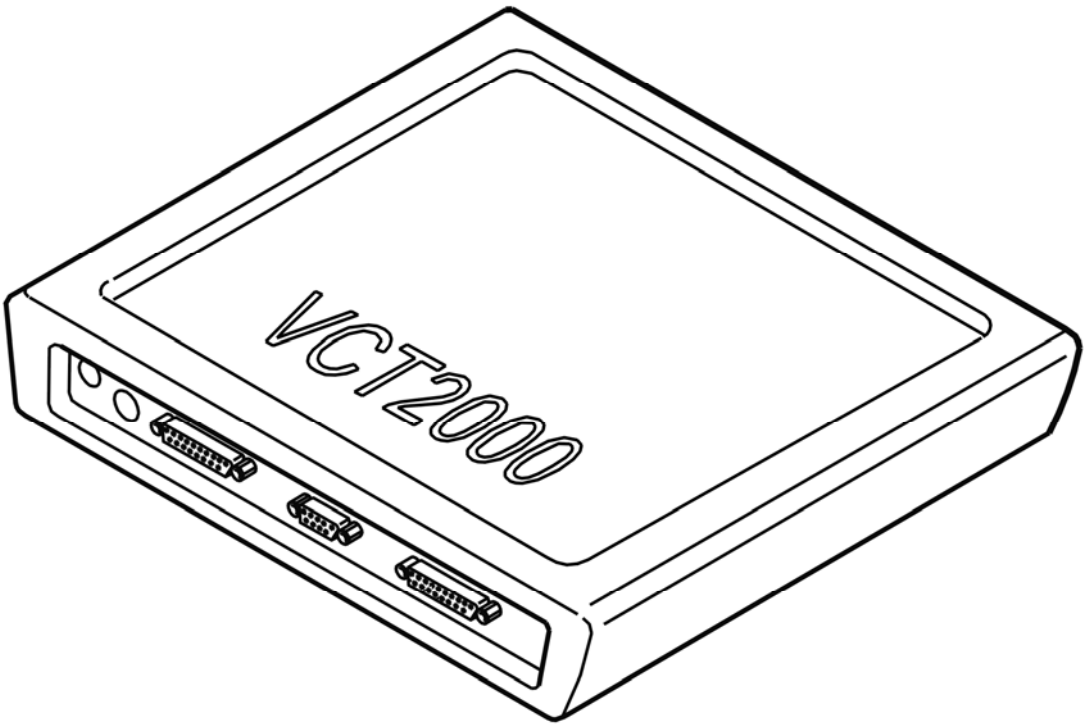

Fig. 128: Identifying VCT2000 Diagnostic Tool Symbol In VIDA
Courtesy of VOLVO CARS CORPORATION

Is the diagnostic trouble code (DTC) intermittent?

- **YES**

  VERIFIED: Troubleshooting has been completed.

- **NO**

  See: **INFORMATION**

INFORMATION

FAULT-TRACING INFORMATION

The fault should have been detected and remedied. As this is not the case fault-tracing has failed.

Exit fault-tracing for this diagnostic trouble code (DTC) or make another attempt.

SRS-0233: SWITCH FOR THE PASSENGER AIRBAG. INCORRECT MEASUREMENT RANGE (2005-2012)

DIAGNOSTIC TROUBLE CODE (DTC) INFORMATION SRS-0233

Condition

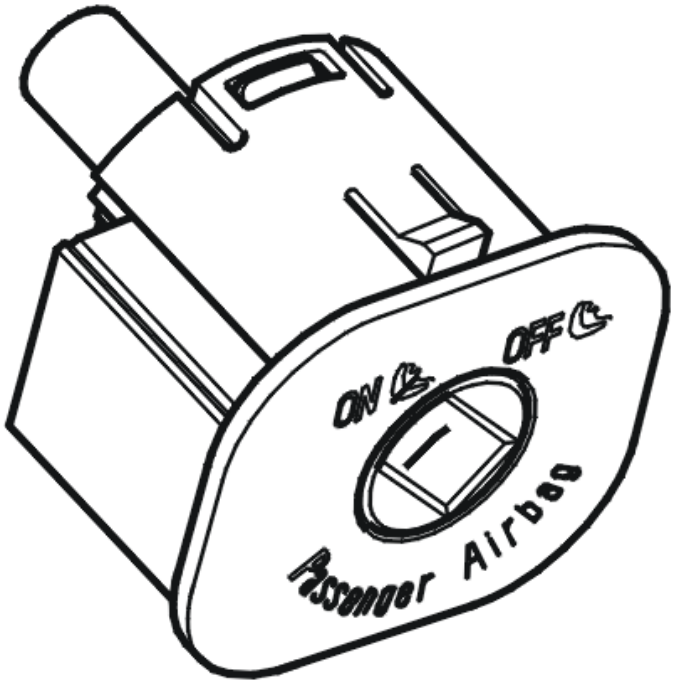

Fig. 129: Identifying Passenger Airbag Switch
Courtesy of VOLVO CARS CORPORATION

The supplemental restraint system module (SRS) checks the signal from the switch for the passenger airbag.

The diagnostic trouble code (DTC) is stored if the control module registers that the voltage in the signal cable is outside the measurement range.

The diagnostic trouble code (DTC) can be diagnosed in ignition positions I, II and III.

Substitute Value

- None.

Possible Source

- Incorrect voltage level in the signal cable between the supplemental restraint system module (SRS) and the switch for the passenger airbag.

Fault symptom[s]

- The SRS indicator lamp is lit.

INCORRECT MEASUREMENT RANGE

REPLACING THE COMPONENT

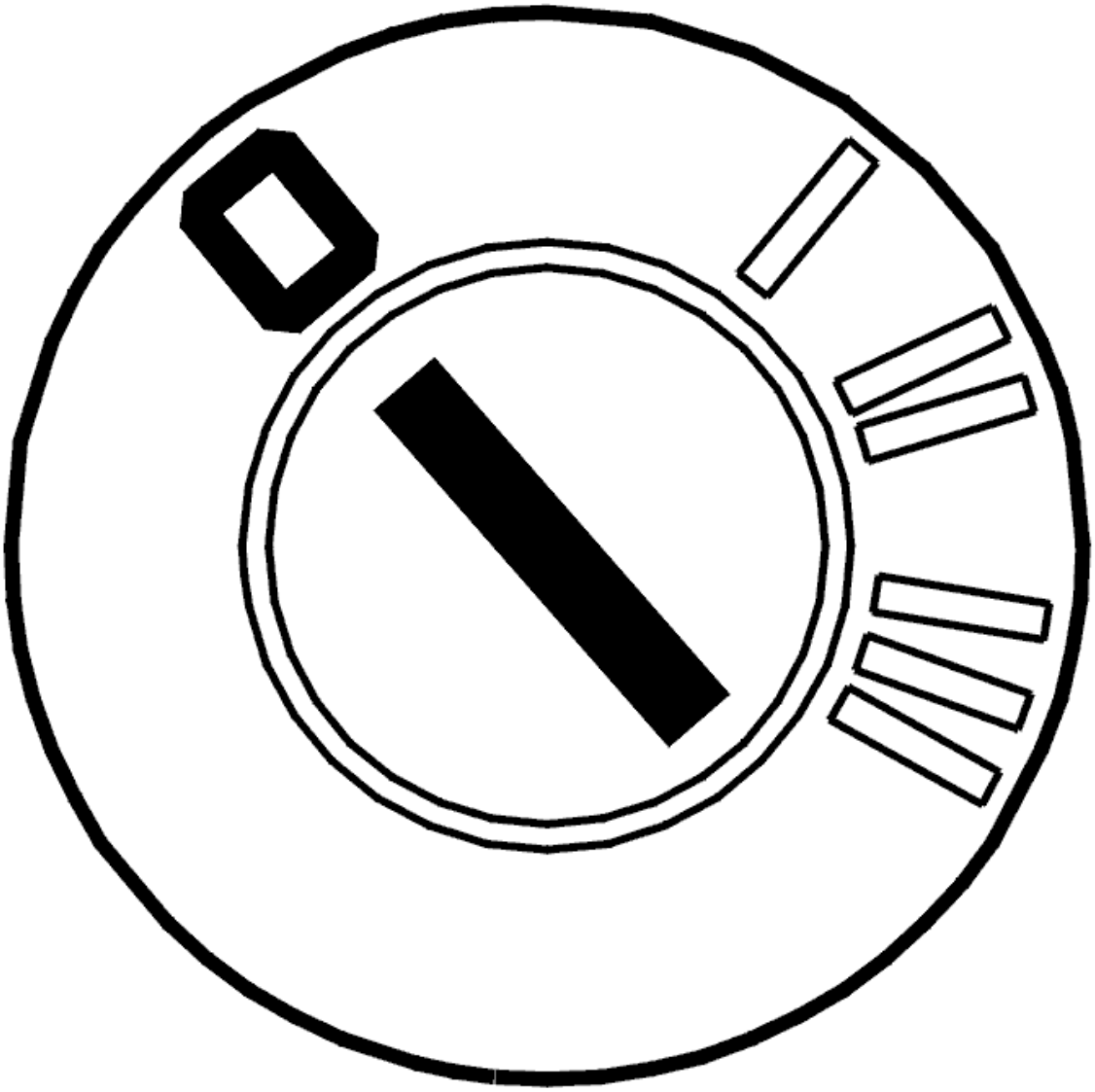

Fig. 130: Identifying Ignition OFF
Courtesy of VOLVO CARS CORPORATION

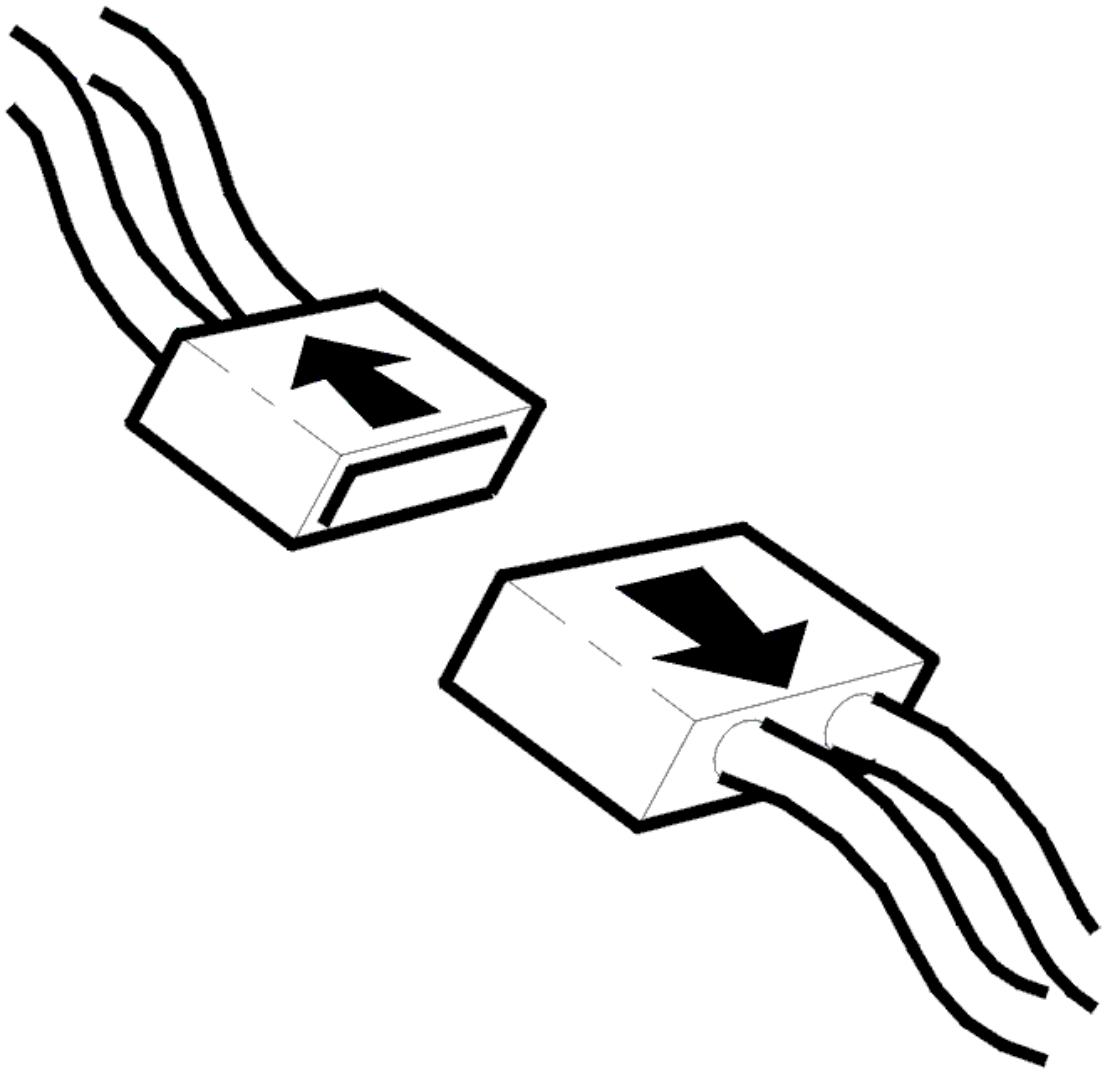

Fig. 131: Disconnecting Connector
Courtesy of VOLVO CARS CORPORATION

- Ignition off.

  Replace the switch for the passenger airbag.

  Other information

  - see **CONTACT BREAKER PASSENGER AIRBAG (SRS), REPLACING**

- **Continue**

  See: **VERIFICATION**

VERIFICATION

VERIFICATION

HINT: After carrying out the repair, check that the fault has been remedied.

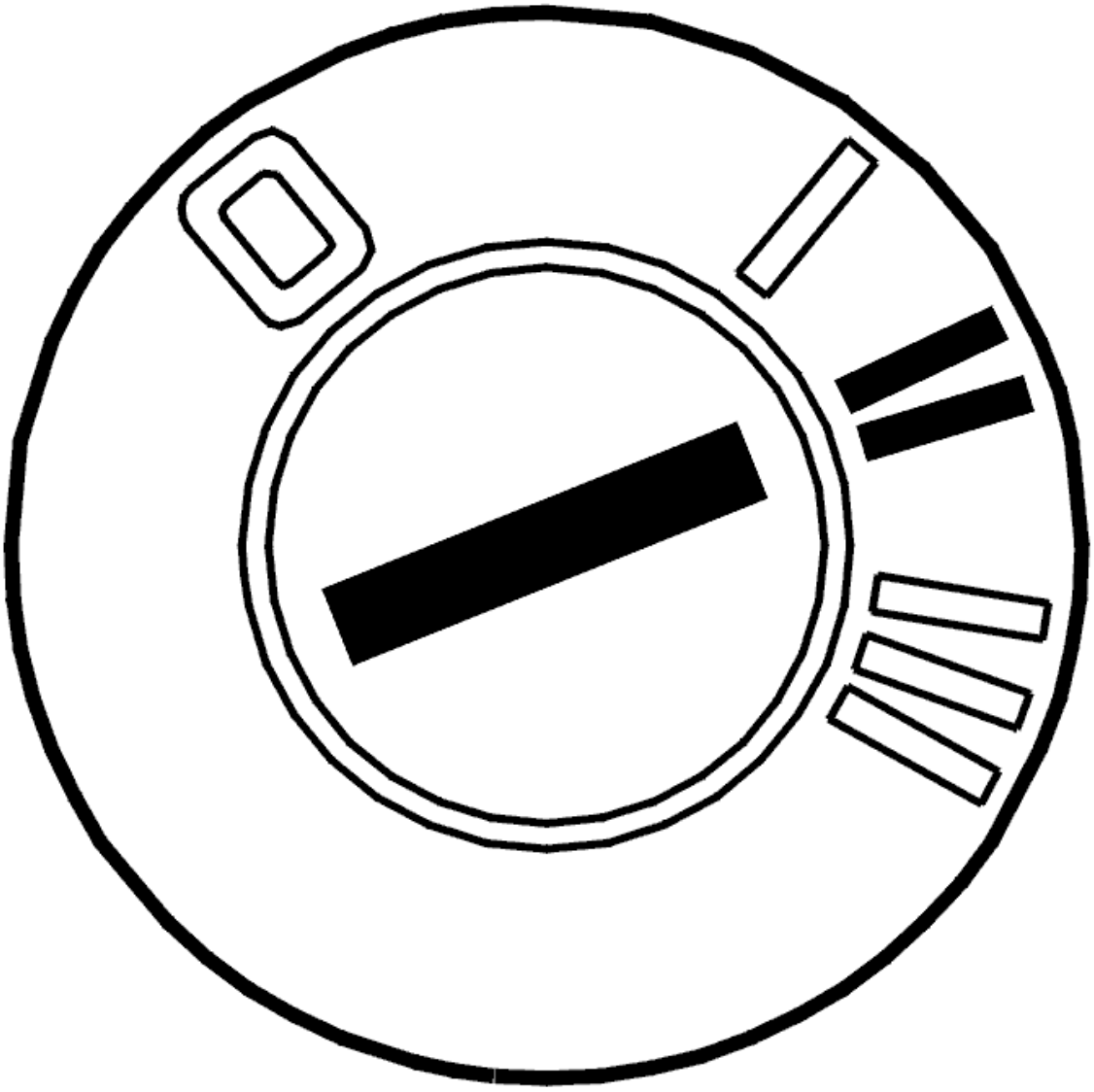

Fig. 132: Identifying Ignition ON
Courtesy of VOLVO CARS CORPORATION

- Ignition off
- Disconnect the battery negative lead
- Reinstall the connectors, components etc.
- Ignition on
- Connect the battery negative lead.

WARNING: **There must not be anyone inside the passenger compartment when the battery is connected.**

- Read off diagnostic trouble codes (DTCs).

  The fault is no longer present if the diagnostic trouble code (DTC) status is intermittent.

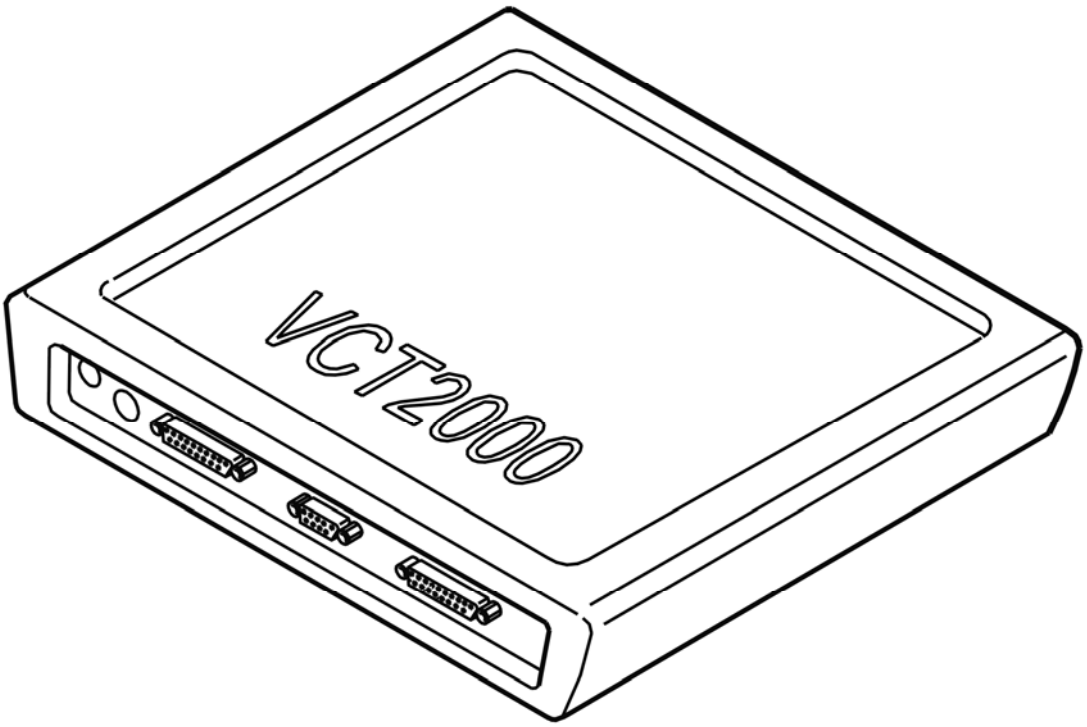

Fig. 133: Identifying VCT2000 Diagnostic Tool Symbol In VIDA
Courtesy of VOLVO CARS CORPORATION

Is the diagnostic trouble code (DTC) intermittent?

- **YES**

  VERIFIED: Troubleshooting has been completed.

- **NO**

  See: **INFORMATION**

INFORMATION

FAULT-TRACING INFORMATION

The fault should have been detected and remedied. As this is not the case fault-tracing has failed.

Exit fault-tracing for this diagnostic trouble code (DTC) or make another attempt.

SRS-0234: SWITCH FOR THE PASSENGER AIRBAG. SIGNAL TOO HIGH (2005-2012)

DIAGNOSTIC TROUBLE CODE (DTC) INFORMATION SRS-0234

Condition

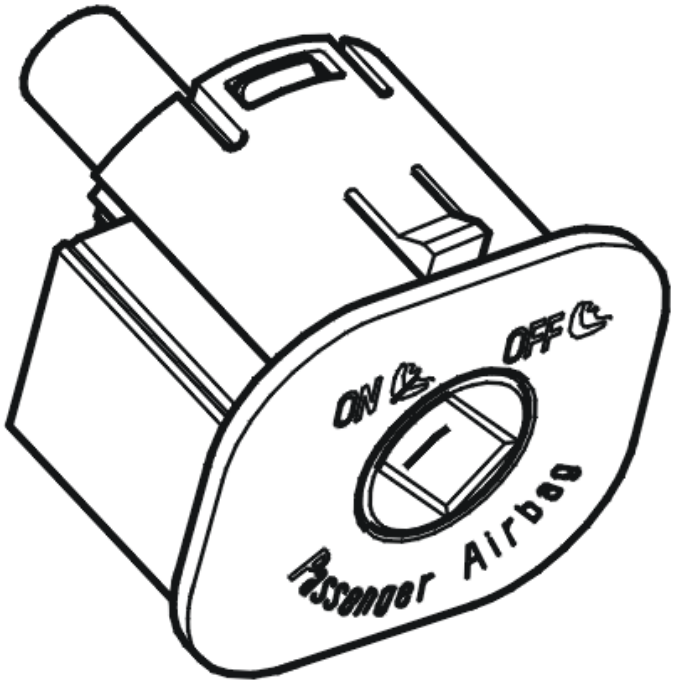

Fig. 134: Identifying Passenger Airbag Switch
Courtesy of VOLVO CARS CORPORATION

The supplemental restraint system module (SRS) checks the signal from the switch for the passenger airbag.

The diagnostic trouble code (DTC) is stored if the control module registers that the voltage in the signal cable is too high.

The diagnostic trouble code (DTC) can be diagnosed in ignition positions I, II and III.

Substitute Value

- None.

Possible Source

- Short-circuit to supply voltage in the signal cable or in the connectors between the supplemental restraint system module (SRS) and the switch for the passenger airbag
- Short-circuit to supply voltage in the switch for the passenger airbag.

Fault symptom[s]

- The SRS indicator lamp is lit.

SIGNAL TOO HIGH

CHECKING COMPONENTS AND WIRING

CAUTION: Do not touch the terminal pins in the supplemental restraint system module (SRS). There is a risk of static discharge. This could damage the supplemental restraint system module (SRS).

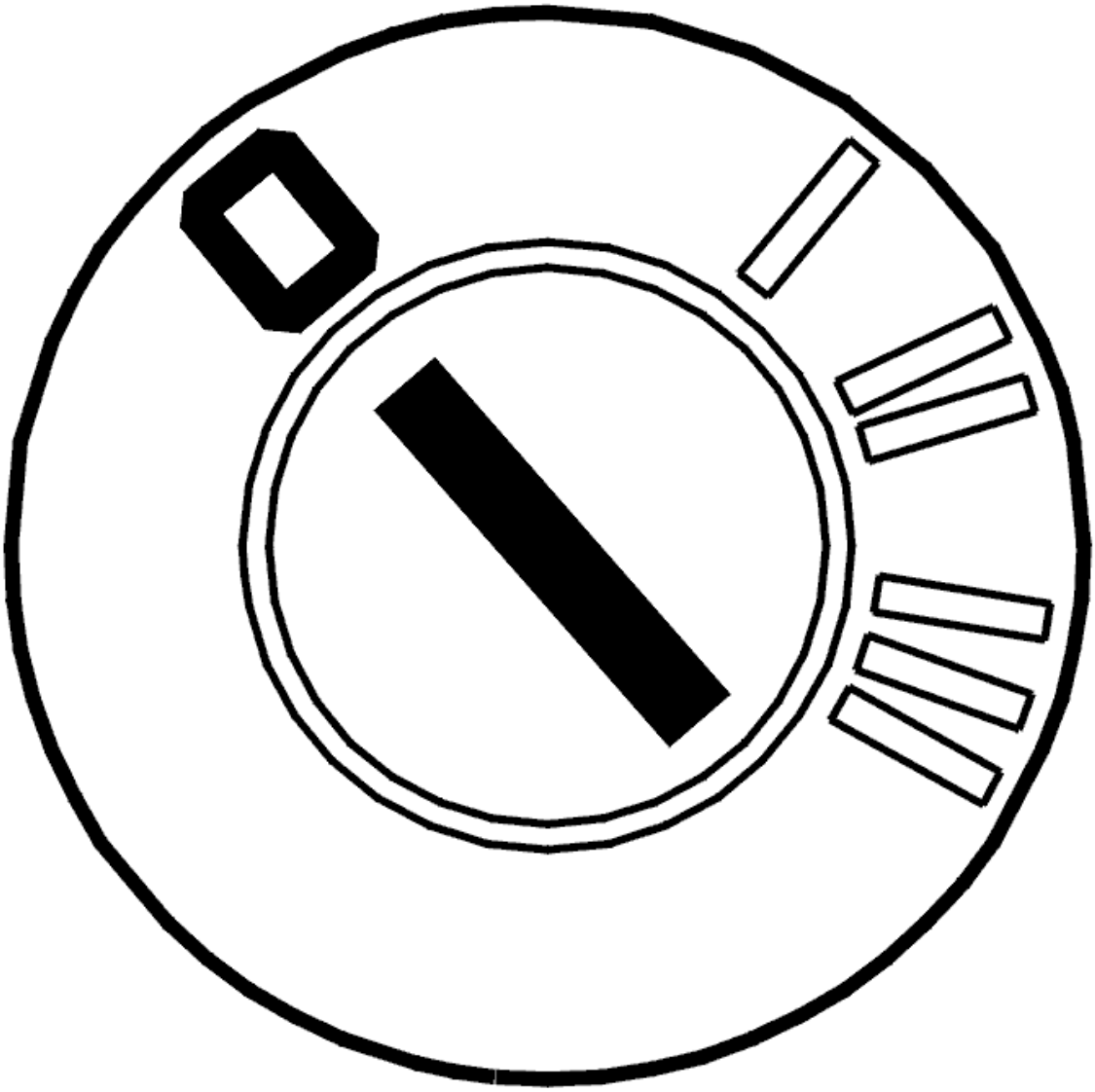

Fig. 135: Identifying Ignition OFF
Courtesy of VOLVO CARS CORPORATION

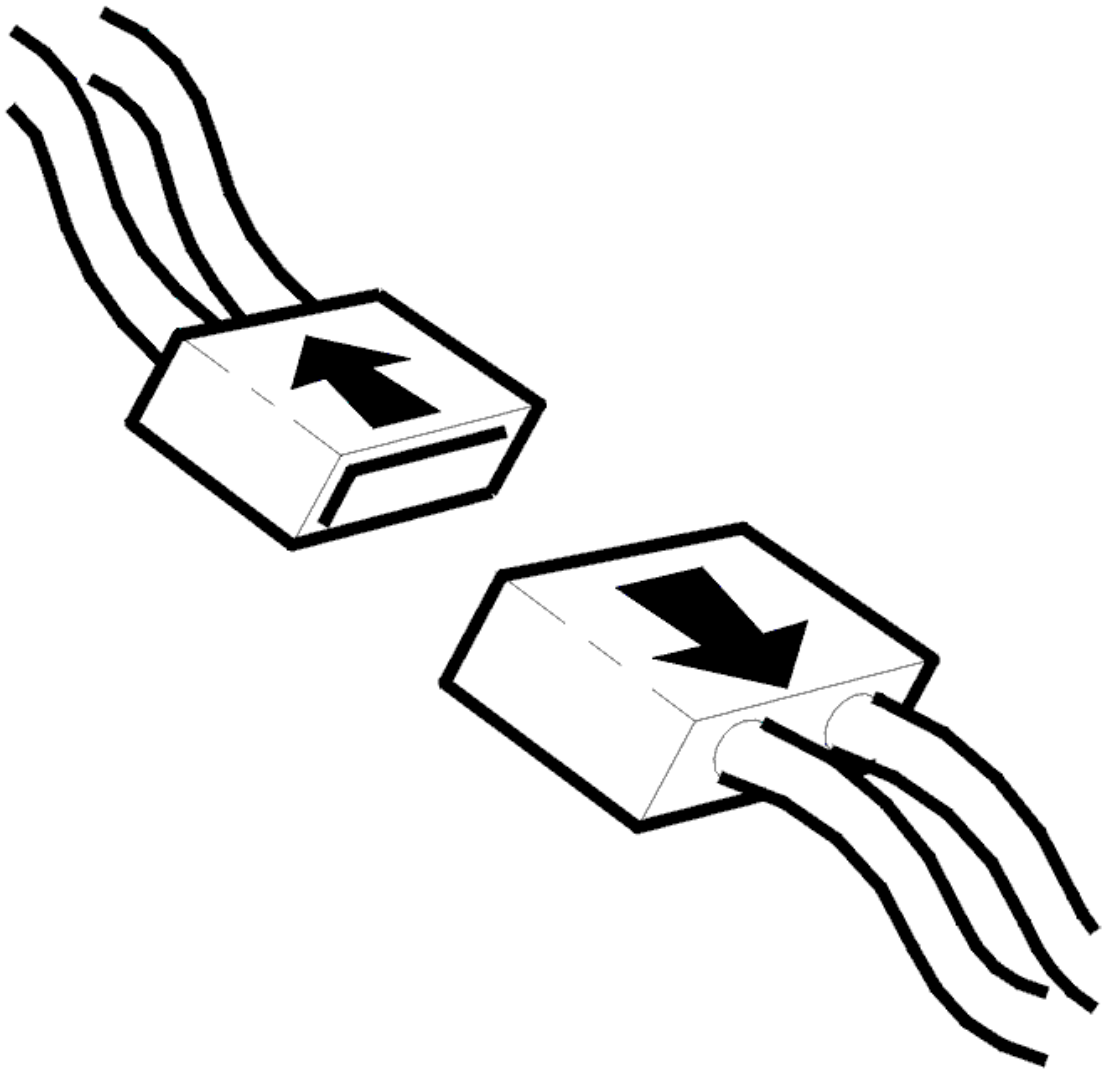

Fig. 136: Disconnecting Connector
Courtesy of VOLVO CARS CORPORATION

- Switch off the ignition. Wait 10 seconds
- Disconnect the connector from the switch for the passenger airbag
- Disconnect the connector from the supplemental restraint system module (SRS).

  Check the connectors for the switch and the supplemental restraint system module (SRS). Check for damage to pins and terminals in the connectors.

  Remedy as necessary.

  Check the cable between the supplemental restraint system module (SRS) and the switch connector. Check for a short-circuit to supply voltage.

Check the cable between:

- Supplemental restraint system module (SRS) terminal #45 and switch connector terminal #4
- Supplemental restraint system module (SRS) terminal #50 and switch connector terminal #5.

Remedy as necessary.

Other information

- see **CONNECTING THE BREAKOUT BOX**
- For -2004, see **SIGNAL SPECIFICATION** or for model year 2005-, see **SIGNAL SPECIFICATION**
- see **SUPPLEMENTAL RESTRAINT SYSTEM MODULE (SRS), REPLACING**
- To access or replace the switch for the passenger airbag and the connectors, see: **CONTACT BREAKER PASSENGER AIRBAG (SRS), REPLACING**
- see **CABLE HARNESS SRS SYSTEM, REPAIR**
- see **CHECKING WIRING AND TERMINALS**

- **Continue**

See: **VERIFICATION**

VERIFICATION

VERIFICATION

HINT: After carrying out the repair, check that the fault has been remedied.

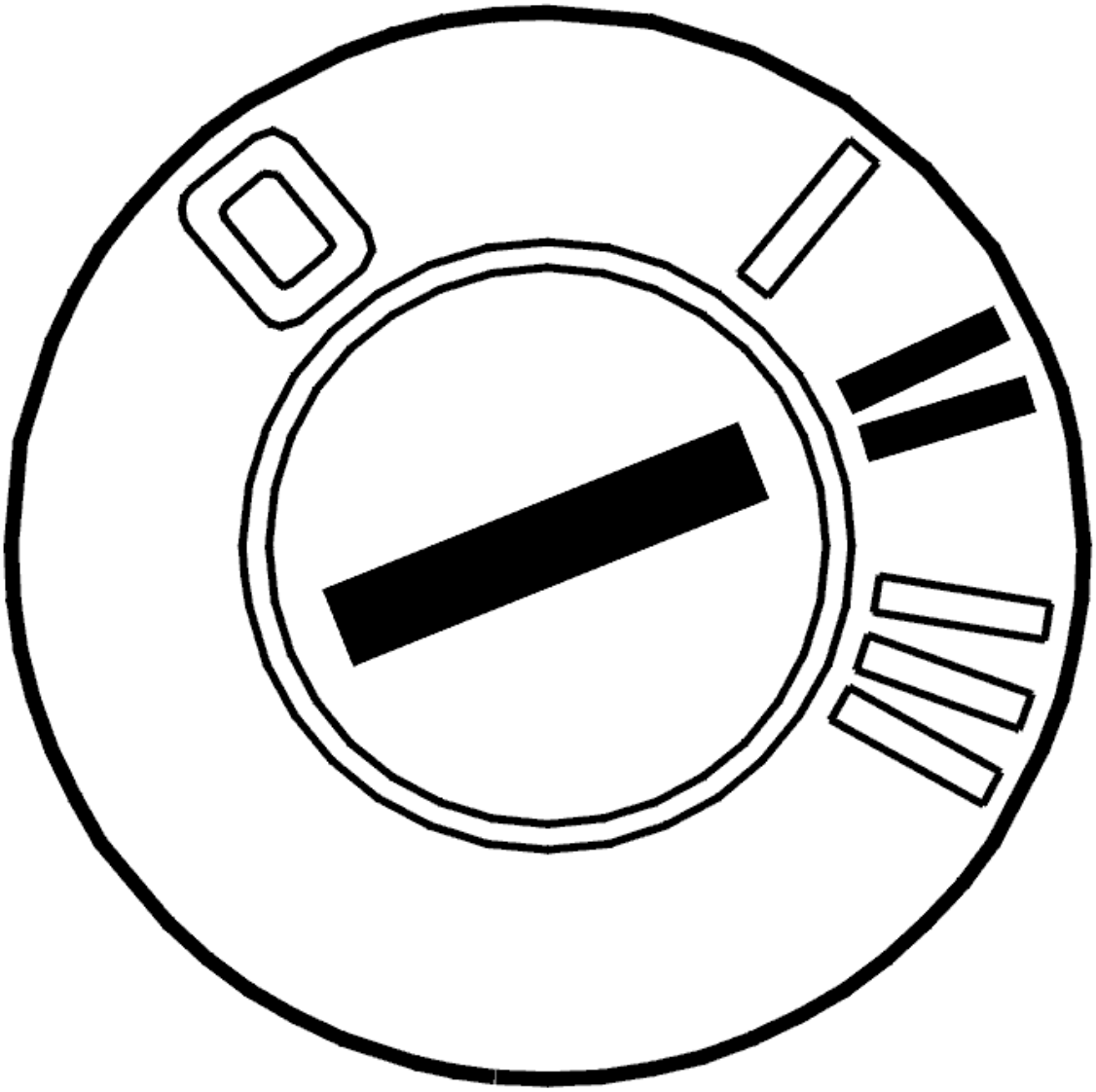

Fig. 137: Identifying Ignition ON
Courtesy of VOLVO CARS CORPORATION

- Ignition off
- Disconnect the battery negative lead
- Reinstall the connectors, components etc.
- Ignition on
- Connect the battery negative lead.

WARNING: There must not be anyone inside the passenger compartment when the battery is connected.

- Read off diagnostic trouble codes (DTCs).

The fault is no longer present if the diagnostic trouble code (DTC) status is intermittent.

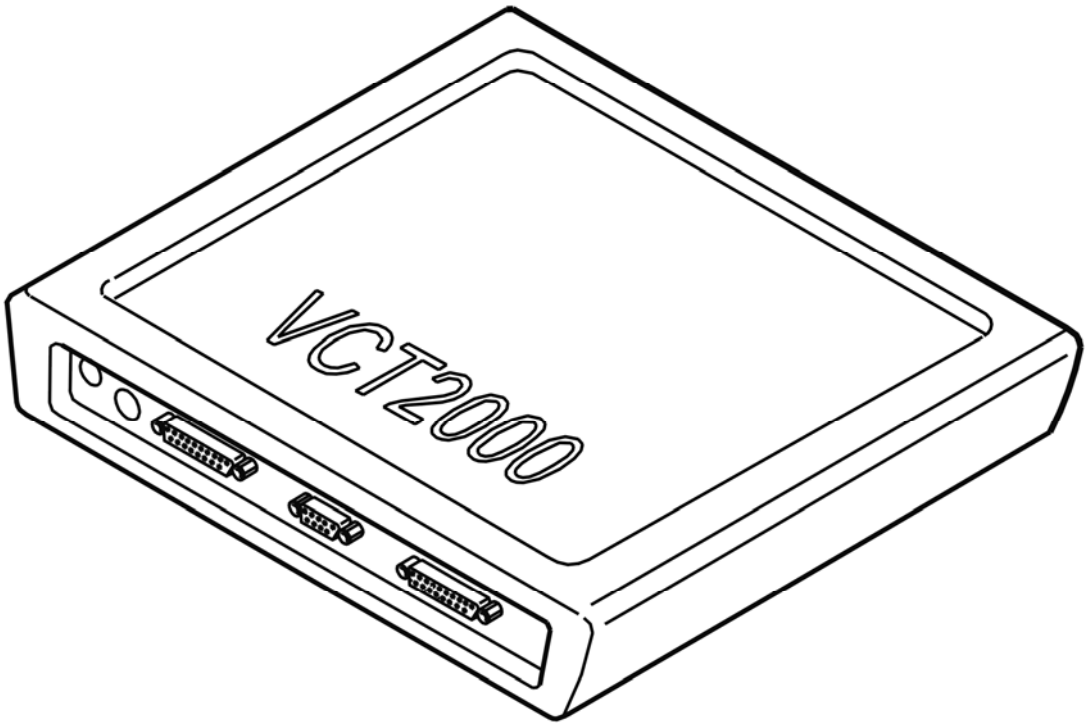

Fig. 138: Identifying VCT2000 Diagnostic Tool Symbol In VIDA
Courtesy of VOLVO CARS CORPORATION

Is the diagnostic trouble code (DTC) intermittent?

- **YES**

  VERIFIED: Troubleshooting has been completed.

- **NO**

  See: **INFORMATION**

INFORMATION

FAULT-TRACING INFORMATION

The fault should have been detected and remedied. As this is not the case fault-tracing has failed.

Exit fault-tracing for this diagnostic trouble code (DTC) or make another attempt.

SRS-0235: SWITCH FOR THE PASSENGER AIRBAG. SIGNAL TOO HIGH

(2005-2012)

DIAGNOSTIC TROUBLE CODE (DTC) INFORMATION SRS-0235

Condition

Fig. 139: Identifying Passenger Airbag Switch
Courtesy of VOLVO CARS CORPORATION

The supplemental restraint system module (SRS) checks the signal from the switch for the passenger airbag.

The diagnostic trouble code (DTC) is stored if the control module registers that the voltage in the signal cable is too low.

The diagnostic trouble code (DTC) can be diagnosed in ignition positions I, II and III.

Substitute Value

- None.

Possible Source

- Short-circuit to ground in the signal cable or in the connectors between the supplemental restraint system

module (SRS) and the switch for the passenger airbag
- Short-circuit to ground in the switch for the passenger airbag.

Fault symptom[s]

- The SRS indicator lamp is lit.

SIGNAL TOO HIGH

CHECKING COMPONENTS AND WIRING

CAUTION: Do not touch the terminal pins in the supplemental restraint system module (SRS). There is a risk of static discharge. This could damage the supplemental restraint system module (SRS).

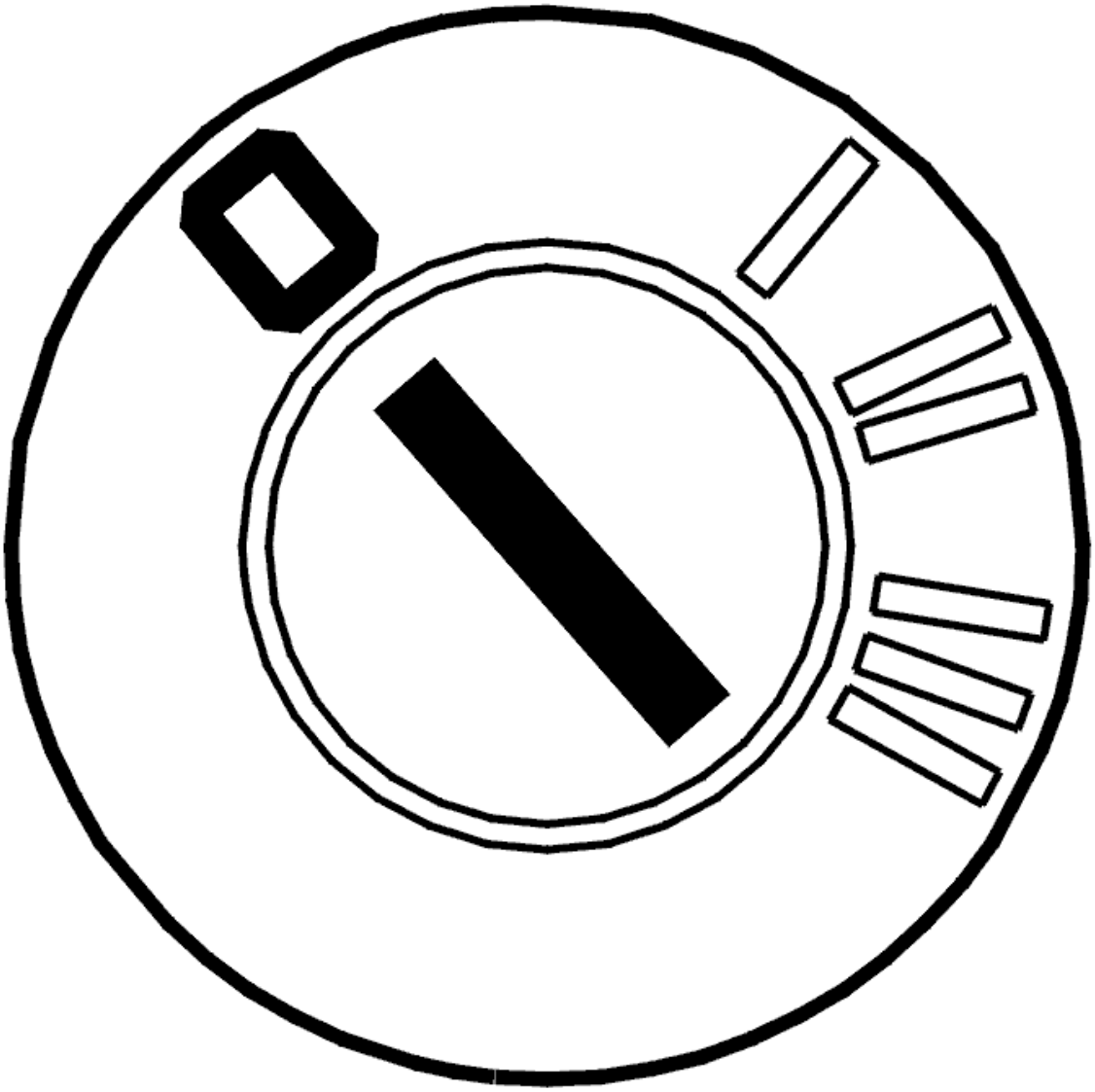

Fig. 140: Identifying Ignition OFF
Courtesy of VOLVO CARS CORPORATION

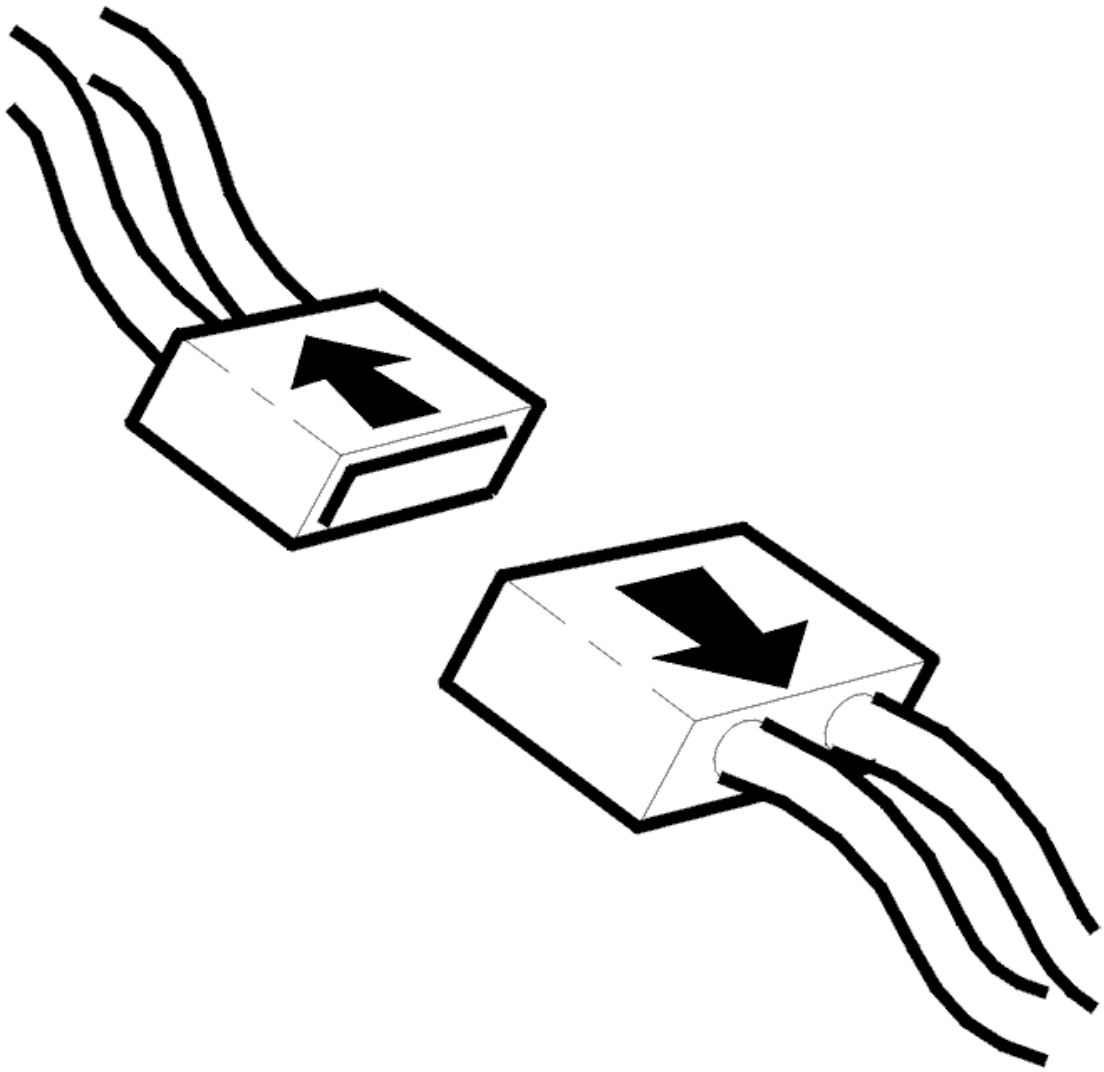

Fig. 141: Disconnecting Connector
Courtesy of VOLVO CARS CORPORATION

- Switch off the ignition. Wait 10 seconds
- Disconnect the connector from the switch for the passenger airbag
- Disconnect the connector from the supplemental restraint system module (SRS).

  Check the connectors for the switch and the supplemental restraint system module (SRS). Check for damage to pins and terminals in the connectors.

  Remedy as necessary.

Check the cable between the supplemental restraint system module (SRS) and the switch connector. Check for a short-circuit to supply voltage.

Check the cable between:

- Supplemental restraint system module (SRS) terminal #45 and switch connector terminal #4
- Supplemental restraint system module (SRS) terminal #50 and switch connector terminal #5.

Remedy as necessary.

Other information

- see **CONNECTING THE BREAKOUT BOX**
- For -2004, see **SIGNAL SPECIFICATION** or for model year 2005-, see **SIGNAL SPECIFICATION**
- see **SUPPLEMENTAL RESTRAINT SYSTEM MODULE (SRS), REPLACING**
- To access or replace the switch for the passenger airbag and the connectors, see: **CONTACT BREAKER PASSENGER AIRBAG (SRS), REPLACING**
- see **CABLE HARNESS SRS SYSTEM, REPAIR**
- see **CHECKING WIRING AND TERMINALS**

- **Continue**

  See: **VERIFICATION**

VERIFICATION

VERIFICATION

HINT: After carrying out the repair, check that the fault has been remedied.

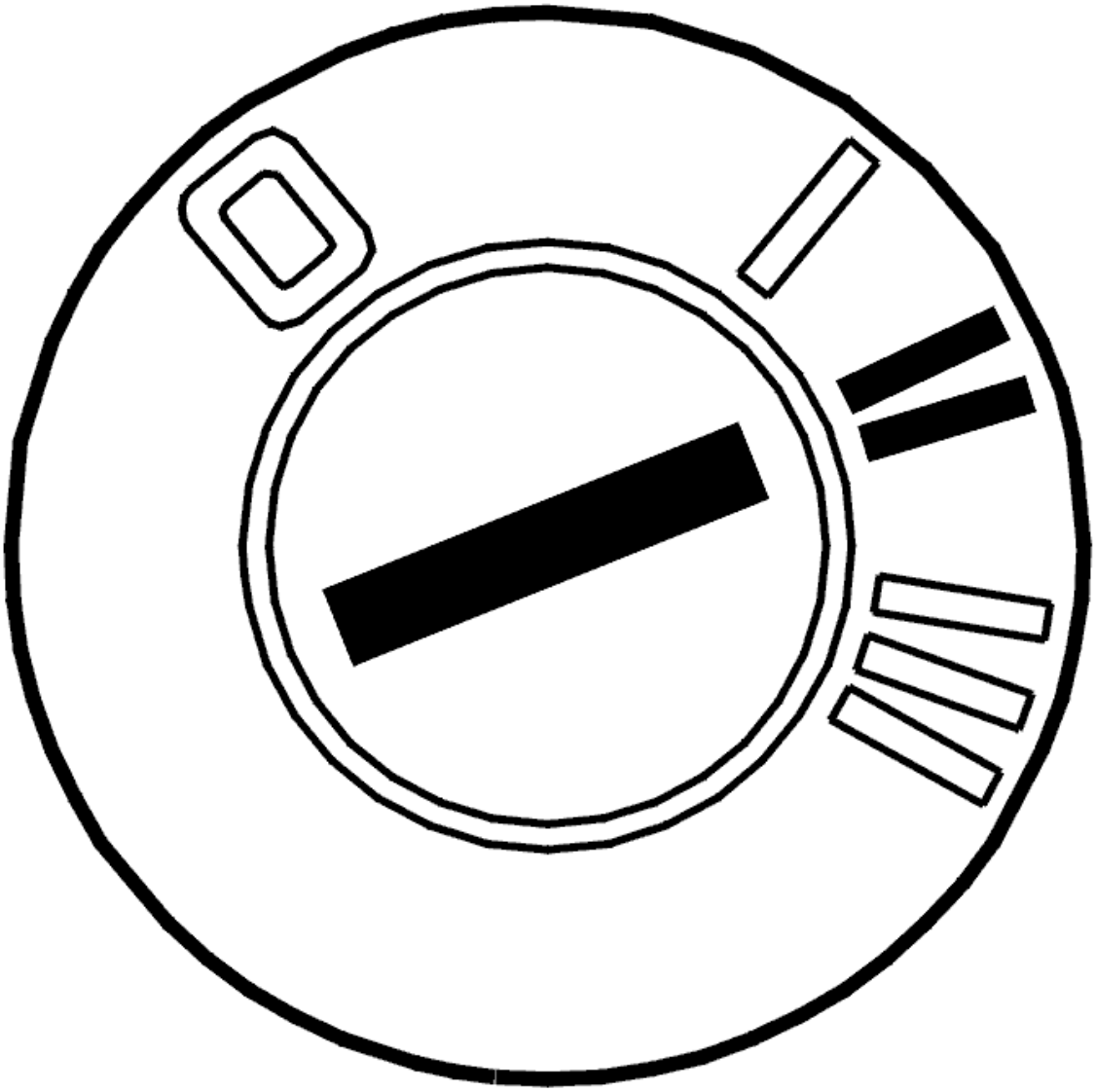

Fig. 142: Identifying Ignition ON
Courtesy of VOLVO CARS CORPORATION

- Ignition off
- Disconnect the battery negative lead
- Reinstall the connectors, components etc.
- Ignition on
- Connect the battery negative lead.

> WARNING: **There must not be anyone inside the passenger compartment when the battery is connected.**

- Read off diagnostic trouble codes (DTCs).

The fault is no longer present if the diagnostic trouble code (DTC) status is intermittent.

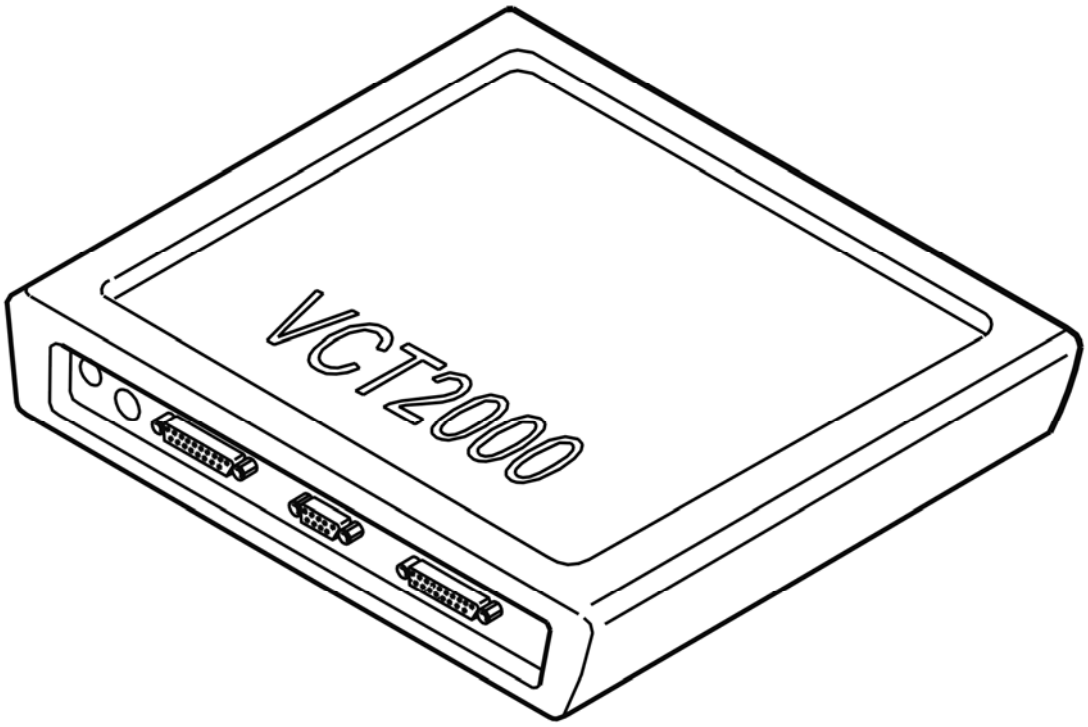

Fig. 143: Identifying VCT2000 Diagnostic Tool Symbol In VIDA
Courtesy of VOLVO CARS CORPORATION

Is the diagnostic trouble code (DTC) intermittent?

- **YES**

  VERIFIED: Troubleshooting has been completed.

- **NO**

  See: **INFORMATION**

INFORMATION

FAULT-TRACING INFORMATION

The fault should have been detected and remedied. As this is not the case fault-tracing has failed.

Exit fault-tracing for this diagnostic trouble code (DTC) or make another attempt.

SRS-0236: SWITCH FOR THE PASSENGER AIRBAG. FAULTY FUNCTION

(2005-2012)

DIAGNOSTIC TROUBLE CODE (DTC) INFORMATION SRS-0236

Condition

Fig. 144: Identifying Passenger Airbag Switch
Courtesy of VOLVO CARS CORPORATION

The supplemental restraint system module (SRS) checks the signal from the switch for the passenger airbag.

The diagnostic trouble code (DTC) is stored if the control module registers that the switch has an internal fault which causes incorrect operation.

The diagnostic trouble code (DTC) can be diagnosed in ignition positions I, II and III.

Substitute Value

- None.

Possible Source

- Fault in the switch for the passenger airbag.

Fault symptom[s]

- SRS indicator lamp lit
- PAD lamp lit.

FAULTY FUNCTION

CHECKING THE COMPONENT

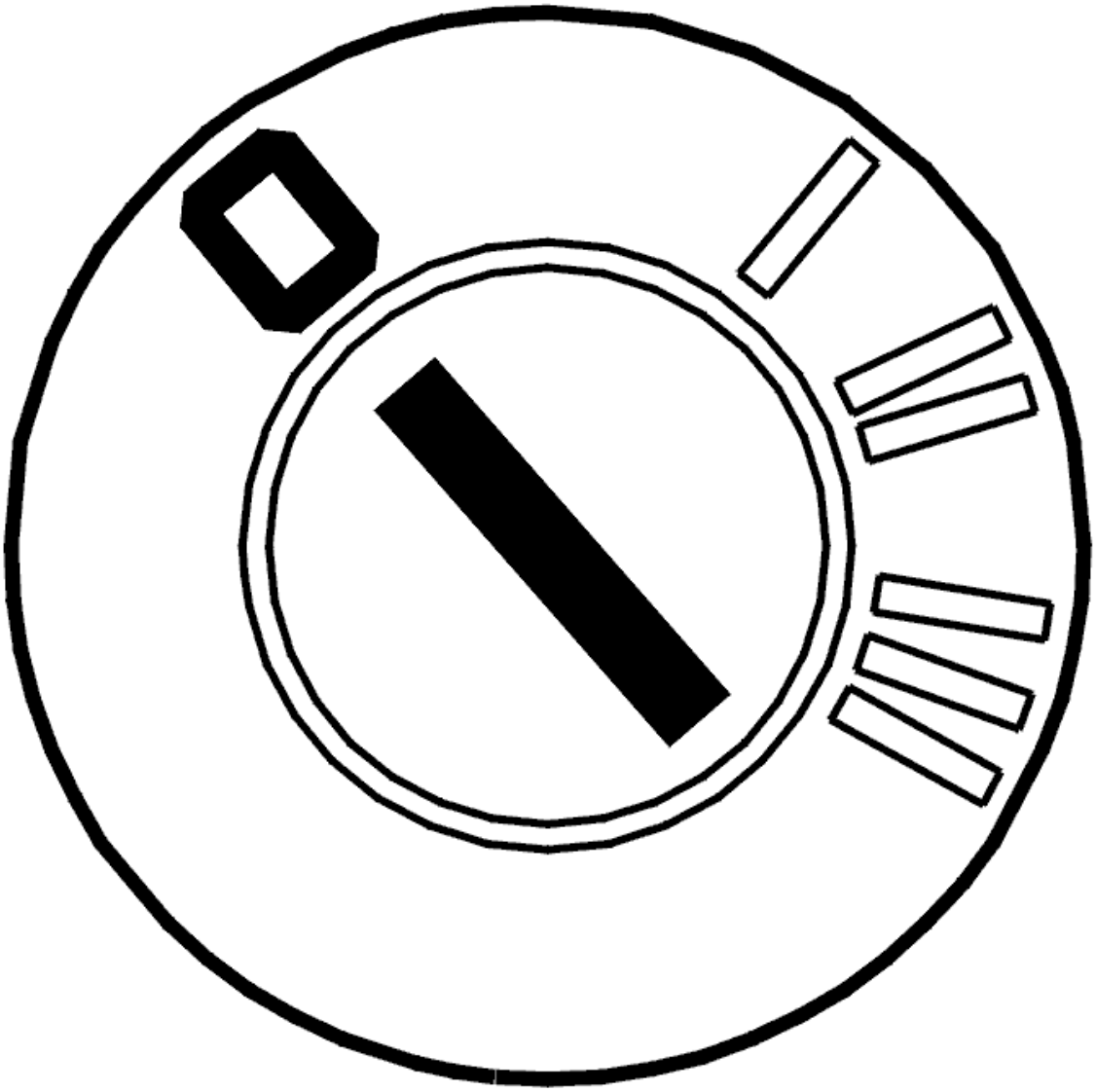

Fig. 145: Identifying Ignition OFF
Courtesy of VOLVO CARS CORPORATION

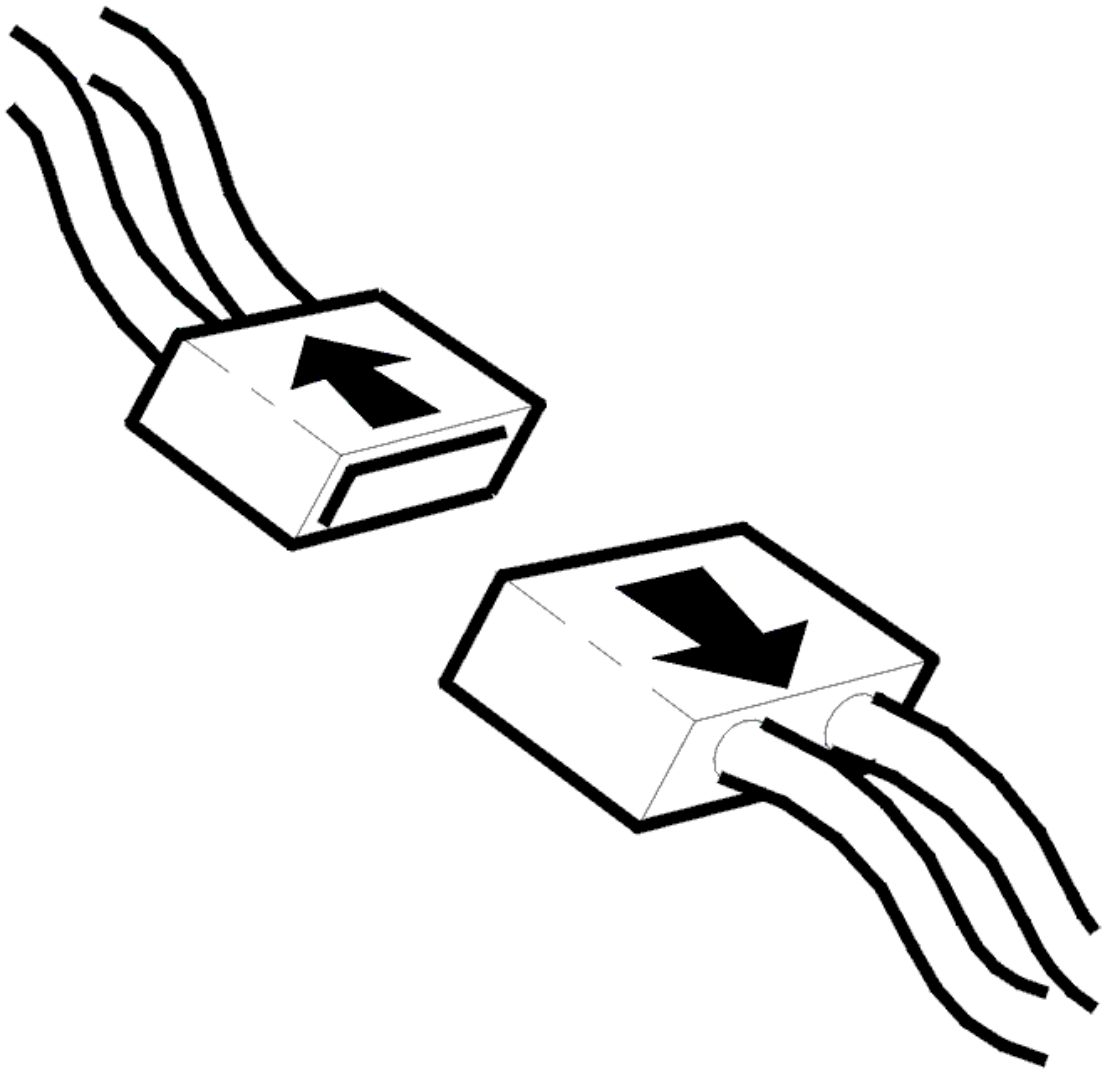

Fig. 146: Disconnecting Connector
Courtesy of VOLVO CARS CORPORATION

- Switch off the ignition. Wait 10 seconds
- Set the switch to the **ON** position
- Switch on the ignition. Wait 10 seconds.

  Check the current running through sensors A and B in the switch.

  When the switch is in the **ON** position, the current level in sensor A must be in the range of 1.6-6.4 mA and the current level in sensor B must be in the range of 12.8-20.1 mA.

  Use the VCT2000 (or appropriate scan tool) to read off the current level.

  Replace the switch if any of the current levels are outside the listed ranges.

- Switch off the ignition. Wait 10 seconds
- Set the switch to the **OFF** position
- Switch on the ignition. Wait 10 seconds.

Check the current running through sensors A and B in the switch.

When the switch is in the **OFF** position, the current level in sensor A must be in the range of 12.8-20.1 mA and the current level in sensor B must be in the range of 1.6-6.4 mA.

Use the VCT2000 (or appropriate scan tool) to read off the current level.

Replace the switch if any of the current levels are outside the listed ranges.

Erase the diagnostic trouble code (DTC) if fault is not found.

Other information

- see **CONTACT BREAKER PASSENGER AIRBAG (SRS), REPLACING** .

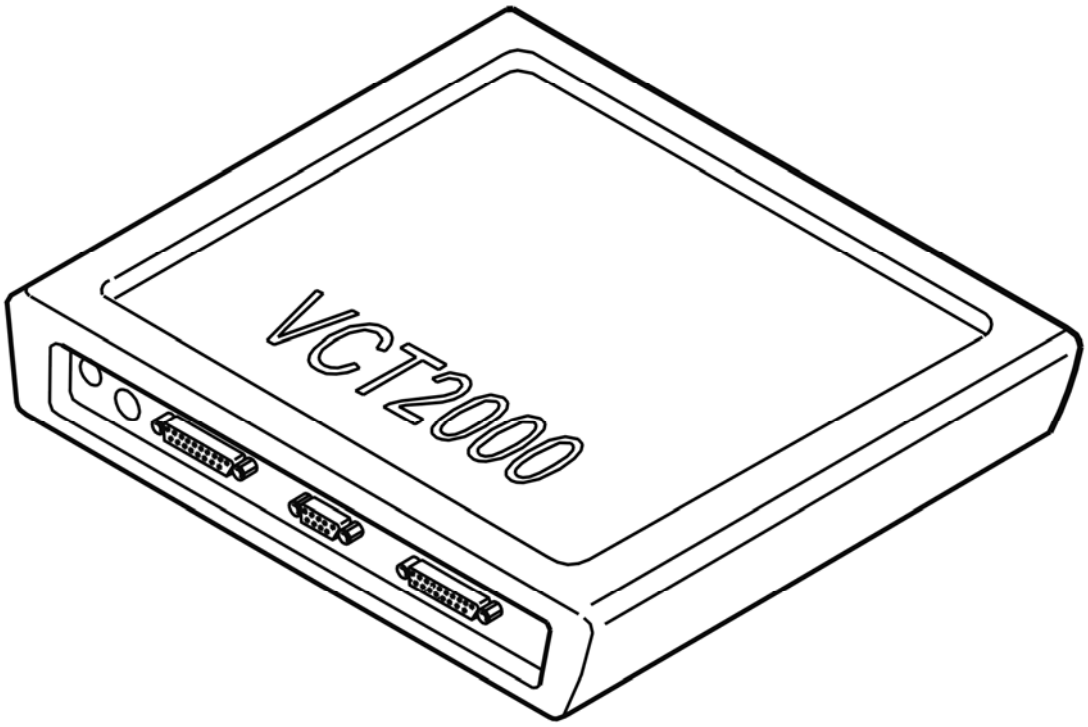

Fig. 147: Identifying VCT2000 Diagnostic Tool Symbol In VIDA
Courtesy of VOLVO CARS CORPORATION

- **Continue**

See: **VERIFICATION**

VERIFICATION

VERIFICATION

HINT: After carrying out the repair, check that the fault has been remedied.

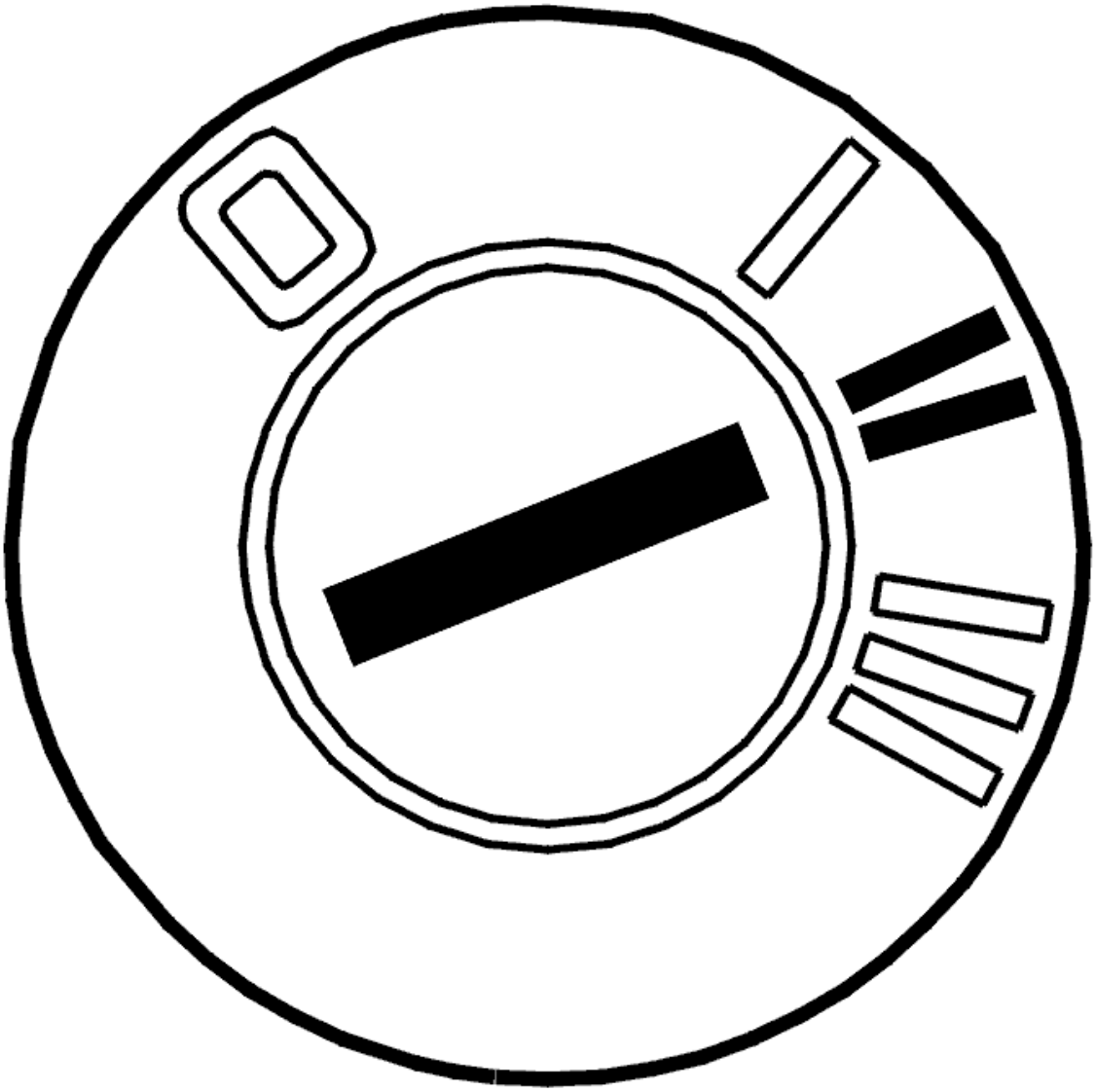

Fig. 148: Identifying Ignition ON
Courtesy of VOLVO CARS CORPORATION

- Ignition off
- Disconnect the battery negative lead
- Reinstall the connectors, components etc.
- Ignition on

- Connect the battery negative lead.

  WARNING: There must not be anyone inside the passenger compartment when the battery is connected.

- Read off diagnostic trouble codes (DTCs).

  The fault is no longer present if the diagnostic trouble code (DTC) status is intermittent.

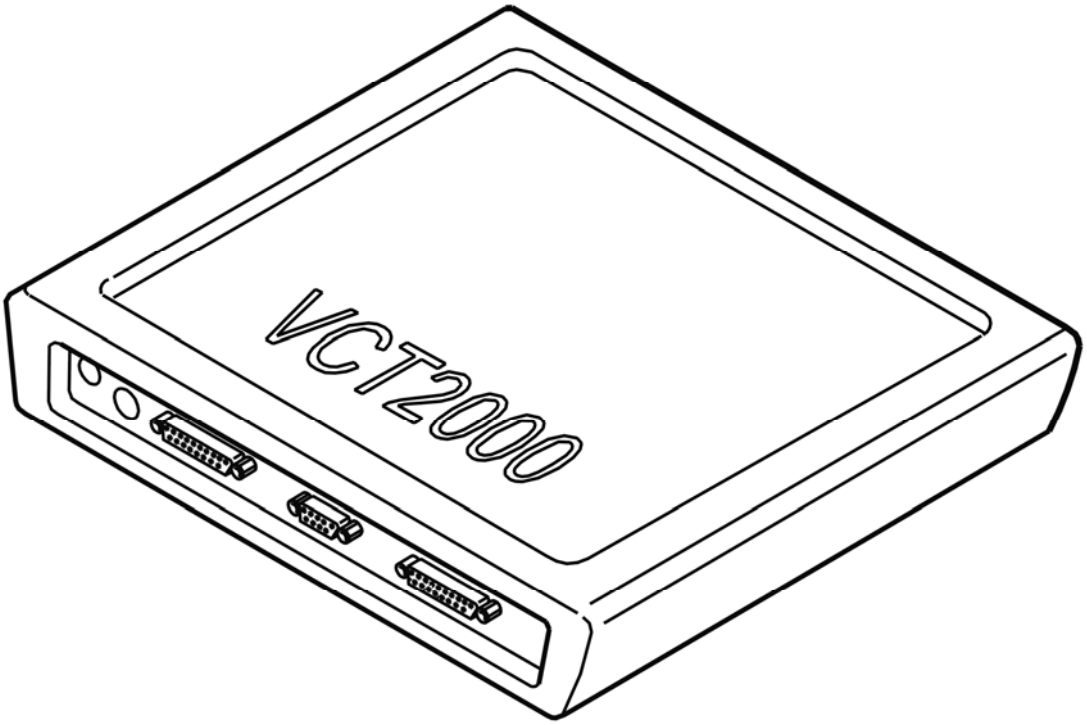

Fig. 149: Identifying VCT2000 Diagnostic Tool Symbol In VIDA
Courtesy of VOLVO CARS CORPORATION

Is the diagnostic trouble code (DTC) intermittent?

- **YES**

  VERIFIED: Troubleshooting has been completed.

- **NO**

  See: **INFORMATION**

INFORMATION

FAULT-TRACING INFORMATION

The fault should have been detected and remedied. As this is not the case fault-tracing has failed.

Exit fault-tracing for this diagnostic trouble code (DTC) or make another attempt.

SRS-0237: SWITCH FOR THE PASSENGER AIRBAG. FAULTY SIGNAL (2005-2012)

DIAGNOSTIC TROUBLE CODE (DTC) INFORMATION SRS-0237

Condition

Fig. 150: Identifying Passenger Airbag Switch
Courtesy of VOLVO CARS CORPORATION

The supplemental restraint system module (SRS) checks the signal from the switch for the passenger airbag.

The diagnostic trouble code (DTC) is stored if the control module registers a configuration fault.

The diagnostic trouble code (DTC) can be diagnosed in ignition positions I, II and III.

Substitute Value

- Passenger airbag is deactivated.

Possible Source

- Incorrect switch installed
- Faulty software in the supplemental restraint system module (SRS).

Fault symptom[s]

- SRS indicator lamp lit
- PAD lamp lit.

FAULTY SIGNAL

REPLACING THE COMPONENT

CAUTION: Do not touch the terminal pins in the supplemental restraint system module (SRS). There is a risk of static discharge. This could damage the supplemental restraint system module (SRS).

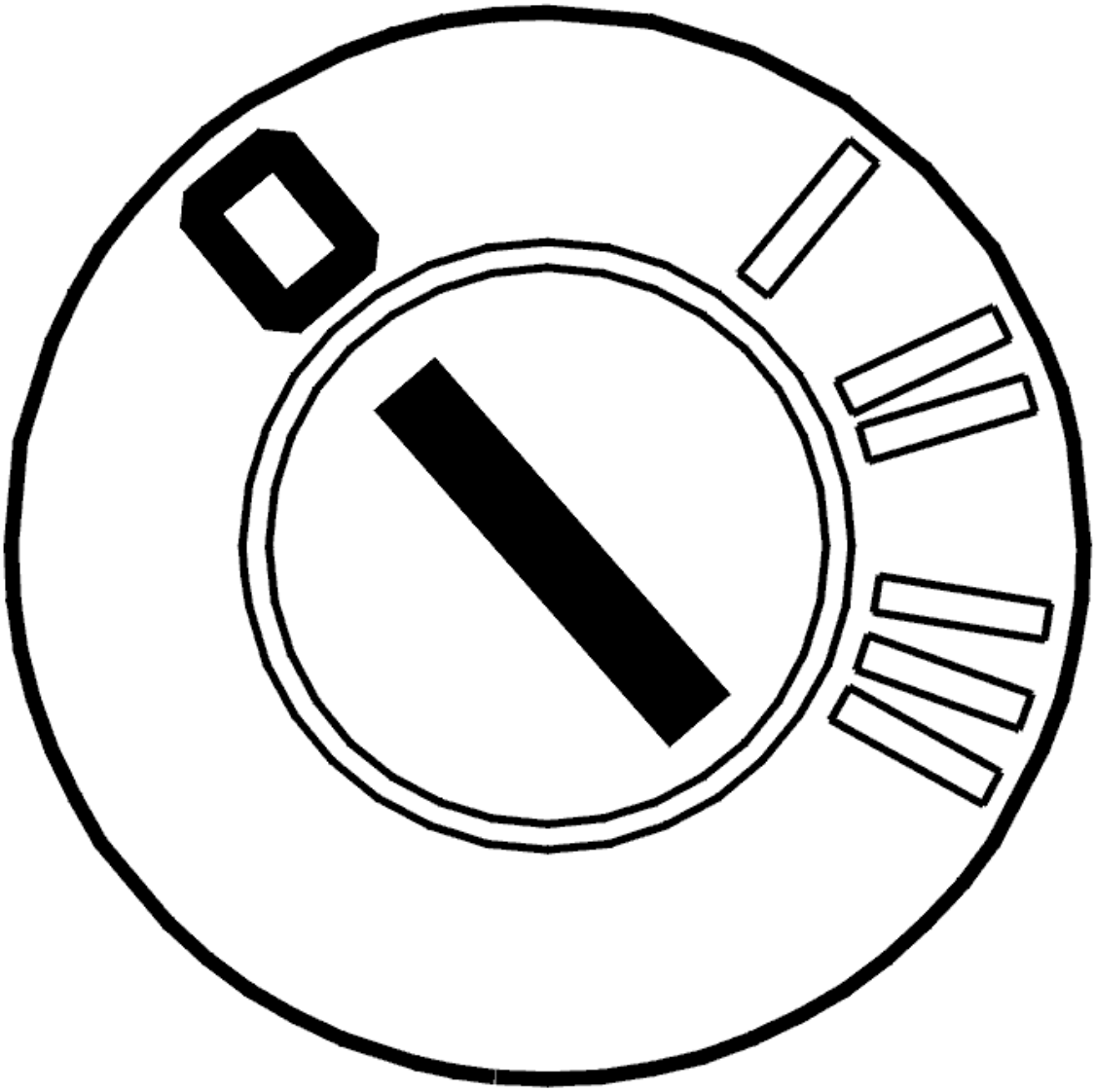

Fig. 151: Identifying Ignition OFF
Courtesy of VOLVO CARS CORPORATION

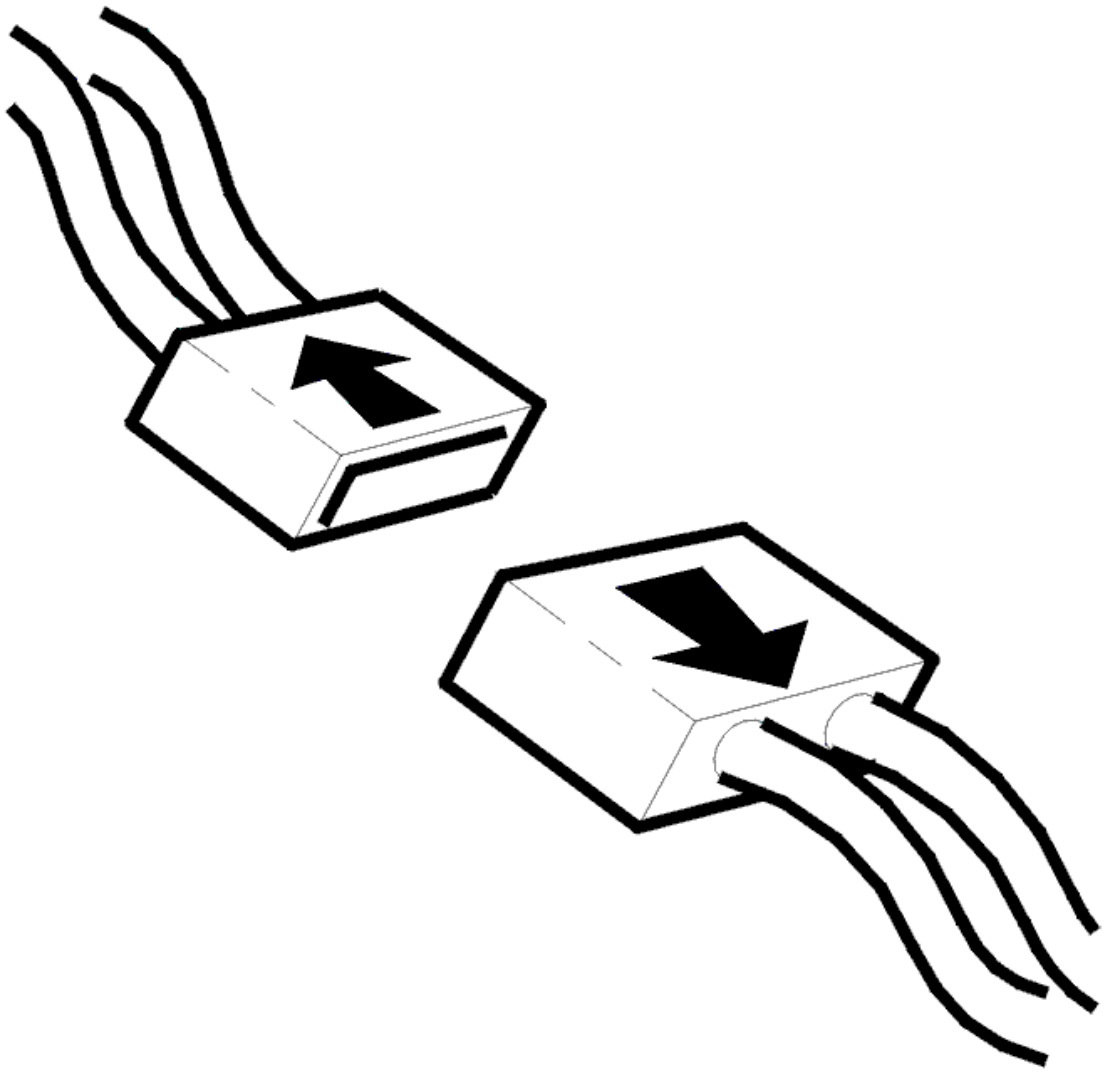

Fig. 152: Disconnecting Connector
Courtesy of VOLVO CARS CORPORATION

- Switch off the ignition. Wait 10 seconds
- Replace the switch for the passenger airbag.

Check the status of the diagnostic trouble code (DTC).

- Reinstall the connectors, components etc.
- Switch on the ignition. Wait 10 seconds
- Read off using the VCT2000 (or appropriate scan tool).

Read off the status of the diagnostic trouble code (DTC) using the VCT2000 (or appropriate scan tool).

The fault has been remedied if the diagnostic trouble code (DTC) is intermittent.

If the fault is still permanent, replace the supplemental restraint system module (SRS).

Remedy as necessary.

Other information

- To access or replace the switch for the passenger airbag and the connectors, see: **CONTACT BREAKER PASSENGER AIRBAG (SRS), REPLACING**
- see **SUPPLEMENTAL RESTRAINT SYSTEM MODULE (SRS), REPLACING**

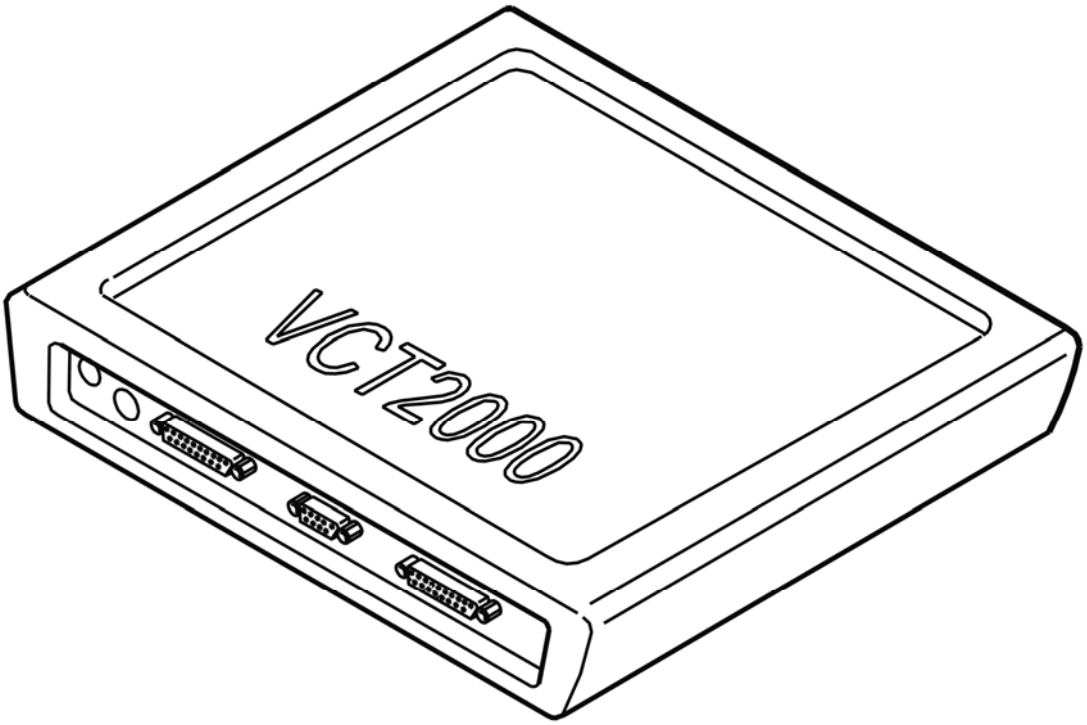

Fig. 153: Identifying VCT2000 Diagnostic Tool Symbol In VIDA
Courtesy of VOLVO CARS CORPORATION

- **Continue**

  See: **VERIFICATION**

VERIFICATION

VERIFICATION

HINT: After carrying out the repair, check that the fault has been remedied.

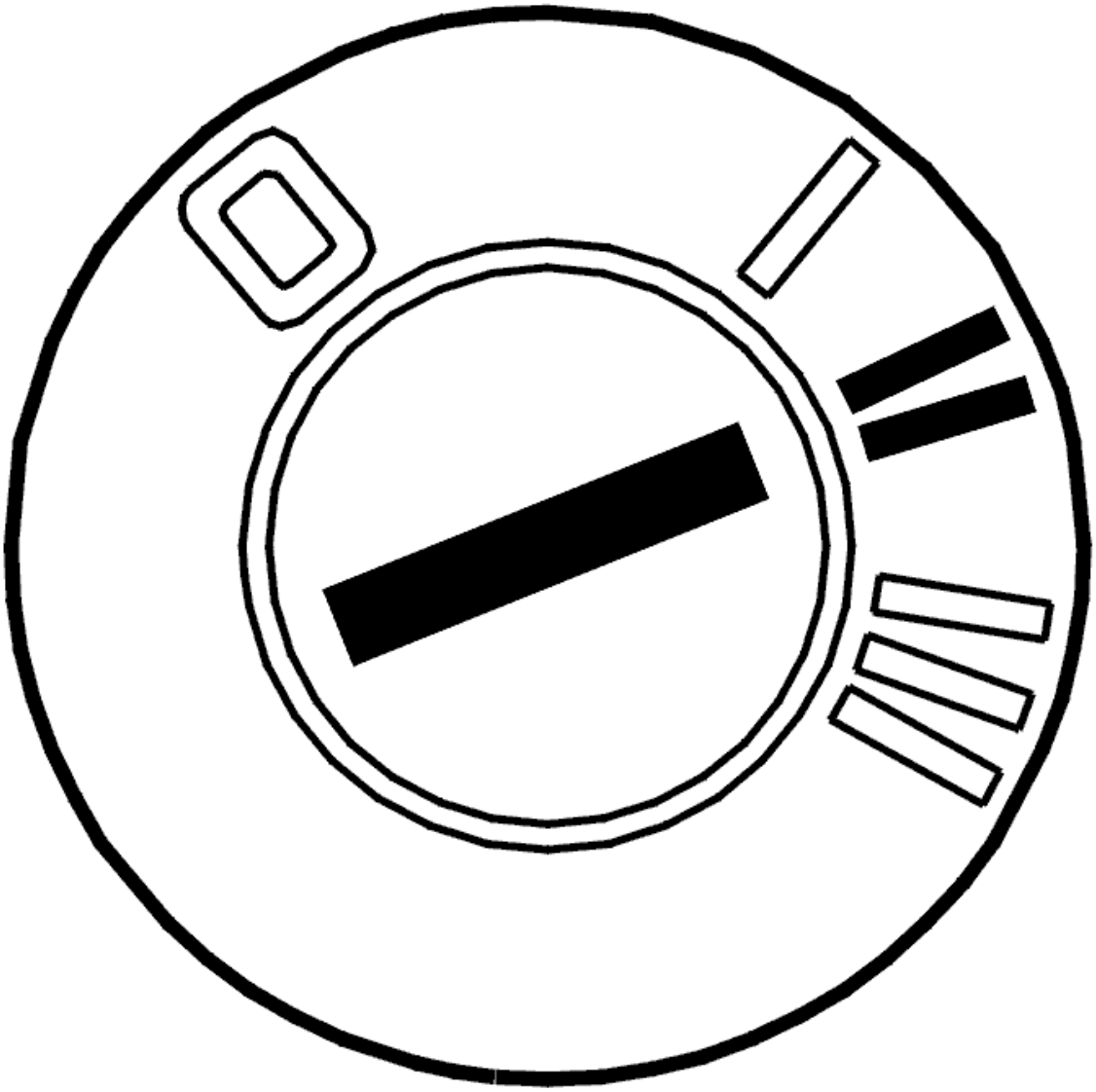

Fig. 154: Identifying Ignition ON
Courtesy of VOLVO CARS CORPORATION

- Ignition off
- Disconnect the battery negative lead
- Reinstall the connectors, components etc.
- Ignition on
- Connect the battery negative lead.

WARNING: There must not be anyone inside the passenger compartment when the battery is connected.

- Read off diagnostic trouble codes (DTCs).

The fault is no longer present if the diagnostic trouble code (DTC) status is intermittent.

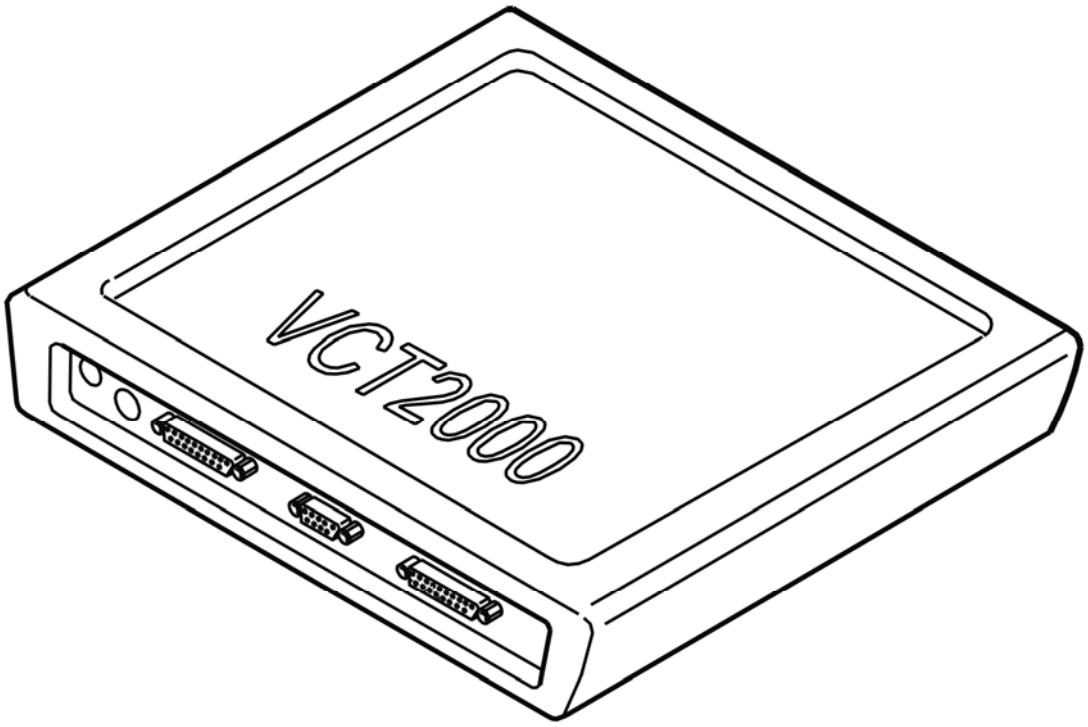

Fig. 155: Identifying VCT2000 Diagnostic Tool Symbol In VIDA
Courtesy of VOLVO CARS CORPORATION

Is the diagnostic trouble code (DTC) intermittent?

- **YES**

  VERIFIED: Troubleshooting has been completed.

- **NO**

  See: **INFORMATION**

INFORMATION

FAULT-TRACING INFORMATION

The fault should have been detected and remedied. As this is not the case fault-tracing has failed.

Exit fault-tracing for this diagnostic trouble code (DTC) or make another attempt.

SRS-0238: SWITCH FOR THE PASSENGER AIRBAG. FAULTY SIGNAL

(2005-2012)

DIAGNOSTIC TROUBLE CODE (DTC) INFORMATION SRS-0238

Condition

Fig. 156: Identifying Passenger Airbag Switch
Courtesy of VOLVO CARS CORPORATION

The supplemental restraint system module (SRS) checks the signal from the switch for the passenger airbag.

The diagnostic trouble code (DTC) is stored if the control module registers a faulty status signal.

The diagnostic trouble code (DTC) can be diagnosed in ignition positions I, II and III.

Substitute Value

- Passenger airbag is deactivated.

Possible Source

- Fault in the switch for the passenger airbag
- Internal fault in the supplemental restraint system module (SRS).

Fault symptom[s]

- The SRS indicator lamp is lit
- PAD lamp lit.

FAULTY SIGNAL

REPLACING THE COMPONENT

CAUTION: Do not touch the terminal pins in the supplemental restraint system module (SRS). There is a risk of static discharge. This could damage the supplemental restraint system module (SRS).

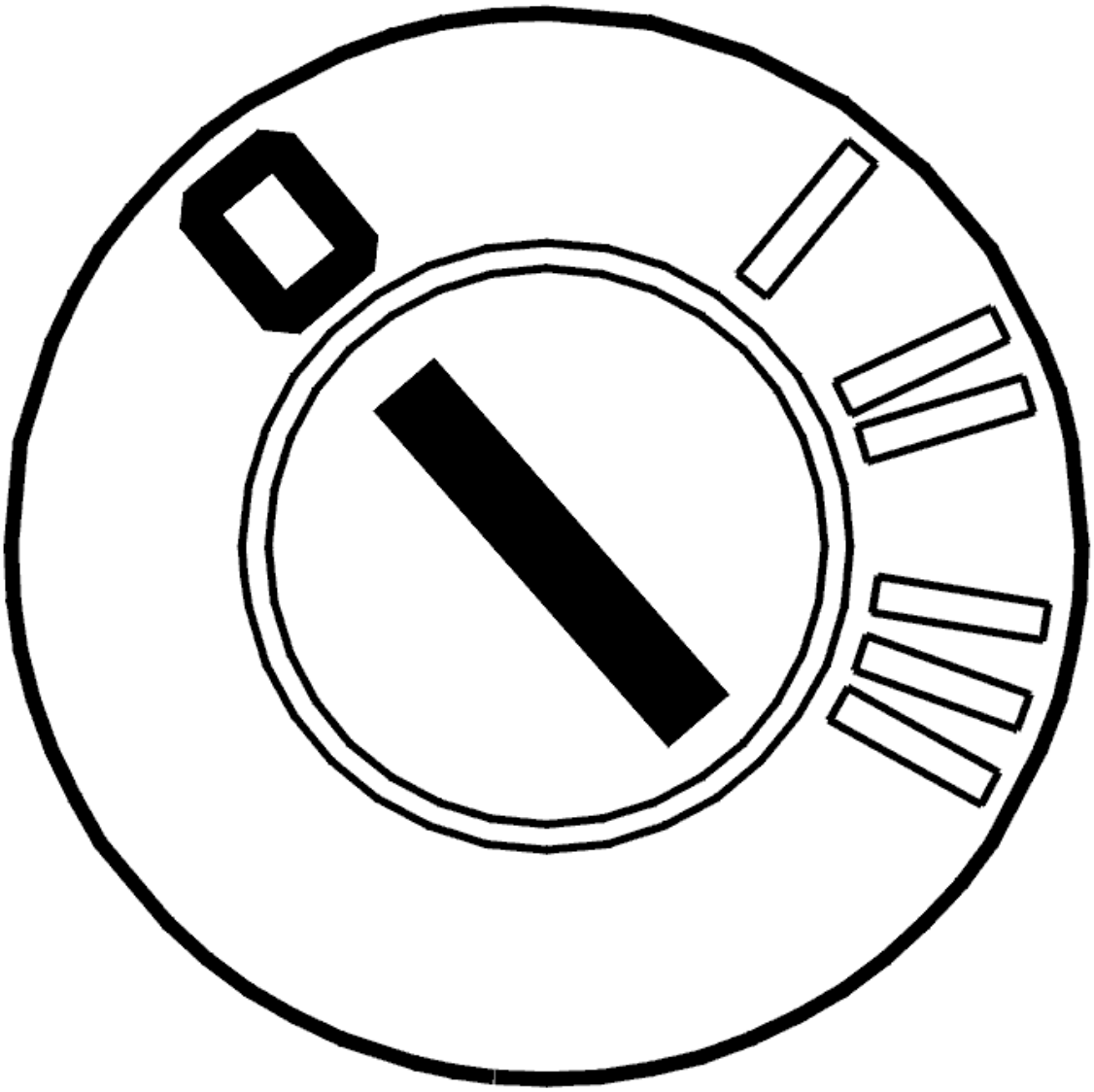

Fig. 157: Identifying Ignition OFF
Courtesy of VOLVO CARS CORPORATION

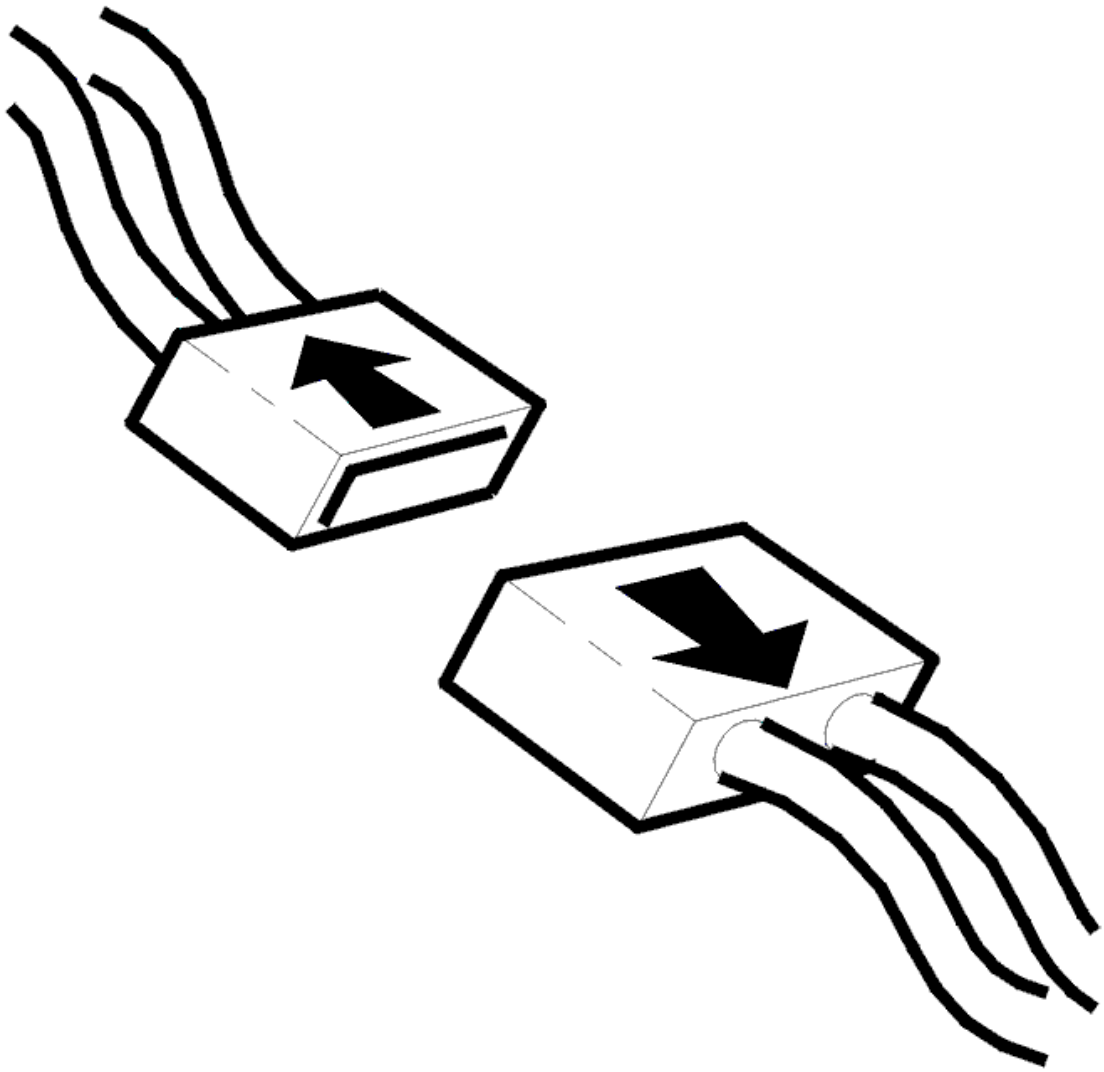

Fig. 158: Disconnecting Connector
Courtesy of VOLVO CARS CORPORATION

- Switch off the ignition. Wait 10 seconds
- Replace the switch for the passenger airbag.

Check the status of the diagnostic trouble code (DTC).

- Reinstall the connectors, components etc.
- Switch on the ignition. Wait 10 seconds
- Read off using the VCT2000 (or appropriate scan tool).

Read off the status of the diagnostic trouble code (DTC) using the VCT2000 (or appropriate scan tool).

The fault has been remedied if the diagnostic trouble code (DTC) is intermittent.

If the fault is still permanent, replace the supplemental restraint system module (SRS).

Remedy as necessary.

Other information

- To access or replace the switch for the passenger airbag and the connectors, see: **CONTACT BREAKER PASSENGER AIRBAG (SRS), REPLACING**
- see **SUPPLEMENTAL RESTRAINT SYSTEM MODULE (SRS), REPLACING**

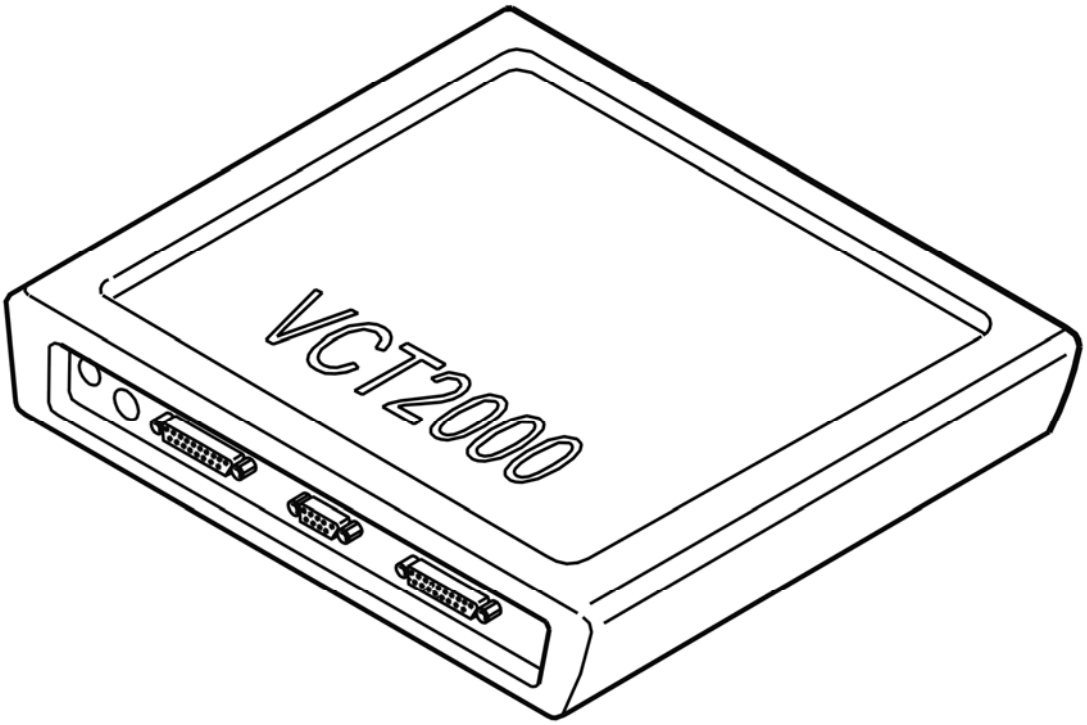

Fig. 159: Identifying VCT2000 Diagnostic Tool Symbol In VIDA
Courtesy of VOLVO CARS CORPORATION

- **Continue**

  See: **VERIFICATION**

VERIFICATION

VERIFICATION

HINT: After carrying out the repair, check that the fault has been remedied.

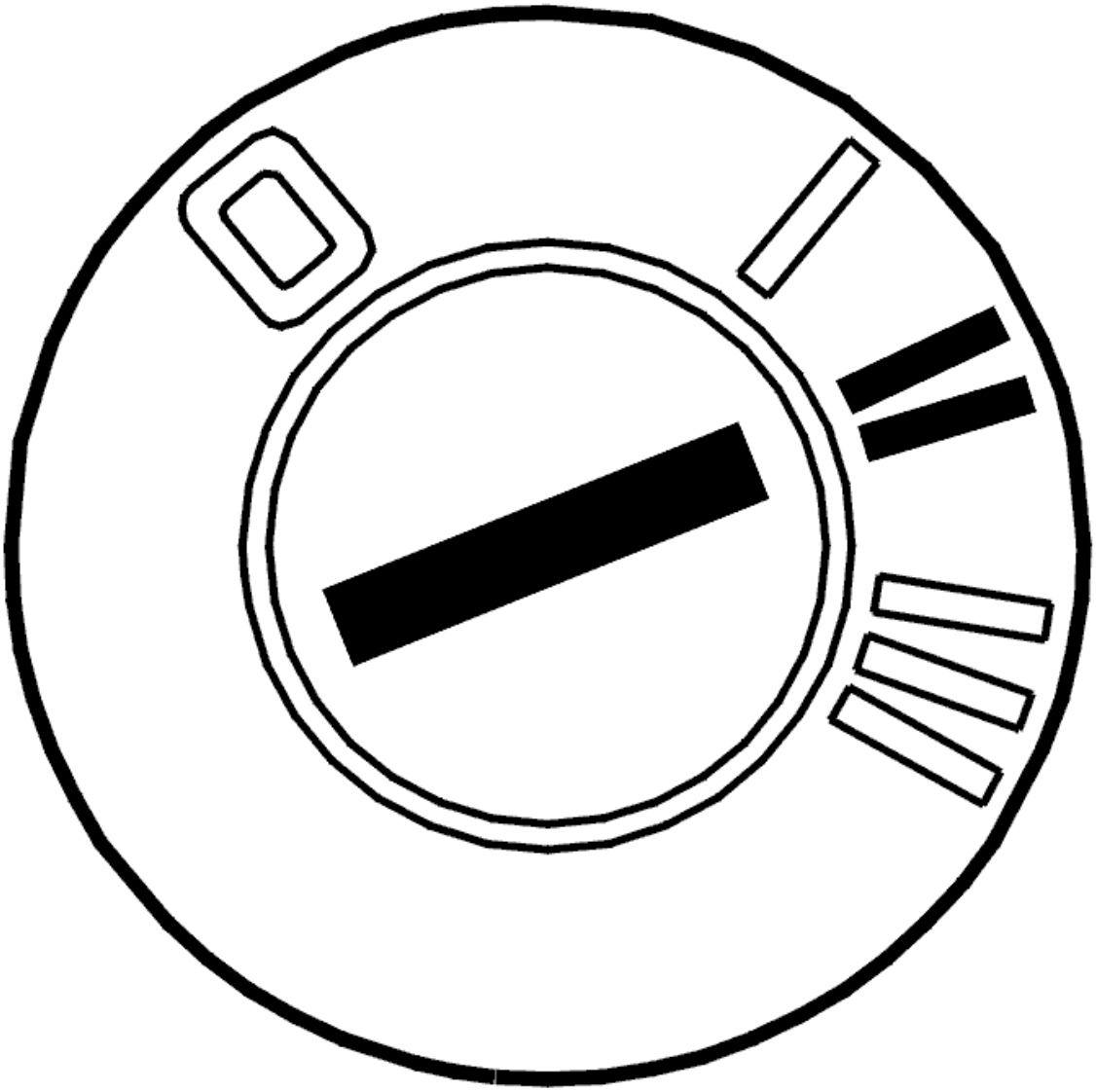

Fig. 160: Identifying Ignition ON
Courtesy of VOLVO CARS CORPORATION

- Ignition off
- Disconnect the battery negative lead
- Reinstall the connectors, components etc.
- Ignition on
- Connect the battery negative lead.

WARNING: There must not be anyone inside the passenger compartment when the battery is connected.

- Read off diagnostic trouble codes (DTCs).

The fault is no longer present if the diagnostic trouble code (DTC) status is intermittent.

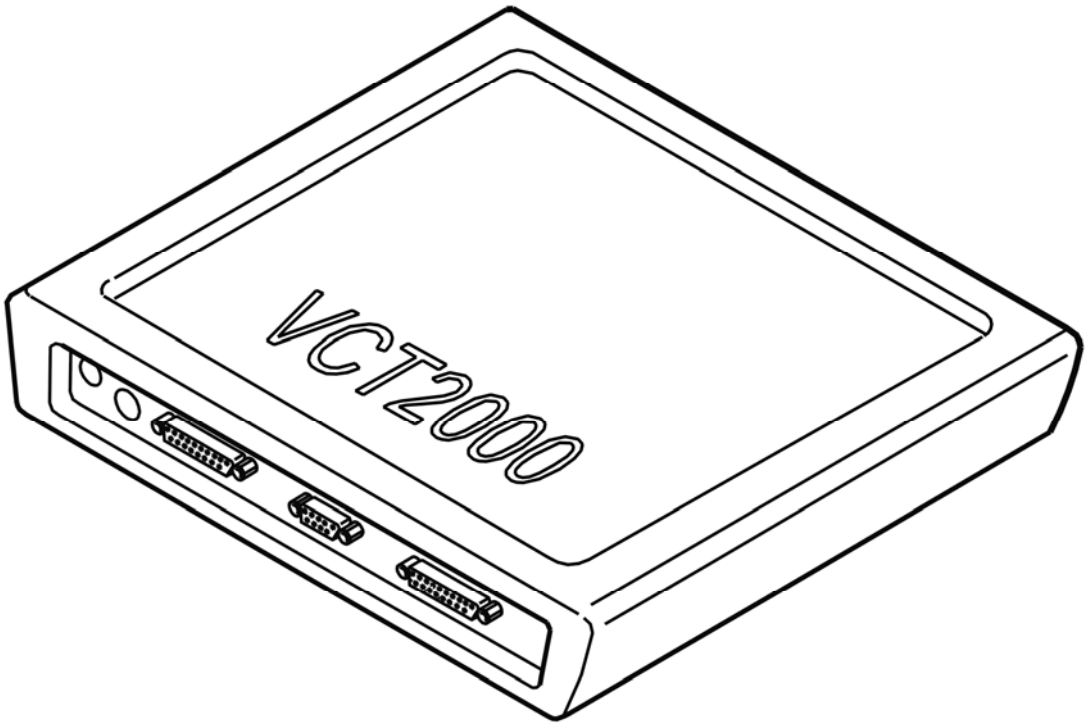

Fig. 161: Identifying VCT2000 Diagnostic Tool Symbol In VIDA
Courtesy of VOLVO CARS CORPORATION

Is the diagnostic trouble code (DTC) intermittent?

- **YES**

  VERIFIED: Troubleshooting has been completed.

- **NO**

  See: **INFORMATION**

INFORMATION

FAULT-TRACING INFORMATION

The fault should have been detected and remedied. As this is not the case fault-tracing has failed.

Exit fault-tracing for this diagnostic trouble code (DTC) or make another attempt.

SRS-0239: SWITCH FOR THE PASSENGER AIRBAG. CONFIGURATION

FAULT (2005-2012)

DIAGNOSTIC TROUBLE CODE (DTC) INFORMATION SRS-0239

Condition

Fig. 162: Identifying Passenger Airbag Switch
Courtesy of VOLVO CARS CORPORATION

The supplemental restraint system module (SRS) checks the signal from the switch for the passenger airbag.

The diagnostic trouble code (DTC) is stored if the control module receives a signal to deactivate the passenger airbag.

The diagnostic trouble code (DTC) can be diagnosed in ignition positions I, II and III.

Substitute Value

- Passenger airbag is deactivated.

Possible Source

- The supplemental restraint system module (SRS) receives a signal from the switch requesting

deactivation of the passenger airbag, even though the control module is programmed that there is no switch for the passenger airbag installed.

Fault symptom[s]

- SRS indicator lamp lit
- PAD lamp lit.

FAULT-TRACING

see **FAULT-TRACING**

SRS-023A: SWITCH FOR THE PASSENGER AIRBAG. CONFIGURATION FAULT (2005-2012)

DIAGNOSTIC TROUBLE CODE (DTC) INFORMATION SRS-023A

Condition

Fig. 163: Identifying Passenger Airbag Switch
Courtesy of VOLVO CARS CORPORATION

The supplemental restraint system module (SRS) checks the signal from the switch for the passenger airbag.

The diagnostic trouble code (DTC) is stored if the control module registers a configuration fault in the signal cable.

The diagnostic trouble code (DTC) can only be diagnosed when the ignition is switched on (12 V). In other words, the diagnostic trouble code (DTC) can only be diagnosed when the ignition is switched from position 0 to positions I, II or III.

Substitute Value

- Passenger airbag is deactivated.

Possible Source

- The supplemental restraint system module (SRS) identifies that the switch for the passenger airbag is installed, despite the control module being programmed that it should not be installed.

Fault symptom[s]

- SRS indicator lamp lit
- PAD lamp lit.

FAULT-TRACING

see **FAULT-TRACING**

SRS-0240: PASSENGER AIRBAG. ACTIVATION (2005-2012)

DIAGNOSTIC TROUBLE CODE (DTC) INFORMATION SRS-0240

Condition

The supplemental restraint system module (SRS) checks the activation signal to the passenger airbag.

The diagnostic trouble code (DTC) is stored if the control module registers a fault in the activation signal.

The diagnostic trouble code (DTC) can be diagnosed in ignition positions I, II and III.

Substitute Value

- Passenger airbag is deactivated.

Possible Source

- The supplemental restraint system module (SRS) identifies that the passenger airbag cannot be activated.

Fault symptom[s]

- SRS indicator lamp lit
- PAD lamp lit.

ACTIVATION

REPLACING THE COMPONENT

CAUTION: Do not touch the terminal pins in the supplemental restraint system module (SRS). There is a risk of static discharge. This could damage the supplemental restraint system module (SRS).

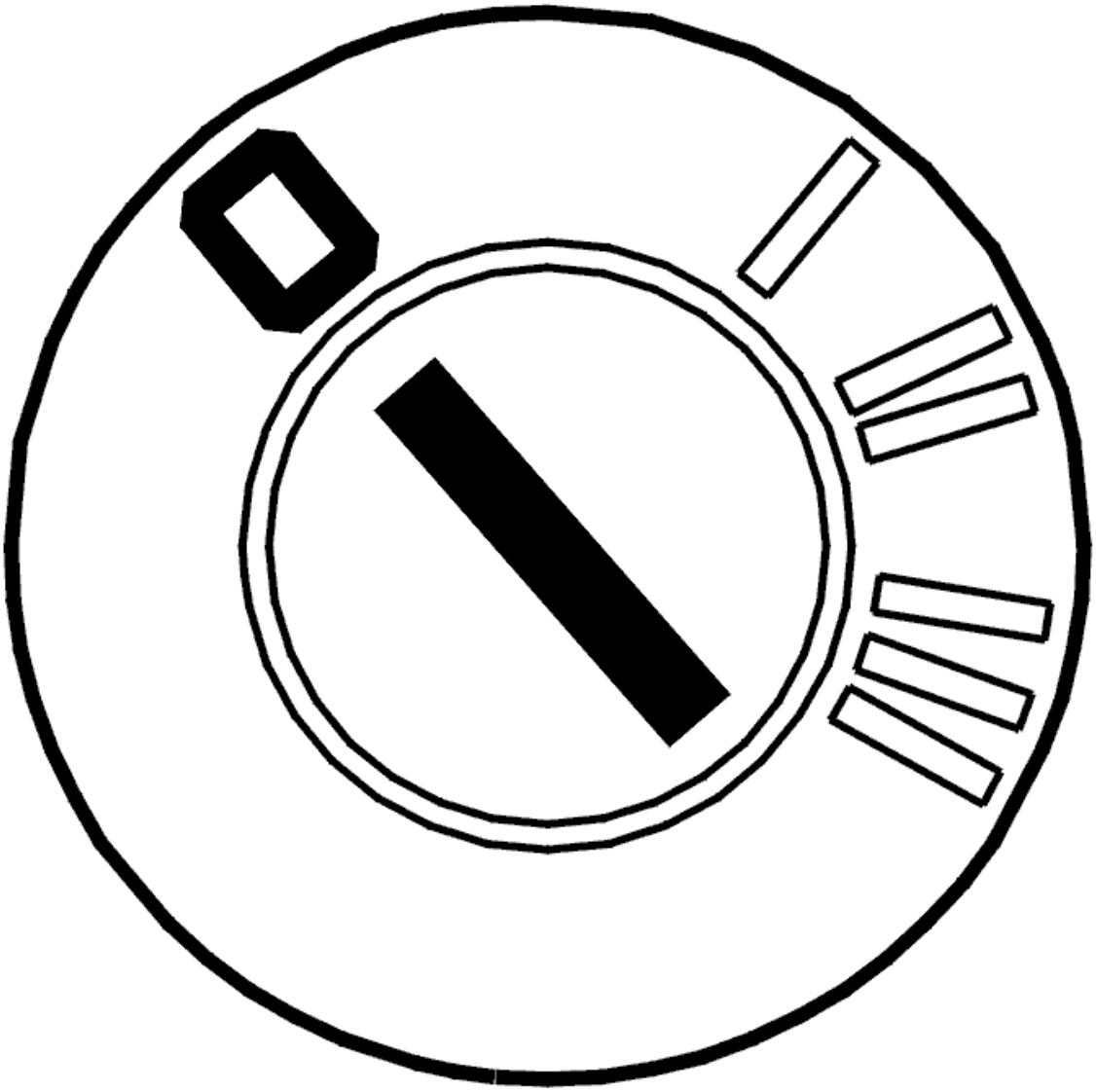

Fig. 164: Identifying Ignition OFF
Courtesy of VOLVO CARS CORPORATION

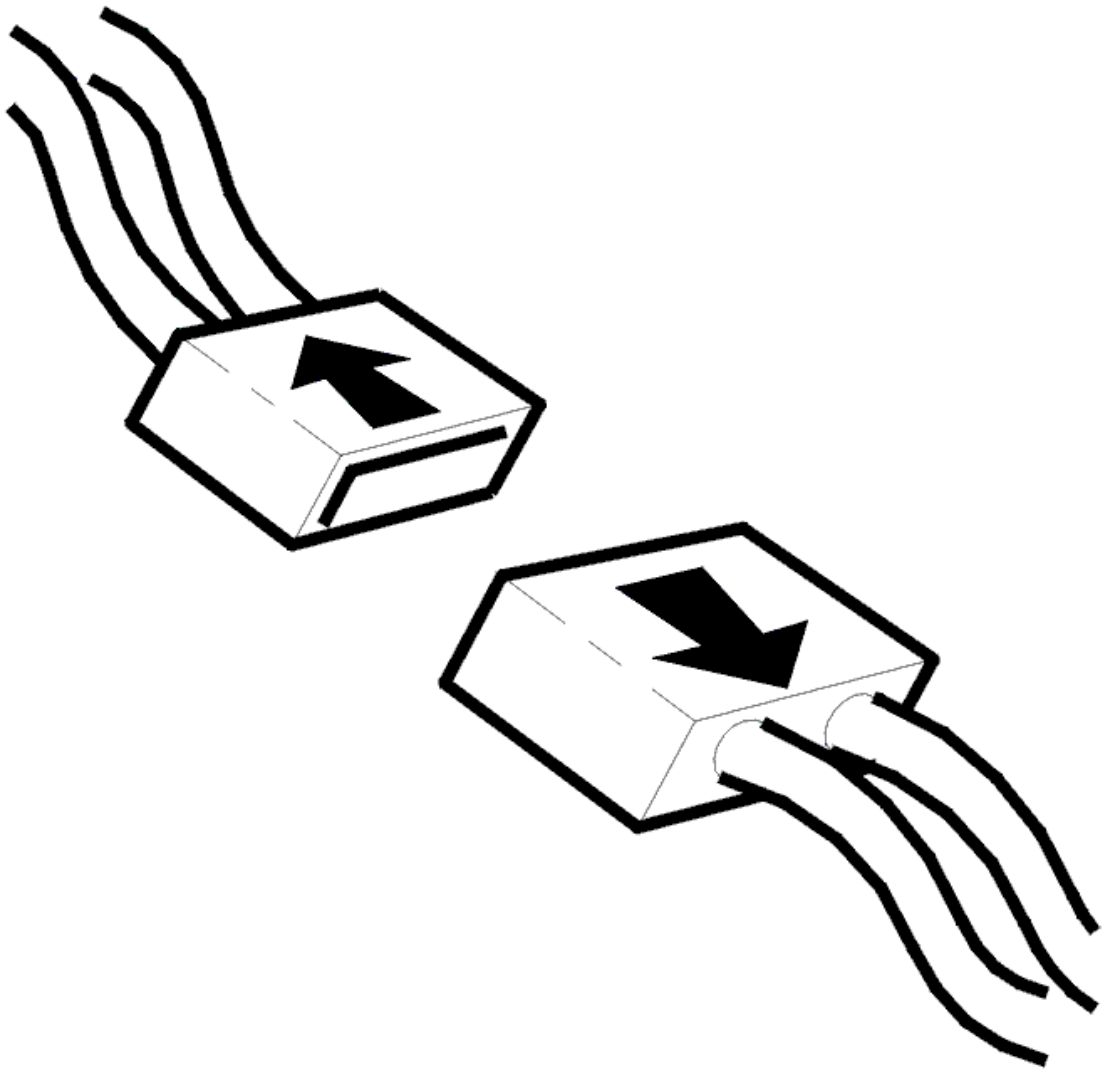

Fig. 165: Disconnecting Connector
Courtesy of VOLVO CARS CORPORATION

- Switch off the ignition. Wait 10 seconds.

  For vehicles with a switch for the passenger airbag:

  - Replace the switch for the passenger airbag.

  Then check the status of the diagnostic trouble code (DTC).

  - Reinstall the connectors, components etc.
  - Switch on the ignition. Wait 10 seconds
  - Read off using the VCT2000 (or appropriate scan tool).

Read off the status of the diagnostic trouble code (DTC) using the VCT2000 (or appropriate scan tool).

The fault has been remedied if the diagnostic trouble code (DTC) is intermittent.

If the fault is still permanent, replace the supplemental restraint system module (SRS).

Remedy as necessary.

On vehicles that do not have a switch for the passenger airbag, replace the supplemental restraint system module (SRS).

Other information

- To access or replace the switch for the passenger airbag and the connectors, see: **CONTACT BREAKER PASSENGER AIRBAG (SRS), REPLACING**
- see **SUPPLEMENTAL RESTRAINT SYSTEM MODULE (SRS), REPLACING**

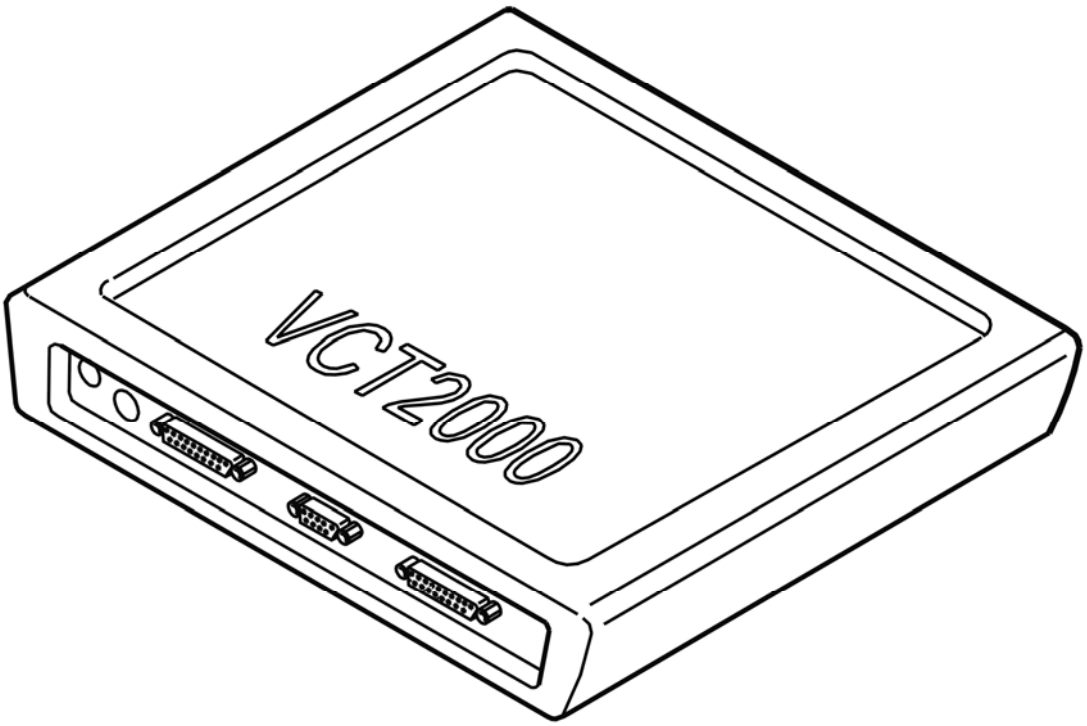

Fig. 166: Identifying VCT2000 Diagnostic Tool Symbol In VIDA
Courtesy of VOLVO CARS CORPORATION

- **Continue**

See: **VERIFICATION**

VERIFICATION

VERIFICATION

HINT: After carrying out the repair, check that the fault has been remedied.

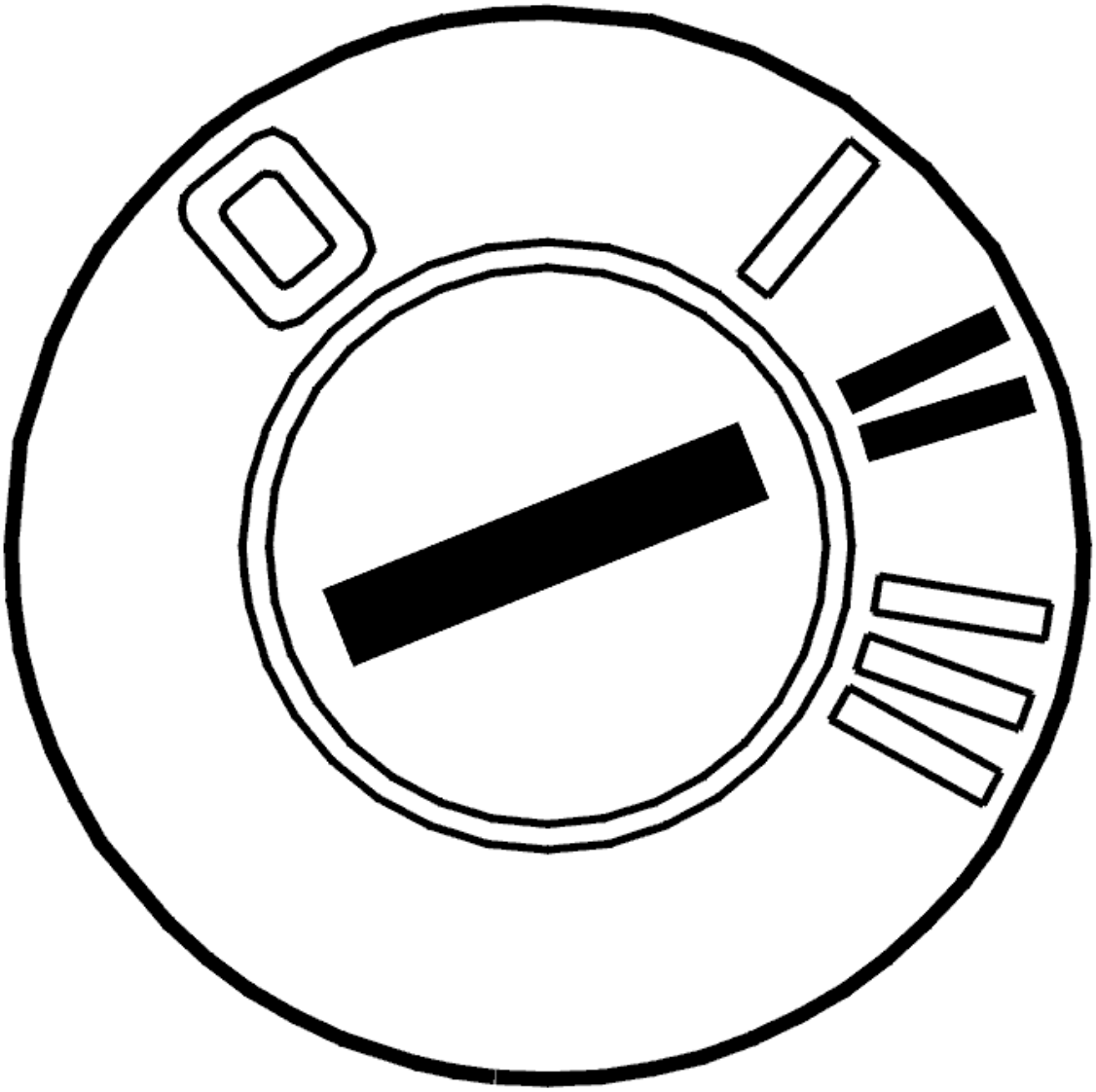

Fig. 167: Identifying Ignition ON
Courtesy of VOLVO CARS CORPORATION

- Ignition off
- Disconnect the battery negative lead
- Reinstall the connectors, components etc.
- Ignition on
- Connect the battery negative lead.

WARNING: There must not be anyone inside the passenger compartment when the battery is connected.

- Read off diagnostic trouble codes (DTCs).

  The fault is no longer present if the diagnostic trouble code (DTC) status is intermittent.

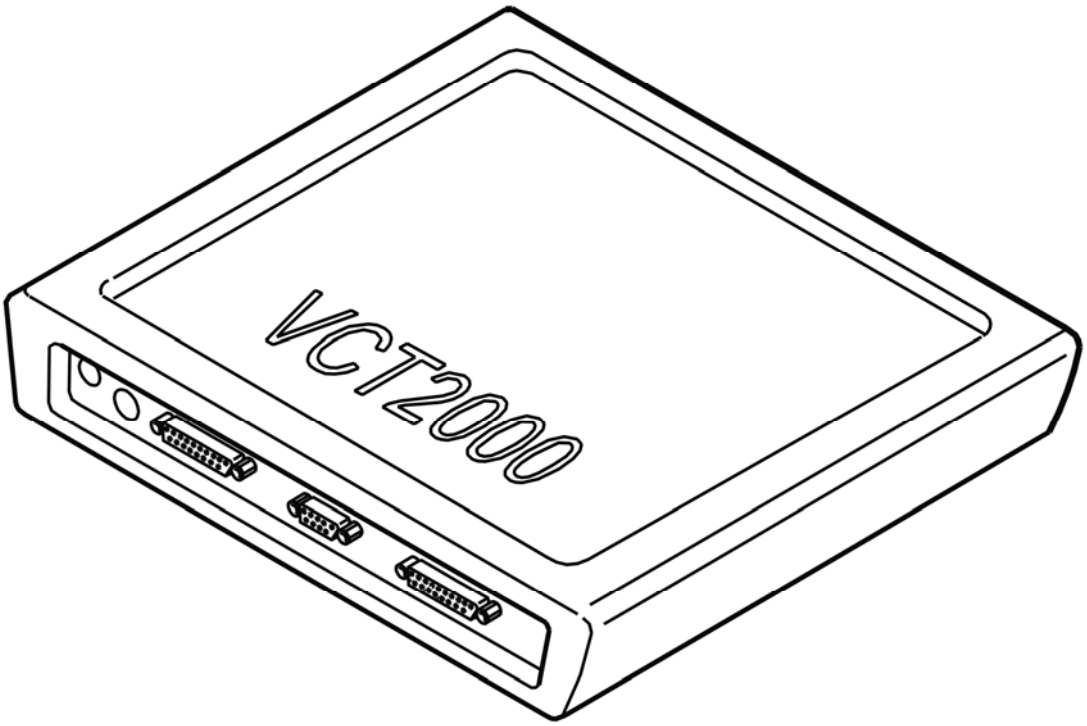

Fig. 168: Identifying VCT2000 Diagnostic Tool Symbol In VIDA
Courtesy of VOLVO CARS CORPORATION

Is the diagnostic trouble code (DTC) intermittent?

- **YES**

  VERIFIED: Troubleshooting has been completed.

- **NO**

  See: **INFORMATION**

INFORMATION

FAULT-TRACING INFORMATION

The fault should have been detected and remedied. As this is not the case fault-tracing has failed.

Exit fault-tracing for this diagnostic trouble code (DTC) or make another attempt.

SRS-0241: PASSENGER AIRBAG. DEACTIVATION (2005-2012)

DIAGNOSTIC TROUBLE CODE (DTC) INFORMATION SRS-0241

Condition

The supplemental restraint system module (SRS) checks the deactivation signal to the passenger airbag.

The diagnostic trouble code (DTC) is stored if the control module registers a fault in the deactivation signal.

The diagnostic trouble code (DTC) can be diagnosed in ignition positions I, II and III.

Substitute Value

- None.

Possible Source

- The supplemental restraint system module (SRS) identifies that the passenger airbag cannot be deactivated.

Fault symptom[s]

- SRS indicator lamp lit
- PAD lamp lit.

DEACTIVATION

REPLACING THE COMPONENT

CAUTION: Do not touch the terminal pins in the supplemental restraint system module (SRS). There is a risk of static discharge. This could damage the supplemental restraint system module (SRS).

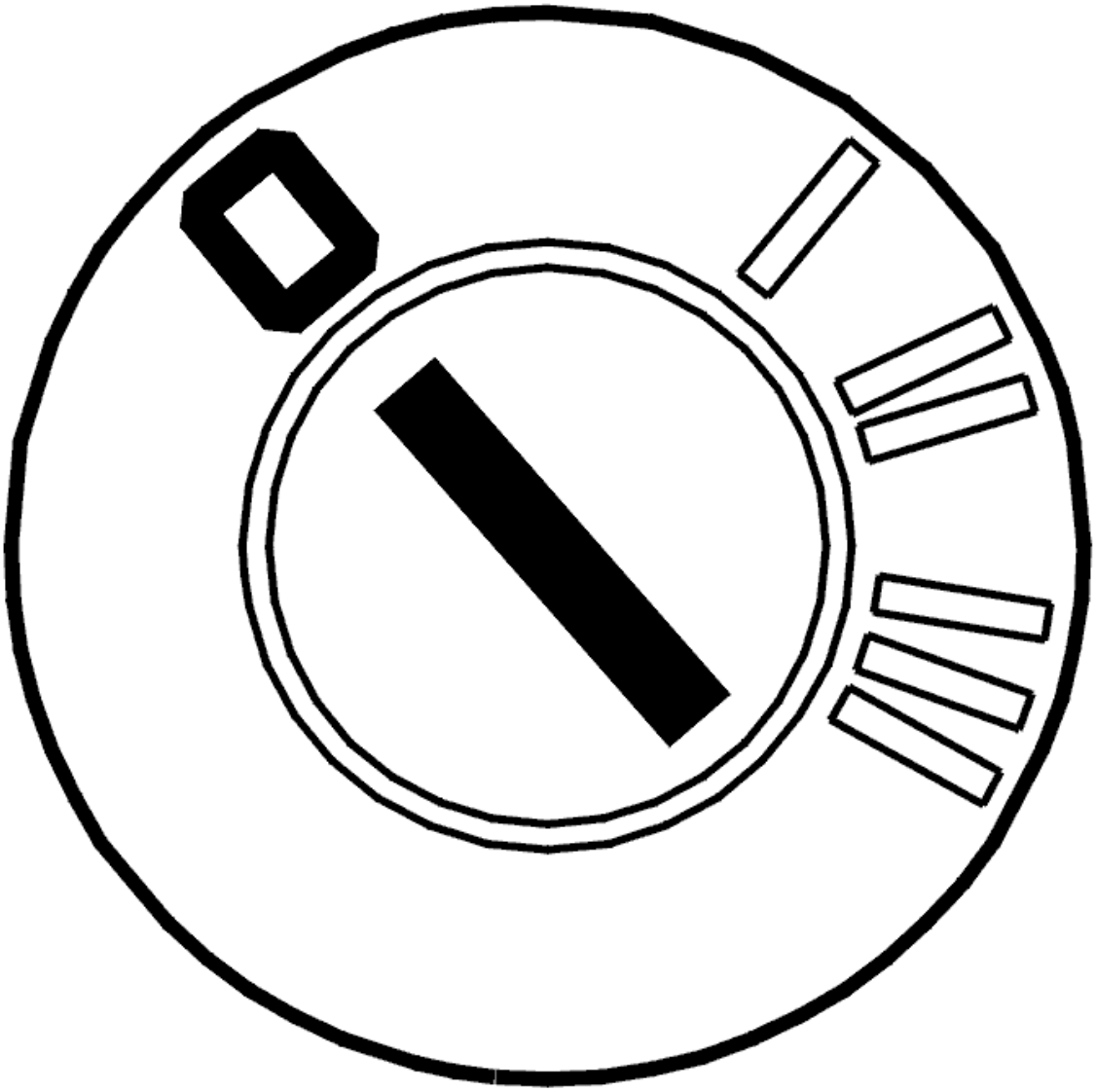

Fig. 169: Identifying Ignition OFF
Courtesy of VOLVO CARS CORPORATION

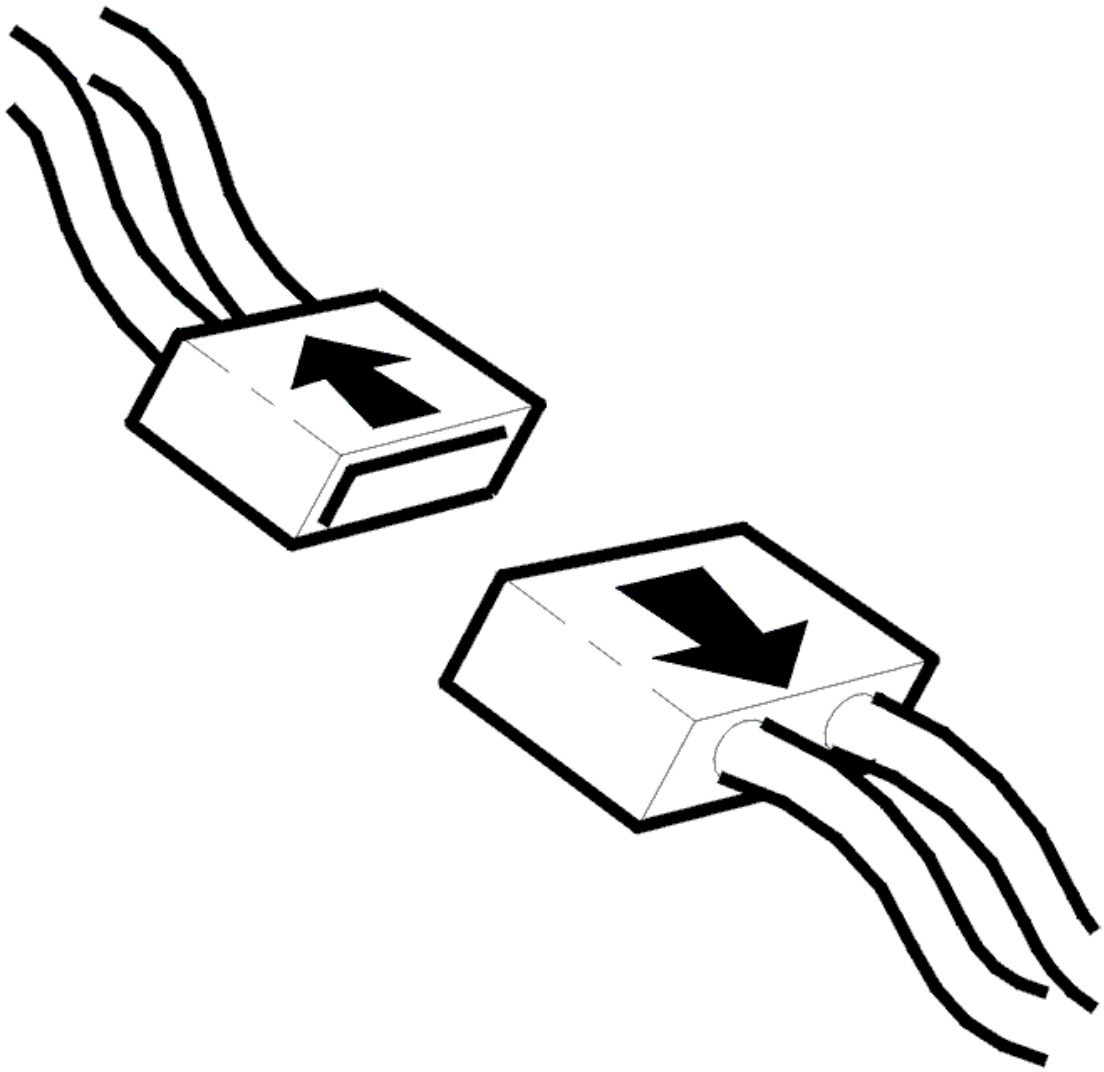

Fig. 170: Disconnecting Connector
Courtesy of VOLVO CARS CORPORATION

- Switch off the ignition. Wait 10 seconds.

  For vehicles with a switch for the passenger airbag:

  - Replace the switch for the passenger airbag.

  Then check the status of the diagnostic trouble code (DTC).

  - Reinstall the connectors, components etc.
  - Switch on the ignition. Wait 10 seconds
  - Read off using the VCT2000 (or appropriate scan tool).

Read off the status of the diagnostic trouble code (DTC) using the VCT2000 (or appropriate scan tool).

The fault has been remedied if the diagnostic trouble code (DTC) is intermittent.

If the fault is still permanent, replace the supplemental restraint system module (SRS).

Remedy as necessary.

On vehicles that do not have a switch for the passenger airbag, replace the supplemental restraint system module (SRS).

Other information

- To access or replace the switch for the passenger airbag and the connectors, see: **CONTACT BREAKER PASSENGER AIRBAG (SRS), REPLACING**
- see **SUPPLEMENTAL RESTRAINT SYSTEM MODULE (SRS), REPLACING**

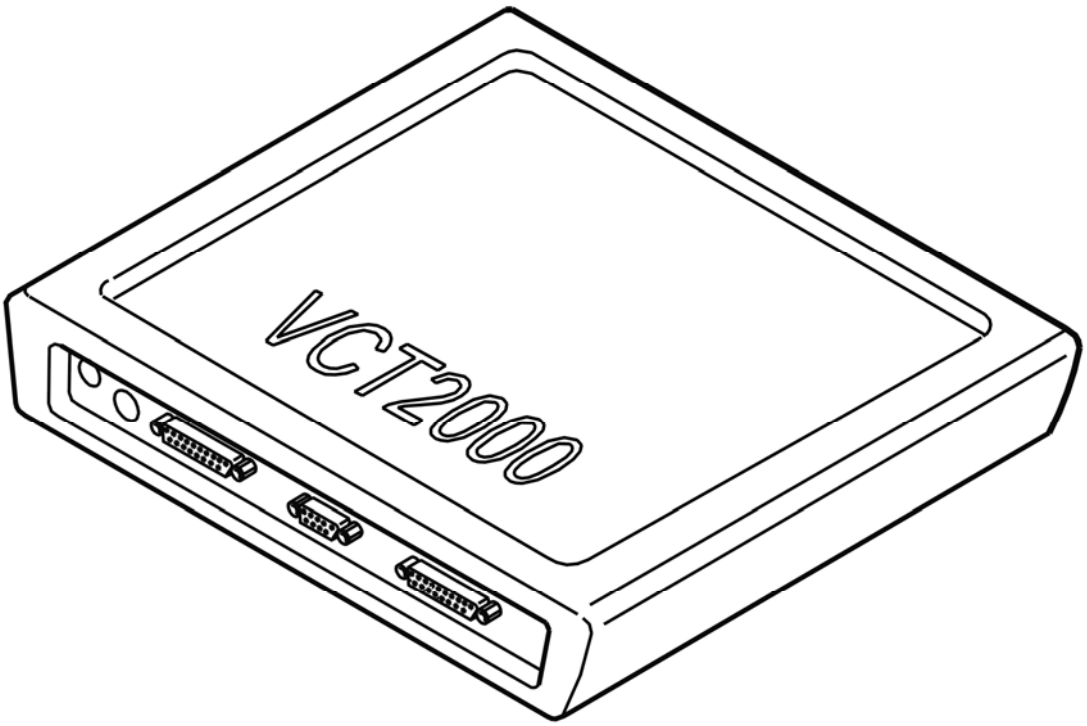

Fig. 171: Identifying VCT2000 Diagnostic Tool Symbol In VIDA
Courtesy of VOLVO CARS CORPORATION

- **Continue**

See: **VERIFICATION**

VERIFICATION

VERIFICATION

HINT: After carrying out the repair, check that the fault has been remedied.

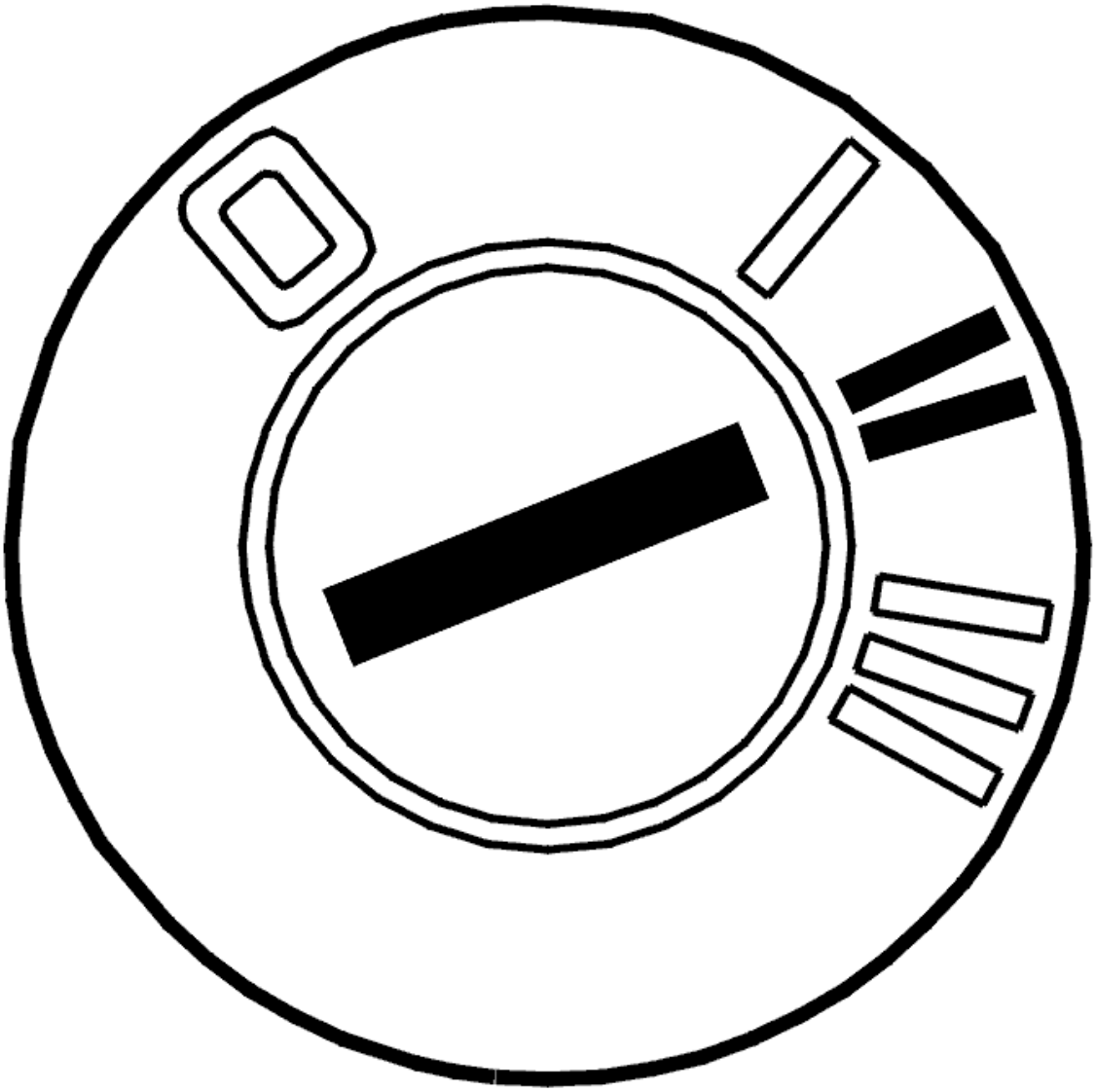

Fig. 172: Identifying Ignition ON
Courtesy of VOLVO CARS CORPORATION

- Ignition off
- Disconnect the battery negative lead
- Reinstall the connectors, components etc.
- Ignition on
- Connect the battery negative lead.

WARNING: There must not be anyone inside the passenger compartment when the battery is connected.

- Read off diagnostic trouble codes (DTCs).

  The fault is no longer present if the diagnostic trouble code (DTC) status is intermittent.

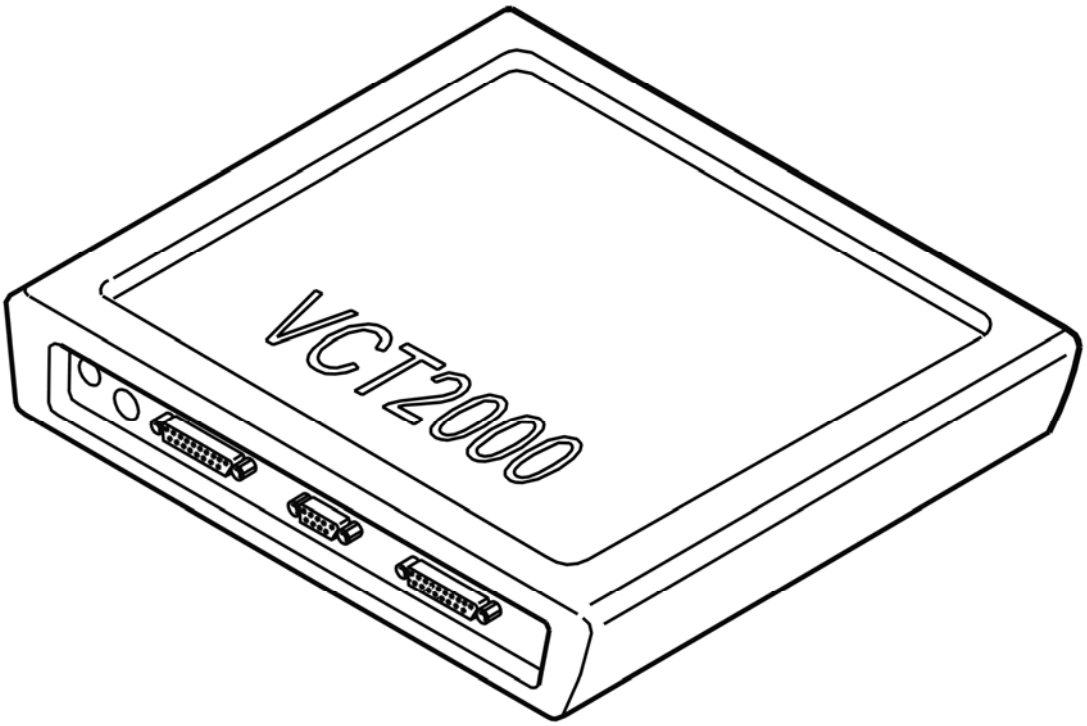

Fig. 173: Identifying VCT2000 Diagnostic Tool Symbol In VIDA
Courtesy of VOLVO CARS CORPORATION

Is the diagnostic trouble code (DTC) intermittent?

- **YES**

  VERIFIED: Troubleshooting has been completed.

- **NO**

  See: **INFORMATION**

INFORMATION

FAULT-TRACING INFORMATION

The fault should have been detected and remedied. As this is not the case fault-tracing has failed.

Exit fault-tracing for this diagnostic trouble code (DTC) or make another attempt.

SRS-0250: OCCUPANT WEIGHT SENSOR (OWS). CALIBRATION FAULT (2005-2012)

DIAGNOSTIC TROUBLE CODE (DTC) INFORMATION SRS-0250

Condition

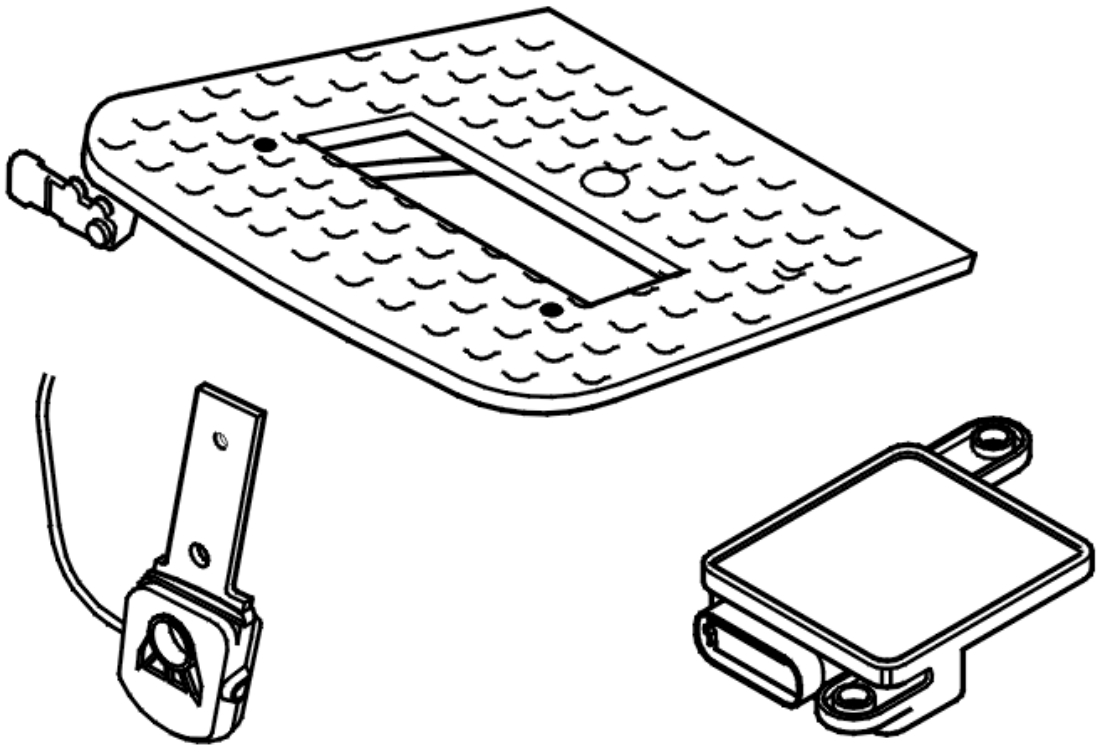

Fig. 174: Identifying Occupant Weight Sensor (OWS) Assembly
Courtesy of VOLVO CARS CORPORATION

The supplemental restraint system module (SRS) checks the signal from the occupant weight sensor (OWS).

The diagnostic trouble code (DTC) is stored if the control module registers a calibration fault.

The diagnostic trouble code (DTC) can be diagnosed in ignition positions I, II and III.

Substitute Value

- Passenger airbag is deactivated.

Possible Source

- Incorrect calibration of the occupant weight sensor (OWS).

Fault symptom[s]

- SRS indicator lamp lit
- PAD lamp lit.

CALIBRATION FAULT

CALIBRATING THE COMPONENT

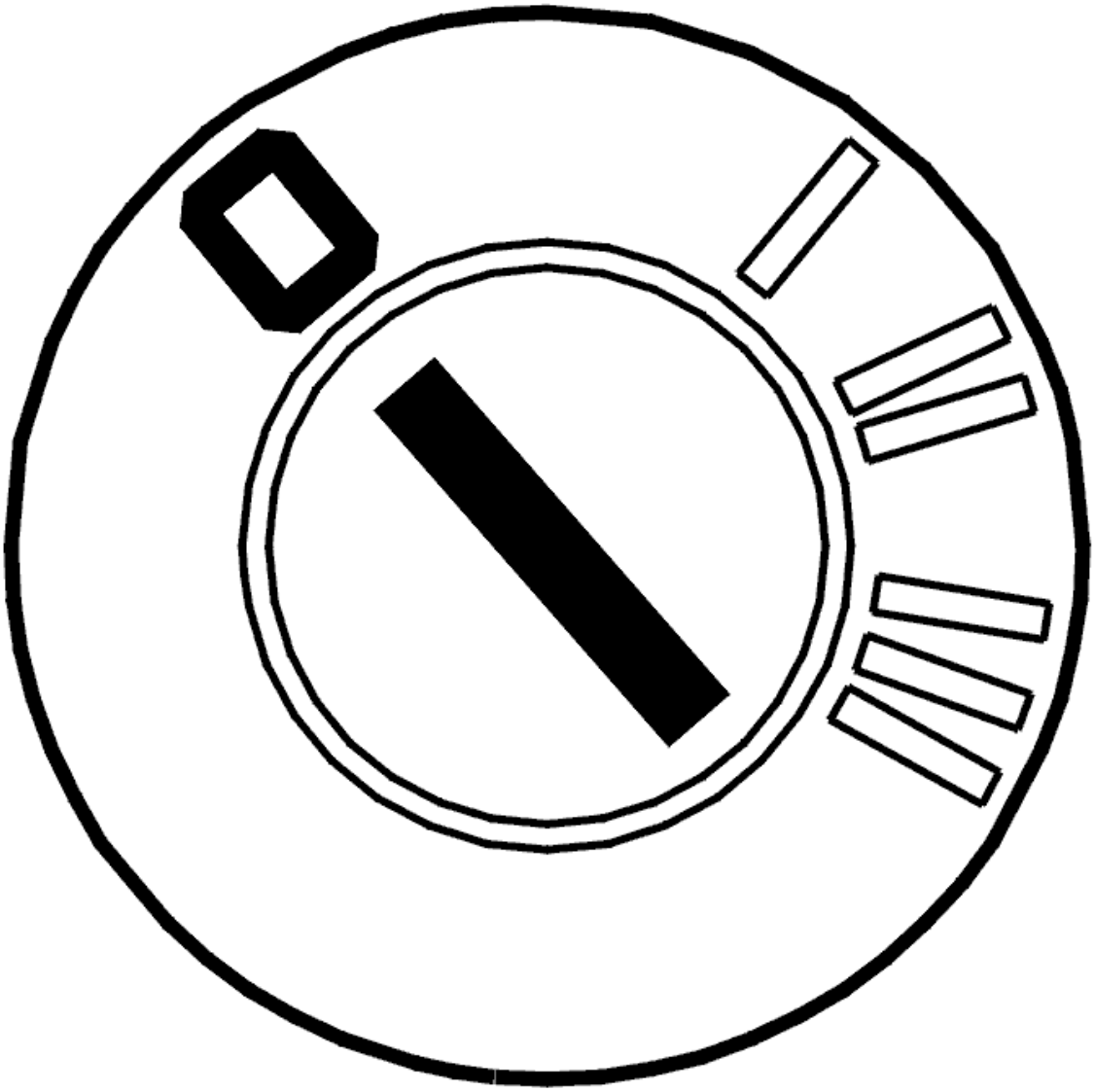

Fig. 175: Identifying Ignition OFF
Courtesy of VOLVO CARS CORPORATION

- Switch off the ignition. Wait 10 seconds.

  Calibrate the occupant weight sensor (OWS).

  Other information

  - see **CALIBRATING THE OCCUPANT WEIGHT SENSOR (OWS)**

- **Continue**

  See: **VERIFICATION**

VERIFICATION

VERIFICATION

HINT: After carrying out the repair, check that the fault has been remedied.

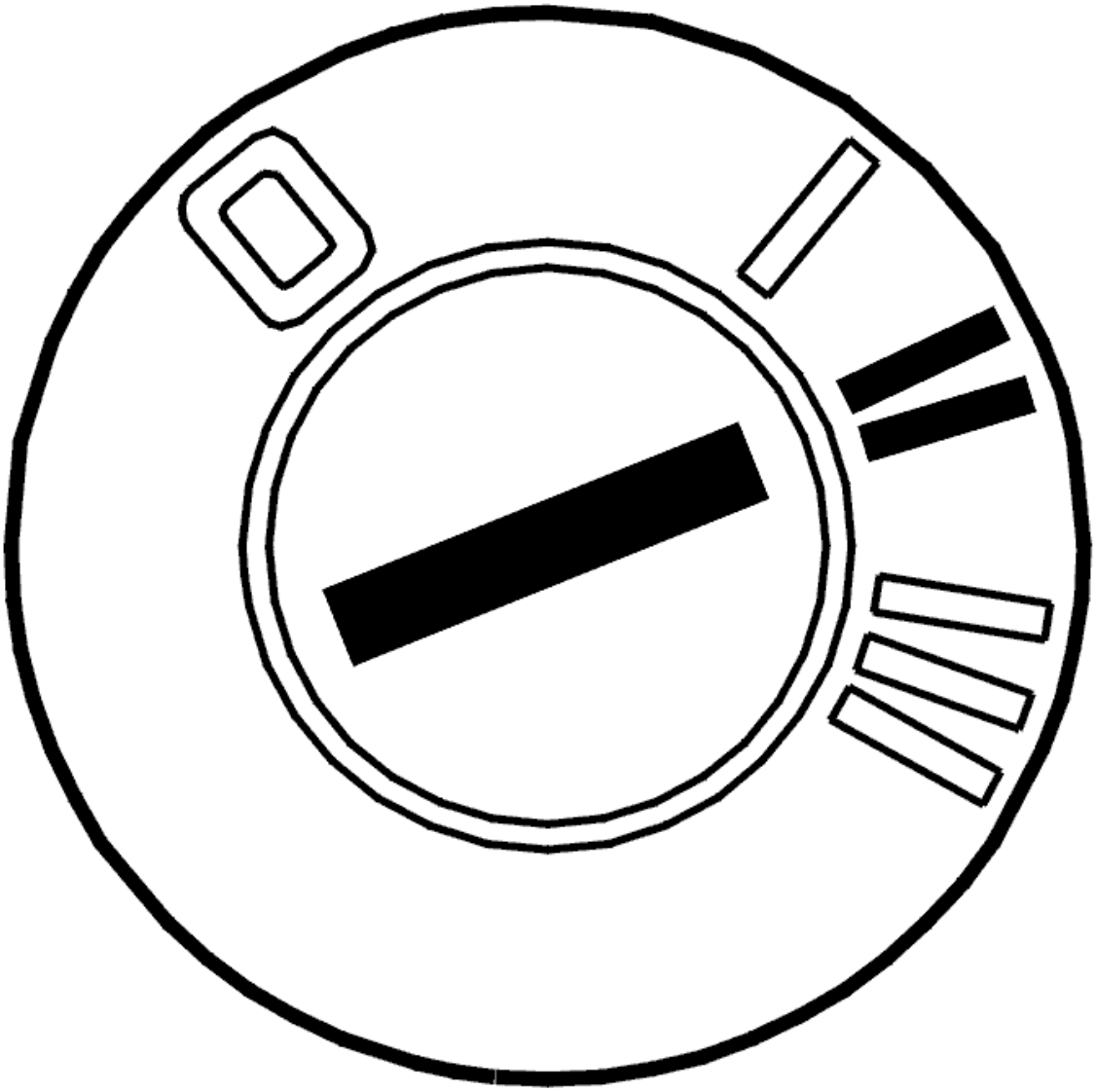

Fig. 176: Identifying Ignition ON
Courtesy of VOLVO CARS CORPORATION

- Ignition off
- Disconnect the battery negative lead
- Reinstall the connectors, components etc.
- Ignition on
- Connect the battery negative lead.

WARNING: There must not be anyone inside the passenger compartment when the battery is connected.

- Read off diagnostic trouble codes (DTCs).

The fault is no longer present if the diagnostic trouble code (DTC) status is intermittent.

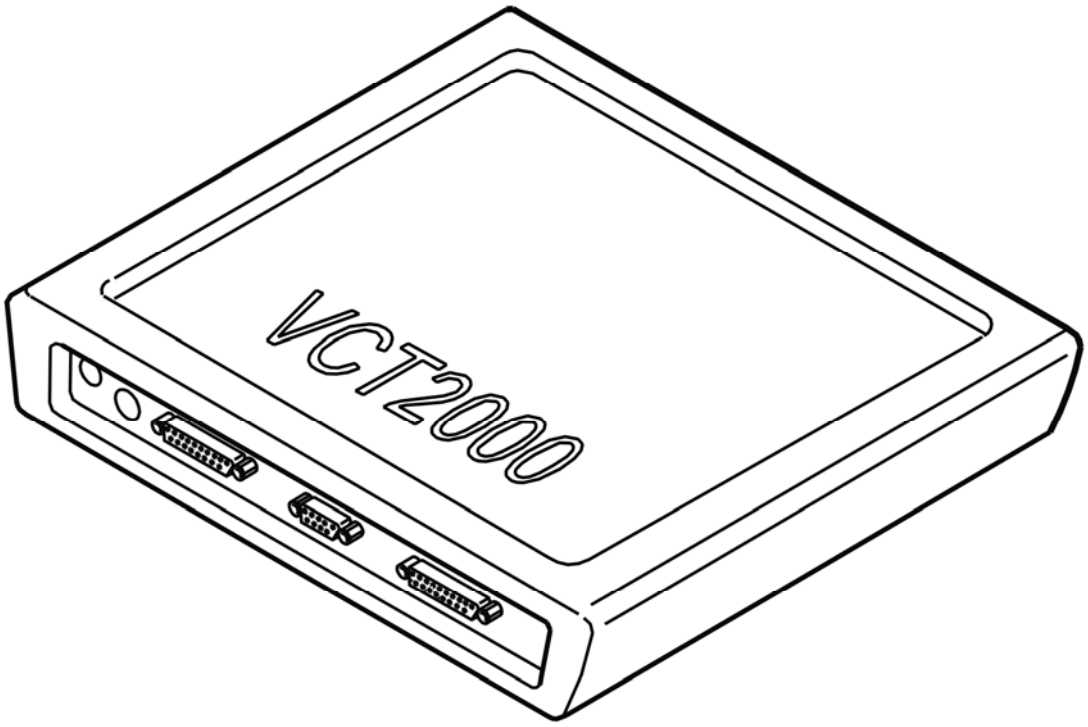

Fig. 177: Identifying VCT2000 Diagnostic Tool Symbol In VIDA
Courtesy of VOLVO CARS CORPORATION

Is the diagnostic trouble code (DTC) intermittent?

- **YES**

  VERIFIED: Troubleshooting has been completed.

- **NO**

  See: **INFORMATION**

INFORMATION

FAULT-TRACING INFORMATION

The fault should have been detected and remedied. As this is not the case fault-tracing has failed.

Exit fault-tracing for this diagnostic trouble code (DTC) or make another attempt.

SRS-0251: OCCUPANT WEIGHT SENSOR (OWS). CONFIGURATION FAULT

(2005-2012)

DIAGNOSTIC TROUBLE CODE (DTC) INFORMATION SRS-0251

Condition

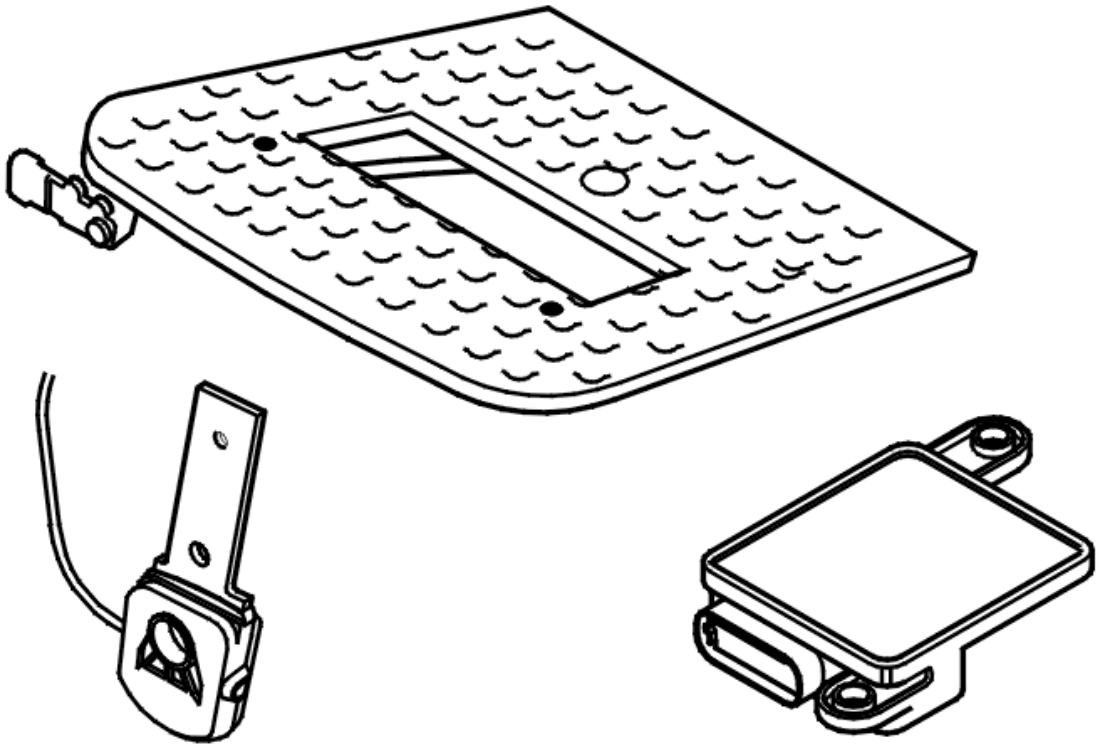

Fig. 178: Identifying Occupant Weight Sensor (OWS) Assembly
Courtesy of VOLVO CARS CORPORATION

The supplemental restraint system module (SRS) checks the signal from the occupant weight sensor (OWS).

The diagnostic trouble code (DTC) is stored if the control module registers a configuration fault.

The diagnostic trouble code (DTC) can be diagnosed in ignition positions I, II and III.

Substitute Value

- Passenger airbag is deactivated.

Possible Source

- Incorrect configuration of the occupant weight sensor (OWS).

Fault symptom[s]

- SRS indicator lamp lit
- PAD lamp lit.

CONFIGURATION FAULT

CONFIGURING THE COMPONENT

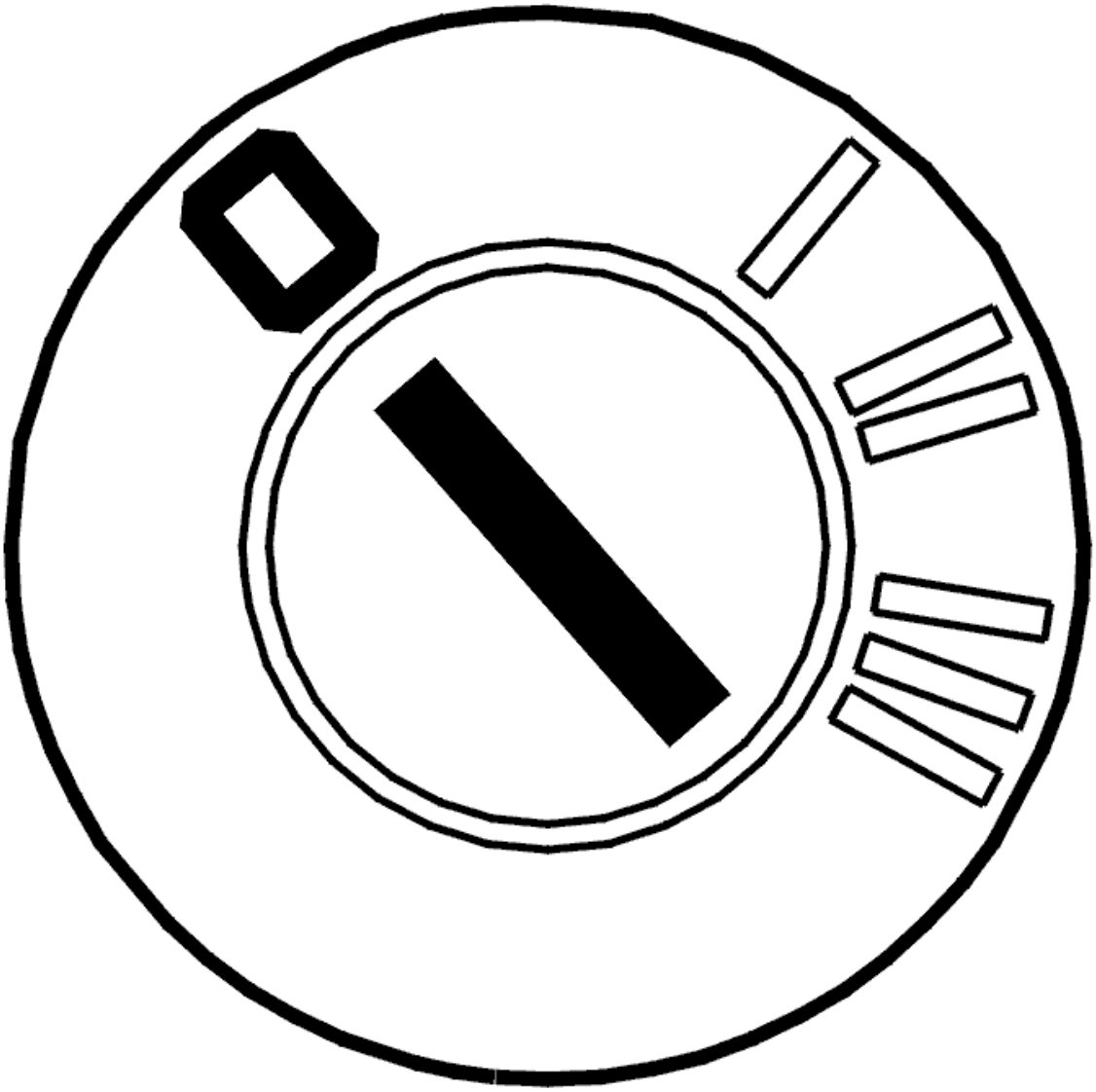

Fig. 179: Identifying Ignition OFF
Courtesy of VOLVO CARS CORPORATION

- Switch off the ignition. Wait 10 seconds.

  Configure the supplemental restraint system module (SRS) by storing the ID number for the occupant weight sensor (OWS).

Other information

- see **STORING THE ID NUMBER FOR THE OCCUPANT WEIGHT SENSOR (OWS)**

- **Continue**

  See: **VERIFICATION**

VERIFICATION

VERIFICATION

HINT: After carrying out the repair, check that the fault has been remedied.

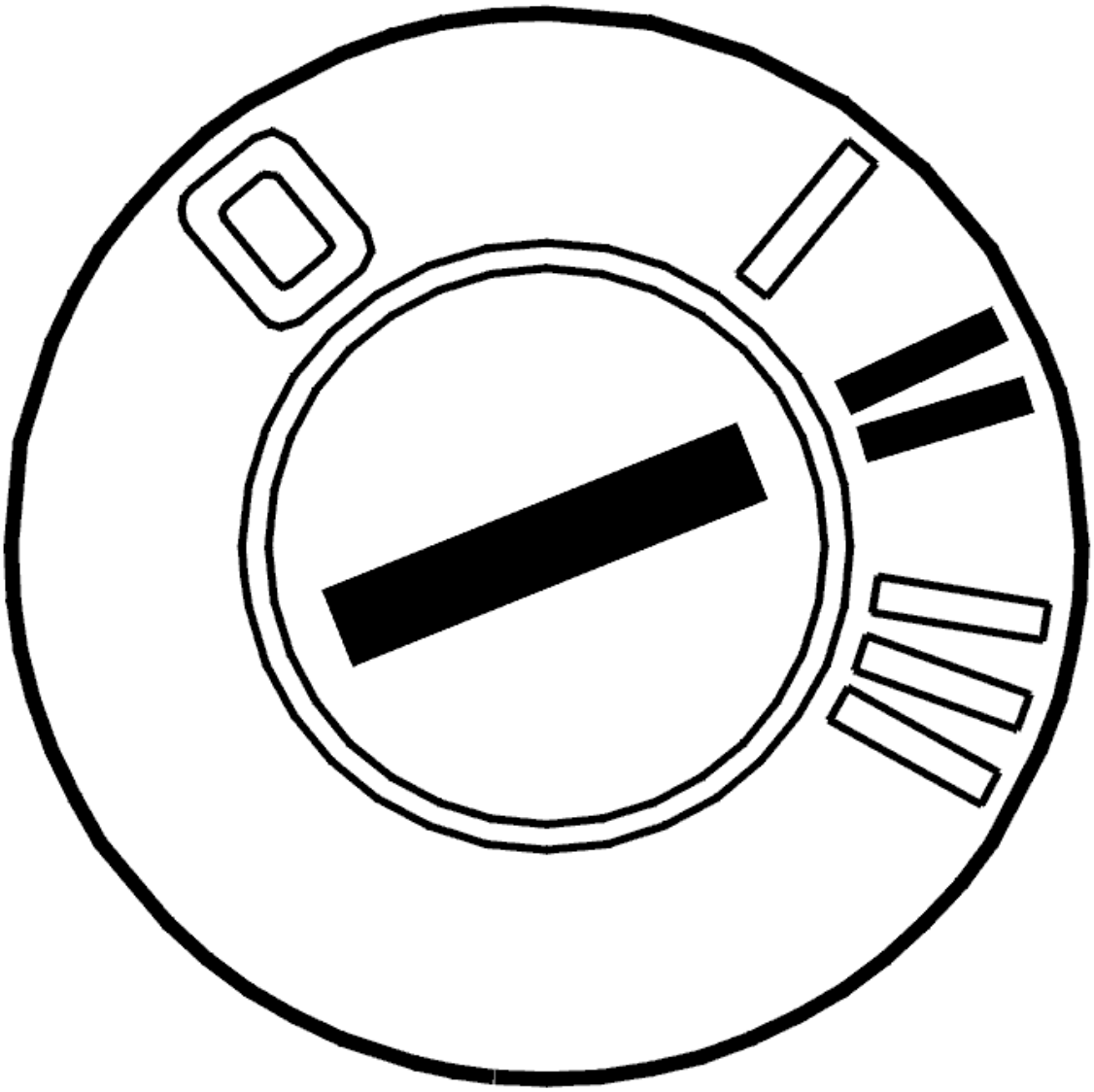

Fig. 180: Identifying Ignition ON
Courtesy of VOLVO CARS CORPORATION

- Ignition off
- Disconnect the battery negative lead
- Reinstall the connectors, components etc.
- Ignition on
- Connect the battery negative lead.

WARNING: There must not be anyone inside the passenger compartment when the battery is connected.

- Read off diagnostic trouble codes (DTCs).

  The fault is no longer present if the diagnostic trouble code (DTC) status is intermittent.

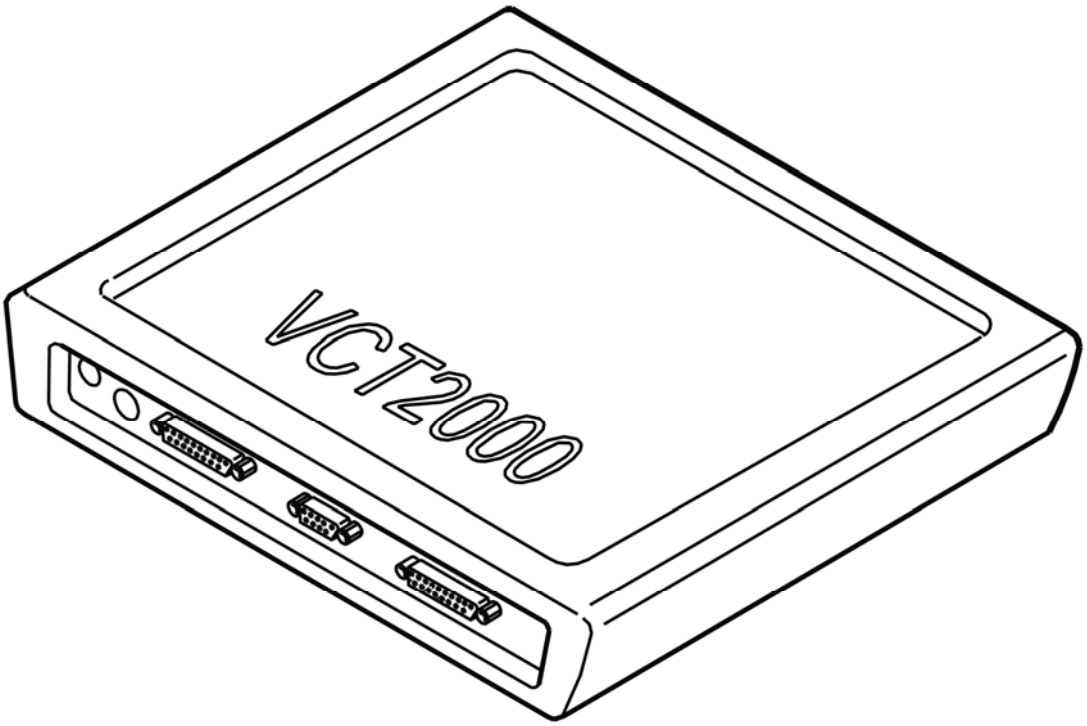

Fig. 181: Identifying VCT2000 Diagnostic Tool Symbol In VIDA
Courtesy of VOLVO CARS CORPORATION

Is the diagnostic trouble code (DTC) intermittent?

- **YES**

  VERIFIED: Troubleshooting has been completed.

- **NO**

  See: **INFORMATION**

INFORMATION

FAULT-TRACING INFORMATION

The fault should have been detected and remedied. As this is not the case fault-tracing has failed.

Exit fault-tracing for this diagnostic trouble code (DTC) or make another attempt.

SRS-0252: OCCUPANT WEIGHT SENSOR (OWS). INTERNAL FAULT (2005-2012)

DIAGNOSTIC TROUBLE CODE (DTC) INFORMATION SRS-0252

Condition

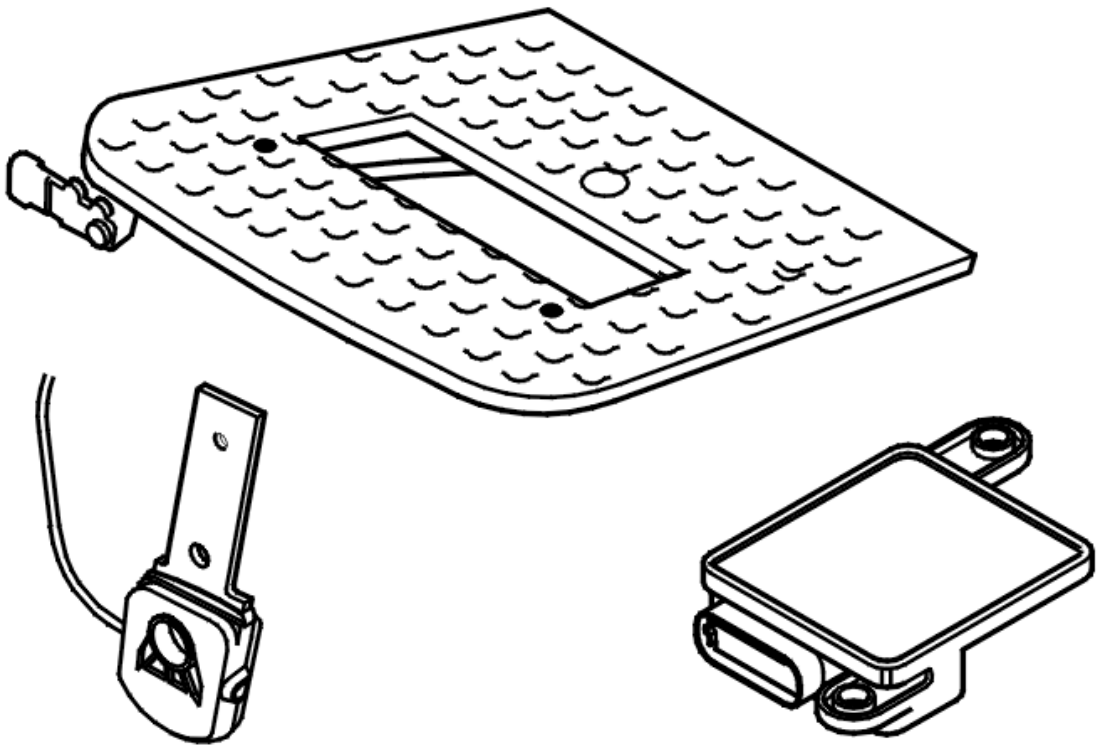

Fig. 182: Identifying Occupant Weight Sensor (OWS) Assembly
Courtesy of VOLVO CARS CORPORATION

The supplemental restraint system module (SRS) checks the signal from the occupant weight sensor (OWS).

The diagnostic trouble code (DTC) is stored if the control module registers an internal fault in the occupant weight sensor (OWS).

The diagnostic trouble code (DTC) can be diagnosed in ignition positions I, II and III.

Substitute Value

- Passenger airbag is deactivated.

Possible Source

- Internal fault in the occupant weight sensor (OWS).

Fault symptom[s]

- SRS indicator lamp lit
- PAD lamp lit.

INTERNAL FAULT

REPLACING THE COMPONENT

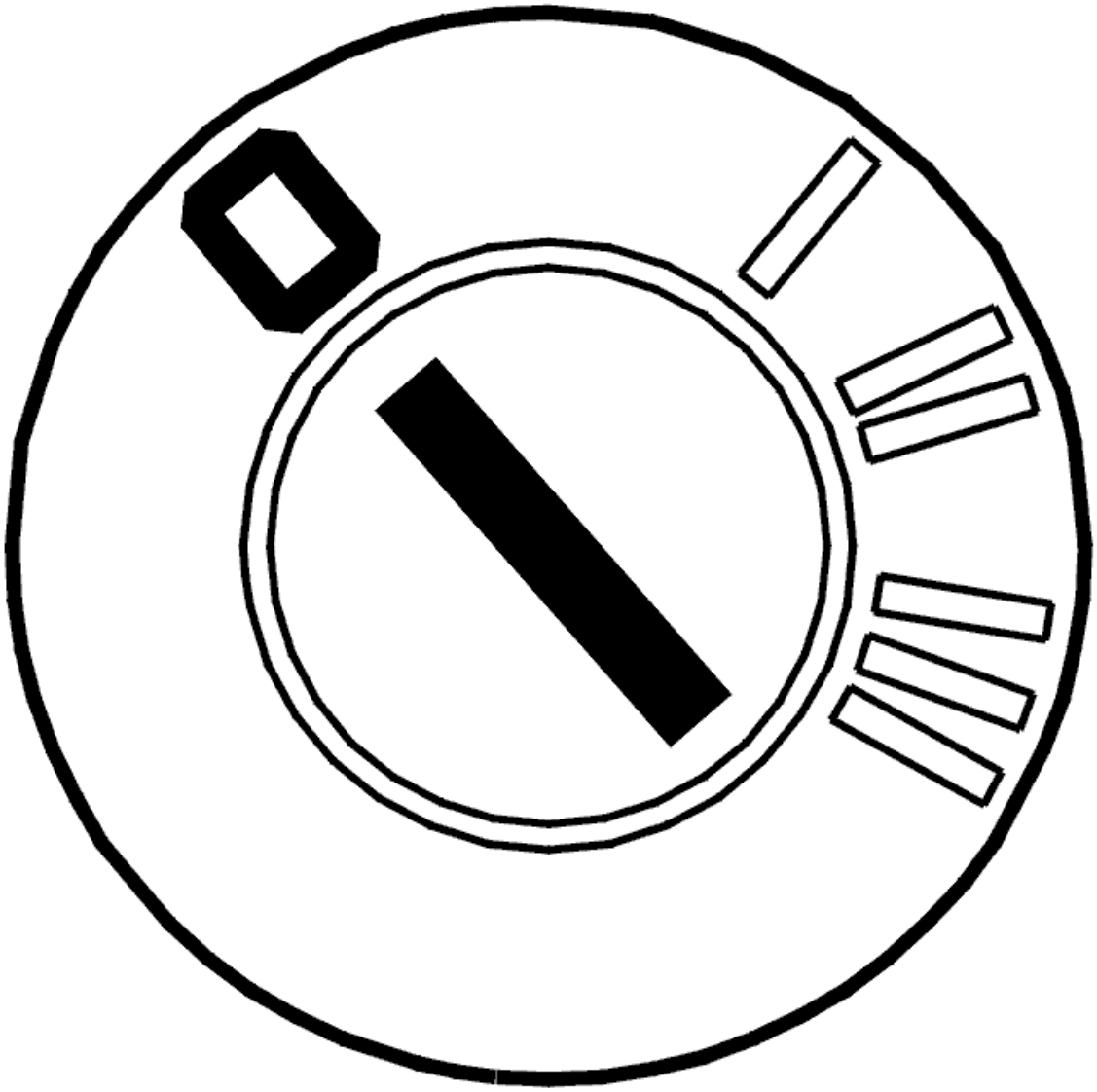

Fig. 183: Identifying Ignition OFF
Courtesy of VOLVO CARS CORPORATION

- Switch off the ignition. Wait 10 seconds.

Replace the pressure sensor and the occupant weight sensor (OWS) module. The pressure sensor and occupant weight sensor (OWS) module are included in the occupant weight sensor (OWS) system.

NOTE: **After replacing the pressure sensor and the occupant weight sensor (OWS) module in the occupant weight sensor (OWS) system, the supplemental restraint system module (SRS) must be calibrated. This is done by storing the ID number for the occupant weight sensor (OWS).**

The occupant weight sensor (OWS) must also be calibrated.

Other information

- see **OCCUPANT WEIGHT SENSOR (OWS), REPLACING**
- see **STORING THE ID NUMBER FOR THE OCCUPANT WEIGHT SENSOR (OWS)**
- see **CALIBRATING THE OCCUPANT WEIGHT SENSOR (OWS)**

- **Continue**

  See: **VERIFICATION**

VERIFICATION

VERIFICATION

HINT: After carrying out the repair, check that the fault has been remedied.

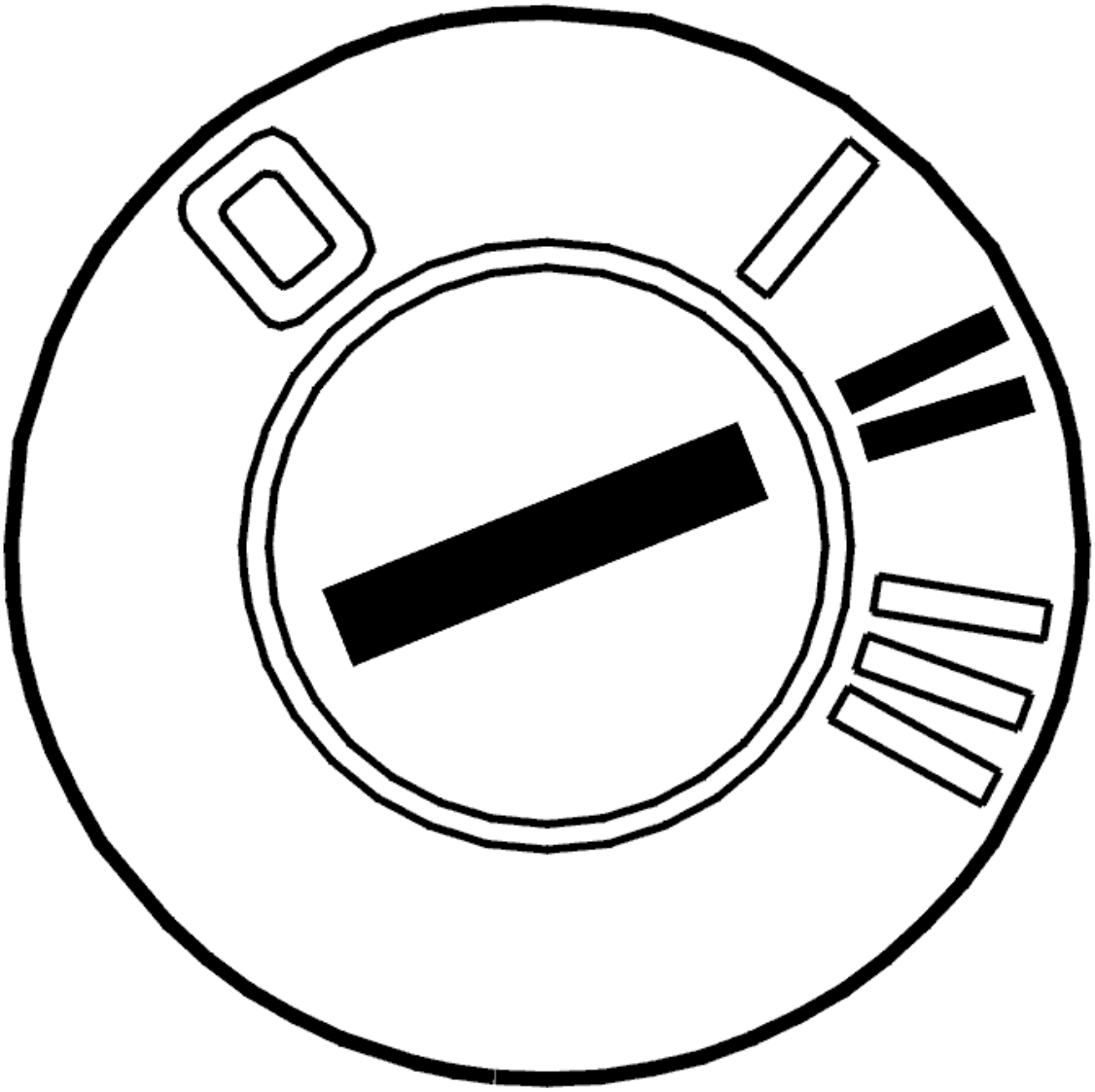

Fig. 184: Identifying Ignition ON

Courtesy of VOLVO CARS CORPORATION

- Ignition off
- Disconnect the battery negative lead
- Reinstall the connectors, components etc.
- Ignition on
- Connect the battery negative lead.

> WARNING: **There must not be anyone inside the passenger compartment when the battery is connected.**

- Read off diagnostic trouble codes (DTCs).

  The fault is no longer present if the diagnostic trouble code (DTC) status is intermittent.

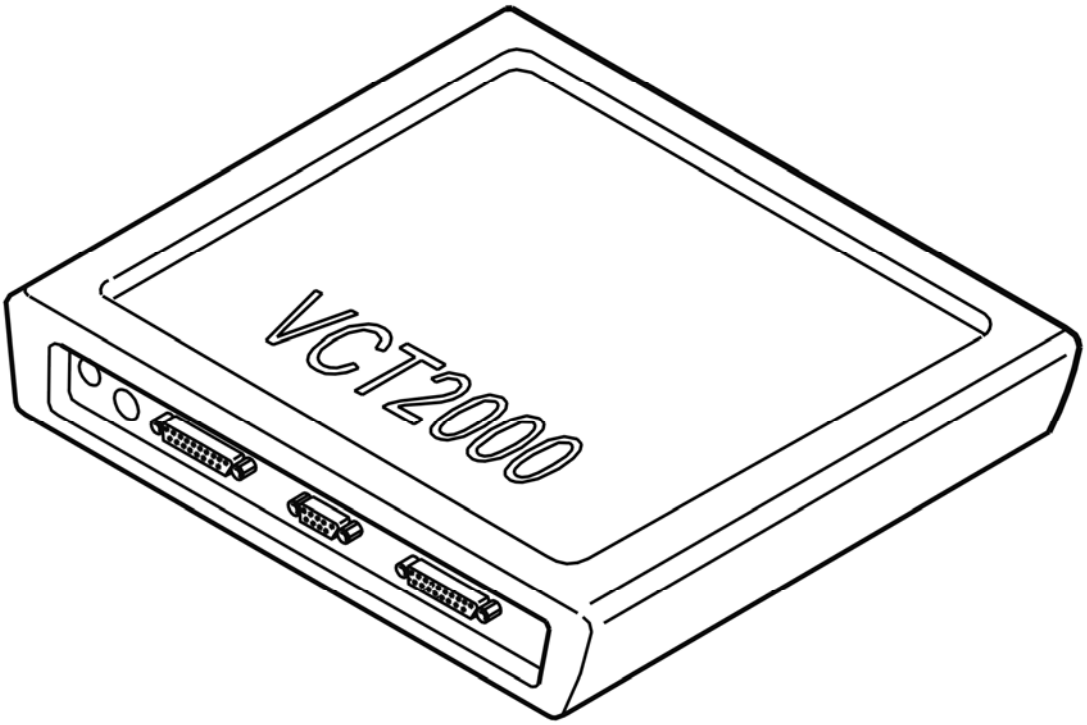

Fig. 185: Identifying VCT2000 Diagnostic Tool Symbol In VIDA
Courtesy of VOLVO CARS CORPORATION

Is the diagnostic trouble code (DTC) intermittent?

- **YES**

VERIFIED: Troubleshooting has been completed.

- **NO**

  See: **INFORMATION**

INFORMATION

FAULT-TRACING INFORMATION

The fault should have been detected and remedied. As this is not the case fault-tracing has failed.

Exit fault-tracing for this diagnostic trouble code (DTC) or make another attempt.

SRS-0253: OCCUPANT WEIGHT SENSOR (OWS). COMMUNICATION FAULT (2005-2012)

DIAGNOSTIC TROUBLE CODE (DTC) INFORMATION SRS-0253

Condition

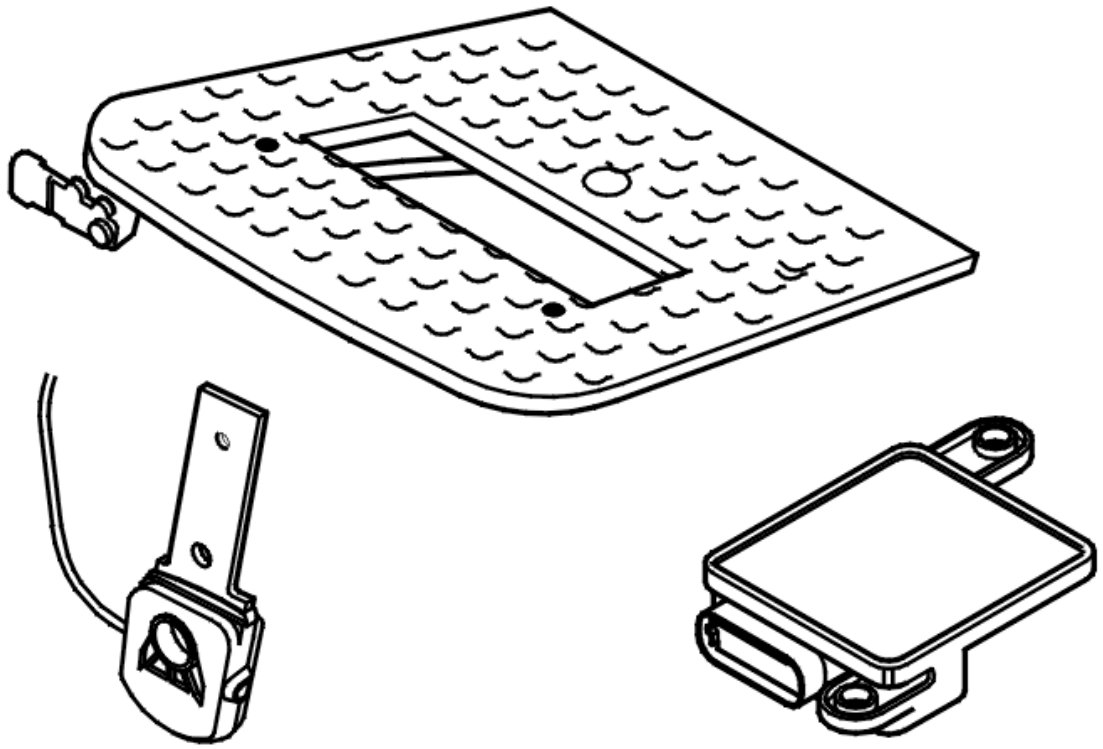

Fig. 186: Identifying Occupant Weight Sensor (OWS) Assembly
Courtesy of VOLVO CARS CORPORATION

The supplemental restraint system module (SRS) checks the signal from the occupant weight sensor (OWS).

The diagnostic trouble code (DTC) is stored if the control module registers a communication fault.

The diagnostic trouble code (DTC) can be diagnosed in ignition positions I, II and III.

Substitute Value

- Passenger airbag is deactivated.

Possible Source

- Open-circuit in the signal cable or in the connectors between the occupant weight sensor (OWS) and supplemental restraint system module (SRS)
- Damaged occupant weight sensor (OWS).

Fault symptom[s]

- SRS indicator lamp lit
- PAD lamp lit.

COMMUNICATION FAULT

CHECKING THE COMPONENT

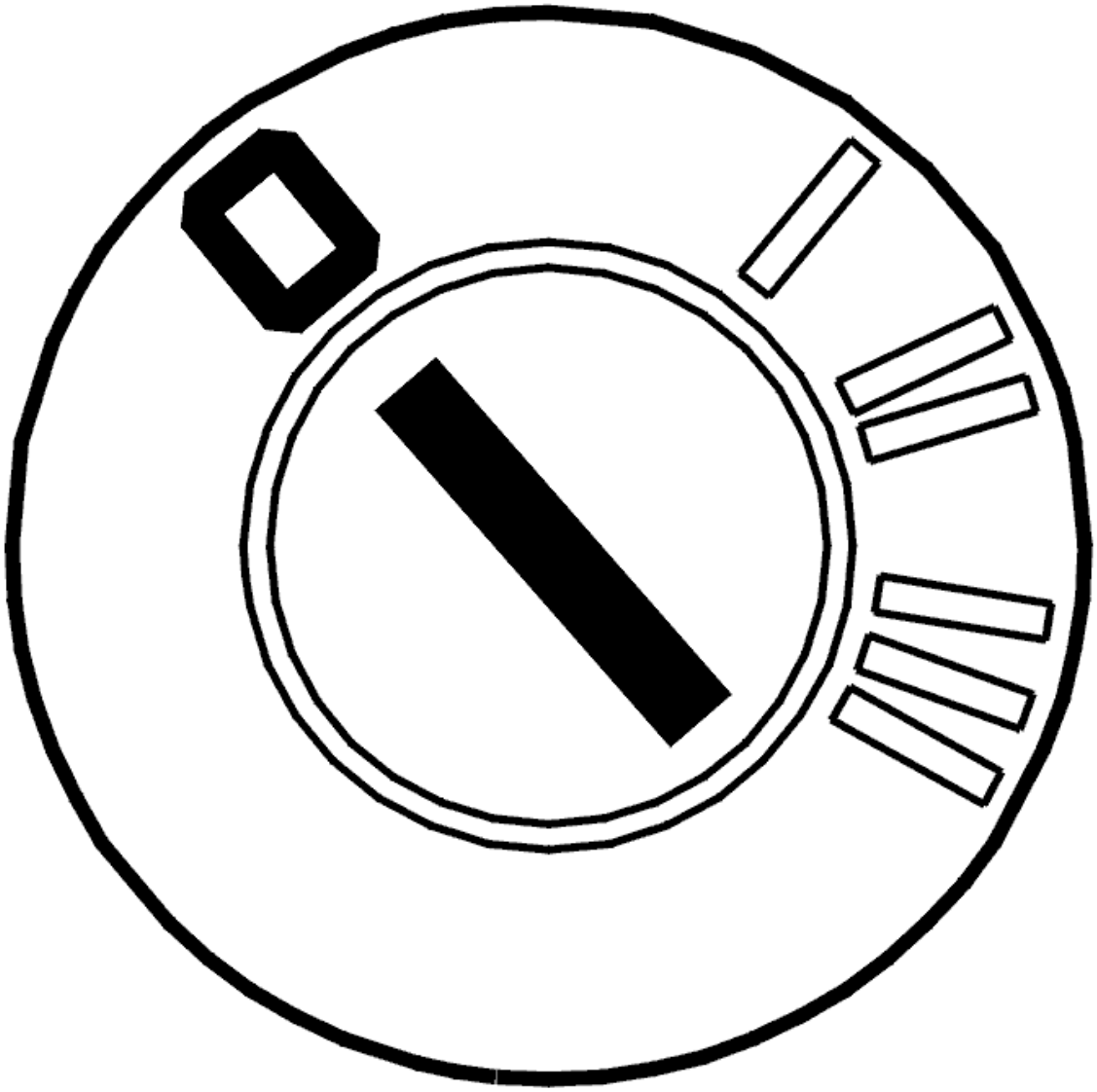

Fig. 187: Identifying Ignition OFF
Courtesy of VOLVO CARS CORPORATION

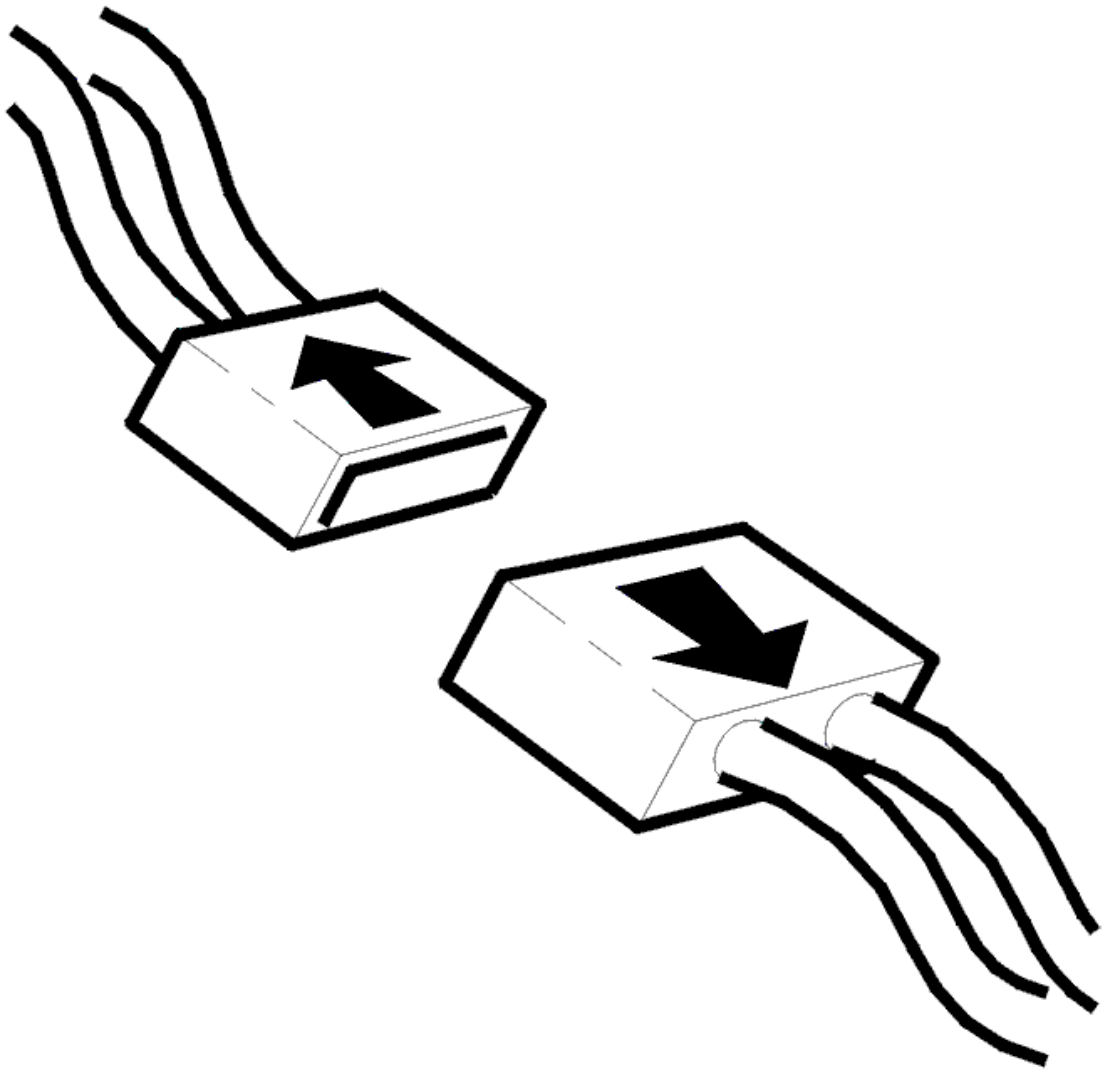

Fig. 188: Disconnecting Connector
Courtesy of VOLVO CARS CORPORATION

- Switch off the ignition. Wait 10 seconds
- Disconnect the 10-pin connector from the occupant weight sensor (OWS)
- Disconnect the connector from the supplemental restraint system module (SRS).

CAUTION: Do not touch the terminal pins in the supplemental restraint system module (SRS) and the occupant weight sensor (OWS). There is a risk of static discharge. This could damage the supplemental restraint system module (SRS) and the occupant weight sensor (OWS).

Check the connectors for the supplemental restraint system module (SRS) and the occupant weight sensor (OWS). Check for damage to pins and terminals in the connectors. Check for contact resistance.

Also check the other connectors that connect the communication cable between the supplemental restraint system module (SRS) and the occupant weight sensor (OWS).

Remedy as necessary.

Check the communication cable (LIN-bus) between the supplemental restraint system module (SRS) and the 10-pin connector for the occupant weight sensor (OWS). Check for an open-circuit.

Check the cable between supplemental restraint system module (SRS) terminal #57 and the 10-pin connector for occupant weight sensor (OWS) terminal #10.

Remedy as necessary.

Replace the pressure sensor and the occupant weight sensor module (OWS) if no fault is detected. The pressure sensor and occupant weight sensor (OWS) module are included in the occupant weight sensor (OWS) system.

NOTE: **After replacing the pressure sensor and the occupant weight sensor (OWS) module in the occupant weight sensor (OWS) system, the supplemental restraint system module (SRS) must be configured. This is done by storing the ID number for the occupant weight sensor (OWS).**

The occupant weight sensor (OWS) must also be calibrated.

Other information

- see **CONNECTING THE BREAKOUT BOX**
- Signal specification, supplemental restraint system module (SRS): -2004, see **SIGNAL SPECIFICATION** or for model year 2005-, see **SIGNAL SPECIFICATION**
- Signal specification, occupant weight sensor (OWS): **SIGNAL SPECIFICATION**
- see **SUPPLEMENTAL RESTRAINT SYSTEM MODULE (SRS), REPLACING**
- see **OCCUPANT WEIGHT SENSOR (OWS), REPLACING**
- see **STORING THE ID NUMBER FOR THE OCCUPANT WEIGHT SENSOR (OWS)**
- see **CALIBRATING THE OCCUPANT WEIGHT SENSOR (OWS)**
- see **CABLE HARNESS SRS SYSTEM, REPAIR**
- see **CHECKING WIRING AND TERMINALS**

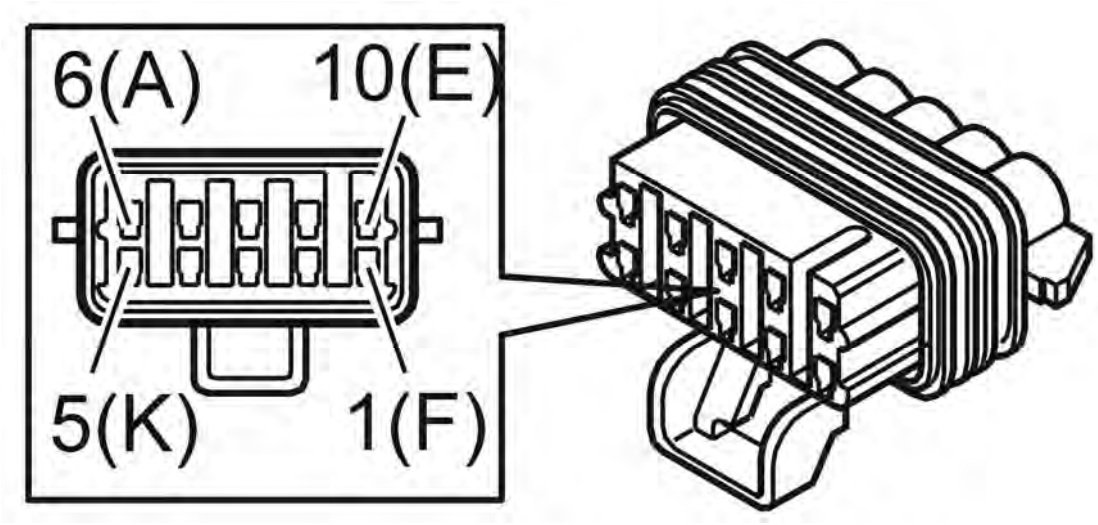

Fig. 189: Identifying 10-Pin Connector
Courtesy of VOLVO CARS CORPORATION

- **Continue**

  See: **VERIFICATION**

VERIFICATION

VERIFICATION

HINT: After carrying out the repair, check that the fault has been remedied.

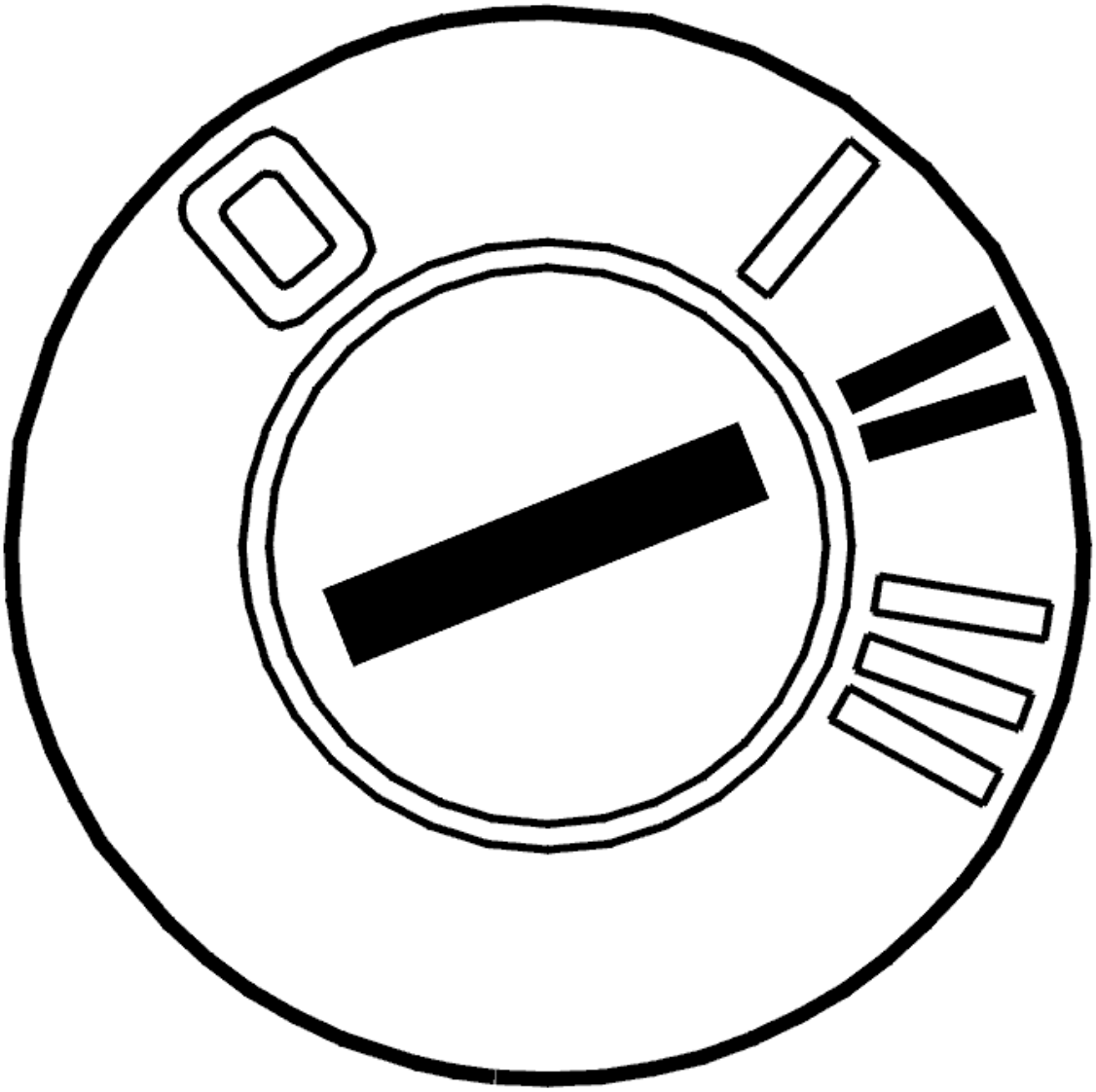

Fig. 190: Identifying Ignition ON
Courtesy of VOLVO CARS CORPORATION

- Ignition off
- Disconnect the battery negative lead
- Reinstall the connectors, components etc.
- Ignition on
- Connect the battery negative lead.

> **WARNING: There must not be anyone inside the passenger compartment when the battery is connected.**

- Read off diagnostic trouble codes (DTCs).

The fault is no longer present if the diagnostic trouble code (DTC) status is intermittent.

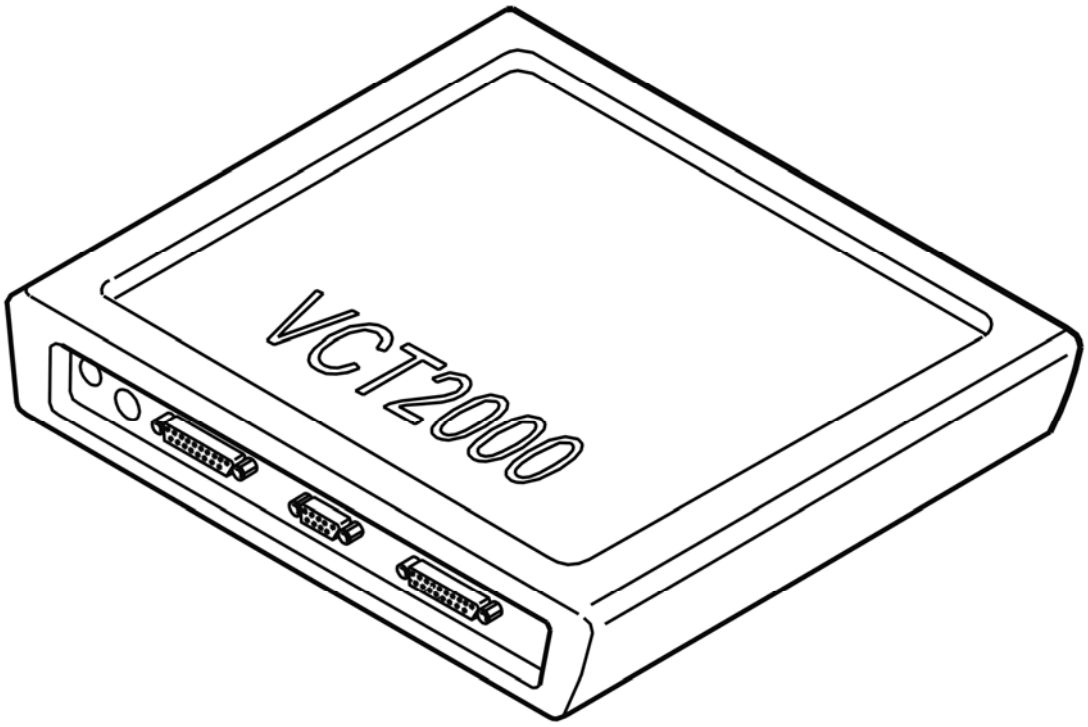

Fig. 191: Identifying VCT2000 Diagnostic Tool Symbol In VIDA
Courtesy of VOLVO CARS CORPORATION

Is the diagnostic trouble code (DTC) intermittent?

- **YES**

  VERIFIED: Troubleshooting has been completed.

- **NO**

  See: **INFORMATION**

INFORMATION

FAULT-TRACING INFORMATION

The fault should have been detected and remedied. As this is not the case fault-tracing has failed.

Exit fault-tracing for this diagnostic trouble code (DTC) or make another attempt.

SRS-0254: OCCUPANT WEIGHT SENSOR (OWS). COMMUNICATION FAULT

(2005-2012)

DIAGNOSTIC TROUBLE CODE (DTC) INFORMATION SRS-0254

Condition

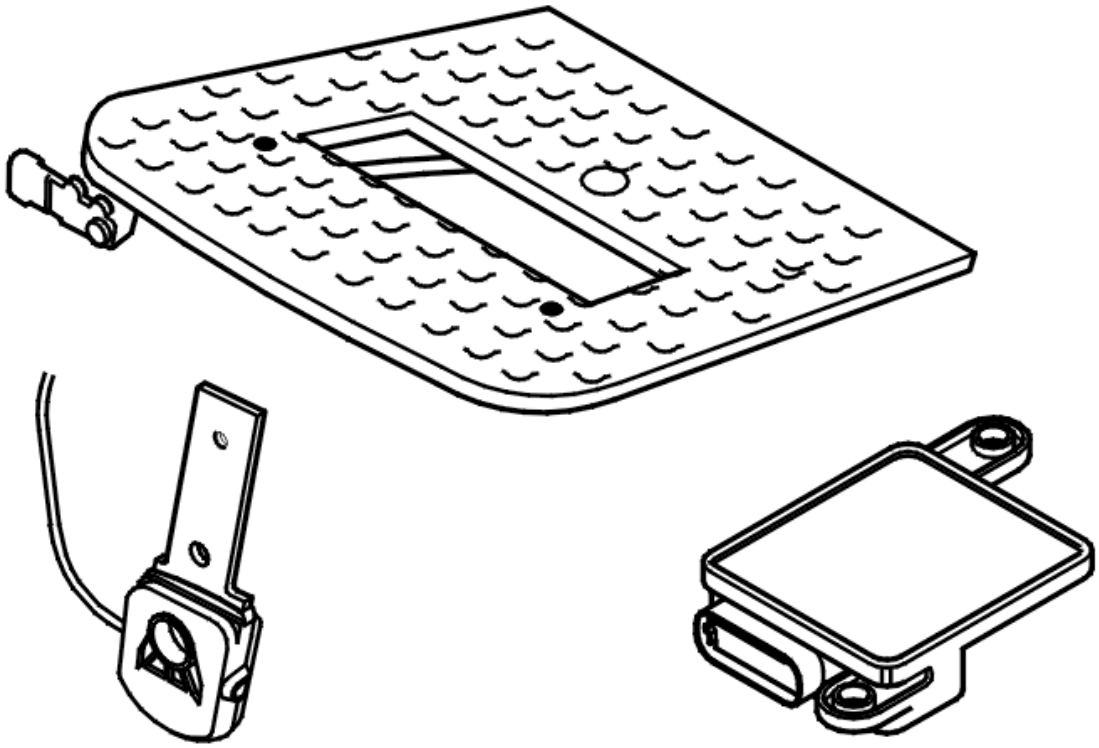

Fig. 192: Identifying Occupant Weight Sensor (OWS) Assembly
Courtesy of VOLVO CARS CORPORATION

The supplemental restraint system module (SRS) checks the signal from the occupant weight sensor (OWS).

The diagnostic trouble code (DTC) is stored if the control module registers a communication fault.

The diagnostic trouble code (DTC) can be diagnosed in ignition positions I, II and III.

Substitute Value

- Passenger airbag is deactivated.

Possible Source

- Open-circuit in the signal cable or in the connectors between the occupant weight sensor (OWS) and supplemental restraint system module (SRS)

- Damaged occupant weight sensor (OWS).

Fault symptom[s]

- SRS indicator lamp lit
- PAD lamp lit.

COMMUNICATION FAULT

CHECKING THE COMPONENT

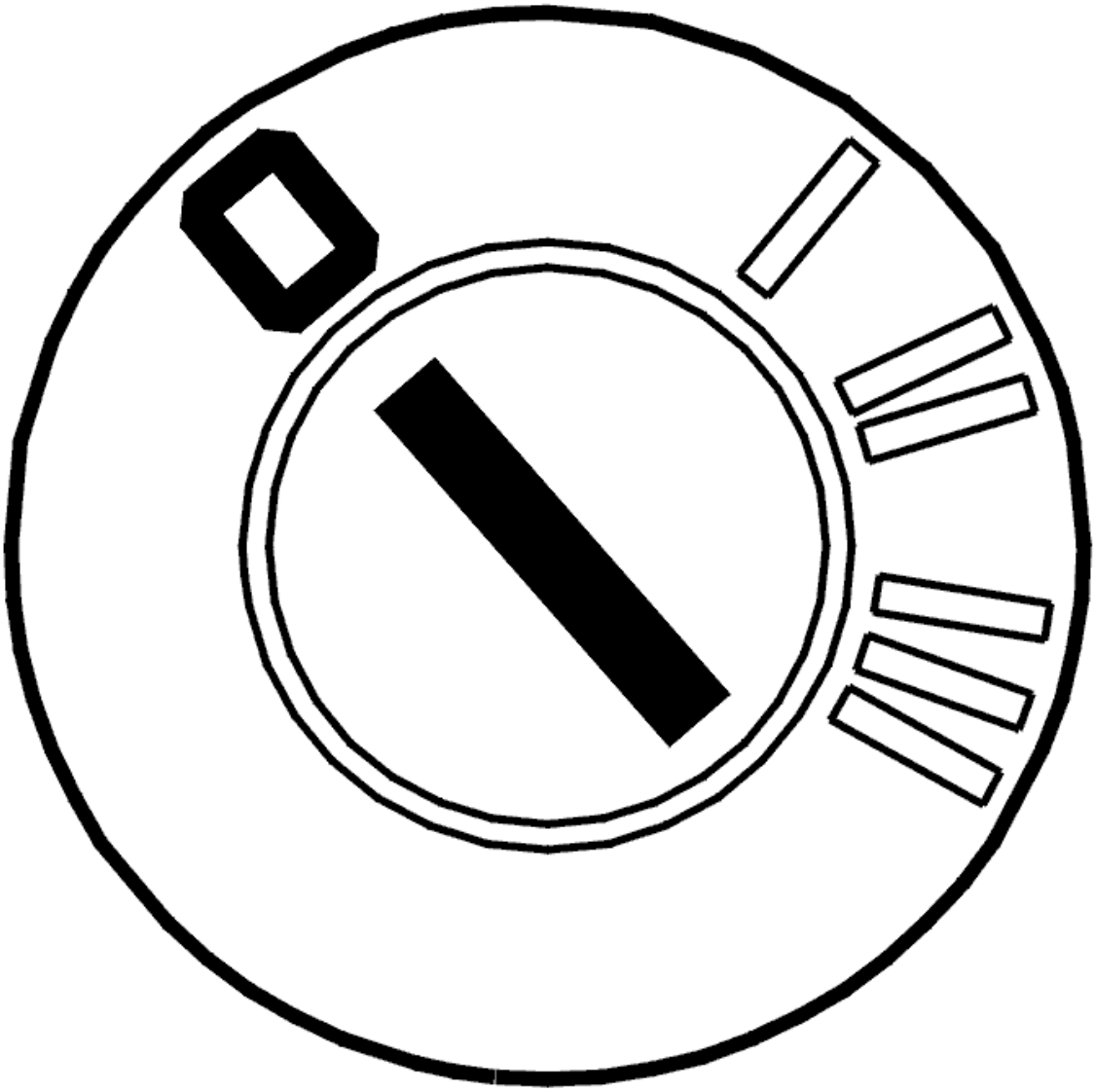

Fig. 193: Identifying Ignition OFF
Courtesy of VOLVO CARS CORPORATION

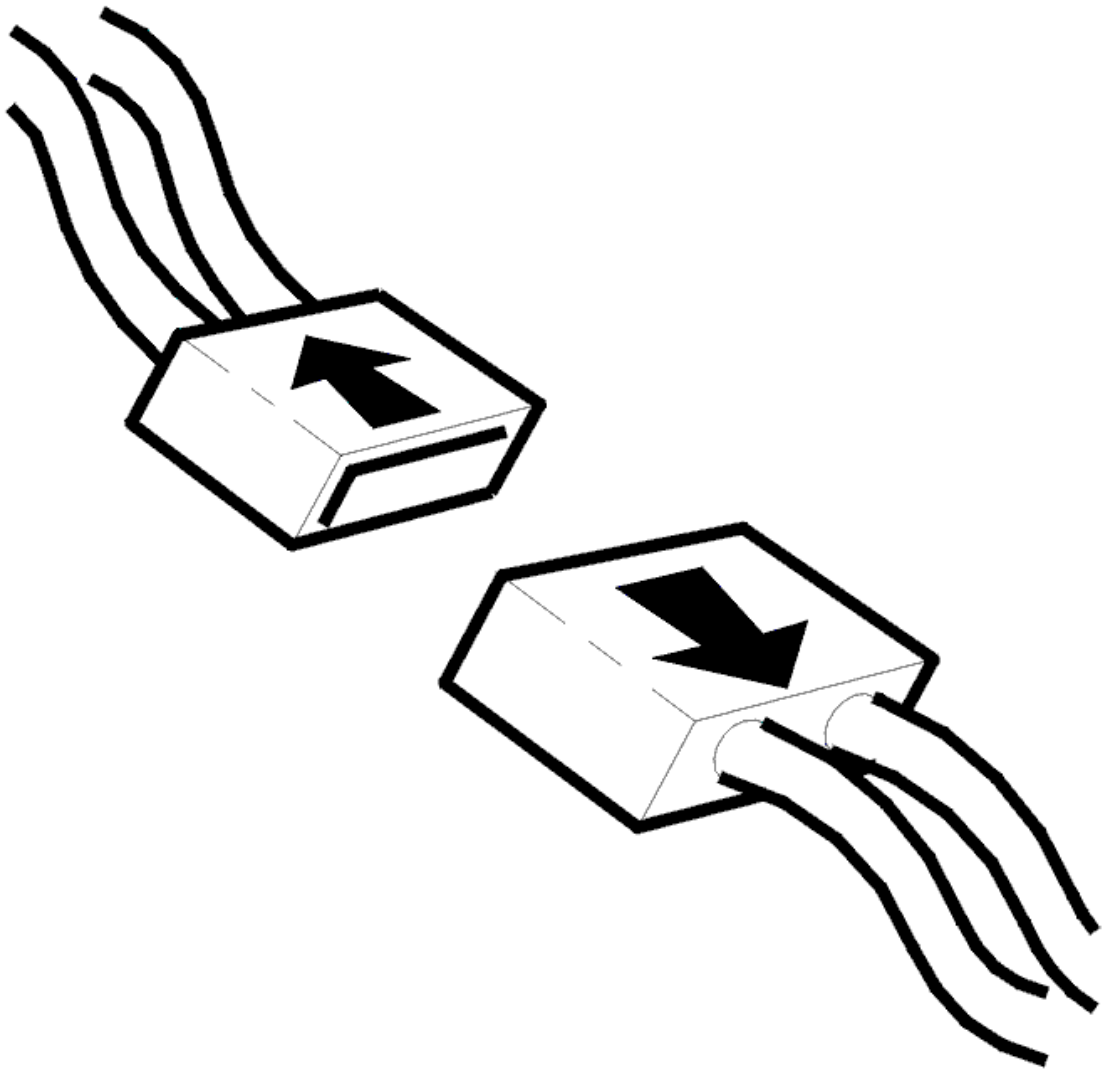

Fig. 194: Disconnecting Connector
Courtesy of VOLVO CARS CORPORATION

- Switch off the ignition. Wait 10 seconds
- Disconnect the 10-pin connector from the occupant weight sensor (OWS)
- Disconnect the connector from the supplemental restraint system module (SRS).

CAUTION: Do not touch the terminal pins in the supplemental restraint system module (SRS) and the occupant weight sensor (OWS). There is a risk of static discharge which could damage the control modules.

Check the connectors for the supplemental restraint system module (SRS) and the occupant weight sensor (OWS). Check for damage to pins and terminals in the connectors. Check for contact resistance.

Also check the other connectors that connect the communication cable between the supplemental restraint

system module (SRS) and the occupant weight sensor (OWS).

Remedy as necessary.

Check the communication cable (LIN-bus) between the supplemental restraint system module (SRS) and the 10-pin connector for the occupant weight sensor (OWS). Check for an open-circuit.

Check the cable between supplemental restraint system module (SRS) terminal #57 and the 10-pin connector for occupant weight sensor (OWS) terminal #10.

Remedy as necessary.

Replace the pressure sensor and the occupant weight sensor module (OWS) if no fault is detected. The pressure sensor and occupant weight sensor (OWS) module are included in the occupant weight sensor (OWS) system.

NOTE: **After replacing the pressure sensor and the occupant weight sensor (OWS) module in the occupant weight sensor (OWS) system, the supplemental restraint system module (SRS) must be configured. This is done by storing the ID number for the occupant weight sensor (OWS).**

The occupant weight sensor (OWS) must also be calibrated.

Other information

- see **CONNECTING THE BREAKOUT BOX**
- Signal specification, supplemental restraint system module (SRS): -2004, see **SIGNAL SPECIFICATION** or for model year 2005-, see **SIGNAL SPECIFICATION**
- Signal specification, occupant weight sensor (OWS): **SIGNAL SPECIFICATION**
- see **SUPPLEMENTAL RESTRAINT SYSTEM MODULE (SRS), REPLACING**
- see **OCCUPANT WEIGHT SENSOR (OWS), REPLACING**
- see **STORING THE ID NUMBER FOR THE OCCUPANT WEIGHT SENSOR (OWS)**
- see **CALIBRATING THE OCCUPANT WEIGHT SENSOR (OWS)**
- see **CABLE HARNESS SRS SYSTEM, REPAIR**
- see **CHECKING WIRING AND TERMINALS**

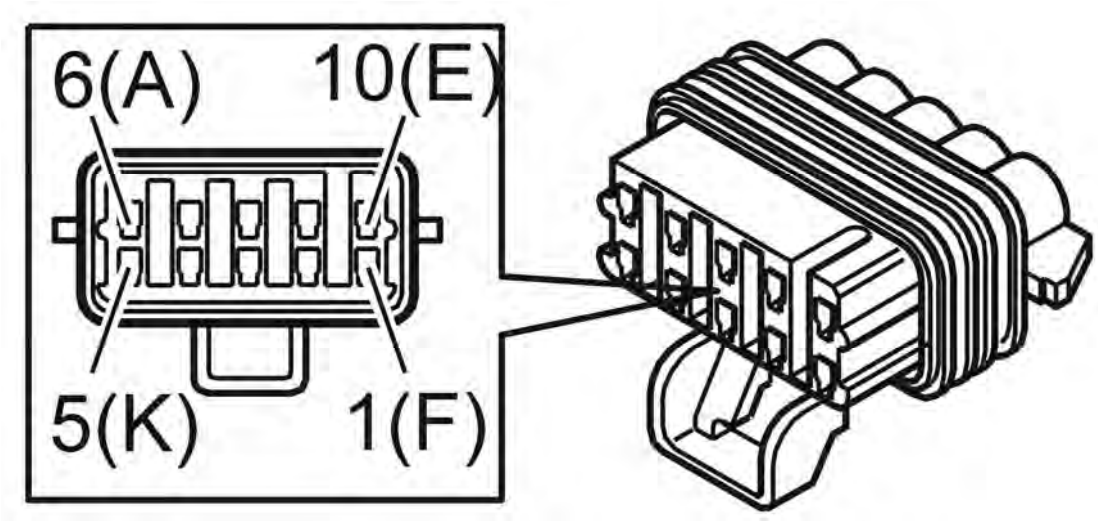

Fig. 195: Identifying 10-Pin Connector
Courtesy of VOLVO CARS CORPORATION

- **Continue**

  See: **VERIFICATION**

VERIFICATION

VERIFICATION

HINT: After carrying out the repair, check that the fault has been remedied.

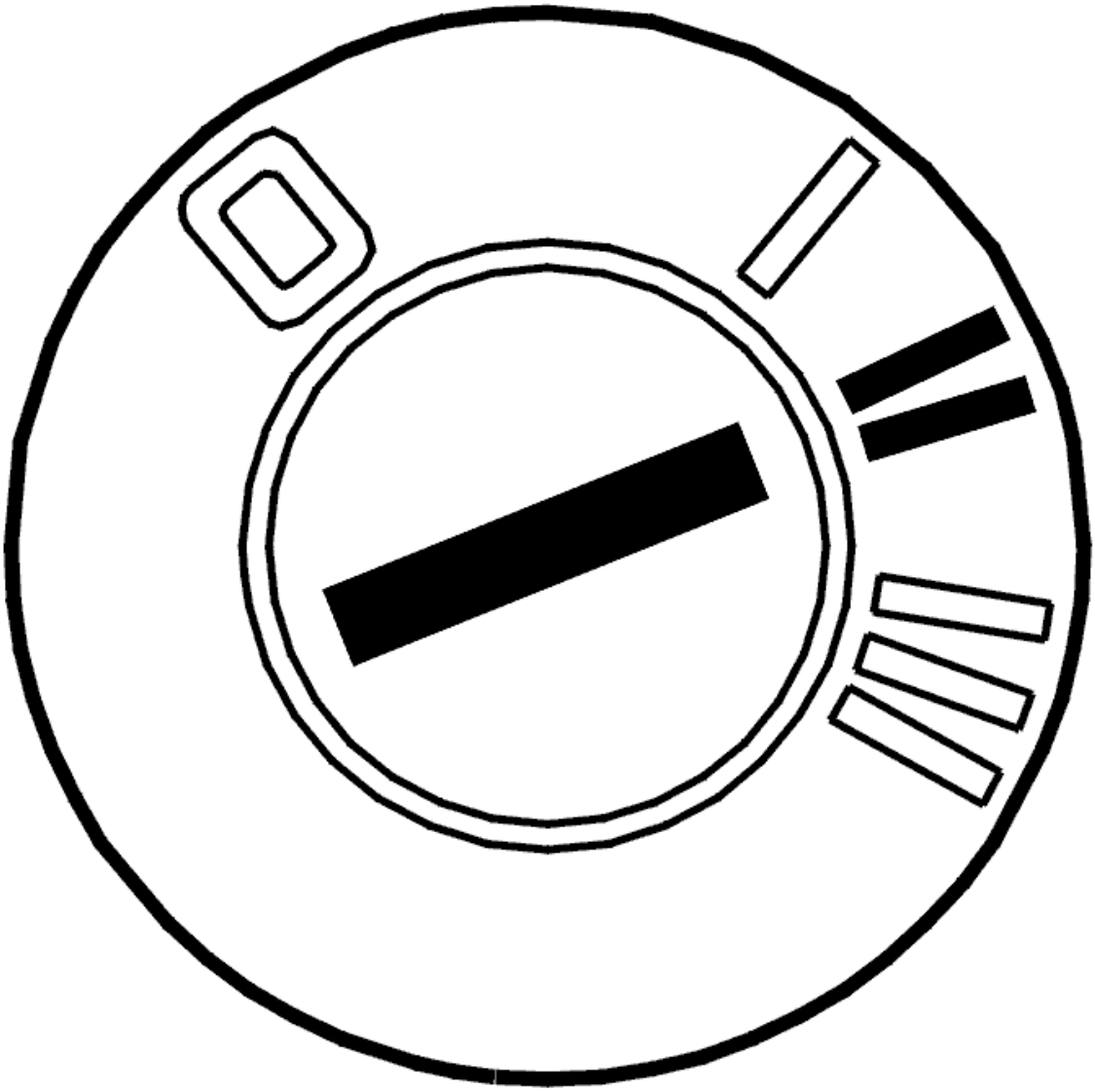

Fig. 196: Identifying Ignition ON
Courtesy of VOLVO CARS CORPORATION

- Ignition off
- Disconnect the battery negative lead
- Reinstall the connectors, components etc.
- Ignition on
- Connect the battery negative lead.

WARNING: There must not be anyone inside the passenger compartment when the battery is connected.

- Read off diagnostic trouble codes (DTCs).

The fault is no longer present if the diagnostic trouble code (DTC) status is intermittent.

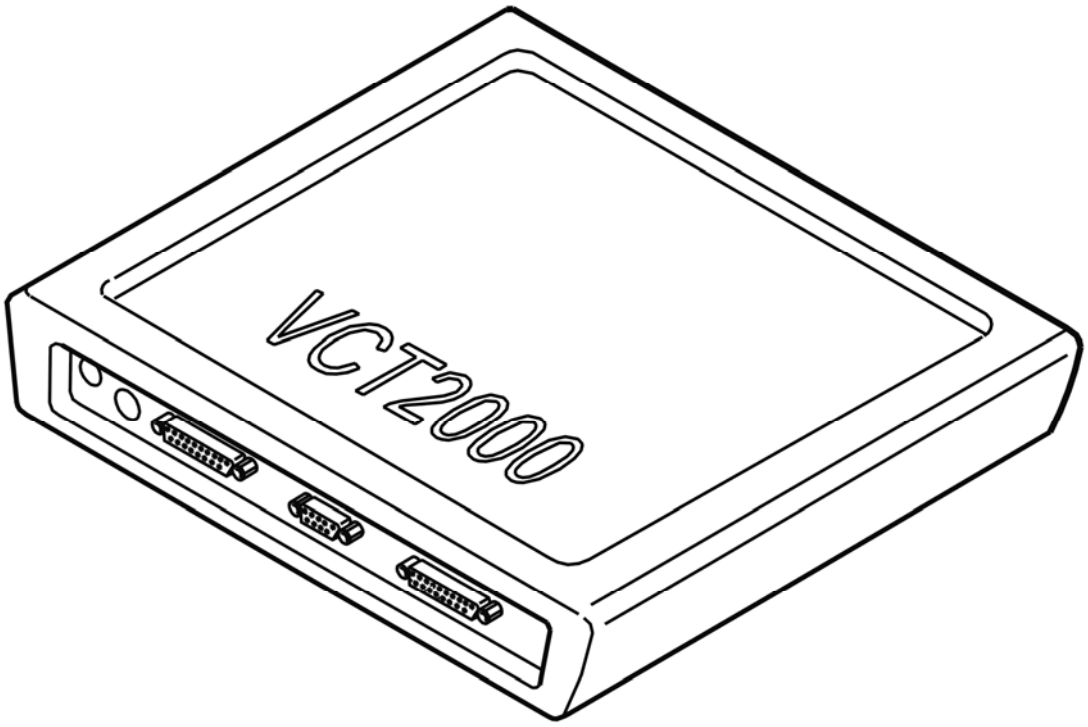

Fig. 197: Identifying VCT2000 Diagnostic Tool Symbol In VIDA
Courtesy of VOLVO CARS CORPORATION

Is the diagnostic trouble code (DTC) intermittent?

- **YES**

  VERIFIED: Troubleshooting has been completed.

- **NO**

  See: **INFORMATION**

INFORMATION

FAULT-TRACING INFORMATION

The fault should have been detected and remedied. As this is not the case fault-tracing has failed.

Exit fault-tracing for this diagnostic trouble code (DTC) or make another attempt.

SRS-0256: OCCUPANT WEIGHT SENSOR (OWS). INTERNAL FAULT (2005-

2012)

DIAGNOSTIC TROUBLE CODE (DTC) INFORMATION SRS-0256

Condition

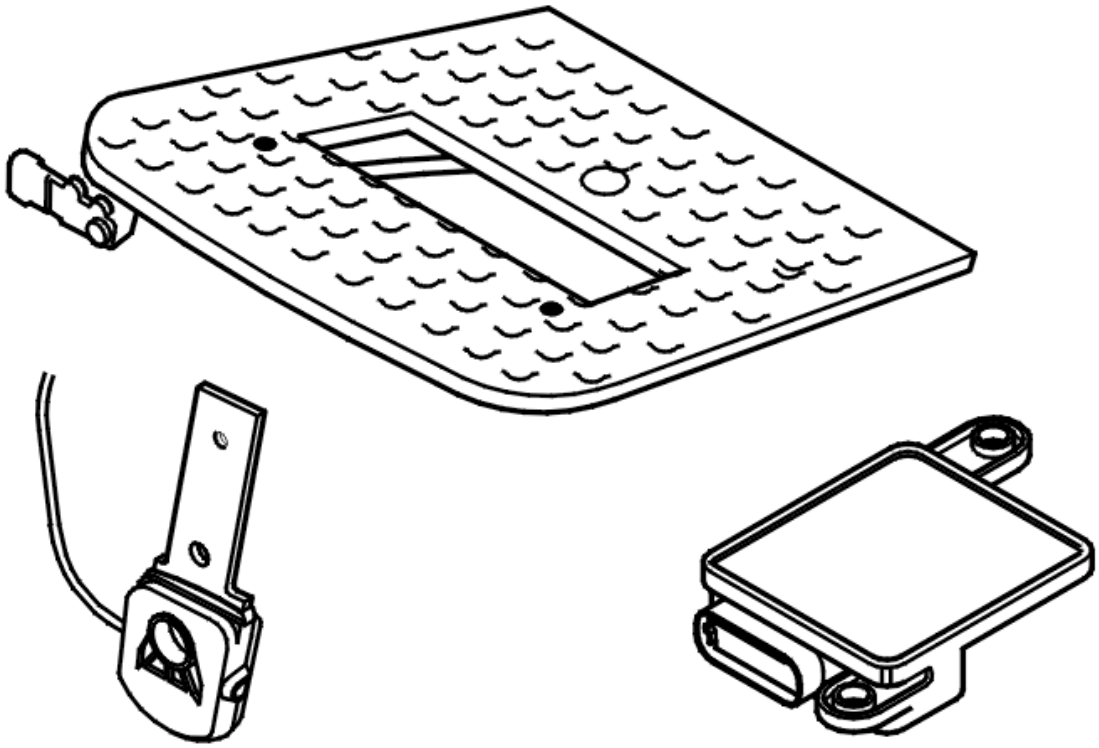

Fig. 198: Identifying Occupant Weight Sensor (OWS) Assembly
Courtesy of VOLVO CARS CORPORATION

The supplemental restraint system module (SRS) checks the signal from the occupant weight sensor (OWS).

The diagnostic trouble code (DTC) is stored if the control module registers an internal fault in the occupant weight sensor (OWS).

The diagnostic trouble code (DTC) can be diagnosed in ignition positions I, II and III.

Substitute Value

- Passenger airbag is deactivated.

Possible Source

- Internal fault in the occupant weight sensor (OWS).

Fault symptom[s]

- SRS indicator lamp lit
- PAD lamp lit.

INTERNAL FAULT

REPLACING THE COMPONENT

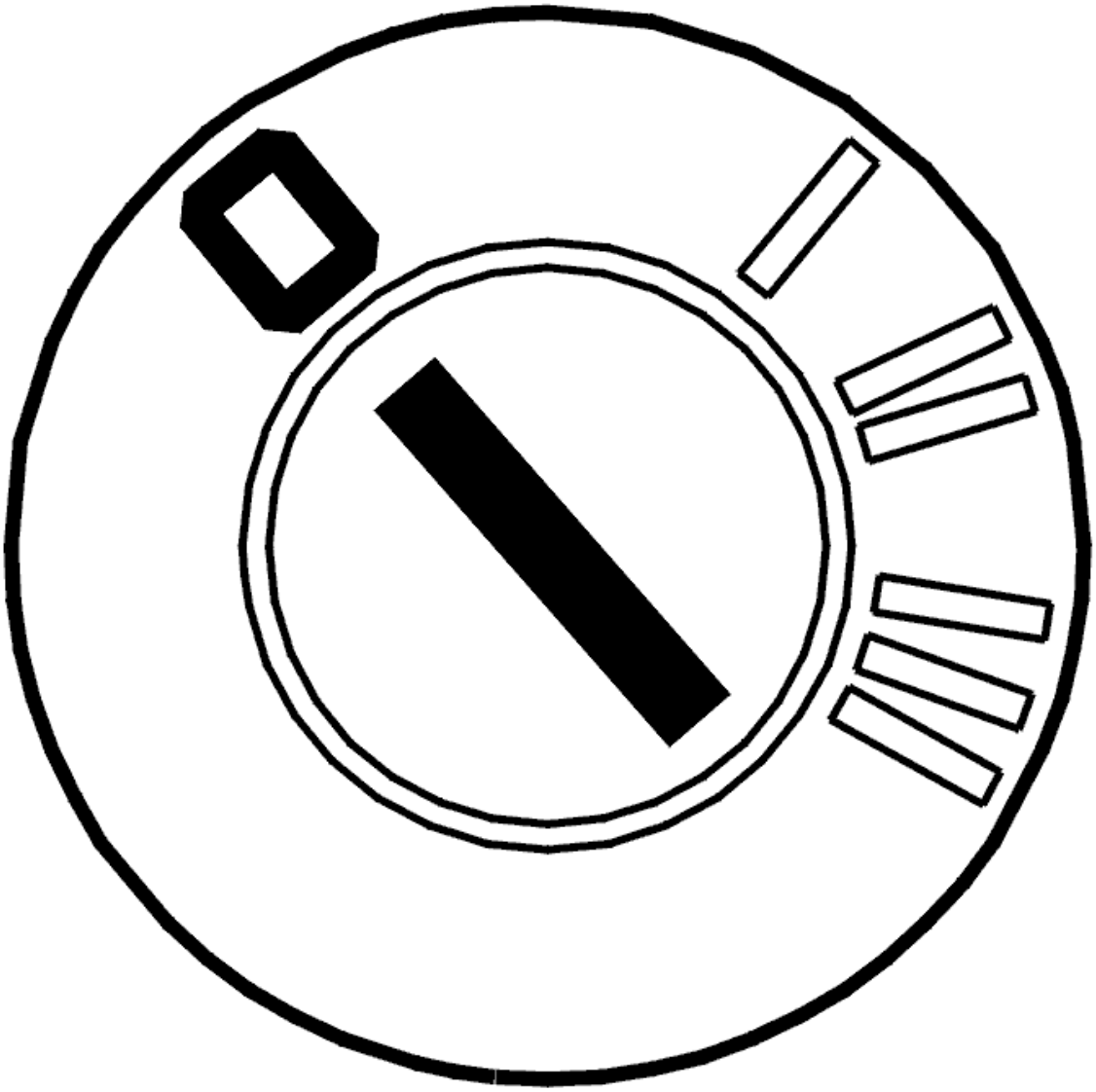

Fig. 199: Identifying Ignition OFF
Courtesy of VOLVO CARS CORPORATION

- Switch off the ignition. Wait 10 seconds.

CAUTION: Avoid touching the terminal pins in the occupant weight sensor

(OWS). There is a risk of static discharge which could damage the occupant weight sensor (OWS).

Replace the pressure sensor and the occupant weight sensor (OWS) module. The pressure sensor and occupant weight sensor (OWS) module are included in the occupant weight sensor (OWS) system.

NOTE: **After replacing the pressure sensor and the occupant weight sensor (OWS) module in the occupant weight sensor (OWS) system, the supplemental restraint system module (SRS) must be configured. This is done by storing the ID number for the occupant weight sensor (OWS).**

The occupant weight sensor (OWS) must also be calibrated.

Other information

- see **OCCUPANT WEIGHT SENSOR (OWS), REPLACING**
- see **STORING THE ID NUMBER FOR THE OCCUPANT WEIGHT SENSOR (OWS)**
- see **CALIBRATING THE OCCUPANT WEIGHT SENSOR (OWS)**

- **Continue**

See: **VERIFICATION**

VERIFICATION

VERIFICATION

HINT: After carrying out the repair, check that the fault has been remedied.

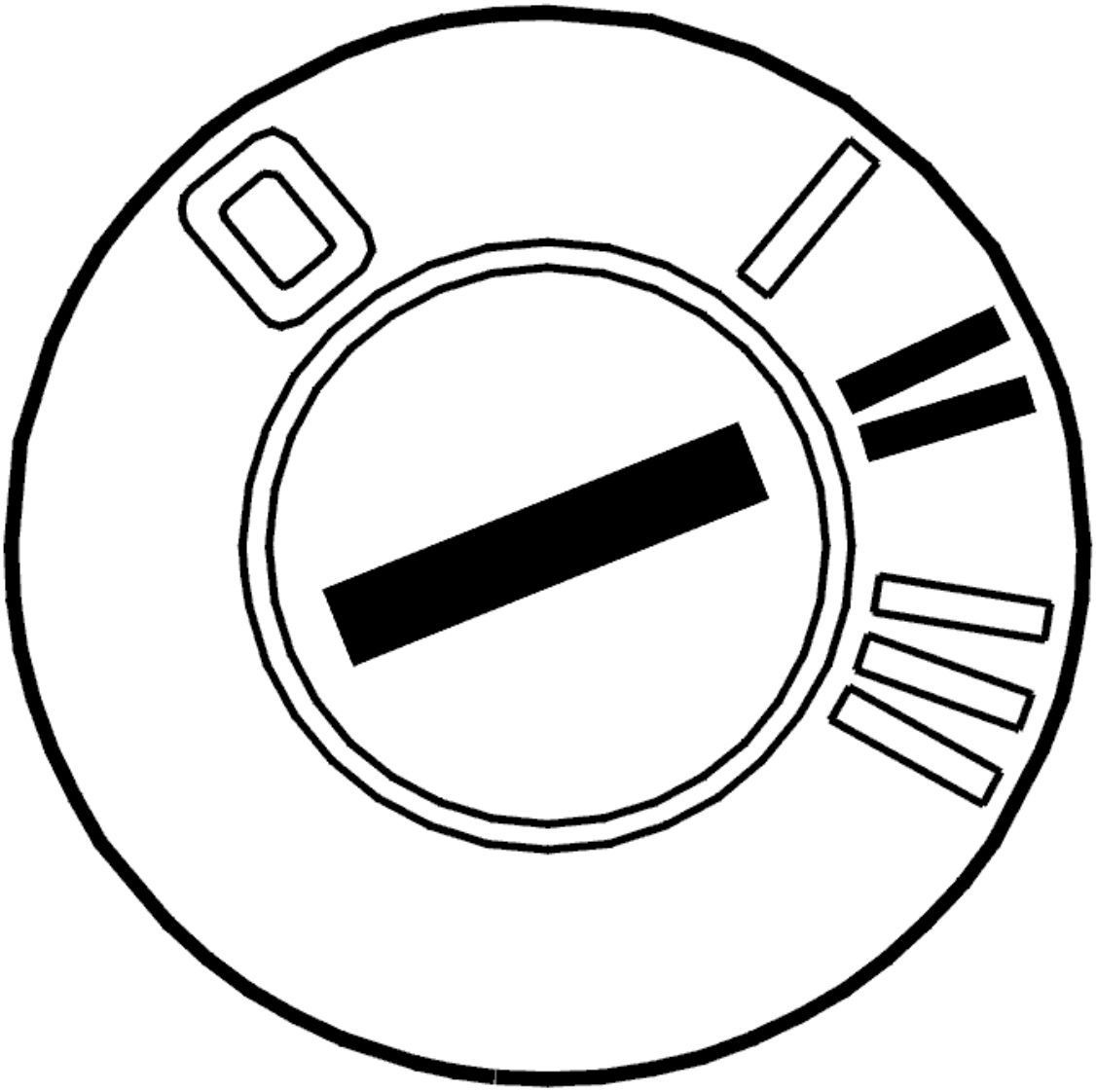

Fig. 200: Identifying Ignition ON
Courtesy of VOLVO CARS CORPORATION

- Ignition off
- Disconnect the battery negative lead
- Reinstall the connectors, components etc.
- Ignition on
- Connect the battery negative lead.

WARNING: There must not be anyone inside the passenger compartment when the battery is connected.

- Read off diagnostic trouble codes (DTCs).

The fault is no longer present if the diagnostic trouble code (DTC) status is intermittent.

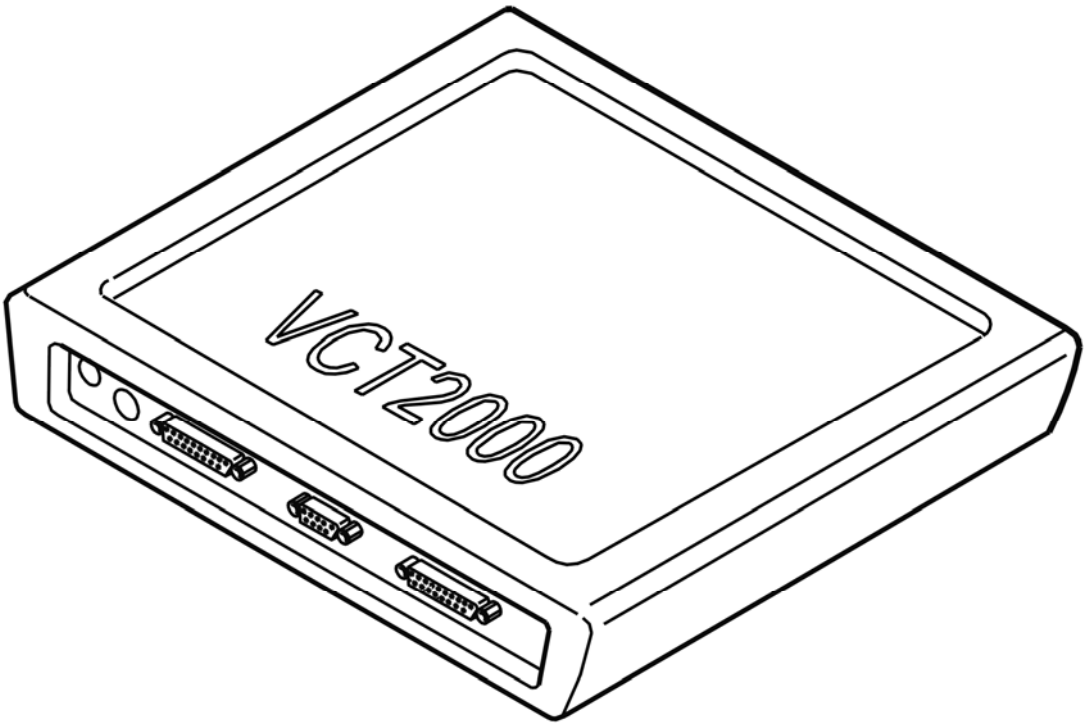

Fig. 201: Identifying VCT2000 Diagnostic Tool Symbol In VIDA
Courtesy of VOLVO CARS CORPORATION

Is the diagnostic trouble code (DTC) intermittent?

- **YES**

  VERIFIED: Troubleshooting has been completed.

- **NO**

  See: **INFORMATION**

INFORMATION

FAULT-TRACING INFORMATION

The fault should have been detected and remedied. As this is not the case fault-tracing has failed.

Exit fault-tracing for this diagnostic trouble code (DTC) or make another attempt.

SRS-0258: OCCUPANT WEIGHT SENSOR (OWS). CALIBRATION FAULT

(2005-2012)

DIAGNOSTIC TROUBLE CODE (DTC) INFORMATION SRS-0258

Condition

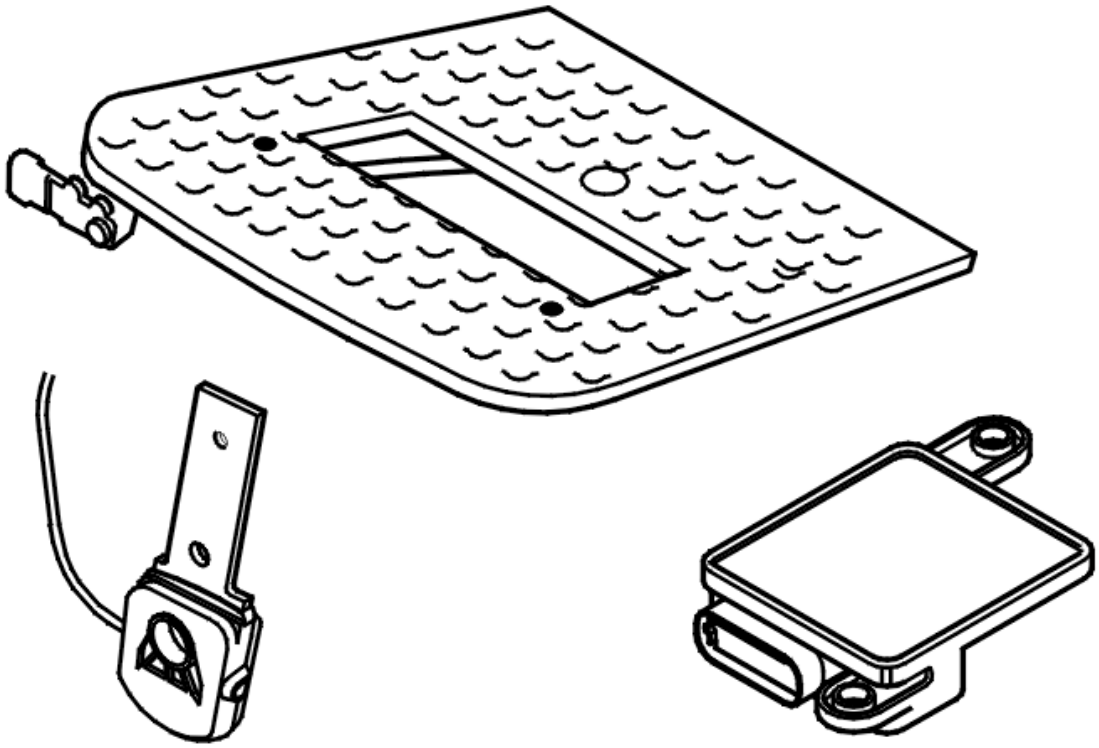

Fig. 202: Identifying Occupant Weight Sensor (OWS) Assembly
Courtesy of VOLVO CARS CORPORATION

The supplemental restraint system module (SRS) checks the signal from the occupant weight sensor (OWS).

The diagnostic trouble code (DTC) is stored if the control module registers a calibration fault.

The diagnostic trouble code (DTC) can be diagnosed in ignition positions I, II and III.

Substitute Value

- Passenger airbag is deactivated.

Possible Source

- Incorrect calibration of the occupant weight sensor (OWS).

Fault symptom[s]

- SRS indicator lamp lit
- PAD lamp lit.

CALIBRATION FAULT

REPLACING THE COMPONENT

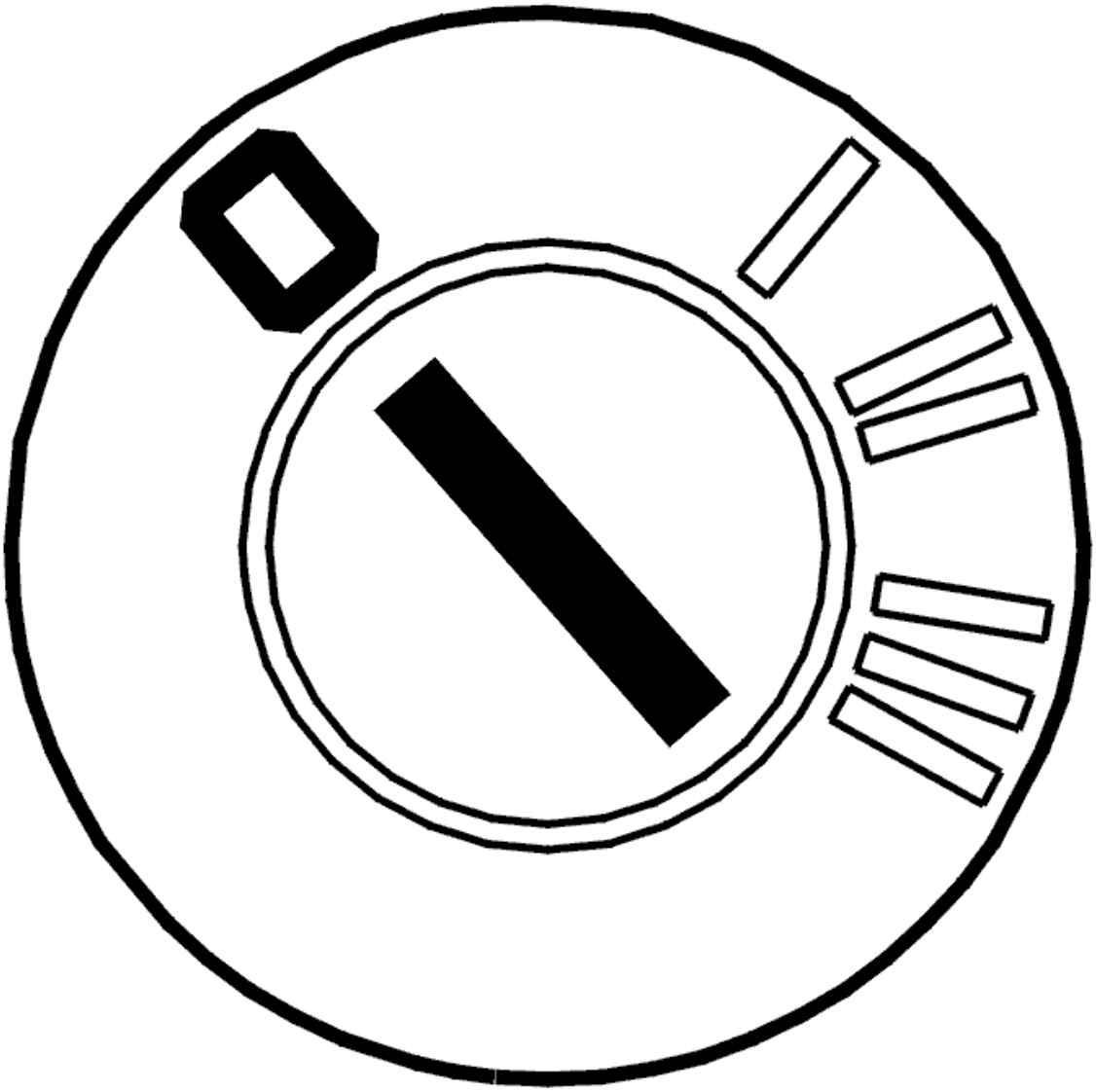

Fig. 203: Identifying Ignition OFF
Courtesy of VOLVO CARS CORPORATION

- Switch off the ignition. Wait 10 seconds

CAUTION: Avoid touching the terminal pins in the occupant weight sensor

(OWS). There is a risk of static discharge which could damage the occupant weight sensor (OWS).

If this diagnostic trouble code (DTC) is generated after unsuccessful calibration of the occupant weight sensor (OWS):

- Recalibrate the occupant weight sensor (OWS).

If the diagnostic trouble code (DTC) was set at another point:

- Replace the pressure sensor and the occupant weight sensor (OWS) module. The pressure sensor and occupant weight sensor (OWS) module are included in the occupant weight sensor (OWS) system.

NOTE: **After replacing the pressure sensor and the occupant weight sensor (OWS) module in the occupant weight sensor (OWS) system, the supplemental restraint system module (SRS) must be configured. This is done by storing the ID number for the occupant weight sensor (OWS).**

The occupant weight sensor (OWS) must also be calibrated.

Other information

- see **OCCUPANT WEIGHT SENSOR (OWS), REPLACING**
- see **STORING THE ID NUMBER FOR THE OCCUPANT WEIGHT SENSOR (OWS)**
- see **CALIBRATING THE OCCUPANT WEIGHT SENSOR (OWS)**

- **Continue**

See: **VERIFICATION**

VERIFICATION

VERIFICATION

HINT: After carrying out the repair, check that the fault has been remedied.

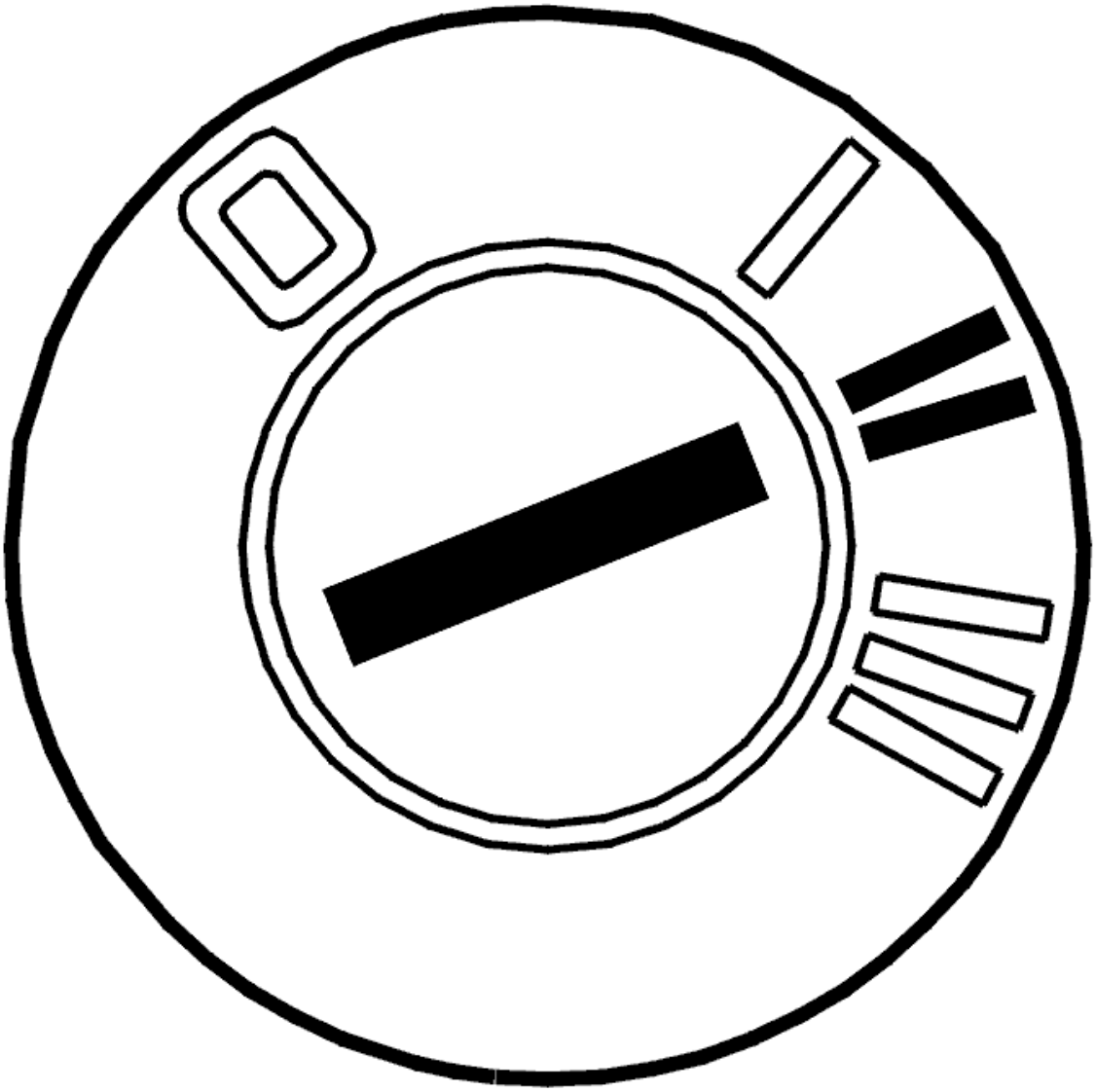

Fig. 204: Identifying Ignition ON
Courtesy of VOLVO CARS CORPORATION

- Ignition off
- Disconnect the battery negative lead
- Reinstall the connectors, components etc.
- Ignition on
- Connect the battery negative lead.

WARNING: There must not be anyone inside the passenger compartment when the battery is connected.

- Read off diagnostic trouble codes (DTCs).

The fault is no longer present if the diagnostic trouble code (DTC) status is intermittent.

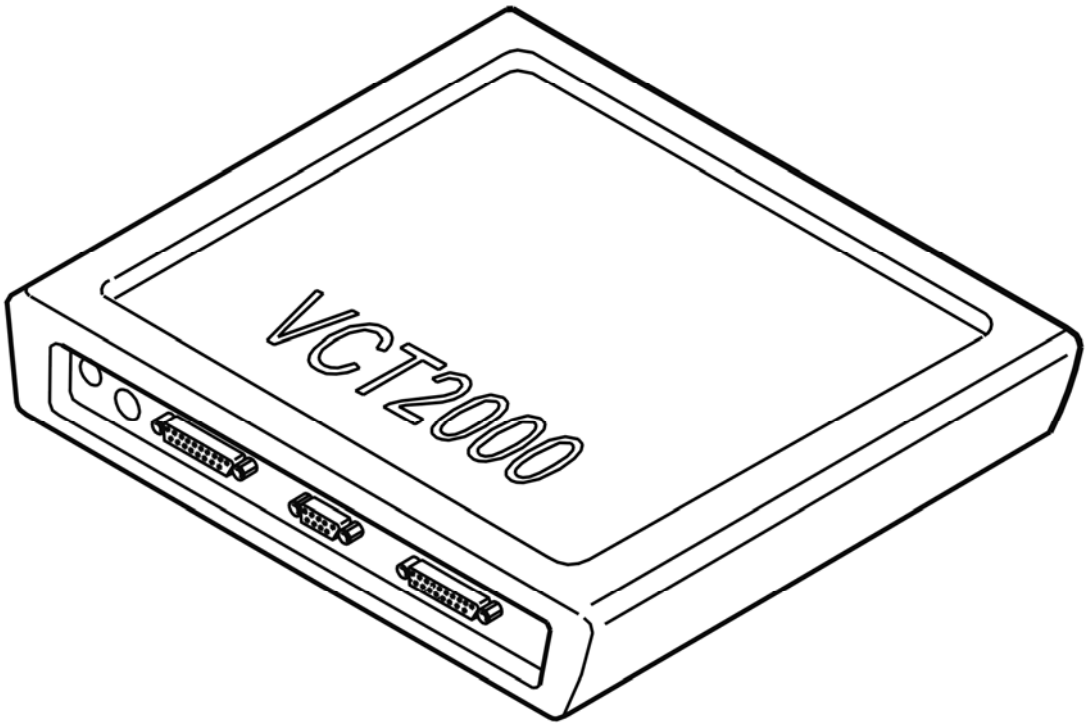

Fig. 205: Identifying VCT2000 Diagnostic Tool Symbol In VIDA
Courtesy of VOLVO CARS CORPORATION

Is the diagnostic trouble code (DTC) intermittent?

- **YES**

  VERIFIED: Troubleshooting has been completed.

- **NO**

  See: **INFORMATION**

INFORMATION

FAULT-TRACING INFORMATION

The fault should have been detected and remedied. As this is not the case fault-tracing has failed.

Exit fault-tracing for this diagnostic trouble code (DTC) or make another attempt.

SRS-0259: OCCUPANT WEIGHT SENSOR. SIGNAL MISSING (2005-2012)

DIAGNOSTIC TROUBLE CODE (DTC) INFORMATION SRS-0259

Condition

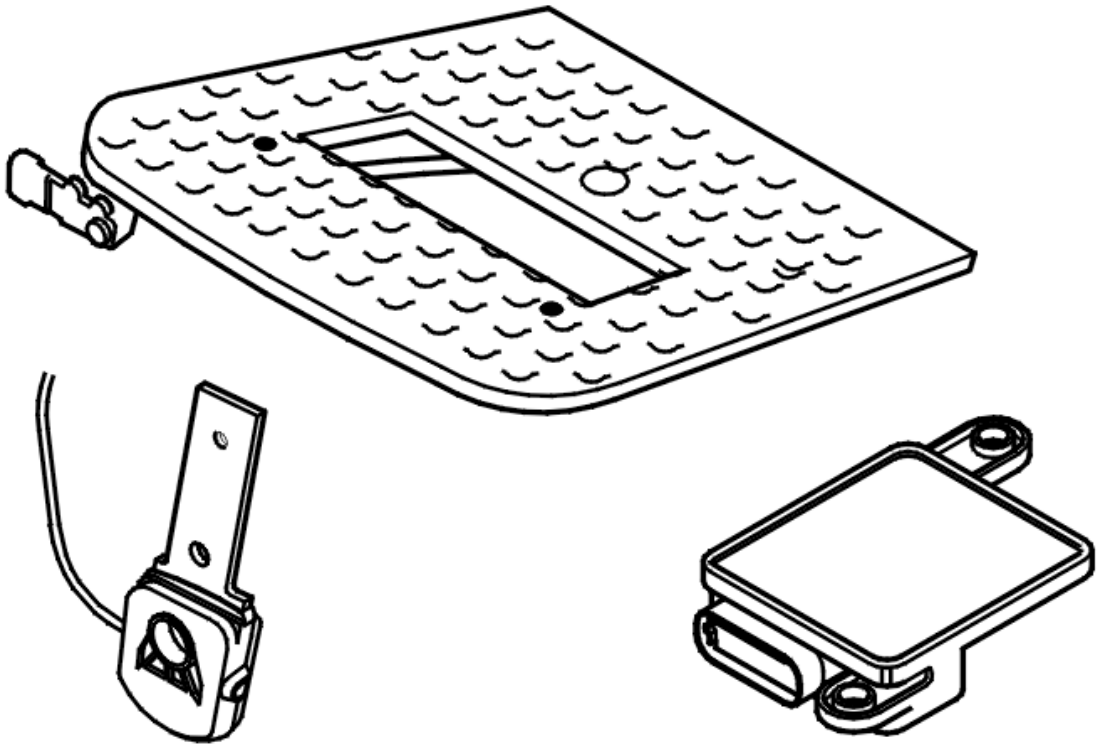

Fig. 206: Identifying Occupant Weight Sensor (OWS) Assembly
Courtesy of VOLVO CARS CORPORATION

The supplemental restraint system module (SRS) checks the LIN signal from the occupant weight sensor (OWS).

The diagnostic trouble code (DTC) is stored if the control module detects that:

The voltage from the Occupant weight sensor (OWS) is too low or is missing.

The control module's test for the diagnostic trouble code (DTC) starts in the event of:

Ignition position I, II and III.

Substitute Value

- Passenger airbag is deactivated.

Possible Source

- Open-circuit in the signal cable (LIN-bus) or in the connectors between the supplemental restraint system module (SRS) and the occupant weight sensor (OWS).
- Damaged occupant weight sensor (OWS).

Fault symptom[s]

- SRS indicator lamp lit
- PAD lamp lit.
- SRS warning message displayed

FAULTY COMMUNICATION

CHECKING THE COMPONENT

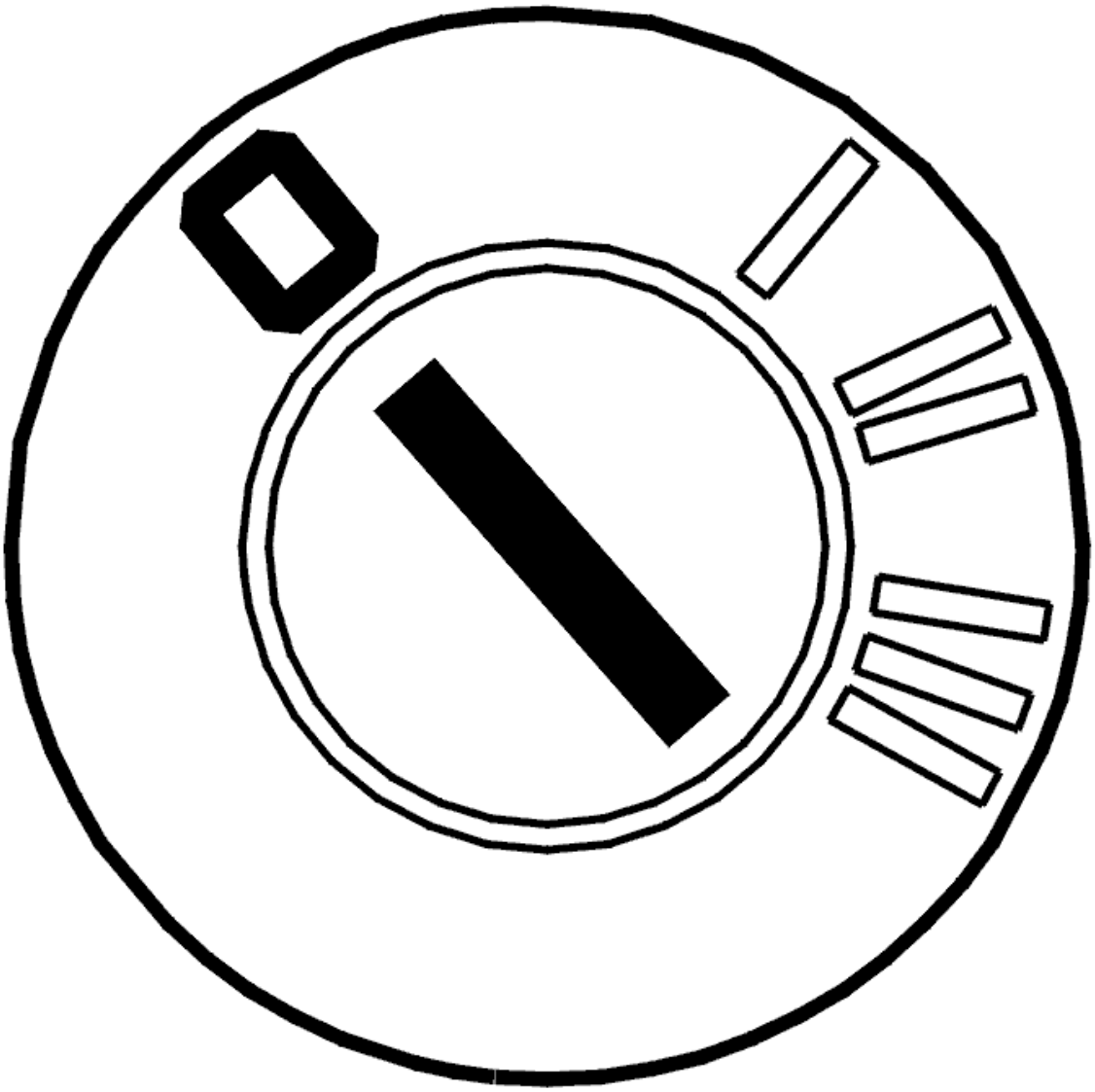

Fig. 207: Identifying Ignition OFF

Courtesy of VOLVO CARS CORPORATION

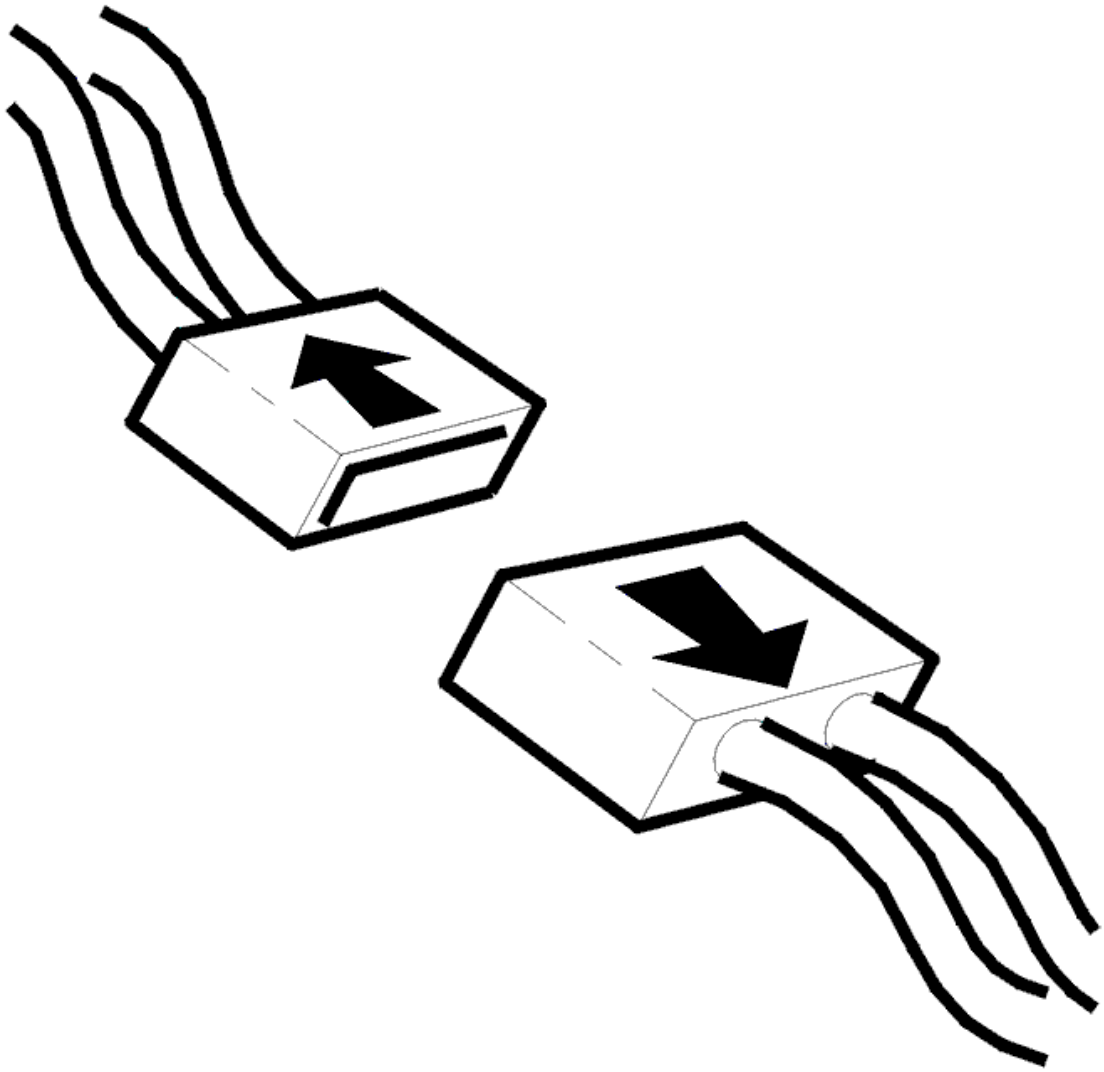

Fig. 208: Disconnecting Connector
Courtesy of VOLVO CARS CORPORATION

- Switch off the ignition. Wait 10 seconds
- Disconnect the 10-pin connector from the occupant weight sensor (OWS)
- Disconnect connector A from the central electronic module (CEM).

CAUTION: Do not touch the terminal pins in the supplemental restraint system module (SRS), the central electronic module (CEM) and the occupant weight sensor (OWS). There is a risk of static discharge which could damage the control modules.

Check the connectors for the central electronic module (CEM) and the occupant weight sensor (OWS).

Check for damage to pins and terminals in the connectors. Check for contact resistance.

Also check the other connectors that connect the power supply cable between the central electronic module (CEM) and the occupant weight sensor (OWS).

Remedy as necessary.

Check the power supply cable between the central electronic module (CEM) and the connector for the occupant weight sensor (OWS). Check for an open-circuit. Check the fuse.

Check the cable between:

- Central electronic module (CEM) terminal #A10 and the 10-pin connector for occupant weight sensor (OWS) terminal #2.

Remedy as necessary.

Check the ground connection for the occupant weight sensor (OWS). Check for an open-circuit. Check for contact resistance.

Check the cable between the 10-pin connector for the occupant weight sensor (OWS) terminal #9 and the ground terminal.

Remedy as necessary.

Disconnect the connector from the supplemental restraint system module (SRS). Check the communication cable (LIN-bus) between the supplemental restraint system module (SRS) and the 10-pin connector for the occupant weight sensor (OWS). Check for an open-circuit.

Check the cable between:

- Supplemental restraint system module (SRS) terminal #57 and the 10-pin connector for occupant weight sensor (OWS) terminal #10.

Remedy as necessary.

Replace the pressure sensor and the occupant weight sensor module (OWS) if no fault is detected. The pressure sensor and occupant weight sensor (OWS) module are included in the occupant weight sensor (OWS) system.

NOTE: **After replacing the pressure sensor and the occupant weight sensor (OWS) module in the occupant weight sensor (OWS) system, the supplemental restraint system module (SRS) must be configured. This is done by storing the ID number for the occupant weight sensor (OWS).**

The occupant weight sensor (OWS) must also be calibrated.

Other information

- see **CONNECTING THE BREAKOUT BOX**
- For -2004, see **SIGNAL SPECIFICATION** or for model year 2005-, see **SIGNAL SPECIFICATION**
- For -2004, see: **CENTRAL ELECTRONIC MODULE (CEM), REPLACING**
- For 2005-, see: **CENTRAL ELECTRONIC MODULE (CEM), REPLACING** .
- see **SUPPLEMENTAL RESTRAINT SYSTEM MODULE (SRS), REPLACING**
- see **OCCUPANT WEIGHT SENSOR (OWS), REPLACING**
- see **STORING THE ID NUMBER FOR THE OCCUPANT WEIGHT SENSOR (OWS)**
- see **CALIBRATING THE OCCUPANT WEIGHT SENSOR (OWS)**
- see **CABLE HARNESS SRS SYSTEM, REPAIR**
- see **CHECKING WIRING AND TERMINALS**

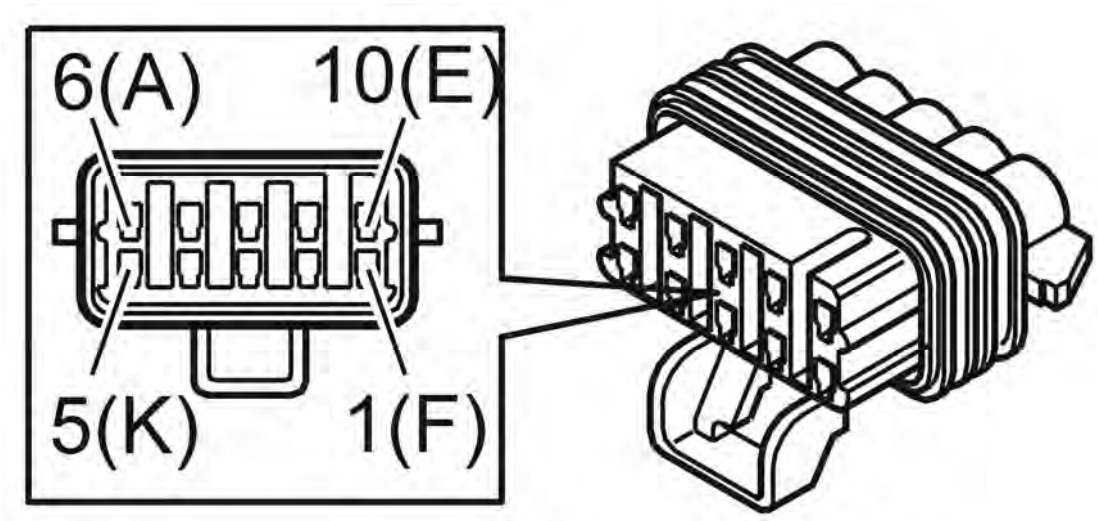

Fig. 209: Identifying 10-Pin Connector
Courtesy of VOLVO CARS CORPORATION

- **Continue**

See: **VERIFICATION**

VERIFICATION

VERIFICATION

HINT: After carrying out the repair, check that the fault has been remedied.

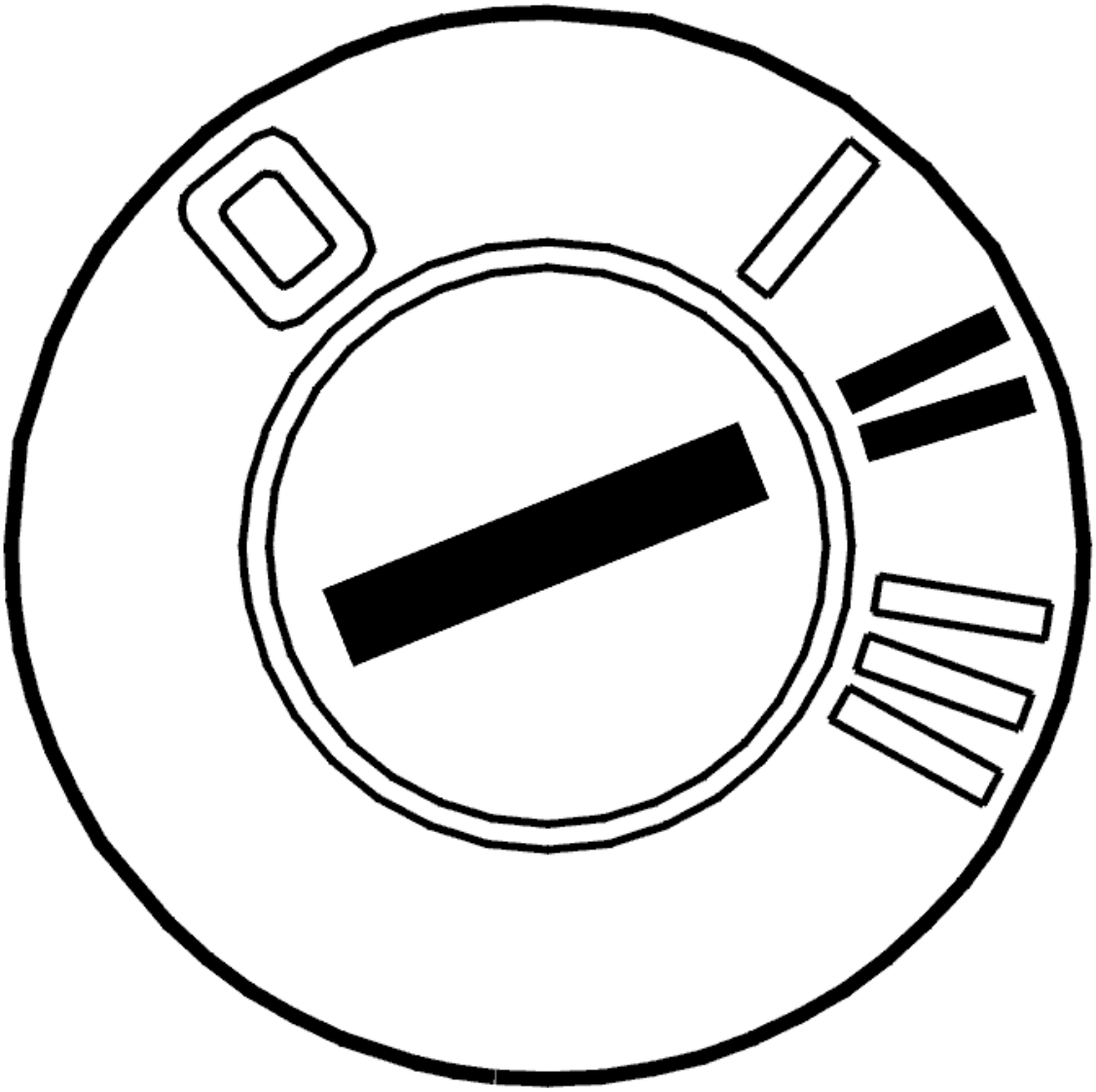

Fig. 210: Identifying Ignition ON
Courtesy of VOLVO CARS CORPORATION

- Ignition off
- Disconnect the battery negative lead
- Reinstall the connectors, components etc.
- Ignition on
- Connect the battery negative lead.

WARNING: There must not be anyone inside the passenger compartment when the battery is connected.

- Read off diagnostic trouble codes (DTCs).

The fault is no longer present if the diagnostic trouble code (DTC) status is intermittent.

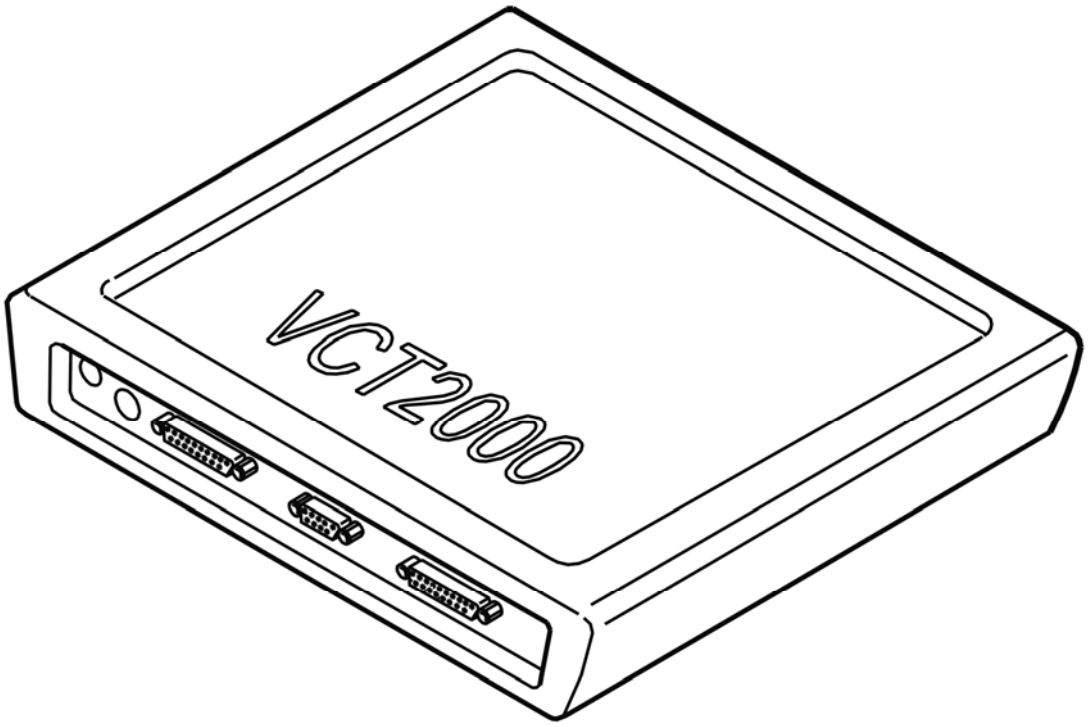

Fig. 211: Identifying VCT2000 Diagnostic Tool Symbol In VIDA
Courtesy of VOLVO CARS CORPORATION

Is the diagnostic trouble code (DTC) intermittent?

- **YES**

  VERIFIED: Troubleshooting has been completed.

- **NO**

  See: **INFORMATION**

INFORMATION

FAULT-TRACING INFORMATION

The fault should have been detected and remedied. As this is not the case fault-tracing has failed.

Exit fault-tracing for this diagnostic trouble code (DTC) or make another attempt.

SRS-025A: OCCUPANT WEIGHT SENSOR (OWS). INTERNAL FAULT (2005-

2012)

DIAGNOSTIC TROUBLE CODE (DTC) INFORMATION SRS-025A

Condition

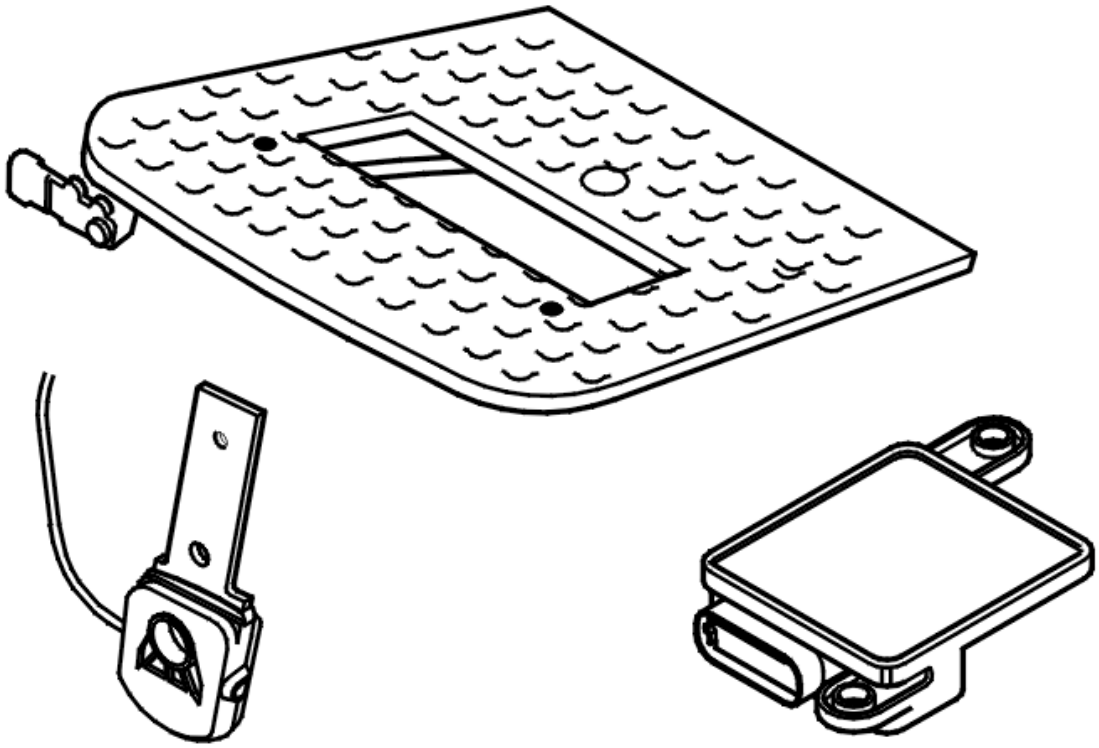

Fig. 212: Identifying Occupant Weight Sensor (OWS) Assembly
Courtesy of VOLVO CARS CORPORATION

The supplemental restraint system module (SRS) checks the signal from the occupant weight sensor (OWS).

The diagnostic trouble code (DTC) is stored if the control module registers an internal fault in the occupant weight sensor (OWS).

The diagnostic trouble code (DTC) can be diagnosed in ignition positions I, II and III.

Substitute Value

- Passenger airbag is deactivated.

Possible Source

- Internal fault in the occupant weight sensor (OWS).

Fault symptom[s]

- SRS indicator lamp lit
- PAD lamp lit.

INTERNAL FAULT

CHECKING THE COMPONENT AND WIRING

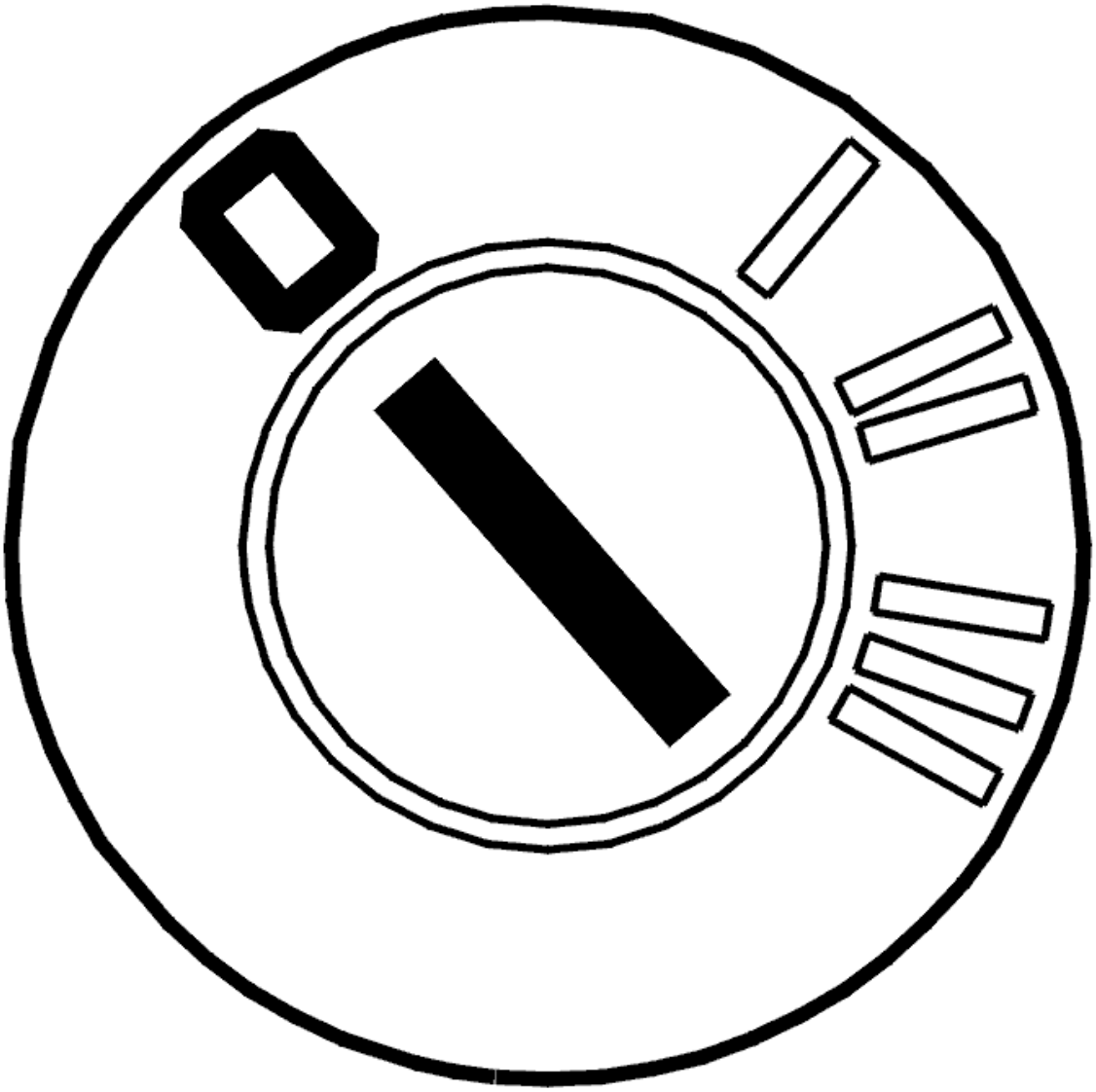

Fig. 213: Identifying Ignition OFF
Courtesy of VOLVO CARS CORPORATION

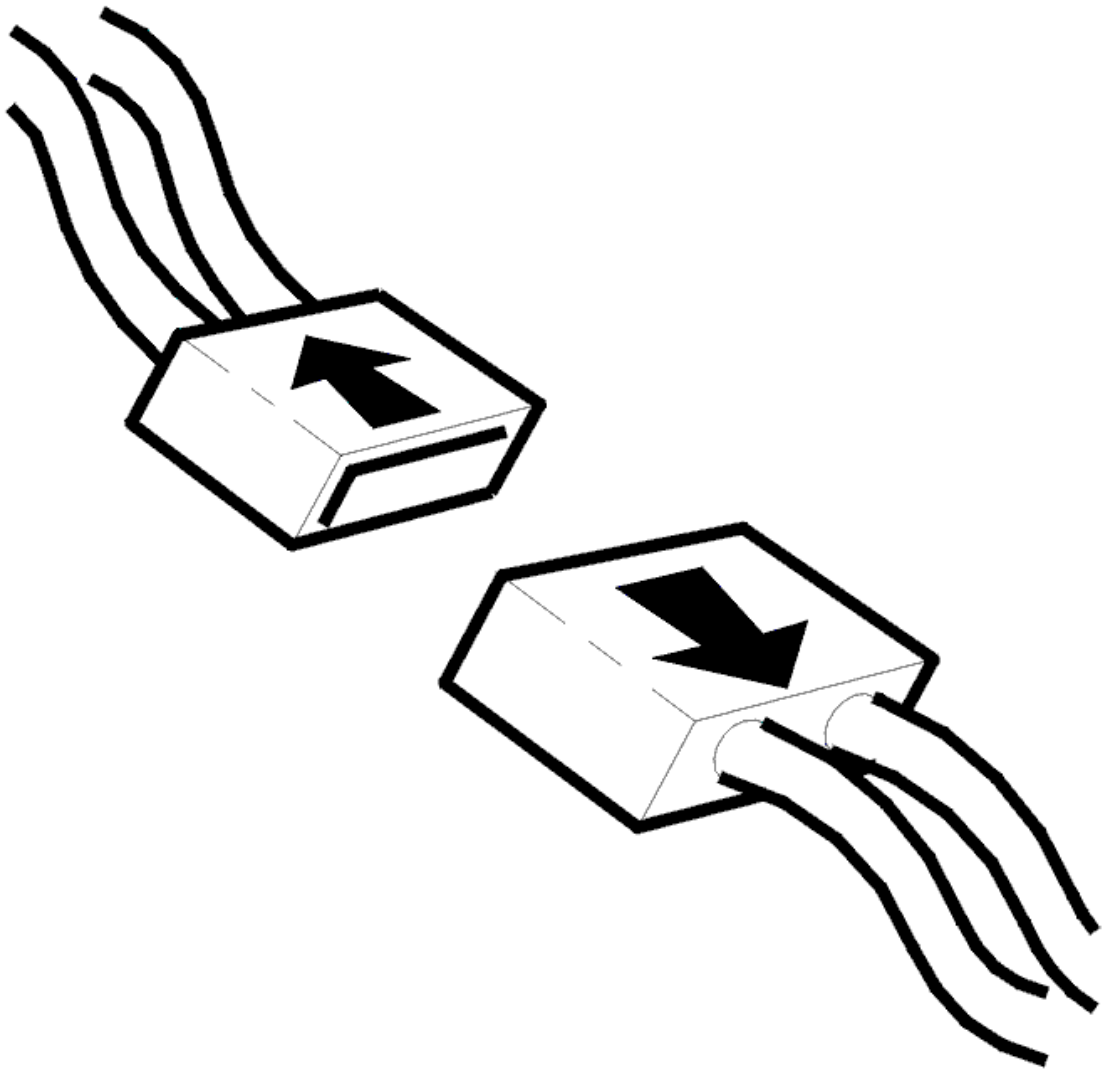

Fig. 214: Disconnecting Connector
Courtesy of VOLVO CARS CORPORATION

- Switch off the ignition. Wait 10 seconds
- Disconnect the 10-pin connector from the occupant weight sensor (OWS) module
- Disconnect the connector from the seat belt force sensor.

CAUTION: Avoid touching the terminal pins in the occupant weight sensor (OWS). There is a risk of static discharge which could damage the occupant weight sensor (OWS).

Check the connectors for the seat belt force sensor and the occupant weight sensor (OWS) module. Check for damage to pins and terminals in the connectors.

Remedy as necessary.

Check the wiring between the occupant weight sensor (OWS) module and the seat belt force sensor. Check for damage.

Remedy as necessary.

If no malfunction is found:Replace the seat belt force limiter.

Other information

- see **SIGNAL SPECIFICATION**
- For replacement of seatbelt force sensor:**FORCE LIMITER MECHANICAL/BELT TENSION SENSOR, REPLACING (2005-2012)**
- see **CHECKING WIRING AND TERMINALS**

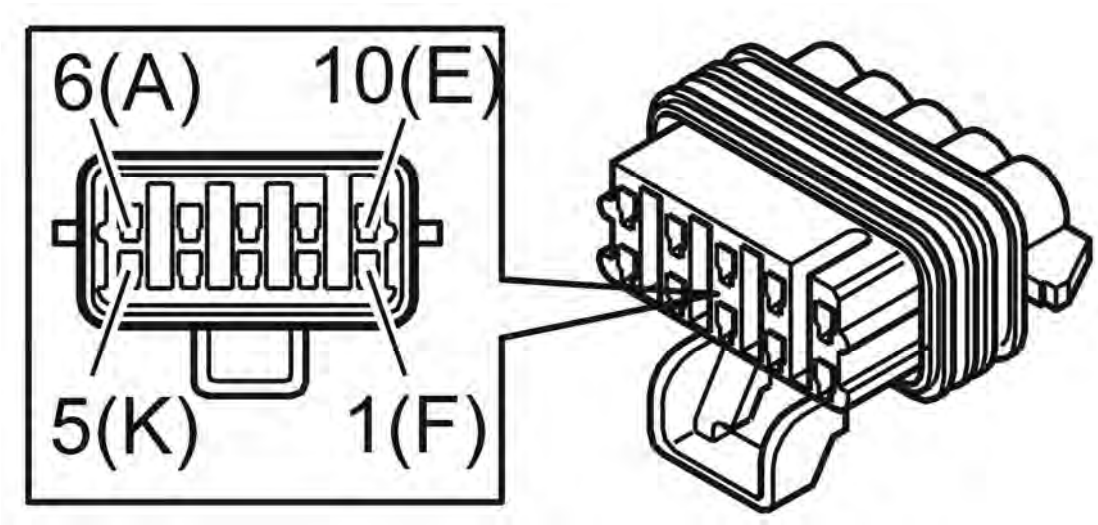

Fig. 215: Identifying 10-Pin Connector
Courtesy of VOLVO CARS CORPORATION

- **Continue**

  See: **VERIFICATION**

VERIFICATION

VERIFICATION

HINT: After carrying out the repair, check that the fault has been remedied.

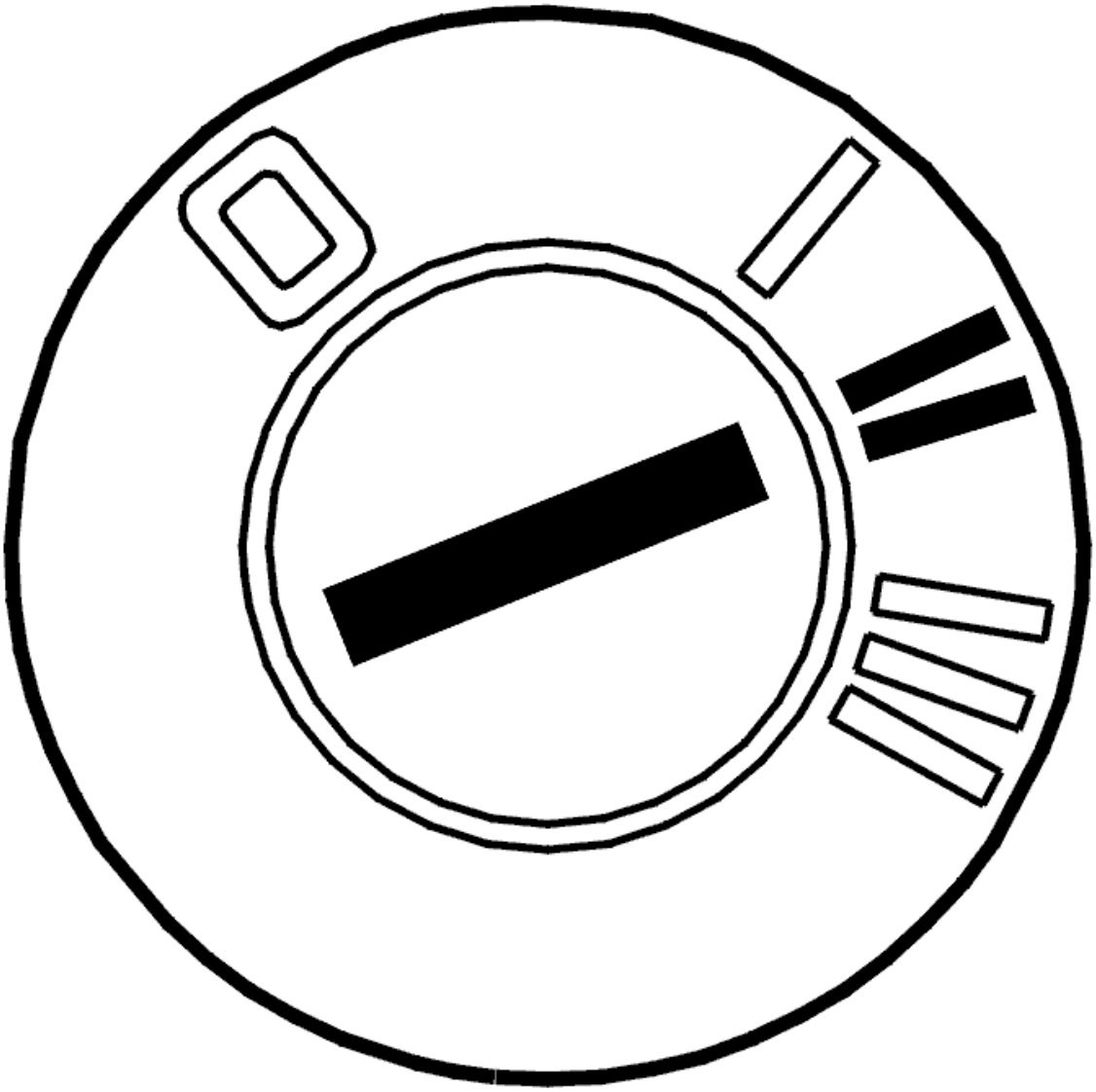

Fig. 216: Identifying Ignition ON
Courtesy of VOLVO CARS CORPORATION

- Ignition off
- Disconnect the battery negative lead
- Reinstall the connectors, components etc.
- Ignition on
- Connect the battery negative lead.

WARNING: There must not be anyone inside the passenger compartment when the battery is connected.

- Read off diagnostic trouble codes (DTCs).

The fault is no longer present if the diagnostic trouble code (DTC) status is intermittent.

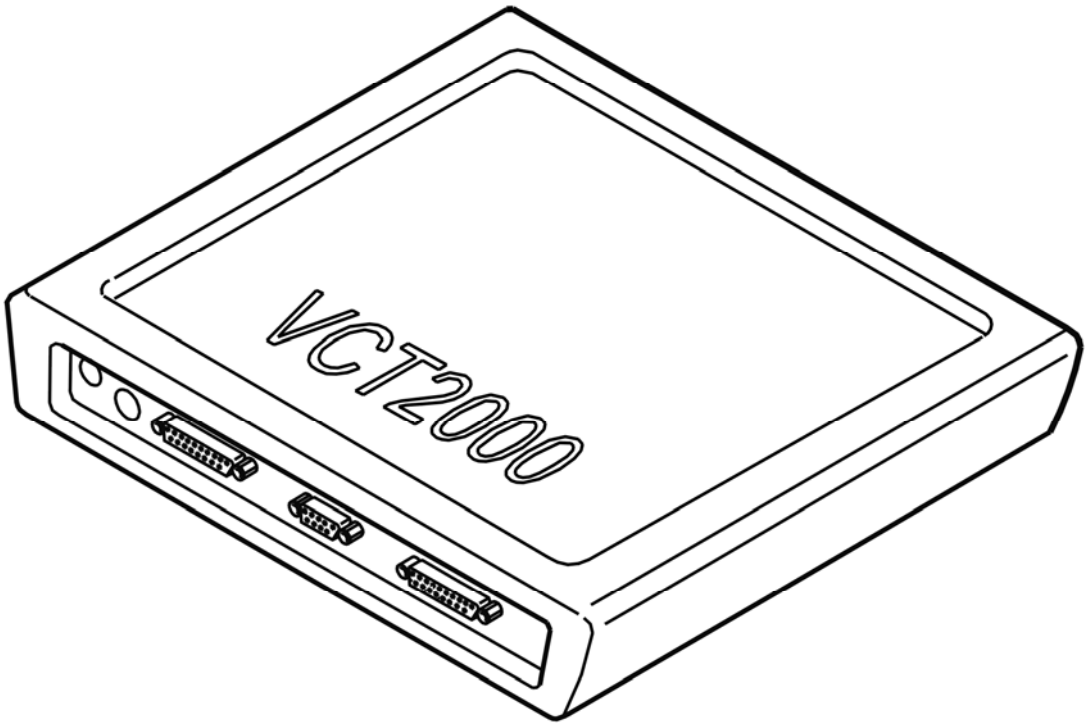

Fig. 217: Identifying VCT2000 Diagnostic Tool Symbol In VIDA
Courtesy of VOLVO CARS CORPORATION

Is the diagnostic trouble code (DTC) intermittent?

- **YES**

  VERIFIED: Troubleshooting has been completed.

- **NO**

  See: **INFORMATION**

INFORMATION

FAULT-TRACING INFORMATION

The fault should have been detected and remedied. As this is not the case fault-tracing has failed.

Exit fault-tracing for this diagnostic trouble code (DTC) or make another attempt.

SRS-025B: OCCUPANT WEIGHT SENSOR (OWS). SIGNAL TOO LOW (2005-

2012)

DIAGNOSTIC TROUBLE CODE (DTC) INFORMATION SRS-025B

Condition

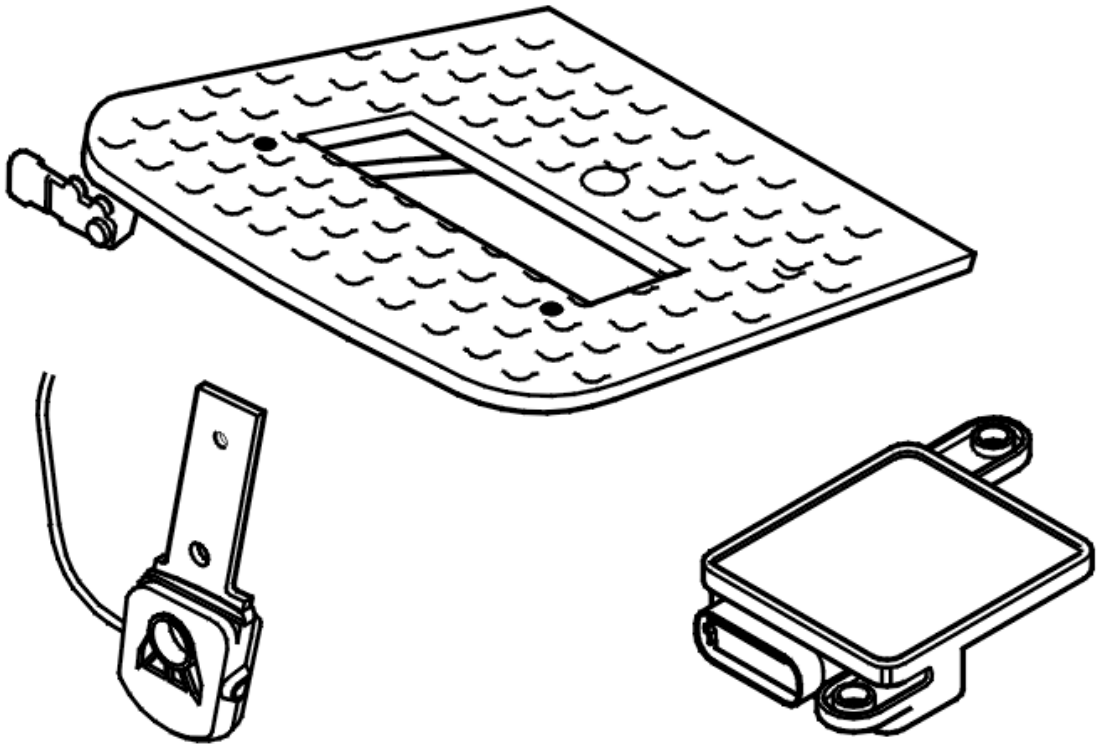

Fig. 218: Identifying Occupant Weight Sensor (OWS) Assembly
Courtesy of VOLVO CARS CORPORATION

The supplemental restraint system module (SRS) checks the signal from the occupant weight sensor (OWS).

The diagnostic trouble code (DTC) is stored if the control module receives a message indicating that the voltage is too low in the occupant weight sensor (OWS).

The diagnostic trouble code (DTC) can be diagnosed in ignition positions I, II and III.

Substitute Value

- Passenger airbag is deactivated.

Possible Source

- Short-circuit to ground in the signal cable or in the connectors between the components in the occupant

weight sensor (OWS).
- Damaged belt tension sensor.

Fault symptom[s]

- SRS indicator lamp lit
- PAD lamp lit.

SIGNAL TOO LOW

CHECKING THE COMPONENT AND WIRING

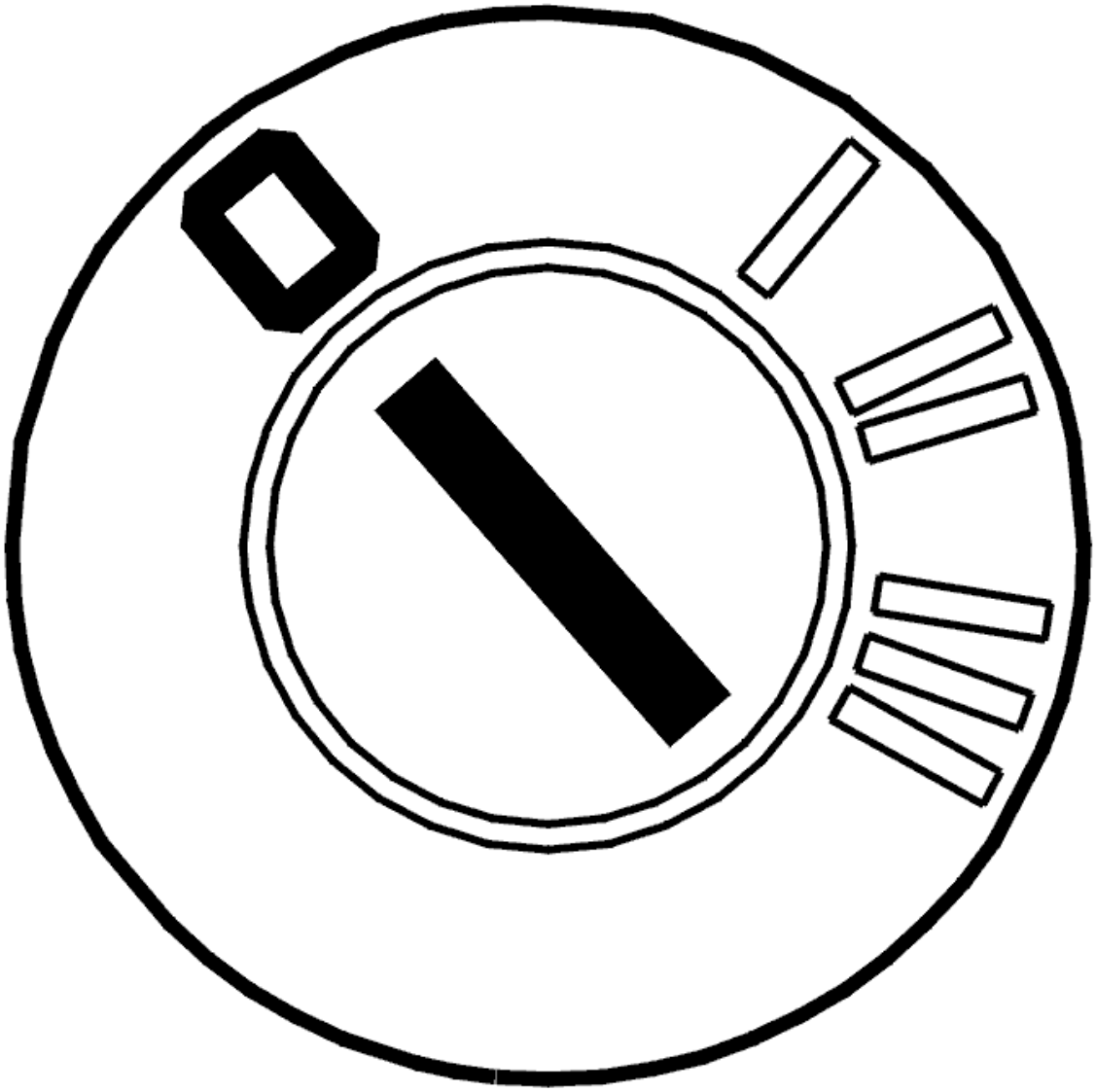

Fig. 219: Identifying Ignition OFF
Courtesy of VOLVO CARS CORPORATION

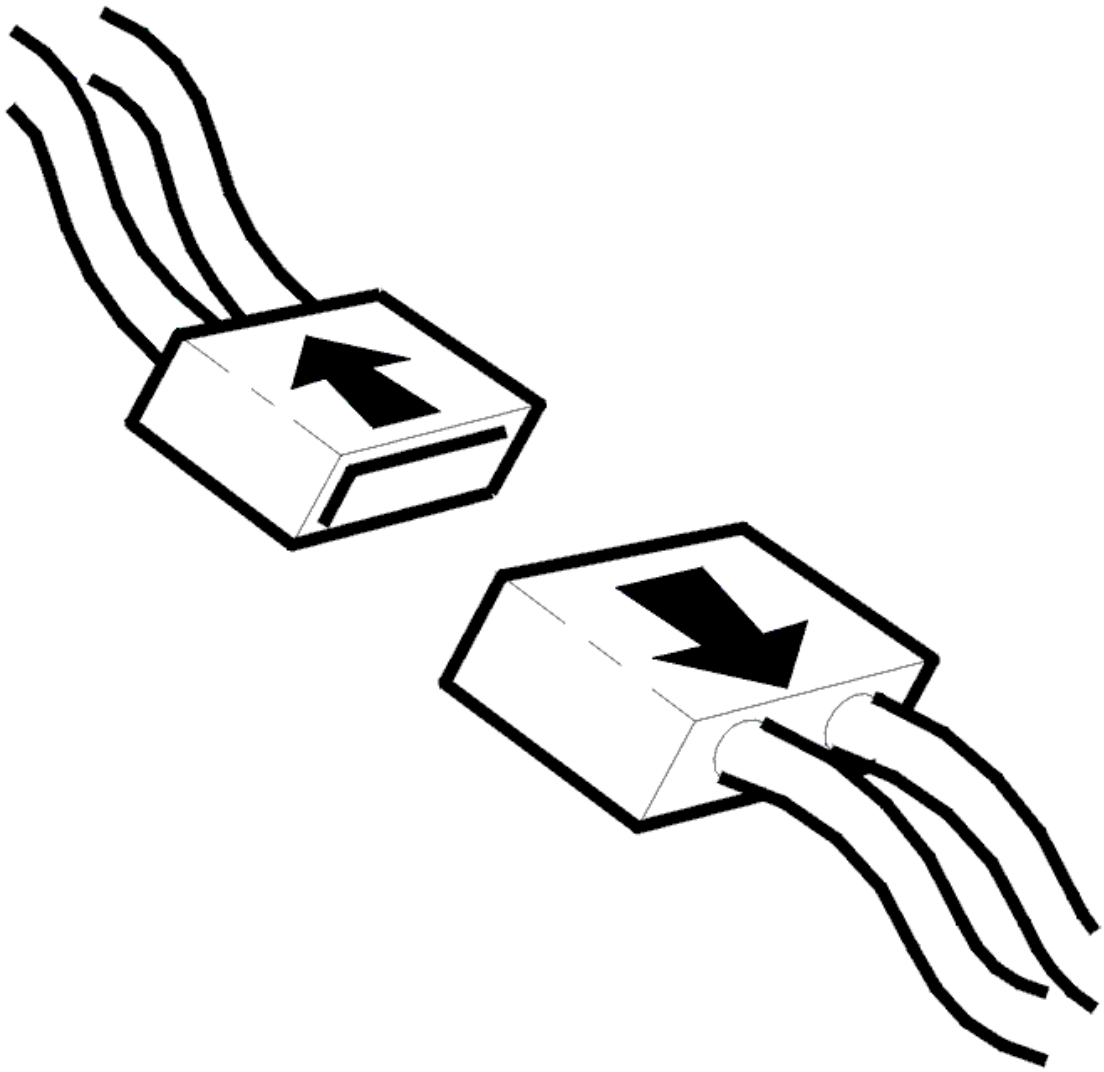

Fig. 220: Disconnecting Connector
Courtesy of VOLVO CARS CORPORATION

- Switch off the ignition. Wait 10 seconds
- Disconnect the 10-pin connector from the occupant weight sensor (OWS) module
- Disconnect the connector from the seat belt force sensor.

CAUTION: Avoid touching the terminal pins in the occupant weight sensor (OWS). There is a risk of static discharge which could damage the occupant weight sensor (OWS).

Check the connectors for the seat belt force sensor and the occupant weight sensor (OWS) module. Check for damage to pins and terminals in the connectors.

Remedy as necessary.

Check the wiring between the occupant weight sensor (OWS) module and the seat belt force sensor. Check for a short-circuit to ground.

Remedy as necessary.

If no malfunction is found:Replace the seat belt force limiter.

Other information

- see **SIGNAL SPECIFICATION**
- For replacement of seatbelt force sensor:**FORCE LIMITER MECHANICAL/BELT TENSION SENSOR, REPLACING (2005-2012)**
- see **CHECKING WIRING AND TERMINALS**

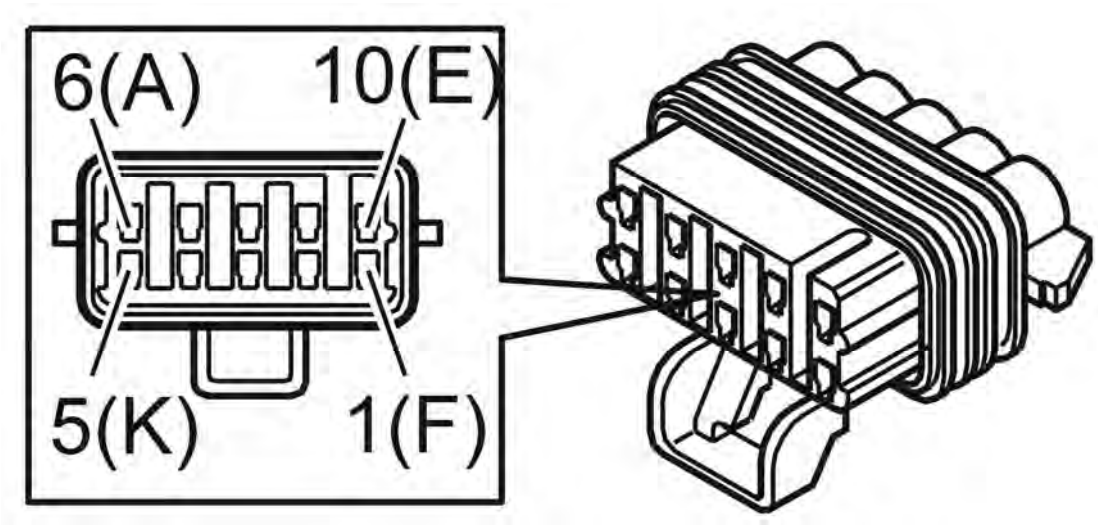

Fig. 221: Identifying 10-Pin Connector
Courtesy of VOLVO CARS CORPORATION

- **Continue**

  See: **VERIFICATION**

VERIFICATION

VERIFICATION

HINT: After carrying out the repair, check that the fault has been remedied.

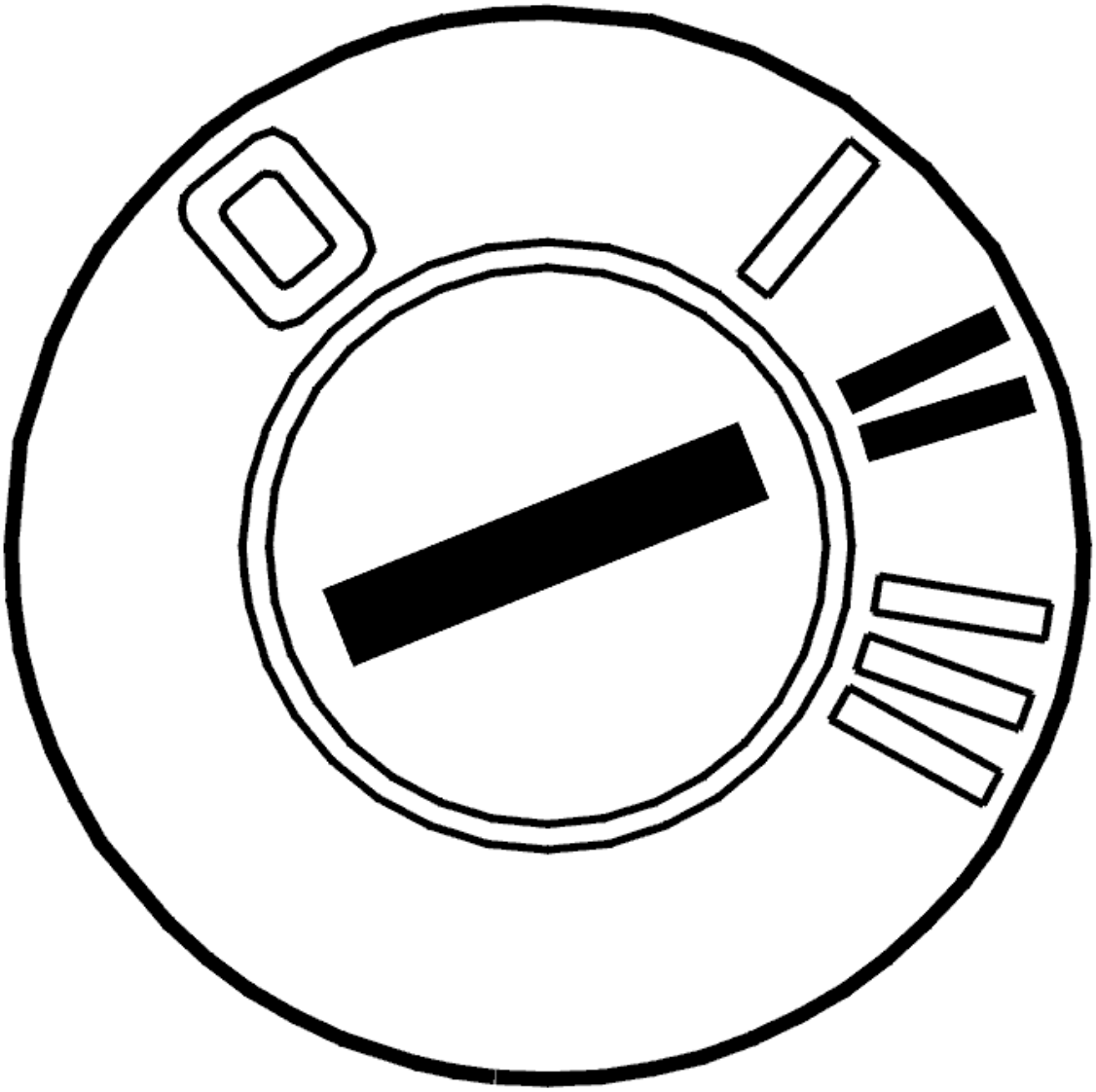

Fig. 222: Identifying Ignition ON
Courtesy of VOLVO CARS CORPORATION

- Ignition off
- Disconnect the battery negative lead
- Reinstall the connectors, components etc.
- Ignition on
- Connect the battery negative lead.

WARNING: There must not be anyone inside the passenger compartment when the battery is connected.

- Read off diagnostic trouble codes (DTCs).

The fault is no longer present if the diagnostic trouble code (DTC) status is intermittent.

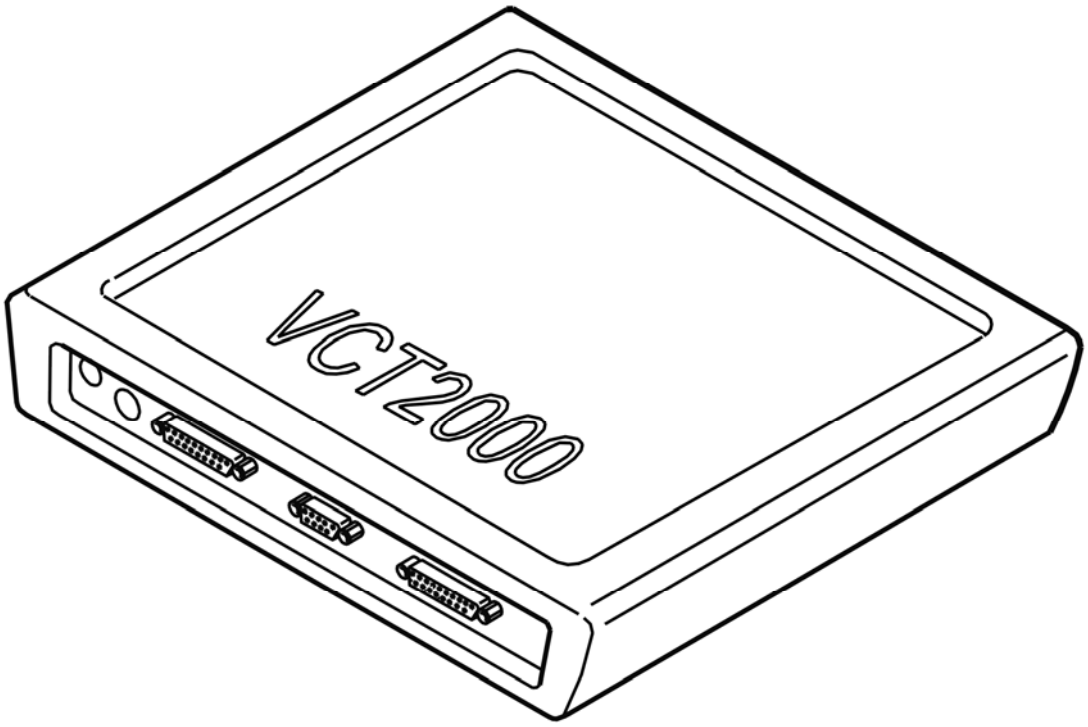

Fig. 223: Identifying VCT2000 Diagnostic Tool Symbol In VIDA
Courtesy of VOLVO CARS CORPORATION

Is the diagnostic trouble code (DTC) intermittent?

- **YES**

  VERIFIED: Troubleshooting has been completed.

- **NO**

  See: **INFORMATION**

INFORMATION

FAULT-TRACING INFORMATION

The fault should have been detected and remedied. As this is not the case fault-tracing has failed.

Exit fault-tracing for this diagnostic trouble code (DTC) or make another attempt.

SRS-025C: OCCUPANT WEIGHT SENSOR (OWS). SIGNAL TOO HIGH (2005-

2012)

DIAGNOSTIC TROUBLE CODE (DTC) INFORMATION SRS-025C

Condition

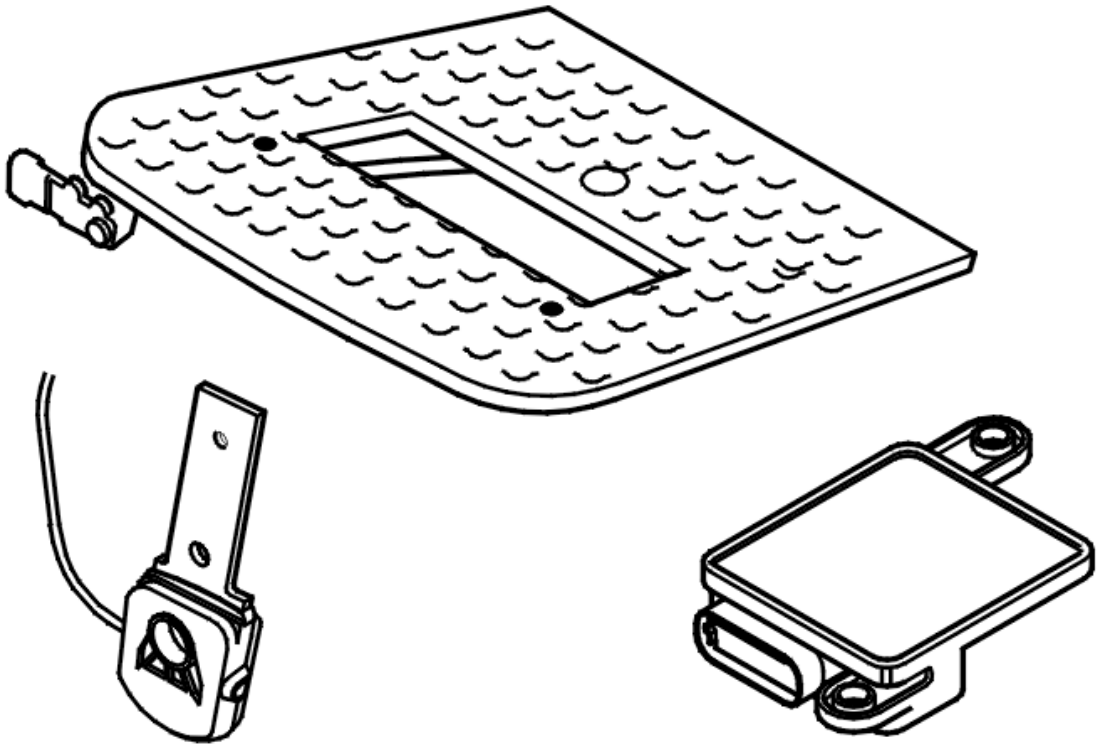

Fig. 224: Identifying Occupant Weight Sensor (OWS) Assembly
Courtesy of VOLVO CARS CORPORATION

The supplemental restraint system module (SRS) checks the signal from the occupant weight sensor (OWS).

The diagnostic trouble code (DTC) is stored if the control module receives a message indicating that the voltage is too high in the occupant weight sensor (OWS).

The diagnostic trouble code (DTC) can be diagnosed in ignition positions I, II and III.

Substitute Value

- Passenger airbag is deactivated.

Possible Source

- Short-circuit to supply voltage in the signal cable or in the connectors between the components in the

occupant weight sensor (OWS).
- Damaged belt tension sensor.

Fault symptom[s]

- SRS indicator lamp lit
- PAD lamp lit.

SIGNAL TOO HIGH

CHECKING THE COMPONENT AND WIRING

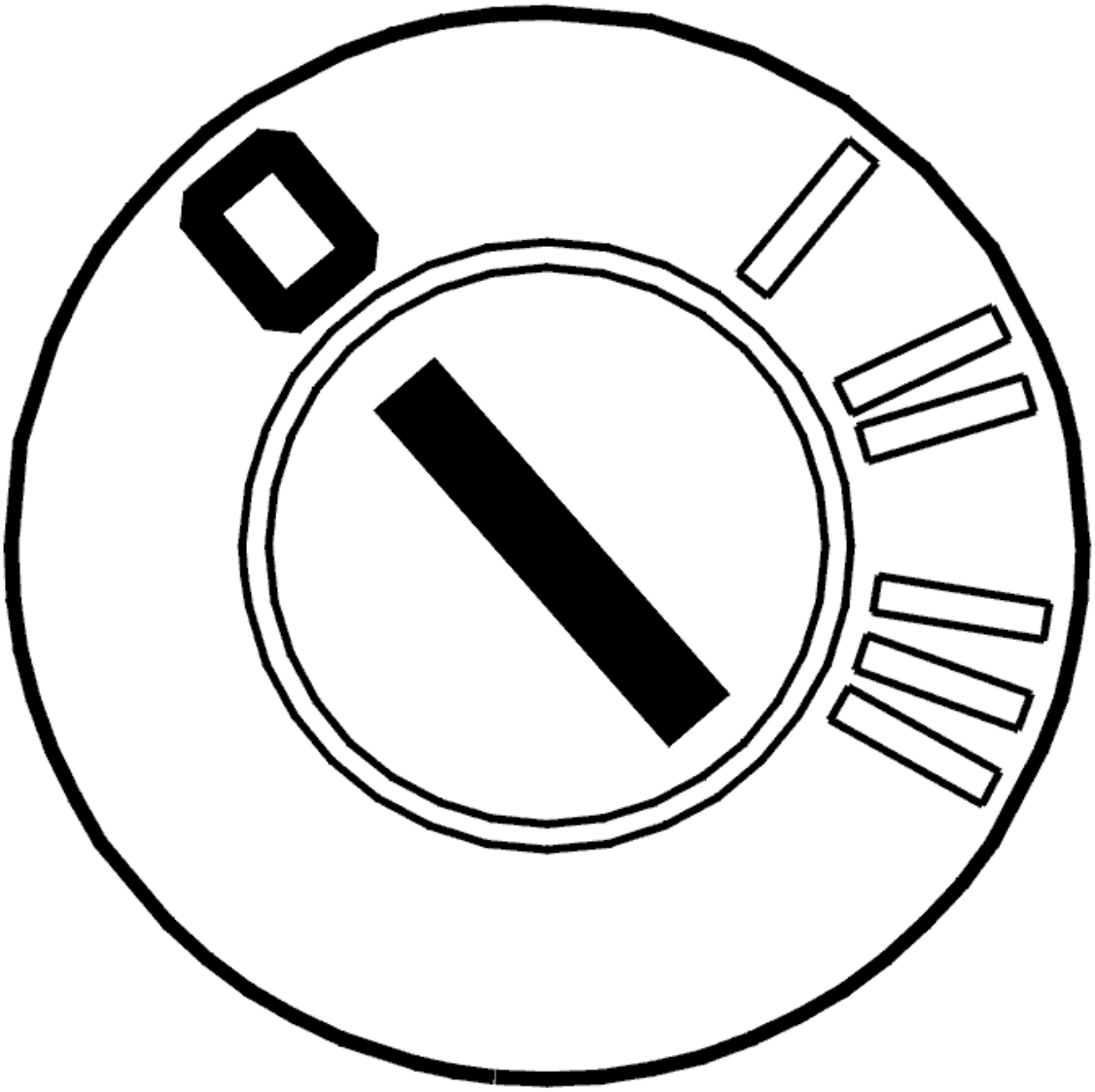

Fig. 225: Identifying Ignition OFF
Courtesy of VOLVO CARS CORPORATION

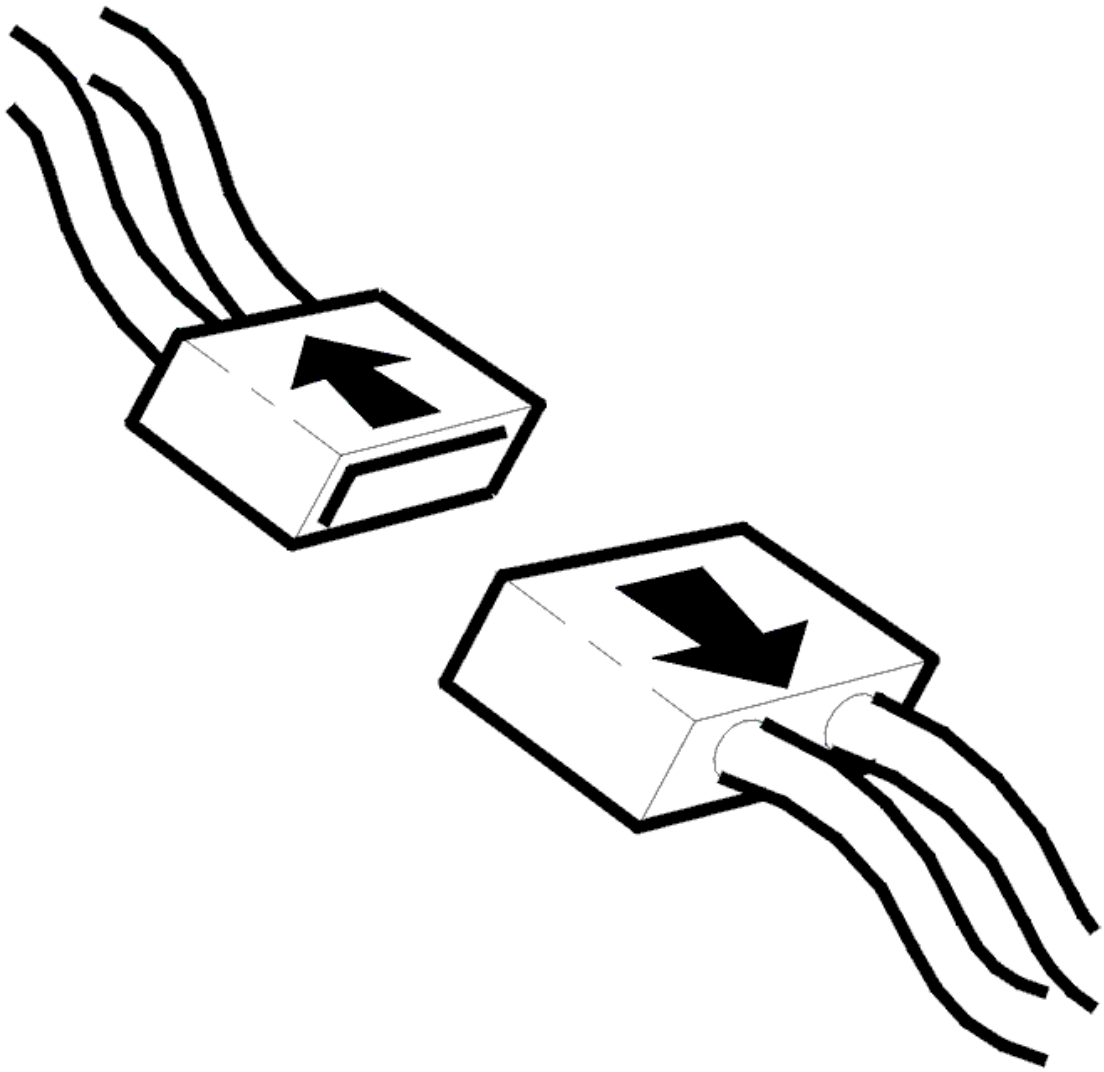

Fig. 226: Disconnecting Connector
Courtesy of VOLVO CARS CORPORATION

- Switch off the ignition. Wait 10 seconds
- Disconnect the 10-pin connector from the occupant weight sensor (OWS) module
- Disconnect the connector from the seat belt force sensor.

CAUTION: Avoid touching the terminal pins in the occupant weight sensor (OWS). There is a risk of static discharge which could damage the occupant weight sensor (OWS).

Check the connectors for the seat belt force sensor and the occupant weight sensor (OWS) module. Check for damage to pins and terminals in the connectors.

Remedy as necessary.

Check the wiring between the occupant weight sensor (OWS) module and the seat belt force sensor. Check for a short-circuit to supply voltage.

Remedy as necessary.

If no malfunction is found:Replace the seat belt force limiter.

Other information

- see **SIGNAL SPECIFICATION**
- For replacement of seatbelt force sensor:**FORCE LIMITER MECHANICAL/BELT TENSION SENSOR, REPLACING (2005-2012)**
- see **CHECKING WIRING AND TERMINALS**

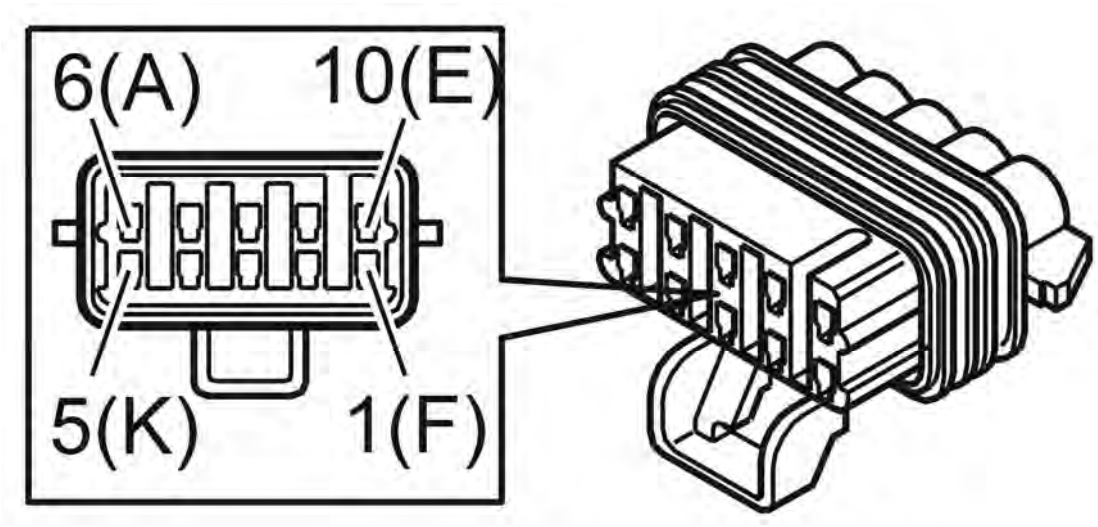

Fig. 227: Identifying 10-Pin Connector
Courtesy of VOLVO CARS CORPORATION

- **Continue**

  See: **VERIFICATION**

VERIFICATION

VERIFICATION

HINT: After carrying out the repair, check that the fault has been remedied.

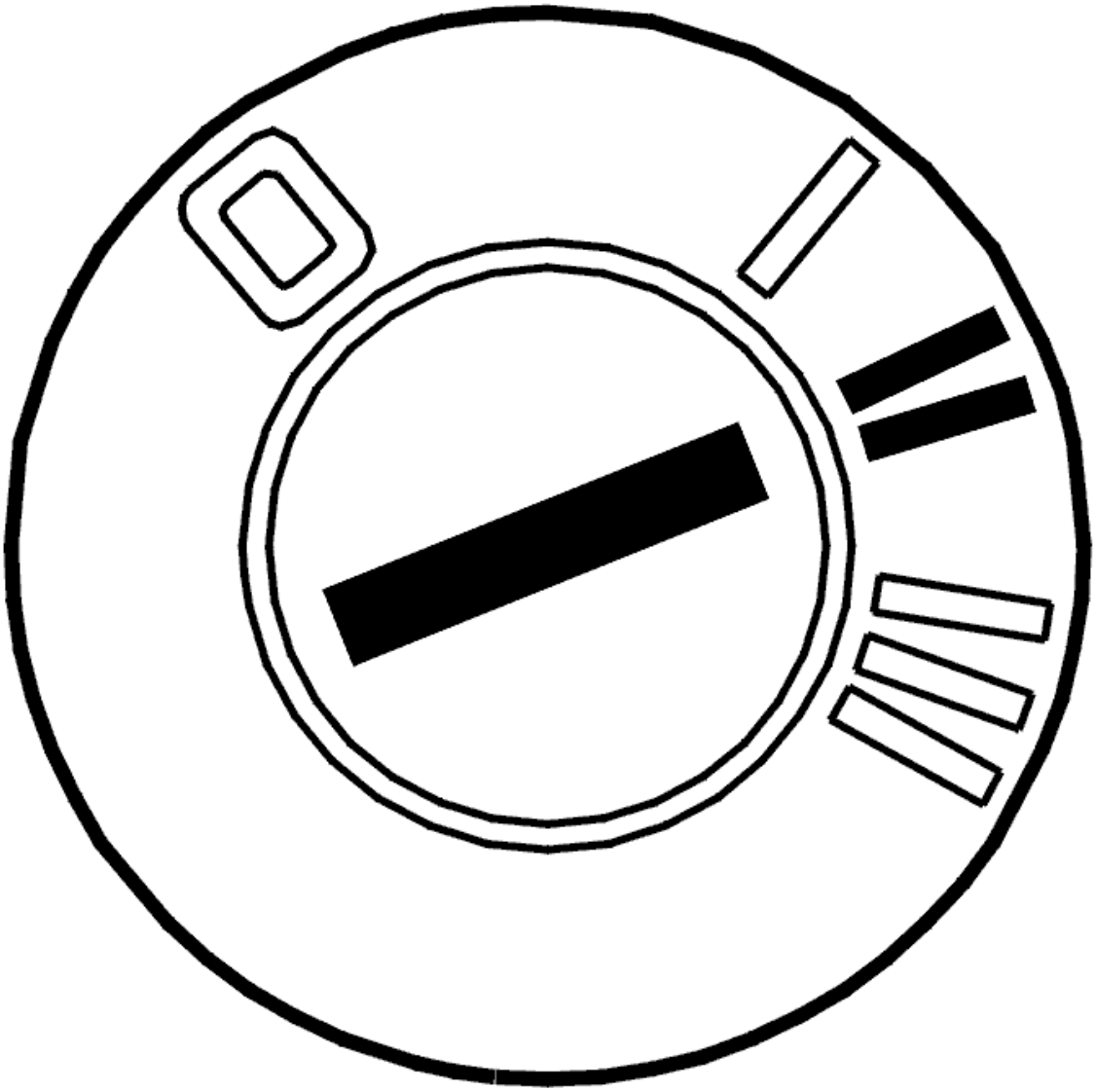

Fig. 228: Identifying Ignition ON
Courtesy of VOLVO CARS CORPORATION

- Ignition off
- Disconnect the battery negative lead
- Reinstall the connectors, components etc.
- Ignition on
- Connect the battery negative lead.

> **WARNING: There must not be anyone inside the passenger compartment when the battery is connected.**

- Read off diagnostic trouble codes (DTCs).

The fault is no longer present if the diagnostic trouble code (DTC) status is intermittent.

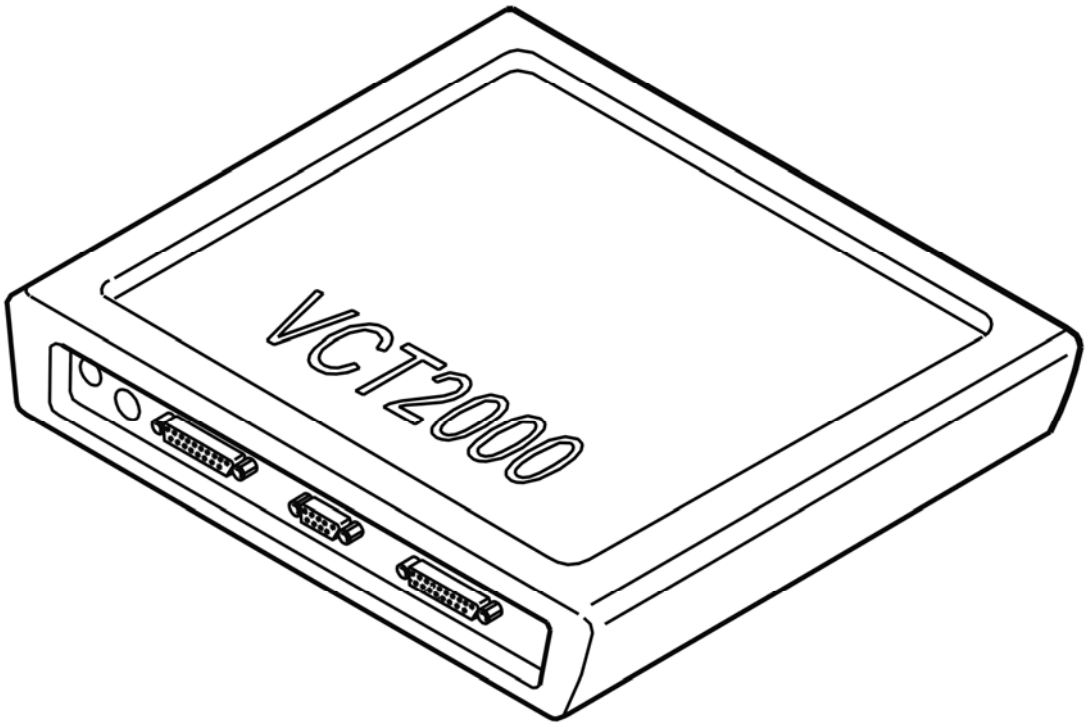

Fig. 229: Identifying VCT2000 Diagnostic Tool Symbol In VIDA
Courtesy of VOLVO CARS CORPORATION

Is the diagnostic trouble code (DTC) intermittent?

- **YES**

  VERIFIED: Troubleshooting has been completed.

- **NO**

  See: **INFORMATION**

INFORMATION

FAULT-TRACING INFORMATION

The fault should have been detected and remedied. As this is not the case fault-tracing has failed.

Exit fault-tracing for this diagnostic trouble code (DTC) or make another attempt.

SRS-025D: OCCUPANT WEIGHT SENSOR (OWS). SIGNAL MISSING (2005-

2012)

DIAGNOSTIC TROUBLE CODE (DTC) INFORMATION SRS-025D

Condition

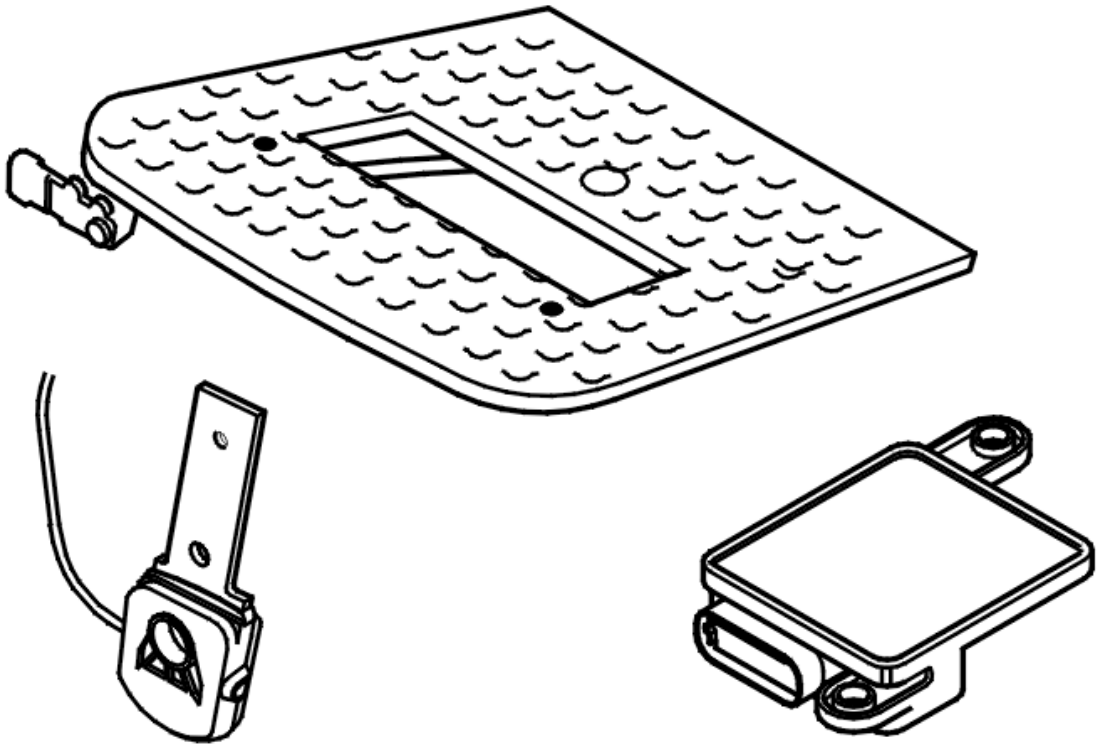

Fig. 230: Identifying Occupant Weight Sensor (OWS) Assembly
Courtesy of VOLVO CARS CORPORATION

The supplemental restraint system module (SRS) checks the signal from the occupant weight sensor (OWS).

The diagnostic trouble code (DTC) is stored if the control module receives a message indicating that there is no signal in the occupant weight sensor (OWS).

The diagnostic trouble code (DTC) can be diagnosed in ignition positions I, II and III.

Substitute Value

- Passenger airbag is deactivated.

Possible Source

- Open circuit in signal line or in connectors between belt tension sensor and the occupant weight sensor

(OWS).
- Damaged belt tension sensor.

Fault symptom[s]

- SRS indicator lamp lit
- PAD lamp lit.

SIGNAL MISSING

CHECKING THE COMPONENT AND WIRING

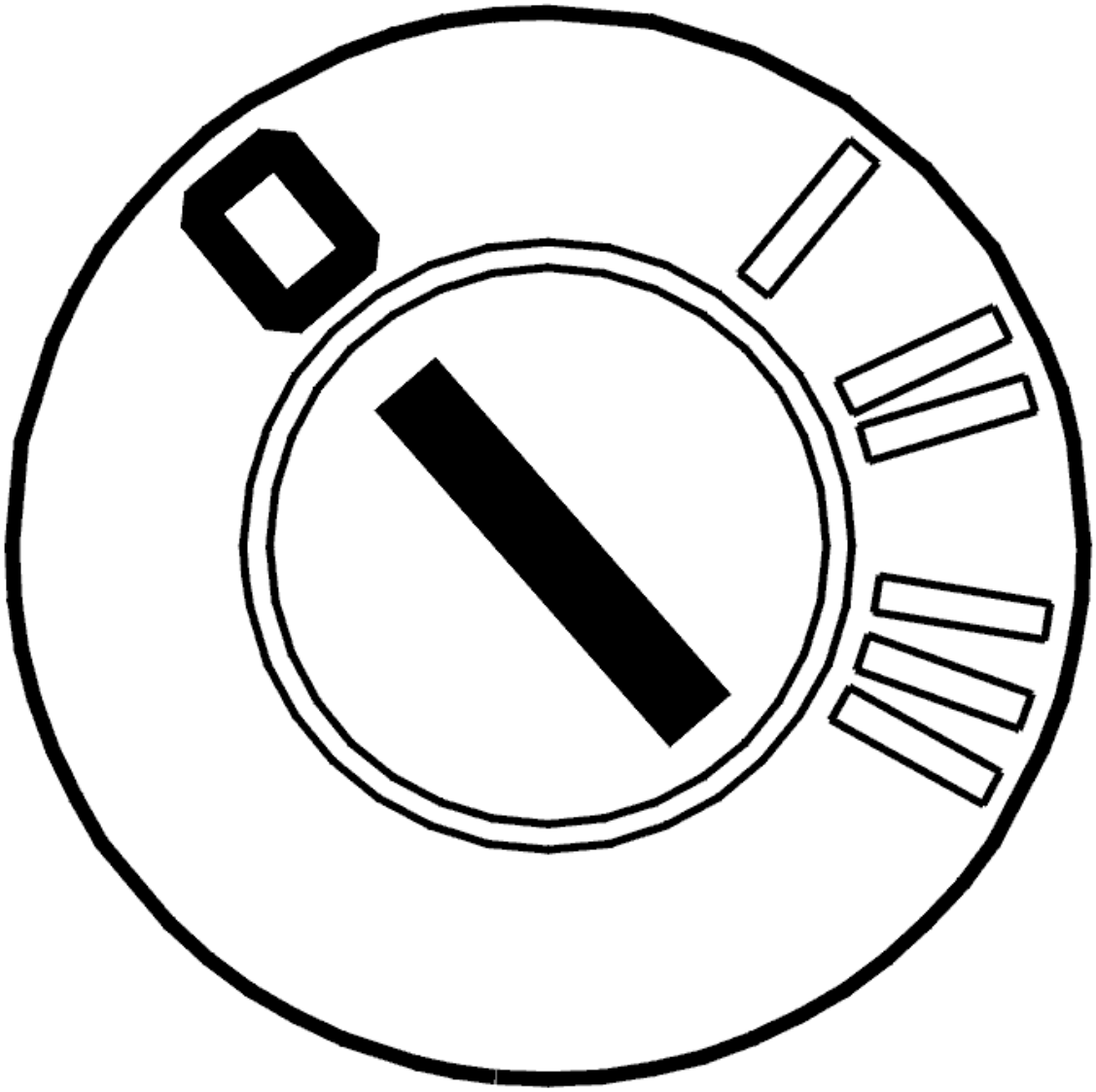

Fig. 231: Identifying Ignition OFF
Courtesy of VOLVO CARS CORPORATION

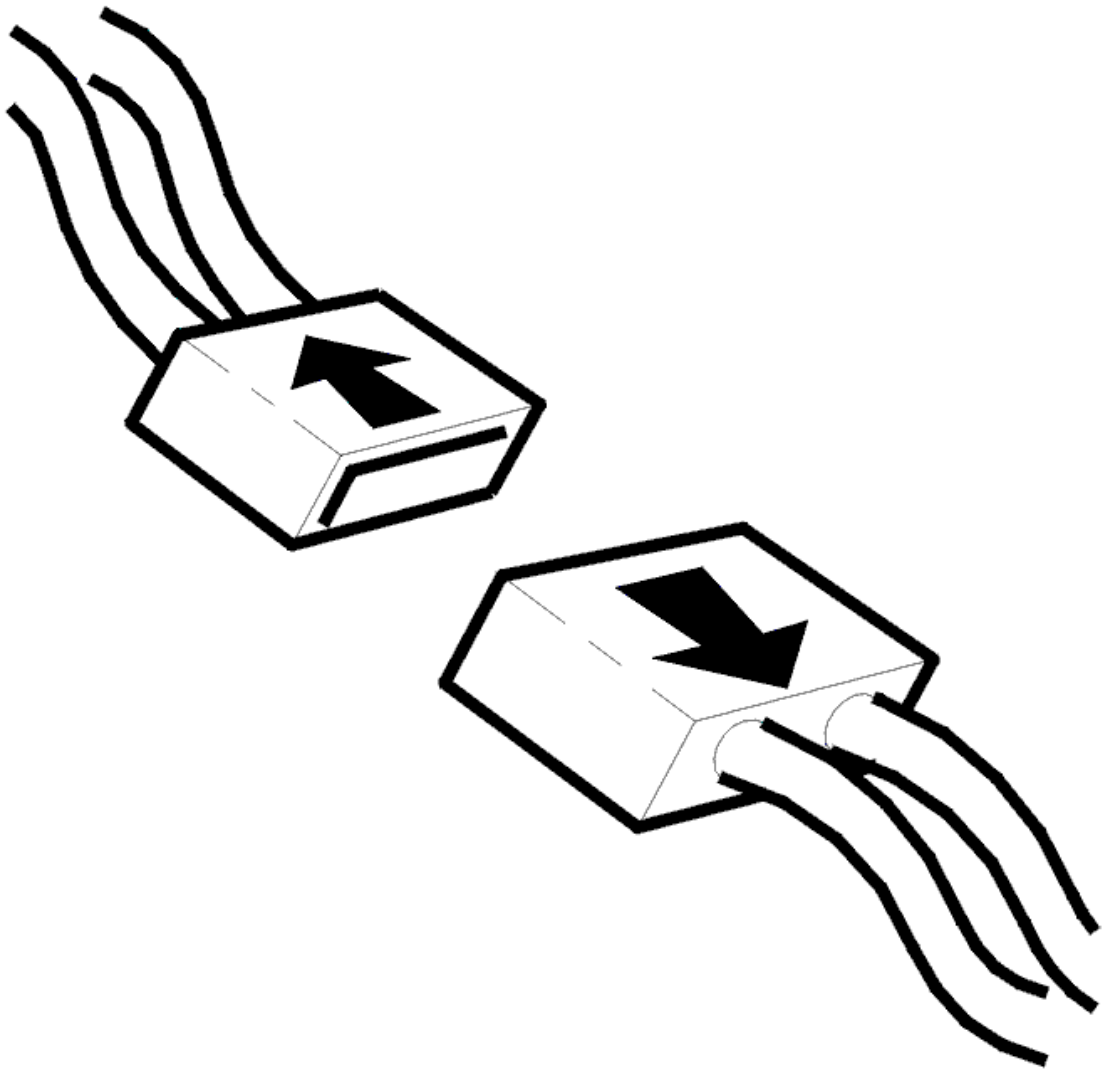

Fig. 232: Disconnecting Connector
Courtesy of VOLVO CARS CORPORATION

- Switch off the ignition. Wait 10 seconds
- Disconnect the 10-pin connector from the occupant weight sensor (OWS) module
- Disconnect the connector from the seat belt force sensor.

CAUTION: Avoid touching the terminal pins in the occupant weight sensor (OWS). There is a risk of static discharge which could damage the occupant weight sensor (OWS).

Check the connectors for the seat belt force sensor and the occupant weight sensor (OWS) module. Check for damage to pins and terminals in the connectors.

Remedy as necessary.

Check the wiring between the occupant weight sensor (OWS) module and the seat belt force sensor. Check for an open-circuit.

Remedy as necessary.

If no malfunction is found:Replace the seat belt force limiter.

Other information

- see **SIGNAL SPECIFICATION**
- For replacement of seatbelt force sensor:**FORCE LIMITER MECHANICAL/BELT TENSION SENSOR, REPLACING (2005-2012)**
- see **CHECKING WIRING AND TERMINALS**

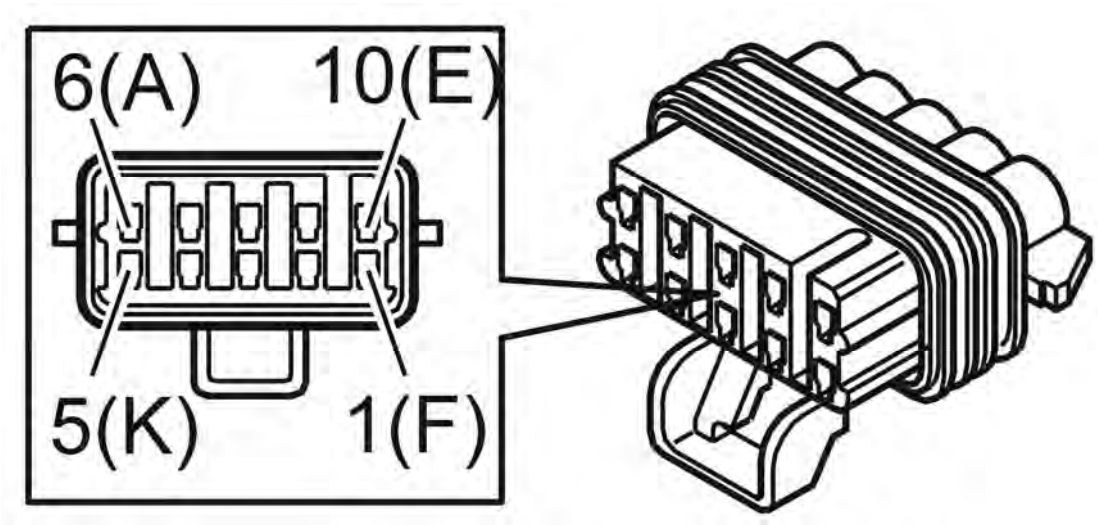

Fig. 233: Identifying 10-Pin Connector
Courtesy of VOLVO CARS CORPORATION

- **Continue**

  See: **VERIFICATION**

VERIFICATION

VERIFICATION

HINT: After carrying out the repair, check that the fault has been remedied.

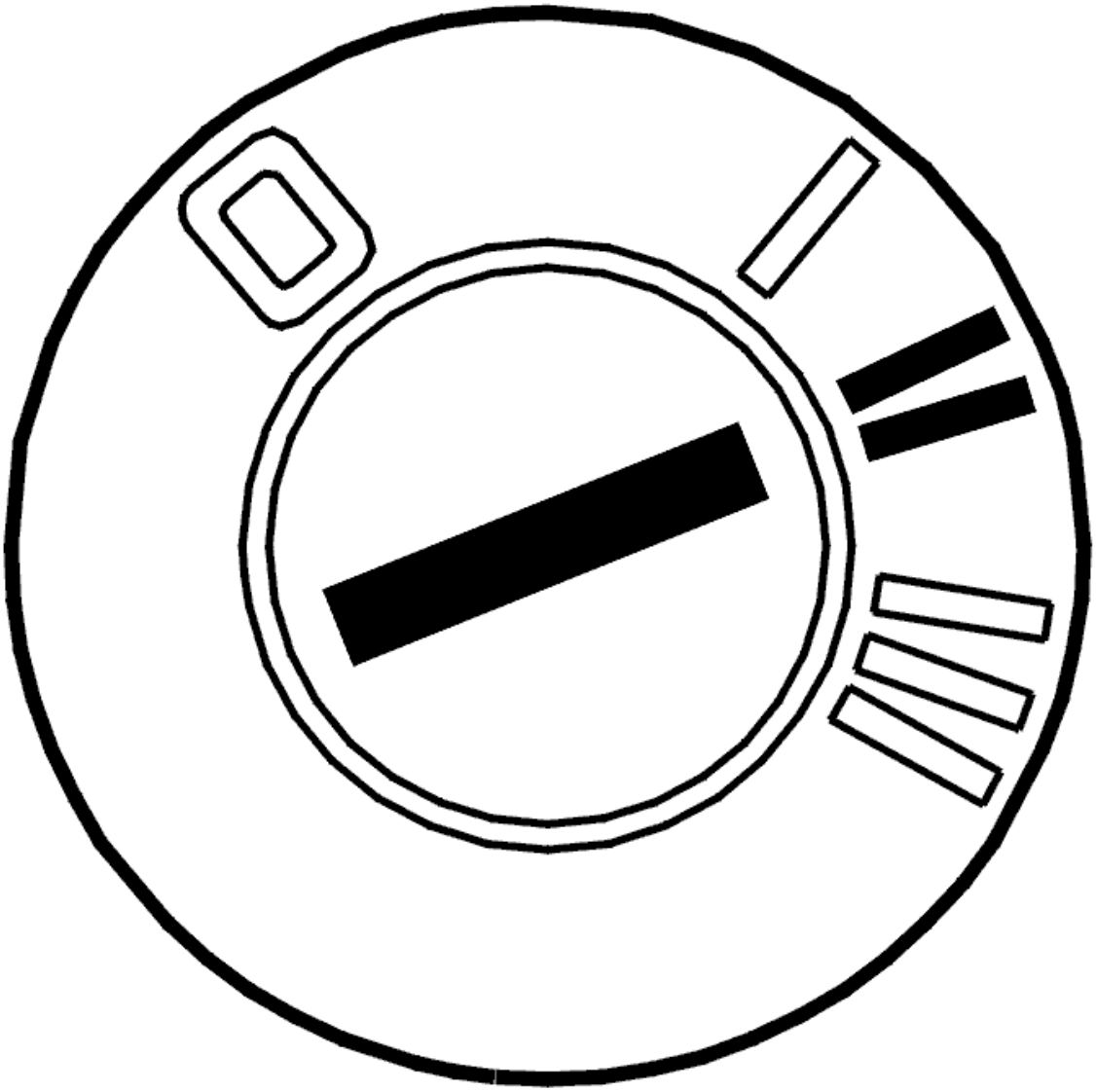

Fig. 234: Identifying Ignition ON
Courtesy of VOLVO CARS CORPORATION

- Ignition off
- Disconnect the battery negative lead
- Reinstall the connectors, components etc.
- Ignition on
- Connect the battery negative lead.

WARNING: There must not be anyone inside the passenger compartment when the battery is connected.

- Read off diagnostic trouble codes (DTCs).

The fault is no longer present if the diagnostic trouble code (DTC) status is intermittent.

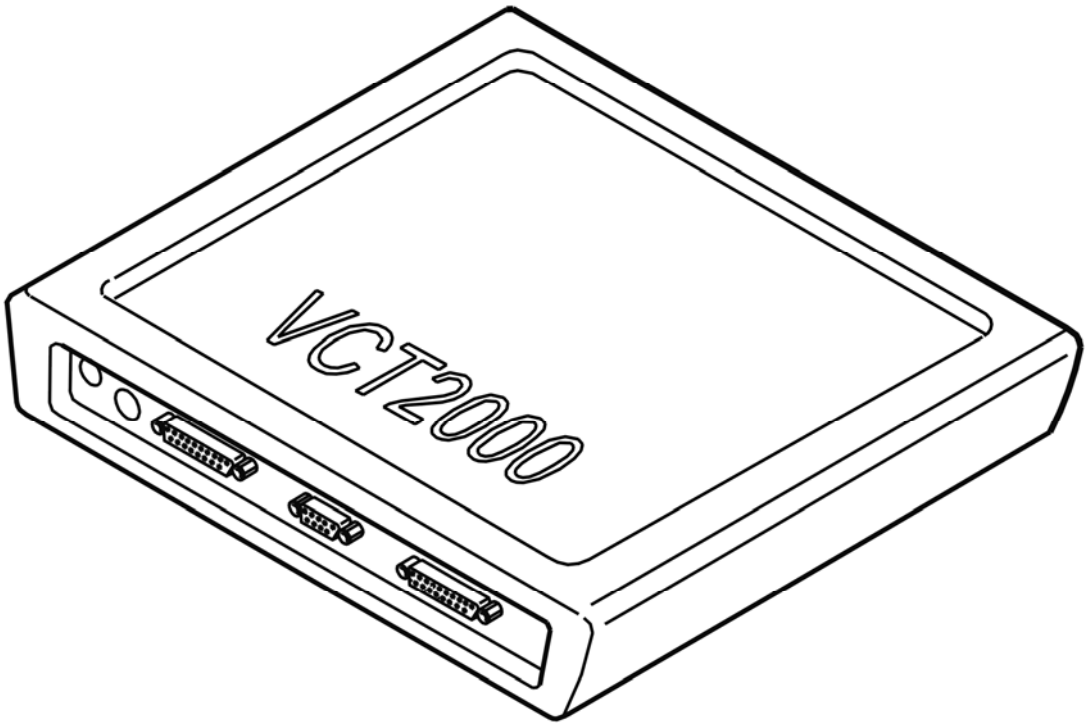

Fig. 235: Identifying VCT2000 Diagnostic Tool Symbol In VIDA
Courtesy of VOLVO CARS CORPORATION

Is the diagnostic trouble code (DTC) intermittent?

- **YES**

  VERIFIED: Troubleshooting has been completed.

- **NO**

  See: **INFORMATION**

INFORMATION

FAULT-TRACING INFORMATION

The fault should have been detected and remedied. As this is not the case fault-tracing has failed.

Exit fault-tracing for this diagnostic trouble code (DTC) or make another attempt.

SRS-025E: OCCUPANT WEIGHT SENSOR (OWS). INTERNAL FAULT (2005-

2012)

DIAGNOSTIC TROUBLE CODE (DTC) INFORMATION SRS-025E

Condition

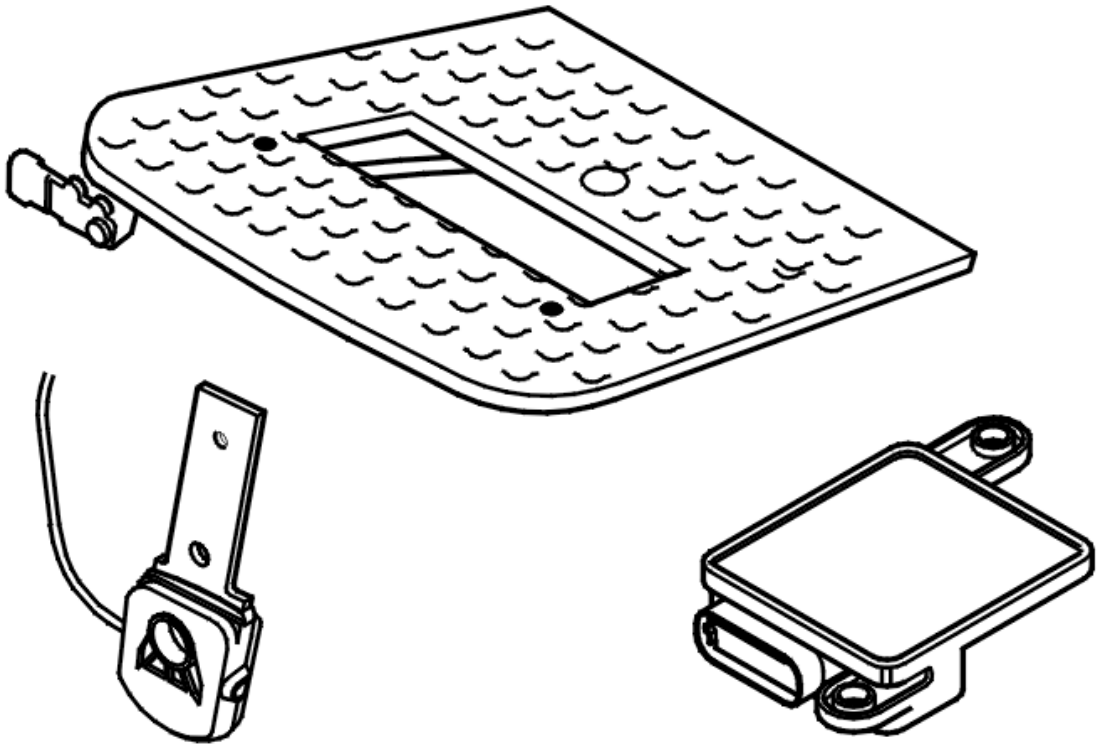

Fig. 236: Identifying Occupant Weight Sensor (OWS) Assembly
Courtesy of VOLVO CARS CORPORATION

The supplemental restraint system module (SRS) checks the signal from the occupant weight sensor (OWS).

The diagnostic trouble code (DTC) is stored if the control module registers an internal fault in the occupant weight sensor (OWS).

The diagnostic trouble code (DTC) can be diagnosed in ignition positions I, II and III.

Substitute Value

- Passenger airbag is deactivated.

Possible Source

- Internal fault in the occupant weight sensor (OWS).

Fault symptom[s]

- SRS indicator lamp lit
- PAD lamp lit.

INTERNAL FAULT

REPLACING THE COMPONENT

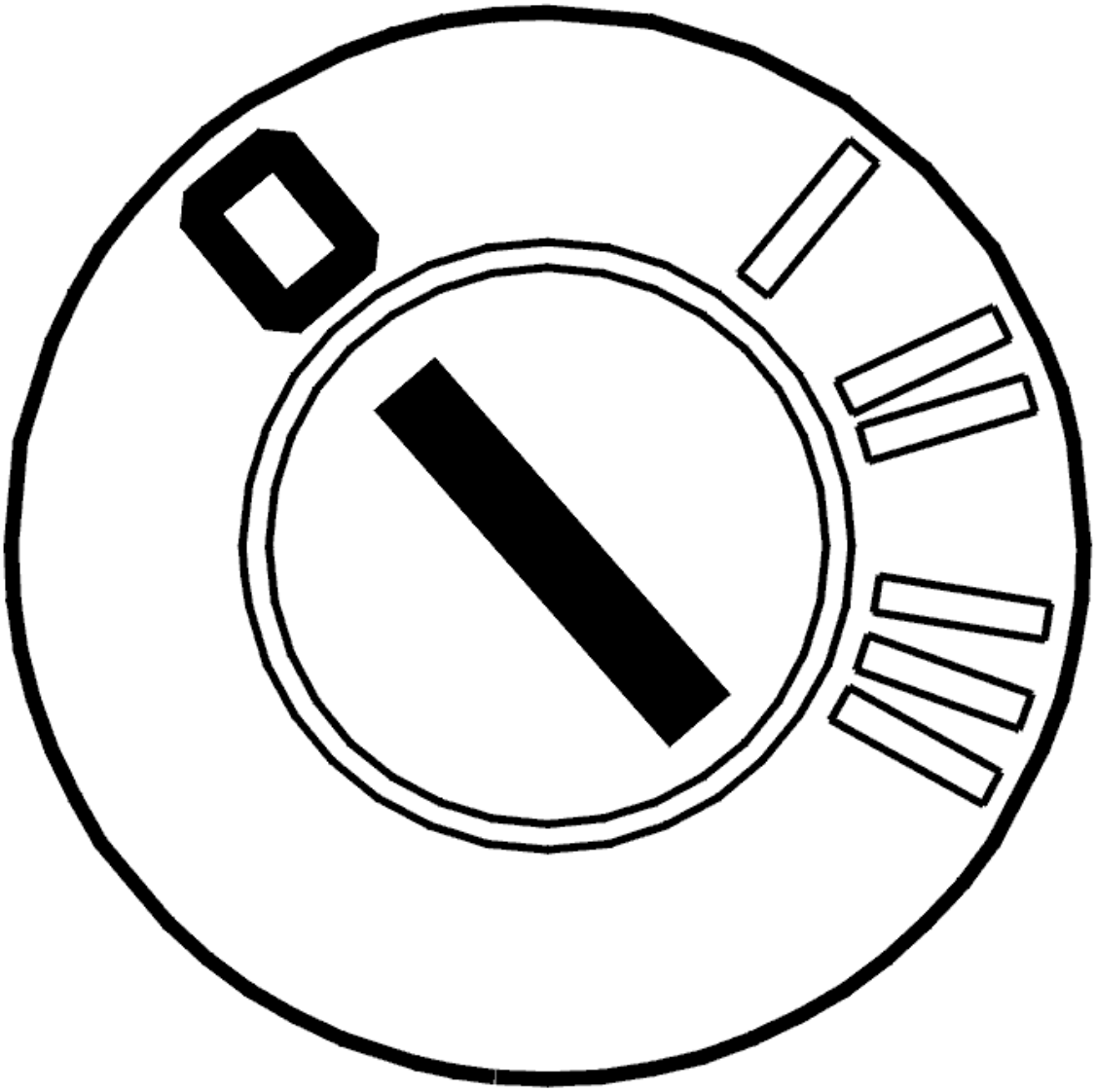

Fig. 237: Identifying Ignition OFF
Courtesy of VOLVO CARS CORPORATION

- Switch off the ignition. Wait 10 seconds.

CAUTION: Avoid touching the terminal pins in the occupant weight sensor

(OWS). There is a risk of static discharge which could damage the occupant weight sensor (OWS).

Replace the pressure sensor and the occupant weight sensor (OWS) module. The pressure sensor and occupant weight sensor (OWS) module are included in the occupant weight sensor (OWS) system.

NOTE: **After replacing the pressure sensor and the occupant weight sensor (OWS) module in the occupant weight sensor (OWS) system, the supplemental restraint system module (SRS) must be configured. This is done by storing the ID number for the occupant weight sensor (OWS).**

The occupant weight sensor (OWS) must also be calibrated.

Other information

- see **OCCUPANT WEIGHT SENSOR (OWS), REPLACING**
- see **STORING THE ID NUMBER FOR THE OCCUPANT WEIGHT SENSOR (OWS)**
- see **CALIBRATING THE OCCUPANT WEIGHT SENSOR (OWS)**

- **Continue**

See: **VERIFICATION**

VERIFICATION

VERIFICATION

HINT: After carrying out the repair, check that the fault has been remedied.

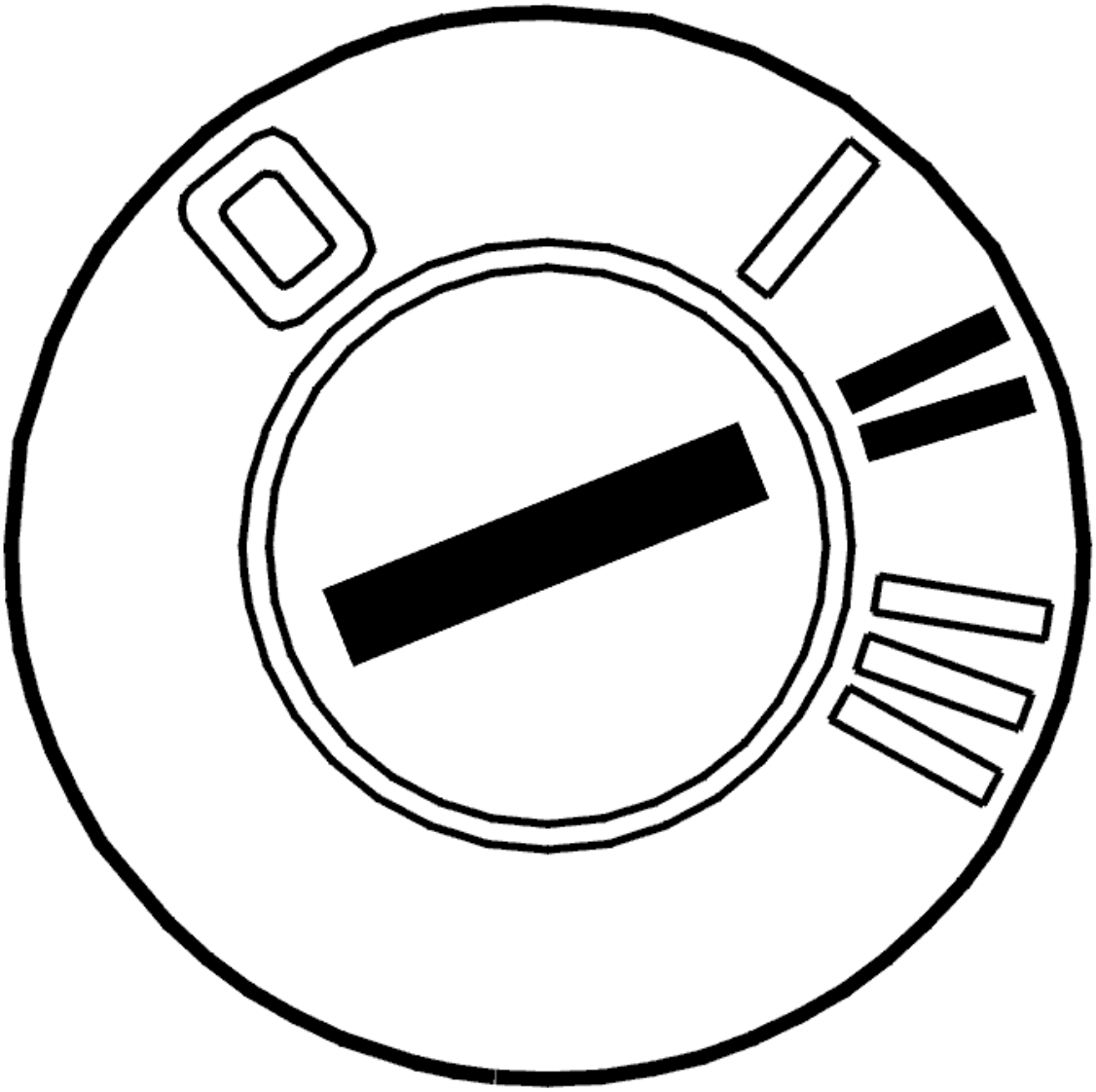

Fig. 238: Identifying Ignition ON
Courtesy of VOLVO CARS CORPORATION

- Ignition off
- Disconnect the battery negative lead
- Reinstall the connectors, components etc.
- Ignition on
- Connect the battery negative lead.

WARNING: There must not be anyone inside the passenger compartment when the battery is connected.

- Read off diagnostic trouble codes (DTCs).

The fault is no longer present if the diagnostic trouble code (DTC) status is intermittent.

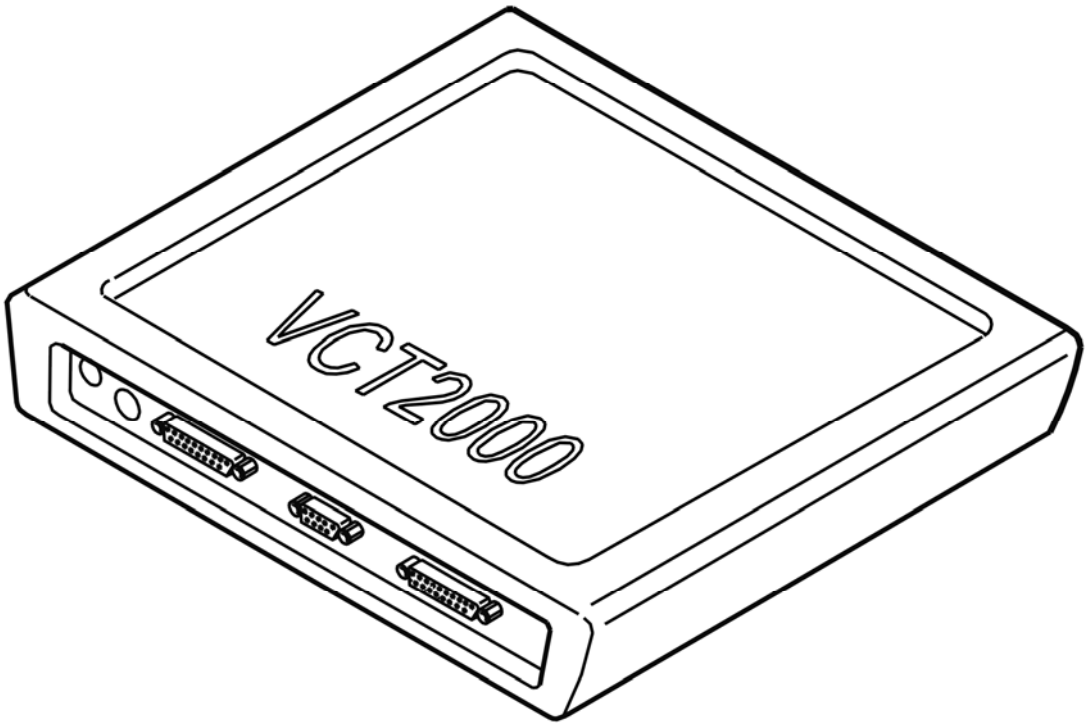

Fig. 239: Identifying VCT2000 Diagnostic Tool Symbol In VIDA
Courtesy of VOLVO CARS CORPORATION

Is the diagnostic trouble code (DTC) intermittent?

- **YES**

  VERIFIED: Troubleshooting has been completed.

- **NO**

  See: **INFORMATION**

INFORMATION

FAULT-TRACING INFORMATION

The fault should have been detected and remedied. As this is not the case fault-tracing has failed.

Exit fault-tracing for this diagnostic trouble code (DTC) or make another attempt.

SRS-025F: OCCUPANT WEIGHT SENSOR (OWS). SIGNAL TOO LOW (2005-

2012)

DIAGNOSTIC TROUBLE CODE (DTC) INFORMATION SRS-025F

Condition

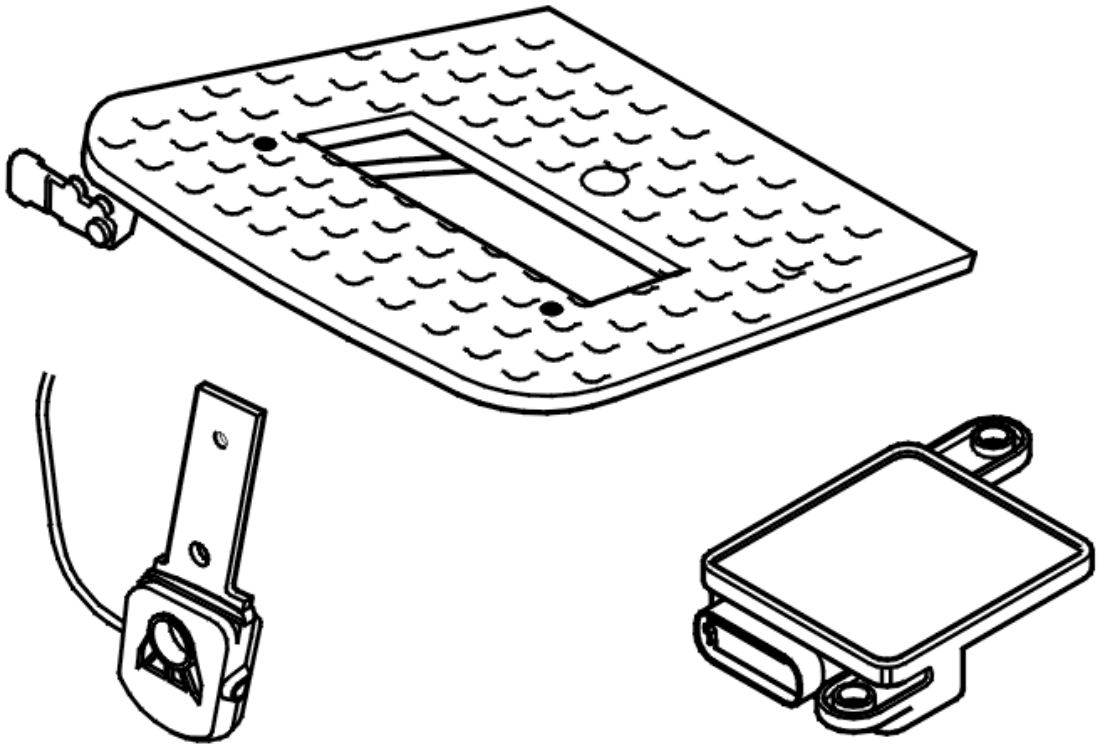

Fig. 240: Identifying Occupant Weight Sensor (OWS) Assembly
Courtesy of VOLVO CARS CORPORATION

The supplemental restraint system module (SRS) checks the signal from the occupant weight sensor (OWS).

The diagnostic trouble code (DTC) is stored if the control module receives a message indicating that the voltage is too low in the occupant weight sensor (OWS).

The diagnostic trouble code (DTC) can be diagnosed in ignition positions I, II and III.

Substitute Value

- Passenger airbag is deactivated.

Possible Source

- Damaged occupant weight sensor (OWS).

- Short-circuit to ground in the signal cable or in the connectors between the components in the occupant weight sensor (OWS).

Fault symptom[s]

- SRS indicator lamp lit
- PAD lamp lit.

SIGNAL TOO LOW

CHECKING THE COMPONENT AND WIRING

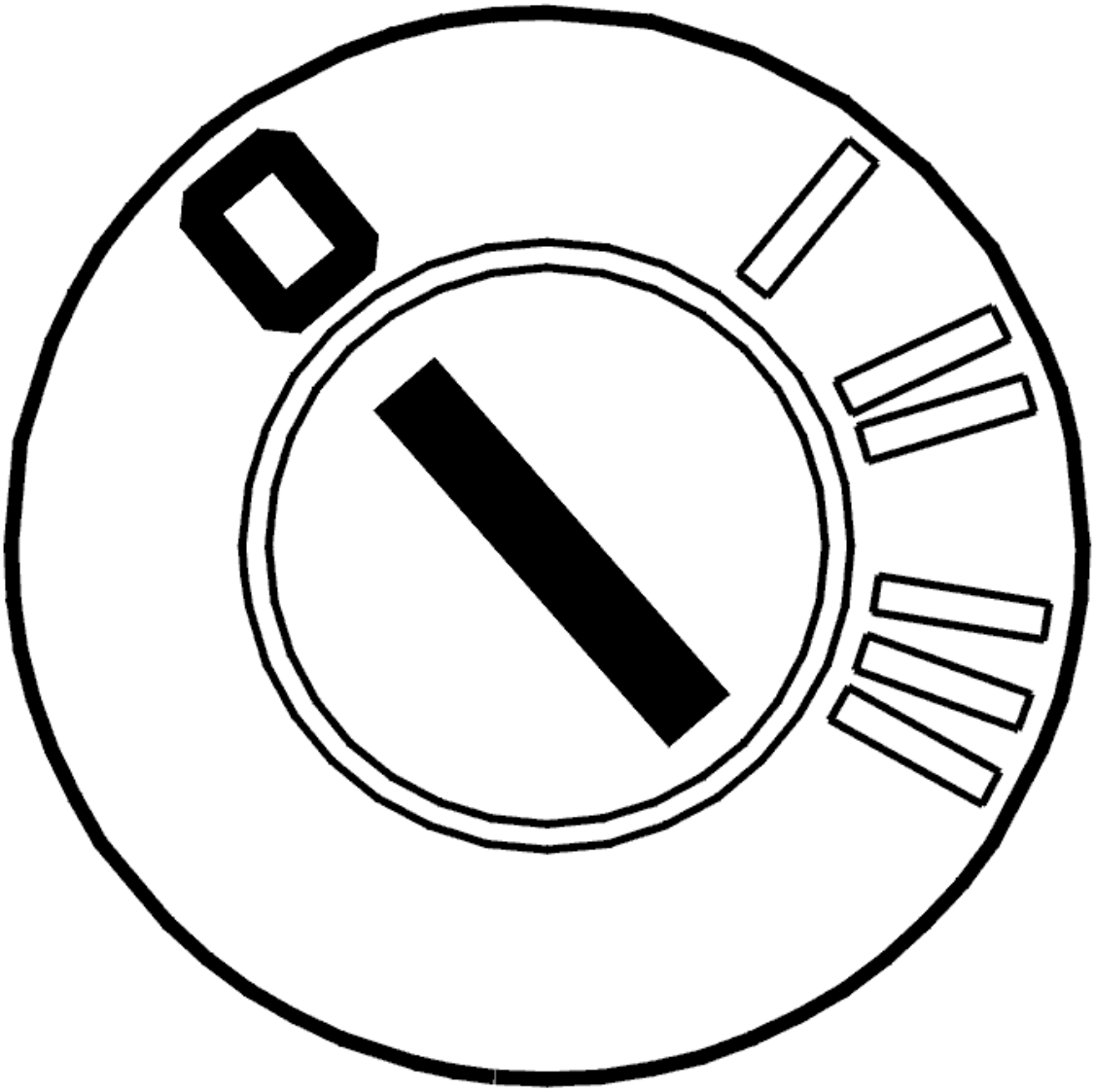

Fig. 241: Identifying Ignition OFF
Courtesy of VOLVO CARS CORPORATION

- Switch off the ignition. Wait 10 seconds.
- Unplug the 10-pin connector from the occupant weight sensor (OWS).
- Unplug the 3-pin connector from the pressure sensor.

CAUTION: Avoid touching the terminal pins in the occupant weight sensor (OWS). There is a risk of static discharge which could damage the occupant weight sensor (OWS).

Check the connectors between the pressure sensor and the occupant weight sensor (OWS) for damaged pins and connections.

Remedy as necessary.

Check the leads between pressure sensor and the occupant weight sensor (OWS) for short-circuiting to voltage/ground and open circuit.

Remedy as necessary.

Other information

- Signal description occupant weight sensor (OWS):**SIGNAL SPECIFICATION**

Has the fault been remedied?

- **YES**

  See: **VERIFICATION**

- **NO**

  See: **REPLACING A COMPONENT**

REPLACING A COMPONENT

- Ignition off, wait for 15 seconds.

CAUTION: Avoid touching the contact pin of the occupant weight sensor (OWS). Risk of electrostatic discharge that may cause damage in occupant weight sensor (OWS).

Change pressure sensor and occupant weight sensor (OWS). Pressure sensor included in system occupant weight sensor (OWS).

NOTE: After change of pressure sensor and occupant weight sensor (OWS) then the supplemental restraint system module (SRS) must be configured. This is done by storing ID-number for occupant weight sensor (OWS).

The occupant weight sensor (OWS) must also be calibrated.

Other information

- see **OCCUPANT WEIGHT SENSOR (OWS), REPLACING**
- see **STORING THE ID NUMBER FOR THE OCCUPANT WEIGHT SENSOR (OWS)**
- see **CALIBRATING THE OCCUPANT WEIGHT SENSOR (OWS)**

- **Continue**

  See: **VERIFICATION**

VERIFICATION

VERIFICATION

HINT: After carrying out the repair, check that the fault has been remedied.

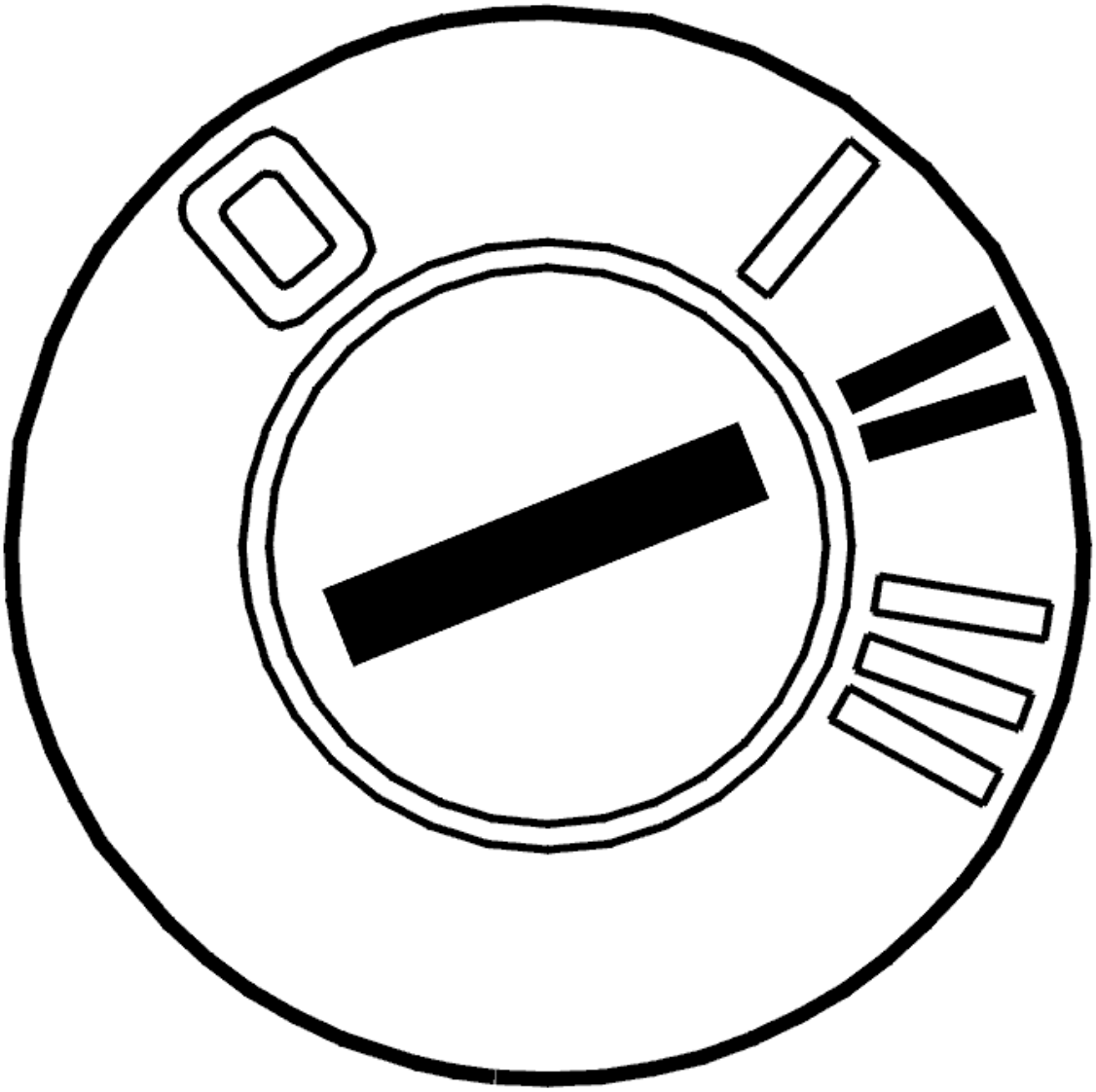

Fig. 242: Identifying Ignition ON
Courtesy of VOLVO CARS CORPORATION

- Ignition off
- Disconnect the battery negative lead
- Reinstall the connectors, components etc.
- Ignition on
- Connect the battery negative lead.

> **WARNING: There must not be anyone inside the passenger compartment when the battery is connected.**

- Read off diagnostic trouble codes (DTCs).

The fault is no longer present if the diagnostic trouble code (DTC) status is intermittent.

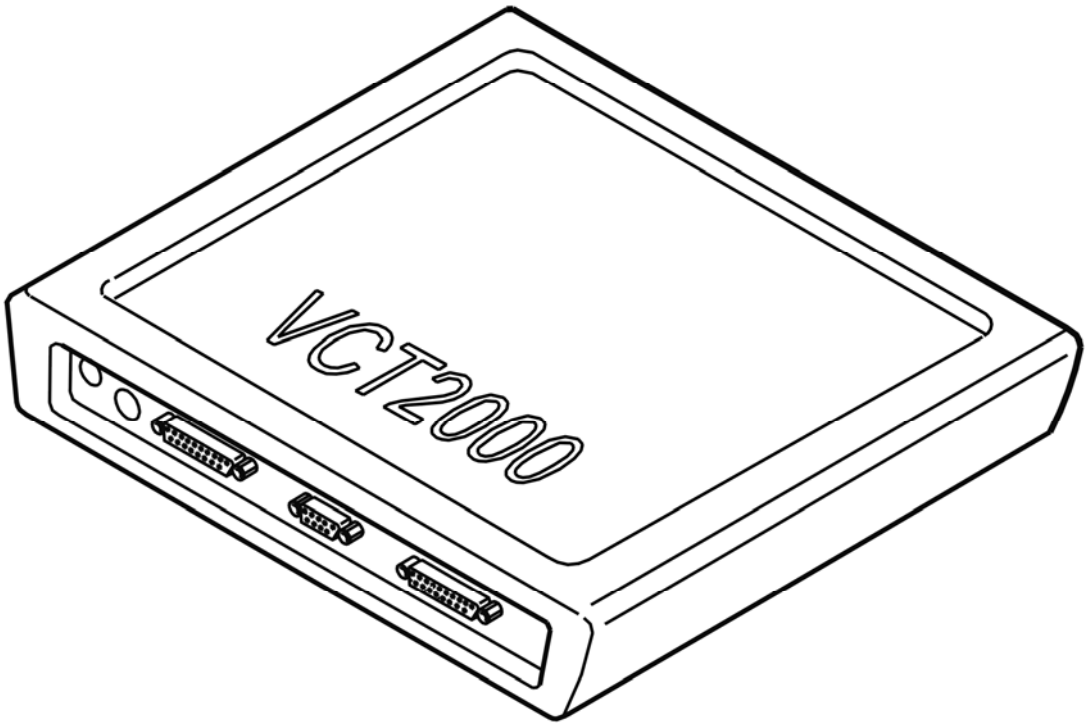

Fig. 243: Identifying VCT2000 Diagnostic Tool Symbol In VIDA
Courtesy of VOLVO CARS CORPORATION

Is the diagnostic trouble code (DTC) intermittent?

- **YES**

  VERIFIED: Troubleshooting has been completed.

- **NO**

  See: **INFORMATION**

INFORMATION

FAULT-TRACING INFORMATION

The fault should have been detected and remedied. As this is not the case fault-tracing has failed.

Exit fault-tracing for this diagnostic trouble code (DTC) or make another attempt.

SRS-0260: OCCUPANT WEIGHT SENSOR (OWS). SIGNAL TOO HIGH (2005-

2012)

DIAGNOSTIC TROUBLE CODE (DTC) INFORMATION SRS-0260

Condition

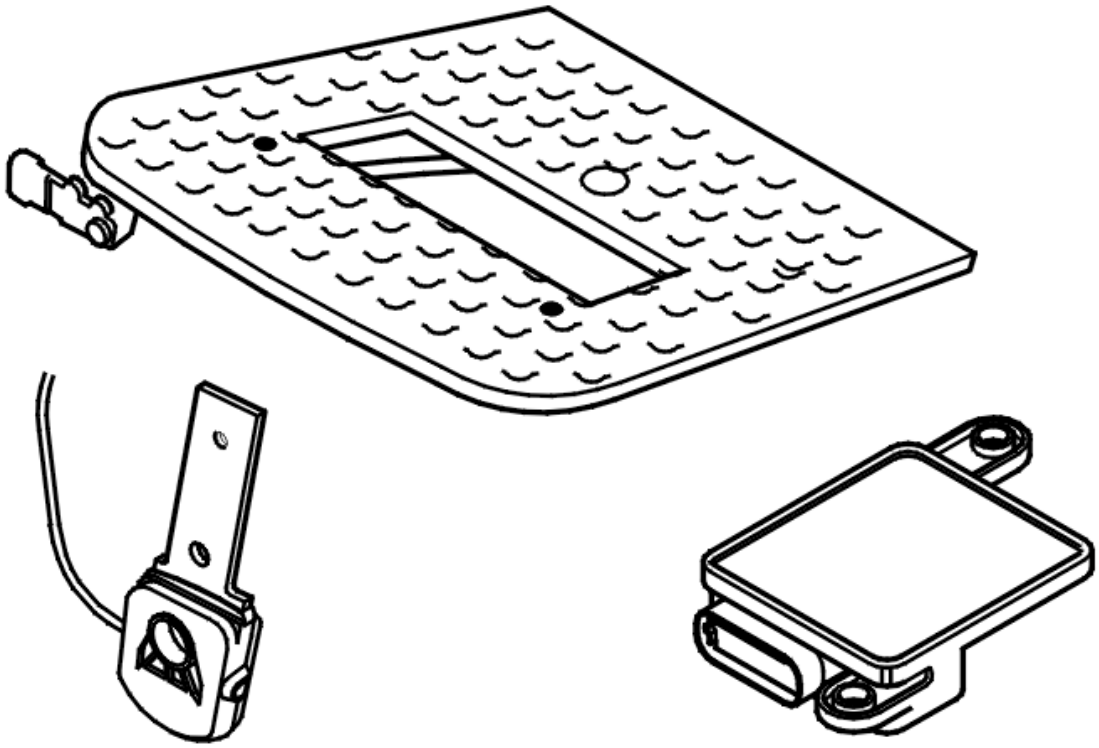

Fig. 244: Identifying Occupant Weight Sensor (OWS) Assembly
Courtesy of VOLVO CARS CORPORATION

The supplemental restraint system module (SRS) checks the signal from the occupant weight sensor (OWS).

The diagnostic trouble code (DTC) is stored if the control module receives a message indicating that the voltage is too high in the occupant weight sensor (OWS).

The diagnostic trouble code (DTC) can be diagnosed in ignition positions I, II and III.

Substitute Value

- Passenger airbag is deactivated.

Possible Source

- Damaged occupant weight sensor (OWS).

- Short-circuit to supply voltage in the signal cable or in the connectors between the components in the occupant weight sensor (OWS).

Fault symptom[s]

- SRS indicator lamp lit
- PAD lamp lit.

SIGNAL TOO HIGH

CHECKING THE WIRING AND TERMINALS

- Ignition off, wait for 15 seconds.
- Unplug the 10-pin connector from the occupant weight sensor (OWS).
- Unplug the 3-pin connector from the pressure sensor.

CAUTION: Avoid touching the contact pin of the occupant weight sensor (OWS). Risk of electrostatic discharge that may cause damage in occupant weight sensor (OWS).

Check the connectors between the pressure sensor and the occupant weight sensor (OWS) for damaged pins and connections.

Remedy as necessary.

Check the leads between pressure sensor and the occupant weight sensor (OWS) for short-circuiting to voltage/ground and open circuit.

Remedy as necessary.

Other information

- see **SIGNAL SPECIFICATION**

Has the fault been remedied?

- **YES**

  See: **VERIFICATION**

- **NO**

  See: **REPLACING THE COMPONENT**

REPLACING THE COMPONENT

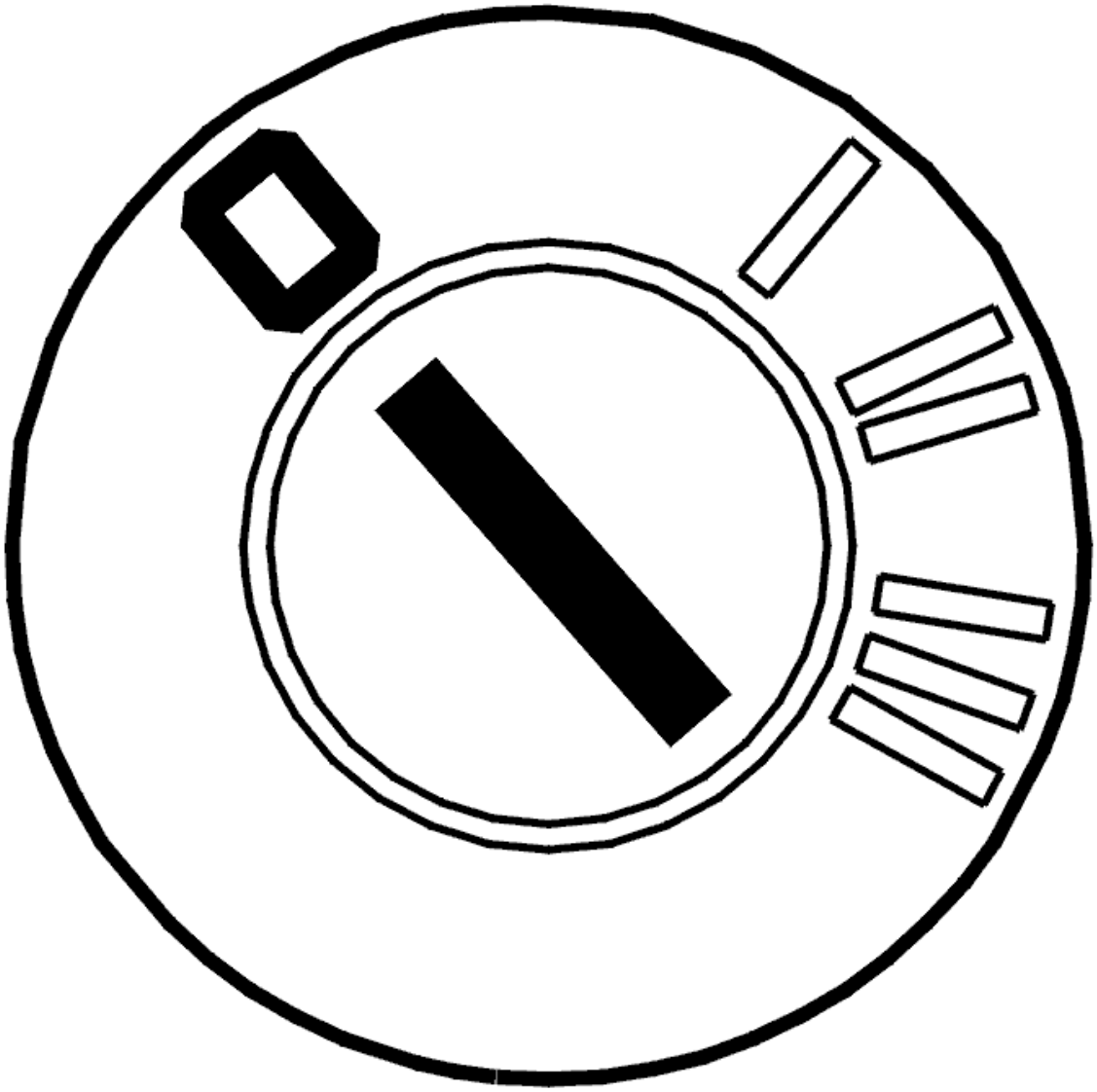

Fig. 245: Identifying Ignition OFF
Courtesy of VOLVO CARS CORPORATION

- Switch off the ignition. Wait 10 seconds.

CAUTION: Avoid touching the terminal pins in the occupant weight sensor (OWS). There is a risk of static discharge which could damage the occupant weight sensor (OWS).

Change pressure sensor and occupant weight sensor (OWS). Pressure sensor included in system occupant weight sensor (OWS).

NOTE: After change of pressure sensor and occupant weight sensor (OWS) then the supplemental restraint system module (SRS) must be configured. This is done by storing ID-number for occupant weight sensor (OWS).

The occupant weight sensor (OWS) must also be calibrated.

Other information

- see **OCCUPANT WEIGHT SENSOR (OWS), REPLACING**
- see **STORING THE ID NUMBER FOR THE OCCUPANT WEIGHT SENSOR (OWS)**
- see **CALIBRATING THE OCCUPANT WEIGHT SENSOR (OWS)**

- **Continue**

  See: **VERIFICATION**

VERIFICATION

VERIFICATION

HINT: After carrying out the repair, check that the fault has been remedied.

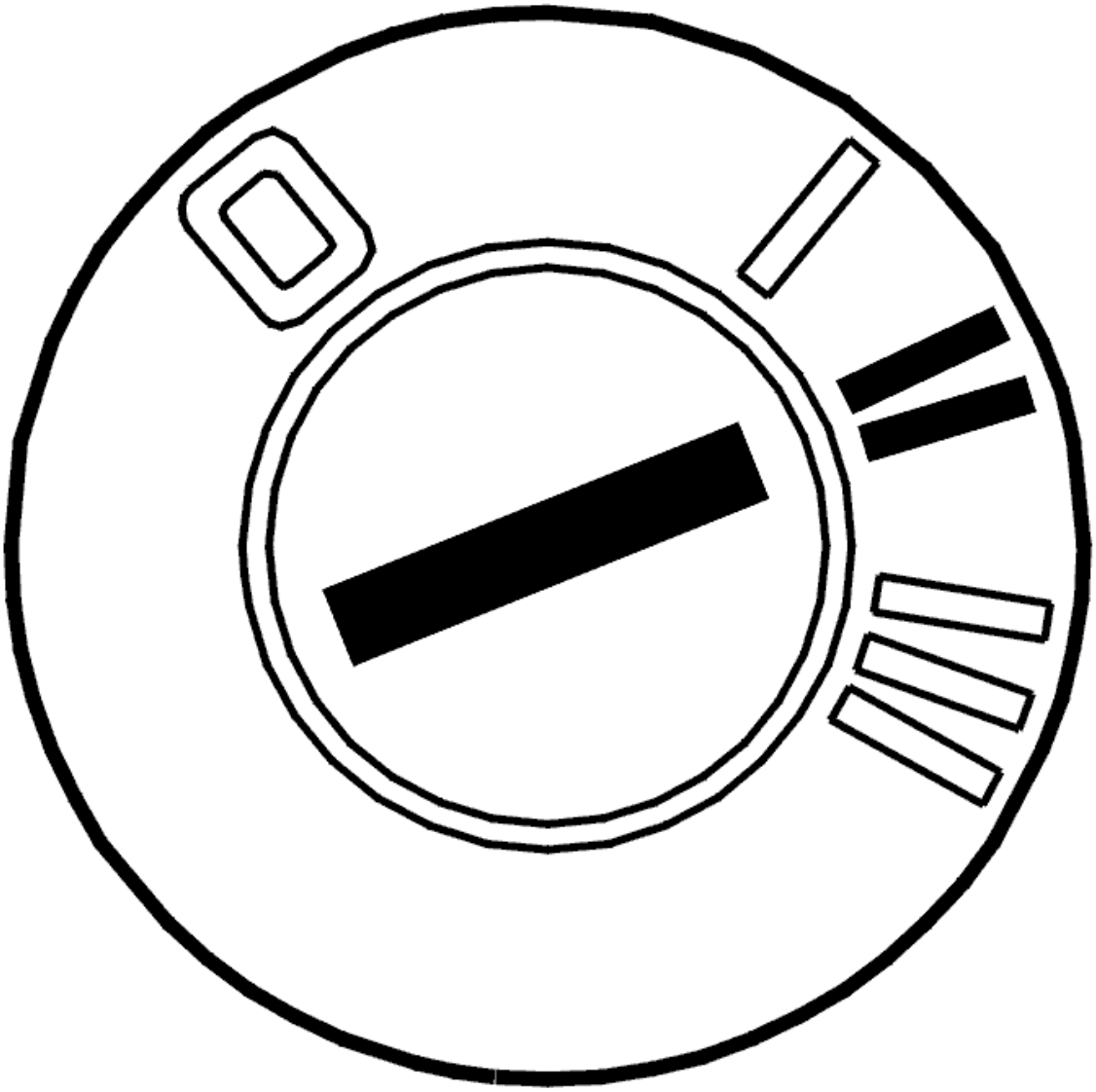

Fig. 246: Identifying Ignition ON
Courtesy of VOLVO CARS CORPORATION

- Ignition off
- Disconnect the battery negative lead
- Reinstall the connectors, components etc.
- Ignition on
- Connect the battery negative lead.

> **WARNING: There must not be anyone inside the passenger compartment when the battery is connected.**

- Read off diagnostic trouble codes (DTCs).

The fault is no longer present if the diagnostic trouble code (DTC) status is intermittent.

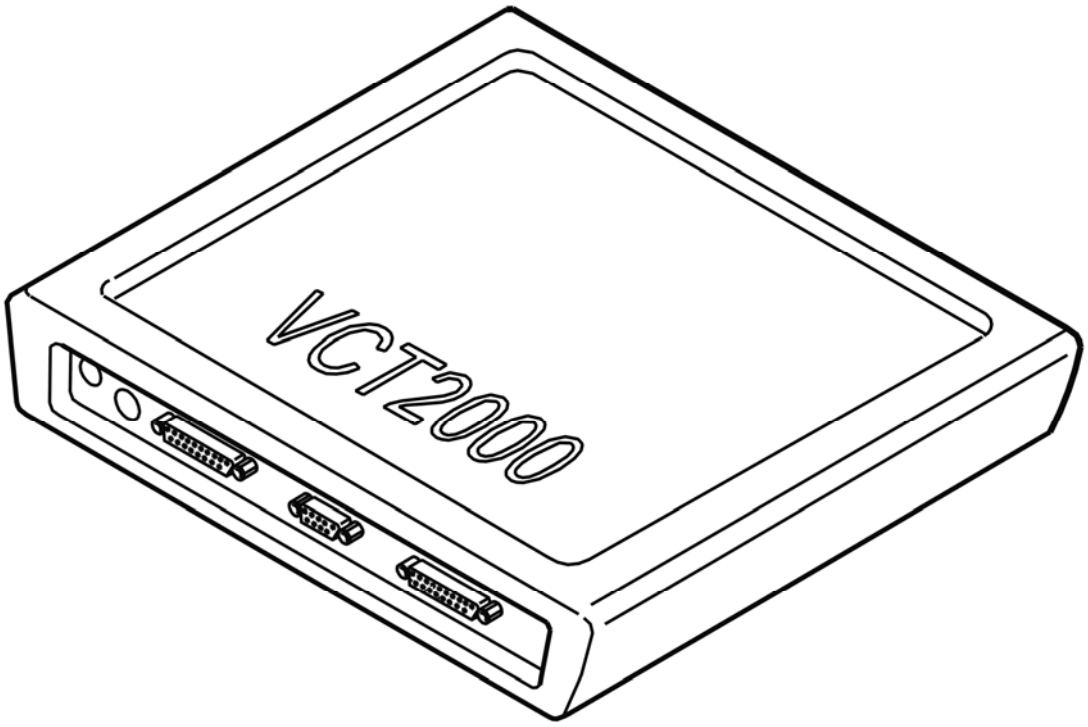

Fig. 247: Identifying VCT2000 Diagnostic Tool Symbol In VIDA
Courtesy of VOLVO CARS CORPORATION

Is the diagnostic trouble code (DTC) intermittent?

- **YES**

  VERIFIED: Troubleshooting has been completed.

- **NO**

  See: **INFORMATION**

INFORMATION

FAULT-TRACING INFORMATION

The fault should have been detected and remedied. As this is not the case fault-tracing has failed.

Exit fault-tracing for this diagnostic trouble code (DTC) or make another attempt.

SRS-0261: OCCUPANT WEIGHT SENSOR. SIGNAL MISSING (2005-2012)

DIAGNOSTIC TROUBLE CODE (DTC) INFORMATION SRS-0261

Condition

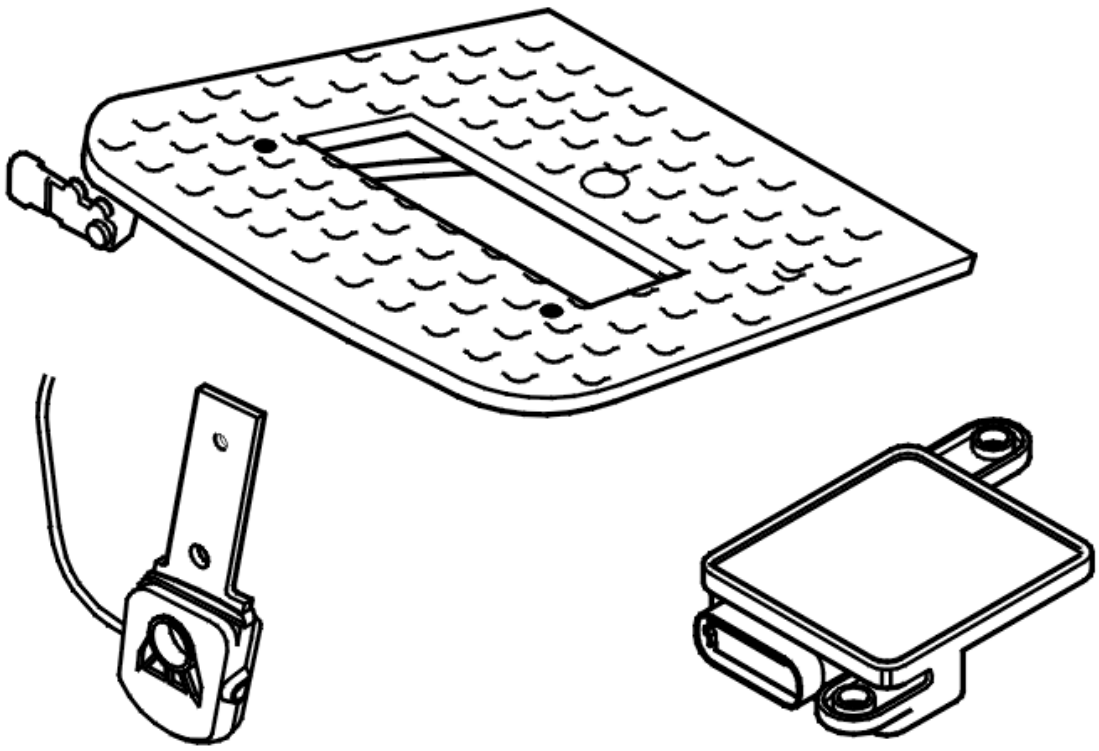

Fig. 248: Identifying Occupant Weight Sensor (OWS) Assembly
Courtesy of VOLVO CARS CORPORATION

The supplemental restraint system module (SRS) checks the LIN signal from the occupant weight sensor (OWS).

The diagnostic trouble code (DTC) is stored if the control module detects that:

The voltage from the Occupant weight sensor (OWS) is too low or is missing.

The control module's test for the diagnostic trouble code (DTC) starts in the event of:

Ignition position I, II and III.

Substitute Value

- Passenger airbag is deactivated.

Possible Source

- Open-circuit in the signal cable (LIN-bus) or in the connectors between the supplemental restraint system module (SRS) and the occupant weight sensor (OWS).
- Damaged occupant weight sensor (OWS).

Fault symptom[s]

- SRS indicator lamp lit
- PAD lamp lit.
- SRS warning message displayed

SIGNAL TOO LOW

see **SIGNAL TOO LOW**

SRS-0262: OCCUPANT WEIGHT SENSOR (OWS). INCORRECT DATA (2005-2012)

DIAGNOSTIC TROUBLE CODE (DTC) INFORMATION SRS-0262

Condition

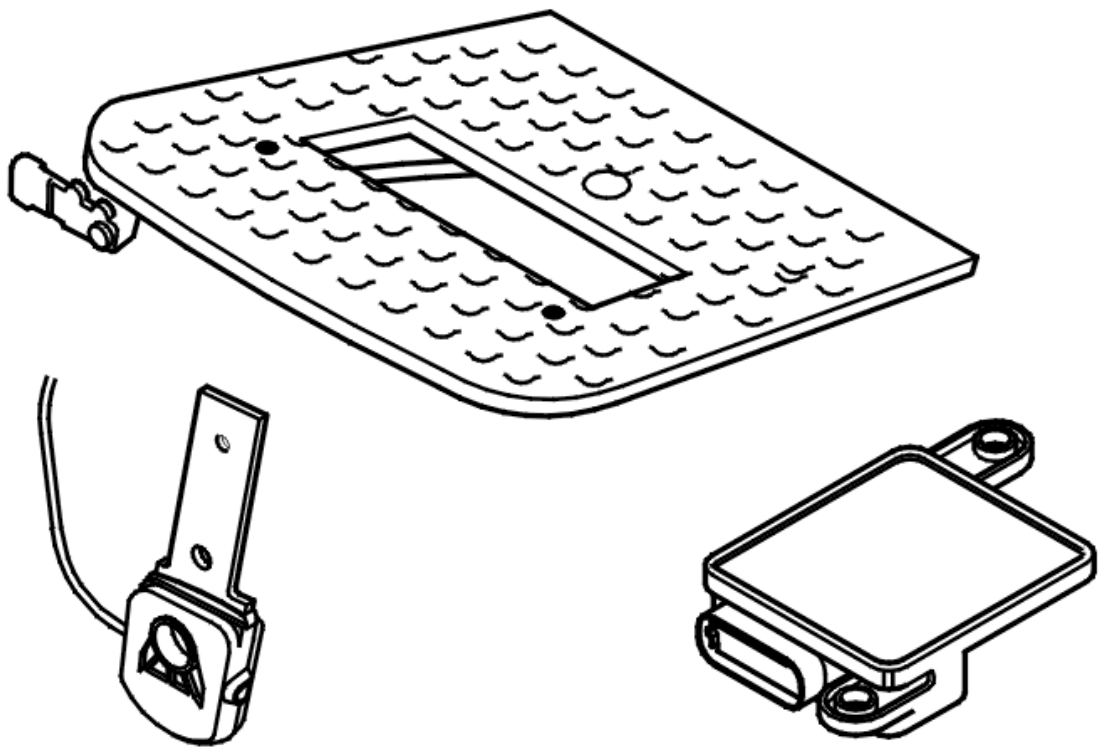

Fig. 249: Identifying Occupant Weight Sensor (OWS) Assembly

Courtesy of VOLVO CARS CORPORATION

The supplemental restraint system module (SRS) checks the signal from the occupant weight sensor (OWS).

The diagnostic trouble code (DTC) is stored if the control module receives a message containing incorrect data.

The diagnostic trouble code (DTC) can be diagnosed in ignition positions I, II and III.

Substitute Value

- Passenger airbag is deactivated.

Possible Source

- Damaged component in the occupant weight sensor (OWS).

Fault symptom[s]

- SRS indicator lamp lit
- PAD lamp lit.

INCORRECT DATA

REPLACING THE COMPONENT

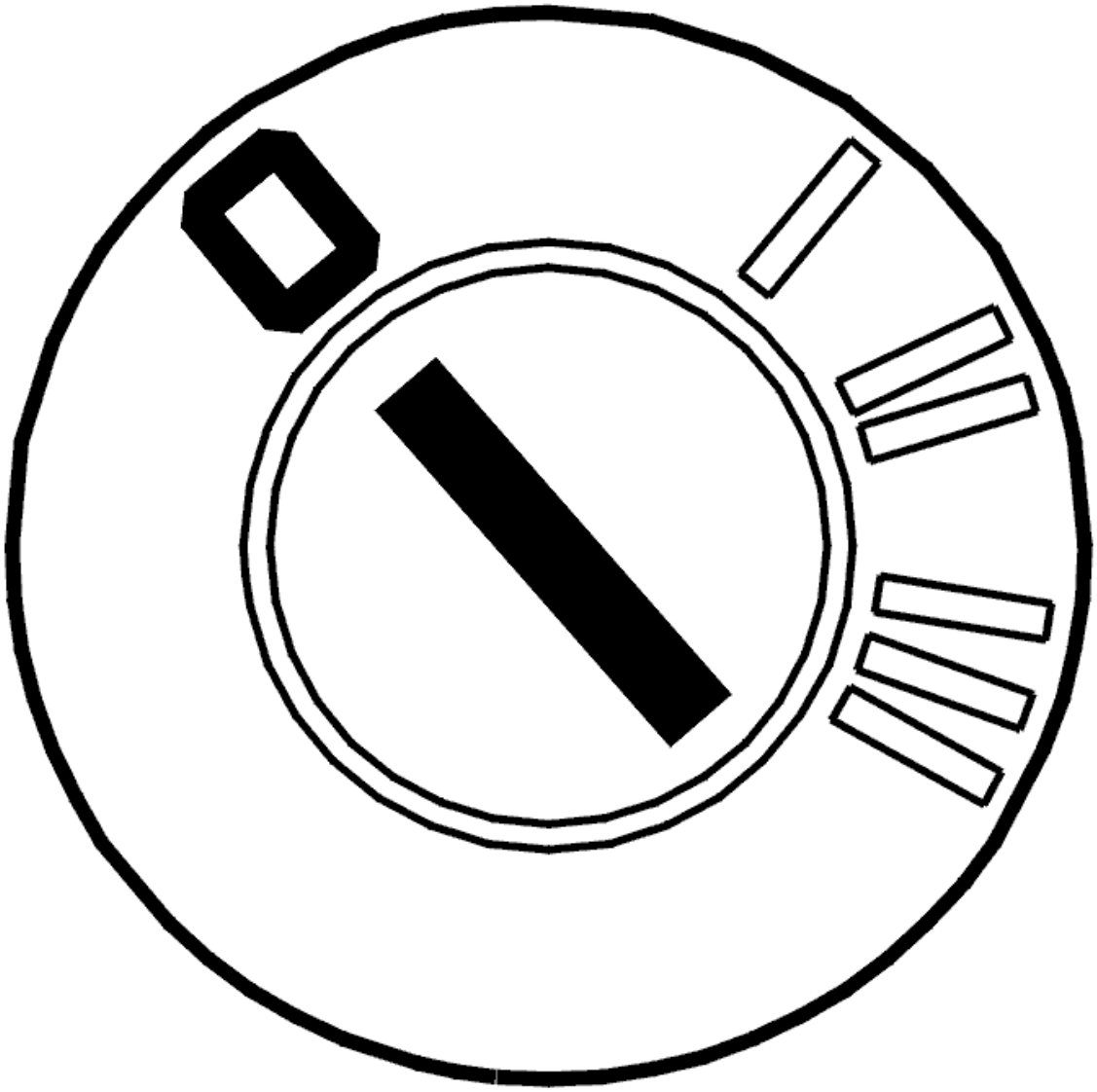

Fig. 250: Identifying Ignition OFF
Courtesy of VOLVO CARS CORPORATION

- Switch off the ignition. Wait 10 seconds.

CAUTION: Avoid touching the terminal pins in the occupant weight sensor (OWS). There is a risk of static discharge which could damage the occupant weight sensor (OWS).

Replace the pressure sensor and the occupant weight sensor (OWS) module. The pressure sensor and occupant weight sensor (OWS) module are included in the occupant weight sensor (OWS) system.

NOTE: After replacing the pressure sensor and the occupant weight sensor (OWS) module in the occupant weight sensor (OWS) system, the supplemental restraint system module (SRS) must be configured. This is

done by storing the ID number for the occupant weight sensor (OWS).

The occupant weight sensor (OWS) must also be calibrated.

Other information

- see **OCCUPANT WEIGHT SENSOR (OWS), REPLACING**
- see **STORING THE ID NUMBER FOR THE OCCUPANT WEIGHT SENSOR (OWS)**
- see **CALIBRATING THE OCCUPANT WEIGHT SENSOR (OWS)**

- **Continue**

  See: **VERIFICATION**

VERIFICATION

VERIFICATION

HINT: After carrying out the repair, check that the fault has been remedied.

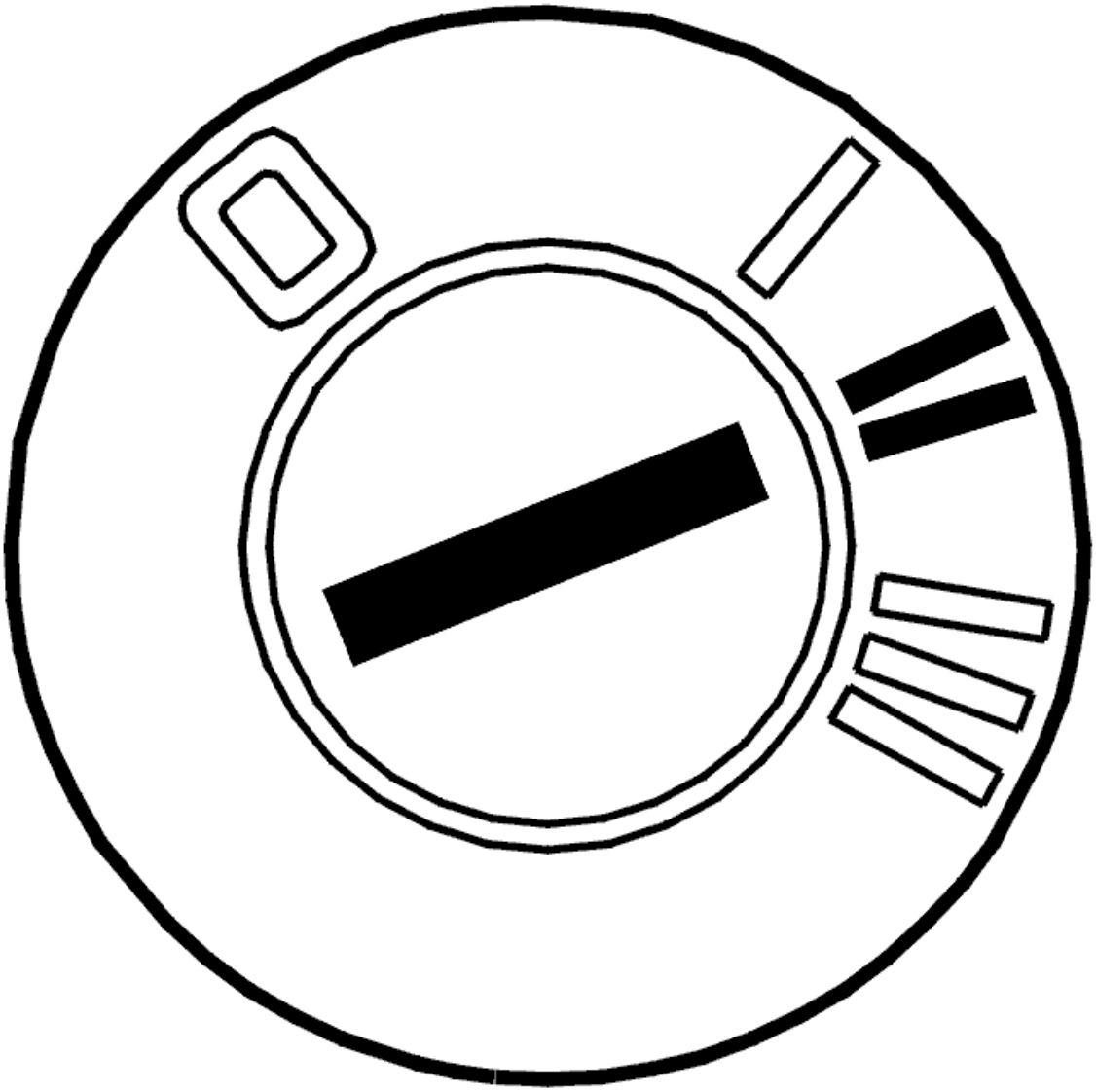

Fig. 251: Identifying Ignition ON
Courtesy of VOLVO CARS CORPORATION

- Ignition off
- Disconnect the battery negative lead
- Reinstall the connectors, components etc.
- Ignition on
- Connect the battery negative lead.

> **WARNING: There must not be anyone inside the passenger compartment when the battery is connected.**

- Read off diagnostic trouble codes (DTCs).

The fault is no longer present if the diagnostic trouble code (DTC) status is intermittent.

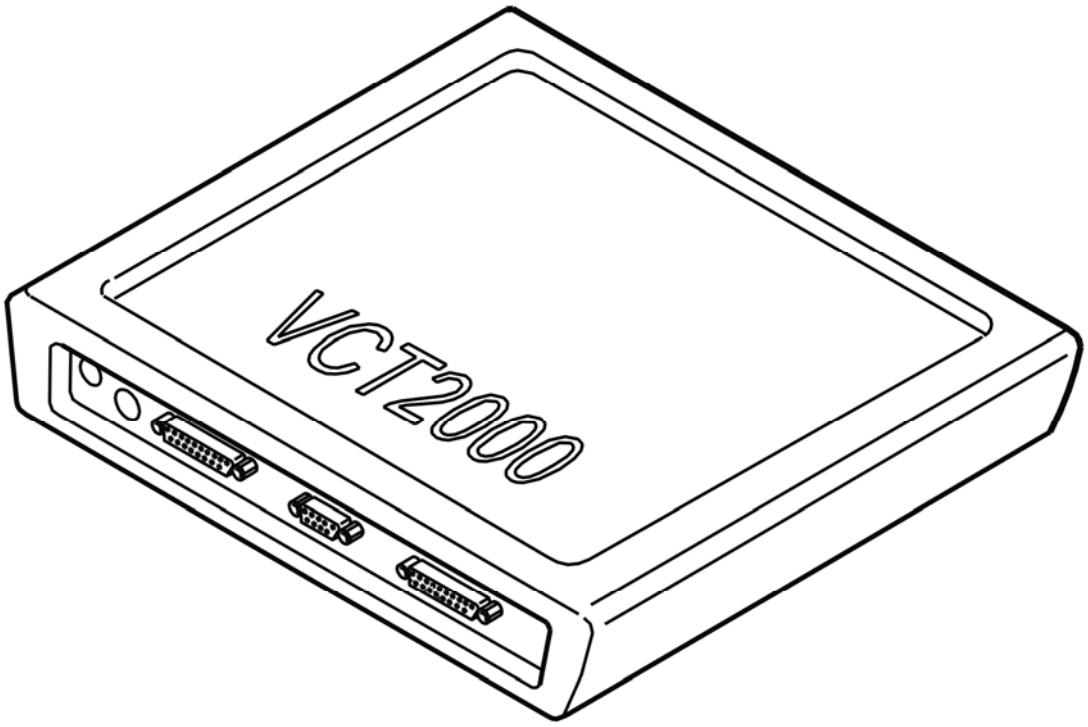

Fig. 252: Identifying VCT2000 Diagnostic Tool Symbol In VIDA
Courtesy of VOLVO CARS CORPORATION

Is the diagnostic trouble code (DTC) intermittent?

- **YES**

  VERIFIED: Troubleshooting has been completed.

- **NO**

  See: **INFORMATION**

INFORMATION

FAULT-TRACING INFORMATION

The fault should have been detected and remedied. As this is not the case fault-tracing has failed.

Exit fault-tracing for this diagnostic trouble code (DTC) or make another attempt.

SRS-DD00: CONTROL MODULE COMMUNICATION. FAULTY

COMMUNICATION (2005-2012)

DIAGNOSTIC TROUBLE CODE (DTC) INFORMATION SRS-DD00

Condition

The supplemental restraint system module (SRS) checks communication between the control module and the occupant weight sensor (OWS).

The diagnostic trouble code (DTC) is stored if the control module registers a communication fault.

The diagnostic trouble code (DTC) can be diagnosed in ignition positions I, II and III.

Substitute Value

- Passenger airbag is deactivated.

Possible Source

- Damage to the signal cable (LIN-bus) or in the connectors between the supplemental restraint system module (SRS) and the occupant weight sensor (OWS)
- Damaged occupant weight sensor (OWS).

Fault symptom[s]

- SRS indicator lamp lit
- PAD lamp lit.

FAULTY COMMUNICATION

CHECKING THE COMPONENT

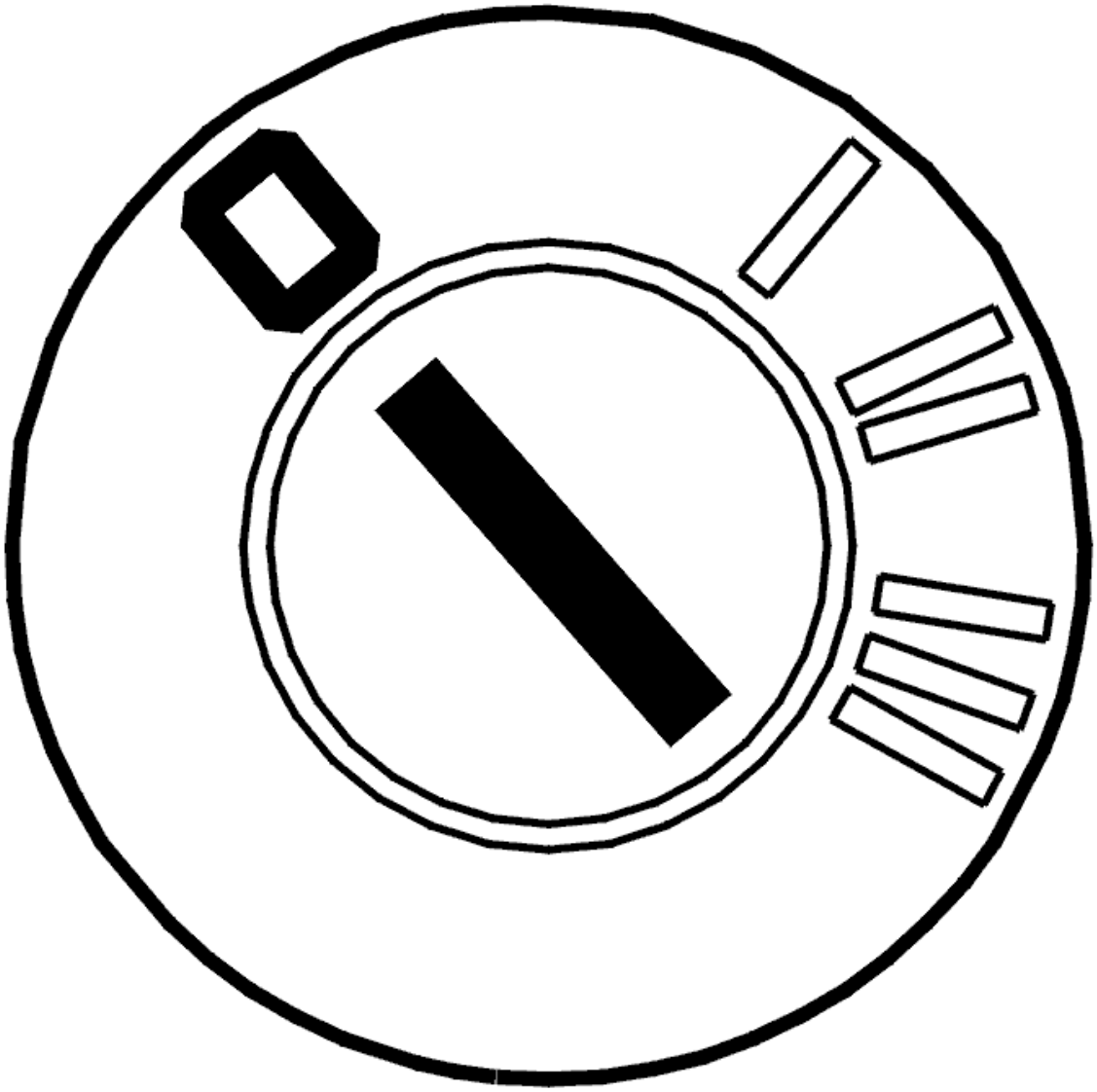

Fig. 253: Identifying Ignition OFF
Courtesy of VOLVO CARS CORPORATION

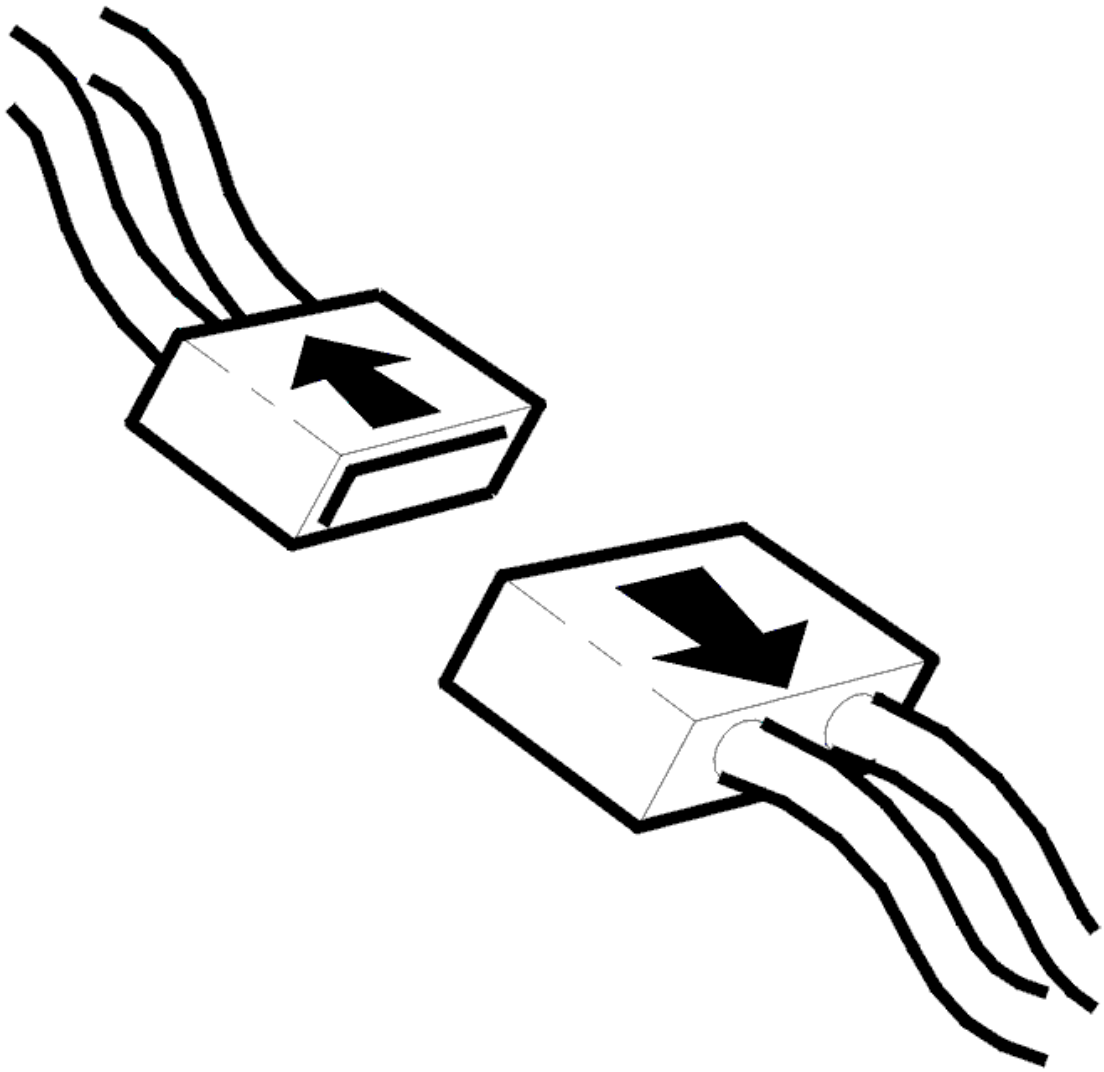

Fig. 254: Disconnecting Connector
Courtesy of VOLVO CARS CORPORATION

- Switch off the ignition. Wait 10 seconds
- Disconnect the 10-pin connector from the occupant weight sensor (OWS)
- Disconnect the connector from the supplemental restraint system module (SRS).

CAUTION: Do not touch the terminal pins in the supplemental restraint system module (SRS) and the occupant weight sensor (OWS). There is a risk of static discharge which could damage the control modules.

Check the connectors for the supplemental restraint system module (SRS) and the occupant weight sensor (OWS). Check for damage to pins and terminals in the connectors. Check for contact resistance.

Also check the other connectors that connect the communication cable between the supplemental restraint

system module (SRS) and the occupant weight sensor (OWS).

Remedy as necessary.

Check the communication cable (LIN-bus) between the supplemental restraint system module (SRS) and the 10-pin connector for the occupant weight sensor (OWS). Check for an open-circuit.

Check the cable between supplemental restraint system module (SRS) terminal #57 and the 10-pin connector for occupant weight sensor (OWS) terminal #10.

Remedy as necessary.

If no fault is found, replace the supplemental restraint system module (SRS).

Remedy as necessary.

Replace the pressure sensor and the occupant weight sensor module (OWS) if a fault is still not detected. The pressure sensor and occupant weight sensor (OWS) module are included in the occupant weight sensor (OWS) system.

NOTE: **After replacing the pressure sensor and the occupant weight sensor (OWS) module in the occupant weight sensor (OWS) system, the supplemental restraint system module (SRS) must be configured. This is done by storing the ID number for the occupant weight sensor (OWS).**

The occupant weight sensor (OWS) must also be calibrated.

Other information

- see **CONNECTING THE BREAKOUT BOX**
- For -2004, see **SIGNAL SPECIFICATION** or for model year 2005-, see **SIGNAL SPECIFICATION**
- see **SUPPLEMENTAL RESTRAINT SYSTEM MODULE (SRS), REPLACING**
- see **OCCUPANT WEIGHT SENSOR (OWS), REPLACING**
- see **STORING THE ID NUMBER FOR THE OCCUPANT WEIGHT SENSOR (OWS)**
- see **CALIBRATING THE OCCUPANT WEIGHT SENSOR (OWS)**
- see **CABLE HARNESS SRS SYSTEM, REPAIR**
- see **CHECKING WIRING AND TERMINALS**

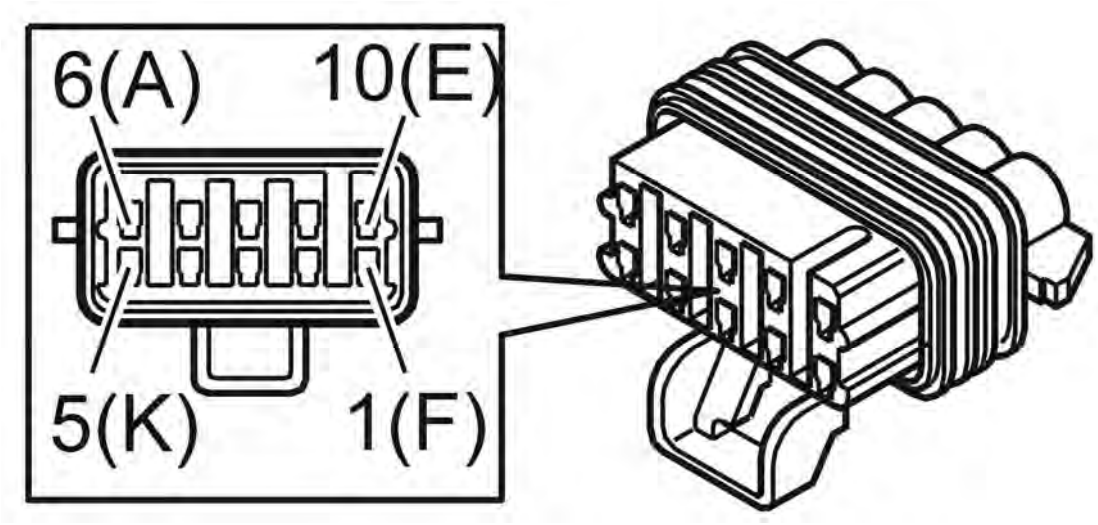

Fig. 255: Identifying 10-Pin Connector
Courtesy of VOLVO CARS CORPORATION

- **Continue**

  See: **VERIFICATION**

VERIFICATION

VERIFICATION

HINT: After carrying out the repair, check that the fault has been remedied.

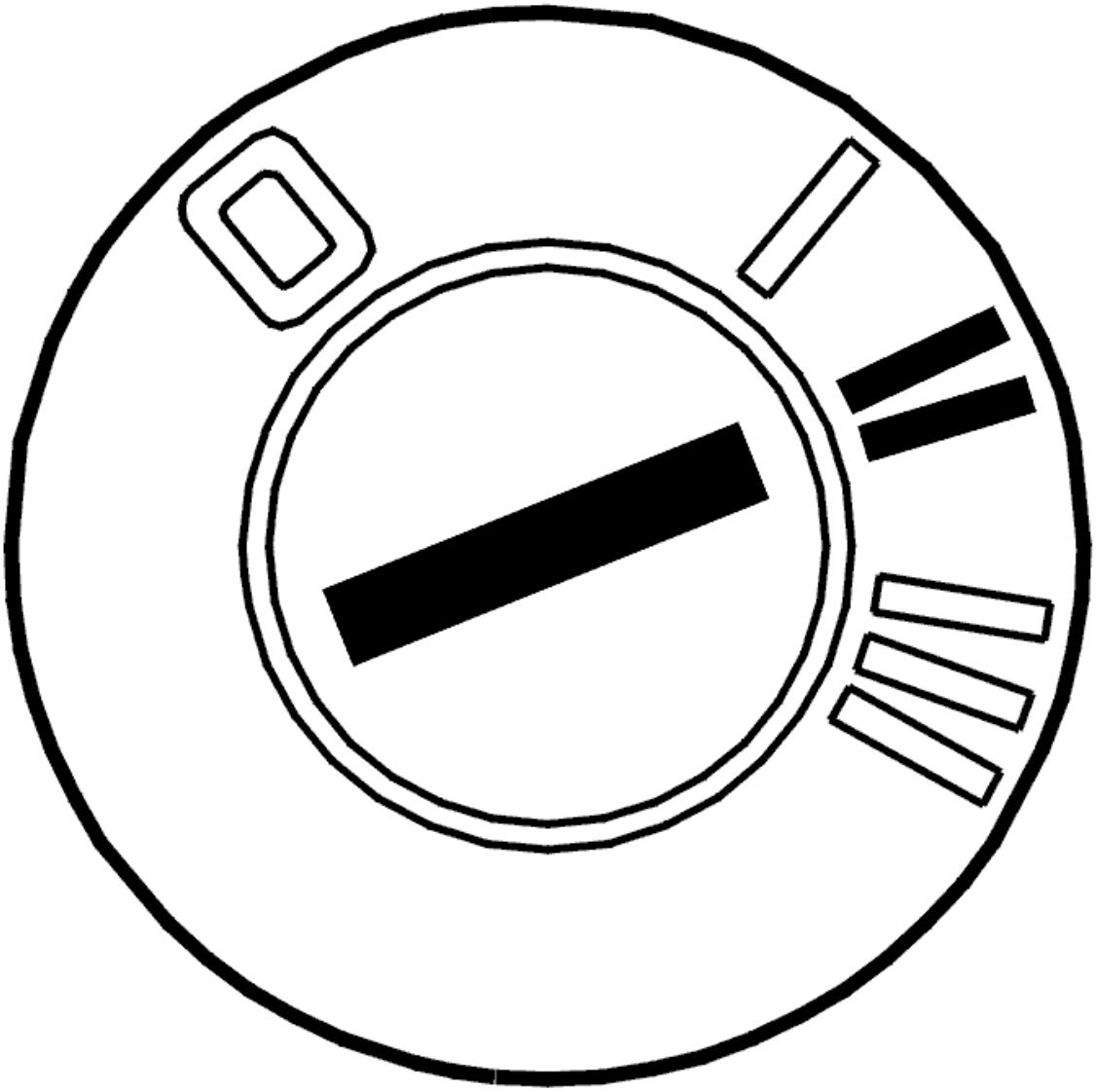

Fig. 256: Identifying Ignition ON
Courtesy of VOLVO CARS CORPORATION

- Ignition off
- Disconnect the battery negative lead
- Reinstall the connectors, components etc.
- Ignition on
- Connect the battery negative lead.

> WARNING: **There must not be anyone inside the passenger compartment when the battery is connected.**

- Read off diagnostic trouble codes (DTCs).

The fault is no longer present if the diagnostic trouble code (DTC) status is intermittent.

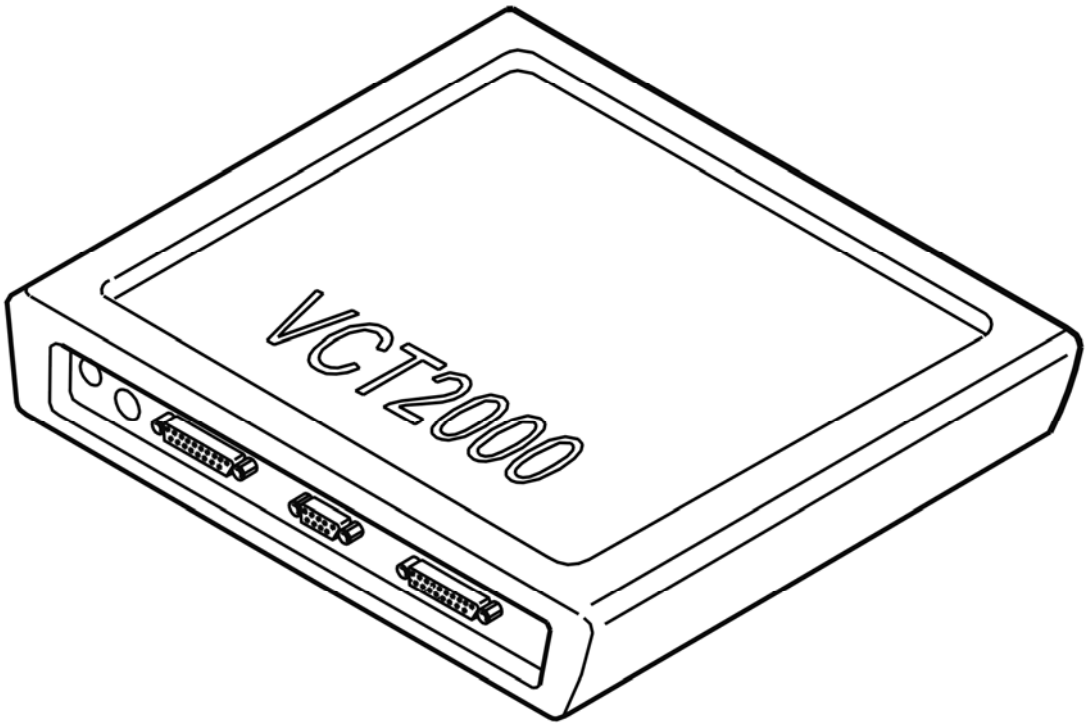

Fig. 257: Identifying VCT2000 Diagnostic Tool Symbol In VIDA
Courtesy of VOLVO CARS CORPORATION

Is the diagnostic trouble code (DTC) intermittent?

- **YES**

  VERIFIED: Troubleshooting has been completed.

- **NO**

  See: **INFORMATION**

INFORMATION

FAULT-TRACING INFORMATION

The fault should have been detected and remedied. As this is not the case fault-tracing has failed.

Exit fault-tracing for this diagnostic trouble code (DTC) or make another attempt.

SRS-DD01: COMMUNICATION CONTROL MODULE. SIGNAL TOO HIGH /

SIGNAL TOO LOW (2005-2012)

DIAGNOSTIC TROUBLE CODE (DTC) INFORMATION SRS-DD01

Condition

The supplemental restraint system module (SRS) checks communication between the control module and the occupant weight sensor (OWS).

The diagnostic trouble code (DTC) is stored if the control module registers a communication fault.

The diagnostic trouble code (DTC) can be diagnosed in ignition positions I, II and III.

Substitute Value

- Passenger airbag is deactivated.

Possible Source

- Short-circuit to supply voltage or ground in the signal cable (LIN-bus) or in the connectors between the supplemental restraint system module (SRS) and the occupant weight sensor (OWS).

Fault symptom[s]

- SRS indicator lamp lit
- PAD lamp lit.

SIGNAL TOO HIGH / SIGNAL TOO LOW

CHECKING THE COMPONENT

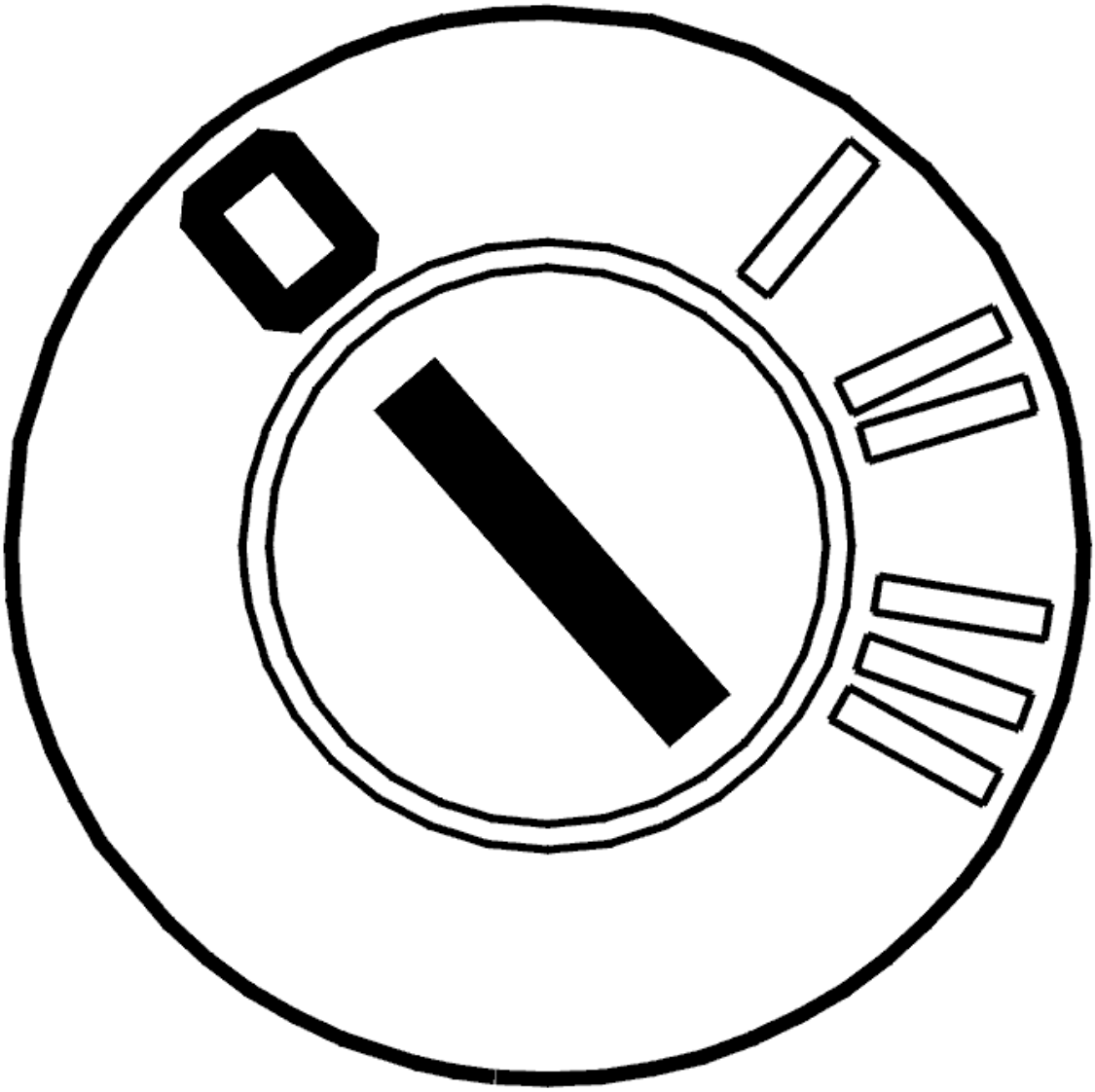

Fig. 258: Identifying Ignition OFF
Courtesy of VOLVO CARS CORPORATION

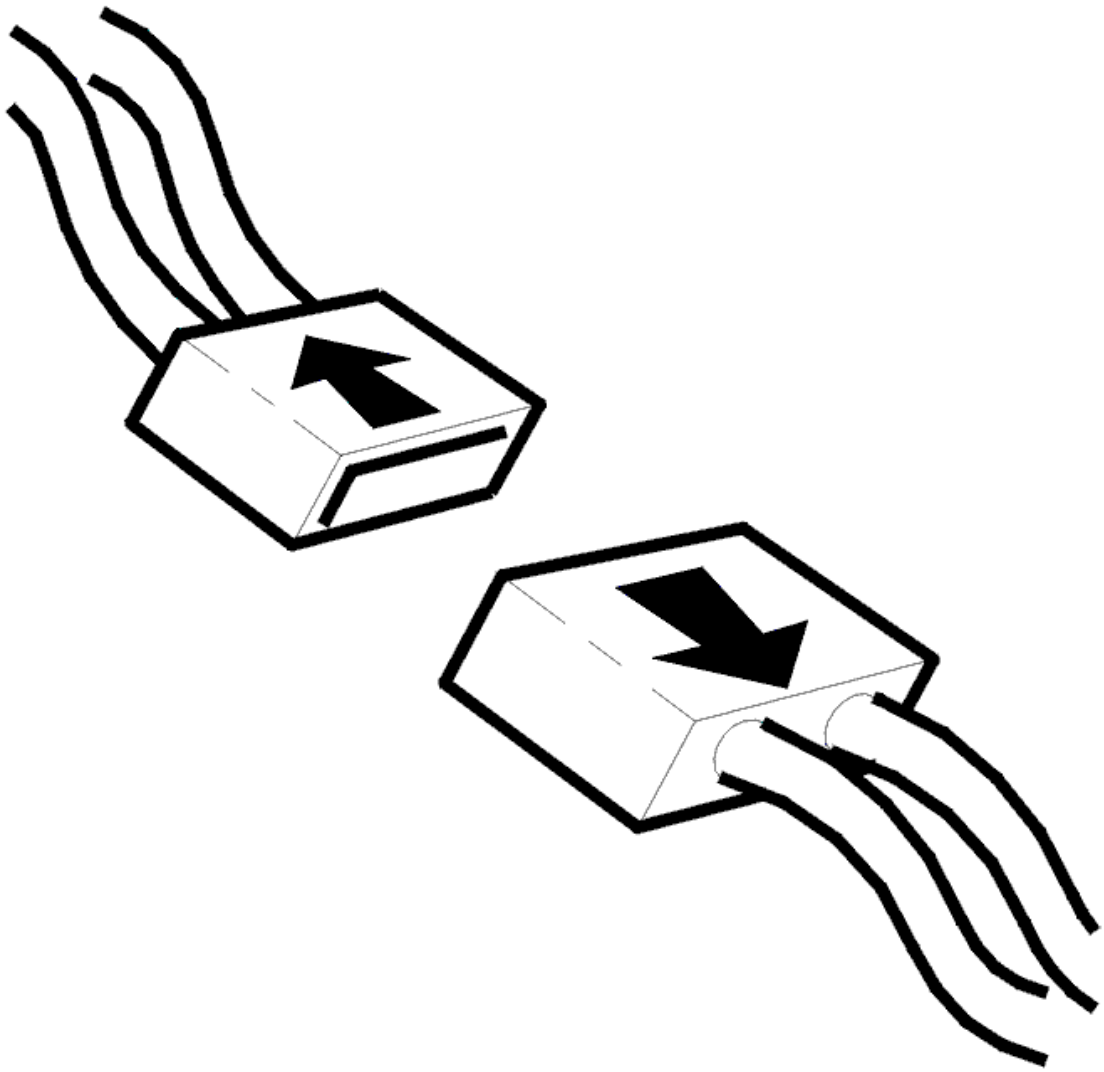

Fig. 259: Disconnecting Connector
Courtesy of VOLVO CARS CORPORATION

- Switch off the ignition. Wait 10 seconds
- Disconnect the 10-pin connector from the occupant weight sensor (OWS)
- Disconnect the connector from the supplemental restraint system module (SRS).

CAUTION: Do not touch the terminal pins in the supplemental restraint system module (SRS) and the occupant weight sensor (OWS). There is a risk of static discharge which could damage the control modules.

Check the connectors for the occupant weight sensor (OWS) and the supplemental restraint system module (SRS). Check for damage to pins and terminals in the connectors.

Also check the other connectors that connect the communication cable between the supplemental restraint

system module (SRS) and the occupant weight sensor (OWS).

Remedy as necessary.

Check the communication cable (LIN-bus) between the supplemental restraint system module (SRS) and the 10-pin connector for the occupant weight sensor (OWS). Check for a short-circuit to ground. Check for a short-circuit to supply voltage.

Check the cable between supplemental restraint system module (SRS) terminal #57 and the 10-pin connector for occupant weight sensor (OWS) terminal #10.

Remedy as necessary.

If no fault is found, replace the supplemental restraint system module (SRS).

Remedy as necessary.

Replace the pressure sensor and the occupant weight sensor module (OWS) if a fault is still not detected. The pressure sensor and occupant weight sensor (OWS) module are included in the occupant weight sensor (OWS) system.

NOTE: **After replacing the pressure sensor and the occupant weight sensor (OWS) module in the occupant weight sensor (OWS) system, the supplemental restraint system module (SRS) must be configured. This is done by storing the ID number for the occupant weight sensor (OWS).**

The occupant weight sensor (OWS) must also be calibrated.

Other information

- see **CONNECTING THE BREAKOUT BOX**
- For -2004, see **SIGNAL SPECIFICATION** or for model year 2005-, see **SIGNAL SPECIFICATION**
- see **SUPPLEMENTAL RESTRAINT SYSTEM MODULE (SRS), REPLACING**
- see **OCCUPANT WEIGHT SENSOR (OWS), REPLACING**
- see **STORING THE ID NUMBER FOR THE OCCUPANT WEIGHT SENSOR (OWS)**
- see **CALIBRATING THE OCCUPANT WEIGHT SENSOR (OWS)**
- see **CABLE HARNESS SRS SYSTEM, REPAIR**
- see **CHECKING WIRING AND TERMINALS**

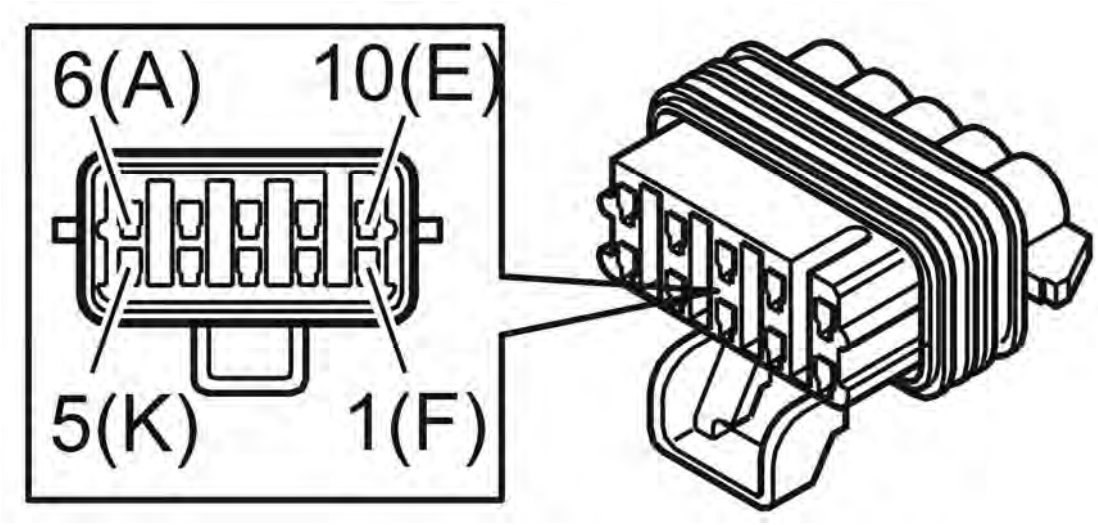

Fig. 260: Identifying 10-Pin Connector
Courtesy of VOLVO CARS CORPORATION

- **Continue**

  See: **VERIFICATION**

VERIFICATION

VERIFICATION

HINT: After carrying out the repair, check that the fault has been remedied.

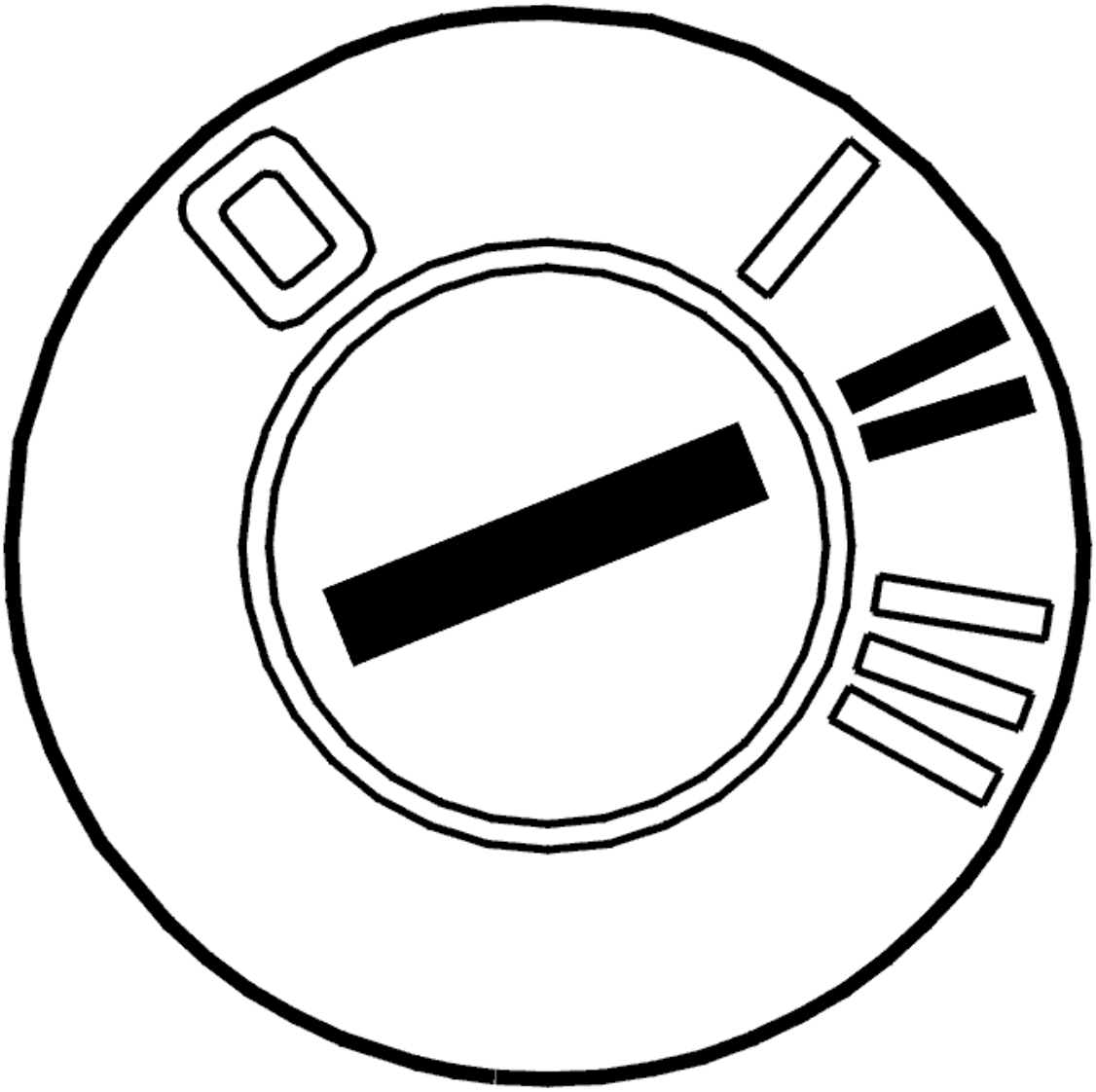

Fig. 261: Identifying Ignition ON
Courtesy of VOLVO CARS CORPORATION

- Ignition off
- Disconnect the battery negative lead
- Reinstall the connectors, components etc.
- Ignition on
- Connect the battery negative lead.

WARNING: There must not be anyone inside the passenger compartment when the battery is connected.

- Read off diagnostic trouble codes (DTCs).

The fault is no longer present if the diagnostic trouble code (DTC) status is intermittent.

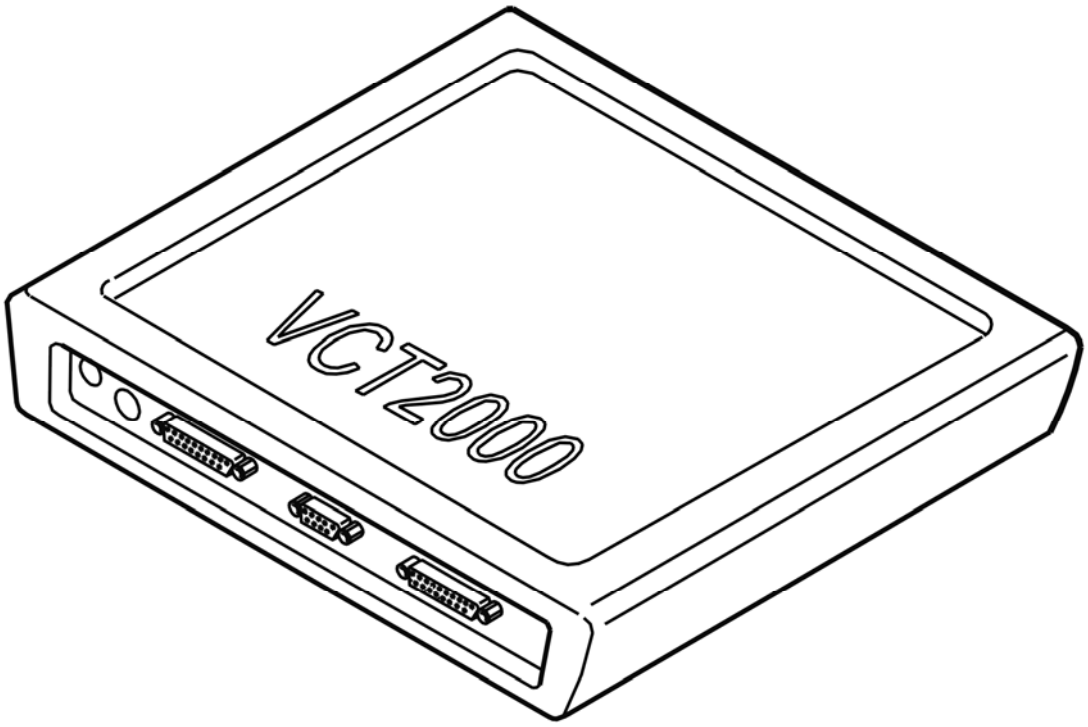

Fig. 262: Identifying VCT2000 Diagnostic Tool Symbol In VIDA
Courtesy of VOLVO CARS CORPORATION

Is the diagnostic trouble code (DTC) intermittent?

- **YES**

  VERIFIED: Troubleshooting has been completed.

- **NO**

  See: **INFORMATION**

INFORMATION

FAULT-TRACING INFORMATION

The fault should have been detected and remedied. As this is not the case fault-tracing has failed.

Exit fault-tracing for this diagnostic trouble code (DTC) or make another attempt.

SRS-DD02: COMMUNICATION CONTROL MODULE. FAULTY

COMMUNICATION (2005-2012)

DIAGNOSTIC TROUBLE CODE (DTC) INFORMATION SRS-DD02

Condition

The supplemental restraint system module (SRS) checks communication between the control module and the occupant weight sensor (OWS).

The diagnostic trouble code (DTC) is stored if the control module registers a communication fault.

The diagnostic trouble code (DTC) can be diagnosed in ignition positions I, II and III.

Substitute Value

- Passenger airbag is deactivated.

Possible Source

- Damage to the signal cable (LIN-bus) or in the connectors between the supplemental restraint system module (SRS) and the occupant weight sensor (OWS)
- Damaged occupant weight sensor (OWS).

Fault symptom[s]

- SRS indicator lamp lit
- PAD lamp lit.

FAULTY COMMUNICATION

CHECKING THE COMPONENT

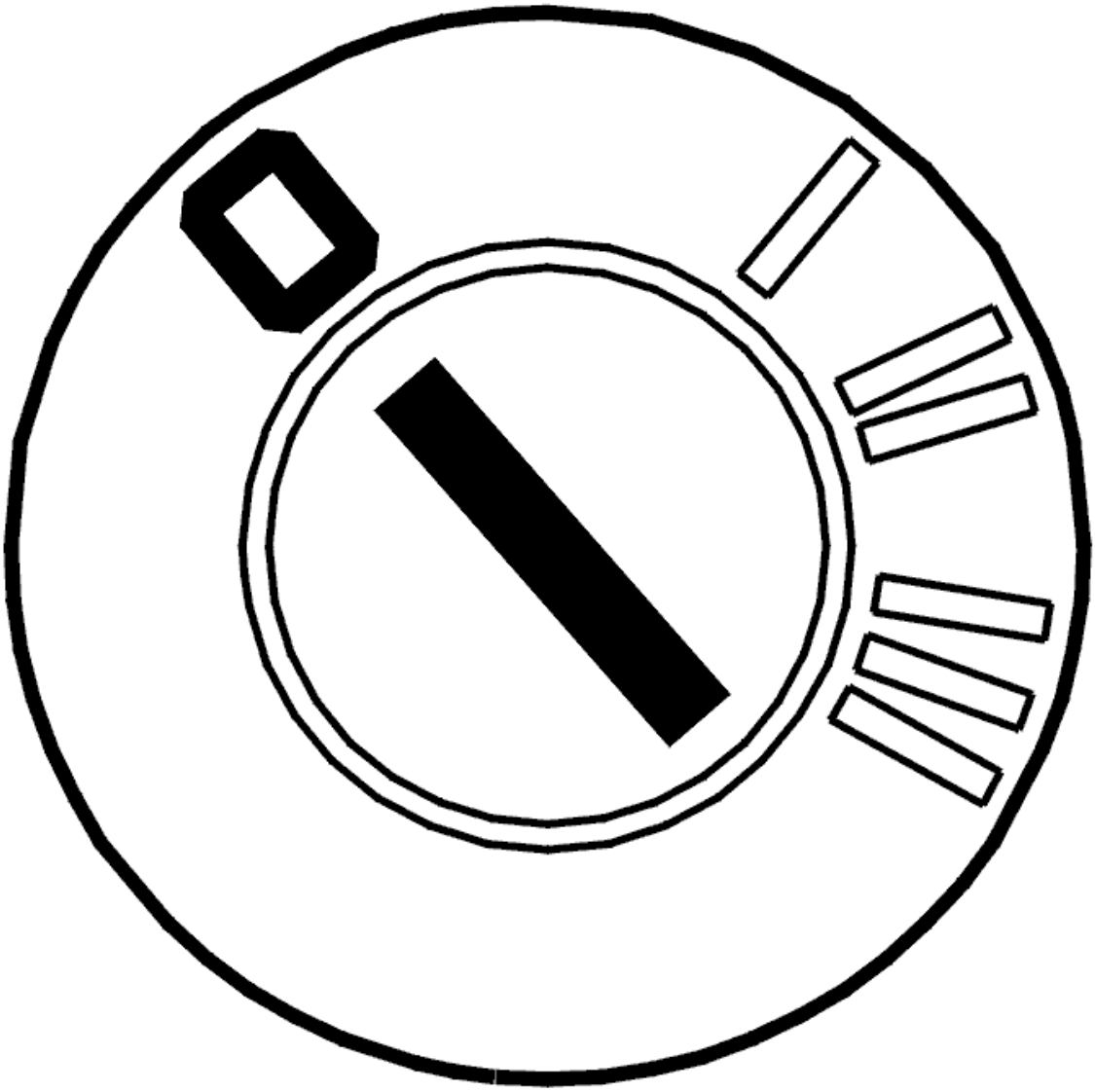

Fig. 263: Identifying Ignition OFF
Courtesy of VOLVO CARS CORPORATION

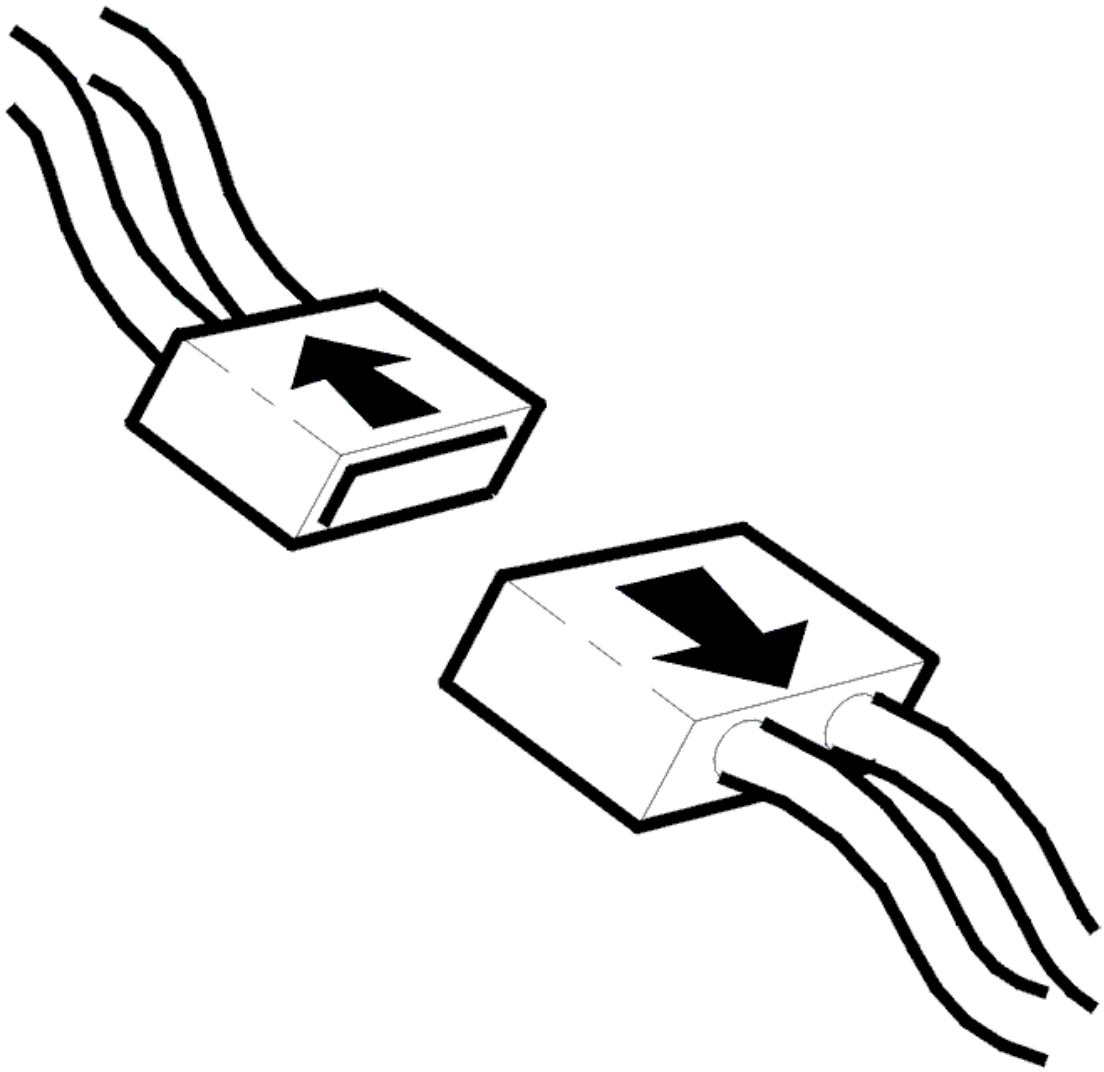

Fig. 264: Disconnecting Connector
Courtesy of VOLVO CARS CORPORATION

- Switch off the ignition. Wait 10 seconds
- Disconnect the 10-pin connector from the occupant weight sensor (OWS)
- Disconnect the connector from the supplemental restraint system module (SRS).

CAUTION: Do not touch the terminal pins in the supplemental restraint system module (SRS) and the occupant weight sensor (OWS). There is a risk of static discharge which could damage the control modules.

Check the connectors for the supplemental restraint system module (SRS) and the occupant weight sensor (OWS). Check for damage to pins and terminals in the connectors. Check for contact resistance.

Also check the other connectors that connect the communication cable between the supplemental restraint

system module (SRS) and the occupant weight sensor (OWS).

Remedy as necessary.

Check the communication cable (LIN-bus) between the supplemental restraint system module (SRS) and the 10-pin connector for the occupant weight sensor (OWS). Check for an open-circuit.

Check the cable between supplemental restraint system module (SRS) terminal #57 and the 10-pin connector for occupant weight sensor (OWS) terminal #10.

Remedy as necessary.

Replace the pressure sensor and the occupant weight sensor module (OWS) if no fault is detected. The pressure sensor and occupant weight sensor (OWS) module are included in the occupant weight sensor (OWS) system.

NOTE: **After replacing the pressure sensor and the occupant weight sensor (OWS) module in the occupant weight sensor (OWS) system, the supplemental restraint system module (SRS) must be configured. This is done by storing the ID number for the occupant weight sensor (OWS).**

The occupant weight sensor (OWS) must also be calibrated.

Other information

- see **CONNECTING THE BREAKOUT BOX**
- For -2004, see **SIGNAL SPECIFICATION** or for model year 2005-, see **SIGNAL SPECIFICATION**
- see **SUPPLEMENTAL RESTRAINT SYSTEM MODULE (SRS), REPLACING**
- see **OCCUPANT WEIGHT SENSOR (OWS), REPLACING**
- see **STORING THE ID NUMBER FOR THE OCCUPANT WEIGHT SENSOR (OWS)**
- see **CALIBRATING THE OCCUPANT WEIGHT SENSOR (OWS)**
- see **CABLE HARNESS SRS SYSTEM, REPAIR**
- see **CHECKING WIRING AND TERMINALS**

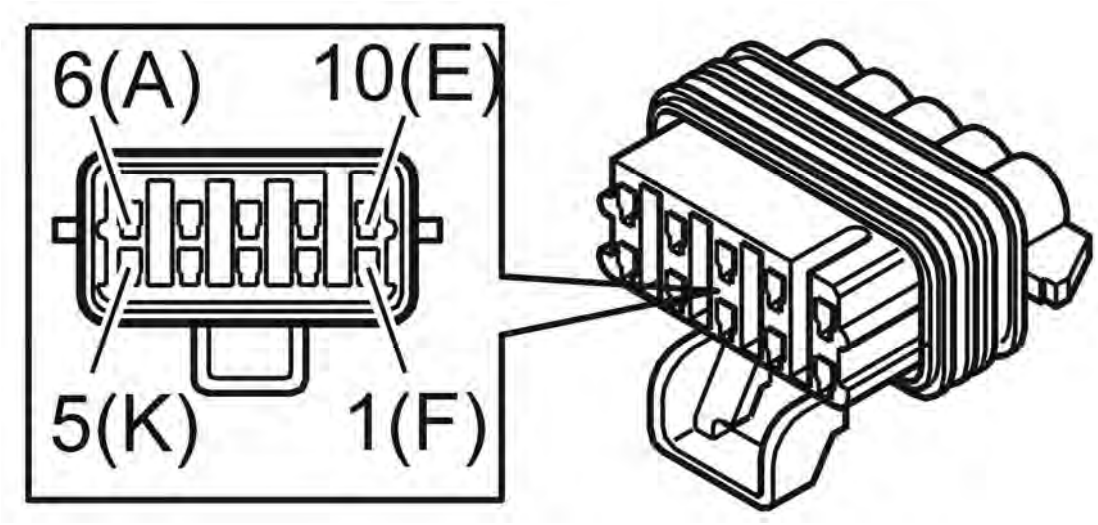

Fig. 265: Identifying 10-Pin Connector
Courtesy of VOLVO CARS CORPORATION

- **Continue**

  See: **VERIFICATION**

VERIFICATION

VERIFICATION

HINT: After carrying out the repair, check that the fault has been remedied.

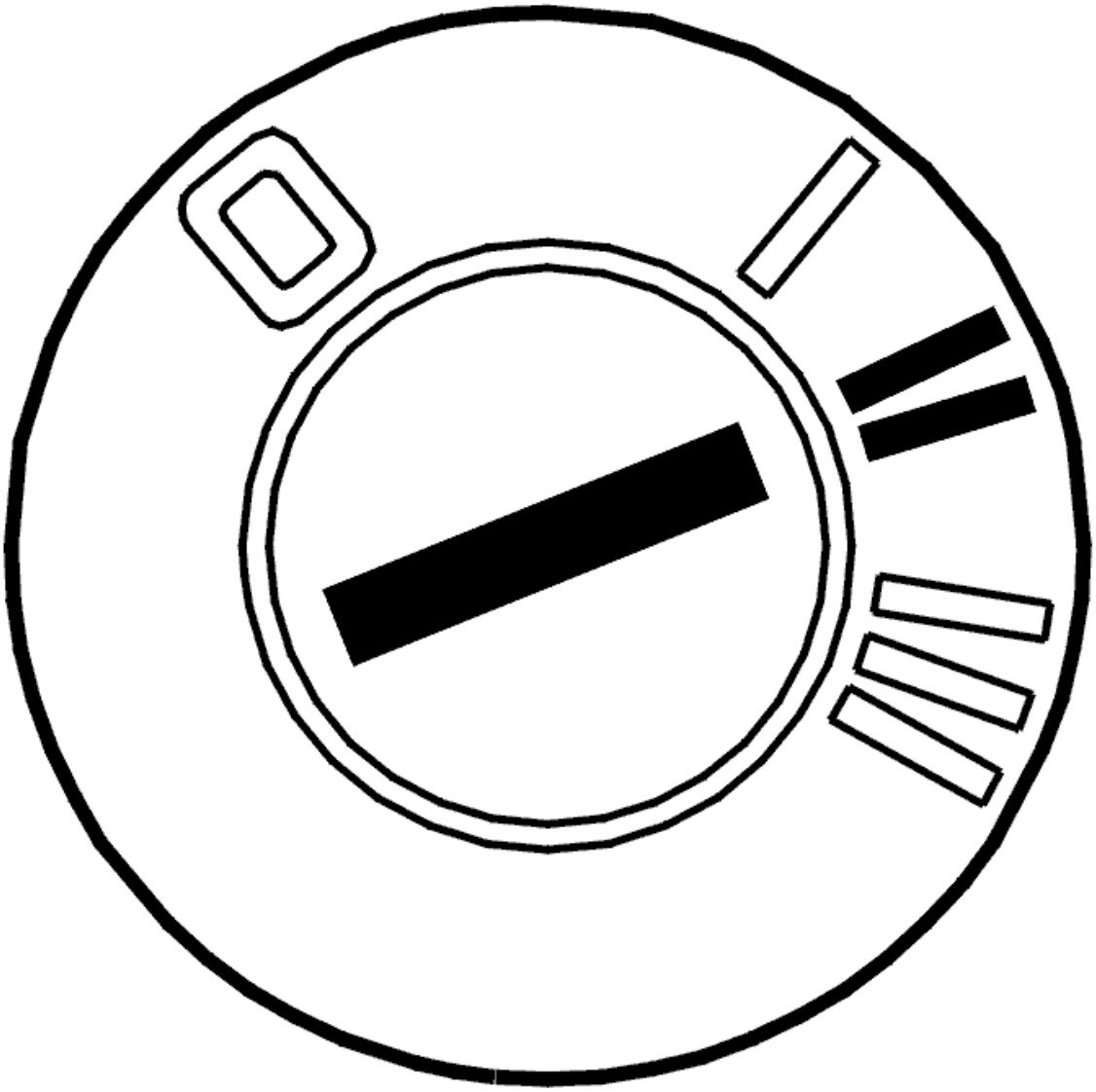

Fig. 266: Identifying Ignition ON
Courtesy of VOLVO CARS CORPORATION

- Ignition off
- Disconnect the battery negative lead
- Reinstall the connectors, components etc.
- Ignition on
- Connect the battery negative lead.

WARNING: There must not be anyone inside the passenger compartment when the battery is connected.

- Read off diagnostic trouble codes (DTCs).

The fault is no longer present if the diagnostic trouble code (DTC) status is intermittent.

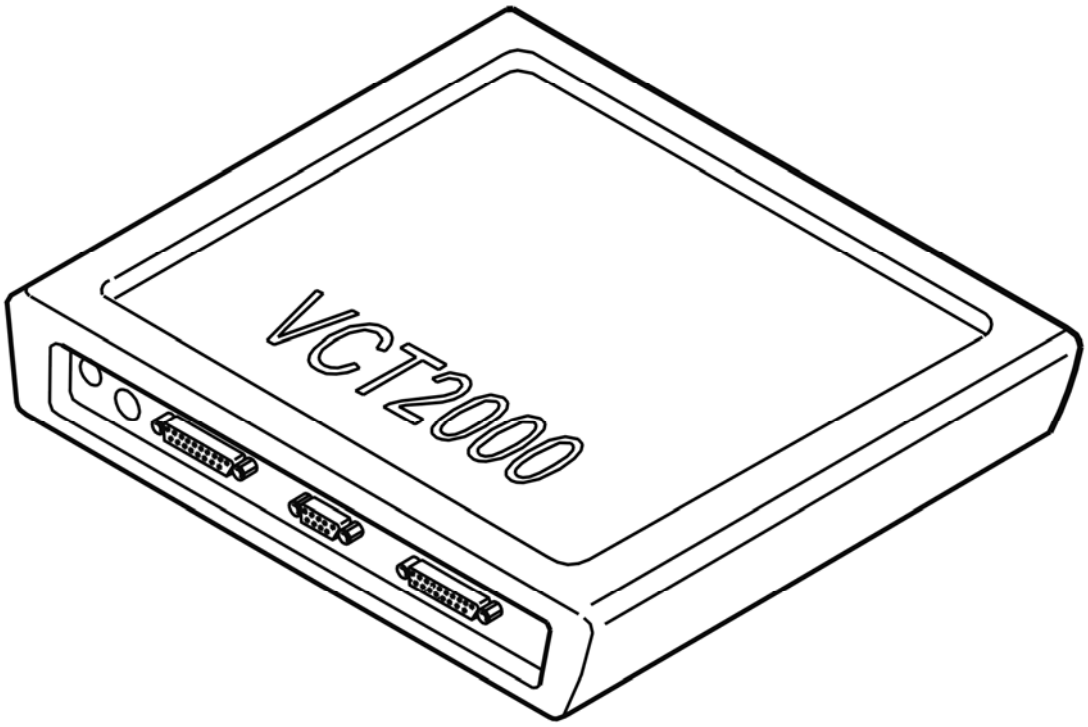

Fig. 267: Identifying VCT2000 Diagnostic Tool Symbol In VIDA
Courtesy of VOLVO CARS CORPORATION

Is the diagnostic trouble code (DTC) intermittent?

- **YES**

  VERIFIED: Troubleshooting has been completed.

- **NO**

  See: **INFORMATION**

INFORMATION

FAULT-TRACING INFORMATION

The fault should have been detected and remedied. As this is not the case fault-tracing has failed.

Exit fault-tracing for this diagnostic trouble code (DTC) or make another attempt.

SRS-DD10: COMMUNICATION CONTROL MODULE. FAULTY

COMMUNICATION (2005-2012)

DIAGNOSTIC TROUBLE CODE (DTC) INFORMATION SRS-DD10

Condition

The supplemental restraint system module (SRS) checks communication between the control module and the occupant weight sensor (OWS).

The diagnostic trouble code (DTC) is stored if the control module registers a communication fault.

The diagnostic trouble code (DTC) can be diagnosed in ignition positions I, II and III.

Substitute Value

- Passenger airbag is deactivated.

Possible Source

- Open-circuit in the signal cable (LIN-bus) or in the connectors between the supplemental restraint system module (SRS) and the occupant weight sensor (OWS).

Fault symptom[s]

- SRS indicator lamp lit
- PAD lamp lit.

FAULTY COMMUNICATION

see **FAULTY COMMUNICATION**

SRS-E001: CONTROL MODULE COMMUNICATION. FAULTY COMMUNICATION (2005-2012)

DIAGNOSTIC TROUBLE CODE (DTC) INFORMATION SRS-E001

Condition

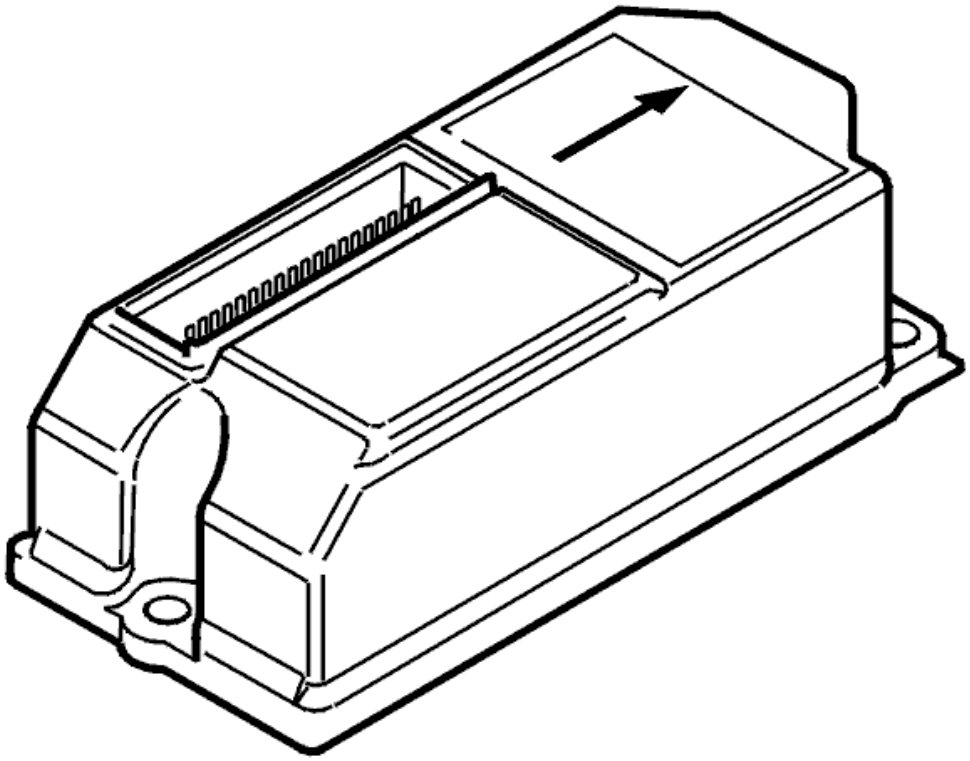

Fig. 268: Identifying SRS Control Module
Courtesy of VOLVO CARS CORPORATION

The control modules transmit and receive information via a standardized serial communication method - CAN (Controller Area Network). The diagnostic trouble code (DTC) is stored if the control module registers serious interference (CAN communication blocked).

NOTE: In the event of system communication problems, it is not possible to communicate with the control module. Therefore it will only be possible to read off the fault if it is intermittent.

Substitute Value

- The control module shuts itself off ("bus-off").

  HINT: The control module will remain shut off until the power supply is broken (15, 30, X). When the power supply is connected the control module will make a new attempt to communicate.

Possible Source

- Short-circuit between the control area network (CAN) wiring
- Open-circuit in the control area network (CAN) wiring
- Internal fault in the control module

- Internal fault in another control module in the same part of the control area network (CAN).

Fault symptom[s]

- The SRS indicator lamp is lit.

SIGNAL MISSING

see **SIGNAL MISSING**

SRS-E001: CONTROL MODULE COMMUNICATION. FAULTY COMMUNICATION (2003-2004)

DIAGNOSTIC TROUBLE CODE (DTC) INFORMATION SRS-E001

see **DIAGNOSTIC TROUBLE CODE (DTC) INFORMATION SRS-E001**

FAULTY COMMUNICATION

see **FAULTY COMMUNICATION**

SRS-E003: CONFIGURATION FAULT. FAULTY CONFIGURATION (2005-2012)

DIAGNOSTIC TROUBLE CODE (DTC) INFORMATION SRS-E003

Condition

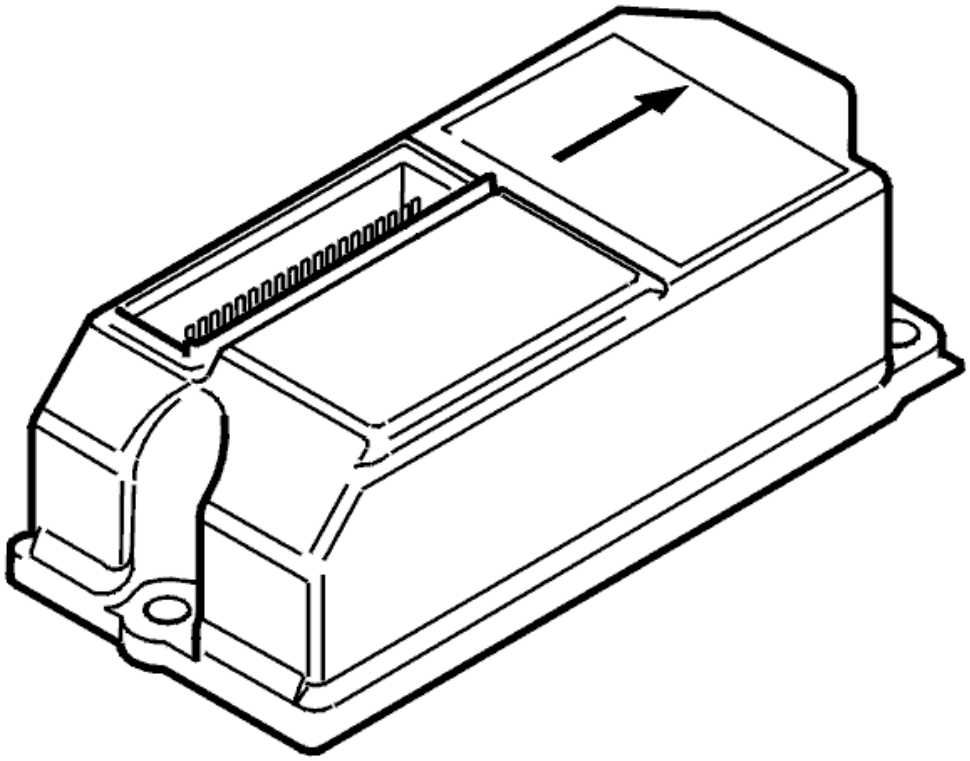

Fig. 269: Identifying SRS Control Module
Courtesy of VOLVO CARS CORPORATION

The control module compares its configuration ID with the signal configuration transmitted on the control area network (CAN) by the central electronic module (CEM). If the configuration IDs do not correspond the fault code is stored. The diagnostic trouble code (DTC) is also stored if the communication between the control module and the central electronic module (CEM) is interrupted.

NOTE: **In the event of open-circuit in both the control area network (CAN) cables, it is not possible to communicate with the control module. Therefore it will only be possible to read off the diagnostic trouble code (DTC) if this type of fault is intermittent. When the diagnostic trouble code (DTC) is stored, the control module responds to the diagnostic command, however normal control area network (CAN) communication does not work. ("Expulsion mode")**

Substitute Value

- None.

Possible Source

- Faulty control area network (CAN) configuration ID. (The node is not intended for this car, for example a used control module with different software/hardware.)

- Open-circuit in the control area network (CAN) wiring between the control module and the central electrical module (CEM).

Fault symptom[s]

- The SRS indicator lamp is lit.

SIGNAL MISSING

see **SIGNAL MISSING**

SRS-E003: CONFIGURATION FAULT. FAULTY CONFIGURATION (2003-2004)

DIAGNOSTIC TROUBLE CODE (DTC) INFORMATION SRS-E003

see **DIAGNOSTIC TROUBLE CODE (DTC) INFORMATION SRS-E003**

FAULTY CONFIGURATION (2003)

see **FAULTY CONFIGURATION (2003)**

FAULTY CONFIGURATION (2004)

see **FAULTY CONFIGURATION (2004)**

SRS-XXXX: UNKNOWN DIAGNOSTIC TROUBLE CODE (DTC) FOR THE CURRENT CONTROL MODULE VERSION (2003-2012)

UNKNOWN DIAGNOSTIC TROUBLE CODE (DTC) FOR THE CURRENT CONTROL MODULE VERSION

READING OFF DIAGNOSTIC TROUBLE CODES (DTCS)

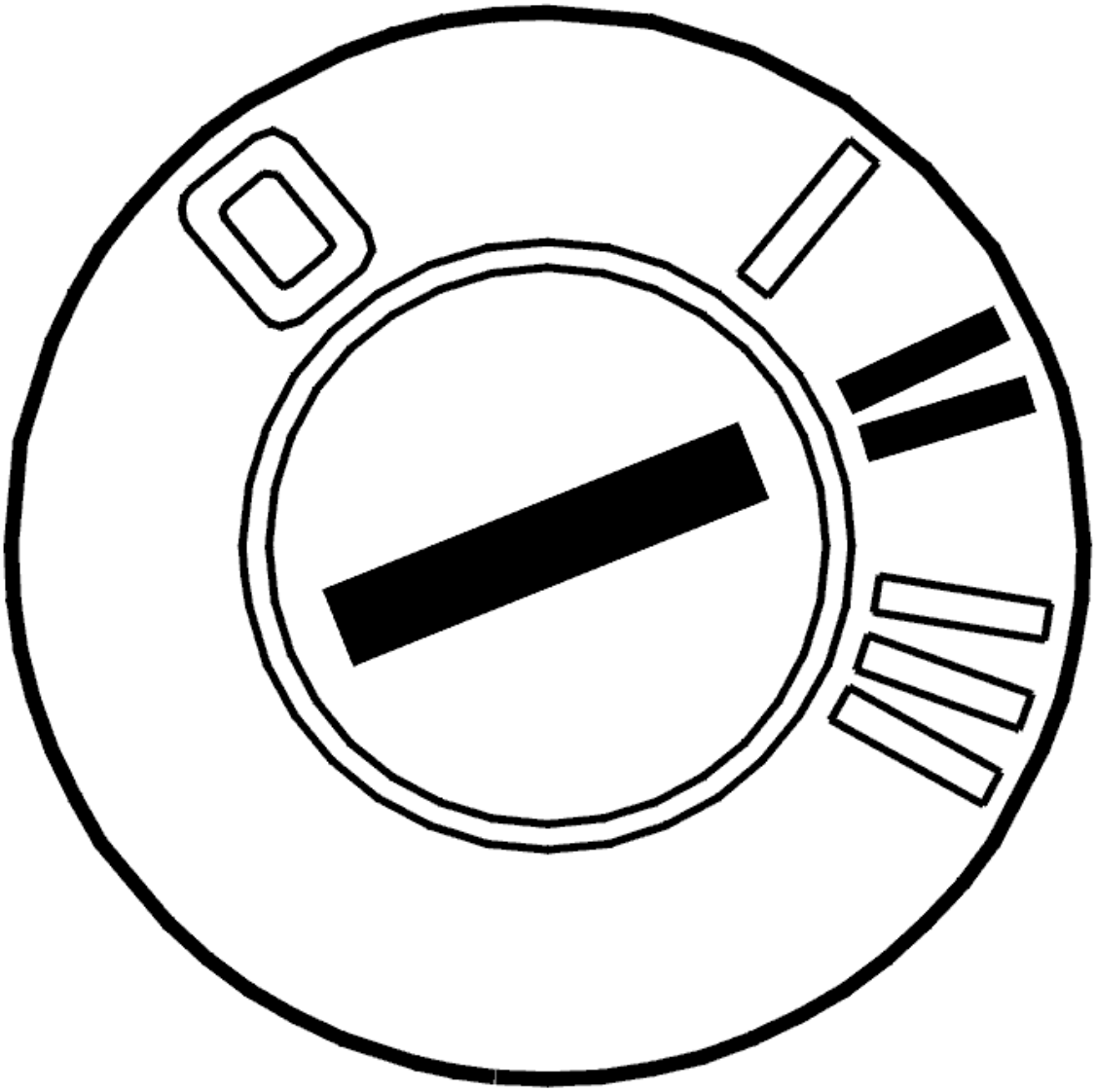

Fig. 270: Identifying Ignition ON
Courtesy of VOLVO CARS CORPORATION

- Ignition on.

  Read off the diagnostic trouble code (DTC) that is stored in the car.

  Make a note of the code for reporting purposes.

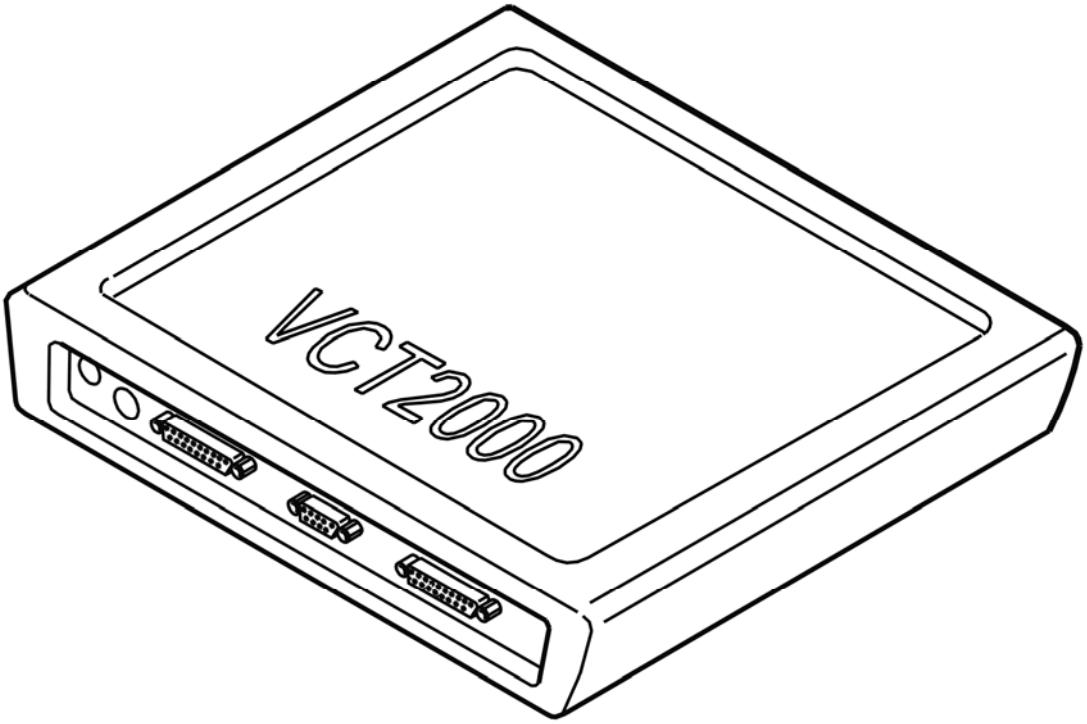

Fig. 271: Identifying VCT2000 Diagnostic Tool Symbol In VIDA
Courtesy of VOLVO CARS CORPORATION

ACCESSORIES AND BODY, CAB

Interior Equipment - Installation instructions, accessories

BABY INSERT, CHILD SEAT (2003-2005)

BABY INSERT, CHILD SEAT

Applies To 5-Point Seat Belts

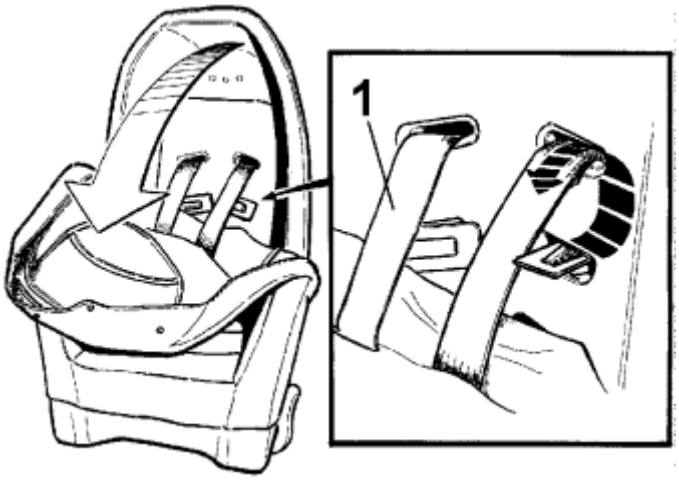

Fig. 1: Identifying Shoulder Straps And Holes
Courtesy of VOLVO CARS CORPORATION

- Release upholstery at upper edge and pull forward.
- Note which group of holes the shoulder straps are routed through.
- Remove the shoulder straps (1) by pulling through the holes.

Applies To 5-Point Seat Belts

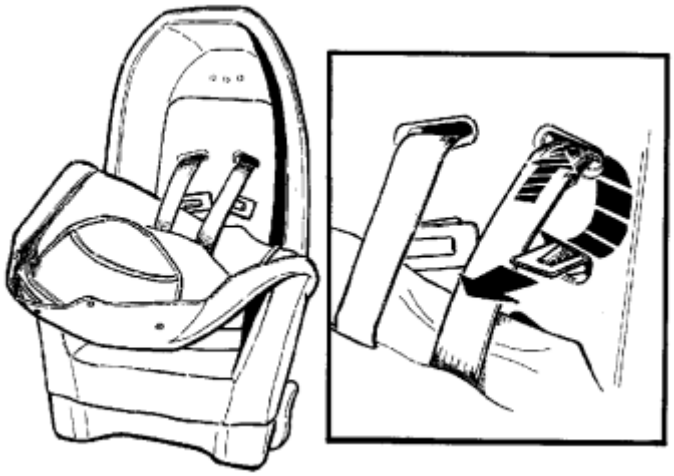

Fig. 2: Identifying Shoulder Strap, Locking Washers And Holes
Courtesy of VOLVO CARS CORPORATION

- Install the baby insert.
- At the appropriate height thread the shoulder straps through the holes in insert, upholstery and seat back.
- Thread the shoulder strap locking washers through the holes as illustrated.
- Check that the locking washers are correctly positioned.

Applies To 5-Point Seat Belts

Fig. 3: Fold Upholstery Back And Press Into Place With Two Clips
Courtesy of VOLVO CARS CORPORATION

- Fold the upholstery back and press into place with the two clips.
- Straighten the upholstery.

Applies To 4-Point Seat Belts

Fig. 4: Identifying Child Seat Harness Threaded Through Holes In Baby Insert
Courtesy of VOLVO CARS CORPORATION

- Thread the child seat harness through the holes in the baby insert.

Applies To 4-Point Seat Belts

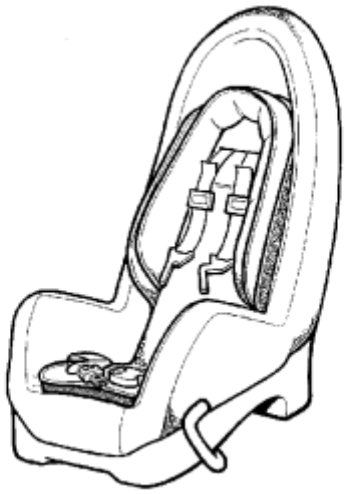

Fig. 5: Baby Insert Positioned Correctly In Child Seat
Courtesy of VOLVO CARS CORPORATION

- Position the baby insert correctly in the child seat and pull the harness lap belt forward.

Applies To Both The Belts

Fig. 6: Adjust Baby Insert According To Child's Height By Moving The Upper Collar Upwards Or Downwards
Courtesy of VOLVO CARS CORPORATION

- Adjust the baby insert according to the child's height by moving the upper collar upwards or downwards.

CARGO NET, CARGO COMPARTMENT FLOOR (2003-2004)

CARGO NET, CARGO COMPARTMENT FLOOR

INSTALL

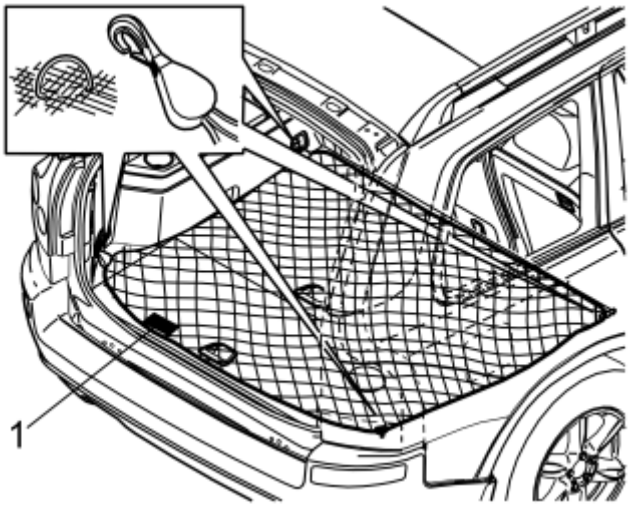

Fig. 7: Hook The Hooks Onto The Four Mounting Eyelets
Courtesy of VOLVO CARS CORPORATION

- Hook the hooks onto the four mounting eyelets
- Ensure that the two longest sides of the net cross the cargo compartment floor
- The net label (1) must be positioned opposite the tailgate opening.

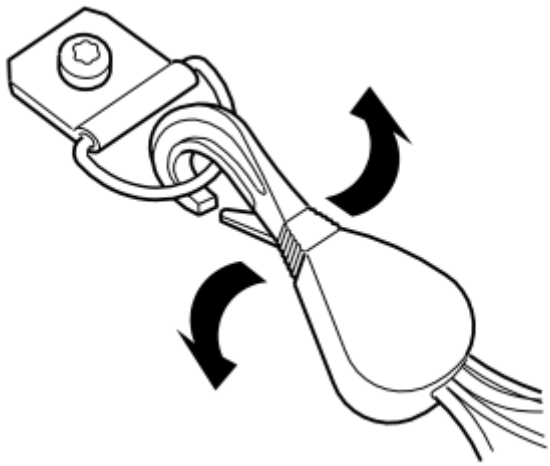

Fig. 8: Identifying Hooks And Mounting Eyelets
Courtesy of VOLVO CARS CORPORATION

- To remove the cargo net: Unhook the hooks from the eyelets.

COOLBOX (2003-2004)

COOLBOX

USAGE

XC90, Second Row Of Seats

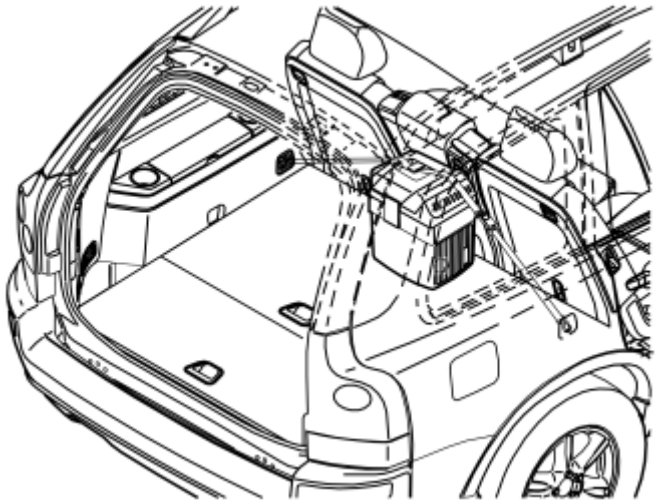

Fig. 9: Position Coolbox In Cargo Compartment Behind Backrest - XC90, Second Row Of Seats
Courtesy of VOLVO CARS CORPORATION

XC90, Third Row Of Seats

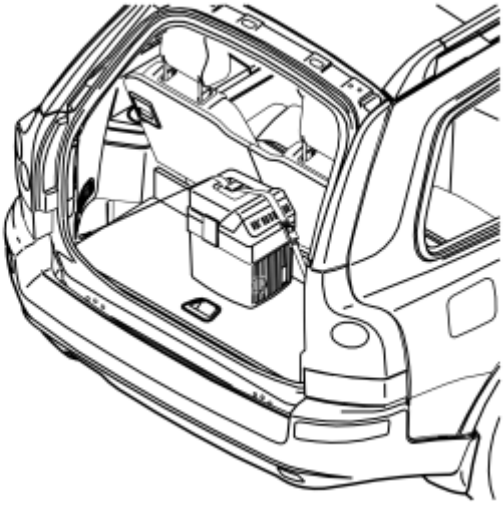

Fig. 10: Position Coolbox In Cargo Compartment Behind Backrest - XC90, Third Row Of Seats
Courtesy of VOLVO CARS CORPORATION

- Position the coolbox in the cargo compartment behind the backrest, as illustrated.

INSTALL

- Install the long strap hook in the left front (XC90 3rd row of rear seats) mounting eyelet (1) in the cargo compartment. Allow the strap lock (2) to hang over the right hand side of the coolbox as illustrated
- Press the mounting (3) down into the handle of the coolbox
- Install the short strap hook in the right hand front mounting eyelet (4) in the cargo compartment
- Lock the straps together. Tighten so that the coolbox is secured in place.

NOTE: Read the warning text on the coolbox.

- Connect the coolbox to the electrical socket in the cargo compartment
- Check the function.

FIRE EXTINGUISHER (2003-2008)

FIRE EXTINGUISHER

CAUTION: When installing the fire extinguisher in front of the front seats, the handle for the fire extinguisher must be turned to the left (looking towards the front of the car).

NOTE: When using an RTI unit in the XC90 the fire extinguisher must be mounted under the right-hand seat.

REMOVE

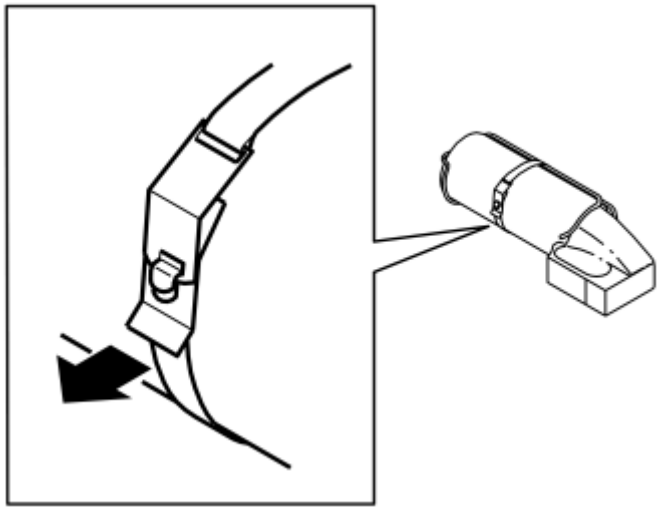

Fig. 11: Removal Of Fire Extinguisher From Mounting
Courtesy of VOLVO CARS CORPORATION

- Remove the fire extinguisher from the mounting.

INSTALL

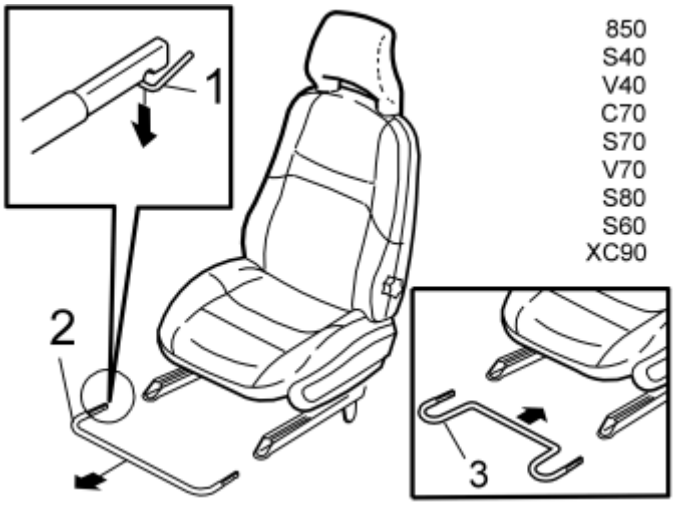

Fig. 12: Identifying Installation Of New Handle
Courtesy of VOLVO CARS CORPORATION

- Raise the driver's seat to its highest point.

Applies To Manual Seats

- Release the catches (1). Remove the handle (2)
- Install the new handle (3).

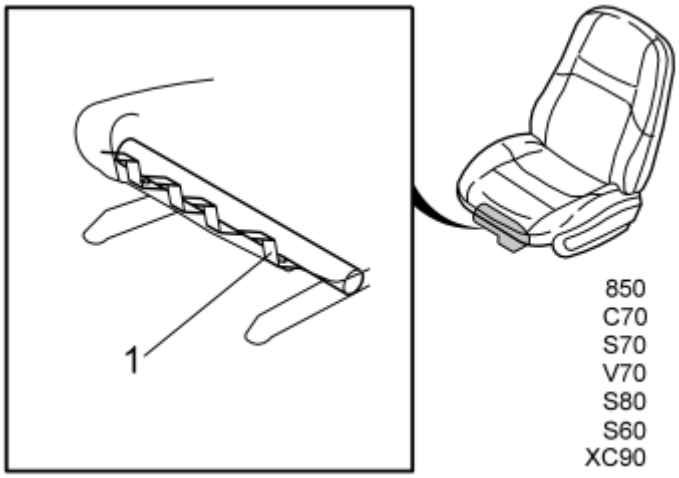

Fig. 13: Cut Off Tie Strap Securing Cable Harness In Left-Hole In Seat Frame
Courtesy of VOLVO CARS CORPORATION

Applies To Power Seats

- Cut off the tie strap securing the cable harness in the left-hole in the seat frame (1).

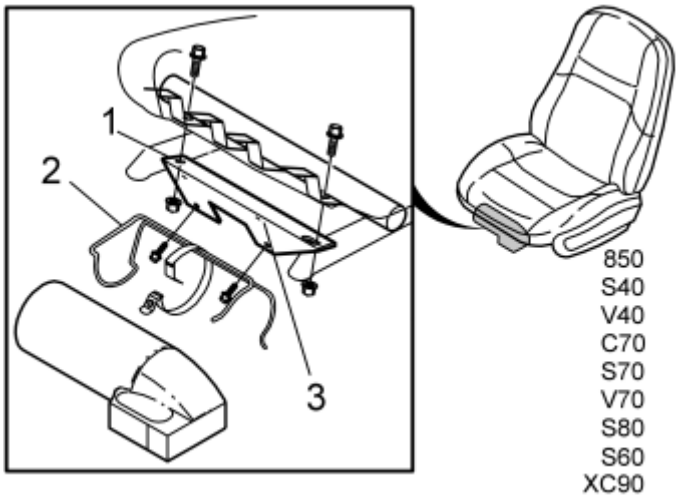

Fig. 14: Identifying Bracket In Front Of Seat Frame
Courtesy of VOLVO CARS CORPORATION

Applies to manual seats from chassis number 415 000 inclusive

- Screw the bracket (1) into place in the existing holes in the front of the seat frame. Tighten to **10 Nm (8 lbf. ft)**
- Install the holder (2) on the bracket (1).

Applies to power seats

- Install a tie strap from the kit for the cable harness in the hole (3) on the bracket (1).

Applies to all car models

- Position the fire extinguisher in the holder. Hook the tensioner in the eyelet, tighten the strap and lock
- Read the fire extinguisher instructions.

INSTALLATION KIT CHILD SEAT (2003-2011)

INSTALLATION KIT CHILD SEAT

WARNING: This installation kit must NOT be mounted on the front seat on the passenger side in cars equipped with Supplemental Restraint System Module (SRS) (airbag). Child seats must NOT be mounted in the front seat on the passenger side in cars equipped with Supplemental Restraint System Module (SRS) (airbag).

NOTE: It is recommended that this installation is carried out at a Volvo workshop.

REMOVE

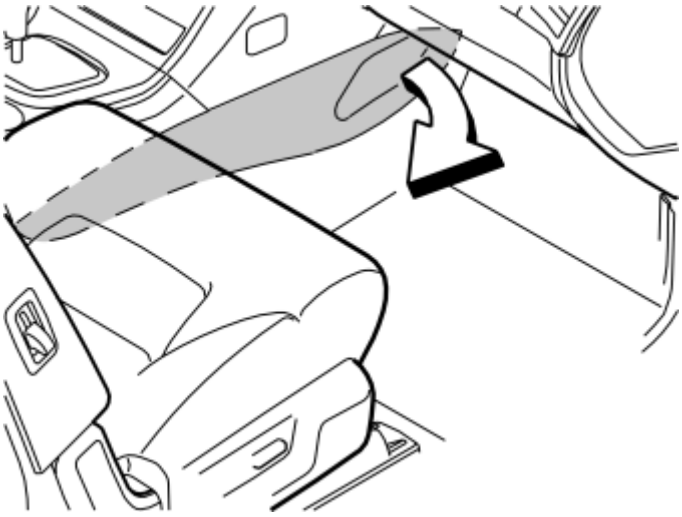

Fig. 15: Remove The Center Console's Right-Hand Side Panel
Courtesy of VOLVO CARS CORPORATION

- Remove the right-hand side panel from the center console by pulling it off. Start at the front edge and then work backwards until all the clips have released.

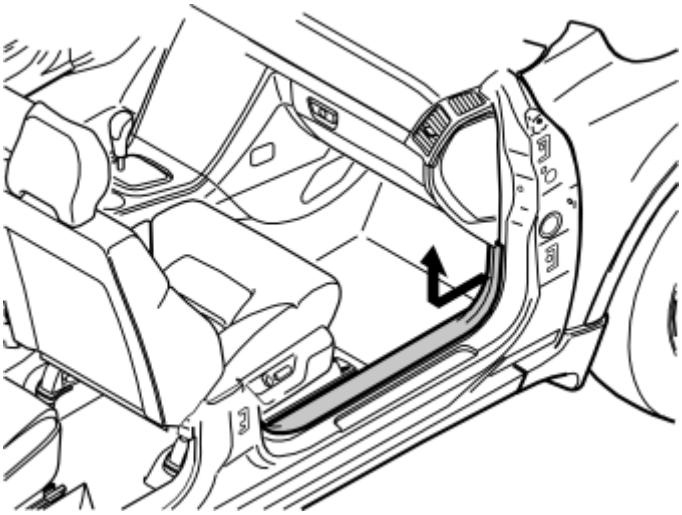

Fig. 16: Right-Hand Front Door Sill Trim Panel
Courtesy of VOLVO CARS CORPORATION

- Remove the sill trim panel for the right-hand front door. Pull it off, starting at the front edge, until the clip there has released. Continue backwards until the remaining clips have released
- Move the sill trim panel to the right in order to fold the carpet away from the right-hand side of the bodywork.

INSTALLING THE RIGHT-HAND MOUNTING

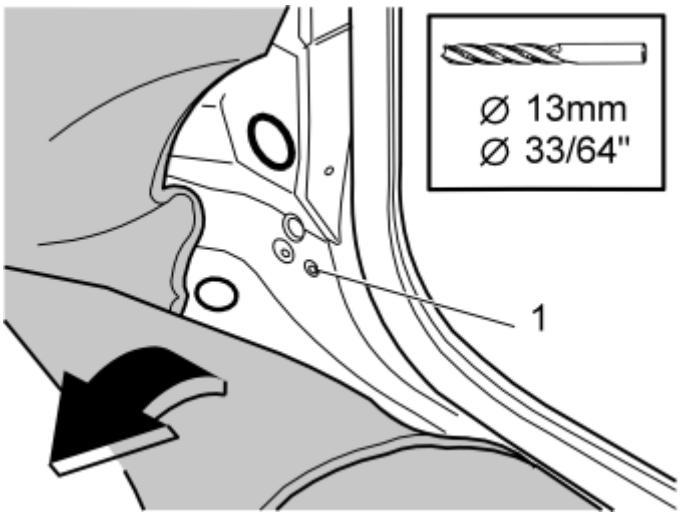

Fig. 17: Identifying Existing Hole In The Bodywork
Courtesy of VOLVO CARS CORPORATION

- Push the floor carpet to one side
- Enlarge the existing hole (1) in the bodywork. Use a **13 mm (33/64")** diameter drill bit
- Smooth off and rust-proof the edges of the hole.

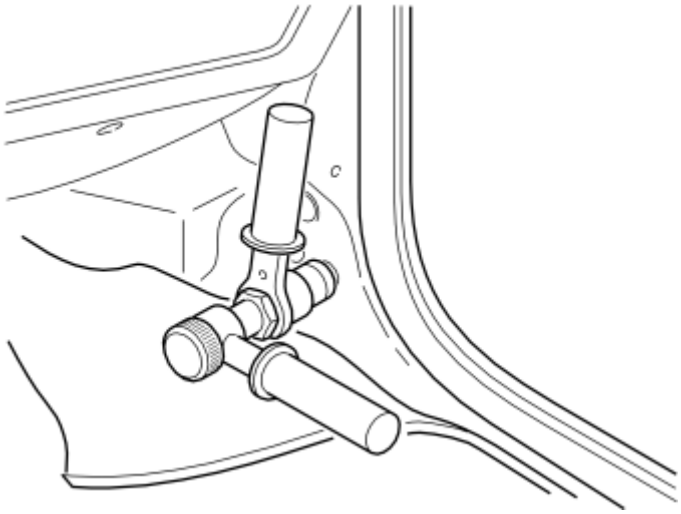

Fig. 18: View Of Rivet Nut On The Rivet Nut Tool (P/N 9512782)
Courtesy of VOLVO CARS CORPORATION

- Take the rivet nut from the kit. Place the rivet nut on the rivet nut tool (P/N 9512782). Install the rivet nut in the drilled hole using the tool. Secure the rivet nut to the bodywork.

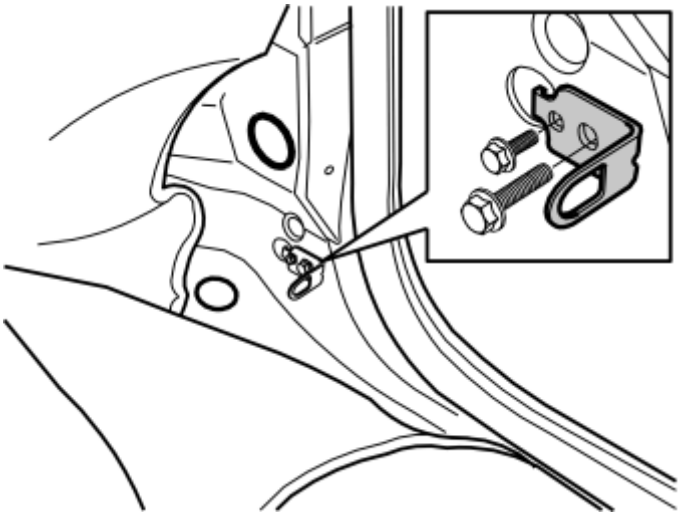

Fig. 19: Identifying Mounting To The Rivet Nut
Courtesy of VOLVO CARS CORPORATION

- Take the mounting and the M10 and M6 screws from the kit. Secure the mounting to the rivet nut. Secure the weld nut in the bodywork. Tighten the M10 screw. Tighten to **50 Nm (37 lbf. ft.)** . Tighten the M6 screw. Tighten to **10 Nm (7 lbf. ft.)**
- If the car has a passenger compartment connector socket, its bracket must be positioned above the mounting. Secure using the M6 screw.

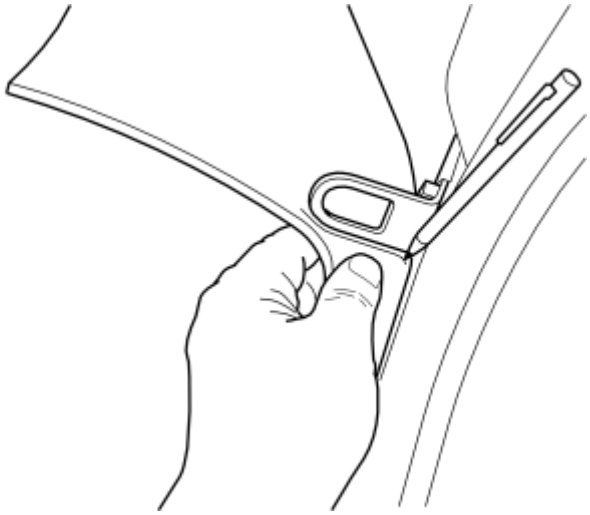

Fig. 20: Position Lower Edge Of Mounting Eyelet
Courtesy of VOLVO CARS CORPORATION

- Fold back the carpet under the mounting. Using a pen, mark on the carpet the position of the lower edge of the mounting eyelet.

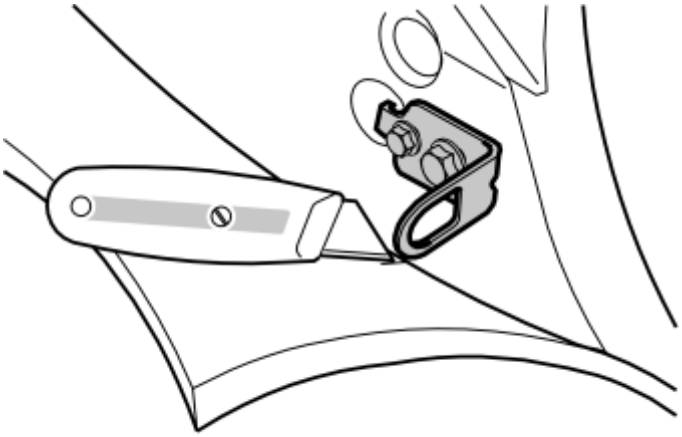

Fig. 21: View Of Cutting Marked Point
Courtesy of VOLVO CARS CORPORATION

- Use a carpet knife. Cut vertically upwards from the marked point. Cut equal to the width of the mounting eyelet.

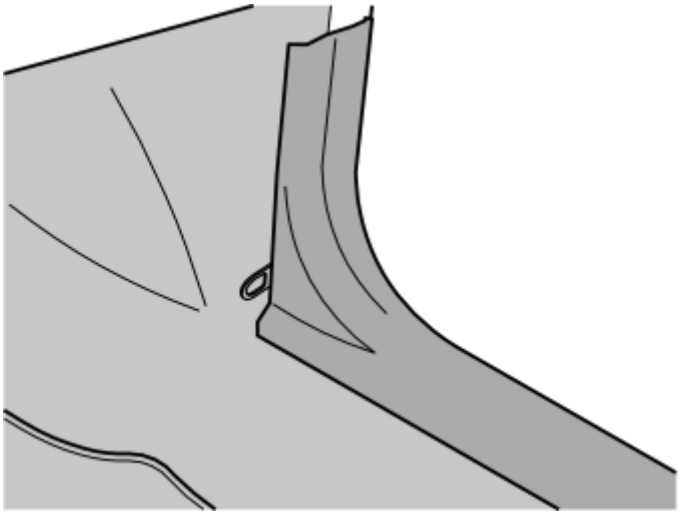

Fig. 22: Reinstall The Sill Trim Panel
Courtesy of VOLVO CARS CORPORATION

- Fold back the carpet. Reinstall the sill trim panel.

INSTALLING THE LEFT-HAND MOUNTING

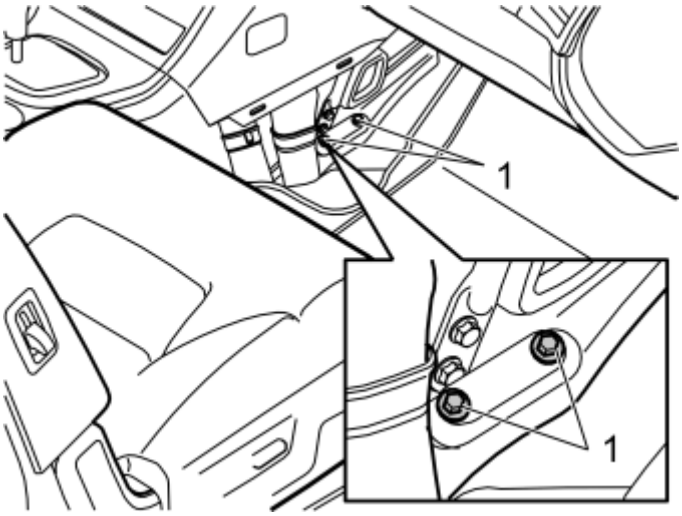

Fig. 23: Identifying Air Duct Screws
Courtesy of VOLVO CARS CORPORATION

- Push the floor carpet to one side where the side panel was removed
- Remove the two screws (1) in front of the air duct. Place the screws to one side. They will not be used again. There are new screws in the kit.

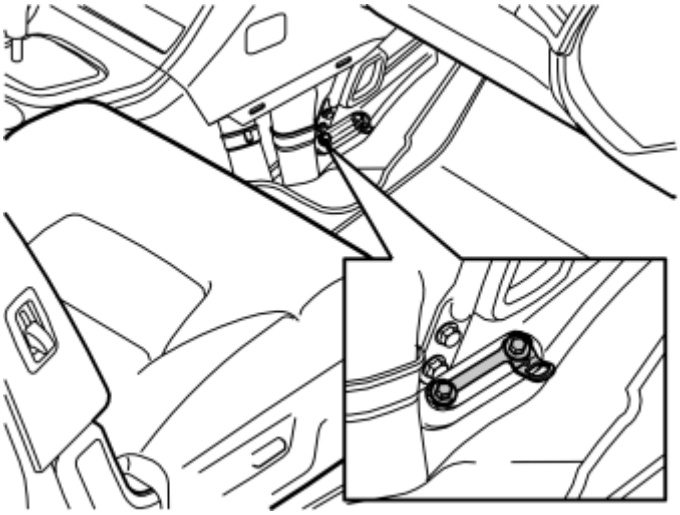

Fig. 24: View Of Mounting To Bodywork
Courtesy of VOLVO CARS CORPORATION

- Take the mounting and two M8 screws from the kit. Secure the mounting to the bodywork. Tighten the screws. Tighten to **24 Nm (18 lbf. ft.)** .

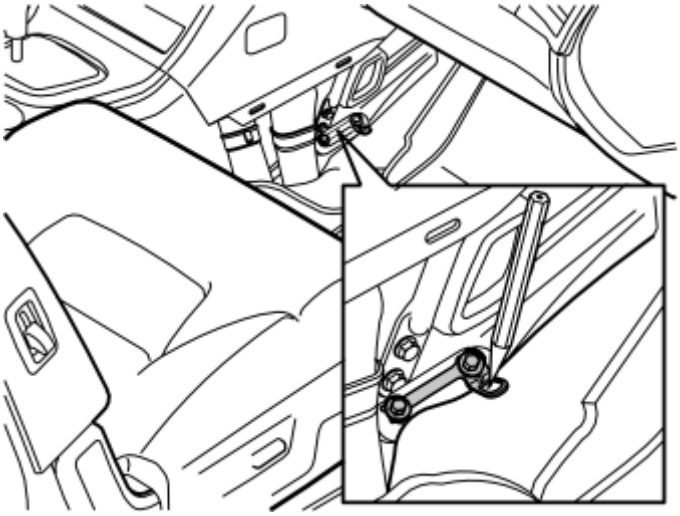

Fig. 25: View Of Pen Mark Where The Mounting Eyelet Is To Go Through The Carpet
Courtesy of VOLVO CARS CORPORATION

- Fold back the carpet under the mounting. Using a pen, mark where the mounting eyelet is to go through the carpet.

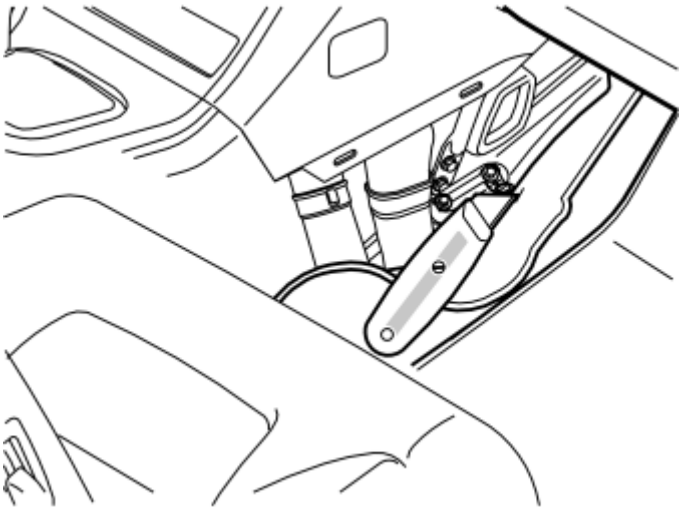

Fig. 26: View Of Cut In The Carpet Directly In Front Of The Marking
Courtesy of VOLVO CARS CORPORATION

- Use a carpet knife. Make a cut in the carpet directly in front of the marking. Make the cut as wide as the mounting eyelet.

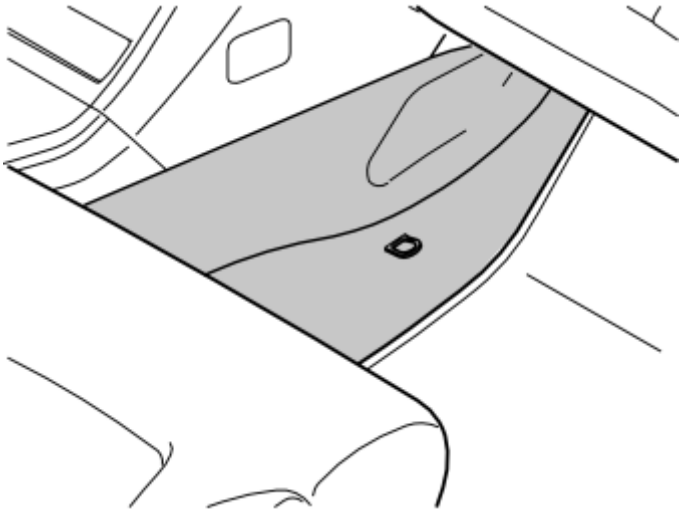

Fig. 27: Carpet Back Into Place
Courtesy of VOLVO CARS CORPORATION

- Fold the carpet back into place
- Reinstall the right-hand side panel on the center console.

ISOFIX GUIDE (2003-2011)

ISOFIX GUIDE

PREPARATION

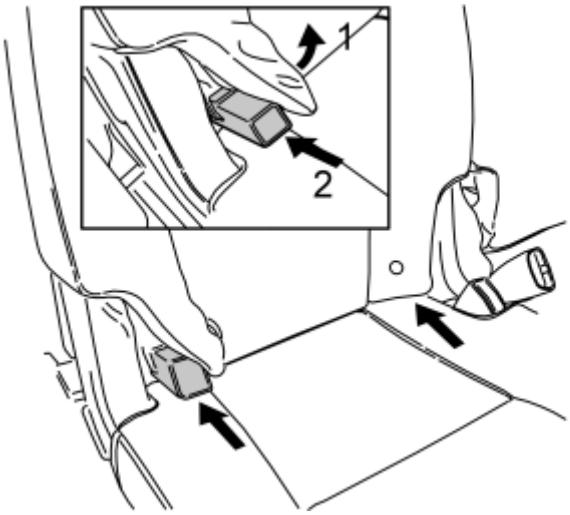

Fig. 28: View Of Isofix Guide
Courtesy of VOLVO CARS CORPORATION

- Bend up the corner (1) with the child seat marking
- Fit the Isofix guide (2) over the brace so that it "snaps into place". The slanted side of the Isofix guide should be up.

INSTALL

- Repeat the same steps on the other side.

NOTE: The Isofix guide should be removed when not in use.

LOAD COMPARTMENT DIVIDER (2003-2011)

CARGO COMPARTMENT WALL

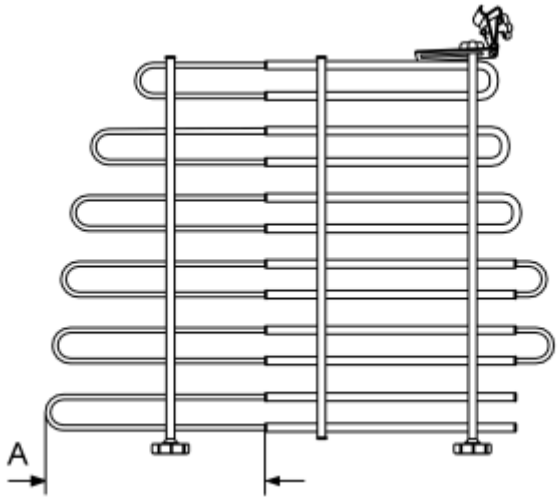

Fig. 29: View Of Cargo Compartment Wall Measurement

Courtesy of VOLVO CARS CORPORATION

- Before installing check the measurement at point A = 410 mm. Adjust as necessary.

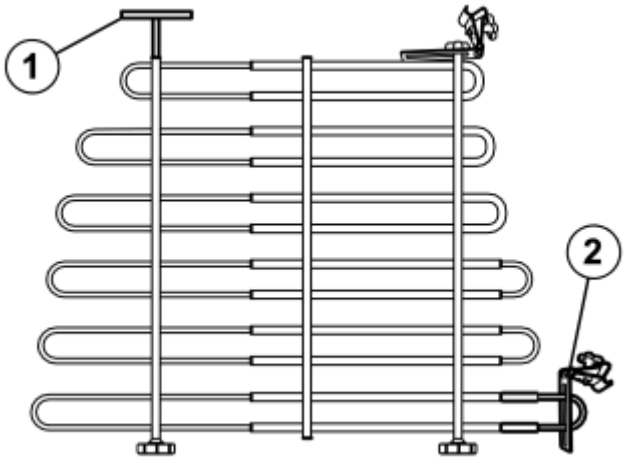

Fig. 30: View Of Cargo Compartment Wall Support Plate
Courtesy of VOLVO CARS CORPORATION

- Screw in the support plate (1).
- Install the lower bracket (2) as illustrated.

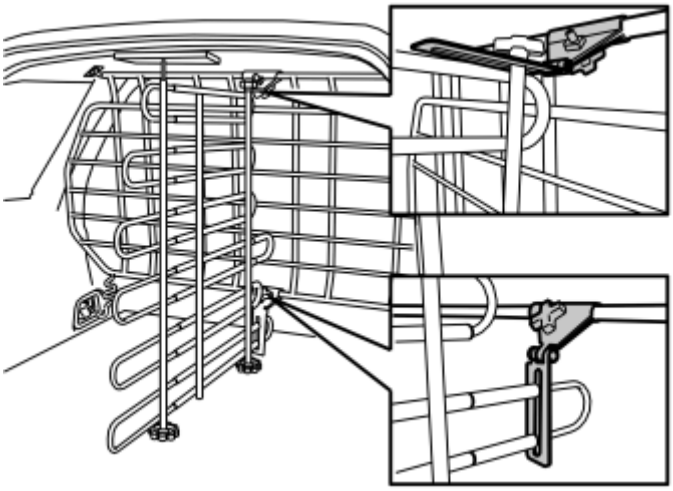

Fig. 31: View Of Cargo Compartment Wall
Courtesy of VOLVO CARS CORPORATION

- Position the cargo compartment wall with the clamps into the car.
- Open the upper clamp and affix it loosely on the top bar of the safety grille.
- Open the lower clamp and affix it as illustrated. Tighten the clamps only exactly as much as necessary to grip the grille, do not tighten them yet.

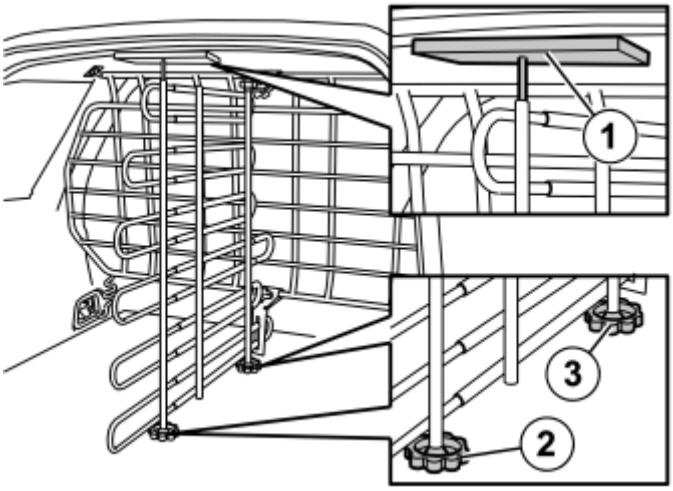

Fig. 32: View Of Cargo Compartment Wall Support Plate
Courtesy of VOLVO CARS CORPORATION

- Adjust so that the cargo compartment wall is vertical and in the center of the cargo compartment.
- Screw up the support plate (1) so that it is in contact with the headlining panel. The support plate must be parallel with the roof panel.
- Screw down the rear support foot (2) so that the cargo compartment wall is tensioned.
- Screw down the front support foot (3) so that the cargo compartment wall stands in a straight, vertical position.

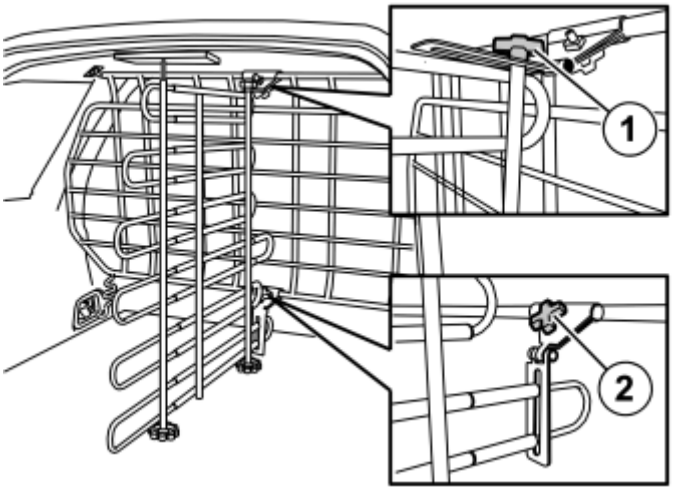

Fig. 33: Identifying Cargo Compartment Wall Knobs
Courtesy of VOLVO CARS CORPORATION

- Tighten the knobs (1) and (2).
- Check that the cargo compartment wall does not make contact with the tailgate when it closes.

LUGGAGE COMPARTMENT NET (2003-2011)

CARGO COMPARTMENT NET

REMOVE

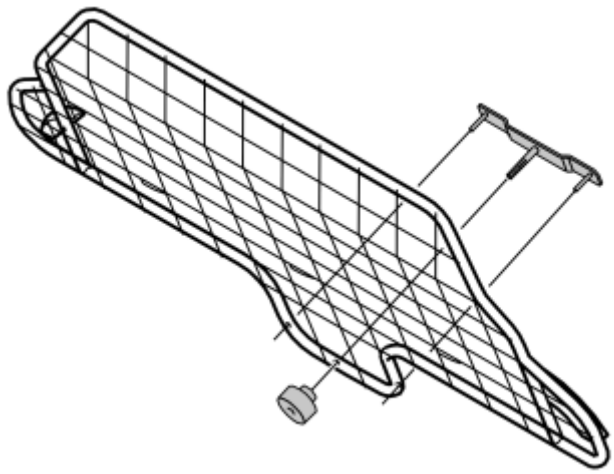

Fig. 34: Remove The Locking Device From The Cargo Compartment Net
Courtesy of VOLVO CARS CORPORATION

- Remove the locking device from the cargo compartment net by unscrewing the knob and pulling it off.

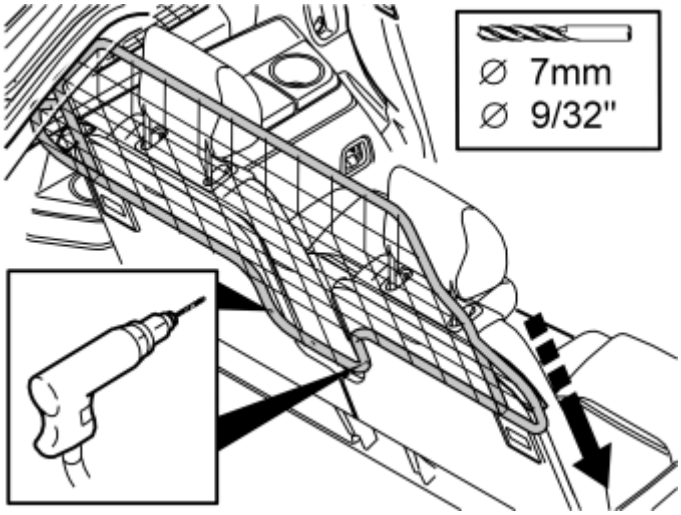

Fig. 35: Drilled Out Holes In Backrest Disc Through Existing Cargo Compartment Net Holes
Courtesy of VOLVO CARS CORPORATION

- Lift in the cargo compartment net through the tailgate. Hang it on the backrest disc as illustrated. Check that the net is horizontal
- Drill out the holes in the backrest disc through the existing holes in the cargo compartment net. Use a 7 mm (9/32") diameter drill bit
- Remove any meat shavings.

INSTALL

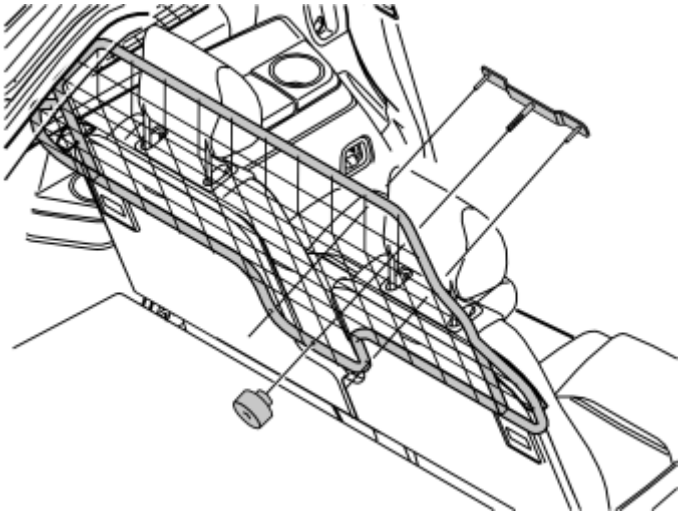

Fig. 36: View Of Locating Pins On The Striker Plate
Courtesy of VOLVO CARS CORPORATION

- Take the striker plate and insert it from the front in the hole where it was disconnected
- Insert the locating pins on the striker plate in the newly drilled holes. Take the knob and tighten the striker plate against the backrest disc.

NET POCKET, CARGO COMPARTMENT (5 SEAT) (2003-2008)

NET POCKET, CARGO COMPARTMENT

PREPARATION

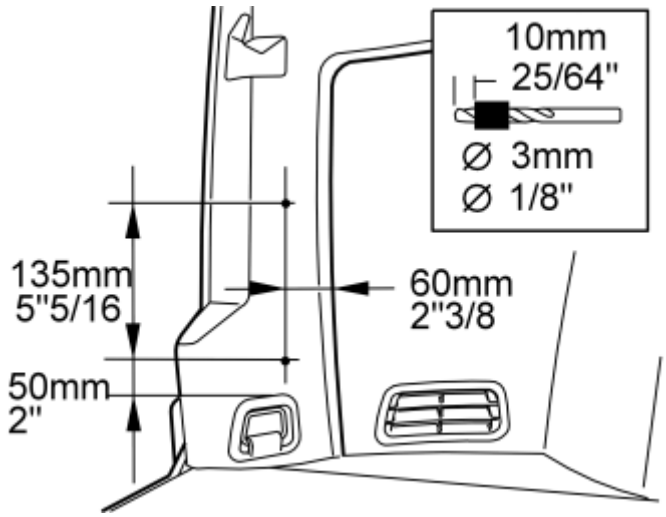

Fig. 37: View Of Drilling Holes For Securing The Net Pocket
Courtesy of VOLVO CARS CORPORATION

- Measure up for drilling holes for securing the net pocket
- Drill out the holes. Use a **3 mm (1/8")** diameter drill bit. Use a **10 mm (25/64") drill stop**

- Remove the metal shavings. Smooth out the hole edges if necessary.

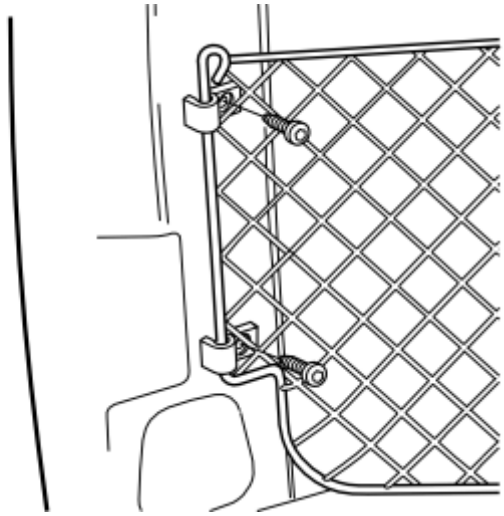

Fig. 38: Identifying Rear Face Of The Net Pocket Screws And Clips
Courtesy of VOLVO CARS CORPORATION

- Take two clips, two screws and the net pocket from the kit
- Using the screws and clips, tighten the rear face of the net pocket in the newly drilled holes as illustrated.

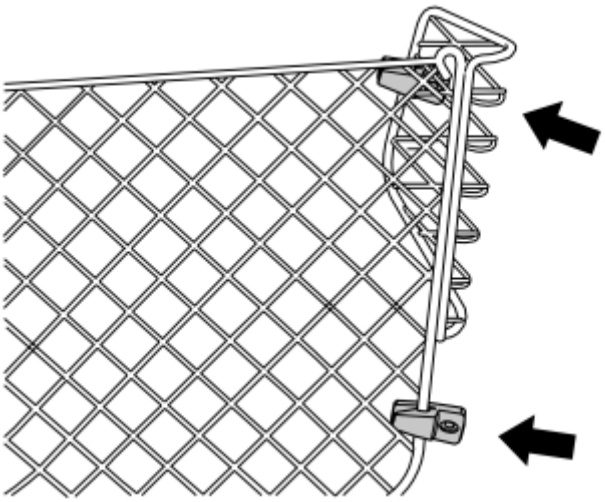

Fig. 39: View Of Front Face Of The Net Pocket In Approximate Position
Courtesy of VOLVO CARS CORPORATION

- Take two clips from the kit. Install them on the front face of the net pocket in approximately the position shown in the illustration.

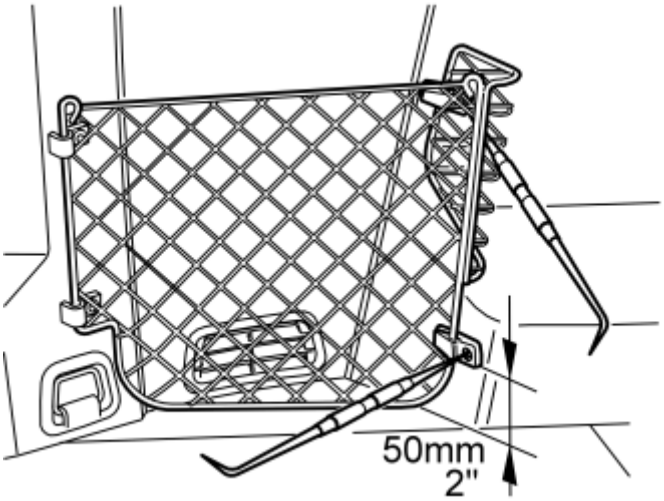

Fig. 40: Identifying Lower Clip Edge To The Floor Hatch
Courtesy of VOLVO CARS CORPORATION

- Bend in the front face of the net pocket towards the side panel
- Align the entire front face of the net pocket so that it is parallel with the edges of the panel as illustrated and the lower face so that it is against the floor hatch
- Raise the lower clip so that its lower edge is **50 mm (2")** from the floor hatch
- Ensure that the clips are against the panel. Mark the panel for drilling using an awl or scriber through the holes in the clips.

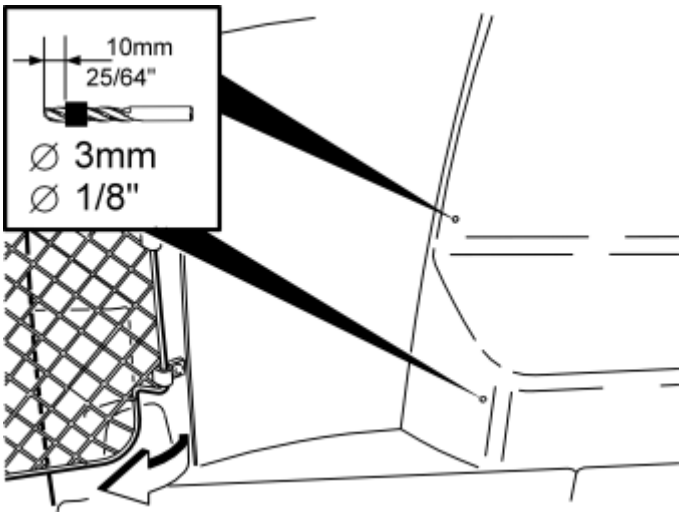

Fig. 41: View Of Drilled Holes
Courtesy of VOLVO CARS CORPORATION

- Angle out the front face of the net pocket
- Drill out the holes. Use a **3 mm (1/8")** diameter drill bit. Use a **10 mm (25/64") drill stop**
- Remove any metal shavings.

INSTALL

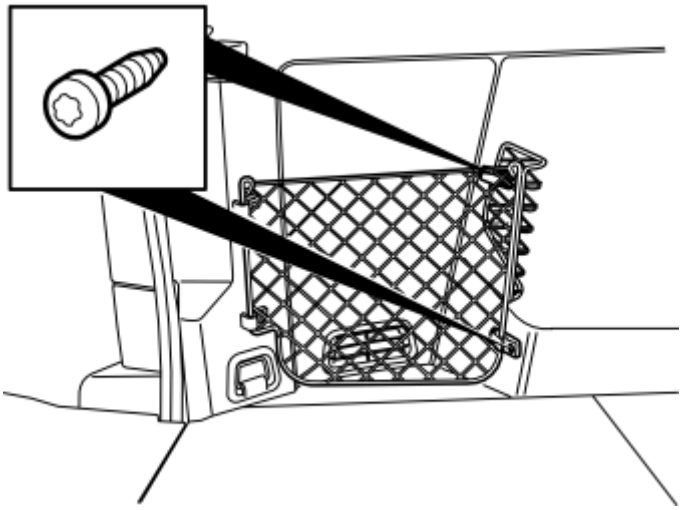

Fig. 42: View Of Net Pocket Screws
Courtesy of VOLVO CARS CORPORATION

- Angle the net pocket in towards the panel
- Take two screws from the kit. Tighten the net pocket and clips to the panel as illustrated.

NET POCKET, CARGO COMPARTMENT (7 SEAT) (2003-2008)

NET POCKET, CARGO COMPARTMENT (7 SEAT)

PREPARATION

Illustration A is for making holes on the left-hand side

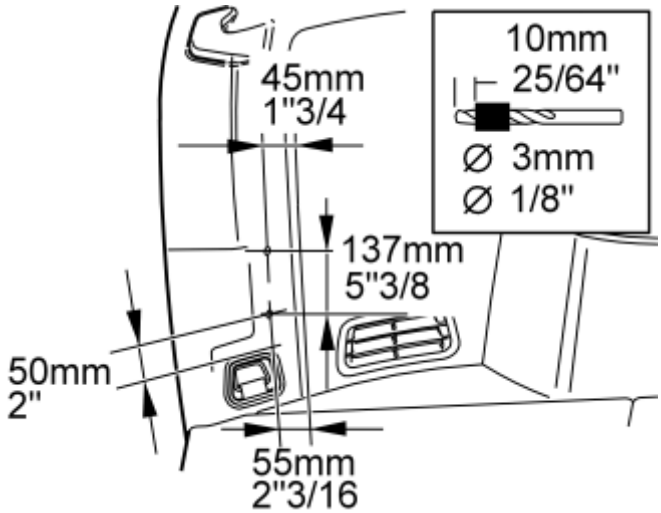

Fig. 43: View Of Making Holes On The Left-Hand Side
Courtesy of VOLVO CARS CORPORATION

Illustration B is for making holes on the right-hand side

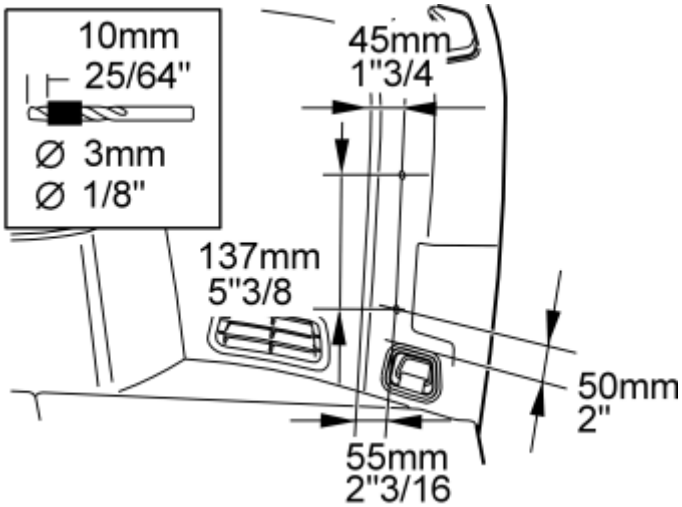

Fig. 44: View Of Making Holes On The Right-Hand Side
Courtesy of VOLVO CARS CORPORATION

- Mark the rear edge of the left-hand side panel for holes for the net pocket. See the illustration
- Drill out the holes. Use a **3 mm (1/8")** diameter drill bit. Use a **10 mm (25/64") drill stop**
- Remove the metal shavings. Smooth out the hole edges if necessary.

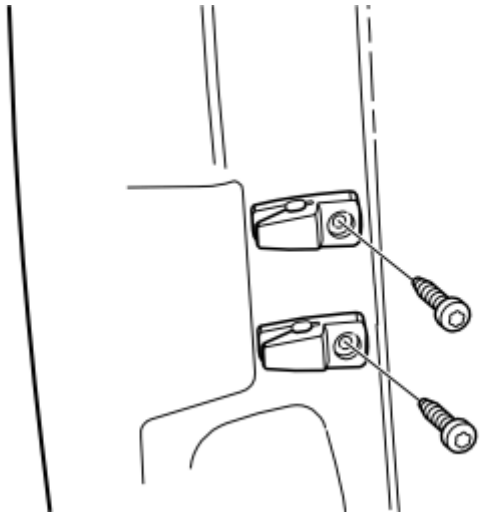

Fig. 45: View Of Cargo Compartment Clips And Screws
Courtesy of VOLVO CARS CORPORATION

- Take two clips and two screws from the kit. Tighten the clips horizontally in the newly drilled holes as illustrated.

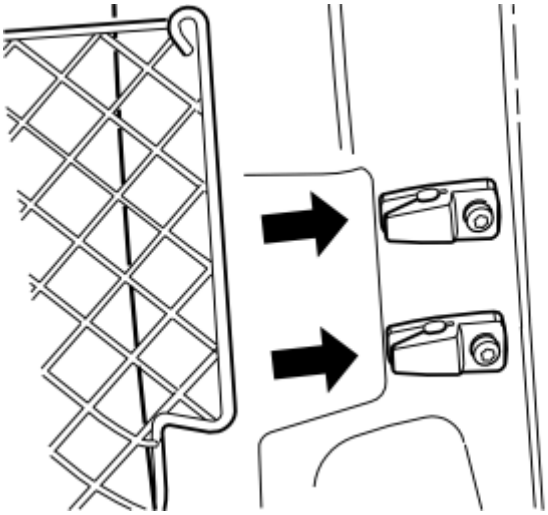

Fig. 46: Net Pocket Clips Snapped Into Place
Courtesy of VOLVO CARS CORPORATION

- Press the shorter face of the net pocket into place in the clips so that a snap is heard.

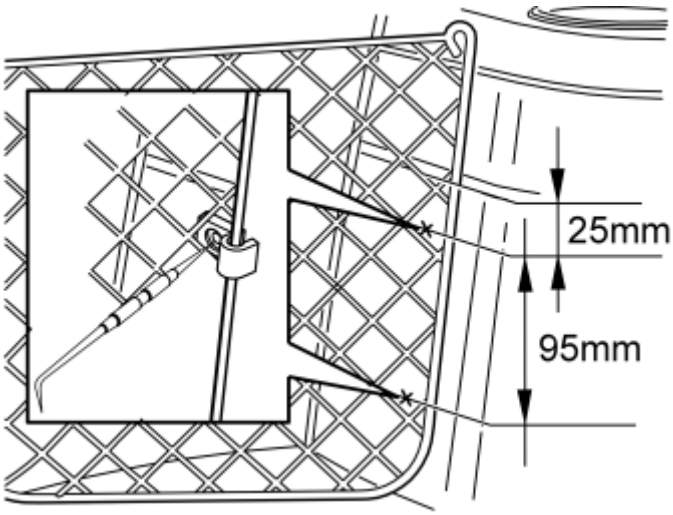

Fig. 47: Identifying Clips In Position
Courtesy of VOLVO CARS CORPORATION

- Take two clips from the kit
- Insert the front face of the net pocket against the side panel. Ensure that the lower face is parallel with the joint between the side floor hatch and the center rear floor hatch
- Position the two clips as illustrated. Mark for drilling through the holes in the clips and in the panel using a ball tipped punch or press through using a scriber.

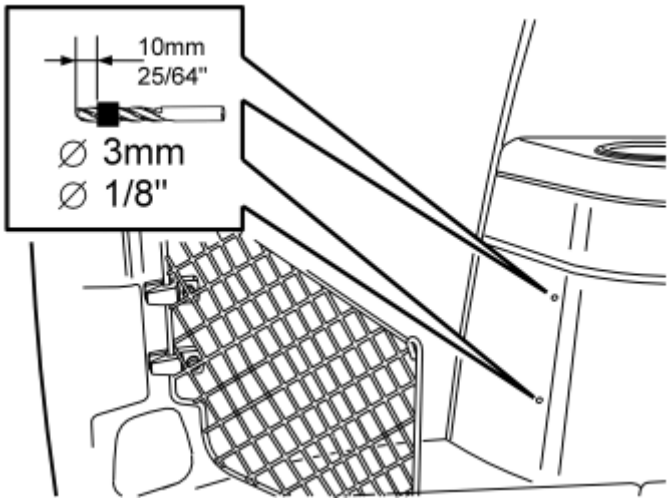

Fig. 48: View Of Drill Holes
Courtesy of VOLVO CARS CORPORATION

- Push the net pocket to one side
- Drill out the holes. Use a **3 mm (1/8")** diameter drill bit. Use a **10 mm (25/64") drill stop**
- Remove the metal shavings. Smooth out the hole edges if necessary.

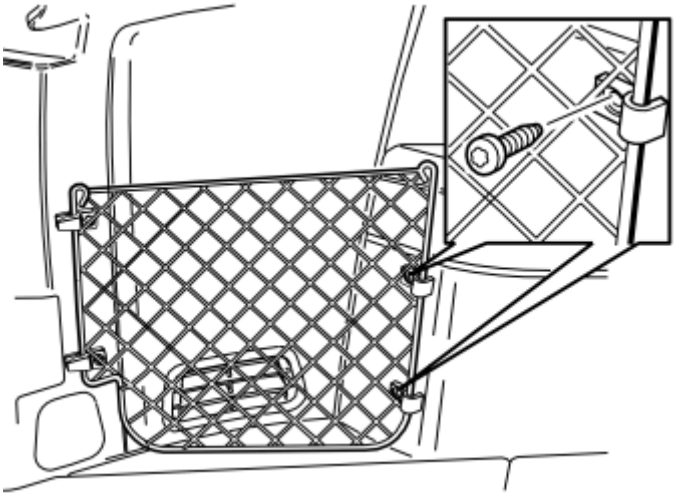

Fig. 49: View Of Net Pocket Clips
Courtesy of VOLVO CARS CORPORATION

- Take two screws from the kit
- Slide back the front face of the net pocket. Tighten to the panel using the two clips and the screws.

NET POCKET, DASHBOARD (2003-2008)

NET POCKET, DASHBOARD

REMOVE

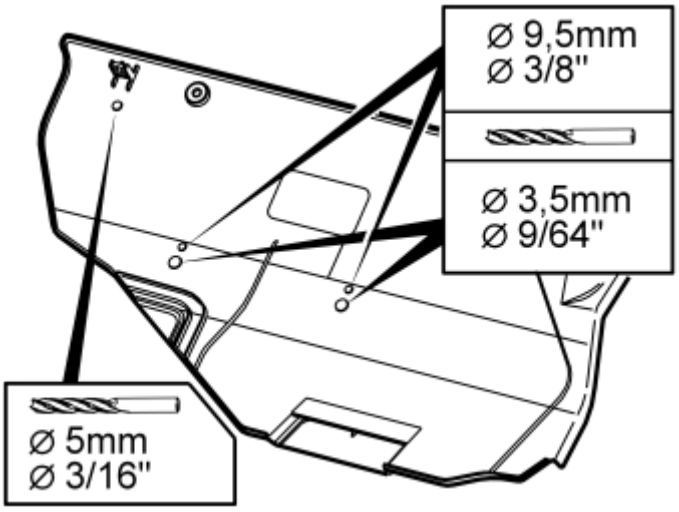

Fig. 50: View Of Holes Drilled
Courtesy of VOLVO CARS CORPORATION

- Place the panel reverse side up on a flat surface
- Drill out the two smallest holes marked at the lower edge of the panel using a **O 3.5 mm (9/64")** drill bit
- Then drill out the two larger holes using a **O 9.5 mm (3/8")** drill bit.

NOTE: **Drill the smaller holes in the larger markings and the larger holes in the smaller markings.**

- Drill out the marked hole on the left-hand top edge of the panel. Use a **5 mm (3/16")** diameter bit
- Remove any metal shavings and even off the hole edges.

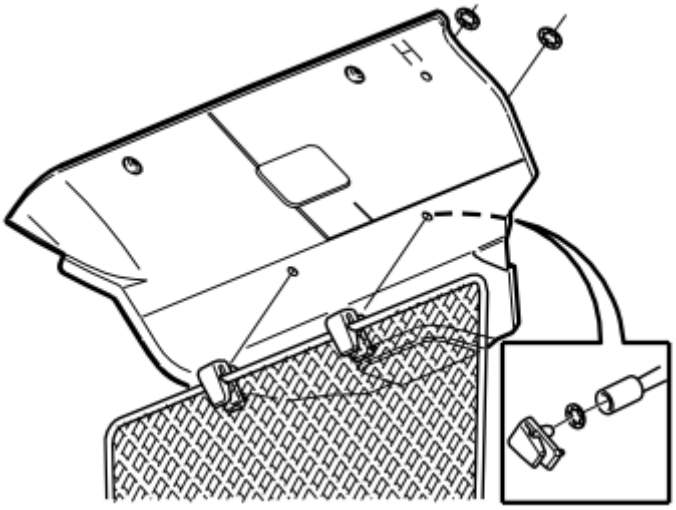

Fig. 51: Identifying Two Lower Clips Into Net
Courtesy of VOLVO CARS CORPORATION

- Press the two lower clips into the net in the lower holes at the lower edge of the panel
- Lock the clips using two new locking washers.

HINT: Use a 10 mm socket as a counterhold when installing the locking washers.

INSTALL

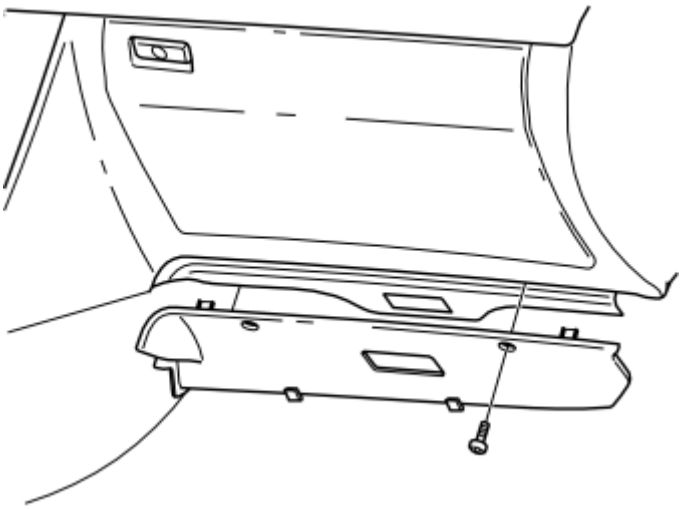

Fig. 52: View Of Panel Right-Hand Screw
Courtesy of VOLVO CARS CORPORATION

- Reinstall the panel. Lightly secure the panel using the right-hand screw.

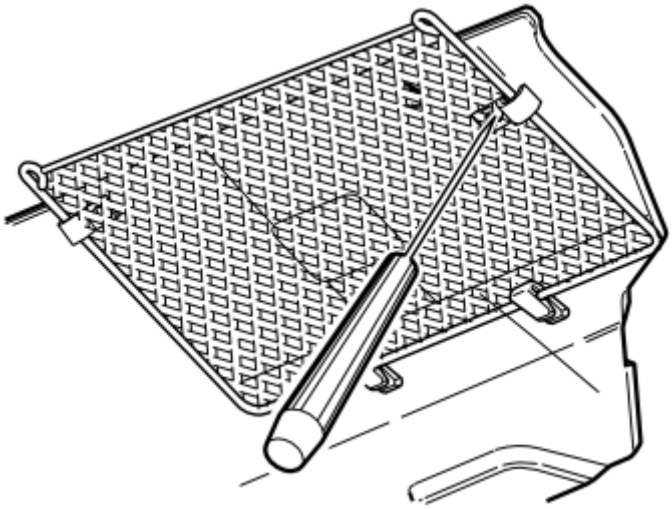

Fig. 53: View Of Right-Hand Hole In The Panel
Courtesy of VOLVO CARS CORPORATION

- Mark for drilling using a pin punch. Punch through the upper right-hand hole in the panel before drilling in point 6
- Remove the panel again.

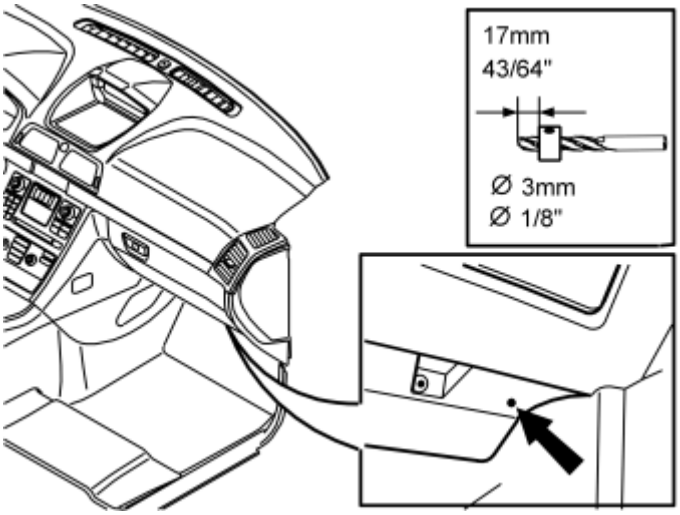

Fig. 54: Identifying Dashboard Drill Hole
Courtesy of VOLVO CARS CORPORATION

- Drill through the dashboard. Use a **3 mm (1/8")** diameter drill bit. Use a **17 mm (43/64")** drill stop
- Remove any metal shavings.

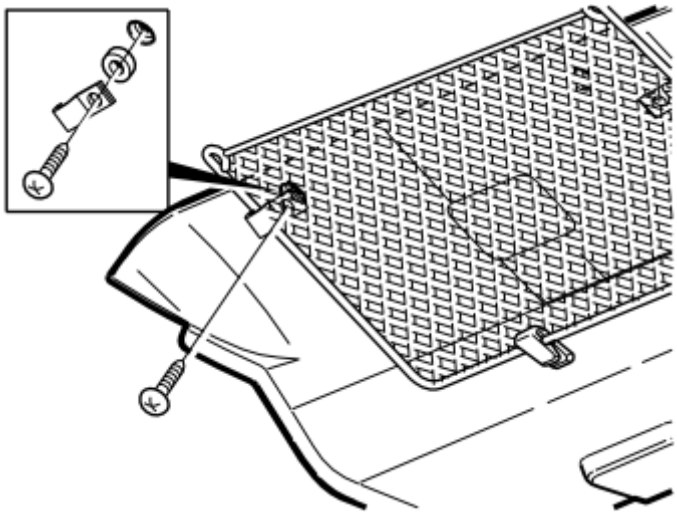

Fig. 55: Identifying Upper Left-Hand Clip Screws
Courtesy of VOLVO CARS CORPORATION

- Reinstall the panel using the right-hand screw
- Fold-up the net pocket against the panel. Ensure that the upper left-hand clip is opposite the hole
- Take the short screw and washer from the kit. First thread the screw through the clip and then the put the washer onto the screw
- Tighten the clip and the panel
- Insert and tighten the right-hand screw through the clip and panel.

NOTE: Ensure that the net is not trapped by the clips or screws when tightening.

- Reinstall the side panel on the center console.

CAUTION: Do not store sharp or heavy items in the net pocket as this may cause injury to passengers in the event of a collision. Maximum recommended weight in the net pocket is - approximately 1 kg.

PC SUPPORT TABLE (2003-2011)

PC SUPPORT TABLE

PREPARATION

- Raise the passenger seat to its highest position.

Applies to power seats

- Cut off the tie strap at the mounting for the bracket for the fire extinguisher.

REMOVE

Applies to cars with manual seats

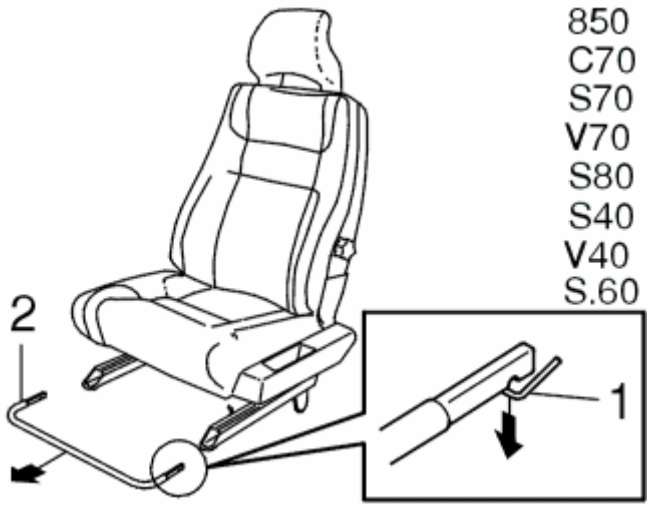

Fig. 56: Identifying Catches And Handle
Courtesy of VOLVO CARS CORPORATION

- Undo the catches (1) and remove the handle (2).

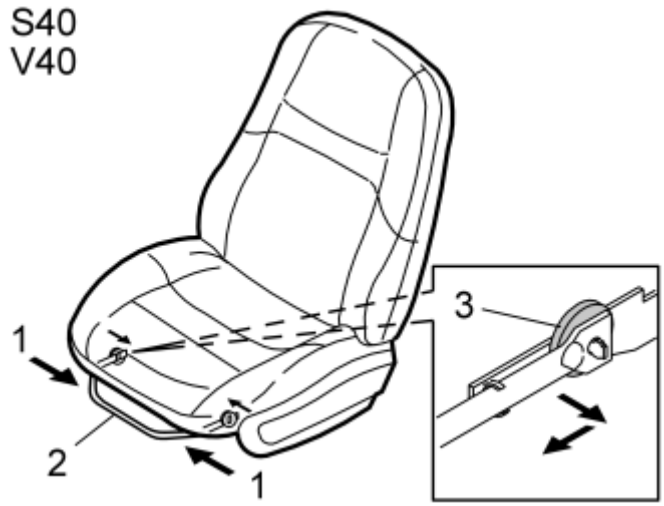

Fig. 57: Remove Handle By Compressing Ends
Courtesy of VOLVO CARS CORPORATION

- Remove the handle (2) by pressing the ends (1) together so that the handle releases from the mounting (3).

INSTALL

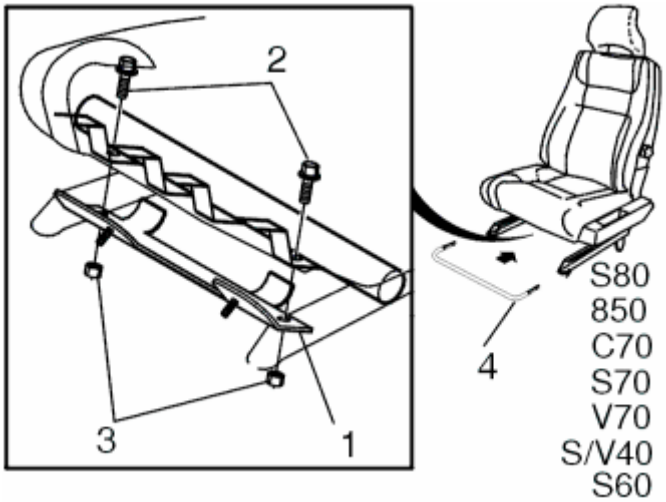

Fig. 58: Identifying Installation Of Bracket In Existing Holes In Front Of Seat Frame
Courtesy of VOLVO CARS CORPORATION

- Install the bracket (1) in the existing holes in the front of the seat frame
- Install the screws (2) and nuts (3) from the kit. Tighten to **10 Nm (8 ft. lb.)**
- Reinstall the handle (4).

Applies to cars with power seats

- Carry out the first two procedures in operation, see **INSTALL**

- Clamp the removed cable in the mounting for the bracket for the fire extinguisher.

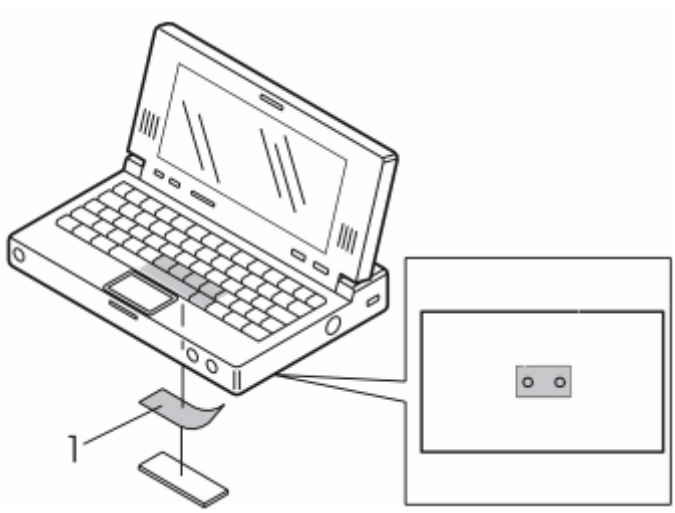

Fig. 59: Identifying Removal Of Backing From Mounting Plate
Courtesy of VOLVO CARS CORPORATION

- Clean the center of the reverse of the computer using a mild alcohol solution
- Remove the backing (1) from the mounting plate
- Press the mounting plate into place in the center of the reverse of the computer.

NOTE: Position the plate so that all the tape on the plate secures.

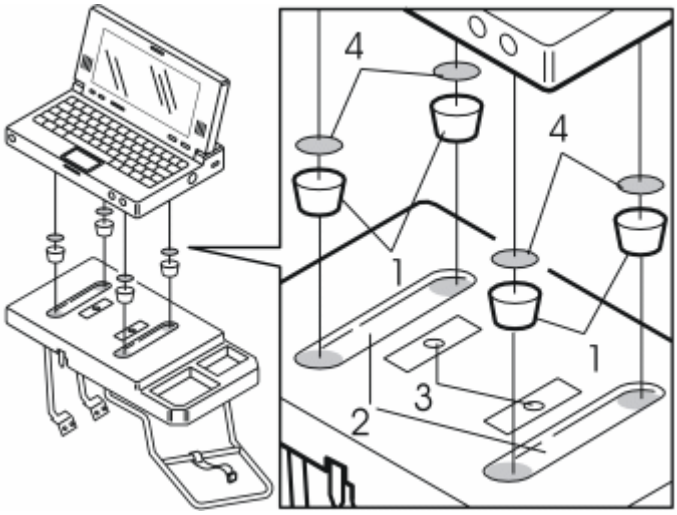

Fig. 60: Identifying Rubber Feet, Channels, Holes And Backing
Courtesy of VOLVO CARS CORPORATION

- Take measurements to determine the position of the rubber feet (1) (supplied with the kit) on the bottom of the computer
- Ensure that the rubber feet are at the same level as the mounting plate. This is to ensure that the lugs on the mounting plate do not catch when the computer is placed on a flat surface

- Ensure that the measurements are accurate so that the rubber feet on the computer align in the channels (2) in the table at the same time as the lugs on the mounting plate align in the holes (3)
- After taking the measurements, clean the mounting surfaces on the computer. Remove the backing (4) on the rubber feet. Press the rubber feet into place.

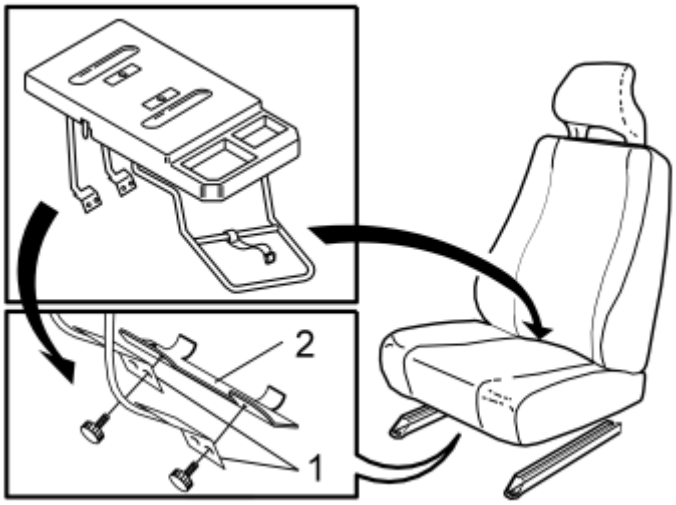

Fig. 61: Align PC Table Mountings Against Seat Mounting
Courtesy of VOLVO CARS CORPORATION

- Place the PC table on the cushion on the passenger seat as illustrated
- Align the PC table mountings (1) against the seat mounting (2). Tighten the PC table using the two knobs.

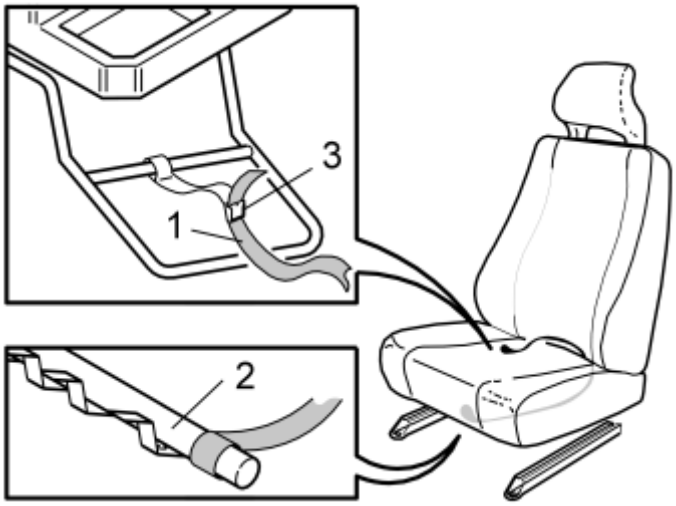

Fig. 62: Identifying Long Strap Looped Around Front SIPS Pipe
Courtesy of VOLVO CARS CORPORATION

- Take the long strap (1) from the kit. Make a loop around the front SIPS pipe (2)
- Route the strap back under the seat cushion and up at the backrest
- Secure the strap in the buckle (3) and tighten fully.

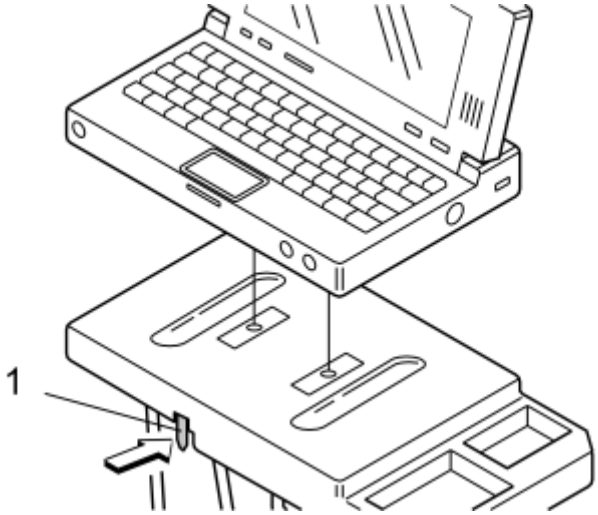

Fig. 63: Identifying Red Handle Pressed In Until It Clicks And Catches Engage
Courtesy of VOLVO CARS CORPORATION

- Place the computer on the PC table so that the rubber feet enter the front-rear holes in the PC table at the same time as the lugs on the mounting plate enter the round holes in the center of the PC table
- Press in the red handle (1) until it clicks and the catches engage
- Check that the computer is secure.
- Adjust the height and position of the seat for a good working position.

PROTECTIVE GRILLE, STEEL, SECOND ROW OF SEATS (2003-2011)

CARGO COMPARTMENT SAFETY GRILLE, STEEL

NOTE: **Remove the front of the cargo compartment cover when using together with a cargo compartment safety grille. This will prevent any rattling.**

PREPARATIONS CARGO COMPARTMENT COVER

REMOVE

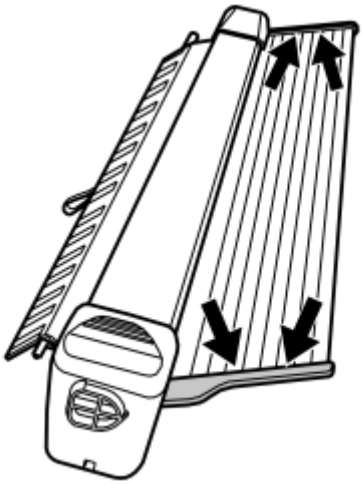

Fig. 64: Identifying Cargo Compartment Cover
Courtesy of VOLVO CARS CORPORATION

Applies to cars with a cargo compartment cover

- Remove the cargo compartment cover from the car
- Carefully pry out both the rubber edgings on the front short section of the cargo compartment cover. Use a small screwdriver. Remove the rubber edgings
- Remove the steel edging inside the rubber edgings (if they did not come off when the rubber edgings were removed).

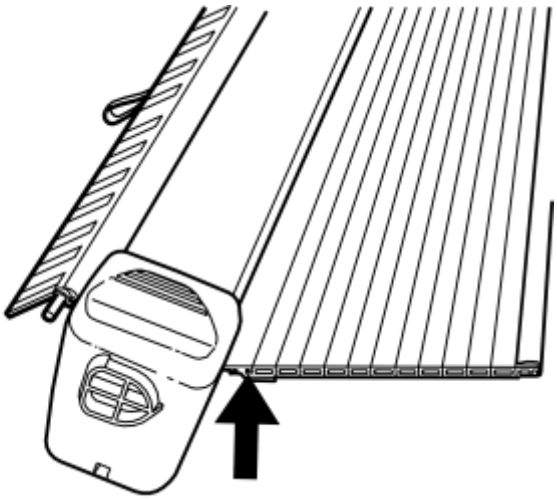

Fig. 65: View Of Steel Edging Inside The Rubber Edgings
Courtesy of VOLVO CARS CORPORATION

Applies to cars with cargo compartment covers with Allen screws on the sides

- Remove the Allen screws (1.3 mm), or ordinary screws, on one edge of the front of the cargo compartment cover.

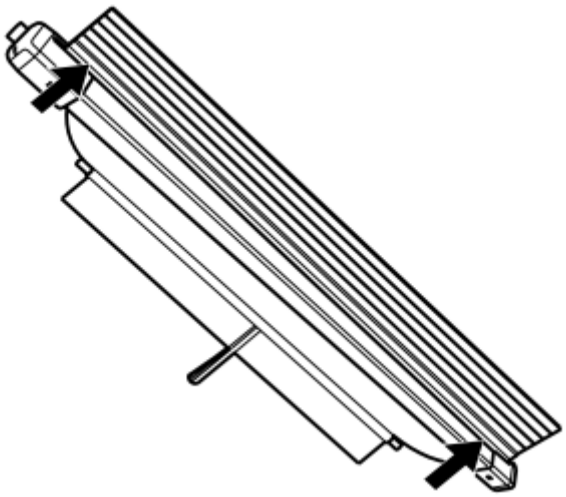

Fig. 66: Identifying Underside Cargo Compartment Screws
Courtesy of VOLVO CARS CORPORATION

Applies to cars with cargo compartment covers with screws on the underside

- Remove both the screws from the underside of the front of the cargo compartment cover.

Illustration A

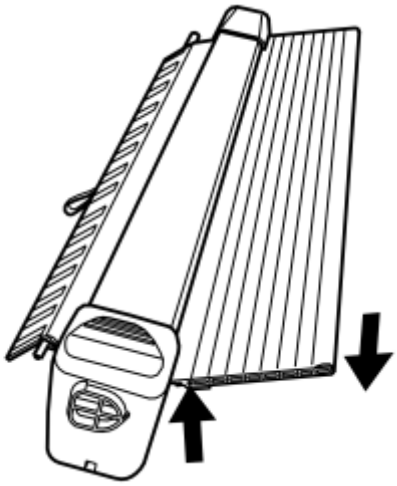

Fig. 67: Identifying Cargo Compartment Rear Section
Courtesy of VOLVO CARS CORPORATION

- Pull the front section of the cargo compartment cover from the channel in the rear section and put it to one side.

Illustration B

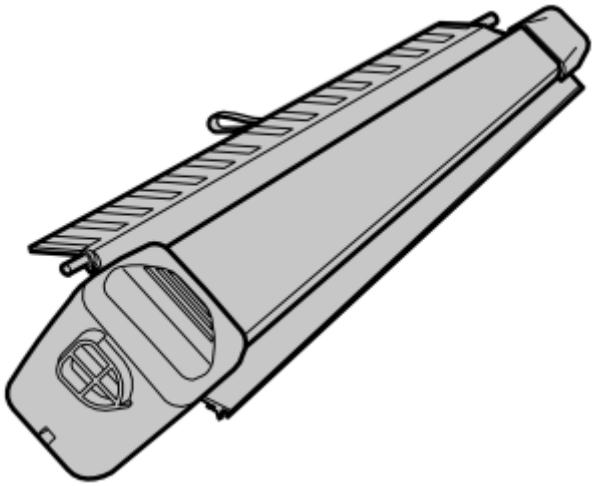

Fig. 68: View Of Cargo Compartment Cover Without Front Section
Courtesy of VOLVO CARS CORPORATION

The cargo compartment cover without its front section will be reinstalled in point 7.

INSTALLING THE CARGO COMPARTMENT SAFETY GRILLE

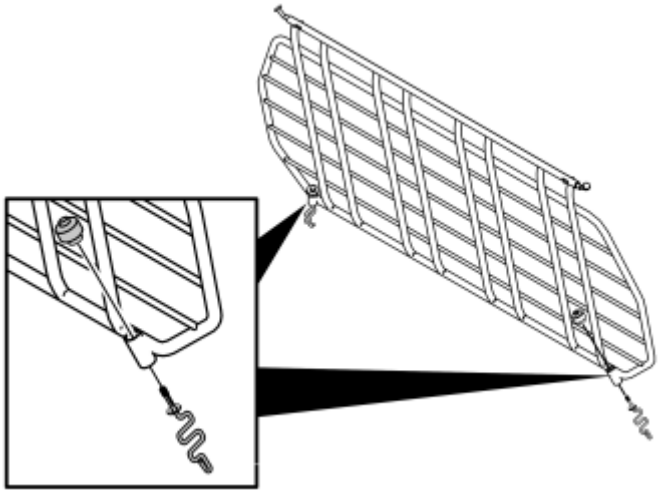

Fig. 69: Identifying Mounting, Knob and Cap
Courtesy of VOLVO CARS CORPORATION

- Detach the mounting, knob and cap from each other.

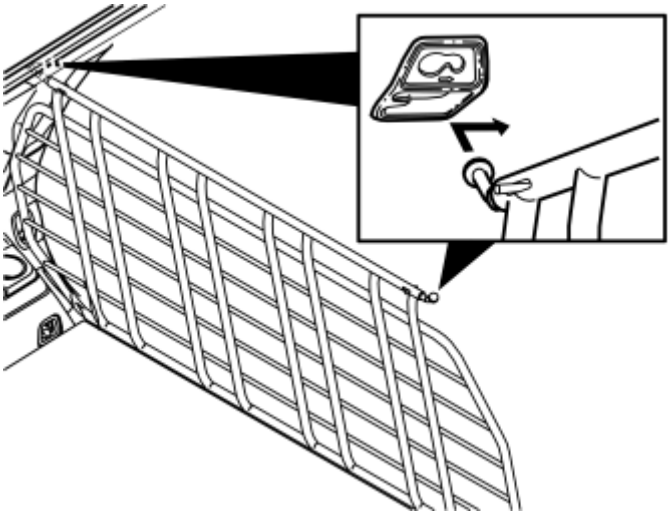

Fig. 70: Installing Safety Grille Into The Corresponding Mounting
Courtesy of VOLVO CARS CORPORATION

- Lift the cargo compartment safety grille in through the tailgate or through one of the rear doors (fold down the second row of seats if using one of the rear doors)
- Insert one mounting for the cargo compartment safety grille into the corresponding mounting above the rear door behind the second row of seats
- Position the cargo compartment safety grille mounting in the front position in the other mounting
- Position the other mounting for the cargo compartment safety grille over the other rear door and move it into the front position.

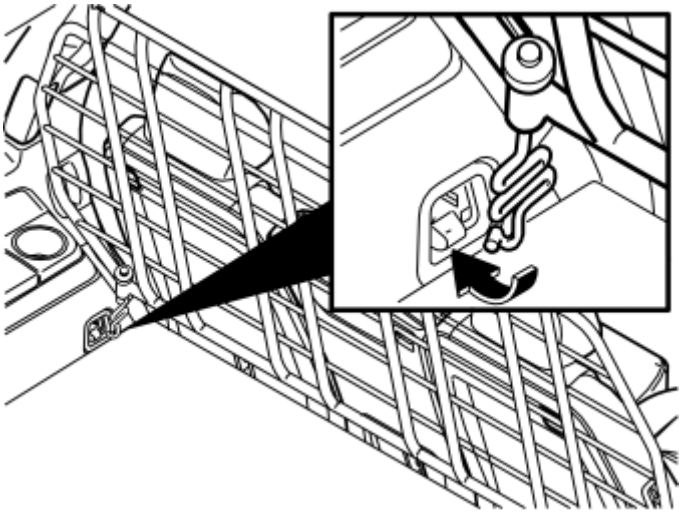

Fig. 71: View Of Mounted Bracket From Underneath
Courtesy of VOLVO CARS CORPORATION

- Insert the mounting bracket from underneath through the lower mounting in the cargo compartment safety grille as illustrated. Screw on the knob
- Secure the mounting bracket hook in the load securing eyelet. Tighten the knob until the mounting bracket engages the load securing eyelet

- Repeat the operation on the other side
- Tighten both the mounting brackets alternately
- Install the protective caps on the threads above the knobs
- Reinstall the cargo compartment cover.

WARNING: Applies to cars with three rows of seats: The third row of seats must be folded down when the cargo compartment safety grille is installed. It is prohibited to sit in the cargo compartment behind a cargo compartment safety grille during a journey.

SEAT CUSHION, CARGO COMPARTMENT (2003-2008)

SEAT CUSHION, CARGO COMPARTMENT

REMOVE

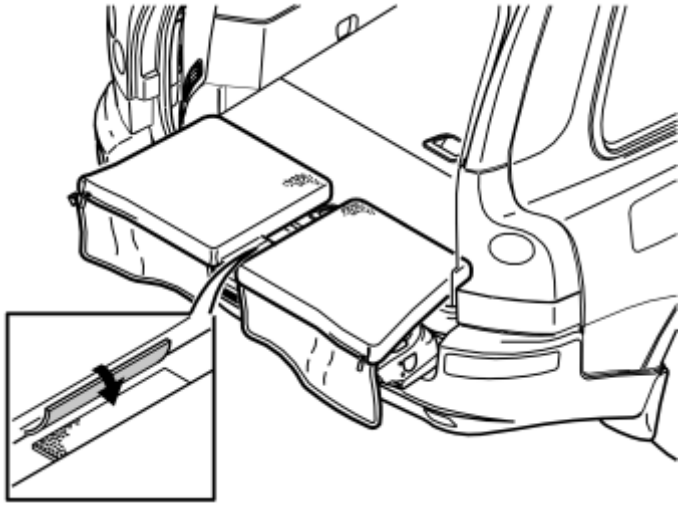

Fig. 72: View Of Cushions On The Lower Tailgate
Courtesy of VOLVO CARS CORPORATION

- Unfold both the cushions
- Position the cushions on the lower tailgate
- Fasten the cushions together using the Velcro strips.

INSTALL

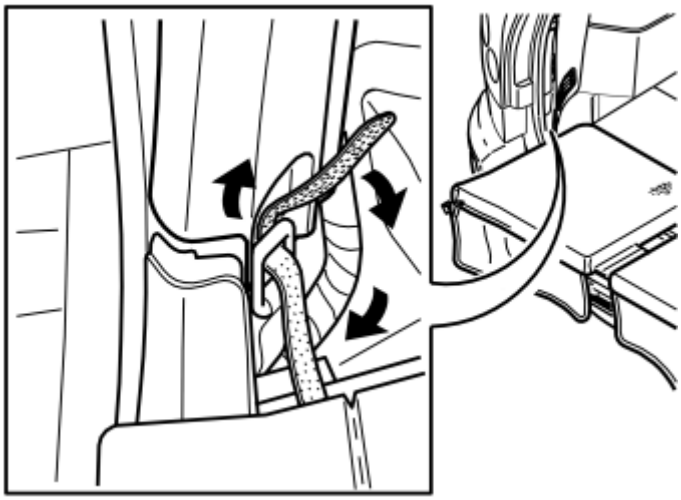

Fig. 73: Velcro Mounting Eyelets
Courtesy of VOLVO CARS CORPORATION

- Insert the Velcro strips on the outside of the cushions through the mounting eyelets positioned in the opening of the cargo compartment. Press the Velcro strips together.

SUNGLASSES HOLDER (2003-2011)

SUNGLASSES HOLDER

PREPARATION

NOTE: Thoroughly clean the surface where the sunglasses holder is to be positioned. Use denatured alcohol.

INSTALLATION

- Remove the backing from the sunglasses holder
- Install the sunglasses holder. Press the tape hard against the surface underneath. Hold for a moment.

NOTE: After mounting, the tape must be allowed to cure for 24 hours at a minimum of +15°C (60°F) before the sunglasses holder can be used.

USING

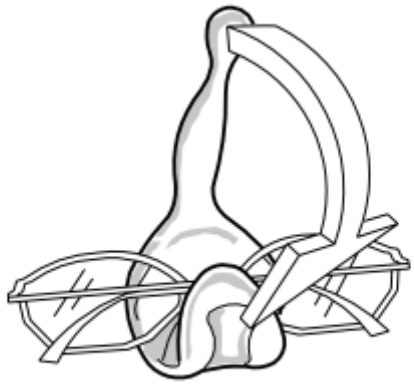

Fig. 74: Identifying Placement Of Sunglasses In Holder And Placement Of Glasses Using Strap
Courtesy of VOLVO CARS CORPORATION

- Place the sunglasses in the holder. Secure the glasses using the strap as illustrated.

TABLE IN THE CARGO COMPARTMENT OPENING (2003-2008)

TABLE IN THE CARGO COMPARTMENT OPENING

REMOVE

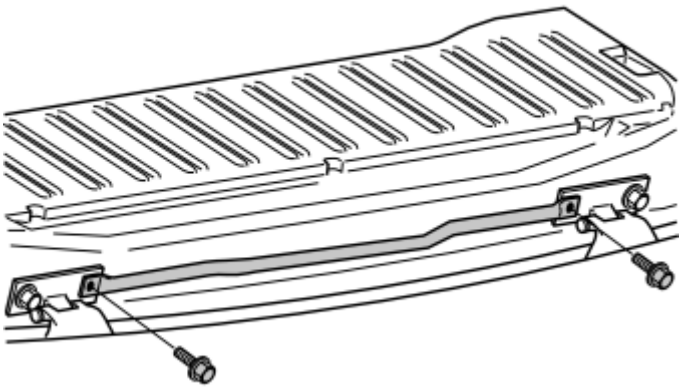

Fig. 75: Identifying Mounting Bracket Between Both Hinges
Courtesy of VOLVO CARS CORPORATION

- Open the upper and lower tailgates
- Fold up and lock the floor extension in the upright position
- Remove the two inner screws in the hinge on the lower tailgate
- Install the mounting bracket (from the kit) between both hinges. Tighten the mounting bracket using the

two screws. Tighten the screws. Tighten to **50 Nm (37 lbf. ft)** .

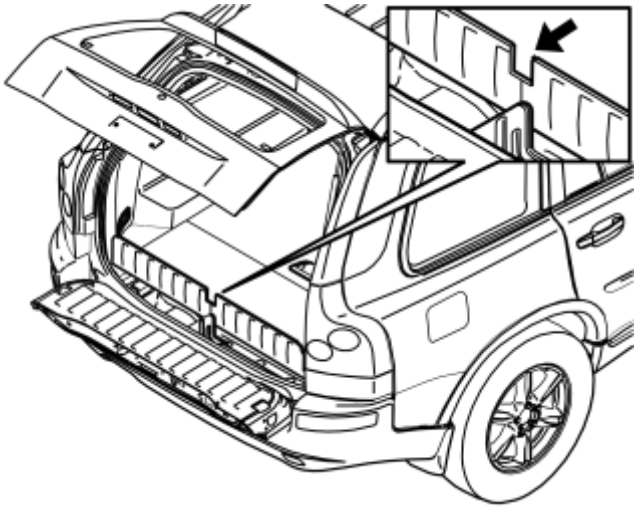

Fig. 76: View Of Cut Out Centre Section Of Floor Extension
Courtesy of VOLVO CARS CORPORATION

- Saw out the center of the floor extension inside the inner marking on the underneath
- Even off the edges using a file
- Remove any metal shavings.

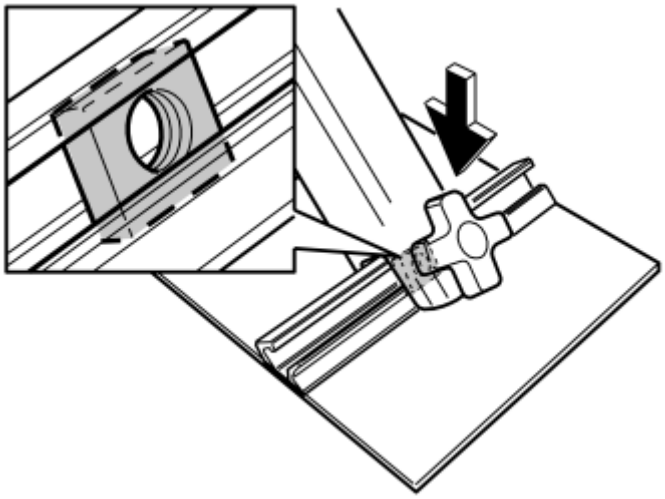

Fig. 77: Secure Table Leg To Table Top
Courtesy of VOLVO CARS CORPORATION

- Remove the table top from the kit. Turn the table top upside down
- Take the knob and table leg from the kit. Secure the table leg to the table top using the nut in the plate profile. See the illustration. Do not tighten the knob yet.

ADJUST

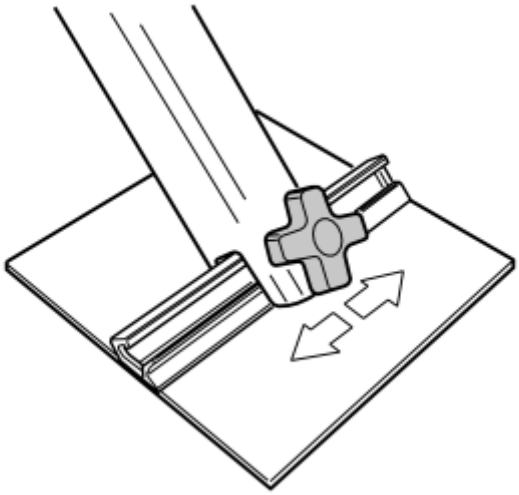

Fig. 78: Identifying Table Leg Adjustment Positions
Courtesy of VOLVO CARS CORPORATION

- Adjust the position of the table leg sideways as desired. Tighten the knob.

INSTALL

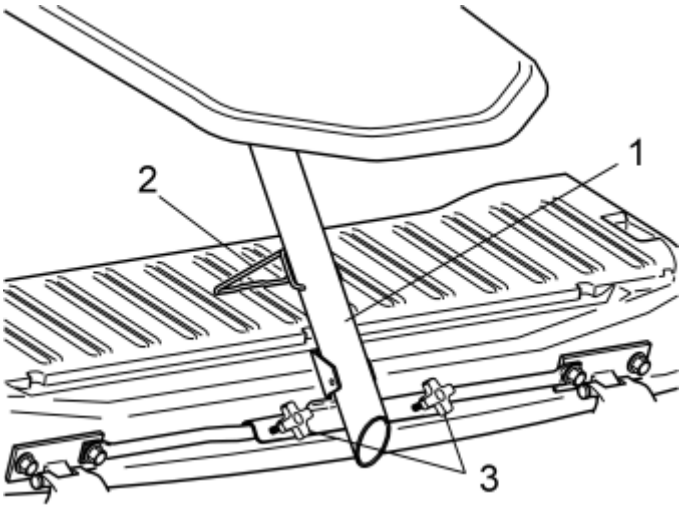

Fig. 79: Identifying Locking Knobs On Lower Section
Courtesy of VOLVO CARS CORPORATION

- Ensure that both locking knobs (3) on the lower section of the table leg are unscrewed from the mounting as far as possible without the leg detaching
- Install the table on the mounting bracket, as illustrated (1). Fold out the support leg (2). Lower the table so that the support leg rests against the lower tailgate
- Lock the table using both locking knobs (3).

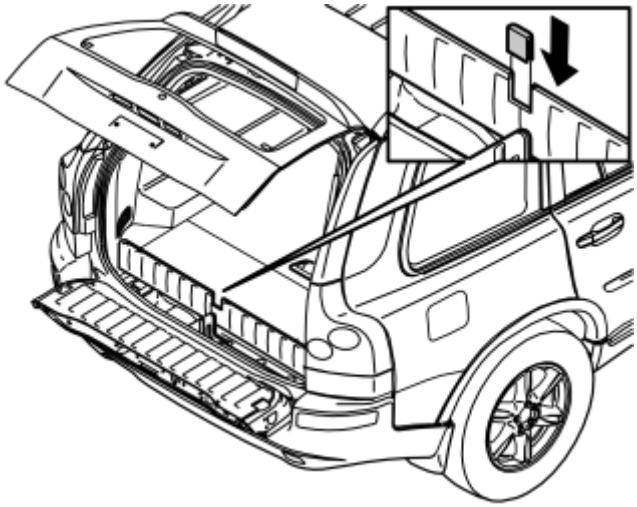

Fig. 80: Identifying Press The Panel (From The Kit) Over The Hole
Courtesy of VOLVO CARS CORPORATION

When the table is not being used

- Press the panel (from the kit) over the hole in the floor extension.

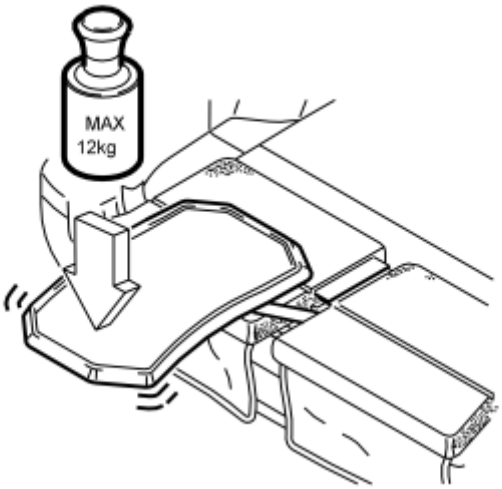

Fig. 81: View Of Maximum Permitted Load Of The Table
Courtesy of VOLVO CARS CORPORATION

NOTE: The maximum permitted load of the table is 12 kg.

TUNNEL CARPET (2003-2008)

TUNNEL CARPET

PREPARATION

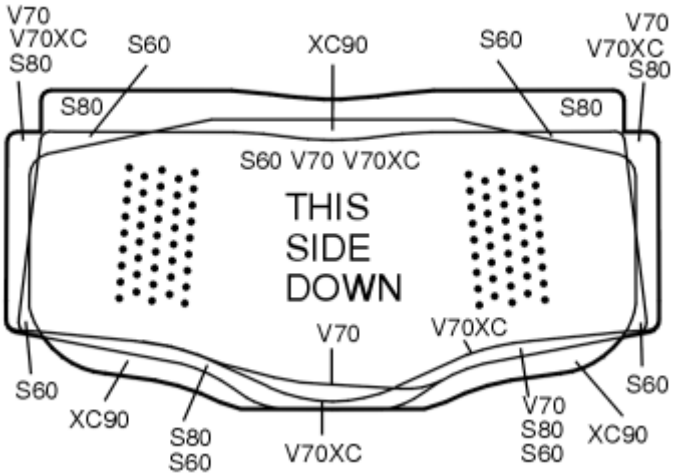

Fig. 82: Cut Underneath Of Tunnel Carpet At Perforations For Relevant Model
Courtesy of VOLVO CARS CORPORATION

- Cut the underneath of the tunnel carpet at the perforations for the relevant model. Cut so that the model designation of the car remains along the outer edges of the tunnel carpet.

INSTALL

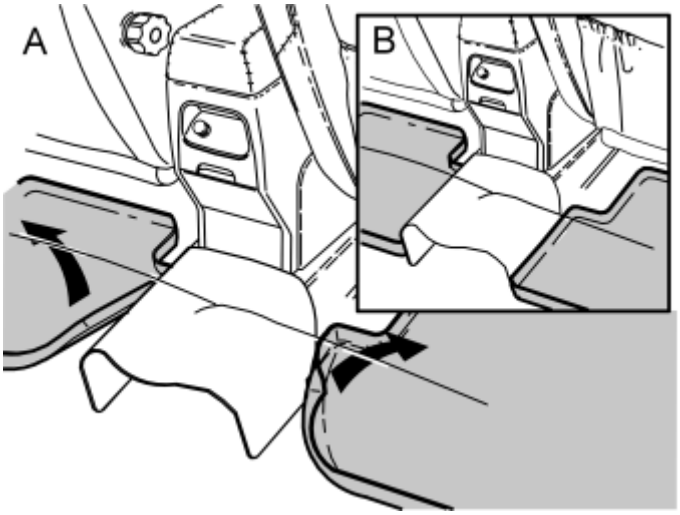

Fig. 83: Identifying Position Of Tunnel Carpet On Transmission Tunnel In Rear Seat Compartment
Courtesy of VOLVO CARS CORPORATION

- Position the tunnel carpet on the transmission tunnel in the rear seat compartment so that an equal amount of the tunnel carpet is positioned on each side of the tunnel
- Fold the short sides of the floor carpet upwards nearest the tunnel. Position the tunnel carpet underneath the floor carpets
- Fold back the floor carpets.

DECOR TRIM, AIR INTAKE, CHROME (2007)

DECOR STRIP, AIR INTAKE, CHROME

REMOVE

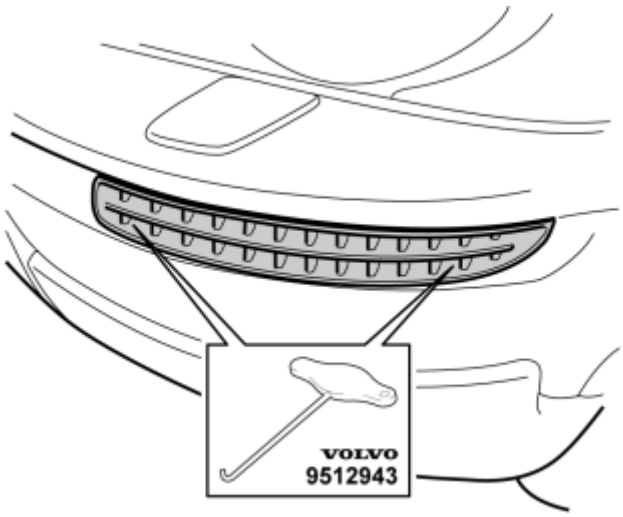

Fig. 84: View Of Removing Bumper Cover Grilles
Courtesy of VOLVO CARS CORPORATION

- Carefully remove the bumper cover grilles on both sides by carefully pulling them off using tool **part no. 9512943** .

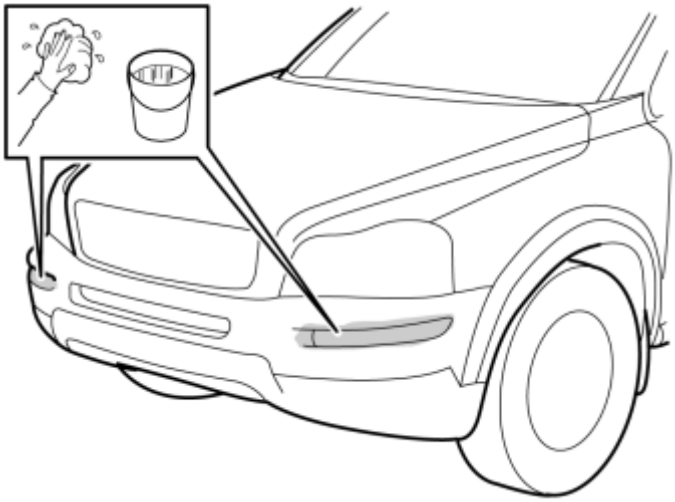

Fig. 85: Clean The Bumper Cover
Courtesy of VOLVO CARS CORPORATION

- Clean the bumper cover where the decor strip is to be secured.

INSTALL

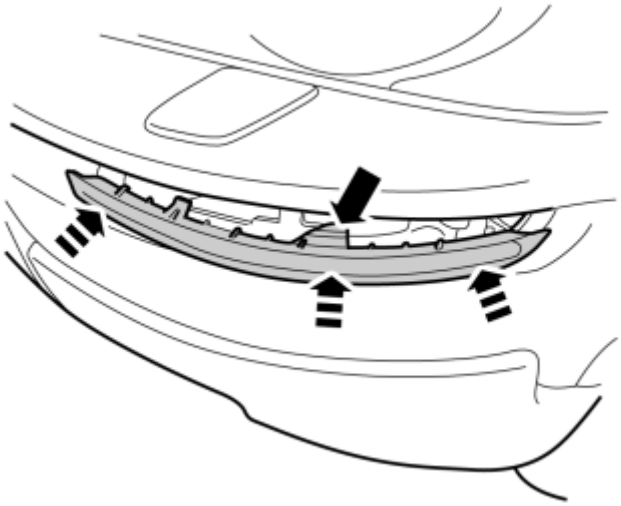

Fig. 86: View Of Decor Panel Into Place
Courtesy of VOLVO CARS CORPORATION

- Align the decor panel in the cut-out and press it into place. Ensure that all hooks engage.
- Repeat the operation on the other side.

DECOR PANEL, INTERIOR (2008-2011)

DECOR PANEL, INTERIOR

NOTE: **Some steps in these installation instructions are presented with illustration only.**

INSTALLING, DECOR PANEL

GLOVE BOX

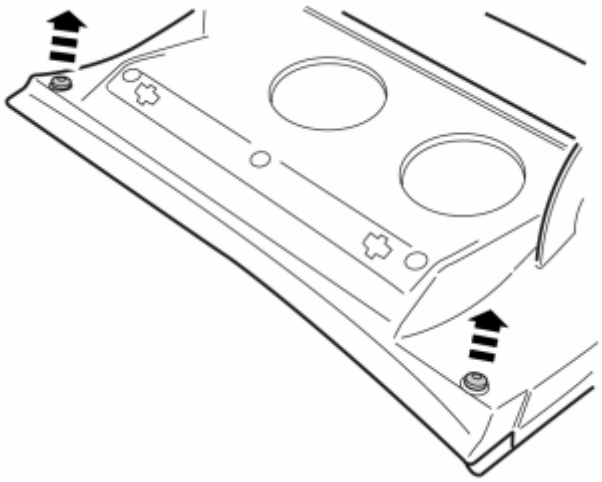

Fig. 87: Identifying Glove Box Screws

Courtesy of VOLVO CARS CORPORATION

- Open the glove box hatch. Remove the two outer screws that hold the decor strip.

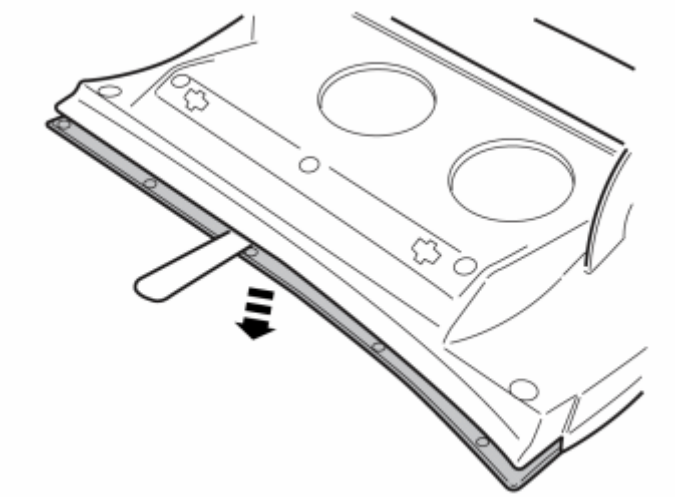

Fig. 88: View Of Decor Strip Removal With Weatherstrip
Courtesy of VOLVO CARS CORPORATION

- Carefully bend loose the decor strip from the glove box hatch with a weatherstrip tool. It is fastened with three clips.

INSTALL

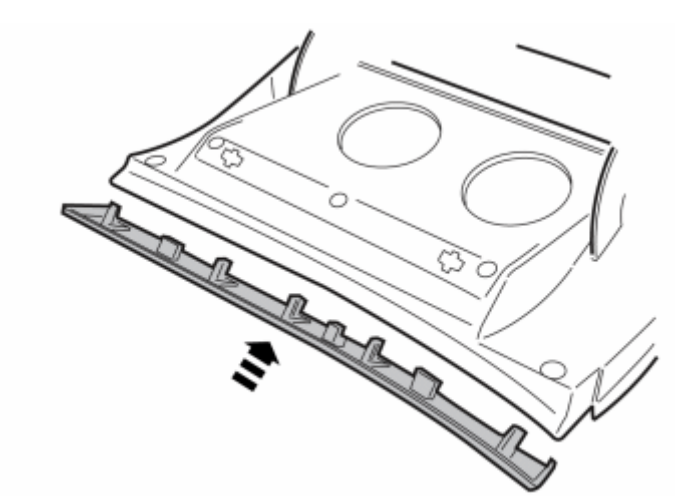

Fig. 89: View Of Snapping In New Panel Into Place
Courtesy of VOLVO CARS CORPORATION

- Get a new panel from the kit and press it into place, instead of the removed.

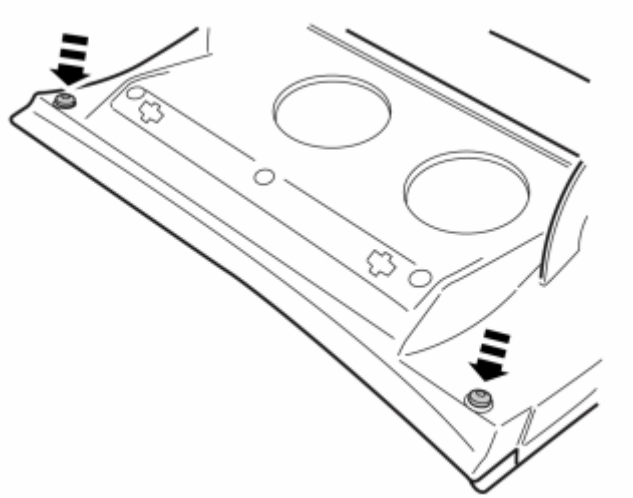

Fig. 90: Identifying Glove Box Screws
Courtesy of VOLVO CARS CORPORATION

ASHTRAY

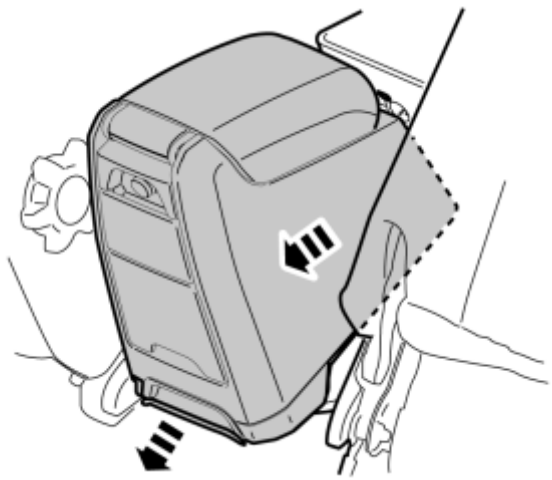

Fig. 91: Pulling Rear Tunnel Console Backwards
Courtesy of VOLVO CARS CORPORATION

- Grab the handle at the trailing edge/lower edge of the rear part of the tunnel console. Pull backwards until the locks by the sides release, and pull loose the unit backwards.

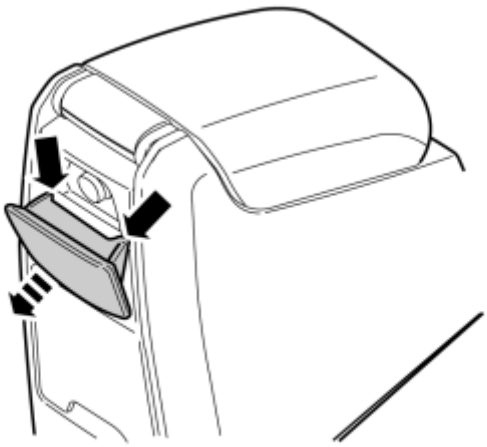

Fig. 92: Identifying Ashtray Catches
Courtesy of VOLVO CARS CORPORATION

- Open the ashtray.
- Press down the ashtray until the catches by the sides are clear from the stops in the holder.
- Pull out the ashtray more and lift it out.

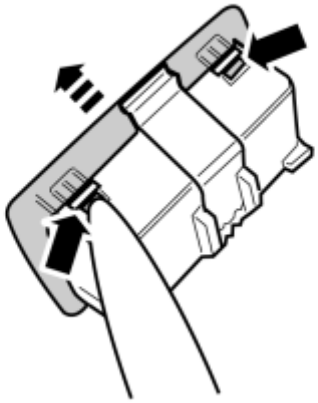

Fig. 93: Unfasten The Panel's Lock Catches
Courtesy of VOLVO CARS CORPORATION

- Unfasten the panels lock catches and unhook it from the top edge on the ashtray.

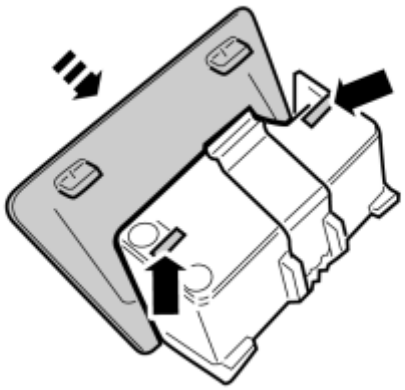

Fig. 94: Identifying Ashtray's Top Edge
Courtesy of VOLVO CARS CORPORATION

- Get a new panel from the kit. Hook it on in the ashtrays top edge and press at the bottom so that the lock catches engage.

REAR, CUP HOLDER

Illustration A

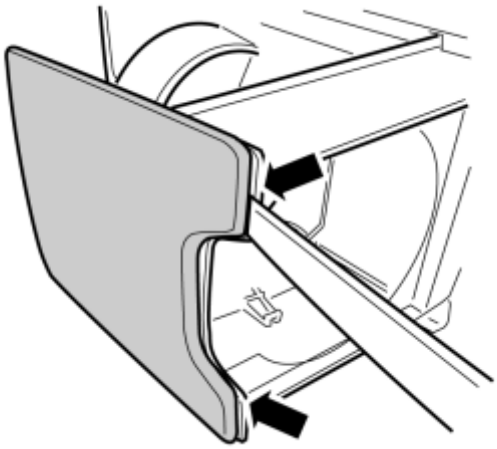

Fig. 95: Identifying Cup Holder Locks
Courtesy of VOLVO CARS CORPORATION

- Pull out the cup holder. Lay the tunnel console on the side on a surface that will not cause any damage.
- Carefully bend loose the panel on both sides at the bottom so that the panels small lock catches are in the clear.

Illustration B

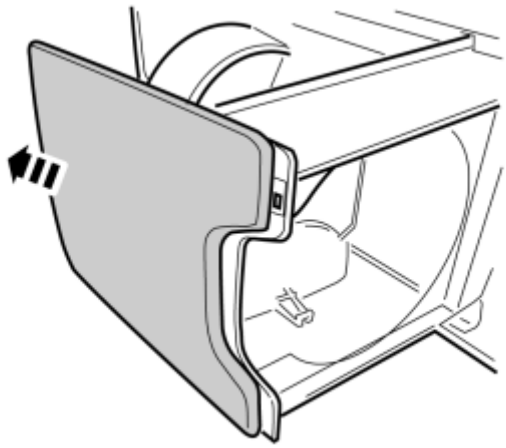

Fig. 96: View Of Push Panel So It Unhooks
Courtesy of VOLVO CARS CORPORATION

- Push up the panel so that it unhooks from the four attachments on the inside. New panel is included in the kit.

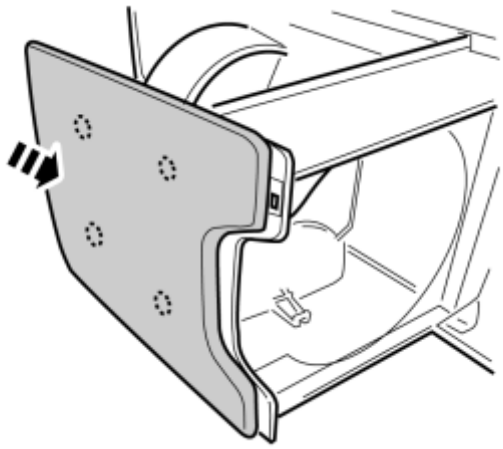

Fig. 97: View Of Four Attachment Catches In The Holder
Courtesy of VOLVO CARS CORPORATION

- Get a new panel from the kit. Fit the four attachment catches in the holder and press into place.

COVER, MIDDLE CONSOLE

Fig. 98: Identifying Ignition Switch Turned To Position 0
Courtesy of VOLVO CARS CORPORATION

- Turn the ignition key to position 0.

NOTE: **Wait at least three minutes before unplugging the connectors or removing other electrical equipment.**

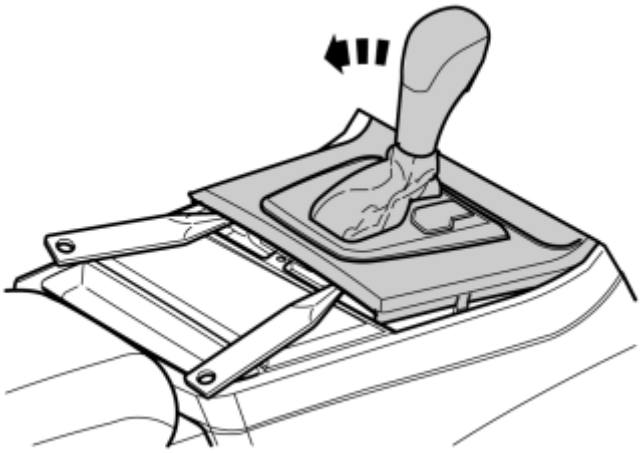

Fig. 99: View Of Pry Off The Gear Selector Panel
Courtesy of VOLVO CARS CORPORATION

Applies to cars with automatic gearbox

- Turn the ignition key to position II.

Applies to all models

- Move the gear selector lever to its rearmost position.

- Use a weatherstrip and pry off the gear selector panel at the rear edge.

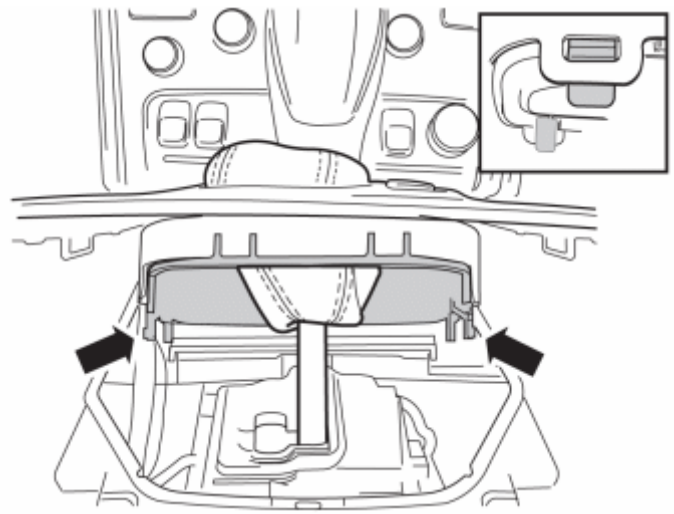

Fig. 100: Pressing In Catches And Removing Panel
Courtesy of VOLVO CARS CORPORATION

- Press in the catches and remove the panel.

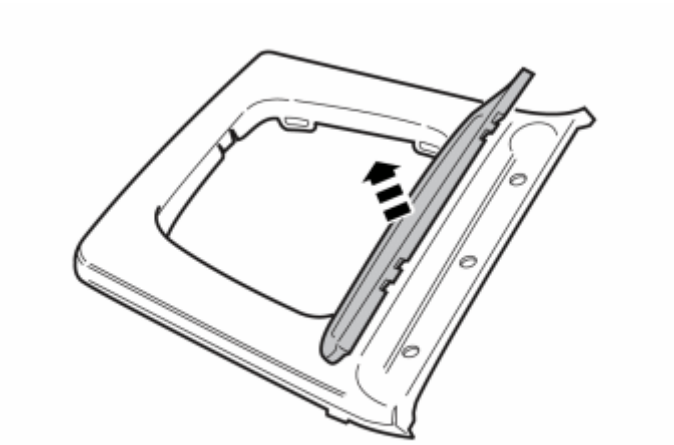

Fig. 101: Identifying Pen Box From The Panel
Courtesy of VOLVO CARS CORPORATION

- Remove the pen box from the panel.
- Place the panel aside, new is included in the kit.

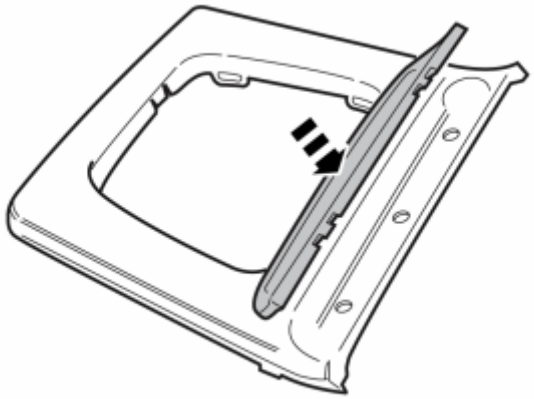

Fig. 102: Press The Pen Box Into Place
Courtesy of VOLVO CARS CORPORATION

- Get a new panel from the kit.
- Press the pen box into place.

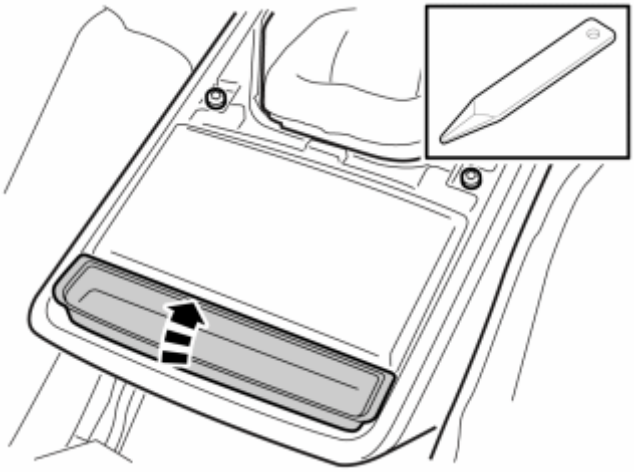

Fig. 103: View Of Small Rear Compartment In The Tunnel Console
Courtesy of VOLVO CARS CORPORATION

- Carefully bend loose the small rear compartment in the tunnel console with a weatherstrip tool.

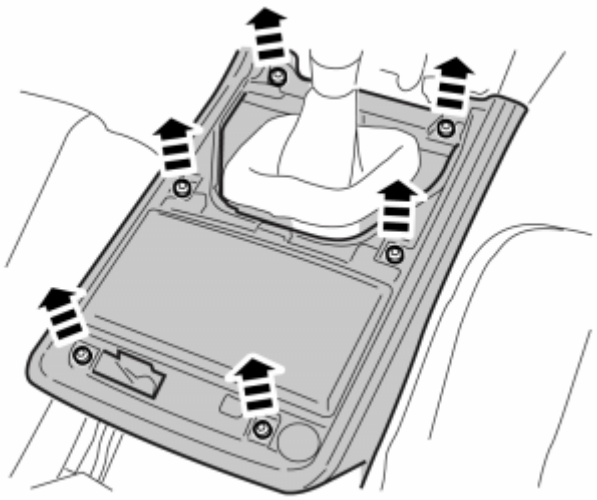

Fig. 104: Identifying Tunnel Console Frame Screws
Courtesy of VOLVO CARS CORPORATION

- Remove the six screws in the frame for the tunnel console.
- Lift away the frame.

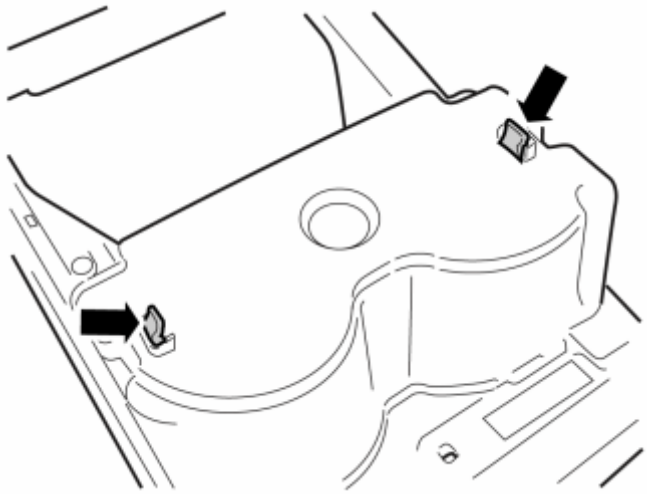

Fig. 105: Identifying Attachment Catches
Courtesy of VOLVO CARS CORPORATION

- Place the frame upside down on a surface that will not cause any damage.
- Move the attachment catches to the side and press them out through the bottom.

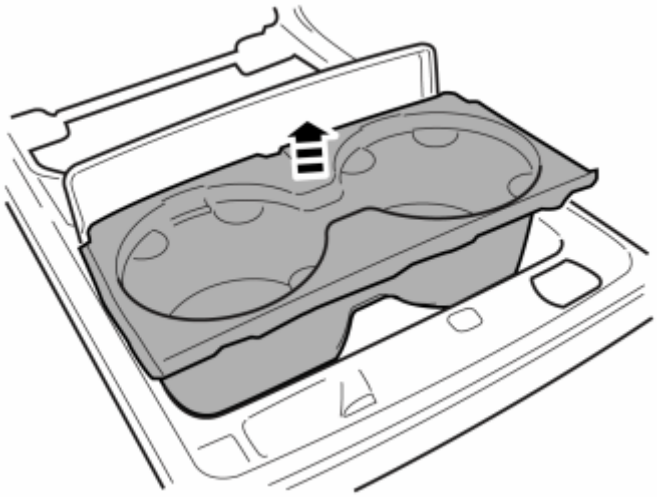

Fig. 106: Identifying Open Cover And Pulled Up Insert
Courtesy of VOLVO CARS CORPORATION

- Open the cover and pull up the insert.

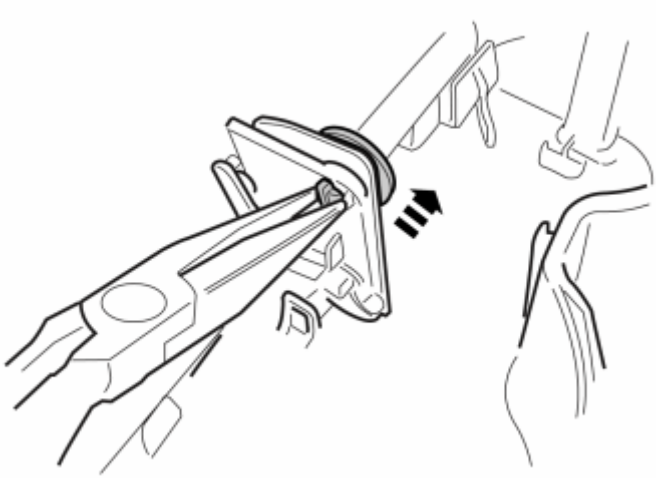

Fig. 107: View Of Cover's Middle Attachment Clips
Courtesy of VOLVO CARS CORPORATION

- Press together the covers middle attachment clips with spring and carefully press it out.

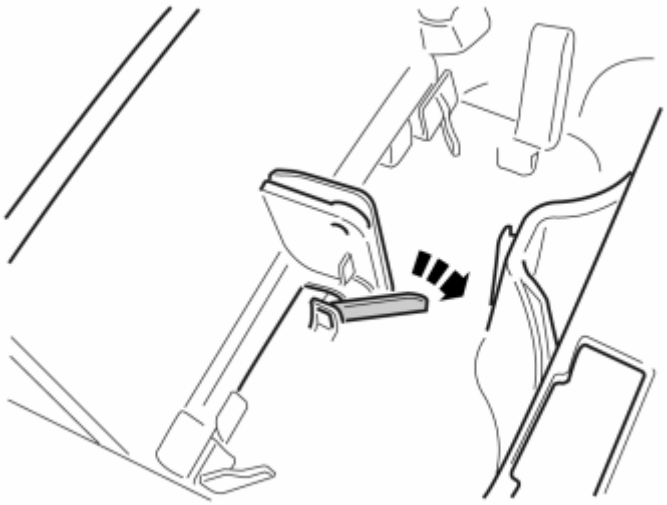

Fig. 108: Identifying Middle Attachment Arm
Courtesy of VOLVO CARS CORPORATION

- Fold the arm forward so that it moves from the middle attachment.

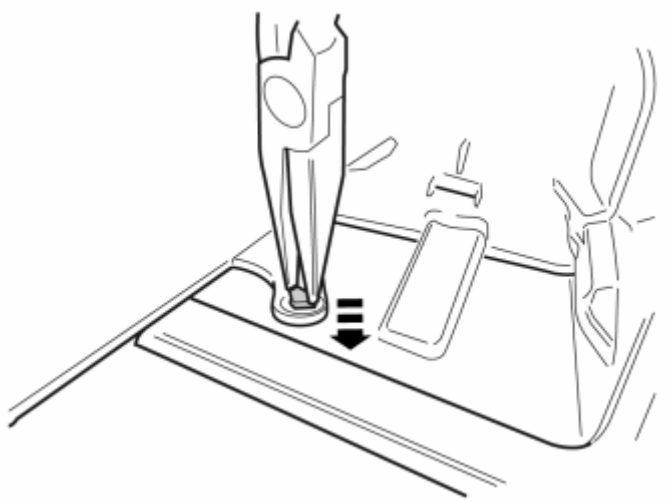

Fig. 109: View Of Cover's Attachment Clips
Courtesy of VOLVO CARS CORPORATION

- Press together the covers attachment clips on both sides and press them.

Illustration A

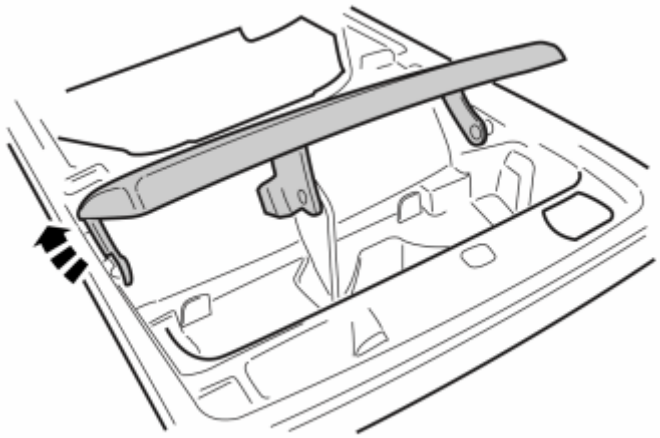

Fig. 110: Identifying Covers Attachment Arms
Courtesy of VOLVO CARS CORPORATION

- Bend out the covers attachment arms from the holes in the sides. First bend up the covers left attachment.

Illustration B

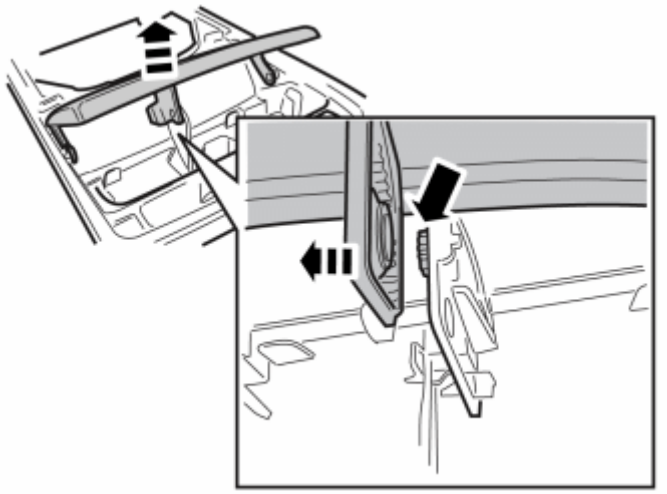

Fig. 111: Identifying Attachment Cover Gear Clearance
Courtesy of VOLVO CARS CORPORATION

- Pull away the covers middle attachment so that it is clear of the gear.
- Lift out the cover. New cover is included in the kit.

Illustration A

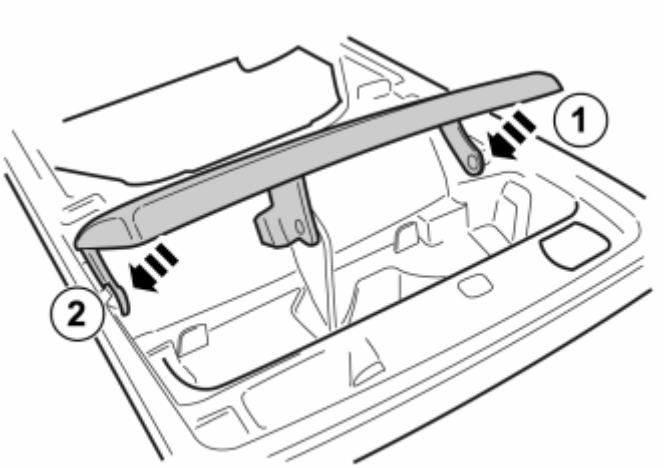

Fig. 112: Identifying New Cover From Kit
Courtesy of VOLVO CARS CORPORATION

- Get a new cover from the kit and install.

Illustration B

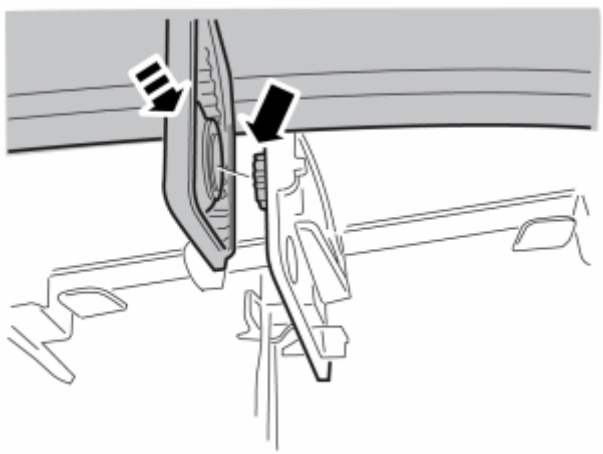

Fig. 113: View Of Correct Gear Position
Courtesy of VOLVO CARS CORPORATION

- Make sure that the gear ends up correctly in the covers rack.

INSTALL

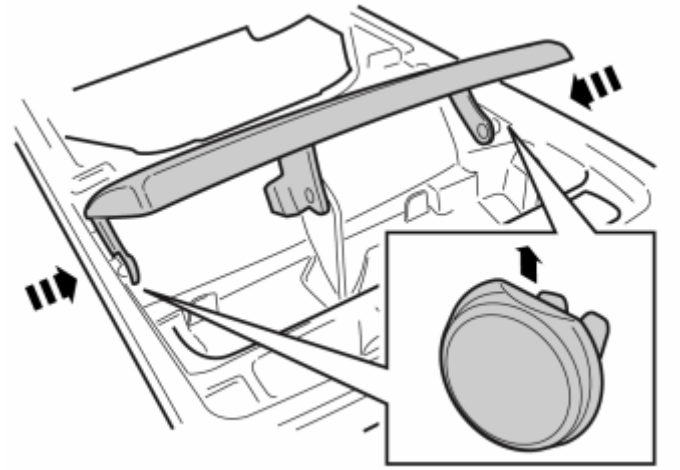

Fig. 114: Identifying Clips Beveled Side Up
Courtesy of VOLVO CARS CORPORATION

- Press the clips into place on both sides. Make sure that the clips bevelled part faces up.

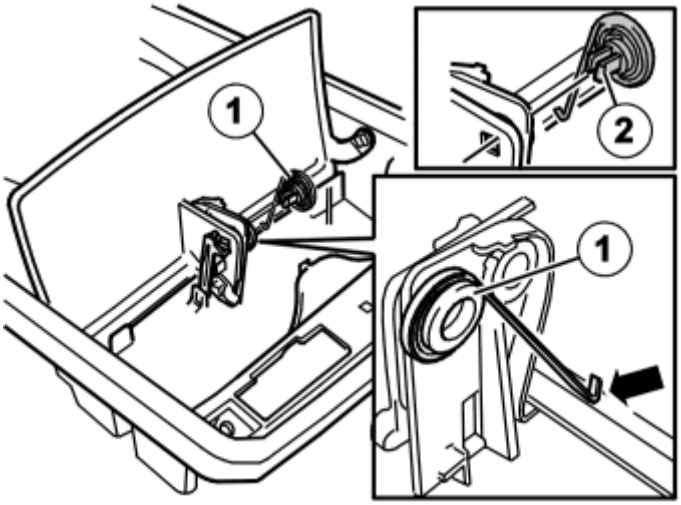

Fig. 115: View Of Spring's Arm Against The Cover
Courtesy of VOLVO CARS CORPORATION

- Check that the internal catch on the spring is attached in the clip.
- Align the springs arm against the cover and install the clip (1) with the spring. The catches (2) on the clip shall be placed vertically.

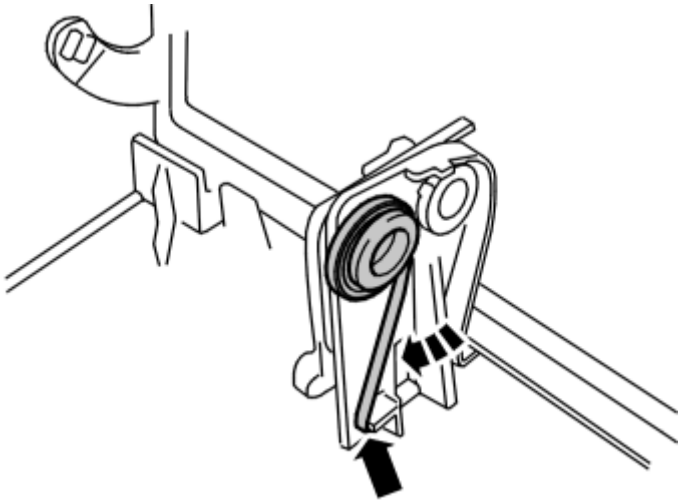

Fig. 116: View Of Attachment Under The Clip
Courtesy of VOLVO CARS CORPORATION

- Move the springs arm backwards so that the catch engages in the attachment under the clip.

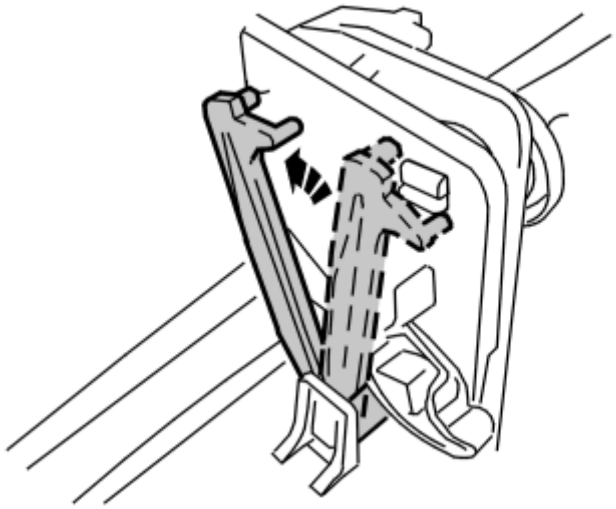

Fig. 117: Identifying Arm Forward Mechanism
Courtesy of VOLVO CARS CORPORATION

- Move the arm forward for the mechanism.
- Check the function of the cover.

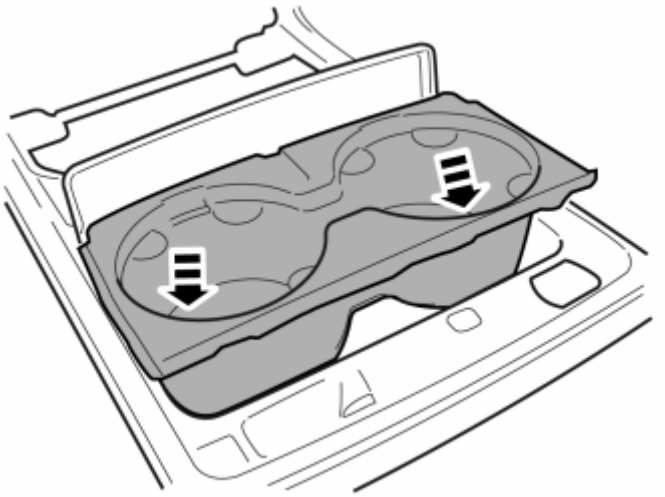

Fig. 118: Pressing Cup Holder Into Place
Courtesy of VOLVO CARS CORPORATION

- Press the cup holder into place and make sure that the clips engage.

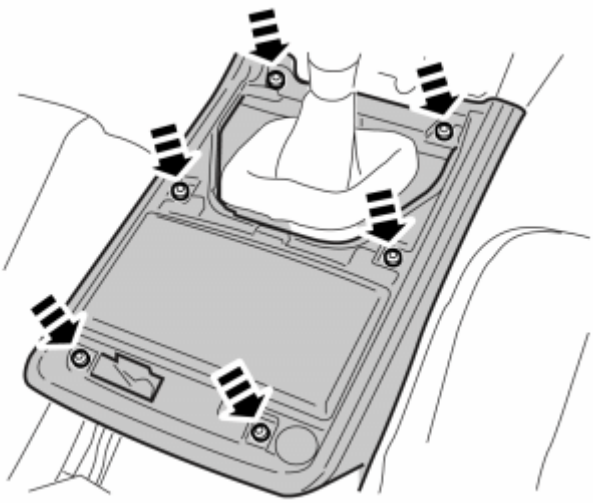

Fig. 119: Identifying Frame Screws
Courtesy of VOLVO CARS CORPORATION

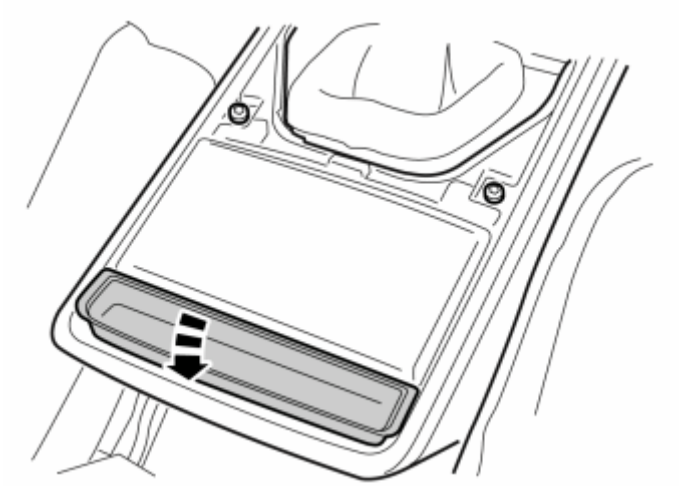

Fig. 120: Installing Small Rear Compartment
Courtesy of VOLVO CARS CORPORATION

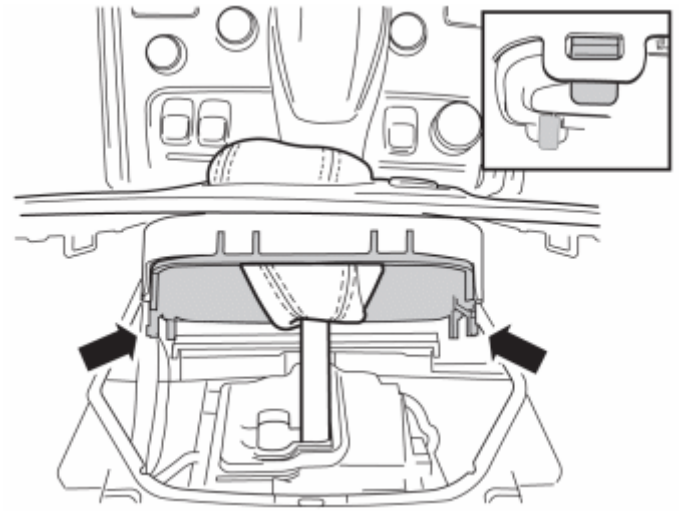

Fig. 121: Pressing In Catches And Removing Panel
Courtesy of VOLVO CARS CORPORATION

- Get the new panel and press into place in the gear lever's holder. Make sure that the catches engage.

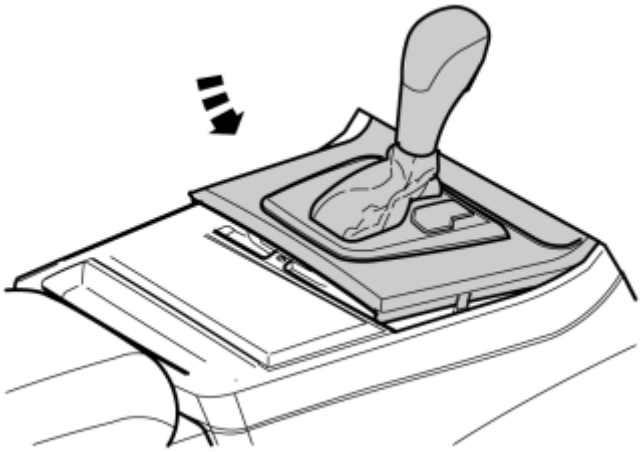

Fig. 122: Installing Gear Selector Panel
Courtesy of VOLVO CARS CORPORATION

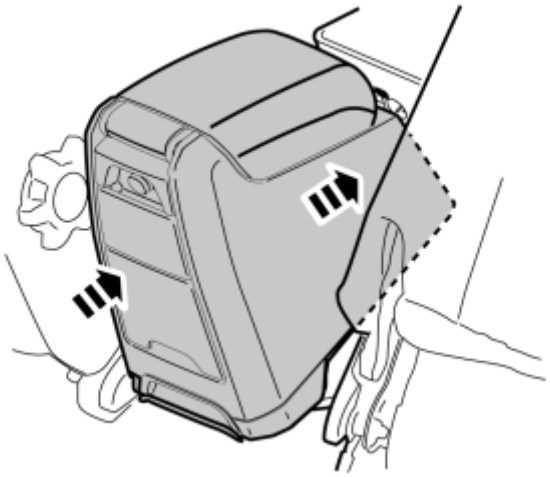

Fig. 123: Installing Middle Console
Courtesy of VOLVO CARS CORPORATION

HOME LINK (2006-2010)

HOME LINK

REMOVE

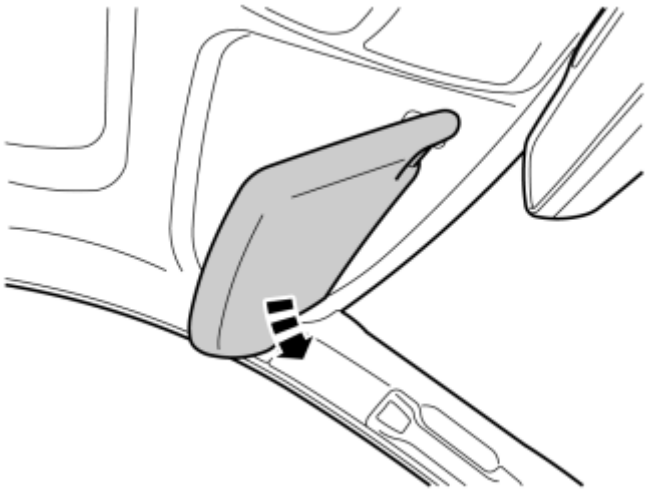

Fig. 124: Identifying Sun Visor
Courtesy of VOLVO CARS CORPORATION

- Fold the sun visor down.

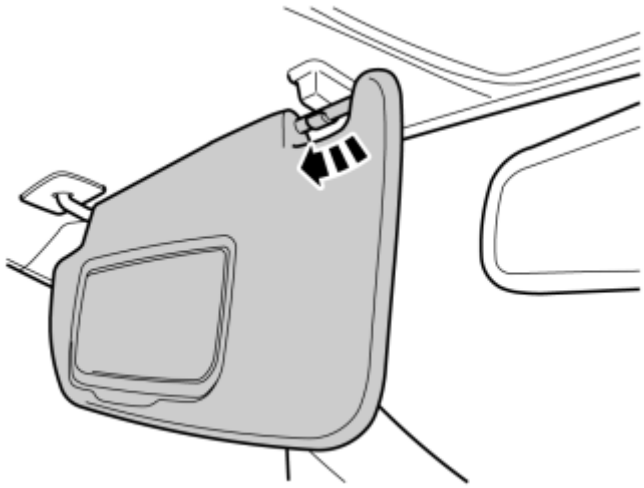

Fig. 125: Unhook Sun Visor
Courtesy of VOLVO CARS CORPORATION

- Unhook the sun visor from its mounting.

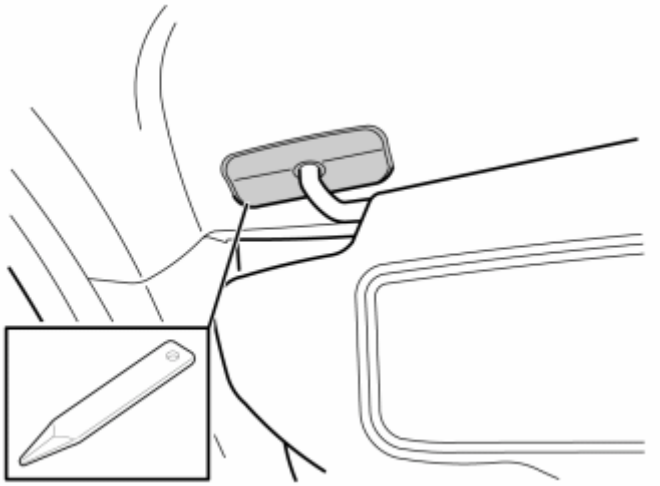

Fig. 126: Identifying Sun Visor Cover
Courtesy of VOLVO CARS CORPORATION

- Remove the cover.

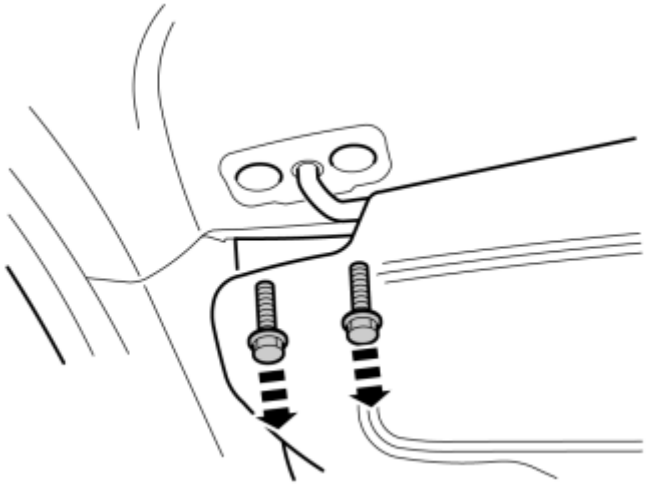

Fig. 127: Identifying Sun Visor Cover Screws
Courtesy of VOLVO CARS CORPORATION

- Remove the screws.

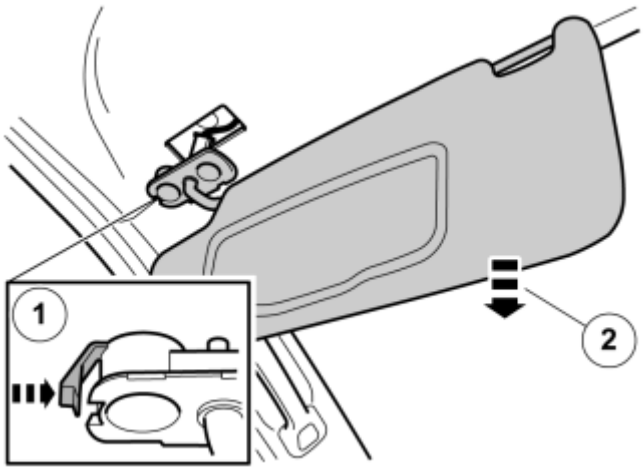

Fig. 128: View Of Pulled Down Sun Visor
Courtesy of VOLVO CARS CORPORATION

- Press the catches in and pull the sun visor down.

INSTALL

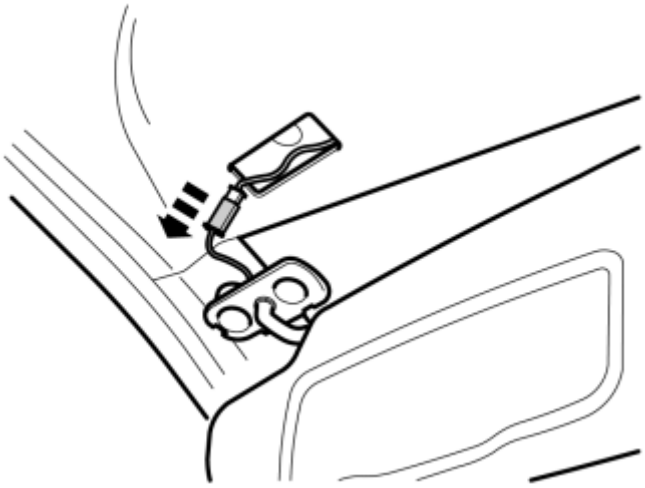

Fig. 129: Identifying Sun Visor Connector
Courtesy of VOLVO CARS CORPORATION

- Unplug the connector.
- Take the new sun visor from the kit and install in reverse order.

NOTE: Take care not to trap the cable during installation.

Tightening torque M6 screws: **10 Nm (7.3 Ibf. ft)** .

MIRRORS, AUTODIM (2009-2011)

MIRRORS, AUTODIM

REMOVE

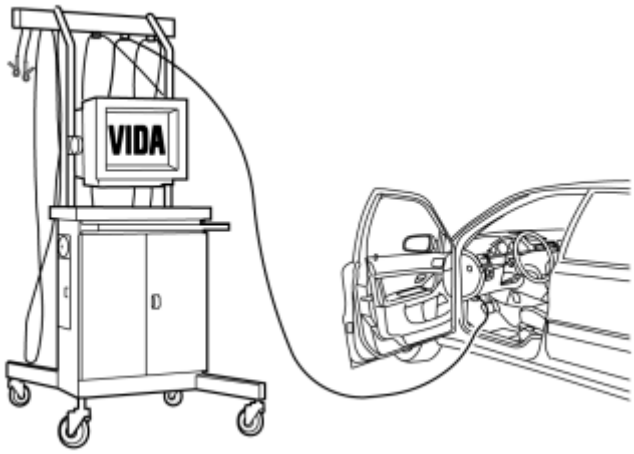

Fig. 130: Identifying VIDA (Service Information) To Program Software
Courtesy of VOLVO CARS CORPORATION

- Data must be read from the Upper electronic module (UEM) before replacing the inner rear view mirror. After replacement the data must be programmed into the new control module. The programmed data is read via VIDA vehicle communication.

NOTE: **First when the new inner rear view mirror has been installed in the vehicle can the new software be ordered. When ordering VIDA will read the identity of the new control module, which is essential to order the right software.**

Fig. 131: Identifying Ignition Switch Turned To Position 0
Courtesy of VOLVO CARS CORPORATION

IMPORTANT: Wait at least three minutes before disassembling the connector or removing other electrical equipment.

Fig. 132: Identifying Fold Down Cover
Courtesy of VOLVO CARS CORPORATION

- Fold down the cover.

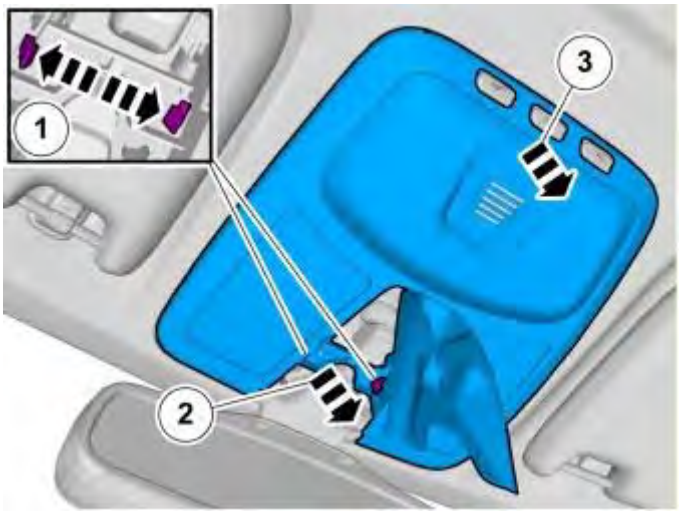

Fig. 133: Identifying Front Edge Of Panel Catches
Courtesy of VOLVO CARS CORPORATION

- Release the catches. Pull down the front edge of the panel and then pull it off by its rear edge.

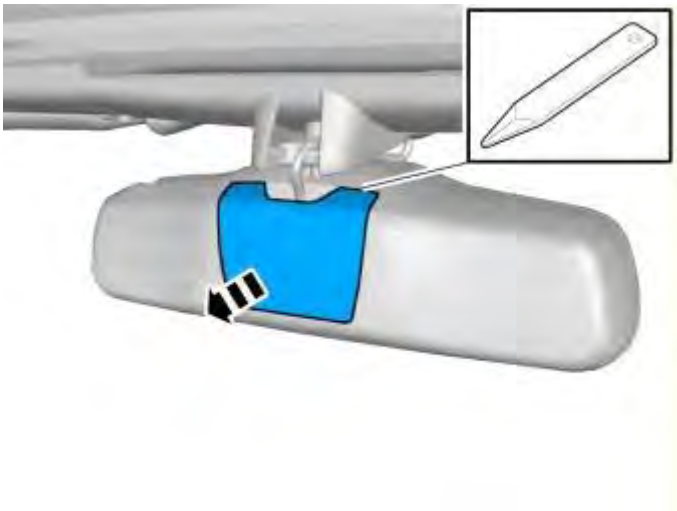

Fig. 134: View Of Mirror Panel
Courtesy of VOLVO CARS CORPORATION

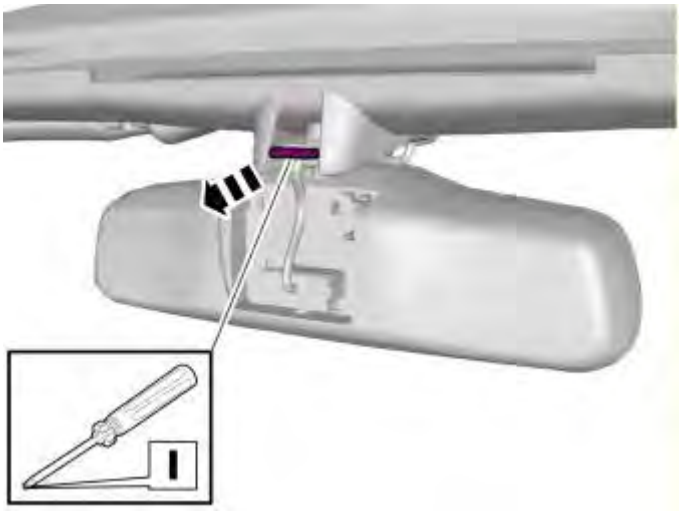

Fig. 135: View Of Mirror Catch
Courtesy of VOLVO CARS CORPORATION

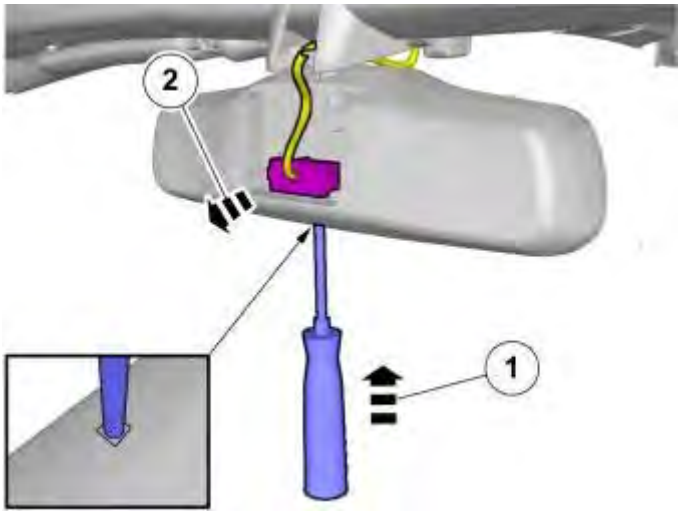

Fig. 136: Unplugging Connector
Courtesy of VOLVO CARS CORPORATION

1. Press in the connector's catches.
2. Unplug the connector.

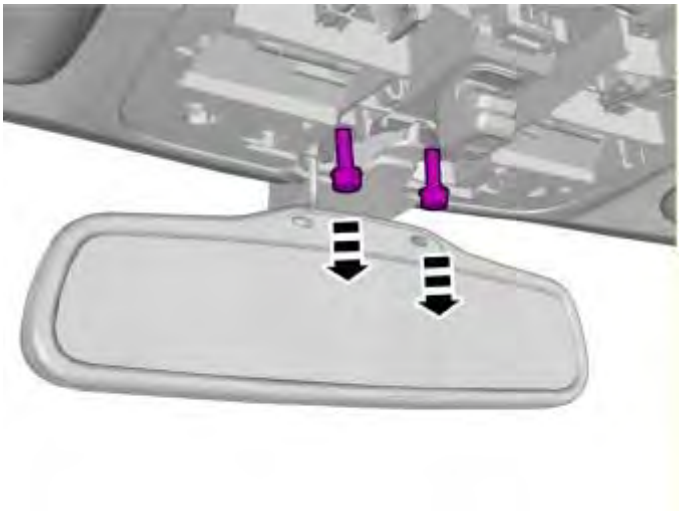

Fig. 137: Identifying Mirror Screws
Courtesy of VOLVO CARS CORPORATION

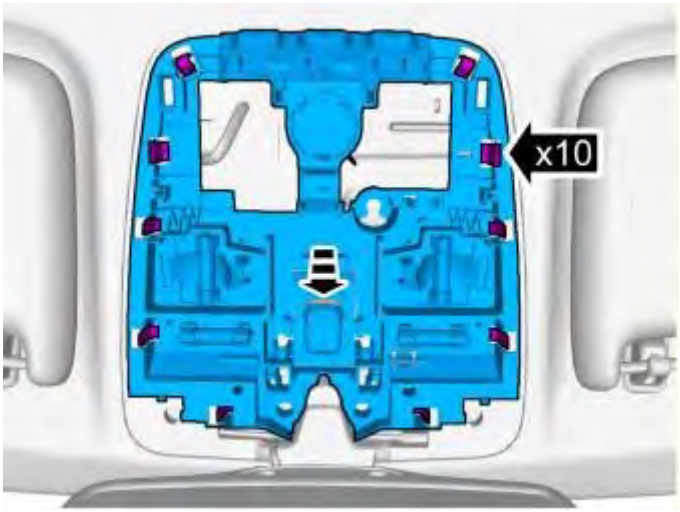

Fig. 138: Identifying Interior Lighting Housing Catches
Courtesy of VOLVO CARS CORPORATION

- Release the catches and carefully pull the interior lighting downwards and let it hang from its wires.

Applies to cars with telephone

Fig. 139: Applies To Cars With Telephone (1 of 2)
Courtesy of VOLVO CARS CORPORATION

Fig. 140: Applies To Cars With Telephone (2 of 2)
Courtesy of VOLVO CARS CORPORATION

Applies to cars without telephone

Fig. 141: Applies To Cars Without Telephone (1 of 2)
Courtesy of VOLVO CARS CORPORATION

Fig. 142: Applies To Cars Without Telephone (2 of 2)
Courtesy of VOLVO CARS CORPORATION

INSTALL

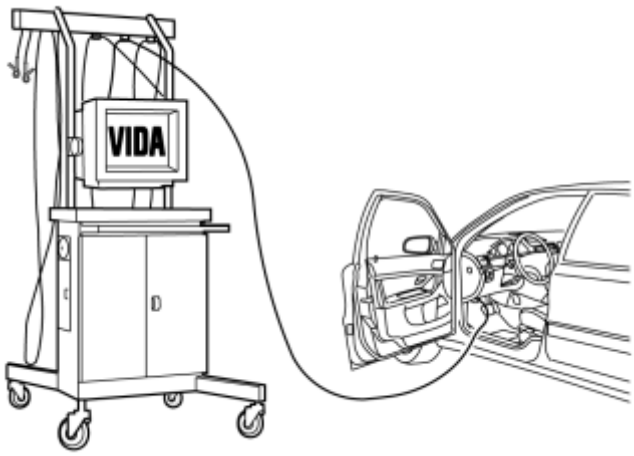

Fig. 143: Identifying VIDA (Service Information) To Program Software
Courtesy of VOLVO CARS CORPORATION

Applies to all models

- Install the new inner rear view mirror in the reverse order. Tightening torque M6 bolts: **10 Nm (7.3 lbf. ft)** .
    - Repair
    - Clean, check and adjust.
    - 8 Body and interior
    - 88 Interior equipment
    - 882 Interior equipment

    - Interior equipment
    - Compass calibration
- Download the software for the accessory's function following the service information in VIDA (Volvo scan tool).
    - Repair
    - Clean, check and adjust.
    - 8 Body and interior
    - 88 Interior equipment
    - 882 Interior equipment
    - Interior equipment
    - Compass calibration
- Calibrate the compass. Information can be found in VIDA under:
    - Repair
    - Clean, check and adjust.
    - 8 Body and interior
    - 88 Interior equipment
    - 882 Interior equipment
    - Interior equipment
    - Compass calibration

ACCESSORIES AND BODY, CAB

Interior Equipment - Removal, Replacement And Installation

DASHBOARD AND RADIO PANEL (2003-2011)

DASHBOARD, REPLACING

The illustrations in this service information are used for different model years and / or models. Some variation may occur. However, the essential information in the illustrations is always correct.

PREPARATIONS

Move the seats back.

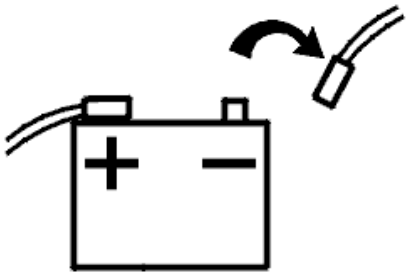

Fig. 1: Disconnecting Battery Lead
Courtesy of VOLVO CARS CORPORATION

Remove the battery lead. See **BATTERY, DISCONNECTING** .

REMOVING THE DASHBOARD

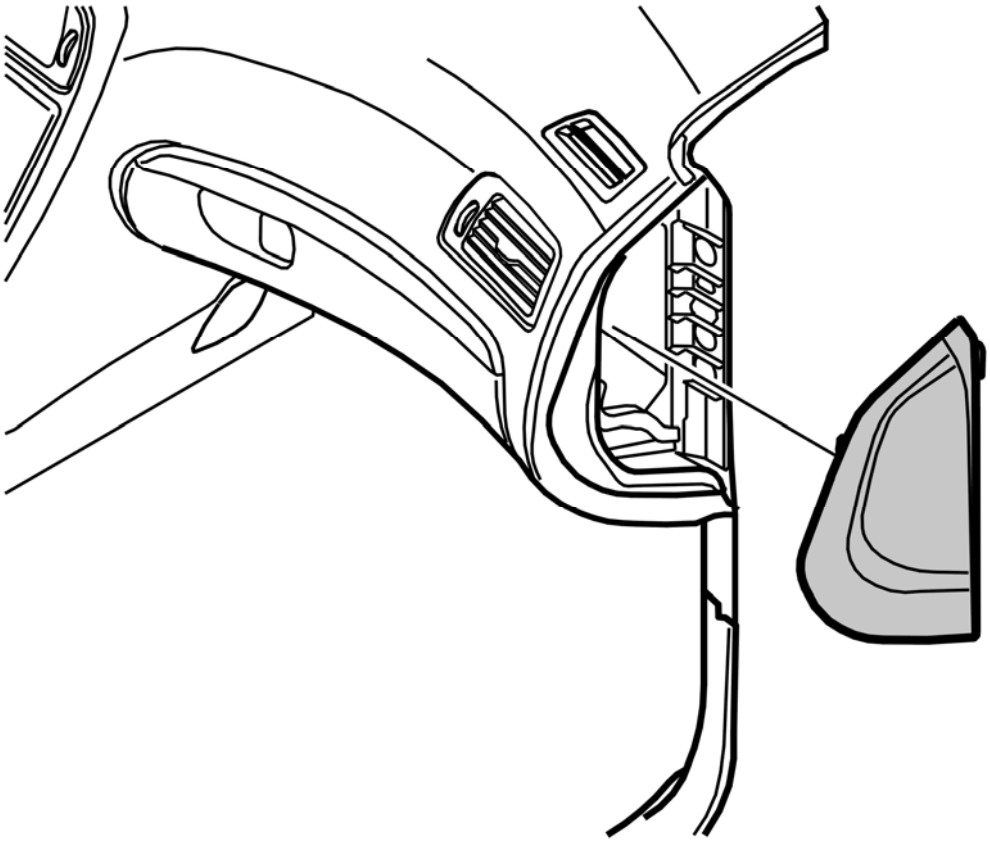

Fig. 2: End Covers
Courtesy of VOLVO CARS CORPORATION

Remove:

- The A-post panels. See **PANEL A-POST, REPLACING**
- the end covers on both sides.

- the soundproofing panels. See **SOUNDPROOFING PANEL, REPLACING**
- the courtesy lighting. See **COURTESY LIGHTING, FRONT, REPLACING**
- the on-board diagnostic (OBD) connector
- the steering wheel. See **STEERING WHEEL, REPLACING**
- the combined instrument panel. See **DRIVER INFORMATION MODULE (DIM), REPLACING**
- gear selector assembly and steering wheel module (SWM)
- the center console. See **CENTER CONSOLE, REPLACING**
- the dashboard environment panel. See **CLIMATE CONTROL MODULE (CCM), REPLACING**
- the bracket for the RTI (road traffic information) / loudspeaker. See **CENTRAL LOUDSPEAKER, REPLACING**
- the connector for the hazard warning signal flasher.

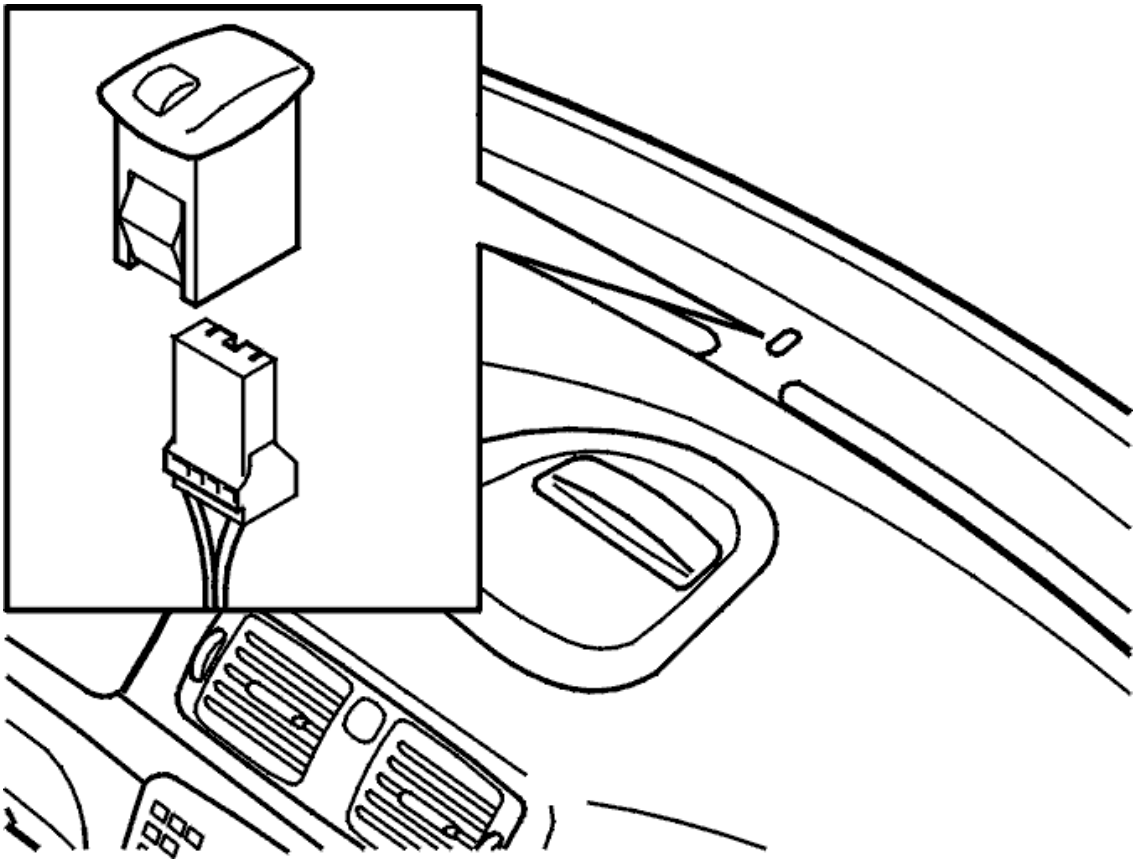

Fig. 3: Disconnecting Connector And Removing Sun Sensor
Courtesy of VOLVO CARS CORPORATION

Lift up the sun sensor.

Disconnect the connector.

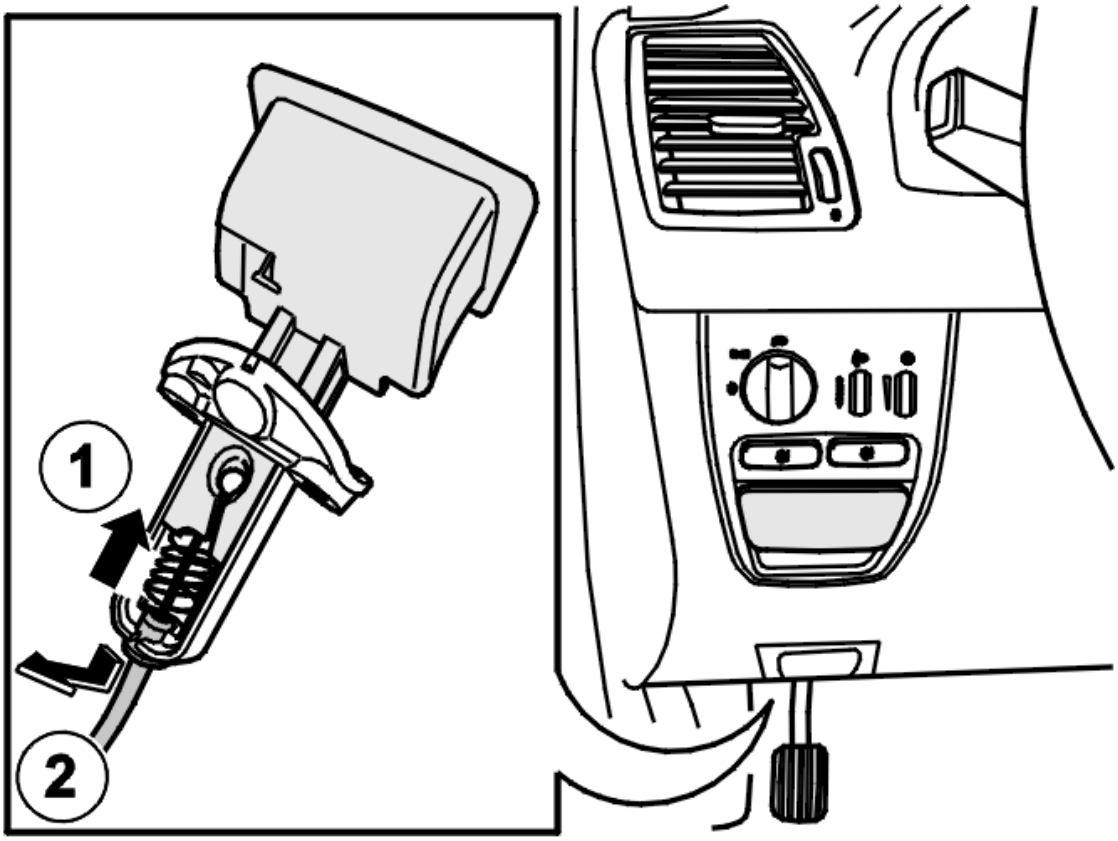

Fig. 4: Identifying Parking Brake Cable And Release Handle
Courtesy of VOLVO CARS CORPORATION

Unhook the cable for the parking brake at the cable terminal by the release handle.

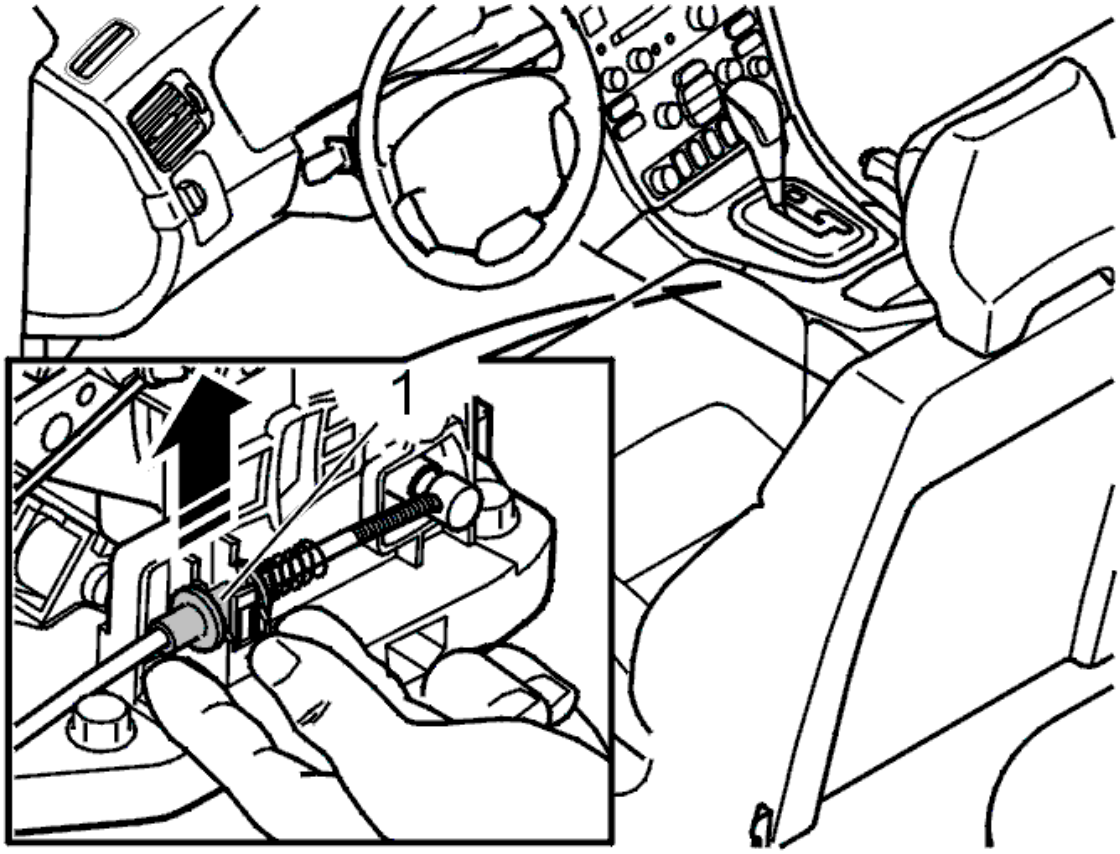

Fig. 5: Disconnecting Mechanical Cable For Gear Lever Lock To Facilitate Removing Dashboard
Courtesy of VOLVO CARS CORPORATION

Disconnect the cable for the gear selector lever lock.

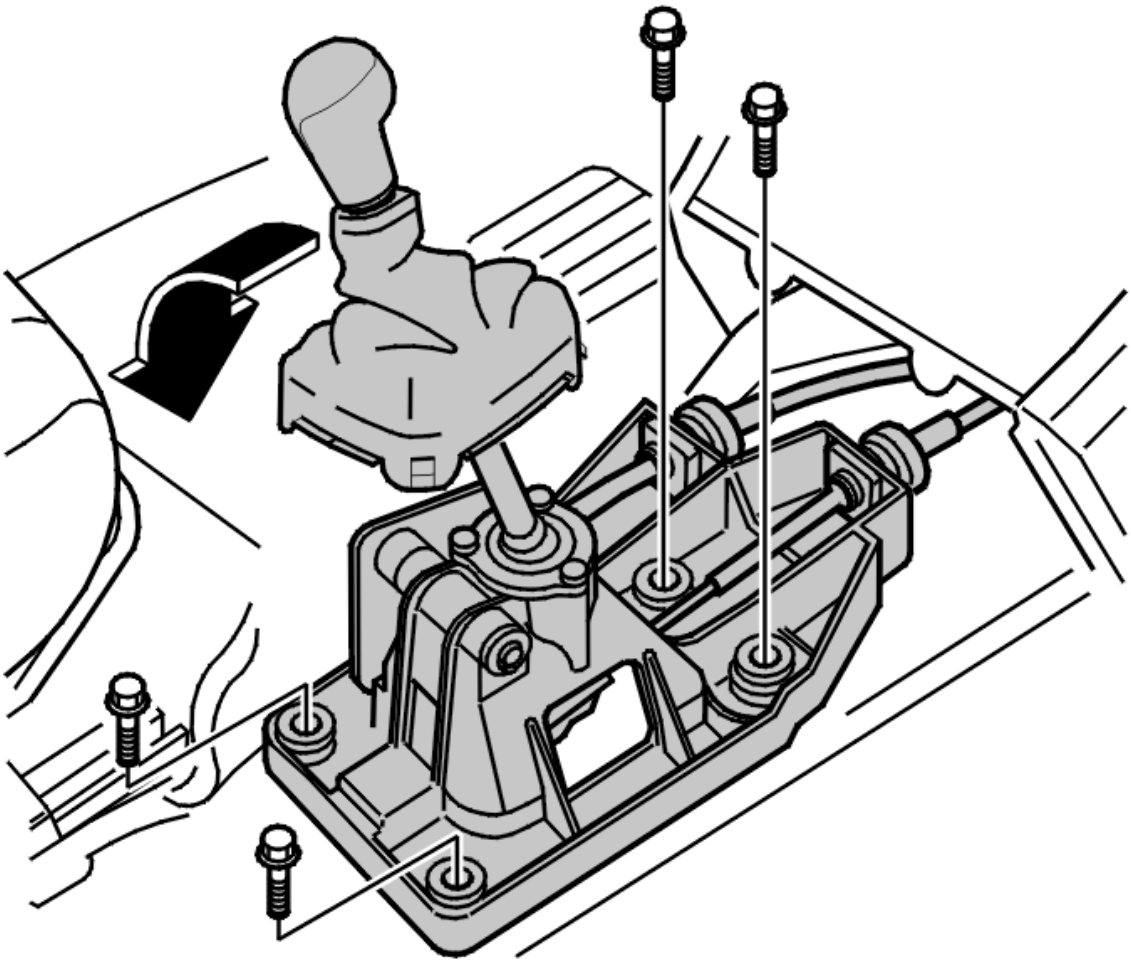

Fig. 6: Identifying Gear Selector Assembly Screws
Courtesy of VOLVO CARS CORPORATION

Detach the gear selector assembly (four screws). Turn the gear selector assembly a quarter turn with the control downwards towards the driver's seat.

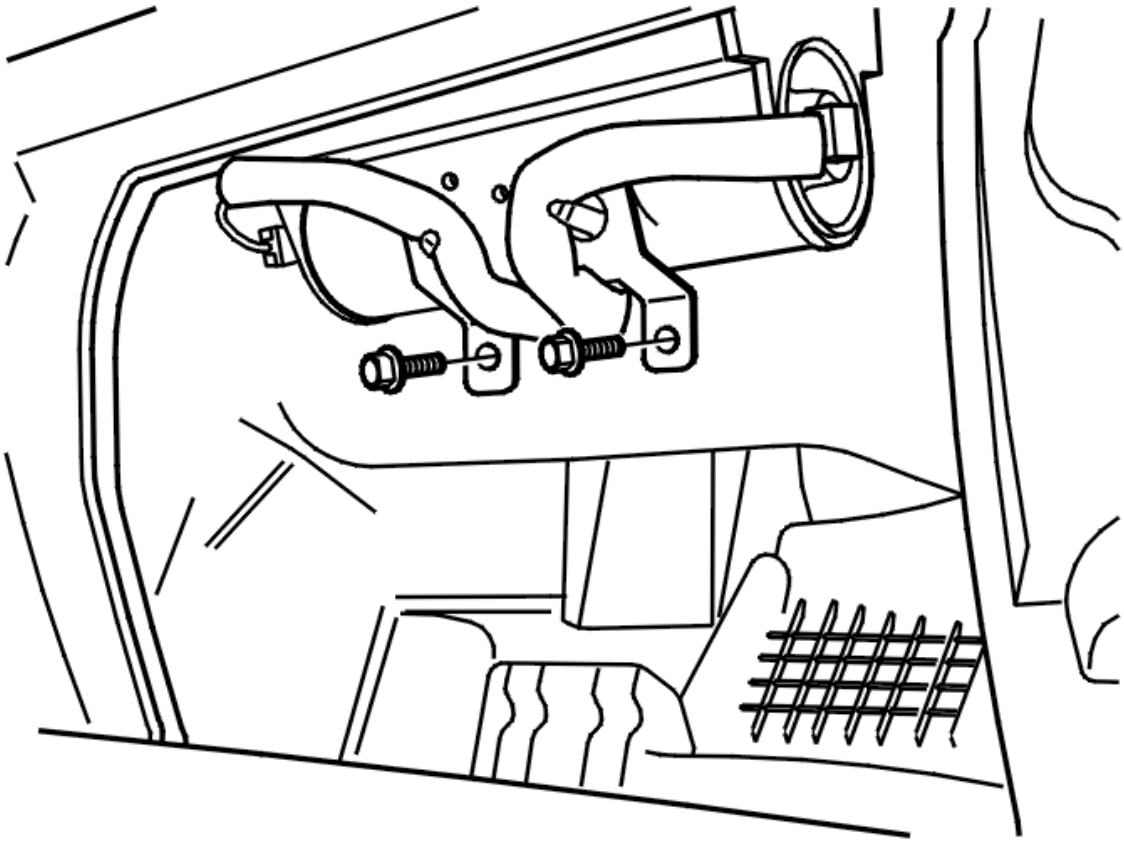

Fig. 7: Identifying Passenger Airbag Module And Screws
Courtesy of VOLVO CARS CORPORATION

Remove:

- the glove compartment. See **GLOVE COMPARTMENT, REPLACING**
- the connector for the passenger airbag module.

Remove the lower mounting for the passenger airbag module (SRS).

Remove the 2 screws.

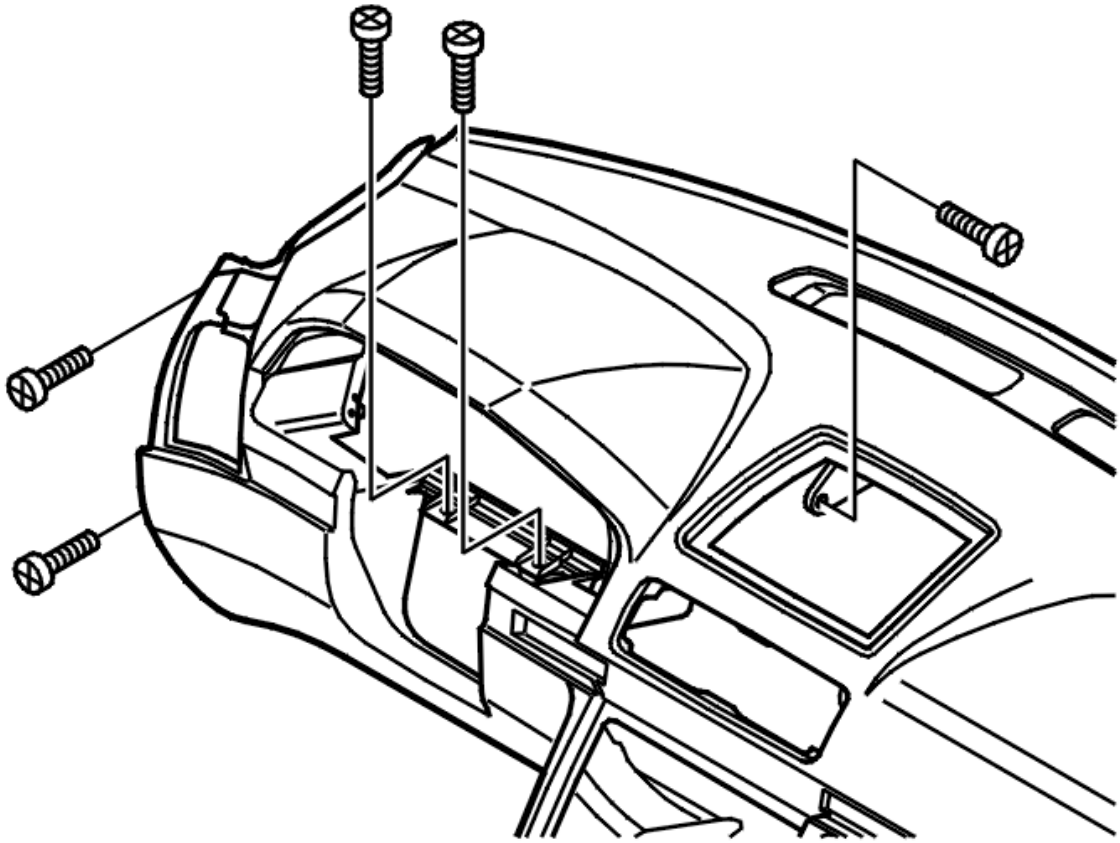

Fig. 8: Locating Dashboard Screws
Courtesy of VOLVO CARS CORPORATION

Remove the 9 screws.

Lift out dashboard.

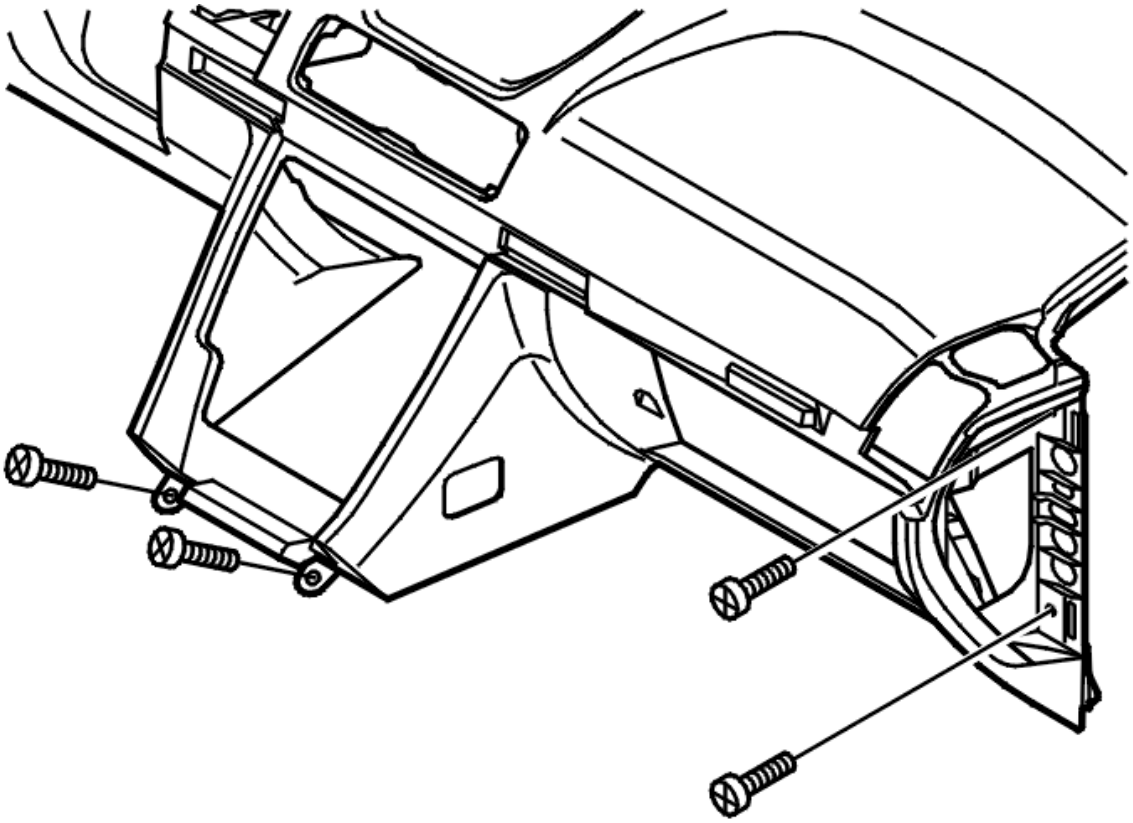

Fig. 9: Identifying Dashboard And Screws
Courtesy of VOLVO CARS CORPORATION

INSTALLING THE DASHBOARD

NOTE: For tightening torques, see TIGHTENING TORQUE .

Lift the dashboard.

Pull the connector for the sun sensor out through the hole in the dashboard.

NOTE: Check that no wiring is trapped at the cable ducts.

Install:

- the dashboard
- the 9 M6 screws. Tighten
- the lower mounting for the passenger airbag module
- the 2 M6 screws. Tighten
- the sun sensor
- the connector for the hazard warning signal flasher
- the cable for the parking brake. Hook the cable into place at the release handle

- the on-board diagnostic (OBD) connector
- the combined instrument panel. See **DRIVER INFORMATION MODULE (DIM), REPLACING**
- gear selector assembly and steering wheel module (SWM)
- the steering wheel. See **STEERING WHEEL, REPLACING**
- the bracket for the RTI (road traffic information) / loudspeaker. See **CENTRAL LOUDSPEAKER, REPLACING**
- the dashboard environment panel. See **CLIMATE CONTROL MODULE (CCM), REPLACING**
- the gear selector assembly
- the 4 M8 screws. Tighten
- the mechanical cable for the gear selector lever knob
- the center console. See **CENTER CONSOLE, REPLACING**
- the courtesy lighting. See **COURTESY LIGHTING, FRONT, REPLACING**
- the end covers on both sides
- The A-post panels. See **PANEL A-POST, REPLACING** .

FINISHING

Check the SRS (supplemental restraint system). See **SUPPLEMENTARY RESTRAINT SYSTEM (SRS), INSPECTION** .

REPLACING THE STEERING COLUMN COVERS

REMOVING STEERING COLUMN COVERS

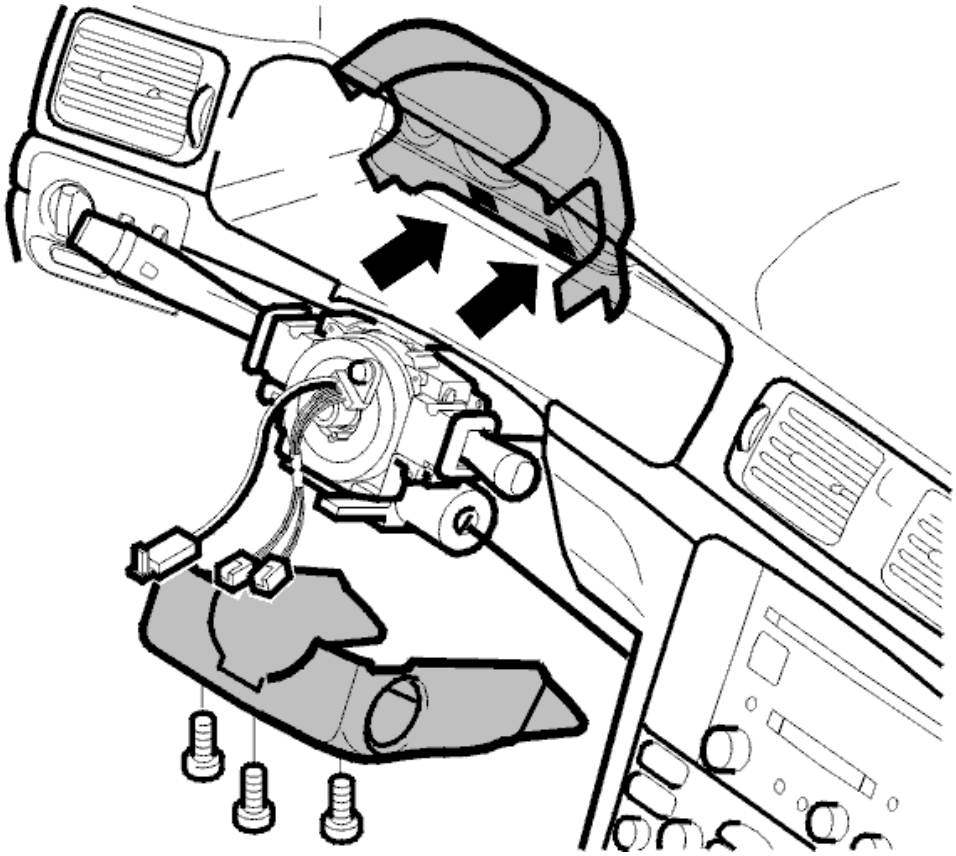

Fig. 10: Identifying Steering Column Covers Removal
Courtesy of VOLVO CARS CORPORATION

Remove three screws.

Pull the steering wheel as far out as possible.

Remove the clip mounting between the covers.

Remove the lower steering column cover.

Remove the seal for the clip mounting at the dashboard.

Remove the upper steering column cover.

INSTALLING STEERING COLUMN COVERS

Install:

- the lower cover for the steering column. Secure the seals for the switches
- the three screws.

Press the seal in towards the dashboard in the upper steering column cover.

Press the upper cover into place in the upper cover.

NOTE: **Check that the seals for the switches are positioned correctly throughout the operation.**

INTERIOR EQUIPMENT (2003-2011)

CENTER CONSOLE, REPLACING

The illustrations in this service information are used for different model years and/or models. Some variation may occur. However, the essential information in the illustrations is always correct.

REMOVING CENTER TUNNEL CONSOLE

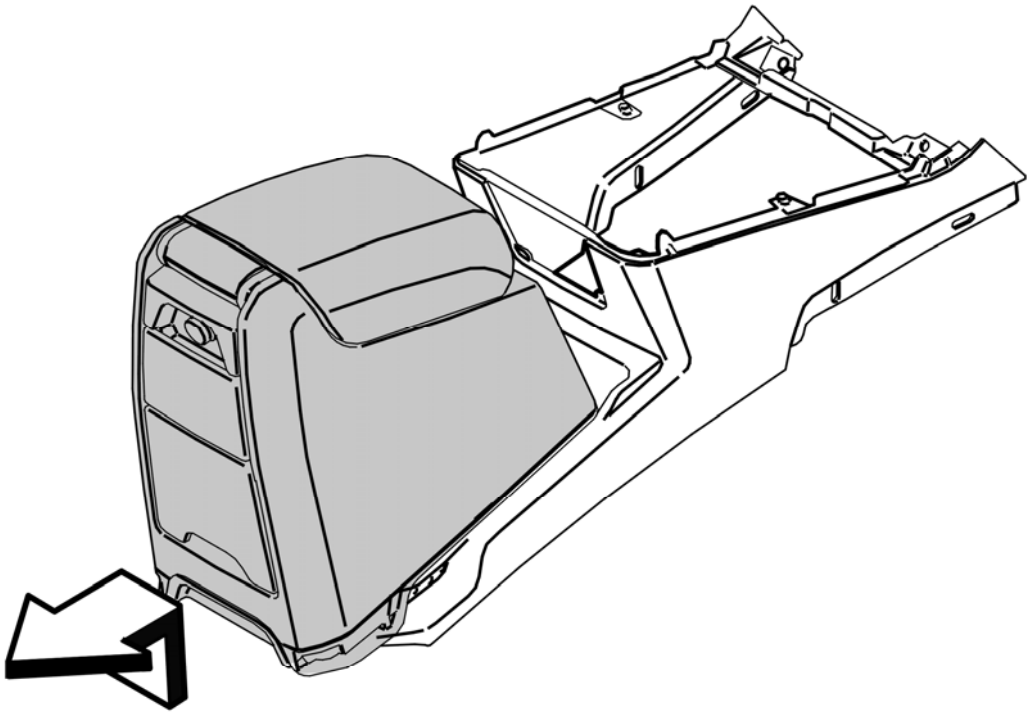

Fig. 11: Identifying Center Tunnel Console Removal
Courtesy of VOLVO CARS CORPORATION

Remove:

- the arm rest at the center console according to the following three alternatives:

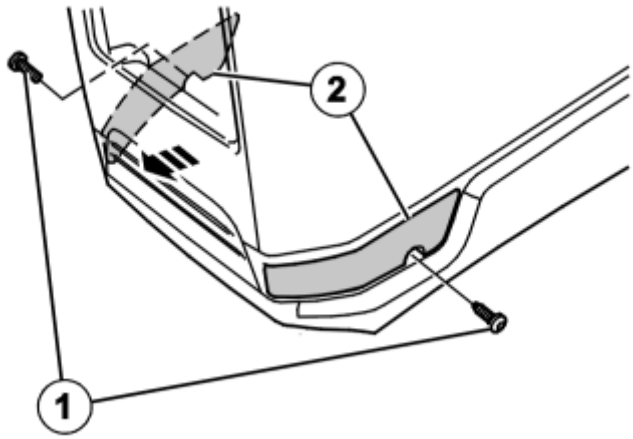

Fig. 12: Identifying Handle And Screws
Courtesy of VOLVO CARS CORPORATION

- **Alt 1** Release handle at the arm rest's lower rear edge, pull backwards.
- **Alt 2** Remove the 2 x screws (1). Press in the catches (2), pull backwards.
- **Alt 3** Remove the 2 x covers (2). Remove the 2 x screws (1), pull backwards.

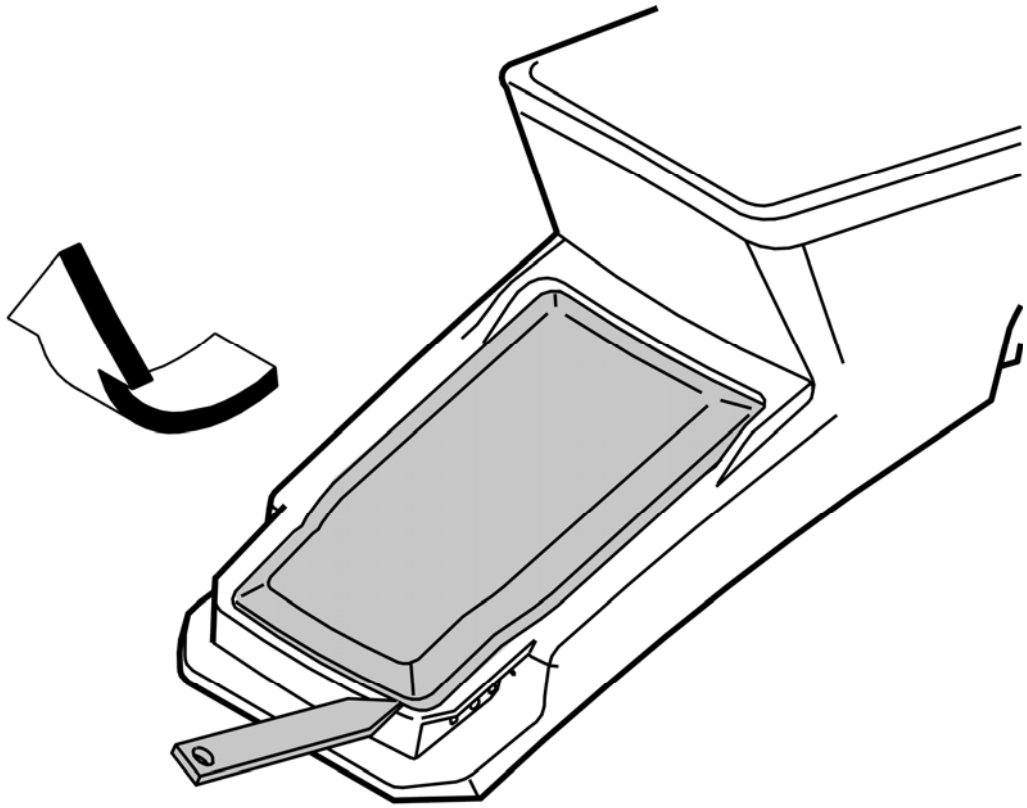

Fig. 13: Identifying Cover Removal
Courtesy of VOLVO CARS CORPORATION

- the cover.

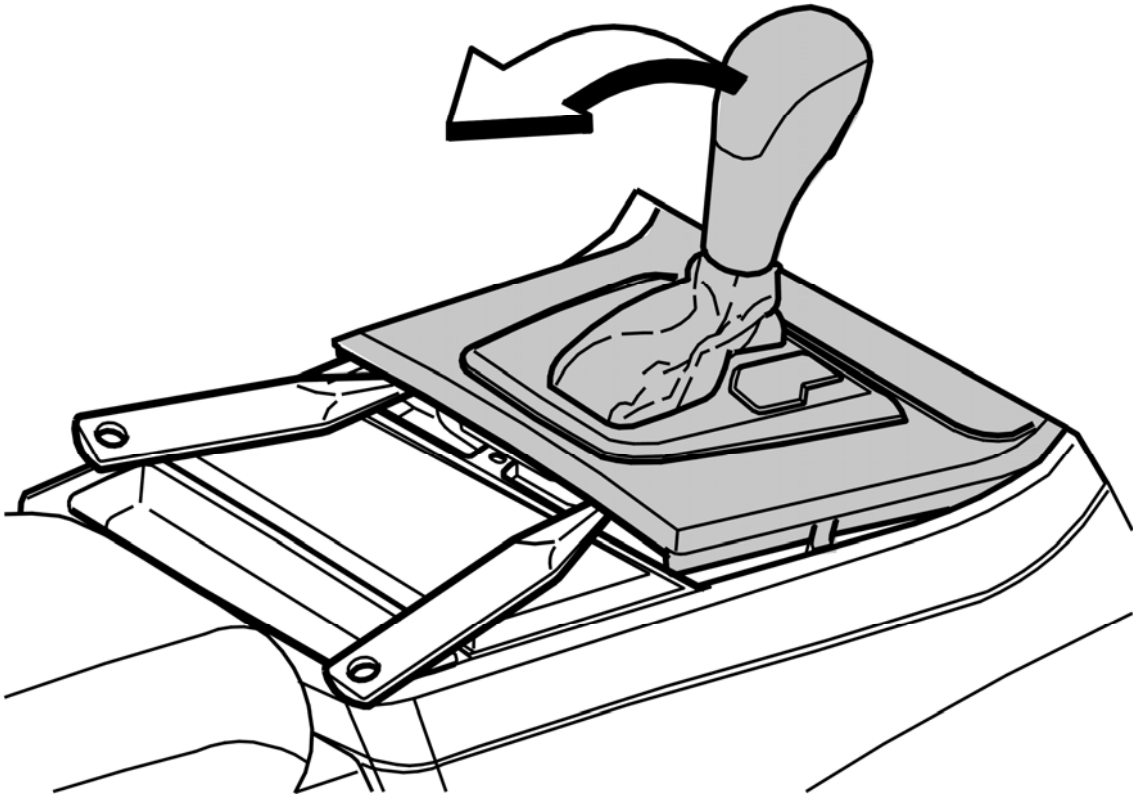

Fig. 14: Detaching Panel At Gear Selector Lever
Courtesy of VOLVO CARS CORPORATION

- the gear shift selector panel.

Press the frame out of the gear shift selector panel.

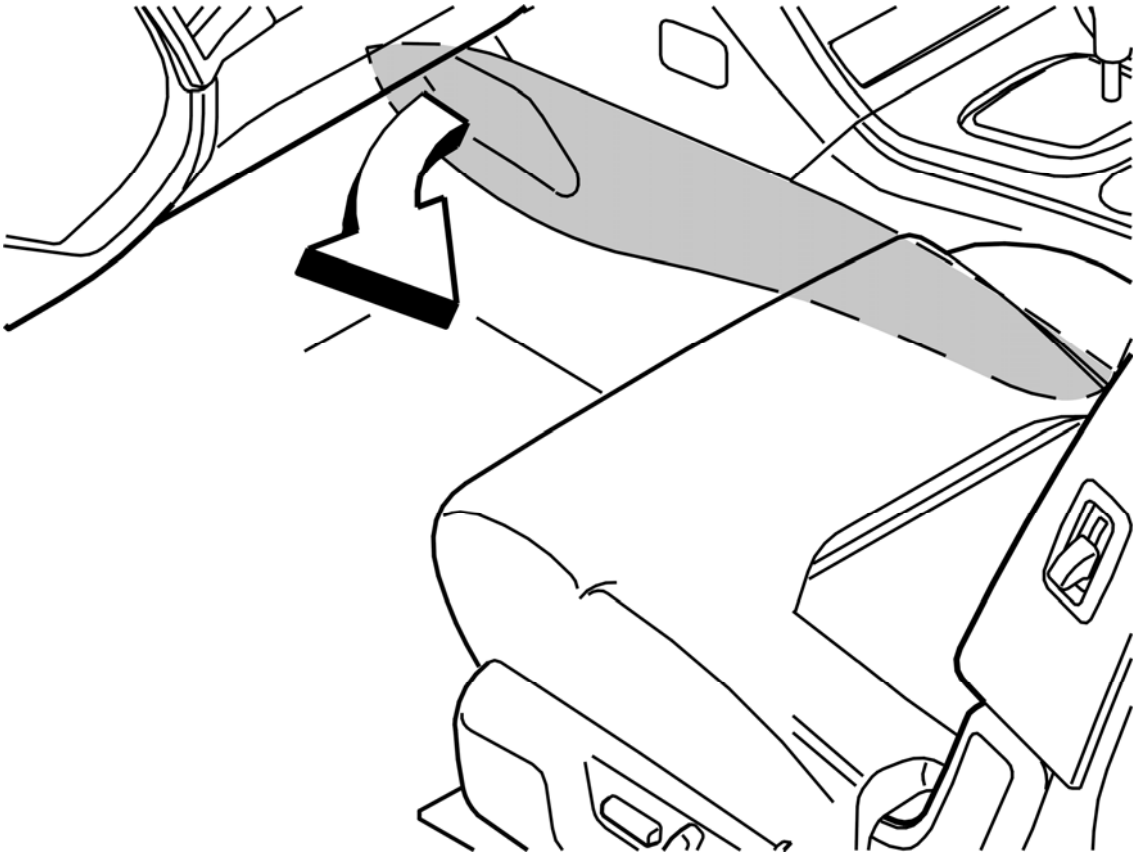

Fig. 15: Identifying Removal Of Center Console Side Panels
Courtesy of VOLVO CARS CORPORATION

Remove:

- the side panels, left and right.

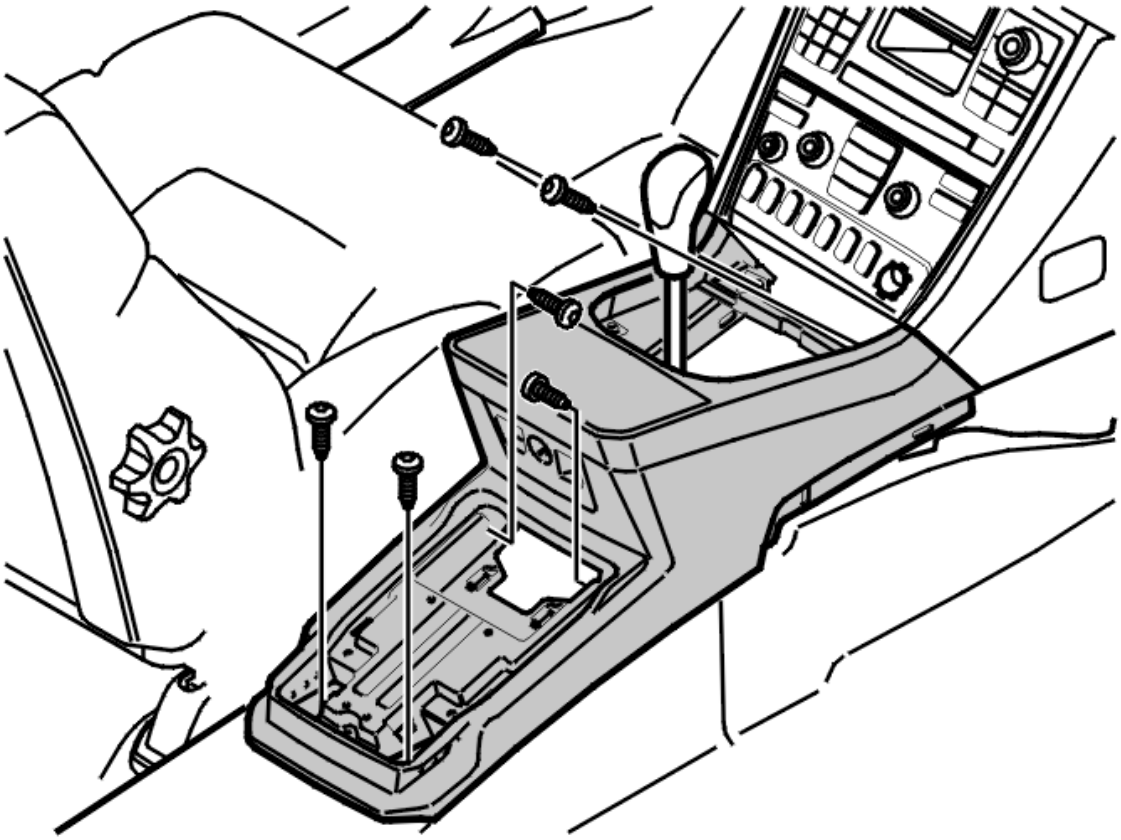

Fig. 16: Identifying Center Console Removal
Courtesy of VOLVO CARS CORPORATION

- the connectors from the cable holder
- the 6 screws.

Lift out the center tunnel console.

INSTALLING THE CENTER TUNNEL CONSOLE

Install:

- the connectors
- the center tunnel console.

NOTE: Ensure that the center tunnel console is correctly positioned in relation to the guide for the dashboard.

Install:

- the 6 screws. Tighten
- the frame for the gear shift selector panel

- the gear shift selector panel
- the cover.
- the armrest at the center tunnel console.

COOL BOX/ARMREST COMPONENTS, REPLACING

see **COOL BOX/ARMREST COMPONENTS, REPLACING**

CUP HOLDER REPAIR KIT

NOTE: Some variation may occur. However, the essential information in the illustrations is always correct.

PREPARATION

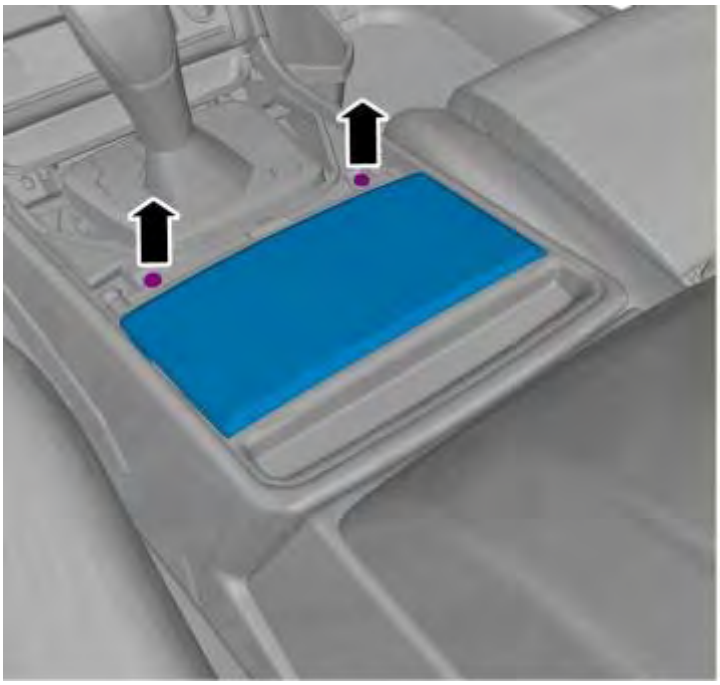

Fig. 17: Cup Holder Preparation (1 of 5)
Courtesy of VOLVO CARS CORPORATION

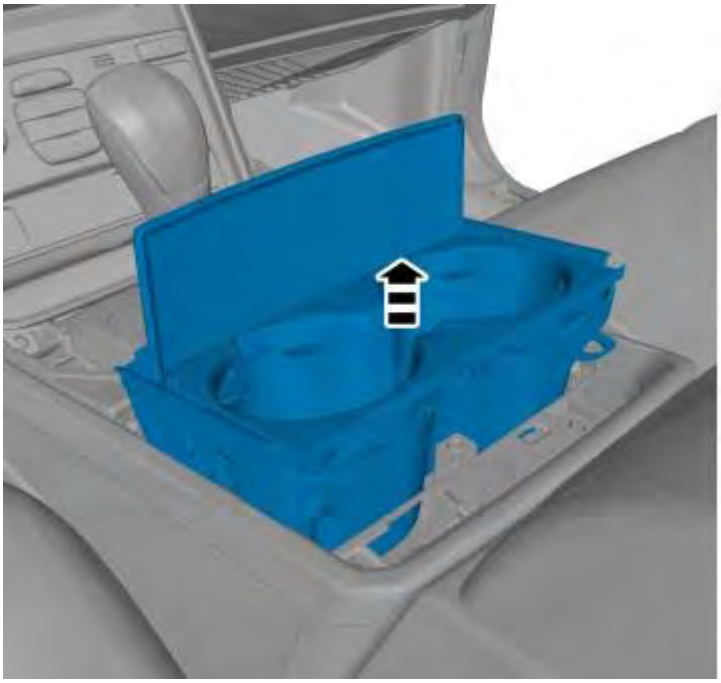

Fig. 18: Cup Holder Preparation (2 of 5)
Courtesy of VOLVO CARS CORPORATION

Fig. 19: Cup Holder Preparation (3 of 5)
Courtesy of VOLVO CARS CORPORATION

Fig. 20: Cup Holder Preparation (4 of 5)
Courtesy of VOLVO CARS CORPORATION

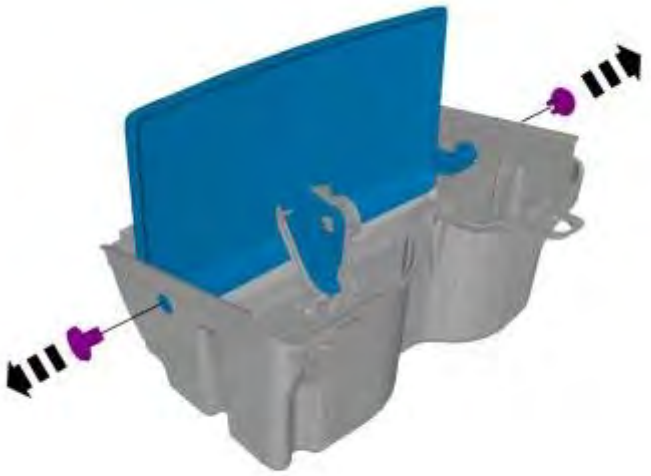

Fig. 21: Cup Holder Preparation (5 of 5)
Courtesy of VOLVO CARS CORPORATION

INSTALLATION

Fig. 22: Cup Holder Repair (1 of 9)
Courtesy of VOLVO CARS CORPORATION

Fig. 23: Cup Holder Repair (2 of 9)
Courtesy of VOLVO CARS CORPORATION

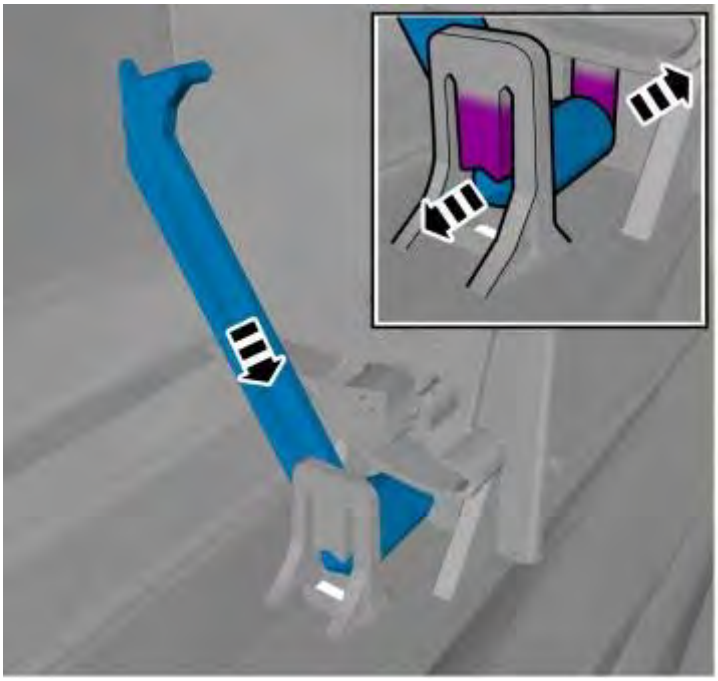

Fig. 24: Cup Holder Repair (3 of 9)
Courtesy of VOLVO CARS CORPORATION

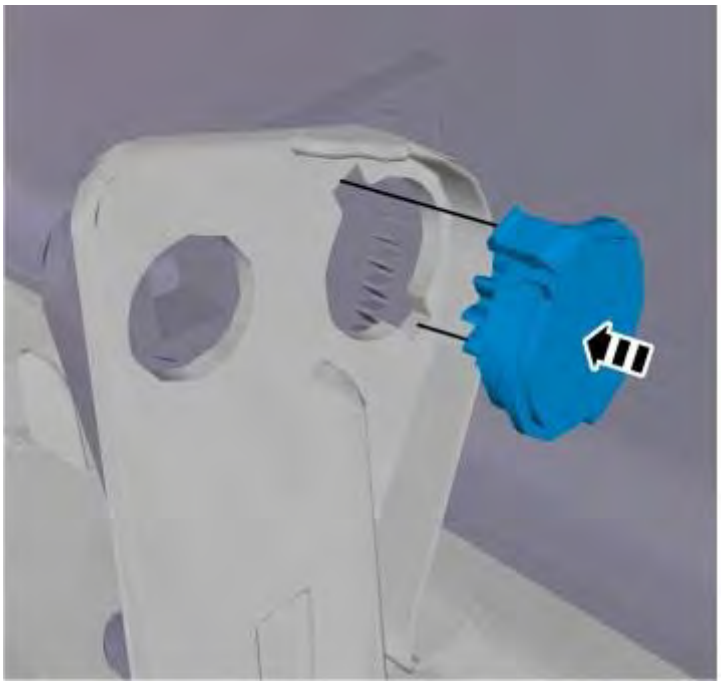

Fig. 25: Cup Holder Repair (4 of 9)
Courtesy of VOLVO CARS CORPORATION

Fig. 26: Cup Holder Repair (5 of 9)
Courtesy of VOLVO CARS CORPORATION

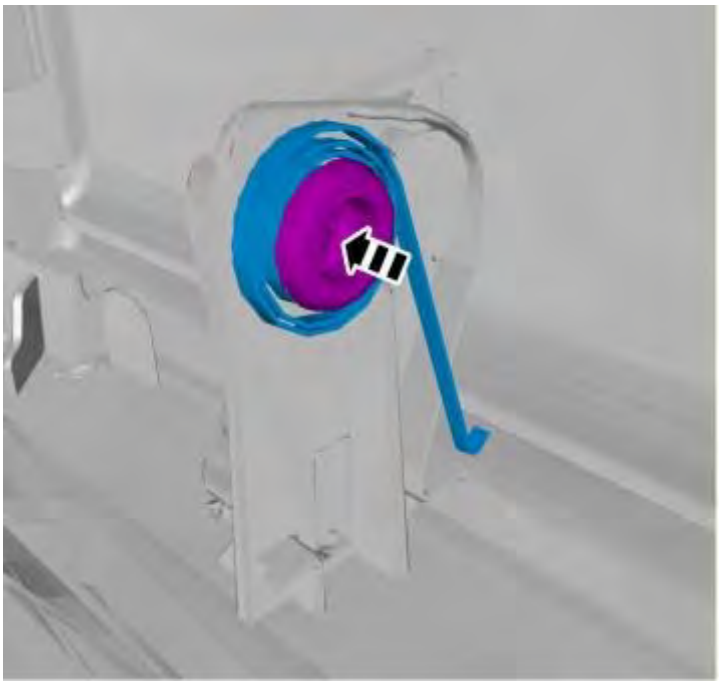

Fig. 27: Cup Holder Repair (6 of 9)
Courtesy of VOLVO CARS CORPORATION

Fig. 28: Cup Holder Repair (7 of 9)
Courtesy of VOLVO CARS CORPORATION

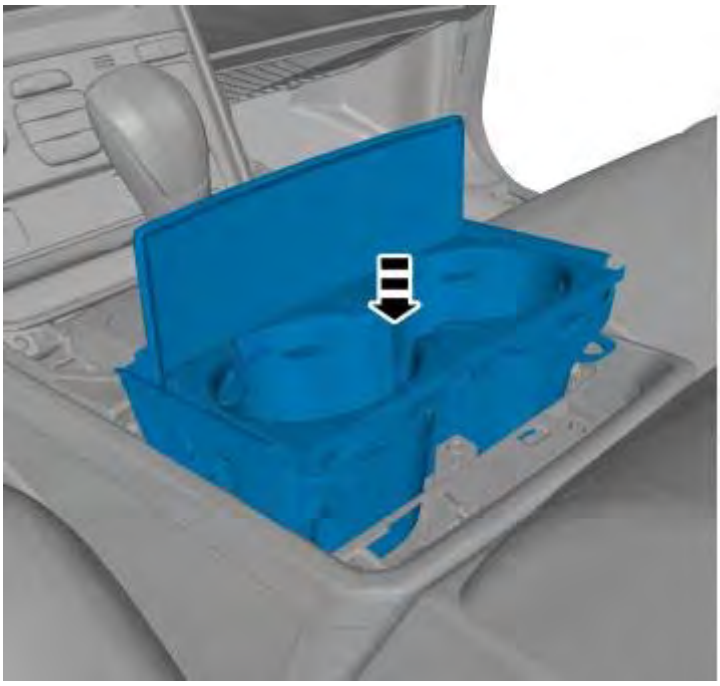

Fig. 29: Cup Holder Repair (8 of 9)
Courtesy of VOLVO CARS CORPORATION

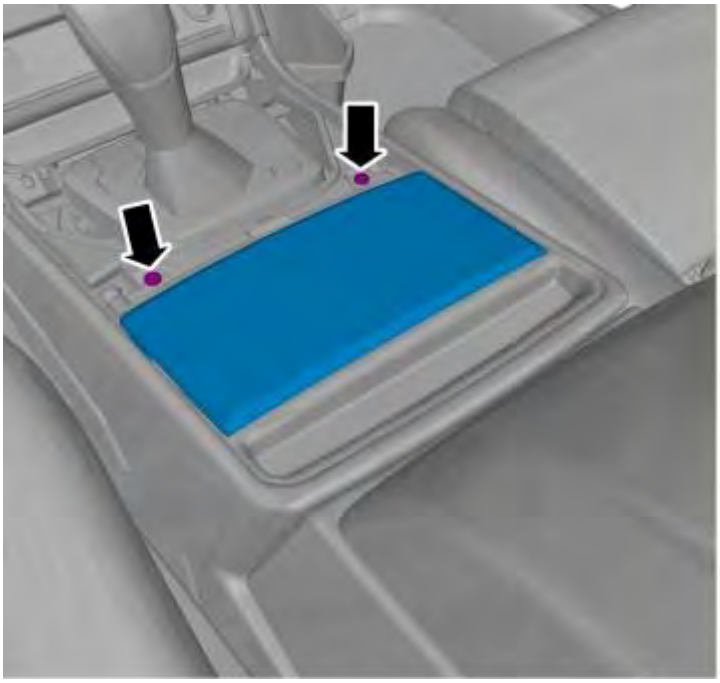

Fig. 30: Cup Holder Repair (9 of 9)
Courtesy of VOLVO CARS CORPORATION

GLOVE COMPARTMENT, REPLACING

As the illustrations in this service information are used for different model years and / or models, some variation may occur. However, the essential information in the illustrations is always correct.

REMOVING THE GLOVE COMPARTMENT

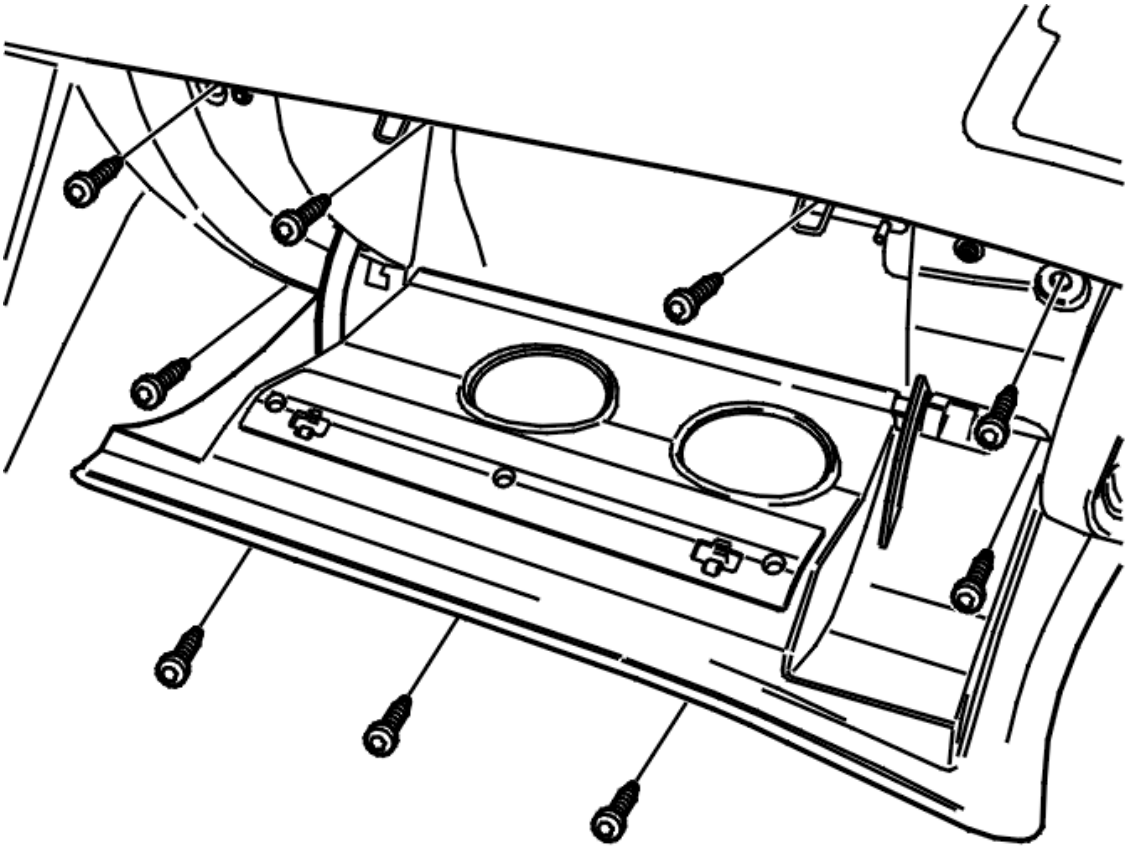

Fig. 31: Identifying Glove Compartment Screws
Courtesy of VOLVO CARS CORPORATION

Remove:

- the soundproofing panel and the side panel. See **SOUNDPROOFING PANEL, REPLACING**
- the 9 screws
- the glove compartment
- one connector.

INSTALLING GLOVE COMPARTMENT

Install:

- the connector
- the glove compartment
- the 9 screws. Tighten
- the soundproofing panel and the side panel. See **SOUNDPROOFING PANEL, REPLACING**

SUN VISOR, REPLACING

As the illustrations in this service information are used for different model years and / or models, some variation

may occur. However, the essential information in the illustrations is always correct.

REMOVING THE SUN VISOR

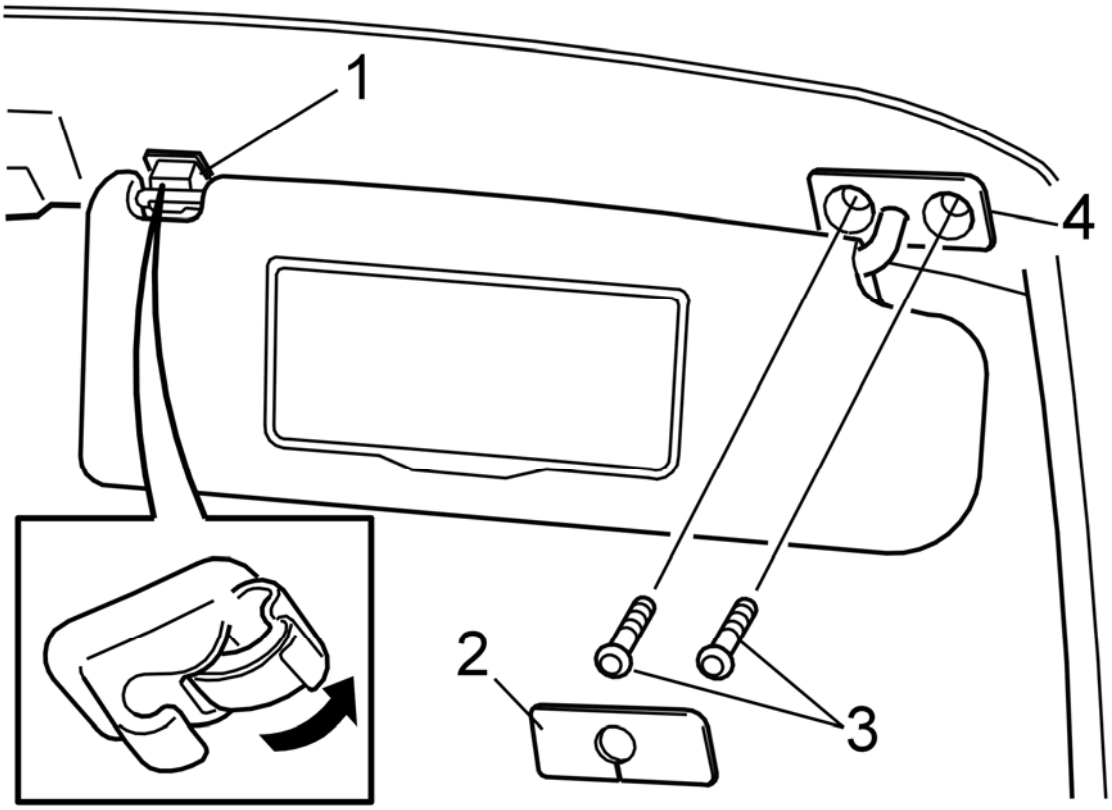

Fig. 32: Removing Sun Visor
Courtesy of VOLVO CARS CORPORATION

Remove:

- the panel (2)
- the 2 screws (3).

Turn the sun visor towards the side window.

Press the catches at the mounting outwards.

Pull the sun visor straight downwards.

Disconnect and disassemble the connector.

REMOVING THE SNAP FASTENER

Open the cover.

Press in the catch.

Fold the mounting downwards.

Pull the mounting (1) back into the car at an angle.

INSTALLING THE SUN VISOR

NOTE: For tightening torques, see TIGHTENING TORQUE .

Install:

- the connector
- the mounting for the sun visor
- the 2 M6 screws. Tighten
- the cover.

INSTALLING THE SNAP FASTENER

Install the snap fastener.

Close the cover.

SEAT BELTS AND OTHER RETENTION SYSTEMS (2003-2004)

AIRBAG DRIVER'S SIDE (SRS), REPLACE

NOTE: The illustrations in this service information are used for different model years and/or models. Some variation may occur. However, the essential information in the illustrations is always correct.

PREPARATORY WORK

REMOVING THE BATTERY LEAD AND IMPORTANT INFORMATION

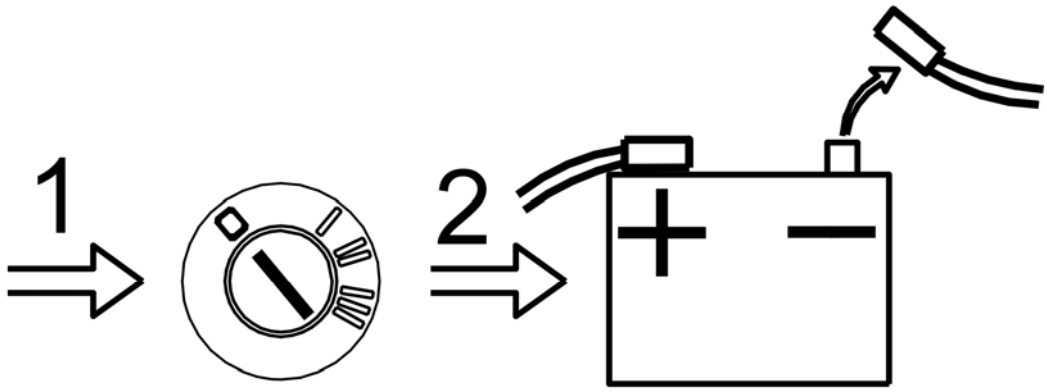

Fig. 33: Disconnecting Battery Negative Cable
Courtesy of VOLVO CARS CORPORATION

Ignition off.

Disconnect the battery negative cable. See: **BATTERY, DISCONNECTING** .

WARNING: **For information about the handling and storage of pyrotechnical SRS components, see: HANDLING NON-DEPLOYED SRS-COMPONENTS .**

NOTE: **Replace the decals for the safety equipment. See: DECALS FOR SAFETY EQUIPMENT .**

WARNING: **Under no circumstances use an ohmmeter or other live measuring instrument to take readings on a disconnected, non-deployed pyrotechnical SRS component. There is a risk of the seat belt tensioner deploying.**

WARNING: **Pyrotechnical SRS components must never be taken apart, repaired or transferred to another vehicle.**

REMOVAL

REMOVING DRIVER'S AIRBAG (SRS)

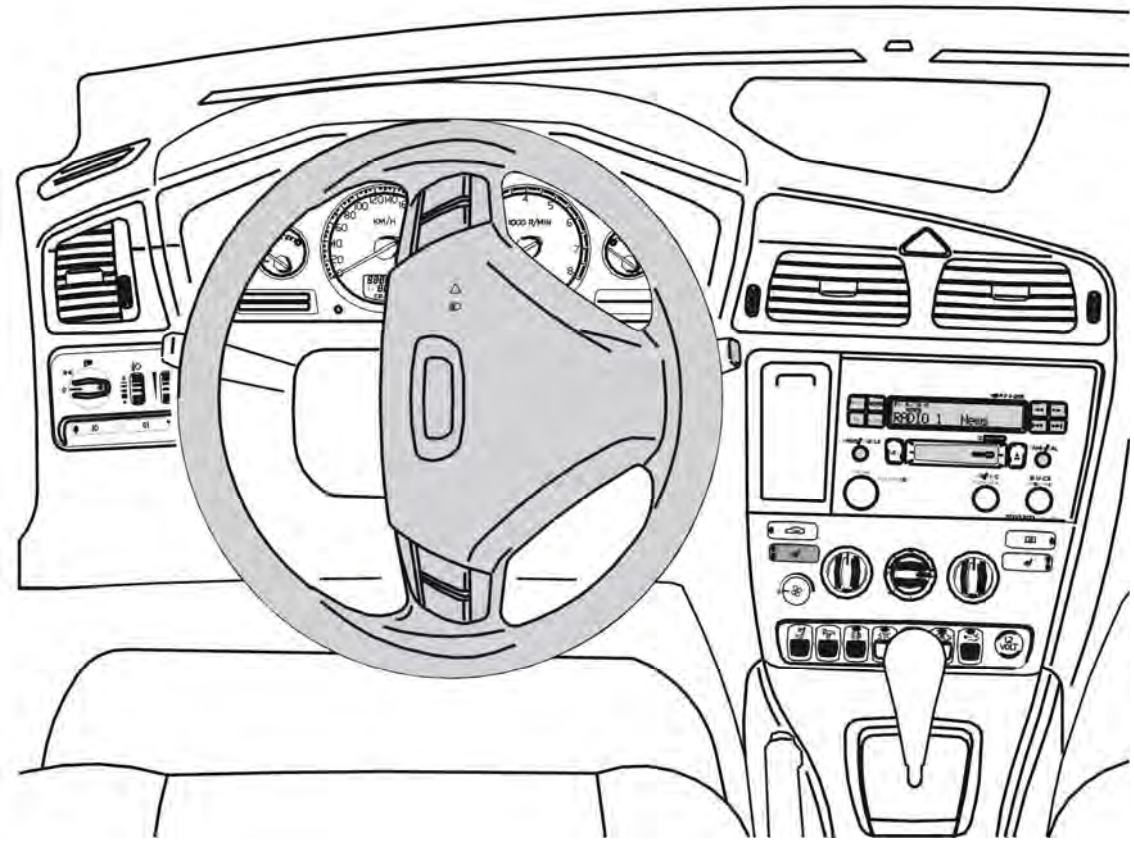

Fig. 34: Identifying Steering Wheel Turned A 1/4 Turn To Access Two Holes On Back
Courtesy of VOLVO CARS CORPORATION

Ignition in position II.

Turn the steering wheel a 1/4 turn so that the two holes on the rear of the steering wheel are accessible.

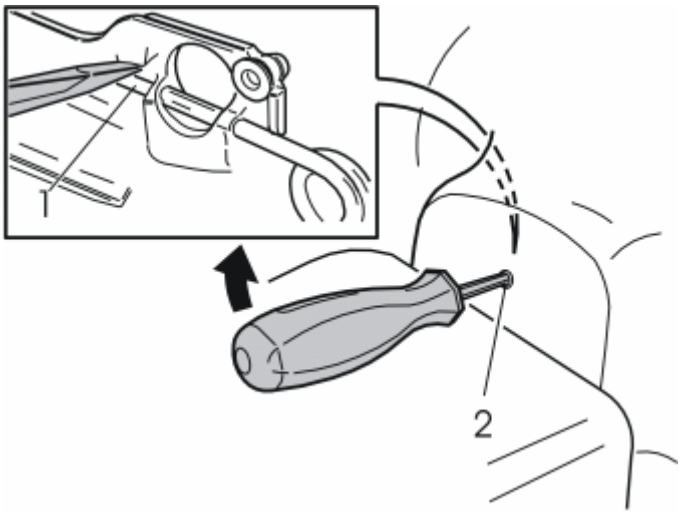

Fig. 35: Identifying Screwdriver Inserted In Back Of Steering Wheel & Locating End Of Locking Spring

Courtesy of VOLVO CARS CORPORATION

Insert a screwdriver in the holes on the reverse of the steering wheel. The screwdriver must be at a right-angle to the rear surface of the steering wheel.

Place the screwdriver point against the top of the spring clip as illustrated.

Pry the screwdriver up against the upper edge of the hole (2) so that the point of the screwdriver presses down the catch (1) until the catch releases.

Turn the steering wheel a 1/2 turn in the opposite direction. Repeat the process on the other side.

Turn the steering wheel to the neutral position.

Fold out the airbag.

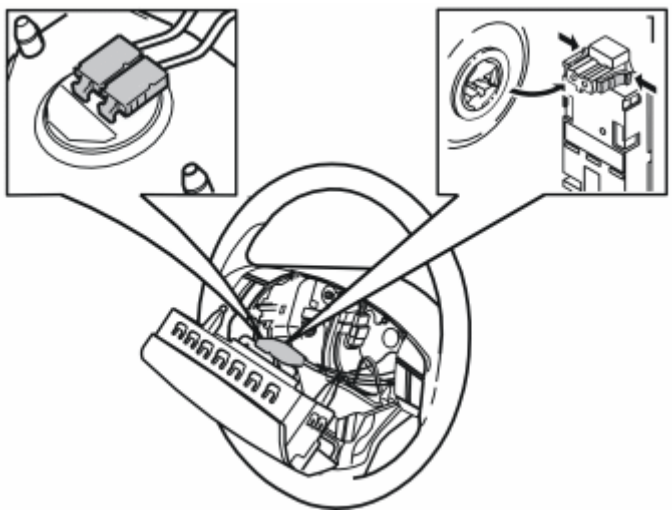

Fig. 36: Identifying Airbag Removal
Courtesy of VOLVO CARS CORPORATION

Disconnect the 2 connectors (2) (there may be more or less) for the SRS ignition cables for the airbag.

Remove the airbag.

ADJUSTMENT

ADJUSTING THE STEERING WHEEL

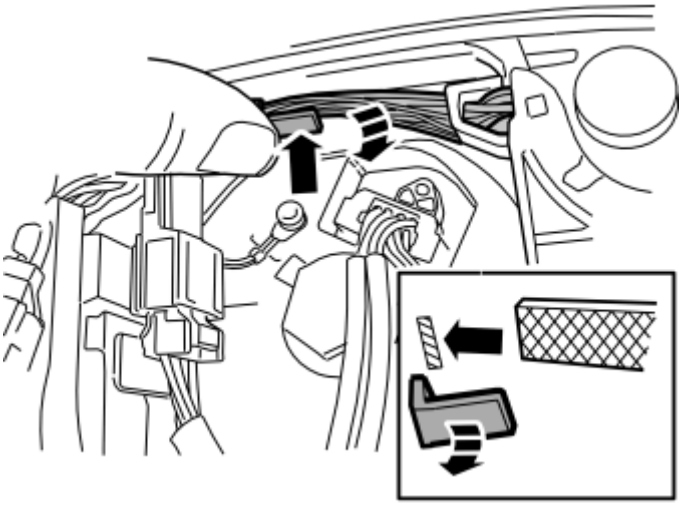

Fig. 37: Breaking Off L Shaped Plastic Bracket
Courtesy of VOLVO CARS CORPORATION

Break off the L shaped plastic bracket.

NOTE: Ensure that the broken piece does not remain in the steering wheel.

Carefully bend the cable harness down

Smooth off the break surface on the steering wheel using a fine file or similar.

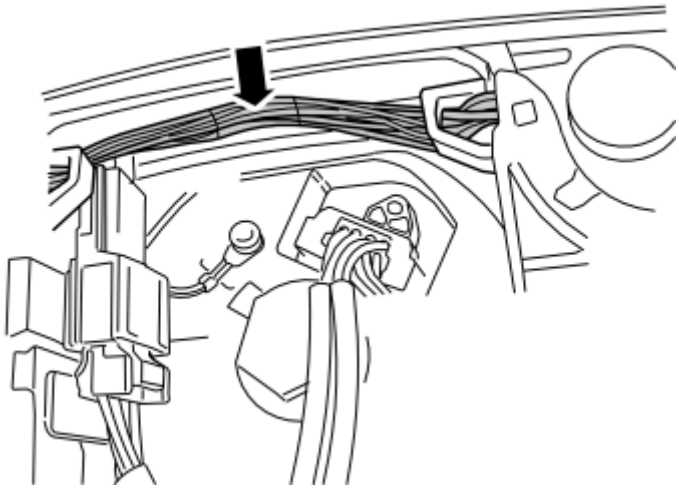

Fig. 38: Identifying Tape Around Cable Harness Removal
Courtesy of VOLVO CARS CORPORATION

Remove the tape around the cable harness.

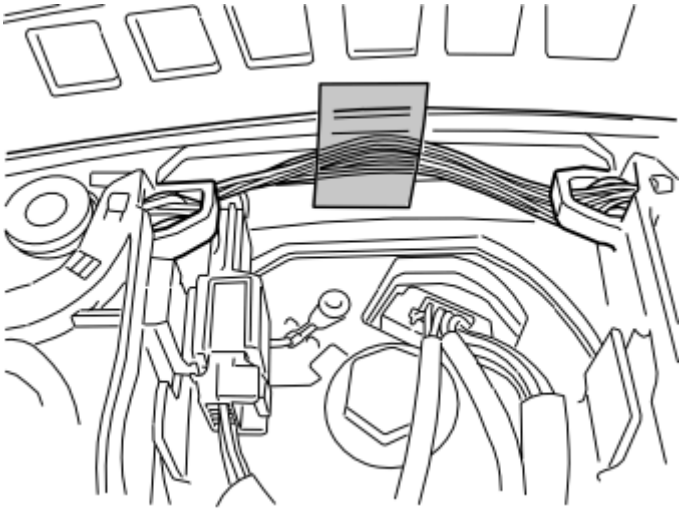

Fig. 39: Identifying Cable Harness Spread Out As Flat As Possible
Courtesy of VOLVO CARS CORPORATION

Spread the cable harness out as flat as possible.

Apply tape, part no. 9511 097.

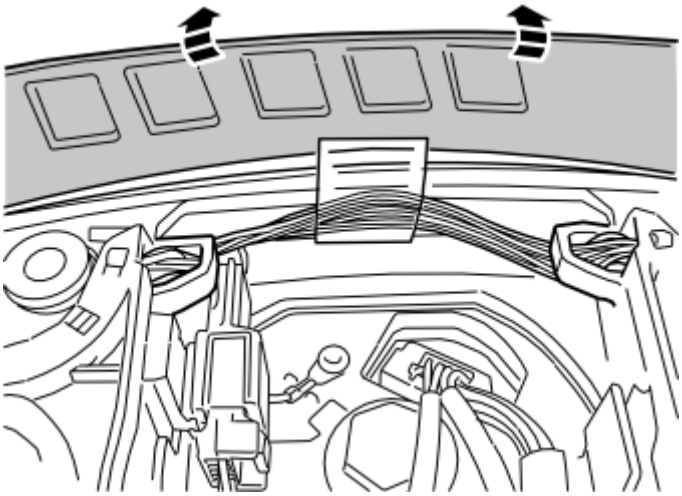

Fig. 40: Bending Up Outer Surround Slightly
Courtesy of VOLVO CARS CORPORATION

Bend up the outer surround slightly.

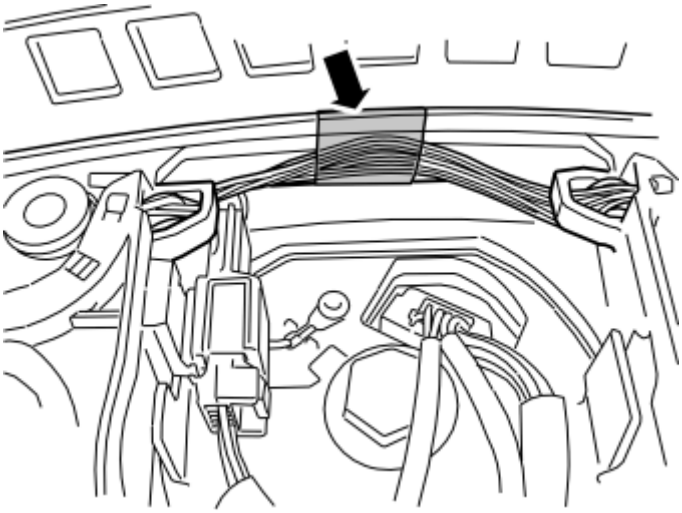

Fig. 41: Bending One Of Tape Ends In Between Outer And Inner Surround
Courtesy of VOLVO CARS CORPORATION

Bend one of the tape ends in between the outer and inner surround.

Carry out the same with the other tape end so that the tape overlaps on top.

INSTALLATION

INSTALLING DRIVER'S AIRBAG (SRS)

NOTE: For airbags (replacement part) supplied without keypads, for Audio, RTI and cruise control for example, an upgrade kit must be ordered.

Install the 2 connectors (there may be more or fewer).

Press the airbag into place.

CAUTION: Make sure that the wiring is not trapped during installation.

Carry out an inspection as described in, see **SUPPLEMENTARY RESTRAINT SYSTEM (SRS), INSPECTION** .

AIRBAG MODULE SEAT (SIPS), REPLACING

NOTE: The illustrations in this service information are used for different model years and/or models. Some variation may occur. However, the essential information in the illustrations is always correct.

PREPARATIONS

Lean the backrest on the seat forwards. Applies only to power seats.

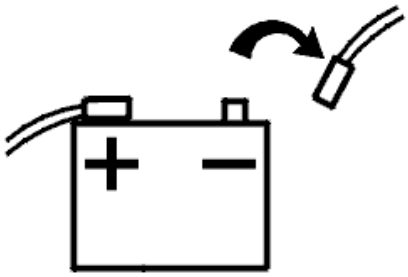

Fig. 42: Disconnecting Battery Lead
Courtesy of VOLVO CARS CORPORATION

Remove the battery lead. See **BATTERY, DISCONNECTING** .

For more information about storing airbags, see **HANDLING NON-DEPLOYED SRS-COMPONENTS** .

To prevent electric static discharge problems:

When removing a seat with a seat airbag module (SIPS) from the vehicle, the seat must be grounded. This is due to the danger of static electricity.

Detach the chair from its screwed joint. Do **not** lift the seat out of the vehicle yet.

Strip a long cable at both ends. Secure one end to the rear mounting on the chair. Secure the other end in the vehicle or in the car hoist.

REMOVING SEAT AIRBAG MODULES (SIPS)

Remove the seat from the vehicle. See **REMOVING THE FRONT SEAT** (-2004) or **FRONT SEAT, REPLACING** (2005-).

Release the tension in the lumbar support.

Remove:

- the lumbar support knob. See **LUMBAR SUPPORT BACKREST CUSHION, REPLACING** (-2004) or **LUMBAR SUPPORT BACKREST CUSHION, REPLACING** (2005-)
- the side piece by pulling it straight out
- the backrest adjustment knob. This applies only to manual seats
- the 5 half moon clips from the bottom of the backrest.

Remove the upholstery up to the first lateral channel. There are 2 half moon clips on each front-rear channel.

Remove 3 half moon clips from the first lateral channel.

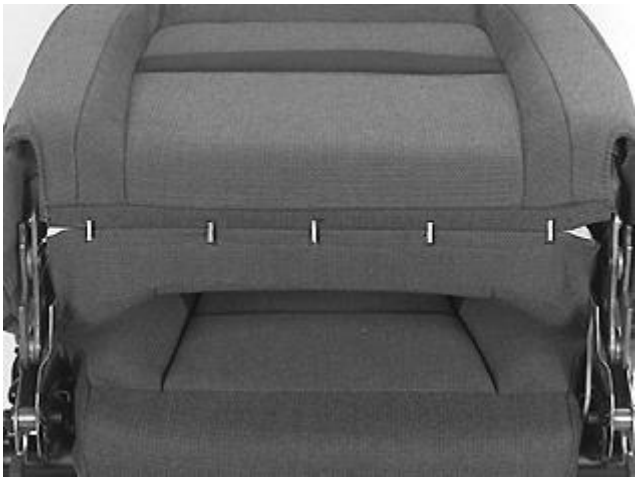

Fig. 43: Five Half Moon Clips At Bottom Edge Of Backrest
Courtesy of VOLVO CARS CORPORATION

Remove another half moon clip from each side of the front-rear channels up to the upper front-rear channel.

Fig. 44: Identifying Spring
Courtesy of VOLVO CARS CORPORATION

Remove the 2 elastic attachments on the inside/reverse of the backrest.

Pull up the backrest upholstery.

Bend out and expose the protective pad on the side where the airbag is located.

Fig. 45: Identifying Removal Of Airbag Screws On Inside Of Backrest Frame
Courtesy of VOLVO CARS CORPORATION

Remove the 2 screws holding the airbag to the inside of the backrest frame.

Pull the airbag downwards. Fold the airbag slightly forward.

Remove the airbag.

Fig. 46: Cable Tie
Courtesy of VOLVO CARS CORPORATION

Cut the tie strap.

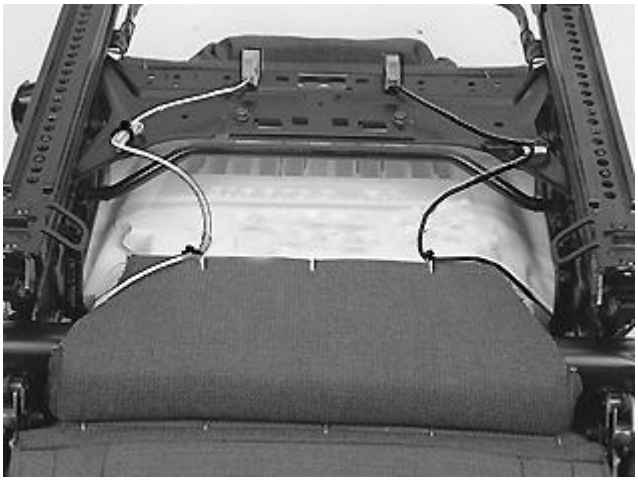

Fig. 47: 3 Half Moon Clips From Rear Edge Of Underside
Courtesy of VOLVO CARS CORPORATION

Cut off the 2 tie straps.

Release the cable harness.

Replace the airbag.

INSTALLING SEAT AIRBAG MODULES (SIPS)

NOTE: For tightening torques, see TIGHTENING TORQUE .

Fig. 48: Identifying Cable Harness
Courtesy of VOLVO CARS CORPORATION

Install the cable harness as illustrated.

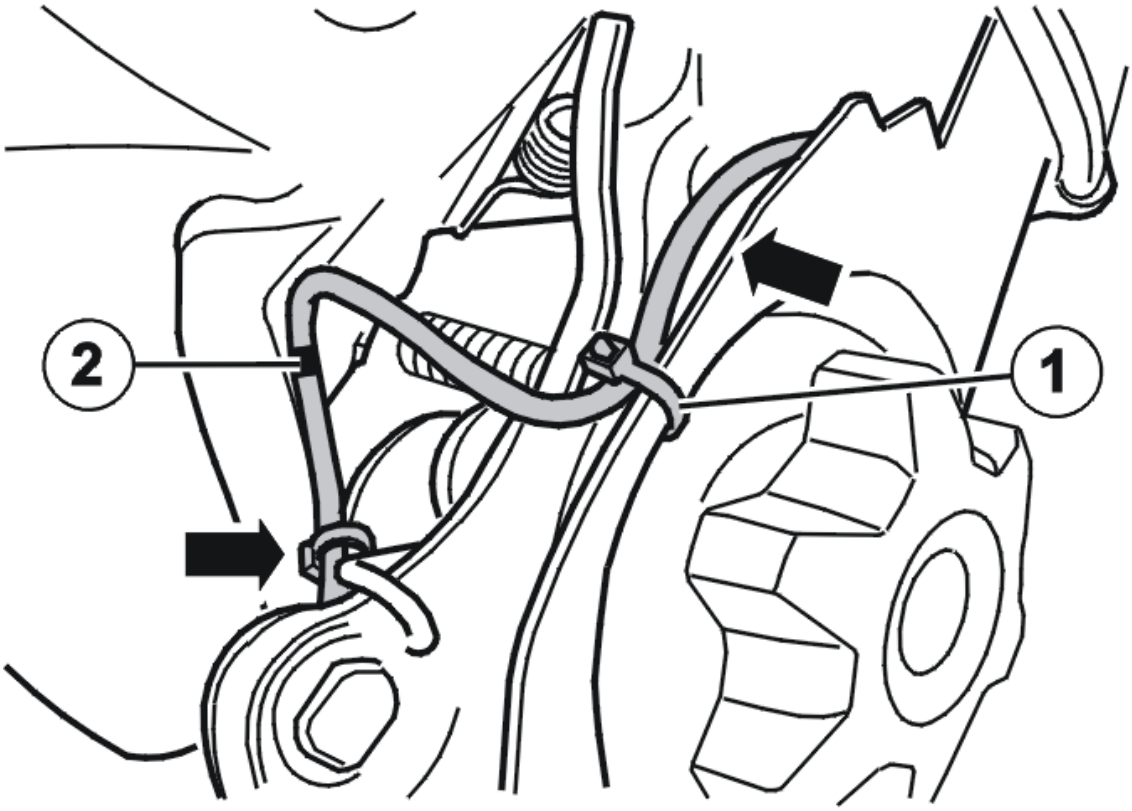

Fig. 49: Ensuring That There Is Sufficient Slack In Cable Harness Between Ignition Cable Connector And First Tie Strap
Courtesy of VOLVO CARS CORPORATION

Ensure that there is sufficient slack in the cable harness between the ignition cable connector and the first tie strap (1).

Alternative 1 (vehicles without protective sheath on the ignition cable)

Install the other tie strap approximately 40 mm below the black mark (2) on the ignition cable.

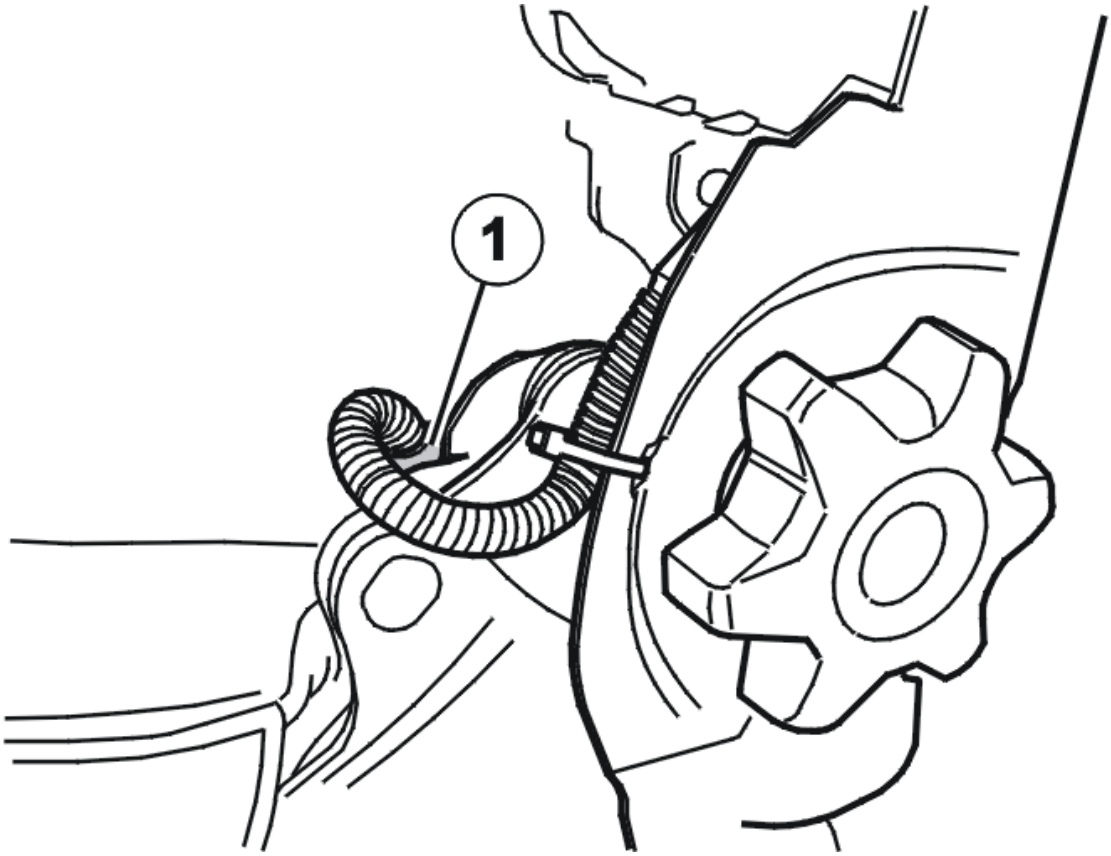

Fig. 50: Identifying Second Tie Strap At Light Mark On Protective Sheath
Courtesy of VOLVO CARS CORPORATION

Alternative 2 (vehicles with protective sheath on the ignition cable)

Install the second tie strap at the light mark (1) on the protective sheath.

Install:

- the third tie strap under the seat cushion
- the airbag
- the 2 M5 screws. Tighten
- the protective pad
- the 2 elastic attachments on the inside/reverse of the backrest.

Pull down the backrest cushion upholstery so that the half moon clips can be installed.

Install:

- the half moon clips, one on each side, in the front-rear channel down to the first lateral channel
- 3 half moon clips in the lateral channel
- 2 half moon clips per front-rear channel down to the base of the backrest

- 5 half moon clips in the underside of the backrest
- the backrest adjustment knob. This applies only to manual seats
- the side piece by pressing it straight in
- the lumbar support knob. See **LUMBAR SUPPORT BACKREST CUSHION, REPLACING** (-2004) or **LUMBAR SUPPORT BACKREST CUSHION, REPLACING** (2005-).

Reinstall the seat in the vehicle. See **INSTALLING THE FRONT SEAT** (-2004) or **FRONT SEAT, REPLACING** (2005-).

Re-tension the lumbar support.

Carry out an inspection. See **SUPPLEMENTARY RESTRAINT SYSTEM (SRS), INSPECTION** .

AIRBAG PASSENGER (SRS), REPLACING

NOTE: The illustrations in this service information are used for different model years and/or models. Some variation may occur. However, the essential information in the illustrations is always correct.

PREPARATORY WORK

REMOVING THE BATTERY LEAD AND IMPORTANT INFORMATION

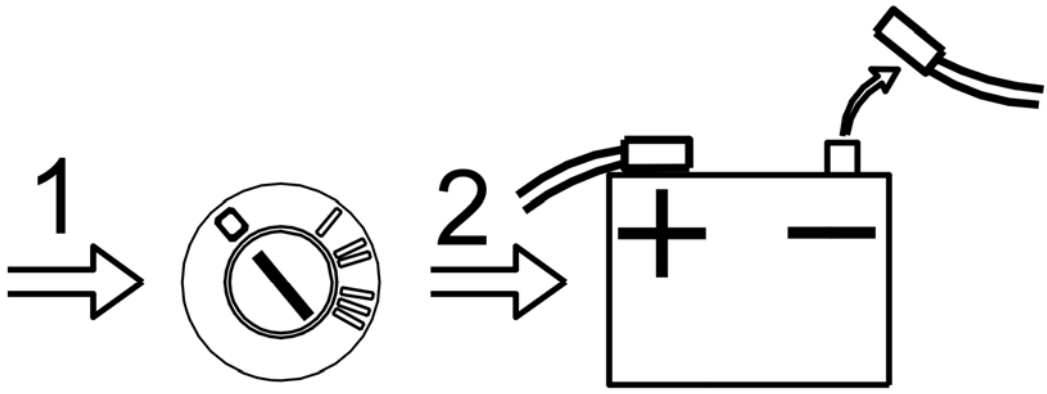

Fig. 51: Disconnecting Battery Negative Cable
Courtesy of VOLVO CARS CORPORATION

Ignition off.

Disconnect the battery negative lead. See: **BATTERY, DISCONNECTING** .

WARNING: **For information about the handling and storage of pyrotechnical SRS components, see: HANDLING NON-DEPLOYED SRS-COMPONENTS .**

NOTE: **Replace the decals for the safety equipment. See: DECALS FOR SAFETY EQUIPMENT .**

WARNING: **Under no circumstances use an ohmmeter or other live measuring instrument to take readings on a disconnected, non-deployed pyrotechnical SRS component. There is a risk of the seat belt tensioner deploying.**

WARNING: **Pyrotechnical SRS components must never be taken apart, repaired or transferred to another vehicle.**

REMOVAL

REMOVING THE PASSENGER SIDE AIRBAG (SRS)

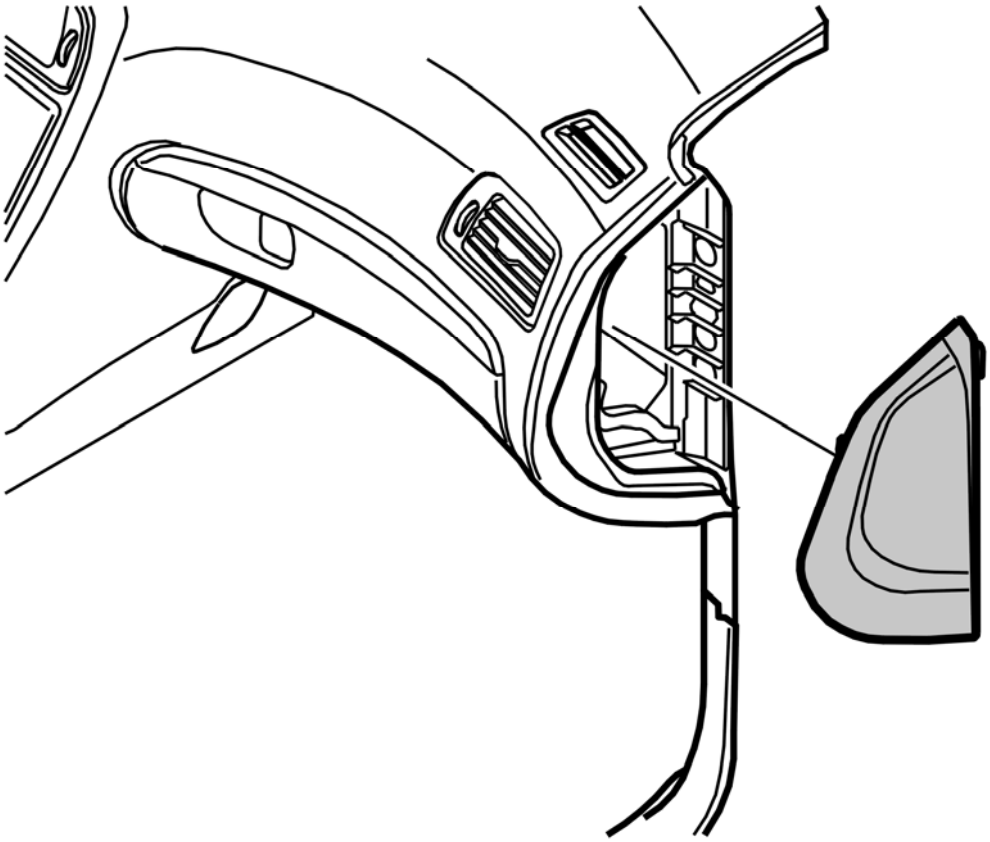

Fig. 52: End Covers
Courtesy of VOLVO CARS CORPORATION

Remove:

- the glove compartment. See: **GLOVE COMPARTMENT, REPLACING**
- the end cover on the passenger side.

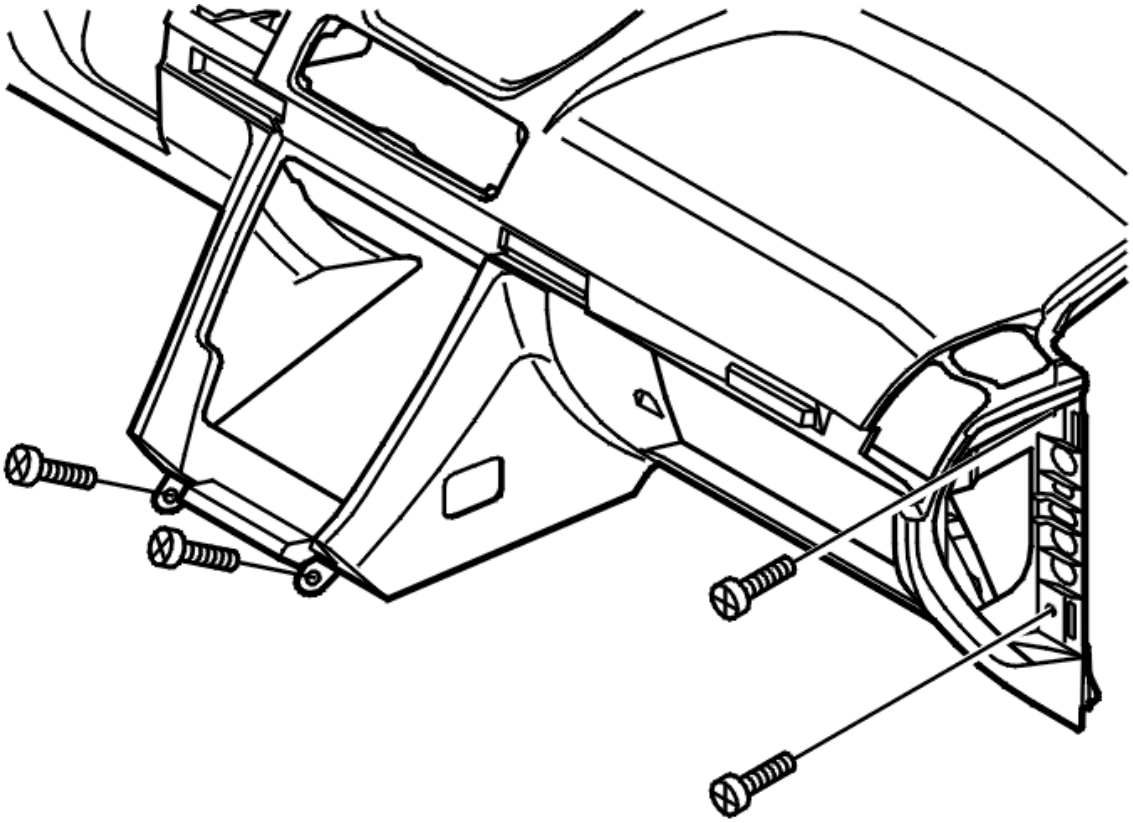

Fig. 53: Identifying Dashboard And Screws
Courtesy of VOLVO CARS CORPORATION

Slacken off both the outer screws for the dashboard.

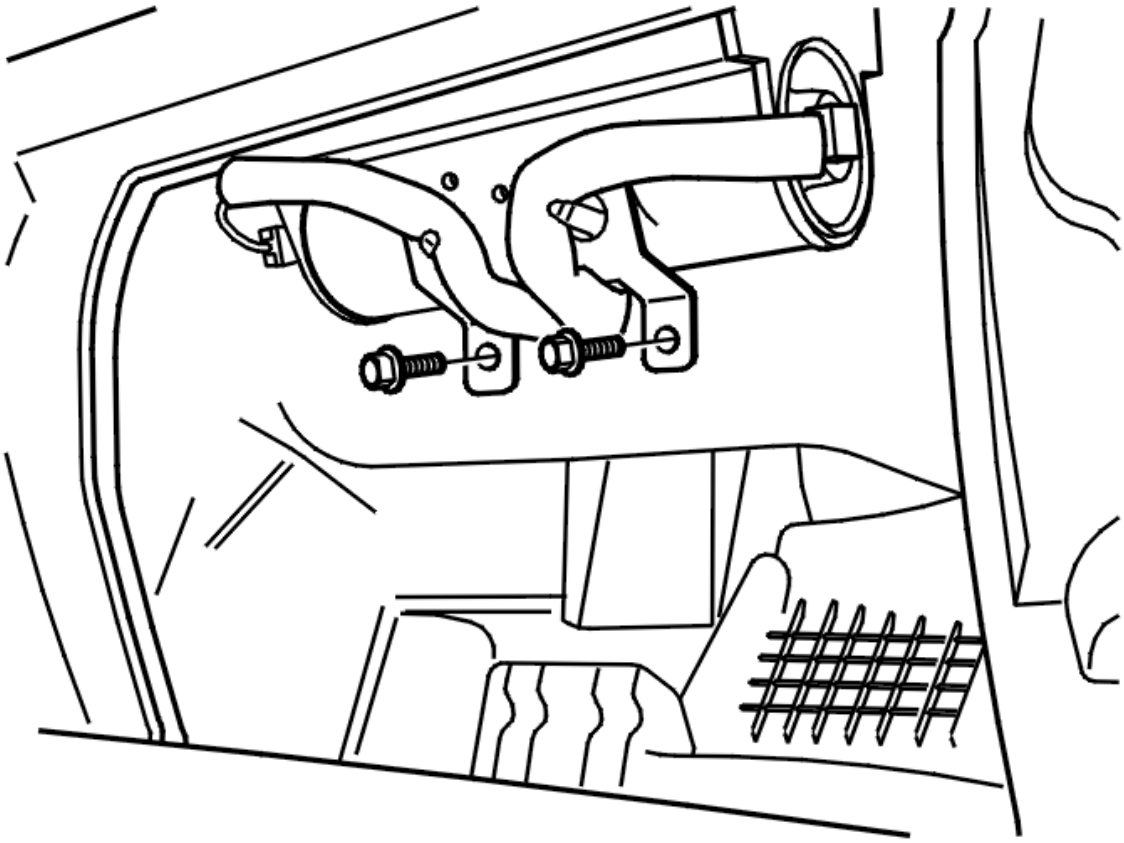

Fig. 54: Identifying Passenger Airbag Module And Screws
Courtesy of VOLVO CARS CORPORATION

Disconnect the connector for the SRS passenger airbag.

NOTE: The connector is between the screws for the lower mounting for the airbag.

Disconnect the lower mounting for the airbag.

Remove the 2 screws.

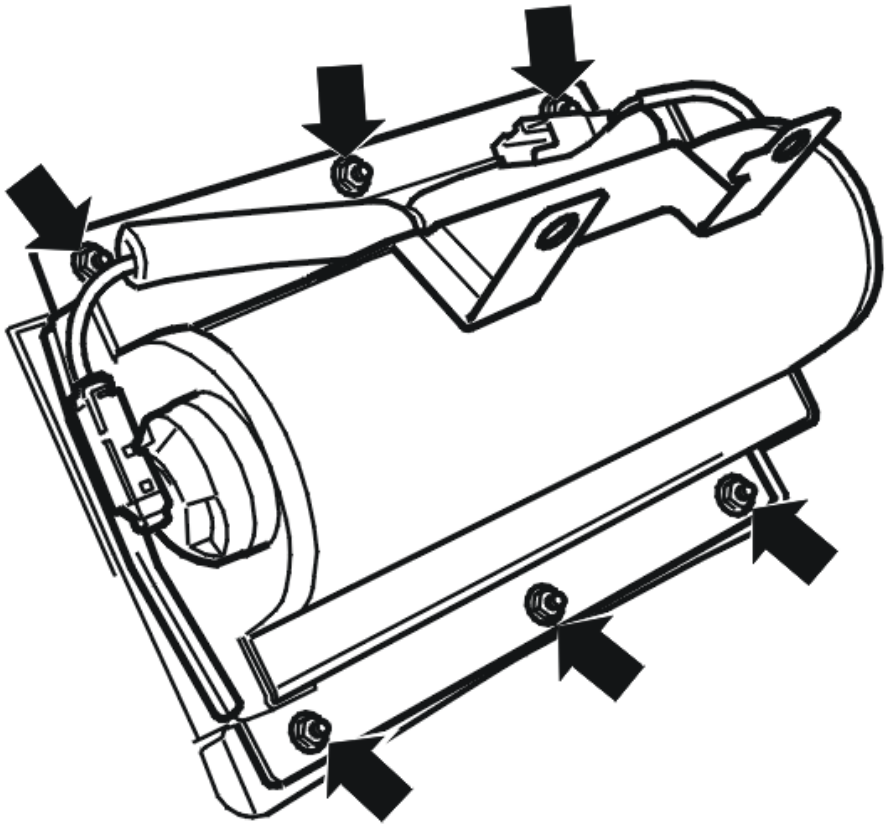

Fig. 55: Identifying Nuts On Airbag
Courtesy of VOLVO CARS CORPORATION

Remove the 6 nuts.

Angle and lift out the airbag.

HINT: Carefully pull the corner of the dashboard on the passenger side to make it easier to lift the airbag out.

INSTALLATION

INSTALLING THE PASSENGER SIDE AIRBAG (SRS)

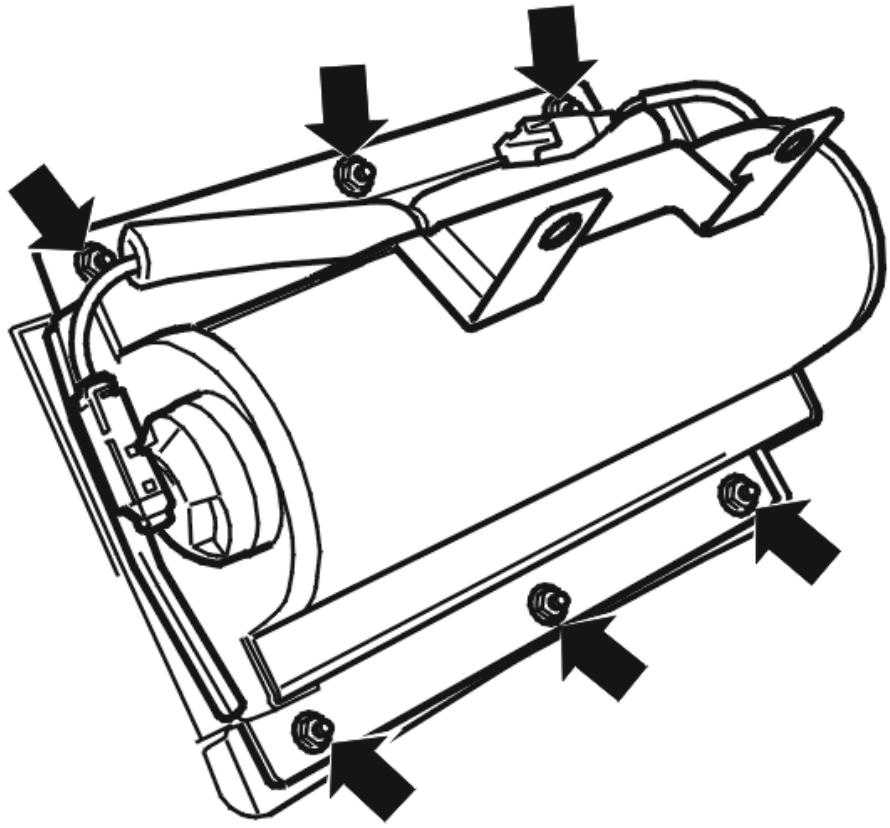

Fig. 56: Identifying Nuts On Airbag
Courtesy of VOLVO CARS CORPORATION

Install:

- the airbag
- the 6 nuts. Tighten
- airbag, lower mounting
- the 2 M6 screws. Tighten
- the connector to the airbag
- the outer screws for the dashboard
- the 2 M6 screws. Tighten
- the end cover on the passenger side
- the glove compartment. See: **GLOVE COMPARTMENT, REPLACING**
- the battery lead.

Carry out an inspection. See: **SUPPLEMENTARY RESTRAINT SYSTEM (SRS), INSPECTION** .

BUCKLE SEAT BELT FRONT, REPLACING

The illustrations in this service information are used for different model years and/or models. Some variation

may occur. However, the essential information in the illustrations is always correct.

PREPARATIONS

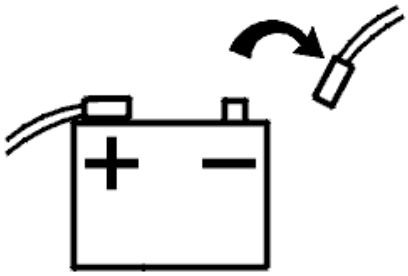

Fig. 57: Disconnecting Battery Lead
Courtesy of VOLVO CARS CORPORATION

Remove the battery lead. See **BATTERY, DISCONNECTING** .

REMOVING THE FRONT SEAT BELT BUCKLES

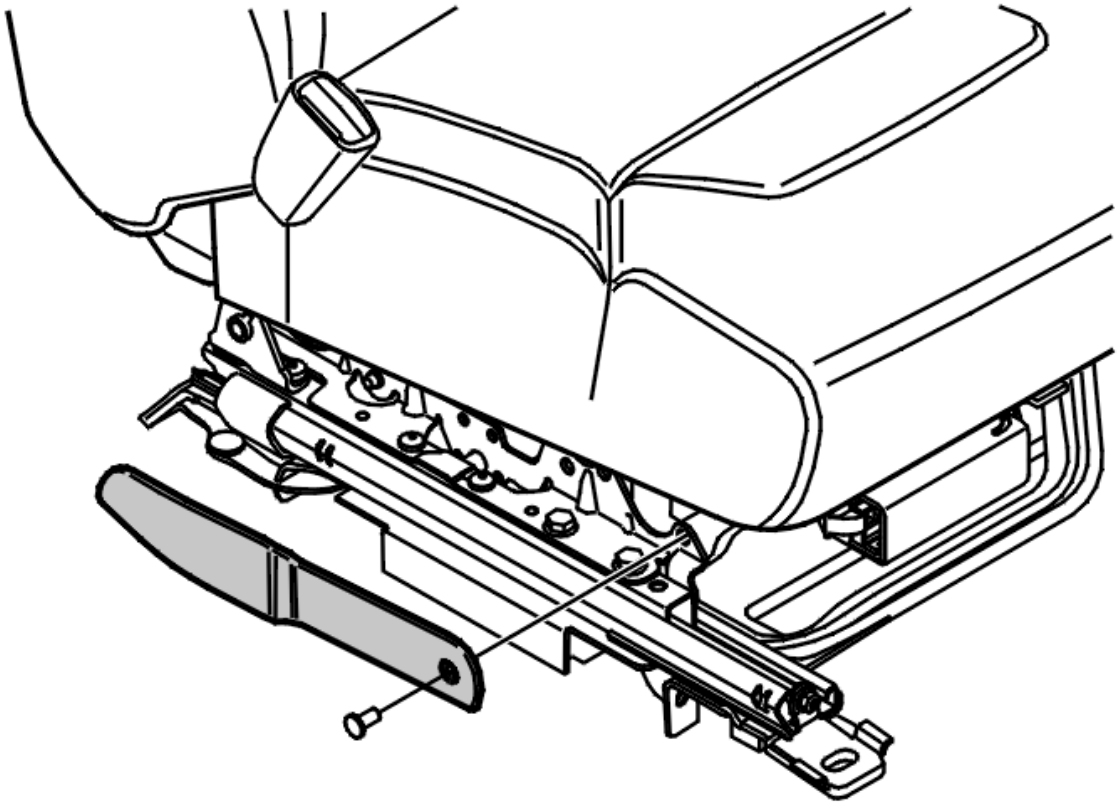

Fig. 58: Identifying Cover / Clip In The Panel
Courtesy of VOLVO CARS CORPORATION

Remove:

- the front seat. See **REMOVING THE FRONT SEAT** (-2004) or **FRONT SEAT, REPLACING** (2005-)
- the cover / clip in the panel.

Move the panel back and remove it.

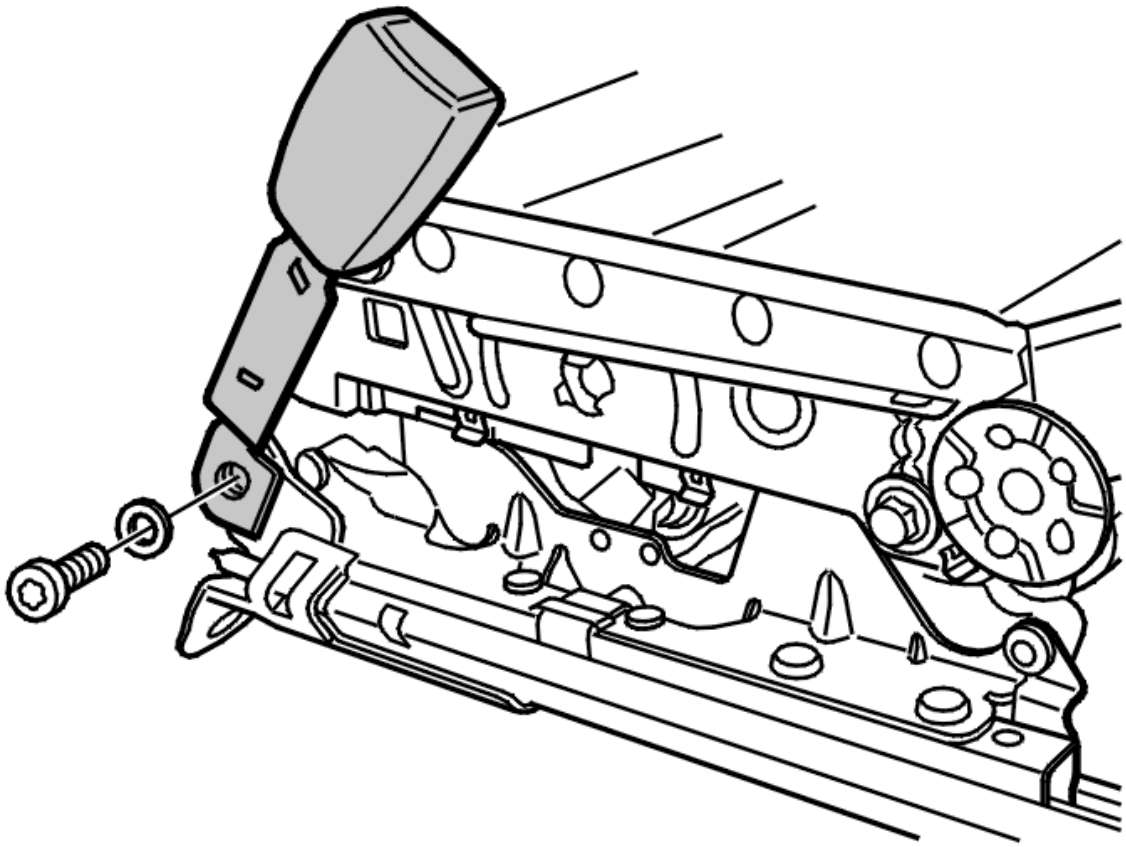

Fig. 59: View Of Seat Belt Buckle Screw
Courtesy of VOLVO CARS CORPORATION

Remove:

- the screw
- the seat belt buckle.

INSTALLING FRONT SEAT BELT BUCKLES

NOTE: For tightening torques, see TIGHTENING TORQUE .

Install:

- the seat belt buckle

- 1 M10 screw. Tighten
- the panel
- the cover / clip
- the front seat. See **INSTALLING THE FRONT SEAT** (-2004) or **FRONT SEAT, REPLACING** (2005-)
- the battery lead. See **BATTERY, DISCONNECTING** .

BUCKLE SEAT BELT REAR, REPLACING

LOCK SEAT BELT REAR OUTER (SECOND ROW), REPLACING

As the illustrations in this service information are used for different model years and / or models, some variation may occur. However, the essential information in the illustrations is always correct.

Included in this method are the methods for the center rear seat belt buckle, see **LOCK SEAT BELT REAR CENTER (SECOND ROW), REPLACING** and the rear seat belt buckle on the third row. See **BUCKLE SEAT BELT REAR (THIRD ROW)**.

REMOVING THE OUTER REAR SEAT BELT BUCKLE (SECOND ROW)

Move the seat as far forward as possible.

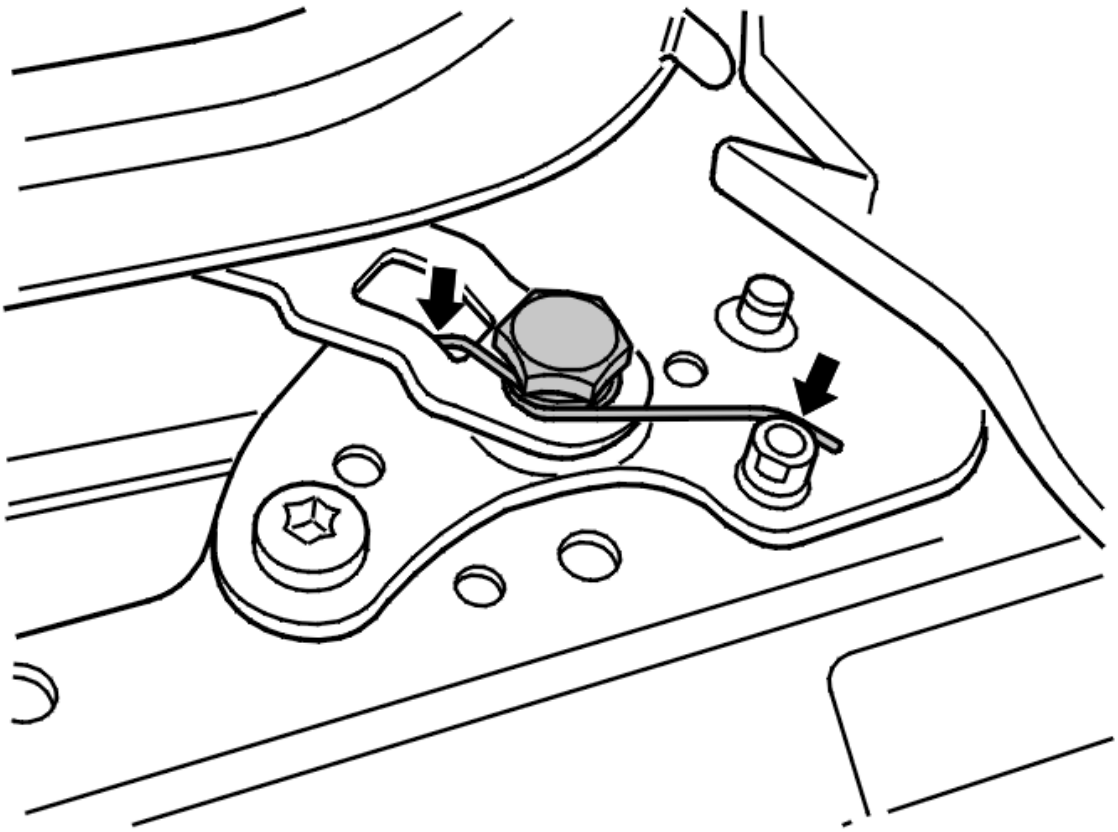

Fig. 60: Identifying Seat Belt Buckle Hinge Spring Position & Screw

Courtesy of VOLVO CARS CORPORATION

Remove:

- the seat. See **REMOVING THE OUTER SEAT (SECOND ROW)**
- 1 screw.

NOTE: Note the position of the spring.

Remove the seat belt buckle.

INSTALLING THE OUTER REAR SEAT BELT BUCKLE (SECOND ROW)

Install:

- the seat belt buckle
- 1 screw. Tighten. See **SUMMARY OF TIGHTENING TORQUES FOR SPECIFIC COMPONENTS**
- the seat. See **INSTALLING THE OUTER SEAT (SECOND ROW)** .

Check the function of the lock.

LOCK SEAT BELT REAR CENTER (SECOND ROW), REPLACING

PREPARATIONS

Remove the battery lead. See **BATTERY, DISCONNECTING** .

Angle the backrest forward.

REMOVING THE CENTER REAR SEAT BELT BUCKLE (SECOND ROW)

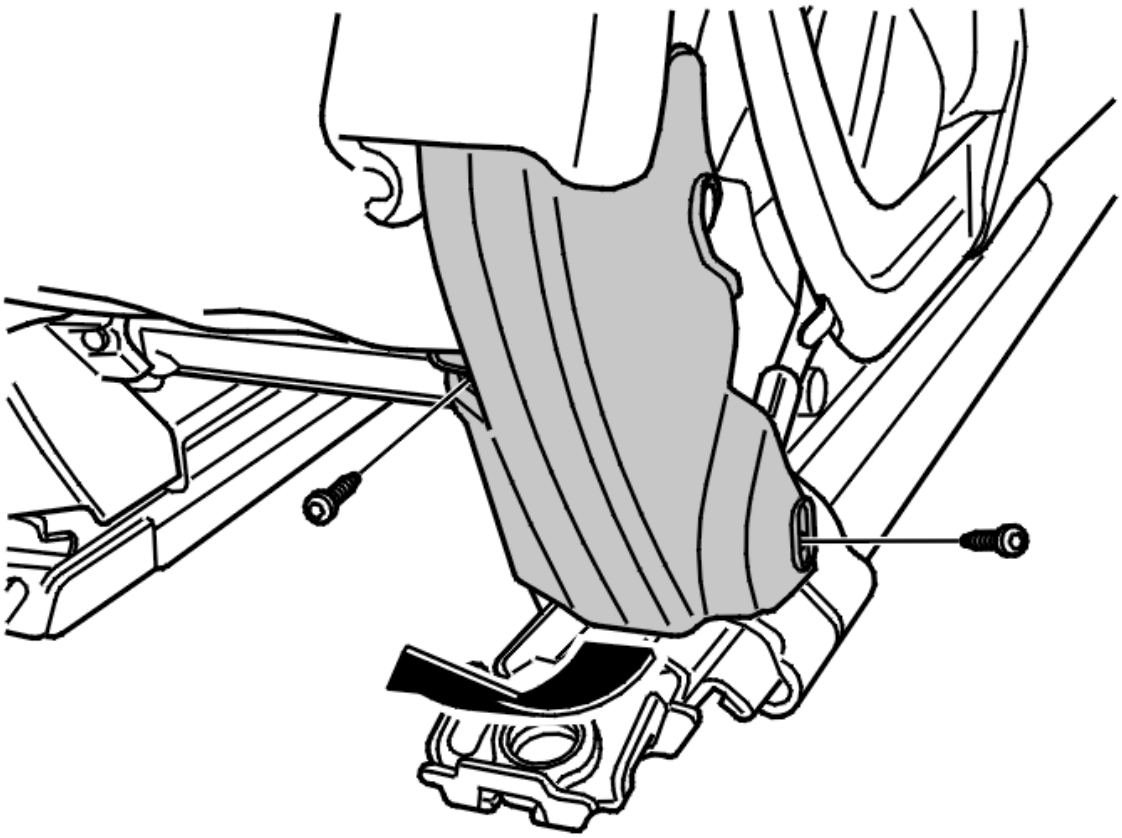

Fig. 61: Identifying Seat Hinge Cover Removal
Courtesy of VOLVO CARS CORPORATION

Remove the center seat. See **REMOVING THE CENTER SEAT (SECOND ROW)** .

Disconnect the connector.

Lift the seat from the car.

Remove:

- the 2 screws
- the panel at the seat belt buckle.

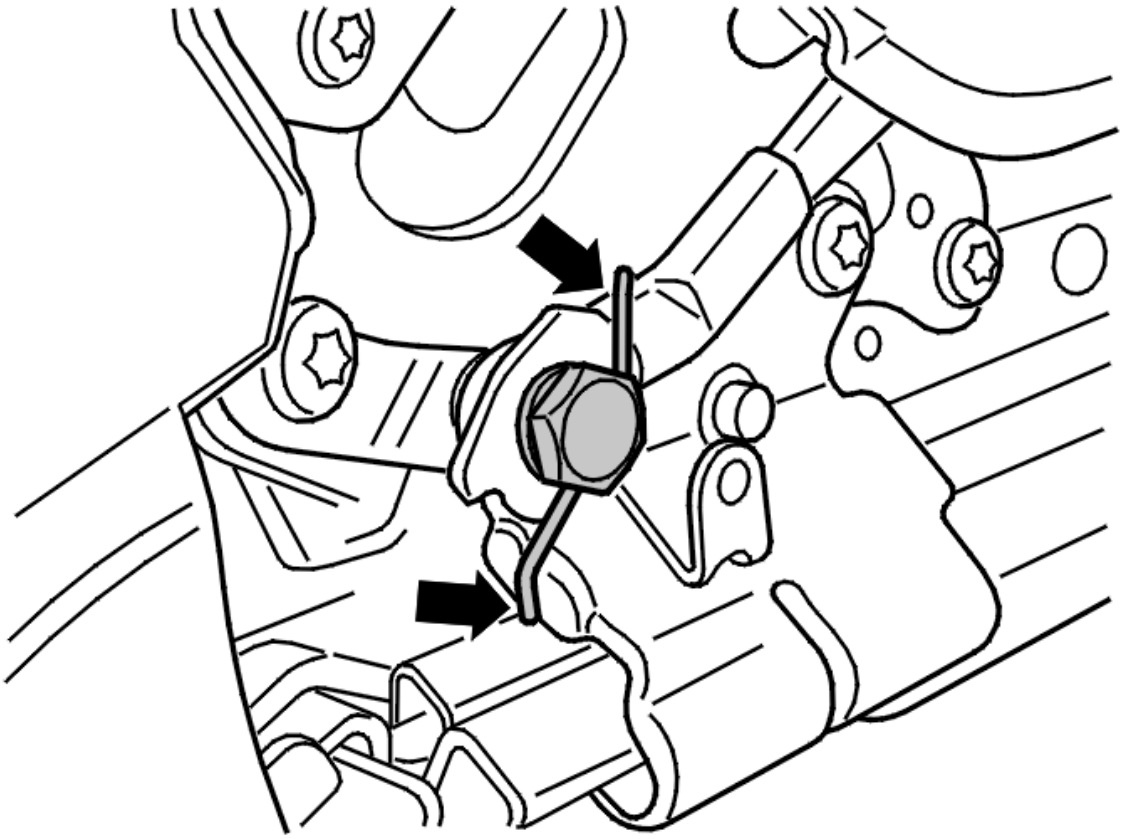

Fig. 62: Identifying Seat Hinge Spring & Screw
Courtesy of VOLVO CARS CORPORATION

HINT: Turn the seat upside down to access the nut.

NOTE: Note the position of the spring.

Remove:

- the screw and nut
- the seat belt buckle.

INSTALLING THE CENTER REAR SEAT BELT BUCKLE (SECOND ROW)

Install:

- the seat belt buckle
- the screw and nut. Tighten. See **SUMMARY OF TIGHTENING TORQUES FOR SPECIFIC COMPONENTS**
- the panel at the seat belt buckle
- the 2 screws. Tighten.

Lift the seat into the car.

Install:

- the connector
- the center seat. See **INSTALLING THE CENTER SEAT (SECOND ROW)**
- the battery lead. See **BATTERY, DISCONNECTING** .

Check:

- the function of the lock
- that the spring is working.

BUCKLE SEAT BELT REAR (THIRD ROW)

REMOVING THE BUCKLE FOR THE REAR SEAT BELT (THIRD ROW)

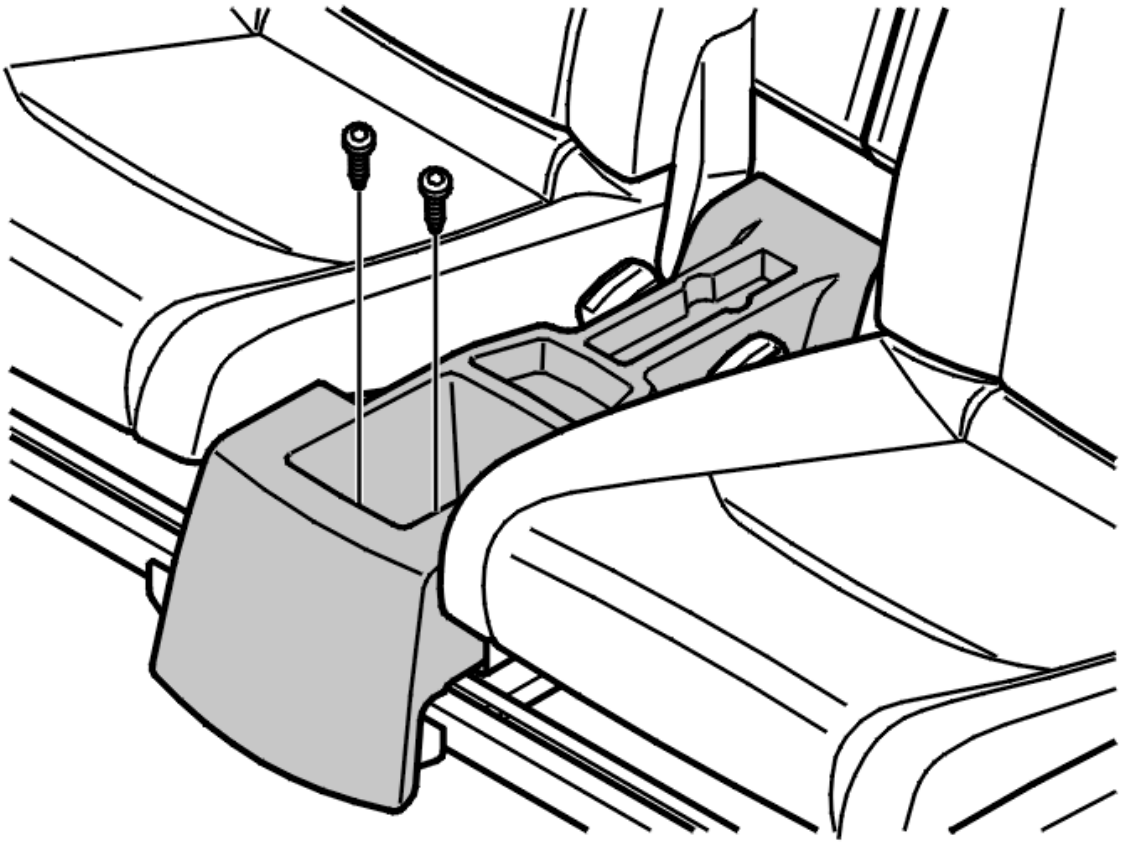

Fig. 63: Identifying Center Storage Compartment With Two Screws
Courtesy of VOLVO CARS CORPORATION

Slide back the seat cushion.

Remove:

- the jack
- the 2 screws for the rear center tunnel console
- the center tunnel console by pulling it forwards and upwards.

- one screw and one nut
- the seat belt buckle.

INSTALLING THE BUCKLE FOR THE REAR SEAT BELT (THIRD ROW)

Install:

- the seat belt buckle
- the screw and nut. Tighten. See **SUMMARY OF TIGHTENING TORQUES FOR SPECIFIC COMPONENTS**
- the center tunnel console
- the 2 screws. Tighten
- the jack.

COLLISION SENSOR B AND C-POST, REPLACING

As the illustrations in this service information are used for different model years and / or models, some variation may occur. However, the essential information in the illustrations is always correct.

COLLISION SENSOR B-POST, REPLACING

PREPARATIONS

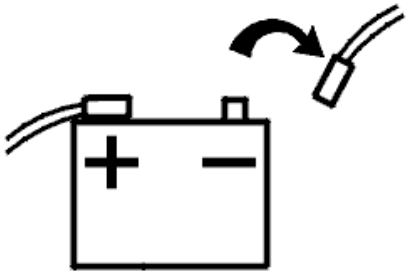

Fig. 64: Disconnecting Battery Lead
Courtesy of VOLVO CARS CORPORATION

Remove the battery lead. See **BATTERY, DISCONNECTING** .

REMOVING THE COLLISION SENSOR B-POST

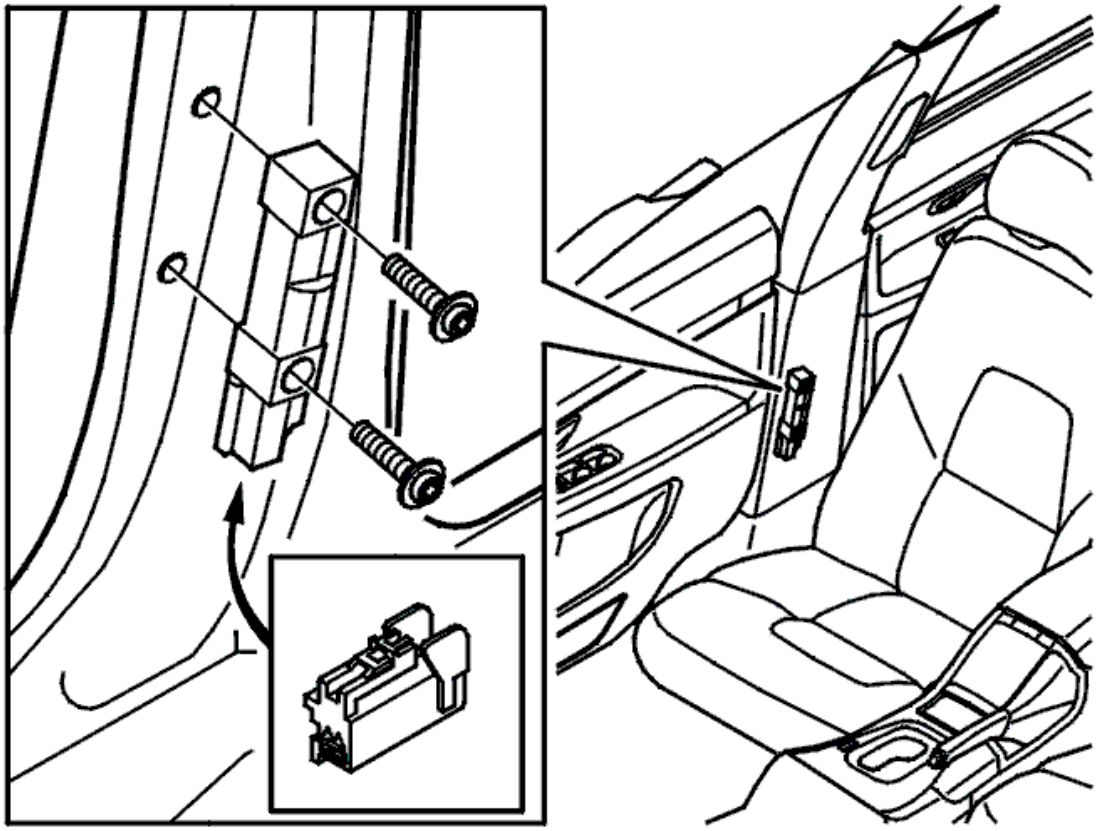

Fig. 65: Identifying Removal Of B-Post Panel And 2 Screws
Courtesy of VOLVO CARS CORPORATION

Remove:

- the B-post panel. See **PANEL B-POST, REPLACING**
- the connector by pressing the catch and carefully pull downwards.

NOTE: Do not pull the wiring.

- the 2 screws
- the collision sensor.

INSTALLING THE COLLISION SENSOR IN THE B-POST

Install:

- the collision sensor
- the 2 screws. Tighten. See **SUMMARY OF TIGHTENING TORQUES FOR SPECIFIC COMPONENTS**
- the connector
- the B-post panel. See **PANEL B-POST, REPLACING** .

COLLISION SENSOR C-POST, REPLACING

PREPARATIONS

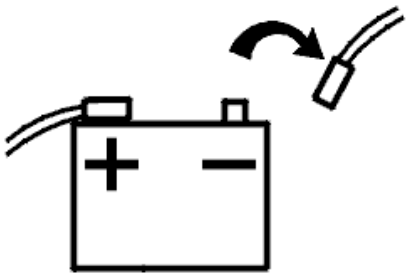

Fig. 66: Disconnecting Battery Lead
Courtesy of VOLVO CARS CORPORATION

Remove the battery lead. See **BATTERY, DISCONNECTING** .

REMOVING THE COLLISION SENSOR FROM THE C-POST

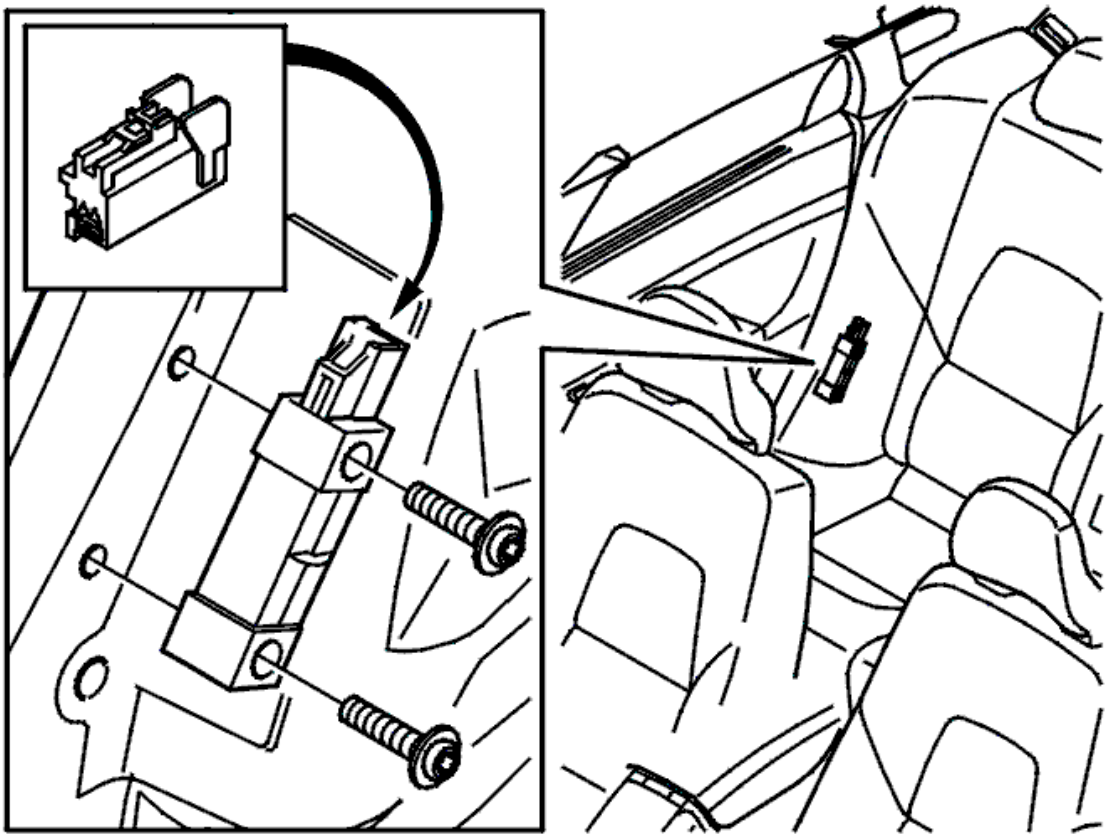

Fig. 67: Identifying Removal Of Connector And 2 Screws
Courtesy of VOLVO CARS CORPORATION

Remove:

- the side panel. See **SIDE PANEL CARGO COMPARTMENT, REPLACEMENT**
- the connector by pressing the catch and carefully pull downwards.

NOTE: Do not pull the wiring.

- the 2 screws
- the collision sensor.

INSTALLING THE COLLISION SENSOR IN THE C-POST

Install:

- the collision sensor
- the 2 screws. Tighten. See **SUMMARY OF TIGHTENING TORQUES FOR SPECIFIC COMPONENTS**
- the connector
- the side panel. See **SIDE PANEL CARGO COMPARTMENT, REPLACEMENT** .

COLLISION SENSOR FRONT, REPLACING

The illustrations in this service information are used for different model years and/or models. Some variation may occur. However, the essential information in the illustrations is always correct.

PREPARATIONS

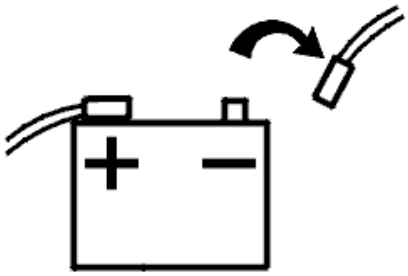

Fig. 68: Disconnecting Battery Lead
Courtesy of VOLVO CARS CORPORATION

Remove the battery lead. See **BATTERY, DISCONNECTING** .

REMOVING THE FRONT COLLISION SENSOR

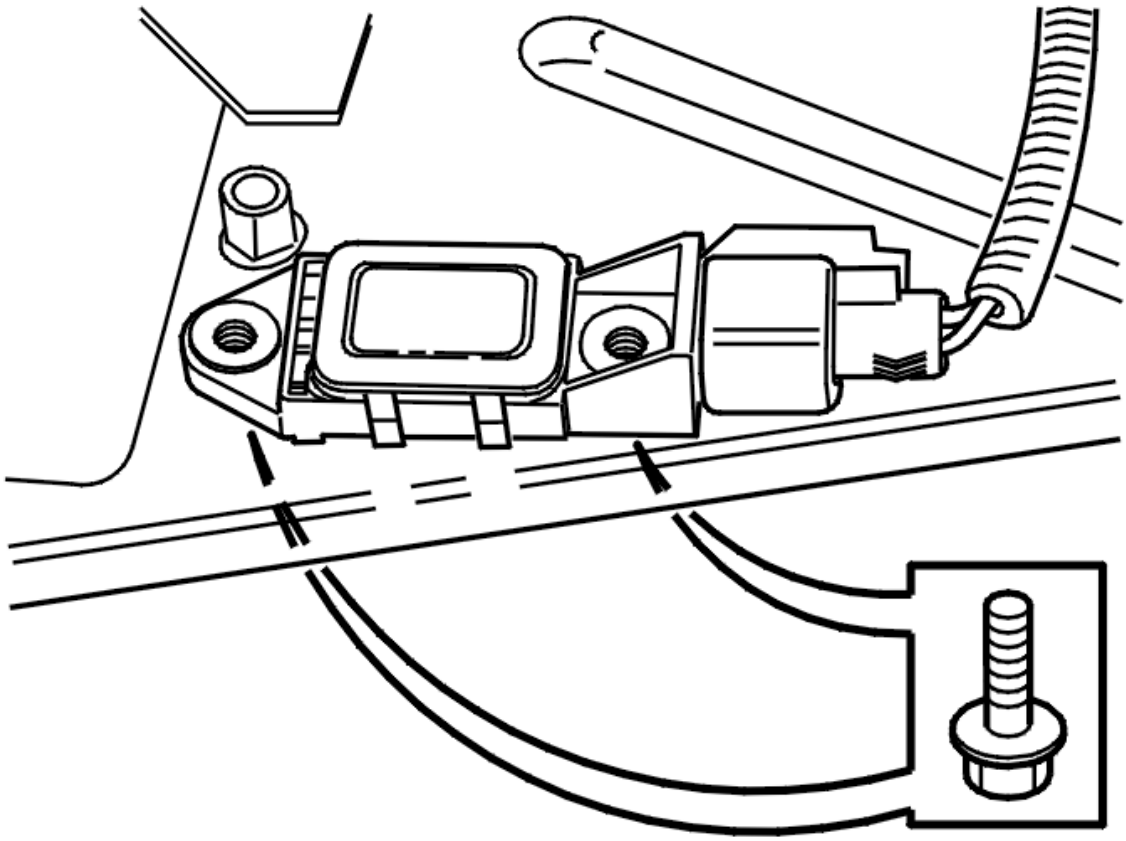

Fig. 69: Identifying Collision Sensor Connector And Screws
Courtesy of VOLVO CARS CORPORATION

Remove:

- the headlamp. See
- the 2 screws
- the connector.

NOTE: Do not pull on the wiring.

INSTALLING THE FRONT COLLISION SENSOR

NOTE: For tightening torques, see GENERAL TIGHTENING TORQUE .

Install:

- the headlamp. See
- the connector
- the 2 M6 screws. Tighten

CONTACT REEL, REPLACEMENT

The illustrations in this service information are used for different model years and/or models. Some variation may occur. However, the essential information in the illustrations is always correct.

PREPARATIONS

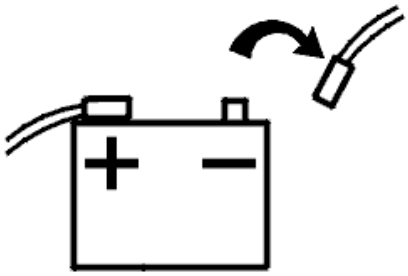

Fig. 70: Disconnecting Battery Lead
Courtesy of VOLVO CARS CORPORATION

Disconnect the battery lead. See **BATTERY, DISCONNECTING** .

REMOVING THE CONTACT REEL

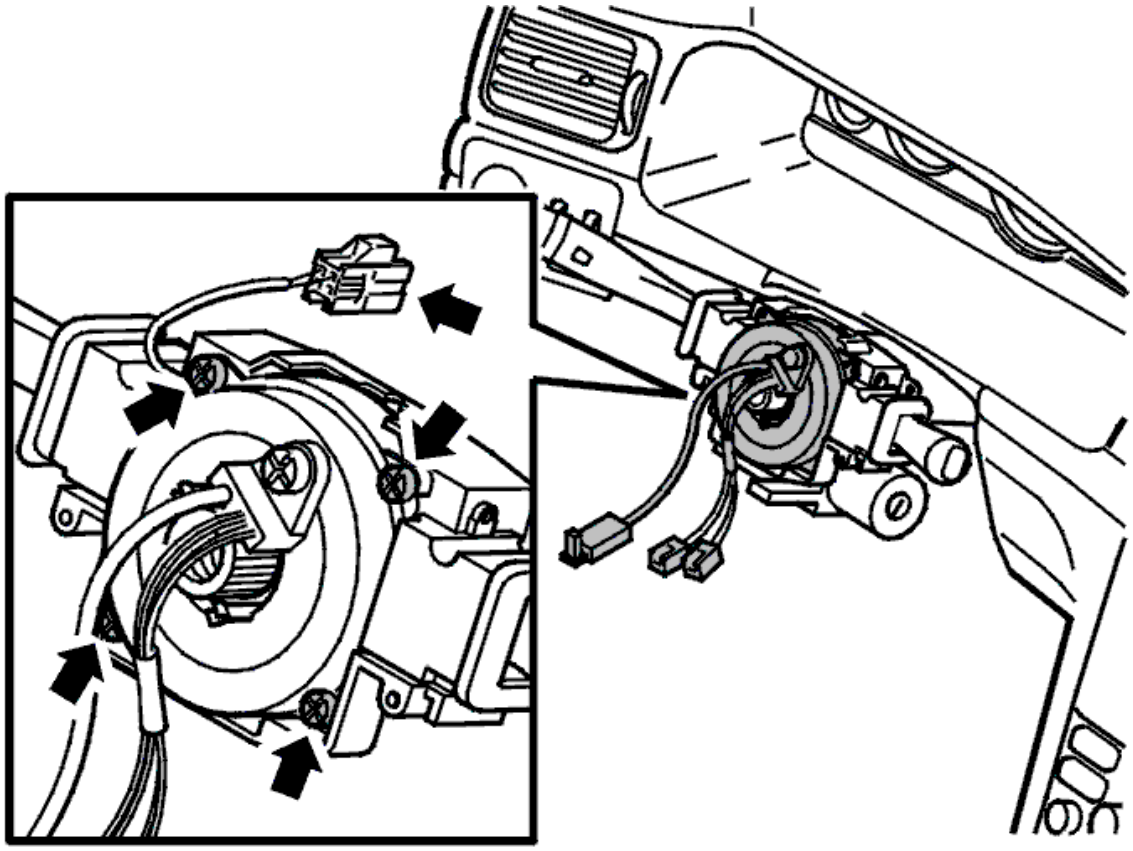

Fig. 71: Identifying Contact Reel And Screws
Courtesy of VOLVO CARS CORPORATION

Remove:

- the steering column covers. See **REPLACING THE STEERING COLUMN COVERS**
- the steering wheel according to **STEERING WHEEL, REPLACING** .

Disconnect the left connector.

Remove:

- four screws
- the contact reel.

INSTALLING THE CONTACT REEL

NOTE: For tightening torques, see TIGHTENING TORQUE .

Install:

- the contact reel
- the 4 M5 screws. Tighten
- the connector.

Zero the contact reel. See **CONTACT REEL DRIVER AIRBAG MODULE, RESETTING** .

Install:

- the steering wheel according to **STEERING WHEEL, REPLACING**
- the steering column covers. See **REPLACING THE STEERING COLUMN COVERS**.

END MOUNTING, REPLACING

NOTE: The illustrations in this service information are used for different model years and/or models. Some variation may occur. However, the essential information in the illustrations is always correct.

This section contains methods for:

- the end mounting for the front seat. See: **END MOUNTING FRONT, REPLACING**
- the end mountings for the seats in the second row. See: **END MOUNTINGS REAR (SECOND ROW), REPLACING**
- the end mounting for the third row. See: **END MOUNTING REAR (THIRD ROW), REPLACING**.

END MOUNTING FRONT, REPLACING

REMOVING FRONT END MOUNTINGS

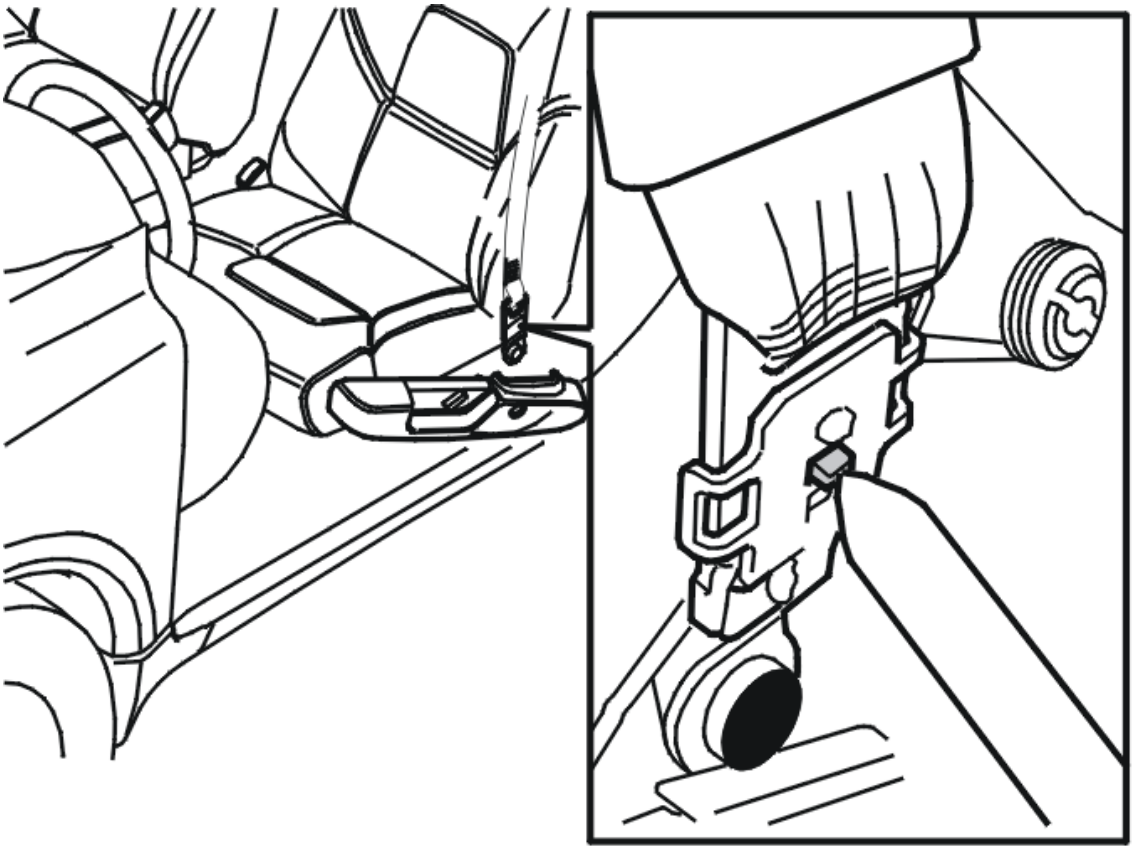

Fig. 72: Identifying Weatherstrip Tool And Seat Belt End Mounting
Courtesy of VOLVO CARS CORPORATION

Move the front seat as far forward as possible.

Remove the side panel. See: **SIDE PANEL, REPLACING** (-2004) or: **SIDE PANEL FRONT SEAT, REPLACING** (2005-).

NOTE: Use a weatherstrip tool to disconnect the seat belt from the end mounting. Carefully press the locking tab, as illustrated.

Remove the screw from the seat. Remove the end mounting.

INSTALLING FRONT END MOUNTINGS

NOTE: For tightening torques, see: TIGHTENING TORQUE .

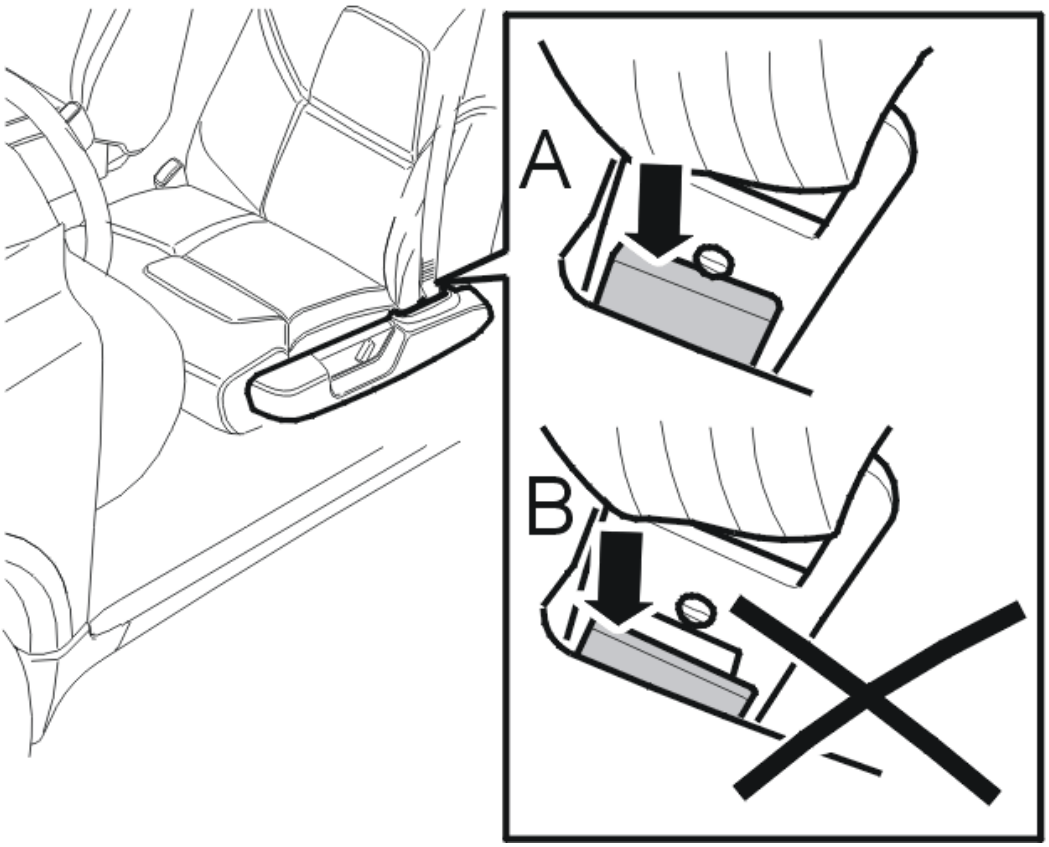

Fig. 73: Identifying Seat Belt And End Mounting
Courtesy of VOLVO CARS CORPORATION

Install:

- the end mounting
- the M10 screw. Tighten.

Press the seat belt into the end mounting.

NOTE: **A clear click is heard when the seat belt has locked correctly with the end mounting.**

NOTE: **Also check that the seat belt has locked correctly with the end mounting by looking at the reverse of the end mounting.**

A = Correctly locked position.

B = If the lock facing does not lock correctly with the end mounting, see A, replace the end mounting with a **new** one.

NOTE: **Check that the seat belt is secure by jerking it hard in an upwards direction.**

Reinstall the side panel. See: **SIDE PANEL, REPLACING** (-2004) or: **SIDE PANEL FRONT SEAT, REPLACING** (2005-).

END MOUNTINGS REAR (SECOND ROW), REPLACING

REMOVING REAR END MOUNTINGS (SECOND ROW)

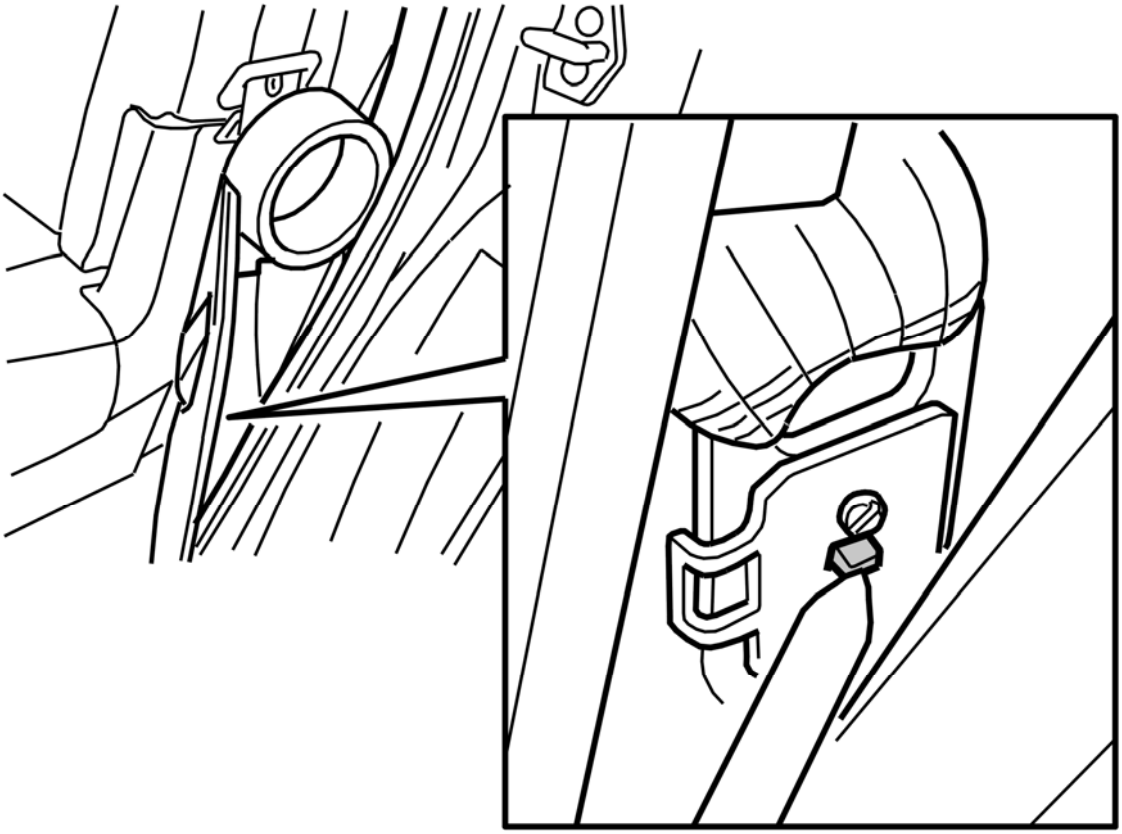

Fig. 74: Disconnecting Seat Belt From End Mounting By Pressing Locking Tab With Weatherstrip Tool
Courtesy of VOLVO CARS CORPORATION

Install the front seat and the outer seat in the second row in their forward positions.

NOTE: **Disconnect the top edge of the sill trim panel. Disconnect the seat belt from the end mounting by carefully pressing the locking tab with a weatherstrip tool, as illustrated, so that the seat belt releases from the end mounting.**

Remove the sill trim panel. See: **SILL TRIM PANEL, REPLACING**

Move any hoses for the air conditioning (A/C) system to one side.

Remove:

- the screw

- the end mounting.

INSTALLING REAR END MOUNTINGS (SECOND ROW)

NOTE: For tightening torques, see: TIGHTENING TORQUE .

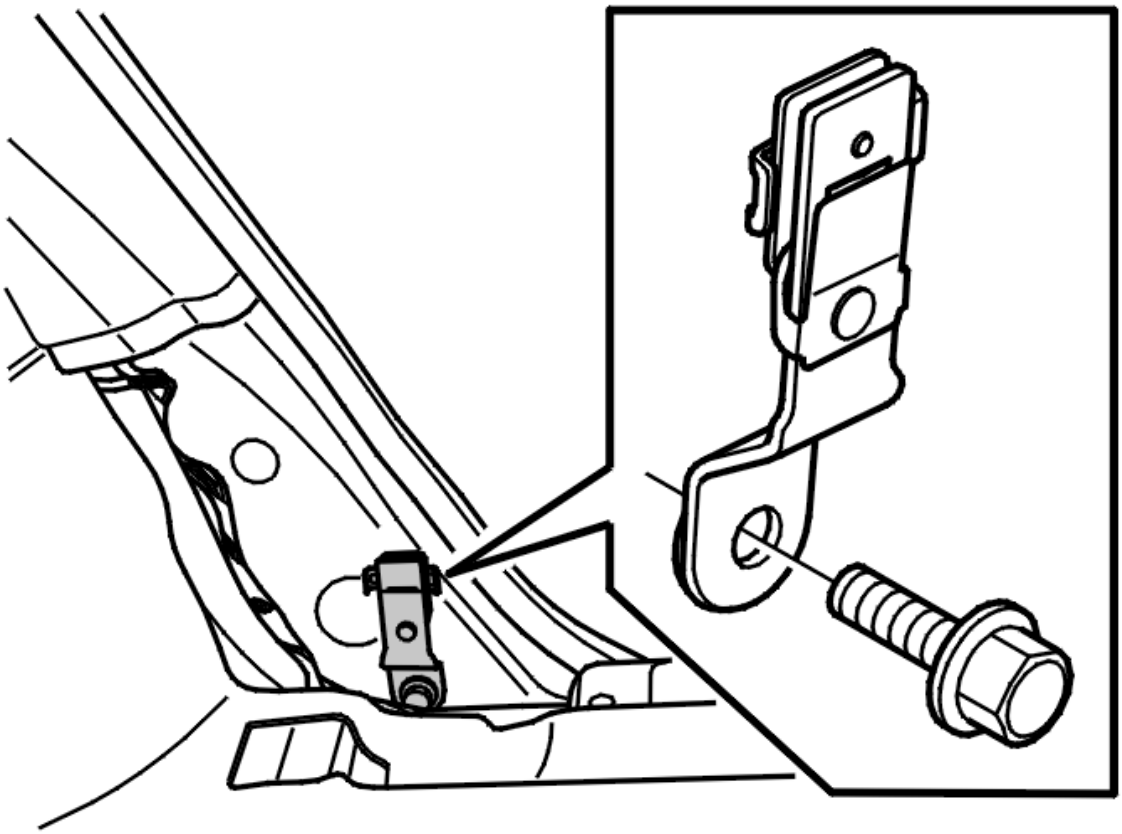

Fig. 75: Identifying End Mounting And Screw
Courtesy of VOLVO CARS CORPORATION

Install:

- the end mounting
- 1 M10 screw. Tighten.

Move any hoses for the air conditioning (A/C) system back into place.

Install the sill trim panel. See: **SILL TRIM PANEL, REPLACING** .

Press the seat belt into the end mounting.

NOTE: A clear click is heard when the seat belt has locked correctly with the end mounting.

NOTE: Also check that the seat belt has locked correctly with the end mounting by looking at the reverse of the end mounting.

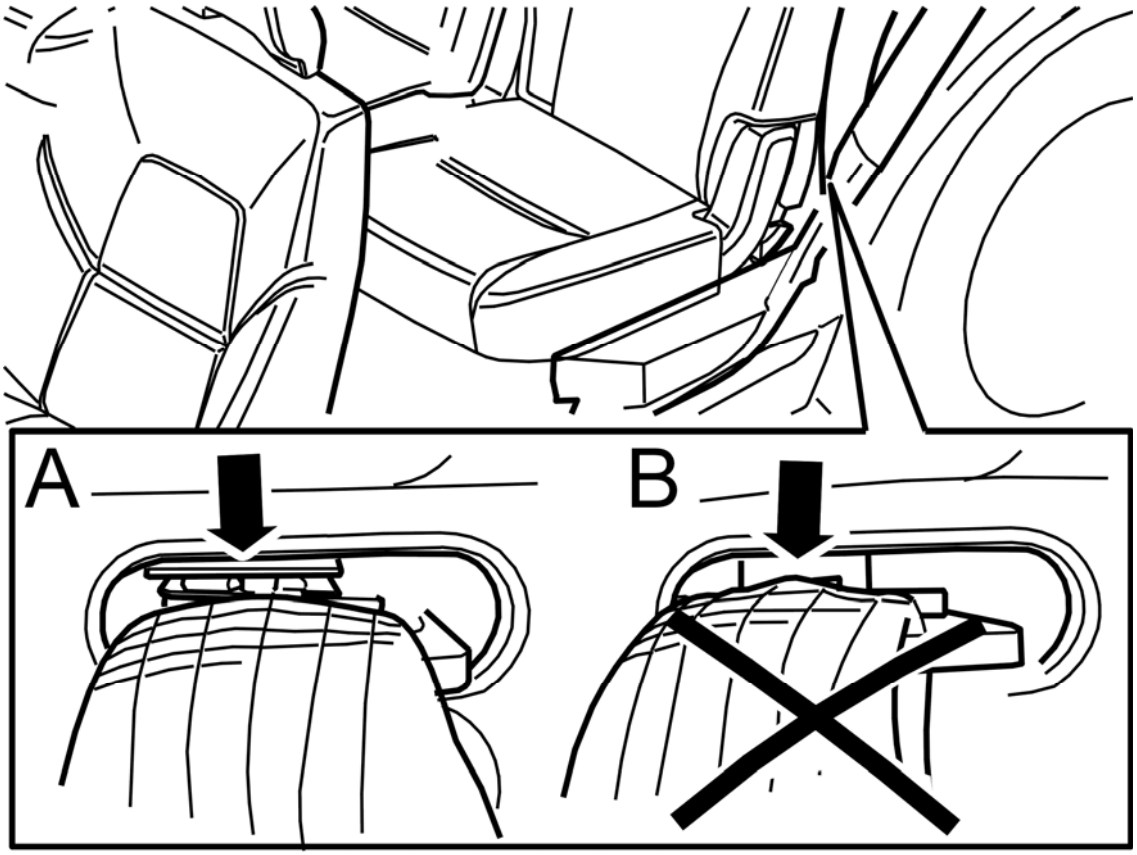

Fig. 76: Identifying Correct And Incorrect Positions For Lock Facing Against End Mounting
Courtesy of VOLVO CARS CORPORATION

The position of the lock facing against the end mounting, with the seat belt fully inserted, must be:

A = Correctly locked position.

B = If the lock facing does not lock correctly with the end mounting, see A, replace the end mounting with a **new** one.

NOTE: Check that the seat belt is secure by jerking it hard in an upwards direction.

END MOUNTING REAR (THIRD ROW), REPLACING

PREPARATORY WORK

HINT: The end mounting lug, positioned between the side panel and the end mounting, is difficult to access. To release the seat belt from the end mounting, unscrew the entire end mounting from the third row of seats as follows.

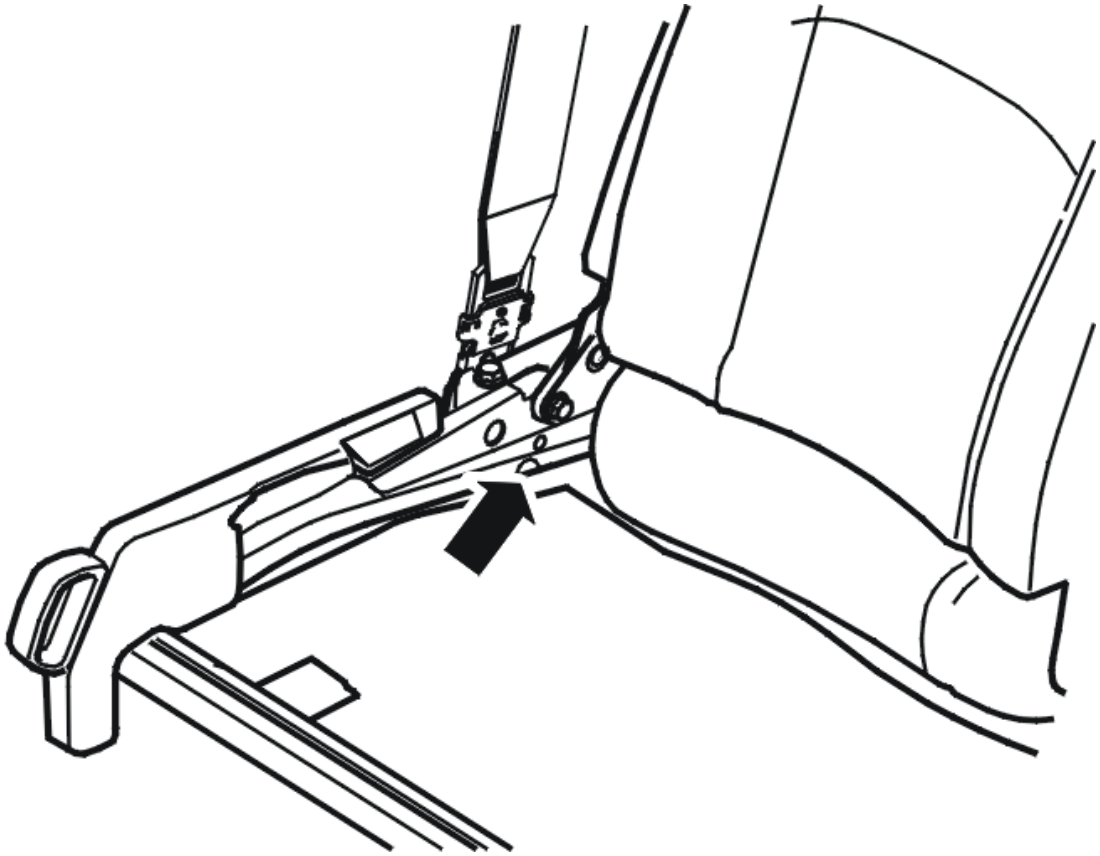

Fig. 77: Identifying Access Hole For End Mounting
Courtesy of VOLVO CARS CORPORATION

Slide the second row seat(s) forward and fold the backrest(s).

Slide the seat cushion(s) for the third row back.

NOTE: Check to, see if the vehicle has a half moon access hole for the screw for the end mounting (See the illustration).

REMOVING REAR END MOUNTINGS (THIRD ROW) WITHOUT ACCESS HOLE

Make a cut-out in the seat rail for the seat cushion.

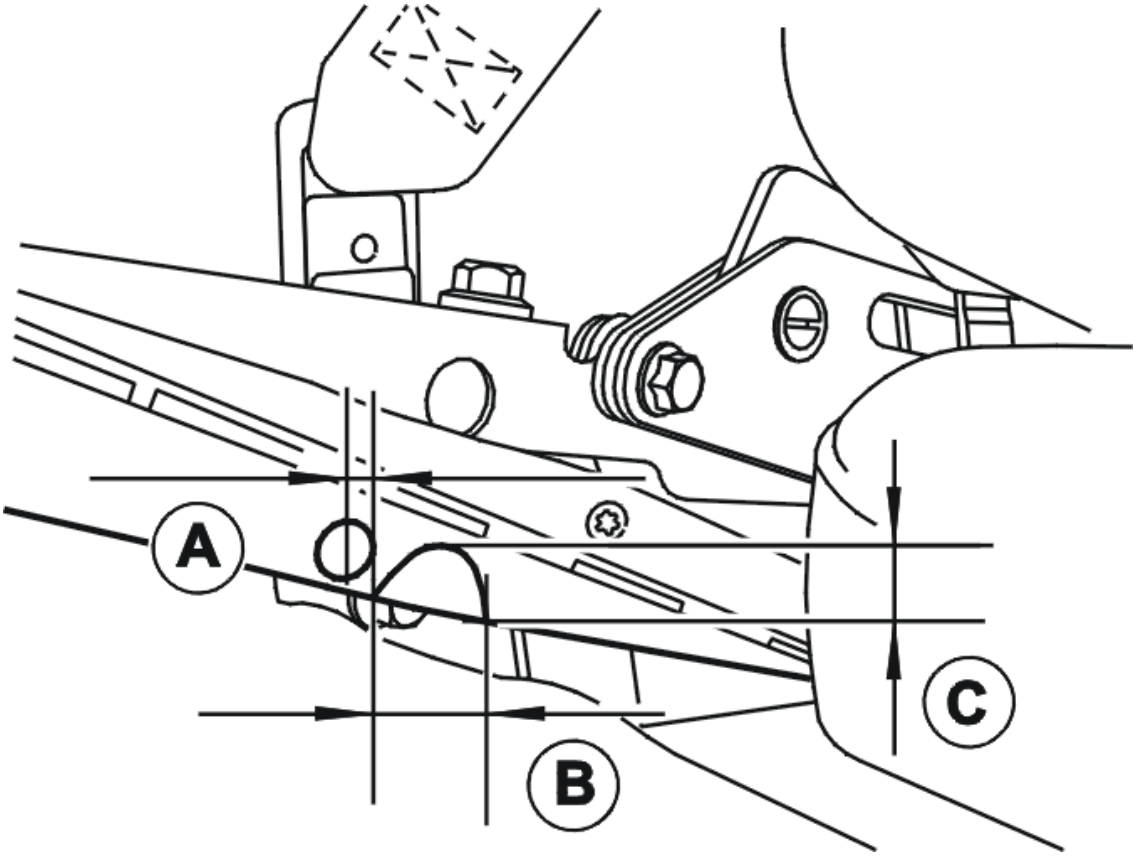

Fig. 78: Identifying Dimensions For Cut-Out In Seat Cushion Rail
Courtesy of VOLVO CARS CORPORATION

Measure up the cut-out according to the following dimensions.

A=11 mm.

B=25 mm.

C=15 mm.

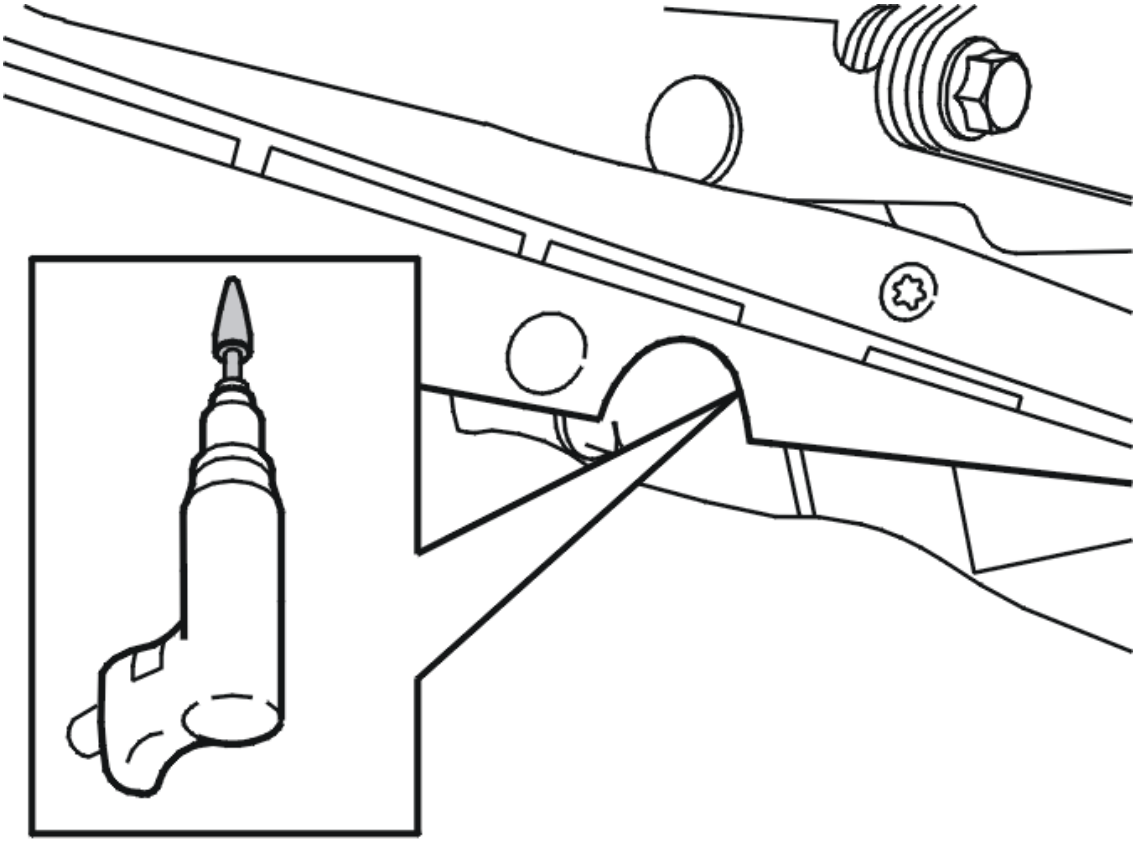

Fig. 79: Identifying Access Hole Milled Out Using Rotary File
Courtesy of VOLVO CARS CORPORATION

Push the carpet to one side.

Mill out the access hole. Use a rotary file.

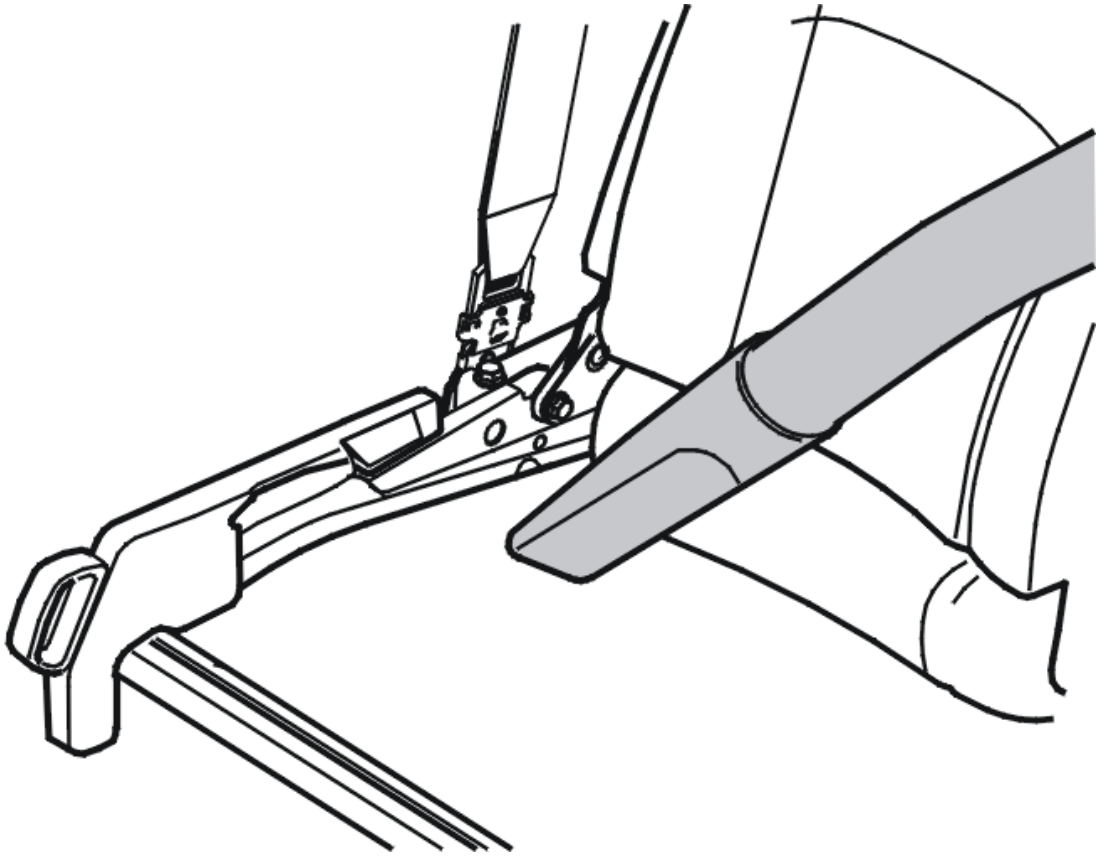

Fig. 80: Identifying Vacuuming Of Milling Particles
Courtesy of VOLVO CARS CORPORATION

Vacuum up the metal shavings from the milling. Wipe clean the seat rail for the seat cushion.

Fold back the carpet.

REMOVING REAR END MOUNTINGS (THIRD ROW) WITH ACCESS HOLE

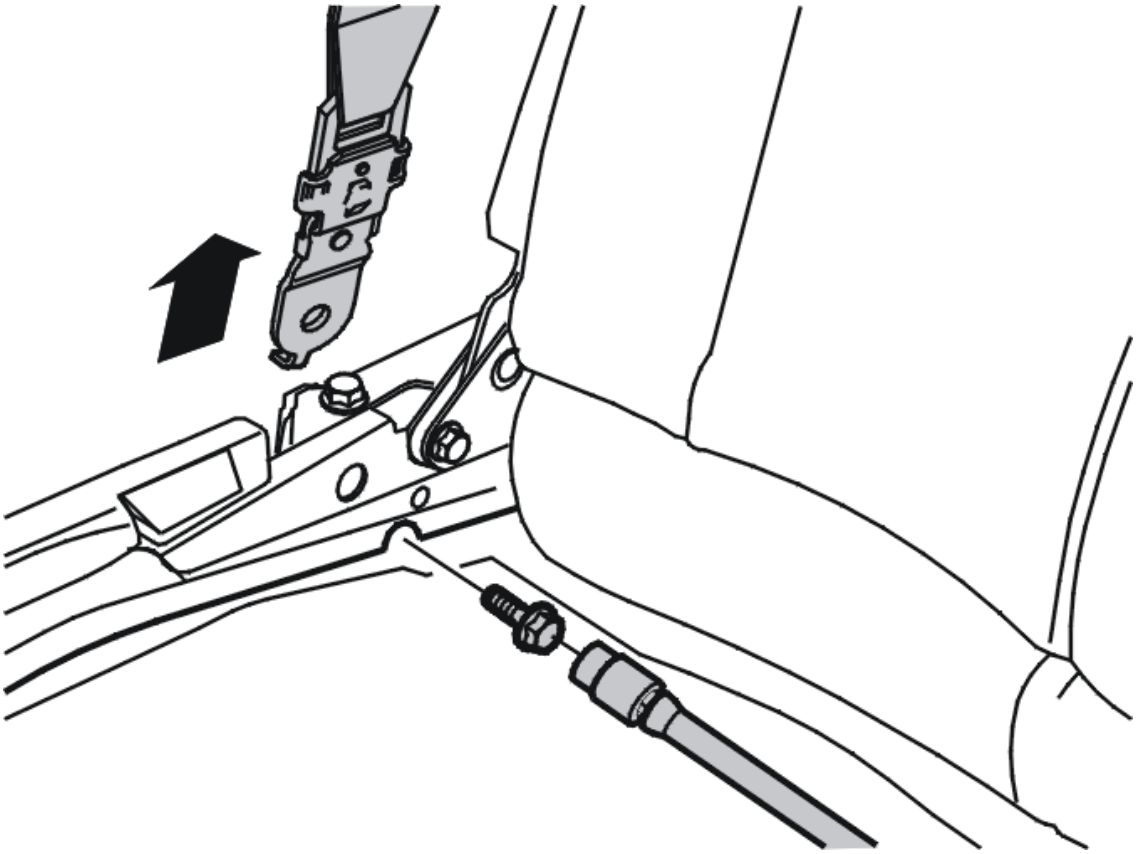

Fig. 81: Identifying Remove The Screw For End Mounting
Courtesy of VOLVO CARS CORPORATION

Remove the screw for the end mounting. Angle out the end mounting at the lower edge and lift straight up.

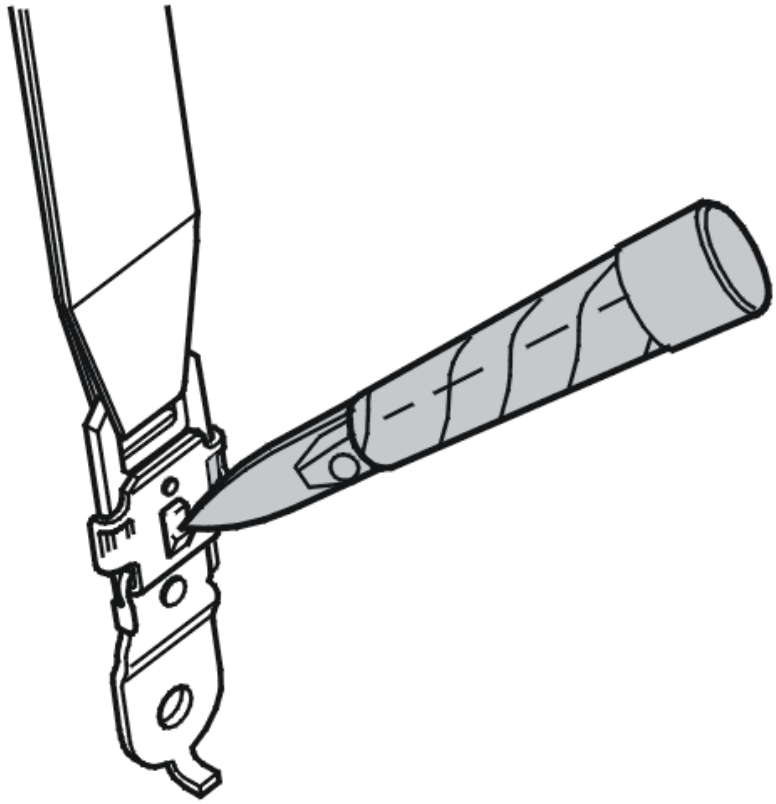

Fig. 82: Identifying Seat Belt At End Mounting
Courtesy of VOLVO CARS CORPORATION

Remove the seat belt from the end mounting.

INSTALLING REAR END MOUNTINGS (THIRD ROW)

Install the seat belt to the end mounting.

NOTE: **A clear click is heard when the seat belt has locked correctly with the end mounting.**

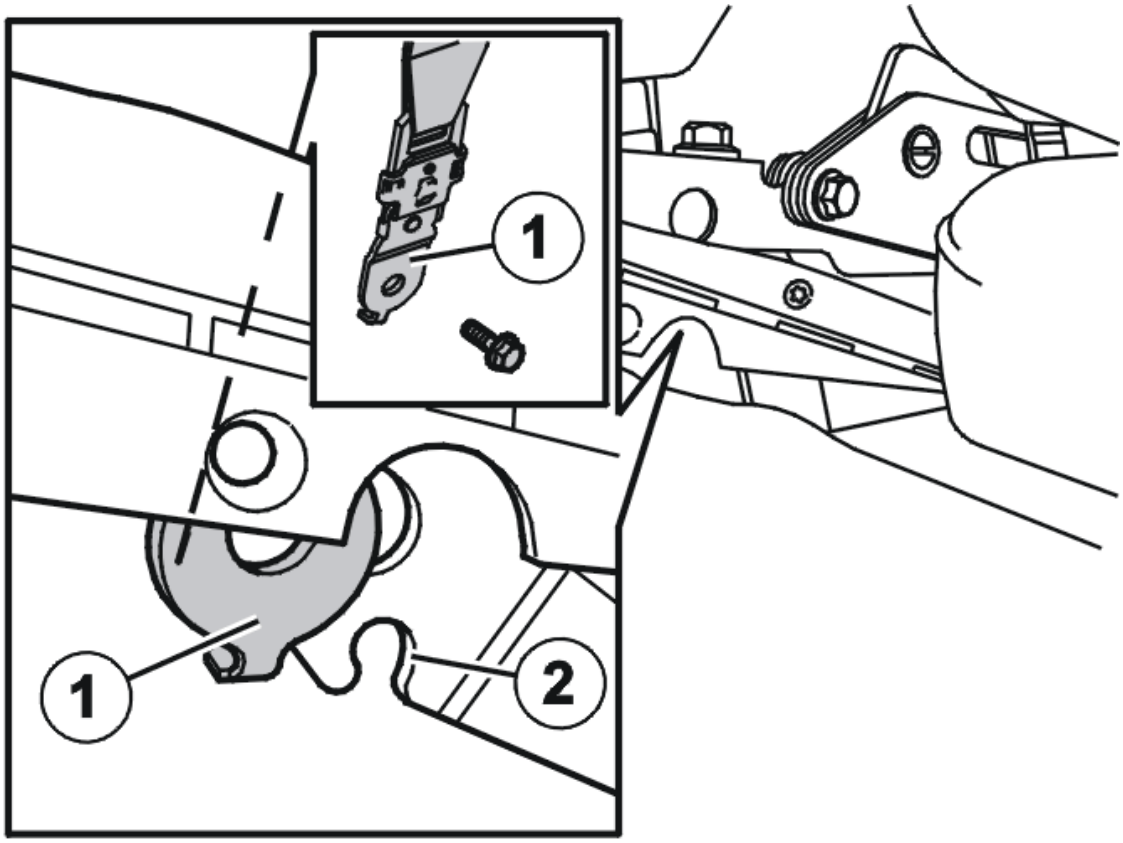

Fig. 83: Identifying Lower Section Of End Mounting And Groove In Seat Frame
Courtesy of VOLVO CARS CORPORATION

Install the end mounting to the seat frame (1).

NOTE: **The lower section of the end mounting must be aligned with the groove in the seat frame (2).**

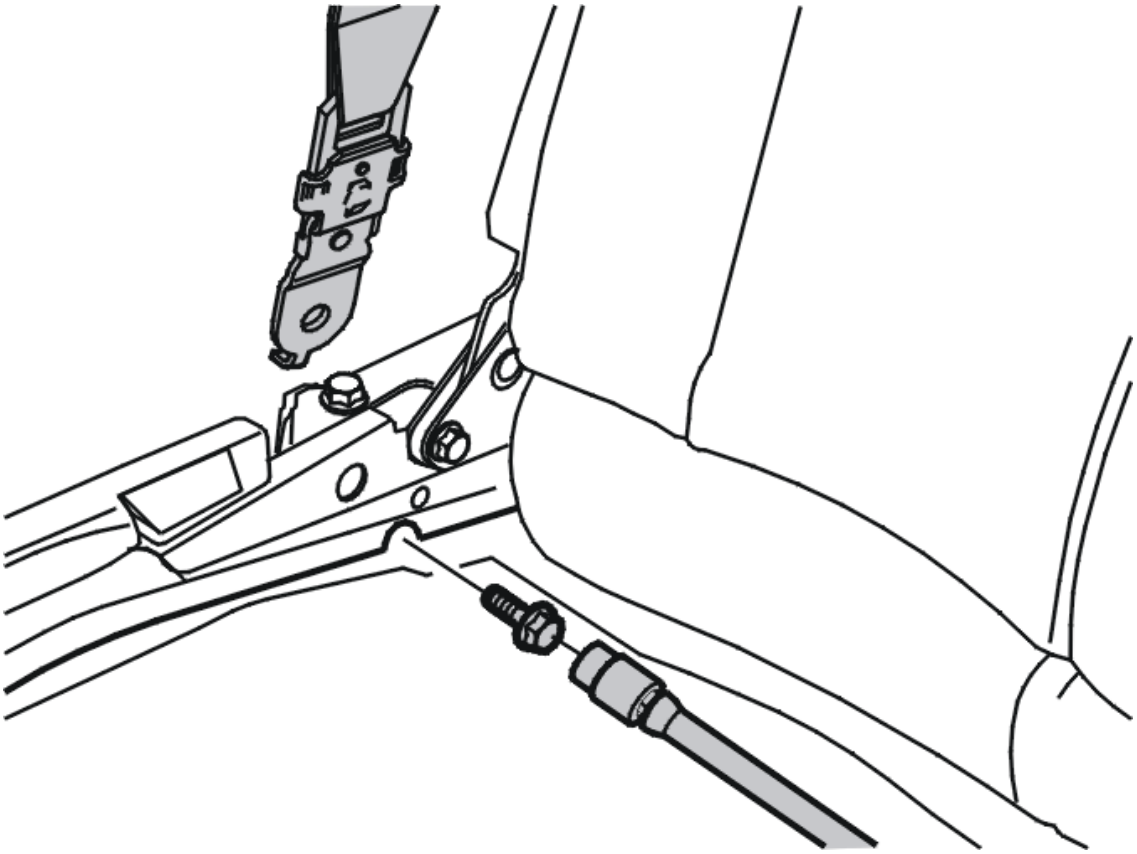

Fig. 84: Identifying Seat Belt Screw
Courtesy of VOLVO CARS CORPORATION

Install 1 M10 screw. Tighten. See: **SUMMARY OF TIGHTENING TORQUES FOR SPECIFIC COMPONENTS** .

NOTE: Check that the seat belt is secure by jerking it hard in an upwards direction.

FINISHING

Pull the seat cushion(s) for the third row forward.

IC (INFLATABLE CURTAIN) MODULE, REPLACING

As the illustrations in this service information are used for different model years and / or models, some variation may occur. However, the essential information in the illustrations is always correct.

PREPARATIONS

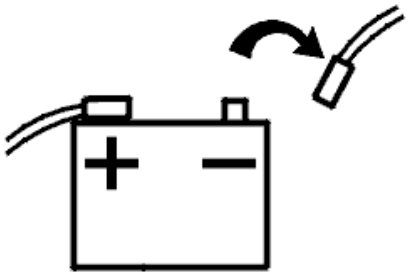

Fig. 85: Disconnecting Battery Lead
Courtesy of VOLVO CARS CORPORATION

Remove the battery lead. See **BATTERY, DISCONNECTING** .

For information about the inflatable curtain, see **HANDLING NON-DEPLOYED SRS-COMPONENTS** .

NOTE: When installing the inflatable curtain, part of the decal on the curtain must be ripped off and stuck on the decal in the door opening.

NOTE: There are two XC90 versions.

- **The five seat version has one inflatable curtain on each side**
- **The seven seat version has two inflatable curtains on each side.**

WARNING: Under no circumstances use an ohmmeter or other live measuring instrument to take readings on a disconnected, non-deployed, inflatable curtain. There is a risk of deployment.

WARNING: The inflatable curtain must never be unscrewed, repaired or moved to another vehicle.

INFLATABLE CURTAIN (FIVE SEAT VERSION), REPLACING

REMOVING INFLATABLE CURTAINS (FIVE SEAT VERSION)

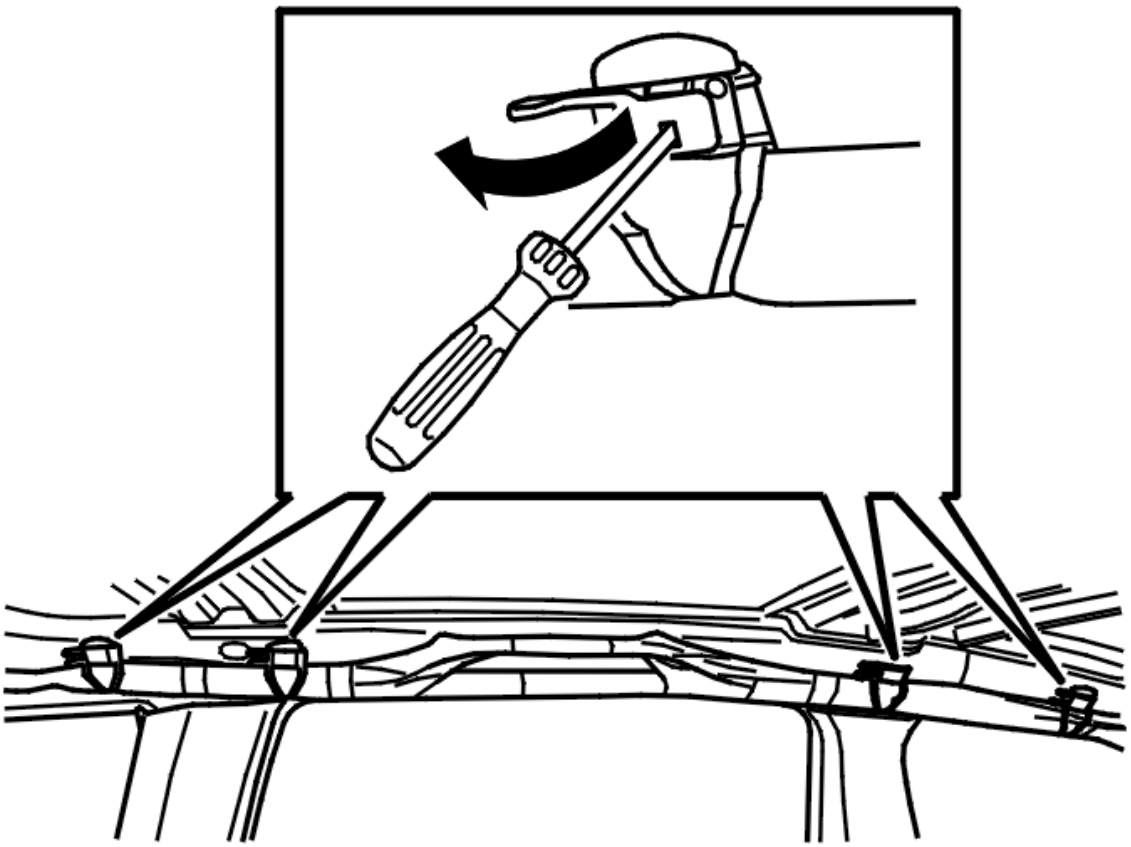

Fig. 86: Identifying Inflatable Curtain Support Clips
Courtesy of VOLVO CARS CORPORATION

Remove:

- the headlining. See **HEADLINING, REPLACING**
- the connector
- the support clips from the body, (4 each side). See **SUPPORT CLIPS INFLATABLE CURTAIN (INFLATABLE CURTAIN MODULE), REPLACING**.

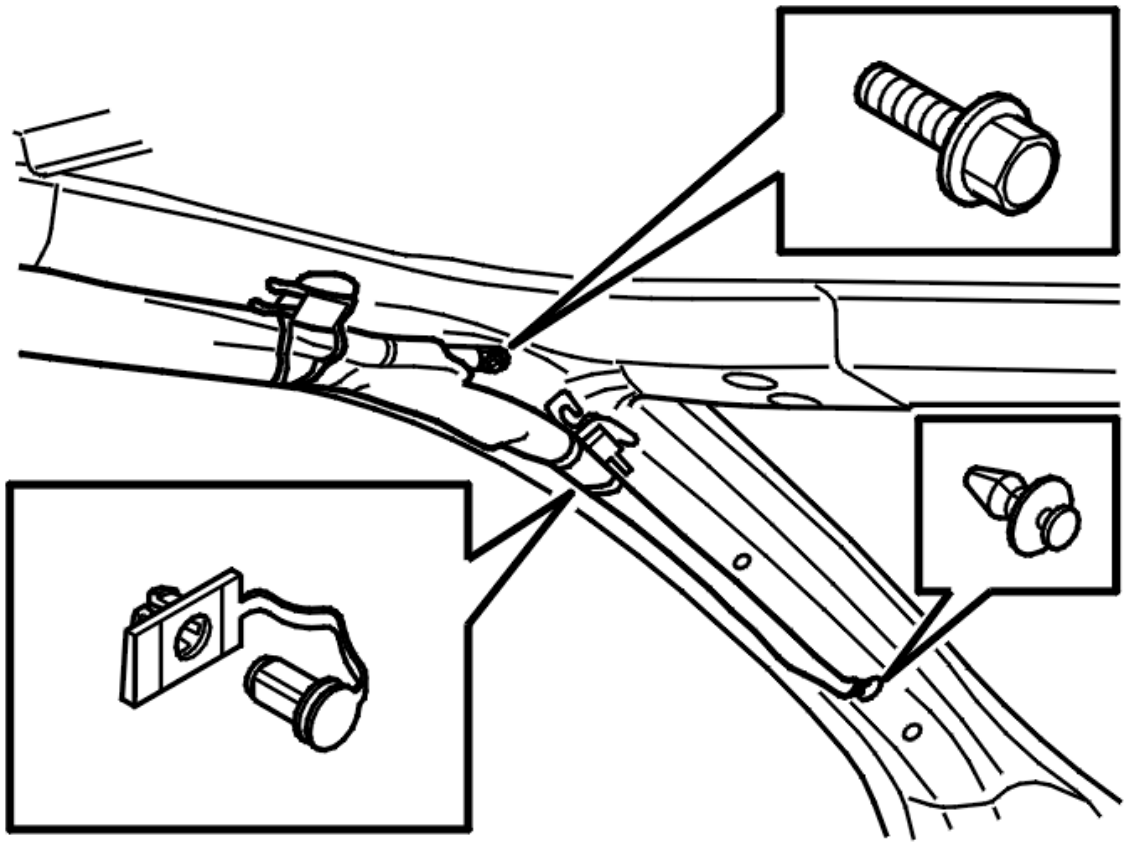

Fig. 87: Identifying Screw And Clips
Courtesy of VOLVO CARS CORPORATION

Remove:

- the front securing clip
- the clip at the A-post. Unhook the hook
- the screw.

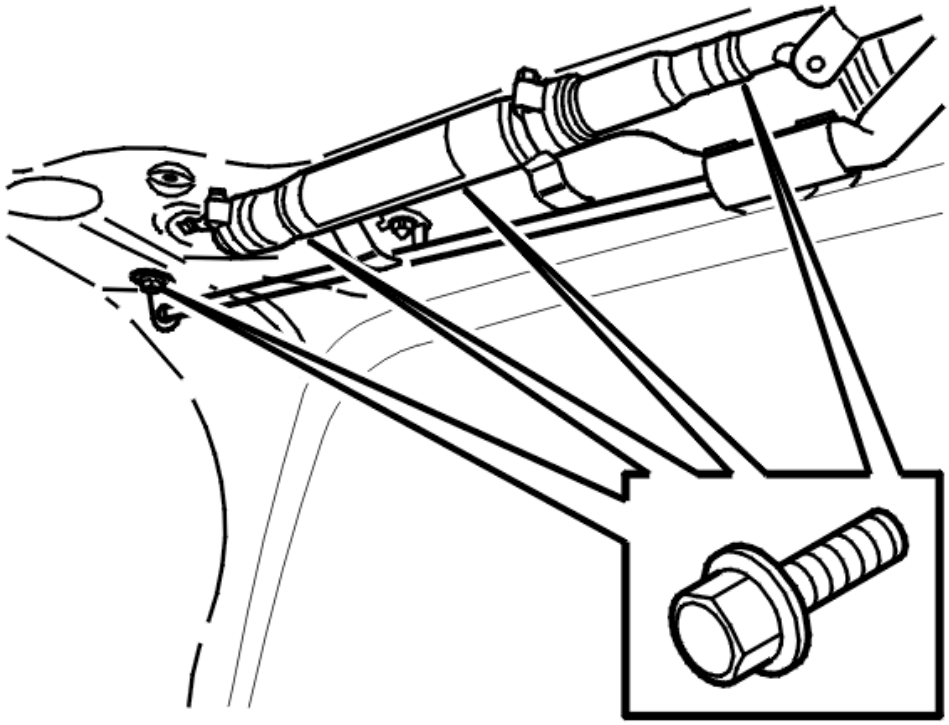

Fig. 88: Locating Screws
Courtesy of VOLVO CARS CORPORATION

- the screw from the gas generator bracket. Unhook
- the screw from the eyelet mounting. Unhook.

Lift out the inflatable curtain.

INSTALLING INFLATABLE CURTAINS (FIVE SEAT VERSION)

NOTE: For tightening torques, see TIGHTENING TORQUE .

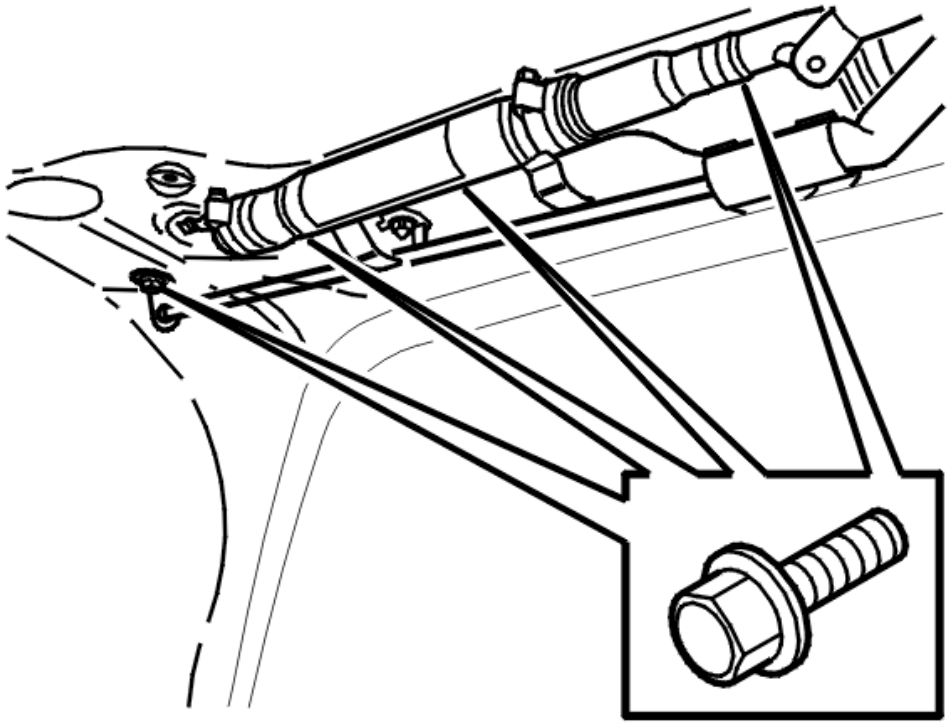

Fig. 89: Locating Screws
Courtesy of VOLVO CARS CORPORATION

Install:

- the insert on the gas generator bracket on the body side
- the 4 support clips on the body side. Press into place
- the 3 M6 screws. Tighten
- 1 M6 screw to the eyelet. Tighten.

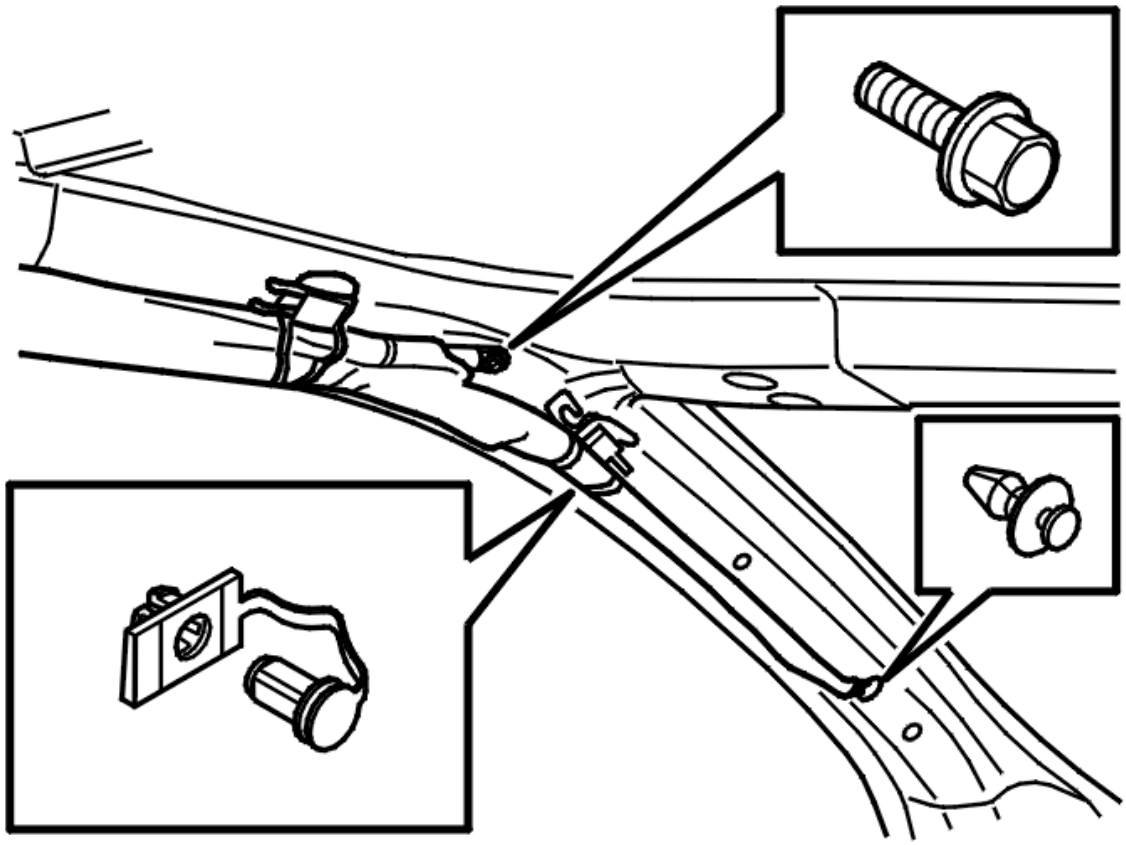

Fig. 90: Identifying Screw And Clips
Courtesy of VOLVO CARS CORPORATION

- 1 M6 screw for the gas pipe at the A-post. Unhook the hook at the A-post
- the clip
- the front securing clip at the A-post.

CAUTION: Always replace the front securing clip with a new one.

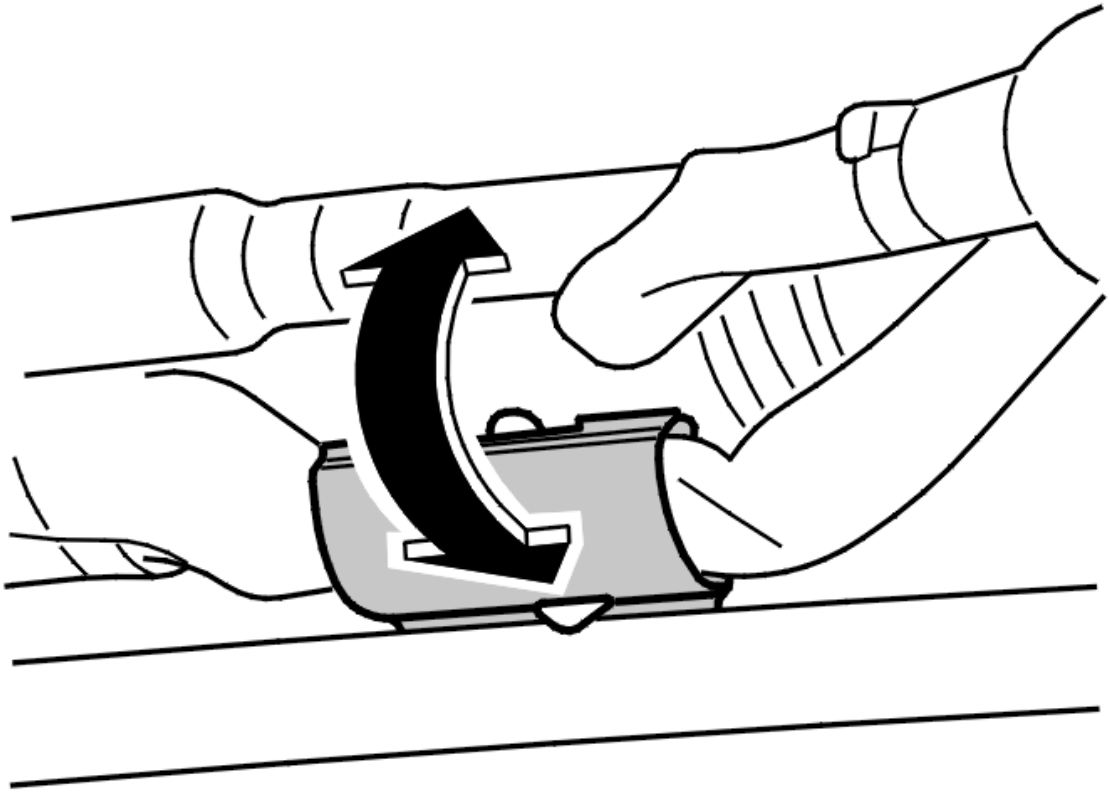

Fig. 91: Identifying Sail Fixation
Courtesy of VOLVO CARS CORPORATION

Check:

- the function of the clip for the sail fixation so that it releases easily
- that the inflatable curtain is not trapped.

Install:

- the connector
- the headlining. See **HEADLINING, REPLACING** .

Carry out an inspection. See **SUPPLEMENTARY RESTRAINT SYSTEM (SRS), INSPECTION** .

INFLATABLE CURTAIN (SEVEN SEAT VERSION), REPLACING

REMOVING INFLATABLE CURTAINS (SEVEN SEAT VERSION)

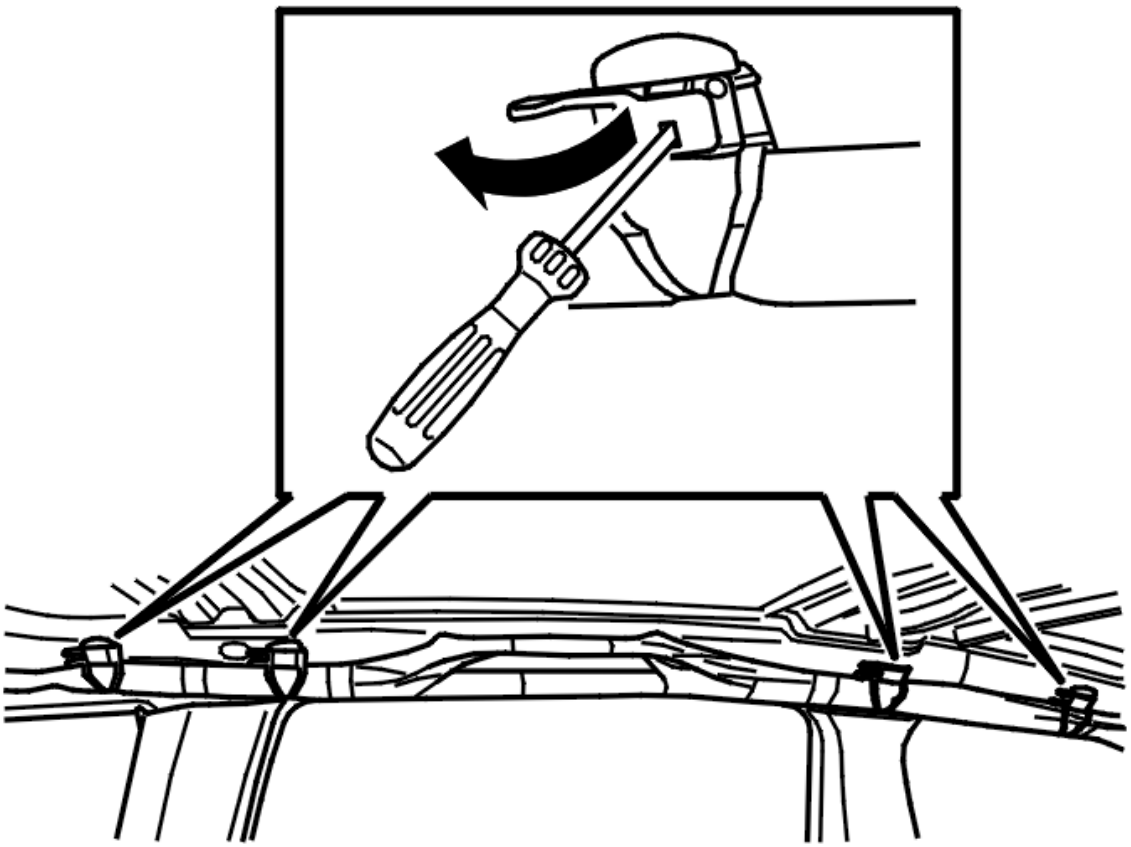

Fig. 92: Identifying Inflatable Curtain Support Clips
Courtesy of VOLVO CARS CORPORATION

Remove:

- the headlining. See **HEADLINING, REPLACING**
- the connector
- the support clips from the body, (4 each side). See **SUPPORT CLIPS INFLATABLE CURTAIN (INFLATABLE CURTAIN MODULE), REPLACING**

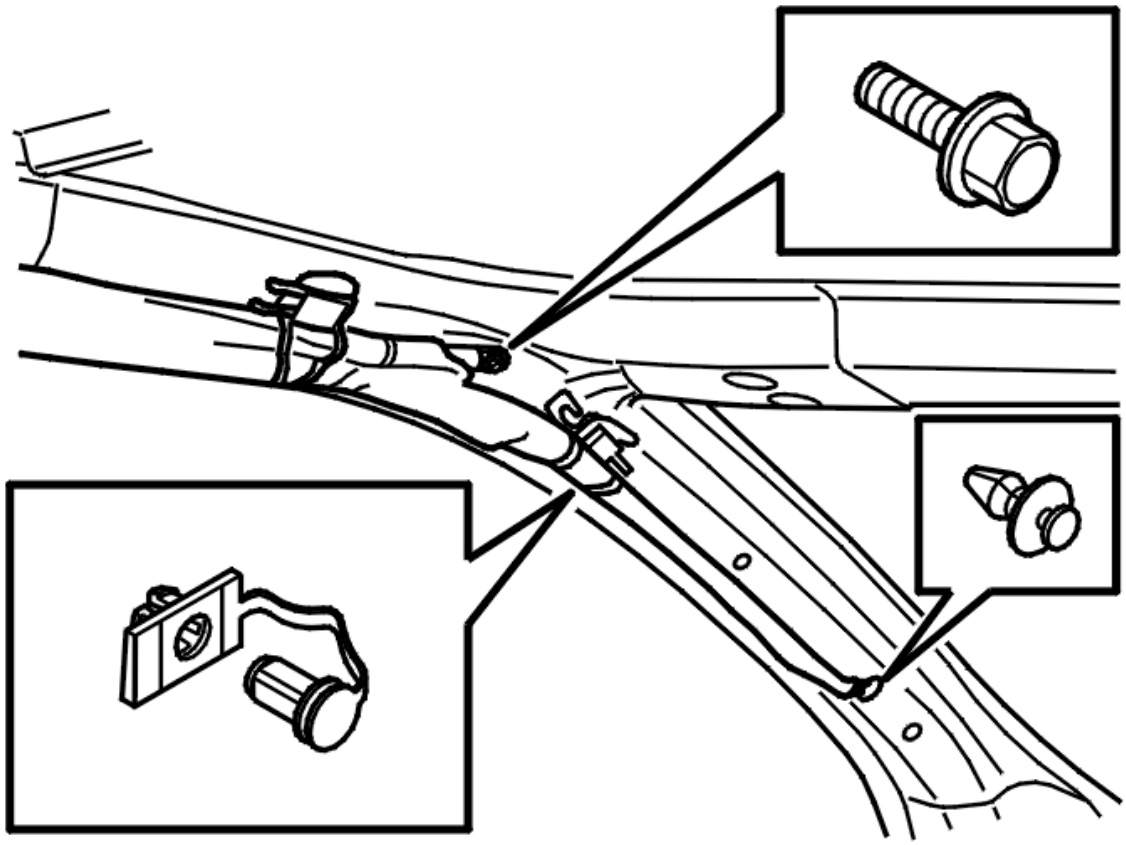

Fig. 93: Identifying Screw And Clips
Courtesy of VOLVO CARS CORPORATION

- the front securing clip
- the clip at the A-post. Unhook the hook
- the screw.

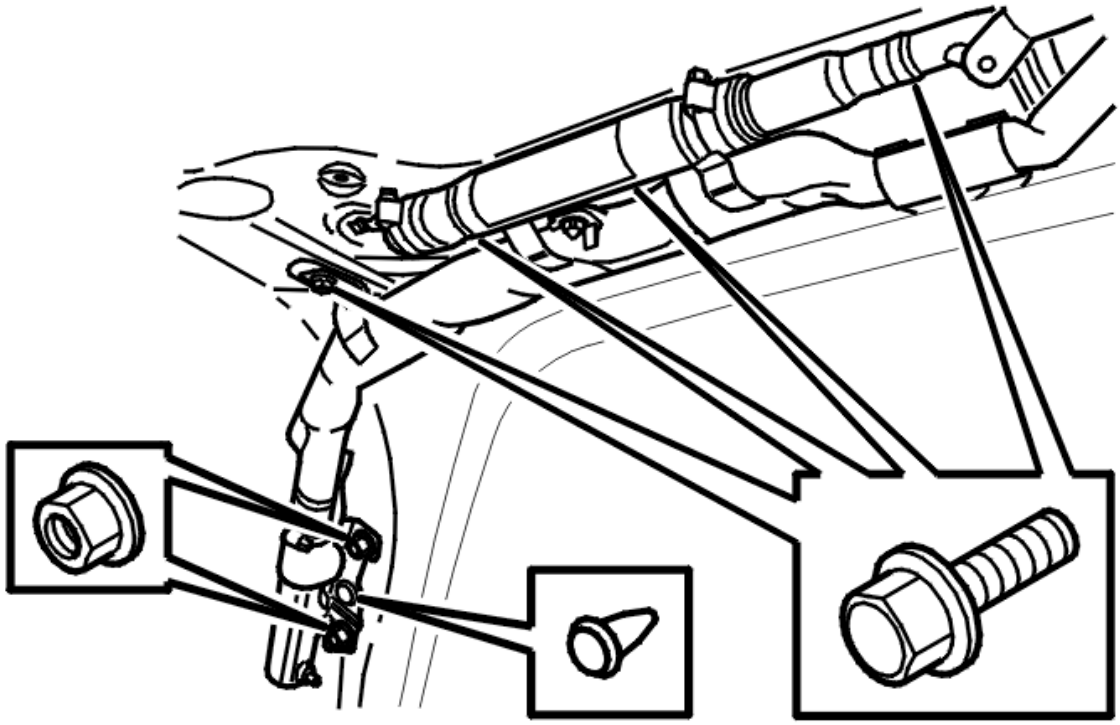

Fig. 94: Identifying Screws, Nuts, And Clip For Inflatable Curtain Components
Courtesy of VOLVO CARS CORPORATION

- the screw from the bracket for the front gas generator. Unhook the screw
- the screw at the D-post
- the nuts, x2, from the bracket for the rear gas generator
- the clip from the bracket for the rear gas generator.

Lift out the inflatable curtain.

INSTALLING INFLATABLE CURTAINS (SEVEN SEAT VERSION)

NOTE: For tightening torques, see TIGHTENING TORQUE .

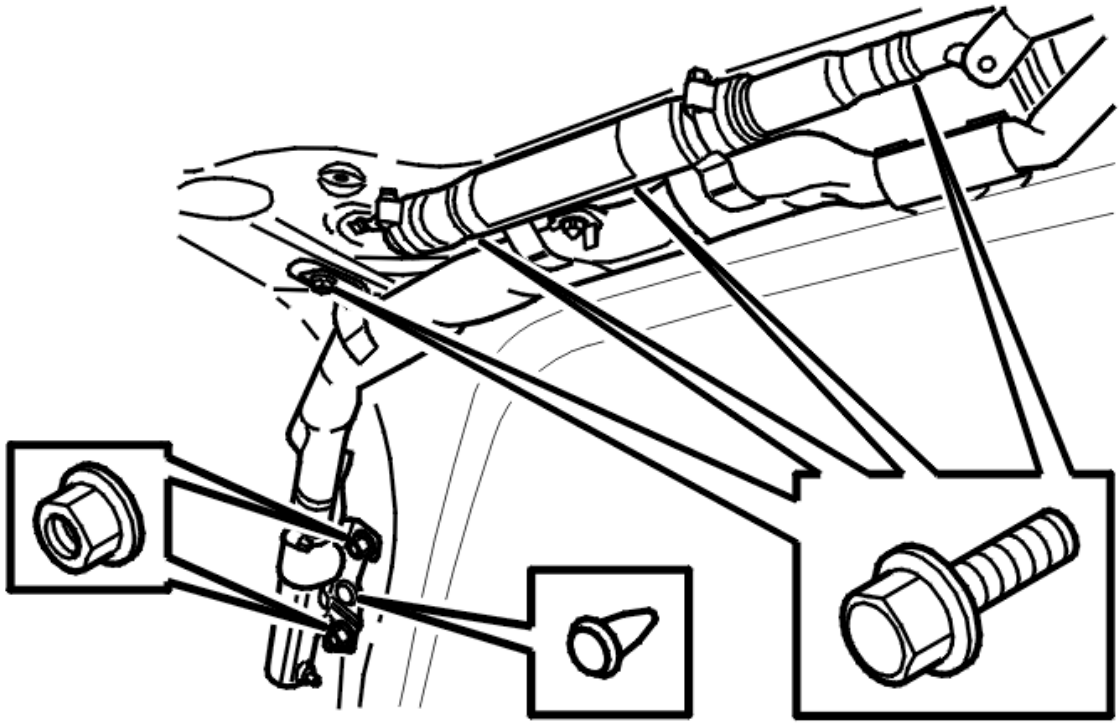

Fig. 95: Identifying Screws, Nuts, And Clip For Inflatable Curtain Components
Courtesy of VOLVO CARS CORPORATION

Install:

- the insert on the gas generator bracket on the body side
- the 4 support clips on the body side. Press into place
- the front gas generator with the center screw, x1 M6. Tighten
- the rear gas generator. Secure using clips
- 2 x M6 nuts. Tighten
- 1 x M6 screw at the D-post. Tighten.

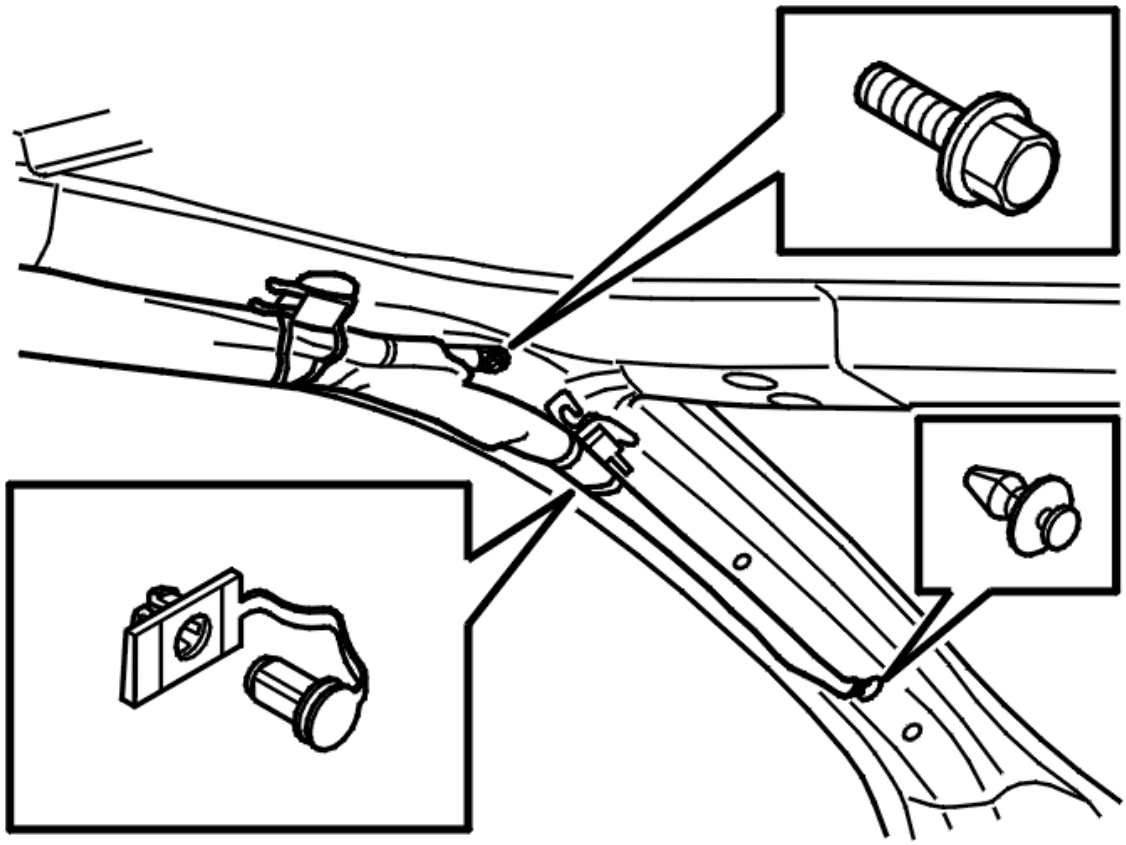

Fig. 96: Identifying Screw And Clips
Courtesy of VOLVO CARS CORPORATION

- 1 M6 screw for the gas pipe the A-post. Unhook the hook at the A-post
- the clip
- the front securing clip at the A-post.

CAUTION: Always replace the front securing clip with a new one.

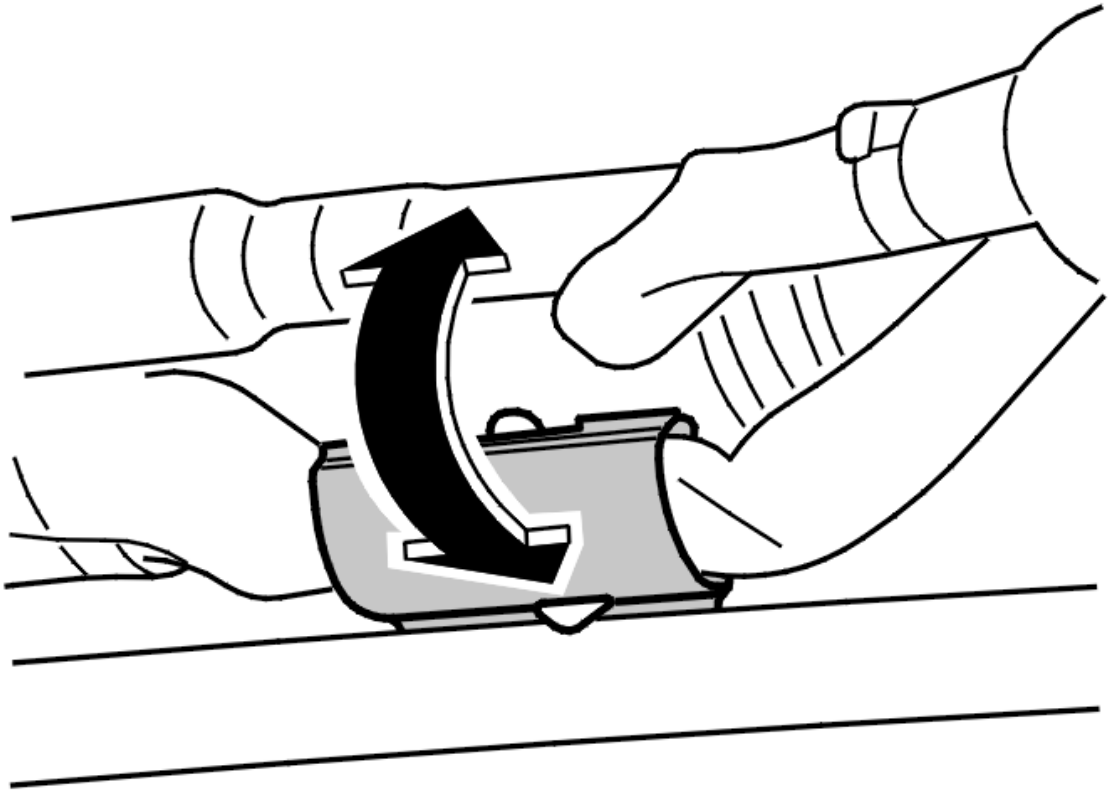

Fig. 97: Identifying Sail Fixation
Courtesy of VOLVO CARS CORPORATION

Check:

- the function of the clip for the sail fixation so that it releases easily
- that the inflatable curtain is not trapped.

Install:

- the connector
- the headlining. See **HEADLINING, REPLACING** .

Carry out an inspection. See **SUPPLEMENTARY RESTRAINT SYSTEM (SRS), INSPECTION** .

SEAT BELT FRONT, REPLACING

As the illustrations in this service information are used for different model years and / or models, some variation may occur. However, the essential information in the illustrations is always correct.

WARNING: **Under no circumstances use an ohmmeter or other live measuring instrument to take readings on a disconnected non-deployed seat belt tensioner. There is a risk that the seat belt tensioner could deploy.**

WARNING: The seat belt tensioner must never be taken apart, repaired or moved to another vehicle.

PREPARATIONS

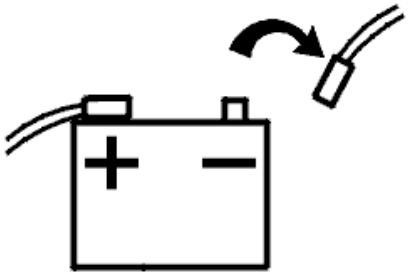

Fig. 98: Disconnecting Battery Lead
Courtesy of VOLVO CARS CORPORATION

Move the front seat as far forward as possible. Fold the backrest forward.

Disconnect the battery lead. See **BATTERY, DISCONNECTING** .

For information about handling seat belt tensioners, see **HANDLING NON-DEPLOYED SRS-COMPONENTS** .

REMOVING FRONT SEAT BELTS

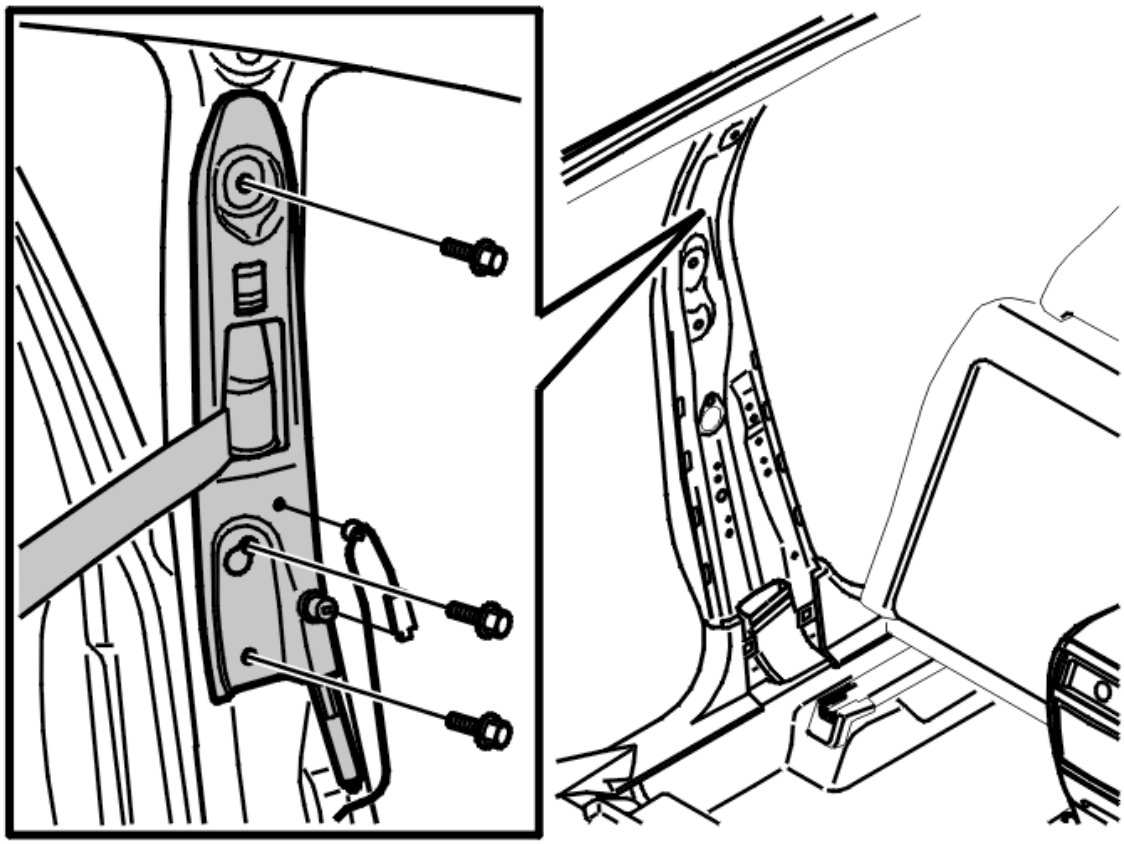

Fig. 99: Identifying Front Seat Belt And Bolts
Courtesy of VOLVO CARS CORPORATION

Remove:

- the end mounting. See **END MOUNTING, REPLACING**
- the B-post panel. See **PANEL B-POST, REPLACING**
- the connector
- the three screws
- the clip for the mounting for the SRS ignition cable in the bracket
- the bracket for the seat belt and seat belt (inertia) reel.

INSTALLING FRONT SEAT BELTS

Install:

- the bracket for the seat belt
- the 3 screws. Tighten. See **SUMMARY OF TIGHTENING TORQUES FOR SPECIFIC COMPONENTS**
- the connector
- the B-post panel. See **PANEL B-POST, REPLACING**
- the end mounting. See **END MOUNTING, REPLACING**

Check the function of the seat belt. See **SEAT BELT FUNCTION, CHECK** .

Carry out a final inspection. See **SUPPLEMENTARY RESTRAINT SYSTEM (SRS), INSPECTION** .

SEAT BELT REAR, REPLACING

As the illustrations in this service information are used for different model years and / or models, some variation may occur. However, the essential information in the illustrations is always correct.

WARNING: **Under no circumstances use an ohmmeter or other live measuring instrument to take readings on a disconnected non-deployed seat belt tensioner. There is a risk that the seat belt tensioner could deploy.**

WARNING: **The seat belt tensioner must never be taken apart, repaired or moved to another vehicle.**

Included in this method are the methods for the center rear seat belt, see **SEAT BELT REAR CENTER (SECOND ROW), REPLACING** and the rear seat belt on the third row. See **SEAT BELT REAR (THIRD ROW), REPLACING**.

SEAT BELT REAR (SECOND ROW), REPLACING

PREPARATIONS

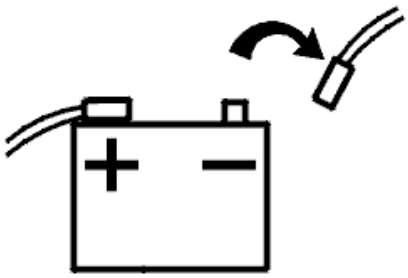

Fig. 100: Disconnecting Battery Lead
Courtesy of VOLVO CARS CORPORATION

Move the seat as far forward as possible. Fold the backrest forward.

Disconnect the battery lead. See **BATTERY, DISCONNECTING** .

For information about handling seat belt tensioners, see **HANDLING NON-DEPLOYED SRS-COMPONENTS** .

REMOVING THE REAR SEAT BELT (SECOND ROW)

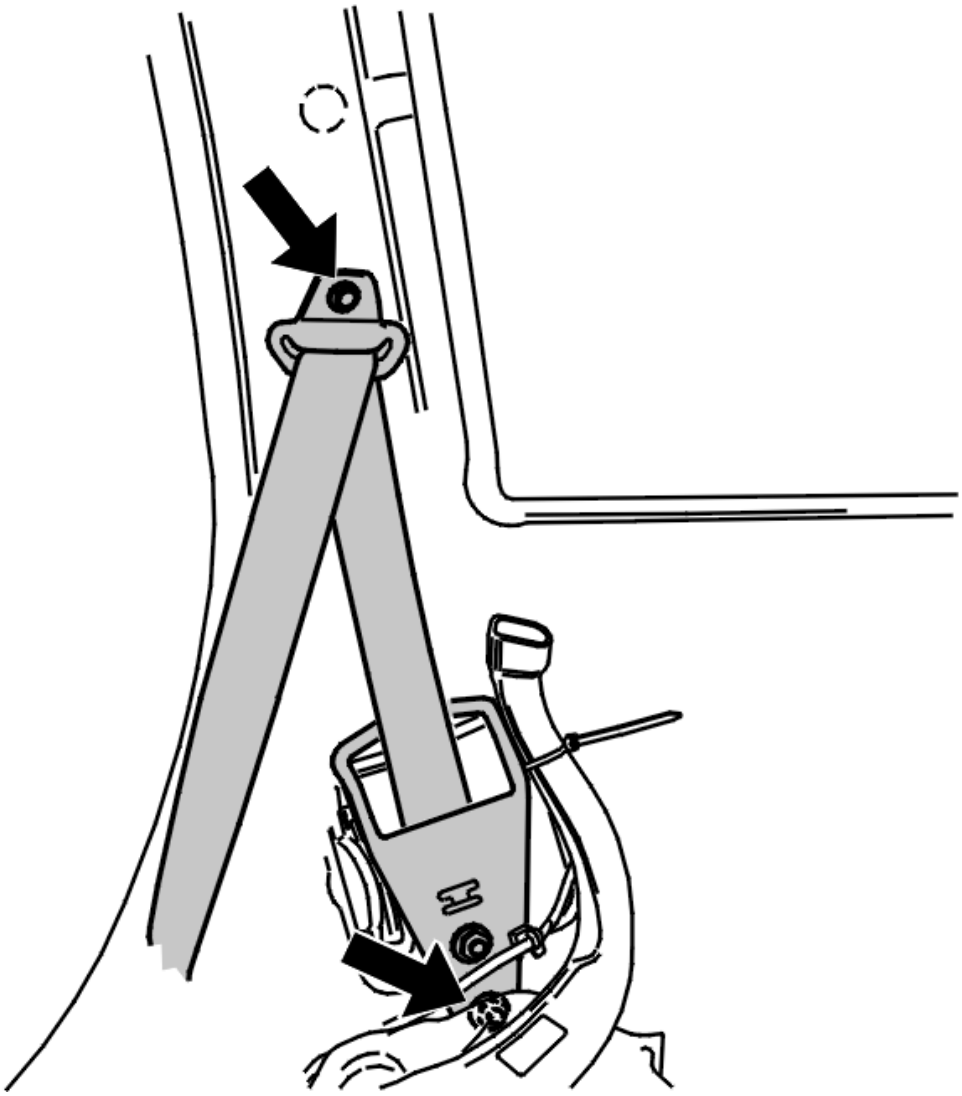

Fig. 101: Identifying Seat Belt Assembly And Bolt
Courtesy of VOLVO CARS CORPORATION

Remove:

- the C-post panel. See **PANEL C-POST, REPLACING**
- the side panel. See **SIDE PANEL CARGO COMPARTMENT, REPLACEMENT**
- one screw from the bracket for the seat belt (inertia) reel
- the bracket for the seat belt (inertia) reel by unhooking it
- the connector
- one screw from the upper mounting
- the end mounting. See **END MOUNTING, REPLACING**.

Thread the seat belt out of the C-post panel.

INSTALLING THE REAR SEAT BELT (SECOND ROW)

NOTE: For tightening torques, see TIGHTENING TORQUE .

Install:

- the seat belt reel and bracket
- the connector
- the bracket for the seat belt (inertia) reel by hooking it into place
- 1 M10 screw. Tighten
- the upper mounting
- 1 M10 screw for the upper mounting. Tighten.

Insert the seat belt through the C-post panel.

Install:

- the end mounting. See **END MOUNTING, REPLACING**
- the side panel. See **SIDE PANEL CARGO COMPARTMENT, REPLACEMENT**
- the C-post panel. See **PANEL C-POST, REPLACING**

Check the function of the seat belt. See **SEAT BELT FUNCTION, CHECK** .

Carry out a final inspection. See **SUPPLEMENTARY RESTRAINT SYSTEM (SRS), INSPECTION** .

SEAT BELT REAR CENTER (SECOND ROW), REPLACING

PREPARATIONS

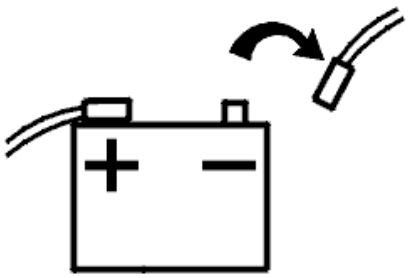

Fig. 102: Disconnecting Battery Lead
Courtesy of VOLVO CARS CORPORATION

Disconnect the battery lead. See **BATTERY, DISCONNECTING** .

REMOVING THE CENTER REAR SEAT BELT (SECOND ROW)

Disconnect the connector under the seat.

Remove the center seat. See **REMOVING THE CENTER SEAT (SECOND ROW)** . Lift the seat from the car.

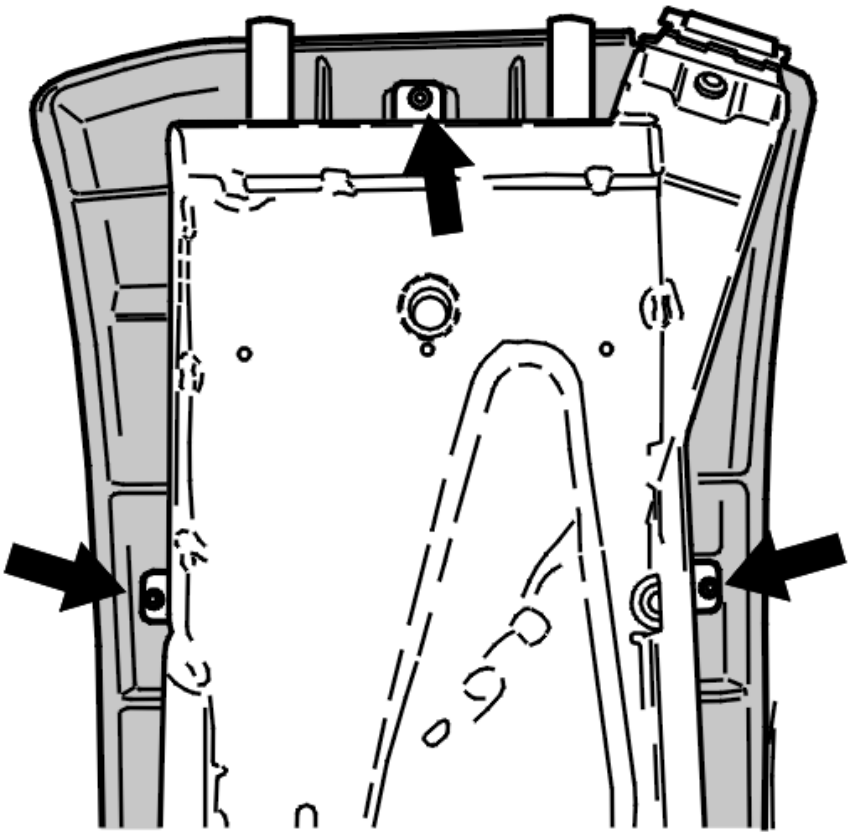

Fig. 103: Folding Up Upholstery
Courtesy of VOLVO CARS CORPORATION

Remove:

- the upholstery from the backrest frame. See **UPHOLSTERY BACKREST CUSHION CENTER (SECOND ROW), REPLACING**
- the three screws.

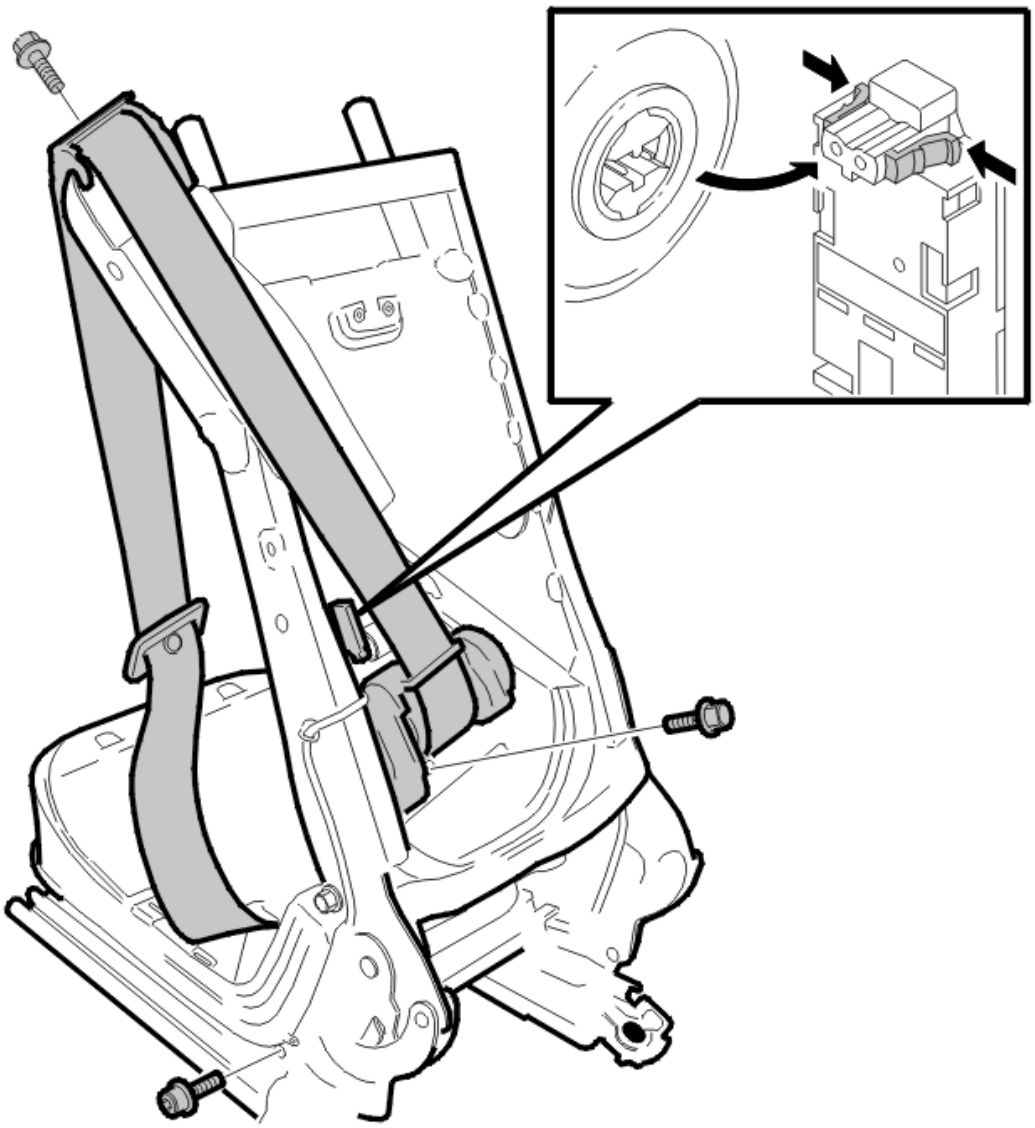

Fig. 104: Identifying Seat Belt Assembly And Screw
Courtesy of VOLVO CARS CORPORATION

- the rear section from the backrest frame
- one screw for the end mounting
- one screw for the upper seat belt mounting
- one screw for the seat belt reel.

Disconnect the connector.

Remove the seat belt (inertia) reel.

INSTALLING THE CENTER REAR SEAT BELT (SECOND ROW)

NOTE: For tightening torques, see TIGHTENING TORQUE .

Install:

- the connector
- the seat belt reel
- 1 screw. Tighten. See **SUMMARY OF TIGHTENING TORQUES FOR SPECIFIC COMPONENTS**
- the upper seat belt anchorage
- 1 screw. Tighten. See **SUMMARY OF TIGHTENING TORQUES FOR SPECIFIC COMPONENTS**
- the end mounting
- 1 M10 screw. Tighten
- the rear section
- the 3 screws. Tighten
- the upholstery for the backrest frame. See **UPHOLSTERY BACKREST CUSHION CENTER (SECOND ROW), REPLACING** .

Lift the seat into the car.

Install:

- the connector under the seat
- the center seat. See **INSTALLING THE CENTER SEAT (SECOND ROW)** .

Check the function of the seat belt. See **SEAT BELT FUNCTION, CHECK** .

Carry out a final inspection. See **SUPPLEMENTARY RESTRAINT SYSTEM (SRS), INSPECTION** .

SEAT BELT REAR (THIRD ROW), REPLACING

PREPARATIONS

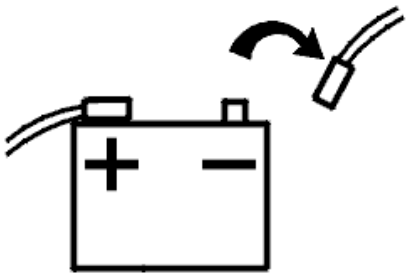

Fig. 105: Disconnecting Battery Lead
Courtesy of VOLVO CARS CORPORATION

Fold the backrest cushions up from the floor. Leave the seat cushions in place.

Remove the battery lead. See **BATTERY, DISCONNECTING** .

For information about handling seat belt tensioners, see **HANDLING NON-DEPLOYED SRS-COMPONENTS** .

REMOVING SEAT BELTS (THIRD ROW)

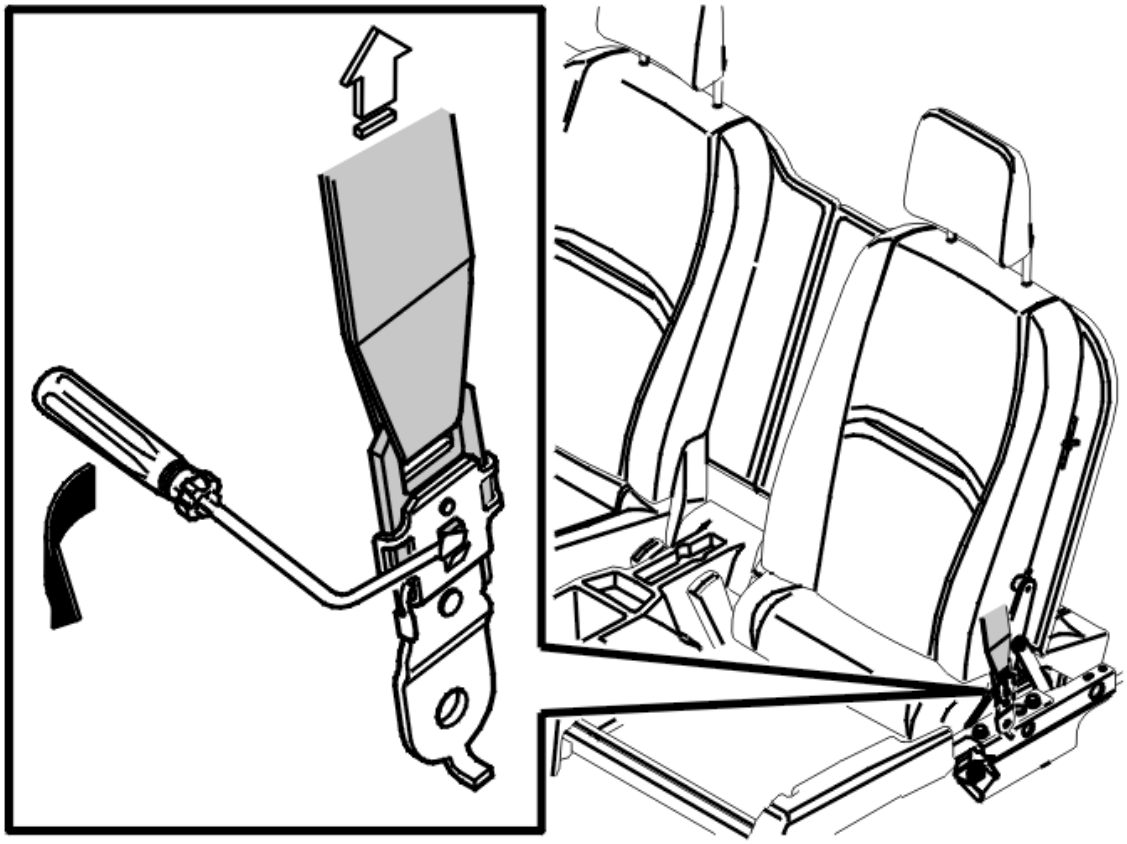

Fig. 106: Releasing Catch Using Chisel Or Screwdriver With Bent Tip
Courtesy of VOLVO CARS CORPORATION

HINT: Bend the tip of a groove-cut chisel 90°. Release the catch for the end mounting using the chisel.

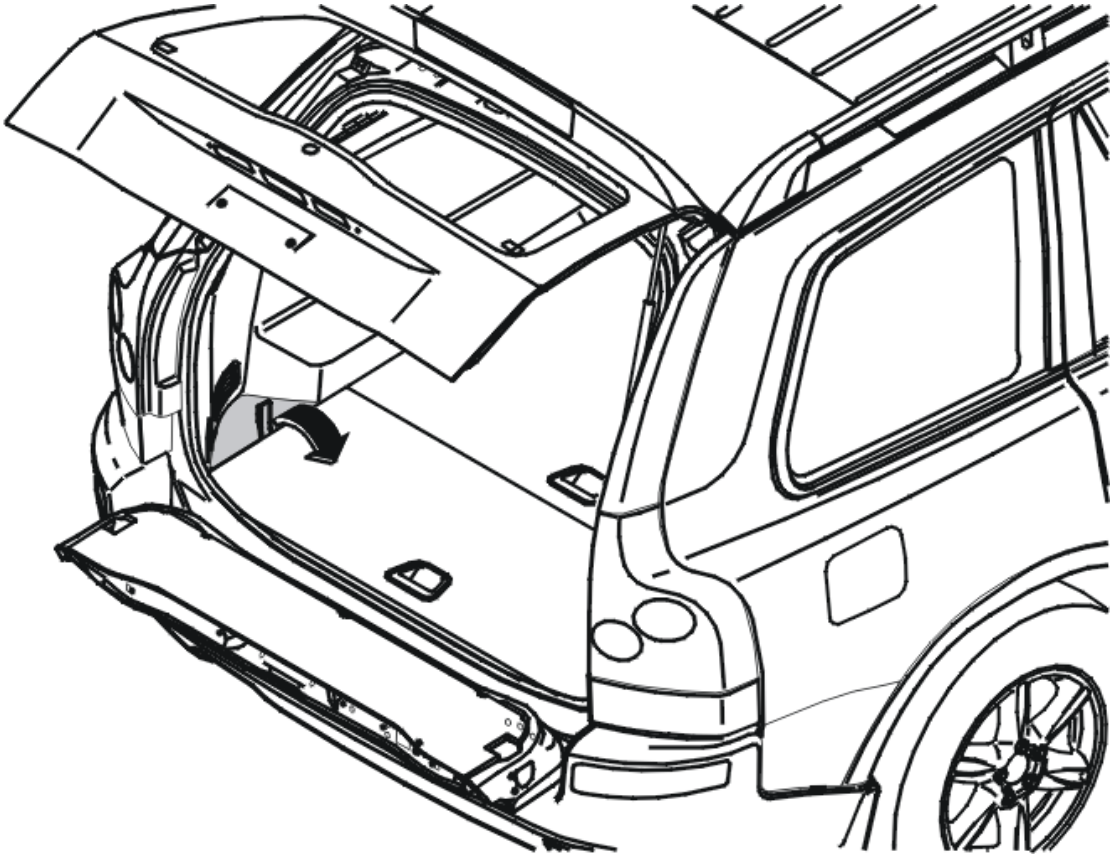

Fig. 107: Identifying Floor Panel
Courtesy of VOLVO CARS CORPORATION

Remove:

- the outer load floor.

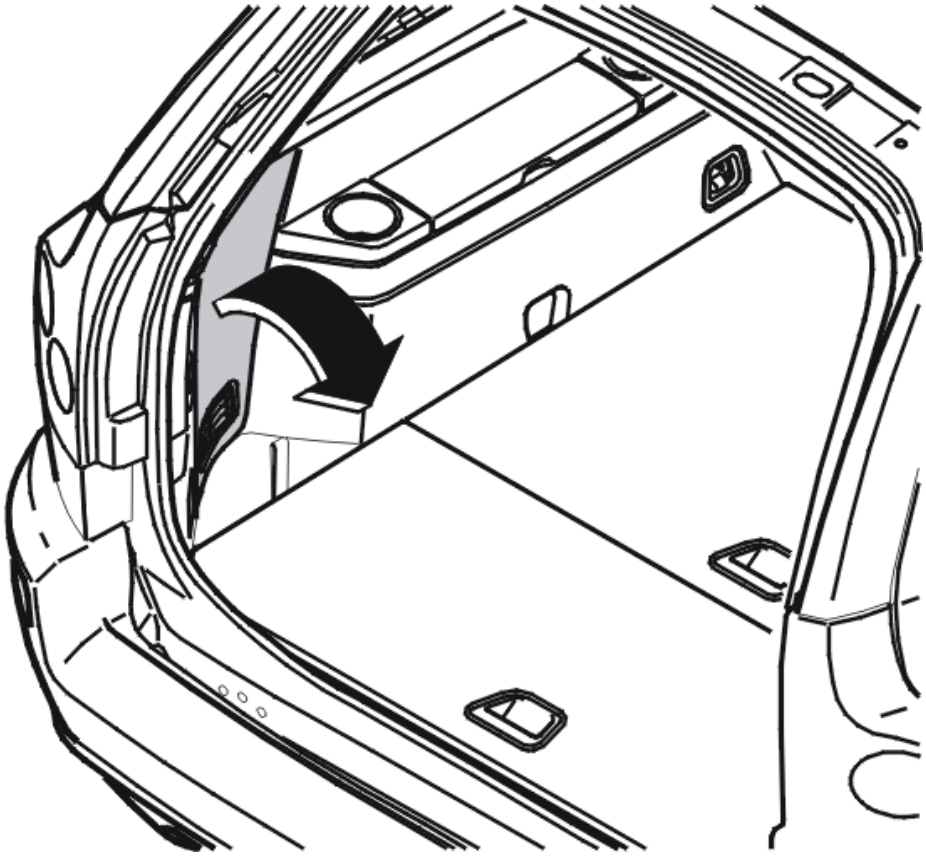

Fig. 108: Removing Side Panel Cover
Courtesy of VOLVO CARS CORPORATION

- the cover for the side panel.
- the seat belt cover in the D-post panel
- the end mounting. See **END MOUNTING, REPLACING**
- one screw from the upper seat belt anchorage
- one screw from the mounting for the seat belt (inertia) reel.

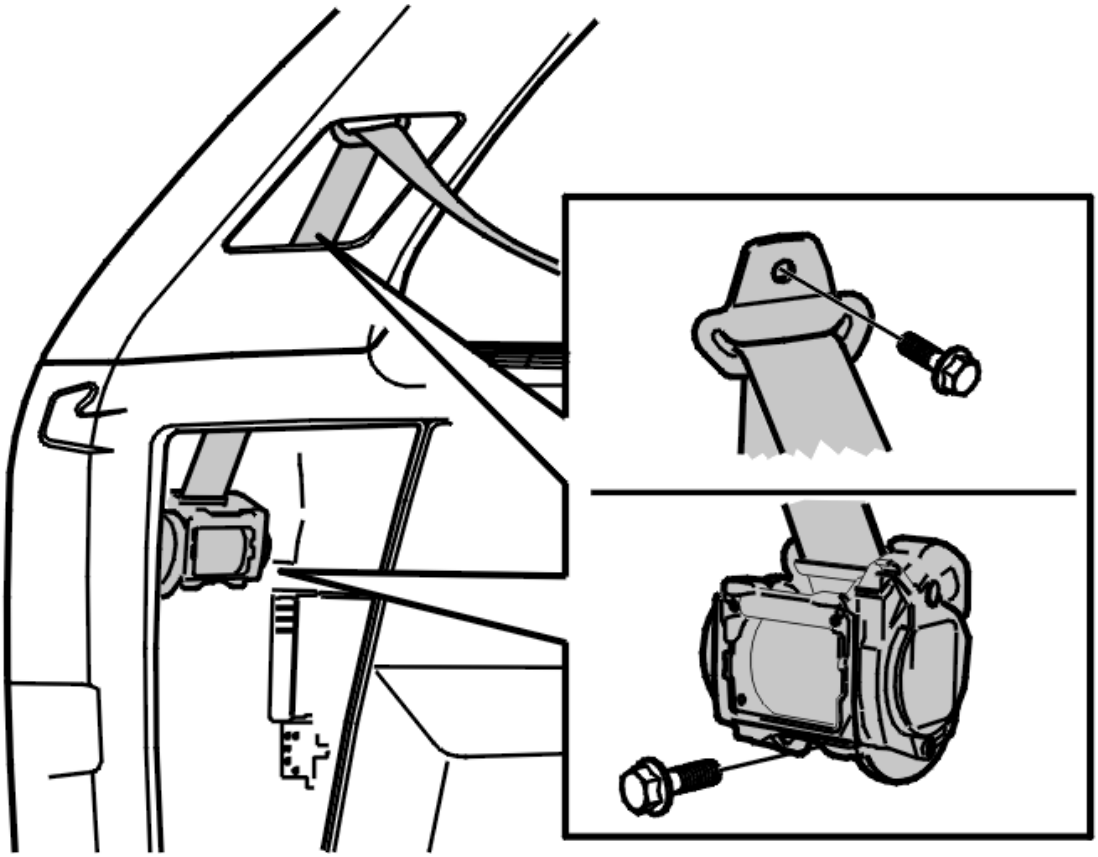

Fig. 109: Locating Seat Belt Reel
Courtesy of VOLVO CARS CORPORATION

Unhook from the seat belt reel.

Remove the connector for the SRS ignition cable.

Thread the seat belt through the hole at the D-post panel and out through the hole in the side panel.

INSTALLING REAR SEAT BELTS (THIRD ROW)

NOTE: For tightening torques, see TIGHTENING TORQUE .

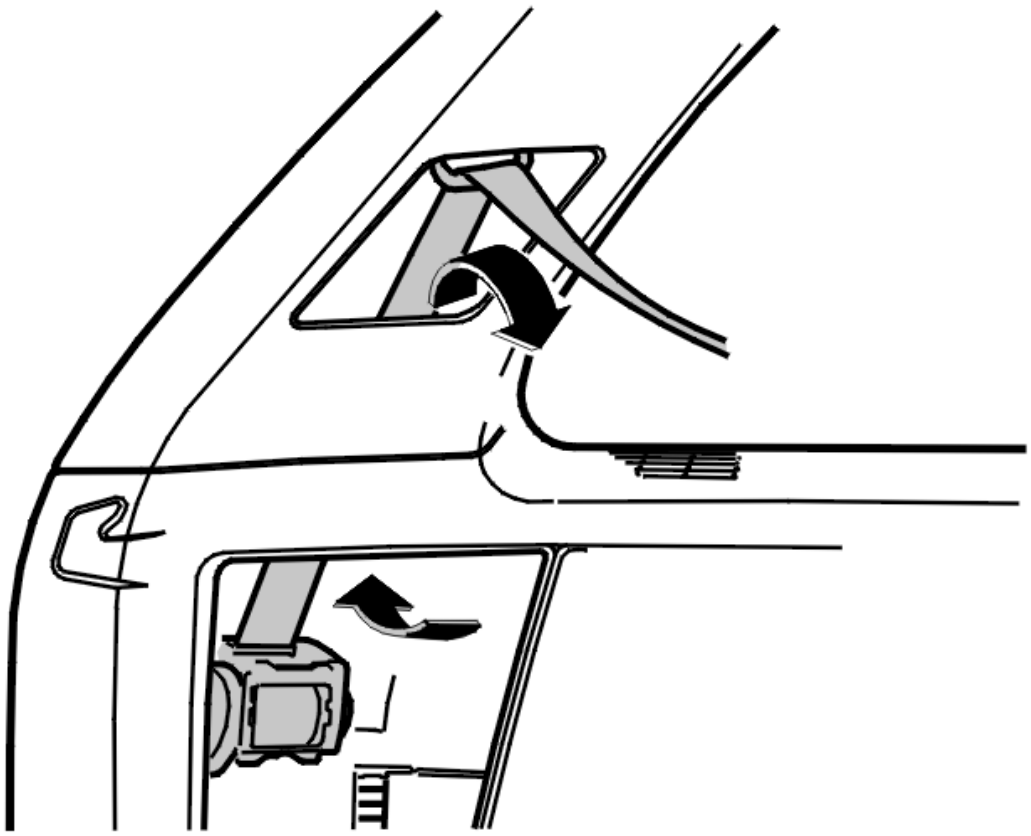

Fig. 110: Locating Seat Belt Reel
Courtesy of VOLVO CARS CORPORATION

Thread the seat belt through the hole in the side post panel and out through the hole in the D-post panel.

Connect the connector to the SRS ignition cable.

Hook onto the seat belt reel.

Install:

- 1 screw for the seat belt reel. Tighten. See **SUMMARY OF TIGHTENING TORQUES FOR SPECIFIC COMPONENTS**
- 1 M10 screw for the upper mounting. Tighten
- the end mounting. See **END MOUNTING, REPLACING**
- the seat belt cover
- the cover for the side panel
- the outer load floor.

Check the function of the seat belt. See **SEAT BELT FUNCTION, CHECK** .

Carry out a final inspection. See **SUPPLEMENTARY RESTRAINT SYSTEM (SRS), INSPECTION** .

STOP BUTTON SEAT BELT, REPLACING

As the illustrations in this service information are used for different model years and / or models, some variation may occur. However, the essential information in the illustrations is always correct.

POSITIONING THE STOP BUTTON

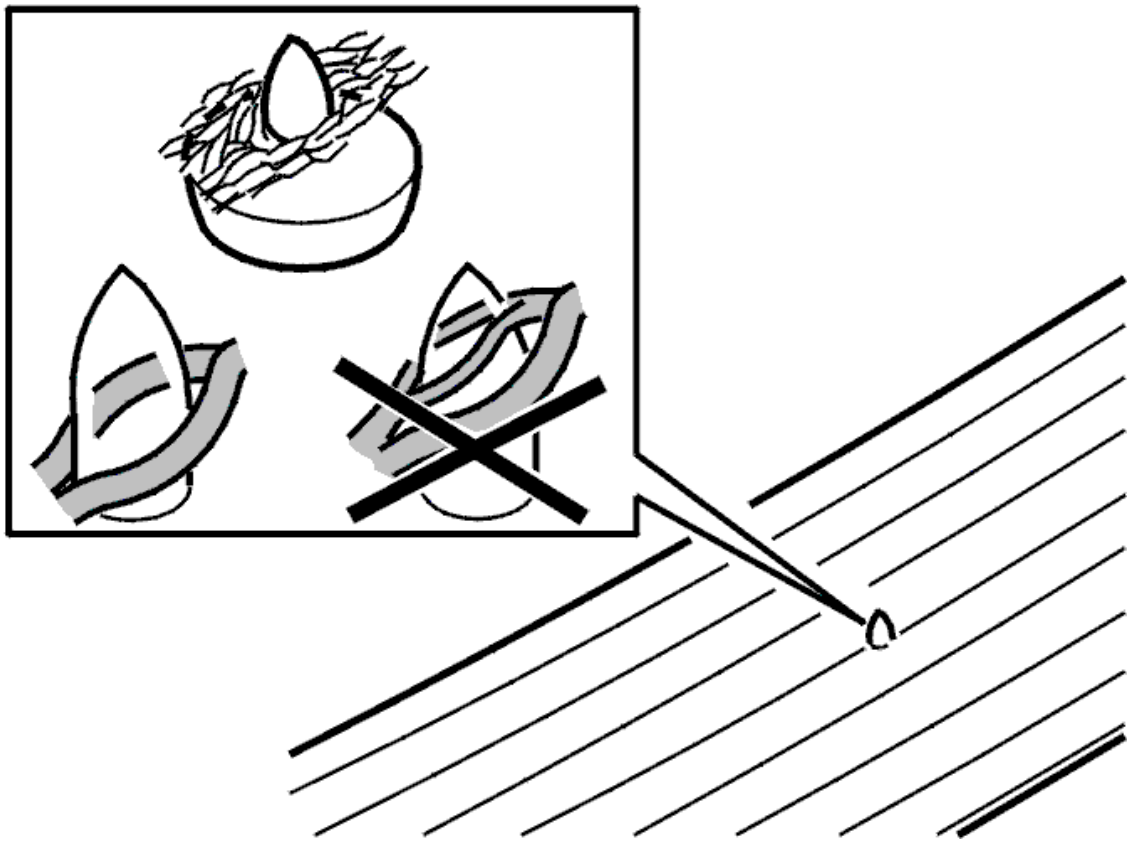

Fig. 111: Checking Belt Does Not Fray When Spike On Stop Is Pressed Through Belt
Courtesy of VOLVO CARS CORPORATION

This method covers all stops positioned on seat belts in the vehicle.

The stop must be positioned in the center of the belt at a distance of XXXX mm from the end mounting. See **STOP BUTTON SEAT BELT, SPECIFICATIONS** .

Check that the belt does not fray when the spike on the stop is pressed through the belt.

Thread the cover onto the stop.

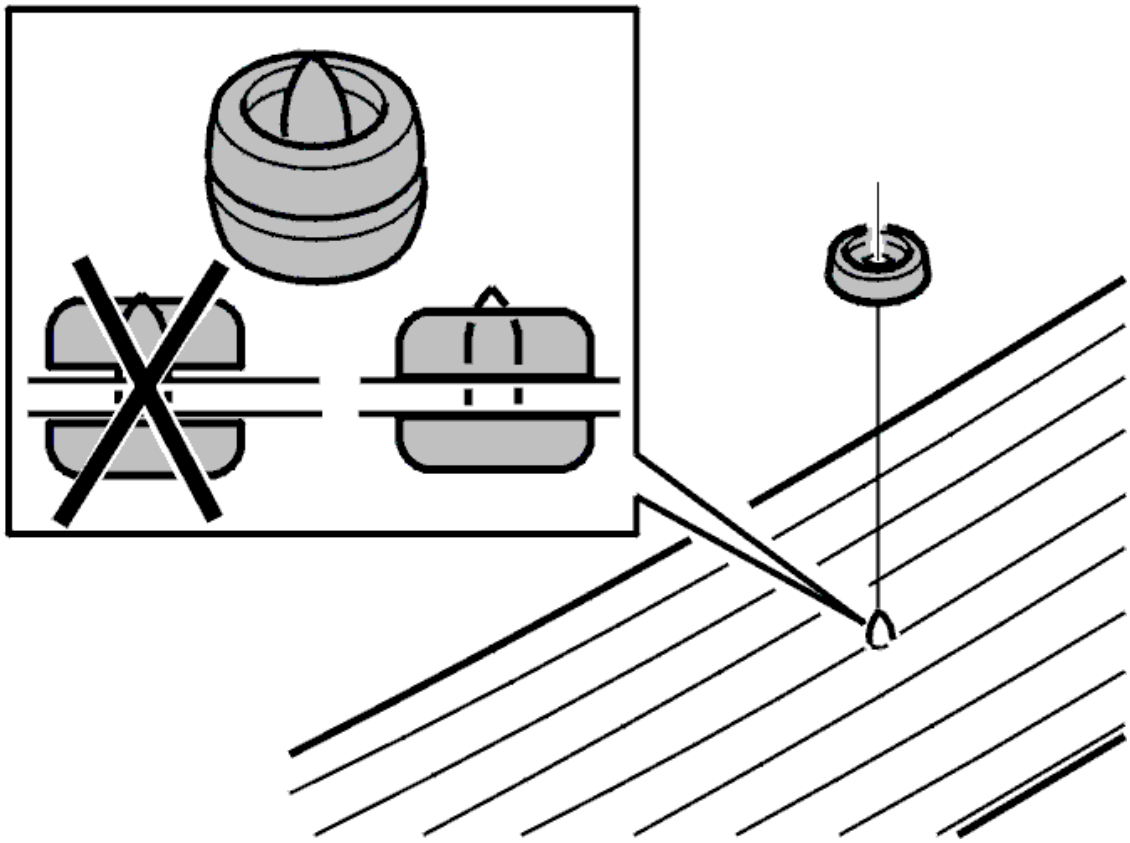

Fig. 112: Checking That Belt Does Not Fray When Spike On Stop Is Pressed Through Belt
Courtesy of VOLVO CARS CORPORATION

Press the sections together as much as possible.

HINT: Hold the cover in place so that there is no gap. Use round-nosed pliers.

WARNING: **The seat belt material must not be overheated or it will melt. If this happens, the entire seat belt must be replaced.**

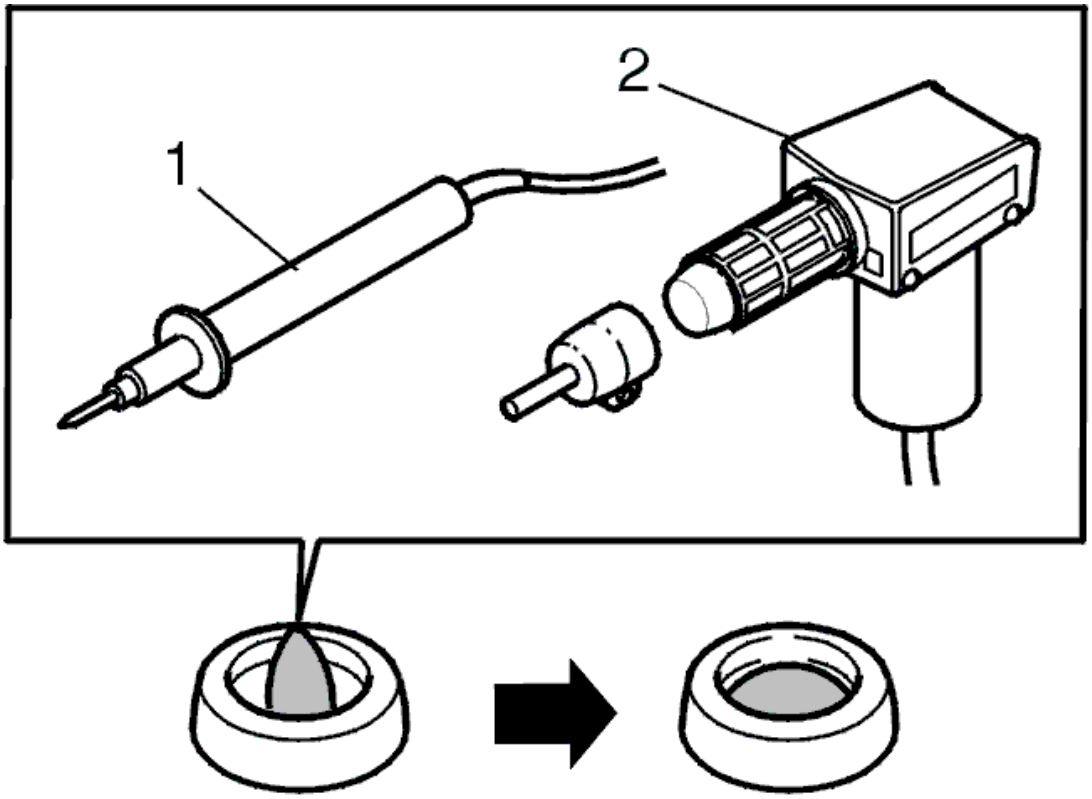

Fig. 113: Heating Using A Soldering Iron Or A Hot Air Gun Equipped With A Long Narrow Nozzle
Courtesy of VOLVO CARS CORPORATION

Heat using a soldering iron or a hot air gun equipped with a long narrow nozzle. Heat until the spike melts and the sections cannot be separated. Hold in place until the material has cooled down.

Check that the stop is secure and cannot be pulled off.

SUPPLEMENTAL RESTRAINT SYSTEM MODULE (SRS), REPLACING

NOTE: The illustrations in this service information are used for different model years and/or models. Some variation may occur. However, the essential information in the illustrations is always correct.

WARNING: The supplemental restraint system module (SRS) for the XC90 contains a new function, ROP (Roll Over Protection). This means that the control module cannot be worked on, removed or moved out of position without the power supply being switched off. Otherwise the airbags and seat belt tensioners may deploy.

PREPARATIONS

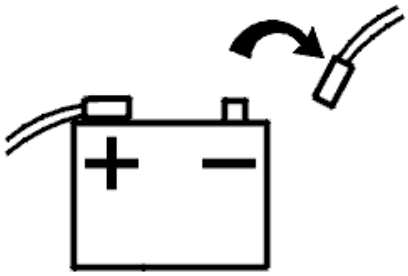

Fig. 114: Disconnecting Battery Lead
Courtesy of VOLVO CARS CORPORATION

Remove the battery cable. See **BATTERY, DISCONNECTING** .

REMOVING THE SUPPLEMENTAL RESTRAINT SYSTEM MODULE (SRS)

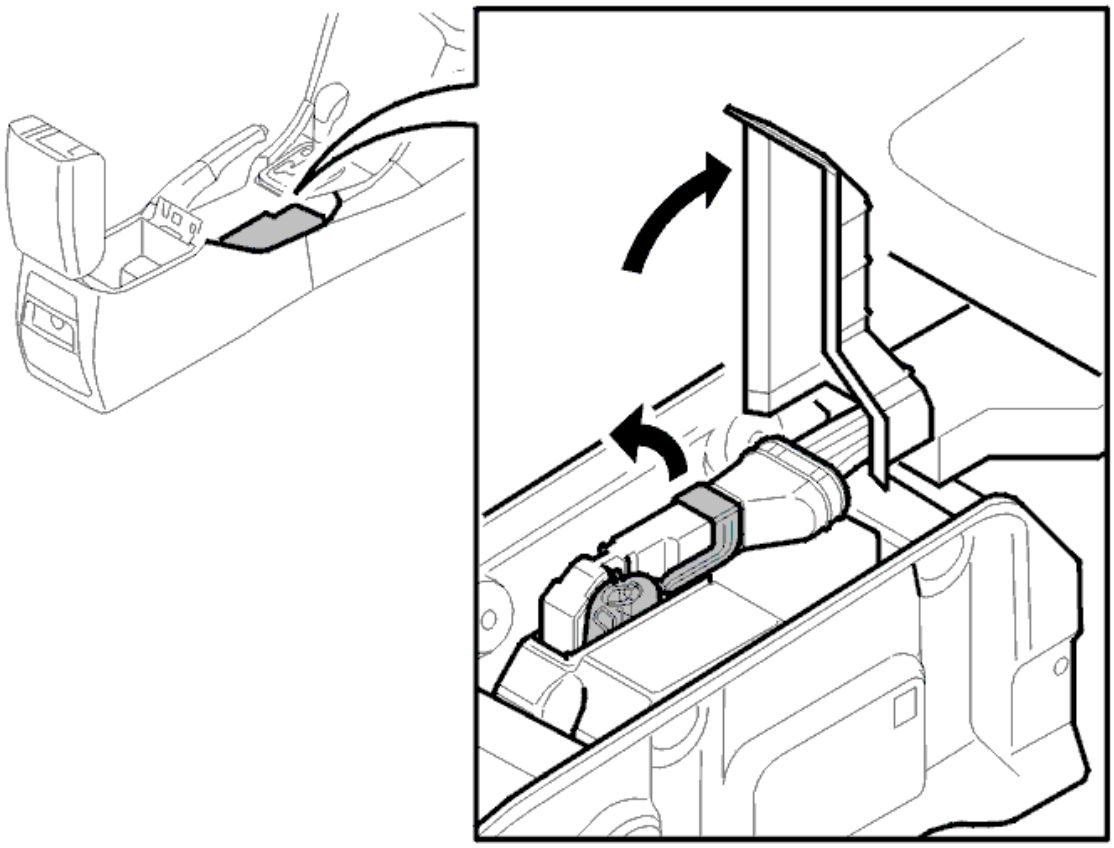

Fig. 115: Identifying Boot & Connector
Courtesy of VOLVO CARS CORPORATION

Remove:

- the tunnel compartment. See: **CENTER CONSOLE, REPLACING**
- the boot
- the connector

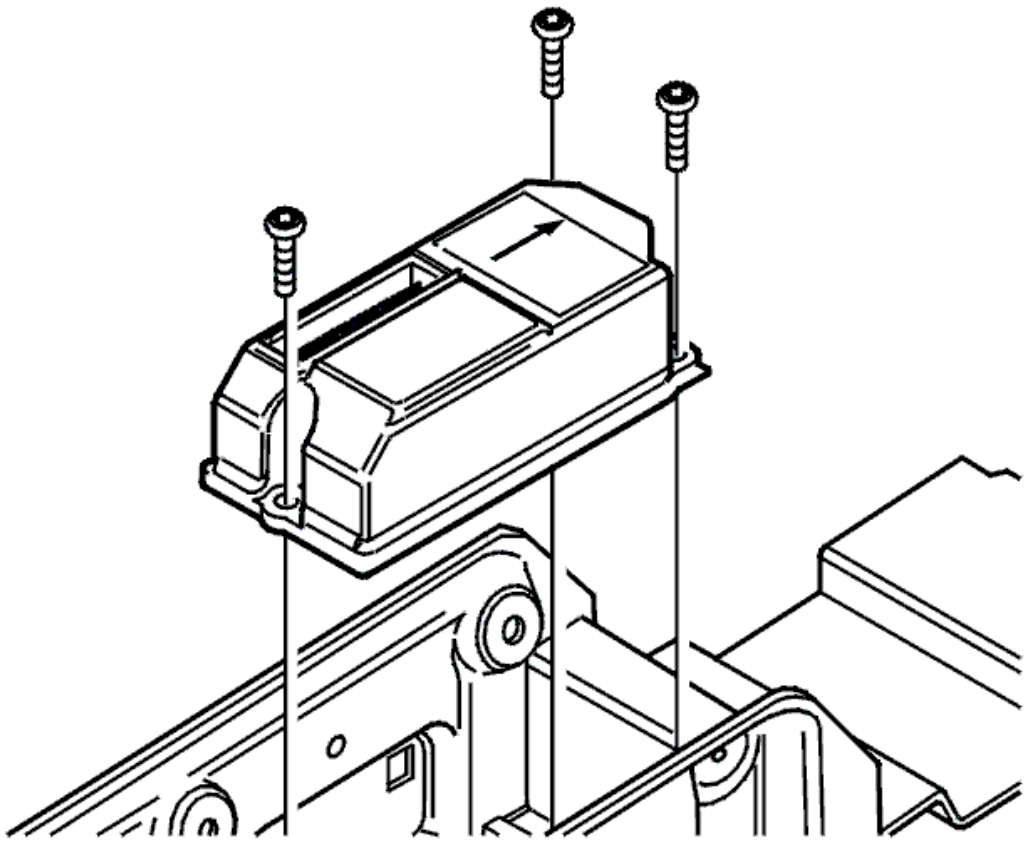

Fig. 116: 3 Control Module Screws
Courtesy of VOLVO CARS CORPORATION

- the 3 screws.

Lift out the supplemental restraint system module (SRS).

INSTALLING THE SUPPLEMENTAL RESTRAINT SYSTEM MODULE (SRS)

NOTE: For tightening torques, see: TIGHTENING TORQUE .

NOTE: Ensure that nothing is between the SRS (supplemental restraint system) module and the body panel, such as large particles of dirt or dust. This can cause over-sensitivity or poor SRS system function.

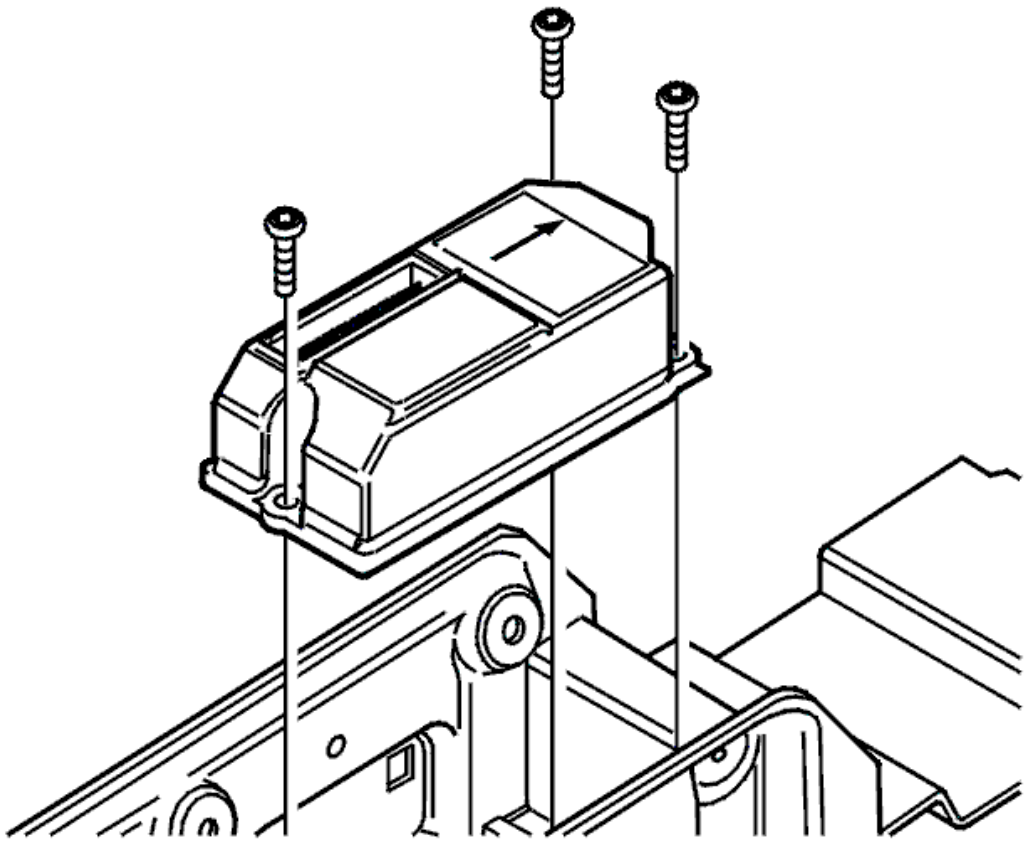

Fig. 117: Three Control Module Screws
Courtesy of VOLVO CARS CORPORATION

Install:

- the supplemental restraint system module (SRS)
- the 3 x M6 screws and tighten
- the connector.
- the boot
- the center console. See **CENTER CONSOLE, REPLACING**.

FINAL CHECK

Order the software in accordance with: 9438415 .

Program the new supplemental restraint system module (SRS).

Applies to MY 2005-

After downloading and configuring the control module the control module receives the vehicle configuration data from the central electronic module (CEM). This can take up to 15 seconds and during this time the SRS lamp flashes in the Driver information module (DIM). Downloading and configuration is complete when the SRS lamp stops flashing.

Carry out an inspection as described in, see **SUPPLEMENTARY RESTRAINT SYSTEM (SRS), INSPECTION** .

SUPPORT CLIPS INFLATABLE CURTAIN (INFLATABLE CURTAIN MODULE), REPLACING

NOTE: The illustrations in this service information are used for different model years and / or models. Some variation may occur. However, the essential information in the illustrations is always correct.

REMOVING THE INFLATABLE CURTAIN (IC MODULE) SUPPORT CLIPS

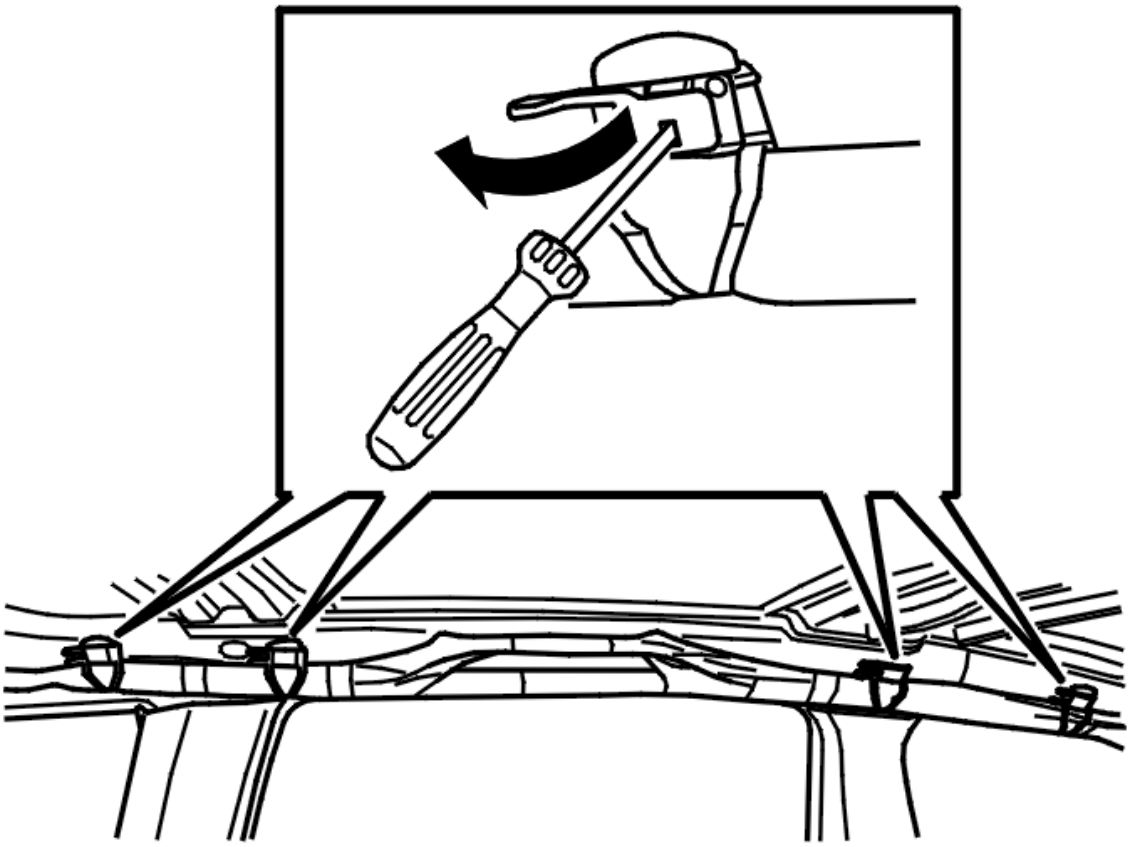

Fig. 118: Identifying Inflatable Curtain Support Clips
Courtesy of VOLVO CARS CORPORATION

Remove the cover with plug.

HINT: Use a TX10 Torx driver. Press the driver straight into the hole to release the catches on the plug.

Move the cover to one side.

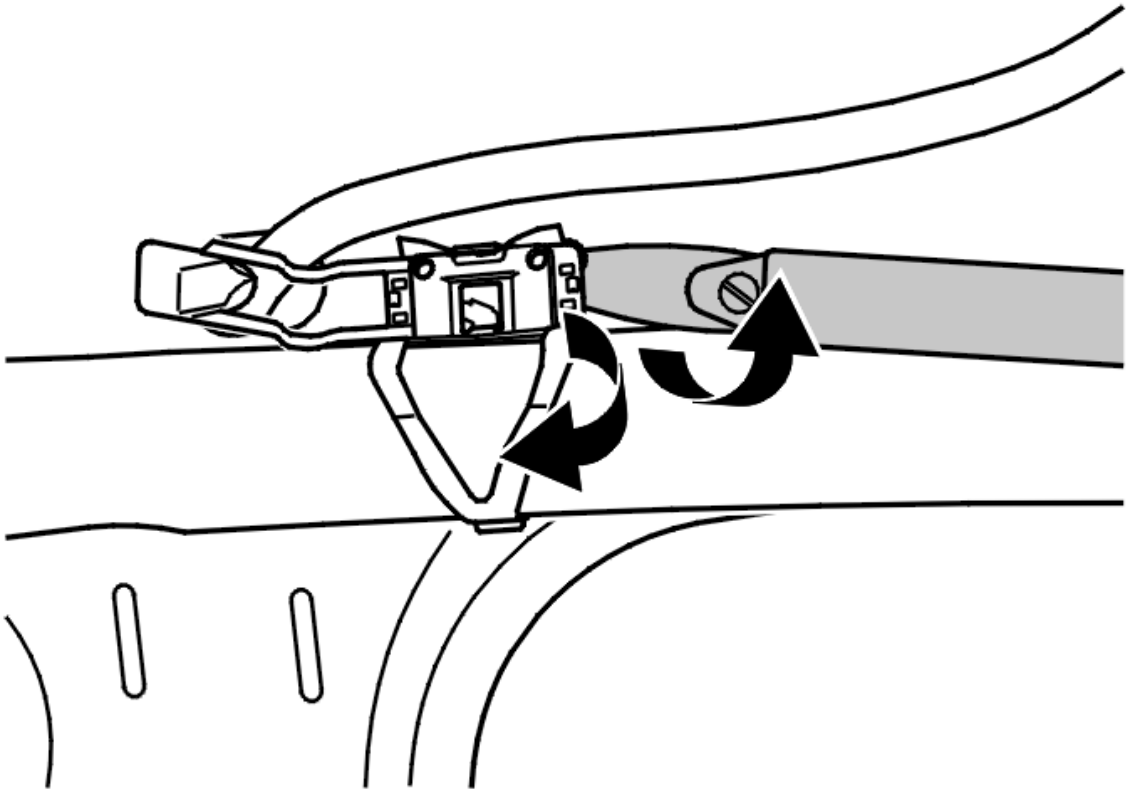

Fig. 119: Identifying Weatherstrip Tool, Support Clip & Bodywork
Courtesy of VOLVO CARS CORPORATION

Angle the support clip to one side.

Insert the weatherstrip tool between the support clip and the bodywork. See the illustration.

Unclip the clip from the body. The support clips will be deformed.

NOTE: Always replace removed support clips with new ones.

When replacing the new inflatable curtain (IC module):

The support clips are pre-mounted on the new inflatable curtain.

When replacing the support clips on the existing inflatable curtain (IC module):

Remove the inflatable curtain (IC-module) from the car. See **IC (INFLATABLE CURTAIN) MODULE, REPLACING**.

Place the inflatable curtain on a level surface.

Check that the inflatable curtain is taped (white pieces of tape).

If these pieces of tape are missing, replace the inflatable curtain with a new one.

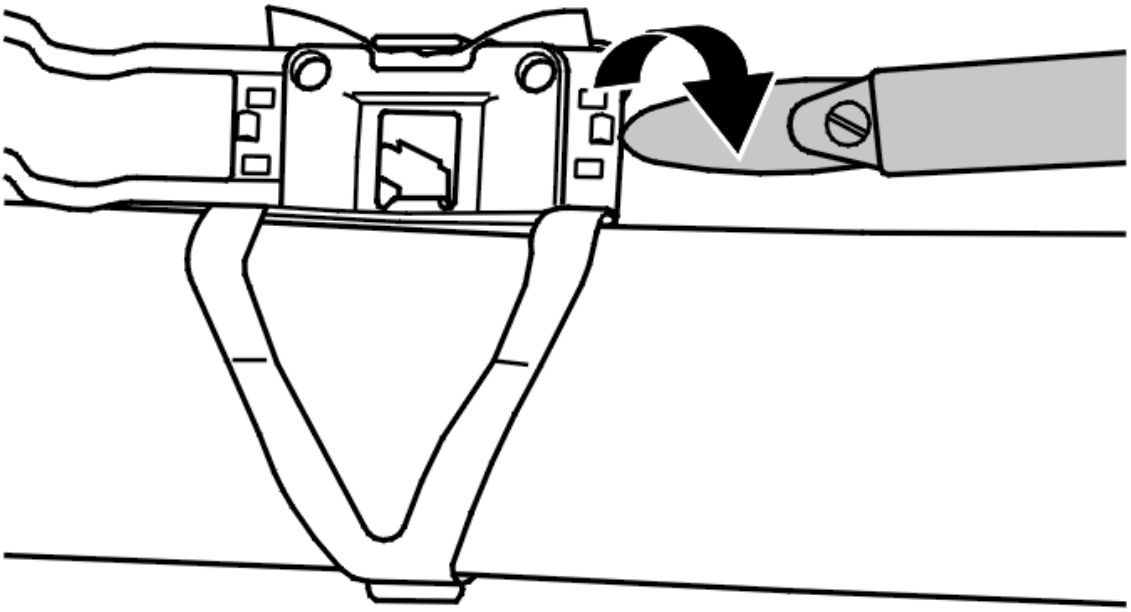

Fig. 120: Identifying Weatherstrip Tool, Support Clip & Bodywork
Courtesy of VOLVO CARS CORPORATION

NOTE: Only replace one support clip at a time.

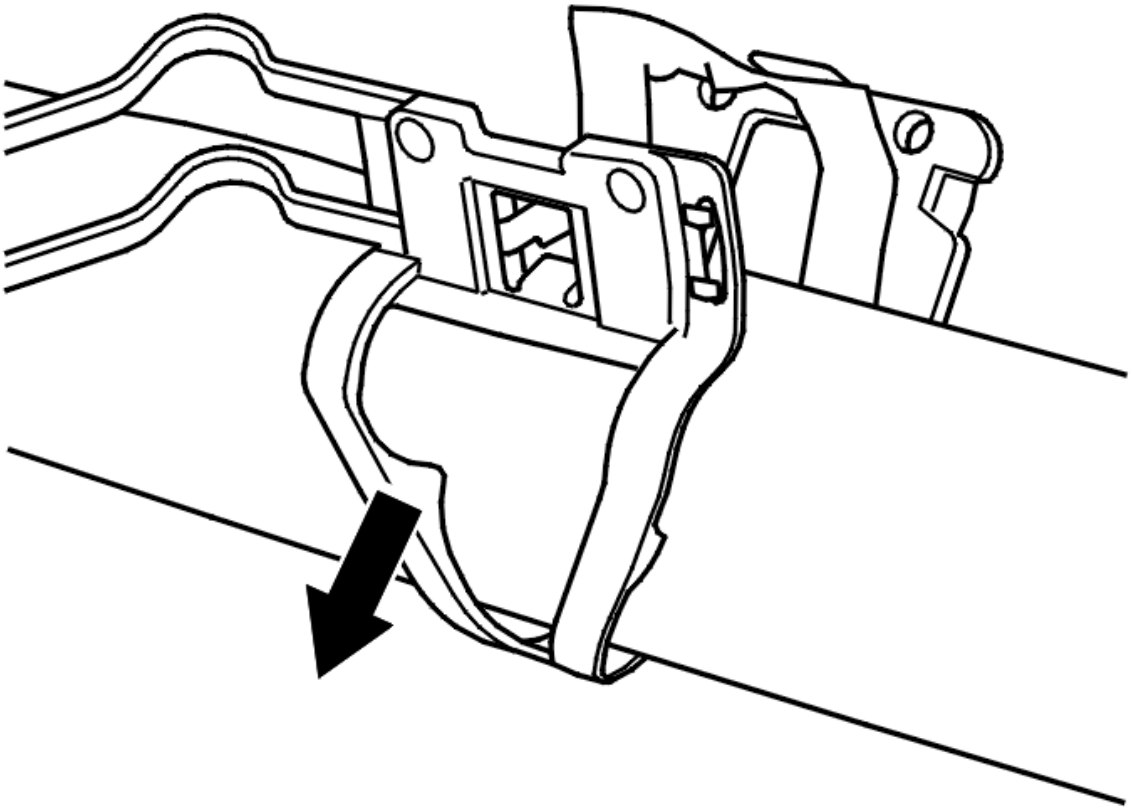

Fig. 121: Identifying Support Clip
Courtesy of VOLVO CARS CORPORATION

Remove the support clip from the inflatable curtain.

INSTALLING THE INFLATABLE CURTAIN (IC MODULE) SUPPORT CLIPS

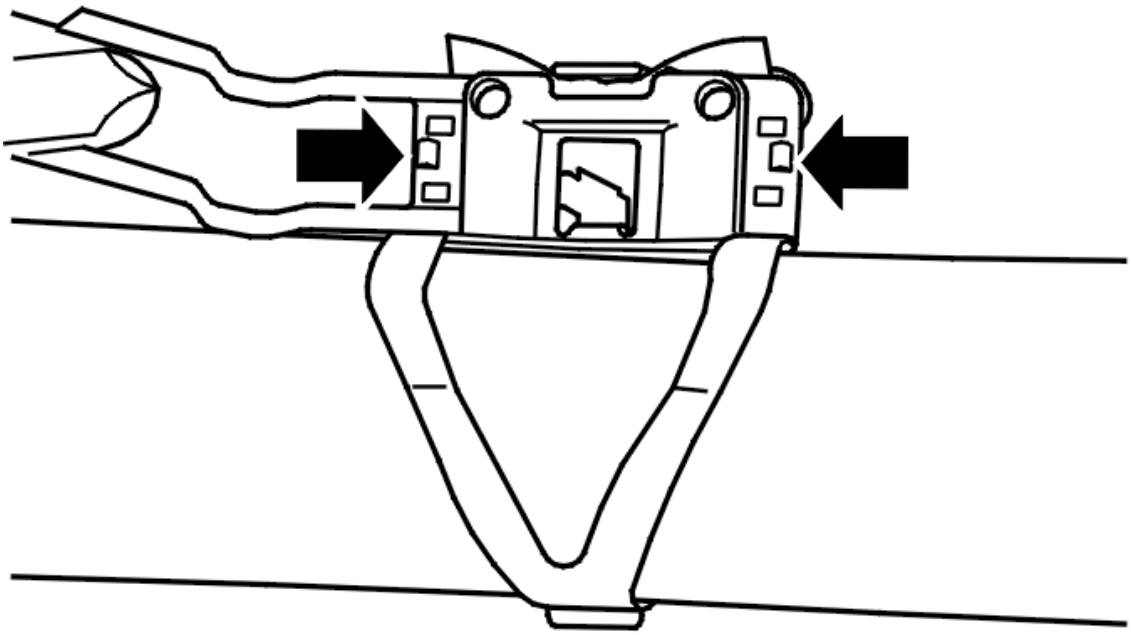

Fig. 122: Identifying Support Clip
Courtesy of VOLVO CARS CORPORATION

Install the new support clip on the inflatable curtain.

NOTE: Ensure that the support clip has clicked together.

Check that the hooks have locked.

Reinstall the inflatable curtain in the car. See **IC (INFLATABLE CURTAIN) MODULE, REPLACING**.

SEAT BELTS AND OTHER RETENTION SYSTEMS (2003-2011)

AIRBAG DRIVER'S SIDE (SRS), REPLACING

NOTE: The illustrations in this service information are used for different model years and/or models. Some variation may occur. However, the essential information in the illustrations is always correct.

NOTE: For vehicles MY -2004 see: AIRBAG DRIVER'S SIDE (SRS), REPLACE.

PREPARATORY WORK

REMOVING THE BATTERY LEAD AND IMPORTANT INFORMATION

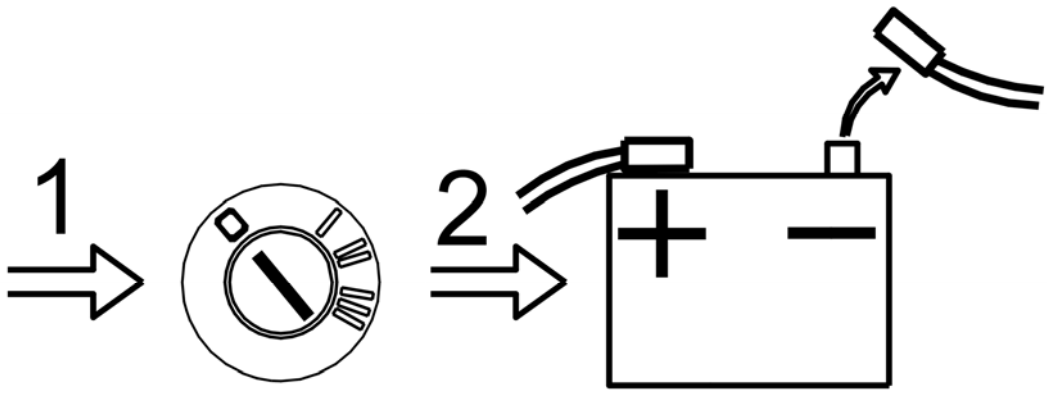

Fig. 123: Disconnecting Battery Negative Cable
Courtesy of VOLVO CARS CORPORATION

Ignition off.

Disconnect the battery negative cable. See: **BATTERY, DISCONNECTING** .

WARNING: **For information about the handling and storage of pyrotechnical SRS components, see: HANDLING NON-DEPLOYED SRS-COMPONENTS .**

NOTE: **Replace the decals for the safety equipment. See: DECALS FOR SAFETY EQUIPMENT (2003-2006) .**

WARNING: **Under no circumstances use an ohmmeter or other live measuring instrument to take readings on a disconnected, non-deployed pyrotechnical SRS component. There is a risk of the seat belt tensioner deploying.**

WARNING: **Pyrotechnical SRS components must never be taken apart, repaired or transferred to another vehicle.**

REMOVAL

REMOVING DRIVER'S AIRBAG (SRS)

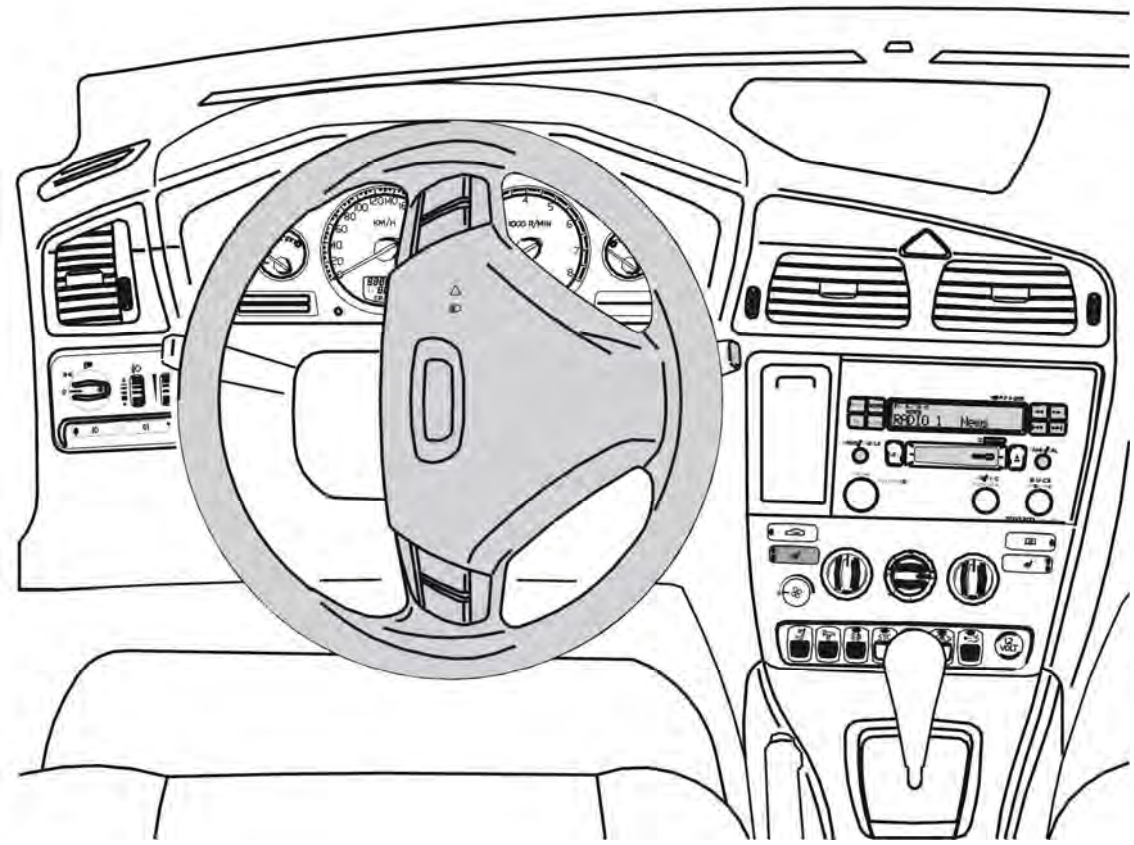

Fig. 124: Identifying Steering Wheel Turned A 1/4 Turn To Access Two Holes On Back
Courtesy of VOLVO CARS CORPORATION

Ignition in position II.

Turn the steering wheel a 1/4 turn so that the two holes on the rear of the steering wheel are accessible.

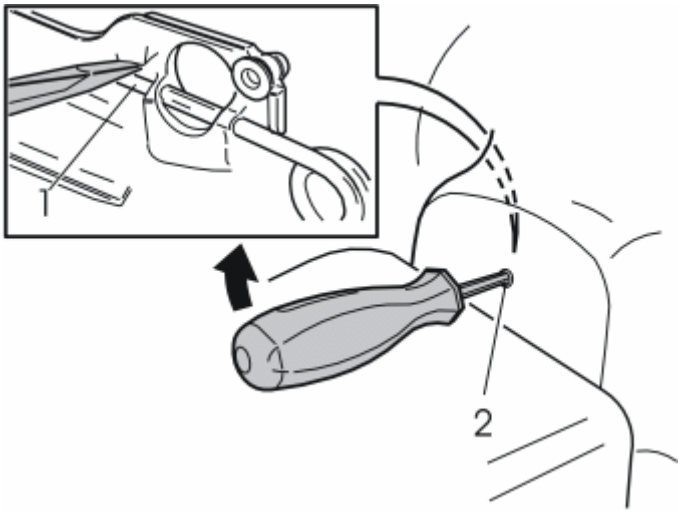

Fig. 125: Identifying Screwdriver Inserted In Back Of Steering Wheel & Locating End Of Locking Spring
Courtesy of VOLVO CARS CORPORATION

Insert a screwdriver in the holes on the reverse of the steering wheel. The screwdriver must be at a right-angle to the rear surface of the steering wheel.

Place the screwdriver point against the top of the spring clip as illustrated.

Pry the screwdriver up against the upper edge of the hole (2) so that the point of the screwdriver presses down the catch (1) until the catch releases.

Turn the steering wheel a 1/2 turn in the opposite direction. Repeat the process on the other side.

Turn the steering wheel to the neutral position.

Fold out the airbag.

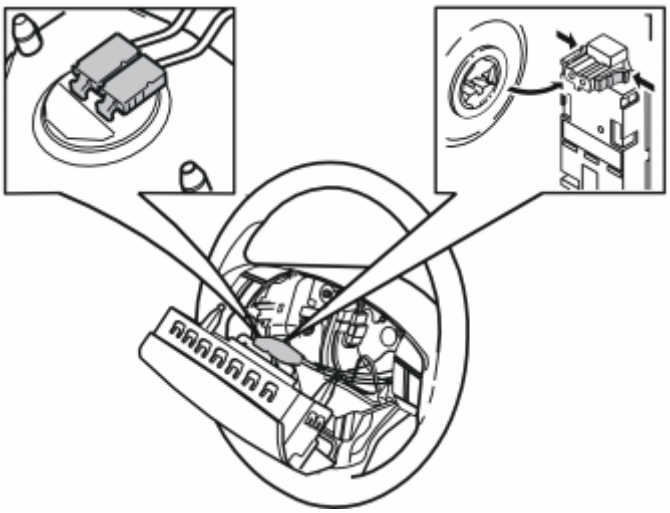

Fig. 126: Identifying Airbag Removal

Courtesy of VOLVO CARS CORPORATION

Disconnect the 2 connectors (2) (there may be more or less) for the SRS ignition cables for the airbag.

Remove the airbag.

INSTALLATION

INSTALLING DRIVER'S AIRBAG (SRS)

NOTE: For airbags (replacement part) supplied without keypads, for Audio, RTI and cruise control for example, an upgrade kit must be ordered.

Install the 2 connectors (there may be more or fewer).

Press the airbag into place.

CAUTION: Ensure that the wiring is not trapped during installation.

Carry out an inspection as described in, see **SUPPLEMENTARY RESTRAINT SYSTEM (SRS), INSPECTION** .

AIRBAG MODULE SEAT (SIPS), REPLACING

see **AIRBAG MODULE SEAT (SIPS), REPLACING**

AIRBAG PASSENGER (SRS), REPLACING

see **AIRBAG PASSENGER (SRS), REPLACING**

BUCKLE SEAT BELT FRONT, REPLACING

see **BUCKLE SEAT BELT FRONT, REPLACING**

BUCKLE SEAT BELT REAR, REPLACING

see **BUCKLE SEAT BELT REAR, REPLACING**

COLLISION SENSOR B AND C-POST, REPLACING

see **COLLISION SENSOR B AND C-POST, REPLACING**

CONTACT REEL, REPLACEMENT

see **CONTACT REEL, REPLACEMENT**

END MOUNTING, REPLACING

see **END MOUNTING, REPLACING**

FORCE LIMITER MECHANICAL/BELT TENSION SENSOR, REPLACING (2005-2011)

NOTE: **The illustrations in this service information are used for different model years and/or models. Some variation may occur. However, the essential information in the illustrations is always correct.**

PREPARATORY WORK

IMPORTANT INFORMATION

The driver's seat always has a mechanical force limiter.

The passenger seat always has a force limiter with a belt tension sensor.

ADJUSTING THE SEAT POSITION

Move the seat as far forward as possible.

REMOVAL

REMOVING THE FORCE LIMITER/BELT TENSION SENSOR

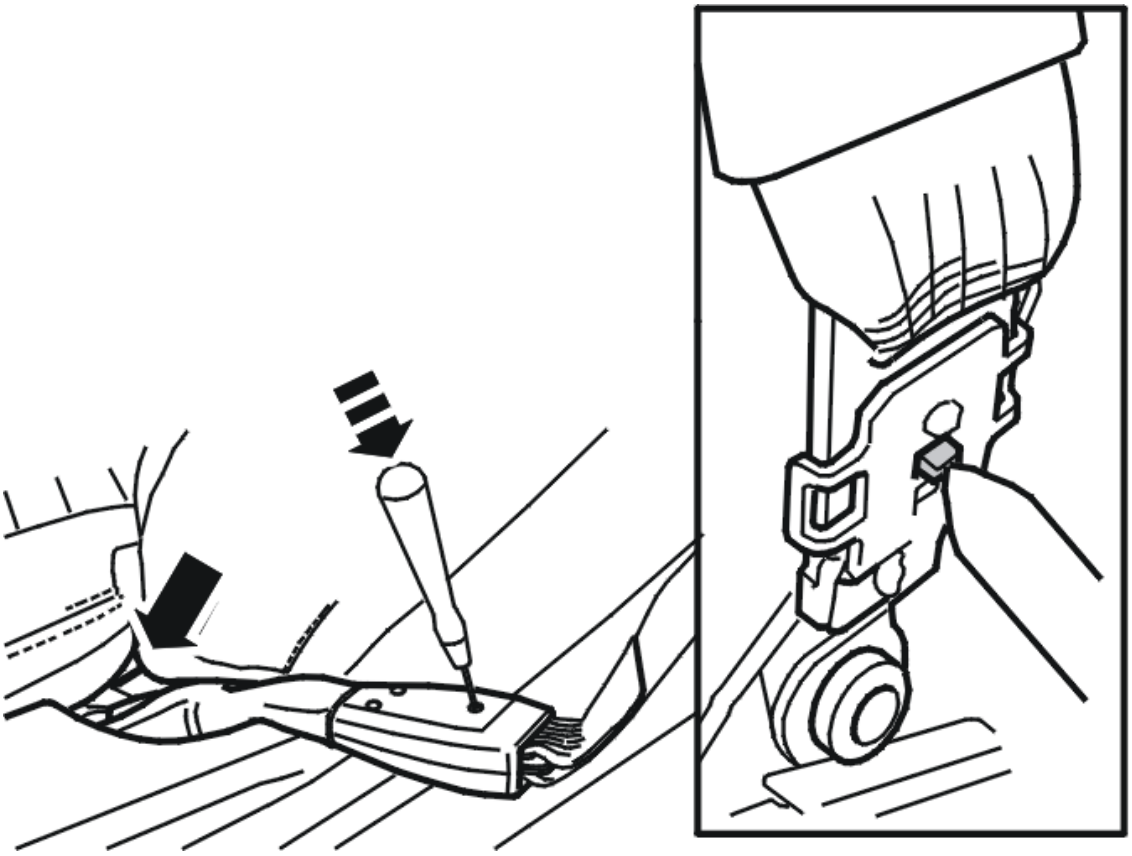

Fig. 127: Identifying Seat Belt And Catch
Courtesy of VOLVO CARS CORPORATION

Remove the front seat side panel. See: **SIDE PANEL FRONT SEAT, REPLACING** .

Insert a screwdriver on the inside of the end mounting. Remove the seat belt by pressing the catch inwards and pulling upwards.

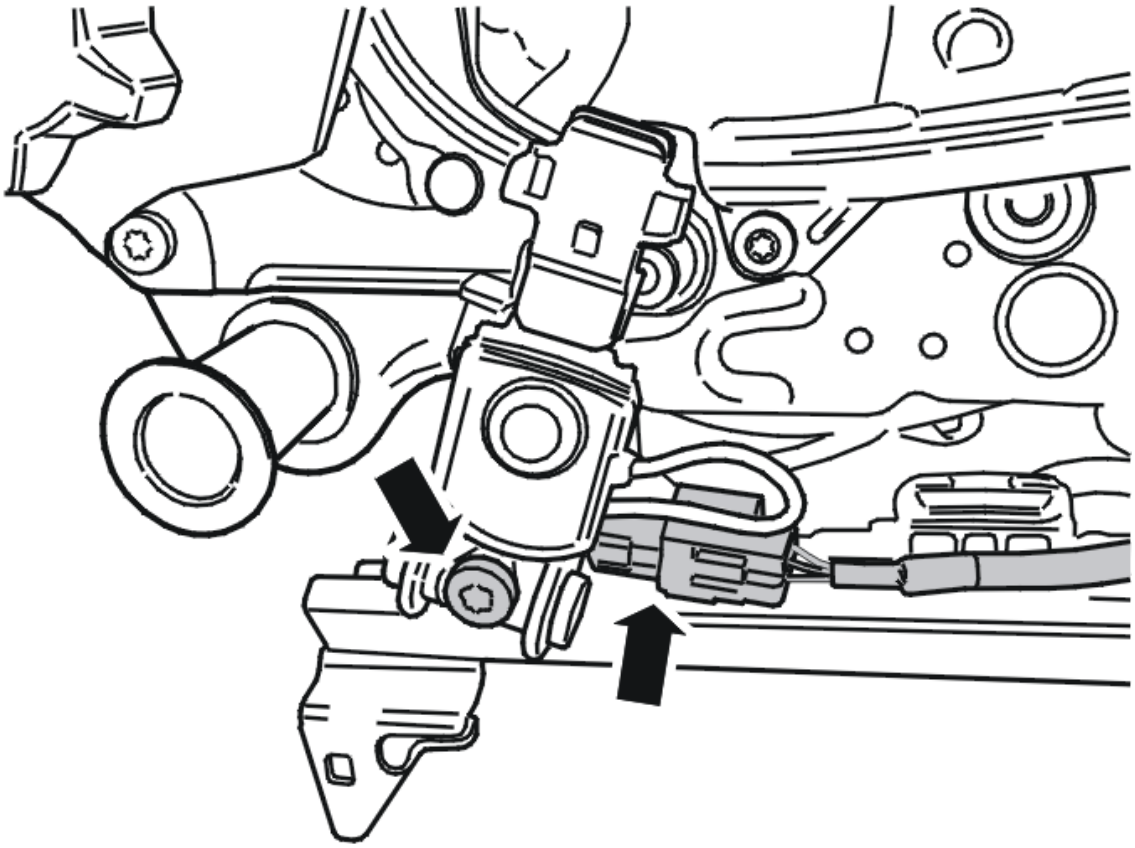

Fig. 128: Identifying Seat Belt Connector And Screw
Courtesy of VOLVO CARS CORPORATION

On the passenger seat, remove:

- the connector
- the screw
- the force limiter with belt tensioner sensor.

On the driver's seat, remove:

- the screw
- the mechanical force limiter.

INSTALLATION

NOTE: **For tightening torques, see: TIGHTENING TORQUE .**

INSTALLING THE FORCE LIMITER/BELT TENSION SENSOR

Install:

- the force limiter/sensor using the M10 screw. Tighten
- the connector (passenger seat only)
- the seat belt and end mounting
- the side panel. See: **SIDE PANEL FRONT SEAT, REPLACING** .

FINISHING

CHECKING THE SEAT BELT FUNCTION AND SUPPLEMENTARY RESTRAINT SYSTEM

Check the seat belt function. See: **SEAT BELT FUNCTION, CHECK** .

Carry out an inspection of the supplementary restraint system. See: **SUPPLEMENTARY RESTRAINT SYSTEM (SRS), INSPECTION** .

IC (INFLATABLE CURTAIN) MODULE, REPLACING

see **IC (INFLATABLE CURTAIN) MODULE, REPLACING**

SEAT BELT FRONT, REPLACING

see **SEAT BELT FRONT, REPLACING**

SEAT BELT REAR, REPLACING

see **SEAT BELT REAR, REPLACING**

SEATBELT FORCE LIMITER ADAPTIVE, REPLACING (2005-2011)

NOTE: **The illustrations in this service information are used for different model years and/or models. Some variation may occur. However, the essential information in the illustrations is always correct.**

PREPARATORY WORK

REMOVING THE BATTERY LEAD AND IMPORTANT INFORMATION

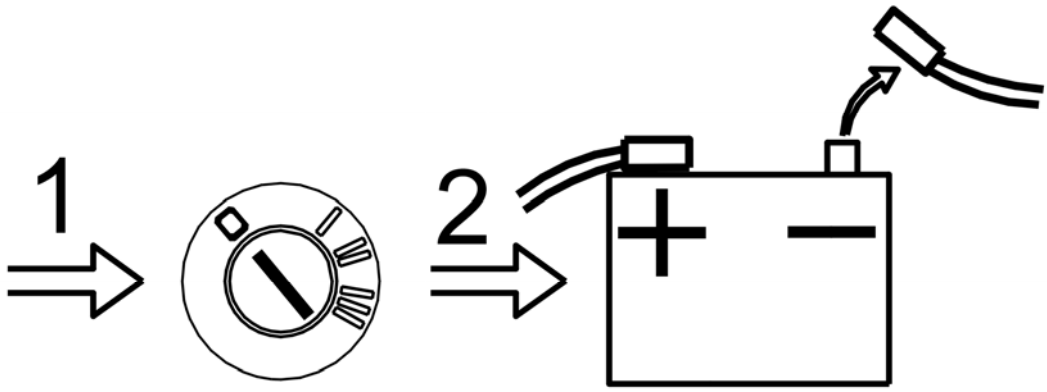

Fig. 129: Disconnecting Battery Negative Cable
Courtesy of VOLVO CARS CORPORATION

Ignition off.

Disconnect the battery negative lead. See: **BATTERY, DISCONNECTING** .

WARNING: **For information about the handling and storage of pyrotechnical SRS components, see: HANDLING NON-DEPLOYED SRS-COMPONENTS .**

WARNING: **Under no circumstances use an ohmmeter or other live measuring instrument to take readings on a disconnected, non-deployed pyrotechnical SRS component. There is a risk of the seat belt tensioner deploying.**

WARNING: **Pyrotechnical SRS components must never be taken apart, repaired or transferred to another vehicle.**

REMOVAL

REMOVING THE ADAPTIVE SEATBELT FORCE LIMITER

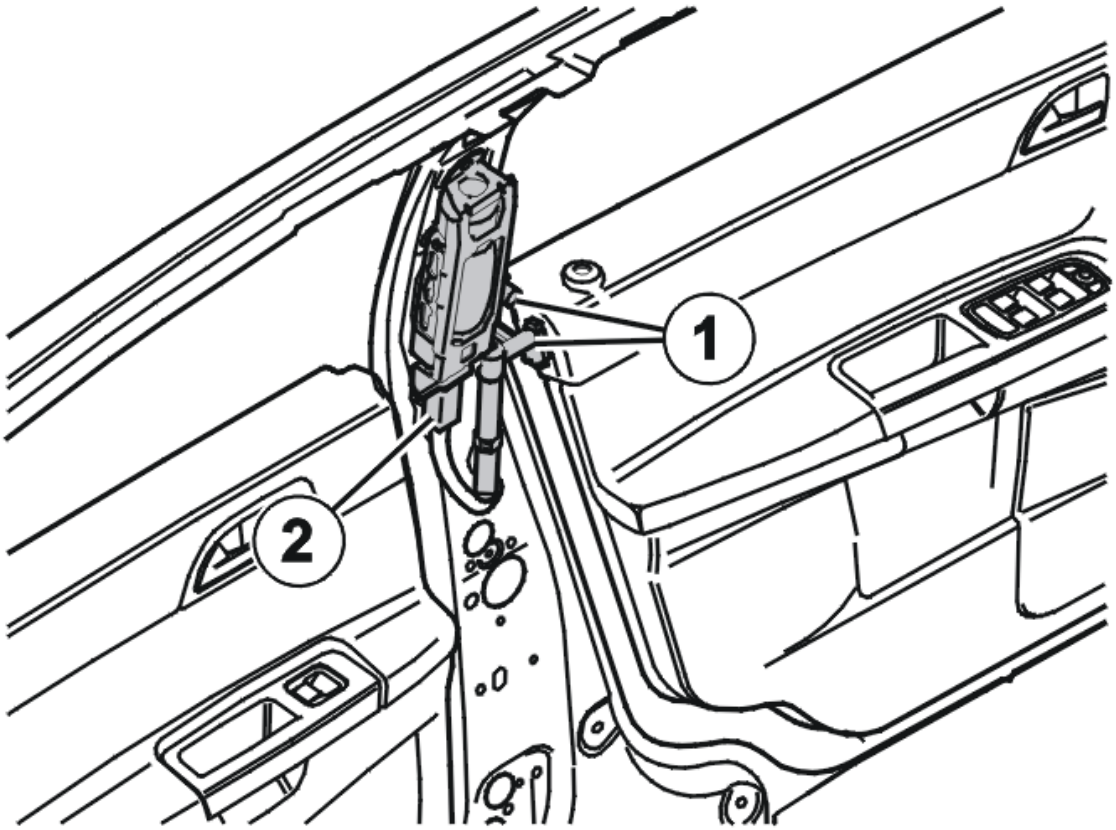

Fig. 130: Identifying Adaptive Seatbelt Force Limiter
Courtesy of VOLVO CARS CORPORATION

Remove:

- the B-post panel. See: **PANEL B-POST, REPLACING**
- the 2 x SRS ignition cables (1)
- the connector (2).

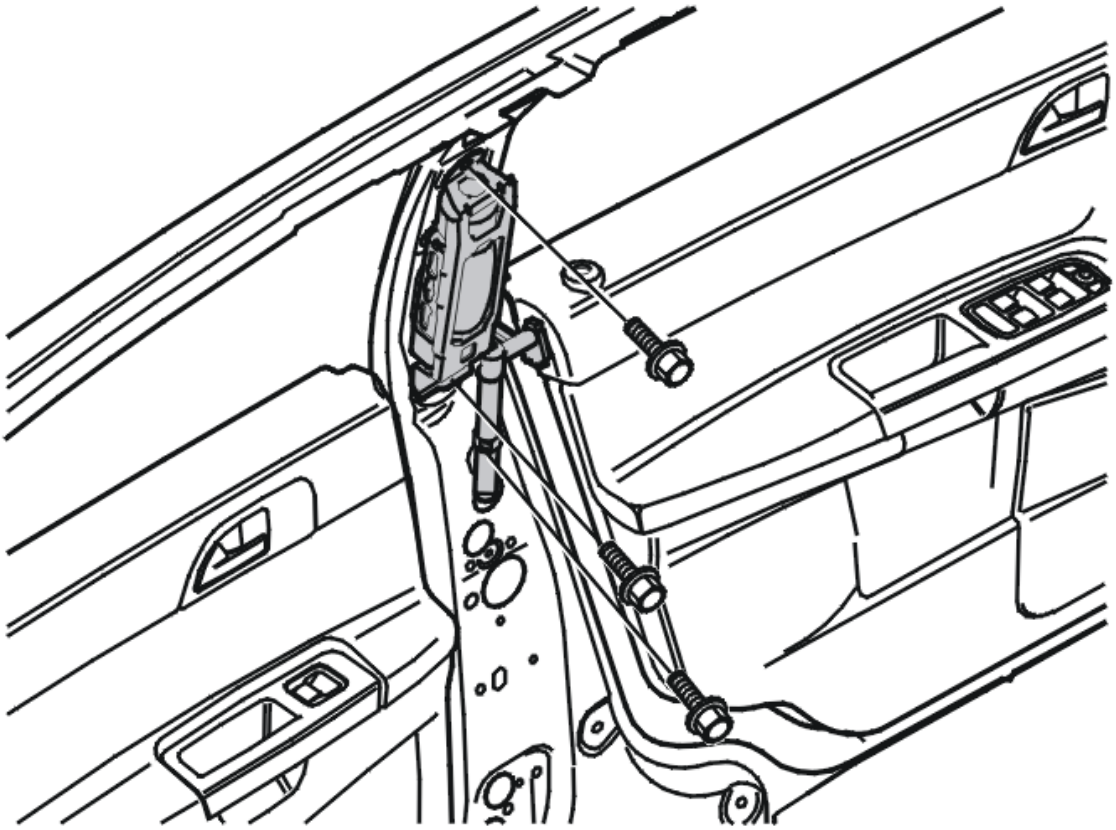

Fig. 131: Identifying 3 Screws
Courtesy of VOLVO CARS CORPORATION

- the 3 screws
- the seat belt reel with the adaptive seatbelt force limiter.

INSTALLATION

INSTALLING THE ADAPTIVE SEATBELT FORCE LIMITER

Correctly align the seat belt reel.

Install:

- the 2 M10 screws. Tighten. See: **SUMMARY OF TIGHTENING TORQUES FOR SPECIFIC COMPONENTS**
- 1 screw. Tighten
- the connector
- the 2 x SRS ignition cables
- the B-post panel. See **PANEL B-POST, REPLACING** .

Connect the battery negative lead. See: **BATTERY, DISCONNECTING** .

STOP BUTTON SEAT BELT, REPLACING

see **STOP BUTTON SEAT BELT, REPLACING**

SUPPLEMENTAL RESTRAINT SYSTEM MODULE (SRS), REPLACING

see **SUPPLEMENTAL RESTRAINT SYSTEM MODULE (SRS), REPLACING**

SUPPORT CLIPS INFLATABLE CURTAIN (INFLATABLE CURTAIN MODULE), REPLACING

see **SUPPORT CLIPS INFLATABLE CURTAIN (INFLATABLE CURTAIN MODULE), REPLACING**

ACCESSORIES AND BODY, CAB

Miscellaneous - Body And Interior - Cleaning, Inspection and Adjustment

INTERIOR EQUIPMENT (2005-2011)

COOL BOX/CENTER CONSOLE, ADJUSTING

see **COOL BOX/CENTER CONSOLE, ADJUSTING**

INTERIOR EQUIPMENT (EXECUTIVE; PREMIER; 2004)

COOL BOX/CENTER CONSOLE, ADJUSTING

see **COOL BOX/CENTER CONSOLE, ADJUSTING**

MISCELLANEOUS

Miscellaneous - Cleaning, Inspection And Adjustment

OIL COOLER, TRANSMISSION (4T65 AWD; 2003-06)

OIL COOLER TRANSMISSION - FLUSHING AND CLEANING

WARNING: Avoid skin contact with the oil.

NOTE: When replacing the transmission, the oil cooler must always be flushed clean since there may be dirt or particles in the oil cooler.

PREPARATIONS

A vacuum oil extractor is used to suck the oil through the oil cooler when flushing the oil cooler.

The following material is required to flush the oil cooler:

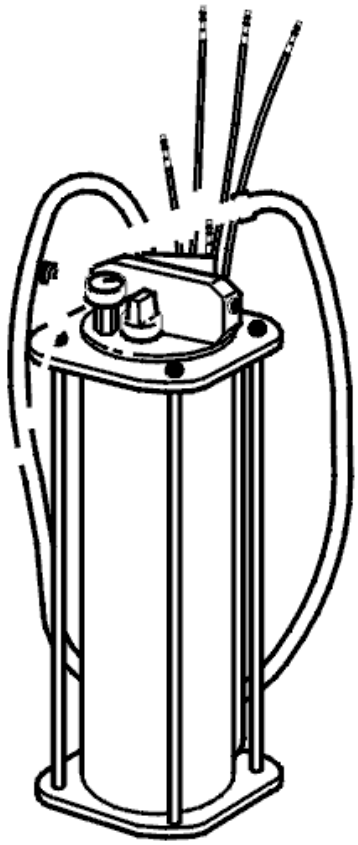

Fig. 1: Identifying Vacuum Extractor
Courtesy of VOLVO CARS CORPORATION

Vacuum extractor.

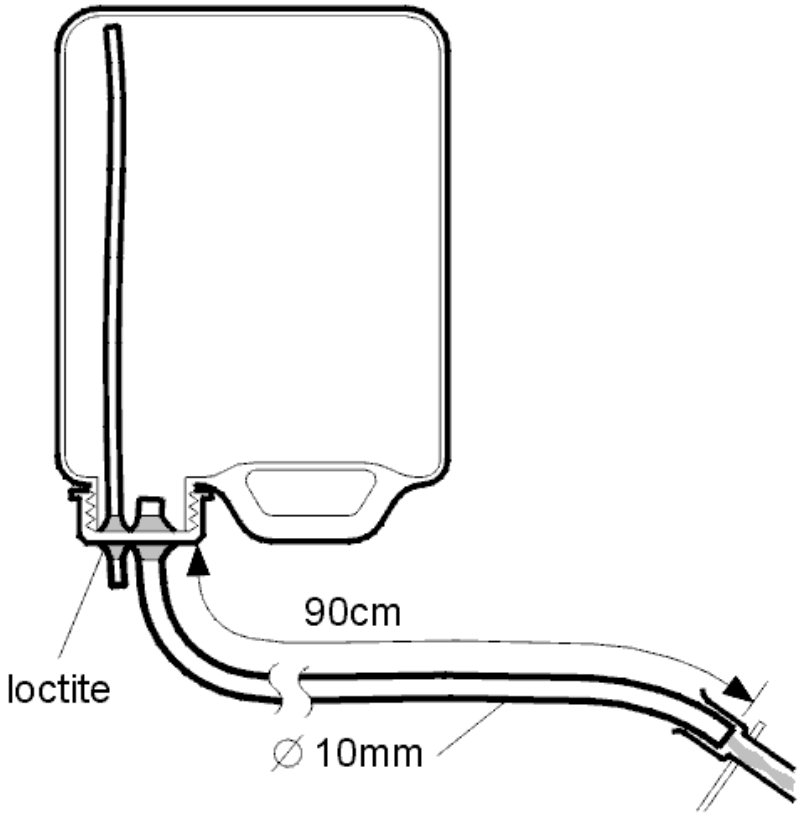

Fig. 2: 5 L. Plastic Container
Courtesy of VOLVO CARS CORPORATION

5 litre plastic container.

Plastic hose

Inner diameter: 10 mm.

Length: 900 mm.

Assemble as shown.

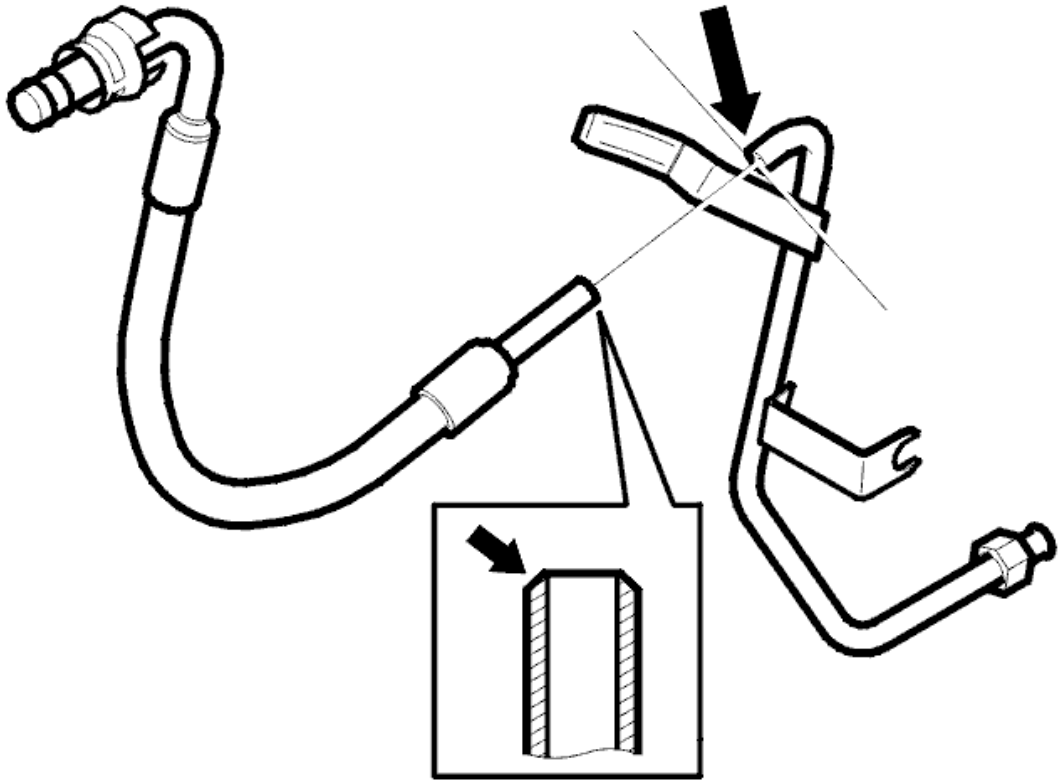

Fig. 3: Cutting Pipe
Courtesy of VOLVO CARS CORPORATION

Upper oil hose and pipe. This oil hose must be on the upper section of the oil cooler.

Cut the pipe as shown. Smooth of the edge of the pipe.

NOTE: Blow the pipe clean.

Fig. 4: Identifying Splash Guard

Courtesy of VOLVO CARS CORPORATION

Connecting components to the vacuum extractor.

Remove the air cleaner (ACL) housing. See **BRAKE CONTROL MODULE (BCM), REPLACING** .

Raise the car. Remove the front air baffle.

Fig. 5: Gearbox Oil Pipe
Courtesy of VOLVO CARS CORPORATION

Slacken off the nut on the return line for the oil pipe bracket a few turns.

Remove the screw nipple on the oil return line from the connection. Counterhold in the gearbox.

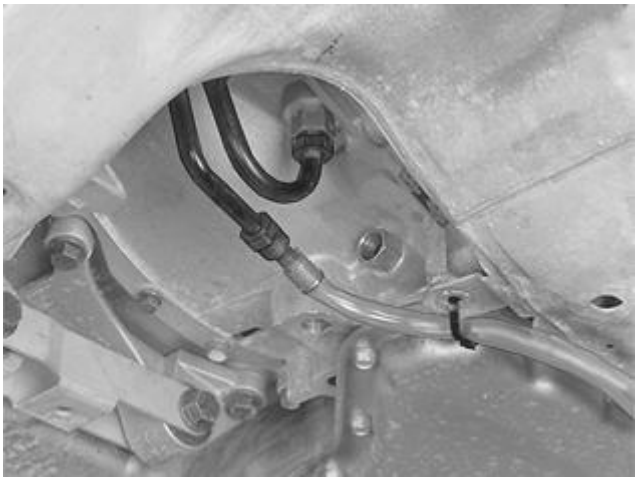

Fig. 6: Identifying Plastic Hose Installed On Oil Return Line
Courtesy of VOLVO CARS CORPORATION

Pull out the oil pipe. Plug the connections in the gearbox.

Press a 10 mm diameter plastic hose (compressed air hose) into place.

Length: 200 mm on the lower oil pipe.

Clamp the hose into place in the sub-frame.

Lower the car.

DETACHING AND INSTALLING THE UPPER OIL HOSE AND PIPE

Detach and push the upper oil hose away from the oil cooler.

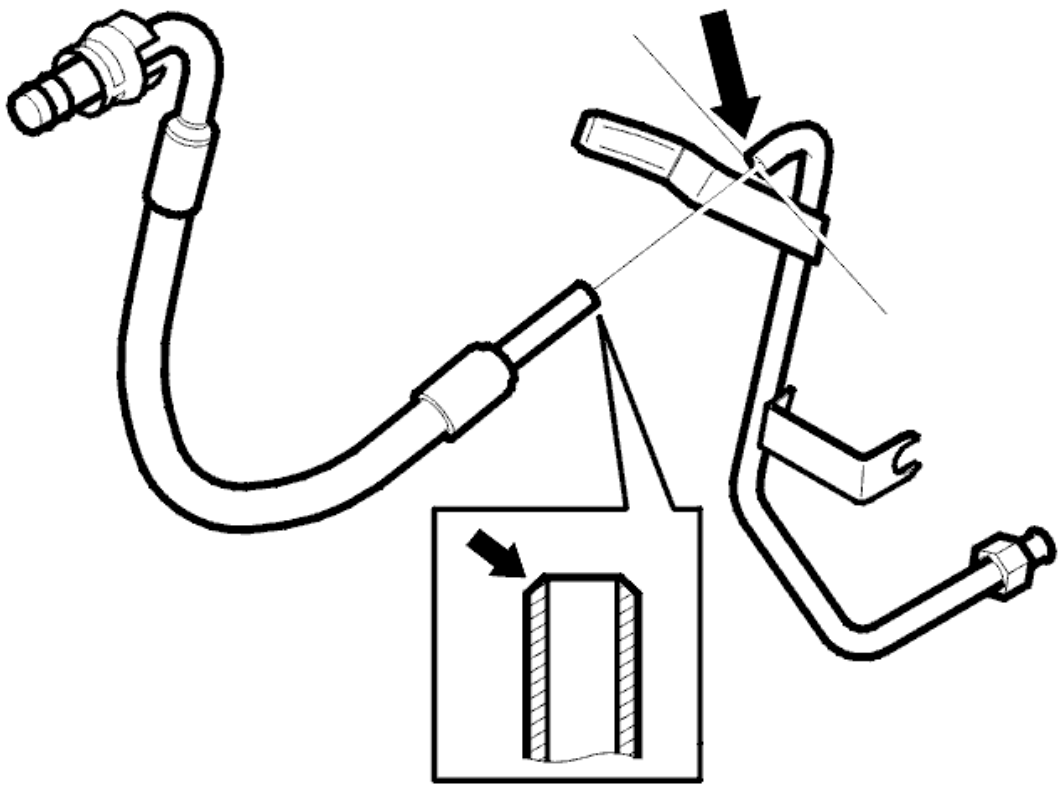

Fig. 7: Cutting Pipe
Courtesy of VOLVO CARS CORPORATION

Install the cut oil hose and pipe on the oil cooler.

Filling with oil

Fill the plastic container with 2 litres of oil.

NOTE: **Oil grade: Only ATF fluid Dexron III (with G-license).**

Transmission oil, Volvo part number 116 1521-8 (1-liter container), 116 1621-6 (4-liter container).

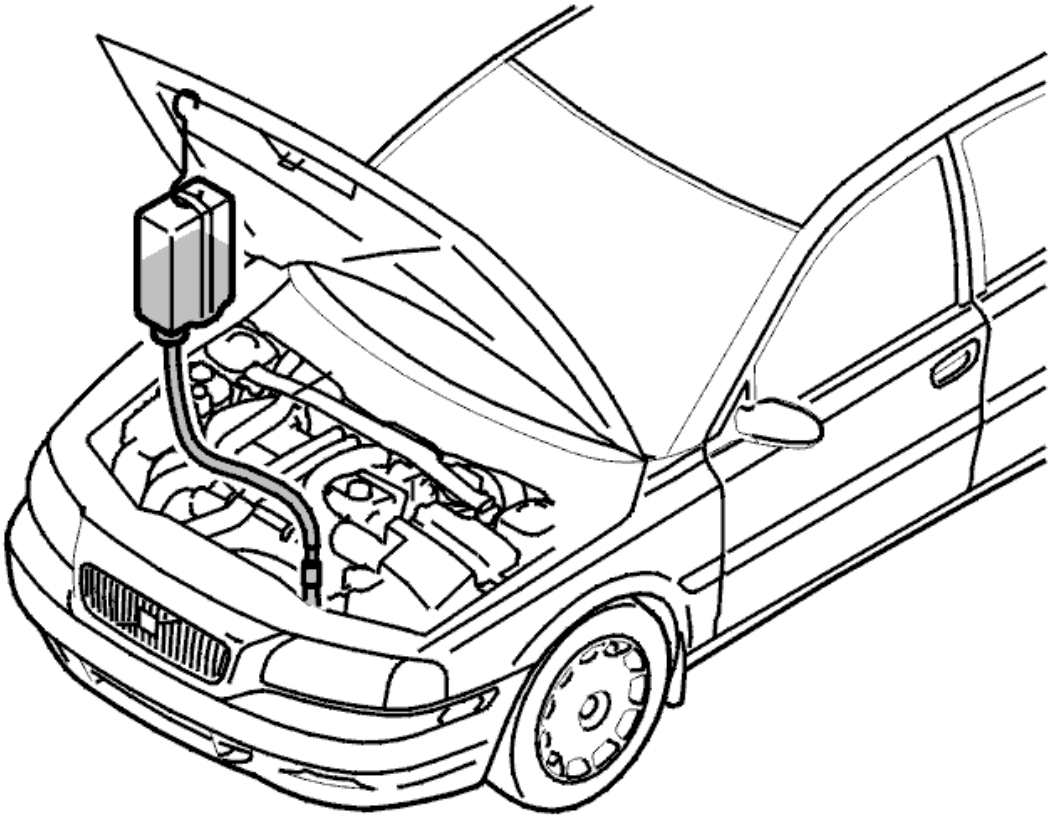

Fig. 8: Plastic Container Hanging Under Hood
Courtesy of VOLVO CARS CORPORATION

Connect the hose from the plastic container to the cut oil pipe. Hang the plastic container under the bonnet.

Raise the car.

FLUSHING

Charge the vacuum extractor.

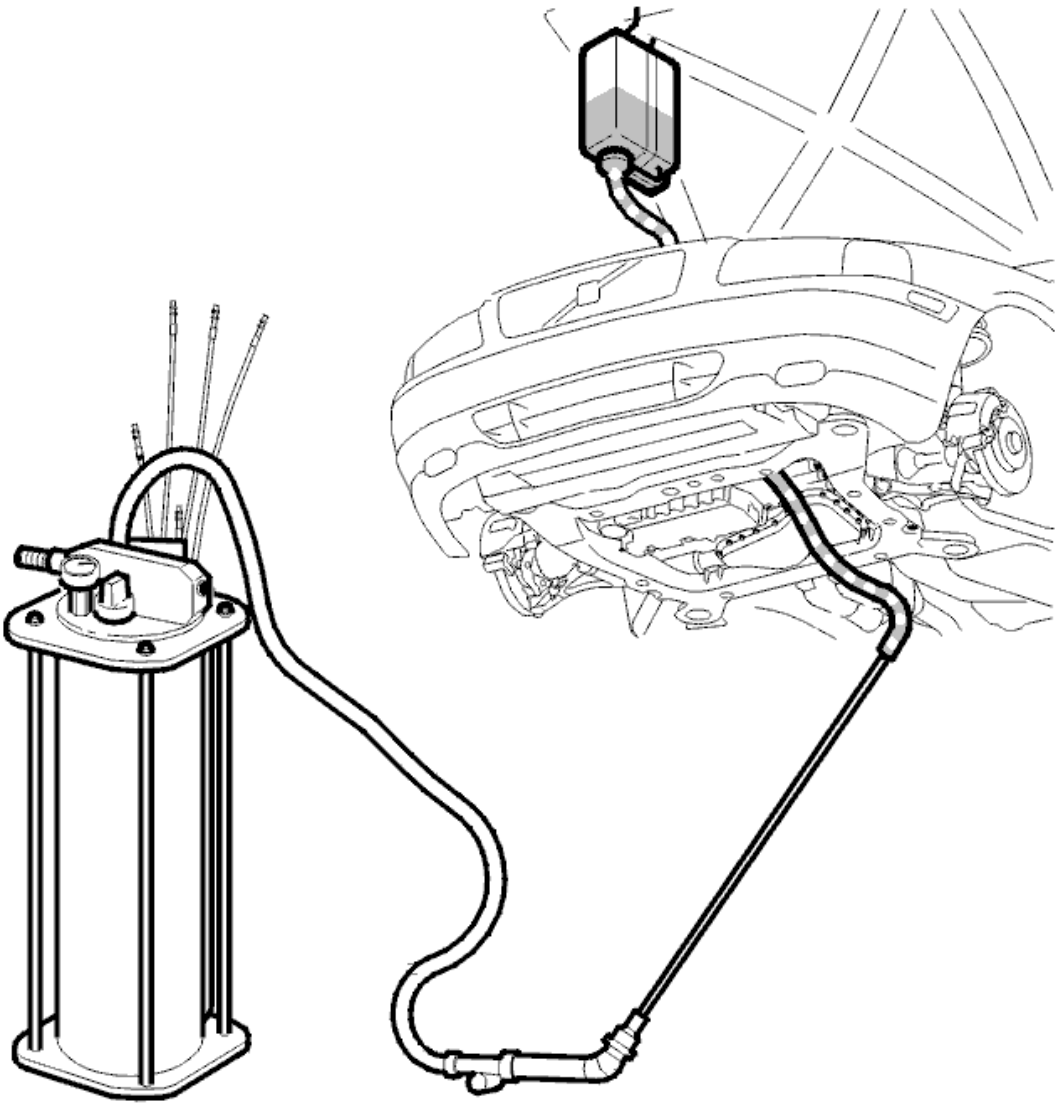

Fig. 9: Connecting Vacuum Extractor
Courtesy of VOLVO CARS CORPORATION

Connecting the vacuum extractor

Connect an oil pipe with an external diameter of 10 mm from the vacuum extractor. Connect the oil pipe to the short hose.

Flushing

Open the cock and suck the oil out of the oil cooler. Check that the filler container is not completely drained. (There should be a little oil left in the hose.) Flow: 2 litres take approximately 40 seconds.

If the level sinks slowly the flushing must be repeated. If the level still sinks slowly replace the oil cooler.

REINSTALLATION

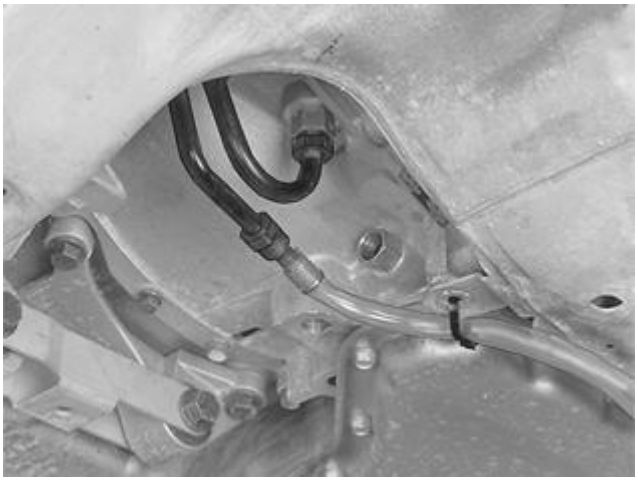

Fig. 10: Identifying Plastic Hose Installed On Oil Return Line
Courtesy of VOLVO CARS CORPORATION

Remove the hose and reinstall:

The oil return line on the gearbox.

The oil pipe and screw nipple on the connection.

Tighten to **30 Nm** .

Fig. 11: Gearbox Oil Pipe
Courtesy of VOLVO CARS CORPORATION

Tighten the nut for the oil pipe bracket. Tighten to **25 Nm** .

Reinstall the air baffle.

Lower the car.

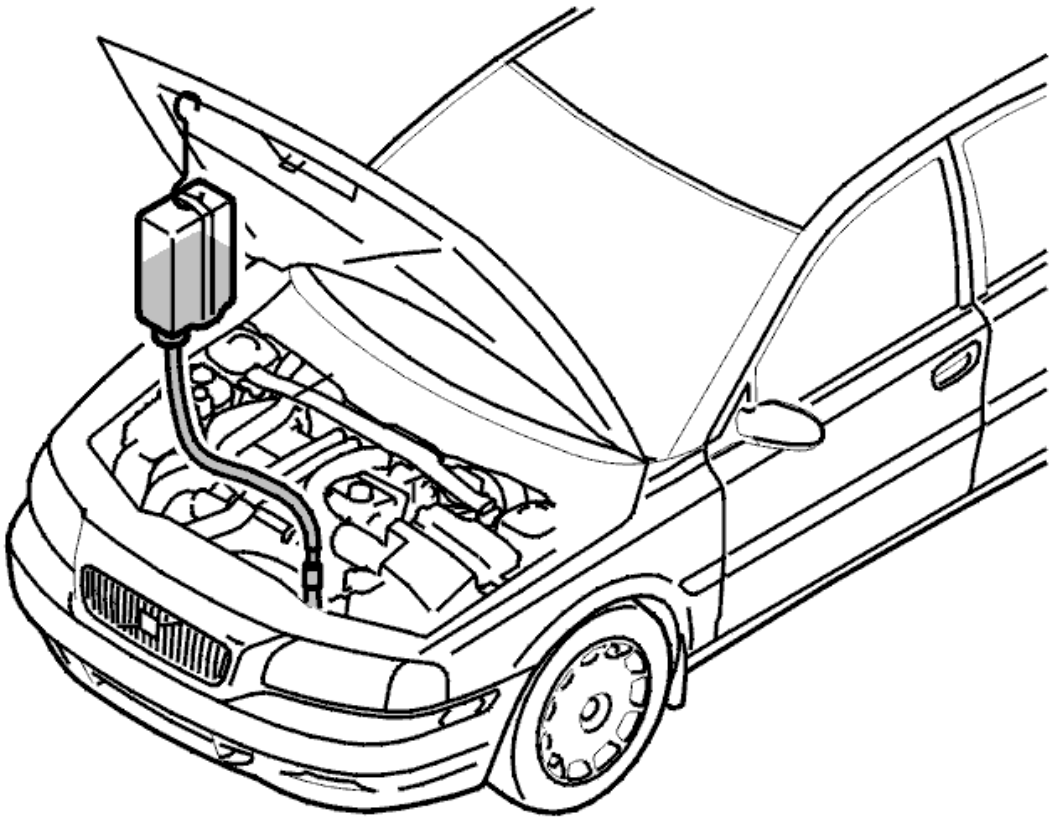

Fig. 12: Plastic Container Hanging Under Hood
Courtesy of VOLVO CARS CORPORATION

Remove the plastic container and the oil pipe from the oil cooler.

Reinstall the existing oil hose on the oil cooler.

Checking the gearbox fluid level

Check the level. See **OIL LEVEL, CHECKING** .

OIL COOLER, TRANSMISSION (TF-80SC; 2011-12)

OIL COOLER TRANSMISSION - FLUSHING AND CLEANING

see **OIL COOLER TRANSMISSION - FLUSHING AND CLEANING**

OIL COOLER, TRANSMISSION (TF-80SC AWD; 2005-12)

OIL COOLER TRANSMISSION - FLUSHING AND CLEANING

see **OIL COOLER TRANSMISSION - FLUSHING AND CLEANING**

ACCESSORIES AND BODY, CAB

Miscellaneous - Component Location

LICENSE PLATE HOLDER (2007-2011)

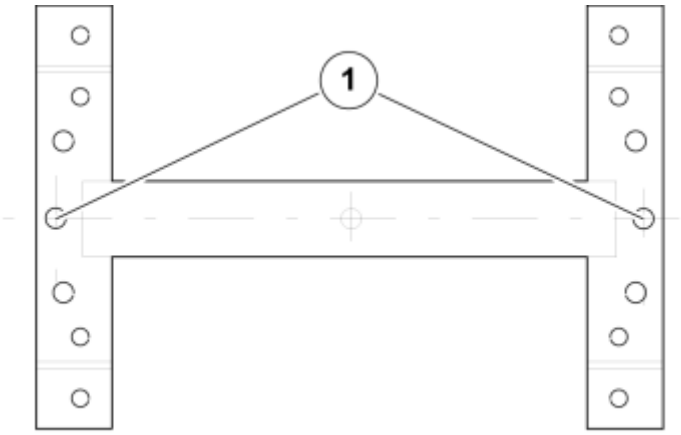

Fig. 1: View Of Installation Holes For Holder
Courtesy of VOLVO CARS CORPORATION

(1) Installation holes for holder.

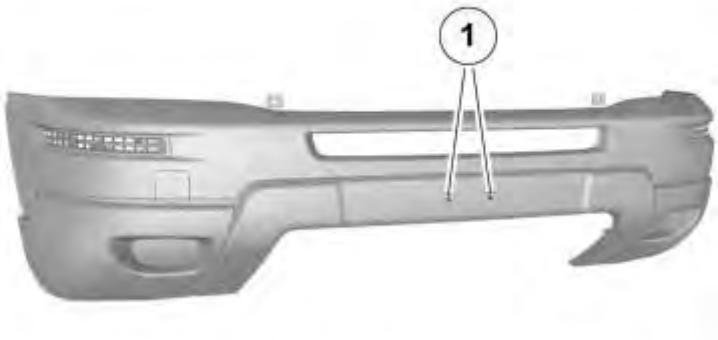

Fig. 2: Locating Installation Holes For Holder
Courtesy of VOLVO CARS CORPORATION

ACCESSORIES AND BODY, CAB

Miscellaneous - Design and Function

GENERATOR (GEN) (2005-2012)

DESIGN

GENERATOR (GEN) DESIGN

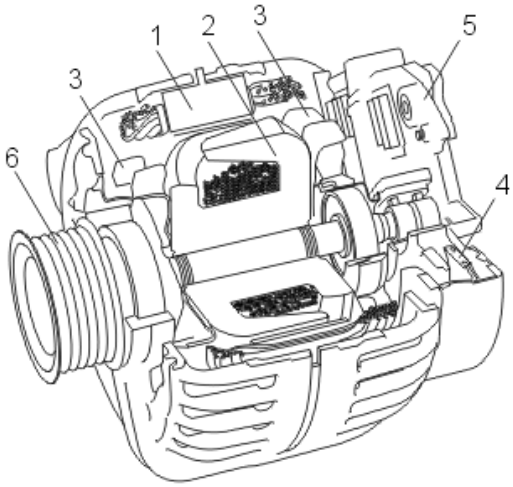

Fig. 1: Generator Design
Courtesy of VOLVO CARS CORPORATION

The main components of the generator (GEN) consist of:

1. Stator
2. Rotor with slip rings
3. Integrated cooling fans
4. DC bridge
5. Charge regulator
6. Pulley.

Generator terminals

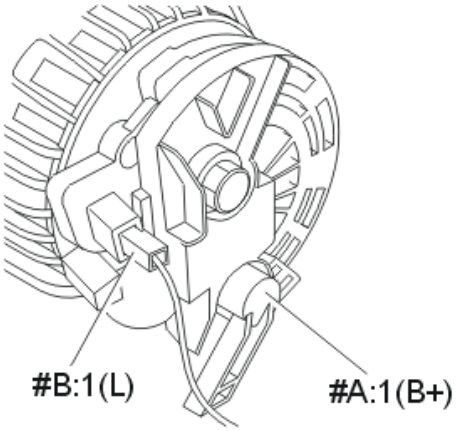

Fig. 2: Identifying Generator Terminals
Courtesy of VOLVO CARS CORPORATION

Generator (GEN) terminals:

- #A:1. B+
- #B:1. To central electronic module (CEM) or engine control module (ECM).

ALTERNATOR STRUCTURE, ENGINE B8444S

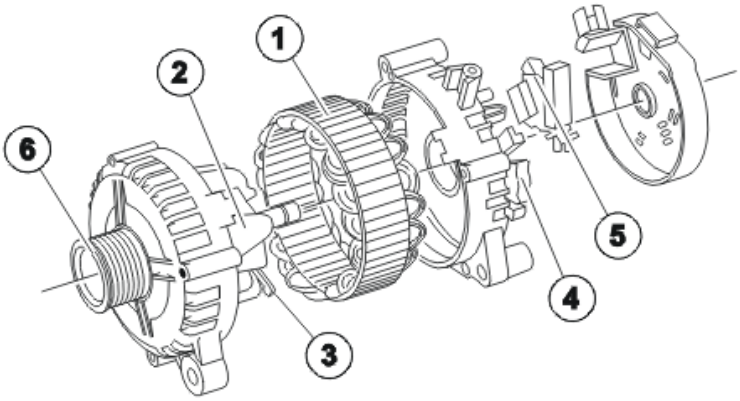

Fig. 3: Identifying Generator Components
Courtesy of VOLVO CARS CORPORATION

The main components of the generator (GEN) consist of:

1. Stator
2. Rotor with slip rings
3. Integrated cooling fans
4. DC bridge
5. Charge regulator
6. Pulley.

Alternator connections, engine B8444S

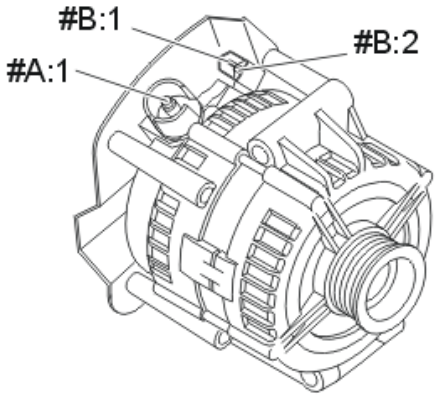

Fig. 4: Identifying Generator (GEN) Terminals
Courtesy of VOLVO CARS CORPORATION

Generator (GEN) terminals:

- #A:1. B+
- #B:1. To engine control module (ECM)
- #B:2. Not used

STATOR

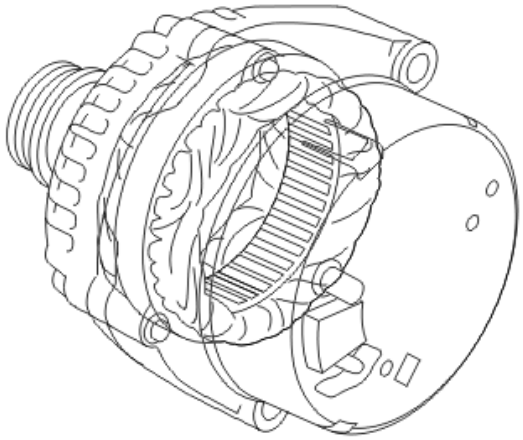

Fig. 5: Identifying Stator
Courtesy of VOLVO CARS CORPORATION

The stator is fixed and consists of grooved plates which are insulated internally and pressed together onto a fixed plate unit. The stator winding coils are positioned in the grooves. They are delta connected at 120° and provide a three phase alternating current to the rectifier bridge.

ROTOR WITH SLIP RINGS

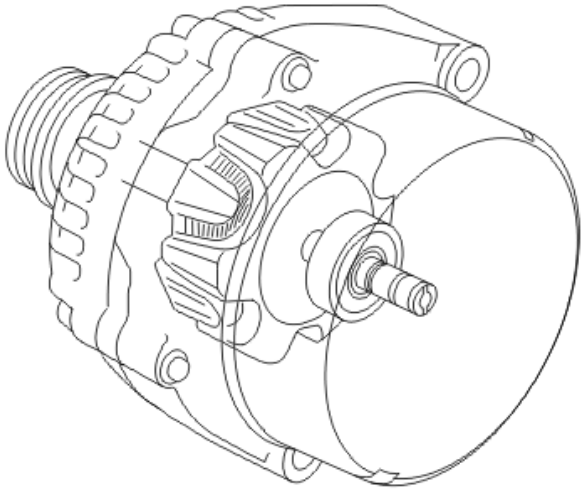

Fig. 6: Identifying Rotor With Slip Rings
Courtesy of VOLVO CARS CORPORATION

The rotor consists of two halves (claw-poles) which interlock. The halves are pressed onto the rotor shaft. There are twelve claws on the rotor, i. e. twelve poles. One half consists of six north poles and the other half six south poles. The excitation winding is secured on the rotor shaft between the claw-pole halves. The excitation winding (also known as rotor winding) consists of a circular coil surrounded by the claw-poles and connected to the slip rings. The charge regulator supplies a magnetic current through carbon brushes positioned against the slip rings. The higher the current in the rotor the stronger the magnet field of the rotor, and therefore the higher the current generated in the windings of the stator.

COOLING FANS

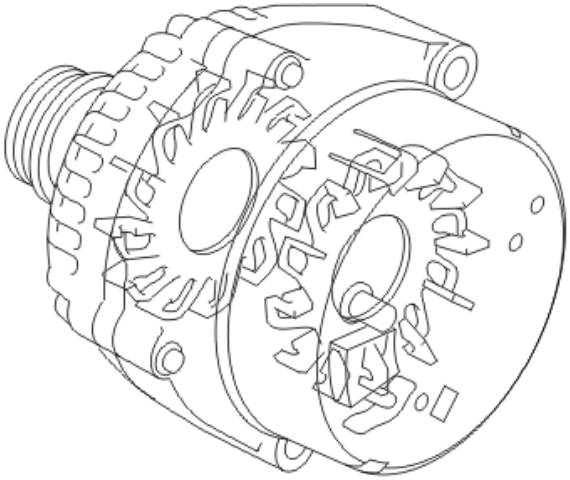

Fig. 7: Cooling Fans
Courtesy of VOLVO CARS CORPORATION

The heat generated in the generator is, in principle, proportional to the current generated and must be directed away to prevent damage to the insulation and diodes. The generator (GEN) is therefore air cooled and equipped with two integrated cooling fans on the rotor shaft.

RECTIFIER

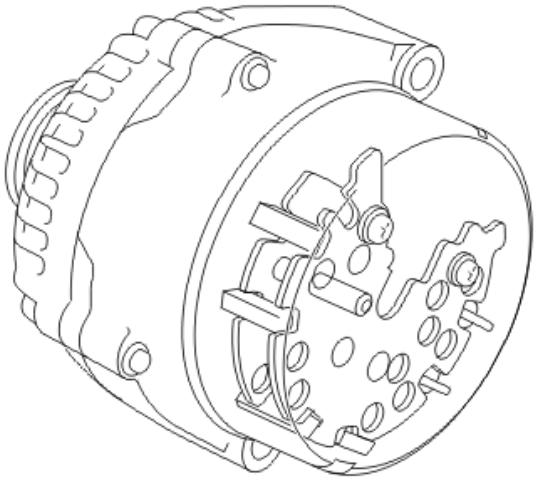

Fig. 8: Identifying Rectifier
Courtesy of VOLVO CARS CORPORATION

Alternating current (AC) is created in the generator stator windings. This must be converted to direct current (DC) before it can be used in the electrical system of the car. This conversion is made using a rectifier bridge which consists of six diodes, two diodes per phase winding.

The stator windings generate three phases and are delta connected An exciter diode is connected to each of the three stator windings. The six rectifier diodes are bridge connected. The diodes are pressed into a diode holder.

CHARGE REGULATOR (ALTERNATOR CONTROL MODULE (ACM))

General

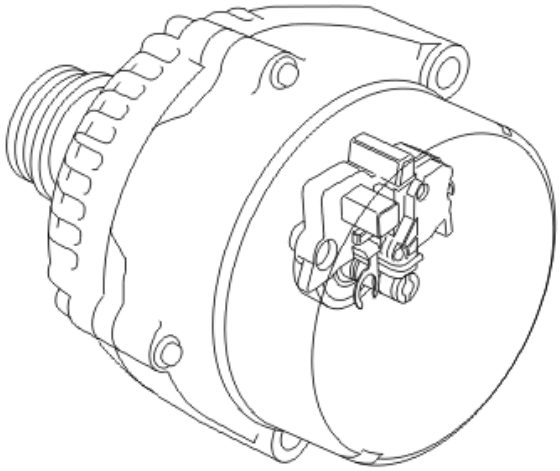

Fig. 9: Charge Regulator
Courtesy of VOLVO CARS CORPORATION

For B8444S

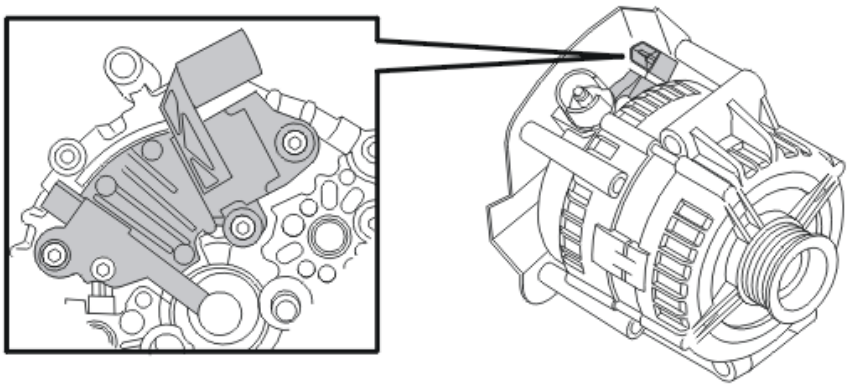

Fig. 10: Identifying Charge Regulator Bracket & Connector
Courtesy of VOLVO CARS CORPORATION

The generator (GEN) has an inbuilt charge regulator at the rear (also known as the alternator control module (ACM)). The regulator can be replaced. The carbon brushes are integrated on the slip rings on the rotor on the regulator.

Charge voltage

At room temperature a fully charged battery cell produces 2.12 V. A 12 V battery has 6 cells and therefore produces 12.72 V when the battery is fully charged. The battery has an internal resistance which must be exceeded before charging can take place. At room temperature 0.2 V is required per cell, or 1.2 V for the entire battery. Therefore to charge a battery at room temperature, 13.92 V (12.72 V+1.2 V) is required. In cold conditions, the chemical reactions take place at a slower rate and the internal resistance increases. This requires a higher voltage during charging to exceed the internal resistance. The charge regulator, depending on how it is controlled by the central electronic module (CEM), regulates the output voltage so that the battery receives

optimal charge.

If the charge regulator is connected to the engine control module (ECM), it will use the commands from the engine control module (ECM) and central electronic module (CEM) to regulate output voltage so that the battery is charged optimally.

Charge regulator control

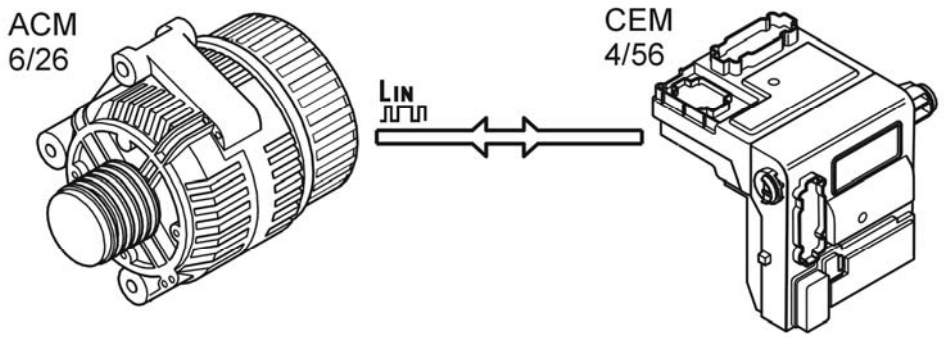

Fig. 11: Generator And Alternator Control Module
Courtesy of VOLVO CARS CORPORATION

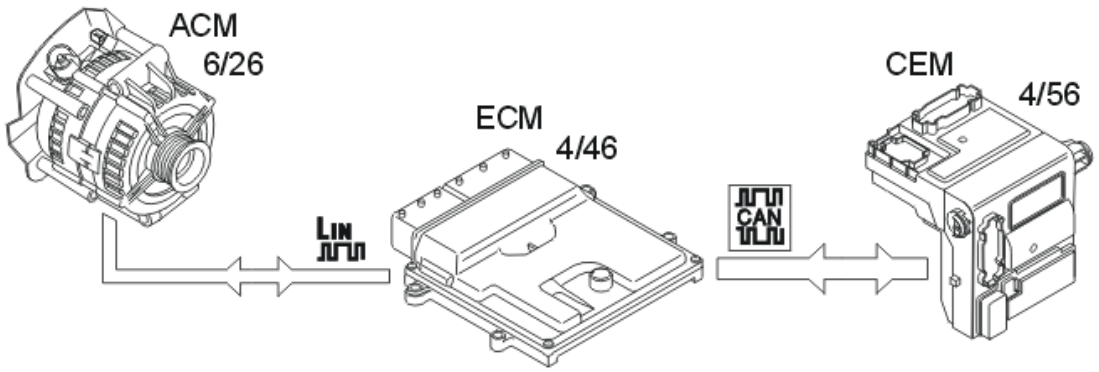

Fig. 12: Identifying ACM, ECM & CEM Communication Link
Courtesy of VOLVO CARS CORPORATION

The above illustrations depict the two different types of connections for the alternator's regulator.

Depending on the model year and type of engine management system, the charge regulator (also known as the alternator control module (ACM)) is connected to either the central electronic module (CEM) or the engine control module (ECM). It communicates via LIN communication.

If the charge regulator is connected to the engine control module (ECM), the engine control module (ECM) then communicates with the central electronic module (CEM) regarding alternator control via the controller area network (CAN).

The central electronic module (CEM) has built-in functions for regulating voltage level and current consumption in the vehicle. The central electronic module (CEM) controls the charge regulator either directly or via the engine control module (ECM). In this manner, it also controls the current/voltage produced by the alternator.

The generator does not initially charge when the engine is started. The charge increases successively when the engine has been started. When there is an increase in load at the generator, the increase from 0 - 100% takes place over the course of a few seconds (this time varies slightly depending on the operating mode the engine management system is in). This is to gradually increase the load on the engine during the start-up phase and to ensure the engine starts.

If the engine speed (RPM) exceeds idle speed (the exact engine speed varies slightly depending on the mode the engine management system is in) during this delay, or if the progressive increase is interrupted, full charge is obtained immediately.

If there is no communication with the charge regulator, the charge regulator will not start charging on start-up. The charge regulator can however self magnetize the rotor and start charging. This occurs at engine speeds greater than approximately 2100 rpm. There is no charge engagement by stages with self magnetization, the generator operates at full charge immediately.

When self magnetizing has begun, the generator (GEN) also charges at engine speeds below 2100 rpm.

FREEWHEEL

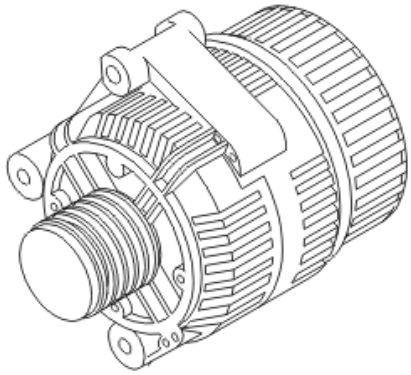

Fig. 13: Freewheel Generator
Courtesy of VOLVO CARS CORPORATION

Some alternators are fitted with freewheels between the rotor shaft and the pulley. However, it is possible to, see that the pulley is fitted with freewheels from the cover fitted over the pulley's nut in the centre. The freewheels allow the alternator's rotor shaft to rotate freely in one direction. This keeps any jerking in the belt transmission to a minimum. For engine B8444S, the alternator is not fitted with freewheels.

FUNCTION

GENERAL

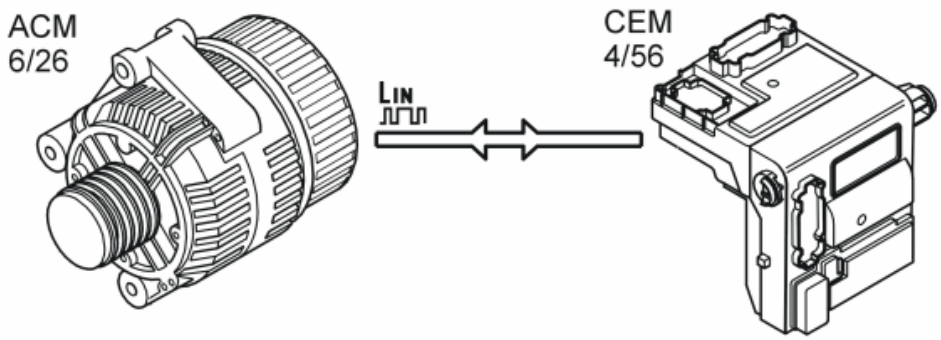

Fig. 14: Identifying ACM To CEM Communication Link
Courtesy of VOLVO CARS CORPORATION

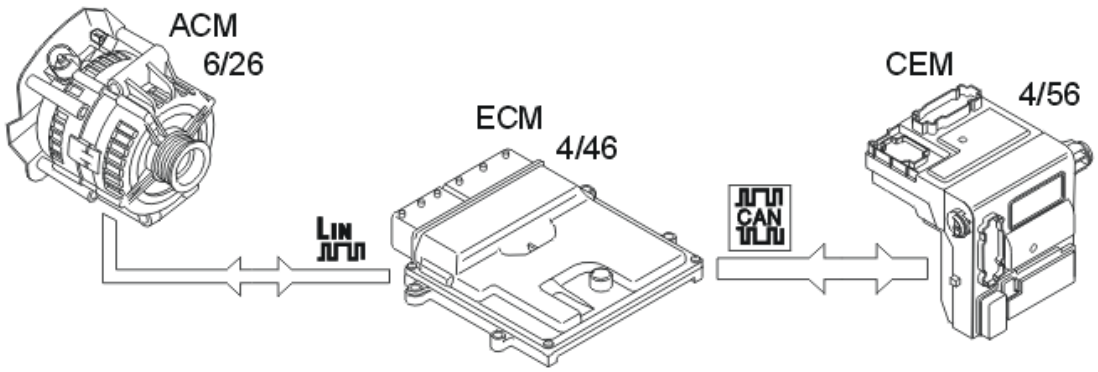

Fig. 15: Identifying ACM, ECM & CEM Communication Link
Courtesy of VOLVO CARS CORPORATION

The above illustrations depict the two different types of connections for the alternator's regulator.

Output voltage from the generator (GEN) is calculated from the calculated battery temperature in order to charge the battery fully. The central electronic module (CEM) calculates the battery temperature using the outside temperature. The outside temperature is obtained from the outside temperature sensor.

The Rear electronic module (REM) checks the voltage on the battery and transmits the value out on the CAN network. The value is used in the Central electronic module (CEM), among others, for diagnosing the charging function.

CHARGING

When the ignition key is in position II (or III), the central electronic module (CEM) sends information to the charge regulator (also known as the alternator control module (ACM)) either directly or via the engine control module (ECM).

The regulator directs current to the excitation winding rotor and is then grounded via the regulator. When the current travels through the rotor a magnetic field is formed around the rotor. When the engine is started and the

rotor begins to rotate, the magnetic field also rotates and then produces alternating current in the stator windings.

Alternating current is rectified when it passes the diodes and is then fed to the electrical system of the vehicle. The voltage obtained from the stator winding also passes to the regulator via the rectifier and affects the control functions.

The desired charge voltage (desired value), based on factors such as calculated battery temperature, is sent from the central electronic module (CEM) to the charge regulator either directly or via the engine control module (ECM). The regulator then controls so that the desired voltage is obtained by the battery.

The charge indicator lamp in the combined instrument panel is controlled by the driver information module (DIM) via signals from the controller area network (CAN).

SYSTEM OVERVIEW

GENERAL

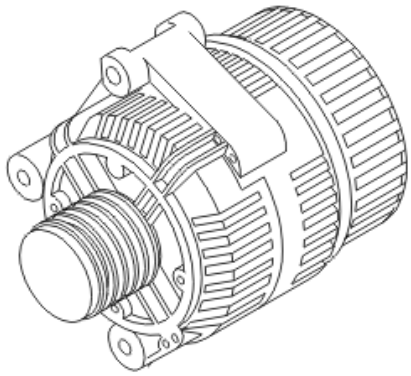

Fig. 16: Freewheel Generator
Courtesy of VOLVO CARS CORPORATION

This document describes the basic principles of the design and function of the generator (GEN), irrespective of the make.

The generator provides power consuming components with current whilst the engine is running and maintains battery charge. The generator (GEN) is mounted on the front edge of the engine.

The output of the generator (GEN) depends on engine speed. When the engine is idling, the generator (GEN) operates at approximately half of maximum output. When the engine is idling with many power consuming components engaged, the generator (GEN) may be unable to maintain full battery charge.

In cold conditions the capacity of the battery to receive charge is lower than at room temperature. This means that, when the engine is idling for a long period with a large number of power consuming components connected, the battery may discharge.

If the generator charge is cut, the power consuming components of the vehicle are only supplied with energy

from the battery, which means that the battery will eventually run flat.

First of all the generator (GEN) creates an alternating current (AC) which is converted to a direct current (DC) in the rectifier bridge.

The alternator has a built-in charge regulator (also known as the alternator control module (ACM)).

NOTE: Depending on the model year and type of engine management system, the charge regulator is connected to either the central electronic module (CEM) or the engine control module (ECM). It communicates via LIN communication.

The auxiliaries belt transfers power from the crankshaft pulley to the auxiliaries such as the power steering pump, air conditioning (A/C) compressor, and the generator. An automatic belt tensioner is used to adjust the belt tension. The belt is a Poly-v-belt.

The alternator with charge regulator is diagnosed via the central electronic module (CEM) provided the charge regulator is connected to the central electronic module (CEM).

If the charge regulator is connected to the engine control module (ECM), it is diagnosed by both the central electronic module (CEM) and the engine control module (ECM).

The charge indicator lamp in the combined instrument panel is controlled by the driver information module (DIM) via signals from the controller area network (CAN).

GLOBAL POSITIONING SYSTEM MODULE (GPS) (2007-2012)

DESIGN

CONTROL MODULE

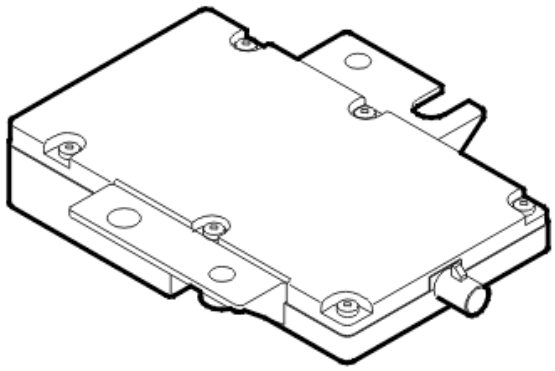

Fig. 17: Identifying Global Positioning System Module (GPS)
Courtesy of VOLVO CARS CORPORATION

The global positioning system module (GPS) has a built-in 12 channel GPS receiver. The receiver is optimized for a frequency of 1575.42 MHz.

The global positioning system module (GPS) transmits two signals:

- A signal to the infotainment control module (ICM) indicating that the control module is awake.
- A combination signal to the Phone module (PHM). Current, received position is transmitted when it is available, otherwise a calculated position is transmitted, based on the last known received position.

If there is no, or poor communication, with the GPS satellites, for example when in a tunnel, the global positioning system module (GPS) uses the information from other control modules for dead reckoning (i. e. to calculate the position of the vehicle).

The global positioning system module (GPS) requires the following to calculate the actual position:

- the information from the wheel rotation counters stored in the brake control module (BCM)
- information about back-up (reverse) gear from the transmission control module (TCM)
- information about whether the parking brake is applied from the driver information module (DIM)
- information about whether the brake pedal is pressed or not from the brake control module (BCM)
- information about the extent to which the traction control system is activated from the brake control module (BCM)
- information about wheel size from the central electronic module (CEM).

All information is transmitted via the infotainment control module (ICM).

The navigation system needs signals from at least three GPS satellites to calculate the position of the vehicle in two planes.

For three dimensional position reckoning, signals are required from at least four satellites.

The position is measured both vertically and horizontally. The antenna continuously transmits information about the position of the vehicle to the GPS receiver. The position is accurate to within a maximum of 25 meters from the position calculated by both the GPS signal and dead reckoning. The accuracy is somewhat reduced when only dead reckoning is used. The fault increases with distance driven since position lost.

If there is signal interference, when traveling in tunnels or high rise areas for example, the accuracy may be reduced slightly.

For the system to determine the position as exactly as possible, the system must differentiate between signals coming directly the GPS satellites or those reflected by a high rise building for example.

When the ignition is switched off the power consumption of the GPS receiver must not exceed 0.1 mA. The receiver stores important information, such as the last GPS signal received if the power is cut.

The system can endure temperatures between -40 °C and 85 °C.

The global positioning system module (GPS) checks the input and output signals through an integrated diagnostic system.

NOTE: **If the diagnostic information indicates a lost GPS signal, the signal should be checked outdoors. This is because the signal may be blocked if the vehicle is indoors.**

ANTENNA

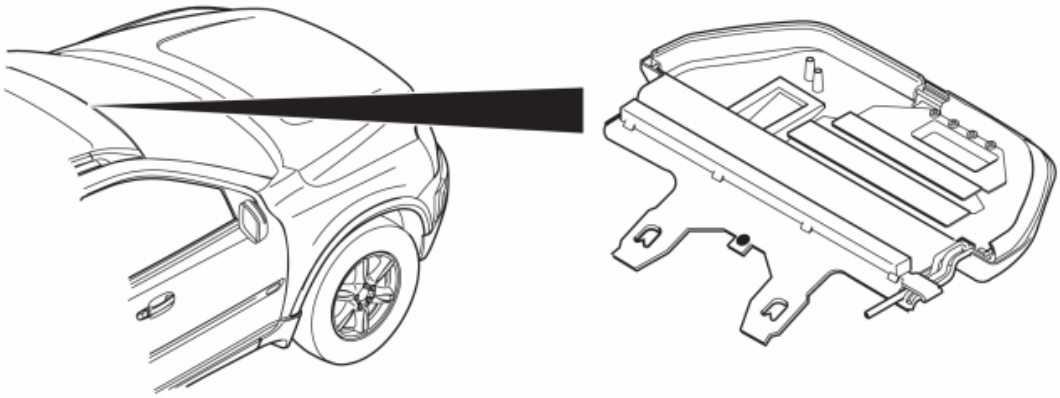

Fig. 18: Locating GPS Antenna
Courtesy of VOLVO CARS CORPORATION

The global positioning system has an antenna. This antenna is a combined antenna for GPS and the carphone.

The GPS receiver supplies the antenna power at 0 - 4.75 ±0.5 V via a coaxial cable.

The antenna is located in front of the inner rear view mirror.

DIAGNOSTIC FUNCTIONS

GENERAL

The control module has a built-in diagnostic system, Volvo Diagnostic, which continuously monitors internal functions as well as input and output signals.

DIAGNOSTIC TROUBLE CODES (DTCS)

A diagnostic trouble code (DTC) is stored if the control module detects a fault.

If a fault disappears for any reason after the diagnostic trouble code (DTC) has been permanently stored in the control module, information about the fault remains in the control module.

READING AND ERASING DIAGNOSTIC TROUBLE CODES (DTCS)

Stored diagnostic trouble codes (DTCs) can be read off and erased using this function.

Diagnostic trouble codes can only be erased once all the diagnostic trouble codes have been read out at least once.

NOTE: Certain functions are unavailable until the diagnostic trouble codes (DTCs) have been erased.

READING OFF INPUT AND OUTPUT SIGNALS

This function can be used to continuously read off the values and status of the control module's input and output signals.

The following parameters can be read off:

- **GPS Received position, longitude.** Indicates the received longitudinal position.
- **GPS Received position, latitude.** Indicates the received latitudinal position.

The following responses may be obtained when reading the available GPS satellites:

- Not available - no contact with satellites.
- No fix - contact with satellites but unable to fix a position.
- 2D Fix- contact with satellites, two-dimensional position fixing.
- 3D Fix- contact with satellites, three-dimensional position fixing.

READING OFF THE CONTROL MODULE IDENTIFICATION

The diagnostic tool identifies control modules by reading off a number of codes from the control module memory.

The codes contain information about the control module:

- hardware P/N (control module without software)
- hardware serial number (control module without software)
- software P/N
- diagnostic software P/N

READING OFF EXTENDED FAULT-TRACING INFORMATION

This function can be used to read parameters, status identifiers and counters stored at the same time as a diagnostic trouble code (DTC). These are called frozen values.

DOWNLOADING SOFTWARE AND REPLACING THE CONTROL MODULE

Software can be downloaded to the global positioning system module (GPS). When software is ordered, the vehicle' software and hardware is compared to Volvo's central database. If they are compatible, the software is downloaded to the system.

If the comparison between the car and Volvo's central database does not correspond, then the database is updated with the vehicle's configuration. When this is complete the software is downloaded.

After replacing the control module the module's unique ID number must be programmed in the Central electronic module (CEM).

FUNCTION

GPS RECEPTION

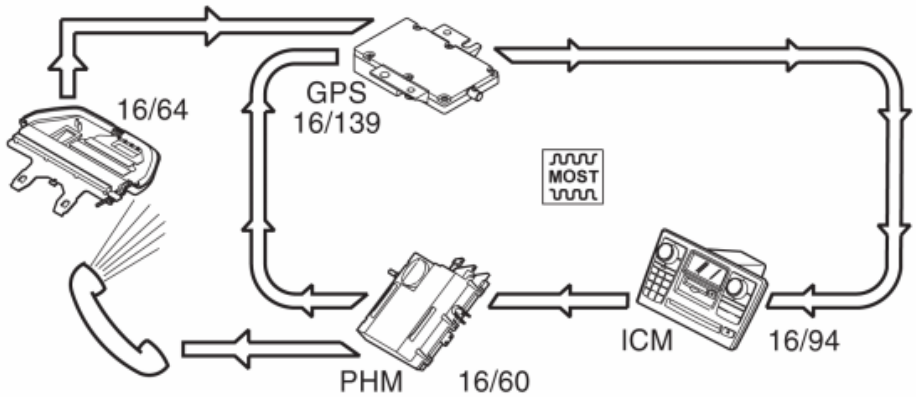

Fig. 19: Identifying GPS Components
Courtesy of VOLVO CARS CORPORATION

The GPS receiver receives signals from GPS satellites. The Global positioning system module (GPS) (16/139) transmits signals onwards via the MOST network to:

- Phone module (PHM) (16/60)
- Infotainment control module (ICM) (16/94).

The signal to the Phone module (PHM) is used by Volvo on Call/ Volvo on Call Plus to locate the vehicle in an emergency situation.

The signal to the Infotainment control module (ICM) is a confirmation that the control module is awake.

When starting from cold, the system must be able to determine the position of the car within 120 seconds. For hot starting the position must be available within 40 seconds.

A cold start is when the system has had no power for a long period. A hot start is where the system has been off for a shorter time, when the car has been in a short-stay car park for example. This does not apply to locations without GPS reception, for example, when the car is inside a garage.

SYSTEM OVERVIEW

CONTROL MODULE

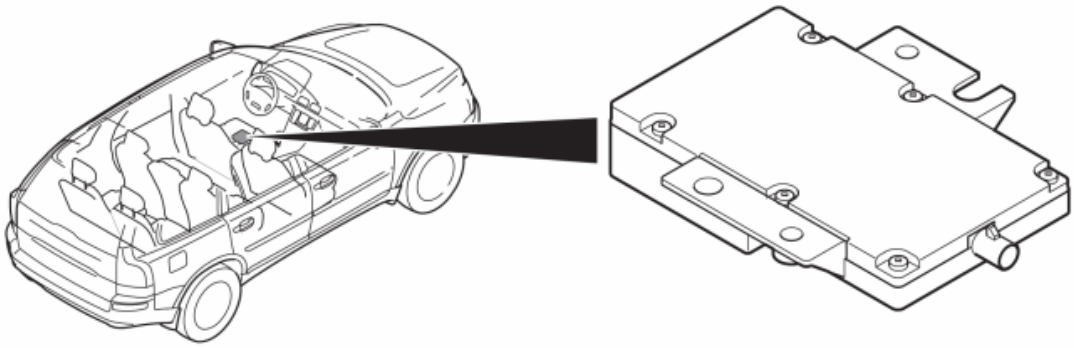

Fig. 20: Locating GPS Module
Courtesy of VOLVO CARS CORPORATION

The global positioning system module (GPS) receives satellite signals to determine position.

The global positioning system module (GPS) is an option and is only used together with Volvo on Call and when the vehicle is equipped with Multimedia module (MMM).

The Global positioning system module (GPS) is located under the left-hand seat.

The global positioning system has an antenna. This antenna is a combined antenna for GPS and the carphone.

The control module uses optical serial communication to communicate with other components on the MOST network. This means that all communication with the Global positioning system module (GPS) is via the infotainment control module (ICM).

The control module checks input and output signals via an integrated diagnostic system. A diagnostic trouble code (DTC) is stored if the control module detects an error. Any diagnostic trouble codes (DTCs) are stored in the control module memory.

The information can be read off using the diagnostic tool.

SIGNALS

The table below summarizes the input signals to and output signals from the global positioning system module (GPS).

The signal types are divided into directly connected signals and MOST communication.

The illustration below displays the same information with the Volvo component designations.

Input signals	Output signals
Directly connected: • Antenna (16/64)	**Directly connected:** -
Via MOST communication:	**Via MOST communication:**

• Infotainment control module (ICM) (16/94)	• Infotainment control module (ICM) (16/94) • Phone module (PHM) (16/60)

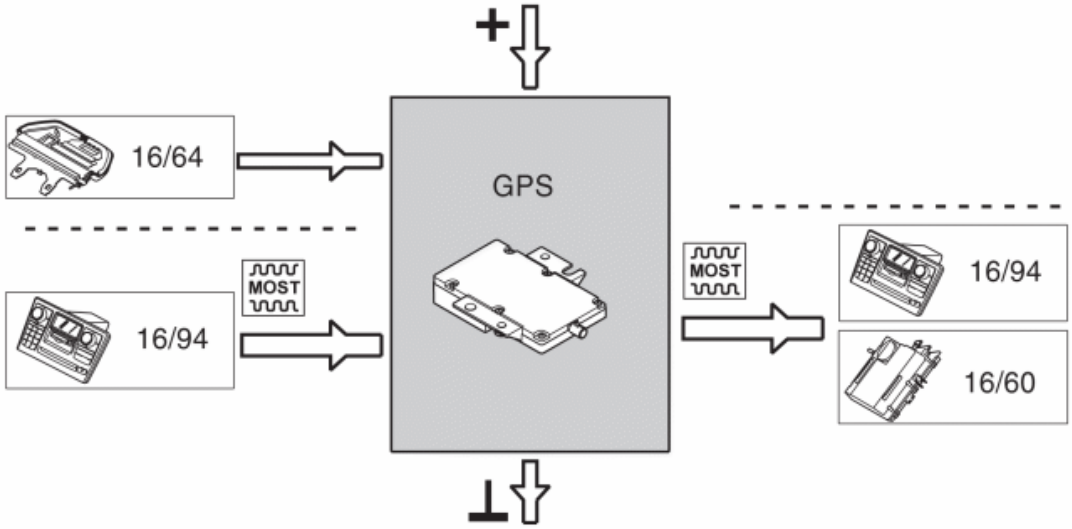

Fig. 21: Identifying Volvo Component Designations
Courtesy of VOLVO CARS CORPORATION

HEADLAMP WASHER (2003-2012)

HEADLAMP WASHER

WASHING

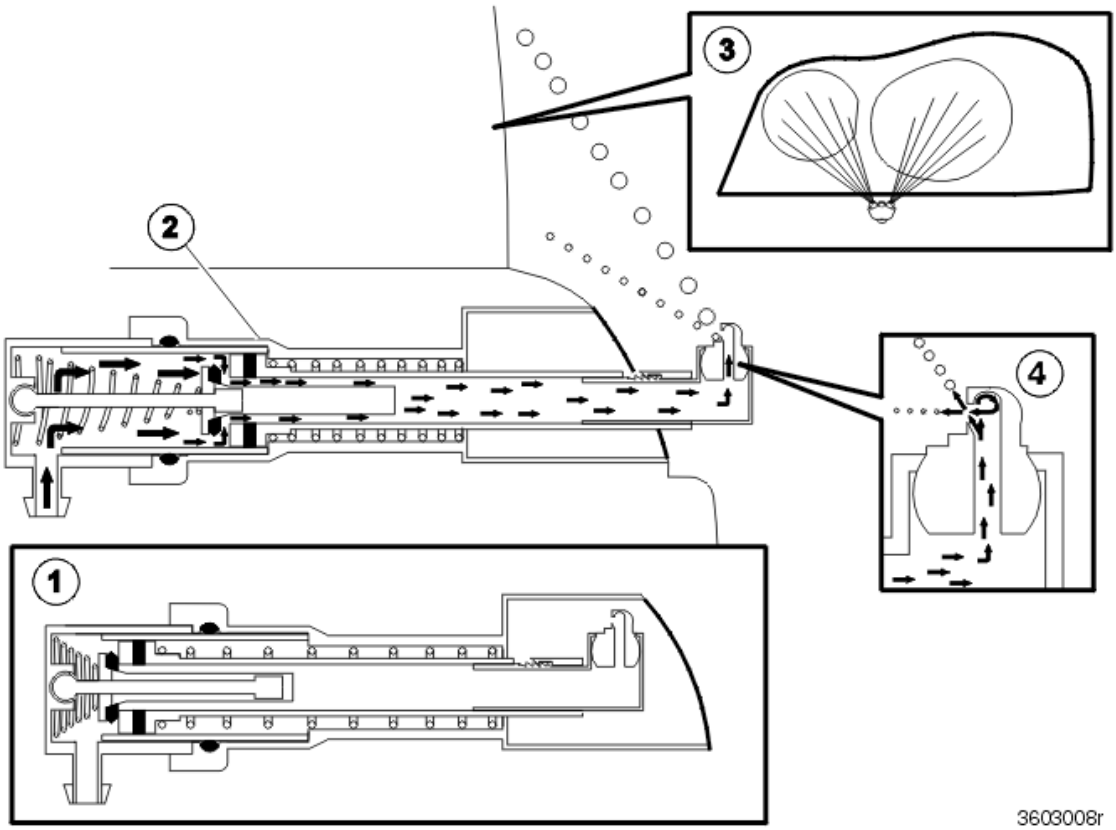

Fig. 22: Identifying Headlamp Washers
Courtesy of VOLVO CARS CORPORATION

1. Washing off
2. Washing on
3. Spray pattern
4. Washer nozzle.

The XC90 has a system to clean the headlamp lenses. This is telescopic with double nozzles installed in the bumper under each headlamp.

Function

- Each telescopic arm consists of a hollow piston which runs inside a cylinder
- When washing, the pressure of the washer fluid presses the piston out
- When the piston is in the deployed position, a relief valve opens and the fluid can move into the nozzle
- When the pressure drops again, a return spring returns the piston into the cylinder
- The washer nozzle has a unique spray pattern
- The telescopic arm has a stroke of 120 mm
- Color coordinated covers lie over the bumper in the resting position.

NOTE: Each washer nozzle is specially adapted for either the right or left-hand headlamp. Color coded: Right =gray, Left = black.

SYSTEM OVERVIEW

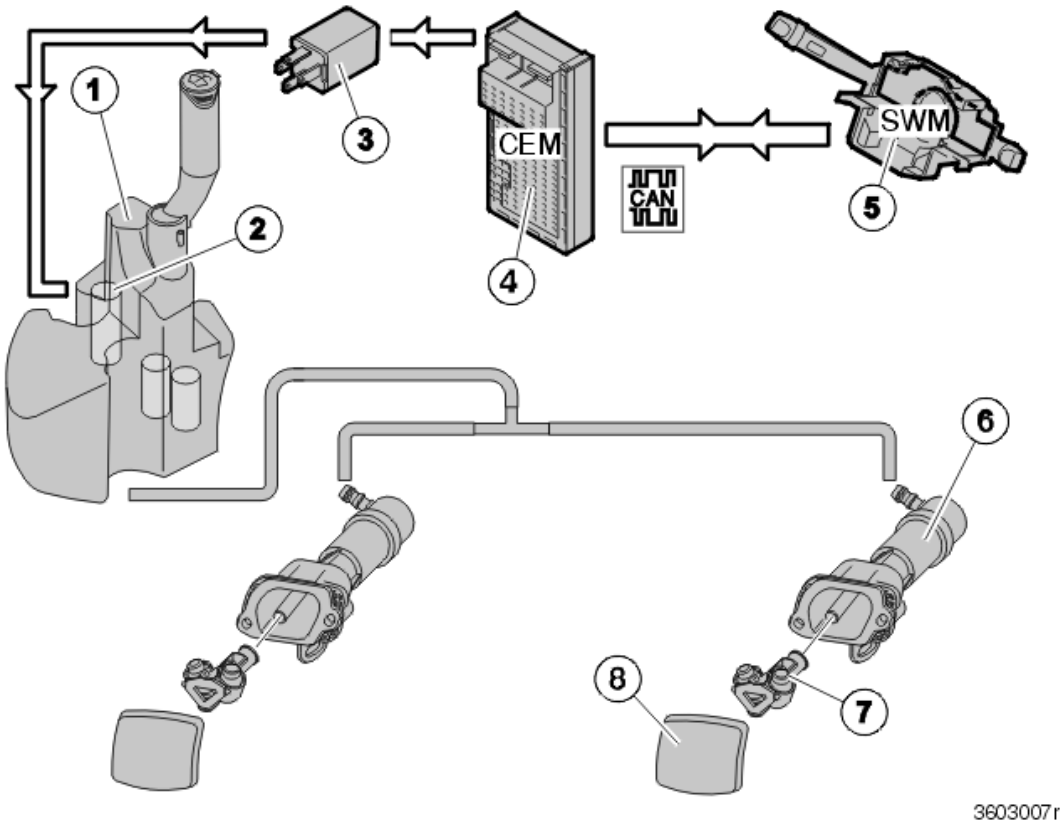

Fig. 23: Identifying Headlamp Washer System
Courtesy of VOLVO CARS CORPORATION

1. Windshield washer reservoir
2. Pump
3. Relay
4. Central electronic module (CEM)
5. Steering wheel module (SWM)
6. Telescopic arm
7. Washer nozzle
8. Cover.

Pump

An electrical centrifugal pump increases the pressure of the fluid in the system. The windshield washer fluid presses the pistons out and then flows out through the nozzles and cleans the headlamps.

- The pump is on the windshield washer reservoir at the pumps for the front and rear windshields
- The motor is activated for 1 second for each wash
- Maximum pump pressure = 4 bar
- Output: 180 W.

Washing

Approximately 1 dl of washer fluid is used for each wash.

The capacity of the windshield washer reservoir is 6.5 liters.

HEADLIGHT CONTROL MODULE (HCM) (2007-2012)

DESIGN

LEFT HEADLIGHT CONTROL UNIT (LHCU) / RIGHT HEADLIGHT CONTROL UNIT (RHCU)

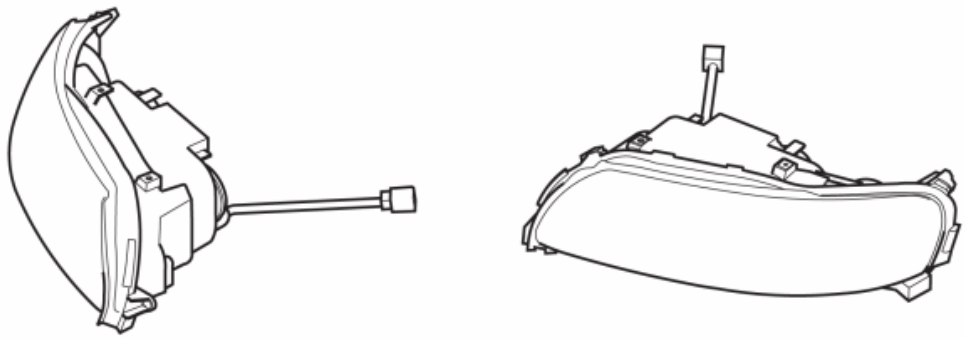

Fig. 24: Identifying Left And Right Headlight Units
Courtesy of VOLVO CARS CORPORATION

The left headlight control unit (LHCU) / right headlight control unit (RHCU) are located within the headlights.

The left headlight control unit (LHCU) / right headlight control unit (RHCU) handle the active regulation of the light beam. Active regulation means that the light beam is turned out to the left or right. The light beam is turned out at different amounts and different rates depending on vehicle speed and steering wheel angle.

Information is transferred between the left headlight control unit (LHCU), right headlight control unit (RHCU) and headlight control module (HCM) via LIN communication.

The lamp housing contains a sensor that indicates whether the light beam has been turned out to the right or left. The left headlight control unit (LHCU) and right headlight control unit (RHCU) send this information to the headlight control module (HCM).

If there is no communication with the headlight control module (HCM) or a fault arises in the left headlight

control unit and/or the right headlight control unit (RHCU), active regulation ceases. If this is the case, the headlights are aimed straight ahead.

The left headlight control unit (LHCU) and right headlight control unit (RHCU) can be diagnosed.

DIAGNOSTIC FUNCTIONS

GENERAL

The control module has a built-in diagnostic system, Volvo Diagnostic, which continuously monitors internal functions as well as input and output signals.

DIAGNOSTIC TROUBLE CODES (DTCS)

A diagnostic trouble code (DTC) is stored if the control module detects a fault. A fault which is detected in the most recent operating cycle is defined as permanent. Other faults are defined as intermittent. An operating cycle involves ignition on, the vehicle speed exceeding 20 km/h and the ignition being switched off.

READING AND ERASING DIAGNOSTIC TROUBLE CODES (DTCS)

Stored diagnostic trouble codes (DTCs) can be read off and erased using this function.

Diagnostic trouble codes (DTCs) can only be erased once all the diagnostic trouble codes (DTCs) have been read off at least once.

READING OFF INPUT AND OUTPUT SIGNALS

This function can be used to continuously read off the status of the control module's input and output signals.

ACTIVATING COMPONENTS

This function can be used to activate components to check that they are working.

READING OFF THE CONTROL MODULE IDENTIFICATION

The diagnostic tool identifies control modules by reading off a number of codes from the control module memory.

The codes contain the following information about the control module:

- hardware P/N (control module without software)
- hardware serial number (control module without software)
- software P/N
- diagnostic software P/N (part of the software).

DOWNLOADING SOFTWARE AND REPLACING THE CONTROL MODULE

New software can be downloaded to the headlight control module (HCM).

When ordering software the vehicle's hardware and software are compared with Volvo's central database. If the comparison is correct the software is downloaded to the control module.

If the comparison between the car and Volvo's central database does not correspond, then the database is updated with the vehicle's configuration. When this is complete the software is downloaded.

FUNCTION

ACTIVE HEADLIGHTS

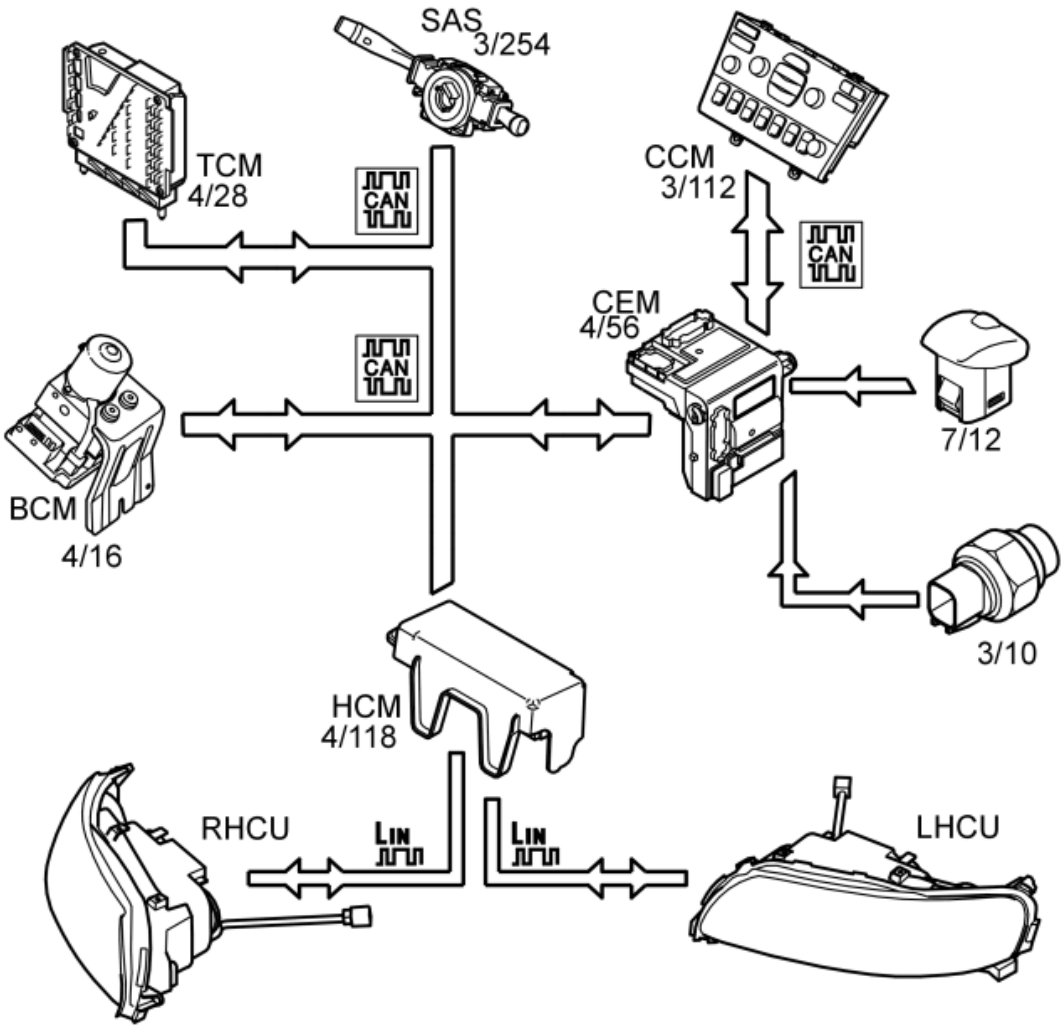

Fig. 25: Identifying Headlight Control Module (HCM) System Communication Links
Courtesy of VOLVO CARS CORPORATION

Active headlights are an intelligent headlight system that optimizes illumination of the road surface at night by turning out the light beam. The motorized headlights are controlled by the headlight control module (HCM), which retrieves signals from the CAN network.

In order to activate the active headlight function, the headlight control module (HCM) (4/118) needs information on the following: vehicle speed, current gear, light conditions.

The headlight control module (HCM) receives information from the following control modules:

- Brake control module (BCM) (4/16) for information on vehicle speed
- Transmission control module (TCM) (4/28) for information on current gear (automatic transmission)
- Central electronic module (CEM) (4/56) for information from the reversing light switch (3/10) (manual transmission)
- Central electronic module (CEM) for information from the twilight sensor (7/12)

The headlight control module (HCM) is activated automatically when the ignition switch is turned to position II. In order to turn out the light beam, the following conditions must be fulfilled:

- The vehicle must be in motion, that is to say travelling at a speed greater than 3.6 km/h (2.2 mph).
- Reverse gear must not be engaged.
- No daylight light conditions.

The switch for active headlights on the climate control module (CCM) (3/112) can be used to disable/enable the function.

When the function is active, the headlight control module (HCM) receives continual information on vehicle speed and steering angle. Vehicle speed is obtained from the brake control module (BCM) while steering angle information comes from the steering wheel angle sensor module (SAS) (3/254). This information enables the headlight control module (HCM) to calculate the current turn-out of the light beam.

SHIFT LIGHT BEAM AND LIMIT ACTIVE CONTROL FOR RIGHT-HAND/LEFT-HAND TRAFFIC ("TOURIST MODE")

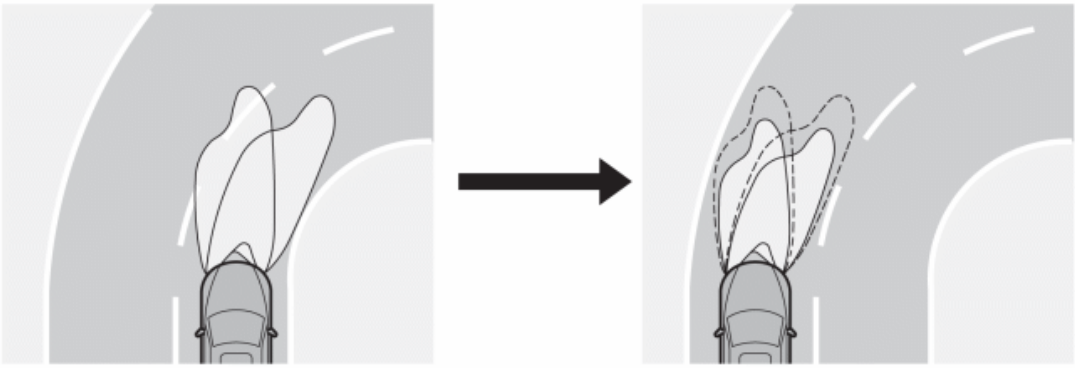

Fig. 26: Identifying Shift Light Beam Patterns For Right-Hand/Left-Hand Traffic
Courtesy of VOLVO CARS CORPORATION

NOTE: Changing light pattern and limiting active control is only permitted on certain markets. The function is controlled by the software in Headlamp Control Module (HCM).

If the vehicle is designed for right-hand traffic and is used in a country where traffic drives on the left, the light beam must be shifted and active control limited so as not to blind oncoming traffic. This also applies if the vehicle is designed for left-hand traffic and is used in a country where traffic drives on the right.

In order to change the setting, hold the active headlight switch on the climate control module (CCM) depressed for at least five seconds.

When the setting has been changed, a message appears in the driver information module to indicate the current setting (for right-hand or left-hand traffic) of the vehicle.

When the setting has been changed and the vehicle is in "tourist mode":

- When driving straight ahead, the light beam is turned in a suitable direction so as not to blind oncoming traffic.
- As before, the light beam will also be turned out in the suitable direction when cornering, just not as much.
- The light beam is also aimed down slightly (shorter beam length) so as not to blind oncoming traffic.

The vehicle must be stationary when the setting is changed.

NOTE: The light beam must under no circumstances be adjusted with the adjuster screws when in "tourist mode". If the light beam is adjusted with the adjuster screws when the system has aimed the headlights down, there is a substantial risk that the vehicle will blind oncoming traffic when the system resumes normal mode.

SYSTEM OVERVIEW

CONTROL MODULE

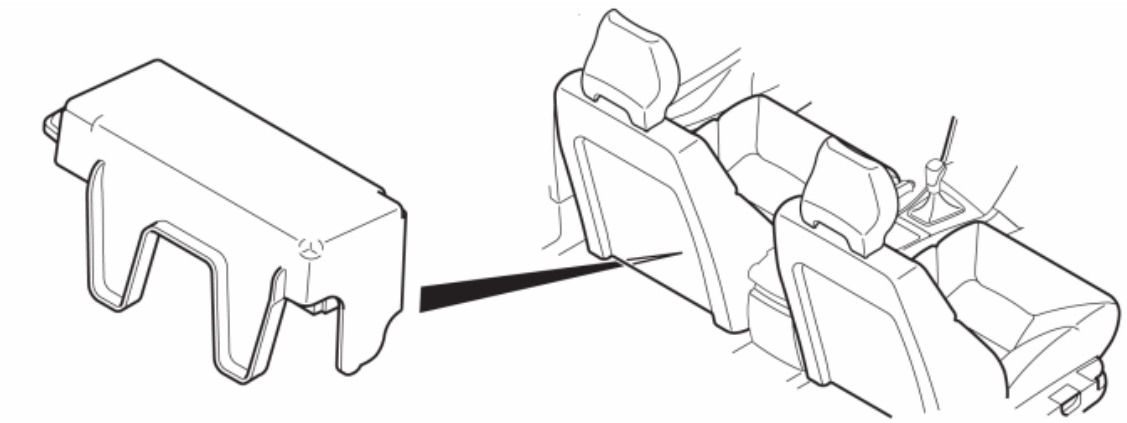

Fig. 27: Locating Headlight Control Module (HCM)
Courtesy of VOLVO CARS CORPORATION

The most important task of the headlight control module (HCM) is handling the active headlight function.

The control module is mounted beneath the driver's seat. The entire control module is removed from the vehicle upon replacement.

The headlight control module (HCM) communicates both with directly connected components, and with other control modules via CAN communication.

The control module checks activations and input and output signals using an integrated diagnostic system A diagnostic trouble code is generated if the control module detects a fault. In certain cases the control module replaces the faulty signal with a substitute value.

Any diagnostic trouble codes are stored in the relevant control module memory. The data can be read off using a diagnostic tool.

If the control module detects a fault, a diagnostic trouble code is registered in the control module's internal memory. At the same time, a number of values that were frozen when the fault occurred are store. Depending on the severity of the fault, some functions will be fully or partially disabled. A warning or information text will appear in the driver information module (DIM) display. In addition, the LED in the active headlight button will flash. Diagnostic trouble codes and frozen values (detailed diagnostic trouble code information) can be read with a diagnostic tool via the data link connector in the vehicle.

In order to check whether the headlight control module (HCM) is supplied power and is grounded, the ignition switch can be set to position II.

SIGNALS

The table below summarizes the input signals to and output signals from the headlight control module (HCM). The signal types are divided into LIN communication and CAN communication. The illustration below displays the same information with the Volvo component designations.

Input signals:	Output signals:
Via LIN communication: • Left headlight control unit (LHCU) / right headlight control unit (RHCU)	**Via LIN communication:** • Left headlight control unit (LHCU) / right headlight control unit (RHCU)
Via CAN communication: • Transmission Control Module (TCM) (4/28) • Brake control module (BCM) (4/16) • Steering wheel angle sensor module (SAS) (3/254) • Climate Control Module (CCM) (3/112). • Central electronic module (CEM) (4/56)	**Via CAN communication:** • Driver information module (DIM) (5/1) • Climate Control Module (CCM) (3/112). • Central electronic module (CEM) (4/56)

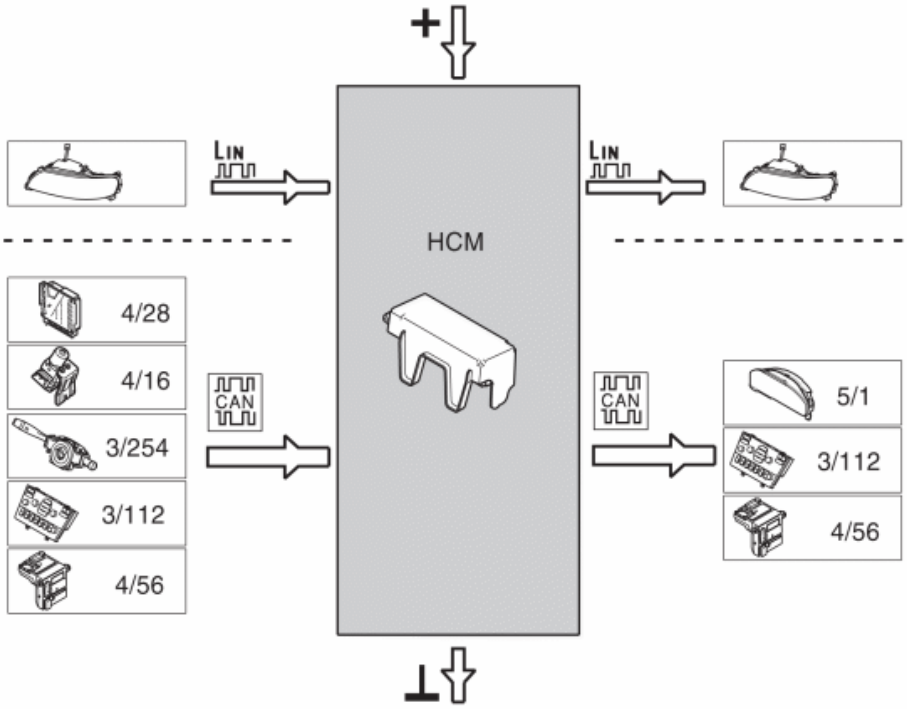

Fig. 28: Identifying Headlight Control Module (HCM) Communication System Links
Courtesy of VOLVO CARS CORPORATION

IMMOBILIZER (2003-2004)

DESIGN

GENERAL

The security system in the vehicle is a distributed system which is monitored by the central electronic module (CEM). A number of other units and components are involved for the various functions.

CENTRAL ELECTRONIC MODULE (CEM)

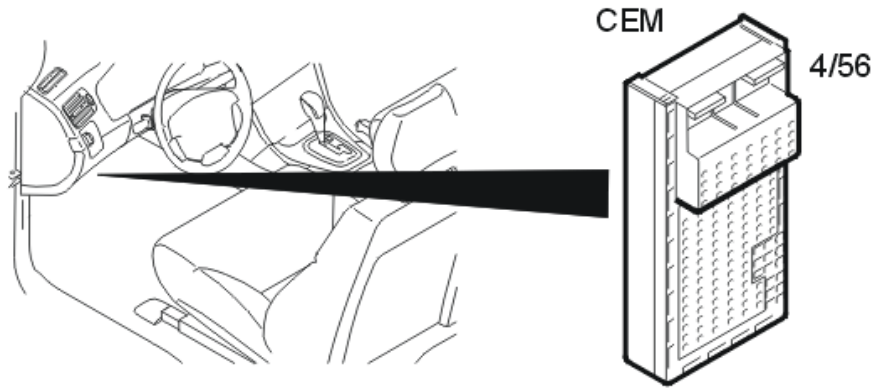

Fig. 29: Central Electronic Module
Courtesy of VOLVO CARS CORPORATION

The central electronic module (CEM) (4/56) is the master unit for the immobilizer function. The central electronic module (CEM) and engine control module (ECM) are linked to each other through codes. The central electronic module (CEM) is also programmed with a code for each ignition key for the vehicle.

The central electronic module (CEM) transmits commands and signals to the other units in the system. The central electronic module (CEM) also approves the identity of the key. The key is checked via the antenna ring. The antenna ring is installed around the ignition switch. There is a transponder (communication circuit) in the ignition key. The identification code of the transponder is unique. The code must be learned by the central electronic module (CEM) before the key can be used to start the vehicle. This code is learned during at the factory. New keys can be added afterwards.

The central electronic module (CEM) checks the relay for the starter motor.

ANTENNA RING

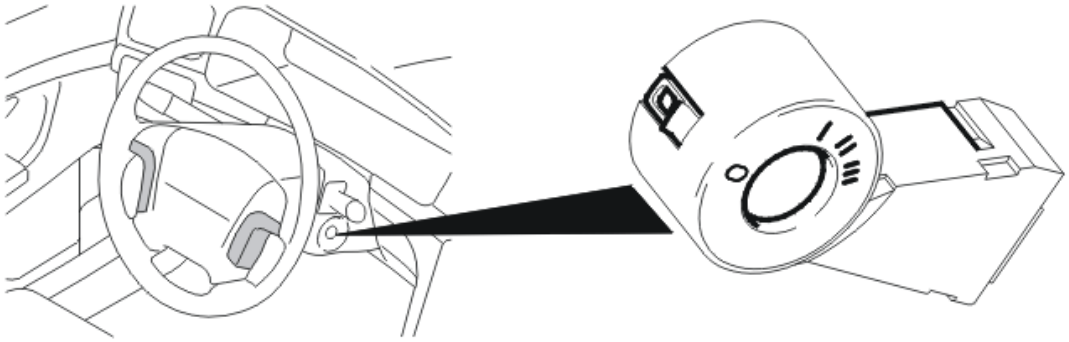

Fig. 30: Antenna Ring

Courtesy of VOLVO CARS CORPORATION

The antenna ring (16/65) is installed around the ignition switch. The antenna ring is used to allow the central electronic module (CEM) to communicate remotely with the ignition key.

The antenna ring comprises a modulation circuit and a communication circuit. The modulation circuit converts signals between the central electronic module (CEM) and the communication circuit. The communication circuit is used to communicate with the key.

When the central electronic module (CEM) activates the antenna ring, a magnetic field is generated around the antenna ring. This magnetic field is converted in the key to an electrical current, which means that the key does not require further electrical supply.

IGNITION KEY

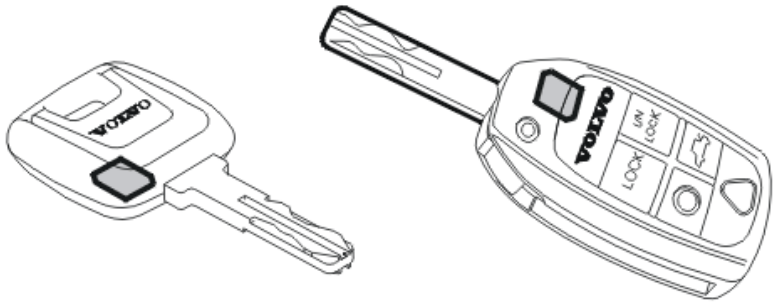

Fig. 31: Identifying Ignition Key Transponder
Courtesy of VOLVO CARS CORPORATION

There is a communication circuit in the ignition key, known as a transponder. This circuit is supplied with power from the magnetic field that is formed around the antenna ring when the central electronic module (CEM) activates the antenna ring. Consequently, the transponder is not dependent on a further power supply.

In order for the key to be used in the vehicle, a code in the key must be entered by the central electronic module (CEM). When the vehicle is delivered from the factory, two keys are normally programmed. When a key has been programmed for the central electronic module (CEM), the key is locked and cannot be programmed for another vehicle.

ENGINE CONTROL MODULE (ECM)

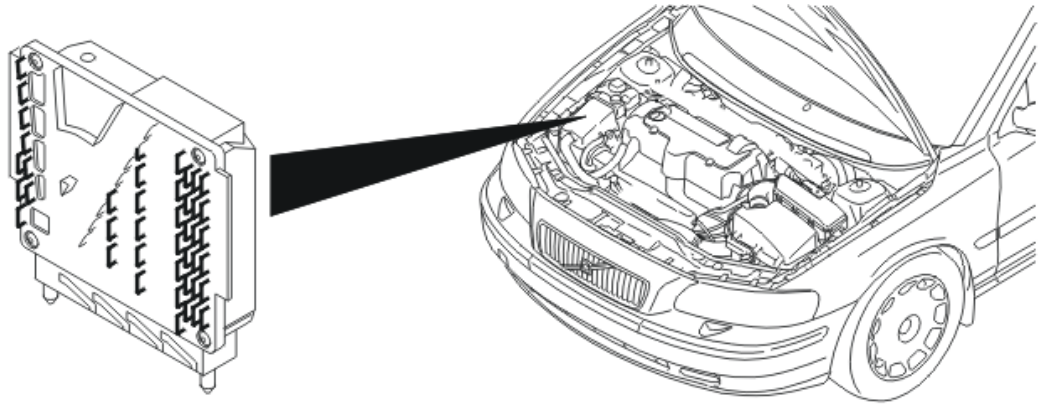

Fig. 32: Engine Control Module
Courtesy of VOLVO CARS CORPORATION

Engine control module (ECM) (4/46) checks the ignition system in the vehicle. The engine control module (ECM) also grants permission to the central electronic module (CEM) if the starter motor is to be allowed to operate when attempting to start. The functions are activated after an approved check of the ignition key has been carried out and an approved identity check has been performed between the engine control module (ECM) and the central electronic module (CEM).

In order for the engine control module (ECM) to work in the immobilizer system, the control module must be programmed with codes. This takes place the first time during installation at the factory, and then if the control module is replaced (when downloading software).

DRIVER INFORMATION MODULE (DIM)

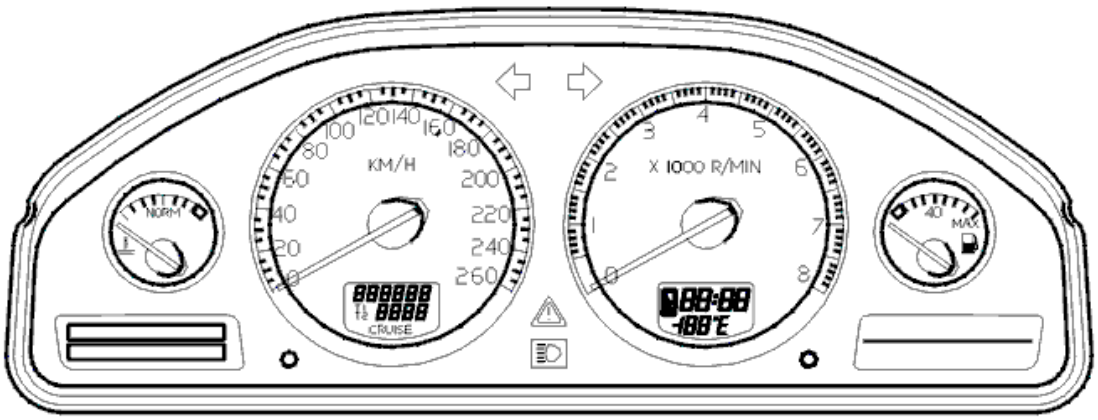

Fig. 33: Driver Information Module

Courtesy of VOLVO CARS CORPORATION

The driver information module (DIM) (5/1) receives information from the central electronic module (CEM) about which message is to appear in the display. A message will be displayed if there is a fault in any of the checks run by the system.

DIAGNOSTIC FUNCTIONS

GENERAL

The central electronic module (CEM) is the master unit for the immobilizer. The central electronic module (CEM) also directly stores diagnostic trouble codes (DTCs) for faults in the immobilizer system. Some other faults can also be stored in the engine control module (ECM).

PROGRAMMING

To increase the security of the immobilizer system, the central electronic module (CEM) and the engine control module (ECM) are linked to each other with codes. The codes must be programmed if a control module is replaced before the vehicle can be started. Programming replaced control modules takes place automatically when downloading software into the new control module.

PROGRAMMING IGNITION KEYS

Ignition keys can be added and erased. A maximum of 6 key IDs can be programmed into the central electronic module (CEM). When programming a key, the key is identified to the control module with a code that is stored in the control module memory.

When a key is programmed for the vehicle, the remote control code is also entered if this is to be linked to the vehicle. However, the remote control code has nothing to do with the immobilizer system.

If a new key is added to a vehicle, the transponder in the key for this vehicle is locked and consequently cannot be programmed for another vehicle.

The erase function is used when the customer wishes to prevent one or more keys from being used to start the vehicle. The keys may have been stolen and could be traced back to the vehicle.

NOTE: **The following applies for model year 2004: Ignition keys and remote controls are integrated. Therefore the code for the remote control and the transponder must be available when programming. These are programmed at the same time. This means that a key that has been erased can be programmed back into the same vehicle if both these keys are available. The codes are on the packaging in which the keys are supplied. If the codes are not available, a new ignition key must be ordered.**

Keys are programmed via VIDA vehicle communication.

FUNCTION

THE IMMOBILIZER SYSTEM

The function of the immobilizer is to make the vehicle unusable unless a genuine Volvo key that belongs to the vehicle is used. When the ignition key is turned to position II, a check is performed electronically to ensure that the correct key is being used. If the key is not approved, the engine will not start. The function of the system will not be noticed by the customer as long as an approved key is used and there are no faults.

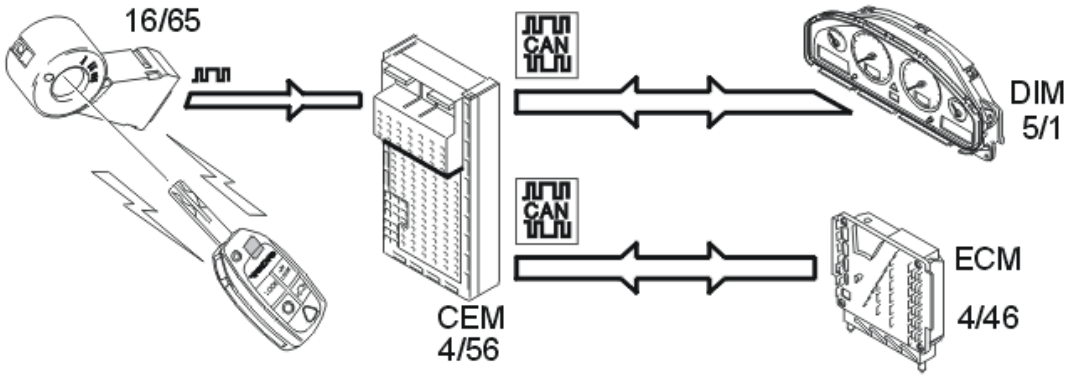

Fig. 34: Identifying Immobilizer Function
Courtesy of VOLVO CARS CORPORATION

Deactivation

When the ignition key is turned to position II, the central electronic module (CEM) performs an identity check of the transponder in the key via the antenna ring. In response, the central electronic module (CEM) receives a code from the transponder, which is compared to the codes that are stored in the central electronic module (CEM). If the codes correspond, the key is approved.

At the same time, the central electronic module (CEM) activates the relay for the starter motor and commences an identity check between the central electronic module (CEM) and the engine control module (ECM). The engine control module (ECM) transmits a code to the central electronic module (CEM) and receives a code back. The central electronic module (CEM) also transmits the results of the key check to the engine control module (ECM). If the identity check between the engine control module (ECM) and the central electronic module (CEM) as well as the check on the key are OK, the engine control module (ECM) will transmit a command to the central electronic module (CEM) that the starter motor may be activated. The engine control module (ECM) will then also activate the ignition system.

NOTE: **The engine control module (ECM) allows the starter motor to turn once the identity check between the engine control module (ECM) and the central electronic module (CEM) is complete. The starter motor will not be allowed to operate until the check on the ignition key is complete. Depending on the outcome of these two checks, the engine control module (ECM) will then determine whether the starter motor is to be allowed to operate.**

If either of the checks fails, a message will appear in the display on the driver information module (DIM) and the engine will not start.

Activation

The immobilizer system is activated when the ignition key is turned to position 0 and the engine stops. The engine control module (ECM) then sends a command to the central electronic module (CEM) that the starter motor is no longer permitted to turn.

The immobilizer system contains safety functions for preventing the system from being activated in the event the engine should stop while the ignition is still switched on. In this case the engine control module (ECM) will wait for a while before a command is sent to the central electronic module (CEM) indicating that the immobilizer is to be activated. If an attempt is made to start the vehicle within this time, there will be no new communication between the engine control module (ECM) and the central electronic module (CEM).

The immobilizer system will neither be activated if the vehicle is still moving when the engine stops. Similarly, the engine will not stop if the engine control module (ECM) conducts an internal restart while driving.

If the ignition key is turned to position 0 but the key is not removed from the ignition switch, the engine control module (ECM) will wait for a while but then send a command to the central electronic module (CEM) to activate the immobilizer, despite the fact that the key has not been removed from the ignition switch.

ERROR MESSAGE IN THE DRIVER INFORMATION MODULE (DIM).

Two different error messages may be displayed in the Driver information module (DIM) display for the immobilizer function.

NOTE: Because the information is sensitive to change the exact wording cannot be written here.

1. **Message regarding fault in the system for the immobilizer with reference to the user manual.** The message is displayed when a problem has occurred in communication between the Central electronic module (CEM) and the Engine control module (ECM).
2. **Message regarding prevented start with new attempt request.** The message is displayed if a fault has occurred when reading the transponder in the key.

For further information, see Diagnostic trouble code (DTC) information for the relevant diagnostic trouble codes (DTCs) in the Information manager.

SYSTEM OVERVIEW

GENERAL

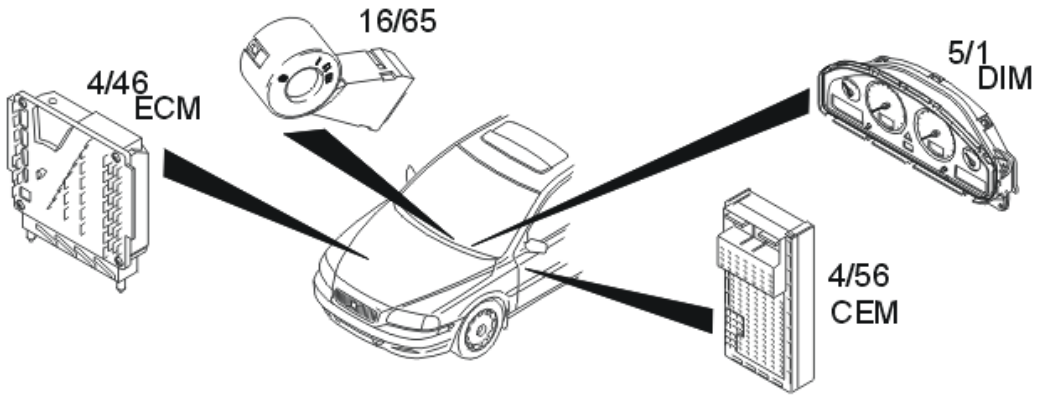

Fig. 35: Immobilizer System Overview
Courtesy of VOLVO CARS CORPORATION

The immobilizer system increases the level of the vehicle safety system by making it extremely difficult to use the vehicle unless a valid key, which belongs to the vehicle, is used to start it. The identity of the key is checked when the vehicle is started, and if the key is not approved the engine will not start. The customer will not notice this function as long as a valid key is used an no fault occurs.

The immobilizer system includes:

- Central electronic module (CEM)
- Engine control module (ECM)
- Antenna ring
- Driver information module (DIM).

Definitions:

Activated system: The system means that the vehicle cannot be started.

Deactivated system: The key has been checked and approved. The system permits the car to start.

SIGNALS

The tables below summarize the input and output signals to the units in the system for the immobilizer. The signal types are divided into directly connected signals, serial communication and controller area network (CAN) communication.

CENTRAL ELECTRONIC MODULE (CEM) (4/56)

Input signals	Output signals
Directly connected: • Input signals from the switches for the different key positions (I, II, III) in the ignition switch.	**Directly connected:** • Starter motor relay for activating the starter motor.
Via serial communication (LIN):	**Via serial communication (LIN):**

• Antenna ring for communication with the key.	• Antenna ring for communication with the key.
Via CAN communication (LS-CAN): -	**Via CAN communication (LS-CAN):** • Driver information module (DIM) for displaying messages.
Via CAN communication (HS-CAN): • Engine control module (ECM) with information about the status of the engine for the immobilizer function.	**Via CAN communication (HS-CAN):** • Engine control module (ECM) for communication and to check the identity.

ANTENNA RING (16/65)

Input signals	Output signals
Via serial communication: • Central electronic module (CEM) for communication with the key.	**Via serial communication:** • Central electronic module (CEM) for communication with the key.

ENGINE CONTROL MODULE (ECM) (4/46)

Input signals	Output signals
Via CAN communication (HS-CAN): • Communication with the central electronic module (CEM) during start attempts.	**Via CAN communication (HS-CAN):** • Information about the status of the engine • Communication with the central electronic module (CEM) during start attempts.

DRIVER INFORMATION MODULE (DIM) (5/1)

Input signals	Output signals
Via CAN communication (HS-CAN): • From the central electronic module (CEM) with information about which message must be displayed.	**Via CAN communication (HS-CAN):** -

IMMOBILIZER (2005-2012)

DESIGN

GENERAL

The security system in the vehicle is a distributed system which is monitored by the central electronic module (CEM). A number of other units and components are involved for the various functions.

CENTRAL ELECTRONIC MODULE (CEM)

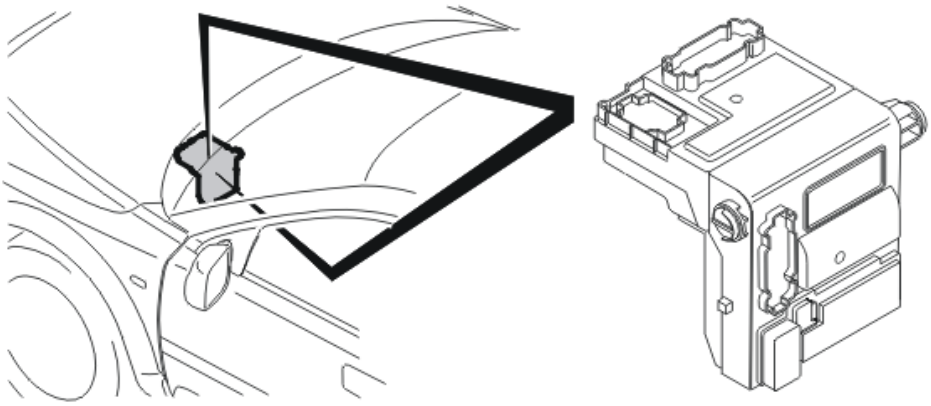

Fig. 36: CEM
Courtesy of VOLVO CARS CORPORATION

The central electronic module (CEM) (4/56) is the master unit for the immobilizer function. The central electronic module (CEM) and engine control module (ECM) are linked to each other through codes. The central electronic module (CEM) is also programmed with a code for each ignition key for the vehicle.

The central electronic module (CEM) transmits commands and signals to the other units in the system. The central electronic module (CEM) also approves the identity of the key. The key is checked via the antenna ring. The antenna ring is installed around the ignition switch. There is a transponder (communication circuit) in the ignition key. The identification code of the transponder is unique. The code must be learned by the central electronic module (CEM) before the key can be used to start the vehicle. This code is learned during installation at the factory. New keys can be added afterwards.

The central electronic module (CEM) controls the relay for the fuel pump and the relay for the starter motor (not applicable to B8444S).

ANTENNA RING

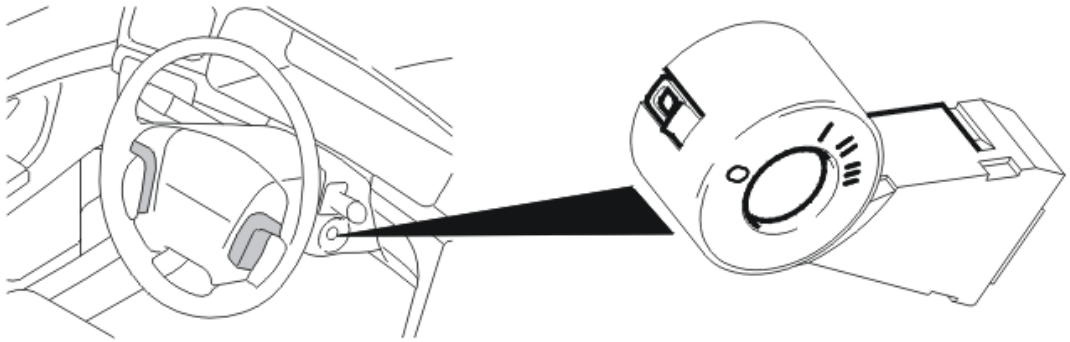

Fig. 37: Antenna Ring
Courtesy of VOLVO CARS CORPORATION

The antenna ring (16/65) is installed around the ignition switch. The antenna ring is used to allow the central electronic module (CEM) to communicate remotely with the ignition key.

The antenna ring comprises a modulation circuit and a communication circuit. The modulation circuit converts signals between the central electronic module (CEM) and the communication circuit. The communication circuit is used to communicate with the key.

When the central electronic module (CEM) activates the antenna ring, a magnetic field is generated around the antenna ring. This magnetic field is converted in the key to an electrical current, which means that the key does not require further electrical supply.

IGNITION KEY

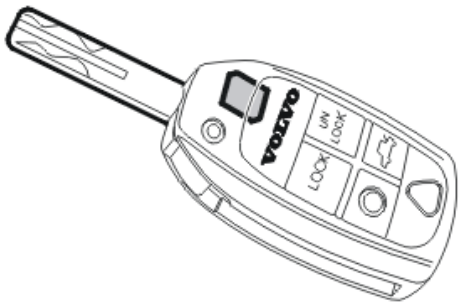

Fig. 38: Identifying Ignition Key
Courtesy of VOLVO CARS CORPORATION

There is a communication circuit in the ignition key, known as a transponder. This circuit is supplied with power from the magnetic field that is formed around the antenna ring when the central electronic module (CEM) activates the antenna ring. Consequently, the transponder is not dependent on a further power supply.

In order for the key to be used in the vehicle, a code in the key must be entered by the central electronic module (CEM). When the vehicle is delivered from the factory, two keys are normally programmed. When a key has been programmed for the central electronic module (CEM), the key is locked and cannot be programmed for another vehicle.

ENGINE CONTROL MODULE (ECM)

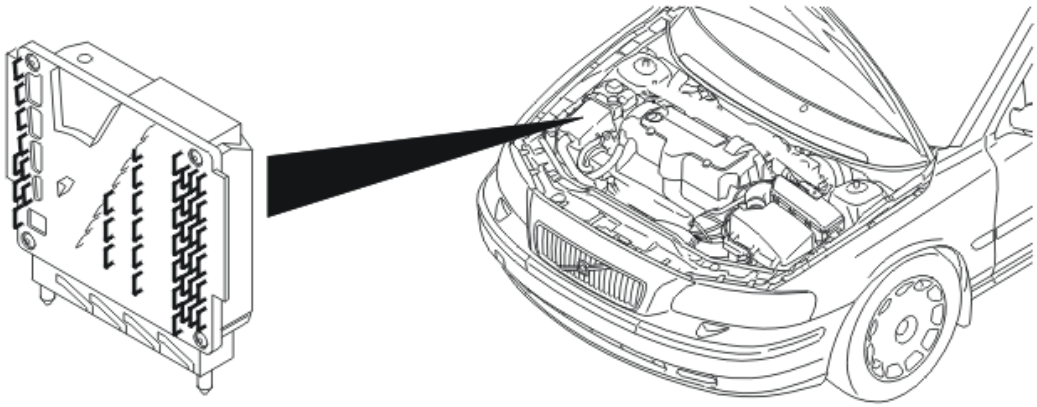

Fig. 39: Engine Control Module
Courtesy of VOLVO CARS CORPORATION

The engine control module (ECM) (4/46) controls the ignition system in the vehicle and controls activation of the starter motor via the starter motor relay (applicable to B8444S only). The engine control module (ECM) also grants permission to the central electronic module (CEM), indicating whether the fuel pump is permitted to run when ignition is attempted. These functions are activated once an approved check of the ignition key has been carried out and an identity check has been carried out between the engine control module (ECM) and the central electronic module (CEM) and the result approved.

In order for the engine control module (ECM) to work in the immobilizer system, the control module must be programmed with codes. This takes place for the first time during assembly in the factory, and subsequently takes place in the event the control module is replaced (when downloading software).

DRIVER INFORMATION MODULE (DIM)

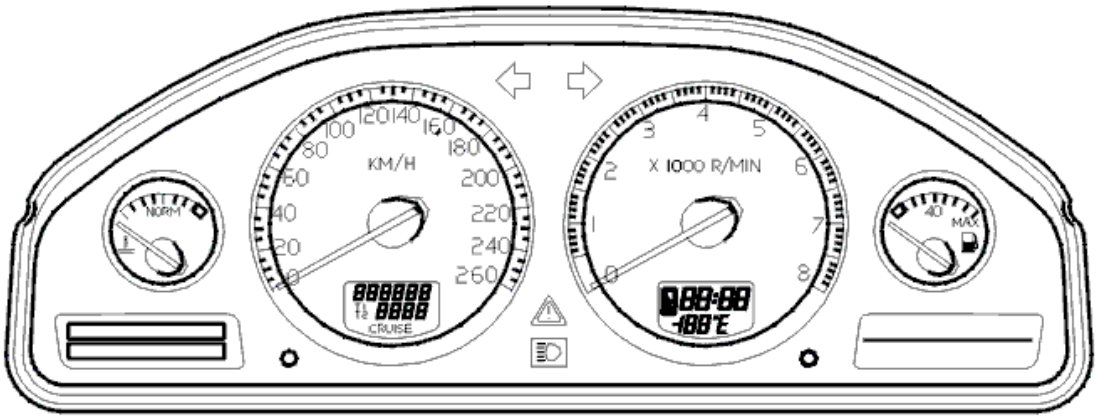

Fig. 40: Driver Information Module
Courtesy of VOLVO CARS CORPORATION

The driver information module (DIM) (5/1) receives information from the central electronic module (CEM) about which message is to appear in the display. A message will be displayed if there is a fault in any of the checks run by the system.

DIAGNOSTIC FUNCTIONS

GENERAL

The central electronic module (CEM) is the master unit for the immobilizer. The central electronic module

(CEM) also directly stores diagnostic trouble codes (DTCs) for faults in the immobilizer system. Some other faults can also be stored in the engine control module (ECM).

PROGRAMMING

To increase the security of the immobilizer system, the central electronic module (CEM) and the engine control module (ECM) are linked to each other with codes. Codes must be programmed in when replacing a control module in order for the vehicle to be started. Programming replaced control modules takes place automatically when downloading software into the new control module.

PROGRAMMING IGNITION KEYS

Ignition keys can be added or erased. A maximum of 6 key IDs can be programmed into the central electronic module (CEM). When programming a key, the key is identified to the control module with a code that is stored in the control module memory.

When a key is programmed for the vehicle, the remote control code is also entered if this is to be linked to the vehicle. However, the remote control code has nothing to do with the immobilizer system. If a new key is added to a vehicle, the transponder in the key for this vehicle is locked and consequently cannot be programmed for another vehicle.

The erase function is used when the customer wishes to prevent one or more keys from being used to start the vehicle. The keys may have been stolen and could be traced back to the vehicle.

NOTE: Ignition keys and remote controls are integrated. Therefore the code for the remote control and the transponder must be available when programming. These are programmed at the same time. This means that a key that has been erased can be programmed back into the same vehicle if both these keys are available. The codes can be found on the packaging in which the keys are delivered. If the codes are not available, a new ignition key must be ordered.

Keys are programmed via VIDA vehicle communication.

FUNCTION

THE IMMOBILIZER SYSTEM

The function of the immobilizer is to make the vehicle unusable unless a genuine Volvo key that belongs to the vehicle is used. When the ignition key is turned to position II, a check is performed electronically to ensure that the correct key is being used. If the key is not approved, the engine will not start. The function of the system will not be noticed by the customer as long as an approved key is used and there are no faults.

Deactivation

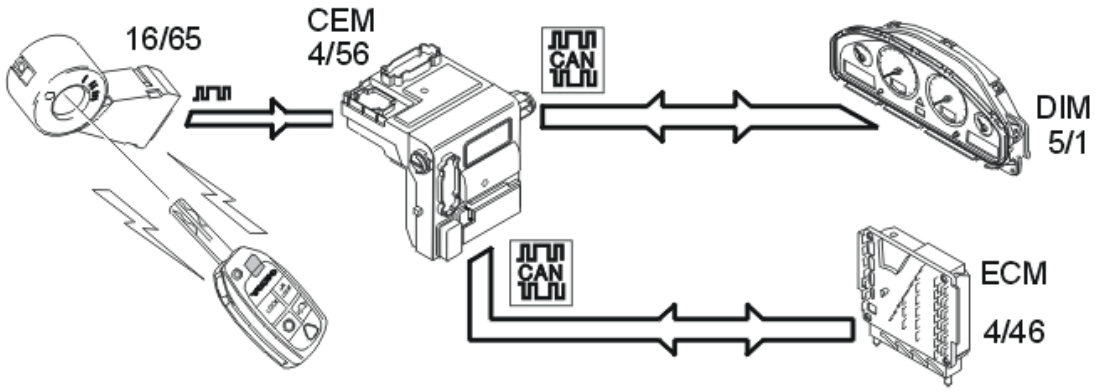

Fig. 41: Identifying Immobilizer System Communication Links & Components
Courtesy of VOLVO CARS CORPORATION

When the ignition key is turned to position II, the central electronic module (CEM) performs an identity check of the transponder in the key via the antenna ring. In response, the central electronic module (CEM) receives a code from the transponder, which is compared to the codes that are stored in the central electronic module (CEM). If the codes correspond, the key is approved.

At the same time, the central electronic module (CEM) activates the fuel pump and commences an identity check between the central electronic module (CEM) and the engine control module (ECM). The engine control module (ECM) transmits a code to the central electronic module (CEM) and receives a code back. The central electronic module (CEM) also transmits the result of the key check to the engine control module (ECM).

For B8444S, the following applies: if the identity check between the engine control module (ECM) and the central electronic module (CEM), plus the key check, are okay, the engine control module (ECM) will send a command to the central electronic module (CEM) indicating that the fuel pump is permitted to continue running. The engine control module (ECM) will then also activate the starter motor relay and the ignition system.

For other engines, the following applies: if the identity check between the engine control module (ECM) and the central electronic module (CEM), plus the key check, are okay, the engine control module (ECM) will send a command to the central electronic module (CEM) indicating that the fuel pump is permitted to continue running and that the starter motor may be activated. The engine control module (ECM) will then also activate the ignition system.

NOTE: **The engine control module (ECM) allows the fuel pump (FP) to run until the key check and identity check between the engine control module (ECM) and the central electronic module (CEM) is complete. The starter motor will not be activated until the check on the ignition key is complete. Depending on the outcome of these two checks, the engine control module (ECM) will then determine whether the starter motor and fuel pump (FP) should be allowed to continue to operate.**

If either of the checks fails, a message will appear in the display on the driver information module (DIM) and the engine will not start.

Activation

The electronic immobilizer system is activated when the ignition key is turned to position 0 and the engine stops.

For B8444S, the following applies: the engine control module (ECM) will then block activation of the starter motor relay and send a command to the central electronic module (CEM) stating that the fuel pump must not be activated.

For other engines, the following applies: the engine control module (ECM) then sends a command to the central electronic module (CEM) stating that the fuel pump is not permitted to turn over and that the fuel pump must not be activated.

The immobilizer system contains safety functions for preventing the system from being activated in the event the engine should stop while the ignition is still switched on. In this case the engine control module (ECM) will wait for a while before a command is sent to the central electronic module (CEM) indicating that the immobilizer is to be activated. If an attempt is made to start the vehicle within this time, there will be no new communication between the engine control module (ECM) and the central electronic module (CEM).

The immobilizer system will neither be activated if the vehicle is still moving when the engine stops. Similarly, the engine will not stop if the engine control module (ECM) conducts an internal restart while driving.

If the ignition key is turned to position 0 but the key is not removed from the ignition switch, the engine control module (ECM) will wait for a while but then send a command to the central electronic module (CEM) to activate the immobilizer, despite the fact that the key has not been removed from the ignition switch.

Remote-controlled immobilization

Applies for the English, Dutch, and Belgian market. A special version with stricter requirements is available for the Brazilian market. Applies from and incl. structure week 201020.

On certain markets there is a function for remote-controlled immobilization and mobilization. The purpose of the function is to nullify the vehicle's programmed keys in case the vehicle is stolen, for example. The vehicle can be immobilized and mobilized either using Volvo On Call service center or via diagnostic commands in VIDA (Volvo scan tool). For certain markets vehicles can only be mobilized by Volvo On Call service center.

If the vehicle is running when immobilization is requested, the vehicle is immobilized at the next start attempt. Central electronic module (CEM) can, in certain markets, request immobilization if the module detects that Phone module (PHM) does not answer to communication.

The function remote-controlled immobilization is diagnosed by Central electronic module (CEM). Immobilization and mobilization of vehicles via diagnostic commands takes place via Phone module (PHM).

ERROR MESSAGE IN THE DRIVER INFORMATION MODULE (DIM).

Two different error messages may be displayed in the Driver information module (DIM) display for the immobilizer function.

NOTE: Because the information is sensitive to change the exact wording cannot be written here.

1. **Message regarding fault in the system for the immobilizer with reference to the user manual.** The message is displayed when a problem has occurred in communication between the Central electronic module (CEM) and the Engine control module (ECM).
2. **Message regarding prevented start with new attempt request.** The message is displayed if a fault has occurred when reading the transponder in the key.

For further information, see Diagnostic trouble code (DTC) information for the relevant diagnostic trouble codes (DTCs) in the Information manager.

SYSTEM OVERVIEW

GENERAL

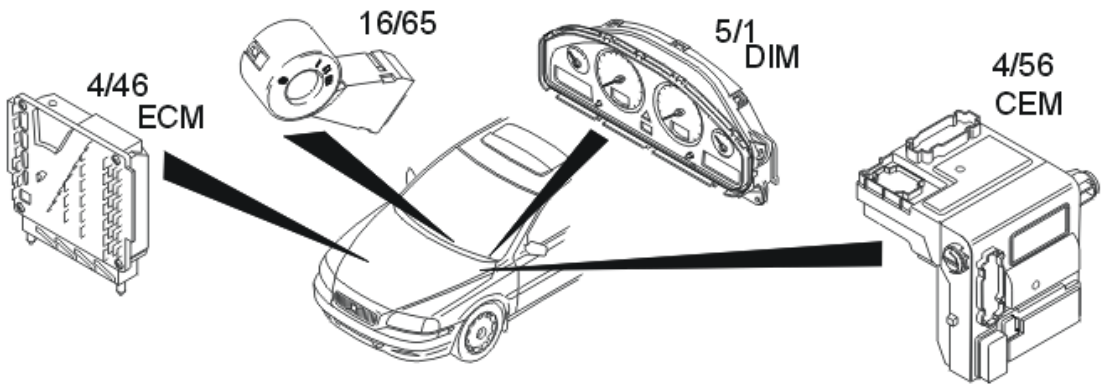

Fig. 42: Locating Immobilizer System Components
Courtesy of VOLVO CARS CORPORATION

The immobilizer system increases the level of the vehicle safety system by making it extremely difficult to use the vehicle unless a valid key, which belongs to the vehicle, is used to start it. The identity of the key is checked when the vehicle is started, and if the key is not approved the engine will not start. The customer will not notice this function as long as a valid key is used an no fault occurs.

The immobilizer system includes:

- Central electronic module (CEM)
- Engine control module (ECM)
- Antenna ring
- Driver information module (DIM)
- Remote-controlled immobilization (2010-, option, only certain markets)

Definitions:

Activated system: The system means that the vehicle cannot be started.

Deactivated system: Key check has been carried out and the key has been approved. The system permits the car to start.

SIGNALS

The tables below summarize the input and output signals to the units in the system for the immobilizer. The signal types are divided into directly connected signals, serial communication and controller area network (CAN) communication.

CENTRAL ELECTRONIC MODULE (CEM) (4/56)

Input signals	Output signals
Directly connected: • Input signals from the switches for the different key positions (I, II, III) in the ignition switch.	**Directly connected:** • Starter motor relay, for activation of starter motor (not applicable to B8444S). • Fuel pump (FP) relay for activating the fuel pump (FP).
Via serial communication (LIN): • Antenna ring for communication with the key.	**Via serial communication (LIN):** • Antenna ring for communication with the key.
Via CAN communication (LS-CAN): • Phone module (PHM) (16/60) (only vehicles with remote-controlled immobilization).	**Via CAN communication (LS-CAN):** • Driver information module (DIM) for displaying messages. • Phone module (PHM) (16/60) (only vehicles with remote-controlled immobilization).
Via CAN communication (HS-CAN): • Engine control module (ECM) with information about the engine status and for the immobilizer function.	**Via CAN communication (HS-CAN):** • Engine control module (ECM) for communication and checking identity.

ANTENNA RING (16/65)

Input signals	Output signals
Via serial communication: • Central electronic module (CEM) for communication with the key.	**Via serial communication:** • Central electronic module (CEM) for communication with the key.

ENGINE CONTROL MODULE (ECM) (4/46)

Input signals	Output signals
Directly connected: -	**Directly connected:** • Starter motor relay, for activation of starter motor (applicable to B8444S only).
Via CAN communication (HS-CAN):	**Via CAN communication (HS-CAN):** • Information about the engine status

• Communication with the central electronic module (CEM) during start attempts.	• Communication with the central electronic module (CEM) during start attempts.

DRIVER INFORMATION MODULE (DIM) (5/1)

Input signals	Output signals
Via CAN communication (LS-CAN): • From the central electronic module (CEM) with information about which message must be displayed.	**Via Controller Area Network (CAN) communication:** -

PHONE MODULE (PHM) (16/60)

Input signals	Output signals
Via Controller Area Network (CAN) communication: • From Central electronic module (CEM) (4/56) with information on remote-controlled immobilization.	**Via Controller Area Network (CAN) communication:** • To Central electronic module (CEM) (4/56) with information on remote-controlled immobilization.

INFOTAINMENT CONTROL MODULE (ICM) (2003-2006)

DESIGN

GENERAL

The infotainment control module (ICM) consists of the following replaceable components:

- display/printed circuit board
- left-hand keypad
- right-hand keypad
- remote controls.

These units can be replaced individually.

DISPLAY/PRINTED CIRCUIT BOARD

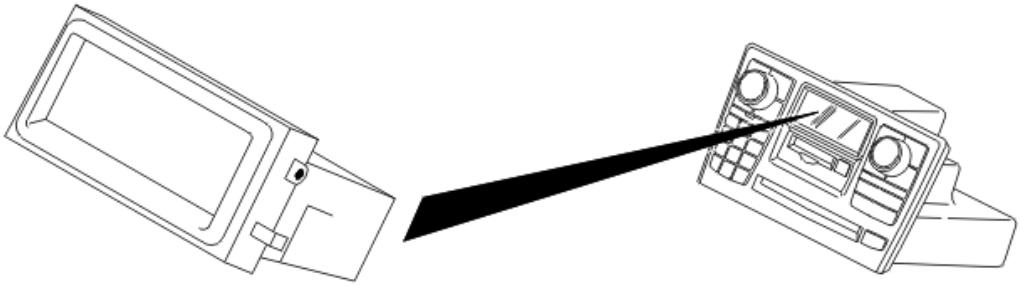

Fig. 43: View of Information Display
Courtesy of VOLVO CARS CORPORATION

The display shows information about the function which is active. It also displays information when selecting functions and preferences for the infotainment system.

The display is connected via a cable direct to the printed circuit board. They are integrated in the same unit.

There are two display versions, standard and graphic. The standard display has three rows of text and a field with fixed symbols. The graphic display consists of a field with 128*64 pixels.

The printed circuit board has inputs for the display, keypads as well as in and outputs for power supply, ground, the CAN and MOST networks. The processor for the infotainment control module (ICM) is on the printed circuit board. Therefore the printed circuit board contains all the functionality and logic for the infotainment control module (ICM). The printed circuit board also stores the software for the infotainment control module (ICM). The control module must be reprogrammed when replacing the display and/or printed circuit board.

There are diagnostics for the power for the display. There are diagnostics for the printed circuit board.

LEFT-HAND KEYPAD

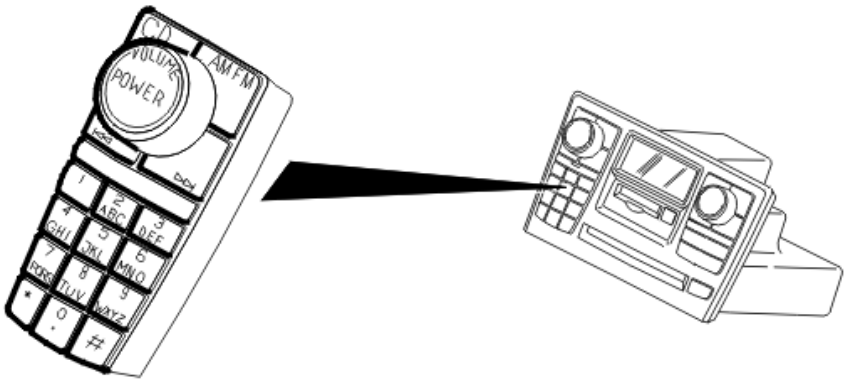

Fig. 44: Identifying Left-Hand Keypad
Courtesy of VOLVO CARS CORPORATION

The left-hand keypad unit is on the left-hand side of the infotainment control module (ICM). The keypad is connected via a cable directly to the printed circuit board. The keypad unit has the following buttons:

- ON/OFF button (POWER)
- buttons for direct access to the CD player and radio
- buttons for searching on the CD player and radio
- numeric buttons for the carphone, CD selection (CD changers only) and preprogrammed radio stations
- a knob for the volume control
- an infrared receiver for remote control.

The buttons are connected in button circuits. When a button is pressed the circuit closes. The infotainment control module (ICM) determines which button is pressed by the voltage level of the input signal from the circuit. The table below outlines which buttons are in the different circuits:

Button circuit	Button			
Button circuit 1	>>|	AM/FM	|<<	CD
Button circuit 2	*	7	4	1
Button circuit 3	0	8	5	2
Button circuit 4	#	9	6	3
Power button	POWER			

There are diagnostics for the left-hand keypad unit.

RIGHT-HAND KEYPAD

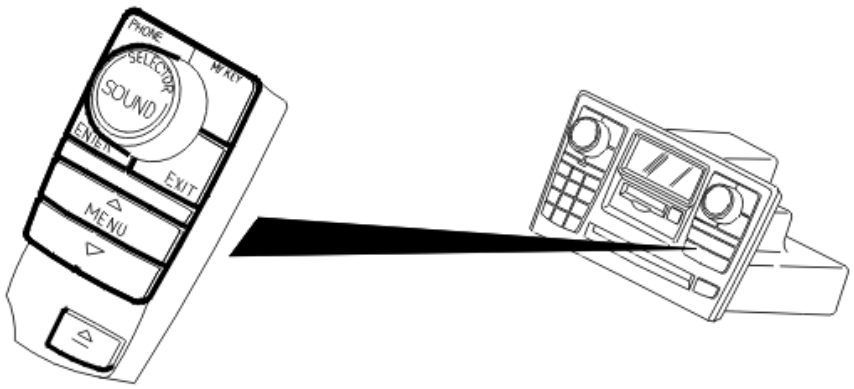

Fig. 45: Identifying Right-Hand Keypad
Courtesy of VOLVO CARS CORPORATION

The right-hand keypad unit is on the right-hand side of the infotainment control module (ICM). The keypad is connected via a cable directly to the printed circuit board. The keypad unit has the following buttons:

- button for sound control (bass, treble etc)
- button for carphone on/off (only for cars with carphones)

- button for selecting the function, can be programmed by the user
- buttons for the carphone and menu control
- SIM card holder (only for cars with carphones)
- button to open the CD tray
- knob to select the source.

The buttons are connected in button circuits. When a button is pressed the circuit closes. The infotainment control module (ICM) determines which button is pressed by the voltage level of the input signal from the circuit. The table below outlines which buttons are in the different circuits:

Button circuit	Button			
Button circuit 1	EXIT	PHONE	ENTER	MY KEY
Button circuit 2	CD eject	Down	Up	
Button circuit 5	Sound			

The SIM card holder is connected via a directly connected cable to the phone module (PHM). It is not connected to the infotainment control module (ICM).

There are diagnostics for the right-hand keypad unit.

REMOTE CONTROLS

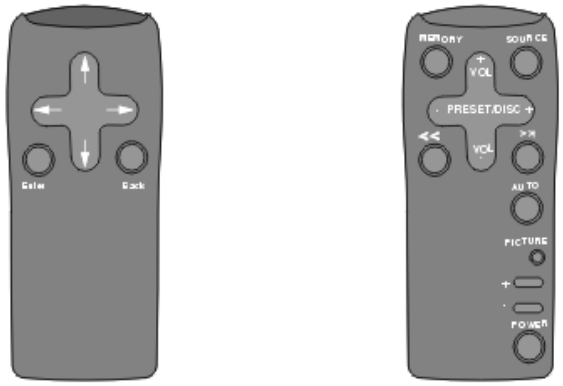

Fig. 46: Identifying Remote Controls
Courtesy of VOLVO CARS CORPORATION

There are two different remote controls for the infotainment system. One is used for audio, radio and TV remote control. The other is used for remote control of the navigation system. The remote controls can be used to activate most of the functions which can be controlled via the keypad units on the infotainment control module (ICM) and via the buttons on the steering wheel.

The remote controls transmit infrared signals to the receiver unit which is in the left-hand keypad on the infotainment control module (ICM). The signals then go via the directly connected cable to the printed circuit board which controls the selected function.

DIAGNOSTIC FUNCTIONS

GENERAL

The control module has a built-in diagnostic system, Volvo Diagnostic, which continuously monitors internal functions as well as input and output signals.

DIAGNOSTIC TROUBLE CODES (DTCS)

A diagnostic trouble code (DTC) is stored if the control module detects a fault.

This control module can store up to six diagnostic trouble codes (DTCs), the three first and the three latest.

Should a fault disappear for any reason after being permanently stored in the control module as a diagnostic trouble code (DTC), the information remains stored in the control module.

READING AND ERASING DIAGNOSTIC TROUBLE CODES (DTCS)

Stored diagnostic trouble codes (DTCs) can be read off and erased using this function. The on-board diagnostic (OBD) system can identify 44 different faults in the infotainment control module (ICM). These are stored as diagnostic trouble codes (DTCs). This function can also be used to read off whether the fault is still present (permanent) or whether it has now ceased (intermittent) after the diagnostic trouble code (DTC) has been stored. Diagnostic trouble codes (DTCs) can only be erased once all the diagnostic trouble codes (DTCs) have been read off at least once.

READING OFF INPUT AND OUTPUT SIGNALS

This function can be used to read off the status or value of parameters. The presentation of the status or value can be obtained graphically or digitally. For further information about the different parameters, see **DESCRIPTION OF PARAMETERS** .

ACTIVATING COMPONENTS AND FUNCTIONS

This function can be used to activate components and functions which affect the infotainment control module (ICM). For further information about activations, see **DESCRIPTION OF ACTIVATIONS** .

READING OFF STATIC DATA

This function allows programmed data to be read off or data such as customer parameters to be programmed in.

READING OFF THE CONTROL MODULE IDENTIFICATION

VIDA identifies control modules by reading off a number of codes from the control module memory.

The codes contain information about the control module:

- hardware P/N (control module without software)
- hardware serial number (control module without software)

- software P/N
- diagnostic software P/N.

READING OFF EXTENDED FAULT-TRACING INFORMATION

This function can be used to read parameters, status identifiers and counters stored at the same time as a diagnostic trouble code (DTC). These are called frozen values.

For further information, see **DESCRIPTION OF EXTENDED DIAGNOSTIC TROUBLE CODE (DTC) INFORMATION** .

DOWNLOADING SOFTWARE AND REPLACING THE CONTROL MODULE

New software can be downloaded into the infotainment control module (ICM). When ordering software, the hardware and the software in the car is compared to the information in the Volvo central database. If the comparison is OK the software is downloaded to the control module.

If the comparison between the car and Volvo central database is not OK, the database is updated with the car configuration. When this is complete the software is downloaded.

The infotainment control module (ICM) is in the center console. The control module needs to be removed from the center console to be replaced.

Parts of the infotainment control module (ICM) can be replaced. The control module must be reprogrammed when replacing the display and/or printed circuit board. The display/printed circuit board can be removed from the infotainment control module (ICM) after the front panel has been removed.

The MOST network is used for a total software reload.

FUNCTION

SECURITY ON MOST

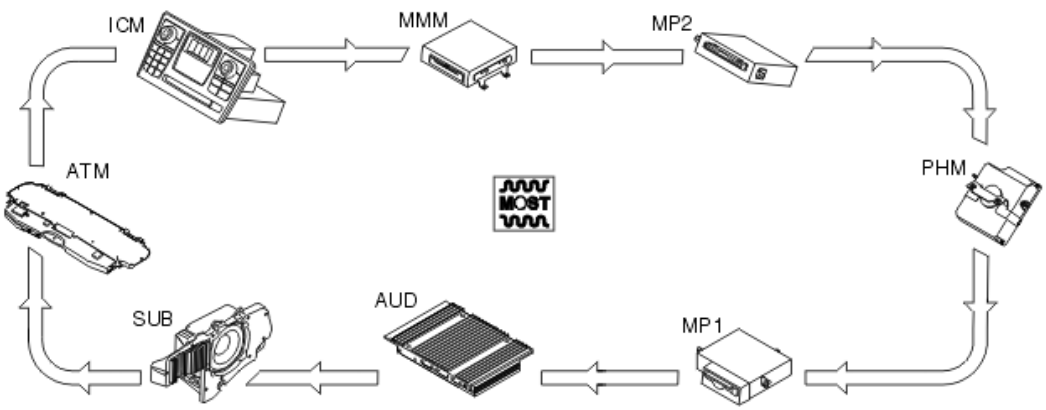

Fig. 47: Control Modules On The MOST Network
Courtesy of VOLVO CARS CORPORATION

The Security on MOST function is intended to prevent non-approved control modules from being installed in the car for the infotainment system. This is to prevent the theft of units.

This function is controlled by the infotainment control module (ICM) (16/1). The infotainment control module (ICM) checks the serial number of all the control modules in the MOST network and compares these with a stored list. The infotainment control module (ICM) retrieves data about the serial number of the control modules via the MOST network. The infotainment control module (ICM) then compares this information with the stored serial numbers.

If a control module is not in the stored list, it is disconnected from the MOST network and the functionality of this control module is blocked. This means that control modules in the MOST network cannot be transferred from one car to another.

If a control module which is in the stored list gives an incorrect response, a diagnostic trouble code (DTC) is stored in the infotainment control module (ICM).

SYSTEM OVERVIEW

INFOTAINMENT CONTROL MODULE (ICM)

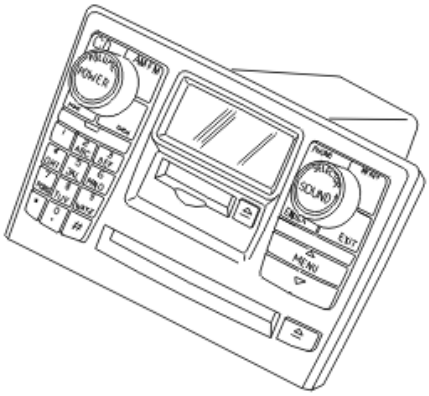

Fig. 48: Identifying Infotainment Control Module (ICM)
Courtesy of VOLVO CARS CORPORATION

The infotainment control module (ICM) acts as a gateway between the CAN and MOST networks. It also acts as the master control module in the MOST network and checks the other control modules. The infotainment control module (ICM) consists of the following components:

- display/printed circuit board
- left-hand keypad
- right-hand keypad
- remote controls (up to two units).

The infotainment control module (ICM) controls functions run on the MOST network via its user interface. The command is transmitted from the infotainment control module (ICM) to the other control modules in the network. These implement the requested functions, for example sound playback, changing sound sources and

radio settings. The infotainment control module (ICM) also controls the Security on MOST function.

The infotainment control module (ICM) is in the center console. The control module is removed from the center console for replacement. The keypad unit and display/printed circuit board can be replaced separately. These are removed by detaching the front panel on the infotainment control module (ICM).

The infotainment control module (ICM) communicates with other control modules via CAN and MOST communication. MOST communication is via a fiber optic communication link.

The control module checks activations and input and output signals via an integrated diagnostic system. A diagnostic trouble code (DTC) is stored if the infotainment control module (ICM) detects a fault.

Any diagnostic trouble codes (DTCs) are stored in the control module memory. This information can be read off using VIDA via the data link connector (DLC) in the car.

A simple way to ensure that the infotainment control module (ICM) is powered and grounded is to check that the button lighting on the infotainment control module (ICM) is lit when the ignition key is in position I or II. The infotainment control module (ICM) is powered and grounded if the button lighting activates.

SIGNALS

The following table summarizes the input signals to and output signals from the infotainment control module (ICM). The signal types are divided into infrared signals, MOST communication and CAN communication. The illustration below displays the same information with the Volvo component designations.

Input signals	Output signals
Via infrared signals: • Remote control.	**Via infrared signals:**
Via MOST communication: • Antenna module (ATM) (16/110) • Audio module (AUD) (16/105) • Multimedia module (MMM) (16/108) • MD module (MP1) (16/107) • CD module (MP2) (16/106) • Phone module (PHM) (16/60) • Subwoofer module (SUB) (16/79).	**Via MOST communication:** • Antenna module (ATM) (16/110) • Audio module (AUD) (16/105) • Multimedia module (MMM) (16/108) • MD module (MP1) (16/107) • CD module (MP2) (16/106) • Phone module (PHM) (16/60) • Subwoofer module (SUB) (16/79).
Via Controller Area Network (CAN) communication: • Accessory electronic module (AEM) (4/78) • Brake control module (BCM) (4/16) • Central electronic module (CEM) (4/56) • Engine control module (ECM) (4/46)	**Via Controller Area Network (CAN) communication:** • Central electronic module.

• Rear electronic module (REM) • Supplemental Restraint System Module • Steering wheel module.	

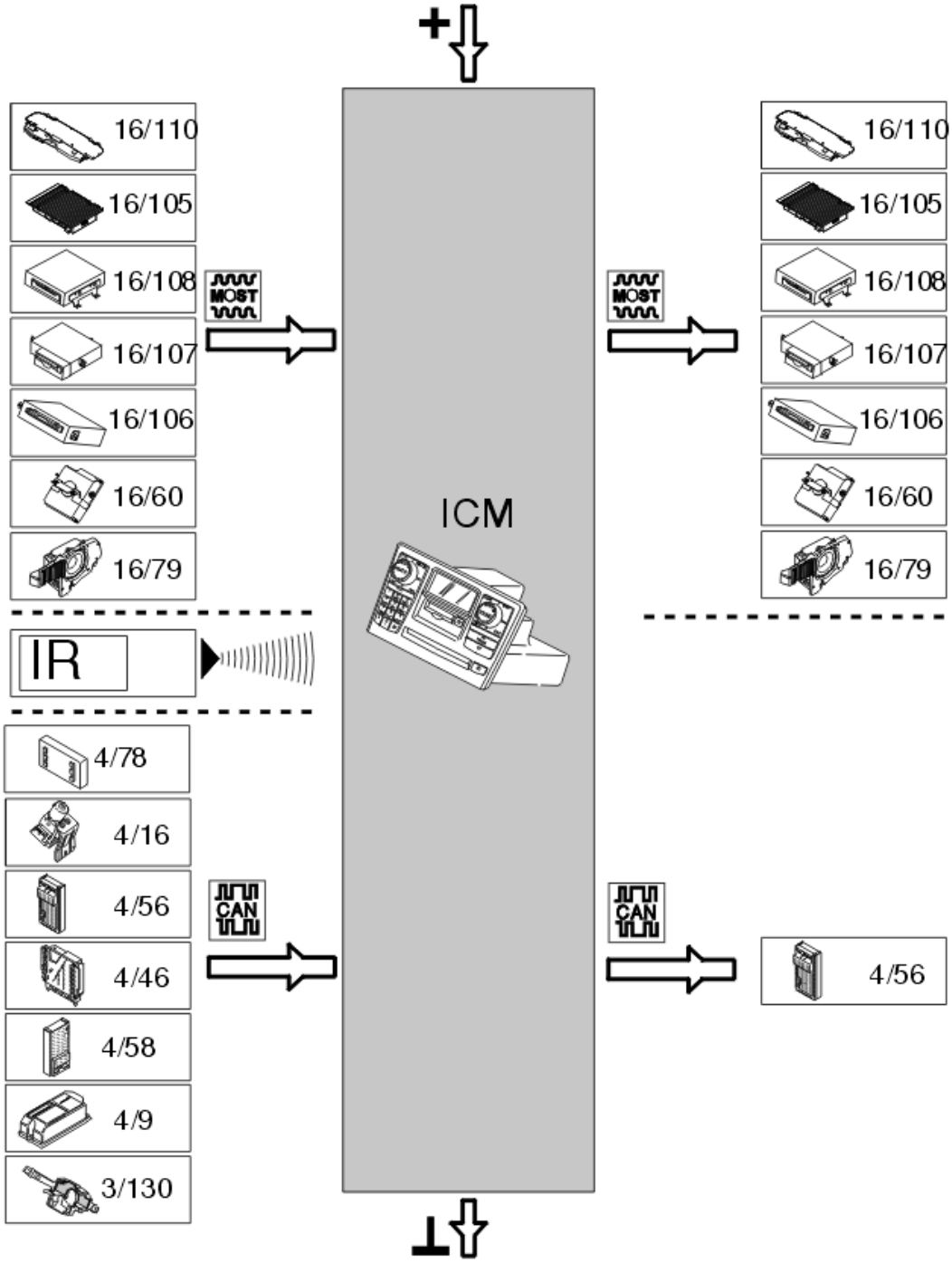

Fig. 49: Identifying Volvo Component Designations
Courtesy of VOLVO CARS CORPORATION

INFOTAINMENT CONTROL MODULE

DESIGN

GENERAL

The infotainment control module consists of the following replaceable components:

- display/printed circuit board
- left-hand keypad
- right-hand keypad
- remote controls.

These units can be replaced individually.

DISPLAY/PRINTED CIRCUIT BOARD

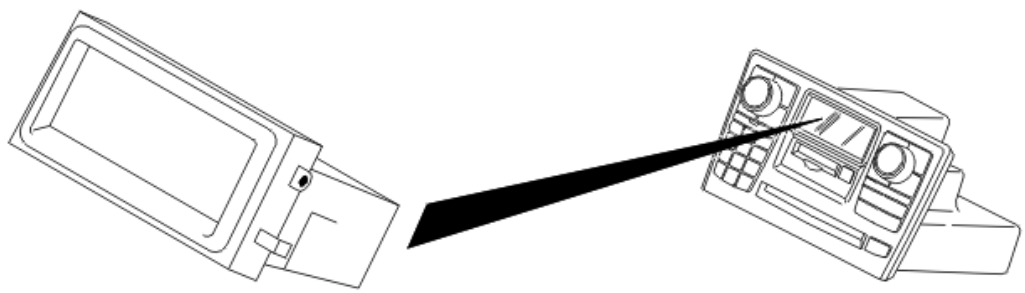

Fig. 50: View of Information Display
Courtesy of VOLVO CARS CORPORATION

The display shows information about the function which is active. It also displays information when selecting functions and preferences for the infotainment system.

The display is connected via a cable direct to the printed circuit board. They are integrated in the same unit.

There are two display versions, standard and graphic. The standard display has three rows of text and a field with fixed symbols. The graphic display consists of a field with 128*64 pixels.

The printed circuit board has inputs for the display, keypads as well as in and outputs for power supply, ground, the CAN and MOST networks. The processor for the infotainment control module is on the printed circuit board. Therefore the printed circuit board contains all the functionality and logic for the infotainment control module. The printed circuit board also stores the software for the infotainment control module. The control module must be reprogrammed when replacing the display and/or printed circuit board.

There are diagnostics for the power for the display. There are diagnostics for the printed circuit board.

LEFT-HAND KEYPAD

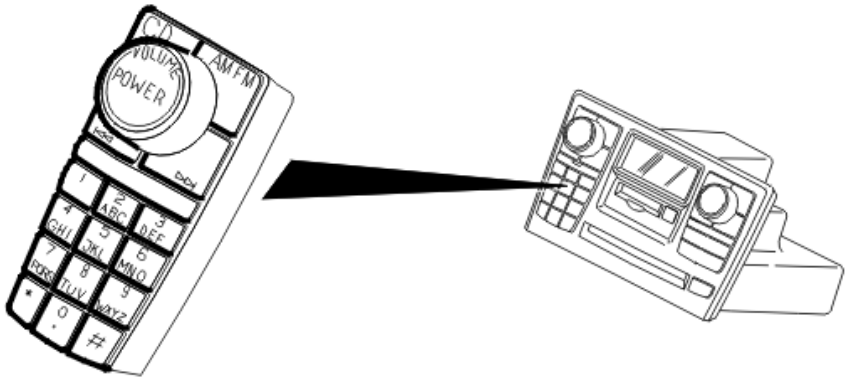

Fig. 51: Identifying Left-Hand Keypad
Courtesy of VOLVO CARS CORPORATION

The left-hand keypad unit is on the left-hand side of the infotainment control module. The keypad is connected via a cable directly to the printed circuit board. The keypad unit has the following buttons:

- ON/OFF button
- buttons for direct access to the CD player and radio
- buttons for searching on the CD player and radio
- numeric buttons for the carphone, CD selection and preprogrammed radio stations
- a knob for the volume control
- an infrared receiver for remote control.

The buttons are connected in button circuits. When a button is pressed the circuit closes. The infotainment control module determines which button is pressed by the voltage level of the input signal from the circuit. The table below outlines which buttons are in the different circuits.

Button circuit	Button			
Button circuit 1				
Button circuit 2				
Button circuit 3				
Button circuit 4				
Power button				

There are diagnostics for the left-hand keypad.

RIGHT-HAND KEYPAD

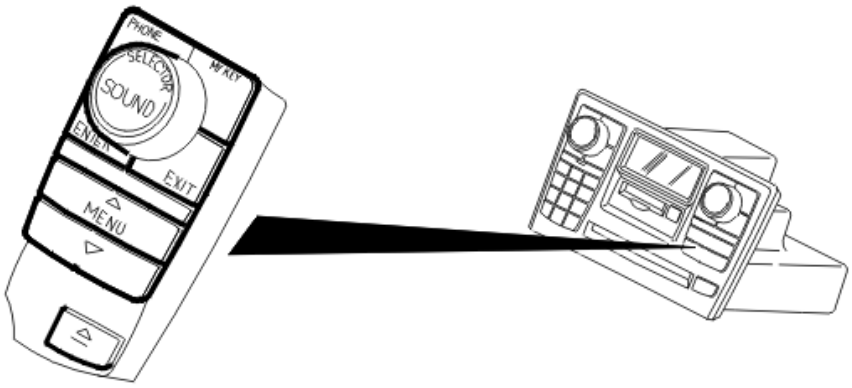

Fig. 52: Identifying Right-Hand Keypad
Courtesy of VOLVO CARS CORPORATION

The right-hand keypad unit is on the right-hand side of the infotainment control module (ICM). The keypad is connected via a cable directly to the printed circuit board. The keypad unit has the following buttons:

- button for sound control
- button for carphone on/off
- button for selecting the function, can be programmed by the user
- buttons for the carphone and menu control
- SIM card holder
- button for CD ejection
- knob to select the source.

The buttons are connected in button circuits. When a button is pressed the circuit closes. The infotainment control module determines which button is pressed by the voltage level of the input signal from the circuit. The table below outlines which buttons are in the different circuits.

Button circuit	Button			
Button circuit 1				
Button circuit 2	CD eject	Down	Up	
Button circuit 5	Sound			

The SIM card holder is connected via a directly connected cable to the phone module (PHM). It is not connected to the infotainment control module (ICM).

There are diagnostics for the right-hand keypad.

REMOTE CONTROLS

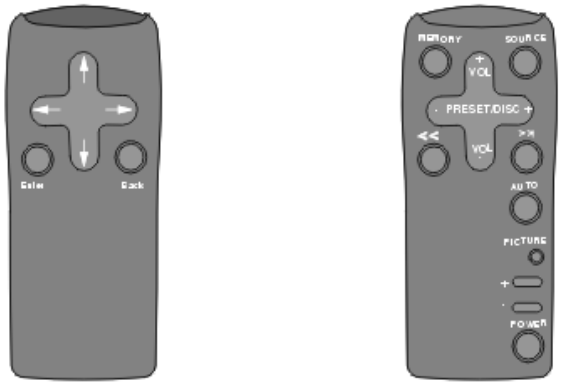

Fig. 53: Identifying Remote Controls
Courtesy of VOLVO CARS CORPORATION

There are two different remote controls for the infotainment system. One is used for audio, radio and TV remote control. The other is used for remote control of the navigation system.

The remote controls can be used to activate most of the functions which can be controlled via the keypad units on the infotainment control module (ICM) and via the buttons on the steering wheel.

The remote controls transmit infrared signals to the receiver unit which is in the left-hand keypad on the infotainment control module (ICM). The signals then go via the directly connected cable to the printed circuit board which controls the selected function.

DIAGNOSTIC FUNCTIONS

GENERAL

The control module has a built-in diagnostic system, Volvo Diagnostic, which continuously monitors internal functions as well as input and output signals.

DIAGNOSTIC TROUBLE CODES (DTCS)

A diagnostic trouble code (DTC) is stored if the control module detects a fault. This control module can store up to 6 diagnostic trouble codes (DTCs), the three first and the three latest.

If a fault disappears for any reason after the diagnostic trouble code (DTC) has been permanently stored in the control module, information about the fault remains in the control module.

READING AND ERASING DIAGNOSTIC TROUBLE CODES (DTCS)

Stored diagnostic trouble codes (DTCs) can be read off and erased using this function. The on-board diagnostic (OBD) system can identify 41 different faults in the infotainment control module (ICM). These are stored as diagnostic trouble codes (DTCs). This function can also be used to read off whether the fault is still present (permanent) or whether it has now ceased (intermittent) after the diagnostic trouble code (DTC) has been stored.

Diagnostic trouble codes can only be erased once all the diagnostic trouble codes have been read out at least once.

READING OFF THE PARAMETERS

This function is used to read the status or value of parameters. The status or value can be presented digitally.

ACTIVATING COMPONENTS AND FUNCTIONS

This function can be used to activate components/functions which affect the infotainment control module (ICM).

READING OFF STATIC DATA

This function allows programmed data to be read off or data such as customer parameters to be programmed in.

READING OFF THE CONTROL MODULE IDENTIFICATION

The diagnostic tool identifies control modules by reading off a number of codes from the control module memory.

The codes contain information about the control module:

- hardware P/N (control module without software)
- hardware serial number (control module without software)
- software P/N
- diagnostic software P/N

READING OFF EXTENDED FAULT-TRACING INFORMATION

This function can be used to read out parameters, identify status and counts stored at the same time as a diagnostic trouble code (known as frozen values).

DOWNLOADING SOFTWARE AND REPLACING THE CONTROL MODULE

New software can be downloaded into the infotainment control module (ICM). When ordering software, the hardware and the software in the car is compared to the information in the Volvo central database. If the comparison is OK the software is downloaded to the control module.

If the comparison between the car and Volvo central database is not OK, the database is updated with the car configuration. When this is complete the software is downloaded.

The infotainment control module (ICM) is in the center console. The control module must be removed from the center console to be replaced.

Parts of the Infotainment control module (ICM) can be replaced. The control module must be reprogrammed when replacing the display and/or printed circuit board.

The display/printed circuit board can be removed from the infotainment control module (ICM) after the front panel has been removed.

Select reload of CAN network for a total reload of the software in the vehicle.

FUNCTION

SECURITY ON MOST

Model year 2007 and 2008

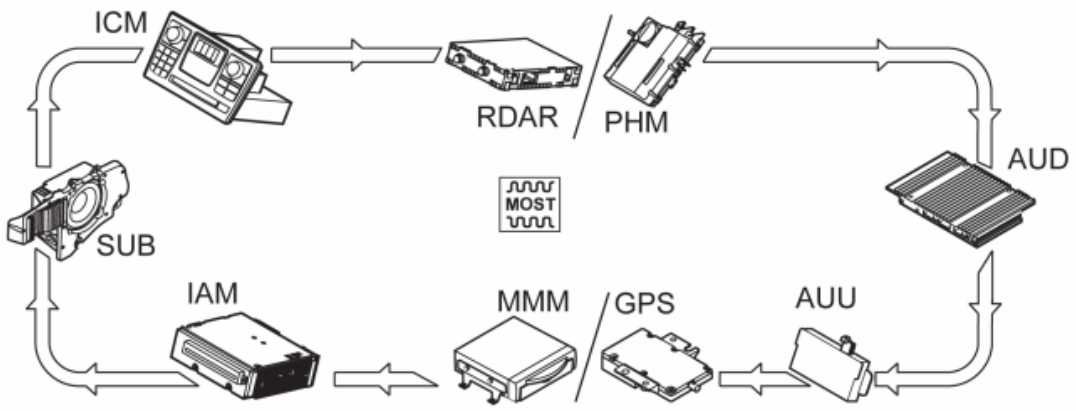

Fig. 54: Control Modules On The Most Network
Courtesy of VOLVO CARS CORPORATION

Model year 2009-2010

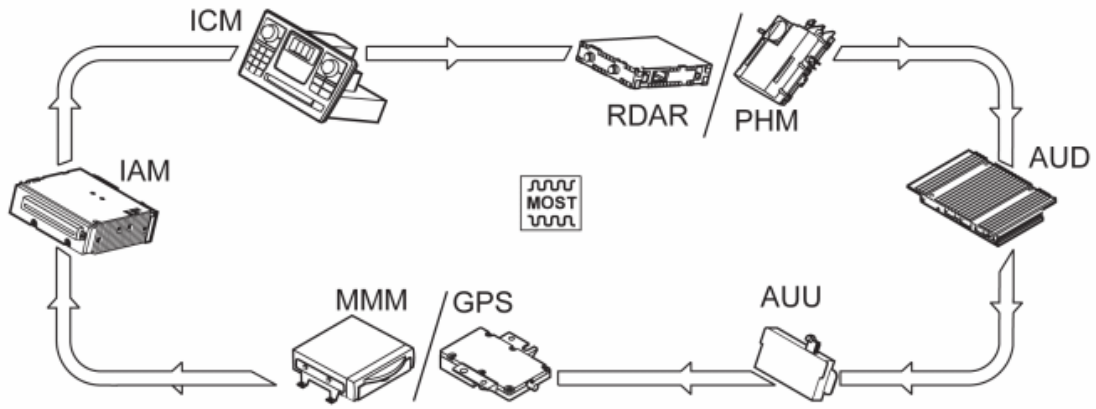

Fig. 55: Identifying MOST Network Control Modules (Up To Eight)
Courtesy of VOLVO CARS CORPORATION

Model year 2011

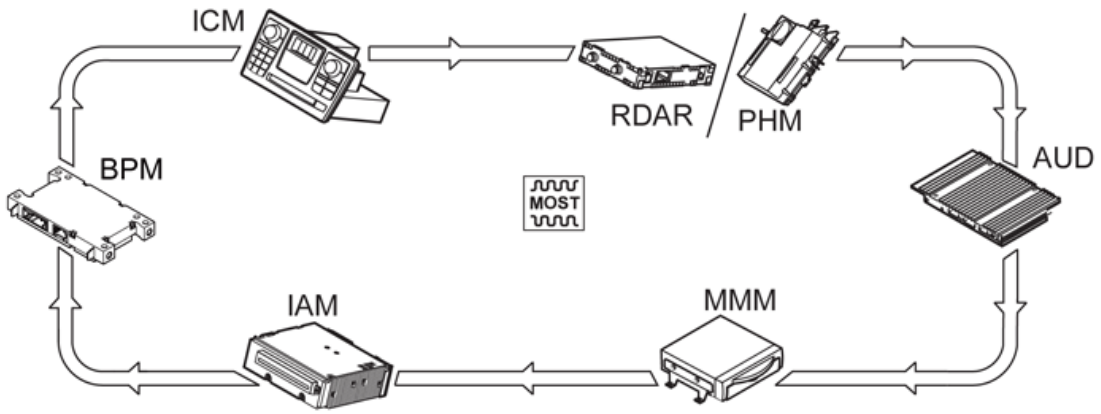

Fig. 56: Control Modules On The Most Network
Courtesy of VOLVO CARS CORPORATION

The function Security on MOST prevents unapproved control modules in the infotainment system from being installed in the vehicle. This is to prevent the theft of units.

The function is controlled by the infotainment control module (ICM). The infotainment control module (ICM) checks the serial numbers of all the control modules in the MOST network and compares these with a stored list. The infotainment control module (ICM) retrieves data about the serial number of the control modules via the MOST network. The infotainment control module (ICM) compares the information with the stored serial numbers.

If a control module is not in the stored list, it is disconnected from the MOST network and the functionality of this control module is blocked. This means that control modules in the MOST network cannot be moved from one vehicle to another.

A diagnostic trouble code (DTC) is stored in the infotainment control module (ICM) if a control module in the stored list gives the incorrect response.

SYSTEM OVERVIEW

CONTROL MODULE

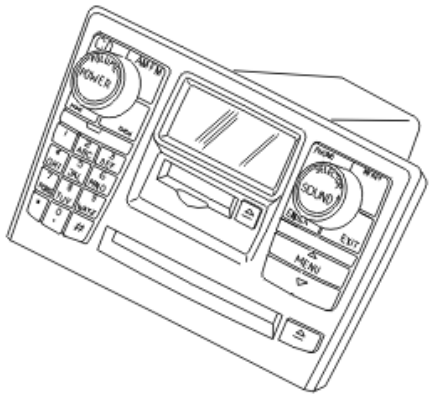

Fig. 57: Identifying Infotainment Control Module

Courtesy of VOLVO CARS CORPORATION

The infotainment control module (ICM) acts as a gateway between the CAN and MOST network. It also acts as the master control module in the MOST network and checks the other control modules.

The infotainment control module (ICM) consists of the following components:

- display/printed circuit board
- left-hand keypad
- right-hand keypad
- remote controls (up to two).

The infotainment control module (ICM) controls functions run on the MOST network via its user interface. The command is transmitted from the infotainment control module (ICM) to the other control modules in the network. These implement the requested functions, for example sound playback, changing sound sources and radio settings.

The infotainment control module (ICM) also controls the Security function on MOST.

The infotainment control module (ICM) is in the center console. The control module is removed from the center console for replacement.

The keypad unit and display/printed circuit board can be replaced separately. These are removed by detaching the front panel on the infotainment control module (ICM).

The Infotainment control module (ICM) communicates with other control modules, via CAN communication and via MOST communication.

MOST communication is via a fiber optic communication link.

The control module checks activations and input and output signals via an integrated diagnostic system. A diagnostic trouble code (DTC) is stored if the infotainment control module (ICM) detects a fault.

Any diagnostic trouble codes (DTCs) are stored in the control module memory. This information can be read off using the diagnostic tool via the data link connector (DLC) in the vehicle.

A simple way to ensure that the infotainment control module (ICM) is powered and grounded is to check that the button lighting on the infotainment control module (ICM) is lit when the ignition key is in position I or II.

If the button lighting is activated, the Infotainment control module (ICM) is powered and grounded.

SIGNALS

The table below summarizes the input signals to and output signals from the Infotainment control module (ICM). The signal types are divided into infra-red signals (IR), MOST communication and controller area network (CAN) communication. The illustration below displays the same information with the Volvo component designations.

Input signals	Output signals
Via MOST communication: • Audio module (AUD) (16/105) • Multimedia module (MMM) (16/108) • Phone module (PHM) (16/60) • Subwoofer module (SUB) (16/79) (up to and incl. model year 2008) • Integrated audio module (IAM) (16/1) • Remote Digital Audio Receiver (RDAR) (16/145) • Global positioning system module (GPS) (16/139) (model year dependent) • Accessory USB unit (AUU) (4/124) (structure week 200709 - 201020) • Bluetooth phone module (BPM) (16/147) (from and including structure week 201020)	**Via MOST communication:** • Audio module (AUD) (16/105) • Multimedia module (MMM) (16/108) • Phone module (PHM) (16/60) • Subwoofer module (SUB) (16/79) (up to and incl. model year 2008) • Integrated audio module (IAM) (16/1) • Remote Digital Audio Receiver (RDAR) (16/145) • Global positioning system module (GPS) (16/139) (model year dependent) • Accessory USB unit (AUU) (4/124) (structure week 200709 - 201020) • Bluetooth phone module (BPM) (16/147) (from and including structure week 201020)
Via infrared signals: • Remote control	**Via infrared signals:** -
Via CAN communication: • Accessory electronic module (AEM) (4/78) • Brake control module (BCM) (4/16) • Central electronic module (CEM) (4/56) • Engine control module (ECM) (4/46) • Rear electronic module (REM) (4/58). • Supplemental Restraint System Module (SRS) (4/9) • Steering wheel module (SWM) (3/254).	**Via CAN communication:** • Central electronic module (CEM) (4/56)

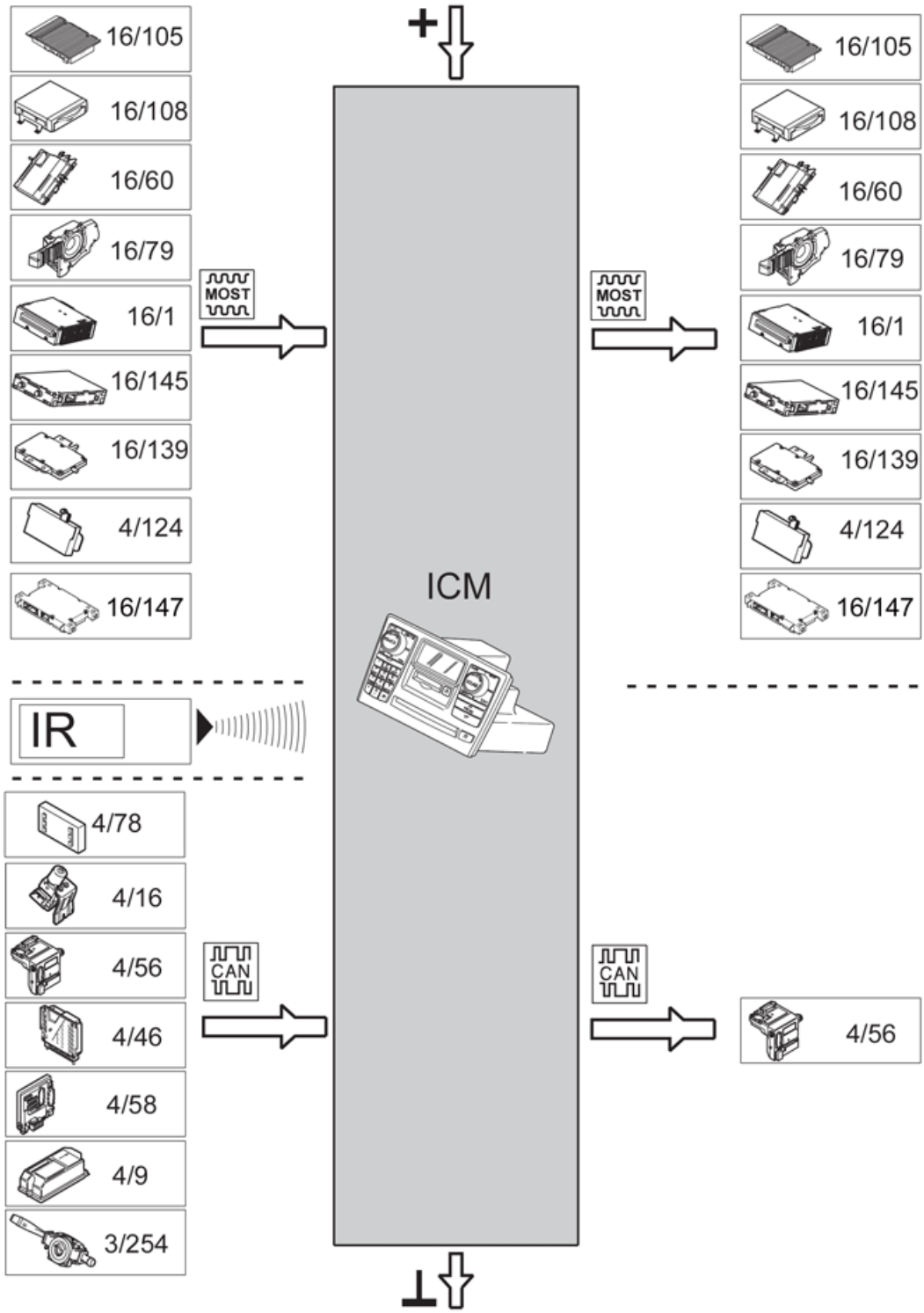
16/105
16/108
16/60
16/79
16/1
16/145
16/139
4/124
16/147
MOST
IR
4/78
4/16
4/56
4/46
4/58
4/9
3/254
CAN
+
ICM
⊥
MOST
16/105
16/108
16/60
16/79
16/1
16/145
16/139
4/124
16/147
CAN
4/56

Fig. 58: Control Modules On The Most Network
Courtesy of VOLVO CARS CORPORATION

INTEGRATED AUDIO MODULE (IAM) (2007-2012)

DESIGN

CONTROL MODULE

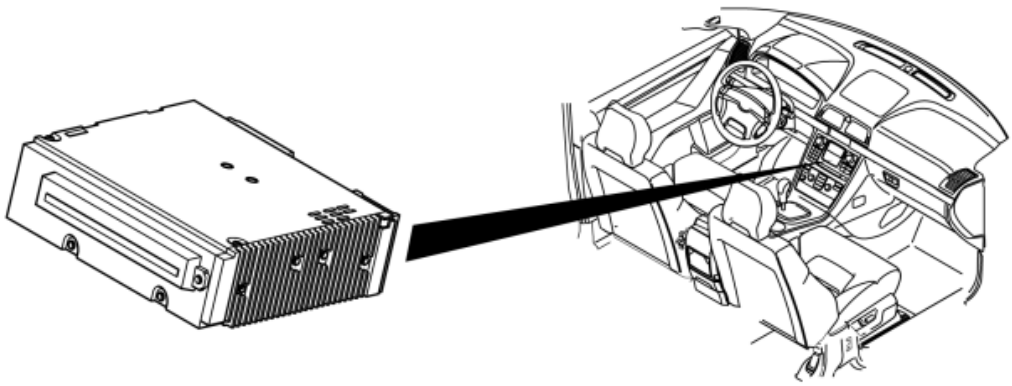

Fig. 59: Identifying Integrated Audio Module (IAM)
Courtesy of VOLVO CARS CORPORATION

The integrated audio module (IAM) is mounted in the center console. It is integrated with the audio unit and they are replaced together.

The infotainment control module (ICM) display shows the current status of the integrated audio module (IAM).

Integrated audio module (IAM) has an integrated amplifier with a power output of 4x20 W.

The two other versions do not have an integrated amplifier, they use the Audio module (AUD) as an amplifier.

ANTENNAS

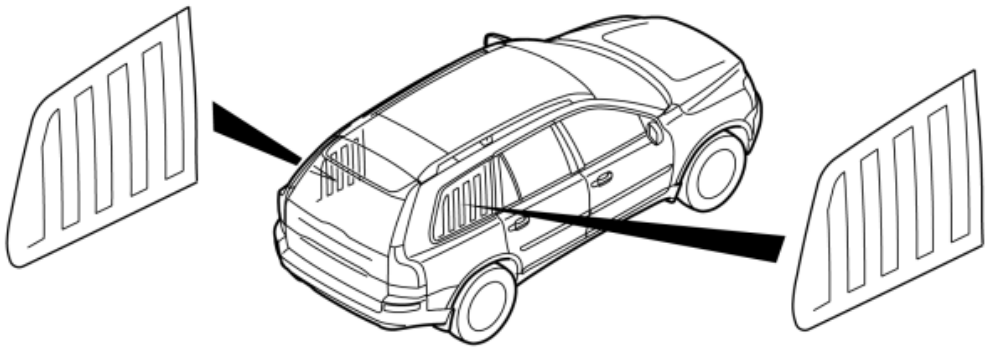

Fig. 60: Identifying Antennas
Courtesy of VOLVO CARS CORPORATION

The integrated audio module (IAM) is connected to an AM and FM antenna system. This consists of a main antenna, an FM sub-antenna and an AM antenna. The antennas are connected to an antenna amplifier. The antenna amplifier has two channels: one for the FM main antenna and the AM antenna and another for the FM sub-antenna.

Both channels are connected to the integrated audio module (IAM) via a coaxial cable.

The connection for the sub antenna is used to supply power to the antenna amplifier. If the Multimedia module (MMM) is in the vehicle (does not apply to the USA), the sub antenna is connected from the antenna amplifier to the Integrated Audio Module (IAM) via the Multimedia module (MMM).

REMOTE CONTROL

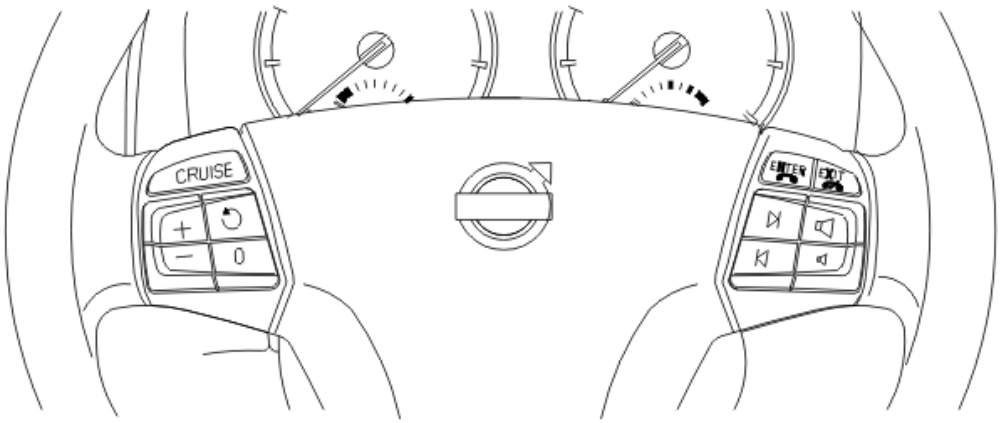

Fig. 61: Identifying Remote Control On Steering Wheel
Courtesy of VOLVO CARS CORPORATION

Remote control via a steering wheel keypad is available as either an option or as standard equipment depending on the market. The keypad is located on the right side of the steering wheel and is connected to the steering wheel module (SWM) via serial communication.

LOUDSPEAKERS

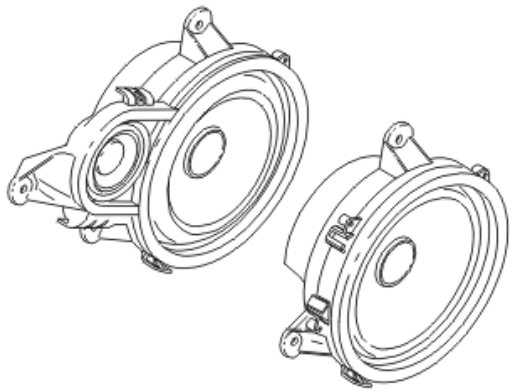

Fig. 62: Identifying Loudspeakers
Courtesy of VOLVO CARS CORPORATION

The integrated audio module for has 4 speakers directly connected to the control module:

- one pair of front loudspeakers
- one pair of rear loudspeakers.

Impedance for each speaker is 4 ohms.

For the two other versions with the integrated audio module, the speakers are connected to the audio module (AUD).

DIAGNOSTIC FUNCTIONS

GENERAL

The control module has a built-in diagnostic system, Volvo Diagnostic, which continuously monitors internal functions as well as input and output signals.

DIAGNOSTIC TROUBLE CODES (DTCS)

If the control module detects a fault, a diagnostic trouble code is generated. The control module can store up to 10 trouble codes. A fault that is detected during the most recent operating cycle is defined as permanent. Other faults that are detected are defined as intermittent.

READING AND ERASING DIAGNOSTIC TROUBLE CODES (DTCS)

Stored diagnostic trouble codes (DTCs) can be read off and erased using this function.

Diagnostic trouble codes (DTCs) can only be erased once all the diagnostic trouble codes (DTCs) have been read off at least once.

READING OFF THE CONTROL MODULE IDENTIFICATION

The control module can be identified by means of reading off a number of codes.

The codes contain information about the control module:

- hardware P/N (control module without software)
- hardware serial number (control module without software)
- software P/N
- diagnostic software P/N

DOWNLOADING SOFTWARE AND REPLACING THE CONTROL MODULE

Software can be downloaded to the integrated audio module (IAM). When software is ordered, the vehicle' software and hardware is compared to Volvo's central database. If they are compatible, the software is downloaded to the system.

If the comparison between the car and Volvo's central database does not correspond, then the database is updated with the vehicle's configuration. When this is complete the software is downloaded.

If the integrated audio module (IAM) is replaced, its unique serial number is checked by the infotainment system (ICM). If the serial number is incorrect, the installed integrated audio module (IAM) does not work.

If a problem arises after software download and the control module does not work, try switching the ignition off and on.

Select the MOST network for a total download of software to the vehicle.

FUNCTION

AUDIO UNIT

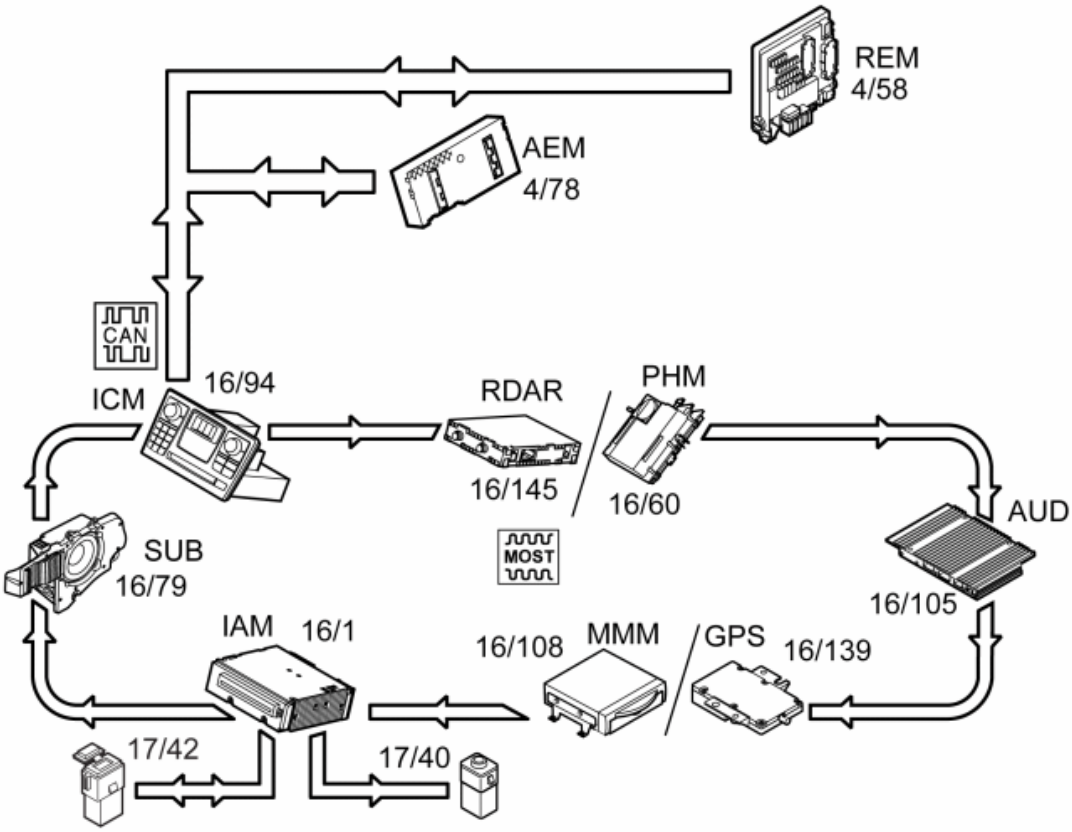

Fig. 63: Control Modules On The MOST Network
Courtesy of VOLVO CARS CORPORATION

The integrated audio module (IAM) functions as a stereo system in the vehicle and is connected to other control modules on the MOST network.

Integrated audio module (IAM) controls settings for:

- Volume
- Bass
- Treble
- Balance
- Fader
- Equalizer

The Integrated Audio Module compensates the sound amplitude depending on the vehicle speed and has automatic loudness.

The Integrated Audio Module manages playback of compressed music formats from cd.

Support available for following formats:

-
-

The integrated audio module (IAM) can play music via the AUX input.

The AUX input is located in the tunnel console.

From structure week 200848, there is support for playback of music via a USB/iPod-connection in the glove compartment (does not apply to Performance or CD-changers for 6 discs). Support available for the following formats:

- mp3
- wav
- wma

From structure week 200848, there is support for reception of digital HD-radio (does not apply to Performance or CD-changers for 6 discs).

HD radio is transmitted digitally on the AM respectively FM wavelength in USA. The Integrated Audio Module (IAM) automatically switches to digital HD radio reception if there is a current frequency and if the function for HD-radio is highlighted in the user menu.

When the Integrated Audio Module (IAM) receives digital HD radio, a symbol appears for HD radio in the Infotainment control module (ICM).

The integrated audio module (IAM) lowers the volume from the current source when the control module receives other audio information, such as indication from the parking assistance function or phone call.

If the vehicle is equipped with a Multimedia module (MMM), voice information is played via the existing speakers.

REMOTE CONTROL

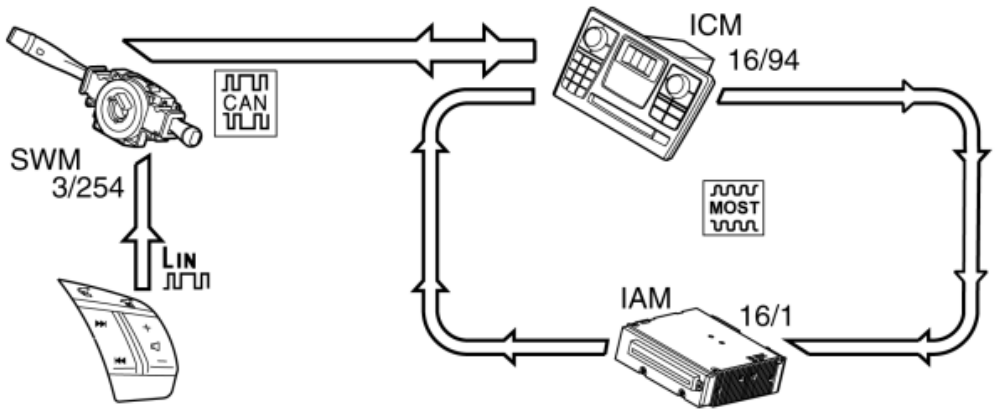

Fig. 64: Identifying Steering Wheel Remote Control

Courtesy of VOLVO CARS CORPORATION

Remote control on the steering wheel (standard/option) is directly connected to the Steering wheel module (SWM) via serial communication. Volume (reduce-increase) and selection of pre-programmed radio stations can be operated via remote control. During CD or USB/iPod playback, the buttons work as track selection.

The Steering wheel module (SWM) (3/254) communicates via LIN with the Central electronic module (CEM) (4/56) and on to the Infotainment control module (ICM) (16/94) via the CAN network.

The Infotainment control module (ICM) transmits the signals on to the Integrated Audio Module (IAM) (16/1) via the MOST network.

AUDIO REMOTE CONTROL (OPTION)

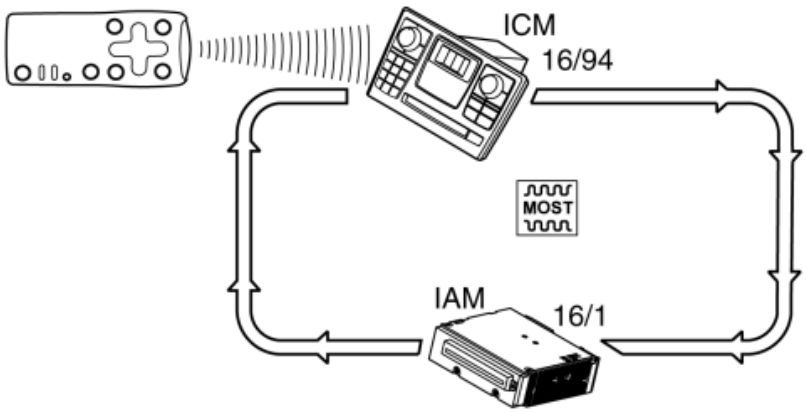

Fig. 65: Viewing Wireless Remote Control
Courtesy of VOLVO CARS CORPORATION

As an option, remote control can occur from a separate wireless remote control. Volume (increase-reduce) can be controlled and pre-programmed radio stations can be selected via remote control.

During CD or USB/iPod playback the buttons on the remote control work as track selection and during CD playback via the CD exchanger, the remote control can also be used to select CD. A certain frequency can also be searched for, radio stations stored in program locations (Presets), Autostore used and SOURCE selected.

SUPPORT FOR USB ACCESSORIES

SUPPORT FOR USB ACCESSORIES

General

The Integrated Audio Module only supports USB accessories with the profile. Both USB 1.1 and USB 2.0 are supported.

Hard disks are not supported but can still work if the power consumption is less than 500 mA.

USB hubs are not supported.

The charging of USB accessories is not supported but can still function if the USB accessory supports 5 volt charging and if the power consumption is less than 500 mA.

USB memories

The Integrated Audio Module supports FAT16 from and including 128 MB and upwards and FAT32 from and including 256 MB and upwards.

Permitted file size: 1 kB to 2 GB.

Maximum permitted number of files: 64000

Maximum permitted number of folders: 500

Maximum permitted folder depth: 8

SUPPORT FOR CELLPHONES AND OTHER ACCESSORIES

SUPPORT FOR CELLPHONES AND OTHER ACCESSORIES

The Integrated Audio Module supports all cellphones with the profile with files in file format FAT32 and FAT16. The cellphone needs to be configured to before use.

For USB accessories with extra functions such as U3 (Sandisk) it is recommended that the extra functions are uninstalled before use.

iPod support

The Integrated Audio Module (IAM) supports playback from iPods with a maximum of 64000 files. No limit for number of folders.

SUPPORT FOR CDS

SUPPORT FOR CDS

General:

- Diameter: 120 ±0.3 mm.
- Thickness: 1.2 +0.3/-0.1 mm.
- Distortion: ±0.5 mm.

Discs with a diameter of 8 cm are not supported and will be ejected if attempts are made to play them.

Disc types

CD Audio, CD-R Audio, CD-RW and CD-ROM.

Disc format

CD Audio:

Maximum permitted number of tracks: 99

Maximum permitted number of sections: 99

CD-ROM:

Maximum permitted number of files: 255

No limit to number of folders or folder depth

SYSTEM OVERVIEW

CONTROL MODULE

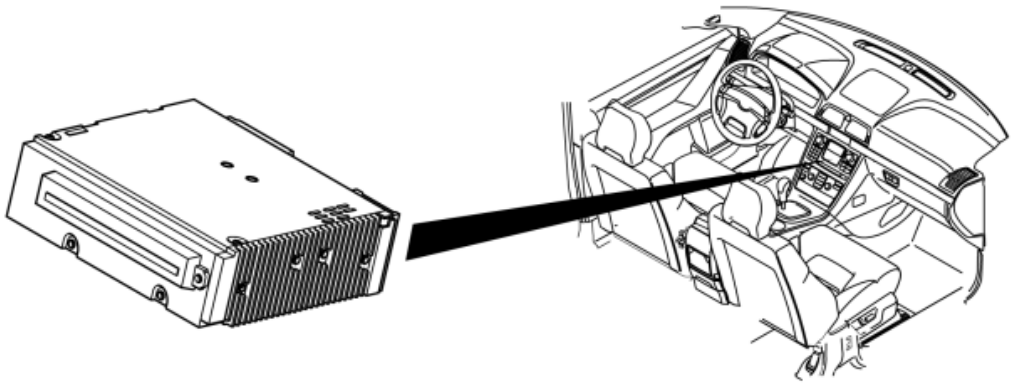

Fig. 66: Identifying Integrated Audio Module (IAM)
Courtesy of VOLVO CARS CORPORATION

The integrated audio module (IAM) handles functions for:

- Radio reception (AM and FM)
- CD playback
- AUX playback
- RDS reception

The integrated audio module (IAM) communicates with directly connected components as well as with other control modules and components via the MOST network, which is a fiber-optic communication network.

The integrated audio module (IAM) is a slave module on the MOST network. The infotainment control module (ICM) is the master module.

The integrated audio module (IAM) is mounted in the center console. It is integrated with the audio unit and

they are replaced together.

In order to function in the MOST network, the infotainment control module (ICM) checks that the integrated audio module (IAM) has a correct serial number. If the number is incorrect, the integrated audio module (IAM) does not work.

The integrated audio module is available in three versions:

- **Integrated amplifier,** with integrated radio, cd player and internal amplifier.
- **Without integrated amplifier,** with integrated radio and cd player. The version requires an external amplifier, Audio module (AUD). Subwoofer, Subwoofer module (SUB) available as accessory.
- **Without integrated amplifier,** with integrated radio and cd changer. The version requires an external amplifier, Audio module (AUD). Subwoofer, Subwoofer module (SUB) available as accessory.

RDS reception (Radio Data System) is possible with FM broadcasts (market-dependent). The system is called RBDS (Radio Broadcast Data System) in USA.

From structure week 200848, versions with support for reception of digital HD-radio are available. Only applies to the USA market.

The Integrated Audio Module manages playback of compressed music formats from cd.

Support available for following formats:

-
-

From structure week 200848, there is support for playback of music via a USB/iPod-connection in the glove compartment (does not apply to Performance or CD-changers for 6 discs). Support available for the following formats:

- mp3
- wav
- wma

The speakers that are installed in the front and rear doors are connected to the control module or an external amplifier, Audio module (AUD).

The Integrated Audio Module (IAM) checks internal components, executed activations and input/output signals via its integrated diagnostics. If the control module detects a fault, a diagnostic trouble code is generated. Any diagnostic trouble codes are stored in the control module memory. The information can be read via the data link connector in the vehicle.

SIGNALS

The table below summarizes the input signals to and output signals from the integrated audio module (IAM).

Signal type is divided into directly connected signals and MOST communication. The illustration below depicts the same information plus Volvo's component designation.

Input signals	Output signals
Directly connected: • Power supply • Ground • Antenna. AM and FM signal via antenna amplifier (16/16) • AUX input (17/40) • USB/iPod input (17/42)	**Directly connected:** • Loudspeaker (16/3-6), x 4 • Phantom feed antenna amplifier (16/16) • USB/iPod input (17/42)
MOST communication: • Infotainment control module (ICM) (16/94)	**MOST communication:** • Infotainment control module (ICM) (16/94) • Audio module (AUD) (16/105) • Subwoofer module (SUB) (16/79)

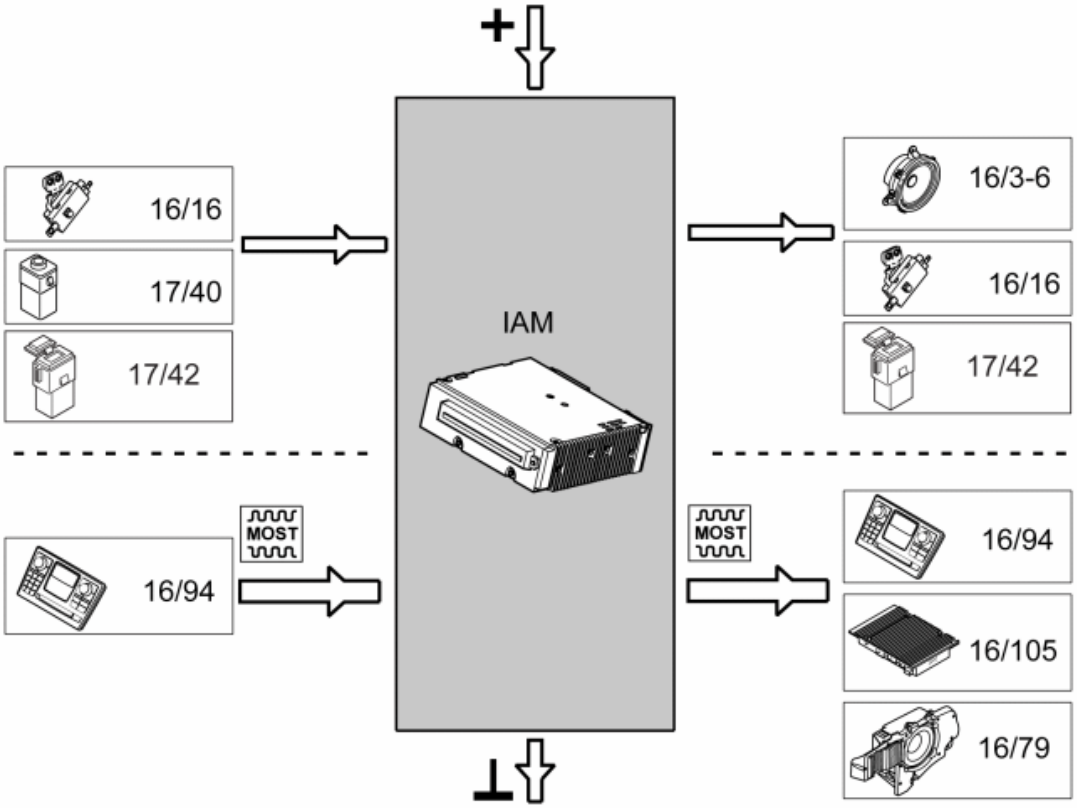

Fig. 67: Identifying Volvo's Component Designation
Courtesy of VOLVO CARS CORPORATION

INTERIOR (2003-2012)

INTERIOR

DASHBOARD/SEATS

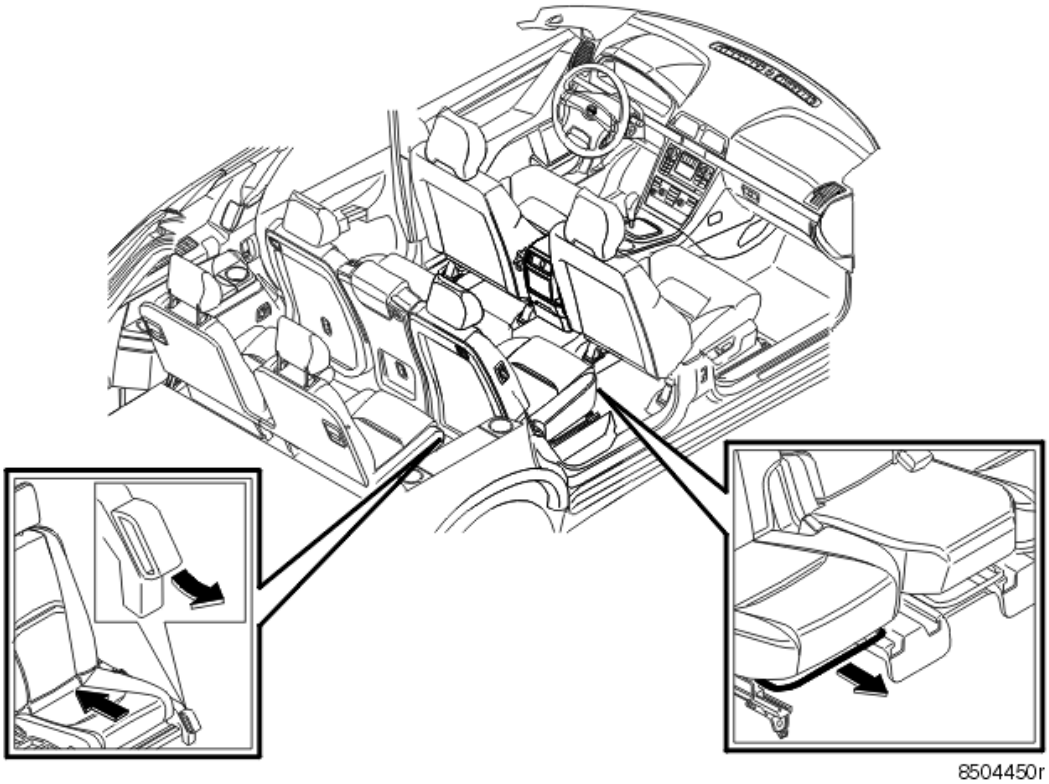

Fig. 68: Identifying Seat Configuration
Courtesy of VOLVO CARS CORPORATION

Dashboard/Center console

The dashboard consists of a single unit.

The center console is detachable. The rear section can be detached and removed.

Seats

The XC90 is available with two different seat formats, five seater and seven seater.

Five seater

The second row of seats in the five seater version splits into three parts, 40-20-40 (%).

The backrests can be folded down individually. When the backrests are folded down, the seat moves downwards to give a flat cargo floor.

Seven seater

The seven seater version has a third row with two separate seats. The second row of seats can be moved and adjusted individually from front to rear.

To access the third row of seats, lift the control on the outer backrest on the second row of seats. The backrest folds forwards while the seat moves forward.

To fold the backrest on the third row of seats, use the control at the front edge of the seat cushions, beside the side panels. When the control is lifted, the seat cushions slide backwards and the backrests then fold.

If the center seat has an integrated child seat, the seat can be slid forward to the front position to remove the rear section of the center console. This gives occupants in the front seats better access to the child.

LIGHTING (2003-2012)

LIGHTING

FRONT LIGHTING

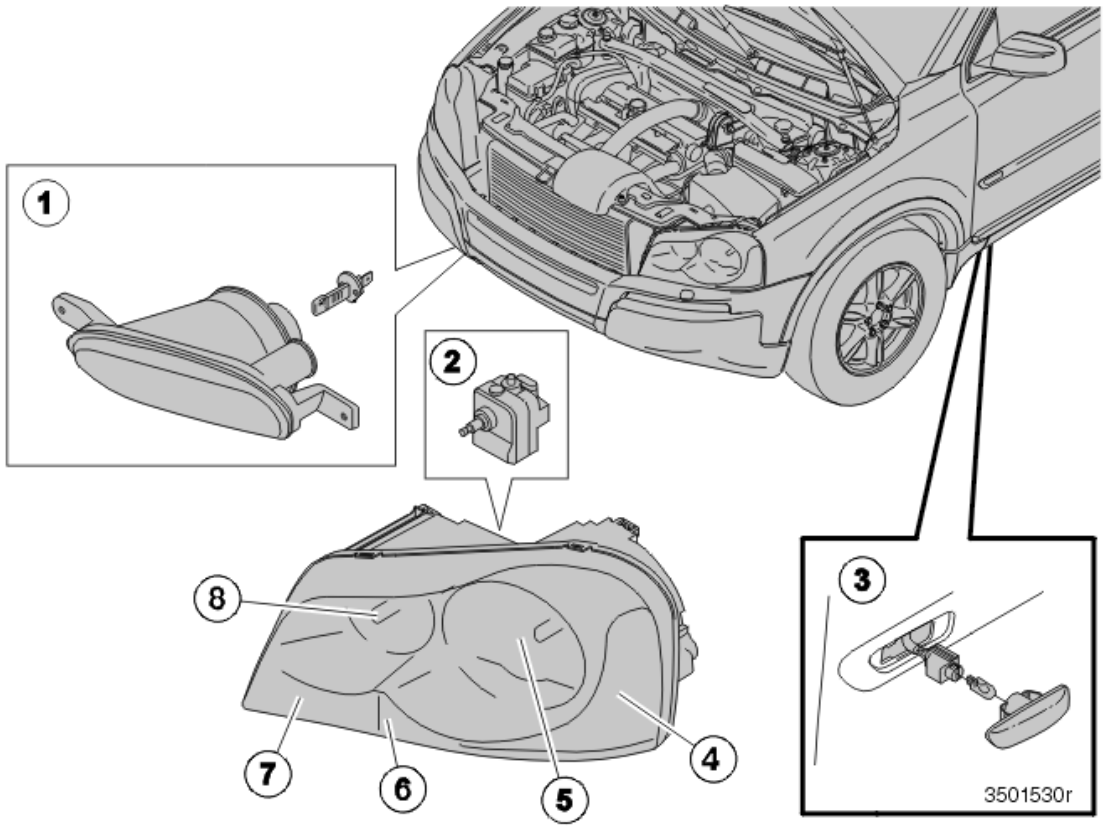

Fig. 69: Identifying Front Lighting
Courtesy of VOLVO CARS CORPORATION

1. Fog lamps

2. Motor, headlamp range adjustment
3. Side turn signal flashers
4. Sidemarker lamps
5. Low beam
6. Parking lamps
7. Turn signal lamps
8. High beam.

Front lighting

Unique to this design is that the entire headlamp housing can be removed. The entire headlamp housing is removed to replace the headlamp and bulbs.

- The lens is made of clear plastic
- There are separate reflectors for high and low beam
- Integrated turn signal lamps and parking lamps
- Headlamp range adjustment is as before.

Bi-xenon

Available as a factory option.

Fog lamps

Positioned in the bumper.

TAIL LAMPS

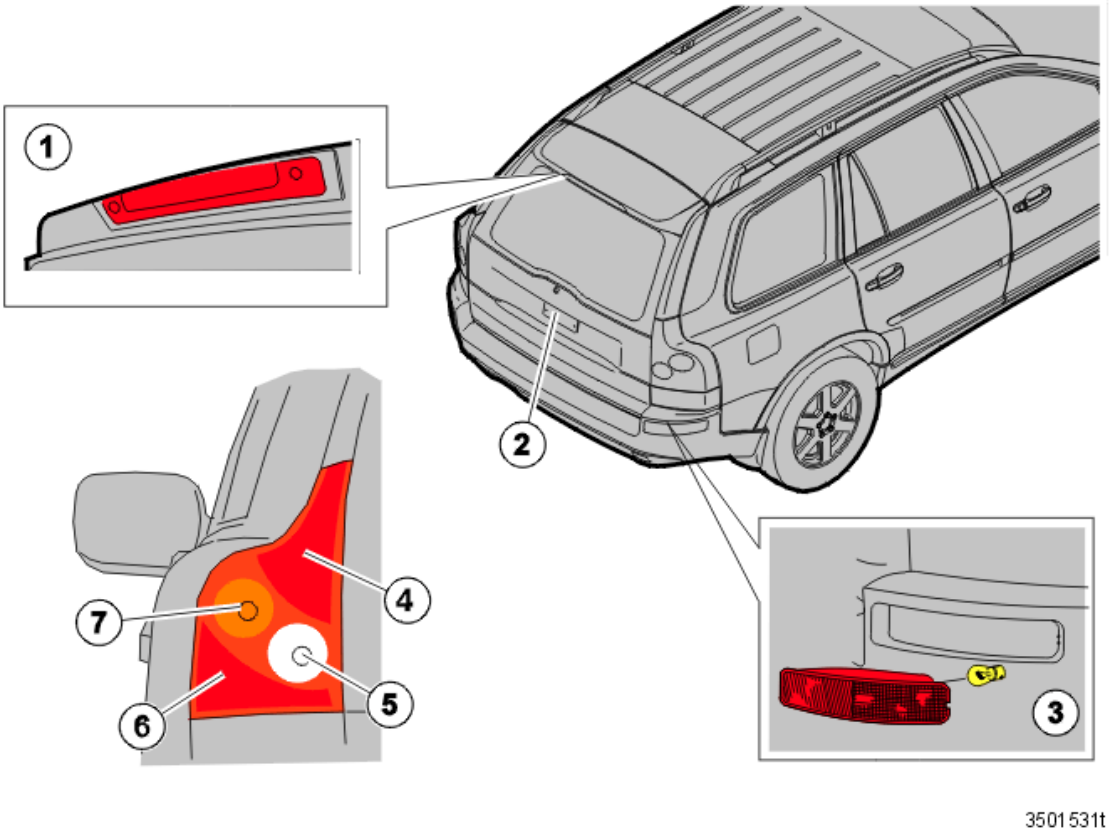

Fig. 70: View of Tail Lamps
Courtesy of VOLVO CARS CORPORATION

1. Stop lamp (LED)
2. License plate lighting
3. Fog tail lamp (Parking lamps, USA)
4. Stop lamps
5. Back-up (reversing) lamp
6. Parking lamps (Fog tail lamp, USA)
7. Turn signal lamps.

Tail lamps

A new design where the entire tail lamp can be detached when changing bulbs.

- High mounted stop lamp in the spoiler
- The fog tail lamp is integrated in the bumper. (Parking lamps, USA)
- A new type of bulb has been introduced. Two wire (4/P21W).

LIN - LOCAL INTERCONNECT NETWORK (2003-2012)

CONTROL MODULES THAT COMMUNICATE VIA LIN

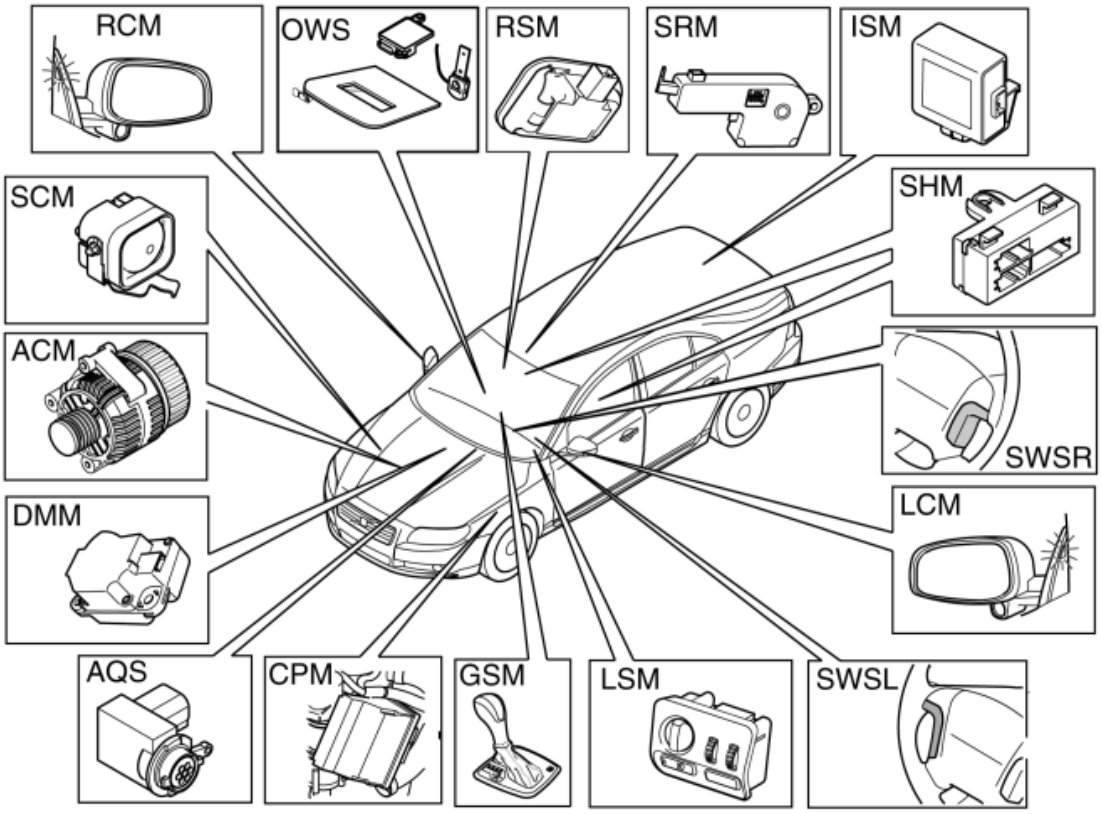

Fig. 71: Control Modules That Communicate Via LIN
Courtesy of VOLVO CARS CORPORATION

NOTE: **The illustration above and the table below is an example that shows model year 2007. All other information in the document is general and applies to all model years.**

Control module	Name/ Function	Connected to/Master node	Other
ACM	Alternator control module (ACM) Controls charge regulation of the battery.	Engine control module (ECM). Also diagnosed by the Central electronic module (CEM).	
AQS	Air quality sensor (AQS) Measures the particle content in the air into the climate system.	Climate control module (CCM)	The Climate control module (CCM) uses this signal as a basis for control of the damper for recirculation.
CPM	Combustion preheater module (CPM)	Central electronic module (CEM)	

	Petrol driven engine and passenger compartment heater.		
DMM	Damper motor module (DMM) Regulates the air flow in the passenger compartment, temperature between the right and left sides as well as recirculation.	Climate control module (CCM)	The number of damper motors varies depending on the equipment level and whether the vehicle is right or left hand drive.
GSM	Gear selector module (GSM) Provides input signals to the Transmission control module (TCM), about the position of the gear shift.	Transmission control module (TCM)	Vehicles with automatic transmission only.
ISM	Inclination sensor module (ISM) Detects changes to the vehicle incline when the alarm is activated.	Rear electronic module (REM)	
LCM	Left camera module (LCM)	Driver door module (DDM) or Passenger door module (PDM) depending on whether the vehicle is right or left hand drive.	Component in the BLIS system.
LSM	Light switch module (LSM) Sends signals to the Central electronic module (CEM) concerning settings for the exterior and instrument lighting.	Central electronic module (CEM)	
OWS	Occupant weight sensor (OWS) Used as an input signal to indicate deactivation of the front passenger airbag.	Supplemental restraint system module (SRS)	
RCM	Right camera module (RCM)	Driver door module (DDM) or Passenger door module (PDM) depending on whether the vehicle is right or left hand drive.	Component in the BLIS system.
RSM	Rain sensor module (RSM) Detects whether there is water on the windscreen.	Upper electronic module (UEM)	Used to control the automatic wiper function.
SCM	Siren control module (SCM) Controls the siren function.	Upper electronic module (UEM)	
SHM	Seat heating module (SHM), driver's side and Seat heating module (SHM), passenger-	Climate control module (CCM)	

	side.		
SRM	Sun roof module (SRM) Control sun roof functionality.	Upper electronic module (UEM)	
SWSL	Steering wheel switch left (SWSL)	Central electronic module (CEM)	Concerns the steering wheel buttons for control of radio and telephone functions.
SWSR	Steering wheel switch right (SWSR)	Central electronic module (CEM)	Concerns the steering wheel buttons for control of radio and telephone functions.

ERROR MANAGEMENT IN THE LOCAL INTERCONNECT NETWORK (LIN)

ELECTRICAL FAULTS

The communication circuits in the LIN control modules cannot detect electrical faults on the wire. However the master node continuously reads back the last message it sent itself to check that it has been sent correctly over the LIN bus.

Should the master node discover that the message last read back is incorrect, for example if the signal wire has been short-circuited to voltage or ground, the master node can set the diagnostic trouble code (DTC) denoting the message has not been sent correctly.

COMMUNICATION FAILURE

The master node on a LIN bus sends out messages at specific time intervals.

The master node on the LIN bus in question knows which type of response that a particular slave node shall send back for a specific message sent from the master node. If the master mode does not receive this response, it can set the diagnostic trouble code for failed communication with the slave node in question.

FAULTS DISCOVERED BY SLAVE NODES

Control modules that use LIN communication can have integrated diagnostics exactly as the control modules on CAN. However, it is the Master node to which the slave node is connected that stores the diagnostic trouble codes for faults that the slave node discovers.

Information about discovered faults in the slave nodes is sent in the messages to the master node.

Each slave node on a LIN bus can be seen as an extension of the master node's own connections. In most cases it is also the master node that makes evaluations whether the diagnostic trouble code (DTC) can be set or not.

SOFTWARE DOWNLOADING

The control modules used as slave nodes on Volvo's LIN buses are supplied preconfigured and with that programmed for a specific behaviour.

Volvo does not use software downloading via LIN. However a new configuration file for a LIN bus can be downloaded to the master node that controls communication on a LIN bus, on condition that the master mode is connected to the vehicle's CAN network.

Accordingly, new slave nodes can be added to an existing LIN bus.

LIN (LOCAL INTERCONNECT NETWORK)

GENERAL

LIN (Local Interconnect Network) is a standardised protocol for serial communication on a single wire between a master and several slave nodes.

The LIN protocol supports Multiplex communication, which means several nodes can communicate on the same wire without disturbing each other.

LIN was developed, by a consortium of automotive manufacturers, at the end of the 90s in order to build a network for data exchange over short distances at a low cost. The development of the LIN standard is ongoing and Volvo plays an active part in this work.

LIN is adapted for one master and up to 16 slave nodes on each communication bus.

More nodes are possible, but several communication buses can in these instances be connected together via the master node. The master node can also make up an interface to other types of communication buses, for example, CAN or MOST.

LIN is bidirectional, (two way half duplex) which means information can be sent in both directions. However only one control module at a time can send information. The level on the bus wire is normally high (approx 13 V) via a pull-up resistance, but is taken down to a low level (approx 1 V) when one of the nodes on the bus transmits.

The LIN protocol is a supplement to CAN. LIN is a less expensive alternative to CAN and is used where the transfer rate and performance is not as critical.

Besides a reduction in the number of wires, LIN is adapted for more basic communications circuits, which means the internal clock circuit in a slave node can be an inexpensive oscillating circuit (a. k. a. RC circuits) instead of crystals or ceramic oscillators that are used in systems with greater sensitivity to time differences.

This means that control module costs for the LIN standard can be kept down.

A synchronisation procedure is used in each message on LIN in order to make communications, which are still time-dependent, possible. A number of bits at the start of each message are used so that the clock circuit in each slave control module can adjust to the correct frequency so that the subsequent data in the message can be received error-free.

If the LIN bus is inactive for a specific period of time, the slave nodes switch to sleep mode to reduce power consumption.

The transfer rate on LIN can lie between 5 and 20 kbit/s, but Volvo uses 9.6 kbit/s. This can be compared to the transfer rate on the CAN network which is 125-500 kbit/s.

1 kbit/s = 1000 bits per second.

The reason why Volvo has selected a transfer rate of 9.6 kbit/s is the balance between performance and transfer quality. A higher transfer rate can be used in some applications.

On a LIN bus there is always one control module that is the main control module (a. k. a. master node). All other control modules on the same LIN bus are slave nodes.

The master node contains a list describing which slave nodes are connected on the LIN bus in question. The list in the master node also describes which messages can be sent on the LIN bus and in which order.

Messages are sent in order according to the list in the master node with a specific time delay between messages, so that any responses from the slave nodes can be received by the master node.

What the slave nodes shall do and/or which data is to be sent as a response when the slave node receives a message is in turn described in a list that is programmed into each slave node. If a slave node has not managed to respond before it is time for the next message to be sent from the master node, the master node will start to send nevertheless and the slave node will be interrupted during its transmission.

The maximum length of a bus wire is set to 35 m (114.83 ft). The high level on LIN means battery voltage, i. e. approx 9-18 V, yet all circuits connected to the bus must withstand up to approximately 25 V.

The LIN bus is terminated to the battery voltage with a pull-up resistance on all nodes, the master mode with 1 kohms and the slave nodes with 20-47 kohms, usually 30 kohms.

This means that in sleep mode the voltage on the LIN bus is approximately 13 V and the dominant level on the bus (that is to say when a "1" is transmitted and a node takes down the bus to a low level during the transmission) is approximately 1 V.

HINT: The voltage on the communication wire is dependent on the supply voltage. The guideline is that the average value during communication is approximately 2/3 of the supply voltage. With a normal supply voltage and normal communication, the average voltage on the LIN bus lies at approximately 7-8 V.

The residue voltage level depends on the internal protection diodes in the control module.

The slave nodes also have a diode in series with the pull-up resistance to prevent the connected components from loading the bus by leading current the back-way if they do not have a power supply.

WIRING

The communication wire used on LIN is a single, unscreened conductor, which includes the most common cable harnesses in the vehicle. On account of the wire being unscreened, some restrictions due to EMC reasons can apply to wire routing.

LIN MESSAGE

Complete message

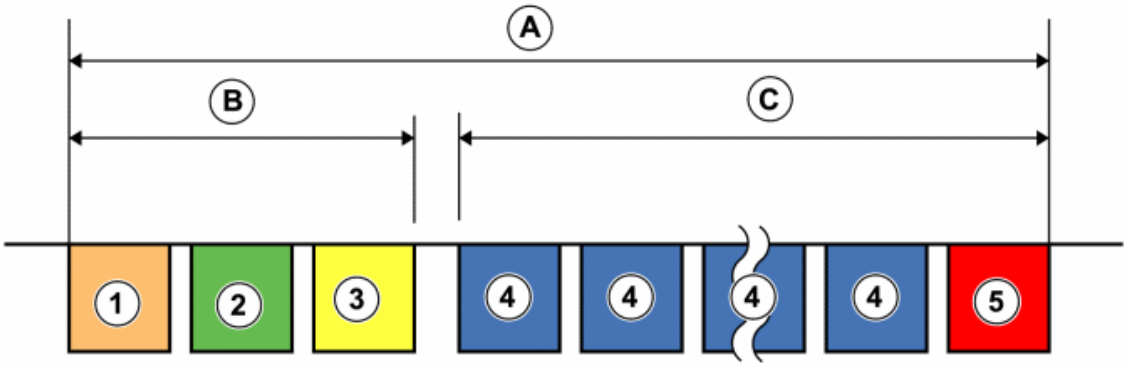

Fig. 72: Identifying LIN Message Format
Courtesy of VOLVO CARS CORPORATION

A = Frame

B = Header

C = Message

A message on LIN is called a frame and consist of the following parts:

1. **Synchronisation interrupt.** Used to wake slave nodes that are in sleep mode.
2. **Synchronisation field.** The synchronisation field helps slave nodes to synchronise with their master node's clock frequency, in order for messages sent to be received correctly.
3. **Identification field.** Contains information about the contents of the message. All nodes can read and respond to a message, yet only one node has the right to send a response to the message. Which node has the right to answer the message is evident from the identifier.
4. **Data information.** The data sent can be two to eight bytes long. The data information is sent with the least significant bit first.
5. **Checksum.** The checksum is a way for slave notes to check whether the received message has been transferred correctly, or if any disturbance can have occurred during the transmission which has corrupted the data. If an error has occurred in a message during transmission from the master node to the slave node, i. e. the checksum calculated by the slave node does not correspond, the slave node will erase the message and await the next message sent from the master node.

The slave nodes do not send an acknowledgement to a message that has been received correctly. The master node re-reads the message sent out on the LIN bus and compares the re-read message with the message that was sent.

If the sent and detected messages are the same, the master mode presupposes that the message has been received correctly by the slave nodes.

Example from an oscilloscope

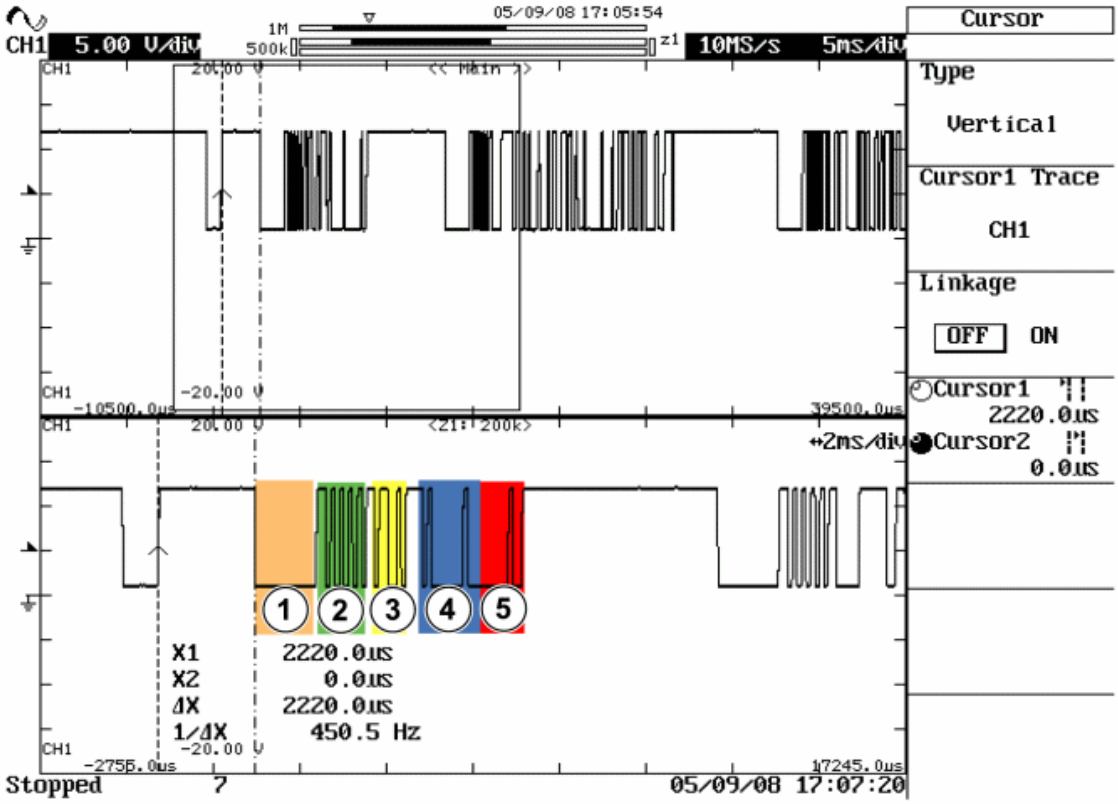

Fig. 73: Identifying Example From An Oscilloscope
Courtesy of VOLVO CARS CORPORATION

If you have access to an oscilloscope and measure on the LIN bus, a start-up procedure with subsequent communication can appear as illustrated in the figure above.

The lower curve is a magnified section of the upper curve.

In the upper curve you first, see the LIN bus in sleep mode with the subsequent message. This is followed by several messages.

The numbers in the different fields correspond to the parts of the message described in the list above.

In the figure you can, see that the sleep voltage on the LIN bus is approximately 13 V and that the voltage drops to approximately 1 V during communication.

NOTE: **The figure above is only one example of how messages on the LIN network can appear.**

NETWORK

GENERAL

Increasing demands on functionality have made the electrical system in vehicles increasingly complex. By using a network with serial communications between the different control modules several functions can be controlled and monitored using fewer cables.

Example of networks using serial communications are CAN and LIN.

LIN is an acronym for and has been jointly developed as a common standard by a number of different automotive manufacturers.

The concept involves the exchange of information, via serial communications with a single wire, between control modules where the same performance as provided by a CAN network is not needed.

LIN is usually used as a communications line between control modules on the CAN network and minor nodes, such as regulators and advanced sensors.

The number of control modules that communicate via LIN is dependent on the vehicle model and the level of equipment.

The difference between CAN and LIN is that the CAN network is routed throughout the entire vehicle. Whereas LIN is usually used in smaller separate networks where the transfer speed and performance is not so highly prioritised.

ADVANTAGES OF A NETWORK

Instead of using a single wire for each function, serial communications over a network make it possible for hundreds of signals and functions to be activated, controlled or read via the same wire.

Using a network it is even easier to adapt the system to customers and markets.

In relation to the number of functions and connected components the length of the wiring is short and the electrical system is more service friendly when based on a network instead of direct connection.

NETWORK STRUCTURE

GENERAL

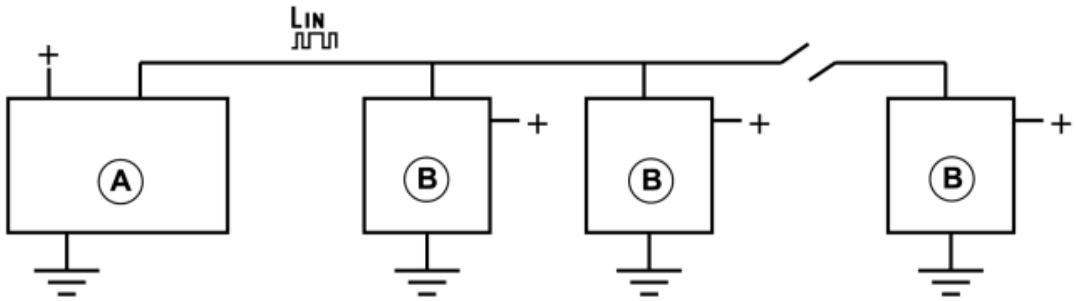

Fig. 74: Identifying Local Interconnect Network (LIN) Structure
Courtesy of VOLVO CARS CORPORATION

A = Master node

B = Slave node

The network is made up of a number of control modules connected to each other via a communications wire. The control modules are voltage fed and ground individually and exchange information in an optional direction via the communication wiring.

In event of a failure on the communication wiring, the control modules will not be able to communicate with the other control modules located after the failure. However, the control modules located before the failure can still communicate.

On a LIN bus there is always one control module that is the main control module (a. k. a. master node). All other control modules on the same LIN bus are slave nodes.

TERMINATING RESISTOR

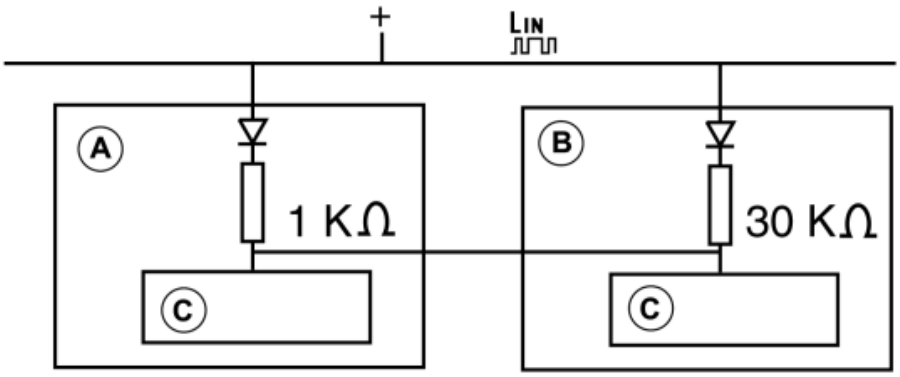

Fig. 75: Identifying Terminating Resistor
Courtesy of VOLVO CARS CORPORATION

A = Master node

B = Slave node

C = Transmitter/receiver

LIN is terminated to the battery voltage on each node via a pull-up resistance

The master node is terminated with 1 kohms and the slave nodes with 30 kohms.

The termination resistance forms a parallel circuit and the resistance to the battery voltage depends on the number of connected nodes. The resistance to ground should be infinite or at least extremely large if no communications are in progress.

MD MODULE (MP1) AND CD MODULE (MP2) (2003-2006)

DESIGN

CONTROL MODULE

There are two different media players:

- the MD module (MP1) plays MiniDiscs
- the CD module (MP2), which plays compact discs, can be a single disc player or a CD changer for six CDs.

The magazine for the CD changer is integrated in the control module. The MD Module (MP1) or CD Module (MP2) can be post-installed. A CD player and a CD changer cannot be installed at the same time.

The control modules are in the center console and are integrated in the infotainment control module (ICM).

The display on the infotainment control module (ICM) shows the current status of the selected media player. The media players are operated via the buttons on the infotainment control module (ICM).

All input and output signals from the control modules are transmitted on the MOST network.

DIAGNOSTIC FUNCTIONS

GENERAL

The control module has a built-in diagnostic system, Volvo Diagnostic, which continuously monitors internal functions as well as input and output signals.

DIAGNOSTIC TROUBLE CODES (DTCS)

A diagnostic trouble code (DTC) is stored if the control module detects a fault.

Should a fault disappear for any reason after being permanently stored in the control module as a diagnostic trouble code (DTC), the information remains stored in the control module.

If a fault is no longer permanent, the diagnostic trouble code (DTC) remains as intermittent.

READING AND ERASING DIAGNOSTIC TROUBLE CODES (DTCS)

Stored diagnostic trouble codes (DTCs) can be read off and erased using this function.

Diagnostic trouble codes (DTCs) can only be erased once all the diagnostic trouble codes (DTCs) have been read off at least once.

NOTE: Certain functions are unavailable until the diagnostic trouble codes (DTCs) have been erased.

READING OFF THE CONTROL MODULE IDENTIFICATION

VIDA identifies control modules by reading off a number of codes from the control module memory.

The codes contain information about the control module:

- hardware P/N (control module without software)
- hardware serial number (control module without software)
- software P/N
- diagnostic software P/N.

READING OFF EXTENDED FAULT-TRACING INFORMATION

This function can be used to read parameters, status identifiers and counters stored at the same time as a diagnostic trouble code (DTC). These are called frozen values.

For further information about the MD Module (MP1), see **DESCRIPTION OF VEHICLE COMMUNICATION INFORMATION** .

For further information about the CD Module (MP2), see **DESCRIPTION OF VEHICLE COMMUNICATION INFORMATION** .

READING OFF THE PARAMETERS

Using this function, the status or value of parameters can be read off. The status/value can be presented digitally. For further information about the different parameters, for the MD Module (MP1) see **DESCRIPTION OF PARAMETERS** and for the CD Module (MP2) see **DESCRIPTION OF PARAMETERS** .

DOWNLOADING SOFTWARE AND REPLACING THE CONTROL MODULE

New software can be downloaded into the MD module (MP1) and CD module (MP2). When ordering software, the hardware and the software in the car is compared to the information in the Volvo central database. If the comparison is OK the software is downloaded to the control module.

If the comparison between the car and Volvo central database is not OK, the database is updated with the car configuration. When this is complete the software is downloaded.

The control module is integrated in the infotainment control module (ICM).

After replacing the control module, the unique serial numbers of the control module are checked by the infotainment control module (ICM). The installed control module will not work if the serial number is incorrect.

Try turning the ignition off and on if there are problems after the software is downloaded and the control module is not working.

The MOST network is used for a total software reload.

FUNCTION

PLAYING DISCS

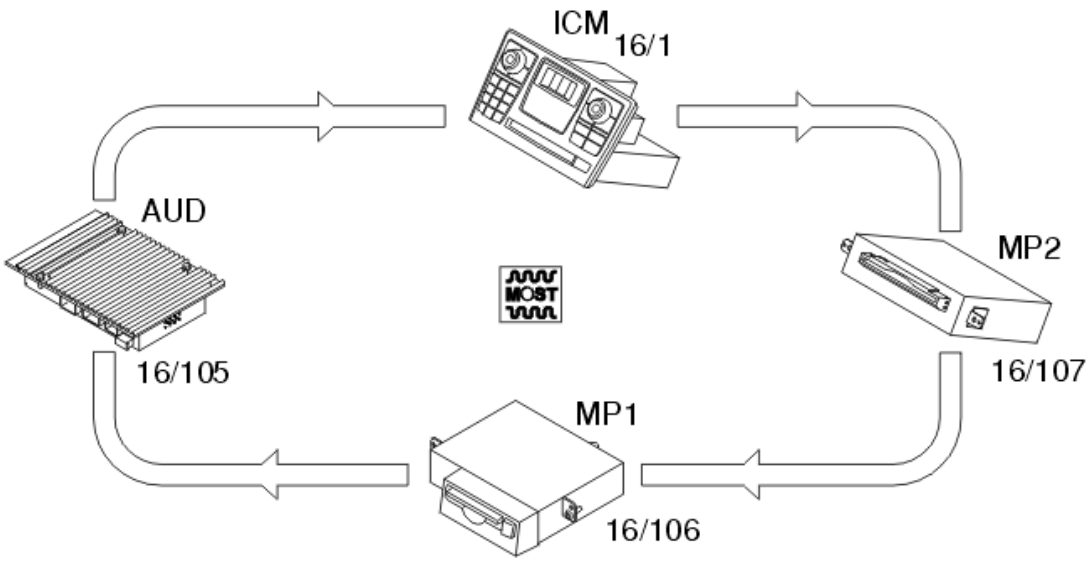

Fig. 76: Identifying Media Players Function
Courtesy of VOLVO CARS CORPORATION

The function of the media players, MD player (MP1) (16/107) and CD player (MP2) (16/106), is to play back minidiscs and compact discs.

The media players receive input signals from the infotainment control module (ICM) (16/1) via the MOST network. The signals indicate when the user has pressed the Play, Stop or Eject buttons for example.

The MD and CD control modules have next/previous track, fast search forwards and reverse and random play (RND) functions. The CD changer also has a function for selecting the desired disc.

When playing back discs, the MD player (MP1) (16/107) or CD player (MP2) (16/106) transmits a signal on the MOST network to the audio module (AUD) (16/105) which then transmits signals to the loudspeakers and the headset outputs. Text stored on the discs is also transmitted via the MOST network to the display on the infotainment control module (ICM).

SYSTEM OVERVIEW

MD MODULE (MP1) AND CD MODULE (MP2)

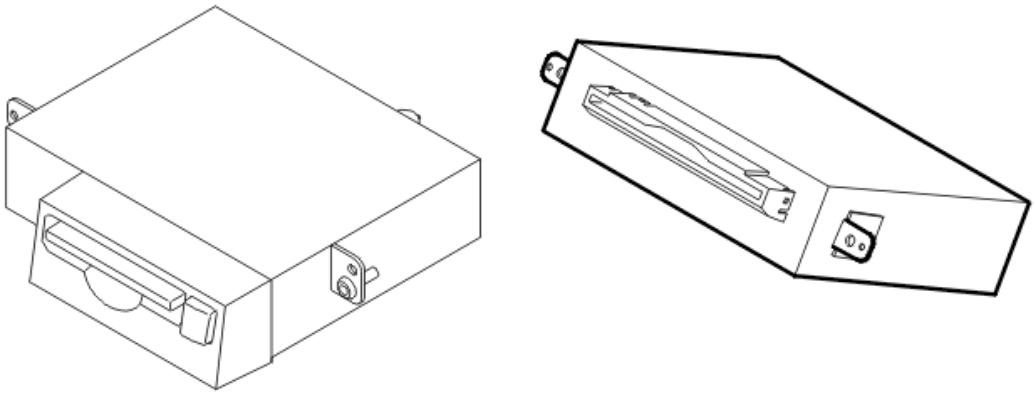

Fig. 77: Identifying MD Module (MP1) and CD Module (MP2)
Courtesy of VOLVO CARS CORPORATION

The media players play back MiniDiscs and compact discs. There are two different media players:

- the MD module (MP1) plays MiniDiscs
- the CD module (MP2), which plays compact discs, can be a single disc player or a CD changer for 6 CDs.

The control modules are in the center console.

The media player uses optical serial communication to communicate with other components on the MOST network. This means that all communication with the media player is via the infotainment control module (ICM). The media players are connected to the audio module (AUD) for access to the loudspeakers.

Any diagnostic trouble codes (DTCs) are stored in the control module memory. This information can be read off using VIDA via the data link connector (DLC) in the car.

SIGNALS

The following table summarizes the input signals to and output signals from the media players. These signals type are only transmitted via MOST communication. The illustration below displays the same information with the Volvo component designations.

Input signals	Output signals
Directly connected:	**Directly connected:** (Power supply unless otherwise stated)

Via MOST communication: • Infotainment Control Module (ICM) (16/1).	**Via MOST communication:** • Audio module (AUD) (16/105) • Infotainment Control Module (ICM) (16/1).

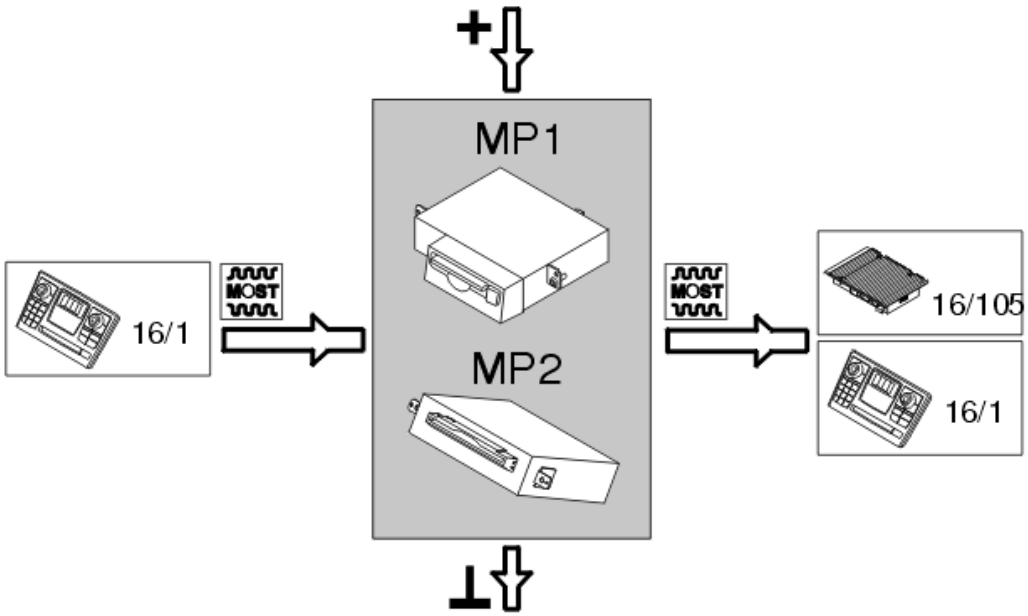

Fig. 78: Identifying Volvo's Component Designation
Courtesy of VOLVO CARS CORPORATION

MOST NETWORK (2003-2006)

CONSTRUCTION OF THE NETWORK

GENERAL

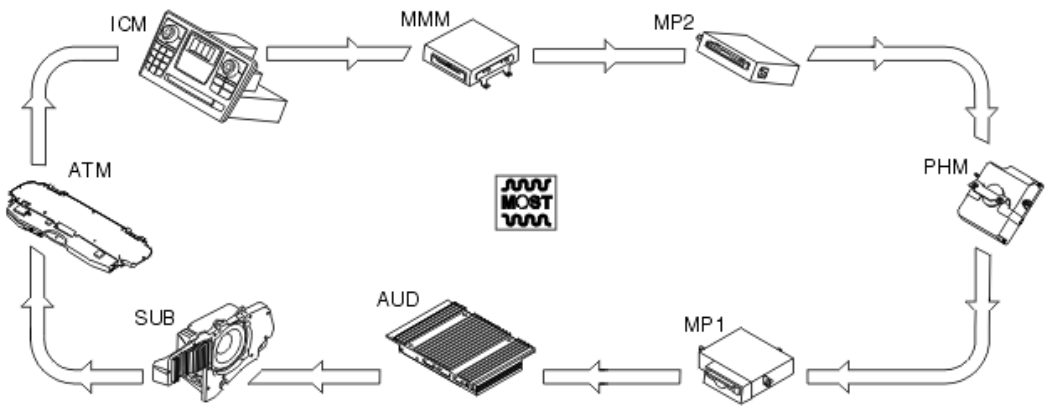

Fig. 79: Control Modules On The MOST Network
Courtesy of VOLVO CARS CORPORATION

The MOST network is a fiber optic network in which all the control modules are connected in a ring. All messages within the MOST network go in the same direction from the infotainment control module (ICM) to the antenna module (ATM).

In a fiber optic network, light pulses are transmitted instead of electrical signals. The light pulses are interpreted in the same way as the electrical signals on the CAN network. The MOST network uses the master-slave concept. This means that the infotainment control module (ICM) has overall control of communication on the MOST network.

The fiber optic cable is made of plastic. Communication is using red light on a wavelength of 650 nm.

THE OPTICAL CONNECTOR

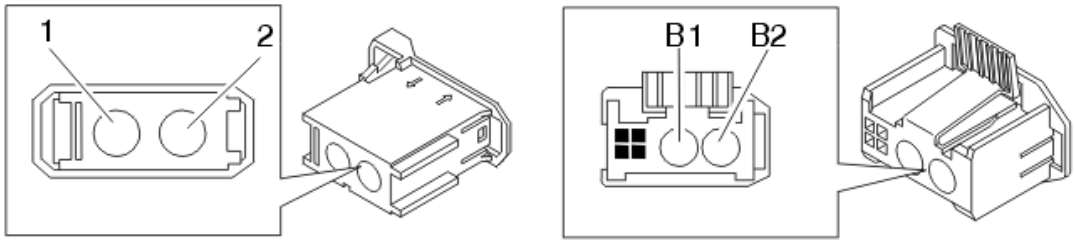

Fig. 80: Identifying Optical Connector
Courtesy of VOLVO CARS CORPORATION

Terminal	Signal type	Other
1 / B1	Optical input signal	Input signal for MOST communication
2 / B2	Optical output signal	Output signal for MOST communication

Each control module in the MOST network has an optical connector which consists of two diodes, a sender diode and a receiver diode. These transmit and receive light pulses. The actual communication between two control modules is as follows. A sender diode transmits the message as a light pulse. This is transmitted from the control module via the MOST network to a photo-optical receiver diode in the receiving control module.

The two optical terminals in the connector are numbered in the same way on all control modules in the MOST network. The size of the plastic housing for the two optical terminals varies. A connector with integrated power supply is integrated with the optical terminals and one connector with only the optical terminals.

MOST COMMUNICATION

All messages are transmitted as light pulses in the same direction on the MOST network. This means that if other control modules are connected between the two control modules which are communicating, the light pulses pass through these with no effect on the information. The control modules which are passed through amplify the light pulse so that it does not become too weak.

A control module with an internal fault can be set to bypass mode. In this mode, the light pulses are sent straight through the control module without the control module amplifying the light pulse. This means that the distance before the light pulse is amplified is longer and therefore the luminance is weaker. If the luminance is too weak, it cannot be received by the receiving control module.

The infotainment control module (ICM) is the gateway between the MOST and CAN networks for communication to and from control modules connected on the CAN network.

The infotainment control module (ICM) monitors the communication on the MOST network. This involves distributing sound channels on the MOST network, so that sound data can be distributed from, for example, the CD module (MP2) to the audio module (AUD). The majority of activations on the MOST network are initiated by the infotainment control module (ICM). The infotainment control module (ICM) also manages diagnostic trouble codes (DTCs) on the MOST network.

If a control module in the MOST network stops working and is unable to transmit light pulses onwards, or if there is an open-circuit in the fiber optic cable, the entire MOST network will stop working. This means that all the control modules on the MOST network will stop working. For more information about remedying this, see fault management on the MOST network.

The infotainment control module (ICM) must always be connected on the MOST network for communication on the MOST network to work.

The MOST network connections increase and the signal routing may change when control modules are added because adapter wiring is used to connect the new control module.

LOCATION OF CONTROL MODULES ON THE MOST NETWORK

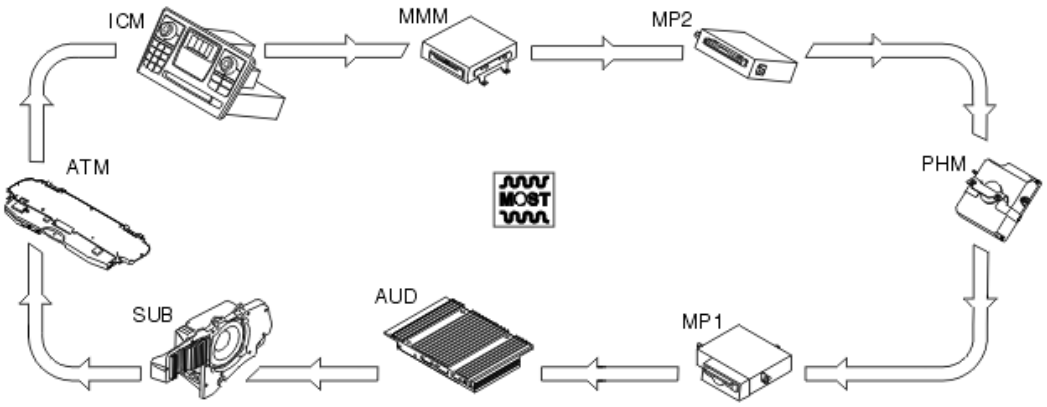

Fig. 81: Control Modules On The MOST Network
Courtesy of VOLVO CARS CORPORATION

The control modules on the MOST network should be positioned in a particular order. If this order is not followed, the fault-tracing of the MOST network will deteriorate.

When further control modules are added to the MOST network, these should be placed in the correct order on the network to make it easier to fault-trace the control modules. If the control modules are connected in another order, this does not effect the function of the MOST network, but fault-tracing will be compromised. The

control modules should be placed in the following order:

1. Infotainment Control Module (ICM) (16/1)
2. Multimedia module (MMM) (16/108)
3. CD module (MP2) (16/106)
4. Phone module (PHM) (16/60)
5. MD module (MP1) (16/107)
6. Audio module (AUD) (16/105)
7. Subwoofer module (SUB) (16/79)
8. Antenna module (ATM) (16/110).

If the MD module (MP1) is installed as an aftermarket accessory in a car with a phone module (PHM) and CD module (MP2), the MD module (MP1) will change positions with the phone module (PHM).

If the configuration of the MOST network in the car is minimal, the following control modules are connected:

- infotainment control module (ICM)
- the audio module (AUD)
- the antenna module (ATM).

CONTROL MODULES IN THE MOST NETWORK

MOST NETWORK

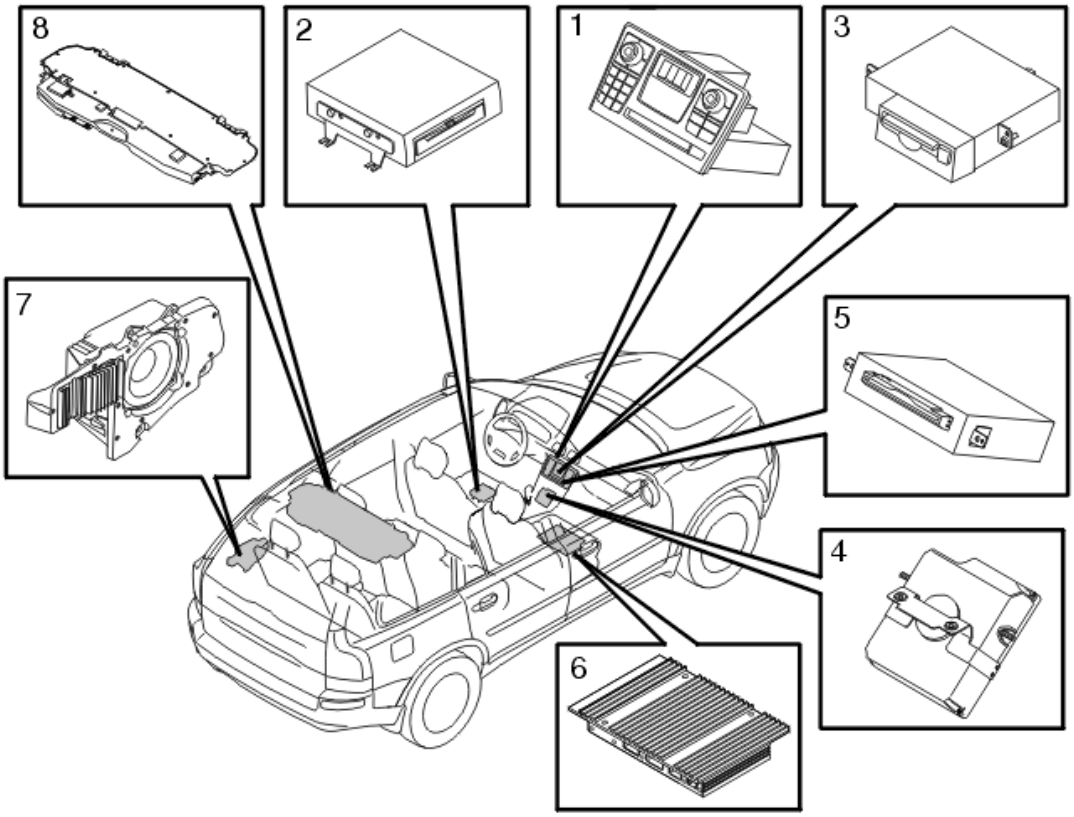

Fig. 82: Identifying MOST Network Control Modules (Up To Eight)
Courtesy of VOLVO CARS CORPORATION

The MOST network can consist of up to eight control modules.

The infotainment control module (ICM) monitors the MOST network and manages communication. The infotainment control module (ICM) is monitored by the central electronic module (CEM) on the controller area network (CAN). In addition to the infotainment control module (ICM), there are two control modules which are standard on the MOST network. These are:

- the audio module (AUD)
- the antenna module (ATM).

The table below lists all the control modules which may be included in the MOST network.

Explanation

CAN = Controller Area Network, electrical network for communication

LS CAN = low speed side of the CAN

MOST = Media Oriented Systems Transport, fiber optic network for communication

Master control module = Control module which monitors the MOST network

Slave control module = Control module which supplies the MOST network functions

Option = accessory installed at the factory during the purchase of a new car

Accessory = after market installation

(x) = position number in the illustration

Control module	Function	Communication	Other
Infotainment Control Module (ICM) (1)	Monitors the MOST network.	The master control module is connected to both the LS CAN and the MOST network.	Included in the standard set-up of the MOST network. Must be connected to the MOST network to function.
Multimedia Module (MMM) (2)	Displays traffic information on the directly connected display screen.	Slave module on the MOST network.	Option, accessory
Phone module (PHM) (4)	Controls carphone functions.	Connected to the LS CAN and is a slave module on the MOST network.	Option, accessory
MD module (MP1) (3)	Plays minidisks.	Slave module on the MOST network.	Option, accessory
CD module (MP2) (5)	Plays CDs. Can consist of a CD player or CD changer	Slave module on the MOST network.	Option, accessory
Antenna module (ATM) (8)	Consists of an AM/FM antenna. May also have a GPS unit and TMC unit as an option.	Slave module on the MOST network.	Included in the standard set-up of the MOST network.
Audio module (AUD) (6)	Amplifier connected to all loudspeakers except the subwoofer module (SUB). The microphone and headset panel are also directly connected to this control module.	Slave module on the MOST network.	Included in the standard set-up of the MOST network.
Subwoofer module (SUB) (7)	Amplifier and bass speakers integrated in the same unit.	Slave module on the MOST network	Option, accessory. The audio module (AUD) must be connected to the MOST network for the subwoofer module (SUB) to function.

FAULT MANAGEMENT ON THE MOST NETWORK

GENERAL

The MOST network is monitored by the infotainment control module (ICM). If it detects a fault in the MOST network, a diagnostic trouble code (DTC) is stored in the infotainment control module (ICM). There are different types of diagnostic trouble codes (DTCs) depending on the type of fault. A general rule is that if the light pulse in the MOST network disappears, the entire network stop working.

Fault types which are processed are:

- no communication from a control module
- faulty communication on the MOST network.

NO COMMUNICATION FROM A CONTROL MODULE

The infotainment control module (ICM) knows which control modules are connected to the MOST network. If any control module on the MOST network stops communicating, a diagnostic trouble code (DTC) is stored in the infotainment control module (ICM). There is a diagnostic trouble code (DTC) for each control module on the MOST network for this fault. The diagnostic trouble codes (DTCs) are ICM-1A51 to ICM-1A57.

Diagnostic trouble codes (DTCs) for missing communication are also stored for additional GPS and TMC units which are connected to the antenna module (ATM). The diagnostic trouble codes (DTCs) are ICM-1A58 and ICM-1A59.

Missing communication may be due to an internal fault in the control module or because the function is incorrectly implemented in the control module.

FAULTY COMMUNICATION

Diagnostic trouble code (DTC) ICM-DC00 is stored in the event of internal faults in the infotainment control module (ICM) preventing the transmitting and receiving diodes from sending sound pulses on the MOST network.

For faults when messages cannot be sent on the MOST network, diagnostic trouble code (DTC) ICM-DC02 is stored Causes of this fault may be that:

- a control module, except the infotainment control module (ICM), has a defective optical connector
- a control module has an internal fault, which means that the optical connection stops working
- a control module on the MOST network is not powered. If there is no power supply, the optical connecter stops transmitting light
- the optical cable is damaged or there is a break in it. This fault may occur if the bend radius of the cable is too small or the cable has been folded
- there is dirt or oil on the optical connectors which impedes the light
- the connection to a control module has come loose
- the fiber optic terminals in the connector are cross-connected
- there is a loose connection because the fiber optical wiring is incorrectly installed or the fiber optic terminal pin has been pressed back in the connector
- a bridging connector has come loose or is damaged.

Ring break diagnostics are used to remedy diagnostic trouble code (DTC) ICM-DC02. If a break is discovered in the MOST network after running a ring break diagnostic, diagnostic trouble code (DTC) ICM-DC01 will be stored in the infotainment control module (ICM). If this is the case, the position of the open-circuit and control module location, can be read off from the infotainment control module (ICM).

RING BREAK DIAGNOSTICS

General

This function is important when fault-tracing the MOST network. Ring break diagnostics are used when there is an open-circuit in the MOST network and diagnostic trouble code (DTC) ICM-DC02 has been stored in the infotainment control module (ICM).

During fault-tracing, all control modules transmit a message to the infotainment control module (ICM) in reverse order in relation to the position on the network. This means that the antenna module (ATM) is first, not last. The control module which is not working will not transmit an answer to the infotainment control module (ICM). This also means that the control modules connected after the defective control module will be unable to transmit a message to the infotainment control module (ICM).

The same applies in the event of an open-circuit in the fiber optic cable in the MOST network. None of the control modules before the open-circuit will be able to send their message to the infotainment control module (ICM). The infotainment control module (ICM) is then able to calculate the position of the open-circuit from the incoming messages.

HINT: It is important to know which control modules are connected and in what order to identify the control module which sends each message.

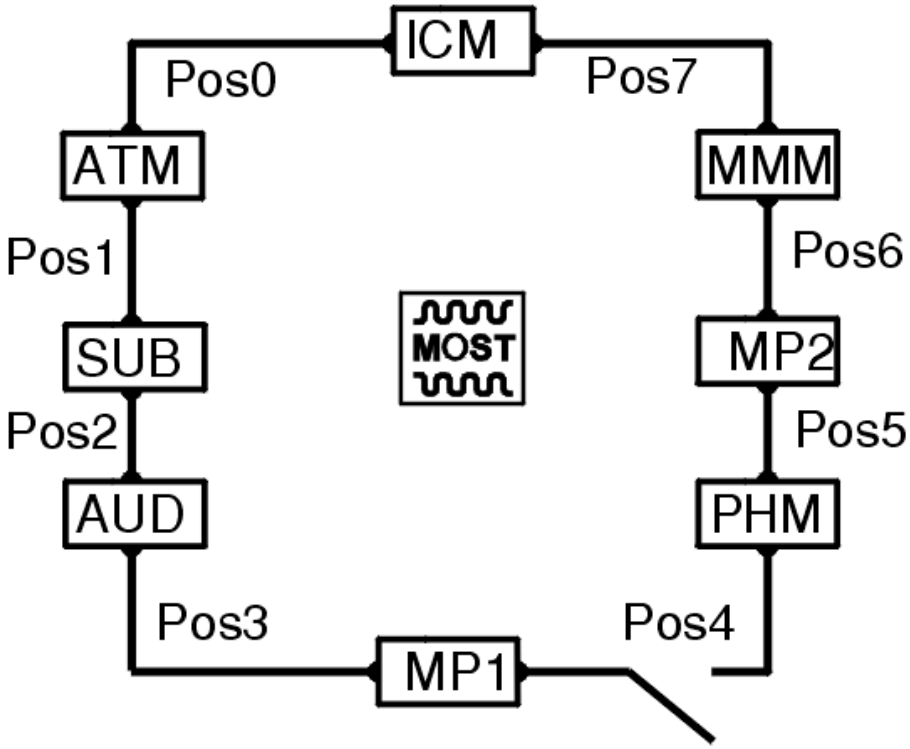

Fig. 83: Identifying Open-Circuit Between The Phone Module (PHM) And The MD Module (MP1)
Courtesy of VOLVO CARS CORPORATION

Example 1

A MOST network contains all eight control modules.

There is an open-circuit in the wiring between the phone module (PHM) and the MD module (MP1). See the illustration.

During the ring break diagnostic, the infotainment control module (ICM) receives responses in reverse order to the order of the control modules. Those that are located before the MD module (MP1) cannot respond to the infotainment control module (ICM).

The infotainment control module (ICM) receives responses up to position four and presents the value 4.

If there was no open-circuit, the infotainment control module (ICM) would have responded "OK".

Example 2

A MOST network to which the subwoofer module (SUB) is not connected, however the other seven control modules are connected.

There is an open-circuit in the wiring between the phone module (PHM) and the CD module (MP2).

During the ring break diagnostic, the response value from all the control modules before the subwoofer module (SUB) will be one less than example 1 when all control modules are connected.

The infotainment control module (ICM) receives responses up to position three and presents the value 3.

If there was no open-circuit, the infotainment control module (ICM) would have responded "OK".

MOST NETWORK

GENERAL

MOST (Media Oriented Systems Transport) is a standardized network communication system for multimedia applications. The MOST protocol is optimized for fiber optic communication. This means that signals are sent as light pulses.

MOST DATA

The MOST protocol determines how light pulses, or the absence of light pulses should be interpreted. Each pulse or absent pulse is called a "bit". The number of "bits" transmitted on the MOST network is 24.8 million per second (24.8 Mbps). A bit can be:

- binary 0, i. e. no light pulse
- binary 1, i. e. light pulse.

The light pulses are transmitted in data frames. A data frame consists of different types of data. The size of a data frame is 64 bytes, which is 64 x 8 = 512 bits.

The data frame has a frequency of 48 kHz. This means that 48000 data frames are sent per second on the MOST network.

The data types which are included in a data frame sent on the MOST network are:

- control data
- synchronous data
- asynchronous data
- administrative data.

Control data

Control data is used to check and to allocate the functions to the control modules and the functions in the MOST network.

The control data message is transmitted from, for example, the infotainment control module (ICM) to another specific control module. The control data message automatically checks if the receiver has received the signal and that the entire message has been correctly transmitted between the transmitting and receiving control modules.

The size of the control data is 2 bytes per data frame. A block, which consists of 16 data frames, is required for a control message to be sent. This means that the total size of the control message is 32 bytes. A control message is the minimum size of a message to activate or deactivate functions in control modules on the MOST network.

Examples of MOST messages are track changes or stop commands on the CD player.

Up to 1000 control data messages can be sent per second.

Synchronous data

Synchronous data is used to transmit data which requires considerable quantities of data in real time, for example to play back sound from the CD module (MP2).

The length of the synchronous data message which can be sent may be up to 60 bytes per data frame, although never less than 24 bytes. This gives a transfer rate of up to 23 Mbits per second for data transmitted as synchronous data.

Synchronous data shares the data frame with asynchronous data. The infotainment control module (ICM) controls which control modules transmit synchronous data and which are receivers.

Asynchronous data

Asynchronous data is used to send large quantities of data, such as TCP/IP and digital images, but not in real time.

The length of the message can be up to 36 bytes (synchronous data minimum 24 bytes + asynchronous data 36 bytes = 60 bytes). This gives a maximum transfer rate of 14 Mbits per second. When the message has been sent, a check is run to ensure that is has been correctly received.

Asynchronous data shares the data frame with synchronous data. The infotainment control module (ICM) controls which control modules transmit asynchronous data and which are receivers.

Administrative data

Administrative data consists of two parts. The first part is at the start of the data frame. This describes how much of the data is synchronous and how much is asynchronous.

The second part is at the end of the data frame. This part checks that the control modules on the MOST network are working correctly.

The size of administrative data is 2 bytes.

MOST DATA FRAME

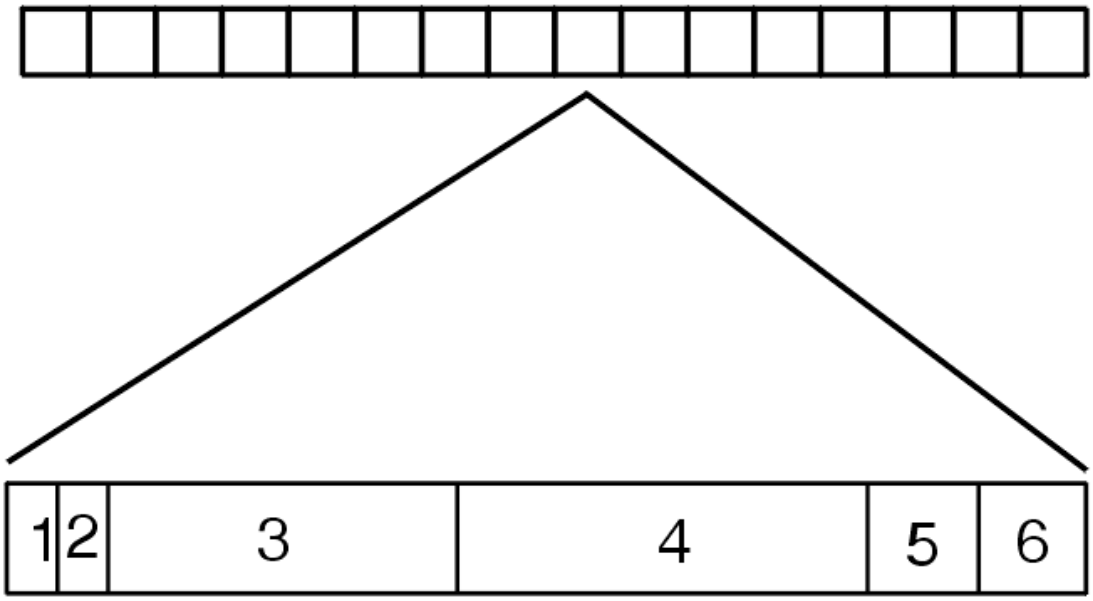

Fig. 84: Identifying MOST Data Frame
Courtesy of VOLVO CARS CORPORATION

A data frame consists of different parts. This consists of check data, asynchronous, synchronous and administrative data. A data frame on the MOST network is 64 bytes. The data frame consists of the following:

1. synchronization of the clock on the MOST network, i. e. the frequency at which data is transmitted so that the data is sent at the correct intervals
2. administrative data, indicates the size of the asynchronous and synchronous data
3. synchronous data
4. asynchronous data
5. control data
6. administrative data.

16 data frames are required to form a block. One block is the minimum size of a MOST message.

MOST PROTOCOL

All activations on the MOST network are control messages or MOST messages. The majority of the MOST messages are initiated by the infotainment control module (ICM). The infotainment control module (ICM) informs certain control modules if a function in the control module should be activated. The infotainment control module (ICM) then creates space on the MOST network for the activations in the control module to transmit data, either synchronous or asynchronous. The structure of a message is as follows:

- DeviceID. FBlockID. InstID. FktID. OPType.

This means:

- DeviceID - The ID number of one of more control modules in the network
- FBlockID - The ID number of a function unit, for example the CD function in the CD module (MP2)
- InstID - The ID number to differentiate between identical function units, for example two CD modules in the MOST network
- FctID - The ID number of the function to be activated, for example play or stop
- OPType - Specifies how the function is to be used, because a function can be used in different ways.

The message may appear as follows:

- MP2. CD.01. Track, Length. Set(10).

This means: play song number 10 on the CD player in the CD module (MP2).

The infotainment control module (ICM) knows which control modules are in the MOST network. It can then assign specific ID numbers to all control modules and the included functions. If control modules are removed or added, the ID numbers for the control modules are re-assigned.

CALCULATING THE TRANSFER RATE

The number of "ones" and "zeros" transmitted per second determines the transfer rate.

The number of data frames multiplied by the clock frequency of a frame gives the transfer rate.

Example

The maximum transfer rate of asynchronous data:

Bit = a binary 1 or 0

Replace = 8 bit

Maximum asynchronous data = 36 byte

This gives: 36 x 8 = 288 bit

The clock frequency for a data frame = 48 kHz

The maximum number of bits of asynchronous data x clock frequency for a frame: 288 x 48000 = 14 Mbit/s.

SOFTWARE DOWNLOADS ON THE MOST NETWORK

The concept for downloading software is the same as for the CAN network. The CAN uses a PBL (primary boot

loader) which is permanently installed in the control module, and a secondary program loading file (SBL - secondary boot loader) which is downloaded into a RAM while the control module is being programmed.

When downloading software for the MOST control modules, a third type of download module is used, GBL (Gateway boot loader). For downloads to the MOST control modules to work, the GBL must be loaded into the infotainment control module (ICM). The GBL cannot be used to program the infotainment control module (ICM). SBL is used to program the infotainment control module (ICM), in the same way as all the other CAN control modules

GBL downloading

A PROG command is transmitted on the CAN network to all control modules including the infotainment control module (ICM). This command sets all the control modules to reset mode. Before the infotainment control module (ICM) switches to reset mode, it switches of the light to all MOST control modules.

The PROG command on the CAN network sets all CAN control modules to programming mode. The MOST network is inactive during this phase.

The GBL is then downloaded to a RAM memory in the infotainment control module (ICM). The GBL is then activated and the infotainment control module (ICM) transmits light pulses on the MOST network. The GBL now functions as a connection between the CAN and MOST networks. The GBL sets the MOST control modules to programming mode. All the control modules on the MOST and CAN networks can then be addressed in the same way to download software.

In the event of a total software reload for the control modules on the MOST network, select the MOST network option. Select CAN network for control modules on the controller area network (CAN).

SECURITY ON MOST

This function is used to ensure that all control modules on the MOST network can be used. The MOST network starts in ignition positions I, II or III. The infotainment control module (ICM) checks that all the control modules on the MOST network have a valid serial number. If the infotainment control module (ICM) detects that one or more control modules does not have a valid serial number, those particular control modules will be set to disabled mode. This means that the control module functions cannot be used in the MOST network. The light pulses can only pass through the control module.

THE NETWORK

GENERAL

The increasing requirements of extended functionality in cars has underpinned the development of systems with better performance and more functions. The MOST network is a result of this development. The MOST network is a fiber optic network which allows a high number of different commands and messages to be sent and received on the same cable and in the same direction. By using a fiber optic network, functionality is extended without increasing the amount of wiring.

The number of commands and messages which can be handled on the network depends on factors such as the network speed and the length of the message or command. The MOST network which is used in Volvo cars has

the capacity to transmit over 300 message types and approximately 1000 messages per second. The transfer rate on the MOST network is approximately 25 Mbps.

ADVANTAGES OF AN OPTICAL NETWORK

- electrical short-circuits are not possible on the MOST network. This reduces the risk of damage to control modules connected to the network
- As an optical network, the MOST network does not have problems with EMC (Electro Magnetic Compatibility)
- the wiring is not sensitive to electrical cross-induction from other wiring
- The transfer speed of the MOST network is much higher than the CAN network
- it is easy to add further functions and to install accessories, known as plug and play units.

The control modules in the network are connected to each other and are constructed so that more functionality can be easily added. All that is required to increase functionality is to:

- connect the sensor to the closest control module
- connect the controlled component to the nearest control module
- download software to change the configuration and programming of the network.

MOST NETWORK (2009-2012)

CONTROL MODULES IN MOST NETWORK

MOST-NETWORK

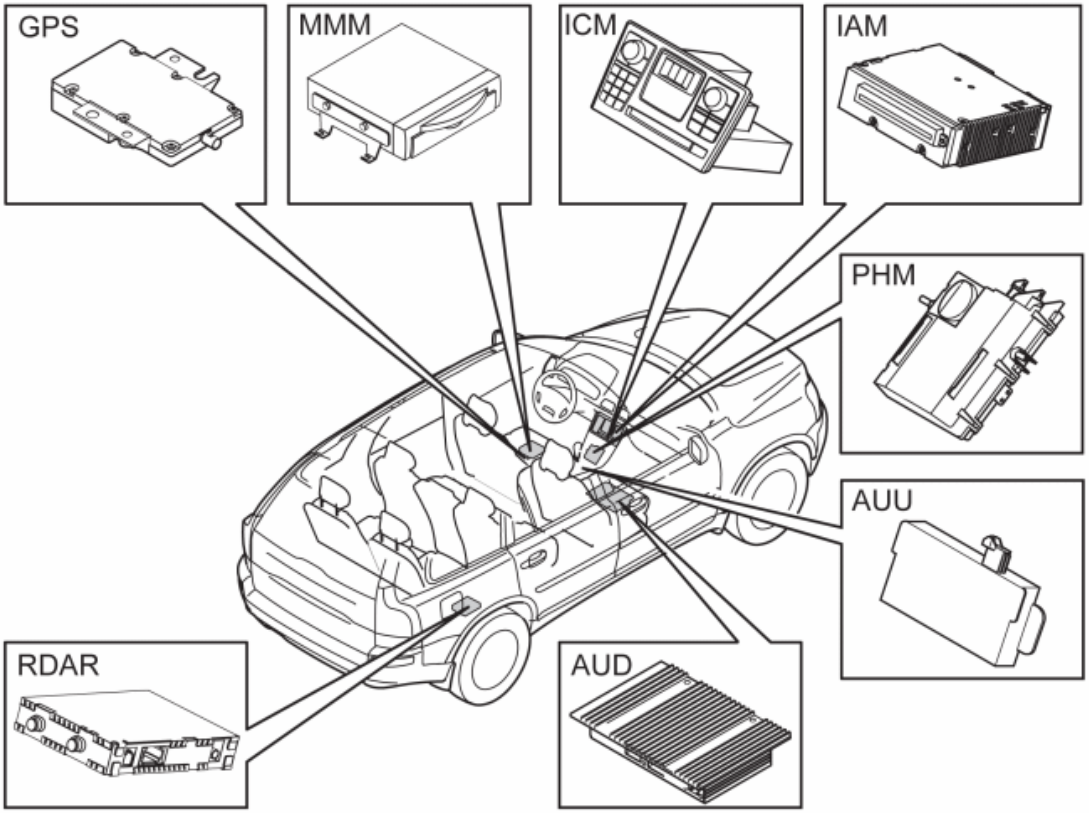

Fig. 85: Identifying MOST Network Control Modules (Up To Eight)
Courtesy of VOLVO CARS CORPORATION

Model year 2011-

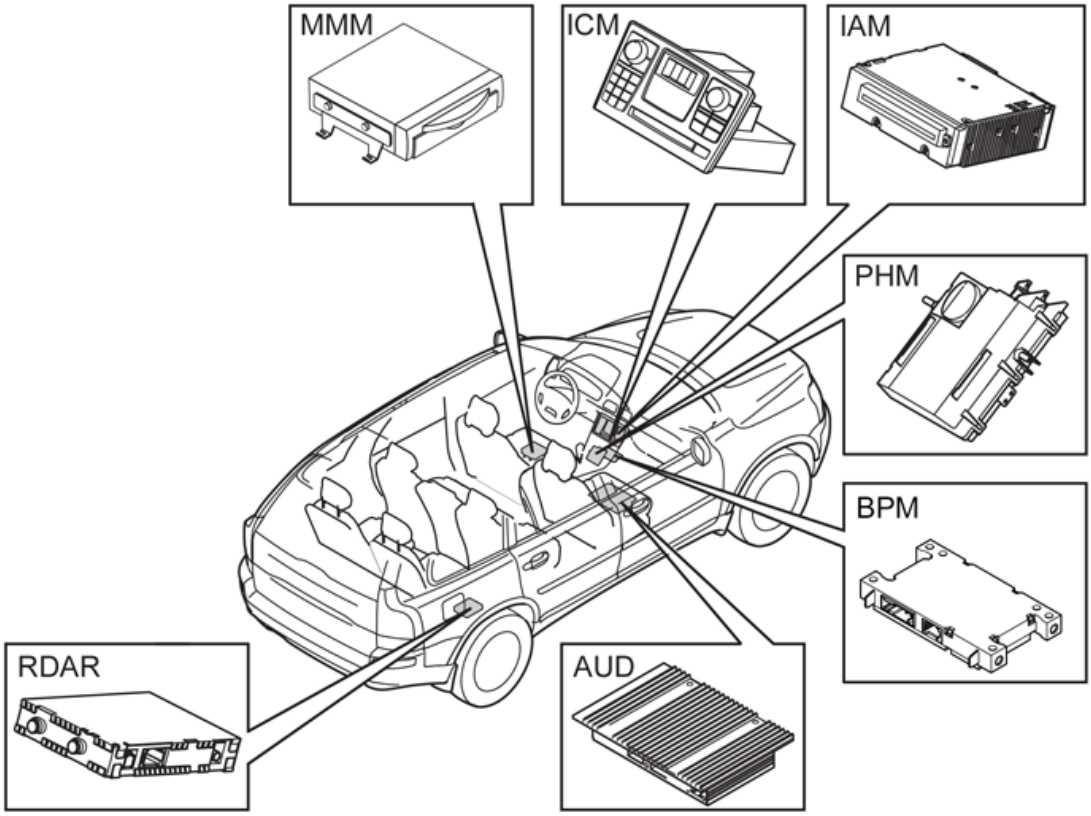

Fig. 86: Identifying MOST Network Control Modules (Up To Seven)
Courtesy of VOLVO CARS CORPORATION

The MOST network can consist of up to seven different control modules.

The infotainment control module (ICM) deals with monitoring and communication on the MOST network. The infotainment control module (ICM) is in turn monitored by the central electronic module (CEM) on the CAN network.

From the Infotainment Control Module (ICM), the Integrated Audio Module (IAM) is included as standard on the MOST network.

The table below lists all the control modules which may be included in the MOST network.

Explanation

CAN = Controller Area Network, electrical network for communication.

LS CAN = CAN low-speed side

MOST = Media Oriented Systems Transport, fiber optic network for communication.

Master control module = Control module which monitors the MOST network.

Slave control module = Control module which supplies the MOST network functions.

Option = Factory installed accessories, during the purchase of a new car.

Accessory = After market installation.

Control module	Function	Communication	Miscellaneous
Infotainment control module (ICM)	Monitors the MOST network.	Master control module, connected to both the LS CAN and the MOST network	Included in the standard set-up of the MOST network. Must be connected to the MOST network to function.
Remote Digital Audio Receiver (RDAR)	Receives and decodes digital radio signals. Has a directly connected antenna.	Slave module on the MOST network.	Option, accessory. Only USA/CDN.
Phone module (PHM)	Controls carphone functions.	Connected to the LS CAN and is a slave module on the MOST network.	Option, accessory. The audio module (AUD) must be connected to the MOST network for the Phone module (PHM) to function.
Audio module (AUD)	Amplifier to which all speakers except the subwoofer module (SUB) are connected.	Slave module on the MOST network.	Option, accessory. Included in sound systems High Performance and Premium Sound.
Multimedia module (MMM)	Displays traffic information on the directly connected display screen. GPS receiver for determining the position of the vehicle.	Slave module on the MOST network.	Option, accessory.
Global positioning system module (GPS)	Calculates the vehicle's position using a GPS signal. Has directly connected GPS antenna.	Slave module on the MOST network.	Option, accessory. The global positioning system module (GPS) is only connected if the vehicle is equipped with telematics but does not have a Multimedia module (MMM).
Integrated Audio	Has its own AM/FM aerial. The performance model has 4 loudspeakers. For the High performance	Slave module on the MOST	Included in the standard set-up of the MOST

Module (IAM)	and Premium Sound models, the audio module (AUD) is required.	network.	network.
Accessory USB unit (AUU)	Enables listening to the customer's portable media players in the vehicle's speaker system via USB-port.	Slave module on the MOST network.	Option, accessory.
Bluetooth phone module (BPM)	Functions as a wireless link between the vehicle's infotainment system and driver's or passenger's mobile telephone equipped with Bluetooth technology.	Slave module on the MOST network.	Option, accessory.

FAULT MANAGEMENT ON MOST NETWORK

GENERAL

The MOST network is monitored by the infotainment control module (ICM). If it detects a fault in the MOST network, a diagnostic trouble code (DTC) is stored in the infotainment control module (ICM). There are different types of diagnostic trouble codes (DTCs) depending on the type of fault. A general rule is that if the light pulse in the MOST network disappears, the entire network stops working.

Fault types which are processed are:

- no communication from a control module
- faulty communication on the MOST network.

NO COMMUNICATION FROM A CONTROL MODULE

The infotainment control module (ICM) knows which control modules are connected to the MOST network. If any control module on the MOST network ceases to communicate, a diagnostic trouble code (DTC) is stored in the infotainment control module (ICM). There is a diagnostic trouble code (DTC) for every control module on the MOST network for this fault.

Missing communication may be due to an internal fault in the control module or because the function is incorrectly implemented in the control module.

FAULTY COMMUNICATION

Diagnostic trouble code (DTC) ICM-DC00 is stored in the event of an internal fault in the infotainment control module (ICM) preventing the transmitting and receiving diodes from sending sound pulses on the MOST network.

For faults when messages cannot be sent on the MOST network, diagnostic trouble code (DTC) ICM-DC02 is stored.

Causes of this fault may be that:

- a control module, except the infotainment control module (ICM), has a defective optical connector
- a control module has an internal fault which means that the optical connection stops working
- a control module on the MOST network is not powered. If there is no power supply, the optical connecter stops transmitting light
- the optical cable is damaged or there is an open-circuit. This fault can occur if the bend radius of the cable is too small or if the cable is kinked or trapped
- there is dirt or oil on the optical connectors which impedes the light
- the connection to a control module has come loose
- the fiber optic terminals in the connector are cross-connected
- there is a loose connection because the fiber optical wiring is incorrectly installed or the fiber optic terminal pin has been pressed back in the connector
- a bridging connector has come loose or is damaged.

Ring break diagnostics are used to remedy diagnostic trouble code (DTC) ICM-DC02. If a break is discovered in the MOST network after running a ring break diagnostic, diagnostic trouble code (DTC) ICM-DC01 will be stored in the infotainment control module (ICM). If this is the case, the position of the open-circuit and control module location, can be read off from the infotainment control module (ICM).

RING BREAK DIAGNOSTICS

General

This function is important when fault-tracing the MOST network. Ring break diagnostics are used when there is an open-circuit in the MOST network and diagnostic trouble code (DTC) ICM-DC02 has been stored in the infotainment control module (ICM).

During a ring break diagnostic, all control modules transmit a message to the infotainment control module (ICM) in reverse order to their position on the MOST network. This means that the Integrated Audio Module (IAM) transmits first, not last.

The control module which is not working will not transmit a response to the infotainment control module (ICM). This also means that the control modules which are connected before the defective control module will be unable to transmit a message to the infotainment control module (ICM).

The same applies in the event of an open-circuit in the fiber optic cable in the MOST network. None of the control modules before the open-circuit will be able to send their message to the infotainment control module (ICM). The infotainment control module (ICM) is then able to calculate the position of the open-circuit from the incoming messages.

HINT: It is important to know which control modules are connected and in what order to identify the control module which sends each message.

Example

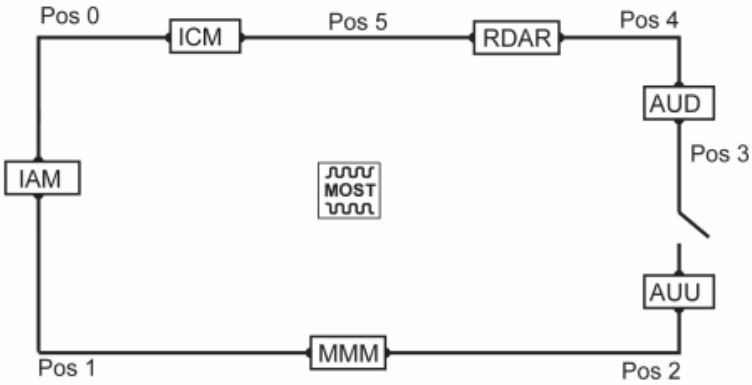

Fig. 87: Identifying An Open Circuit Between The Audio Module (AUD) And The Accessory USB Unit (AUU)
Courtesy of VOLVO CARS CORPORATION

A MOST network with all control modules.

An open circuit occurs on the cable between the Audio module (AUD) and the Accessory USB unit (AUU), see figure.

The infotainment control module (ICM) receives responses up to and including the Accessory USB unit (AUU) and presents the value 3.

If there was no open-circuit, the infotainment control module (ICM) would have responded "OK.

MOST-NETWORK

GENERAL

MOST (Media Oriented Systems Transport) is a standardized network communication system for multimedia applications. The MOST protocol is optimized for fiber optic communication. This means that signals are sent as light pulses.

MOST DATA

The MOST protocol determines how light pulses or their absence should be interpreted. Each pulse or absent pulse is called a "bit". The number of "bits" transmitted on the MOST network is 24.8 million per second (24.8 Mbit/s).

A bit can be:

- binary 0, i. e. no light pulse
- binary 1, i. e. light pulse.

The light pulses are transmitted in data frames. A data frame consists of different types of data. The size of a data frame is 64 bytes, which is 64 x 8 = 512 bits.

The data frame has a frequency of 48 kHz. This means that 48000 data frames are sent per second on the MOST network.

The data types which are included in a data frame sent on the MOST network are:

- control data
- synchronous data
- asynchronous data
- administrative data.

Control data

Control data is used to check and to allocate the functions to the control modules and the functions in the MOST network.

The control data message is transmitted from, for example, the infotainment control module (ICM) to another specific control module.

The control data message automatically checks if the receiver has received the signal and that the entire message has been correctly transmitted between the transmitting and receiving control modules.

The size of the control data is 2 bytes per data frame. A block, which consists of 16 data frames, is required for a control message to be sent. This means that the total size of the control message is 32 bytes. A control message is the minimum size of a message to activate or deactivate functions on the MOST network.

Examples of MOST messages are track changes or stop commands on the CD player.

Up to 1000 control data messages can be sent per second.

Synchronous data

Synchronous data is used to transmit data which requires considerable quantities of data in real time, for example to play back sound to the Audio Module (AUD).

The length of the synchronous data message which can be sent may be up to 60 bytes per data frame, although never less than 24 bytes. This gives a transfer rate of up to 23 Mbits per second for data transmitted as synchronous data.

Synchronous data shares the data frame with asynchronous data. The infotainment control module (ICM) controls which control modules transmit synchronous data and which are receivers.

Asynchronous data

Asynchronous data is used to send large quantities of data, such as TCP/IP and digital images, but not in real

time.

The length of the message can be up to 36 bytes (synchronous data minimum 24 bytes + asynchronous data 36 bytes = 60 bytes). This gives a maximum transfer rate of 14 Mbits per second. When the message has been sent, a check is run to ensure that is has been correctly received.

Asynchronous data shares the data frame with synchronous data. The infotainment control module (ICM) controls which control modules transmit asynchronous data and which are receivers.

Administrative data

Administrative data consists of two parts.

The first part is at the start of the data frame. This describes how much of the transmitted data is synchronous and how much is asynchronous.

The second part is at the end of the data frame. This part checks that the control modules on the MOST network are working correctly.

The size of administrative data is 2 bytes.

MOST DATA FRAME

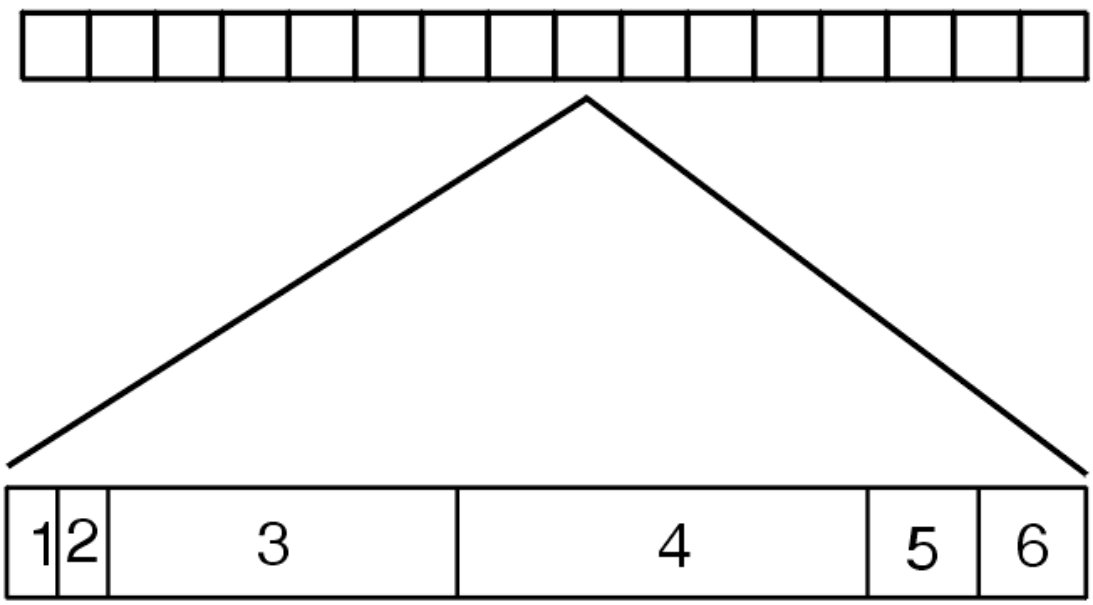

Fig. 88: Identifying MOST Data Frame

Courtesy of VOLVO CARS CORPORATION

A data frame consists of different parts. This contains for example:

- control data
- asynchronous data
- synchronous data
- administrative data.

A data frame on the MOST network is 64 bytes. The data frame consists of the following:

1. synchronization of the clock on the MOST network, i. e. the frequency at which data is transmitted so that the data is sent at the correct intervals
2. administrative data, indicates the size of the asynchronous and synchronous data
3. synchronous data
4. asynchronous data
5. control data
6. administrative data.

16 data frames are required to form a block. One block is the minimum size of a MOST message.

MOST PROTOCOL

All activations on the MOST network are control messages or MOST messages. The majority of the MOST messages are initiated by the infotainment control module (ICM). The infotainment control module (ICM) informs certain control modules if a function in the control module must be activated. The infotainment control module (ICM) then allocates space to transmit data on the MOST network for those activations which have been initiated in the control modules. This is either synchronous or asynchronous data. The structure of a message is as follows:

- DeviceID. FBlockID. InstID. FktID. OPType

This means:

- DeviceID - ID-number of one or several control modules in the network
- FBlockID - ID-number of a function unit, for example, the CD-function in the integrated audio module (IAM)
- InstID - ID-number to separate identical function units, e. g., two CD-control modules in the MOST-net
- FktID - ID-number for the function that is to be performed, e. g., play or stop
- OPType - Specifies how function is to be used, since a function can be used in different ways.

The message may appear as follows:

- IAM. CD.01. Track, Length. Set(10)

This means: play song number 10 on the CD player in the Integrated Audio Module (IAM).

The infotainment control module (ICM) knows which control modules are in the MOST network. It can then assign specific ID numbers to all control modules and the included functions. If control modules are removed or added, the ID numbers for the control modules are re-assigned.

CALCULATING THE TRANSFER RATE

The number of "ones" and "zeros" transmitted per second determines the transfer rate.

The number of data frames multiplied by the clock frequency of a frame gives the transfer rate.

Example

The maximum transfer rate of asynchronous data:

Bit = a binary 1 or 0

Byte = 8 bit

Maximum asynchronous data = 36 byte

This gives: 36 x 8 = 288 bit

The clock frequency for a data frame = 48 kHz

The maximum number of bits of asynchronous data x clock frequency for a frame: 288 x 48000 = 14 Mbit/s.

SOFTWARE DOWNLOADS ON THE MOST NETWORK

The concept for downloading software is the same as for the CAN network. The CAN uses a PBL (primary boot loader) which is permanently installed in the control module, and a secondary program loading file (SBL - secondary boot loader) which is downloaded into a RAM while the control module is being programmed.

When downloading software for the MOST control modules, a third type of download module is used, GBL (Gateway boot loader). For downloads to the MOST control modules to work, the GBL must be loaded into the infotainment control module (ICM). SBL is used to program the infotainment control module (ICM), in the same way for all other CAN control modules.

GBL downloading

A PROG command is transmitted on the CAN network to all control modules including the infotainment control module (ICM). This command sets all the control modules to reset mode. Before the infotainment control module (ICM) switches to reset mode, it switches off the light to all MOST control modules.

The GBL is then downloaded to a RAM memory in the infotainment control module (ICM). The GBL is then activated and the infotainment control module (ICM) transmits light pulses on the MOST network. The GBL now functions as a connection between the CAN and MOST networks. The GBL sets the MOST control

modules to programming mode. All the control modules on the MOST and CAN networks can then be addressed in the same way to download software.

In the event of a total software reload for the control modules on the MOST network, select the MOST network option. Select CAN network for control modules on the controller area network (CAN).

SECURITY ON MOST

This function is used to ensure that all control modules on the MOST network can be used. When the MOST network starts up, ignition position I, II or III, the infotainment control module (ICM) checks that all control modules on the MOST network have approved serial numbers. If the infotainment control module (ICM) detects that one or more control modules do not have approved serial numbers, these modules will be set to disable mode. This means that the control module functions cannot be used in the MOST network. The control module only acts as a conduit for the light pulses.

It takes 30 seconds for the infotainment control module (ICM) to check the control modules. This means that non-approved control modules will be disabled after 30 seconds.

NETWORK DESIGN

GENERAL

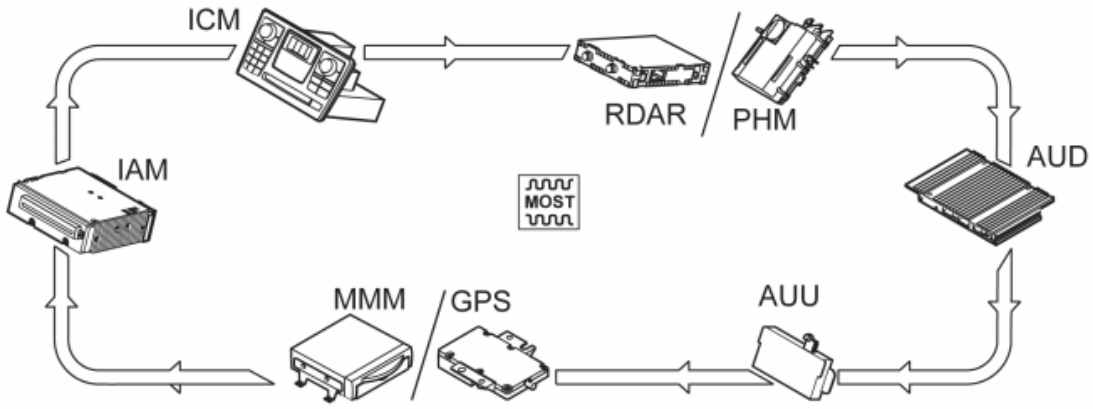

Fig. 89: Identifying MOST Network Control Modules (Up To Eight)
Courtesy of VOLVO CARS CORPORATION

Model year 2011-

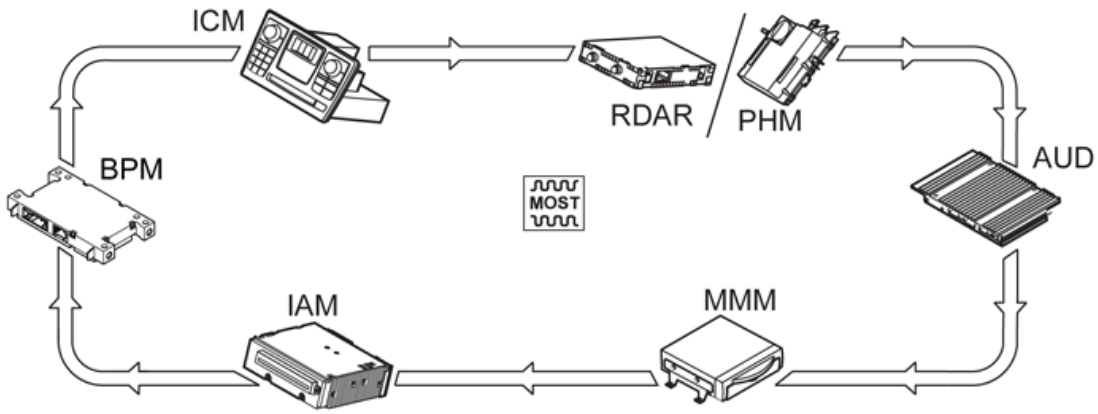

Fig. 90: Identifying MOST Network Control Modules (Up To Seven)
Courtesy of VOLVO CARS CORPORATION

The MOST network is an optical network in which all control modules included are connected in a ring. All messages in the MOST network travel in one and the same direction from the infotainment control module (ICM) to the integrated audio module (IAM).

In a fiber optic network, light pulses are transmitted instead of electrical signals. The light pulses are interpreted in the same way as the electrical signals on the CAN network.

The MOST network uses the master-slave concept. This means that a master control module, infotainment control module (ICM) has overall control of communication on the MOST network.

The fiber optic cable is made of plastic. Communication is using red light on a wavelength of 650 nm.

THE OPTICAL CONNECTOR

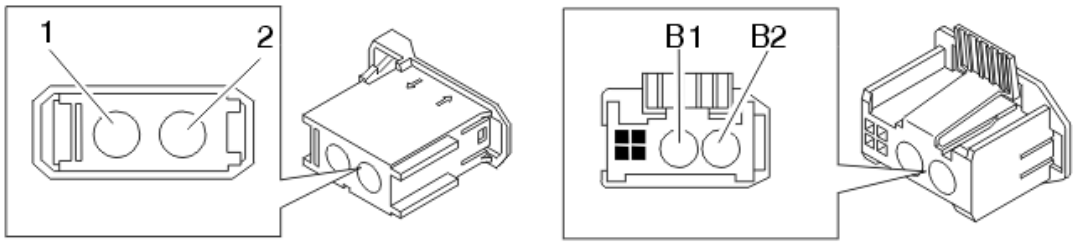

Fig. 91: Identifying Optical Connector
Courtesy of VOLVO CARS CORPORATION

Terminal	Signal type	Miscellaneous
1 / B1	Optical input signal	Input signal for MOST communication
2 / B2	Optical output signal	Output signal for MOST communication

Each control module in the MOST network has an optical connector which consists of two diodes, a sender diode and a receiver diode. These transmit and receive light pulses.

The actual communication between two control modules is as follows. A sender diode transmits the message as a light pulse. This is transmitted from the control module via the MOST network to a photo-optical receiver diode in the receiving control module.

The two optical terminals in the connector are numbered in the same way on all control modules in the MOST network. The size of the plastic housing for the two optical terminals varies. A connector with integrated power supply is integrated with the optical terminals and one connector with only the optical terminals.

MOST COMMUNICATION

All messages are transmitted as light pulses in the same direction on the MOST network. This means that if other control modules are connected between the two control modules which are communicating, the light pulses pass through these with no effect on the information. The control modules which are passed through amplify the light pulse so that it does not become too weak.

A control module with an internal fault can be set to bypass mode. In this mode, the light pulses are sent straight through the control module without the control module amplifying the light pulse. This means that the distance before the light pulse is amplified is longer and therefore the luminance is weaker. If the light pulse is too weak, it cannot be received by the receiving control module.

The infotainment control module (ICM) is the gateway between the MOST and CAN networks for communication to and from control modules connected on the CAN network.

The infotainment control module (ICM) monitors the communication on the MOST network. This involves distributing sound channels on the MOST network, so that sound data can be distributed from, for example, the Remote Digital Audio Receiver (RDAR) to the Integrated Audio Module (IAM). The majority of activations on the MOST network are initiated by the infotainment control module (ICM).

The infotainment control module (ICM) also manages diagnostic trouble codes (DTCs) on the MOST network.

If a control module on the MOST network stops working and is unable to transmit light pulses onwards, or if there is an open-circuit in the fiber optic cable, the entire MOST network will stop working. This means that all the control modules on the MOST network will stop working. For further information about remedying this, see: **FAULT MANAGEMENT ON MOST NETWORK**

The infotainment control module (ICM) must always be connected on the MOST network for communication on the MOST network to work.

The MOST network connections increase and the signal routing may change when control modules are added because adapter wiring is used to connect the new control module.

LOCATION OF CONTROL MODULES ON THE MOST NETWORK

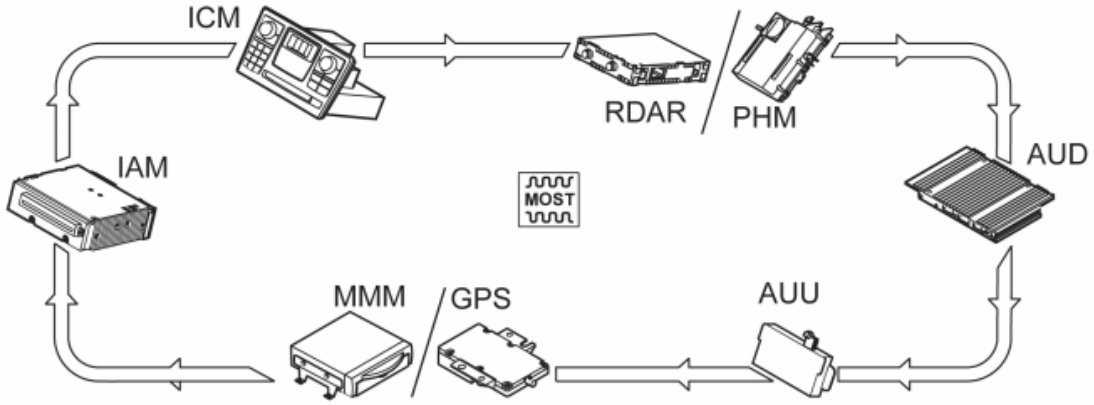

Fig. 92: Identifying MOST Network Control Modules (Up To Eight)
Courtesy of VOLVO CARS CORPORATION

Model year 2011-

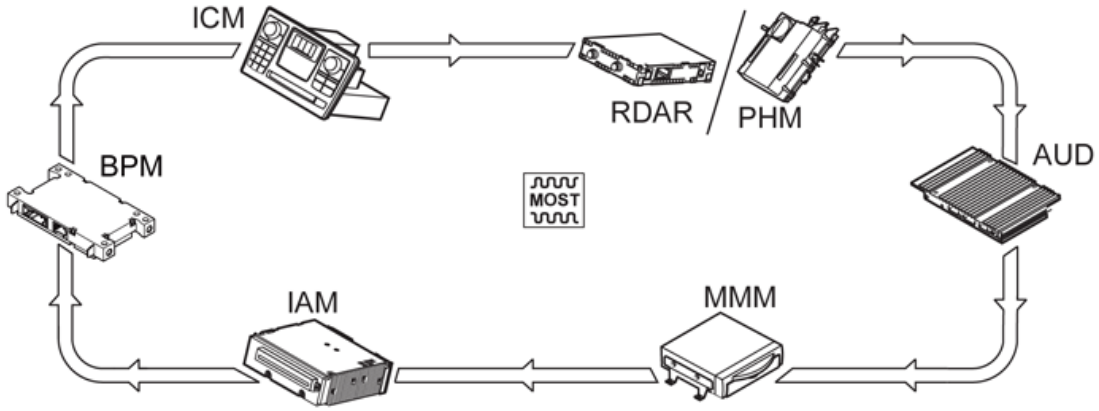

Fig. 93: Identifying MOST Network Control Modules (Up To Seven)
Courtesy of VOLVO CARS CORPORATION

NOTE: **The control modules on the MOST network should be positioned in a particular order. If this order is not followed, the fault-tracing of the MOST network will be more difficult.**

When a control module is added to the MOST network, it should be placed in the correct order on the network to make it easier to fault-trace the control modules.

If the control modules are connected in another order, this does not effect the function of the MOST network, but fault-tracing will be more difficult.

The control modules should be placed in the following order:

1. Infotainment control module (ICM)
2. The Remote Digital Audio Receiver (RDAR)/Phone module (PHM)
3. Audio module (AUD)

4. Accessory USB unit (AUU)
5. Multimedia module (MMM)/Global positioning system module (GPS)
6. Integrated Audio Module (IAM)

Model year 2011-

The following order applies to model year 2011 onwards:

1. Infotainment control module (ICM)
2. Remote Digital Audio Receiver (RDAR)
3. Phone module (PHM)
4. Audio module (AUD)
5. Multimedia module (MMM)
6. Integrated Audio Module (IAM)
7. Bluetooth phone module (BPM)

If the minimum configuration of control modules on the MOST network in the car is used, the following control modules are connected:

- infotainment control module (ICM)
- Integrated Audio Module (IAM)

THE NETWORK

GENERAL

The increasing requirements of extended functionality in vehicles has underpinned the development of systems with better performance and more functions. The MOST network is a result of this development.

The MOST network is a fiber optic network which allows a high number of different commands and messages to be sent and received on the same cable and in the same direction.

By using a fiber optic network, functionality is extended without increasing the amount of wiring.

The number of commands and messages which can be handled on the network depends on factors such as the network speed and the length of the message or command. The MOST network which is used in Volvo cars has the capacity to transmit over 300 message types and approximately 1000 messages per second. The transfer rate on the MOST network is approximately 25 Mbit/s.

ADVANTAGES OF AN OPTICAL NETWORK

- electrical short-circuits are not possible on the MOST network. This reduces the risk of damage to control modules connected to the network
- As an optical network, the MOST network does not have problems with EMC (Electro Magnetic Compatibility)

- the wiring is not sensitive to electrical cross-induction from other wiring
- The transfer speed of the MOST network is much higher than the CAN network
- it is easy to add further functions and to install accessories, known as plug and play units.

The control modules in the network are connected to each other and are constructed so that more functionality can be easily added. All that is required to increase functionality is:

- to connect the sensors to the nearest control module
- to connect the controlled component to the nearest control module
- to download software to change the configuration and programming of the network.

MOST NETWORK (2007-2008)

CONTROL MODULES IN MOST NETWORK

MOST-NETWORK

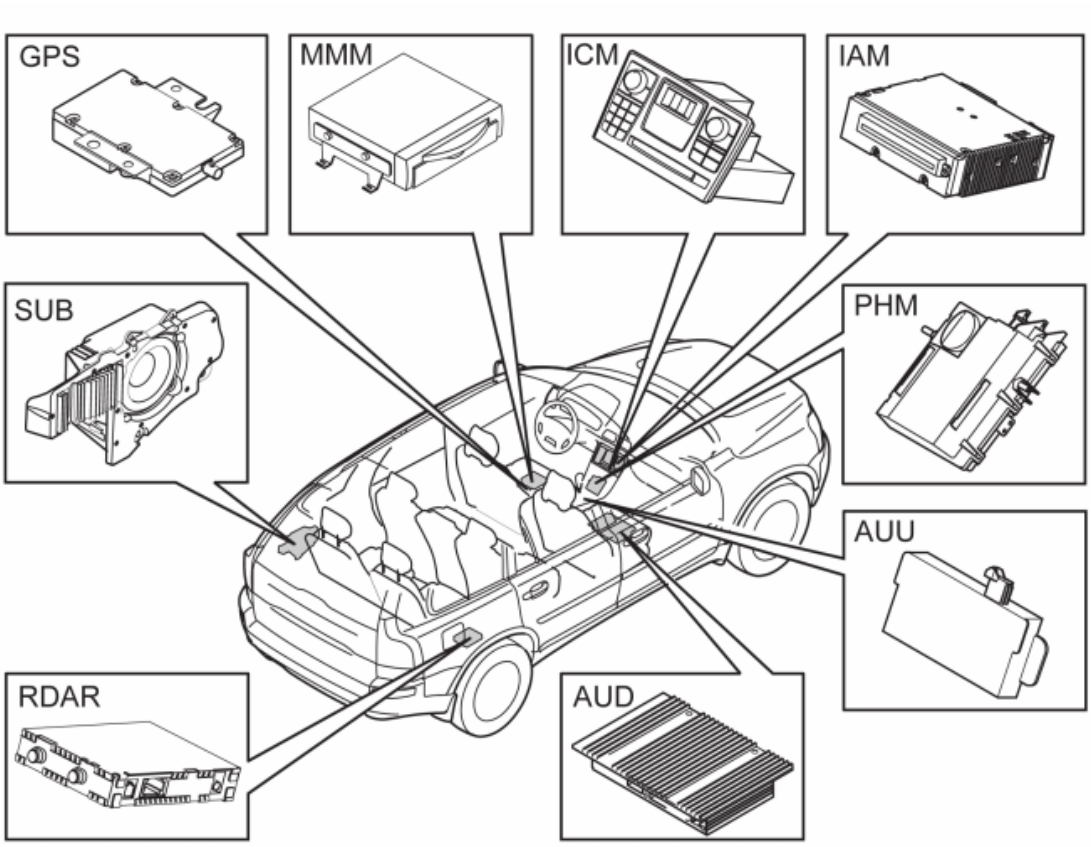

Fig. 94: Control Modules In MOST Network
Courtesy of VOLVO CARS CORPORATION

The MOST network can consist of up to seven different control modules.

The infotainment control module (ICM) deals with monitoring and communication on the MOST network. The infotainment control module (ICM) is in turn monitored by the central electronic module (CEM) on the CAN network.

From the Infotainment Control Module (ICM), the Integrated Audio Module (IAM) is included as standard on the MOST network.

The table below lists all the control modules which may be included in the MOST network.

Explanation

CAN = Controller Area Network, electrical network for communication.

LS CAN = low speed side of the CAN

MOST = Media Oriented Systems Transport, fiber optic network for communication.

Master control module = Control module which monitors the MOST network.

Slave control module = Control module which supplies the MOST network functions.

Option = Factory installed accessories, during the purchase of a new car.

Accessory = After market installation.

Control module	Function	Communication	Miscellaneous
Infotainment control module (ICM)	Monitors the MOST network.	Master control module, connected to both the LS CAN and the MOST network	Included in the standard set-up of the MOST network. Must be connected to the MOST network to function.
Remote Digital Audio Receiver (RDAR)	Receives and decodes digital radio signals. Has a directly connected antenna.	Slave module on the MOST network.	Option, accessory. Only USA/CDN.
Phone module (PHM)	Controls carphone functions.	Connected to the LS CAN and is a slave module on the MOST network.	Option, accessory. The audio module (AUD) must be connected to the MOST network for the Phone module (PHM) to function.
Audio module (AUD)	Amplifier to which all speakers except the subwoofer module (SUB) are connected.	Slave module on the MOST network.	Option, accessory. Included in sound systems High Performance and Premium Sound.

Multimedia module (MMM)	Displays traffic information on the directly connected display screen. GPS receiver for determining the position of the vehicle.	Slave module on the MOST network.	Option, accessory.
Global positioning system module (GPS)	Calculates the vehicle's position using a GPS signal. Has directly connected GPS antenna.	Slave module on the MOST network.	Option, accessory. The global positioning system module (GPS) is only connected if the vehicle is equipped with telematics but does not have a Multimedia module (MMM).
Integrated Audio Module (IAM)	Has its own AM/FM aerial. The performance model has 4 loudspeakers. For the High performance and Premium Sound models, the audio module (AUD) is required.	Slave module on the MOST network.	Included in the standard set-up of the MOST network.
Accessory USB unit (AUU)	Enables listening to the customer's portable media players in the vehicle's speaker system via USB-port.	Slave module on the MOST network.	Option, accessory. Applies from and incl. structure week 200709.
Subwoofer module (SUB)	Amplifier and bass speakers integrated in the same unit.	Slave module on the MOST network.	Option, accessory. The audio module (AUD) must be connected to the MOST network for the subwoofer module (SUB) to function.

FAULT MANAGEMENT ON MOST NETWORK

GENERAL

The MOST network is monitored by the infotainment control module (ICM). If it detects a fault in the MOST network, a diagnostic trouble code (DTC) is stored in the infotainment control module (ICM). There are different types of diagnostic trouble codes (DTCs) depending on the type of fault. A general rule is that if the light pulse in the MOST network disappears, the entire network stops working.

Fault types which are processed are:

- no communication from a control module
- faulty communication on the MOST network.

NO COMMUNICATION FROM A CONTROL MODULE

The infotainment control module (ICM) knows which control modules are connected to the MOST network. If any control module on the MOST network ceases to communicate, a diagnostic trouble code (DTC) is stored in the infotainment control module (ICM). There is a diagnostic trouble code (DTC) for every control module on the MOST network for this fault.

Missing communication may be due to an internal fault in the control module or because the function is incorrectly implemented in the control module.

FAULTY COMMUNICATION

Diagnostic trouble code (DTC) ICM-DC00 is stored in the event of an internal fault in the infotainment control module (ICM) preventing the transmitting and receiving diodes from sending sound pulses on the MOST network.

For faults when messages cannot be sent on the MOST network, diagnostic trouble code (DTC) ICM-DC02 is stored.

Causes of this fault may be that:

- a control module, except the infotainment control module (ICM), has a defective optical connector
- a control module has an internal fault which means that the optical connection stops working
- a control module on the MOST network is not powered. If there is no power supply, the optical connecter stops transmitting light
- the optical cable is damaged or there is an open-circuit. This fault can occur if the bend radius of the cable is too small or if the cable is kinked or trapped
- there is dirt or oil on the optical connectors which impedes the light
- the connection to a control module has come loose
- the fiber optic terminals in the connector are cross-connected
- there is a loose connection because the fiber optical wiring is incorrectly installed or the fiber optic terminal pin has been pressed back in the connector
- a bridging connector has come loose or is damaged.

Ring break diagnostics are used to remedy diagnostic trouble code (DTC) ICM-DC02. If a break is discovered in the MOST network after running a ring break diagnostic, diagnostic trouble code (DTC) ICM-DC01 will be stored in the infotainment control module (ICM). If this is the case, the position of the open-circuit and control module location, can be read off from the infotainment control module (ICM).

RING BREAK DIAGNOSTICS

General

This function is important when fault-tracing the MOST network. Ring break diagnostics are used when there is an open-circuit in the MOST network and diagnostic trouble code (DTC) ICM-DC02 has been stored in the infotainment control module (ICM).

During a ring break diagnostic, all control modules transmit a message to the infotainment control module (ICM) in reverse order to their position on the MOST network. This means that the Subwoofer module (SUB) transmits first, not last.

The control module which is not working will not transmit a response to the infotainment control module (ICM). This also means that the control modules which are connected before the defective control module will be unable to transmit a message to the infotainment control module (ICM).

The same applies in the event of an open-circuit in the fiber optic cable in the MOST network. None of the control modules before the open-circuit will be able to send their message to the infotainment control module (ICM). The infotainment control module (ICM) is then able to calculate the position of the open-circuit from the incoming messages.

HINT: It is important to know which control modules are connected and in what order to identify the control module which sends each message.

Example 1 (up to and incl. structure week 200708)

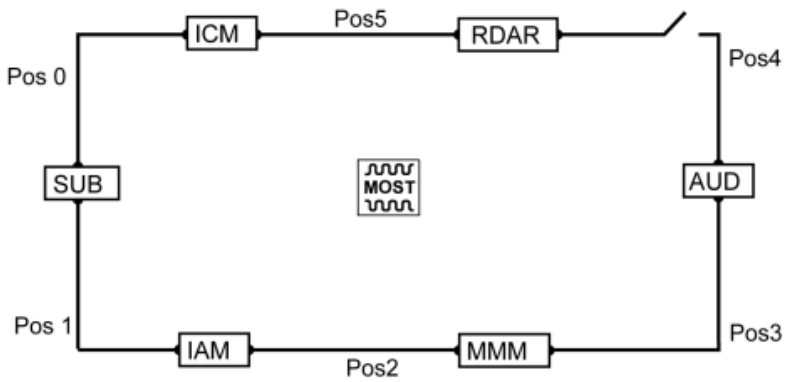

Fig. 95: Identifying Open-Circuit Between The Remote Digital Audio Receiver (RDAR) And The Audio Module (AUD)
Courtesy of VOLVO CARS CORPORATION

A MOST network contains 6 control modules. There is an open-circuit in the cable between the Remote Digital Audio Receiver (RDAR) and the audio module (AUD). See the illustration.

During the ring break diagnostic, the infotainment control module (ICM) receives responses in reverse order to the order of the control modules on the MOST network.

The Remote Digital Audio Receiver (RDAR), located after the Audio module (AUD) cannot transmit its response to the Infotainment control module (ICM). The infotainment control module (ICM) receives responses up to position four and presents the value 4.

If there was no open-circuit, the infotainment control module (ICM) would have responded "OK.

Example 2 (from and incl. structure week 200709)

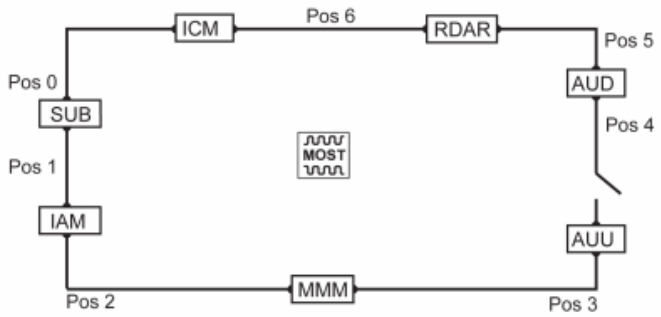

Fig. 96: Identifying An Open Circuit Between The Audio Module (AUD) And The Accessory USB Unit (AUU)
Courtesy of VOLVO CARS CORPORATION

A MOST network with all control modules.

An open circuit occurs on the cable between the Audio module (AUD) and the Accessory USB unit (AUU), see figure.

The infotainment control module (ICM) receives responses up to and including the Accessory USB unit (AUU) and presents the value 4.

If there was no open-circuit, the infotainment control module (ICM) would have responded "OK.

MOST NETWORK

GENERAL

MOST (Media Oriented Systems Transport) is a standardized network communication system for multimedia applications. The MOST protocol is optimized for fiber optic communication. This means that signals are sent as light pulses.

MOST DATA

The MOST protocol determines how light pulses or their absence should be interpreted. Each pulse or absent pulse is called a "bit". The number of "bits" transmitted on the MOST network is 24.8 million per second (24.8 Mbit/s).

A bit can be:

- binary 0, i. e. no light pulse

- binary 1, i. e. light pulse.

The light pulses are transmitted in data frames. A data frame consists of different types of data. The size of a data frame is 64 bytes, which is 64 x 8 = 512 bits.

The data frame has a frequency of 48 kHz. This means that 48000 data frames are sent per second on the MOST network.

The data types which are included in a data frame sent on the MOST network are:

- control data
- synchronous data
- asynchronous data
- administrative data.

Control data

Control data is used to check and to allocate the functions to the control modules and the functions in the MOST network.

The control data message is transmitted from, for example, the infotainment control module (ICM) to another specific control module.

The control data message automatically checks if the receiver has received the signal and that the entire message has been correctly transmitted between the transmitting and receiving control modules.

The size of the control data is 2 bytes per data frame. A block, which consists of 16 data frames, is required for a control message to be sent. This means that the total size of the control message is 32 bytes. A control message is the minimum size of a message to activate or deactivate functions on the MOST network.

Examples of MOST messages are track changes or stop commands on the CD player.

Up to 1000 control data messages can be sent per second.

Synchronous data

Synchronous data is used to transmit data which requires considerable quantities of data in real time, for example to play back sound to the Audio Module (AUD).

The length of the synchronous data message which can be sent may be up to 60 bytes per data frame, although never less than 24 bytes. This gives a transfer rate of up to 23 Mbits per second for data transmitted as synchronous data.

Synchronous data shares the data frame with asynchronous data. The infotainment control module controls which control modules transmit synchronous data and which are receivers.

Asynchronous data

Asynchronous data is used to send large quantities of data, such as TCP/IP and digital images, but not in real time.

The length of the message can be up to 36 bytes. This gives a maximum transfer rate of 14 Mbits per second. When the message has been sent, a check is run to ensure that is has been correctly received.

Asynchronous data shares the data frame with synchronous data. The infotainment control module controls which control modules transmit asynchronous data and which are receivers.

Administrative data

Administrative data consists of two parts.

The first part is at the start of the data frame. This describes how much of the transmitted data is synchronous and how much is asynchronous.

The second part is at the end of the data frame. This part checks that the control modules on the MOST network are working correctly.

The size of administrative data is 2 bytes.

MOST DATA FRAME

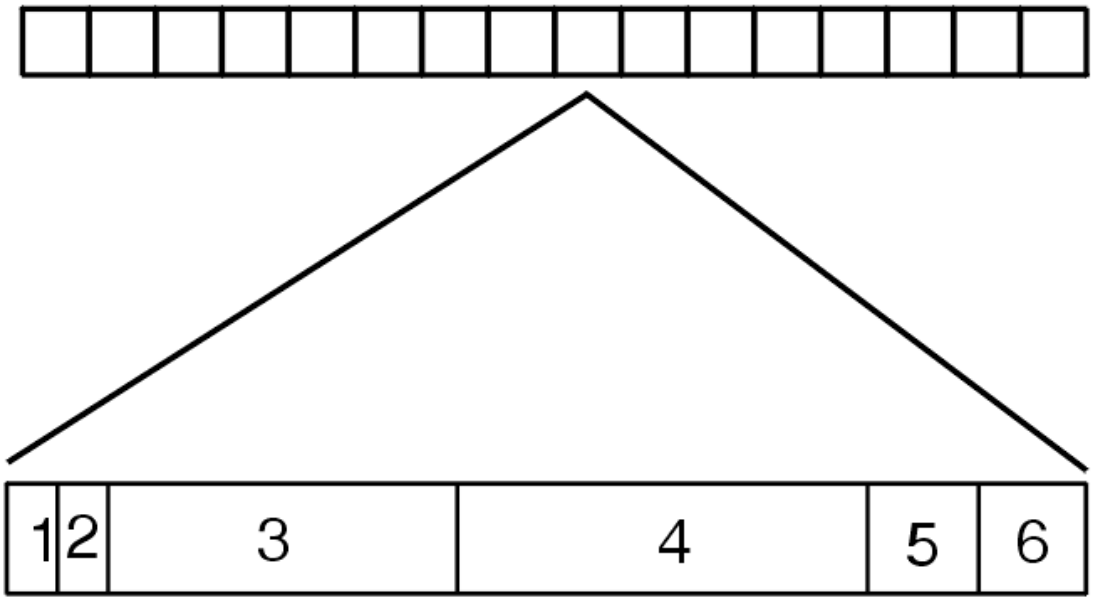

Fig. 97: Identifying MOST Data Frame
Courtesy of VOLVO CARS CORPORATION

A data frame consists of different parts. This contains for example:

- control data
- asynchronous data
- synchronous data and
- administrative data.

A data frame on the MOST network is 64 bytes. The data frame consists of the following:

1. synchronization of the clock on the MOST network, i. e. the frequency at which data is transmitted so that the data is sent at the correct intervals
2. administrative data, indicates the size of the asynchronous and synchronous data
3. synchronous data
4. asynchronous data
5. control data
6. administrative data.

16 data frames are required to form a block. One block is the minimum size of a MOST message.

MOST PROTOCOL

All activations on the MOST network are control messages or MOST messages. The majority of the MOST messages are initiated by the infotainment control module. The infotainment control module informs certain control modules if a function in the control module must be activated. The infotainment control module then allocates space to transmit data on the MOST network for those activations which have been initiated in the control modules. This is either synchronous or asynchronous data. The structure of a message is as follows:

-

This means:

- - The ID number of one of more control modules in the network
- - the ID number of a function unit, for example the CD function in the Integrated Audio Module
- - ID number to differentiate two identical function units, for example two CD control modules in the MOST network
- - The ID number of the function to be activated, for example play or stop
- - Specifies how the function is to be used, because a function can be used in different ways.

The message may appear as follows:

-

This means: play song number 10 on the CD player in the Integrated Audio Module (IAM).

The infotainment control module (ICM) knows which control modules are in the MOST network. It can then assign specific ID numbers to all control modules and the included functions. If control modules are removed or added, the ID numbers for the control modules are re-assigned.

CALCULATING THE TRANSFER RATE

The number of "ones" and "zeros" transmitted per second determines the transfer rate.

The number of data frames multiplied by the clock frequency of a frame gives the transfer rate.

Example

The maximum transfer rate of asynchronous data:

Bit = a binary 1 or 0

Byte = 8 bit

Maximum asynchronous data = 36 byte

This gives: 36 x 8 = 288 bit

The clock frequency for a data frame = 48 kHz

The maximum number of bits of asynchronous data x clock frequency for a frame: 288 x 48000 = 14 Mbit/s.

SOFTWARE DOWNLOADS ON THE MOST NETWORK

The concept for downloading software is the same as for the CAN network. The CAN uses a PBL (primary boot loader) which is permanently installed in the control module, and a secondary program loading file (SBL - secondary boot loader) which is downloaded into a RAM while the control module is being programmed.

When downloading software for the MOST control modules, a third type of download module is used, GBL (Gateway boot loader). For downloads to the MOST control modules to work, the GBL must be loaded into the infotainment control module (ICM). SBL is used to program the infotainment control module (ICM), in the same way for all other CAN control modules.

GBL downloading

A PROG command is transmitted on the CAN network to all control modules including the infotainment control module (ICM). This command sets all the control modules to reset mode. Before the infotainment control module (ICM) switches to reset mode, it switches off the light to all MOST control modules.

The GBL is then downloaded to a RAM memory in the infotainment control module (ICM). The GBL is then activated and the infotainment control module (ICM) transmits light pulses on the MOST network. The GBL now functions as a connection between the CAN and MOST networks. The GBL sets the MOST control modules to programming mode. All the control modules on the MOST and CAN networks can then be addressed in the same way to download software.

In the event of a total software reload for the control modules on the MOST network, select the MOST network option. Select CAN network for control modules on the controller area network (CAN).

SECURITY ON MOST

This function is used to ensure that all control modules on the MOST network can be used. When the MOST network starts up, ignition position I, II or III, the infotainment control module (ICM) checks that all control modules on the MOST network have approved serial numbers. If the infotainment control module (ICM) detects that one or more control modules do not have approved serial numbers, these modules will be set to disable mode. This means that the control module functions cannot be used in the MOST network. The control module only acts as a conduit for the light pulses.

It takes 30 seconds for the infotainment control module (ICM) to check the control modules. This means that non-approved control modules will be disabled after 30 seconds.

NETWORK DESIGN

GENERAL

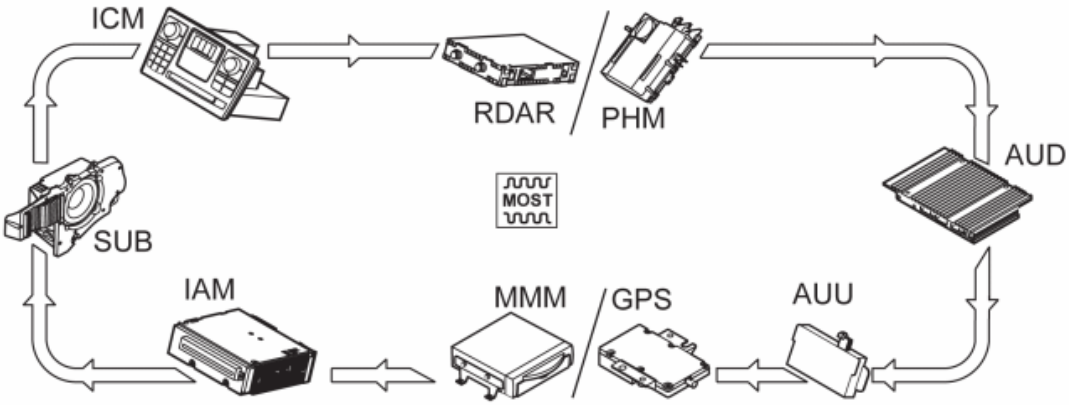

Fig. 98: Control Modules In MOST Network
Courtesy of VOLVO CARS CORPORATION

The MOST network is an optical network in which all control modules included are connected in a ring. All messages in the MOST network travel in one and the same direction from the infotainment control module (ICM) to the Subwoofer module (SUB).

In a fiber optic network, light pulses are transmitted instead of electrical signals. The light pulses are interpreted in the same way as the electrical signals on the CAN network.

The MOST network uses the master-slave concept. This means that a master control module, infotainment control module (ICM) has overall control of communication on the MOST network.

The fiber optic cable is made of plastic. Communication is using red light on a wavelength of 650 nm.

THE OPTICAL CONNECTOR

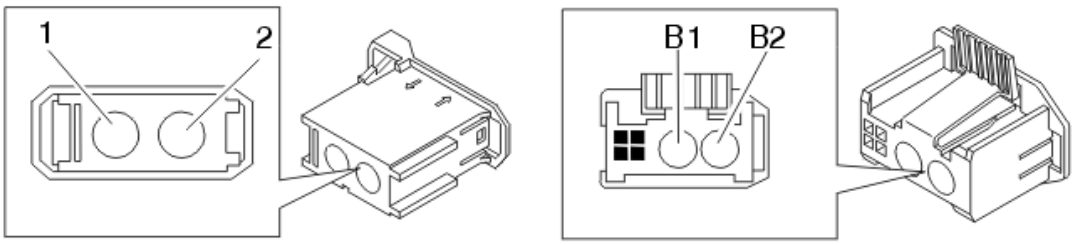

Fig. 99: Identifying Optical Connector
Courtesy of VOLVO CARS CORPORATION

Terminal	Signal type	Miscellaneous
1 / B1	Optical input signal	Input signal for MOST communication
2 / B2	Optical output signal	Output signal for MOST communication

Each control module in the MOST network has an optical connector which consists of two diodes, a sender diode and a receiver diode. These transmit and receive light pulses.

The actual communication between two control modules is as follows. A sender diode transmits the message as a light pulse. This is transmitted from the control module via the MOST network to a photo-optical receiver diode in the receiving control module.

The two optical terminals in the connector are numbered in the same way on all control modules in the MOST network. The size of the plastic housing for the two optical terminals varies. A connector with integrated power supply is integrated with the optical terminals and one connector with only the optical terminals.

MOST COMMUNICATION

All messages are transmitted as light pulses in the same direction on the MOST network. This means that if other control modules are connected between the two control modules which are communicating, the light pulses pass through these with no effect on the information. The control modules which are passed through amplify the light pulse so that it does not become too weak.

A control module with an internal fault can be set to bypass mode. In this mode, the light pulses are sent straight through the control module without the control module amplifying the light pulse. This means that the distance before the light pulse is amplified is longer and therefore the luminance is weaker. If the light pulse is too weak, it cannot be received by the receiving control module.

The infotainment control module (ICM) is the gateway between the MOST and CAN networks for communication to and from control modules connected on the CAN network.

The infotainment control module (ICM) monitors the communication on the MOST network. This involves distributing sound channels on the MOST network, so that sound data can be distributed from, for example, the Remote Digital Audio Receiver (RDAR) to the Integrated Audio Module (IAM). The majority of activations on the MOST network are initiated by the infotainment control module (ICM).

The infotainment control module (ICM) also manages diagnostic trouble codes (DTCs) on the MOST network.

If a control module on the MOST network stops working and is unable to transmit light pulses onwards, or if there is an open-circuit in the fiber optic cable, the entire MOST network will stop working. This means that all the control modules on the MOST network will stop working. For further information about remedying this, see: **FAULT MANAGEMENT ON MOST NETWORK**

The infotainment control module (ICM) must always be connected on the MOST network for communication on the MOST network to work.

The MOST network connections increase and the signal routing may change when control modules are added because adapter wiring is used to connect the new control module.

LOCATION OF CONTROL MODULES ON THE MOST NETWORK

Model year 2007 (up to and incl. structure week 200708)

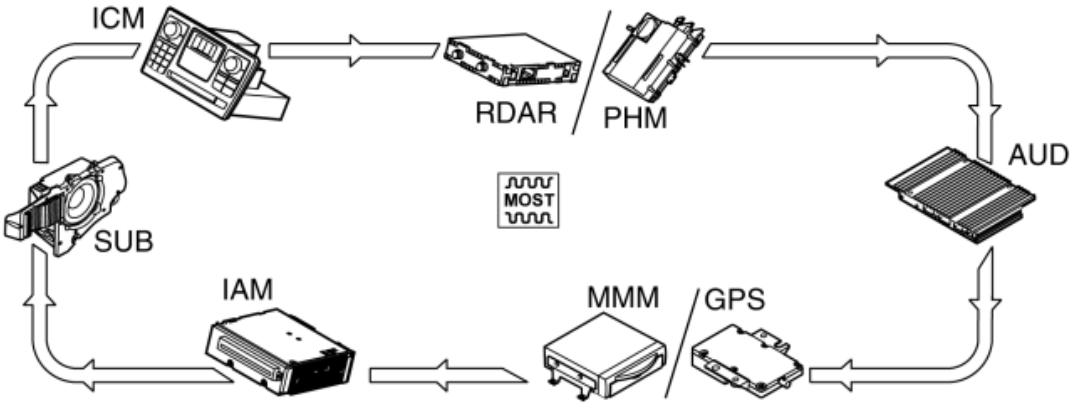

Fig. 100: Control Modules In MOST Network
Courtesy of VOLVO CARS CORPORATION

Model year 2007 (from and incl. structure week 200709)

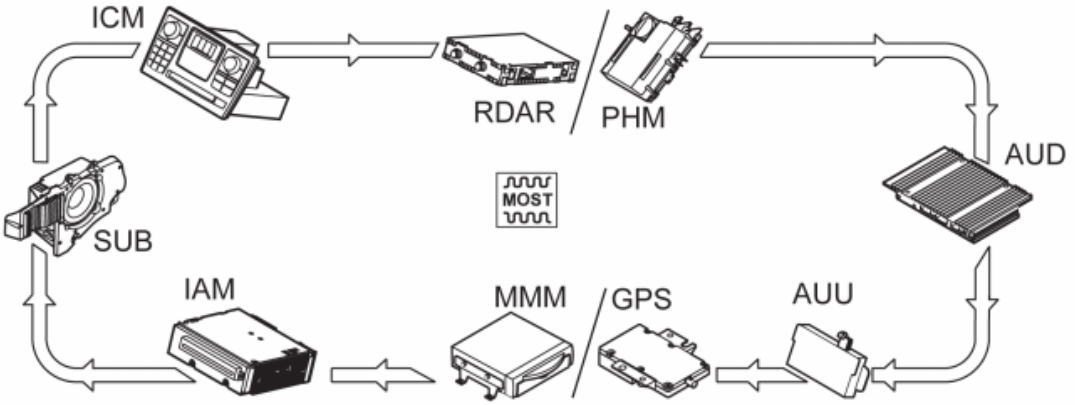

Fig. 101: Control Modules In MOST Network
Courtesy of VOLVO CARS CORPORATION

NOTE: **The control modules on the MOST network should be positioned in a particular order. If this order is not followed, troubleshooting of the MOST network will be more difficult.**

When a control module is added to the MOST network, it should be placed in the correct order on the network to make it easier to fault-trace the control modules.

If the control modules are connected in another order, this does not effect the function of the MOST network, but fault-tracing will be more difficult.

Control modules should be placed in the following order (applies to and incl. structure week 200708, model year 2007):

1. Infotainment control module (ICM)
2. The Remote Digital Audio Receiver (RDAR)/Phone module (PHM)

3. Audio module (AUD)
4. Multimedia module (MMM)/Global positioning system module (GPS)
5. Integrated Audio Module (IAM)
6. Subwoofer module (SUB)

Control modules should be placed in the following order (applies from and incl. model year 2007, structure week 200709):

1. Infotainment control module (ICM)
2. The Remote Digital Audio Receiver (RDAR)/Phone module (PHM)
3. Audio module (AUD)
4. Accessory USB unit (AUU)
5. Multimedia module (MMM)/Global positioning system module (GPS)
6. Integrated Audio Module (IAM)
7. Subwoofer module (SUB)

If the minimum configuration of control modules on the MOST network in the car is used, the following control modules are connected:

- infotainment control module (ICM)
- Integrated Audio Module (IAM)

THE NETWORK

GENERAL

The increasing requirements of extended functionality in vehicles has underpinned the development of systems with better performance and more functions. The MOST network is a result of this development.

The MOST network is a fiber optic network which allows a high number of different commands and messages to be sent and received on the same cable and in the same direction.

By using a fiber optic network, functionality is extended without increasing the amount of wiring.

The number of commands and messages which can be handled on the network depends on factors such as the network speed and the length of the message or command. The MOST network which is used in Volvo cars has the capacity to transmit over 300 message types and approximately 1000 messages per second. The transfer rate on the MOST network is approximately 25 Mbit/s.

ADVANTAGES OF AN OPTICAL NETWORK

- electrical short-circuits are not possible on the MOST network. This reduces the risk of damage to control modules connected to the network
- As an optical network, the MOST network does not have problems with EMC (Electro Magnetic

Compatibility)
- the wiring is not sensitive to electrical cross-induction from other wiring
- The transfer speed of the MOST network is much higher than the CAN network
- it is easy to add further functions and to install accessories, known as plug and play units.

The control modules in the network are connected to each other and are constructed so that more functionality can be easily added. All that is required to increase functionality is:

- to connect the sensors to the nearest control module
- to connect the controlled component to the nearest control module
- to download software to change the configuration and programming of the network.

MULTIMEDIA MODULE (MMM) (2003-2006)

DESIGN

CONTROL MODULE

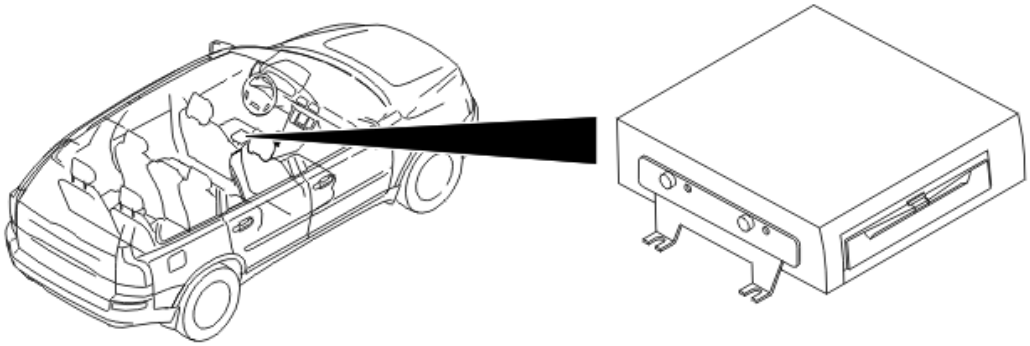

Fig. 102: Locating Multimedia Module (MMM)
Courtesy of VOLVO CARS CORPORATION

A DVD player is integrated in the multimedia module (MMM). The DVD player is used for navigation. The control module has various user functions such as:

- the start menu
- navigation
- system settings.

The start menu displays all the functions available to the user on the screen.

The navigation function in the multimedia module (MMM) calculates the position of the car using the signals from the GPS antenna. The GPS antenna is integrated in the antenna module (ATM).

The multimedia module (MMM) also has a built-in three dimensional piezo-electrical gyro. This supplies information about the movements of the car, such as any turns taken.

Information used from other nodes for navigation:

- the wheel rotation counter from the brake control module (BCM)
- back-up gear position from the transmission control module (TCM) and central electronic module (CEM)
- speed signal from the central electronic module (CEM).

Information from these control modules is transmitted to the infotainment control module (ICM) which then sends the information onwards to the multimedia module (MMM).

The map displayed on the screen indicates the position of the car. This position is adjusted using information from:

- the wheel rotation counter
- the speed signal
- the gyro in the multimedia module (MMM)
- the back-up gear position
- the GPS antenna
- the map matching function.

Information from the gyro and wheel rotation counter can be used for dead reckoning (i. e. to calculate the position). This happens for example when communication with the GPS satellites is lost such as when traveling through a tunnel.

The multimedia module (MMM) receives traffic information messages (TMC) from the antenna module (ATM) via the MOST network. This information is displayed on the directly connected display screen. The traffic message channel (TMC) is a standardized code system for traffic messages. It provides information about road works, heavy traffic etc. The Japanese equivalent of TMC is called FM multiplex. This system is not available in the USA.

The navigation function also includes voice guiding which instructs the driving how to reach the set destination.

The user can configure certain functions in the system settings. These functions are:

- date and time
- user settings, such as password.

The following functions are displayed on the directly connected display screen:

- navigation.

The control module transmits all the signals required to control the display screen.

The multimedia module (MMM) uses the Windows CE operating system.

DISPLAY SCREEN

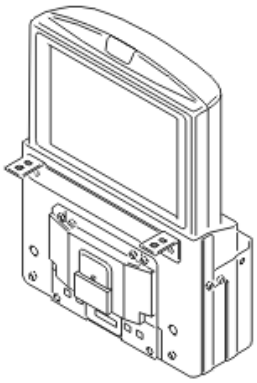

Fig. 103: Identifying Display Screen
Courtesy of VOLVO CARS CORPORATION

Functions such as Mobile office, system settings and navigation are presented on a 6.5" display screen in the center of the dashboard. The display screen is directly connected to the multimedia module (MMM). The control module transmits all the signals required to control the display screen.

If there is an internal fault in the screen or faults in communication with the control module, the quality of the display on the screen will deteriorate or the screen will stop working completely. A simple way to detect a fault in the screen, or communication problems between the screen and the control module, is to check the appearance of the image on screen.

The menu system on the display screen can be controlled either using the navigation buttons on the reverse of the steering wheel or using the screen remote control. The infra-red receiver for the remote control is on the infotainment control module (ICM).

DIAGNOSTIC FUNCTIONS

GENERAL

The control module has a built-in diagnostic system, Volvo Diagnostic, which continuously monitors internal functions as well as input and output signals.

DIAGNOSTIC TROUBLE CODES (DTCS)

A diagnostic trouble code (DTC) is stored if the control module detects a fault. A fault which is detected in the most recent operating cycle is defined as permanent. Other faults are defined as intermittent.

Should a fault disappear for any reason after being permanently stored in the control module as a diagnostic trouble code (DTC), the information remains stored in the control module.

If a fault is no longer permanent, the diagnostic trouble code (DTC) remains as intermittent.

READING AND ERASING DIAGNOSTIC TROUBLE CODES (DTCS)

Stored diagnostic trouble codes (DTCs) can be read off and erased using this function.

Diagnostic trouble codes (DTCs) can only be erased once all the diagnostic trouble codes (DTCs) have been read off at least once.

NOTE: Certain functions are unavailable until the diagnostic trouble codes (DTCs) have been erased.

READING OFF THE CONTROL MODULE IDENTIFICATION

VIDA identifies control modules by reading off a number of codes from the control module memory.

The codes contain information about the control module:

- hardware P/N (control module without software)
- hardware serial number (control module without software)
- software P/N
- diagnostic software P/N.

READING OFF EXTENDED FAULT-TRACING INFORMATION

This function can be used to read parameters, status identifiers and counters stored at the same time as a diagnostic trouble code (DTC). These are called frozen values.

For further information, see **DESCRIPTION OF VEHICLE COMMUNICATION INFORMATION** .

DOWNLOADING SOFTWARE AND REPLACING THE CONTROL MODULE

New software can be downloaded into the multimedia module (MMM). When ordering software, the hardware and the software in the car is compared to the information in the Volvo central database. If the comparison is OK the software is downloaded to the control module.

If the comparison between the car and Volvo central database is not OK, the database is updated with the car configuration. When this is complete the software is downloaded.

All the software required for the traffic information system to work in the control module is on the DVDs.

The control module is under the left front seat.

After replacing the control module, the unique serial numbers of the control module are checked by the infotainment control module (ICM). The installed control module will not work if the serial number is incorrect.

Try turning the ignition off and on if there are problems after the software is downloaded and the control module is not working.

The MOST network is used for a total software reload.

FUNCTION

MENU CONTROL OF THE MULTIMEDIA MODULE (MMM)

The on-screen menu can be controlled using the buttons on the reverse of the steering wheel.

The buttons consists of:

- a Back button
- an Enter button
- a navigation button which is used to move the cursor up, down, left and right on the screen.

These commands are transmitted from the steering wheel module (SWM) (3/130) to the infotainment control module (ICM) (16/1) via the Controller area network (CAN). The infotainment control module (ICM) converts the electrical signal to an optical signal and sends it onwards to the multimedia module (MMM) (16/108) via the MOST network.

The remote control for the multimedia module (MMM) has the same functions as the steering wheel buttons. The remote control can be used to control the menus on the display screen. An infra-red signal is transmitted from the remote control to an infra-red receiver on the infotainment control module (ICM), which in turn sends the signal on to the multimedia module (MMM) on the MOST network.

NAVIGATION

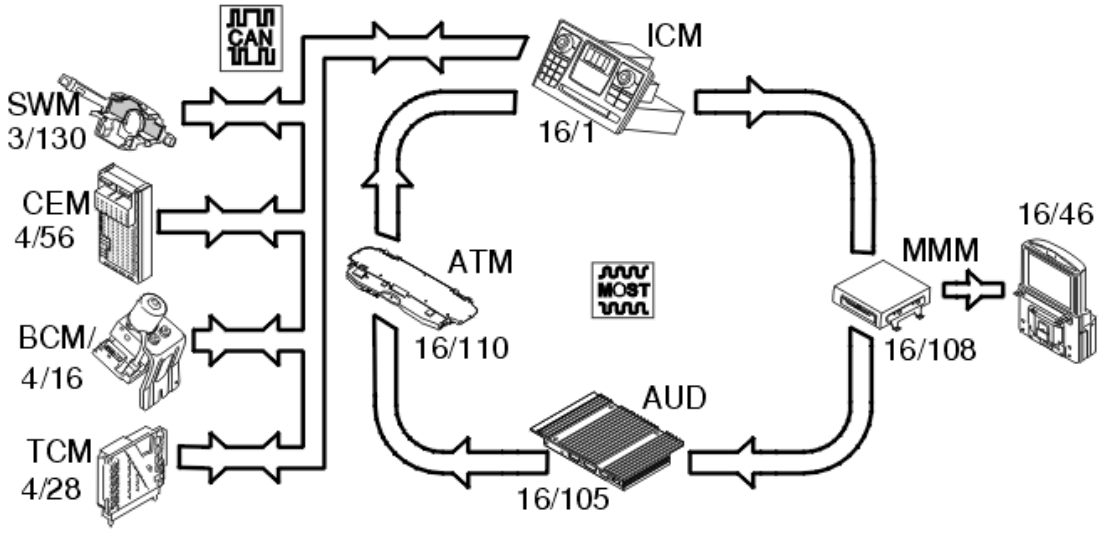

Fig. 104: Identifying Navigation Network
Courtesy of VOLVO CARS CORPORATION

The navigation function displays the location of the car and directions to the entered destination.

The navigation buttons on the steering wheel module (SWM) (3/130) are used to control the on-screen menu for

navigation.

The multimedia module (MMM) (16/108) receives GPS signals from the antenna module (ATM) (16/110) via the MOST network.

Two signals are transmitted via the high speed side of the Controller area network (CAN) to the central electronic module (CEM) (4/56):

- information about the wheel rotation counter is transmitted from the brake control module (BCM) (4/16)
- information about the back-up gear position is transmitted from the transmission control module (TCM) (4/28).

The central electronic module (CEM) transmits both signals to the infotainment control module (ICM) (16/1) via the low speed side of the Controller area network (CAN). The vehicle speed is also transmitted to the infotainment control module (ICM) from the central electronic module (CEM). This in turn sends the signals on to the multimedia module (MMM) on the MOST network.

Information for voice guiding for the selected destination is transmitted on the MOST network between the multimedia module (MMM) and the audio module (AUD) (16/105).

A DVD with the required road network must be installed in order for the multimedia module (MMM) to select a route and display the position of the car. The multimedia module (MMM) is then able to calculate the position and display it on the directly connected screen (16/46).

SYSTEM OVERVIEW

MULTIMEDIA MODULE (MMM)

The multimedia module (MMM) is an optional control module. Its primary task is to manage the functions for:

- navigation
- Traffic message channel (TMC)
- FM multiplex (Japan only)
- display screen
- DVD player.

Only the display screen is directly connected to the multimedia module (MMM). The DVD player is integrated in the multimedia module (MMM). The functions from other control modules are via the MOST network, but are managed using the multimedia module (MMM). The system is not compatible with music CD or DVDs.

The multimedia module (MMM) uses the MOST network to communicate with other control modules.

The control module checks activations and input and output signals via an integrated diagnostic system. A diagnostic trouble code (DTC) is stored if the control module detects a fault. Any diagnostic trouble codes (DTCs) are stored in the control module memory. This information can be read off using VIDA via the data link connector (DLC) in the car.

In order to work correctly on the MOST network, the infotainment control module (ICM) checks that the serial number in the multimedia module (MMM) is correct. The multimedia module (MMM) will not function if the number is incorrect. Try switching the ignition off and on if there are problems when replacing the control module.

A simple way to ensure that the multimedia module (MMM) is powered is to insert and then remove a DVD. If this does not work, check that the unit is powered and grounded.

The multimedia module (MMM) is under the left front seat.

SIGNALS

The table below summarizes the input signals to and output signals from the multimedia module (MMM). The signal types are divided into directly connected signals and MOST communication. The illustration below displays the same information with the Volvo component designations.

Input signals	Output signals
Directly connected:	**Directly connected:** (power supply unless otherwise stated) • Display screen (16/46) (color and synchronizing signals).
Via MOST communication: (ring network) • Infotainment Control Module (ICM) (16/1) master control module • Audio module (AUD) (16/105) • Phone module (PHM) (16/60) • Antenna module (ATM) (16/110).	**Via MOST communication:** (ring network) • Infotainment Control Module (ICM) (16/1) master control module • Audio module (AUD) (16/105) • Phone module (PHM) (16/60) • Antenna module (ATM) (16/110).

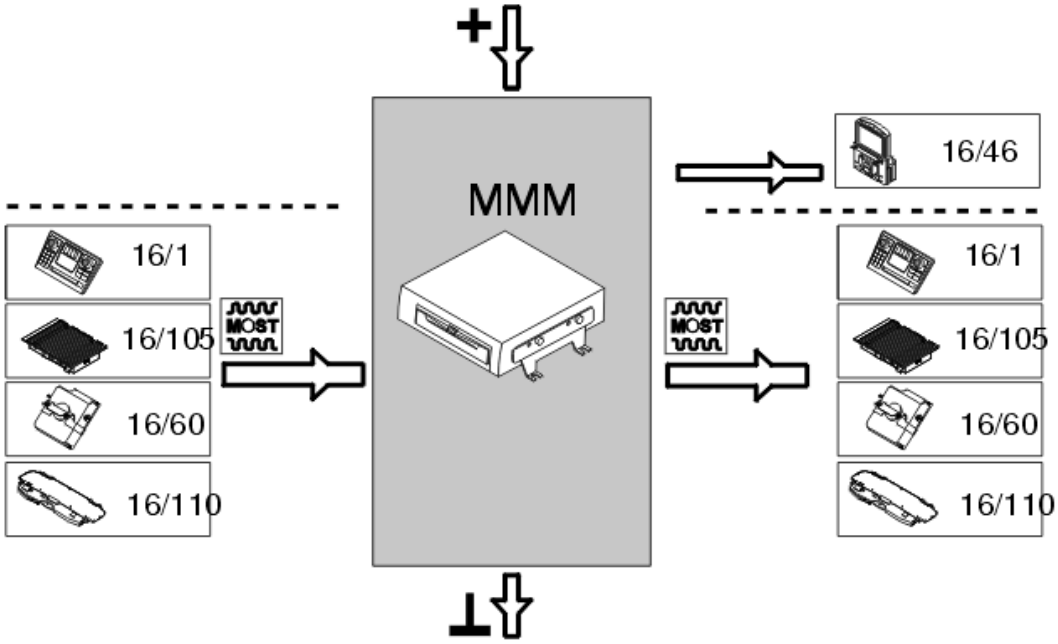

Fig. 105: Identifying Volvo Component Designations
Courtesy of VOLVO CARS CORPORATION

MULTIMEDIA MODULE (MMM) (2007-2012)

DESIGN

CONTROL MODULE

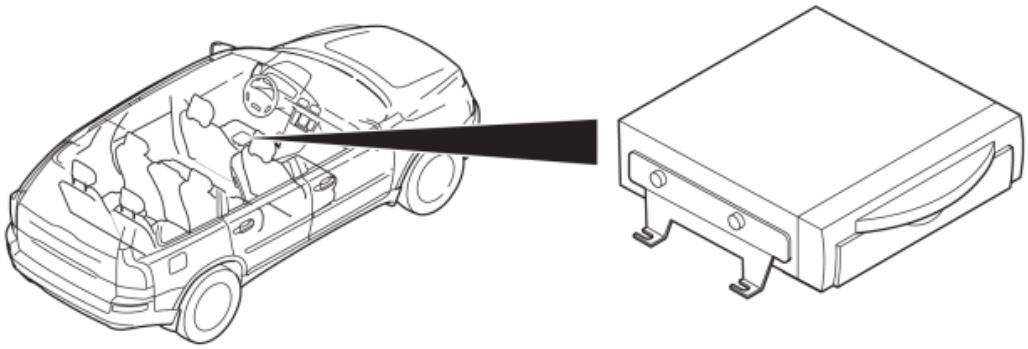

Fig. 106: Locating Multimedia Module (MMM)
Courtesy of VOLVO CARS CORPORATION

The Multimedia module (MMM) has a hard disk and a DVD player integrated in the control module. The DVD player is used to upgrade the software in the Multimedia module (MMM) and transfer map information from the DVD to the hard disk. Using the hard disk obtains the map information quicker and makes storing more data possible. The map information is used for navigation.

The Multimedia module (MMM) has an integrated gyro that manages information about the vehicle's direction of travel.

The multimedia module (MMM) as inputs and outputs for:

- power supply
- ground
- GPS
- TMC
- RGB output to the screen
- MOST network

GPS

Information to the GPS unit consists of signals received from GPS satellites via the GPS antenna.

The navigation system requires at least three satellites to be able to calculate the vehicle's position.

Power is supplied to the GPS unit from the multimedia module (MMM). The GPS unit is integrated in the multimedia module (MMM).

NOTE: **If the GPS signal is diagnosed as missing, the signal should be checked outdoors in an open area as the signal could be blocked if the vehicle is indoors and surrounding buildings could interfere with reception of GPS signals. It can take up to 12 minutes until the GPS signal has been captured and the position has been determined.**

TMC

The TMC signal is transmitted from the antenna amplifier and received by the TMC receiver. The TMC signal is managed in the Multimedia module (MMM) and the information is then presented on the display screen.

The TMC receiver is integrated in the multimedia module (MMM).

TMC is a standardized code system for traffic bulletins, such as information on road construction. TMC is only available on certain markets.

SCREEN

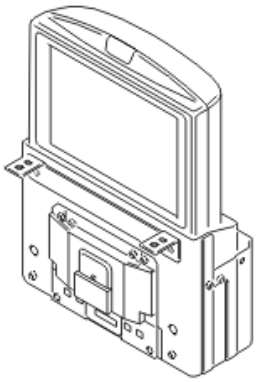

Fig. 107: Identifying Display Screen
Courtesy of VOLVO CARS CORPORATION

Functions such as system settings and navigation are presented on the display screen in the center of the dashboard. The Multimedia module (MMM) transmits RGB signals to the display screen.

If there is an internal fault in the screen or faults in communication with the control module, the quality of the display on the screen will deteriorate or the screen will stop working completely. A simple way to detect a fault in the screen, or communication problems between the screen and the control module, is to check the appearance of the image on screen.

The screen's menu system can be controlled with the navigation keys on the back of the steering wheel or with the remote control for the screen.

The infra-red receiver for the remote control is in the infotainment control module (ICM) (just under the volume knob). The infra-red receiver at the upper edge of the monitor is not active.

DIAGNOSTIC FUNCTIONS

GENERAL

The control module has a built-in diagnostic system, Volvo Diagnostic, which continuously monitors internal functions as well as input and output signals.

DIAGNOSTIC TROUBLE CODES (DTCS)

If the control module detect a fault, a diagnostic trouble code (DTC) is stored. A fault that was detected during the last operating cycle is defined as permanent. Other faults that are detected are defined as intermittent.

Should a fault disappear for any reason after being stored in the control module as a permanent diagnostic trouble code, the information remains stored in the control module. If a fault is no longer permanent, the diagnostic trouble code remains as intermittent.

READING AND ERASING DIAGNOSTIC TROUBLE CODES (DTCS)

Stored diagnostic trouble codes (DTCs) can be read off and erased using this function.

Diagnostic trouble codes can only be erased once all the diagnostic trouble codes have been read out at least once.

NOTE: Certain functions are unavailable until the diagnostic trouble codes (DTCs) have been erased.

READING OFF THE PARAMETERS

This function is used to read the status or value of parameters. The status or value can be presented digitally.

ACTIVATING COMPONENTS AND FUNCTIONS

This function can be used to activate components and functions that affect the multimedia module (MMM).

READING OFF THE CONTROL MODULE IDENTIFICATION

The diagnostic tool identifies control modules by reading off a number of codes from the control module memory.

The codes contain information about the control module:

- hardware P/N (control module without software)
- hardware serial number (control module without software)
- software P/N
- diagnostic software P/N

READING OFF EXTENDED FAULT-TRACING INFORMATION

This function can be used to read out parameters, identify status and counts stored at the same time as a diagnostic trouble code (known as frozen values).

DOWNLOADING SOFTWARE, MAP UPDATING AND REPLACING THE CONTROL MODULE

SOFTWARE DOWNLOADING

The DVD is used to upgrade the application software in the multimedia module (MMM).

MAP UPDATING

Map information is updated by inserting a new DVD with updated map information in the DVD player. The map information is transferred onto the hard disk in the Multimedia module (MMM).

When the map information has been updated, the DVD must be in the DVD player in order for the map information to be displayed.

REPLACING THE CONTROL MODULE

The Multimedia module (MMM) is installed under the left-hand front seat.

The Multimedia module (MMM) is preloaded with application software and map information.

When replacing the Multimedia module (MMM), software must also be downloaded via Volvo's central database to be able to write the new serial number to the Central electronic module (CEM).

After replacement of the multimedia module (MMM), the infotainment control module (ICM) checks its unique serial number. If the serial number is incorrect, the multimedia module (MMM) will not work. If the problem remains after software download, try switching the ignition off/on.

FUNCTION

CONTROL MODULE

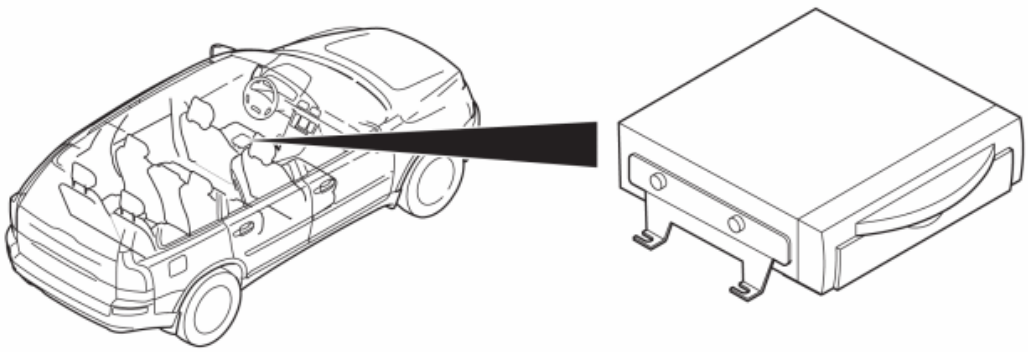

Fig. 108: Locating Multimedia Module (MMM)
Courtesy of VOLVO CARS CORPORATION

The DVD player is used to transfer map information to the hard disk. The map information on the hard disk is used to navigate. The Multimedia module (MMM) has several user functions, such as:

- route guidance, i. e. guidance to a specific target (address, a specific hotel etc.)
- show map
- find a hotel, a car park, a shopping mall, in the surroundings or in the vicinity of a specific place
- show TMC information, i. e. traffic information (traffic jams, closed roads etc.)
- show remaining mileage and estimated journey time to selected destination.
- system settings for navigation

The start menu allows the user to choose whether the system is to start in a Beginner or Advanced user setting. In the Beginner user setting, only the most important functions are available and are intended for beginners. All functions are available in the advanced user setting

The navigation menu and quick menu display, on the monitor, all the functions that are available for the user to use.

Certain functions can be configured by the user in system settings. These functions are:

- type of route guidance (fastest route, shortest route or easiest route)
- avoid ferries, toll roads etc or not
- volume voice guidance
- language.

MENU NAVIGATION

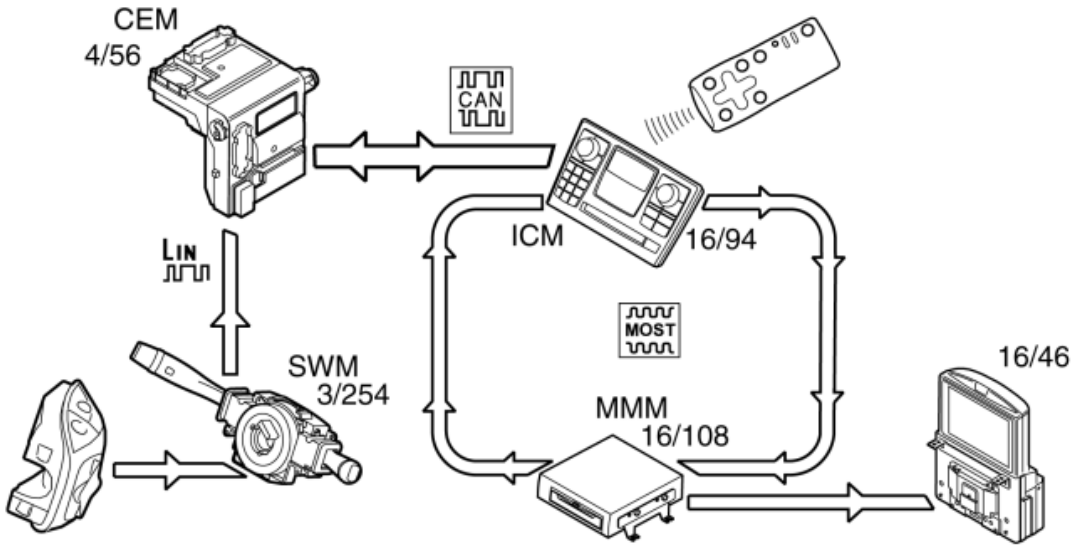

Fig. 109: Networking Diagram
Courtesy of VOLVO CARS CORPORATION

The on-screen menu can be controlled using the navigation buttons on the reverse of the steering wheel (16/46).

The buttons consist of:

- an enter button
- a back button
- a control button that can move the marker on the screen up, down, left and right.

The commands are transmitted from the Steering wheel module (SWM) (3/254) via LIN to the Central electronic module (CEM) and on to the Infotainment control module (ICM) (16/94) on the CAN network. The Steering wheel module (SWM) converts the electrical signal to an optical signal and sends it onwards to the multimedia module (MMM) (16/108) via the MOST network.

The remote control for the Multimedia module (MMM) has the same functions as the steering wheel buttons.

NAVIGATION

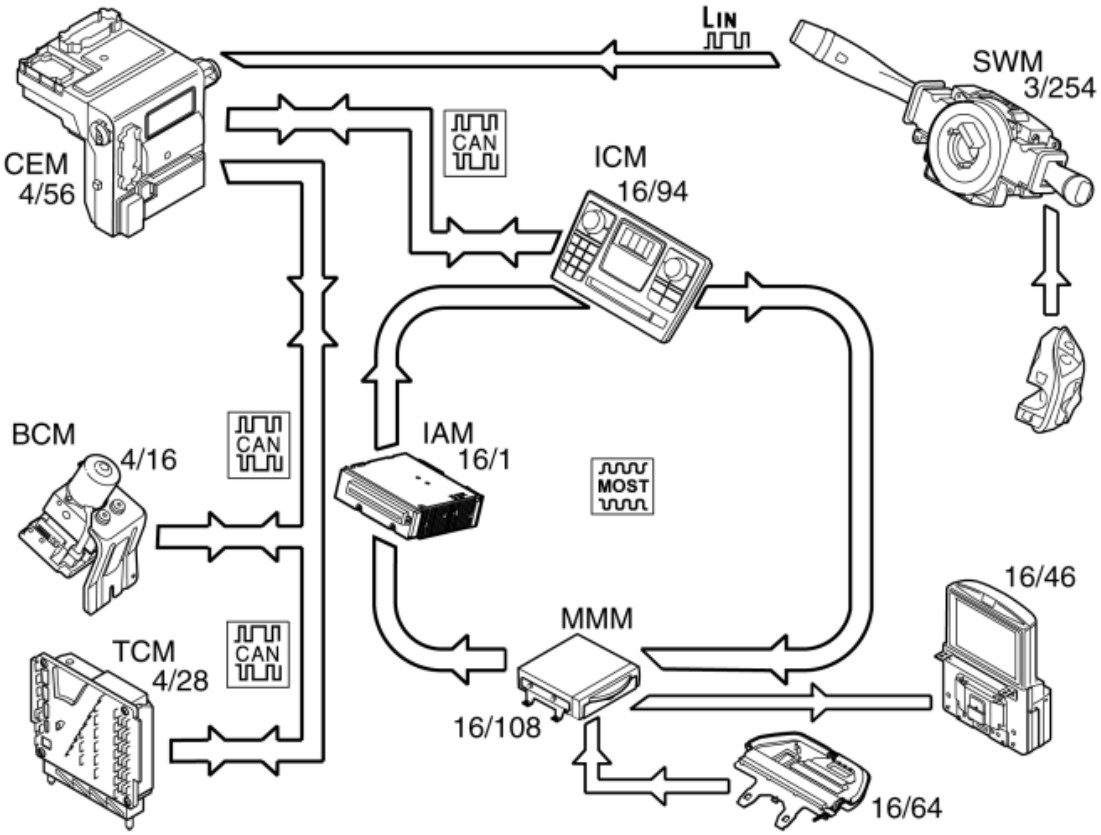

Fig. 110: Networking Diagram
Courtesy of VOLVO CARS CORPORATION

The navigation section in the Multimedia module (MMM) (16/108) calculates the vehicle's position from the information from:

- GPS antenna
- wheel rotation counter
- the gyro in the multimedia module (MMM)
- reverse gear status
- map matching function.

Information from other nodes that is used for navigation:

- wheel rotation counter from the brake control module (BCM) (4/16)
- reverse gear status from the transmission control module (TCM) (4/28) and central electronic module (CEM) (4/56)

Information from these control modules is sent to the infotainment control module (ICM) (16/94), which then distributes the information to the multimedia module (MMM).

Information from the gyro and the wheel rotation counter is used to achieve better precision than the GPS

position from the GPS antenna can give, and is used for dead reckoning, i. e. to calculate the position when communication is lost with the GPs satellites. This occurs when in a tunnel, for example.

The navigation function indicates current position and how to get to the specified destination. There is also voice guidance, which tells the driver which way to drive to get to the specified destination.

The navigation buttons on the steering wheel module (SWM) (3/254) are used to control the on-screen menu for navigation.

Two signals are sent via the high speed side of the CAN network to the central electronic module (CEM):

- information from the wheel rotation counter is sent from the brake control module (BCM)
- information on reverse gear status is sent from the transmission control module (TCM)

The central electronic module (CEM) transmits both signals to the infotainment control module (ICM) via the low speed side of the Controller area network (CAN). In turn, it sends the signals on the MOST network to the Multimedia module (MMM).

Information for voice guidance to the selected destination is sent between the multimedia module (MMM) and integrated audio module (IAM) (16/1) via the MOST network.

In order for the Multimedia module (MMM) to select a route and display the position of the car, the map information must be on the hard disk. The Multimedia module (MMM) calculates the position and displays it on the directly connected screen. If the map information has been updated, the DVD must be left in the DVD player, otherwise the map information will not be displayed.

GPS RECEPTION

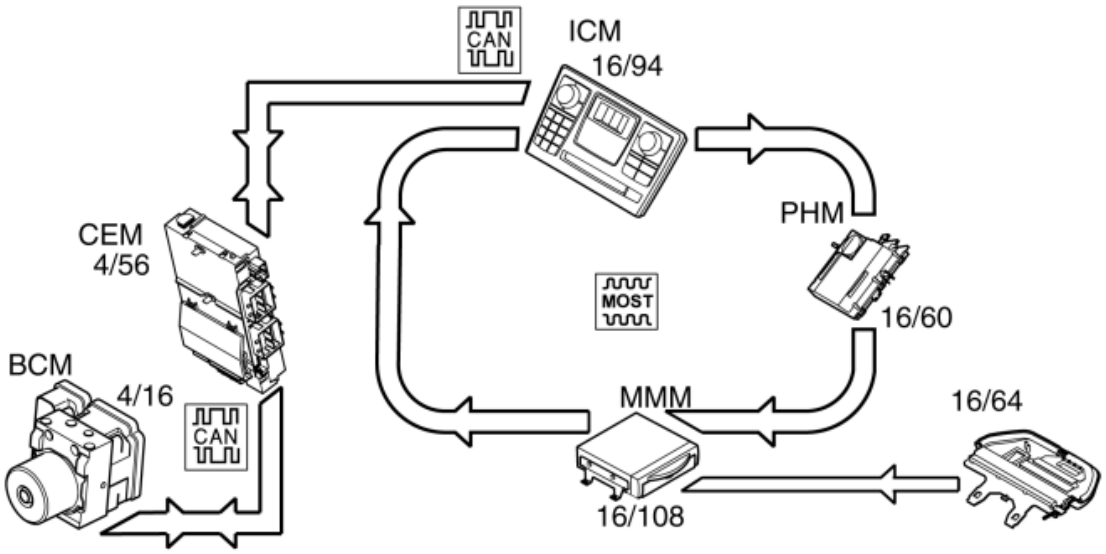

Fig. 111: Networking Diagram
Courtesy of VOLVO CARS CORPORATION

The multimedia module (MMM) (16/108) receives GPS signals from the GPS antenna (16/64) to the integrated GPS unit for position determination.

The information about the vehicle's position is continuously transmitted from the Multimedia module (MMM) via the MOST network to the Phone module (PHM) (16/60) for the Volvo On Call function.

A telephone number can also be sent from the Multimedia module (MMM) via the MOST network to the Phone module (PHM), to make a call to a hotel for example.

TMC RECEPTION

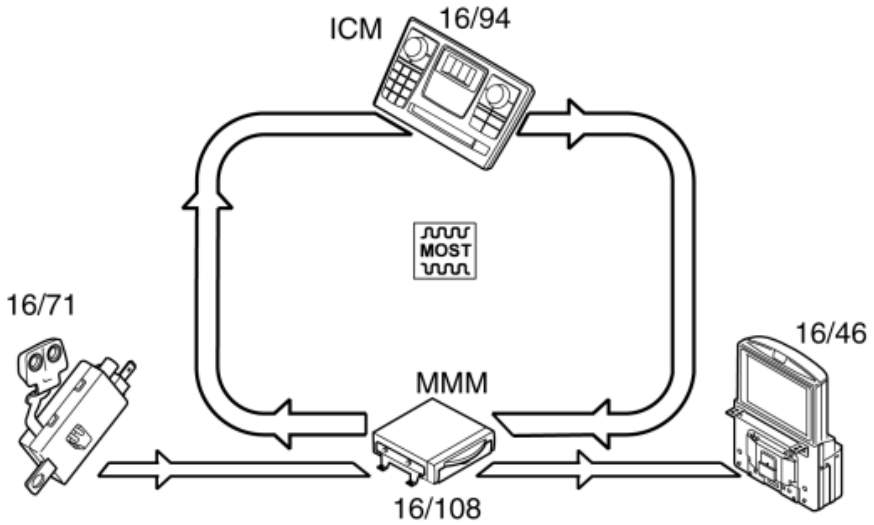

Fig. 112: Networking Diagram
Courtesy of VOLVO CARS CORPORATION

The multimedia module (MMM) (16/108) receives traffic information messages (TMC) via the TMC receiver. The signal is transmitted via the antenna amplifier. Traffic information messages (TMC) are displayed on the display screen (16/46).

TMC is a standardized code system for traffic bulletins, such as information on road construction.

The information is displayed on the monitor and is also used by the navigation function during guidance, to avoid closed roads and navigate around queues if possible (dynamic route guidance).

SYSTEM OVERVIEW

CONTROL MODULE

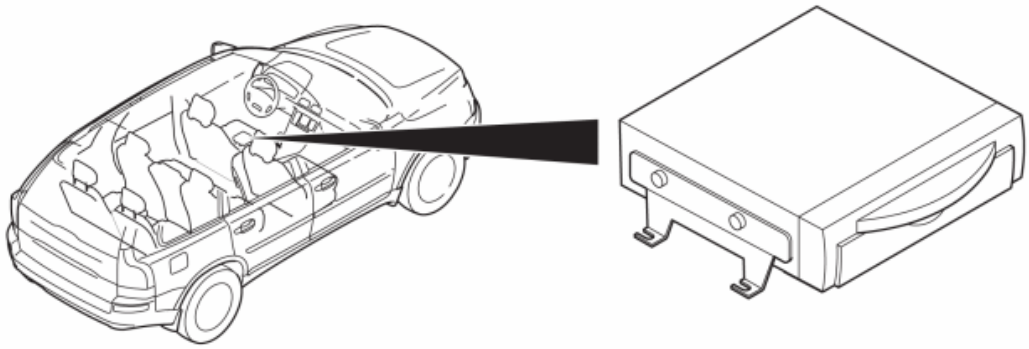

Fig. 113: Locating Multimedia Module (MMM)
Courtesy of VOLVO CARS CORPORATION

The multimedia module (MMM) is an optional module. Its most important task is handling the functions for:

- navigation
- TMC
- GPS
- RGB output for the screen
- DVD player

The GPS unit and the TMC receiver are integrated in the Multimedia module (MMM). The monitor is directly connected to the Multimedia module (MMM). The DVD player is integrated in the Multimedia module (MMM). The Multimedia module (MMM) has a hard disk where map information is stored.

Map data that is stored on the hard disc is updated via the DVD player.

Other functions come from the control modules on the MOST network, but are managed using the Multimedia module (MMM). The system cannot handle CDs or DVDs containing music or films.

The multimedia module (MMM) communicates with other control modules via the MOST network.

The control module checks internal components, executed activations and input/output signals via its integrated diagnostics. If the control module detects a fault, a diagnostic trouble code is generated. Any diagnostic trouble codes are stored in the control module memory. The information can be read via the data link connector in the vehicle.

In order to work in the MOST network, the infotainment control module (ICM) checks that the central electronic module (CEM) has the correct serial number for the multimedia module (MMM). If the number is incorrect, the multimedia module (MMM) will not be operable. If a problem arises upon control module replacement, try switching the ignition off/on.

A simple way to check that the Multimedia module (MMM) is supplied with power is to insert and eject a

DVD. The check requires the ignition to be in ignition position II. If this does not work, first check that the unit is powered and grounded.

The Multimedia module (MMM) is installed under the left-hand front seat.

SIGNALS

The table below summarizes the input signals to and output signals from the multimedia module (MMM). The signal types are divided into directly connected signals and MOST communication. The illustration below depicts the same information with the Volvo component designations.

Input signals	Output signals
Directly connected: • Power supply • Ground • GPS signal from GPS antenna (16/64) • TMC signal from antenna amplifier (16/71)	**Directly connected:** • Display screen (16/46) (color and synchronizing signals)
Via MOST communication: • Infotainment control module (ICM) (16/94) (brake control module (BCM) and transmission control module send signals to infotainment control module (ICM) via CAN network).	**Via MOST communication:** • Infotainment control module (ICM) (16/94) • Integrated audio module (IAM) (16/1) • The Phone module (PHM) (16/60) (call to point of interest (POI), the vehicle's position to the Volvo On Call service)

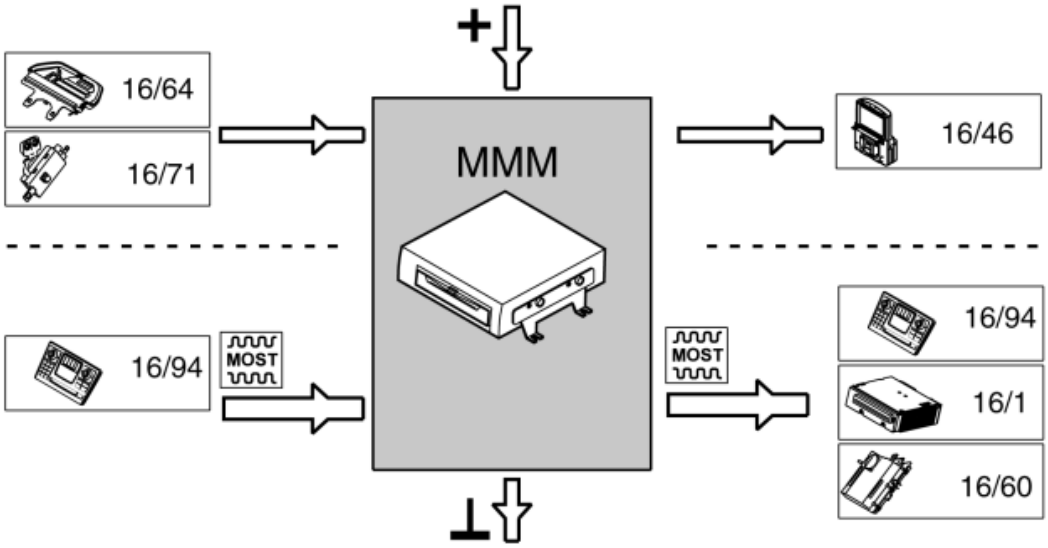

Fig. 114: Identifying Volvo Component Designations
Courtesy of VOLVO CARS CORPORATION

OVERVIEW BRAKE SYSTEM (2003-2012)

BRAKES

OVERVIEW BRAKE SYSTEM

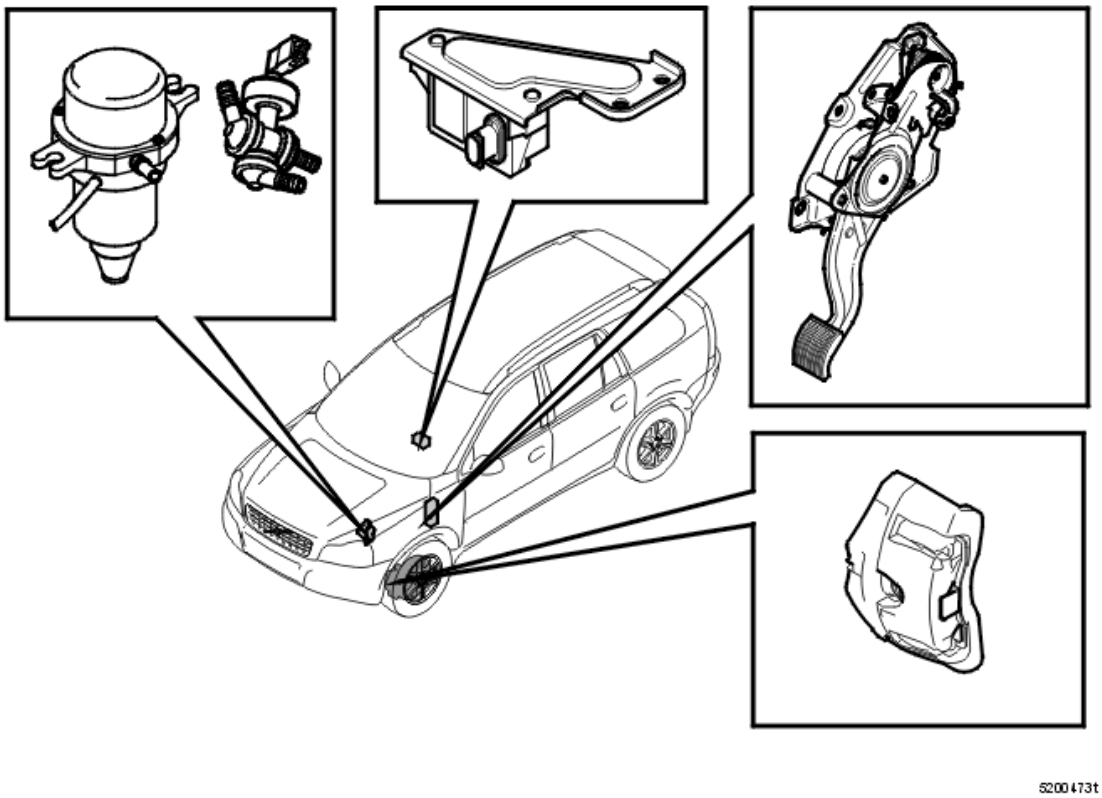

Fig. 115: Identifying Brake System Components
Courtesy of VOLVO CARS CORPORATION

RSC (Roll Stability Control)

The Volvo XC90 has an active system which counteracts any tendency to roll over, and gives the vehicle stability during violent avoidance maneuvers.

If there is a risk of the car turning over, RSC is activated. This function is integrated in DSTC (Dynamic Stability and Traction Control). It lowers the engine torque and stabilizes the vehicle by braking one or more wheels.

Foot controlled parking brake

The parking brake is applied by pressing the pedal on the floor. The handle in the light switch module (LSM) is used to release the parking brake.

Vacuum pump

B6294T has an electrical vacuum pump to ensure that the pressure is stable in the power brake booster.

- The vacuum switch is on the power brake booster side
- The switch is controlled via the system relay for the engine control module (ECM) and is connected in series to the vacuum pump.

General

For 17 " wheels, the diameter of the brake discs is 316 mm at the front and 308 mm at the rear.

New brake pads, more environmentally friendly. Lead free.

FOOT CONTROLLED PARKING BRAKE

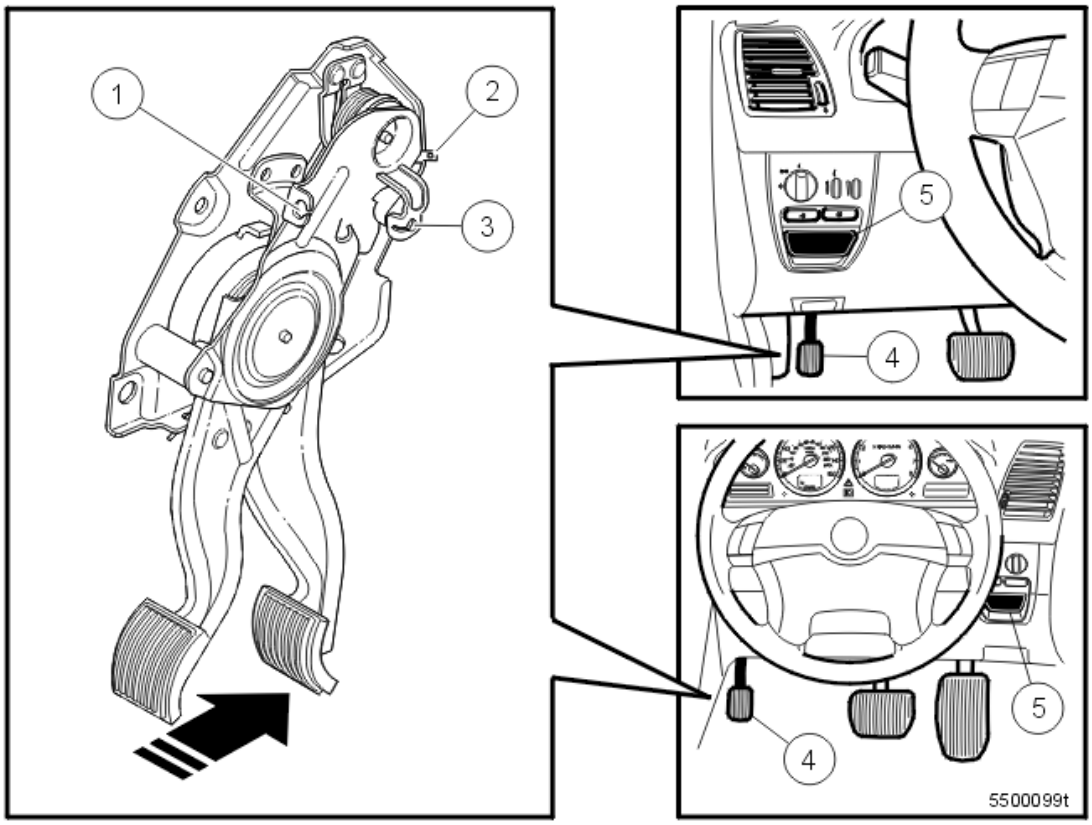

Fig. 116: Viewing Foot Controlled Parking Brake
Courtesy of VOLVO CARS CORPORATION

1. Cable holder, cable to the brake shoes
2. Parking brake switch
3. Cable holder, cable to the handle
4. Parking brake pedal
5. Release handle.

The parking brake is mechanical and acts on the brake shoes in the brake drum on the rear wheels.

The brake pedal is operated when the driver presses the pedal.

The handle in the light switch module (LSM) is used to release the parking brake.

The switch for the parking brake warning lamp is on the mechanism for the parking brake.

The foot controlled mechanism has an integrated adjuster function.

The parking brake pedal is located,

- on the left-hand side at floor height

RSC (ROLL STABILITY CONTROL)

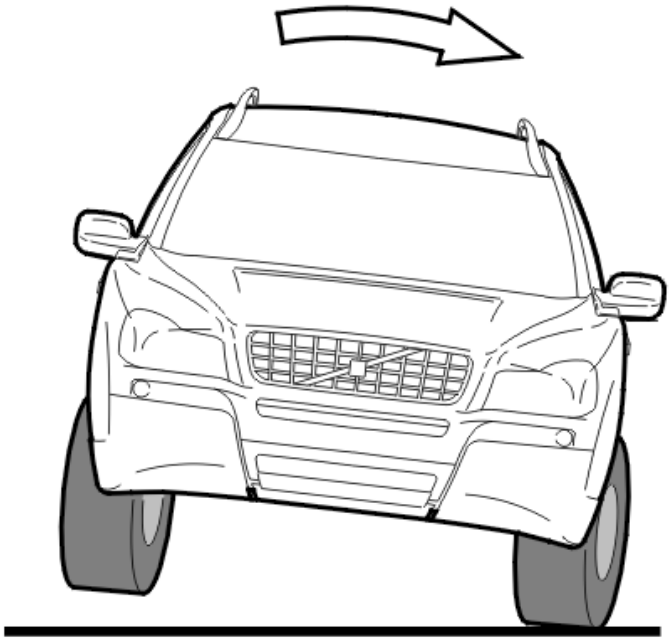

Fig. 117: Identifying Roll Stability
Courtesy of VOLVO CARS CORPORATION

The Volvo XC90 has an active system which counteracts roll over, and increases the vehicle stability during violent avoidance maneuvers.

An integrated gyroscope in the DSTC cluster calculates the dynamic angle of lean and therefore the risk of roll over.

If there is a risk of the car turning over, RSC is activated. This function is integrated in DSTC (Dynamic

Stability and Traction Control). It lowers the engine torque and stabilizes the vehicle by braking one or more wheels.

- The RSC function cannot be disabled
- RSC is activated at speeds above 10 km/h
- In RSC mode, the all-wheel drive (AWD) function is disengaged via the differential electronic module (DEM).

RSC, basic principles

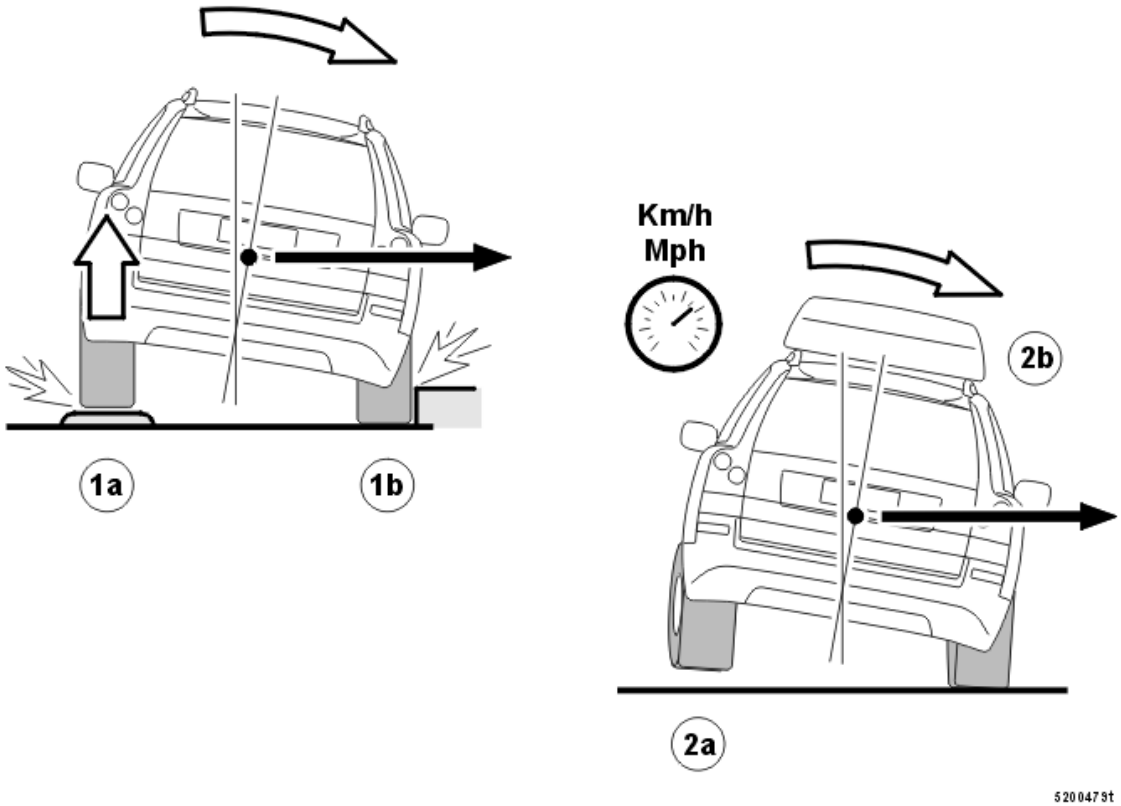

Fig. 118: Identifying Roll Causes
Courtesy of VOLVO CARS CORPORATION

There are number of factors which could cause a wheel to leave the ground.

Caused by an obstacle. (Tripped roll-over):

- the inner wheels hit a raised surface on the road. (1a)
- if the outer wheels hit a fixed object in a corner. (1b).

Caused by friction when cornering. (Un-tripped roll-over):

- the vehicle speed is too high in relationship to the radius of the corner. (2a).

Basic criteria for RSC to activate,

- the vehicle is traveling at a speed in excess of 10 km/h
- one or more wheels is off the ground.

Note that when carrying heaving loads on the roof, the risk of roll over increases when taking sharp corners. (2b)

Overview sensor(s) for RSC

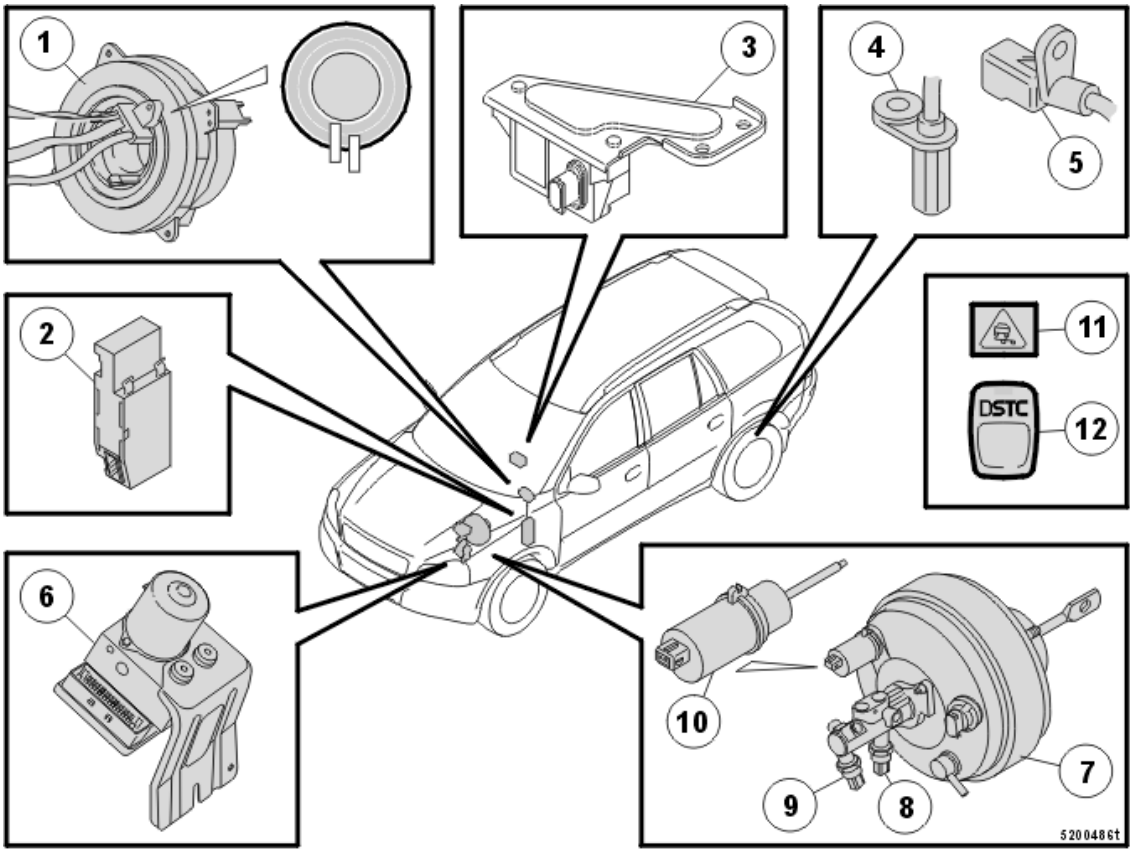

Fig. 119: Identifying RSC Sensors
Courtesy of VOLVO CARS CORPORATION

1. Steering wheel angle sensor
2. Steering wheel angle sensor (SAS)
3. Cluster
4. Wheel sensor, front
5. Wheel sensor, rear
6. Brake control module (BCM)
7. Power brake booster housing
8. Brake pressure sensor

9. Brake pressure sensor
10. Pedal position sensor
11. Warning lamp
12. DSTC switch.

RSC is included in the same cluster as DSTC. The cluster is located under the right-hand seat.

The RSC function cannot be disabled using the DSTC button.

When switching off the DSTC switch, only the SC (Stability Control) function is disengaged.

PARKING ASSISTANCE CAMERA (PAC) (2007-2012)

DESIGN

CONTROL MODULE

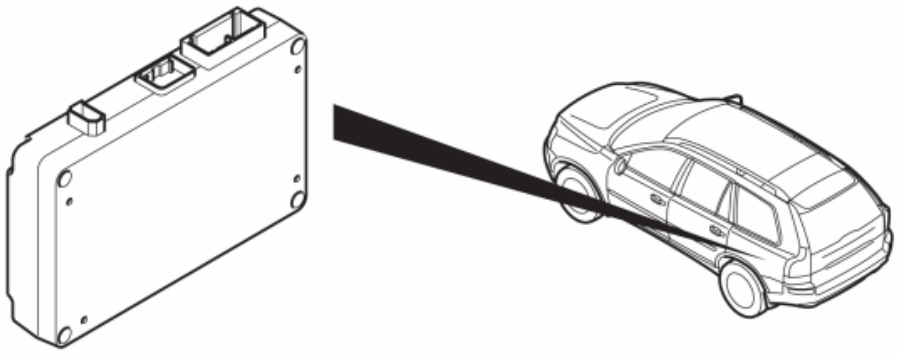

Fig. 120: Identifying Parking Assistance Control Module
Courtesy of VOLVO CARS CORPORATION

The Parking Assistance Camera (PAC) is located on the left-hand side of the cargo compartment, on top of the Trailer module (TRM). The Parking Assistance Camera (PAC) is equipped with three connections. One to the video camera, one to the video output and a CAN connection.

The Parking Assistance Camera (PAC) uses the connection to the camera to send control signals to the camera via LIN communication, receive LVDS video signals and to supply the camera with power.

The video output is used to transfer the NTSC video composite signal to the display screen via T connection on the Multimedia module (MMM).

The CAN connection is used to receive necessary signals from the Steering wheel angle sensor module (SAS), Central electronic module (CEM) and Brake control module (BCM).

The Parking Assistance Camera (PAC) is activated in ignition position II, when reverse is engaged. When the

Parking Assistance Camera (PAC) is active, the camera is also active.

Parking Assistance Camera (PAC) switches off:

- ignition positions greater than II
- if the ignition position is less than II for longer than 15 seconds
- when reverse gear is disengaged for longer than 30 seconds.

Multimedia module (MMM) switches off:

- when reverse gear has been disengaged for longer than 15 seconds
- or if the speed exceeds 10 km/h.

Logic for display screen

The display screen is controlled by the Multimedia module (MMM) and the screen is controlled by the Parking Assistance Camera (PAC).

When the navigation system is not active the following applies:

- The display screen goes up and the Parking Assistance Camera (PAC) displays images when reverse is activated in ignition position II.
- When reverse is disengaged, the display screen is up displaying images for 15 seconds. If the vehicle speed is greater than 10 km/h during these 15 seconds, the display screen goes down. If the navigation system is activated during these 15 seconds, these images are displayed instead.

When the navigation system is active the following applies.

- The Parking Assistance Camera (PAC) displays images when reverse gear is activated in ignition position II.
- When reverse gear is disengaged, the parking camera image is displayed for 15 seconds. If the vehicle speed is greater than 10 km/h during these 15 seconds, images from the navigation system are displayed. If the switch for activating the navigation system is pressed during these 15 seconds, the navigation system image is displayed instead.

CAMERA

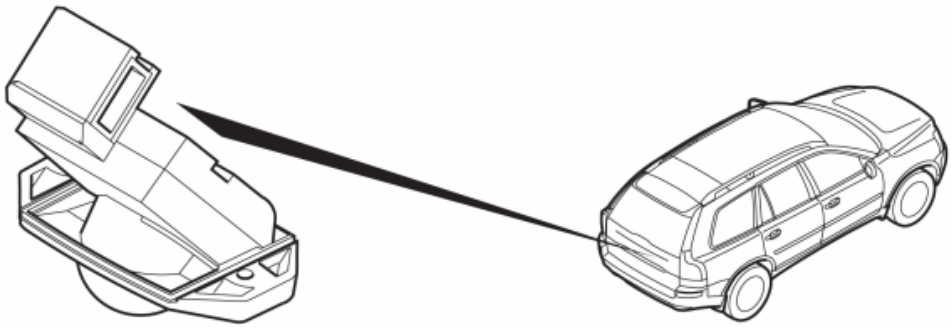

Fig. 121: Identifying Parking Assistance Camera (PAC)
Courtesy of VOLVO CARS CORPORATION

The camera is located in the tailgate, slightly to the right of the handle.

After installing a new camera, it must be set so that the help lines are displayed in the correct place on the screen. This is carried out using a check procedure in Volvo's diagnostic tool. By activating the check procedure, the view of the camera is displayed on screen with a general semi-transparent pattern that should match the contour of the bumper, at the lower edge of the image.

The camera is only activated when the Parking Assistance Camera (PAC) is activated.

DIAGNOSTIC FUNCTIONS

GENERAL

The Parking Assistance Camera (PAC) does not have a built-in diagnostic system. In the event of a fault in any of the components that are required to generated or transmit image information from the camera to the display screen, a black screen is shown instead. It is only shown if the fault occurs when the Parking Assistance Camera (PAC) is activated, and is only shown once.

ACTIVATING COMPONENTS

This function can be used to activate components to check that they are working.

READING OFF THE CONTROL MODULE IDENTIFICATION

The diagnostic tool identifies control modules by reading off a number of codes from the control module memory.

The codes contain the following information about the control module:

- hardware P/N (control module without software)
- hardware serial number (control module without software)
- software P/N

- diagnostic software P/N (part of the software).

DOWNLOADING SOFTWARE AND REPLACING THE CONTROL MODULE

New software can be downloaded to the Parking Assistance Camera (PAC).

When ordering software the vehicle's hardware and software are compared with Volvo's central database. If the comparison is correct the software is downloaded to the control module.

If the comparison between the car and Volvo's central database does not correspond, then the database is updated with the vehicle's configuration. When this is complete the software is downloaded.

FUNCTION

MENU SYSTEM

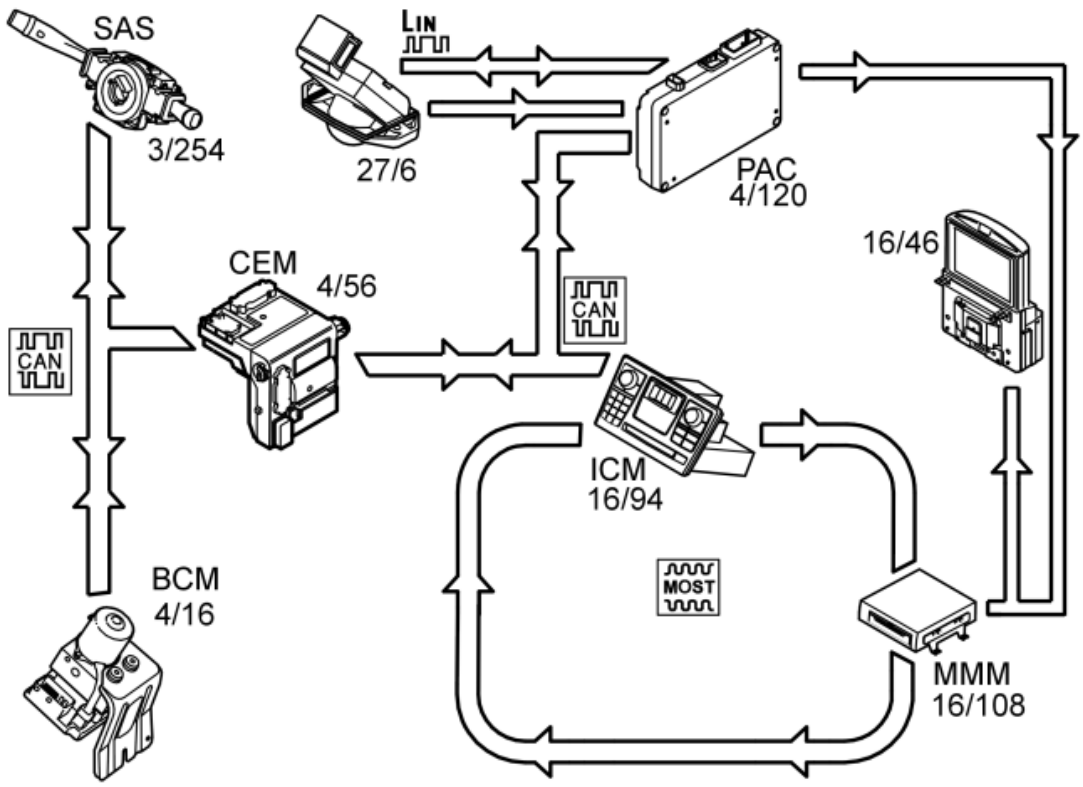

Fig. 122: Identifying Parking Assistance Camera (PAC) Network
Courtesy of VOLVO CARS CORPORATION

The signal with information about which gear is engaged is transmitted via the CAN network from the Central electronic module (CEM) (4/56) to the Parking Assistance Camera (PAC) (4/120) and Infotainment control module (ICM) (16/94). The Infotainment control module (ICM) transmits, in turn, the signal onwards via the MOST network to the Multimedia module (MMM) (16/108).

The Steering wheel angle sensor module (SAS) (3/254) transmits information about the steering wheel angle, via the CAN network, to the Central electronic module (CEM), which transmits the information on to the Parking Assistance Camera (PAC).

The Brake control module (BCM) (4/16) transmits signals about the speed via the CAN network to the Central electronic module (CEM), which transmits the signal onwards to the Infotainment control module (ICM) and the Parking Assistance Camera (PAC). The Infotainment control module (ICM) transmits, in turn, the signal onwards via the MOST network to the Multimedia module (MMM).

The Parking Assistance Camera (PAC) controls the camera (27/6) via LIN communication. The camera transmits a LVDS video signal to the Parking Assistance Camera (PAC). The Parking Assistance Camera (PAC) converts this signal to an NTSC video signal, which is transmitted to the display screen, via a T connector on the Multimedia module (MMM).

SYSTEM OVERVIEW

CONTROL MODULE

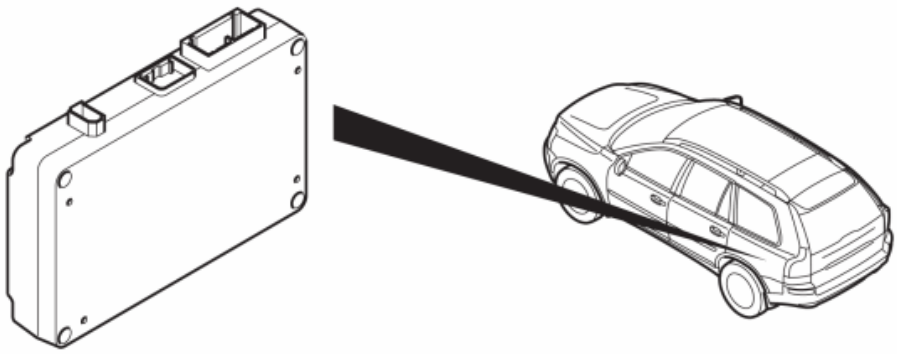

Fig. 123: Identifying Parking Assistance Control Module
Courtesy of VOLVO CARS CORPORATION

The task of the Parking Assistance Camera (PAC) is to facilitate parking. When reverse is engaged, the Parking Assistance Camera (PAC) is activated. An image on the display screen then shows what is behind the vehicle. The display screen also shows help lines that correspond to a distance of 0.3 and 1.5 m backwards. At right-angles to these help lines are lines that show the lateral position of the vehicle. If the steering wheel is moved, the help lines move to the lateral position of the vehicle.

The camera is located in the tailgate and the control module is located on the left-hand side of the cargo compartment.

The Parking Assistance Camera (PAC) communicates both with directly connected components via LIN communication and with other control modules via CAN communication.

The control module does not have integrated diagnostics, instead a black screen is shown in the event of a system fault.

The Parking Assistance Camera (PAC) and corresponding video camera can be replaced separately.

To check that the Parking Assistance Camera (PAC) is powered and grounded, ignition position II can be activated and reverse engaged when stationary. If the display screen rises and shows an image of what is behind the vehicle, the Parking Assistance Camera (PAC) is powered.

SIGNALS

The table below summarizes the input signals to and output signals from the Parking Assistance Camera (PAC). The signal types are divided into directly connected signals, LIN communication and controller area network (CAN) communication. The illustration below displays the same information with the Volvo component designations.

Input signals:	Output signals:
Directly connected: • Camera (27/6)	**Directly connected:** • Screen (16/46)
Via LIN communication: • Camera (27/6)	**Via LIN communication:** • Camera (27/6)
Via CAN communication: • Steering wheel angle sensor module (SAS) (3/254) • Central electronic module (CEM) (4/56) • Brake control module (BCM) (4/16)	**Via CAN communication:** -

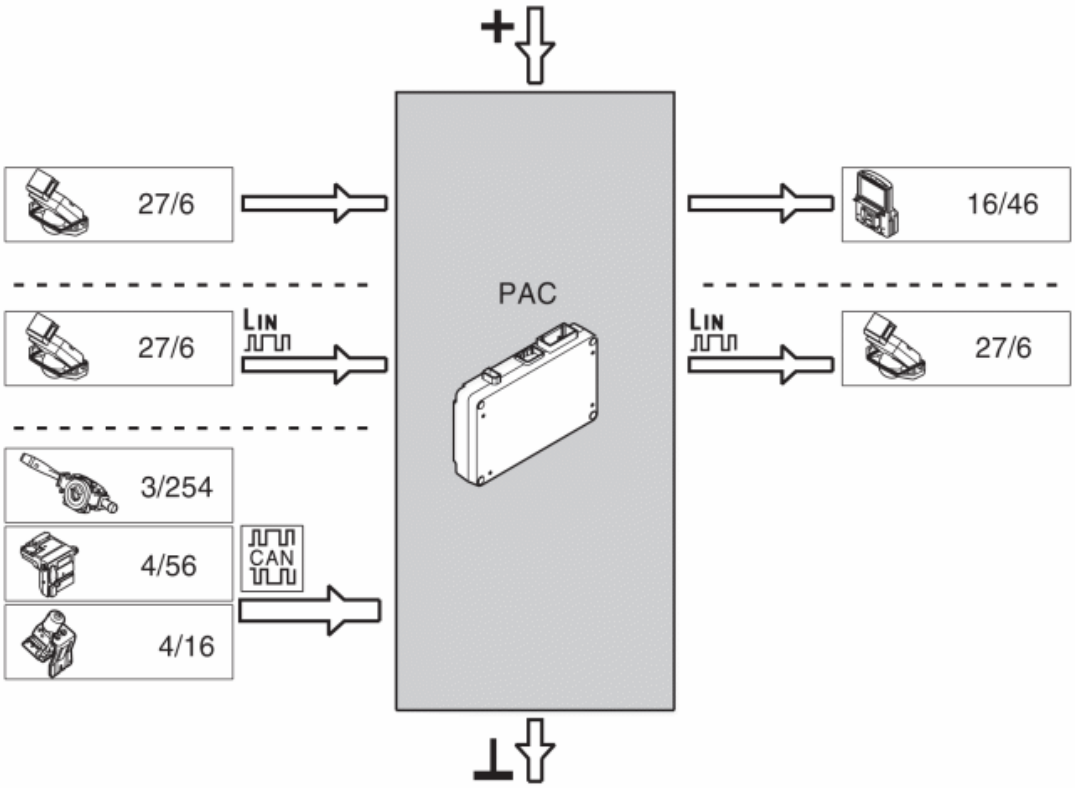

Fig. 124: Identifying Volvo Component Designations
Courtesy of VOLVO CARS CORPORATION

PHONE MODULE (PHM) (2006-2012)

DESIGN

PHONE ANTENNA

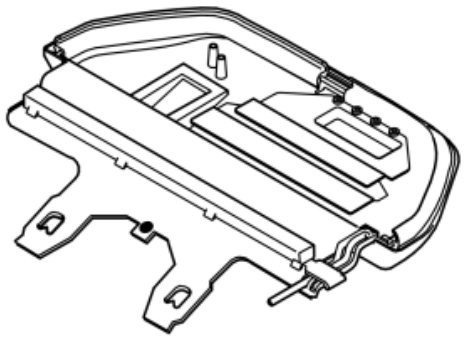

Fig. 125: Viewing Phone Antenna
Courtesy of VOLVO CARS CORPORATION

The phone antenna is directly connected to the phone module (PHM).

The phone antenna is located in the windshield in front of the rear view mirror.

There are diagnostics for the antenna.

HANDSET (MODEL YEAR-DEPENDENT)

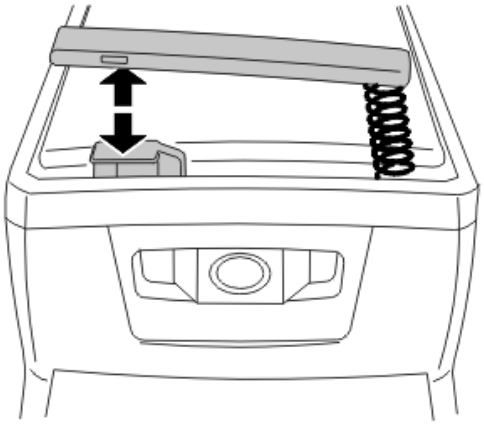

Fig. 126: View Of Handset
Courtesy of VOLVO CARS CORPORATION

The handset is directly connected to the phone module (PHM). The handset is located in the center console.

The phone module (PHM) determines if the call is to be connected via handsfree or handset from the click signal of the handset. When the handset is in the holder all calls are connected via handsfree. The handset is activated when it is removed from the holder. Note that voice calls do not go via the handset if it is lifted when an incoming call arrives or when an out going call is started using the ENTER button. The handset must be replaced and then lifted again for conversations via the handset. The reason for this is to avoid missing sound when the handset has been lifted accidentally. The click signal to the phone module (PHM) is controlled by a magnetic switch placed in the handset. The switch is closed by the magnet in the handset. When the handset is in the holder the click signal to the phone module (PHM) is 0 V, when the handset is used the signal is 5 V.

There are diagnostics for the handset.

SIM CARD HOLDER

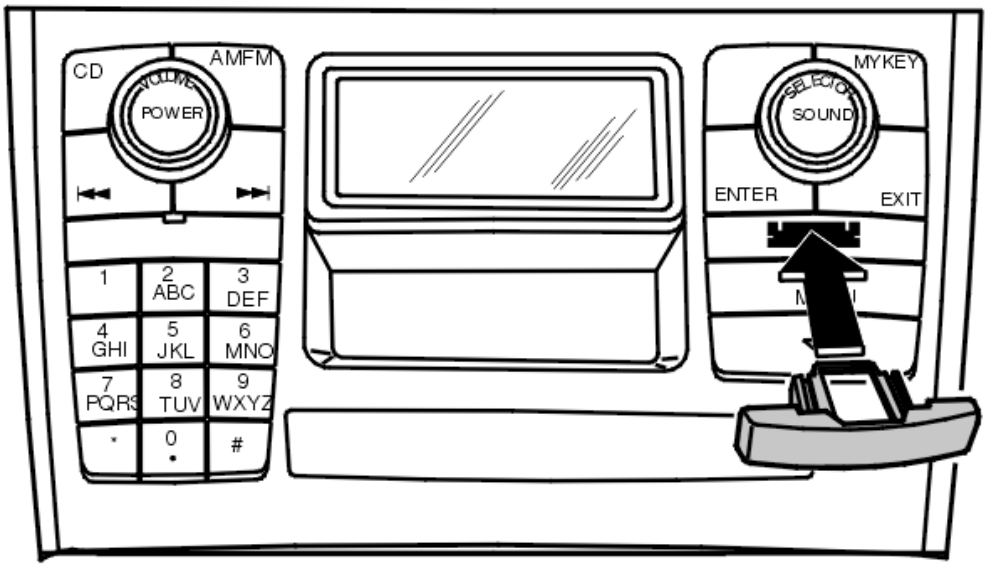

Fig. 127: Identifying Sim Card Holder
Courtesy of VOLVO CARS CORPORATION

The holder for the customer's private SIM card is located in the key pad for the infotainment control module (ICM). The SIM card holder is serially connected to the phone module (PHM).

There are diagnostics for the SIM card holder.

SWITCH FOR VOLVO ON CALL

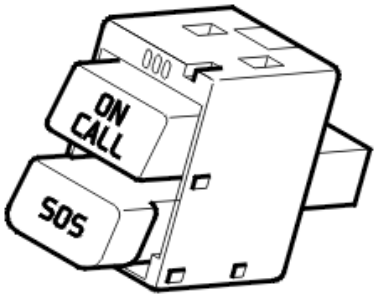

Fig. 128: Identifying Switches
Courtesy of VOLVO CARS CORPORATION

The switches for ON CALL and SOS are located in the instrument panel under the switch for the hazard warning signal flashers. The switches are only for the phone module (PHM) with the Volvo On Call functionality.

The switches are directly connected to the phone module (PHM).

Voltage supply and grounding of the switch lighting is via the phone module (PHM). The level of the light strength is adjusted using a pulse width modulated (PWM) signal.

There are diagnostics for the switches.

DIAGNOSTIC FUNCTIONS

GENERAL

The control module has a built-in diagnostic system, Volvo Diagnostic, which continuously monitors internal functions as well as input and output signals.

DIAGNOSTIC TROUBLE CODES (DTCS)

If the control module detects a fault, a diagnostic trouble code is generated. The number of diagnostic trouble codes (DTCs) totals approximately 29. A fault that is detected during the most recent operating cycle is defined as permanent. Other faults that are detected are defined as intermittent.

READING AND ERASING DIAGNOSTIC TROUBLE CODES (DTCS)

Stored diagnostic trouble codes (DTCs) can be read off and erased using this function.

Diagnostic trouble codes (DTCs) can only be erased once all the diagnostic trouble codes (DTCs) have been read off at least once.

READING OFF THE CONTROL MODULE IDENTIFICATION

VIDA identifies control modules by reading off a number of codes from the control module memory.

The codes contain information about the control module:

- hardware P/N (control module without software)
- hardware serial number (control module without software)
- software P/N
- diagnostic software P/N.

READING OFF EXTENDED DIAGNOSTIC TROUBLE CODE (DTC) INFORMATION

This function can be used to read parameters, status identifiers and counters stored at the same time as a diagnostic trouble code (DTC). These are called frozen values.

READING OFF THE PARAMETER VALUES

Using this service the status or value of parameters can be read out. The status/value is presented digitally.

REINSTALLING THE RESERVE BATTERY

This service can reset the value to 100% when the reserve battery has been replaced. After replacing the reserve battery in the phone module (PHM) with Volvo On Call functionality the battery algorithm must restored.

DOWNLOADING SOFTWARE AND REPLACING THE CONTROL MODULE

GENERAL

New software can be downloaded to the phone module (PHM). When ordering software the vehicle software and hardware are compared to Volvo's central database. If the comparison corresponds the new software is downloaded to the control module.

If the comparison between the vehicle and the Volvo central database does not correspond, the database is updated with the vehicle configuration, and then the software and any security codes (Security access code) is downloaded.

The phone module (PHM) is located behind the center console.

REPLACING PHONE MODULE (PHM) WITH VOLVO ON CALL

In addition to the software for the phone module (PHM) with Volvo On Call functionality, a unique security code is also downloaded with the software. When replacing the phone module (PHM) the security code is retrieved from the Volvo central database. A new phone module (PHM) has a generally known security code. The code is used to unlock the control module, and to program functions and to read off parameters. Unlocking is carried out automatically in the ordering version accessible in VIDA (Volvo scan tool).

After software download the read off parameters are transmitted to the Volvo central database. Information about modification to the customer data for Volvo On Call are then transmitted further from the Volvo central database to the web portal that handles customer data for Volvo On Call. The information is also transmitted to the Volvo On Call Service Center via ftp (File Transfer Protocol).

The unique security code is programmed into the phone module (PHM) during software download.

The following parameters are read off and transmitted to the Volvo central database:

- GSM number for the subscription
- The security code for the unit (Security access code)
- The PUK code for the internal SIM card for Volvo On Call
- IMEI (International Mobile Equipment Identity), GSM unit serial number
- Version number on the GSM unit software
- Unit type.

NOTE: After replacing the phone module (PHM), the Volvo On Call functionality must be activated if the customer has an active subscription. This does not happen automatically during the order process.

Volvo On Call is activated either via software orders or via the keypad on the Infotainment control module (ICM). After the Volvo On Call functionality is activated, the phone module (PHM) will wait for information about the position of the vehicle for 0.5-20 minutes. The position is sent from the Aerial module (ATM) (-2006) or Multimedia module (MMM) (2007-), the MOST network. During this time, the car must be parked outdoors with no large obstacles, which could prevent the Aerial module (ATM) (-2006) or Multimedia module (MMM) (2007-) from establishing contact with the GPS satellites, obscuring it. If the phone module (PHM) is unable to receive a position within this time, the activation sequence will be cancelled. Volvo On Call Plus functionality switches to deactivated. After the phone module (PHM) has obtained the position of the car, the ON CALL button must be held in for at least two seconds to connect a voice call the Volvo On Call Service Center. This call is made to confirm the new vehicle data and to check that Volvo On Call is functioning correctly.

Because of the unique security code and the internal SIM card a phone module (PHM) with Volvo On Call functionality cannot be swapped from one vehicle to another.

ACTIVATING AND DEACTIVATING VOLVO ON CALL

It is also possible to activate or deactivate the Volvo On Call function by downloading software. The security access code must be retrieved from the Volvo central database. It is also possible to activate/deactivate the functionality via menu management. The instructions and activation code for this are available at the Volvo On Call ' web site. If necessary (misuse of Volvo On Call for example) the network operator can cancel the subscription of the internal SIM card for Volvo On Call. After activation of the Volvo On Call functionality the same applies as for replacing a control module as regards searching for GPS satellites and connecting calls to the Volvo On Call Service Center.

If the Volvo On Call functionality is deactivated the user will be informed by text message. The text message will be displayed in the driver information module (DIM) at the start of every driving cycle (key position I).

FUNCTION

PHONE

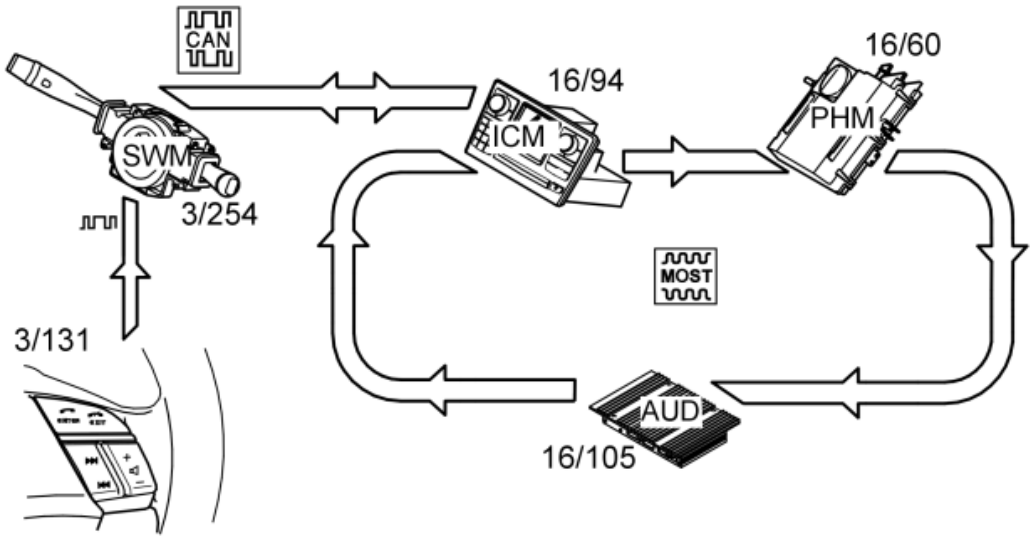

Fig. 129: Identifying Phone Network
Courtesy of VOLVO CARS CORPORATION

When using the menu via the steering wheel buttons (3/131) information is transmitted from the steering wheel module (SWM) (3/254) to the infotainment control module (ICM) via the CAN network. The information is then transmitted to the phone module (PHM) via the MOST network.

Menu management is displayed for the user in the display for the infotainment control module (ICM). Information is transmitted from the phone module (PHM) to the infotainment control module (ICM) via the MOST network.

When starting the phone module (PHM), receiving incoming calls or when using the phone, a request to use the display will be transmitted to the infotainment control module (ICM).

Phone calls can be connected via handsfree or the handset. The phone module (PHM) for the XC90 does not have a separate microphone or loudspeaker for handsfree.

For calls via handsfree the microphone and loudspeaker connected to the audio module (AUD) (16/105) are used. The phone module (PHM) transmits a request to the infotainment control module (ICM) to get access to the microphone and loudspeaker that are connected to the audio module (AUD).

VOLVO ON CALL

Model year -2006

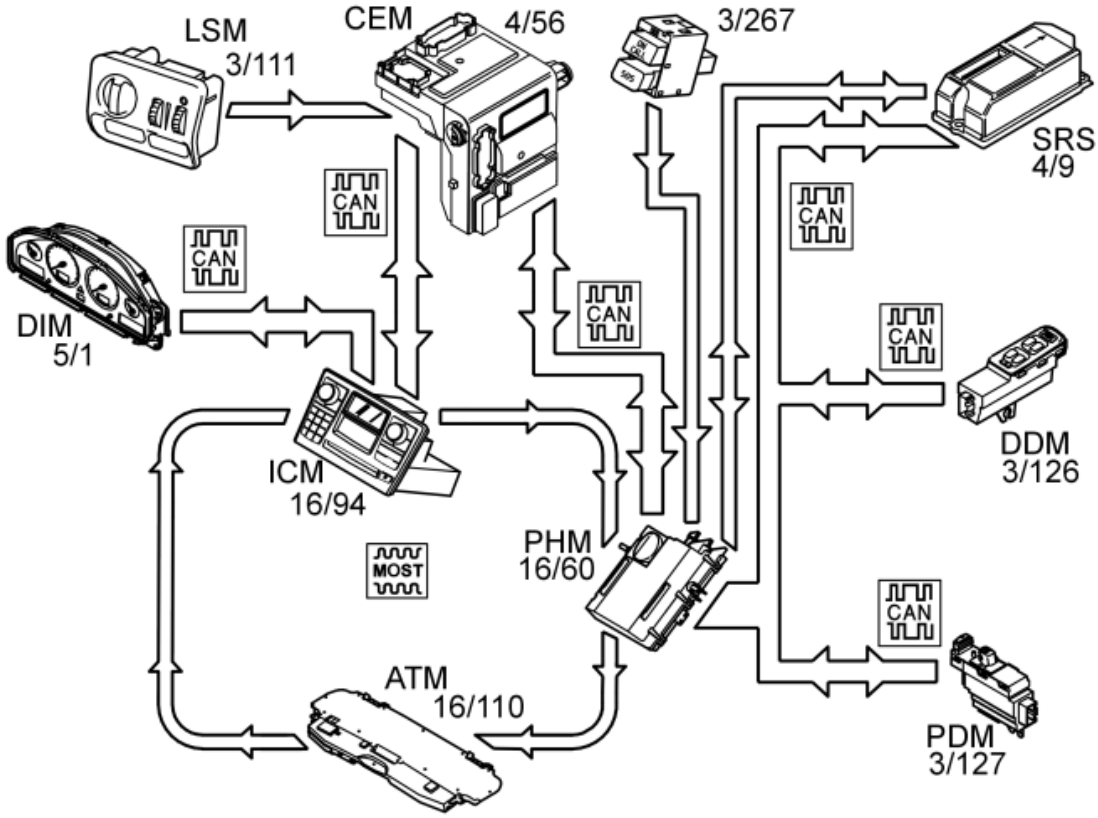

Fig. 130: Identifying Volvo On Call Network
Courtesy of VOLVO CARS CORPORATION

Model year 2007-

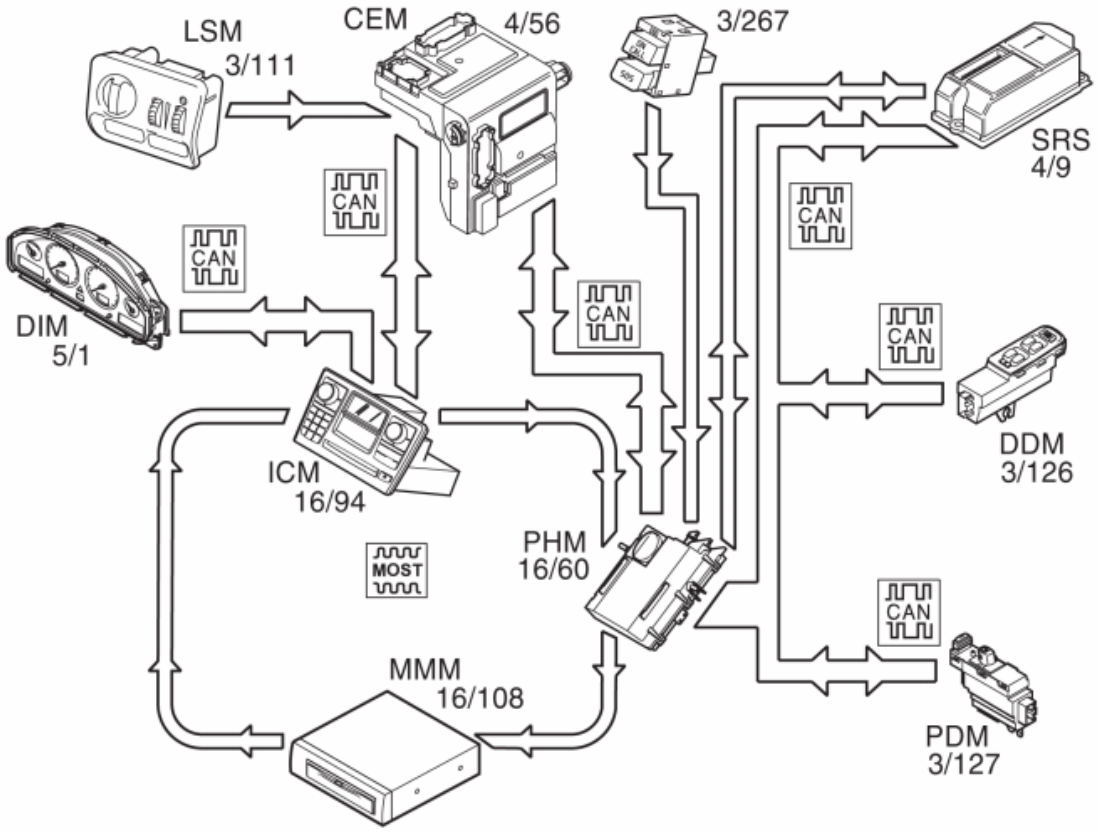

Fig. 131: Identifying Volvo On Call Network
Courtesy of VOLVO CARS CORPORATION

Volvo On Call is a system developed by Volvo where the owner has access to different services for safety and service. The service is based on the passenger or driver being able to contact a Volvo On Call Service Center by phone. The personnel at the service center, decide what action to take, depending on the circumstances. Using the information from the On Call system, including the exact position of the vehicle, the service center can quickly direct ambulance, police and recovery vehicles to the vehicle. The different services provided can be separated into two groups, service and safety.

A Volvo On Call service can be activated in one of the following ways:

- by the customer via the switches for Volvo On Call (3/267)
- by the Volvo On Call Service Center
- by the vehicle system.

The strength of the lighting in the switches for Volvo On Call is controlled via the rheostat controls in the light switch module (LSM) (3/111).

Phone module (PHM) (16/60) receives the rheostat signal from the central electronic module (CEM) (4/56) via infotainment control module (ICM) (16/94) on the MOST network.

When activating a Volvo On Call service the phone module (PHM) transmits the information to the

infotainment control module (ICM). The infotainment control module (ICM) transmits on to the driver information module (DIM) (5/1) that displays a text message that a Volvo On Call service is activated and what status it has.

Each time a Volvo On Call service is started the present vehicle data is transmitted to Volvo On Call Service Center. The vehicle data contains information about:

- **Call type.** SOS or On Call service.
- **The time at which the message was transmitted.** The Phone module (PHM) receives information about time from the Aerial module (ATM) (16/110) (-2006) or the Multimedia module (MMM) (16/108) (2007-), via the MOST network.
- **The Vehicle VIN number.** Phone Module (PHM) receives information from the central electronic module (CEM) via the controller area network (CAN).
- **Alarm status** (deactivated, activated, deployed). The phone module (PHM) receives information about the status of the alarm from the central electronic module (CEM) via the controller area network (CAN).
- **Position of the ignition key.** The Phone module (PHM) receives information about the position of the ignition key (in/out, position I, II or III) from the central electronic module (CEM) via the controller area network (CAN).
- **The vehicle's position.** The Phone module (PHM) receives the position of the vehicle, from the Aerial module (ATM) (-2006) or the Multimedia module (MMM) (2007-), via the MOST network.
- **Voltage source.** What voltage source is used by the phone module (PHM). Main or back-up battery.
- **Engine running or not.** The phone module (PHM) receives a signal from the central electronic module (CEM) via the controller area network (CAN).
- **Fuel volume.** The phone module (PHM) receives the information about the remaining fuel volume from the central electronic module (CEM) via the controller area network (CAN).
- **Status of main battery.** The phone module (PHM) receives information about the voltage over the main battery from the central electronic module (CEM) via the controller area network (CAN).
- **Ambient and internal temperature.** The phone module (PHM) receive information about the ambient temperature from the central electronic control module (CEM) and the internal temperature from the climate control module (CCM) (3/112) via the controller area network (CAN).
- **Locked/unlocked.** The phone module (PHM) receives information about whether the vehicle is locked from the inside or from the outside, from the Central electronic module (CEM) via the controller area network (CAN).
- **Front side window open/closed.** The phone module (PHM) receives information about the status of the front side windows from the driver door module (DDM) (3/126) and the passenger door module (PDM) (3/127) via the controller area network (CAN).
- **SRS activated or not.** The phone module (PHM) receives information about whether the vehicle has been in a collision and the SRS system has been activated. The information is received from the Supplemental restraint system module (SRS) (4/9), both via the controller area network (CAN) and the collision cable. The collision cable runs from the Supplemental restraint system module (SRS) to the phone module (PHM) and the central electronic module (CEM). The collision cable is a backup solution in the event of the controller area network (CAN) communication disappearing.

Safety

An SOS service can be started in two ways:

- automatically, in the event of a collision when a component in the SRS system has been activated
- manually, by the customer pressing the SOS button or selecting the service from the phone menu.

In a collision where an SRS component is activated the signal is transmitted from the supplemental restraint system module (SRS) to the phone module (PHM). The phone module (PHM) transmits the vehicle data to Volvo On Call Service Center which connects a call to the vehicle. The call is made in order to establish what action is necessary, for example, whether an ambulance or recovery vehicle is required.

When a Volvo On Call service has been activated the reserve battery is used if there is not sufficient voltage in the main battery.

Service

The Volvo On Call Service Center gives the customer access to various services, such as:

- road assistance
- remote unlocking of the vehicle
- theft message
- localization of stolen vehicle
- remote start of parking heater
- remote-controlled immobilization
- unpermitted movement.

The services that the customer can access vary between different markets.

Road assistance

Help in case of, e. g., a flat tire or if you run out of fuel.

Remote unlocking of the vehicle

Unlocking of the vehicle if the driver happens to lock the keys in the vehicle. Remote unlocking of the vehicle occurs after the owner has contacted the Volvo On Call Service Center, identified themselves using a password and given the required service. The owner and Volvo On Call Service Center then decide at what time the vehicle should be unlocked. The Service center can then transmit a command to the phone module (PHM) that the vehicle must be unlocked.

The central electronic module (CEM) will then transmit a signal via the CAN network to the phone module (PHM) when the handle on the tailgate is closed. If the signal from the central electronic module (CEM) is within the time interval agreed by the customer and the Volvo On Call Service Center, the phone module (PHM) then transmits a request to unlock the car to the central electronic module (CEM) via the CAN network. Then Central electronic module (CEM) sends a signal to driver door module (DDM), passenger door module (PDM) and Rear electronic module (REM) which unlocks all doors. The phone module (PHM) then transmits an acknowledgement to the Volvo On Call Service Center that the car has been unlocked. When one of the

doors or tailgate is opened, the alarm is triggered. The alarm is then active until it is correctly deactivated.

Theft message

If the vehicle alarm is activated, for example by theft, information about the alarm status is transmitted from the central electronic module (CEM) to the phone module (PHM) via controller area network (CAN). If the alarm is active for more than 15 seconds the phone module (PHM) transmits the vehicle data to the Volvo On Call Service Center, which contacts the owner and informs what has happened. In the first instance Volvo On Call Service Center calls the vehicle, if the person answering cannot give the password the owner is called on other numbers that the owner has supplied to the Service center.

Localization of stolen vehicle

If the vehicle has been stolen the owner can request that the service center localizes the vehicle. The Service center transmits a request to the phone module (PHM) to continuously send vehicle data. The interval of the vehicle data that is sent is determined by the Volvo On Call Service Center.

Remote start of parking heater

Applies from and incl. structure week 201020.

With remote start of the parking heater it is possible to set timers for the parking heater as well as start the parking heater directly via a computer with internet connection or via mobile telephone.

Remote-controlled immobilization

Applies for the English, Dutch, and Belgian market. A special version with stricter requirements is available for the Brazilian market. Applies from and incl. structure week 201020.

On certain markets there is a function for remote-controlled immobilization and mobilization. The purpose of the function is to nullify the vehicle's programmed keys in case the vehicle is stolen, for example. The vehicle can be immobilized and mobilized either using Volvo On Call service center or via diagnostic commands in VIDA (Volvo scan tool). For certain markets vehicles can only be mobilized by Volvo On Call service center.

If the vehicle is running when immobilization is requested, the vehicle is immobilized at the next start attempt. Central electronic module (CEM) can, in certain markets, request immobilization if the module detects that Phone module (PHM) does not answer to communication. The function remote-controlled immobilization is diagnosed by Central electronic module (CEM). Immobilization and mobilization of vehicles via diagnostic commands takes place via Phone module (PHM).

Unpermitted movement

Applies for the English, Dutch, and Belgian market from and incl. structure week 201020.

When the vehicle is to be used, the drivers must identify themselves by entering a six-digit code. If the vehicle is driven off without entering a code this is counted as an unpermitted movement

The function is activated automatically one minute after the vehicle's engine has been turned off, regardless of if the vehicle is locked or not. When the function is active the vehicle is monitored to detect unpermitted movement. Unpermitted movement is either that the vehicle is moved with the engine off (towing or loading and transport on trailer, etc.) or that the vehicle is driven off with the engine on without the right code having been entered. If the wrong code is entered three times in a row this will also be counted as an unpermitted movement, even if no movement has taken place. The limit value for unpermitted movement varies depending on current sensor status and on which market the vehicle has been sold. The limit value is normally between 100 - 400 metres. The function uses angle sensor, odometer, and GPS to detect unpermitted movement.

If the function detects unpermitted movement of the vehicle, a notice is sent from the vehicle to Volvo's On Call Service Center. The vehicle's owner and authorities or police can then be informed that the vehicle has been stolen. The Phone module (PHM) then continuously sends information to Volvo's On Call Service Center about the vehicle's whereabouts in the form of GPS coordinates. This information can be used to make it easier for the driver and authorities or police to locate and recover the vehicle.

Mobile applications (only applies to MY 2012)

Mobile applications use Volvo On Call to communicate with the vehicle.

SYSTEM OVERVIEW

CONTROL MODULE

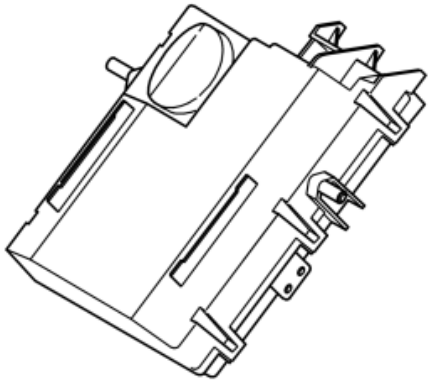

Fig. 132: Identifying Phone Module (Phm)
Courtesy of VOLVO CARS CORPORATION

Two versions of the phone module (PHM) are available, with or without Volvo On Call functionality (market dependent).

The main function of the phone module (PHM) is to manage functions for:

- voice calls
- automatic connection to service centers in the event of a collision or alarm (Volvo On Call)
- connection to a service center for other services when the SOS or ON CALL button (Volvo On Call) has been pressed.

The control module is located behind the center console.

Phone module (PHM) with Volvo On Call functionality cannot be retro fitted.

The phone module (PHM) communicates partly with directly connected components and partly with other control modules via the CAN and MOST networks. All diagnostic communication between VIDA and the phone module (PHM) occurs via the CAN network.

The phone module (PHM) does not have a separate keypad but uses menu handling of the keypad and display for the infotainment control module (ICM).

The control module checks activations and input and output signals using an integrated diagnostic system A diagnostic trouble code (DTC) is stored if the control module detects an error. In certain cases the control module replaces the faulty signal with a substitute value.

For phone modules (PHM) with Volvo On Call functionality the driver will be alerted by a message in the driver information module (DIM) when a diagnostic trouble code (DTC) is stored.

Any diagnostic trouble codes (DTCs) are stored in the control module memory. This information can be read off using VIDA via the data link connector (DLC) in the vehicle.

If the phone module (PHM) is not supplied with voltage there will be no communication with the MOST network and the system will shut off.

The phone module (PHM) has a SIM card reader for the customer private telephone subscription. For phone modules (PHM) with the Volvo On Call function there is also an internally mounted SIM card. This subscription is only connected to the service center which supplies Volvo On Call services.

The following applies to phones with Volvo On Call

A started Volvo On Call service will always have higher priority than a call via the customer's private telephone subscription. A normal phone call will either not be possible or will be interrupted while a Volvo On Call service is active.

The phone module (PHM) with Volvo On Call function has an integrated spare battery. The reserve battery must ensure that the control module is supplied with voltage when a Volvo On Call service is activated if normal battery voltage is not available. This means that the main battery should be disconnected as short time as possible to save the spare battery. The residual capacity of the spare battery is calculated by the control module. When the battery is replaced the level of the capacity must be restored to full value. This is carried out using VIDA (Volvo scan tool). When the calculated capacity has fallen to 30% of full capacity a diagnostic trouble code is stored.

The phone module (PHM) with Volvo On Call function has a reserve microphone and reserve loudspeaker. The loudspeaker is located internally in the control module and the microphone is located by the switches for Volvo On Call. The reserve microphone and the reserve loudspeaker are only used when a Volvo On Call service is activated and the normal loudspeaker and handsfree microphone are not available.

The phone module (PHM) with the Volvo On Call function has an integrated reserve antenna. This is located

internally in the control module. The reserve antenna is only used when a Volvo On Call service is activated and when the normal antenna does not function.

SIGNALS

The table below summarizes the input signals and output signals to and from the phone module (PHM). The signal type is divided into directly connected signals, MOST and CAN communication. The illustration below reproduces the same information and Volvo component designations.

Input signals	Output signals
Directly connected: • SIM card holder (16/94) • Antenna signal, phone (16/64) • Microphone, handset (16/62) (model year-dependent) • Switch for Volvo On Call including reserve microphone (only for Volvo On Call) (3/267) • Collision signal from supplemental restraint system (SRS) (4/9) (only applies to phone modules (PHM) with Volvo On Call)	**Directly connected:** (power supply unless otherwise stated) • Antenna signal, phone (16/64) • Speaker, handset (16/62) (model year-dependent)
Via Controller Area Network (CAN) communication: • Central electronic module (CEM) (4/56) • Supplemental Restraint System Module (SRS) (4/9) • Driver door module (DDM) (3/126) • Passenger door module (PDM) (3/127) • Brake Control Module (BCM) (4/16) • Driver information module (DIM) (5/1)	**Via Controller Area Network (CAN) communication:** • Central electronic module (CEM) (4/56) • Driver information module (DIM) (5/1)
Via MOST communication: • Infotainment control module (ICM) (16/94) • Audio module (AUD) (microphone sound with handsfree) (16/105) • Antenna module (ATM) (16/110) (vehicle position, only applies to -2006 for phone modules (PHM) with Volvo On Call) • Multimedia module (MMM) (16/108) (vehicle position, via GPS, only applies to 2007- for phone modules (PHM) with Volvo On Call) • The Global positioning system module (GPS) (16/139) (only applies to 2007-, for vehicle's	**Via MOST communication:** • Infotainment control module (ICM) (16/94) • Audio module (AUD) (loudspeaker sound for handsfree) (16/105)

with Phone module (PHM) with Volvo On Call that are not equipped with Multimedia module (MMM))	

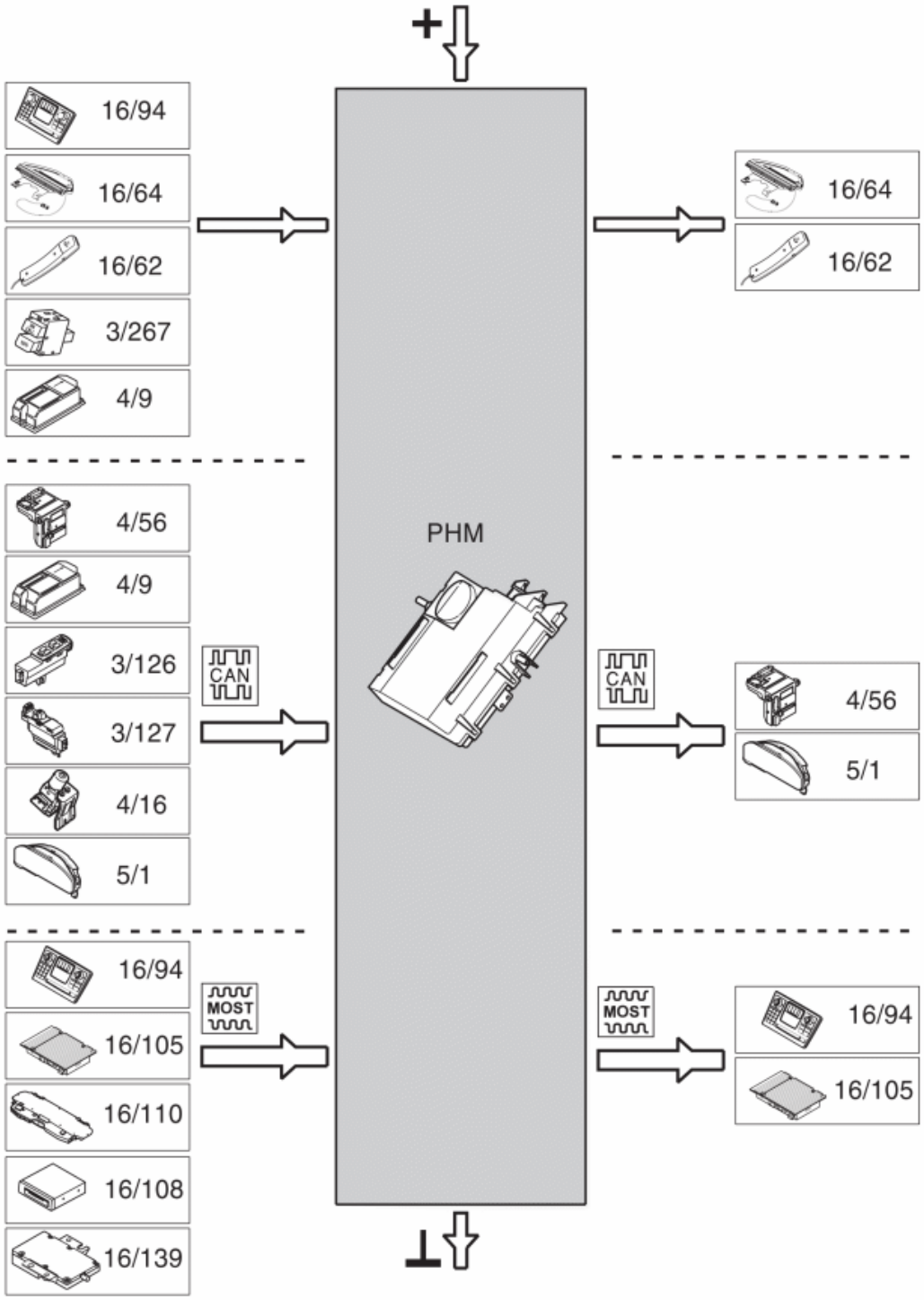
+
16/94
16/64
16/62
3/267
4/9
4/56
4/9
3/126
3/127
4/16
5/1
16/94
16/105
16/110
16/108
16/139
CAN
MOST
PHM
16/64
16/62
CAN
4/56
5/1
MOST
16/94
16/105
⊥

Fig. 133: Identifying Volvo Component Designations
Courtesy of VOLVO CARS CORPORATION

PHONE MODULE (PHM) (2003-2005)

DESIGN

CARPHONE ANTENNA

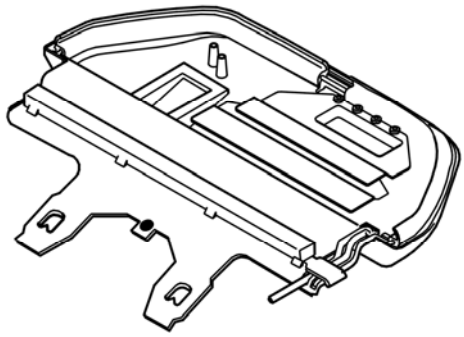

Fig. 134: Identifying Carphone Antenna
Courtesy of VOLVO CARS CORPORATION

The carphone antenna is directly connected to the phone module (PHM).

The carphone antenna is in the front windshield in front of the rear view mirror.

There are diagnostics for the antenna.

HANDSET

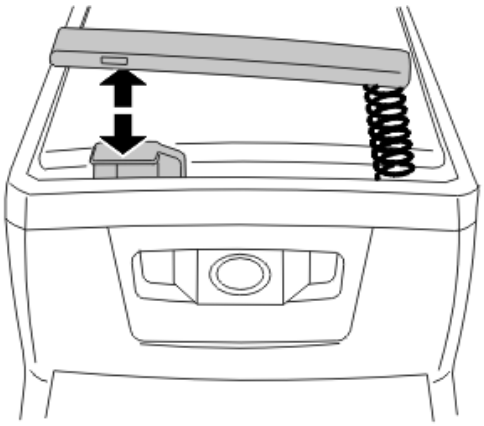

Fig. 135: Identifying Handset
Courtesy of VOLVO CARS CORPORATION

The handset is directly connected to the phone module (PHM). The handset is in the center console.

The phone module (PHM) determines whether to connect the call using hands free or the handset, depending on the signal from the cradle. When the handset is in the cradle, all voice calls are hands free. The handset is activated when it is removed from the cradle. The cradle signal to the phone module (PHM) is controlled by a solenoid switch in the handset. The switch is closed by a magnet in the cradle. When the handset is in the cradle, the cradle signal to the phone module (PHM) is 0 V. The signal is 5 V when the handset is in use.

There are diagnostics for the handset.

SIM CARD HOLDER

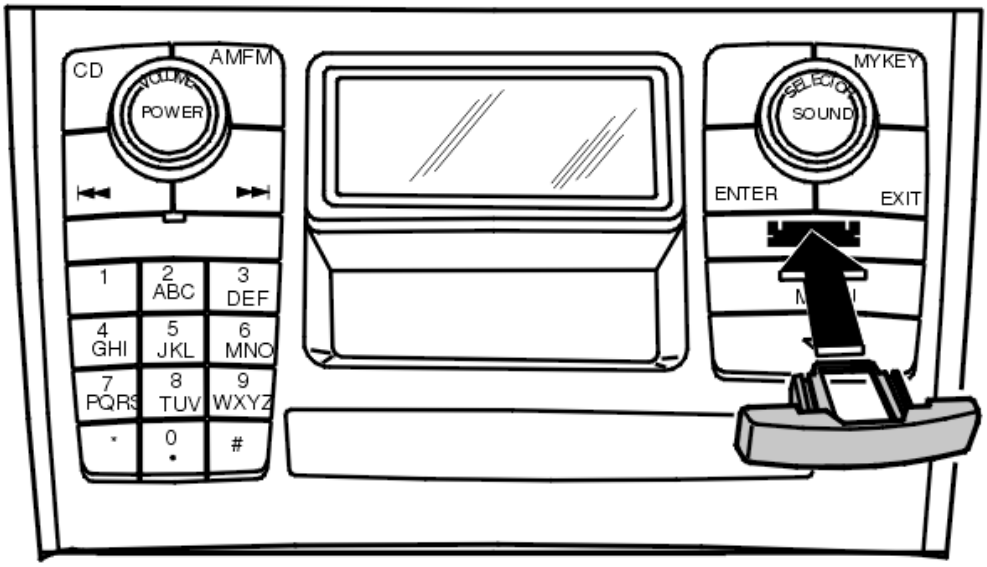

Fig. 136: Locating Sim Card Holder
Courtesy of VOLVO CARS CORPORATION

The holder for the customer's private SIM card is in the keypad for the infotainment control module (ICM). The SIM card holder is connected to the phone module (PHM) via serially connected wiring.

There are diagnostics for the SIM card holder.

DIAGNOSTIC FUNCTIONS

GENERAL

The control module has a built-in diagnostic system, Volvo Diagnostic, which continuously monitors internal functions as well as input and output signals.

DIAGNOSTIC TROUBLE CODES (DTCS)

A diagnostic trouble code (DTC) is stored if the control module detects a fault. A fault which is detected in the most recent operating cycle is defined as permanent. Other faults are defined as intermittent.

The control module can store up to ten diagnostic trouble codes (DTCs).

Should a fault disappear for any reason after being permanently stored in the control module as a diagnostic trouble code (DTC), the information remains stored in the control module.

If a fault is no longer permanent, the diagnostic trouble code (DTC) remains as intermittent.

READING AND ERASING DIAGNOSTIC TROUBLE CODES (DTCS)

Stored diagnostic trouble codes (DTCs) can be read off and erased using this function.

Diagnostic trouble codes (DTCs) can only be erased once all the diagnostic trouble codes (DTCs) have been read off at least once.

READING OFF THE CONTROL MODULE IDENTIFICATION

VIDA identifies control modules by reading off a number of codes from the control module memory.

The codes contain information about the control module:

- hardware P/N (control module without software)
- hardware serial number (control module without software)
- software P/N
- diagnostic software P/N.

READING OFF EXTENDED FAULT-TRACING INFORMATION

This function can be used to read parameters, status identifiers and counters stored at the same time as a diagnostic trouble code (DTC). These are called frozen values.

For further information, see **DESCRIPTION OF FROZEN VALUES, PHONE MODULE (PHM)** .

READING OFF THE PARAMETERS

Using this function, the status or value of parameters can be read off. The presentation of the status or value can be obtained graphically or digitally. For further information about the different parameters, see **DESCRIPTION OF PARAMETERS** .

DOWNLOADING SOFTWARE AND REPLACING THE CONTROL MODULE

New software can be downloaded into the phone module (PHM). When ordering software, the hardware and the software in the car is compared to the Volvo central database. If the comparison is OK the software is downloaded to the control module.

If the comparison between the car and Volvo central database is not OK, the database is updated with the car configuration. When this is complete the software is downloaded.

The control module is positioned behind the center console.

After replacing the control module, check the unique serial number of the infotainment control module (ICM). If the serial number is not correct, the installed control module is not functioning.

If problems arise after downloading the software and the control module does not function, try switching the ignition off and then on again.

When totally reloading the software in the car, select CAN network.

FUNCTION

CARPHONE

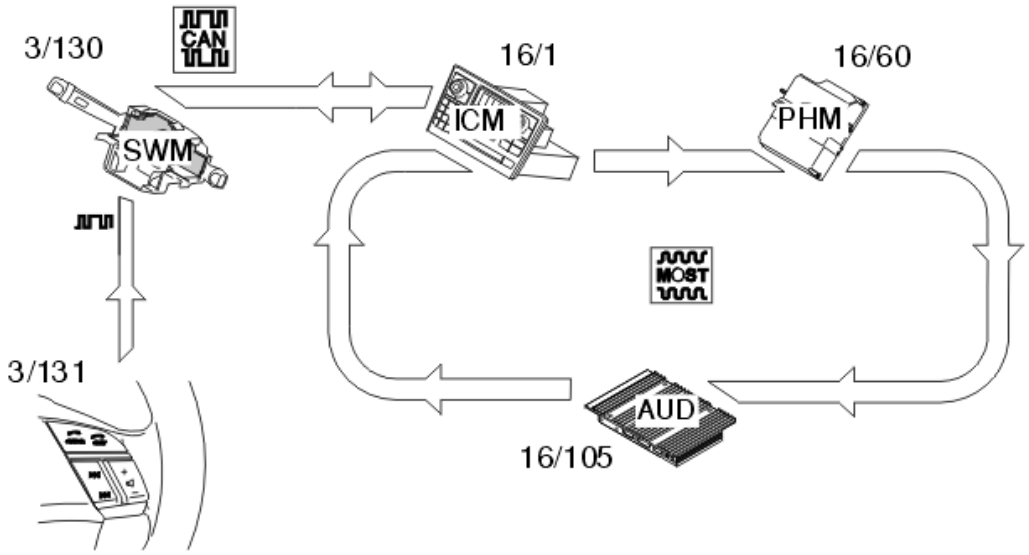

Fig. 137: Identifying Carphone Network
Courtesy of VOLVO CARS CORPORATION

The phone module (PHM) (16/60) for the XC90 does not have its own keypad to control the menus. It uses the keypad on the infotainment control module (ICM) (16/1) panel.

When controlling the menus via the steering wheel buttons (3/131), the information is transmitted from the steering wheel module (SWM) (3/130) to the infotainment control module (ICM) via the CAN network. The information is then sent on to the phone module (PHM) via the MOST network.

The menu is displayed for the user in the infotainment control module's (ICM) display. The information is transmitted from the phone module (PHM) to the infotainment control module (ICM) via the MOST network.

When the phone module (PHM) is started, a request is transmitted to the infotainment control module (ICM) to use the display when there are incoming calls or when the carphone is in use.

Telephone calls can be made either hands free or using the handset. The phone module (PHM) for the XC90 does not have its own microphone or loudspeaker for hands free.

The microphone and loudspeaker for the Audio module (AUD) (16/105) are used instead for hands free calls. The phone module (PHM) transmits a request to the infotainment control module (ICM) to access the audio module (AUD) loudspeaker and microphone.

Communication between the phone module (PHM), infotainment control module (ICM) and audio module (AUD) is via the MOST network.

SYSTEM OVERVIEW

PHONE MODULE (PHM)

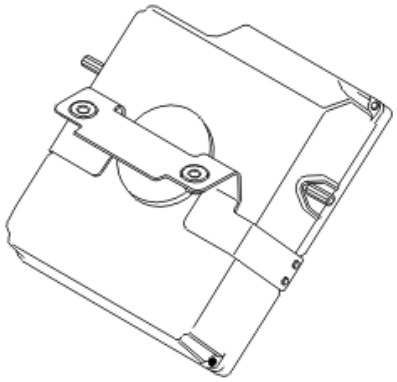

Fig. 138: Viewing Phone Module (PHM)
Courtesy of VOLVO CARS CORPORATION

The main task of the phone module (PHM) is to manage voice calls.

The control module is behind the center console.

The phone module (PHM) communicates with components which are directly connected and with other control modules and components via serial communication. The phone module (PHM) uses the MOST network to communicate with other control modules. Diagnostic communication and software downloads are via the Controller area network (CAN).

The phone module (PHM) does not have its own keypad. The keypad and display for the infotainment control module (ICM) are used to manage menus.

The control module checks activations and input and output signals via an integrated diagnostic system. A

diagnostic trouble code (DTC) is stored if the control module detects an error. In certain cases the control module replaces the faulty signal with a substitute value.

Any diagnostic trouble codes (DTCs) are stored in the control module memory. This information can be read off using VIDA via the data link connector (DLC) in the car.

If the phone module (PHM) is not powered, there will be no MOST network communication. The Infotainment Control Module (ICM) will then shut down all functionality on the MOST network.

SIGNALS

The following table summarizes the input signals to and output signals from the phone module (PHM). The signal types are divided into directly connected signals and MOST communication. The illustration below displays the same information with the Volvo component designations.

Input signals	Output signals
Directly connected: • Antenna signal, carphone (16/64) • Microphone, handset (16/62) • SIM card holder (16/1).	**Directly connected:** (power supply unless otherwise stated) • Antenna signal, carphone (16/64) • Loudspeaker, handset (16/62).
Via MOST communication: • Infotainment Control Module (ICM) (16/1) • Audio control module (AUD) (16/105) microphone sound during hands free usage.	**Via MOST communication:** • Infotainment Control Module (ICM) (16/1) • Audio control module (AUD) (16/105) loudspeaker sound during hands free usage.

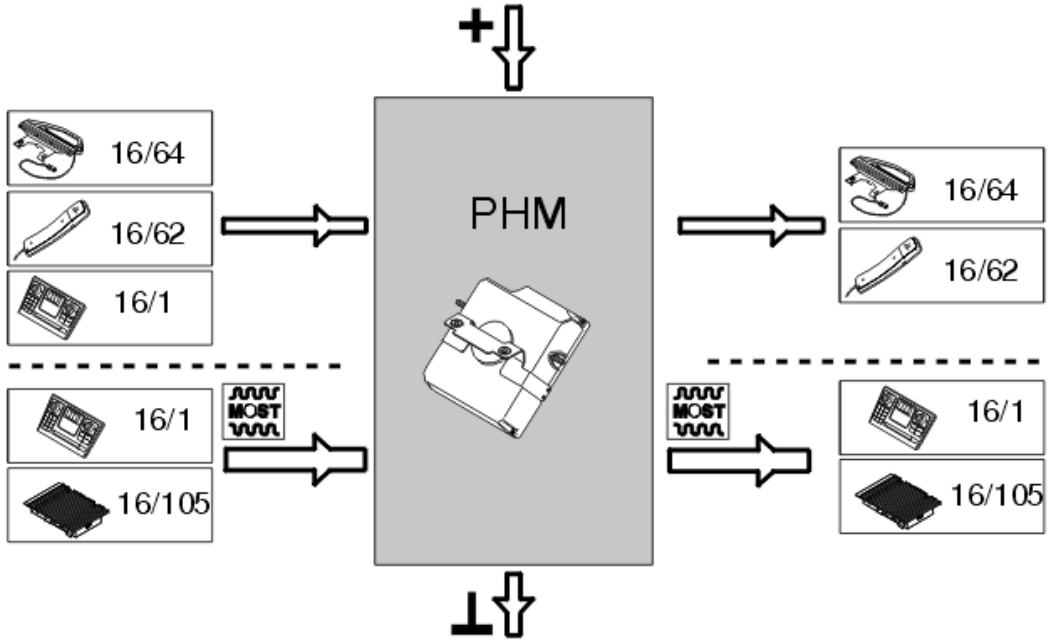

Fig. 139: Identifying Volvo Component Designations
Courtesy of VOLVO CARS CORPORATION

POWER SEAT MODULE (2003-2004)

DESIGN

CONTROL PANEL

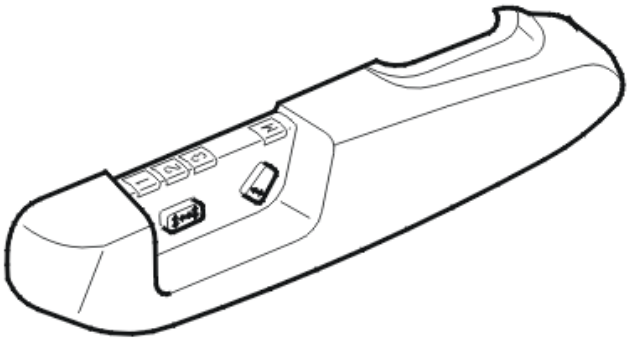

Fig. 140: Identifying Power Seat Control Module
Courtesy of VOLVO CARS CORPORATION

There are two different types of control panels. In cars with power seats without memory, the control panel is directly connected to the motors and does not have a power seat module.

In cars with power seats and memory, the control panel is directly connected to the power seat module. An easy way of differentiating between power seats with memory (power seat module) and power seats without memory is to look at the control panel. Seats without memory do not have memory buttons 1- 3 or a programming button.

This information refers to seats with memory (power seat module) unless otherwise stated.

The control panel is connected to the power seat module via wiring that is integrated in the control panel. The entire control panel must be replaced if there is a fault with the wiring or the panel.

The panel is used to transmit input signals to the control module from the user:

- Runs each of the four motors in the direction required
- Memory buttons. Input signal indicating the position of the buttons (Memory 1, 2 and 3 and the programming button)
- Ground
- To detect that a control panel is connected to the control module.

If there is no supply to the control panel, because of an open-circuit in the cable for example, the control module will not register any input signals from the control panel. If a cable breaks only that function will fail. For

example Memory 1 cannot be programmed but the other memories are functioning.

The wiring cannot be replaced separately. The entire control panel must be replaced if there is a fault.

The control panel can be diagnosed.

DOWNLOADING SOFTWARE AND REPLACING THE CONTROL MODULE

New software can be downloaded into the power seat module. When ordering software, the hardware and the software in the car is compared to the Volvo central database. If the comparison is OK the software is downloaded to the control module.

If the comparison between the car and Volvo central database does not correspond, the database is updated with the configuration of the car. New software is downloaded after the update is complete.

A control module may already have software installed which will result in incorrect information being updated on Volvo's Central Database. To avoid this, tick the box in the VIDA software manager indicating the software has been replaced when the control module has been replaced.

A number of customer parameters can be programmed into the power seat module. These customer parameters are stored in the control module but not in the Volvo central database. This means that the customer parameters must be reprogrammed when the hardware is replaced and when downloading software.

The power seat module calculates the current required by the motors. A current limit can be set to protect the wiring from high currents.

- There is a parameter which detects when the seat has reached its limit position, in other words blocked motor. (Programmable)
- There is a parameter for detecting short-circuits (Can be read off).

The value of the current for a blocked motor can be set using the diagnostic tool. When programming, the value of the blocked motor must be less than the value for a short-circuit. If this is not the case, the control module will indicate a short-circuit in the cable when the seat is run to its limit position.

The motor stops when the current exceeds the value for a blocked motor and the control module registers no pulses from the Hall sensor. The level of current for a blocked motor can be set between 9 and 20 Amperes.

It is possible to reprogram the function so that the seat is automatically set by remote control. With this function activated the seat can be set using the remote control. This function is removed if it is deactivated.

FUNCTION

SEAT PROGRAMMING

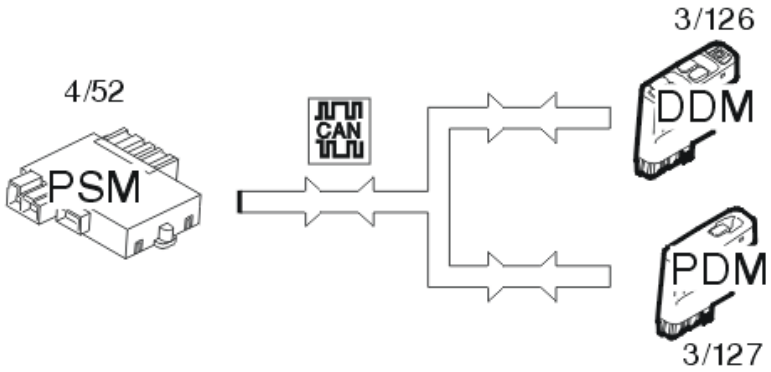

Fig. 141: Identifying Seat Programming Input And Output Signals
Courtesy of VOLVO CARS CORPORATION

There are four buttons for programming seat positions. There are three memory buttons, 1, 2 and 3 and a programming button, MEM.

To program a new seat position, move the seat to the desired position and press MEM and one of the memory buttons at the same time.

To move the seat to a programmed position press and hold down the desired memory button. The button must be kept depressed for the seat to move. The seat stops if the button is released.

The seat stops moving when the position of the seat matches the position programmed into the memory. If another button is pressed the seat will stop moving. The seat will not move if no position is programmed.

If the car was built in structure week 9950 or later, the car has door mirrors with memories. When the desired memory button is pressed, the mirrors and seat are set to the desired positions. Data is sent from the power seat module (4/52) to the passenger door module (3/126) (3/127) to set the door mirrors to the programmed position. The memory positions of the door mirrors are stored in the driver's door module (DDM) (3/126) and passenger door module (PDM) (3/127). When setting a new mirror position, this is stored in each control module. The position of the driver's door mirror is stored in the driver door module (DDM). The position of the passenger door mirror is stored in the passenger door module (PDM).

When the seat is run, a maximum of two motors are activated at the same time. If all motors need to operate to reach the programmed position, there is an order of priority. Motor 1 (front-rear adjustment) and Motor 2 (backrest adjustment) operate first.

Each seat motor has a Hall sensor which detects the current seat position. When one of the stepper motors for the seat is run, the control module counts the number of pulses from the Hall sensor. The Hall sensor counts the number of revolutions made by the motor by detecting a magnet on the motor shaft. This creates a pulse for each revolution of the motor.

When a seat position is stored, information about the number of pulses recorded from each motor is stored in a memory, allowing the position of the seat to be saved.

When one of the memory buttons is pressed in, the control module calculates which motors need to be run and

in which direction to obtain the desired position.

MANEUVERING SEATS WITH MEMORY

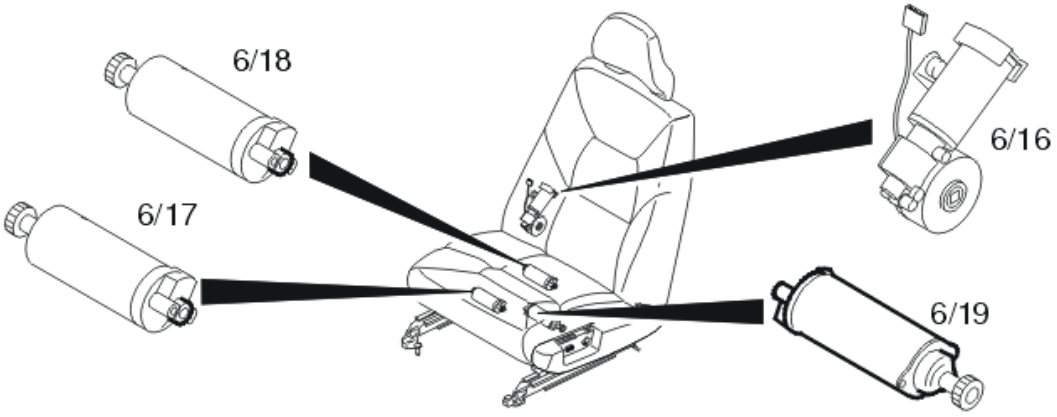

Fig. 142: Identifying Seat Motors
Courtesy of VOLVO CARS CORPORATION

On a power seat, the backrest can be adjusted, the seat height can be altered and the seat can be moved forwards or backwards. There are four motors for moving the seat. The control buttons are on the outside of the seat and are in the shape of a small seat and a small backrest. There are two control buttons on each panel. The buttons are spring-loaded, so they must be held pressed in for the seat to move.

The seat can be maneuvered:

- Within a period of 9 minutes and 40 seconds of the door being opened
- Within 40 seconds of the door being closed
- With the key in the radio position
- With the ignition on.

REMOTE OPERATION OF SEATS

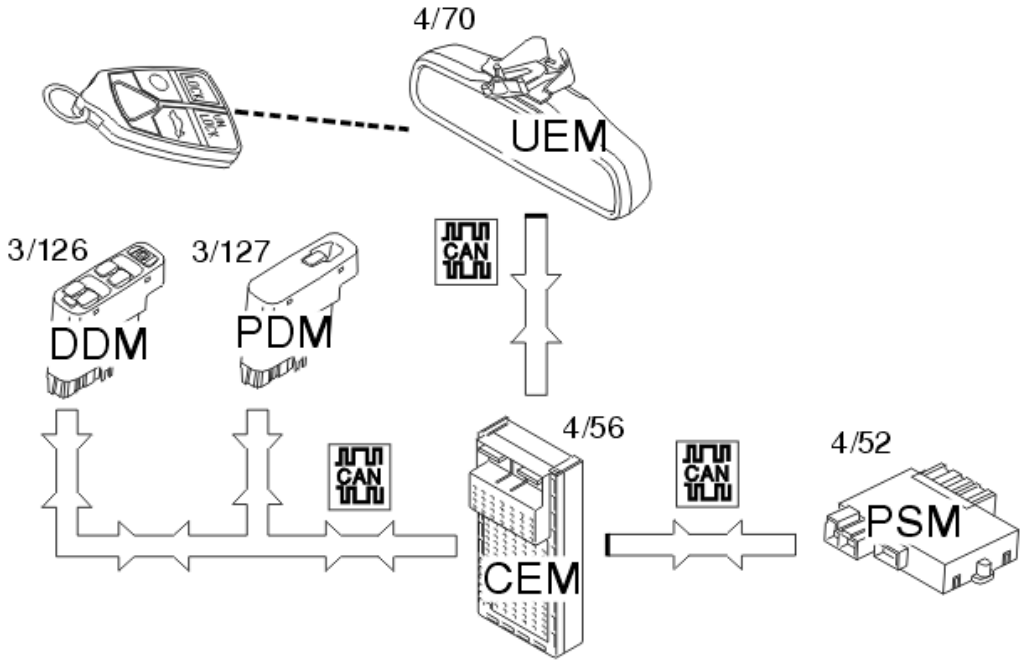

Fig. 143: Identifying Input / Output Signals For Remote Operation Of Seats
Courtesy of VOLVO CARS CORPORATION

There are three memories in the power seat module (PSM) which store the seat positions for a maximum of 3 remote controls. There are also three further memory positions which can be stored from the control panel. The seat can store a total of six different memory positions.

Cars with power seats with memory have a personal setting function. Using this function, the positions of the mirrors and seat can be stored individually for each remote control (a maximum of three remote controls, i. e. remote memory positions 1, 2 and 3).

The customer parameters in the power seat module (4/52) determine whether the remote memory for the seat is activated or not.

From model year 2003 inclusive the remote control memory for the mirrors can also be switched off. This is done using a customer parameter in the driver's door module (DDM) (3/126) and passenger door module (PDM) (3/127). "Programming of the remote control settings" for seats and mirrors is carried out via VIDA vehicle communication.

The signal from the remote control is transmitted to the upper control module (UEM) (4/70) when the car is locked or unlocked. The upper electronic module (UEM) also identifies which remote control is being used. The central electronic module (CEM) (4/56) receives this information from the upper electronic module (UEM). The central electronic module (CEM) identifies and stores the remote control which is being used and determines the data to be sent to the power seat module (PSM) (4/52), driver door module (DDM) (3/126) and passenger door module (PDM) (3/127). This is done when the door is opened.

For model year 2003 the central electronic module (CEM) transmits information about which remote control locked the car.

From model year 2003 inclusive , the central electronic module (CEM) transmits information about which remote control locked the car and which unlocked the car.

If the position of the seat is changed, the power seat module (PSM) (4/52) stores the new position before reverting to sleep mode.

Remote memory positions are stored in the power seat module (PSM) in the following cases:

- 10 minutes after the door has been opened
- 1 minute after the door has been closed
- With the ignition off
- When the key is removed from the ignition switch
- When a new remote control is activated.

The remote memory positions for the door mirrors are stored for the driver door module (DDM) and passenger door module (PDM) in the following cases:

- When the key is removed from the ignition switch
- When a new remote control is activated.

When the car is unlocked, the power seat module (PSM) uses the information about which remote control unlocked the car. This is so that the correct remote memory position can be selected (i. e. the seat position last set by the driver for this remote control). When the door is opened the seat starts to move to the programmed remote memory position. The seat can be stopped by pressing one of the buttons on the control panel.

If the car is opened with a key, the memory settings for the seat are not affected. Remote operation of the seat is not possible if the key is in the ignition switch.

On model year 1999-2002 cars, the system may exhibit unwanted properties. Only information about which remote control unlocked the car is transmitted, a new memory position is not stored if the car was unlocked before this. This is because when a car door is opened and the power seat module (PSM) switches into active mode, the module is unable to identify which remote control is being used.

In addition, when a door is open, it takes 10 minutes before the power seat module (PSM) switches to sleep mode. If this occurs, and the customer then attempts to set a new seat position, the information about which remote control opened the door will have been lost and a new memory position will not be stored.

MANEUVERING SEATS WITHOUT MEMORY

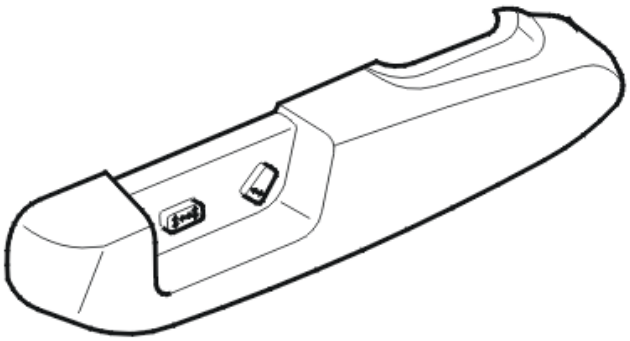

Fig. 144: Identifying Seats Control Panel
Courtesy of VOLVO CARS CORPORATION

Power seats without memory do not have memory management buttons. The seat motors can only be operated directly via the control panel. This type of seat does not have a power seat module (PSM). The seat motors are directly connected to the control panel.

POWER SEAT MODULE DIAGNOSTIC FUNCTIONS

GENERAL

The control module has a built-in diagnostic system, the Volvo on-board diagnostic (OBD) system, which continuously monitors itself and its input and output signals.

DIAGNOSTIC TROUBLE CODES (DTCS)

If the control module detects a fault it will store a diagnostic trouble code (DTC). A fault which is detected in the latest driving cycle is defined as permanent. Other detected faults are defined as intermittent.

READING AND ERASING DIAGNOSTIC TROUBLE CODES (DTCS)

Stored diagnostic trouble codes (DTCs) can be erased using this function.

Erasing diagnostic trouble codes (DTCs) can only be carried out when all diagnostic trouble codes (DTCs) have been read at least once.

READING OFF CONTROL MODULE IDENTIFICATION

VIDA identifies the control modules by reading off a number of codes from control module memory.

The codes contain information about control module:

- P/N hardware (control module without software)
- serial number hardware (control module without software)
- P/N software

- P/N diagnostic software

SYSTEM OVERVIEW

CONTROL MODULE

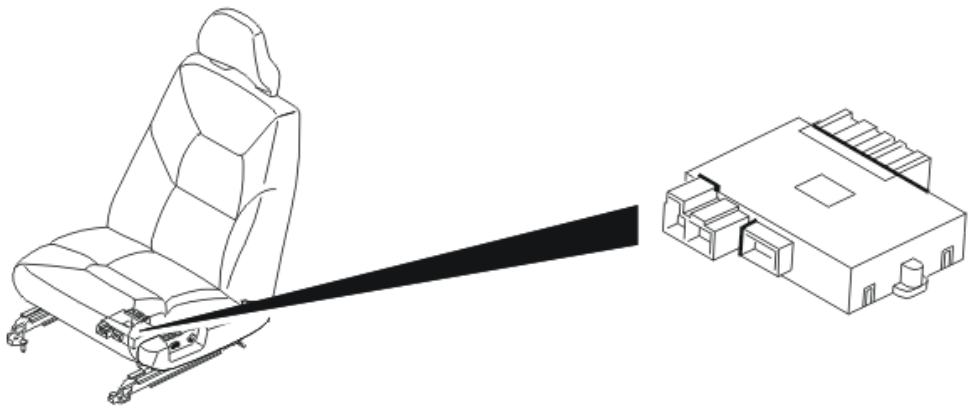

Fig. 145: Identifying Power Seat Control Module
Courtesy of VOLVO CARS CORPORATION

The task of the power seat module is to manage the following functions:

- Seat maneuvering
- Storage of memory positions (seat positions only).

The control module is under the seat on the driver's side. The seat must be removed in order to replace the control module.

The power seat module is directly connected to components and to other control modules via CAN communication.

The control module checks activations and input and output signals through an integrated diagnostic system A diagnostic trouble code (DTC) is stored in certain cases if the control module detects a fault.

Diagnostic trouble codes (DTC) are stored in the control module memory. The data can be read off using the diagnostic tool.

A simple way to check that the power seat module (4/52) is supplied with power and grounded is to move the seat.

If the voltage is below 8.5 V or above 16.0 V the power seat module will not function. If the voltage increases to 9.0 V or falls to 15.5 V the control module will function again.

SIGNALS

The table below summarizes input and output signals to and from the power seat module (4/52). The signal

types are divided into directly connected signals, serial communication and Control area network (CAN) communication. The illustration below displays the same information with the Volvo component designations.

Input signals	Output signals
Directly connected: Control panel (3/26) with: • Control buttons (eight input signals, two buttons) • Memory button 1, 2 and 3 • Programming button (MEM). Hall sensors (four integrated in the seat motor) Control circuit connected to the control panel	**Directly connected:** (power supply unless otherwise stated) Seat motors (6/16-19) (four) Voltage supply signal EXT. X
Via Control Area Network (CAN): Central electronic module (4/56) Upper electronic module (4/70)	**Via Control Area Network (CAN):** Passenger door module (3/126) Driver's door module (3/127)

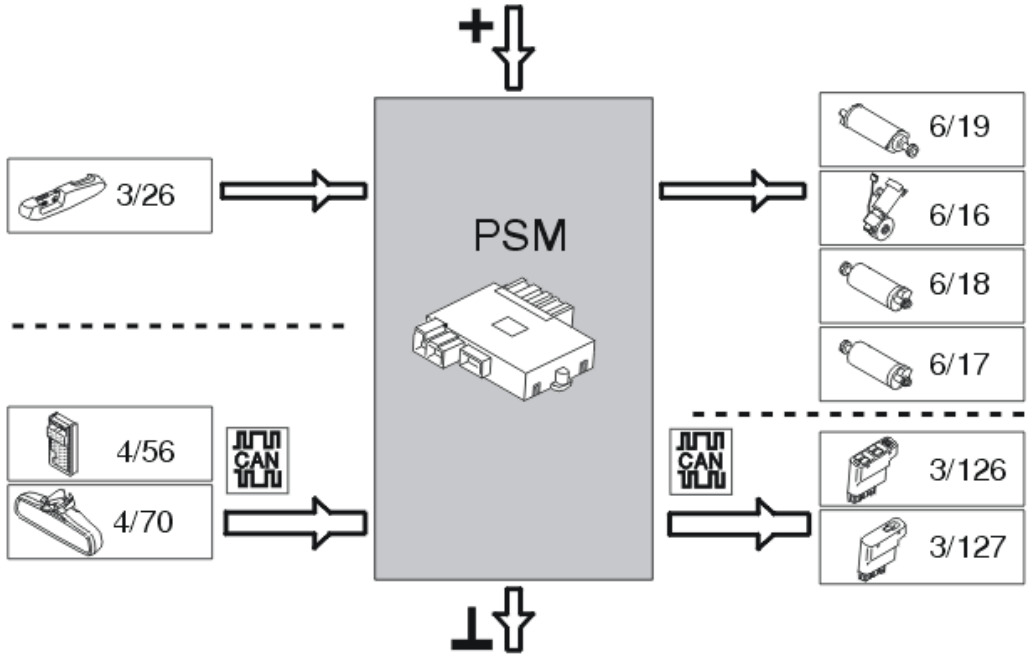

Fig. 146: Identifying Volvo Component Designations
Courtesy of VOLVO CARS CORPORATION

POWER SEAT MODULE (PSM) (2005-2012)

DESIGN

CONTROL PANEL

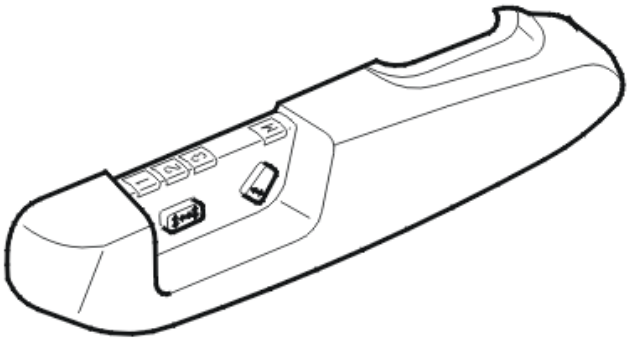

Fig. 147: Identifying Power Seat Control Module
Courtesy of VOLVO CARS CORPORATION

There are two different types of control panels. In vehicles with power seats without memory, the control panel is directly connected to the motors and does not have a power seat module (PSM).

In vehicles with power seats with memory, the control panel is directly connected to the power seat module (PSM). An easy way of differentiating between power seats with memory and power seats without memory is to look at the control panel. Seats without memory do not have memory buttons 1- 3 or a programming button.

This information refers to seats with memory (with a power seat module (PSM)) unless otherwise stated.

The control panel is connected to the control module via wiring that is integrated in the control panel. The entire control panel must be replaced if there is a fault with the wiring or the panel.

The panel is used to transmit input signals to the control module from the user:

- Runs each of the four motors in the direction required
- Memory buttons. Input signal indicating the position of the buttons (Memory 1, 2 and 3 and the programming button)
- Ground
- To detect that a control panel is connected to the control module.

If there is no supply to the control panel, because of an open-circuit in the cable for example, the control module will not register any input signals from the control panel. If a cable breaks only that function will fail. For example Memory 1 cannot be programmed but the other memories are functioning.

The wiring cannot be replaced separately. The entire control panel must be replaced if there is a fault.

There are diagnostics for the control panel.

DIAGNOSTIC FUNCTIONS

GENERAL

The control module has a built-in diagnostic system, Volvo Diagnostic, which continuously monitors internal functions as well as input and output signals.

DIAGNOSTIC TROUBLE CODES (DTCS)

A diagnostic trouble code (DTC) is stored if the control module detects a fault. A fault which is detected in the most recent operating cycle is defined as permanent. Other faults which are detected are defined as intermittent.

READING AND ERASING DIAGNOSTIC TROUBLE CODES (DTCS)

Stored diagnostic trouble codes (DTCs) can be read off and erased using this function.

Diagnostic trouble codes (DTCs) can only be erased once all the diagnostic trouble codes (DTCs) have been read off at least once.

READING OFF CONTROL MODULE IDENTIFICATION

VIDA identifies control modules by reading off a number of codes from the control module memory. The codes contain information about the control module:

- hardware P/N (control module without software)
- hardware serial number (control module without software)
- software P/N
- diagnostic software P/N.

DOWNLOADING SOFTWARE AND REPLACING THE CONTROL MODULE

New software can be downloaded into the engine power seat module (PSM). When ordering software, the hardware and the software in the car is compared to the information in the Volvo central database. If the comparison is OK the software is downloaded to the control module.

If the comparison between the car and the Volvo central database does not correspond, the database is updated with the configuration of the car. New software is downloaded after the update is complete.

A control module may already have software installed which will result in incorrect information being updated in the Volvo Central Database. To avoid this, tick the box in the VIDA software manager indicating the software has been replaced when the control module has been replaced.

A number of customer parameters can be programmed into the power seat module (PSM). These customer parameters are stored in the control module but not in the Volvo central database. This means that the customer parameters must be reprogrammed when the hardware is replaced and when downloading software.

The power seat module (PSM) calculates the current required by the motors. A current limit can be set to protect the wiring from high currents.

- There is a parameter which detects when the seat has reached its limit position, in other words blocked motor. (Programmable)
- There is a parameter for detecting short-circuits. (Can be read off).

The value of the current for a blocked motor can be programmed using VIDA (Volvo scan tool). When programming, the value of the blocked motor must be less than the value for a short-circuit. If this is not the case, the control module will indicate a short-circuit in the cable when the seat is run to its limit position.

The motor stops when the current exceeds the value for a blocked motor and the control module registers no pulses from the Hall sensor. The level of current for a blocked motor can be set between 9 and 20 Amperes.

It is possible to reprogram the function so that the seat is automatically set by remote control. With this function activated the seat can be set using the remote control. This function is not available if it is deactivated.

FUNCTION

SEAT PROGRAMMING

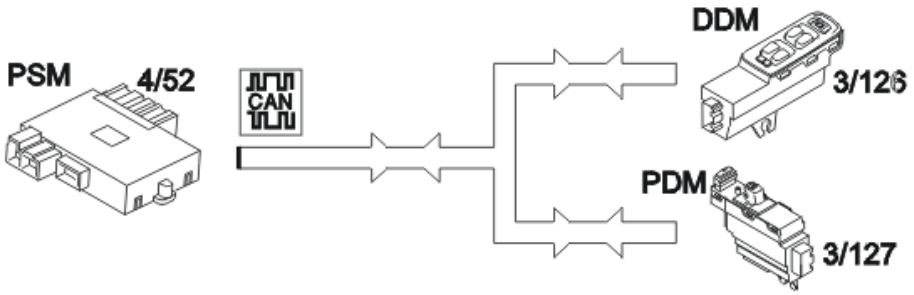

Fig. 148: Identifying Seat Programming Communication Links
Courtesy of VOLVO CARS CORPORATION

There are four buttons for programming seat positions. There are three memory buttons, 1, 2 and 3 and a programming button, MEM.

To program a new seat position, move the seat to the desired position and press MEM and one of the memory buttons at the same time.

To move the seat to a programmed position press and hold down the desired memory button. The button must be kept depressed for the seat to move. The seat stops if the button is released.

The seat stops moving when the position of the seat matches the position programmed into the memory. If another button is pressed the seat will stop moving. The seat will not move if no position is programmed.

On vehicles with mirrors with memories, the desired positions for the mirrors and seat are set when the relevant memory button is pressed. Information is sent from the power seat module (PSM) (4/52) to the passenger door

module (PDM) (3/127) and driver door module (DDM) (3/126) to set the door mirrors to the programmed position. The memory position of the door mirrors are stored in the driver door module (DDM) and the passenger door module (PDM). When setting a new mirror position, this is stored in each control module. The position of the door mirror on the driver's side is stored in the driver door module (DDM). The position of the door mirror on the passenger side is stored in the passenger door module (PDM).

When the seat is run, a maximum of two motors are activated at the same time. If all motors need to operate to reach the programmed position, there is an order of priority. Motor 1 (front-rear adjustment) and Motor 2 (backrest adjustment) operate first.

Each seat motor has a Hall sensor which detects the present position of the seat. When one of the stepper motors for the seat is run, the control module counts the number of pulses from the Hall sensor. The Hall sensor counts the number of revolutions made by the motor by detecting a magnet on the motor shaft. This creates a pulse for each revolution of the motor.

When a seat position is stored, information about the number of pulses recorded from each motor is stored in a memory, allowing the position of the seat to be saved.

When one of the memory buttons is pressed in, the control module calculates which motors need to be run and in which direction to obtain the desired position.

MANEUVERING SEATS WITH MEMORY

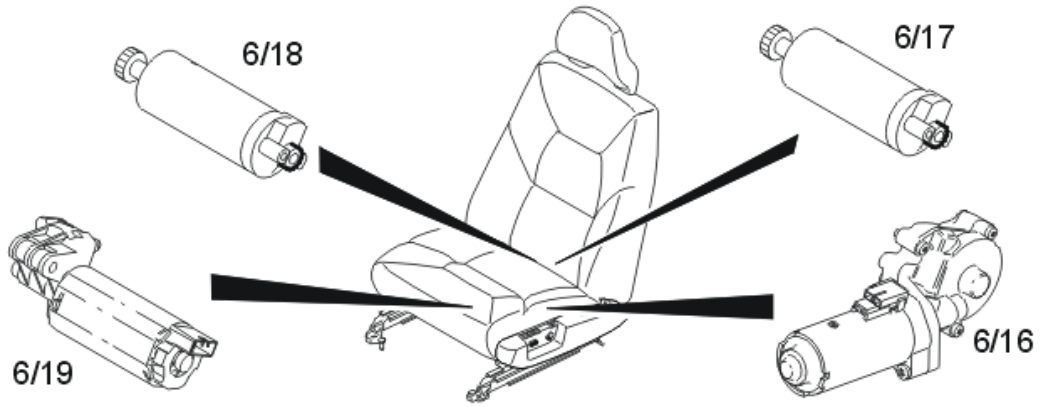

Fig. 149: Locating Seat Memory And Control Components
Courtesy of VOLVO CARS CORPORATION

On a power seat, the backrest can be adjusted, the seat height can be altered and the seat can be moved forwards or backwards. There are four motors for moving the seat. The control buttons are on the outside of the seat and are in the shape of a small seat and a small backrest. There are two control buttons on each panel. The buttons are spring-loaded, so they must be held pressed in for the seat to move.

The seat can be maneuvered:

- Within a period of 9 minutes and 40 seconds of the door being opened
- Within 40 seconds of the door being closed

- With the key in the radio position
- With the ignition on.

REMOTE OPERATION OF SEATS

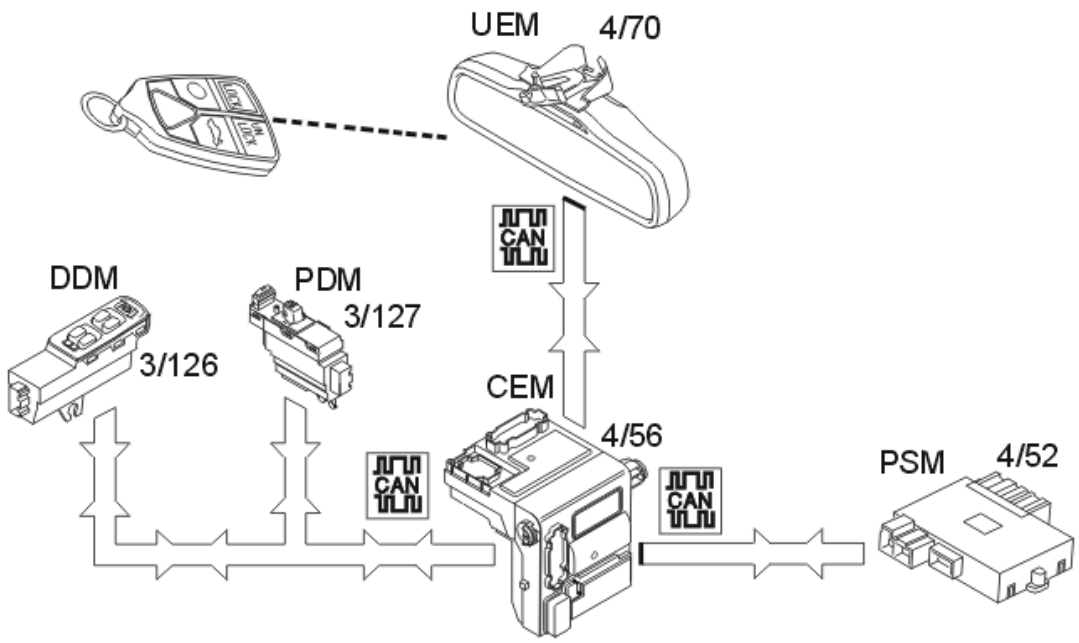

Fig. 150: Identifying Remote Operation Of Seats
Courtesy of VOLVO CARS CORPORATION

There are three memories in the power seat module (PSM) which store the seat positions for a maximum of 3 remote controls. There are also three further memory positions which can be stored from the control panel. The seat can store a total of six different memory positions.

Cars with power seats with memory have a personal setting function. Using this function, the positions of the mirrors and seat can be stored individually for each remote control (a maximum of three remote controls, i. e. remote memory positions 1, 2 and 3).

The customer parameters in the power seat module (PSM) (4/52) determine whether the remote memory for the seat is activated or not.

The remote control memory for the door mirrors can also be switched off. This is done using a customer parameter in the driver door module (DDM) (3/126) and passenger door module (PDM) (3/127). "Programming of the remote control settings" for seats and mirrors is carried out via VIDA vehicle communication.

The signal from the remote control is transmitted to the upper control module (UEM) (4/70) when the car is locked or unlocked. The upper electronic module (UEM) also identifies which remote control is being used. The central electronic module (CEM) (4/56) receives this information from the upper electronic module (UEM). The central electronic module (CEM) identifies and stores the remote control which is used. It also determines what

information must be sent to the power seat module (PSM), driver door module (DDM) and passenger door module (PDM). This is done when the door is opened.

The central electronic module (CEM) transmits information about which remote control locked the vehicle and which remote control unlocked the vehicle.

If the position of the seat is changed, this new position is stored after 5 seconds.

Remote memory positions are stored in the power seat module (PSM) in the following cases:

- 5 minutes after the door has been opened
- 1 minute after the door has been closed
- With the ignition off
- When the key is removed from the ignition switch
- When a new remote control is activated.

The remote memory positions for the door mirrors are stored for the driver door module (DDM) and passenger door module (PDM) in the following cases:

- When the key is removed from the ignition switch
- When a new remote control is activated.

When the car is unlocked, the power seat module (PSM) uses the information about which remote control unlocked the car. This is so that the correct remote memory position can be selected (i. e. the seat position last set by the driver for this remote control). When the door is opened the seat starts to move to the programmed remote memory position. The seat can be stopped by pressing one of the buttons on the control panel.

If the car is opened with a key, the memory settings for the seat are not affected. Remote operation of the seat is not possible if the key is in the ignition switch.

In addition, when a door is open, it takes 5 minutes before the power seat module (PSM) switches to sleep mode. If this occurs, and the customer then attempts to set a new seat position, the information about which remote control opened the door will have been lost and a new memory position will not be stored.

MANEUVERING SEATS WITHOUT MEMORY

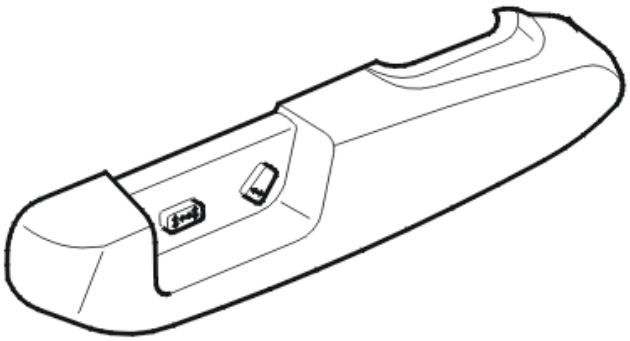

Fig. 151: Identifying Seats Control Panel
Courtesy of VOLVO CARS CORPORATION

Power seats without memory do not have memory management buttons. The seat motors can only be operated directly via the control panel. This type of seat does not have a power seat module (PSM). The seat motors are directly connected to the control panel.

SYSTEM OVERVIEW

CONTROL MODULE

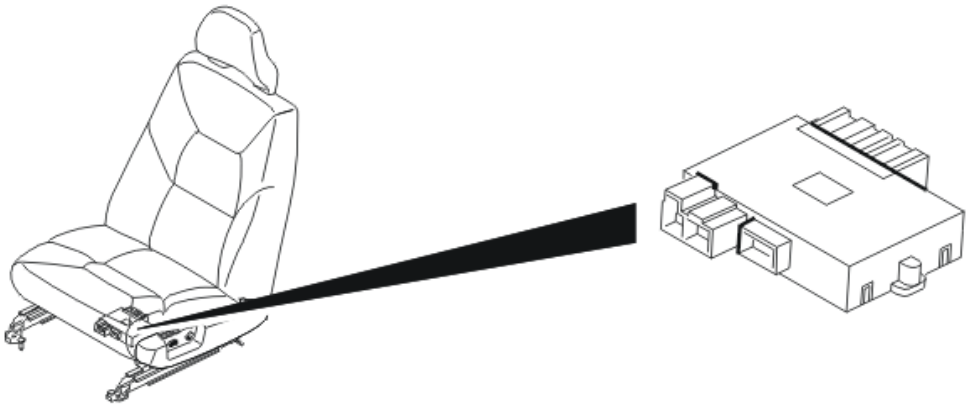

Fig. 152: Identifying Power Seat Control Module
Courtesy of VOLVO CARS CORPORATION

The primary task of the power seat module (PSM) is to manage the functions for:

- seat operation
- storage of memory positions (seat positions only).

The control module is under the seat on the driver's side. The seat must be removed in order to replace the control module.

The power seat module (PSM) communicates with directly connected components and with other control

modules via CAN communication.

The control module checks activations and input and output signals via an integrated diagnostic system. A diagnostic trouble code (DTC) is stored in certain cases if the control module detects a fault.

Any diagnostic trouble codes (DTCs) are stored in the control module memory. The data can be read off using VIDA (Volvo scan tool).

A simple way to check that the power seat module is supplied with power and grounded is to move the seat.

If the voltage is below 8.5 V or above 16.0 V, the power seat module (PSM) will not function. If the voltage increases to above 9.0 V or falls below 15.5 V, the control module will function again.

SIGNALS

The table below summarizes input and output signals to and from the power seat module (PSM) (4/52). The signal types are divided into directly connected signals, serial communication and controller area network (CAN) communication. The illustration below displays the same information with the Volvo component designations.

Input signals	Output signals

Directly connected:
• Control panel (3/26) with:
  • Control buttons (eight input signals, two buttons)
  • Memory button 1, 2 and 3
  • Programming button (MEM).
• Hall sensors (four integrated into the seat motor)
• Control circuit connected to the control panel.
	Directly connected:
	• Seat motors (6/16-19) (four units).

Via Controller Area Network (CAN) communication: • Central electronic module (CEM) (4/56) • Upper electronic module (UEM) (4/70).	**Via Controller Area Network (CAN) communication:** • Driver door module (DDM) (3/126) • Passenger door module (PDM) (3/127).

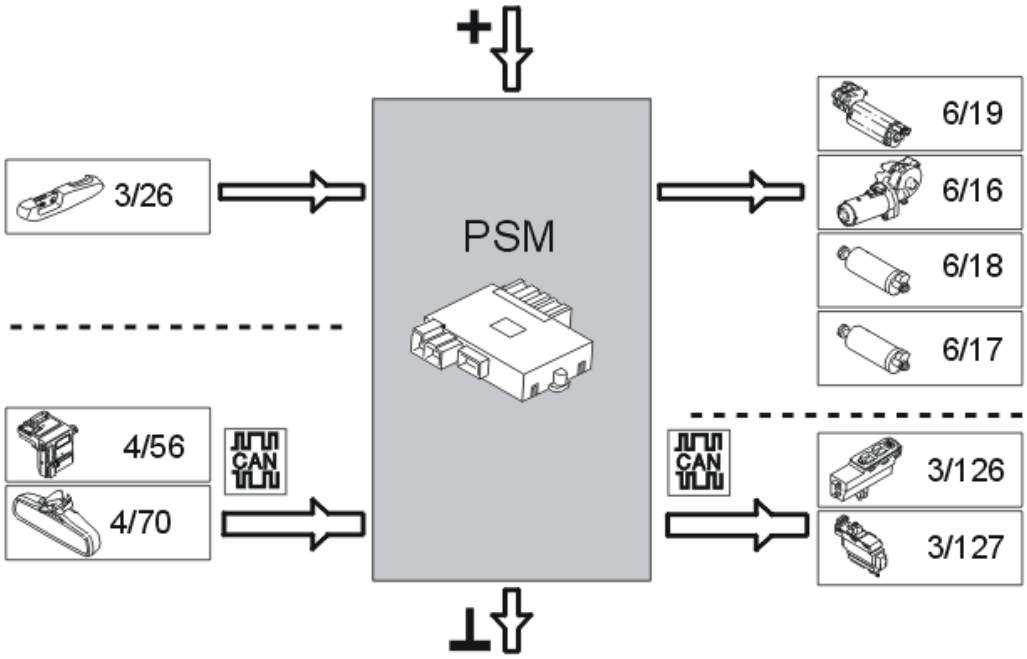

Fig. 153: Identifying Volvo Component Designations
Courtesy of VOLVO CARS CORPORATION

REAR ELECTRONIC MODULE (REM) (2003-2004)

DESIGN

INCLINATION SENSOR MODULE (ISM)

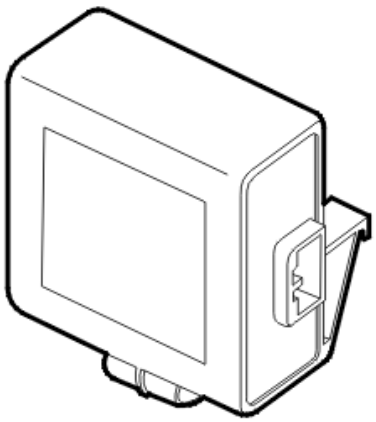

Fig. 154: Identifying Inclination Sensor Module
Courtesy of VOLVO CARS CORPORATION

The inclination sensor module (ISM) is on the left-hand side of the rear relay box.

The inclination sensor module (ISM) is powered from the rear electronic module (REM), which both activates and deactivates it. Information is transferred from the inclination sensor module (ISM) to the rear electronic

module (REM) using serial communication.

The inclination sensor module (ISM) detects when the angle of the car changes. If the angle changes when the car is alarmed, a signal is transmitted to the rear electronic module (REM) which sends this data out on the controller area network (CAN) to activate the alarm.

There are diagnostics for the Inclination Sensor Module (ISM).

HEADLAMP RANGE ADJUSTMENT POSITION SENSORS (BI-XENON)

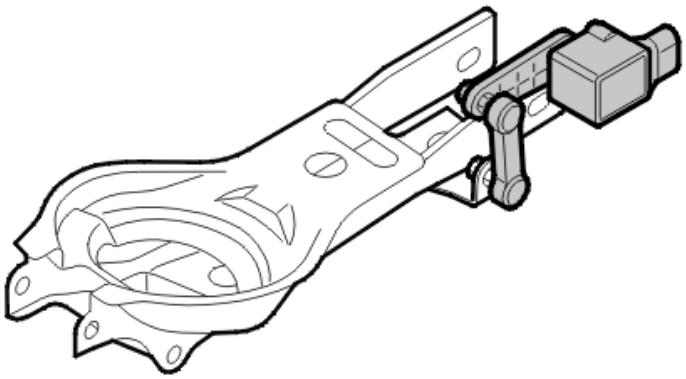

Fig. 155: Headlamp Range Adjustment Position Sensors (Bi-Xenon)
Courtesy of VOLVO CARS CORPORATION

Cars with Bi-Xenon lamps have a position sensor so that the headlamps can automatically adjust beam length. The vertical adjustment accounts for load and road conditions to reduce the risk of dazzle.

The position sensor is beside the rear axle and is connected to the left-hand rear control arm by a linkage system. This linkage system affects the sensor, allowing the angle of the car to be gauged.

The position sensor is directly connected to the rear electronic module (REM) via three inputs. Two are used for the power supply and ground connection for the sensor. One input is used for signals about the angle of the car. The signals are received by the rear electronic module (REM) which sends them onwards via the Control area network (CAN) to the central electronic module (CEM) which controls the headlamp range adjustment function.

The position sensor can be calibrated using VIDA (Volvo scan tool). The calibration is saved in the rear electronic module (REM) and must be carried out again if the rear electronic module (REM) or position sensor is replaced.

There are diagnostics for the position sensor.

FUEL LEVEL

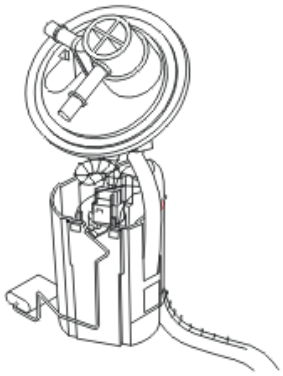

Fig. 156: Fuel Level Sensor
Courtesy of VOLVO CARS CORPORATION

The fuel level in the tank is measured by two sensors. The sensors are located on each side of the fuel tank. Cars with engine B5244S6 have only one sensor, on the pump side. The sensors are directly connected to the rear electronic module (REM).

There are different tables for different fuel tank sizes. These are stored in the rear electronic module (REM) and indicate which sensor values correspond to the remaining fuel in the tank. The rear electronic module (REM) determines which tank is in the car by reading a parameter.

The resistance of the sensor increases as the fuel volume in the tank decreases. The signals from the sensors are compared with the values in the fuel tank table to obtain a value for the remaining fuel volume. This data is displayed by the fuel gauge in the driver information module (DIM).

If the sensors are faulty, the fuel gauge will show 0.

There are diagnostics for the fuel level sensors.

FUEL LEVEL (BI-FUEL)

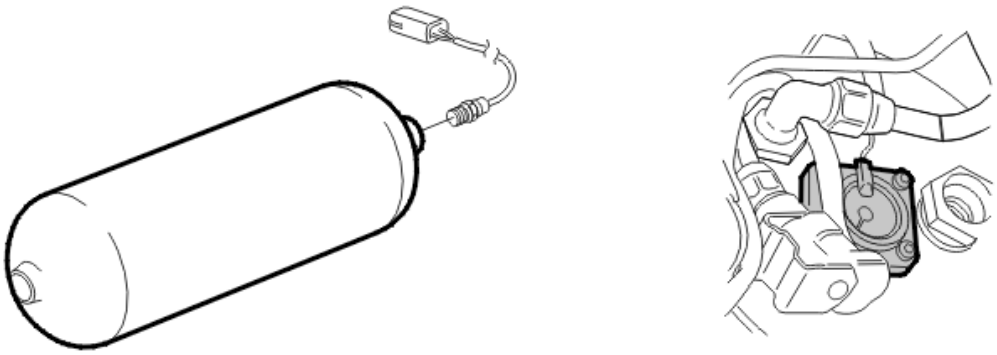

Fig. 157: Fuel Level Sensor (Bi-Fuel)
Courtesy of VOLVO CARS CORPORATION

CNG (Compressed Natural Gas)

The fuel level in the gasoline tank operates in the same way as for cars with B5244S6 engines, using a sensor in the tank. A combined pressure and temperature sensor is used to measure the fuel level in the gas tank. The sensor is on the left-hand side of the gas tank.

The sensor is directly connected to the rear electronic module (REM). The signals from the sensor are transmitted to the rear electronic module (REM) where they are calculated and sent to the driver information module (DIM) via the Control area network (CAN).

There are diagnostics for the fuel level sensor.

LPG (Liquefied Petroleum Gas)

The fuel level in the gasoline tank operates in the same way as for cars with B5244S6 engines, using a sensor in the tank.

A sensor, on the right-hand side of the tank, is used to measure the fuel level in the LPG tank. The sensor is directly connected to the rear electronic module (REM). The signals from the sensor are compared with a table stored in the rear electronic module (REM). Data about the remaining volume of fuel is transmitted via the Control area network (CAN) to the driver information module (DIM).

There are diagnostics for the fuel level sensor.

SHUT-OFF VALVE (BI-FUEL)

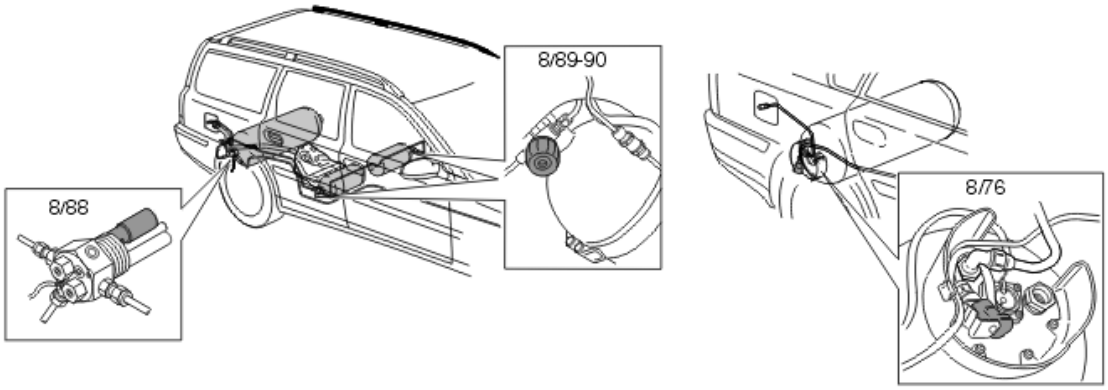

Fig. 158: Identifying Shut-Off Valve (Bi-Fuel)
Courtesy of VOLVO CARS CORPORATION

There are shut-off valves on the gas tanks to open and close the tank valves on bi-fuel cars.

These are positioned at the inlet/outlet on each gas tank. There is one for LPG and three for CNG.

The valves are controlled electro-magnetically and powered via a relay directly connected to the rear electronic module (REM). The rear electronic module (REM) activates the relay when a request for gas power is transmitted on the controller area network (CAN).

The valves close when the car is running on gasoline, when the ignition is switched off or in the event of a collision.

The valves can be opened via a diagnostic command by activating the relay for the gas valves. Activation is carried out in VIDA via the vehicle communication socket.

The valves can also be closed manually using an Allen key or opened by unscrewing the shut-off valve and replacing it with a special tool.

There are diagnostics for the shut-off valve relay.

REAR FOG LAMP

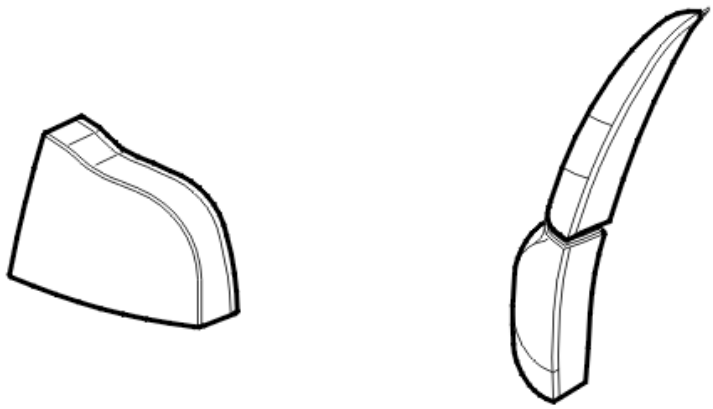

Fig. 159: Identifying Rear Fog Lamp And Back-Up Lamp
Courtesy of VOLVO CARS CORPORATION

The rear fog lamp are in the tail lamps. The fog lamps are operated via a button in the light switch module (LSM). An LED in the button lights when the fog lamps are activated. The rear fog lamp can only be activated when low beam is on (market dependent). The light switch transmits information to the central electronic module (CEM) using serial communication when the button for the rear fog lamp is pressed. The central electronic module (CEM) transmits the data via the Controller area network (CAN) to the rear electronic module (REM). The power supply for the lamps is via a directly connected relay on the rear electronic module (REM).

When reactivating key position II, the function is set to non-activated mode.

In order to detect bulb faults for the rear fog lamp, the rear electronic module (REM) detects the power consumption in the circuit using a directly connected shunt. If the power consumption falls below a certain limit, a fault is indicated and a text message is displayed in the driver information module (DIM).

There are diagnostics for the rear fog lamp relay.

BACK-UP LAMP

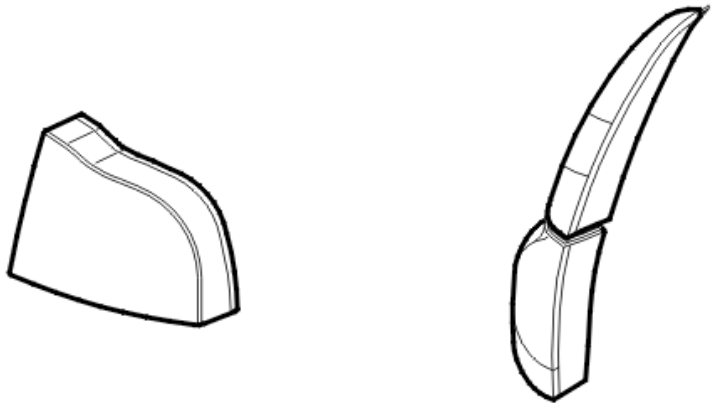

Fig. 160: Identifying Rear Fog Lamp And Back-Up Lamp
Courtesy of VOLVO CARS CORPORATION

There are two back-up (reversing) lamps. These are in the tail lamps. The back-up (reversing) lamp lights when back-up (reverse) gear is selected. The back-up (reversing) lamps are connected to the rear electronic module (REM) via a directly connected relay. The lamps are powered via the relay.

Cars with manual transmissions

Cars with manual transmissions have a back-up (reverse) switch on the transmission. The switch closes and transmits a directly connected signal to the central electronic module (CEM) when back-up (reverse) gear is selected.

There are diagnostics for the back-up (reversing) lamp relay.

Cars with automatic transmissions

In cars with automatic transmissions, a signal is transmitted from the transmission control module (TCM) on the Control area network (CAN) to the central electronic module (CEM) indicating that back-up (reverse) gear is selected.

There are diagnostics for the back-up (reversing) lamp relay.

BRAKE LIGHT

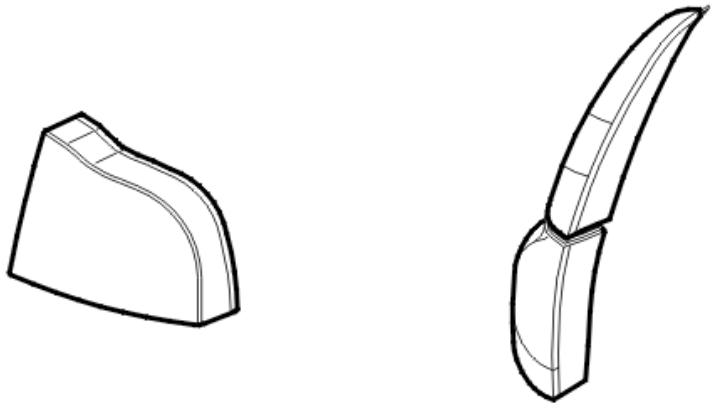

Fig. 161: Identifying Rear Fog Lamp And Back-Up Lamp
Courtesy of VOLVO CARS CORPORATION

The stop lamps are in the tail lamps. The lamps light when the stop lamp switch on the brake pedal is closed. The stop lamp switch is connected to the central electronic module (CEM). The signal from the stop lamp switch is sent on to the rear electronic module (REM) via a hardwired cable. The power supply for the lamps is via a directly connected relay on the rear electronic module (REM). In order for the stop lamps to work when the ignition is not on, there is no logic in the rear electronic module (REM) to activate the relay. The relay is activated directly by the signal from the stop lamp switch. The rear electronic module (REM) receives data via the controller area network (CAN) from the central electronic module (CEM) indicating that the stop lamp switch is activated.

In order to detect faults in the stop lamps, the rear electronic module (REM) detects the power consumption in the lamp circuit using a directly connected shunt. If the power consumption falls below a certain limit, a fault is indicated and a text message is displayed in the driver information module.

HIGH LEVEL STOP LAMP

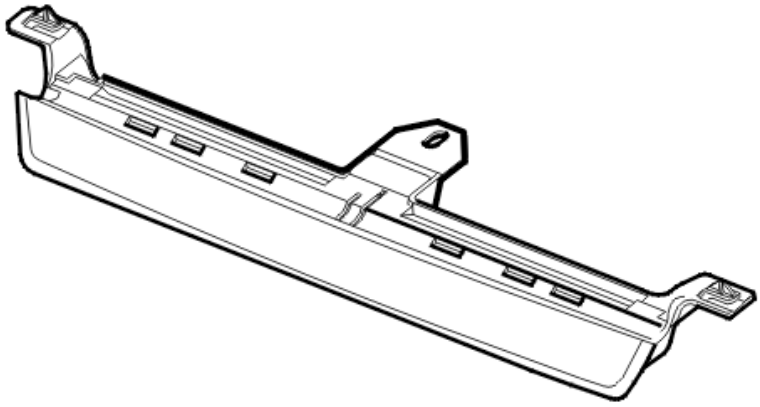

Fig. 162: High Level Stop Lamp
Courtesy of VOLVO CARS CORPORATION

There is a high-mounted stop (brake) lamp on the inside of the rear windshield. This lamp lights during braking together with the standard stop lamps. The stop lamp is activated when the stop lamp switch on the brake pedal is closed.

The high mounted stop lamp is supplied with power directly from the rear electronic module (REM). The lamp consists of a number of LEDs.

There are diagnostics for the high level stop lamp.

REAR DEMIST

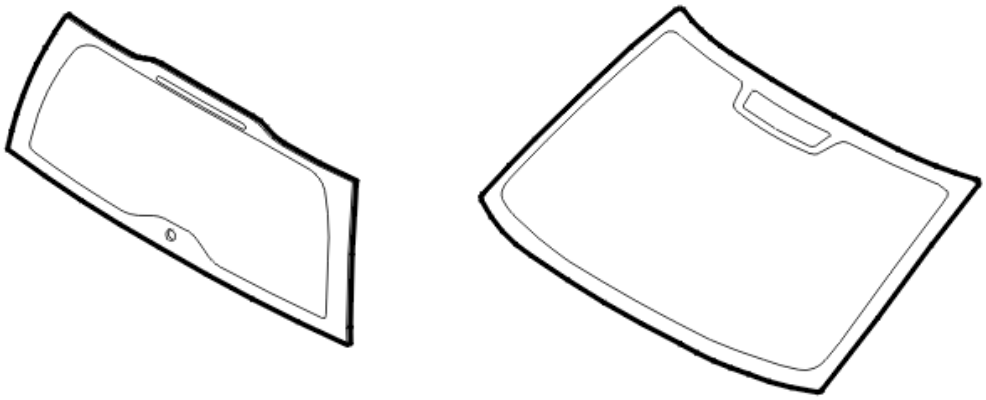

Fig. 163: Identifying Rear De-Mist
Courtesy of VOLVO CARS CORPORATION

There are heating loops in the glass for demisting and to prevent ice from forming. The loops heat up when they are supplied with power. The power supply is via a relay on the rear relay box. The relay is controlled by the rear electronic module (REM).

Rear demist is controlled using a switch on the right-hand side of the climate control module (CCM).

The engine must be running for the demister to work. Press the button again to switch off the function. Demisting is switched off automatically after the maximum time of 12 minutes.

The relay can be diagnosed by the rear electronic module (REM). The switch can be diagnosed via the climate control module (CCM).

CARGO COMPARTMENT LIGHTING

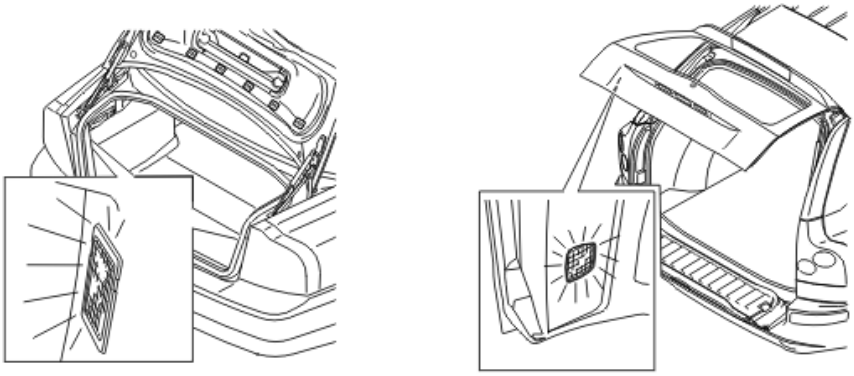

Fig. 164: Cargo Compartment Lighting
Courtesy of VOLVO CARS CORPORATION

There are lamps in the cargo compartment. In the XC90 there is a lamp in the trunk lid. The lamps light when the trunk lid is open. The cargo compartment lighting is powered directly from the rear electronic module (REM).

There are diagnostics for the cargo compartment lighting.

REAR 12 V SOCKET

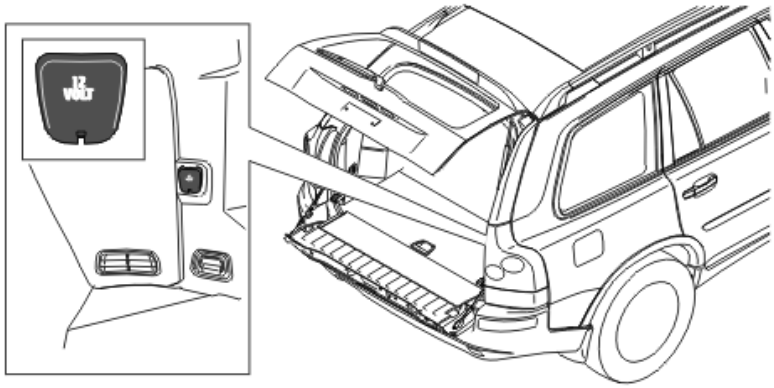

Fig. 165: Identifying Rear 12 V Socket
Courtesy of VOLVO CARS CORPORATION

There is a 12V socket on the right-hand side of the cargo compartment. This socket can be used to power a number of accessories.

The socket is directly connected to the 30-supply via a fuse and a directly connected shunt on the rear electronic module (REM).

The rear electronic module (REM) measures the current through the shunt periodically and calculates an average value. This is compared with a limit value to determine if any power consuming component is connected.

This information is transmitted via the Control area network (CAN) to the driver information module (DIM) which displays a text message when a power consuming component is connected (applies only to factory installed 12V sockets).

PARKING ASSISTANCE (APPLIES ONLY TO THE XC90 2003-2004)

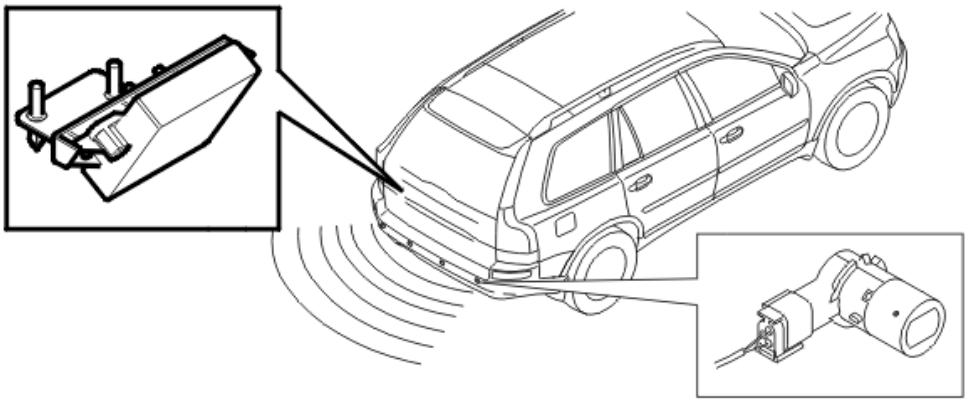

Fig. 166: Identifying Parking Assistance
Courtesy of VOLVO CARS CORPORATION

There is a back-up (reversing) warning system to assist reversing maneuvers. The back-up (reversing) warning system consists of:

- four sensors in the rear bumper
- a parking assistance module (PAM) under the rear relay box.

The parking assistance module (PAM) communicates with the rear electronic module (REM) using serial communication. The signals transmitted contain information about status and diagnostics. The sensors are directly connected to the Parking Assistance Module (PAM). The sensors are also powered via the parking assistance module (PAM).

The back-up (reversing) warning system is activated via a switch on the lower section of the climate control module (CCM). When the system is active, an LED lights in the switch and a text message is displayed in the infotainment control module (ICM)

The sensors detect objects within 1.5 meters and if reverse gear is engaged then a beeping tone can be heard from the rear loudspeakers. The tone intensifies when the car draws closer to the object. At approx. 30 cm the tone becomes continuous.

In the event of a fault in the parking assistance module (PAM) or sensors, the general warning lamp in the driver information module (DIM) lights and a text message is displayed.

There are diagnostics for the back-up (reversing) warning system.

DIAGNOSTIC FUNCTIONS

DIAGNOSTIC FUNCTIONS

GENERAL

The rear electronic module (REM) has a built-in diagnostic system, the Volvo on-board diagnostic (OBD) system, which continuously monitors itself and the input and output signals.

DIAGNOSTIC TROUBLE CODES (DTC)

A diagnostic trouble code (DTC) is stored if the rear electronic module (REM) detects a fault. This control module can store up to 6 diagnostic trouble codes (DTCs), the 3 first and the 3 latest.

Should a fault disappear for any reason after being permanently stored in the control module as a diagnostic trouble code (DTC), the information remains stored in the memory.

READING AND ERASING DIAGNOSTIC TROUBLE CODES (DTCS)

Stored diagnostic trouble codes (DTCs) can be read off and erased using this function. The on-board diagnostic (OBD) system can identify 58 different faults in the rear electronic module (REM) in the form of diagnostic trouble codes (DTCs).

This function can also be used to read off whether the fault is still present (permanent) or whether it has now ceased (intermittent) after the diagnostic trouble code (DTC) has been stored.

Diagnostic trouble codes (DTC) can only be erased once all the diagnostic trouble codes (DTC) have been read off at least once.

READING OFF INPUT AND OUTPUT SIGNALS

This function can be used to continuously read off the values and status of the rear electronic module (REM) input and output signals.

The following parameters can be read off:

- status of the locking relay and unlocking relay for the left rear door
  - Engaged = The gear selector lever is in the back-up (R) position
  - Disengaged = The gear selector lever is not in the back-up (R) position.
- status of the locking relay and unlocking relay for the right rear door
  - Engaged = The gear selector lever is in the back-up (R) position
  - Disengaged = The gear selector lever is not in the back-up (R) position.
- status of the relay for the rear folding head restraint
  - Engaged = The gear selector lever is in the back-up (R) position
  - Disengaged = The gear selector lever is not in the back-up (R) position.
- the status of the trunk lid pop-up relay (4 doors)
  - Engaged = The gear selector lever is in the back-up (R) position
  - Disengaged = The gear selector lever is not in the back-up (R) position.
- status of the locking relay and unlocking relay for the fuel tank filler cover
  - Engaged = The gear selector lever is in the back-up (R) position
  - Disengaged = The gear selector lever is not in the back-up (R) position.
- status of the rear fog lamp relay
  - Engaged = The gear selector lever is in the back-up (R) position

    - Disengaged = The gear selector lever is not in the back-up (R) position.
- status of the rear fog lamp relay, German version and trailer
    - Engaged = The gear selector lever is in the back-up (R) position
    - Disengaged = The gear selector lever is not in the back-up (R) position.
- status of the back-up lamp relay
    - Engaged = The gear selector lever is in the back-up (R) position
    - Disengaged = The gear selector lever is not in the back-up (R) position.
- status of the rear windshield heating relay
    - Engaged = The gear selector lever is in the back-up (R) position
    - Disengaged = The gear selector lever is not in the back-up (R) position.
- power supply from the rear electronic module (REM)
    - Engaged = The gear selector lever is in the back-up (R) position
    - Disengaged = The gear selector lever is not in the back-up (R) position.
- fuel level, left and right tank halves
    - Engaged = The gear selector lever is in the back-up (R) position
    - Disengaged = The gear selector lever is not in the back-up (R) position.
- input signal from the pressure sensor (CNG), Full (200bar): 4.5V Empty (0 bar): 0.5V)
    - Engaged = The gear selector lever is in the back-up (R) position
    - Disengaged = The gear selector lever is not in the back-up (R) position.
- input signal from the temperature sensor (CNG) (5V - 0.5V) (0°C~4.5V, 25°C~3.6V)
    - Engaged = The gear selector lever is in the back-up (R) position
    - Disengaged = The gear selector lever is not in the back-up (R) position.
- lamp fault. Indicates whether any bulb has blown. Parking lamp groups 1 and 2, cover the left and right rear parking lamps.
    - Engaged = The gear selector lever is in the back-up (R) position
    - Disengaged = The gear selector lever is not in the back-up (R) position.
- the power supply to the inclination sensor module (ISM) (low, high). High when the car is alarmed, otherwise low
    - Engaged = The gear selector lever is in the back-up (R) position
    - Disengaged = The gear selector lever is not in the back-up (R) position.
- Inclination sensor module (ISM), alarm status. Indicates whether the inclination sensor module (ISM) has deployed the alarm
    - Engaged = The gear selector lever is in the back-up (R) position
    - Disengaged = The gear selector lever is not in the back-up (R) position.
- Inclination sensor module (ISM), x/y status. Indicates whether the inclination sensor module (ISM) has deployed first in the X or Y axis
    - Engaged = The gear selector lever is in the back-up (R) position
    - Disengaged = The gear selector lever is not in the back-up (R) position.

- the status of the trunk lid handle, (pop up, no action) (4 doors)
  - Engaged = The gear selector lever is in the back-up (R) position
  - Disengaged = The gear selector lever is not in the back-up (R) position.
- current, bulb failure warning sensor group 1 (left rear parking lamps). The rear electronic module (REM) detects lamp faults when the current is below 0.6A (4 doors) / 0.45A (5 doors)
  - Engaged = The gear selector lever is in the back-up (R) position
  - Disengaged = The gear selector lever is not in the back-up (R) position.
- current, bulb failure warning sensor group 2 (right rear parking lamps). The rear electronic module (REM) detects lamp faults when the current is below 0.6A (4 doors) / 0.45A (5 doors)
  - Engaged = The gear selector lever is in the back-up (R) position
  - Disengaged = The gear selector lever is not in the back-up (R) position.
- current, lamp fault rear fog lamp. The rear electronic module (REM) detects lamp faults when the current is below 1.5A
  - Engaged = The gear selector lever is in the back-up (R) position
  - Disengaged = The gear selector lever is not in the back-up (R) position.
- Central electronic module (CEM) driver brake (off, on). Checks the input signal from the stop lamp driver from the central electronic module (CEM) to the rear electronic module (REM)
  - Engaged = The gear selector lever is in the back-up (R) position
  - Disengaged = The gear selector lever is not in the back-up (R) position.
- stop lamp check (lamp on, lamp off). Checks whether the rear electronic module (REM) transmits a signal to activate the stop lamp relay
  - Engaged = The gear selector lever is in the back-up (R) position
  - Disengaged = The gear selector lever is not in the back-up (R) position.
- current, lamp fault, stop lamp. The rear electronic module (REM) detects lamp faults when the current is below 3.0 A
  - Engaged = The gear selector lever is in the back-up (R) position
  - Disengaged = The gear selector lever is not in the back-up (R) position.
- status of the relay for the tailgate wiper. Controls starting and stopping the tailgate wiper (5 doors)
  - Engaged = The gear selector lever is in the back-up (R) position
  - Disengaged = The gear selector lever is not in the back-up (R) position.
- status of the relay for extended X-supply. Controls the power supply to the tailgate wiper (5 doors)
  - Engaged = The gear selector lever is in the back-up (R) position
  - Disengaged = The gear selector lever is not in the back-up (R) position.
- status relay 15I in the power supply
  - Engaged = The gear selector lever is in the back-up (R) position
  - Disengaged = The gear selector lever is not in the back-up (R) position.
- status relay gas tank valve (Bi-fuel)
  - Engaged = The gear selector lever is in the back-up (R) position
  - Disengaged = The gear selector lever is not in the back-up (R) position.

- status relay rear A/C (XC90)
  - Engaged = The gear selector lever is in the back-up (R) position
  - Disengaged = The gear selector lever is not in the back-up (R) position.
- cargo compartment lighting output signal (0W - 10W)
  - Engaged = The gear selector lever is in the back-up (R) position
  - Disengaged = The gear selector lever is not in the back-up (R) position.
- position sensor input signal for the headlamp beam height control (1.7V -3.2V)
  - Engaged = The gear selector lever is in the back-up (R) position
  - Disengaged = The gear selector lever is not in the back-up (R) position.
- calibration status of the position sensor for headlamp beam height control
  - Engaged = The gear selector lever is in the back-up (R) position
  - Disengaged = The gear selector lever is not in the back-up (R) position.
- status seat belt reminder passenger (off/on)
  - Engaged = The gear selector lever is in the back-up (R) position
  - Disengaged = The gear selector lever is not in the back-up (R) position.
- input signal anode/cathode for seat belt reminder.
  - Engaged = The gear selector lever is in the back-up (R) position
  - Disengaged = The gear selector lever is not in the back-up (R) position.
- Back-up (reverse) gear status. The parameter indicates whether the rear electronic module (REM) receives a signal indicating that the gear selector lever is in the back-up (R) position
  - Engaged = The gear selector lever is in the back-up (R) position
  - Disengaged = The gear selector lever is not in the back-up (R) position.
- Status, parking assistance rear. The parameter indicates whether the rear electronic module (REM) detects that the rear parking assistance system is active or not
  - On = The rear parking assistance system is active
  - Off = The rear parking assistance system is not active.
- Status, Distance behind. The parameter indicates the distance to a detectable object. The value of the parameter is transmitted by the rear electronic module (REM) on the controller area network (CAN). The distance is presented as a digit between 1 and 32
  - 1 = the distance from the rear bumper to the detectable object is approximately 1.5 m or greater
  - 2 to 31 = the distance to the detectable object is between approximately 1.5 m and approximately 0.3 m
  - 32 = the distance from the rear bumper to the detectable object is approximately 0.3 m or less.
- Status, back-up warning sensor 1-4. The parameter indicates whether the rear electronic module (REM) receives a status signal form the parking assistance module (PAM). This signal indicates whether there is a fault in the sensors or there terminals
  - Faulty = there is a fault in the back-up warning sensor or its terminals
  - OK = there is no fault in the back-up warning sensor or its terminals.

ACTIVATING COMPONENTS AND FUNCTIONS

This function can be used to activate components and functions which affect the outputs on the rear electronic module (REM).

The following components can be activated:

- activation of relay, simultaneous rear locking (rear doors and filler cap).
- activating the relay, left rear door locking
- activating the relay, left rear door unlocking
- activating the relay, deadlock for the rear doors
- activating the relay, right rear door locking
- activating the relay, right rear door unlocking
- activating the relay, rear folding head restraint
- activating the relay, tailgate pop-up
- activating the relay, fuel tank filler cap locking
- activating the relay, fuel tank filler cap unlocking
- activating the relay, rear fog lamp
- activating the relay for the rear fog lamp, German version and trailer
- activating the relay, back-up (reversing) lamp
- activating the relay, rear windshield heating
- activating the relay, tailgate wiper (5 doors)
- activating the relay, extended X-supply
- activating the relay, 15I power supply
- activating the relay, gas tank valve (CNG, Bi-fuel)
- activating the relay, rear A/C
- set assumed fuel level in the left tank half (10, 20, 30 or 40 liters)
- set assumed fuel level in the right tank half (10, 20, 30 or 40 liters)
- set assumed information about bulb failure monitoring (lamp fault)
- activating and deactivating the inclination sensor module (ISM)
- check "sleep mode" ("wake up" or "enter sleep"), inclination sensor module (ISM)
- assumed signal from the handle, tailgate pop-up
- activate the rear electronic module (REM) alarm trigger
- activate the cargo compartment lighting
- activate the back-up (reversing) warning.

READING OFF STATIC DATA

With this function programmed data can be read off. For the rear electronic module (REM), this indicates primarily which relays should be installed.

The following statistics can be read off:

- relay, left rear door locking
- relay, left rear door unlocking
- relay, rear door deadlock
- relay, right rear door locking
- relay, right rear door unlocking
- relay, tailgate pop-up
- relay, fuel tank filler cap locking
- relay, fuel tank filler cap unlocking
- relay, rear fog lamp
- relay, rear fog lamp, German version and trailer
- relay, back-up (reversing) lamp
- relay, rear windshield heating
- relay, increased X-supply
- relay, tailgate wiper
- relay, folding rear head restraint
- relay, 15I power supply
- relay, rear air conditioning (A/C)
- relay, gas tank valve
- relay, RMI 15, reserve
- relay, RMI 11, reserve
- relay, RMI 12, reserve.

READING OFF THE CONTROL MODULE IDENTIFICATION

VIDA identifies control modules by reading off a number of codes from the control module memory.

The codes contain information about the control module:

- hardware P/N (control module without software)
- hardware serial number (control module without software)
- software P/N
- diagnostic software P/N
- P/N slave nodes (inclination sensor module (ISM))
- CAN frame period (40 ms for the CAN low-speed network at time of writing)
- Subcontractor identification plate (ECU-ID).

DIAGNOSTIC FUNCTIONS

GENERAL

The rear electronic module (REM) has a built-in diagnostic system, the Volvo on-board diagnostic (OBD)

system, which continuously monitors itself and the input and output signals.

DIAGNOSTIC TROUBLE CODES (DTC)

A diagnostic trouble code (DTC) is stored if the rear electronic module (REM) detects a fault. This control module can store up to 6 diagnostic trouble codes (DTCs), the 3 first and the 3 latest.

Should a fault disappear for any reason after being permanently stored in the control module as a diagnostic trouble code (DTC), the information remains stored in the memory.

READING AND ERASING DIAGNOSTIC TROUBLE CODES (DTCS)

Stored diagnostic trouble codes (DTCs) can be read off and erased using this function. The on-board diagnostic (OBD) system can identify 58 different faults in the rear electronic module (REM) in the form of diagnostic trouble codes (DTCs).

This function can also be used to read off whether the fault is still present (permanent) or whether it has now ceased (intermittent) after the diagnostic trouble code (DTC) has been stored.

Diagnostic trouble codes (DTC) can only be erased once all the diagnostic trouble codes (DTC) have been read off at least once.

READING OFF INPUT AND OUTPUT SIGNALS

This function can be used to continuously read off the values and status of the rear electronic module (REM) input and output signals.

The following parameters can be read off:

- status of the locking relay and unlocking relay for the left rear door
- status of the locking relay and unlocking relay for the right rear door
- status of the relay for the rear folding head restraint
- the status of the trunk lid pop-up relay (4 doors)
- status of the locking relay and unlocking relay for the fuel tank filler cover
- status of the rear fog lamp relay
- status of the rear fog lamp relay, German version and trailer
- status of the back-up lamp relay
- status of the rear windshield heating relay
- power supply from the rear electronic module (REM)
- fuel level, left and right tank halves
- input signal from the pressure sensor (CNG), Full (200bar): 4.5V Empty (0 bar): 0.5V)
- input signal from the temperature sensor (CNG) (5V - 0.5V) (0°C~4.5V, 25°C~3.6V)
- lamp fault. Indicates whether any bulb has blown. Parking lamp groups 1 and 2, cover the left and right rear parking lamps.

- the power supply to the inclination sensor module (ISM) (low, high). High when the car is alarmed, otherwise low
- Inclination sensor module (ISM), alarm status. Indicates whether the inclination sensor module (ISM) has deployed the alarm
- Inclination sensor module (ISM), x/y status. Indicates whether the inclination sensor module (ISM) has deployed first in the X or Y axis
- the status of the trunk lid handle, (pop up, no action) (4 doors)
- current, bulb failure warning sensor group 1 (left rear parking lamps). The rear electronic module (REM) detects lamp faults when the current is below 0.6A (4 doors) / 0.45A (5 doors)
- current, bulb failure warning sensor group 2 (right rear parking lamps). The rear electronic module (REM) detects lamp faults when the current is below 0.6A (4 doors) / 0.45A (5 doors)
- current, lamp fault rear fog lamp. The rear electronic module (REM) detects lamp faults when the current is below 1.5A
- Central electronic module (CEM) driver brake (off, on). Checks the input signal from the stop lamp driver from the central electronic module (CEM) to the rear electronic module (REM)
- stop lamp check (lamp on, lamp off). Checks whether the rear electronic module (REM) transmits a signal to activate the stop lamp relay
- current, lamp fault, stop lamp. The rear electronic module (REM) detects lamp faults when the current is below 3.0 A
- status of back-up gear (idle, engaged)
- status of the relay for the tailgate wiper. Controls starting and stopping the tailgate wiper (5 doors)
- status of the relay for extended X-supply. Controls the power supply to the tailgate wiper (5 doors)
- status relay 15I in the power supply
- status relay gas tank valve (Bi-fuel)
- status relay rear A/C
- cargo compartment lighting output signal (0W - 10W)
- position sensor input signal for the headlamp beam height control (1.7V -3.2V)
- calibration status of the position sensor for headlamp beam height control
- status seat belt reminder passenger (off/on)
- input signal anode/cathode for seat belt reminder.

ACTIVATING COMPONENTS AND FUNCTIONS

This function can be used to activate components and functions which affect the outputs on the rear electronic module (REM).

The following components can be activated:

- activation of relay, simultaneous rear locking (rear doors and filler cap).
- activating the relay, left rear door locking
- activating the relay, left rear door unlocking

- activating the relay, deadlock for the rear doors
- activating the relay, right rear door locking
- activating the relay, right rear door unlocking
- activating the relay, rear folding head restraint
- activating the relay, tailgate pop-up
- activating the relay, fuel tank filler cap locking
- activating the relay, fuel tank filler cap unlocking
- activating the relay, rear fog lamp
- activating the relay for the rear fog lamp, German version and trailer
- activating the relay, back-up (reversing) lamp
- activating the relay, rear windshield heating
- activating the relay, tailgate wiper (5 doors)
- activating the relay, extended X-supply
- activating the relay, 15I power supply
- activating the relay, gas tank valve (CNG, Bi-fuel)
- activating the relay, rear A/C
- set assumed fuel level in the left tank half (10, 20, 30 or 40 liters)
- set assumed fuel level in the right tank half (10, 20, 30 or 40 liters)
- set assumed information about bulb failure monitoring (lamp fault)
- activating and deactivating the inclination sensor module (ISM)
- check "sleep mode" ("wake up" or "enter sleep"), inclination sensor module (ISM)
- assumed signal from the handle, tailgate pop-up
- activate the rear electronic module (REM) alarm trigger
- activate the cargo compartment lighting
- activate the back-up (reversing) warning.

READING OFF STATIC DATA

With this function programmed data can be read off. For the rear electronic module (REM), this indicates primarily which relays should be installed.

The following statistics can be read off:

- relay, left rear door locking
- relay, left rear door unlocking
- relay, rear door deadlock
- relay, right rear door locking
- relay, right rear door unlocking
- relay, tailgate pop-up

- relay, fuel tank filler cap locking
- relay, fuel tank filler cap unlocking
- relay, rear fog lamp
- relay, rear fog lamp, German version and trailer
- relay, back-up (reversing) lamp
- relay, rear windshield heating
- relay, increased X-supply
- relay, tailgate wiper
- relay, folding rear head restraint
- relay, 15I power supply
- relay, rear air conditioning (A/C)
- relay, gas tank valve
- relay, RMI 15, reserve
- relay, RMI 11, reserve
- relay, RMI 12, reserve.

READING OFF THE CONTROL MODULE IDENTIFICATION

VIDA identifies control modules by reading off a number of codes from the control module memory.

The codes contain information about the control module:

- hardware P/N (control module without software)
- hardware serial number (control module without software)
- software P/N
- diagnostic software P/N
- P/N slave nodes (inclination sensor module (ISM))
- CAN frame period (40 ms for the CAN low-speed network at time of writing)
- Subcontractor identification plate (ECU-ID).

DOWNLOADING SOFTWARE AND REPLACING THE CONTROL MODULE

New software can be downloaded into the rear electronic module (REM). When ordering software, the hardware and the software in the car is compared to the information in the Volvo central database. If the comparison is OK the software is downloaded to the control module.

If the comparison between the car and Volvo central database is not OK, the database is updated with the car configuration. When this is complete the software is downloaded.

The control module is mounted in a relay box behind the left-hand cargo compartment panel. To replace the rear electronic module (REM), remove it from the relay box.

For cars with Bi-Xenon lamps, the position sensor for headlamp range adjustment must be calibrated when the control module is replaced. This is carried out in VIDA via the vehicle communication socket.

FUNCTION

FUEL LEVEL

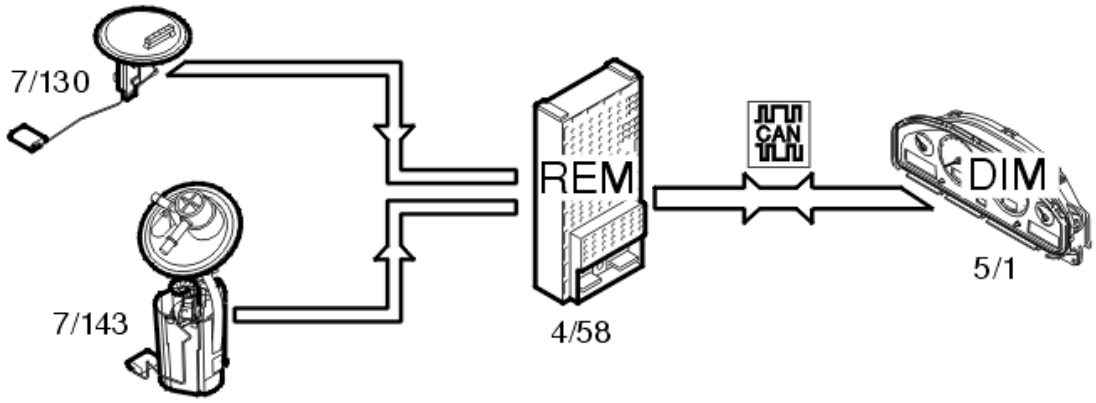

Fig. 167: Fuel Level Input And Output Signals
Courtesy of VOLVO CARS CORPORATION

The fuel level is gauged by the fuel level sensors (7/130, 7/143). The signals from the sensors are transmitted to the rear electronic module (REM) (4/58). The rear electronic module (REM) calculates the quantity of fuel remaining by comparing the signals with a tank table stored in the rear electronic module (REM). Information about the quantity of fuel is transmitted via the Control area network (CAN) to the driver information module (DIM) (5/1) where the fuel level is displayed on the fuel gauge.

FUEL LEVEL (BI-FUEL)

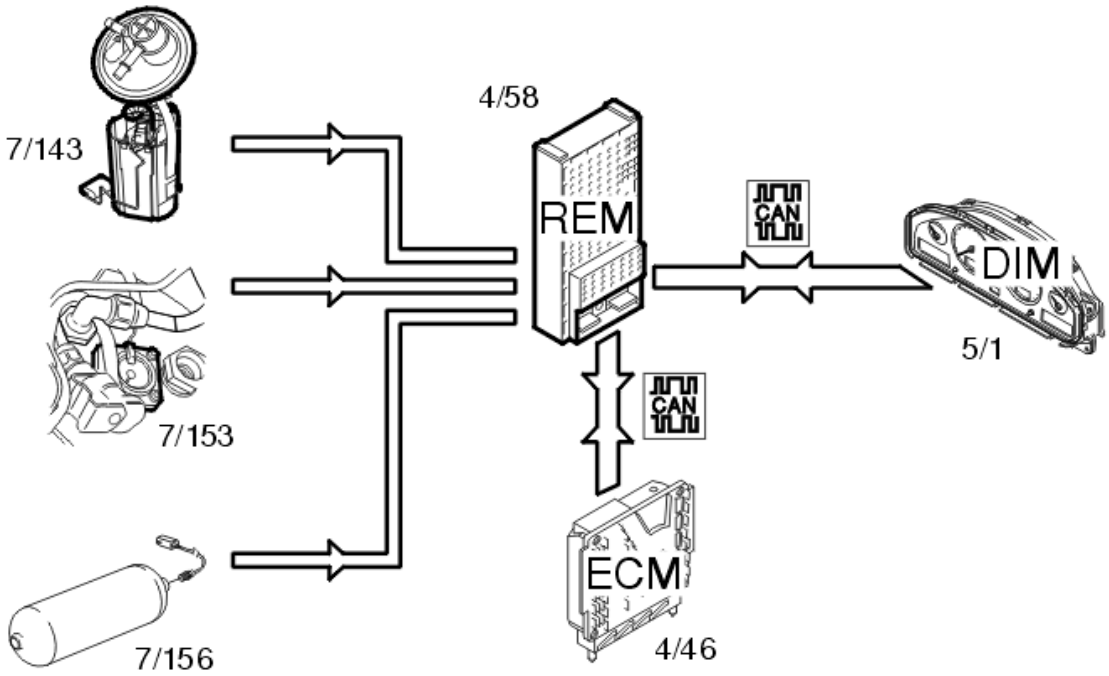

Fig. 168: Fuel Level Input And Output Signals (Bi-Fuel)
Courtesy of VOLVO CARS CORPORATION

The fuel level in the gasoline tank is measured by the fuel level sensor (7/143). The level in the gas tank is measured by the fuel level sensor (7/156) (CNG) or (7/153) (LPG). The signals from the sensors are transmitted to the rear electronic module (REM) (4/58).

The rear electronic module (REM) calculates the quantity of fuel remaining in each tank and transmits this information via the Control area network (CAN) to the driver information module (DIM) (5/1). The driver information module (DIM) also receives data via the Control area network (CAN) from the engine control module (ECM) (4/46) indicating which type of fuel the car is running on. The gas level in the tank is displayed via the fuel gauge. The gasoline fuel level is displayed in the text window in the driver information module (DIM).

SHUT-OFF VALVE (BI-FUEL)

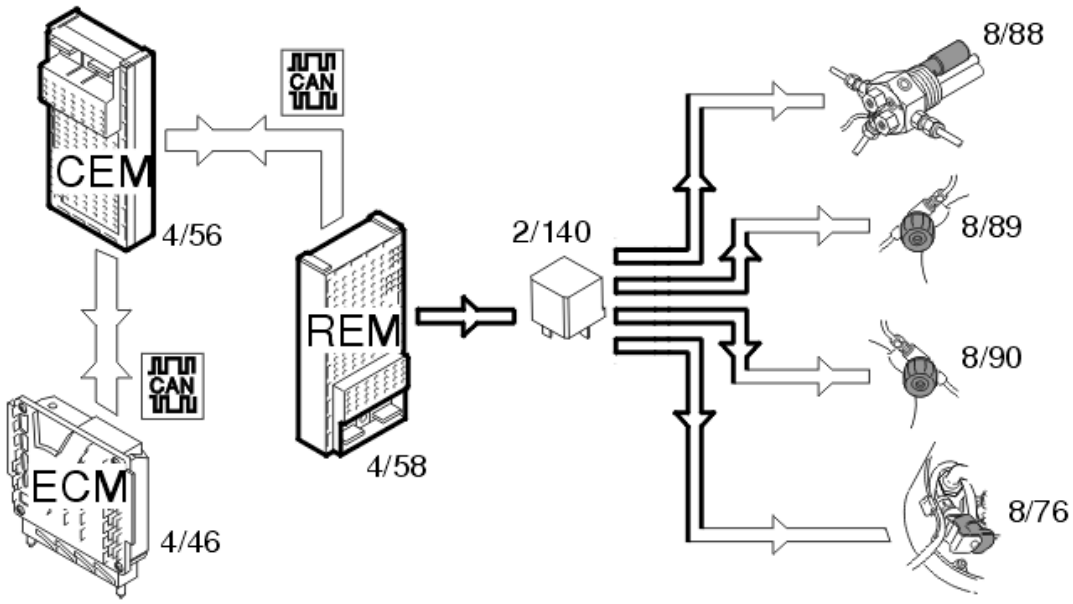

Fig. 169: Identifying Shut-Off Valve Input And Output Signals (Bi-Fuel)
Courtesy of VOLVO CARS CORPORATION

The rear electronic module (REM) (4/58) controls the shut-off valves, (8/88-90) (CNG) and (8/76) (LPG), via a directly connected relay (2/140) which supplies the valves with power when they should be open.

The rear electronic module (REM) receives information via the control area network (CAN) from the engine control module (ECM) (4/46) indicating that the car should run on gas/LPG. The rear electronic module (REM) also receives information via the control area network (CAN) from the central electronic module (CEM) (4/56) indicating the position of the ignition and data about collision status. When the ignition is on and no collision has been registered, the rear electronic module (REM) activates the relay, which supplies the valves with power.

The rear electronic module (REM) deactivates the relay in the following cases:

- there is a signal from the engine control module (ECM) indicating that gasoline operation has been selected
- ignition off
- the collision status changes
- there is a fault in the communication on the controller area network (CAN).

The relay can be activated via a diagnostic command to, for example, allow the tank to be drained. Activation is carried out in VIDA via the vehicle communication socket.

REAR FOG LAMP

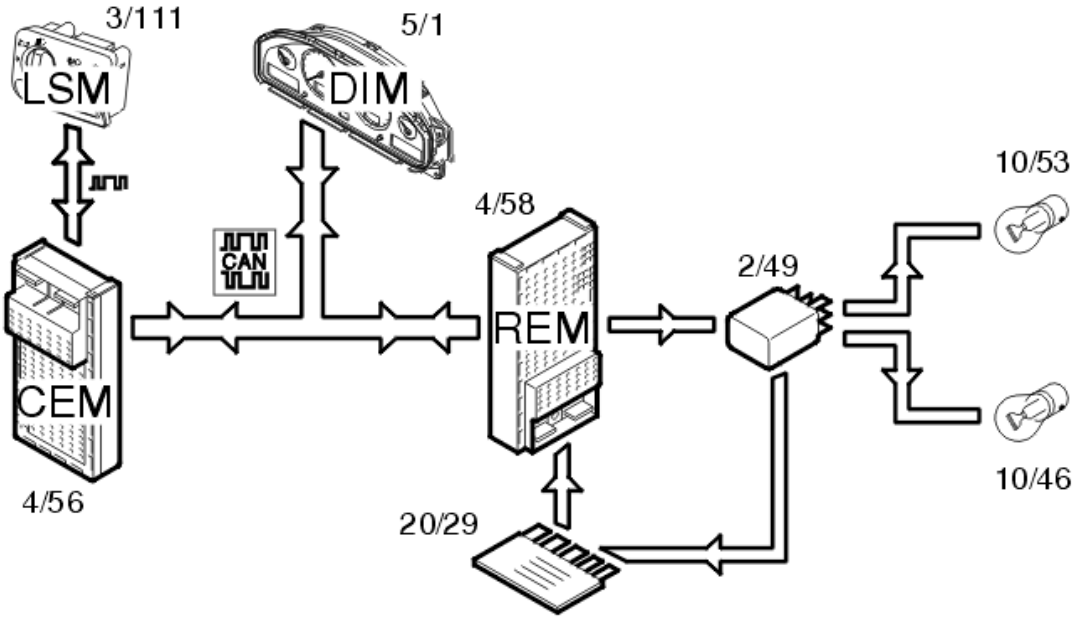

Fig. 170: Identifying Rear Fog Lamp Input And Output Signals
Courtesy of VOLVO CARS CORPORATION

The rear fog lamps (10/46, 10/53) are activated by pressing the button for the rear fog lamps in the lamp switch module (3/111). The light switch module (LSM) transmits a request to light the lamps to the central electronic module (CEM) (4/56) using serial communication. The central electronic module (CEM) transmits the request to the rear electronic module (REM) (4/58) via the Controller area network (CAN). The rear electronic module (REM) activates the relay (2/49) and the lamps are supplied with power via the relay.

Central Electronic Module (CEM) transmits information:

- back to the light switch module (LSM) to light the LED in the button
- via the Controller area network (CAN) to the driver information module (DIM) (5/1) to light the indicator lamp for the rear fog lamps.

Information about the lamp circuit is obtained by the rear electronic module (REM) via a shunt (20/29). The rear electronic module (REM) sends the status of the lamp fault via the Control area network (CAN) to the central electronic module (CEM). In the event of a fault, the central electronic module (CEM) transmits data via the Control area network (CAN) to the driver information module (DIM) which displays a text message.

BACK-UP LAMP

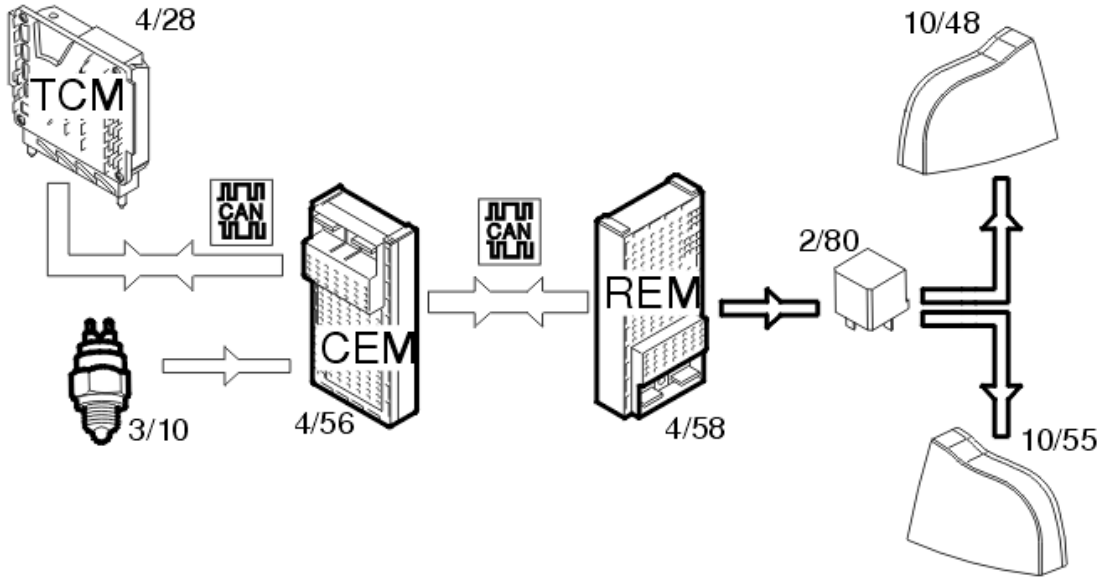

Fig. 171: Back-Up Lamp Input And Output Signals
Courtesy of VOLVO CARS CORPORATION

Manual transmissions

The back-up (reversing) lamps (10/48, 10/55) are activated when back-up (reverse) gear is selected. The switch (3/10) on the transmission is then closed. A directly connected signal is transmitted to the central electronic module (CEM) (4/56) indicating that back-up (reverse) gear is selected. The central electronic module (CEM) transmits the information via the controller area network (CAN) to the rear electronic module (REM) (4/58) to activate the back-up lamps. The rear electronic module (REM) activates the relay (2/80) and the lamps are supplied with power via the relay.

Automatic transmission

The back-up (reversing) lamps (10/48, 10/55) are activated when back-up (reverse) gear is selected. The transmission control module (TCM) (4/28) transmits information via the Control area network (CAN) to the central electronic module (CEM) (4/56) indicating that back-up (reverse) gear is selected. The central electronic module (CEM) transmits the information via the controller area network (CAN) to the rear electronic module (REM) (4/58) to activate the back-up lamps. The rear electronic module (REM) activates the relay (2/80) and the lamps are supplied with power via the relay.

BRAKE LIGHT

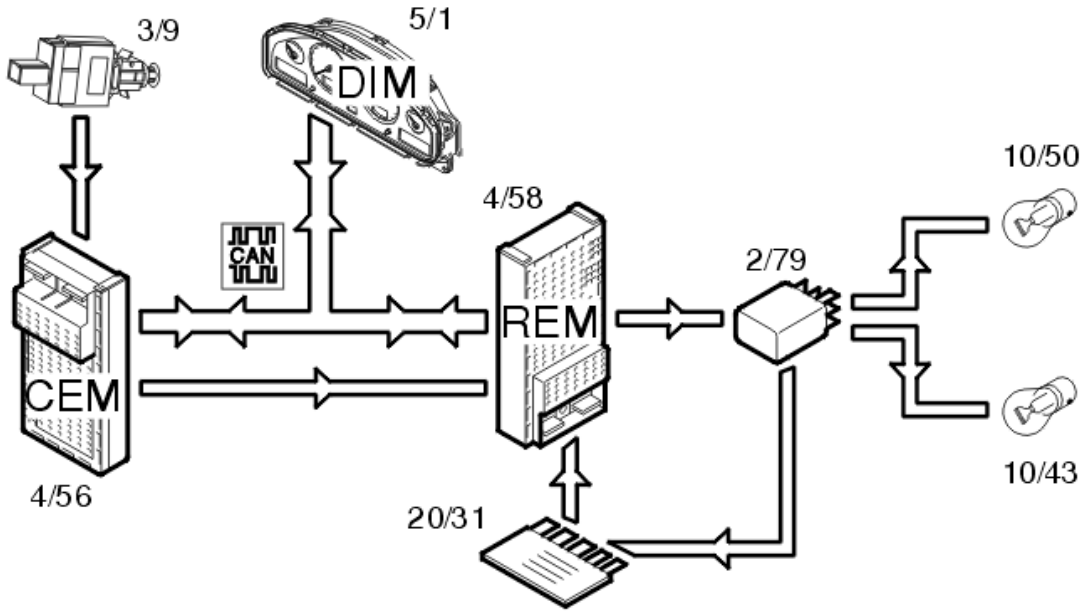

Fig. 172: Brake Light Input And Output Signals
Courtesy of VOLVO CARS CORPORATION

The stop lamps (10/43, 10/50) are activated when the brake switch is (3/9) closed. A directly connected signal is transmitted via the central electronic module (CEM) (4/56) to the rear electronic module (REM) (4/58) and activates the relay (2/79). The lamps are powered via the relay. The central electronic module (CEM) transmits the data via the Controller area network (CAN) to the rear electronic module (REM) indicating that the stop lamp switch is activated. Information about the lamp circuit is obtained by the rear electronic module (REM) via a shunt (20/31). The rear electronic module (REM) sends status information for the lamp fault via the Control area network (CAN) to the central electronic module (CEM). In the event of a fault, the central electronic module (CEM) transmits data via the Control area network (CAN) to the driver information module (DIM) (5/1) which displays a text message.

HIGH LEVEL STOP LAMP

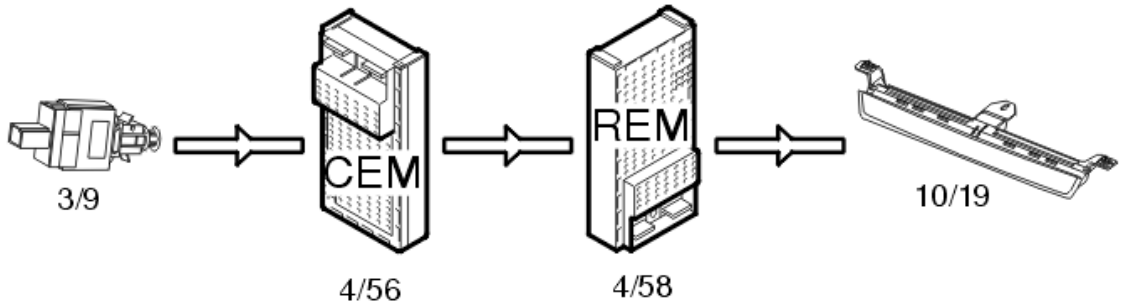

Fig. 173: High Level Stop Lamp Input And Output Signals
Courtesy of VOLVO CARS CORPORATION

When the stop lamp switch (3/9) is closed, a signal is transmitted to the central electronic module (CEM) (4/56). The signal is transmitted from the central electronic module (CEM) to the rear electronic module (REM) (4/58) via a directly connected cable. The high mounted stop lamp is supplied with power directly from the rear electronic module (REM). The stop lamp is supplied with power for as long as the stop lamp switch is closed.

REAR DEMIST

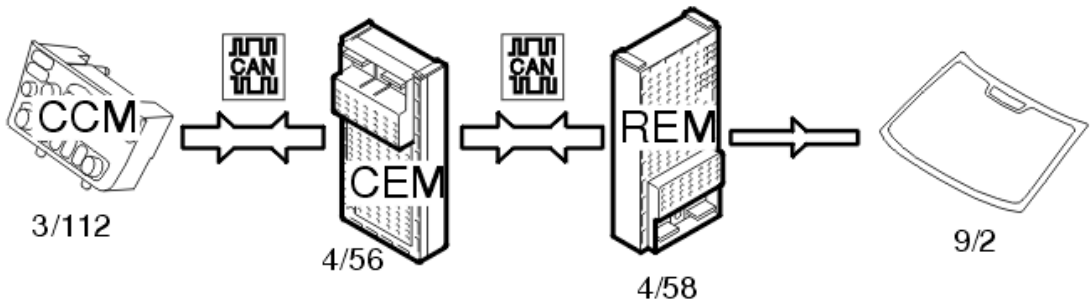

Fig. 174: Identifying Rear De-Mist Input And Output Signals
Courtesy of VOLVO CARS CORPORATION

Rear demist (9/2) is activated by pressing the switch on the climate control module (CCM) (3/112). The climate control module (CCM) transmits the data via the Control area network (CAN) to the central electronic module (CEM) (4/56). The central electronic module (CEM) checks that the conditions to start the demist have been met. If the conditions are met, a request is sent via the Control area network (CAN) to the rear electronic module (REM) (4/58) to activate the relay (2/82). The rear electronic module (REM) powers the relay and the demister is powered.

The central electronic module (CEM) also transmits a request via the Control area network (CAN) back to the climate control module (CCM) to light the LED in the switch.

CARGO COMPARTMENT LIGHTING

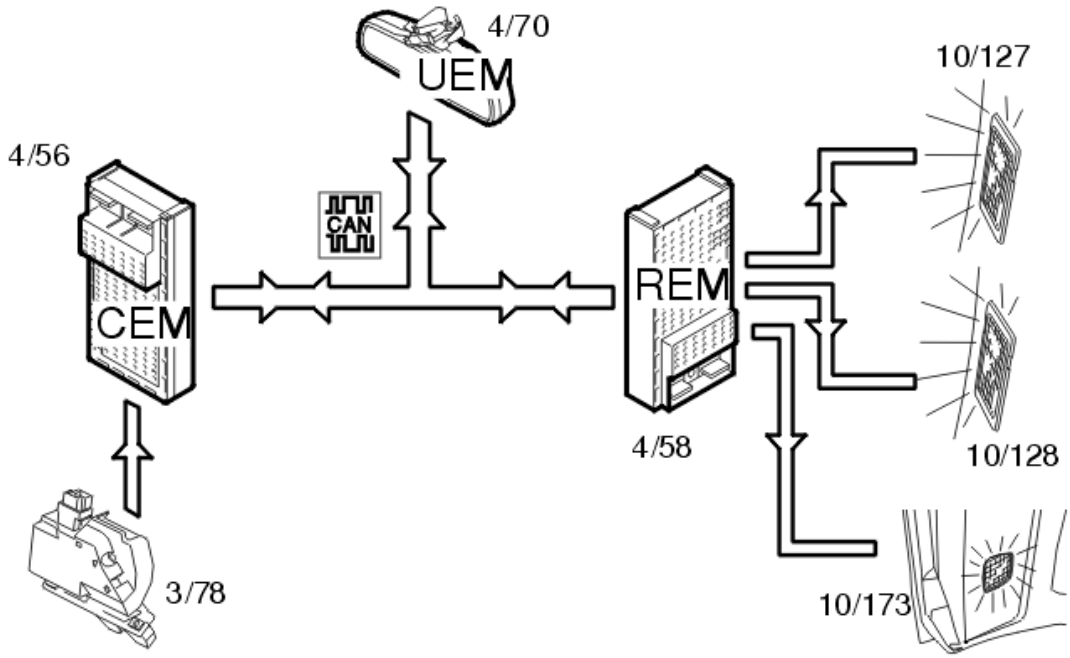

Fig. 175: Cargo Compartment Lighting Input And Output Signals
Courtesy of VOLVO CARS CORPORATION

The cargo compartment lighting is activated when the trunk lid is opened. The central electronic module (CEM) (4/56) receives a signal from the lock (3/78) in the trunk lid. The central electronic module (CEM) transmits the information via the Controller area network (CAN) to the rear electronic module (REM) (4/58) about the status of the trunk lid. A request for cargo compartment lighting is also sent from the upper electronic module (UEM) (4/70) to the rear electronic module (REM). The lamps (10/173 (XC90)) are then powered directly from the rear electronic module (REM).

For the XC90, the roof lamp in the cargo compartment also lights.

REAR 12 V SOCKET

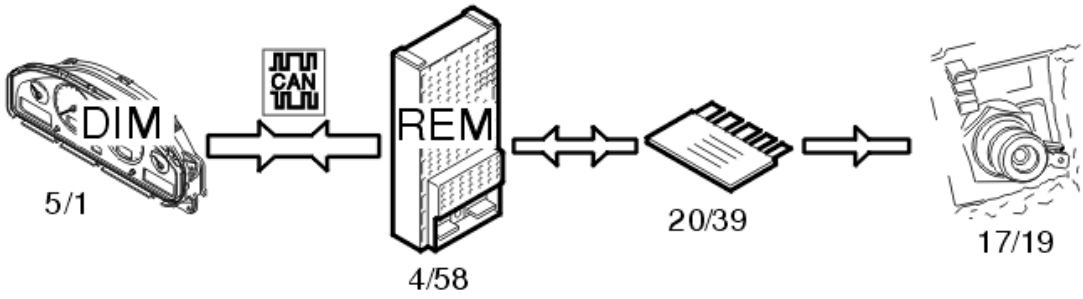

Fig. 176: Identifying Rear 12 V Socket Input And Output Signals
Courtesy of VOLVO CARS CORPORATION

When a power consuming component is connected to the rear 12V socket (17/19), the power consumption is measured via a directly connected shunt (20/39) on the rear electronic module (REM) (4/58). The rear electronic module (REM) transmits status data via the control area network (CAN) to the driver information module (DIM) (5/1) which displays a text message (applies only to factory mounted 12V sockets).

The text message is also displayed if a power consuming component is connected when changing from ignition position:

- II to I
- I to 0 and
- 0 to the key is removed.

There is also an audible warning note when the key is removed.

PARKING ASSISTANCE (APPLIES ONLY TO THE XC90 2003-2004)

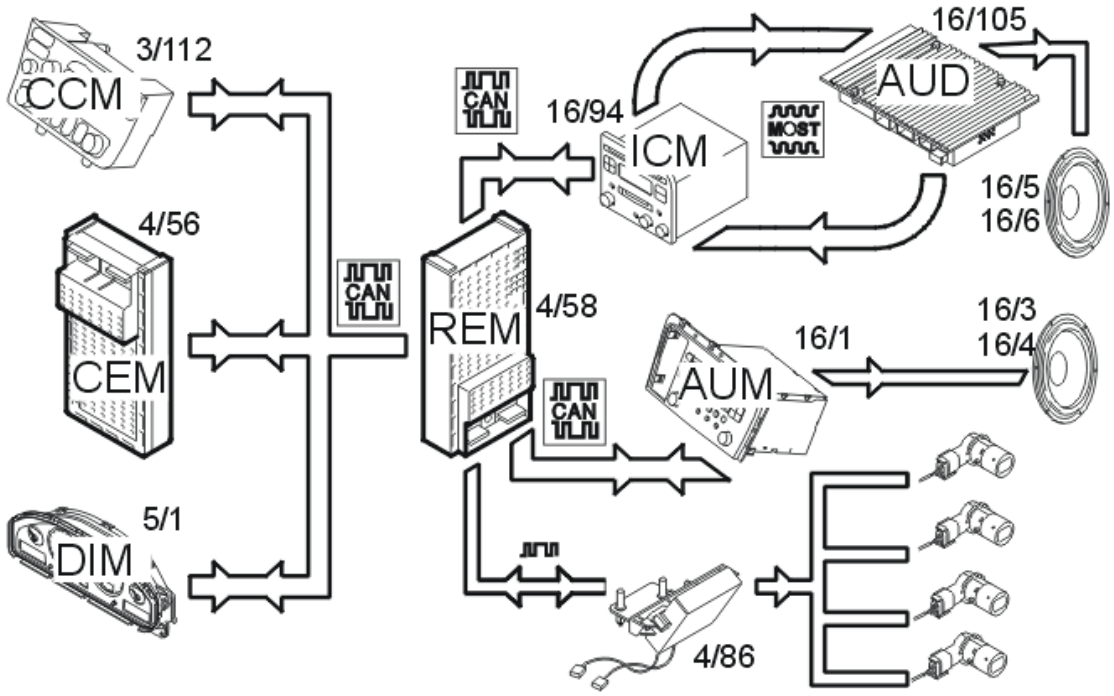

Fig. 177: Identifying Parking Assistance Input And Output Signals
Courtesy of VOLVO CARS CORPORATION

The back-up (reverse) warning system is activated by pressing the switch on the climate control module (CCM) (3/112). Information about the position of the switch is sent via the Control area network (CAN) to the rear electronic module (REM) (4/58). When back-up (reverse) warning is selected, this is confirmed by the rear electronic module (REM) sending a signal back to the climate control module (CCM) to light the LED in the switch.

The rear electronic module (REM) also receives information via the Control area network (CAN) from the central electronic module (CEM) (4/56) about:

- the key position and
- that back-up (reverse) gear is selected.

The parking assistance system can detect nearby objects when the ignition is on in position II and back-up gear (R) is selected. The parking assistance system is deactivated automatically when the gear selector lever is moved from (R) to any other position.

When the conditions for activating the back-up (reverse) warning are met, the rear electronic module (REM) sends data via serial communication to the parking assistance module (PAM) (4/86). The parking assistance module (PAM) receives signals from the back-up (reversing) warning sensors. A signal for sound from the parking assistance system is sent back from the parking assistance module (PAM) via the rear electronic module (REM) to the infotainment control module (ICM) (16/94). The parking assistance module (PAM) sends the signal when there is an object within 1.5 meters of the rear of the car.

The Infotainment Control Module (ICM) display a text message that the back-up (reversing) warning is active. The Infotainment Control Module (ICM) also sends information via the MOST network to the Audio Control Module (AUD) (16/105). The information which is sent contains the time interval between the acoustic tones as well as the muting of other sound, e. g. CD or radio. The Audio Control Module (AUD) playback the sound in the right-hand rear loudspeaker (16/5).

SYSTEM OVERVIEW

CONTROL MODULE

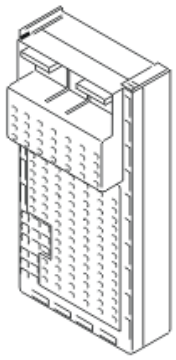

Fig. 178: Central Electronic Module Control module
Courtesy of VOLVO CARS CORPORATION

The rear electronic module (REM) handles functions for:

- alarm (certain functions)
- locks (certain functions)
- inclination sensor module (ISM)
- headlamp range adjustment position sensors (Bi-Xenon)
- fuel level

- fuel level (Bi-fuel)
- shut-off valve (Bi-fuel)
- rear fog lamps
- back-up lamp
- stop lamps
- high level stop lamps
- rear windshield wiper/washers
- rear demist
- cargo compartment lighting
- rear 12 V socket
- parking assistance (applies only to the XC90 2003-2004).

The control module is installed as a separate unit in the rear relay box. This is under the left-hand cargo compartment panel.

The rear electronic module (REM) communicates with components which are directly connected and also with other control modules and components via serial communication and the control area network (CAN).

The control module checks activations and input and output signals using an integrated diagnostic system A diagnostic trouble code (DTC) is stored if the control module detects an error. In certain cases the control module replaces the faulty signal with a substitute value.

Any diagnostic trouble codes (DTCs) are stored in the control module memory. This information can be read off using VIDA via the data link connector (DLC) in the car.

Lock and unlock the rear doors to check whether the rear electronic module (REM) is grounded and powered. The control module is powered and grounded if the doors lock and unlock. Another way to check whether the rear electronic module (REM) is powered and grounded is to switch on the rear fog lamp.

SIGNALS

The following table summarizes input signals to and output signals from the rear electronic module (REM). The signal types are divided into directly connected signals, serial communication and controller area network (CAN) communication. The illustration below displays the same information with the Volvo component designations.

Input signals	Output signals
Directly connected: • Fuel level sensor (7/130, 7/143) • Fuel level sensor (CNG) (7/156) • Fuel level sensor (LPG) (7/153) • Stop lamps from the central electronic module (CEM) (4/56)	**Directly connected:** • Fuel level sensor (CNG) (7/156) • Rear demist, relay (9/2) • Cargo compartment lighting (10-127-128, 10/173) • High level stop lamp (10/19)

• Position sensor for headlamp range adjustment (Bi-Xenon) (7/120)	• Position sensor for headlamp range adjustment (Bi-Xenon) (7/120) • Inclination sensor module (ISM) (7/100).
Via serial communication: • Inclination sensor module (ISM) (optional extra) (7/100) • Parking assistance (optional extra) (4/86) (applies only to the XC90 2003-2004).	**Via serial communication:** • Inclination sensor module (ISM) (optional extra) (7/100) • Parking assistance (optional extra) (4/86) (applies only to the XC90 2003-2004).
Via Controller Area Network (CAN) communication: • Climate Control Module (CCM) (3/112) • Central electronic module (CEM) (4/56) • Engine control module (ECM) (4/46) • Supplemental Restraint System Module (SRS) (4/9) • Upper electronic module (UEM) (4/70).	**Via Controller Area Network (CAN) communication:** • Climate Control Module (CCM) (3/112) • Central electronic module (CEM) (4/56) • Driver information module (DIM) (5/1) • Infotainment control module (ICM) (16/1) (XC90) • Phone module (PHM) (optional equipment) (16/60) • Supplemental Restraint System Module (SRS) (4/9) • Transmission control module (TCM) (4/28).

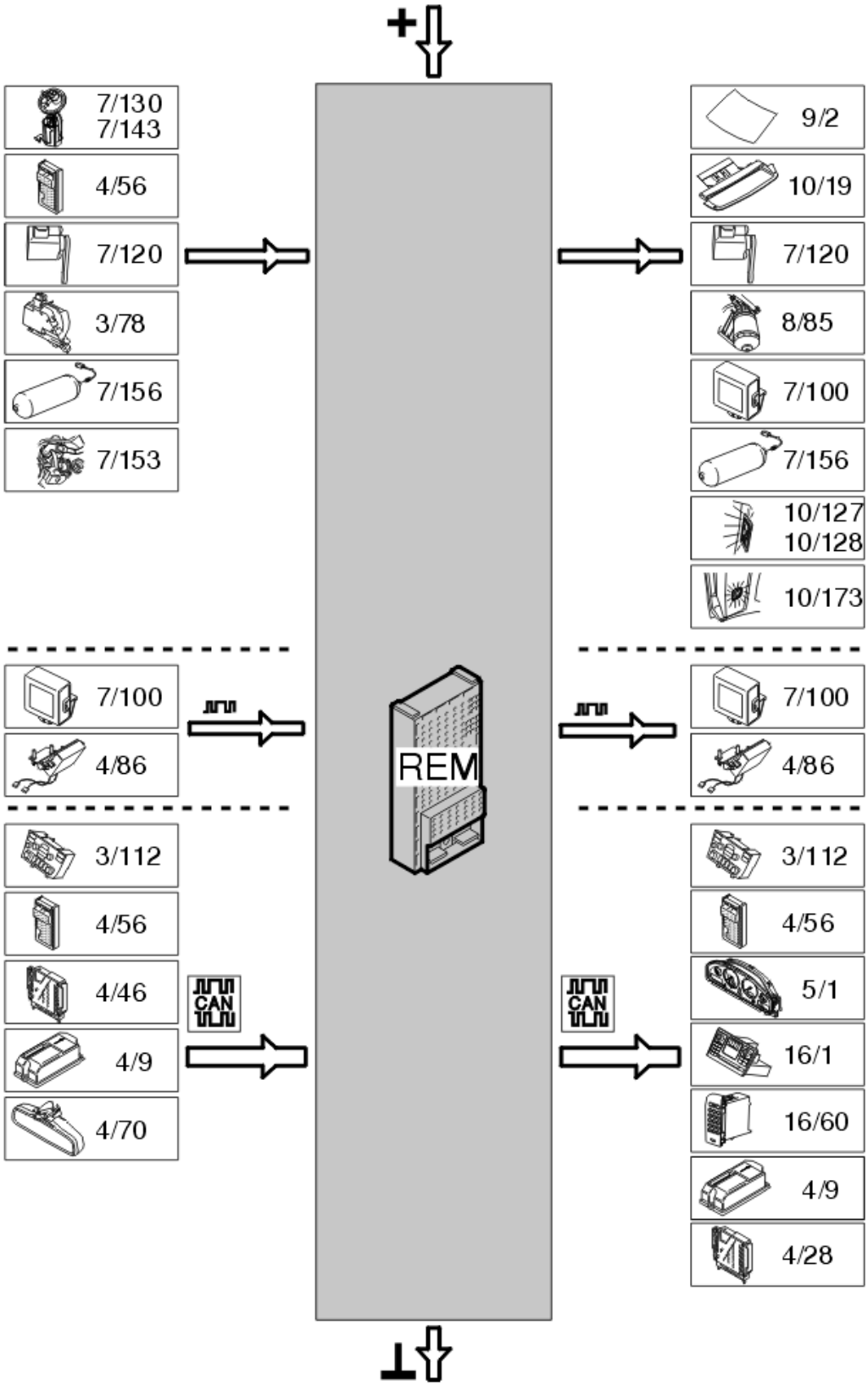

Fig. 179: Identifying Rear Electronic Module Input And Output Signals

Courtesy of VOLVO CARS CORPORATION

REAR ELECTRONIC MODULE (REM) (2005-2012)

DESIGN

INCLINATION SENSOR MODULE (ISM) (XC90 STRUCTURE WEEK -201127)

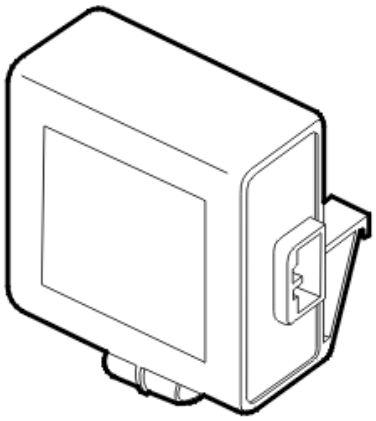

Fig. 180: Identifying Inclination Sensor Module
Courtesy of VOLVO CARS CORPORATION

The inclination sensor module (ISM) is on the left-hand side of the rear relay box.

The inclination sensor module (ISM) is powered from the rear electronic module (REM), which both activates and deactivates it. Information is transferred from the inclination sensor module (ISM) to the rear electronic module (REM) using serial communication.

The inclination sensor module (ISM) detects when the angle of the vehicle changes. If the angle changes when the vehicle is alarmed, a signal is transmitted to the rear electronic module (REM) which sends this information out on the controller area network (CAN) to activate the alarm.

There are diagnostics for the Inclination Sensor Module (ISM).

INCLINATION SENSOR MODULE ALARM (BBS-IS) (XC90 STRUCTURE WEEK 201128-)

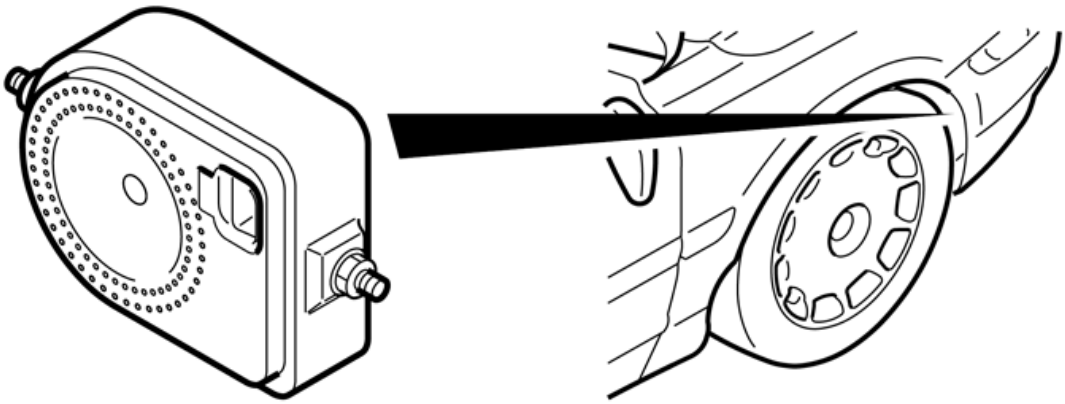

Fig. 181: Locating Inclination Sensor Module Alarm
Courtesy of VOLVO CARS CORPORATION

If the vehicle is equipped with a vehicle inclination sensor, the sensor is integrated in the siren. The vehicle inclination sensor reacts to changes in the angle of lean of the vehicle and transmits a signal to the Rear electronic module (REM). While the vehicle inclination sensor is mounted in the siren it is counted as a separate unit. If the vehicle inclination sensor indicates that the vehicle is being lifted the master control module must send an activation signal to the siren. In this case the siren cannot trigger an alarm by itself.

The siren is powered via a fuse from the central electronic module (CEM) The siren is grounded in the engine compartment.

SIREN (BBS) (XC90 STRUCTURE WEEK 201128-)

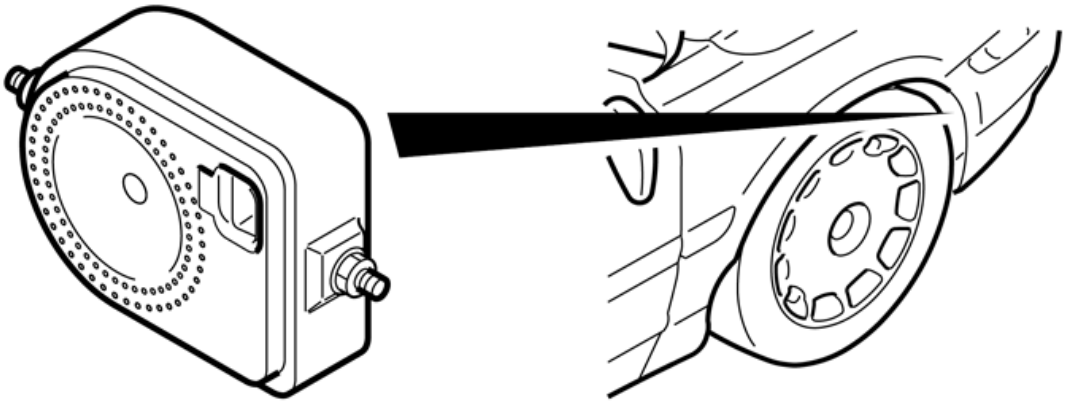

Fig. 182: Locating Inclination Sensor Module Alarm
Courtesy of VOLVO CARS CORPORATION

The siren is used as a sound source for the alarm function. The siren is located in a protected position under the fender liner in the front right wheel housing. The siren is available in versions with or without an internal vehicle inclination sensor. The type of siren installed in the vehicle depends on the market and the customer's wishes.

The siren will sound if the power supply to it is broken or if communication with the master control module ends when the alarm is activated. The siren contains an internal battery that is charged when the ignition is on or

engine running.

The battery service life is limited and depends on the local climate. The battery cannot be replaced as an individual component. The alarm cause can be read from VIDA (Volvo scan tool). This states what caused the alarm.

The siren is powered via a fuse from the central electronic module (CEM) The siren is grounded in the engine compartment.

There are diagnostics for the siren.

HEADLAMP RANGE ADJUSTMENT POSITION SENSORS (BI-XENON)

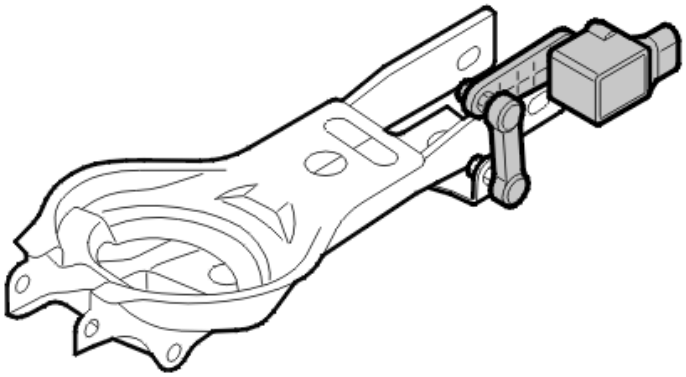

Fig. 183: Headlamp Range Adjustment Position Sensors (Bi-Xenon)
Courtesy of VOLVO CARS CORPORATION

Cars with Bi-Xenon lamps have a position sensor so that the headlamps can automatically adjust beam length. The vertical adjustment accounts for load and road conditions to reduce the risk of dazzle.

The position sensor is beside the rear axle and is connected to the left-hand rear control arm by a linkage system. This linkage system affects the sensor, allowing the angle of the car to be gauged.

The position sensor is directly connected to the rear electronic module (REM) via three inputs. Two are used for the power supply and ground connection for the sensor. One input is used for signals about the angle of the car. The signals are received by the rear electronic module (REM) which sends them onwards via the Control area network (CAN) to the central electronic module (CEM) which controls the headlamp range adjustment function.

The position sensor can be calibrated using VIDA (Volvo scan tool). The calibration is saved in the rear electronic module (REM) and must be carried out again if the rear electronic module (REM) or position sensor is replaced.

There are diagnostics for the position sensor.

FUEL LEVEL (BI-FUEL)

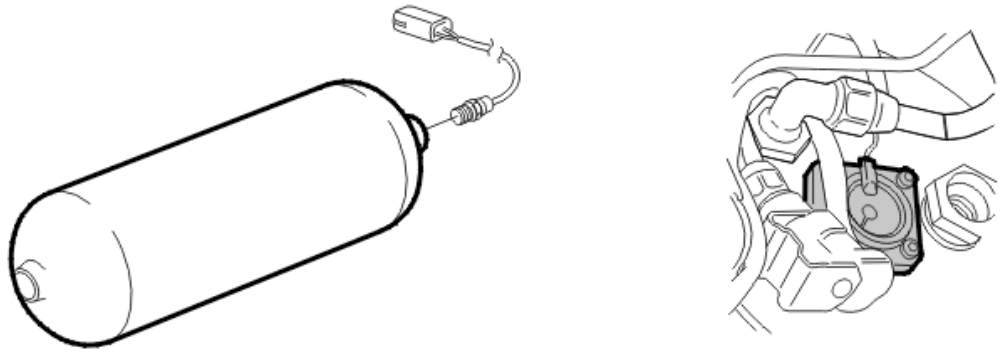

Fig. 184: Fuel Level Sensor (Bi-Fuel)
Courtesy of VOLVO CARS CORPORATION

CNG (Compressed Natural Gas)

The fuel level in the gasoline tank operates in the same way as for vehicles with B5244S6 engines, using a sensor in the gasoline tank. A combined pressure and temperature sensor is used to measure the fuel level in the gas tank. The sensor is on the left-hand side of the gas tank.

The sensor is directly connected to the rear electronic module (REM). The signals from the sensor are transmitted to the rear electronic module (REM) where they are calculated and sent to the driver information module (DIM) and engine control module (ECM) via the controller area network (CAN).

There are diagnostics for the fuel level sensor.

LPG (Liquefied Petroleum Gas)

The fuel level in the gasoline tank operates in the same way as for vehicles with B5244S6 engines, using a sensor in the gasoline tank.

A sensor, on the right-hand side of the tank, is used to measure the fuel level in the LPG tank. The sensor is directly connected to the rear electronic module (REM). The signals from the sensor are compared with a table stored in the rear electronic module (REM). Data about the remaining volume of fuel is transmitted to the driver information module (DIM) and engine control module (ECM) via the controller area network (CAN).

There are diagnostics for the fuel level sensor.

SHUT-OFF VALVE (BI-FUEL)

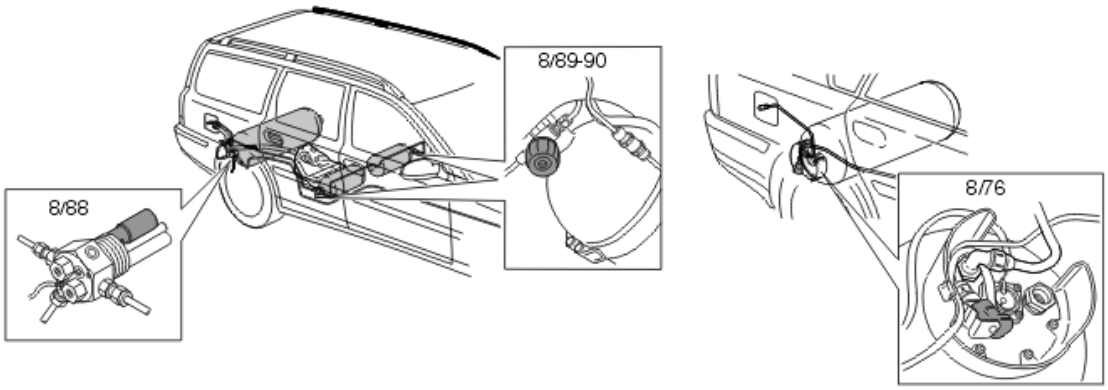

Fig. 185: Identifying Shut-Off Valve (Bi-Fuel)
Courtesy of VOLVO CARS CORPORATION

There are shut-off valves on the gas tanks to open and close the tank valves on bi-fuel cars.

These are positioned at the inlet and outlet on each gas tank. There is one for LPG and three for CNG.

The valves are controlled electro-magnetically and powered via a relay directly connected to the rear electronic module (REM). The rear electronic module (REM) activates the relay when a request for gas power is transmitted on the controller area network (CAN) by the engine control module (ECM).

The valves close when the vehicle is running on gasoline, when the ignition is switched off or in the event of a collision.

The valves can be opened via a diagnostic command by activating the relay for the gas valves. Activation is carried out in VIDA vehicle communication.

The valves for the CNG tanks can also be closed manually using an Allen key.

There are diagnostics for the shut-off valve relay.

REAR FOG LAMP

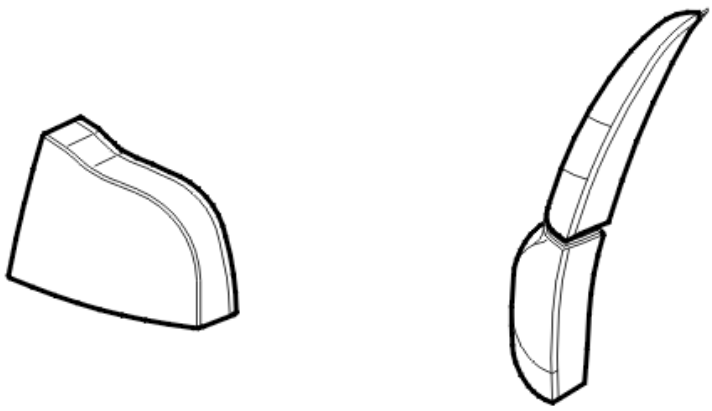

Fig. 186: Identifying Rear Fog Lamp And Back-Up Lamp

Courtesy of VOLVO CARS CORPORATION

The rear fog lamp are in the tail lamps. The fog lamps are operated via a button in the light switch module (LSM). An LED in the button lights when the fog lamps are activated. The rear fog lamp can only be activated when low beam is on (market dependent). The light switch transmits information to the central electronic module (CEM) using serial communication when the button for the rear fog lamp is pressed. The central electronic module (CEM) transmits the data via the Controller area network (CAN) to the rear electronic module (REM). The power supply for the lamps is via a directly connected relay in the rear electronic module (REM).

When reactivating key position II, the function is set to non-activated mode.

To detect faults in the rear fog lamps, the rear electronic module (REM) reads the power consumption of the circuit. If the power consumption falls below a certain limit, a fault is indicated and a text message is displayed in the driver information module.

REAR PARKING LAMPS/LICENSE PLATE LIGHTING

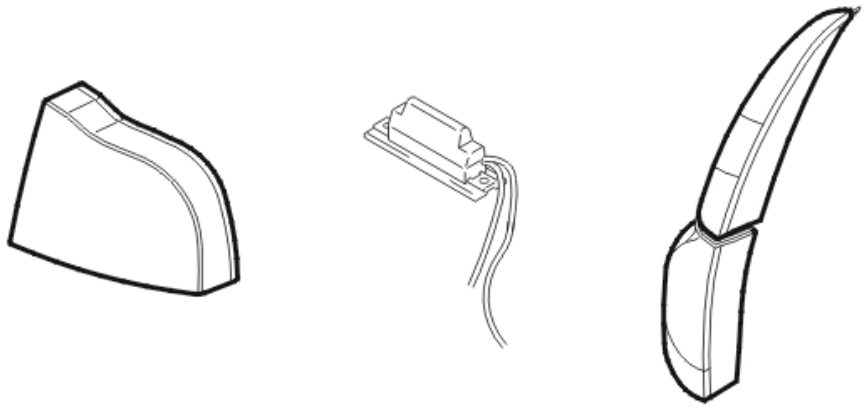

Fig. 187: Identifying Rear Parking Lamps/License Plate Lighting
Courtesy of VOLVO CARS CORPORATION

There are a number of lamps positioned around the car to mark its position. These are in the headlamps and tail lamps. The lamps light together with the license plate lighting when the light switch module (LSM) is in parking lamp mode or low beam is on.

The rear parking lamps and license plate lighting are powered by the rear electronic module (REM).

The front parking lamps are powered by the central electronic module (CEM).

There are diagnostics for the rear parking lamps and license plate lighting.

BACK-UP LAMP

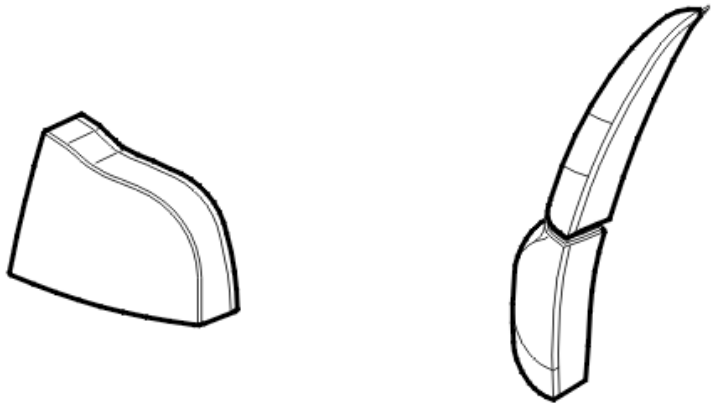

Fig. 188: Identifying Rear Fog Lamp And Back-Up Lamp
Courtesy of VOLVO CARS CORPORATION

There are two back-up (reversing) lamps. These are in the tail lamps. The back-up (reversing) lamp lights when back-up (reverse) gear is selected. The back-up (reversing) lamps are connected to the rear electronic module (REM) via an internal directly connected relay. The lamps are powered via the relay.

Cars with manual transmissions

Cars with manual transmissions have a back-up (reverse) switch on the transmission. The switch closes and transmits a directly connected signal to the central electronic module (CEM) when back-up (reverse) gear is selected.

Cars with automatic transmissions

In cars with automatic transmissions, a signal is transmitted from the transmission control module (TCM) on the controller area network (CAN) to the central electronic module (CEM) indicating that back-up (reverse) gear is selected.

BRAKE LIGHT

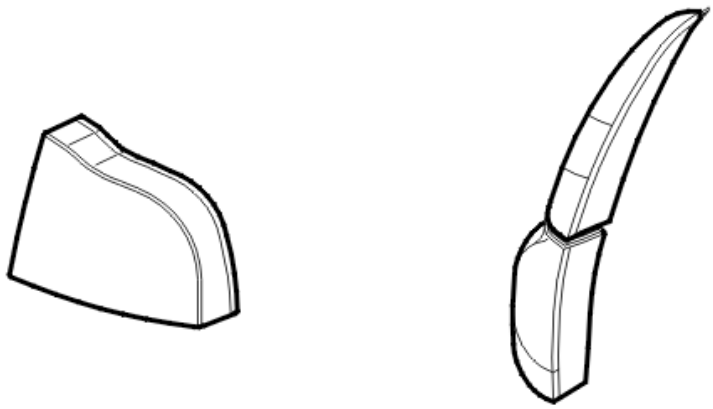

Fig. 189: Identifying Rear Fog Lamp And Back-Up Lamp
Courtesy of VOLVO CARS CORPORATION

The stop lamps are in the tail lamps. The lamps light when the stop lamp switch on the brake pedal is closed. The stop lamp switch is connected to the central electronic module (CEM). The signal from the stop lamp switch is sent on to the rear electronic module (REM) via a hardwired cable. The power supply for the lamps is via a directly connected relay in the rear electronic module (REM). In order for the stop lamps to work when the ignition is not on, there is no logic in the rear electronic module (REM) to activate the relay. The relay is activated directly by the signal from the stop lamp switch. The rear electronic module (REM) receives data via the controller area network (CAN) from the central electronic module (CEM) indicating that the stop lamp switch is activated.

To detect faults in the stop lamps, the rear electronic module (REM) reads the power consumption of the lamp circuit. If the power consumption falls below a certain limit, a fault is indicated and a text message is displayed in the driver information module.

There are diagnostics for the stop lamps.

HIGH LEVEL STOP LAMP

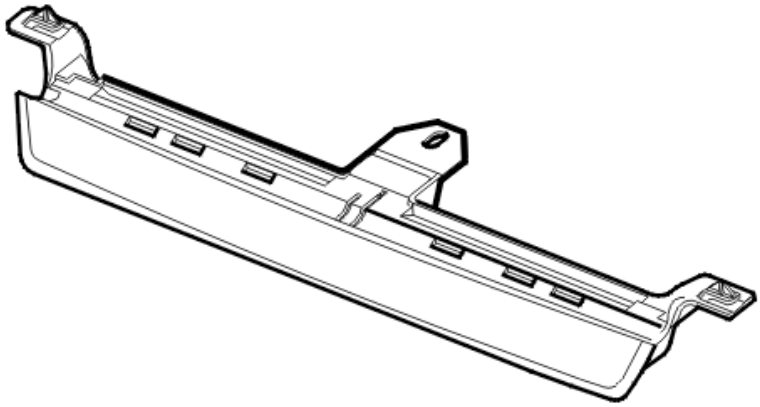

Fig. 190: High Level Stop Lamp
Courtesy of VOLVO CARS CORPORATION

There is a high-mounted stop lamp on the inside of the rear windshield. This lamp lights during braking together with the standard stop lamps. The stop lamp is activated when the stop lamp switch on the brake pedal is closed.

The high mounted stop lamp is supplied with power directly from the rear electronic module (REM). The lamp consists of a number of LEDs.

There are diagnostics for the high level stop lamp.

REAR DEMIST

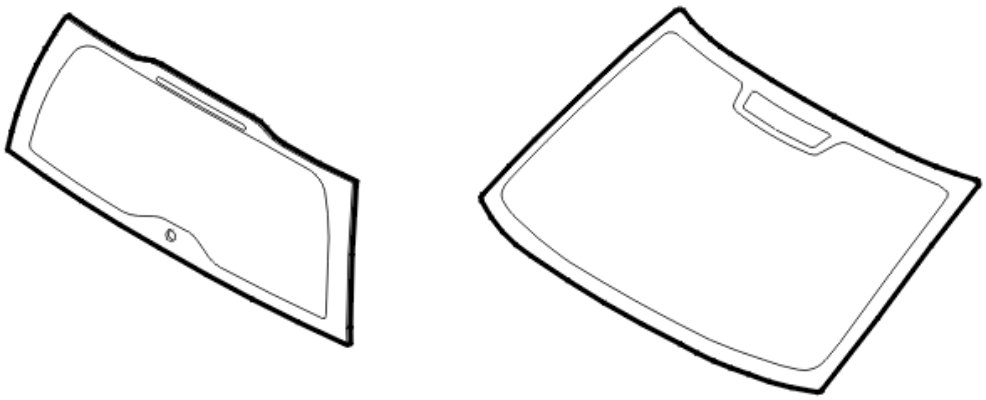

Fig. 191: Identifying Rear De-Mist
Courtesy of VOLVO CARS CORPORATION

There are heating loops in the glass for demisting and to prevent ice from forming. The loops heat up when they are supplied with power. The power supply is via a directly connected relay in the rear electronic module (REM).

Rear demist is controlled using a switch on the right-hand side of the climate control module (CCM).

The engine must be running for the demister to work. Press the button again to switch off the function. Demisting is switched off automatically after the maximum time of 12 minutes.

There are diagnostics for the switch via the climate control module (CCM).

CARGO COMPARTMENT LIGHTING

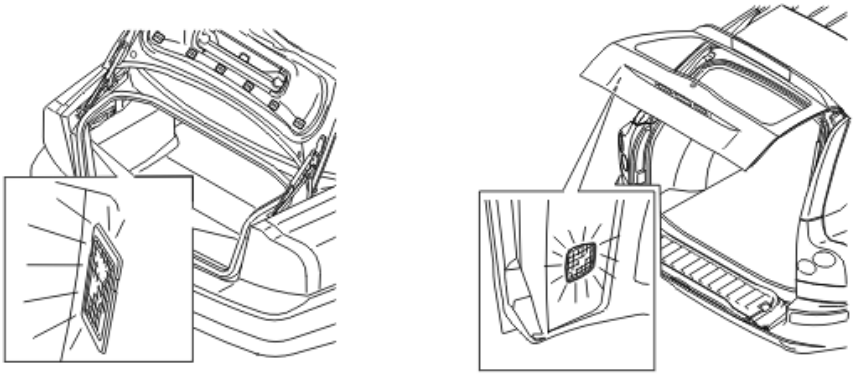

Fig. 192: Cargo Compartment Lighting
Courtesy of VOLVO CARS CORPORATION

There are lamps in the cargo compartment. In the XC90 there is a lamp in the trunk lid. The lamps light when the trunk lid is open. The cargo compartment lighting is powered directly from the rear electronic module (REM).

There are diagnostics for the cargo compartment lighting.

REAR 12V SOCKET

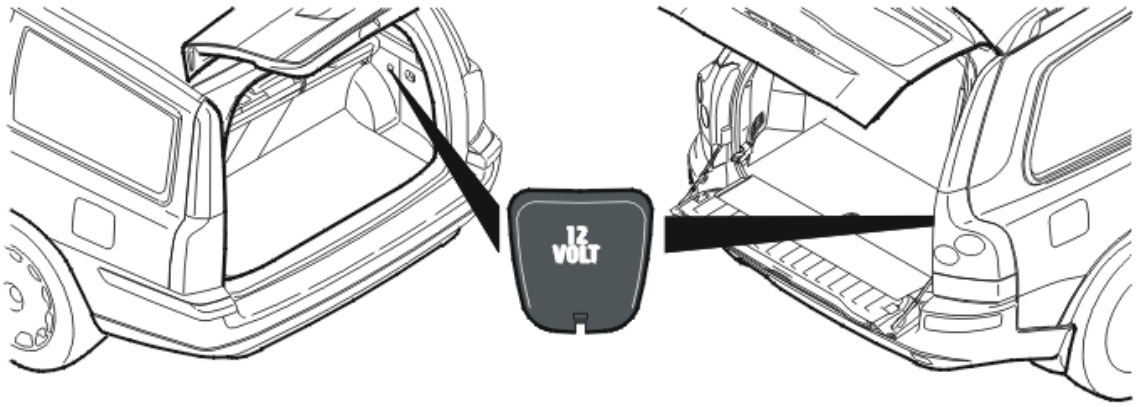

Fig. 193: Identifying Rear 12V Socket
Courtesy of VOLVO CARS CORPORATION

There is a 12V socket on the right-hand side of the cargo compartment. This socket can be used to power a number of accessories.

The socket is directly connected to the 30-supply via a fuse on the rear electronic module (REM).

The rear electronic module (REM) measures the power consumption and calculates an average value. This is compared with a limit value to determine if any power consuming component is connected.

This information is transmitted via the controller area network (CAN) to the driver information module (DIM) which displays a text message when a power consuming component is connected.

PARKING ASSISTANCE SYSTEM (OPTIONAL EXTRA)

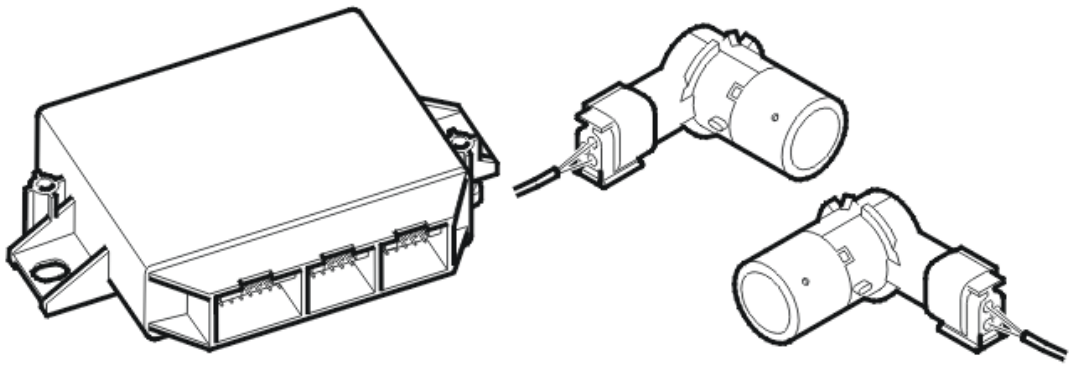

Fig. 194: Identifying Parking Assistance System
Courtesy of VOLVO CARS CORPORATION

There is a parking assistance system to assist parking. The parking assistance system consists of:

- four parking sensors in the rear bumper

- four parking sensors in the front bumper (option)
- the parking assistance module (PAM) under the rear relay box.

The parking assistance module (PAM) communicates with the rear electronic module (REM) using serial communication. The signals transmitted contain information about status and diagnostics. The sensors are directly connected to the parking assistance module (PAM). The sensors are also powered via the parking assistance module (PAM).

The parking assistance module (PAM) is powered and grounded via the rear electronic module (REM).

The parking assistance system is activated via a switch on the dashboard environment panel for the climate control module (CCM). An LED lights in the switch when the system is active.

The rear sensors detect objects within 1.5 meters if back-up (reverse) gear is selected. There is a beeping noise from the rear loudspeakers. The sound intensifies as the vehicle gets nearer to the object. The sound is constant from approximately 30 cm.

The front sensors (option) detect objects within 0.8 meters if back-up gear is selected or if the car is driven forwards at a speed below 10 km/h. There is a beeping sound from one of the front loudspeakers. The sound intensifies as the vehicle gets nearer to the object. The sound is constant from approximately 30 cm.

In the event of a fault in the parking assistance module (PAM) or sensors, the general warning lamp in the driver information module (DIM) lights and a text message is displayed.

The parking assistance system can be temporarily deactivated at lower speeds. This is done manually using a switch on the dashboard environment panel for the climate control module (CCM). The LED in the switch goes out when the system is deactivated.

There are diagnostics for the parking assistance system

TOW HITCH (OPTIONAL EXTRA)

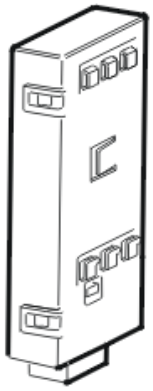

Fig. 195: Identifying Trailer Module (TRM)
Courtesy of VOLVO CARS CORPORATION

The trailer module (TRM) manages the electrical connection between the vehicle and the trailer. The trailer module (TRM) is directly connected to the rear electronic module (REM).

The primary task of the trailer module (TRM) is to manage output signals to the tow hitch cable harness for:

- Turn signal lamps
- Brake light
- Parking lamps
- Fog lights

The rear electronic module (REM) transmits the following voltages to the electrical socket for the tow hitch:

- Back-up lamp
- +12V voltage
- +12V supply.

REAR WINDOW LIFT MECHANISMS

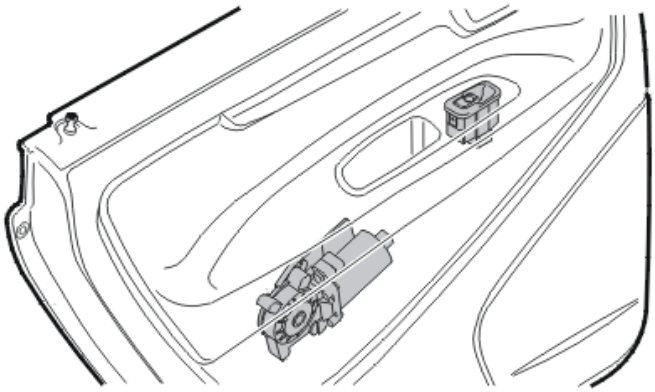

Fig. 196: Identifying Rear Window Lift Mechanisms
Courtesy of VOLVO CARS CORPORATION

The rear side windows are operated by motors in the doors. The switches for operating the windows are in the door panels. The windows can also be operated from the driver's door module (DDM).

The function is controlled by five relays inside the rear electronic module (REM). Depending on whether the control switch is moved up or down, the relays are activated to carry out the requested operation.

Two relays guide the window up on the right and left-hand sides. Two other relays lower the window. A further relay controls the power supply.

When operated from the driver's position, information is transmitted via the controller area network (CAN) from the driver's door module (DDM) to the rear electronic module (REM) which sends out signals to the relays.

DIAGNOSTIC FUNCTIONS

GENERAL

The control module has a built-in diagnostic system, Volvo Diagnostic, which continuously monitors internal functions as well as input and output signals.

DIAGNOSTIC TROUBLE CODES (DTCS)

A diagnostic trouble code (DTC) is stored if the control module detects a fault. The control module can store up to 6 diagnostic trouble codes (DTCs). A fault which is detected in the most recent operating cycle is defined as permanent. Other faults which are detected are defined as intermittent.

READING AND ERASING DIAGNOSTIC TROUBLE CODES (DTCS)

Stored diagnostic trouble codes (DTCs) can be read off and erased using this function.

Diagnostic trouble codes (DTCs) can only be erased once all the diagnostic trouble codes (DTCs) have been read off at least once.

READING OFF THE CONTROL MODULE IDENTIFICATION

VIDA identifies control modules by reading off a number of codes from the control module memory.

The codes contain information about the control module:

- hardware P/N (control module without software)
- hardware serial number (control module without software)
- software P/N
- diagnostic software P/N.

READING OFF EXTENDED DIAGNOSTIC TROUBLE CODE (DTC) INFORMATION

This function can be used to read parameters, status identifiers and counters stored at the same time as a diagnostic trouble code (DTC). These are called frozen values.

For further information, see: **DESCRIPTION OF FROZEN VALUES, REAR ELECTRICAL MODULE**

READING OFF THE PARAMETER VALUES

Using this function, the status or value of parameters can be read off. The status/value is presented digitally.

For further information about the different parameters, see: **DESCRIPTION OF PARAMETERS**

ACTIVATING COMPONENTS AND FUNCTIONS

This function can be used to activate components and functions which affect the outputs on the rear electronic

module (REM).

For further information, see: **DESCRIPTION OF ACTIVATIONS**

DESCRIPTION OF FROZEN VALUES, REAR ELECTRICAL MODULE

EXPLANATION

Not all the parameters described need to be implemented in the control module. This varies from system to system.

Frozen values are parameter values that are stored when a diagnostic trouble code (DTC) is stored.

BATTERY VOLTAGE, VALUE

Measurement range: 0-12 V.

Normal value when the generator (GEN) is charging: 13.0-14.5 V.

The value is the voltage from the central electronic module (CEM).

DISTANCE, VALUE

Measurement range: 0-1048575 km.

The value indicates the total mileage of the car at the time the diagnostic trouble code (DTC) was stored.

PASSENGER COMPARTMENT TEMPERATURE, VALUE

Measurement range: -60-195 °C.

The combined instrument panel obtains the value via the control area network (CAN).

OUTSIDE TEMPERATURE, VALUE

Measurement range: -128-127.75 °C.

The combined instrument panel obtains the value via the control area network (CAN).

ENGINE RUNNING, STATUS

The status displays whether the engine was running when the diagnostic trouble code (DTC) was stored.

No = the engine was not running

Yes = the engine was running

TIME, VALUE

The value displays the time that has passed since the diagnostic trouble code (DTC) was stored.

DOWNLOADING SOFTWARE AND REPLACING THE CONTROL MODULE

New software can be downloaded into the rear electronic module (REM). When ordering software, the hardware and the software in the car is compared to the information in the Volvo central database. If the comparison is OK the software is downloaded to the control module.

If the comparison between the car and Volvo central database is not OK, the database is updated with the car configuration. When this is complete the software is downloaded.

The control module is mounted in a relay box behind the left-hand cargo compartment panel. To replace the rear electronic module (REM), remove it from the relay box.

For cars with Bi-Xenon lamps, the position sensor for headlamp range adjustment must be calibrated when the control module is replaced. This is carried out in VIDA via the vehicle communication socket.

FUNCTION

BATTERY VOLTAGE

The task of the rear electronic module (REM) is to check the voltage of the battery. The value of the voltage is transmitted out on the CAN network as a reference for other control modules.

The Central electronic module (CEM) receives this signal and checks it against its own supply voltage from the battery. The value is used when diagnosing the charging function.

FUEL LEVEL (BI-FUEL)

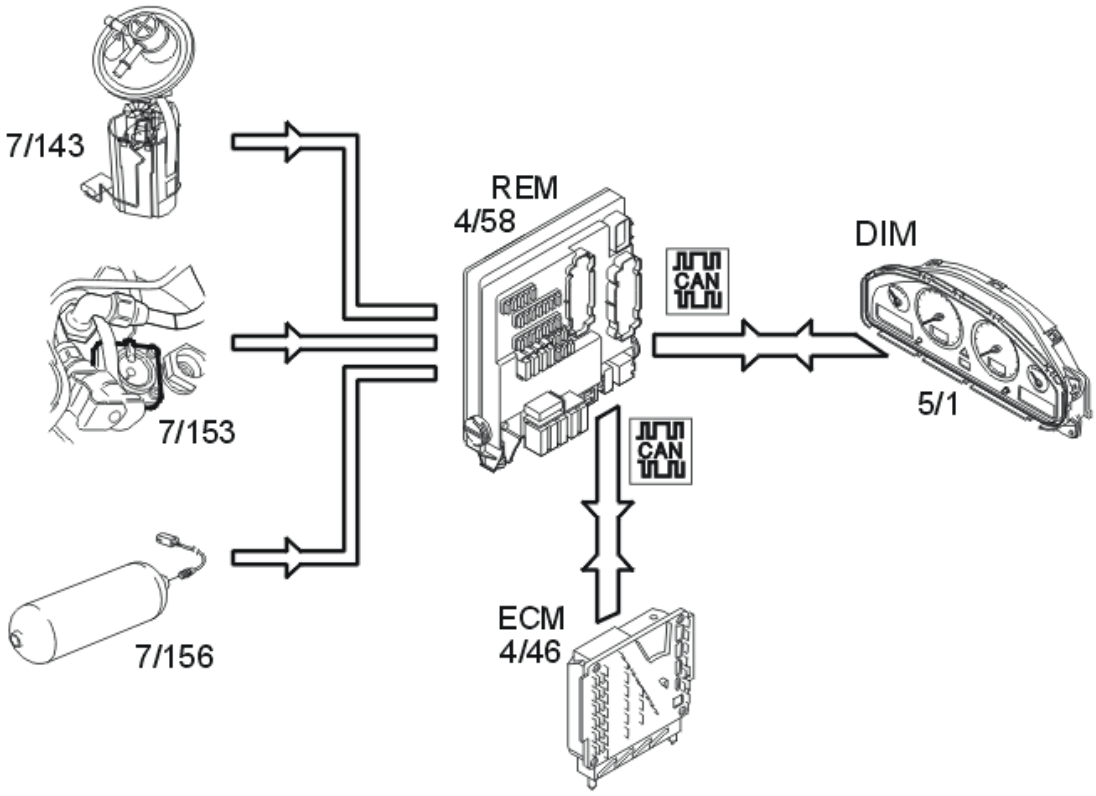

Fig. 197: Identifying Fuel Level Measurement System And Components
Courtesy of VOLVO CARS CORPORATION

The fuel level in the gasoline tank is measured by the fuel level sensor (7/143). The level in the gas tank is measured by the fuel level sensor (7/156) (CNG) or (7/153) (LPG). The signals from the sensors are transmitted to the rear electronic module (REM) (4/58).

The rear electronic module (REM) calculates the quantity of fuel remaining in each tank and transmits this information via the controller area network (CAN) to the driver information module (5/1) and engine control module (ECM) (4/46). The driver information module (DIM) also receives data via the controller area network (CAN) from the engine control module (ECM) (4/46) indicating which type of fuel the car is running on. The gas level in the tank is displayed via the fuel gauge. The gasoline fuel level is displayed in the text window in the driver information module (DIM).

SHUT-OFF VALVE (BI-FUEL)

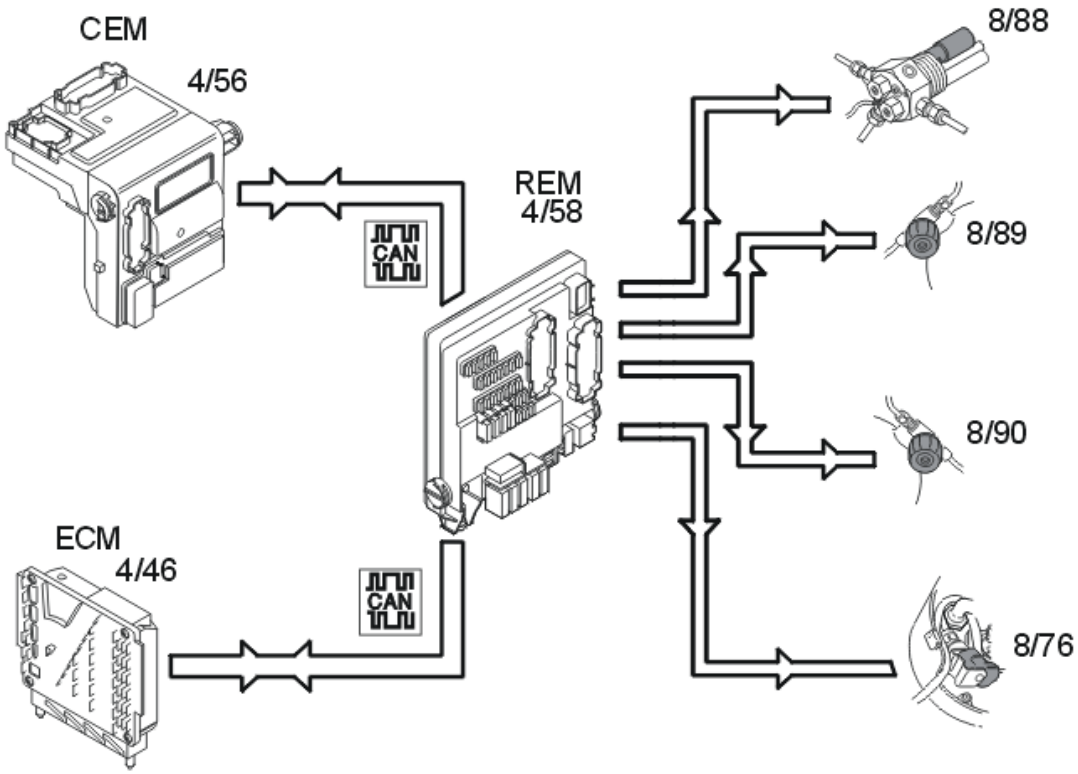

Fig. 198: Identifying Bi-Fuel Shut-Off Valve Communication Links & Components
Courtesy of VOLVO CARS CORPORATION

The rear electronic module (REM) (4/58) controls the shut-off valves, (8/88-90) (CNG) and (8/76) (LPG), via a relay (which supplies the valves with power when they should be open.

The rear electronic module (REM) receives information via the controller area network (CAN) from the engine control module (ECM) (4/46) indicating that the car should run on LPG or CNG. The rear electronic module (REM) also receives information via the controller area network (CAN) from the central electronic module (CEM) (4/56) indicating the position of the ignition and data about collision status. When the ignition is on and no collision has been registered, the rear electronic module (REM) activates the relay, which supplies the valves with power.

The rear electronic module (REM) deactivates the relay in the following cases:

- there is a signal from the engine control module (ECM) indicating that gasoline operation has been selected
- ignition off
- the collision status changes
- there is a fault in the communication on the controller area network (CAN).

The relay can be activated via a diagnostic command, for example, to allow the tank to be drained. Activation is carried out in VIDA via the vehicle communication socket.

REAR FOG LAMP

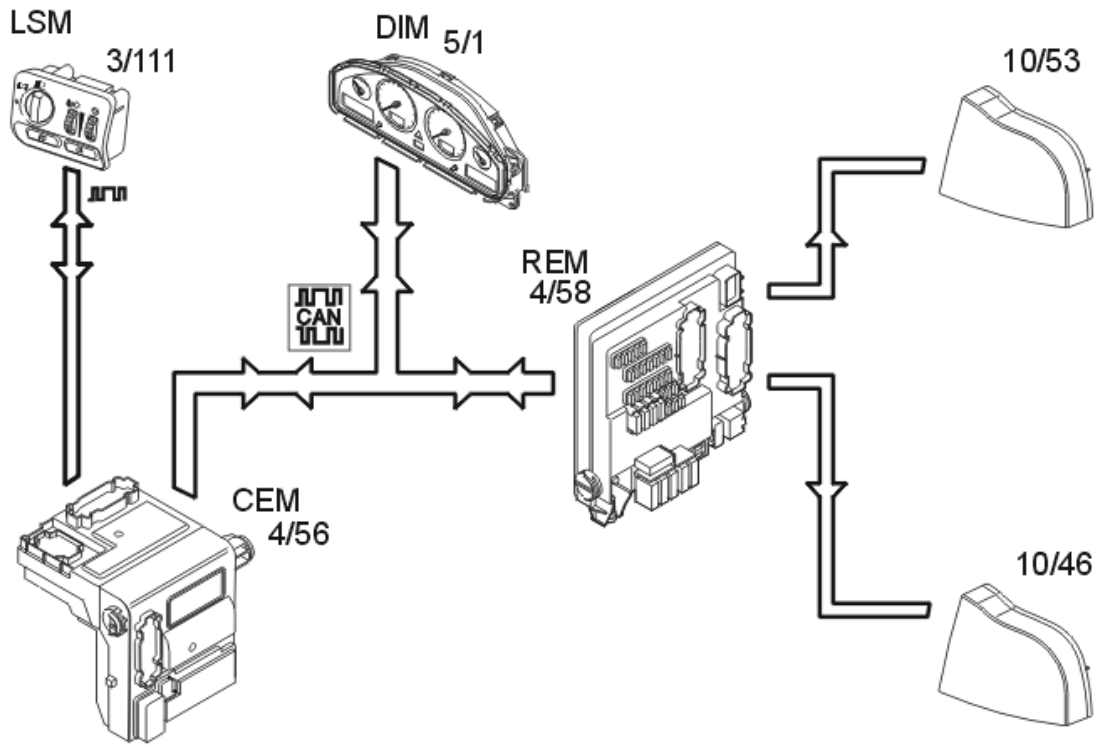

Fig. 199: Identifying Rear Fog Lamp(s) Communication Links & Components
Courtesy of VOLVO CARS CORPORATION

The rear fog lamps (10/46, 10/53) are activated by pressing the button for the rear fog lamps in the lamp switch module (3/111). The light switch module (LSM) transmits a request to light the lamps to the central electronic module (CEM) (4/56) using serial communication. The central electronic module (CEM) transmits the request to the rear electronic module (REM) (4/58) via the Controller area network (CAN).

Central Electronic Module (CEM) transmits information:

- back to the light switch module (LSM) to light the LED in the button
- via the Controller area network (CAN) to the driver information module (DIM) (5/1) to light the indicator lamp for the rear fog lamps.

The rear electronic module (REM) sends the status of the lamp fault via the Control area network (CAN) to the central electronic module (CEM). In the event of a fault, the central electronic module (CEM) transmits data via the Control area network (CAN) to the driver information module (DIM) which displays a text message.

REAR PARKING LAMPS/LICENSE PLATE LIGHTING

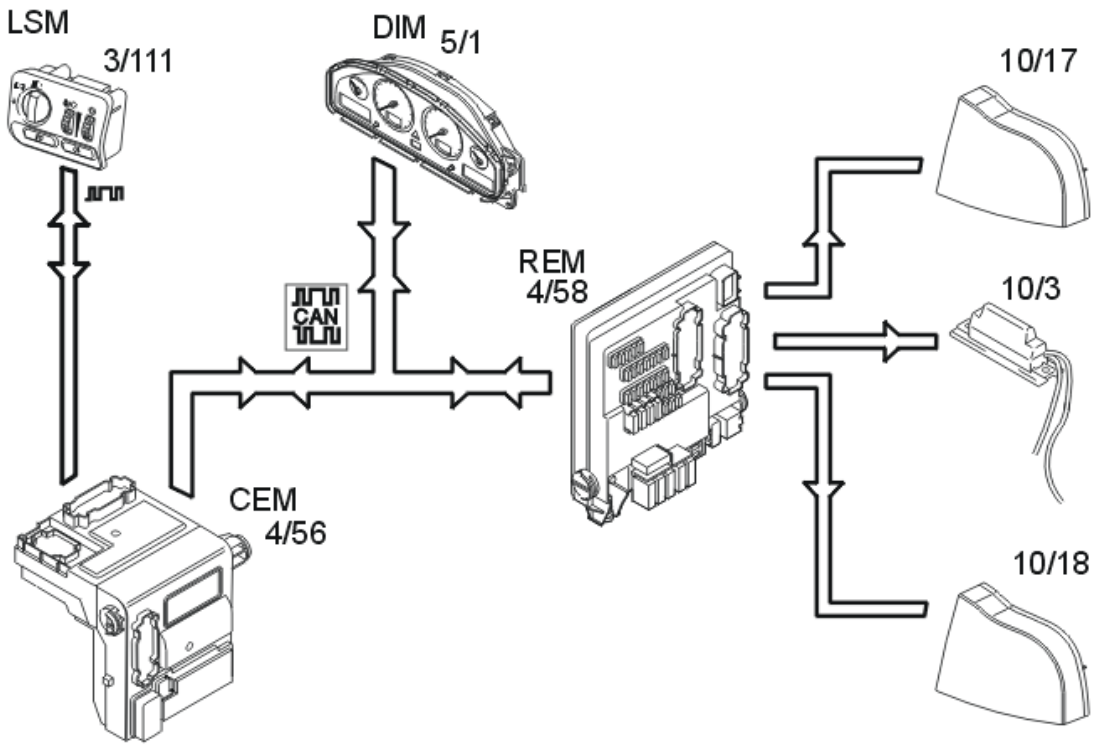

Fig. 200: Identifying Rear Parking Lamps/License Plate Lighting Communication Links & Components
Courtesy of VOLVO CARS CORPORATION

The parking lamps (10/17-18) and license plate lighting (10/3) light when:

- the knob in the light switch module (LSM) (3/111) is in the low beam position
- the knob in the light switch module (LSM) is in the parking lamp position
- low beam is lit via the low beam automatic function.

The lamp switch module (LSM) transmits data using serial communication to the central electronic module (CEM) (4/56) to activate the lamps.

The central electronic module (CEM) transmits the data via the controller area network (CAN) to the rear electronic module (REM) which activates the lamps.

The rear parking lamps and license plate lighting are powered via the rear electronic module (REM) (4/58).

In the event of a bulb fault for the rear parking lamps or license plate lighting, data is transmitted on the controller area network (CAN) from the rear electronic module (REM) to the driver information module (DIM) (5/1) and a text message is displayed.

There is a Limp Home function for the parking lamps so that they will work even if there is a fault in the controller area network (CAN) or in the serial communication between the light switch module (LSM) and the

central electronic module (CEM).

BACK-UP LAMP

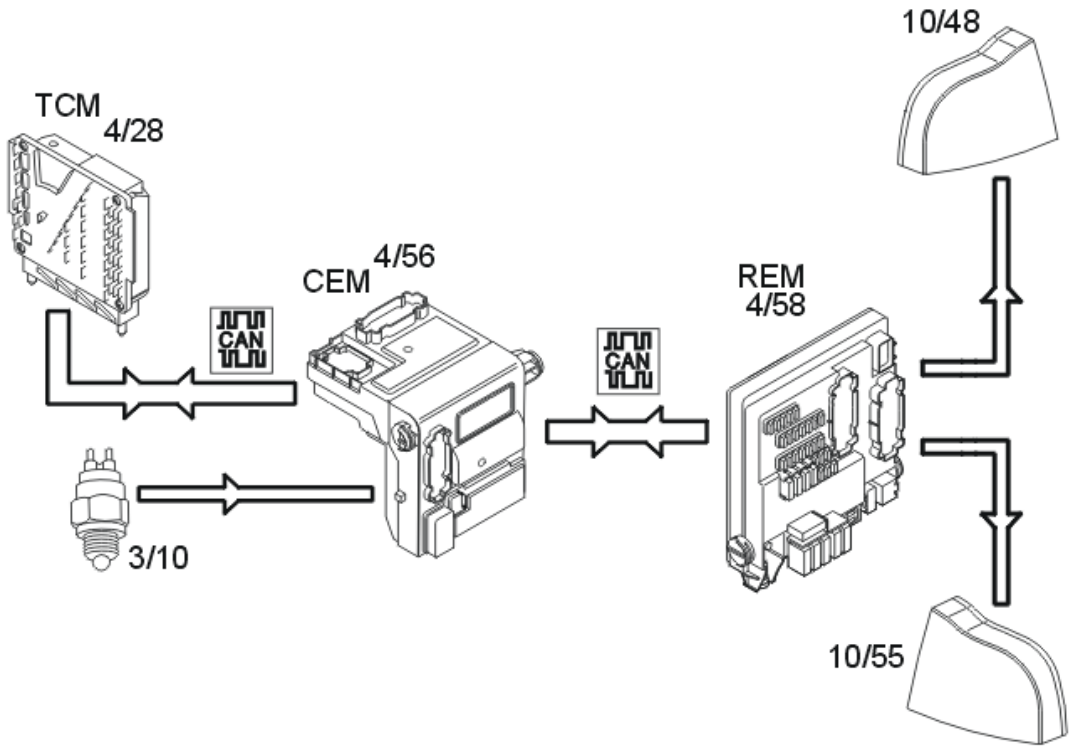

Fig. 201: Identifying Back-Up Lamp Communication Links And Components
Courtesy of VOLVO CARS CORPORATION

Manual transmissions

The back-up (reversing) lamps (10/48, 10/55) are activated when back-up (reverse) gear is selected. The switch (3/10) on the transmission is then closed. A directly connected signal is transmitted to the central electronic module (CEM) (4/56) indicating that back-up (reverse) gear is selected. The central electronic module (CEM) transmits the information via the controller area network (CAN) to the rear electronic module (REM) (4/58) to activate the back-up lamps. The rear electronic module (REM) activates the relay and the back-up lamps are supplied with power via the relay.

Automatic transmission

The back-up (reversing) lamps (10/48, 10/55) are activated when back-up (reverse) gear is selected. The transmission control module (TCM) (4/28) transmits information via the Control area network (CAN) to the central electronic module (CEM) (4/56) indicating that back-up (reverse) gear is selected. The central electronic module (CEM) transmits the information via the controller area network (CAN) to the rear electronic module (REM) (4/58) to activate the back-up lamps. The rear electronic module (REM) activates the relay and the back-up lamps are supplied with power via the relay.

BRAKE LIGHT

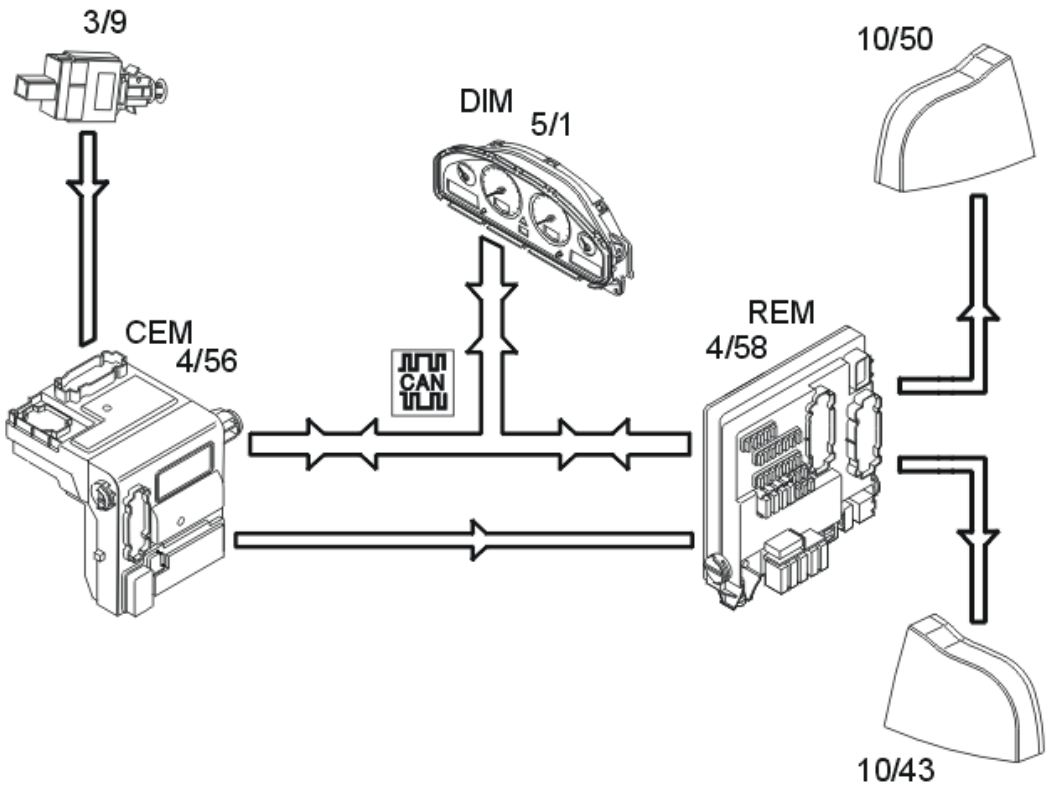

Fig. 202: Identifying Brake Light Communication Links And Components
Courtesy of VOLVO CARS CORPORATION

The stop lamps (10/43, 10/50) are activated when the brake switch is (3/9) closed. A directly connected signal is transmitted via the central electronic module (CEM) (4/56) to the rear electronic module (REM) (4/58) and activates the relay. The lamps are powered via the relay. The central electronic module (CEM) transmits the data via the Controller area network (CAN) to the rear electronic module (REM) indicating that the stop lamp switch is activated. The rear electronic module (REM) sends status information for the lamp fault via the Control area network (CAN) to the central electronic module (CEM). In the event of a fault, the central electronic module (CEM) transmits data via the Control area network (CAN) to the driver information module (DIM) (5/1) which displays a text message.

HIGH LEVEL STOP LAMP

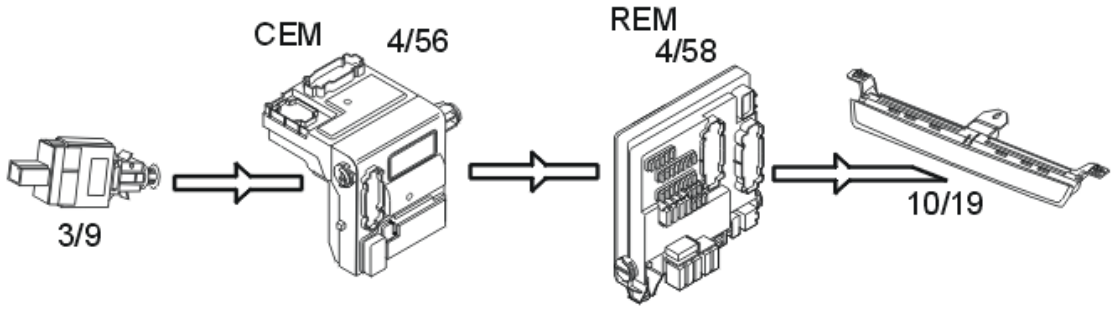

Fig. 203: Identifying High Level Stop Lamp Communication Links & Components
Courtesy of VOLVO CARS CORPORATION

When the stop lamp switch (3/9) is closed, a signal is transmitted to the central electronic module (CEM) (4/56). The signal is transmitted from the central electronic module (CEM) to the rear electronic module (REM) (4/58) via a directly connected cable. The high mounted stop lamp is supplied with power directly from the rear electronic module (REM). The stop lamp is supplied with power for as long as the stop lamp switch is closed.

REAR DEMIST

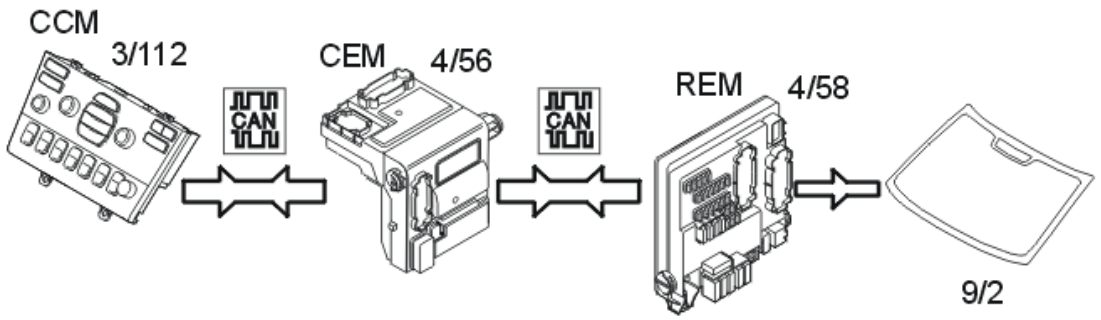

Fig. 204: Identifying Rear Demister Communication Links & Components
Courtesy of VOLVO CARS CORPORATION

Rear demist (9/2) is activated by pressing the switch on the climate control module (CCM) (3/112). The climate control module (CCM) transmits the data via the Control area network (CAN) to the central electronic module (CEM) (4/56). The central electronic module (CEM) checks that the conditions to start the demist have been met. If the conditions are met, a request is transmitted via the controller area network (CAN) to the rear electronic module (REM) (4/58) to activate the relay. The rear electronic module (REM) powers the relay and the demister is powered.

The central electronic module (CEM) also transmits a request via the Control area network (CAN) back to the climate control module (CCM) to light the LED in the switch.

CARGO COMPARTMENT LIGHTING)

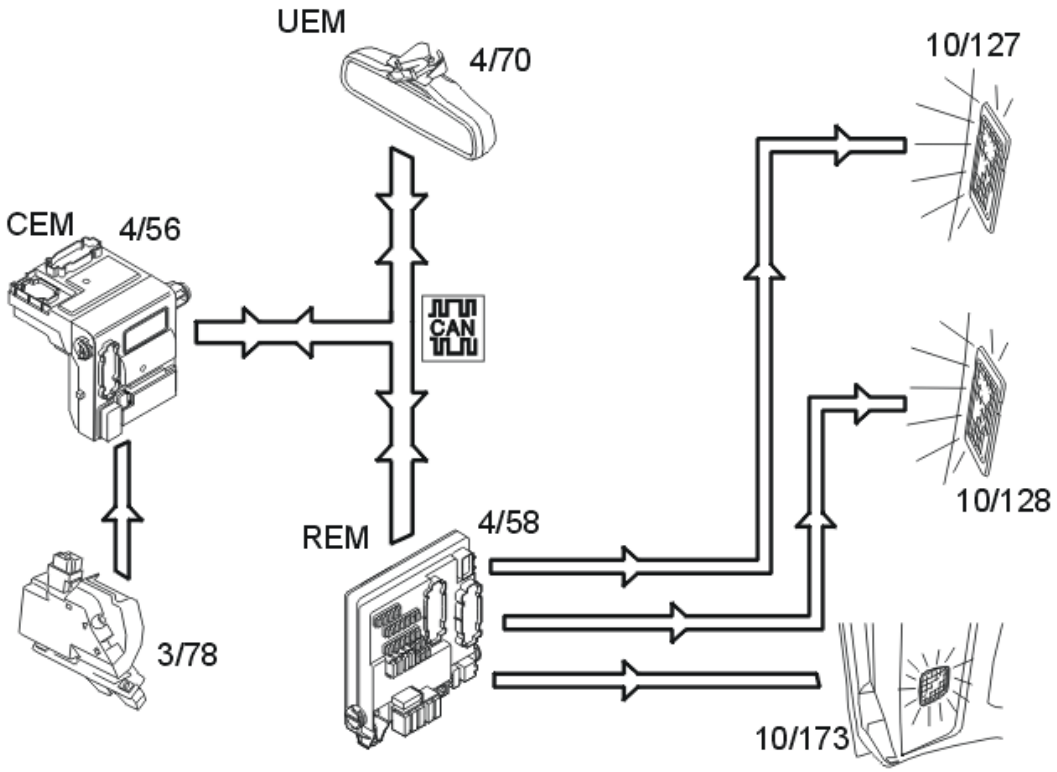

Fig. 205: Cargo Compartment Lighting Modules
Courtesy of VOLVO CARS CORPORATION

The cargo compartment lighting is activated when the trunk lid is opened. The central electronic module (CEM) (4/56) receives a signal from the lock (3/78) in the trunk lid. The central electronic module (CEM) transmits the information via the Controller area network (CAN) to the rear electronic module (REM) (4/58) about the status of the trunk lid. A request for cargo compartment lighting is also sent from the upper electronic module (UEM) (4/70) to the rear electronic module (REM). The lamps (10/173 (XC90)) are then powered directly from the rear electronic module (REM).

For the XC90, the roof lamp in the cargo compartment also lights..

REAR 12V SOCKET

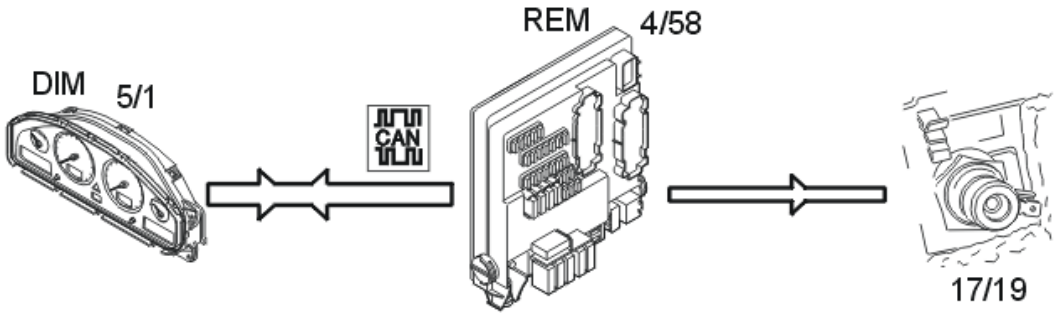

Fig. 206: Identifying Rear 12V Socket Communication Links & Components
Courtesy of VOLVO CARS CORPORATION

When a power consuming component is connected to the rear 12V socket (17/19), the power consumption is measured via a shunt inside the rear electronic module (REM) (4/58). The rear electronic module (REM) transmits status data via the controller area network (CAN) to the driver information module (DIM) (5/1) which displays a text message.

The text message is also displayed if a power consuming component is connected when changing from ignition position:

- II to I
- I to 0 and
- 0 to the key is removed.

There is also an audible warning note when the key is removed.

PARKING ASSISTANCE SYSTEM (OPTIONAL EXTRA)

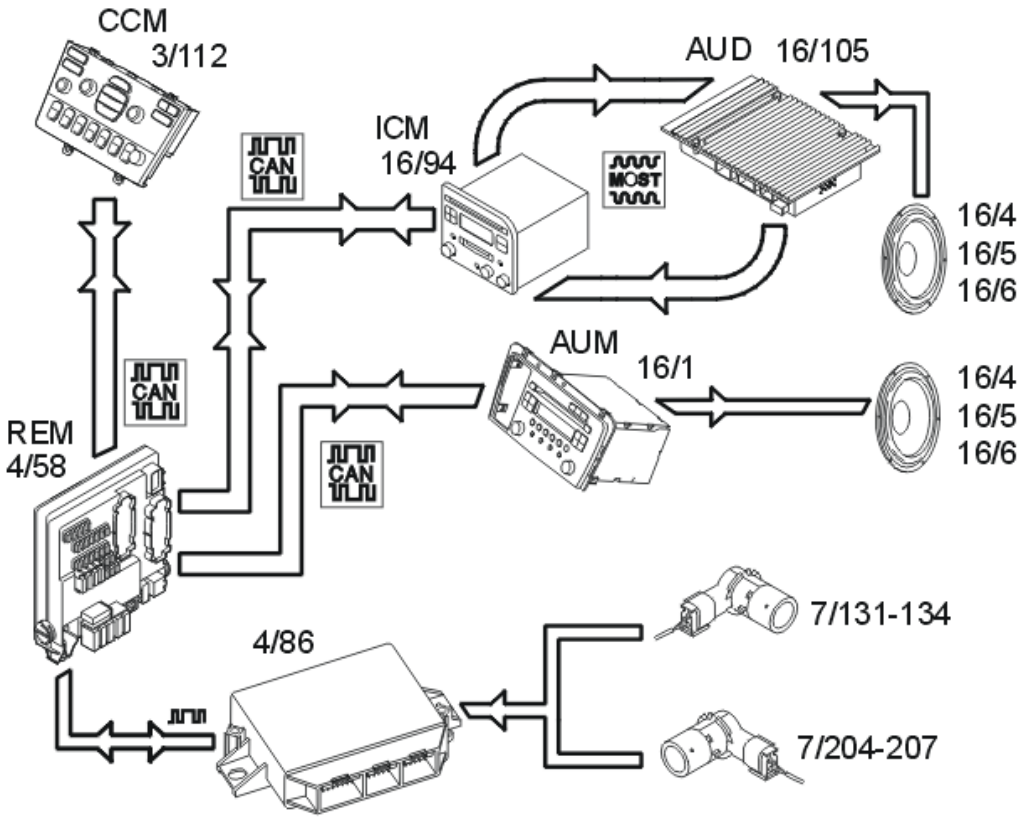

Fig. 207: Identifying Parking Assistance System Communication Links & Components
Courtesy of VOLVO CARS CORPORATION

The parking assistance system warns the drivers of close objects when reversing.

The driver is warned by a sound signal from the loudspeakers for the audio module (AUM) (16/1). The signal is transmitted via the infotainment control module (ICM) (16/94).

The rear sensors (7/131, 7/132, 7/133 and 7/134) are active when the ignition is on in position II and back-up gear (R) is selected. The sensors are deactivated automatically when the gear selector lever is moved from R to any other position. The sensors detect objects at a distance of 1.5 meters. A beeping sound is heard from the rear right-hand loudspeaker (16/5). The sound signal becomes more frequent as the distance to the object reduces. The sound is constant at distances below approximately 30 cm.

The front sensors (7/204, 7/205, 7/206 and 7/207) (option) are active when the ignition is on in position II and gear R is selected, or when the ignition is on in position II and the car is driven forwards at speeds below 10 km/h. The sensors are automatically deactivated when the car is driven forwards at above 15 km/h. On cars with automatic transmissions, the sensors are deactivated if P is selected, irrespective of speed. The sensors detect objects at a distance of 0.8 meters. A beeping sound is heard from one of the front loudspeaker on the driver's side (16/4). The sound signal becomes more frequent as the distance to the object reduces. The sound is constant at distances below approximately 30 cm.

A signal is transmitted from the parking assistance module (PAM) (4/86) to the rear electronic module (REM) (4/58). This indicates whether the buzzer should be switched on or off.

The rear electronic module (REM) then transmits a signal to the audio module (AUM) on the controller area network (CAN). This signal is sent to the Infotainment Control Module (ICM).

If a trailer or caravan is connected, the parking assistance system must be deactivated. This is done using the switch on the climate control module (CCM) (3/112).

The climate control module (CCM) then transmits a signal to the rear electronic module (REM) via the controller area network (CAN). The parking assistance system is deactivated.

TOW HITCH (OPTIONAL EXTRA)

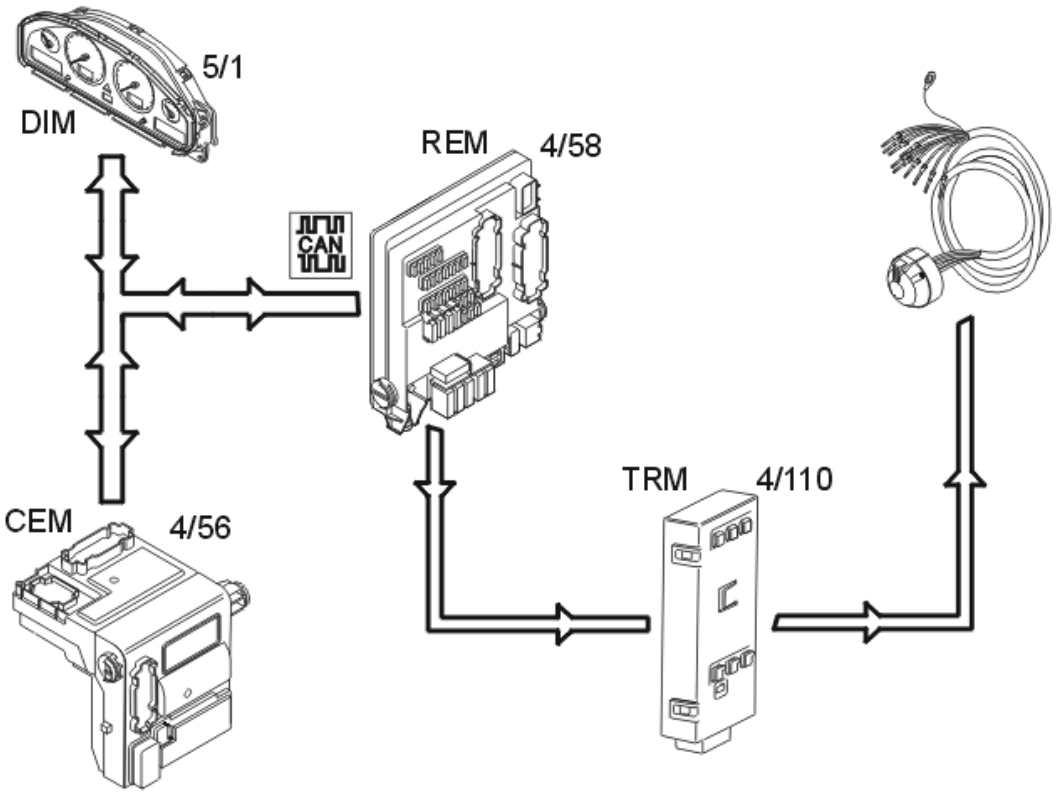

Fig. 208: Identifying Tow Hitch Communication Links & Components
Courtesy of VOLVO CARS CORPORATION

The trailer module (TRM) (4/110) ensures that the correct type of signals are transmitted to the tow hitch cable harness.

The rear electronic module (REM) (4/58) receives messages on the controller area network (CAN) from the central electronic module (CEM) (4/56) about when output signals to the turn signal lamps, parking lamps, back-up lamps and fog lamps should be activated. The rear electronic module (REM) then transmits a direct signal to the trailer module (TRM).

The trailer module (TRM) forwards the signal to the tow hitch cable harness.

The +12 V output signal is activated when the ignition key is turned from position 0 to I, II or III. The rear electronic module (REM) transmits the signal.

+12 V supply is direct from the battery.

The rear electronic module (REM) transmits messages on the controller area network (CAN) to the central electronic module (CEM) and driver information module (DIM) (5/1), if a trailer is connected to the tow hitch connector socket. A separate indicator lamp in the driver information module (DIM) indicates when the turn signal lamps are used and the trailer is connected. If one of the turn signal lamp bulbs is defective the separate indicator lamp will not light.

The output signals for back-up lamps, fog lamps and +12 V in the socket for the tow hitch connector are market dependent. The socket for the tow hitch connector is available in a number of variants with different numbers of pins.

REAR WINDOW LIFT MECHANISMS

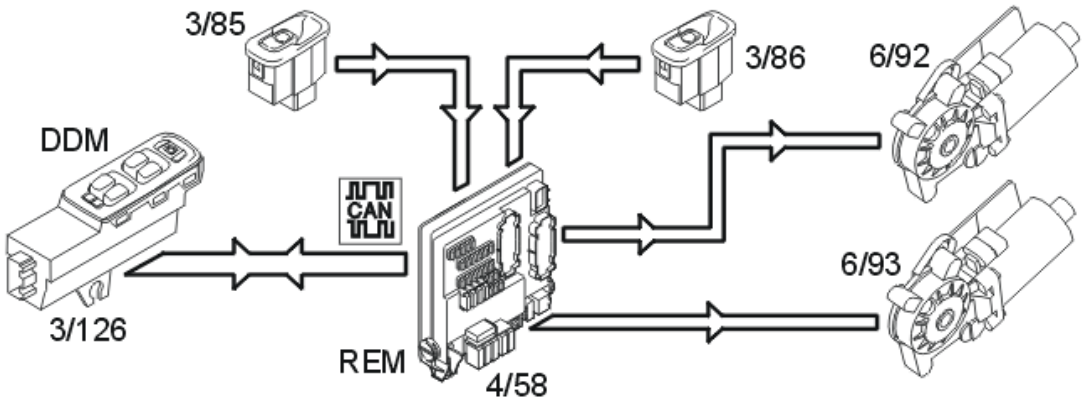

Fig. 209: Identifying Rear Window Lift Mechanism(s) Communication Links & Components
Courtesy of VOLVO CARS CORPORATION

The rear window lift mechanisms are operated using switches (3/85-86) in the door panels.

When the window lift mechanisms are operated from the driver's position, data is transmitted from the driver's door module (3/126) via the controller area network (CAN) to the rear electronic module (REM) (4/58) which transmits a signal to the correct relay.

There is a switch in the driver's door module (DDM) to allow for child locking, where the windows can only be operated from the driver's position. When the function is active, information is transmitted via the controller area network (CAN) to the rear electronic module (REM) to disconnect the relay. The circuit for the rear switch is then broken.

When the child lock is activated, the lighting in the rear switches goes out.

SYSTEM OVERVIEW

CONTROL MODULE

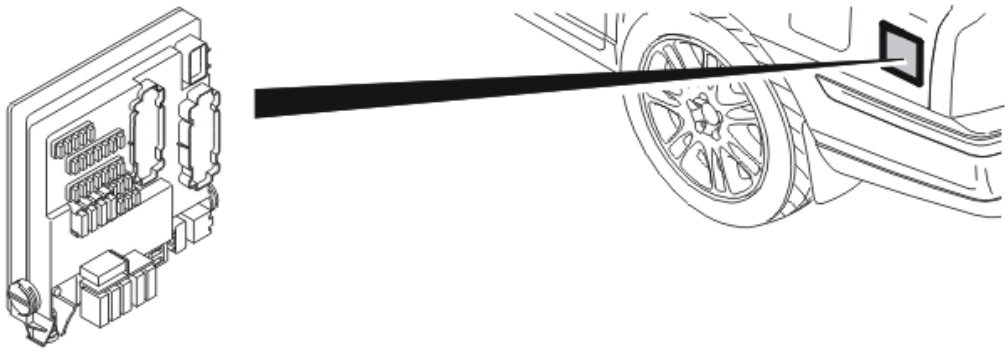

Fig. 210: Locating Rear Electronic Module (REM)
Courtesy of VOLVO CARS CORPORATION

The rear electronic module (REM) handles functions for:

- alarm (certain functions)
- locks (certain functions)
- Inclination Sensor Module alarm
- siren (XC90 structure week 201128-)
- headlamp range adjustment position sensors (Bi-Xenon)
- fuel level (Bi-fuel)
- shut-off valve (Bi-fuel)
- rear fog lamps
- back-up lamp
- stop lamps
- high level stop lamp
- rear windshield wiper/washers
- rear demist
- cargo compartment lighting
- rear 12 V socket
- parking assistance system
- electrical connections on the tow hitch
- rear parking lamps/license plate lighting
- rear window lift mechanisms.

The control module is installed as a separate unit in the rear relay box. This is under the left-hand cargo compartment panel.

The rear electronic module (REM) communicates with components which are directly connected and also with other control modules and components via serial communication and the control area network (CAN).

The control module checks activations and input and output signals using an integrated diagnostic system A diagnostic trouble code (DTC) is stored if the control module detects an error. In certain cases the control module replaces the faulty signal with a substitute value.

Any diagnostic trouble codes (DTCs) are stored in the control module memory. This information can be read off using VIDA via the data link connector in the vehicle.

Lock and unlock the rear doors to check whether the rear electronic module (REM) is grounded and powered. The control module is powered and grounded if the doors lock and unlock. Another way to check whether the rear electronic module (REM) is powered and grounded is to switch on the rear fog lamp.

SIGNALS

The following table summarizes input signals to and output signals from the rear electronic module (REM). The signal types are divided into directly connected signals, serial communication and controller area network (CAN) communication. The illustration below displays the same information with the Volvo component designations.

Input signals	Output signals
Directly connected: • Fuel level sensor (CNG) (7/156) • Fuel level sensor (LPG) (7/153) • Stop lamps from the central electronic module (CEM) (4/56) • Position sensor for headlamp range adjustment (Bi-Xenon) (7/120) • Tailgate lock unit (3/78) • Trailer module (TRM) (4/110) (optional extra).	**Directly connected:** • Fuel level sensor (CNG) (7/156) • Rear demist, relay (9/2) • Cargo compartment lighting (10/127-128, 10/173) (S60/S80/XC90) • High level stop lamp (10/19) • Position sensor for headlamp range adjustment (Bi-Xenon) (7/120) • Inclination sensor module (ISM) (7/100) (XC90 structure week -201127) • Trailer module (TRM) (4/110) (optional extra).
Via serial communication: • Inclination sensor module (ISM) (7/100) (extra equipment) (XC90 structure week -201127) • Inclination sensor module BBS-IS (16/35) (extra equipment) (XC90 structure week 201128-) • Siren BBS (16/35) (extra equipment) (XC90 structure week 201128-) • Parking assistance module (PAM) (4/86) (optional extra).	**Via serial communication:** • Inclination sensor module (ISM) (7/100) (extra equipment) (XC90 structure week -201127) • Inclination sensor module BBS-IS (16/35) (extra equipment) (XC90 structure week 201128-) • Siren BBS (16/35) (extra equipment) (XC90 structure week 201128-) • Parking assistance module (PAM) (4/86) (optional extra).
Via Controller Area Network (CAN) communication:	**Via Controller Area Network (CAN) communication:**

• Climate Control Module (CCM) (3/112) • Central electronic module (CEM) (4/56) • Engine control module (ECM) (4/46) • Supplemental Restraint System Module (SRS) (4/9) • Upper electronic module (UEM) (4/70) • Driver door module (DDM) (3/126).	• Climate Control Module (CCM) (3/112) • Central electronic module (CEM) (4/56) • Driver information module (DIM) (5/1) • Infotainment control module (ICM) (16/94) (XC90) • Phone module (PHM) (16/60) (optional equipment) • Supplemental Restraint System Module (SRS) (4/9) • Transmission control module (TCM) (4/28).

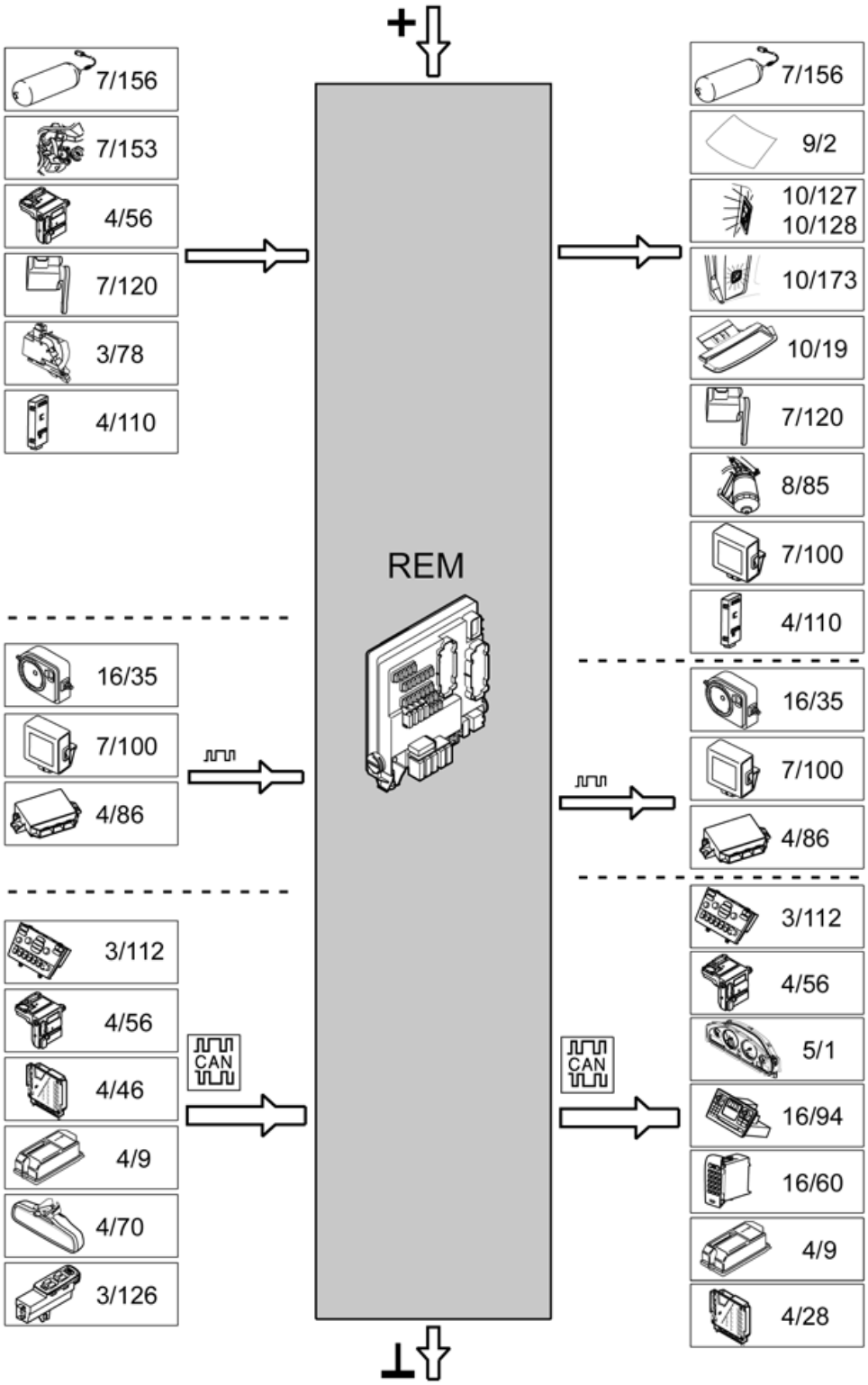
+
7/156
7/153
4/56
7/120
3/78
4/110
16/35
7/100
4/86
3/112
4/56
4/46
4/9
4/70
3/126
CAN
REM
7/156
9/2
10/127
10/128
10/173
10/19
7/120
8/85
7/100
4/110
16/35
7/100
4/86
3/112
4/56
5/1
16/94
16/60
4/9
4/28
CAN

Fig. 211: Identifying Volvo Component Designations
Courtesy of VOLVO CARS CORPORATION

REAR SEAT ENTERTAINMENT SYSTEM (RSE), GENERATION 3.1/3.2 (2005-2006)

DESIGN

REAR SEAT ENTERTAINMENT MODULE (RSE)

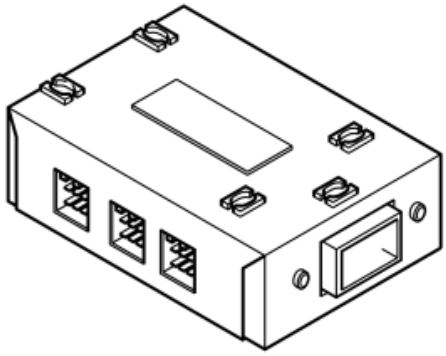

Fig. 212: Rear Seat Entertainment Module (RSE)
Courtesy of VOLVO CARS CORPORATION

The rear seat entertainment module (RSE) is enclosed in a steel casing with installation holes. In the XC90, it is located below the centre console between the driver's and passenger seat. The control module is driven from Ext. X-feed in the central electronic module (CEM).

The central unit of the rear seat entertainment system is the rear seat entertainment module (RSE), which interprets and implements the commands issued by the user via the system's infrared remote control. These commands are forwarded to the rear seat entertainment module (RSE) via the system's infrared receiver in the screens. The rear seat entertainment system (RSE) also distributes current to the system and detects the status of the vehicle ignition via a sensor lead that runs from the control module to the vehicle ignition switch. This prevents battery consumption when the vehicle is not in use.

The rear seat entertainment module (RSE) receives audio and video signals from the DVD player and the vehicle's TV receiver (if installed). It is also possible to receive additional input audio/video and output a two-channel audio output at low level via the AUX inputs.

REAR AUDIO SEPARATION MODULE (RAS)

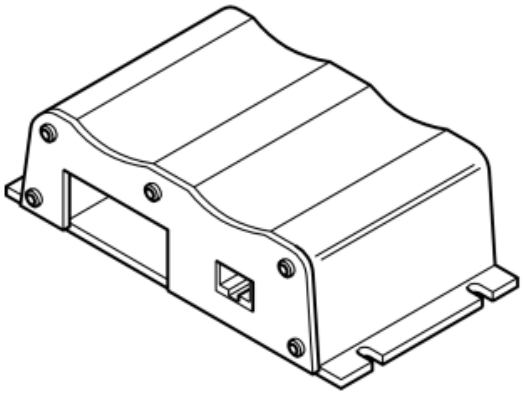

Fig. 213: Rear Audio Separation Module (RAS)
Courtesy of VOLVO CARS CORPORATION

The rear audio separation module (RAS) is enclosed in a casing of ribbed aluminium with installation holes.

The rear audio separation module is a unit with dual functions. The first is the production of continual infrared signals via "control module infrared transfer" for "wireless headphones" (audio is in headphone mode as standard). The second is integration with the vehicle's rear speakers for media selection.

SCREEN, HEAD RESTRAINT

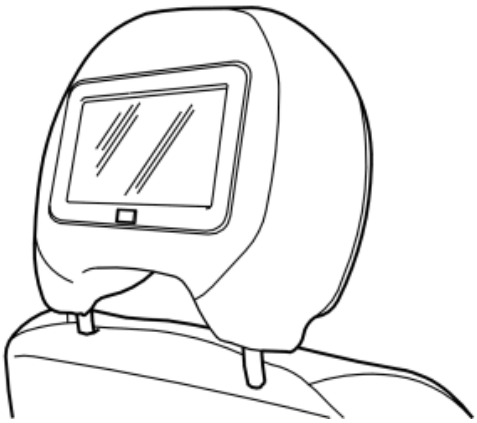

Fig. 214: Screen, Head Restraint
Courtesy of VOLVO CARS CORPORATION

The multimedia head restraint consists of five main components:

- Screen
- Circuit board
- Rear piece
- Border
- Head restraint pad

The rear piece is fastened in an opening on the rear of the head restraint pad. The circuit board is held in place

in the rear piece with three screws. The screen is housed in the rear piece in front of the circuit board and is connected with a flexible foil cable and an AC lead. The border holds all electronic components in place in the rear piece in the head restraint pad. The lower edge of the border contains a window so that the infrared receiver on the circuit board can receive infrared signals from the remote control. The infrared receiver is separately connected to the rear seat entertainment module (RSE) and is activated when the rear seat entertainment module (RSE) is on.

The 7-inch screen has an aspect ratio of 16:9. The screen is positioned to provide the optimal viewing angle. The screen has a 120 degree horizontal viewing angle.

The integrated infrared receiver is activated when the rear seat entertainment module (RSE) is supplied power. The screen is activated once the receiver obtains an infrared "switch-on command" from the remote control. The circuit board contains an image generator, an infrared receiver and a unit that controls all screen settings:

- colour
- contrast
- brightness
- aspect ratio.

Contrast control has a contrast ratio of 30:1 to improve the image and reduce sharp light from bright daytime conditions down to complete darkness. Brightness can be adjusted so that the image on the screen is clear even in daylight. The circuit board is also responsible for voltage protective and the power supply to the screen's background illumination. The control module contains logic for interpreting commands for setting video output, input selections and background illumination brightness.

The screens are supplied power and grounded via the rear seat entertainment module (RSE).

DVD PLAYER

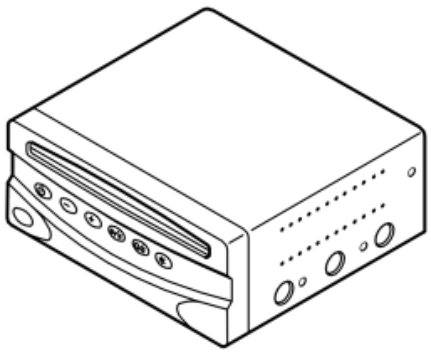

Fig. 215: Identifying DVD Player
Courtesy of VOLVO CARS CORPORATION

The DVD player has a compact chassis and border in miniature format that is ideal for tight installation locations (148 mm x 55 mm x 160 mm). The DVD player has standard ISO connections. Its mechanism is resistant to vibrations and works to avoid the image or audio becoming choppy during playback. The DVD

player has slot-in disc feed with region coding programmed into the software. The DVD player has video output in NTSC or PAL format depending on the format of the DVD disc. The player is completely integrated with the rear seat entertainment system and is controlled with the infrared remote control via the rear seat entertainment module (RSE). The operating temperature of the player is -20 to +70 °C.

Introduction of a new DVD player is planned for week 5 2005. The new and improved DVD player can read DVD-R/+R, DVD-RW/+RW, CD-R and CD-RW discs and can play MP3 files. The "+" and "-" buttons can now be used to change chapters in a DVD movie or jump to the next track on a CD.

The DVD player is supplied power and grounded via the rear seat entertainment module (RSE).

HEADPHONES

Fig. 216: Identifying Headphones
Courtesy of VOLVO CARS CORPORATION

The wireless IR headphones are compatible with both screens. IR transfer is used to transfer standard audio to the headphones in two-channel stereo format. The headphones are powered by internal batteries. The headphones are switched on with a button on one side while the volume of the respective headphones is adjusted with a wheel. Each set also has a channel selector that controls which audio source the set of headphones receives.

EXTERNAL INPUT

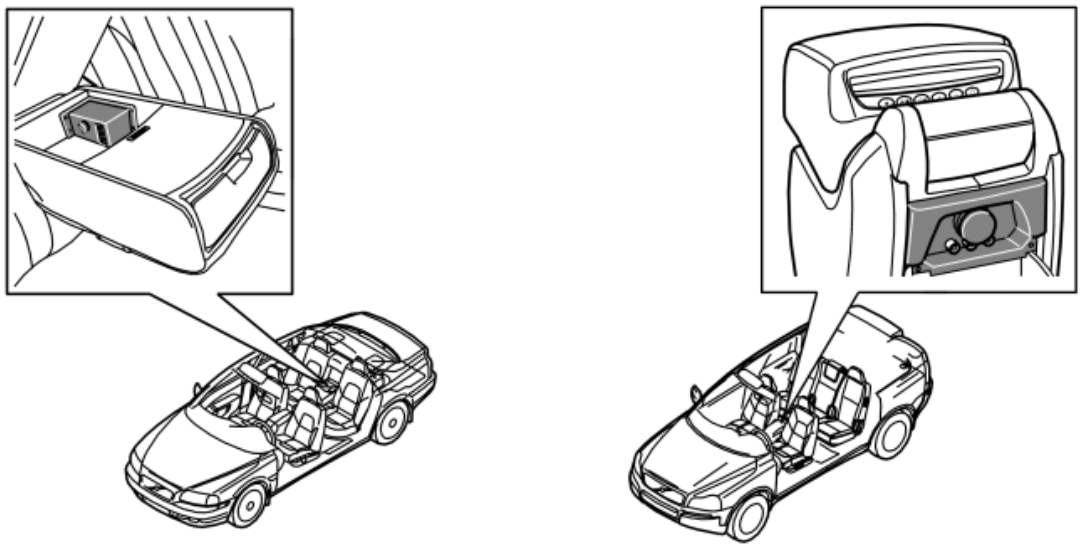

Fig. 217: External Input
Courtesy of VOLVO CARS CORPORATION

The rear of the centre console (XC90) houses an AUX panel with external input connections for audio/video. This input can be used for inputting standard AV signals to the system. Such signals include video camera, Dreamcast, Nintendo, Playstation, Playstation 2, VHS videotapes, portable DVD or CD player.

DIAGNOSTIC FUNCTIONS

The rear seat entertainment system is not connected to the vehicle's CAN network and contains no diagnostic trouble codes or readable diagnostic services. System fault tracing is done via symptom input.

FUNCTION

REAR SEAT ENTERTAINMENT MODULE (RSE)

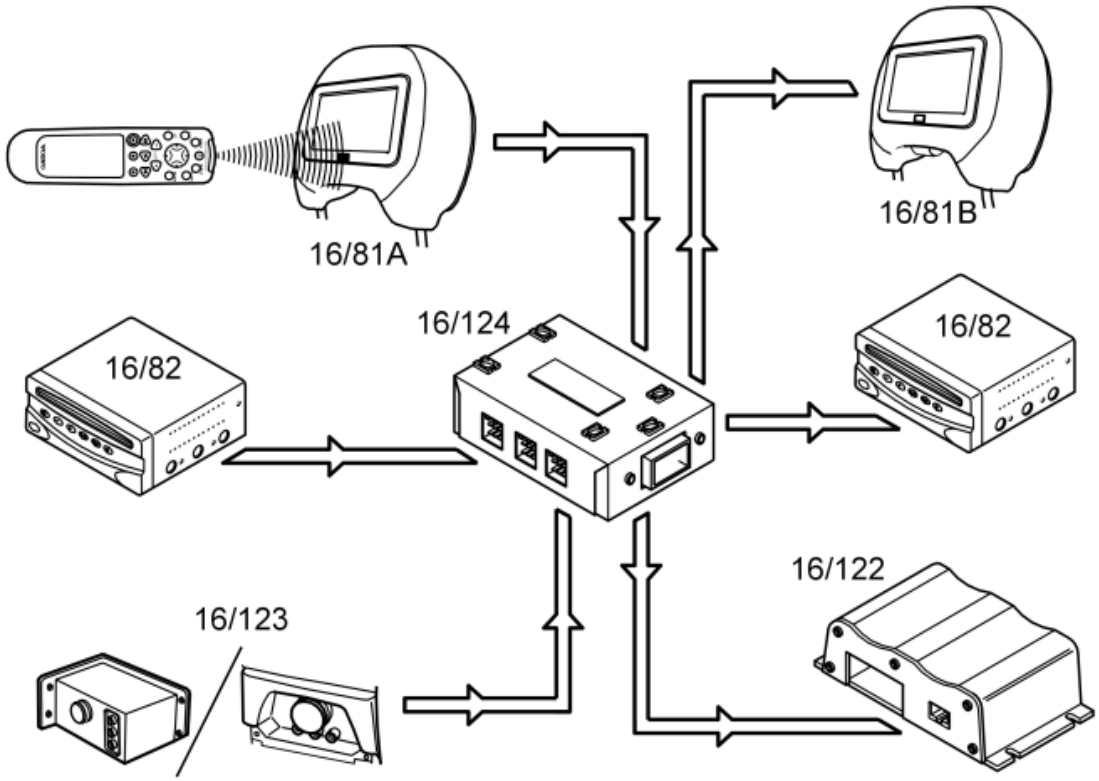

Fig. 218: Rear Seat Entertainment Module (RSE)
Courtesy of VOLVO CARS CORPORATION

The rear seat entertainment system is supplied power and regulated by the rear seat entertainment module (RSE) (16/124).

When the rear seat entertainment module (RSE) receives a switch-on command from the infrared remote control via the IR receivers in one of the head restraints, it performs a simple system check and then sends commands to other system components for activation. Once a screen (16/81A, B) has been selected with the infrared remote control, the rear seat entertainment module (RSE) identifies the selected screen and displays a menu from which the user can select the functions described below:

- Independent shifting of three audio/video inputs (DVD, TV (if installed) and AUX)
- Image adjustment (image colour, brightness, contrast and aspect ratio)
- Audio settings (bass, treble and volume)
- Language selection for on-screen instructions
- Switch individual screens ON/OFF

The rear seat entertainment module (RSE) also determines which media source has been linked to the selected screen and forwards the commands in an appropriate protocol. For example, if screen 1 is set for DVD playback and an infrared playback command is detected at screen 1, it will be received, stored and forwarded to the DVD player (16/82) in the DVD player's infrared protocol. A fixed memory stores the instruction language used and current audio and video settings for the respective output channel. These settings are loaded upon start. Volume

is automatically set to low level.

REAR AUDIO SEPARATION MODULE (RAS)

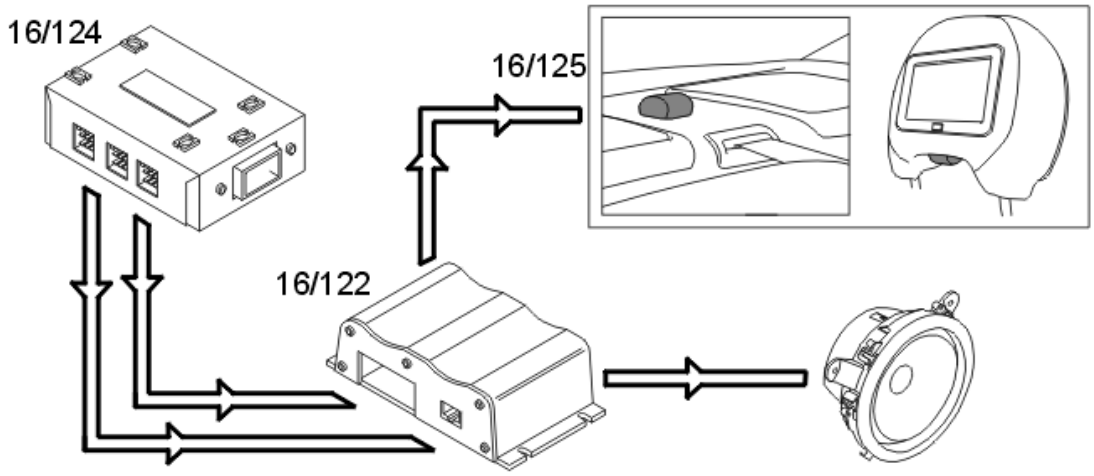

Fig. 219: Rear Audio Separation Module (RAS)
Courtesy of VOLVO CARS CORPORATION

The rear audio separation module (RAS) (16/122) is a unit with dual functions. The first is the production of continual infrared signals for the wireless headphones (audio is in headphone mode as standard) via the IR transmitter (16/125). The second is integration with the vehicle's rear speakers 16/5, 16/6, 16/57, 16/58 (XC90)) for media selection.

When the unit is in standard mode, audio signals are sent from the front audio system to the rear speakers. When selected using the remote control, the rear audio separation module (RAS) is activated and audio signals from the front audio system are replaced with audio signals from the rear seat entertainment system. In rear seat entertainment system mode, media signals for the right or left screen can be selected via the remote control.

NOTE: **Lowering the volume of the screen will increase the signal/noise ratio of the headphones. Optimal headphone output is obtained by setting screen volume to 75%. Headphone volume can then be set on the headphones themselves.**

INFRARED (IR) CONTROL

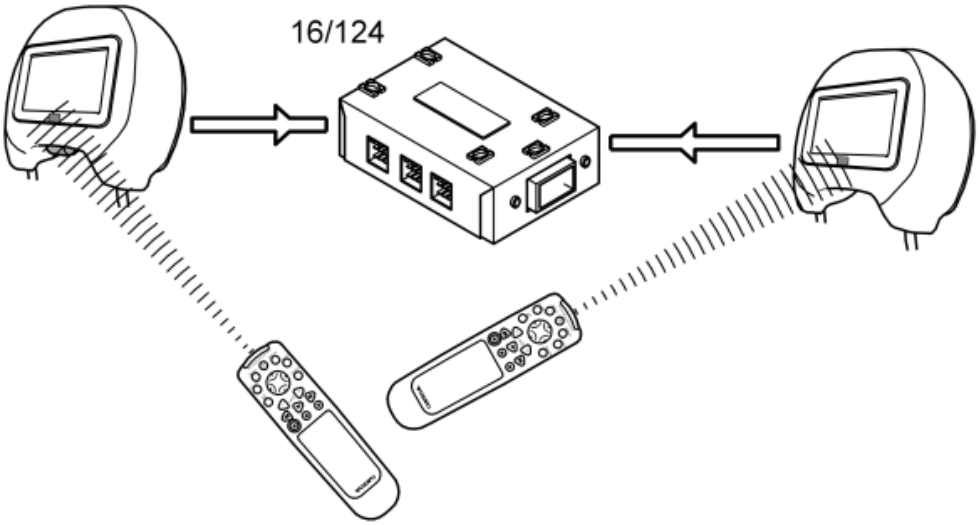

Fig. 220: Infrared (IR) Control
Courtesy of VOLVO CARS CORPORATION

Each screen houses an IR receiver. The IR receivers are connected to the rear seat entertainment module (RSE) (16/124) and are activated when the rear seat entertainment module (RSE) is supplied power. When a button is pressed on the remote control, it emits a signal with infrared light. The coding of this signal varies depending on which button was pressed. The IR signal is received by the IR receiver below the respective head restraint screen (16/81A, B) and is forwarded to the rear seat entertainment module (RSE) for processing.

The remote control can be used to switch between different audio and/or video inputs in the system:

- DVD player, audio/video
- AUX input, audio or audio/video
- Audio from the front audio system to one of the headphones, both headphones or separately to one of the headphones and the rear speakers
- Audio/video from a TV receiver (if installed) to one or both screens.

The remote control is used for selection by aiming it at the screen that is to respond to the command. The command from the remote control is received by one (or both) of the IR receivers located below the screens (16/81A, B). The integrated infrared receiver is activated when the rear seat entertainment module (RSE) (16/124) is supplied power. The receiver forwards the command to the rear seat entertainment module (RSE). The rear seat entertainment module (RSE) will select AV or audio source for the screen in question. The remote control can then be aimed at the other screen to select a source for that screen.

DVD PLAYER

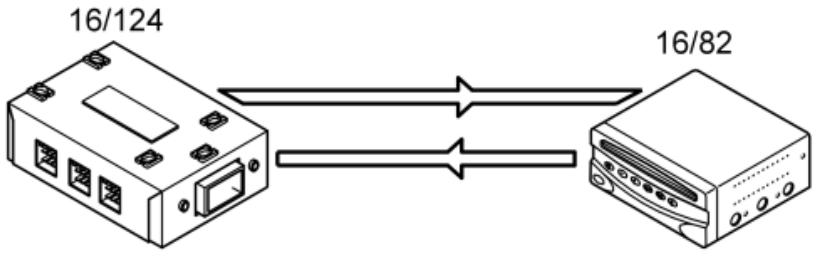

Fig. 221: DVD Player
Courtesy of VOLVO CARS CORPORATION

NOTE: There may be a slight delay between selecting a DVD function with the remote control and activation of the DVD player function. A message will appear on the screen to confirm that the DVD function was selected. Display of "Not permitted" indicates that the DVD player is still processing a previously selected function.

The DVD player is not operational until the rear seat entertainment module (RSE) (16/124) has been activated via an infrared switch-on command from the remote control and the screens are lit.

NOTE: This means, for example, that a disc in the DVD player (16/82) cannot be ejected until the rear seat entertainment system has been switched on.

A microprocessor is used to control the power supply to the DVD player based on the position of the ignition key. This is handled via a connection from the ignition switch to the rear seat entertainment system (RSE). The system is functional when the ignition key is in position II. If the voltage in the lead is high, the DVD player can be supplied power. If voltage in the lead is low, the system cannot be supplied power. The lead for controlling power supply is also used to activate the fan on the rear of the player.

The microprocessor is also used to send commands to and receive information from the DVD mechanism. IR commands from the remote control are received by the rear seat entertainment module (RSE) and come to the DVD player via the IR pin on the rear connection block (ISO connection). IR commands are interpreted by the microprocessor. The DVD player is used to read the source media, which consists of DVDs and CDs that fulfil relevant standards. The DVD player does not read CD-R discs. The use of DVD-R, CD-RW and DVD-RW discs in the DVD player is also discouraged.

NOTE: Introduction of a new version of the DVD player is expected week 5 2005. The new DVD player can play DVD-R/+R, DVD-RW/+RW, CD-R and CD-RW discs. It can also read Kodak photo CDs and play MP3 files in the disc's root directory and subfolders. The DVD player will also be able to read play lists for MP3 files in M3U format.

When a DVD is inserted in the opening, DVD playback starts automatically if the disc does not have a play

menu. DVD playback can be resumed from a pause, for example if the ignition is switched off while a movie is being played. Playback then resumes where it left off once the ignition is switched back on. Audio and video signals are fed out from the DVD player from the connection block (ISO connection) on the rear of the unit.

HEADPHONES

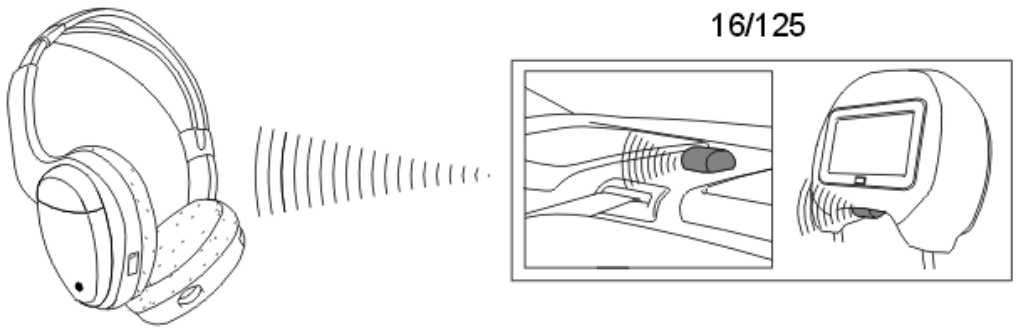

Fig. 222: Headphones
Courtesy of VOLVO CARS CORPORATION

Two sets of IR headphones are included. Any number of headphones can be used provided they are within the area of the IR transmitter. The wireless headphones use an infrared signal. There must be a free path between the transmitter and the receivers on the side of the headphones. If the path is blocked, audio will be interrupted. The headphones are activated by pressing the power button on one side of the headphones. They switch off automatically 3-4 minutes after the IR transmitter has stopped sending a signal.

NOTE: Lowering the volume of the screen will increase the signal/noise ratio of the headphones. Optimal headphone output is obtained by setting screen volume to 75%. Headphone volume can then be regulated using the wheel on the headphones themselves.

IDENTIFICATION OF GENERATION

REAR SEAT ENTERTAINMENT SYSTEM

NOTE: This information does not apply to roof mounted systems.

Rear seat entertainment systems are available in a number of different generations. The generations have different designs and are equipped with different functions. This section describes the easiest method to identify which generation of system is installed in the vehicle.

The table below shows which generations are available for each model and model year. This is followed by the most distinct differences between the generations.

The information in the table only applies to factory installed systems. To identify a retrofitted accessory system, see each generation below.

Model	Model year	Remarks	Generation
S80 (-06)	2002-2005	For chassis number: 257332-431446	3.1
	2005-2006	For chassis number: 431447-446475	3.2
XC90	2005-2006	For chassis number: 137372-258728	3.2
	2006-2007	For chassis number: 258729-371137	4.1
	2007-2008	For chassis number: 371138-*	4.2
	2009-		4.3
V70 (00-08)	2006-2008		4.1
V70XC (01-)/XC70 (-07)	2006-2007		4.1
S80 (07-)	2007-2008		4.2
	2009-		4.3
V70 (08-)/XC70 (08-)	2008		4.2
	2009-		4.3

* Until model year 2008 changed to model year 2009.

Fig. 223: Identifying Remote Control (Generation 3.1)
Courtesy of VOLVO CARS CORPORATION

Generation 3.1

Equipped with a remote control that has 29 buttons.

Has two 7" screens.

NOTE: **When replacing the Rear seat entertainment module (RSE) the remote control must also be replaced. The new remote control, which must be used, is generation 3.2. The chassis number as set out above must now be used to distinguish the systems.**

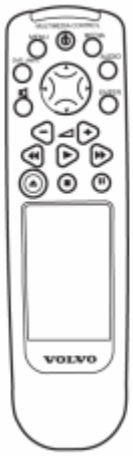

Fig. 224: Identifying Remote Control (Generation 3.2)
Courtesy of VOLVO CARS CORPORATION

Generation 3.2

Equipped with a remote control that has 16 buttons.

Has two 7" screens.

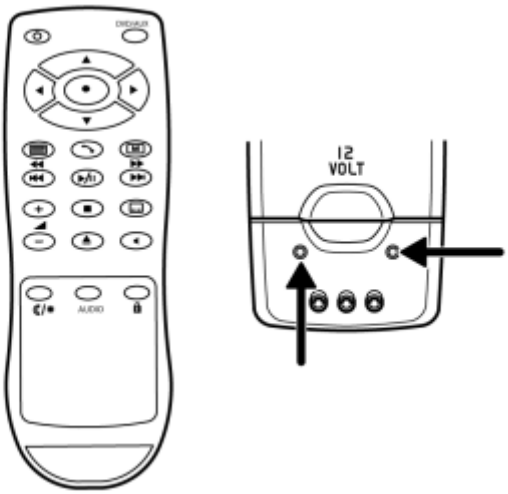

Fig. 225: Identifying Remote Control (Generation 4.1)
Courtesy of VOLVO CARS CORPORATION

Generation 4.1

Is equipped a remote-control that has 22 buttons of which one button is red and 21 are white.

In addition, there are two sockets for headphones on the AUX panel. One socket for the left-hand screen and one socket for the right-hand screen.

Has two 7" screens.

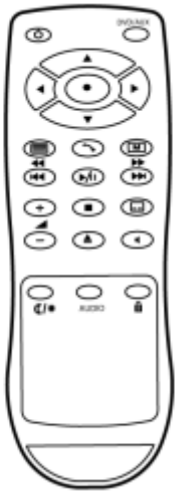

Fig. 226: Identifying Remote Control (Generation 4.2)
Courtesy of VOLVO CARS CORPORATION

Generation 4.2

Is equipped a remote-control that has 22 buttons of which one button is red and 21 are white.

Has two 7" screens.

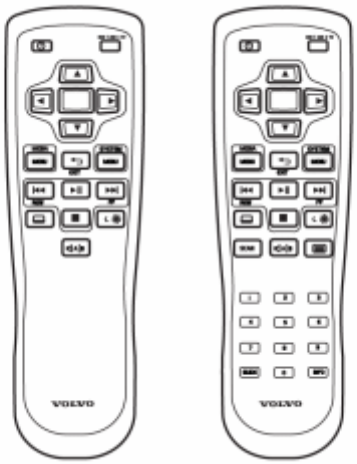

Fig. 227: Identifying Remote Control (Generation 4.3)
Courtesy of VOLVO CARS CORPORATION

Generation 4.3

Equipped with a remote control that has 17 buttons.

If the system is equipped with a TV (DVB-T) the remote control has 29 buttons. In addition, there is a visible card slot for a subscription/program card on the TV receiver.

The TV receiver is installed in the cargo compartment, in XC90 on the right-hand side under the cover above the wheel housing.

Has two 8" screens.

SYSTEM OVERVIEW

REAR SEAT ENTERTAINMENT SYSTEM

The rear seat entertainment system is a mobile entertainment system specially designed to keep rear seat passengers occupied and entertained with video games or movies.

The system is completely integrated in the vehicle, with two separately controlled high resolution 7-inch screens designed to resist any adverse condition to which they can be subjected during the journey. The screens are mounted in the head restraints.

The rear seat entertainment module (RSE) can receive up to three AV inputs and can output video to two separately controlled screens.

A connection panel with AV inputs is mounted on the rear of the centre console.

Audio is sent out to the component headphones via an IR transmitter or to the vehicle's rear speakers.

The system is controlled via an infrared remote control, which can also be used to control the DVD player and the vehicle's front audio system (if installed).

NOTE: **The DVD player is not operational unless the rear seat entertainment system is on. This means, for example, that a DVD disc cannot be ejected from the player unless the rear seat entertainment system has been switched on using the remote control.**

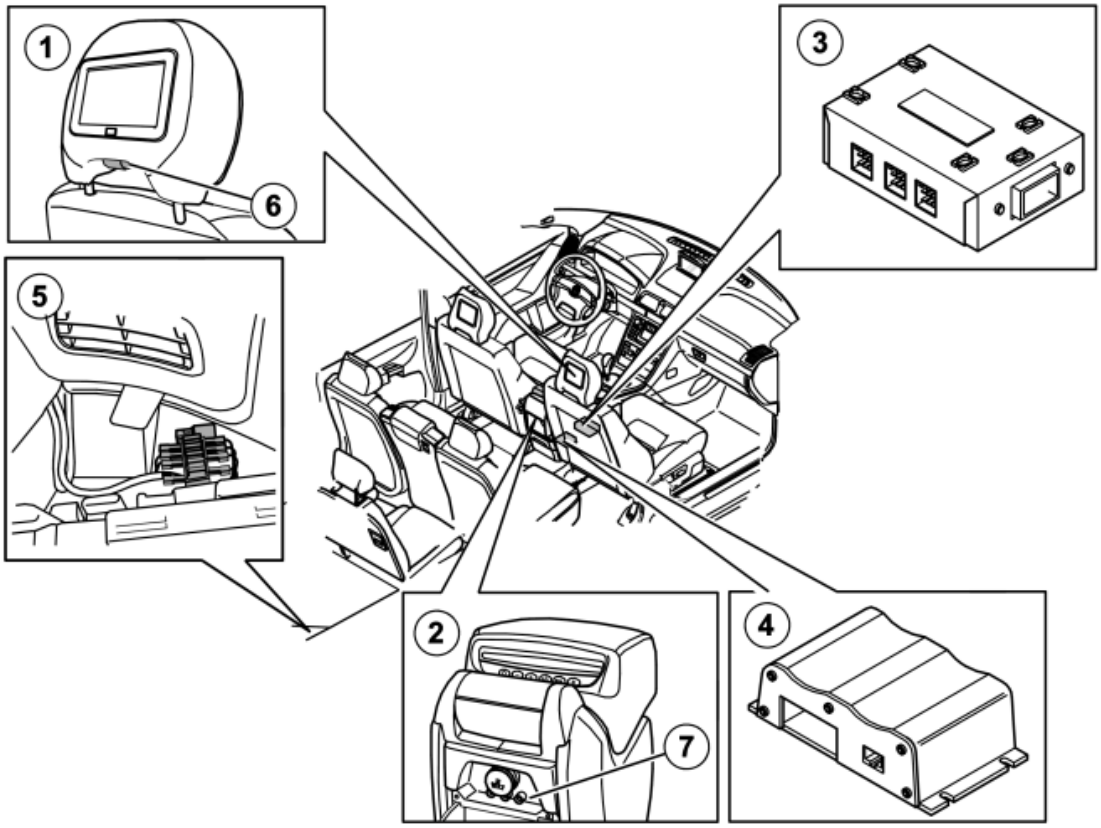

Fig. 228: Rear Seat Entertainment System -- System Overview
Courtesy of VOLVO CARS CORPORATION

1. Screen, head restraint (16/81A, B)
2. DVD player, rear (16/82)
3. Rear seat entertainment module (RSE) (16/124)
4. Rear audio separation module (RAS) (16/122)
5. Fuse holder (11F)
6. Infrared transmitter (16/125)
7. AUX socket (16/123)

SIGNALS

The tables below summarise the input and output signals to the units of the rear entertainment system. The signal type is only directly connected signals as the rear seat entertainment module (RSE) is not connected to the CAN network.

REAR SEAT ENTERTAINMENT MODULE (RSE) (16/124)

Input signals	Output signals
Direct connection: • Commands from remote control via head	**Via infrared - direct connection:** • Command to DVD player (16/82)

restraint screens (16/81A, B) • Audio/video signals from DVD player (16/82) • Audio/video signals from AUX panel (16/123)	forwarded from remote control • Audio to rear audio separation module (RAS) (16/122)
-	**Serial communication:** • Head restraint screens (16/81A, B)

REAR AUDIO SEPARATION MODULE (RAS) (16/122)

Input signals	Output signals
Audio (Tri-Level) - direct connection: • Rear seat entertainment module (RSE) (16/124) for controlling audio path between headphones/rear speakers	**Direct connection:** • Rear speakers (16/17, 16/18 (S80)), (16/5, 16/6, 16/57, 16/58 (XC90)) • IR transmitter (16/125) (signal to headphones)
Audio - direct connection: • Rear seat entertainment module (RSE) (16/124)	-

SCREEN, HEAD RESTRAINT (16/81A, B)

Input signals	Output signals
Wireless communication (IR): • Remote control.	-
-	**Direct connection:** • Rear seat entertainment module (RSE) (16/124), forwarded commands from remote control
Serial communication: • Rear seat entertainment module (RSE) (16/124), video signals.	-

DVD PLAYER, REAR (16/82)

Input signals	Output signals
Direct connection: • IR commands from remote control forwarded via rear seat entertainment module (RSE) (16/124)	**Output signals** • Audio/video signals to rear seat entertainment module (RSE) (16/124)

INFRARED HEADPHONES

Input signals	Output signals

Wireless (IR): • IR transmitter (16/125)	-

REAR SEAT ENTERTAINMENT SYSTEM (RSE), GENERATION 3.1/3.2 (EXECUTIVE; PREMIER; 2004)

DESIGN

see **DESIGN**

DIAGNOSTIC FUNCTIONS

see **DIAGNOSTIC FUNCTIONS**

FUNCTION

see **FUNCTION**

IDENTIFICATION OF GENERATION

see **IDENTIFICATION OF GENERATION**

SYSTEM OVERVIEW

see **SYSTEM OVERVIEW**

REAR SEAT ENTERTAINMENT SYSTEM (RSE), GENERATION 4.1 (2006-2007)

DESIGN

REAR SEAT ENTERTAINMENT MODULE (RSE)/DVD PLAYER

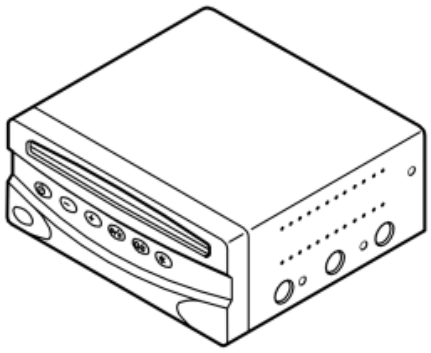

Fig. 229: Identifying DVD Player
Courtesy of VOLVO CARS CORPORATION

Rear seat entertainment module (RSE) is the central unit in the system for rear seat entertainment.

The control module is integrated with the DVD player and is located at the rear edge of the center console.

The control module interprets and carries out the commands given by the user using the system's infra red remote control. These commands are then forwarded from the remote control to the Rear seat entertainment module (RSE) via the system's infra red receiver in the screens. The Rear seat entertainment module also distributes current to the system's other components.

The Rear seat entertainment module distributes audio and video signals from the DVD player to screens and loudspeakers in the system. Other audio and video sources can be connected via external inputs, such as games consoles and video cameras etc.

The DVD player mechanism has an anti-shock system and it helps to prevent the image or sound skipping when played. The DVD player has slot-in disc insertion and region coding programmed into the software. The region code can be changed using a security code.

The following media formats can be played by the DVD player:

- DVD-R/+R
- DVD-RW/+RW
- CD-R and CD-RW
- CDDA
- HDCD

The following information formats can be played:

- DVD
- DVD Audio
- VCD
- SVCD
- DivX
- WMV
- Audio CD
- Kodak photo CD
- MP3
- MP3 Pro
- playlists in M3U format
- WMA Sound.

Formats such as THX and DolbyDigital are also supported. Only stereo signals of this audio format are reproduced.

The control module is supplied with power from the Ext. X-supply in the Central electronic module and directly from the battery.

To easily check whether the control module is powered and grounded, switch on the ignition. The background illumination on the function buttons should then come on.

Change of DVD player region code

The region coding means that only discs with the region code matching that of the DVD player can be played.

The region code in the DVD player can be changed up to 10 times. After the 11th change, the set region will then be locked and it will not be possible to change again.

NOTE: Warranty repairs due to locked region on the DVD player will not be approved. Region code changes to the region in which the vehicle will be used is to be done at the workshop. The security code is not to be given to the customer.

Do as follows to open the menu for region code change:

Model year 2006:

1. Switch on the system
2. Open the menu:
3. Enter the code: 1971 and press

Model year 2007-:

1. Switch on the system

   NOTE: There must not be a disc in the DVD player.

2. Aim the remote control at a screen and depress the button for child lock for approx. 5 seconds. The menu will be displayed with four stars underneath.
3. Enter the code 1971 using the arrow keys on the remote control and then press OK.
4. Select menu selection and press OK.

The submenu can then be used to select a new region for the DVD player.

REAR AUDIO SEPARATION MODULE (RAS)

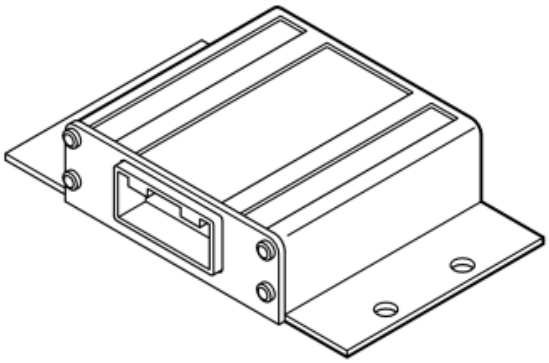

Fig. 230: Identifying Rear Audio Separation Module (RAS)
Courtesy of VOLVO CARS CORPORATION

The rear audio separation module (RAS) is enclosed in a ribbed aluminum casing with installation holes.

The task of the Rear audio separation module (RAS) is to distribute audio from various audio sources to the vehicle's rear loudspeakers.

The Rear audio separation module (RAS) is supplied with power from the Rear seat entertainment module (RSE).

To check whether the rear audio separation module (RAS) is powered and grounded, switch on the ignition and then switch on the rear seat entertainment system.

You must then use the remote control to activate the sound to the rear speakers.

When the function is activated, there is an audible click from an internal relay in the rear audio separation module (RAS).

SCREEN, HEAD RESTRAINT

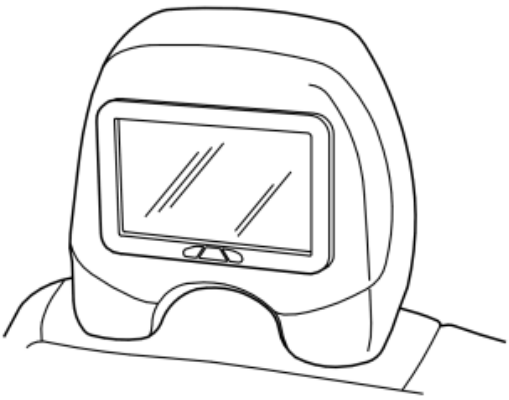

Fig. 231: Identifying Rear Facing Head Restraint Video Screen
Courtesy of VOLVO CARS CORPORATION

The multimedia head restraint consists of five main components:

- Screen
- Circuit board
- Rear piece
- Border
- Head restraint pad

The rear piece is fastened in an opening on the rear of the head restraint pad. The circuit board is held in place in the rear piece with three screws. The screen is housed in the rear piece in front of the circuit board and is connected with a flexible foil cable and an AC lead. The border holds all electronic components in place in the rear piece in the head restraint pad. The lower edge of the border contains a window so that the infrared receiver on the circuit board can receive infrared signals from the remote control. The infrared receiver is separately connected to the rear seat entertainment module (RSE) and is activated when the rear seat entertainment module (RSE) is on.

The 7-inch screen in the head restraint has an aspect ratio of 16:9. The screen is positioned to provide the optimal viewing angle. The screen has a 120 degree horizontal viewing angle.

The integrated infrared receiver is activated when the rear seat entertainment module (RSE) is supplied power. The screen is not activated until it receives a high signal from the rear seat entertainment module (RSE)/DVD player via the wake-up cable.

This signal is sent when the system is switched on with the POWER button on the remote control or with the POWER button on the control module.

The circuit board contains an image generator, infrared receiver, infrared transmitter and the unit that controls all screen settings:

- colour
- contrast
- brightness
- aspect ratio.

The damping control has a damping ratio of 30:1 to improve the image and reduce bright light from daylight conditions down to complete darkness. Brightness can be adjusted so that the screen's image can easily be seen in daylight. Voltage protection and current supply of the background lighting also occurs via the circuit card. The control module contains logic for interpreting the command for setting the video performance, input selection and strength of background lighting. The control command is transmitted from the Rear seat entertainment module (RSE) via a private CAN network.

Each screen has an integrated infrared transmitter to send audio signals to the supplied wireless headphones. On the AUX panel, on the rear of the center console there is also an output for connecting headphones with leads.

The screens are supplied power and grounded via the rear seat entertainment module (RSE).

To check whether a screen has power and ground, you can switch on the ignition and then switch on the system with the remote control. The screen will then come on.

NOTE: **If there is power and ground to the screen, but the screen does not have contact with the rear seat entertainment module (RSE)/DVD player, the screen will come on in LOCAL mode nonetheless. This is no guarantee that the entire system is operational.**

If the screen works in LOCAL mode this indicates that the voltage supply and ground to the screen's circuit board are OK.

REMOTE CONTROL

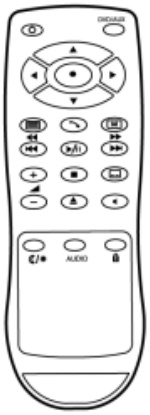

Fig. 232: Identifying Remote Control
Courtesy of VOLVO CARS CORPORATION

The remote control is used to control the Rear seat entertainment module (RSE)/DVD player and the screens.

The remote control has 22 buttons; 1 red button and 21 white buttons.

The remote control uses infrared signals (IR) to transfer commands to the system. The signals are received by the screens' infrared receivers.

The remote control is equipped with two batteries, fitted under a cover at the rear.

HEADPHONES

Fig. 233: Identifying Headphones
Courtesy of VOLVO CARS CORPORATION

The wireless IR headphones can be used with both screens. IR transfer is used to transfer standard audio to the headphones in two-channel stereo format. The headphones are powered by internal batteries. The headphones are switched on with a button on one side while the volume of the respective headphones is adjusted with a wheel. Each set also has a channel selector that controls which audio source the set of headphones receives.

The audio from the left screen is always transmitted on channel A and the audio from the right screen is always transmitted on channel B.

EXTERNAL INPUT (AUX)

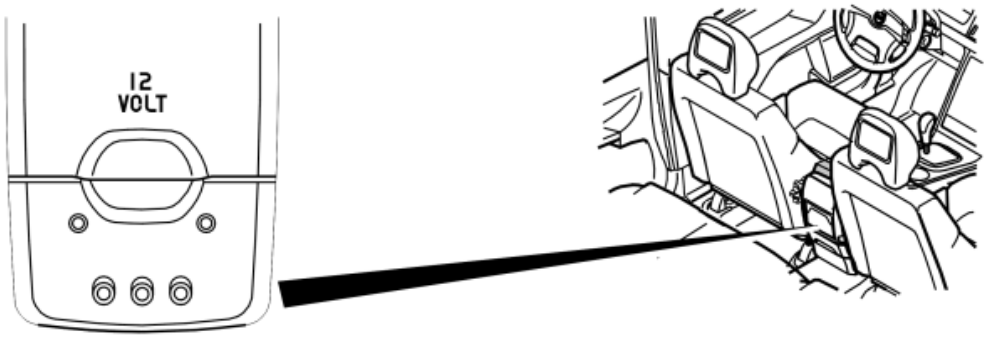

Fig. 234: Identifying AUX Panel
Courtesy of VOLVO CARS CORPORATION

On the rear of the center console there is an AUX panel with external input terminals for audio/video. This input can be used for supplying standard AV signals to systems, such as, video cameras, video game consoles, VHS videos, portable DVD or CD players.

All inputs on the AUX panel are directly connected to the rear seat entertainment module (RSE)/DVD player.

Two headphone sockets for connecting headphones with wires are also on the panel, one for the left-hand screen and one for the right-hand screen.

DIAGNOSTIC FUNCTIONS

FAULT-TRACING INFORMATION

The rear seat entertainment module (RSE)/DVD player does not have any diagnostic functions and is not connected to the rest of the car's CAN network. Because of this, for example, no diagnostic trouble codes can be read from the control module. **All fault tracing must be done by fault tracing symptoms**

The following is information that may facilitate when fault tracing in the system.

When the ignition is switched on the Rear seat entertainment module (RSE) performs a basic internal system check and starts the start-up procedure with the screens.

If the time from when the ignition is switched on until the system is in standby mode (only the illuminated POWER button is lit) is longer than normal or that the lighting does not appear to be normal, this indicates a communication fault with the screens.

The start-up times, see: **SYSTEM START-UP**

A long start-up time or irregularities can be due to:

- No supply voltage and ground to the screen
- Damaged wake-up signal cable.
- Damaged leads for the internal CAN-network (no communication can take place). In connector D on Rear seat entertainment module (RSE)/DVD-player, which contains the connections to the control module for rear audio separation (RAS), there is a bridging of the CAN-net for *right screen* .

  Bridging is there so that in the future the system can be extended with additional units. If connector D has been damaged, has slipped out, or if there for some reason is no contact between the ends on the bridging of the CAN-leads, it will not be possible to establish communication.

Switch on the system using the remote control

If the system is switched on using the remote control aimed towards the right-hand screen, when the voltage supply and ground to the screen are fully functional but for example there is no CAN-communication with the Rear seat entertainment module (RSE)/DVD-player, the screen will be lit and work in LOCAL mode. It will then be possible to show the menus and to adjust the sound and brightness settings.

This can be misinterpreted as the function is OK. However no image will be shown on screen if, for example, you play a DVD disc. The system will be switched on and the left-hand screen will start. This is because the cables for the IR signals do not go via the CAN network, but go directly to the DVD player and are interpreted.

If the screen works in LOCAL mode this indicates that the voltage supply and ground to the screen's circuit board are OK.

Later software

Switch on the system using the POWER button on the DVD player

If one of the screens does not start when the system is switched on, when the start-up procedure has elapsed over the normal time (without fault), and only the POWER lamp on the control module/DVD player is lit, this indicates a fault with the actual screen or the cables between the screen and the circuit board.

When communication with the control modules/DVD player in this case is okay, both these screens' circuit boards behind the actual screens are OK.

The functionality of the circuit boards can also be checked by switch on the system and checking whether the IR lamps in the bottom of the screen are slightly illuminated.

The IR-lights are lit for about 2 minutes after the system is switched on or when sound is played from a selected audio source.

FUNCTION

REAR SEAT ENTERTAINMENT MODULE (RSE)

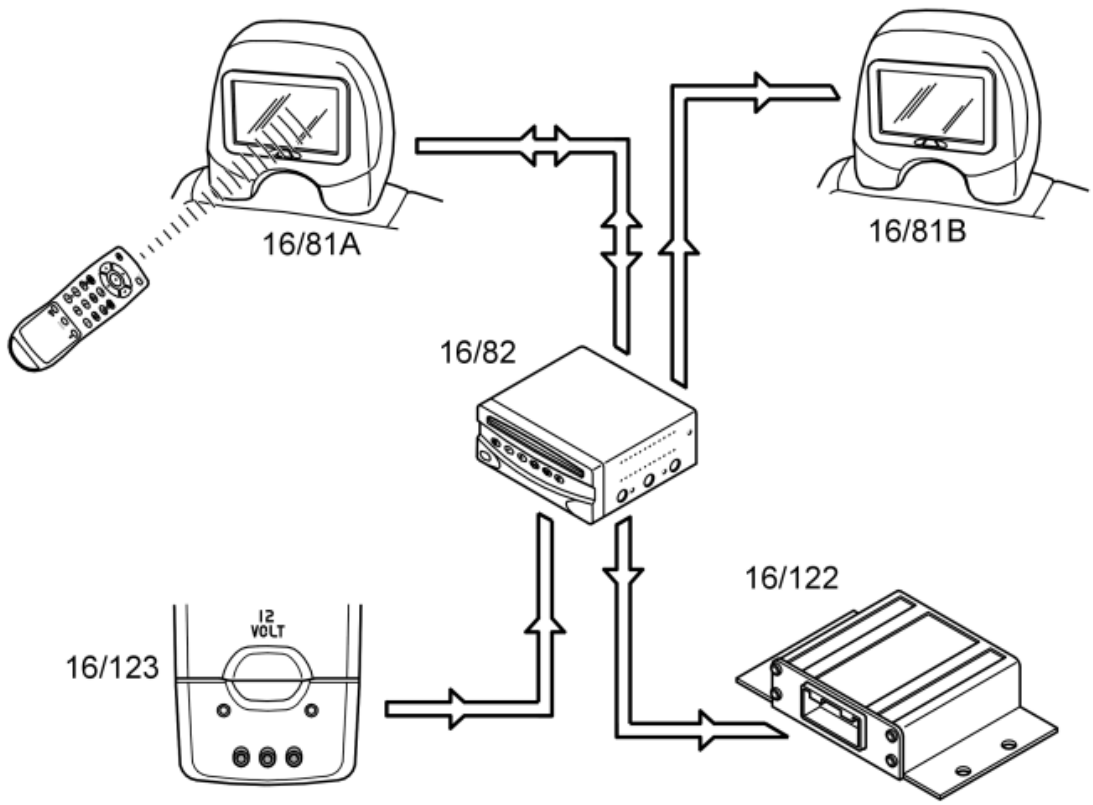

Fig. 235: Identifying Rear Seat Entertainment Module Communication Links & Components
Courtesy of VOLVO CARS CORPORATION

NOTE: There may be a slight delay between selecting a DVD function with the remote

control and activation of the DVD player function. A message will appear on the screen to confirm that the DVD function was selected. Display of indicates that the DVD player is still processing a previously selected function.

The rear seat entertainment system is supplied with power and regulated by the rear seat entertainment module (RSE) (16/82).

The control module also includes the DVD player for the system.

The system can either be switched on with the POWER button on the control module or with the POWER button on the remote control.

The remote control must be aimed at one of the screens before a button is depressed as the receiver for remote control signals is located in the bottom edge of the screens.

When the remote control is aimed at a screen (16/81A, B) and a function button is depressed, the rear seat entertainment module (RSE) identifies the selected screen and carries out the remote control command.

If, for example, you press a menu selection button, a menu opens on the screen at which the remote control was aimed. The possible selections are described below:

- Independent shifting of three audio/video inputs (DVD, TV (if installed) and AUX).
- Image adjustment (image color, brightness, contrast and aspect ratio).
- Audio settings (bass, treble and volume).
- Language selection for on-screen instructions.
- Switch individual screens ON/OFF.

The rear seat entertainment module (RSE) also determines which media source has been linked to the selected screen and forwards the commands in the suitable protocol.

If, for example, the left screen is set for DVD playback and an infrared play command is detected at the left screen, the message is received, saved and forwarded to the DVD player (16/82) in the DVD player's infrared protocol.

A fixed memory saves the displayed instruction language used and the current audio and video settings for the respective output channel. These settings are loaded upon start-up with the exception of volume level, which is set to low as standard.

The system is powered via X-feed and directly from the battery. If the system is operating when the ignition is switched of, a question will appear on the screens as to whether continued play is permitted.

If the user answers YES, the system will continuing playing another 10 minutes. The system will then shut down. If there is no response to the question, the system will shut down after 1 minute. As a means of safeguarding the battery, play time cannot be extended unless the ignition is switched on again.

When a DVD is inserted in the opening, DVD playback starts automatically if the disc does not have a play

menu. DVD playback can be resumed from a pause, for example if the ignition is switched off while a movie is being played. Playback then resumes where it left off once the ignition is switched back on. Audio and video signals are fed out from the DVD player from the connection block (ISO connection) on the rear of the unit.

SYSTEM START-UP

When the ignition is switched on the Rear seat entertainment module (RSE) performs a basic internal system check and starts the start-up procedure with the screens.

The start-up process differs depending on software.

Previous software

Start-up process, no communication fault

1. The ignition is switched on.
2. Lighting in the DVD-player's buttons is activated.
3. The Rear seat entertainment module (RSE) feeds the connections #E1 (left-hand screen) and #E13 (right-hand screen) with voltage.
4. The Rear seat entertainment module (RSE) sends a wake-up signal of approximately 11.5 V to connection #E2 for the left-hand screen.
5. The left-hand screen then returns an OK signal to the Rear seat entertainment module (RSE) via the internal CAN network.
6. The Rear seat entertainment module (RSE) returns a message to the left-hand screen on the CAN network which assigns the screen number 1. This is necessary for the video and audio to be addressed to the right screen and so that commands from the remote control can be executed on the right screen. Wake-up signal's voltage maintained at 11.5 V.
7. Communication for the left-hand screen is now OK.
8. The Rear seat entertainment module (RSE) sends a wake-up signal of approximately 11.5 V to connection #E14 for the right-hand screen.
9. The right-hand screen then returns an OK signal to the Rear seat entertainment module (RSE) via the internal CAN network.
10. On the CAN, the Rear seat entertainment module (RSE) sends back a message to the right hand screen allocated screen number 2. The wake-up signal's voltage is maintained at 11.5 V.
11. Communication for the right-hand screen is now OK.
12. Lighting in the DVD-player's buttons, except the POWER button, goes out.
13. The start-up procedure is implemented and the system switches to standby.

Start-up times

A start-up with fault-free communication takes 4-10 seconds.

Start-up process, communication fault with left screen

1. The ignition is switched on.
2. Lighting in the DVD-player's buttons is activated.
3. The Rear seat entertainment module (RSE) feeds the connections #E1 (left-hand screen) and #E13 (right-hand screen) with voltage.
4. The Rear seat entertainment module (RSE) sends a wake-up signal of approximately 11.5 V to connection #E2 for the left-hand screen.
5. No response from left screen. The Rear seat entertainment module (RSE) maintains high voltage (11.5V), but drops it down to 0 V every 10 seconds until further notice. The wake-up signal to the right screen is 0 V.
6. Lighting in the DVD player's buttons follow the same pattern as the wake-up signal for the left screen.
7. The system will not work.

Start-up process, communication fault with right screen

1. The ignition is switched on.
2. Lighting in the DVD-player's buttons is activated.
3. The Rear seat entertainment module (RSE) feeds the connections #E1 (left-hand screen) and #E13 (right-hand screen) with voltage.
4. The Rear seat entertainment module (RSE) sends a wake-up signal of approximately 11.5 V to connection #E2 for the left-hand screen.
5. The left-hand screen then returns an OK signal to the Rear seat entertainment module (RSE) via the internal CAN network.
6. The Rear seat entertainment module (RSE) returns a message to the left-hand screen on the CAN network which assigns the screen number 1. This is necessary for the video and audio to be addressed to the right screen and so that commands from the remote control can be executed on the right screen. Wake-up signal's voltage maintained at 11.5 V.
7. Communication for the left-hand screen is now OK.
8. The Rear seat entertainment module (RSE) sends a wake-up signal of approximately 11.5 V to connection #E14 for the right-hand screen.
9. No response from right screen. The Rear seat entertainment module (RSE) maintains high voltage (11.5V), but drops it down to 0 V every 10 seconds until further notice. The wake-up signal to the left screen (whose communication is OK) is continually high (11.5V).
10. Lighting in the DVD player's buttons follow the same pattern as the wake-up signal for the right screen.
11. The system will not work.

Start-up process, CAN related fault

1. The ignition is switched on.
2. Lighting in the DVD-player's buttons is activated.
3. The Rear seat entertainment module (RSE) feeds the connections #E1 (left-hand screen) and #E13 (right-hand screen) with voltage.
4. The Rear seat entertainment module (RSE) sends a wake-up signal of 11.5 V at the same time to both

terminals, #E2 for the left screen and #E14 for the right screen.

5. The Rear seat entertainment module (RSE) maintains high voltage (11.5 V) to both screens, but drops it down to 0 V every 10 seconds until further notice.
6. Lighting in the DVD player's buttons follow the same pattern as the wake-up signal for the screens.
7. The system will not work.

Conclusions of start-up signal's voltage

By checking the wake-up signal's voltage to both the screens during system start-up, the following conclusions can be drawn. The table below is worked into the symptom fault-tracings.

Left screen	Right screen	Conclusion
Voltage is continually high (11.5 V).	Voltage is continually high (11.5 V).	Communication with both screens established and OK.
Voltage is high (11.5 V) but drops to 0 V every 10 seconds.	Voltage is 0 V.	No communication with left screen. No attempt made with right screen.
Voltage is continually high (11.5 V).	Voltage is high (11.5 V) but drops to 0 V every 10 seconds.	Communication with left screen established and OK. No communication with right screen.
Voltage is continually high (11.5 V).	Voltage is 0 V.	Communication with left screen established and OK. Probable open-circuit on wake-up signal for right screen.
Voltage is 0 V.	Voltage is 0 V.	No communication with left screen. No attempt made with right screen. Probable open-circuit on wake-up signal for left screen.
Voltage is high (11.5 V) but drops to 0 V every 10 seconds.	Voltage is high (11.5 V) but drops to 0 V every 10 seconds.	Probable fault with CAN communication with screens.

Later software

1. The ignition is switched on.
2. Lighting in the DVD-player's buttons is activated.
3. The Rear seat entertainment module (RSE) feeds the connections #E1 (left-hand screen) and #E13 (right-hand screen) with voltage.
4. The Rear seat entertainment module (RSE) sends a wake-up signal of approximately 11.5 V to connection #E2 for the left-hand screen.
5. The left-hand screen then returns an OK signal to the Rear seat entertainment module (RSE) via the internal CAN network.

NOTE: the screen does not respond on the CAN network, the Rear seat

entertainment module (RSE) makes a further two attempts according to the pattern below (*). If the screen does not respond the Rear seat entertainment module (RSE) continues as set out in section 8 below.

6. The Rear seat entertainment module (RSE) returns a message to the left-hand screen on the CAN network which assigns the screen number 1. This is necessary for the video and audio to be addressed to the right screen and so that commands from the remote control can be executed on the right screen.
7. Communication for the left-hand screen is now OK.
8. The Rear seat entertainment module (RSE) sends a wake-up signal of approximately 11.5 V to connection #E14 for the right-hand screen.
9. The right-hand screen then returns an OK signal to the Rear seat entertainment module (RSE) via the internal CAN network.

NOTE: **If the screen does not respond on the CAN network, the Rear seat entertainment module (RSE) makes a further two attempts according to the pattern below (*). If the screen does not respond the Rear seat entertainment module (RSE) continues as set out in item 12 below.**

10. The Rear seat entertainment module (RSE) returns a message to the right-hand screen on the CAN network which assigns the screen number 2.
11. Communication for the right-hand screen is now OK.
12. Lighting in the DVD-player's buttons, except the POWER button, goes out.
13. The start-up procedure is implemented and the system switches to standby.
14. The system can now be started using the POWER button on the DVD player or the remote control.

(*) Wake-up signal (signal pattern with a fault)

High signal (approx. 11.5 V) is sent for approx 1 second (first attempt).

If there is no response a low signal is sent (approx. 0 V) for approximately 1 second.

High signal (approx. 11.5 V) is sent for approx 1 second (second attempt).

If there is no response a low signal is sent (approx. 0 V) for approximately 10 seconds.

High signal is sent (approx. 11.5 V) and remains continuously high (third and last attempt).

Start-up times

Start-up without faults detected takes approximately 4-10 seconds.

Start-up with communication fault on one screen takes approximately 20-25 seconds.

Start-up with communication fault on both screens takes approximately 30-35 seconds.

The times above should only be seen as a guide and are not exact times.

REAR AUDIO SEPARATION MODULE (RAS)

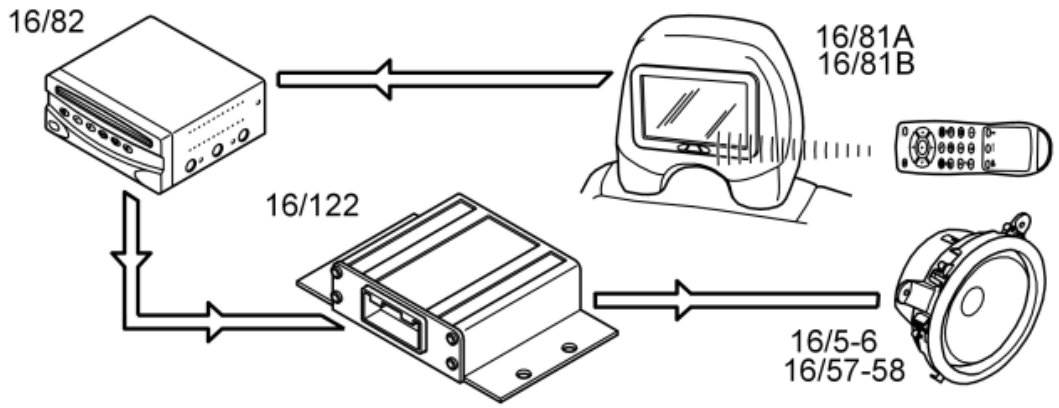

Fig. 236: Identifying Rear Audio Separation Module (RAS) Communication Links & Components
Courtesy of VOLVO CARS CORPORATION

The rear audio separation module (RAS) (16/122) is designed to redirect audio signals from the car's internal audio system or from the system's DVD player to the rear speakers (16/5, 16/6, 16/57 and 16/58).

When the unit is in normal mode, audio signals are routed from the front audio system to the rear speakers.

The remote control can be used to activate the rear audio separation module (RAS). Audio signals from the front audio system will then be replaced with audio signals from the rear seat entertainment system.

Which audio channel is connected to the rear speakers is determined by which screen the remote control is aimed at when the button to activate the rear audio separation module (RAS) is pressed.

If a parking assistance system is installed, the control module is temporarily deactivated via an input when reverse gear is engaged. The deactivation signal comes from the same voltage circuit the drives the reversing lights. The parking assistance system signals will then be heard via the rear speakers.

INFRARED (IR) CONTROL

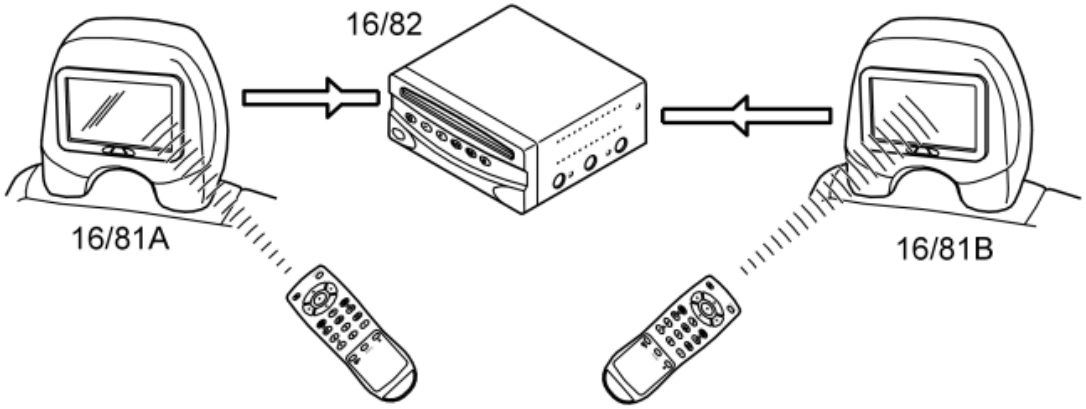

Fig. 237: Identifying Infrared (IR) Control Signal Examples
Courtesy of VOLVO CARS CORPORATION

Each screen houses an IR receiver. The IR receivers are directly connected to the rear seat entertainment module (RSE) (16/82) and are activated when the rear seat entertainment module (RSE) is supplied power. When a button is pressed on the remote control, it emits a signal with infrared light. The coding of this signal varies depending on which button was pressed. The IR signal is received by the IR receiver below the respective head restraint screen (16/81A, B) and is forwarded to the rear seat entertainment module (RSE) for processing.

The remote control can be used to switch between different audio and/or video inputs in the system:

- DVD player, audio/video
- AUX input, audio or audio/video
- Audio from the front audio system to one of the headphones, both headphones or separately to one of the headphones and the rear speakers
- Audio/video from a TV receiver (if installed) to one or both screens.

Selection is carried by pointing the remote control towards the screen to be commanded. Depending on which of the two screens that received the command, the Rear seat entertainment module (RSE) selects AV or audio source for the screen. The remote control can then be pointed to the other screen to select the source for that screen.

HEADPHONES

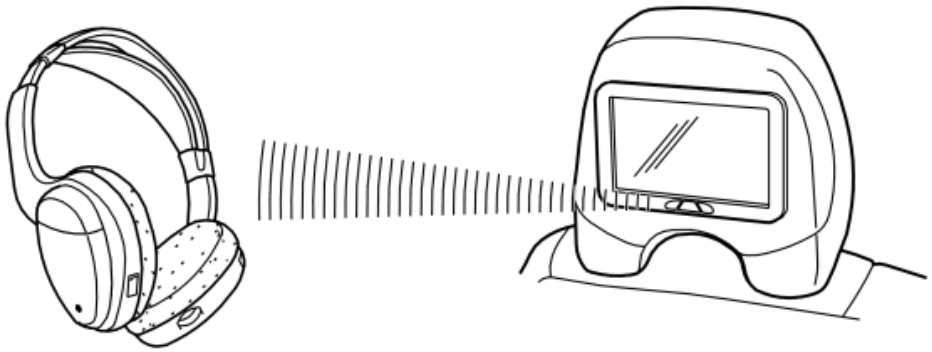

Fig. 238: Identifying IR Headphone Signal Example
Courtesy of VOLVO CARS CORPORATION

The system includes two pairs of IR headphones as standard. Any number of headphones can be used as long as they are within range of the IR transmitter.

Sound is transferred from the screen to the wireless headphones via an infrared signal. There must be free travel between the transmitter in the bottom edge of the screen and the receivers on the side of the headphones. If the way is blocked, the signal may be interfered with and sound quality will thus deteriorate.

The headphones are switched on with the switch located on the side. The headphones switch off automatically if no IR signal is received for 3-4 minutes.

The headphones also have a button to set which audio channel to listen to. Channel A or B can be selected. Channel A is always transmitted from the left screen and channel B is always transmitted from the right screen.

NOTE: Lowering the volume of the screen will increase the signal/noise ratio of the headphones. Optimal headphone output is obtained by setting screen volume to 75%. Headphone volume can then be regulated using the wheel on the headphones themselves.

IDENTIFICATION OF GENERATION

see **IDENTIFICATION OF GENERATION**

SYSTEM OVERVIEW

REAR SEAT ENTERTAINMENT SYSTEM

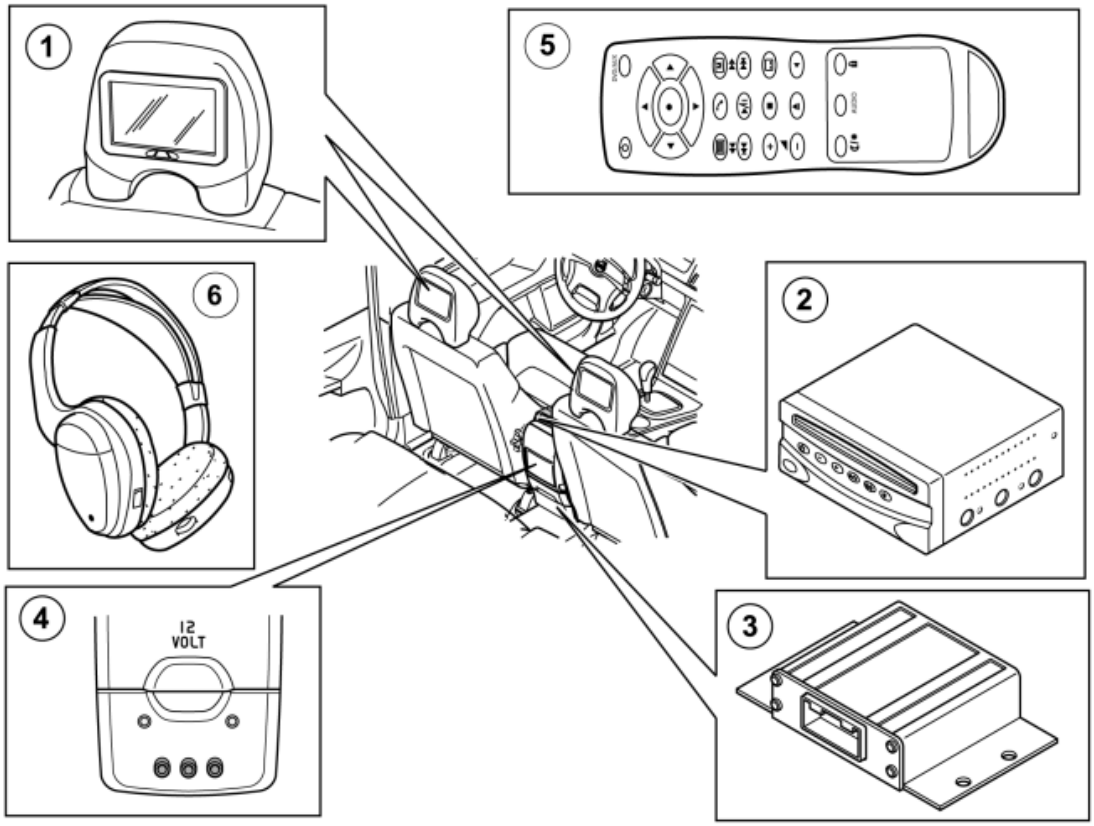

Fig. 239: Locating Rear Seat Entertainment System Components
Courtesy of VOLVO CARS CORPORATION

1. Screen, head restraint (16/81A, B)

2. DVD player with integrated Rear seat entertainment module (RSE) (16/82)
3. Rear audio separation module (RAS) (16/122)
4. AUX socket (16/123)
5. Headphones (two)
6. Remote control

The rear seat entertainment system is a mobile entertainment system for keeping rear seat passengers occupied and entertained with video games or movies.

The system is fully integrated in the car and has two separately controlled, high-resolution 7-inch screens mounted in the head restraints.

The rear seat entertainment module (RSE) is integrated in the DVD player and can receive signals from up to three AV inputs and can transmit video to two separately controlled screens. The control module can also send an output signal to an external screen.

The following media formats can be played by the DVD player:

- DVD-R/+R
- DVD-RW/+RW
- CD-R and CD-RW
- CDDA
- HDCD

The following information formats can be played:

- DVD
- DVD Audio
- VCD
- SVCD
- DivX
- WMV
- Audio CD
- Kodak photo CD
- MP3
- MP3 Pro
- playlists in M3U format
- WMA Sound.

Formats such as THX and DolbyDigital are also supported. Only stereo signals of this audio format are reproduced.

A connection panel with AV inputs is mounted on the rear section of the center console. Other audio and video sources can be connected to the system via this panel, such as video cameras, games consoles or portable DVD and CD players.

The system includes two pairs of wireless headphones. Audio is transferred to the headphones via an IR transmitter in each screen. Headphones with wire can be used by connecting them to the socket in the AUX panel on the back of the center console.

Audio can also be played in the rear speakers using the rear audio separation module (RAS).

The system is controlled via an infrared remote control, which can also be used to control the DVD player and the vehicle's front audio system (if installed).

Different versions (generations) of the system

The system comes in different versions depending on which software is installed in the control module/DVD player. There are slight differences in function, primarily when handling system faults. There is no difference between the systems form a hardware perspective.

XC90

For XC90 from VIN 258731, generation 4.1 is installed on the car.

For VINs prior to this number the system is generation 3.

The software version in the car can be read out using the service menu. Access the menu as follows:

Model year 2006:

1. Switch on the system
2. Open the menu:
3. Enter the code: 1971 and press

Model year 2007-:

1. Switch on the system

   NOTE: There must not be a disc in the DVD player.

2. Aim the remote control at a screen and depress the button for child lock for approx. 5 seconds. The menu will be displayed with four stars underneath.

SIGNALS

The tables below include the in and output signals for the units in the system for rear seat entertainment.

NOTE: **The CAN communication given here is only a private CAN between the control module and the screens.**

REAR SEAT ENTERTAINMENT MODULE (RSE)/DVD PLAYER (16/82)

Input signals:	Output signals:
Directly connected: • Commands from remote control via head restraint screens (16/81A, B). • Audio/video signals from AUX panel (16/123).	**Directly connected:** • Audio signals to rear audio separation module (RAS) (16/122). • Rear audio separation module (RAS) (16/122), power supply and ground terminal. • Screen, head restraint (16/81A, B), audio and video signals. • Screen, head restraint (16/81A, B), power supply and ground terminal. • AUX panel (16/123), audio and video signals.
Via Controller Area Network (CAN) communication: • Communication with screens (16/81A, B).	**Via Controller Area Network (CAN) communication:** • Communication with screens (16/81A, B).

REAR AUDIO SEPARATION MODULE (RAS) (16/122)

Input signals:	Output signals:
Directly connected: • Rear seat entertainment module (RSE)/DVD player (16/82), power supply and ground terminal. • Rear seat entertainment module (RSE)/DVD player (16/82), audio signals. • Rear seat entertainment module (RSE)/DVD player (16/82), activation signal. • Input signals from circuit for back-up (reversing) lamps, to indicate engaged reverse gear.	**Directly connected:** • Rear loudspeakers, (16/5, 16/6, 16/57, 16/58).

SCREEN, HEAD RESTRAINT (16/81A, B)

Input signals:	Output signals:
Wireless communication (IR): • Remote control	**Wireless communication (IR):** • IR signals to wireless headphones
Directly connected: • Rear seat entertainment module (RSE)/DVD player (16/82), audio and video signals. • Rear seat entertainment module	**Directly connected:** • Rear seat entertainment module (RSE)/DVD player (16/82), command from remote control.

(RSE)/DVD player (16/82), power supply and ground terminal.	
Via Controller Area Network (CAN) communication: • Rear seat entertainment module (RSE)/DVD player (16/82), control signals.	**Via Controller Area Network (CAN) communication:** • Rear seat entertainment module (RSE)/DVD player (16/82), communication signals.

INFRARED HEADPHONES

Input signals:	Output signals:
Wireless (IR): • Screen, head restraint (16/81A, B), IR signals from transmitter in screen.	**Wireless (IR):** -

REAR SEAT ENTERTAINMENT SYSTEM (RSE), GENERATION 4.2 (2007-2008)

DESIGN

REAR SEAT ENTERTAINMENT MODULE (RSE)/DVD-PLAYER

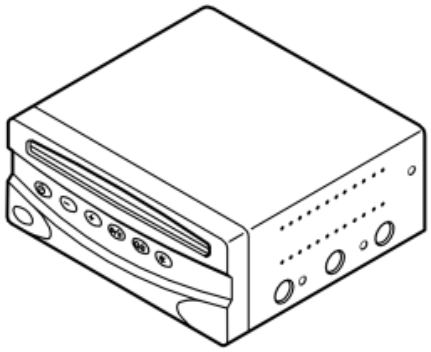

Fig. 240: Identifying DVD Player
Courtesy of VOLVO CARS CORPORATION

Rear seat entertainment module (RSE) is the central unit in the system for rear seat entertainment.

The control module is integrated with the DVD player and is located at the rear edge of the center console.

The control module interprets and executes the commands given by the user with the system's infrared remote control. These commands are transmitted from the remote control to Rear seat entertainment module (RSE) via system's infrared receivers in the screens. Rear seat entertainment module (RSE) also distributes current to the system's other components.

Rear seat entertainment module (RSE) distributes audio and video signals from the DVD-player to screens and

speakers in the system. Via external inputs, other audio and video sources can also be connected, e. g., game pads or video cameras.

The DVD player mechanism has an anti-shock system and it helps to prevent the image or sound skipping when played. The DVD player has slot-in disc insertion and region coding programmed into the software. The region code can be changed using a security code.

The following media formats can be played by the DVD player:

- DVD-R/+R
- DVD-RW/+RW
- CD-R and CD-RW
- CDDA
- HDCD

The following information formats can be played:

- DVD
- DVD Audio
- VCD
- SVCD
- DivX
- WMV
- Audio CD
- Kodak photo CD
- MP3
- MP3 Pro
- playlists in M3U format
- WMA Sound.

Formats such as THX and DolbyDigital are also supported. Only stereo signals of this audio format are reproduced.

The control module is supplied with power from the Ext. X-supply in the Central electronic module and directly from the battery.

To easily check whether the control module is powered and grounded, switch on the ignition. The background illumination on the function buttons should then come on.

CHANGE OF DVD PLAYER REGION CODE

The region coding means that only discs with the region code matching that of the DVD player can be played.

The region code in the DVD player can be changed up to 10 times. After the 11th change, the set region will

then be locked and it will not be possible to change again.

NOTE: Warranty repairs due to locked region on the DVD player will not be approved. Region code changes to the region in which the vehicle will be used is to be done at the workshop. The security code is not to be given to the customer.

Do as follows to open the menu for region code change:

1. Switch on the ignition.
2. Switch on the system

   NOTE: There must not be a disc in the DVD player.

3. Aim the remote control at a screen and depress the button for child lock for approx. 5 seconds. The menu will be displayed with four stars underneath.
4. Enter the code 1971 using the arrow keys on the remote control and then press OK.
5. Select menu selection and press OK.
6. Select the region code which applies to the relevant vehicle and press OK.
7. Check that the set region code, which will be shown in the top left-hand corner of the screen corresponds with the region where the vehicle will be used.
8. Switch off the system

The submenu can then be used to select a new region for the DVD player.

AUX-INPUT

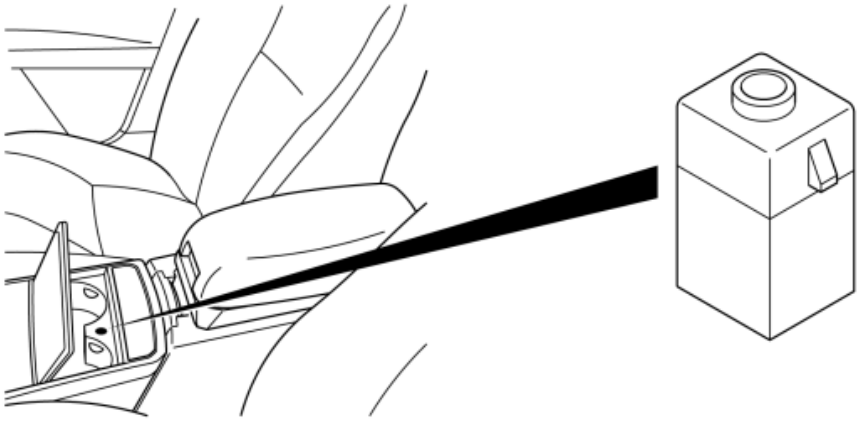

Fig. 241: Identifying Aux-Input 3.5 mm Stereo Connection
Courtesy of VOLVO CARS CORPORATION

In order to playback audio from the rear seat entertainment system using the vehicle's ordinary audio system, the Rear seat entertainment module (RSE) is connected to the regular AUX input.

The AUX-input is a 3.5 mm stereo connection and can be used to connect, e. g., a portable CD-player or other

media player to the system.

The connection is breaking which means, if nothing is connected, it is the audio signals from the Rear seat entertainment module (RSE)/DVD-player that are forwarded to the Integrated Audio Module (IAM).

When something is connected, this connection is broken and the audio from the connected unit is forwarded instead to the Integrated Audio Module (IAM).

Internal electrical connections:

- AUX input connection #1 is internally connected to AUX input #7.
- AUX input connection #2 is internally connected to AUX input #6. The circuit is broken when a 3.5 mm plug is connected.
- AUX input connection #3 is internally connected to AUX input #5. The circuit is broken when a 3.5 mm plug is connected.

SCREEN, HEAD RESTRAINT

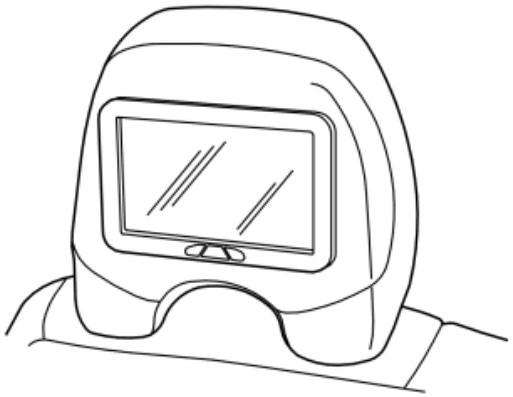

Fig. 242: Identifying Rear Facing Head Restraint Video Screen
Courtesy of VOLVO CARS CORPORATION

The multimedia head restraint consists of five main components:

- Screen
- Circuit board
- Rear piece
- Border
- Head restraint pad

The rear piece is fastened in an opening on the rear of the head restraint pad. The circuit board is held in place in the rear piece with three screws. The screen is housed in the rear piece in front of the circuit board and is connected with a flexible foil cable and an AC lead. The border holds all electronic components in place in the rear piece in the head restraint pad. The lower edge of the border contains a window so that the infrared receiver on the circuit board can receive infrared signals from the remote control. The infrared receiver is separately

connected to the rear seat entertainment module (RSE) and is activated when the rear seat entertainment module (RSE) is on.

The 7-inch screen in the head restraint has an aspect ratio of 16:9. The screen is positioned to provide the optimal viewing angle. The screen has a 120 degree horizontal viewing angle.

The integrated infrared receiver is activated when Rear seat entertainment module (RSE) receives voltage supply. The screen is not activated until it receives a high signal on the wake-up cable from Rear seat entertainment module (RSE)/DVD-player.

This signal is sent when the system is switched on with the POWER button on the remote control or with the POWER button on the control module.

The circuit board contains an image generator, infrared receiver, infrared transmitter and the unit that controls all screen settings:

- colour
- contrast
- brightness
- aspect ratio.

Damping control has a damping relationship of 30:1 to improve the image and reduce bright light from light day conditions down to complete darkness. Brightness can be adjusted so that the screen's image easily can be seen in daylight as well. Voltage protection and power supply of the screens background lighting also take place via the circuit board. The control module contains logic for interpreting commands for setting video performance, input selection, and intensity of background lighting. Control commands are sent from Rear seat entertainment module (RSE) via a private CAN-net.

Each screen has an integrated infrared transmitter to send sound signals to the wireless headphones.

The screens are supplied power and grounded via the rear seat entertainment module (RSE).

To check whether a screen has power and ground, you can switch on the ignition and then switch on the system with the remote control. The screen will then come on.

NOTE: **If voltage supply and ground to the screen work but the screen has no contact with Rear seat entertainment module (RSE)/DVD-player, the screen will still be activated in LOCAL-mode. However, this is no guarantee that the whole system works. For more information, see : TROUBLESHOOTING INFORMATION If the screen works in LOCAL-mode this indicates that voltage supply and ground to the screen's circuit board are okay.**

REMOTE CONTROL

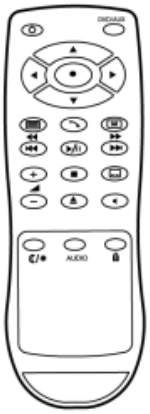

Fig. 243: Identifying Remote Control
Courtesy of VOLVO CARS CORPORATION

The remote control is used to control Rear seat entertainment module (RSE)/DVD-player and the screens. The remote control has 22 buttons, one is red and 21 are white.

The remote control uses infrared signals (IR) to transfer commands to the system. The signals are received by the screens' infrared receivers.

The remote control is equipped with two batteries, fitted under a cover at the rear.

HEADPHONES

Fig. 244: Identifying Headphones
Courtesy of VOLVO CARS CORPORATION

The wireless IR-headphones can be used for both screens. The standard sound is transmitted via IR-transmission to the headphones in two-channel stereo format. The headphones are driven by an internal battery.

The headphones are turned on with a button on one side, and the volume, in each headphone, can be adjusted with a knob. Each kit also has a channel selector, that controls which audio channel the headphone receives.

The audio from the left screen is always transmitted on channel A and the audio from the right screen is always transmitted on channel B.

AV-PANEL

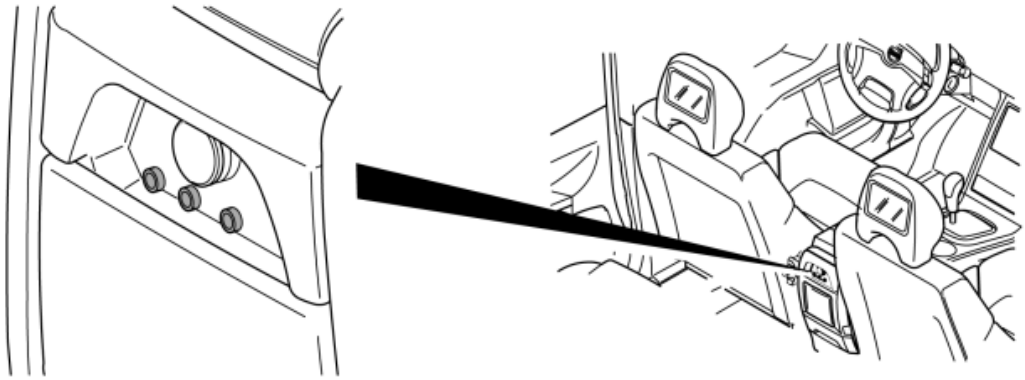

Fig. 245: Identifying AV-Panel With External Input Terminals
Courtesy of VOLVO CARS CORPORATION

On the rear of the center console there is an AV-panel with external input terminals for audio/video. This input can be used for supplying standard AV signals to systems, such as, video cameras, video game consoles, VHS videos, portable DVD or CD-players.

All inputs on the AV-panel are directly connected to Rear seat entertainment module (RSE)/DVD-player.

DIAGNOSTIC FUNCTIONS

TROUBLESHOOTING INFORMATION

For diagnostics the Rear seat entertainment module (RSE)/DVD-player has a basic internal system check and a start-up procedure for the screens.

The control module is not connected to the vehicle's other CAN networks. This means for example that **no** diagnostic trouble codes (DTCs) can be read from the control module. All fault tracing must therefore be carried out via symptom fault tracing.

The following is information that may facilitate when fault tracing in the system.

When the ignition is switched on the Rear seat entertainment module (RSE) performs a basic internal system check and starts the start-up procedure with the screens.

If the time from when the ignition is switched on until the system is in standby mode (only the illuminated POWER button is lit) is longer than normal, this indicates a communication fault with the screens.

The start-up times, see: **SYSTEM START-UP PROCEDURE**

Causes of a long start-up time can be:

- No supply voltage and ground to the screen

- Damaged wake-up signal cable.
- Damaged cables for the internal CAN network (no communication can take place). In connector D on the Rear seat entertainment module (RSE)/DVD-player the CAN network is strapped for the *right-hand screen* . The strap is used to support the future expansion of the system with additional devices. If connector D has been damaged, has become dislodged or for some reason there is no connection between both ends of the strap on the CAN cables, it will not be possible to establish communication.

Switch on the system using the POWER button on the DVD player

If one of the screens does not start when the system is switched on, when the start-up procedure has elapsed over the normal time (without fault), and only the POWER lamp on the control module/DVD player is lit, this indicates a fault with the actual screen or the cables between the screen and the circuit board.

When communication with the control modules/DVD player in this case is okay, both these screens' circuit boards behind the actual screens are OK.

The functionality of the circuit boards can also be checked by switch on the system and checking whether the IR lamps in the bottom of the screen are slightly illuminated.

The IR-lights are lit for about 2 minutes after the system is switched on or when sound is played from a selected audio source.

Switch on the system using the remote control

If the system is switched on using the remote control aimed towards the right-hand screen, when the voltage supply and ground to the screen are fully functional but for example there is no CAN-communication with the Rear seat entertainment module (RSE)/DVD-player, the screen will be lit and work in LOCAL mode. It will then be possible to show the menus and to adjust the sound and brightness settings.

This can be misinterpreted as the function is OK. However no image will be shown on screen if, for example, you play a DVD disc. The system will be switched on and the left-hand screen will start. This is because the cables for the IR signals do not go via the CAN network, but go directly to the DVD player and are interpreted.

If the screen works in LOCAL mode this indicates that the voltage supply and ground to the screen's circuit board are OK.

FUNCTION

REAR SEAT ENTERTAINMENT MODULE

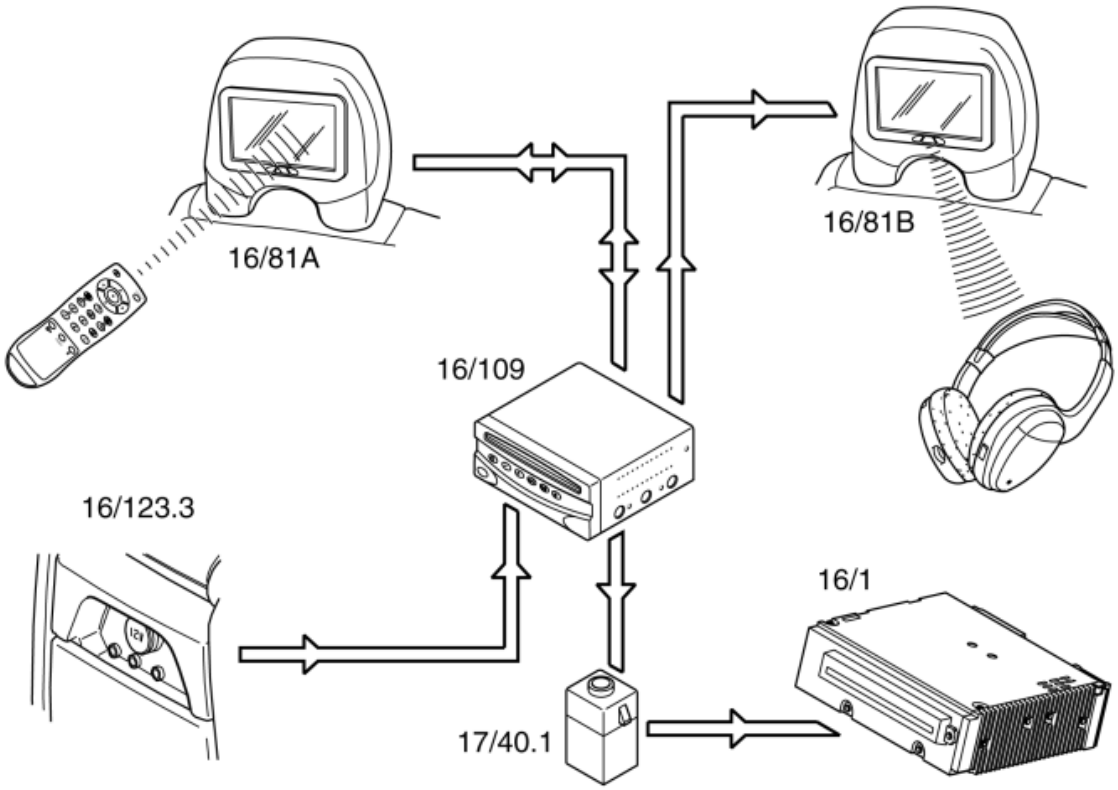

Fig. 246: Identifying Rear Seat Entertainment Network
Courtesy of VOLVO CARS CORPORATION

NOTE: **There may be a slight delay between selecting a DVD function with the remote control and activation of the DVD player function. A message will appear on the screen to confirm that the DVD function was selected. Display of indicates that the DVD player is still processing a previously selected function.**

The rear seat entertainment system is supplied with electric power and is controlled by the rear seat entertainment module (RSE) (16/109).

The control module also includes the DVD player for the system.

The system is powered via X-feed and directly from the battery. If the system is operating when the ignition is switched of, a question will appear on the screens as to whether continued play is permitted.

If the user answers YES, the system will continuing playing another 10 minutes. The system will then shut down. If there is no response to the question, the system will shut down after 1 minute. As a means of safeguarding the battery, play time cannot be extended unless the ignition is switched on again.

All buttons will light for approximately 5-10 seconds when attempting to start the system using the POWER button on the DVD player in this mode, they will then go out. Accordingly, the system is not permitted to start before the ignition has been switched on again.

If the system is to be switched on using the remote control, the ignition must be switched on and the remote control must be pointed at one of the screens before any buttons are depressed, the receiver for the signals from the remote control is located on the lower edge of the screens.

When the remote control is aimed at a screen (16/81A, B) and a function key is pressed in, the Rear seat entertainment module (RSE) identifies the selected screen and executes the command that the remote control sent out.

If, for example, you press a menu selection button, a menu opens on the screen at which the remote control was aimed. The possible selections are described below:

- Independent shifting of three audio/video inputs (DVD and AUX).
- Image adjustment (image color, brightness, contrast and aspect ratio).
- Audio settings (bass, treble and volume).
- Language selection for on-screen instructions.
- Switch individual screens ON/OFF.

Rear seat entertainment module (RSE) also decides which media source that has been linked to the selected screen and transmits command in a suitable protocol.

If, for example, the left screen is set for DVD-playback and an infrared play command is detected at the left screen, the message is received, saved and forwarded to the DVD-player (16/109) in the DVD-player's infrared protocol.

A fixed memory saves the displayed instruction language used and the current audio and video settings for the respective output channel. These settings are loaded upon start-up with the exception of volume level, which is set to low as standard.

When a DVD disc is inserted in the opening DVD playback starts automatically if the DVD disc does not have a disc menu.

DVD playback can resume from a paused position, for example, if the ignition was switched off when watching a movie. In this case playback continues from the last position when the ignition is switched on again. The audio and video signals are fed out from the DVD player from the connection block (ISO connection) at the rear of the device.

SYSTEM START-UP PROCEDURE

When the ignition is switched on the Rear seat entertainment module (RSE) performs a basic internal system check and starts the start-up procedure with the screens.

Depending on software, the start-up times are different and handling of the POWER-button's lighting. Version of software can be identified using the SERVICE MENU, see: **CHANGE OF DVD PLAYER REGION CODE**

The following takes place:

Software, version DVD TMS S/W 2.1.3 (a newer software)

1. The ignition is switched on.
   - If the wake-up attempt and communication check are OK, the control module continues as set out in section 14.
   - If both the wake-up attempt/communication check fail, the control module continues as set out in section 13.
2. Lighting in the DVD-player's buttons is activated.
   - If the wake-up attempt and communication check are OK, the control module continues as set out in section 14.
   - If both the wake-up attempt/communication check fail, the control module continues as set out in section 13.
3. The Rear seat entertainment module (RSE) feeds the connections #E1 (left-hand screen) and #E13 (right-hand screen) with voltage.
   - If the wake-up attempt and communication check are OK, the control module continues as set out in section 14.
   - If both the wake-up attempt/communication check fail, the control module continues as set out in section 13.
4. The Rear seat entertainment module (RSE) sends a wake-up signal of approximately 11.5 V to connection #E2 for the left-hand screen.
   - If the wake-up attempt and communication check are OK, the control module continues as set out in section 14.
   - If both the wake-up attempt/communication check fail, the control module continues as set out in section 13.
5. The left-hand screen then returns an OK signal to the Rear seat entertainment module (RSE) via the internal CAN network.

   NOTE: If the screen does not respond on the CAN network, the Rear seat entertainment module (RSE) makes a further two attempts according to the pattern below (*). If the screen does not respond the Rear seat entertainment module (RSE) continues as set out in section 8 below.

   - If the wake-up attempt and communication check are OK, the control module continues as set out in section 14.
   - If both the wake-up attempt/communication check fail, the control module continues as set out in section 13.
6. The Rear seat entertainment module (RSE) returns a message to the left-hand screen on the CAN network which assigns the screen number 1. This is necessary for the video and audio to be addressed to the right screen and so that commands from the remote control can be executed on the right screen.
   - If the wake-up attempt and communication check are OK, the control module continues as set out in section 14.
   - If both the wake-up attempt/communication check fail, the control module continues as set out in section 13.

7. Communication for the left-hand screen is now OK.
   - If the wake-up attempt and communication check are OK, the control module continues as set out in section 14.
   - If both the wake-up attempt/communication check fail, the control module continues as set out in section 13.
8. The Rear seat entertainment module (RSE) sends a wake-up signal of approximately 11.5 V to connection #E14 for the right-hand screen.
   - If the wake-up attempt and communication check are OK, the control module continues as set out in section 14.
   - If both the wake-up attempt/communication check fail, the control module continues as set out in section 13.
9. The right-hand screen then returns an OK signal to the Rear seat entertainment module (RSE) via the internal CAN network.

   NOTE: If the screen does not respond on the CAN network, the Rear seat entertainment module (RSE) makes a further two attempts according to the pattern below (*). If the screen does not respond the Rear seat entertainment module (RSE) continues as set out in item 12 below.

   - If the wake-up attempt and communication check are OK, the control module continues as set out in section 14.
   - If both the wake-up attempt/communication check fail, the control module continues as set out in section 13.
10. The Rear seat entertainment module (RSE) returns a message to the right-hand screen on the CAN network which assigns the screen number 2.
    - If the wake-up attempt and communication check are OK, the control module continues as set out in section 14.
    - If both the wake-up attempt/communication check fail, the control module continues as set out in section 13.
11. Communication for the right-hand screen is now OK.
    - If the wake-up attempt and communication check are OK, the control module continues as set out in section 14.
    - If both the wake-up attempt/communication check fail, the control module continues as set out in section 13.
12. The Rear seat entertainment module (RSE) checks whether the result of the wake-up attempt according to section 7 and 11 is OK. It then performs a communication check with the DVD player.
    - If the wake-up attempt and communication check are OK, the control module continues as set out in section 14.
    - If both the wake-up attempt/communication check fail, the control module continues as set out in section 13.
13. The illuminated DVD player buttons are on for approximately 60 seconds.
14. Lighting in the DVD-player's buttons, except the POWER button, goes out.

15. The start-up procedure is implemented and the system switches to standby.
16. The system can now be started using the POWER button on the DVD player or the remote control.

(*) Wake-up signal (signal pattern with a fault)

High signal (approx. 11.5 V) is sent for approx 1 second (first attempt).

If there is no response a low signal is sent (approx. 0 V) for approximately 3 seconds.

High signal (approx. 11.5 V) is sent for approx 1 second (second attempt).

If there is no response a low signal is sent (approx. 0 V) for approximately 3 seconds.

High signal is sent (approx. 11.5 V) and remains continuously high (third and last attempt).

Start-up times

Start-up without faults detected takes approximately 10 seconds.

Start-up with communication fault on one screen takes approximately 85 seconds.

Start-up with communication fault on both screens takes approximately 95 seconds.

The times above should only be seen as a guide and are not exact times.

Software, version DVD TMS S/W 3.0.0 and 2.1.1 (an older software)

1. The ignition is switched on.
2. Lighting in the DVD-player's buttons is activated.
3. The Rear seat entertainment module (RSE) feeds the connections #E1 (left-hand screen) and #E13 (right-hand screen) with voltage.
4. The Rear seat entertainment module (RSE) sends a wake-up signal of approximately 11.5 V to connection #E2 for the left-hand screen.
5. The left-hand screen then returns an OK signal to the Rear seat entertainment module (RSE) via the internal CAN network.

NOTE: **If the screen does not respond on the CAN network, the Rear seat entertainment module (RSE) makes a further two attempts according to the pattern below (*). If the screen does not respond the Rear seat entertainment module (RSE) continues as set out in section 8 below.**

6. The Rear seat entertainment module (RSE) returns a message to the left-hand screen on the CAN network which assigns the screen number 1. This is necessary for the video and audio to be addressed to the right screen and so that commands from the remote control can be executed on the right screen.
7. Communication for the left-hand screen is now OK.

8. The Rear seat entertainment module (RSE) sends a wake-up signal of approximately 11.5 V to connection #E14 for the right-hand screen.
9. The right-hand screen then returns an OK signal to the Rear seat entertainment module (RSE) via the internal CAN network.

NOTE: **If the screen does not respond on the CAN network, the Rear seat entertainment module (RSE) makes a further two attempts according to the pattern below (*). If the screen does not respond the Rear seat entertainment module (RSE) continues as set out in item 12 below.**

10. The Rear seat entertainment module (RSE) returns a message to the right-hand screen on the CAN network which assigns the screen number 2.
11. Communication for the right-hand screen is now OK.
12. Lighting in the DVD-player's buttons, except the POWER button, goes out.
13. The start-up procedure is implemented and the system switches to standby.
14. The system can now be started using the POWER button on the DVD player or the remote control.

(*) Wake-up signal (signal pattern with a fault)

High signal (approx. 11.5 V) is sent for approx 1 second (first attempt).

If there is no response a low signal is sent (approx. 0 V) for approximately 1 second.

High signal (approx. 11.5 V) is sent for approx 1 second (second attempt).

If there is no response a low signal is sent (approx. 0 V) for approximately 10 seconds.

High signal is sent (approx. 11.5 V) and remains continuously high (third and last attempt).

Start-up times

Start-up without faults detected takes approximately 4-10 seconds.

Start-up with communication fault on one screen takes approximately 20-25 seconds.

Start-up with communication fault on both screens takes approximately 30-35 seconds.

The times above should only be seen as a guide and are not exact times.

For more information about the procedure at start, see: **TROUBLESHOOTING INFORMATION**

PLAYBACK OF AUDIO IN THE VEHICLE'S FIXED AUDIO SYSTEM

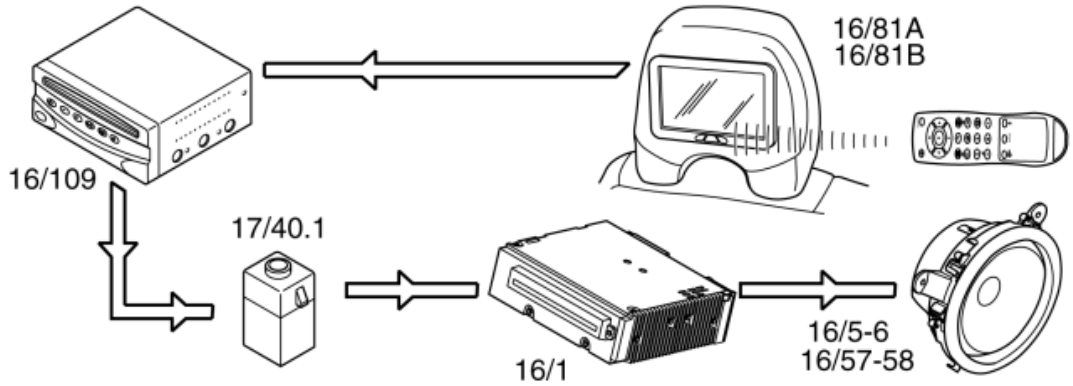

Fig. 247: Identifying Fixed Audio System Network
Courtesy of VOLVO CARS CORPORATION

In order to playback audio from the DVD player using the vehicle's ordinary audio system the Rear seat entertainment module (RSE)/DVD player is connected to the AUX input on the Integrated Audio Module (IAM).

Audio from the DVD-player or AUX-input can be selected as audio source on Integrated Audio Module (IAM) by selecting input signal "AUX" in the audio system's menu system.

When Rear seat entertainment module (RSE)/DVD-player plays a disc, the audio is automatically sent out on the outputs to the Integrated Audio Module (IAM). But no sound will be heard in the speakers until "AUX" has been selected as the audio source.

NOTE: If an audio source is connected to the AUX input's 3.5 mm stereo connection, the audio signals from the Rear seat entertainment module (RSE)/DVD player to the Integrated Audio Module (IAM) are disconnected.

INFRARED (IR) CONTROL

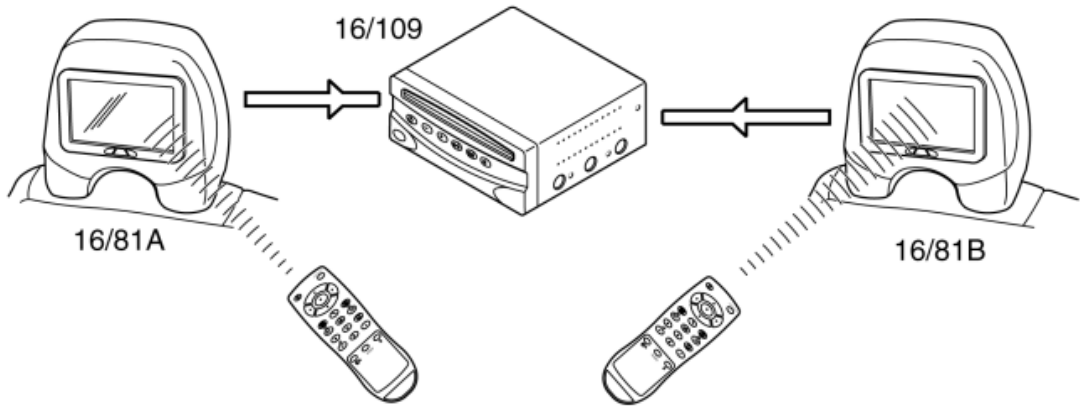

Fig. 248: Remote Control Emitting A Signal With Infrared
Courtesy of VOLVO CARS CORPORATION

Each screen houses an IR-receiver. The IR-receivers are connected to the rear seat entertainment module (RSE) (16/109) and are activated when the rear seat entertainment module (RSE) is supplied power. When a button is pressed on the remote control, it emits a signal with infrared light. The coding of this signal varies depending on which button was pressed. The IR-signal is received by the IR-receiver below the respective head restraint screen (16/81A, B) and is forwarded to the rear seat entertainment module (RSE) for processing.

The remote control can be used to switch between different audio and/or video inputs in the system:

- DVD player, audio/video
- AV-panel, audio or audio/video
- Audio/video from a TV receiver (if installed) to one or both screens.

Selection is performed by aiming the remote control at the screen where the command is to be executed.

Depending on which of the two screens that received the command, the Rear seat entertainment module (RSE) will select AV- or audio source for that screen. Then the remote control can be aimed at the other screen to select source for that screen.

HEADPHONES

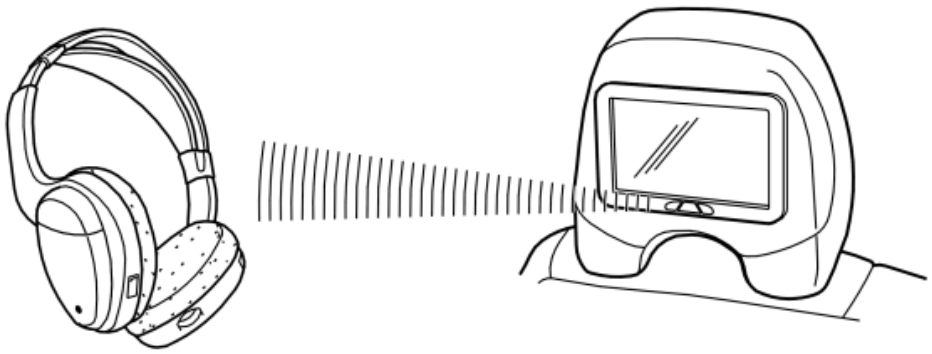

Fig. 249: Identifying IR Headphone Signal Example
Courtesy of VOLVO CARS CORPORATION

The system includes two pairs of IR headphones as standard. Any number of headphones can be used as long as they are within range of the IR transmitter.

Sound is transferred from the screen to the wireless headphones via an infrared signal. There must be free travel between the transmitter in the bottom edge of the screen and the receivers on the side of the headphones. If the way is blocked, the signal may be interfered with and sound quality will thus deteriorate.

The headphones are switched on with the switch located on the side. The headphones switch off automatically if no IR signal is received for 3-4 minutes.

The headphones also have a button to set which audio channel to listen to. Channel A or B can be selected. Channel A is always transmitted from the left screen and channel B is always transmitted from the right screen.

NOTE: **Lowering the volume of the screen will increase the signal/noise ratio of the headphones. Optimal headphone output is obtained by setting screen volume to 75%. Headphone volume can then be regulated using the wheel on the headphones themselves.**

IDENTIFICATION OF GENERATION

see **IDENTIFICATION OF GENERATION**

SYSTEM OVERVIEW

REAR SEAT ENTERTAINMENT SYSTEM

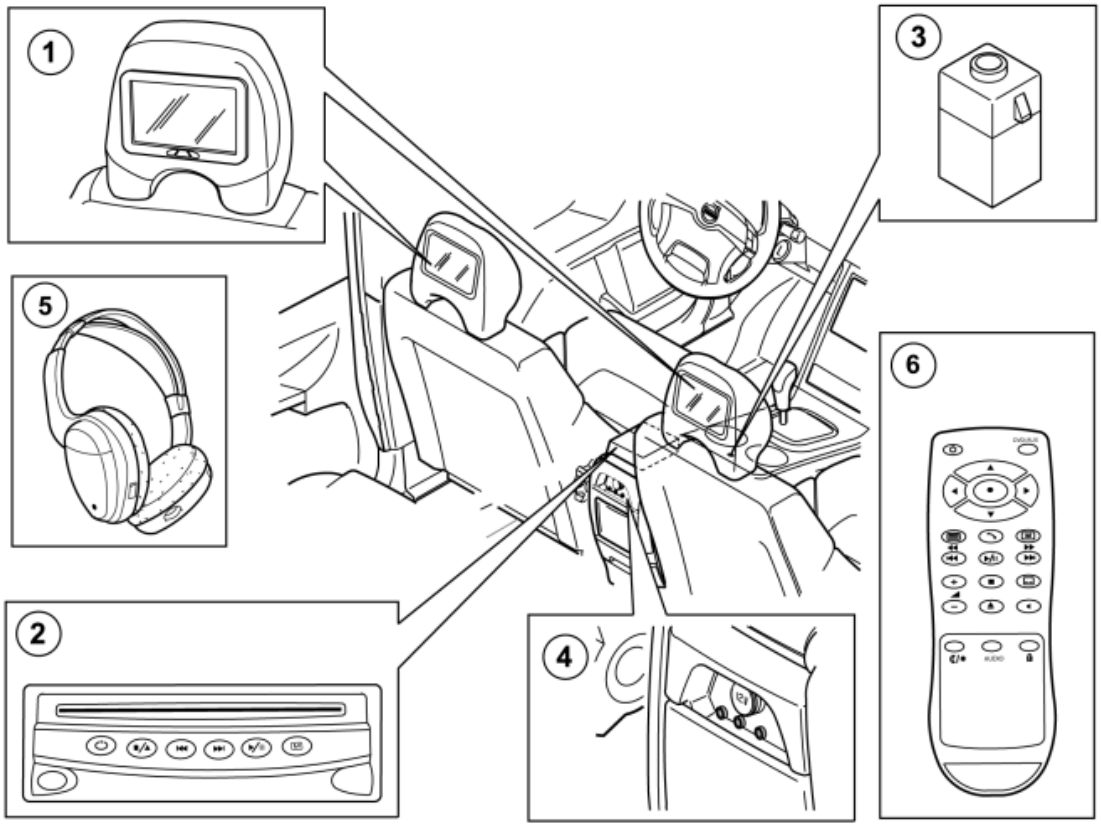

Fig. 250: Rear Seat Entertainment System Components
Courtesy of VOLVO CARS CORPORATION

1. Screen, head restraint (16/81A, B)
2. DVD-player with integrated Rear seat entertainment module (RSE) (16/109)
3. AUX-input (17/40.1)
4. AV-panel (16/123.3)
5. Headphones (two)
6. Remote control

The system for rear seat entertainment is a mobile entertainment to keep the rear seat passengers occupied and amused with TV-games or movies.

The system is fully integrated in the car and has two separately controlled, high-resolution 7-inch screens mounted in the head restraints.

There is an internal CAN network between the Rear seat entertainment module (RSE)/DVD-player and the screens for the transfer of information. This CAN network is not connected to the vehicle's ordinary CAN network.

Rear seat entertainment module (RSE) is integrated in the DVD-player and can receive signals from up to three AV-inputs and supply video to two separately controlled screens. The control module can also supply output signal to an external screen.

The following media formats can be played by the DVD player:

- DVD-R/+R
- DVD-RW/+RW
- CD-R and CD-RW
- CDDA
- HDCD

The following information formats can be played:

- DVD
- DVD Audio
- VCD
- SVCD
- DivX
- WMV
- Audio CD
- Kodak photo CD
- MP3
- MP3 Pro
- playlists in M3U format
- WMA Sound.

Formats such as THX and DolbyDigital are also supported. Only stereo signals of this audio format are reproduced.

A connection panel with AV inputs is mounted on the rear section of the center console. Other audio and video sources can be connected to the system via this panel, such as video cameras, games consoles or portable DVD and CD players.

Two pairs of wireless headphones are included in the system. The sound is transferred to the headphones via an IR transmitter in each screen.

Audio can also be played in the vehicle's ordinary speakers via the connection from Rear seat entertainment module (RSE) to Integrated Audio Module (IAM).

Wired headphones can also be connected if the vehicle is equipped with headphone panels in the C-posts. The panels are available as accessories to the vehicle's audio system and are not directly included in the rear seat entertainment system.

In the storage compartment between the front seats there is also an AUX-input where, e. g., a portable CD or media player can be connected. When an audio source is connected, the sound from it can be played in the vehicle's ordinary speakers, by selecting "AUX" as audio source on the audio panel.

The system is controlled using an infrared (IR) remote control, which also can be used to control the DVD-player and screens.

SIGNALS

The following tables summarize input and output signals to the units in the system for rear seat entertainment.

NOTE: The CAN communication given here is only a private CAN between the control module and the screens.

REAR SEAT ENTERTAINMENT MODULE (RSE)/DVD-PLAYER (16/109)

Input signals:	Output signals:
Directly connected: • Commands from remote control via head restraint screens (16/81A, B). • Audio/video signals from AV-panel (16/123.3).	**Directly connected:** • Screen, head restraint (16/81A, B), audio and video signals. • Screen, head restraint (16/81A, B), power supply and ground terminal. • Screen, head restraint (16/81A, B), wake-up signal. • AUX-input (17/40:1), audio and video signals to the vehicle's audio system.
Via CAN communication: • Communication with screens (16/81A, B).	**Via CAN communication:** • Communication with screens (16/81A, B).

SCREEN, HEAD RESTRAINT (16/81A, B)

Input signals:	Output signals:
Wireless communication (IR): • Remote control	**Wireless communication (IR):** • IR signals to wireless headphones
Directly connected: • Rear seat entertainment module	**Directly connected:**

(RSE)/DVD-player (16/109), audio and video signals. • Rear seat entertainment module (RSE)/DVD-player (16/109), wake-up signal. • Rear seat entertainment module (RSE)/DVD-player (16/109), voltage feed and ground connection.	• Rear seat entertainment module (RSE)/DVD player (16/109), command from remote control.
Via CAN communication: • Rear seat entertainment module (RSE)/DVD-player (16/109), control signals.	**Via CAN communication:** • Rear seat entertainment module (RSE)/DVD-player (16/109), communication signals.

WIRELESS HEADPHONES

Input signals:	Output signals:
Wireless communication (IR): • Screen, head restraint (16/81A, B), IR signals from transmitter in screen.	**Wireless communication (IR):** -

REAR SEAT ENTERTAINMENT SYSTEM (RSE), GENERATION 4.3 (2009-2012)

DESIGN

REAR SEAT ENTERTAINMENT MODULE (RSE)/DVD-PLAYER

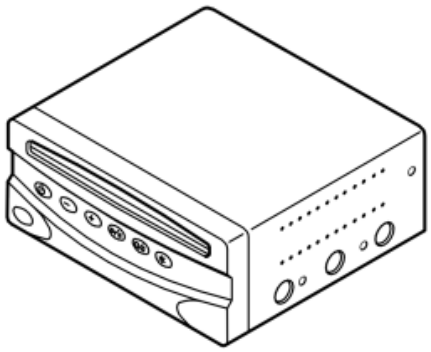

Fig. 251: Identifying DVD Player
Courtesy of VOLVO CARS CORPORATION

Rear seat entertainment module (RSE) is the central unit in the system for rear seat entertainment.

The control module is integrated with the DVD player and is located in the storage tray in the centre console. In XC90 it is located at the rear edge of the centre console.

The control module interprets and executes the commands given by the user with the system's infrared remote control. These commands are transmitted from the remote control to Rear seat entertainment module (RSE) via system's infrared receivers in the screens. Rear seat entertainment module (RSE) also distributes current to the system's other components.

The Rear seat entertainment module (RSE) distributes audio and video signals from the DVD player or digital TV receiver to the screen and speakers in the system. Other audio and video sources can be connected via external inputs (AV panel), for example, games consoles or video cameras.

There is an internal CAN network between the Rear seat entertainment module (RSE)/DVD-player and the screens for the transfer of information. This CAN network is not connected to the vehicle's ordinary CAN network.

The DVD player mechanism has an anti-shock system and it helps to prevent the image or sound skipping when played. The DVD player has slot-in disc insertion and region coding programmed into the software. The region code can be changed using a security code.

The following media formats can be played by the DVD player:

- DVD-R/+R
- DVD-RW/+RW
- CD-R and CD-RW
- CDDA
- HDCD

The following information formats can be played:

- DVD
- DVD Audio
- VCD
- SVCD
- DivX
- WMV
- Audio CD
- Kodak photo CD
- MP3
- MP3 Pro
- playlists in M3U format
- WMA Sound.

Formats such as THX and DolbyDigital are also supported. Only stereo signals of this audio format are reproduced.

The control module is supplied with power from the Ext. X-supply in the Central electronic module (CEM) and

directly from the battery.

To easily check whether the control module is powered and grounded, switch on the ignition. The background illumination on the function buttons should then come on.

Change of DVD player region code

The region coding means that only discs with the region code matching that of the DVD player can be played.

The region code in the DVD player can be changed up to 25 times. After the last change, the set region will be locked and it will not be possible to change again.

NOTE: Warranty repairs due to locked region on the DVD player will not be approved. Region code changes to the region in which the vehicle will be used is to be done at the workshop. The security code is not to be given to the customer.

Do as follows to open the menu for region code change:

1. Switch on the ignition.
2. Switch on the system.

   NOTE: There must not be a disc in the DVD player.

3. Direct the remote-control towards one of the screens and press and hold the Day/Night switching button for approx. 5 seconds. The SERVICE MENU will now be shown with four stars below.
4. Enter the code 1971 using the arrow keys on the remote control and then press OK.
5. Select menu REGION CODE and press OK.
6. Select the region code which applies to the relevant vehicle and press OK.
7. Check that the set region code, which will be shown in the top left-hand corner of the screen corresponds with the region where the vehicle will be used.
8. Switch off the system.

The submenu can then be used to select a new region for the DVD player.

AUX-INPUT

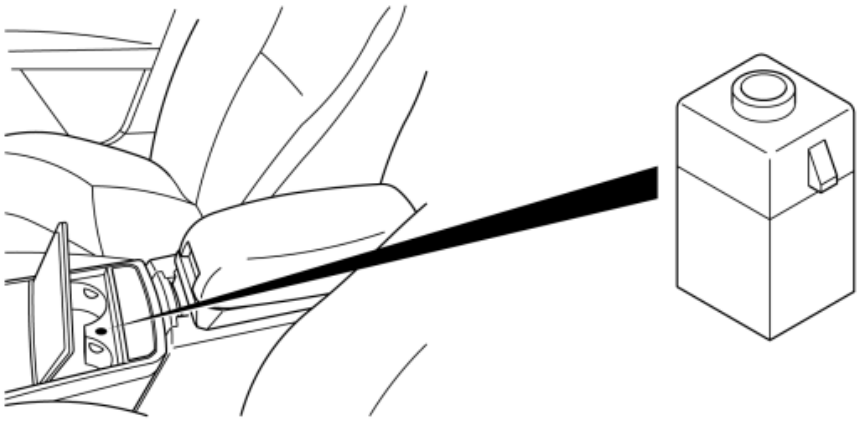

Fig. 252: Identifying Aux-Input 3.5 mm Stereo Connection
Courtesy of VOLVO CARS CORPORATION

In order to playback audio from the rear seat entertainment system using the vehicle's ordinary audio system, the Rear seat entertainment module (RSE) is connected to the regular AUX input.

The AUX-input is a 3.5 mm stereo connection and can be used to connect, e. g., a portable CD-player or other media player to the system.

The connection is breaking which means, if nothing is connected, it is the audio signals from the Rear seat entertainment module (RSE)/DVD-player that are forwarded to the Integrated Audio Module (IAM).

When something is connected, this connection is broken and the audio from the connected unit is forwarded instead to the Integrated Audio Module (IAM).

Internal electrical connections:

- AUX input connection #1 is internally connected to AUX input #7.
- AUX input connection #2 is internally connected to AUX input #6. The circuit is broken when a 3.5 mm plug is connected.
- AUX input connection #3 is internally connected to AUX input #5. The circuit is broken when a 3.5 mm plug is connected.

SCREEN, HEAD RESTRAINT

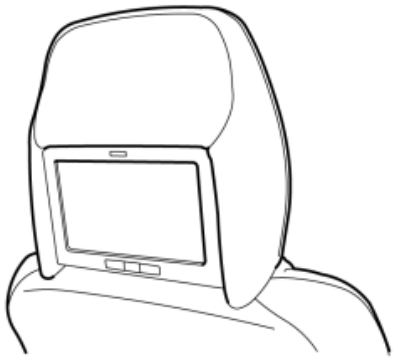

Fig. 253: Identifying Multimedia Head Restraint
Courtesy of VOLVO CARS CORPORATION

The multimedia head restraint consists of the following main components:

- Screen unit with integrated holder and circuit board.
- Head restraint pad.

The screen is attached to the opening on the rear of the head restraint cushion and is held in position in the head restraint cushion frame by two screws.

On the lower edge of the screen there is a window so that infrared signals (IR) from the remote control can be received by the infrared receiver on the screen's circuit board, and the integrated infrared red transmitter can send audio signals to the wireless headphones.

The 8-inch screen in the head restraint has an aspect ratio of 16:9. The screen is positioned to provide the optimal viewing angle. The screen has a 120 degree horizontal viewing angle.

The screen has an integrated temperature sensor that registers the temperature inside the screen. The temperature signal is sent to the Rear seat entertainment module (RSE)/DVD-player via the CAN network to prevent the use of the screens with a two high or low temperature.

The temperature is not monitored during the first 5 minutes after the ignition has been switched on. This is to prevent the system being switched off unnecessarily if, for example, the temperature is too high in the passenger compartment when the vehicle is started. If the temperature is high the climate unit is usually used to lower the temperature.

The following occurs:

- At +72 °C (-19 °C) a warning is shown on the screen. The warning message clears if the temperature changes to +70 °C (-17 °C).
- If the temperature changes to +77 °C (-24 °C) the system will also switches off.

NOTE: The temperature limits above apply inside the screen and not to the temperature in the passenger compartment.

The integrated infrared receiver is activated when the Rear seat entertainment module (RSE) is voltage fed. The receiver receives infrared signals from the remote control executes these commands.

The infrared receiver is also directly connected to the Rear seat entertainment module (RSE). When the ignition is switched on, the LEDs on the infrared receiver and transmitter should be slightly illuminated. The LEDs are on for approx. 2 minutes after the system has been switched on and when audio is played back from a selected audio source.

The screens are not activated until the system has been switched on using the POWER button on the remote control or the POWER button on the DVD player. Before the screens can be activated the Rear seat entertainment module (RSE) must establish communication with the integrated circuit board in the screens. This is performed directly when the ignition is switched on and normally takes approx. 8-10 seconds

The circuit board contains an image generator, infrared receiver, infrared transmitter and the unit that controls all screen settings:

- colour
- contrast
- brightness
- aspect ratio.

The dampening control has a dampening factor of 30:1 to improve the image and reduce sharp light from bright day conditions down to complete dark. The brightness can be adjusted so that the image can be easily seen in daylight. The control module contains logic to interpret commands for setting video performance, input selection and the strength of the background lighting. Control commands are sent from the Rear seat entertainment module (RSE) via a private CAN network.

The screens are supplied power and grounded via the rear seat entertainment module (RSE).

To check whether a screen has power and ground, you can switch on the ignition and then switch on the system with the remote control. The screen will then come on.

NOTE: **If the voltage supply and ground to the screen work, but the screen does not have contact with the Rear seat entertainment module (RSE)/DVD-player via the CAN network, the screen will start up and be lit in LOCAL mode. However this is not a guarantee that the complete system works.**

For further information, see: **DIAGNOSTIC FUNCTIONS**

If the screen works in LOCAL mode this indicates that the voltage supply and ground to the screen's circuit board are OK.

REMOTE CONTROL

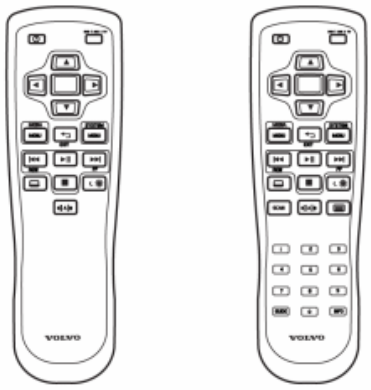

Fig. 254: Remote Control Available In 2 Designs
Courtesy of VOLVO CARS CORPORATION

The remote control is used to control the Rear seat entertainment module (RSE)/DVD player, screens, TV receiver (if the accessory is installed).

The remote control is available in 2 designs. If the system is equipped with TV the remote control has 17 buttons.

If the system is equipped with TV (DVB-T) the remote control has 29 buttons.

The remote control uses infrared signals (IR) to transfer commands to the system. The signals are received by the screens' infrared receivers.

The remote control is equipped with two batteries, fitted under a cover at the rear.

HEADPHONES

Fig. 255: Identifying Headphones
Courtesy of VOLVO CARS CORPORATION

The wireless headphones can be used on both screens. The sound to the headphones is transferred from the screen via infrared signals (IR) to the headphones in two channel stereo format. The headphones are powered by an internal battery.

The headphones are switched on using a button on the side and the volume, in each earpiece, can be adjusted using a knob. The headphones also have a channel selector which controls the audio channel received by the headphones. The sound from the left-hand screen is always sent on channel A and the sound from the right-hand screen is always sent on channel B. A LED is lit when the headphones are switched on.

AV-PANEL

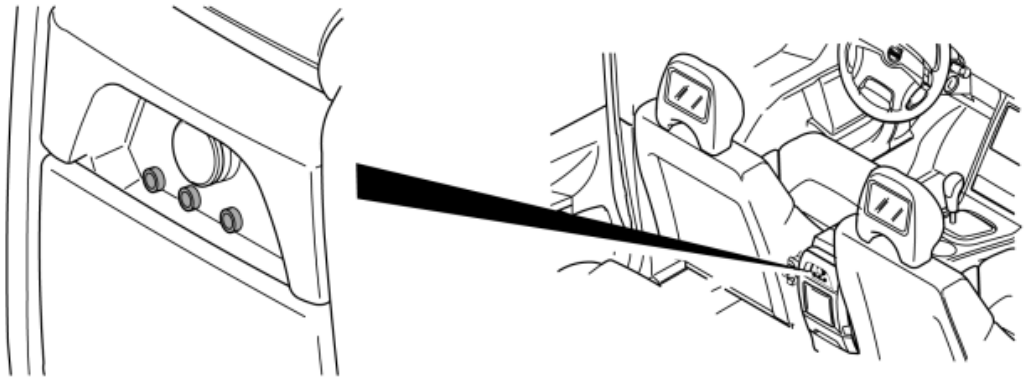

Fig. 256: Identifying AV-Panel With External Input Terminals
Courtesy of VOLVO CARS CORPORATION

There is an AV panel with external input connections for audio/video in the storage tray in the centre console in front of the DVD player. In XC90 this is positioned at the rear of the centre console.

This input can be used to feed standard AV signals to the system from e. g. a video camera, video games console, VHS video, portable DVD or CD player.

All inputs on the AV-panel are directly connected to Rear seat entertainment module (RSE)/DVD-player.

DIGITAL TV RECEIVER (DVB-T)

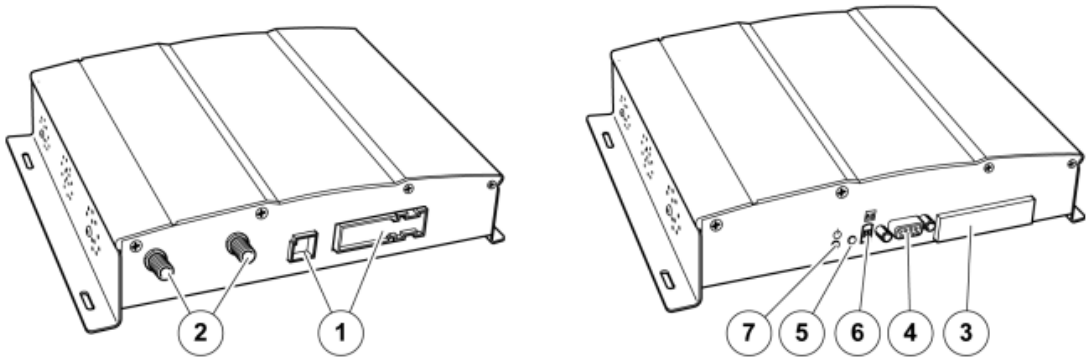

Fig. 257: Identifying Digital TV Receiver (DVB-T)
Courtesy of VOLVO CARS CORPORATION

The digital TV receiver (DVB-T) is an extra option that can receive digital TV channels, convert them and send

them on to the Rear seat entertainment module (RSE).

Two antennas are connected to the receiver so that the TV receiver is able to receive and send the channels.

DVB stands for Digital Video Broadcasting and is a series of internationally accepted open technical standards for digital television. The suffix "T" stands for Terrestrial and alludes to the subset of standards that regulate how a digital TV signal should appear when transmitted terrestrially.

In XC90 the receiver is installed in the cargo compartment, on the right-hand side under the cover above the wheel housing.

The following connections, switches and card slots can be found on the TV receiver:

1. Connection to the vehicle and Rear seat entertainment module (RSE) the two connectors.
2. Connections for two antennas.
3. Slot for a subscription/program card.
4. Serial communications port (serial port RS232).
5. Reset button.
6. Two functions switches.
7. Green status LED.

The TV receiver is voltage fed directly from the battery via connector #A4 for the Rear seat entertainment module (RSE) and then a fuse. The fuse holder is on the TV receiver.

To easily, see whether the receiver is voltage fed and ground switch on the ignition. The status LED should then be lit green.

Subscription/program card

Used to watch paid-by-view channels.

Serial communications port (serial port RS232)

Used to connect a computer when updating the software.

NOTE: Special instructions are issued when this is to be performed.

Reset button

Used to restart the TV receiver when the ignition is on. Switching the ignition off and on has the same effect.

Function switches

Used to:

- Change the signal standard between PAL and NTSC.
- Switch the TV receiver to software update mode.
- Deleting stored TV channels.

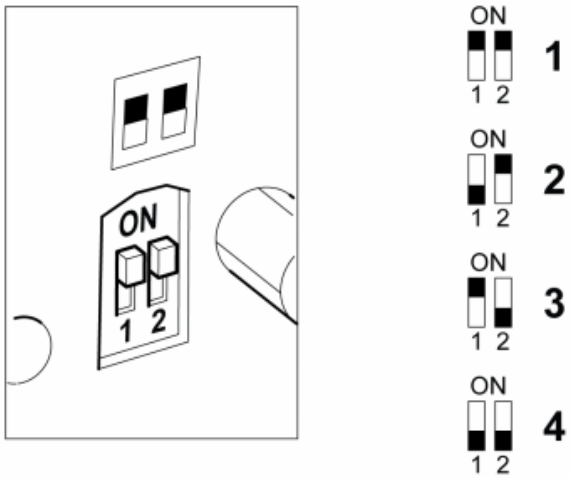

Fig. 258: Viewing Function Switches
Courtesy of VOLVO CARS CORPORATION

The following settings are possible:

1. Normal mode
2. Software update mode
3. Mode to delete programmed TV channels.
4. Mode to change signal standard between PAL and NTSC.

To initiate one of the settings, proceed as follows:

1. Ignition on.
2. Set the switches to the required mode as set out above.
3. Ignition off and on again. This initiates the selected function. As an option the reset button can be used instead of switching the ignition off and on.
4. The selected function is now initiated.

When initiation takes place with the switches in the positions set out above the following occurs:

- Mode 2. A special menu to update the software is shown on the screens.
- Mode 3. All stored channels are deleted directly. A message about deletion is shown on the screens followed by a menu to restore the channels.
- Mode 4. The receiver switch the signal standard from either PAL to NTSC depended on the original setting. Each time the system is restarted (ignition off and on again) or when the reset button is used, the

TV receiver switches between PAL or NTSC. The screens can handle both types of standard signals so that no difference in image is seen.

HINT: If the customer comes in with his/her vehicle and complains about one of the following, the position of the switches, as set out above must be checked. Normally these should always be set in Normal mode.

- a software update menu is always shown on the screens when showing the TV.
- the stored TV channels are always deleted and a message is shown.

ANTENNAS FOR DIGITAL TV RECEIVER

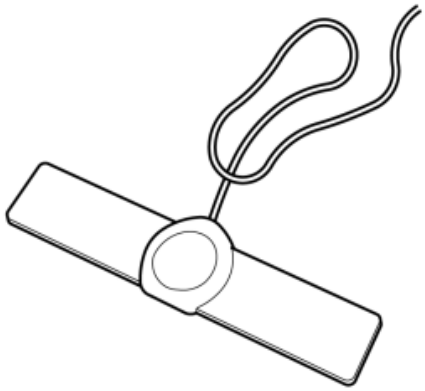

Fig. 259: Identifying Antenna For Digital TV Receiver
Courtesy of VOLVO CARS CORPORATION

The two antennas receive the transmitted digital TV signals and send these to the digital TV receiver. The antennas are voltage fed and ground from the TV receiver. A supply voltage of approx. 5 V is fed via the antenna cable's conductor and is ground via the cable's screen.

On each antenna, under the cover, is a status LED that lights when the digital TV receiver is on and the antenna is OK. If the system is on and the LED is not lit, there is either a fault on the antenna, its cables or the supply from the TV receiver.

The antennas are installed underneath the upper side corners on the rear bumpers.

DIAGNOSTIC FUNCTIONS

For diagnostics the Rear seat entertainment module (RSE)/DVD-player has a basic internal system check and a start-up procedure for the screens.

The control module is not connected to the vehicle's other CAN networks. This means for example that **no** diagnostic trouble codes (DTCs) can be read from the control module. All fault tracing must therefore be carried out via symptom fault tracing.

The following is information that may facilitate when fault tracing in the system.

When the ignition is switched on the Rear seat entertainment module (RSE) performs a basic internal system check and starts the start-up procedure with the screens.

If the time from when the ignition is switched on until the system is in standby mode (only the illuminated POWER button is lit) is longer than normal, this indicates a communication fault with the screens.

The start-up times, see: **SYSTEM START-UP PROCEDURE**

Causes of a long start-up time can be:

- No supply voltage and ground to the screen
- Damaged wake-up signal cable.
- Damaged cables for the internal CAN network (no communication can take place). In connector D on the Rear seat entertainment module (RSE)/DVD-player the CAN network is strapped for the *right-hand screen* . The strap is used to support the future expansion of the system with additional devices. If connector D has been damaged, has become dislodged or for some reason there is no connection between both ends of the strap on the CAN cables, it will not be possible to establish communication.

Switch on the system using the POWER button on the DVD player

If one of the screens does not start when the system is switched on, when the start-up procedure has elapsed over the normal time (without fault), and only the POWER lamp on the control module/DVD player is lit, this indicates a fault with the actual screen or its cables between the screen and the circuit board.

When communication with the control modules/DVD player in this case is okay, both these screens' circuit boards behind the actual screens are OK.

The functionality of the circuit boards can also be checked by switch on the system and checking whether the IR lamps in the bottom of the screen are slightly illuminated.

The IR-lights are lit for about 2 minutes after the system is switched on or when sound is played from a selected audio source.

Switch on the system using the remote control

If the system is switched on using the remote control aimed towards the right-hand screen, when the voltage supply and ground to the screen are fully functional but for example there is no CAN-communication with the Rear seat entertainment module (RSE)/DVD-player, the screen will be lit and work in LOCAL mode. It will then be possible to show the menus and to adjust the sound and brightness settings.

This can be misinterpreted as the function is OK. However no image will be shown on screen if, for example, you play a DVD disc or watch the TV. The system will be switched on and the left-hand screen will start. This is because the cables for the IR signals do not go via the CAN network, but go directly to the DVD player and are interpreted.

If the screen works in LOCAL mode this indicates that the voltage supply and ground to the screen's circuit board are OK.

FUNCTION

REAR SEAT ENTERTAINMENT MODULE (RSE)

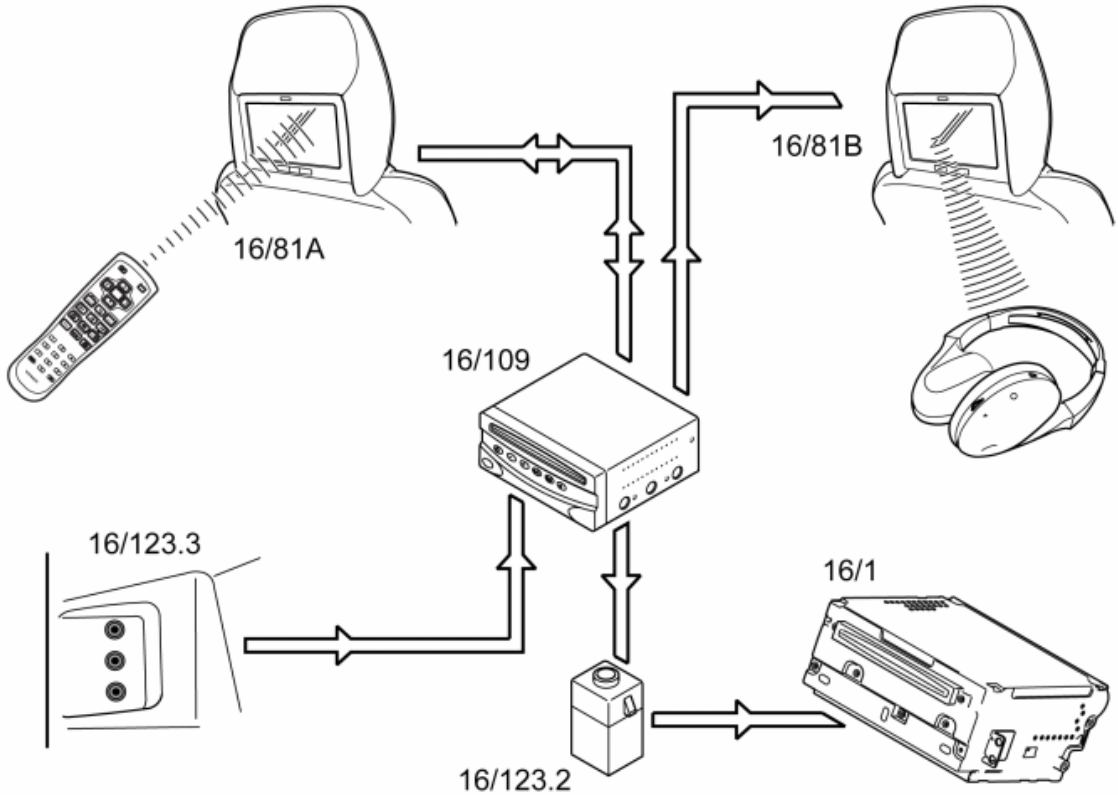

Fig. 260: Identifying Rear Seat Entertainment Network
Courtesy of VOLVO CARS CORPORATION

HINT: AUX-input (16/123.2) in XC90 has number 17/40.1.

NOTE: There may be a slight delay between selecting a DVD function with the remote control and activation of the DVD player function. A message will appear on the screen to confirm that the DVD function was selected. Display of 'Not permitted' indicates that the DVD player is still processing a previously selected function.

The rear seat entertainment system is power fed and controlled by the Rear seat entertainment module (RSE) (16/109). The control module also includes the system's DVD player.

The system is powered via X-feed and directly from the battery. If the system is operating when the ignition is switched of, a question will appear on the screens as to whether continued play is permitted.

If the user answers YES, the system will continuing playing another 10 minutes. The system will then shut down. If there is no response to the question, the system will shut down after 1 minute. As a means of safeguarding the battery, play time cannot be extended unless the ignition is switched on again.

All buttons will light for approximately 5 seconds when attempting to start the system using the POWER button on the DVD player in this mode, they will then go out. Accordingly, the system is not permitted to start before the ignition has been switched on again.

When the ignition is switched on the Rear seat entertainment module (RSE) performs a basic internal system check and starts the start-up procedure with the screens.

For further information, see: **SYSTEM START-UP PROCEDURE**

If the system is to be switched on using the remote control, the ignition must be switched on and the remote control must be pointed at one of the screens before any buttons are depressed, the receiver for the signals from the remote control is located on the lower edge of the screens.

When the remote control is aimed at a screen (16/81A, B) and a function key is pressed in, the Rear seat entertainment module (RSE) identifies the selected screen and executes the command that the remote control sent out.

If, for example, you press a menu selection button, a menu opens on the screen at which the remote control was aimed. The possible selections are described below:

- Independent shifting of three audio/video inputs (DVD, TV (if installed) and AUX).
- Image adjustment (image color, brightness, contrast and aspect ratio).
- Audio settings (bass, treble and volume).
- Language selection for on-screen instructions.
- Switch individual screens ON/OFF.
- Service menu to reach settings such as selection of region code, TV receiver, etc.

Rear seat entertainment module (RSE) also decides which media source that has been linked to the selected screen and transmits command in a suitable protocol.

If, for example, the left screen is set for DVD-playback and an infrared play command is detected at the left screen, the message is received, saved and forwarded to the DVD-player (16/109) in the DVD-player's infrared protocol.

A fixed memory saves the displayed instruction language used and the current audio and video settings for the respective output channel. These settings are loaded upon start-up with the exception of volume level, which is set to low as standard.

When a DVD disc is inserted in the opening DVD playback starts automatically if the DVD disc does not have a disc menu.

DVD playback can resume from a paused position, for example, if the ignition was switched off when watching a movie. In this case playback continues from the last position when the ignition is switched on again. The audio and video signals are fed out from the DVD player from the connection block (ISO connection) at the rear of the device.

SYSTEM START-UP PROCEDURE

See: **SYSTEM START-UP PROCEDURE**

PLAYBACK OF AUDIO IN THE VEHICLE'S FIXED AUDIO SYSTEM

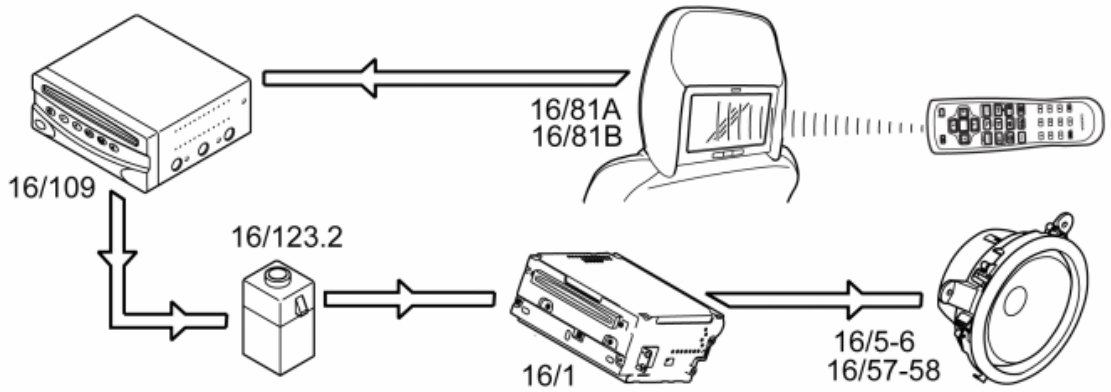

Fig. 261: Identifying Rear Seat Entertainment Network
Courtesy of VOLVO CARS CORPORATION

HINT: AUX-input (16/123.2) in XC90 has number 17/40.1.

In order to playback audio from the DVD player using the vehicle's ordinary audio system the Rear seat entertainment module (RSE)/DVD player is connected to the AUX input on the Integrated Audio Module (IAM).

Audio from the DVD-player or AUX-input can be selected as audio source on Integrated Audio Module (IAM) by selecting input signal "AUX" in the audio system's menu system.

When Rear seat entertainment module (RSE)/DVD-player plays a disc, the audio is automatically sent out on the outputs to the Integrated Audio Module (IAM). But no sound will be heard in the speakers until "AUX" has been selected as the audio source.

NOTE: If an audio source is connected to the AUX input's 3.5 mm stereo connection, the audio signals from the Rear seat entertainment module (RSE)/DVD player to the Integrated Audio Module (IAM) are disconnected.

INFRARED (IR) CONTROL

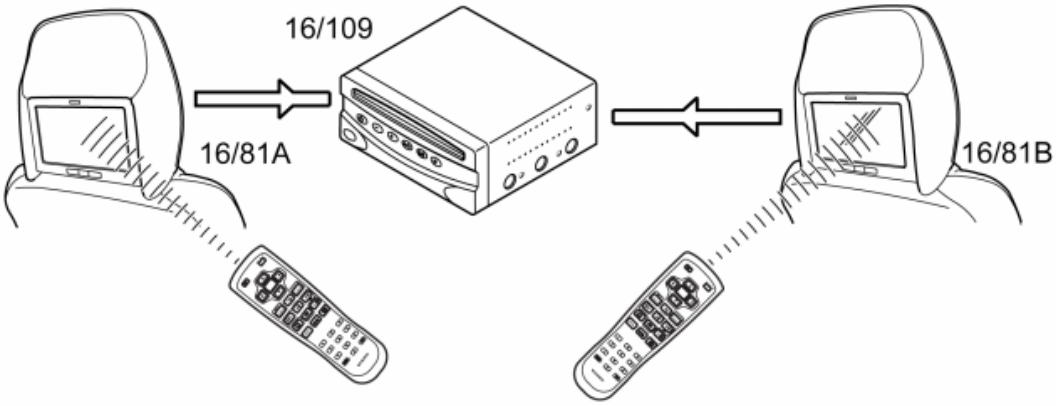

Fig. 262: Remote Control Signal With Infrared Light
Courtesy of VOLVO CARS CORPORATION

There is an infrared receiver (IR receiver) in each screen. The IR receivers are directly connected to the Rear seat entertainment module (RSE) (16/109) and are activated when the Rear seat entertainment module (RSE) is voltage fed. When a button is pressed on the remote control a signal is sent out with infrared light (IR). This signal has a different coding depending on the button pressed. The IR signal is received by the IR receiver under the screen (16/81A, B) on each head restraint and is forwarded to the Rear seat entertainment module (RSE) for processing.

The remote control can be used to switch between different audio and/or video inputs in the system:

- DVD player, audio/video
- AV-panel, audio or audio/video
- Audio/video from a TV receiver (if installed) to one or both screens.

Selection is performed by aiming the remote control at the screen where the command is to be executed.

Depending on which of the two screens that received the command, the Rear seat entertainment module (RSE) will select AV- or audio source for that screen. Then the remote control can be aimed at the other screen to select source for that screen.

HEADPHONES

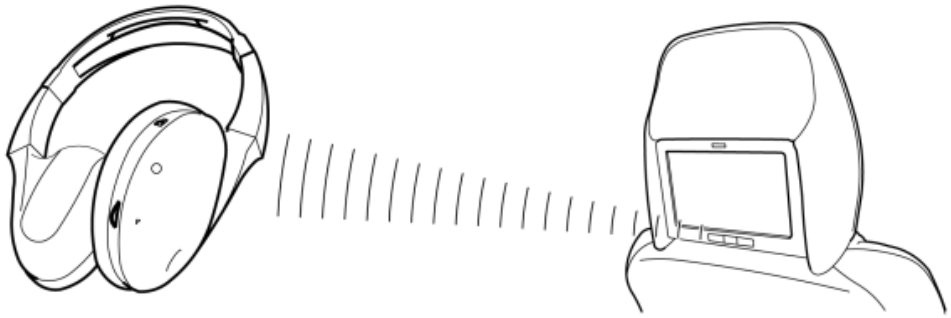

Fig. 263: Identifying Signal to Headphones
Courtesy of VOLVO CARS CORPORATION

Two pairs of headphones are supplied with the system as standard. The transfer of sound between the screen and the wireless headphones takes place using an infrared signal (IR). Any number of headphones can be connected provided that they are within the working range of the IR transmitters.

There must be a clear path between the transmitter on the lower edge of the screen and the receiver on the side of the headphones. If the path is blocked the signals may be disrupted and the audio quality impaired.

The headphones are switched on with the switch located on the side. The headphones switch off automatically if no IR signal is received for 3-4 minutes.

The headphones also have a button to set which audio channel to listen to. Channel A or B can be selected. Channel A is always transmitted from the left screen and channel B is always transmitted from the right screen.

NOTE: The audio signal from the screens to the headphones has a fixed sound level. This means the headphone volume can only be adjusted using the knob on the headphones.

SHOWING TV PROGRAMS

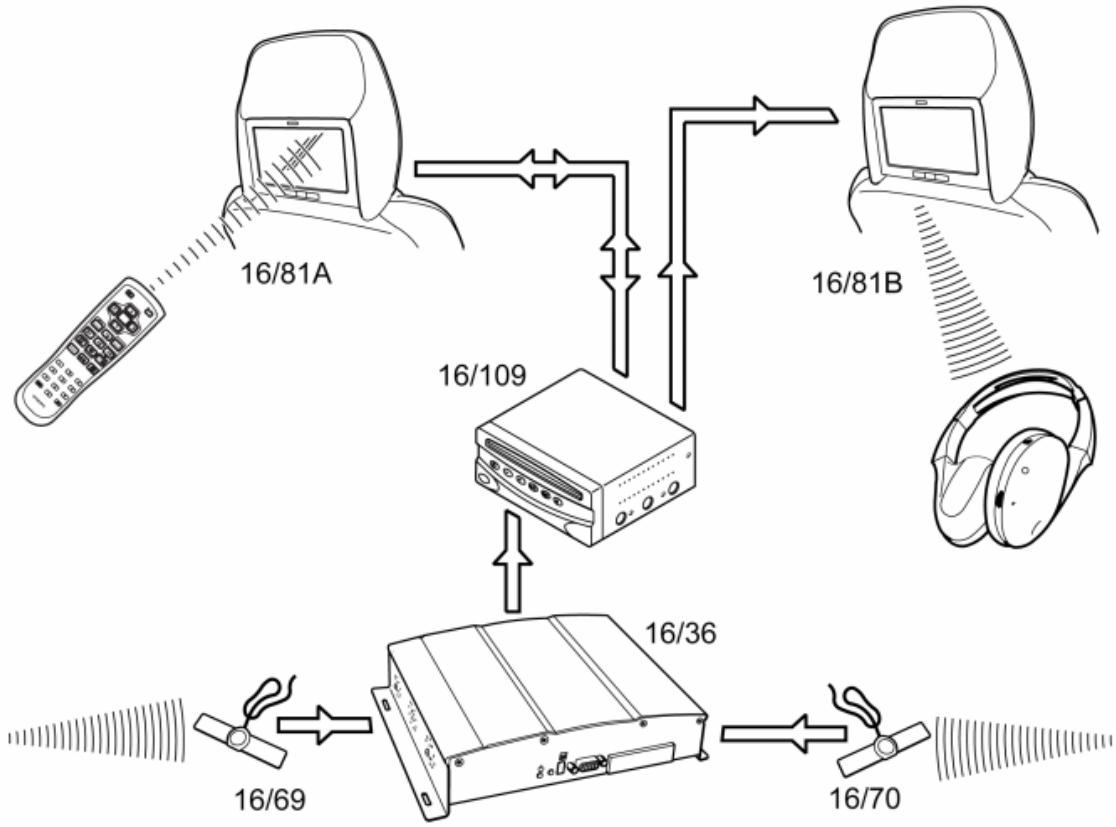

Fig. 264: Identifying Rear Seat Entertainment Network
Courtesy of VOLVO CARS CORPORATION

When the ignition is switched on the Rear seat entertainment module (RSE) performs a basic internal system check and starts the start-up procedure with the screens. At the same time a wake-up signal is sent to the TV receiver and the TV receiver's green status LED comes on.

When the start-up procedure for the screens has finished and the illuminated buttons on the DVD player, except the POWER button, have gone out the TV receiver's status LED also goes out.

When the system is switched on using e. g. the POWER button on the DVD player the status LED comes on.

When the remote control is directed towards a screen (16/81A, B) and the function button to select the signal source (DVD/AUX/TV) is pressed a menu is displayed. The TV receiver can be selected as the "source" from the menu. When the TV receiver is selected, the last tuned channel is shown. If no channel has been stored a channel menu is shown.

NOTE: **The direction of the antenna and the current reception conditions determine the image quality. If the image breaks up or freezes, if the audio stutters or if some channels disappear this is probably due to a weak antenna signal. The signal was affected among others by the lay of the land, weather conditions and the position of the vehicle in relation to the TV transmitter, consequently the problem can appear in connection with movements, time of the year, weather**

conditions.

IDENTIFICATION OF GENERATION

see **IDENTIFICATION OF GENERATION**

ACCESSORIES AND BODY, CAB

Miscellaneous - Design and Function

ACCESSORY ELECTRONIC MODULE (AEM) (2003-2012)

DESIGN

TIMER START OF THE ELECTRIC PARKING HEATER

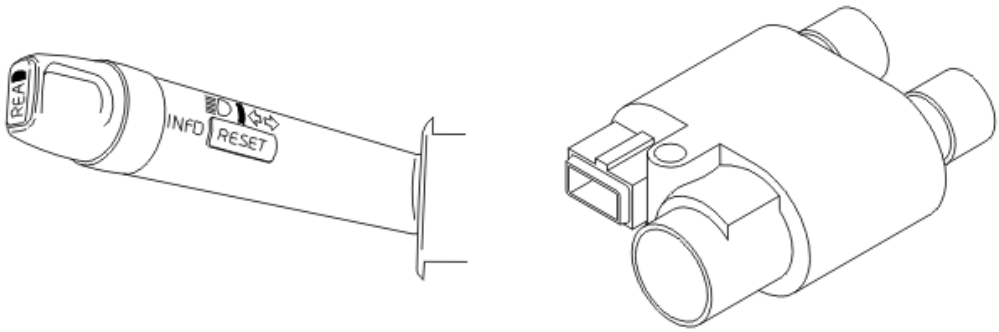

Fig. 1: Electric Parking Heater Timer Control And Module
Courtesy of VOLVO CARS CORPORATION

A timer control function can be connected to the electrical parking heater which is controlled via the accessory electronic module (AEM).

The system consists of:

- A relay for the electrical parking heater
- Wiring between the relay and accessory electronic module (AEM).

The relay is mounted on the engine block heater and controls the electrical parking heater and relay passenger compartment socket.

The relay acts as a switch and is supplied with power and controlled via the wiring from the accessory electronic module (AEM).

The relay is connected to the ground terminal in the engine compartment.

When post-installing the timer start system for the electrical parking heater the car must be configured using new software which is carried out via VIDA (Volvo scan tool).

There are diagnostics for the relay/control signal.

REMOTE CONTROLLED PARKING HEATER

There are two ways to remote control the parking heater. Via the mini-call system and via remote control. There are also two types of parking heater, an electrical parking heater and a gasoline parking heater. The type of heater to be activated via remote start must be preset in the car's driver information module (DIM).

Remote start using the remote control cannot be combined with remote start via the mini call system.

To use the remote start function for the electrical parking heater, the "Timer start of the electric parking heater" function must be installed.

Remote starting via the mini call system (certain markets only)

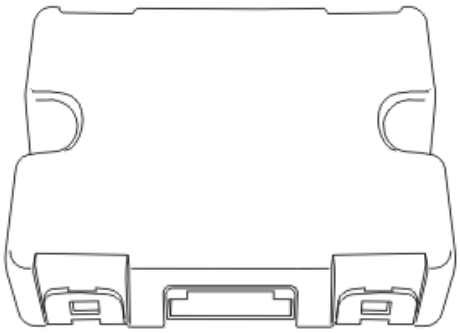

Fig. 2: Mini-Call Unit
Courtesy of VOLVO CARS CORPORATION

The mini-call unit is directly connected with voltage supply, ground connection as well as start/stop signal to the accessory electronic module (AEM).

The mini-call unit is continuously supplied with voltage via the accessory electronic module (AEM) since it must be active all the time to be able to receive start and stop signals.

The remote start system for the parking heater is remote controlled using a normal telephone via the existing mini call network which is available in certain markets.

When installing the remote start warning system the car must be configured using new software. Configuration is carried out via VIDA (Volvo scan tool).

There are diagnostics for the remote start system.

Remote start via the remote control

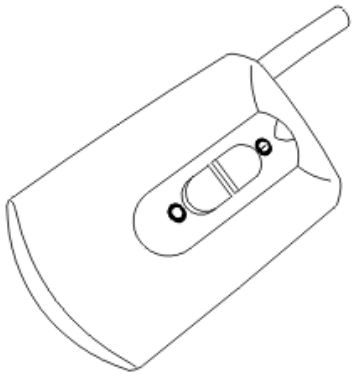

Fig. 3: Parking Heater Remote Control
Courtesy of VOLVO CARS CORPORATION

The remote start system starts and stops the parking heater via a remote control instead of via mini call.

The remote start system consists of a remote control and a receiver for the remote control as well as a contact relay mounted at the accessory electronic module (AEM). The receiver is supplied with voltage and connected to ground via a branching connection at the accessory electronic module (AEM).

Communication between receiver and the accessory electronic module (AEM) consists of a start or stop signal.

The remote start system with remote control is available as accessory for the accessory electronic module (AEM) for cars of later versions.

There are three LR03 (AAA) batteries in the remote control.

The remote control must be synchronized with the receiver.

When installing the remote start warning system the car must be configured using new software. Configuration is carried out via VIDA (Volvo scan tool).

ALARM SIGNAL OUTPUTS

An external (aftermarket) alarm unit can be connected to the accessory electronic module (AEM). The system consists of four output signals that via a cable harness can be used as input signals in the external alarm system. The accessory electronic module (AEM) uses the existing CAN-network to receive/transmit signals that describe the car's alarm, key, and door status.

When installing an after market alarm system the car must be configured using new software. Configuration is carried out via VIDA (Volvo scan tool).

There are diagnostics for the alarm signal outputs.

TELEMUTE FUNCTION FOR NON-INTEGRATED MOBILE PHONES

With the telemute function, the audio module (AUM)/ audio control module (AUD), is muted when the cell

phone rings.

The design consists of a signal input and a signal output. The input signal is digital (0V/12V) and the output signal is a Controller area network (CAN) communication.

When post-installing the hands free unit the car must be configured using new software. Configuration is carried out via VIDA (Volvo scan tool).

There are diagnostics for the telemute function.

AFTERMARKET RADIO UNIT

The design consists of a signal input and four signal outputs on the accessory electronic module (AEM).

The input signal is an analogue +12V mute signal, from either the reverse warning system or the non-integrated hands free system.

Two output signal are pulse width modulated signals for the lighting rheostat signal position and the speed sensitive volume signal.

One output signal is a digital 12V mute signal to the radio unit.

One output signal is a +30 supply for an external aerial amplifier.

When installing an after market radio unit, the car must be configured using new software. Configuration is carried out via VIDA (Volvo scan tool).

Information regarding which production plant a car is manufactured in can be found in the VIN number. The seventh position from the right in the VIN specifies the production plant.

There are diagnostics for the system.

SIGNAL OUTPUT FOR RTI (ROAD TRAFFIC INFORMATION) (JAPAN ONLY)

The signal output consists of four output signals of which one is a pulsed speed signal (0V/12V), one for the brightness for the display lighting and one for indicating that reverse gear has been engaged.

The fourth signal is to deploy a relay which then controls the power supply to the navigation system.

When post-installing the RTI (Japan only) the car must be configured using new software. Configuration is carried out via VIDA (Volvo scan tool).

There are diagnostics for the signal outputs.

DIAGNOSTIC FUNCTIONS

GENERAL INFORMATION

The accessory electronic module (AEM) has a built-in diagnostic system, Volvo Diagnostic, which continuously monitors internal functions as well as input and output signals.

DIAGNOSTIC TROUBLE CODES (DTCS)

A diagnostic trouble code (DTC) is stored if the accessory electronic module (AEM) detects a fault. This control module can store up to 6 diagnostic trouble codes (DTCs), the 3 first and the 3 latest.

Should a fault disappear for any reason after being permanently stored in the control module as a diagnostic trouble code (DTC), the information remains stored in the memory.

READING AND ERASING DIAGNOSTIC TROUBLE CODES (DTCS)

Stored diagnostic trouble codes (DTCs) can be read off and erased using this function. The diagnostic system in the accessory electronic module (AEM) can identify 32 different faults in form of diagnostic trouble codes.

This function can also be used to read off whether the fault is still present (permanent) or whether it has now ceased (intermittent) after the diagnostic trouble code (DTC) has been stored.

Diagnostic trouble codes (DTCs) can only be erased once all the diagnostic trouble codes (DTCs) have been read off at least once.

READING OFF INPUT AND OUTPUT SIGNALS

This function can be used to continuously read off the values and status for the accessory electronic module (AEM) input and output signals.

The following parameters can be read off:

- Voltage supply to the accessory electronic module (AEM)
- Rheostat signal, the strength is given as a percentage
- Speed signal, given as a frequency where 512 is the highest frequency
- Voltage level of the signal to the relay, engine block heater
- Voltage level of the signal to the remote start module
- Voltage supply to the remote start unit
- Voltage level of alarm signals P0, P1, S0 and S1
- Voltage level of the signal to telemute
- Voltage level of the signal from telemute
- Power supply to the aerial amplifier.

ACTIVATING COMPONENTS AND FUNCTIONS

This function can be used to activate components/functions which affect the accessory electronic module (AEM) outputs.

The following components can be activated:

- Start signal to the remote start unit
- Speed signal, simulates a change in speed from 0 km/h to 255 km/h in stages of 5 km/h
- Rheostat signal, simulates a change in light from 0% to 100% and then back to 0% in stages of 5%
- Telemute signal which simulates the phone muting the radio.

READING OFF THE CONTROL MODULE IDENTIFICATION

The diagnostic tool identifies control modules by reading off a number of codes from the control module memory.

The codes contain information about the control module:

- hardware P/N (control module without software)
- hardware serial number (control module without software)
- software P/N
- diagnostic software P/N
- start address CAN configuration.

DOWNLOADING SOFTWARE AND REPLACING THE CONTROL MODULE

When installing or replacing the accessory electronic module (AEM) the software must be downloaded to the control module. The software for the accessory electronic module (AEM) must be downloaded first. Then the software for the connected accessories must be downloaded.

When ordering software, the hardware and the software in the car is compared to the Volvo central database. If the comparison is OK the software is downloaded to the control module.

If the comparison between the car and Volvo central database is not OK, the database is updated with the car configuration. When this is complete the software is downloaded.

FUNCTION

STARTING THE PARKING HEATER VIA THE TIMER

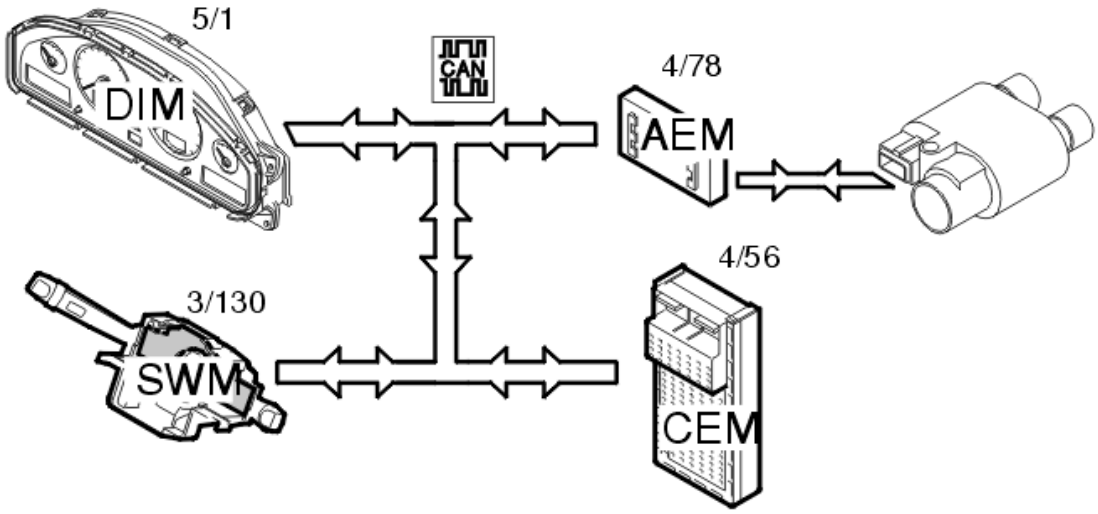

Fig. 4: Starting Parking Heater Via Timer
Courtesy of VOLVO CARS CORPORATION

The left control lever controls the start timer for the parking heater. No other timer is required when setting the timer control. The control lever is directly connected to the steering wheel module (SWM) (3/130) which sends a signal via the CAN-net to the central electronic module (CEM), which in turn sends the signal on to the accessory electronic module (AEM) (4/78) when it is time to start the electric heater.

The start timer functions on either the electric or fuel-driven parking heater (not XC90). The accessory electronic module (AEM) is not involved when the fuel-driven parking heater is selected. The heater to be used is selected in the driver information module (DIM) (5/1).

It is also possible to combine this function with the remote start function.

REMOTE CONTROLLED PARKING HEATER

Remote starting via the mini call system (certain markets only)

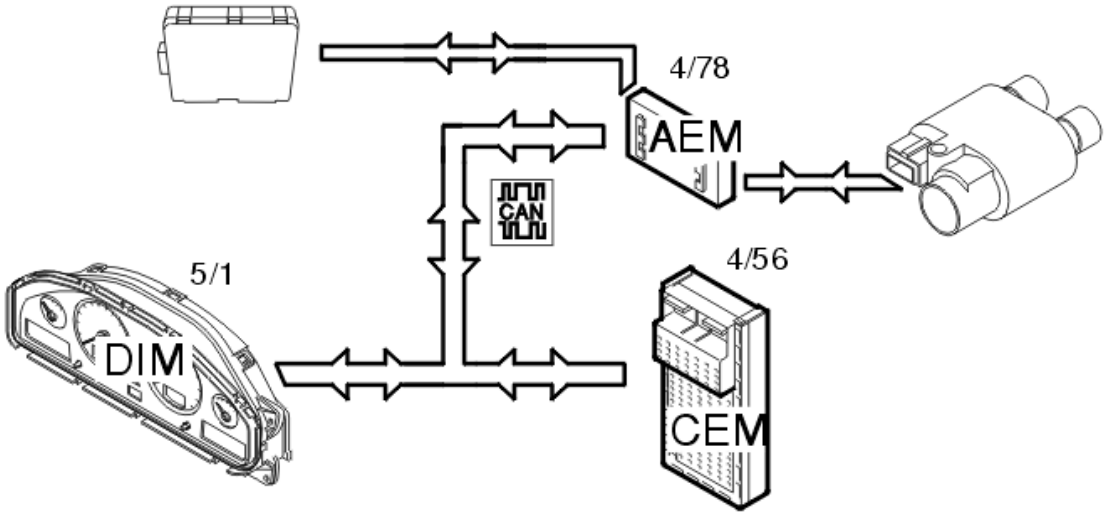

Fig. 5: Remote Controlled Parking Heater Function
Courtesy of VOLVO CARS CORPORATION

The remote controlled system for the parking heater functions as follows. The mini call unit receives a signal from the mini call network to start the electrical parking heater or the fuel driven parking heater either directly or using the timer in the car.

Electrical parking heater

A signal is sent via the mini-call unit to the accessory electronic module (AEM) (4/78) to start the electric parking heater. The accessory electronic module (AEM) then sends a signal via the CAN-net to the central electronic module (CEM) (4/56). The central electronic module (CEM) then sends back a signal via the CAN-net to the accessory electronic module (AEM), which then controls the relay for the parking heater.

Fuel-driven parking heater

A signal is sent via the mini-call unit to the accessory electronic module (AEM) (4/78) to start the gasoline driven parking heater.

The accessory electronic module (AEM) then sends a signal via the CAN-net to the central electronic module (CEM) (4/56), which in turn starts the parking heater.

Selection of the type of parking heater is performed in the driver information module (DIM) (5/1).

The remote start function is dependent on good reception/coverage of the mini call network in order to operate satisfactorily.

Remote start via the remote control

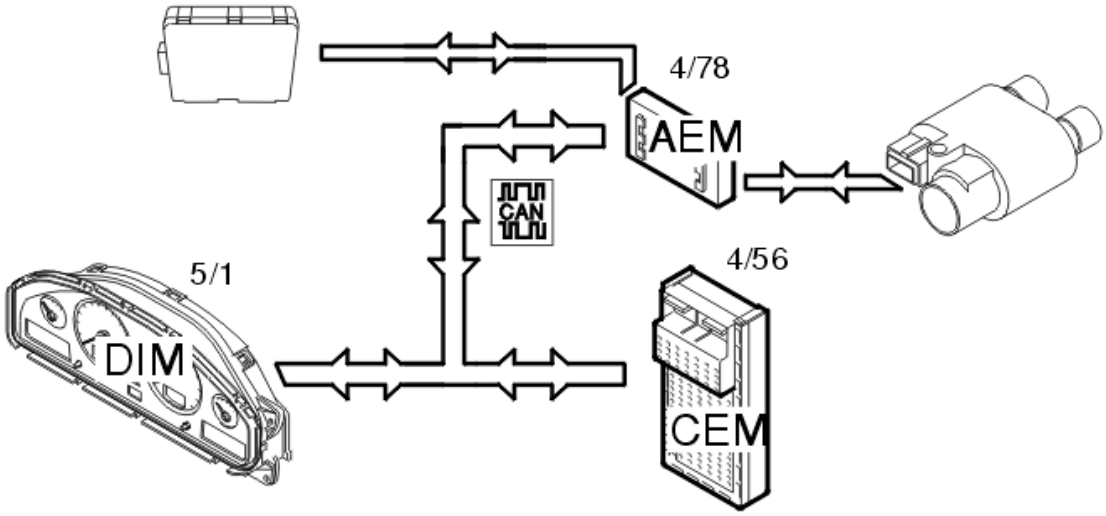

Fig. 6: Remote Controlled Parking Heater Function
Courtesy of VOLVO CARS CORPORATION

The remote start system for the parking heater via remote control functions in the same way as the mini call system. However, the system does not use the mini call network.

The remote control sends a radio signal (FM) to the receiver. In turn, the receiver sends a start/stop signal to the accessory electronic module (AEM) (4/78).

The range of the remote control is approximately 400 meters but varies depending on the other conditions.

ALARM SIGNAL OUTPUTS

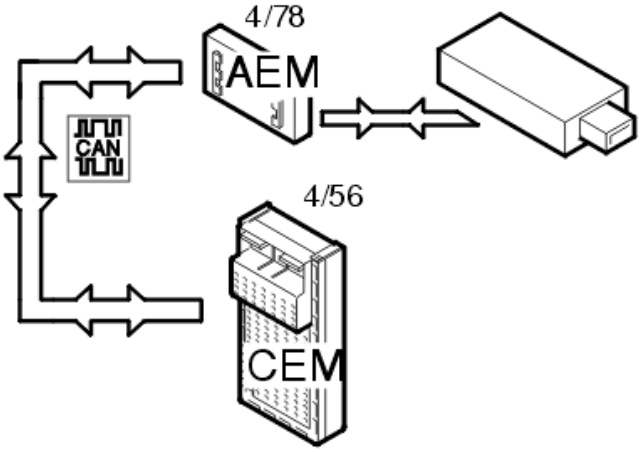

Fig. 7: Alarm Signal Outputs
Courtesy of VOLVO CARS CORPORATION

Output signals from the accessory electronic module (AEM) (4/78) are used when installing an after market alarm unit.

Access is available to signals indicating:

- the alarm status of the car
- the door status of the car
- the key status.

In this case the accessory electronic module (AEM) functions as a port between the car's CAN-net and the external alarm unit.

TELEMUTE FUNCTION FOR MOBILE TELEPHONES

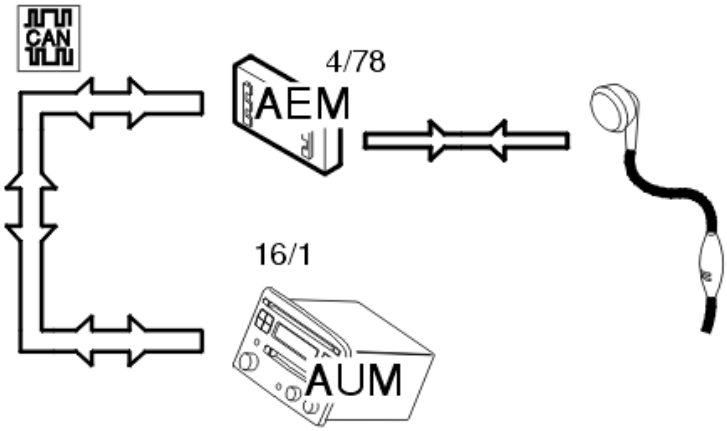

Fig. 8: Telemute Function For Mobile Telephones
Courtesy of VOLVO CARS CORPORATION

In case of phone calls, the accessory electronic module (AEM) (4/78) receives an input signal from the aftermarket hands-free unit and transmits it on the CAN-net to the audio module (AUM) (16/1) (audio control module (AUD) in XC90). The audio module (AUM)/ audio control module (AUD) lowers the volume in the sound unit's speakers when the aftermarket hands-free unit is used.

The telemute function is available as an accessory for the accessory electronic module (AEM).

USING AN AFTER MARKET RADIO UNIT

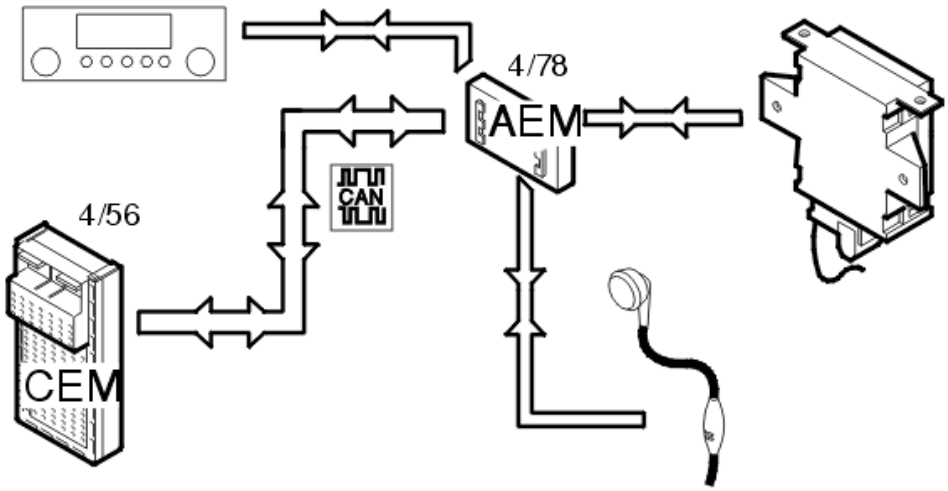

Fig. 9: Using An After Market Radio Unit
Courtesy of VOLVO CARS CORPORATION

The accessory electronic module (AEM) (4/78) makes it possible to automatically control the telemute function, display lighting and speed-adapted volume control when using an aftermarket radio unit. This is on the condition that the aftermarket radio unit supports these functions. The accessory electronic module (AEM) receives a speed signal (volume adaptation) via the CAN-net and brightness of the display lighting via rheostat from the central electronic module (CEM) (4/56).

The accessory electronic module (AEM) also receives a mute signal from the reverse warning system and external hands-free unit and transmits it on to the radio unit.

SIGNAL OUTPUT FOR RTI (ROAD TRAFFIC INFORMATION) (JAPAN ONLY)

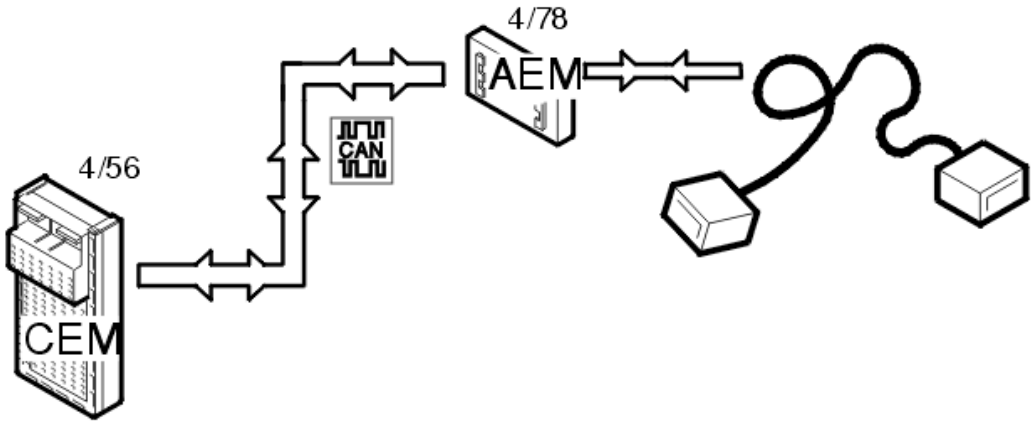

Fig. 10: Signal Output For RTI (Road Traffic Information) (Japan Only)
Courtesy of VOLVO CARS CORPORATION

The road and traffic information system, RTI in Japan, uses directly connected input signals from the accessory electronic module (AEM) (4/78) for processing of information.

The accessory electronic module (AEM) sends four signals to the RTI-system. Two of the signals are display lighting and reverse gear signal to the navigation unit, and the third is a speed signal. The fourth signal is a relay control for voltage supply.

The brightness of the display lighting, vehicle speed signal, and the reverse gear signal comes from the central electronic module (CEM) (4/56) via the CAN-net.

SYSTEM OVERVIEW

CONTROL MODULE

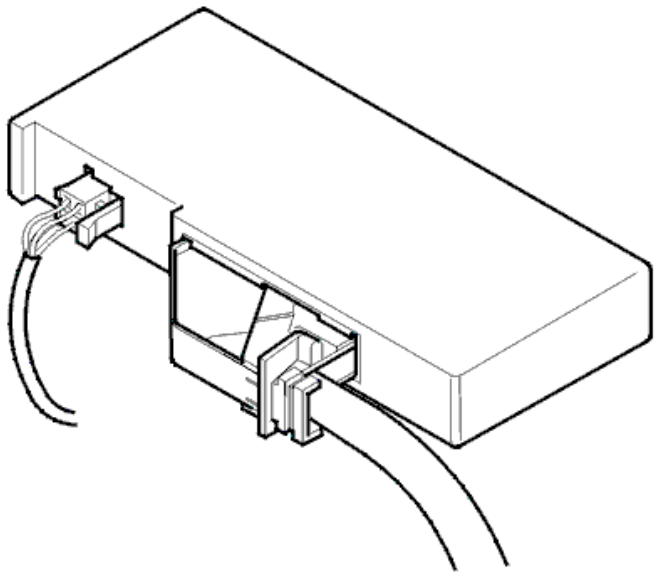

Fig. 11: Accessory Electronic Module
Courtesy of VOLVO CARS CORPORATION

The function of the accessory electronic module (AEM) is to allow certain accessories to exchange information with the car's controller area network. This exchange of information means that accessories can be installed with greater functionality and higher quality. The accessory electronic module (AEM) manages the following functions:

- Reverse warning system
- Relay for the electrical engine block heater
- Remote start for the parking heater
- External aftermarket alarm
- Aftermarket radio unit
- Signals for RTI (road traffic information) for Japan

- Tele-mute for non-integrated carphones.

The functions managed by the accessory electronic module (AEM) may vary between different car models.

The accessory electronic module (AEM) is an accessory and is only available for order and installation as an after market item.

Information regarding which production plant a car is manufactured in can be found in the VIN number. The seventh position from the right in the VIN specifies the production plant.

Information regarding which production plant a car is manufactured in can be found in the VIN number. The seventh position from the right in the VIN specifies the production plant.

The control module is installed in the cargo compartment of the car behind the side panel at the right-hand wheel arch.

After installation the accessory electronic module (AEM) is configured using software. Configuration is carried out via VIDA (Volvo scan tool).

The control module communicates with directly connected components, and via a Controller area network (CAN).

One of the main purposes of the control module is to function as an interface between accessories, which are not prepared for Controller area network (CAN) communication, and the Control area network (CAN) of the car and its functions.

The control module checks activations and input and output signals via an integrated diagnostic system. A diagnostic trouble code (DTC) is stored if the control module detects a fault. Any diagnostic trouble codes (DTCs) and stored in the control module memory and information can be read out using VIDA (Volvo scan tool).

SIGNALS

The table below summarizes the input and output signals to and from the accessory electronic module (AEM) (4/78). The signal types are divided into directly connected signals and Controller area network (CAN) communication. The following illustration displays the same information with the Volvo component designations.

NOTE: The signals are only available for installed accessories.

Input signals	Output signals
Directly connected: • The reverse warning system control module transmits a buzzer signal (mute signal) • Remote start module (mini call, remote	**Directly connected:** • Four signals for RTI (road traffic information) for Japan: • Speed

control) for remote starting the parking heater (start/stop signal) • The tele-mute signal from after market hands free units to the carphone to mute the volume on the audio module (AUM) (AUD) or after market radio unit.	• Reverse gear indication • Lighting signal • X-supply to the relay. • Parking assistance module (PAM) (voltage and ground terminal) • Start for the parking heater consisting of +12V to the relay for the electrical parking heater • External alarm unit (trigger signal/power supply) • Signal for integrating an after market radio unit (tele-mute signal, speed signal, rheostat signal and controlled power supply to the external antenna amplifier) • Tele-mute signal from an after market handsfree unit to an after market radio unit • Mini call unit for remote start, supply and ground terminal connection.

Via Controller Area Network (CAN):
• Central electronic module (CEM) (4/56):
  • Start and stop signal, to control the relay for the electrical parking heater
  • Reverse gear indication to start the reverse warning system
  • Reverse gear indication, for the RTI (road traffic information) system (Japan)
  • Vehicle speed signal, used by after market radio units and the traffic information system, RTI for Japan
  • Alarm status, used by the accessory electronic module (AEM) controlled external alarm
  • Light position, indicates parking lamps, low and full beam. Used by RTI (road traffic information) for Japan for the background lighting of the navigation display
  • Indication to not start the reverse warning system when a trailer is connected. Activated by switching on the turn signal lamps.
	Via Controller Area Network (CAN):
	• Central electronic module (CEM) (4/56):
	  • Remote start to activate the parking heater.
	• Audio module (AUM) (16/1):
	  • Tele-mute signal
	  • Reverse warning signal.

• Audio module (AUM) (16/1): • Indicates the brightness of the background lighting.	

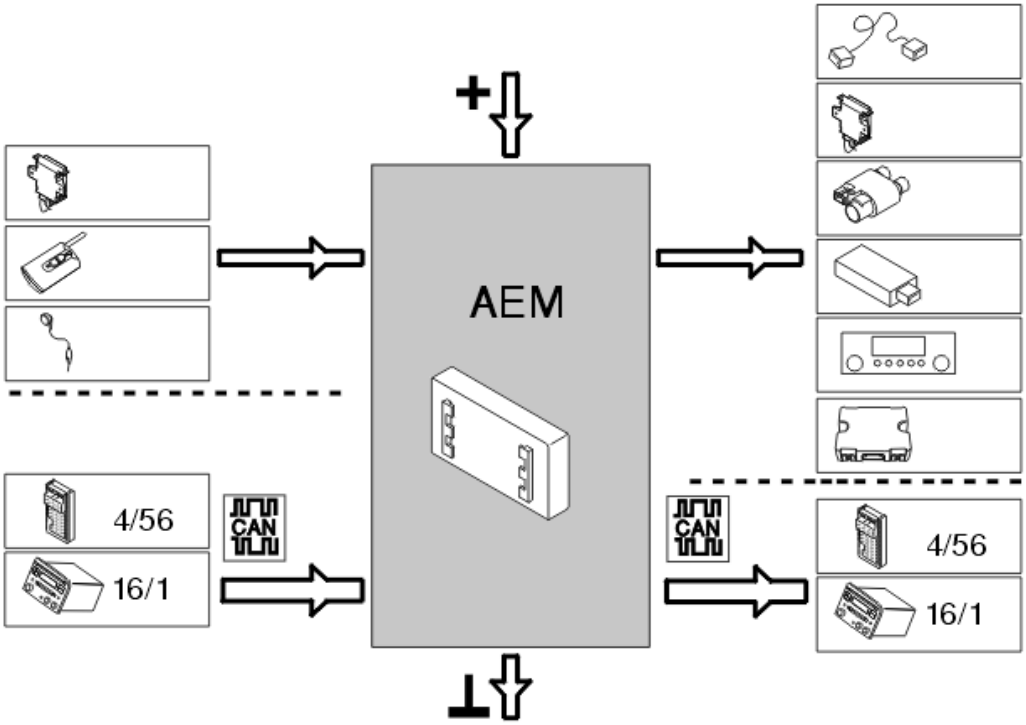

Fig. 12: AEM Flow Chart
Courtesy of VOLVO CARS CORPORATION

ACCESSORY USB UNIT (AUU) (2007-2010)

DESIGN

CONTROL MODULE

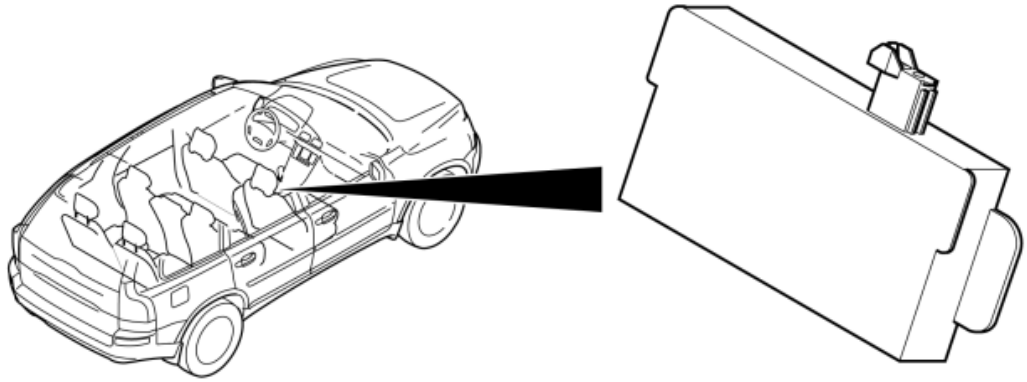

Fig. 13: Accessory USB Unit (AUU)
Courtesy of VOLVO CARS CORPORATION

The accessory USB unit (AUU) is designed to serve as an interface between the vehicle infotainment system and external USB and iPod devices.

The accessory USB unit (AUU) has a directly connected USB port and supports the standard for removable media on USB 2.0.

The accessory USB unit (AUU) receives input signals from the infotainment control module (ICM) via the MOST network. The current status appears on the Infotainment Control Module (ICM) display.

All input and output signals from the control module travel via the MOST network.

The Accessory USB unit (AUU) is located in the tunnel console between the seats.

When replacing the control module reprogramming is required.

The control module can be diagnosed.

DIAGNOSTIC FUNCTIONS.

GENERAL INFORMATION

The control module has a built-in diagnostic system, Volvo Diagnostic, which continuously monitors internal functions as well as input and output signals.

DIAGNOSTIC TROUBLE CODES (DTCS)

A diagnostic trouble code (DTC) is stored if the control module detects a fault.

There are two diagnostic trouble codes (DTCs) for the Accessory USB unit (AUU). A fault that was detected during the last driving cycle is defined as permanent. Other faults that are detected are defined as intermittent.

READING AND ERASING DIAGNOSTIC TROUBLE CODES (DTCS)

Stored diagnostic trouble codes (DTCs) can be read off and erased using this function. Diagnostic trouble codes (DTCs) can only be erased once all the diagnostic trouble codes (DTCs) have been read off at least once.

READING OFF THE CONTROL MODULE IDENTIFICATION

The diagnostic tool identifies control modules by reading off a number of codes from the control module memory.

The codes contain information about the control module:

- hardware P/N (control module without software)
- hardware serial number (control module without software)
- software P/N
- diagnostic software P/N.

READING OFF EXTENDED FAULT-TRACING INFORMATION

This function can be used to read out parameters, identify status and counts stored at the same time as a diagnostic trouble code (known as frozen values).

DOWNLOADING SOFTWARE AND REPLACING THE CONTROL MODULE

New software can be downloaded into the accessory USB unit (AUU). When software is ordered the software and hardware of the vehicle are compared with Volvo's central database. If the comparison corresponds then the software is downloaded into the control module.

If the comparison between the car and Volvo's central database does not correspond, the database is updated with the vehicle's configuration. When this is complete, new software is downloaded.

The Accessory USB unit (AUU) is located in the tunnel console between the seats.

Select the MOST network for a total download of software to the vehicle.

FUNCTION

PLAYING STORED MEDIA

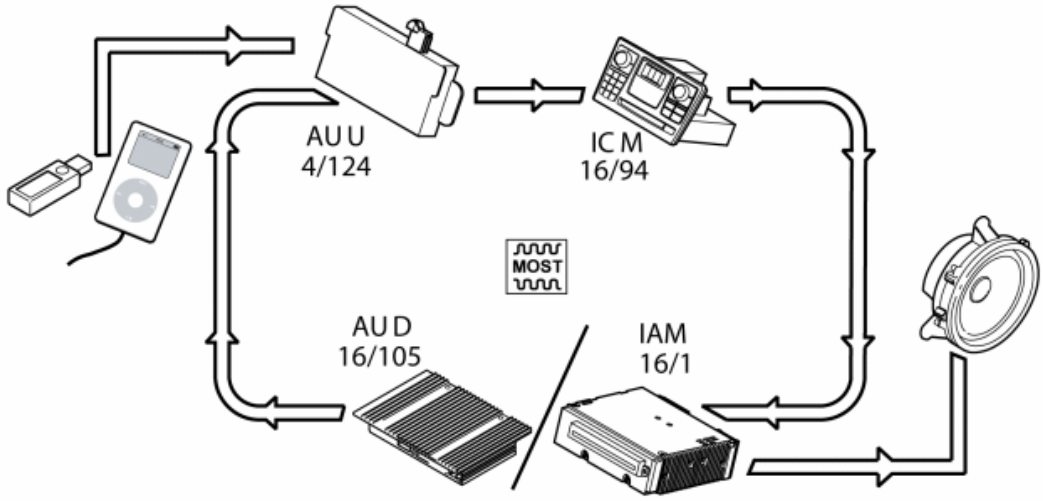

Fig. 14: Media Network Components
Courtesy of VOLVO CARS CORPORATION

The task of the Accessory USB unit (AUU) is to manage playback of media that is stored on the external USB memory and the iPod player.

The Accessory USB unit (AUU) supports media formats:

- mp3
- wav
- wma

The accessory USB unit (AUU) (4/124) is controlled via the buttons on the center console. Signals indicate when the user has pressed the Play or Stop button.

The accessory USB unit (AUU) communicates with the infotainment control module (ICM) (16/94) via the MOST network. The infotainment control module (ICM) then uses the MOST network to send the signals on to the integrated audio module (IAM) (16/1) or the audio module (AUD) (16/105) depending on vehicle configuration.

The accessory USB unit (AUU) has functions for:

- next track/previous track
- fast forward/rewind
- random playback (Random)
- system search (scan)

Any stored text information is also sent via the MOST network to the infotainment control module (ICM) display, where it is displayed.

SYSTEM OVERVIEW

CONTROL MODULE

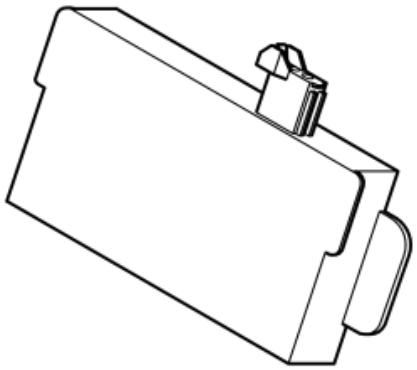

Fig. 15: View Of Accessory USB Unit (AUU)
Courtesy of VOLVO CARS CORPORATION

The accessory USB unit (AUU) is designed to serve as an interface between the vehicle's infotainment system and external USB and iPod devices that support the standard for removable media on USB 2.0.

Examples of USB/iPod devices that support the standard for removable media on USB and 2.0 are:

- Cameras
- MP3 players
- Handheld computers
- Portable USB drives
- iPod G4 from version 3.1.1
- iPod G5 from version 1.2.1
- iPod mini from version 1.4.1
- iPod nano from version 1.1
- iPod Video from version 1.1

The Accessory USB unit (AUU)is located in the tunnel console between the seats and the associated USB port is located either in the glove compartment or in the tunnel tray.

The accessory USB unit (AUU) has serial optic communication with components on the MOST network. All communication with the accessory USB unit (AUU) is handled via the infotainment control module (ICM).

In order to function in the MOST network, the infotainment control module (ICM) checks that the accessory USB unit (AUU) has a correct serial number. If the number is incorrect, the accessory USB unit (AUU) does not work.

The accessory USB unit (AUU) checks executed activations and input/output signals via its integrated

diagnostics. If the control module detects a fault, a diagnostic trouble code is generated. Any diagnostic trouble codes are stored in the control module memory. The information can be read via the data link connector in the vehicle.

SIGNALS

The table below summarizes the input signals to and output signals from the accessory USB unit (AUU). The signal types are divided into directly connected signals, serial communication and MOST communication. The illustration below displays the same information with the Volvo component designations.

Input signals	Output signals
Directly connected: • External USB device (for example mp3 player and iPod devices)	**Directly connected:** • External USB device (for example mp3 player and iPod devices)
Via MOST communication: • Infotainment control module (ICM) (16/94)	**Via MOST communication:** • Infotainment control module (ICM) (16/94)

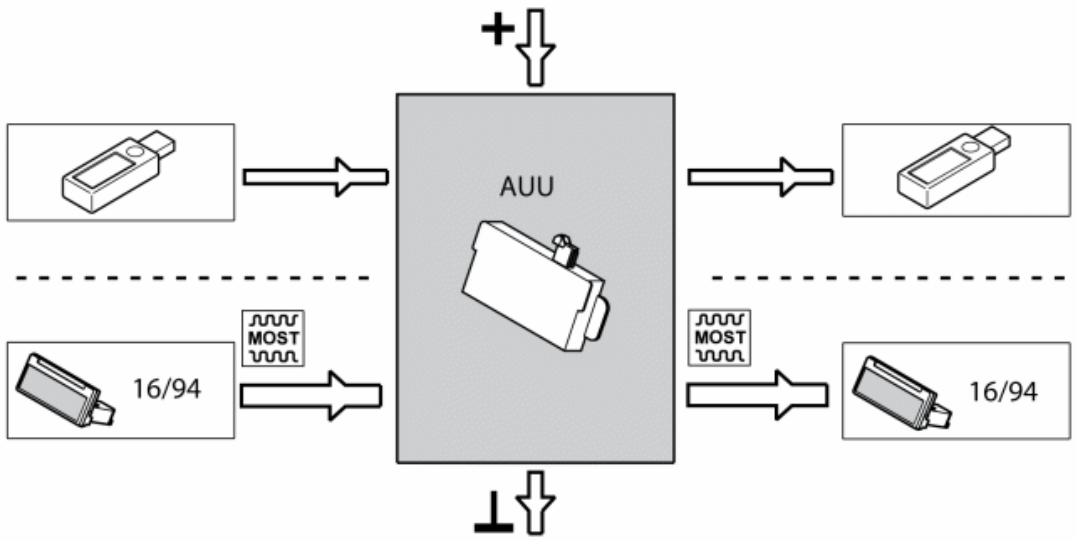

Fig. 16: Volvo Component Designations
Courtesy of VOLVO CARS CORPORATION

ACTIVE ON DEMAND COUPLING (AOC) (2003-2004)

DESIGN

CONTROL MODULE

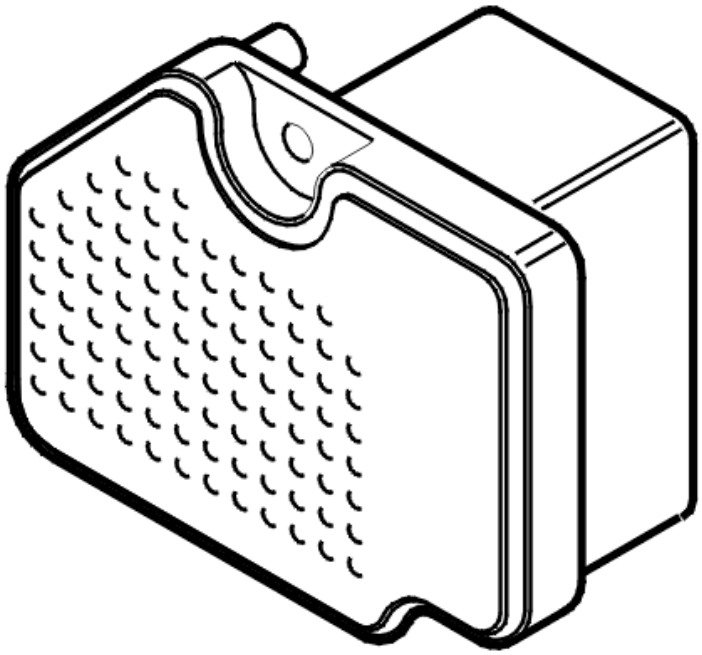

Fig. 17: Active On Demand Coupling Control Module
Courtesy of VOLVO CARS CORPORATION

The differential electronic module (DEM) is secured directly to the coupling unit housing and forms a single unit with the axial solenoid. The axial solenoid controls the control valve.

The differential electronic module (DEM) receives signals from the engine control module (ECM), the central electronic module (CEM) and the brake control module (BCM) via the high speed side of the control area network (CAN). The differential electronic module (DEM) uses these signals to determine the oil pressure required for the multi-plate clutch in the coupling unit. The oil pressure for the multi-plate clutch determines the amount of torque which can be transferred to the rear wheels.

Four wheel drive is not available if there is a fault in the differential electronic module (DEM).

OIL PRESSURE AND TEMPERATURE SENSOR

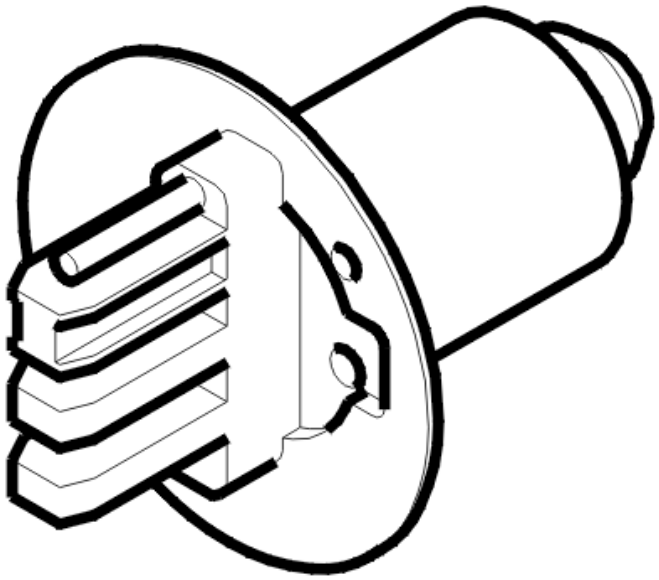

Fig. 18: Identifying Oil Pressure And Temperature Sensor
Courtesy of VOLVO CARS CORPORATION

The oil pressure and temperature sensor in the clutch unit are close to the axial solenoid in the housing for the differential control module (DEM). The sensor is flushed with hydraulic fluid. The sensor gauges the temperature and pressure of the hydraulic fluid (measurement range 0-4 MPa). The sensor transmits signals about temperature and pressure to the control module. The control module uses the temperature and pressure signals to adapt the function of the system, changing the temperature, and therefore the viscosity, of the fluid as required.

If the temperature of the fluid exceeds 100 °C there is no pressure in the coupling and all wheel drive is disengaged. When the temperature falls below 100 °C the coupling is pressurized again. If the oil pressure exceeds 7.4 MPa, the safety valve in the coupling opens. The coupling is pressurized again when the oil pressure drops below 7.4 MPa.

Four wheel drive is not available if there is a fault in the pressure and/or temperature sensor.

There are diagnostics for the oil pressure and temperature sensor.

CONTROL VALVE/AXIAL SOLENOID

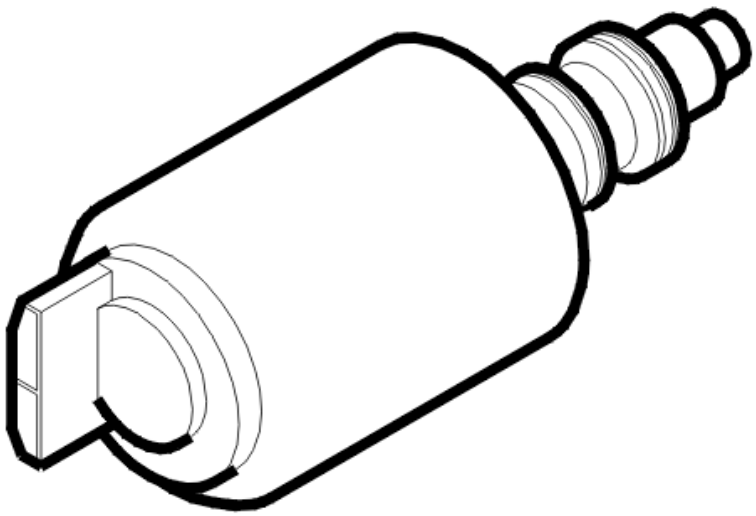

Fig. 19: Control Valve/Axial Solenoid
Courtesy of VOLVO CARS CORPORATION

The control valve/axial solenoid are in the coupling unit for the active on demand coupling (AOC).

The axial solenoid receives a constant pulse width modulated (PWM) signal from the control module. The control signal from the control module is used by the solenoid to change the position of the control valve. This regulates the pressure to the operating piston in the multi-plate clutch.

Four wheel drive is disabled if there is a fault in the control valve/axial solenoid.

There are diagnostics for the control valve/axial solenoid.

ELECTRICAL FEED PUMP

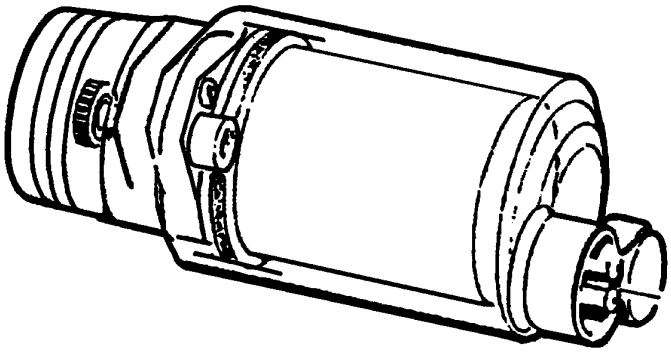

Fig. 20: Electrical Feed Pump
Courtesy of VOLVO CARS CORPORATION

The electrical feed pump is integrated in the coupling unit and is powered by the differential electronic module (DEM). When the engine is started and exceeds 400 RPM, the electrical feed pump receives power from the control unit.

The feed pump pumps oil to the annular pistons, whose rollers move into contact with the cam disc. At the same time the oil flows to the operating piston, so that the play in the multi-plate clutch unit is eliminated. The coupling is then able to react rapidly and regulate as required.

Four wheel drive is disengaged if there is a fault in the feed pump.

There are diagnostics for the feed pump.

DIAGNOSTIC FUNCTIONS

GENERAL INFORMATION

The control module has a built-in diagnostic system, Volvo Diagnostic, which continuously monitors internal functions as well as input and output signals.

DIAGNOSTIC TROUBLE CODES (DTCS)

A diagnostic trouble code (DTC) is stored if the control module detects a fault. Should a fault disappear for any reason after being permanently stored in the control module as a diagnostic trouble code (DTC), the information remains stored in the control module.

READING AND ERASING DIAGNOSTIC TROUBLE CODES (DTCS)

Stored diagnostic trouble codes (DTCs) can be read off and erased using this function.

Diagnostic trouble codes (DTCs) can only be erased once all the diagnostic trouble codes (DTCs) have been read off at least once.

READING OFF INPUT AND OUTPUT SIGNALS

This function can be used to continuously read off the status of the control module's input and output signals.

For further information about parameters, see **DESCRIPTION OF PARAMETERS**

READING OFF THE CONTROL MODULE IDENTIFICATION

VIDA identifies control modules by reading off a number of codes from the control module memory.

The codes contain information about the control module:

- hardware P/N (control module without software)
- hardware serial number (control module without software)
- software P/N
- diagnostic software P/N.

DESCRIPTION OF PARAMETERS

This parameter description contain both a description for Differential Electronic Module (DEM) generation 3 and for generation 4. Generation 3 is presented first, and then generation 4.

PARAMETERS, STATUS

NOTE: The parameters that can be read off are determined by the systems with which the car is equipped.

ENGINE STARTED

The value indicates whether the pump motor is started.

YES = Engine started.

NO = Engine not started.

PARAMETERS, VALUE

DIFFERENTIAL ELECTRONIC MODULE (DEM), VOLTAGE

The value indicates the voltage in the control module.

Measurement range: 0-24 V

CENTRAL ELECTRONIC MODULE (CEM), VOLTAGE

The value indicates the voltage over the Central Electronic Module (CEM).

The control module transmits the signal on the controller area network (CAN) and the Differential Electronic Module (DEM) uses the signal to diagnose the power supply.

Measurement range: 5-30 V

OIL TEMPERATURE

The value shows the oil temperature in the clutch for all-wheel-drive.

Measurement range: -128 °C to +127 °C

OIL PRESSURE

The value shows the oil pressure in the clutch for all-wheel-drive.

Measurement range: 0-4 MPa

SOLENOID, CURRENT

The value indicates the current through the control solenoid for all-wheel-drive.

Measurement range: 0-4095 mA

PUMP, CURRENT

The value indicates the supply through the hydraulic feed pump.

Measurement range: 0-8191 mA

WHEEL SPEED

The value indicates wheel speed.

The Brake Control Module (BCM) transmits the speed signal on the controller area network (CAN) and the Differential Electronic Module (DEM) uses the signal to engage all-wheel drive.

Measurement range: 0 - 250 km/h.

NUMBER OF DETECTED ERRORS

The value indicates the number of detections of incorrect all-wheel-drive engagements.

The Differential electronic module (DEM) has an internal counter that counts up each time an incorrect engagement of all-wheel-drive is detected. The Differential electronic module (DEM) can only detect one incorrect engagement per operating cycle.

Measurement range: 0-255 times

PARAMETERS

These parameters apply to Differential Electronic Module (DEM) generation 4.

PARAMETERS, STATUS

NOTE: The parameters that can be read off are determined by the systems with which the car is equipped.

BRAKE PEDAL

The value indicates the status of the stop lamp switch. The engine control module (ECM) sends a signal on the controller area network (CAN) about the position of the stop lamp switch: activated or not activated.

Activated = brake light switch actuated.

Not activated = stop lamp switch unaffected.

PARKING BRAKE

The value indicates the position of the parking brake.

Activated = Parking brake applied.

Not activated = Parking brake not applied.

PARAMETERS, VALUE

POWER SUPPLY, DIFFERENTIAL ELECTRONIC MODULE (DEM)

The value indicates the power supply to the Differential Electronic Module (DEM).

Measurement range: 0 - 25.5 V.

Normal range: 12.0 - 14.5 V.

POWER SUPPLY, PUMP MOTOR

The value indicates the supply through the electrically driven feed pump.

Measurement range 0 - 8191 mA.

POWER SUPPLY, PRESSURE REDUCING VALVE

The value displays the current through the pressure reducing valve.

Measurement range 0 - 4095 mA.

WHEEL SPEED

Shows the wheel speed on all four wheels.

The brake control module (BCM) transmits the vehicle speed signal on the controller area network (CAN) and the differential electronic module (DEM) uses the signal to control four wheel drive.

Measurement range: 0 - 255 km/h.

ECU-TEMPERATURE

The value shows the temperature in Differential electronic module (DEM). The temperature sensor is located on the circuit board.

DOWNLOADING SOFTWARE AND REPLACING THE CONTROL MODULE

New software for the differential electronic module (DEM) can be downloaded. When ordering software, the hardware and the software in the car are compared to the data in the Volvo central database. If the comparison is OK the software is downloaded to the control module.

If the comparison between the car and Volvo central database is not OK, the database is updated with the car configuration. When this is complete the software is downloaded.

The control module is integrated in the coupling unit for the active on demand coupling (AOC). If the control module is replaced, the control valve/axial solenoid and oil pressure and temperature sensor must also be replaced.

FUNCTION

ELECTRONIC FUNCTION

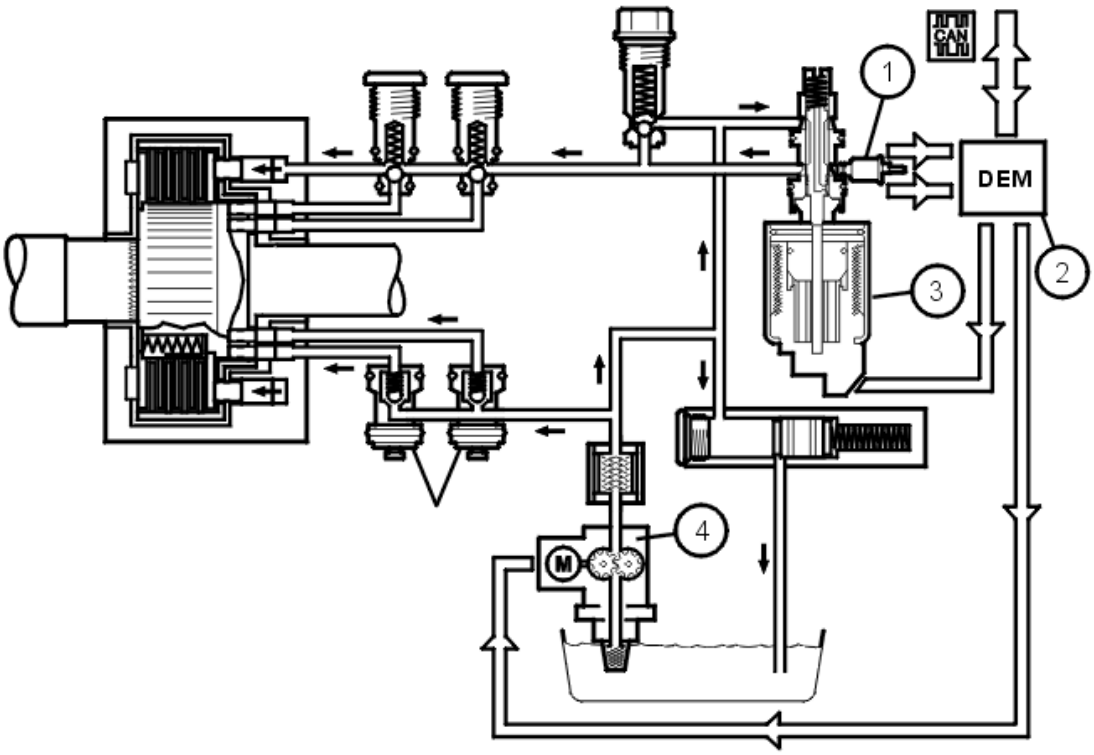

Fig. 21: Active On Demand Coupling Electronic Function
Courtesy of VOLVO CARS CORPORATION

1. Oil pressure and temperature sensor
2. Differential electronic module (DEM)
3. Control valve/axial solenoid
4. Electrical feed pump.

The differential electronic module (DEM) is secured directly to the coupling unit and forms a single unit with the axial solenoid and control valve. The differential electronic module (DEM) receives signals from the engine control module (ECM) and the brake control module (BCM) via the control area network (CAN). The differential electronic module (DEM) uses the sensor signals to control the oil pressure to the multi-plate clutch by adjusting the axial solenoid. The axial solenoid regulates the control valve constantly using a pulse width modulation (PWM) signal. The oil pressure for the multi-plate clutch determines the amount of torque which can be transferred to the rear wheels.

NOTE: If the car has dynamic stability and traction control (DSTC), the required stability control is applied before four wheel drive.

Active On demand Coupling (AOC) has an oil pressure and temperature sensor, which gauge the prevailing temperature and pressure of the hydraulic fluid. The oil pressure and temperature sensor provide the differential electronic module (DEM) with information about the temperature and pressure. Four wheel drive is disengaged to protect the coupling unit from damage if the temperature becomes too high, above 97 °C. The coupling unit

is re-engaged at full function when the temperature falls below 93 °C.

MECHANICAL FUNCTION, OVERVIEW

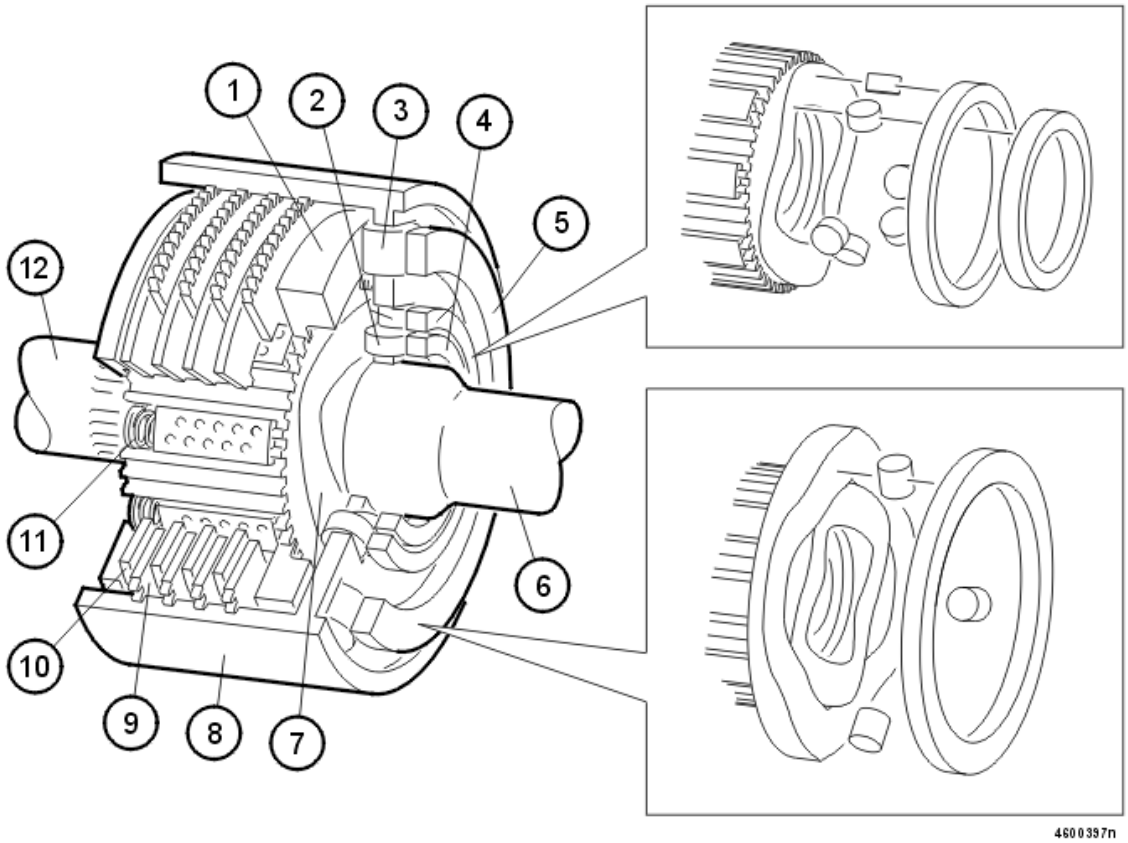

Fig. 22: Active On Demand Coupling Mechanical Function Overview
Courtesy of VOLVO CARS CORPORATION

1. Pressure plate
2. Rollers for the annular piston
3. Rollers for the operating piston
4. Annular piston
5. Operating piston
6. Input shaft
7. Cam disc
8. Housing for the outer plates
9. Outer plates
10. Inner plates
11. Springs
12. Output shaft.

The gearbox transfers engine torque to the propeller shaft. The input shaft is separate from the output shaft. The

multi-plate clutch in the coupling must be engaged to transfer torque to the rear axle. The inner and outer wet multi-plate clutch are the transfer point between the input and output shafts.

The sinusoidal cam disc rotates at the same speed as the propeller shaft. The annular piston rollers act on the cam disc to press the annular piston in and out. This creates an oil pressure which affects the operating piston, which in term engages the multi-plate clutch unit.

HYDRAULIC FUNCTION, OVERVIEW (-2005)

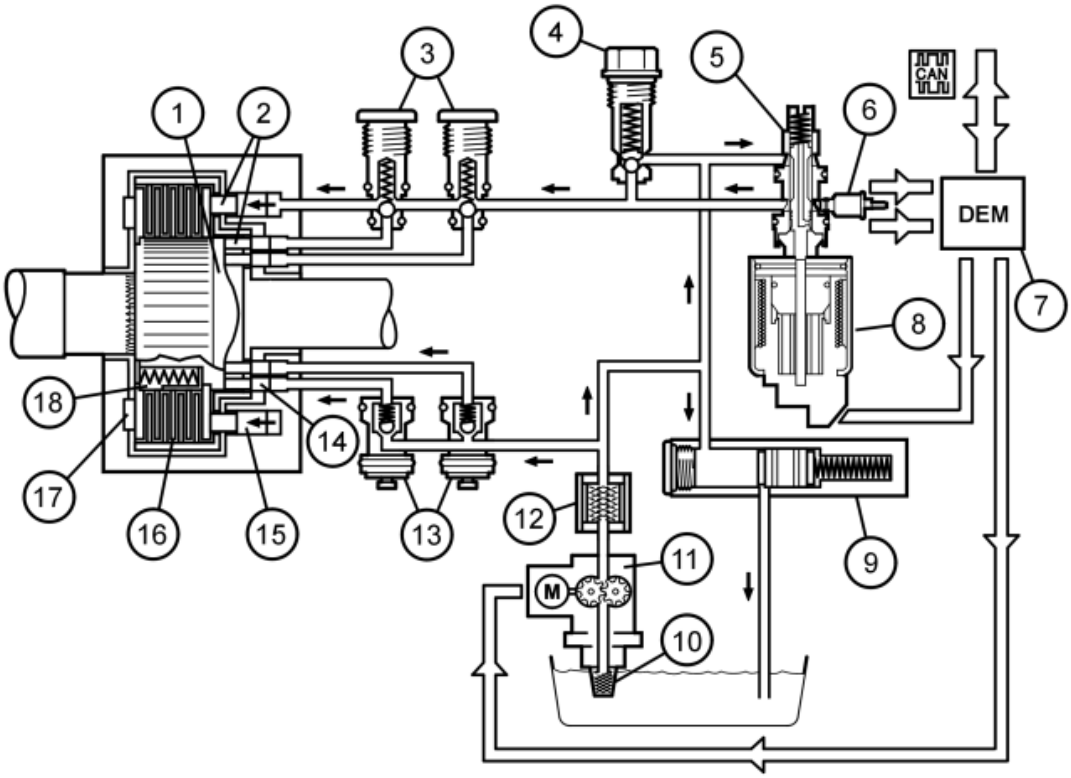

Fig. 23: Active On Demand Coupling Hydraulic Function Overview (-2005)
Courtesy of VOLVO CARS CORPORATION

1. Cam disc
2. Rollers
3. Pressure valves
4. Pressure limiting valve
5. Control valve cover
6. Oil pressure and temperature sensor
7. Differential electronic module (DEM)
8. Control valve/axial solenoid
9. Accumulator
10. Oil screen

11. Electrical feed pump.
12. Oil filter
13. Suction valves
14. Piston pump
15. Operating piston
16. Wet plate unit
17. Bearing
18. Springs.

The Active On demand Coupling (AOC) can be described as a hydraulic pump.

The basic pressure is generated by the electronic feed pump. This pressurizes the annular pistons with oil so that they are pressed against the cam disc via rollers. The annular piston generates a working pressure which is led to the operating piston via the pressure valve. This pressure creates a fixed connection between the input and output shafts. The maximum pressure is limited by the pressure limiting valve. The difference in speed between the input and output shafts is in proportion to the oil pressure fed to the annular pistons. A large difference between the input and output shafts results in high oil pressure to the annular pistons. If the input and output shafts are at the same speed, the oil pressure to the annular pistons is less. The oil pressure at the multi-plate clutch is regulated by the control valve. The axial solenoid controls the control valve. A closed control valve gives maximum pressure to the multi-plate clutch, resulting in maximum power gearbox. An open control valve gives minimum pressure to the multi-plate clutch, resulting in limited power gearbox.

The accumulator maintains the basic pressure in the system. The oil filter keeps the fluid clean by filtering dirt and small particles which could damage the system.

HYDRAULIC FUNCTION, OVERVIEW (2006-)

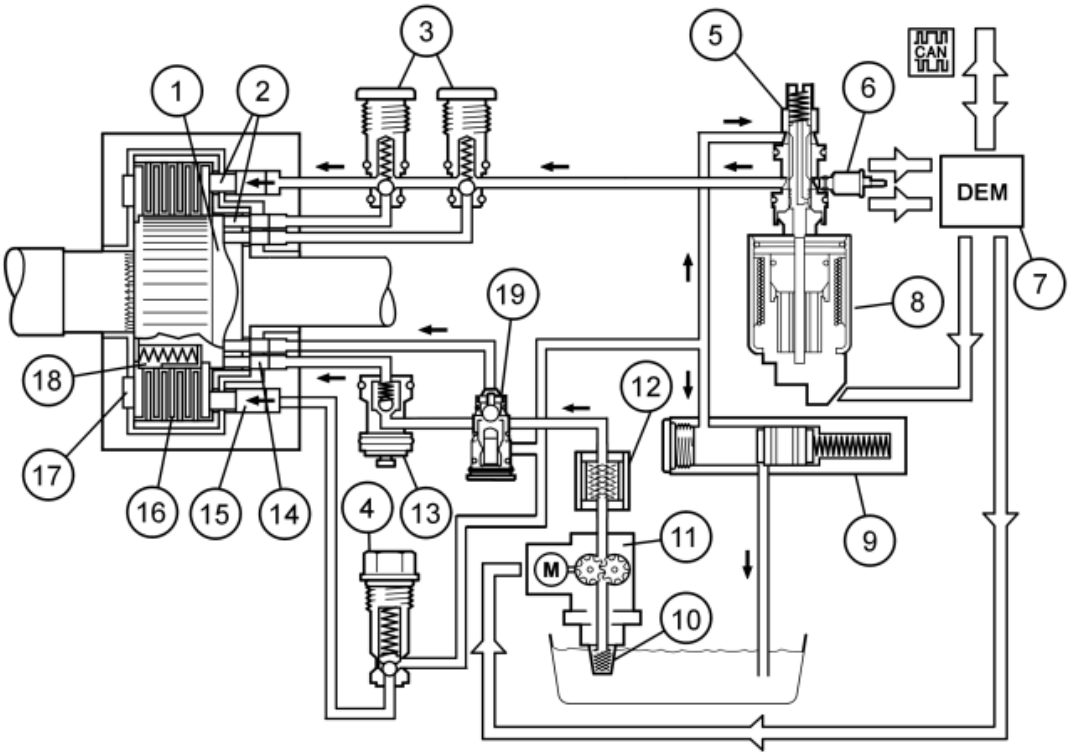

Fig. 24: Active On Demand Coupling Hydraulic Function Overview (2006-)
Courtesy of VOLVO CARS CORPORATION

1. Cam disc
2. Rollers
3. Pressure valves
4. Pressure limiting valve
5. Control valve cover
6. Oil pressure and temperature sensor
7. Differential Electronic Module (DEM)
8. Control valve/axial solenoid
9. Accumulator
10. Oil screen
11. Electrical feed pump.
12. Oil filter
13. Suction valve
14. Piston pump
15. Operating piston
16. Wet plate unit
17. Bearing

18. Springs.
19. Relief and by-pass valve

The Active On demand Coupling (AOC) can be described as a hydraulic pump.

The basic pressure is generated by the electronic feed pump. This pressurizes the annular pistons with oil so that they are pressed against the cam disc via rollers. The annular piston generates a working pressure which is led to the operating piston via the pressure valve. This pressure creates a fixed connection between the input and output shafts. The maximum pressure is limited by the pressure limiting valve. The difference in speed between the input and output shafts is in proportion to the oil pressure fed to the annular pistons. A large difference between the input and output shafts results in high oil pressure to the annular pistons. If the input and output shafts are at the same speed, the oil pressure to the annular pistons is less. The oil pressure at the multi-plate clutch is regulated by the control valve. The axial solenoid controls the control valve. A closed control valve gives maximum pressure to the multi-plate clutch, resulting in maximum power gearbox. An open control valve gives minimum pressure to the multi-plate clutch, resulting in limited power gearbox.

The accumulator maintains the basic pressure in the system. The oil filter keeps the fluid clean by filtering dirt and small particles which could damage the system.

Pretensioning

The function of the four-wheel drive system is based in there being a difference in speed between front and rear wheels. This difference in speed can affect traction performance in certain driving situations. The role of the pretensioning function is to improve traction performance, primarily in starting off from being stationary, without affecting other properties of the system to achieve this.

The pretensioning function has been achieved by replacing one of the AOC unit suction valves with a new combined relief and by-pass valve, extra oil ducts in the housing and adapted software in the differential electronic module (DEM).

As before, the electronic feed pump starts as soon as the engine has started. Running the pump at a higher speed than before generates increased oil flow. The increased oil flow combined with the new relief and by-pass valve results in a pressure increase that can work on the clutch discs. Greater engine torque can thereby be transferred to the rear axle. The pretensioning function is controlled by software so that it is only activated when necessary.

SYSTEM OVERVIEW

ACTIVE ON DEMAND COUPLING (AOC)

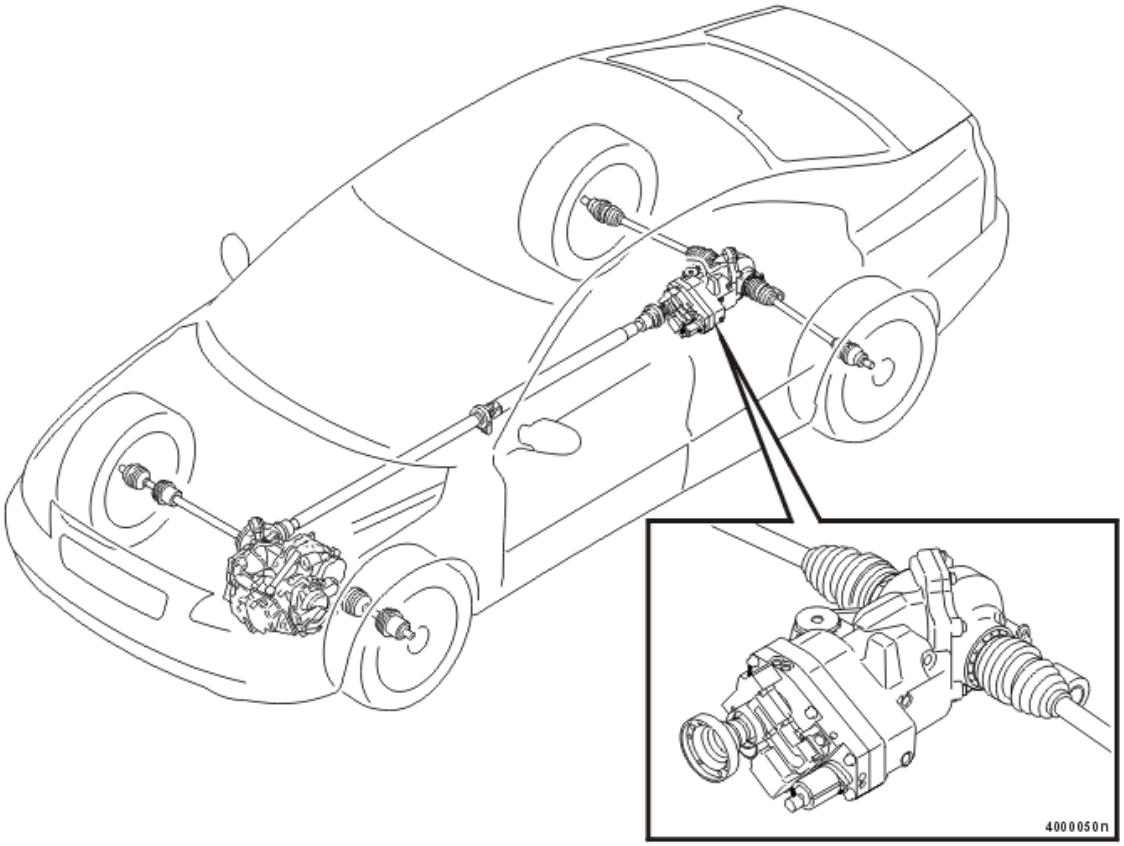

Fig. 25: Active On Demand Coupling
Courtesy of VOLVO CARS CORPORATION

The main role of Active On demand Coupling and the differential electronic module (DEM) is to regulate the four-wheel drive function, i. e. the distribution of drive between the front and rear axles. The system consists of a coupling combining mechanical, hydraulic and electronic sections. The coupling unit is on the rear axle, between the differential gear and the propeller shaft. The mechanical and hydraulic sections are driven by the rotation of the propeller shaft.

Active On demand Coupling (AOC) has the following characteristics:

- Permanent all wheel drive with electronic control of torque transfer
- Driving characteristics similar to all wheel drive
- Quicker reactions
- No wind-up during slow speed maneuvers and parking
- The system is not sensitive to differences between tires (when driving with a spare wheel for example)
- The system is not sensitive to being towed with one axle raised
- Unaffected by brake tests on a chassis dynamometer.

COUPLING UNIT AND CONTROL MODULE

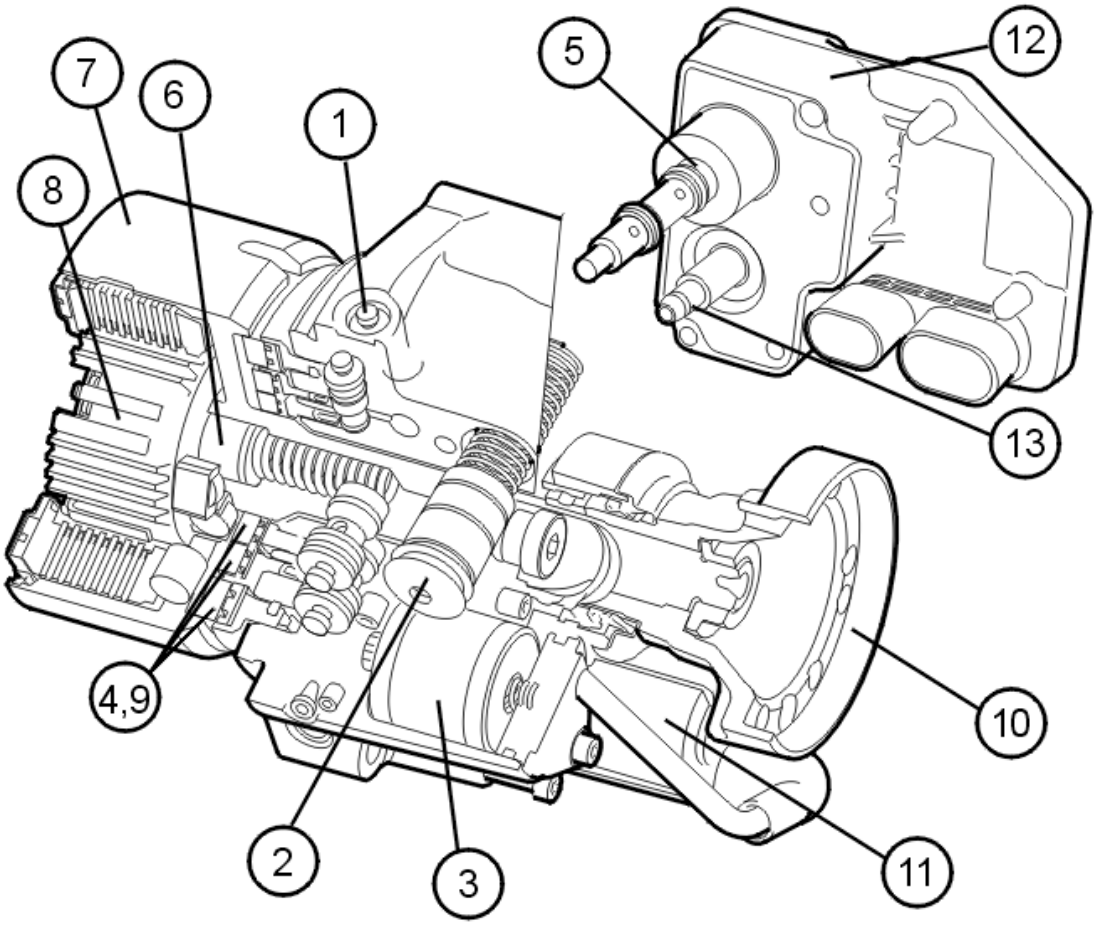

Fig. 26: Coupling Unit And Control Module
Courtesy of VOLVO CARS CORPORATION

The hydraulic section consists of 1-5, the mechanical section consists of 6-10 and the electronic section consists of 11-13.

1. Pressure valves
2. Accumulator
3. Oil filter
4. Annular pistons
5. Control valve/axial solenoid
6. Input shaft
7. Inner and outer wet multi-plate clutch
8. Inner connection hub with sinusoidal cam disc
9. Rollers with annular pistons
10. Output shaft
11. Electrical feed pump

12. Differential electronic module (DEM)
13. Oil pressure and temperature sensor.

The differential electronic module (DEM) is integrated in the coupling unit.

The differential electronic module (DEM) communicates with other control modules using controller area network (CAN) communication.

There are internal diagnostics for the control module.

SIGNALS

The table below summarizes the input signals to and output signals from the differential electronic module (DEM). The following illustration displays the same information with the Volvo component designations.

Input signals	Output signals
Directly connected: • **Oil pressure and temperature sensor** .	**Directly connected:** (power supply unless otherwise stated) • **Electrical feed pump** • **Axial solenoid** - pulse width modulated (PWM) signal.
Via Controller Area Network (CAN) communication: • **Central electronic module (CEM)** (4/56), status of the parking brake switch, ignition key position and back-up (reverse) signal • **Brake control module (BCM)** (4/16), the wheel speed from the wheel rotation sensor and the status signal (to open the coupling during stability control) • **Engine control module (ECM)** (4/46), provides data about engine speed (RPM), torque, accelerator pedal (AP) position and the status of the stop lamp switch.	**Via Controller Area Network (CAN) communication:** • **Brake control module (BCM)** (4/16), status of the coupling.

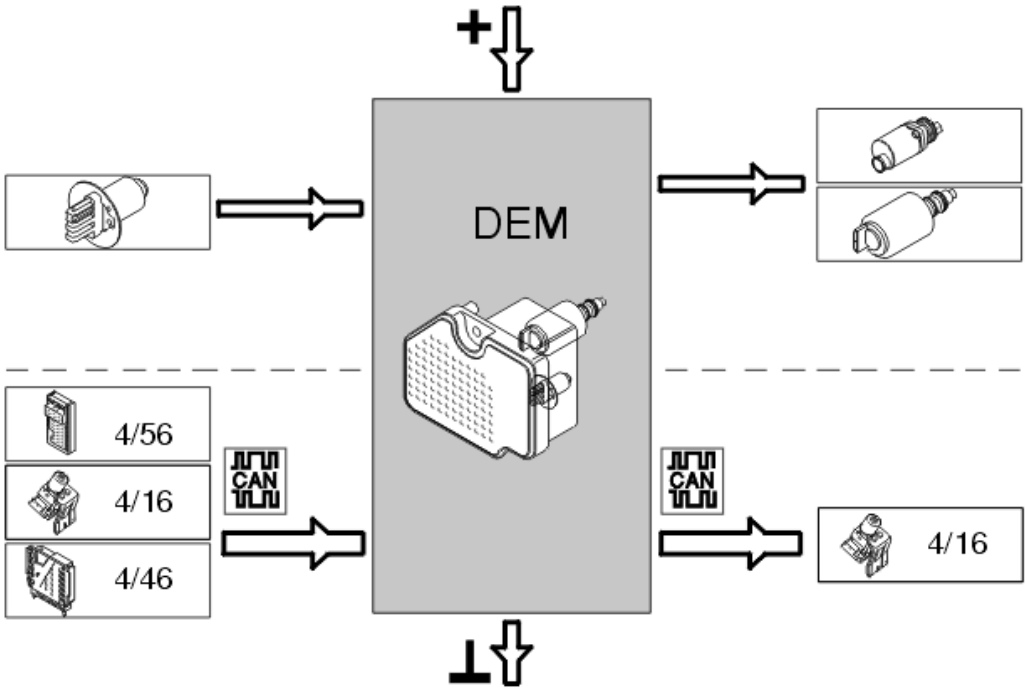

Fig. 27: Identifying Input Signals To And Output Signals From Differential Electronic Module
Courtesy of VOLVO CARS CORPORATION

ADDITIONAL HEATER AND PARKING HEATER (COMBUSTION PREHEATER MODULE) (2003-2004)

ADDING ACCESSORIES AND REPLACING THE CONTROL MODULE

REPLACING THE CONTROL MODULE

New software cannot be downloaded into the combustion preheater module because it is not a CAN node. Software can be downloaded into the central electronic module to obtain a new function.

ADD ACCESSORIES

The following accessories can be ordered to add functions:

- Additional heater
- Parking heater
- Residual heater.

Heaters are factory installed from structure week 9850 inclusive and can also be ordered for older cars. When the parking heater function is added to a car, the software is downloaded into a varying number of control modules (depending on the structure week in which the car was built) as follows: The structure week in which the car was manufactured can be read off using VIDA - Vehicle communication.

When ordering software, the status of the software in the car is compared to the Volvo central database. If the

comparison is OK the software is downloaded to the control module.

If the comparison between the car and Volvo central database is not OK, the database is updated with the latest information. When this is complete the software is downloaded.

DESIGN

PARKING HEATER

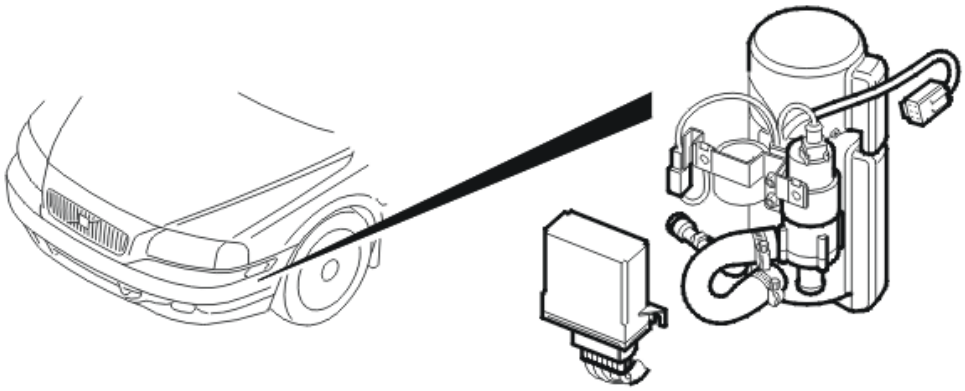

Fig. 28: Additional Heater And Parking Heater
Courtesy of VOLVO CARS CORPORATION

The start time for the heater is always programmed by selecting the desired parking function using the ring on the control stalk and entering the desired time by turning the ring and pressing the "reset" button. Direct start can also be used to start the heater.

The climate control module is activated when the engine coolant temperature (ECT) is > +20 °C. The blower fan starts and distributes the air in the passenger compartment.

Certain conditions must be met before the heater can start. These are:

- Quantity of fuel >4 liters
- No diagnostic trouble codes (DTCs) stored in the central electronic module that will prevent starting
- Airbag not deployed.

When the conditions are met, the heater glow plug is activated for 1 minute. If the voltage has dropped below 11.5 V, the climate control module is stopped. The heater and the climate control module are stopped if the voltage falls below 11.3 V. A message indicating low battery voltage is displayed in the combined instrument panel (driver information module). These voltage values apply even if the heater is operating normally.

To minimize the risk of the fuel pump for the heater failing due to lack of use, the central electronic module sends a signal every week to the combustion preheater module to activate the pump for approximately 1 second. This takes place when the ignition is switched off.

DIAGNOSTIC FUNCTIONS

GENERAL INFORMATION

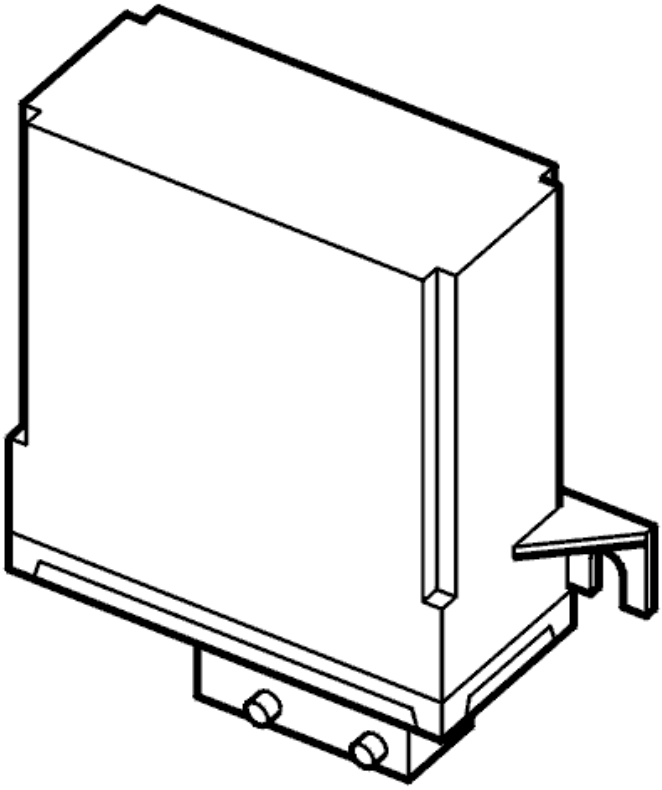

Fig. 29: Additional Heater And Parking Heater (Combustion Preheater Module)
Courtesy of VOLVO CARS CORPORATION

The control module has a built-in diagnostic system, the Volvo on-board diagnostic (OBD) system. This system continuously monitors itself and the input and output signals.

DIAGNOSTIC TROUBLE CODES (DTCS)

If the control module detects a fault a diagnostic trouble code (DTC) list is sent from the additional heater module to the central electronic module. The heater can identify up to 25 faults.

The diagnostic trouble codes (DTC) are stored in the central electronic module. If for some reason a fault disappears after the diagnostic trouble code (DTC) has been permanently stored, information about the fault is stored in the central electronic module.

READING OFF THE VOLVO ON-BOARD DIAGNOSTIC (OBD) SYSTEM

Information about faults and other data can be read off using the VIDA PC connected to the data link connector (DLC). The VIDA PC communicates with the control module via a standardized interface.

VOLVO ON-BOARD DIAGNOSTIC (OBD) SYSTEM

With the VIDA PC it is possible to:

- read off and erase stored diagnostic trouble codes (DTCs)
- continuously monitor the values and status of the input and output signals for the signals
- activate certain functions
- read off the control module identification.

The following conditions must be met before the Volvo on-board diagnostic (OBD) system is activated:

- the ignition must be on
- the battery voltage must be normal.

READING AND ERASING DIAGNOSTIC TROUBLE CODES (DTCS)

Stored diagnostic trouble codes (DTCs) can be read off and erased using this function. The on-board diagnostic (OBD) system can identify 25 different faults in the form of diagnostic trouble codes (DTCs).

Diagnostic trouble codes (DTCs) can only be erased when all diagnostic trouble codes (DTCs) have been read at least once. Diagnostic trouble codes (DTCs) for the heater are stored in the central electronic module.

READING OFF INPUT AND OUTPUT SIGNALS

Using this function, the values and status of the control module input and output signals can be continuously read off.

The following parameters can be read off:

- failed start attempt, Heater
- successful start attempt, Heater
- overheating incidents, Heater
- engine coolant temperature, value
- battery voltage, value
- additional heater status, value
- Extended X-supply, status
- glow plug, status
- glow plug grade, value
- water pump, status
- combustion fan, actual value
- combustion fan, calculated value
- combustion fan PWM, value
- fuel pump frequency, value
- fuel level, status
- heater operation time, value

- supply voltage to components, status.

ACTIVATING COMPONENTS AND FUNCTIONS

With this function the components and functions in the additional heater system can be activated.

The following components can be activated:

- the additional heater
- the water pump
- the combustion fan
- the glow plug
- the fuel pump
- component supply voltage.

NOTE: It is important that only the ignition is on in order for the heater to start.

READING OFF THE CONTROL MODULE IDENTIFICATION

The control module can be identified by reading off a code from the control module memory.

The code contains information about the control module's:

- hardware P/N (control modules without software)
- hardware serial number (control modules without software)
- software P/N
- P/N diagnostic software.

FUNCTION

DESCRIPTION OF FUNCTION OF THE OPERATING STATUS OF THE HEATER

The heater can have a number of different statuses. Each status and what should occur in it is described below.

Operating status:	Description:
0: The heater has not started	Initialization of the heater control module (combustion preheater module)
1: The heater starts	Heater self test. The glow plug and the water pump is activated. The combustion fan then starts at low speed to ventilate the heater. This is to cool the glow plug so that the flame sensor does not detect light from the glow plug as a flame. The control module pulses the supply to the glow plug (pulse width modulation (PWM) signal).

	The glow plug is sufficiently warm after approximately 45 seconds to ignite the fuel. This whole process takes approximately 1 minute.
2: The heater starts and the fuel pump is active	The fuel pump starts and the speed of the combustion fan increases. The control module waits for a flame. The blower fan will now be running. This procedure takes a maximum of one minute.
3: The heater runs	A flame has been detected by the flame sensor and heats the heater. When the car is being driven the heater is stopped if the engine coolant temperature (ECT) exceeds a certain level. The heater is stopped by cutting the fuel supply. The combustion fan ventilates the heater when the flame has gone out. When the temperature falls below a certain level, the heater starts again. This means that the heater cycles between 2 temperature ranges.
4: The heater stops	The fuel pump stops, the flame is extinguished and the heater is ventilated.
5: The heater waits	Waiting for the engine coolant temperature (ECT) to fall low enough for the heater to start again.
6: The heater has stopped	The heater only has this status if a fault has occurred.
7: The flame is extinguished	The flame has gone out while the car is being driven.
8: Residual heat	If, when the outside temperature is low, the driver is in the car and turns on the heater, the water pump starts in order to heat the passenger compartment.
9: Fuel pump activated	Used in production.
10: Activating the fuel pump	Single pulses to the fuel pump are used to prevent the fuel pump sticking.

FUNCTIONS

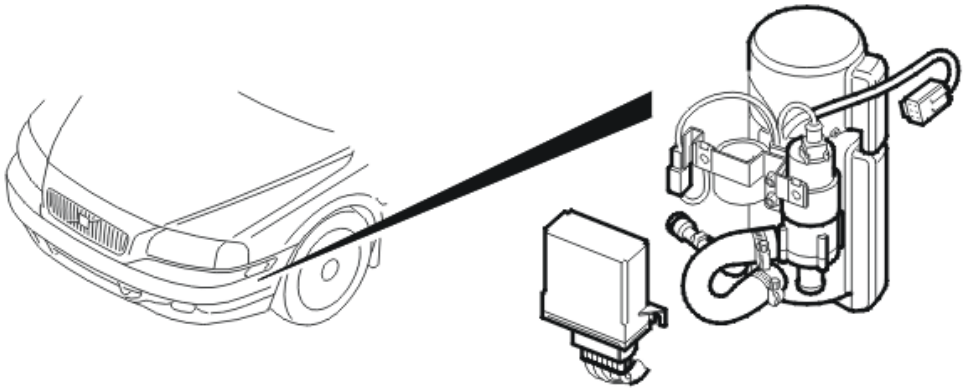

Fig. 30: Additional Heater And Parking Heater
Courtesy of VOLVO CARS CORPORATION

The vehicle configuration can be read off to check what functions the car is equipped with. The following affect the function of the heater:

- Parking and additional heater function
- Parking heater or not (gasoline engines)
- Residual heater or not
- Electrical engine block heater (time controlled via the driver information module) or not.

FUEL DRIVEN PARKING HEATER

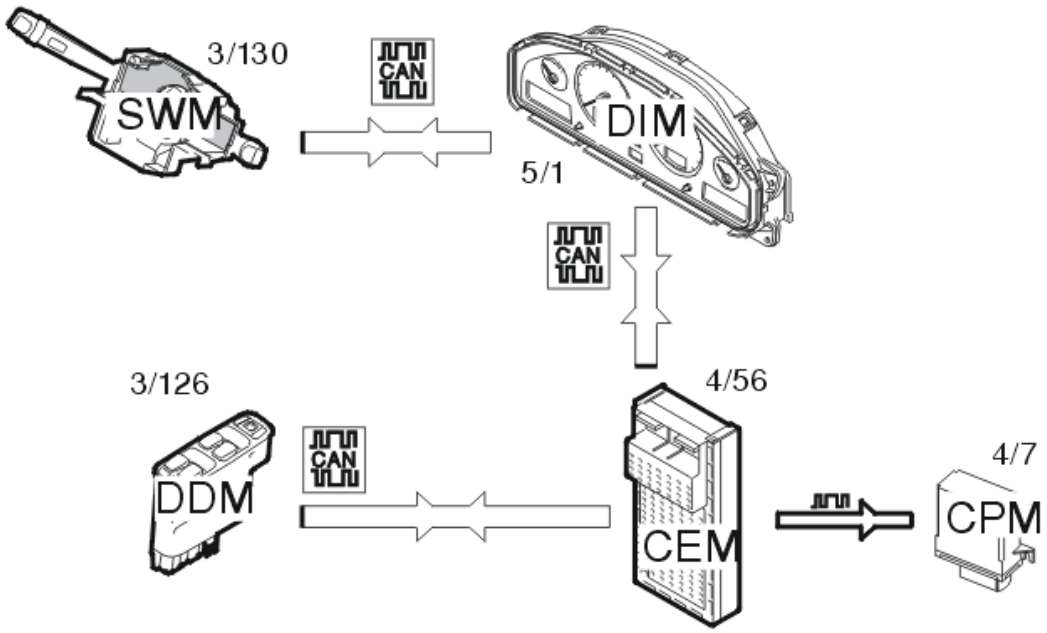

Fig. 31: Additional Heater And Parking Heater
Courtesy of VOLVO CARS CORPORATION

The user sets the desired start time using one of the two timer functions in the display on the combined instrument panel (driver information module) (5/1). The time is programmed by twisting the ring on the control stalk and by pressing the "reset" button for the desired time (timer 1, timer 2 or direct start). Direct start can also be used to start the heater.

The central electronic module (4/56) receives data about when the driver wants to drive from the control stalk module (steering wheel module) (3/130) and the combined instrument panel (driver information module).

The central electronic module calculates when the heater needs to start so that it is warm enough in relation to the outside temperature. Information about the temperature comes from the outside temperature sensor which is connected to the driver's or passenger door module.

The central electronic module calculates when the heater needs to start:

- The heater calculates when start is required (15-50 minutes before the intended departure at medium low temperatures between -10 °C and +15 °C)
- The run time of the heater is a maximum of 60 minutes at temperatures < -10 °C
- The running time of the heater is at least 15 minutes before the planned departure (Warm temperatures between +15 °C and +25 °C).

When the heater is started directly using the control stalk it runs until it is shut off or for a maximum of 60 minutes. The heater is on for 10 minutes after the set time to allow for the driver getting to the car late.

A text message is displayed in the driver information module when the heater is running.

ELECTRICAL HEATER WITH TIMER FUNCTION

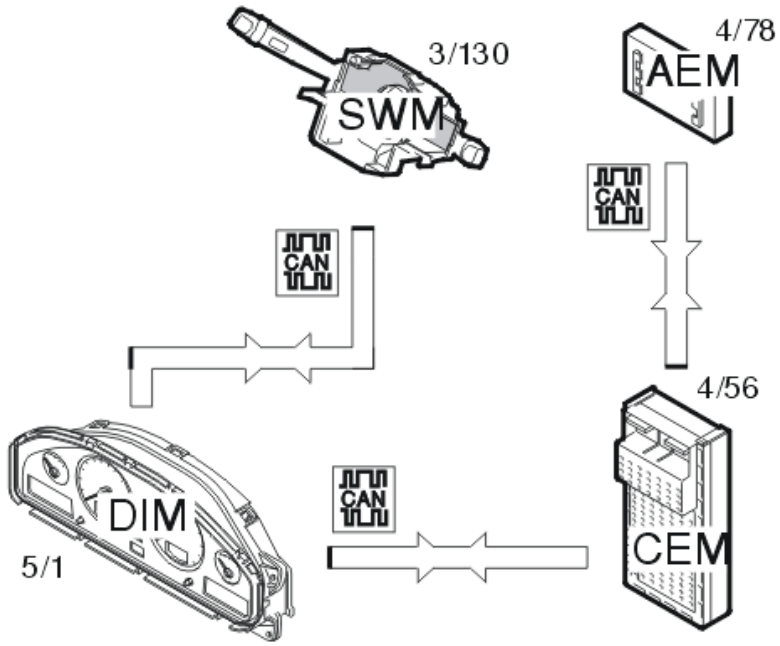

Fig. 32: Electrical Heater With Timer Function
Courtesy of VOLVO CARS CORPORATION

The desired departure time is set using the control lever module (steering wheel module) (3/130).

The central electronic module (4/56) calculates when the heater should start. The heater starts 2 hours and 45 minutes before the set departure time, irrespective of the temperature. A text message is displayed in the driver information module (5/1) when the electrical heater is running.

The accessory electronic module (4/78) electrically controls when the heater should be switched on and off. The engine block heater must be connected to a wall socket. The accessory electronic module activates a relay which closes the switch for a heater element.

RESIDUAL HEATER

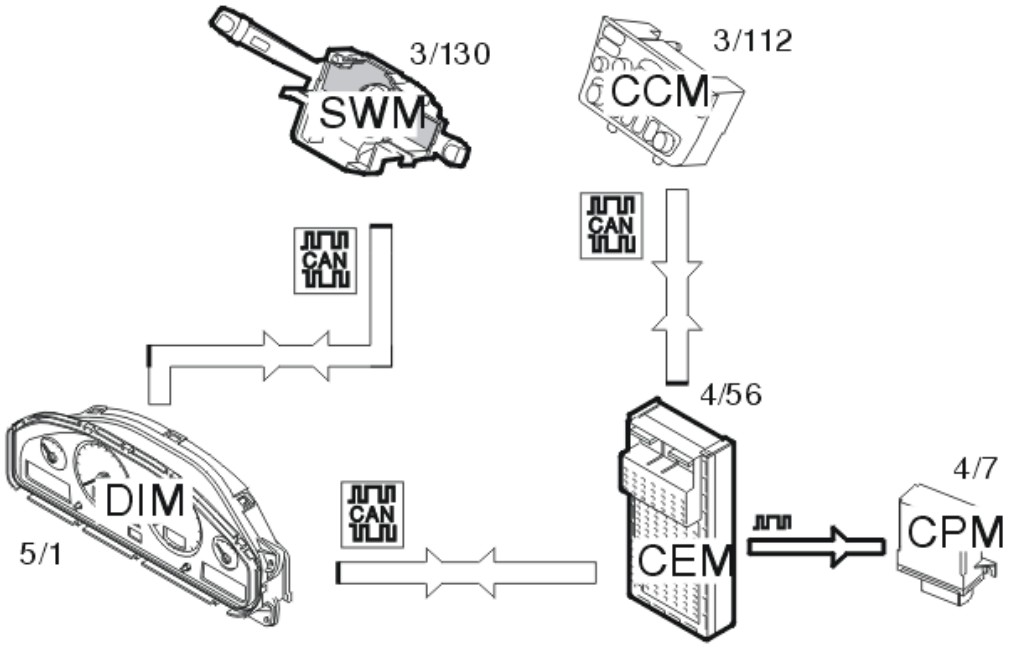

Fig. 33: Residual Heater
Courtesy of VOLVO CARS CORPORATION

This function can be ordered as an accessory.

The function is activated in the driver information module (5/1) using the control stalk (compare to the parking heater). Information about activation is sent to the central electronic module (4/56) and climate control module (3/112). The blower fan and damper settings are set by the climate control module. The central electronic module transmits data to the combustion preheater module (4/7) instructing it to activate the water pump.

When the residual heater is activated it will operate as long as the coolant temperature is above 30 °C or for a maximum of 20 minutes or until the function is switched off.

This function is used when the coolant is already warm. The coolant pump is started thereby circulating the coolant. The heat is distributed from the coolant to the passenger compartment unit in the climate control unit and on to the passenger compartment.

When the residual heater is running, the passenger compartment is heated by the climate control module controlling the fan and damper according to a customer parameter (Applies only to electronic climate control (ECC)). This parameter is used to set the distribution between the defroster and the floor. The normal setting is 30% defroster and 70% floor.

ADDITIONAL HEATER AND PARKING HEATER

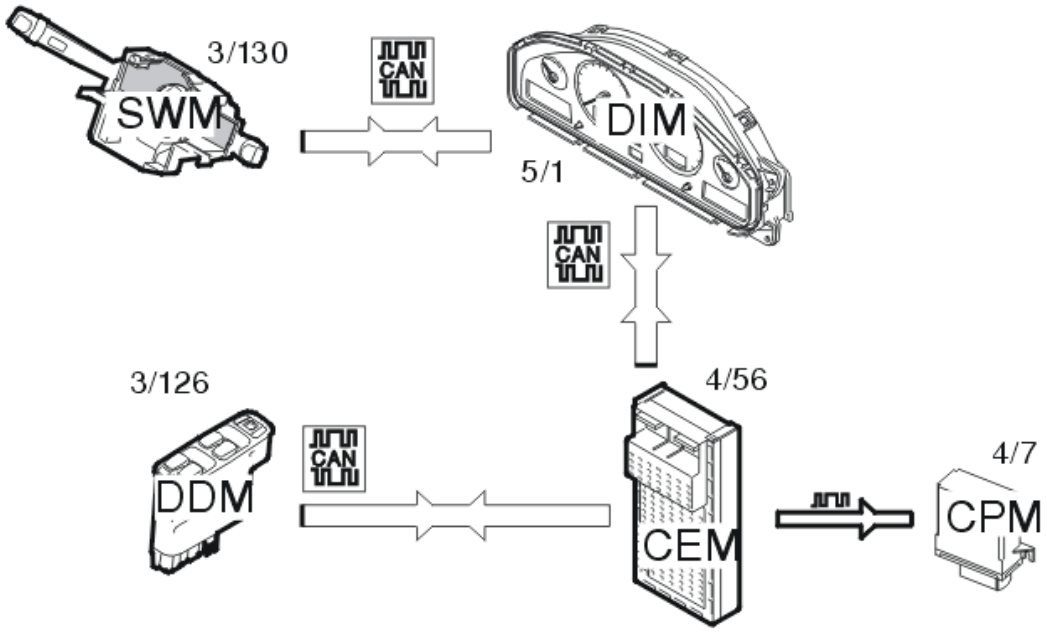

Fig. 34: Additional Heater And Parking Heater
Courtesy of VOLVO CARS CORPORATION

If the parking heater has been programmed and the driver comes to the car earlier than anticipated, the additional heater will not engage until the car is started. The additional heater then determines if the heater should be on or off, even if the driver attempts to disengages the heater using the control stalk.

REMOTE START

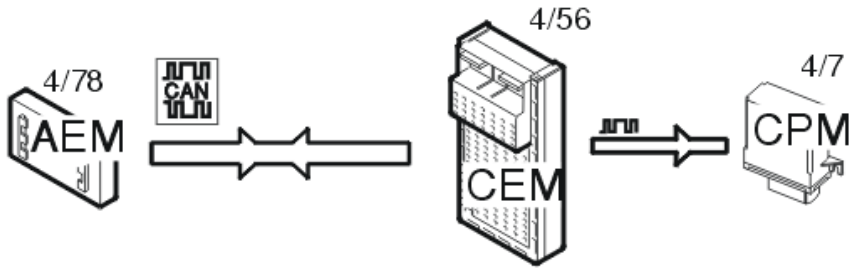

Fig. 35: Remote Starting
Courtesy of VOLVO CARS CORPORATION

Cars with an accessory electronic module can have a remote start function for the heater. This allows the heater to be started using a pager. A stop or start signal is transmitted from the accessory electronic module (4/78) to the central electronic module which starts the heater (4/7). This function is available for both fuel driven and electrical heaters.

SYSTEM OVERVIEW

CONTROL MODULE

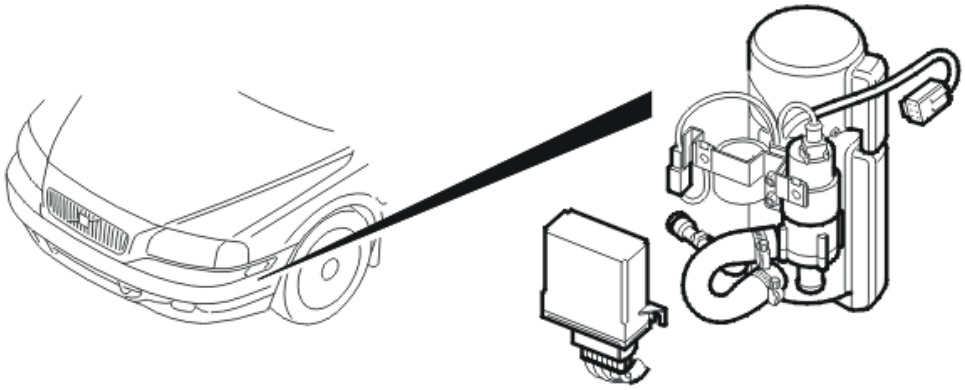

Fig. 36: Additional Heater And Parking Heater
Courtesy of VOLVO CARS CORPORATION

The key role of the additional and parking heater (combustion preheater module) is to manage the function for:

- Additional heater
- Parking heater
- Electrical heater
- Residual heater
- Remote start.

The same control module is used for both the additional heater and the parking heater. Depending on the vehicle configuration, the heater can function as an additional heater or as a parking heater. The additional heater is standard in some markets (cold climates). The heater which uses radiant heat from the engine is not capable of maintaining a comfortable passenger compartment temperature.

The control module is positioned in the front left corner of the car in front of the wheel. A large number of the heater functions are controlled by the central electronic module.

The combustion preheater module communicates partly with components which are directly connected and partly with other control modules and components via serial communication.

The combustion preheater module is not a CAN node. It is a slave node of the central electronic module which uses serial communication.

The control module checks activations and input and output signals through an integrated diagnostic system Diagnostic trouble codes (DTCs) are validated in the combustion preheater module if the control module detects an error. In certain cases the control module replaces the faulty signal with a substitute value.

Any diagnostic trouble codes (DTCs) are then sent to the central electronic module where they are stored. The data can be read off using the diagnostic tool.

A simple way to check that the combustion preheater module is supplied with power is to activate the heater. On cars with a parking heater the heater can be activated using the control stalk on the steering wheel. For cars with an additional heater, use the diagnostic tool to activate the heater. The diagnostic tool can be used to start the heater even if diagnostic trouble codes (DTCs) which would prevent the heater from starting are stored.

SIGNALS

The table below summarizes input and output signals to and from the combustion preheater module. The signal types are divided into directly connected signals, serial communication and Control area network (CAN) communication. The illustration below displays the same information with the Volvo part numbers.

Input signals	Output signals
Directly connected: Flame sensor (photo sensor) Coolant temperature sensor (NTC resistor) Fan motor reading (Electromotive force supply)	**Directly connected:** (power supply unless otherwise stated) Fuel pump Water pump Glow plugs (pulse width modulation (PWM)) Combustion fan (pulse width modulation (PWM)) (The supply relay must be active before the components can be activated)
Via serial communication: Start/stop signal for the heater	**Via serial communication:** (The heater communicates with the central electronic module via serial communication) Heater operating status Coolant temperature Diagnostic trouble code (DTC) list Heater running time
Via Control Area Network (CAN): ECM, 4/46 Driver Information Module, 5/1 Steering wheel module, 3/130 Climate control module, 3/112 Rear electrical module, 4/58 Driver's door module/passenger door module, 3/126-127 Accessory Electronic Module, 4/78 SRS, 4/9	**Via CAN communication:** (The heater communicates with the rest of the Control area network (CAN) via the central electronic module) Driver Information Module, 5/1 Steering wheel module, 3/130 Climate control module, 3/112 Accessory Electronic Module, 4/78

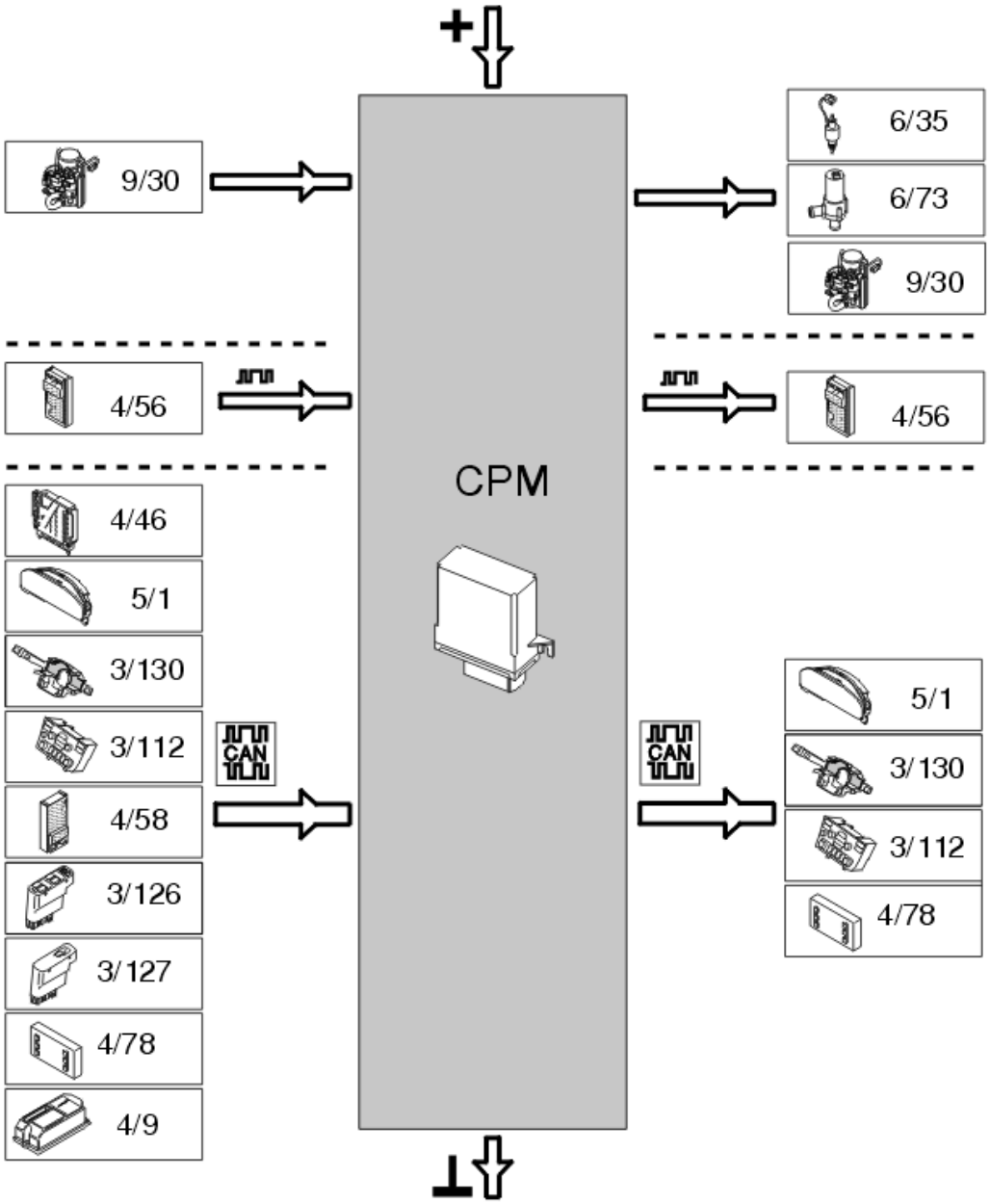

Fig. 37: Input And Output Signals To And From Combustion Preheater Module
Courtesy of VOLVO CARS CORPORATION

ALARM (2003-2004)

SIGNALS

The table below summarizes the input signals to and output signals from the different control modules for the alarm function. The signal types are divided into directly connected signals, serial communication and control area network (CAN) communication.

Directly connected input signals from the sensors / switches to the control module:	Directly connected output signals to the controlled components / functions from the control module:
Central electronic module (CEM) (4/56) • All doors, closed/open • Rear doors, locked/unlocked • Tailgate, closed / open • Hood, closed/open	**Central electronic module (CEM)** (4/56) • The turn signal lamps, on/off • Alarm diode (3/112), on/off. (via the climate control module (CCM).
The climate control module (3/112) • Switch for reduced alarm, on/off.	**The climate control module** (3/112) • Alarm diode, on/off. Direct cable from the central electronic module through the climate control module.
The driver's door module (3/126) • Driver's door, locked/unlocked • Key, locking / neutral position/ unlocking.	
The passenger door module (3/127) • The passenger door, locked/unlocked.	

Received information to control modules via Controller Area Network (CAN):	Transmitted information to control modules via Controller Area Network (CAN):
The central electronic module (4/56) receives from: The climate control module (3/112) • Switch for reduced alarm, on/off. Driver's door module (DDM) (3/126) • Driver's door, locked/unlocked • Key, locking / unlocking. Passenger door module (3/127) • Passenger door, locked/unlocked. Rear electronic module (4/58) • Vehicle inclination sensor status from the inclination sensor module.	**The central electronic module (4/56) transmits to:** The driver information module (5/1) • Text message in the text window.

Upper electronic module (4/70) • Button status from the remote control, LOCK/UNLOCK • Battery status siren • The status of the Mass movement sensor.	
Driver information module (5/1) receives from: The central electronic module (CEM) (4/56) • Text message.	**The upper electronic module (4/70) transmits to:** The central electronic module (CEM) (4/56) • Remote control signal. LOCK, UNLOCK, BOOT • The status of the Mass movement sensor • Battery status siren.

Received information to control modules via serial communication:	Transmitted information to control modules via serial communication:
The rear electronic module (4/58) receives from: Inclination sensor module (7/100) • Vehicle inclination sensor status.	**The upper electronic module (4/70) transmits to:** Siren control module (16/35) • Activate/deactivate the siren • The mass movement sensor (7/122), on/off.
The upper electronic module (4/70) receives from: The mass movement sensor (7/122) • Movement in the passenger compartment. Siren control module (16/35) • Battery status.	**Rear electronic module (4/58) transmits to:** Inclination sensor module (7/100), on/off.

SYSTEM DESCRIPTION

GENERAL INFORMATION

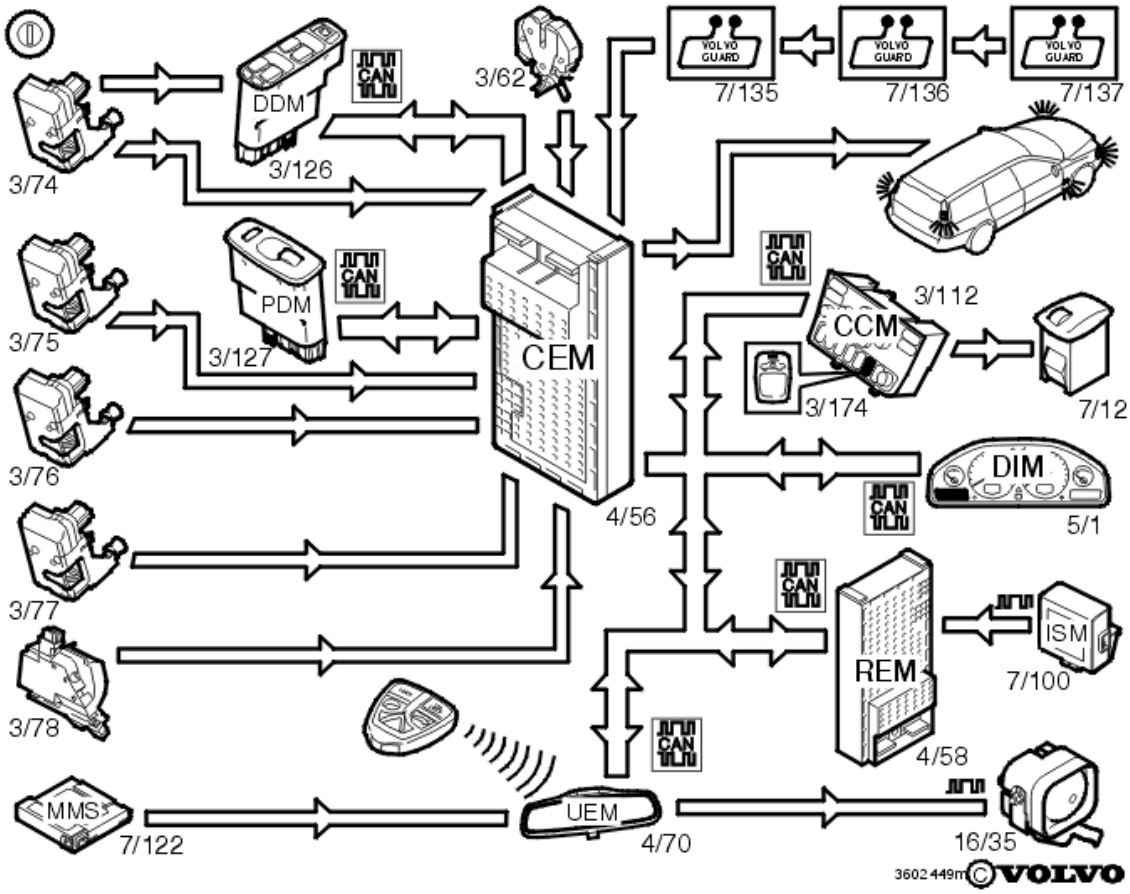

Fig. 38: Alarm Function
Courtesy of VOLVO CARS CORPORATION

The alarm function is a distributed function and uses a number of control modules for its function.

The control modules used for the alarm function are:

- Central electronic module
- Climate control module
- Driver's door module
- Driver information module
- Inclination sensor module
- Mass movement sensor
- Passenger door module
- Rear electronic module
- Siren control module
- Upper electronic module.

TERMINOLOGY

The following terms are used in information about the alarm.

Activated : The car is locked and the alarm protects the car.

Deactivated : The alarm is switched off and no longer protects the car.

Reactivating : The alarm has activated itself and protects the car.

Deployed : The alarm has started and the siren sounds.

CENTRAL ELECTRONIC MODULE

The central electronic module (4/56) is the main control module for alarm functionality. The central electronic module determines how the alarm should be activated, deactivated or deployed by receiving information on the Controller Area Network (CAN) from other control modules and via the directly connected signal cables from the components.

Signal cables are directly connected to the central electronic module from:

- Switch in the lock units in all doors (3/74-77), open/closed
- Switch in the lock units in the rear side doors (3/76-77), locked / unlocked
- Switch hood (3/62), open/closed

The central electronic module is controlled via a direct cable:

- All turn signal lamps.

CLIMATE CONTROL MODULE

The climate control module (3/112) transmits information via the Controller area network (CAN) to the central electronic module about the status of the switch for reduced alarm (3/174).

Signal cables are directly connected to the climate control module from:

- Switch for reduced alarm (3/174), on/off.

The climate control module controls via direct cables:

- Alarm diode (7/12) in the dashboard, on/off. The signal is received via the directly connected cable from the central electronic module.

DRIVER'S DOOR MODULE

The driver's door module, (3/126) transmits information via the Controller area network (CAN) to the central electronic module if the lock is locked or unlocked in the driver's door and if the door has been unlocked using a key.

Signal cables are directly connected to the driver's door module from:

- Switch in the lock units in the driver's doors (3/74), locked / unlocked
- Switch in the lock units in the driver's doors (3/74), locking / neutral position / unlocking. The signal comes from the door lock and indicates the position of the door key in the lock.

DRIVER INFORMATION MODULE

Driver information module (5/1) gives text messages in the text window and receives information from the central electronic module via the Controller area network (CAN). The text messages given are information about the status of the alarm system.

INCLINATION SENSOR MODULE (MARKET DEPENDENT/OPTION)

The Inclination Sensor Module (7/100) transmits information via the serial communication (Volcano Lite) to the rear electronic module, about the vehicle inclination sensor status. The rear electrical module transmits information to the central electronic module via the Controller area network (CAN).

MASS MOVEMENT SENSOR (MARKET DEPENDENT/OPTION)

The mass movement sensor (7/122) transmits information about the movement in the car to the upper electrical module via the serial communication (Volcano Lite). The upper electrical module transmits information to the central electronic module via the Controller area network (CAN).

PASSENGER DOOR MODULE

The passenger door module (3/127) transmits information via the Controller area network (CAN) to the central electronic module if the lock is locked or unlocked in the passenger door.

Signal cables are directly connected to the passenger door module from:

- Switch in the lock unit in the passenger door, locked/unlocked.

REAR ELECTRONIC MODULE

The rear electrical module (4/58) transmits information via the Controller area network (CAN) to the central electronic module about the status of the inclination sensor module. Information about the status is transmitted by the Inclination Sensor Module to the rear electrical module.

SIREN CONTROL MODULE

The task of the control module is to supply the car with the siren sound. The siren control module (16/35) can activate the siren noise in three ways:

- The central electronic module transmits information via the controller area network to the upper electronic module to deploy the alarm. The upper electronic module transmits information via serial communication (Volcano Lite) to the siren control module, which starts the siren
- The siren control module has an integrated battery which is used as a back-up in the event of an alarm.

The battery charges via an integrated charger. The siren control module monitors the power supply from the car battery to the control module. If the voltage from the car battery suddenly drops (open-circuit in the cable) the siren is activated

- The siren control module monitors the communication cable from the upper electronic module (life pulse) and if the communication ceases the siren is activated.

The siren control module transmits information about the status of the internal battery to the UEM via serial communication via serial communication (Volcano Lite).

UPPER ELECTRONIC MODULE

The upper electronic module (4/70) transmits information via the Control area network (CAN) to the central electronic module, about which button on the remote control is depressed and the status of the siren.

The central electronic module in turn sends information to the upper electronic module via the Controller area network (CAN), if the siren must be activated. The upper electronic module transmits information via serial communication (Volcano Lite) to the siren control module, which activates the siren.

SYSTEM OVERVIEW

LOCATION OF COMPONENTS

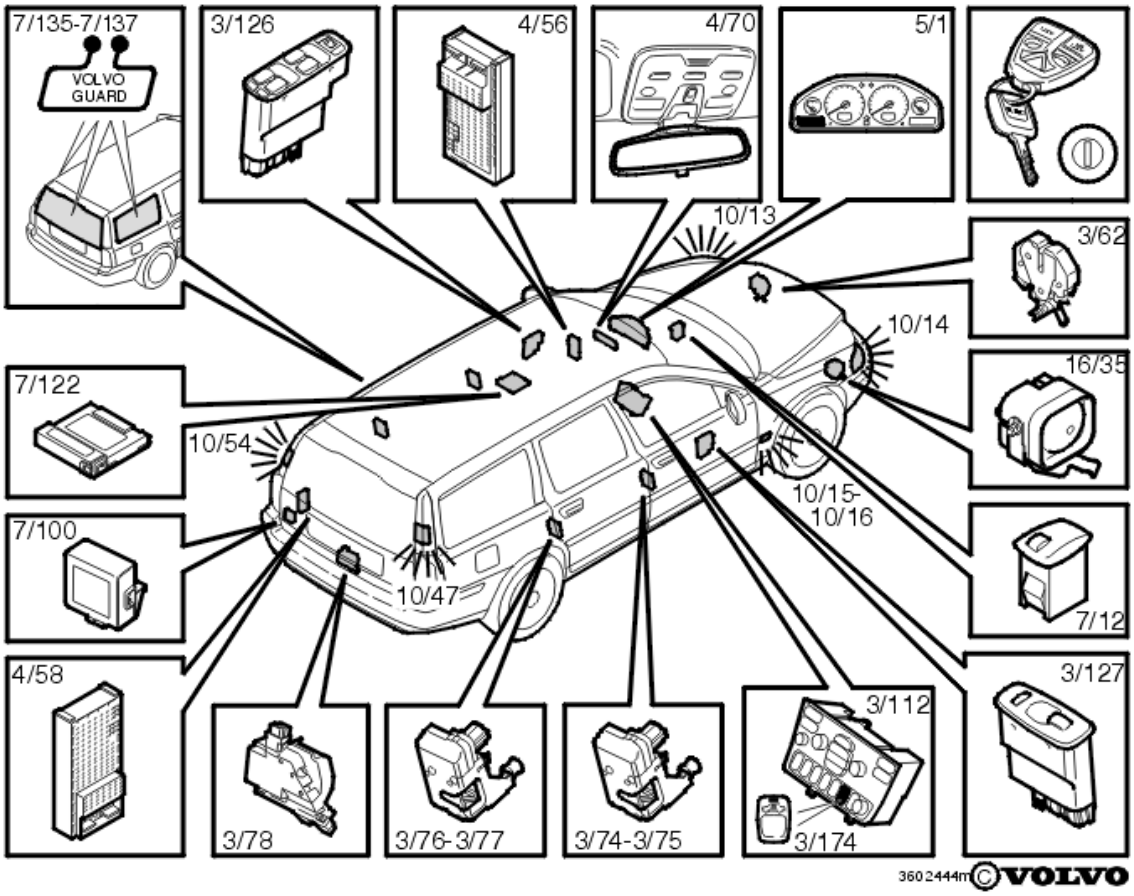

Fig. 39: Location Of Alarm Components
Courtesy of VOLVO CARS CORPORATION

The alarm function uses the following components (may differ depending on the options and market):

Position	Component	Position	Component
3/62	Switch in hood catch	7/12	Alarm diode
3/74-3/77	Switches in door locks	7/100	Inclination sensor module. Option /accessory
3/78	Switch in trunk lock	7/122	Mass movement sensor. Option /accessory
3/112	Climate control module	7/135-7/137	Resistive wires. Market dependent, option
3/126, 3/127	Drivers door module / Passenger door module	10/13, 10/14	Left and right turn signal lamps, front
3/174	Switch for reduced alarm. Only on cars with mass movement sensors and inclination sensor modules.	10/15, 10/16	Left and right turn signal lamps, Side
4/56	Central electronic module	10/54, 10/47	Left and right turn signal lamps, Rear
4/58	Rear electronic module	16/35	Siren control module
4/70	Upper electronic module		Key and lock cylinder
5/1	Driver information module		Remote control

TERMINOLOGY

The following terms are used in information about the alarm.

Activated : The car is locked and the alarm protects the car.

Deactivated : The alarm is switched off and no longer protects the car.

Reactivating : The alarm has activated itself and protects the car.

Deployed : The alarm has started and the siren sounds.

ALARM SYSTEM

There are different versions of the alarm system. Some of the versions are market dependent or options:

- **Basic Alarm** . Doors, hood and tailgate
- **Extended alarm** . Has one or more of the following as additions to the basic Alarm. Mass movement sensor, the inclination sensor module and glass wire
- **Number of alarm cycles** . Market dependent. There are two choices, 1 or 10 cycles. The alarm cycle is the number of times the alarm sounds when it has been deployed. An alarm cycle means that the siren

sounds for approximately 25 seconds and the hazard warning signal flashers flash for approximately 5 minutes. Once the alarm has been deployed the alarm is reactivated. If a door or hatch is left open, that door or hatch will not be included in the alarm loop when the alarm is activated once again.

Components and switches differ depending on the model year, version and equipment.

ACTIVATING THE ALARM

The alarm can be activated as follows:

- Using the remote control LOCK button
- Using the key in the driver's door lock cylinder (market dependent).

25 seconds after activating the alarm the car is fully protected. An acknowledgment that the alarm is activated is obtained by the alarm diode on the dashboard flashing once per second. The alarm diode does not flash and the car is not alarmed if a door is open or if a fault occurs.

DEACTIVATING THE ALARM

The alarm can be deactivated as follows:

- Using the remote control UNLOCK button
- Using the key in the driver's door lock cylinder (market dependent)
- Using the key in the driver's door lock cylinder and then turning the ignition to position II
- If the key is inserted in the ignition switch within 25 seconds after the alarm is activated. This is a safety feature which prevents the alarm being deployed when a driver presses down the lock button on the remote control by mistake when sitting inside the car. The alarm is deployed if the driver takes longer than 25 seconds from depressing the lock button to inserting the key in the ignition.

An acknowledgment that the alarm is deactivated is obtained by the alarm diode on the dashboard going out and not flashing.

REDUCED ALARM

If the car is equipped with a mass movement sensor and/or an inclination sensor module, these can be deactivated temporarily if required.

The inclination sensor and mass movement modules are deactivated using the switch for reduced alarm on the climate control module.

The ignition key should be in position I, 0 or removed (time factor applies for a removed key).

Once the switch has been pressed an LED lights up in the switch at the same time as a (reduced alarm) message is displayed in the driver information module.

Next time the ignition key is inserted and turned to position II, the system is reset. This means that the next time the vehicle is locked from the outside, using the key or the remote control, the inclination sensor and the mass

movement sensor will be activated. A message (fully alarmed) is displayed in the driver information module.

SPECIAL FUNCTIONS

- The alarm is also activated when automatic relocking occurs
- The alarm is activated automatically with a certain amount of delay if all doors, the tailgate and hood are closed, when the key is in position 0 or I. This function is market dependent
- If any door is not closed the alarm will not be completely activated. If a closed door is opened the alarm is deployed, the open door(s) are disconnected from the alarm loop. The mass movement sensor and the inclination sensor module are activated after a delay. If the open door or doors is/are closed, the alarm will once again be completely activated.

ACKNOWLEDGMENTS

When the alarm is activated it is acknowledged by the alarm diode on the dashboard flashing once per second.

When the alarm is deactivated it is acknowledged by the alarm diode stopping flashing.

In the event of the alarm being deployed the following warnings are displayed to the driver:

- When the car is unlocked the alarm diode flashes approximately 3 times per second
- When the ignition key is turned to position I, a message is displayed (alarm deployed, check the car) in the driver information module.

ALARM

The alarm signals in different ways depending on what has caused the alarm to deploy:

- When the alarm has deployed by the doors, tailgate, hood, glass wires, angle or movement in the sensor, the alarm will start an alarm cycle. An alarm cycle means that the siren sounds for approximately 25 seconds and the hazard warning signal flashers flash for approximately 5 minutes. If the car has more alarm cycles (market dependent) the alarm will deploy again within 5 seconds, if the cause is still present. This procedure is repeated for the number of alarm cycles the car is programmed for. When all the alarm cycles have been run through the alarm is activated again. If a door or hatch is left open that door or hatch will not be included in the alarm loop when the alarm is activated once again
- If the battery voltage for the car suddenly disappears the siren sounds for approximately 5 minutes, then stops. In this instance the siren is supplied with power from its internal battery and does not sound as loud as when the siren is supplied with power by the car battery.

ALARM (2005-2012)

DESIGN

REAR ELECTRONIC MODULE (REM)

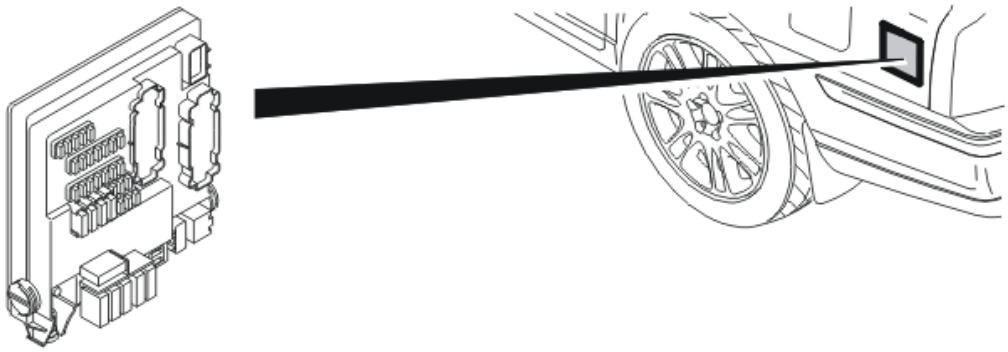

Fig. 40: Locating Rear Electronic Module (REM)
Courtesy of VOLVO CARS CORPORATION

The rear electronic module (REM) is the main unit for alarm functions.

The control module communicates with units that are connected directly or serially and via CAN communication. The control module has a number of sensors connected to it and carries out the appropriate actions depending on the status of the sensors and input signals from other control modules.

SWITCHES IN THE LOCK UNITS

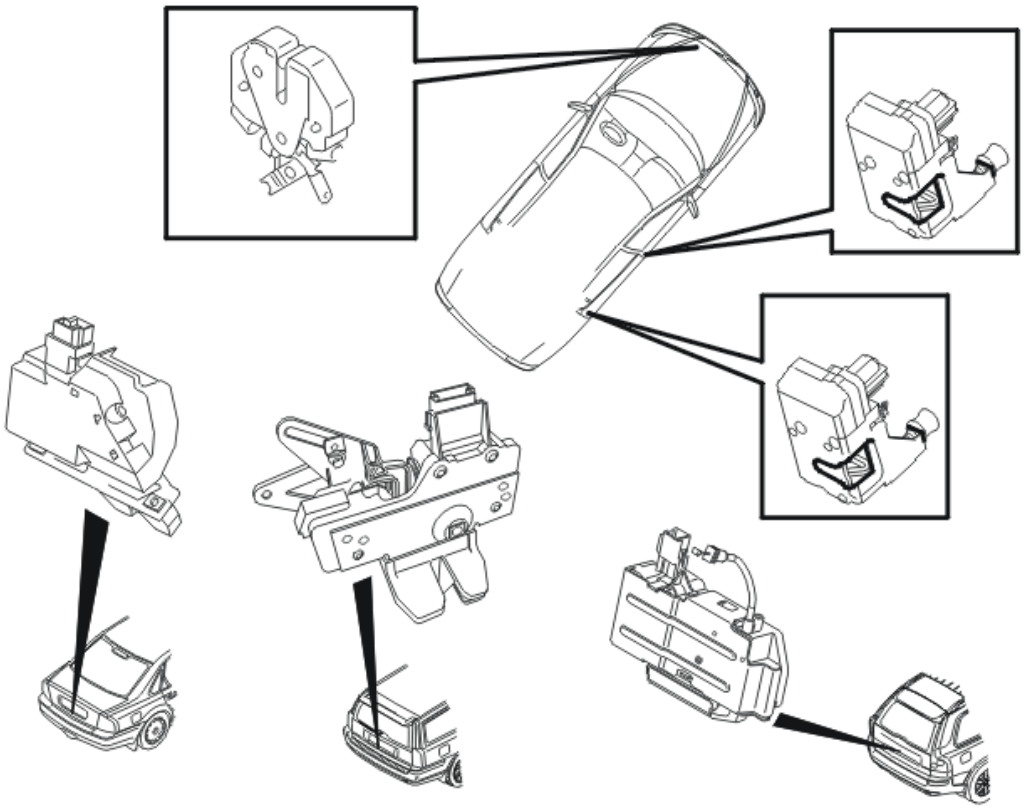

Fig. 41: Identifying Switches In Lock Units

Courtesy of VOLVO CARS CORPORATION

A switch is fitted in each lock unit for the doors and trunk lid/tailgate. Vehicles equipped with an alarm have a switch in the hood lock. The switches are closed when the respective door or hatch is closed. There is no switch for the fuel tank filler cover.

At regular intervals, the rear electronic module (REM) checks if the switches are closed when the alarm is activated. If the rear electronic module (REM) detects that a switch opens, the alarm is triggered.

If the rear electronic module (REM) detects a switch that is not closed when central locking is engaged and alarm activation is to be carried out, the inclination sensor module and the mass movement sensor module (MMS), or movement sensor (IMS), will not be activated. Similarly, signals from a switch that was not closed during activation will be disregarded. No flash is given in acknowledgment before all switches are closed.

SIREN (SCM/BBS)

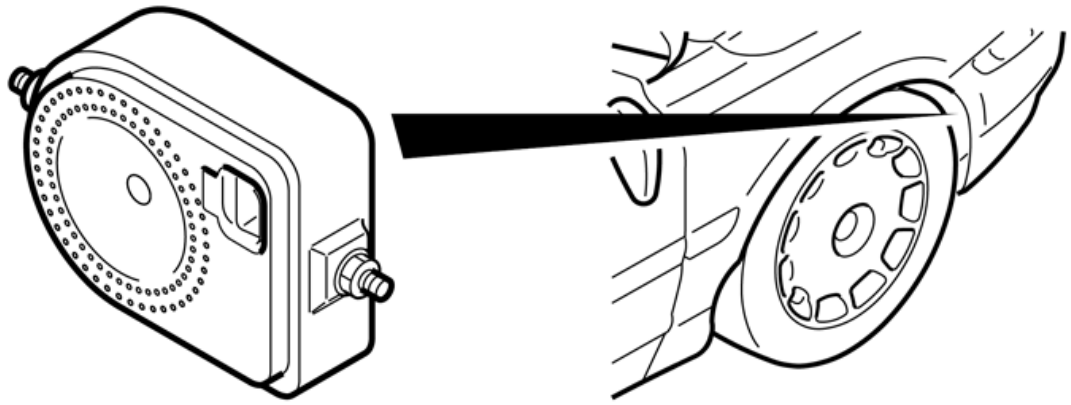

Fig. 42: Locating Siren
Courtesy of VOLVO CARS CORPORATION

The siren is used as a sound source for the alarm function. The siren is located in a protected position under the fender liner in the front right wheel housing. From and incl. structure week 201128 the siren is available in two versions, with or without internal vehicle inclination sensor. The type of siren installed in the vehicle depends on the market and the customer's wishes.

The siren sounds if the power supply to it is cut or if communication with the master electronic module (UEM/REM) fails while the alarm is activated. The siren contains an internal battery which is charged when the ignition is on or the engine is running. The battery service life is limited and depends on the local climate. The battery cannot be replaced by itself. Any alarm cause can be read from VADIS. This states what caused the alarm.

The siren is powered via a fuse from the central electronic module (CEM) The siren is grounded in the engine compartment.

There are diagnostics for the siren.

From and incl. structure week 201128 the siren on XC90 is connected to and communicates with REM instead

of UEM.

MASS MOVEMENT SENSOR MODULE (MMS)

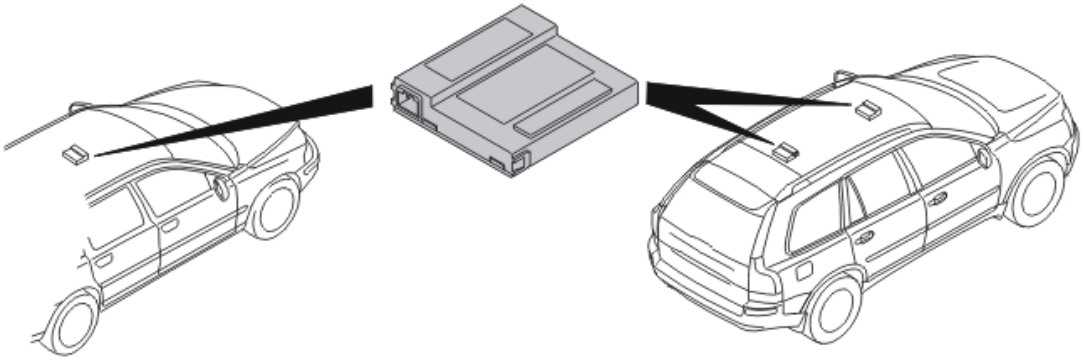

Fig. 43: Locating Mass Movement Sensor Module (MMS)
Courtesy of VOLVO CARS CORPORATION

NOTE: For XC90 MY 2012- the Mass movement sensor module (MMS) is replaced with ultrasonic sensor module (IMS).

The mass movement sensor module (MMS) is located in the roof under its own panels.

The two sensors in the XC90 are located along the front edge of the roof and in the roof above the cargo compartment.

The mass movement sensor module (MMS) is used to detect movement in the passenger compartment when the alarm is activated.

When the alarm is activated, the upper electronic module (UEM) carries out a check of the sensors.

The sensors communicate serially with the upper electronic module (UEM). If two sensors are installed, these are connected in parallel to the upper electronic module (UEM).

When the sensors are activated, they transmit microwaves into the vehicle. The microwaves bounce back from the interior of the vehicle and the sensors react to variations in the rebounding waves. A system that uses microwaves is more stable than a system that uses ultrasound sensors and reduces the number of false alarms. For example, microwaves are not affected by the changing temperature of different layers of air inside a vehicle parked in the sun. The cause of the alarm can be read off and verified via VIDA (Volvo scan tool).

The mass movement sensor module (MMS) is powered and grounded via the upper electronic module (UEM).

ULTRASONIC SENSOR MODULE (IMS) (ONLY XC90 MY 2012-)

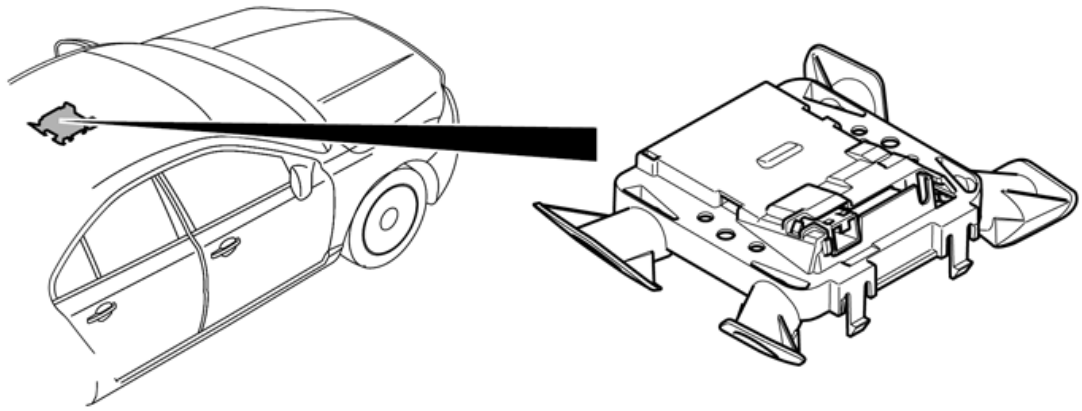

Fig. 44: Identifying Ultrasonic Sensor Module (IMS)
Courtesy of VOLVO CARS CORPORATION

The ultrasonic sensor module (IMS) is located in a cover in the ceiling. The ultrasonic sensor module (IMS) is used to detect movements inside the passenger compartment when the alarm has been activated. The aim is to detect anyone trying to reach in and steal a bag or similar or example. When the sensor is activated, an internal self test is performed and informs the Central electronic module (CEM) of the result. If the test failed the Central electronic module (CEM) stores a DTC. The sensors communicate serially and are powered via the Upper electronic module (UEM). When the sensor is activated it transmits ultrasound inside the passenger compartment. The sound waves reflect back to the sensor and if the sensor detects a change in reflections or movements in the passenger compartment, the alarm is tripped.

NOTE: The sensor's performance is affected by air turbulence and therefore all windows and any roof hatches must be closed for the sensor to work optimally.

INCLINATION SENSOR MODULE (ISM) (STRUCTURE WEEK -201127)

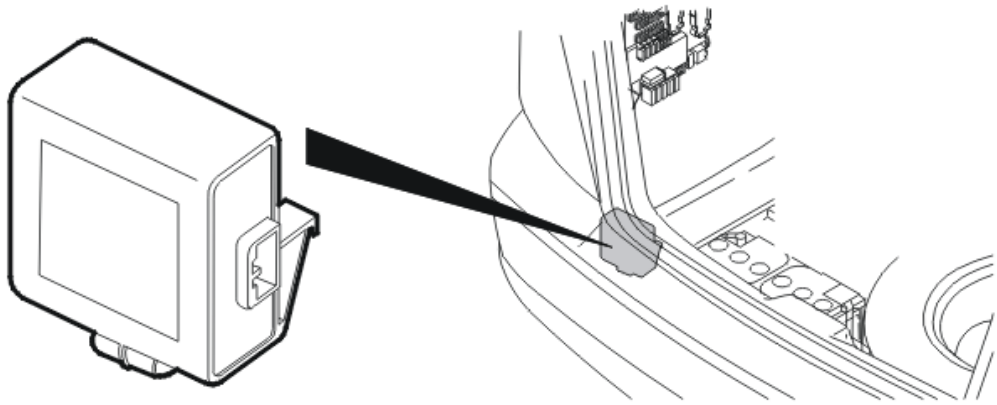

Fig. 45: Locating Inclination Sensor Module (ISM)
Courtesy of VOLVO CARS CORPORATION

The inclination sensor module (ISM) is fitted near the rear electronic module (REM) and gives input signals to the rear electronic module (REM) when the alarm is activated. The sensor registers changes in the vehicle angle that would occur during an attempted tow or theft of a wheel, for example. The inclination sensor module (ISM)

is connected in series with and powered by the rear electronic module (REM). The inclination sensor module (ISM) is grounded to the body. The cause of the alarm can be read off and verified via VIDA (Volvo scan tool).

INCLINATION SENSOR MODULE ALARM (BBS-IS) (XC90 STRUCTURE WEEK 201128-)

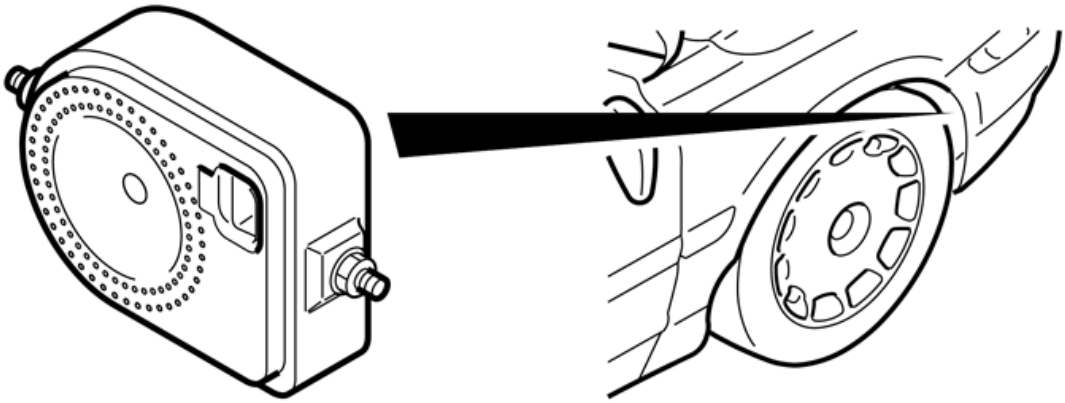

Fig. 46: Locating Siren
Courtesy of VOLVO CARS CORPORATION

If the vehicle is equipped with a vehicle inclination sensor, the sensor is integrated in the siren. The vehicle inclination sensor reacts to changes in the angle of lean of the vehicle and transmits a signal to the Rear electronic module (REM). While the vehicle inclination sensor is mounted in the siren it is counted as a separate unit. If the vehicle inclination sensor indicates that the vehicle is being lifted the Rear electronic module (REM) must send an activation signal to the siren. In this case the siren cannot trigger an alarm by itself.

The siren is powered via a fuse from the central electronic module (CEM) The siren is grounded in the engine compartment.

ALARM LED

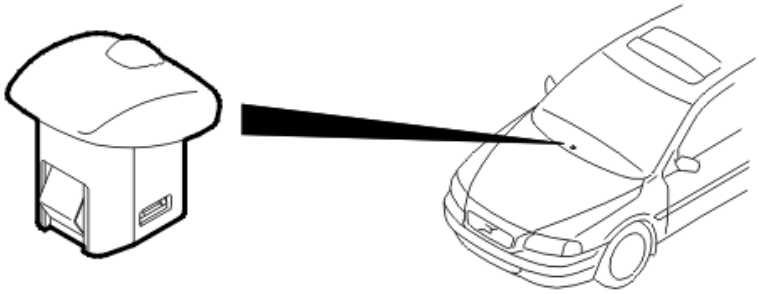

Fig. 47: Sun Sensor
Courtesy of VOLVO CARS CORPORATION

The alarm LED is located on top of the dashboard in the same shell as the sun sensor and twilight sensor. The LED is directly connected to the rear electronic module (REM) and is used for indicating alarm status.

When the alarm is activated, the LED will flash approximately once every two seconds.

If the alarm is triggered, the LED will begin to flash rapidly (approximately 5 times per second) and continue to flash as long as the alarm continues. Once the alarm cycle is concluded, the LED will once again begin to flash slowly.

If the alarm has been triggered, the LED will begin to flash rapidly again (approximately 5 times per second) after the vehicle is unlocked until the ignition is switched on. This is an indication to the driver that the alarm has been triggered.

SWITCH FOR REDUCED ALARM

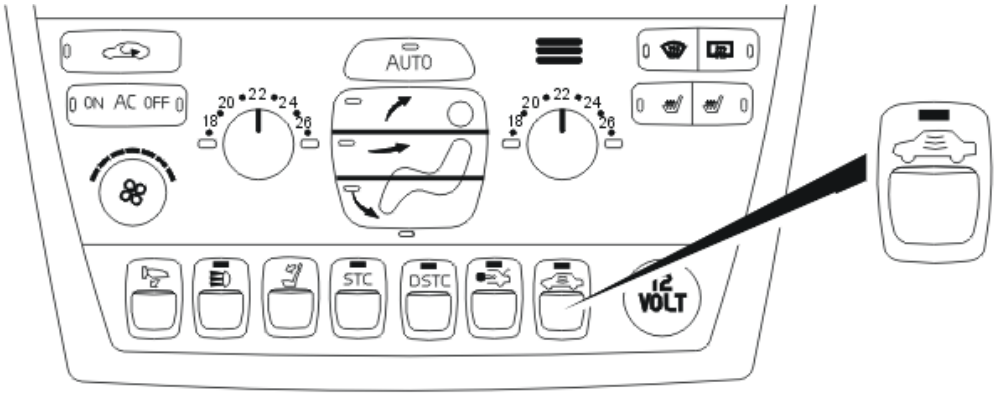

Fig. 48: Locating Switch For Reduced Alarm
Courtesy of VOLVO CARS CORPORATION

NOTE: The switches can be positioned in a different order than indicated in the illustration depending on vehicle configuration and equipment.

The switch for reduced alarm is located on the climate control comfort panel. The switch is used to temporarily deactivate the inclination sensor module and mass movement sensor module (MMS) alternatively ultrasonic sensor module (IMS) functions. When the function is activated, deadlock mode will not engage after the vehicle is locked. The function can only be activated when the ignition is in position I, 0 or after the ignition has been switched off and up to one minute after the ignition key has been removed from the ignition switch.

The switch has an integrated LED that indicates if the function is activated and messages will be displayed in the driver information module (DIM). However, messages are not displayed once the key is removed.

With the switch the alarm can be set to so called garage mode if the car is configured for passive activation (option for certain markets). This mode is activated if the switch is pressed in and the unlock button on the remote control is pressed in within 5 seconds. In garage mode there will be no passive activation of the alarm. This mode is active for 24 hours after activation or until any button is pressed on the remote control.

DIAGNOSTIC FUNCTIONS

GENERAL INFORMATION

The rear electronic module (REM) is the main unit for the alarm function and contains diagnostics for the alarm function.

READING OFF THE ALARM CAUSE

The three latest alarm causes can be read off with this function.

Alarm cause:

- Right front door
- Left front door
- Right rear door
- Left rear door
- Hood
- Luggage Compartment Lid
- Ignition (non-permitted start attempt)
- Inclination Sensor Module alarm
- Voltage drop siren
- Rear mass movement sensor module, Rear sensor for the XC90.
- Front mass movement sensor module. Front sensor for the XC90.

FUNCTION

ACTIVATION

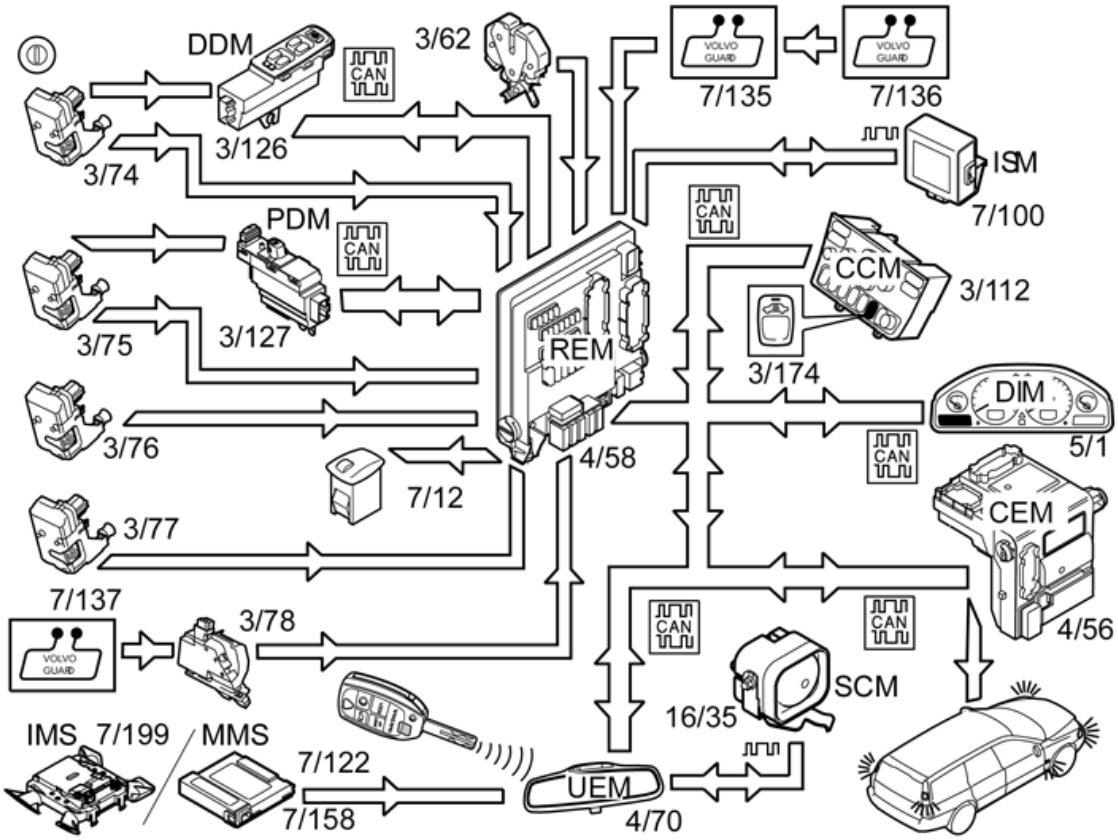

Fig. 49: Identifying Volvo Component Designations
Courtesy of VOLVO CARS CORPORATION

XC90 from and incl. structure week 201128-

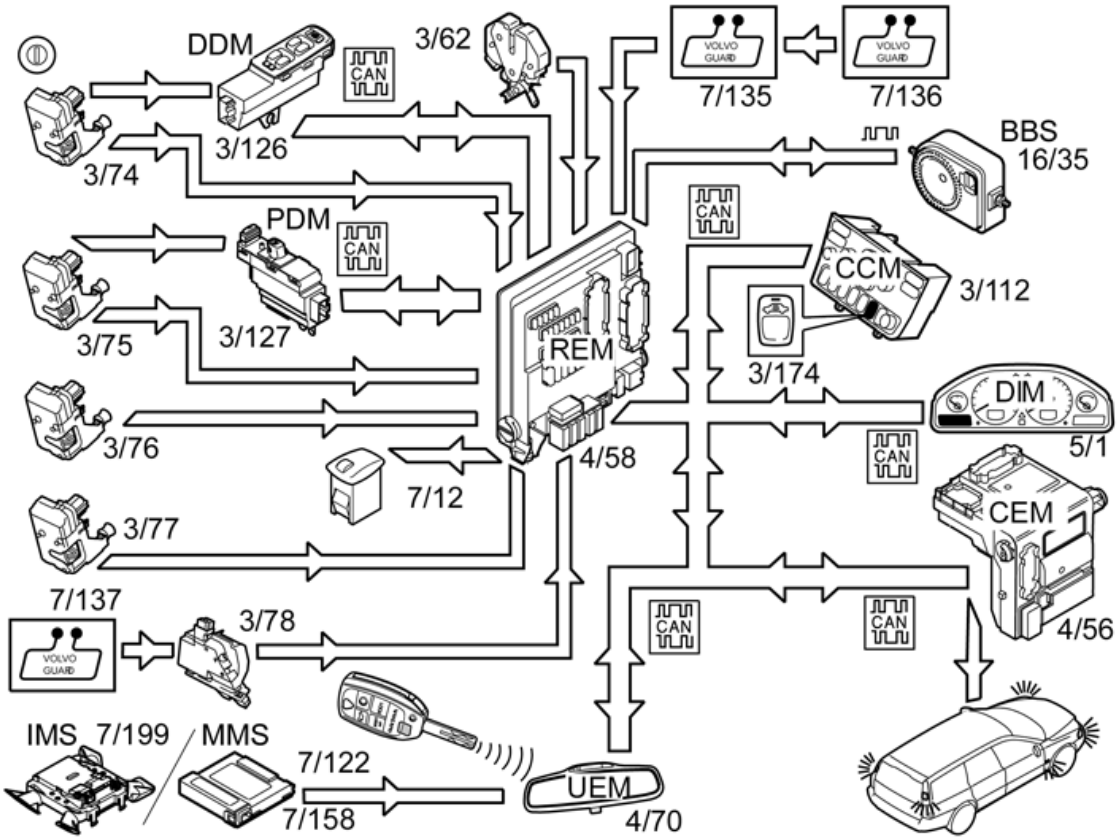

Fig. 50: Identifying Volvo Component Designations
Courtesy of VOLVO CARS CORPORATION

With the remote control

When the upper electronic module (UEM) receives a locking command, it sends a command to the rear electronic module (REM). The rear electronic module (REM) first engages central locking and then activates the alarm. The alarm LED will begin to flash directly after system activation. However, the rear electronic module (REM) will disregard signals from the mass movement sensor module (MMS), or ultrasonic sensor module (IMS) or the inclination sensor module (ISM) until 25 seconds have transpired or after deadlock mode has been engaged by the central locking function.

With the key

An alarm activation function for a vehicle that is locked with the key is available in certain markets. In this case, a locking command is sent to the rear electronic module (REM) from the driver door module (DDM) when a switch in the driver's door lock cylinder is actuated. When the rear electronic module (REM) has engaged the central lock, the alarm is activated. This function is controlled by the vehicle configuration file which is stored in the central electronic module (CEM).

With the interior central locking switches

The alarm can be activated after an interior central locking switch has been used to engage the central locking in vehicles that are configured for a dual stage central locking function. The vehicle will be fully protected

approximately 25 seconds after the last door is closed.

Passive activation

There is a passive alarm activation function available on the Belgian and Israeli markets. After a driving cycle has been completed (ignition on, engine running, ignition off), the driver's door has been opened and closed and the ignition key is in position 0, 1 or removed, the alarm will be activated after approximately 1.5 minutes. Depressing the reduced alarm switch and depressing the remote control unlocking button within 5 seconds deactivates the function (garage mode). The function is deactivated for 24 hours or until a button is pushed on the remote control.

TRIGGERING THE ALARM

If the alarm is in active mode and the rear electronic module (REM) receives an indication from a directly connected sensor or the upper electronic module (UEM), a so-called alarm cycle will be initiated. The rear electronic module (REM) or Upper Electronic Module (UEM) sends a command to the siren for it to activate. At the same time, the rear electronic module (REM) sends a direction indicator lamp activation command to the central electronic module (CEM). The siren sounds for a period of approximately 25 seconds and then stops. The light signal will continue for an additional 4.5 minutes. The function for alarm redeployment (if for example, a door is still open) is market dependent.

DEACTIVATION

In order to deactivate the alarm, the vehicle can be unlocked with the remote control. The rear electronic module (REM) receives a request for alarm deactivation from the upper electronic module (UEM) if the upper electronic module (UEM) receives an unlocking command from the remote control.

NOTE: This means that if a locked vehicle with an activated alarm is then unlocked with the ignition key instead of the remote control, the alarm will be triggered. Exceptions include a vehicle with an activated function for alarm activation and deactivation with the key.

The alarm function can also be deactivated locally if the trunk lid/tailgate unlocking button on the remote control is depressed. In this case, the rear electronic module (REM) disregards signals from the switch indicating an open trunk lid/tailgate in the trunk lid/tailgate lock unit. The level sensor and mass movement sensor module (MMS) or ultrasonic sensor module (IMS) will also be deactivated temporarily. The vehicle alarm is reactivated once the hatch is closed.

The alarm can also be deactivated if an approved key is inserted in the ignition switch and is turned to position II.

RESETTING THE ALARM

If the alarm has been triggered, it can be reset in two ways; by depressing the unlocking button on the remote control or by turning the ignition key to position II.

REDUCED ALARM FUNCTION

The switch for reduced alarm function is located in the climate control comfort panel. The switch is used to temporarily deactivate the level sensor, mass movement sensor module (MMS) or ultrasonic sensor module (IMS) and deadlock mode when the vehicle is locked. An integrated LED in the switch indicates when the function is activated.

The function is activated during a locking cycle, i. e. from the time the button is depressed and the vehicle is locked until the vehicle is unlocked. When the ignition is once again turned to position II, reduced function is deactivated.

Examples of applications for this function include when a person or pet remains inside the vehicle after the vehicle has been locked, and if the vehicle is transported by tow truck or onboard a ferry.

SYSTEM OVERVIEW

GENERAL INFORMATION

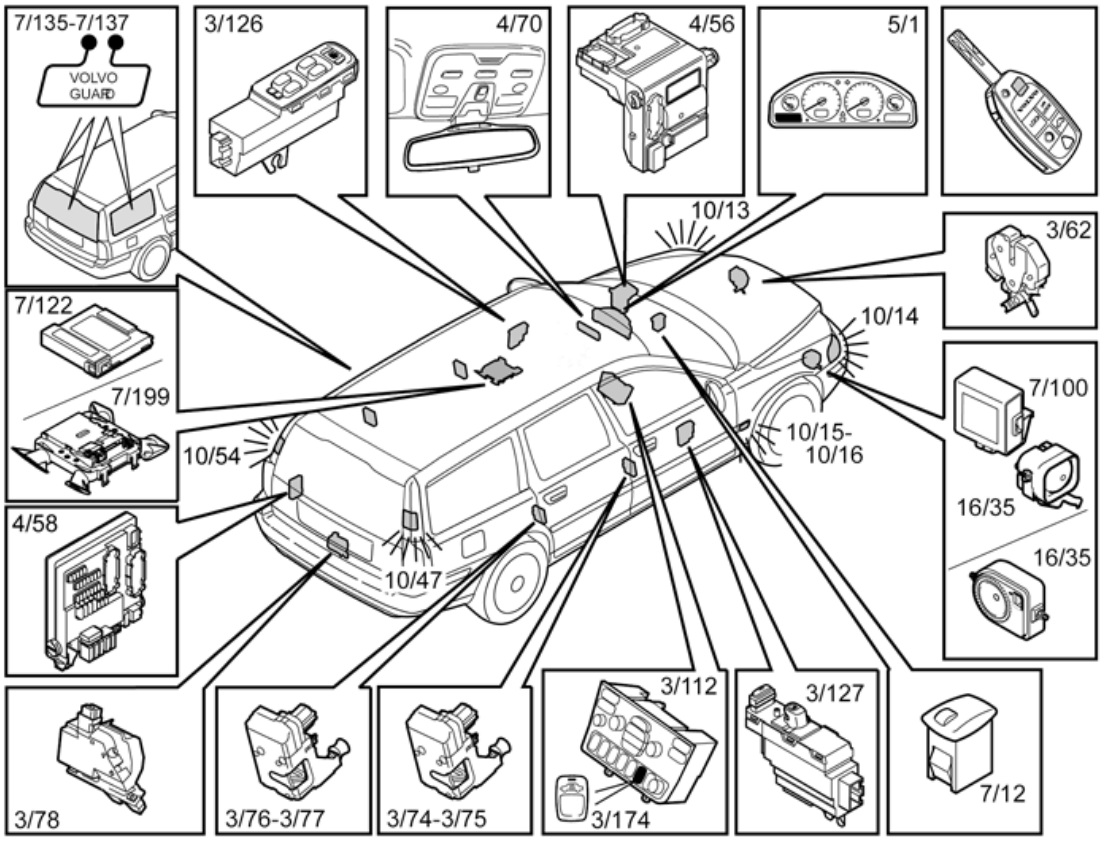

Fig. 51: Identifying Volvo Component Designations
Courtesy of VOLVO CARS CORPORATION

The alarm is an entry protection system for the vehicle. The aim is to prevent anyone getting into the vehicle or manipulating the vehicle in any way without being detected.

The alarm is available in various configurations:

- **Basic configuration.** This configuration includes switches in the lock units (including switches in the hood and trunk lid/tailgate), an alarm LED and a siren (SCM).
  - Mass movement sensor module (MMS) or ultrasonic sensor module (IMS) (IMS replaces MMS for XC90 MY 2012-)
  - Inclination Sensor Module (ISM) (BBS-IS replaces ISM from and incl. structure week 201128)
- **Extended configuration.** Can include one or more of the following components:
  - Mass movement sensor module (MMS) or ultrasonic sensor module (IMS) (IMS replaces MMS for XC90 MY 2012-)
  - Inclination Sensor Module (ISM) (BBS-IS replaces ISM from and incl. structure week 201128)

Definitions:

- **Deactivated:** the alarm is not activated and is not protecting the vehicle
- **Activated:** the alarm is protecting the vehicle and will be triggered if there is an input signal from one of the sensors
- **Deployed:** An alarm cycle is initiated. The siren sounds for 25 seconds and the direction indicators flash for approx. 5 minutes. When the alarm cycle is finished, the alarm goes to activated mode.

SIGNALS

The tables below summarize the input and output signals to the units in the system for the alarm. The signal types are divided into directly connected signals, serial communication and controller area network (CAN) communication.

REAR ELECTRONIC MODULE (REM) (4/58):

Input signals	Output signals
Directly connected: • Switch in lock unit (3/74) for indicating open driver's door. • Switch in lock unit (3/75) for indicating open passenger door. • Switch in lock unit (3/76) for indicating open door, left rear. • Switch in lock unit (3/77) for indicating open door, right rear. • Switch in hood lock (3/62) for indicating open hood. • Switch in lock unit (3/78) for indicating open trunk lid/tailgate.	**Directly connected:** • Alarm LED (7/12) for indicating alarm status. • Inclination Sensor Module alarm (ISM) (7/100), voltage feed (applies to and incl. structure week 201127).
Via serial communication: • Inclination Sensor Module alarm (7/100), for information on vehicle's position, or integrated Inclination Sensor in siren (BBS-	**Via serial communication:** • Inclination Sensor Module alarm (7/100), for status request, or integrated Inclination Sensor in siren (BBS-IS) (from and incl. structure

IS) (from and incl. structure week 201128). • Communication with siren (SCM) (16/35) (from and incl. structure week 201128).	week 201128). • Communication with siren (SCM) (16/35) (from and incl. structure week 201128).
Via CAN communication (LS-CAN): • Reduced alarm switch (3/174) via the climate control module (CCM) (3/112) for deactivation of the inclination sensor module (ISM), the mass movement sensor module (MMS), or ultrasonic sensor module (IMS) (7/199) and deadlock mode. • Upper electronic module (UEM) (4/70) for signals from the mass movement sensor module (MMS) or ultrasonic sensor module (IMS) (7/199), siren (SCM) and commands from the remote control.	**Via CAN communication (LS-CAN):** • The driver information module (DIM) (5/1) for information about which message is to be displayed. • Upper electronic module (UEM) (4/70) for siren (SCM) activation. • Central electronic module (CEM) (4/56) for activating direction indicator lamps when the alarm is triggered and the horn during triggered panic function.

UPPER ELECTRONIC MODULE (UEM) (4/70):

Input signals	Output signals
Directly connected:	**Directly connected:** • **For XC90:(MY-2011)** Mass movement sensor module (MMS) (7/158), rear sensor and mass movement sensor module (MMS) (7/122), front sensor, power supply. The sensors are connected in parallel. • **For XC90 (MY 2012-):** ultrasonic sensor module (IMS) (7/199).
Via serial communication: • **For XC90:(MY-2011)** Mass movement sensor module (MMS) (7/158), rear sensor and mass movement sensor module (MMS) (7/122), front sensor. The sensors are connected in parallel. • **For XC90 (MY 2012-):** ultrasonic sensor module (IMS) (7/199). • Communication with siren (SCM) (16/35) (applies to and incl. structure week 201127).	**Via serial communication:** • **For XC90:(MY-2011)** Mass movement sensor module (MMS) (7/158), rear sensor and mass movement sensor module (MMS) (7/122), front sensor. The sensors are connected in parallel. • **For XC90 (MY 2012-):** ultrasonic sensor module (IMS) (7/199). • Communication with siren (SCM) (16/35) (applies to and incl. structure week 201127).
Via CAN communication (LS-CAN): • Rear electronic module (REM) (4/58) with request for function activation.	**Via CAN communication (LS-CAN):** • Rear electronic module (REM) (4/58) with command for siren (SCM) activation.

ANTENNA MODULE (ATM) (2003-2006)

DESIGN

AM/FM

The antenna module (ATM) consists of a thin film antenna and an AM/FM receiver. The control module can be upgraded with GPS and traffic message channel (TMC) units.

Information from the AM/FM receiver consists of radio signals received on the AM or FM-waveband.

The signal from the AM/FM tuner is transmitted to the audio control module (AUD) and infotainment module (ICM) via the MOST network.

If the antenna module (ATM) is not supplied with voltage communication on the MOST net does not function and the Infotainment system shuts down.

GPS

The data transmitted from the GPS unit consists of signals received from GPS satellites.

The GPS unit transmits the signal to the multimedia module (MMM) via the MOST network.

The navigation system requires at least three satellites in order calculate the position of the car. The position calculated from the GPS satellites is accurate to within 25 meters.

The power supply to the GPS unit is from the antenna module (ATM).

The GPS unit is integrated with the antenna module (ATM) and transmits signals via the MOST network.

NOTE: If the GPS signal is being diagnosed because it is missing, the signal should be tested outdoors. This is because the signal may be blocked if the vehicle is indoors.

TRAFFIC MESSAGE CHANNEL (TMC)

The traffic message channel (TMC) signal is captured by the TMC receiver and transmitted to the receiver in the multimedia module (MMM) via the MOST network.

The information is then displayed on the screen.

The traffic message channel (TMC) receiver is integrated with the antenna module (ATM) and transmits signals via the MOST network.

This also applies to FM Multiplex, which is the Japanese equivalent of traffic message channel (TMC).

DIAGNOSTIC FUNCTIONS

GENERAL INFORMATION

The control module has a built-in diagnostic system, Volvo Diagnostic, which continuously monitors internal

functions as well as input and output signals.

DIAGNOSTIC TROUBLE CODES (DTCS)

A diagnostic trouble code (DTC) is stored if the control module detects a fault. A fault which is detected in the most recent operating cycle is defined as permanent. Other faults are defined as intermittent.

The control module can store up to seven diagnostic trouble codes (DTCs).

Should a fault disappear for any reason after being permanently stored in the control module as a diagnostic trouble code (DTC), the information remains stored in the control module.

If a fault is no longer permanent, the diagnostic trouble code (DTC) remains as intermittent.

READING AND ERASING DIAGNOSTIC TROUBLE CODES (DTCS)

Stored diagnostic trouble codes (DTCs) can be read off and erased using this function.

Diagnostic trouble codes (DTCs) can only be erased once all the diagnostic trouble codes (DTCs) have been read off at least once.

NOTE: Certain functions are unavailable until the diagnostic trouble codes (DTCs) have been erased.

READING OFF THE CONTROL MODULE IDENTIFICATION

VIDA identifies control modules by reading off a number of codes from the control module memory.

The codes contain information about the control module:

- hardware P/N (control module without software)
- hardware serial number (control module without software)
- software P/N
- diagnostic software P/N.

READING OFF EXTENDED FAULT-TRACING INFORMATION

This function can be used to read parameters, status identifiers and counters stored at the same time as a diagnostic trouble code (DTC). These are called frozen values.

For further information, see **DESCRIPTION OF VEHICLE COMMUNICATION INFORMATION** .

READING OFF THE PARAMETERS

Using this function, the status or value of parameters can be read off. The presentation of the status or value can be obtained graphically or digitally. For further information about the different parameters, see **DESCRIPTION OF PARAMETERS** .

DOWNLOADING SOFTWARE AND REPLACING THE CONTROL MODULE

New software can be downloaded into the antenna module (ATM) When ordering software, the hardware and the software in the car is compared to the information in the Volvo central database. If the comparison is OK the software is downloaded to the control module.

If the comparison between the car and Volvo central database is not OK, the database is updated with the car configuration. When this is complete the software is downloaded.

The control module is located in the rear section of the roof. Detach the headlining in the passenger compartment if the control module is replaced.

After replacing the control module, the unique serial numbers of the control module are checked by the infotainment control module (ICM). The installed control module will not work if the serial number is incorrect.

Try turning the ignition off and on if there are problems after the software is downloaded and the control module is not working.

The MOST network is used for a total software reload.

FUNCTION

AM/FM RECEPTION

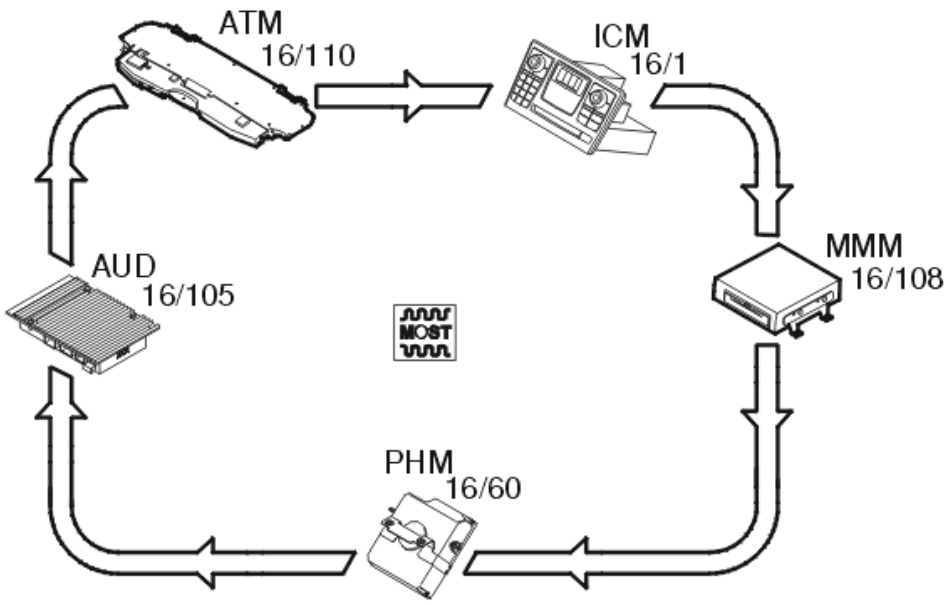

Fig. 52: Identifying Volvo Component Designations
Courtesy of VOLVO CARS CORPORATION

The base unit of the antenna module (ATM) (16/110) has the task of receiving and converting AM and FM signals. The antenna signals are converted to sound signals which are transmitted digitally to the audio control

module (AUD) (16/105) via the MOST network.

The antenna module (ATM) (16/110) receives information from the infotainment module (ICM) (16/1) about which frequency / radio station and which waveband the listener wishes to listen to.

The antenna module (ATM) does not transmit sound signals to the audio module (AUD) if the radio station signal is not strong enough. The antenna module (ATM) is in "MUTE" mode when searching frequencies.

The antenna module (ATM) stores the most recently used frequency for a waveband. When changing from one frequency to another the control module will use the stored frequency.

GPS RECEPTION

The GPS unit (option) has the task of receiving satellite signals for determining position. The antenna module (ATM) (16/110) transmits two different position signals on MOST:

- a received signal from the GPS satellites. Used by the multimedia module (MMM) (16/108) and the phone module (PHM) (16/60)
- a calculated signal. Used by the Phone Module (PHM) (16/60).

The calculated signal is obtained by dead reckoning. The antenna module (ATM) calculates the present position of the car based on the most recent GPS-signal. The control module receives information about direction and speed from the brake control module (BCM) and central electronic module (CEM) via the infotainment module (ICM) (16/1) to calculate the present position.

TRAFFIC MESSAGE CHANNEL (TMC) RECEPTION

The traffic message channel (TMC) receiver in the antenna module (ATM) is an option and has the task of receiving traffic information sent by radio. The antenna module (ATM) transmits information to the multimedia module (MMM).

Traffic message channel (TMC) is a European standardized code system for traffic messages, such as information about road works. The Japanese equivalent is called FM multiplex.

There is no traffic information system in the USA.

SYSTEM OVERVIEW

ANTENNA MODULE (ATM)

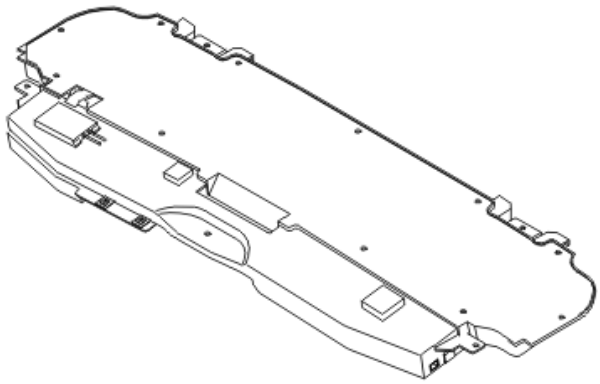

Fig. 53: Identifying Antenna Module (ATM)
Courtesy of VOLVO CARS CORPORATION

The main function of the antenna module (ATM) is to handle the antenna signals for:

- AM/FM
- GPS (Global Positioning System), receiving position signals
- Traffic message channel (TMC), receiving traffic information.

The antenna module (ATM) consists of a thin film antenna and a receiver. There is a base unit which only has AM/FM reception. The control module can be upgraded with GPS and traffic message channel (TMC) units. The following types are available:

- base unit with only AM/FM-reception without the possibility of upgrading, for market codes EU and US
- base unit with only AM/FM-reception with the possibility of upgrading, for market codes EU and US
- base unit with only AM/FM-reception with the possibility of upgrading, for market code JP.

The control module is positioned in the rear of the roof. Detach the headlining in the passenger compartment if the control module is replaced.

The antenna module (ATM) uses serial communication on the MOST network to communicate with other control modules.

The control module checks activations and input and output signals via an integrated diagnostic system. A diagnostic trouble code (DTC) is stored if the control module detects a fault.

Any diagnostic trouble codes (DTCs) are stored in the control module memory. This information can be read off using VIDA via the data link connector (DLC) in the car.

If the antenna module (ATM) is not supplied with voltage communication on the MOST net does not function and the Infotainment system shuts down.

SIGNALS

The table below summarizes the input signals to and output signals from the antenna module (ATM). The signal types are divided into directly connected signals and MOST communication. The illustration below displays the same information with the Volvo component designations.

Input signals	Output signals
Directly connected:	**Directly connected:** (power supply unless otherwise stated)
Via MOST communication: • Infotainment Control Module (ICM) (16/1) • Multimedia module (MMM) (16/108).	**Via MOST communication:** • Audio module (AUD) (16/105) • Multimedia module (MMM) (16/108) • Infotainment Control Module (ICM) (16/1) • Phone module (PHM) (16/60).

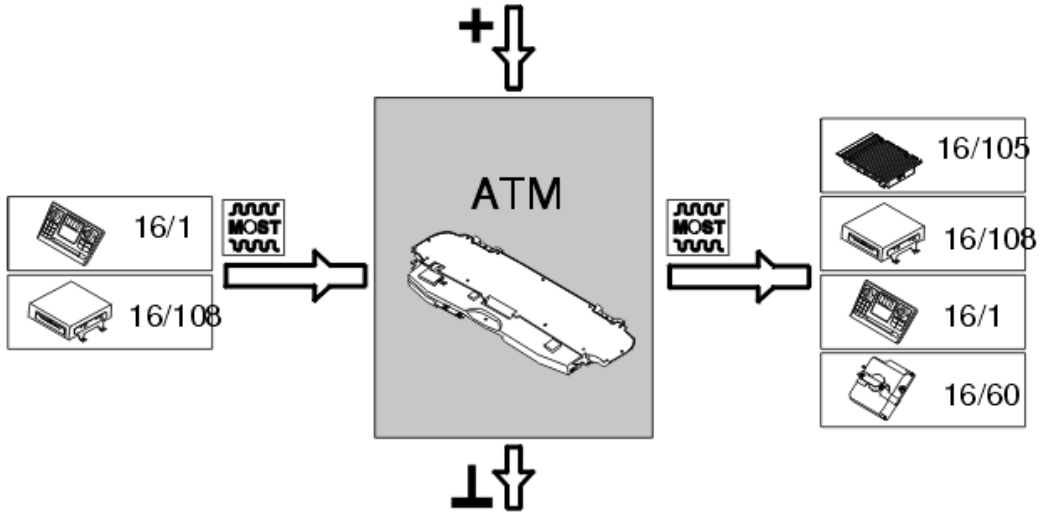

Fig. 54: Identifying Volvo Component Designations
Courtesy of VOLVO CARS CORPORATION

AUDIO MODULE (AUD) (2003-2006)

DESIGN

CONTROL MODULE

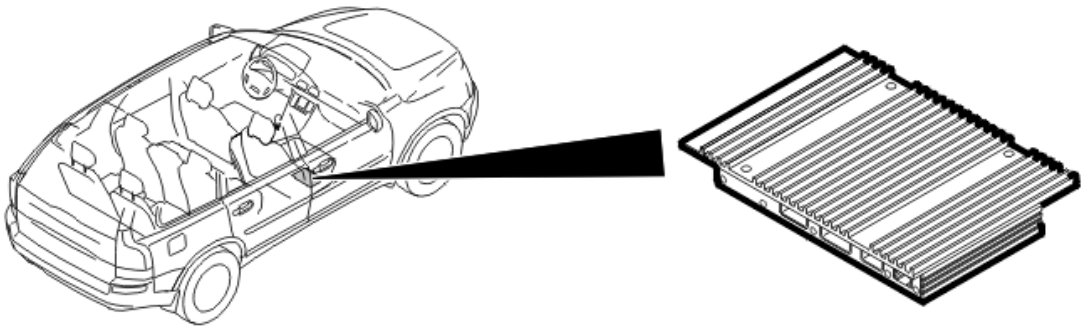

Fig. 55: Identifying Audio Module (Aud)
Courtesy of VOLVO CARS CORPORATION

The audio module (AUD) is an amplifier which is connected to the MOST network. It has the following functions:

- to carry the sound signal transmitted on the MOST network out to the directly connected loudspeakers and to the headsets as analogue signals
- to carry voice messages from the microphone, which is directly connected to the audio module (AUD), to the MOST network
- to transmit requests from the headset panel, which is directly connected to the audio module (AUD), to the relevant control modules on the MOST network to change to the next or the previous track or to change the sound source.

If a subwoofer module (SUB) is installed on the MOST network, the audio module (AUD) can process the incoming signal and transmit it to the subwoofer module (SUB).

There are three versions of the audio module (AUD):

Performance

- Has an output of 25 W per channel. The control module has 4 channels, giving a total output of 100 W.

High Performance

- Has an output of 40 W per channel. The control module has 4 channels, giving a total output of 160 W. There are two versions, one with four headset sockets and one without any headset sockets. These sockets can run headsets with a minimum impedance of 8 ohms.

Premium Sound

- Has an output of 70 W per channel plus an output of 25 W for the channel for the centrally-mounted loudspeaker. The control module has four channels plus the channel for the centrally-mounted loudspeaker. This gives a total output of 305 W. The Premium Sound Audio Module (AUD) has four headset sockets. These sockets can run headsets with a minimum impedance of 8 ohms.

Each version of the audio module (AUD) has a different number of loudspeakers and different loudspeaker models.

All versions of the audio module (AUD) have a microphone input. This is used by the phone module (PHM) for phone calls (handsfree) for example.

FUNCTIONS IN THE AUDIO MODULE (AUD)

The audio module (AUD) can run a number of different functions, but these functions can also be activated by other nodes. An example of these functions is lowering and increasing the volume. The signal comes from the infotainment control module (ICM), but it is the audio module (AUD) that actually changes the volume. The functions are described below.

Functions in the audio module (AUD):

1. **Adjustable volume** , raises and lowers the volume
2. **Adjustable bass** , raises and lowers the bass level
3. **Adjustable treble** , raises and lowers the treble level
4. **System generated sound signals** , assists other nodes in the system with single sound signals generated in the control module, for example alarm signals for the reverse (reverse) warning function
5. **Limiter** , the limiter function in the control module does not permit an increase in the power output level if this leads to a fall in sound quality
6. **Mixing** , mixing allows numerous different sound types to be mixed. In this case, the different sound types are foreground noise, background noise and system generated sound signals. An example of this is where a CD is playing (background noise) and the carphone rings (foreground noise). The ringing signal will be heard through the loudspeakers while the volume of the music drops at the same time
7. **Digital bass speaker output** , the control module transmits sound signals to the bass speakers via the MOST network. The signal is processed in the audio module (AUD) before it is transmitted on the MOST network to the subwoofer module (SUB)
8. **Bass compensation** , the bass from the control module is compensated or modified depending on the volume level and the speed of the car. If the vehicle speed and volume level changes, the bass compensation is also changed
9. **Treble compensation** , the treble in the control module is compensated or modified depending on how the volume is changed. If the volume changes, the treble compensation also changes
10. **Equalizer setting, sound compensation** , there are different settings for the sound from the audio module (AUD). This compensates for factors such as the location of the loudspeakers and the layout of the car interior
11. **Dolby ProLogic II** , a surround decoder for sound reproduction.

There are two types of sound, foreground sound and background sound. The sounds which are foreground and background are listed below.

Foreground sound

- telephone calls

- carphone settings (setting the ring signal)
- navigation
- system generated sound from the audio module (AUD) (different types of alarm sound)
- traffic messages.

Background sound

- analogue radio, AM/FM
- digital radio, DAB
- CD player
- MD player.

The functions in the different versions of the audio module (AUD) are:

Performance

1. adjustable volume
2. adjustable bass level
3. adjustable treble level
4. system generated sound signals
5. limiter.

High Performance

1. adjustable volume
2. adjustable bass level
3. adjustable treble level
4. system generated sound signals
5. limiter
6. mixing
7. digital bass speaker output
8. bass compensation
9. treble compensation
10. equalizer.

Premium Sound

1. adjustable volume
2. adjustable bass level
3. adjustable treble level
4. system generated sound signals

5. limiter
6. mixing
7. digital bass speaker output
8. bass compensation
9. treble compensation
10. equalizer
11. DPL2 - Dolby ProLogic II.

LOUDSPEAKERS

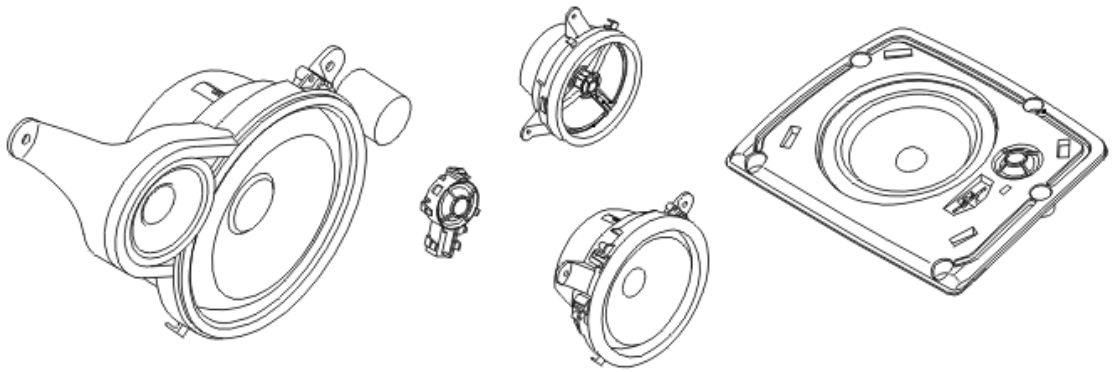

Fig. 56: Identifying Loudspeakers
Courtesy of VOLVO CARS CORPORATION

Two pairs of loudspeakers and one center loudspeaker can be installed in the car.

The two pairs of loudspeakers are:

- front loudspeakers in the front doors
- rear loudspeakers in the rear doors.

The center loudspeaker is positioned in the middle of the dashboard.

In some versions of the audio module (AUD), a treble speaker can be connected to the front and rear speakers. The treble speakers for the front loudspeakers are positioned in the front door at the same height as the door mirrors. For the rear loudspeakers, the treble speakers are positioned in the D-post.

The three audio module (AUD) versions have different loudspeaker arrangements:

Performance

- one pair of front bass speakers
- one pair of rear loudspeakers.

Each loudspeaker consists of a transducer for the entire frequency range. There are no treble speakers connected to this version.

High Performance

- a pair of front bass / mid-range loudspeakers with treble speakers
- a rear pair of loudspeakers (coaxial*) with treble speakers.

The front treble speakers are electrically connected to the same signal cable as the front loudspeakers. The rear treble speakers are electrically connected to the rear loudspeakers.

Premium Sound

- a front pair of 3-way loudspeakers (consisting of a pair of 2-way loudspeakers with treble speakers)
- a rear pair of loudspeakers (coaxial*) with treble speakers.
- a centrally-mounted loudspeaker in the dashboard.

The front treble speakers are electrically connected to the same signal cable as the front loudspeakers. The rear treble speakers are electrically connected to the rear loudspeakers.

*Consists of one bass and one treble transducer integrated in the same unit.

TABLE OF LOUDSPEAKER ARRANGEMENTS

System	Front door / door mirror	Front door	Rear door	D-post	Dashboard
Performance	-	165 mm broadband loudspeaker (16/4, 16/3). Impedance 4 ohms.	165 mm broadband loudspeaker (16/6, 16/5). Impedance 4 ohms.	-	-
High Performance	36 mm treble loudspeaker (16/55, 16/56). Impedance 8 ohms.	165 mm bass and midrange loudspeaker (16/4, 16/3). Impedance 2 ohms.	165 mm coaxial loudspeaker (16/6, 16/5). Impedance 2 ohms.	36 mm treble loudspeaker (16/58, 16/57). Impedance 8 ohms.	-
Premium Sound	36 mm treble loudspeaker (16/55, 16/56). Impedance 8 ohms.	165 mm bass loudspeaker, 80 mm midrange loudspeaker (16/4, 16/3). Impedance 4 ohms.	165 mm coaxial loudspeaker (16/6, 16/5). Impedance 6 ohms.	36 mm treble loudspeaker (16/58, 16/57). Impedance 8 ohms.	2 way center loudspeaker (16/26). The impedance is 6 ohms if a display screen is installed for the multimedia module

					(MMM). The impedance is 8 ohms if a display screen is not installed.

HEADSET PANEL

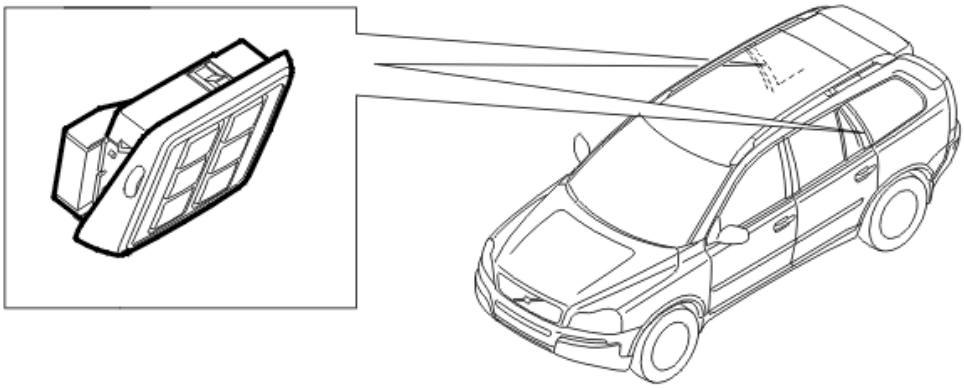

Fig. 57: Locating Headset Panels
Courtesy of VOLVO CARS CORPORATION

Depending on the version of the audio module (AUD), two headset panels can be installed. The panels have two headset sockets each giving a total of four headset sockets.

Each headset socket has a SEL. button which is used to select the sound source, such as CD player, MD player and radio.

Each headset output also has buttons to select the previous and next track or one of the pre-programmed radio channels. The buttons are internally connected to a resistor stage. When the buttons are pressed, different voltages levels are produced. These voltages are interpreted by the control module as three different selections. When any of the buttons are pressed, this data is transmitted to the audio module (AUD). The module then transmits the data via MOST network to the infotainment module (ICM). The infotainment control module (ICM) then changes the track or sound source.

Each headset socket has a volume control which can be used to change the sound level in the headset. The headset panels are in the left and right-hand C-posts.

If a sound source, which has already been selected via the infotainment control module (ICM), is selected the track or radio channel for this sound source cannot be changed via the headset output. There is no difference in priority between the headset outputs. This means that the radio channel or track can be changed via the headset output for a sound source which is being used by another headset output. All headset outputs with the same sound source then change radio channel or track.

The signals to the headset sockets and the buttons on the headset panel are directly connected to the audio module (AUD).

MICROPHONE

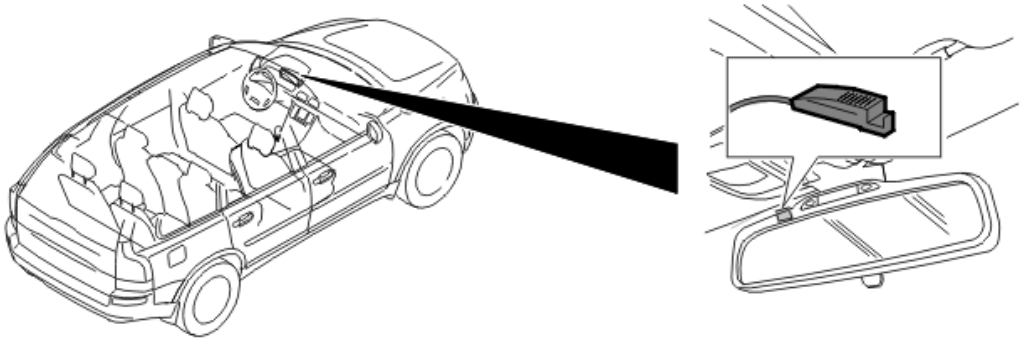

Fig. 58: Locating Microphone
Courtesy of VOLVO CARS CORPORATION

All versions of the audio module (AUD) have a microphone which is directly connected to the control module. The microphone is installed in the rear view mirror.

The microphone is used for functions such as handsfree in the phone module (PHM).

DIAGNOSTIC FUNCTIONS

GENERAL INFORMATION

The control module has a built-in diagnostic system, Volvo Diagnostic, which continuously monitors internal functions as well as input and output signals.

DIAGNOSTIC TROUBLE CODES (DTCS)

A diagnostic trouble code (DTC) is stored if the control module detects a fault. A fault which is detected in the most recent operating cycle is defined as permanent. Other faults are defined as intermittent.

Should a fault disappear for any reason after being permanently stored in the control module as a diagnostic trouble code (DTC), the information remains stored in the control module.

If a fault is no longer permanent, the diagnostic trouble code (DTC) remains as intermittent.

READING AND ERASING DIAGNOSTIC TROUBLE CODES (DTCS)

Stored diagnostic trouble codes (DTCs) can be read off and erased using this function.

Diagnostic trouble codes (DTCs) can only be erased once all the diagnostic trouble codes (DTCs) have been read off at least once.

NOTE: Certain functions are unavailable until the diagnostic trouble codes (DTCs) have

been erased.

READING OFF THE CONTROL MODULE IDENTIFICATION

VIDA identifies control modules by reading off a number of codes from the control module memory.

The codes contain information about the control module:

- hardware P/N (control module without software)
- hardware serial number (control module without software)
- software P/N
- diagnostic software P/N.

READING OFF EXTENDED FAULT-TRACING INFORMATION

This function can be used to read parameters, status identifiers and counters stored at the same time as a diagnostic trouble code (DTC). These are called frozen values.

For further information, see **DESCRIPTION OF VEHICLE COMMUNICATION INFORMATION** .

DOWNLOADING SOFTWARE AND REPLACING THE CONTROL MODULE

New software can be downloaded into the audio module (AUD). When ordering software, the hardware and the software in the car is compared to the information in the Volvo central database. If the comparison is OK the software is downloaded to the control module.

If the comparison between the car and Volvo central database is not OK, the database is updated with the car configuration. When this is complete the software is downloaded.

The control module is under the right-hand front seat. The seat must be removed to replace the control module

After replacing the control module, the unique serial numbers of the control module are checked by the infotainment control module (ICM). The installed control module will not work if the serial number is incorrect.

Try turning the ignition off and on if there are problems after the software is downloaded and the control module is not working.

The MOST network is used for a total software reload.

FUNCTION

PLAYING BACK SOUND

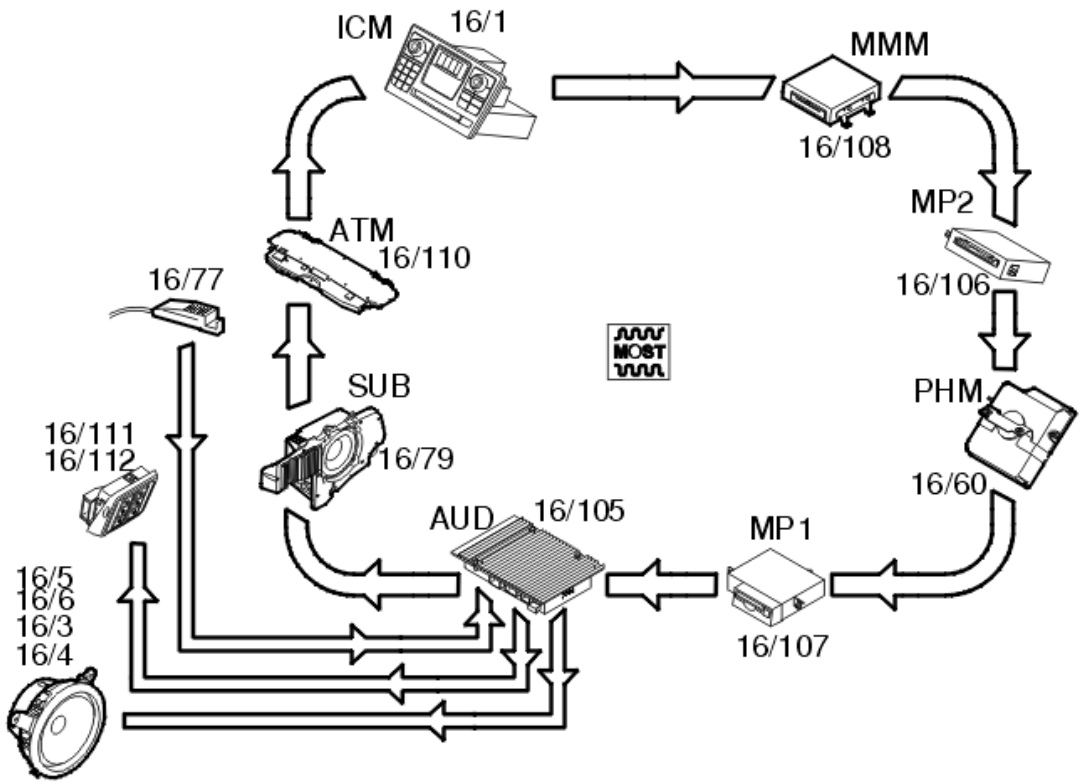

Fig. 59: Identifying Volvo Component Designations
Courtesy of VOLVO CARS CORPORATION

All functions in the audio module (AUD) (16/105) are controlled by the signals from other nodes in the MOST network.

To play back sound, a control module transmits a request to the infotainment module (ICM) (16/1). The infotainment control module (ICM) distributes the request to the audio module (AUD). The control module is then able to transmit signals via the MOST network to the audio module (AUD).

The infotainment control module (ICM) (16/1) processes changes to the sound, balance, bass, treble and equalizer settings. It transmits the changes via the MOST network to the audio module (AUD) (16/105) which then carries out the changes.

The control modules on the MOST network which use the audio module (AUD) to play back sound are:

- the antenna module (ATM) (16/110) for AM/FM radio
- the antenna module (ATM) (16/110) for digital radio, DAB
- the phone module (PHM) (16/60) for handsfree calls
- multimedia module (MMM) (16/108) for voice guiding (navigation)
- the MD module (MP1) (16/107) for minidiscs
- the CD module (MP2) (16/106) for compact discs.

The audio module (AUD) can generate simple sound signals which are used for example to warn the driver and passengers if there are problems. These signals are transmitted from the infotainment control module (ICM) to the audio module (AUD).

When the audio module (AUD) has received optical signals on the MOST network, these signals are sent onwards as analog signals to the directly connected front (16/4, 16/3) and rear (16/6, 16/5) loudspeakers. Certain versions of the control module have several directly connected components such as front treble speakers (16/55, 16/56), D-post loudspeakers (16/58, 16/57), center loudspeaker (16/26) and headset sockets (16/111, 16/112). The control module transmits analog signals to these components.

The microphone (16/77) is directly connected to the audio module (AUD). The microphone transmits analog signals to the control module.

When sound compensation is required, the infotainment control module (ICM) transmits sound compensation signals via the MOST network to the audio module (AUD).

Certain versions of the audio module (AUD) can also generate a digital subwoofer signal from the signal transmitted to the audio module (AUD). This signal is then transmitted via the MOST network to the subwoofer module (SUB) (16/79). The signal which is transmitted from the audio module (AUD) to the subwoofer module (SUB) is a summated and filtered loudspeaker signal.

The bass speaker signals are transmitted from the audio module (AUD) on a dedicated channel on the MOST network.

When the MOST network starts after the ignition is switched on, the infotainment control module (ICM) transmits data to the audio module (AUD) indicating whether or not there is a subwoofer module (SUB) available on the MOST network.

SELECTING THE SOUND SOURCE AND TRACK FROM THE HEADSET PANEL

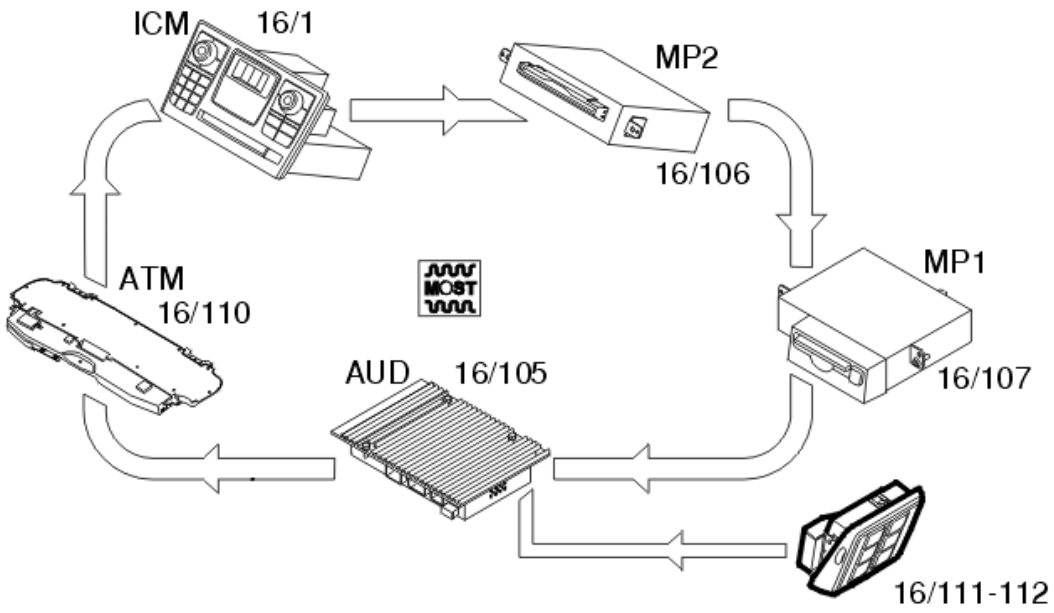

Fig. 60: Identifying Volvo Component Designations
Courtesy of VOLVO CARS CORPORATION

There are two identical button arrangements (16/111, 16/112) on the headset panel, one for each socket. These buttons are used to change the sound source and track.

When a button is pressed on the headset panel, the audio module (AUD) identifies which button it was. This signal is transmitted between the headset panel and the audio module (AUD) on a directly connected cable. The audio module (AUD) (16/105) then sends the data onwards via the MOST network to the infotainment control module (ICM) (16/1) which in turn transmits the data onwards to the selected sound source.

The sound sources which can be selected are:

- radio (ATM) (16/110)
- CD player (MP2) (16/106)
- MD player (MP1) (16/107).

SYSTEM OVERVIEW

AUDIO MODULE (AUD)

The primary task of the audio module (AUD) is to manage the functions for:

- the front, center and rear loudspeakers
- the subwoofer module (SUB)
- the headset, headset panel
- the microphone.

The audio module (AUD) communicates with directly connected components and with other control modules and components via the MOST network, a fiber optic network used for communication.

The audio module (AUD) checks executed activations and input/output signals via its integrated diagnostics. If the control module detects a fault, a diagnostic trouble code is generated. Any diagnostic trouble codes are stored in the control module memory. The information can be read with the help of VIDA via the data link connector in the car.

In order to work correctly on the MOST network, the infotainment control module (ICM) checks that the serial number in the audio module (AUD) is correct. The audio module (AUD) will not function if the number is incorrect. Try switching the ignition off and on if there are problems when replacing the control module.

A simple way to check whether the control module is functioning is to switch on the radio and to then change the volume. The volume from the loudspeakers should rise and fall with the changes.

The Audio module (AUD) is a slave module on the MOST network. The infotainment control module (ICM) is the master control module.

There are three versions of the audio module (AUD):

- Performance
- High Performance
- Premium Sound.

The number of functions and loudspeaker outlets varies between the versions. The power output of the versions is also different.

The control module is under the right-hand front seat.

SIGNALS

The table below summarizes the input signals to and output signals from the audio module (AUD). The signal types are divided into directly connected signals and MOST communication. The illustration below displays the same information with the Volvo component designations.

Input signals	Output signals
Directly connected: • Microphone (16/77) analogue signals • Headset panel (16/111, 16/112) analogue control signals.	**Directly connected:** • Headset panel (16/111, 16/112) analogue signals • Loudspeaker left front (16/4, 16/55) • Loudspeaker right front (16/3, 16/56) • Loudspeaker left rear (16/6) • Loudspeaker right rear (16/5) • Treble loudspeaker left D-post (16/57) • Treble loudspeaker right D-post (16/58).
Via MOST communication: • Infotainment Control Module (ICM) (16/1) master control module • Aerial module (ATM) (16/110) • CD module (MP2) (16/106) • MD module (MP1) (16/107) • Phone module (PHM) (16/60) • Multimedia module (MMM) (16/108).	**Via MOST communication:** • Infotainment Control Module (ICM) (16/1) master control module • Subwoofer module (SUB) (16/79) • Phone module (PHM) (16/60) • Multimedia module (MMM) (16/108).

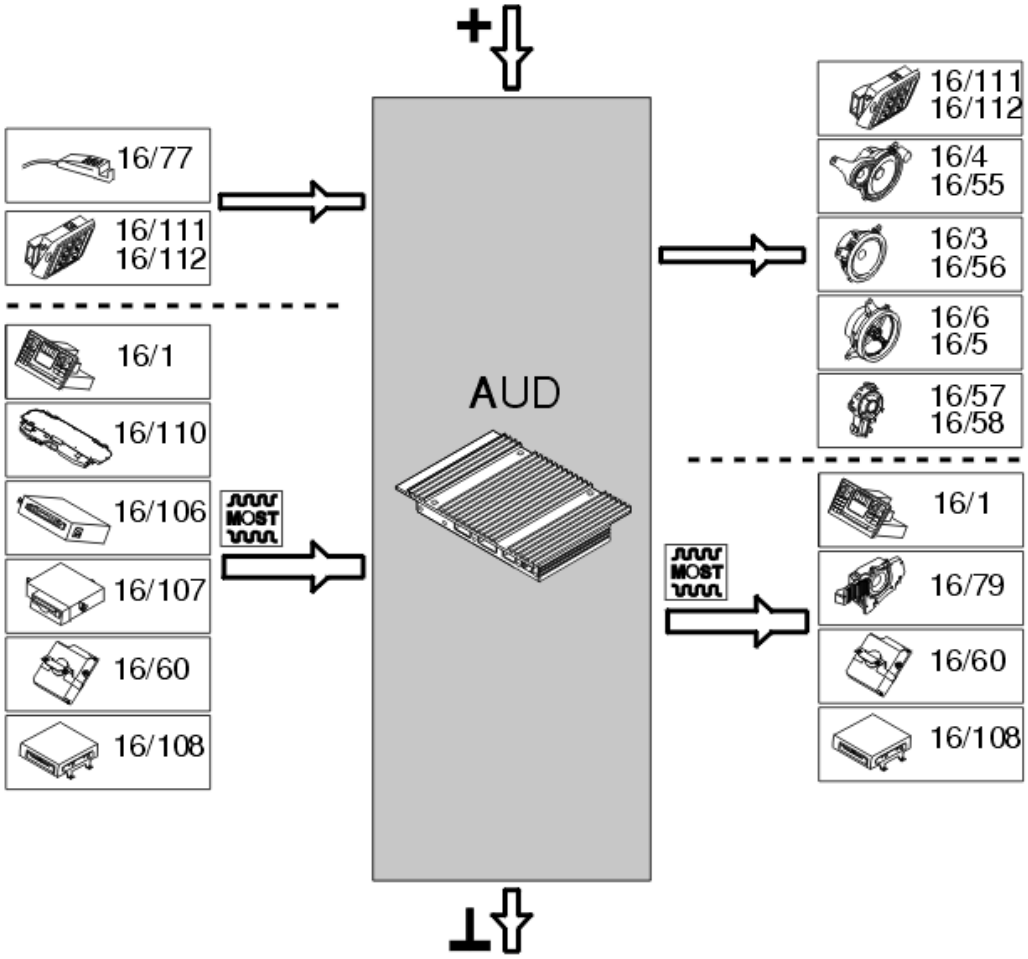

Fig. 61: Identifying Volvo Component Designations
Courtesy of VOLVO CARS CORPORATION

AUDIO MODULE (AUD) (2007-2012)

DESIGN

CONTROL MODULE

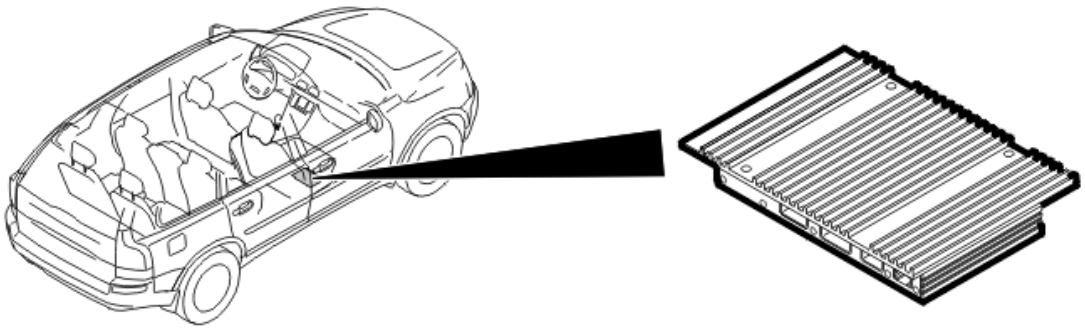

Fig. 62: Identifying Audio Module
Courtesy of VOLVO CARS CORPORATION

The audio module is an amplifier which is connected to the MOST network. It has the following functions:

- to carry the sound signal transmitted on the MOST network out to the directly connected loudspeakers and to the headsets as analogue signals
- to carry voice messages from the microphone, out on the MOST network.
- to transmit requests from the headset panel to change to the next or the previous track or to change the sound source.

If there is a subwoofer module installed on the MOST network, the audio module can process the incoming signal and transmit it to the subwoofer module.

The following versions of Audio module are available:

- Headset panel
- Headset panel

Audio module and have 4x40 W output and has 5x130 W.

Each version of the audio module (AUD) has a different number of loudspeakers and different loudspeaker models.

FUNCTIONS IN THE AUDIO MODULE (AUD)

The audio module (AUD) can run a number of different functions, but these functions can also be activated by other nodes. An example of these functions is lowering and increasing the volume. The signal comes from the infotainment control module (ICM), but it is the audio module (AUD) that actually changes the volume. The functions are described below.

1. **Adjustable volume** , raises and lowers the volume
2. **Adjustable bass** , raises and lowers the bass level
3. **Adjustable treble** , raises and lowers the treble level

4. **System generated sound signals** , assist other nodes in the system with single sound signals generated in the control module, for example alarm signals for the park assistance function.
5. **Limiter** , the limiter function in the control module does not permit an increase in the power output level if this leads to a fall in sound quality
6. **Mixing** , mixing allows numerous different sound types to be mixed. In this case, the different sound types are foreground noise, background noise and system generated sound signals. An example of this is where a CD is playing (background noise) and the carphone rings. The ringing signal will be heard through the loudspeakers while the volume of the music drops at the same time
7. **Digital bass loudspeaker output,** via MOST network, transmits signals to Subwoofer module. No foreground noise must be included in the signals.
8. **Bass compensation** , the bass from the control module is compensated or modified depending on the volume level and the speed of the car. If the vehicle speed and volume level changes, the bass compensation is also changed
9. **Treble compensation** , the treble in the control module is compensated or modified depending on how the volume is changed. If the volume changes, the treble compensation also changes
10. **Equalizer setting, sound compensation** , there are different settings for the sound from the audio module. This compensates for factors such as the location of the loudspeakers and the layout of the car interior.
11. a surround decoder for playing sound.

There are two types of sound, foreground sound and background sound. The sounds which are foreground and background are listed below.

Foreground sound:

- navigation
- system generated sound from the audio module
- traffic messages.

Background sound:

- analogue radio, AM/FM
- CD player
- playing sound via the AUX input.

The functions in the different versions of the audio module are:

1. adjustable volume
2. adjustable bass level
3. adjustable treble level
4. system generated sound signals
5. limiter
6. mixing

7. digital bass speaker output
8. bass compensation
9. treble compensation
10. equalizer

1. adjustable volume
2. adjustable bass level
3. adjustable treble level
4. system generated sound signals
5. limiter
6. mixing
7. digital bass speaker output
8. bass compensation
9. treble compensation
10. equalizer
11. DPL2 - Dolby ProLogic II.

LOUDSPEAKERS

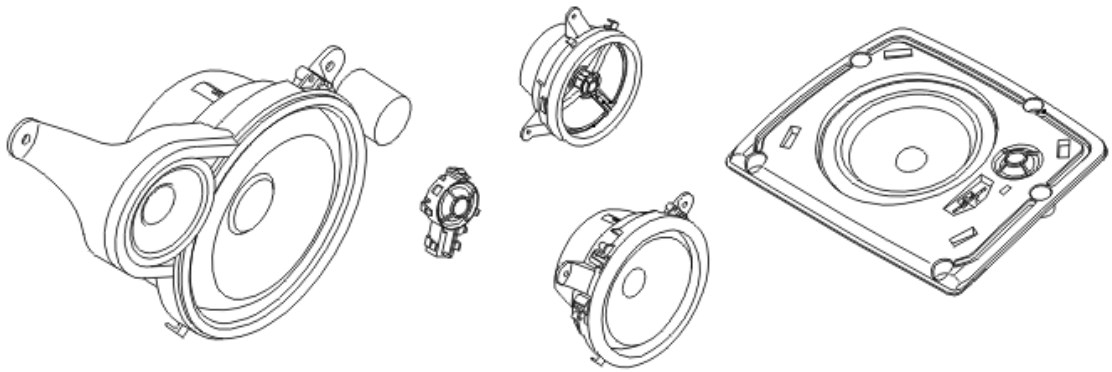

Fig. 63: Identifying Loudspeakers
Courtesy of VOLVO CARS CORPORATION

and

For High Performance and High Performance HP, 8 loudspeakers are used. It is a 2 way loudspeaker system with base/mid-range speakers and separate trebles. The speakers are installed in the front and rear doors. There are also 2 speakers installed in the D-posts.

The impedance is 2 ohms for the base/mid-range loudspeakers and 8 ohms for the treble speakers.

For Premium Sound, 9 loudspeakers are used. It is a 2 way loudspeaker system with base/mid-range and separate trebles. The speakers are installed in the front and rear doors. There are also 2 loudspeakers installed in

the D-posts. To increase the sound there is a 2 way central loudspeaker in the dashboard.

The impedance is 4 ohms for the base/mid-range loudspeakers and 8 ohms for the trebles. The center loudspeaker impedance is 6 ohms if a display screen is installed in the dashboard, otherwise the central loudspeaker impedance is 8 ohms.

HEADSET PANEL

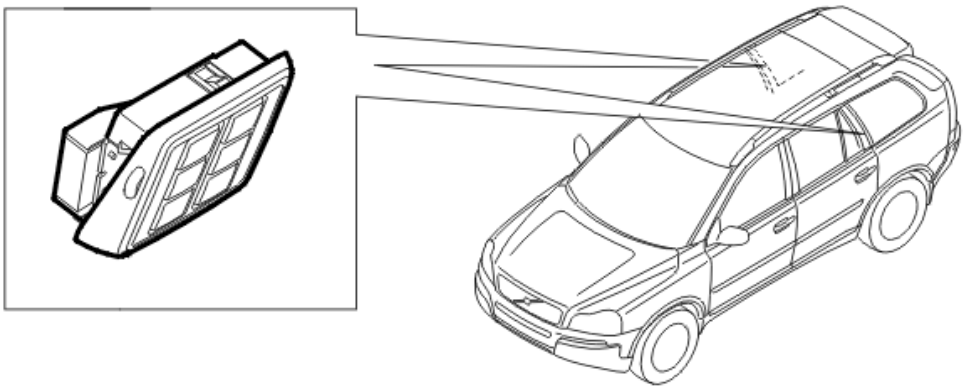

Fig. 64: Identifying Headset Panels
Courtesy of VOLVO CARS CORPORATION

The Audio module (AUD) has outputs for connections to the left and right headset panel. The headset panels are located on the inside of the C-post. Each headset panel has a control for volume, next track, previous track and source.

MICROPHONE

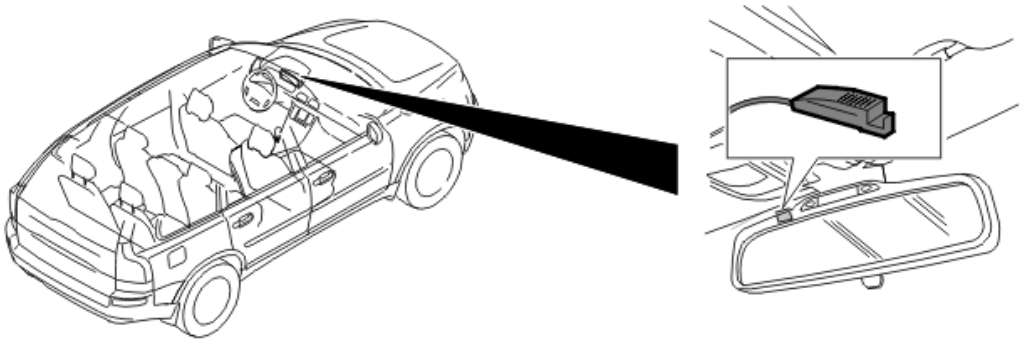

Fig. 65: Locating Microphone
Courtesy of VOLVO CARS CORPORATION

The microphone is directly connected to the audio module (AUD). The microphone transmits analog signals to the control module.

Telephone calls can be made either hands free or using the handset. During handsfree calls, the microphone and

speaker are used which are connected to the audio module (AUD). The microphone is phantom fed via the audio module (AUD).

DIAGNOSTIC FUNCTIONS

GENERAL INFORMATION

The control module has a built-in diagnostic system, Volvo Diagnostic, which continuously monitors internal functions as well as input and output signals.

DIAGNOSTIC TROUBLE CODES (DTCS)

A diagnostic trouble code (DTC) is stored if the control module detects a fault. A fault which is detected in the most recent operating cycle is defined as permanent. Other faults which are detected are defined as intermittent.

If for some reason a fault disappears after being stored in the control module as a permanent diagnostic trouble code, the information remains stored in the control module. If a fault is no longer permanent, the diagnostic trouble code remains as intermittent.

READING AND ERASING DIAGNOSTIC TROUBLE CODES (DTCS)

Stored diagnostic trouble codes (DTCs) can be read off and erased using this function.

Diagnostic trouble codes (DTCs) can only be erased once all the diagnostic trouble codes (DTCs) have been read off at least once.

NOTE: Certain functions are unavailable until the diagnostic trouble codes (DTCs) have been erased.

READING OFF THE PARAMETERS

This function is used to read the status or value of parameters. The status or value can be presented digitally.

READING OFF THE CONTROL MODULE IDENTIFICATION

The diagnostic tool identifies control modules by reading off a number of codes from the control module memory.

The codes contain information about the control module:

- hardware P/N (control module without software)
- hardware serial number (control module without software)
- software P/N
- diagnostic software P/N

READING OFF EXTENDED DIAGNOSTIC TROUBLE CODE (DTC) INFORMATION

This function can be used to read parameters, status identifiers and counters stored at the same time as a diagnostic trouble code (DTC). These are called frozen values.

DOWNLOADING SOFTWARE AND REPLACING THE CONTROL MODULE

GENERAL INFORMATION

New software can be downloaded into the audio module (AUD). When software is ordered the software and hardware of the vehicle are compared with Volvo's central database. If the comparison corresponds then the software is downloaded into the control module.

If the comparison between the car and Volvo's central database does not correspond, then the database is updated with the vehicle's configuration. When this is complete the software is downloaded.

REPLACING THE CONTROL MODULE

The control module is located under the right front seat.

After replacement of the audio module (AUD), the infotainment control module (ICM) checks its unique serial number. If the serial number is incorrect, the audio module (AUD) will not work. If the problem remains after software download, try switching the ignition off/on.

Select the MOST network for a total download of software to the vehicle.

FUNCTION

PLAYING BACK SOUND

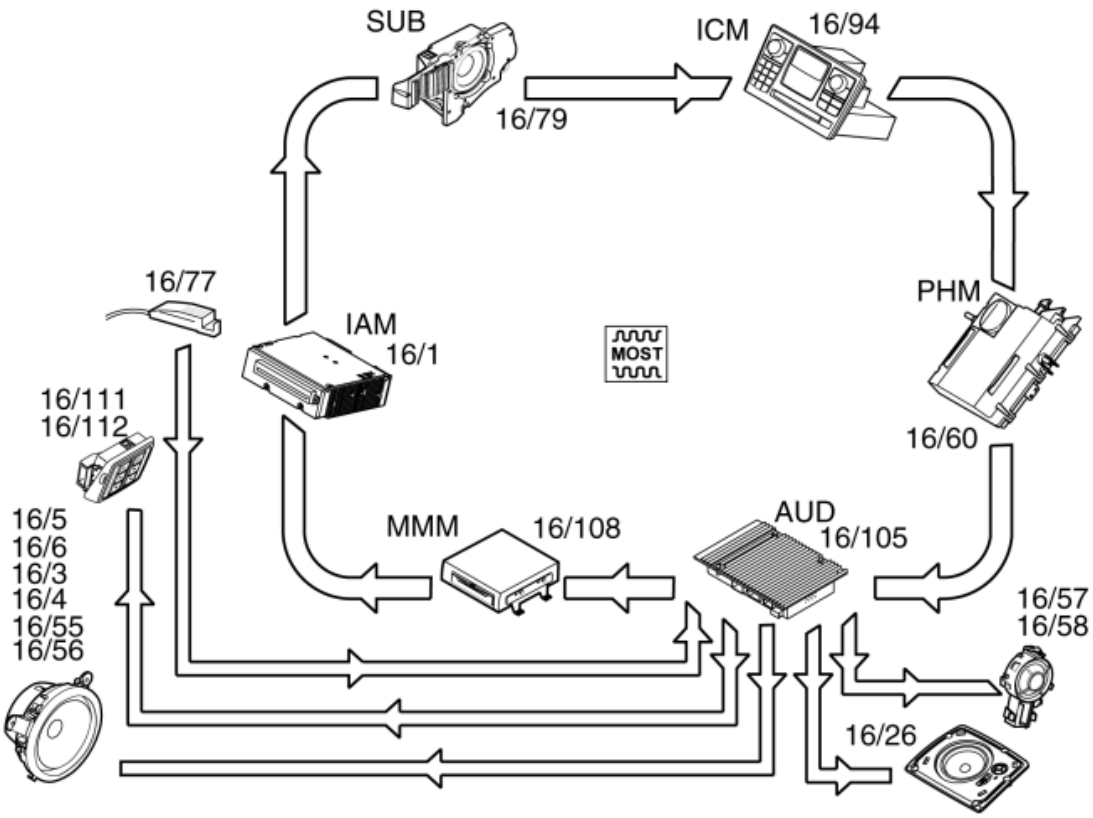

Fig. 66: Identifying Volvo Component Designations
Courtesy of VOLVO CARS CORPORATION

All functions in the audio module (AUD) (16/105) are controlled by the signals from other nodes in the MOST network.

To initiate audio playback, a control module transmits a request to the infotainment module (ICM) (16/94). The infotainment control module (ICM) allocates the request to the audio module (AUD) then the control module can transmit data via the MOST network to the audio module (AUD).

The infotainment control module (ICM) processes changes to the volume, balance, bass, treble and equalizer settings. The infotainment control module (ICM) transmits the changes via the MOST network to the audio module (AUD) which then carries out the changes.

The control modules on the MOST network which use the audio module (AUD) to play back sound are:

- multimedia module (MMM) (16/108) for voice guiding (navigation)
- integrated audio module (IAM) (16/1)
- Subwoofer module (SUB) (16/79)
- phone module (PHM) (16/60), handsfree speaker sound.

The audio module (AUD) can generate simple sound signals which are used for example to warn the driver and passengers if there are problems. These signals are transmitted from the infotainment control module (ICM) via

the MOST network to the audio module (AUD).

When the Audio module (AUD) has received optical signals on the MOST network, the signals are transmitted onwards as analog signals to:

- loudspeaker left front (16/4, 16/55)
- loudspeaker right front (16/3, 16/56)
- Loudspeaker left rear (16/6)
- Loudspeaker right rear (16/5)
- loudspeaker left D-post (16/57)
- loudspeaker right D-post (16/58)
- Center loudspeaker (16/26) (option).
- headset panel, left, rear (16/111)
- headset panel, right, rear (16/112).

The microphone (16/77) is directly connected to the audio module (AUD). The microphone transmits analog signals to the control module.

When sound compensation is required, the infotainment control module (ICM) transmits sound compensation signals via the MOST network to the audio module (AUD).

SELECTING THE SOUND SOURCE AND TRACK FROM THE HEADSET PANEL

There are two identical button arrangements (16/111, 16/112) on the headset panel, one for each socket. These buttons are used to change the sound source and track.

When a button is pressed on the headset panel, the audio module (AUD) (16/105) identifies which button it was. This signal is transmitted between the headset panel and the Audio module (AUD) on a directly connected cable. The Audio module (AUD) then transmits information on, via the MOST network, to the Infotainment control module (ICM) (16/94), which, in turn transmits the information on to the selected sound source.

SYSTEM OVERVIEW

CONTROL MODULE

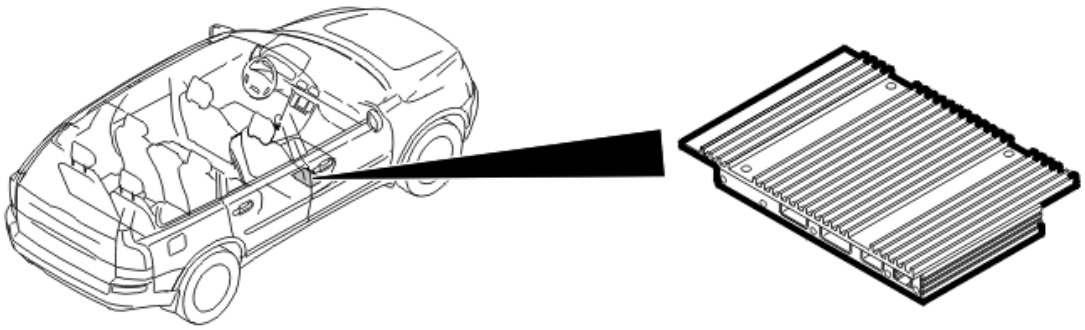

Fig. 67: Identifying Audio Module
Courtesy of VOLVO CARS CORPORATION

The most important task of the audio module (AUD) is handling the functions of the front, rear and center speakers and microphone.

If a subwoofer module (SUB) is installed on the MOST network, the audio module (AUD) transmits signals to the subwoofer module (SUB).

The audio module (AUD) communicates with directly connected components and with other control modules and components via the MOST network, a fiber optic network used for communication.

The Audio module (AUD) checks internal components, executed activations and input/output signals via its integrated diagnostics. If the control module detects a fault, a diagnostic trouble code is generated. Any diagnostic trouble codes are stored in the control module memory. The information can be read via the data link connector in the vehicle.

In order to work correctly on the MOST network, the infotainment control module (ICM) checks that the serial number in the audio module (AUD) is correct. The audio module (AUD) will not function if the number is incorrect. Try switching the ignition off and on if there are problems when replacing the control module.

A simple way to check whether the control module is functioning is to switch on the radio and to then change the volume. The volume from the loudspeakers should rise and fall with the changes.

The Audio module is a slave module on the MOST network. The infotainment control module is the master control module.

The following versions of Audio module are available:

- Headset panel
- Headset panel

The number of functions and loudspeaker outlets varies between the versions. The power output of the versions is also different.

The control module is located under the right front seat.

SIGNALS

The table below summarizes the input signals to and output signals from the audio module (AUD). The signal types are divided into directly connected signals and MOST communication. The illustration below displays the same information with the Volvo component designations.

Input signals	Output signals
Directly connected: • Power supply • Ground • Microphone (16/77) • Headset panel (control signal) (16/111, 16/112)	**Directly connected:** • Loudspeaker left front (16/4, 16/55) • Loudspeaker right front (16/3, 16/56) • Loudspeaker left rear (16/6) • Loudspeaker right rear (16/5) • Center loudspeaker (16/26) (option). • Loudspeaker left D-post (16/57) • Loudspeaker right D-post (16/58) • Headset panel (16/111, 16/112) • Microphone (16/77) (phantom feed)
Via MOST communication: (ring network) • Infotainment control module (ICM) (16/94), main control module • Integrated audio module (IAM) (16/1) • Phone module (PHM) (16/60) • Multimedia module (MMM) (16/108)	**Via MOST communication:** (ring network) • Infotainment control module (ICM) (16/94), main control module • Multimedia module (MMM) (16/108) • Subwoofer module (SUB) (16/79) • Phone module (PHM) (16/60)

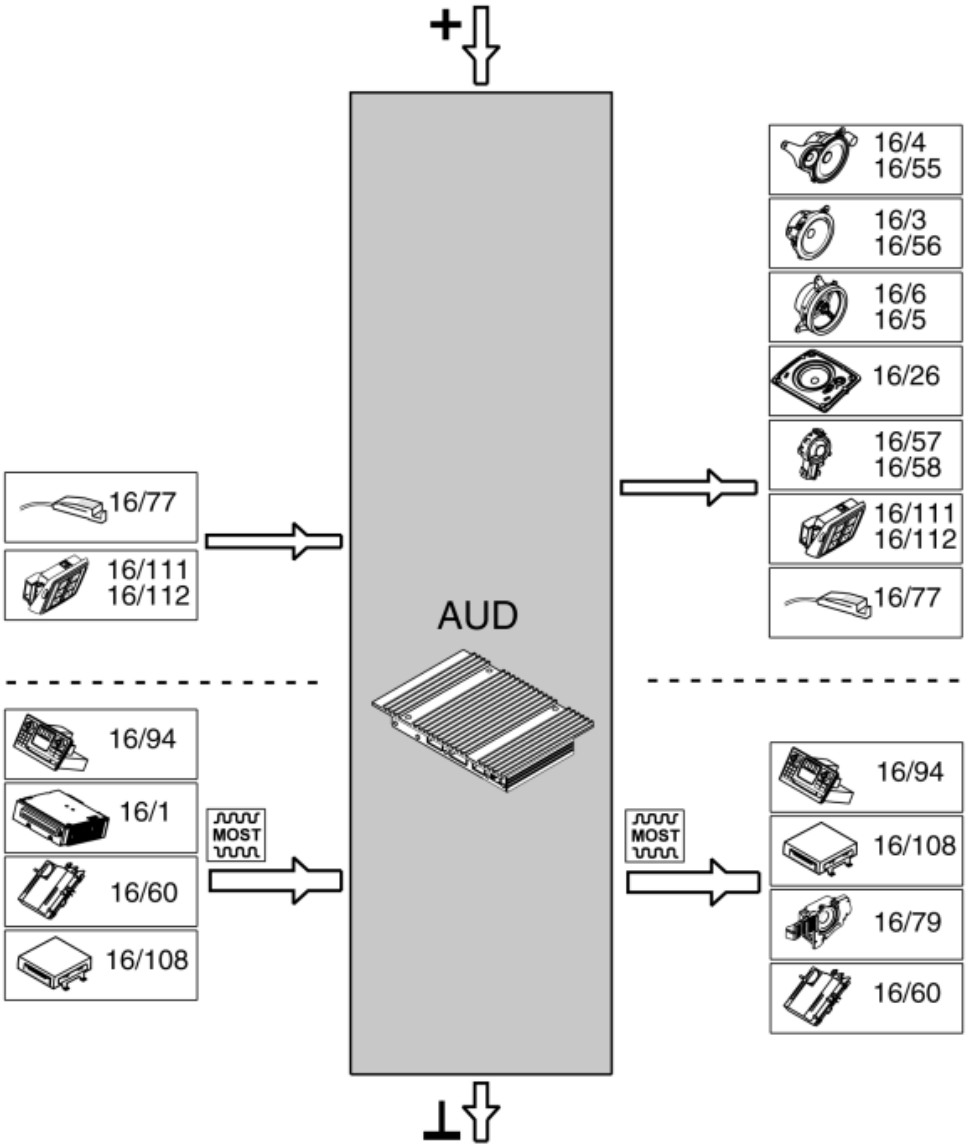

Fig. 68: Identifying Volvo Component Designations
Courtesy of VOLVO CARS CORPORATION

BATTERY (ALL)

DESIGN AND FUNCTION

INTRODUCTION

The battery type used in most cars is usually know as a lead accumulator. These batteries are so named because the electrodes are lead and the role of the battery is to store (accumulate) energy.

A key characteristic of lead accumulators is that they can meet the extreme physical requirements for charging and discharging. Lead accumulators provide optimal performance as both starter and reserve power batteries. Lead accumulators are relatively cheap to produce and can store large amounts of energy. As a result, lead accumulators make up in excess of 50% of the entire battery market.

PRINCIPLE

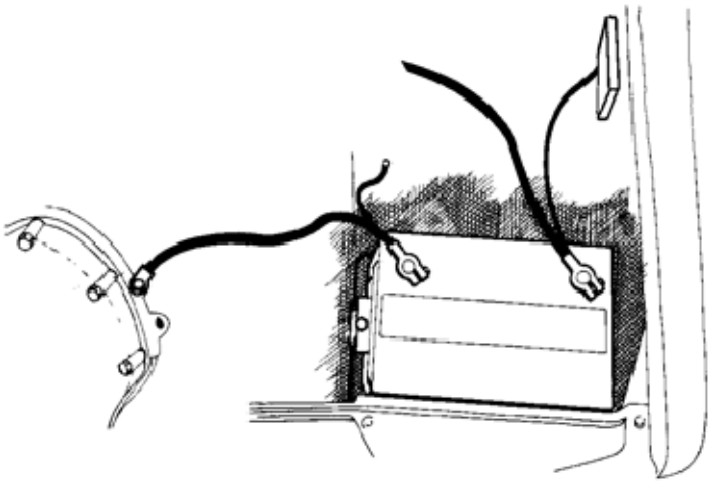

Fig. 69: Battery Principle
Courtesy of VOLVO CARS CORPORATION

A battery is a unit which stores chemical energy which can then be converted into electrical energy as required. When the battery is connected to an external source of consumption (the car starter motor for example), the stored chemical energy is converted into electrical energy and current flows through the circuit.

The start battery in a car, the lead accumulator, is rechargeable. Such a battery can be recharged repeatedly, whereby electrical energy is converted to chemical energy.

FUNCTION

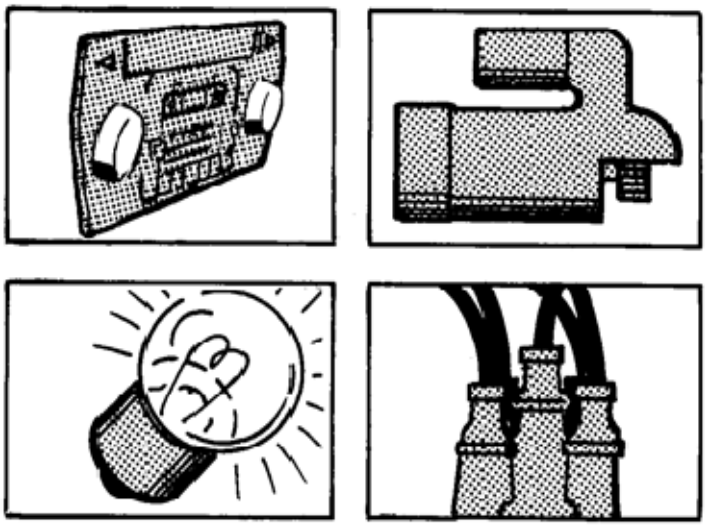

Fig. 70: Identifying Components Which Require Battery Current
Courtesy of VOLVO CARS CORPORATION

The function of the battery in a car is to supply the car with a stable voltage in all situations. One of the tasks of the battery is to provide a current when starting the engine. Other tasks are to provide a current to components (such as the parking lamps) which require current when the engine is not running (i. e. when the generator (GEN) is not charging). The battery also operates as an energy reserve when the capacity of the generator (GEN) is insufficient and needs to be supplemented.

A BATTERY WORKS AS FOLLOWS

The battery consists of several cells. Schematically, a battery can be said to be made up of two electrodes, one positive and one negative. These electrodes are different materials, which are submerged in a container filled with electrolyte, often called battery acid. As a result of the different electrode materials, there is an electrical charge between the positive and negative electrodes. There is a chemical reaction between the electrodes and the electrolyte causing electrical energy to be generated. If the positive and the negative poles of the electrodes are connected to form a closed circuit, a current flows through the circuit.

In a lead accumulator, the positive electrode consists of lead oxide and the negative electrode of porous lead. The electrolyte consists of diluted sulphuric acid ($H_2 SO_4$) which is a mixture of concentrated sulphuric acid and distilled or deionized water.

BATTERY TYPES

In principle, lead batteries can be divided into two different categories:

- Open batteries
- Sealed batteries

Open batteries

In principle, open batteries have free-hanging plates in the battery box, most often insulated from each other by

the negative plate being located in a small separator bag of polyethylene. The electrolyte is highly viscous and can flow freely between the plates.

A maintenance-free battery is normally an open battery where the design has reduced the gas and also has made the battery box so airtight that any gases stay in place. A lot of acid means that the fluid will last for its service life without topping up.

Sealed batteries (recombination batteries)

For sealed batteries the battery box is designed as a pressure vessel with relief valves and go under the name VRLA (Valve Regulated Lead Acid), that is, valve-controlled lead-acid batteries.

If you shut in the acid and hydrogen gas then these can react with each other and be reformed to water. This is called recombination and is a good way to almost completely eliminate fluid losses. It is not possible to shut in and recycle everything, but it can be reduced significantly. The sealed batteries can be divided into two groups:

- Gel batteries
- AGM-batteries

Gel batteries

A gel battery has a few substances, often silicone compounds, added in the electrolyte so that it gels. Thus there is no free-floating acid that can run out of the battery.

Gel batteries have good capacity, but due to the slightly higher resistance in the low viscosity acid, they may be limited as start batteries. They can handle deep cycle discharges very well, that is, when you slowly discharge the batteries a lot several times.

Gel batteries are very rugged and are often used, e. g., in cleaning machines and golf carts.

The small volume of electrolyte in the battery and that it is low viscosity makes the battery sensitive to dehydration that an overcharge with resulting gas generation could entail.

AGM-batteries

In AGM-batteries the electrolyte is kept in place by the separator paper, consisting of a fibreglass mat (AGM = Absorbed Glass Mat), working as a "sponge". The capillary forces in the separator means that electrolyte ends up in the right place. The batteries can be built with very thin separators, which keeps down the internal resistance. This means that that you can get high power from a small volume, making it perfect as start battery.

The fibreglass mat is quite thin, which makes for a small electrolyte volume in the battery. This makes the battery sensitive to dehydration that an overcharge with resulting gas generation could entail.

PROPERTIES (A FEW TYPICAL PROPERTIES)

Open batteries	
Advantages:	***Disadvantages:***

• Lower price in relation to the current that it can provide. • Low weight in relation to the current that is can provide. • Can handle high charging voltage. • Water can be filled (not maintenance-free batteries).	• Damaged if discharged too much, too many times. • Must be installed standing. • Need periodic maintenance (not maintenance-free batteries). • Higher degree of self-discharge. • Not very vibration-resistant. • Acid may leak out if battery tilts over.
Sealed batteries AGM-batteries	
Advantages: • No maintenance needed during the battery's lifetime. • No gases, no corrosion, no acid spills. • Low degree of self-discharge. • Extremely vibration-resistant. • Withstands several deep-cycle discharges.	***Disadvantages:*** • Higher price in relation to capacity. • Higher weight in relation to capacity. • Requires careful control of charging voltage. • Sensitive to overcharging. • Not possible to fill water.

THE CONSTRUCTION OF THE BATTERY

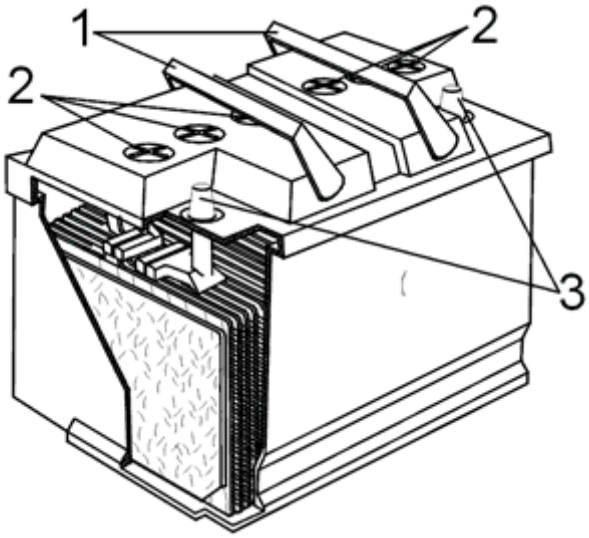

Fig. 71: Battery Construction
Courtesy of VOLVO CARS CORPORATION

Battery

1. Handle (on certain battery models)
2. Plugs (not maintenance-free as well as AGM-batteries)
3. Positive and negative posts.

The battery is in a plastic container and has six internal chambers, one for each cell. These chambers are not connected to each other. This means that the electrolyte level can drop in one chamber without affecting the level in the other chambers. The cells are connected in series by a sealed joint between each chamber.

On the top of some "open" batteries, there is a cover with six plugs, one for each cell. The plugs can be opened to check electrolyte level and for topping up with battery water. Maintenance-free batteries as well as AGM-batteries do not have these plugs and therefore cannot be topped up with battery water.

The battery is filled with electrolyte. The electrolyte consists of diluted sulphuric acid ($H_2 SO_4$) which is a mixture of concentrated sulphuric acid and distilled or deionized water. Electrolyte is often referred to as battery acid. Electrolyte has a density of 1.28 g/cm^3 when the battery is fully charged.

A battery is built up of two or more cells connected in series depending on which terminal voltage is desired. An open car battery consists of six cells and the terminal voltage of a fully charged battery is 12.72 V, that is 2.12 V per cell. For AGM-batteries, the max. terminal voltage of a fully charged battery is 12.93 V.

The AGM-batteries' container is provided with a safety valve. The purpose is to protect the battery against too high pressure inside the battery. Too high pressure can occur in case of incorrect charging, e. g., with too high voltage.

NOTE: The battery is damaged if the safety valve has been activated.

Evacuation hose (not sealed batteries)

Certain batteries (such as genuine Volvo batteries) have an evacuation hose. This applies to car models where the battery is located in the cargo compartment (not in the engine compartment). The function of the evacuation hose is to lead any gases (oxyhydrogens) that build up in the battery during charging away from the cargo compartment out into the open air.

CAUTION: The evacuation hose must be connected at all times when the battery is connected. Always remember to connect the hose and ensure that the hose is routed downwards to the dedicated outlet in the bodywork when replacing the battery

THE CONSTRUCTION OF THE CELLS

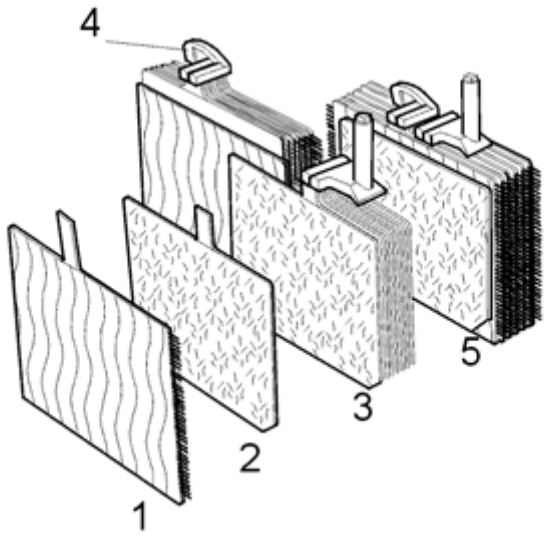

Fig. 72: Construction Of The Cells
Courtesy of VOLVO CARS CORPORATION

The construction of the cells

1. Positive plate in separator
2. Negative plate
3. Positive and negative plate assembly
4. Connection
5. Plate assembly for one cell.

A cells consists of several positive and negative plates. These plates are welded together in groups by plate straps. These plates function as electrodes in the cell. Each positive cell is in a type of isolator, known as a separator. The task of the separator is to separate the positive and negative plates and to catch any particles that have detached from the positive plate, thus preventing short-circuits. Each cell contains a combination of such plates connected in series. The separators consist of an acid resistant plastic.

For AGM-batteries, the pocket separator consists of a thin fibre-glass mat (AGM = Absorbed Glass Mat).

Each plate is made up of a grille with an external layer of active material. This active material contributes to the electrochemical process during charging and discharging. The grille is constructed of a type of a lead alloy which functions as a conductor for the active material and also carries the current. The positive plate has an external layer of lead dioxide, while the external layer on the negative plate consists of porous lead.

The cell is surrounded by electrolyte. This is the final component of a complete cell. Each cell can generate 2.12 V (full charge at 25°C (77°F)).

For AGM-batteries, each cell can generate 2.155 V.

DISCHARGE

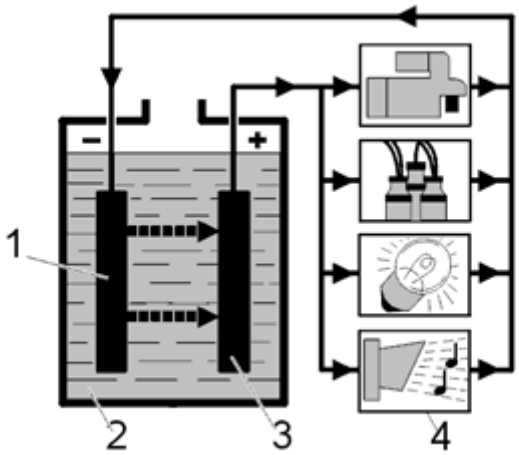

Fig. 73: Battery Discharge
Courtesy of VOLVO CARS CORPORATION

The process during discharge

1. Negative plate: Pure lead is converted to lead sulphate
2. Electrolyte: The sulphuric acid is converted to water
3. Positive plate: Lead oxide is converted to lead sulphate
4. Power consuming components.

During discharge, the lead in the negative plate is converted to lead sulphate ($PbSO_4$).

The lead dioxide (PbO_2) in the positive plate is also converted to lead sulphate. During the discharge process, sulphuric acid (H_2 SO_4) is consumed while water (H_2 O) is created. This reduces the density of the electrolyte.

The density drops throughout the discharge process and can be gauged to determine the condition of the battery. The electrolyte in a fully charged battery has a density of 1.28 g/cm^3 . The density of the electrolyte in a fully discharged battery is 1.10 g/cm^3 .

CHARGING

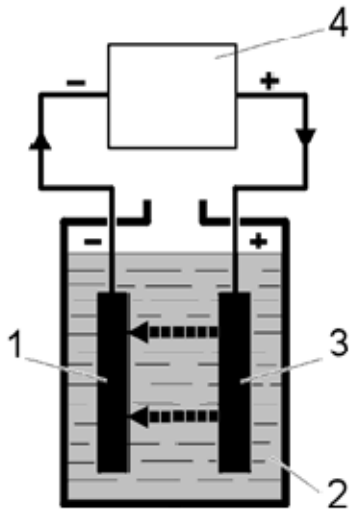

Fig. 74: Battery Charging
Courtesy of VOLVO CARS CORPORATION

The process during charging

1. Negative plate: Lead sulphate is converted to pure lead
2. Electrolyte: Water is converted to sulphuric acid
3. Positive plate: Lead sulphate is converted to lead oxide
4. The power supply from the generator or the external battery charger.

During charging, energy is supplied to the battery. This causes an electro-chemical process that is the reverse of the process during discharge. The lead sulphate ($PbSO_4$) in the negative plate is converted back to pure porous lead (Pb) and the lead sulphate ($PbSO_4$) in the positive plate is converted to lead dioxide (PbO_2).

Water (H_2 O) is consumed during the charging process. Sulphuric acid (H_2 SO_4) is formed. The density of the electrolyte increase as the amount of sulphuric acid increases.

CAUTION: For charging AGM-batteries, use only chargers that are both current and voltage-controlled. AGM-batteries are sensitive to overcharging and must be charged with an adapted charger. This since a battery that is charged with too high voltage/current does not absorb all the energy and the excess is converted to heat. When the battery becomes too warm the electrolyte evaporates (acid). When the pressure in the battery becomes too high, the gas is released through the battery box safety valve. When the water volume decreases the acid concentrates to an unacceptable high level, which may destroy the battery

AGM-batteries may be charged with a max. voltage/current as follows.

Battery capacity (Ah)	Max. current (A) *	Max. voltage (V)	Max. charging time (h)

			**
100 Ah	25 A	14, 4 V	5-24 h
90 Ah	22, 5 A	14, 4 V	5-24 h
80 Ah	20 A	14, 4 V	5-24 h
70 Ah	17, 5 A	14, 4 V	5-24 h
60 Ah	15 A	14, 4 V	5-24 h
50 Ah	12, 5 A	14, 4 V	5-24 h
40 Ah	10 A	14, 4 V	5-24 h
30 Ah	7, 5 A	14, 4 V	5-24 h
20 Ah	5 A	14, 4 V	5-24 h
10 Ah	2, 5 A	14, 4 V	5-24 h
5 Ah	1, 25 A	14, 4 V	5-24 h

* Max. current is calculated with the following formula (Battery capacity Ah/20)*5. For example, for a battery with capacity 70 Ah: (70/20)*5= 17.5 A.

** Charging time depends on how discharged the battery is, however, max. 24 h.

GAS BUILD UP

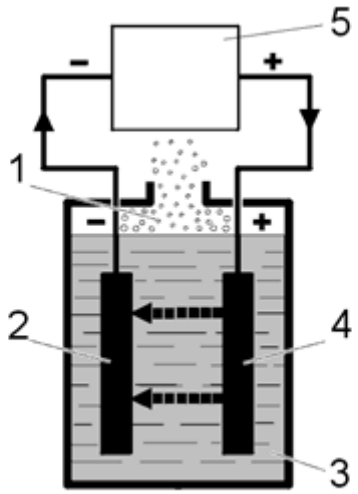

Fig. 75: Battery Gas Build Up
Courtesy of VOLVO CARS CORPORATION

Gas build up

1. Gas build up at the plates
2. Negative plate
3. Electrolyte
4. Positive plate

5. The power supply from the generator or the external battery charger.

Gas builds up at the end of the charging process when charging a lead battery. When the battery has reached 85-90% of the maximum capacity, the water in the electrolyte begins to separate into oxygen (O_2) and hydrogen (H_2). Oxygen is formed at the positive plate and hydrogen at the negative plate.

Gas build up results in a loss of some of the gas from the battery, because the battery must not be fully sealed. Because the water is lost, the electrolyte level in the battery will drop. New distilled or deionized water must therefore be added to prevent damage to the plates as a result of the electrolyte level being too low. If new water is not added when necessary, the plates may come into contact with the air. This would result in corrosion, reducing the capacity of the battery.

For maintenance-free batteries as well as sealed batteries (AGM), normally no gases are released. This means that the battery water is not consumed in the electrolyte and topping up of battery water is not necessary. Also, the design of the battery box does not permit topping up of battery water.

WARNING: **If oxygen and hydrogen are mixed in the right proportions, oxyhydrogen is formed. This mixture is extremely explosive. Take great care to avoid personal injuries as well as damage to the battery.**

WARNING: **Make sure that the battery charger is turned off before the terminals are disconnected. This to prevent sparking which may ignite the oxyhydrogen.**

NOTE: **Make sure that ventilation is good.**

SELF-DISCHARGE

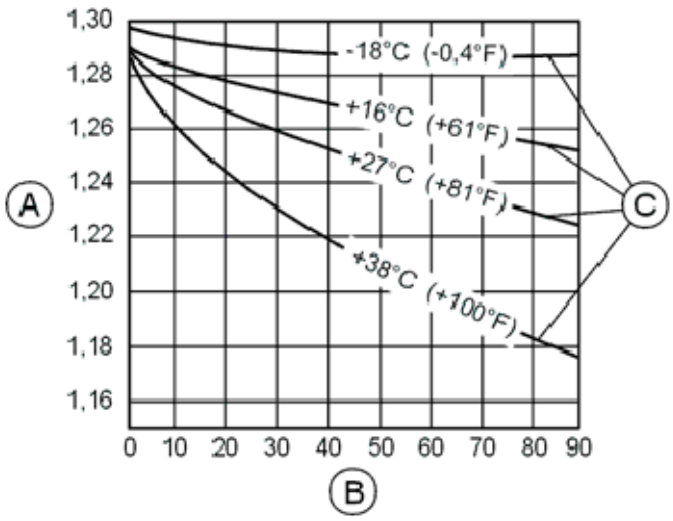

Fig. 76: Battery Self-Discharge
Courtesy of VOLVO CARS CORPORATION

Example of self-discharge (for open battery type) depending on battery temperature and discharge time

A. Acid density in g/cm^3
B. Number of days that the battery was not under load
C. Acid density at different battery temperatures.

There is always some self-discharge in a battery, when the battery is not in use and during both charging and discharging. If a battery is not used for a longer period, there is considerable self-discharge. The acid density falls and the active material in the plates is converted to lead sulphate. Excessive discharge must be avoided because otherwise there is an increased risk of sulfation. Sulfation may cause permanent damage to the battery. Regular charging of the battery will prevent sulfation. See **SULFATION**. There is an increased risk of damage from freezing in a heavily discharged battery. See **DEEP DISCHARGING**.

The speed of discharge depends on the temperature, time, the condition and construction of the battery. The temperature is particularly influential. The rate of self-discharge is faster at higher temperatures. Batteries should be stored for prolonged periods in a dry, cold place, preferably below freezing.

Ensure that the battery is fully charged if it is to be left unused for a long period. No further charging will be required if the battery is in good condition and is stored in a dry cold place. If the battery is being stored in a warm place, it may require regular charging.

The illustration shows an example of how quickly a battery (of open type) can self-discharge, depending on the temperature of the battery. Note how the density of the acid reduces with time and how the self-discharge speeds up as the temperature increases. For an explanation of the density of the acid, see **ACID DENSITY**.

ACID DENSITY

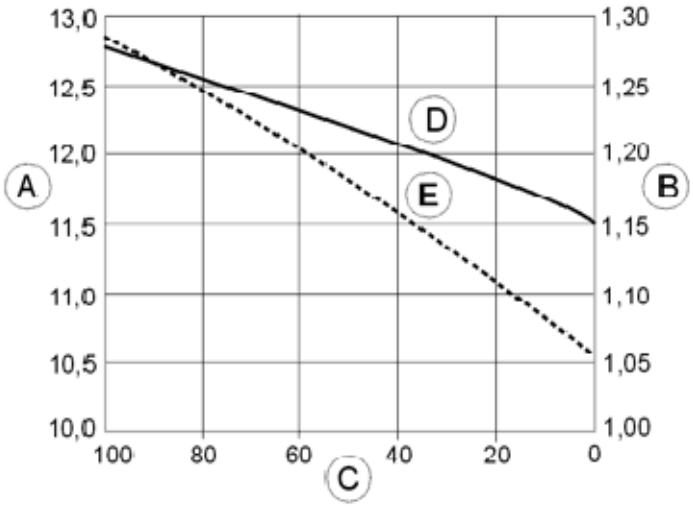

Fig. 77: Battery Acid Density
Courtesy of VOLVO CARS CORPORATION

Example of the variation in the stand-by voltage and in the density of the acid with the state of charge in a battery (of open type) at +25°C (77°F) (measured after approx. 2 hours charging or discharging)

A. Stand-by voltage in V
B. Acid density in g/cm^3
C. State of charge, SOC, in %
D. Variation in the stand-by voltage with the state of charge
E. Variation in the density of the acid with the state of charge.

The density of the acid is a unit showing the concentration of sulphuric acid in the electrolyte. The density of the acid is a measurement of the battery voltage and, see **STATE OF CHARGE, SOC**. The density of the acid is measured in g/cm^3 . Sulphuric acid is required for the chemical processes in the battery.

The higher the value of the acid (i. e. high concentration of sulphuric acid), the higher the voltage and state of charge. A low acid density value means a correspondingly low concentration of sulphuric acid, low voltage and a reduced capability for providing current. The electrolyte in a fully charged battery has a density of 1.28 g/cm^3 at +25°C (+77°F). The density of the electrolyte in a fully discharged battery is 1.10 g/cm^3 or lower depending on the type of battery.

The illustration shows how the stand-by voltage and the density of the acid drops as the state of charge of a battery reduces.

HINT: For maintenance-free as well as sealed batteries (AGM) the battery acid cannot be accessed and thus its density cannot be measured.

STATE OF CHARGE, SOC

The state of charge (SOC) is expressed as the amount of electrical energy that is stored in the battery at any given time, in relation to how much energy can be stored in a fully charged battery. The state of charge is listed as a percentage of full charge.

CAPACITY

The capacity of a fully charged battery is its ability to give a constant current during a certain time and is stated in the unit ampere-hours (Ah). The time for discharging varies depending on the battery's purpose.

In principle, the capacity is controlled by the plates' area as well as thickness. In a battery there is a big area on the plates, on which chemical reactions can take place, and also where a great amount of electrons (current) can be generated between the plates. This gives them a higher cold-start current value (CCA = Cold Cranking Amperes).

A start battery has big area but thin plates.

For a deep cycle battery, e. g., battery for leisure use, it is important that the chemical process can continue for a long time with lower current use, that is why the plates have to be thick. This gives them many ampere-hours or "spare minutes". Since the plates are thick, they need longer time to charge so that the chemical reaction also takes place deep inside the plates.

For start batteries, 20 hours' capacity (K20) is mentioned. This refers to how much current the battery can

deliver during 20 hours in an ambient temperature of +25°C (+77°F) without the terminal voltage going below 10.5 V.

Example: A battery (of open type) with a stated capacity of 70 Ah should be able to provide a constant current of a max. 3.5 A (3.5 A x 20 h = 70 Ah) for 20 hours.

The capacity of a battery is not only dependent on the size and construction of the battery, but also varies considerably for batteries of the same type with the size of the discharge current. The lower the discharge current the higher the capacity and vice versa. The capacity of the battery is also affected by the temperature and the age of the battery. The nominal value is given at +25°C (+77°F). The capacity of the battery reduces considerably at low temperatures.

The table shows the difference in capacity in a battery at +25°C (+77°F) and -18°C (-0.4°F).

DIFFERENCES IN CAPACITY AT +25°C (+77°F) AND -18°C (-0.4°F)

Capacity at +25°C (+77°F)	Corresponding capacity at -18°C (-0.4°F)
100%	55%
70%	35%
40%	25%

BATTERY SERVICE LIFE

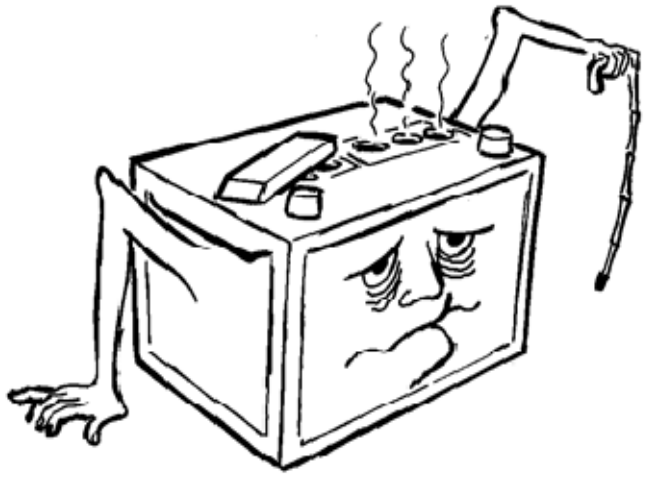

Fig. 78: Battery Service Life
Courtesy of VOLVO CARS CORPORATION

The service life of the battery depends primarily on its construction, maintenance and operating conditions. The following factors may shorten the service life of the battery:

- see **HIGH TEMPERATURES**
- see **CYCLING**
- see **LOW ELECTROLYTE LEVEL**

- see **DEEP DISCHARGING**
- see **INCORRECT CHARGING**
- see **SULFATION**
- see **CORROSION**
- see **VIBRATIONS**

To maintain the best possible service life and capacity, the battery must be maintained and charged in accordance with Volvo's recommendations.

HIGH TEMPERATURES

A high ambient temperature speeds up the chemical processes in the battery during charging and discharging. For every 10°C (18°F) increase in temperature, the reaction speed of the processes doubles. The risk of corrosion, self-discharge and sulfation increase at a high temperature and the service life of the battery is reduced. The service life of a battery improves in colder surroundings.

CYCLING

Cycling means all the discharging and charging in a battery. A battery is always cycling. Discharging, or cycling, can have varying degrees of depth. Deeper discharge is more damaging than lesser discharge. Each discharge results in stress to the plates which deteriorate accordingly. Each instance of cycling cause the material in the plates to become more fragile and ultimately some of this material will separate from the plates. Cycling results in a reduction of capacity.

A lead battery cannot tolerate infinite cycling. Deep discharges should be avoided in order to maintain as long a service life as possible.

LOW ELECTROLYTE LEVEL

The electrolyte level in an open battery (not maintenance-free battery and AGM-batteries) must be checked regularly. The water in the electrolyte is consumed by gas production and absorption. Batteries have different water consumption. This depends on design and ambient temperature. The water is used more quickly in hot climates.

If the electrolyte level is too low, the battery may suffer corrosion and the capacity of the battery may be reduced. Corrosion may occur in the connections between the cells. The consequence may be an open-circuit in a connection which will prevent the battery from supplying a current.

The capacity of the battery is reduced if the electrolyte level is so low that some of the surface of the plates are not submerged in electrolyte. Such surfaces cannot contribute to the chemical processes that occur during charging and discharging.

CAUTION: Note Check the electrolyte level regularly and top up with distilled or deionized water to the indicated maximum marking. Never use tap water

DEEP DISCHARGING

The acid density in a deeply discharged battery is very low (nearly all the sulphuric acid has been consumed and almost pure water remains. There is a high risk that the battery will be damaged beyond repair by freezing at relatively mild temperatures.

The table shows the freezing point of electrolyte in relation to the degree of charge of the battery.

THE FREEZING POINT OF THE BATTERY IN RELATION TO THE DEGREE OF CHARGE

Degree of charge	Freezing point
100 %	approximately -70°C (-94°F)
40 %	approx. -25°C (-13°F)
10 %	approx. -10°C (+14°F)

A deeply discharged battery can also **hydrogenate** .

Hydrogenation

If the discharge is extremely deep, ultimately all the sulphuric acid will be consumed and only water will remain in the electrolyte.

Where lead sulphate is more soluble in water than in sulphuric acid, some of the lead sulphate in the plates will fall into the electrolyte. When the battery is charged, lead will fall on to the negative plates and separators. Lead gathers in small spots on the surface. This can cause short-circuits. This is known as hydrogenation.

INCORRECT CHARGING

Incorrect charging may result in permanent damage to the battery. Incorrect charging may be, for example, charging using a current/voltage that is so strong that the temperature of the electrolyte increases or that the gas development is too powerful.

Increased electrolyte temperature

If charging occurs with an extremely high current, the temperature of the electrolyte will increase considerably as the battery begins to reach full charge. Excessive temperature may damage the materials in the battery and increase the risk of short-circuits.

Intensive gas development

If the gas development during charging is extremely intensive, some of the particles may be forced loose from the active materials on the plates. The plates suffer wear, reducing the service life and capacity. Short-circuits may occur as released particles drop to the bottom of the cell container or cross to the opposite plate.

To ensure optimal performance, always charge batteries according to Volvo's instructions.

CAUTION: For charging AGM-batteries, use only chargers that are both current and voltage-controlled. AGM-batteries are sensitive to overcharging and must be charged with an adapted charger. This since a battery that is charged with too high voltage/current does not absorb all the energy and the

excess is converted to heat. When the battery becomes too warm the electrolyte evaporates (acid). When the pressure in the battery becomes too high, the gas is released through the battery box safety valve. When the water volume decreases the acid concentrates to an unacceptable high level, which may destroy the battery

SULFATION

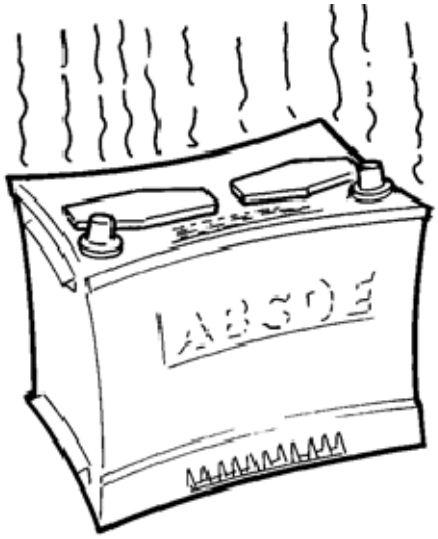

Fig. 79: Battery Sulfation
Courtesy of VOLVO CARS CORPORATION

Lead sulphate is formed on the plates during discharge. Normally small crystals are formed, which then revert to lead and lead oxide when the battery charges.

In certain circumstances during discharge, *large insoluble* crystals of lead sulphate may be formed. These crystals may form an insulating layer on the plates. This reduces the effective surface of the plates, reducing the contact between the active materials on the plates and the electrolyte. As a result, the capacity of the battery reduces considerably. This is called sulfation and is a result of a battery being left standing for a long period (in excess of two weeks) at a low charge, or because the battery has been under charged repeatedly.

The plates always expand slightly during discharge. If the discharge is very slow, the expansion may be so great that the plates deform or crack. Such damage is permanent and the battery cannot be used again. If a battery has undergone excessive sulfation, it may be possible to renovate the battery by charging the battery slowly using a very low current.

Regular maintenance charging will prevent sulfation.

CORROSION

Batteries may corrode in hot conditions, particularly in countries with hot climates. At high temperatures, the grille in the cell plates corrodes and becomes porous. The connections between the plates may also corrode. The result is a reduction in conductivity and therefore capacity.

VIBRATIONS

The battery is subjected to vibrations if the car is driven on uneven surfaces. Such vibrations can place stress on the inner connections in the battery and cell units, resulting in wear and damage to the battery. This is a rare occurrence in modern cars however.

TERMINOLOGY

AGM-BATTERY

For AGM-batteries, the pocket separator consists of a thin fibre-glass mat (AGM = Absorbed Glass Mat).

See: **SEPARATOR**

ACTIVE MATERIAL

The active material consists of lead oxide in the positive plates and porous lead in the negative plates. The active materials react with the sulphuric acid in the electrolyte during charging and discharging according to the following chemical reaction:

$PbO_2 + Pb + 2\ H_2\ SO_4 = 2\ PbSO_4 + 2\ H_2\ O$

AMPERE (A)

Unit for electrical current. Abbreviated to A.

AMPERE HOURS (AH)

Unit of measurement used to measure the ability of the battery to store electricity or the capacity. The storage capacity is obtained by multiplying the outflowing current in amperes by the discharge time in hours. Ampere hours are abbreviated to Ah.

Example:

A battery that supplies 3 amperes for 20 hours provides 3 A x 20 h = 60 Ah.

BATTERY ACID

Another name for electrolyte. See **ELECTROLYTE**.

BATTERY WATER

Battery water is distilled or deionized water and must be used to top up the battery if the electrolyte level is low. Regular tap water must not be used because it contains substances which may damage the battery.

For maintenance-free batteries as well as sealed batteries (AGM) it is not possible to fill battery water.

CCA

Abbreviation of Cold Cranking Amperes. The, see **COLD CRANKING AMPERES** of a battery is expressed using the CCA value.

CELL

Electro-chemical current producing unit in a battery. Consists of a package with positive and negative plates, separators and electrolyte enclosed in a shell. A fully charged lead battery with a stand-by voltage of 12.72 V has six cells.

CYCLE

In a battery, a cycle consists of a discharge phase and a charge phase.

DIN

An industry norm. Abbreviation of Deutsche Industrie-Norm.

ELECTRICAL CURRENT

A current is a flow of electrodes moving in a cable. It can be compared with a stream of water. Electrical current is measured in amperes (A).

ELECTRODE

An electrode is the place where the chemical reactions during discharge and charge take place. A cell consists of at least one positive and one negative electrode. During discharge, lead oxide is converted to lead sulphate at the positive electrode. At the negative electrode, porous lead is converted to lead sulphate. During charging, the reactions are in the opposite direction; lead dioxide and porous lead are reformed. Electrodes also transport current. In a battery, the electrodes are normally called plates.

ELECTROLYTE

In a lead battery, electrolyte consists of concentrated sulphuric acid and distilled water. Electrolyte is a liquid that conducts current and adds hydrogen and sulphate ions to the electro-chemical reaction during charging and discharging:

$$PbO_2 + Pb + 2\ H_2\ SO_4 = 2\ PbSO_4 + 2\ H_2\ O$$

SEPARATOR

A type of plastic insulator enclosing each positive plate in the cell. The roll of the separator is to separate the positive and negative plates from each other and to catch particles that detach from the positive plate to avoid short-circuits.

For AGM-batteries, the pocket separator consists of a thin fibre-glass mat (AGM = Absorbed Glass Mat).

GRID

A lead alloy frame construction on each plate in the battery. The grid functions as a carrier of the active materials, lead oxide and porous lead, which contribute to the electro-chemical processes during charging and discharging. The grid also conducts the current in the cell.

CAPACITY

The capacity is the ability of a fully charged battery to provide a constant current over a certain time and is given in ampere-hours (Ah). The time taken to discharge depends on the intended use of the battery. For starter batteries one refers to 20 hours capacity (K20). This refers to the amount of current the battery can provide over 20 hours at an ambient temperature of +25°C (+77°F) without the pole voltage falling below 10.5 V.

Example: A battery with a listed capacity of 70 Ah should be able to provide a current of a maximum 3.5 A (3.5A x 20h = 70 Ah) for 20 hours.

CORROSION

A destructive chemical reaction when metal is broken down in an aggressive chemical environment. Sulphuric acid, for example, is aggressive against iron. The iron breaks down and corrodes. The battery terminal is vulnerable to corrosion if it is not maintained correctly.

SHORT-CIRCUIT

A short-circuit is when the current takes a short cut where the resistance is less and therefore does not go via the intended route. A short-circuit can be caused for example by particles detaching from the plates in the cells. Eventually these deposits can be so large that a conductive connection is made between the two plates so that the current can flow between the two plates instead. A short-circuit in a cell can fully discharge a battery and render the battery useless.

COLD CRANKING AMPERES

A measurement of the ability of the battery to start the car. The cold cranking amperage is expressed as a CCA value. Volvo batteries are usually marked with a CCA value according to the SAE norm. The cold cranking amperes according to the SAE norm is defined as the current that a fully charged battery can supply at a temperature of -17.8°C (0°F) for 30 seconds without the voltage dropping below 7.2 V. The higher the cold cranking amperes value, the better the starting capacity of the battery. In certain markets the batteries are marked according to the DIN norm.

CHARGING

The process by which a battery is supplied with energy by a charger or the generator (GEN) in the car. During charging, the lead sulphate in the plates is converted back to pure lead on the negative plates and to lead oxide on the positive plate. Water is consumed, sulphuric acid is formed and the density of the acid increases.

This reaction can be written:

$$2\ PbSO_4 + 2\ H_2O \rightarrow PbO_2 + Pb + 2\ H_2SO_4$$

STATE OF CHARGE, SOC

The state of charge is expressed as the amount of electrical energy that is stored in the battery at any given time, in relation to how much energy can be stored in a fully charged battery. The state of charge is listed as a percentage of full charge. This is the "State of Charge", SOC.

DIRECT CURRENT, DC

An electrical current that only travels in one direction in an electrical cable. A battery supplies direct current during discharge and must be recharged (from the generator (GEN) or an external battery charger) with direct current in the opposite direction to current during discharge.

PLATE

The plates in a battery function as electrodes. Each cells consists of several positive and negative plates. These plates are welded together in groups by plate straps. The plate is made up of a grid with an external layer of active material. This active material contributes to the electrochemical process during charging and discharging. The grid is constructed of a type of a lead alloy which functions as a conductor of the active material and also carries the current. The positive plate has an external layer of lead dioxide, while the external layer on the negative plate consists of porous lead.

PLUG (NOT MAINTENANCE-FREE AS WELL AS AGM-BATTERIES)

On top of the battery is a cover with six plugs, one for each cell. The plugs can be opened when checking and topping up the electrolyte.

RESERVE CAPACITY, RC

The reserve capacity, RC, is measured in minutes and is, according to the SAE norm, the time taken to discharge a fully charged battery at 25 A to a voltage of 10.5 V at a temperature of +25°C (+77°F). The reserve capacity is the length of time the battery is able to supply necessary components with current when the generator (GEN) in the car is not functioning. Volvo batteries are marked with the RC value according to the SAE norm.

SAE

An industry norm. SAE is an abbreviation of "Society of Automotive Engineers".

SEPARATOR

See **SEPARATOR**.

SELF-DISCHARGE

A battery that is not in use will discharge itself over time. This is know as self-discharge and is quicker in hot environments. The battery must be maintained by recharging at regular intervals to avoid excessive discharge.

SULFATION

Sulfation is where, in some circumstances, large insoluble lead sulphate crystals are formed on the plates as the

battery discharges. This reduces the capacity of the battery. Note that the formation of small soluble lead sulphate crystals is normal during discharge.

The plates always expand during discharge. If the discharge is very slow, the expansion may be so great that the plates deform or crack. Such damage is permanent and the battery must be discarded. This is an excessive form of sulfation. The longer the sulfation process continues, the more difficult it is to save the battery.

Sulfation is a result of a battery being left standing for a long period at a low charge, or the battery has been under charged repeatedly. Regular charging of the battery will prevent sulfation.

ACID DENSITY

The unit showing the amount of sulphuric acid in the electrolyte and is a measurement of the battery voltage and charge status. The density of the acid is measured in g/cm^3 . The higher the value of the acid density (i. e. high concentration of sulphuric acid), the higher the voltage and state of charge. A low acid density value means a correspondingly low concentration of sulphuric acid, low voltage and a reduced capability for providing current. The electrolyte in a fully charged battery has a density of 1.28 g/cm^3 . The density of the electrolyte in a fully discharged battery is 1.10 g/cm^3 .

HINT: For maintenance-free as well as sealed batteries (AGM) the battery acid cannot be accessed and thus its density cannot be measured.

DISCHARGE

The process where a battery is under load and gives off current. During discharge, the lead on the negative plate and the lead oxide on the positive plate are converted to lead sulphate. Sulphuric acid is consumed and water is formed, reducing the density of the acid.

This reaction can be written:

$PbO_2 + Pb + 2\ H_2\ SO_4 \text{ --> } 2\ PbSO_4 + 2\ H_2\ O$

STAND-BY VOLTAGE

The stand-by voltage is the voltage measured from an unloaded battery after approximately 2 hours discharging or charging. It is important that the battery is left unloaded for a longer period so that the concentration of sulphuric acid has time to distribute evenly in the electrolyte. The measured voltage is then a good indication of the charge status of the battery.

STAND BY CURRENT CONSUMPTION

The stand by current is the current used by the car when the key is removed (such as the current for the clock, anti-theft alarm and remote control locking).

VOLT (V)

Unit for electrical power. Abbreviated to V.

VOLVO BATTERY ANALYZER 3100

A tool used to test and troubleshoot batteries of open type.

NOTE: Not intended for AGM-batteries.

SURFACE CHARGING

The concentration of sulphuric acid is higher at the plates than in the electrolyte in a battery that has recently been charged. This is because the sulphuric acid formed at the plates during charging has not had time to spread into the rest of the electrolyte. If the stand-by voltage of the battery is measured directly after charging, a higher value will be obtained, giving an incorrect reading of the charge status of the battery. This is called surface charging. If the battery is left without load for a while the concentration of the sulphuric acid will even out. It is therefore important to leave the battery without load for at least 2 hours before measuring the stand-by voltage of the battery, allowing time for the concentration of the sulphuric acid to even out in the electrolyte. The measured voltage is then a good indication of the charge status of the battery.

BLUETOOTH PHONE MODULE (BPM) (2011-2012)

DESIGN

CONTROL MODULE

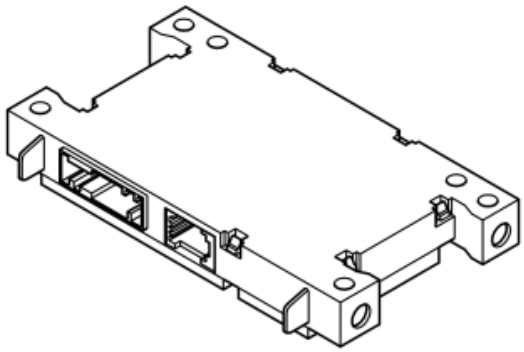

Fig. 80: Identifying Bluetooth Phone Module (BPM)
Courtesy of VOLVO CARS CORPORATION

The Bluetooth phone module (BPM) has the task of functioning as a wireless link between the vehicle's infotainment system and a cellphone equipped with blue tooth technology.

The Bluetooth phone module (BPM) contains:

- A main processor which manages all functionality and logic for the Bluetooth phone module (BPM). The software for the bluetooth phone module (BPM) is also stored here.
- Sound processor which manages handsfree sound and generates polyphonic ring signals which are then transmitted on to the integrated audio module (IAM) and audio module (AUD) (only certain versions) via

the MOST network.
- Internal blue tooth antenna.

DIAGNOSTIC FUNCTIONS

GENERAL INFORMATION

The control module has a built-in diagnostic system, Volvo Diagnostic, which continuously monitors internal functions as well as input and output signals.

DIAGNOSTIC TROUBLE CODES (DTCS)

A diagnostic trouble code (DTC) is stored when control module detects a fault. There are approximately 10 diagnostic trouble codes (DTCs) for Bluetooth phone module (BPM). A fault which was detected in the most recent operating cycle is defined as permanent. Other faults are defined as intermittent.

READING AND ERASING DIAGNOSTIC TROUBLE CODES (DTCS)

Stored diagnostic trouble codes (DTCs) can be read off and erased using this function.

Diagnostic trouble codes (DTCs) can only be erased once all the diagnostic trouble codes (DTCs) have been read off at least once.

READING OFF THE CONTROL MODULE IDENTIFICATION

The diagnostic tool identifies control modules by reading off a number of codes from the control module memory.

The codes contain information about the control module:

- hardware P/N (control module without software)
- hardware serial number (control module without software)
- software P/N
- diagnostic software P/N

READING OFF EXTENDED DIAGNOSTIC TROUBLE CODE (DTC) INFORMATION

This function can be used to read parameters, status identifiers and counters stored at the same time as a diagnostic trouble code (DTC). These are called frozen values.

READING OFF THE PARAMETER VALUES

Using this function, the status or value of parameters can be read off. The status/value is presented digitally.

DOWNLOADING SOFTWARE AND REPLACING THE CONTROL MODULE

GENERAL INFORMATION

Software can be downloaded to the Bluetooth phone module (BPM). When software is ordered, the vehicle' software and hardware is compared to Volvo's central database. If they are compatible, the software is downloaded to the system.

If the comparison between the vehicle and the Volvo central database does not correspond, the database is updated with the vehicle configuration, and then the software and any security codes (Security access code) is downloaded.

FUNCTION

PHONE

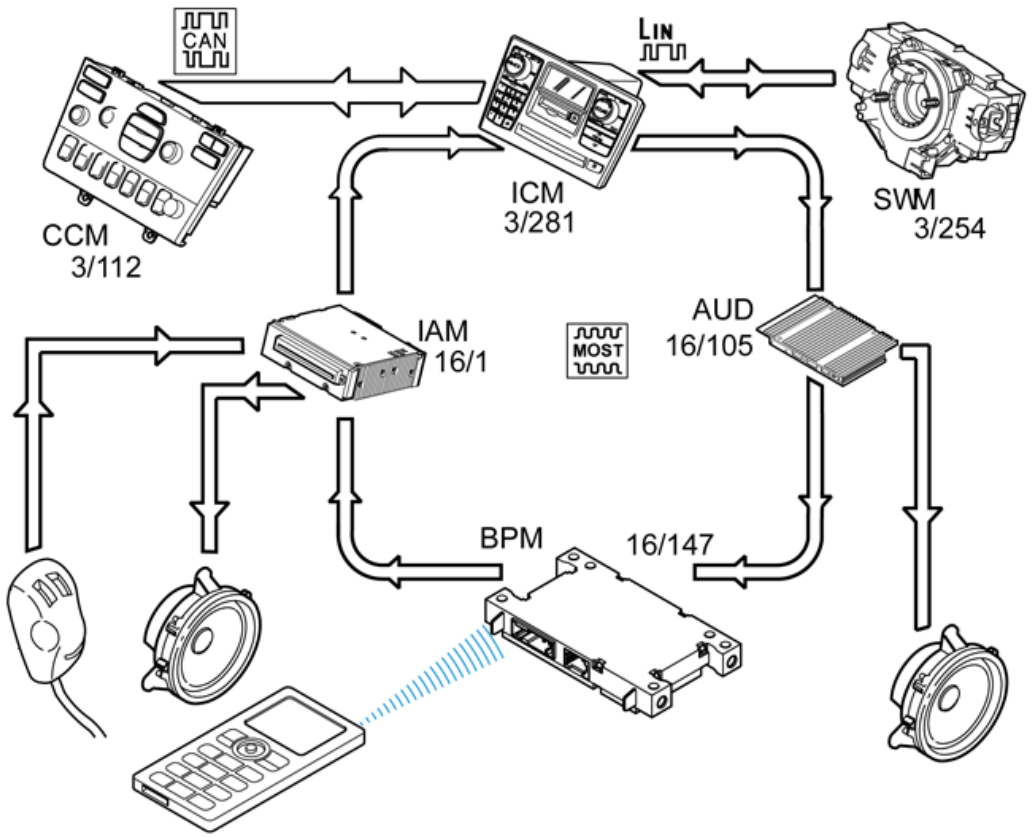

Fig. 81: Identifying Volvo Component Designations
Courtesy of VOLVO CARS CORPORATION

The system is a handsfree system which allows the customer to control their own cellphone from the vehicle and allows the customer to use the vehicle audio system during calls.

The following telephone functions are available via the vehicle's buttons and display when a cellphone is connected to the bluetooth phone module (BPM) via bluetooth:

- Receive incoming calls with number presentation
- End telephone calls

- Initiate telephone calls via normal number dialing
- Searching and initiating telephone calls from the mobile telephone's phone book. In vehicles with model year from and incl. 2012 the Bluetooth phone module (BPM) is equipped with PBAP - Phone Book Access Profile. PBAP is a new standard for faster transfer of the phone book from the customer's mobile telephone to Bluetooth phone module (BPM).
- Accessing last number dialed/received/missed calls on the cellphone
- Activating voice activated function in the cellphone
- Transfer of sound between the vehicle's audio system and the cellphone can occur without interrupting the call.
- A2DP - Advanced Audio Distribution Profile. With A2DP the customer can play back music from their mobile telephone in the car's loudspeakers via Bluetooth phone module (BPM). For vehicles with model year from and incl. 2012.

The Bluetooth phone module (BPM) (16/147) has no keypad of its own for menu management but is either controlled via the keypad on the Climate control module (CCM) (3/112) or via the steering wheel buttons. Climate control module (CCM) transmits the signals for menu management to the infotainment control module (ICM) (3/281) via the CAN network. The infotainment control module (ICM) then transmits the signals onward to the Bluetooth phone module (BPM) via the MOST network.

When using the menu via the steering wheel buttons, information is transmitted from the steering wheel module (SWM) (3/254) to the infotainment control module (ICM) via LIN communication. The information is then transmitted to the Bluetooth phone module (BPM) via the MOST network.

Menu management is displayed for the user in the display for the infotainment control module (ICM). Information is transmitted from the Bluetooth phone module (BPM) to the infotainment control module (ICM) via the MOST network.

When starting the Bluetooth phone module (BPM), receiving incoming calls or when using the phone, a request to use the display will be transmitted to the infotainment control module (ICM).

During conversations via handsfree the microphone and speakers which are connected to the Audio module (AUD) (16/105) and Integrated Audio Module (IAM) (16/1) are used. Bluetooth phone module (BPM) transmits a request to the Infotainment control module (ICM) to receive access to the speakers and microphone. The infotainment control module (ICM) transmits the request onward to the Audio module (AUD) and Integrated Audio Module (IAM). The communication between the Bluetooth phone module (BPM), infotainment control module (ICM), Audio module (AUD) and Integrated Audio Module (IAM) occurs via the MOST network.

MANAGING BLUETOOTH CONNECTIONS

When the system is first activated the customer is led through a pairing process so that the Bluetooth phone module (BPM) and the cellphone recognize and approve each other. This process usually only needs to be carried out once for each cellphone to be used in the vehicle.

The pairing process starts by the Bluetooth phone module (BPM) searching for all nearby blue tooth units. When this search is complete a list is presented for the user with all the cellphones which were found during the

search. The name which occurs in the list can normally be set on the customer's cellphone. Note that the bluetooth function in the cellphone must be active and it must be possible to search for the cellphone for it to appear in the list.

When the customer selects their cellphone in the list the units must exchange identity information with each other. A randomly generated 4 figure code is presented for the user in the display in the infotainment control module (ICM). The code can then be entered in the cellphone to complete the pairing process. If this fails the user can try again.

When the process has been successful, the cellphone automatically connects to the Bluetooth phone module (BPM) and the phone functions become available. If the copying of the phonebook and call lists are supported by the cellphone, these will be automatically transferred to the Bluetooth phone module (BPM) after the devices have been connected.

This process can take a few minutes the first time, and the phonebook is not available during this time.

The next time the customer enters the vehicle with that cellphone it will be connected to the Bluetooth phone module (BPM) automatically. Note that the bluetooth function must be active in the cellphone for the automatic connection to occur. The previously copied phone book is available immediately, but a new copy will be taken in the background to ensure that any changes in the customer phonebook are available.

A total of five phones can be paired to the vehicle at the same time. However only one cellphone can be connected, i. e. can be controlled from the vehicle and connect sound via the vehicle.

On start up, the Bluetooth phone module (BPM) will automatically try to connect the cellphone which was most recently connected to the system. If this cellphone is not detected a list of all paired cellphones and the opportunity to pair a new cellphone is presented to the user. It is then possible to change the connected phone while driving.

It is also possible to remove cellphones from the list of paired phones.

SYSTEM OVERVIEW

CONTROL MODULE

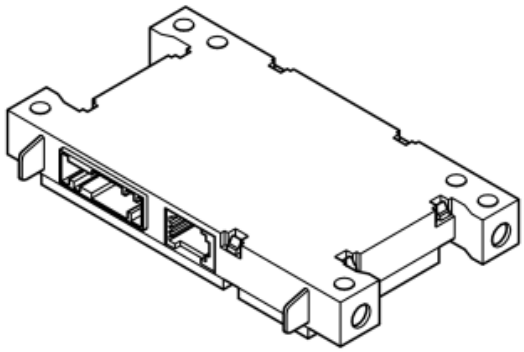

Fig. 82: Identifying Bluetooth Phone Module (BPM)

Courtesy of VOLVO CARS CORPORATION

The Bluetooth phone module (BPM) has the task of functioning as a wireless link between the vehicle's infotainment system and the driver's or passenger's cellphone equipped with blue tooth technology.

The following telephone functions are available via the vehicle's buttons and display when a cellphone is connected to the bluetooth phone module (BPM) via bluetooth:

- Receive incoming calls with number presentation
- End telephone calls
- Initiate telephone calls via normal number dialing
- Searching and initiating calls from the cellphone address book
- Accessing last number dialed/received/missed calls on the cellphone
- Activating voice activated function in the cellphone
- Transfer of sound between the vehicle's audio system and the cellphone can occur without interrupting the call.

The Bluetooth phone module (BPM) is located above the glove compartment inside the dashboard.

The Bluetooth phone module (BPM) cannot be combined with the Volvo On Call function.

The Bluetooth phone module (BPM) has serial optical communication with components on the MOST network where the infotainment control module (ICM) is the main control module.

The control module checks activations and input and output signals using an integrated diagnostic system A diagnostic trouble code (DTC) is stored if the control module detects an error. In certain cases the control module replaces the faulty signal with a substitute value.

Any diagnostic trouble codes (DTCs) are stored in the control module memory. This information can be read off using the diagnostic tool via the data link connector (DLC) in the vehicle.

If the Bluetooth phone module (BPM) is not supplied with voltage there will be no communication with the MOST network and the system will shut off.

SIGNALS

The table below summarizes the input signals to and output signals from the Bluetooth phone module (BPM). The signal types are divided into directly connected signals (via bluetooth) and MOST communication. The illustration below displays the same information with the Volvo component designations.

Input signals	Output signals
Via Bluetooth: • Cellphone	**Via Bluetooth:** • Cellphone
Via MOST communication: • Infotainment control module (ICM) (3/281)	**Via MOST communication:** • Infotainment control module (ICM) (3/281)

• Integrated audio module (IAM) (16/1) (microphone)	• Integrated audio module (IAM) (16/1) (loudspeaker sound) • Audio module (AUD) (16/105) (loudspeaker sound) (only certain versions)

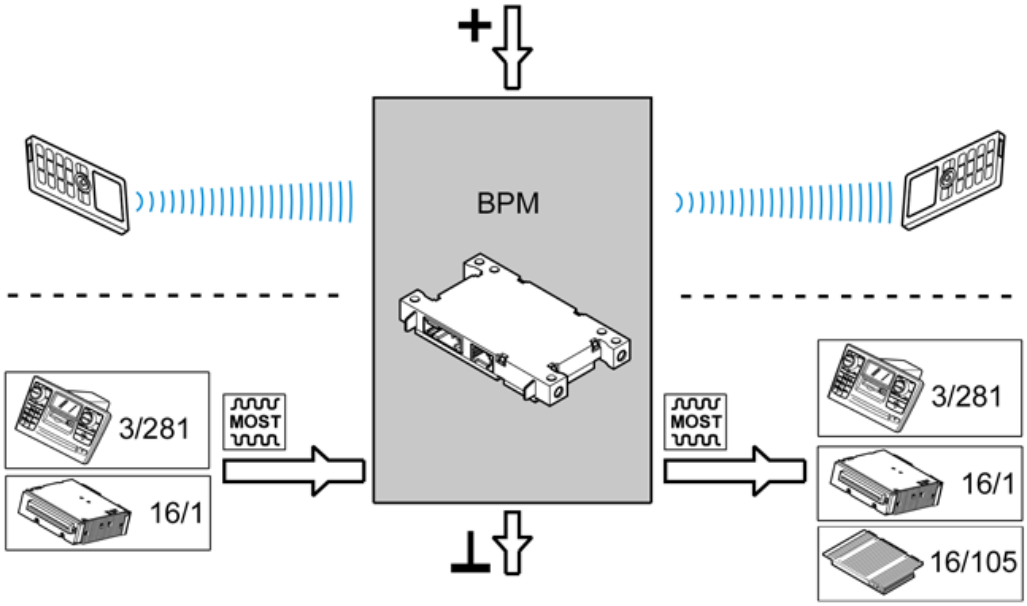

Fig. 83: Identifying Volvo Component Designations
Courtesy of VOLVO CARS CORPORATION

BOSCH ME7.01 ENGINE MANAGEMENT SYSTEM (B5254T2; 2003-2007)

DESIGN

IGNITION SWITCH

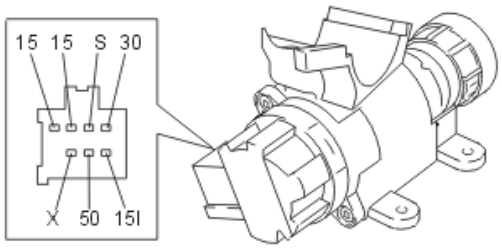

Fig. 84: Identifying Ignition Switch And Connector Terminals
Courtesy of VOLVO CARS CORPORATION

The Engine Control Module (ECM) uses the signal from the ignition switch to detect when the ignition key has been turned to position II or III. When the key is in the ignition position (position II) or starting position (position III) a high signal (U_{bat}) is transmitted from the ignition switch to the engine control module (ECM). The engine management system prepares for start-up (for example, temporarily activates the fuel pump (FP) relay). When the flywheel in the engine rotates, the engine speed (RPM) sensor signal is used to keep the fuel pump (FP) relay activated.

The fuse in the fusebox in the passenger compartment supplies current to the ignition switch.

The central electronic module (CEM) can diagnose the ignition switch.

FUEL PUMP CONTROL MODULE (ONLY VEHICLES WITH DEMAND CONTROLLED FUEL PUMPS)

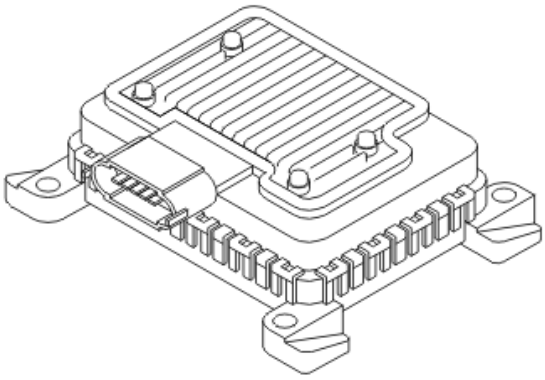

Fig. 85: Fuel Pump Control Module
Courtesy of VOLVO CARS CORPORATION

The fuel pump control module powers the fuel pump and regulates the output of the pump. The fuel pressure changes with the output of the pump.

The fuel pump control module is supplied with battery voltage by the fuel pump (FP) relay and is grounded in

the car body. The fuel pump (FP) relay is controlled by the central electronic module (CEM) when requested by the engine control module (ECM).

The engine cannot be started if the power supply to the fuel pump control module is faulty because the fuel pump will not then be powered.

The fuel pump control module is controlled by the engine control module (ECM) via serial communication. The fuel pump control module then controls the fuel pump by transmitting a PWM voltage on the ground lead for the fuel pump. This means that the voltage drop across the pump changes, and with it the output of the fuel pump. Also, see **FUEL PRESSURE REGULATION (ONLY VEHICLES WITH DEMAND CONTROLLED FUEL PUMPS)**.

There are no diagnostics for the fuel pump control module. The engine control module (ECM) has diagnostics for fuel pressure regulation and the associated components. Also, see **FUEL PRESSURE REGULATION, DIAGNOSTICS** .

The pulse-width modulated (PWM) signal from the engine control module (ECM) to the fuel pump control module can be read using VIDA (Volvo scan tool).

The fuel pump control module is on the outside on the right-hand side of the fuel tank.

FUEL PUMP (ONLY VEHICLES WITH DEMAND CONTROLLED FUEL PUMPS)

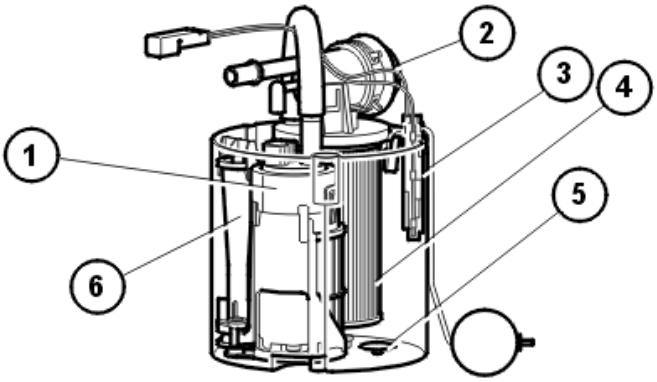

Fig. 86: Fuel Pump
Courtesy of VOLVO CARS CORPORATION

The function of the fuel pump is to ensure that the pressure is correct at the delivery lines for the injectors when requested by the fuel pump control module.

The fuel pump consists of:

1. An electrical pump with an integrated safety valve
2. A pressure equalization valve. This valve equalizes rapid pressure peaks which occur, for example, when the injectors close during engine braking. It also contains a non-return valve which ensures that the pressure in the system does not drop when the engine is switched off

3. Fuel level sensor
4. Fuel filter, cannot be replaced separately
5. Relief valve, releases fuel into the pump housing
6. Ejector pump, continuously fills the pump housing with fuel. The fuel always flows from the fuel pump through the ejector and back to the pump housing.

The fuel pump is supplied with battery voltage by the fuel pump control module and is grounded in the car body.

The engine control module (ECM) has diagnostics for the fuel pump function to ensure that the pressure is correct. Also, see **FUEL PRESSURE REGULATION, DIAGNOSTICS** .

The fuel pump can be activated and its status read off using VIDA (Volvo scan tool).

The pressure in the fuel rail can be measured by connecting a manometer to a nipple. This nipple is on the right-hand end of the fuel rail.

BRAKE LIGHT SWITCH

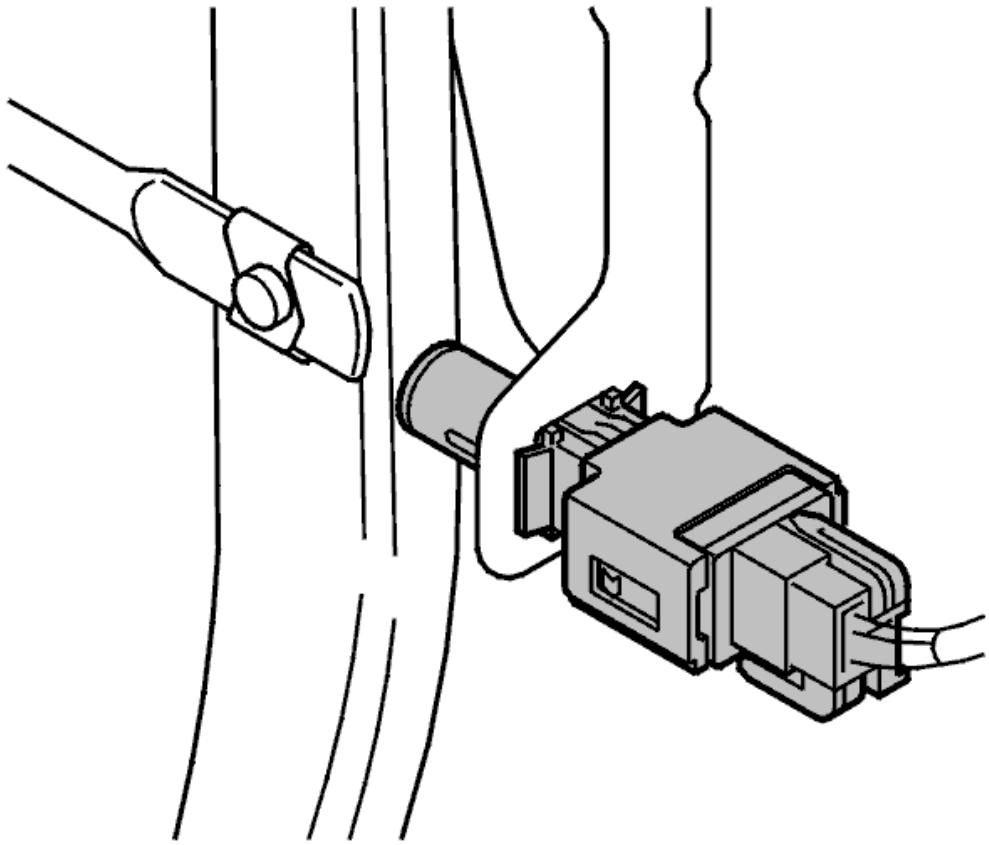

Fig. 87: Brake Light Switch
Courtesy of VOLVO CARS CORPORATION

The task of the brake light switch is to provide the engine control module (ECM) with information about the

position of the brake pedal.

A signal is transmitted to the engine control module (ECM) when the brake pedal is pressed. The engine control module (ECM) disengages the cruise control (if activated). The brake pedal sensor also disengages cruise control.

The brake light switch is supplied with power from the ignition switch (terminal 30). When the brake pedal is depressed the switch closes and a high signal (12 V) is transmitted to the engine control module (ECM).

The engine control module (ECM) can diagnose the brake light switch. The status of the switch can be read using VIDA (Volvo scan tool).

The brake light switch is on the pedal box by the brake pedal.

CLUTCH PEDAL SENSOR (MANUAL TRANSMISSIONS ONLY)

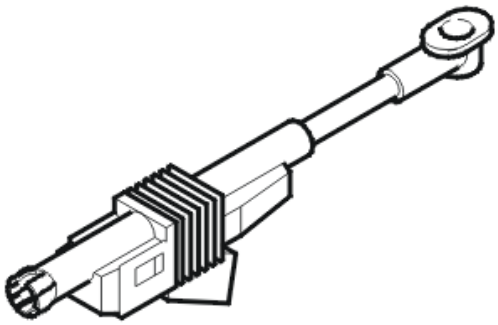

Fig. 88: Clutch Pedal Sensor
Courtesy of VOLVO CARS CORPORATION

The clutch pedal sensor provides the Engine Control Module (ECM) with information about the position of the clutch pedal.

This information is used by the control module to switch off the cruise control.

The sensor signal is also used by the control module to prevent engine start if the clutch pedal is not pressed (certain markets).

The sensor consists of a sliding potentiometer which is supplied with power by the control module (signal) and which is grounded in the control module.

The resistance in the sensor drops when the clutch pedal is pressed.

The engine control module (ECM) can diagnose the clutch pedal sensor. The status (position) of the sensor can be read using VIDA (Volvo scan tool).

The sensor is on the pedal box by the clutch pedal.

AIR CONDITIONING (A/C) PRESSURE SENSOR

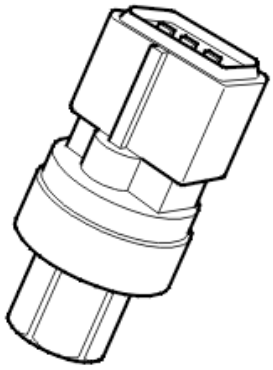

Fig. 89: Air Conditioning Compressor
Courtesy of VOLVO CARS CORPORATION

The air conditioning (A/C) pressure sensor detects the pressure in the high-pressure side of the air conditioning (A/C) system. This is so the engine control module (ECM) can control:

- engine cooling fan (FC) start
- stopping the compressor if the pressure in the air conditioning (A/C) is too high
- constant idle speed compensation for the air conditioning (A/C) compressor load.

The sensor is linear. It is grounded in the control module and supplied with a 5 Volt current from the control module. A linear signal (between 0-5 V depending on the pressure in the air conditioning (A/C)) is transmitted to the control module. At 0.25 kPa or lower, the voltage is 0 V, at 3100 kPa the voltage is approximately 4.75 V. Low pressure results in low voltage, high pressure in high voltage.

The engine control module (ECM) can diagnose the air conditioning (A/C) pressure sensor. The sensor value can be read off using VIDA (Volvo scan tool).

The air conditioning (A/C) pressure sensor is positioned on the high pressure delivery line for the air conditioning (A/C) system.

HEATED OXYGEN SENSORS (HO2S)

- 5 cylinder engines have two heated oxygen sensors (HO2S), front and rear
- 6 cylinder engines have four heated oxygen sensors (HO2S), front and rear for bank 1 (cylinders 1-3) and front and rear for bank 2 (cylinders 4-6)
- XC90s with 6 cylinder engines utilize the Y-concept, where the engine has two heated oxygen sensors (HO2S) bank 1 (cyl. 1 -3), bank 2 (cyl. 4 -6) and a rear heated oxygen sensor (HO2S) (bank 1).

Front heated oxygen sensor (HO2S)

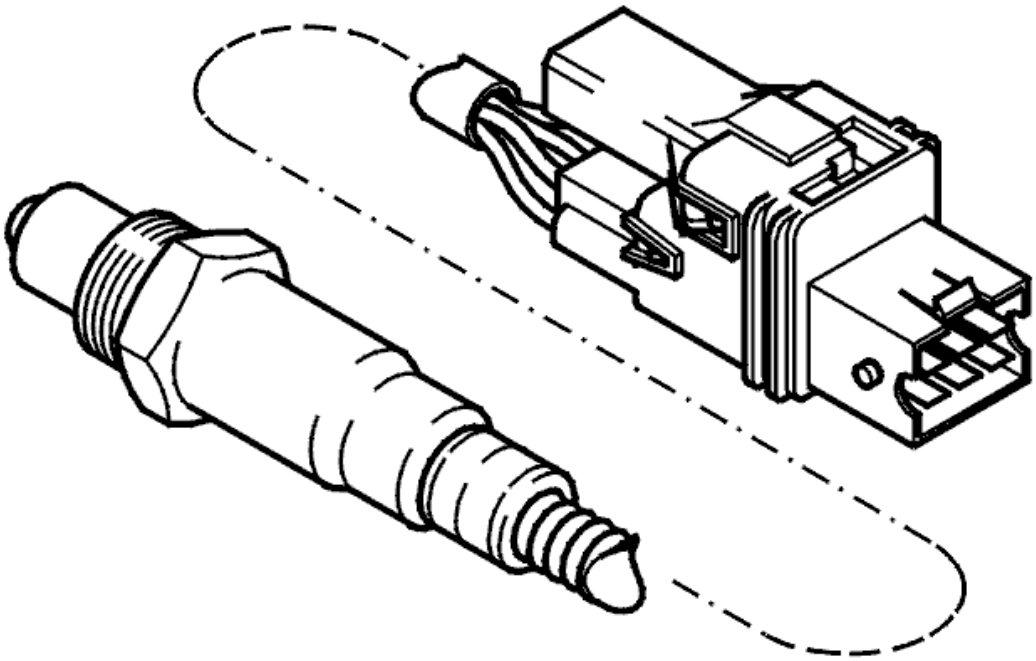

Fig. 90: Front Heated Oxygen Sensor
Courtesy of VOLVO CARS CORPORATION

The front heated oxygen sensor (HO2S) is used to provide the Engine Control Module (ECM) with information about the remaining oxygen content of the exhaust gases in front of the three-way catalytic converter (TWC). This is so that the Engine Control Module (ECM) can continually check the combustion so that lambda=1. lambda=1 is the ideal fuel-air ratio, with 14.7 kg air/1 kg fuel.

The heated oxygen sensor uses current regulation and its signal characteristic is linear. With a linear signal characteristic, the amplitude of the signal curve is low when changing the oxygen content in the exhaust gases. The probe consists of a preheating element (see "Pre-heating heated oxygen sensors (HO2S)") and the actual lambda sensor. The lambda sensor is an oxygen sensitive ceramic body consisting of zirconium oxide. The control module supplies power to the ceramic body, which reacts to the oxygen content of the exhaust gases. This in turn affects the signal to the engine control module (ECM). In order to determine the oxygen content in the exhaust pipe, the heated oxygen sensor needs reference air from the surrounding air. This reference air reaches the heated oxygen sensor via the wiring.

CAUTION: The wiring for the heated oxygen sensors (HO2S) must not be trapped or damaged in any way. The connectors for the heated oxygen sensors (HO2S) must not be greased under any circumstances. The oil in the grease would disrupt the reference air and the function of the heated oxygen sensors (HO2S).

The engine control module (ECM) can diagnose the heated oxygen sensor. For further information, see

HEATED OXYGEN SENSOR (HO2S) DIAGNOSTIC . VIDA can be used to read off the calculated lambda value from the heated oxygen sensor.

Rear heated oxygen sensor (HO2S)

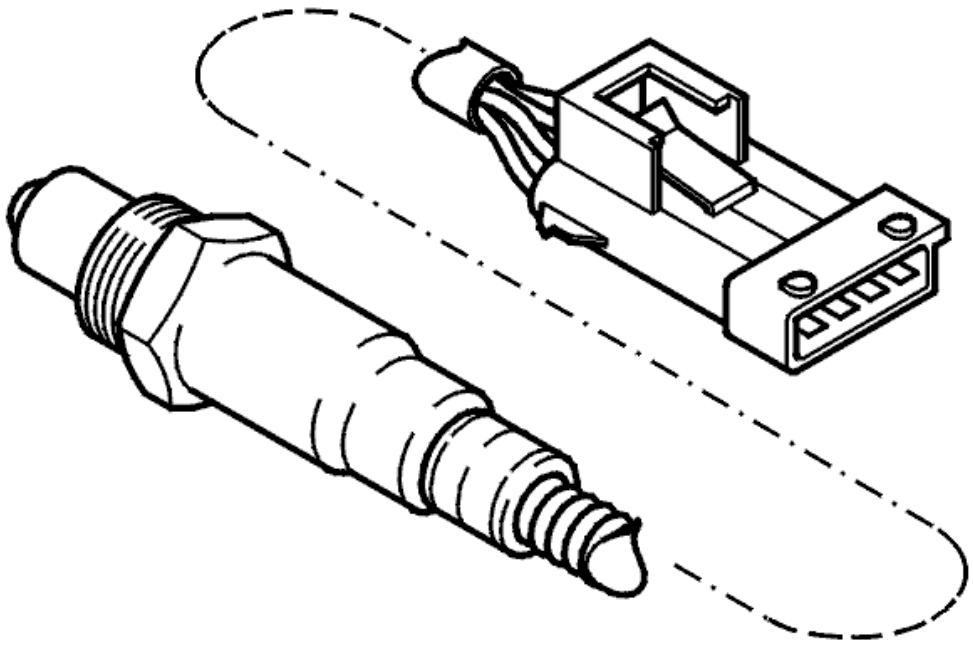

Fig. 91: Identifying Rear Heated Oxygen Sensor
Courtesy of VOLVO CARS CORPORATION

The rear heated oxygen sensor (HO2S) is used to provide the Engine Control Module (ECM) with information about the remaining oxygen content of the exhaust gases beyond the three-way catalytic converter (TWC). This information is used by the Engine Control Module (ECM) to check the function of the three-way catalytic converter (TWC). This check is carried out when the conditions for the catalytic converter diagnostics have been met. The rear heated oxygen sensor (HO2S) has no direct effect on regulation of the fuel/air mixture. However the Engine Control Module (ECM) uses the signal to optimize the signal from the front heated oxygen sensor (HO2S).

See **CATALYTIC CONVERTER DIAGNOSTIC** .

The heated oxygen sensor (HO2S) uses voltage control. The signal characteristic is binary. With a binary signal characteristic, the amplitude of the signal curve changes considerably when changing the oxygen content in the exhaust gases. Otherwise its components and function are the same as the front heated oxygen sensor (HO2S).

CAUTION: The wiring for the heated oxygen sensors (HO2S) must not be trapped or

damaged in any way. The connectors for the heated oxygen sensors (HO2S) must not be greased under any circumstances. The oil in the grease would disrupt the reference air and the function of the heated oxygen sensors (HO2S).

The engine control module (ECM) can diagnose the rear heated oxygen sensor. The signal can be read using VIDA (Volvo scan tool).

Preheating of the heated oxygen sensors (HO2S)

The heated oxygen sensor (HO2S) only functions above a certain temperature, approximately 300 °C. The normal operating temperature is between 300-900 °C. The heated oxygen sensors (HO2S) are electrically pre-heated so that operating temperature is rapidly reached. This also ensures that the heated oxygen sensors (HO2S) maintain a normal operating temperature and to prevent condensation which could damage the heated oxygen sensor (HO2S).

The heater element in the probe consists of a positive temperature coefficient (PTC) resistor. The system relay supplies the heater element with voltage. The element is grounded in the engine control module (ECM). When the control module grounds the connection a current flows through the PTC resistor. When the heated oxygen sensor (HO2S) is cold, the resistance in the PTC resistor is low and a large current will flow through the circuit. The current from the Engine Control Module (ECM) is pulsed at first to prevent condensation damage to the heated oxygen sensor (HO2S). Depending on the temperature, allowances are made for factors such as the dew point. As the temperature in the PTC resistor rises, the resistance rises, the current falls and switches in stages to a constant current. The pre-heating time for the front heated oxygen sensor (HO2S) is short, approximately 20 seconds.

Probe preheating begins as soon as the engine is started. The heater element heats the heated oxygen sensors (HO2S) to approximately 350 °C. The probes maintain this as a minimum temperature.

The engine control module (ECM) can diagnose the heater element.

ENGINE COOLANT TEMPERATURE (ECT) SENSOR

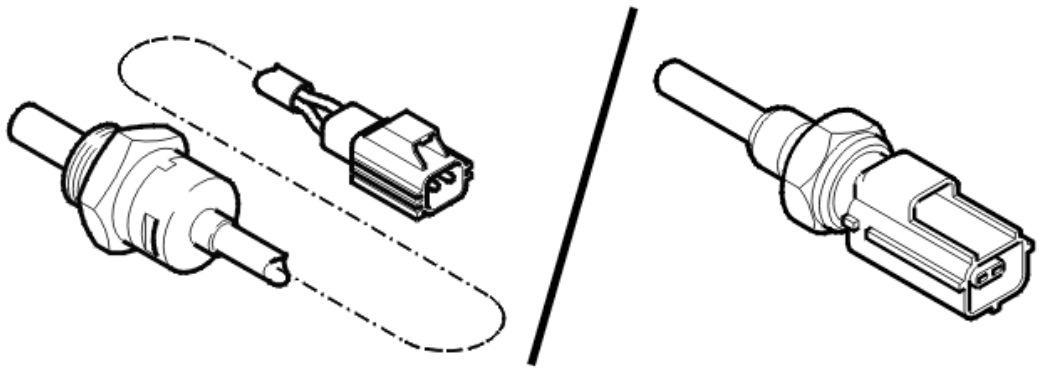

Fig. 92: Engine Coolant Temperature Sensor
Courtesy of VOLVO CARS CORPORATION

The engine coolant temperature (ECT) sensor checks the temperature of the engine coolant. The temperature of the engine coolant is required so that the engine control module (ECM) can regulate:

- the injection period
- the idle speed
- the engine cooling fan (FC)
- the ignition advance
- engagement and disengagement of the A/C compressor
- diagnostic functions.

The sensor is a negative temperature coefficient (NTC) type which is supplied with power from the control module (signal) and is grounded in the control module.

The resistance in the sensor changes depending on the temperature of the coolant. Depending on the resistance in the sensor, a voltage (signal) is transmitted to the Engine Control Module (ECM). At 0 °C, the voltage is approximately 4.0 V. At 100 °C the voltage is approximately 0.5 V. Low temperature results in high voltage (high resistance), high temperature in low voltage (low resistance).

The engine coolant temperature (ECT) sensor is located beside the thermostat.

The engine control module (ECM) can diagnose the engine coolant temperature sensor. The sensor value can be read off using VIDA (Volvo scan tool).

ENGINE COOLING FAN (FC) / ENGINE COOLING FAN (FC) CONTROL MODULE

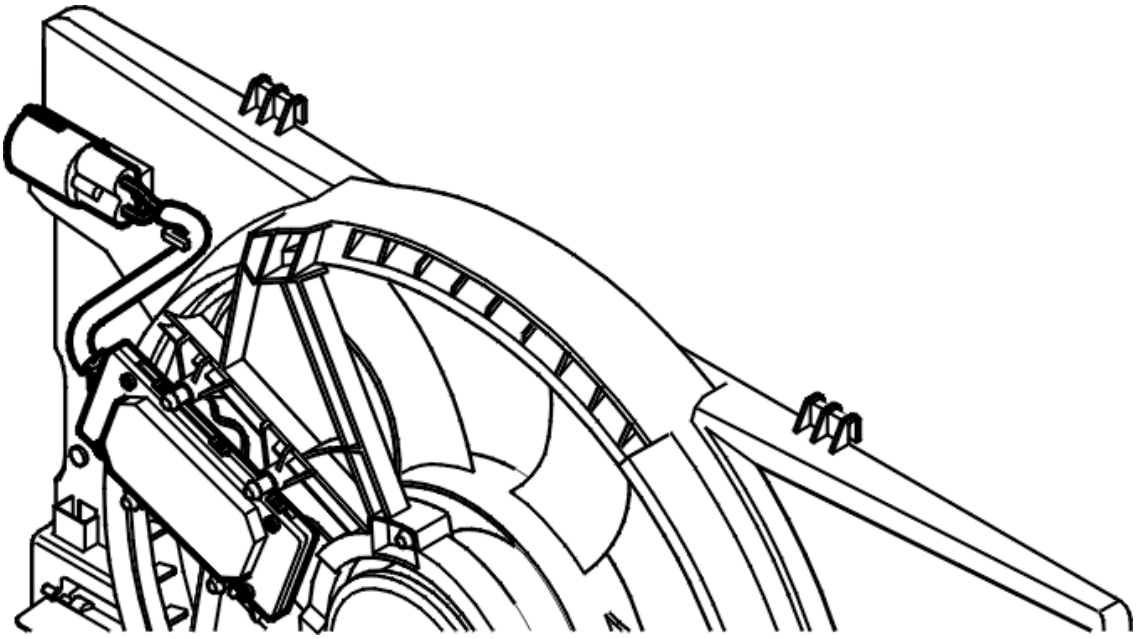

Fig. 93: Engine Cooling Fan And Control Module
Courtesy of VOLVO CARS CORPORATION

The engine cooling fan (FC) has two functions. One is to cool the engine compartment, the other is to cool the

condenser when the air conditioning (A/C) compressor is working.

The engine control module (ECM) transmits a pulse width modulated (PWM) signal to the engine cooling fan (FC) control module. The control module then activates the fan at different speeds. The speed of the engine cooling fan (FC) is determined by the engine control module (ECM), depending on the coolant temperature (based on the signal from the engine coolant temperature (ECT) sensor) and the vehicle speed.

The temperature conditions for engagement of the different engine cooling fan (FC) stages may vary slightly, depending on the engine variant and the equipment level.

The temperature conditions apply when:

- the A/C is off
- no faults are detected by the Engine Control Module (ECM).

NOTE: The engine cooling fan may have a post-run of up to approx. 6 minutes after the engine has been turned off. The time for the fan's post-run depends on engine temperature, temperature in the engine compartment and pressure level in the AC-system.

WARNING: Be careful since the engine cooling fan may have a post-run after the engine has been turned off.

The engine cooling fan (FC) and its control module are behind the radiator.

The engine control module (ECM) can diagnose the engine cooling fan. The fan can be activated using VIDA (Volvo scan tool).

COOLING FAN FOR CONTROL MODULES, TURBOCHARGER (TC) (CERTAIN MARKETS ONLY)

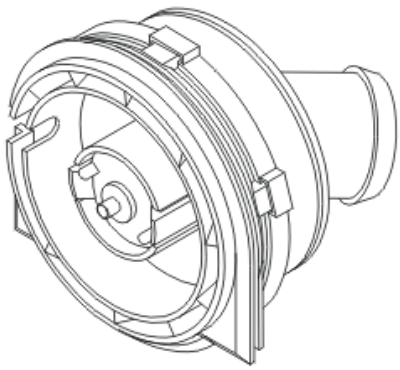

Fig. 94: Cooling Fan For Control Modules
Courtesy of VOLVO CARS CORPORATION

The function of the cooling fan is to cool the control modules in the control module box in the engine

compartment. The control modules may be damaged if they overheat.

The engine control module (ECM) activates the fan depending on the signal from the engine coolant temperature (ECT) sensor and the temperature sensor in the control module.

The cooling fan is in the hose between the control module box and the firewall.

The engine control module (ECM) can diagnose the cooling fan. The fan can be activated using VIDA (Volvo scan tool).

A diagnostic trouble code (DTC) is stored if the temperature in the engine control module (ECM) gets too high.

MASS AIR FLOW (MAF) SENSOR (2002-2004)

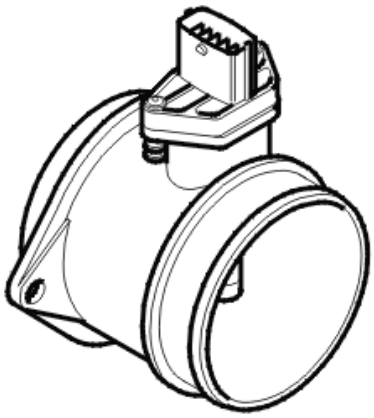

Fig. 95: Identifying Mass Air Flow Sensor
Courtesy of VOLVO CARS CORPORATION

The mass air flow (MAF) sensor gauges the air mass sucked into the engine. It continuously transmits signals to the engine control module (ECM) about the mass of the intake air. This data is used by the engine control module (ECM) to calculate:

- the injection period
- the ignition timing
- turbocharger (TC) boost pressure (turbocharged engines only)
- the engine load.

The transmission control module (TCM) also uses this data for its gear shift calculations. This data is transmitted to the transmission control module (TCM) from the engine control module (ECM) via the high speed side of the Controller area network (CAN).

The mass air flow (MAF) sensor consists of a plastic housing with connectors, test electronics and an aluminum heat sink. The test electronics in the mass air flow (MAF) sensor consist of a hot film comprised of four resistors. The hot film is cooled by the air flow to the engine.

The mass air flow (MAF) sensor is supplied with battery voltage by the system relay and is grounded in the

engine control module (ECM). The signal from the sensor is analogue and varies between approximately 1-5 V depending on the air mass. Low air flow (low mass) results in low voltage, high air flow (high mass) gives high voltage. No air flow gives a reading of approximately 1 V.

The mass air flow (MAF) sensor is positioned between the air cleaner (ACL) housing and the intake manifold.

The shape of the mass air flow (MAF) sensor is slightly different on naturally aspirated engines and also contains an air temperature sensor.

The engine control module (ECM) can diagnose the mass air flow (MAF) sensor. The signal can be read using VIDA (Volvo scan tool).

MASS AIR FLOW (MAF) SENSOR (2005-)

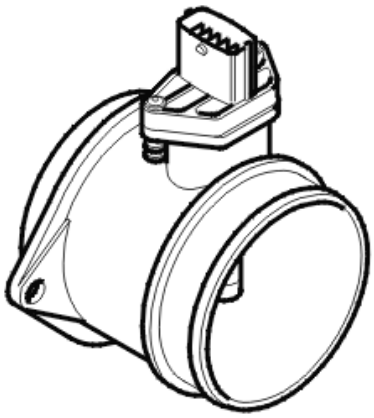

Fig. 96: Identifying Mass Air Flow Sensor
Courtesy of VOLVO CARS CORPORATION

The mass air flow (MAF) sensor measures the air mass sucked into the engine. On naturally aspirated engines and 5 cylinder turbocharged engines (except B5254T2/-T4), it also measures the temperature of the intake air.

Air mass

The mass air flow (MAF) sensor transmits signals to the engine control module (ECM) about the mass of the intake air. This data is used by the engine control module (ECM) to calculate:

- the injection period
- the ignition timing
- turbocharger (TC) boost pressure (turbocharged engines only)
- the engine load.

The transmission control module (TCM) also uses this data for its gear shift calculations. This data is transmitted to the transmission control module (TCM) from the engine control module (ECM) via the high speed side of the Controller area network (CAN).

The mass air flow (MAF) sensor consists of a plastic housing with connectors, test electronics and an aluminum

heat sink. The test electronics in the mass air flow (MAF) sensor consist of a hot film comprised of four resistors. The hot film is cooled by the air flow to the engine.

The mass air flow (MAF) sensor is supplied with battery voltage by the system relay and is grounded in the engine control module (ECM). The signal from the sensor is analogue and varies between approximately 1-5 V depending on the air mass. Low air flow (low mass) results in low voltage, high air flow (high mass) gives high voltage. No air flow gives a reading of approximately 1 V.

Intake temperature

The temperature sensor detects the temperature of the intake air after the charge air cooler (CAC). This data is used by the engine control module (ECM) to calculate the boost pressure control (turbocharger (TC) and to calculate the injection period. The control module also controls certain diagnostic functions using the signal from the temperature sensor.

The sensor, which is an NTC resistor, is grounded in the control module and supplied with power (signal) from the control module. The resistance in the sensor changes according to the temperature of the intake air. This provides the control module with a signal of between 0-5 V. The lower the temperature the higher the voltage (high resistance). A high temperature results in low voltage (low resistance).

The mass air flow (MAF) sensor is positioned between the air cleaner (ACL) housing and the intake manifold.

The engine control module (ECM) can diagnose the air mass and intake temperature of the mass air flow sensor. The signals can be read using VIDA (Volvo scan tool).

MANIFOLD ABSOLUTE PRESSURE (MAP) SENSOR, INTAKE (TURBOCHARGED ENGINES ONLY, 2002-2004)

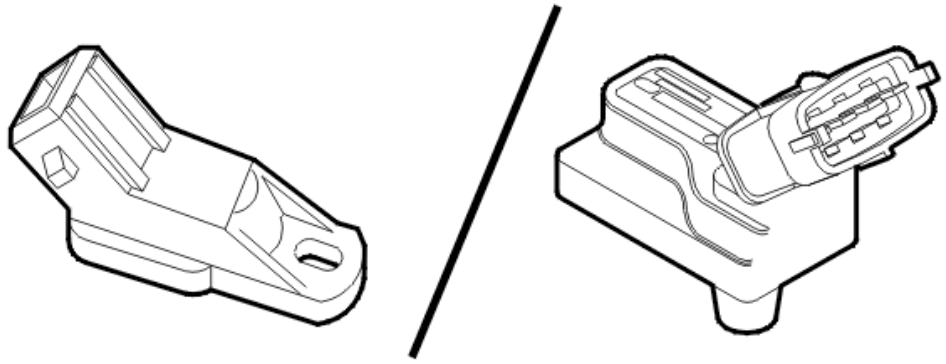

Fig. 97: Manifold Absolute Pressure Sensor - Intake (Turbocharged Engines Only, 2002-2004)
Courtesy of VOLVO CARS CORPORATION

The manifold absolute pressure (MAP) sensor detects the pressure in the intake manifold downstream of the charge air cooler (CAC). The signal from the sensor is primarily used by the engine control module (ECM) to check that the correct boost pressure is reached. The boost pressure is governed by the turbocharger (TC) control valve.

The sensor, which is a piezo resistor, is grounded in the control module and supplied with 5 V from the control

module.

The resistance in the sensor changes depending on the pressure in the intake manifold, giving a signal of 0 -5 V. Low pressure results in low voltage, high pressure in high voltage.

The engine control module (ECM) can diagnose the manifold absolute pressure sensor. The sensor signal can be read using VIDA (Volvo scan tool).

The manifold absolute pressure (MAP) sensor is in the intake hose for the throttle body (TB).

MANIFOLD ABSOLUTE PRESSURE (MAP) SENSOR, INTAKE (TURBOCHARGED ENGINES ONLY, 2005-)

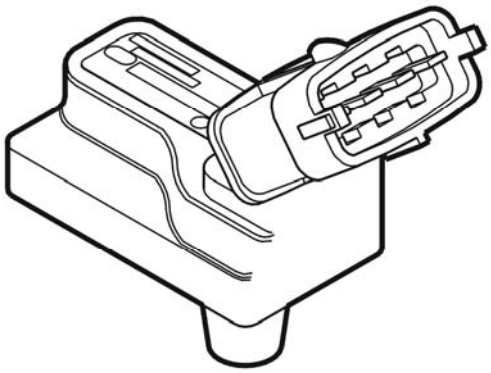

Fig. 98: Manifold Absolute Pressure Sensor - Intake (Turbocharged Engines Only, 2005-)
Courtesy of VOLVO CARS CORPORATION

The manifold absolute pressure (MAP) sensor detects the pressure in the intake manifold downstream of the charge air cooler (CAC). On 6 cylinder turbocharged engines and B5254T2/-T4, the temperature of the intake air is also detected.

Pressure sensor

The signal from the sensor is primarily used by the engine control module (ECM) to check that the correct boost pressure is reached. The boost pressure is governed by the turbocharger (TC) control valve.

The sensor, which is a piezo resistor, is grounded in the control module and supplied with 5 V from the control module.

The resistance in the sensor changes depending on the pressure in the intake manifold, giving a signal of 0 -5 V. Low pressure results in low voltage, high pressure in high voltage.

Intake temperature

The temperature sensor detects the temperature of the intake air after the charge air cooler (CAC). This data is used by the engine control module (ECM) to calculate the boost pressure control (turbocharger (TC) and to calculate the injection period. The control module also controls certain diagnostic functions using the signal from the temperature sensor.

The sensor, which is an NTC resistor, is grounded in the control module and supplied with power (signal) from the control module.

The resistance in the sensor changes according to the temperature of the intake air. This provides the control module with a signal of between 0-5 V. The lower the temperature the higher the voltage (high resistance). A high temperature results in low voltage (low resistance).

The engine control module (ECM) can diagnose the manifold absolute pressure sensor. The sensor signal can be read using VIDA (Volvo scan tool).

The manifold absolute pressure (MAP) sensor is in the intake hose for the throttle body (TB).

LEAK DIAGNOSTIC UNIT (CERTAIN MARKETS ONLY)

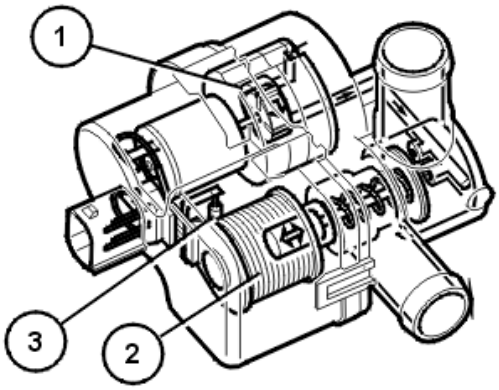

Fig. 99: Identifying Leak Diagnostic Unit
Courtesy of VOLVO CARS CORPORATION

The function of the leak diagnostic unit is to pressurize the fuel tank system during leak diagnostics.

The leak diagnostic unit consists of a plastic housing with:

1. electrical air pump
2. a valve / solenoid which governs the air flow in the unit
3. a heater element (PTC resistor) which warms up the pump.

The electrical pump, valve and heater element in the unit are supplied with voltage by the system relay. The pump, valve and heater element are grounded (control) in the engine control module (ECM).

NOTE: On model years, 2002-2004 the heating element was controlled by the Central electronic module (CEM), but on request from the Engine control module (ECM).

During leak diagnostics the pump in the leak diagnostic unit starts. The valve in the unit is operated by the engine control module (ECM) by grounding the different circuits internally in the engine control module (ECM).

The Engine control module (ECM) checks the fuel tanks system for leaks by pressurizing the system and at the same time monitoring a number of relevant parameters. See : **LEAK DIAGNOSTICS (CERTAIN MARKETS ONLY)**

The engine control module (ECM) can diagnose the leak diagnostic unit.

The valve in the leak diagnostic unit can be activated.

The leak diagnostic unit is at the upper front edge of the fuel tank.

OUTSIDE TEMPERATURE SENSOR

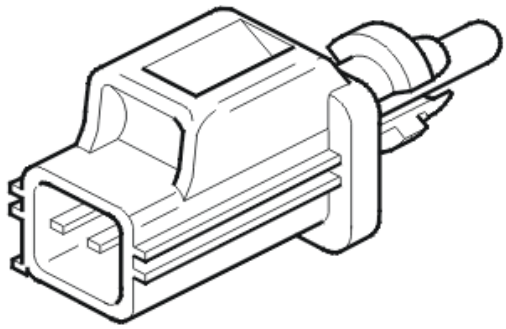

Fig. 100: Identifying Outside Temperature Sensor
Courtesy of VOLVO CARS CORPORATION

The outside temperature sensor detects the temperature in the surrounding air. The signal is used by the engine control module (ECM) as a substitute value in the event of a fault in certain components or functions and to control certain diagnostic functions.

The sensor is a negative temperature coefficient (NTC) type which is supplied with power from the control module (signal) and is grounded in the control module.

The resistance in the sensor, which provides a signal between 0-5 V, changes depending on the outside temperature. Low temperatures produce high voltage (high resistance), high temperatures produce low voltage (low resistance).

The outside temperature sensor is positioned in the left door mirror.

The engine control module (ECM) can diagnose the outside temperature sensor. The sensor value can be read off using VIDA (Volvo scan tool).

ENGINE SPEED (RPM) SENSOR

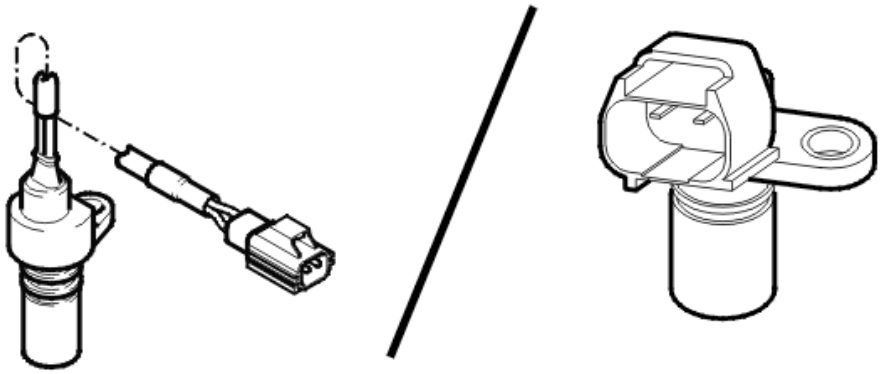

Fig. 101: Engine Speed Sensor
Courtesy of VOLVO CARS CORPORATION

The engine speed (RPM) sensor provides the Engine Control Module (ECM) with information about the speed and position of the crankshaft. The Engine Control Module (ECM) is able to use the signal from the engine speed (RPM) sensor to determine when a piston is approaching top dead center (TDC). However it is unable to use the signal from the engine speed (RPM) sensor to determine whether the piston is in the combustion stroke or whether the exhaust valve is open (exhaust stroke). The signal from the camshaft position (CMP) sensor is also required to determine the operating cycle of the engine.

The signal from the engine speed (RPM) sensor is also used to check the engine for misfires. For further information, see **MISFIRE DIAGNOSTICS** .

Cars with manual transmissions have a series of holes drilled in the periphery of the flywheel. Cars with automatic transmissions have a steel ring with punched holes. This steel ring is welded to the edge of the carrier plate. In both cases, there is 6° between each hole. This arrangement creates a hole for each tooth. There are 360° in one revolution. 6° between each hole means that there are 60 holes. However one hole is not drilled/punched, to create a reference position (tooth) for the crankshaft. This reference position is 72° before the top dead center (TDC) of cylinder 1 on a 5 cylinder engine.

The engine speed (RPM) sensor is at the rear of the engine above the flywheel.

The sensor is inductive with a permanent magnet. An alternating current is induced in the sensor when the flywheel/carrier plate passes the engine speed (RPM) sensor. The generated voltage and frequency increases with the engine speed (RPM). The signal varies between 0.1-100 V depending on the engine speed (RPM).

The Engine Control Module (ECM) is able to determine the engine speed (RPM) by counting the number of holes per time unit. When the reference tooth passes the engine speed (RPM) sensor, the voltage and frequency drop momentarily to zero, even though the engine is still running. This allows the engine control module (ECM) to determine the position of the crankshaft.

The following applies to model year 2002 onwards:

If the signal from the engine speed (RPM) sensor is incorrect or missing, the control module will use the signals from the camshaft position (CMP) sensor, on the condition that the position of the camshaft has been adapted and the car can be driven if there is no signal.

The engine control module (ECM) can diagnose the engine speed (RPM) sensor. The sensor value (engine speed (RPM)) can be read off using VIDA (Volvo scan tool).

CAMSHAFT SENSOR

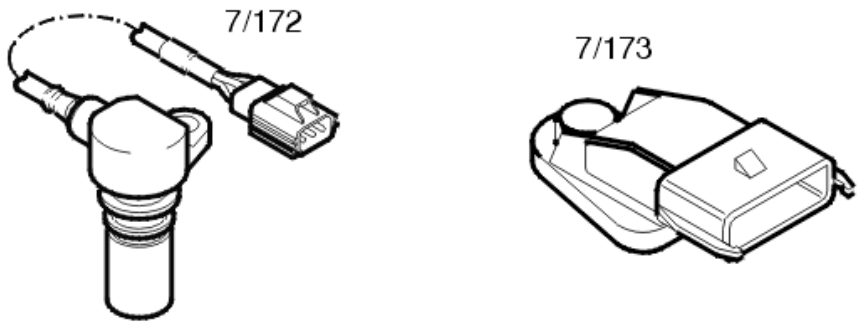

Fig. 102: Camshaft Sensor
Courtesy of VOLVO CARS CORPORATION

The function of the camshaft position (CMP) sensor is to detect the camshaft flanks. The signal from the sensor is used by the engine control module (ECM) to determine the radial position of the camshaft.

Each camshaft has four flanks per camshaft revolution. A pulse wheel on the camshaft consisting of four teeth (the teeth are positioned by each flank) is used by the camshaft position sensor (CMP) to detect the flanks.

The flanks are not symmetric on the camshaft. This allows the control module to determine which flank has been detected and therefore which operating cycle the camshaft is in.

When the operating cycle of the camshaft is established, the control module is able to determine which cylinder should be ignited. In the event of misfire or engine knock, the control module is also able to determine which cylinder is misfiring or knocking. Also, see **KNOCK SENSOR (KS)** and **ENGINE SPEED (RPM) SENSOR**.

Data about the position of the camshaft is used during camshaft control (CVVT). See **CAMSHAFT CONTROL (CVVT)**.

The sensor, which is a magnetic resistor with a permanent magnet, is grounded in the control module and supplied with 5 V from the control module. When one of the teeth on the camshaft pulse wheel passes the camshaft position (CMP) sensor, a signal is transmitted to the control module from the camshaft position (CMP) sensor. The signal varies between 0-1 V and is low when a flank passes the camshaft position (CMP) sensor.

The camshaft position (CMP) sensor is positioned at the rear of the engine by the controllable camshaft (CVVT).

The engine control module (ECM) can diagnose the camshaft position (CMP) sensor.

KNOCK SENSOR (KS)

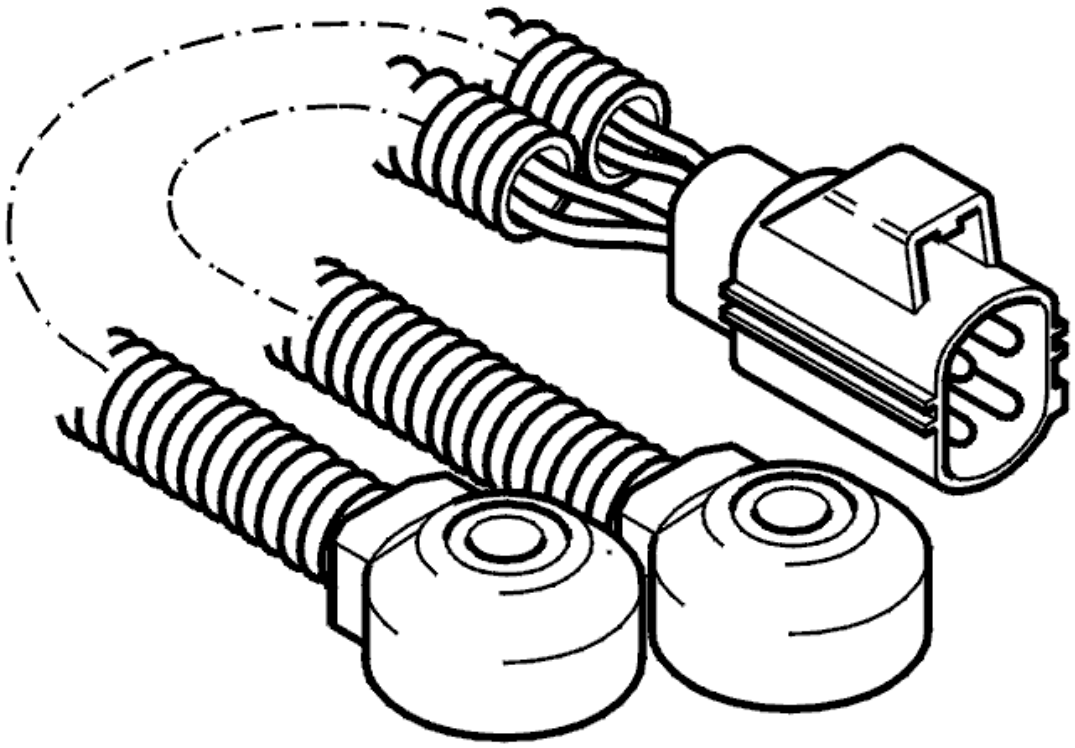

Fig. 103: Identifying Knock Sensor
Courtesy of VOLVO CARS CORPORATION

The function of the knock sensor (KS) is to monitor combustion knocking from the engine. Knocking may damage the engine and reduces the efficiency of engine combustion.

If the engine control module (ECM) registers knocking from any of the cylinders, the ignition will be retarded for that cylinder at the next combustion stage. If repeated ignition retardation does not prevent knocking, the injection period will be increased. This has a cooling effect. On turbocharged engines the boost pressure will also be lowered, reducing the engine load.

The sensor is made up of a Piezo electrical crystal. If there is engine knock, vibrations (sound waves) spread through the cylinder block to the knock sensor (KS). The resultant mechanical stress in the piezo electrical material in the knock sensors generates a voltage. This signal is transmitted to the engine control module (ECM). The signal corresponds to the frequency and amplitude of the sound waves. This allows the Engine Control Module (ECM) to determine if the engine is knocking. The camshaft position (CMP) sensor and engine speed (RPM) sensor are used to determine the operating cycle of the engine (which cylinder is igniting) and thereby which cylinder is knocking.

The knock sensors (KS) are positioned on the cylinder block below the intake manifold.

The engine control module (ECM) can diagnose the knock sensors (KS).

ELECTRONIC THROTTLE UNIT

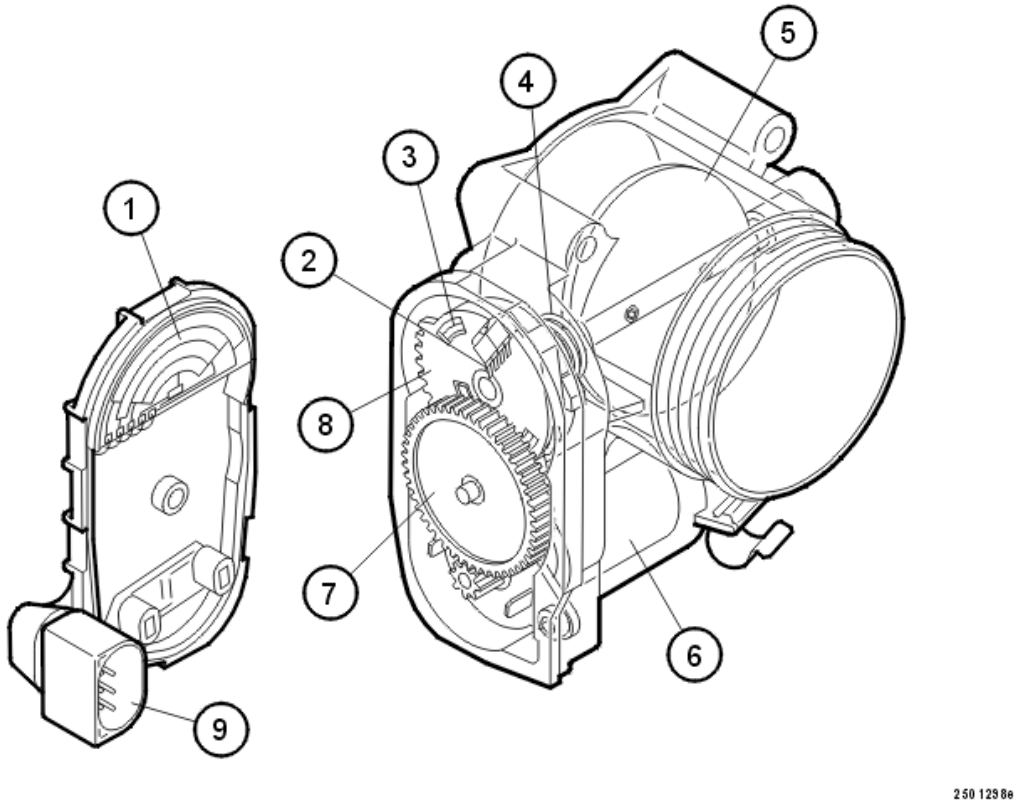

Fig. 104: Electronic Throttle Unit
Courtesy of VOLVO CARS CORPORATION

The electronic throttle unit, using the control signal from the engine control module (ECM), regulates the amount of air for engine combustion. This is done using an electronic shutter.

The electronic throttle unit consists of a round throttle disc on a shaft. This is turned using a DC motor (damper motor), gear wheel and two springs, an opening spring and a return spring. The damper motor is controlled by the engine control module (ECM) and is supplied with power by an integrated power stage in the control module. At one of the limit positions the throttle disc is closed so that no air can pass the throttle unit. At the other limit position the throttle disc is parallel to the air flow so that the air is able to freely pass through the throttle unit. The throttle disc shaft is mechanically connected to two built-in potentiometers (position sensors) which are supplied with power by the control module. The signals from the potentiometers provide the control module with data about the position of the throttle disc. The electronic throttle unit has a connector with six gold plated pins.

NOTE: A damaged terminal pin surface can interfere with the function

1. Current channels, potentiometers
2. Contact strips, potentiometers
3. Spring
4. Spring

5. Throttle disc
6. Damper motor
7. Gear wheel
8. Gear sector
9. Connector.

The electronic throttle unit is located on the engine intake manifold.

In the event of a fault, the throttle unit must be replaced as a single unit.

The engine control module (ECM) can diagnose the electronic throttle unit.

THROTTLE POSITION (TP) SENSOR

See **ELECTRONIC THROTTLE UNIT**.

ACCELERATOR PEDAL (AP) POSITION SENSOR

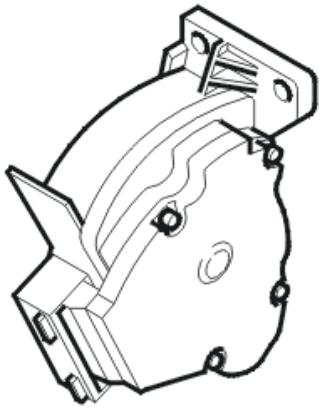

Fig. 105: Accelerator Pedal Position Sensor
Courtesy of VOLVO CARS CORPORATION

The function of the accelerator pedal (AP) position sensor is to provide the engine control module (ECM) with information about the position of the accelerator pedal. This data is used by the control module to deploy the shutter in the throttle unit to the correct angle.

The sensor consists of a plastic housing with two potentiometers, an Analog/Digital converter and circuits. The potentiometers are connected to a shaft which is affected by the position of the accelerator pedal (AP). The resistance in the potentiometers changes with the position of the accelerator pedal (AP).

The accelerator pedal (AP) position sensor transmits an analogue and a digital signal (pulse width modulated (PWM) signal) to the control module. These signals indicate the position of the accelerator pedal (AP). The digital signal is generated by the sensors Analog/Digital converter.

The analog and digital signals are used at the same time by the control module to regulate the throttle shutter

angle.

The sensor is supplied with 12 V by the system relay via a fuse and is grounded to the body.

The digital signal is also used in conjunction with the analog signal for accelerator pedal position sensor diagnostics. The accelerator pedal (AP) position sensor signals can be read off using VIDA (Volvo scan tool). A diagnostic trouble code (DTC) is stored if the engine control module (ECM) detects a difference between the analog and digital signals. The engine control module (ECM) then uses a minimal value to ensure the function (limp home).

The accelerator pedal (AP) position sensor is located on the accelerator pedal bracket.

ENGINE COOLANT LEVEL SENSOR

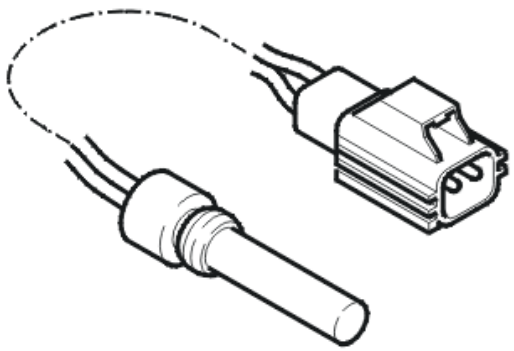

Fig. 106: Engine Coolant Level Sensor
Courtesy of VOLVO CARS CORPORATION

The function of the engine coolant level sensor is to alert the driver if the engine coolant level in the expansion tank is too low.

The sensor is a magnetic reed switch, which is enclosed in a pipe on the bottom of the expansion tank. Around the pipe, on the inside of the expansion tank is a float. This float contains a magnet. When the engine coolant level is above minimum, the float is too high in the tank to affect the switch. However if the engine coolant level falls below the minimum level, the magnetic field acts on the switch.

The sensor is supplied with voltage (signal) from the Engine Control Module (ECM) and grounded in chassis. When the engine coolant level in the expansion tank is over a certain level the circuit closes, which produces a low signal. When the engine coolant level is below a certain level the circuit is opened by the engine coolant level sensor, which produces a high signal. When the engine control module (ECM) detects a high signal the information about low engine coolant level is transmitted via the Controller area network (CAN) to the driver information module (DIM), which warns the driver.

NOTE: There are no functions controlled by the engine which are directly connected to the low coolant level warning lamp. The Engine Control Module (ECM) only transfers the signal which is used by the Driver Information Module (DIM).

The following applies from model year 2005-

The signal of the engine coolant level sensor can be read using VIDA (Volvo scan tool).

The engine control module (ECM) cannot diagnose the engine coolant level sensor.

TEMPERATURE SENSOR, INTAKE (TURBOCHARGED ENGINES ONLY, 2002-2004)

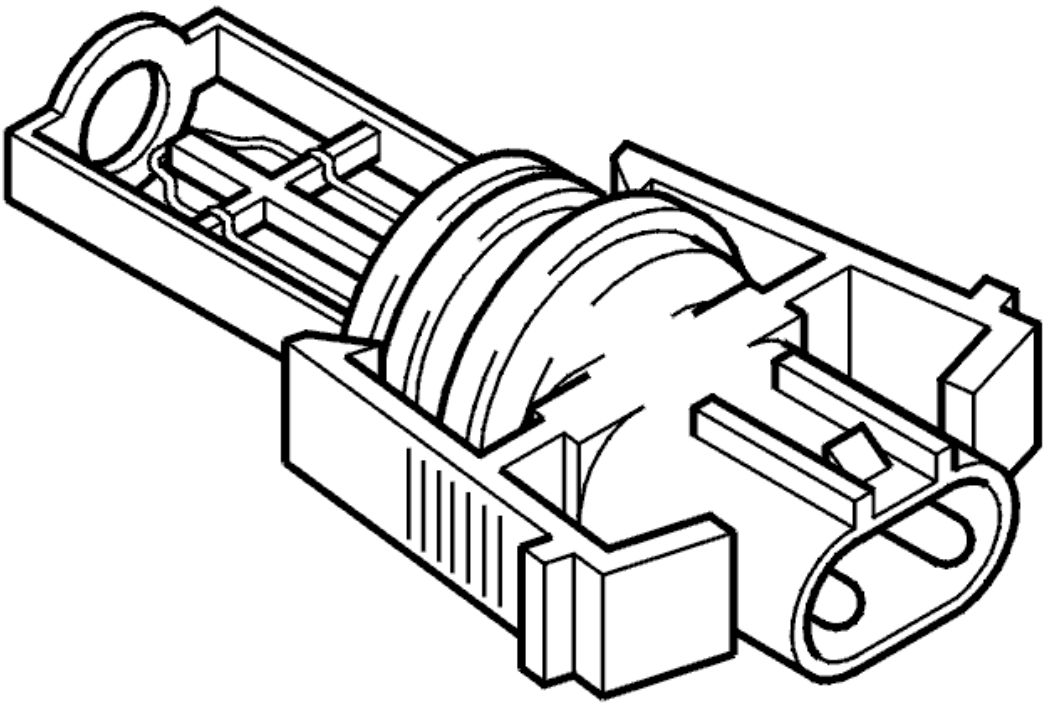

Fig. 107: Identifying Temperature Sensor - Intake (Turbocharged Engines Only, 2002-2004)
Courtesy of VOLVO CARS CORPORATION

On naturally aspirated engines, the intake air temperature sensor is integrated in the mass air flow (MAF) sensor. On model year 2002 turbocharged engines, the temperature sensor is a stand-alone component. On turbocharged engines from model year 2003, the temperature sensor is integrated in the intake air pressure sensor.

The temperature sensor detects the temperature of the intake air after the charge air cooler (CAC). This data is used by the engine control module (ECM) to calculate the boost pressure control (turbocharger (TC) and to calculate the injection period. The control module also controls certain diagnostic functions using the signal from the temperature sensor.

The sensor, which is an NTC resistor, is grounded in the control module and supplied with power (signal) from the control module.

The resistance in the sensor changes according to the temperature of the intake air. This provides the control module with a signal of between 0-5 V. The lower the temperature the higher the voltage (high resistance). A high temperature results in low voltage (low resistance).

The temperature sensor is between the air cleaner (ACL) housing and the intake manifold (does not apply to turbocharged engines 2003-). The temperature sensor on turbocharged engines 2003- is integrated in the intake air pressure sensor.

The engine control module (ECM) can diagnose the temperature sensor. The sensor signal can be read using VIDA (Volvo scan tool).

FUEL PRESSURE SENSOR / FUEL TEMPERATURE SENSOR (ONLY VEHICLES WITH DEMAND CONTROLLED FUEL PUMPS)

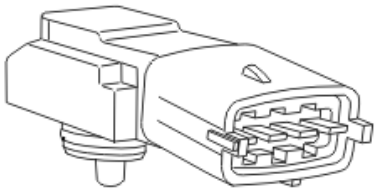

Fig. 108: Fuel Pressure Sensor And Fuel Temperature Sensor
Courtesy of VOLVO CARS CORPORATION

The fuel pressure sensor is combined and consisted of both the fuel pressure sensor and the fuel temperature sensor. The sensor detects the fuel pressure (the absolute pressure) and the temperature of the fuel in the fuel rail.

Fuel pressure sensor

The pressure sensor is a Piezo resistive type resistor, the resistance of which changes with the pressure. Depending on the pressure in the fuel rail, an analog signal of 0-5 V is transmitted. Low pressure results in low voltage, high pressure in high voltage.

The engine control module (ECM) then uses this signal to adjust the pressure in the fuel rail using the fuel pump control module. Also, see **FUEL PRESSURE REGULATION (ONLY VEHICLES WITH DEMAND CONTROLLED FUEL PUMPS)**.

The pressure sensor is supplied with 5 V and grounded in the engine control module (ECM). The pressure sensor transmits a signal indicating the fuel pressure to the engine control module (ECM) on a separate cable.

The engine control module (ECM) can diagnose the fuel pressure sensor. Its signals (pressure and temperature) can be read using VIDA (Volvo scan tool).

NOTE: The absolute pressure is displayed when using VIDA parameter readout to read off the fuel pressure. If there is no pressure at the fuel rail, the atmospheric pressure will be displayed.

HINT: The relative pressure (absolute pressure minus atmospheric pressure) is displayed when reading off the fuel pressure via a manometer connected to the fuel rail.

Fuel temperature sensor

The temperature sensor is an NTC sensor. The sensor is supplied with voltage (signal) from and grounded in the engine control module (ECM).

The resistance in the sensor changes according to the temperature of the fuel. This provides the engine control module (ECM) with a signal of between 0-5 V. Low temperature results in high voltage (high resistance). High temperature results in low voltage (low resistance).

The engine control module (ECM) uses the signal to calculate the volume of the fuel.

The fuel pressure sensor is on the left-hand end of the fuel rail.

OIL LEVEL SENSOR (2004-, CERTAIN MARKETS AND MODELS ONLY)

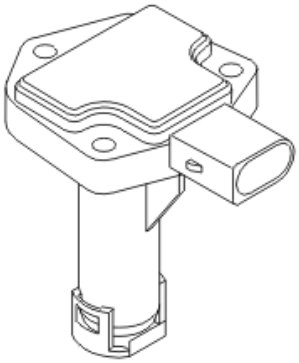

Fig. 109: Identifying Oil Level Sensor
Courtesy of VOLVO CARS CORPORATION

The oil level sensor provides the engine control module (ECM) with information about the quality and temperature of the engine oil and the oil level in the oil trough. Which of these functions is used by the sensor varies between different car models.

All three functions are combined in one unit with a sensor section and an electronics section. There are no moving parts in the sensor.

The sensor consists of:

- a terminal with three pins

- integrated electronics
- 2 capacitive gauge elements
- a PTC resistor.

The oil level sensor is supplied with 5 V by the engine control module (ECM). The oil level sensor generates a PWM signal for the engine control module (ECM). Also, see **OIL LEVEL MONITORING (2004-, CERTAIN MARKETS AND MODELS ONLY)**.

The engine control module (ECM) can diagnose the functions of the oil level sensor. Also, see **OIL LEVEL SENSOR, DIAGNOSTICS** .

The pulse-width modulated (PWM) signal from the oil level sensor can be read using parameter readout.

MAIN RELAY (SYSTEM RELAY)

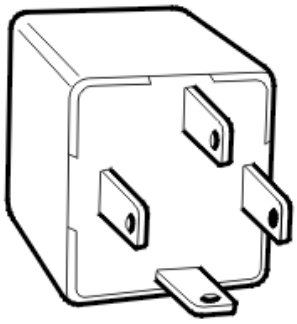

Fig. 110: Identifying Main Relay
Courtesy of VOLVO CARS CORPORATION

The function of the main relay (system relay) is to supply certain components with voltage.

The relay is mechanical and has a closing function. In the rest position the circuit in the relay is open.

The main relay terminals (#30 and #86) are supplied with voltage by the battery. When the ignition key has been turned and the Engine Control Module (ECM) is powered, the terminal (#85) on the main relay is grounded by the Engine Control Module (ECM).

When the terminal (#85) is grounded, the relay is activated and a number of components are powered via the relay terminal (#87).

The engine control module (ECM) can diagnose the main relay.

The main relay is in the relay/fusebox in the engine compartment.

AIR CONDITIONING (A/C) RELAY

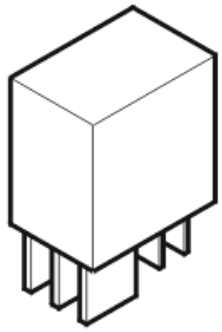

Fig. 111: Air Conditioning Relay
Courtesy of VOLVO CARS CORPORATION

The air conditioning (A/C) relay supplies the A/C compressor with voltage. The relay is controlled by the engine control module (ECM) based on information from different signals:

- the climate control module (CCM) (via the control area network (CAN))
- the engine coolant temperature
- the position of the accelerator pedal (AP)
- the pressure in the system.

The Engine Control Module (ECM) can temporarily disengage the A/C compressor during wide open throttle (WOT) acceleration.

The relay is mechanical. It has a closing / breaking function and is supplied with power from the system relay.

In the rest position the circuit in the relay is open.

The system relay supplies the coil and the relay with power. The relay activates when the coil is grounded in the engine control module (ECM), the circuit closes and the A/C compressor is supplied with power via the relay voltage output.

The relay coil is grounded (signal) when the engine control module (ECM) receives a signal via the Controller area network (CAN) from the climate control module (CCM) to activate the relay and start the compressor.

FUEL PUMP (FP) RELAY, (2002-2004)

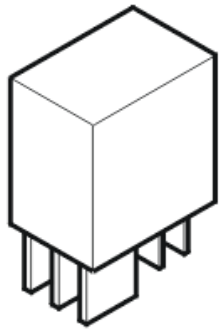

Fig. 112: Air Conditioning Relay
Courtesy of VOLVO CARS CORPORATION

The following applies for model year 2002-2004

The fuel pump (FP) relay supplies the fuel pump with power. The relay also cuts the power to the pump when the ignition is switched off or if the engine stops. In cars with demand controlled fuel pumps, the above function applies to the fuel pump control module. The central electronic module (CEM) also cuts the power to the relay if the supplemental restraint module (SRS) transmits a message indicating that an airbag has deployed.

The central electronic module (CEM) activates and deactivates the relay when requested by the engine control module (ECM) (via the Controller area network (CAN)).

When the ignition is switched on, the engine control module (ECM) sends a signal to the central electronic module (CEM) via the controller area network (CAN) to run the fuel pump (FP) for one seconds. This is so that the pressure increases in the fuel system, shortening the start time.

When the flywheel in the engine rotates (generating a signal from the engine speed (RPM) sensor), the engine control module (ECM) will transmit a request to the central electronic module (ECM) via the controller area network (CAN) to start the fuel pump. In the event of the engine stopping, the Engine Control Module (ECM) cancels the "activated fuel pump" signal. The central electronic module (CEM) then switches off the fuel pump.

There is a directly connected cable between the engine control module (ECM) and the central electronic module (CEM). In the event of a fault in the controller area network (CAN), this cable is used for the "activated fuel pump" signal.

INJECTORS

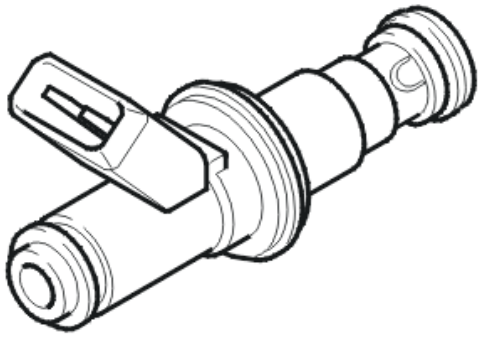

Fig. 113: Identifying Fuel Injector
Courtesy of VOLVO CARS CORPORATION

The function of the injectors is to spray fuel into the cylinders in the correct spray patterns. This happens sequentially.

The injectors are in the intake manifold.

It is essential that the injectors are correctly installed with no air leakage around them. Fuel leakage from the top of an injector when it is not activated may lead to starting and driving problems.

The engine control module (ECM) controls the injectors using a pulse width modulation (PWM) signal.

The injectors for each cylinder have different terminals in the engine control module (ECM), depending on whether the engine has 5 or 6 cylinders.

The engine control module (ECM) can diagnose the injectors. The injectors can be activated using VIDA (Volvo scan tool).

EVAPORATIVE EMISSION SYSTEM (EVAP) VALVE

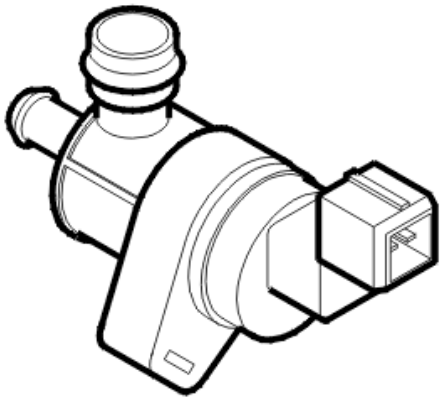

Fig. 114: Evaporative Emission System Valve
Courtesy of VOLVO CARS CORPORATION

The evaporative emission system (EVAP) valve is used to open/close the connection between the EVAP canister and the intake manifold. The valve controls the flow of hydro-carbons (fuel vapor) from the EVAP canister to the engine intake manifold using the vacuum in the intake manifold. This ensures that hydro-carbons stored in the EVAP canister are used in the engine combustion process.

The valve is an electro-magnetic valve which is powered from the system relay. When the valve needs to be opened, it is grounded internally in the engine control module (ECM). The evaporative emission system (EVAP) valve is closed when in the standby position (open-circuit).

When the control module requests that the EVAP canister should be emptied (the hydrocarbons stored in the canister should be released into the engine), the control module deploys the evaporative emission system (EVAP) valve by grounding it. The valve is grounded using a pulse width modulation (PWM) signal, allowing the control module to govern the extent to which the valve opens and adapting the emptying of the canister according to how full it is, engine speed (RPM) and load etc.

The engine control module (ECM) can diagnose the evaporative emission system (EVAP) valve. The valve can be activated using VIDA (Volvo scan tool).

The evaporative emission system (EVAP) valve is close to the intake manifold.

CAMSHAFT RESET VALVE (CONTINUOUS VARIABLE VALVE TIMING (CVVT))

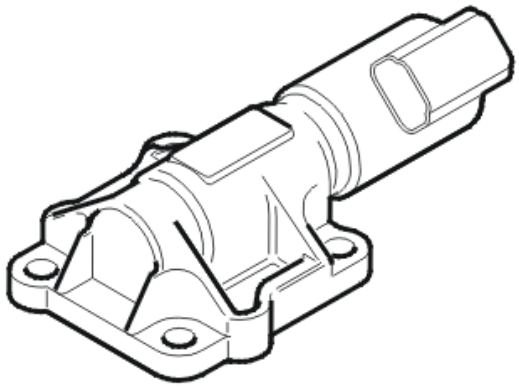

Fig. 115: Camshaft Reset Valve
Courtesy of VOLVO CARS CORPORATION

The camshaft reset valve controls the oil flow to the CVVT unit (camshaft pulley).

The valve consists of an electro-magnetic valve with a spring-loaded piston. There are slits in the piston which channel the engine lubricating oil to the CVVT unit by moving the piston in the reset valve. The continuous variable valve timing (CVVT) unit turns the camshaft (the cam timing changes). The direction in which the camshaft turns depends on the chamber in the CVVT unit which is supplied with oil (pressure). Also, see **CAMSHAFT CONTROL (CVVT)**.

The system relay supplies the reset valve with voltage. The valve is grounded (control stage) in the engine control module (ECM). When the valve is grounded using a pulse width modulation (PWM) signal, the oil flow in the valve can be controlled to the different chambers in the continuous variable valve timing (CVVT) unit at

variable rates. This allows the cam timing to be changed precisely and steplessly.

The engine control module (ECM) can diagnose the camshaft reset valve.

The valve is on the cylinder head above the camshaft with camshaft control.

TURBOCHARGER (TC) CONTROL VALVE

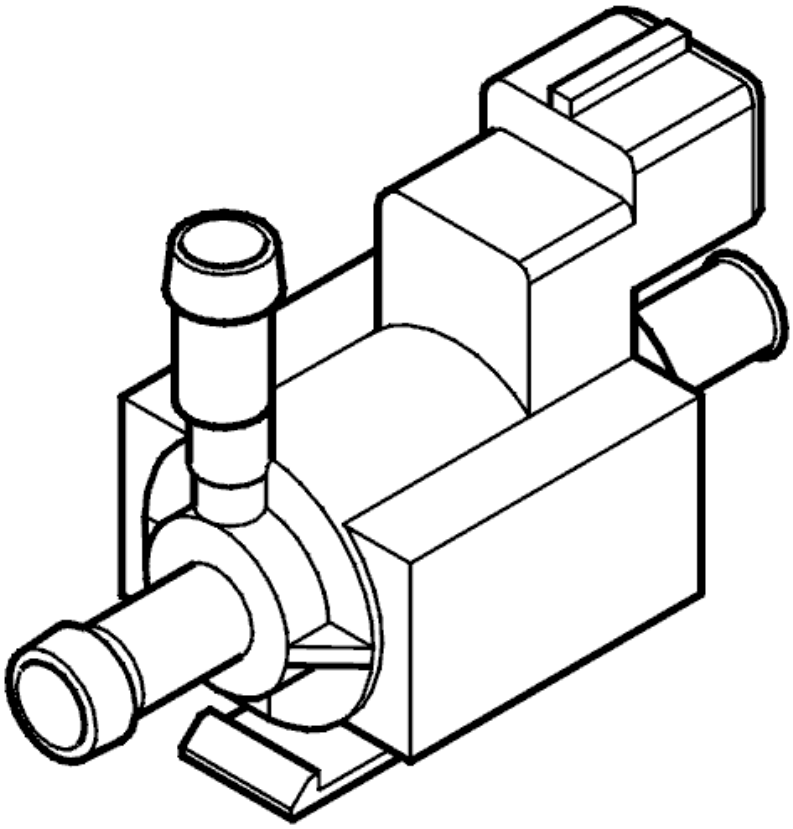

Fig. 116: Identifying Turbocharger Control Valve
Courtesy of VOLVO CARS CORPORATION

The turbocharger (TC) control valve is used to open/close the connection between the intake manifold and the pressure servo for the turbocharger (TC). The valve controls the pressure servo which affects the boost pressure control (BPC) valve and therefore the boost pressure. Also, see **TURBOCHARGER (TC) CONTROL SYSTEM**.

The valve is an electro-magnetic valve which is powered from the system relay. When the valve needs to be opened, it is grounded internally in the engine control module (ECM). The valve can be controlled steplessly by grounding the valve using a pulse width modulation (PWM) signal.

The valve is closed when in the standby position (open-circuit).

The turbocharger control valve can be diagnosed and can be activated using VIDA (Volvo scan tool).

The turbocharger (TC) control valve is on a hose between the intake manifold and the pressure servo for the turbocharger.

IGNITION COILS

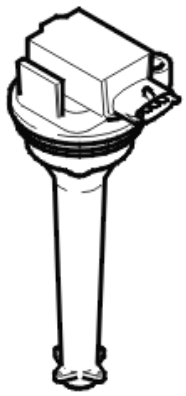

Fig. 117: Identifying Ignition Coils
Courtesy of VOLVO CARS CORPORATION

The ignition coils supply the spark plugs with high voltage to produce sparks. The engine control module (ECM) controls the ignition coils so that sparks are generated at the correct time.

Each ignition coil has its own integrated power stage.

The ignition coils are in the sparkplug wells above each spark plug.

The ignition coils for each cylinder have different terminals in the engine control module (ECM), depending on whether the engine has 5 or 6 cylinders.

The engine control module (ECM) can diagnose the ignition coils.

EMISSIONS WARNING LAMP

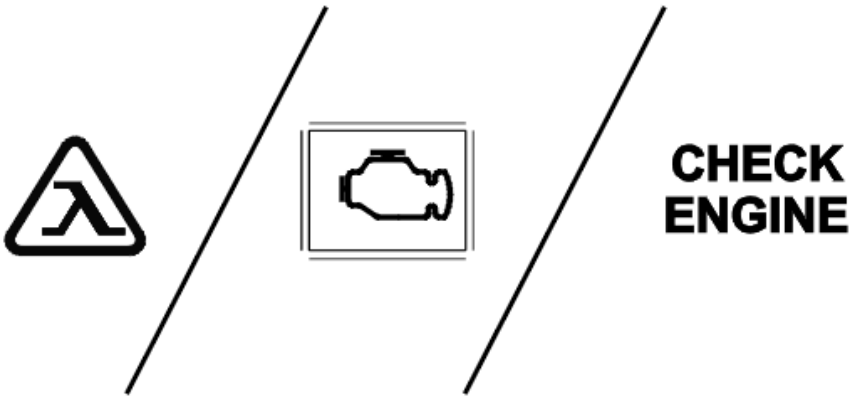

Fig. 118: Emissions Warning Lamp
Courtesy of VOLVO CARS CORPORATION

The emissions warning lamp in the Driver Information Module (DIM) has a warning symbol. This warning symbol varies depending on the market and model year. The warning symbols are:

- "Engine symbol" (not USA, model year 2001-)
- "CHECK ENGINE" (MIL - Malfunction Indicator Lamp, USA only).
- "Lambda symbol" (not USA, model year 1999-2000).

The warning symbol lights when the ignition key is turned to position II and goes out when the engine is started if the engine management system does not detect any faults.

The warning lamp is directly connected to the engine control module (ECM).

The warning lamp will light if there is a fault in one of the parameters in the engine management system. The warning lamp will also light in response to a request transmitted via the Control area network (CAN) if there is a fault in one of the following systems which affects emissions:

- transmission control module (TCM)
- brake control module (BCM).

DIAGNOSTIC FUNCTIONS

OVERVIEW

See **OVERVIEW**.

MISFIRE DIAGNOSTIC

See **MISFIRE DIAGNOSTICS** .

CAMSHAFT DIAGNOSTICS (CVVT)

See **CAMSHAFT DIAGNOSTICS (CVVT)** .

LEAK DIAGNOSTICS (CERTAIN MARKETS ONLY)

To minimize false detection of leakage, new software has been released for the Engine control module (ECM). The software has been released afterwards, in order of priority, started at the end of 2006.

To check the current software version, see Vehicle communication in VIDA (Volvo scan tool).

The improved software version makes diagnostics more robust and durable against aging and wear of the leak diagnostic unit. It affects strategies, behavior and to a degree also read off parameters.

- see **LEAK DIAGNOSTICS, ORIGINAL VERSION (-2004)**
- see **LEAK DIAGNOSTICS, ORIGINAL VERSION (2005-)**
- see **LEAK DIAGNOSTICS, IMPROVED VERSION (2002-)**

HEATED OXYGEN SENSOR (HO2S) DIAGNOSTIC

See **HEATED OXYGEN SENSOR (HO2S) DIAGNOSTIC** .

THREE-WAY CATALYTIC CONVERTER (TWC) DIAGNOSTICS

See **CATALYTIC CONVERTER DIAGNOSTIC** .

FUEL PRESSURE REGULATION, DIAGNOSTICS (ONLY VEHICLES WITH DEMAND CONTROLLED FUEL PUMPS)

See **FUEL PRESSURE REGULATION, DIAGNOSTICS** .

OIL LEVEL SENSOR, DIAGNOSTICS (2004-, CERTAIN MARKETS AND MODELS ONLY)

See **OIL LEVEL SENSOR, DIAGNOSTICS** .

LEAK DIAGNOSTICS, IMPROVED VERSION (2002-)

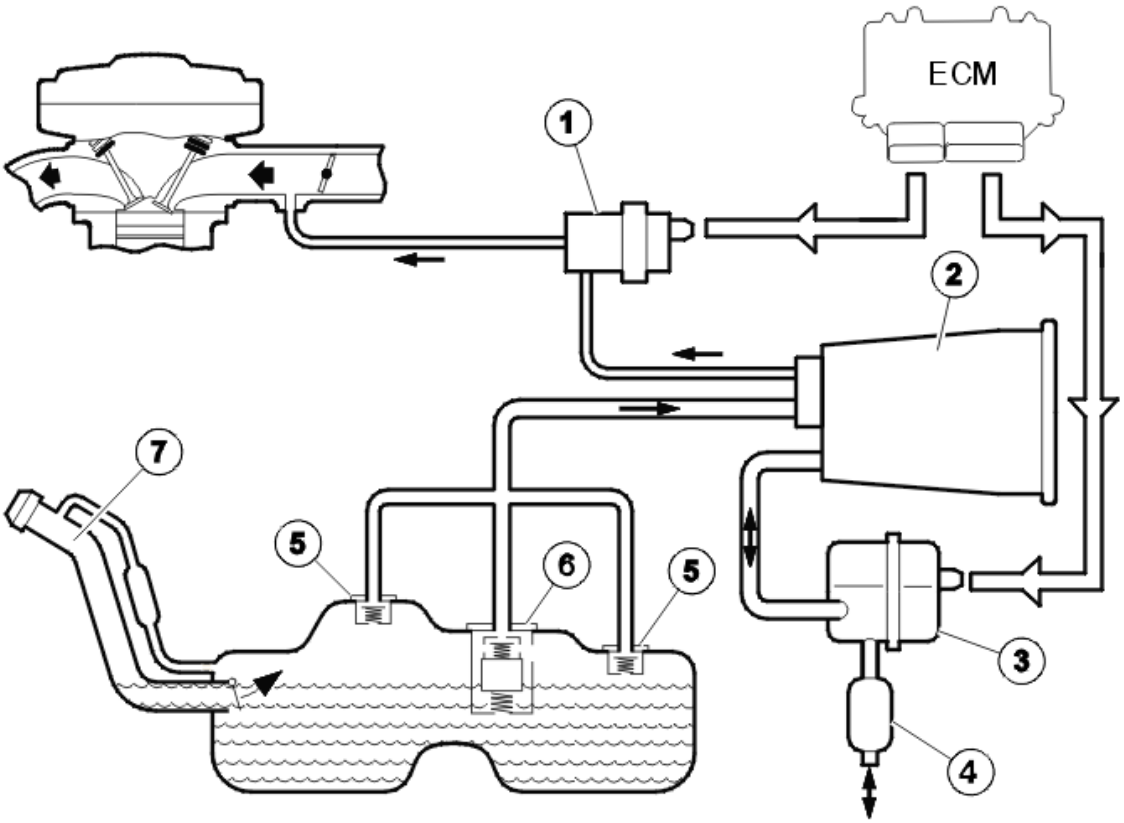

Fig. 119: Fuel Tank System Leak Overview
Courtesy of VOLVO CARS CORPORATION

All gases that evaporate from fuel in the fuel tank must be led to and stored in the evaporative emission system (EVAP) canister so that they can be directed into the engine for combustion. In order to detect leakages which

cause evaporation of gases into the air, the fuel tank system is diagnosed for leakage. The fuel tank system consists of:

- fuel tank
- the EVAP canister purge valve (1)
- EVAP canister (2)
- leak diagnostic unit (3)
- air cleaner (ACL) (4)
- Roll-over valve (5)
- Float Limit Vent Valve (6)
- fuel filler pipe (7)
- all lines between the above components.

The fuel tank system has a leak diagnostic unit to diagnose any leakage. The leak diagnostic unit pressurizes the fuel tank system when the conditions for leak diagnostics are met.

The control module can detect faults in the function of the leak diagnostic unit and leakage that is 0.5 mm or greater. Minor leak; leakage greater than 0.5 mm but less than 1.0 mm. Major leak; leakage greater than 1.0 mm.

The leak diagnostic unit consists of a pump and a valve that controls the air flow in the unit. The Engine control module (ECM) checks for leakage in the fuel tank system by measuring the relationship between reached pressure and flow from the leak diagnostic pump during pressurization.

If a certain pressure is not reached with a predetermined supplied flow (with known mass), the Engine control module (ECM) interprets this as a leak from the fuel tank system.

Leak diagnostics starts in normal operation when specific conditions are met, see below. The diagnostics can also be started on command using VIDA when some of these conditions are ignored.

Conditions for diagnosis

The diagnosis begins when all the following conditions are met.

Note: When diagnostics are started on command using VIDA, certain different conditions apply.

- No diagnostic trouble codes (DTCs) for EVAP valve or atmospheric pressure sensor may be stored.
- The engine is switched off until the engine coolant temperature (ECT) has fallen to a few degrees above the outside temperature, then engine running for at least 10 minutes
- Ignition off
- Vehicle speed 0 km/h.
- Engine coolant temperature (ECT) 4-35°C.
- Maximum altitude of 2500 meters above sea level
- Outside temperature 4-35 °C.

- Fuel volume in the tank between 0-85 %. The engine control module (ECM) ignores these parameters if a diagnostic trouble code (DTC) is stored for the fuel level sensor and the fuel volume cannot be determined.
- Battery voltage between 11-15 V. The voltage must be stable.
- EVAP canister purge valve closed
- Low volume in the canister.
- Fuel tank filler cap locked. Tip. Locking occurs when the vehicle speed exceeds approximately 20 km/h.

Diagnostic phases

The diagnostic is divided into the following phases and is carried out in sequence when all conditions for the diagnostic have been met.

- reference phase
- function test
- checking the fuel tank system

Reference phase

Before the leak diagnostic begins, the control module runs a reference phase for leakage. During the reference phases for leakage that is 0.5 mm, the pump in the leak diagnostic unit pumps ambient air through a 0.5 mm hole and back out to the ambient air. At the same time, the pump in the leak diagnostic unit is monitored and the reference values stored for later use to determine whether the tank system is leaking or not.

If a reference value for the pump is outside its unexpectedly high or low, or deviates too much, diagnostics is cancelled and a DTC is stored.

Function test

After the reference phase, the valve in the leak diagnostic unit is activated and controls the air flow to the fuel tank to pressurize the fuel tank system. This change of air flow will cause the load the pump to fall briefly before the pressure builds up in the fuel tank system. If the load does not change within permitted parameters within a permitted time, diagnostics is cancelled and a DTC is stored.

Checking the tank system, major leak (leak greater than 1.0 mm)

Diagnostics are carried out every time conditions for diagnostics are met.

The leak diagnostic unit pressurizes the fuel tank system and checks for leaks by monitoring the pressure the fuel tank system. The pressure is a calculated pressure, calculated using the measured pump power consumption. If the pressure stabilizes and/or does not exceed 1500 Pa within 450 seconds, this is interpreted as a leak from the fuel tank system. Diagnostics are cancelled and a DTC for major leak is stored.

Checking the fuel tank system, minor leak (leakage greater than 0.5 mm but less than 1.0 mm)

The diagnostic for minor leaks is run every other time that the conditions for the diagnostic are met. Otherwise

diagnostics stop after checking for major leaks.

The leak diagnostic unit continues to pressurize the fuel tank system. The Engine control module (ECM) checks for leakage in the fuel tank system by measuring the relationship between reached pressure and flow from the leak diagnostic pump during pressurization. In a sealed system the relationship between these must be linear. Any deviations from the linear relationship are calculated and used to determine how well sealed the tank system is.

A diagnostic trouble code (DTC) is stored if a minor leak is detected within 15 minutes.

OVERVIEW

OVERVIEW

The engine control module (ECM) checks itself and all input and output signals.

FOUR DIFFERENT CONDITIONS FOR DIAGNOSTICS

Trip

When all diagnostic functions have been gone through.

Drive cycle

Begins 15 seconds after the engine starts and finishes when the engine is switched off.

Warm-up cycle

Begins when the engine starts and engine coolant temperature (ECT) is below 40°C (104°F) and finishes when the engine temperature is above 84°C (183.2°F).

Time

Some diagnostics are carried out a set amount of time after a particular occurrence (for example when vehicle speed is above 23 km/h (14.3 mph)).

EMISSIONS RELATED DIAGNOSTIC FUNCTIONS

The engine control module (ECM) checks that the emissions related functions are working. These systems are checked by an ongoing diagnostic function. The diagnostic function checks that the relevant components and the actual function in the system are working. It is called a trip when all diagnostic functions have been gone through. Trip time may vary depending on driving style, but normally it takes approximately 25 minutes fir mixed driving.

DIAGNOSTIC TROUBLE CODE (DTC) MEMORY

When the engine control module (ECM) detects a fault, the diagnostic trouble code (DTC) is stored with the qualifier and status in the unit DTC memory. For certain types of diagnostic trouble codes (DTCs) the missing

signal is replaced with a substitute value so that the system can continue to operate.

If the fault disappears, the diagnostic trouble code (DTC) will be present for a longer time in the diagnostic trouble code (DTC) memory although the status of the code will have changed.

MALFUNCTION INDICATOR LAMP (MIL) ACTIVATION

Emissions related diagnostic trouble codes (DTC) are stored even when it is lit. A counter counts down to determine when the malfunction indicator lamp (MIL) should be lit. The conditions for lighting the malfunction indicator lamp (MIL) vary depending on the diagnostic trouble code (DTC) that is stored.

Faults that have been diagnosed in the automatic transmission may affect emissions and the automatic transmission may request the activation of the malfunction indicator lamp (MIL).

LEAK DIAGNOSTICS, ORIGINAL VERSION (-2004)

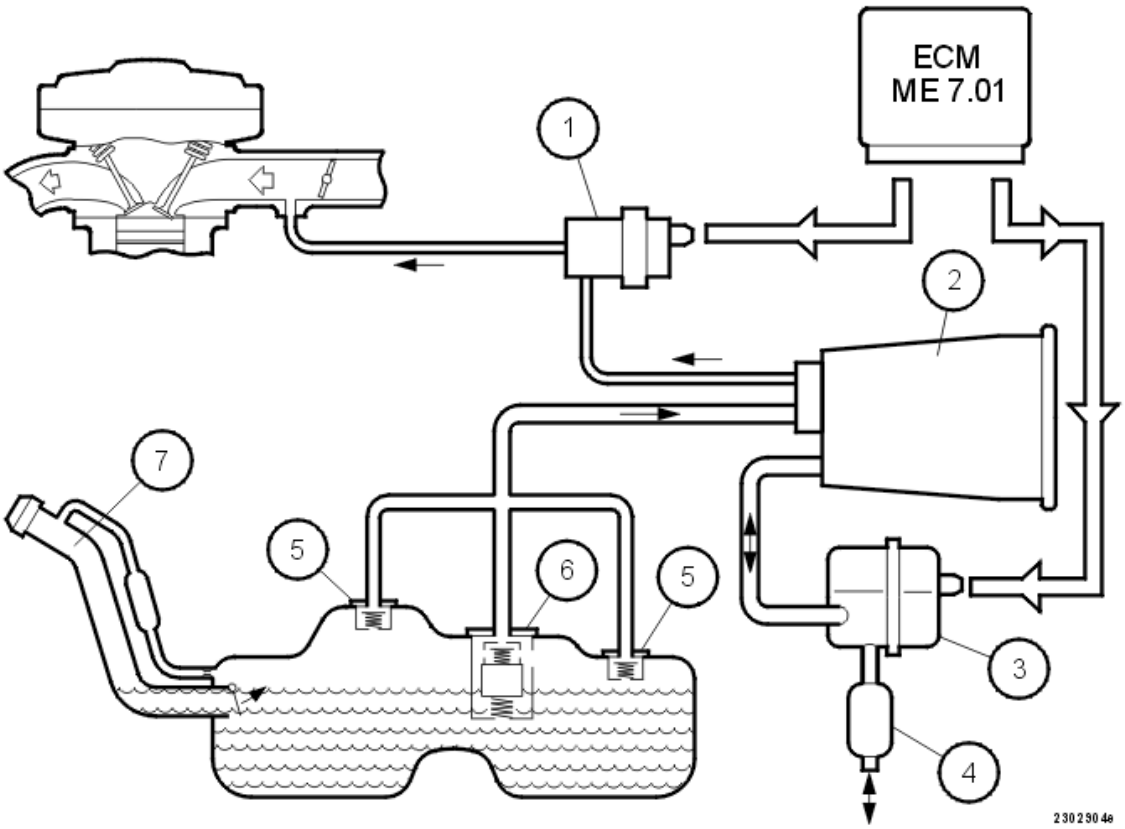

Fig. 120: Fuel Tank System Overview
Courtesy of VOLVO CARS CORPORATION

All gases that evaporate from fuel in the fuel tank must be led to and stored in the evaporative emission system canister so that they can be directed into the engine for combustion. In order to detect leakages that cause gas to evaporate into the air, the fuel tank system is diagnosed for leakage. The fuel tank system consists of fuel tank,, fuel filler pipe (7), EVAP canister (2), EVAP valve (1), air cleaner (4), leak diagnostic unit (3) and all cables between these components. The fuel tank system has a leak diagnostic unit that makes it possible to diagnose

any leaks. The unit pressurizes the fuel tank system when the ignition is switched off if the conditions for leak diagnostics are met. The control module can detect faults in the function of the diagnostic unit and leakage that is 0.5 mm (minor leak) or greater (major leak, fuel filler cap missing).

The leak diagnostic unit consists of a pump and a valve that controls the air flow in the unit. The fuel tank system tests for leaks by measuring the power consumption of the pump. The power consumption of the pump corresponds to a certain pressure in the fuel tank system. During diagnosis, the rate at which the pressure can build up is checked, taking into account the quantity of fuel in the tank. The quicker the pressurization the better the fuel tank system is sealed.

Conditions for diagnosis

The diagnosis begins when all the following conditions are met:

- There must be no diagnostic trouble code (DTC) stored for the following components or functions:
  - the power stage for the pump in the leak diagnostic unit
  - the power stage for the valve in the leak diagnostic unit
  - the power stage for the EVAP canister purge valve
  - the EVAP canister purge valve.
- Engine off for at least 5 hours (context), engine running for at least 20 minutes (context)
- Ignition off
- Vehicle speed 0 km/h
- Engine coolant temperature (ECT) +4 °C or higher
- Maximum altitude of 2500 meters above sea level
- Outside temperature between +4 and +35 °C
- Stable signal from the fuel level sensor
- Fuel volume in the tank between 15-85 %
- Battery voltage between 11.0-14.5 V. The voltage must be stable
- EVAP canister purge valve closed
- Low volume in the canister.

Diagnostic phases

The diagnostic is divided into the following phases and is carried out in sequence when all conditions for the diagnostic have been met.

- Reference phase 1
- Function test
- Leak diagnostic.

Reference phase and function test

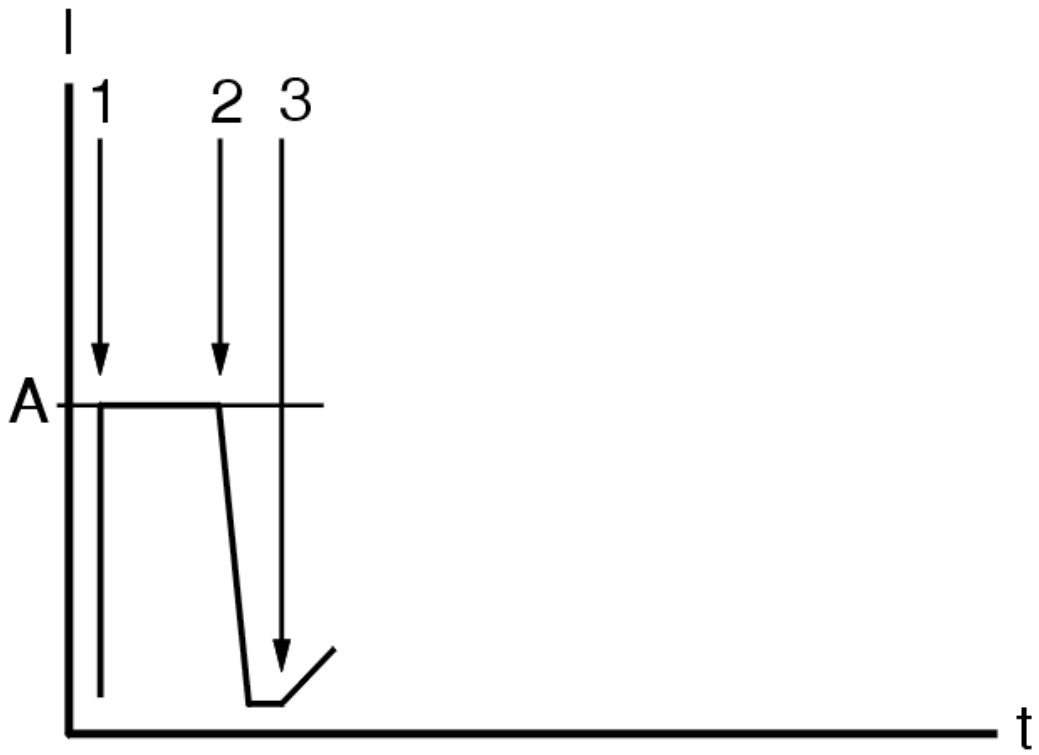

Fig. 121: Fault Free Fuel Tank System Diagram
Courtesy of VOLVO CARS CORPORATION

(the illustration is a diagram of a fault free fuel tank system) Before the actual leak diagnostic begins, the control module enters a reference phase for leakage and checks the components in the system.

Reference phase 1 and reference phase 2

During the reference phases (1-2) for leakage that is 0.5 mm, the pump in the leak diagnostic unit pumps ambient air through a 0.5 mm hole and back out to the ambient air. At the same time, the power consumption of the pump is measured and stored in the control module (A). The stored value for the power consumption of the pump corresponds to a leakage of 0.5 mm.

Function test

If the value for the power consumption of the pump is too high or low during reference phase1 (1-2), or if the value varies too much during reference phase 1 (1-2), the diagnostic is cancelled and starts again the next time the conditions for the diagnostic are met. Diagnostic trouble code (DTC) ECM-431D, faulty signal, is stored if the diagnostic is cancelled 10 times due to excessive variation in the power consumption of the pump.

After the reference phase, the valve (2) in the leak diagnostic unit is activated and controls the air flow to the fuel tank to pressurize the fuel tank system. This change of air flow will cause the power consumption of the pump to fall briefly before the pressure builds up in the fuel tank system (3). Diagnostic trouble code (DTC) ECM-431D, signal missing, is stored if the value for the power consumption of the pump drops too quickly, too

slowly or not at all.

Leak diagnostic

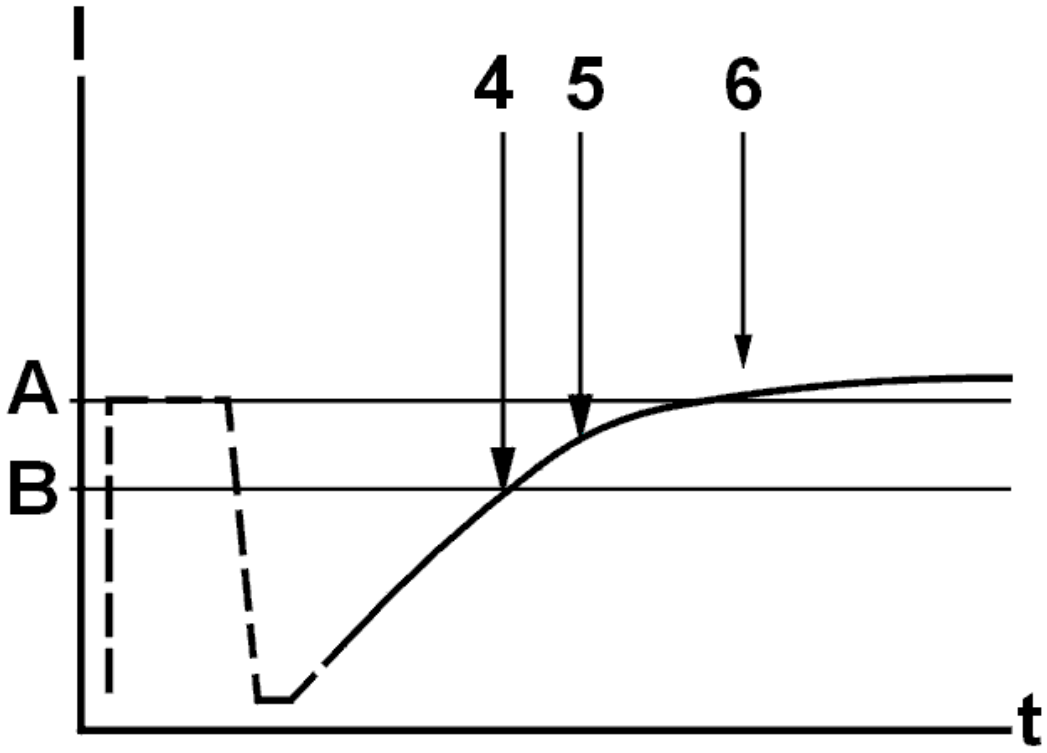

Fig. 122: Fault Free Fuel Tank System Diagram (Major Leak)
Courtesy of VOLVO CARS CORPORATION

(the illustration is a diagram of a fault free fuel tank system). As long as diagnostic trouble code (DTC) ECM-431D is not stored, the leak diagnostic will be carried out after the reference phase and the function test.

Major leak

(leaks >1.0 mm) The diagnostic for "major leaks" is carried out every other time when the diagnostic conditions are met. The leak diagnostic unit pressurizes the fuel tank system, measures the power consumption of the pump (4) and compares this with a calculated desired value (B). If the measured value does not reach the calculated desired value within a certain amount of time (this time is determined by the fuel level in the tank), the function of the leak diagnostic unit is rechecked by running reference phase 2 again to check that low power consumption has not led to changes in the components. Diagnostic trouble code ECM-400C, major leak, is generated if the power consumption of the pump is OK during reference phase 2.

Diagnostic trouble code (DTC) ECM-4338 (fuel tank filler cap missing) will also be stored and the driver will receive a text message in the Driver Information Module (DIM) when a major leak is detected by the Engine Control Module (ECM).

Minor leak

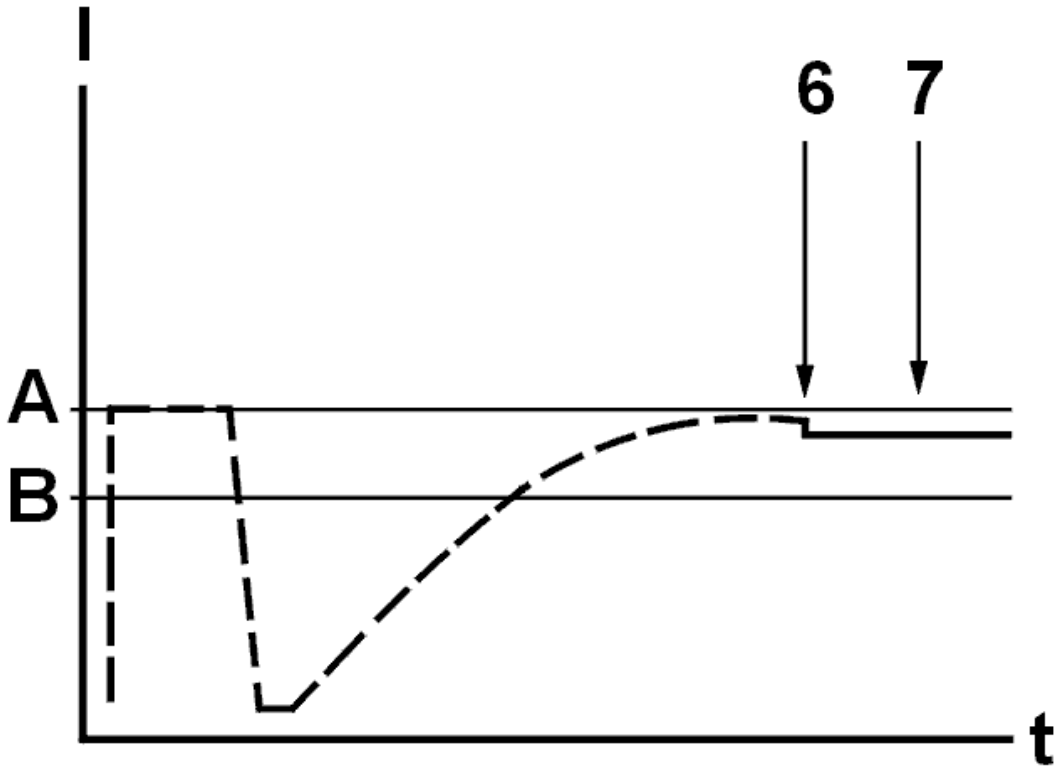

Fig. 123: Fault Free Fuel Tank System Diagram (Minor Leak)
Courtesy of VOLVO CARS CORPORATION

(leaks >0.5 mm <1.0 mm). The diagnostic for "minor leaks" is carried out every 14th time when the diagnostic conditions are met. The diagnostic for major leaks is always run before the diagnostic for minor leaks. The leak diagnostic unit continues to pressurize the fuel tank system (5). If the measured value (6) is the same or less than the value stored in the reference phase (A) after a certain amount of time (determined by the fuel level in the tank), reference phase 2 (7) is run to ensure that the lower power consumption (6) is not the result of changes in components. If the measured power consumption during the second reference phase (7) is lower than that measured during pressurization (6), the control module interprets this as meaning that the fuel tank system is sealed. Diagnostic trouble code ECM-400C, minor leak, is generated if the measured power consumption from the second reference phase (7) is the same or higher than that measured during pressurization (6).

LEAK DIAGNOSTICS, ORIGINAL VERSION (2005-)

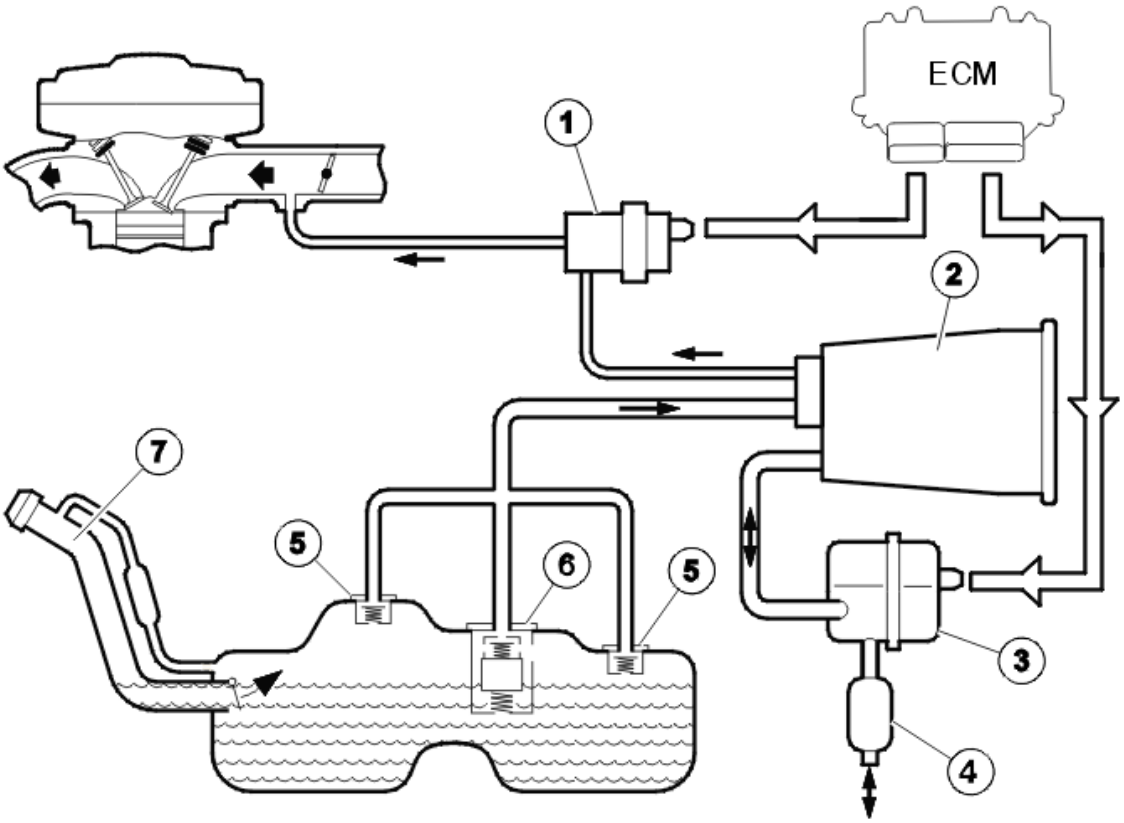

Fig. 124: Fuel Tank System Leak Overview
Courtesy of VOLVO CARS CORPORATION

All gases that evaporate from fuel in the fuel tank must be led to and stored in the evaporative emission system (EVAP) canister so that they can be directed into the engine for combustion. In order to detect leakages which cause evaporation of gases into the air, the fuel tank system is diagnosed for leakage. The fuel tank system consists of:

- fuel tank
- the EVAP canister purge valve (1)
- EVAP canister (2)
- leak diagnostic unit (3)
- air cleaner (ACL) (4)
- Roll-over valve (5)
- Float Limit Vent Valve (6)
- fuel filler pipe (7)
- all lines between the above components.

The fuel tank system has a leak diagnostic unit to diagnose any leakage. The leak diagnostic unit pressurizes the fuel tank system when the ignition is off, if the conditions for diagnosis have been met. The control module can detect faults in the function of the leak diagnostic unit and leakage that is 0.5 mm or greater. Minor leak; leakage greater than 0.5 mm but less than 1.0 mm. Major leak; leakage greater than 1.0 mm.

The leak diagnostic unit consists of a pump and a valve that controls the air flow in the unit. The fuel tank system tests for leaks by measuring the power consumption of the pump. The power consumption of the pump corresponds to a certain pressure in the fuel tank system. During diagnosis, the rate at which the pressure can build up is checked, taking into account the quantity of fuel in the tank. The quicker the pressurization the better the fuel tank system is sealed.

Conditions for diagnosis

The diagnosis begins when all the following conditions are met:

- There must be no diagnostic trouble code (DTC) stored for the following components or functions:
  - the power stage for the pump in the leak diagnostic unit
  - the power stage for the valve in the leak diagnostic unit
  - the power stage for the EVAP canister purge valve
  - the evaporative emission system (EVAP) valve
  - the engine coolant temperature (ECT) sensor
  - speed signal.
- The engine is switched off until the engine coolant temperature (ECT) has fallen to a few degrees above the outside temperature, then engine running for at least 10 minutes
- Ignition off
- Vehicle speed 0 km/h
- Engine coolant temperature (ECT) -5 °C or higher
- Maximum altitude of 2500 meters above sea level.
- Outside temperature between -5 and +35 °C
- Fuel volume in the tank less than 85 %. The engine control module (ECM) ignores these parameters if a diagnostic trouble code (DTC) is stored for the fuel level sensor and the fuel volume cannot be determined
- Battery voltage between 11.0-14.5 V. The voltage must be stable
- EVAP canister purge valve closed
- Low volume in the canister.

Fuel tank filler cap check

The exception from the above conditions is when the car has been refuelled. The engine control module (ECM) starts a check of the fuel tank filler cap after refuelling. This check is a simplified version of the leak diagnostic unit for major leaks. The fuel tank filler cap control is run while the vehicle is being driven. This allows the control module to check that the cap has been reinstalled. A diagnostic trouble code (DTC) is stored in the engine control module (ECM) and a text message is displayed in the driver information module (DIM) if the cap is missing.

Diagnostic phases

The diagnostic is divided into the following phases and is carried out in sequence when all conditions for the

diagnostic have been met.

- Reference phase
- Function test
- Leak diagnostics

Reference phase (1-2)

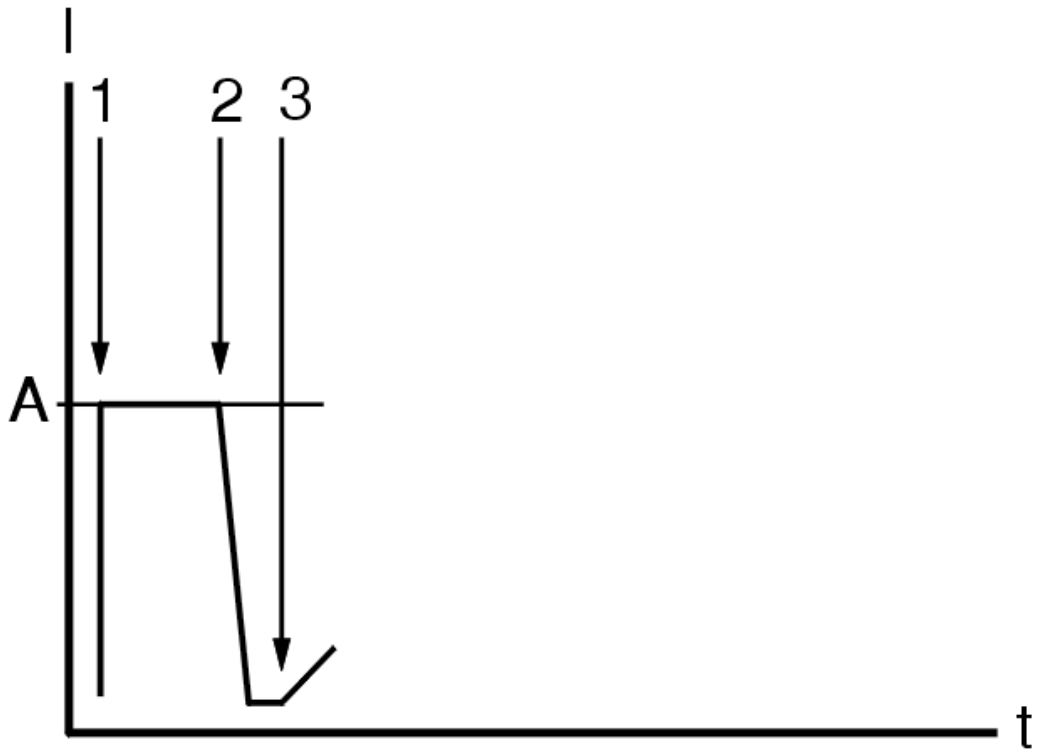

Fig. 125: Fault Free Fuel Tank System Diagram
Courtesy of VOLVO CARS CORPORATION

The illustration is a diagram of a fault free fuel tank system.

Before the leak diagnostic begins, the control module runs a reference phase for leakage. During the reference phase (1-2) for leakage that is 0.5 mm, the pump in the leak diagnostic unit pumps ambient air through a 0.5 mm hole and back out to the ambient air. At the same time, the power consumption (A) of the pump is measured and stored in the control module. The stored value (A) for the power consumption of the pump corresponds to a leakage of 0.5 mm. This value is then used by the engine control module (ECM) to determine the leak status of the fuel tank system.

Function test (1-3)

If the value for the power consumption of the pump is too high or low during the reference phase (1-2), or if the

value varies too much during the reference phase (1-2), the diagnostic is cancelled and starts again the next time the conditions for the diagnostic are met. A diagnostic trouble code (DTC) is stored if the diagnostic is cancelled several time in a row because the power consumption of the pump is varying excessively.

After the reference phase, the valve (2) in the leak diagnostic unit is activated and controls the air flow to the fuel tank to pressurize the fuel tank system. This change of air flow will cause the power consumption of the pump to fall briefly before the pressure builds up in the fuel tank system (3). A diagnostic trouble code is stored if the value for the power consumption of the pump drops too quickly, slowly or not at all.

Leak diagnostic, major leak (leakage greater than 1.0 mm)

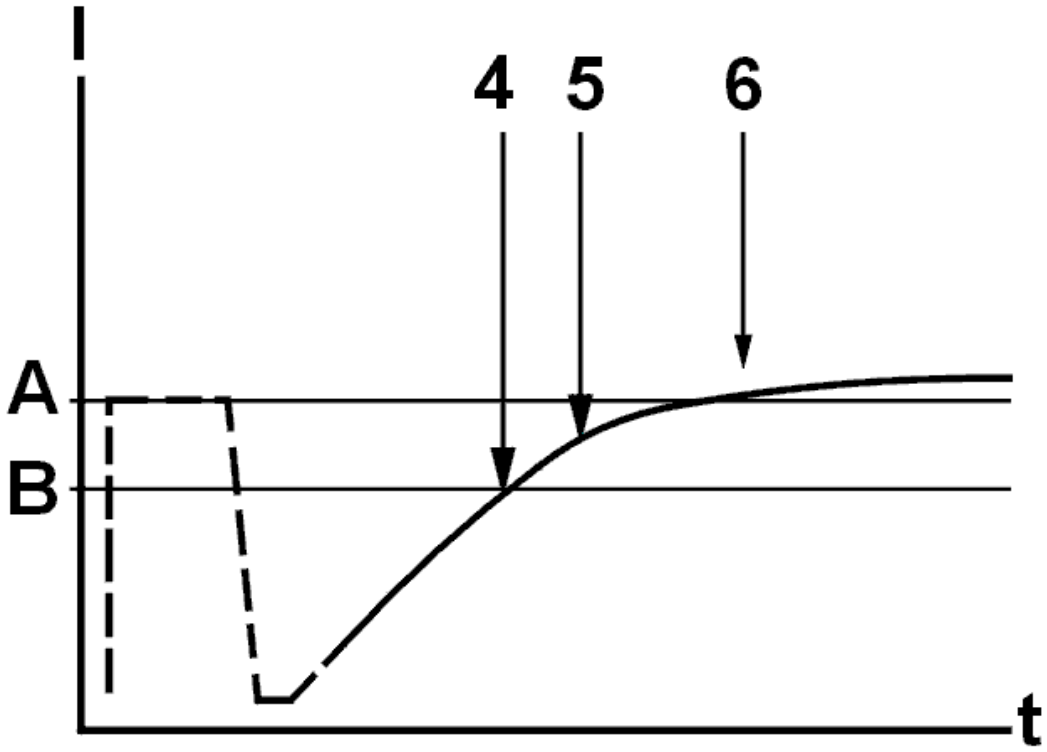

Fig. 126: Fault Free Fuel Tank System Diagram (Major Leak)
Courtesy of VOLVO CARS CORPORATION

The diagnostic for "major leaks" is carried out each time when the conditions for the diagnostic are met. The leak diagnostic unit pressurizes the fuel tank system, measures the power consumption of the pump (4) and compares this with a calculated desired value (B). A diagnostic trouble code (DTC) for a major leak is stored if the measured value does not reach the calculated desired value within a certain time (the time is determined by atmospheric pressure and the fuel level in the tank).

Leak diagnostic, minor leak (leakage greater than 0.5 mm but less than 1.0 mm)

The diagnostic for minor leaks is run every other time that the conditions for the diagnostic are met. The diagnostic for major leaks is always run before the diagnostic for minor leaks. The leak diagnostic unit

continues to pressurize the fuel tank system (5-6). After a certain amount of time (the time varies depending on the fuel level in the tank), the engine control module (ECM) checks that the fuel tank system for leaks. This is determined based on:

- time
- the measured reference current consumption of the pump (A)
- the measured power consumption of the pump when the assessment is made
- the shape and character of the current curve during pressurization.

A diagnostic trouble code (DTC) is stored if a minor leak is detected.

DOWNLOADING SOFTWARE AND REPLACING THE CONTROL MODULE

New software can be downloaded into the engine control module (ECM). When ordering software, the hardware and the software in the car is compared to the information in the Volvo central database. If the comparison is OK the software is downloaded to the control module. If the comparison between the car and Volvo central database is not OK, the database is updated with the car configuration. When this is complete the software is downloaded.

The engine control module (ECM) is positioned in the cool box in the engine compartment.

The engine control module (ECM) contains a unique code for each car for the immobilizer. The central electronic module (CEM) checks this code at engine start up. The engine will not start if the central electronic module (CEM) detects an incorrect code for the immobilizer. This means that the engine control module (ECM) cannot be switched from car to car.

The engine control module (ECM) must first be "unlocked" using a unique PIN for each car before it can be programmed with a code for the immobilizer. When the engine control module (ECM) has approved the PIN, the code for the immobilizer can be programmed.

The PIN and the code for the immobilizer are obtained from the Volvo central database and sent out with the software package when software for downloading has been ordered.

All new engine control modules (ECM) have the same PIN which is preprogrammed by the control module supplier. After the engine control module (ECM) has been programmed successfully the original PIN for the car will be programmed in the engine control module (ECM) memory and replace the preprogrammed PIN code.

FUNCTION

CAMSHAFT CONTROL (CVVT)

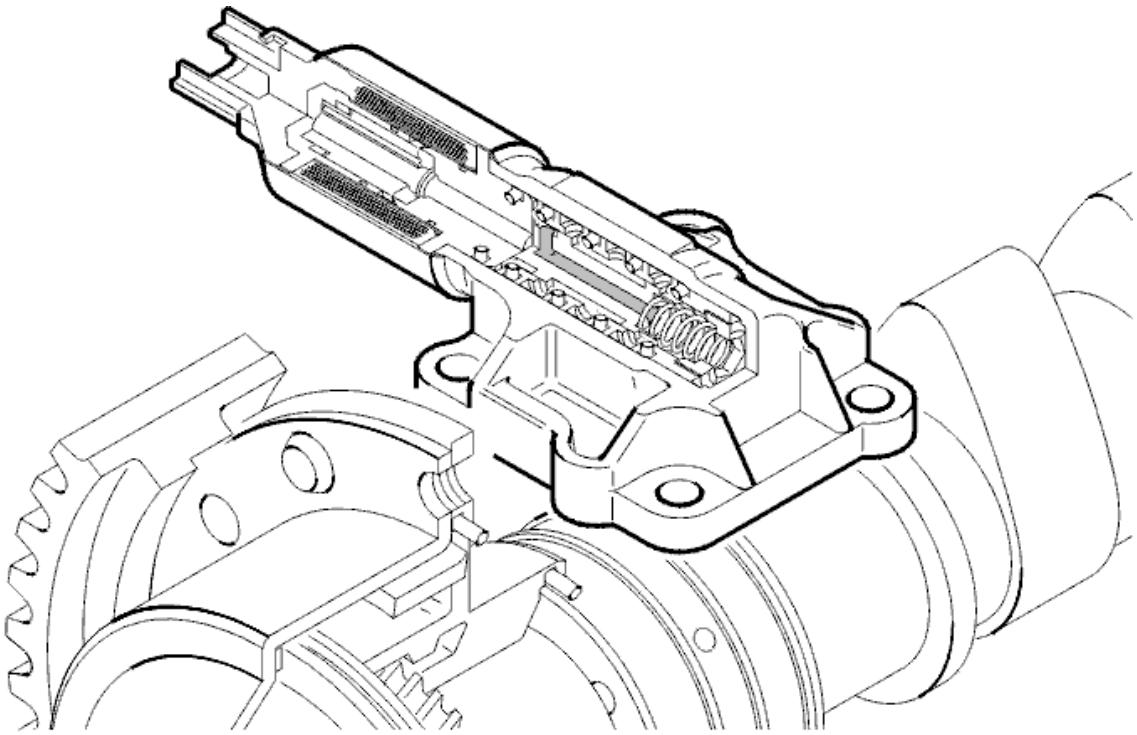

Fig. 127: Camshaft Control
Courtesy of VOLVO CARS CORPORATION

When the camshaft is set at the factory, it is aligned with the position of the crankshaft. The position of the camshaft in relation to the crankshaft is designated the camshaft 0 position. During camshaft control (CVVT) the camshaft 0 position is offset. The value of the 0 position offset is called the cam timing. The cam timing is 0° if the camshaft is not being controlled.

By controlling the cam timing (the camshaft is deployed from its 0 position) the performance of the engine is increased, the idle speed quality is improved and the emissions are reduced.

In order to detect the cam timing, the engine control module (ECM) uses the signals from the engine speed (RPM) sensor (the position of the crankshaft) and from the camshaft position (CMP) sensor (the position of the camshaft). By comparing these two signals, the control module is able to determine the cam timing (the number of degrees the camshaft is from its 0 position).

There are diagnostic for this function, see **CAMSHAFT DIAGNOSTICS (CVVT)** .

Camshaft cam timing

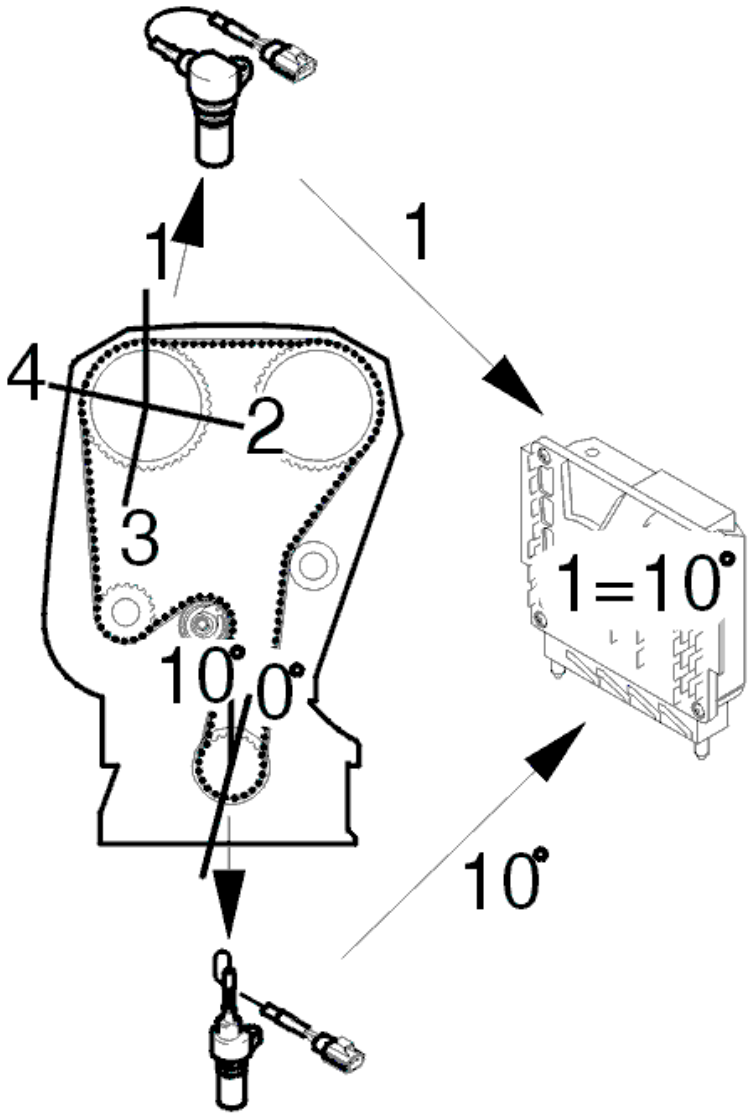

Fig. 128: Camshaft Cam Timing
Courtesy of VOLVO CARS CORPORATION

The camshaft (A) is divided into four flanks per revolution of the camshaft (flanks 1-4). The angle between flanks 1-2 = 103°, flanks 2-3 = 90°, flanks 3-4 = 90° and flanks 4-1 = 77°. The angle between the flanks is different, allowing the control module to determine which flank it is detecting and therefore determine which combustion cycle the cylinders are in,

The crankshaft has four reference positions, one for each camshaft flank. The camshaft turns at half the speed of the crankshaft. This means that two reference positions are detected for each turn of the crankshaft. Therefore two engine revolutions are required to detect all flanks on the camshaft. For example (may vary between different engine variants): flank 1 at 0°, flank 2 at 206°, flank 3 at 386° and flank 4 at 576° (flanks 3 and 4 are detected during the second engine revolution).

The reference positions of the crankshaft coincide exactly with each camshaft flank if the camshaft cam timing is 0°. If the cam timing deviates from 0°, i. e. the flanks deviate from the reference positions of the crankshaft,

the control module calculates the number of crankshaft degrees by which the flank is deviating.

The control module detects the reference positions for the camshaft flanks using the signal from the engine speed (RPM) sensor.

Example:

If camshaft flank 1 is detected at 10° from the crankshaft reference position for flank 1 (0° +10°), the cam timing is 10°. If the cam timing is the same (10°), flank 2 is detected at 216° (206° + 10°), flank 3 at 396° (386° + 10°), and flank 4 at 586° (576° + 10°). The cam timing can be positive (+) or negative (-) depending on whether the flank is detected before or after the different reference positions for the crankshaft.

The engine control module (ECM) controls the camshaft reset valve smoothly in order to regulate the camshaft cam timing. The valve controls the flow of engine oil to the continuous variable valve timing (CVVT) unit which is affected by the oil pressure that builds up.

see **CAMSHAFT RESET VALVE (CONTINUOUS VARIABLE VALVE TIMING (CVVT))**.

Control

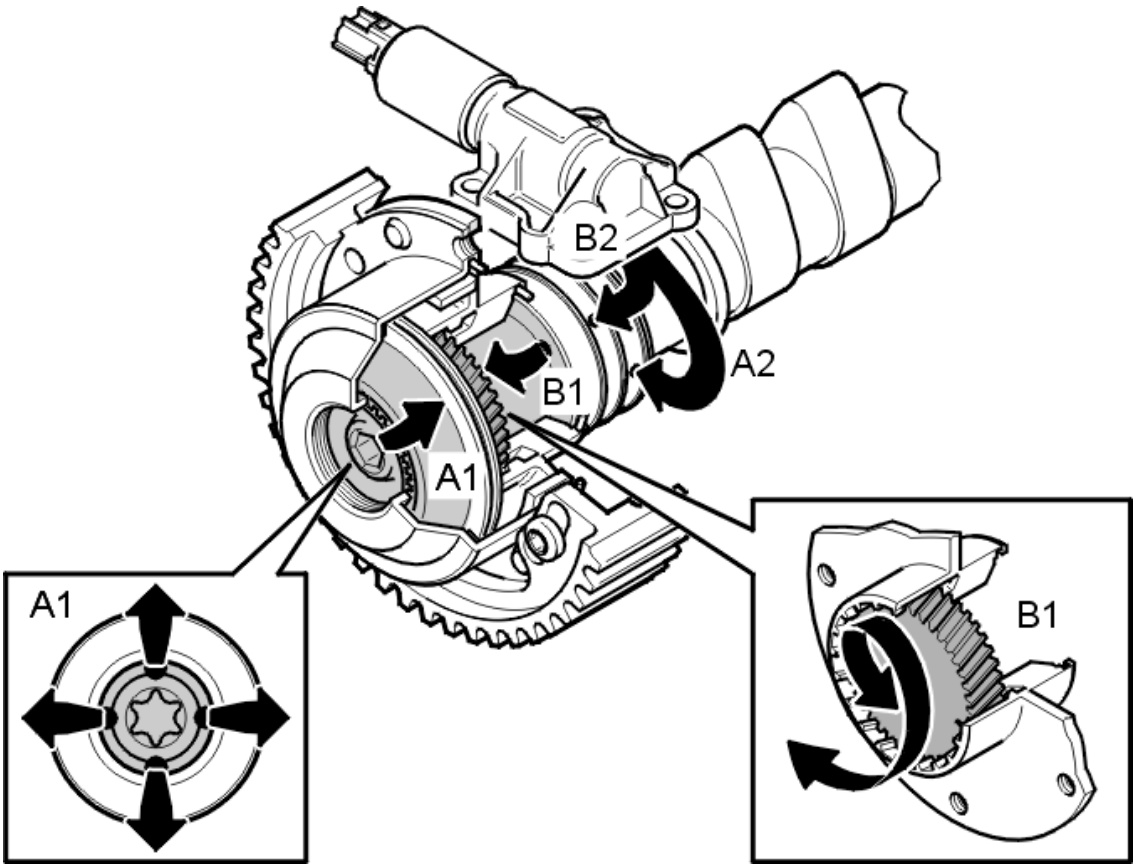

Fig. 129: CVVT Control
Courtesy of VOLVO CARS CORPORATION

Control takes place as follows when deploying the camshaft:

1. Oil is forced from the engine lubricating system to the intake port on the reset valve
2. The engine control module (ECM) grounds the valve, the position of the piston in the valve changes and the oil is guided to the continuous variable valve timing (CVVT) unit chamber (A1) via the duct (A2) in the camshaft
3. The continuous variable valve timing (CVVT) unit hub is pressed backwards by the oil pressure. The continuous variable valve timing (CVVT) unit then rotates the hub and the carriers are joined by twisted splines
4. The oil flows to the engine oil pan via the outer ducts on the hub and the reset valve's return hose.

Control takes place as follows when returning the camshaft:

1. Oil is forced from the engine lubricating system to the intake port on the reset valve
2. The engine control module (ECM) breaks the ground connection for the valve. The piston in the valve is then pressed back by a spring. The oil flows to the continuous variable valve timing (CVVT) unit chamber (B1) via a duct (B2) in the camshaft
3. The hub of the continuous variable valve timing (CVVT) unit is forced forward by the oil pressure that is created. The continuous variable valve timing (CVVT) unit will rotate back to the non-deployed position
4. The oil flows to the engine oil pan via the center duct on the hub and the reset valve's return duct.

The above takes place very quickly. The engine control module (ECM) controls the deployment and return of the reset valve continually at high frequency. This results in rapid and exact control. The extent of camshaft control (the change of cam timing) varies depending on the engine variant and the model year.

"Wide Range" concept

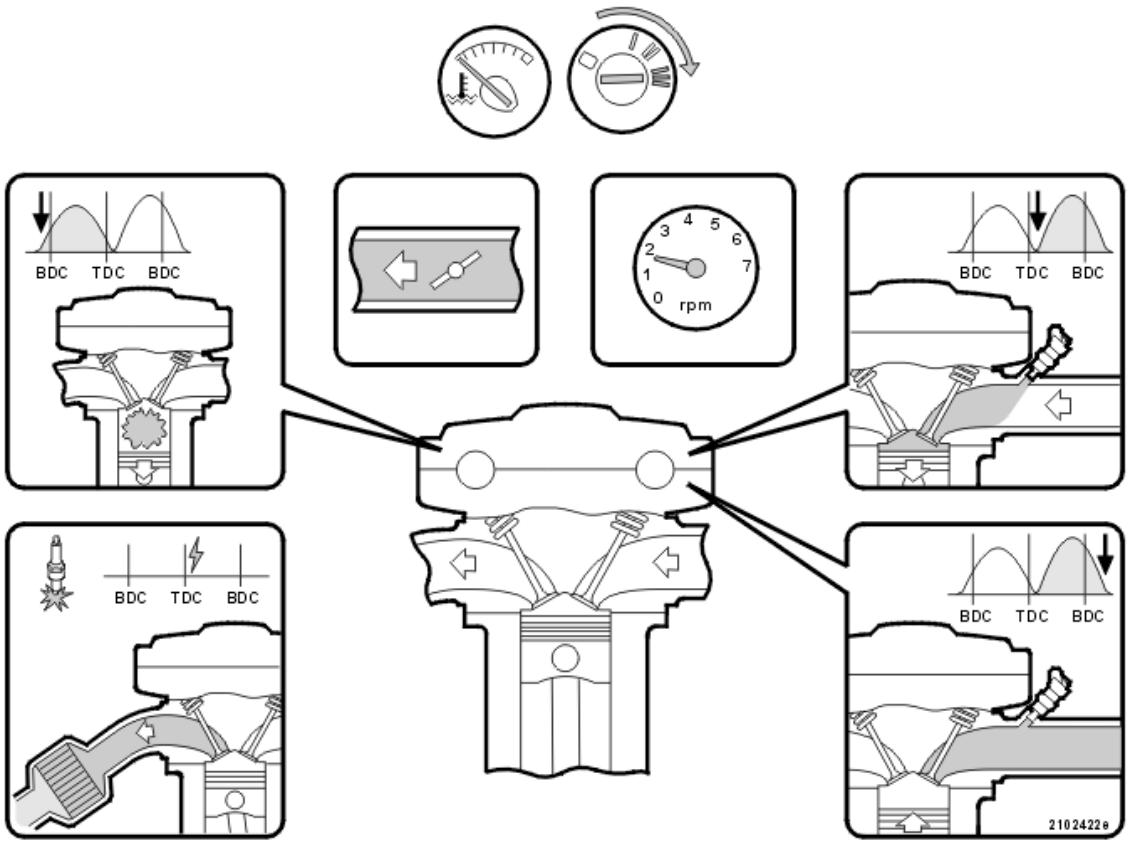

Fig. 130: Wide Range Concept
Courtesy of VOLVO CARS CORPORATION

Ignition timing

The combustion of the fuel film on the cylinder walls is improved by retarding the ignition.

Retarded ignition reduces the efficiency of the engine and the heat energy which is generated is released with the exhaust gases. This is used to heat the three-way catalytic converters (TWC).

Exhaust camshaft (turbocharged engines)

By opening the exhaust valve late, combustion takes place over a relatively long period. The film of fuel on the cylinder walls combusts, reducing the exhaust emissions.

Intake camshaft

By opening/closing the intake valve late:

- so that there is little or no overlap, a predetermined pressure difference is maintained between the intake manifold and the combustion chamber/cylinder. The lower pressure in the cylinder ensures that all the injected fuel reaches the cylinder. This allows the Engine Control Module (ECM) to calculate and control the fuel quantity required in the combustion phase in advance

- maintains a high and stable pressure in the intake manifold (due to the upwards movement of the piston). Stable high pressure means that the vaporization of the fuel which has condensed on the walls of the intake manifold can be predicted.

Double continuous variable valve timing (CVVT)

CVVT on both the intake camshaft and the exhaust camshaft means that the valve overlap can be changed to a greater degree than on engines where only one of the camshafts is controlled. Valve overlap is the extent to which the intake and exhaust valves (on the same cylinder) are open at the same time.

The advantages of continuous variable valve timing (CVVT) are used in different operating conditions:

- *during cold starting and during the warm-up phases* when the intake camshaft and exhaust camshaft are set late. This reduces the emissions
- *during idle and when the engine is at operating temperature* when the exhaust camshaft is set to early and the intake camshaft is set to late. This results in small valve overlap, reducing exhaust gas recirculation (EGR) and ensuring stable idling
- *at part load* when both the exhaust and intake camshaft are set to relatively late, with greater valve overlap. Greater valve overlap results in internal exhaust gas recirculation (EGR) which reduces the release of nitrous oxide. This also limits the incoming fuel/air mixture to the cylinder. As a result, the throttle does not need to reduce the supply of air, thereby reducing "pump losses" and lowering the fuel consumption. At higher engine speeds (RPM), the camshafts are set for a smaller valve overlap. The exhaust camshaft is set earlier, the intake camshaft later. This provides an optimum fuel/air mixture to the cylinder. Reduces internal exhaust gas recirculation (EGR).

TURBOCHARGER (TC) CONTROL SYSTEM

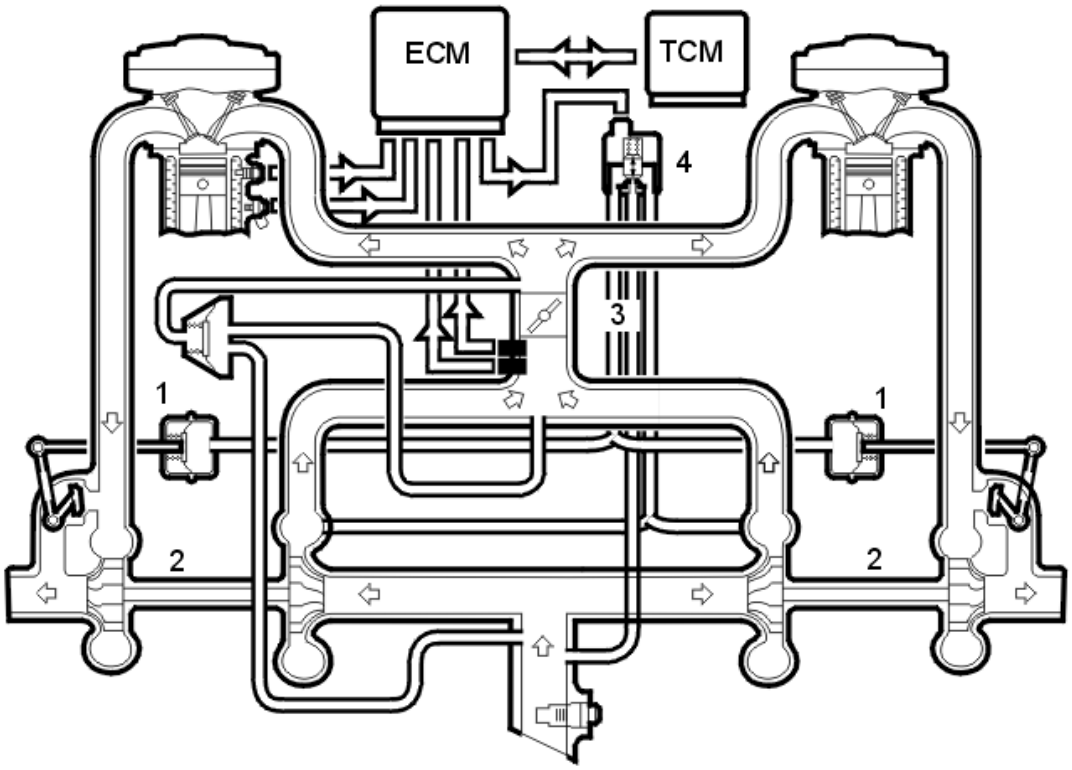

Fig. 131: Turbocharger Control System
Courtesy of VOLVO CARS CORPORATION

HINT: The above illustration is for a 6 cylinder engine. However the principle is the same for 5 cylinder engines.

The boost pressure in the intake manifold is controlled by the boost pressure control (BPC) valves, whose pressure regulators (1) are affected by the pressure from the turbocharger (TC) (2).

The Engine Control Module (ECM) receives information about the actual throttle position via the throttle position sensor (TP) for the throttle unit (3), engine load, knocking etc. This affects the boost pressure that is permitted. The boost pressure is measured by the boost pressure sensor.

The control module controls the control pressure using the turbocharger (TC) control valve (4), see **TURBOCHARGER (TC) CONTROL VALVE**), which controls the pressure to the boost pressure control (BPC) valves so that the control is adapted to the required pressure.

The pressure regulators in the boost pressure control (BPC) valves are affected when the pressure rises. When the boost pressure has increased to the maximum permissible value, the boost pressure control (BPC) valves open. Some of the exhaust gases pass the turbine in the turbocharger (TC), limiting the boost pressure.

Turbocharger (TC) control is governed continually by the engine control module (ECM).

When a higher boost pressure is permitted, the control module opens the turbocharger (TC) control valve further. Some of the boost pressure which affects the pressure regulators for the boost pressure control (BPC) valves is released back into the turbocharger (TC) intake. This lowers the control pressure, the boost pressure control (BPC) valves open later and the boost pressure increases.

Because the control module calculates the boost pressure using the signal from the boost pressure sensor and the intake temperature sensor, there is automatic compensation of boost pressure control when driving at altitude and at different temperatures. As a result engine power will not be noticeably affected by the air density or temperature.

The engine control module (ECM) can diagnose the turbocharger (TC) control function.

THROTTLE CONTROL

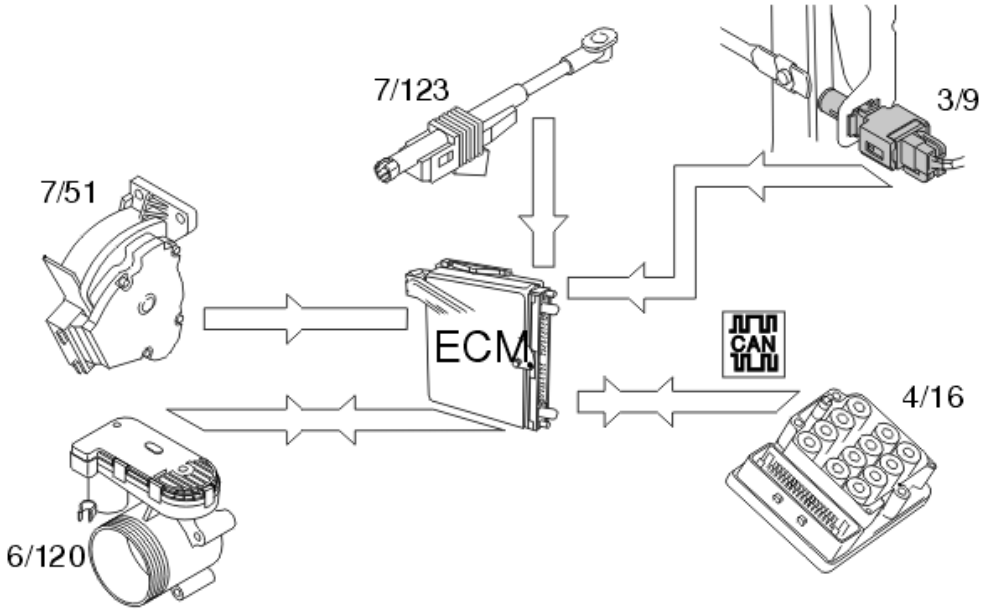

Fig. 132: Identifying Throttle Control
Courtesy of VOLVO CARS CORPORATION

To ensure that the correct throttle angle is reached, the engine control module (ECM) controls the throttle shutter in the throttle unit (6/120), mainly using the signal from:

- accelerator pedal (AP) position sensor (7/51)
- clutch pedal sensor (7/123)
- stop lamp switch (3/9)
- the throttle position (TP) sensor on the electronic throttle unit (6/120)
- brake control module (BCM) (4/16), signal for the brake pedal sensor.

Additional signals and parameters are used to ensure optimum throttle control. For example there is

compensation for the load from the air conditioning (A/C) compressor, load from the transmission depending on the gear selected (automatic), engine temperature etc. In cars with Four-C (Continuously Controlled Chassis Concept), the throttle characteristic changes depending on the driving mode selected.

The position of the throttle is measured by two potentiometers, in the throttle position (TP) sensor, which are on the throttle unit. These are connected, so that potentiometer 1 produces a higher voltage as the throttle angle increases, while potentiometer 2 does the opposite.

In a combustion engine, the difference between the minimum and maximum airflow is considerable. The smaller air flows need more thorough regulation, so the potentiometer signal from potentiometer 1 is amplified approximately 4 times in the engine control module (ECM) before it reaches the Analog/Digital converter in the engine control module (ECM). This means that there are three, two real and one fictitious, input signals available to the engine control module (ECM). These signals are used to determine the position of the throttle and to deploy the damper motor to the correct position. In general the amplified signal is primarily used for small throttle angles (small air flows), which are desirable when a high degree of accuracy is required, for idle air trim for example.

Because the signal is amplified, it reaches its maximum value as early as approximately a quarter of maximum deployment.

The engine control module (ECM) first uses the signal from potentiometer 1 to measure the throttle opening. The signal from potentiometer 2 is mainly used to check that potentiometer 1 is functioning correctly. The engine control module (ECM) then uses the signal to calculate a throttle angle (actual value). This is the actual throttle angle. The value for the actual throttle angle is used by those functions in the engine control module (ECM) which depend on this information so that the throttle can be correctly regulated.

There is an adaptation (learning) in the engine control module (ECM) so that the control module can calculate how the damper motor needs to be controlled. See "Adaptation of the throttle unit" below. This adaptation is carried out during manufacture of the car, when the engine control module (ECM) deploys the throttle disc to the different positions and reads off and registers the actual values from the potentiometers.

The throttle angle is regulated so that the actual angle (actual value) is the same as the angle calculated by the engine control module (ECM) (desired value). The engine control module (ECM) also uses the values that were stored during adaptation of the throttle angle, and the actual signals from the potentiometers.

The damper motor is controlled by a power stage integrated in the engine control module (ECM) using a pulse width modulation (PWM) signal. The torsion from the opening and return springs in the throttle unit is also used. If there is a fault in the engine control module (ECM) so that the throttle unit cannot be operated or supplied with power, the springs in the throttle unit will turn the throttle disc to the limp home position (return position). This return position gives a throttle angle large enough to allow the car to be driven to a workshop, although with considerably reduced drivability.

Throttle angle

The throttle angle is usually gauged by potentiometer 1. For small angles the amplified signal is used to obtain a clearer signal. The engine control module (ECM) also monitors the throttle unit signals from the potentiometers to check that they are plausible, that they are within the minimum and maximum limits and that the signals correspond to the same throttle angle. If there is a difference in the signals, a fictitious throttle signal is

calculated from the load signal, the engine speed (RPM) and the prevailing conditions, particularly pressure and temperature.

The potentiometer whose signal is closest to the calculated throttle angle will then be assumed to be correct. The other potentiometer is then classified as not functioning and a diagnostic trouble code (DTC) is stored. The system then constantly monitors the throttle angle of the remaining potentiometer in comparison to the calculated throttle angle. If there is a difference between these values, the engine control module (ECM) will not rely on any of the throttle unit potentiometers. The power stage in the throttle unit is then disengaged, and the throttle switches to limp home mode (return position).

Adaptation of the throttle unit

Normally the engine control module (ECM) adapts the throttle unit during manufacture of the car. There are a number of other occasions when the throttle unit must be adapted. A new adaptation is obviously required if the throttle unit or the engine control module (ECM) is replaced, but also if the software in the engine control module (ECM) is replaced. This is because the adaptation values are stored in the EEPROM memory in the control module, at a predetermined location in the memory for each software. These storage locations may vary between different software, in which case a new adaptation will be required. The final reason for adaptation is that the values for the throttle unit may have changed during its service life. Therefore there is a routine which begins adaptation of the throttle unit if the car is left with the engine off and the throttle on for 30 seconds (and other basic conditions for adaptation of the throttle unit are met). A new adaptation is then carried out. If the "new" values are different from the "old" values, the new values are used. Adaptation usually takes place automatically when the engine control module (ECM) detects that the adaptation has not been run or that the values from a previous adaptation are outside certain tolerances. However a number of basic conditions must be met to ensure that the adaptation is carried out correctly:

Basic conditions for adaptation of the throttle unit:

- ignition on / engine off
- battery voltage above 10 V
- accelerator pedal (AP) released (unaffected)
- the car must be stationary (no speed signal)
- engine coolant temperature (ECT) between 5 and 100 °C
- intake air temperature (IAT) above 5 °C.

During adaptation, the engine control module (ECM) checks that the values obtained are within reasonable limits. This helps to determine whether the throttle unit is functioning correctly or not. When the adaptation has been carried out, all relevant values are stored in the EEPROM memory in the control module so that they can be retrieved if the power supply is broken. This means that if the battery is replaced for example, a new adaptation is not necessary.

FUEL TRIM

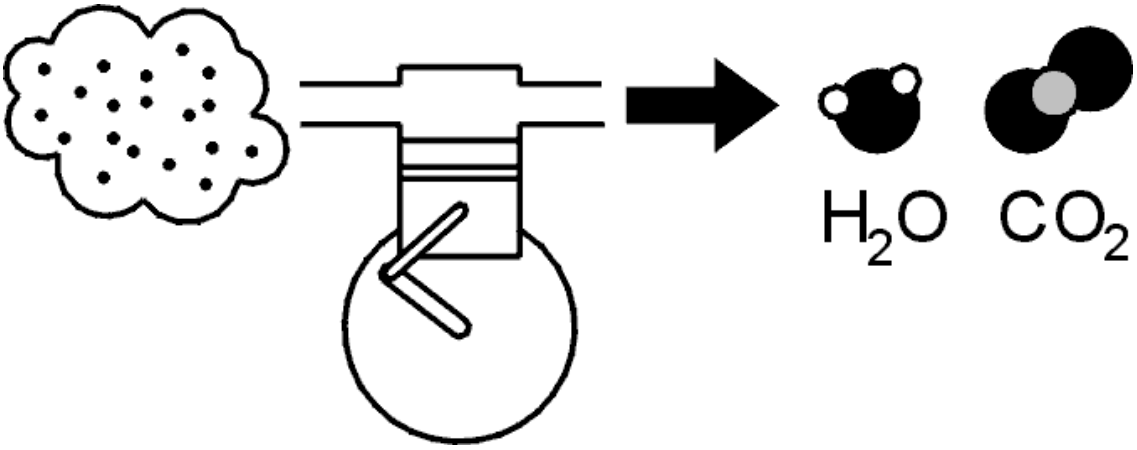

Fig. 133: Fuel Trim
Courtesy of VOLVO CARS CORPORATION

Overview

Fuel trim reduces exhaust emissions. Fuel trim reduces nitrous oxide (NO_x), carbon monoxide (CO) and hydrocarbon (HC) emissions.

Theoretically, if the correct amount of oxygen is added during combustion, fuel can be converted to water (H_2O) and carbon dioxide (CO_2). Emissions would then be completely safe.

In practice considerable amounts of hydro-carbons (HC) and varying amounts of carbon monoxide (CO) and carbon dioxide (CO_2) remain.

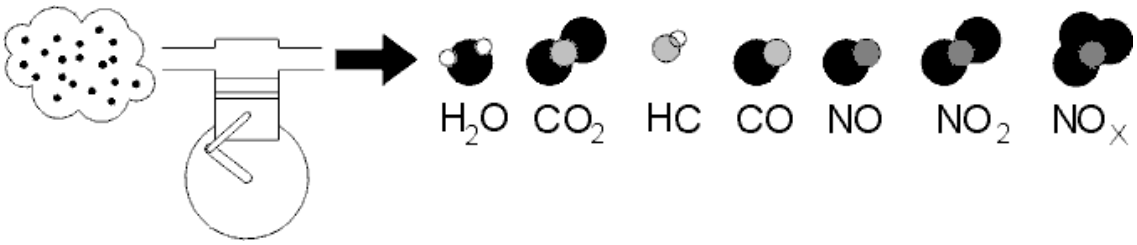

Fig. 134: Fuel Trim
Courtesy of VOLVO CARS CORPORATION

Due to the high temperature and pressure, nitrous oxides such as NO and NO_2 are also formed. The common designation for these gases is nitrous oxides NO_x .

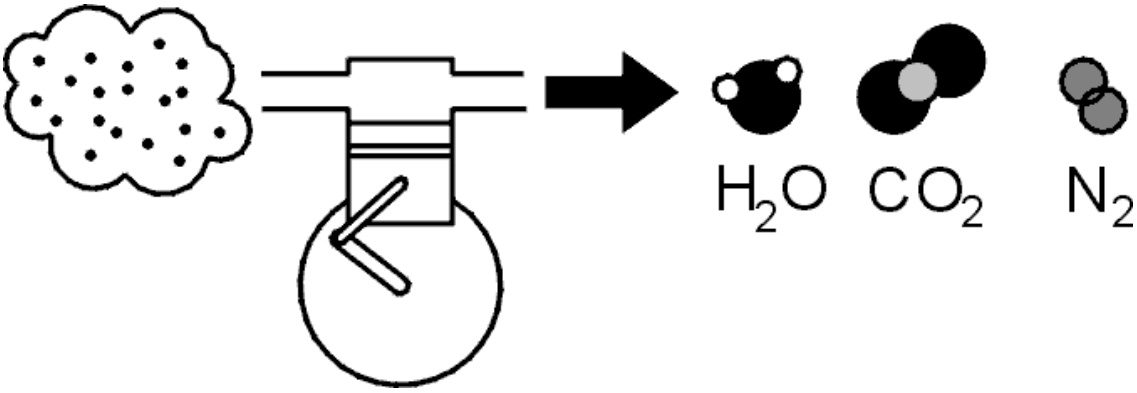

Fig. 135: Converting Exhaust To H2O And CO2
Courtesy of VOLVO CARS CORPORATION

By speeding up the reaction between the remaining reactive components using a catalytic converter, these can be converted to water (H_2 O), carbon dioxide (CO_2) and nitrogen (N_2).

However this can only happen if the balance of hydro-carbons (HC), carbon monoxide (CO), oxygen (O_2) and nitrous oxides (NO_x) is exactly right in the exhaust. This happens when the fuel air mixture before combustion is 14.7 kg of air per kg of fuel. The Lambda value is then said to be one, (lambda=1).

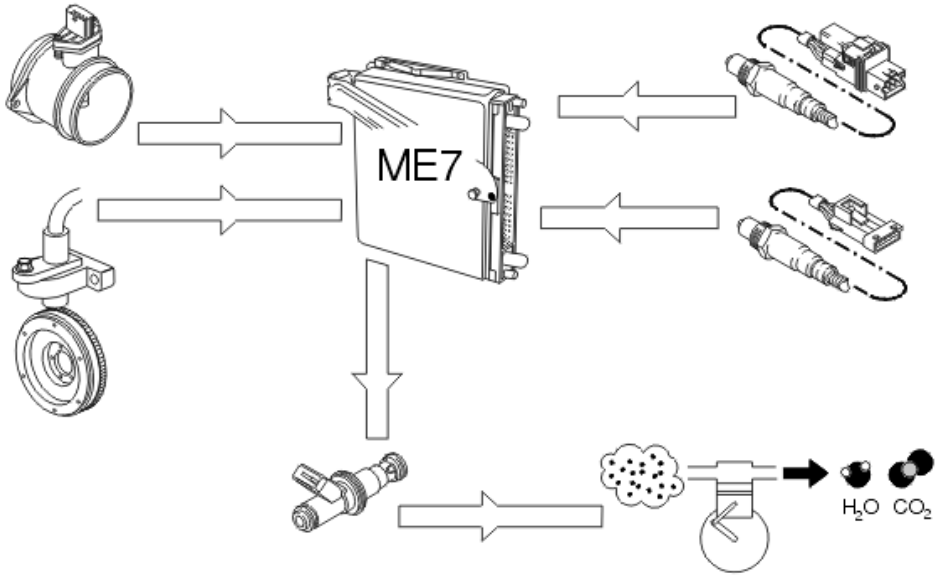

Fig. 136: ECM Signal Input And Output For Exhaust
Courtesy of VOLVO CARS CORPORATION

A base program in the engine control module (ECM) calculates the injection period based on data about load, i. e. the measured air mass and engine speed (RPM). The calculated injection time (from the base program) is then modified by a circuit (short-term fuel trim). The signal from the heated oxygen sensor (HO2S) is used to finely

adjust the injection period so that lambda=1 is reached. The short-term fuel trim is also a circuit that finely adjusts the injection period so that the fuel air mixture is optimized (lambda=1). The control module also used the signals from the front and rear heated oxygen sensors (HO2S) to correct the front heated oxygen sensor (HO2S) (offset adjustment) and thereby the injection period. This gives a higher degree of accuracy during fuel trim. Fuel trim is a rapid process which may take place several times a second. Adjustment of the calculated injection period calculated in the base program is limited.

The fuel trim can be read off using VIDA (Volvo scan tool).

Adaptive functions

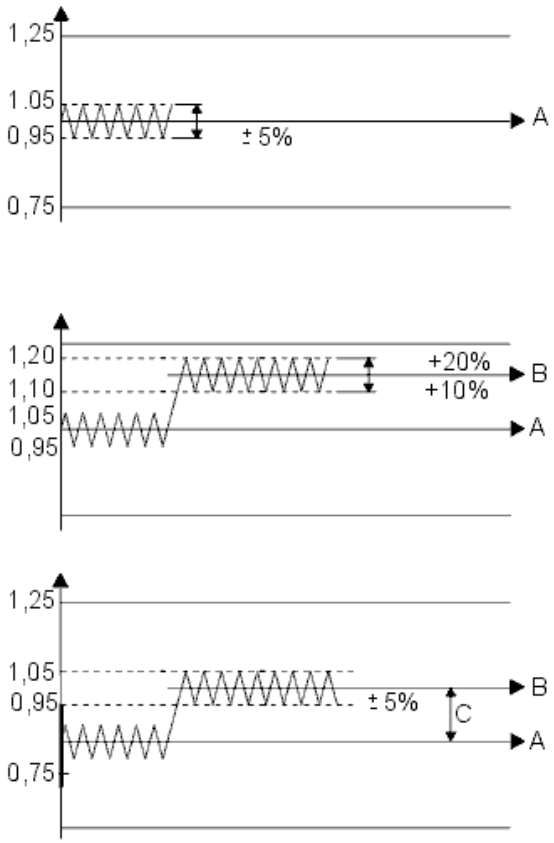

Fig. 137: Adaptive Function Charts
Courtesy of VOLVO CARS CORPORATION

Certain factors, such as deviations in tolerance for certain components such as the mass air flow (MAF) sensor and injectors, intake air leakage, fuel pressure etc, will affect the composition of the fuel air mixture. To compensate for this, the engine control module (ECM) has adaptive (self learning) functions. When the engine is new, the short-term fuel trim is assumed to vary cyclically around a nominal center line (A) 1.00 with, for example, a ± 5% change in the injection period when fuel trim is active.

If there is air leakage for example, the short-term fuel trim will quickly be offset to a new position (B) and will then work for example between 1.10 (+10%) and 1.20 (+20%), although still at an amplitude of 5%, but with an offset in relation to the original center line (A). The injection period has then been increased to compensate the increase in the amount of air.

The adaptive functions will correct the change, so that the short-term fuel trim will work around the new center line (B) where it will again have its full range of control available.

Put simply, fuel trim is a measurement of the difference (C) between the original short-term fuel trim center line (A) and the new center line (B).

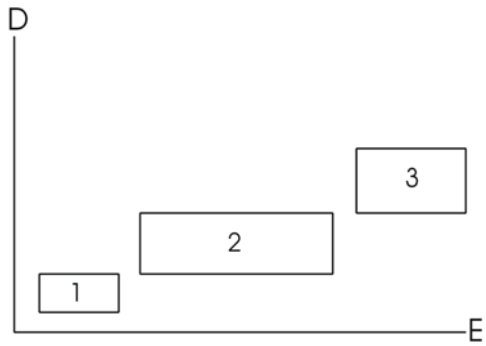

Fig. 138: Adaptive Function Sections
Courtesy of VOLVO CARS CORPORATION

The adaptive functions consist of three sections and correspond to the different operating ranges of the engine; load (D) and engine speed (E):

- Additive adaptation (1) is when the engine is idling. This is how the control module adjusts the CO content at idle speed. Long-term fuel trim, idling can be read off using VIDA
- Multiplicative adaptation, lower part load (2), carried out in the lower part load range. Lower part load range is reached when driving at low load. Long-term fuel trim, lower part load can be read off using VIDA
- Multiplicative adaptation, upper part load (3). Carried out in the upper part load range. The upper part load range is reached when driving under high load and at high engine speed (RPM). Long-term fuel trim, upper part load can be read off using VIDA (Volvo scan tool).

The adaptive adjustments of the injection period are stored continuously in the control module. This means that under different operating conditions the fuel air mixture is obtained before the heated oxygen sensor (HO2S) is warm enough to function.

A diagnostic trouble code (DTC) will be stored in the control module if any adaptation value is too high or too low. For further information, also, see **HEATED OXYGEN SENSOR (HO2S) DIAGNOSTIC** .

KNOCK CONTROL

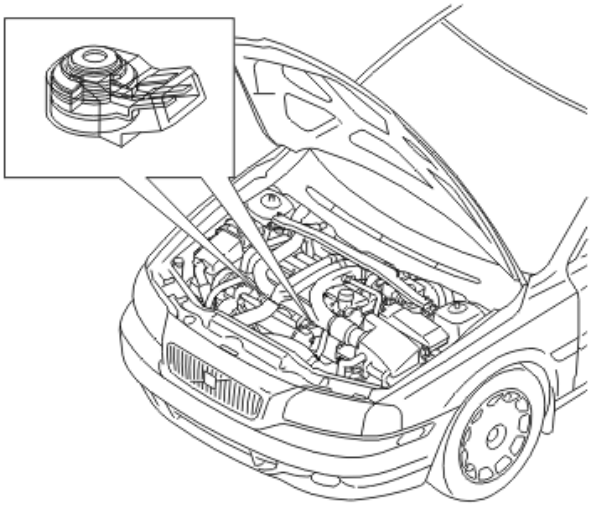

Fig. 139: Identifying Knock Control
Courtesy of VOLVO CARS CORPORATION

Knocking occurs in the combustion chamber when the fuel and air mixture self ignites. This can occur either before or after the spark plug has produced an ignition spark. In both cases the gas in two or more places ignites in the combustion chamber.

This results in an extremely fast combustion process with flames from several directions. When these flames collide, the pressure in the cylinder increases rapidly and there is a mechanical knocking sound.

If any of the cylinders knock there is a specific type of vibration in the cylinder block. These vibrations are transferred to the knock sensors (KS) which are screwed into place in the cylinder block. The resultant mechanical stress in the piezo electrical material in the knock sensors generates a voltage. The engine control module (ECM) can then determine which cylinder is knocking with the help of the camshaft position (CMP) sensor and the engine speed (RPM) sensor.

The knock sensors (KS) also interpret a proportion of normal engine sound. The control module is able to recognize the vibrations which correspond to knocking by filtering, amplifying and using software to evaluate the signal.

If the knock sensors (KS) detect knocking in the engine over a certain threshold value, the ignition timing is first retarded and then the fuel / air mixture is enriched to eliminate knocking.

IGNITION CONTROL

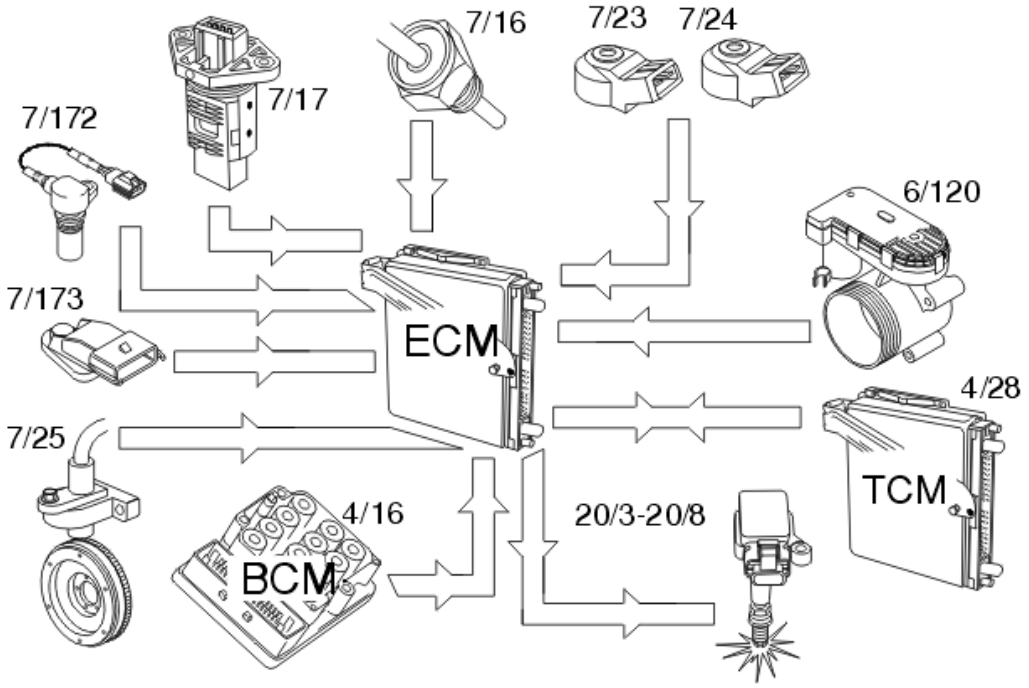

Fig. 140: Ignition Control Signal Input And Output
Courtesy of VOLVO CARS CORPORATION

The following components are used for ignition control:

- engine speed (RPM) sensor (7/25)
- camshaft position (CMP) sensor (7/172-7/173)
- mass air flow (MAF) sensor (7/17)
- engine coolant temperature (ECT) sensor (7/16)
- throttle position (TP) sensor on the electronic throttle unit (6/120)
- knock sensor (KS) (7/23-7/24)
- transmission control module (TCM) (4/28)
- spark plugs with ignition coils (20/3-20/8)
- brake control module (BCM) (4/16).

The engine control module (ECM) calculates the optimum ignition advance based on the software and information from the sensors. The engine control module (ECM) cuts the current to the ignition coil mounted on the cylinder to be ignited and produces a spark.

During the starting phase the engine control module (ECM) produces a fixed ignition setting. When the engine starts and the car is driven the engine control module (ECM) calculates the optimum ignition setting according to the engine speed (RPM), load, temperature etc.

The engine control module (ECM) analyses the signal from the knock sensors (KS) when the engine reaches operating temperature. If any of the cylinders knock, the ignition is retarded for that specific cylinder until the knocking ceases.

The ignition then advanced to the normal position or until the knock recurs.

Before the transmission control module (TCM) changes gear, it sometimes transmits a torque limiting request to the engine control module (ECM). The engine control module (ECM) then retards the ignition momentarily to reduce the torque, resulting in smoother gear changes and reducing the load on the transmission. There are different ignition retardation levels depending on the signals from the transmission control module (TCM). The return signal from the engine control module (ECM) to the transmission control module (TCM) confirms that the signal reached the engine control module (ECM). The Brake Control Module (BCM) transmits information to the engine control module (ECM) about deviations in the drive line. The signal is used to stop the diagnosis., see **MISFIRE DIAGNOSTICS** .

CRUISE CONTROL

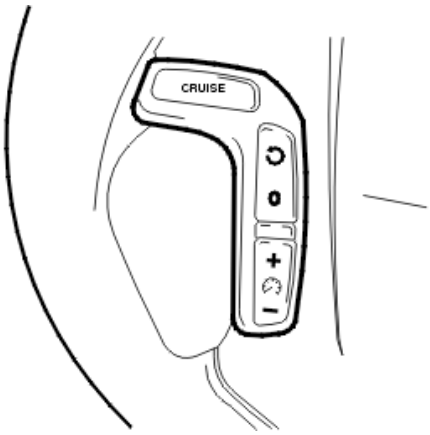

Fig. 141: Cruise Control
Courtesy of VOLVO CARS CORPORATION

The cruise control function is an example of distributed functionality.

The following components are used when driving using cruise control:

- engine control module (ECM)
- electronic throttle unit
- brake control module (BCM)
- accelerator pedal (AP) position sensor
- clutch pedal sensor
- brake pedal sensor
- control unit cruise control
- steering wheel module (SWM)
- central electronic module (CEM)
- transmission control module (TCM)
- driver information module (DIM).

To activate cruise control the function must be switched on using the "CRUISE" button. A lamp lights up in the

driver information module (DIM).

The driver activates the function by pressing the SET+ or SET- button. A message is then transmitted via the low speed side of the Controller area network (CAN) to the central electronic module (CEM) which then transmits the message on via the high speed side of the Controller area network (CAN) to the engine control module (ECM).

The engine control module (ECM) controls the throttle angle so that a constant speed is maintained using the vehicle speed signal from the Brake Control Module (BCM). The transmission control module (TCM) also receives a message indicating that cruise control is active via the Controller area network (CAN), so that the transmission follows certain shifting patterns when the cruise control is active.

If the accelerator pedal (AP) is depressed the speed increases as normal and then resumes to the stored value when the driver releases the accelerator pedal (AP) again.

The engine control module (ECM) continually stores the speed. If the cruise control is disengaged, if for example the driver presses the brake pedal, the previous stored speed can be used by pressing the "RESUME" button.

Cruise control cannot be activated at speeds below 35 km/h.

Cruise control is disengaged:

- when the driver presses the clutch pedal or brake pedal
- when the driver presses the "CRUISE" button on the steering wheel
- when the driver depresses the "0" button on the steering wheel
- if the "P" or "N" positions are transmitted on the controller area network (CAN) (applies to automatic transmissions)
- if the speed deviates too much from the set value
- when certain diagnostic trouble codes (DTCs) are stored which do not allow continued activation

FUEL PRESSURE REGULATION (ONLY VEHICLES WITH DEMAND CONTROLLED FUEL PUMPS)

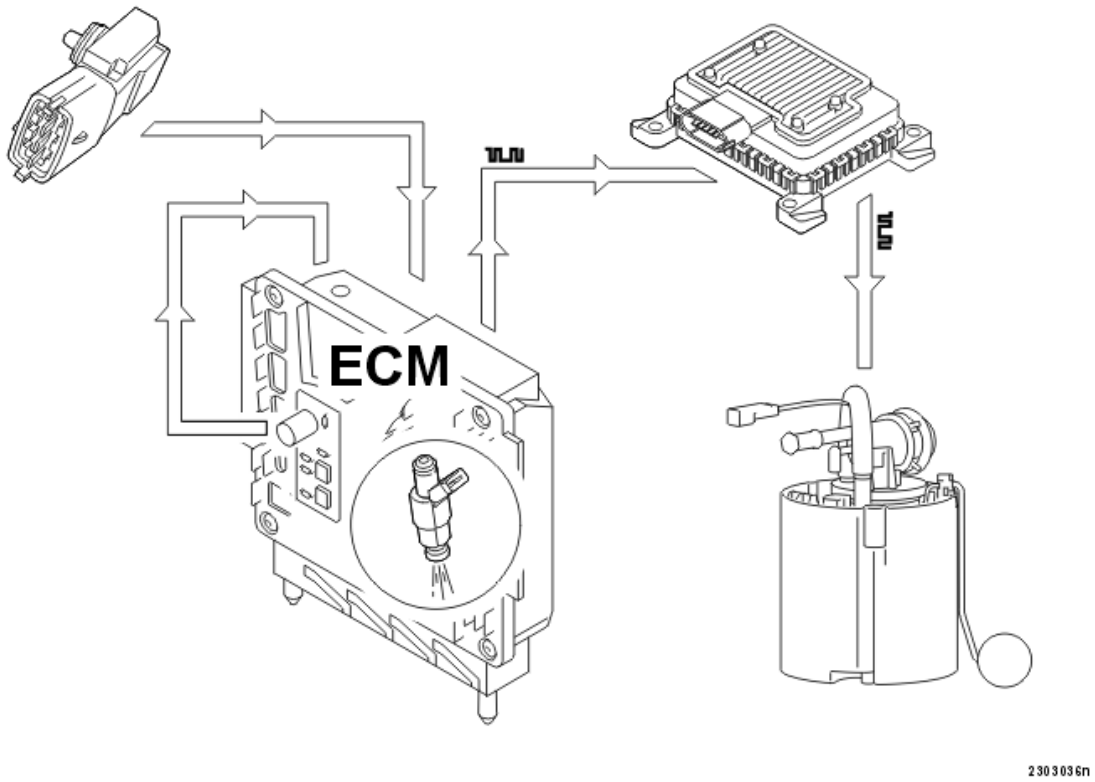

Fig. 142: Fuel Pressure Regulation
Courtesy of VOLVO CARS CORPORATION

General

Fuel pressure regulation for demand controlled fuel pumps (DECOS - DEmand COntrolled fuel Supply) means that the fuel pressure is controlled steplessly by varying the output of the fuel pump. The design of the system allows a greater maximum pressure (approximately 6.5 bar) in the fuel pump. This pressure is used in extreme situations, such as heavy engine load for example.

The following components are used for fuel pressure regulation:

- engine control module (ECM)
- the fuel pump control module
- a fuel pressure sensor with a fuel temperature sensor
- a fuel pump (FP) with a by-pass valve.

The time taken for the engine start procedure can be reduced by rapidly increasing the pressure in the fuel rail when the engine control module (ECM) receives a signal about the position of the ignition switch from the central electronic module (CEM).

The engine control module (ECM) is better able to calculate the injection period because the signal from the fuel pressure sensor gives information about the fuel pressure. This particular improves the cold starting

characteristics of the engine.

The advantages of varying the output of the fuel pump so that it is not always at full power are:

- the total power consumption of the fuel pump (FP) is reduced, reducing the load on the power supply system
- the service life of the fuel pump (FP) is increased
- fuel pump noise is reduced.

Control

The engine control module (ECM) calculates the desired fuel pressure. A signal is then transmitted to the fuel pump control module indicating the desired fuel pressure. Serial communication between the engine control module (ECM) and the fuel pump control module is used to carry the signal. The fuel pump control module then operates the fuel pump unit to obtain the desired pressure using a pulse width modulation voltage on the ground lead. The fuel pump (FP) can be controlled steplessly by changing the pulse width modulation (PWM) signal. Only that pressure which is required at that specific time will then be released to the fuel rail/injectors. The value of the pulse width modulation (PWM) signal is a measurement of the operational load of the fuel pump (FP) (% duty, 100% = maximum pressure).

The engine control module (ECM) continuously monitors the fuel pressure using the signal from the fuel pressure sensor. This allows the desired fuel pressure to be reached, and if necessary a signal is transmitted to the fuel pump control module requesting that the fuel pressure is adjusted.

By-pass valve

When the injectors are closed because of too high pressure (during engine braking for example) there is a pressure peak. The by-pass valve in the fuel pump (FP) is used to even out the pressure peak. The opening pressure of the valve is approximately 6.5 bar.

The by-pass valve also functions as a non-return valve, ensuring that the fuel pressure in the system is maintained when the engine is switched off.

There is high pressure before the engine is started. This high pressure means that the valve in the by-pass valve opens and the system is "flushed".

Passive safety

For safety reasons, the engine control module (ECM) shuts off the fuel pump (FP) if the supplemental restraint system module (SRS) detects a collision.

OIL LEVEL MONITORING (2004-, CERTAIN MARKETS AND MODELS ONLY)

General

The following components are used for oil monitoring:

- the oil level sensor
- engine control module (ECM)
- driver information module (DIM).

One of the advantage of always monitoring the oil level is that the driver can then be informed, via the driver information module (DIM), if the oil needs topping up.

Oil quality detection

To calculate the quality of the oil, the capacitance of the oil is gauged and then compared with the capacitance of the air. (Capacitance is the ability to store an electrical charge).

The capacitance of the oil and air is measured using both the capacitive gauge elements. The volume of contaminants in the oil increases the capacitance. This provides the electronics integrated in the oil level sensor with an oil quality dependent input signal.

Oil temperature detection

The PTC resistor integrated in the oil level sensor is used to calculate the oil temperature. The resistance of the PTC resistor changes, depending on the oil temperature. The resistance increases as the oil temperature rises. This provides the electronics integrated in the oil level sensor with a temperature dependent input signal.

Oil level detection

The electronics integrated in the sensor calculate the oil level using the obtained values for oil temperature and quality.

Temporary changes in the oil level in the oil trough must be taken into account to correctly calculate the oil level. This happens when cornering and taking hills for example. The engine control module (ECM) makes these calculations using the oil level sensor signal and a number of other parameters. These other parameters include the vehicle speed signal and the load signal.

Oil level sensor signal

The oil level sensor internally calculates the parameters for oil level, quality and temperature. A PWM signal is then generated and transmitted on a cable to the engine control module (ECM).

The PWM signal consists of a pulse train. The first pulse in the pulse train represents the oil temperature. The second pulse represents the oil level. The third pulse represents the oil quality. A change in oil level, quality or oil temperature affects the pulse ratio of the relevant pulse.

SYSTEM OVERVIEW

CONTROL MODULE

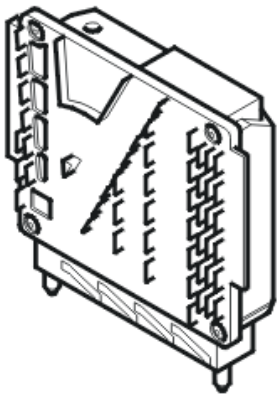

Fig. 143: Air conditioning (A/C) relay
Courtesy of VOLVO CARS CORPORATION

The Engine Control Module (ECM) controls the following functions:

- injectors
- ignition
- camshafts (CVVT)
- evaporative emission system (EVAP) valve
- turbocharger (TC) control
- throttle angle
- engine cooling fan (FC)
- Air conditioning (A/C) compressor
- fuel pump (only vehicles with demand controlled fuel pumps).

There is a micro-processor in the control module which receives signals from the different sensors in the car. The micro-processor uses a program which interprets the signals from the different sensors and how the components / functions should be controlled.

The control module has several self-learning (adaptive) functions. It continually adapts ongoing calculations to changing circumstances (wear, air leaks, differences between different fuels etc.).

Emissions are kept low through efficient management of the injection period, ignition, evaporative emission system (EVAP) valve and camshafts etc. Faults which affect emissions can be detected by running diagnostics for functions and components.

The control module is in a box in the engine compartment.

The engine control module (ECM) communicates with other control modules using controller area network (CAN) communication.

The engine control module (ECM) checks activations, input and output signals and functions using an integrated diagnostic system. A diagnostic trouble code (DTC) is stored if, after validation, the control module

detects a fault. In certain cases the faulty signal is replaced with a substitute value or certain functions are limited.

Substitute values can be set for e. g.:

- engine coolant temperature (ECT)
- mass air flow
- throttle position
- atmospheric pressure
- etc.

Mathematical calculations and signals from certain components are used to calculate the substitute values. Other substitute values are fixed, predefined values in the control module.

The substitute value allows the car to be driven and for the emissions to be kept at a reasonable level even though vital functions / components are faults.

Functions which are limited may be for example:

- turbocharger (TC) control
- Camshaft control (CVVT)
- fuel trim
- throttle angle
- etc.

A function is limited so that the system still functions, to protect components or for safety reasons (for example the throttle angle).

Any diagnostic trouble codes (DTCs) are stored in the control module memory. The data can be read off using VIDA (Volvo scan tool).

SIGNALS

The table below summarizes the input signals to and output signals from the Engine Control Module (ECM). The signal types are divided into directly connected signals, serial communication and controller area network (CAN) communication. The illustration below displays the same information with the Volvo component designations.

Input signals	Output signals
Directly connected: • Ignition switch (3/1) • Stop lamp switch (3/9) • Clutch pedal sensor (7/123) • Air conditioning (A/C) pressure sensor (7/8)	**Directly connected:** • Main relay (system relay) (2/32) • Fuel pump (FP) relay (2/23) • Air conditioning (A/C) relay (2/22) • Electronic throttle unit (6/120)

• Front heated oxygen sensor (HO2S) (7/15) • Rear heated oxygen sensor (HO2S) (7/82) • Engine coolant temperature (ECT) sensor (7/16) • Mass air flow (MAF) sensor (7/17) • Manifold absolute pressure (MAP) sensor, intake (7/81) (certain turbocharged engines only) • Manifold absolute pressure (MAP) sensor, with integrated intake air temperature (IAT) sensor, intake (7/81) (certain turbocharged engines only) • Leak diagnostic unit (6/67), (certain markets only) • Electronic throttle unit (6/120) • Outside temperature sensor (7/105) • Camshaft position (CMP) sensor (7/172) • Camshaft position (CMP) sensor (7/173) • Engine speed (RPM) sensor (7/25) • Accelerator pedal (AP) position sensor (7/51) • Engine coolant level sensor (7/73) • Knock sensor (KS) (7/23-7/24) • Manifold absolute pressure (MAP) sensor, intake (7/77) (not turbocharged engines 2003-2004) • Oil level sensor (7/35) (certain markets and models only) • Fuel pressure sensor with integrated fuel temperature sensor (7/156) (vehicles with demand controlled fuel pumps only).	• Engine cooling fan (FC) control module (4/71) • Engine cooling fan (FC) control module box (6/44) (turbocharger (TC) only and certain markets) • Front heated oxygen sensor (HO2S), preheating (7/103) • Rear heated oxygen sensor (HO2S), preheating (7/104) • Injectors (8/6-8/11) • Leak diagnostic unit (6/67), (certain markets only) • Evaporative emission system (EVAP) valve (8/18) • Camshaft reset valve (CVVT) (8/19) (certain engines only) • Camshaft reset valve (CVVT) (8/81) (certain engines only) • Turbocharger (TC) control valve (8/28) • Ignition coils (20/3-20/8) • Driver information module (DIM) (5/1), emissions warning lamp • Fuel pump control module (6/33) (only vehicles with demand controlled fuel pumps) • Central electronic module (CEM) (4/56).
Via Controller Area Network (CAN) communication: • Transmission Control Module (TCM) (4/28) (only cars with automatic transmissions) • Brake control module (BCM) (4/16) • Central electronic module (CEM) (4/56) • Suspension module (SUM) (4/84) (vehicle with Four-C (Continuously Controlled Chassis Concept) only). Via central electronic module (CEM) (4/56):	**Via Controller Area Network (CAN) communication:** • Transmission Control Module (TCM) (4/28) (only cars with automatic transmissions) • Brake control module (BCM) (4/16) • Central electronic module (CEM) (4/56) • Differential electronic module (DEM) (4/82) (AWD only) • Suspension module (SUM) (4/84) (vehicle with Four-C (Continuously Controlled Chassis Concept) only).

• Climate Control Module (CCM) (3/112) • Data link connector (DLC) (17/13) • Driver information module (DIM) (5/1) • Steering wheel module (SWM) (3/130).	Via central electronic module (CEM) (4/56): • Climate Control Module (CCM) (3/112) • Data link connector (DLC) (17/13) • Driver information module (DIM) (5/1) • Steering wheel module (SWM) (3/130).

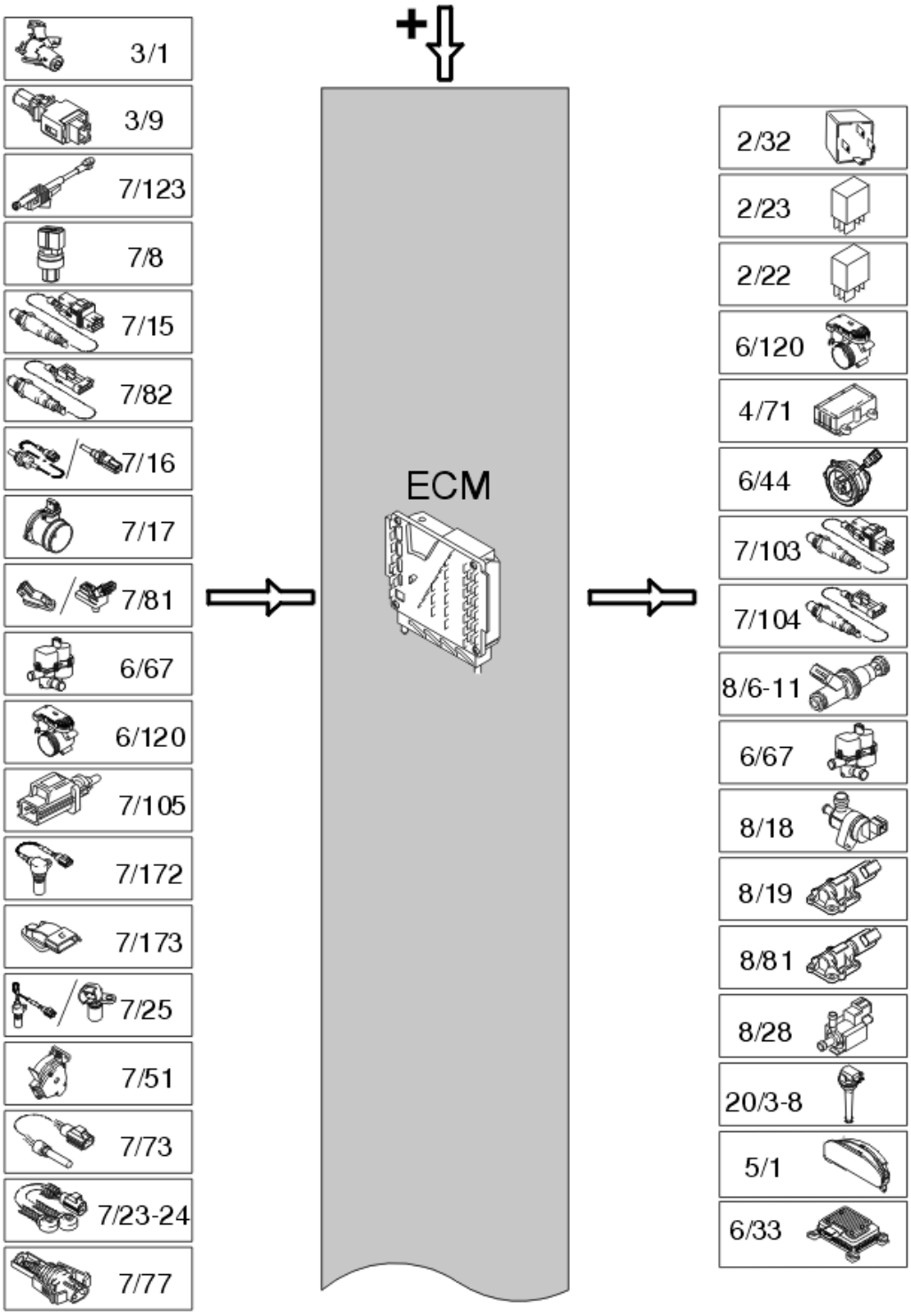

Fig. 144: ECM Signal Input And Output (1 Of 2)
Courtesy of VOLVO CARS CORPORATION

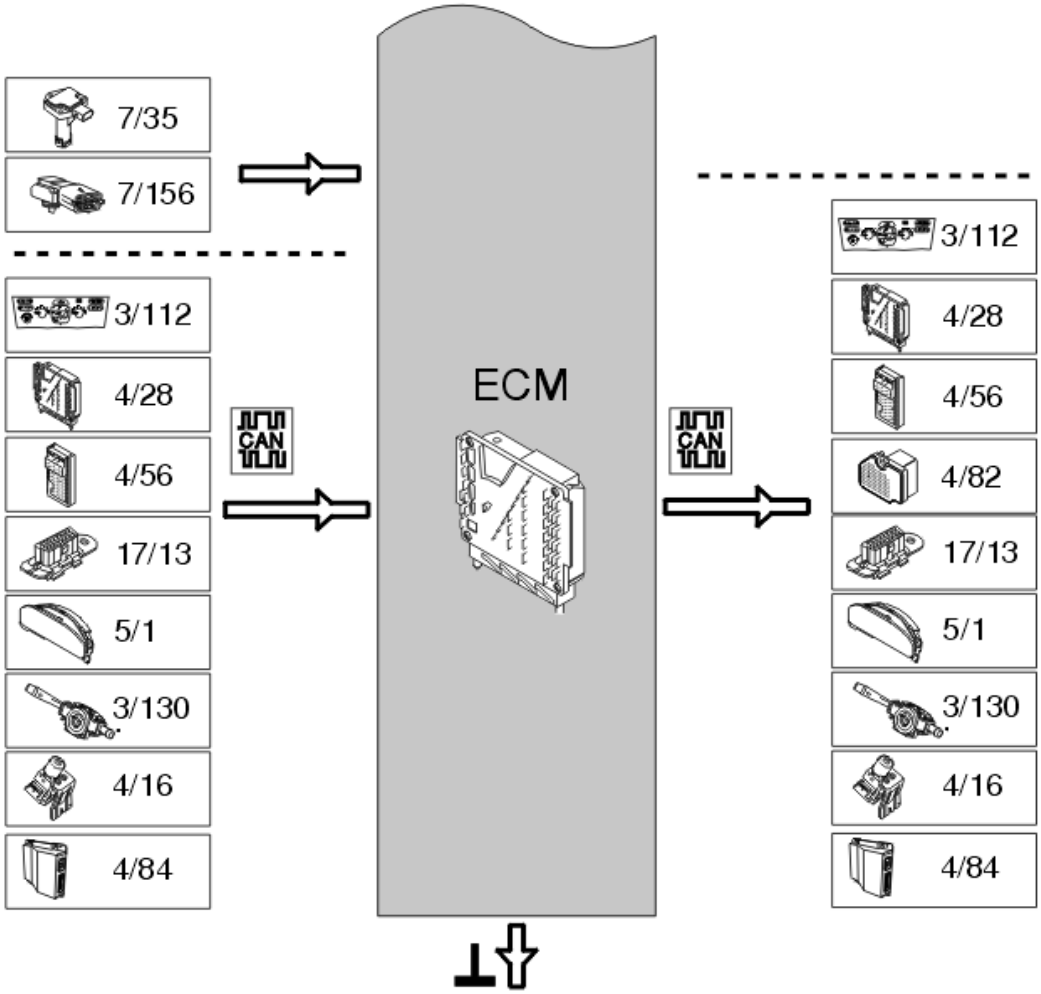

Fig. 145: ECM Signal Input And Output (2 Of 2)
Courtesy of VOLVO CARS CORPORATION

BOSCH ME7.01 ENGINE MANAGEMENT SYSTEM (B6294T; 2003-2006)

DESIGN

see **DESIGN**

DIAGNOSTIC FUNCTIONS

see **DIAGNOSTIC FUNCTIONS**

DOWNLOADING SOFTWARE AND REPLACING THE CONTROL MODULE

see **DOWNLOADING SOFTWARE AND REPLACING THE CONTROL MODULE**

FUNCTION

see **FUNCTION**

SYSTEM OVERVIEW

see **SYSTEM OVERVIEW**

BRAKE CONTROL SYSTEM (2003-2012)

CALIBRATING DSTC (DYNAMIC STABILITY AND TRACTION CONTROL)

For active yaw control to operate after a repair, brake control modules (BCM) with DSTC (dynamic stability and traction control) must be calibrated. This means that the brake control module (BCM) adjusts the signals from the unique sensors in the DSTC (dynamic stability and traction control) system.

When replacing:

- The brake control module (BCM), data for the steering wheel angle sensor module (SAS), brake pressure sensor and the DSTC sensor module must be calibrated
- The brake pressure sensor, data for the brake pressure sensor must be calibrated
- DSTC sensor module, the data for the sensor module must be calibrated.

Generally calibration must be carried out after repair to a component which affects the position of the steering wheel in relation to the position of the front wheels.

Calibrating is carried out according to VIDA vehicle communication.

DESIGN

CONTROL MODULE AND ABS HYDRAULIC MODULATOR

The brake control module (BCM) is mounted on the hydraulic modulator in the engine compartment.

The control module is supplied with power via two fuses and connected to ground by two ground terminals.

There are diagnostics for the valve coils.

The brake control module (BCM) is available in two different versions.

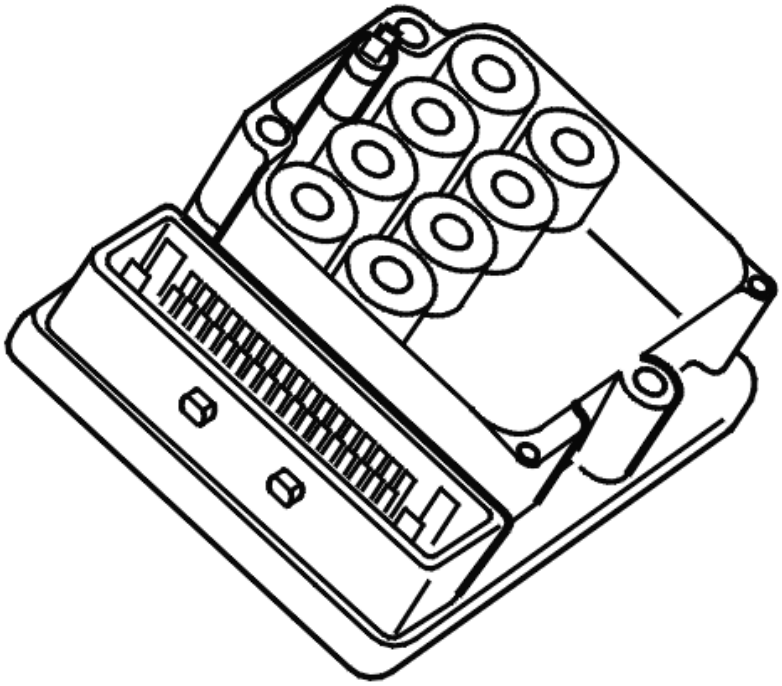

Fig. 146: Control Module And ABS Hydraulic Modulator
Courtesy of VOLVO CARS CORPORATION

ABS control module

The control module contains two different micro-processors which receive signals from different sensors in the system. The micro-processors operate in parallel and use a program to compute the necessary ABS and electronic brake force distribution functions. The ABS control module has eight valve coils for the hydraulic valves, four outlet valves and four inlet valves.

The control module has a connector for connection to the car wiring.

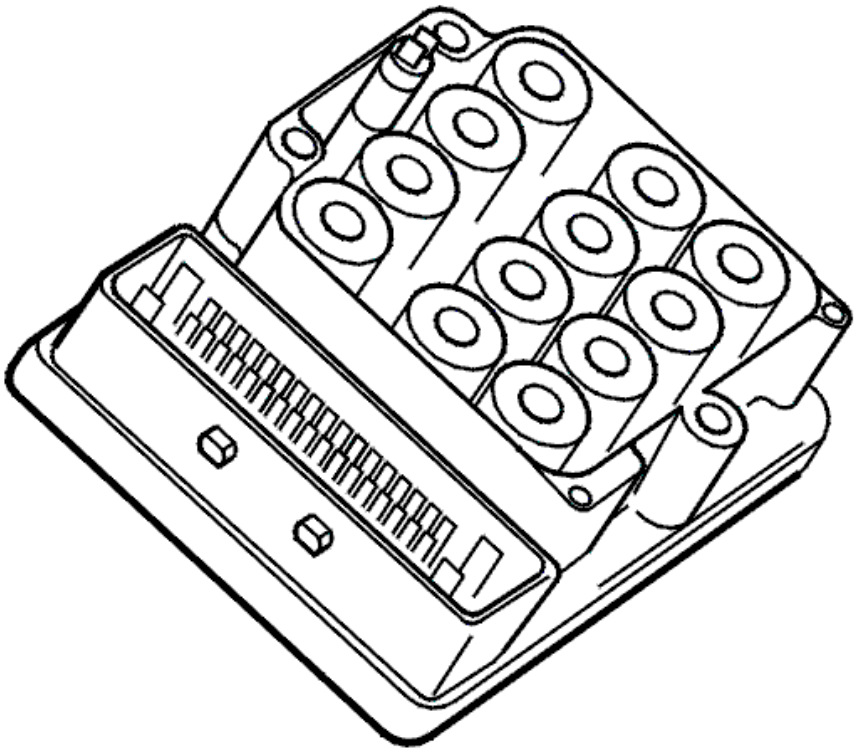

Fig. 147: ABS Control Module
Courtesy of VOLVO CARS CORPORATION

Control module for STC (stability and traction control), DSTC (dynamic stability and traction control), and TRACS (traction control system)

The control module for STC/DSTC/TRACS has twelve valve coils for the hydraulic valves; four are outlet valve coils, four are inlet valve coils and four are used for stability and traction control.

When replacing brake control modules (BCM) with DSTC, the control module must be calibrated according to the instructions in VIDA vehicle communication or by a special test drive.

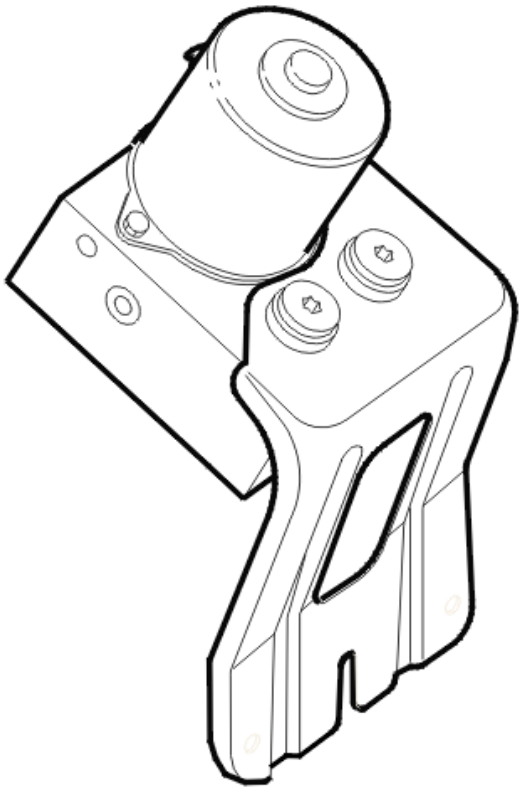

Fig. 148: Control Module For STC, DSTC And TRACS
Courtesy of VOLVO CARS CORPORATION

ABS hydraulic modulator

The hydraulic modulator is available in three versions; ABS, STC (stability and traction control) and DSTC (dynamic stability and traction control)/TRACS (traction control system). The ABS hydraulic modulator is located in the engine compartment.

The ABS hydraulic modulator consists of hydraulic valves, check valves and a pump motor. The pump motor builds up the brake pressure required during ABS or stability control.

There are diagnostics for the pump motor.

STC/DSTC SWITCH

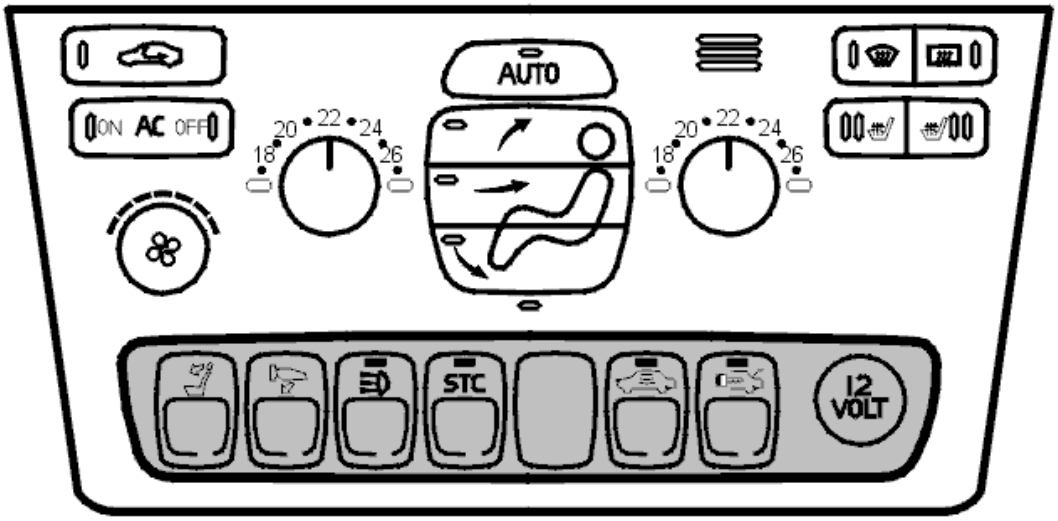

Fig. 149: Identifying Climate Control Module (CCM)
Courtesy of VOLVO CARS CORPORATION

The switch for STC/DSTC is positioned next to the other buttons on the lower section of the climate control module (CCM). The stability and traction control functions can be switched on and off manually (this applies only to the stability function from model year 2003 inclusive). When the ignition is switched on all functions are engaged. The switches have a green LED indicator which display the ON-position. When STC/DSTC is switched on or off, this is confirmed by a message in the driver information module (DIM). If the STC-/DSTC function is disabled, the other functions work normally.

NOTE: The figure shows switch for car equipped with STC.

WARNING LAMPS

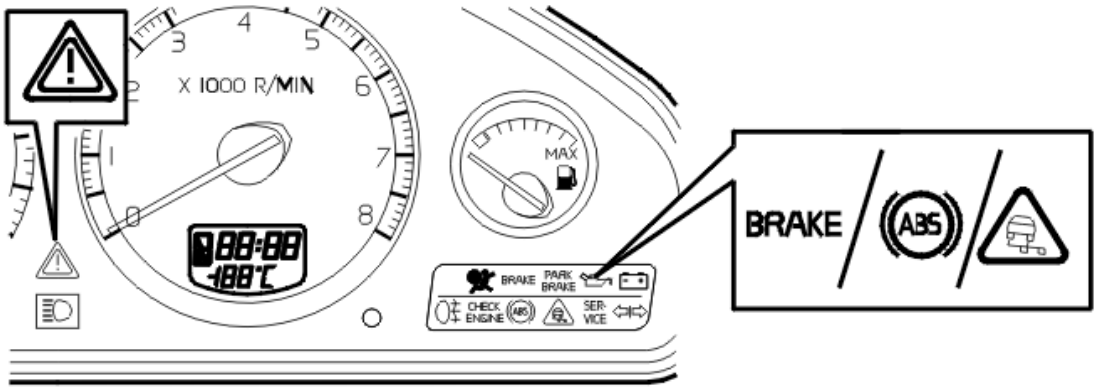

Fig. 150: Warning Lamps
Courtesy of VOLVO CARS CORPORATION

The brake system uses four warning lamps positioned in the combined instrument panel.

ABS warning lamp

The ABS warning lamp indicates an ABS system fault.

Brake warning lamp

The brake warning lamp indicates:

- faults in the electronic brake force distribution (EBD) function
- that the brake fluid level is too low.

Traction control warning lamp (only cars with STC/DSTC) model year 1999-2002

The traction control warning lamp is on continuously when:

- STC/DSTC is deactivated because a diagnostic trouble code (DTC) is stored
- The STC/DSTC system has been manually switched off
- the brake disc temperature is too high.

The traction control warning lamp flashes when:

- a drive wheel starts to spin during acceleration. The control module is activated to regain traction
- the lateral stability limit is exceeded (the car oversteers or understeers) during active yaw control.

Traction control warning lamp (only cars with STC/DSTC) model year 2003-

The traction control warning lamp is lit continuously when the road surface is slippery.

The traction control warning lamp flashes when:

- there is a risk of a loss of traction
- a drive wheel starts to spin during acceleration. The control module is activated to regain traction
- the lateral stability limit is exceeded (the car oversteers or understeers) during active yaw control.
- the limit for the anti-roll function is exceed and active yaw control is activated to regain stability.

General warning lamp model year 1999-2002

The general warning lamp (red/yellow) lights only for those faults in the brake control system which disable emergency brake assistance.

General warning lamp model year 2003-

- STC/DSTC is deactivated because a diagnostic trouble code (DTC) is stored
- The brake disc temperature is too high.

Text display model year 2003-

The stability function has been manually disabled using the STC/DSTC switch.

WHEEL SENSORS

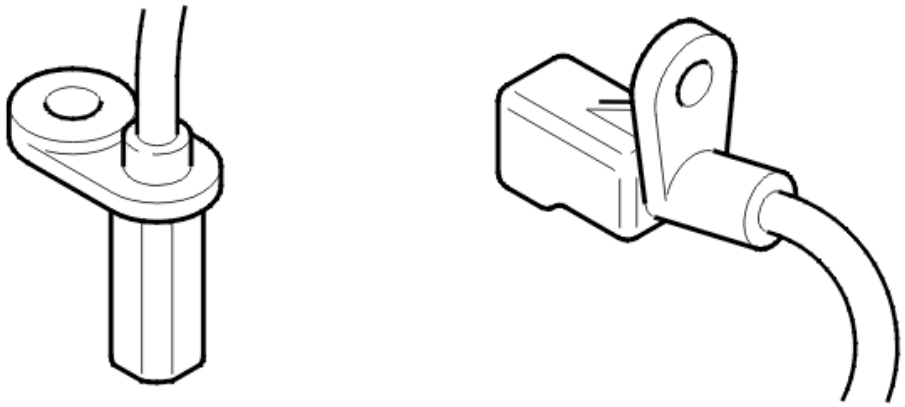

Fig. 151: Identifying Wheel Sensors
Courtesy of VOLVO CARS CORPORATION

There are four wheel sensors, one at each wheel. The wheel sensors supply the control module with information about the rotation speed, acceleration and retardation of each wheel. By recording the pulses, the control module can calculate the wheel speed.

The wheel sensors are active sensors. When the pulse wheel rotates, the sensor generates a pulsed current (quadratic wave) where the strength of the current depends on the position of the pulse wheel. The signals from the coils in the wheel sensors are then affected by a magnetic resistance element, which generates a current which changes between 7mA and 14mA, and whose frequency increases with speed.

On the front wheels, the pulse wheel is pressed onto the outer constant velocity joint and the wheel sensors are

located radially in the shaft housing relative to the pulse wheel. On the rear wheels, the pulse wheel is pressed onto the hub and the wheel sensors are located axially relative to the pulse wheel. Both the front and rear pulse wheels have 48 teeth. In the event of a fault in any of the wheel sensors the following systems will be disengaged or will not engage:

- ABS
- TRACS
- STC
- DSTC.

Electronic brake force distribution (EBD) is available if one wheel sensor is faulty. Electronic brake force distribution (EBD) is disengaged if there is a fault in more than one wheel sensor simultaneously.

The control module calculates the vehicle speed using the signals from the wheel sensors. There are diagnostics for the wheel sensors.

BRAKE LAMP SWITCH

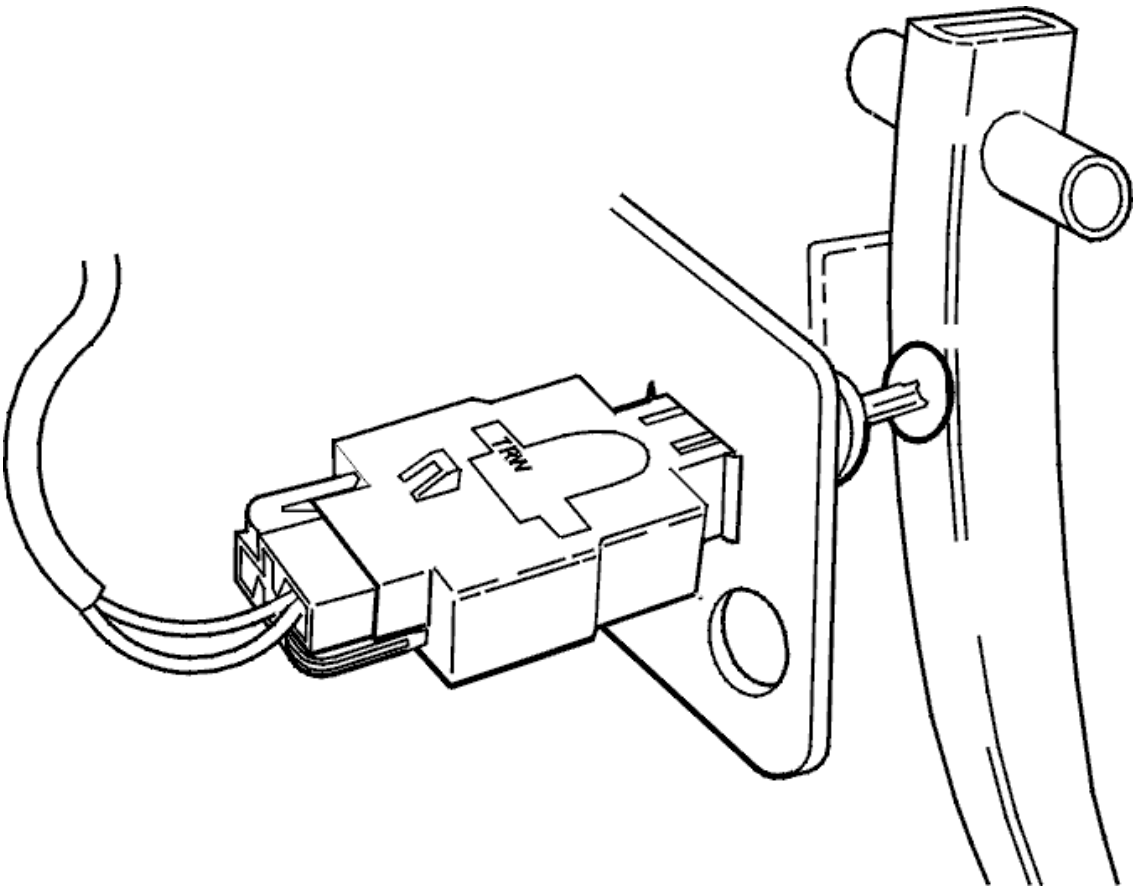

Fig. 152: Identifying Brake (Stop) Light Switch
Courtesy of VOLVO CARS CORPORATION

The brake lamp switch is a single pole switch positioned at the brake pedal lever. The brake lamp switch self-

adjusts during installation.

The brake control module (BCM) receives information about the status of the brake lamp switch via the engine control module (ECM). The brake lamp switch signal is used by the brake control module (BCM) to diagnose faults in the pedal position sensor.

The brake lamp switch is supplied with power from the battery. When the switch is closed, the signal is grounded through the engine control module (ECM). The engine control module (ECM) then transmits a signal on the Control area network (CAN) indicating that the brake lamp switch has been activated.

There are diagnostics for the brake lamp switch.

SENSOR MODULE (ONLY DSTC)

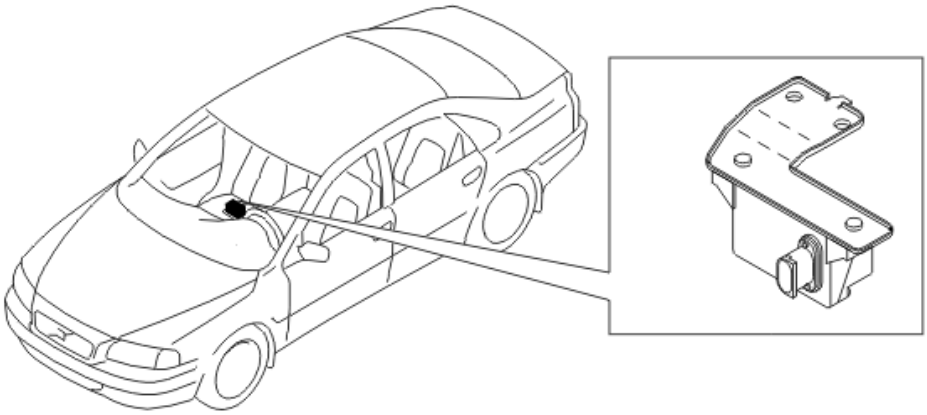

Fig. 153: Sensor Module
Courtesy of VOLVO CARS CORPORATION

The sensor module is installed under the right-hand front seat and contains two to four sensors, depending on which of the three versions is installed. The information from the sensor module is used for stability calculations in the brake control module (BCM). The sensor module for 2 wheel drive cars contains a yaw angle sensor which measures the yaw angle speed in °/s, and a lateral acceleration sensor which measures lateral acceleration in m/s^2 . The sensor module all-wheel drive (AWD) also contains a yaw angle sensor and lateral acceleration sensor as well as an acceleration sensor which measures longitudinal acceleration in m/s^2 .

The XC90 also has a tilt sensor in the sensor module. The tilt sensor gauges the tilt rate in °/s. The sensor is installed using a new bracket, turned 90°.

The sensor module communicates with the brake control module (BCM) via an internal control area network (CAN).

The supply voltage to the sensor is 12V and is connected to ground.

There are diagnostics for the sensor module.

When replacing the sensor module, the brake control module (BCM) must be calibrated according to the information in VIDA vehicle communication or manually according to the test drive.

ACTIVE SERVO UNIT, PEDAL PRESSURE SENSOR (DSTC ONLY)

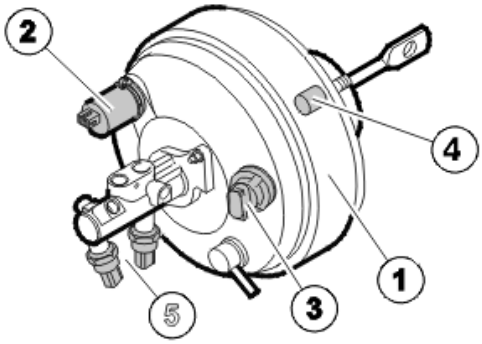

Fig. 154: Active Power Brake Booster, Pedal Pressure Sensor
Courtesy of VOLVO CARS CORPORATION

The servo unit is positioned on the bulkhead in the engine compartment. It consists of a vacuum cylinder (1), pedal position sensor (2), pressure build-up valve (3) and pedal pressure sensor (4). The pressure build-up valve and the pedal pressure sensor (activation unit) have a common connector which cannot be replaced.

The pedal pressure sensor is positioned in the servo unit and provides the brake control module (BCM) with information about brake activity. If the driver presses the brake pedal during stability control, the control module will take account of this.

The active servo unit is controlled by the brake control module (BCM) and builds up an initial brake pressure. This is so to allow braking during active yaw control. An active brake pressure is obtained within 0.1 seconds. This occurs without the driver needing to brake. The pressure build-up valve opens and allows atmospheric pressure to enter the rear chamber in the servo unit. The brake pressure sensors (5) continuously monitor the brake pressure. The pulse width controlled pressure build-up valve in the servo unit maintains the brake pressure at approximately 10 bar during stability control.

PEDAL POSITION SENSOR

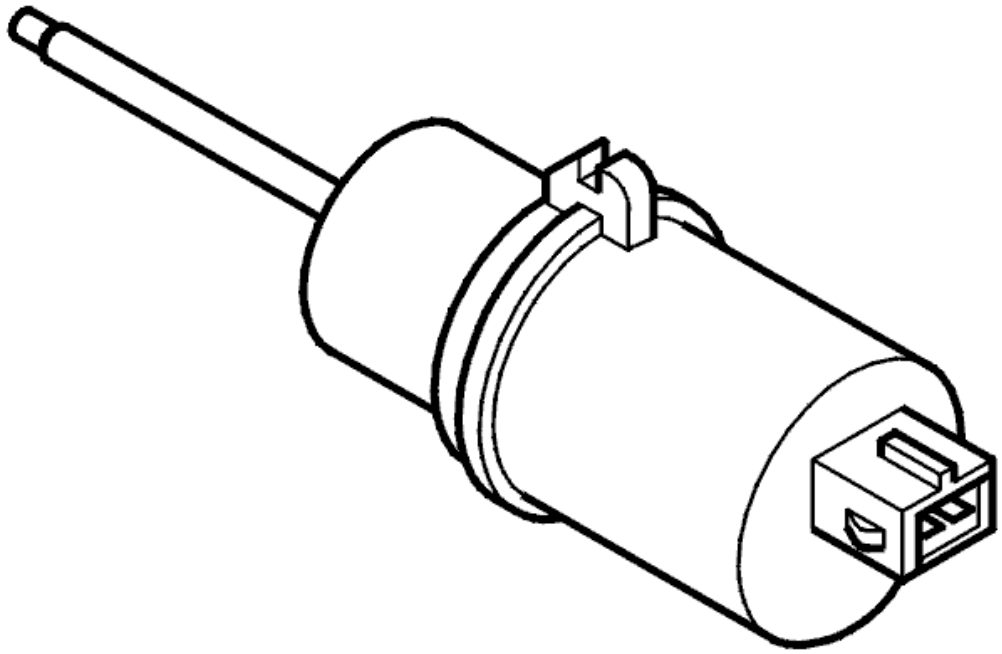

Fig. 155: Identifying Brake Pedal Position Sensor
Courtesy of VOLVO CARS CORPORATION

The pedal position sensor is mounted on the servo unit in the engine compartment. The sensor has several functions. It is used to:

- register rapid pedal movements for emergency brake assistance
- shut off the traction control during braking
- to diagnose the function of the brake lamp switch
- it is used by the engine control module (ECM) for cruise control. The signal is transmitted via the control area network (CAN).

The sensor, which responds to the push rod for the pedal, is a sliding potentiometer. 0 mm corresponds to 0 V and 38.5 mm movement corresponds to approximately 95 % of battery voltage (U_{bat}).

BRAKE PRESSURE SENSOR (ONLY DSTC)

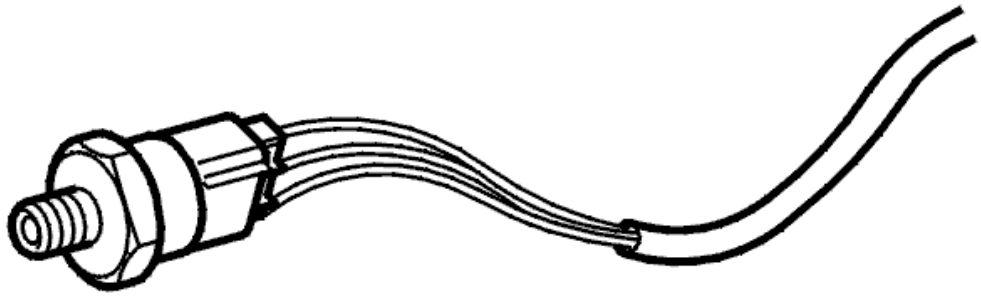

Fig. 156: Brake Pressure Sensor
Courtesy of VOLVO CARS CORPORATION

Two brake pressure sensors are positioned on the master cylinder. One sensor is located on the primary circuit and one on the secondary circuit. The information is transmitted via two analogue signals (measurement range 0-5 V) and is used by the brake control module (BCM) to calculate the brake pressure during active yaw control, and when the driver applies the brakes.

The sensors are supplied with voltage via the brake control module (BCM). There are diagnostics for the sensors.

When replacing the brake pressure sensor, the brake control module (BCM) must be calibrated according to the information in VIDA vehicle communication or manually according to the test drive.

DIAGNOSTIC FUNCTIONS

GENERAL INFORMATION

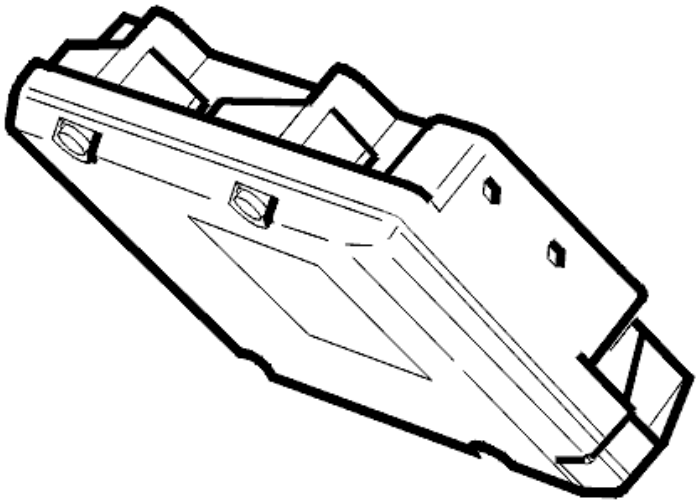

Fig. 157: Brake Control Module
Courtesy of VOLVO CARS CORPORATION

The control module has a built-in diagnostic system, Volvo Diagnostic, which continuously monitors internal functions as well as input and output signals.

DIAGNOSTIC TROUBLE CODES (DTCS)

If the control module detects a fault, a diagnostic trouble code (DTC) is set. Any fault detected during the last run cycle is defined as permanent. Other faults are defined as intermittent. A run cycle comprises ignition on, the car speed exceeding 10 km/h (20 km/h in XC90 with B8444S engine) and ignition off.

READING AND ERASING DIAGNOSTIC TROUBLE CODES (DTCS)

Stored diagnostic trouble codes (DTCs) can be read off and erased using this function.

Diagnostic trouble codes (DTCs) can only be erased once all the diagnostic trouble codes (DTCs) have been read off at least once.

READING OFF INPUT AND OUTPUT SIGNALS

This function can be used to continuously read off the status of the control module's input and output signals.

ACTIVATING COMPONENTS

This function can be used to activate components to check that they are working.

READING OFF THE CONTROL MODULE IDENTIFICATION

VIDA identifies control modules by reading off a number of codes from the control module memory.

The codes contain the following information about the control module:

- hardware P/N (control module without software)
- hardware serial number (control module without software)
- software P/N
- diagnostic software P/N (part of the software).

FUNCTION

ABS FUNCTION

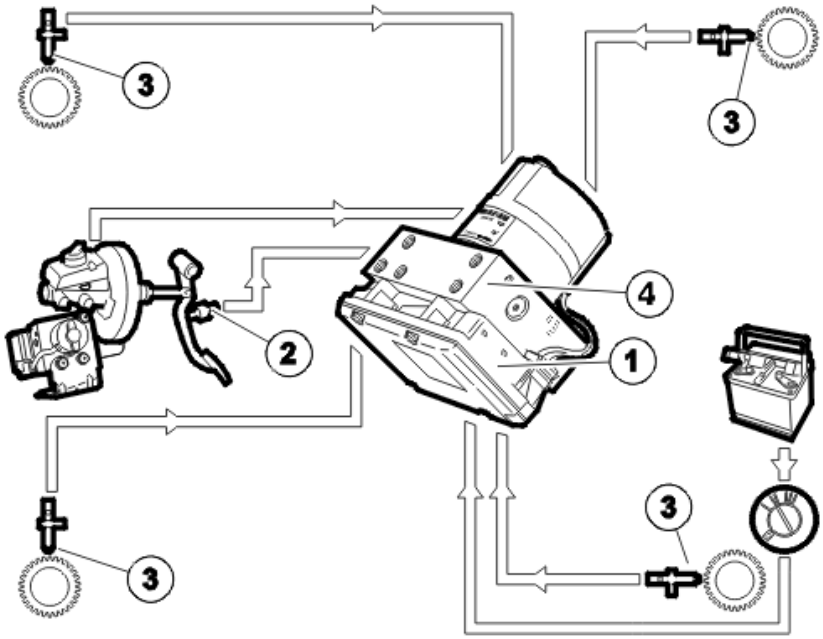

Fig. 158: ABS Function
Courtesy of VOLVO CARS CORPORATION

While driving, the brake control module (BCM) (1) registers the acceleration and deceleration of the wheels. The 4 wheel sensors (3) (one on each wheel) give the brake control module (BCM) information about the rotation speed of the wheels. The brake control module (BCM) calculates the speed of the car using this information and puts it out on the Control area network (CAN). There the signal is accessible for other systems.

During braking, the brake control module (BCM) receives a signal from the stop (brake) lamp switch (2)

indicating braking. The brake control module (BCM) then goes into standby mode for ABS control. The signal from the stop (brake) lamp switch is not required for ABS control, but does give softer control at the beginning of ABS control.

If the brake control module (BCM) detects that there is a risk of wheel lock-up, the ABS hydraulic modulator (4) is affected and the hydraulic pressure for the relevant wheel is adapted so that wheel lock up is avoided.

The pressure in the circuit is controlled so that the maximum possible braking force is transferred to the road surface. This occurs when the wheel rotates with 12-20% slippage on the surface.

ABS is first activated when the speed of the car exceeds approximately 7 km/h, which means that at speeds below approximately 7 km/h the wheels can lock up. This has little practical effect on the function of the system or from the driver's point of view.

ABS control can be divided into three stages:

1. Open position. (Pressure increase). This is the normal condition during braking. The inlet valve is open and the outlet valve is closed. This permits the brake pressure to pass from the master cylinder to the wheel
2. Pressure retention phase. (Constant pressure). If the brake control module (BCM) detects that one of the wheels is rotating too slowly, the brake control module (BCM) will close the inlet valve. This stops the brake pressure to the wheel from increasing, even if the driver increases the pressure on the brake pedal. If the rotation speed of the wheel continues to fall the control moves into the pressure reduction phase
3. Pressure reduction phase. (Pressure release). The inlet valve remains closed. The brake control module (BCM) opens the outlet valve and starts the pump which transfers brake fluid from the wheel, this reduces the brake pressure. When the rotation speed has increased sufficiently the control module closes the exhaust valve, opens the inlet valve and control returns to the open position.

Steps 1, 2 or 3 are repeated until braking finishes or the ABS system stops.

ABS CONTROL

No braking

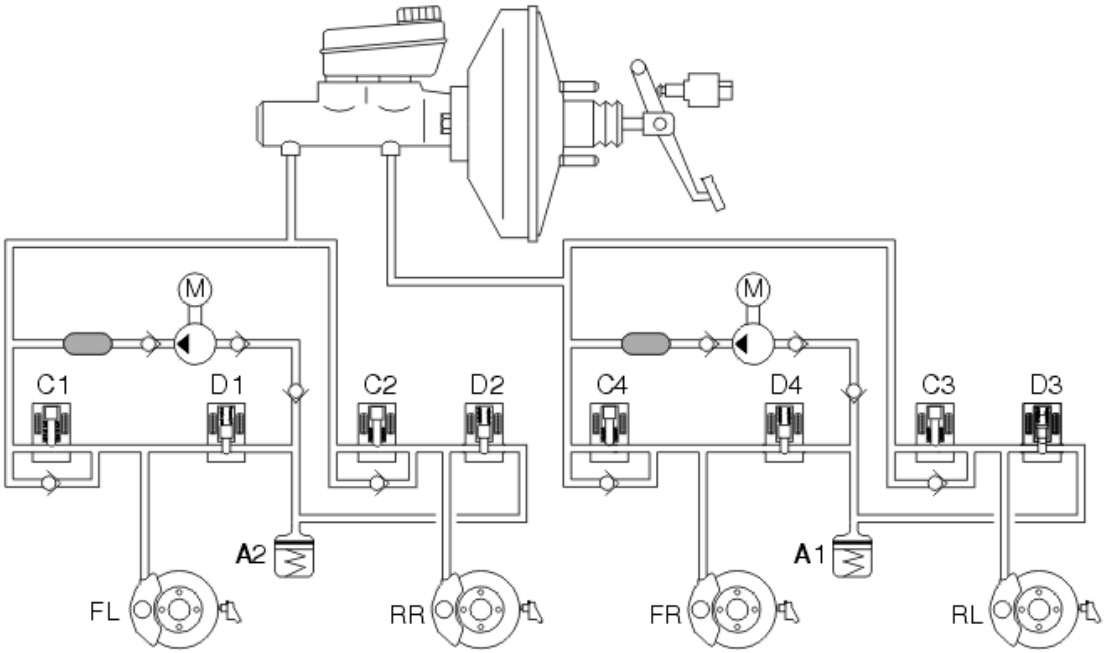

Fig. 159: ABS Control -- No Braking
Courtesy of VOLVO CARS CORPORATION

When the driver is not braking, the brake system is unaffected (i. e. the master cylinder is in the rest position and the connections between the brake fluid reservoir and the rest of the hydraulic system is open). There is no pressure in the system. In the ABS hydraulic modulator valve block, the hydraulic valves are in their rest position. In other words, the inlet valves are open and the outlet valves closed.

Braking without ABS

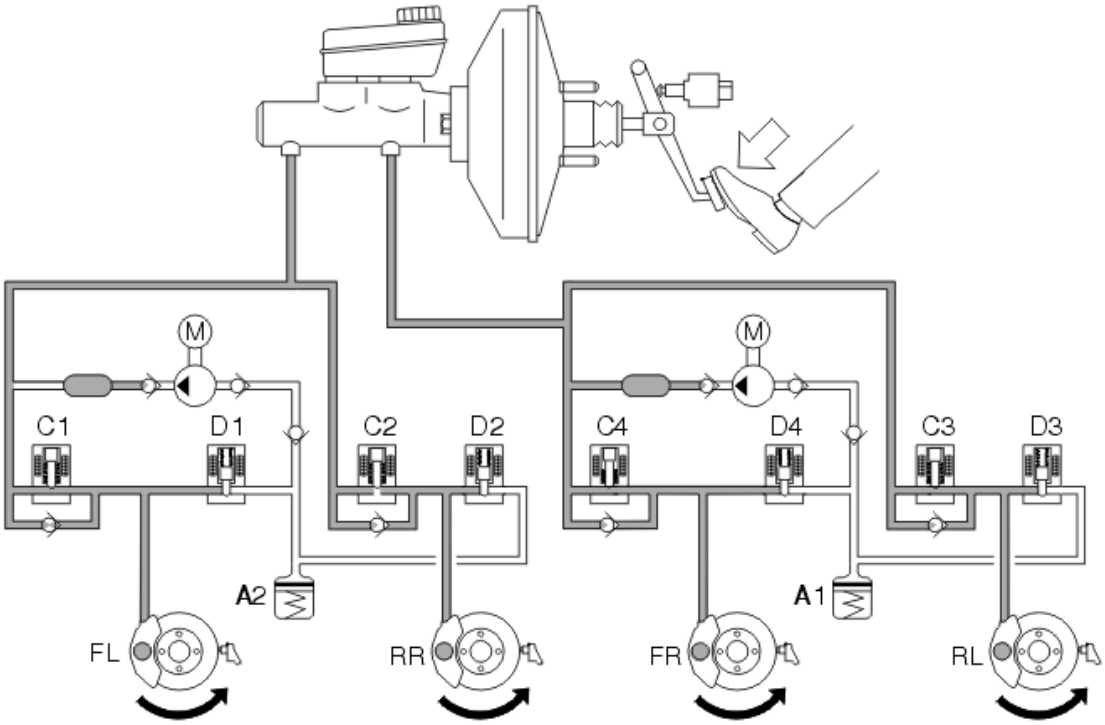

Fig. 160: ABS Control -- Braking Without ABS
Courtesy of VOLVO CARS CORPORATION

When the brake pedal is depressed, the movement of the pedal is transmitted via the power brake booster to the master cylinder pistons and the stop (brake) lamp switch trips. When the primary and secondary pistons move forwards in the master cylinder, the openings for the brake fluid reservoir are closed. The hydraulic pressure in the two brake circuits increases and affects the pistons in the brake calipers which press the brake pads against the brake discs.

When the brake pedal is released, the pistons revert to the rest position in the master cylinder. The connection to the brake fluid reservoir opens and the brake system pressure falls. The brake caliper pistons return to their rest positions with the aid of the sealing rings.

Braking with ABS

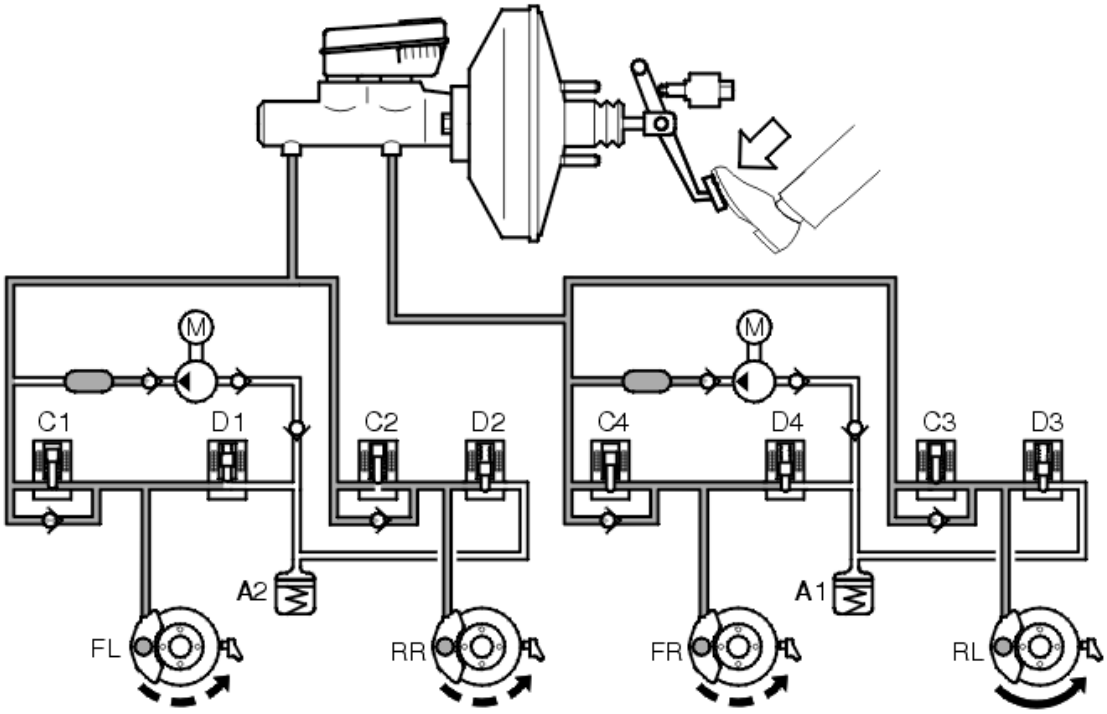

Fig. 161: ABS Control -- Braking With ABS
Courtesy of VOLVO CARS CORPORATION

When a wheel locks-up under braking, the brake control module (BCM) begins to close the inlet valve for the relevant brake circuit so that the supply of brake fluid from the master cylinder is interrupted. This means that the hydraulic pressure cannot increase irrespective of the pressure in the master cylinder (constant pressure). The hydraulic pump starts at the same time.

If the wheel locks anyway, the outlet valve opens and the brake fluid is allowed back to the accumulators resulting in a reduction in the brake circuit pressure (pressure release). This reduces the hydraulic pressure and braking effect, allowing the wheel to accelerate. The hydraulic pump returns the brake fluid from the accumulators to the master cylinder.

When the acceleration is sufficient, the brake control module (BCM) closes the outlet valve and opens the inlet valve, so that the hydraulic pressure in the circuit increases. During the pressure increase phase the required fluid volume is supplied by the master cylinder and the pump if the accumulators contain brake fluid. As the volume of fluid supplied to the brake circuit is greater than the volume released back into the accumulators from the brake circuits, the accumulators only compensate for the volume peaks on the pump suction side. The pump returns the brake fluid from the low pressure accumulators to the master cylinder or brake circuits depending on the position of the inlet valves.

When the pump operates the brake pedal is raised and lowered (pulses). This is normal and is also a warning to the driver that ABS control is active.

The hydraulic pump is operational for approximately 1 second after the ABS control has finished to ensure that the accumulators are empty.

ELECTRONIC BRAKE FORCE DISTRIBUTION (EBD)

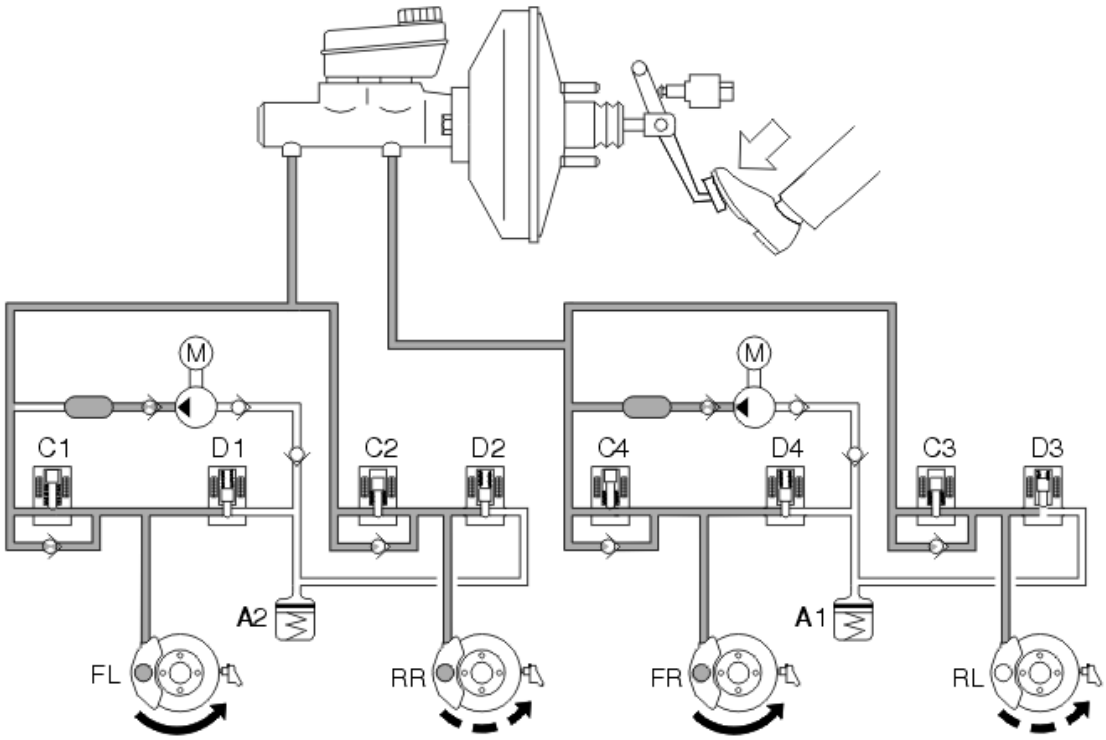

Fig. 162: Electronic Brake Force Distribution
Courtesy of VOLVO CARS CORPORATION

Electronic brake force distribution (EBD) is integrated in the ABS system and controls the braking forces to the rear wheel brakes. Electronic brake force distribution (EBD) replaces the relief valve, which otherwise reduces the pressure in the brake circuit for the rear wheels and prevents premature activation of rear ABS control.

Electronic brake force distribution controls the hydraulic pressure in the brake circuit for the rear wheels the rear wheels slip considerably less than the front wheels under braking. This ensures optimal and stable braking.

The brake control module (BCM) controls the brake pressure by controlling the inlet and outlet valves in the rear wheel brake circuits.

The brake pressure in the rear wheel circuits varies, depending on how much the rear wheels slip in relation to the front wheels. This functions tries to keep the rear wheel slippage 0-2 % lower than front wheel slippage. The function is load sensitive.

Generally, the difference between the rear wheel and front wheel slippage under braking is dependent on how hard the brakes are applied and on the load of the car. Hard braking /light loads cause more slippage, light braking/heavy loads cause less slippage.

Therefore the requirement for brake fluid when the hydraulic pump is not activated during electronic brake

force distribution (EBD) control is less than during stability and traction control. The fluid volume returned from the brake circuits is taken up by the accumulators.

STC (STABILITY AND TRACTION CONTROL) SYSTEM

The STC (stability and traction control) system consists of two functions, stability control and traction control. The stability function is controlled by the engine control module (ECM). The traction control function and TRACS (TRAction Control System) operate in the same way.

STABILITY CONTROL

Stability control occurs when the brake control module (BCM) transmits a signal to the engine control module (ECM) to lower the engine torque if any of the wheels loose traction. Stability control is available between 0 km/h and top speed. For information about traction control.

TRACTION CONTROL

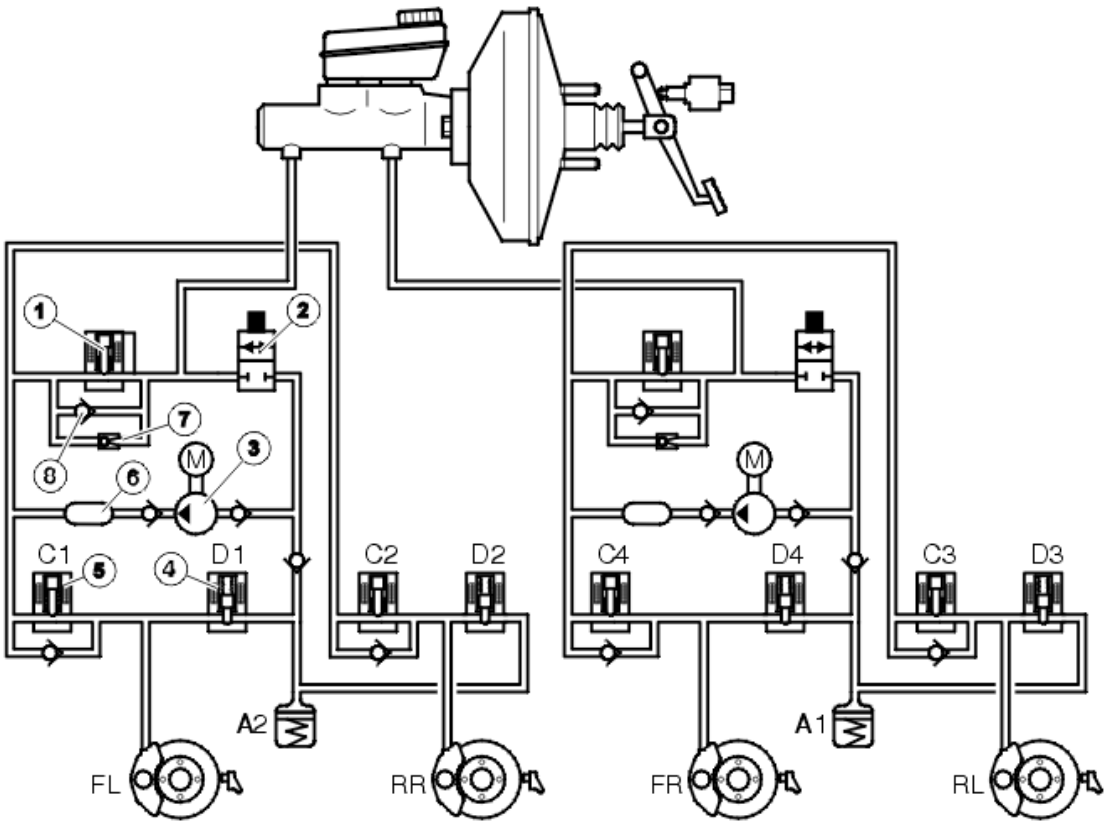

Fig. 163: Identifying Traction Control
Courtesy of VOLVO CARS CORPORATION

Components

1. Separation valve, normally open
2. Electronic shuttle valve, normally closed

3. Hydraulic pump
4. Outlet valve, normally closed
5. Inlet valve, normally open
6. Pressure equalizer
7. By-pass valve
8. Non-return valve.

Traction control is integrated in the steering wheel bracket.

The system is mainly designed to assist with moving off on slippery surfaces at speeds up to approximately 60 km/h. Traction control has only a very limited effect at speeds over 60 km/h.

The traction control function is always engaged when the ignition is switched on. The function can be disengaged (model years 1999-2002 only) using the STC/DSTC switch, which is located on the lower section of the climate control module (CCM).

If the brake control module (BCM) registers, via the front wheel sensors, that one of the driven wheels is spinning faster than the other, the separation valve (1) closes and the hydraulic pump (3) starts so that the brake fluid is pumped to the brake caliper of the slipping wheel. Pressure builds up in the brake circuit and the brakes are applied as much as required so that the drive force is distributed between the driven wheels. The wheel which has the best traction receives the most driven force against the surface. This process is independent of engine output.

On cars with traction control, the brake control module (BCM) continually registers brake usage and calculates the temperatures of the front wheel brake discs. If traction control is engaged and the calculated temperature is too high (approximately 450 °C), traction control cuts out and the wheel spin warning indicator lights (applies to model year 1999-2002). From model year 2003, the general warning lamp (yellow) lights, and a text is displayed in the combined instrument panel. A diagnostic trouble code (DTC) is stored in the brake control module (BCM). Traction control is blocked to prevent the brakes from overheating. The light goes out once the calculated temperature falls below approximately 300 °C and traction control is engaged again. However, the ABS function is always available. Information about the calculated temperature of the brake discs is in the brake control module (BCM) as long as the 30-supply is connected. If the brake system has been used too hard, this may also cause high brake temperatures.

TRACTION CONTROL

No traction control

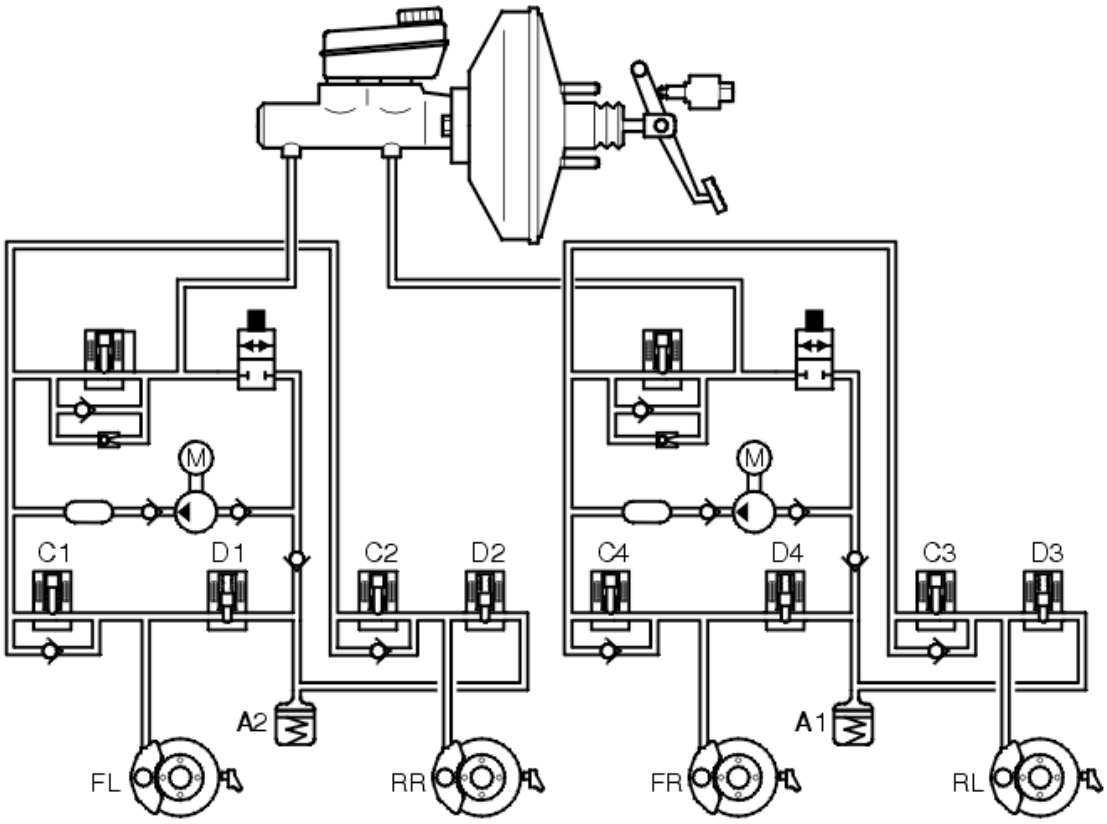

Fig. 164: Identifying Traction Control -- No Traction Control
Courtesy of VOLVO CARS CORPORATION

When the driven wheels are not spinning the brake system is unaffected (i. e. the master cylinder is in the rest position and the connections between the brake fluid reservoir and the rest of the hydraulic system are open). There is no pressure in the system. In the ABS hydraulic modulator valve block, the hydraulic valves are in their rest position. In other words, the inlet valves and the separation valves are open and the outlet valves closed.

Traction control when one or both driven wheels spin

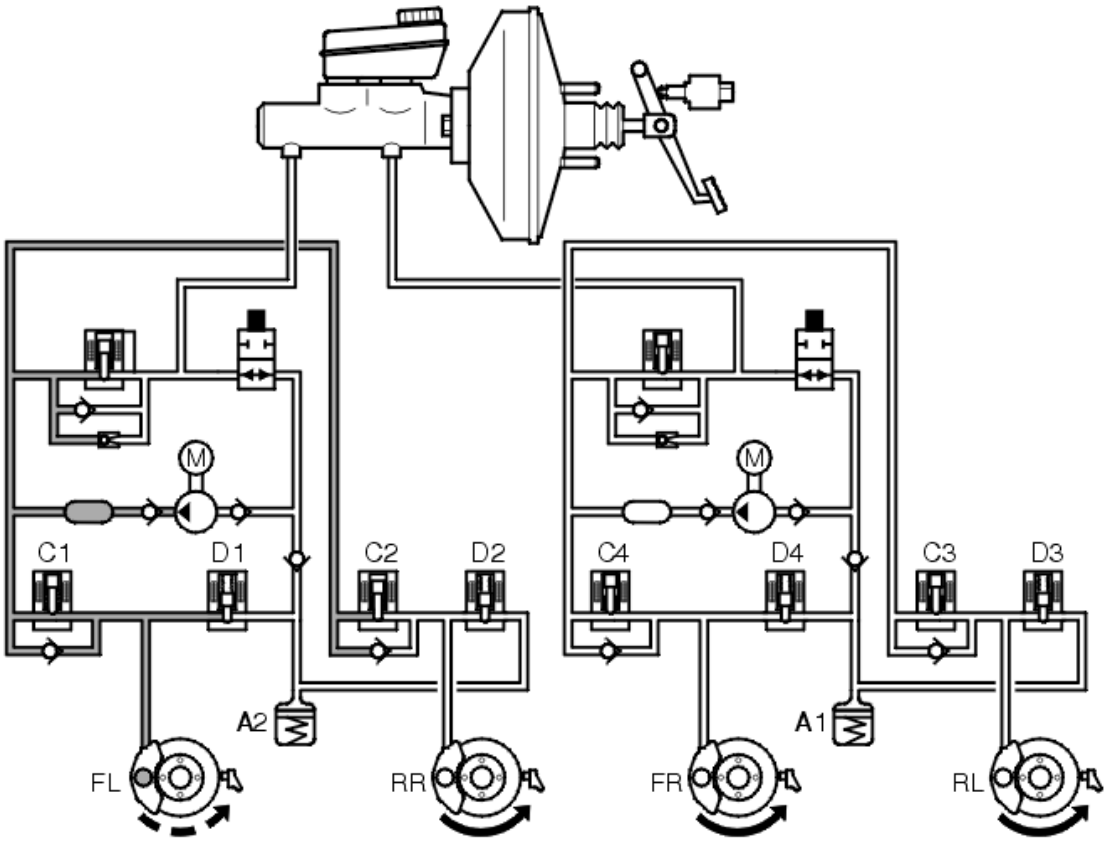

Fig. 165: Identifying Traction Control -- Traction Control When One Or Both Driven Wheels Spin
Courtesy of VOLVO CARS CORPORATION

If the car moves off and one or both driven wheels are threatening to slip, the brake control module (BCM) detects this by comparing the signals from the wheel sensors with a calculated reference speed. The control module closes one or both separation valves and the hydraulic pump starts. The separation valve blocks the connection between the pump pressure side and the master cylinder primary circuit /secondary circuit. The inlet valve for the non-spinning wheel closes so that the brake is not applied on that wheel. The hydraulic pump draws brake fluid from the brake fluid reservoir via the electronic shuttle valve and increases the pressure until the by-pass valve opens. The hydraulic pressure reaches the spinning wheel and slows down the wheel so that the driven force is distributed between the driven wheels so that the wheel with the best traction receives the most driven force.

As the pump supplies a greater flow than required by traction control, the excess brake fluid is drained off by the by-pass valve for the master cylinder or is drawn directly up by the pump.

If traction control is manually disengaged (model tears 1999-2002) it can be re-engaged using the switch while the wheels are spinning. The function then starts more softly than normal.

The inlet valve closes as soon as the spinning wheel has been slowed down by the brake to a relatively normal speed. Depending on the acceleration of the wheel, the outlet valve opens (brake fluid flows back to the suction side of the pump) so that the pressure in the brake circuit drops or the outlet valve remains closed to maintain the pressure (constant pressure). The outlet valve closes to increase the pressure in the brake circuit, the inlet valve opens and the pressure rises in the brake circuit.

This control brakes the wheel in proportion to optimum slippage until one of the following occurs:

- As friction against the surface becomes greater wheel spin stops
- The process is stopped by the brake control module (BCM) to prevent the brakes from overheating
- Braking occurs
- The function is disengaged using the switch on the climate control module (CCM) (applies to model years 1999-2002)
- The car reaches the speed where traction control ceases.

If the rear wheels lock during traction control (for example the parking brake is applied), the brake control module (BCM) stops traction control to allow ABS to cut-in. The traction control lamp lights (applies to model years 1999-2002).

The separation valve is activated during traction control.

Activating the brakes, which is registered by the brake control module (BCM) via the signal from the stop (brake) lamp switch, enables the traction control to be interrupted and the separation valve to open. The electronic shuttle valve closes, so that the pump is unable to draw brake fluid from the master cylinder. The hydraulic modulator now operates as a normal ABS hydraulic modulator.

A difference in speed between the driven wheels requires traction control. This difference varies with the speed of the car. When the vehicle speed is 0 km/h, a difference in speed of 8 km/h between the driven wheels is required for traction control to function. At a vehicle speed of 20 km/h, a difference of 18 km/h, and at 40 km/h a difference of 25 km/h are required. At higher speeds the differences required between the driven wheel speeds is so great that in practice traction control does not function above 60 km/h.

ACTIVE YAW CONTROL SYSTEM

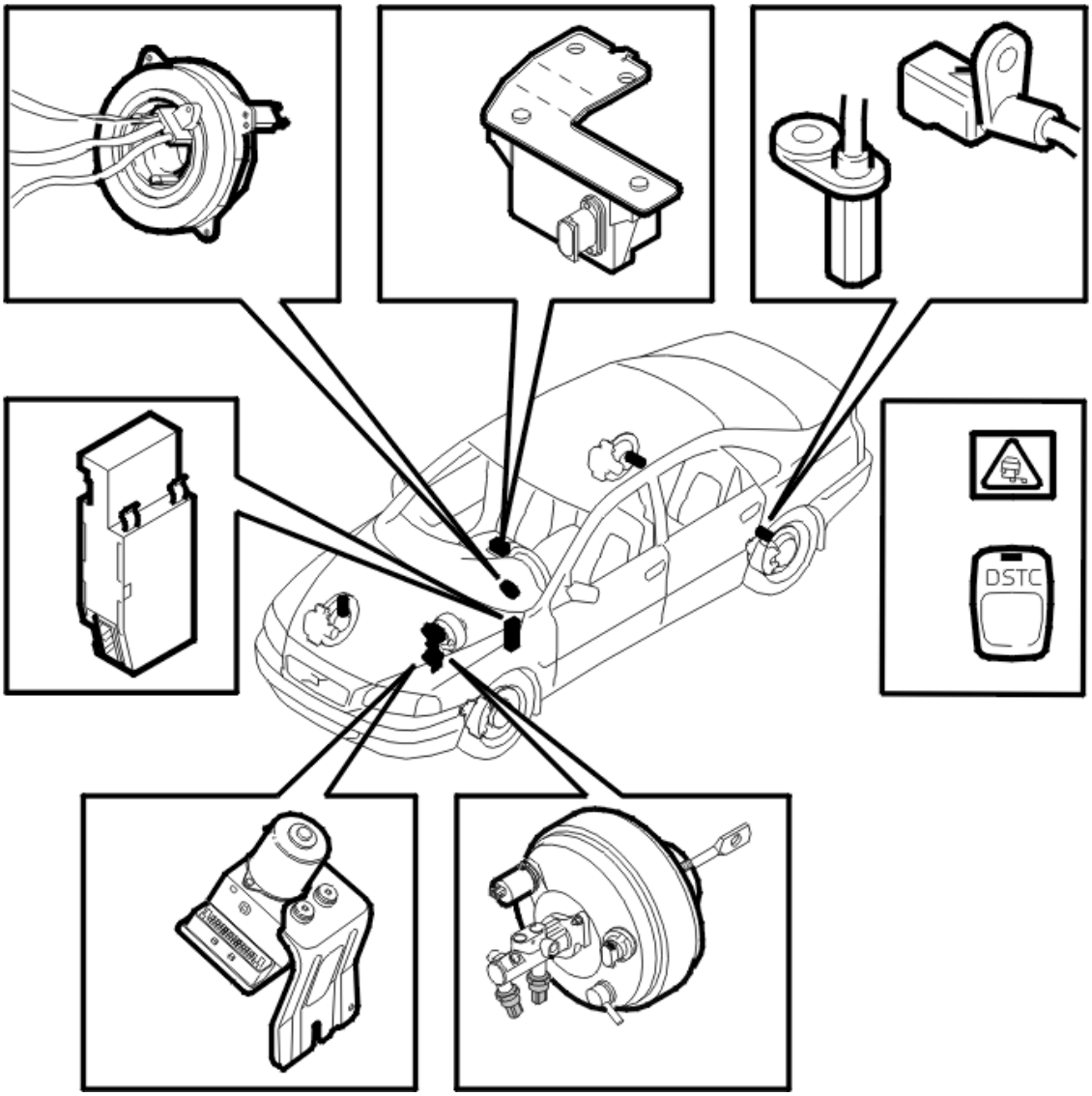

Fig. 166: Active Yaw Control System
Courtesy of VOLVO CARS CORPORATION

The brake control module (BCM) with DSTC (dynamic stability and traction control) uses continuous information from the different sensors in the system to calculate the positions of the steering wheel and car. The brake control module (BCM) calculates the driving manner of the driver by measuring the steering wheel angle, the engine torque, the speed of the car and brake pressure. The brake control module (BCM) also calculates the behavior of the car by monitoring the steering wheel angle, steering wheel angle speed, yaw rate speed and lateral acceleration. When the differences between the movements of the driver and the behavior of the car exceed a certain point, Active Yaw Control limits the engine torque to maintain lateral stability in all driving conditions. Active Yaw Function also activates the power brake booster and the individual brake control to control the hydraulic modulator separation valves and electronic shuttle valves and the inlet and outlet valves which correct the car in the event of a skid.

ACTIVE YAW CONTROL

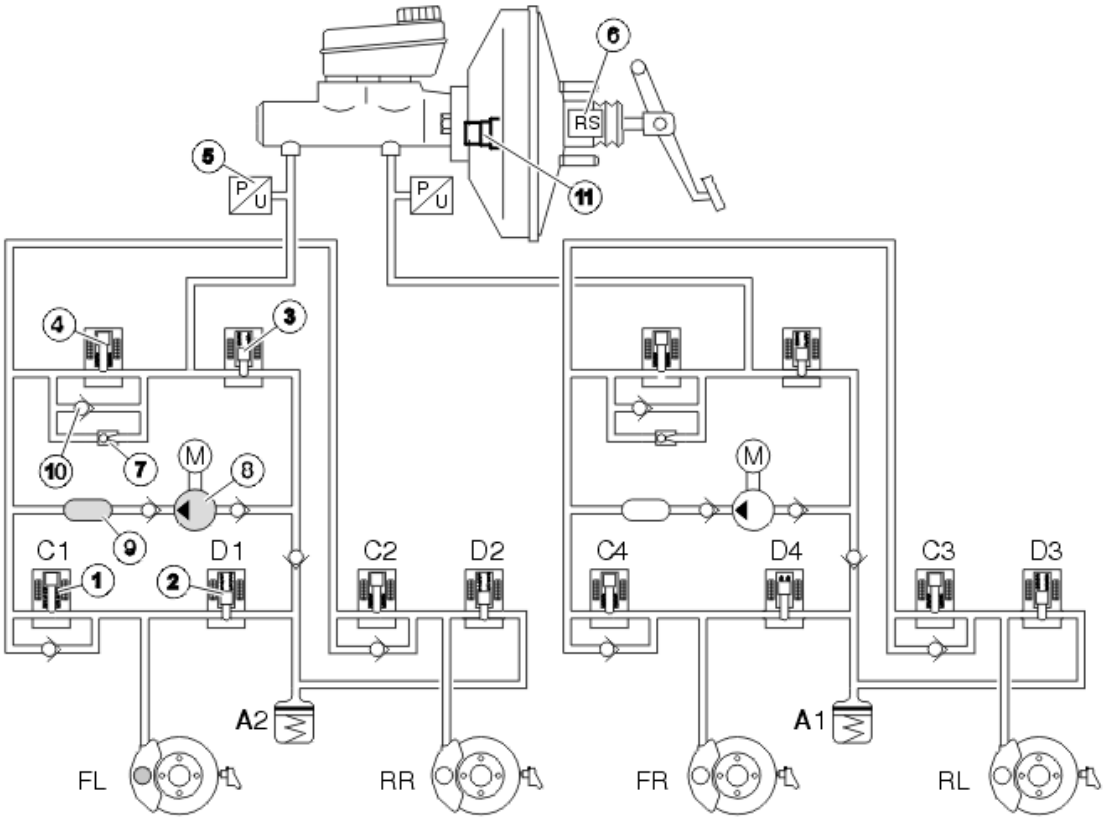

Fig. 167: Active Yaw Control
Courtesy of VOLVO CARS CORPORATION

1. Inlet valve, normally open
2. Outlet valve, normally closed
3. Electronic shuttle valve, normally closed
4. Separation valve, normally open
5. Brake pressure sensor
6. Pedal pressure sensor
7. By-pass valve
8. Hydraulic pump
9. Pressure absorber
10. Non-return valve
11. Pressure build-up valve.

During Active Yaw Control, when the car skids, a vacuum valve opens on the power brake booster. The power brake booster then quickly builds up pressure without the driver activating the brake pedal. At the same time the hydraulic pump (8) starts and builds up brake pressure. The hydraulic pump takes over braking after the initial phase. The brake control module (BCM) then activates the valves in the hydraulic modulator and checks the individual wheel brake forces by raising, maintaining or lowering the pressure individually to stabilize the car. The brake pedal moves up and down during activation. If the driver presses the brake pedal during stability

control, the control module, through the pedal pressure sensor (6) in the power brake booster, will take account of the pressure exerted by the driver in the stability control.

Active yaw control oversteer

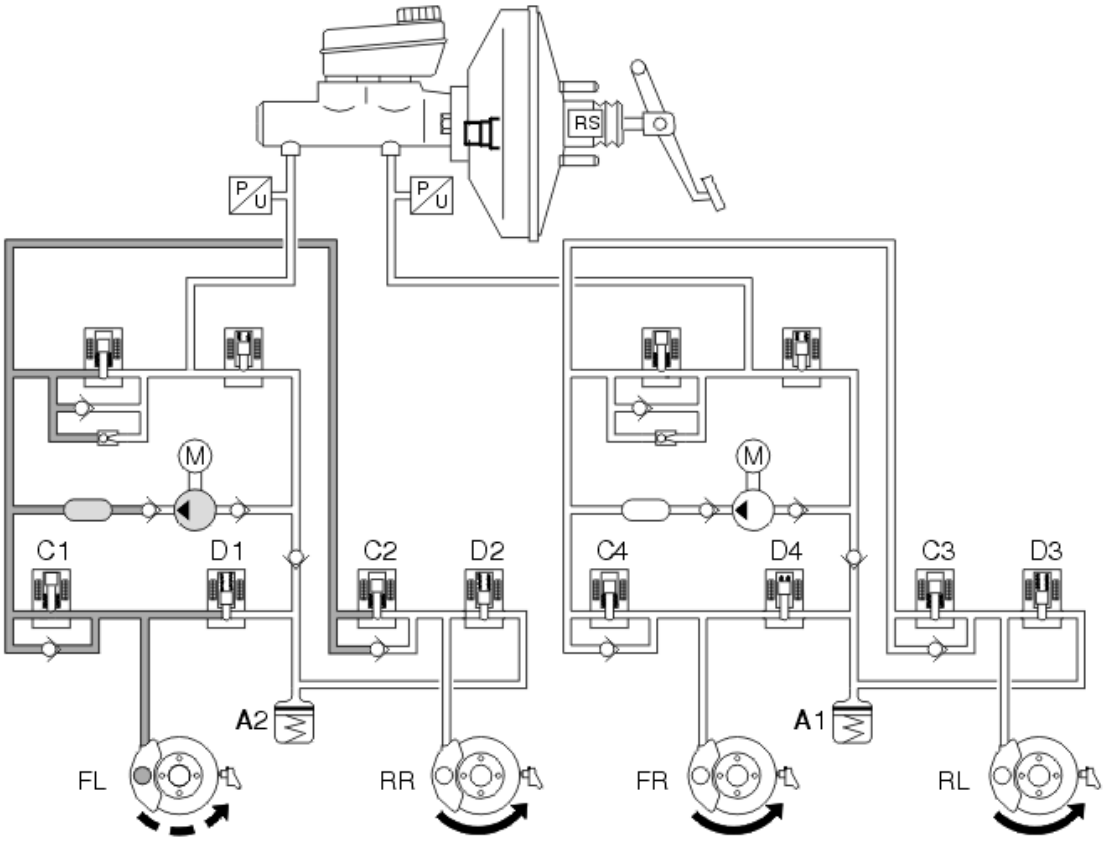

Fig. 168: Active Yaw Control Oversteer
Courtesy of VOLVO CARS CORPORATION

Oversteer is a very dangerous condition which is difficult for the average driver to control. Oversteer is when the car turns more than the steering wheel has been turned. If not corrected, oversteer can lead to the car spinning uncontrollably.

In the example above the car turns to the right and the car oversteers. To counter this the DSTC system has closed the separation valve, opened the electronic shuttle valve and started the pump. The inlet valve (C1) has been left open, while the other inlet valves are closed. This causes brakes the left front wheel, which causes the wheel to lose grip and reduces oversteer.

Active yaw control understeer

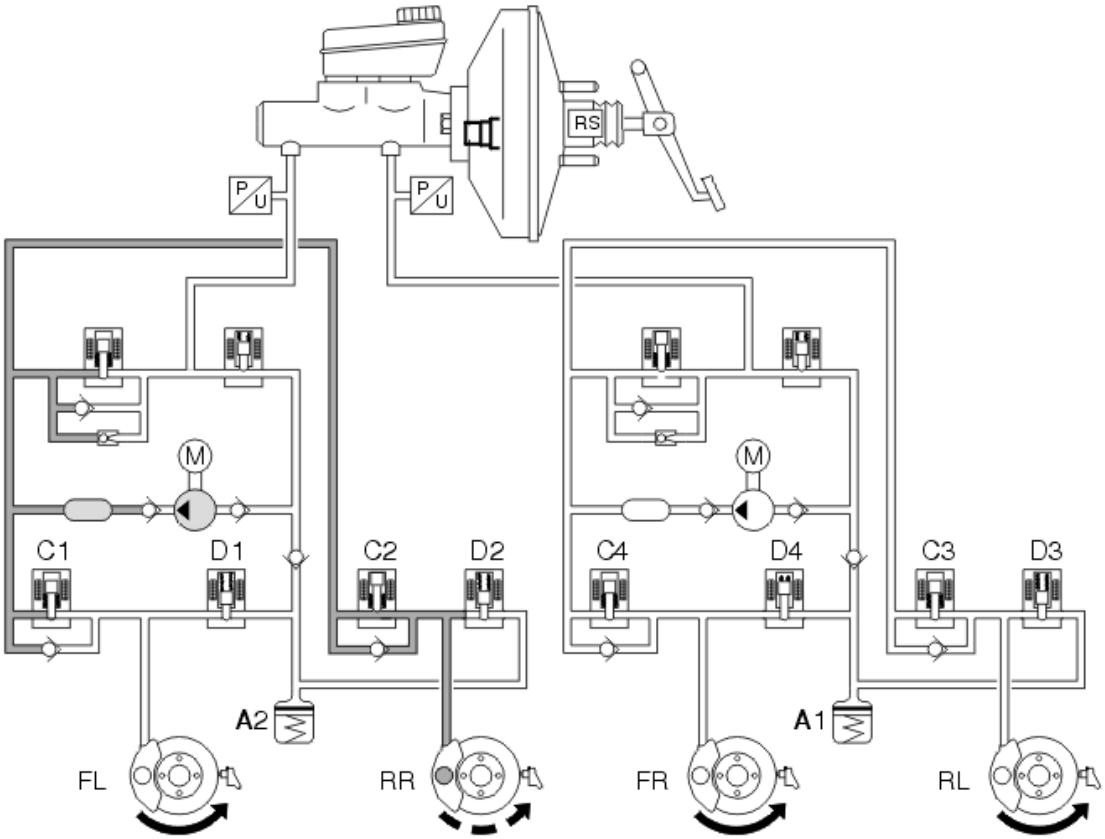

Fig. 169: Active Yaw Control Understeer
Courtesy of VOLVO CARS CORPORATION

Understeer is when the car continues straight forward even though the steering wheel has been turned. Understeer is caused by too much acceleration. When the car understeers the brake control module (BCM) transmits a request for torque reduction to the engine control module (ECM) via the Controller area network (CAN).

In the example above, the steering wheel has been turned to the right, but the car continues straight on. The separation valve closes, the electronic shuttle valve opens and the pump starts. The DSTC system applies the brakes to the right rear wheel by leaving inlet valve C2 open and closing and closing the other inlet valves (C1, C3 and C4). In the event that braking the right rear wheel is not sufficient to get the car back on course, the brake control module (BCM) opens inlet valve C4 and brakes the right front wheel.

Dynamic stability control

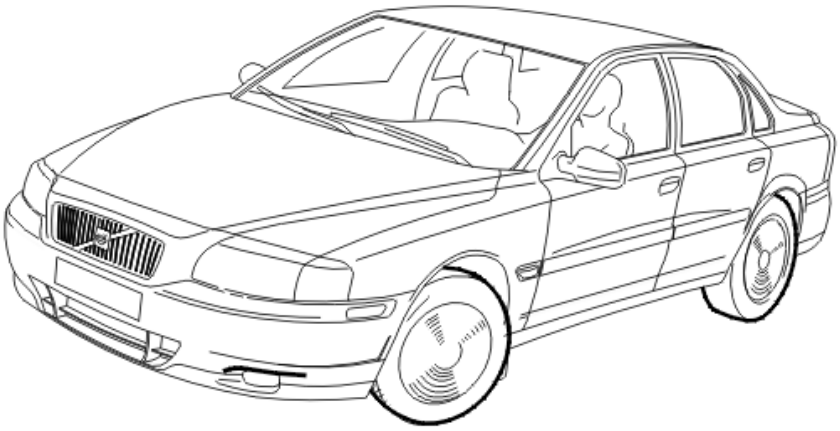

Fig. 170: Dynamic Stability Control
Courtesy of VOLVO CARS CORPORATION

When the driver brakes during Active Yaw Control, the brake control module (BCM) releases the active power brake booster and increases the brake pressure for a short time as priority is given to the lateral stability of the car. Included in the calculations are the driver's desired brake pressure and functions for:

- Active yaw control
- ABS
- EBD
- Stability control.

In the event of a hand brake turn, the anti-yaw control function is activated if the speed exceeds approximately 40 km/h. At lower speeds the AYC is decreased successively, and at 20-25 km/h will not be noticeable.

The self diagnostic function, for valves and pump motors, occurs at speeds exceeding 20 km/h after a new drive cycle. The self diagnostic function for the active power brake booster takes place when the speed exceeds 11 km/h. The self diagnostics are carried out at each new drive cycle.

If the driver presses the brake pedal during stability control, the control module, through the pedal pressure sensor in the power brake booster, will take account of the pressure exerted by driver in the stability control.

SOFTWARE DOWNLOADING

New software can be downloaded into the brake control module (BCM). When ordering software, the hardware and the software in the car is compared to the data in the Volvo central database. If the comparison is OK the software is downloaded to the control module. If the comparison between the car and Volvo central database is

not OK, the database is updated with the car configuration. When this is complete the software is downloaded.

SYSTEM OVERVIEW

INTRODUCTION

The Mark 25 brake control system

The Mark 25 brake control system with the brake control module (BCM) is an electronic control system which prevents wheel lock up during braking (ABS). By preventing wheel lock up, steering control is maintained and maximum braking effect is utilized.

The brake control system is equipped with:

- Antilock Braking System
- Electrical Brake force Distribution (EBD) for the rear wheel brakes.

The brake control system, as a factory installed option, can be supplemented with:

- TRACS (TRAction Control System)
- STC (Stability and Traction Control)
- DSTC (Dynamic Stability and Traction Control).

EBD

EBD (Electrical Brake force Distribution) is a function for electronically controlling the brake force on the rear wheels and is integrated with the ABS system. The purpose of the control module for electronic brake force distribution (EBD) control is to control the hydraulic pressure in the brake circuit for the rear wheels if the rear wheels tend to lock under braking. This ensures optimal and stable braking. The EBD function replaces the relief valve used in the Mark IV version to reduce the pressure in the brake circuit for the rear wheels.

TRACS

TRACS is a traction control system which is integrated with the ABS system. TRACS is only available on all-wheel drive (AWD) cars. The traction control system distributes driven power between the wheels so that the wheel with the best road traction receives the greatest amount of driven power. The system is mainly designed to assist with moving off on slippery surfaces at speeds up to approximately 60 km/h. TRACS has only a very limited effect at speeds over 60 km/h. TRACS (traction control system) is always engaged when the ignition is switched on. TRACS (traction control system) is engaged and disengaged using a switch under the climate control module (CCM). From model year 2003 inclusive, the TRACS function cannot be disabled manually.

STC

STC (stability and traction control) consists of two components:

- Traction Control - this function is described above under TRACS. The traction control function is always engaged when the ignition is switched on. The traction control function together with the stability

function is engaged and disengaged using a switch under the climate control module (CCM). From model year 2003 inclusive, the Traction Control function cannot be disabled manually

- Stability Control - stability system which is integrated in the ABS system and stabilizes the car in the event of wheel spin. The brake control module (BCM) transmits a signal to the engine control module (ECM) to reduce engine torque until the slipping wheel(s) has/have stopped spinning. The stability function is always engaged when the ignition is switched on. The stability function together with the traction control function is engaged and disengaged manually using a switch under the climate control module (CCM).

DSTC

DSTC (Dynamic Stability and Traction control) - a dynamic anti-slip system which is integrated in the STC (stability and traction control) system. The DSTC (dynamic stability and traction control) function is engaged when the ignition is switched on but can be disengaged or engaged manually using the switch on the climate control module (CCM).

The DSTC (Dynamic stability and traction control) system consists of the following:

- Traction Control - This function is described above under TRACS
- Stability Control - Described under STC above
- AYC (Active Yaw Control). The system is based upon a number of sensors which sense the driver's steering movements (steering wheel angle) and the directional, both straight and lateral, movement of the car. The information is used to correct the car in the event of oversteer or understeer
- RSC (Roll over stability control) is a function which monitors the tilt angle rate. If the driver turns the steering wheel quickly, during an avoidance maneuver for example, and the car is likely to tip over, the tilt angle sensor registers the rate at which the tilt angle is changing. The DSTC system rights the car. RSC (roll over stability control) is only available on the XC90
- Emergency Brake Assistance is a new function found in cars equipped with DSTC (dynamic stability and traction control) from model year 2002-. The function is integrated in the brake control module (BCM) and monitors the movement of the brake pedal. A sudden movement of the brake pedal (emergency braking) deploys the emergency brake assistance function to achieve optimum braking (more effective than normal braking). Information from the pedal position sensor is used to start the emergency brake assistance function. Full braking force is maintained for as long as the driver maintains or increases the pressure on the brake pedal. If the driver releases the brake pedal the emergency brake assistance function is immediately interrupted. Emergency brake assistance operates from approximately 10km/h up to the maximum speed. This function cannot be switched off.

CONTROL MODULE

The control module is integrated in the ABS hydraulic modulator and is located in the engine compartment. The control module contains the electrical valve coils for the different hydraulic valves.

The main function of the control module is to process the signals from the different sensors and to control the hydraulic pump and the electromagnetic hydraulic valves (inlet and outlet valves) in the ABS hydraulic modulator when controlling the:

- ABS

- EBD
- TRACS
- STC or
- DSTC.

Control modules with the DSTC (dynamic stability and traction control) function also have external sensors which sense the driver's steering wheel movements and the directional behavior of the car.

The control module communicates with directly connected components and other control modules via the Controller Area Network (CAN).

The control module checks calculations and all input and output signals via the built-in diagnostic functions. When the control module detects a fault certain functions are completely disengaged depending on the severity of the fault. At the same time a warning light comes on or a text message will be displayed depending on the fault (see table). When manually disengaging by activating the STC (stability and traction control) / DSTC (dynamic stability and traction control) switch (pressed in for approximately 1/2 second) all functions are disengaged except for the ABS, Electronic Brake force Distribution, emergency brake assistance and vehicle speed signal. In the event of the temperature of the brake discs being too high traction control is switched off to prevent damaging the brake caliper and brake discs. The general warning lamp is only lit by the brake control module (BCM) in the event of faults which affect the emergency brake assistance function. However it can be lit by other control modules which have been affected by faults in the brake control system.

From model year 2003 inclusive, only the traction control system can be disengaged manually. A traction loss warning lamp and a text message in the combined instrument panel are also used for models from this date.

	Warning lamp			
	ABS	Brake	Wheel spin / text display	General
ABS	**X**			
EBD		**X**		
TRACS			**X**	
STC			**X**	
DSTC			**X**	
EBA				**X**

Any diagnostic trouble codes (DTC) are stored in the control module memory. This information can be read off using VIDA via the data link connector (DLC) in the car.

When the car is driven the control module checks that a signal is received from the wheel sensors. When the car reaches 20 km/h for the first time (40 km/h if the stop (brake) lamp switch is activated) the control module checks the pump motor and the hydraulic valves by quickly activating them. A noise is then heard from the hydraulic pump, this is completely normal. The ABS function is first activated when the speed of the car exceeds approximately 7 km/h. Traction control functions from start.

SIGNALS, BRAKE CONTROL MODULE (BCM) WITH OR WITHOUT STC (STABILITY AND TRACTION

CONTROL) / TRACS (TRACTION CONTROL SYSTEM)

The table below summarizes the input signals to and output signals from the brake control module (BCM). The signal types are divided into directly connected signals, serial communication and Controller area network (CAN) communication. The following illustration displays the same information with the Volvo component designations.

Input signals	Output signals
Directly connected: **Four Wheel sensors** (7/31, 7/32, 7/56, 7/57) **Pedal position sensor** (7/124)	**Directly connected:**
Via Controller Area Network (CAN) communication: **Central electronic module (CEM)** (4/56). Provides information about the car configuration. **Transmission control module (TCM)** (4/28). Provides information about the current gear, next gear and lock-up status (automatic transmission only). **Climate control module (CCM)** (3/112). Provides information that the driver has switched of the STC (Stability and traction control) function. **Engine control module (ECM)** (4/46): • Via the central electronic module (CEM): The signal indicates if the engine is running or not, the current engine speed (RPM) and the current torque • Provides information about the driver's intentions concerning acceleration or deceleration for calculating the stability control (STC only). **Differential electronic module (DEM)** (4/82). Provides information about the torque distribution to the rear wheels and the function status (All-wheel drive (AWD) only).	**Via Controller Area Network (CAN) communication:** **Driver information module (DIM)** (5/1): • Vehicle speed • Receives a request about the lighting of the ABS-, brake, and traction control warning lamp in the combined instrument panel • Receives a request about which text message should be displayed in the combined instrument panel. **Climate control module (CCM)** (3/112). Receives a request to light/turn off the indicator in the STC button. **Transmission control module (TCM)** (4/28): • Receives a request to delay a gearshift in the event of a substantial speed difference in the front wheels • Receives information about the position of the brake pedal sensor. **Engine control module (ECM)** (4/46): • Receives a request to decrease torque during stability control • Receives information about the position of the pedal. **Differential electronic module (DEM)** (4/82). Receives information about the brake function

	(AWD). **Road Traffic Information Module (RTI)** (16/45). Receives information about the rotation speed of the front wheels. Used to measure distance. **Phone Module (PHM)** (16/60). Receives information about the traveled distance, used when the Global Positioning System makes calculations.

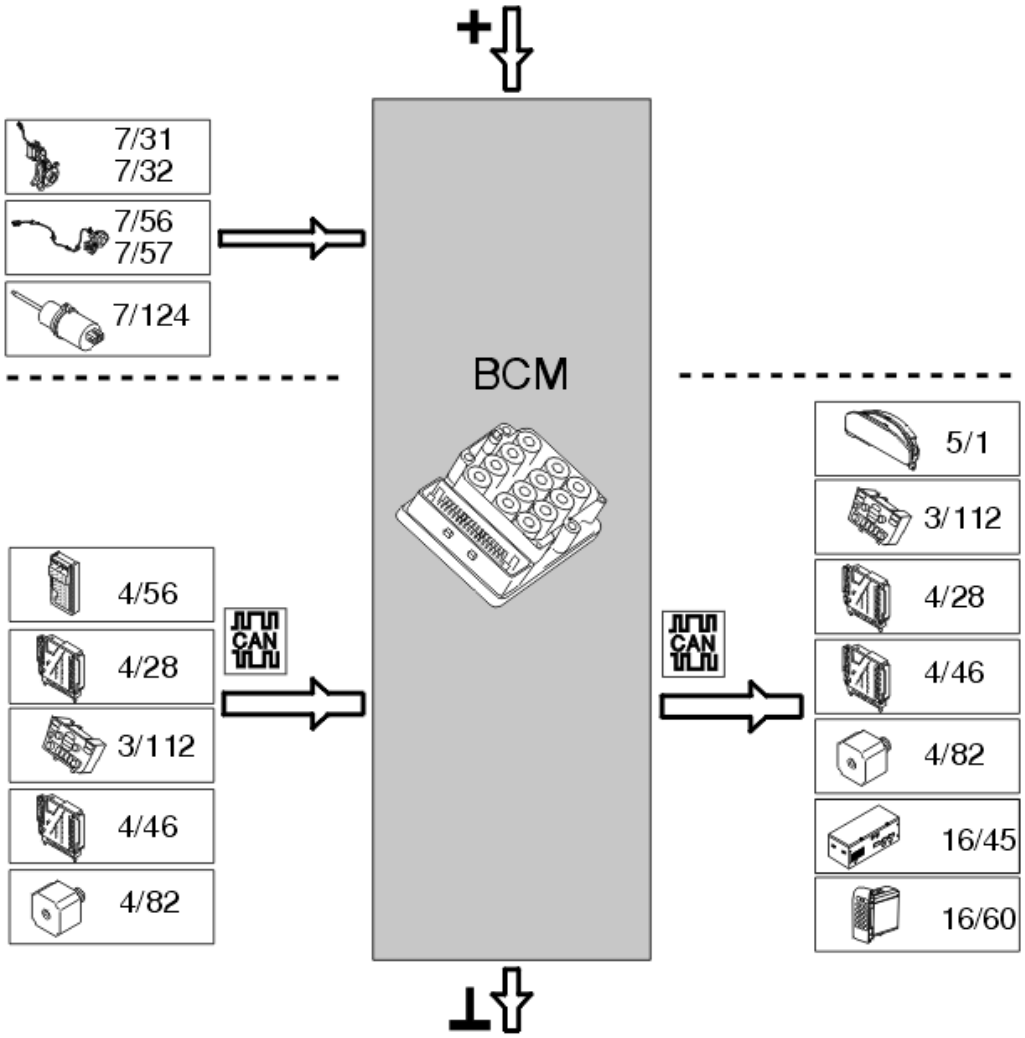

Fig. 171: Brake Control Module Input And Output Signals (1 Of 2)
Courtesy of VOLVO CARS CORPORATION

SIGNALS, BRAKE CONTROL MODULES (BCM) WITH DSTC (DYNAMIC STABILITY AND TRACTION CONTROL)

The table below summarizes the input signals to and output signals from the brake control module (BCM). The signal types are divided into directly connected signals, serial communication and Controller area network (CAN) communication. The following illustration displays the same information with the Volvo component designations.

Input signals	Output signals
Directly connected: **Four Wheel sensors** (7/31, 7/32, 7/56, 7/57) **Pedal position sensor** (7/124) **Activation unit DSTC** (Pedal pressure sensor) (8/46) **Two pressure sensors** (7/129, 7/139)	**Directly connected:** **Activation unit DSTC** (Pressure build-up valve) (8/46)
Via internal Controller Area Network (CAN) communication: **Sensor module DSTC** (7/164). Provides information about the yaw angle speed, lateral acceleration and, on cars with All-wheel drive (AWD), also forward acceleration.	**Via internal Controller Area Network (CAN) communication:**
Via Controller Area Network (CAN) communication: **Central electronic module (CEM)** (4/56). • Provides information about the car configuration • Provides information indicating that back-up (reverse) gear has been selected. This is to temporarily switch off the Active Yaw Control function (manual gearboxes only). **Transmission control module (TCM)** (4/28). • Provides information indicating that back-up (reverse) gear is selected to temporarily switch off the Active Yaw Control function (automatic transmission only) • Provides information about the current gear, next gear and lock-up status (automatic transmission only). **Climate control module (CCM)** (3/112). Provides information that the driver has switched of the traction control function. **Steering wheel angle sensor module (SAS)** (4/68). Provides information: • about the position of the steering wheel to calculate the position of the car • about whether the steering wheel is turned to the left or right	**Via Controller Area Network (CAN) communication:** **Driver information module (DIM)** (5/1): • Vehicle speed • Receives a request to light the ABS, brake, and traction control warning lamp in the combined instrument panel • Receives a request about which text message should be displayed in the combined instrument panel. **Climate control module (CCM)** (3/112). Receives a request to light/turn off the indicator in the DSTC button. **Transmission control module (TCM)** (5/1): • Receives a request to delay a gearshift in the event of a substantial speed difference in the front wheels • Receives information about the position of the pedal. **Engine control module (ECM)** (4/46): • Receives a request to decrease the torque during stability control • Receives information about the position of the pedal.

• about the speed at which the steering wheel is turned • about the status of the steering wheel angle sensor module (SAS) • about whether the steering wheel angle signal is OK. **Engine control module (ECM)** (4/46): • Via the central electronic module (CEM): The signal indicates if the engine is running or not, the current engine speed (RPM) and the current torque • Indicates current engine torque when calculating the traction control. **Differential electronic module (DEM)** (4/82). Provides information about the torque distribution to the rear wheels and the function status (All-wheel drive (AWD) only).	**Differential electronic module (DEM)** (4/82). Receives information about the brake function (AWD). **Phone Module (PHM)** (16/60). Receives information about the traveled distance, used when the Global Positioning System makes calculations. **Road Traffic Information Module (RTI)** (16/45). Receives information about the rotation speed of the front wheels. Used to measure distance.

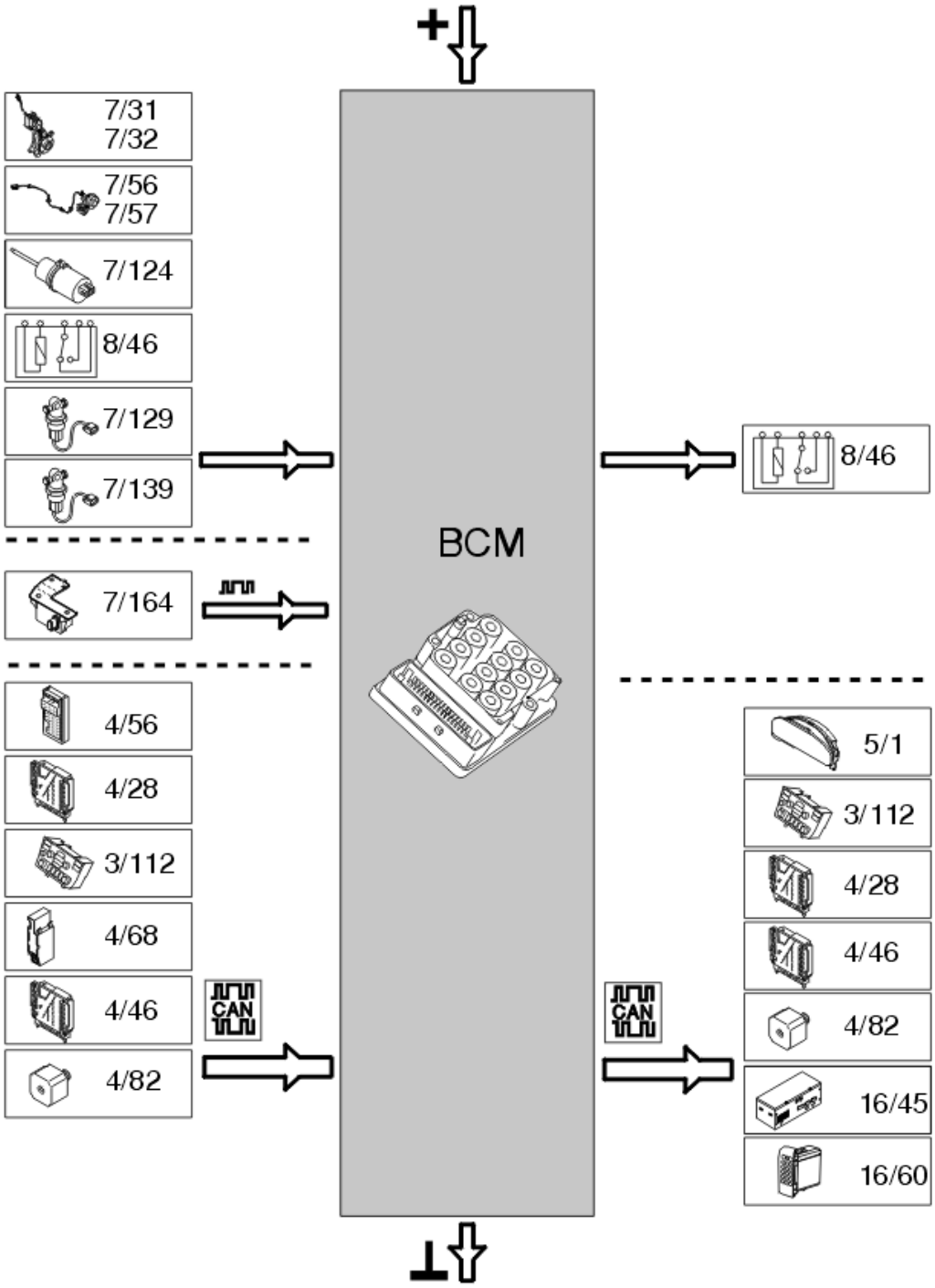

Fig. 172: Brake Control Module Input And Output Signals (2 Of 2)
Courtesy of VOLVO CARS CORPORATION

CAR BODY (2003-2012)

CAR BODY

CAR BODY DESIGN

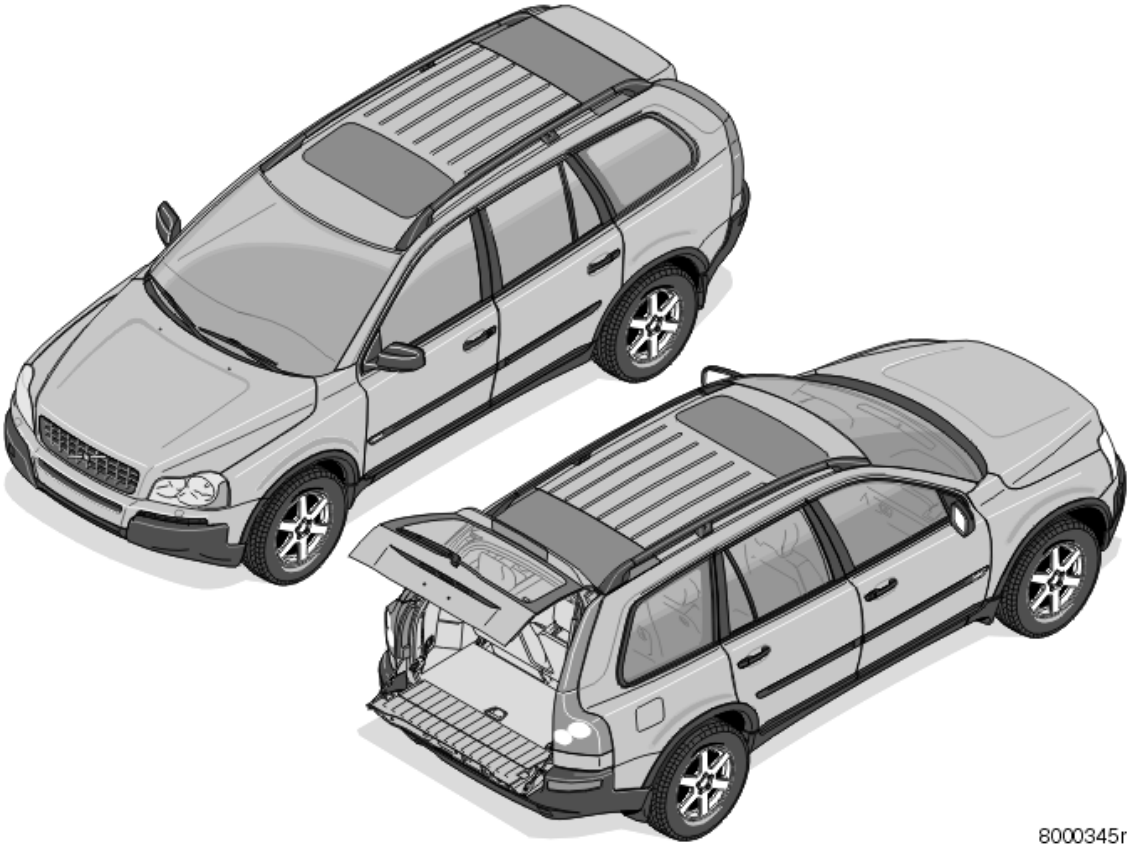

Fig. 173: Identifying Car Body Design
Courtesy of VOLVO CARS CORPORATION

The XC90 is based on a passenger car chassis with unitary construction. This gives a low center of gravity, ensuring good directional stability and countering any tendency to roll over.

The shape of the XC90 body is based on the same basic design as the V70 body. Front and rear crumple zones absorb collision forces. The passenger compartment has a safety cage in which the door sills, posts, cantrails and doors are reinforced.

An aluminum member is spot-welded and screwed into place between the ends of the front side members. Steel plugs have been pressed into the aluminum member so that it can be welded into place.

The members in the front and rear doors form an important part of the reinforcement of the passenger compartment. The members are manufactured of boron steel.

Body with extremely high torsional rigidity.

A rigid body has a positive impact on active safety, sound level and collision safety (particularly in the event of side impacts).

There are two types of chassis applications, soft (USA) and hard (EU).

SURFACE TREATMENT/OUTER PANELS

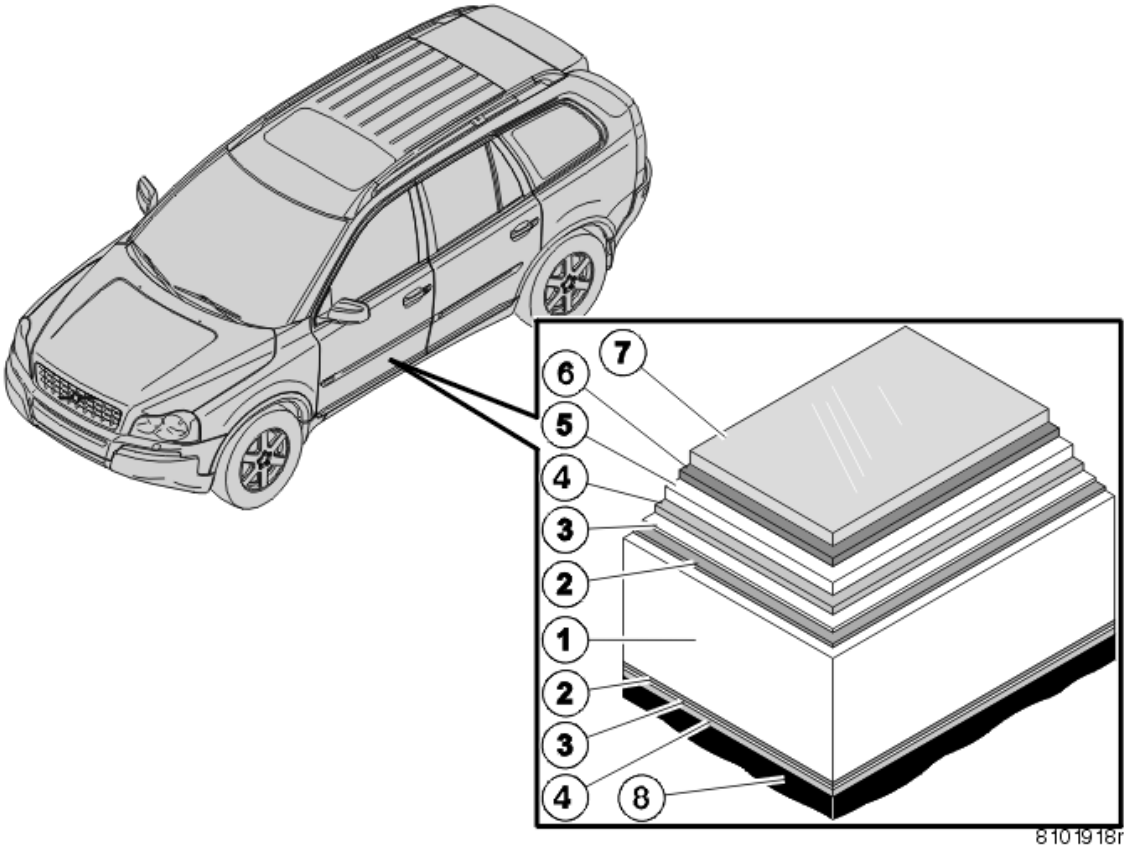

Fig. 174: Identifying Surface Treatment/Outer Panels
Courtesy of VOLVO CARS CORPORATION

1. Panels
2. Zinc
3. Phosphate
4. Primer
5. Undercoat
6. Paint
7. Clear varnish
8. Underseal.

Paint

All paints are water based.

PASSIVE SAFETY

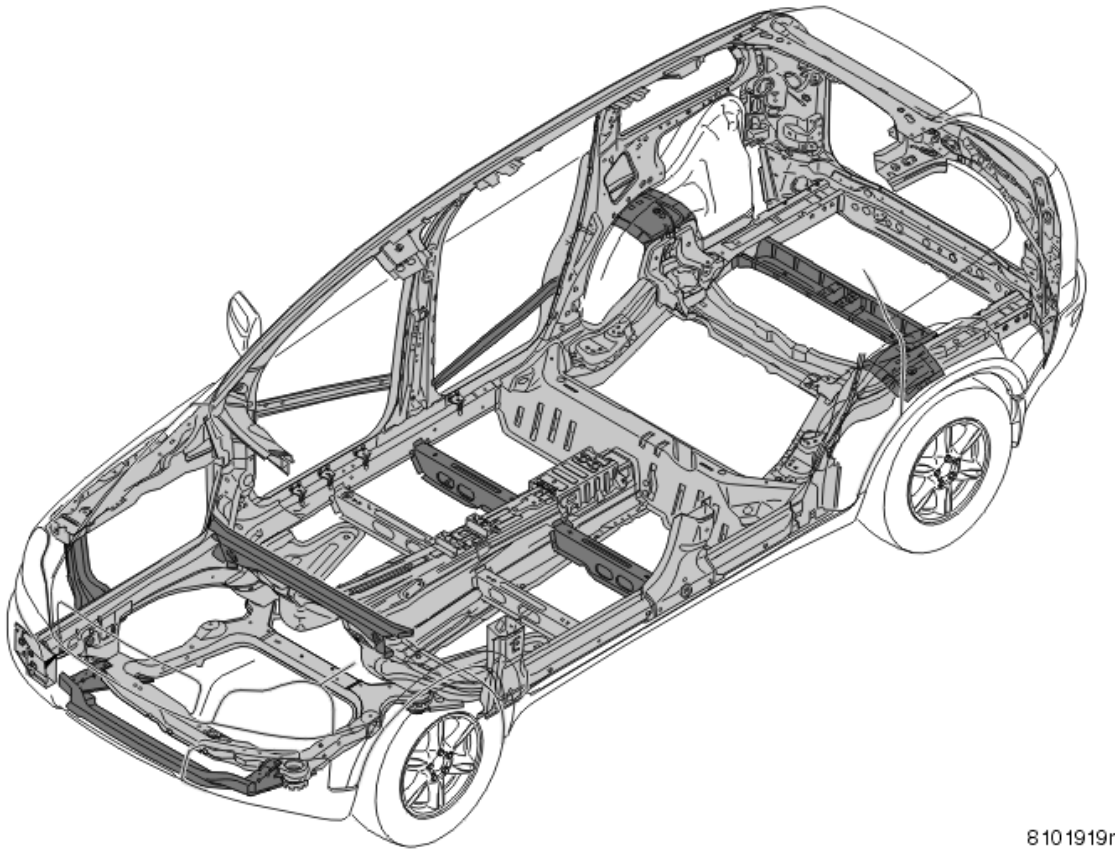

Fig. 175: Identifying XC90 Structure
Courtesy of VOLVO CARS CORPORATION

In terms of collision safety, the XC90 has the same design solutions found in other Volvo cars. An SUV is a tall vehicle. This means that in a collision, it will hit other cars at a higher level than a passenger car.

To reduce the risks of damage and injury from this type of impact, the front end subframe has been supplemented with a lower crossmember which is at the same height as the bumper on a conventional passenger car. This lower member is integrated in the structure of the XC90 and is hidden behind the spoiler. This reduces the damage to the other car, allowing its safety system to be fully utilized.

FRONT CRUMPLE ZONE

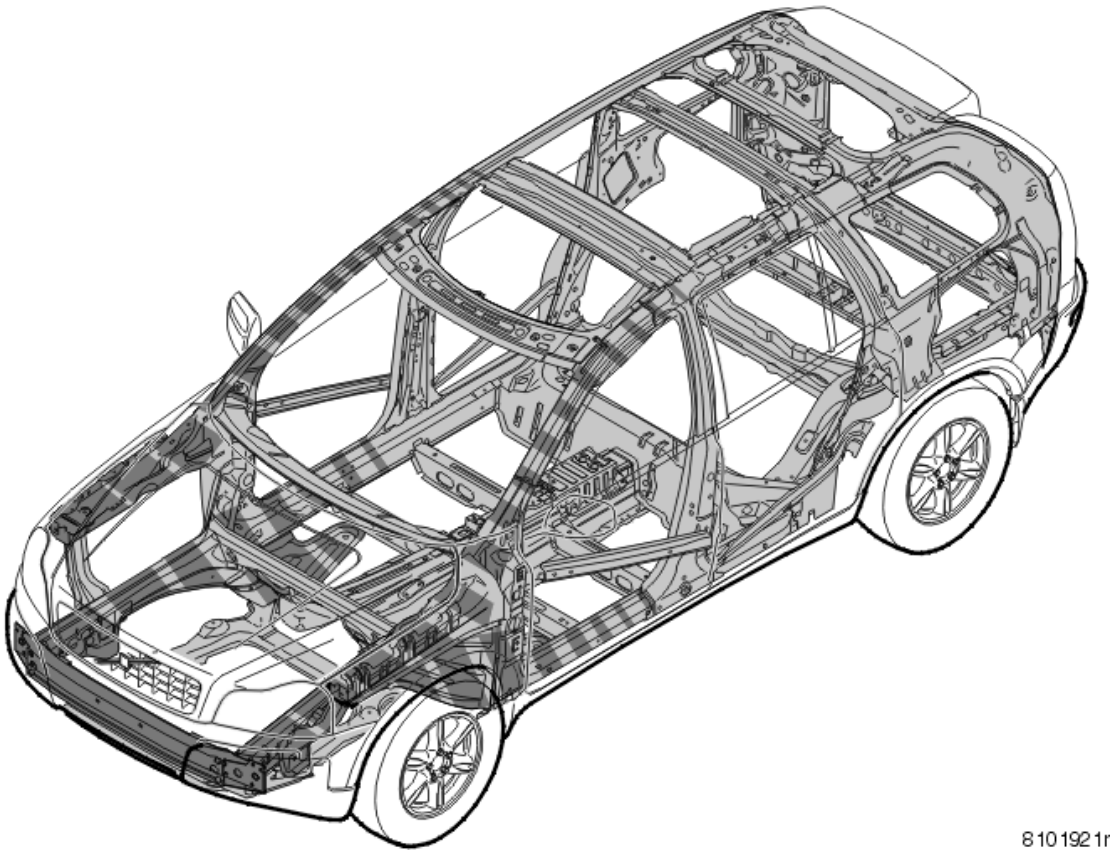

Fig. 176: Identifying Crumple Zones
Courtesy of VOLVO CARS CORPORATION

- In the front crumple zone the collision forces are transferred to the heavily reinforced passenger compartment by three braking crumple zones
- Two lower crumple zones, the front side members and the subframe transfer the force on to the body through the door sills and floor
- The upper crumple zone, the upper side members transfer the force onwards to the body through the A-post and on to the cantrail and roof
- The collision force which goes via the A-post is also transferred to the doors.

REAR CRUMPLE ZONE

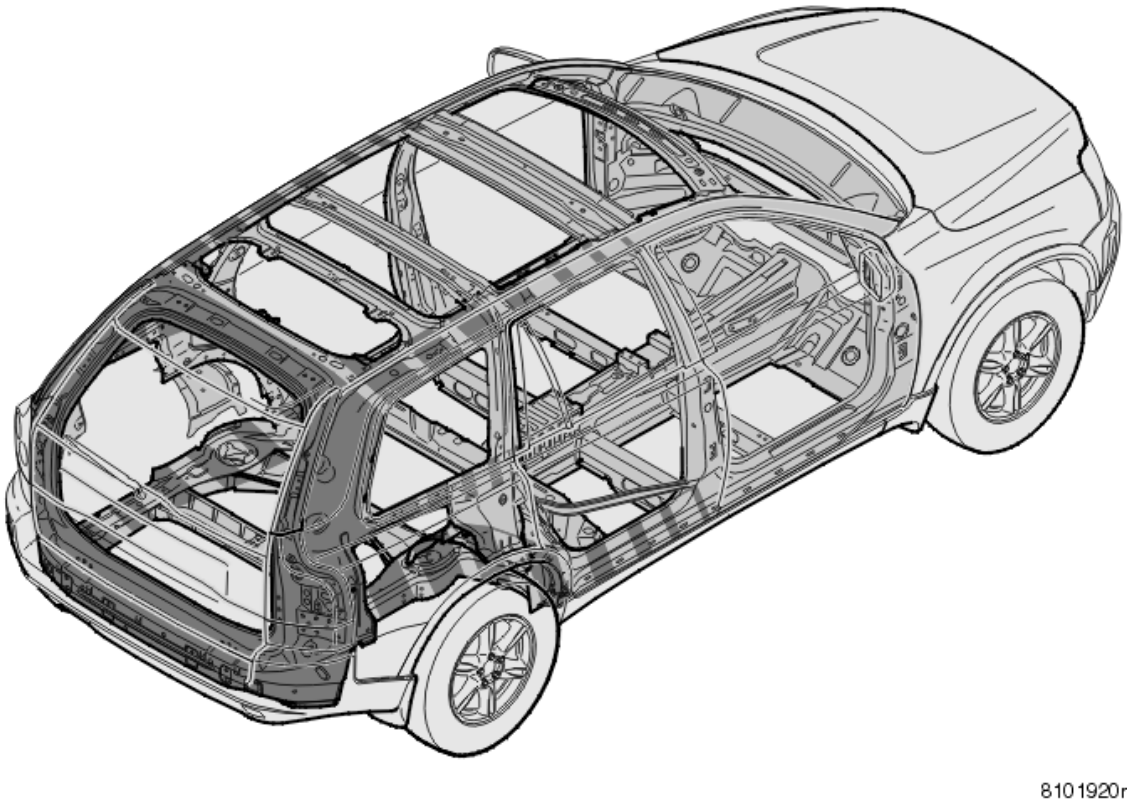

Fig. 177: Identifying Crumple Zones
Courtesy of VOLVO CARS CORPORATION

In the rear crumple zone, the collision force is transferred via the rear side members to the door sill and floor, and to the cantrail and roof via the D-post.

The doors, which are an important part of the passenger compartment reinforcement also absorb much of the collision force.

SIDE CRUMPLE ZONES

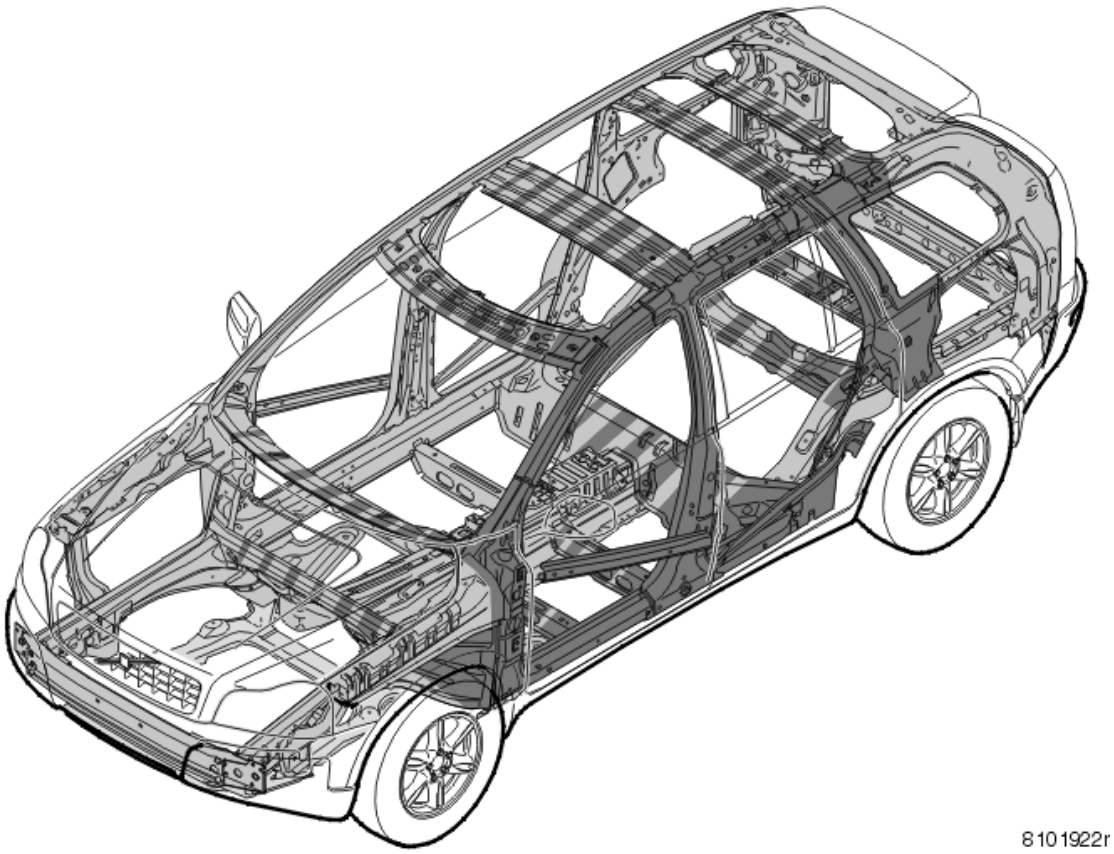

Fig. 178: Identifying Crumple Zones
Courtesy of VOLVO CARS CORPORATION

In the event of a side impact, the collision force is absorbed by the reinforced door sills and the A and B posts.

The roof member and part of the B-posts are made of brushed steel.

HIGH STRENGTH STEEL / BORON STEEL

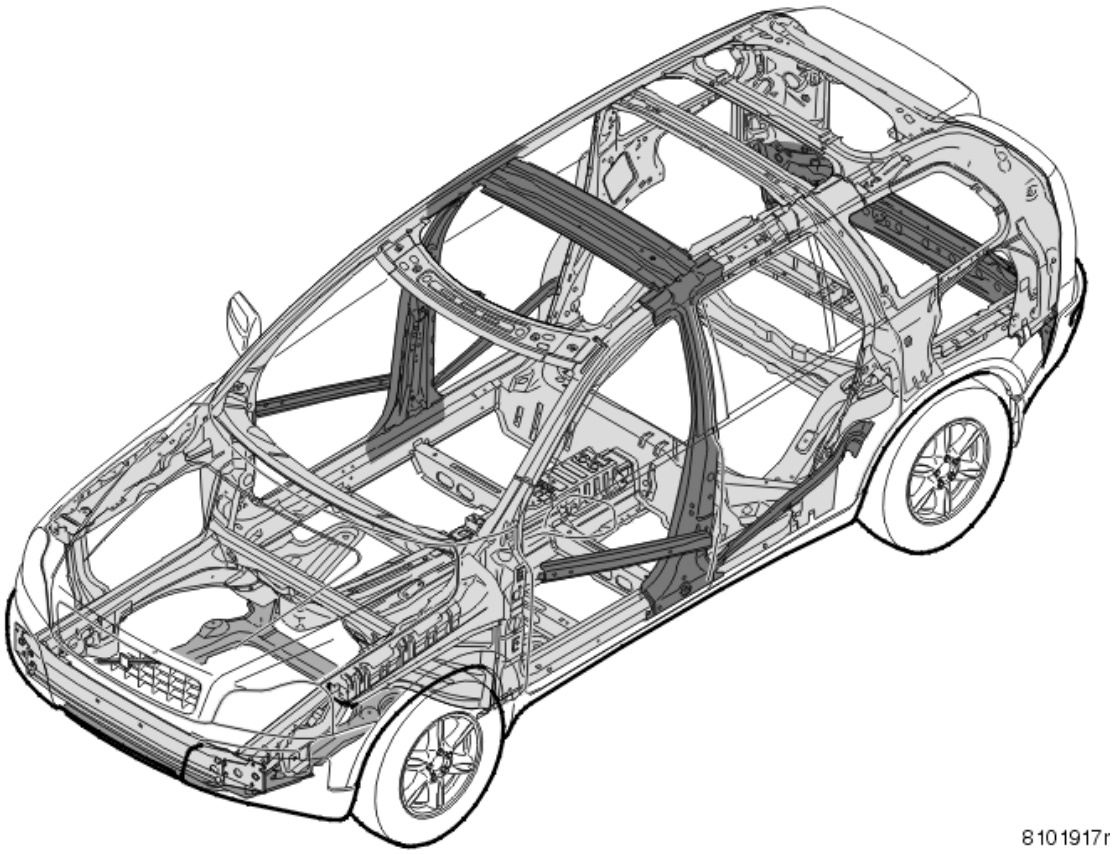

Fig. 179: Identifying High Strength/Boron Steel
Courtesy of VOLVO CARS CORPORATION

HSS steel, general

Certain parts of the body are manufactured of steel with an increased yield and breaking point. HSS steel is used for a number of reasons:

- Partly to save weight, HSS plate is thinner than standard plate without compromising on the resistance and strength of the component
- partly when a component or section needs to be reinforced. For example at the sides where the body needs to be reinforced for greater impact protection.

Boron steel, general

Boron steel has particular advantages over other hardened steels. In particular it is very tough, yet can also be welded and shaped during manufacture. It also has a high resistance to fatigue and wear.

Boron steel is extremely hard and cannot be aligned or machined.

GALVANIZED BODY COMPONENTS

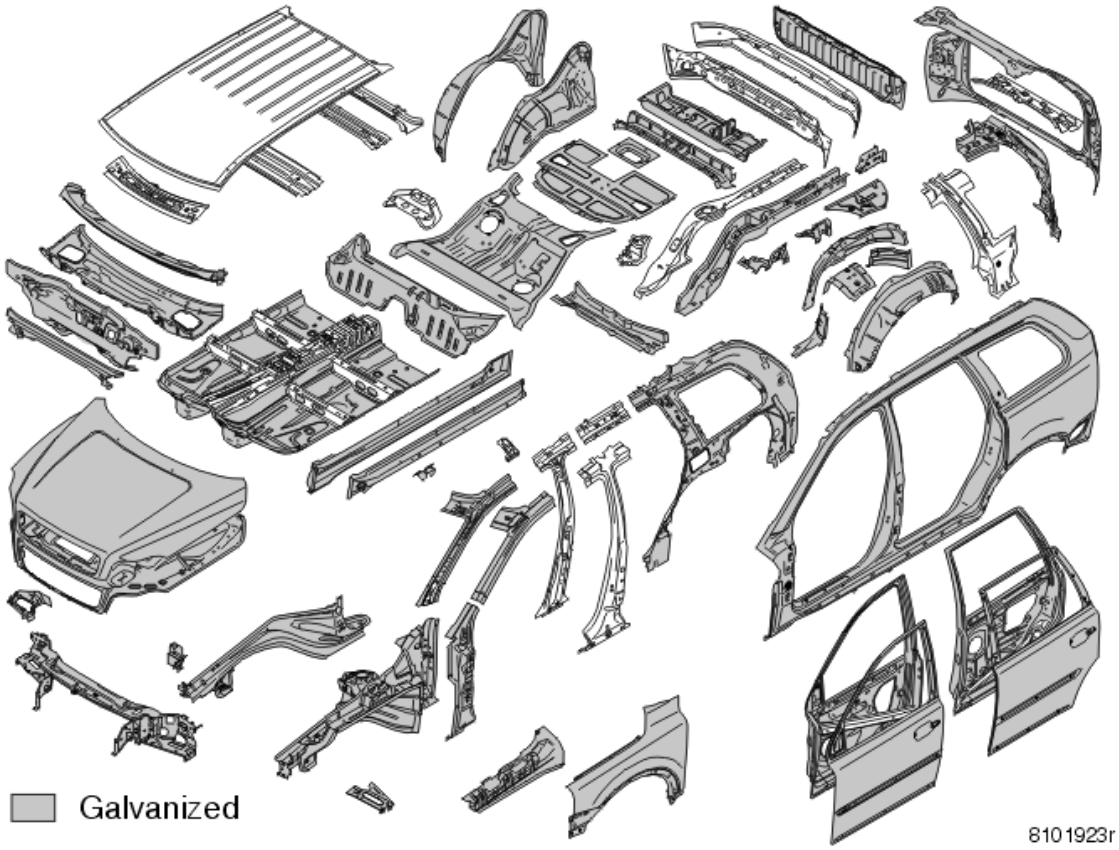

Fig. 180: Identifying Galvanized Body Components
Courtesy of VOLVO CARS CORPORATION

Galvanizing, general

There are three different methods when surface treating the body

- Electrolytic zinc galvanization
- Hot-dip zinc galvanization
- Hot-dip galvanization.

The method which is used for a particular component depends on factors such as where it will be used in the car. It may be treated on both side or only on one side, depending on whether it is an external component which needs a smooth surface or not.

Galvanized body components

All outer panels are galvanized except the roof.

PANEL MATERIALS

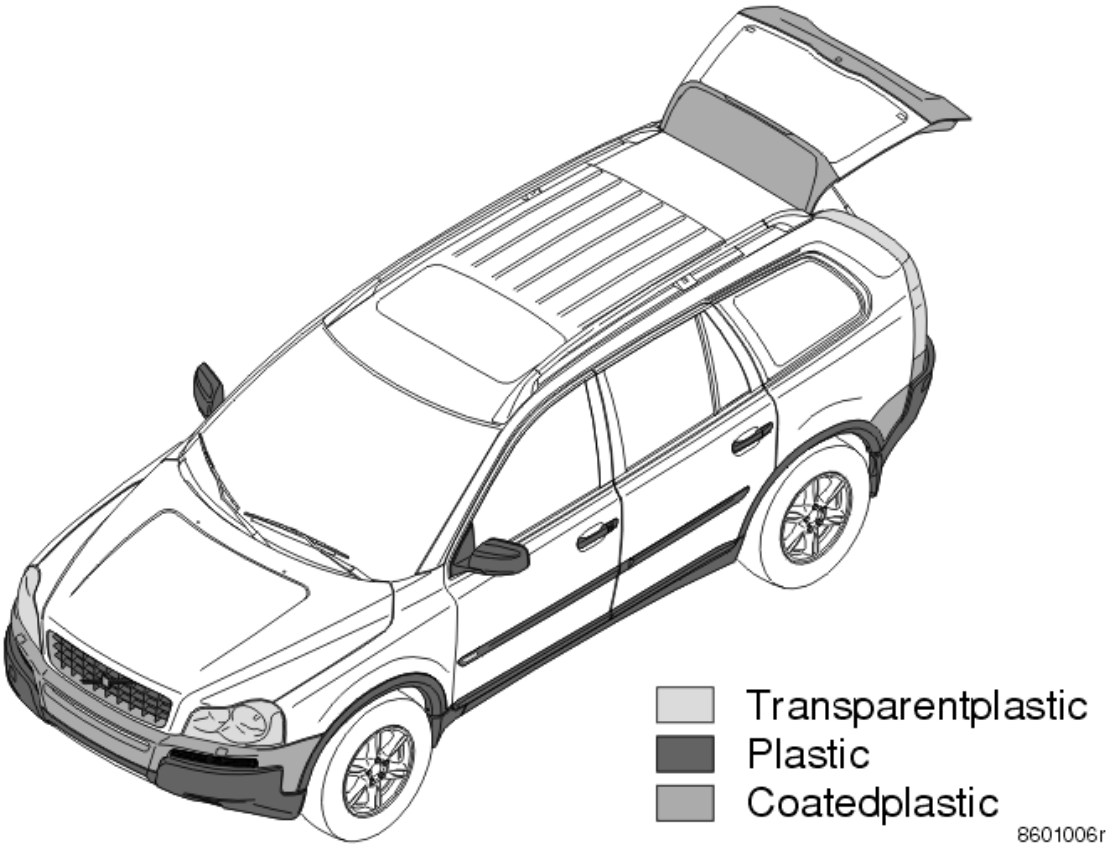

Fig. 181: Identifying Plastic Components
Courtesy of VOLVO CARS CORPORATION

Painted plastic components

The front and rear bumper covers are partly painted in the same color as the car.

The tailgate is painted the same color as the car.

Plastic components

Trim molding, sill trim panel, door mirrors and fender extension moldings are not painted.

Headlamps

The headlamp lenses are made of transparent plastic.

ALUMINUM/ PLASTIC

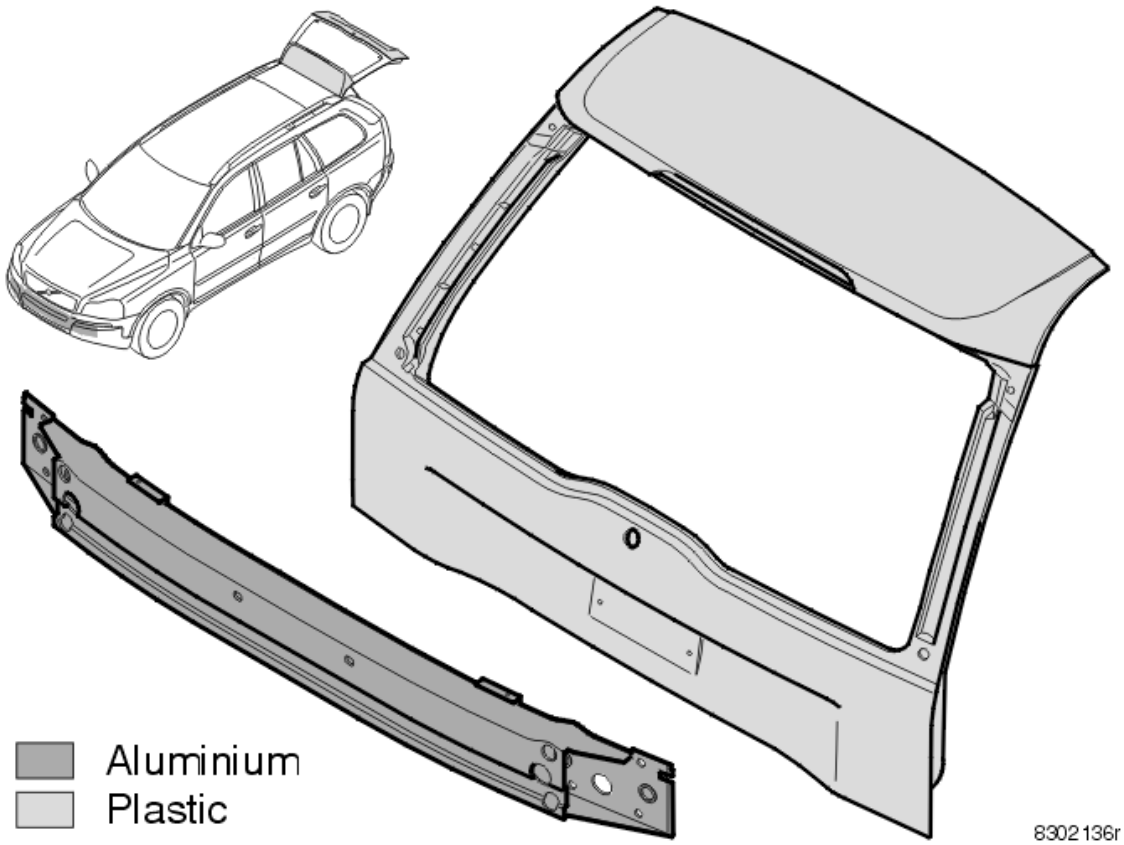

Fig. 182: Identifying Aluminum/ Plastic
Courtesy of VOLVO CARS CORPORATION

Aluminum

- The front bumper rail is made of aluminum. The bumper rail is point welded and screwed into position. Steel plugs have been pressed into the aluminum member so that it can be welded into place in the ends of the front side members.

Plastic

- The upper tailgate is made of plastic. Only available as a complete replacement part
- The drain hose for the sun roof in the A and D posts is made of plastic.

TWO PIECE TAILGATE

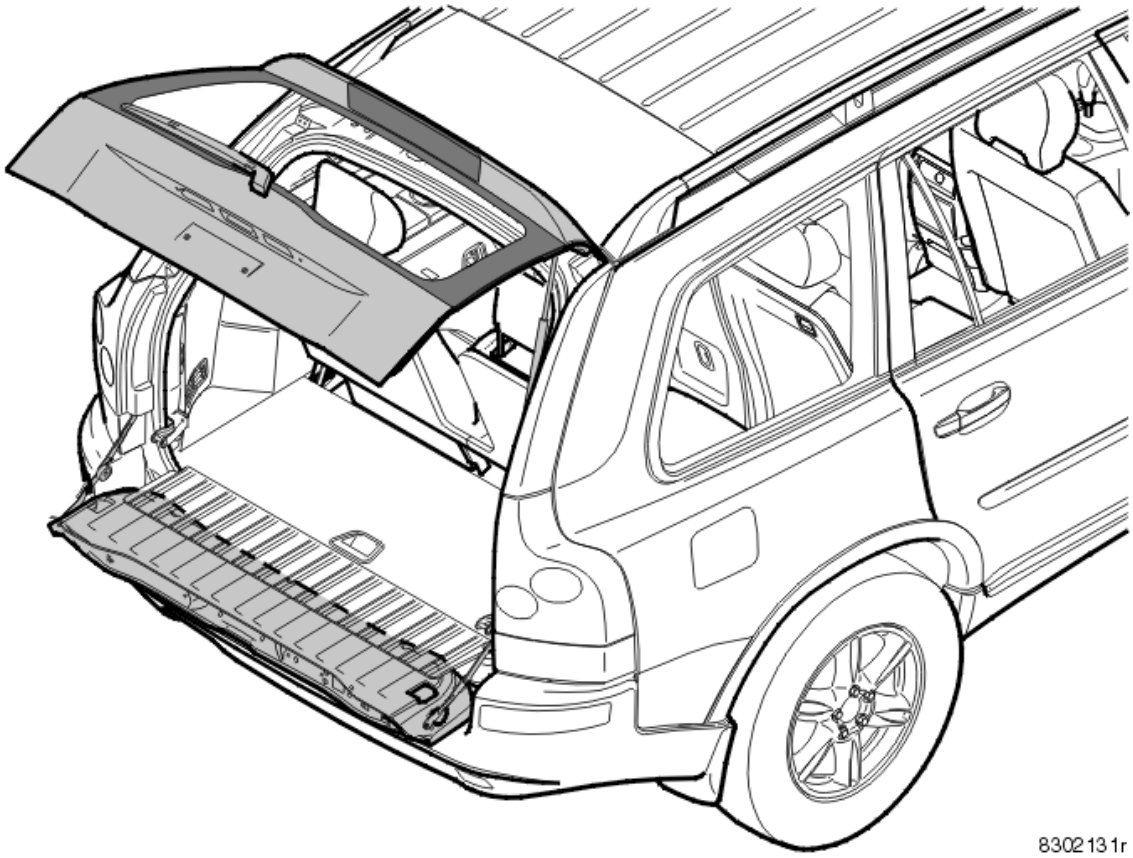

Fig. 183: Identifying Two Piece Tailgate
Courtesy of VOLVO CARS CORPORATION

Plastic / Sheet metal

- The upper section of the tailgate is manufactured from Urethane plastic with 30% glass fiber
- The tailgate consists of a frame and an outer panel which are bonded together. The outer panel cannot be replaced. Glass fiber and plastic adhesive is used for repairs
- The lower tailgate is made of sheet metal and can withstand a load of 150 kg when folded down.

CENTRAL ELECTRONIC MODULE (CEM) (2003-2004)

DESIGN

HEADLAMPS

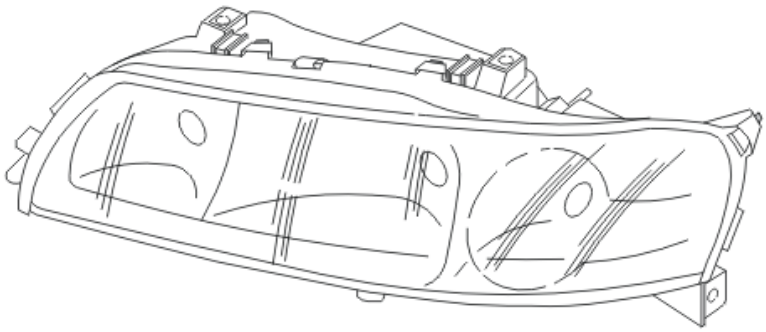

Fig. 184: Headlamps
Courtesy of VOLVO CARS CORPORATION

The headlamps at the front of the car are operated by the light switch module (LSM) which is positioned on the dashboard to the left of the steering wheel. The signals between the light switch module (LSM) and the central electronic module (CEM) are transmitted via serial communication. Low and high beam are operated by moving the left-hand control stalk towards the steering wheel.

The power supply for the lamps is via two directly connected relays on the central electronic module (CEM). One relay is for low beam and the other for high beam. The power supply for low beam is also via a shunt so that faults in the lamp can be detected.

For Bi-Xenon lamps the reflector in the lamp housing is moved by an actuator motor when changing between high and low beam. The actuator motor is integrated in the lamp housing.

There are three versions of the light switch function. These are programmed using the diagnostic tool:

- Low beam in all switch positions except the parking light position (flex zero)
- The light switch functioning on the basis of: off, parking light, low beam (flexsted)
- Low beam always on regardless of the position of the light switch (flexlgt).

To detect problems with the low beam, the central electronic module (CEM) reads the power consumption of the circuit. If this falls below a certain threshold value a fault will be indicated. The general warning lamp lights in the driver information module (DIM) and a text message is displayed.

For Bi-Xenon lamps there is a connection from the actuator motor to the central electronic module (CEM). In the event of incorrect values, the central electronic module (CEM) lowers the length of the beam using the headlamp range adjustment function.

There are diagnostics for the light switch and the relays.

There are also diagnostic for the high and low beam function (actuator motor) for Bi-Xenon lamps.

PARKING LIGHTS / LICENSE PLATE LIGHTING

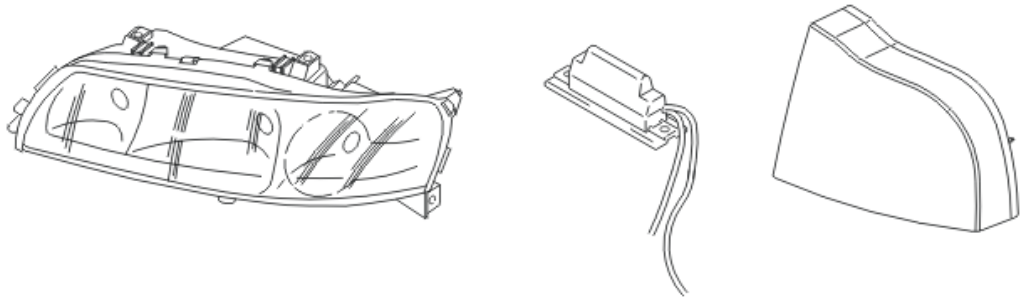

Fig. 185: Parking Lights And License Plate Lighting
Courtesy of VOLVO CARS CORPORATION

There are a number of lamps positioned around the car to mark its position. These are in the headlamps, tail lamps and on the front fenders (US model). The lamps light together with the license plate lighting when the light switch module (LSM) is in parking lamp mode or low beam is on.

The lamps are powered via a directly connected relay on the central electronic module (CEM). The rear parking lamps are supplied with power via two shunts (mounted on the rear electronic module (REM)), one for each side. This is so that the power consumption can be monitored and any fault in the lamps detected. The faults are detected by the rear electronic module (REM).

There are diagnostics for the relay, the rear parking lamps (via the rear electrical module (REM)) and the light switch.

HEADLAMP RANGE ADJUSTMENT (CERTAIN MARKETS)

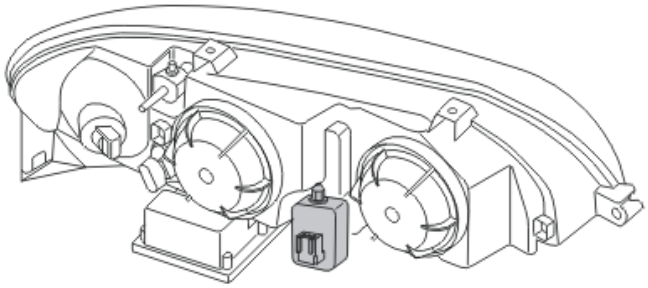

Fig. 186: Headlamp Range Adjustment
Courtesy of VOLVO CARS CORPORATION

There are two motors on the reverse of the headlamps. These angle the headlamps upwards or downwards to control the range of the beam.

The motors are controlled by a thumb wheel which is located in the light switch module (LSM) on the left of

the dashboard. If the thumb wheel is turned, information is transmitted to the motors which adjust the headlamps accordingly.

There are diagnostics for the headlamp range adjustment.

AUTOMATIC RANGE ADJUSTMENT (BI-XENON)

There are two motors on the reverse of the headlamps. These angle the headlamps upwards or downwards to control the range of the beam.

The motors are controlled by signals from a position sensor at the rear axle. The sensor detects the angle of the car under different load conditions and sends this information so that the central electronic module (CEM) can determine whether the lamps need to be raised or lowered.

There are diagnostics for the headlamp range adjustment.

FRONT FOG LAMPS

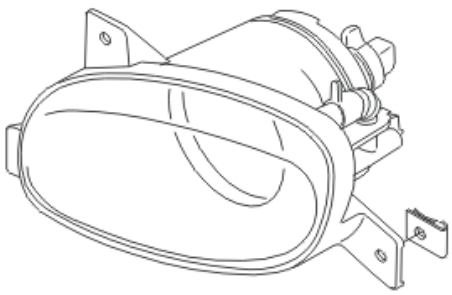

Fig. 187: Front Fog Lamps
Courtesy of VOLVO CARS CORPORATION

If the car has front fog lamps, these are in the bumper casing below the headlamps.

The fog lamps are operated via a button in the light switch module (LSM). An LED in the button lights when the fog lamps are activated. The light switch transmits data via serial communication to the central electronic module (CEM). The lamps are powered via a directly connected relay on the central electronic module (CEM).

There are diagnostics for the fog lamp relay.

TURN SIGNAL LAMPS / HAZARD WARNING SIGNAL FLASHERS

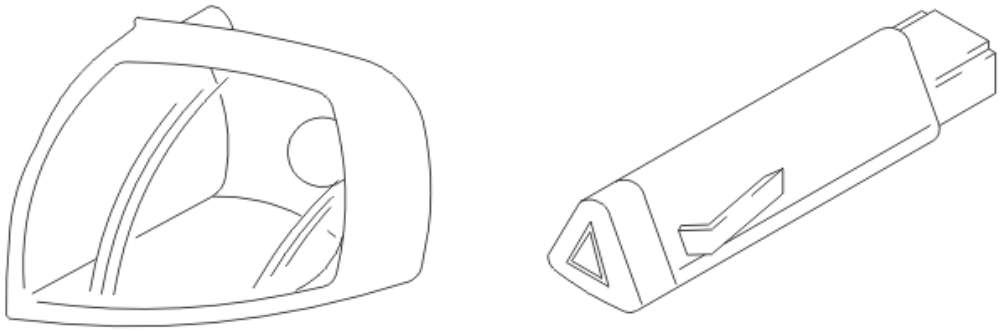

Fig. 188: Turn Signal Lamps And Hazard Warning Signal Flashers
Courtesy of VOLVO CARS CORPORATION

There are six lamps around the car to indicate direction changes. These are located in the front and rear lights and on the sides of the car in front of the front doors.

The turn signal lamps are operated using the left-hand control stalk.

To cancel the hazard warning signal flashers, where all the turn signal lights flash, press in the button for the hazard warning signal flasher. This is positioned in the middle of the dashboard by the center air vents.

The central electronic module (CEM) supplies the lamps with power via two shunts. These are located on the relay box by the central electronic module (CEM). A signal is also sent to the bulb in the hazard warning signal flasher switch when this function is activated.

The central electronic module (CEM) monitors the power consumption on each side to check for bulb faults. If the power consumption falls below a certain threshold value, a fault is indicated and the frequency of the signal to the bulbs is doubled on the side of the blown lamp.

There are diagnostics for the shunts.

COURTESY LIGHTING / KEY LIGHTING / GLOVE COMPARTMENT LIGHTING

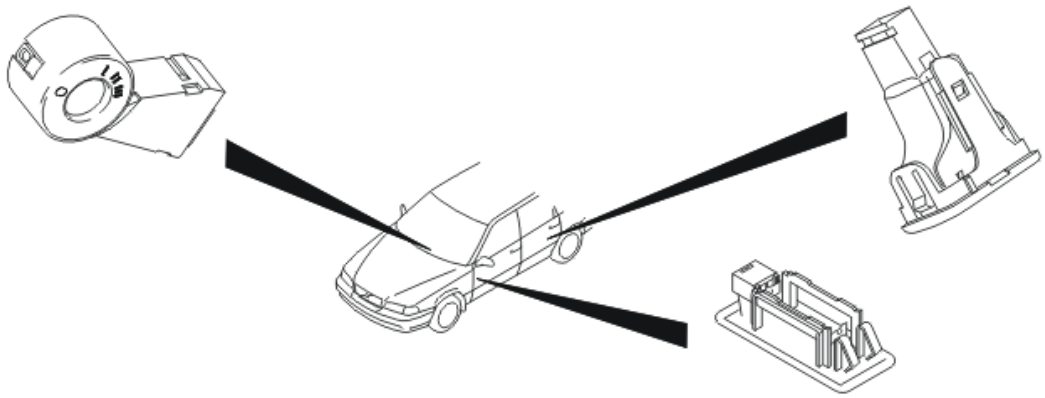

Fig. 189: Courtesy Lighting, Key Lighting And Glove Compartment Lighting

Courtesy of VOLVO CARS CORPORATION

There are various lamps inside the passenger compartment, such as the courtesy lighting and glove compartment lighting for example. There are also LEDs around the keyhole in the ignition switch.

The lamps for the courtesy lighting are in the soundproofing panels on the driver and passenger sides. For the backseat the lamps are in the doors The lamp for the glove compartment is positioned on the left-hand inner side.

The lighting time can be programmed via the upper electronic module (UEM).

There are only diagnostics for the keyhole lighting.

HORN

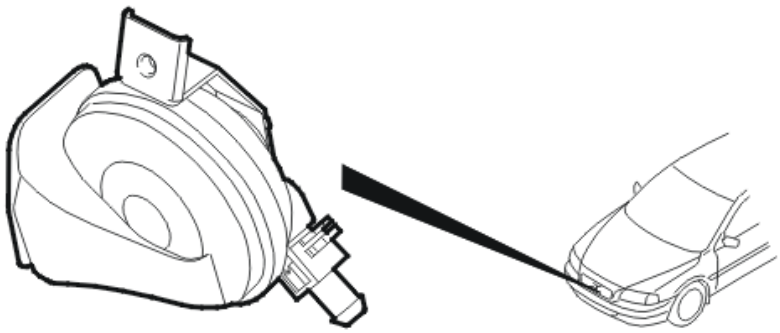

Fig. 190: Horn
Courtesy of VOLVO CARS CORPORATION

There are two horns in front of the radiator. There are four switches in the steering wheel. The horn is activated when one of these is closed.

The signal continues for as long as the switch is closed.

The horn is also activated when the panic alarm button on the remote control is pressed (certain markets).

The power supply to the horns is via a relay in the relay box in the engine compartment.

There are diagnostics for the relay for the horn.

STARTER MOTOR

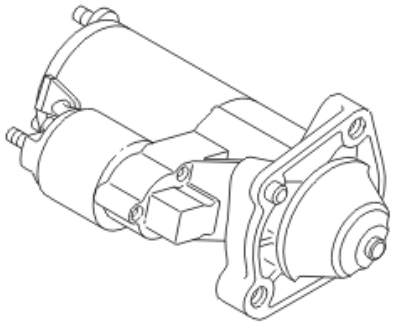

Fig. 191: Starter Motor
Courtesy of VOLVO CARS CORPORATION

The starter motor is on the left-hand side of the engine by the air cleaner (ACL) housing. The starter motor is powered directly from the battery. There is a solenoid on the starter motor to close the circuit. The central electronic module (CEM) activates a relay in the relay box in the engine compartment to act on the solenoid. This supplies the solenoid with power and closes the circuit for the starter motor.

The starter motor turns when the key is turned to position III in the ignition switch.

There are different functions which prevent starting, depending on whether the car has an automatic or manual transmission. The central electronic module (CEM) also has an electronic immobilizer function which communicates with a transponder in the key.

- Cars with manual gearboxes have a sensor in the clutch pedal. The clutch pedal must be depressed to allow starting (certain markets)
- In cars with type 4T65EV automatic transmissions, a signal is transmitted from the gear-shift position sensor to the transmission control module (TCM) which then sends a directly connected signal to the central electronic module (CEM)
- In cars with AW automatic transmissions, a directly connected signal is transmitted directly from the gear-shift position sensor to the central electronic module (CEM).

There are diagnostics for the relay for the starter motor.

REAR WINDOW LIFT MECHANISMS

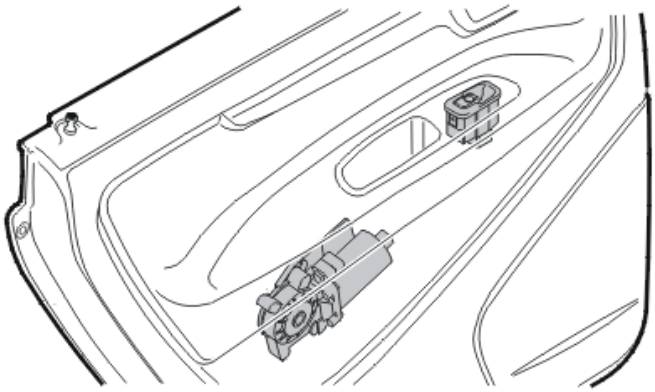

Fig. 192: Identifying Rear Window Lift Mechanisms
Courtesy of VOLVO CARS CORPORATION

The rear side windows are operated by motors in the doors. The switches for operating the windows are in the door panels. The windows can also be operated from the driver's door module (DDM).

The function is controlled by five relays on the central electronic module (CEM). Depending on whether the control switch is moved up or down, the relays are activated to carry out the requested operation.

Two relays guide the window up on the right and left-hand sides. Two different relays guide the window down. A further relay controls the power supply.

When operated from the driver's position, information is transmitted via the controller area network (CAN) from the driver's door module (DDM) to the central electronic module (CEM) which sends out signals to the relays.

There are diagnostics for the relays for the rear window lift mechanisms.

FUEL PUMP

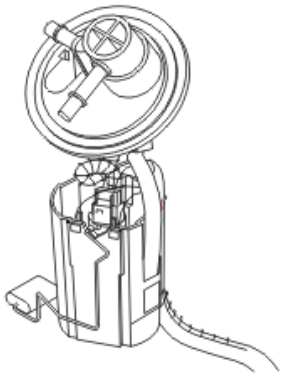

Fig. 193: Fuel Level Sensor
Courtesy of VOLVO CARS CORPORATION

The fuel pump (FP) is located on the inside of the fuel tank on the right-hand side. The pump is checked by the

central electronic module (CEM) which operates a relay. This relay controls the power supply to the pump and is directly connected to the central electronic module (CEM).

The central electronic module (CEM) uses the controller area network (CAN) to communicate with the engine control module (ECM) to control the fuel pump (FP). There is also a hardwire connection between the engine control module (ECM) and the central electronic module (CEM). This is used to transmit a pulsed signal to operate the fuel pump (FP). This allows the pump to function if there is a fault in the controller area network (CAN).

The central electronic module (CEM) also communicates with the supplemental restraint system (SRS) module via the controller area network (CAN). In the event of a collision, the supplemental restraint system module (SRS) transmits data and the central electronic module (CEM) shuts off the fuel pump (FP).

There are diagnostics for the input signal from the engine control module (ECM) and for the relay for the fuel pump (FP).

WASHER / WIPERS

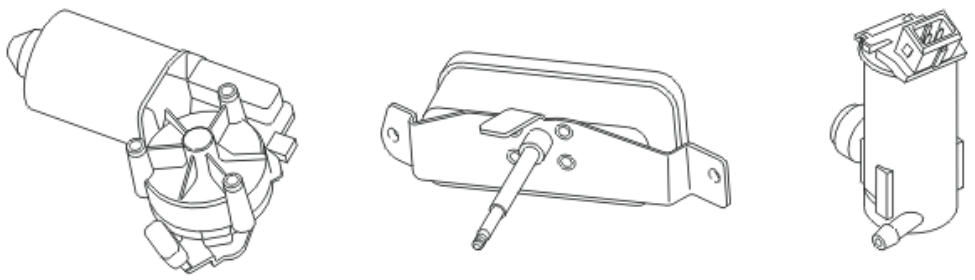

Fig. 194: Washer And Wipers
Courtesy of VOLVO CARS CORPORATION

The windshield wipers are powered by a motor positioned under the cowl. There are also headlamp wipers. There are also washer nozzles on the hood and bumper cover for cleaning the windshield and headlamps. The washer nozzles are connected to a pump motor on the windshield washer reservoir at the front right of the engine compartment.

For cars with five doors, there is a wiper and washer nozzle for the rear windshield. The washer nozzle is connected to a separate pump on the windshield washer reservoir.

The windshield wipers are operated using the right-hand control stalk. There are three positions: intermittent, low speed and high speed. The time between strokes for intermittent wiping is adjusted using a ring on the control stalk.

Pull the control stalk towards the steering wheel to clean the windshield. The washer and wipers for the headlamps are activated at the same time. The headlamp wipers operate for as long as washing is activated. They are not activated when only the windshield wipers are activated.

Push the control stalk away from the steering wheel to clean the rear windshield. There is a button at the end of the control stalk to control the rear wiper.

Information about the position of the control stalk is transmitted to the central electronic module (CEM) on the controller area network (CAN). The central electronic module (CEM) also receives a signal from the wiper motor if the wipers are in the park position.

The central electronic module (CEM) also monitors the windshield washer reservoir level via a level sensor in the reservoir. The switch in the level sensor closes if the level falls below one liter. A text message indicating that the windshield washer fluid needs to be topped up then lights in the driver information module (DIM).

The power supply for the rear windshield wiper is via a directly connected relay on the rear electronic module (REM). Other wipers and the washer motors are supplied with power via relays in the engine compartment.

There are diagnostics for the windshield wipers.

HEATED SEATS (CERTAIN MARKETS)

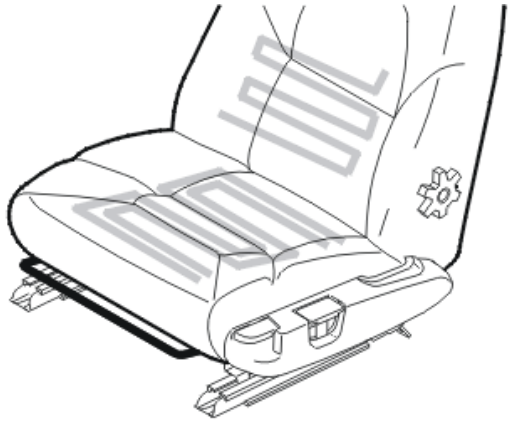

Fig. 195: Heated Seats
Courtesy of VOLVO CARS CORPORATION

There are heater pads in the cushions and backrests to warm the seats. These are controlled by a control module under the seat. A thermistor on the heater pad detects the heat level.

The information between the control module and the central electronic module (CEM) is transmitted using serial communication. This data contains status information, diagnostic information and signals to control the heat level.

The seat heaters are operated using a switch to the right of the climate control module (CCM). The heat can be set to high or low. These temperatures can be programmed using the diagnostic tool.

There are diagnostics for the seat heaters.

SPEED SENSITIVE POWER STEERING

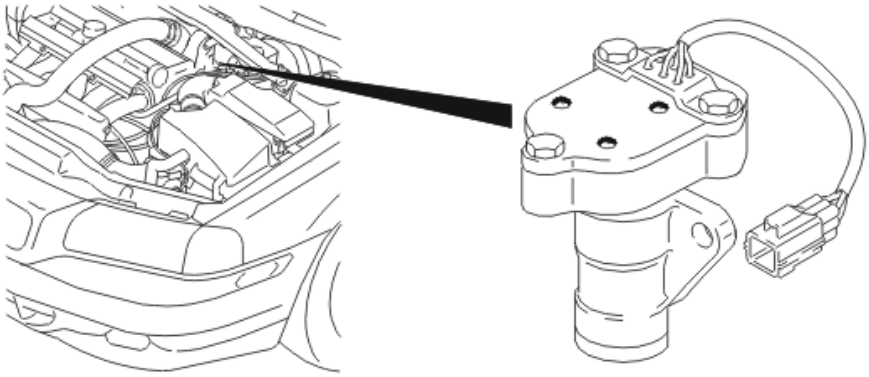

Fig. 196: Speed Sensitive Power Steering
Courtesy of VOLVO CARS CORPORATION

If the car has speed dependent power steering to control the steering assistance, there is a stepper motor which controls a hydraulic valve on the steering gear.

The stepper motor is operated by the central electronic module (CEM) and checked via four outputs in the central electronic module (CEM). Signals are transmitted from the central electronic module (CEM) to set the motor to the correct position for the speed of the car. The motor deploys the valve on the steering gear to the required degree and regulates the oil in the steering gear to reduce or increase the servo assistance. The steering assistance increases at lower speeds and is reduced at higher speeds.

There are diagnostics for the power steering.

DIAGNOSTIC FUNCTIONS

GENERAL INFORMATION

The control module has a built-in diagnostic system, Volvo Diagnostic, which continuously monitors internal functions as well as input and output signals.

DIAGNOSTIC TROUBLE CODES (DTCS)

A diagnostic trouble code (DTC) is stored if the control module detects a fault. The control module can store up to 10 diagnostic trouble codes (DTCs).

If a fault disappears for any reason after the diagnostic trouble code (DTC) has been permanently stored in the control module, information about the fault remains in the control module.

READING AND ERASING DIAGNOSTIC TROUBLE CODES (DTCS)

Stored diagnostic trouble codes (DTCs) can be read off and erased using this function. The on-board diagnostic (OBD) system can identify 275 different faults in the form of diagnostic trouble codes (DTCs).

This function can also be used to read off whether the fault is still present (permanent) or whether it has now ceased (intermittent) after the diagnostic trouble code (DTC) has been stored.

Diagnostic trouble codes (DTCs) can only be erased once all the diagnostic trouble codes (DTCs) have been read off at least once.

READING OFF INPUT AND OUTPUT SIGNALS, CEM

This function can be used to continuously read off the values and status of the control module's input and output signals.

The following parameters can be read off:

- the status of the relay for extended X supply. The relay controls the power supply for the following functions: parking heater, power driver's seat and "after blow" for the air conditioning (A/C) system. The relay is activated in key positions I, II and III when the drivers door is opened (10 minutes), driver's door is closed and key position 0 (1 minute) and when one of the above functions is activated
- the status of the relay for extended X2 supply (AUT). Controls the power supply to the gear selector module (GSM). The relay is activated in key positions I, II, III, 0 or out for 10 seconds
- the status of the relay for the park neutral position (PNP) switch
- the status of the relay for the starter motor (activation signal from the central electronic module (CEM) to the relay)
- the status of the relay to raise the rear left-hand window. The relay is only active when the window lift mechanism is operated via the switch in the driver's door
- the status of the relay to lower the rear left-hand window. The relay is only active when the window lift mechanism is operated via the switch in the driver's door
- the status of the relay to raise the rear right-hand window. The relay is only active when the window lift mechanism is operated via the switch in the driver's door
- the status of the relay to lower the rear right-hand window. The relay is only active when the window lift mechanism is operated via the switch in the driver's door
- the status of the relay for the child lock (blocks operation of the rear window lift mechanisms). Note that when the function is activated, (i. e. the LED lit), the relay which supplies the rear window lift mechanisms is not activated. The read off gives the status of the relay
- status of the relay for high beam
- status of the relay for low beam
- status of the spot lamp relay
- status of the parking lamp relay
- status of the relay for the daytime running lamps
- status of the relay for the front fog lamps
- status of the relay for the windscreen wipers, off or on
- status of the relay for the windscreen wipers, high speed
- status of the relay for the washer motor
- status of the relay for the headlamp washer
- status of the relay for the horn
- status of the power supply (S-, X-, 15-, 50- and 30-supply)

- status of the key position
- status of the L signal (from the generator (GEN)). Ignition on ~0V, engine running ~1v
- status of the confirmation from the gear-shift position sensor about whether start (starter motor relay activated) is possible
- the status of the frequency signal from the engine control module (ECM) for the fuel pump (FP) relay
- the status of the windscreen washer reservoir level
- the status of the windscreen wipers
- the status of the driver's door (open or closed)
- the status of the passenger door (open or closed)
- the status of the left rear door (open or closed)
- the status of the right rear door (open or closed)
- the status of the tailgate (open or closed)
- the status of the lock switch for the driver's door (from the driver door module (DDM))
- the status of the lock switch for the passenger door (from the passenger door module (PDM))
- the status of the lock switch for the left-hand rear door
- the status of the lock switch for the right-hand rear door
- status hood alignment (the parameter indicates if the hood was open or closed when the alarm was activated).
- the status of the signal from the relay switch for the fuel pump (FP)
- the status signal from the supplemental restraint system (SRS) module indicating whether the Airbag is OK
- the status of the switch for the hazard warning signal flasher
- the status of the button lamp for the hazard warning signal flashers
- the status of the key ring lighting
- the status of the indication LED for the alarm
- the status of the fuel pump (FP)

NOTE: **The seat belt switches are connected to the Supplemental Restraint System Module (SRS) on model year 2003 and onward. They cannot then be read from the Central Electronic Module (CEM).**

-
- the voltage of the seat belt switch, driver's side
- the voltage at the seat belt switch, passenger side
- output, pulse width modulated signal to the courtesy lighting
- speed signal (for accessories). If the car is raised for this read off, ensure that the wheels are stationary when the gear selector is moved to position P (automatic transmissions). Note that diagnostic trouble codes (DTCs) may be stored in the ABS system if the front wheels are stationary and the rear wheels rotate
- the status of the pulse width modulation (PWM) signal for headlamp beam height control

- the status of the pulse width modulation (PWM) signal from the left-hand Xenon lamp (65%-90%)
- the status of the pulse width modulation (PWM) signal from the right-hand Xenon lamp (65%-90%)
- the fault status for the xenon lamp
- the status of the infotainment relay.

READING OFF PARAMETERS, IMMOBILIZER

- **ID CODE RECEIVED**

  Indicates whether the central electronic module (CEM) has received a key code (Transponder ID code). This applies whether the key is stored as an approved key or not. YES or NO. However, the key must be of the correct type - intended for this type of Volvo.

- **ID CODE STORED**

  ID CODE STORED Indicates whether the last received key code (transponder ID code) is stored as an approved key code in the central electronic module (CEM) memory. YES or NO.

- **RANDOM CODE TO TP**

  Indicates whether the central electronic module (CEM) is transmitting a random code to the key which presupposes that the key code is stored. SEND or DO NOT SEND.

- **RESPONSE FROM TP**

  Indicates whether the central electronic module (CEM) is receiving a response from the key (via the antenna ring) which presupposes that the key code is stored. YES or NO. YES is also displayed for a key belonging to another car of the same type, with the same key ID but a different security code.

- **TP STATUS OK**

  Indicates whether all of the following conditions are fulfilled: 1) Key code (transponder ID code) is stored. 2) The key has the car's security code (the key belongs to the car). 3) Communication (random code and response) is OK. YES or NO.

- **KEY TYPE**

  Indicates whether the ignition key used is a MASTER KEY or a SERVICE KEY

- **KEY NO.**

  Indicates which of the vehicle's keys is in the ignition switch. Each key programmed into the central electronic module (CEM) is given a serial number from 1 to 6. NO. 1 - NO. 6.

- **NUMBER OF KEYS**

Indicates how many keys (key codes) are stored in the central electronic module (CEM) memory, 1-6. A maximum of six keys can be stored.

- **IMMO MODE**

  Indicates the mode of the immobilizer in the central electronic module (CEM), NORMAL or PROGRAMMABLE. In NORMAL it is not possible to change the content (add/erase key codes) in the immobilizer. In PROGRAMMABLE mode the immobilizer can be programmed (add/erase key codes). In this mode the engine cannot be started.

  After a programming has been carried out, VIDA returns to NORMAL mode.

  HINT: If communication problems occur during programming, the central electronic module (CEM) remains in PROGRAMMABLE mode.

  HINT: To correct this, remove fuse 11C/32 from the fusebox in the passenger compartment and reinstall it so the central electronic module (CEM) returns to NORMAL mode again.

- **ECM DATA RECEIVED**

  Indicates whether the Control area network (CAN) signal containing Immo ECM data transmitted is received within a given (maximum) time. This signal is transmitted by the engine control module (ECM) to the central electronic module (CEM) on the high speed network, when the ignition is switched on. YES or NO

- **ECM START SIGNAL**

  Indicates whether the Control area network (CAN) signal transmitted by the engine control module (ECM) to the central electronic module (CEM) on the high speed network after an IMMO CHECK is completed, when the ignition is switched on, allows the engine control module (ECM) to be start (POS) the engine or not (NEG). The following conditions must be met before the engine control module (ECM) will allow the engine to be started. The transponder check must have been successful (the key code, transponder ID, is stored and the security codes for the key and the central electronic module (CEM) correspond). The immobilizer check must have been successful (the codes in the central electronic module (CEM) and the engine control module (ECM) correspond).

- **SECURITY CODE RECEIVED (VIN-CODE ok)**

  Indicates if an approved security code form the Engine control module (ECM) has been received by the Central electronic module (CEM).

- **IMMO RELAY STATUS**

  Indicates the status of the immobilizer's request to the starter motor relay. If the immobilizer permits the relay to connect the starter motor, START POSSIBLE is displayed. IF not, START NOT POSSIBLE is displayed.

ACTIVATING COMPONENTS AND FUNCTIONS

This function can be used to activate components and functions which affect the outputs of the central electronic module (CEM).

The following components can be activated:

- deactivation of the relay for extended power supply
- activating the relay for extended X2 supply
- activating the relay for the park neutral position (PNP) switch
- activating the relay to raise the rear left-hand window
- activating the relay to lower the rear left-hand window
- activating the relay to raise the rear right-hand window
- activating the relay to lower the rear right-hand window
- activating the relay for high beam
- activating the relay for low beam
- activating the spot lamp relay (accessory)
- activating the relay for the parking lamps
- activating the relay for the daytime running lamps
- activating the relay for the front fog lamps
- activating the relay for the windscreen wipers off/on
- activating the high speed windscreen wiper relay
- activating the relay for the front washer motor
- activating the relay for the headlamp washer
- activating the relay for the horn
- activating the frequency signal from the engine control module (ECM) for the fuel pump (FP) relay
- activating the speed signal (for accessories)
- activating the signal to the switch for the hazard warning signal flashers. To switch off the hazard warning signal flashers, they must be activated and reset again. The function is switched off if the button in the car is pressed once
- activating the key ring lighting (the key ring lighting does not light if the car is locked. The window can be open however, to allow communication with the data link connector (DLC))
- activating the signal for the alarm LED
- activating the pulse width modulated signal for the courtesy lighting
- activating the relay for preheating the leak diagnostic pump
- activating the infotainment relay.

READING OFF AND PROGRAMMING DATA

This function allows programmed data to be read off or data such as customer parameters to be programmed in.

NOTE: If possible, all data must be read out from the control module before replacement. After replacement the relevant data must be programmed into the

new control module.

Customer parameters can be programmed for approach lights, seat heaters, post drying and daytime running lamps.

Seat heater: First read off the data that is programmed in the central electronic module (CEM). Answer, for example, 37C. Then enter the temperature desired by the customer, for example 41C. After programming, the new data must be saved in the control module memory. The following values can be programmed in: 0, 10C, 28C, 30C, 31C, 32C, 33C, 34C, 35C, 36C, 37C, 38C, 39C, 40C, 41C, 43C. The left and right-hand seats are programmed individually and there are two settings that can be selected by the customer, high or low.

Approach lights: First read off the data that is programmed in the central electronic module (CEM). Answer, for example, 30 seconds. Then enter the time desired by the customer, for example 90 seconds). After programming, the new data must be saved in the control module memory. The following values can be programmed in: 0, 30, 60 and 90 seconds.

Post drying: First read off the parameters programmed in the central electronic module (CEM). Reply for example the function is not set. Then enter if the customer wants post drying (the function is set). After programming, the new parameters must be saved to the control module memory. The following values can be entered: Off or on.

Daytime running lamps: First read off the data that is programmed in the central electronic module (CEM). For example, daytime running lamps off. Then enter if the vehicle is to have daytime running lamps (daytime running lamps on). After programming, the new data must be saved in the control module memory. The following values can be programmed in: Off or on. There are two versions of off. Dipped headlamps can be switched on in all light switch positions apart from the P position. The dipped headlamp beam can also be adjusted.

READING OFF THE CONTROL MODULE IDENTIFICATION

VIDA identifies control modules by reading off a number of codes from the control module memory.

The codes contain information about the control module:

- hardware P/N (control module without software)
- hardware serial number (control module without software)
- software P/N
- diagnostic software P/N.

DOWNLOADING SOFTWARE AND REPLACING THE CONTROL MODULE

New software can be downloaded into the central electronic module. When ordering software, the hardware and the software in the car is compared to the Volvo central database. If the comparison is OK the software is downloaded to the control module.

If the comparison between the car and Volvo central database is not OK, the database is updated with the car configuration. When this is complete the software is downloaded.

The control module is in a relay box under the soundproofing panel on the driver's side. The control module needs to be removed from the relay box to be replaced.

When installing a completely new central electronic module in the car, PIN codes for the central electronic module, immobilizer and transponder (key) are downloaded into the control module. The PIN codes are loaded automatically during the ordering process in VIDA (Volvo scan tool). The PIN codes are retrieved from the Volvo Central Database and sent with the software package when software is ordered for the new control module. Each transponder key must however, be programmed as each key has a unique code which must be stored in the central electronic module.

Because of the unique PIN codes, the central electronic modules cannot be moved between cars.

Three customer parameters can be programmed into the central electronic module. These customer parameters are stored in the control module but not in the Volvo central database. This means that the customer parameters must be reprogrammed when the hardware is replaced.

The customer parameters which can be programmed are:

Seat temperature

- There are two values that can be programmed: low temperature and high temperature. Programming must be carried out so that the high temperature setting is higher than the low temperature setting.

Approach lights

- The approach lights can be programmed to stay on for a longer or shorter time according to the wishes of the customer. The factory setting is 30 seconds. The time can be set to 0, 30, 60 or 90 seconds.

Daytime running lamps

- The daytime running lamps can be programmed in three ways:
  1. Low beam in all switch positions except the parking light position (Flex zero)
  2. The light switch functioning on the basis of: off, parking light and low beam (Flex standard)
  3. Low beam always on regardless of the position of the light switch (Flex low).

NOTE: It is essential that the legal requirements of each country are followed.

FUNCTION

HEADLAMPS

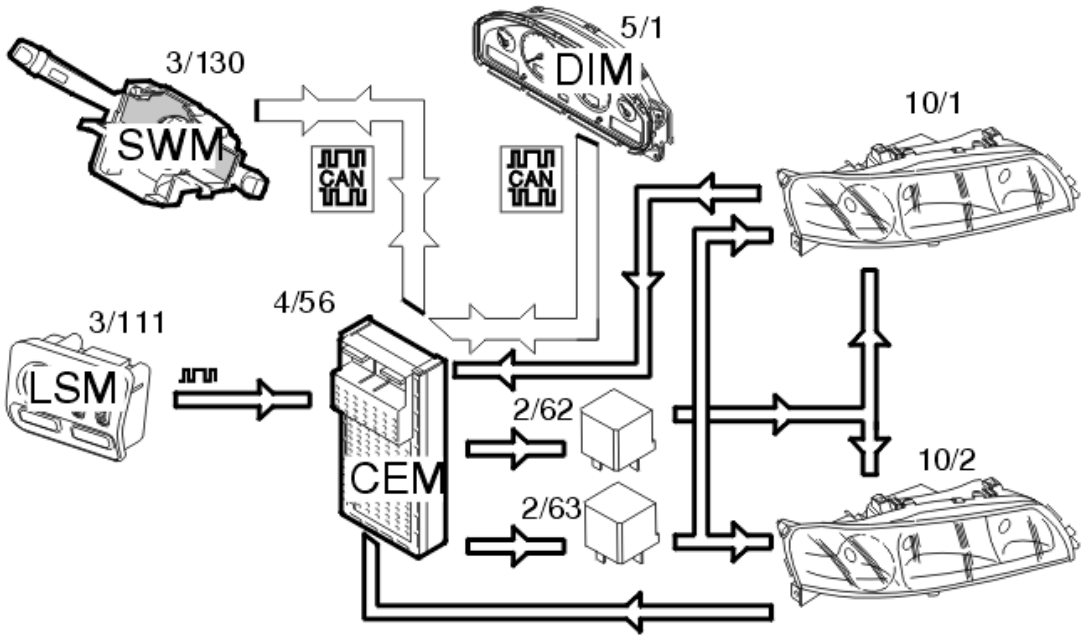

Fig. 197: Headlamp Input And Output Signals
Courtesy of VOLVO CARS CORPORATION

Depending on the position of the knob, the light switch module (LSM) (3/111) transmits information via serial communication to the central electronic module (CEM) to turn on low beam. The central electronic module (CEM) (4/56) then transmits a control signal to activate the low beam relay (2/62). The bulbs are then supplied with power.

To change to high beam, the left-hand control stalk is pulled towards the steering wheel. The control area network (CAN) signal from the steering wheel module (SWM) (3/130) is transmitted to the central electronic module (CEM) which activates the high beam relay (2/63) and supplies power to the high beam. For Bi-Xenon lamps, the position of the reflector is also changed so that the Xenon lamp is on at high beam.

The central electronic module (CEM) also transmits a CAN signal to the driver information module (DIM) (5/1) to light the indicator lamp for high beam.

There is a Limp Home function that ensures that low beam still works if there is a fault in the control area network (CAN). For Bi-Xenon lamps the beam is then set to the shortest range.

PARKING LIGHTS / LICENSE PLATE LIGHTING

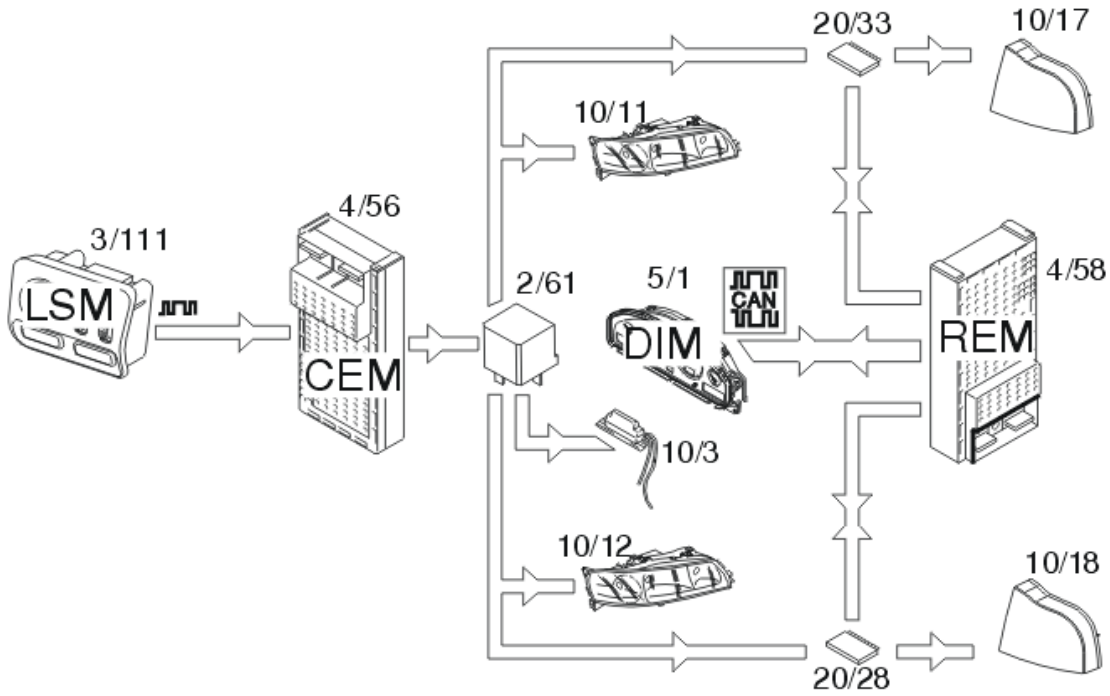

Fig. 198: Parking Lights And License Plate Lighting Input And Output Signals
Courtesy of VOLVO CARS CORPORATION

The parking lamps (10/11-12, 10/17-18) and license plate lighting (10/3) lights when:

- The knob in the light switch module (LSM) (3/111) is in the low beam position
- The knob in the light switch module (LSM) is in the parking lamp position
- Low beam is lit via the low beam automatic function.

The lamp switch module (LSM) transmits data using serial communication to the central electronic module (CEM) (4/56) to activate the lamps.

The lamps are supplied with power via a relay (2/61) which is activated by the central electronic module (CEM). The license plate lighting, the front parking lamps (also on the front fenders for US models) are directly supplied with power. The rear parking lamps are supplied by two shunts (20/28, 20/33) on the rear electronic module (REM) (4/58) so that blown bulbs can be detected.

In the event of a bulb fault for the rear parking lamps, data is transmitted on the control area network (CAN) from the rear electronic module (REM) to the driver information module (DIM) (5/1) and a text message is displayed.

There is a Limp Home function for the parking lamps so that they will work even if there is a fault in the control area network (CAN) or in the serial communication between the light switch module (LSM) and the central electronic module (CEM).

HEADLAMP RANGE ADJUSTMENT (CERTAIN MARKETS)

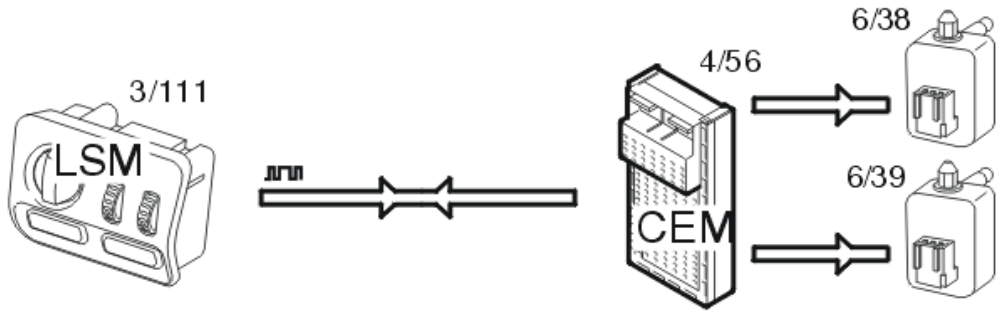

Fig. 199: Headlamp Range Adjustment Input And Output Signals
Courtesy of VOLVO CARS CORPORATION

Headlamp range adjustment is controlled by the central electronic module (CEM) (4/56). The central electronic module (CEM) communicates with the light switch module (LSM) (3/111) using serial communication.

If the thumb wheel in the light switch module (LSM) is turned, information about the position of the wheel is transmitted to the central electronic module (CEM). The central electronic module (CEM) transmits a pulse width modulation (PWM) signal to the actuator motors (6/38-39) with the pulse ratio set according to the position of the thumb wheel. The headlamp range can be adjusted in 16 stages.

AUTOMATIC RANGE ADJUSTMENT (BI-XENON)

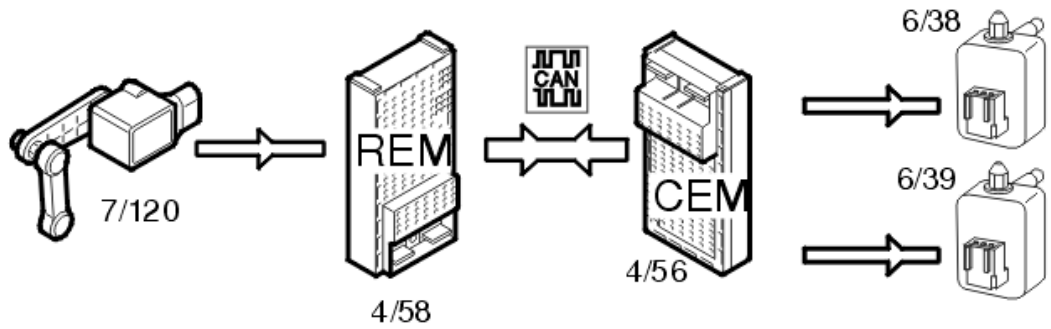

Fig. 200: Automatic Range Adjustment Input And Output Signals
Courtesy of VOLVO CARS CORPORATION

Automatic headlamp range adjustment is controlled by the central electronic module (CEM) (4/56). The position sensor (7/120) on the rear suspension transmits signals to the rear electronic module (REM) (4/58) about the angle of the car in terms of the load conditions.

The rear electronic module (REM) transmits this data via the control area network (CAN) to the central electronic module (CEM) which compares the information with the table for the relevant model. The table is stored in the central electronic module (CEM).

The actuator motors (6/38-39) are then operated from the central electronic module (CEM) via a PWM signal, the pulse ratio of which depends on the angle the lamps need to be set to.

FRONT FOG LAMPS

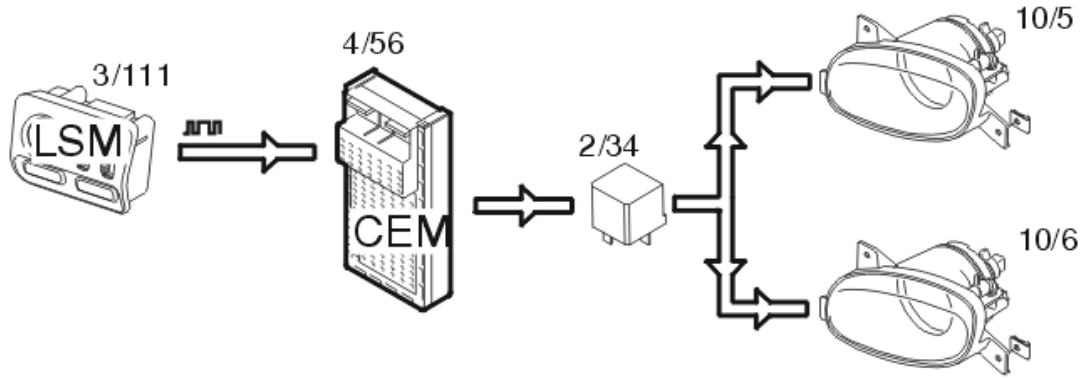

Fig. 201: Front Fog Lamps Input And Output Signals
Courtesy of VOLVO CARS CORPORATION

The front fog lamps (10/5-6) are activated by pressing the button for the front fog lamps in the light switch module (LSM) (3/111). The light switch module (LSM) transmits data to the central electronic module (CEM) (4/56) to light the lamps. The central electronic module (CEM) activates the relay (2/34) and the bulbs are supplied with power via the relay.

TURN SIGNAL LAMPS / HAZARD WARNING SIGNAL FLASHERS

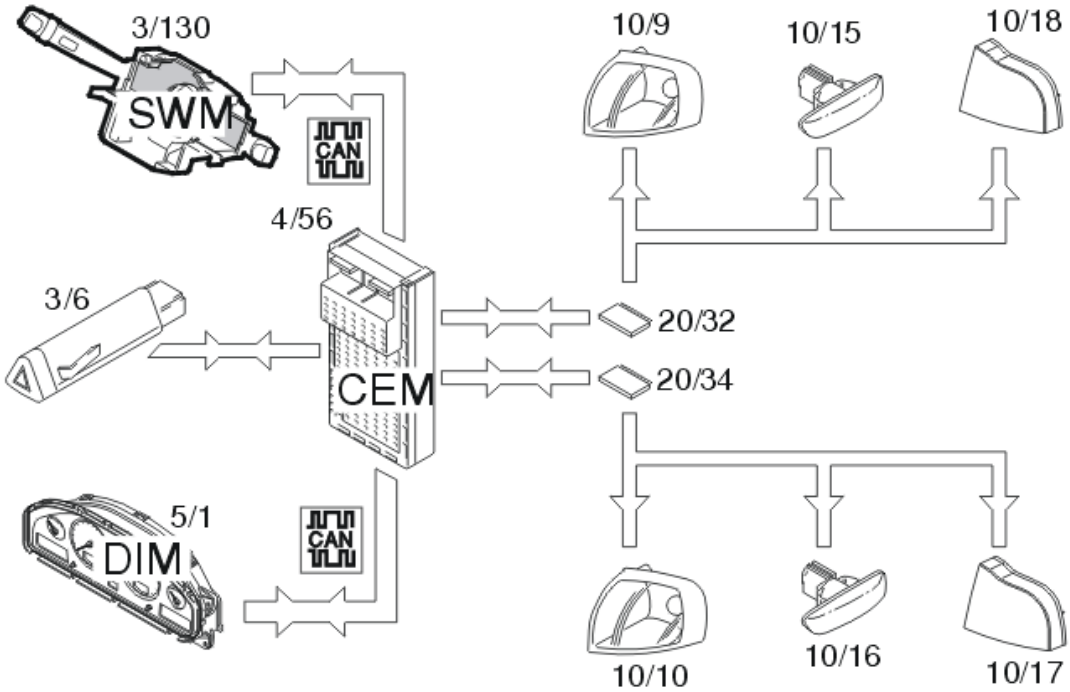

Fig. 202: Turn Signal Lamps And Hazard Warning Signal Flashers Input And Output Signals

Courtesy of VOLVO CARS CORPORATION

This function is controlled by the left control stalk. The steering wheel module (SWM) (3/130) sends data to the central electronic module (CEM) (4/56) to activate the turn signal lamps via the control area network (CAN). The central electronic module (CEM) transmits information to the driver information module (DIM) (5/1) to activate the turn signal indicator lamp and powers the turn signal lamp via a shunt (20/32, 20/34).

The power supply is pulsed and the turn signal lamps are activated 90 times per minute.

The hazard warning signal flasher is activated by closing the switch (3/6) and transmits a signal to the central electronic module (CEM) to start the function. The central electronic module (CEM) transmits a signal in the same way as above, but to both sides. The central electronic module (CEM) also transmits a signal to the bulb in the switch to indicate that the hazard warning signal flashers are on. If the ignition key is in position I or II, there is a clicking sound from the driver information module (DIM). If the ignition is switched off, there is no sound, but the hazard warning signal flashers continue to flash.

If a fault occurs with a lamp, the central electronic module (CEM) detects the reduction in power consumption and the frequency is doubled on the side where the fault occurred.

COURTESY LIGHTING / KEY LIGHTING / GLOVE COMPARTMENT LIGHTING

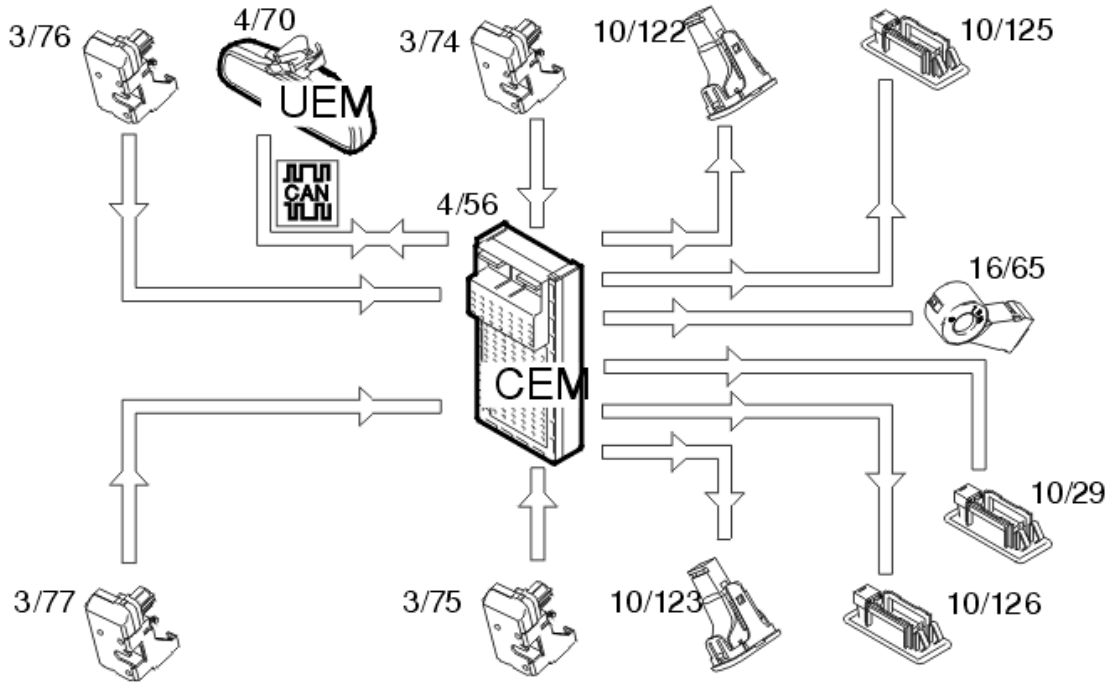

Fig. 203: Courtesy Lighting, Key Lighting And Glove Compartment Lighting Input And Output Signals
Courtesy of VOLVO CARS CORPORATION

The courtesy lighting (10/122-123, 10/125-126), keyhole (16/65) and glove compartment lighting (10/29) are controlled via the central electronic module (CEM) (4/56). All other interior lighting is controlled by the upper electronic module (UEM) (4/70). The central electronic module (CEM) powers the lamps which it controls directly.

The lamps are powered if a door is opened (3/74-77), or when the upper electronic module (UEM) transmits a request via the control area network (CAN). The upper electronic module (UEM) transmits a request when it has received an unlock command from one of the remote controls. If a door is opened, the central electronic module (CEM) sends a control area network (CAN) signal to the upper electronic module (UEM) to light the lighting it controls.

The glove compartment lighting (10/29) is supplied with power directly from the central electronic module (CEM) when the switch by the lamp is activated when the glove compartment is opened.

HORN

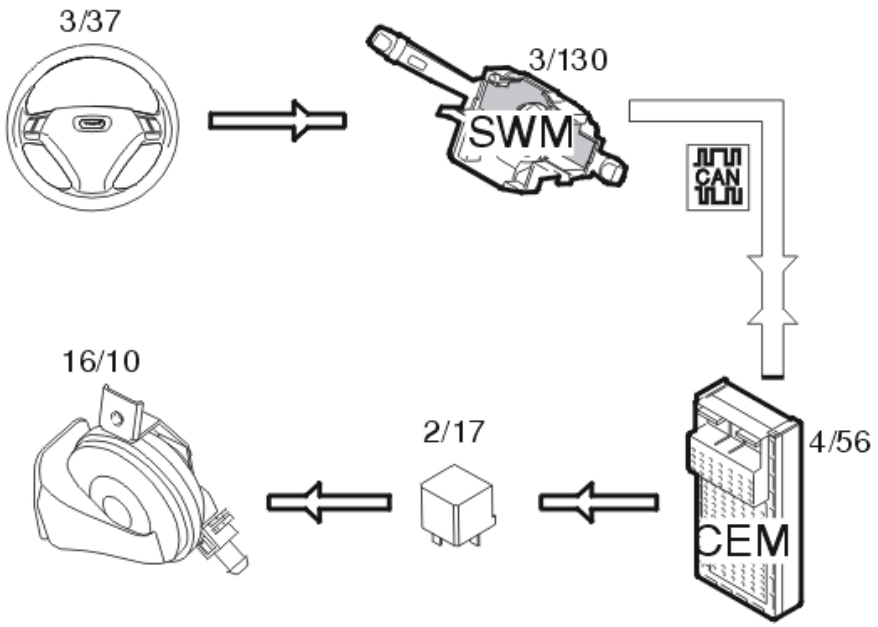

Fig. 204: Horn Input And Output Signals
Courtesy of VOLVO CARS CORPORATION

The horn is operated when the steering wheel module (SWM) (3/130) receives a signal from the switches (3/37) in the steering wheel. The steering wheel module (SWM) sends data to the central electronic module (CEM) (4/56) via the control area network (CAN) indicating that the switch is closed. The central electronic module (CEM) activates the relay (2/17) for power supply to the horn.

There is also a signal directly connected from the steering wheel module (SWM) to the central electronic module (CEM). This is used if there is a fault in the control area network (CAN). This is a Limp-Home function.

STARTER MOTOR

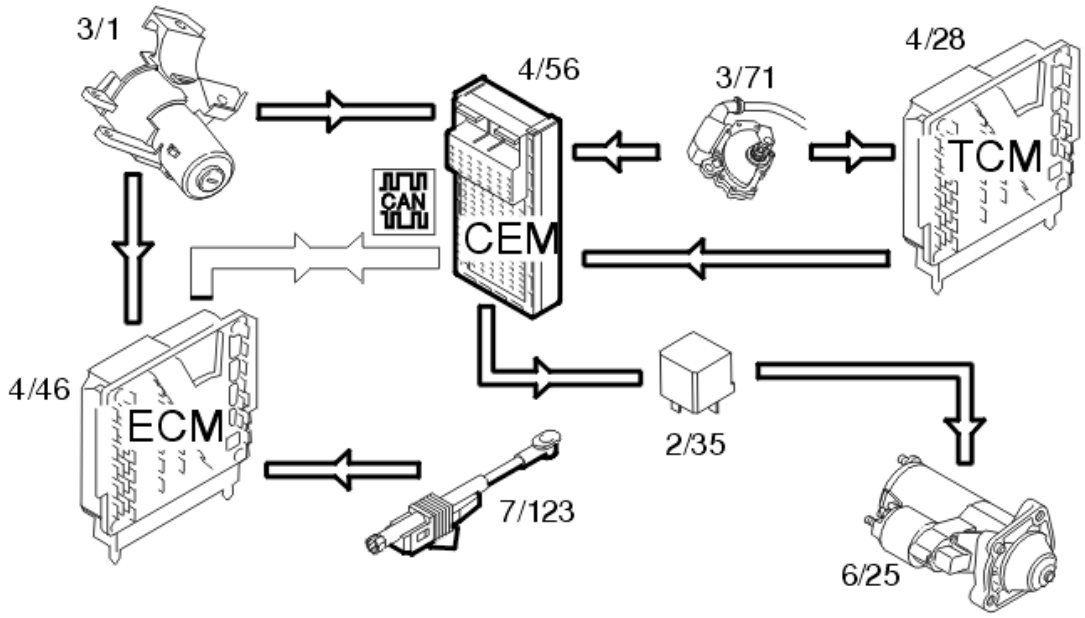

Fig. 205: Starter Motor Input And Output Signals
Courtesy of VOLVO CARS CORPORATION

Manual transmissions

The starter motor (6/25) is operated by turning the key in the ignition switch (3/1) to position III.

- For transmissions **with** a clutch interlock (certain markets), a signal is transmitted from the ignition switch to the engine control module (ECM) (4/46). The engine control module (ECM) detects the position of the clutch pedal sensor (7/123). The engine control module (ECM) transmits data to the central electronic module (CEM) (4/56) via the control area network (CAN) about the position of the pedal. The central electronic module (CEM) requires a signal that the clutch is pressed down and that the key is in position III before it will send a signal to the relay (2/35). When the relay is activated, the solenoid in the starter motor is powered
- For transmissions **without** clutch interlock, the central electronic module (CEM) (4/56) activates relay 2/35 and powers the solenoid in the starter motor (6/25).

The starter motor turns for as long as the key is in position III. If the engine has been started once, there is a Limp Home function so that the engine can be started again even if there is a fault in the control area network (CAN). This function is active for a brief period after the key is removed from the ignition switch. After this time the car will not start because there is no communication for the immobilizer between the central electronic module (CEM) and the engine control module (ECM).

Automatic transmission

The starter motor (6/25) is operated by turning the key in the ignition switch (3/1) to position III.

- For transmission 4T65EV, a signal is transmitted from the gear-shift position sensor (3/71) via the transmission control module (TCM) (4/28) to the central electronic module (CEM) (4/56) indicating that the gear selector is in position P/N
- For AW transmissions the signal is transmitted directly from the gear-shift position sensor to the central electronic module (CEM). The central electronic module (CEM) requires this signal and a signal indicating that the key is in position III before it will send a signal to the relay (2/35). When the relay is activated, the solenoid in the starter motor is powered.

The starter motor turns for as long as the key is in position III. If the engine has been started once, there is a Limp Home function so that the engine can be started again even if there is a fault in the control area network (CAN). This function is active for a brief period after the key is removed from the ignition switch. After this time the car will not start because there is no communication for the immobilizer between the central electronic module (CEM) and the engine control module (ECM).

REAR WINDOW LIFT MECHANISMS/CHILD LOCK

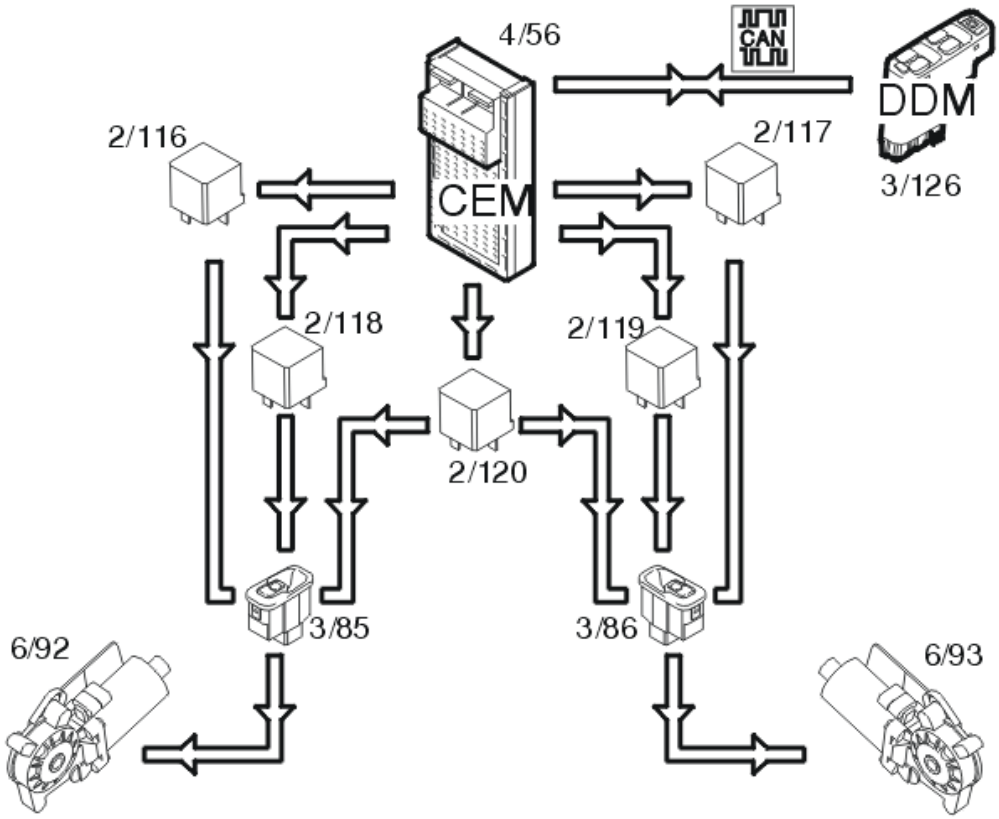

Fig. 206: Rear Window Lift Mechanisms/Child Lock Input And Output Signals
Courtesy of VOLVO CARS CORPORATION

The rear window lift mechanisms are operated using switches (3/85-86) in the door panels. Relays 2/116 or 2/118 for the left-hand side and relays 2/117 or 2/119 for the right-hand side are activated in the central electronic module (CEM) (4/56) depending on whether the window is to move up or down.

When the window lift mechanisms are operated from the driver's position, data is transmitted from the driver's door module (3/126) via the control area network (CAN) to the central electronic module (CEM) which transmits a signal to the correct relay.

There is a switch in the driver's door module (DDM) to allow for child locking, where the windows can only be operated from the driver's position. When this is active, data is transmitted via the control area network (CAN) to the central electronic module (CEM) to disconnect relay 2/120. This breaks the circuit for the rear switches.

When the child lock is activated, the lighting in the rear switches goes out.

FUEL PUMP

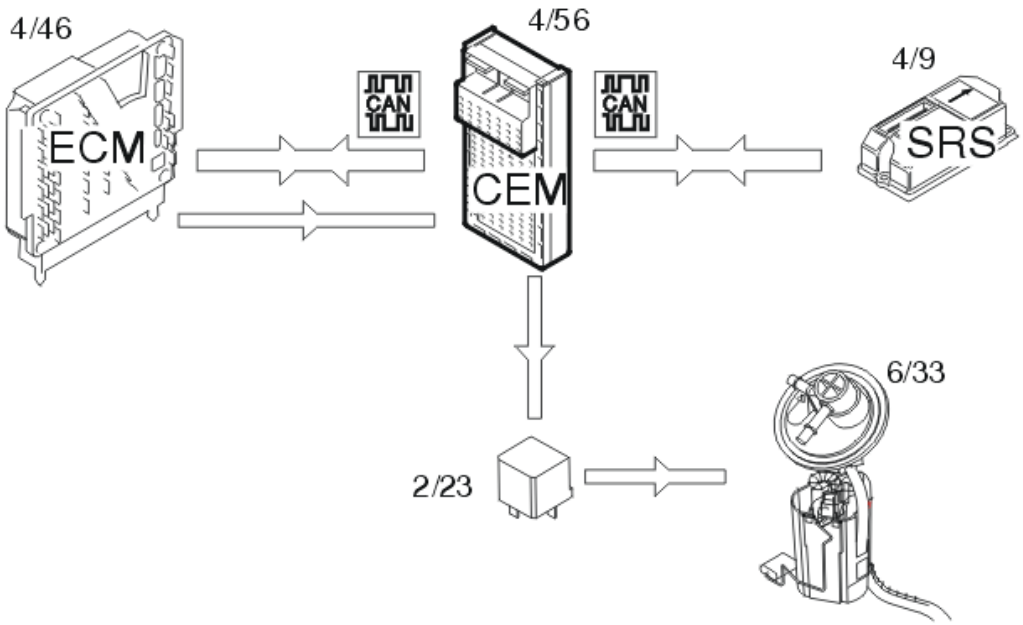

Fig. 207: Fuel Pump Input And Output Signals
Courtesy of VOLVO CARS CORPORATION

The central electronic module (CEM) (4/56) receives a request from the engine control module (ECM) (4/46) via the control area network (CAN) to start the fuel pump (FP) (6/33). The central electronic module (CEM) then activates the relay (2/23) which supplies the fuel pump with power.

In the event of a collision in which the airbags are deployed, a signal is transmitted from the supplemental restraint system (SRS) module (4/9) via the control area network (CAN) to the central electronic module (CEM) which deactivates the relay for the fuel pump.

If the control area network (CAN) is not functioning, a pulsed signal to control the fuel pump (FP) is transmitted from the engine control module (ECM) to the central electronic module (CEM) via a directly connected cable.

WIPER / WASHERS FOR THE WINDSHIELD AND HEADLAMPS

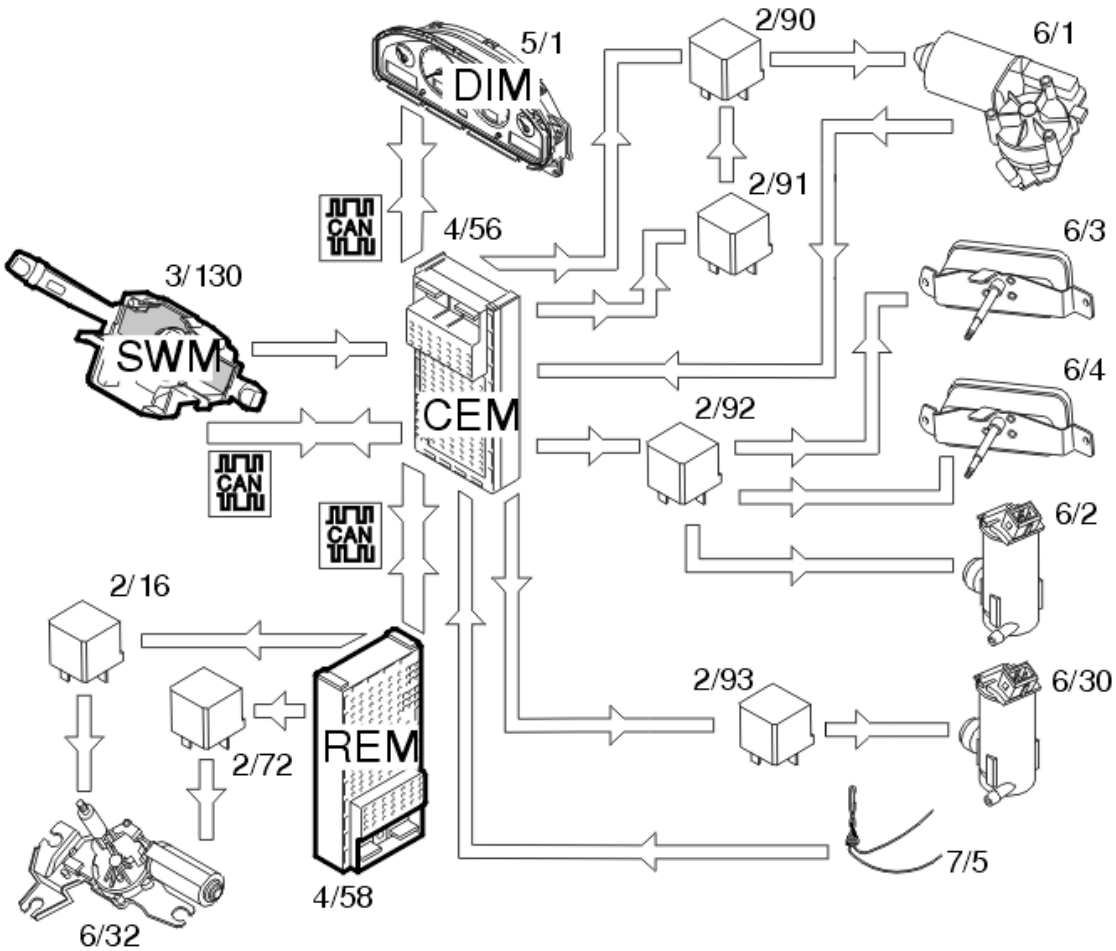

Fig. 208: Wiper And Washers For The Windshield And Headlamps Input And Output Signals
Courtesy of VOLVO CARS CORPORATION

The right-hand control stalk is moved downwards through three positions to operate the windshield wipers. The steering wheel module (SWM) (3/130) transmits information via the control area network (CAN) to the central electronic module (CEM) (4/56) about the selected position. The central electronic module (CEM) then activates relay 2/91 which supplies the wiper motor (6/1) with power in position 1. If high speed wiping is selected, relay 2/90 is also activated to power the motor in position 2.

The central electronic module (CEM) receives a signal from the motor when the wipers are in the parked position so that the wipers can be stopped in the correct position.

For intermittent wiping, the process is the same as for low speed, but the time between each stroke is set using the ring on the control stalk to one of eight positions between 1 and 27 seconds. The central electronic module (CEM) controls this once it has received information about intermittent wiping from the steering wheel module (SWM) via the control area network (CAN).

The windshield and headlamps are washed when the right-hand control stalk is moved towards the steering wheel. The steering wheel module (SWM) transmits information to the central electronic module (CEM) via the Control area network (CAN) to activate washing. The central electronic module (CEM) activates the relay 2/92 which powers the pump motor (6/2) and wiper motors (6/3-4) for the headlamps.

The central electronic module (CEM) receives a signal from the level sensor (7/5) in the windshield washer reservoir so that it can check the windshield washer reservoir level. The switch in the level sensor closes if the level falls below one liter. The central electronic module (CEM) sends the signal to Driver information module (DIM) (5/1) via the controller area network (CAN). The driver information module (DIM) displays a text message indicating that the windshield washer fluid needs to be topped up.

Rear windshield cleaning is activated when the right-hand control stalk is pushed away from the steering wheel. The steering wheel module (SWM) sends signals via the control area network (CAN) to the central electronic module (CEM) to activate rear windshield washing. The central electronic module (CEM) activates relay 2/93 to power the pump motor (6/30). At the same time the rear electronic module (REM) activates the tailgate wiper.

The wipers only operate at low speed if there is a fault in the control area network (CAN). If this is the case, the central electronic module (CEM) receives a directly connected signal from the steering wheel module (SWM).

There is no Limp Home function for the rear windshield washer and wiper.

HEATED SEATS (CERTAIN MARKETS)

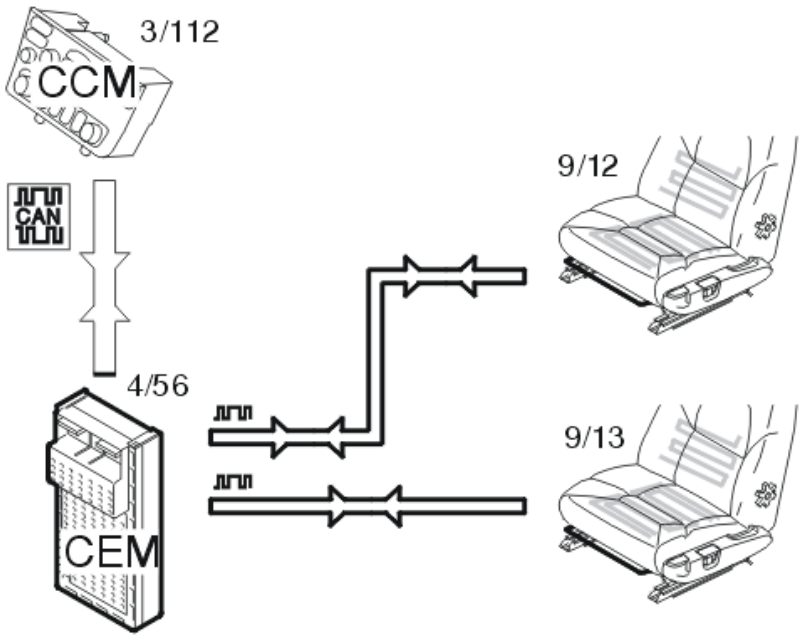

Fig. 209: Heated Seats Input And Output Signals
Courtesy of VOLVO CARS CORPORATION

The seat heaters are activated by pressing the switch to the right of the climate control module (CCM) (3/112). If the switch is pressed once, they are activated at high temperature. Pressing again will activate low temperature. Pressing a third time switches the heaters off.

The climate control module (CCM) transmits information via the control area network (CAN) to the central electronic module (CEM) (4/56) to activate the seat heaters. The central electronic module (CEM) sends back a

signal to the climate control module (CCM) to light the LED in the button. The central electronic module (CEM) compares the signal from the climate control module (CCM) with the programmed value for high/low temperature and transmits a pulsed signal to the control module for the seat heater (9/12-13) about the requested temperature. The number of pulses determines the power at which the control module will operate the seat heater. The control module also compares the value from the thermistor so that it can detect faults in the heater pad.

SPEED SENSITIVE POWER STEERING

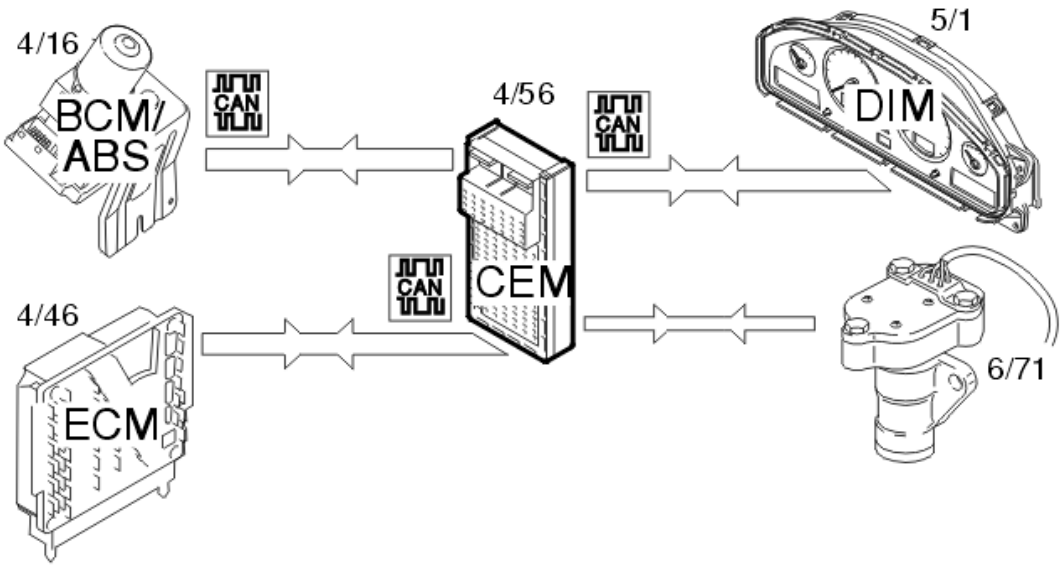

Fig. 210: Speed Sensitive Power Steering Input And Output Signals
Courtesy of VOLVO CARS CORPORATION

The central electronic module (CEM) (4/56) receives data from the engine control module (ECM) (4/46) via the control area network (CAN) that the engine is running and information from the ABS system (4/16) about the speed of the car. From model year 2001 the ABS module is called the brake control module (BCM). The central electronic module (CEM) then operates the stepper motor (6/71) via the four outputs to set the stepper motor to the correct servo assistance level.

The central electronic module (CEM) checks the signals. If a fault is detected, the servo assistance is set to normal (approx.70km/h) and the system is disengaged. The central electronic module (CEM) also transmits a signal to the driver information module (DIM) (5/1) via the control area network (CAN) which lights the general warning lamp and displays a text message.

SYSTEM OVERVIEW

CONTROL MODULE

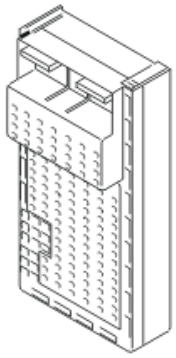

Fig. 211: Central Electronic Module Control module
Courtesy of VOLVO CARS CORPORATION

The central electronic module (CEM) controls the Controller area network (CAN) and acts as a bridge between the high and low speed networks and the data link connector (DLC). It also manages the following functions:

- Alarm (certain functions)
- Locks (certain functions)
- Immobilizer
- Headlamps
- Parking lights / license plate lighting
- Front fog lamps
- Headlamp range adjustment (certain markets)
- Automatic range adjustment (Bi-Xenon)
- Turn signal lamps
- High-mounted stop lamp
- Courtesy lighting / key lighting / glove compartment lighting
- Rear window lift mechanisms
- Fuel pump
- Wiper / washers for the windshield and headlamps
- Starter motor
- Speed sensitive power steering
- Electrically heated seats
- Horn.

The control module is installed as a separate unit in a relay box under the soundproofing panel on the driver's side. The control module is removed from the relay box for replacement.

The car configuration file is stored in the central electronic module (CEM). It contains information about the car VIN number, structure week and the equipment in the car. When replacing the central electronic module (CEM), the VIN cannot be read off until the software has been downloaded from the Volvo central database.

The central electronic module (CEM) communicates with components which are directly connected and also with other control modules and components via serial communication and the control area network (CAN).

The control module checks activations and input and output signals using an integrated diagnostic system A diagnostic trouble code (DTC) is stored if the control module detects an error. In certain cases the central electronic module (CEM) replaces the faulty signal with a substitute signal. Other control modules also communicate on the network with the central electronic module (CEM) if they have diagnostic trouble codes (DTCs) stored. This function is used when reading off diagnostic trouble codes (DTCs) without VIDA (Volvo scan tool).

Any diagnostic trouble codes (DTCs) are stored in the control module memory. This information can be read off using VIDA via the data link connector (DLC) in the car.

The easiest way to check if the central electronic module (CEM) is grounded and receiving power is to activate the hazard warning signal flasher. The central electronic module (CEM) is supplied with power if the function operates. Another way of checking that the central electronic module (CEM) is supplied with voltage and grounded is to activate one of the rear window lift mechanisms.

SIGNALS

The following table summarizes the input signals to and the output signals from the central electronic module (CEM). The signal types are divided into directly connected signals, serial communication and Controller area network (CAN) communication. The following illustration displays the same information with the Volvo component designations.

Input signals	Output signals
Directly connected:	**Directly connected:**
Back-up (reversing) lamp (3/10)	Starter motor, relay (x2) (6/25)
Windshield wiper motor (6/1)	Stepper motor, power steering (x 4) (6/71)
Windshield washer level sensor (7/5)	Headlamp range adjustment (6/38)
Control signal doors / tailgate (x 8) (3/74)	Windshield wiper, relay (x2) (6/1)
Horn switch (3/37)	Washer motor, relay (x 2) (6/2)
Stop lamp switch (3/9)	Horn, relay (16/10)
Seat belt buckle sensor (x 4) (3/93)	Stop lamps from the rear electronic module (REM) (4/58)
Fuel pump frequency signal (4/46)	
Control signal, gear selector lever module P/N-position (3/156)	Fuel pump, relay (6/33)
Supplemental restraint system module (SRS) (Airbag OK) (4/9)	Hazard warning signal flasher switch (3/6)
Gear-shift position sensor (8/37)	Glove compartment lighting (10/29)
Immobilizer (x 2) (16/65)	Ignition switch lighting (16/65)
Hazard warning signal flasher switch (3/6)	Alarm LED (7/12)
Glass breakage sensor (7/136)	Courtesy lighting (10/122)
L signal (generator) (6/26)	12V socket (9/25)
	Auxiliary lamps (10/65)

Via serial communication: Additional heater / parking heater (optional extra) (4/7) Light switch (3/111) Heated seats (4/201) Communication line (data link connector) (17/13)	**Via serial communication:** Additional heater / parking heater (optional extra) (4/7) Light switch (3/111) Heated seats (4/201) Communication line (data link connector) (17/13)
Via Controller Area Network (CAN) communication: Accessory electronic module (AEM) (optional equipment) (4/78) Audio module (AUM) (16/1) Brake control module (BCM) / Anti-lock Brake System Module (ABS) (4/16) Climate control module (CCM) (3/112) Driver's door module (DDM) (3/126) Differential electronic module (DEM) (optional equipment) (4/82) Driver information module (DIM) (5/1) Engine control module (ECM) (4/46) Electronic throttle module (ETM) (4/50) Passenger door module (PDM) (3/127) Phone module (PHM) (optional equipment) (16/60) Power seat module (PSM) (4/52) Rear electronic module (REM) (4/58) Road Traffic Information Module (RTI) (optional extra) (16/45) Steering wheel angle sensor module (SAS) (4/68) Supplemental Restraint System Module (SRS) (4/9) Steering wheel module (SWM) (3/130) Transmission control module (TCM) (4/28) Upper electronic module (UEM) (4/70) Data link connector (DLC) (17/13)	**Via Controller Area Network (CAN) communication:** Accessory electronic module (AEM) (optional equipment) (4/78) Audio module (AUM) (16/1) Brake control module (BCM) / Anti-lock Brake System Module (ABS) (4/16) Climate control module (CCM) (3/112) Driver's door module (DDM) (3/126) Differential electronic module (DEM) (optional equipment) (4/82) Driver information module (DIM) (5/1) Engine control module (ECM) (4/46) Electronic throttle module (ETM) (4/50) Passenger door module (PDM) (3/127) Phone module (PHM) (optional equipment) (16/60) Power seat module (PSM) (4/52) Rear electronic module (REM) (4/58) Road Traffic Information Module (RTI) (optional extra) (16/45) Steering wheel angle sensor module (SAS) (4/68) Supplemental Restraint System Module (SRS) (4/9) Steering wheel module (SWM) (3/130) Transmission control module (TCM) (4/28) Upper electronic module (UEM) (4/70) Data link connector (DLC) (17/13)

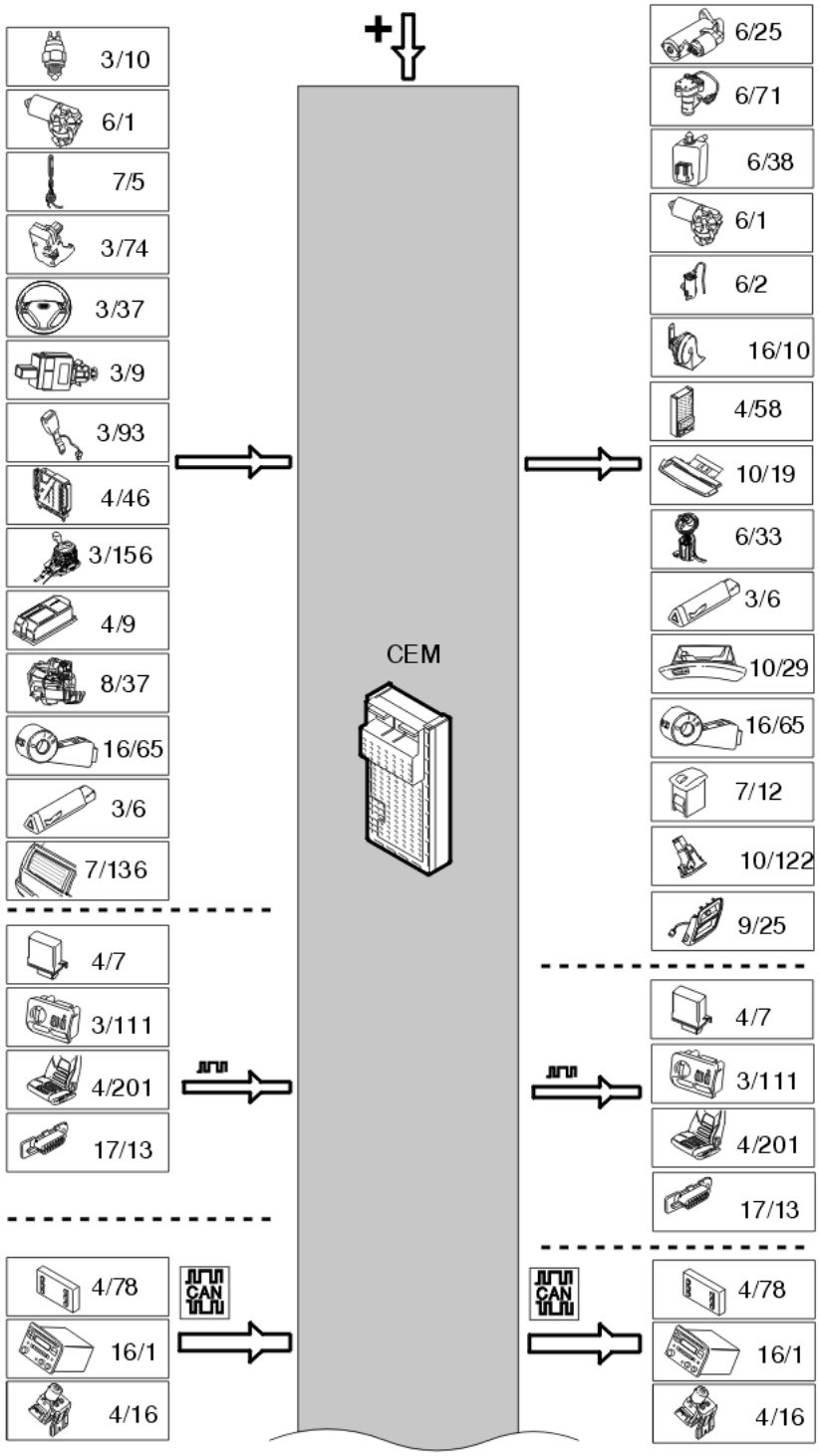

Fig. 212: Central Electronic Module Input And Output Signals (1 Of 2)
Courtesy of VOLVO CARS CORPORATION

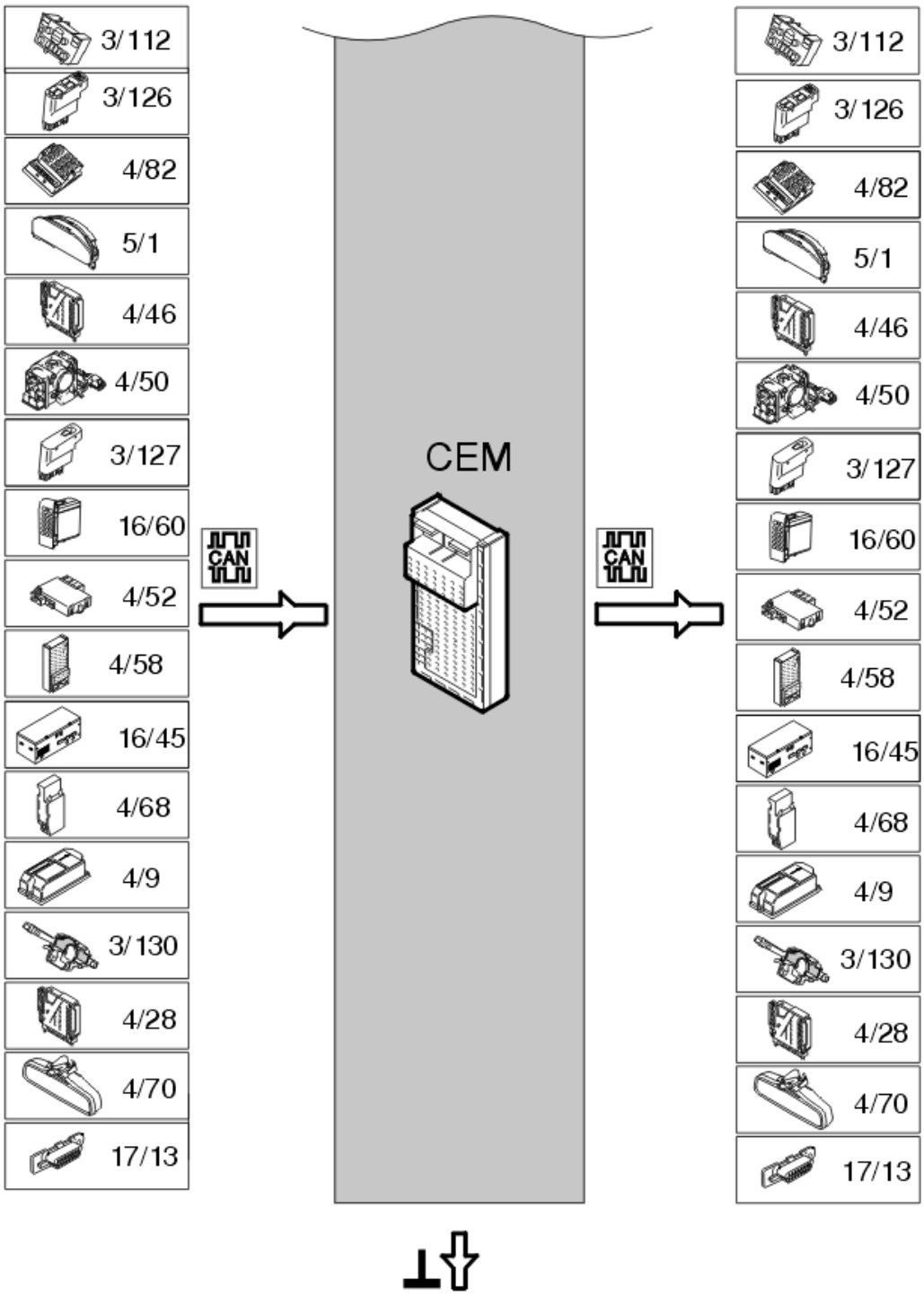

Fig. 213: Central Electronic Module Input And Output Signals (2 Of 2)
Courtesy of VOLVO CARS CORPORATION

CENTRAL ELECTRONIC MODULE (CEM) (2005-2012)

DESIGN

GENERATOR (GEN) (ALTERNATOR CONTROL MODULE (ACM))

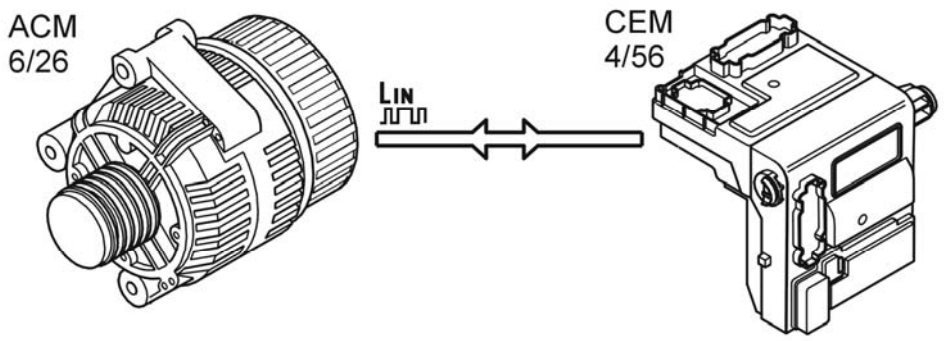

Fig. 214: Generator And Alternator Control Module
Courtesy of VOLVO CARS CORPORATION

CURRENT LIMITING

The central electronic module (CEM) checks and sometimes limits the current from the battery and generator.

The central electronic module (CEM) communicates with the alternator control module (ACM) via serial communication.

If there is a fault with current limitation, the general warning lamp will light in the driver information module (DIM) and a text message will be displayed.

STEERING WHEEL MODULE (SWM)

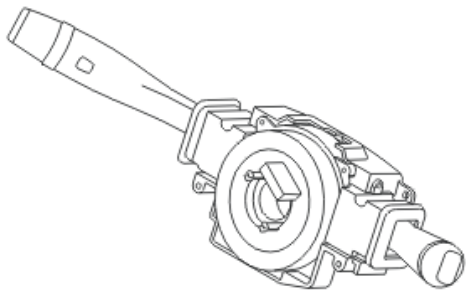

Fig. 215: Identifying Steering Wheel Module
Courtesy of VOLVO CARS CORPORATION

The steering wheel module (SWM) has the task of managing the signals for those functions which can be controlled via the steering wheel control stalks and buttons. The signals are transmitted using LIN

communication to the central electronic module (CEM). The central electronic module (CEM) forwards these signals on the controller area network (CAN) to the relevant control modules. The actual functions are not in the steering wheel module (SWM).

The steering wheel module (SWM) manages the control signals for the following functions:

- Volume control and CD track / radio selection
- Volume control during hands free carphone calls and menu selection for the phone module (PHM)
- Menu selection for traffic information
- Front windshield wipers and washers
- Rear windshield wiper and washer
- Cruise control
- Turn signal lamps
- High and low beam
- Trip computer and displaying/erasing text messages in the driver information module (DIM).

The steering wheel module (SWM) is integrated into the steering wheel bracket. The steering wheel must be removed to replace the steering wheel module (SWM). Control stalks, key pads and switches can be replaced as separate units.

Cars with DSTC also have a steering wheel angle sensor in the contact reel in the steering wheel module (SWM).

A simple way to ensure that the steering wheel module (SWM) is powered and grounded is to flash the headlamp high beam or to change the audio or carphone volume.

STEERING WHEEL BUTTONS

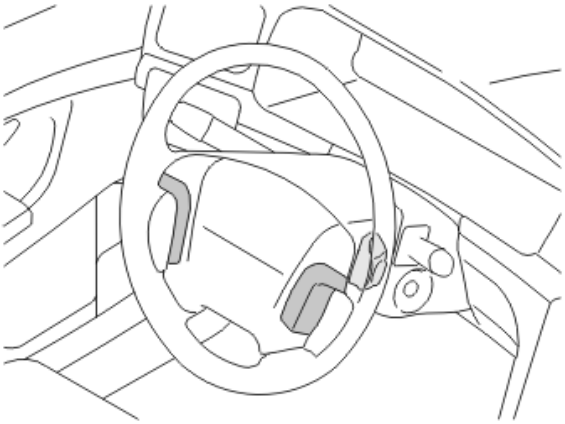

Fig. 216: Identifying Steering Wheel Control Buttons
Courtesy of VOLVO CARS CORPORATION

The steering wheel buttons control functions and menu selection for:

- Traffic information (option)

- Audio (option)
- Carphone (option)
- Cruise control (option).

The signals from the steering wheel buttons are transmitted via serial communication.

HEADLAMPS

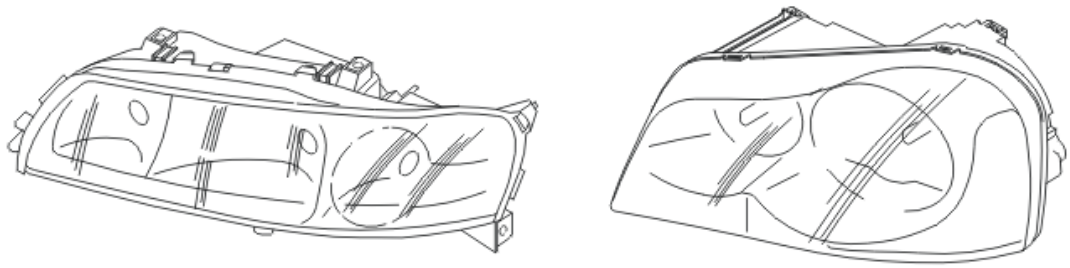

Fig. 217: Headlamps
Courtesy of VOLVO CARS CORPORATION

WARNING: Both drive stages, which are built into the lamp housing, and the wiring for the Bi-Xenon lamps are high voltage.

The headlamps are operated via the light switch module (LSM). This is on the dashboard at the side of the steering wheel. The light switch module (LSM) uses serial communication to communicate with the central electronic module (CEM). Low and high beam are operated by moving the left-hand control stalk towards the steering wheel.

Low beam is powered directly by the central electronic module (CEM). High beam is powered via a directly connected relay in the central electronic module (CEM). The level of the supply voltage to the low beam is regulated by the central electronic module (CEM). When the supply voltage is sufficient (in excess of 13 V), pulse width modulation is used to maintain the voltage level at 13.0 V +/- 0.2 V. This does not apply to cars with Bi-Xenon lamps.

Cars with Bi-Xenon lamps are powered directly via the central electronic module (CEM) without pulse width modulation.

In Bi-Xenon lamps, the reflector in the lamp housing is moved by an actuator motor when changing between high and low beam. The actuator motor is integrated in the lamp housing.

To detect problems with the low beam, the central electronic module (CEM) reads the power consumption of the circuit. If this falls below a certain threshold value a fault will be indicated. The general warning lamp lights in the driver information module (DIM) and a text message is displayed.

There are also diagnostics for the high and low beam function (actuator motor) for Bi-Xenon lamps.

HEADLAMP RANGE ADJUSTMENT (CERTAIN MARKETS)

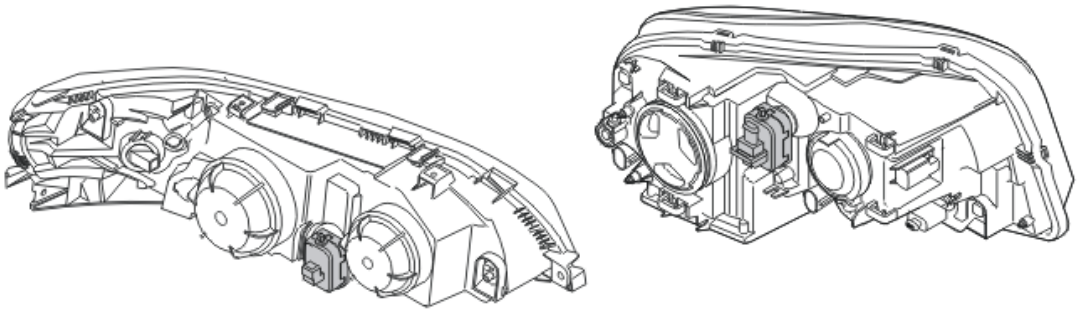

Fig. 218: Headlamp Range Adjustment
Courtesy of VOLVO CARS CORPORATION

There are two motors, one on each headlamp, which angle the headlamps upwards or downwards to control the range of the beam. The motors are on the rear of the headlamps.

The motors are controlled by a thumb wheel which is located in the light switch module (LSM) on the dashboard by the side of the steering wheel.

If the thumb wheel is turned, information is transmitted to the motors which adjust the headlamps accordingly.

There are diagnostics for the headlamp range adjustment.

AUTOMATIC RANGE ADJUSTMENT (BI-XENON)

There are two motors, one on each headlamp, which angle the headlamps upwards or downwards to control the range of the beam. The motors are on the rear of the headlamps.

The motors are controlled by signals from a position sensor at the rear axle. The sensor detects the angle of the car under different load conditions and sends this information via the rear electronic module (REM) so that the central electronic module (CEM) can determine whether the lamps need to be raised or lowered.

There are diagnostics for the headlamp range adjustment.

FRONT FOG LAMPS

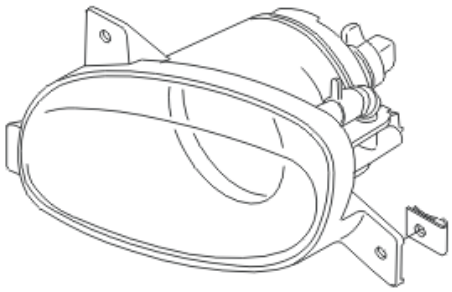

Fig. 219: Front Fog Lamps
Courtesy of VOLVO CARS CORPORATION

If the car has front fog lamps, these are in the bumper casing below the headlamps.

The fog lamps are operated via a button in the light switch module (LSM). An LED in the button lights when the fog lamps are activated. The light switch module (LSM) uses serial communication to communicate with the central electronic module (CEM). The bulbs are powered via a directly connected relay in the central electronic module (CEM).

FRONT PARKING LAMPS

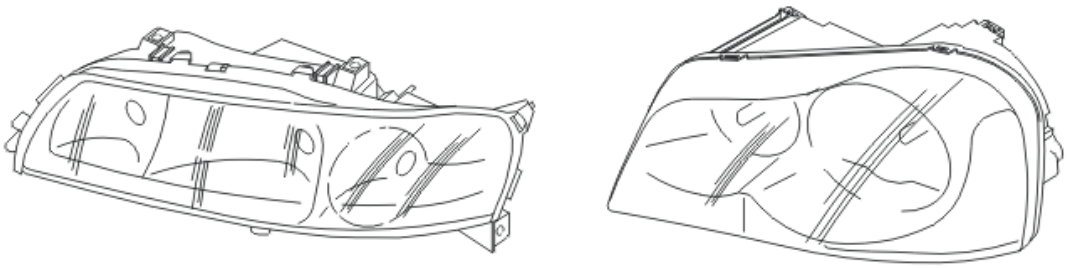

Fig. 220: Headlamps
Courtesy of VOLVO CARS CORPORATION

There are a number of lamps positioned around the car to mark its position. These are in the headlamps and tail lamps. The lamps light together with the license plate lighting when the light switch module (LSM) is in parking lamp mode or low beam is on.

The front parking lamps are powered directly via two outputs on the central electronic module (CEM). One of the outputs powers:

- the front left-hand parking lamp

- the left-hand parking lamps.

The other output powers:

- the front right-hand parking lamp
- the right-hand side parking lamps.

The rear parking lamps and license plate lighting are powered by the rear electronic module (REM).

There are diagnostics for the parking lamps.

TURN SIGNAL LAMPS / HAZARD WARNING SIGNAL FLASHERS

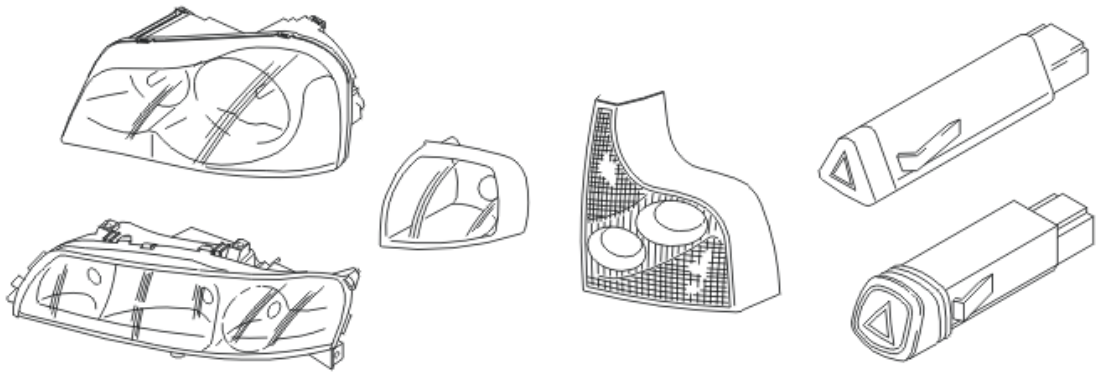

Fig. 221: Turn Signal Lamps / Hazard Warning Signal Flashers
Courtesy of VOLVO CARS CORPORATION

There are six lamps around the car to indicate direction changes. These are in the headlamps, tail lamps and on the side of the vehicle in front of the doors.

The turn signal lamps are operated using the left-hand control stalk.

To cancel the hazard warning signal flashers, where all the turn signal lights flash, press in the button for the hazard warning signal flasher. This is positioned in the middle of the dashboard by the center air vents.

The front and rear lamps are powered directly from the central electronic module (CEM).

A signal is also sent to the bulb in the hazard warning signal flasher switch when this function is activated.

The central electronic module (CEM) monitors the power consumption on each side to check for bulb faults. If the power consumption falls below a certain threshold value, a fault is indicated and the frequency of the signal to the bulbs is doubled on the side of the blown lamp.

There are diagnostics for the front and rear turn signal lamps.

HIGH LEVEL STOP LAMP

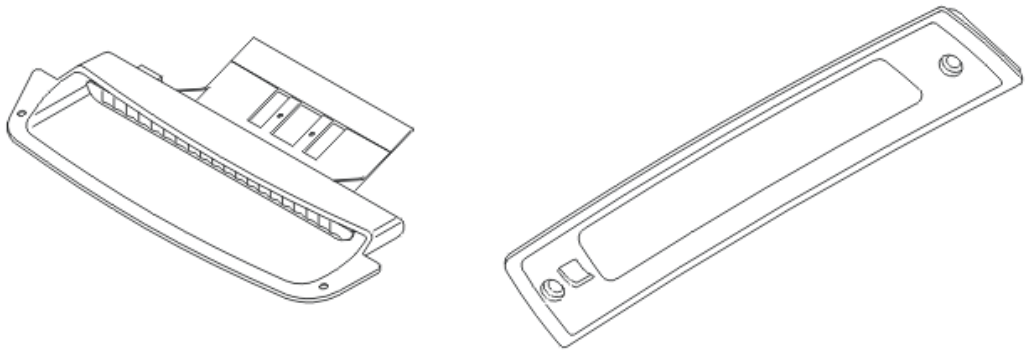

Fig. 222: High Level Stop Lamp
Courtesy of VOLVO CARS CORPORATION

COURTESY LIGHTING / KEY LIGHTING / GLOVE COMPARTMENT LIGHTING

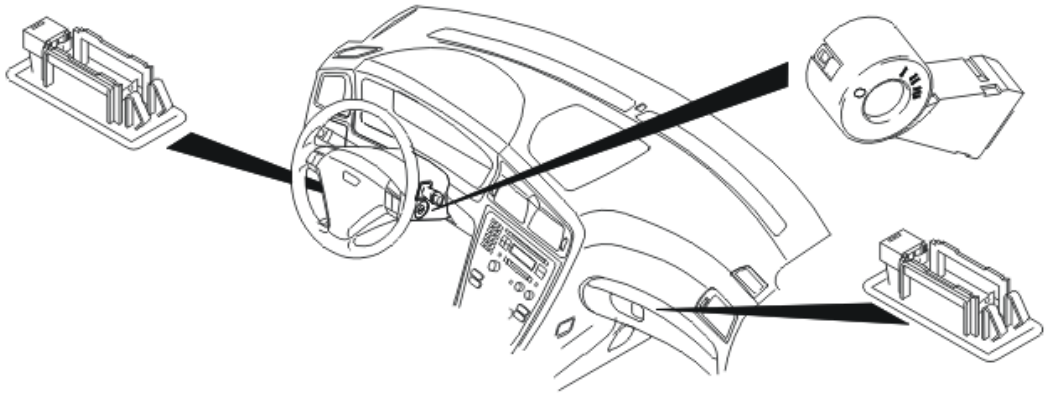

Fig. 223: Courtesy Lighting / Key Lighting / Glove Compartment Lighting
Courtesy of VOLVO CARS CORPORATION

There are various lamps inside the passenger compartment, such as the courtesy lighting and glove compartment lighting for example. There are also LEDs around the keyhole in the ignition switch.

The lamps for the courtesy lighting are in the soundproofing panels on the driver and passenger sides. The lamp for the glove compartment is positioned on the left-hand inner side.

The lighting time can be programmed via the upper electronic module (UEM).

There are diagnostics for the key lighting and glove compartment lighting.

HORN

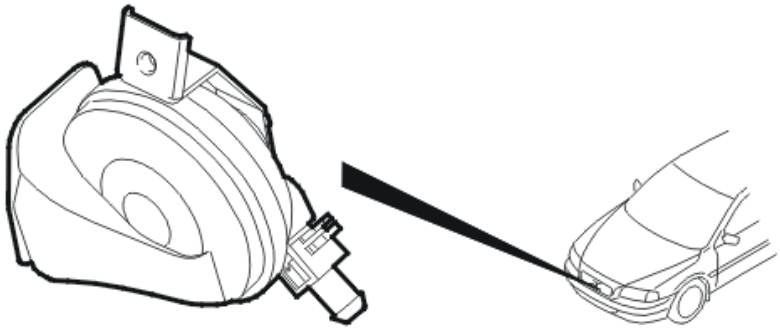

Fig. 224: Horn
Courtesy of VOLVO CARS CORPORATION

There are two horns in front of the radiator. There are four switches in the steering wheel. The horn is activated when one of these is closed.

The signal continues for as long as the switch is closed.

The horn is also activated when the panic alarm button on the remote control is pressed (certain markets).

The power supply for the horn is controlled from the central electronic module (CEM).

FUEL PUMP

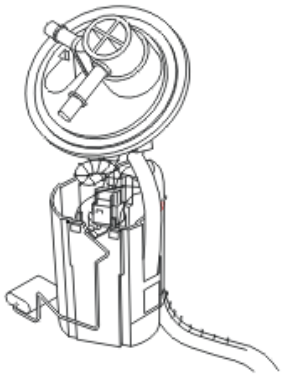

Fig. 225: Fuel Level Sensor
Courtesy of VOLVO CARS CORPORATION

The fuel pump (FP) is located on the inside of the fuel tank on the right-hand side. The power supply for the pump is checked by the central electronic module (CEM) which operates a relay. This relay controls the power supply to the pump and is directly connected to the central electronic module (CEM).

The central electronic module (CEM) uses the controller area network (CAN) to communicate with the engine control module (ECM) which requests power to the pump system. The active-on-demand pump system that receives a control signal from the engine control module (ECM) to control the flow.

The central electronic module (CEM) also communicates with the supplemental restraint system (SRS) module via a directly connected signal. In the event of a collision, the supplemental restraint system module (SRS) transmits data and the central electronic module (CEM) closes the relay for the pump system and shuts off the power supply to the fuel pump (FP).

There are diagnostics for the input signal from the engine control module (ECM) and for the relay for the fuel pump (FP).

In the event of a fault in the controller area network (CAN) or central electronic module (CEM), there is a limp-home function in the central electronic module (CEM). This keeps the fuel pump (FP) relay active throughout the operating cycle.

This function is stopped in the event of a collision. A signal is transmitted from the supplemental restraint system module (SRS) to the central electronic module (CEM).

If there are electrical faults, the engine cannot be restarted after a collision.

FUEL LEVEL

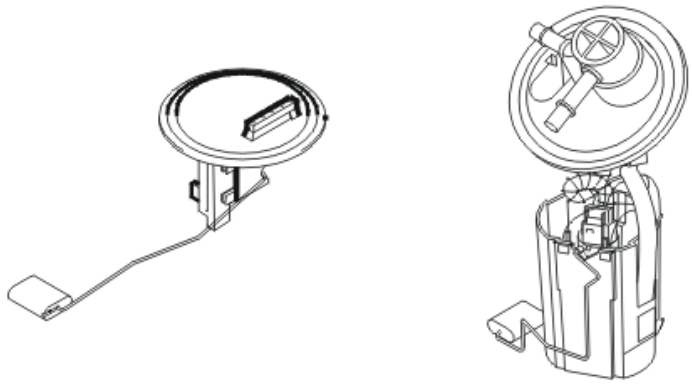

Fig. 226: Locating Fuel Level Sensors
Courtesy of VOLVO CARS CORPORATION

The fuel level in the tank is measured by two sensors. The sensors are located on each side of the fuel tank. Cars with engine B5244S6 have only one sensor, on the pump side. The sensor is directly connected to the central electronic module (CEM).

There are different tables for different fuel tank sizes. The tables are stored in the central electronic module (CEM) and indicate which sensor values correspond to the remaining fuel in the tank. The central electronic module (CEM) determines which tank is in the car by reading a parameter.

The resistance of the sensor increases as the fuel volume in the tank decreases. The signals from the sensors are compared with the values in the fuel tank table to obtain a value for the remaining fuel volume. This data is displayed by the fuel gauge in the driver information module (DIM).

If the sensors are faulty, the fuel gauge will show 0.

There are diagnostics for the fuel level sensors.

The fuel level sensor for Bi-fuel is connected to the rear electronic module (REM).

WASHER / WIPERS

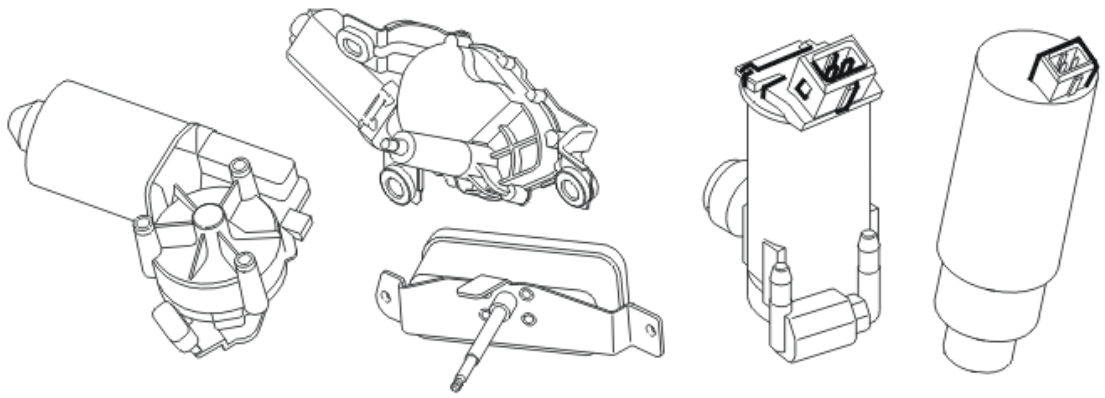

Fig. 227: Wiper Motors
Courtesy of VOLVO CARS CORPORATION

The windshield wipers are powered by a motor positioned under the cowl. There are also washer nozzles on the hood and bumper cover for cleaning the windshield and headlamps. The washer nozzles are connected to a pump motor on the windshield washer reservoir at the front right of the engine compartment.

For cars with five doors, there is a wiper and washer nozzle for the rear windshield.

The windshield wipers are operated using the right-hand control stalk. There are four positions:

- intermittent
- single sweep
- low speed
- high speed.

The time between strokes for intermittent wiping is adjusted using a ring on the control stalk.

Pull the control stalk towards the steering wheel to clean the windshield. The washer and wipers for the headlamps or high-pressure cleaning system are activated at the same time. The headlamp wipers operate for as long as washing is activated. They are not activated when only the windshield wipers are activated.

Push the control stalk away from the steering wheel to clean the rear windshield. There is a button at the end of the control stalk to control the rear wiper.

Information about the position of the control stalk is transmitted by the steering wheel module (SWM) to the central electronic module (CEM) using serial communication. The central electronic module (CEM) also receives a signal from the wiper motor if the wipers are in the park position.

The central electronic module (CEM) also monitors the windshield washer reservoir level via a level sensor in the reservoir. The switch in the level sensor closes if the level falls below one liter. A text message indicating that the windshield washer fluid needs to be topped up then lights in the driver information module (DIM) for approximately 10 seconds.

The power supply for the rear windshield wiper is via a directly connected relay in the rear electronic module (REM). The windshield wiper motor and high-pressure cleaning are supplied with power via relays in the engine compartment. The washer pump and headlamp wiper motors are powered via the central electronic module (CEM).

There are diagnostics for the windshield wiper motors and relays.

STARTER MOTOR

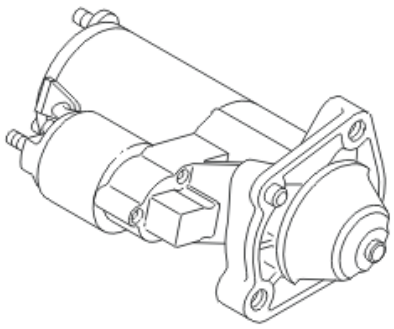

Fig. 228: Starter Motor
Courtesy of VOLVO CARS CORPORATION

The starter motor is on the left-hand side of the engine by the air cleaner (ACL) housing. The starter motor is powered directly from the battery. There is a solenoid on the starter motor to close the circuit. The central electronic module (CEM) activates a relay in the relay box in the engine compartment to act on the solenoid. This supplies the solenoid with power and closes the circuit for the starter motor.

The starter motor turns when the key is turned to position III in the ignition switch.

There are different functions which prevent starting, depending on whether the car has an automatic or manual transmission. The central electronic module (CEM) also has an electronic immobilizer function which communicates with a transponder in the key.

- Cars with manual transmissions have a sensor in the clutch pedal. The clutch pedal must be depressed to allow starting (certain markets)
- In cars with type 4T65EV automatic transmissions, a signal is transmitted from the gear-shift position sensor to the transmission control module (TCM) which then sends a directly connected signal to the central electronic module (CEM)
- In cars with AW automatic transmissions, a directly connected signal is transmitted directly from the gear-shift position sensor to the central electronic module (CEM).

There are diagnostics for the relay for the starter motor.

SPEED SENSITIVE POWER STEERING

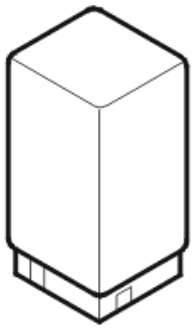

Fig. 229: Power Steering Control Module
Courtesy of VOLVO CARS CORPORATION

If the car has speed dependent power steering to control the steering assistance, there is a solenoid which controls a hydraulic valve on the steering gear.

The solenoid is controlled by the power steering control module. This receives speed data from the directly connected speed signal from the central electronic module (CEM).

The power steering control module uses a signal to check the solenoid. The solenoid deploys the valve on the steering gear to the required degree and regulates the oil in the steering gear to reduce or increase the servo assistance. The steering assistance increases at lower speeds and is reduced at higher speeds.

There are no diagnostics for the power steering.

PARKING HEATER (OPTIONAL EXTRA)

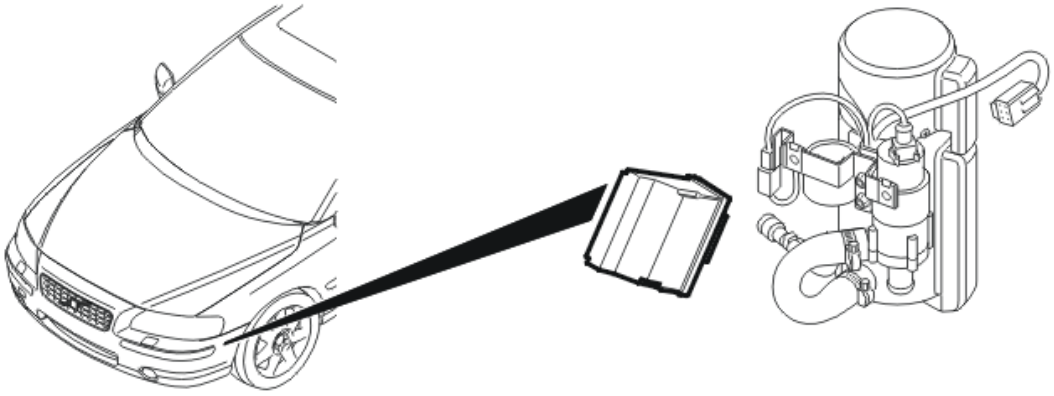

Fig. 230: Climate Control Module
Courtesy of VOLVO CARS CORPORATION

The start time of the heater is programmed as follows:

- the desired parking function is selected by turning the ring on the control stalk
- the desired time is selected by turning the ring on the control stalk
- press the RESET button.

Direct start can also be used to start the heater.

The climate control module (CCM) is activated when the engine coolant temperature (ECT) is greater than +20 °C. The blower fan starts and distributes the air in the passenger compartment.

Certain conditions must be met before the heater can start. These are:

- Quantity of fuel greater than 4 liters
- No diagnostic trouble codes (DTCs) that will prevent starting are stored in the central electronic module (CEM)
- The airbags have not deployed.

When the conditions are met, the heater glow plug is activated for 1 minute. If the voltage has dropped below 11.5 V, the climate control module (CCM) is switched off. The heater and the climate control module (CCM) are stopped if the voltage falls below 11.3 V. A message indicating low battery voltage is displayed in the driver information module (DIM). These voltage values apply even if the heater is operating normally.

To minimize the risk of the fuel pump for the heater failing due to lack of use, the central electronic module (CEM) sends a signal every week to the combustion preheater module (CPM) to activate the pump for approximately 1 second. This takes place when the ignition is switched off.

Remote start of parking heater (Applies from and incl. structure week 201020)

With remote start of parking heater it is possible to set timers for the parking heater as well as direct start of the parking heater via a computer with internet connection or via mobile telephone. Only applies to vehicles with Phone module (PHM).

TWILIGHT SENSOR

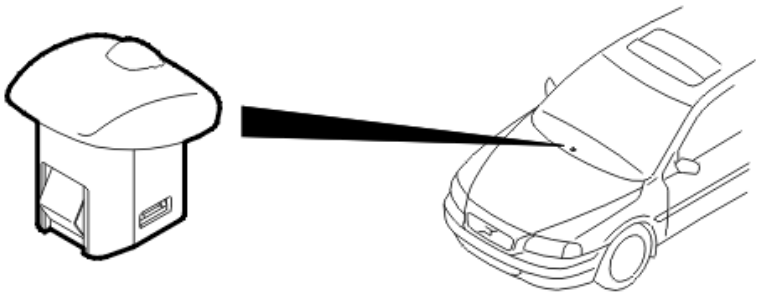

Fig. 231: Sun Sensor
Courtesy of VOLVO CARS CORPORATION

The twilight sensor consists of a photo diode powered from the central electronic module (CEM). The conductivity of the diode depends on the amount of light to which it is exposed.

The diode is under a diffusing lens which reduces the sensitivity of the photo diode to the angle of the light hitting it. Increased light intensity reduces the voltage over the photo diode.

The control module measures the voltage across the photo diode and converts the voltage to information which is then transmitted to other control modules via the controller area network (CAN).

The twilight sensor is in the same holder as the sun sensor.

There are diagnostics for the twilight sensor.

SUN SENSOR (ELECTRONIC CLIMATE CONTROL ONLY)

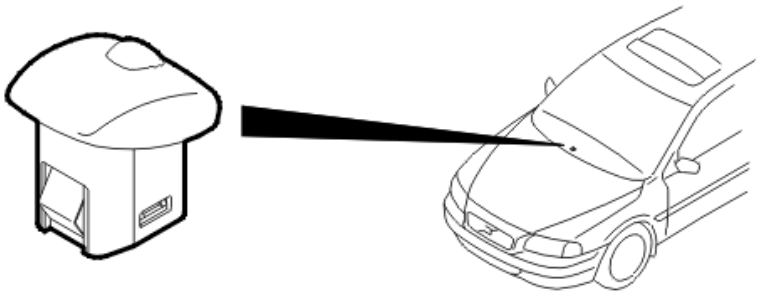

Fig. 232: Sun Sensor
Courtesy of VOLVO CARS CORPORATION

The sun sensor consists of a photo diode powered from the central electronic module (CEM). The conductivity of the diode depends on the amount of light to which it is exposed.

The diode is located under a diffusing lens which reduces the sensitivity of the photo diode to the angle of the light hitting it. Increased sun intensity reduces the voltage over the photodiode.

The control module measures the voltage across the photo diode and converts the voltage to information which is then transmitted to the climate control module (CCM) via the controller area network (CAN).

The sun sensor is located in the middle of the dashboard by the windshield.

There are diagnostics for the sun sensor.

BLIND SPOT INFORMATION SYSTEM (BLIS)

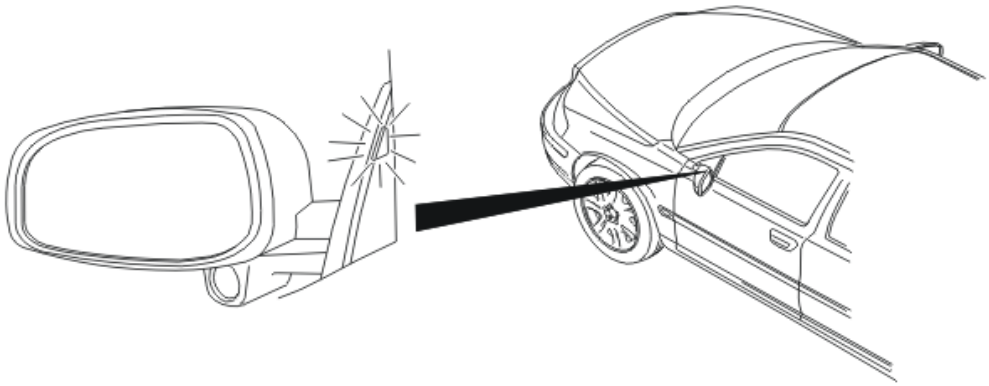

Fig. 233: Locating Blind Spot Information System LED
Courtesy of VOLVO CARS CORPORATION

The blind spot information system (BLIS) is an auxiliary system designed to help the vehicle's driver when moving sideways. The blind spot information system (BLIS) consists of two cameras integrated in the external rear view mirrors and two LEDs located in the panel at the front of the inside of the respective windows.

The central electronic module (CEM) communicates with the left camera module (LCM) and the right camera module (RCM) via serial communication.

The blind spot information system (BLIS) is always activated automatically when the ignition is switched on, but it is possible to deactivate and activate the blind spot information system (BLIS) using one of the switches on the dashboard environment panel on the climate control module (CCM). A signal is then transmitted via the central electronic module (CEM) to the left camera module (LCM) and the right camera module (RCM) with a request to deactivate or activate the blind spot information system (BLIS).

When reverse gear is engaged, the blind spot information system (BLIS) is deactivated.

The blind spot information system (BLIS) can be diagnosed.

DIAGNOSTIC FUNCTIONS

GENERAL INFORMATION

The control module has a built-in diagnostic system, Volvo Diagnostic, which continuously monitors internal functions as well as input and output signals.

DIAGNOSTIC TROUBLE CODES (DTCS)

A diagnostic trouble code (DTC) is stored if the control module detects a fault. The control module can store up to 10 diagnostic trouble codes (DTCs). A fault which is detected in the most recent operating cycle is defined as permanent. Other faults which are detected are defined as intermittent.

READING AND ERASING DIAGNOSTIC TROUBLE CODES (DTCS)

Stored diagnostic trouble codes (DTCs) can be read off and erased using this function.

Diagnostic trouble codes (DTCs) can only be erased once all the diagnostic trouble codes (DTCs) have been read off at least once.

READING OFF THE CONTROL MODULE IDENTIFICATION

VIDA identifies control modules by reading off a number of codes from the control module memory.

The codes contain information about the control module:

- hardware P/N (control module without software)
- hardware serial number (control module without software)
- software P/N
- diagnostic software P/N.

READING OFF EXTENDED DIAGNOSTIC TROUBLE CODE (DTC) INFORMATION

This function can be used to read parameters, status identifiers and counters stored at the same time as a diagnostic trouble code (DTC). These are called frozen values.

For further information, see: **DESCRIPTION OF FROZEN VALUES, CENTRAL ELECTRONIC MODULE (CEM)**

READING OFF THE PARAMETER VALUES

Using this function, the status or value of parameters can be read off. The status/value is presented digitally.

For further information about the different parameters, see: **DESCRIPTION OF PARAMETERS**

ACTIVATING COMPONENTS AND FUNCTIONS

This function can be used to activate components and functions which affect the outputs of the central electronic module (CEM).

For further information, see: **DESCRIPTION OF ACTIVATIONS**

READING OFF AND PROGRAMMING DATA

This function allows programmed data to be read off or data such as customer parameters to be programmed in.

NOTE: **If possible, all data must be read out from the control module before replacement. After replacement the relevant data must be programmed into the new control module. The data must be read off before the control module is replaced. This is so that the same information can be programmed in to the new control module.**

PROGRAMMING KEYS

Add or Remove key

This function is used to add a new key or remove a non-functioning or lost key.

DESCRIPTION OF FROZEN VALUES, CENTRAL ELECTRONIC MODULE (CEM)

EXPLANATION

Not all the parameters described need to be implemented in the control module. This varies from system to system.

Frozen values are parameter values that are stored when a diagnostic trouble code (DTC) is stored.

BATTERY VOLTAGE, VALUE

Measurement range: 0-12 V.

Normal value when the generator (GEN) is charging: 13.0-14.5 V.

DISTANCE, VALUE

Measurement range: 0-1048575 km.

The value indicates the total mileage of the car at the time the diagnostic trouble code (DTC) was stored.

PASSENGER COMPARTMENT TEMPERATURE, VALUE

Measurement range: -60-195 °C.

The combined instrument panel obtains the value via the control area network (CAN).

OUTSIDE TEMPERATURE, VALUE

Measurement range: -128-127.75 °C.

The combined instrument panel obtains the value via the control area network (CAN).

ENGINE RUNNING, STATUS

The status displays whether the engine was running when the diagnostic trouble code (DTC) was stored.

No = the engine was not running

Yes = the engine was running

TIME, VALUE

The value displays the time that has passed since the diagnostic trouble code (DTC) was stored.

DOWNLOADING SOFTWARE AND REPLACING THE CONTROL MODULE

New software can be downloaded into the central electronic module (CEM). When ordering software, the hardware and the software in the car is compared to the information in the Volvo central database. If the comparison is OK the software is downloaded to the control module. The PINs for the existing remote controls are downloaded at the same time.

If the comparison between the car and Volvo central database is not OK, the database is updated with the car configuration. When this is complete the software is downloaded.

When installing a completely new central electronic module (CEM) in the vehicle, the PIN codes are downloaded into the control module (when downloading software) for the following:

- central electronic module (CEM)
- immobilizer
- transponder (key).

The PIN codes are downloaded automatically in the order procedure available in VIDA (Volvo scan tool). The PIN codes are retrieved from the Volvo central database and are sent in the software package when software is ordered for the new control module.

The central electronic module (CEM) is to the left of the steering column under the dashboard. The entire control module is removed from the car during replacement.

Because of the unique PIN codes, the central electronic module (CEM) cannot be moved between cars.

Five customer parameters (six for 5 door cars) can be programmed into the central electronic module (CEM). These customer parameters are stored in the control module but not in the Volvo central database. This means that the customer parameters must be reprogrammed when hardware is replaced.

The customer parameters which can be programmed are:

- **Automatic locking.** If this function is activated, the side doors lock when the speed exceeds 7 km/h (5 mph). Selectable values: On / off
    1. The tailgate wiper can only be activated manually
    2. The tailgate wiper can be activated automatically when back-up (reverse) gear is selected and the front wipers are activated.
- **Locking acknowledgment via the turn signal lamps.** If this function is activated, the turn signal lamps flash when the car is locked and unlocked. Selectable values: On / Off
    1. The tailgate wiper can only be activated manually
    2. The tailgate wiper can be activated automatically when back-up (reverse) gear is selected and the front wipers are activated.
- **Tailgate wiper (certain models).** The tailgate wiper function can be programmed in two ways:
    1. The tailgate wiper can only be activated manually
    2. The tailgate wiper can be activated automatically when back-up (reverse) gear is selected and the

front wipers are activated.

FUNCTION

GENERATOR (GEN) (ALTERNATOR CONTROL MODULE (ACM))

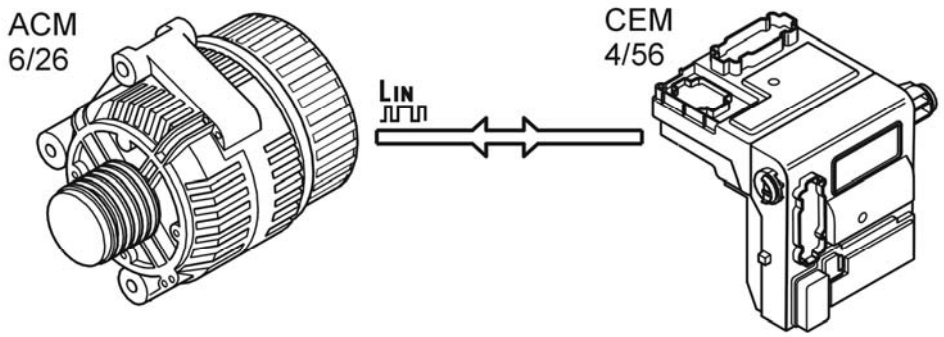

Fig. 234: Generator And Alternator Control Module
Courtesy of VOLVO CARS CORPORATION

CURRENT LIMITING

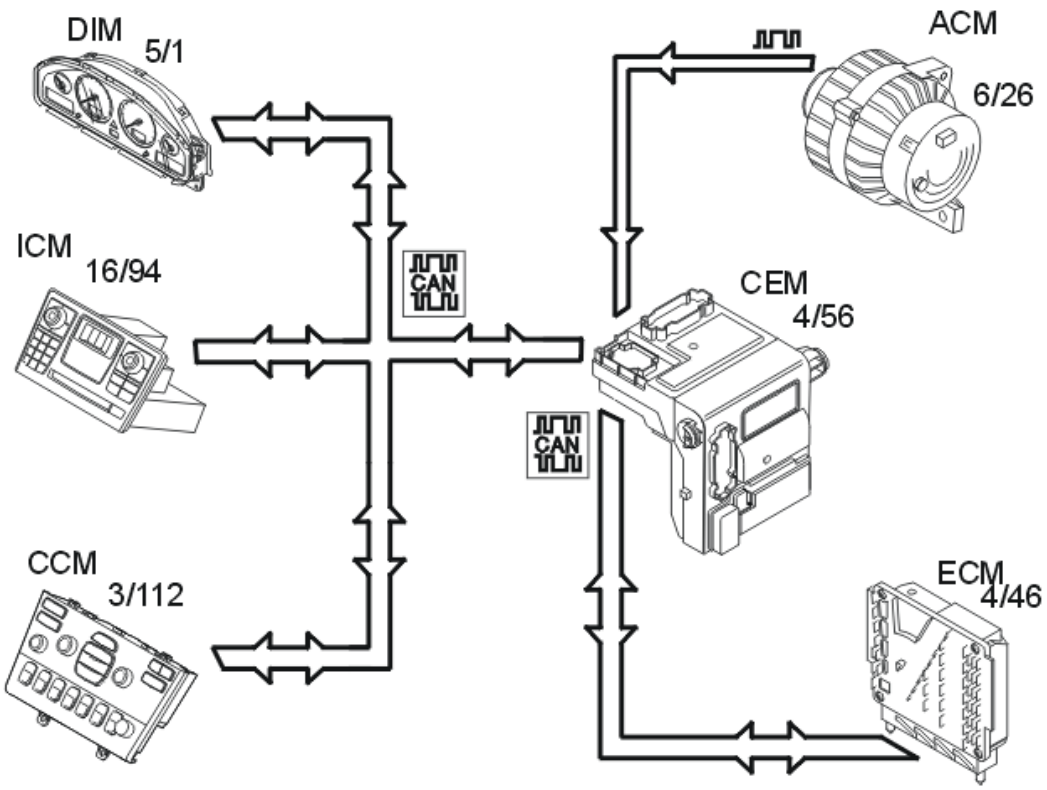

Fig. 235: CEM Communication Diagram

Courtesy of VOLVO CARS CORPORATION

The central electronic module (CEM) (4/56) communicates with the alternator control module (ACM) (6/26) via LIN-communication. In this way the central electronic module (CEM) receives information about how much current the generator produces and how much current can be used for the various loads in the vehicle.

The central electronic module (CEM) uses the prevailing outside temperature to calculate the voltage at which the battery should be charged.

Under certain conditions the generator cannot produce enough current for those loads which are connected. The central electronic module (CEM) communicates with the climate control module (CCM) (3/112) which then completely or partially switches off the following loads:

- electrical additional heater
- rear demist
- electrically heated seats
- heated door mirrors.

The central electronic module (CEM) also transmits a request via the Control area network (CAN) to the engine control module (ECM) to increase the engine idle speed.

When the engine is not running all current is taken from the battery. There are a number of different loads which can be activated when the engine is not running, for example the infotainment system (XC90). The central electronic module (CEM) continuously monitors the voltage level of the battery. When the voltage level is too low the central electronic module (CEM) transmits information to the infotainment control module (ICM) (16/1) which then shuts off the infotainment system. In the event of a fault, the central electronic module (CEM) transmits data via the Control area network (CAN) to the driver information module (DIM) (5/1) which displays a text message to the user.

If the infotainment system used in key position II, when the engine is not running, the information is sent to the driver information module (DIM). A message is displayed if the infotainment system is switched off for 2 minutes.

CHARGE VOLTAGE

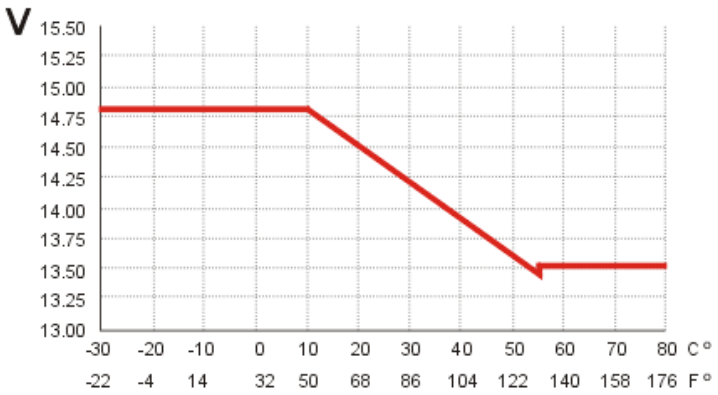

Fig. 236: Identifying Charge Voltage
Courtesy of VOLVO CARS CORPORATION

To charge the battery optimally the central electronic module (CEM) calculates the output voltage from the generator (GEN) using the temperature of the battery. The alternator control module (ACM) controls the output voltage, depending on the control from the central electronic module (CEM). See the illustration above. In some driving conditions for example, the engine control module (ECM) is able to affect generator (GEN) control, whereby the output voltage will deviate from the above.

TRIP COMPUTER AND DISPLAYING/ERASING TEXT MESSAGES

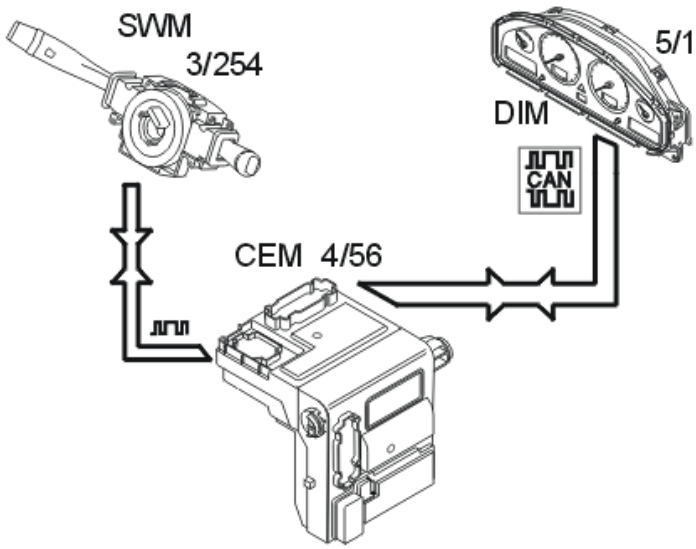

Fig. 237: Steering Wheel Module, Central Electronic Module And Driver Information Module Communication Diagram
Courtesy of VOLVO CARS CORPORATION

The left-hand control stalk is used to control the trip computer and to display and erase text messages in the driver information module (DIM) (5/1).

The steering wheel module (SWM) (3/254) transmits data to the central electronic module (CEM) using LIN communication to indicate the selected function. The central electronic module (CEM) (4/56) forwards this data to the driver information module (DIM) via the CAN network.

The trip computer menu is controlled using the ring on the left-hand control stalk. Turn the ring forwards or backwards to scroll through the menu one step at a time. Some menu selections, such as average speed and fuel consumption, can be reset using the RESET button.

Error messages displayed in the driver information module (DIM) display are erased using the READ button.

HEADLAMPS

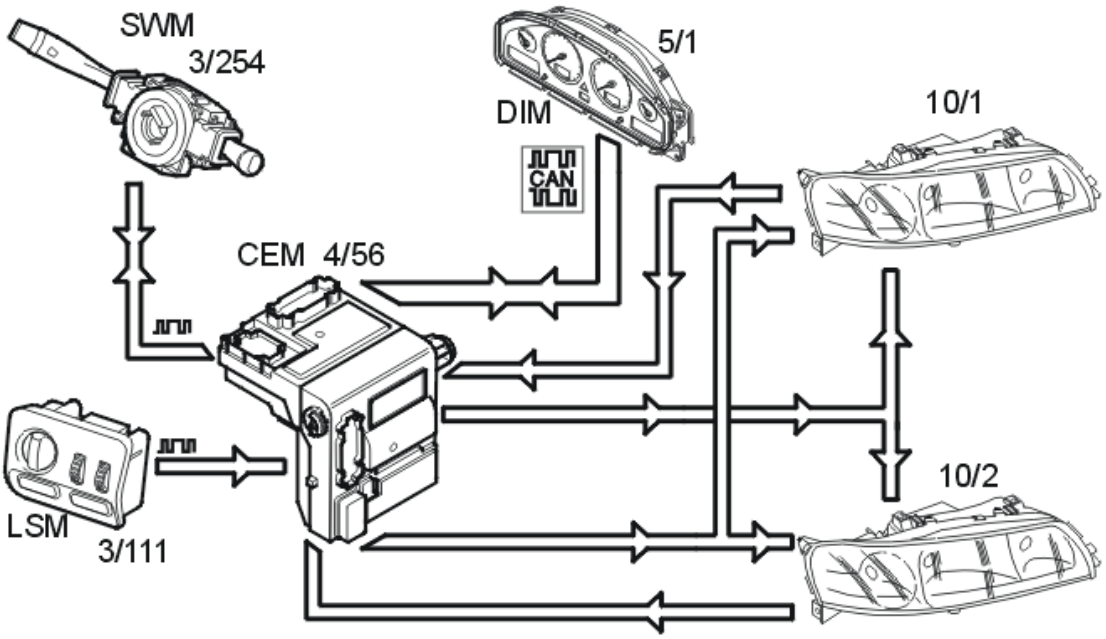

Fig. 238: Headlamps Communication Diagram
Courtesy of VOLVO CARS CORPORATION

Depending on the position of the knob, the light switch module (LSM) (3/111) transmits information via serial communication to the central electronic module (CEM) to turn on low beam. The central electronic module (CEM) (4/56) then transmits a control signal to activate the low beam relay. The bulbs are then supplied with power.

To change to high beam, the left-hand control stalk is pulled towards the steering wheel. The serial communication signal from the steering wheel module (SWM) (3/254) is transmitted to the central electronic module (CEM) which activates the high beam relay and supplies power to the high beam. For Bi-Xenon lamps, the position of the reflector is also changed so that the Xenon lamp is on at high beam.

The central electronic module (CEM) also transmits a CAN signal to the driver information module (DIM) (5/1) to light the indicator lamp for high beam.

There is a Limp Home function which ensures that low beam still works if there is a fault in the control area network (CAN). For Bi-Xenon lamps the beam is then set to the shortest range.

HEADLAMP RANGE ADJUSTMENT (CERTAIN MARKETS)

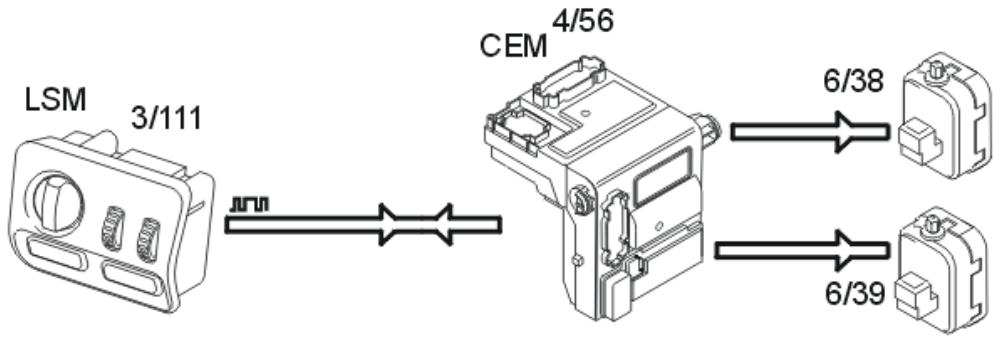

Fig. 239: Headlamp Range Adjustment Communication Diagram
Courtesy of VOLVO CARS CORPORATION

Headlamp range adjustment is controlled by the central electronic module (CEM) (4/56). The central electronic module (CEM) communicates with the light switch module (LSM) (3/111) using serial communication.

If the thumb wheel in the light switch module (LSM) is turned, information about the position of the wheel is transmitted to the central electronic module (CEM). The central electronic module (CEM) transmits a pulse width modulation (PWM) signal to the actuator motors (6/38-39) with the pulse ratio set according to the position of the thumb wheel. The headlamp range can be adjusted in 16 stages.

AUTOMATIC RANGE ADJUSTMENT (BI-XENON)

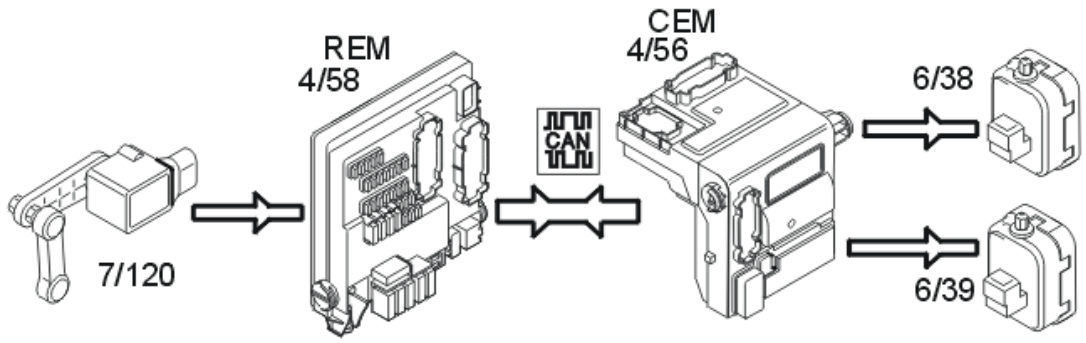

Fig. 240: Automatic Range Adjustment Communication Diagram
Courtesy of VOLVO CARS CORPORATION

Automatic headlamp range adjustment is controlled by the central electronic module (CEM) (4/56). The position sensor (7/120) on the rear suspension transmits signals to the rear electronic module (REM) (4/58) about the angle of the car in terms of the load conditions.

The rear electronic module (REM) transmits this data via the control area network (CAN) to the central electronic module (CEM) which compares the information with the table for the relevant model. The table is stored in the central electronic module (CEM).

The actuator motors (6/38-39) are then operated from the central electronic module (CEM) via a PWM signal, the pulse ratio of which depends on the angle the lamps need to be set to.

FRONT FOG LAMPS

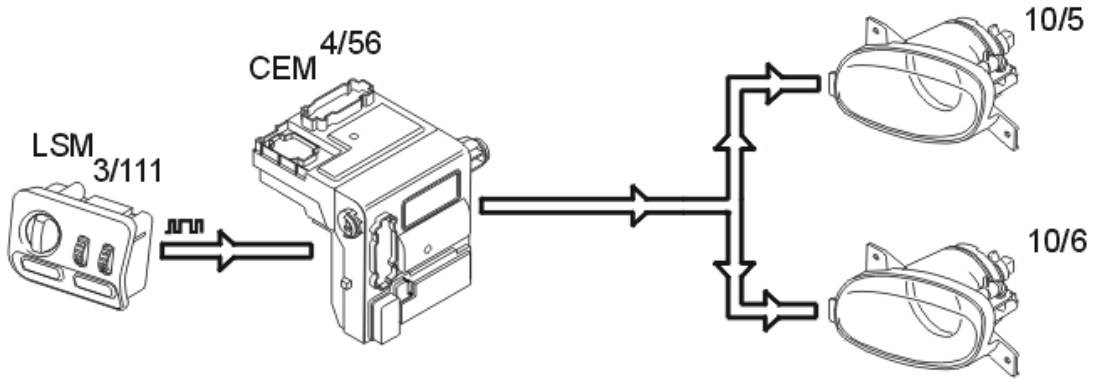

Fig. 241: Front Fog Lamps Communication Diagram
Courtesy of VOLVO CARS CORPORATION

The front fog lamps (10/5-6) are activated by pressing the button for the front fog lamps in the light switch module (LSM) (3/111). The light switch module (LSM) transmits data to the central electronic module (CEM) (4/56) to light the lamps. The central electronic module (CEM) activates the relay and the bulbs are supplied with power via the relay.

FRONT PARKING LAMPS

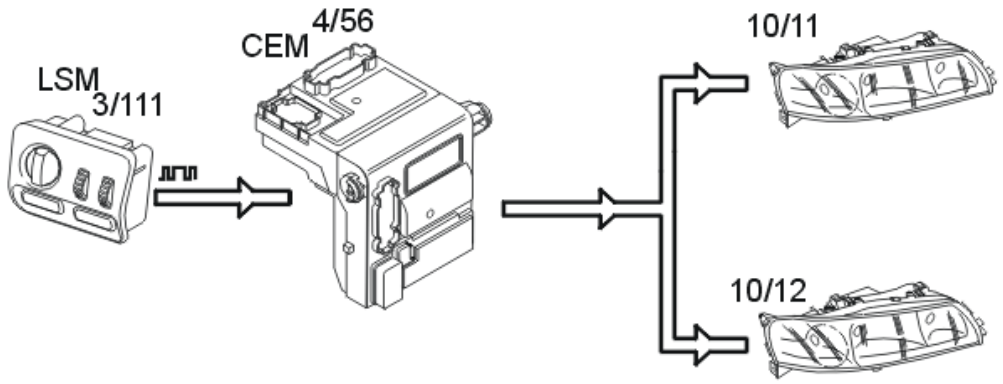

Fig. 242: Front Parking Lamps Communication Diagram
Courtesy of VOLVO CARS CORPORATION

Parking lamps (10/11-12) light when:

- the knob in the light switch module (LSM) (3/111) is in the low beam position
- the knob in the light switch module (LSM) is in the parking lamp position
- low beam is lit via the low beam automatic function.

The lamp switch module (LSM) transmits data using serial communication to the central electronic module (CEM) (4/56) to activate the lamps.

The lamps are supplied with power via a relay which is activated by the central electronic module (CEM). The front parking lamps have a direct power supply.

The rear parking lamps and license plate lighting are powered by the rear electronic module (REM).

There is a Limp Home function for the parking lamps so that they will work even if there is a fault in the control area network (CAN) or in the serial communication between the light switch module (LSM) and the central electronic module (CEM).

TURN SIGNAL LAMPS / HAZARD WARNING SIGNAL FLASHERS

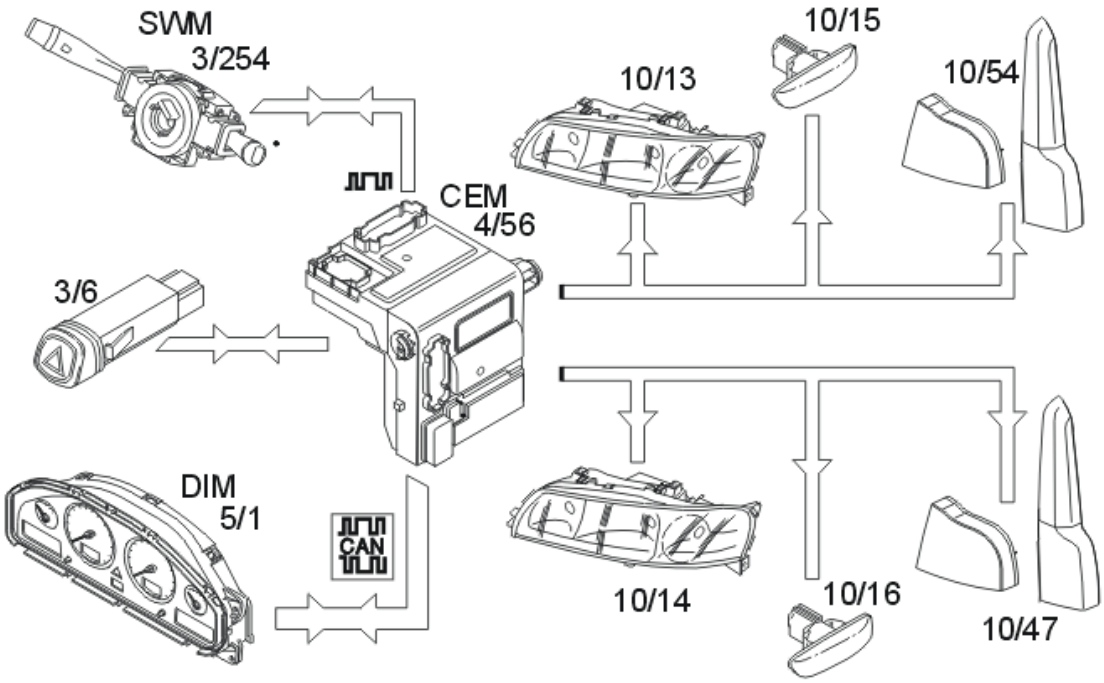

Fig. 243: Turn Signal Lamps / Hazard Warning Signal Flashers Communication Diagram
Courtesy of VOLVO CARS CORPORATION

This function is controlled by the left control stalk. The steering wheel module (SWM) (3/254) sends data to the central electronic module (CEM) (4/56) to activate the turn signal lamps via serial communication. The central electronic module (CEM) transmits information to the driver information module (DIM) (5/1) to activate the turn signal indicator and powers the turn signal lamp.

The power supply is pulsed and the turn signal lamps are activated 90 times per minute.

The hazard warning signal flasher is activated by closing the switch (3/6) and transmits a signal to the central electronic module (CEM) to start the function. The central electronic module (CEM) transmits a signal in the same way as above, but to both sides. The central electronic module (CEM) also transmits a signal to the bulb in the switch to indicate that the hazard warning signal flashers are on. If the ignition key is in position I or II,

there is a clicking sound from the driver information module (DIM). If the ignition is switched off, there is no sound, but the hazard warning signal flashers continue to flash.

If a fault occurs with a lamp, the central electronic module (CEM) detects the reduction in power consumption and the frequency is doubled on the side where the fault occurred.

HIGH LEVEL STOP LAMP

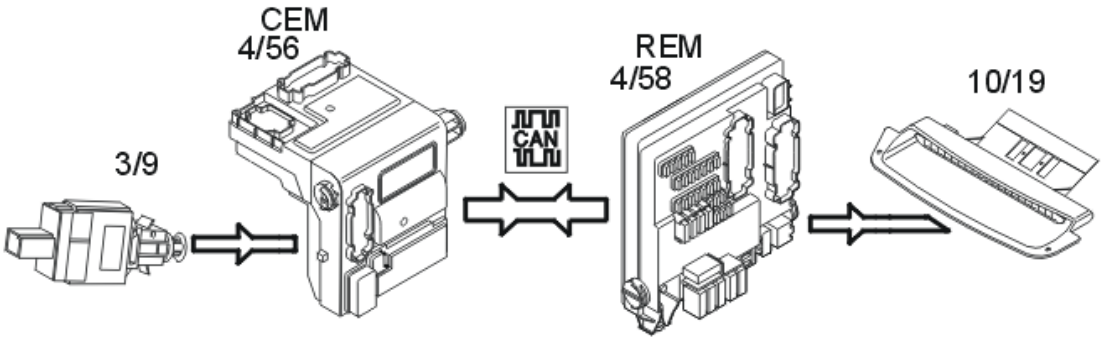

Fig. 244: High Level Stop Lamp Communication Diagram
Courtesy of VOLVO CARS CORPORATION

COURTESY LIGHTING / KEY LIGHTING / GLOVE COMPARTMENT LIGHTING

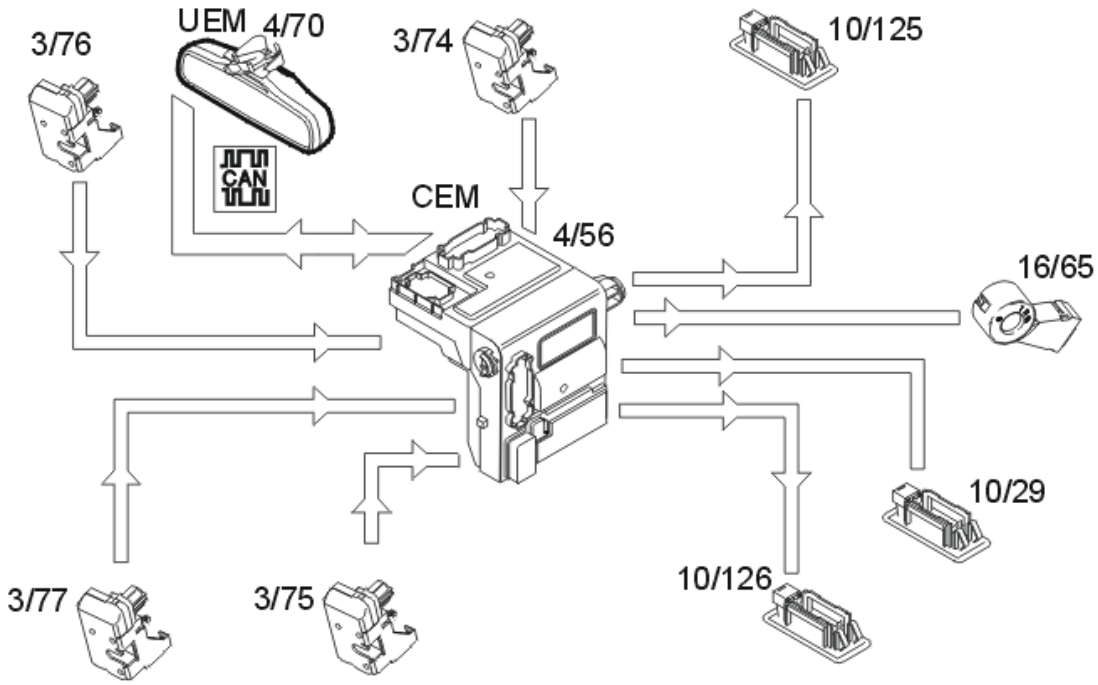

Fig. 245: Courtesy Lighting / Key Lighting / Glove Compartment Lighting Communication Diagram
Courtesy of VOLVO CARS CORPORATION

The courtesy lighting (10/125-126), ignition switch (16/65) and glove compartment lighting (10/29) are controlled via the central electronic module (CEM) (4/56). All other interior lighting is controlled by the upper electronic module (UEM) (4/70). The central electronic module (CEM) powers the lamps which it controls directly.

The lamps are powered if a door is opened (3/74-77), or when the upper electronic module (UEM) transmits a request via the control area network (CAN). The upper electronic module (UEM) transmits a request when it has received an unlock command from one of the remote controls. If a door is opened, the central electronic module (CEM) sends a control area network (CAN) signal to the upper electronic module (UEM) to light the lighting it controls.

The glove compartment lighting (10/29) is supplied with power directly from the central electronic module (CEM) when the switch by the lamp is activated when the glove compartment is opened.

HORN

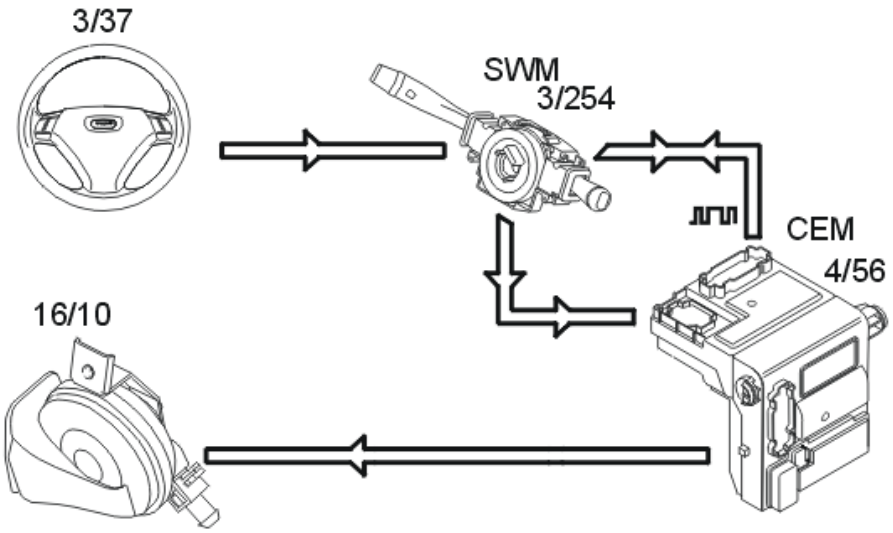

Fig. 246: Horn Communication Diagram
Courtesy of VOLVO CARS CORPORATION

The horn is operated when the steering wheel module (SWM) (3/254) receives a signal from the switches (3/37) in the steering wheel. The steering wheel module (SWM) sends data to the central electronic module (CEM) (4/56) via serial communication indicating that the switch is closed. The central electronic module (CEM) activates the relay for power supply to the horn.

There is also a signal directly connected from the steering wheel module (SWM) to the central electronic module (CEM). This is a Limp-Home function.

FUEL PUMP

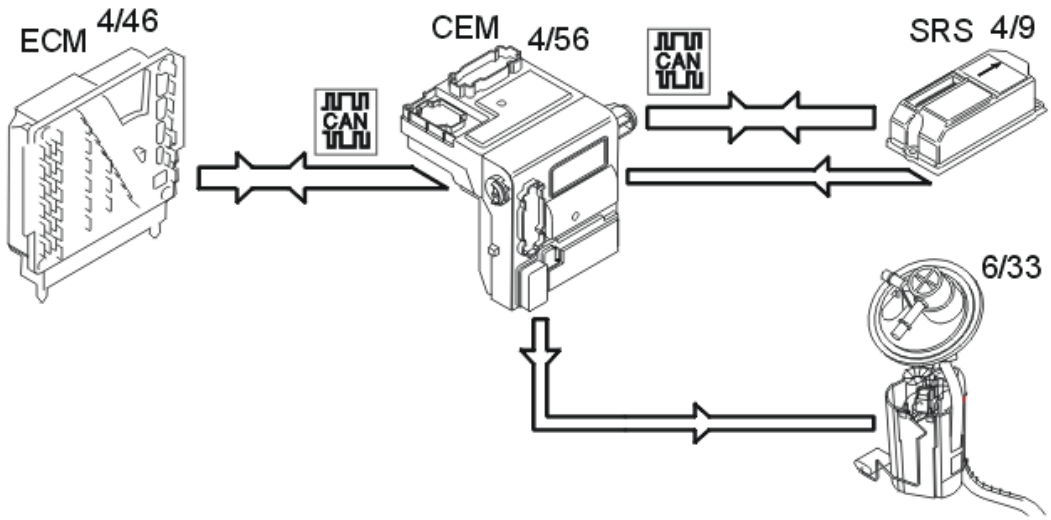

Fig. 247: Fuel Pump Communication Diagram
Courtesy of VOLVO CARS CORPORATION

The central electronic module (CEM) (4/56) receives a request from the engine control module (ECM) (4/46) via the control area network (CAN) to start the fuel pump (FP) (6/33). The central electronic module (CEM) then activates the relay which supplies the fuel pump with power.

In the event of a collision in which the airbags are deployed, a signal is transmitted from the supplemental restraint system (SRS) module (4/9) to the central electronic module (CEM) which deactivates the relay for the fuel pump.

FUEL LEVEL

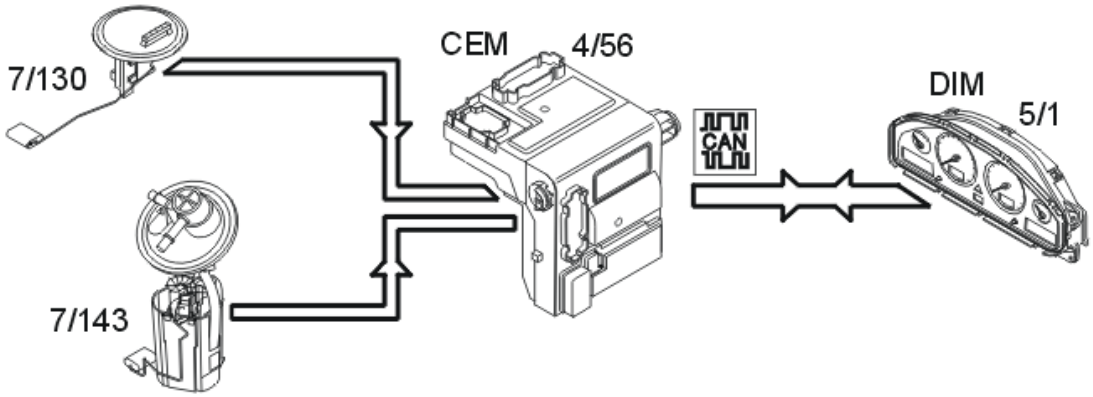

Fig. 248: Fuel Level Communication Diagram
Courtesy of VOLVO CARS CORPORATION

The fuel level is gauged by the fuel level sensors (7/130, 7/143). The signals from the sensors are transmitted to the central electronic module (CEM) (4/56). The central electronic module (CEM) calculates the remaining quantity of fuel by comparing the signals with a tank table stored internally. Information about the quantity of fuel is transmitted via the Control area network (CAN) to the driver information module (DIM) (5/1), where the

fuel level is displayed on the fuel gauge.

WIPERS / WASHERS

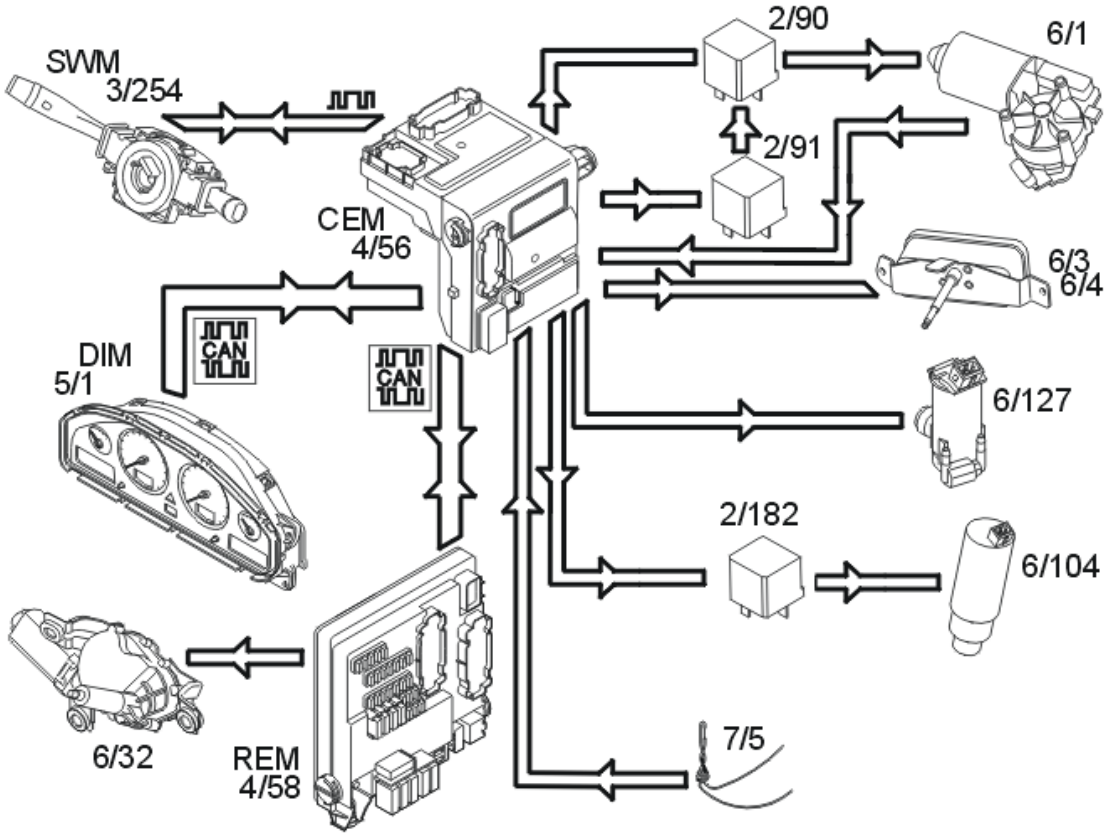

Fig. 249: Wipers / Washers Communication Diagram
Courtesy of VOLVO CARS CORPORATION

The right-hand control stalk is moved downwards through three positions to operate the windshield wipers. The steering wheel module (SWM) (3/254) transmits information to the central electronic module (CEM) (4/56) about the selected position using serial communication. The central electronic module (CEM) then activates the relay which supplies the wiper motor (6/1) with power in position 1. If high speed wiping is selected, the relay is also activated to power the motor in position 2.

The central electronic module (CEM) receives a signal from the motor when the wipers are in the parked position so that the wipers can be stopped in the correct position.

For intermittent wiping, the process is the same as for low speed, but the time between each stroke is set using the ring on the control stalk to one of eight positions between 1 and 27 seconds. The central electronic module (CEM) controls this once it has received information about intermittent wiping from the steering wheel module (SWM) via serial communication.

The windshield and headlamps are washed when the right-hand control stalk is moved towards the steering wheel. The steering wheel module (SWM) transmits information to the central electronic module (CEM) to activate washing via serial communication. The central electronic module (CEM) activates an internal relay

which powers the pump motor (6/127).

For other models, the central electronic module (CEM) activates the relay (2/182) which powers high-pressure cleaning (6/104).

The central electronic module (CEM) receives a signal from the level sensor (7/5) in the windshield washer reservoir so that it can check the windshield washer reservoir level. The switch in the level sensor closes if the level falls below one liter. The central electronic module (CEM) sends the signal to Driver information module (DIM) (5/1) via the controller area network (CAN). The driver information module (DIM) displays a text message for approximately 10 seconds indicating that the windshield washer fluid needs to be topped up.

The tailgate wiper (6/32) is controlled by the rear electronic module (REM) (4/58). The rear electronic module (REM) receives a signal from the steering wheel module (SWM) via the central electronic module (CEM). The rear electronic module (REM) then powers the relay to start the tailgate wiper. The tailgate wiper is powered by the rear electronic module (REM).

The tailgate wiper can be programmed so that it is not activated if the windshield wipers are on and back-up (reverse) gear is selected.

Rear windshield cleaning is activated when the right-hand control stalk is pushed away from the steering wheel. The steering wheel module (SWM) transmits information to the central electronic module (CEM) to activate tailgate washing via serial communication. The central electronic module (CEM) activates the relay to power the pump motor (6/127). At the same time the rear electronic module (REM) activates the tailgate wiper.

The wipers only operate at low speed if there is a fault in the control area network (CAN). If this is the case, the central electronic module (CEM) receives a directly connected signal from the steering wheel module (SWM).

There is no Limp Home function for the rear windshield washer and wiper.

STARTER MOTOR

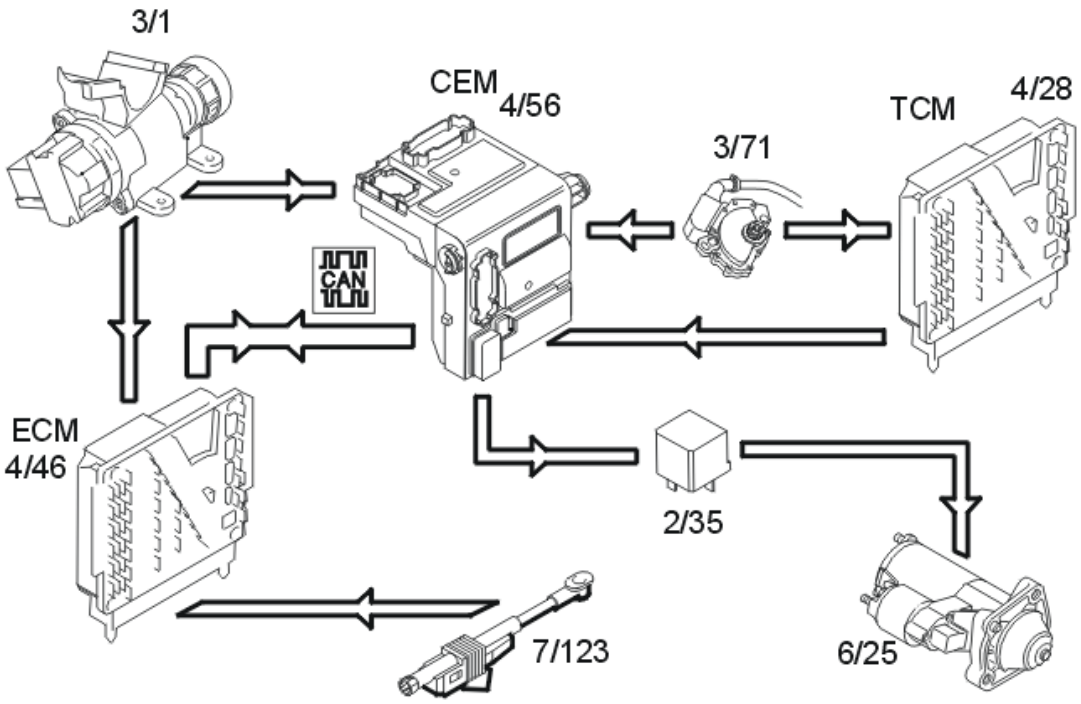

Fig. 250: Starter Motor Communication Diagram
Courtesy of VOLVO CARS CORPORATION

Manual transmissions

The starter motor (6/25) is operated by turning the key in the ignition switch (3/1) to position III.

- For transmissions **with** a clutch interlock (certain markets), a signal is transmitted from the ignition switch to the engine control module (ECM) (4/46). The engine control module (ECM) detects the position of the clutch pedal sensor (7/123). The engine control module (ECM) transmits data to the central electronic module (CEM) (4/56) via the control area network (CAN) about the position of the pedal. The central electronic module (CEM) requires a signal that the clutch is pressed down and that the key is in position III before it will send a signal to the relay (2/35). When the relay is activated, the solenoid in the starter motor is powered
- For transmissions **without** clutch interlock, the central electronic module (CEM) (4/56) activates relay 2/35 and powers the solenoid in the starter motor (6/25).

The starter motor turns for as long as the key is in position III. If the engine has been started once, there is a Limp Home function so that the engine can be started again even if there is a fault in the control area network (CAN). This function is active for a brief period after the key is removed from the ignition switch. After this time the car will not start because there is no communication for the immobilizer between the central electronic module (CEM) and the engine control module (ECM).

Automatic transmission

The starter motor (6/25) is operated by turning the key in the ignition switch (3/1) to position III.

- For transmission 4T65EV, a signal is transmitted from the gear-shift position sensor (3/71) via the transmission control module (TCM) (4/28) to the central electronic module (CEM) (4/56) indicating that the gear selector is in position P/N
- For AW transmissions the signal is transmitted directly from the gear-shift position sensor to the central electronic module (CEM). The central electronic module (CEM) requires this signal and a signal indicating that the key is in position III before it will send a signal to the relay (2/35). When the relay is activated, the solenoid in the starter motor is powered.

The starter motor turns for as long as the key is in position III. If the engine has been started once, there is a Limp Home function so that the engine can be started again even if there is a fault in the control area network (CAN). This function is active for a brief period after the key is removed from the ignition switch. After this time the car will not start because there is no communication for the immobilizer between the central electronic module (CEM) and the engine control module (ECM).

SPEED SENSITIVE POWER STEERING

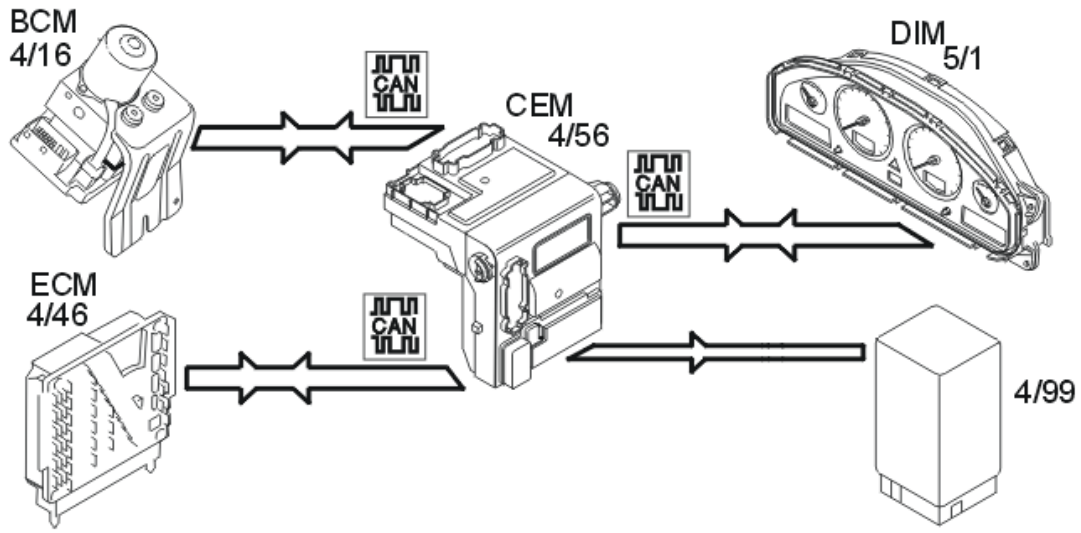

Fig. 251: Speed Sensitive Power Steering Communication Diagram
Courtesy of VOLVO CARS CORPORATION

The central electronic module (CEM) (4/56) receives information that the engine is running from the engine control module (ECM) (4/46) on the controller area network (CAN). It receives information about vehicle speed from the brake control module (BCM) (4/16). The central electronic module (CEM) then controls the power steering control module which in turn acts on the solenoid.

The central electronic module (CEM) checks the signals. If a fault is detected, the servo assistance is set to normal (approximately 70 km/h) and the system is disengaged. The central electronic module (CEM) also transmits a signal to the driver information module (DIM) (5/1) via the control area network (CAN) which lights the general warning lamp and displays a text message.

DESCRIPTION OF FUNCTION OF THE OPERATING STATUS OF THE HEATER

The heater can have a number of different statuses. Each status and what should occur in it is described below.

Operating status:	Description:
0: The heater has not started	Initialization of the combustion preheater module (CPM).
1: The heater starts	Heater self test. The glow plug and the water pump are activated. The combustion fan then starts at low speed to ventilate the heater. This is to cool the glow plug so that the flame sensor does not detect light from the glow plug as a flame. The control module pulses the supply to the glow plug (pulse width modulation (PWM) signal). The glow plug is sufficiently warm to ignite the fuel after approximately 45 seconds. This whole process takes approximately 1 minute.
2: The heater starts and the fuel pump is active	The fuel pump starts and the speed of the combustion fan increases. The control module waits for a flame. The blower fan will now be running. Maximum time 1 minute.
3: The heater runs	A flame has been detected by the flame sensor and heats the heater. When the car is being driven the heater is stopped if the engine coolant temperature (ECT) exceeds a certain level. The heater is stopped by cutting the fuel supply. The combustion fan ventilates the heater when the flame has gone out. When the temperature falls below a certain level, the heater starts again. This means that the heater cycles between 2 temperature ranges.
4: The heater stops	The fuel pump stops, the flame is extinguished and the heater is ventilated.
5: The heater waits	Waiting for the engine coolant temperature (ECT) to fall low enough for the heater to start again.
6: The heater has stopped	The heater only has this status if a fault has occurred.
7: The flame is extinguished	The flame has gone out while the car is being driven.
8: Residual heat	If, when the outside temperature is low, the driver is in the car and turns on the heater, the water pump starts in order to heat the passenger compartment.
9: Fuel pump activated	Used in production.
10: Activating the fuel pump	Single pulses to the fuel pump are used to prevent the fuel pump sticking.

The vehicle configuration can be read off to check what functions the car is equipped with. The following affect the function of the heater:

- Parking and additional heater function
- Parking heater or not (gasoline engines)
- Residual heater or not
- Electrical engine block heater (time controlled via the driver information module (DIM)) or not.

FUEL DRIVEN PARKING HEATER

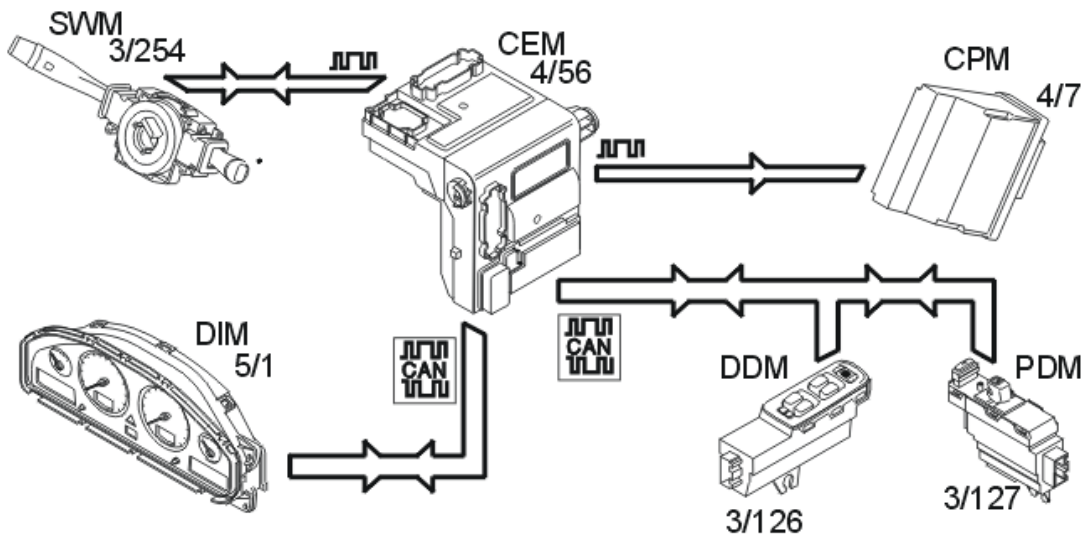

Fig. 252: Additional Heater And Parking Heater Communication Diagram
Courtesy of VOLVO CARS CORPORATION

The driver sets the desired departure time using one of the two timer functions in the display on the driver information module (DIM) (5/1). The time is programmed by twisting the ring on the control stalk and by pressing the "reset" button for the desired time (timer 1, timer 2 or direct start). Direct start can also be used to start the heater.

The central electronic module (CEM) (4/56) receives data about when the driver wants to drive from the control stalk module (steering wheel module (SWM)) (3/254) and the driver information module (DIM).

The central electronic module (CEM) calculates when the heater needs to start so that it is warm enough in relation to the outside temperature. Information about temperature is obtained from the outside temperature sensor in the right-hand door mirror. This sensor is connected to the driver door module (DDM) or passenger door module (PDM).

The central electronic module (CEM) calculates when the heater needs to start:

- The heater calculates when start is required (15-50 minutes before the intended departure at medium low temperatures between -10 °C and +15 °C)
- This procedure takes a maximum of one minute. 60 minutes at temperatures below -10 °C
- This running time of the heater is a minimum of 15 minutes before the planned departure. (Warm temperatures between +15 °C and +25 °C).

When the heater is started directly using the control stalk it runs until it is shut off or for a maximum of 60 minutes. The heater is on for 10 minutes after the set time to allow for the driver getting to the car late.

A text message is displayed in the driver information module (DIM) when the heater is running.

Remote start of parking heater (Applies from and incl. structure week 201020)

With remote start of parking heater it is possible to set timers for the parking heater as well as direct start of the parking heater via a computer with internet connection or via mobile telephone. Only applies to vehicles with Phone module (PHM).

ELECTRICAL HEATER WITH TIMER FUNCTION

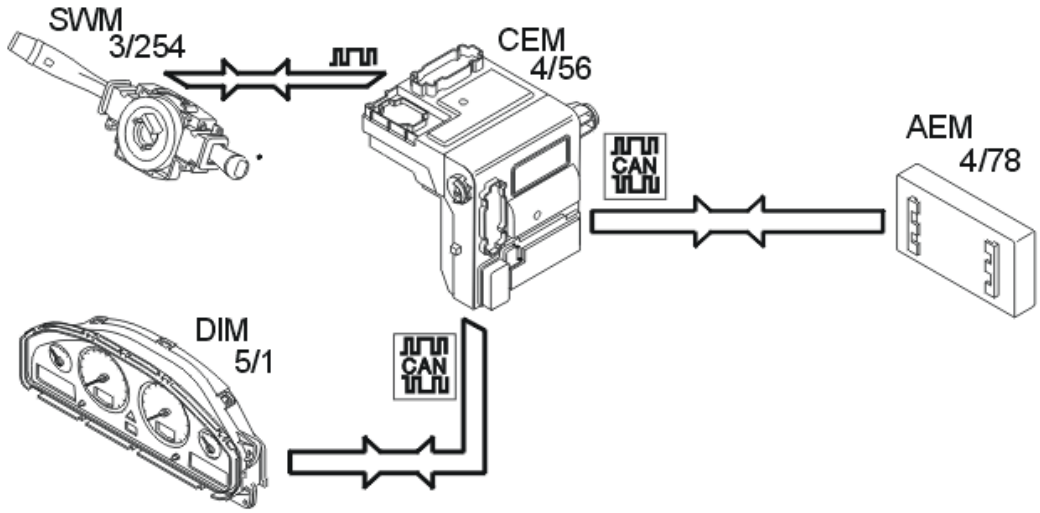

Fig. 253: Electrical Heater With Timer Function Communication Diagram
Courtesy of VOLVO CARS CORPORATION

The desired departure time is set using the steering wheel module (SWM) (3/254).

The central electronic module (CEM) (4/56) calculates when the heater needs to start. The heater starts 2 hours and 45 minutes before the set departure time, irrespective of the temperature. A text message is displayed in the driver information module (DIM) (5/1) when the electrical heater is running.

The accessory electronic module (AEM) (4/78) electrically controls when the heater should be switched on and off. The engine block heater must be connected to a wall socket. The accessory electronic module (AEM) activates a relay which closes the switch for a heater element.

RESIDUAL HEATER

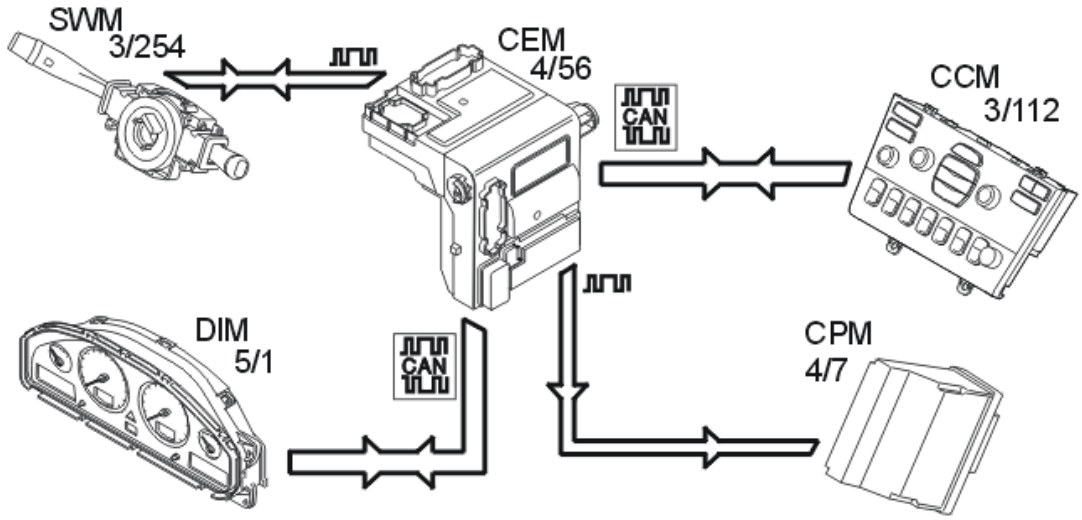

Fig. 254: Residual Heater Communication Diagram
Courtesy of VOLVO CARS CORPORATION

This function can be ordered as an accessory.

The function is activated in the driver information module (DIM) (5/1) using the control stalk (compare to the parking heater). Information about activation is sent to the central electronic module (CEM) (4/56) and climate control module (CCM) (3/112). The blower fan and damper settings are set by the climate control module (CCM). The central electronic module (CEM) transmits data to the combustion preheater module (CPM) (4/7) instructing it to activate the water pump.

When the residual heater is activated it will operate as long as the coolant temperature is above 30 °C or for a maximum of 20 minutes or until the function is switched off.

This function is used when the coolant is already warm. The coolant pump is started thereby circulating the coolant. The heat is distributed from the coolant to the passenger compartment unit in the climate control unit and on to the passenger compartment.

When the residual heater is running, the passenger compartment is heated by the climate control module (CCM) controlling the fan and damper according to a customer parameter (Applies only to electronic climate control (ECC)). This parameter is used to set the distribution between the defroster and the floor. The normal setting is 30% defroster and 70% floor.

STARTING THE HEATER REMOTELY

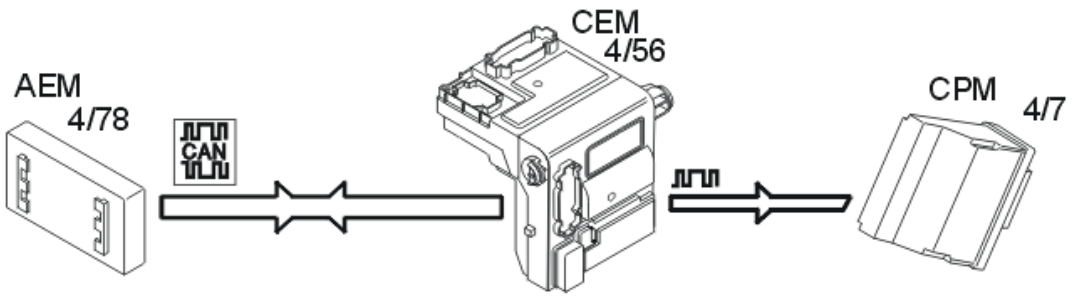

Fig. 255: Starting The Heater Remotely Communication Diagram
Courtesy of VOLVO CARS CORPORATION

Cars with an accessory electronic module (AEM) (4/78) can have a remote start function for the heater. This allows the heater to be started using a pager. A stop or start signal is transmitted from the accessory electronic module (AEM) to the central electronic module (CEM) (4/56) to start or stop the heater (4/7). This function is available for both fuel driven and electrical heaters.

BLIND SPOT INFORMATION SYSTEM (BLIS)

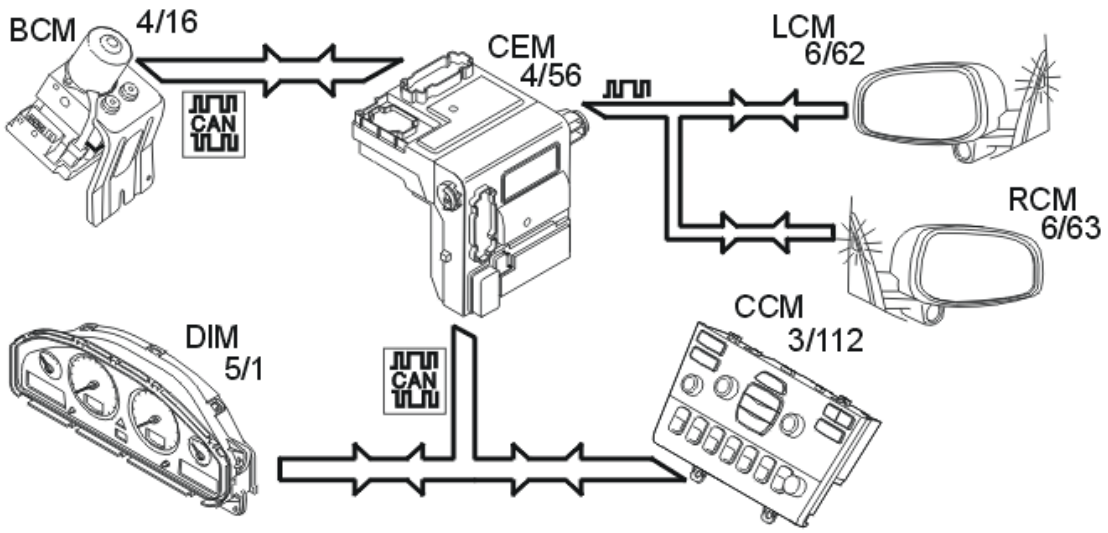

Fig. 256: Blind Spot Information System Communication Diagram
Courtesy of VOLVO CARS CORPORATION

The cameras take 30 images a second and compare each image with the previous one to check whether any changes have taken place. To be able to determine whether a change is of any significance when moving sideways, the camera module also has to know the vehicle's speed. To calculate the vehicle's speed and know whether the vehicle is turning, the speed signals for the respective rear wheels from the brake control module (BCM) are used. The central electronic module (CEM) (4/56) receives information from the brake control module (BCM) (4/16) via the CAN network on the respective speeds of the two rear wheels. These two signals are then passed on to the left camera module (LCM) and right camera module (RCM) respectively via serial

communication.

If the camera module discovers that there is something in the dead angle, an orange LED, located on the inside of the panel at the front of the window on the door, comes on. This LED is directly connected to the respective camera module.

The blind spot information system (BLIS) can be deactivated using one of the switches on the dashboard environment panel. When this switch is depressed, a signal is transmitted from the climate control module (CCM) to the central electronic module (CEM) via the CAN network. The system is then deactivated until the switch is depressed again or the next time the vehicle is started.

If a fault is detected by the central electronic module (CEM), a diagnostic trouble code (DTC) is stored and a signal is transmitted via the CAN network to the driver information module (DIM), which turns on a general warning lamp and displays a text message.

SYSTEM OVERVIEW

CONTROL MODULE

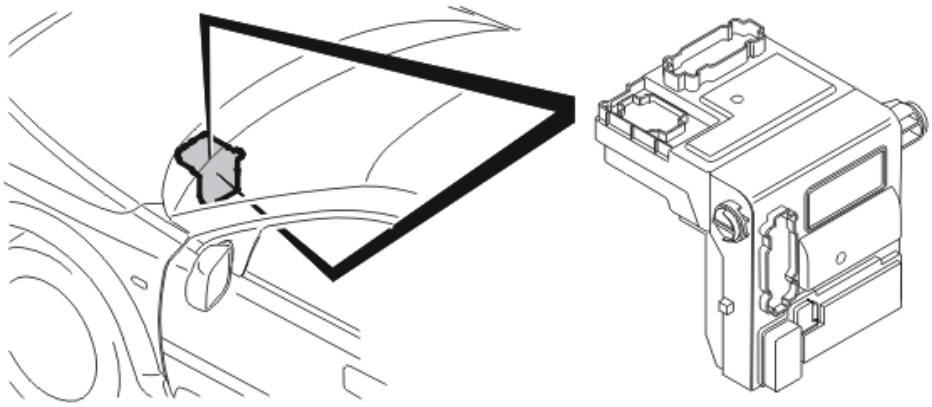

Fig. 257: CEM
Courtesy of VOLVO CARS CORPORATION

The role of the central electronic module (CEM) is to control the controller area network (CAN) and to act as a bridge between the low and high speed sections of the controller area network (CAN) and the data link connector (DLC).

It also manages the following functions:

- Alarm (certain functions)
- Locks (certain functions)
- Immobilizer
- Headlamps
- Front parking lamps
- Front fog lamps

- Headlamp range adjustment (certain markets)
- Automatic range adjustment (Bi-Xenon)
- Turn signal lamps
- Courtesy lighting / key lighting / glove compartment lighting
- Fuel pump
- Wiper / washers for the windshield and headlamps
- Starter motor
- Speed sensitive power steering
- Horn
- Clock
- Power supply (generator control)
- Current limiting
- Fuel level display
- Additional heater.
- Parking heater
- Blind spot information system (BLIS)

The control module is to the left of the steering column under the dashboard. The entire control module is removed from the car during replacement.

A car configuration file is stored in the central electronic module (CEM). This file contains information about:

- the VIN of the car
- the structure week
- the equipment level of the car.

When replacing the central electronic module (CEM), the VIN cannot be read off until the software has been downloaded from the Volvo central database.

The central electronic module (CEM) communicates with directly connected components and with other control modules and components via serial communication and the control area network (CAN).

The central electronic module (CEM) uses built in diagnostics to check all activations and the input and output signals. A diagnostic trouble code (DTC) is stored if the control module detects a fault. In certain cases, the incorrect signal is replaced with a substitute value. Other control modules use the network to report to the central electronic module (CEM) if they have diagnostic trouble codes (DTCs) stored. This function is used when reading off diagnostic trouble codes (DTCs) without VIDA (Volvo scan tool).

Any diagnostic trouble codes (DTCs) are stored in the control module memory. This information can be read off using VIDA via the data link connector in the vehicle.

The easiest way to check if the central electronic module (CEM) is grounded and receiving power is to activate the hazard warning signal flasher. The central electronic module (CEM) is powered if the function operates.

SIGNALS

The table below summarizes the input signals to and output signals from the central electronic module (CEM). The signal types are divided into directly connected signals, serial communication and controller area network (CAN) communication. The illustration below displays the same information with the Volvo component designations.

Input signals	Output signals
Directly connected: • Back-up (reversing) lamp switch (3/10) • Windshield wiper motor (6/1) • Windshield washer level sensor (7/5) • Horn switch (3/37) • Stop lamp switch (3/9) • Control signal P/N position, gear selector module (GSM) (3/156) (automatic transmissions only) • Supplemental restraint system module (SRS) (Airbag OK) (4/9) • Gear-shift position sensor (8/37) • Antenna ring, immobilizer (16/65) • Hazard warning signal flasher switch (3/6) • Fuel level sensor (7/130, 7/143) • Seat position sensor driver (3/255-256) (XC90 USA/CDN only) • Twilight sensor (7/12) • Sun sensor (7/12).	**Directly connected:** • Starter motor (6/25) • Headlamp range adjustment (6/38-39) (certain markets) • Windshield wiper (6/1) • Washer motor (6/127) • Horn (16/10-11) • Stop lamps via the rear electronic module (REM) (4/58) • Fuel pump (FP) (6/33) • Hazard warning signal flasher switch (3/6) • Glove compartment lighting (10/29) • Ignition switch lighting (16/65) • Courtesy lighting (10/125-126) • 12 V socket (9/25) • Auxiliary lamps (10/65, 10/66) • High beam (10/64, 10/68) • Low beam (10/66, 10/70) • Front parking lamps (10/11-12) • Turn signal lamps (10/13-14, 10/15-16, 10/47, 10/54) • Front fog lamps (10/5-6) • Electrical power steering module (EPS) (4/99).
Via serial communication: • Combustion preheater module (CPM) (4/7) (optional extra) • Light switch module (LSM) (3/111) • Steering wheel module (SWM) (3/254) • Alternator control module (ACM) (6/26). • Blind spot information system (BLIS) (6/62, 6/63) (optional extra)	**Via serial communication:** • Combustion preheater module (CPM) (4/7) (optional extra) • Light switch module (LSM) (3/111) • Steering wheel module (SWM) (3/254) • Alternator control module (ACM) (6/26). • Blind spot information system (BLIS) (6/62, 6/63) (optional extra)

Via Controller Area Network (CAN) communication: • Accessory electronic module (AEM) (optional equipment) (4/78) • Audio module (AUM) (16/1) (not XC90) • Brake control module (BCM) (4/16) • Climate Control Module (CCM) (3/112) • Driver door module (DDM) (3/126) • Differential electronic module (DEM) (optional equipment) (4/82) • Driver information module (DIM) (5/1) • Engine control module (ECM) (4/46) • Electronic throttle module (ETM) (4/50) • Passenger door module (PDM) (3/127) • Phone module (PHM) (optional equipment) (16/60) • Power seat module (PSM) (4/52) • Rear electronic module (REM) (4/58) • Road traffic information module (RTI) (16/45) (optional equipment, not XC90) • Steering wheel angle sensor module (SAS) (3/254) • Supplemental Restraint System Module (SRS) (4/9) • Transmission Control Module (TCM) (4/28) • Upper electronic module (UEM) (4/70) • Suspension module (SUM) (4/84) (optional extra) • Infotainment control module (ICM) (16/94) (XC90 only) • Data link connector (DLC) (17/13).	**Via Controller Area Network (CAN) communication:** • Accessory electronic module (AEM) (optional equipment) (4/78) • Audio module (AUM) (16/1) (not XC90) • Brake control module (BCM) (4/16) • Climate Control Module (CCM) (3/112) • Driver door module (DDM) (3/126) • Differential electronic module (DEM) (optional equipment) (4/82) • Driver information module (DIM) (5/1) • Engine control module (ECM) (4/46) • Electronic throttle module (ETM) (4/50) • Passenger door module (PDM) (3/127) • Phone module (PHM) (optional equipment) (16/60) • Power seat module (PSM) (4/52) • Rear electronic module (REM) (4/58) • Road traffic information module (RTI) (16/45) (optional equipment, not XC90) • Steering wheel angle sensor module (SAS) (3/254) • Supplemental Restraint System Module (SRS) (4/9) • Transmission Control Module (TCM) (4/28) • Upper electronic module (UEM) (4/70) • Suspension module (SUM) (4/84) (optional extra) • Infotainment control module (ICM) (16/94) (XC90 only) • Data link connector (DLC) (17/13).

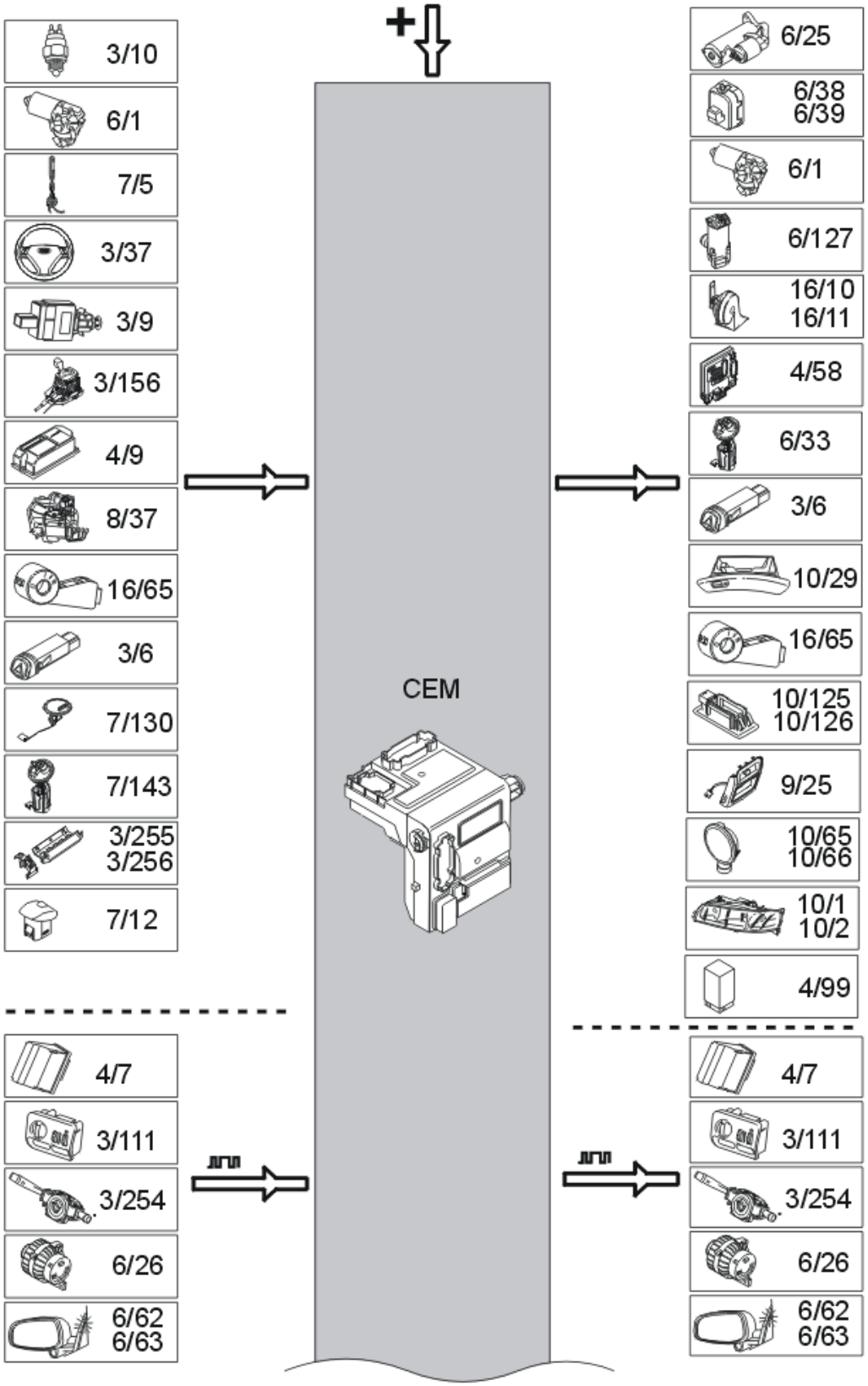
3/10
6/1
7/5
3/37
3/9
3/156
4/9
8/37
16/65
3/6
7/130
7/143
3/255
3/256
7/12
4/7
3/111
3/254
6/26
6/62
6/63
CEM
6/25
6/38
6/39
6/1
6/127
16/10
16/11
4/58
6/33
3/6
10/29
16/65
10/125
10/126
9/25
10/65
10/66
10/1
10/2
4/99
4/7
3/111
3/254
6/26
6/62
6/63

Fig. 258: CEM Devices (1 Of 2)
Courtesy of VOLVO CARS CORPORATION

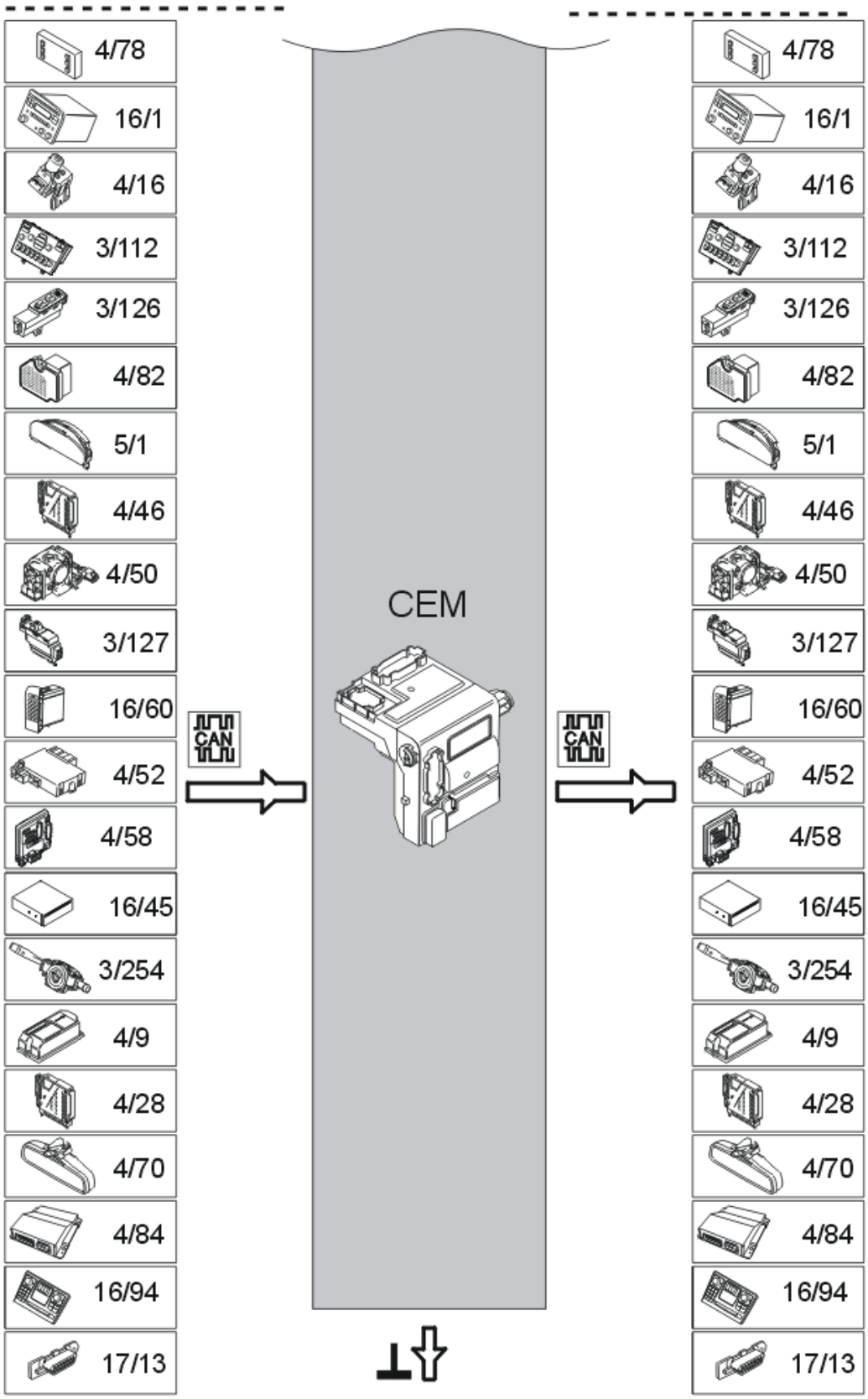
4/78
16/1
4/16
3/112
3/126
4/82
5/1
4/46
4/50
3/127
16/60
4/52
4/58
16/45
3/254
4/9
4/28
4/70
4/84
16/94
17/13
CAN
CEM
CAN
4/78
16/1
4/16
3/112
3/126
4/82
5/1
4/46
4/50
3/127
16/60
4/52
4/58
16/45
3/254
4/9
4/28
4/70
4/84
16/94
17/13

Fig. 259: CEM Devices (2 Of 2)
Courtesy of VOLVO CARS CORPORATION

CENTRAL LOCKING (2003-2004)

SIGNALS

The table below summarizes the input signals to and output signals from the different control modules for the lock function. The signal types are divided into directly connected signals, serial communication and control area network (CAN) communication.

Directly connected input signals from the sensors / switches to the control module:	Directly connected output signals to the controlled components / functions from the control module:
Brake control module (BCM) / ABS control module , (4/16) • Vehicle speed sensors (VSS) from all wheels, vehicle speed signal.	**Central electronic module (CEM)** (4/56) • All turn signal lamps, on/off • Shift relay deadlock/power child lock in rear doors.
Central electronic module (CEM) (4/56) • All doors, closed/open • Rear doors, locked/unlocked • Tailgate, closed / open • Collision output signal from SRS (supplemental restraint system) control module, collision/no collision.	**The driver's door module** (3/126) • Driver's door lock motor, lock/unlock • Lock motor deadlocked, lock/unlock.
The climate control module (3/112) • Switch for reduced alarm, on/off • Switch child lock, on/off • Switch valet lock, on/off.	**The passenger door module** (3/127) • Passenger door lock motor, lock/unlock • Lock motor deadlocked, lock/unlock.
The driver's door module (3/126) • Driver's door, locked/unlocked • Key, locking / unlocking.	**Rear electronic module** (4/58) • Rear doors lock motors, lock/unlock • Lock motor deadlocked, lock/unlock • Power child lock motors, lock/unlock • Fuel tank filler cover lock motor, lock/unlock
The passenger door module (3/127) • The passenger door, locked/unlocked.	**SRS control module** (4/9) • Collision output signal to the central electronic module, collision/no collision.
Rear electronic module (4/58) • Switch in the trunk lid, on/off (S60/S80 only).	

Received information to control modules via Controller Area Network (CAN):	Transmitted information to control modules via Controller Area Network (CAN):
The central electronic module (4/56) receives from: The brake control module (ABS-control module) (4/16) • Speed, speed signal. The climate control module (3/112) • Switch for reduced alarm, on/off • Switch child lock, on/off • Switch valet lock, on/off. Driver's door module (DDM) (3/126) • Driver's door, locked/unlocked • Key, locking / unlocking • Switch door panel, on/off. Passenger door module (3/127) • Passenger door, locked/unlocked • Switch door panel, on/off. Rear electronic module (4/58) Upper electronic module (4/70) • Remote control signal. LOCK, UNLOCK and TRUNK.	**The central electronic module (4/56) transmits to:** The driver information module (5/1) • Text message, reduced alarm, valet lock, child lock and fuel tank filler cover unlocked (only cars with switch for fuel tank filler cover opening). Driver's door module (DDM) (3/126) • Driver's door lock motor, lock/unlock • Lock motor deadlocked, lock/unlock. Passenger door module (3/127) • Passenger door lock motor, lock/unlock • Lock motor deadlocked, lock/unlock. Rear electronic module (4/58) • Rear doors lock motors, lock/unlock • Lock motor deadlocked, lock/unlock • Power child lock motors, lock/unlock • Fuel tank filler cover lock motor, lock/unlock
Driver information module (3/126) receives from: The central electronic module (CEM) (4/56) • Driver's door lock motor, lock/unlock • Lock motor deadlocked, lock/unlock.	**The brake control module (ABS-control module) (4/16) transmits to:** The central electronic module (CEM) (4/56) • Speed, speed signal.
Driver information module (5/1) receives from: The central electronic module (CEM) (4/56) • Text message, reduced alarm, valet lock, child	**Driver's door module (DDM) (3/126) transmits to:** The central electronic module (CEM) (4/56)

lock and fuel tank filler cover unlocked (only cars with switch for fuel tank filler cover opening).	• Driver's door, locked/unlocked • Key, locking / unlocking • Door panel switch, active/not active.
Passenger door module (3/126) receives from: The central electronic module (CEM) (4/56) • Passenger door lock motor, lock/unlock • Lock motor deadlocked, lock/unlock.	**The passenger door module (3/126) transmits to:** The central electronic module (CEM) (4/56) • Passenger door, locked/unlocked • Door panel switch, active/not active.
The rear electronic module (4/58) receives from: The central electronic module (CEM) (4/56) • Rear doors lock motors, lock/unlock • Lock motor deadlocked, lock/unlock • Power child lock motors, lock/unlock • Fuel tank filler cover lock motor, lock/unlock	**Rear electronic module (4/58) transmits to:** The central electronic module (CEM) (4/56)
	The upper electronic module (4/70) transmits to: The central electronic module (CEM) (4/56) • Remote control signal, LOCK, UNLOCK and BOOT.

SYSTEM DESCRIPTION

GENERAL INFORMATION

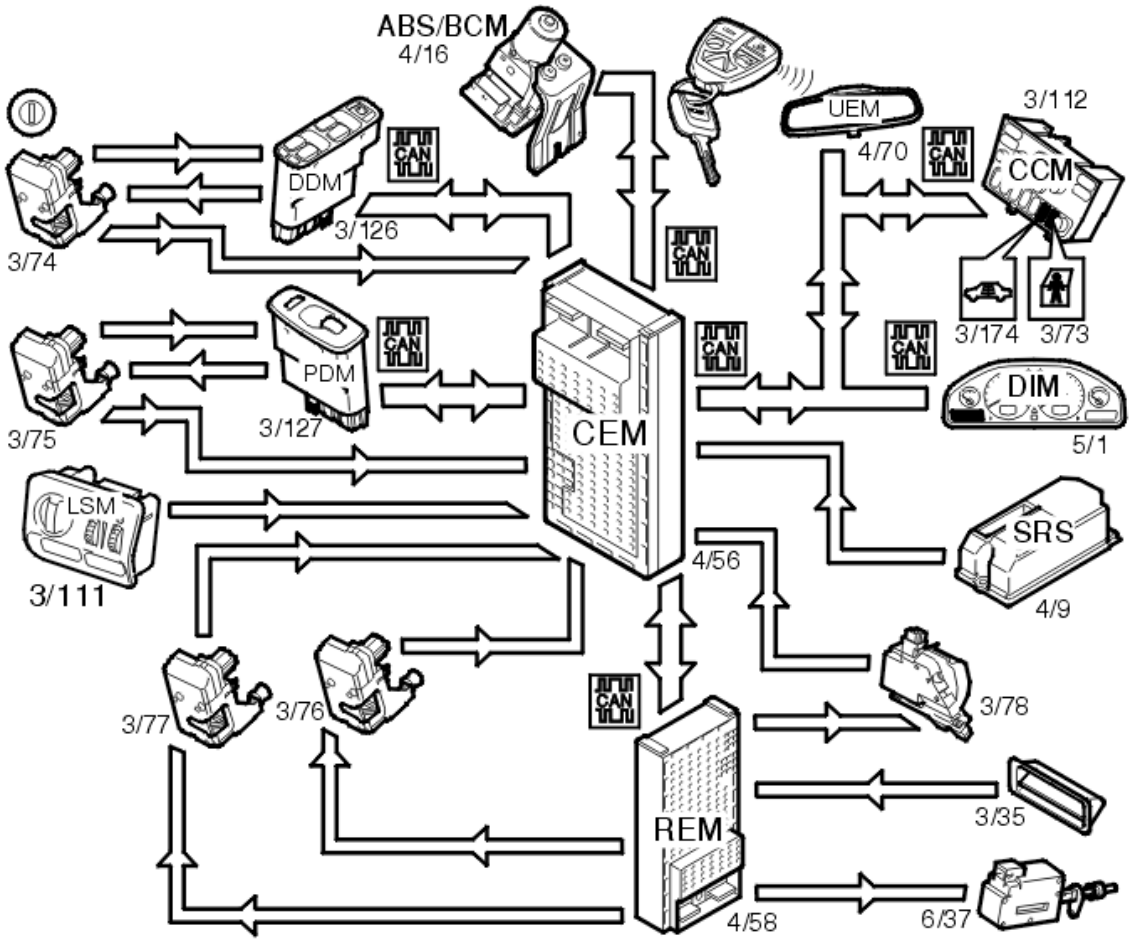

Fig. 260: Central Locking Input And Output Signals
Courtesy of VOLVO CARS CORPORATION

The lock function is a distributed function and uses a number of control modules for its function.

The control modules used for the lock function are:

- Central electronic module
- The brake control module, 2002-/ ABS-control module, 1999-2001
- Climate control module
- Driver's door module
- Driver information module
- Passenger door module
- Rear electronic module
- SRS (supplemental restraint system) control module
- Upper electronic module.

CENTRAL ELECTRONIC MODULE

The central electronic module (4/56) is the main control module for central locking functionality. The central electronic module determines how the lock should be locked and unlocked by receiving information on the Controller Area Network (CAN) from other control modules and via the directly connected signal cables from the components.

Signal cables are directly connected to the central electronic module from:

- Lock units in all doors (3/74-77), open / closed
- Lock units in the rear doors (3/76-77), locked / unlocked
- Lock unit tailgate (3/78), open/closed
- SRS (supplemental restraint system) control module (SRS) (4/9), collision/no collision.

The central electronic module is controlled via a direct cable:

- All turn signal lamps, on/off
- Shift relay for power child locks in the rear door, on/off. The shift relay is only installed on those cars equipped with power child locks. The relay shifts between child proof and deadlock positions. The shift between child proof and deadlock occurs by the central electronic module transmitting a signal to the relay, which shifts the relay to the directly connected cable. When the relay has shifted, a control signal is transmitted to the lock motor from the rear electronic module and the lock unit assumes the deadlock or childproof mode depending what the relay shifted to. To ensure that the relay shifts and that the lock unit has time to assume the new status, a control signal is transmitted from the central electronic module for approximately one second.

BRAKE CONTROL MODULE / ABS CONTROL MODULE

The brake control module (4/16), (ABS up to and including model year 2001) transmits information about the vehicle speed to the central electronic module via the Controller area network (CAN). The information is used for models with fuel tank filler cover locking via remote switch. The information is also used to prevent unlocking of the trunk using the remote control and automatic locking of the car.

Signal cables are directly connected to the brake control module (ABS) from:

- Vehicle speed sensors (VSS) from all wheels.

CLIMATE CONTROL MODULE

Climate control module (3/112) transmits information via the Controller area network (CAN) to the central electronic module about the status of the switch for reduced alarm, valet locking and child locks.

Signal cables are directly connected to the climate control module from:

- Switch for reduced alarm (3/174), on/off
- Switch for valet locking (3/173), on/off
- Switch for child lock (3/73), on/off.

DRIVER'S DOOR MODULE

The driver's door module (3/126) transmits information to the central electronic module via Controller area network (CAN), about whether the driver's door lock is lock or unlocked and the status of the switches in the driver's door. The central electronic module transmits information via the controller area network (CAN) to the driver's door module to activate the lock motor in the driver's door.

Signal cables are directly connected to the driver's door module from:

- Lock units in the driver's doors (3/74), locked / unlocked
- Key, locking / unlocking.

The driver's door module controls via direct cables:

- Driver's door lock motor, lock/unlock
- Lock motor deadlocked, lock/unlock.

DRIVER INFORMATION MODULE

Driver information module (5/1) displays a text message in the display. The information comes from the central electronic module via the controller area network (CAN). The text messages given are information about the reduced alarm, valet locking and child locks.

PASSENGER DOOR MODULE

The passenger door module (3/127) transmits information to the central electronic module via Controller area network (CAN), about whether the passenger door lock is lock or unlocked and the status of the switches in the passenger door. The central electronic module transmits information via the controller area network (CAN) to the passenger door module to activate the lock motor in the passenger door.

Signal cables are directly connected to the passenger door module from:

- Lock unit passenger door, locked/unlocked.

The passenger door module controls via direct cables:

- Passenger door lock motor, lock/unlock
- Lock motor deadlocked, lock/unlock.

REAR ELECTRONIC MODULE

The central electronic module transmits information via the controller area network to the rear electronic module to:

- activate the lock motors in the rear doors
- activate the lock motor for the fuel tank filler cover

Signal cables are directly connected to the rear electronic module from:

- Trunk lid switch, activated/not activated (sedan models only).

The rear control module controls via direct cables:

- Rear doors lock motors, lock/unlock
- Lock motors deadlocked, lock/unlock
- Power child lock motors, lock/unlock. The same relays in the rear electrical module as in the deadlocked lock motor are used for the power child lock. The shift between the motor for deadlocks and the power child lock motor occurs via direct cable from the central electronic module to a shift relay in the rear doors. For the power child lock the central electronic module transmits a control signal to the shift relay. At the same time the rear electronic module transmits a control signal to the lock motor
- Fuel tank filler cover lock motor, lock/unlock

SRS (SUPPLEMENTAL RESTRAINT SYSTEM) CONTROL MODULE

The SRS (supplemental restraint system) control module (4/9) transmits information about collisions to the central electronic module via a directly connected cable.

Signal cables are directly connected to the SRS (supplemental restraint system) from:

- Collision sensor, collision/no collision.

Signal cables are directly connected to the SRS (supplemental restraint system) from:

- Collision output signal to the central electronic module.

UPPER ELECTRONIC MODULE

The upper electronic module (4/70) transmits remote control signals about which button on the remote control has been pressed to the central electronic module via the Controller area network (CAN).

SYSTEM OVERVIEW

LOCATION OF COMPONENTS

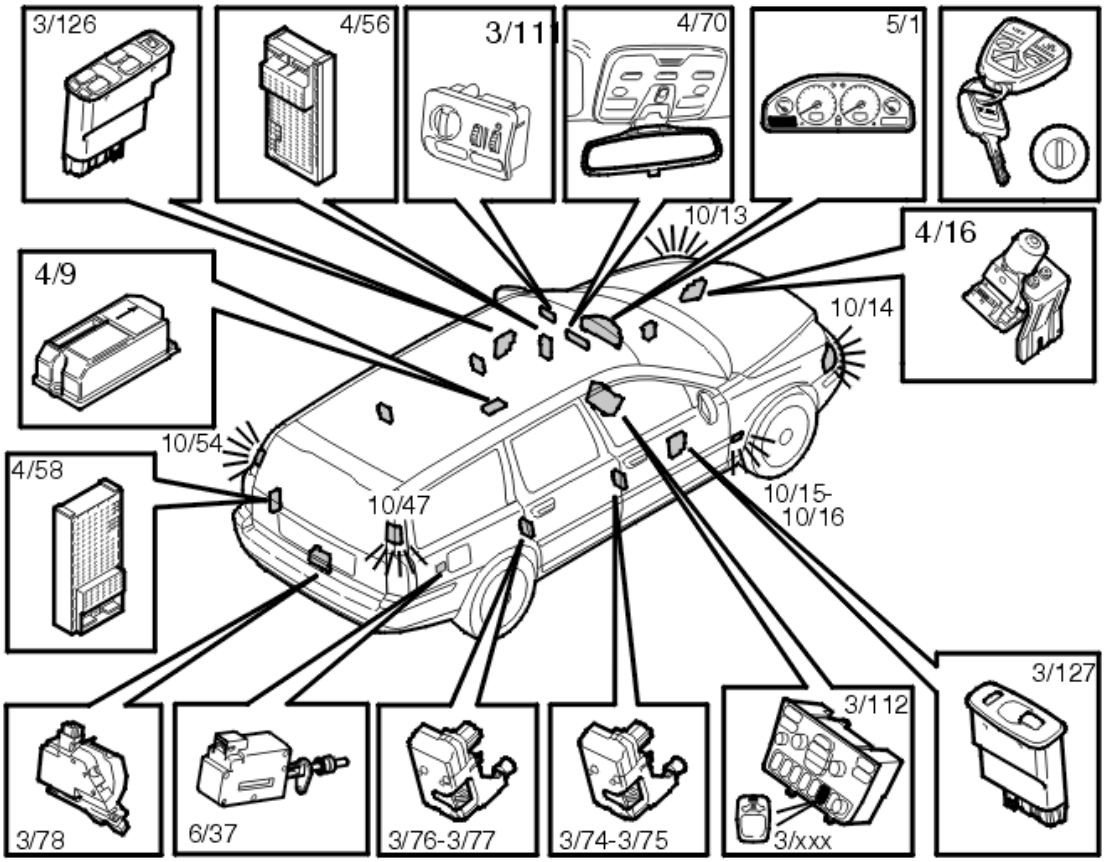

Fig. 261: Central Locking Components
Courtesy of VOLVO CARS CORPORATION

The central locking function uses the following components (may differ depending on model, model year, options and market):

Position	Component	Position	Component
3/73	Power child lock switch	4/56	Central electronic module
3/74-3/77	Switches in door locks	4/58	Rear electronic module
3/78	Switch in trunk lock	4/70	Upper electronic module
3/111	Light switch module	5/1	Driver information module
3/112	Climate control module	6/37	Lock motor for the fuel tank filler cover
3/126, 3/127	Drivers door module / Passenger door module	10/13, 10/14	Turn signal lamp, front
3/173	Valet lock switch	10/15, 10/16	Turn signal lamp, front fender
3/174	Switch for reduced alarm.	10/54, 10/47	Turn signal lamp, rear
4/9	SRS (supplemental restraint system) control module		Key and lock cylinder
4/16	The brake control module, 2002-/ ABS-control module, 1999-2001.		Remote control

LOCKING SYSTEM

The lock system is available in the following versions:

- Central locking with single step unlocking
- Central locking deadlock (differs in the lock unit from single step unlocking). Not available in USA and Canada
- Central locking with power child lock. Market dependent
- Central locking with two step unlocking and *without* fuel tank filler cover opening via remote switch. Applies to the USA and Canada only
- Central locking with two step unlocking and *with* fuel tank filler cover opening via remote switch. Applies to the USA and Canada only.

The number of switches, electrical motors in the door and relays, differs depending on the model year, version and type. The same control modules are used in different versions. The software differs on the type of lock, locking system and model. It is possible to shift between single step unlocking and two step unlocking by downloading new software.

INITIATION

The central locking system must be reinitiated after the battery has been disconnected. This is carried out by unlocking the car using either the remote control or the key in the driver's door. If the central locking system is not initiated, the switches in the driver's door module and the passenger door module will not work.

FUNCTION

The user can control the different central locking functions using:

- The key in the driver's door lock cylinder
- Remote control
- The switches in the driver's door module and the passenger door module
- The switches in the center console
- The switch on the control module for the light switch module for opening the fuel tank filler cover. Only applies to cars with a fuel tank filler cover remote switch.

The number of switches, lock cylinders, differs depending on the version of lock system.

LOCKING AND UNLOCKING DOORS

The doors can be locked:

- Using the key in the driver's door lock cylinder
- Using the remote control LOCK button
- Using the switches in the driver's door module and the passenger door module The function is disabled if the car is locked from outside or using the remote control. For single step locking all doors must be closed

so that locking can be carried out using the switch. For two step unlocking with the ignition key removed all the doors lock at the same time using the switch even if a door is open.

NOTE: **If the ignition key is in the ignition switch the car cannot be locked using the remote control or using a key in the driver's door. If the ignition key is in the ignition switch and the driver's door is open and the button on the driver's door module is pressed then the doors lock and immediately unlock. These two functions prevent locking the key in the car.**

The doors can be unlocked:

- Using the key in the driver's door lock cylinder
- Using the remote control UNLOCK button
- Using the switches in the driver's door module and the passenger door module The function is disabled if the car is locked using a key or using the remote control
- Via a request from the SRS (supplemental restraint system) control module in the event of a collision.

LOCKING AND UNLOCKING THE FUEL TANK FILLER COVER, MODELS WITHOUT FUEL TANK FILLER COVER OPENING VIA REMOTE SWITCH

The fuel tank filler cover can be locked:

- Using the key in the driver's door lock cylinder (fuel tank filler cover locking is delayed 10 min, from structure week 200020 inclusive)
- Using the remote control LOCK button (fuel tank filler cover locking is delayed 10 min, from structure week 200020 inclusive)
- Using the switches in the driver's door module and the passenger door module (from structure week 200020 inclusive the switch inside the car is disconnected from the fuel tank filler cover lock). The function is disabled if the car is locked from outside or using the remote control.

The fuel tank filler cover can be unlocked:

- Using the key in the driver's door lock cylinder
- Using the remote control UNLOCK button
- Using the switches in the driver's door module and the passenger door module (from structure week 200020 inclusive the switch inside the car is disconnected from the fuel tank filler cover lock). The function is disabled if the car is locked from outside or using the remote control.

LOCKING AND UNLOCKING THE FUEL TANK FILLER COVER, MODELS WITH FUEL TANK FILLER COVER OPENING VIA REMOTE SWITCH (MARKET DEPENDANT)

The fuel tank filler cover can be locked:

- Automatically when the speed of the car exceeds 7 km/h (5 mph).

The fuel tank filler cover can be unlocked:

- Using the switch above the light switch.

At 7 km/h (5 mph) the fuel tank filler cover locks automatically and remains locked until the switch is reactivated. The fuel tank filler cover lock is unaffected by the remote control. Locking and unlocking the doors and other hatches is carried out the same way as for models *without* fuel tank filler cover opening via remote switch.

Models *with* fuel tank filler cover opening via remote switch are equipped with a fuel leakage detecting system. The system for fuel leakage detecting pressurizes the fuel system to trace any leakage. The test is carried after the ignition has been switched off. When the switch is activated any leakage detection underway is stopped to evacuate the over pressure from the fuel tank. The over pressure is evacuated to prevent the fuel from traveling up the fuel filler pipe when the fuel tank filler cap is opened.

AUTOMATIC FUNCTIONS

- If the car is unlocked and no doors are opened within 2 minutes the car relocks automatically
- If the lock button in the driver or passenger doors is depressed when the door is open the switch returns to the upper (unlocked) position
- When the tailgate has been unlocked using the remote control, the tailgate locks automatically when it closes.
- The doors and hatches lock automatically at speeds above 7 km/h (5 mph), (option, market dependent)
- When the SRS (supplemental restraint system) control module registers a collision all the doors and hatches unlock.

DEADLOCKED (MARKET DEPENDENT)

If the car is locked using the key or the remote control the deadlock is activated after approximately 25 seconds. The doors cannot be opened from the inside.

If a door is opened from the inside before the deadlock is engaged, deadlock will not be activated. In order to lock the car again the car must be unlocked first. Then the car can be locked as normal.

The deadlock is deactivated if, when the car is locked, the ignition key is inserted in the ignition switch and turned to position II.

The function can be disconnected using the switch for the reduced alarm in the center console.

Information that the function is disengaged is given by:

- the LED in the button remaining lit until the car is locked
- a text message being displayed in the driver information module.

Next time the ignition key is inserted and turned to position II, the system is reset. To obtain reduced alarm the switch must be reactivated.

TWO STEP UNLOCKING (MARKET DEPENDENT)

Certain markets have two step unlocking. The differences are:

- When unlocking using the key, the key must be turned anticlockwise twice within 10 seconds to unlock all the doors and hatches
- When unlocking using the remote control, the UNLOCK button must be pressed twice within 10 seconds to unlock all the doors and hatches. On cars with the fuel tank filler cover opening via remote switch, the fuel tank filler cover only opens via the switch
- To unlock the driver's door and fuel tank filler cover using the key, turn the key anticlockwise once. On cars with the fuel tank filler cover opening via remote switch, the fuel tank filler cover only opens via the switch
- To unlock the driver's door and fuel tank filler cover using the remote control, press the UNLOCK button once. On cars with the fuel tank filler cover opening via remote switch, the fuel tank filler cover only opens via the switch
- If the driver's door is open at the same time that the switch in the driver's door is used for locking, the car will lock. That is on the condition that the key is not in the ignition switch.

For more information, see **LOCKING AND UNLOCKING THE FUEL TANK FILLER COVER, MODELS WITH FUEL TANK FILLER COVER OPENING VIA REMOTE SWITCH (MARKET DEPENDANT)**.

POWER CHILD LOCK (OPTION)

Mechanical (manual) child locks are standard in the back doors.

A power child lock is available as a factory installed option. The child lock is activated / deactivated using a switch in the climate control unit panel.

Cars equipped with two stage unlocking (USA, Canada) are not equipped with the power child locks.

ACKNOWLEDGMENT (MARKET DEPENDENT)

The lock system provides a visual acknowledgment when locking and unlocking.

When the car is locked this is acknowledged by a long single flash from the turn signal lamps. If a door or hatch is open when the car is locked, the flash is delayed until these are closed. Applies only to cars equipped with an alarm.

When the car is unlocked this is either not acknowledged or acknowledged by two short flashes from the turn signal lamps.

This function is market dependent and is programmed via VIDA (Volvo scan tool).

CENTRAL LOCKING (2005-2012)

DIAGNOSTIC FUNCTIONS

GENERAL INFORMATION

The control modules have a built-in diagnostic system, Volvo Diagnostics, which continuously monitors internal functions as well as input and output signals. The central locking system is a distributed system which stores diagnostic trouble codes (DTCs) in different control modules depending on where the fault occurred.

DIAGNOSTIC TROUBLE CODES (DTCS)

A diagnostic trouble code (DTC) is stored if a control module detects a fault in a connected component.

If for some reason a fault disappears after the diagnostic trouble code (DTC) has been permanently stored in a control module, information about the fault remains in the control module.

Rear electronic module (REM)

Rear electronic module (REM) can identify 12 different faults associated with the central locking system and can store up to 10 diagnostic trouble codes (DTCs) simultaneously.

Driver door module (DDM)

Driver door module (DDM) can identify 20 different faults associated with the central locking system and can store up to 10 diagnostic trouble codes (DTCs) simultaneously.

Passenger door module (PDM)

Passenger door module (PDM) can identify 20 different faults associated with the central locking system and can store up to 10 diagnostic trouble codes (DTCs) simultaneously.

ACTIVATING COMPONENTS AND FUNCTIONS

A number of activations can be performed via VIDA Vehicle communication:

- Lock motor, left-hand/right-hand rear door, lock/unlock
- Lock motor, trunk lid/tailgate, lock/unlock
- Lock motor, fuel tank filler cap, lock/unlock
- Lock motor, child safety locks, lock/unlock

FUNCTION

GENERAL INFORMATION

The lock function which is activated on delivery depends on the market. The central locking system can be configured for standard locking function or 2 stage locking function. For the standard locking function the central locking system can also include the deadlocking function.

STANDARD LOCKING FUNCTION

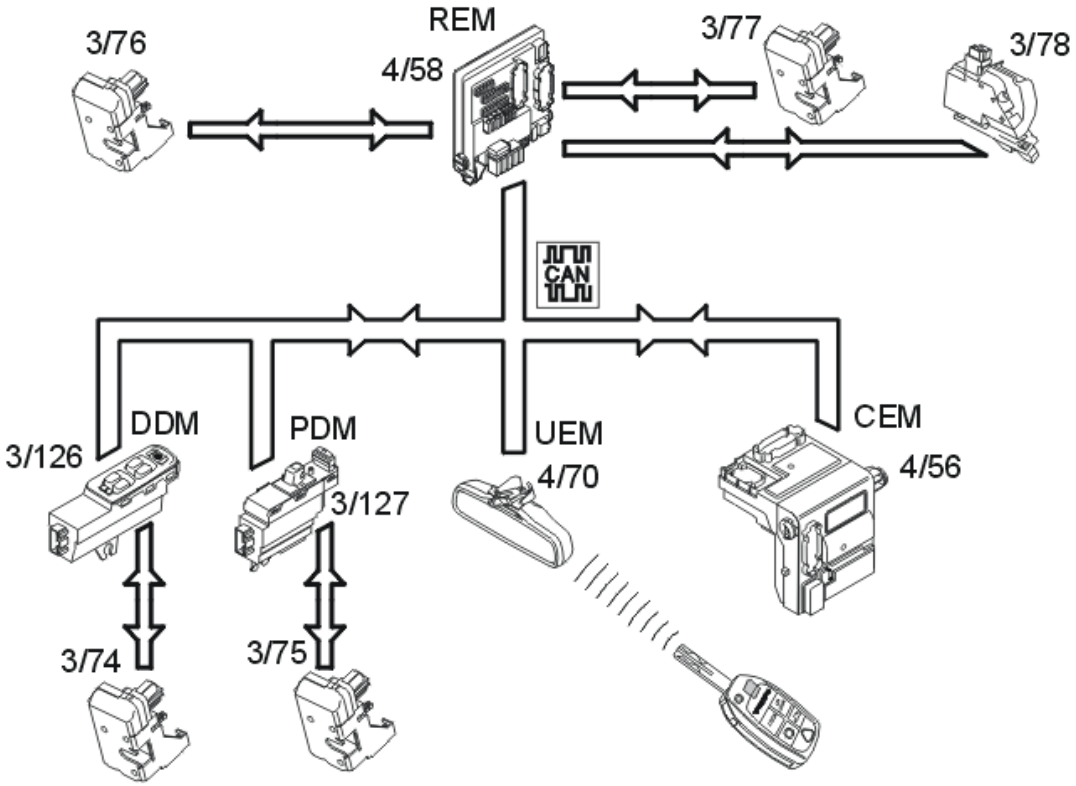

Fig. 262: Door Lock Communication Diagram
Courtesy of VOLVO CARS CORPORATION

Standard locking function means that all doors and hatches are locked or unlocked simultaneously. The exception is the fuel tank filler cover which is unlocked with unlocking but locked after 10 minutes or when the vehicle reaches a speed of 16 km/h (10 mph). With locking or unlocking a confirmation is normally given via the direction indicators that the central locking has successfully performed the operation. If locking or unlocking did not succeed no confirmation is given. This confirmation also applies to the alarm functions if an alarm is installed in the vehicle.

Locking/unlocking of the vehicle can be performed with:

- the key in the driver's door lock cylinder
- buttons on the remote control
- the central locking switches on the inside of the front side doors.

When using the key:

When locking with the key in the door lock, a hatch or a door can still be open. Doors and locks will be locked and remain locked after being closed. However, the alarm will not be activated if the vehicle has this setting (key set). This setting is made in the vehicle's configuration file which is stored in the central electronic module (CEM).

The switches on the inside of the front side doors are deactivated if the vehicle is locked with a key. To be able to lock the vehicle with the switches all doors must be closed.

When locking with the remote control:

For remote control locking to be possible there must no key belonging to the vehicle in the ignition switch.

When locking, one or more doors or hatches can still be open. The alarm functions will be activated and confirmation given when the last door or hatch is closed. If the function for deadlocking is installed then this will be activated 25 seconds after the last side door is closed. The fuel tank filler cover is locked automatically after 10 minutes.

When locking with central locking switches:

Locking with central locking switches can only take place if all doors are closed. If a door is open when a switch is pressed then the doors will be locked and then immediately unlocked again. The central locking switches are disconnected when the vehicle is locked from the outside, with a key or the remote control.

Normally the vehicle is unlocked by activating the remote control unlocking button. Depending on settings, this can also deactivate the alarm if installed. If the setting for alarm deactivation on key unlocking is not made then the alarm will be triggered if the vehicle is unlocked with a key. The alarm can then be reset by inserting the ignition key into the ignition switch.

2 STAGE LOCKING FUNCTION

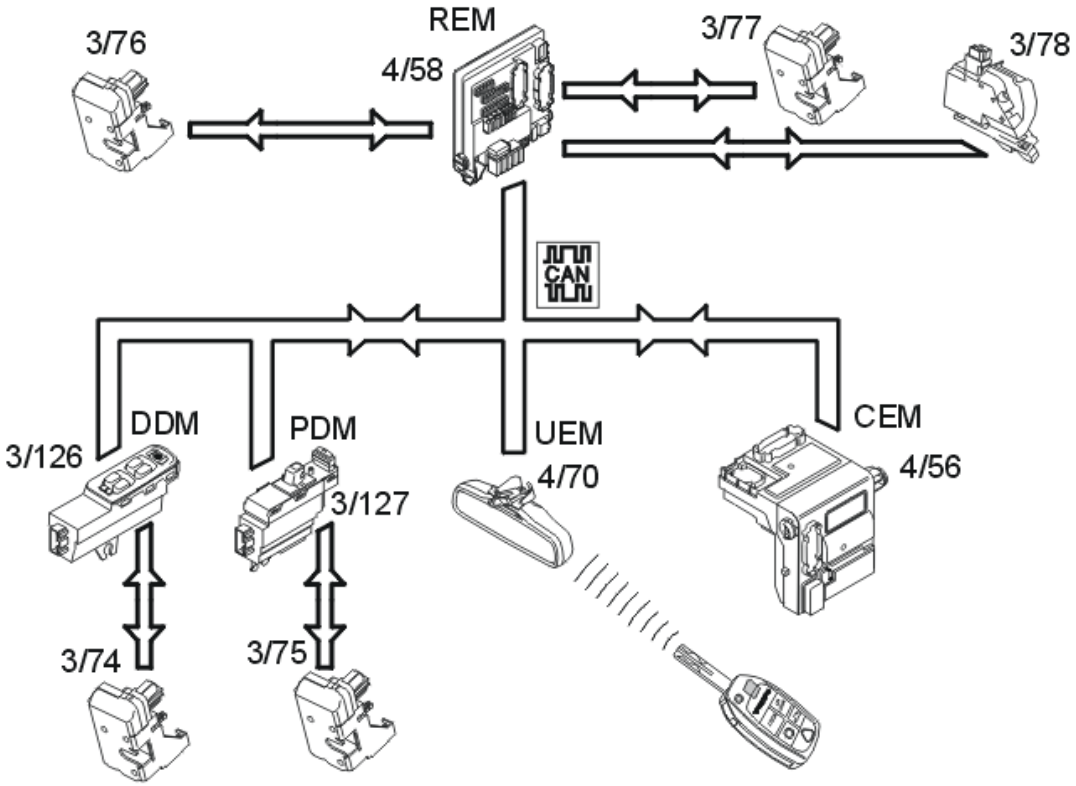

Fig. 263: Door Lock Communication Diagram
Courtesy of VOLVO CARS CORPORATION

In principle the 2 stage locking function is used exclusively on the American market. The function means that the front doors can be unlocked in two stages. Locking and unlocking can either take place with a key or remote control. Locking can also take place with the inner central locking switches in the front side doors.

Locking/unlocking with the key:

Locking and unlocking is performed via the lock cylinder in the driver's door. To unlock all doors and hatches the key must be turned counter clockwise twice within 10 seconds. The first key turn unlocks the driver's door and the fuel tank filler cap. The second key turn unlocks the other side doors and tailgate/trunk lid. To lock, the key only needs to be turned clockwise once for all doors and hatches to be locked. The vehicle can be locked with a key even if a door or hatch is open.

Locking/unlocking with remote control:

When unlocking with the remote control, the driver's door and fuel tank filler cover are unlocked with the first press on the remote control. To unlock the other doors and hatches the unlocking button must be pressed once more within 10 seconds. When locking the locking button only needs to be pressed once.

Locking with central locking switches:

Locking can be performed with one of the inner central locking switches on condition that the door where the

switch is pressed is open. However, the alarm functions will not be activated if the locking takes place with the switch on the driver's door. The vehicle will be locked when the last door is closed.

STANDARD LOCKING FUNCTION WITH DEADLOCKING

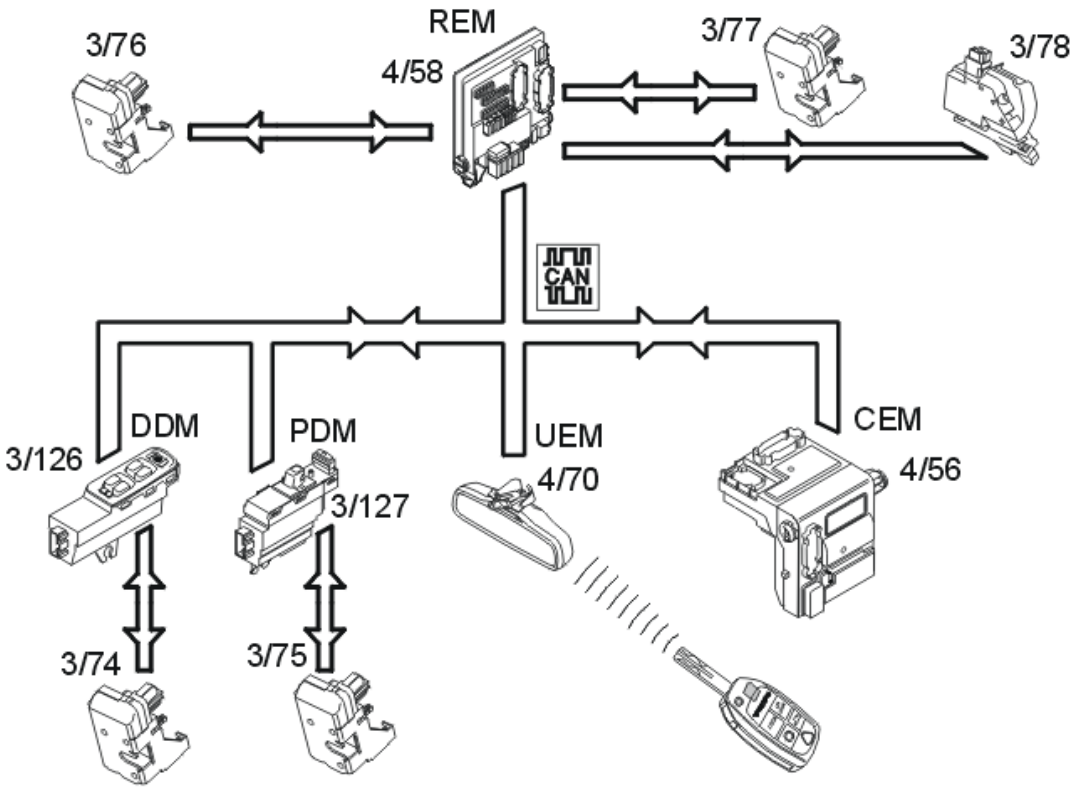

Fig. 264: Door Lock Communication Diagram
Courtesy of VOLVO CARS CORPORATION

The function in the locking system for locks with deadlocking is the same as in the standard locking system. There is an extra lock motor in the lock units for the deadlocking function. The function of this lock motor is to mechanically disconnect the lock unit in the door from the door handles. The function is normally activated automatically 25 seconds after the vehicle has been locked and the last door closed. This means for example that a side door cannot be opened even if a window is broken.

NOTE: This also means that anybody remaining in the vehicle when it is locked cannot leave. The function can be temporarily disconnected with the switch for reduced alarm which is located on the dashboard environment panel.

CHILD-PROOF LOCKS

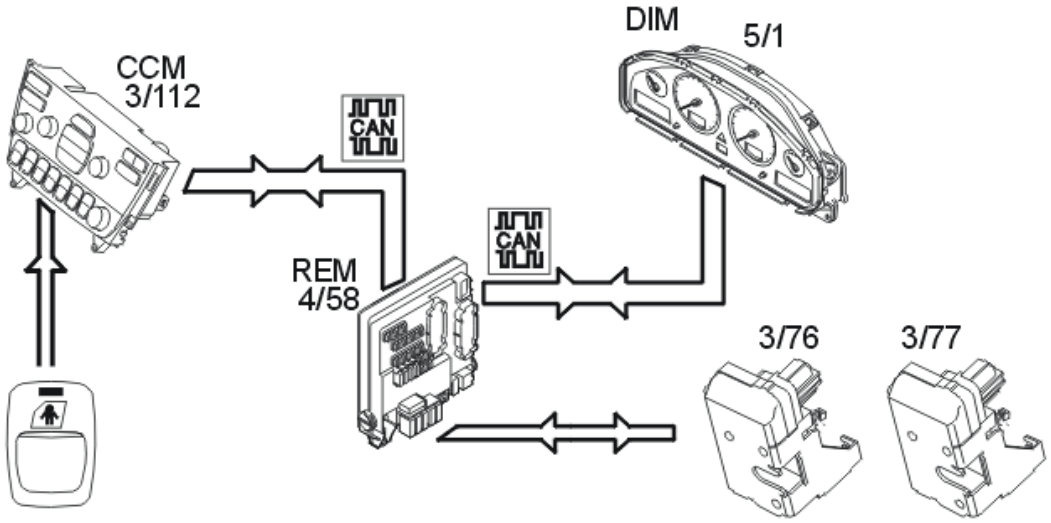

Fig. 265: Child-Proof Locks Communication Diagram
Courtesy of VOLVO CARS CORPORATION

The function for child safety locks involves an extra lock motor in each rear lock unit. The function is only available for the rear doors. The lock motor disconnects the inner door handle and the lock button on each rear door and this means that the door cannot be opened from the inside. However, the door can still be opened from the outside.

The function is activated with a switch on the dashboard environment panel for climate control when the ignition key is position I or II. The switch has an alternating function which connects or disconnects the function with every other press. The switch for activation has an integral LED to indicate the activated function. A message is also displayed in the text window of the driver information module (DIM).

The child safety lock status is saved as a setting in the rear electronic module (REM) and is also valid after the ignition has been switched off and then on again. In order to deactivate the function the ignition key must be turned to position I or II and the switch on the dashboard environment panel pressed in so that the LED goes out. A message will then be displayed in the text window of the driver information module (DIM). The rear electronic module (REM) receives a signal from the lock units in the rear doors that the lock motor is in the locked position.

If the indication from the lock motors is incorrect or fails to appear, or if activation or deactivation is not successful, then a diagnostic trouble code (DTC) is generated in the rear electronic module (REM). A message will also be displayed in the driver information module (DIM).

OPENING THE TRUNK LID/TAILGATE

The tailgate/trunk lid can be opened in two ways:

- the switch on the tailgate/trunk lid
- the button on the remote control.

As a reserve alternative where appropriate the tailgate/trunk lid can be opened with a key in the lock cylinder on

the tailgate/trunk lid.

The lock unit in the tailgate is locked and unlocked by the rear electronic module (REM) together with the side doors. The handle on the tailgate is mechanically connected to the lock mechanism. The tailgate can be opened using the button on the remote control even if the rest of the vehicle is locked. In order to open the tailgate the button on the remote control must be pressed twice within 3 seconds.

If the button on the remote control is pressed a message is sent from the remote control. This message is received by the upper electronic module (UEM) which checks that the key belongs to the vehicle. If this is the case then the upper electronic module (UEM) sends a request for lock motor activation to the rear electronic module (REM).

NOTE: If the vehicle has been locked and the tailgate/trunk lid is unlocked using the remote control then the LOCK button on the remote control must be pressed in after the tailgate/trunk lid is closed. This is so that the central locking has locked status and the alarm is activated.

LOCKING/UNLOCKING THE FUEL TANK FILLER COVER

Locking and unlocking the fuel tank filler cover takes place at different points depending on the configuration of the vehicle.

Standard locking function

The fuel tank filler cover is locked 10 minutes after the vehicle is locked and unlocked at the same time as the other doors and hatches. The exception is if the vehicle is locked with one of the inner lock buttons, when the fuel tank filler cover is locked immediately.

2 stage locking function

The fuel tank filler cover locks automatically after 10 minutes or when the vehicle is locked.

The fuel tank filler cover is unlocked together with the driver's door with the first press on the remote control or with the first turn of the key in the lock cylinder in the driver's door.

Automatic locking of the fuel tank filler cover when the vehicle reaches a speed of 7 km/h (5 mph) can be specified as an automatic function with all configurations.

If the vehicle is equipped with the system for automatic fuel leakage detection then the fuel tank filler cover can only be opened with a switch located on the light switch module (LSM). Light switch module (LSM) communicates in serial with the central electronic module (CEM). Central electronic module (CEM) forwards the request to the rear electronic module (REM).

The cover can only be opened if the speed of the vehicle is less than 16 km/h (10 mph). With one press on the switch it can take up to 1.5 seconds before the cover opens. This is so that overpressure in the fuel tank can be equalized before the fuel tank filler cap is removed.

This function is only available for the American market.

INDICATION OF THE STATUS OF THE DOORS, HATCHES AND LOCK MOTORS

There can be up to three contact breakers in the side door lock units:

- contact breaker which indicates if the door is not closed
- contact breaker to indicate that the central locking motor is in the locked position
- contact breaker for whether the child safety lock motor is in the locked position.

Each contact breaker provides a ground connection on an input to the rear electronic module (REM) when the contact breaker is closed.

Contact breaker for open door indication is used:

- to generate a message on whether a door is opened during the journey
- to indicate to the rear electronic module (REM) whether or not the vehicle is ready for locking (depending on lock configuration)
- to activate and trigger the alarm function if installed in the vehicle.

Contact breaker for central locking motor indication is used to check whether locking or unlocking has been successful or not.

Contact breakers for child safety locks are only available in the rear doors and indicate that the child safety lock is activated.

There is only one contact breaker in the lock unit in the tailgate/trunk lid. This indicates whether the tailgate/trunk lid is open or closed.

The signals are also used to activate the locking and alarm function, for example if locking takes place while a door is still open. If the central locking is locked and a door is open then a light signal will come on, and the alarm will be activated when the last door is closed.

If the vehicle is equipped with an alarm then there is also a contact breaker at the hood. However, this has no role in the central locking system, but the contact breaker is used to trigger the alarm if installed.

AUTOMATIC LOCKING WHEN DRIVING

Whether the function for automatic locking is activated or not at delivery depends on the market. If the function is activated then the side doors are locked when the speed exceeds 7 km/h (5 mph). This is on condition that all side doors are closed, the engine is running and the vehicle is moving forwards. The exception is the tailgate/trunk lid which may be open. The rear electronic module (REM) receives information on whether or not the engine is running from the engine control module (ECM).

The indication that the engine is driving the vehicle forward differs between vehicles with automatic or manual transmission. On vehicles with automatic transmission the position of the gear selector is obtained from the transmission control module (TCM). The gear selector must not be in Park (P) or Neutral (N) position for the

automatic locking to work. On vehicles with manual transmission the rear electronic module (REM) receives information on the speed of the vehicle from the brake control module (BCM). At the same time the accelerator pedal must be partially actuated for the locking to be performed.

The door can be unlocked again with a normal unlocking procedure

An unlocking procedure activates the function. Example: the vehicle is unlocked, started and driven off. When the vehicle exceeds 7 km/h (5 mph) the side doors not already locked will be locked. If the vehicle then stops and the side doors are unlocked for a passenger to get out, e. g. with one of the central locking switches, then the vehicle will *not* be automatically locked the next time the vehicle exceeds 7 km/h (5 mph). However, if the passenger getting out opens the door by pulling in the inner door handle or unlocks the door using the lock button then the door will be locked when the vehicle next exceeds 7 km/h (5 mph).

AUTOMATIC LOCKING AFTER UNLOCKING

If the vehicle is unlocked with the remote control and no side door or tailgate/trunk lid is opened within 2 minutes then the vehicle will automatically lock again. If the vehicle is unlocked with a key then there will be no re-locking. Whether the function is activated or not at delivery depends on the market.

SIGNALS

The tables below summarize the input and output signals to the units in the central locking function. The signal types are divided into directly connected signals and Controller Area Network (CAN) communication.

REAR ELECTRONIC MODULE (REM) (4/58):

Input signals	Output signals
Directly connected: • Contact breaker in lock unit, driver's door, for indicating open door. • Contact breaker in lock unit, passenger door, for indicating open door. • Contact breaker in lock unit, right-hand rear door, for indicating open door. • Contact breaker in lock unit, left-hand rear door, for indicating open door. • Contact breaker in lock unit, tailgate/trunk lid, for indicating open tailgate/trunk lid. • Contact breaker, hood, for indicating open hood (only vehicles with alarm). • Contact breaker in lock unit, left-hand rear door, for indicating lock motor status. • Contact breaker in lock unit, right-hand rear door, for indicating lock motor status.	**Directly connected:** • Lock unit, tailgate/trunk lid, for activating lock motor. • Lock motor, fuel tank filler cover, for activating lock motor. • Lock unit in left-hand rear door, for activating lock motors. • Lock unit in right-hand rear door, for activating lock motors.
Via Controller Area Network (CAN) communication:	**Via Controller Area Network (CAN) communication:**

• Driver door module (DDM), for status information on certain lock motors. • Passenger door module (PDM), for status information on certain lock motors. • Engine control module (ECM) for information on the status of the engine. • Brake control module (BCM), for information on vehicle speed. • Transmission control module (TCM), indicates the position of the gear selector. • Central electronic module (CEM), for information on the type of key used to unlock the vehicle and the request to open the fuel tank filler cover.	• Driver door module (DDM), for locking and unlocking commands. • Passenger door module (PDM), for locking and unlocking commands. • Central electronic module (CEM), with the request for acknowledgment via direction indicators and activation of acoustic signal (key warning).

DRIVER DOOR MODULE (DDM) (3/126):

Input signals	Output signals
Directly connected: • Indication of locked mode from the lock motor • Central locking switch	**Directly connected:** • Output signal to driver's door lock unit for activation of central locking motor. • Output signal to driver's door lock unit for activation of deadlocking motor.
Via Controller Area Network (CAN) communication: • Rear electronic module (REM), for locking and unlocking commands.	**Via Controller Area Network (CAN) communication:** • Rear electronic module (REM), for status information on certain lock motors.

PASSENGER DOOR MODULE (PDM) (3/127):

Input signals	Output signals
Directly connected: • Indication of locked mode from the lock motor • Central locking switch	**Directly connected:** • Output signal to passenger door lock unit for activation of central locking motor. • Output signal to passenger door lock unit for activation of deadlocking motor.
Via Controller Area Network (CAN) communication: • Rear electronic module (REM), for locking and unlocking commands.	**Via Controller Area Network (CAN) communication:** • Rear electronic module (REM), for status information on certain lock motors.

CLIMATE CONTROL MODULE (CCM) (3/112):

Input signals	Output signals
Via Controller Area Network (CAN)	**Via Controller Area Network (CAN)**

communication: • Rear electronic module (REM), for activation of LEDs in switches for activated function (private locking, child safety locks, reduced alarm).	**communication:** • Rear electronic module (REM), if switch for reduced alarm is pressed (no deadlocking). • Rear electronic module (REM), if switch for child safety locks is pressed (option).

DRIVER INFORMATION MODULE (DIM) (5/1):

Input signals	Output signals
Via Controller Area Network (CAN) communication: • Rear electronic module (REM), for information on whether information lamp or warning lamp is to be lit. • Rear electronic module (REM), for information on which text message is to be displayed. • Central electronic module (CEM), for activation of acoustic signal (key warning).	**Via Controller Area Network (CAN) communication:** -

UPPER ELECTRONIC MODULE (UEM) (4/70):

Input signals	Output signals
Wireless communication: • Signal from remote control.	**Wireless communication:** -
Via Controller Area Network (CAN) communication: -	**Via Controller Area Network (CAN) communication:** • Rear electronic module (REM), with the request for activation of a function. • Central electronic module (CEM), Comfort functions.

CENTRAL ELECTRONIC MODULE (CEM) (4/56):

Input signals	Output signals
Directly connected: • Light switch module (LSM) (3/111), signal from switch for opening fuel tank filler cover.	**Directly connected:** -

SYSTEM DESCRIPTION/DESIGN

GENERAL INFORMATION

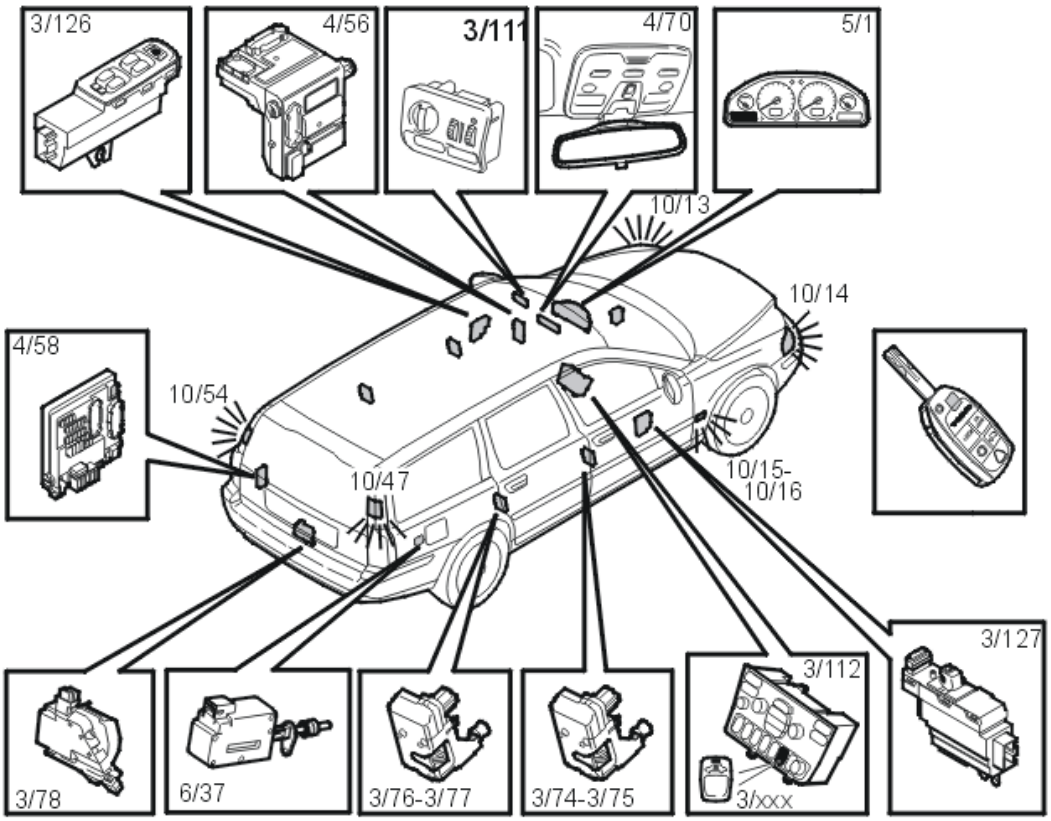

Fig. 266: Electrical Modules
Courtesy of VOLVO CARS CORPORATION

The central locking system is a distributed system. Those parts which are included in the system are:

- rear electronic module (REM)
- central electronic module (CEM)
- driver door module (DDM)
- passenger door module (PDM)
- driver information module (DIM)
- climate control module (CCM)
- upper electronic module (UEM)
- switch for unlocking the fuel tank filler cover
- lock units in doors
- lock motor at the fuel tank filler cover
- lock unit for tailgate/trunk lid.

REAR ELECTRONIC MODULE (REM)

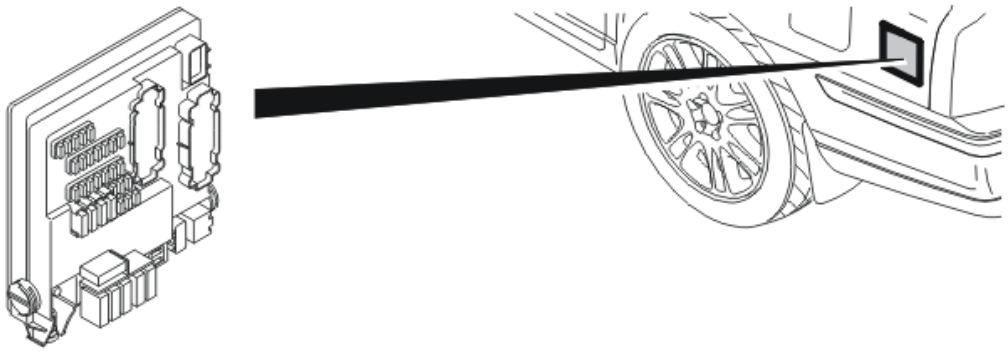

Fig. 267: Locating Rear Electronic Module (REM)
Courtesy of VOLVO CARS CORPORATION

Rear electronic module (REM) (4/58) controls and monitors the central locking system and its functions. The control module is located under the protective panel on the left-hand side of the cargo compartment. No door or hatch can be unlocked without a command from the rear electronic module (REM). The rear electronic module (REM) continuously follows up the status of the system with respect to the status of door and lock motors.

Rear electronic module (REM) is supplied with power from the ignition switch and is grounded in the body.

CENTRAL ELECTRONIC MODULE (CEM)

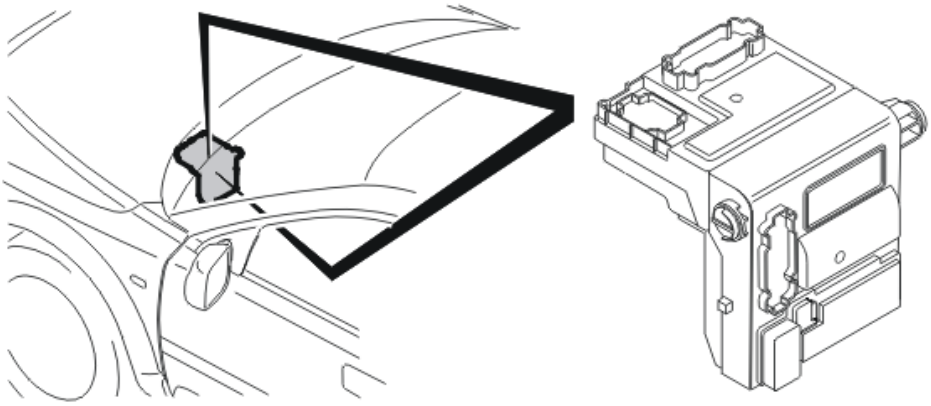

Fig. 268: CEM
Courtesy of VOLVO CARS CORPORATION

Central electronic module (CEM) (4/56) is located behind the dashboard, beside the driver. The function of the central electronic module (CEM) in the central locking system is:

- to activate the direction indicators, as confirmation with locking and unlocking the central locking
- to send a command, to activate the acoustic signal in the driver information module (DIM) with the function for key warning
- to send a message to the rear electronic module (REM), on the type of key used to unlock the vehicle or the type of key for switching on the ignition. This is significant for activating and deactivating private

locking.
- to forward the request for unlocking the fuel tank filler cover from the light switch module (LSM).

Central electronic module (CEM) communicates with the rear electronic module (REM) via the low-speed side of the CAN network.

DRIVER DOOR MODULE (DDM) / PASSENGER DOOR MODULE (PDM)

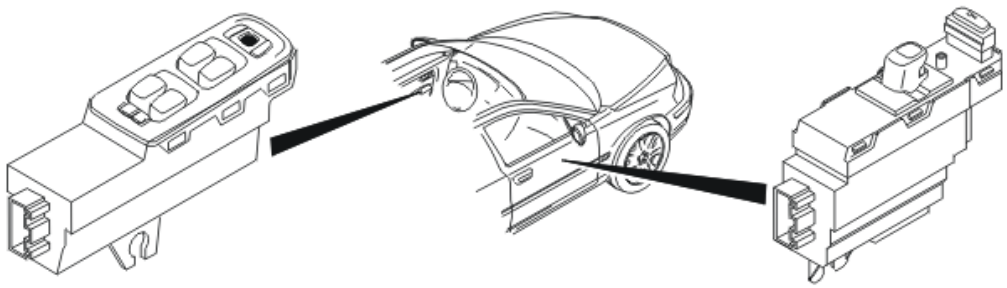

Fig. 269: Locating Driver Door Module And Passenger Door Module
Courtesy of VOLVO CARS CORPORATION

Driver door module (DDM) (3/126) is located in the driver's door and the passenger door module (PDM) (3/127) is located in the passenger door. Amongst other things, switches for window lifts are located on the top part of the control modules. The appearance and physical design differs between the two control modules.

The control panel on the driver's side has control buttons for setting the door mirrors and window lifts.

The control panel on the passenger side has control buttons for the power window mechanism.

Also on each front side door is a button for locking and unlocking central locking.

Driver door module (DDM) and the passenger door module (PDM) are directly connected to the lock unit in each door. Driver door module (DDM) and the passenger door module (PDM) lock and unlock the door on a command from the rear electronic module (REM). Driver door module (DDM) and the passenger door module (PDM) can only unlock the door after receiving a signal from the rear electronic module (REM).

Driver door module (DDM) and the passenger door module (PDM) have diagnostic functions which monitor the function of the buttons with respect to jammed buttons and relays.

Driver door module (DDM) and the passenger door module (PDM) communicate with the rear electronic module (REM) via the low-speed side of the CAN network.

DRIVER INFORMATION MODULE (DIM)

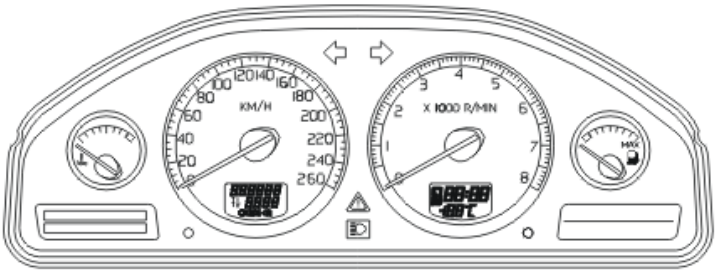

Fig. 270: Driver Information Module Display Area
Courtesy of VOLVO CARS CORPORATION

Driver information module (DIM) (5/1) displays a message in the text display and lights a warning lamp if one of the side doors or a hatch has opened during the journey. If the doors or hatches are fully closed then this is indicated by means of contact breakers in the lock units. A contact breaker at the hood is only fitted on vehicles with alarm.

A yellow warning lamp lights if the vehicle speed is below 7 km/h (5 mph). The red warning lamp lights if the vehicle speed is above 7 km/h (5 mph).

The tailgate is only indicated by a text message and yellow warning lamp, irrespective of the speed.

Driver information module (DIM) also displays a message with activation and deactivation of the functions private locking, child safety locks, and when the fuel tank filler cover is opened. The driver information module (DIM) also emits an acoustic signal with the function for key warning.

Driver information module (DIM) communicates with the rear electronic module (REM) via the low-speed side of the CAN network.

CLIMATE CONTROL MODULE (CCM)

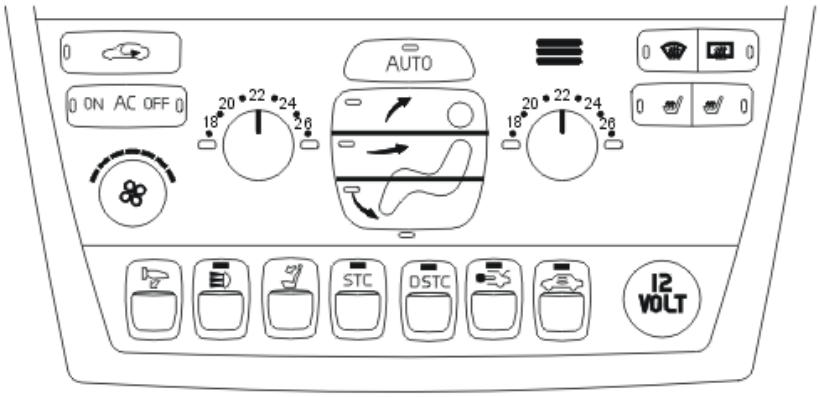

Fig. 271: Dashboard Environment Panel
Courtesy of VOLVO CARS CORPORATION

Climate control module (CCM) (3/112) receives the signals from the switches furthest down on the dashboard environment panel (7 in a row). Located here amongst other things are switches for private locking, child safety locks and reduced alarm.

NOTE: The switches may be arranged in a different order from the one shown in the illustration depending on the vehicle's configuration and equipment.

When one of the switches is pressed the climate control module (CCM) sends a request over the CAN network to the rear electronic module (REM) that the corresponding function is activated or deactivated.

The climate control module (CCM) communicates with the rear electronic module (REM) via the low-speed side of the CAN network.

UPPER ELECTRONIC MODULE (UEM)

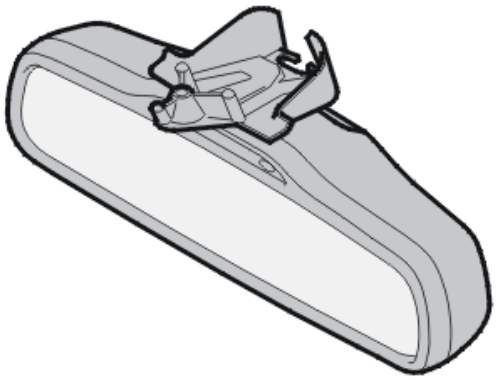

Fig. 272: Identifying Rear View Mirror
Courtesy of VOLVO CARS CORPORATION

Upper electronic module (UEM) receives the signals from the remote control and checks that the remote control belongs to the vehicle. For the upper electronic module (UEM) to be able to perform the check it must be programmed with codes for the remote controls belonging to the vehicle. If the key being used is approved then a request is sent for unlocking or locking to the rear electronic module (REM).

Upper electronic module (UEM) communicates with the rear electronic module (REM) via the low-speed side of the CAN network.

SWITCH FOR UNLOCKING THE FUEL TANK FILLER COVER

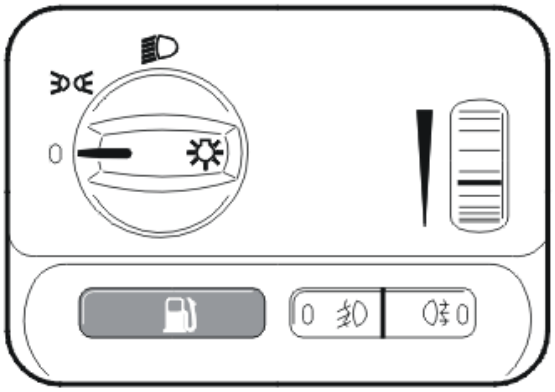

Fig. 273: Fuel Tank Filler Cover Switch
Courtesy of VOLVO CARS CORPORATION

The switch for unlocking the fuel tank filler cover is located on the light switch module (LSM) (3/111). The switch is only on vehicles with fuel tank leakage diagnostics.

Light switch module (LSM) communicates in serial with the central electronic module (CEM). If the switch is pressed the central electronic module (CEM) sends a request to the rear electronic module (REM) that the lock motor for the fuel tank filler cover is activated. The cover can be opened if the speed of the vehicle is less than 7 km/h (5 mph).

The fuel tank filler cover is opened after a delay so that the automatic check for fuel leakage can be interrupted and the fuel tank pressure equalized. The fuel tank filler cover is then locked when the vehicle reaches a speed of 16 km/h (10 mph) or after 10 minutes if the vehicle has 2 stage locking function.

LOCK UNITS SIDE DOORS

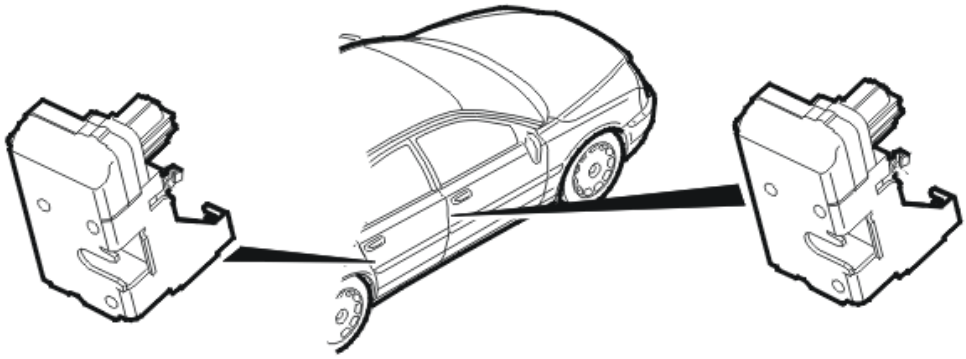

Fig. 274: Side Door Lock Units
Courtesy of VOLVO CARS CORPORATION

The lock units (3/74-77) are fitted in the rear of the side doors. The lock units in the front doors are each directly connected to their associated control module in the door. The lock units in the rear doors are directly connected to the rear electronic module (REM).

There are different versions of the lock units, depending on the configuration of the lock motors.

There are two versions of the lock units in the front doors with lock motors for:

- central locking
- central locking and deadlocking.

There are four versions of the lock units in the rear doors with lock motors for:

- central locking
- central locking and deadlocking
- central locking, deadlocking and child-proof locking
- central locking and child-proof locking.

The central locking lock motor locks the door.

The deadlocking lock motor disconnects the mechanical couplings from the door handles and the lock button to the lock unit. This function depends on the market.

The lock motor for child safety locks is only for the rear doors and disconnects the inner door handle and the lock button.

Driver door module (DDM) and the passenger door module (PDM) can only unlock the doors after a command from the rear electronic module (REM).

In addition to the lock motors, the lock units contain up to three contract breakers depending on the configuration:

- contact breaker to indicate that the central locking motor is in the locked position
- contact breaker which indicates that the door is not locked
- contact breaker to indicate the child-proof lock motor is locked.

The lock motors have integral overheating protection which prevents lock motor activation if the lock motor risks becoming too hot.

LOCK UNIT, TAILGATE/TRUNK LID

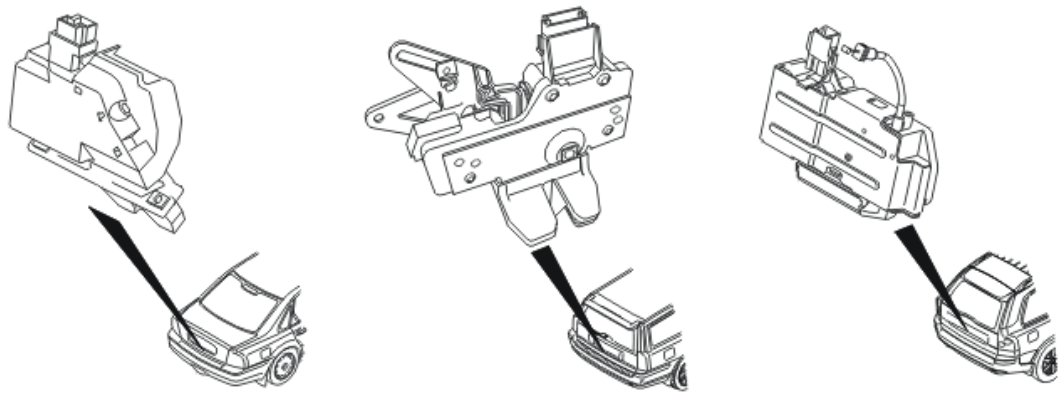

Fig. 275: Tailgate/Trunk Lid Lock Unit
Courtesy of VOLVO CARS CORPORATION

The lock unit in the tailgate locks and unlocks during a normal locking procedure. When the tailgate is unlocked and the handle on the tailgate is pressed the catch in the mechanism from the lock brace in the body disengages and the tailgate opens.

There is a lock cylinder on the tailgate on the XC90 if a third row of seats was fitted at the factory.

The tailgate/trunk lid can also be unlocked/opened separately with a special button on the remote control.

REMOTE CONTROL

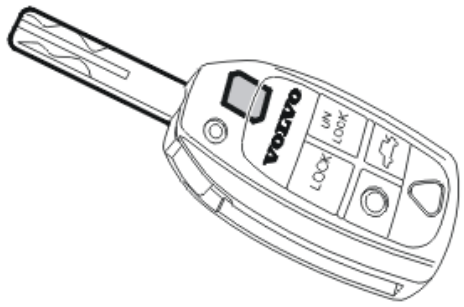

Fig. 276: Identifying Ignition Key
Courtesy of VOLVO CARS CORPORATION

The remote control is used to activate function in the system remotely. The basic functions of the remote control are:

- unlocking
- locking
- unlocking the trunk lid/tailgate
- activating the local lighting

- activating alarm functions.

The remote control has an integrated communication circuit and memory. When a button on the remote control is pressed a coded signal is sent out. This signal is received by the upper electronic module (UEM) and is forwarded to the rear electronic module (REM). In order that the remote control can work with the system a unique code must be programmed into the remote control by the upper electronic module (UEM). This is first performed at the factory. Following which remote controls can be added or removed at a Volvo workshop.

The remote control has an integral battery which is used when commands are sent to the system. This battery requires replacement at regular intervals. An indication of a weak battery is when the range of the remote control decreases.

SYSTEM OVERVIEW

GENERAL INFORMATION

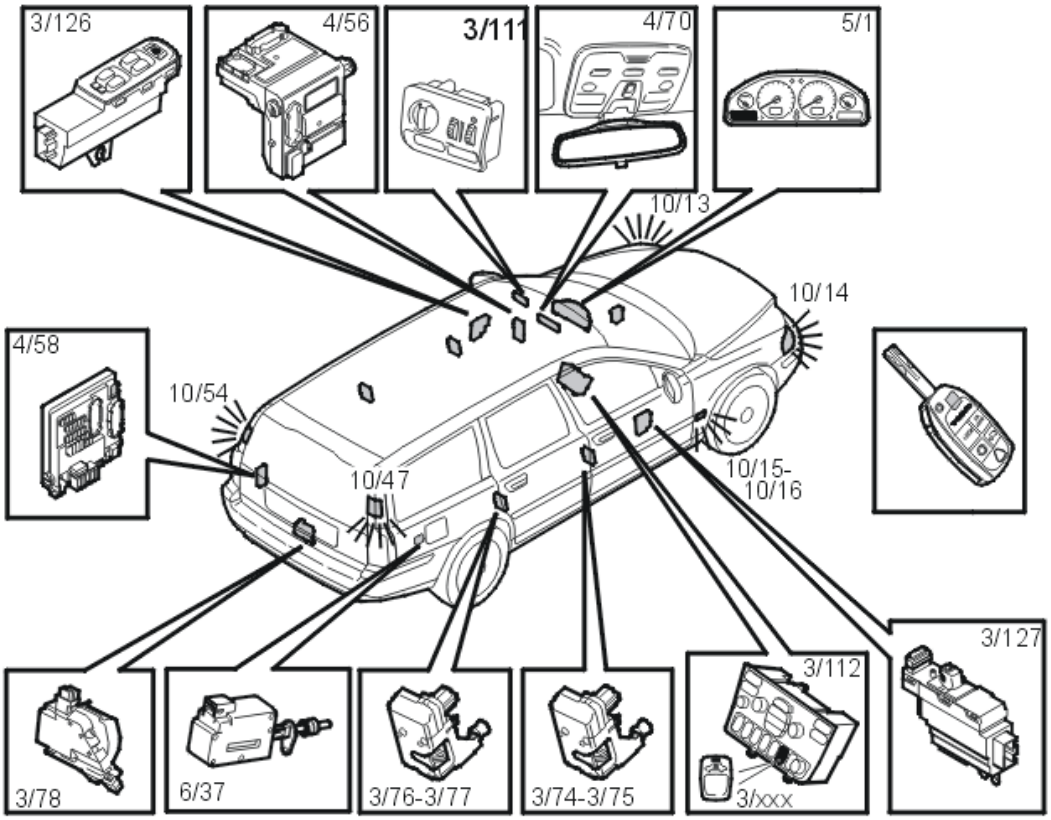

Fig. 277: Electrical Modules
Courtesy of VOLVO CARS CORPORATION

The central locking system includes a number of functions. The main unit of the system is the rear electronic module (REM) (4/58). The rear electronic module (REM) communicates with the internal components both via direct connections and the CAN network.

The functions covered are:

- standard locking function
- 2 stage locking function
- deadlocking
- private locking mode
- child safety locks
- unlocking the trunk lid/tailgate
- unlocking the fuel tank filler cover
- indication of the status of the doors and hatches
- automatic locking function
- re-locking.

After the battery has been disconnected the central locking system must be initialized. This can be performed by locking and unlocking once with the key in the driver's door or with the remote control. This is performed to ensure that the status for lock motors and doors is operative.

The locking function on the vehicle at delivery depends on the market and is stored in the vehicle's configuration file, which is stored in the central electronic module (CEM). The configuration can be read via VIDA Vehicle communication.

STANDARD LOCKING FUNCTION

The standard locking function unlocks the side doors and the fuel tank filler cover and it activates the lock button on the trunk lid/tailgate so that this can be opened. Total unlocking unlocks all doors and hatches at the same time.

2 STAGE LOCKING FUNCTION

This locking function is used almost exclusively on the American market. The function can either be used via key or via remote control. If the vehicle shall be unlocked with a key then the key must be turned counterclockwise twice within 10 seconds so that all doors and hatches are unlocked. The first key turn unlocks the driver's door and the fuel tank filler cover. The second key turn unlocks the other doors and the tailgate/trunk lid. If the vehicle shall be unlocked with the remote control then the unlocking button must be pressed twice within 10 seconds.

DEADLOCK

The function for deadlocking is optional. Deadlocking means that the inner door handles and the inner lock button are disconnected. This means that a side door cannot be opened from the inside even if a window is broken. Deadlocking is activated 25 seconds after the vehicle is locked. The function can be temporarily disconnected by activating the switch for reduced alarm. The function is not available in the US/CA market.

VALET LOCKING MODE

The cargo compartment can be locked in a "private" mode. The function is used to prevent access to the glove

compartment and cargo compartment if, for example, the vehicle must be left in a workshop along with personal effects. The function is activated by a switch on the dashboard environment panel for climate control. To activate and deactivate the function a key belonging to the vehicle must be used (a "Master Key") and the ignition must be in position II.

CHILD-PROOF LOCKS

The function for child safety locks disconnects the rear inner door handles and the inner lock button. The switch for the function is located in the dashboard environment panel for climate control.

UNLOCKING THE TRUNK LID/TAILGATE

The lock unit in the tailgate is unlocked during a normal unlocking procedure. The tailgate can also be unlocked separately with a button on the remote control. The tailgate can also be opened independently of the central locking system with the key in the lock cylinder on the tailgate. The lock cylinder is only on vehicles with a factory-fitted auxiliary rear facing seat. If the tailgate is opened with the key in the lock cylinder then the alarm will be triggered if more than 26 seconds has elapsed since locking the central locking (applies to vehicles with alarm function).

The lock unit on the tailgate is directly connected to the rear electronic module (REM).

UNLOCKING THE FUEL TANK FILLER COVER

As standard the fuel tank filler cover unlocks at the same time as other doors and locks again after 10 minutes or when the vehicle reaches 16 km/h (10 mph).

If the vehicle is equipped with a fuel leakage diagnostics system then a switch for unlocking the fuel tank filler cover is located on the light switch module (LSM). The light switch module (LSM) communicates in serial with the central electronic module (CEM) and transmits the information if the switch has been pressed. The lock motor for the fuel tank filler cover is located on the rear edge of the fuel tank filler cover. The lock motor is directly connected to the rear electronic module (REM).

CONTACT BREAKERS AT DOORS AND HATCHES.

There are contact breakers in the side door and tailgate/trunk lid lock units which indicate whether the door or tailgate/trunk lid is open or closed, and a contact breaker located at the hood if the vehicle is equipped with alarm. There are no contact breakers by the fuel tank filler cover. The contact breakers are closed if the door or hatch is closed and then provide a direct ground connection to the rear electronic module (REM).

AUTOMATIC LOCKING

The system has a function which can be activated so that the vehicle is locked automatically when it reaches a speed of 7 km/h (5 mph). The function is normally not activated on delivery from the factory, but can be activated afterwards.

RE-LOCKING

The system has a function for re-locking. If the car is unlocked using the remote control or key and the side

doors or trunk lid/tailgate are not opened within 2 minutes, the car will be locked automatically. This function prevents the car from being left unlocked unintentionally.

TEXT MESSAGE FOR THE LOCK SYSTEM

The text message window of the driver information module (DIM) displays whether the function for child safety locks, private locking or reduced alarm is activated. Also displayed here is a warning message if a door or hatch is opened when the ignition is switched on.

ACKNOWLEDGMENTS

Confirmation can be given by the central locking system when locking or unlocking is performed. The basic setting is one long light signal when locking and two short ones when unlocking.

REMOTE CONTROL

The central locking system can be unlocked using the remote control.

The remote control has buttons for:

- unlocking
- locking
- unlocking the trunk lid/tailgate
- panic function
- local lighting.

PANIC FUNCTION

The panic function activates the vehicle's horn for 25 seconds. The function is used to attract attention in an emergency situation. The panic function can be activated by a button on the remote control.

UNLOCKING USING THE KEY

The central locking can be locked and unlocked with a key via the lock cylinder in the driver's door. This applies whether the setting is standard or 2 stage. During this process the alarm functions can also be activated or deactivated. The alarm function depends on a setting in the vehicle's configuration file which is stored in the central electronic module (CEM). If the customer wishes, the alarm can be set to only be activated and deactivated if the vehicle is locked or unlocked with the remote control.

CHASSIS/SUSPENSION (2003-2012)

CHASSIS/SUSPENSION

CHASSIS/SUSPENSION

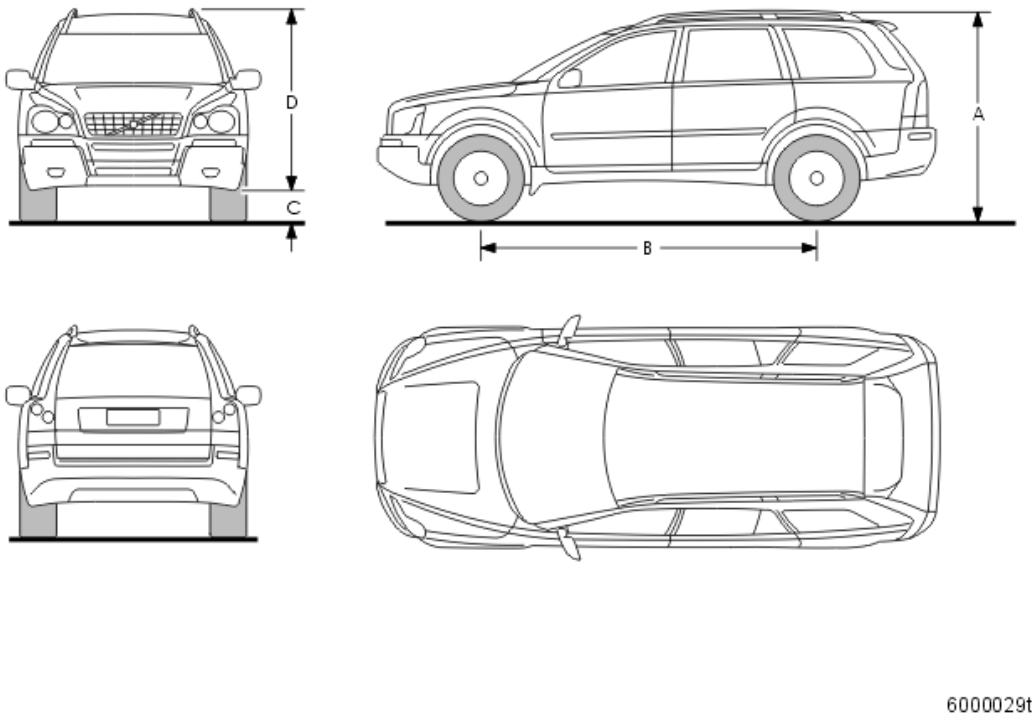

Fig. 278: Identifying Basic Chassis Dimensions
Courtesy of VOLVO CARS CORPORATION

Height (A)	**Wheelbase** (B)	**Ground clearance** (C)	**Chassis height** (D)	**Weight**	**Track, front**	**Track, rear**
1740 mm	2859 mm	219 mm	1, 521mm	1880 - 2110 kg	1634 mm	1624 mm

Most common SUVs (Sports Utility Vehicles) are based on a type of chassis also found on high trucks. The XC90 is constructed like a passenger car, developed to meet the high handling standards. There is equal weight distribution between the front and rear ends due to the laterally mounted engine and four wheel drive.

The center of gravity is lower resulting in excellent directional stability.

Suspension

Front:

- Individual suspension with MacPherson springs
- Negative steering radius.

Rear:

- Individual suspension, Multilink.

FRONT SUSPENSION

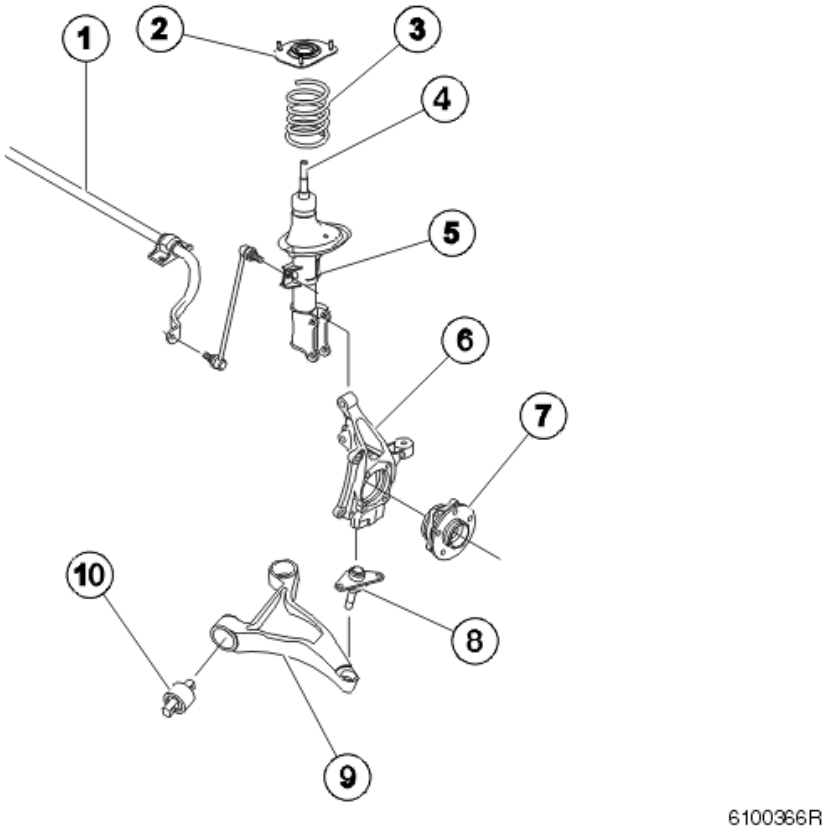

Fig. 279: Identifying Front Suspension Components
Courtesy of VOLVO CARS CORPORATION

1. Anti-roll bar
2. Bearing
3. Coil spring
4. Shock absorber
5. Spring strut
6. Steering arm
7. Wheel hub
8. Ball joint
9. Control arm
10. Bushing.

Individual suspension with MacPherson springs

- Lower control arm, forged
- Ball joint, modified mounting from previous models
- Steering arm, cast iron
- Coil spring, 3 different versions depending on weight.

Steering

- Limiter (plastic sleeve installed inside the steering gear). 70 mm for 16", tire size 225. 65 mm for 17", tire size 235
- The steering gear is made by ZF
- Speed dependent power steering. Option.

REAR SPRING/REAR SUSPENSION

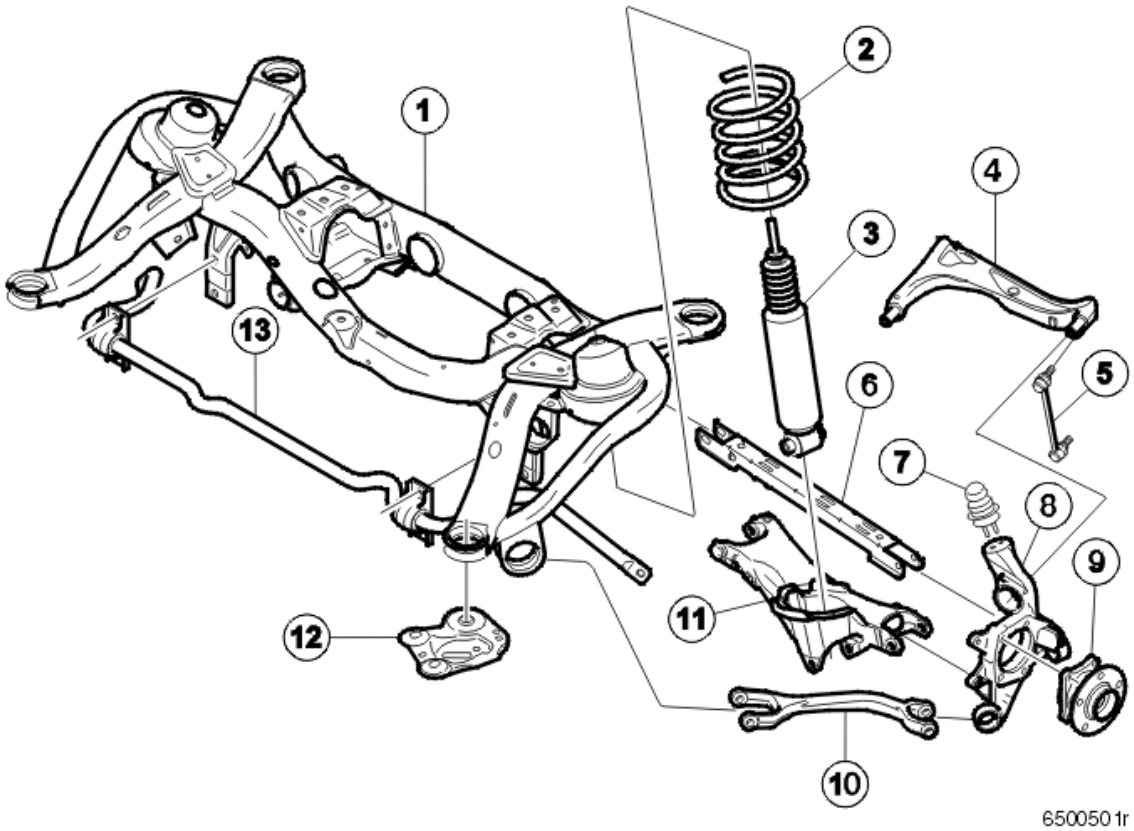

Fig. 280: Identifying Rear Suspension Components
Courtesy of VOLVO CARS CORPORATION

1. Subframe
2. Coil spring
3. Shock absorber, nivomat
4. Rear control arm

5. Cross stay, anti-roll bar
6. Adjustment stay
7. Bump rubber
8. Wheel spindle
9. Hub
10. Front control arm
11. Lower control arm
12. Bracket
13. Anti-roll bar.

The coil spring and shock absorber are mounted separately in the subframe.

- There are six (6) different types of coil spring (depending on weight, soft, medium, hard)
- The coil spring is oval where it meets the lower control arm. It can only be installed in one way
- The coil spring has a color marking which must be facing the marking on the lower control arm.

Shock absorber, the upper bushing is oval shaped to reduce side forces.

- The bushing is stiffer longitudinally
- Nivomat is standard on the seven seater version. For five seater versions it is an option or accessory.

The front and rear anti-roll bars are both 23 mm thick.

- The anti-roll bar is solid. It is manufactured from spring steel.

The subframe is manufactured in steel.

CLIMATE CONTROL (2003-2012)

DESIGN

AIR CONDITIONING

See: **AIR CONDITIONING**

AIR CONDITIONING (A/C) REAR, SEVEN SEAT XC90 (OPTION)

See: **AIR CONDITIONING (A/C) REAR, SEVEN SEAT XC90 (OPTION)**

AIR DISTRIBUTION SYSTEM

See: **AIR DISTRIBUTION SYSTEM**

BLOWER FAN

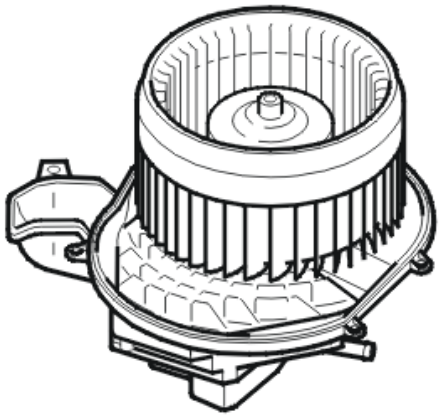

Fig. 281: Blower Fan
Courtesy of VOLVO CARS CORPORATION

The fan wheel is the radial type with a guide vane rim on the outer edge. The fan wheel is balanced using steel clips.

The blower fan motor is a permanent magnet type fan.

The blower fan has stepless electronic control.

The power unit is mounted under the fan unit. The power unit can be removed.

FILTER

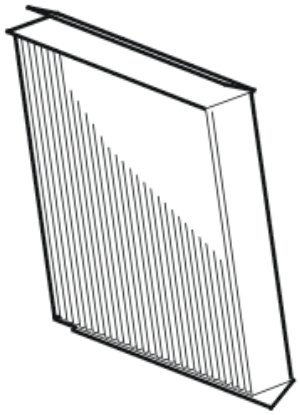

Fig. 282: Filter
Courtesy of VOLVO CARS CORPORATION

The filter is located after the fan to also clean recirculated air. The filter is coded, that is, designed so that it cannot be installed incorrectly.

There are two types of filter.

- Particle filter

- Multi-filter.

The multi-filter filters particles in the same way as the particle filter. The multi-filter contains active carbon which reduces the influx of gases (bad odors) into the passenger compartment.

The multi-filter is only available for vehicles with electronic climate control (ECC) and then in combination with the air quality sensor (AQS).

NOTE: The climate control system has either a particle filter or a multi-filter, never both.

HEAT EXCHANGER

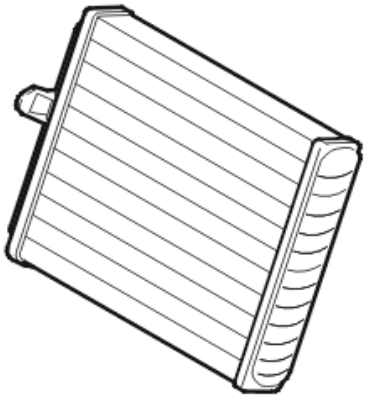

Fig. 283: Heat Exchanger
Courtesy of VOLVO CARS CORPORATION

In order to heat the air in the passenger compartment, the heating system uses the heat that is generated by the engine. The heat exchanger is connected to the cooling system for the engine. The outlet connection for the heat exchanger is located directly on the engine at the point where the pressure and temperature of the coolant are highest. The coolant flows through the cooling ducts for the engine block and on into the heat exchanger. The return flow is connected to the return pipe on the suction side of the water pump.

The heat exchanger comprises a pipe loop through which the engine coolant flows. The pipe has flanges that provide heat to the airflow.

Engine coolant constantly flows through the heat exchanger. There is no valve to regulate the flow. The selected temperature is achieved using dampers for the right and left-hand sides of the car installed upstream of the heater element. These control the amount of air to be warmed. There is also a damper after the heater element which guides air out into the passenger compartment through the various vents.

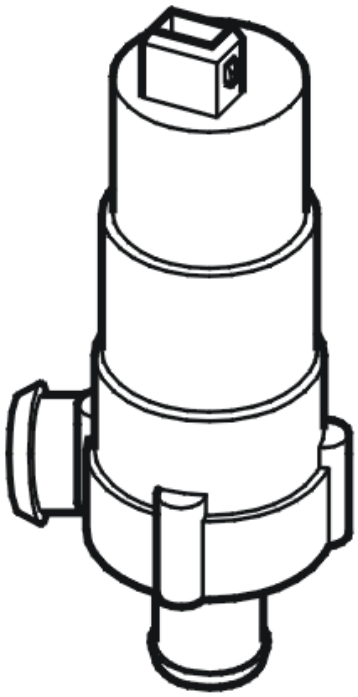

Fig. 284: Electric Pump
Courtesy of VOLVO CARS CORPORATION

Vehicles with engine B8444S have an electric pump in the coolant circuit to ensure a comfortable level of heating is supplied to the passenger compartment. The electric pump increases the amount of coolant the flows through the heat exchanger. The pump is located in the engine compartment within the front fender in front of the front left wheel housing.

ADDITIONAL HEATER/PARKING HEATER

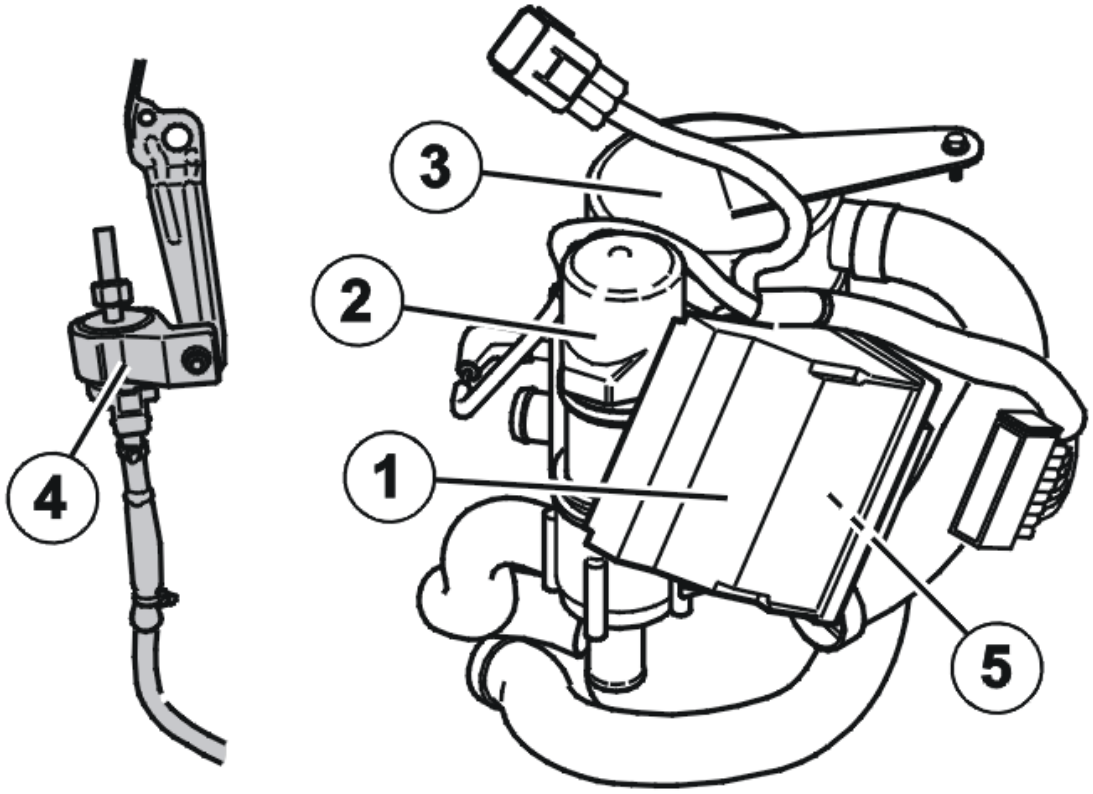

Fig. 285: Additional Heater/Parking Heater
Courtesy of VOLVO CARS CORPORATION

1. Control module
2. Water pump
3. Fan shroud
4. Fuel pump (FP) (in front of the fuel tank)
5. Heat exchanger

Gasoline driven vehicles can use a parking heater with timer function.

The additional heater/parking heater are positioned inside the front fenders, in front of the front left wheel arch.

The heater consists of:

- the heater unit
- the combustion preheater module (CPM)
- the exhaust system
- the air intake
- the water pump.

The heater is connected to:

- the engine cooling system
- the vehicle fuel tank
- central electronic module (CEM).

Both versions have a fuel pump (FP) located on the right-hand side in front of the fuel tank.

Vehicles with the parking heater function use the turn signal lamp stalk to control the heater. The information appears in the driver information module (DIM).

LOCATION OF THE COMPONENTS IN THE CLIMATE CONTROL SYSTEM

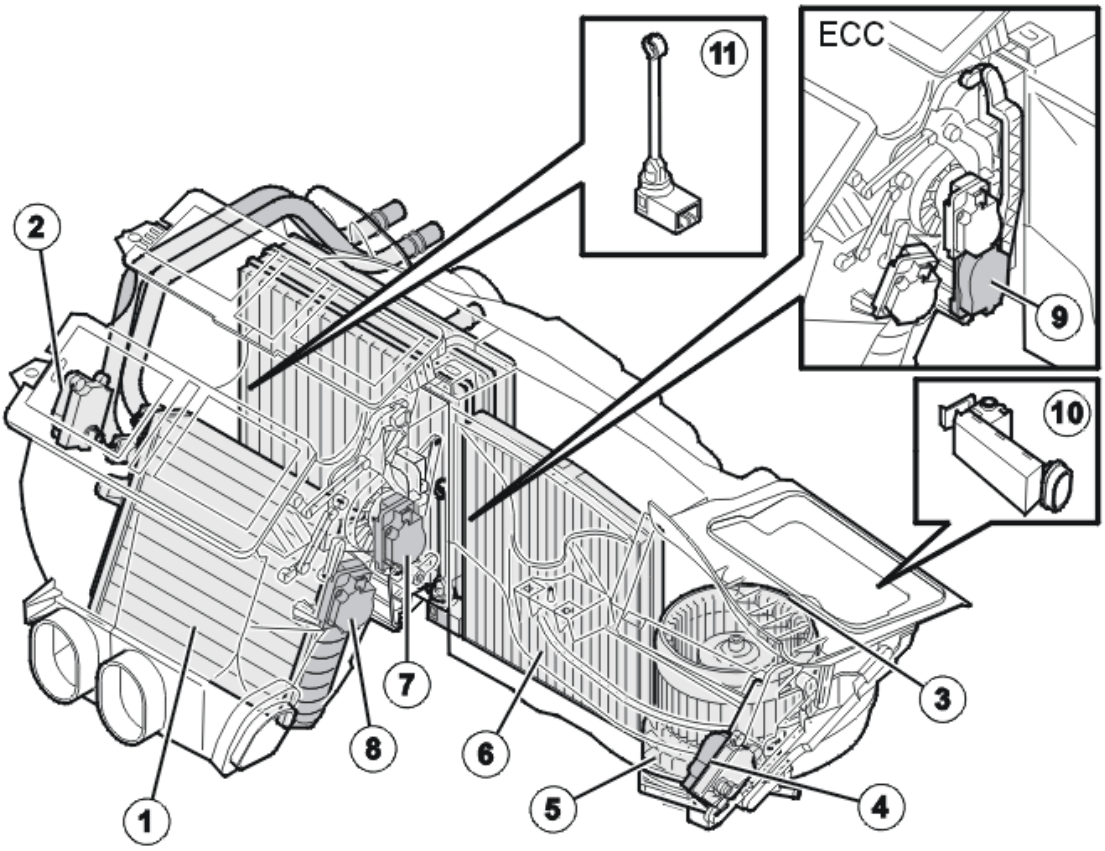

Fig. 286: Locating Climate Control System Components
Courtesy of VOLVO CARS CORPORATION

1. Heat exchanger
2. Damper motor, temperature, left
3. Blower fan
4. Damper motor, fresh air intake and recirculation damper
5. Power unit for blower fan motor
6. Particle filter or multi-filter
7. Damper motor, ventilation and floor (also defroster for MCC)

8. Damper motor, temperature, right
9. Damper motor, defroster (only ECC)
10. Air quality sensor (AQS)
11. Evaporator temperature sensor.

AIR CONDITIONING

GENERAL INFORMATION

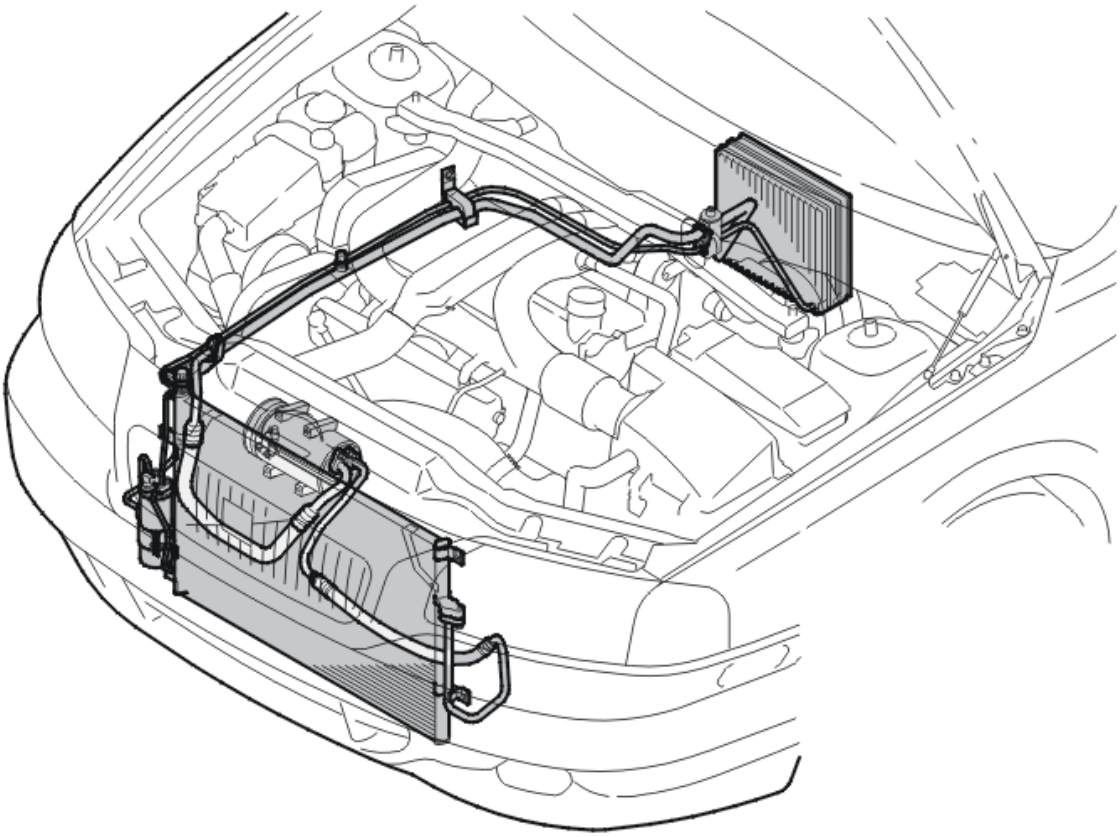

Fig. 287: Climate Control System
Courtesy of VOLVO CARS CORPORATION

There are five main components in the climate control system:

- evaporator
- receiver drier
- compressor
- condenser
- expansion valve.

The system is filled with a suitable quantity of refrigerant and oil. The role of the oil is to lubricate and seal the compressor (piston and cylinder).

A fluorescent leak-tracing agent is added to the refrigerant. The leak-tracing agent makes it possible to trace leaks using UV light.

PRINCIPLE SKETCH OF THE CLIMATE CONTROL SYSTEM

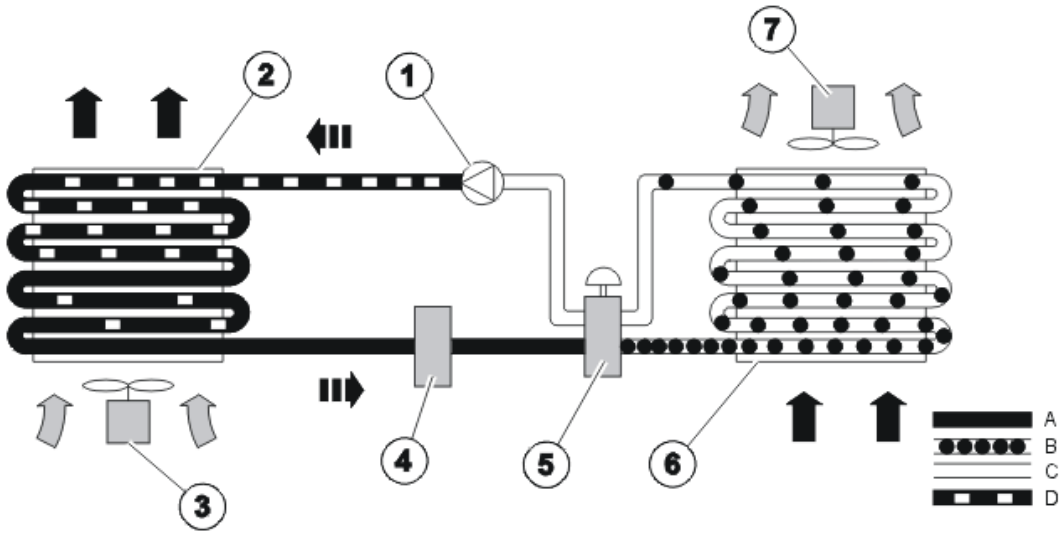

Fig. 288: Identifying Principle Sketch Of Climate Control System
Courtesy of VOLVO CARS CORPORATION

Included in the climate control system:

1. Compressor
2. Condenser
3. Engine cooling fan (the same cooling fan used by the engine cooling system)
4. Receiver drier
5. Expansion valve
6. Evaporator
7. Blower fan.

Explanation:

A - High pressure, warm fluid

B - Low pressure, cold fluid

C - Low pressure, cold gas

D - High pressure, warm gas

Dark arrow - Warm air

Light arrow - Cold air

The system is divided into:

- a low pressure side (B, C)
- a high pressure side (A, D).

The two sides are separated by the compressor (1) and the expansion valve (5). The evaporator (6) is located on the low pressure side and the condenser (2) is on the high pressure side.

The design of the climate control system in a vehicle is based on the laws of nature, which mean that liquids evaporate when they are subjected to a temperature increase or a reduction in pressure and that heat is absorbed during this process.

If the hot vapor is then cooled again, the heat that has been absorbed is released and the gas reverts to liquid form. This process is repeated as many times as necessary, so that "cooling is produced" continually. This is the same type of process as used in refrigerators, for example.

REFRIGERANT

In order to remove heat from the passenger compartment a medium that has a lower evaporating temperature than air is used, because heat will always move from a hotter body to a cooler body. The medium that is used is refrigerant R134a.

R134a is a gaseous fluorocarbon. It is chlorine free and does not damage the ozone layer. However, R134a is still environmentally hazardous as it contributes to the greenhouse effect. It is therefore important that all service work is performed by trained personnel.

R134a retains its gaseous form at normal atmospheric pressure, and only condenses if it is cooled down to below -26 °C.

R134a has the following properties:

- can only be mixed with synthetic PAG oils (polyalkyline glycol) and not with mineral oils
- does not affect metals
- affects some types of plastic, so only special seals (O rings) that are intended for R134a should be used
- is not explosive
- is odorless
- is not toxic in low doses
- effectively absorbs moisture
- is not flammable
- is heavier than air in gaseous form.

COMPRESSOR (NOT B8444S)

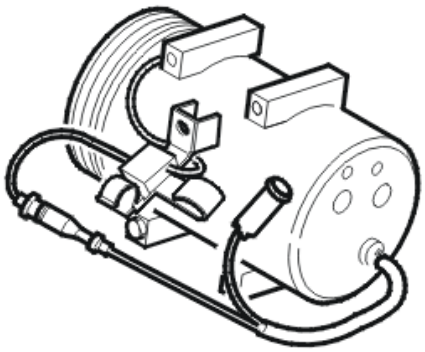

Fig. 289: Compressor (Not B8444S)
Courtesy of VOLVO CARS CORPORATION

The compressor is located at the front of the engine. The air conditioning compressor is installed on the auxiliaries bracket which is in turn installed on the cylinder block. There are no bushings between the air conditioning compressor, the auxiliaries bracket and the cylinder block. Direct mounting gives increased rigidity to the mounting. It minimizes the risk of noise.

The compressor is in the refrigerant circuit, located between the evaporator and the condenser.

The compressor has a fixed cylinder displacement.

Compressors with fixed displacement have two limits:

- off
- on.

The air conditioning (A/C) compressor is controlled by an air conditioning (A/C) pressure sensor. The air conditioning (A/C) pressure sensor is positioned on the receiver drier. In vehicles with electronic climate control (ECC), the compressor is also controlled by the temperature after the evaporator.

The compressor is lubricated with specially developed refrigerant oil. This oil (synthetic PAG oil) is mixed with the refrigerant when the air conditioning system is in operation.

The compressor also has a relief valve, located on the rear section of the compressor. The relief valve functions as an additional safety device. The valve opens and releases refrigerant when the pressure in the system is too high (at approx. 3.5 MPa (35 bar)). The valve then shuts again when the pressure has returned to normal.

The compressor is mechanical and is driven by the vehicle engine. When the compressor is operating it "steals" 0.5-8 kW (0.7-11 bhp) from the engine. This may be noticed as slight jerks when driving as the compressor is engaged / disengaged.

The compressor is disengaged for 10 - 20 seconds under full acceleration.

The compressor is the component in the climate control system with the greatest mass. This means that the

compressor takes the longest time to warm up. In climates with large differences in day and night temperatures this means that the compressor is often the coldest part of the system. All the refrigerant in the system therefore gathers in the compressor. The compressor cannot compress liquid which means that the pressure becomes very high and there is a risk that the safety valve will be activated when the system is switched on. The safety valve closes when the pressure falls but there is a slight release of refrigerant each time. When the liquid release occurs it also causes a loud noise and shaking.

To minimize the risk of liquid compression the compressor is engaged at the same time as the starter motor is operating. The starter motor has a lower engine speed (RPM) than the vehicle drive motor and the pressure build up in the compressor is not as high. The risk of the safety valve being deployed is minimized and any liquid refrigerant is driven from the compressor.

COMPRESSOR (B8444S ONLY)

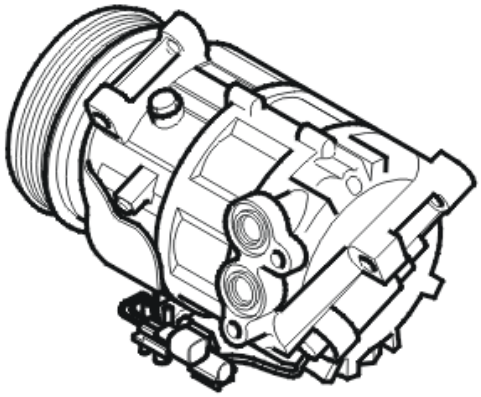

Fig. 290: Compressor (B8444S Only)
Courtesy of VOLVO CARS CORPORATION

The compressor is mounted directly on the engine block and is driven by the engine crankshaft via the auxiliaries belt.

In the refrigerant circuit, the compressor is located between the evaporator and the condenser.

The compressor has variable displacement that is regulated by a replaceable solenoid, which is located on the underside of the compressor. The temperature sensor situated after the evaporator sends a signal to the Climate Control Module (CCM), which uses the signal to control the solenoid.

Compressors with variable displacement usually do not switch off during normal operation. The flow of refrigerant is continually adapted based on need. The compressor works between min. and max. displacement due to the following:

- the pistons are driven by a cam disc with a variable angle
- the angle is determined by springs if the compressor is disengaged
- if the compressor is engaged, the angle is determined by the pressure exerted on the top of the pistons (= intake pressure) and the bottom of the pistons (= pressure in the crankcase) during the intake phase
- the pressure on the bottom of the pistons (= in the crankcase) is regulated by a solenoid that is controlled

by the Climate Control Module (CCM).

If intake pressure is high, the compressor works to increase displacement.

- The solenoid opens and lowers the pressure in the crankcase. The counterpressure on the back of the pistons then reduces and the cam disc angle increases.
- The increased angle generates increased stroke, which causes a greater amount of refrigerant to be "sucked in" and a drop in intake pressure.

When intake pressure is low, the compressor works to reduce displacement.

- The valve closes and pressure in the crankcase increases. The pressure is built up by refrigerant that is led from the outlet side to the crankcase via a calibrated duct. The counterpressure on the back of the pistons then increases and the cam disc angle decreases.
- The decreased angle generated reduced stroke, which causes a smaller amount of refrigerant to be "sucked in" and an increase in intake pressure.

The compressor is also regulated by the A/C pressure sensor, which deactivates the system if pressure becomes too high.

The compressor is lubricated with specially developed refrigerant oil. This oil (synthetic PAG oil) is mixed with the refrigerant when the air conditioning system is in operation.

The compressor is the component of the climate control system with the largest mass. Thus, it takes the longest to warm up. In climates where the temperature varies greatly from night to day, it is often the compressor that is the system's coldest point each morning. Thus, all the refrigerant in the system makes its way to the compressor crankcase. Upon start, it takes 1-2 minutes for the refrigerant to evaporate. During this period, it may seem like the climate control system is not working.

MAGNETIC CLUTCH ASSEMBLY

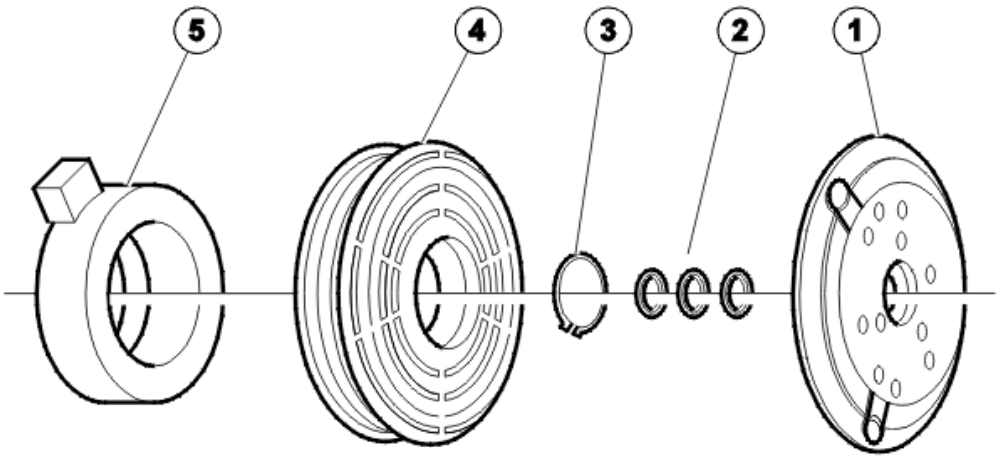

Fig. 291: Identifying Magnetic Clutch Assembly
Courtesy of VOLVO CARS CORPORATION

1. Carrier disc
2. Shim discs
3. Spring ring
4. Pulley
5. Magnet coil.

The compressor is driven by the engine camshaft via the drive belt. As soon as the engine has started, the pulley (4) on the compressor drive shaft operates without hindrance.

Then the climate control system is switched on, the current passes through the magnetic coil (5), which is magnetized. This causes the carrier (1) on the compressor drive shaft to be pressed forward towards the pulley (4). The coupling is closed and the compressor rotates at the engine speed.

When the current to the magnetic coil is interrupted, the carrier disc (1) is released from the pulley (4) with the aid of return springs.

In order for the magnetic clutch to function correctly, the distance between the carrier disc (1) and the pulley (4) must be exactly correct. Shim discs (2) are therefore placed between them.

EXPANSION VALVE

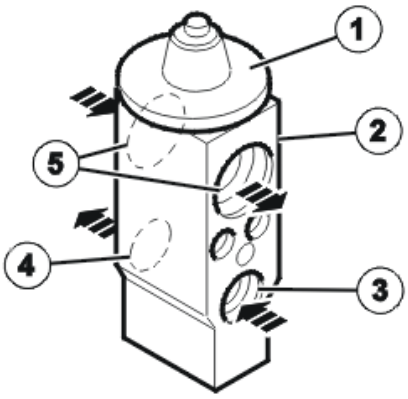

Fig. 292: Expansion Valve
Courtesy of VOLVO CARS CORPORATION

1. Diaphragm
2. Valve housing
3. Refrigerant in liquid form from the receiver drier
4. Refrigerant in liquid form to the evaporator
5. Refrigerant in gas form from the evaporator to the compressor.

The expansion valve is mounted on the intake and outlet pipes of the evaporator. In the refrigerant circuit, it is

located on the high pressure side between the receiver drier and the evaporator.

The expansion valve is a pressure and temperature dependent flow regulator of the constriction type. At low cooling demand the amount of refrigerant is reduced by the valve closing. If the cooling demand increases the valve opens slightly to allow more refrigerant to the evaporator.

Systems with an expansion valve have a greater register than systems with a fixed choke because the amount of refrigerant can be better regulated to the cooling demand.

The expansion valve consists of a diaphragm (1) and a valve housing (2).

Cross section of the expansion valve

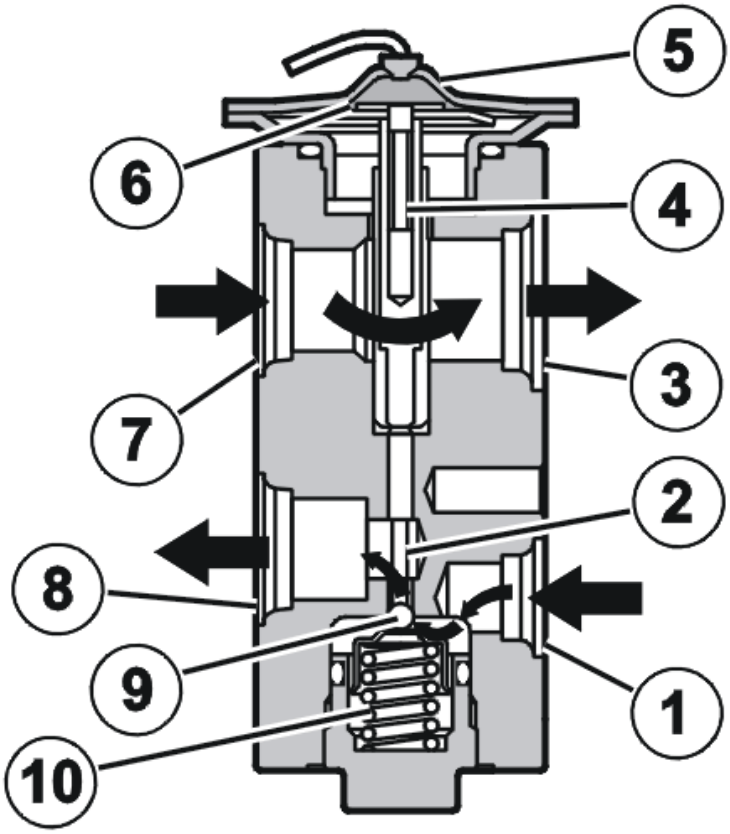

Fig. 293: Cross Section Of Expansion Valve
Courtesy of VOLVO CARS CORPORATION

1. Valve inlet from receiver drier
2. Valve slide
3. Valve outlet to compressor
4. Temperature sensor
5. Diaphragm (filled with refrigerant)
6. Diaphragm

7. Valve inlet from evaporator
8. Valve outlet to evaporator
9. Ball valve
10. Spring.

Liquid refrigerant comes from the receiver drier and flows through the valve inlet (1). The ball valve (9) mists the refrigerant before the refrigerant flows on through the valve outlet (8) and into the evaporator.

The ball valve opening is controlled by the temperature and pressure in the refrigerant gas coming out of the evaporator.

If for example the temperature of the refrigerant gas, coming from the evaporator in the expansion valve intake (7), increases the temperature sensor (4) and increases the temperature of the refrigerant in the diaphragm head.

The refrigerant in the diaphragm head expands and compresses the ball valve in the valve seat downwards using the diaphragm (6) and a valve slide (2) so that the valve seat opens. The flow of the refrigerant to the evaporator increases. The evaporator is cooled and the temperature of the refrigerant gas is reduced.

The ball valve closes as soon as the temperature in the evaporator falls and therefore the temperature of the refrigerant in the diaphragm head also falls.

EVAPORATOR

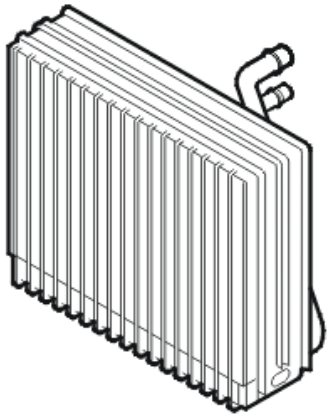

Fig. 294: Evaporator
Courtesy of VOLVO CARS CORPORATION

The evaporator is an air heated heat exchanger located in the distribution housing for the climate control system.

The surface of the evaporator is polyurethane coated to reduce bad odors. The polyurethane coating reduces the surface tension of the water and makes it easier for the water to run off.

The evaporator consists of pipe loops in which the refrigerant flows. The loops have flanges to increase the heat absorbing surface. The evaporator is inclined to make it easier for the condensation to run off. 10 - 11 liters of condensation are formed per hour. The condensation is led via a drainage house out of the distribution housing and down under the vehicle.

If one experiences bad odors when the vehicle is started, a workshop can activate a function which starts the blower fan a moment after the ignition key is moved to the 0 position. The fan blows the evaporator dry for a few minutes to prevent condensation and bad odors the next time the vehicle is used.

In the refrigerant circuit, the evaporator is located on the low pressure side between the expansion valve and the compressor.

In the evaporator there is a low pressure due to the expansion valve choke and the suction effect of the compressor. When the refrigerant enters the evaporator via the expansion valve, it expands and both its pressure and temperature lower.

When the warm air encounters the cold evaporator, the humidity condenses on the evaporator. The heat (energy) that is released during condensation is transferred to the refrigerant which evaporates. The temperature difference between the air and the refrigerant reduces. High humidity results in an increased need for cooling.

To obtain sufficient cooling capacity, the refrigerant's evaporation temperature must be considerably lower than the temperature desired in the passenger compartment. But to prevent the moisture that has condensed on the evaporator from freezing to ice, the air is not cooled below approximately +3 °C (at which stage the temperature of the refrigerant in the evaporator is approximately -3 °C).

There is a temperature sensor after the evaporator. The temperature sensor detects the temperature of the air that has passed through the evaporator. When the temperature is too low, the compressor is switched off. This is to prevent ice forming on the evaporator.

It is important that there is the correct amount of refrigerant in the climate control system.

- Too much refrigerant in the evaporator causes the refrigerant to heat up, but it only evaporates partially. This means that a smaller amount of heat is absorbed from the air, which results in reduced cooling capacity
- Too little refrigerant in the evaporator causes the refrigerant to evaporate and the vapor to overheat. This means that a smaller amount of heat is absorbed from the air, which results in reduced cooling capacity.

RECEIVER DRIER

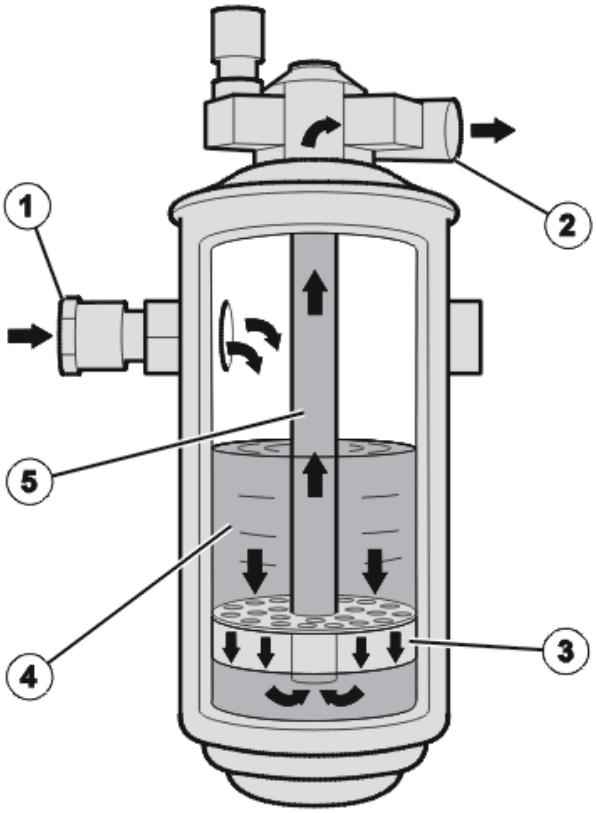

Fig. 295: Identifying Receiver Drier
Courtesy of VOLVO CARS CORPORATION

1. Intake line from the condenser
2. Outlet line to expansion valve
3. Drying element
4. Liquid refrigerant
5. Riser.

The receiver drier is located to the right of the condenser in the engine compartment. In the refrigerant circuit, it is located on the high pressure side between the condenser and the expansion valve.

Liquid refrigerant passes at high pressure from the condenser through the intake pipe (1) and into the receiver drier. A drier element (3) separates any moisture from the refrigerant and filters any contaminants.

The refrigerant passes onwards through the riser (5) to the outlet line (2) and on to the expansion valve.

If the cooling system has been open (unplugged) for 10 minutes, or has leaked for some time, so that moisture may have entered the system the receiver drier must be replaced.

The receiver drier can only absorb a limited amount of moisture. If the system contains more moisture than the receiver drier can handle it may lead to icing which blocks the expansion valve.

A/C PRESSURE SENSOR

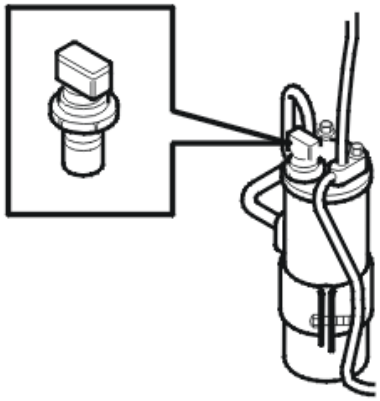

Fig. 296: A/C Pressure Sensor
Courtesy of VOLVO CARS CORPORATION

A linear pressure sensor is mounted directly on the receiver drier. The pressure sensor has an integrated measurement amplifier that generates an output voltage that is linear to the pressure.

The pressure sensor signal is used to control the following functions:

- the engine cooling fan (FC)
- deactivation of the compressor when pressure is too high
- deactivation of the compressor if the system has run dry of refrigerant.

CONDENSER (AIR COOLED HEAT EXCHANGER)

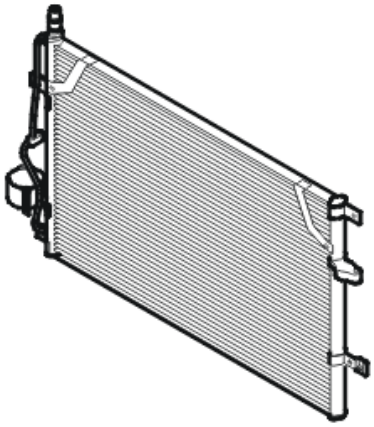

Fig. 297: Condenser (Air Cooled Heat Exchanger)
Courtesy of VOLVO CARS CORPORATION

The condenser is located in front of the engine radiator. The airflow and engine cooling fan (FC) blow air through the condenser. In the cooling system, the condenser is located on the high pressure side opposite the compressor and the receiver drier.

The condenser consists of pipe loops in which the refrigerant flows. The loops have flanges to increase the heat radiating surface.

When the refrigerant enters the condenser it is in gas form and has both high pressure and high temperature. In the condenser the hot refrigerant loses some of its heat to the surrounding cooler air. The refrigerant then condenses and changes into liquid form. The amount of heat given off = the amount of heat taken up in the evaporator + the amount of heat supplied by the compressor. In order to supply sufficient cooling capacity, the condensation temperature of the refrigerant must be greater than the temperature of the outside air.

SERVICE VALVES

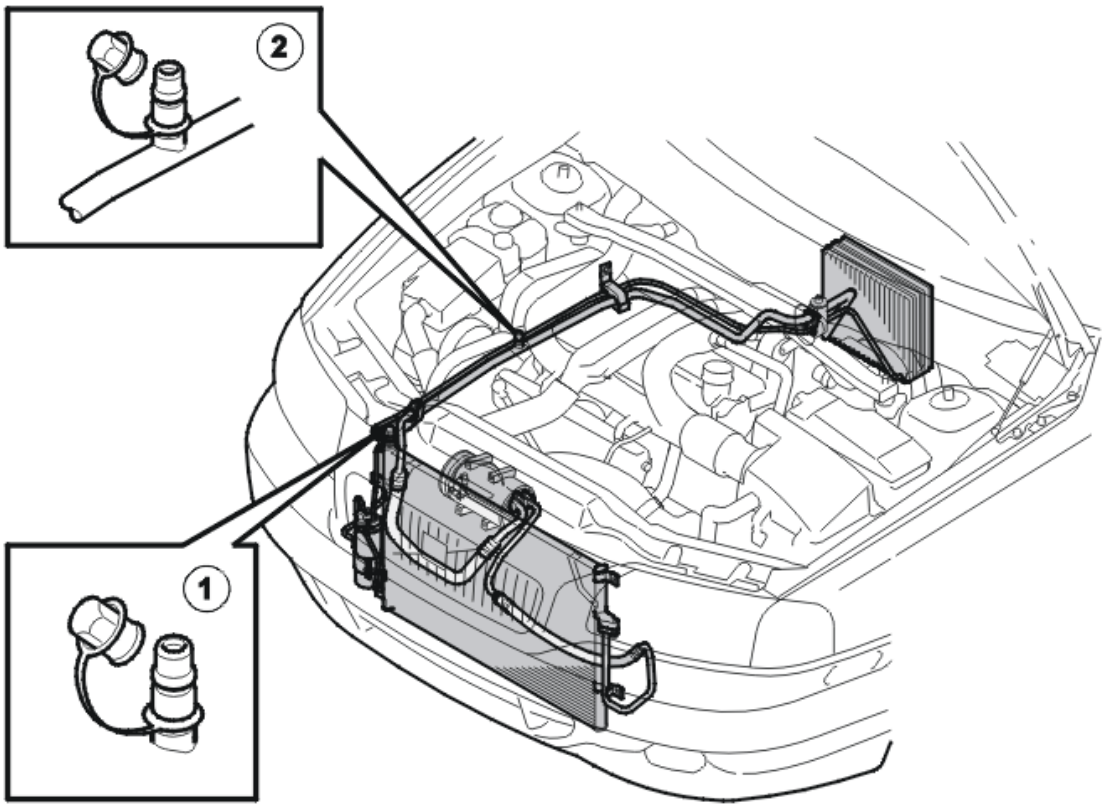

Fig. 298: Identifying Service Valves
Courtesy of VOLVO CARS CORPORATION

1. The service valve for draining, vacuum pumping and filling with refrigerant
2. Service valve for draining and vacuum pumping.

One service valve is located on the low pressure side and one service valve is located on the high pressure side. The valves are different sizes. This is to avoid incorrect connection.

CAUTION: Filling with refrigerant must only be carried out on the high-pressure side to prevent the risk of liquid refrigerant in the compressor.

HOSES, PIPES

All connections, apart from those for the expansion valve and condenser, have double O-rings as a seal. The connections for the expansion valve and condenser have single O-rings.

The O-rings are manufactured in a specially developed material (HNBR = hydrated nitrile rubber).

AIR DISTRIBUTION SYSTEM

GENERAL INFORMATION

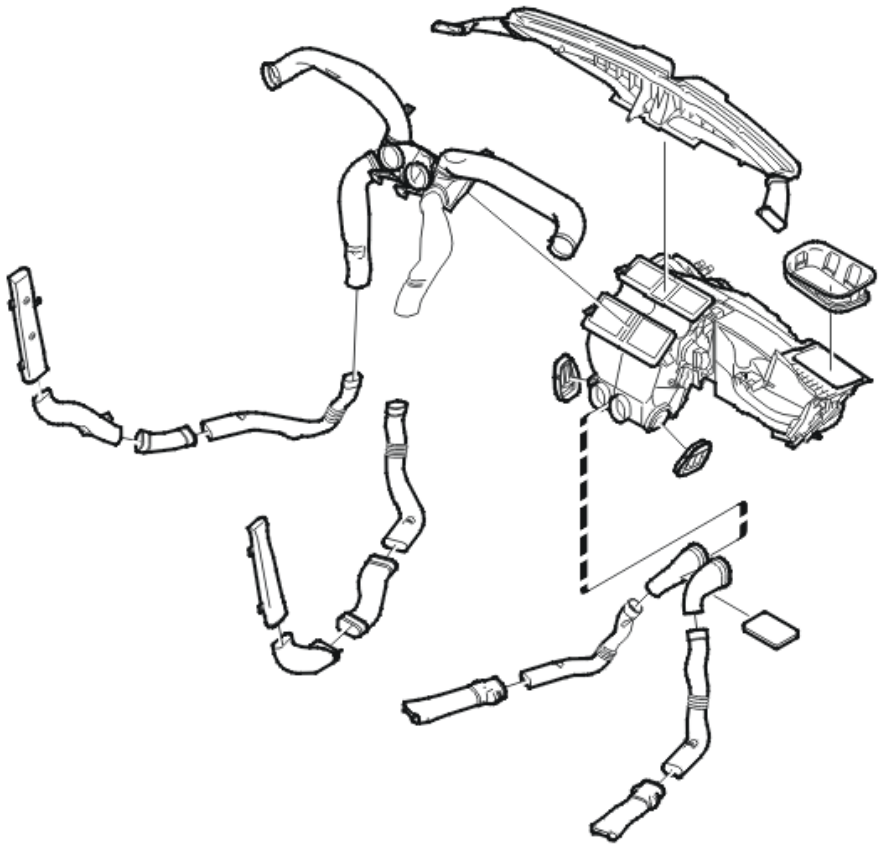

Fig. 299: Air Distribution System Components
Courtesy of VOLVO CARS CORPORATION

The air distribution system consists of:

- climate control system:
  - blower fan
  - damper
  - filter
  - recirculation throttle.
- air ducts
- vents.

Dampers control the outgoing air to:

- defroster
- the dashboard vents
- the floor outlets
- the B post vents.

Fresh air enters the climate control system through the fresh air intake under the plenum chamber.

The fresh air intake is located:

- on the right-hand side

Air enters the climate control system and is distributed by a large number of air vents to the passenger compartment. After circulating, the air leaves the passenger compartment via the evacuation valves in the cargo compartment.

THE DAMPERS

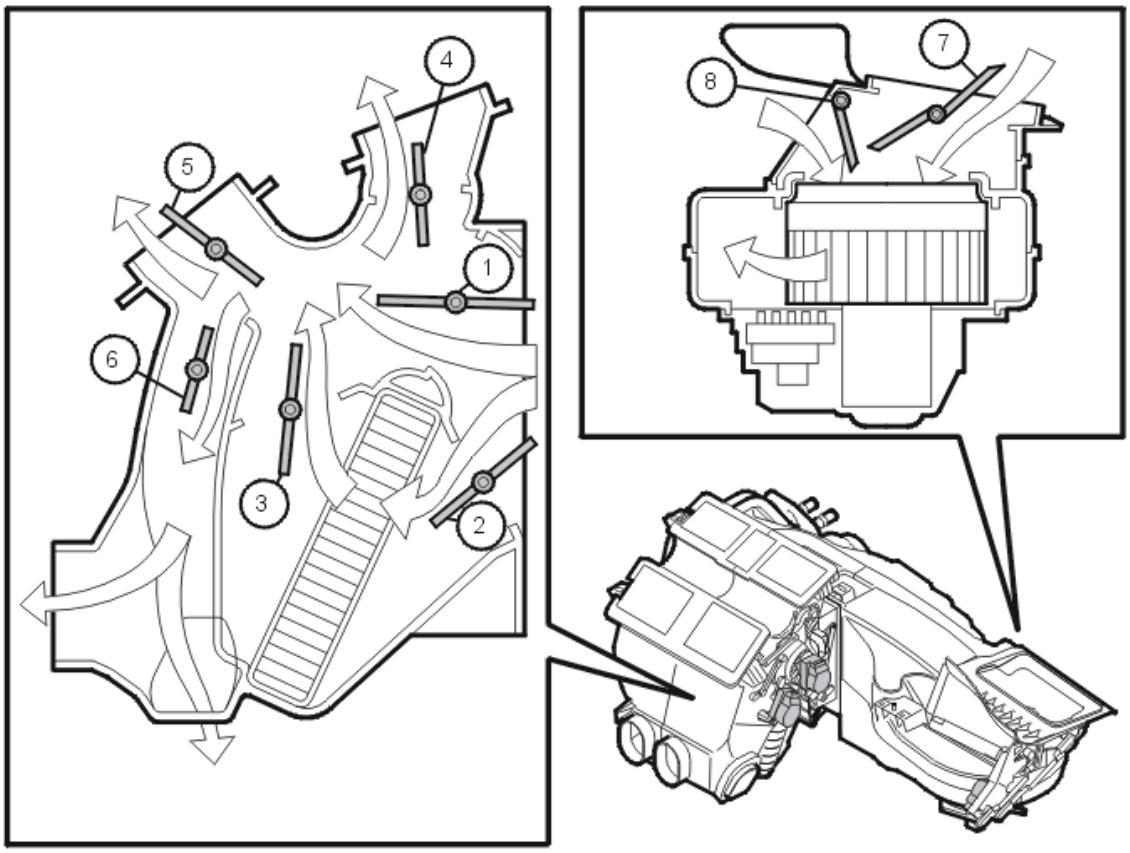

Fig. 300: Identifying Temperature Damper Assembly
Courtesy of VOLVO CARS CORPORATION

1. Temperature damper for controlling the heater element

2. Temperature damper upstream of heating element
3. Temperature damper downstream of heating element
4. Defroster damper
5. Ventilation damper
6. Floor damper
7. Fresh air damper
8. Recirculation damper.

Dampers controlled by damper motors are located in the climate control system.

- Electronic climate control (ECC) has five damper motors
- Manual climate control (MCC) has four damper motors.

There are eleven different dampers controlling the air flow of the climate control unit:

- Six temperature dampers for mixing hot and cold air. Three for the left hand side and three for the right hand side. On each side one damper (2) is installed before and one damper (3) installed after the heater pad. Together (1) and (2) control the amount of air to be heated and (3) guides the warm air to the correct vent
- A floor vent for guiding the airflow to the front and rear of the floor
- A defroster damper for guiding the airflow to the front windshield and side windows.

NOTE: Electronic climate control (ECC) has a separate damper motor for the defroster damper.

- A ventilation shutter for guiding the airflow to the dashboard and B post
- A fresh air damper for controlling the flow of external air into the climate control system
- A recirculation damper for controlling the flow of the air in the passenger compartment back into the climate control system.

By changing the direction of the dampers in the climate control system, air is directed through the various air ducts out to the passenger compartment.

The temperature is regulated by mixing hot and cold air. The temperature dampers on the right and left sides are controlled by a damper motor each. This makes it possible to have different temperatures on the driver's side and the passenger side.

The dampers are regulated proportionally to ensure that the passenger compartment achieves the selected temperature.

The fresh air damper is speed controlled, which means that the damper reduces the size of the hole to the air inlet the higher the vehicle speed. At speeds above 60 km/h the fresh air damper closes successively. At speeds above 120 km/h the fresh air damper is nearly completely closed. The speed control of the fresh air is to keep the airflow in the passenger compartment constant, irrespective of the speed of the vehicle.

RECIRCULATION

There are two ways for the ventilation system to draw in air:

- fresh air enters through the fresh air intake in the climate control system under the plenum chamber
- recirculated air from the passenger compartment.

DASHBOARD VENTS

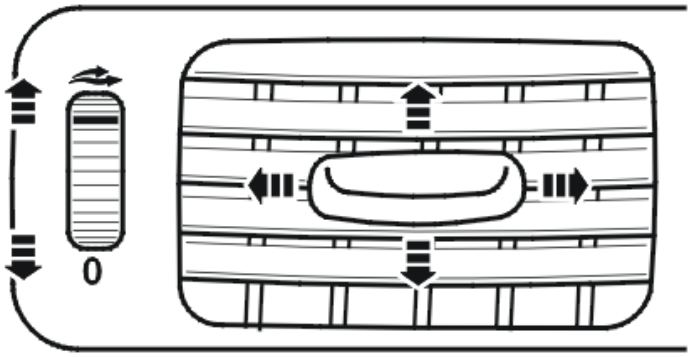

Fig. 301: Dashboard Vents
Courtesy of VOLVO CARS CORPORATION

There are four vents on the dashboard. Two are located in the middle at the front and one on either side.

The air flow can be regulated, fully closed or steered in the required direction using a damper. The damper is controlled with the thumb wheel located on the side of the vent. (See illustration).

DEFROSTER VENTS

There are six defroster vents, two for the windshield, two for the front side windows and two for the rear side windows. The two for the windshield are designed so that the majority of the air is directed up against the windshield. The remaining air trickles out at the bottom edge of the windshield to help keep the windshield wipers free of ice.

The air ducts to the front side window defrosters are a continuation of the windshield ducts.

The air ducts to the rear side windows go via the floor to the B posts. The air ducts are a continuation of the windshield ducts.

The defroster vents in the B posts can be adjusted by the rear seat passengers.

The seven seat XC90 has two additional defroster vents, one in each C post. The air to the two additional defroster vents comes from the XC90s rear climate control.

FLOOR VENTS

There are four air vents in the floor (seven seat XC90 has six air vents).

Two are positioned under the respective soundproofing panel, one on each side of the center console. The other two are located one under each front seat and face backwards.

Seven seat XC90s two additional floor air vents are located on the left and right hand sides below the center row of seats.

EVACUATION VALVES

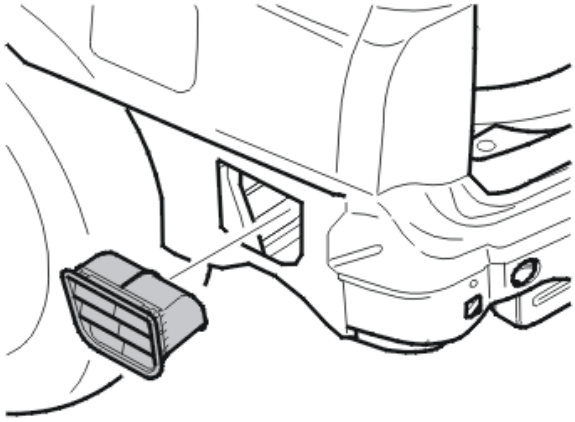

Fig. 302: Evacuation Valves
Courtesy of VOLVO CARS CORPORATION

In 4-door vehicles, the air vents are located at the edge between the parcel shelf and the rear windshield. The air goes from here through the cargo compartment and on out through the air vents behind the rear bumper.

In 5-door vehicles, the air passes directly out through the air vents in the cargo compartment.

There are rubber flaps in the air vents. The flaps open when the air pressure is higher in the passenger compartment that outside. When the air pressure is the same on the inside and the outside, the flaps close. This prevents water and air (odors, dust and exhausts fumes) from penetrating the passenger compartment.

AIR CONDITIONING (A/C) REAR, SEVEN SEAT XC90 (OPTION)

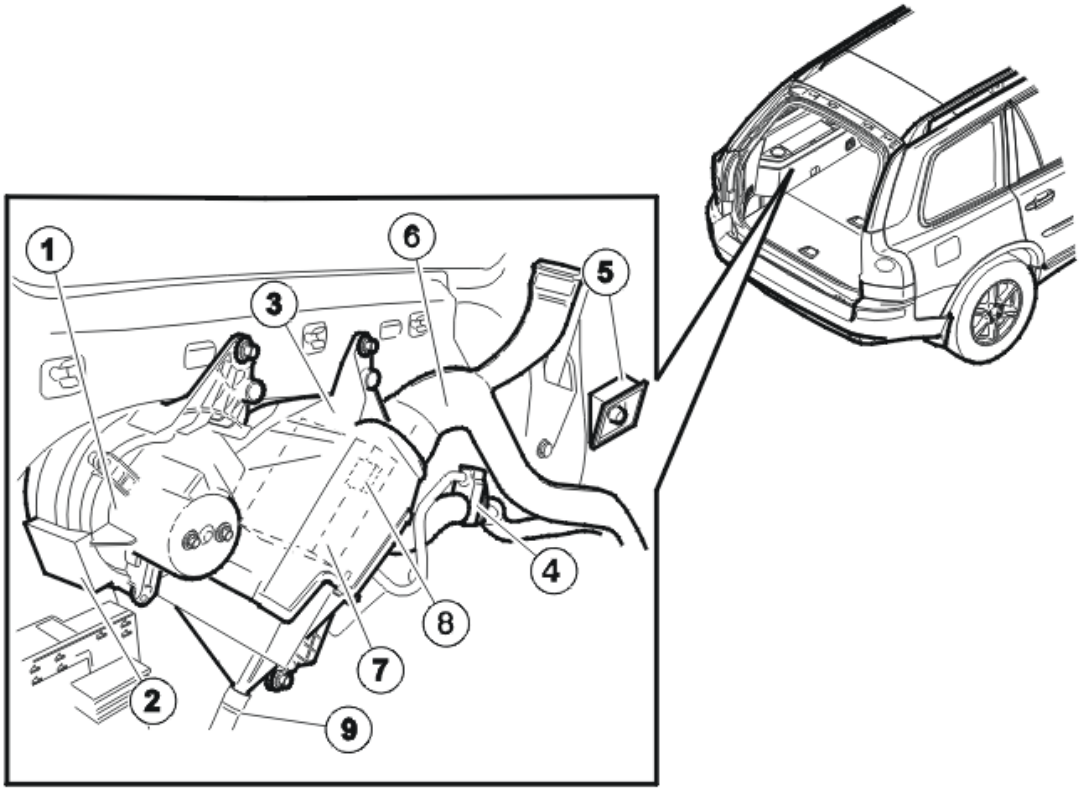

Fig. 303: Air Conditioning (A/C) Rear, Seven Seat XC90
Courtesy of VOLVO CARS CORPORATION

1. Fan motor
2. Power unit
3. Housing rear climate control unit
4. Pipe rear climate control unit
5. Switch, fan speed
6. Air duct
7. Evaporator
8. Expansion valve
9. Drain hose.

As an option, it is possible to have additional air conditioning in the rear of the seven seat XC90. The air conditioning unit is located inside the panel on the left hand side of the cargo compartment panels. The front and rear air conditioning refrigerant circuits are connected in parallel. The rear air conditioning is connected via a connector on the firewall.

The connection between the rear and front air conditioning units is via pipes and rubber hoses inside the passenger compartment. The fan (1) is operated using a control (5) placed on a panel at the rear of the passenger compartment.

The compressor, condenser and receiver drier are used together by the front and rear air conditioning units.

A T-connection is located on the high-pressure side in the engine compartment between the receiver drier and the expansion valve. A T-connection for refrigerant, with high pressure, from the front climate control unit to the rear climate control unit.

The refrigerant is sprayed into the rear evaporator using the rear expansion valve. Then the refrigerant is routed at low pressure back to the front air conditioning unit. The return routing is connected to the front cooling system using a T-connection located between the expansion valve and the compressor on the low pressure side of the engine compartment.

FUNCTION

AIR CONDITIONING

See:**AIR CONDITIONING**

AIR DISTRIBUTION SYSTEM

See: **AIR DISTRIBUTION SYSTEM**

BLOWER FAN

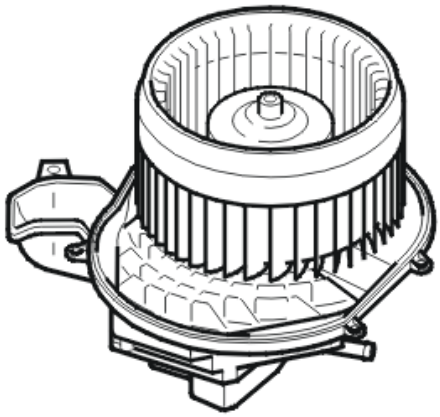

Fig. 304: Blower Fan
Courtesy of VOLVO CARS CORPORATION

The blower fan provides the airflow through the vehicle.

The blower fan must be operating before the climate control system can be engaged.

The blower fan switches off when the vehicle speed is approximately 160 km/h.

FILTER

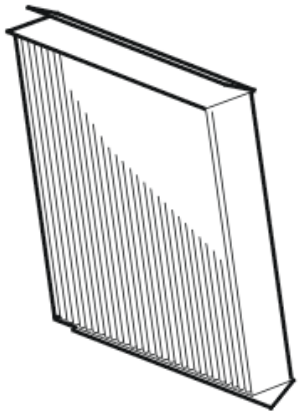

Fig. 305: Filter
Courtesy of VOLVO CARS CORPORATION

The particle filter cleans the air of particles such as dust and pollen, which would otherwise pass through the air intake into the passenger compartment.

The multi-filter has the same function as the particle filter, but also neutralizes unpleasant smells and keeps the air as free from gases as possible. In vehicles that have the multi-filter, known as the air quality system (AQS), there is also an outside air sensor that ensures that the recirculation closes in the event that the content of gases in the outside air increases. This increases the service life of the multi-filter.

ADDITIONAL HEATER/PARKING HEATER

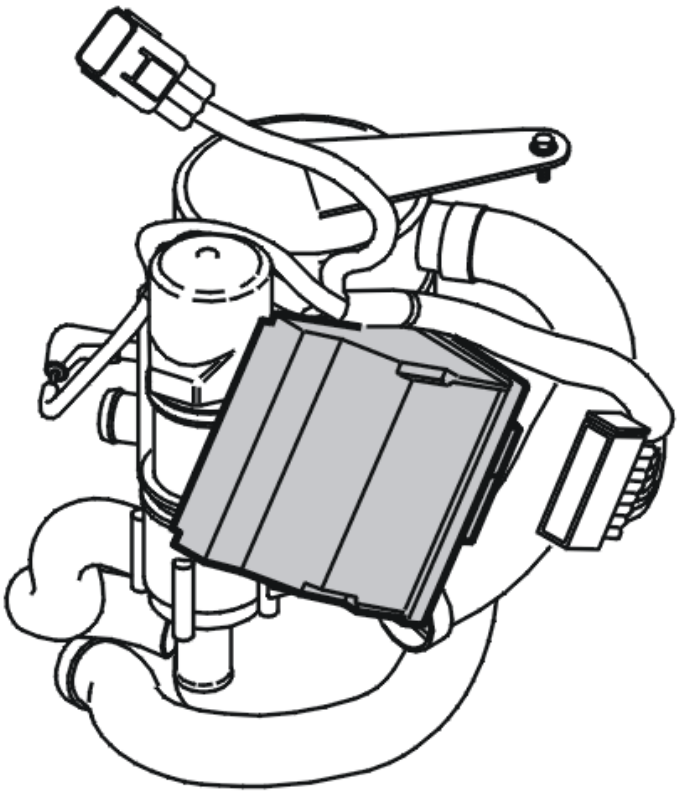

Fig. 306: Additional Heater And Parking Heater
Courtesy of VOLVO CARS CORPORATION

The additional heater/parking heater produces heat by burning gasoline. The heat is distributed via the engine cooling system to the heat exchanger and on out into passenger compartment.

When the engine is running, the additional heater can provide extra heat to the passenger compartment in the event that the engine is unable to provide sufficient heat. When the engine is not running, the parking heater can heat the passenger compartment (and the engine). This function can be started directly or using a timer.

AIR CONDITIONING

GENERAL INFORMATION

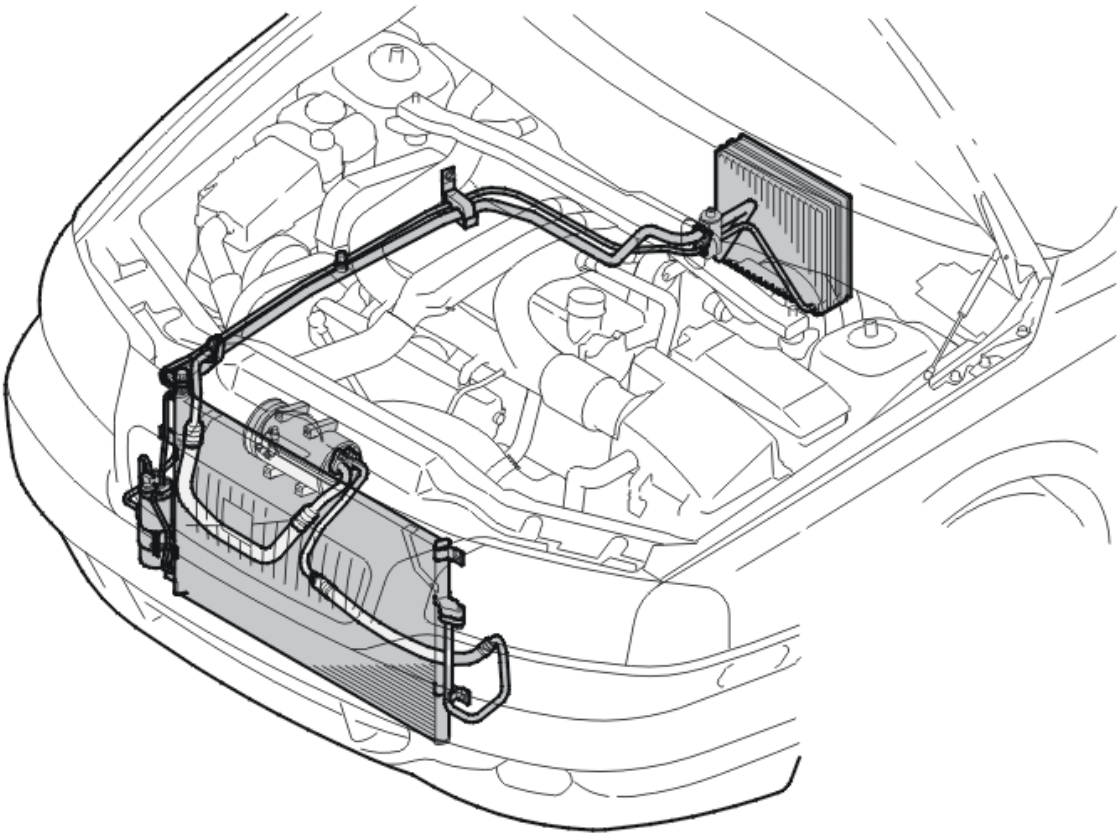

Fig. 307: Climate Control System
Courtesy of VOLVO CARS CORPORATION

The air conditioning only functions at ambient temperatures above 0 °C. At temperatures lower than this, the pressure in the system is too low and the compressor is never engaged. This setting is made to prevent ice building up on the evaporator.

The air conditioning only functions when the engine is running. The air conditioning functions regardless of engine speed (RPM) and vehicle speed. The compressor is dependent on the engine speed, the higher the engine speed the more cooling that can be provided.

The blower fan must be operating before the climate control system can be engaged.

The air conditioning system has only two positions, off and on. If it is too cold in the passenger compartment, the temperature can be controlled with the normal heat and blower fan controls.

Air conditioning is based on the same principle as that used in refrigerators.

The rear climate control unit in the seven seat XC90 supplies the passengers in the third row of seats with cooled air. For the rear climate control system to function the rear climate control system blower fan motor must be running and the front climate control system must be switched on.

REFRIGERANT

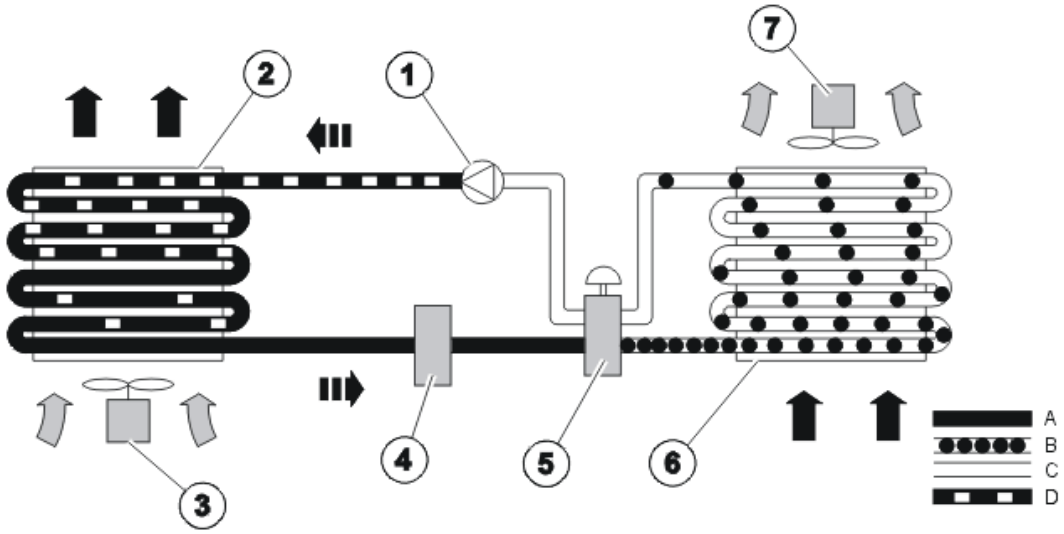

Fig. 308: Identifying Principle Sketch Of Climate Control System
Courtesy of VOLVO CARS CORPORATION

1. Compressor
2. Condenser
3. Engine cooling fan (FC)
4. Receiver drier
5. Expansion valve
6. Evaporator
7. Blower fan.

Explanation:

A - High pressure, warm fluid

B - Low pressure, cold fluid

C - Low pressure, cold gas

D - High pressure, warm gas

Dark arrow - Warm air

Light arrow - Cold air

By allowing the refrigerant to circulate in the closed system and changing the pressure and volume it will change temperature and boil (evaporate). At the pressure found in the system, approximately 170 - 320 kPa (1.7 - 3.2 bar), the refrigerant boils at approximately 0 °C to +4 °C.

A condition of the refrigerant boiling is that the heat is accessible. This heat is taken from the air around the

evaporator (6) where boiling occurs. When the heat is taken up by the refrigerant the surrounding air becomes cooler. It is this cooled air that is blown into the passenger compartment by the climate control system blower fan (7). The heat taken up by the refrigerant in the evaporator (6) is transported out to the engine compartment, where it is transferred to the air by the condenser (2). The condenser is cooled by the airflow and the engine cooling fan (FC) (3).

COMPRESSOR

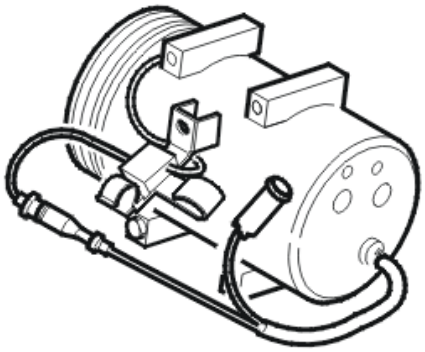

Fig. 309: Compressor (Not B8444S)
Courtesy of VOLVO CARS CORPORATION

The task of the compressor is to:

- draw gaseous refrigerant from the evaporator
- compress the gas thereby increasing its pressure and temperature
- expel the gas with high pressure and high temperature to the condenser.

The compressor takes in cold refrigerant gas from the evaporator on the intake side through the low pressure connection. In ideal conditions, the compressor compresses the refrigerant from approximately 200 kPa (2 bar) to between 1.2 MPa and 2.1 MPa (12 and 21 bar). During the process, the refrigerant heats up from 0 °C to between 70 °C and 110 °C. These pressure and temperature values apply when the system is operating under optimal conditions.

The relief valve, located on the rear section of the compressor, functions as an additional safety device. The valve opens and releases refrigerant when the pressure in the system is too high. The valve then shuts again when the pressure has returned to normal. The temperature of refrigerant gas can reach as high as 125 °C.

The compressor can only compress gases, as liquid would damage the compressor.

EXPANSION VALVE

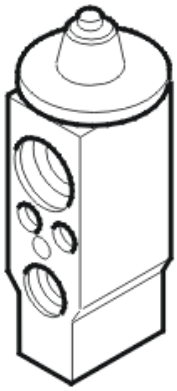

Fig. 310: Expansion Valve
Courtesy of VOLVO CARS CORPORATION

The expansion valve checks the refrigerant flow in the evaporator in relation to the temperature and pressure. The expansion valve gives an even temperature control because the amount of refrigerant is controlled as necessary.

EVAPORATOR

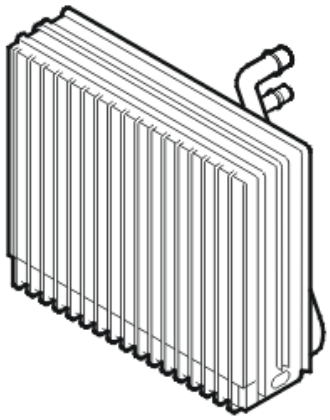

Fig. 311: Evaporator
Courtesy of VOLVO CARS CORPORATION

The task of the evaporator is to cool and dry the air.

The refrigerant (the volume that is measured by the expansion valve) is sprayed into the evaporator. As soon as the refrigerant enters the cooling pipes, it evaporates due to the drop in pressure. During this process, heat is also extracted from the cooling pipes. The cooling pipes and the entire evaporator cool immediately. The refrigerant gas is then drawn out using the compressor.

The airflow is routed past the evaporator and is cooled and dried, and then forwarded to the passenger compartment via the air distribution ducts.

When the air entering the passenger compartment encounters the cold evaporator, the humidity in the air condenses on the evaporator. The water drains out under the vehicle via a drain hose. In the event of high

humidity, this may be considerable quantities of water, which is often mistaken for a water leak from the engine for example.

RECEIVER DRIER

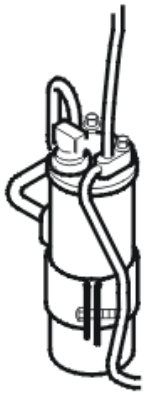

Fig. 312: Identifying Receiver Drier
Courtesy of VOLVO CARS CORPORATION

The task of the receiver drier is to:

- function as a filter, taking up and binding moisture (water) found in the system
- function as a storage container for leak detection agent.

The leak detection dye mixes with the oil. When a leak occurs, it is possible to locate the leak with UV light.

CONDENSER (AIR COOLED HEAT EXCHANGER)

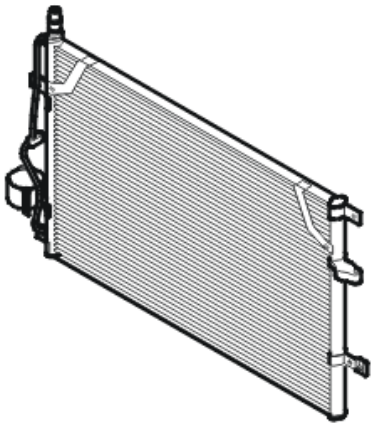

Fig. 313: Condenser (Air Cooled Heat Exchanger)
Courtesy of VOLVO CARS CORPORATION

The task of the condenser is to cool, so converting the hot, gaseous refrigerant to a liquid.

The compressor pumps in hot refrigerant gas under high pressure. The gas has a temperature of between 70 and 110 °C in the intake on top of the condenser. When the hot gas flows through the pipe loop, it is cooled down

and condensed. The heat that is removed from the gas during this process is transferred to the surrounding air. The engine cooling fan (FC), which is the same fan used by the engine cooling system, increases the airflow through the condenser. The air flow increases the transfer of heat from the refrigerant to the outside air.

The engine cooling fan (FC) is controlled by the linear pressure sensor (high-pressure and safety valve), located on the drier, via the engine control module (ECM) and via the control module for the engine cooling fan (FC). The engine cooling fan (FC) is also controlled by the engine coolant temperature (ECT).

SERVICE VALVES

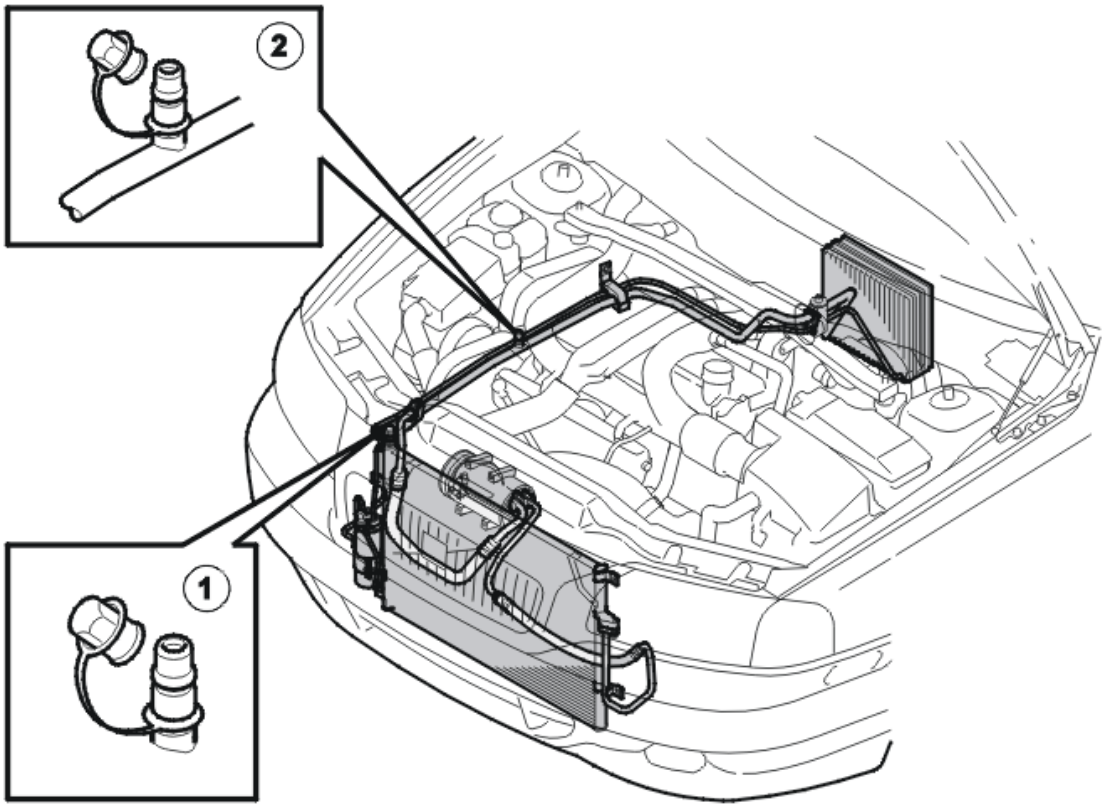

Fig. 314: Identifying Service Valves
Courtesy of VOLVO CARS CORPORATION

1. The service valve for draining, vacuum pumping and filling with refrigerant
2. Service valve for draining and vacuum pumping.

The service valves are used to:

- check the system through manometer connections
- drain the system of refrigerant
- vacuum pumping
- filling with refrigerant, high-pressure side only (1).

CAUTION: Filling with refrigerant must only be carried out on the high-pressure side to prevent the risk of liquid refrigerant in the compressor.

AIR DISTRIBUTION SYSTEM

GENERAL INFORMATION

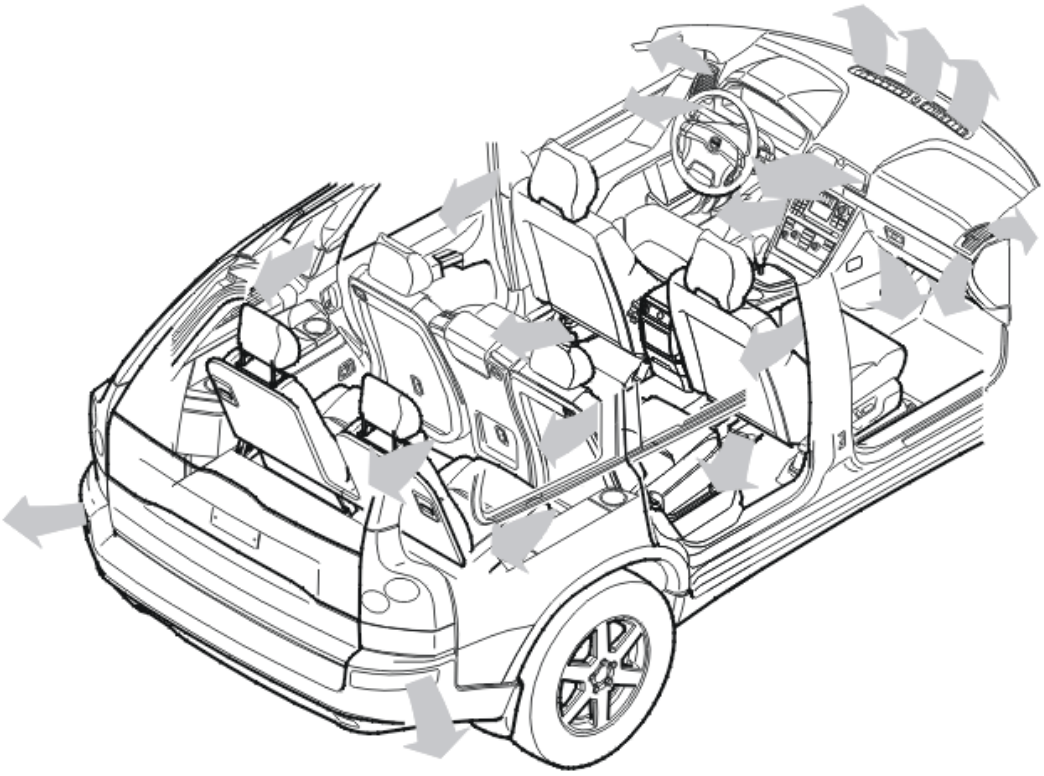

Fig. 315: Air Distribution System
Courtesy of VOLVO CARS CORPORATION

The air distribution system distributes the air to the passenger compartment. It is used jointly by the heating system and the cooling system in the climate control system. The blower fan draws air into the system. Fresh air enters through the fresh air intake in the distribution housing under the plenum chamber.

The air passes through the filter and the evaporator, past the temperature damper and possibly though the heat exchanger, before being released into the passenger compartment through the vents.

The temperature of the air from all the air vents can be controlled separately for the right or left hand sides.

After circulating, the air disappears out of the passenger compartment though air vents at the rear of the vehicle.

RECIRCULATION

The recirculation damper regulates the amount of incoming fresh air. The recirculation function makes it

possible to prevent outside air from entering the passenger compartment, for example when the ambient air is contaminated with exhaust fumes, smoke, etc. This function can also be used for rapid heating or cooling of the passenger compartment.

If the recirculation function is used for an extended period, the air humidity in the passenger compartment increases. This is because of the humidity of the expelled breath of the passengers. This can result in mist on the windows. The recirculation function has a timer function to eliminate the risk of misting.

When the controls are in the Maximum cooling position all the air is taken from the passenger compartment. This produces more rapid cooling of the passenger compartment air.

In vehicles with an air quality system (AQS), the transition to recirculation takes place automatically if the level of contaminants in the outside air increases, when the system is in the AUTO mode.

DEFROSTER VENTS

Mist forms easily on the windows in cold, damp weather. The defroster vents release air towards the front and side windows. The air flow removes the mist that forms. As the air is dry, the airflow also prevents moist air from the passenger compartment reaching the glass, so countering misting. The air conditioning contributes significantly to these functions by dehumidifying the air at temperatures above 0 °C.

The defroster function, for the electronic climate control system (ECC), automatically sets the climate control system for the best defrosting of windshields.

EVACUATION VALVES

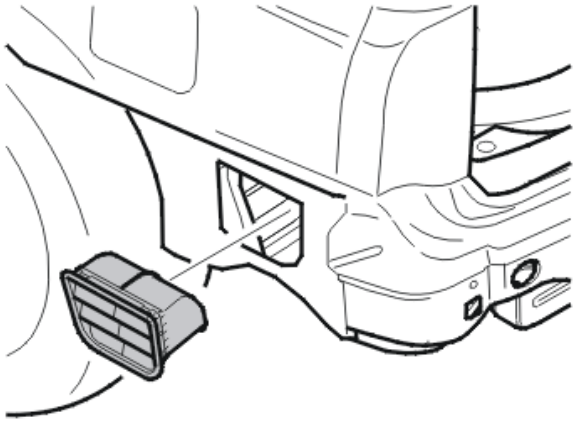

Fig. 316: Evacuation Valves
Courtesy of VOLVO CARS CORPORATION

The evacuation valves are used to even out the pressure in the passenger compartment.

The rubber dampers in the evacuation valves open when the air pressure is slightly higher in the passenger compartment than outside. When the air pressure is the same on the inside and the outside, the rubber dampers close. This prevents water and air (odors, dust and exhausts fumes) from penetrating the passenger compartment.

NOTE: The evacuation valves must not be blocked, this will impair the function of the climate control system.

OVERVIEW

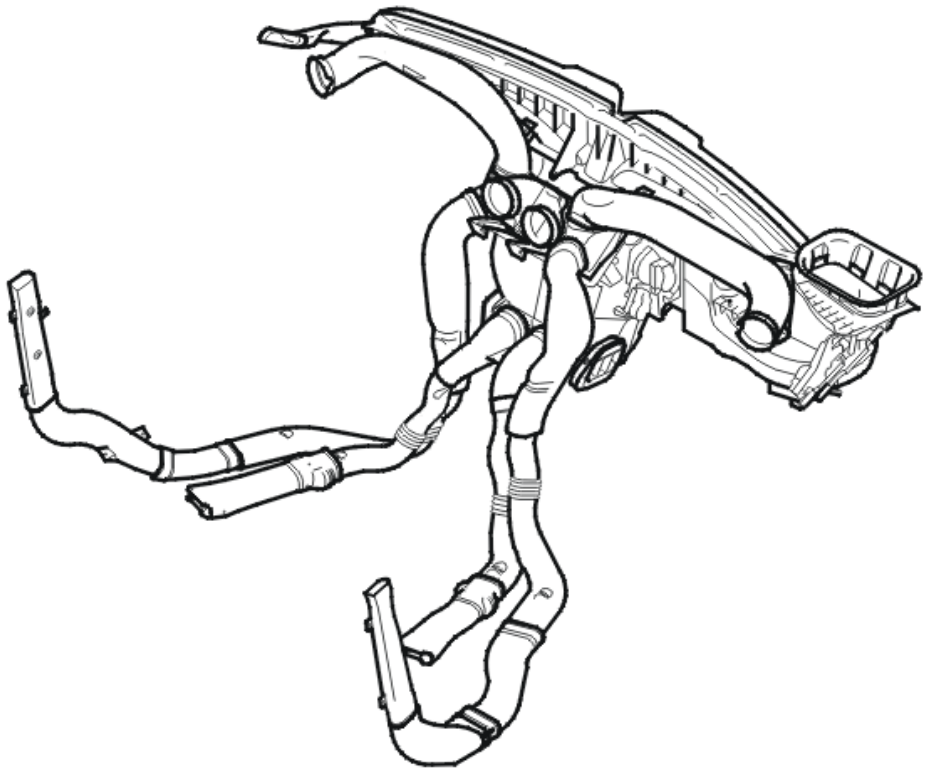

Fig. 317: Climate Control System
Courtesy of VOLVO CARS CORPORATION

The climate control system is no longer a luxury item in modern vehicles. It has instead become a factor for active safety, and can now be considered part of the safety equipment in the vehicle.

The correct temperature in the passenger compartment increases safety.

It is well documented that the human performance abilities are reduced in heat. Research carried out in traffic and in a normal vehicle demonstrated that when the passenger compartment temperature was increased from 21 to 27 °C:

- the risk of the driver missing important traffic information (hazard warnings, traffic signals, signs etc.) increased by 50 %
- the driver reaction times were 22 % slower.

With an air conditioning system in the vehicle, car travel is both more comfortable and safer.

A climate control system provides increased comfort by:

- cooling the air in the event of high temperatures in the surrounding air or in warm, sunny conditions
- warming the air in the event of low temperatures
- dehumidifying the air
- filtering the air.

The relative humidity of the air is extremely important for our well-being. We perceive a relative humidity of 30-60 % to be comfortable, as the moisture that is given off by the human body can easily be absorbed by the surrounding air.

If the humidity exceeds 75 %, we perceive it to be oppressive and uncomfortable in warm weather, as the air cannot absorb much more moisture. For this reason, the climate control system is designed to regulate both temperature and air humidity.

The vehicle is equipped with either:

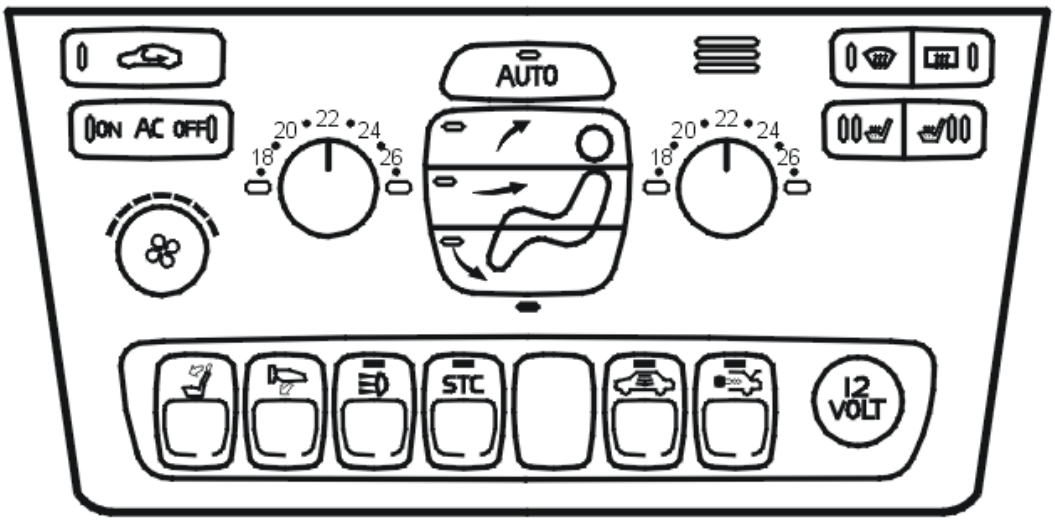

Fig. 318: Electronic Climate Control
Courtesy of VOLVO CARS CORPORATION

Electronic climate control, ECC

ECC is a fully automatic climate control system that has the option of manual settings.

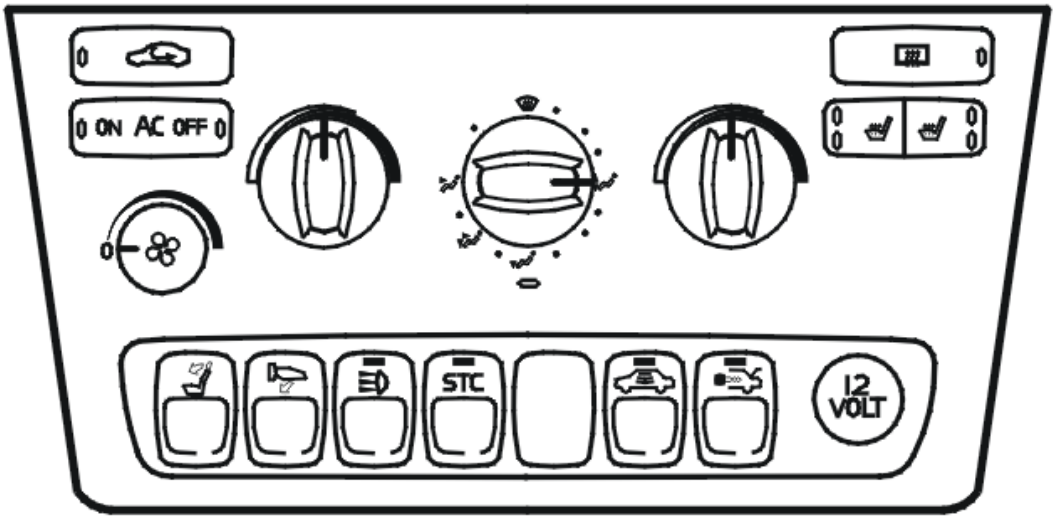

Fig. 319: Manual Climate Control
Courtesy of VOLVO CARS CORPORATION

Manual climate control, MCC

MCC is a manual climate control system.

The climate control system comprises a heater and an air conditioner. These are combined in the distribution housing to form a single unit with a shared ventilation system for distributing heating and cooling in the passenger compartment.

The system mixes the air, i. e. hot and cold air are mixed to achieve the desired temperature. One advantage of this is that the temperature in the passenger compartment can be changed quickly if required. Another advantage is that the ECC system compensates extremely quickly when the external conditions change.

The seven seat XC90 has an extra air conditioning unit in the rear. The additional air conditioning unit is located inside the panel on the left hand side of the cargo compartment panel.

The climate control module (CCM) controls the climate control system and the buttons in the dashboard environment panel.

The climate control system also includes a number of sensors.

When the engine is running, the additional heater can provide extra heat to the passenger compartment and the

engine. The parking heater heats up the passenger compartment and the engine when the engine is not running. This function can be started directly or by using a timer.

Gasoline cars may have an additional heater/parking heater as an option.

ACCESSORIES AND BODY, CAB

Miscellaneous - Design and Function

REAR SEAT ENTERTAINMENT SYSTEM (RSE), GENERATION 4.3 (2009-2012)

SYSTEM OVERVIEW

REAR SEAT ENTERTAINMENT SYSTEM

XC90

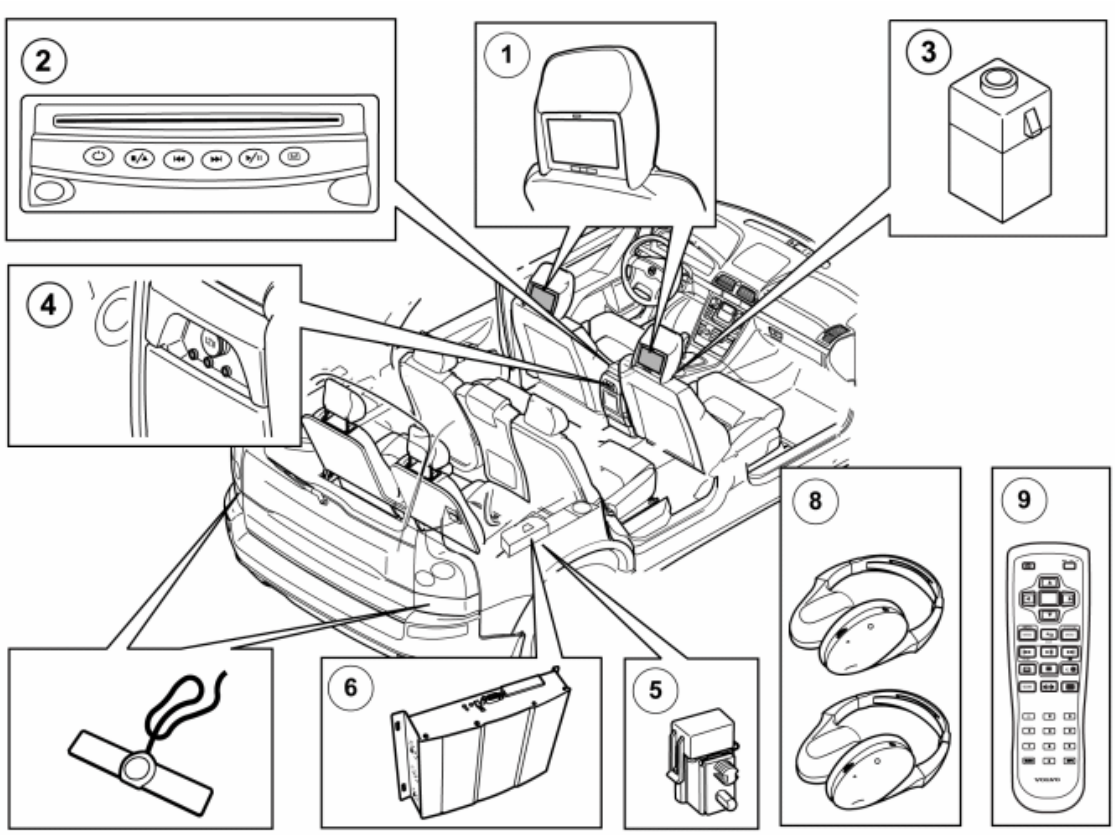

Fig. 1: Rear Seat Entertainment System Components
Courtesy of VOLVO CARS CORPORATION

1.	Screen, head restraint (16/81A, B)	6.	Fuse holder and fuse for the TV receiver (only if the TV receiver is installed)
2.	DVD-player with integrated Rear seat entertainment module (RSE) (16/109)	7.	Antennas (left 16/69, right 16/70) (two) for the digital TV receiver (only if the TV receiver is installed).
3.	AUX-input (16/123.2) (for XC90 17/40.1)	8.	Headphones (two)
4.	AV-panel (16/123.3)	9.	Remote control

5.	Digital TV receiver (DVB-T) (16/36) (if the option is installed)		

The rear seat entertainment system is a mobile entertainment system to keep rear seat passengers occupied and entertained with video games digital TV transmissions or movies.

The system is fully integrated in the car and has two separately controlled, high-resolution 8-inch screens mounted in the head restraints.

The Rear seat entertainment module (RSE) is integrated in the DVD player and can receive signals from up to three AV inputs or a digital TV receiver and can provide video to two separately controlled screens. The module can also provide output signals to an external screen.

The control module/DVD-player is installed in the storage compartment in the center console.

The following media formats can be played by the DVD player:

- DVD-R/+R
- DVD-RW/+RW
- CD-R and CD-RW
- CDDA
- HDCD

The following information formats can be played:

- DVD
- DVD Audio
- VCD
- SVCD
- DivX
- WMV
- Audio CD
- Kodak photo CD
- MP3
- MP3 Pro
- playlists in M3U format
- WMA Sound.

Formats such as THX and DolbyDigital are also supported. Only stereo signals of this audio format are reproduced.

A connection panel with AV inputs is installed behind the cover on the centre console, in XC90 it is located at the rear of the centre console. Other audio and video sources can be connected to the system via this, for

example, video cameras, game consoles or portable DVD and CD players.

The system includes two pairs of wireless headphones. Audio is transferred to the headphones via infrared signals (IR) from the transmitters in each screen.

Audio can also be played in the vehicle's ordinary speakers via the connection from Rear seat entertainment module (RSE) to Integrated Audio Module (IAM).

The vehicle's ordinary AUX input is located in the storage tray between the front seats where a portable CD or media player can be connected. The Rear seat entertainment module (RSE) is connected to the AUX input with left and right audio signals. Select "AUX" as the audio source on the audio panel in order for this audio to be heard.

As an option there is a digital TV receiver (DVB-T). This receives digital terrestrial transmitted TV channels, converts them and sends them to the Rear seat entertainment module (RSE). In order to view paid-by-view channels the receiver must be supplemented with a subscription/program card.

The system is controlled using an infrared (IR) remote control, which can be used to control the screens, DVD player and TV receiver.

SIGNALS

The following tables summarize input and output signals to the units in the system for rear seat entertainment.

NOTE: The CAN communication given here is only a private CAN between the control module and the screens.

REAR SEAT ENTERTAINMENT MODULE (RSE)/DVD-PLAYER (16/109)

Input signals:	Output signals:
Directly connected: • Commands from remote control via head restraint screens (16/81A, B). • Audio/video signals from AV-panel (16/123.3). • Digital TV receiver (16/36), audio and video signals.	**Directly connected:** • Screen, head restraint (16/81A, B), audio and video signals. • Screen, head restraint (16/81A, B), power supply and ground terminal. • AUX input (16/123.2) (for XC90 17/40.1), audio and video signals to the vehicle's audio system. • Digital TV receiver (16/36), wake-up signal and commands from the remote control.
Via Controller Area Network (CAN) communication: • Communication with the screens (16/81A, B), communication signals, temperature signal.	**Via Controller Area Network (CAN) communication:** • Communication with screens (16/81A, B).

SCREEN, (CIRCUIT BOARD) HEAD RESTRAINT (16/81A, B)

Input signals:	Output signals:
Wireless communication : • IR signals from the remote control.	**Wireless communication :** • IR signals for audio to wireless headphones.
Directly connected: • Rear seat entertainment module /DVD-player, audio and video signals. • Rear seat entertainment module /DVD-player, wake-up signal. • Rear seat entertainment module /DVD-player, voltage feed and ground connection.	**Directly connected:** • Rear seat entertainment module /DVD player, command from remote control.
Via Controller Area Network communication: • Rear seat entertainment module /DVD-player, control signals.	**Via Controller Area Network communication:** • Rear seat entertainment module /DVD player, communication signals, temperature signal.

WIRELESS HEADPHONES

Input signals:	Output signals:
Wireless communication : • Screen, head restraint, IR signals from transmitter in screen.	**Wireless communication :** -

TV RECEIVER

Input signals:	Output signals:
Directly connected: • Rear seat entertainment module /DVD player, command from remote control. • Rear seat entertainment module /DVD-player, wake-up signal.	**Directly connected:** • Rear seat entertainment module /DVD-player, audio and video signals.

REAR SEAT ENTERTAINMENT SYSTEM, M&D

DESIGN

DVD DEVICE

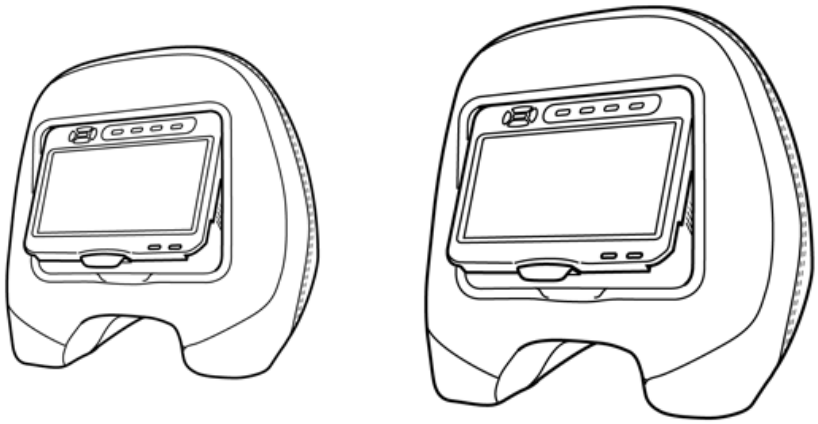

Fig. 2: Identifying Screen, Head Restraint
Courtesy of VOLVO CARS CORPORATION

The system consists of two DVD devices with DVD player integrated in the screens. To access the DVD player, lift the button mounting at the lower edge of the screen. Discs are inserted via a feed slot in the DVD player.

Two DVD devices are included in the original installation kit: a and a. A DVD device is available as a replacement part. Select DVD device via the remote control. The screen is recoded via the service menu.

The DVD unit's mechanism is designed to withstand shaking to prevent the image or audio quality from being distorted during playback.

The DVD device is region coded, which can be changed using a security code. The screen is designed for PAL and NTSC image display.

The DVD device interprets and performs the commands that are specified by the user via the system's remote control or via the screen's front panel.

The DVD device has memory handling to remember where, for example, in a film different power cut-offs occurred.

The system is 15-supplied, which means that the ignition must be on to activate the system. When the ignition is switched off, the system shuts down automatically. There is also a voltage sensor that switches off the system when the battery has a low voltage level. Depending on which the system is set to, the screen will react differently when the DVD device is switched ON/OFF. Coding of can be done via a service menu.

The audio to the car's stereo can be switched off or on regardless of the setting of the headsets. However, if the customer connects an external source to the car's own A/V input, audio cannot be played-back from the system for rear seat entertainment in the car's stereo.

To select external audio and image sources there is a separate A/V input for each DVD unit. The A/V input is on the lower edge on the right-hand corner of the screen. The system for rear seat entertainment also contains a extension cable of the RCA type for the connection of external equipment: DVD or CD player, iPod®, MP3 player, video camera, VHS video or games console.

Connecting external equipment

- Yellow socket: Video signal
- White socket: Left channel for audio
- Red socket: Right channel for audio

The following media formats can be played by the DVD player:

- DVD-R/+R
- DVD-RW/+RW
- CD-R/+R
- CD-RW/+RW

The following information formats can be played:

- DVD - Video, Audio
- CD Digital Audio
- Super Audio CD
- MP3 Audio CD/MP3 ID3 Tags ISO 96660
- VCD
- WMV
- SVCD
- DivX/MPEG-4
- Windows Media Audio
- OGG multimedia format

Formats such as THX and DolbyDigital are also supported. Only stereo signals of this audio format are reproduced.

To easily check if the DVD device is powered and grounded, switch the ignition on, the background lighting on the screen's button should then illuminate. The system for rear seat entertainment is activated by pressing the button, the Volvo emblem then appears on the screen. The DVD devices and are controlled independently via the screen's front panel or via the system's remote control.

A/V INPUT

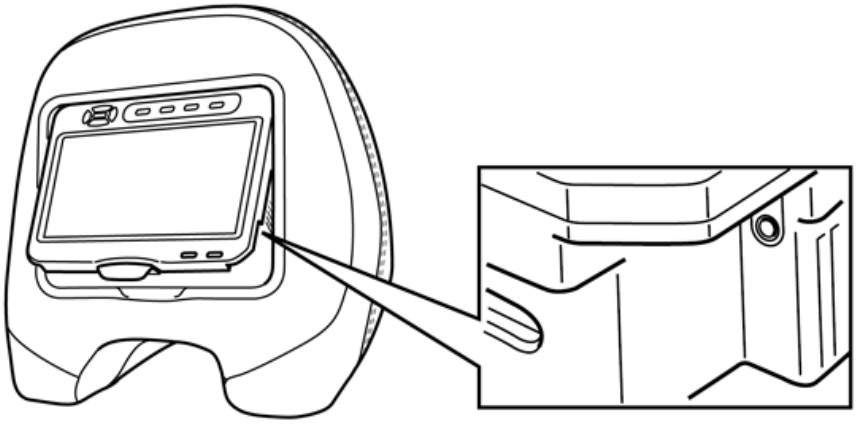

Fig. 3: Locating A/V Input
Courtesy of VOLVO CARS CORPORATION

The system has an A/V input that enables the connection of external media sources: iPod®, MP3 player, video camera or games console. The A/V input is on the lower edge on the right-hand corner of the screen.

SCREEN, HEAD RESTRAINT

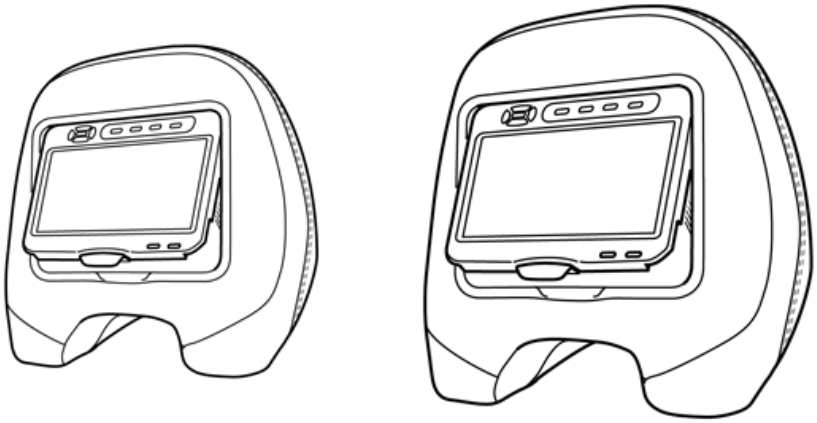

Fig. 4: Identifying Screen, Head Restraint
Courtesy of VOLVO CARS CORPORATION

The screen on each of the headrests is a 16:9 format, 7 inch TFT LCD screen and has a 120 degree horizontal viewing angle. The screen is manually adjustable to minimise the risk of reflections and mirroring in harsh light conditions. The top of the screen has 4 LEDS for transmitting and receiving infrared signals from remote controls and headsets.

HEADPHONES

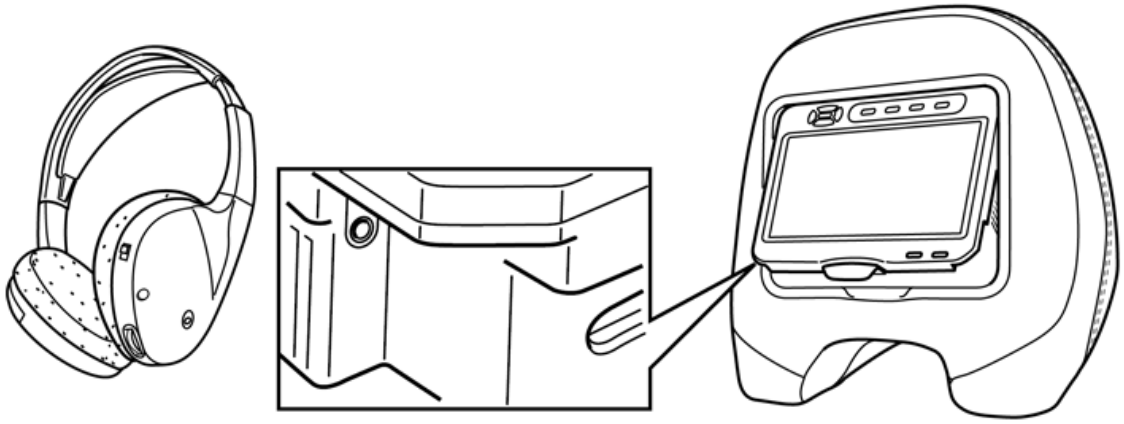

Fig. 5: Locating Corded Headset Socket
Courtesy of VOLVO CARS CORPORATION

The wireless headsets can be used by passengers in the rear seat. Standard audio is transferred via infrared signals to the headsets in two-channel stereo format. The headsets are powered by a battery which is located in the left headset under a cover. The headsets are activated by a button on one side of the headsets. The volume for each headset is adjusted via a volume control. Selection of audio source, DRIVER or PASSENGER, is made via control button: CH A and CH B.

Corded headsets can also be connected to the system, one to each screen. The socket is located at the lower edge of the screen on the left corner.

REMOTE CONTROL

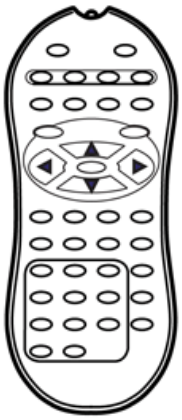

Fig. 6: Identifying Remote Control
Courtesy of VOLVO CARS CORPORATION

The remote control can be used to switch between different audio and/or video inputs in the system:

- DVD device, audio/video
- A/V input, audio or audio/video

The remote controls can be used to navigate the menu system, system menu, DVD menu and the service menu.

The remote control uses infrared signals to transfer the command to the system. The remote control uses two AAA batteries, installed under a cover on the rear of the control.

CHANGING THE REGION CODE IN THE DVD DEVICE

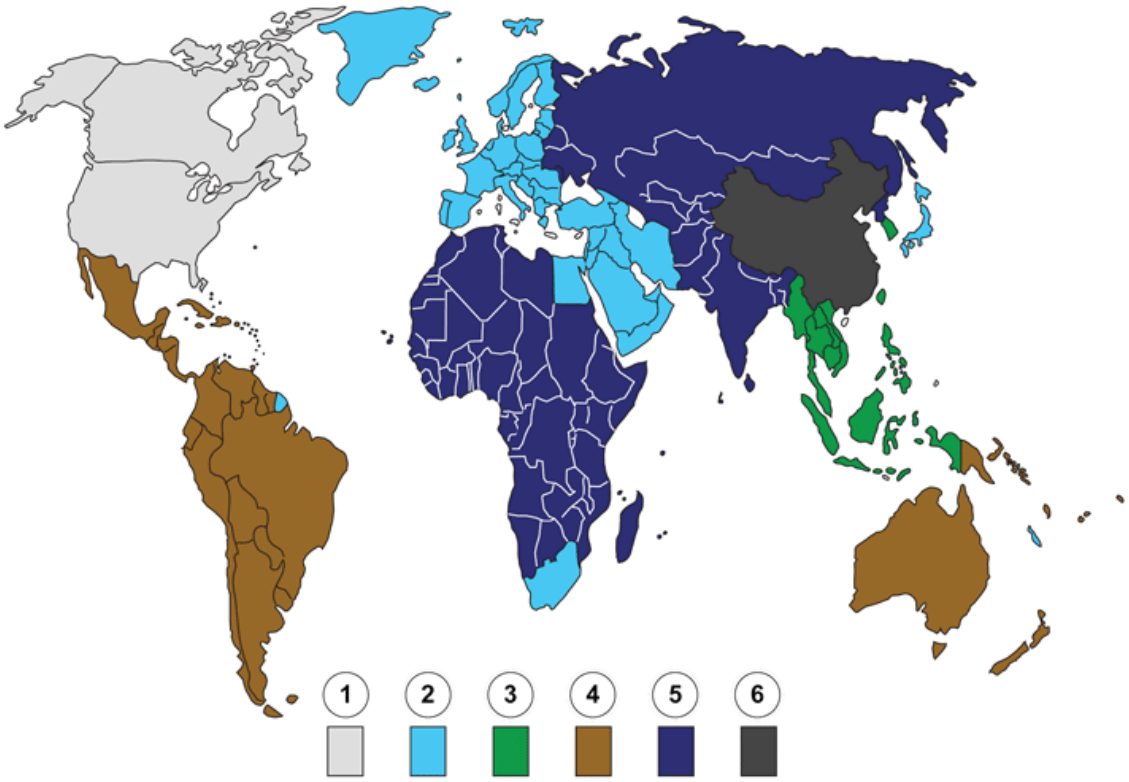

Fig. 7: The Region Code Can Be Changed Up To 5 Times
Courtesy of VOLVO CARS CORPORATION

The region coding means that only discs that correspond with the set region in the DVD device can be played. Preselected region code is region code 1. The region code in the DVD device can be changed up to 5 times. After that, the set region is then locked and cannot be changed.

Region codes:

1. USA, Canada, and Bermuda.
2. Europe including Armenia, Georgia, Azerbaijan, Egypt, Iran, Japan, Lesotho, South Africa, Swaziland, French Guyana, and Greenland.
3. South East Asia, Hong Kong, Macao, South Korea, and Taiwan.
4. Australia, Oceania, Mexico, Central America, and South America.
5. Russia, South Asia, India, Mongolia, North Korea, and Africa.
6. China excluding Hong Kong and Macao.

NOTE: **Warranty repairs due to locked region on the DVD device will not be approved. Region code changes to the region in which the vehicle will be used can only to be done at the workshop. The security code is not to be given to the customer. Region code 0 is not used.**

Do as follows to open the menu for region code change:

1. Turn on the ignition.
2. Activating the system for rear seat entertainment.

   NOTE: **There must not be a disc in the DVD player.**

3. Press or on the remote control depending on which DVD device is to be coded.
4. Point the remote control at the DVD device to be coded and press: 7, 7, 7 and then the button.
5. Select the region code that applies to the relevant vehicle and press.
6. Use the **RIGHT** respectively **LEFT** arrow to select region. Then press.
7. Press to exit the menu.
8. Deactivating the system for rear seat entertainment.

Perform the same procedure for both the right and left screens separately.

SERVICE MENU FOR CHANGING POWER MODE

There are three different in the system that define how the system is to interact in switching the system ON/off. The system is set to as default, and this should not be changed unless requested by the customer.

Short description of the various :

- : The DVD device is automatically activated when the ignition is switched on.
- : The DVD device is automatically set to standby mode the next time the ignition is switched on after the power has been cut.
- : The DVD device is automatically activated if, in the last operating cycle, it was activated, and deactivated if, in the last operating cycle, it was deactivated, the next time the ignition is switched on.

Do as follows to open the menu for changing :

1. Turn on the ignition.
2. Activating the system for rear seat entertainment.

   NOTE: **There must not be a disc in the DVD player.**

3. Press or on the remote control depending on which DVD device is to be coded.

   NOTE: **Ensure that only the DVD unit to be coded is active.**

4. Point the remote control at the DVD device to be coded and press the following sequence: **UP** , **RIGHT** , **LEFT** , **DOWN** and then.
5. Select the applicable coding for the relevant DVD device by scrolling the menu with the **RIGHT** arrow. Then press to confirm and exit the menu.
6. Deactivating the system for rear seat entertainment.

SERVICE MENU FOR CHANGING THE DRIVER/PASSENGER SETTINGS

All replacement parts of the DVD device are coded for the driver's side). To install a DVD device on the passenger side so that it corresponds with the remote control it must be recoded to.

Do as follows to open the menu for changing the / settings:

1. Turn on the ignition.
2. Activating the system for rear seat entertainment.

   NOTE: There must not be a disc in the DVD player.

3. Press or on the remote control depending on which DVD device is to be coded.

   NOTE: Ensure that only the DVD unit to be coded is active.

4. Point the remote control at the DVD device to be coded and press the following sequence: **UP** , **RIGHT** , **LEFT** , **DOWN** and then.
5. Select the applicable coding for the relevant DVD device by scrolling the menu with the **LEFT** arrow. Then press to confirm and exit the menu.
6. Deactivating the system for rear seat entertainment.

DIAGNOSTIC FUNCTIONS

FAULT-TRACING INFORMATION

The system for rear seat entertainment does not contain any diagnostic functions and is not connected to the vehicle's communication network. This means that no DTCs can be read out from the DVD device. All fault tracing must be performed via symptom fault tracings.

FUNCTION

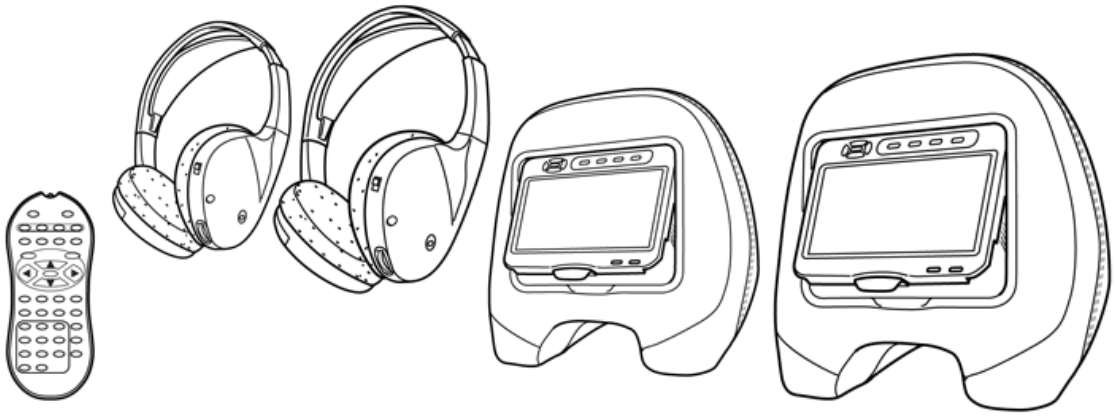

Fig. 8: Identifying Rear Seat Entertainment System Cmponents
Courtesy of VOLVO CARS CORPORATION

The system can be activated either with the button on the screen or with the button on the remote control. This is done separately for the right, respectively left screens. If the system is to be activated with the remote control, the ignition must be on and the remote control pointed at the screen.

SYSTEM START-UP

When the ignition is switched on, the lighting in the screen's -button and the system become set to standby mode. When the button is pressed in, the system is activated and an image with the Volvo emblem appears.

The remote control can be used to activate/deactivate the system and to navigate the menu system.

- Switch between audio/video source.
- Image adjustment.
- Audio settings.
- Language selection for on-screen instructions.

An internal memory saves the language selection and the current audio and video settings. These settings are loaded upon start-up with the exception of volume level, which is set to low as standard.

When a CD/DVD is inserted, playback starts automatically if the CD/DVD does not have a menu. DVD playback can be resumed from a standby mode, e. g. if the ignition is switched off during the playback of a film. In this case, playback continues from the last point when the ignition is switched back on, after the system has been reactivated. To insert a disc, the screen must first be folded out.

TEST SEQUENCE

Procedure	Expected result	Remarks
1. Insert the key and turn on the ignition.	The lighting in the screen's button illuminates and the system is set to standby mode.	

2. Activate the DVD device on the driver's side using the remote control by first pressing and then.	Only the DVD device on the driver's side is activated and the Volvo emblem appears on the screen.	If the DVD device on the passenger side is activated, the DVD device must be recoded. See: **DESIGN**- Service menu for changing DRIVER/PASSENGER settings
3. Activate the DVD device on the passenger side using the remote control by first pressing and then.	Only the DVD device on the passenger side is activated and the Volvo emblem appears on the screen.	If the DVD device on the driver's side is activated, the DVD device must be recoded. See: **DESIGN**- Service menu for changing DRIVER/PASSENGER settings
4. Ensure that the correct DVD region is coded in. This is done manually on each DVD device.		See: **DESIGN**- Changing the region code in the DVD device
5. Ensure that the system is in standby and then switch off the ignition.		

HEADPHONES

Fig. 9: Identifying Headsets
Courtesy of VOLVO CARS CORPORATION

Two headsets are supplied with the system as standard. The number of headsets that can be used is unlimited as long as they are within range of the IR transmitters. Transfer of audio between DVD devices and the wireless headsets is via infrared signals. There must not be any obstacles blocking the transmitter, which is located at the top of the screen, and the receivers, which are on the side of the headsets. If the path is blocked, the signal will be interrupted and the sound quality affected. Select sound source, or, via control button: and (channel B).

The headsets are activated using a button on one side of the headsets. The headsets switch off automatically if an IR signal is not received within 3-4 minutes.

SYSTEM OVERVIEW

CONTROL MODULE

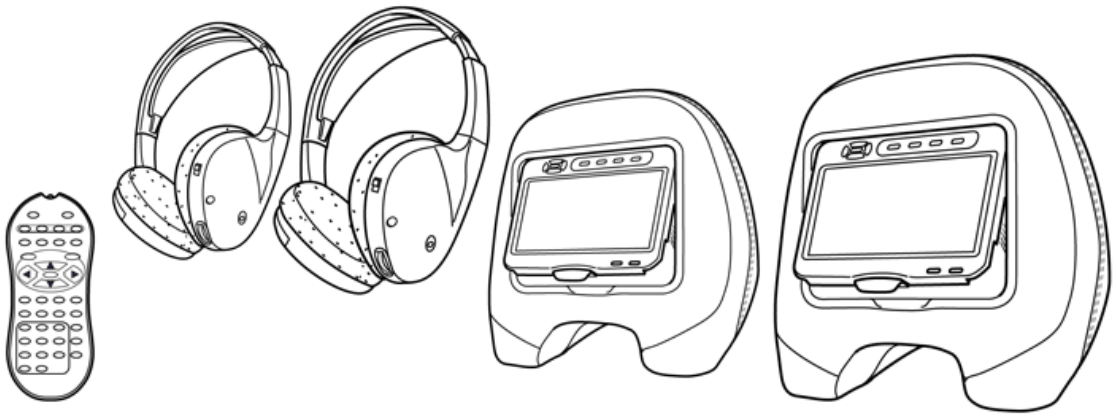

Fig. 10: Identifying Rear Seat Entertainment System Cmponents
Courtesy of VOLVO CARS CORPORATION

The rear seat entertainment system is a mobile entertainment system integrated in the headrests for keeping passengers in the rear seats occupied and entertained with video games or movies.

The system consists of two brilliant 7-inch, 16:9 format LCD screens. The screens can be adjusted manually to minimise the risk of reflections and mirroring in strong light conditions. The DVD players are integrated in the screens. Media discs are loaded from underneath, which reduces the risk of small objects being inserted into the DVD player. The system is equipped with AUX inputs, which make it possible to connect external media sources: iPod®, MP3 player, video camera or games console. The system also contains two pairs of wireless headphones and a wireless remote control. The DVD devices have been thoroughly tested and meet Volvo's high demands on safety.

The following media formats can be played by the DVD player:

- DVD-R/+R
- DVD-RW/+RW
- CD-R/+R
- CD-RW/+RW

The following information formats can be played:

- DVD - Video, Audio (Single/Dual layer)
- CD Digital Audio
- Super Audio CD (SACD)
- MP3 Audio CD/MP3 ID3 Tags ISO 96660
- VCD (Video CD)
- WMV
- SVCD (Super VCD)
- DivX/MPEG-4

- Windows Media Audio (WMA)
- OGG multimedia format

Formats such as THX and DolbyDigital are also supported. Only stereo signals of this audio format are reproduced.

SIGNALS

The tables below include the in and output signals for the DVD devices in the system for rear seat entertainment.

DVD DEVICE

Input signals:	Output signals:
Wireless communication (IR): • Remote control	**Wireless communication (IR):** • IR signals to wireless headphones
Directly connected: • Ignition on/off (supply for the system). • Internal A/V input from corresponding DVD device.	**Directly connected:** • Internal A/V output to corresponding DVD device. • Connecting to the car's stereo. • Wireless headsets.

REMOTE CONTROL

Input signals:	Output signals:
•	• IR signals to the DVD device

WIRELESS HEADPHONES

Input signals:	Output signals:
Wireless communication (IR): • DVD device (both right and left)	**Wireless communication (IR):** •

REMOTE DIGITAL AUDIO RECEIVER (RDAR) (2007-2012)

DESIGN

CONTROL MODULE

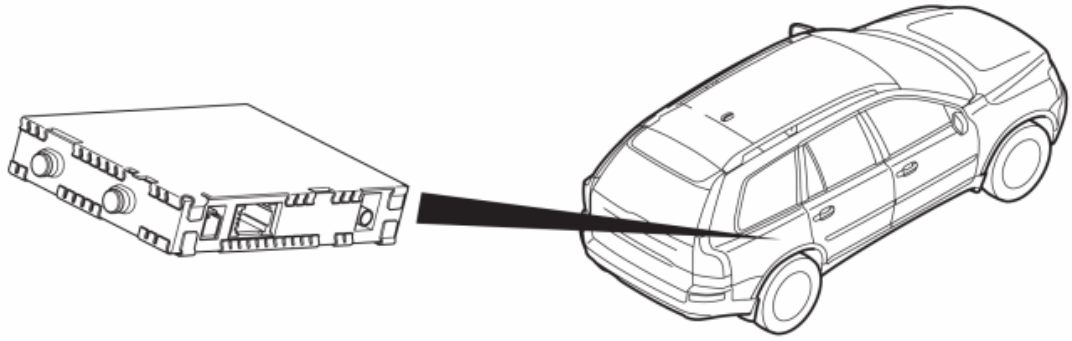

Fig. 11: Locating Remote Digital Audio Receiver
Courtesy of VOLVO CARS CORPORATION

The system for digital radio reception consists of:

- antenna for digital satellite and terrestrial radio
- Remote Digital Audio Receiver (RDAR)

The remote digital audio receiver (RDAR) has the task of receiving digital satellite and terrestrial radio signals. The remote digital audio receiver (RDAR) uses the signal that is the strongest at that instant.

Frequency range for radio reception:

- satellite transmitter 2320.0 - 2332.5 MHz
- terrestrial 2324.2 - 2328.3 MHz

Remote Digital Audio Receiver (RDAR) has CD quality sound. The quality of the sound is not affected by poor reception, the sound is temporarily switched off instead. If the antenna is concealed by a roof box for example.

A Volvo SIRIUS satellite radio subscription must be activated in order for the satellite radio to function. Activation is carried out by the customer ringing Sirius and giving the serial number of the Remote Digital Audio Receiver (RDAR). The serial number can be obtained in the display for the Infotainment module (ICM).

ANTENNA

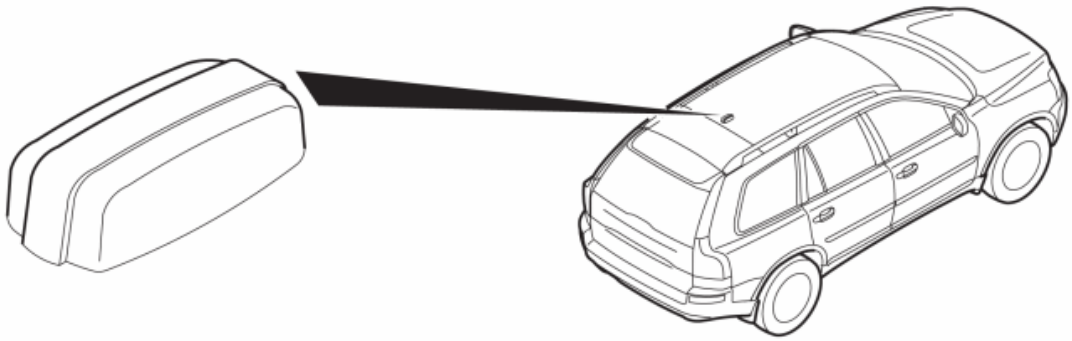

Fig. 12: Remote Digital Audio Receiver Antenna
Courtesy of VOLVO CARS CORPORATION

The Remote Digital Audio Receiver (RDAR) has an antenna. The antenna receives digital satellite and terrestrial radio signals. The antenna is directly connected to the Remote Digital Receiver (RDAR). The antenna is installed on the roof.

There are diagnostics for the antenna.

DIAGNOSTIC FUNCTIONS

DIAGNOSTIC SYSTEM,

The control module has a built-in diagnostic system, Volvo Diagnostic, which continuously monitors internal functions as well as input and output signals.

DIAGNOSTIC TROUBLE CODES (DTCS)

A diagnostic trouble code (DTC) is stored if the control module detects a fault.

If a fault disappears for any reason after the diagnostic trouble code (DTC) has been permanently stored in the control module, information about the fault remains in the control module.

READING AND ERASING DIAGNOSTIC TROUBLE CODES (DTCS)

Stored diagnostic trouble codes (DTCs) can be read off and erased using this function. Diagnostic trouble codes (DTCs) can only be erased once all the diagnostic trouble codes (DTCs) have been read off at least once.

READING OFF INPUT AND OUTPUT SIGNALS

This function can be used to continuously read off the values and status of the control module's input and output signals.

READING OFF THE CONTROL MODULE IDENTIFICATION

The diagnostic tool identifies control modules by reading off a number of codes from the control module

memory.

The codes contain information about the control module:

- hardware P/N (control module without software)
- hardware serial number (control module without software)
- software P/N
- diagnostic software P/N

READING OFF EXTENDED FAULT-TRACING INFORMATION

This function can be used to read parameters, status identifiers and counters stored at the same time as a diagnostic trouble code (DTC). These are called frozen values.

DOWNLOADING SOFTWARE AND REPLACING THE CONTROL MODULE

DOWNLOADING SOFTWARE

Software can be downloaded to the Remote Digital Audio Receiver (RDAR). When software is ordered, the vehicle' software and hardware is compared to Volvo's central database. If they are compatible, the software is downloaded to the system.

If the comparison between the car and Volvo's central database does not correspond, then the database is updated with the vehicle's configuration. When this is complete the software is downloaded.

After replacing the control module the module's unique ID number must be programmed in the Central electronic module (CEM).

If a problem arises after software download and the control module does not work, try switching the ignition off and on.

Select the MOST network for a total download of software to the vehicle.

ACTIVATING A SIRIUS SATELLITE RADIO SUBSCRIPTION

A Volvo SIRIUS satellite radio subscription must be activated for a satellite radio to function.

Activation is carried out by the customer ringing Sirius and giving the serial number for the Remote Digital Audio Receiver (RDAR). The serial number can be obtained in the display for the infotainment control module (ICM).

FUNCTION

RADIO RECEPTION

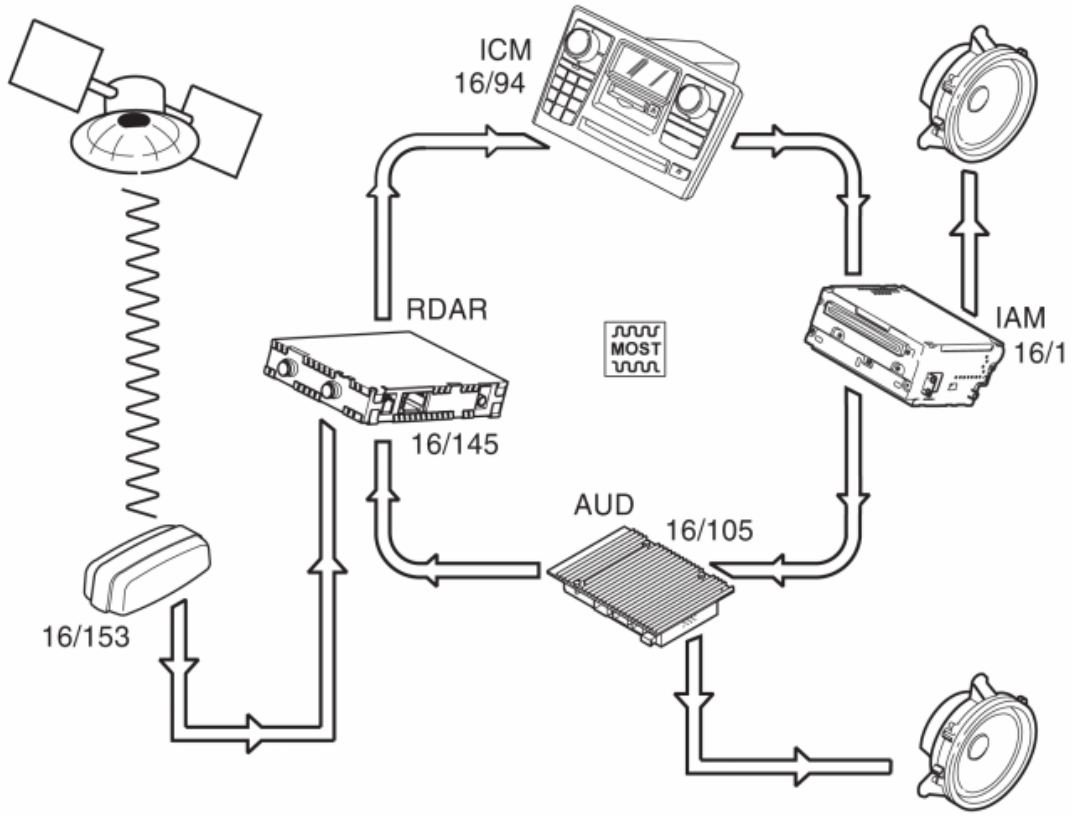

Fig. 13: Identifying Remote Digital Audio Components
Courtesy of VOLVO CARS CORPORATION

During radio reception, the digital radio signals are received by the antenna system and transmitted to the remote digital audio receiver (RDAR) (16/145) where they are decoded. The remote digital audio receiver (RDAR) then transmits the signals onwards via the MOST network to the infotainment control module (ICM) (16/94) and the integrated audio module (IAM) (16/1) or the audio module (AUD) (16/105) depending on the vehicle configuration.

Remote Digital Audio Receiver (RDAR) uses the signal, satellite or terrestrial, which is strongest at the time.

SYSTEM OVERVIEW

CONTROL MODULE

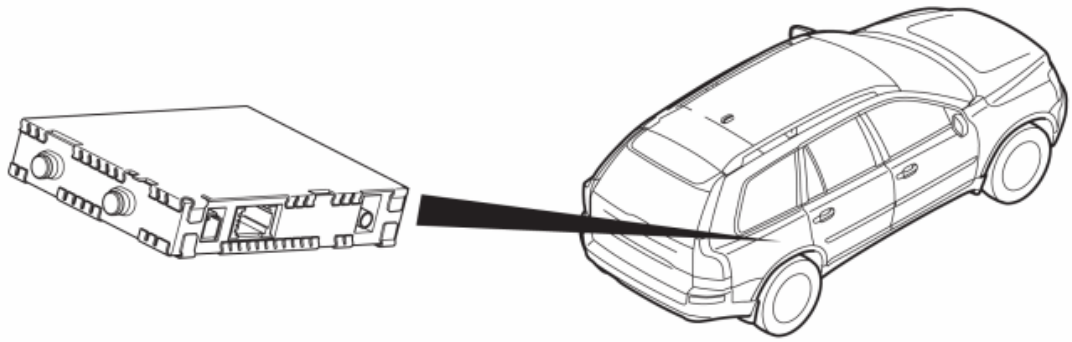

Fig. 14: Locating Remote Digital Audio Receiver
Courtesy of VOLVO CARS CORPORATION

Remote Digital Audio Receiver (RDAR) has the task of receiving both digital satellite and terrestrial radio signals, process them and transmit them onward on the MOST network.

The remote digital audio receiver (RDAR) is located beneath the rear side window on the right side of the vehicle.

The control module has serial optical communication with other components in the MOST network. This means that all communication with Remote Digital Audio Receiver (RDAR) occurs via the Infotainment control module (ICM) or on the initiative of the Infotainment control module (ICM).

The control module checks the input and output signals through an integrated diagnostic system.

The control module communicates with directly connected components, and via MOST communication.

Any diagnostic trouble codes are stored in the control module memory. The information can be read out via the data link connector in the vehicle.

SIGNALS

The table below summarizes the input signals to and output signals from the Remote Digital Audio Receiver (RDAR). The signal types are divided into directly connected signals and MOST communication. The illustration below displays the same information with the Volvo component designations.

Input signals	Output signals
Directly connected: • Antenna (16/153)	**Directly connected:** -
Via MOST communication: • Infotainment control module (ICM) (16/94)	**Via MOST communication:** • Infotainment control module (ICM) (16/94) • Integrated audio module (IAM) (16/1) • Audio module (AUD) (16/105)

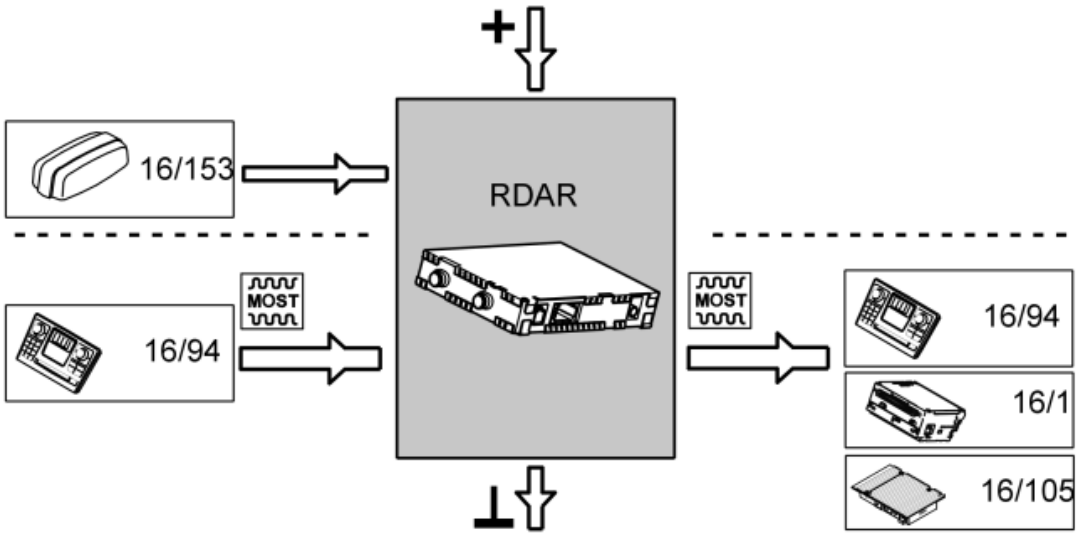

Fig. 15: Identifying Volvo Component Designations
Courtesy of VOLVO CARS CORPORATION

ROOF-MOUNTED SYSTEM FOR REAR SEAT ENTERTAINMENT (2005-2010)

DESIGN

MONITOR/DVD-PLAYER

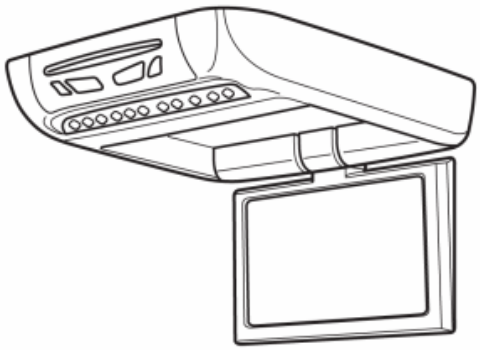

Fig. 16: Identifying Roof-Mounted Monitor/DVD-Player
Courtesy of VOLVO CARS CORPORATION

Monitor/DVD-player is central unit in the system for roof-mounted rear seat entertainment. Monitor and DVD-player are integrated and located in the roof between the front seats.

The unit interprets and performs the commands given by the user with the system's infrared remote control. Via external inputs (AV-panel), other audio and video sources can be connected, e. g., game pads or video cameras.

The monitor is an 8 inch TFT LCD-screen with a size format of 16:9 and with a 120 degree horizontal viewing angle. The monitor is manually adjustable in x-axis and via remote control adjustable in y-axis.

The monitor is adapted to both PAL as well as NTSC.

The DVD-player mechanism has an anti-shock system and it helps to prevent the image or sound skipping when played. The DVD-player has Slot-in disc insertion and region coding programmed into the software. The region code can be changed using a security code.

The DVD-player has memory handling to remember where, e. g., in a film different power cut-offs occurred.

The system has 30-feed, that is, supplied directly from the battery. However, there is a signal that informs when the ignition turns off, and a question appears on the monitor if the system is to be active for another hour. Then the system will be shut off automatically and the ignition must be turned on again to start the system. There is also a voltage monitor that turns off the system when the battery voltage is too low.

The built-in loudspeakers can be turned off/on independent of the headphones.

To be able to select external audio and video sources there is an AUX-connection on the back of the unit. 3xRCA for video (yellow) and audio (red and white). AUX-inputs can be used to input signals from video camera, video game pad, VHS-video, MP3-player, portable DVD- or CD-player.

The following media formats can be played by the DVD player:

- DVD-R/+R
- DVD-RW/+RW
- CD-R/+R
- CD-RW/+RW
- CD-3 (80 mm)

The following information formats can be played:

- DVD - Video, Audio
- Audio CD (CD-DA)
- Super Audio CD (SACD)
- MP3 Audio CD/MP3 ID3 Tags ISO 96660
- VCD (Video CD)
- SVCD (Super VCD)
- DivX/MPEG-4

- Photo-CD Kodak
- Photo-CD (JPEG ISO 9660)
- WMA - Video, Audio

Formats such as THX and DolbyDigital are also supported. Only stereo signals of this audio format are reproduced.

For a simple check that the unit is supplied with voltage and grounded, turn on the ignition. The background lighting for the POWER-button should come on. Activate the system by pressing on the POWER-button. Then monitor will be lowered.

Change of DVD player region code

The region coding means that only discs with the region code matching that of the DVD player can be played.

The regional code in the DVD-player can be changed up to 20 times. After that the set region will be locked and cannot be changed again.

NOTE: Warranty repairs due to locked region on the DVD player will not be approved. Region code changes to the region in which the vehicle will be used is to be done at the workshop. The security code is not to be given to the customer.

Do as follows to open the menu for region code change:

1. Switch on the ignition.
2. Switch on the system

   NOTE: There must not be a disc in the DVD player.

3. Point the remote control at a screen and hold down the button for child lock for approx. 5 seconds. The menu SERVICE MENU will be shown with four starts underneath.
4. Enter the code 1971 using the arrow keys on the remote control and then press OK.
5. Select menu REGION CODE and press OK.
6. Select the region code which applies to the relevant vehicle and press OK.
7. Check that the set region code, which will be shown in the top left-hand corner of the screen corresponds with the region where the vehicle will be used.
8. Switch off the system

The submenu can then be used to select a new region for the DVD player.

HEADPHONES

Fig. 17: Identifying Headphones
Courtesy of VOLVO CARS CORPORATION

The wireless IR-headphones can be used for all passengers in the rear seats. Standard audio is transmitted via IR to the headphones in two-channel stereo format. The headphones are powered by an internal battery. The headphones are turned on with a button on one side and the volume, in each headphone, can be adjusted with a knob.

REMOTE CONTROL

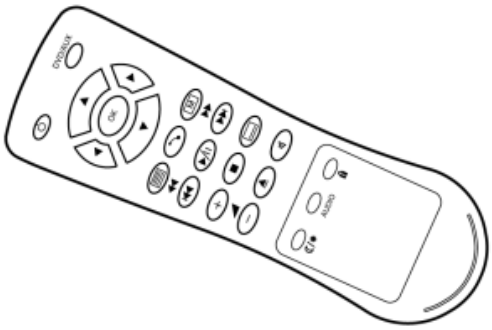

Fig. 18: Identifying Remote Control
Courtesy of VOLVO CARS CORPORATION

The remote control can be used to switch between different audio and/or video inputs in the system:

- DVD player, audio/video
- AUX-panel, audio or audio/video

The remote control can be used to navigate in the menu systems, system menu, DVD-menu and service menu.

DIAGNOSTIC FUNCTIONS

TEST SEQUENCE AFTER INSTALLATION

Handling	Expected result	Remarks
Insert the key and turn on the ignition.	RSE in standby mode, power-button lights up.	The RSE-system has a "last memory handling", that is, if the monitor was down the last time the vehicle was turned off, the monitor will be lowered when the ignition is activated again.
Activate RSE by pressing on the power-button.	The monitor is lowered and remaining buttons on the control panel light up.	
Engage reverse.	The monitor comes up.	The signal comes from the left back-up light.
Disengage reverse.	The monitor goes down.	
Remove the key.	The dialogue box on the monitor shows: "CHOOSE YES TO CONTINUE 1 HOUR"	
Choose "NO".	The RSE-system is inactivated and the monitor is lowered.	
Insert the key again and turn on the ignition.	The RSE-system is activated and the monitor is lowered.	
Turn off the system with the power-button.	The monitor comes up again.	This is only done so that the system shall be in stand-by the next time that the ignition is turned on.
Remove the key.	The RSE-system is inactivated.	

TROUBLESHOOTING INFORMATION

The roof-mounted system for rear seat entertainment (RSE) does not include any diagnostic functions and is not connected to the vehicle's CAN-net.

This means, e. g., that no diagnostic trouble codes can be read out from the unit. All troubleshooting must take place using symptom troubleshooting.

The following is troubleshooting information that may facilitate when troubleshooting in the system.

Symptom	Malfunction cause	Malfunction investigation
The system does not start.	1. No ignition 2. Reverse gear is engaged 3. Poor batteries in remote control 4. Low voltage on the car battery 5. Blown fuse 6. Poor connection	1. Switch on the ignition. 2. Disengage reverse gear 3. Replace batteries in remote control 4. Start car engine 5. Check fuse 6. Check connections

Monitor does not turn off.	1. Poor batteries in remote control 2. Blown fuse	1. Replace batteries in remote control 2. Check fuse
No contact with DVD-player.	1. DVD-player is not selected as media source 2. No or defect disc in DVD-player 3. System is off 4. Blown fuse	1. Select DVD-player as media source 2. Change DVD-disc 3. Switch on the system 4. Check fuse
DVD-player does not eject disc.	1. System is off 2. Blocking 3. No or defect disc in player 4. Blown fuse	1. Switch on the system 2. Remove blocking 3. Wait 20 seconds and try to eject disc again. If nothing happens, try inserting a disc to, see if the DVD-player is empty. 4. Check fuse
System does not react to signals from remote control.	1. No ignition 2. Poor batteries in remote control 3. Blown fuse	1. Switch on the ignition. 2. Replace batteries in remote control 3. Check fuse
No or poor sound in headphones.	1. Poor batteries (only IR-headphones) 2. Headphones not on (only IR-headphones) 3. Headphones not correctly connected (only wired headphones) 4. System is off 5. Volume too low 6. No or defect disc in DVD-player 7. Headphones are outside IR-coverage (only IR-headphones) 8. Incorrect media source selected	1. Change batteries in headphones 2. Turn on headphones 3. Unplug and plug in headphone cable in correct outlet 4. Switch on the system 5. Increase volume 6. Eject disc. If nothing happens, try inserting a disc to, see if the DVD-player is empty. 7. Test headphones closer to IR-transmitter 8. Select correct media source
No or poor picture on monitor.	1. Disc cannot be copied 2. Disc has unknown format 3. System is not on 4. No or defect disc in DVD-player	1. Contact dealer who sold disc 2. Use a disc with correct format 3. Switch on the system 4. Eject disc. If nothing happens, try inserting a disc to, see if

	5. Incorrect media source selected	the DVD-player is empty. 5. Select correct media source
No or poor sound in loudspeakers.	1. Sound is off 2. Volume too low 3. System is not on 4. No or defect disc in DVD-player 5. Incorrect media source selected	1. Turn on sound 2. Increase volume 3. Switch on the system 4. Eject disc. If nothing happens, try inserting a disc to, see if the DVD-player is empty. 5. Select correct media source

FUNCTION

REAR SEAT ENTERTAINMENT SYSTEM

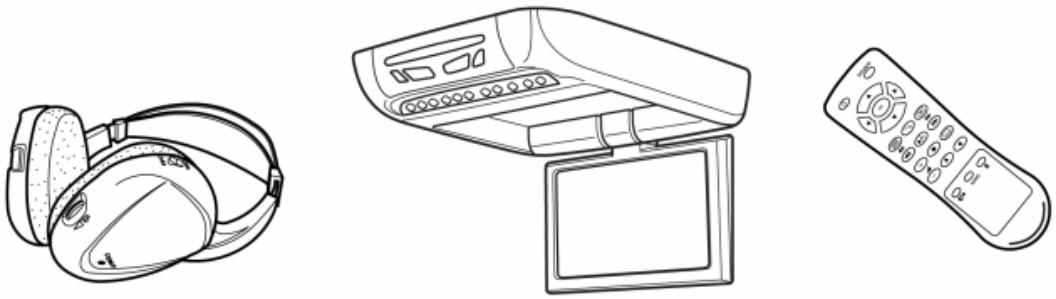

Fig. 19: Identifying Rear Seat Entertainment System Components
Courtesy of VOLVO CARS CORPORATION

The system can either be switched on with the POWER button or with the POWER button on the remote control.

If the system is on when the ignition is turned off, a question appears on the monitor if you want to continue using the system for another hour. Within that time, the ignition has to be turned on again, so that the system is not turned off automatically when time is up.

If the system is to be turned on with the remote control, the ignition must be on and the remote control pointed at the monitor/DVD-player.

System start-up

When the ignition is turned on, lighting is turned on in the POWER-button and the system will go to standby mode. When the POWER-button is pressed in, the system is activated and the monitor closes automatically.

The remote control can be used to turn on/off the system and navigate in the menu system:

- Switch between audio/video source (DVD and AUX).
- Image adjustment (image color, brightness, contrast and aspect ratio).
- Audio settings (bass, treble, volume and balance).
- Language selection for on-screen instructions.

A permanent memory stores the shown instruction language used as well as current settings for audio and video. These settings are loaded at start with exception of the volume which is set to low level as standard.

The system is powered via X-feed and directly from the battery. If the system is operating when the ignition is switched of, a question will appear on the monitor as to whether continued play is permitted.

If the user answers YES, the system will continue playing for another 1 hour. Then the system will be turned off.

If there is no answer to the question, the system will be turned off in 1 minute.

To prevent the battery from being discharged, it is not possible to extend playing time without turning on the ignition again. There is also a voltage monitor that turns off the system if the battery voltage is too low.

When a DVD is inserted in the opening, DVD play-back starts automatically unless the DVD has a disc menu. DVD play-back can be restarted from a resting position, e. g., if the ignition is turned off when a film is playing. In this case, the film continues playing from where it stopped the last time when the ignition is turned on again.

HEADPHONES

Fig. 20: Identifying Headphones
Courtesy of VOLVO CARS CORPORATION

The system includes two pairs of IR headphones as standard. Any number of headphones can be used as long as they are within range of the IR transmitter.

Sound is transferred from the screen to the wireless headphones via an infrared signal. There must be free travel between the transmitter in the bottom edge of the screen and the receivers on the side of the headphones. If the way is blocked, sound will be interrupted.

The headphones are switched on with the switch located on the side. The headphones switch off automatically if no IR signal is received for 3-4 minutes.

NOTE: **Lowering the volume of the screen will increase the signal/noise ratio of the headphones. Optimal headphone output is obtained by setting screen volume to 75%. Headphone volume can then be regulated using the wheel on the headphones themselves.**

SYSTEM OVERVIEW

SYSTEM FOR ROOF-MOUNTED REAR SEAT ENTERTAINMENT

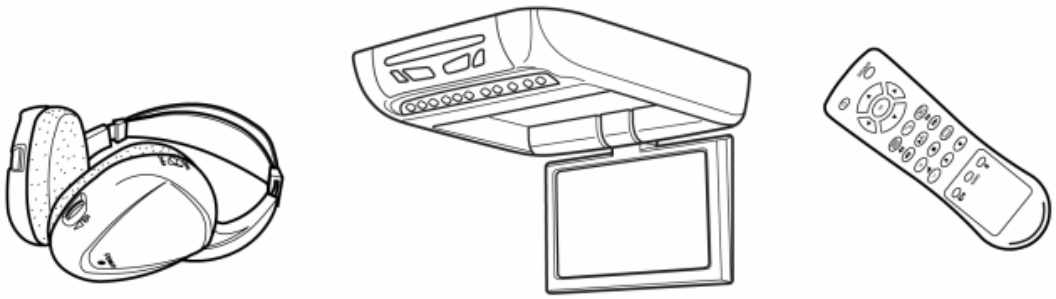

Fig. 21: View of Roof-Mounted Rear Seat Entertainment Components
Courtesy of VOLVO CARS CORPORATION

The system for rear seat entertainment is a mobile entertainment to keep the rear seat passengers occupied and amused with TV-games or movies.

The roof-mounted system consists of a unit with an 8-inch monitor with integrated DVD-player. The unit is mounted in the roof between the front seats. The unit has automatic opening/closing of the monitor when it is turned on/off.

The following media formats can be played by the DVD player:

- DVD-R/+R
- DVD-RW/+RW
- CD-R/+R
- CD-RW/+RW
- CD-3 (80 mm)

The following information formats can be played:

- DVD - Video, Audio
- Audio CD (CD-DA)

- Super Audio CD (SACD)
- MP3 Audio CD/MP3 ID3 Tags ISO 96660
- VCD (Video CD)
- SVCD (Super VCD)
- DivX/MPEG-4
- Photo-CD Kodak
- Photo-CD (JPEG ISO 9660)
- WMA - Video, Audio

Formats such as THX and DolbyDigital are also supported. Only stereo signals of this audio format are reproduced.

An AUX-panel with RCA-inputs is found on the back of the DVD-player. Through this, other audio and video sources can be connected to the system, such as video cameras, game pads or portable MP3-, DVD- and CD-players.

The system includes two pairs of wireless headphones. Audio is transmitted to the headphones via an IR-transmitter from the monitor/DVD-player. Wired headphones can also be connected. Audio can also be played via internal speakers in the unit.

Control of the system is also possible with an infrared remote control.

SIGNALS

The tables below include the input and output signals for the unit in the system for rear seat entertainment.

MONITOR/DVD-PLAYER

Input signals:	Output signals:
Wireless communication (IR): • Remote control	**Wireless communication (IR):** • IR signals to wireless headphones
Directly connected: • Reverse signal, from left back-up light • Ignition on/off	**Directly connected:** -

REMOTE CONTROL

Input signals:	Output signals:
Wireless communication (IR): -	**Wireless communication (IR):** • IR-signals to monitor/DVD-player

WIRELESS HEADPHONES

Input signals:	Output signals:
Wireless communication (IR):	**Wireless communication (IR):**

• - Monitor/DVD-player	-

SOFTWARE DOWNLOADING (2003-2012)

DOWNLOADING SOFTWARE

When software is to be downloaded to the vehicle there are a number of stages in the downloading procedure in VIDA:

- Preparations
- Verification
- Downloading
- Diagnostic services
- Confirmation
- Completion

PREPARATIONS

The preparations involve, among others that the user shall ascertain that the communications tool is connected and that there is sufficient power supply to the vehicle. VIDA performs a check of the voltage level status and the ignition position.

VERIFICATION

During verification, VIDA compares the software, hardware and serial number in the vehicle with that supplied in the software package.

If verification is OK, VIDA continues with the download.

If verification is not OK, a mismatch adaptation will be made and the Volvo central database will be updated before downloading can be performed.

DOWNLOADING

All control modules are set to programming mode when software is to be downloaded to a control module. Any existing software in the control module is erased so this cannot affect the new software.

When erasure is complete the new software is downloaded. Once the download has been sent a reset command is sent to the vehicle.

DIAGNOSTIC SERVICES

After the software has been downloaded, diagnostic services are run if necessary, for example, programming of codes or initialisation of windows.

CONFIRMATION

Confirmation involves a confirmation file containing the vehicle's new configuration being created and sent to the Volvo central database. This is to update the Volvo central database with the vehicle's latest status and so a mismatch adaptation is not performed with the next download.

COMPLETION

The software download is completed by erasing all diagnostic trouble codes (DTC) stored in the vehicle.

NOTE: The clock in the vehicle may stop while downloading some software. Check the clock in the vehicle after downloading and adjust if necessary.

OVERVIEW

The vehicle's electrical system consist of a number of control modules on the CAN and MOST network. The functions of the vehicle can be divided between the different control modules in the vehicle. The vehicle's different functions are implemented via the CAN and MOST network. Each control module is loaded with software that executes functions and monitors the control module through integrated diagnostics.

Incorrect or failed functions in the vehicle usually depend on hardware faults, for example, contact play, oxidation, breakages or short-circuiting.

Software is not worn out and its function is not impaired overtime, however, unforeseeable behaviour can occur in software which means it needs to be upgraded. It may also be necessary to upgrade software on account of legislation or when moving to another market.

When starting the control module the primary bootloader starts (PBL) for 20 ms (0.02 seconds). Should the control module receive a programming command (prog) during these 20 ms the control module enters programming mode.

The programming command is sent for approximately 2 seconds so that all control modules have time to execute the command and enter programming mode. If no programming command is sent the control module's application software takes over the function of the control module.

If a reset command is sent to the control modules in programming mode, the control modules will enter normal operating mode.

The primary bootloader means it is always possible for a control module to enter programming mode even if the application software has been corrupted, for example, during unsuccessful downloading.

ORDERING SOFTWARE PRODUCTS

Generally you can divide software downloading into two stages.

First a software product must be ordered and sent from the Volvo central database to the VIDA station. The software must then be downloaded from the VIDA station to the vehicle.

This section describes ordering of a software product.

Each Volvo spare part has a part number, this also applies to software products. A software product is listed in the spare parts catalogue in exactly the same way as any other part.

Ordering a software product is done as follows:

The mechanic specifies which software product is to be ordered and to which vehicle (model and chassis number). This is either done from the spare parts catalogue (via the part number) or via the software tab in VIDA (via software product). Several software products can be ordered at the same time for the same vehicle.

When ordering upgrades no reading is done from the vehicle. VIDA presupposes that the vehicle and the Volvo central database correspond and the software package is supplied to the VIDA station. A verification to ensure that the vehicle and the Volvo central database correspond will be performed before downloading starts.

When ordering re-downloading, VIDA reads the hardware and serial number from the vehicle and update the Volvo central database with information. The software packages is then supplied to the VIDA station.

The system structure for software controls the content of the software package for the ordered software product. A check is made that the software is applicable for the vehicle in question. If the check is not approved, an error message is shown to the mechanic. The mechanic must assess what the error is and reorder the software once the error has been rectified.

When the software package has been supplied to the VIDA station downloading can begin.

RESETTING CUSTOMER PARAMETERS

Before software downloading, VIDA reads in all customer parameters from the vehicle and saves these locally on the VIDA station.

When downloading is complete VIDA restores the customer parameters in the vehicle.

Under the SOFTWARE tab in VIDA there is a RESET CUSTOMER PARAMETERS button, which is used to, see which parameters have been reset in the vehicle. Only parameters whose values have been changed from the factory settings are shown.

SOFTWARE PRODUCTS

The following types of software products are available:

- Re-downloading
- Upgrading
- Total upgrading CAN/MOST
- Add or remove functionality or accessories
- Individual configuration

RE-DOWNLOADING

The software product re-downloading is used when a control module has been replaced. In order to obtain software that corresponds with the replaced control module the vehicle data is read when placing the order.

Diagnostic services are run after downloading when necessary (e. g. programming of code).

UPGRADING

Software product upgrading is used to upgrade the software in the control module when there has been a complaint and there is a solution available to correct the issue.

VIDA does not read the vehicle data on ordering as no hardware is to be replaced during an upgrade.

If the latest software is already installed in the control module, the software package is not put together, the user receives the message that the control module already contains the latest software.

TOTAL UPGRADING CAN/MOST

The software product total upgrade is used to upgrade the software in several control modules on the CAN or MOST network.

Total upgrade involves building a software package for the control modules needing upgraded software. It all the control modules already have the latest software, no software package is formed.

ADD OR REMOVE FUNCTIONALITY OR ACCESSORIES

The software product adds/removes the functionality used to increase or decrease the functionality in the vehicle. This is primarily done through modifying the vehicle configuration file in the Central electronic module (CEM) (applies to accessories that do not require hardware replacement).

Modified functionality in the vehicle is achieved by changing this file. In addition there are some functions that require software to be downloaded, for example, when you add a control module to the vehicle.

The software product remove functionality does not erase any software, it changes a parameter in the vehicle configuration file so that the control modules in the vehicle interpret this as if the function no longer exists.

INDIVIDUAL CONFIGURATION

The software product individual configuration is used to replace the software in a control module, so it no longer corresponds with the System structure for software. The system product individual configuration is not included in the spare part catalogue in VIDA (Volvo scan tool).

If an individual configuration has previously been downloaded to the vehicle the mechanic receives a warning before this is replaced.

A list of software products for individual configuration is available in the Technical Journals.

THE VOLVO CENTRAL DATABASE

The Volvo central database contains information about all Volvo cars in the world from model year 1999.

This includes information about the vehicles configuration, i. e. how the car is equipped, where the car was built, the vehicle structure week and VIN number.

It also contains information about which control modules are installed in the vehicle as well as their hardware, software and serial number. For S40 (-04) and V40 there is only a limited amount of information in the Volvo central database.

In the system structure for software, there are links between control modules and compatible software. The system structure of the software ensures that it is always the latest release of compatible software, which is included in the software package when ordering software re-downloading or upgrades.

STARTER MOTOR (2003-2012)

DESIGN

EXPLODED VIEW OF THE STARTER MOTOR

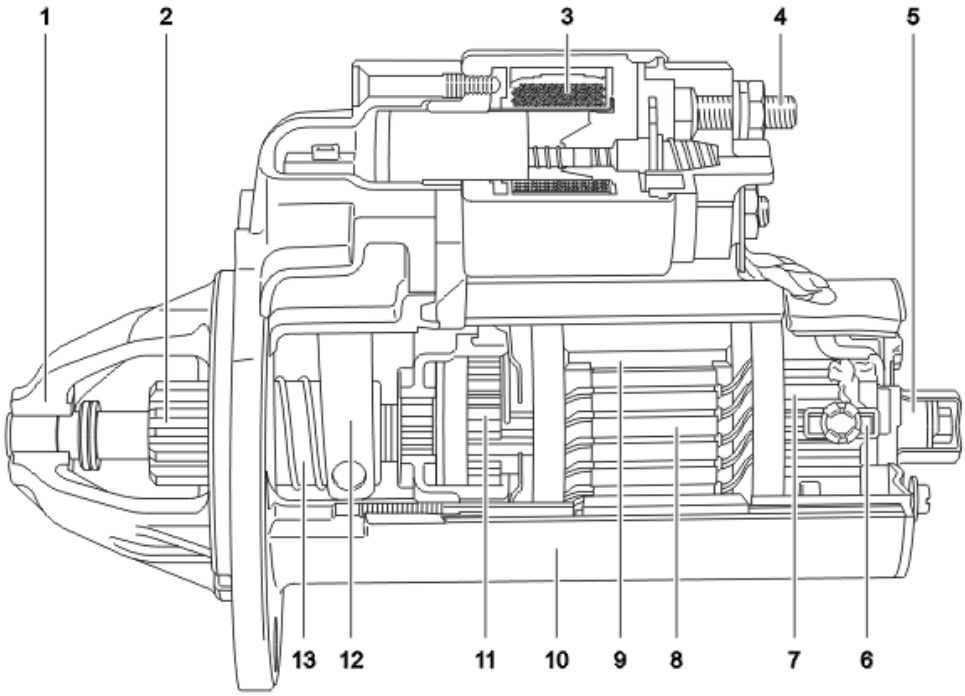

Fig. 22: Cut Away View Of Starter Motor
Courtesy of VOLVO CARS CORPORATION

The starter motor consists of:

1. Drive cover
2. Gear wheel
3. Solenoid magnet

4. Battery terminal
5. Rear end and bearing
6. Carbon brush holder and carbon brushes
7. Commutator
8. Armature
9. Permanent magnet
10. Armature housing
11. Planetary train
12. Lever with free rotating clutch
13. Engagement unit for the pinion.

NOTE: **The starter motor of the V8 engine is equipped with field windings instead of permanent magnets. The field windings are electrically connected in series with the carbon brushes.**

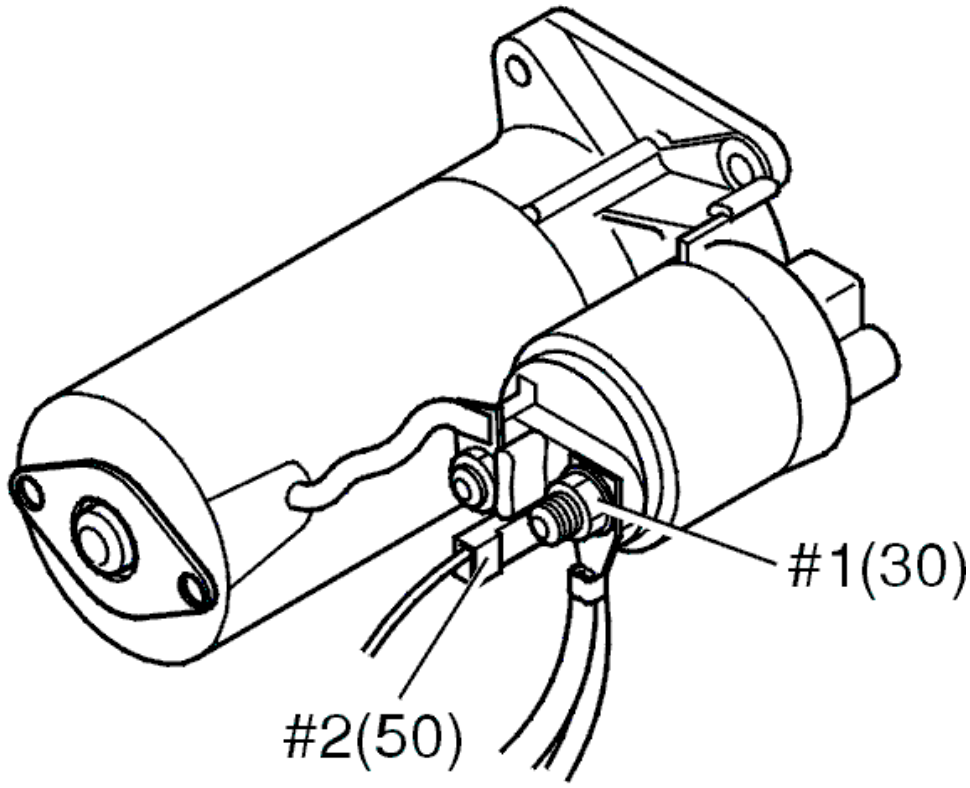

Fig. 23: Identifying Starter Motor Terminals
Courtesy of VOLVO CARS CORPORATION

Starter motor terminals:

- #1 (30) From the battery positive terminal

- #2 (50) From starter motor relay.

Ground terminal via gearbox / cylinder block.

PRINCIPLE

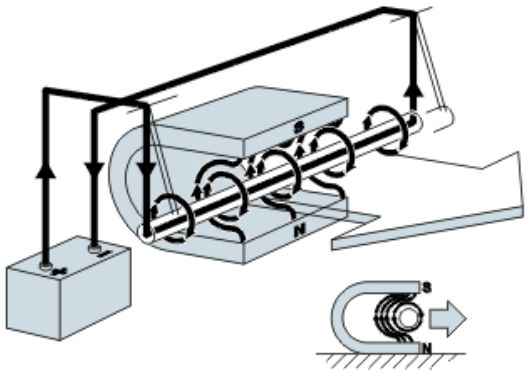

Fig. 24: Identifying Starter Motor Operation Principle
Courtesy of VOLVO CARS CORPORATION

The starter motor is a DC motor which uses a permanent magnet. This type of motor operates following the principle that the same poles (North/North) are forced away from each other and opposite poles (North/South) are drawn to each other.

CONTROL SOLENOID

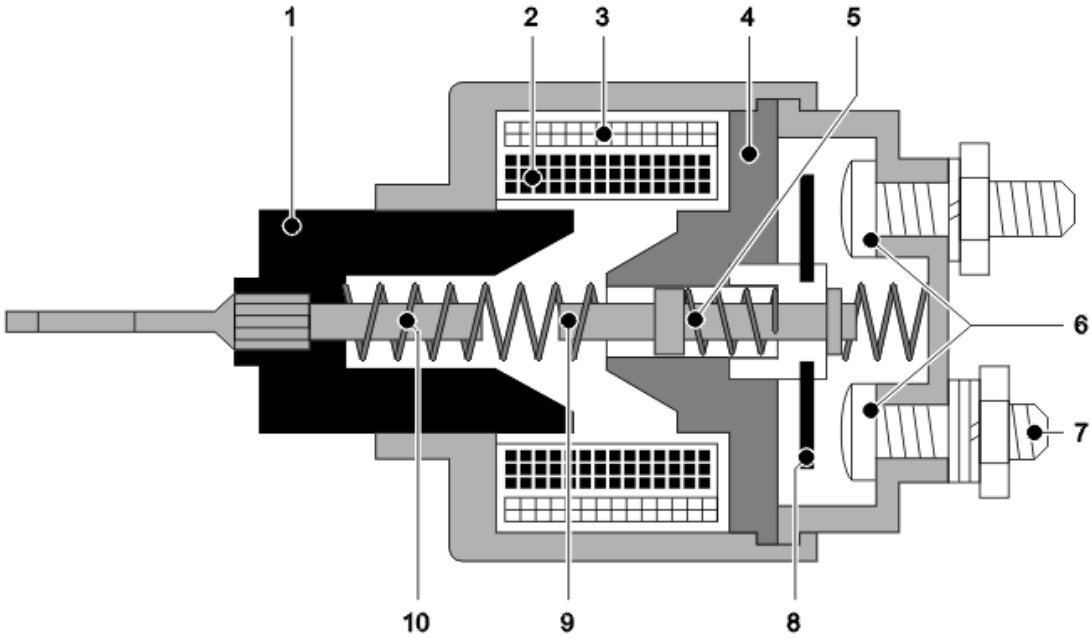

Fig. 25: Control Solenoid

Courtesy of VOLVO CARS CORPORATION

The control solenoid has two functions. The first is to mechanically engage the pinion in the flange/flywheel gear collar. The other is to function as a relay and to handle the greater current required to drive the starter motor when the pinion engages with the gear collar.

The control solenoid consists of the following components:

1. Moving steel cores. Moved by pull-in winding in the control solenoid, slides the pinion into position and moves the moving switch towards the fixed switches
2. Pull-in winding. Pull in the moving steel core. Disconnect when the moving steel core reaches the bottom position
3. Hold-in winding. Holds the moving steel core in position for as long as the control solenoid is supplied
4. Fixed steel cores. Stop position for the moving steel core
5. Contact spring
6. Fixed contacts. Closes when the moving switches reach the fixed switches
7. Terminals. One for the battery and one for the DC motor
8. Moving switch. Switch which closes the fixed switches
9. Moving shaft. Affected by the moving steel core and connects the moving switches with the fixed switches
10. Return spring. Resets the control solenoid components to the rest position when the starter motor relay is disconnected.

FREEWHEEL

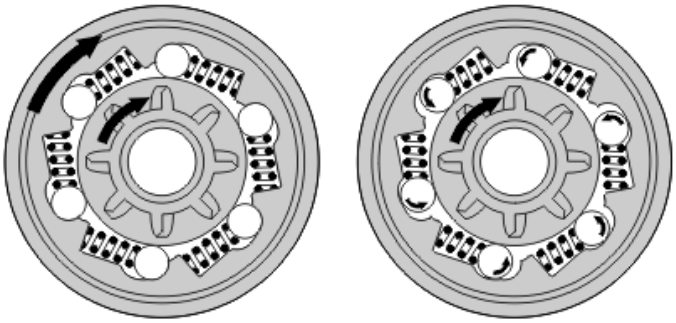

Fig. 26: Freewheel
Courtesy of VOLVO CARS CORPORATION

Functions as a one way clutch (freewheel). The freewheel allows the starter motor to drive the car engine, but not the other way around. This prevents the starter motor from being over-revved. This is carried out by spring-loaded rollers which lock the pinion and gear together when the starter motor operates.

The engine cannot drive the starter motor because the pinion turns in the rollers.

The freewheel clutch is attached to the armature shaft by spiral splines, which facilitate engagement and

disengagement of the starter motor pinion / flywheel ring gear.

The left-hand illustration displays the normal position. The starter motor, connected to the outer section drives the pinion (inner section) by means of the rollers, which then lock.

The right-hand illustration displays what happens when the starter motor remains connected when the engine is started. The pinion (inner section) cannot drive the starter motor (outer section) because the rollers disengage.

PLANETARY TRAIN

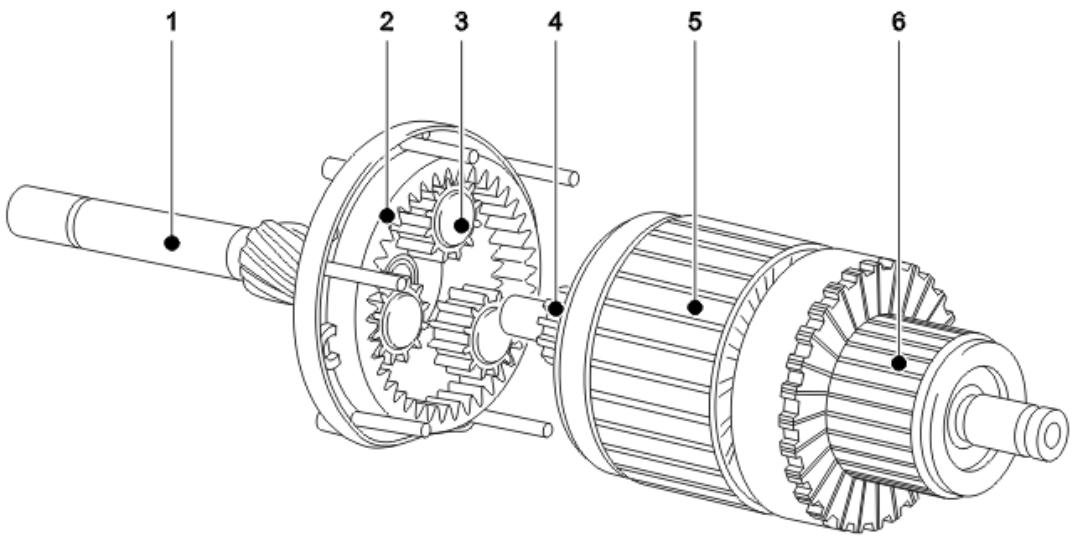

Fig. 27: Identifying Planetary Train
Courtesy of VOLVO CARS CORPORATION

The planetary train is used to reduce the rotation speed of the pinion gear in relation to the speed of the armature and to increase the torque of the pinion.

The planetary train consists of:

1. Pinion shaft with splines
2. Ring gear (fixed section)
3. Planetary gear (connected to the pinion shaft)
4. Sun gear (connected to the rotor)
5. Armature
6. Commutator

FUNCTION

ENGAGING THE PINION

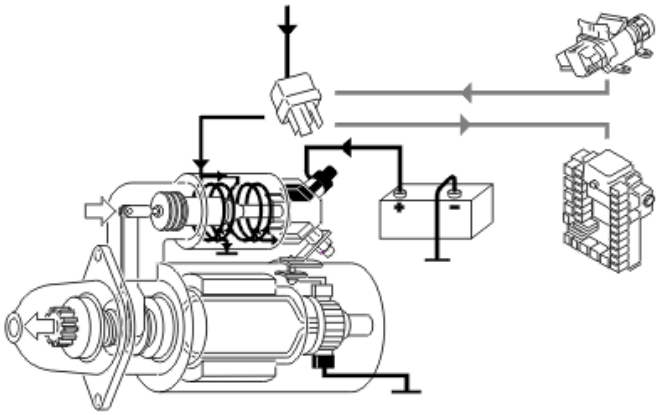

Fig. 28: Engaging Pinion
Courtesy of VOLVO CARS CORPORATION

When the ignition key is turned to position II, the starter motor relay is supplied power at position 86. If the immobilizer check is OK, the central electronic module (CEM) or engine control module (ECM) supply the relay with a ground connection at position 85 and the relay is activated. Depending on the type of engine management system, the starter motor relay is regulated by either the central electronic module (CEM) or the engine control module (ECM).

Solenoid position #2 (50) is supplied power from relay position 87. This creates a magnetic field in both the pull-in and hold-in winding. This generates a movement of the moving steel core. When the core moves, a lever fixed to the end of the core causes the starter motor 's pinion to mesh with the crown wheel on the flywheel/carrier.

The pull-in winding is grounded through the rotor and carbon brushes. This ground connection is lost when the moving switches close the circuit and the current passes from the solenoid to the starter motor.

PLANETARY TRAIN

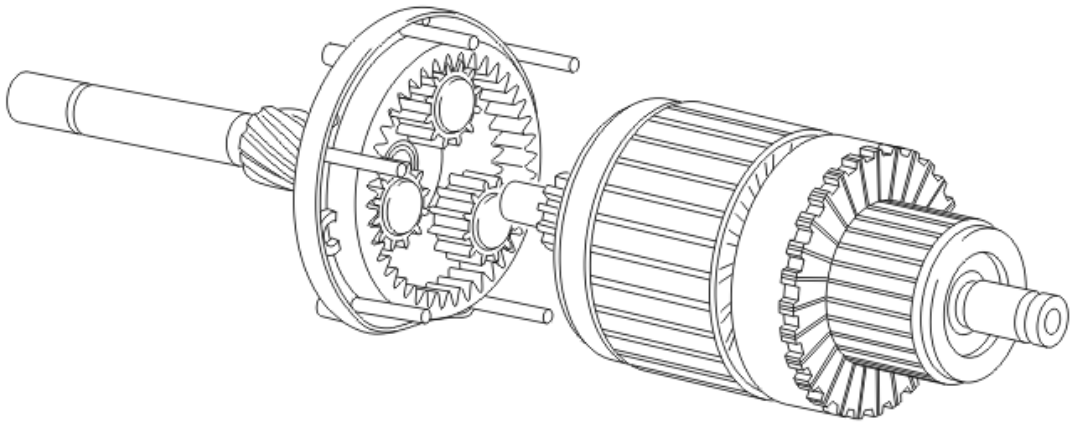

Fig. 29: Identifying Planetary Train
Courtesy of VOLVO CARS CORPORATION

When the starter motor rotates, the sun wheel rotates clockwise. The planetary gears, which are constantly engaged with the sun wheel and ring wheel, rotate counter-clockwise. As the ring wheel is secured, the planetary gears are forced to circle around the sun wheel clockwise. The planetary gears rotate more slowly than the sun wheel. It is the clockwise rotation of the planetary gears which drives the pinion. The speed reduction that occurs between the sun gear and the planetary gear, results in greater torque. This means that a smaller and lighter starter motor can be used.

STARTING THE ENGINE

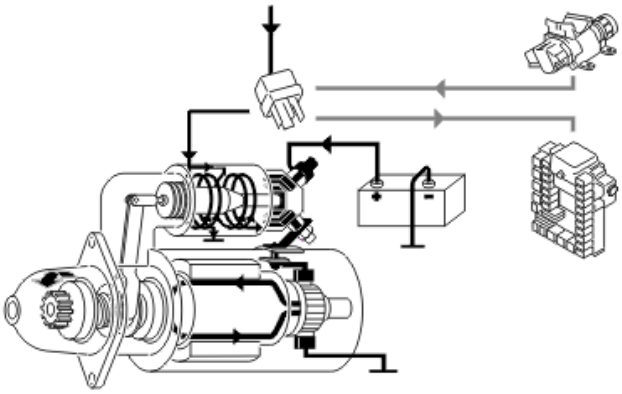

Fig. 30: Identifying Engine Start
Courtesy of VOLVO CARS CORPORATION

When the moving steel cores for the solenoids reach their limit position the moving switches break the circuit with the fixes switches and the pull-in winding is disconnected. The hold-in winding keeps the switches closed. The current now passes through the positive carbon brushes and the armature winding. Grounding is carried out through the negative carbon brushes. This current creates a magnetic field in the rotor, which starts the rotor rotating. When the rotor rotates, the magnetic field is generated continuously depending on how the commutator and the windings are organized on the rotor. This allows the rotor to continue rotating.

NOTE: The starter motor of the V8 engine is equipped with field windings instead of permanent magnets. The field windings are electrically connected in series with the carbon brushes.

When the ignition key is released the starter motor relay is deactivated and the circuit for the hold in winding is broken. Then the return spring for the solenoid pulls the pinion back, at the same time as the fixed and moving switches separate and the current to the starter motor is broken.

SYSTEM OVERVIEW

OVERVIEW

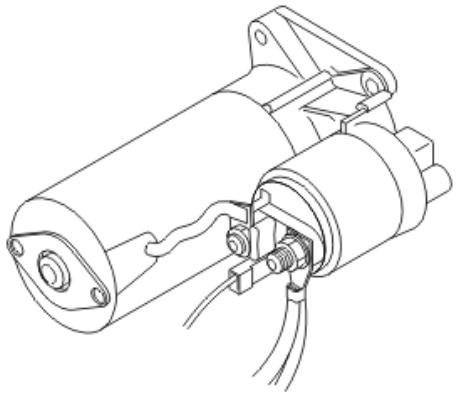

Fig. 31: Identifying Starter Motor
Courtesy of VOLVO CARS CORPORATION

This document describes the principle design and function of a starter motor, regardless of the make.

The starter motor (6/25) cranks the engine to make starting possible. The starter motor is located on the transmission side of the engine block. The exact location depends on engine type. A solenoid causes a pinion to mesh with the crown wheel on the engine's flywheel/carrier. When the engine has started and engine speed exceeds starter motor speed, the pinion disengages. This prevents overcranking of the starter motor.

This type of starter motor is equipped with permanent magnets instead of field windings (except for the V8 engine, which has field windings).

The starter motor gives the greatest torque at low rpm at the same time as the voltage current through the starter motor is greatest.

NOTE: The engagement time for the starter motor must not exceed 20-30 seconds. Longer engagement time results in the starter motor overheating and becoming damaged.

The starter motor solenoid is controlled by a starter motor relay (2/35). The relay, in turn, is controlled by the ignition switch (3/1) together with either the central electronic module (CEM) (4/56) or the engine control module (ECM). The engine management system of the vehicle determines whether the starter motor relay is regulated by the central electronic module (CEM) or the engine control module (ECM).

STEERING WHEEL ANGLE SENSOR MODULE (SAS) (2005-2012)

DESIGN

STEERING WHEEL ANGLE SENSOR MODULE (SAS)

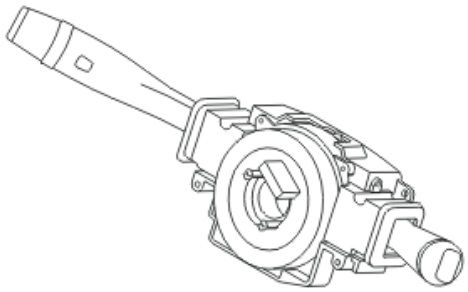

Fig. 32: Identifying Steering Wheel Module
Courtesy of VOLVO CARS CORPORATION

After initiation, with the ignition key in position II and when the steering wheel is turned 4.5 degrees in any direction, the steering wheel angle sensor module (SAS) continuously transmits information about the steering wheel angle position to the brake control module (BCM) to calculate the intended direction of travel. The steering wheel angle sensor module (SAS) also transmits information to the suspension module (SUM).

Communication between the steering wheel angle sensor module (SAS) and the brake control module (BCM) occurs on the high speed side of the controller area network (CAN). The steering wheel angle sensor module (SAS) is integrated in the steering wheel module (SWM).

The steering wheel angle sensor module (SAS) is powered via the steering wheel module (SWM).

STEERING WHEEL ANGLE SENSOR

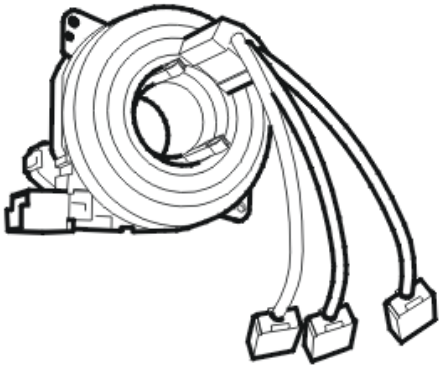

Fig. 33: Identifying Steering Wheel Angle Sensor
Courtesy of VOLVO CARS CORPORATION

The steering wheel angle sensor is incorporated with the SRS contact reel, which in turn is installed on the steering wheel module (SWM). A code wheel is mounted inside the steering wheel angle sensor which follows the movements of the steering wheel. 9 optical digital sensors and 2 analog photo diodes read off the code wheel. The signal must create a specific pattern. This information is transmitted to the steering wheel angle sensor module (SAS) which uses these signals to calculate the steering wheel angle, speed and number of turns. In total, the steering wheel angle sensor can measure a range of +/- 720 degrees, although the steering wheel can only be turned a maximum of +/-540 degrees.

Due to the reliance of the DSTC (Dynamic stability and traction control) system on information from the steering angle sensor it is extremely important that the contact reel has been centered correctly and that only an original Volvo steering wheel is used.

DIAGNOSTIC FUNCTIONS

OVERVIEW

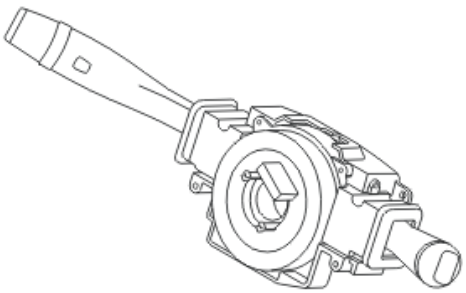

Fig. 34: Identifying Steering Wheel Module
Courtesy of VOLVO CARS CORPORATION

The control module has a built-in diagnostic system, Volvo Diagnostic, which continuously monitors internal functions as well as input and output signals.

DIAGNOSTIC TROUBLE CODES (DTCS)

A diagnostic trouble code (DTC) is stored if the control module detects a fault. If a fault disappears for any reason after the diagnostic trouble code (DTC) has been permanently stored in the control module, information about the fault remains stored in the control module.

READING AND ERASING DIAGNOSTIC TROUBLE CODES (DTCS)

Diagnostic trouble codes (DTCs) stored in the control module can be read off using this function.

Diagnostic trouble codes (DTCs) must be read off at least once before they can be erased.

READING OFF INPUT AND OUTPUT SIGNALS

This function can be used to continuously read off the status of the control module's input and output signals.

For further information about parameters, see: **DESCRIPTION OF PARAMETERS**

READING OFF THE CONTROL MODULE IDENTITY

VIDA identifies the control modules by reading off a number of codes from the control module memory.

The codes contain the following information about the control module:

- hardware P/N
- software P/N
- diagnostic software P/N.

FUNCTION

See the section about the Active Yaw Control (AYC) in **BRAKE CONTROL SYSTEM - DESIGN AND FUNCTION**

SOFTWARE DOWNLOADING

New software can be downloaded into the steering wheel angle sensor module (SAS). When ordering software, the hardware and the software in the car is compared to the information in the Volvo central database. If the comparison is OK the software is downloaded to the control module. If the comparison between the car and Volvo central database is not OK, the database is updated with the car configuration. When this is complete the software is downloaded.

SYSTEM OVERVIEW

CONTROL MODULE

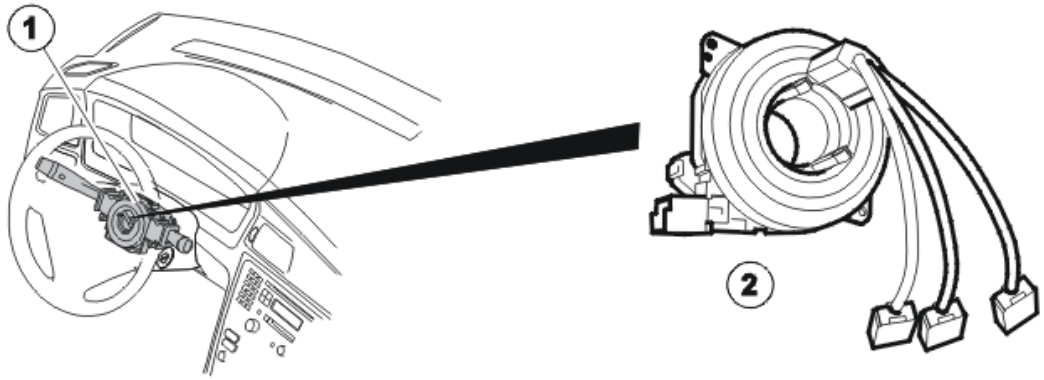

Fig. 35: Identifying Steering Wheel Angle Sensor Module (SAS) & Steering Wheel Module (SWM)
Courtesy of VOLVO CARS CORPORATION

1. The steering wheel angle sensor module (SAS) is integrated in the steering wheel module (SWM)
2. Steering wheel angle sensor.

Only cars equipped with DSTC (dynamic stability and traction control) have a steering wheel angle sensor module (SAS). The easiest way to determine if a car is equipped with DSTC (Dynamic stability and traction control) is to search for a switch, marked DSTC, positioned in the panel on the climate control module (CCM).

The steering wheel angle sensor module (SAS) is integrated in the steering wheel module (SWM). The only function of the steering angle sensor module (SAS) is to process the signals from the steering wheel angle sensor. The signals used by the DSTC system. The steering wheel angle sensor is installed on the steering wheel module (SWM). The sensor is directly connected to the steering wheel angle sensor module (SAS). The steering wheel angle sensor module (SAS) transmits signal information, via the high speed side of the controller area network (CAN), to the brake control module (BCM) and suspension module (SUM).

If a fault occurs, the steering wheel angle sensor module (SAS) detects this and a diagnostic trouble code (DTC) is stored. The DSTC function is switched off.

Diagnostic trouble codes (DTCs) stored in the steering wheel angle sensor module (SAS). This information can be read off using VIDA via the data link connector (DLC) in the vehicle.

SIGNALS

The table below summarizes input and output signals to and from the steering wheel angle sensor module (SAS). The signal types are divided into directly connected signals, serial communication and controller area network (CAN) communication.

Input signals	Output signals
Directly connected: • **The steering wheel angle sensor** (7/91). Provides the steering wheel angle sensor module (SAS) with relevant information about the steering wheel angle from the	**Directly connected:** -

straight ahead position, the speed of the steering wheel movements and about which direction the steering wheel is turned.	
Via Controller Area Network (CAN) communication: -	**Via Controller Area Network (CAN) communication:** • **Brake control module (BCM)** (4/16). The steering wheel angle sensor module (SAS) provides the brake control module (BCM) with information about the steering wheel angle from the straight ahead position, the speed of the steering wheel movements and about which direction the steering wheel is turned • **Suspension module (SUM)** (4/84). The steering wheel angle sensor module (SAS) provides the suspension module (SUM) with information about the position of the steering wheel and the speed at which it is turned.

STEERING WHEEL MODULE (SWM) (2003-2004)

DESIGN

STEERING WHEEL BUTTONS

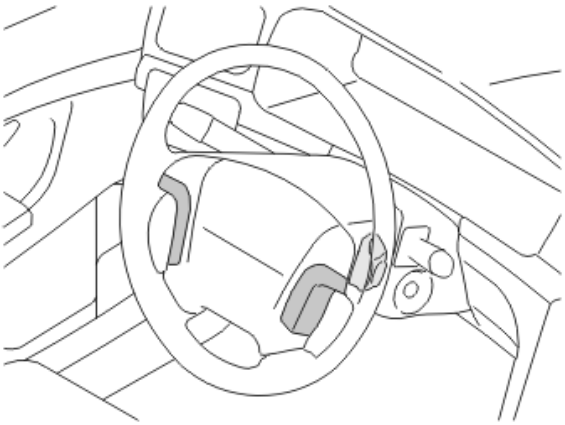

Fig. 36: Identifying Steering Wheel Control Buttons
Courtesy of VOLVO CARS CORPORATION

The steering wheel buttons control functions and menu selection for:

- Traffic information (option)
- Audio (option)
- Carphone (option)
- Cruise control (option).

The signals from the steering wheel buttons are transmitted via serial communication.

The steering wheel buttons are connected in series to the steering wheel module (SWM) via contact reel in the steering wheel hub. The steering wheel buttons are connected in the following order, counted from the contact reel:

1. Cruise control
2. Audio /carphone
3. Traffic information.

There are diagnostics for the steering wheel buttons.

DIAGNOSTIC FUNCTIONS

OVERVIEW

The control module has a built-in diagnostic system, Volvo Diagnostic, which continuously monitors internal functions as well as input and output signals.

DIAGNOSTIC TROUBLE CODES (DTCS)

A diagnostic trouble code (DTC) is stored if the control module detects a fault. 35 diagnostic trouble codes (DTCs) can be stored. A fault which is detected in the most recent operating cycle is defined as permanent. Other faults which are detected are defined as intermittent.

READING AND ERASING DIAGNOSTIC TROUBLE CODES (DTCS)

Stored diagnostic trouble codes (DTCs) can be read off and erased using this function.

Diagnostic trouble codes (DTCs) can only be erased once all the diagnostic trouble codes (DTCs) have been read off at least once.

READING OFF INPUT AND OUTPUT SIGNALS

This function can be used to continuously read off the status of the control module's input and output signals.

For further information about parameters, see **DESCRIPTION OF PARAMETERS** .

READING OFF EXTENDED DIAGNOSTIC TROUBLE CODE (DTC) INFORMATION

This function can be used to read parameters, status identifiers and counters stored at the same time as a diagnostic trouble code (DTC). These are called frozen values.

For further information, see **FROZEN VALUES STEERING WHEEL MODULE, DESCRIPTION**.

READING THE CONTROL MODULE IDENTIFICATION

VIDA identifies control modules by reading off a number of codes from the control module memory.

The codes contain the following information about the control module:

- hardware P/N (control module without software)
- hardware serial number (control module without software)
- software P/N
- diagnostic software P/N.

DESCRIPTION OF PARAMETERS

NOTE: The parameters that can be read off for the steering wheel module display how the steering wheel module interprets the position on the buttons and control stalks. In the event of a fault in the buttons or the wiring, the status will be constantly On or Off depending on the position on the buttons and control stalks.

HIGH BEAM FLASH, STATUS

The value is displayed if the high beam flash is activated.

Not activated

Flash

Rocker position high beam / low beam

READ BUTTON, STATUS

The value indicates if the read button is pressed in.

Not activated

Activated

RESET BUTTON, STATUS

The value indicates if the reset button is pressed in.

Not activated

Activated

RIGHT-HAND INDICATOR LAMPS, STATUS

This value indicates whether the right-hand indicator lamps are activated.

Not activated

Activated

LEFT-HAND INDICATOR LAMPS, STATUS

This value indicates whether the left-hand indicator lamps are activated.

Not activated

Activated

CRUISE CONTROL ON / OFF BUTTON, STATUS

This value indicates whether the cruise control on / off button is pressed in.

Not activated

Activated

CRUISE CONTROL +BUTTON, STATUS

This value indicates whether the +button is pressed in.

Not activated

Activated

CRUISE CONTROL -BUTTON, STATUS

The value indicates whether the -button is pressed in.

Not activated

Activated

CRUISE CONTROL RESUME BUTTON, STATUS

This value indicates whether the cruise control resume button is pressed in.

Not activated

Activated

CRUISE CONTROL DISENGAGE BUTTON, STATUS

This value indicates whether the cruise control disengage button is pressed in.

Not activated

Activated

AUDIO / CARPHONE SEARCH+ BUTTON, STATUS

This value indicates whether the audio / carphone search+ button is pressed in.

Not activated

Activated

AUDIO / CARPHONE SEARCH- BUTTON, STATUS

This value indicates whether the audio / carphone search- button is pressed in.

Not activated

Activated

AUDIO / CARPHONE VOLUME+ BUTTON, STATUS

The value indicates whether the audio / carphone volume+ button is pressed in.

Not activated

Activated

AUDIO /CARPHONE VOLUME- BUTTON, STATUS

This value indicates whether the audio / carphone volume- button is pressed in.

Not activated

Activated

CARPHONE YES BUTTON, STATUS

This value indicates whether the carphone YES button is pressed in.

Not activated

Activated

CARPHONE NO BUTTON, STATUS

This value indicates whether the carphone NO button is pressed in.

Not activated

Activated

ROAD TRAFFIC INFORMATION (RTI) RIGHT-HAND BUTTON, STATUS

This value indicates whether the road traffic information (RTI) right-hand button is pressed in.

Not activated

Activated

ROAD TRAFFIC INFORMATION (RTI) LEFT-HAND BUTTON, STATUS

This value indicates whether the road traffic information (RTI) left-hand button is pressed in.

Not activated

Activated

ROAD TRAFFIC INFORMATION (RTI) UP BUTTON, STATUS

This value indicates whether the road traffic information (RTI) up button is depressed.

Not activated

Activated

ROAD TRAFFIC INFORMATION (RTI) DOWN BUTTON, STATUS

This value indicates whether the RTI down button is pressed in.

Not activated

Activated

ROAD TRAFFIC INFORMATION (RTI) ENTER BUTTON, STATUS

This value indicates whether the road traffic information (RTI) enter button is pressed in.

Not activated

Activated

ROAD TRAFFIC INFORMATION (RTI) RESET BUTTON, STATUS

This value indicates whether the road traffic information (RTI) reset button is depressed.

Not activated

Activated

WINDSCREEN WASHER, STATUS

This value indicates whether the windscreen wiper lever is activated in the washer position.

Not activated

Activated

HIGH SPEED POSITION, STATUS

This value indicates whether the windscreen wiper lever is activated in the high speed position.

Not activated

Activated

LOW SPEED POSITION, STATUS

This value indicates whether the windscreen wiper lever is activated in the low speed position.

Not activated

Activated

INTERMITTENT POSITION, STATUS

This value indicates whether the windscreen wiper lever is activated in the intermittent position.

Not activated

Activated

SINGLE SWEEP POSITION, STATUS

This value indicates whether the windscreen wiper lever is activated in the single sweep position.

Not activated

Activated

FROZEN VALUES STEERING WHEEL MODULE, DESCRIPTION

EXPLANATION

Not all the parameters described need to be implemented in the control module. This varies from system to system.

Frozen values are parameter values that are stored when a diagnostic trouble code (DTC) is stored.

BATTERY VOLTAGE, VALUE

Measurement range: 0-28.4 V

Normal value when the generator (GEN) is charging: 13.0-14.5 V

The value indicates the voltage at the steering wheel module.

DISTANCE, VALUE

Measurement range: 0-1048575 km

The value indicates the total mileage of the car at the time the diagnostic trouble code (DTC) was stored.

PASSENGER COMPARTMENT TEMPERATURE, VALUE

Measurement range: -60 to +195 °C

The value indicates the passenger compartment temperature at the time the diagnostic trouble code (DTC) was stored.

OUTSIDE TEMPERATURE, VALUE

Measurement range: -128 to +127.75 °C

The value indicates the outside temperature at the time the diagnostic trouble code (DTC) was stored.

ENGINE RUNNING, STATUS

The status displays whether the engine was running when the diagnostic trouble code (DTC) was stored.

Yes = the engine was running

No = the engine was not running

TIME, VALUE

The value displays the time that has passed since the diagnostic trouble code (DTC) was stored.

DOWNLOADING SOFTWARE AND REPLACING THE CONTROL MODULE

New software can be downloaded into the steering wheel module (SWM). When ordering software, the hardware and the software in the car is compared to the data in the Volvo central database. If the comparison is

OK the software is downloaded to the control module.

If the comparison between the car and Volvo central database is not OK, the database is updated with the car configuration. When this is complete the software is downloaded.

The control module is integrated in the steering wheel bracket. The steering wheel must be removed to replace the control module.

FUNCTION

TRIP COMPUTER AND DISPLAYING/ERASING TEXT MESSAGES

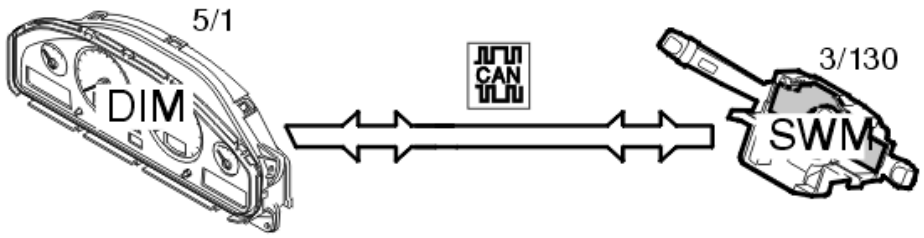

Fig. 37: Driver Information Module And Steering Wheel Module Input/Output Signals
Courtesy of VOLVO CARS CORPORATION

The left-hand control stalk is used to control the trip computer and to display and erase text messages in the driver information module (DIM) (5/1). The steering wheel module (SWM) (3/130) transmits information to the driver information module (DIM) on the Control area network (CAN) indicating which function is selected.

The trip computer menu is controlled using the ring on the left-hand control stalk. Turn the ring forwards or backwards to scroll through the menu one step at a time. Some menu selections, such as average speed and fuel consumption, can be reset using the RESET button.

Error messages displayed in the driver information module display are erased using the READ button.

SYSTEM OVERVIEW

CONTROL MODULE

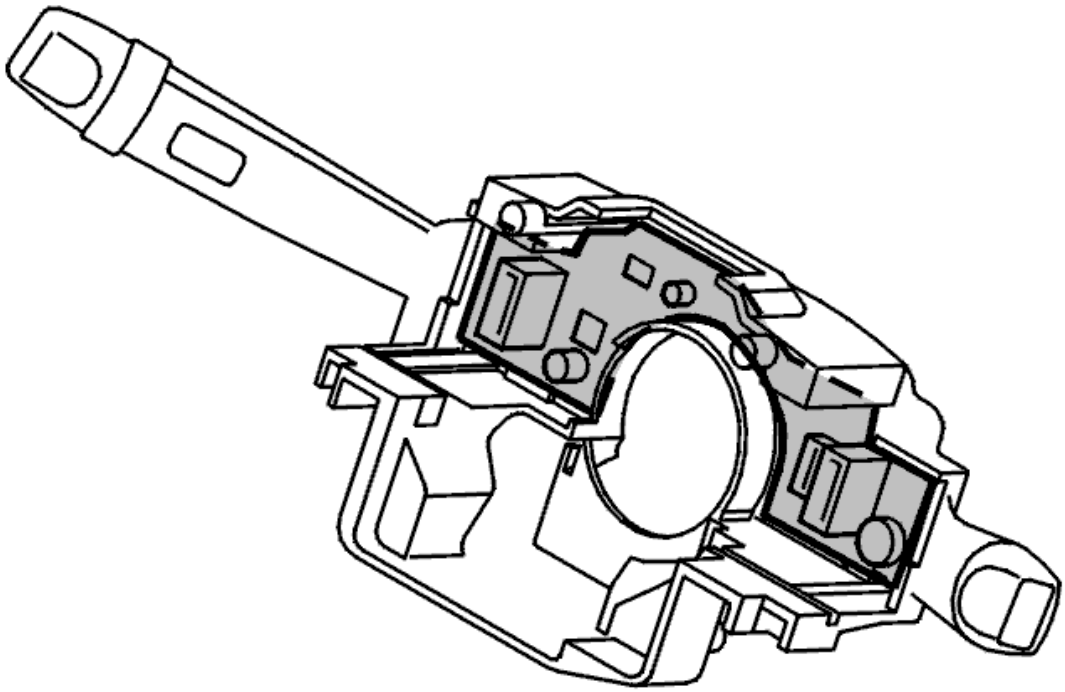

Fig. 38: Identifying Steering Wheel Module
Courtesy of VOLVO CARS CORPORATION

The steering wheel module (SWM) has the task of managing the signals for those functions which can be controlled via the steering wheel control stalks and buttons. The signals are transmitted to the relevant control modules via the control area network (CAN). The actual functions are not in the steering wheel module (SWM).

The steering wheel module (SWM) manages the control signals for the following functions:

- Volume control and CD track / radio selection
- Volume control during hands free carphone calls and menu selection for the phone module (PHM)
- Menu selection for traffic information
- Front windshield wipers/washers
- Rear windshield wiper/washer (V70, V70XC/XC70 and XC90)
- Cruise control
- Turn signal lamps
- High and low beam
- Trip computer and displaying / erasing text messages in the driver information module (DIM).

The control module is integrated in the steering wheel bracket. The steering wheel must be removed to replace the control module. Control stalks, key pads and switches can be replaced as separate units.

Cars with DSTC also have a steering wheel angle sensor installed in the contact reel in the steering wheel module (SWM).

The steering wheel module (SWM) communicates with directly connected components and communicates with other control modules via the Control Area Network (CAN).

The control module checks activations and input and output signals via an integrated diagnostic system. A diagnostic trouble code (DTC) is stored if the control module detects an error. In certain cases the control module replaces the faulty signal with a substitute signal.

Any diagnostic trouble codes (DTCs) are stored in the control module memory. This information can be read off using VIDA via the data link connector (DLC) in the car.

A simple way to ensure that the steering wheel module (SWM) is powered and grounded is to flash the headlamp high beam or to change the audio or carphone volume.

SIGNALS

The table below summarizes the input signals to and output signals from the steering wheel module (SWM). The signal types are divided into directly connected signals, serial communication and Controller area network (CAN) communication. The following illustration displays the same information with the Volvo component designations.

Input signals	Output signals
Via serial communication: Steering wheel buttons, digital signal from the buttons to the steering wheel module (SWM): • Cruise control control unit (3/4) • Audio/carphone switch (3/131) • RTI switch (3/135).	**Via serial communication:**
Via Controller Area Network (CAN) communication: • Central electronic module (CEM) (4/56).	**Via Controller Area Network (CAN) communication:** • Engine control module (ECM) (4/46) • Transmission control module (TCM) (4/28) • Upper electronic module (UEM) (4/70) • Accessory electronic module (AEM) (4/78) (optional equipment) • Audio module (AUM) 16/1 (optional equipment, not XC90) • Central electronic module (CEM) (4/56) • Driver information module (DIM) (5/1) • Phone module (PHM) (16/60) (optional equipment)

	• Rear electronic module (REM) (4/58) • Road traffic information module (RTI) (16/45) (optional equipment, not XC90) • Infotainment Control Module (ICM) (16/1) (XC90 only).

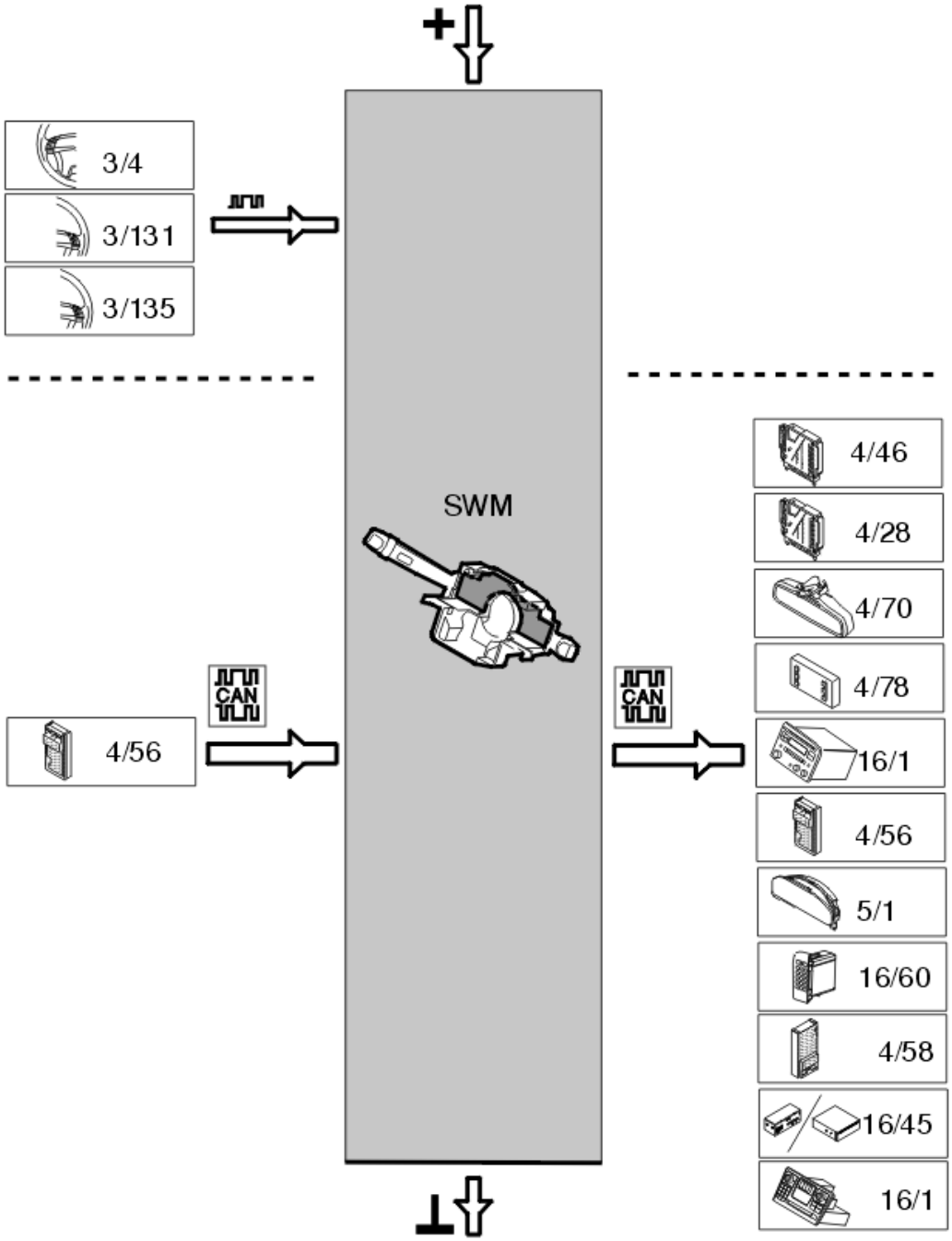

Fig. 39: Identifying Steering Wheel Module (SWM) Input/Output Signals

Courtesy of VOLVO CARS CORPORATION

SUBWOOFER MODULE (SUB) (2003-2008)

DESIGN

CONTROL MODULE

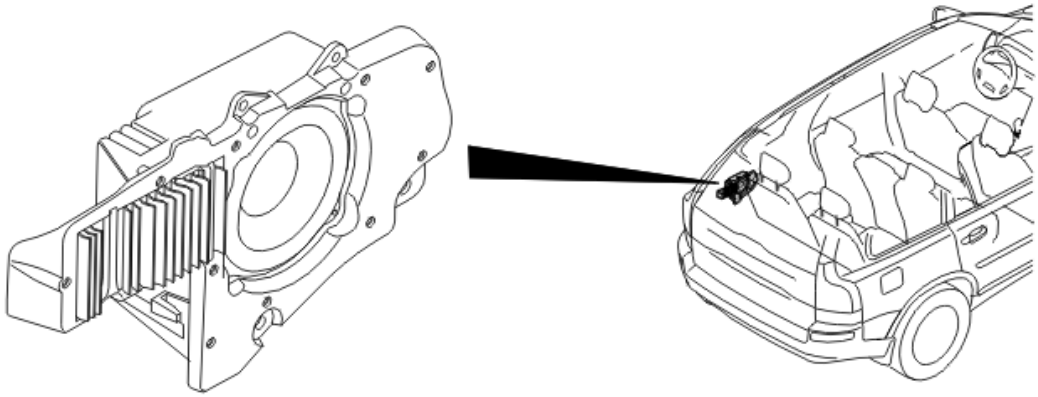

Fig. 40: Locating Subwoofer Module (SUB)
Courtesy of VOLVO CARS CORPORATION

The subwoofer module (SUB) consists of two components:

- a loudspeaker element
- an amplifier.

The loudspeaker element is an 8 inch bass loudspeaker with two sound axes. The impedance is 4 ohms for each sound axis.

The amplifier has two channels, one for each sound axis. The output from each channel on the amplifier is 70 W at 4 ohms. Power booster amplification is set so that the acoustic output from the subwoofer module (SUB) matches the other loudspeaker channels.

When transferring sound signals to the subwoofer module (SUB), the infotainment control module (ICM) allocates a channel on the MOST network. The audio module (AUD) transmits sound signals to the subwoofer module (SUB) via the MOST network. All filtering and sound treatment of the sound signal takes place in the audio module (AUD). Volume control takes place in the Subwoofer module (SUB).

The volume of the Subwoofer module (SUB) is raised or lowered using the volume knob on the infotainment control module (ICM). The infotainment control module (ICM) transmits a request on the MOST network to the subwoofer module (SUB), which then processes the request and actively raises or lowers the volume.

The limiter function in the subwoofer module (SUB) does not permit an increase in the output level if this leads to a fall in sound quality.

The subwoofer module (SUB) is supplied with power by one of the relays in the rear electronic module (REM).

DIAGNOSTIC FUNCTIONS

OVERVIEW

The control module has a built-in diagnostic system, Volvo Diagnostic, which continuously monitors internal functions as well as input and output signals.

DIAGNOSTIC TROUBLE CODES (DTCS)

A diagnostic trouble code (DTC) is stored if the control module detects a fault. A fault which is detected in the most recent operating cycle is defined as permanent. Other faults are defined as intermittent.

Should a fault disappear for any reason after being permanently stored in the control module as a diagnostic trouble code (DTC), the information remains stored in the control module.

If a fault is no longer permanent, the diagnostic trouble code (DTC) remains as intermittent.

READING AND ERASING DIAGNOSTIC TROUBLE CODES (DTCS)

Stored diagnostic trouble codes (DTCs) can be read off and erased using this function.

Diagnostic trouble codes (DTCs) can only be erased once all the diagnostic trouble codes (DTCs) have been read off at least once.

NOTE: Certain functions are unavailable until the diagnostic trouble codes (DTCs) have been erased.

READING OFF THE CONTROL MODULE IDENTIFICATION

VIDA identifies control modules by reading off a number of codes from the control module memory.

The codes contain information about the control module:

- hardware P/N (control module without software)
- hardware serial number (control module without software)
- software P/N
- diagnostic software P/N.

READING OFF EXTENDED FAULT-TRACING INFORMATION

This function can be used to read parameters, status identifiers and counters stored at the same time as a diagnostic trouble code (DTC). These are called frozen values.

For further information, see **DESCRIPTION OF VEHICLE COMMUNICATION INFORMATION** .

DOWNLOADING SOFTWARE AND REPLACING THE CONTROL MODULE

New software can be downloaded into the subwoofer module (SUB). When ordering software, the hardware and the software in the car is compared to the information in the Volvo central database. If the comparison is OK the software is downloaded to the control module.

If the comparison between the car and Volvo central database is not OK, the database is updated with the car configuration. When this is complete the software is downloaded.

The control module is located on the left-hand side behind the third row of seats.

After replacing the control module, the unique serial numbers of the control module are checked by the infotainment control module (ICM). The installed control module will not work if the serial number is incorrect.

Try turning the ignition off and on if there are problems after the software is downloaded and the control module is not working.

The MOST network is used for a total software reload.

FUNCTION

For further information about the function of the subwoofer module (SUB), see Design and Function, audio module (AUD) in **MEDIA, COMMUNICATION AND NAVIGATION - DESIGN AND FUNCTION**

SYSTEM OVERVIEW

SUBWOOFER MODULE (SUB)

The primary task of the subwoofer module (SUB) is to manage sound reproduction from the audio module (AUD) to the bass loudspeaker.

The bass loudspeakers and amplifier are integrated into the control module. This means that the whole unit must be replaced when replacing the control module.

The subwoofer module (SUB) only functions if the audio module (AUD) is connected to the MOST network.

The subwoofer module (SUB) checks activations and input and output signals via an integrated diagnostic system. A diagnostic trouble code (DTC) is stored if the control module detects a fault. Any diagnostic trouble codes (DTCs) are stored in the control module memory.

The subwoofer module (SUB) uses the MOST network to communicate with other control modules.

In order to work correctly on the MOST network, the infotainment control module (ICM) checks that the serial number in the subwoofer module (SUB) is correct. The subwoofer module (SUB) will not function if the number is incorrect. Try switching the ignition off and on if there are problems when replacing the control module.

A simple way to check whether the subwoofer module (SUB) is functioning is to switch on the radio and to then change the volume. The volume from the subwoofer module (SUB) should rise and fall with the changes.

NOTE: Ensure that the bass loudspeaker is selected in the infotainment control module (ICM). Turn the SEL button on the infotainment control module (ICM).

The subwoofer module (SUB) is on the left-hand side of the cargo compartment.

SIGNALS

The table below summarizes the input signals to and output signals from the subwoofer module (SUB) on the MOST network. The illustration below displays the same information with the Volvo component designations.

Input signals	Output signals
Via MOST communication: (ring network) • Infotainment Control Module (ICM) (16/1) Master control module • Audio module (AUD) (16/105).	**Via MOST communication:** (ring network) • Infotainment Control Module (ICM) (16/1) Master control module).

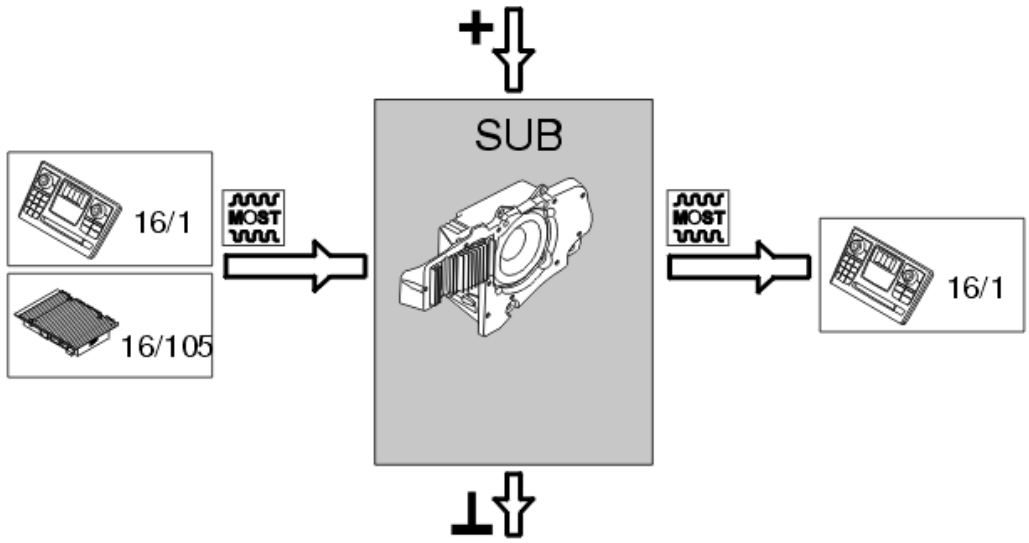

Fig. 41: Volvo Component Designations
Courtesy of VOLVO CARS CORPORATION

SUN ROOF (2003-2012)

DESIGN

SUN ROOF ASSEMBLY

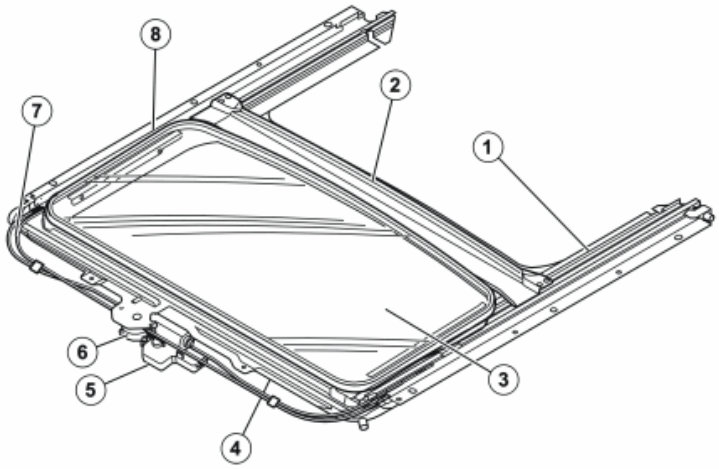

Fig. 42: Identifying Sun Roof Assembly
Courtesy of VOLVO CARS CORPORATION

1. Sun roof frame
2. Drain channel
3. Glass panel
4. Sunshade (closed)
5. Sun Roof Module (SRM)
6. Motor
7. Drive cables
8. Mechanism

The drive mechanism consists of the Sun Roof Module (SRM), motor and mechanism with drive cables. The Sun Roof Module (SRM) with motor is connected to the vehicle electrical system.

Sun roof frame

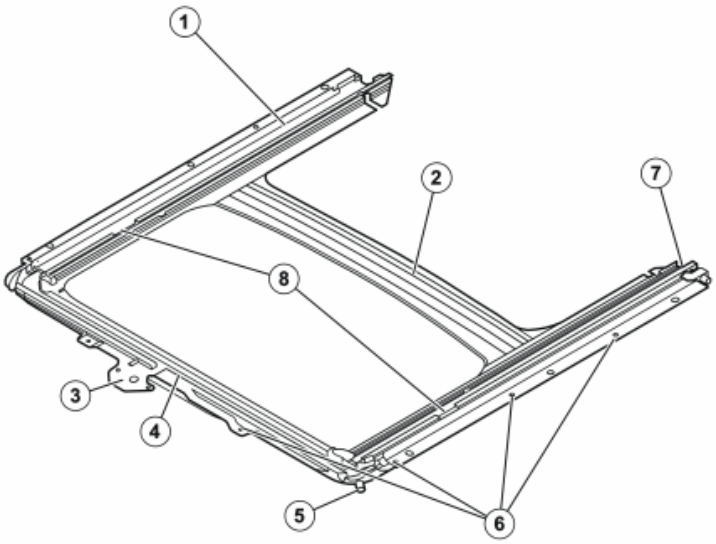

Fig. 43: Identifying Sun Roof Frame
Courtesy of VOLVO CARS CORPORATION

The sun roof frame is designed to hold all components together and to maintain rigidity, which keeps the movements of the mechanism stable. The A-frame struts serve as guide rails (1) for the drive mechanism. The guide rails contain fixed notches (8), which are necessary for the function of the mechanism. The center member (2) is riveted between the guide rails to increase frame strength and is used for mounting the edging. The front member (4) houses mountings (3) for the motor and Sun Roof Module (SRM). There are eight mounting points (6) along the guide rails and front member to mount the sun roof in the body.

The frame also serves to lead rain water to the drain hoses housed in the four corners (5). The drain channel, which is not part of the frame, collects the water and leads it to the guide rail channels in the frame. These channels are connected to the drain hoses (5) in the front edge and the drains with drain hoses (7) in the rear edge. The drain hoses, drains and connections between the front crossmember and the guide rails are sealed to prevent water from leaking into the headlining.

Drain channel

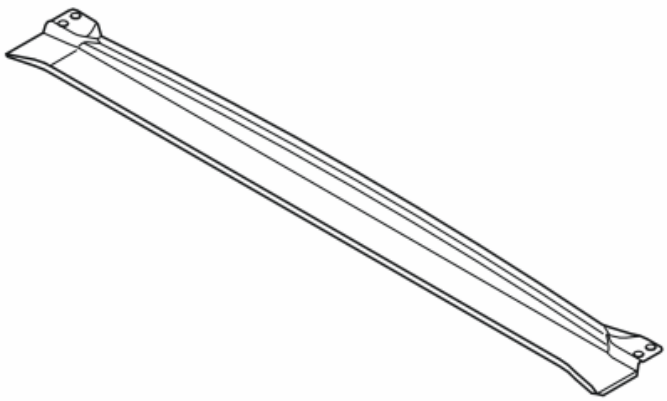

Fig. 44: Drain Channel
Courtesy of VOLVO CARS CORPORATION

The drain channel is designed to lead rain water to the guide rail channels. The drain channel is mounted on the mechanism and moves along with the glass panel when it slides back.

When the sun roof is closed, the drain channel lies under the glass panel seals to catch any water that may leak in. When the sun roof is in the tilted position, the drain rail is positioned farther forward to catch rain water and prevent it from entering the passenger compartment.

Glass panel

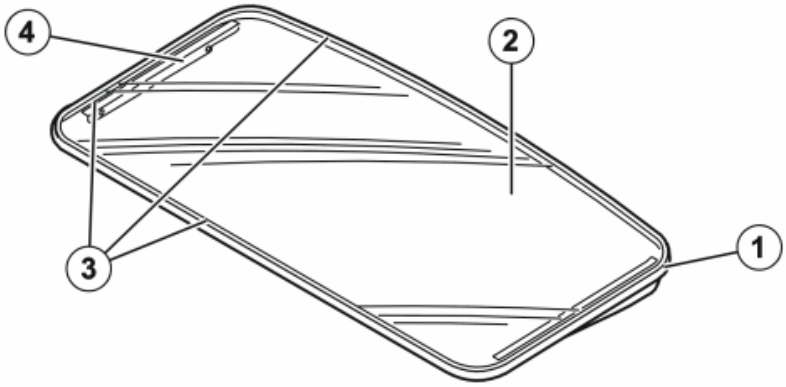

Fig. 45: Glass Panel
Courtesy of VOLVO CARS CORPORATION

The glass panel (2) and sunshade are the visible components of the sun roof. The glass provides extra light to the drive and passengers while protecting them from cold air and rain. The panel is made of safety glass to protect the driver and passengers. It is mounted on metal reinforcements (3) and side brackets (4). The glass panel is mounted in the drive mechanism with screws in the side brackets. The reinforcements are secured to the glass with adhesive, which provides extra rigidity against impact and wind load. The glass edge is covered with a rubber seal (1) that keeps out rain water and dust.

Sunshade

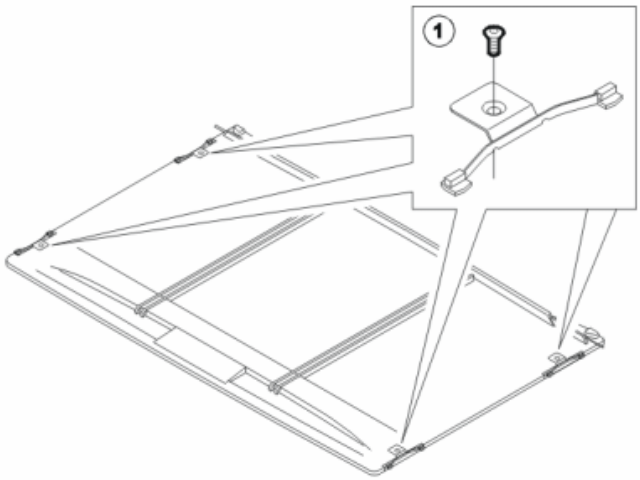

Fig. 46: Identifying Sunshade & Fasteners
Courtesy of VOLVO CARS CORPORATION

The sunshade protects the driver and passengers from intense sunlight and also serves as an insulator. The sunshade is usually opened and closed manually. If, however, the glass panel is open to the comfort position or is completely open, the sunshade is opened by the drain channel, which moves the sunshade back to the open position. The spring-loaded carriages (1) sit in the guide rail and allow the sunshade to slide easily.

Drive cables

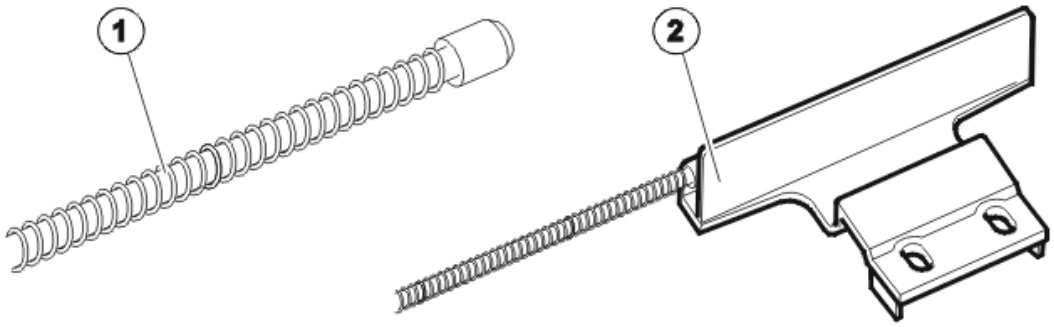

Fig. 47: Drive Cables
Courtesy of VOLVO CARS CORPORATION

1. Drive cables
2. Drive plate

The two sun roof drive cables constitute the connection between the motor and the drive mechanism. Each cable is of a worm type, which moves forward or back by the motor turning a gear wheel. The rear end of the cable is fixed in the drive plate, which is connected to the drive mechanism. The cable moves in the guide rail and drive

tube.

Drive mechanism

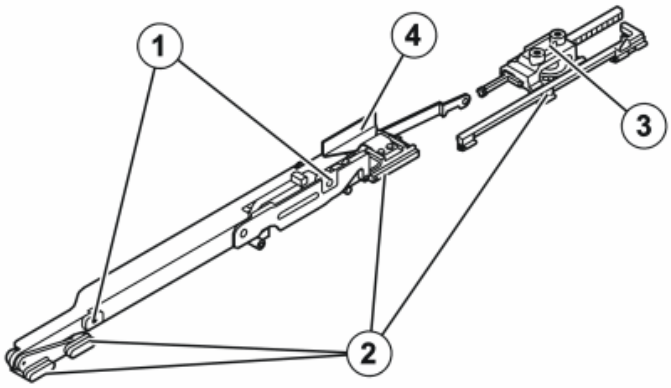

Fig. 48: Drive Mechanism
Courtesy of VOLVO CARS CORPORATION

The drive mechanism is depicted above. The mechanism bears the glass panel and moves it to the various positions. The left and right mechanism each have two mounting points for the glass panel (1). The drive mechanism can move through the guide rail on carriages (2). Because the carriages slide through the rail, it must be well lubricated.

The drain channel is mounted on the support (3) and the drive plate on the carriage (4).

SUN ROOF MODULE (SRM)

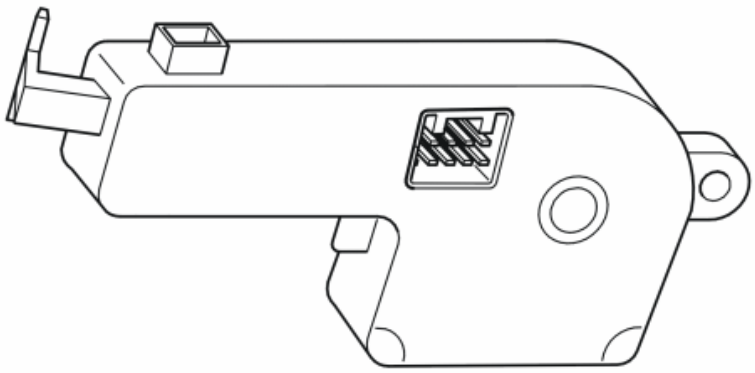

Fig. 49: Identifying Sun Roof Module (SRM)
Courtesy of VOLVO CARS CORPORATION

The Sun Roof Module (SRM) regulates the sun roof motor with the help of software. This software regulates pinch protection, calibration and drive mechanism movements.

- Pinch protection is a safety requirement to prevent anyone from getting injured when the sun roof is closed. Maximum closing force up to 50 km/h (30 mph) is 100 Nm. Over 50 km/h (30 mph), the closing

force is adjusted based on vehicle speed to compensate for wind resistance.

- The sun roof is calibrated by opening the glass panel to its end position (completely open), which is then set as its zero position. The Sun Roof Module (SRM) must be calibrated for the panel to be able to find its main positions and for the pinch protection function to be active. The sun roof must be calibrated each time it has been disassembled. Calibration is performed following the information in VIDA under Repairing/Cleaning, checking and adjusting.

The following are the main glass panel positions programmed in the Sun Roof Module (SRM):

Tilted position

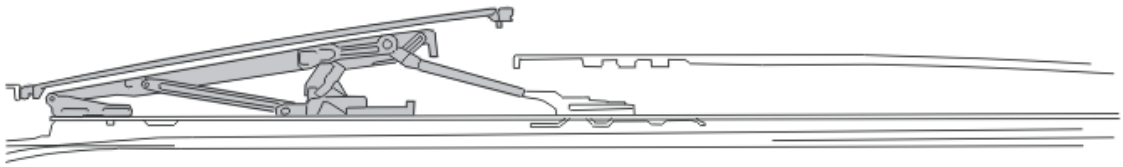

Fig. 50: Identifying Sun Roof Tilted Position
Courtesy of VOLVO CARS CORPORATION

Closed

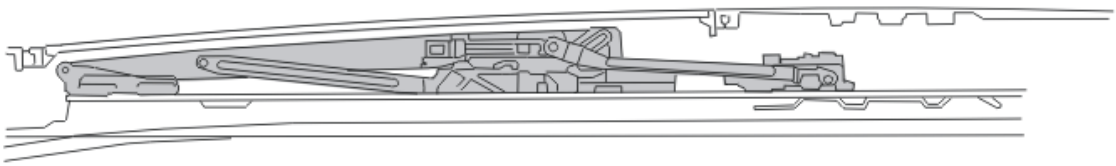

Fig. 51: Identifying Sun Roof Closed
Courtesy of VOLVO CARS CORPORATION

Open

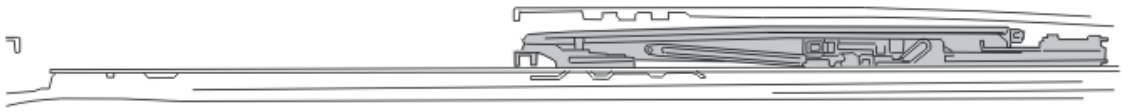

Fig. 52: Identifying Sun Roof Open
Courtesy of VOLVO CARS CORPORATION

Comfort position

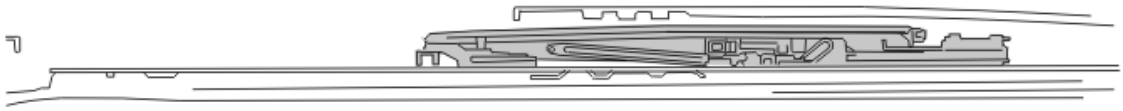

Fig. 53: Identifying Sun Roof Comfort Position
Courtesy of VOLVO CARS CORPORATION

The Sun Roof Module (SRM) determines the positions using a slotted gear wheel and two light sensors. These measure the number of gear wheel revolutions, which is proportionate to glass panel displacement.

SUN ROOF MOTOR

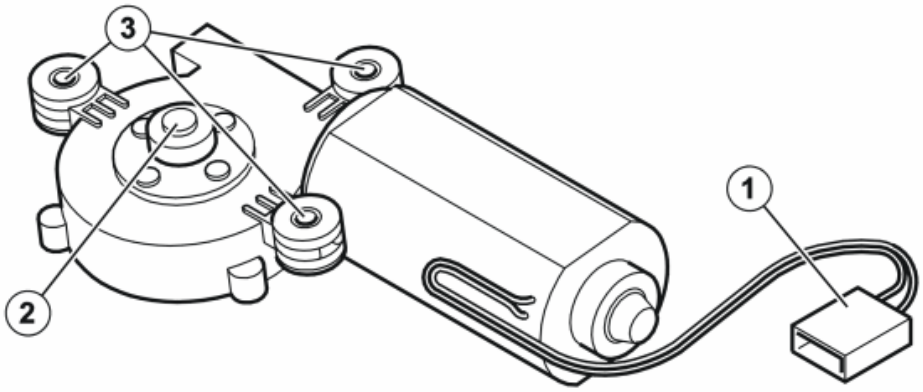

Fig. 54: Identifying Sun Roof Motor
Courtesy of VOLVO CARS CORPORATION

The sun roof motor is connected (1) to the Sun Roof Module (SRM), which regulates current to the motor. Nominal system voltage is 12 V. Maximum top load during normal operation is 5 A. The motor drives a gear wheel (2), which engages the drive cables and causes them to rotate. The gear wheel has a maximum torque of 2.0 Nm and the motor has thermal overload protection. The motor is mounted with screws in the three mounting points (3) in the sun roof frame.

CAUTION: In the event of mechanical blockage, which is normally prevented by the Sun Roof Module (SRM), the motor can produce a maximum torque of 6.8 Nm. This can damage drive wheels and cables. If the sun roof has been blocked, all sun roof components must be checked and, if necessary, replaced before recalibration.

FUNCTION

SUN ROOF DRIVE MECHANISM

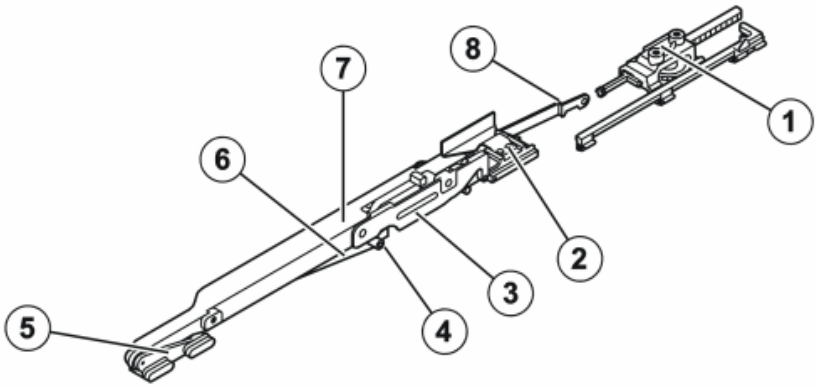

Fig. 55: Identifying Sun Roof Drive Mechanism
Courtesy of VOLVO CARS CORPORATION

1. Drain channel support

2. Carriage
3. Guide link
4. Main arm
5. Front arm
6. Return rod
7. Mounting rail
8. Connecting rod

The three main positions of the glass panel (tilted, closed and completely open) are depicted below. When completely open, the glass panel lies under the vehicle roof.

Tilted position

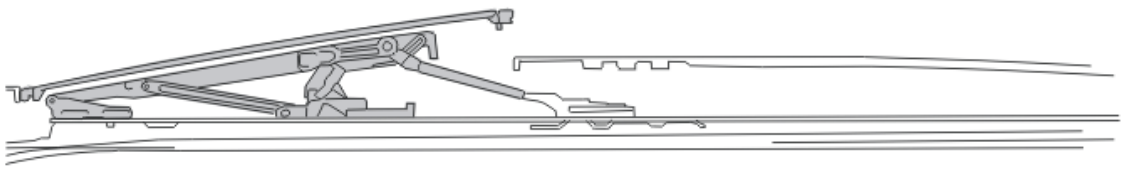

Fig. 56: Identifying Sun Roof Tilted Position
Courtesy of VOLVO CARS CORPORATION

Closed

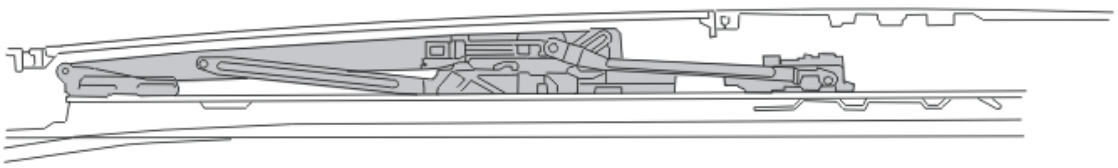

Fig. 57: Identifying Sun Roof Closed
Courtesy of VOLVO CARS CORPORATION

Completely open

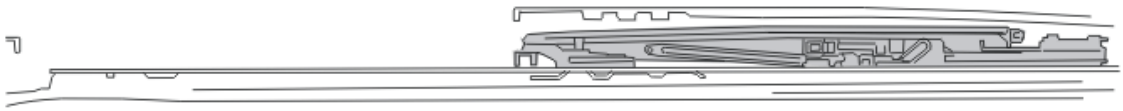

Fig. 58: Identifying Sun Roof Open
Courtesy of VOLVO CARS CORPORATION

Comfort position

The fourth position (known as the Comfort position) is regulated by the Sun Roof Module (SRM). This position is 80 mm in front of the completely open position. Wind noise is reduced in this position.

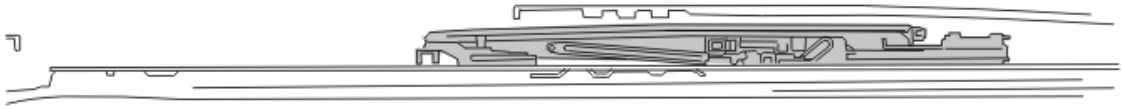

Fig. 59: Identifying Sun Roof Comfort Position
Courtesy of VOLVO CARS CORPORATION

When the mechanism slides from the open to the closed position, the it is locked by the notches in the guide rails. The front part of the mechanism stops moving while the rear part slides the rear of the glass panel to the normal closed or tilted position. These positions are electronically regulated. The mechanical stop in the fully tilted position is only used for calibration. The electronically regulated tilted position is slightly lower. The drain rail is part of the mechanism and moves along with it.

ELECTRICAL FUNCTION

The sun roof receives its main input signal from the sun roof switch. The switch has a two-way function and an automatic function. There are two ways to operate the sun roof. If the switch is held, the glass will move to the desired position. A brief press with the switch rearward opens the sun roof to the comfort position. A brief press with the switch forward closes the sun roof completely. Note that the automatic function can be used to move the glass panel from the tilted position to the comfort position. The automatic function cannot be used to close

the glass panel from the tilted position.

When the sun roof is tilted, only continual operation is possible (except for automatic opening from the tilted to the completely open position).

Sun roof motor

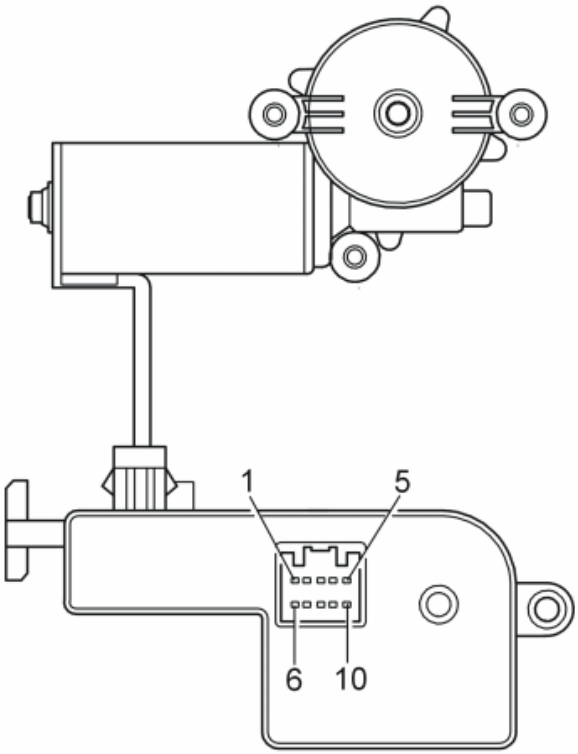

Fig. 60: Identifying Sun Roof Motor
Courtesy of VOLVO CARS CORPORATION

1. Battery voltage
2. Sun roof switch, forward
3. Sun roof switch, tilt
4. C cable
5. Body connection
6. Battery voltage
7. Sun roof switch, automatic function
8. Sun roof switch, rearward
9. Sun roof switch, switch feed
10. Body connection

The sun roof switch is connected to the Sun Roof Module (SRM) and the Sun Roof Module (SRM) is connected to the motor.

Input signals to the Sun Roof Module (SRM) are the vehicle communication cable (C cable (4)), battery voltage and the sun roof switch. Numbers 1 and 10 are for the motor's power supply, which goes through the Sun Roof Module (SRM). Sun roof feed (9) is the switch's signal voltage.

CALIBRATION FUNCTION

During calibration, the software of the Sun Roof Module (SRM) detects the sun roof's zero position. The zero position serves as a reference point for the Sun Roof Module (SRM) when the sun roof is operated. This reference point helps the Sun Roof Module (SRM) determine where the main positions of the glass panel should be.

Once calibration is complete, pinch protection is activated. The Sun Roof Module (SRM) then detects if the closing speed of the glass panel decreases, that is to say if something is in the path of the glass panel. Pinch protection is then triggered.

During calibration, glass panel speed is also detected by two light sensors that measure how many revolutions and at what speed the gear wheels of the sun roof motor rotate. The light sensors (1) are located within the sun roof motor. The sun roof motor can handle a drop in voltage down to 9 Volts during calibration and still maintain precision.

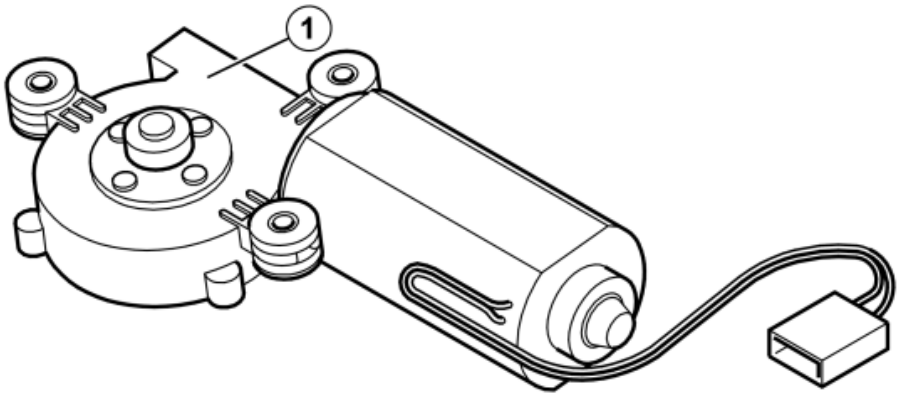

Fig. 61: Identifying Light Sensors
Courtesy of VOLVO CARS CORPORATION

If the sun roof stops in the open position when it should be closed, you can pull on the sun roof while holding the switch depressed.

CAUTION: If for some reason the sun roof is blocked and the switch is held in when the sun roof is tiled/open, the Sun Roof Module (SRM) will calibrate its zero position as the position at which the sun roof is blocked. This means that the main positions of the glass panel will be incorrectly programmed.

This problem is remedied by recalibrating the sun roof. First hold the switch pressed in for 5 seconds when in

the tiled/open position. Then open the sun roof to the end position and recalibrate.

If the sun roof should seize, there will not be a diagnostic trouble code in the control module.

WARNING: If the Sun Roof Module (SRM) is not calibrated, the sun roof safety functions (specifically the pinch protection function) and the programmed main positions will not be operational.

CAUTION: In the event of mechanical blockage, which is normally prevented by the Sun Roof Module (SRM), the motor can produce a maximum torque of 6.8 Nm. This can damage drive wheels and cables. If the sun roof has been blocked, all sun roof components must be checked and, if necessary, replaced before recalibration.

Calibration is carried out following the information in VIDA under Repairing/Cleaning, checking and adjusting.

OVERVIEW

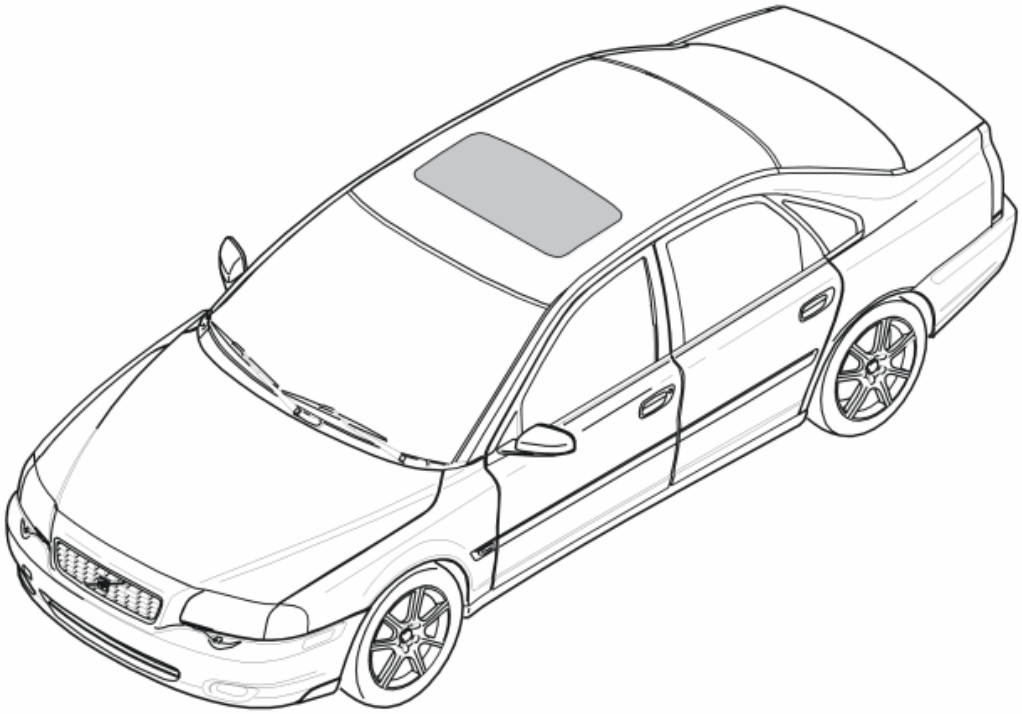

Fig. 62: Identifying Sun Roof
Courtesy of VOLVO CARS CORPORATION

The main task to the sun roof is to allow light and ventilation in the passenger compartment. This, in turn, makes the vehicle feel even more luxurious. The glass panel provides extra light to the driver and passengers,

while vehicle ventilation can be regulated by opening or closing the sun roof. The sun roof has four preprogrammed positions:

- Closed
- Tilted
- Comfort
- Completely open.

Other positions can be set manually as desired.

The glass is tinted to protect the driver and passengers from strong sunlight. This tinting also protects against heat. The sunshade can also be used for these purposes.

SUPPLEMENTAL RESTRAINT SYSTEM CONTROL MODULE (SRS) (2005-2012)

DESIGN

CONTROL MODULE

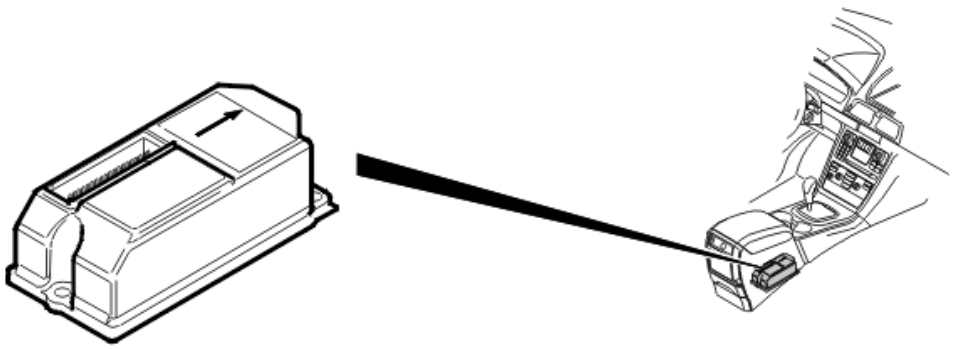

Fig. 63: Locating Supplemental Restraint System (SRS) Control Module
Courtesy of VOLVO CARS CORPORATION

WARNING: **The battery must be disconnected before any work is carried out on the supplemental restraint system (SRS). Otherwise the airbags could accidentally deploy.**

The primary task of the supplemental restraint system module (SRS) is to minimize injuries to the driver and passengers in different types of accident. To do this, the control module validates incoming pulsed collision signals (acceleration signals generated by a collision) and then determines the required action. The control module uses internal sensors as well as external collision sensors. Using the data collected from the sensors, the system determines which of the following will be activated:

- front airbags

- side impact protection (SIPS) bags
- inflatable curtains
- seat belt tensioners
- adaptive steering column (XC90 USA/CDN only).

The collision sensor in the control module registers the longitudinal mechanical stress that occurs in a frontal collision. A side impact may also be registered in the collision sensor. The longitudinal stresses are measured using two acceleration sensors. On vehicles with front impact sensors, these are used to register stresses in the event of a head-on collision. If the longitudinal stresses exceed a certain level, the stress will be calculated (the collision pulse). The calculation evaluates whether the collision pulse was sufficient to activate the airbags and/or the seat belt tensioners. Airbags and seat belt tensioners can be activated individually.

On the XC90, the control module is also able to register if the vehicle is about to roll over. If the sideways tilt and rotational energy of the car exceed a certain level, the control module begins a calculation to determine whether the roll over protection should be activated. The critical tilt angle is 50-55 degrees. All seat belt tensioners and inflatable curtains are deployed if the roll over protection is activated.

For certain models, depending on the market, the following are also used:

- an occupant weight sensor (OWS) located under the seat cushion on the front passenger seat
- two seat position sensors located on the rail under the driver's seat and front passenger seat.

The driver and passenger airbags and the seat belt tensioners are designed to deploy in the event of a frontal collision as necessary. For the XC90 (USA/CDN only), the adaptive steering column will also be activated if necessary.

No seat belt tensioners or airbags will be activated in the event of a collision from the rear.

Two requirements need to be fulfilled in order for the side impact protection system to be activated:

1. that the collision pulse is sufficiently high that a trigger signal is sent from the side impact sensor to the control module
2. the control module or another collision sensor transmits a confirmation signal which allows the collision protection system to be deployed.

The side impact protection system is deployed when the control module has received both an activation and a confirmation signal.

If the side impact occurred at the front of the vehicle the side airbags and the inflatable curtains are deployed on the side that received the impact. If the side impact is towards the rear of the car, only the inflatable curtains are deployed on that side.

The control module has a collision recording function. This records certain system information in the event of a collision. If necessary, this information can be analyzed and used after a collision. This data is used in ongoing development of collision safety systems.

In the event of a frontal collision, side on collision or rear collision a collision signal is transmitted from the supplemental restraint system module (SRS) to the phone module (PHM) and the central electronic module (CEM) using a directly connected cable. The purpose of this signal is to:

- switch off the fuel pump (FP)
- light the interior lighting
- unlock the doors
- if the vehicle is equipped with Volvo On Call (Plus), send an automatic alarm to CSC (Customer Service Center) when the accident has occurred.

A collision signal is also sent to the phone module (PHM) and the central electronic module (CEM) via the Controller area network (CAN).

The supplemental restraint system module (SRS) decides to deploy the airbags and/or the seat belt tensioners in the event of a frontal collision. This depends on information such as:

- if the driver and front passenger are wearing seat belts or not
- if there is a fault in the seat belt buckles
- if there is a fault in the controller area network (CAN) communication.

As a result of the above conditions, in the event of a low impact collision the seat belt tensioner may deploy on the driver's side whilst the airbag is deployed on the passenger side.

The SRS indicator lamp lights when the ignition is switched on. If no faults are registered by the control module, either internally or from the sensors, wiring or igniters, a signal is transmitted on the controller area network (CAN) to the driver information module (DIM) confirming that the SRS indicator lamp can be switched off. If there is a fault, the supplemental restraint system module (SRS) transmits information to the driver information module (DIM) indicating which lamp should be lit and the text to be displayed in the combined instrument panel.

The driver information module (DIM) continuously transmits information to the supplemental restraint system (SRS) control module via the controller area network (CAN) about the status of the SRS indicator lamp.

If the SRS indicator lamp stops working, the general warning lamp is used instead.

Note that after a collision, it may be necessary to replace the cable harness for the components of the collision protection system which have deployed. This is because the connectors may melt at the moment of deployment. If a connector has melted, the cable harness adjacent to the connector must be replaced.

WARNING: **The battery must be disconnected before any work is carried out on the supplemental restraint system (SRS). Otherwise the airbags could accidentally deploy.**

SIDE IMPACT SENSOR

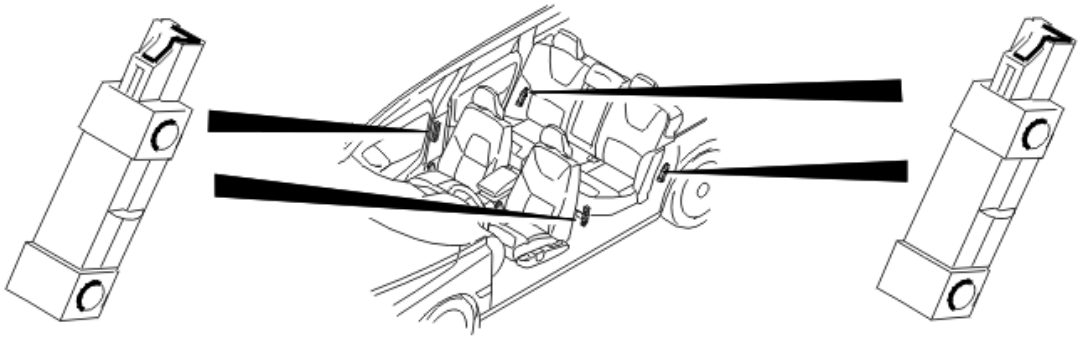

Fig. 64: Locating Side Impact Sensors
Courtesy of VOLVO CARS CORPORATION

The side impact sensors in the vehicle are used to measure the collision pulses.

The four sensors which are used in the car are:

- 1 side impact sensor in each left and right B post
- 1 side impact sensor in each left and right C post.

The side impact sensors have integrated logic. In the event of a collision, they determine whether the impact was large enough to warrant transmitting an activation signal to the control module to deploy the side impact airbag. Only the side impact protection on the side from which the activation signal was sent can be deployed.

The side impact sensors transmit continuous signals to the control module to indicate that they are working. In the event of a fault in the side impact sensor, a fault signal is transmitted to the control module which then stores a diagnostic trouble code (DTC). A diagnostic trouble code (DTC) is stored when the communication between the control module and one of the side impact sensors does not function. Each side impact sensor has a software ID. The ID is used to check that the correct side impact sensor is installed. This is because the activation level of the signal which is transmitted to the control module is not necessarily the same for the different side impact sensors.

The front (B-post) and rear (C-post) side impact sensors are a different color and have different coding on their connectors to simplify installation.

The front side impact sensors cannot be installed in the position for the rear side impact sensors and vice versa.

Data is transmitted on the same cable used for power supply.

FRONT IMPACT SENSOR (CERTAIN MARKETS AND MODELS ONLY)

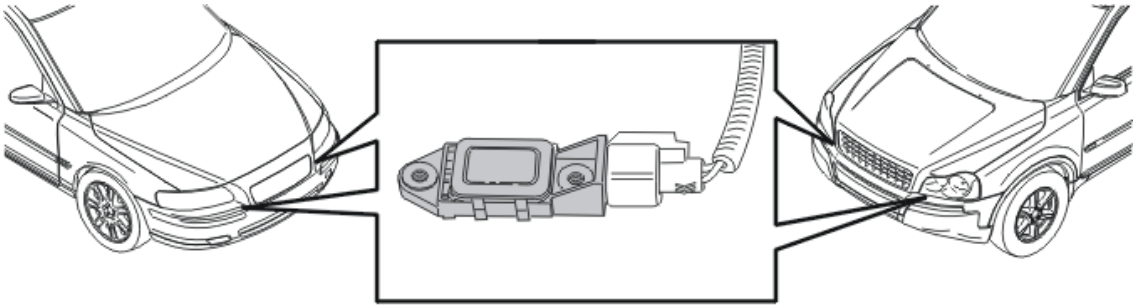

Fig. 65: Locating Front Impact Sensors
Courtesy of VOLVO CARS CORPORATION

The frontal impact sensors are used to provide the supplemental restraint system module (SRS) with advance information about the collision pulse. This enables the control module to determine more accurately the components to be activated.

The frontal impact sensors have integrated logic which transmits acceleration data to the supplemental restraint system module (SRS).

The front impact sensors transmit continuous signals to the control module to indicate that they are working. In the event of a fault in a frontal impact sensor, a fault signal is transmitted to the control module which then stores a diagnostic trouble code (DTC). A diagnostic trouble code (DTC) is also stored if the communication between the control module and one of the frontal impact sensors does not function. Each frontal impact sensor has a software ID. The ID is used to check that the correct frontal impact sensor is installed.

Data is transmitted on the same cable used for power supply.

The two frontal impact sensors are inside the left and right-hand headlamps.

SEAT POSITION SENSORS (XC90 USA/CDN ONLY)

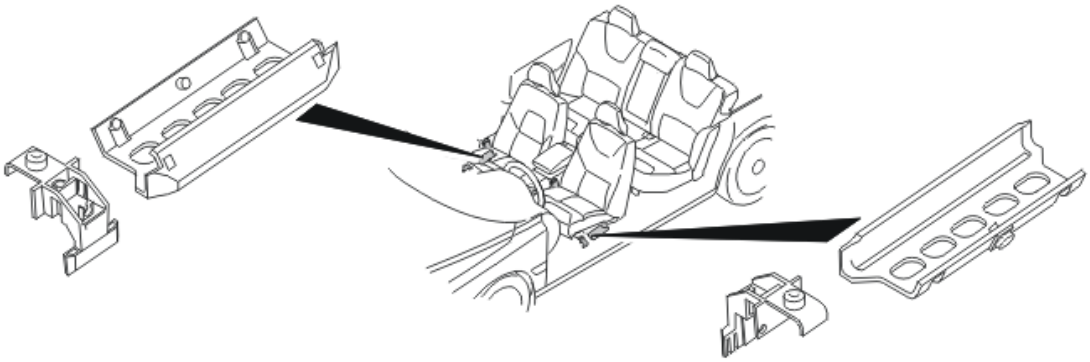

Fig. 66: Identifying Seat Position Sensors
Courtesy of VOLVO CARS CORPORATION

The seat position sensor is used to determine the size of the person sitting on the seat. There are two seat position sensors in the car. One is under the driver's seat and the other under the front passenger seat. The seat position sensors are connected directly to the central electronic module (CEM).

The seat position sensor consists of a Hall sensor which alters the current depending on the position of the seat. The seat position sensor has two classifications, these are a small person and a large person.

A small person means that the seat is approximately 10 cm from the first seat position and forwards. Other positions are classified as a large person.

This information is sent onwards on the controller area network (CAN) to the supplemental restraint system (SRS) module. The supplemental restraint system module (SRS) uses this information to optimize the function of the front driver and passenger airbags in the event of a collision.

ADAPTIVE STEERING COLUMN (XC90 USA/CDN ONLY)

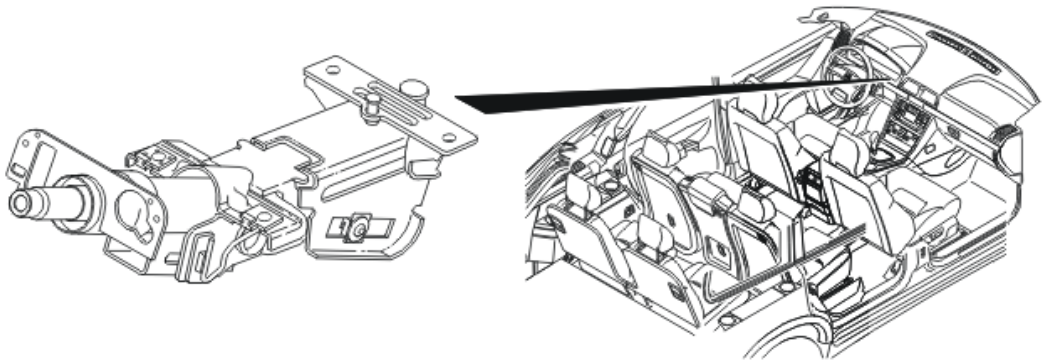

Fig. 67: Identifying Adaptive Steering Column
Courtesy of VOLVO CARS CORPORATION

WARNING: **Never use an ohmmeter or similar tool to test airbags, inflatable curtains, the adaptive steering column or seat belt tensioners. Disconnect airbags, inflatable curtains, the adaptive steering column or seat belt tensioners before testing them. Failure to do so may result in accidental deployment. This could result in serious injury or death.**

When the adaptive steering column in the collision protection system is activated, a pin is deployed which makes the steering column longitudinally adjustable and thus collapsible. If the frontal collision exceeds a certain level the steering wheel is pressed into the dashboard to a greater degree than if the steering column were rigid.

The steering is not affected by the deployment of the pin. The pin is deployed by a pyrotechnical charge and is located in the center of the steering column. The collision protection system in the adaptive steering column only functions if the driver is wearing the seatbelt and if the airbag deploys. The entire steering column must be replaced if the collision protection system in the adaptive steering column has deployed.

OCCUPANT WEIGHT SENSOR (OWS) (CERTAIN MARKETS AND MODELS ONLY)

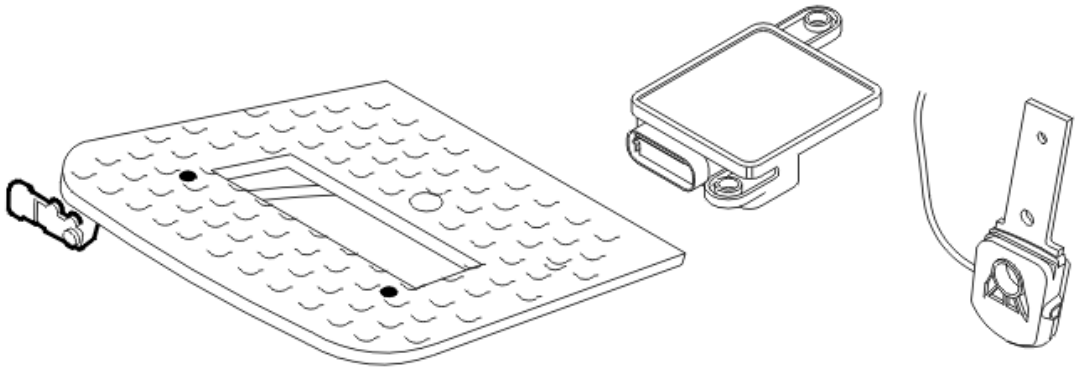

Fig. 68: Identifying Occupant Weight Sensor (OWS) Components
Courtesy of VOLVO CARS CORPORATION

The occupant weight sensor (OWS) consists of three interactive components:

- The pressure sensor, installed under the front passenger seat
- The seatbelt force sensor, mounted in the seat frame on the outside of the front passenger seat
- Occupant weight sensor module, installed under the front passenger seat.

The pressure sensor and occupant weight sensor are linked via a hose. The pressure sensor registers the pressure the seat is exposed to, for example when someone is sitting in the car. Information from the seat belt force sensor is also used to ensure the good performance of the system. The seatbelt force sensor informs the occupant weight sensor module what force the belt is tensioned with. This is done because the pressure measured by the pressure sensor can be affected by the passenger fastening the seatbelt tightly. This means that the passenger exerts greater pressure on the seat than during normal seatbelt use. The passenger is then interpreted as being heavier than he or she is. The occupant weight sensor module uses the information from both the pressure sensor and seatbelt force sensor to calculate the actual weight of the passenger. The occupant weight sensor (OWS) transmits continuous signals to the supplemental restraint system module (SRS) and occupant weight sensor (OWS) on the LIN bus. If the occupant weight sensor (OWS) does not function correctly the supplemental restraint system module (SRS) will:

- deactivate the front passenger airbag
- light the warning lamp for passenger airbag disconnected (PAD) in the upper electronic module (UEM)
- light the SRS (supplemental restraint system) indicator lamp and display the alert message in the driver information module (DIM).

If a fault occurs in any of the components the following should be noted:

- The pressure sensor and occupant weight sensor module must be replaced at the same time
- The seatbelt force sensor is replaced separately.

NOTE: The on/off switch for the front passenger airbag and occupant weight sensor

(OWS) must not be installed in the vehicle together.

SWITCH ON/OFF, FRONT PASSENGER AIRBAG (NOT USA/CDN)

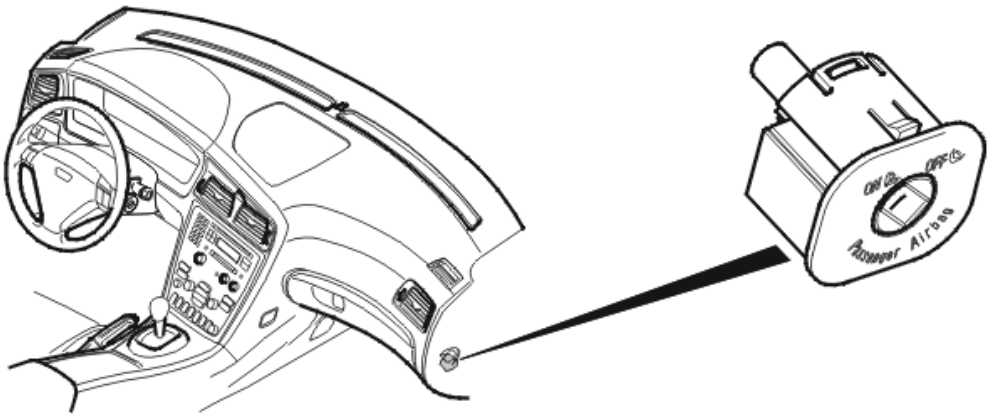

Fig. 69: Identifying Front Passenger Airbag Switch
Courtesy of VOLVO CARS CORPORATION

This switch is used to activate or deactivate the front passenger airbag. The switch is on the side of the dashboard on the passenger side. The switch can only be accessed with the front passenger door open. The ignition key is used to change the position of the switch. When the switch is in the OFF position, all the stages of the passenger airbag are deactivated and the passenger airbag disconnected (PAD) warning lamp lights. When the switch is moved between OFF and ON, the two Hall sensors detect the position of the switch. The Hall sensors for the switch are directly connected to the supplemental restraint system module (SRS). Each Hall sensor is individually connected to the control module. The signal which is transmitted from the Hall sensors has two different current levels, depending on the position of the switch.

A diagnostic trouble code (DTC) is stored if the signal from the Hall sensors cannot be correctly interpreted. The control module may, depending on the fault, deactivate the passenger airbag. The PAD (passenger airbag disconnected) warning lamp lights if the passenger airbag is deactivated. If a fault is detected and the passenger airbag is not deactivated, the SRS warning lamp lights and a text message is displayed in the driver information module (DIM).

NOTE: The on/off switch for the front passenger airbag and occupant weight sensor (OWS) must not be installed in the vehicle together.

FRONT AIRBAGS

Driver airbag

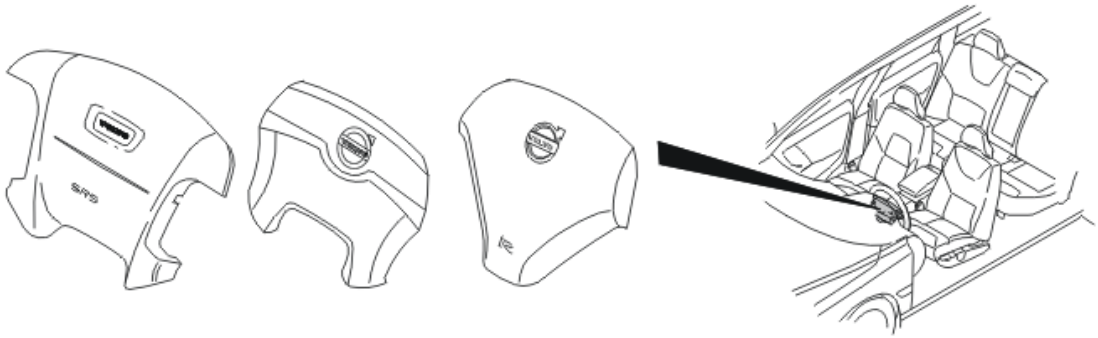

Fig. 70: Identifying Driver Airbag Types
Courtesy of VOLVO CARS CORPORATION

Front passenger airbag

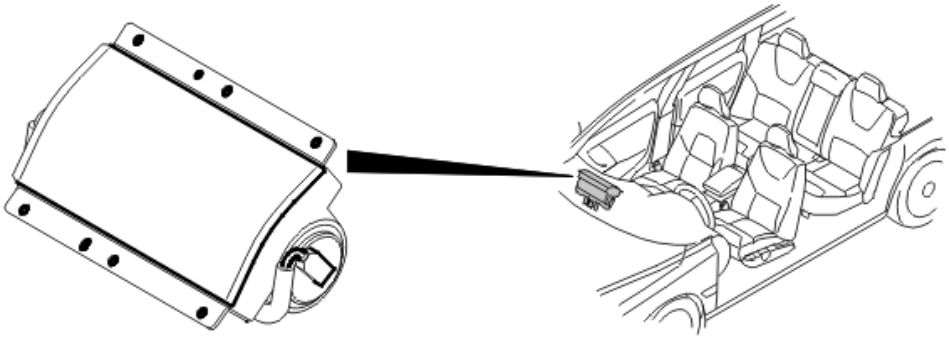

Fig. 71: Front Passenger Airbag
Courtesy of VOLVO CARS CORPORATION

WARNING: **Never use an ohmmeter or similar tool to test airbags, inflatable curtains, the adaptive steering column or seat belt tensioners. Disconnect airbags, inflatable curtains, the adaptive steering column or seat belt tensioners before testing them. Failure to do so may result in accidental deployment. This could result in serious injury or death.**

For the XC90 in USA/CDN, the front airbags are:

- driver airbag, 3 stage deployment
- front passenger airbag, 3 stage deployment.

For other models and markets, the front airbags are:

- driver airbag, 2 stage deployment
- front passenger airbag, 2 stage deployment.

The driver's airbag is located in the steering wheel. The passenger airbag is located above the glove compartment in the dashboard.

Each airbag stage has a separate ignition section. These are electrically separated from each other. This means that the different ignition components have their own separate power supply and grounding points from the control module.

When activating the airbags electrical signals are transmitted from the supplemental restraint system module (SRS) to the relevant airbag stage.

Stage 1

Stage 1 of the driver's airbag is pyrotechnic. In the event of activation the charge combusts and the gas which develops is blown into the airbag.

Stage 1 on the passenger airbag consists of a pyrotechnic component in combination with a reservoir which stores a gas. On activation the pyrotechnic charge and mixes with the stored gas. The gas mixture is blown into the airbag.

Stage 2

Stage 2 of the driver's and passenger airbags is pyrotechnical. In the event of activation the charge combusts and the gas which develops is blown into the airbag.

The pace of the airbag 2 stage activation is dependent on collision type and seat belt use. Both stages activate but in the event of a lesser impact, there is a greater time delay between stage 1 and stage 2. For more serious impacts the time delay is shorter between stages 1 and 2.

Stage 3 (XC90 USA/CDN only)

Stage 3 of the driver's and passenger airbags is pyrotechnical. A valve opens on the airbag during deactivation.

The control module uses information from the occupant weight sensor (OWS), seat position sensor and collision sensor to determine the size of the driver/passenger and the force of the collision. The control module adapts the volume of the airbag to the force of the collision. This is done using airbag ventilation.

WARNING: **Never use an ohmmeter or similar tool to test airbags, inflatable curtains, the adaptive steering column or seat belt tensioners. Disconnect airbags, inflatable curtains, the adaptive steering column or seat belt tensioners before testing them. Failure to do so may result in accidental deployment. This could result in serious injury or death.**

SIDE IMPACT AIR BAGS

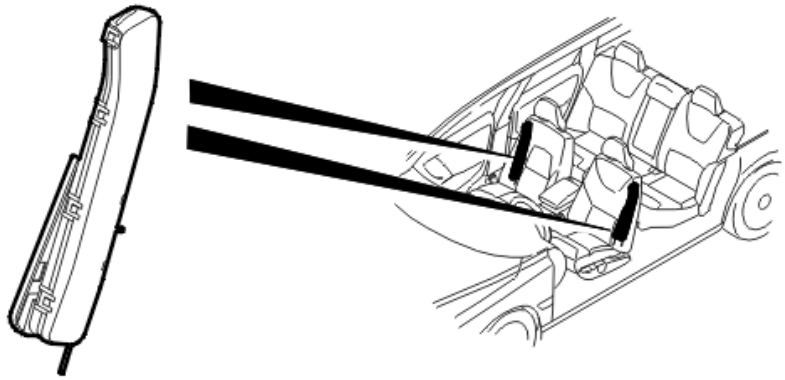

Fig. 72: Identifying Side Impact Air Bags
Courtesy of VOLVO CARS CORPORATION

WARNING: **Never use an ohmmeter or similar tool to test airbags, inflatable curtains, the adaptive steering column or seat belt tensioners. Disconnect airbags, inflatable curtains, the adaptive steering column or seat belt tensioners before testing them. Failure to do so may result in accidental deployment. This could result in serious injury or death.**

There are two side impact protection (SIPS) bags connected to the supplemental restraint system module (SRS). Their connectors are electrically separated from each other. The side impact protection (SIPS) bags are on the outside of the front seats, underneath the upholstery. The side impact protection (SIPS) bags deploy on the side of the impact. Their task is to protect the hips, chest and upper body in the event of a side on collision.

The side airbags together with the inflatable curtains and other safety systems can help to protect the driver and front passenger in the event of a collision.

The side impact protection (SIPS) bag uses a pyrotechnic component in combination with a reservoir which stores a gas. On activation the pyrotechnic charge and mixes with the stored gas. The gas mixture is blown into the airbag.

WARNING: **Never use an ohmmeter or similar tool to test airbags, inflatable curtains, the adaptive steering column or seat belt tensioners. Disconnect airbags, inflatable curtains, the adaptive steering column or seat belt tensioners before testing them. Failure to do so may result in accidental deployment. This could result in serious injury or death.**

SEAT BELT TENSIONERS

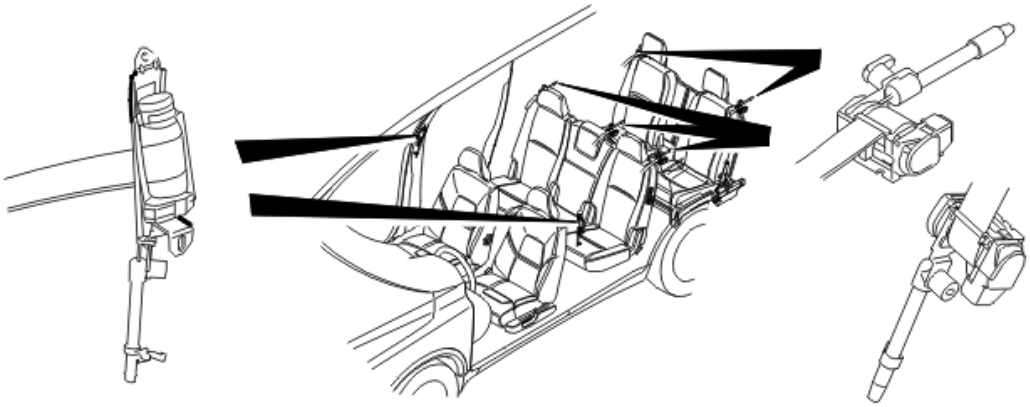

Fig. 73: Locating Seat Belt Tensioners
Courtesy of VOLVO CARS CORPORATION

WARNING: **Never use an ohmmeter or similar tool to test airbags, inflatable curtains, the adaptive steering column or seat belt tensioners. Disconnect airbags, inflatable curtains, the adaptive steering column or seat belt tensioners before testing them. Failure to do so may result in accidental deployment. This could result in serious injury or death.**

Depending on the model and market, there may be up to seven seat belt tensioners in the vehicle. Two in the front seat, three in the rear seats and two in the third row if applicable. The seat belt tensioners contain an explosive charge which tensions the seat belts when deployed. The seat belt tensioners are separated from each other electrically. This means that each seat belt tensioner has a separate individual power supply and ground from the control module.

The seat belt tensioner tensions the seat belt to reduce the forward movement of the body. This also reduces the forces on the chest from the airbag and seat belt.

The supplemental restraint system module (SRS) determines whether to deploy the seat belt tensioners based on whether the seat belts are being used. The seat belt tensioner will not be activated if the seat belt is not engaged. If the seat belt is fastened and the seatbelt indication does not function for the front seat belt buckles, the seat belt tensioners will be activated anyway.

The seat belt tensioner consists of a pyrotechnical charge and a cylinder with a piston. The piston is connected to a steel cable which is secured to the seat belt reel. When the control module activates the seat belt tensioner the piston is forced downwards by the expanding gas. The piston pulls in the steel cable which reels in the belt.

WARNING: **Never use an ohmmeter or similar tool to test airbags, inflatable curtains, the adaptive steering column or seat belt tensioners. Disconnect airbags, inflatable curtains, the adaptive steering column or seat belt tensioners before testing them. Failure to do so may result in accidental deployment. This could result in serious injury or death.**

INFLATABLE CURTAINS

XC90

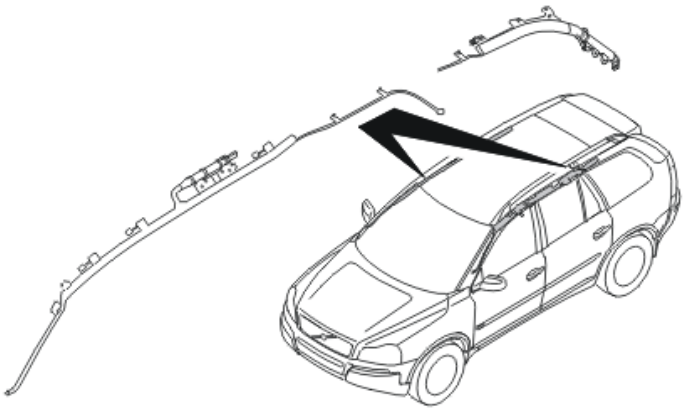

Fig. 74: Identifying Inflatable Curtains
Courtesy of VOLVO CARS CORPORATION

WARNING: **Never use an ohmmeter or similar tool to test airbags, inflatable curtains, the adaptive steering column or seat belt tensioners. Disconnect airbags, inflatable curtains, the adaptive steering column or seat belt tensioners before testing them. Failure to do so may result in accidental deployment. This could result in serious injury or death.**

Depending on the model and configuration, there are up to four inflatable curtains connected to the supplemental restraint system module (SRS). Their connectors are electrically separated from each other.

For the 7 seater XC90 models, the inflatable curtains are in the roof between the A and D-posts. For the 5 seater XC90 models and other models, the inflatable curtains are in the roof between the A and C-posts.

The configuration is as follows:

- On the 7 seater XC90, side and rear inflatable curtains on each side. There are a total of four inflatable curtains
- On the 5 seater XC90 and other models, there is one inflatable curtain on each side. There are a total of two inflatable curtains.

The inflatable curtains have only one ignition component each. The task of the inflatable curtains is to protect the head and the upper body in the event of a side impact. The supplemental restraint system module (SRS) activates the inflatable curtains on the side where the collision occurred.

The inflatable curtain uses a pyrotechnic component in combination with a reservoir which stores a gas. On activation the pyrotechnic charge and mixes with the stored gas. The gas mixture is blown into the inflatable curtain which falls and covers the side windows and B post. If rear inflatable curtains are installed the C post is also covered.

Where there are two inflatable curtains per side, these are always activated simultaneously.

WARNING: Never use an ohmmeter or similar tool to test airbags, inflatable curtains, the adaptive steering column or seat belt tensioners. Disconnect airbags, inflatable curtains, the adaptive steering column or seat belt tensioners before testing them. Failure to do so may result in accidental deployment. This could result in serious injury or death.

SRS INDICATION

The supplemental restraint system module (SRS) continuously checks the system. A diagnostic trouble code (DTC) is stored and an SRS indication is made.

SRS indication is accompanied by a text message in the Driver information module (DIM), partly through:

- an SRS warning lamp
- a general warning lamp.

The lamps light depending on how serious the fault is: Information about which lamp should be lit is transmitted by the supplemental restraint system module (SRS) on the controller area network (CAN).

The SRS indicator lamp lights when the ignition is switched on. If no faults are registered by the control module, either internally or from the sensors, wiring or igniters, a signal is transmitted on the controller area network (CAN) to the driver information module (DIM) confirming that the SRS indicator lamp can be switched off. If no faults are detected when the ignition is switched on, the lamp will remain lit for a few seconds. The lamp goes out when the system has been checked and is operating without faults.

The control module has an EEPROM memory which retains data about diagnostic trouble codes (DTCs) even when the battery has been disconnected.

The driver information module (DIM) continuously indicates to the supplemental restraint system module (SRS) the function of the SRS indicator lamp. If the lamp stops working, the general warning lamp lights up and a text message is displayed.

NOTE: If a diagnostic trouble code (DTC) is stored because the resistance in an SRS ignition cable is too high or too low, it is important that the resistance of the SRS ignition cable is not measured when the collision protection system is connected. Special tools with the same resistance as the collision protection system must be used for fault-tracing.

PASSENGER AIRBAG INDICATION

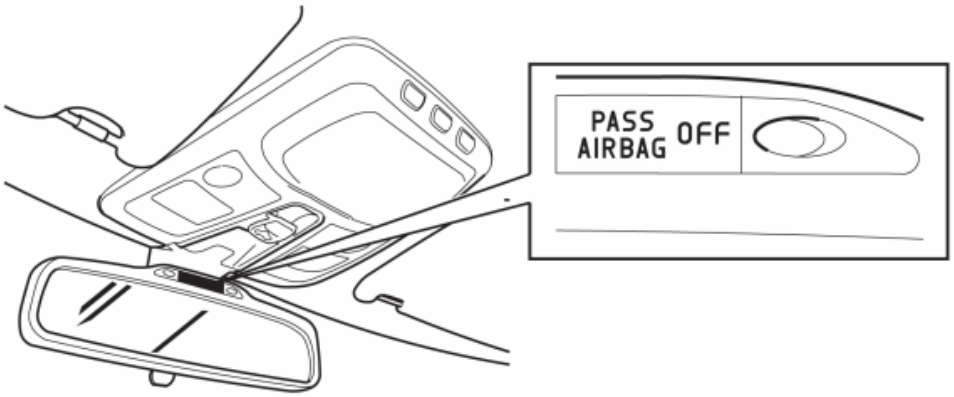

Fig. 75: Identifying Passenger Airbag Indicator Light
Courtesy of VOLVO CARS CORPORATION

Supplemental restraint system module (SRS) transmits signals on the CAN network to the upper electronic module (UEM) if the front passenger airbag is activated or not. If the upper electronic module (UEM) receives information that the passenger airbag is deactivated, the upper electronic module (UEM) lights the passenger airbag warning lamp (PAD). The warning lamp is located in the upper section of the rear view mirror.

Depending on the market, if the switch for activating and deactivating the front passenger airbag is used to deactivate it, the passenger airbag disconnected (PAD) warning lamp lights.

The warning lamp goes out when the airbag is reactivated.

If an occupant weight sensor (OWS) is installed (market and model dependent), the passenger airbag disconnected (PAD) warning lamp lights when the airbag is deactivated. However there is an exception to this:

- The passenger airbag disconnected warning lamp will remain unlit if the occupant weight sensor (OWS) registers that the passenger seat is unoccupied. This means that the passenger airbag is deactivated.

The warning lamp goes out when the airbag is reactivated.

Reasons that the passenger airbag disconnected warning lamp lights may also be:

- communication problems between the supplemental restraint system module (SRS) and upper electronic module (UEM)
- faulty function in the on/off switch for the front passenger airbag
- defective occupant weight sensor (OWS) function.

SEAT BELT BUCKLE

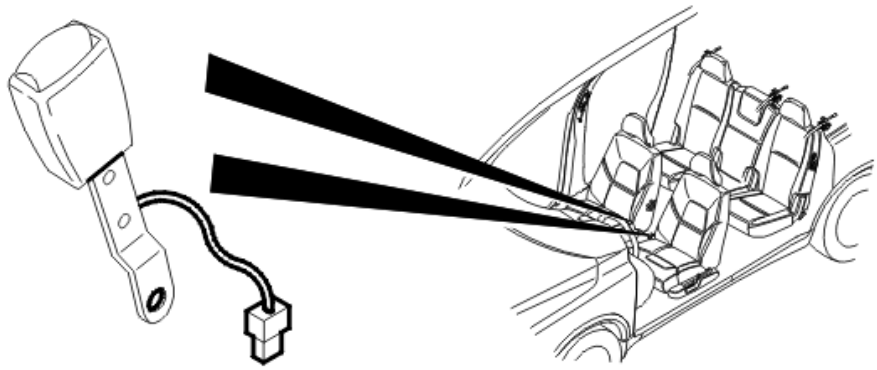

Fig. 76: Locating Seat Belt Buckles
Courtesy of VOLVO CARS CORPORATION

The two front seat belt buckles have Hall sensors and are connected to the SRS module. These connections are electrically separated from each other.

The hall sensor detects whether the belt is engaged in the seat belt buckle or not and indicates this to the supplemental restraint system module (SRS). The information is used to set the activation level for the airbags and seat belt tensioners. If a fault is detected in the seat belt buckles or in their terminals, an adjustment is made for this, depending on the type of fault.

ACTIVATING THE COLLISION PROTECTION SYSTEM

The collision safety system is extremely advanced. It is able to adapt the collision protection system to suit the specific circumstances of a collision. In general it is extremely unlikely that all airbags and seat belt tensioners will be deployed in the same accident. It is possible that only one airbag or seat belt tensioner is deployed. This is determined by the supplemental restraint system module (SRS) based on the forces that occur during the collision.

If the control module deploys the front airbags, all stages will always be activated. By varying the time between the deployment phases, the inflation of the airbag is more gentle for a low speed collision.

ACTIVATION LEVELS FOR THE COLLISION PROTECTION SYSTEM

The table below shows how the SRS system reacts in the event of a frontal impact.

Level 1= Low speed collision

Level 5 = Severe collision

Collision level	Front seat		Rear seat / Rear seat 3rd row
	Seat belt not in use	Seat belt in use	
Level 1	No corrective action.	The seat belt tensioner is activated. The airbags are not	No corrective action.

		deployed.	
Level 2	The airbags are deployed with a slow build-up of pressure. Ventilating the airbags (only XC90 USA/CDN).	The seat belt tensioner is activated. The airbags are not deployed.	No corrective action.
Level 3	The airbags are deployed with a slow build-up of pressure. Ventilating the airbags (only XC90 USA/CDN).	The seat belt tensioner is activated. The airbags are deployed with a slow build-up of pressure. Ventilating the airbags (only XC90 USA/CDN).	The seat belt tensioner is activated.
Level 4	The airbags are deployed with a fast build-up of pressure. Ventilating the airbags (only XC90 USA/CDN).	The seat belt tensioner is activated. The airbags are deployed with a slow build-up of pressure. Ventilating the airbags (only XC90 USA/CDN).	The seat belt tensioner is activated.
Level 5	The airbags are deployed with a fast build-up of pressure. Ventilating the airbags (only XC90 USA/CDN).	The seat belt tensioner is activated. The airbags are deployed with a fast build-up of pressure. The adaptive steering column of the collision protection system is activated (XC90 USA/CDN only). Ventilating the airbags (only XC90 USA/CDN).	The seat belt tensioner is activated.

ACTIVATING THE SIDE IMPACT PROTECTION SYSTEM

The table below shows how the SRS system reacts in the event of a side impact.

	Side impact sensor, left-hand side		Side impact sensor, right-hand side	
	B-post	**C-post**	**B-post**	**C-post**
Left-hand (SIPS) bag	X			
Left-hand inflatable curtain	X	X		
Inflatable curtain left rear (XC90 7 seater only)	X	X		
Right-hand SIPS bag			X	
Right-hand inflatable				

curtain			X	X
Inflatable curtain right rear (XC90 7 seater only)			X	X

DIAGNOSTIC FUNCTIONS

OVERVIEW

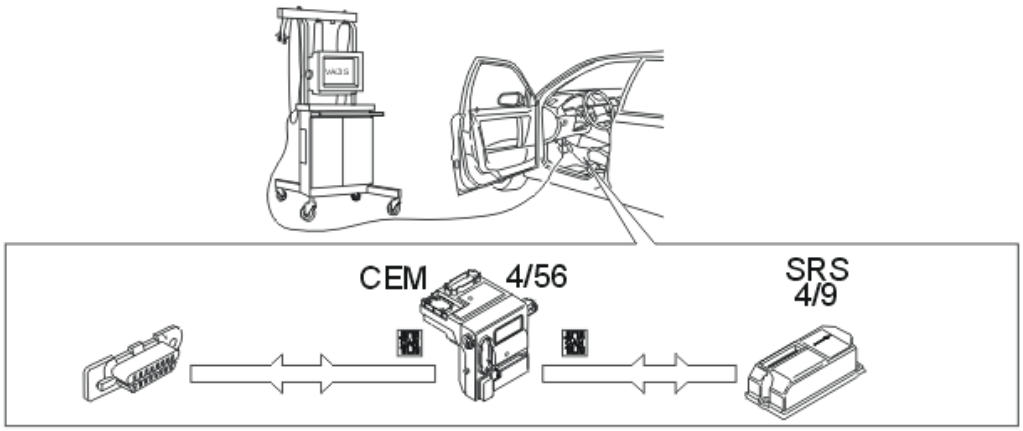

Fig. 77: Identifying Supplemental Restraint System (SRS) Diagnostic System
Courtesy of VOLVO CARS CORPORATION

The diagnostic system for the supplemental restraint system (SRS) continually diagnoses the function of supplemental restraint system (SRS) components and stores any diagnostic trouble codes (DTCs). Diagnostic trouble codes can be read via VIDA (Volvo scan tool). Information is presented in VIDA in a manner similar to that of other diagnostic systems.

FAULT INDICATION

If a fault occurs in the SRS system, the driver is warned in various ways via the driver information module (DIM):

- SRS warning lamp and text message in the display
- the general warning lamp and text message in the display.

A VIDA station must be connected to the data link connector (DLC) in order to identify the source of the fault.

DIAGNOSTIC TROUBLE CODES (DTCS)

A diagnostic trouble code (DTC) is stored if the control module detects a fault. The control module can store up to 10 diagnostic trouble codes (DTCs).

Should a fault disappear for any reason after being stored in the control module as a diagnostic trouble code (DTC), the information remains stored in the control module. If a fault is no longer permanent, the diagnostic trouble code (DTC) remains as intermittent.

READING AND ERASING DIAGNOSTIC TROUBLE CODES (DTCS)

Stored diagnostic trouble codes (DTCs) can be read off and erased using this function.

This function can also be used to read off whether the fault is still present (permanent) or whether it has now ceased (intermittent) after the diagnostic trouble code (DTC) has been stored.

Diagnostic trouble codes (DTCs) can only be erased once all the diagnostic trouble codes (DTCs) have been read off at least once.

READING OFF THE PARAMETERS

Data can be read off from the supplemental restraint system module (SRS) using this function.

Vehicle type

Read out which type of vehicle is programmed in the supplemental restraint system module (SRS).

Steering

Read out which type of steering is programmed in the supplemental restraint system module (SRS) - left-hand or right-hand drive.

Passenger airbag

Read out whether the supplemental restraint system module (SRS) is programmed for a front passenger airbag.

Also read out the status of the airbag.

Occupant weight sensor (OWS)

Read out whether the supplemental restraint system module (SRS) is programmed for an occupant weight sensor (OWS).

Switch On/Off, front passenger airbag

Read out whether the supplemental restraint system module (SRS) is programmed for a switch.

Front seat belt buckle

Reads off the status of the driver and passenger seatbelt buckles.

Warning lamp, front passenger airbag (PAD)

Read out whether the supplemental restraint system module (SRS) sends a signal to request illumination of the warning lamp.

READING OFF CONTROL MODULE IDENTIFICATION

VIDA identifies control modules by reading off a number of codes from the control module memory. The codes contain information about the control module:

- hardware P/N (control module without software)
- hardware serial number (control module without software)
- software P/N
- software number, diagnostics
- serial number, side impact sensor.

The following information can also be read off from the control module memory:

- hardware part number for occupant weight sensor (OWS) (certain markets and models only)
- software part number for occupant weight sensor (OWS) (certain markets and models only)

CALIBRATION OF OCCUPANT WEIGHT SENSOR (OWS) (CERTAIN MARKETS AND MODELS ONLY)

The occupant weight sensor (OWS) can be calibrated using this function.

CONFIGURATION OF NUMBER OF SEATS (XC90 ONLY)

This service makes it possible to change the parameter value for number of seats in the supplemental restraint system module (SRS).

ID NUMBER STORAGE FOR OCCUPANT WEIGHT SENSOR (OWS) (CERTAIN MARKETS AND MODELS ONLY)

This service makes it possible to store the ID number of the occupant weight sensor (OWS) in the supplemental restraint system module (SRS).

DOWNLOADING SOFTWARE AND REPLACING THE CONTROL MODULE

New software for the supplemental restraint system module (SRS) can be downloaded. When ordering software, the hardware and the software in the car is compared to the information in the Volvo central database. If the comparison is OK the software is downloaded to the control module.

Software can be downloaded if the comparison between the car and the Volvo central database does not correspond.

When the control module is replaced, the new control module will have certain preprogrammed software.

The software which is preprogrammed is:

- application software
- diagnostic software
- collision algorithm software.

The software which will be downloaded is parameter files containing:

- parameters unique to this model
- vehicle equipment level
- a signal configuration file.

FUNCTION

CHECKING THE SRS SYSTEM

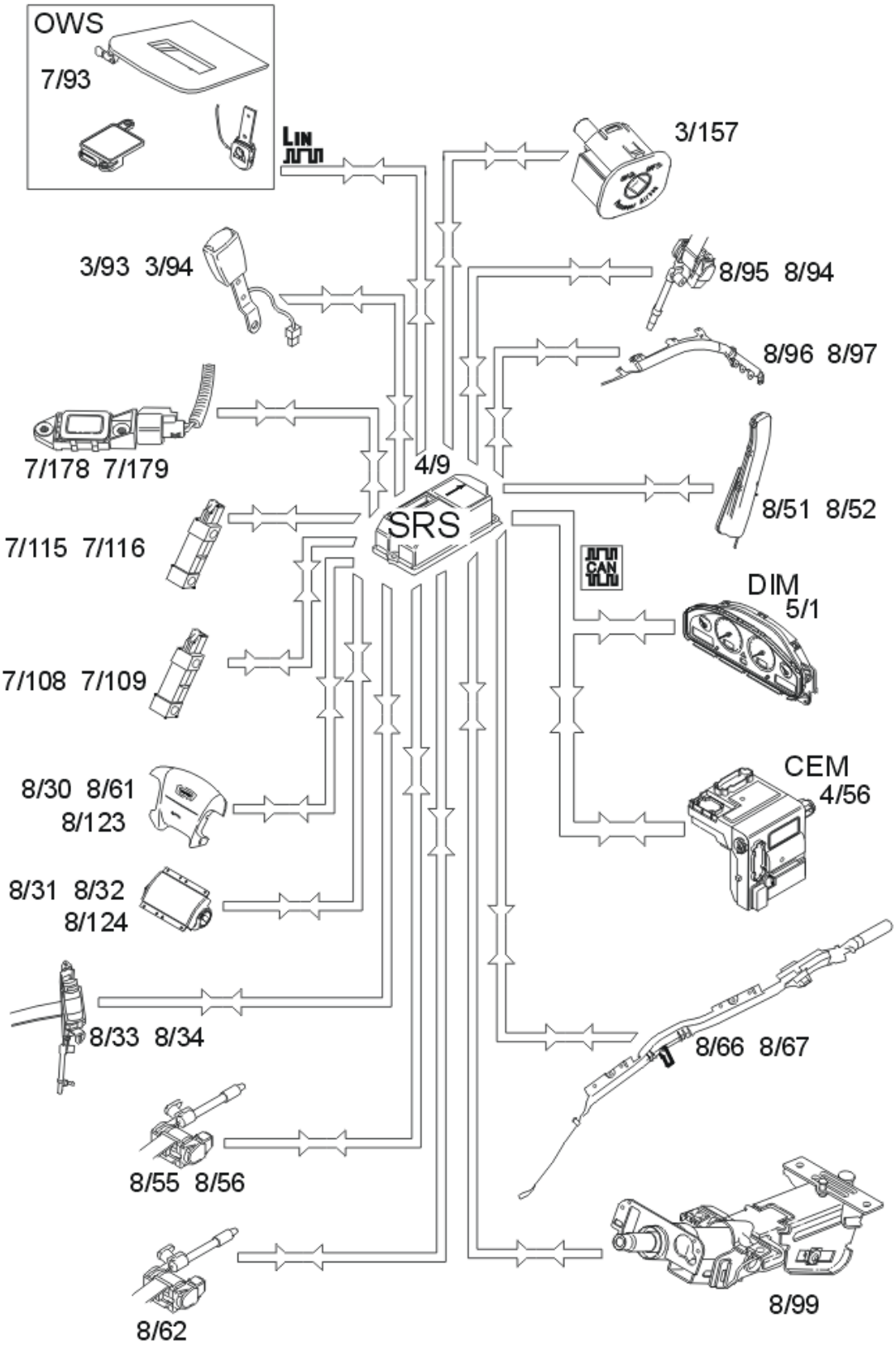
OWS
7/93
LIN
3/157
3/93 3/94
8/95 8/94
8/96 8/97
7/178 7/179
4/9
SRS
8/51 8/52
7/115 7/116
CAN
DIM
5/1
7/108 7/109
CEM
4/56
8/30 8/61
8/123
8/31 8/32
8/124
8/33 8/34
8/66 8/67
8/55 8/56
8/99
8/62

Fig. 78: Identifying SRS System Communication Links & Components
Courtesy of VOLVO CARS CORPORATION

When the ignition key is turned from 0 to I, II or III, the communication on the controller area network (CAN), the status of the internal functions in the supplemental restraint system module (SRS) (4/9) as well as all directly connected components are checked:

- driver's airbag stages 1 and 2 (8/30 and 8/61)
- driver's airbag stage 3 (8/123) (XC90 USA/CDN only)
- passenger airbag stages 1 and 2 (8/31 and 8/32)
- passenger airbag stage 3 (8/124) (XC90 USA/CDN only)
- seat belt tensioners front and rear (8/33, 8/34 8/55, 8/56 and 8/62)
- seat belt tensioners third row (8/94 and 8/95) (XC90 7 seater only)
- side impact sensors (7/108, 7/109, 7/115 and 7/116)
- left and right inflatable curtains (8/66 and 8/67)
- left and right rear inflatable curtains (8/96 and 8/97) (XC90 7 seater only)
- SIPS bags (8/51 and 8/52)
- front impact sensors (7/178 and 7/179) (certain markets and models only)
- front seat belt buckles (3/93 and 3/94)
- adaptive steering column (8/99) (XC90 USA/CDN only)
- switch on/off, front passenger airbag (3/157) (not USA/CDN)
- occupant weight sensor (OWS) (7/93) (certain markets and models only)

The supplemental restraint system module (SRS) transmits information via the controller area network (CAN) to the driver information module (DIM) (5/1) indicating that this test is in progress. The central electronic module (CEM) (4/56) also transmits the parameter values during the status check.

The driver information module (DIM) then lights the SRS indicator lamp. The SRS indicator lamp is lit while the supplemental restraint system (SRS) is being checked. When the supplemental restraint system (SRS) has been tested and no faults have been detected, the SRS indicator lamp goes out.

If a fault is detected during the check it will be indicated in one of the following ways, depending on how serious it is:

- the SRS indicator lamp continues to light and a warning text is displayed in the driver information module (DIM)
- the general warning lamp lights and a warning text is displayed in the driver information module (DIM).

The driver information module (DIM) continuously transmits a signal to the supplemental restraint system module (SRS) via the controller area network (CAN) with information about whether the SRS indicator lamp is working or not. The general warning lamp will light and a text message will be displayed in the driver information module (DIM) if the SRS warning lamp is not working. If the CAN communication between the supplemental restraint system (SRS) module and the driver information module (DIM) fails, the red lamp in the general warning lamp lights up and text is displayed in the driver information module (DIM). If the faults

disappear and the driver information module (DIM) can transmit information to the supplemental restraint system module (SRS) and the status of the SRS warning lamp is OK, the warning lamps will return to normal function.

SIDE IMPACT

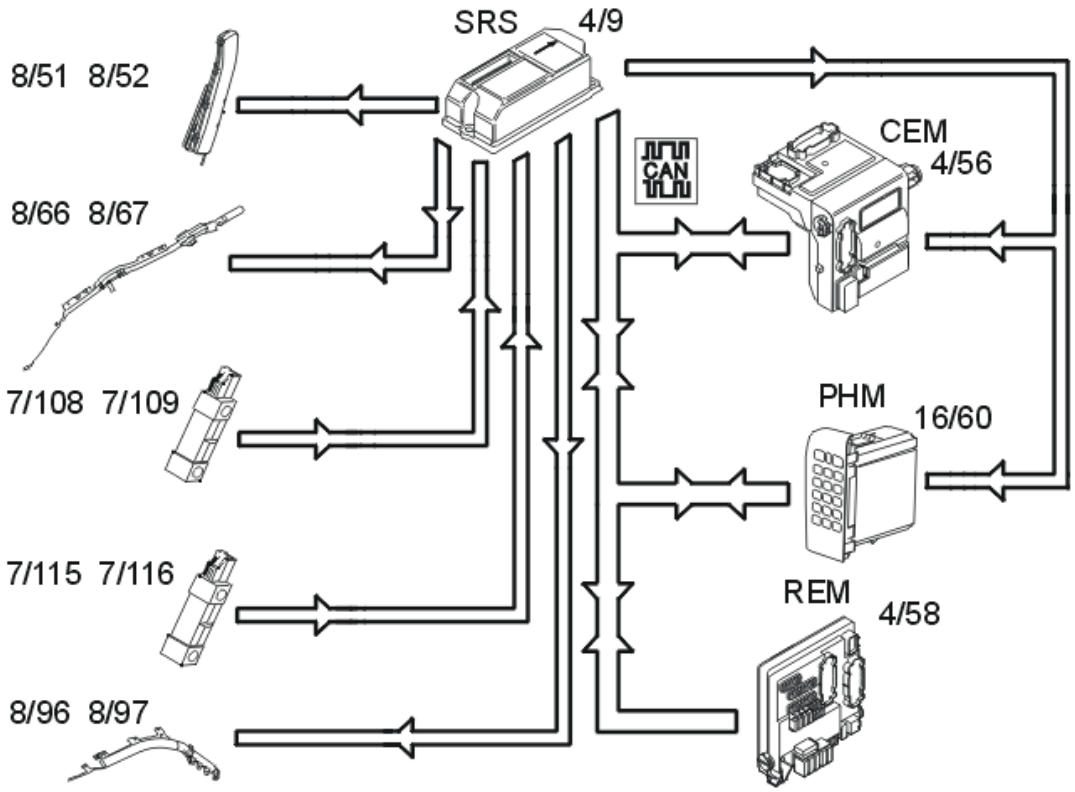

Fig. 79: Identifying Side Impact / SRS System Communication Links & Components
Courtesy of VOLVO CARS CORPORATION

In event of a side-on collision, the side impact sensors (7/108, 7/109, 7/115 and 7/116) on the left and right-hand sides evaluate the force of the collision pulse. If the collision pulse is powerful enough, the level of the acceleration signal from the side impact sensors will exceed the calculated activation level for the collision protection system in the supplemental restraint system module (SRS) (4/9).

The control module also requires a further acceleration sensor, either from the acceleration sensors in the control module or from another side impact sensor. If the signal from the collision sensor meets the conditions for activation of the side impact airbags (8/51 and 8/52) and/or inflatable curtains (8/66 and 8/67) (8/96 and 8/97 on the 7 seater XC90 only), the control module sends a current pulse to those side impact airbags and/or inflatable curtains that are to be deployed. The side impact protection system will only be deployed on the side where the impact is registered.

The activation level of the side impact protection system depends on the vehicle speed and whether any of the front doors are open during the collision. The central electronic module (CEM) (4/56) transmits information about vehicle speed on the controller area network (CAN). The rear electronic module (REM) (4/58) transmits

information about the status (open or closed) of the left and right-hand front doors.

The control module also transmits a collision signal on a directly connected cable to the central electronic module (CEM) and the phone module (PHM) (16/60), so that these control modules can take certain actions.

A collision status signal is also sent to the phone module (PHM) and the central electronic module (CEM) via the controller area network (CAN).

FRONTAL COLLISION

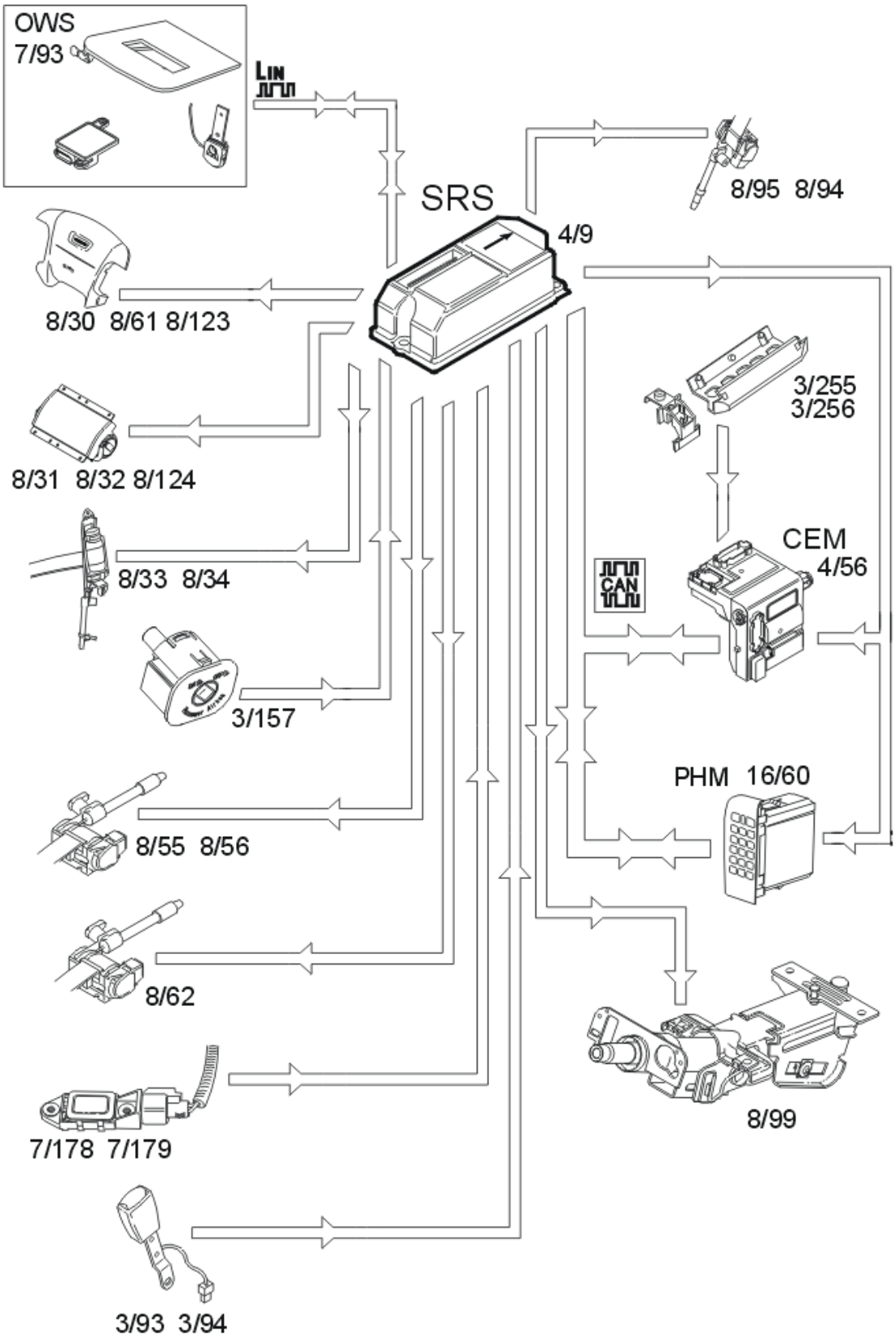
OWS
7/93
LIN
SRS
4/9
8/95 8/94
8/30 8/61 8/123
3/255
3/256
8/31 8/32 8/124
CEM
4/56
CAN
8/33 8/34
3/157
PHM 16/60
8/55 8/56
8/62
8/99
7/178 7/179
3/93 3/94

Fig. 80: Identifying Front Impact / SRS System Communication Links & Components
Courtesy of VOLVO CARS CORPORATION

A function known as multi-point detection is used during a head-on collision. This means that the impact pulse is registered in several points. This function is integrated in the supplemental restraint system module (SRS) (4/9). The front impact sensors (7/178 and 7/179) (certain markets and models only) is also part of multi-point detection in the control module. The front impact sensors register the impact pulse and send acceleration data to the control module.

When the collision pulse is sufficiently large an activation signal (current pulse) is transmitted to one or more of the following:

- front airbags stages 1 and 2 (8/30, 8/31, 8/32 and 8/61)
- front airbags stage 3 (8/123 and 8/124) (XC90 USA/CDN only)
- seat belt tensioners (8/33, 8/34, 8/55 8/56 and 8/62)
- seat belt tensioners third row (8/94 and 8/95) (XC90 7 seater only).

In vehicles with an on/off switch for the front passenger airbag (3/157), the passenger airbag will not be activated if it has been switched off.

In cars with an occupant weight sensor (OWS) (7/93), this is used to activate and deactivate the passenger airbag.

For cars with an adaptive steering column (8/99), when the driver's airbag is activated and the driver seatbelt is fastened, an activation signal (current pulse) is transmitted by the control module to the adaptive steering column.

A collision signal is transmitted on a direct connection from the supplemental restraint system module (SRS) to the central electronic module (CEM) (4/56) and phone module (PHM) (16/60) when the collision protection system is activated. These two control modules ensure that:

- the central locking system is unlocked
- the fuel pump (FP) is switched off
- the interior lighting lights
- the hazard warning signal flashers are activated
- the collision pulse is registered
- an automatic alarm is sent to CSC (customer service center) if the vehicle is equipped with Volvo On Call (Plus).

A collision status signal is also sent to the phone module (PHM) and the central electronic module (CEM) via the controller area network (CAN).

ROLL OVER PROTECTION (XC90 ONLY)

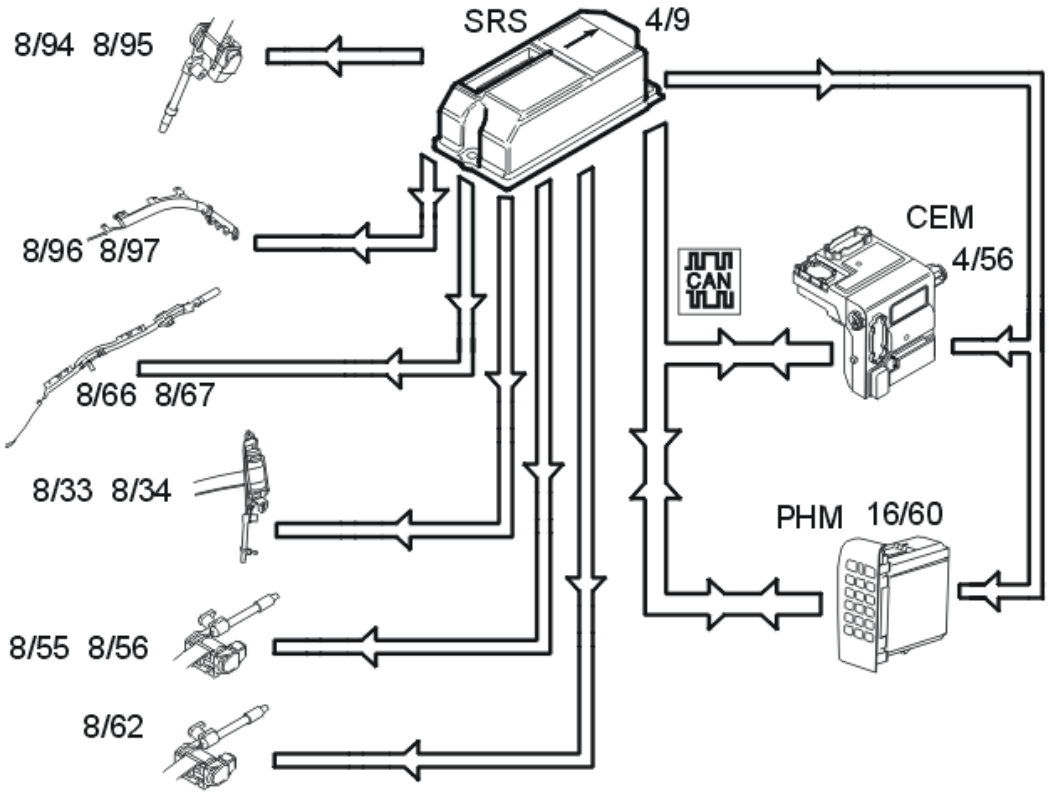

Fig. 81: Identifying Roll Over Protection Components
Courtesy of VOLVO CARS CORPORATION

If the side tilt of the car exceeds 50 - 55 degrees, the supplemental restraint system module (SRS) starts calculating the strength of the rotational energy. If the sideways lean and rotational energy are high enough, the control module will activate the roll over protection. All seat belt tensioners in the car, front (8/33, 8/34), rear (8/55, 8/56, 8/62) and for the third row of seats (8/94, 8/95) (7 seater XC90 only) will be activated. The front (8/66, 8/67) and rear (8/96, 8/97 (7 seater XC90 only)) inflatable curtains will also be activated.

A collision signal is transmitted on a direct connection from the supplemental restraint system module (SRS) to the central electronic module (CEM) (4/56) and phone module (PHM) (16/60) when the collision protection system is activated. These two control modules ensure that:

- the central locking system is unlocked
- the fuel pump (FP) is switched off
- the interior lighting lights
- the hazard warning signal flashers are activated
- the collision pulse is registered
- an automatic alarm is sent to CSC (customer service center) if the vehicle is equipped with Volvo On Call (Plus).

A collision status signal is also sent to the phone module (PHM) and the central electronic module (CEM) via the controller area network (CAN).

ACTIVATING/DEACTIVATING THE FRONT PASSENGER AIRBAG (NOT USA/CDN)

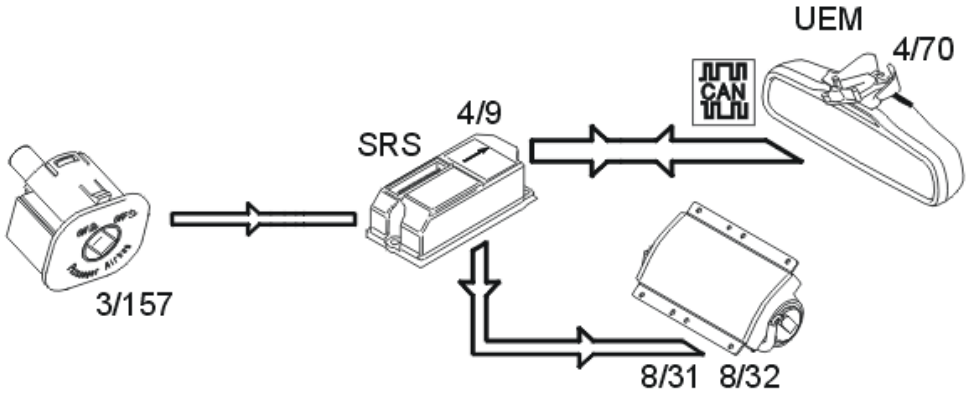

Fig. 82: Identifying Front Passenger Airbag Activation / Deactivation Communication Links & Components
Courtesy of VOLVO CARS CORPORATION

If necessary, the front passenger airbag (8/31 and 8/32) can be deactivated. This is done using a switch (3/157) positioned on the side of the dashboard on the passenger side.

If the position of the switch is changed from "on" to "off", the level of current at the two Hall sensors connected to the switch changes. The Hall sensors transmit the altered current levels to the supplemental restraint system module (SRS) (4/9) via directly connected cables.

The control module software deactivates the front passenger airbag, which means that the airbag has no functionality in the event of a collision. The supplemental restraint system module (SRS) transmits a signal on the controller area network (CAN) to the upper electronic module (UEM) (4/70), with a request to light the passenger airbag disconnected warning lamp. The upper electronic module (UEM) then lights the passenger airbag disconnected warning lamp.

When the position of the switch is changed from "off" to "on", a new current level is transmitted from the Hall sensors to the supplemental restraint system module (SRS). The control module software then activates the airbag, which means that the airbag has full functionality in the event of a collision. At the same time, the supplemental restraint system module (SRS) transmits a signal on the controller area network (CAN) to the upper electronic module (UEM), with a request to switch off the passenger airbag disconnected warning lamp. The upper electronic module (UEM) then switches off the passenger airbag disconnected warning lamp.

NOTE: The on/off switch for the front passenger airbag and occupant weight sensor (OWS) must not be installed in the vehicle together.

ACTIVATING/DEACTIVATING FRONT PASSENGER AIRBAG (USA/CDN - CERTAIN MODELS ONLY)

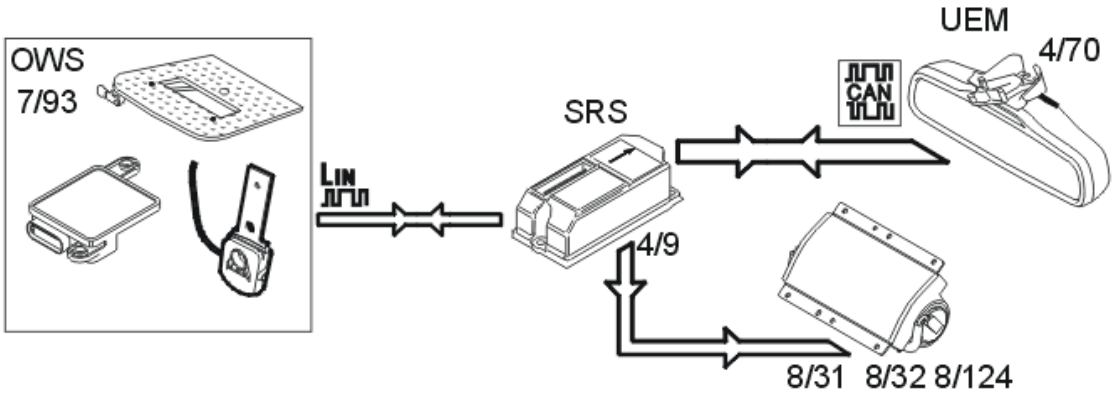

Fig. 83: Identifying Occupant Weight Sensor (OWS) System Communication Links & Components
Courtesy of VOLVO CARS CORPORATION

Under normal conditions the information from the occupant weight sensor (OWS) system (7/93) is the basis for whether the supplemental restraint system module (SRS) (4/9) should activate or deactivate the front passenger airbag (8/31 8/32 and 8/124). The occupant weight sensor (OWS) communicates continuously with the supplemental restraint system (SRS) module on the local LIN bus. When a passenger weighing more than a certain weight is in the seat, the supplemental restraint system module (SRS) is informed by the occupant weight sensor (OWS). The control module software activates the front passenger airbag, which means that the airbag has full functionality in the event of a collision. At the same time the supplemental restraint system module (SRS) transmits a signal on the controller area network (CAN) to the upper electronic module (UEM) (4/70), with a request to switch off the passenger airbag disconnected warning lamp. The upper electronic module (UEM) then switches off the passenger airbag disconnected warning lamp.

If the weight on the front passenger seat is below a certain level the supplemental restraint system module (SRS) is informed by the occupant weight sensor (OWS). The control module software deactivates the front passenger airbag, which means that the airbag has no functionality in the event of a collision. At the same time the supplemental restraint system module (SRS) transmits a signal on the controller area network (CAN) to the upper electronic module (UEM), with a request to switch on the passenger airbag disconnected warning lamp. The upper electronic module (UEM) then lights the passenger airbag disconnected warning lamp. However there is an exception to this:

- The passenger airbag disconnected warning lamp will remain unlit if the occupant weight sensor (OWS) registers that the passenger seat is unoccupied. This means that the passenger airbag is deactivated.

NOTE: The on/off switch for the front passenger airbag and occupant weight sensor (OWS) must not be installed in the vehicle together.

THE OCCUPANT WEIGHT SENSOR (OWS) SYSTEM (USA/CDN - CERTAIN MODELS ONLY)

The occupant weight sensor (OWS) is designed to meet the regulatory requirements of Federal Motor Vehicle Safety Standard (FMVSS) 208 and is designed to disable (will not inflate) the passenger's side front airbag

under certain conditions.

The occupant weight sensor (OWS) works with sensors that are part of the front passenger's seat and safety belt. The sensors are designed to detect the presence of a properly seated occupant and determine if the passenger's side front airbag should be enabled (may inflate) or disabled (will not inflate).

The occupant weight sensor (OWS) will disable (will not inflate) the passenger's side front airbag when:

- the front passenger seat is unoccupied, or there are small/medium objects in the front passenger seat,
- the system determines that an infant is present in a rear-facing infant seat that is installed according to the manufacturer's instructions,
- the system determines that a small child is present in a forward-facing child restraint that is installed according to the manufacturer's instructions,
- the system determines that a small child is present in a booster seat,
- a front passenger takes his/her weight off of the seat for a period of time,
- a child or a small person occupies the front passenger seat.

The occupant weight sensor (OWS) uses a passenger airbag warning lamp (PAD) which will illuminate and stay lit to remind you that the passenger's side front airbag is disabled. The passenger airbag warning lamp (PAD) is located in the interior rear view mirror.

NOTE: The passenger airbag warning lamp (PAD) will illuminate for a short period of time when the ignition is turned on to confirm it is functional.

When the front passenger seat is not occupied (empty seat) or in the event that the passenger's side front airbag is enabled (may inflate), the passenger airbag warning lamp (PAD) will be unlit.

The occupant weight sensor (OWS) is designed to disable (will not inflate) the passenger's side front airbag when a rear facing infant seat, a forward-facing child restraint, or a booster seat is detected. The passenger airbag warning lamp (PAD) will illuminate and stay lit to remind you that the passenger's side front airbag is disabled.

NOTE: Volvo recommends that children always be properly restrained in appropriate child restraints in the rear seats.

In rare situations when the safety belt is not latched, some child restraints may not be detected by the OWS because there is very little weight on the vehicle seat cushion. In these cases the passenger's side front airbag may be disabled, but the passenger airbag warning lamp (PAD) will not be lit. **Do not assume that the passenger's side front airbag is disabled unless the passenger airbag warning lamp (PAD) is lit.**

The occupant weight sensor (OWS) is designed to enable (may inflate) the passenger's side front airbag anytime the system senses that a person of adult size is sitting properly in the front passenger seat. The passenger airbag warning lamp (PAD) will be unlit and stay unlit.

The occupant weight sensor (OWS) detects pressure on the front passenger seat cushion as a result of load put in the seat. The occupant weight sensor (OWS) classifies the occupant as small or large based on whether the

induced pressure is below or above a predetermined threshold. The threshold is defined between the pressure induced by children and the pressure induced by adults in accordance with the regulatory requirements of Federal Motor Vehicle Safety Standard (FMVSS) 208. If the occupant weight sensor (OWS) determines a small occupant classification, the passenger's side front airbag will be disabled and the passenger airbag warning lamp (PAD) will be lit. If the occupant weight sensor (OWS) determines a large occupant classification, the passenger's side front airbag will be enabled and the passenger airbag warning lamp (PAD) will be unlit.

SYSTEM OVERVIEW

CONTROL MODULE

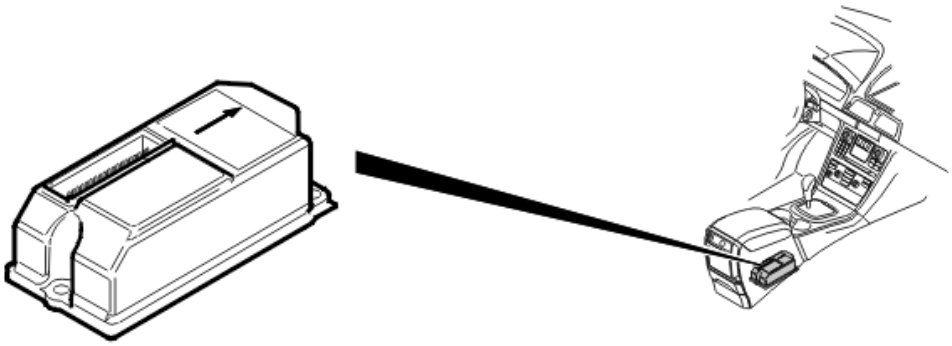

Fig. 84: Locating Supplemental Restraint System (SRS) Control Module
Courtesy of VOLVO CARS CORPORATION

The supplemental restraint system module (SRS) handles functions for:

- seat belt tensioners
- side impact sensors
- front impact sensor (certain markets and models only)
- seat position sensors (XC90 USA/CDN only)
- side impact protection (SIPS) bags
- front driver and passenger airbags
- inflatable curtains
- SRS indication
- passenger airbag indication
- collision output signal
- collision registration
- adaptive steering column (XC90 USA/CDN only)
- front seat belt buckles
- switch on/off, front passenger airbag (not USA/CDN)
- occupant weight sensor (OWS) (certain markets and models only)

The control module is in the transmission tunnel, between the gear selector lever and the parking brake.

The supplemental restraint system module (SRS) communicates with directly connected components and with other control modules via the Controller Area Network (CAN).

The control module checks the input and output signals through an integrated diagnostic system. A diagnostic trouble code (DTC) is stored if the control module detects a fault.

Any diagnostic trouble codes (DTCs) are stored in the control module memory. The data can be read off using VIDA (Volvo scan tool).

The control module can process multiple collisions, frontal collisions, collisions from behind, side-on collisions and overturning.

The control module function can be easily checked by switching on the ignition. The SRS indicator lamp in the combined instrument panel must light up when the key is in ignition positions I-III. The lamp goes out after a short while if no faults are detected. This means that the supplemental restraint system (SRS) is functioning correctly.

SIGNALS

The table below summarizes the input signals to and output signals from the supplemental restraint system module (SRS). The signal types are divided into directly connected signals, LIN and CAN communication. The illustration below displays the same information with the Volvo component designations.

Input signals	Output signals
Directly connected: • Side impact sensor left C-post (7/108) • Side impact sensor right C-post (7/109) • Side impact sensor left B-post (7/115) • Side impact sensor right B-post (7/116) • Front impact sensor, front left (7/179) (certain markets and models only) • Front impact sensor, front right (7/178) (certain markets and models only) • Seat belt buckle left front (3/93) • Seat belt buckle right front (3/94) • Switch on/off, front passenger airbag (3/157) (not USA/CDN).	**Directly connected:** • Central electronic module (CEM) (4/56), collision output signal • Phone Module (PHM) (16/60), collision output signal • Seat belt tensioner left front (8/33) • Seat belt tensioner right front (8/34) • Seat belt tensioner left rear (8/55) • Seat belt tensioner right rear (8/56) • Seat belt tensioner center rear (8/62) • Seat belt tensioner third row left (8/94) (XC90 7 seater only) • Seat belt tensioner third row right (8/95) (XC90 7 seater only) • Adaptive steering column (8/99) (XC90 USA/CDN only) • Airbag passenger front stage 1 (8/31) • Airbag passenger front stage 2 (8/32)

	• Passenger airbag front stage 3 (8/124) (XC90 USA/CDN only) • Airbag driver front stage 1 (8/30) • Airbag driver front stage 2 (8/61) • Driver airbag front stage 3 (8/123) (XC90 USA/CDN only) • Side impact protection (SIPS) bag left front (8/51) • Side impact protection (SIPS) bag right front (8/52) • Left inflatable curtain (8/66) • Right inflatable curtain (8/67) • Inflatable curtain left rear (8/96) (XC90 7 seater only) • Inflatable curtain right rear (8/97) (XC90 7 seater only).
Via LIN communication (certain markets and models only): • Occupant weight sensor (OWS) (7/93).	**Via LIN communication (certain markets and models only):** • Occupant weight sensor (OWS) (7/93).
Via Controller Area Network (CAN) communication: • Central electronic module (CEM) (4/56) • Driver information module (DIM) (5/1) • Upper electronic module (UEM) (4/70) • Rear electronic module (REM) (4/58).	**Via Controller Area Network (CAN) communication:** • Central electronic module (CEM) (4/56) • Driver information module (DIM) (5/1) • Phone module (PHM) (16/60) • Upper electronic module (UEM) (4/70)

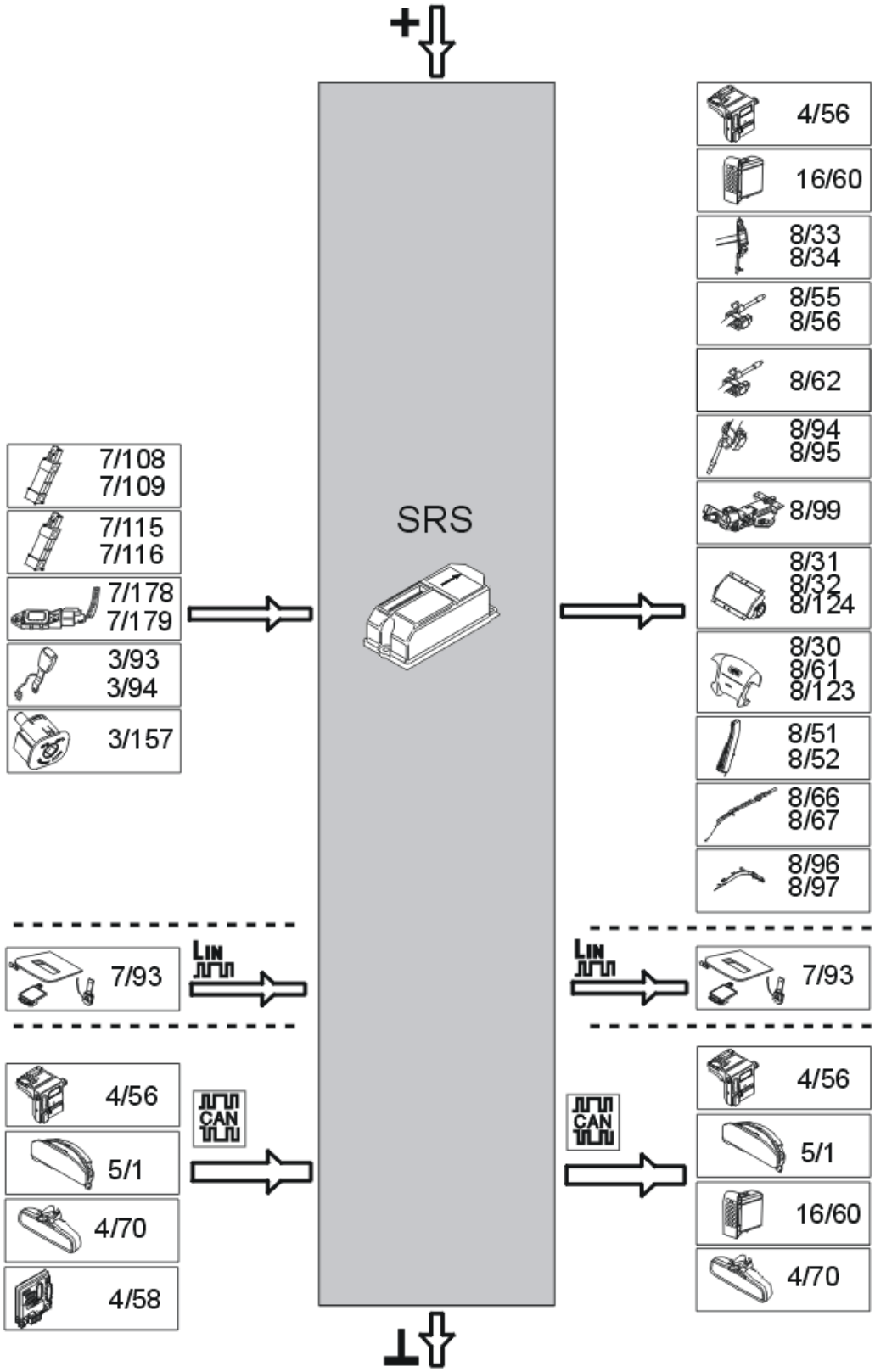
+
SRS
7/108
7/109
7/115
7/116
7/178
7/179
3/93
3/94
3/157
7/93
LIN
4/56
CAN
5/1
4/70
4/58
4/56
16/60
8/33
8/34
8/55
8/56
8/62
8/94
8/95
8/99
8/31
8/32
8/124
8/30
8/61
8/123
8/51
8/52
8/66
8/67
8/96
8/97
LIN
7/93
CAN
4/56
5/1
16/60
4/70
⊥

Fig. 85: Identifying SRS System Communication Links & Components
Courtesy of VOLVO CARS CORPORATION

SUPPLEMENTAL RESTRAINT SYSTEM MODULE (SRS) (2003-2004)

DESIGN

CONTROL MODULE

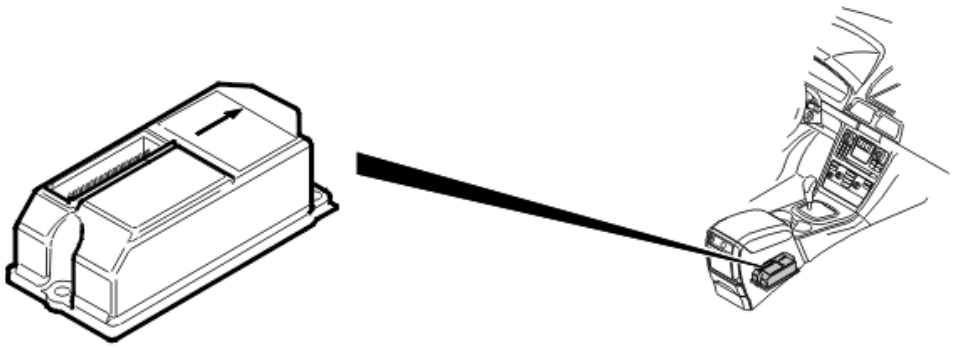

Fig. 86: Locating Supplemental Restraint System (SRS) Control Module
Courtesy of VOLVO CARS CORPORATION

WARNING: The ignition must be switched off before any work is carried out on the supplemental restraint system (SRS). The airbags could accidentally deploy if the ignition is switched on.

The primary task of the supplemental restraint system module (SRS) is to minimize injuries to the driver and passengers in different types of accident. To do this, the control module validates incoming pulsed collision signals (acceleration signals generated by a collision) and then determines the required action. The control module uses internal sensors as well as external collision sensors. Using the data collected from the sensors, the system determines which of the following will be activated:

- front airbags
- side impact protection (SIPS) bags
- inflatable curtains
- seat belt tensioners.

The collision sensor in the control module registers the longitudinal mechanical stress that occurs in a frontal collision. A side impact may also be registered in the collision sensor. Front-rear stresses are gauged by two acceleration sensors. Two frontal collision sensors are also used to register stresses in the event of a frontal collision. If the longitudinal stresses exceed a certain level, the stress will be calculated (the collision pulse). The calculation evaluates whether the collision pulse was sufficient to activate the airbags and/or the seat belt tensioners. Airbags and seat belt tensioners can be activated individually.

The control module is also able to register when the car is about to roll over. If the sideways tilt and rotational energy of the car exceed a certain level, the control module begins a calculation to determine whether the roll over protection should be activated. The critical tilt angle is 50-55 degrees. All seat belt tensioners and inflatable curtains are deployed if the roll over protection is activated.

The driver and passenger airbags and the seat belt tensioners are designed to deploy in the event of a frontal collision.

When the collision protection system is activated, the control module transmits a pulsed current to the ignition mechanisms in the airbags and/or the seat belt tensioners. No seat belt tensioners or airbags will be activated in the event of a collision from the rear.

Two requirements need to be fulfilled in order for the side impact protection system to be activated:

1. that the collision pulse is sufficiently high that a trigger signal is sent from the side impact sensor to the control module
2. the control module or another collision sensor transmits a confirmation signal which allows the collision protection system to be deployed.

The side impact protection system is deployed when the control module has received both an activation and a confirmation signal.

If the side impact occurred at the front of the vehicle the side airbags and the inflatable curtain are deployed on the side that received the impact. If the side impact is towards the rear of the car, only the inflatable curtains are deployed on that side.

The control module has a collision recording function. This records certain system information in the event of a collision. If necessary, this information can be analyzed and used after a collision. This data is used in ongoing development of collision safety systems.

In the event of a collision a collision signal is transmitted from the supplemental restraint system module (SRS) to the carphone module (PHM) and the central electronic module (CEM) using a directly connected cable. The purpose of the signal is to switch off the fuel pump, light the interior lighting, unlock the doors and to transmit an automatic alarm to the Customer Service Center (if the car is equipped with Volvo On Call (Plus)) in the event of a collision. This also applies in the event of a collision from the rear.

A collision signal is also sent to the phone module (PHM) and the rear electronic module (REM) via the controller area network (CAN).

The supplemental restraint system module (SRS) either deploys the airbags or the seat belt tensioners. This depends on whether:

- if the driver and front passenger are wearing seat belts or not
- if there is a fault in the side impact sensor or the connection to the side impact sensor
- if there is a fault in the seat belt buckles
- if Controller area network (CAN) communication is not working.

As a result of the above conditions, in the event of a low speed collision the seat belt tensioner may deploy on the driver's side whilst the airbag is deployed on the passenger side.

The SRS indicator lamp lights when the ignition is switched on. If no faults are registered by the control module, either internally or from the sensors, wiring or igniters, a signal is transmitted on the controller area network (CAN) to the driver information module (DIM) confirming that the SRS indicator lamp can be switched off. If there is a fault, the supplemental restraint system module (SRS) transmits information to the driver information module (DIM) indicating which lamp should be lit and the text to be displayed in the combined instrument panel.

The driver information module (DIM) continuously transmits information to the supplemental restraint system (SRS) control module via the controller area network (CAN) about the status of the SRS indicator lamp.

If the SRS indicator lamp stops functioning, the orange or red light in the general warning lamp is used instead.

Note that after a collision, it may be necessary to replace the wiring for the airbags and seat belt tensioners which deployed. This is because the connectors may melt at the moment of deployment. If a connector has melted, the wiring adjacent to it must be replaced.

WARNING: The ignition must be switched off before any work is carried out on the supplemental restraint system (SRS). The airbags could accidentally deploy if the ignition is switched on.

SIDE IMPACT SENSOR

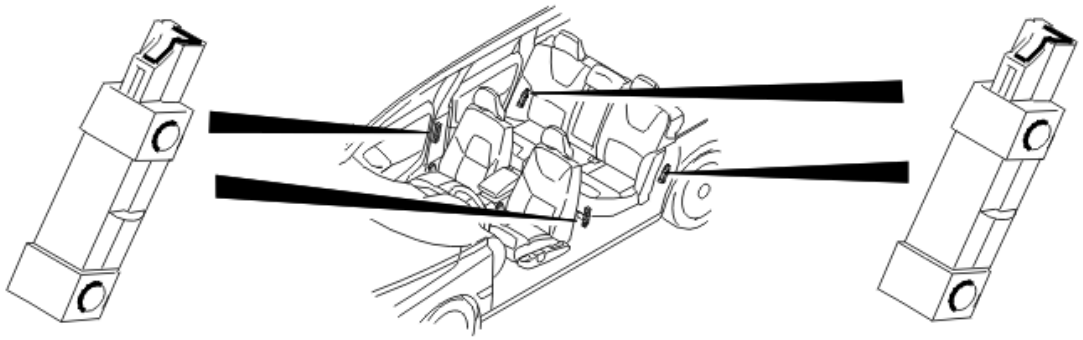

Fig. 87: Locating Side Impact Sensors
Courtesy of VOLVO CARS CORPORATION

The side impact sensors in the car are used to measure and evaluate the collision pulses. An assessment is then transmitted to the supplemental restraint system module (SRS).

The sensors which are used in the car are:

- 2 side impact sensors in the B-post
- 2 side impact sensors in the C-post.

The side impact sensors have integrated logic. In the event of a collision, they determine whether the impact was large enough to warrant transmitting an activation signal to the control module to deploy the side impact airbag. Only the side impact protection on the side from which the activation signal was sent can be deployed.

The side impact sensors transmit continuous OK signals to the control module to indicate that they are working. In the event of a fault in the side impact sensor, a fault signal is transmitted to the control module which then stores a diagnostic trouble code (DTC). A diagnostic trouble code (DTC) is also stored when the control module has not received an OK signal. Each side impact sensor has a software ID. The ID is used to check that the correct side impact sensor is installed. This is because the activation level of the signal which is transmitted to the control module is not necessarily the same for the different side impact sensors.

The front (B-post) and rear (C-post) side impact sensors are a different color and have different coding on their connectors to simplify installation.

The front side impact sensors cannot be installed in place of the rear sensors and vice versa.

Data transmission occurs on the same cable used for power supply, i. e. one cable to each side impact sensor.

FRONTAL IMPACT SENSOR

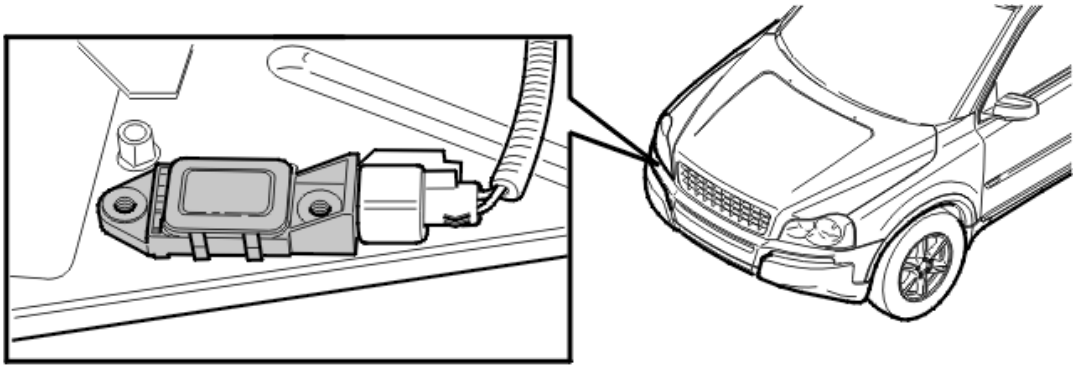

Fig. 88: Locating Frontal Impact Sensor
Courtesy of VOLVO CARS CORPORATION

The car's frontal impact sensors are used to provide the supplemental restraint system module (SRS) with accurate advanced information about the collision pulse. This enables the supplemental restraint system module (SRS) to determine more accurately the components to be activated.

The frontal impact sensors have integrated logic which transmits acceleration data to the supplemental restraint system module (SRS).

The frontal impact sensors transmit continuous OK signals to the control module to indicate that they are working. In the event of a fault in a frontal impact sensor, a fault signal is transmitted to the control module which then stores a diagnostic trouble code (DTC). A diagnostic trouble code (DTC) is also stored when the control module has not received an OK signal. Each frontal impact sensor has a software ID. The ID is used to check that the correct frontal impact sensor is installed.

Data is transmitted on the cable used for power supply, i. e. there is one cable for each frontal impact sensor.

The two frontal impact sensors are under the left and right-hand headlamps.

FRONT AIRBAGS

Driver airbag

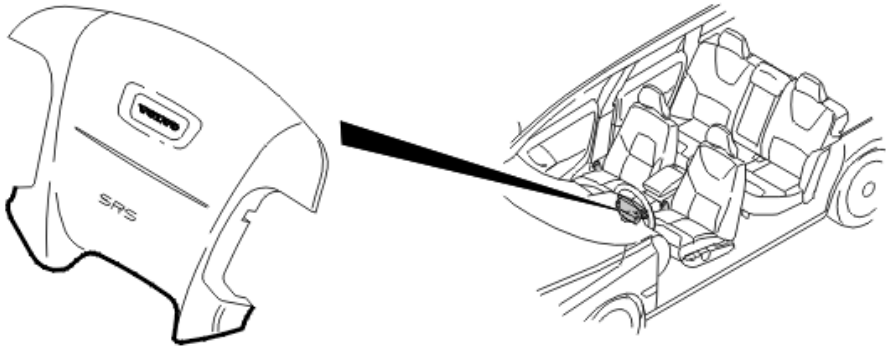

Fig. 89: Driver Airbag
Courtesy of VOLVO CARS CORPORATION

Front passenger airbag

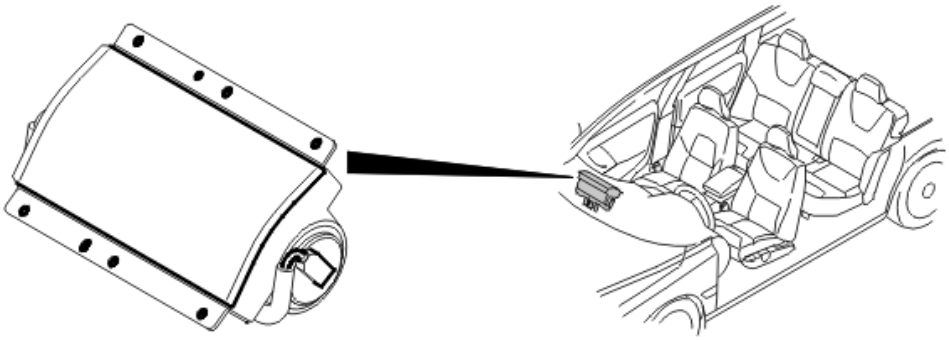

Fig. 90: Front Passenger Airbag
Courtesy of VOLVO CARS CORPORATION

WARNING: **Never use an ohmmeter or similar tool to test airbags, inflatable curtains or seat belt tensioners. Disconnect airbags, inflatable curtains or seat belt tensioners before testing them. Failure to do so may result in accidental deployment. This could result in serious injury or death.**

The airbags at the front of the car are:

- driver airbag - 2 stage deployment
- front passenger airbag - 2 stage deployment.

The front airbags have two ignition components each. These are electrically separated from each other. This means that the different ignition components have their own separate power supply and grounding points from the control module. Two power supply outputs are required from the control module for each airbag. That is one output for each ignition component. This means that in total four pins on the control module, two power supply pins and two ground pins, are used for each airbag.

When activating the airbags electrical signals are transmitted from the supplemental restraint system module (SRS) to the relevant airbag stage.

Stage 1

Stage 1 of the driver's airbag is pyrotechnic. In the event of activation the charge combusts and the gas which develops is blown into the airbag.

Stage 1 on the passenger airbag consists of a pyrotechnic component in combination with a reservoir which stores a gas. On activation the pyrotechnic charge and mixes with the stored gas. The gas mixture is blown into the airbag.

Stage 2

Stage 2 of the driver's and passenger airbags is pyrotechnical. In the event of activation the charge combusts and the gas which develops is blown into the airbag.

The pace of the airbag 2 stage activation is dependent on collision type and seat belt use. Both stages activate but in the event of a lesser impact, there is a greater time delay between stage 1 and stage 2. For more serious impacts the time delay is shorter between stages 1 and 2.

The driver's airbag is located in the steering wheel. The passenger airbag is located above the glove compartment in the dashboard.

WARNING: **Never use an ohmmeter or similar tool to test airbags, inflatable curtains or seat belt tensioners. Disconnect airbags, inflatable curtains or seat belt tensioners before testing them. Failure to do so may result in accidental deployment. This could result in serious injury or death.**

SIDE IMPACT AIR BAGS

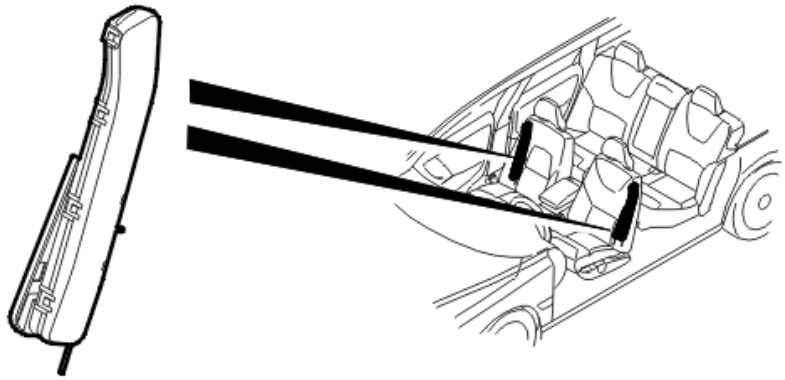

Fig. 91: Identifying Side Impact Air Bags
Courtesy of VOLVO CARS CORPORATION

WARNING: **Never use an ohmmeter or similar tool to test airbags, inflatable curtains or seat belt tensioners. Disconnect airbags, inflatable curtains or seat belt tensioners before testing them. Failure to do so may result in accidental deployment. This could result in serious injury or death.**

There are two side impact protection (SIPS) bags connected to the supplemental restraint system module (SRS). Their connectors are electrically separated from each other. The side impact protection (SIPS) bags are on the outside of the front seats. The side impact protection (SIPS) bags deploy on the side of the impact. Their task is to protect the upper body in the event of a side on collision.

The side airbags together with the inflatable curtains and other safety systems can help to protect the driver and front passenger in the event of a collision.

The side impact protection (SIPS) bag uses a pyrotechnic component in combination with a reservoir which stores a gas. On activation the pyrotechnic charge and mixes with the stored gas. The gas mixture is blown into the airbag.

WARNING: **Never use an ohmmeter or similar tool to test airbags, inflatable curtains or seat belt tensioners. Disconnect airbags, inflatable curtains or seat belt tensioners before testing them. Failure to do so may result in accidental deployment. This could result in serious injury or death.**

FRONT, REAR AND THIRD ROW SEAT BELT TENSIONERS

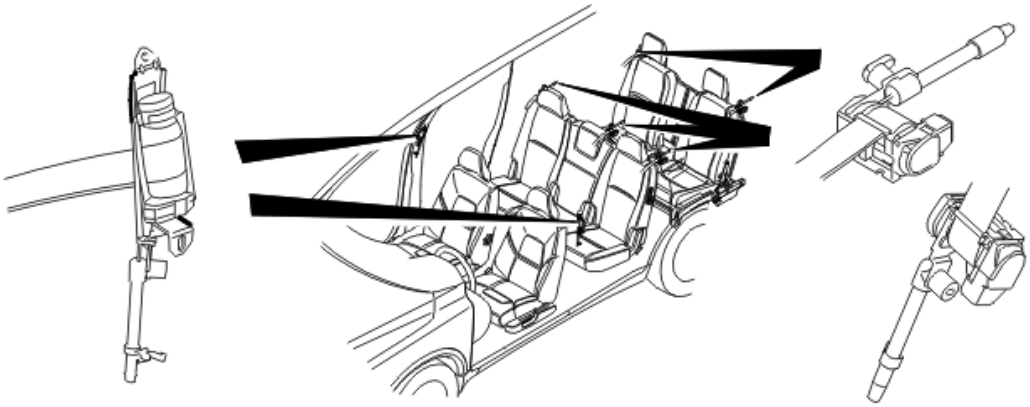

Fig. 92: Locating Seat Belt Tensioners
Courtesy of VOLVO CARS CORPORATION

WARNING: **Never use an ohmmeter or similar tool to test airbags, inflatable curtains or seat belt tensioners. Disconnect airbags or seat belt tensioners before testing them. Failure to do so may result in accidental deployment. This could result in serious injury or death.**

There are up to seven seat belt tensioners in the car, two in the front, three on the rear seat and two on the third row if applicable. They contain an explosive charge which tensions the seat belts when deployed. The seat belt tensioners are separated from each other electrically. This means that each seat belt tensioner has a separate individual power supply and ground from the control module.

The front seat belt buckles are directly connected to the supplemental restraint system module (SRS). This means that data indicating whether the seat belts are engaged or not is transmitted directly to the supplemental restraint system module (SRS).

The seat belt tensioner tensions the seat belt to reduce the forward movement of the body. This also reduces the forces on the chest from the airbag and seat belt. Each seat has a seat belt tensioner.

The supplemental restraint system module (SRS) determines whether to deploy the seat belt tensioners based on whether the seat belts are being used. The seat belt tensioner will not be activated if the seat belt is not engaged. However, if the control module reads off incorrect data for the front seat belt buckles, the seat belt tensioners will be activated and the air bag will be deployed. Deployment of the airbags occurs in the same way as when the seat belts are not fastened.

The seat belt tensioner consists of a pyrotechnical charge and a cylinder with a piston. The piston is connected to a steel cable which is secured to the seat belt reel. When the control module activates the seat belt tensioner the piston is forced downwards by the expanding gas. The piston pulls in the steel cable which reels in the belt.

WARNING: **Never use an ohmmeter or similar tool to test airbags, inflatable curtains or seat belt tensioners. Disconnect airbags or seat belt tensioners before testing them. Failure to do so may result in accidental deployment. This could result in serious injury or death.**

INFLATABLE CURTAINS

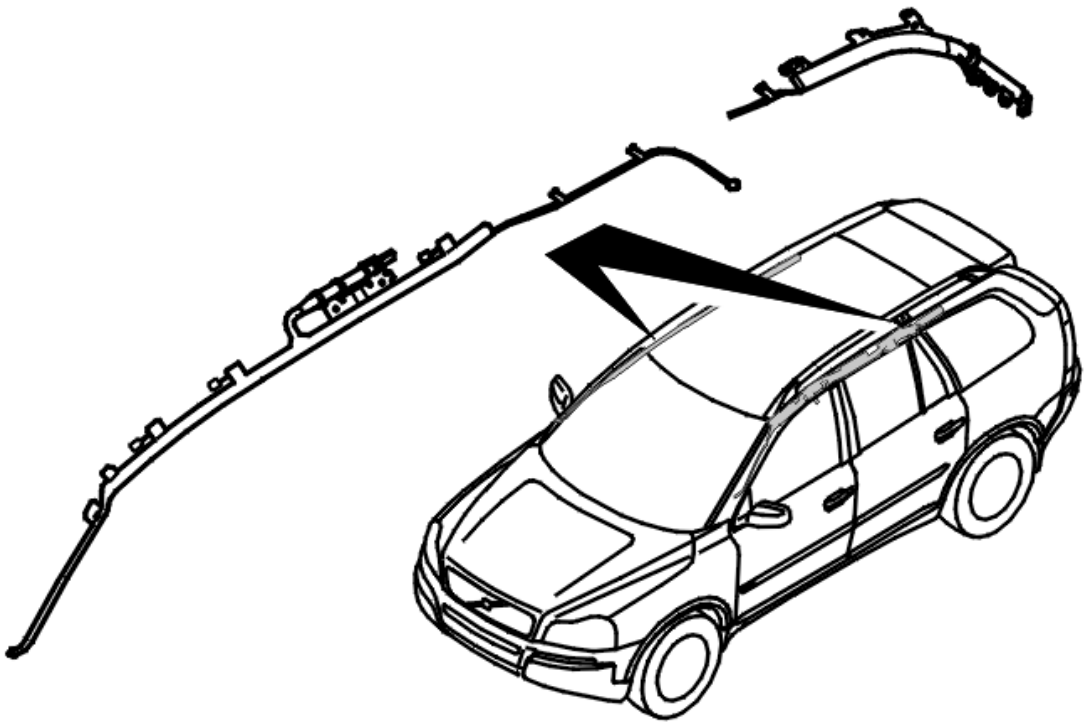

Fig. 93: Identifying Inflatable Curtains
Courtesy of VOLVO CARS CORPORATION

WARNING: **Never use an ohmmeter or similar tool to test airbags, inflatable curtains or seat belt tensioners. Disconnect airbags or seat belt tensioners before testing them. Failure to do so may result in accidental deployment. This could result in serious injury or death.**

There are up to four inflatable curtains connected to the supplemental restraint system module (SRS). Their connectors are electrically separated from each other.

The inflatable curtains are located in the roof between the A and D-posts. The front and rear inflatable curtains have only one ignition component each. The task of the inflatable curtain is to protect the head and the upper body in the event of a side impact. The supplemental restraint system module (SRS) deploys the inflatable curtains on the side from which the side impact sensors transmitted an activation signal.

The number of inflatable curtains in the car depends on whether the car is a 5 or 7 seater model. The configuration is as follows:

- 5 seater models: There is a front inflatable curtain on each side, two in total
- 7 seater models: There are front and rear inflatable curtains on each side, four in total.

The inflatable curtain uses a pyrotechnic component in combination with a reservoir which stores a gas. On activation the pyrotechnic charge and mixes with the stored gas. The gas mixture is blown into the inflatable curtain which falls and covers the side windows and B post. If rear inflatable curtains are installed the C post is also covered.

Where there are two inflatable curtains per side, these are always activated simultaneously.

WARNING: Never use an ohmmeter or similar tool to test airbags, inflatable curtains or seat belt tensioners. Disconnect airbags or seat belt tensioners before testing them. Failure to do so may result in accidental deployment. This could result in serious injury or death.

SRS INDICATION

The supplemental restraint system module (SRS) checks the system once every second. A diagnostic trouble code (DTC) is stored and the SRS indicator lamp lights if the same fault is detected 10 times in one ignition cycle.

SRS indication is partially via the SRS indicator lamp which changes between red and orange depending on how serious the fault is and partially via a text message display. The SRS indicator lamp lights when the ignition is switched on. If no faults are registered by the control module, either internally or from the sensors, wiring or igniters, a signal is transmitted on the controller area network (CAN) to the driver information module (DIM) confirming that the SRS indicator lamp can be switched off. If no faults are detected when the ignition is switched on, the lamp will remain lit for 7 seconds. The lamp goes out when the system has been checked and is operating without faults. If a fault is detected in the supplemental restraint system module (SRS), the SRS indicator lamp lights and a text message is displayed in the text box. Information about which lamp should be lit is transmitted by the supplemental restraint system module (SRS) on the controller area network (CAN).

The control module has an EEPROM memory which retains data about diagnostic trouble codes (DTCs) even when the battery has been disconnected.

The driver information module (DIM) continuously indicates to the supplemental restraint system module (SRS) whether the SRS indicator lamp is working or not. If the lamp stops working, the general warning lamp lights up and a text message is displayed in the text box.

NOTE: Never take a resistance reading across the airbags or seat belt tensioners if a diagnostic trouble code (DTC) is stored for too high or low igniter resistance. Special tools with the same resistance as the airbag or seat belt tensioner must be used for fault-tracing.

SEAT BELT BUCKLE

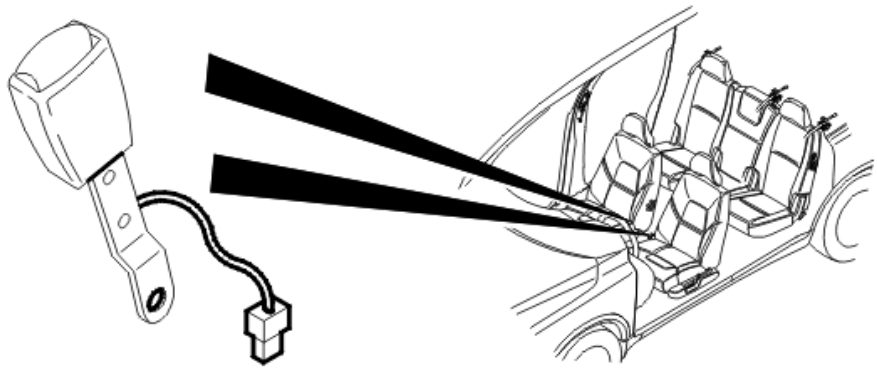

Fig. 94: Locating Seat Belt Buckles
Courtesy of VOLVO CARS CORPORATION

The two front seat belt buckles have hall sensors and are connected to the SRS module. These connections are electrically separated from each other.

The hall sensor detects whether the belt is engaged in the seat belt buckle or not and indicates this to the supplemental restraint system module (SRS).

This data is used to set the activation level of the airbags and to determine whether or not the seat belt tensioners need to be activated. If a fault is detected in the seat belt buckles or in the terminal for the seat belt buckles, the activation level of both the driver and passenger airbags is set as if the occupant is not wearing a seat belt. The seat belt tensioner will still function as if the occupant is wearing a seat belt however.

DEPLOYING AIRBAGS / SEAT BELT TENSIONERS

The collision safety system is extremely advanced. It is able to adapt airbag deployment and the activation of the seat belt tensioners to suit the specific circumstances of a collision. In general it is extremely unlikely that all airbags and seat belt tensioners will be deployed in the same accident. It is possible that only one airbag or seat belt tensioners is deployed. This is determined by the supplemental restraint system module (SRS) based on the forces that occur during the collision.

If the control module deploys the front airbags, both stages will always be activated. By varying the time between the two deployment phases, the deployment of the airbag is more gentle for a low speed collision.

ACTIVATION LEVELS FOR AIRBAGS AND SEAT BELT TENSIONERS

The table below shows how the SRS system reacts in the event of a frontal impact.

NOTE: The deployment of the driver and passenger airbags is calculated individually.

Level 1 = Low speed collision

Level 5 = Severe collision

Collision level	Front seats		Rear seat / Rear seat 3rd row
	Seat belt not in use	Seat belt in use	
Level 1	No action	The seat belt tensioner is activated. The airbags are not deployed.	No action
Level 2	The seat belt tensioner is not activated. The airbags are deployed with a slow build-up of pressure.	The seat belt tensioner is activated. The airbags are not deployed.	No action
Level 3	The seat belt tensioner is not activated. The airbags are deployed with a slow build-up of pressure.	The seat belt tensioner is activated. The airbags are deployed with a slow build-up of pressure.	The seat belt tensioner is activated.
Level 4	The seat belt tensioner is not activated. The airbags are deployed with a rapid build-up of pressure.	The seat belt tensioner is activated. The airbags are deployed with a slow build-up of pressure.	The seat belt tensioner is activated.
Level 5	The seat belt tensioner is not activated. The airbags are deployed with a rapid build-up of pressure.	The seat belt tensioner is activated. The airbags are deployed with a rapid build-up of pressure.	The seat belt tensioner is activated.

DEPLOYMENT OF SIDE IMPACT PROTECTION (SIPS) BAGS

The table below shows how the SRS system reacts in the event of a side impact.

	Side impact sensor, left-hand side		Side impact sensor, right-hand side	
	B-post	**C-post**	**B-post**	**C-post**
Left-hand (SIPS) bag	X			
Left-hand inflatable curtain, front and rear	X	X		
Right-hand SIPS bag			X	
Right-hand inflatable curtain, front and rear			X	X

DIAGNOSTIC FUNCTIONS

OVERVIEW

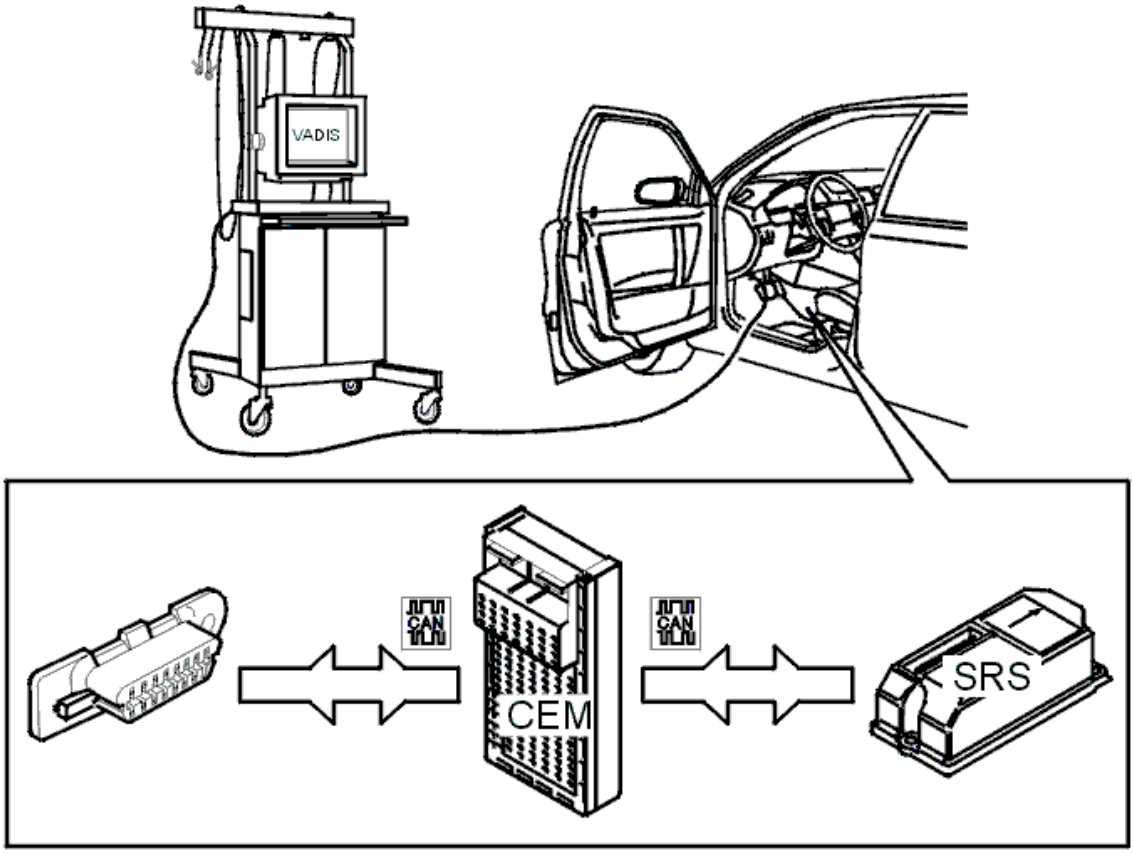

Fig. 95: Identifying Supplementary Restraint System Diagnostic Functions
Courtesy of VOLVO CARS CORPORATION

The on-board diagnostic (OBD) system for the supplemental restraint system module (SRS) continually diagnoses the function of supplemental restraint system components and stores any diagnostic trouble codes (DTCs). The diagnostic trouble codes (DTCs) can then be read off via VIDA (Volvo scan tool). The principle behind VIDA information presentation is the same as for other on-board diagnostic (OBD) systems.

FAULT INDICATION

The driver is warned in a number of ways via the combined instrument panel if any fault occurs in the supplemental restraint system:

- SRS warning lamp and text in the display
- the general warning lamp lights up in red and there is text in the display
- the general warning lamp lights up in orange and there is text in the display.

A VIDA station must be connected to the car data link connector (DLC) in order for a fault source to be identified.

DIAGNOSTIC TROUBLE CODES (DTCS)

The control module will store a diagnostic trouble code (DTC) if it detects a fault. The control module can store

up to 10 diagnostic trouble codes (DTCs).

If a fault disappears for any reason after the diagnostic trouble code (DTC) has been stored in the control module, information about the fault remains in the control module. If a fault is no longer permanent the diagnostic trouble code (DTC) remains as intermittent.

READING AND ERASING DIAGNOSTIC TROUBLE CODES (DTCS)

Stored diagnostic trouble codes (DTCs) can be read off and erased using this function.

After the diagnostic trouble code (DTC) is stored it can also be read off if the fault is still present (permanent fault), or if the fault has disappeared for any reason (intermittent fault).

Diagnostic trouble codes (DTCs) can only be erased when all diagnostic trouble codes (DTCs) have been read at least once.

DATA READ-OUT

Data can be read off from the supplemental restraint system module (SRS) using this function.

Car model

Reads off the model that is programmed into the control module.

Steering

Read off whether the supplemental restraint system module (SRS) is programmed for left or right-hand drive.

Passenger airbag

Read off the configuration that is programmed into the supplemental restraint system module (SRS), with or without passenger airbag.

Front seat belt buckle

Reads off the status of the driver and passenger seatbelt buckles.

READING OFF THE CONTROL MODULE IDENTIFICATION

VIDA identifies the control modules by reading off a number of codes from the control module memory.

The codes contain information about the control module's:

- hardware P/N (control modules without software)
- hardware serial number (control modules without software)
- side impact sensor serial number
- software P/N

- P/N diagnostic software.

DOWNLOADING SOFTWARE AND REPLACING THE CONTROL MODULE

New software for the supplemental restraint system module (SRS) can be downloaded. When ordering software, the hardware and the software in the car is compared to the information in the Volvo central database. If the comparison is OK the software is downloaded to the control module.

If the comparison between the car and Volvo central database is not OK, the database is updated with the car configuration. When this is complete the software is downloaded.

When the control module is replaced, the new control module will not have any preprogrammed software.

The type of information which is downloaded is parameter files containing:

- vehicle type
- right / left hand drive
- parameters unique to this model
- whether the car has a passenger airbag or not
- a signal configuration file.

The MOST network is used for a total software reload.

FUNCTION

CHECKING THE SRS SYSTEM

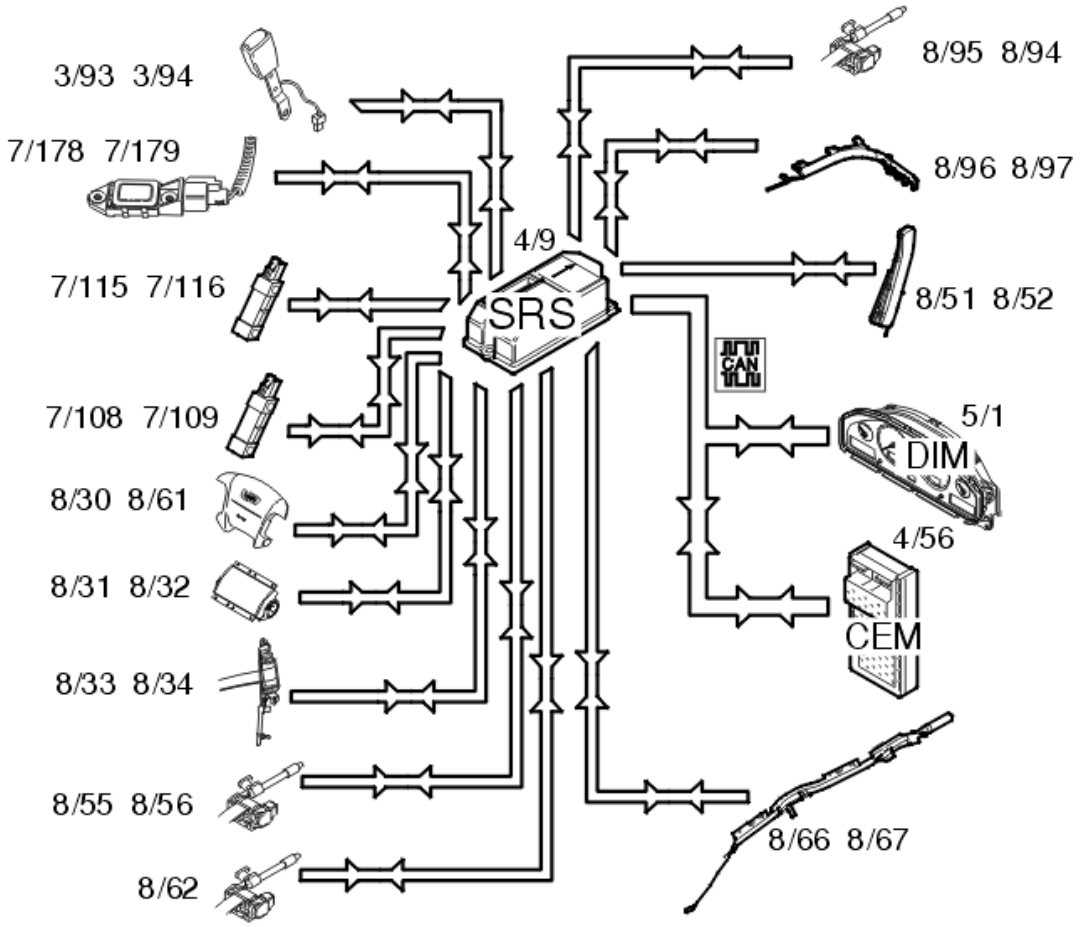

Fig. 96: Identifying SRS System Components
Courtesy of VOLVO CARS CORPORATION

When the ignition key is turned from 0 to I, II or III, the status of the internal functions in the supplemental restraint system module (SRS) (4/9) is checked, as well as all directly connected components such as:

- driver airbags (8/30 and 8/61)
- passenger airbags (8/31 and 8/32)
- seat belt tensioners (8/33, 8/34, 8/55, 8/56, 8/62, 8/94, 8/95)
- side impact sensors (7/108, 7/109, 7/115 and 7/116)
- front and rear inflatable curtains (8/66, 8/67, 8/96, 8/97)
- SIPS bags (8/51 and 8/52)
- frontal impact sensor (7/178, 7/179)
- front seat belt buckles (3/93, 3/94).

At the same time, the supplemental restraint system module (SRS) transmits data via the Controller area network (CAN) to the driver information module (DIM) (5/1) indicating that this test is in progress. The central electronic module (CEM) (4/56) also transmits the parameter values during the status check.

The driver information module (DIM) then lights the SRS indicator lamp. The SRS indicator lamp is lit while the SRS system is being checked. When the SRS system has been tested and if no faults have been detected, the SRS indicator lamp goes out.

If a fault is detected, the lamp remains lit and a warning text is displayed in the text box in the combined instrument panel. The driver information module (DIM) continuously transmits a signal to the supplemental restraint system module (SRS) via the Controller area network (CAN) with information about whether the SRS indicator lamp is working or not. The orange general warning lamp lights up if the SRS indicator lamp stops working. If this lamp also stops working, the red general warning lamp is used. If the CAN communication between the supplemental restraint system (SRS) module and the driver information module (DIM) fails, the red lamp in the general warning lamp lights up and text is displayed in the text box in the combined instrument panel. If the fault disappears and the driver information module (DIM) is again able to transmit information to the supplemental restraint system module (SRS) indicating that the status of the SRS indicator lamp is OK, the general warning lamp will not light but the SRS indicator lamp will take over.

It may take up to 3 minutes before the seat belt buckles indicate whether they are functioning correctly.

SIDE IMPACT

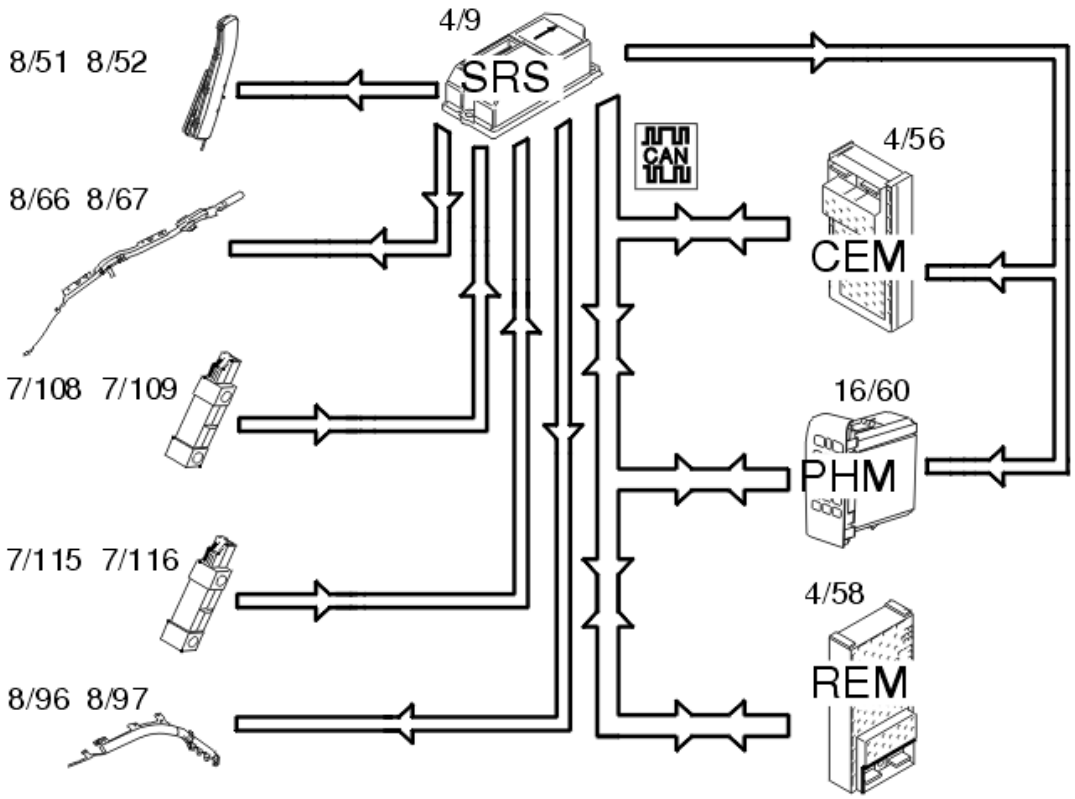

Fig. 97: Identifying Side Impact Components
Courtesy of VOLVO CARS CORPORATION

In event of a side-on collision, the side impact sensors in the left (7/108 and 7/115) and right-hand (7/109 and 7/116) sides evaluate the force of the collision pulse. If the collision pulse is powerful enough, an activation

signal for the collision protection system is transmitted to the SRS (supplemental restraint system) (4/9).

The control module also requires a confirmation signal, either from the acceleration sensors in the control module or from another side impact sensor. If the pulse from the collision sensor meets the conditions for activation of the SIPS bags (8/51 and 8/52) and inflatable curtains (8/66, 8/67, 8/96 and 8/97), the control module sends a current pulse to those SIPS bags or inflatable curtains that are to be deployed. The side impact protection system will only be deployed on the side where the impact is registered.

The control module also transmits a collision signal on the directly connected cable to the central electronic module (CEM) (4/56) and the phone module (PHM) (16/60), so that these control modules can take certain actions.

A collision status signal is also sent to the phone module (PHM) and rear electronic module (REM) (4/58) on the Controller Area Network (CAN).

FUNCTION IN THE EVENT OF A FRONTAL IMPACT

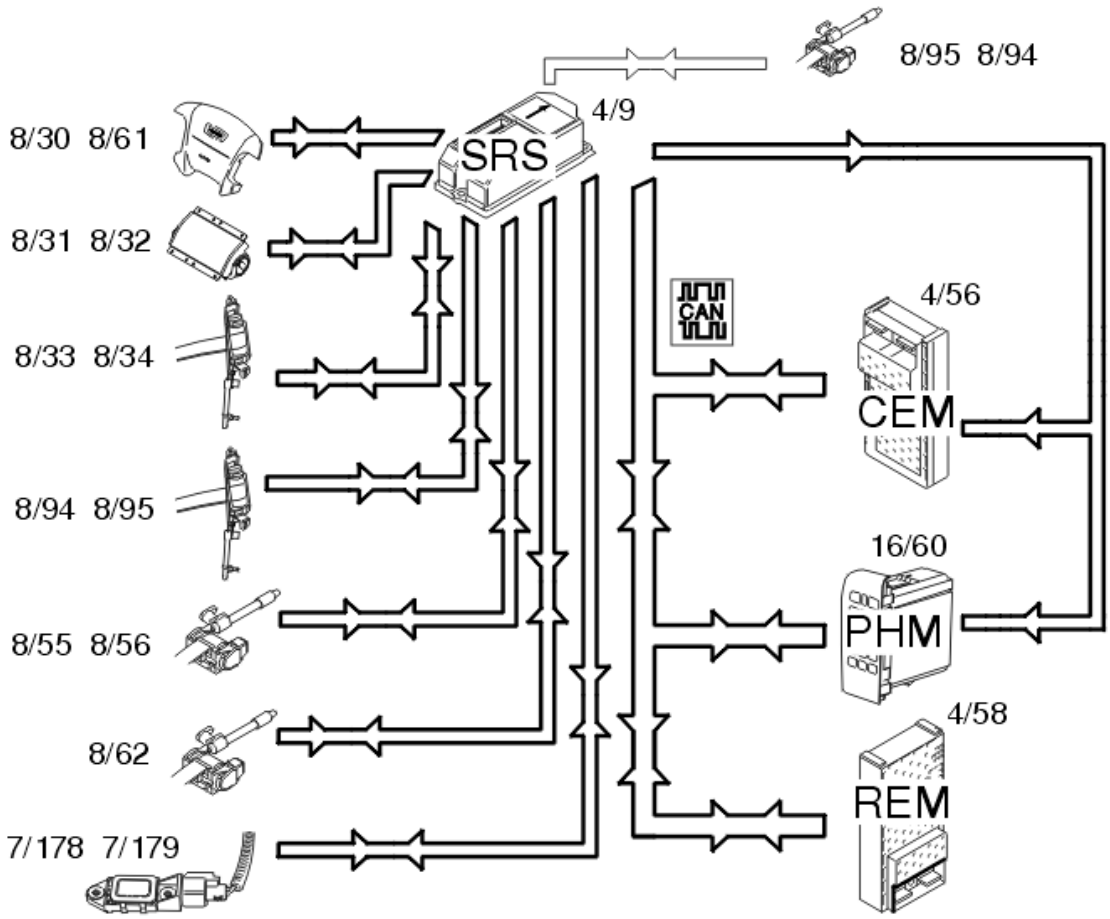

Fig. 98: Identifying Frontal Impact Components
Courtesy of VOLVO CARS CORPORATION

In the event of frontal collision a function called multi point detection is used. The collision pulse is registered at several points. This function is integrated in the supplemental restraint system module (SRS) (4/9) and is called a collision sensor. When the collision pulse is sufficiently large an activation signal (current pulse) is transmitted to the front airbags and/or the seat belt tensioners. The frontal collision sensors (7/178, 7/179) are also part of multi point detection in the control module. They register the collision pulse and transmit acceleration data to the control module indicating the size of the collision pulse. The driver (8/30, 8/61) and front passenger (8/31, 8/32) airbags are deployed. The seat belt tensioners for the front (8/33, 8/34), rear (8/55, 8/56 and 8/62) and third row of seats (8/94, 8/95) are activated.

When the collision protection system has been activated a collision signal is transmitted from the supplemental restraint system module (SRS) (4/9) to the central electronic module (CEM) (4/56) and phone module (PHM) (16/60) on a directly connected cable. These two control modules ensure that:

- the central locking system is unlocked
- the fuel pump (FP) is switched off
- the interior lighting is lit
- the warning lamps are lit
- the collision pulse is registered
- an automatic alarm is sent to CSC (customer service center), and to Volvo On Call (Plus) if applicable.

ROLL OVER PROTECTION

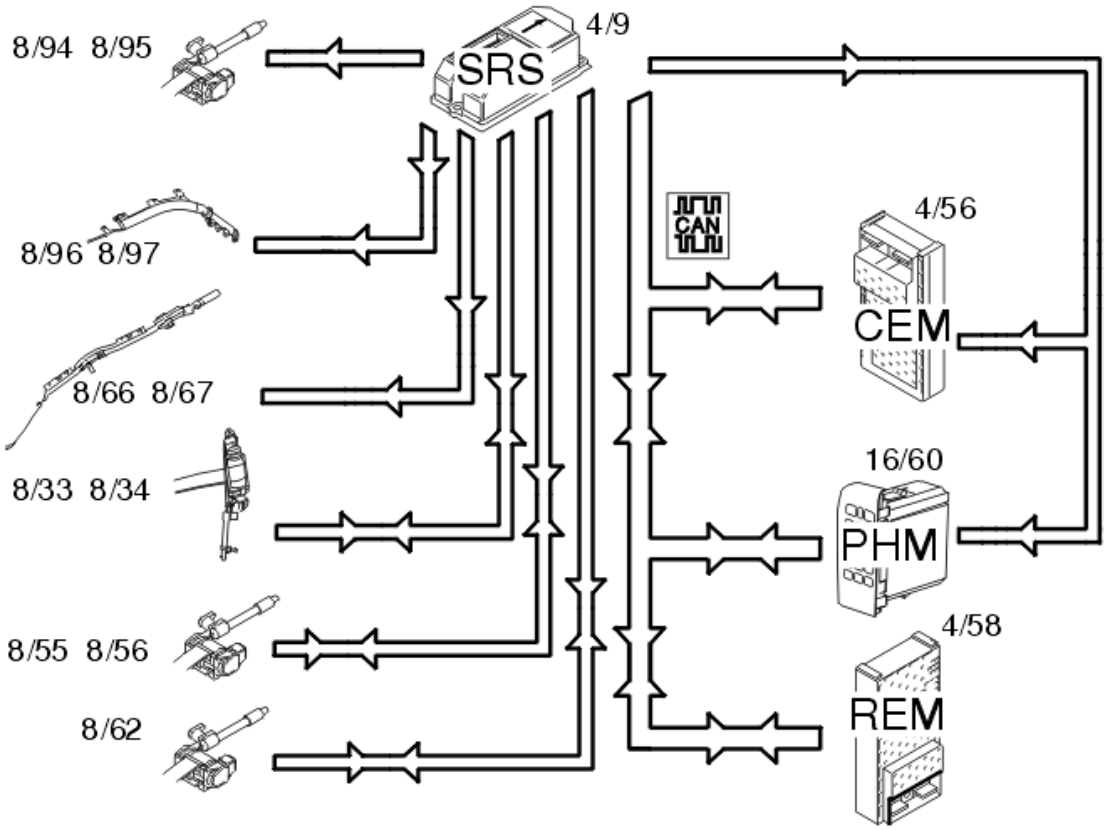

Fig. 99: Identifying Roll Over Protection Components

Courtesy of VOLVO CARS CORPORATION

If the side tilt of the car exceeds 50 - 55 degrees, the supplemental restraint system module (SRS) starts calculating the strength of the rotational energy. If the sideways lean and rotational energy are high enough, the control module will activate the roll over protection. All seat belt tensioners in the car, front (8/33, 8/34), rear (8/55, 8/56, 8/62) and for the third row of seats (8/94, 8/95) (if applicable) will be activated. The front (8/66, 8/67) and rear (8/96, 8/97) inflatable curtains will also be activated.

When the collision protection system has been activated a collision signal is transmitted from the supplemental restraint system module (SRS) (4/9) to the central electronic module (CEM) (4/56) and phone module (PHM) (16/60) on a directly connected cable. These two control modules ensure that:

- the central locking system is unlocked
- the fuel pump (FP) is switched off
- the interior lighting is lit
- the warning lamps are lit
- the collision pulse is registered
- an automatic alarm is sent to CSC (customer service center), and to Volvo On Call (Plus) if applicable.

A collision status signal is also sent to the phone module (PHM) and rear electronic module (REM) (4/58) on the Controller Area Network (CAN).

SYSTEM OVERVIEW

SUPPLEMENTAL RESTRAINT SYSTEM MODULE (SRS)

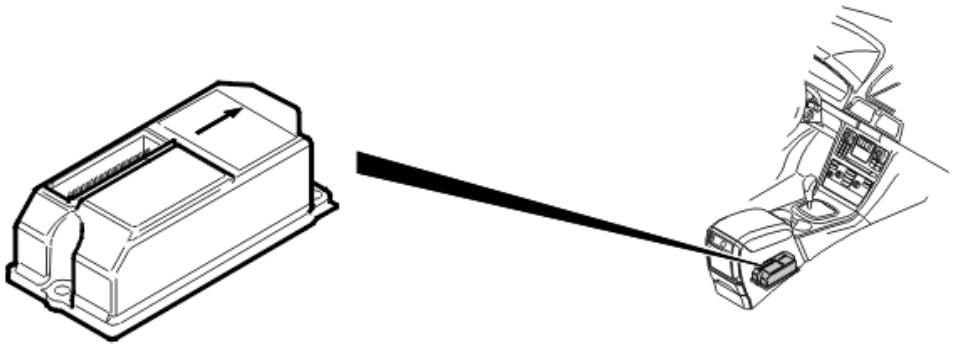

Fig. 100: Locating Supplemental Restraint System (SRS) Control Module
Courtesy of VOLVO CARS CORPORATION

The primary task of the supplemental restraint system module (SRS) is to manage the following functions:

- seat belt tensioners
- side impact sensors
- frontal collision sensors

- side impact protection (SIPS) bags
- front driver and passenger airbags
- inflatable curtains
- SRS indication
- collision output signal
- collision registration.

The control module is in the transmission tunnel, between the gear selector lever and the parking brake.

The supplemental restraint system module (SRS) communicates with directly connected components and with other control modules via the Controller Area Network (CAN).

The control module checks the input and output signals through an integrated diagnostic system. A diagnostic trouble code (DTC) is stored if the control module detects a fault.

Any diagnostic trouble codes (DTCs) are stored in the control module memory. The data can be read off using VIDA (Volvo scan tool).

The control module can process multiple collisions, frontal collisions, collisions from behind, side-on collisions and overturning.

The control module function can be easily checked by switching on the ignition. The SRS indicator lamp in the combined instrument panel must light up when the key is in ignition positions I-III. The lamp goes out after a short while if no faults are detected. This means that the supplemental restraint system (SRS) is functioning correctly.

SIGNALS

The table below summarizes the input signals to and output signals from the supplemental restraint system module (SRS). The signal types are divided into directly connected signals and Controller area network (CAN) communication. The illustration below displays the same information with the Volvo component designations.

Input signals	Output signals
Directly connected: • Side impact sensor left C-post (7/108) • Side impact sensor right C-post (7/109) • Side impact sensor left B-post (7/115) • Side impact sensor right B-post (7/116) • Frontal collision sensor left front (7/179) • Frontal collision sensor right front (7/178) • Seat belt buckle left front (3/93) • Seat belt buckle right front (3/94).	**Directly connected:** (power supply unless otherwise stated) • Central electronic module (CEM) (4/56), collision output signal • Phone Module (PHM) (16/60), collision output signal • Seat belt tensioner left front (8/33) • Seat belt tensioner right front (8/34) • Seat belt tensioner left rear (8/55) • Seat belt tensioner right rear (8/56)

	• Seat belt tensioner center rear (8/62) • Airbag passenger front stage 1 (8/31) • Airbag passenger front stage 2 (8/32) • Airbag driver stage 1 (8/30) • Airbag driver stage 2 (8/61) • Side impact protection (SIPS) bag left front (8/51) • Side impact protection (SIPS) bag right front (8/52) • Inflatable curtain left front (8/66) • Inflatable curtain right front (8/67) • Inflatable curtain left rear (8/96) • Inflatable curtain right rear (8/97) • Seat belt tensioner third row left (8/94) • Seat belt tensioner third row right (8/95).
Via Controller Area Network (CAN) communication: • Central electronic module (CEM) (4/56) • Driver information module (DIM) (5/1) • Rear electronic module (REM) (4/58).	**Via Controller Area Network (CAN) communication:** • Central electronic module (CEM) (4/56) • Driver information module (DIM) (5/1) • Phone module (PHM) (16/60) • Rear electronic module (REM) (4/58).

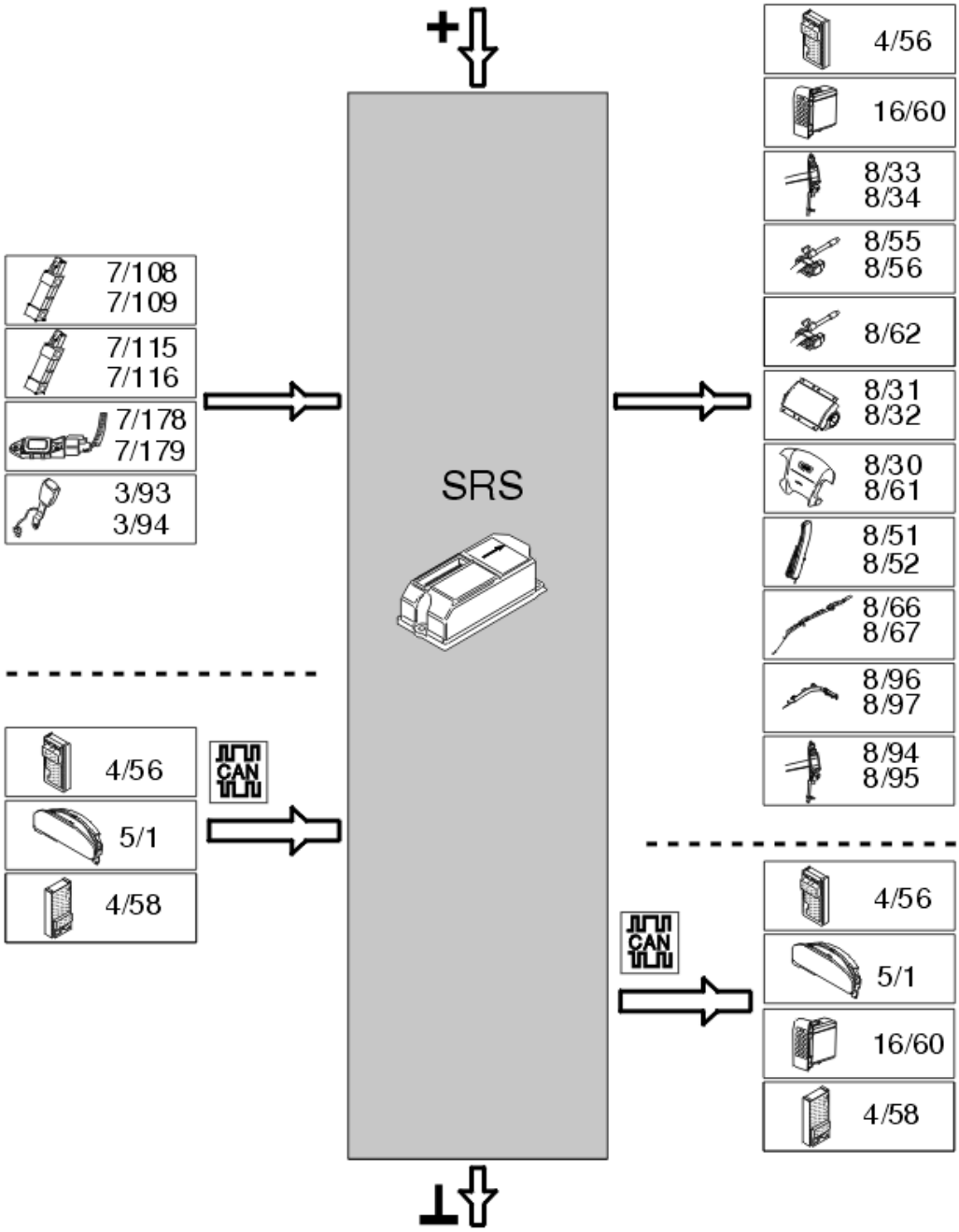

Fig. 101: Identifying Volvo Component Designations.
Courtesy of VOLVO CARS CORPORATION

THE CONTROLLER AREA NETWORK (CAN) (2003-2004)

CAN-NETWORK (CONTROLLER AREA NETWORK)

OVERVIEW

CAN (Controller Area Network) is a standardised system for multiplex-communication. Volvo has developed a new standard for multiplex communication - VOLCANO. VOLCANO is a further development of CAN and operates with real time operation and prioritising. The description of prioritising is developed from VOLCANO but is designated CAN.

The standard for Control area network (CAN) specifies:

- That two cables should be used (CAN H and CAN L)
- Which voltage levels should be used
- What a message should look like
- How transfer errors should be handled.

CABLES, CAN H AND CAN L

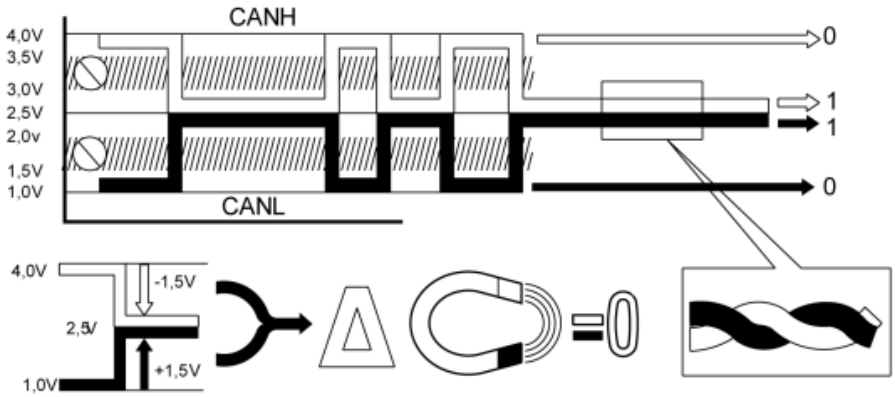

Fig. 102: CAN H And CAN L Distributing Signals Within Multiplex Communication Network
Courtesy of VOLVO CARS CORPORATION

The CAN H and CAN L cables must not be confused with HS CAN and LS CAN which are speeds on the Controller area network. CAN H and CAN L are a way of distributing signals within the multiplex communication network.

Communication occurs through two cables. These two cables are paired together. CAN H is always white and CAN L is always green.

The cables are made of copper and are easily identified by the green and white colouring.

The voltage levels for communication occur using differential voltage levels.

The reason for communicating using paired cables and differential voltage levels is that the network becomes less sensitive to interference.

The same message is transferred simultaneously by both cables, but different voltage levels are used.

- Binary 1 = 2.5 V on both CAN H and CAN L.

- Binary 0 = 4 V on CAN H and 1 V on CAN L.

Average voltage level is 2.5V.

CONTROLLER AREA NETWORK (CAN) MESSAGE

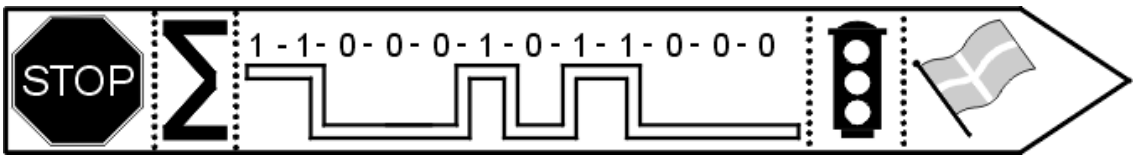

Fig. 103: Controller Area Network Message
Courtesy of VOLVO CARS CORPORATION

The message consists of the following components:

- Identifier ("flag"), which indicates the message identity and prioritisation
- Data information (value, information etc.)
- Check sum, used to check that the message has arrived correctly
- Stop signal, which indicates that the message has finished.

A complete Controller area message is called a frame.

PRIORITISING

Conflicts can occur in a network when several control modules wish to send a message at the same time. For example when the driver presses the brake pedal at the same time as the passenger changes the climate control settings and a passenger in the rear seat opens the power window.

For safe function the messages must be prioritised. In addition the time delays which occur in the event of a queue situation must be held with reasonable limits. This is so that the customer does not experience the system as slow.

To solve problems with conflicts and time delays there is a priority order of messages to ensure good functionality.

Prioritisation of messages is determined by the number of zeroes at the beginning of a message, the more zeroes the higher the priority.

Prioritisation occurs as follows:

- When the network is available all the control modules with "something to say" send bit one in their message
- All the control modules detect what has been transmitted on the network
- If a control module has transmitted 0 those that have sent 1 stop and wait until the next time the network is available

- Those that transmitted 0 transmit bit two of the message
- If a control module has transmitted 0 as bit two those that have sent 1 stop and wait until the next time the network is available and so on.

The message with the highest priority (most zeroes at the beginning) "wins" and is sent first.

The end of a message is seven zeroes. The control modules then know that the network is available and a new message can be sent in priority order.

TWO TYPES OF MESSAGE

There are two types of message in the system:

- Periodical frames. These messages are sent regularly and give the present status of a parameter. They are used for information which is frequently updated, speed signals for example
- Event frames, which are only sent when predetermined conditions have been met. This type of message is used for things that seldom occur, raising / lowering a window for example.

The message can contain an update bit which states how "fresh" the information is.

The system assumes that the receiver has received the message so an acknowledgement is not sent (a reply is only sent to a direct question from another control module).

But the receiver knows how often it should receive a message about which status applies. If the message is missing the receiver can connect an emergency program and / or set a diagnostic trouble code.

COMPATIBILITY

The units must "speak" the same language and must be compatible with each other. A standardised communication protocol is used for this.

Signal configuration (sfg) contains the language between the units. If any module has a signal configuration which does not correspond to other units the module cannot communicate. This means that all the units must have compatible signal configuration. The signal configuration is occasionally modified so that the new messages are added and old messages removed.

CONFIGURATION

Instructions for the following are downloaded when a system is configured:

- Which control modules are included in the system (for example central electronic module, and others.)
- Which control module should do what (for example "you are the control module for the passenger door - you are the control module for the driver's door")
- Which functions should be included (for example if the alarm function should be on or off)
- Which components are connected to the control modules (for example whether the inclination sensor is included in the alarm or not)

- Which messages a control module is to transmit and which it is to receive
- Where the different data should be stored.

The configuration must be adapted after installation of accessories and must be downloaded again after any control module is replaced. The configuration is adapted and downloaded via VIDA (Volvo scan tool).

NOTE: Even if two cars appear identical, they may behave differently because of differing configurations, a parameter may have been modified by, e. g., the customer or workshop.

CONTROL MODULES IN THE CONTROL AREA NETWORK (CAN)

CONTROL MODULES

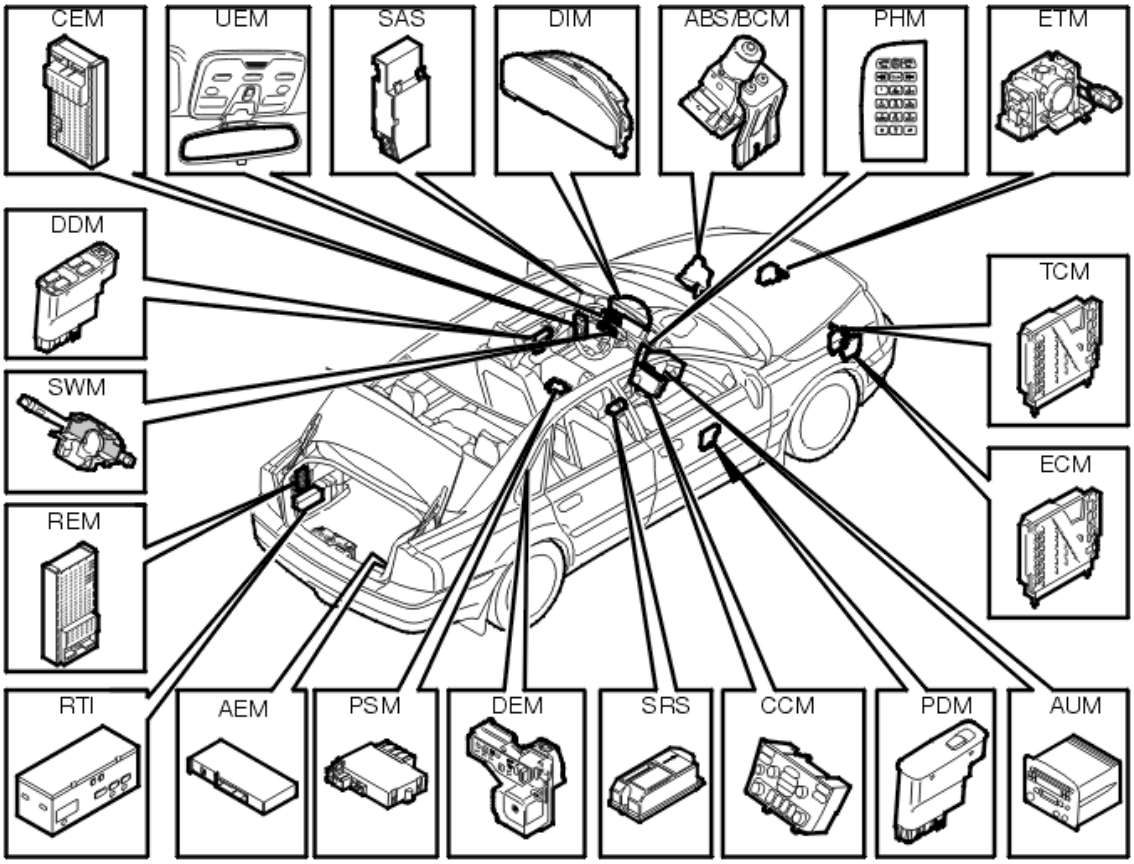

Fig. 104: Controller Area Network Components
Courtesy of VOLVO CARS CORPORATION

The number of control modules in the CAN varies depending on the level of equipment, the car model and the structure week. The description applies to the structure week 199815-200149. The structure week and the manufacture week are not necessarily the same week. The week of manufacture is the week in which the car was manufactured in the factory. The content of the car is guided by the structure week A structure week can extend over many manufacture weeks. The structure week is specified in the format YYYYWW.

For example, the structure week 199815 indicates that the structure week of the car is week 15 1998.

Explanation		
LS CAN	=	CAN Low speed section (125 Kbps)
HS CAN	=	CAN High speed section (250 Kbps)
Serial	=	Serial communication (Volcano Lite) between the slave control module and the Controller area network (CAN) control module (10.4 Kbps).
Slave control module	=	A control module with low computing power which is connected to a main "control module" and which only operates on commands from the main control module.
Option	=	Accessories installed at the factory to order, when purchasing a new car.
Accessories	=	After market installations.

Control module	Name/ Function	Communication	Other
ABS	Anti-Lock Brake System Module. Controls the brake system ABS/EBD/DSTC/STC functions and communicates with the other modules via the network high speed sector. Contains a terminating resistor for the network. Replaced by the brake control module from structure week 200135 inclusive.	HS CAN	Replaced by the brake control module from structure week 200135 inclusive.
AEM	Accessory Electronic Module. Controls certain accessory functions for the car. The control module communicates with other control modules via the low speed sector of the network.	LS CAN	Accessories
Audio control module	AUdio Module. Controls the radio / audio equipment and communicates with the other modules via the network low speed sector.	LS CAN	Standard/ accessory/option.
Brake control module	Brake Control Module Controls the ABS/EBD/DSTC/STC functions of the brake system and communicates with the other modules via the network high speed sector. Contains a terminating resistor for the	HS CAN	Replaces the ABS control module from structure week 200135.

	network. Replaces the ABS control module from structure week 200135.		
Climate control module	Climate Control Module Controls the climate control system functions and communicates with the other modules via the network low speed sector.	LS CAN	STD/ MCC/ ECC
Central electronic module	Central Electronic Module Is the network main control module and the interface between the high and low speed sides. The control module has a comprehensive function in the electrical system and handles a large number of functionalities.	HS CAN/ LS CAN	
Additional heater module	Combustion Preheater Module	Serial Start the parking heater. The combustion preheater module is a slave control module for the central electronic module and communicates serially.	Option /accessory. Market dependent Slave control module for the central electronic module (CEM).
Driver's door module	Driver Door Module Controls the drivers door functions and communicates with the other modules via the network low speed side.	LS CAN	
DEM	Differential Electronic Module Controls four wheel drive engagement and communicates with the other modules via the network high speed side.	HS CAN	Option from structure week 200135 inclusive.
Driver information module	Driver Information Module Controls the combined instrument panel functions and communicates	LS CAN	

	with the other modules via the network low speed side.		
Engine control module (ECM)	Engine Control Module Controls the engine functions and communicates with the other modules via the network high speed side. Contains a terminating resistor for the high speed side on the network for those engines which do not have an electronic throttle module.	HS CAN	Different versions depending on the engine alternative.
Electronic throttle module	Electronic Throttle Module	HS CAN Controls the throttle and communicates with the other modules via the network high speed side. Contains a terminating resistor for the high speed side on the network.	Gasoline engines only. A design change has been introduced structure week 200135 on certain gasoline engines. The electronic throttle module has been replaced by a new type of electronic throttle which does not communicate using the controller area network (CAN).
GSM	Gear Selector Module	Serial Transmits and receives information about the position of the gear selector and the lighting strength in the gear selector. The gear selector module is a slave control module for the transmission control module (TCM) and communicates serially.	Slave control module for the transmission control module (TCM). Applies to cars with automatic transmission only.
Inclination Sensor Module	Inclination Sensor Module	Serial	Option /accessory. Slave control module for the rear electronic module (REM).

	Used for the alarm, transmits information about the angle of the vehicle. The inclination sensor module is a slave control module for the rear electronic module and communicates serially.		
LSM	Light Switch Module Transmits information about the light switch beam level adjustment and rheostat positions, and status of the switches. The light switch module is a slave control module for the central electronic module and communicates serially.	Serial	Slave control module for the central electronic module (CEM).
Mass Movement Sensor	Mass Movement Sensor Module Used for the alarm, transmits information about movement in the passenger compartment The mass movement sensor module sensor is a slave control module for the upper electronic module and communicates serially.	Serial	Option /accessory. Slave control module for the upper electronic module.
Passenger door module	Passenger Door Module Controls the functions in the passenger side door and communicates with the other modules via the network low speed side.	LS CAN	
Carphone module	PHone Module Controls the functions of the carphone and communicates with the other modules via the network low speed side.	LS CAN	Option /accessory.
Power seat module	Power Seat Module	LS CAN Controls the positions and functions of the driver's seat. Communicates with other control	Standard/ option **NOTE:** **Power seat module (PSM) does not check the seat heating and SIPS (side impact protection system)**

		modules via the low speed side on the network.	**airbag function.**
Rear electronic module	Rear Electronic Module Controls the electrical functions in the rear section of the car, and communicates with the other modules via the low speed side on the network. Contains a terminating resistor for the network.	LS CAN	
RTI (road traffic information)	Road Traffic Information Module Controls the road traffic information functions and communicates with the other modules via the low speed side on the network.	LS CAN	Option /accessory
Steering angle sensor	Steering Angle Sensor Module Collects information about the steering angle and communicates with other control modules using the high speed side on the network.	HS CAN	Option. Used in the DSTC system.
Siren control module	Siren Control Module Controls the siren and functions. The siren control module is a slave control module for the upper electronic module and communicates serially.	Serial	Option /accessory. Slave control module for the upper electronic module.
SRM	Sun Roof Module Controls the sun roof and functions. The sun roof control module is a slave control module for the upper electronic module and communicates serially.	Serial	Option. Slave control module for the upper electronic module.
SRS (supplemental restraint system)	Supplemental Restraint System Module Controls the crash safety system and communicates with the other modules	LS CAN	

	via the low speed side on the network.		
Steering wheel module	Steering Wheel Module Receives signals from the switch in the steering wheel and the controls around the steering wheel. Communicates with other control modules via the low speed side on the network.	LS CAN	
Transmission control module (TCM)	Transmission Control Module Controls the automatic transmission and communicates with the other modules via the high speed side on the network.	HS CAN	Applies to cars with automatic transmission only.
Upper electronic module	Upper Electronic Module	LS CAN Controls the electrical functions in the upper section of the passenger compartment. Communicates with other control modules via the low speed side on the network. Contains a terminating resistor for the network.	Included in the rear view mirror. **NOTE:** **There are two versions of the upper electronic module. One with automatic anti-glare function and one without. The two versions cannot be interchanged.**

ERROR MANAGEMENT IN THE CONTROLLER AREA NETWORK (CAN)

OVERVIEW

The Controller area network (CAN) is monitored and controlled by the central electronic module. When the central electronic module detects a fault in the controller area network a diagnostic trouble code (DTC) is set in the central electronic module. There are different diagnostic trouble codes depending on the type of malfunction detected.

Types of error which are handled are:

- Electrical faults
- No communication from the control module
- Faulty communication.

ELECTRICAL FAULTS

In the event of errors in the signal levels on the communication cables for the central electronic module a diagnostic trouble code (DTC) is stored in the central electronic module. A check is carried out on each communication cable to the central electronic module, CAN L, CAN H on the low speed side and CAN L and CAN H on the high speed side There are two different levels which are detected (low or high).

This gives eight diagnostic trouble codes for detecting electrical faults.

The diagnostic trouble codes for electrical faults are CEM-DF0X for the low speed network and CEM-DF1X for high speed network.

NO COMMUNICATION FROM THE CONTROL MODULE

The central electronic module knows which control modules are in the Controller area network and checks that all the control modules communicate. If any control module on the Controller area network (CAN) does not communicate a diagnostic trouble code is stored in the central electronic module. There is a diagnostic trouble code for each control module. The diagnostic trouble codes are CEM-1A5X respectively CEM-1A6X.

FAULTY COMMUNICATION

Each control module except for the central electronic module has two diagnostic trouble code types which are related to faulty communication (the central electronic module only has one type of diagnostic trouble code).

These are:

- Faulty messages
- Configuration fault (missing in the central electronic module (CEM)).

Faulty messages

When a control module sends errors in the messages a number of times, the control module stops communication. The diagnostic trouble code is stored in the control module which caused the faulty message. If the fault is permanent it is impossible to communicate with the control module. It is not possible to read off diagnostic trouble codes from the control module with the switched off communication.

The diagnostic trouble codes (DTCs) are XXX-E000 for the high speed network and XXX-E001 for low speed network.

Configuration fault

If the signal configuration of a control module does not correspond to the signal configuration of the central electronic module, a diagnostic trouble code is stored in the control module with the faulty signal configuration.

The diagnostic trouble code for configuration fault is XXX-E003.

THE NETWORK

OVERVIEW

Increasing demands for further functionality in the car, both by statutory requirement and customers, have led to an increased complexity in the car.

This has in turn driven the development of more flexible electronic systems. The Controller area network (CAN) is a result of this research. The network allows a large number of different commands and messages to be transmitted and received on the same cable. Previously each command or message required a separate cable. By using the network functionality has increased without increasing the number of cables.

The number of commands and messages that can be handled by the network depends on the speed of the network and the length of the message / command. The Volvo network which is based on a Controller Area Network (CAN), can transmit over 500 different signals and approximately 100 messages (also known as frames). Each message can contain several signals, for example a message to the rear electronic module can contain all the signals for how the tail lamps should be lit.

ADVANTAGES OF A NETWORK

Easier to add further functions and install accessories

Because the control modules in the network are already connected to each other and are easy to add more information to, all that is required is:

- to connect the sensors to the nearest control module
- to connect the controlled component to the nearest control module
- to download software to alter the configuration and programming of the network.

The length of the wiring and the number of components which are introduced with the car are less than previously.

An example of this is the addition of cruise control for the car.

Before the introduction of the network the installation of control modules, switches, vacuum pumps, vacuum servos, hoses and cable harnesses was necessary.

With the network only the installation of a switch and the downloading of software which alters the configuration of the car is required.

Easier to introduce logical functions

Logical functions can be explained as "if this occurs then the following corrective action must be carried out". For example, the system is programmed so that if a tail lamp is broken, a message is transmitted via the Controller area network (CAN) to the driver information module to warn the driver.

All that is required to introduce a logical function is to change the programming of the affected control module - the rear electronic module and driver information module in the example above.

Introduction of logic functions does not increase the number of components or cables.

Easy to adapt the system to customer and market requirements

The functions can be altered depending on the requirements of the customer and market. An example of this could be fog tail lamps. Certain markets use two fog tail lamps, others only use one on the driver's side. Previously it was required that different replacement parts were stored for different markets. Now the same replacement part can be used for all markets, by changing the programming depending on the market.

Similar basic systems can be used for a whole model program

Similar networks (hardware) can be used for a large number of different cars.

The only thing which differentiates the cars is:

- the components (control modules, sensors controlled components etc.) which are connected to the system
- Which components do what
- Which components/functions are standard /optional/accessories
- The configuration /programming of the system.

THE NETWORK CONSTRUCTION

OVERVIEW

The network is made up of a number of control modules (sometimes called nodes)which are connected to each other serially via two communication cables. Each control module is supplied with power and grounded individually and receives messages /commands via the two communication cables. In both networks (high and low speed sides) the control modules are serially connected. In the event of an open-circuit those control modules beyond the open-circuit will not be able to communicate with other parts of the network.

HIGH AND LOW SPEED SIDES ON THE NETWORK

The network consists of two parts. A high speed side which transfers (HS CAN) signals/messages between the central electronic module and the control modules in the engine compartment, and a low speed side (LS CAN) which transfers the signals /messages between the central electronic module and the control modules in the passenger compartment.

The interface between the high and low speed sides is supplied by the central electronic module which speeds up or slows down the communication between the two network sides.

TRANSFER SPEEDS

The Volvo Controller area network (CAN) has two transfer speeds.

- HS CAN (High speed) has a transfer speed of 250 Kbps
- LS CAN (Low speed) has a transfer speed of 125 Kbps.

1 Kbps = 1024 bit per second (1byte = 8 bits).

For serial communication (Volcano Lite) between a control module and a slave control module the transfer speed is 10.4 Kbps.

TERMINATING RESISTOR

To prevent electrical reflections and interference in the Controller area network (CAN) there are terminating resistors which bridge CAN H and CAN L. One in each end point on both the high and low speed side of the network. Each terminating resistor has a resistance of 120 ohm.

- The terminating resistor for the high speed Controller area network (CAN) is positioned in the brake control module/ABS control module and in the engine control module (ECM) or electronic throttle module. The terminating resistor is in the engine control module, on models without an electronic throttle module
- There are terminating resistors for the low speed Controller area network (CAN) in the upper electronic module and the rear electronic module.

Both the terminating resistors create a parallel circuit The following resistors can be measured under specified conditions:

- When the Controller area network (CAN) is intact the resistance in the network is approximately 60 ohm
- In the event of an open-circuit in the wiring, the resistance in the network is approximately 120 ohm
- In the event of a short-circuit between the communication cables the resistance is approximately 0 ohm.

THE CONTROLLER AREA NETWORK (CAN) (2005-2012)

CAN-NETWORK (CONTROLLER AREA NETWORK)

OVERVIEW

CAN (Controller Area Network) is a standardised system for multiplex communication. Multiplex communication means that you can transmit messages between one or more control modules on the same wires without communication between the various control modules disrupting one another. Volvo has produced a new standard for multiplex communication, known as VOLCANO. VOLCANO is a further development of CAN and works with real-time processing, as well as prioritisation. The description of prioritisation is based on VOLCANO but named CAN.

The standard for Control area network (CAN) specifies:

- That two cables should be used (CAN H and CAN L)
- Which voltage levels should be used
- What a message should look like
- How transfer errors should be handled.

CABLES, CAN H AND CAN L

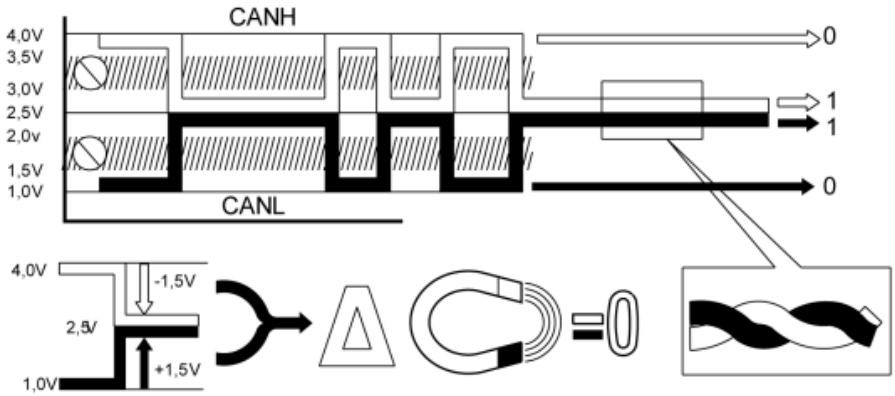

Fig. 105: CAN H And CAN L Distributing Signals Within Multiplex Communication Network
Courtesy of VOLVO CARS CORPORATION

The wires CAN H and CAN L must not be confused with HS CAN and LS CAN, which indicate the speed of the CAN network. CAN H and CAN L are the names for the wires used to distribute the signals in the multiplex communications network.

Communication takes place using two wires. These two wires are twisted together and are made of a copper material.

The voltage levels for communication take place using differential voltage levels. Two twisted-pair wires and differential voltage levels are used because this makes the network less susceptible to interference.

The same message is transferred simultaneously by both cables, but different voltage levels are used.

- Binary 1 = 2.5 V on both CAN H and CAN L.
- Binary 0 = 4 V on CAN H and 1 V on CAN L.

When measured between CAN L and earth, the average voltage level is approx. 2.3 V.

When measuring between CAN H and ground, the average voltage level is approx. 2.8 V. When measuring between the two CAN wires, with normal traffic on the network, the average voltage level is approx. 0.55-0.90 V (up to max. 0.6-1.4 V).

Volvo's CAN-net meets ISO 11898-2. Other standard is 11898-3 where the voltage on CAN H changes from approx. 5 V to approx. 1 V, and CAN L from approx. 0 V to approx. 4 V when changing from logic "0" to logic "1". Other standard is SAE J2411 where only one cable is used for CAN-communication.

CONTROLLER AREA NETWORK (CAN) MESSAGE

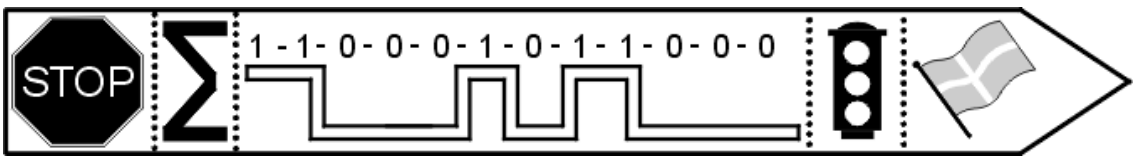

Fig. 106: Controller Area Network Message

Courtesy of VOLVO CARS CORPORATION

The message consists of the following components:

- Identifier ("flag"), which indicates the message's identity and priority.
- Data information (value, information, etc.).
- Check sum, used to check that the message has arrived correctly
- Stop signal, which indicates that the message has finished.

A complete CAN-message is called a frame.

PRIORITISING

Conflicts can occur in a network when several control modules wish to send a message at the same time. For example when the driver presses the brake pedal at the same time as the passenger changes the climate control settings and a passenger in the rear seat opens the power window.

For safe function the messages have to be prioritised. In addition the time delays which occur in case of queue situations must be held within reasonable limits. This is so that the customer does not experience the system as "sluggish" or slow.

To solve problems with conflicts and time delays there is a priority order of messages to ensure good functionality.

Prioritisation of messages is determined by the number of zeroes at the beginning of a message, the more zeroes the higher the priority.

Prioritisation occurs as follows:

- When the network is available, all the control modules that have "something to say" send bit one in their message.
- All the control modules detect what has been transmitted on the network
- If a control module has transmitted 0 those that have sent 1 stop and wait until the next time the network is available
- Those that transmitted 0 transmit bit two of the message
- If a control module has transmitted 0 as bit two those that have sent 1 stop and wait until the next time the network is available and so on.

The message with the highest priority (most zeroes at the beginning) "wins" and is sent first.

The end of a message is seven zeroes. The control modules then know that the network is available and a new message can be sent in priority order.

TWO TYPES OF MESSAGE

There are two types of message in the system:

- **Periodical frames** . These messages are sent regularly and give the status of a parameter. They are used for information which is frequently updated, speed signals for example.
- **Event frames** , which are only sent when predetermined conditions have been met. This type of message is used for things that seldom occur, raising / lowering a window for example.

The message can contain an update bit which states how "fresh" the information is.

The system assumes that the receiver has received the message so an acknowledgement is not sent (a reply is only sent to a direct question from another control module).

However, the receiver "knows" how often it should receive a message about which status applies. If the message is missing, the receiver can connect an emergency program and/or generate a diagnostic trouble code.

Diagnostic trouble codes (DTCs) can also be stored if the receiving control module does not "understand" the message it has received. Examples of this may include intermittent short-circuits between one of the CAN wires and voltage or earth.

QUALITY FACTOR

In a distributed system where information (signals) is sent between different control modules in a network, it is usually the control module that generates/creates information (the signal) that knows the quality of the information that is sent. To be able to inform receiving control modules about the quality of information, a quality factor (Q-factor) is sent over the network at the same time as the information (signal). The quality factor describes status of the information (signal). For example, if the signal is defective due to a faulty sensor, a receiving control module can use the quality factor to decide if the control module shall take any action (e. g., reconfiguration).

The quality factor can be of the following status:

- **Ok**

  The value indicates that the signal is normal and shows a credible status and accuracy.

- **Outside specified range**

  Even though the value indicates that the signal is normal and may be usable, some fault has been detected that indicates that accuracy has been reduced so that performance may be affected or instability can occur.

- **No data found**

  The value indicates that the signal has its initial start-up value and has not yet had time to receive measured or calculated value. This may occur when the control module's start-up process is not completely finished. As soon as the control module has started, the signal shall have a correct value. Receiving control module has a built-in delay to wait for correct signal.

- **No data exists**

The value indicates that the signal is faulty. This prevents the signal from being used by receiving control modules.

SUMMARY OF QUALITY FACTOR THAT MAY APPLY.

Sending control module	Receiving control module and its function	
Status	"Common" control module	Control module with high demand for accuracy
Ok	Normal function	Normal function
Outside specified range *	Normal function	Controlled limitation of performance may occur *
No data found	Normal function	Normal function
No data exists *	Limited or lost performance/lost function *	Limited or lost performance/lost function *

* Diagnostic trouble code may be stored.

COMPATIBILITY

The units must "speak" the same language and must be compatible with each other. A standardised communication protocol is used for this.

Signal configuration (sfg) contains the language between the modules. If any module has a signal configuration which does not tally with other modules, this module is unable to communicate with other modules. This means that all modules must have compatible signal configuration. The signal configuration is sometimes changed as new messages are added and old ones are deleted.

CONFIGURATION

Instructions for the following are downloaded when a system is configured:

- Which control modules are included in the system (for example central electronic module (CEM), and others.)
- Which control module should do what (for example "you are the control module for the driver's door - you are the control module for the passenger door")
- Which functions should be included (for example if the alarm function should be on or off)
- Which components are connected to the control modules (for example whether the inclination sensor is included in the alarm or not)
- Which messages a control module is to transmit and which it is to receive
- Where the different data should be stored.

In the central electronic module (CEM), information is stored on which control modules are installed in this particular vehicle. This information is stored and retrieved from Volvo's central database when software is downloaded. The central electronic module (CEM) also contains information on which primary signal configuration is to be used in the vehicle. Information on the vehicle's signal configuration must be stored in all

control modules connected to the CAN network so that they can communicate in the first place.

The signal configuration is a part of the software downloaded after a control module is fitted or replaced. When software is loaded to a control module, the information in the control module indicating, for example, that a new accessory has been connected is updated automatically.

Once software has been downloaded, some values may be changed according to the customer's requirements, for example whether lamp indication upon locking or unlocking the vehicle should be active, or the dip degree of the interior rear view mirror. These settings may disappear when new software is downloaded.

Software is downloaded via the Software Manager.

NOTE: Even if two vehicles appear identical they may behave differently due to differing configurations, a parameter may have been modified by, e. g., the customer or workshop.

CONSTRUCTION OF THE NETWORK

OVERVIEW

The network is made up of a number of control modules (sometimes called nodes)which are connected to each other serially via two communication cables. Each control module is supplied with power and grounded individually and receives messages /commands via the two communication cables. In both networks (high and low speed sides) the control modules are serially connected. In the event of an open-circuit those control modules beyond the open-circuit will not be able to communicate with other parts of the network.

HIGH AND LOW SPEED SIDES ON THE NETWORK

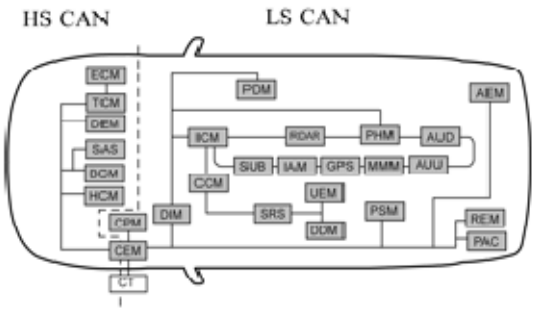

Fig. 107: CAN Network Diagram
Courtesy of VOLVO CARS CORPORATION

The network consists of two parts: a high speed side (HS CAN) which transmits signals/messages between the

central electronic module (CEM) and control modules mainly in the engine compartment, and a low speed side (LS CAN) which transmits signals/messages between the central electronic module (CEM) and control modules in the passenger compartment and the luggage compartment.

The interface between the high and low speed sides is supplied by the central electronic module (CEM) which converts the transmission speed up or down for communication between the two network sides.

DATA LINK CONNECTOR

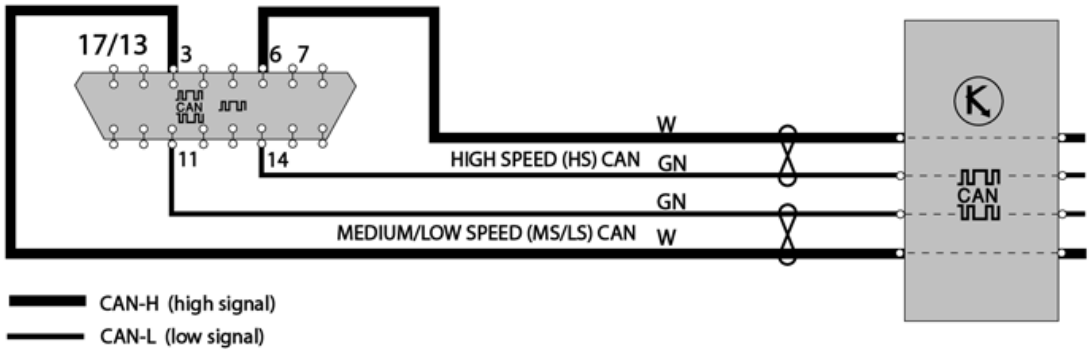

Fig. 108: Identifying CAN Data Link Connector & Terminals
Courtesy of VOLVO CARS CORPORATION

The data link connector is located in the passenger compartment near the driver's station, cables for high-speed side (HS CAN) and low-speed side (LS CAN) are connected to the data link connector.

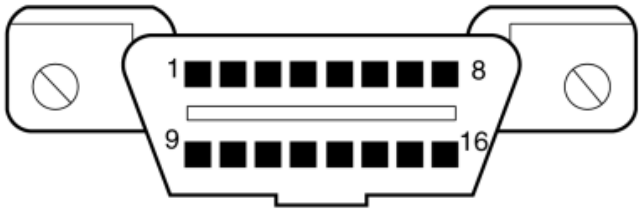

Fig. 109: Identifying Standardized Pins On OBD II-Connector
Courtesy of VOLVO CARS CORPORATION

- Pin 3 LS CAN (low-speed side) (H-cable)
- Pin 4 Chassis ground
- Pin 5 Signal ground
- Pin 6 HS CAN (high-speed side) (H-cable)
- Pin 11 LS CAN (low-speed side) (L-cable)

- Pin 14 HS CAN (high-speed side) (L-cable)
- Pin 16 Voltage feed

NOTE: The data link connector's other connections may be used by other functions. This section only decribes connections related to CAN.

TRANSFER SPEEDS

The Volvo Controller area network (CAN) has two transfer speeds.

- HS CAN (high speed) has a transfer rate of 500 kbit/s.
- LS CAN (low speed) has a transfer rate of 125 kbit/s.

1 kbit/s = 1024 bits per second (1 byte = 8 bits).

For serial communication (Volcano Lite) between a control module and a slave control module the transfer rate is 10.4 kbit/s.

There is another serial standard known as LIN. This is an international standard which is becoming more commonly used. Its function is almost identical to that of Volcano Lite. The difference is in the communication method and rate. The transfer rate for LIN is 9.6 kbit/s.

TERMINATING RESISTOR

High-speed net HS CAN (High Speed), example

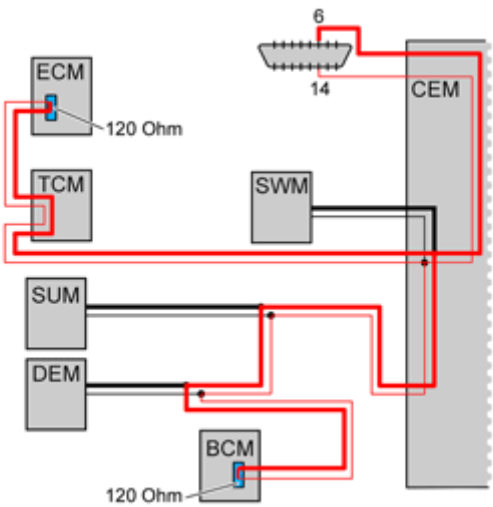

Fig. 110: Identifying HS CAN (High Speed) Functional Block Diagram
Courtesy of VOLVO CARS CORPORATION

Low-speed net LS CAN (Low Speed), example

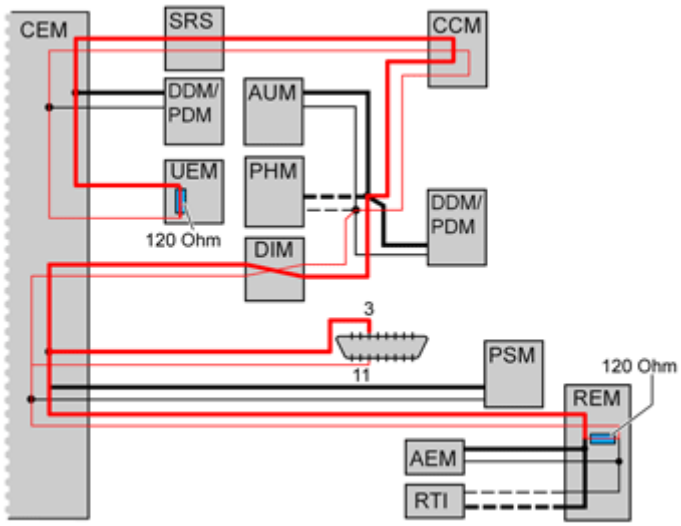

Fig. 111: Identifying LS CAN (Low Speed) Functional Block Diagram
Courtesy of VOLVO CARS CORPORATION

To prevent electrical reflections and interference in the CAN network, there are terminating resistors which bridge CAN H (High) and CAN L (Low), one at each end (main line) on both the high and low speed sides of the network. Each terminating resistor has a resistance of 120 ohm

- For HS CAN (high speed), the terminating resistors are located in the brake control module (BCM) and the engine control module (ECM).
- For LS CAN (low speed), the terminating resistors are located in the upper electronic module (UEM) and the rear electronic module (REM).

Resistance measurement of parallel circuit with terminating resistor

Both the terminating resistors create a parallel circuit The following resistors can be measured under specified conditions:

- When the CAN network is intact, the resistance on the network is approx. 60 ohm.
- In case of open circuits on the cables, so that 1 terminating resistor is not included in the circuit, the resistance in the net is approx. 120 ohm (only one main line is measured)
- An open circuit on the cables to control modules located "outside" the measured circuit cannot be detected with this measurement.
- In case of short-circuiting between the communication cables, the resistance is approx. 0 ohm between the cables, regardless of where the short-circuiting is located.

RESISTANCE MEASUREMENT IN HIGH-SPEED NET HS CAN (HIGH SPEED), EXAMPLE

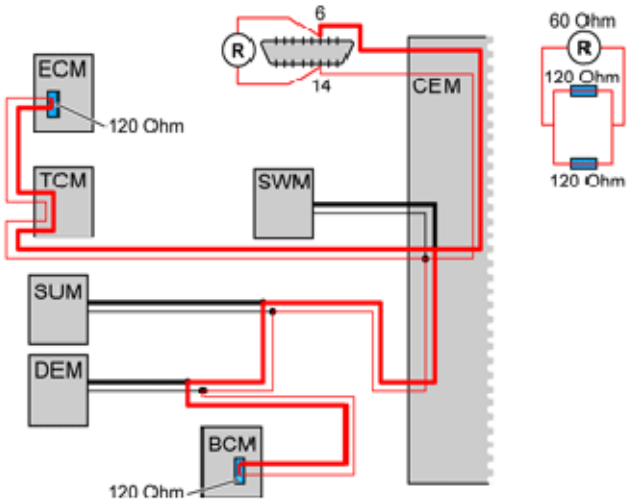

Fig. 112: Checking Resistance In CAN Lines
Courtesy of VOLVO CARS CORPORATION

RESISTANCE MEASUREMENT IN LOW-SPEED NET LS CAN (LOW SPEED), EXAMPLE

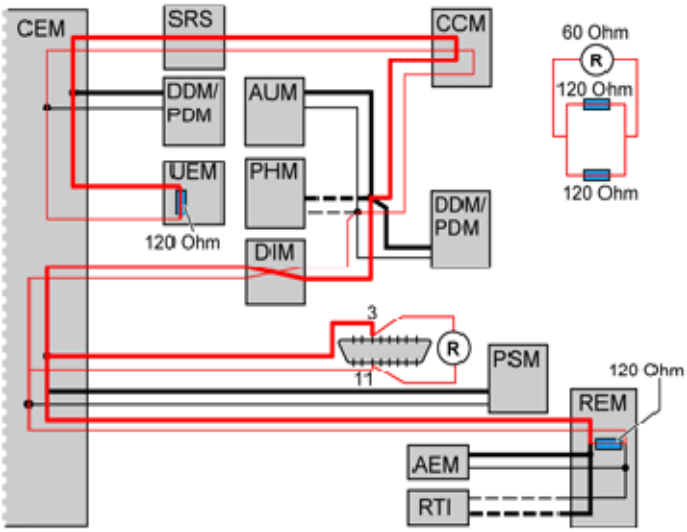

Fig. 113: Checking Resistance In CAN Lines
Courtesy of VOLVO CARS CORPORATION

CONTROL MODULES IN THE CONTROL AREA NETWORK (CAN)

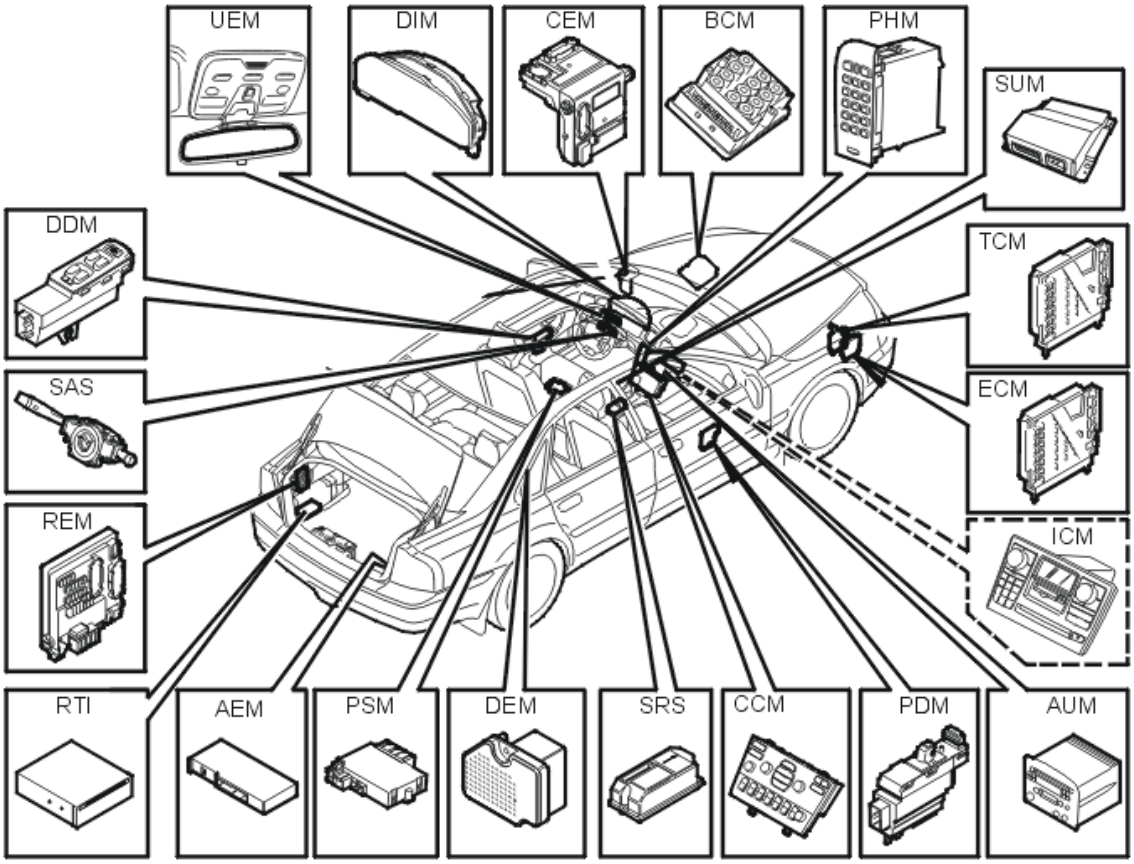

Fig. 114: Identifying Controller Area Network Components
Courtesy of VOLVO CARS CORPORATION

The number of control modules in the CAN network varies depending on the car model, equipment level and structure week, The structure week and construction week are not necessarily the same week. The construction week is the week in which the vehicle is built in the factory. The content of the vehicle is steered towards structure week. A structure week may extend over a number of construction weeks. Structure weeks are specified in the format YYYYWW.

For example, structure week 199815 indicates that the structure week of the vehicle is week 15, year 1998.

NOTE: **To troubleshoot respective CAN-net, see troubleshooting for CAN-related diagnostic trouble codes for Central electronic module (CEM). For example, choose any of CEM-DF01 - DF17 depending on CAN-net.**

Explanation		
LS CAN	=	CAN Low Speed Section (125 kbit/s)
HS CAN	=	CAN High Speed Section (500 kbit/s)
Serial	=	Serial communication (Volcano Lite) between the slave control module and the CAN control module (10.4 kbit/s). LIN (9.6 kbit/s).
Slave control module	=	A control module with low computing power which is connected to a main "control module" and which only operates on commands from the main control module.

Option	=	Accessories installed at the factory to order, when purchasing a new car.
Accessories	=	Aftermarket installation.

Control module	Name/ Function	Network	Miscellaneous
AEM	Accessory electronic module (AEM) Controls certain accessory functions for the vehicle, This control module communicates with other control modules via the low speed side of the network.	LS CAN	Accessories
Audio control module	Audio module (AUM) Controls the radio / audio equipment and communicates with the other modules via the network low speed sector.	LS CAN	Standard/ accessory/option.
Brake control module	Brake control module (BCM) Controls the ABS/EBD/DSTC/STC functions of the brake system and communicates with the other modules via the network high speed sector. Contains a terminating resistor for the network.	HS CAN	
Climate control module	Climate control module (CCM) Controls the climate control system functions and communicates with the other modules via the network low speed sector.	LS CAN	STD/ MCC/ ECC
Central electronic module	Central electronic module (CEM) This is the network's main control module and the interface between the high and low speed sides. The control module has a comprehensive function in the electrical system and handles a large number of functions.	HS CAN/LS CAN	
DDM	Driver door module (DDM) Controls the drivers door functions and communicates with the other modules via the network low speed side.	LS CAN	
DEM	Differential electronic module (DEM) Controls four wheel drive engagement and communicates with the other modules via the network high speed side.	HS CAN	Option.
Driver information module	Driver information module (DIM) Controls the combined instrument panel functions and communicates with the other modules via the network low speed side.	LS CAN	
ECM	Engine control module (ECM) Controls the engine's functions and	HS CAN	Different versions depending on the engine

	communicates with other control modules via the high speed side of the network. Contains a terminating resistor for the high speed side of the network.		alternative.
ICM	Infotainment control module (ICM) Controls the radio, navigation and telephone functions. This is the primary unit for communication with the units in the MOST network.	LS CAN	XC90 only.
PDM	Passenger door module (PDM) Controls the functions in the passenger side door and communicates with the other modules via the network low speed side.	LS CAN	
Carphone module	Phone module (PHM) Controls the functions of the carphone and communicates with the other modules via the network low speed side.	LS CAN	Option /accessory.
Power seat module	Power seat module (PSM) Controls the positions and functions of the driver's seat. Communicates with other control modules via the low speed side on the network.	LS CAN	Standard/ option **NOTE:** **The power seat module (PSM) does not check seat heating and SIPS (side impact protection system) airbag function.**
REM	Rear electronic module (REM) Controls the electrical functions in the rear section of the vehicle, and communicates with the other modules via the low speed side on the network. Contains a terminating resistor for the network.	LS CAN	
RTI	Road traffic information module (RTI) Controls the road traffic information functions and communicates with the other modules via the low speed side on the network.	LS CAN	Option /accessory
Steering angle sensor	Steering wheel angle sensor module (SAS) Collects information about the steering angle and communicates with other control modules using the high speed side on the network.	HS CAN	Option. Used in the DSTC system.
SRS	Supplemental restraint system module (SRS) Controls the vehicle's crash safety system	LS CAN	

	and communicates with the other modules via the low speed side on the network.		
SUM	Suspension module (SUM) This control module handles the Four-C (Continuously Controlled Chassis Concept) function, i. e. constantly regulates damping in the shock absorbers. Communicates with other control modules via the high speed side on the network.	HS CAN	Option. Not XC90.
TCM	Transmission control module (TCM) Controls the automatic gearbox and communicates with the other modules via the high speed side on the network.	HS CAN	Vehicles with automatic transmission only.
Upper electronic module	Upper electronic module (UEM) Controls the electrical functions in the upper part of the passenger compartment. Also includes remote control receivers. Communicates with other control modules via the low speed side on the network. Contains a terminating resistor for the network.	LS CAN	Included in the interior rear view mirror. **NOTE:** **There are two types of upper electronic module (UEM): one with an automatic dip function, and one without.**

ERROR MANAGEMENT IN THE CONTROLLER AREA NETWORK (CAN)

OVERVIEW

The CAN network is monitored by the central electronic module (CEM). When the central electronic module (CEM) detects a fault in the CAN network, a diagnostic trouble code (DTC) is stored in the central electronic module (CEM). There are various types of diagnostic trouble code (DTC), depending on the type of fault.

Types of error which are handled are:

- Electrical faults
- No communication from the control module
- Faulty communication.

NOTE: **To troubleshoot respective CAN-net, see troubleshooting for CAN-related diagnostic trouble codes for Central electronic module (CEM). For example, choose any of CEM-DF01 - DF17 depending on CAN-net.**

ELECTRICAL FAULTS

When there is a fault in the signal levels on the communication wire to the central electronic module (CEM), a diagnostic trouble code (DTC) is stored in the central electronic module (CEM). Each individual

communication wire to the central electronic module (CEM), CAN L and CAN H on the low speed side of the network and CAN L and CAN H on the high speed side of the network, is checked. There are two different levels detected on each wire: short-circuit to voltage or short-circuit to earth. As the central electronic module (CEM) can also determine when a short-circuit on one or more wires takes place, the control module can also detect a short-circuit between the two CAN wires in the same part of the network.

This gives eight diagnostic trouble codes for detecting electrical faults.

HINT: The central electronic module (CEM) is unable to store diagnostic trouble codes (DTCs) for open-circuits on the CAN wires. Other diagnostic trouble codes (DTCs) may, however, be stored on account of this.

NO COMMUNICATION FROM THE CONTROL MODULE

The central electronic module (CEM) knows which control modules should be present in the CAN network and checks at regular intervals to ensure that all control modules are communicating. If any control module in the CAN network is not communicating, a diagnostic trouble code (DTC) is stored in the central electronic module (CEM). There is a specific diagnostic trouble code (DTC) for every control module in the CAN network.

FAULTY COMMUNICATION

Every control module, apart from the central electronic module (CEM), has two diagnostic trouble code (DTC) types which relate to faulty communication (the central electronic module (CEM) has only one diagnostic trouble code (DTC) type).

These are:

- Faulty messages
- Configuration error (not present on the central electronic module (CEM)).

Diagnostic trouble code (DTC) for faulty configuration is missing from the Central electronic module (CEM) since the control module is always the main control module in the network.

Faulty messages

When a control module transmits faulty signals in its messages a number of times, the control module shuts down communication. This is referred to as the control module going to "Bus-off". A diagnostic trouble code (DTC) is stored in the control module that transmitted faulty messages, and the control module stops communicating on the CAN network. This is done so that the control module does not interfere with other communication on the CAN network. If the fault is permanent, it is not possible to communicate with the control module and there is no chance of reading diagnostic trouble codes (DTCs) from the control module that has shut down communication as long as the control module continues to be powered. If the control module which stored a diagnostic trouble code (DTC) is powered down (for example by switching off the ignition or if the fuse to the power feed is removed), the control module will attempt again to communicate when the control module is powered up again. When troubleshooting such faults, therefore, it is important to know what kind of power feed is used for the control module in question.

Configuration fault

The central electronic module (CEM) transmits at regular intervals a control message to all control modules on the CAN network, This message includes, among other things, the ID number of the signal configuration currently being used. The reason for this is that all control modules on the CAN network must have the same signal configuration if they are to be able to communicate.

If the ID number of a control module's signal configuration does not tally with the ID number transmitted by the central electronic module (CEM), a diagnostic trouble code (DTC) is stored in the control module with the faulty signal configuration.

The control module which stores the diagnostic trouble code (DTC) will stop communicating on the CAN network but will still monitor traffic and respond to diagnostics communication.

THE NETWORK

OVERVIEW

Increasing demands for further functionality in the vehicle, both statutory requirements and customers, have led to increased complexity in the vehicle.

This, in turn, has encouraged developments towards more flexible electrical systems. The CAN-net (Controller Area Network) is a result of this research. The network permits the transmission and receipt of a large number of different commands and messages on the same wiring. Earlier, every command or message required a separate cable. Using networks has allowed functionality to be expanded without increasing the number of cables.

The number of commands and messages which can be handled on the network depends on factors such as the network speed and the length of the message or command. The Volvo network which is based on a control area network (CAN), can transmit over 500 different signals and approximately 100 messages. These messages are also called frames. Each message can contain several signals, e. g., a message to Rear electronic module (REM) can contain all signals for how the tail lights should be lit.

ADVANTAGES OF A NETWORK

Easier to add further functions and install accessories.

Because the control modules in the network are already connected to each other and are easy to add more information to, all that is required is:

- to connect the sensors to the nearest control module
- to connect the controlled component to the nearest control module
- to download software to alter the configuration and programming of the network.

The length of the wiring and the number of components which are introduced with the vehicle are less than previously.

An example of this is the addition of cruise control for the car.

Before the introduction of the network the installation of control modules, switches, vacuum pumps, vacuum servos, hoses and cable harnesses was necessary.

With the network only the installation of a switch and the downloading of software which alters the configuration of the vehicle is required.

Easier to introduce logical functions.

Logical functions can be explained as "If this occurs then the following corrective action must be carried out". For example, the system is programmed so that if a tail light is broken, a message is transmitted via the control area network (CAN) to the driver information module (DIM) to warn the driver.

The only thing you need to do to introduce a logical function is alter the programming of control modules affected - the rear electronic module (REM) and the driver information module (DIM) in the example above.

Introduction of logic functions does not increase the number of components or cables.

Easy to adapt the system to customer and market requirements.

The functions can be altered depending on the requirements/demands of the customer and market. An example of this could be fog tail lamps. Certain markets use two fog tail lamps, others only use one on the driver's side. Previously it was required that different replacement parts were stored for different markets. Now the same replacement part can be used for all markets, by changing the programming depending on the market.

A similar basic system can be used for a whole model programme.

Similar networks (hardware) can be used for a large number of different vehicles.

The only thing that differentiates the vehicles is:

- the components (control modules, sensors controlled components etc.) which are connected to the system
- Which components do what.
- Which components/functions are standard /optional/accessories
- Configuration/programming of the system

TIRE PRESSURE MONITORING SYSTEM (TPMS) (2007-2012)

DESIGN

TIRE PRESSURE MONITORING SYSTEM (TPMS)

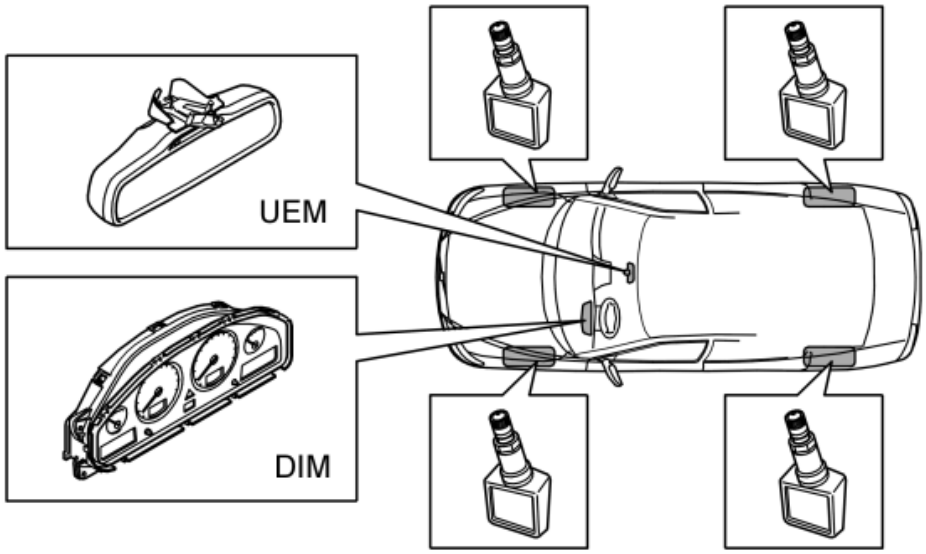

Fig. 115: Locating Tire Pressure Monitoring System (TPMS) Components
Courtesy of VOLVO CARS CORPORATION

The purpose of the tire pressure monitoring system, TPMS, is to enable the driver to have optimum tire pressure by giving a warning when the pressure in any of the tires becomes too low. Correct tire pressure is important for:

- achieving good fuel economy
- achieving optimum comfort and good driving characteristics
- preventing flat tires due to too low tire pressure.

The function is integrated in the Upper electronic module (UEM). Sensors are installed together with the air valve on each wheel to measure the air pressure in the tires.

NOTE: **The system shall be regarded as a helpful tool for the driver to maintain correct tire pressure. The system shall NOT be regarded as a warning system that some serious vehicle malfunction has occurred.**

No tire seals completely tight - there is always some minor leak since the tire can never seal tight against the rim. When inflating the tires with air, try to make sure that all tires have the same temperature as the outdoor temperature. Also, do not use so-called "Comfort pressure" as this gives a tire pressure that is too close to the limit value for the monitoring system. This means that even minor changes in temperature or load can result in tire pressure becoming too low for what the system considers acceptable.

"Comfort pressure" may also have a negative impact on the vehicle's driving characteristics. When inflating tires, inflate to the pressure indicated on the decal on the body or in the owner's manual. The pressure is developed with consideration of fuel economy, comfort, and safety. Therefore, do not use another pressure. If the decal is missing or damaged, order and install a new

one. This is especially important on vehicles with TPMS.

TIRE PRESSURE SENSOR

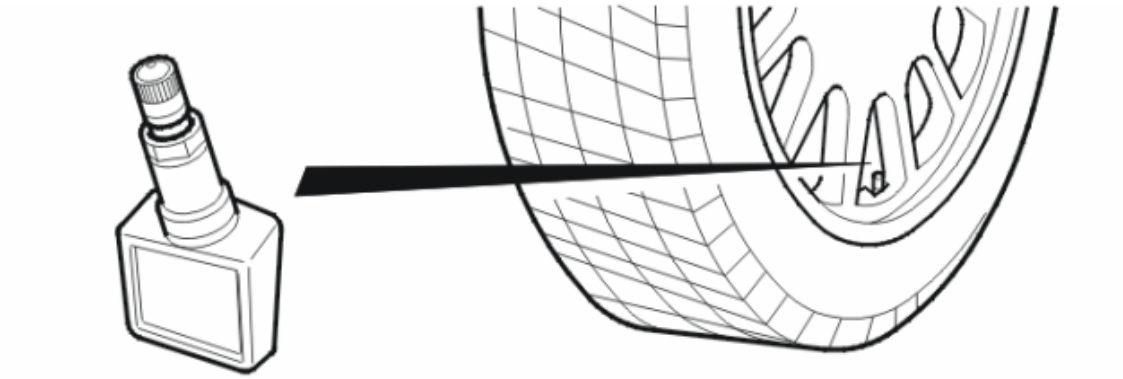

Fig. 116: Locating Tire Pressure Sensor
Courtesy of VOLVO CARS CORPORATION

The tire pressure sensors are installed together with the air valve on the rim. The sensor consists of a pressure sensor, a communication circuit, an acceleration sensor and a battery.

NOTE: Special procedures are required for removing the tire from the rim depending on vehicle model and tire type. This is to prevent damaging the sensor.

DIAGNOSTIC FUNCTIONS

TIRE PRESSURE MONITORING SYSTEM (TPMS)

The Upper electronic module (UEM) can store diagnostic trouble codes (DTCs) in the event of a fault on the actual receiver or on one of the sensors.

In order to perform a correct evaluation of the function, the vehicle must have traveled faster than 40 km/h (25 mph) for more than 570 seconds. This time is accumulated time, i. e. the time count stops if the vehicle travels slower than 40 km/h if, for example, you stop at traffic lights.

The count continues where it was as soon as the vehicle travels faster than 40 km/h once again.

Upper Electronic Module can store two diagnostic trouble codes per sensor. One diagnostic trouble code for lost communication and one diagnostic trouble code for low battery voltage. When a diagnostic trouble code is stored, the ID-number of the sensor to which the diagnostic trouble code applies is also stored.

When a diagnostic trouble code is stored, a message will be shown in the Driver information module.

QUICK CHECK OF TPMS

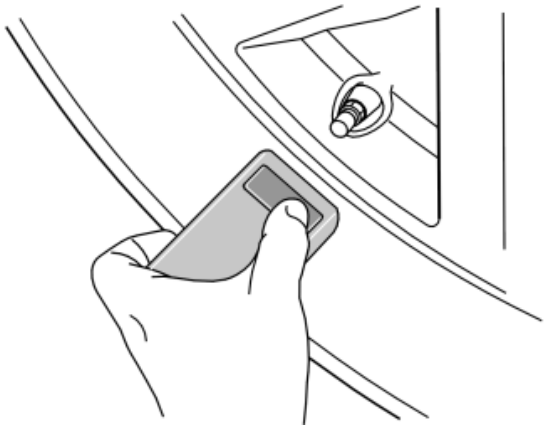

Fig. 117: Checking TPMS
Courtesy of VOLVO CARS CORPORATION

NOTE: Some car/model years require that you are more accurate when aiming the diagnostic tool at the sensor for an activation to succeed. If an activation fails, realign the diagnostic tool and perform the activation again. First after three failed activation attempts can a sensor be regarded as defective.

The system can be checked, using the diagnostic tool, by activating a read off at the same time as activating the sensors using a special tool.

The special tool is placed against the tire in the place where the sensor is installed, at the same time as you push in a button on the special tool. Then the special tool sends out a signal that activates the sensor so that it starts to transmit signals to Upper Electronic Module. The activated sensor's ID-number and tire pressure are then shown on the display in the diagnostic tool. Note the sensor's id-number and its position.

FUNCTION

TIRE PRESSURE MONITORING SYSTEM

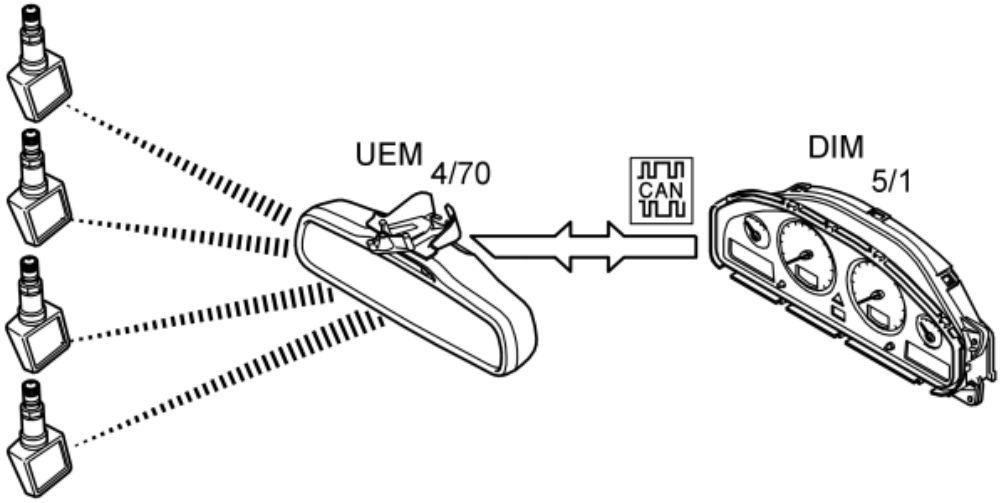

Fig. 118: Identifying Tire Pressure Monitoring System Information Display
Courtesy of VOLVO CARS CORPORATION

The system covers the upper electronic module and the sensors in the wheels. The sensors in the wheels are activated when the vehicle exceeds 40 km/h. The sensors then start to transmit data messages approximately once per minute, which are received by the remote control receiver in the Upper electronic module. These messages contain the sensor's ID number and air pressure in the tire where the sensor is mounted.

The frequency used by sensors to transmit is the same for all sensors. Thus, the control module can receive signals also from other vehicles with the same system installed. However, the ID-number in each sensor is unique.

Sensors installed on your own vehicle can be retrieved by a statistical selection in the Upper Electronic Module. When the ignition is turned on the Upper Electronic Module starts to listen for messages from the sensors. The control module registers the ID-numbers contained in the received messages transmitted by the sensors, both from own and from other vehicles.

All ID-numbers are added in a list in the internal memory by the Upper Electronic Module. For each received ID-number, the number of times it has been received is also saved. As the quantity of received ID-numbers increases, an assessment takes place of which ID-numbers have been received most times. The four ID-numbers that have been received most often get the highest "ranking" and are then considered to belong to the own vehicle.

In this way any ID-numbers that may have been received from other vehicles with the same type of system, e. g., driving in the adjacent lane, are separated. This assessment takes approx. 5 minutes if the Upper Electronic Module is empty of data.

If the evaluation has been carried out, the sensors that are assumed to belong to the actual vehicle are stored in the control module. The information remains between each driving cycle. In this case, it is sufficient for the control module to receive a message from each sensor with corresponding ID number to complete evaluation.

In Upper Electronic Module, there are tables programmed with the recommended air pressure for this specific vehicle model. This information about air pressure in tires included in messages from sensors is compared to programmed values in Upper Electronic Module.

If the pressure reported from a sensor differs more than 22% from the recommended value, a warning message will be shown in the Driver information module.

There are two warning levels that generate different warning messages, one warning for low pressure and one warning for no pressure. A message will also be shown is a sensor should stop transmitting or should receive too low battery voltage.

To reset a warning it is easiest to stop the vehicle and fill air in the tire where the air pressure is low. In order for the warning to reset air has to be filled so that the air pressure reaches a level that corresponds to at least 95% of the recommended air pressure, and then drive the vehicle faster than 40 km/h for more than 10 minutes, accumulated time.

If the customer has come to the workshop, the warning can also be reset by filling air in the tire where the air

pressure is low and then the sensor is activated with the special tool for activating the tire pressure sensor.

When air is filled and the pressure changes, the sensor immediately sends a signal to Upper Electronic Module. If the ignition is on, the warning is reset immediately.

NOTE: Only applies to USA/CDN. A warning lamp also lights in the Driver information module at the same time as the warning message.

TYRE PRESSURE MESSAGES

Message in the Driver information module	Percentage under rec. tyre pressure	Speed for resetting	Driving time for resetting
Low tyre pressure. Check the tyres.	22 %	50 km/h	5 minutes
Extremely low tyre pressure. Tyres require air immediately.	40 %	50 km/h	5 minutes

SYSTEM OVERVIEW

CONTROL MODULE

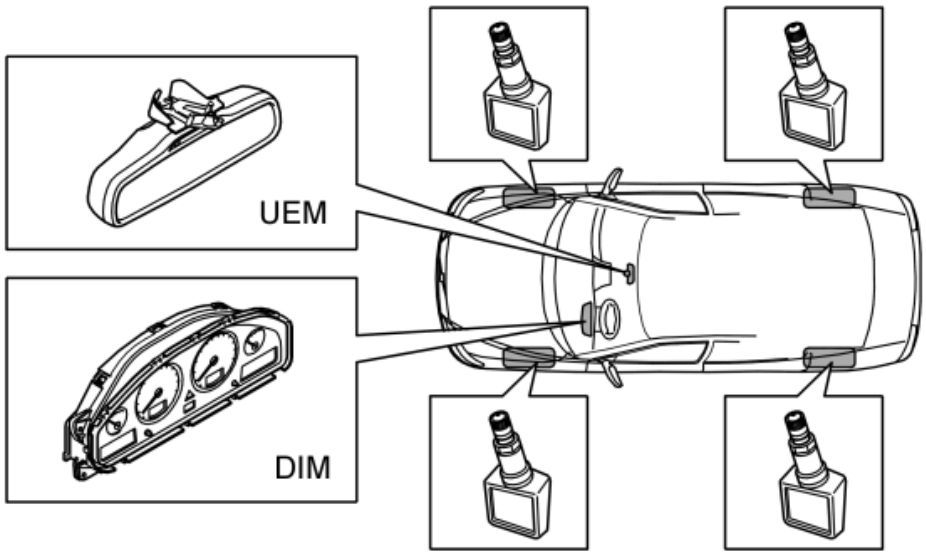

Fig. 119: Locating Tire Pressure Monitoring System Components
Courtesy of VOLVO CARS CORPORATION

The tire pressure warning function is checked by the Upper Electronic Module. The system must give a warning to driver on the driver information module display if the air pressure in one of the tires is lower than the predetermined limit value.

TRANSMISSION

DESIGN

TRANSMISSION, GENERAL

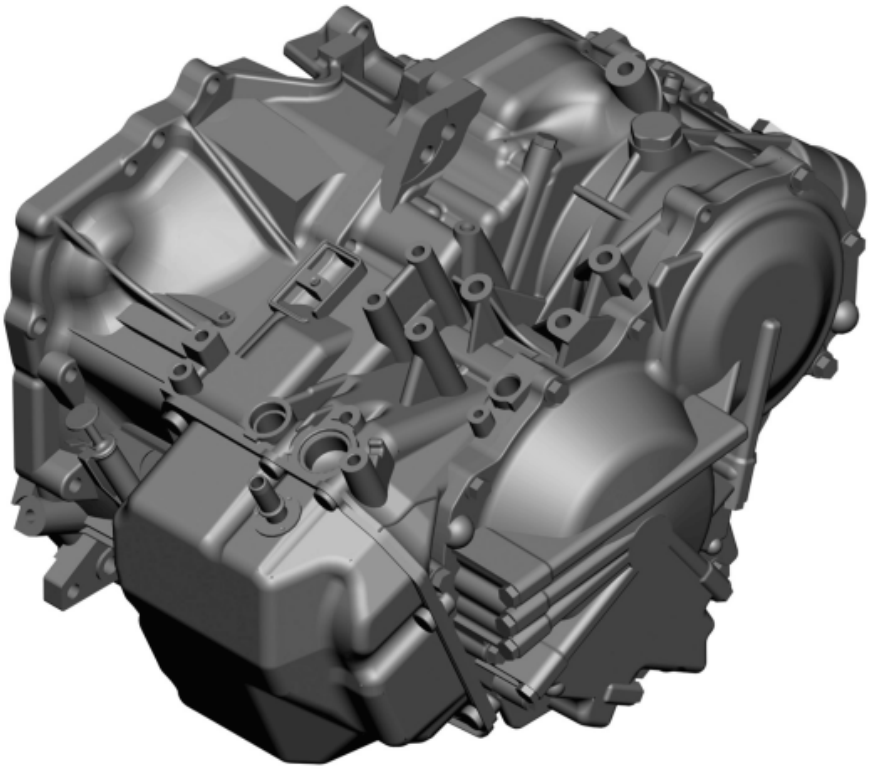

Fig. 120: Identifying Transmission
Courtesy of VOLVO CARS CORPORATION

The automatic transmission has five forward gears and one back-up gear. The fifth gear is an overdrive which saves fuel during highway driving.

The mechanical components of the transmission are enclosed within the torque converter cover, the transmission housing and valve housing.

Gearshifts are controlled by an hydraulic operating system. Gearshifts take place without freewheeling and completely automatically in terms of load and speed.

The solenoid valves are located under the valve housing cover on the transmission, in the valve housing for the hydraulic system. These are activated by the transmission control module.

The transmission input speed sensor is electro-magnetic and acts on a toothed pulse wheel. By comparing the engine and transmission speeds, the control module can determine the amount of slippage in the torque converter.

The gear-shift position sensor has three separate functions:

- using an electrical route to inform the transmission control module of the selected gear position

- to activate the back-up light when the gear selector is in -position
- To allow engine start if the gear selector is in or -position. This signal is also transmitted to the engine's control system and is used for drive position compensation of idle.

The transmission and final drive share a common oil pan. A dipstick in the transmission is used to check the oil level in the transmission.

TORQUE CONVERTER

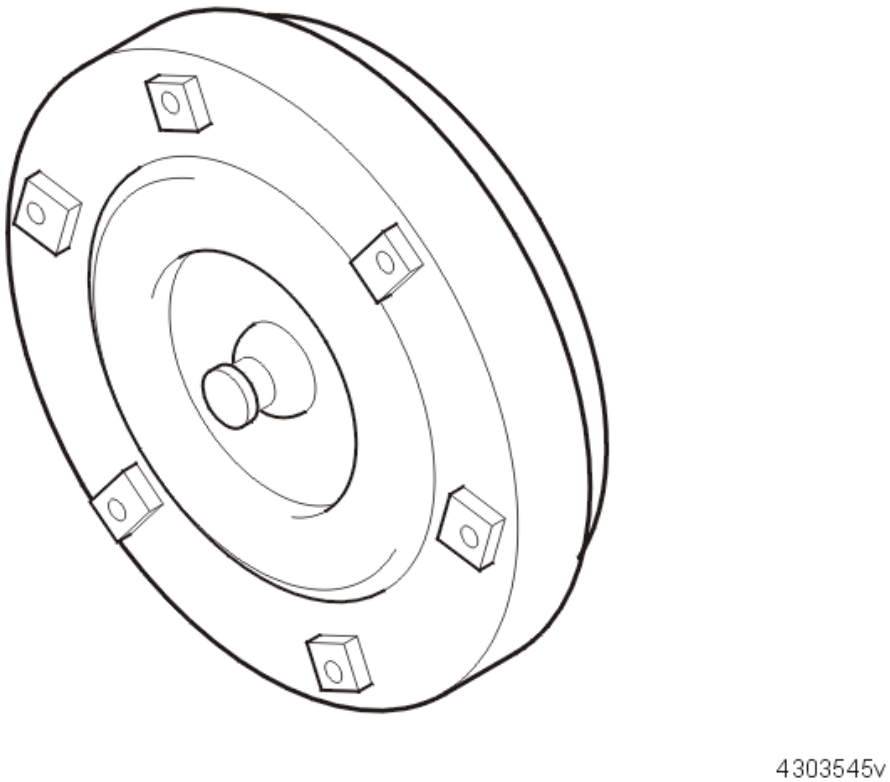

Fig. 121: Identifying Torque Converter
Courtesy of VOLVO CARS CORPORATION

The torque converter is between the engine and the automatic transmission.

When the engine is idling the pump effect is too weak to drive the turbine and the vehicle will not move. As the engine speed rises it successively starts to drive in a gradual way. At higher engine speeds the power transfer to the turbine can be up to 95%. The torque converter functions as an hydraulic clutch. It also amplifies the torque of the engine at lower engine speeds and therefore an automatic transmission does not require as many gears as a manual transmission.

The torque converter consists of a round metal casing which contains two impeller wheels and is filled with oil. One of the impeller wheels, the pump wheel, is fixed to the casing. Both are connected to the engine crankshaft and rotate with it. The other impeller wheel, the turbine wheel, is connected to the input shaft of the

transmission and is driven by the oil which is pumped around by the pump wheel. The rotating impeller wheels and the oil in the torque converter "slip" slightly and creates a slight loss of power, which raises fuel consumption slightly.

Thanks to a third, smaller wheel, the stator wheel, the torque converter also reinforces the engine torque at low engine speeds.

DIFFERENTIAL

Fig. 122: Differential
Courtesy of VOLVO CARS CORPORATION

The differential distributes power equally between the drive wheels, even if they are rotating at different speeds.

The differential consists of the differential housing, large and small side gears, shaft journals and thrust washers.

The differential has 6 gearwheels. The differential housing is completely sealed so that if a drive shaft is removed no dirt can penetrate and no oil can run out.

FUNCTION

TRANSMISSION, GENERAL

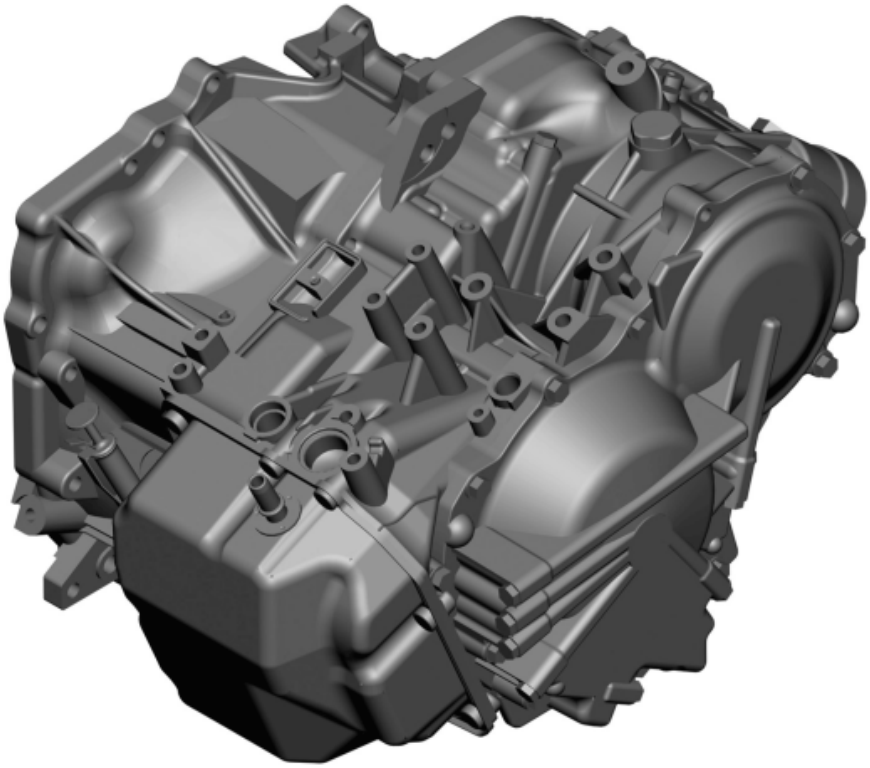

Fig. 123: Identifying Transmission
Courtesy of VOLVO CARS CORPORATION

The basic parameters for shifting are the accelerator pedal position and the vehicle speed.

The gear shift quality is determined by the torque control by reading off speed changes of the transmission input shaft and comparing the calculated value.

This is used to calculate the pressure setting for the clutches and brakes.

TORQUE CONVERTER

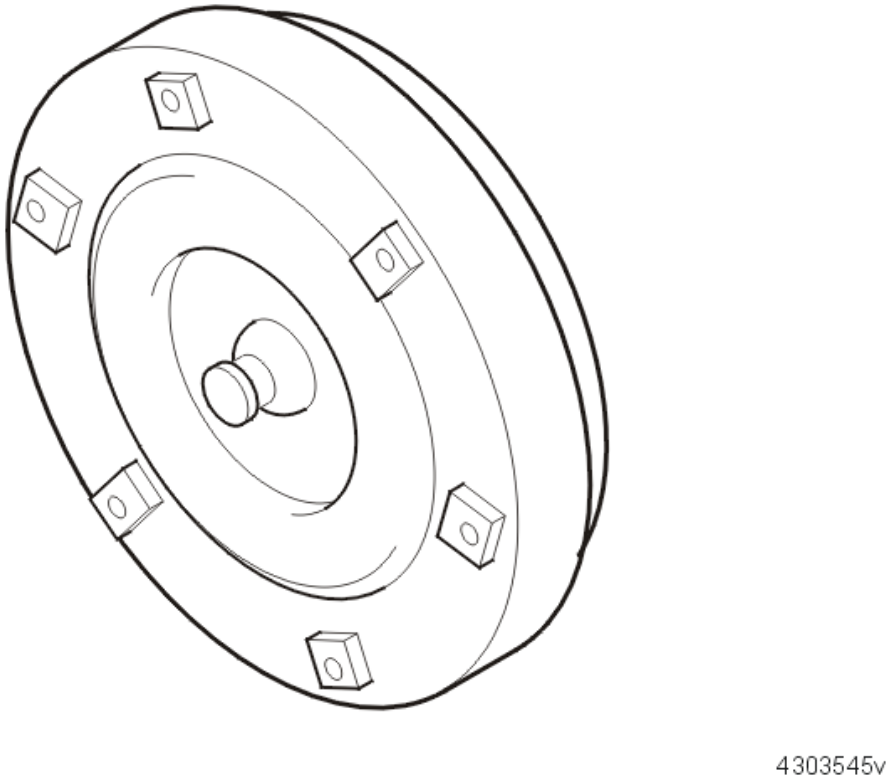

Fig. 124: Identifying Torque Converter
Courtesy of VOLVO CARS CORPORATION

The torque converter functions as an hydraulic automatic clutch. When the engine is idling the pump effect is too weak to drive the turbine and the vehicle will not move. As the engine speed rises it successively starts to drive in a gradual way. At higher engine speeds the power transfer to the turbine can be up to 95%. The torque converter functions as an hydraulic clutch.

Thanks to a third, smaller wheel, the stator wheel, the torque converter also reinforces the engine torque at low engine speeds.

The rotating impellers and the oil in the torque converter "slip" slightly and create a slight loss of power, which increases fuel consumption slightly.

DIFFERENTIAL

Fig. 125: Differential
Courtesy of VOLVO CARS CORPORATION

The differential distributes power equally between the drive wheels, even if they are rotating at different speeds.

When driving straight ahead, the ring wheel and differential housing rotate at the same speed as the drive shafts and the driving wheels.

When cornering, the differential gears rotate to compensate for the different speeds of the wheels. Because the small side gears are rotating on the shaft journal, the drive shafts can rotate at different speeds. Power is transferred from the differential housing to the drive shafts via the small side gears in the same way as when driving straight ahead. Both drive wheels still have the same driven power.

Cars with four wheel drive have a splined pin on the differential housing. The sleeve on the pin connects the differential housing with the bevel gear. This transfers the power to the rear wheels.

GEAR SELECTOR ASSEMBLY

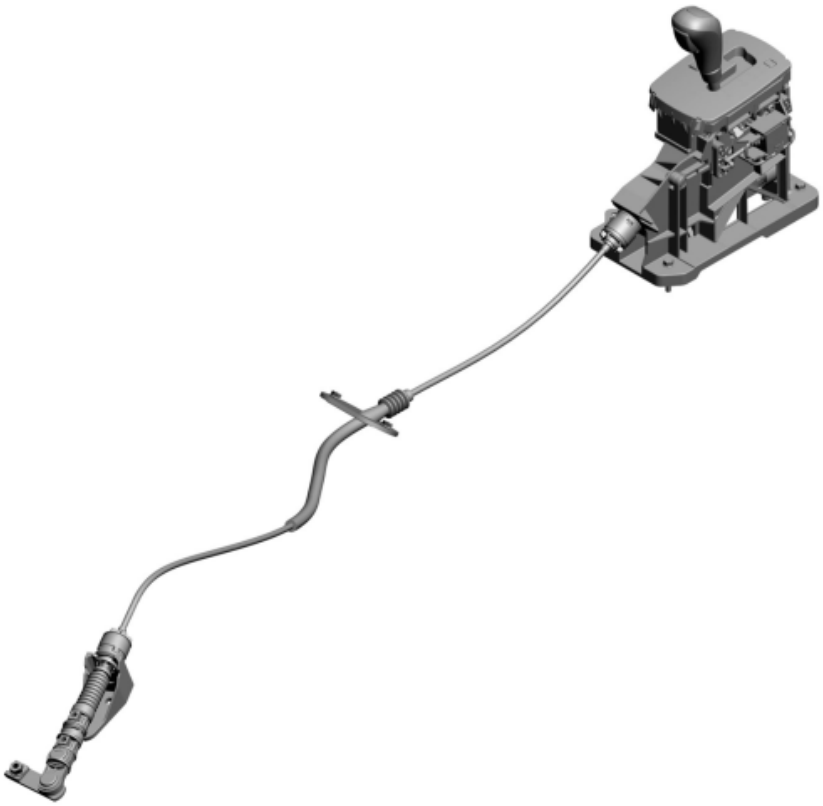

Fig. 126: Gear Selector Assembly
Courtesy of VOLVO CARS CORPORATION

Fig. 127: Gear Selector Assembly
Courtesy of VOLVO CARS CORPORATION

The gear selector assembly is positioned in the center console and is mechanically connected to the transmission by a cable which affects the gear valve.

Gear selectors and cables are shaped differently depending on which car model they are installed in.

Gear selector assemblies with Geartronic, in addition to P/R/N/D modes, also have a manual shifting mode. The manual gear positions can be selected at any point while driving. The engaged gear is locked until the driver selects another gear. The automatic transmission only down shifts if the vehicle slows down to very low speed.

To downshift the gear selector must be moved to minus. To upshift the gear selector must be moved to plus. At start, 3rd is the highest possible gear.

The engine can only be started in position **P** or **N** .

THE DIFFERENT GEAR SELECTOR POSITIONS

Position	Meaning	Function
	Parking	The output shaft of the transmission is locked, so that the vehicle does not roll. This position should be selected when the vehicle is parked or the engine is started.

	Back-up	Back-up gear. This position must only be selected when the vehicle is stationary.
	Neutral	Neutral means that no gear is engaged and the vehicle can roll freely. The engine can be started in this position.
	Drive	The D position is used for all forward motion. When D is engaged the engine drives the vehicle forward. Up and down shifting occurs automatically depending on acceleration and speed.
	Manual	This position allows the driver to change gears manually.

POWER FLOW

When throttling off, the output shaft's power in 5th, 4th, 3rd, 2nd or reverse gear goes directly to the input shaft without any freewheel, which provides engine braking. 1st gear does not have any engine braking since the power transmission is interrupted by freewheel.

Position

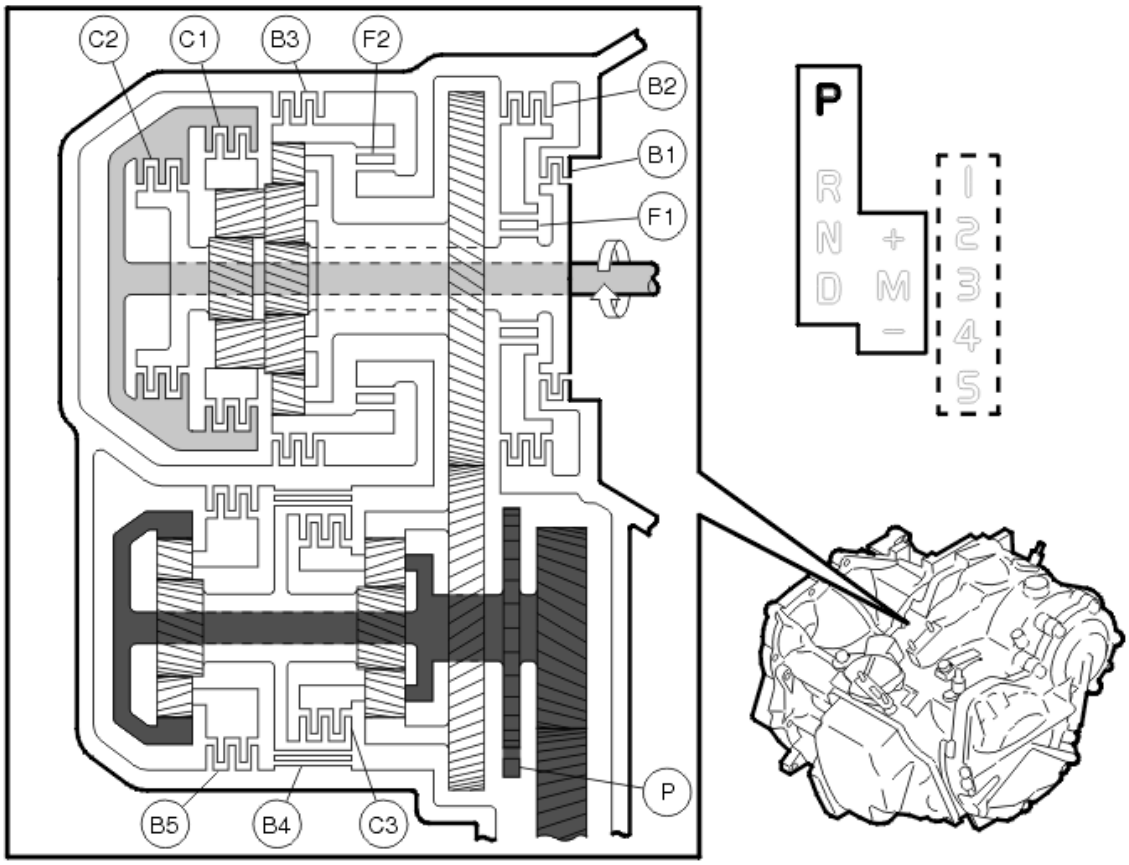

Fig. 128: Identifying Power Flow Position P
Courtesy of VOLVO CARS CORPORATION

Primary shaft

The input shaft rotates clockwise. All clutches and brakes are disengaged, and no power is transferred to the planetary trains.

Output shaft

No power is transmitted to the output shaft. Brake band locks the sun gear so that it cannot rotate in any direction. Shiftlock, which is affected by the mechanical link system, is engaged with the lock wheel on the output shaft and prevents the vehicle from rolling.

Position

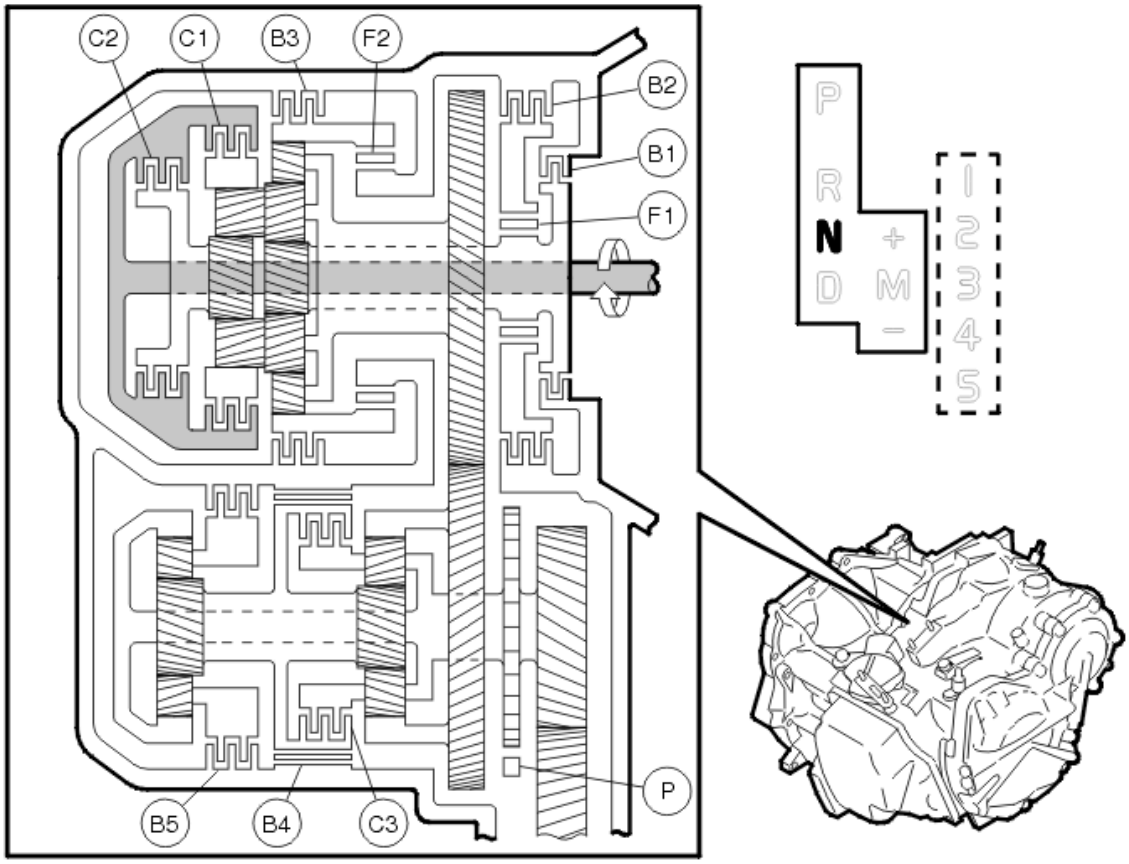

Fig. 129: Identifying Output Shaft Position N
Courtesy of VOLVO CARS CORPORATION

Primary shaft

The input shaft rotates clockwise. All clutches and brakes are disengaged, and no power is transferred to the planetary trains.

Output shaft

No power is transmitted to the output shaft. Brake band locks the sun gear so that it cannot rotate in any direction. Shift-lock is disengaged. The planetary gears can rotate freely around the sun gear and the vehicle will start to roll if it is on an incline.

The reason for the brake being activated in both as -position is to minimize the engagement shock that otherwise is produced when several brakes and clutches are activated at the same time when the gear selector is moved to or -position. Since is still activated in both first gear and reverse, in this way simultaneous engagements are reduced.

Position and 1st gear

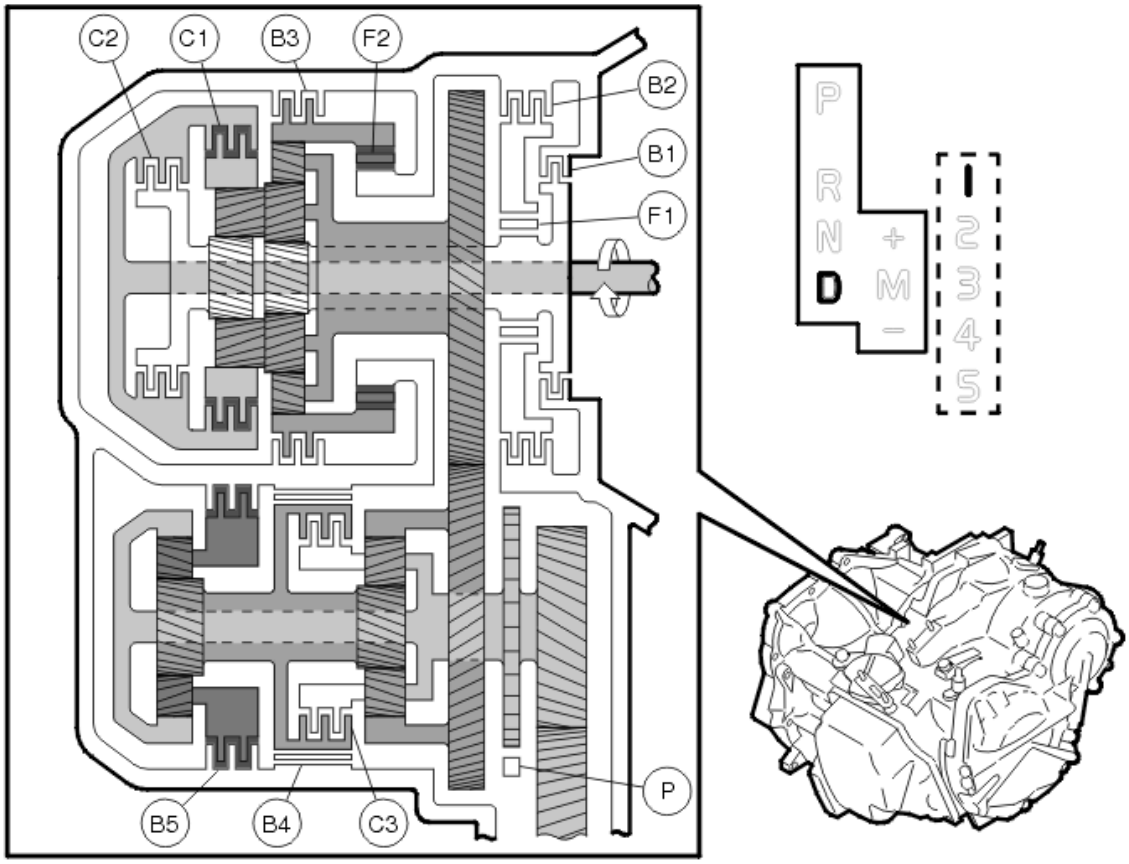

Fig. 130: Identifying Output Shaft Position D And 1st Gear
Courtesy of VOLVO CARS CORPORATION

Main section

The input shaft rotates clockwise. Clutch connects the input shaft to the rear ring gear, which rotates clockwise. The rear planetary gear rotates clockwise. The front large planetary gear rotates clockwise with the rear planetary gear as a unit.

The front small planetary gear rotates clockwise. The front ring gear rotates counter-clockwise. Freewheel locks the front ring gear's rotation counter-clockwise.

The front and rear planetary carriers are turned clockwise because of the reactive forces from the small gear. The primary intermediate gear rotates clockwise with the front and rear planetary carriers as a unit.

U/D section

The secondary intermediate gear rotates counter-clockwise. The front ring gear rotates counter-clockwise with secondary intermediate gear as a unit.

The front planetary gear rotates clockwise. The front planetary gear rotates clockwise. The rear sun gear rotates clockwise with the front sun gear as a unit.

The rear planetary gear rotates counter-clockwise. Brake locks the rear planetary carrier's rotation. The rear ring gear rotates counter-clockwise. The front planetary carrier and final drive pinion rotates counter-clockwise with the rear ring gear as a unit. The final drive rotates clockwise.

Engine brake

The primary intermediate gear and front and rear main planetary carriers rotate clockwise. The rear planetary carrier rotates clockwise. The rear planetary gear is turned counter-clockwise while it rotates counter-clockwise because of the resistance from the rear ring gear.

The front large gear wheel is turned clockwise while it rotates counter-clockwise and the small gear wheel is turned clockwise while it rotates clockwise. The front planetary carrier is turned clockwise.

The front ring gear rotates clockwise because the front small gear rotates clockwise, but drive force is reduced because freewheel is disengaged. Therefore the engine brake does not operate.

Position and 2nd gear

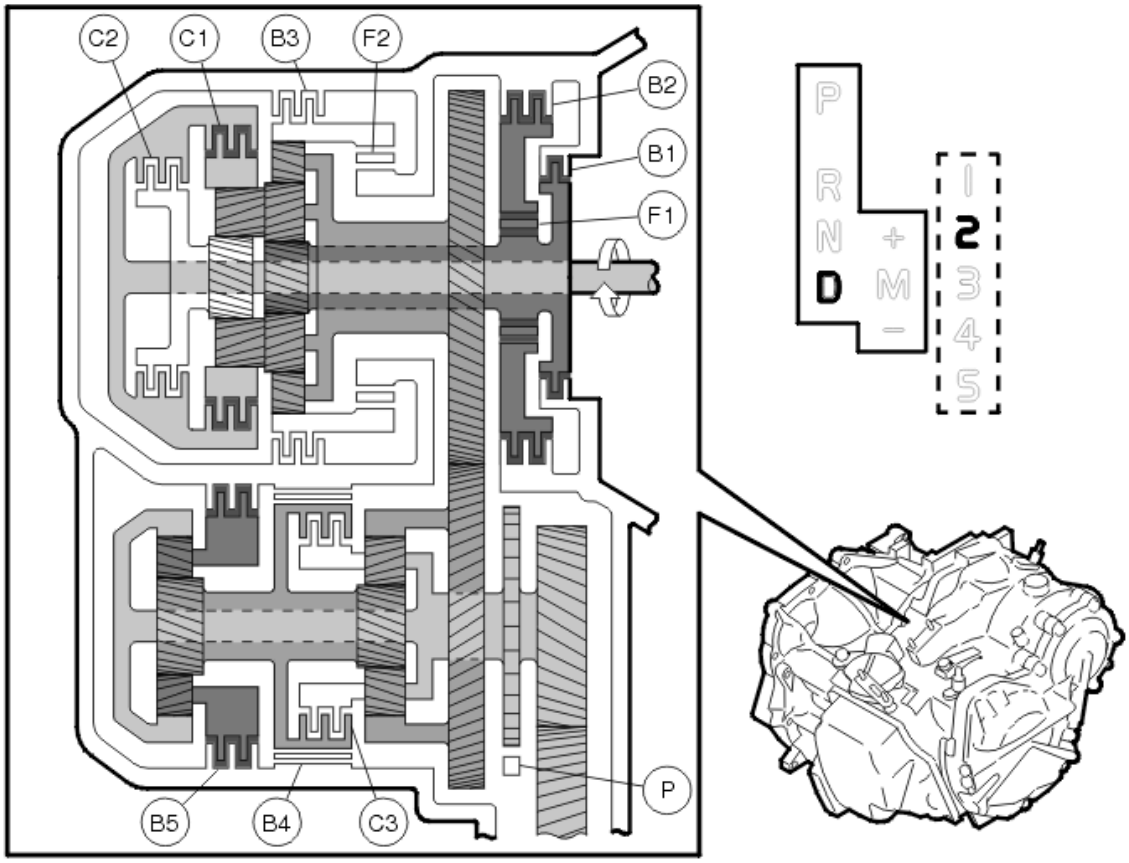

Fig. 131: Engine Brake Position D And 2nd Gear
Courtesy of VOLVO CARS CORPORATION

Main section

The input shaft rotates clockwise. Clutch connects the input shaft to the rear ring gear. The rear ring gear rotates clockwise. The rear planetary gear rotates clockwise.

The front large planetary gear rotates clockwise with the rear planetary gear as a unit. Brake, freewheel and brake lock the sun gear's rotation.

The front and rear planetary carriers are turned clockwise because of the reactive forces from the front large gear. The primary intermediate gear rotates clockwise with the front and rear planetary carriers as a unit.

U/D section

The secondary intermediate gear rotates counter-clockwise. The front ring gear rotates counter-clockwise with the secondary intermediate gear as a unit. The front planetary gear rotates clockwise. The front planetary gear rotates clockwise.

The rear sun gear rotates clockwise with the front sun gear as a unit. The rear planetary gear rotates counter-clockwise. Brake locks the rear planetary carrier's rotation. The rear ring gear rotates counter-clockwise.

The front planetary carrier and final drive pinion rotates clockwise with the rear ring gear as a unit. The final drive rotates clockwise.

Engine brake

Drive force is transferred directly to the input shaft without the one way clutch. Therefore the engine brake operates.

Position and 3rd gear

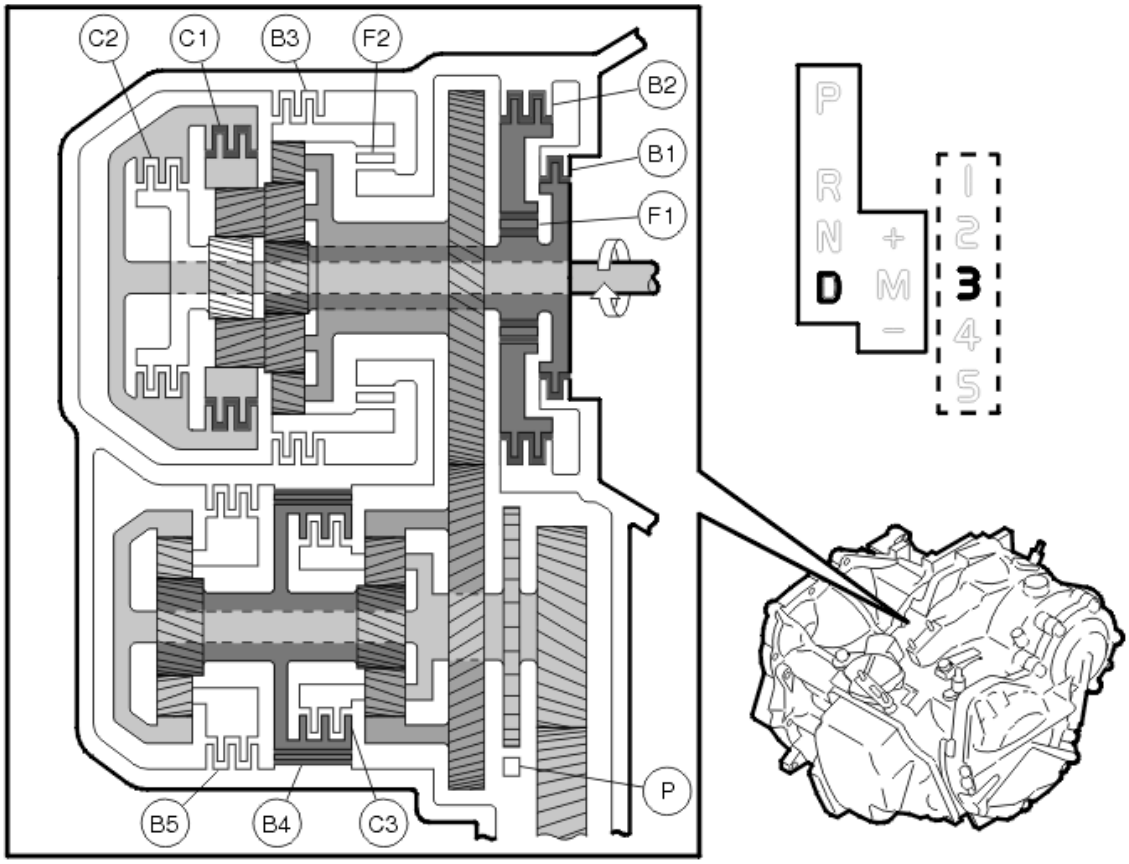

Fig. 132: Engine Brake Position D And 3rd Gear
Courtesy of VOLVO CARS CORPORATION

Main section

The input shaft rotates clockwise. Clutch connects the input shaft to the rear ring gear. The rear ring gear rotates clockwise. The rear planetary gear rotates clockwise.

The front large planetary gear rotates clockwise with the rear planetary gear as a unit. Brake, freewheel and brake lock the sun gear's rotation.

The front and rear planetary carriers are turned clockwise because of the reactive forces from the front large gear. The primary intermediate gear rotates clockwise with the front and rear planetary carriers as a unit.

U/D section

The secondary intermediate gear rotates counter-clockwise. The front ring gear rotates counter-clockwise with the secondary intermediate gear as a unit. The front planetary gear rotates clockwise. Brake locks the rotation of the front and rear sun gear.

The front planetary carrier is turned clockwise because of the reactive forces from the front large planetary gear. The front planetary carrier and final drive pinion rotate clockwise with the rear ring gear as a unit. The final drive rotates clockwise.

Engine brake

Drive force is transferred directly to the input shaft without the one way clutch. Therefore the engine brake operates

Position and 4th gear

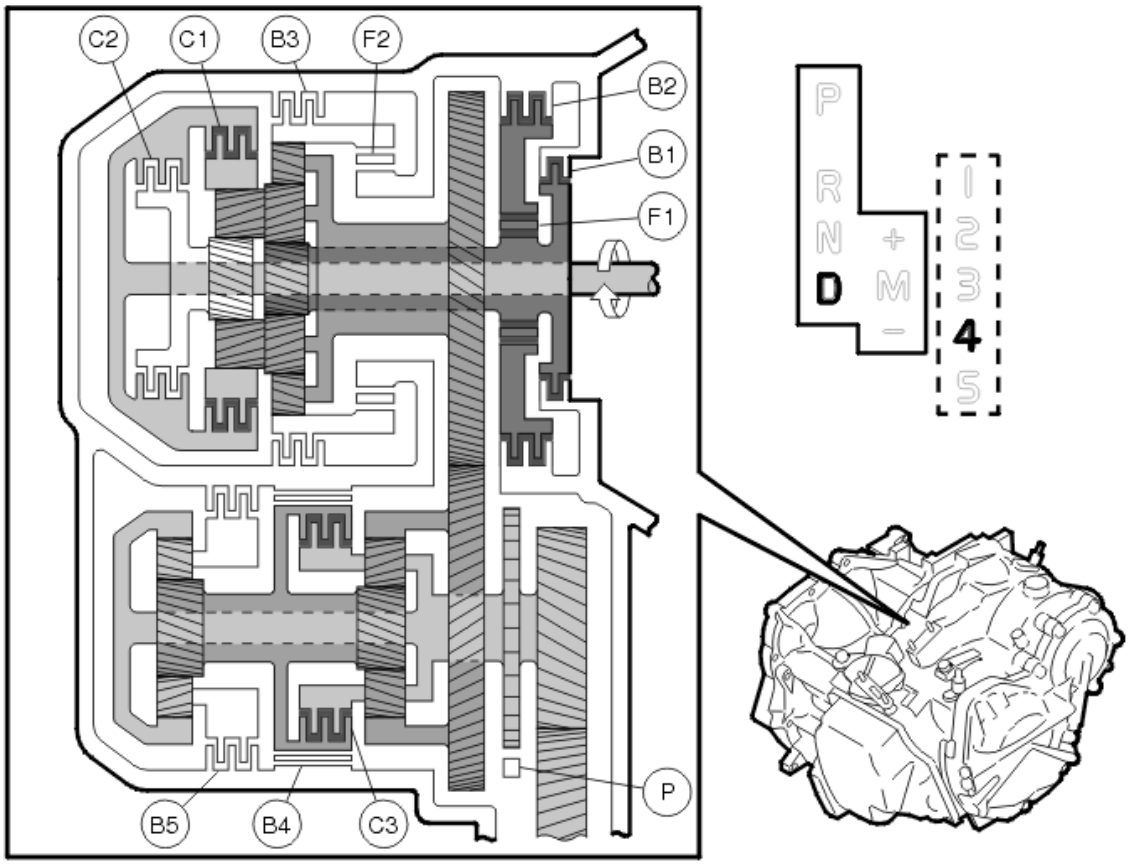

Fig. 133: Engine Brake Position D And 4th Gear
Courtesy of VOLVO CARS CORPORATION

Main section

The input shaft rotates clockwise. Clutch connects the input shaft to the rear ring gear. The rear ring gear rotates

clockwise. The rear planetary gear rotates clockwise.

The front large planetary gear rotates clockwise with the rear planetary gear as a unit. Brake, freewheel and brake lock the sun gear's rotation.

The front and rear planetary carriers are turned clockwise because of the reactive forces from the front large gear. The primary intermediate gear rotates clockwise with the front and rear planetary carriers as a unit.

U/D section

The secondary intermediate gear rotates clockwise. The front ring gear rotates counter-clockwise with the secondary intermediate gear as a unit. Clutch C3 connects the sun gear to the front planetary carrier.

The front planetary gear cannot rotate and the U/D unit rotates counter-clockwise as a unit. The final drive pinion rotates counter-clockwise with the U/D unit as a unit. The final drive rotates clockwise.

Engine brake

Drive force is transferred directly to the input shaft without the one way clutch. Therefore the engine brake operates.

Position and 5th gear

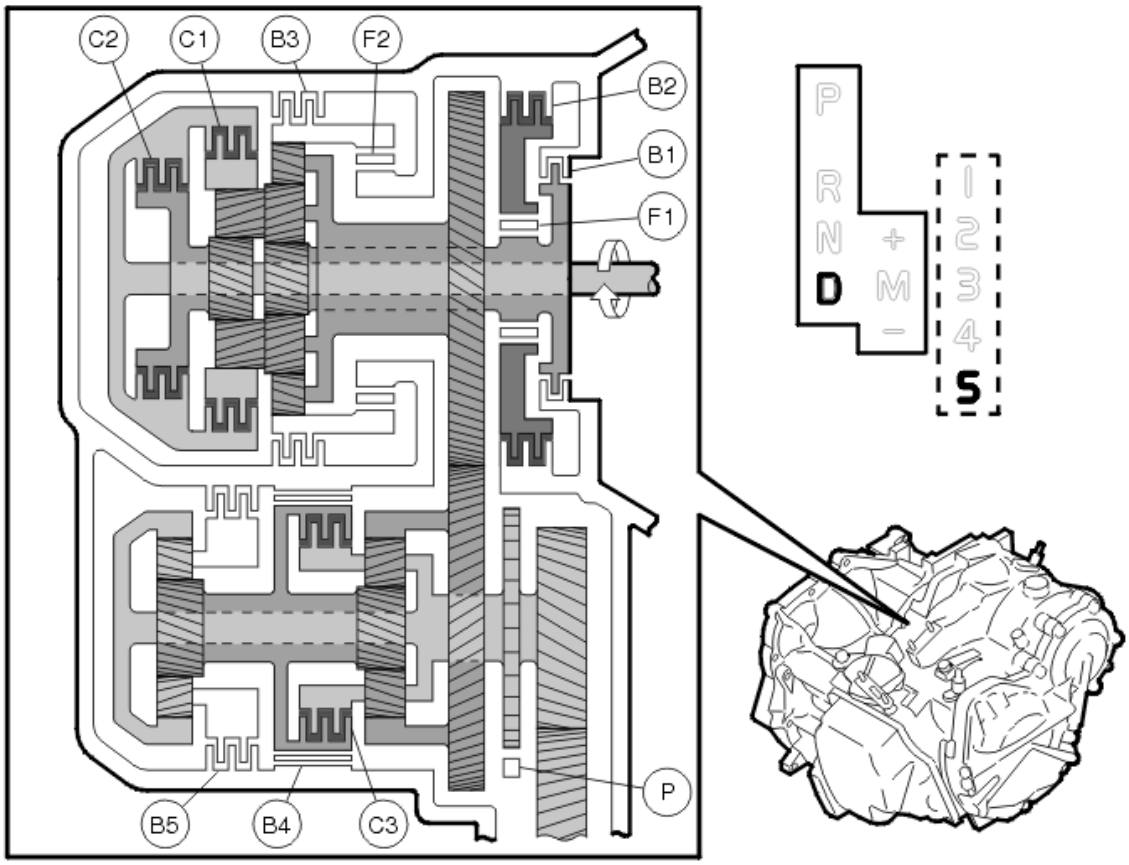

Fig. 134: Engine Brake Position D And 5th Gear
Courtesy of VOLVO CARS CORPORATION

Main section

The input shaft rotates clockwise. Clutch connects the input shaft to the rear ring gear. Clutch connects the input shaft to the sun gear.

The rear planetary gear cannot rotate and the rear planetary gear unit rotates clockwise as a unit. The front planetary gear cannot rotate with the rear planetary gear as a unit. The front planetary unit rotates clockwise as a unit. The primary intermediate gear rotates clockwise with the front planetary unit as a unit.

U/D section

The secondary intermediate gear rotates counter-clockwise. The front ring gear rotates counter-clockwise with the secondary intermediate gear as a unit. Clutch connects the sun gear to the front planetary carrier.

The front planetary gear cannot rotate and the U/D unit rotates counter-clockwise as a unit. The final drive pinion rotates counter-clockwise with the U/D unit as a unit. The final drive rotates clockwise.

Engine brake

Drive force is transferred directly to the input shaft without the one way clutch. Therefore the engine brake operates.

Position

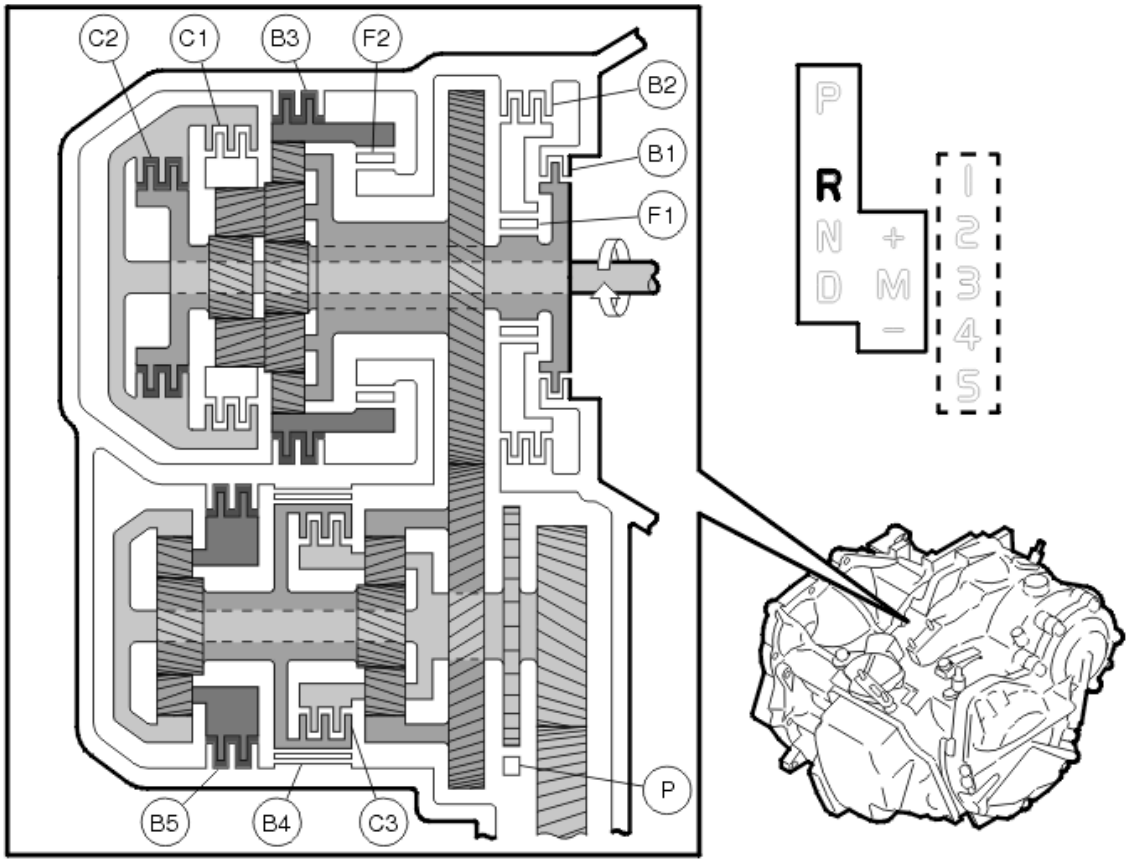

Fig. 135: Engine Brake Position R
Courtesy of VOLVO CARS CORPORATION

Main section

The input shaft rotates clockwise. Clutch connects the input shaft to the sun gear. The sun gear rotates clockwise.

The rear planetary gear rotates counter-clockwise. The front large planetary gear rotates counter-clockwise with the rear planetary gear as a unit. The front small planetary gear rotates clockwise.

Brake locks the front ring gear's rotation counter-clockwise. The front and rear planetary carriers are turned clockwise because of the reaction forces from the front small gear. The primary intermediate gear rotates counter-clockwise with the front and rear planetary carriers as a unit.

U/D section

The secondary intermediate gear rotates clockwise. The front ring gear rotates clockwise with the secondary intermediate gear as a unit. The front planetary gear rotates clockwise. The front sun gear rotates counter-clockwise.

The rear sun gear rotates counter-clockwise with the front sun gear as a unit. The rear planetary gear rotates clockwise. Brake locks the rear planetary carrier's rotation. The rear ring gear rotates clockwise. The front

planetary carrier and final drive pinion rotate clockwise with the rear ring gear as a unit. The final drive rotates counter-clockwise.

Engine brake

Drive force is transferred directly to the input shaft without the one way clutch. Therefore the engine brake operates.

TOWING

Towing is only permitted in the vehicle's forward direction at max. 80 km/h for max. 80 km.

The gear selector shall be in position.

CAUTION: The car must not be towed backwards under any circumstances.

OVERVIEW

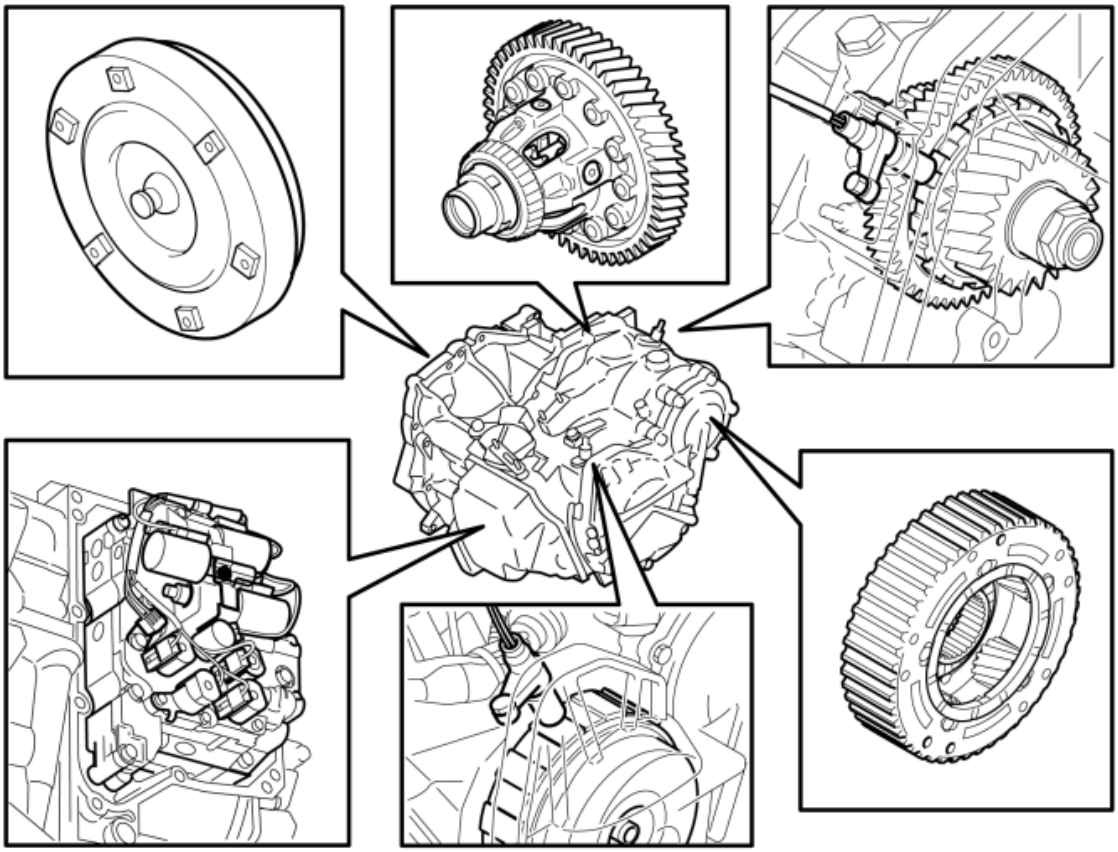

Fig. 136: Identifying Transmission
Courtesy of VOLVO CARS CORPORATION

AW55-51 is a 5 speed electronically controlled automatic transmission with a lock-up function for the three

highest gears. The transmission control module (TCM) adapts the gear changes to ensure that the correct gear is selected for the driving mode, engine load, driver requirements, speed etc. This gives good fuel economy combined with increased comfort by ensuring smoother gear changes and lower noise levels.

In a vehicle with an automatic transmission, the driver neither needs to decide which gear should be used nor shift gear. There is a operating system in the AW55-51 which uses a torque converter and gear shift system to do this.

TRANSMISSION (TF-80SC; 2007-2012)

DESIGN AND FUNCTION

TRANSMISSION COMPONENTS

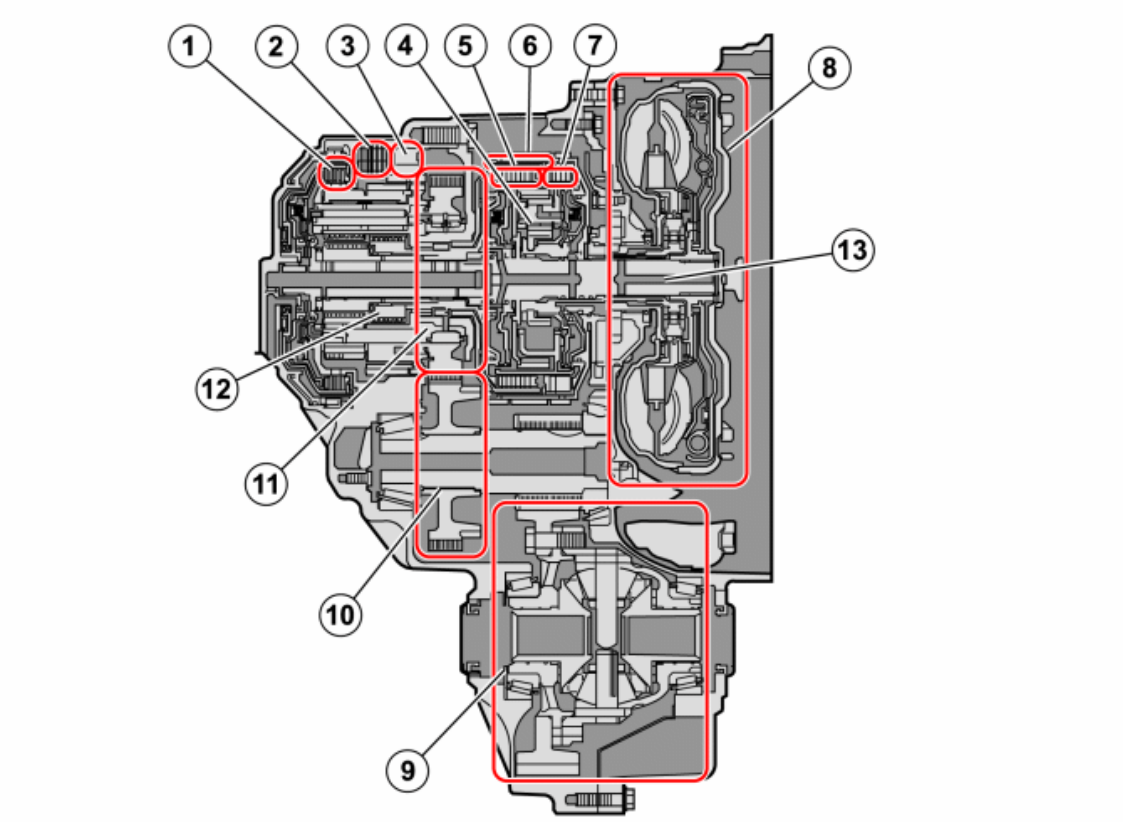

Fig. 137: Identifying Cross-Section Of Transmission
Courtesy of VOLVO CARS CORPORATION

Number	Designation	Number	Designation
1	Clutch C2	8	Torque converter
2	Brake B2	9	Differential unit
3	Freewheel F1	10	Driven counter rotating gear
4	Front planetary train	11	Driven gear
			Rear planetary train,

5	Clutch C1	12	Ravigneaux
6	Brake B1	13	Input shaft
7	Clutch C3		

TORQUE CONVERTER WITH LOCK-UP

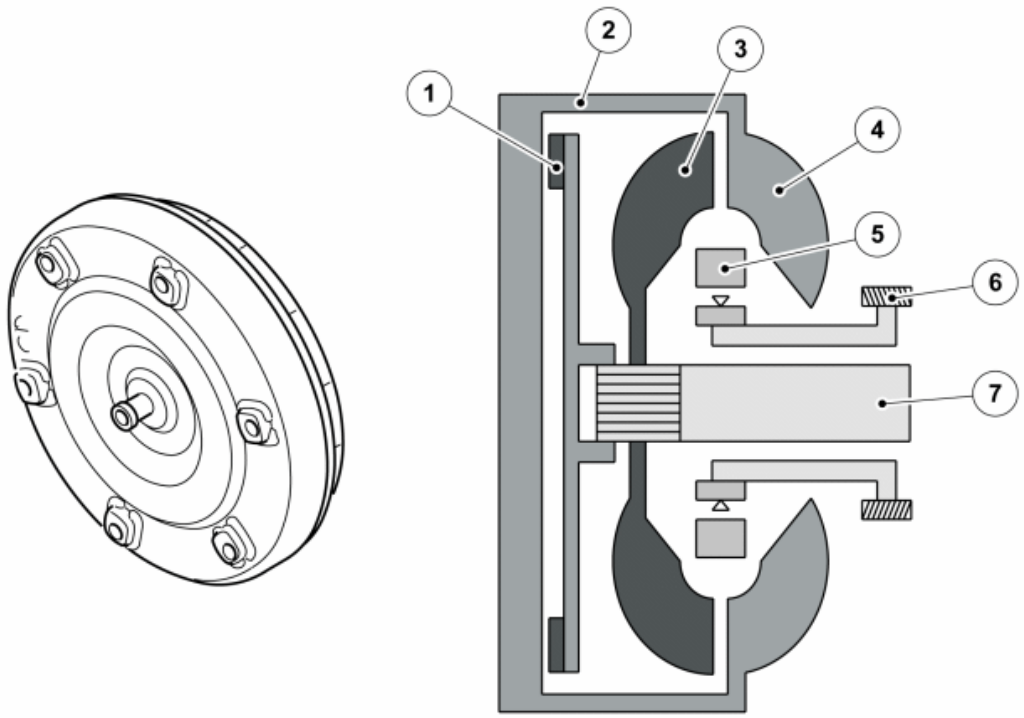

Fig. 138: Identifying Cross Section Of Torque Converter With Lock-Up
Courtesy of VOLVO CARS CORPORATION

Number	Designation	Number	Designation
1	Lock-up-clutch	5	Stator
2	Casing	6	Oil pump
3	Turbine rotor	7	Input shaft
4	Pump rotor		

The torque converter is between the engine and the automatic transmission. It consists of a round metal casing which contains three impellers. The torque converter is filled with oil. The first impeller, pump rotor, is secured in the torque converter casing, which is connected to the engine's crankshaft via a carrier plate. The pump rotor rotates with the crankshaft.

The second impeller, the turbine rotor, is connected to the transmission's input shaft and is driven by the oil that is circulated by the pump rotor.

The third impeller, the stator, is located between the pump rotor and the turbine rotor.

There is a hydraulically controlled lock-up clutch with a friction plate in the torque converter. The turbine rotor can connect with the torque converter housing via the lock-up clutch. This reduces fuel consumption.

The torque converter functions like a hydraulic automatic clutch. At idle, the pump action is too weak to drive the turbine rotor and thus the vehicle is stationary. When the engine speed is increased the turbine rotor starts to drive in a smooth way. Thanks to the stator rotor, the torque converter can also reinforce the engine's torque when starting and low driving speed.

The rotating impellers and the oil in the torque converter "slip" slightly. This gives a certain power loss, which slightly increases fuel consumption.

When the vehicle is moving the torque converter's reinforcement of the engine's torque is not needed. In this situation the lock-up function is activated and, at a certain speed, mechanically connects the transmission's input shaft with the engine. This is automatic and cannot be affected by the driver. The engine speed drops and, since the torque converter's slipping disappears, fuel consumption is also reduced.

PLANETARY TRAIN

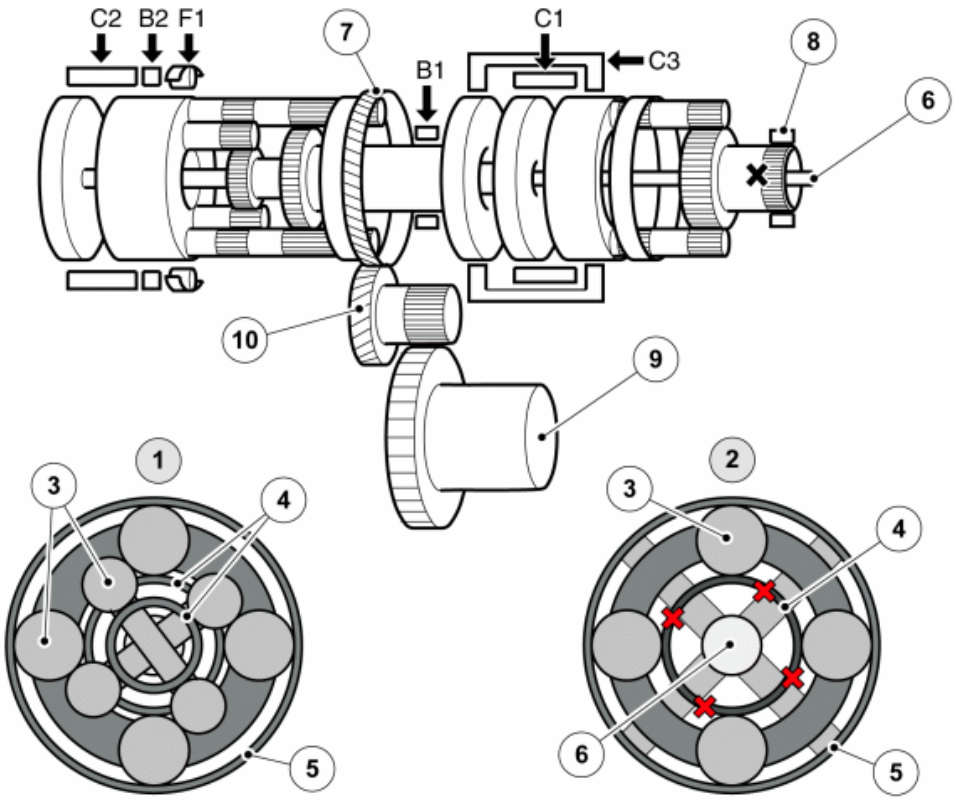

Fig. 139: Identifying Planetary Train
Courtesy of VOLVO CARS CORPORATION

X = locked

Number	Designation	Number	Designation
1	Rear planetary train, (Ravigneaux)	6	Input shaft
2	Front planetary train	7	Driven gear
3	Planetary gear	8	Oil pump
4	Sun gear	9	Differential
5	Ring gear	10	Driven counter rotating gear

Unique to the TF-80SC is a Ravigneaux planetary gear connected in series to a conventional planetary gear. The conventional planetary gear creates a reduction in RPM in the Ravigneaux planetary gear for 1st gear up to 5th gear and reverse.

The planetary gear's ratios are controlled by 3 clutches (C1, C2, C3) and 2 brakes (B1, B2).

The number of planetary gears depends on the engine's cylinder displacement and can therefore differ from what is shown here.

Planetary train, Ravigneaux

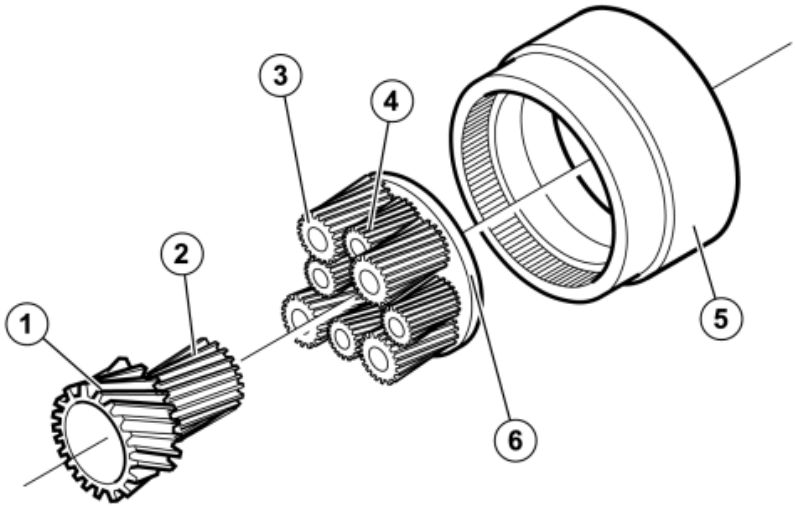

Fig. 140: Identifying Ravigneaux Planetary Train
Courtesy of VOLVO CARS CORPORATION

Number	Designation	Number	Designation
1	Large sun gear	4	Inner planetary gear
2	Small sun gear	5	Ring gear
3	Outer planetary gear	6	Planetary wheel carrier

The characteristic of a Ravigneaux planetary train is that several gears can be used in comparison to a conventional planetary train. It is compact (takes up little room) in relation to the number of possible ratios. The Ravigneaux planetary train has two sun gears of different diameters and sets of two planetary gears, an inner

and outer set. The inner planetary gears are constantly connected to the outer planetary gears and the small sun gear. The outer planetary gears are constantly connected to the ring gear and large sun gear.

The planetary train has a common planetary gear carrier for both sets of planetary gears.

Principles of function

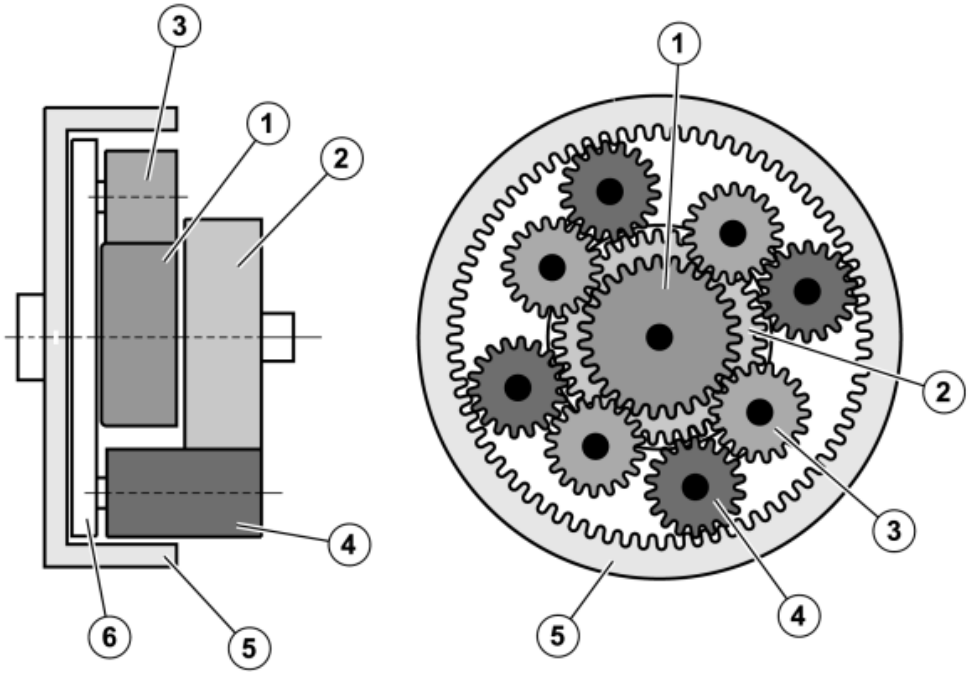

Fig. 141: Identifying Cross-Section Of Ravigneaux Planetary Train
Courtesy of VOLVO CARS CORPORATION

Number	Designation	Number	Designation
1	Small sun gear	4	Outer planetary gear
2	Large sun gear	5	Ring gear
3	Inner planetary gear	6	Planetary wheel carrier

The ratios are obtained through different combinations of locked and/or connected components. The table displays the principle for how the ratios are obtained from large ratio, 1, to small ratio, 6, and counter rotation (i. e. reverse with large ratio).

Combination	Power in	Locked	Power out
1	Small sun gear	Planetary gear carrier	Ring gear
2	Small sun gear	Large sun gear	Ring gear

3	Small sun gear and large sun gear	No component	Ring gear
4	Small sun gear and planetary gear carrier	No component	Ring gear
5	Large sun gear and planetary gear carrier	No component	Ring gear
6	Planetary gear carrier	Large sun gear	Ring gear
Reverse	Large sun gear	Planetary gear carrier	Ring gear

OIL PUMP

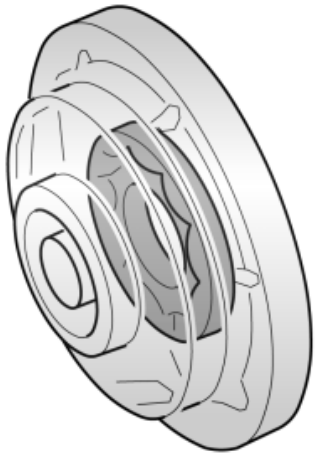

Fig. 142: Identifying Oil Pump
Courtesy of VOLVO CARS CORPORATION

The oil pump is of "non-crescent" type and is located after the torque converter. It is driven by the engine's crankshaft via the torque converter housing.

The oil pump supplies the hydraulics with oil and supplies the other components of the transmission with oil for lubrication and cooling. Excess oil is routed back to the oil sump.

OIL COOLER

The oil is routed in/out in separate lines to the external oil cooler.

THE HYDRAULIC SYSTEM

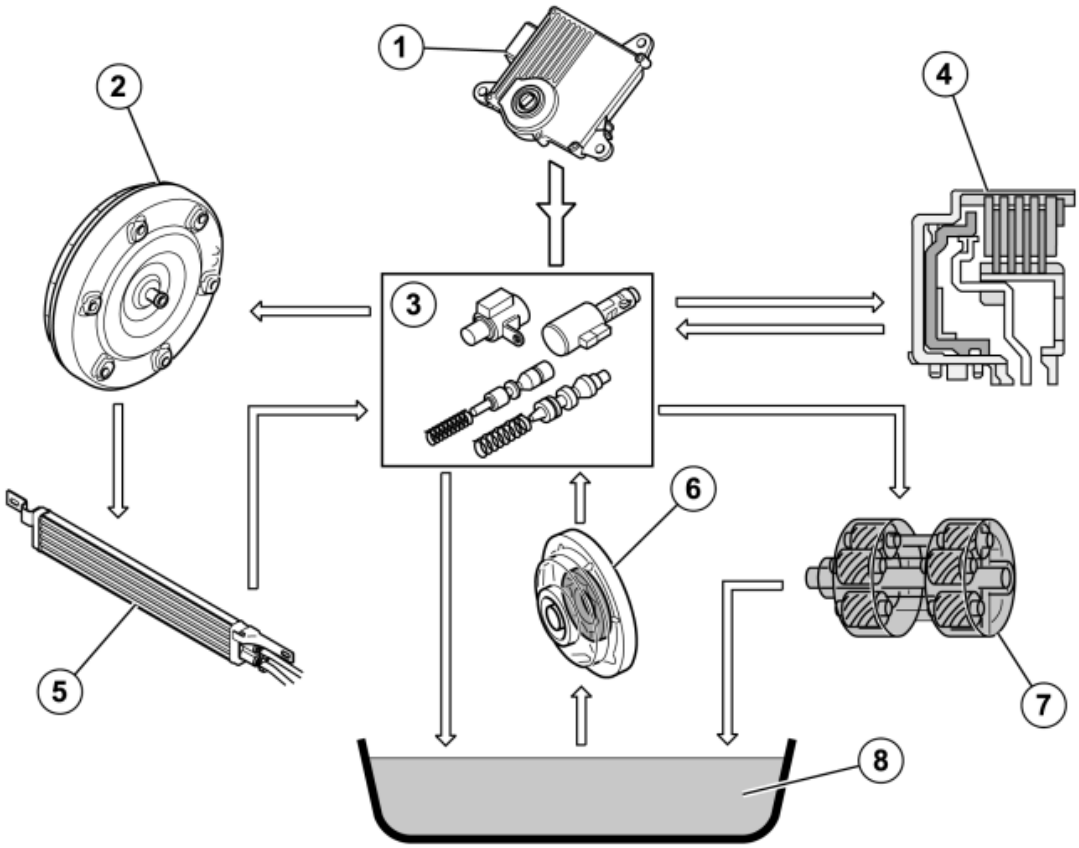

Fig. 143: Identifying Hydraulic System
Courtesy of VOLVO CARS CORPORATION

Number	Designation	Number	Designation
1	Transmission control module (TCM)	5	Oil cooler
2	Torque converter	6	Oil pump
3	Valves and solenoids	7	Planetary train
4	Clutches and brakes	8	Oil sump

The transmission's hydraulic system consists of oil pump, torque converter, hydraulic control system and oil cooler.

The solenoids, which control the hydraulic valves, are located in the transmission's control system, which are mounted on the front edge of the transmission. The solenoids are activated by the Transmission control module (TCM).

The oil pump supplies the hydraulics with oil and supplies the other components of the transmission with oil for lubrication and cooling. Excess oil is routed back to the oil sump.

CAUTION: The transmission oil differs from conventional ATF oil properties. Always use transmission oil that is specified for this transmission. Otherwise the

function of the transmission will be damaged.

The oil level is checked though a level pipe (transmission does not have conventional oil dipstick).

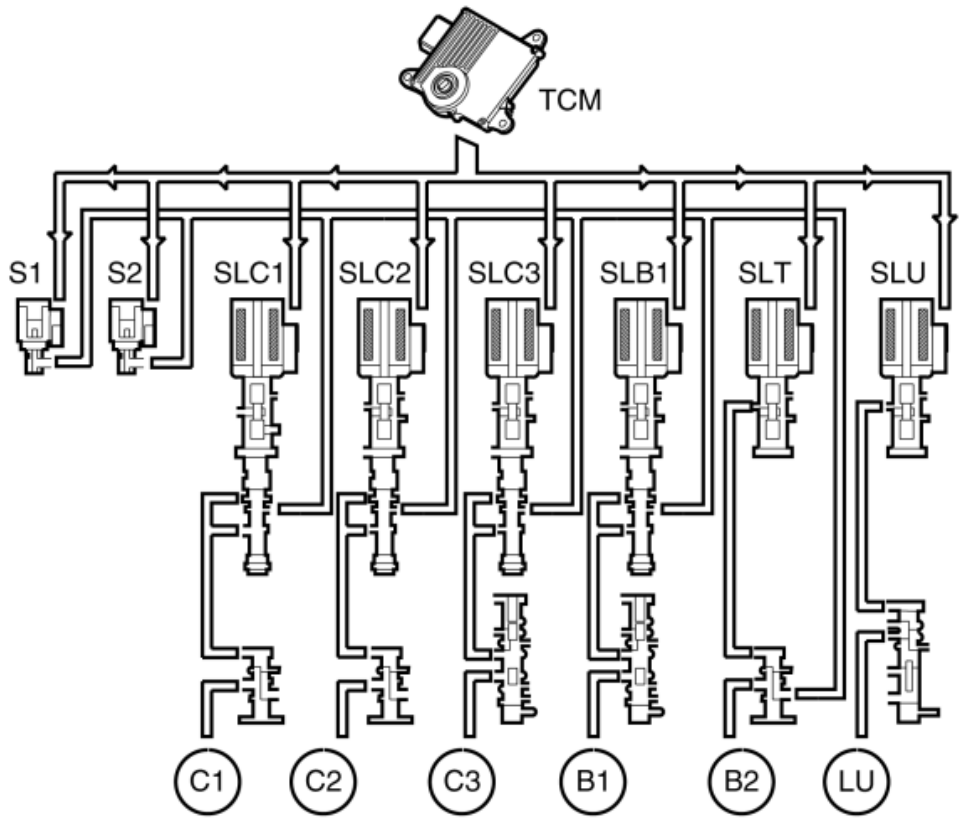

Fig. 144: Identifying Transmission Control Module (TCM), Solenoids And Sensors
Courtesy of VOLVO CARS CORPORATION

S1 = Solenoid, S1	SLU = Lock-up solenoid, SLU
S2 = Solenoid, S2	C1 = Clutch, C1
SLC1 = Line pressure solenoid, SLC1	C2 = Clutch, C2
SLC2 = Line pressure solenoid, SLC2	C3 = Clutch, C3
SLC3 = Line pressure solenoid, SLC3	B1 = Brake, B1
SLB1 = Line pressure solenoid, SLB1	B2 = Brake, B2
SLT = Line pressure solenoid, SLT	LU = Lock-up

Shifting occurs by the oil pump building up hydraulic pressure. The hydraulic valves, which are controlled by their respective solenoids, send the hydraulic pressure to the relevant clutch, brake or lock-up depending on which signals come from the Transmission control module (TCM).

Hydraulic pressure chamber

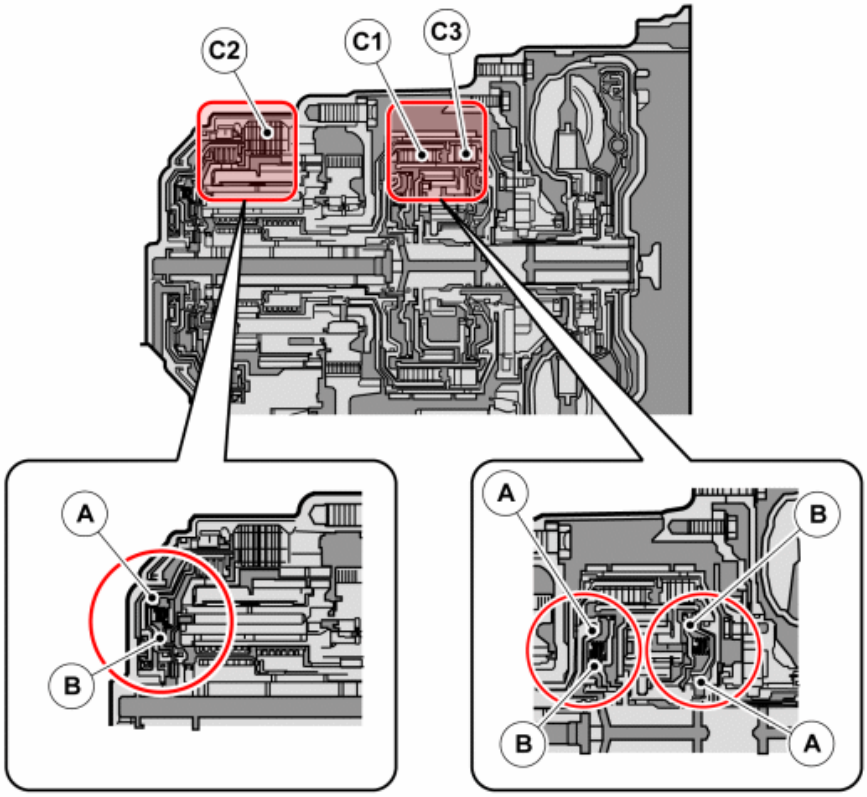

Fig. 145: Identifying Hydraulic Pressure Chambers
Courtesy of VOLVO CARS CORPORATION

A = Piston's hydraulic pressure chamber

B = Counter acting hydraulic pressure chamber

When the rotation of the clutch increases, the centrifugal force affects the oil inside the clutch. The hydraulic pressure increases and the clutch engages. The centrifugal force means that a difference occurs in the rotation between the input and output shafts, which can mean a shift judder. To solve this, there is an extra pressure chamber opposite the piston's hydraulic pressure chamber. This extra pressure chamber means that the centrifugal force also works in the opposite direction and therefore affects the pressure from the piston's hydraulic pressure chamber. In addition, the clutch does not engage too soon.

GEAR SELECTOR ASSEMBLY

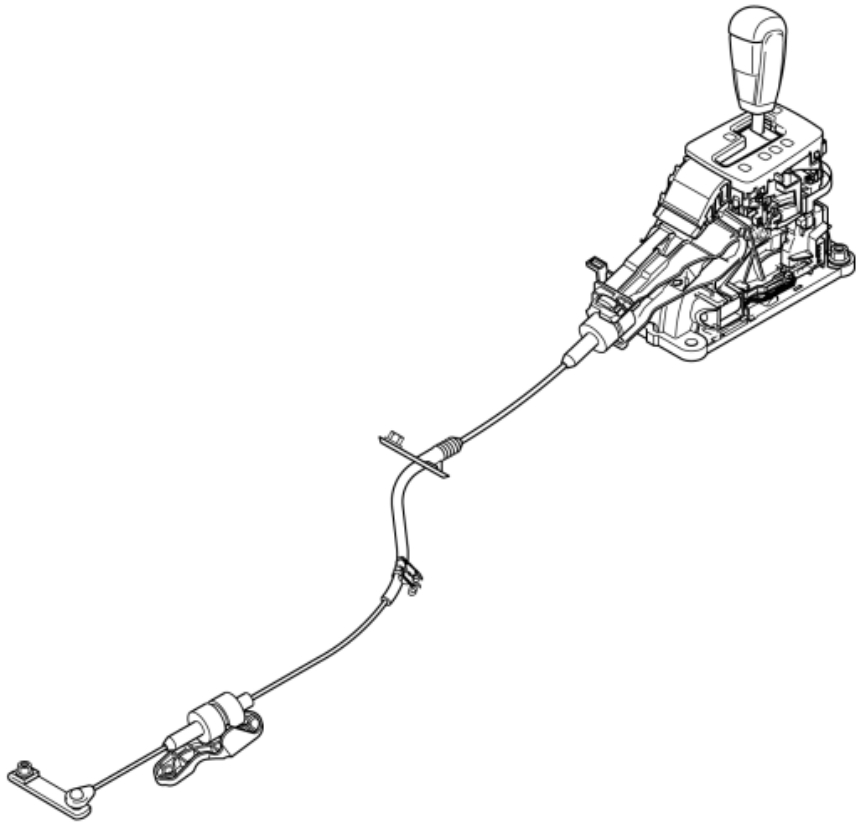

Fig. 146: Identifying Gear Selector Assembly
Courtesy of VOLVO CARS CORPORATION

The gear selector assembly is in the tunnel console. It is mechanically connected to the transmission by a cable which moves the gear valve. The gear valve is integrated in the Transmission control module (TCM). The gear selected is indicated by a row of LEDs in the top panel on the gear selector assembly.

Gear selector assemblies with Geartronic, in addition to P/R/N/D modes, have a manual (M) shifting mode. The manual gear positions can be selected at any point while driving. The engaged gear is locked until the driver selects another gear. The automatic transmission only down shifts if the vehicle slows down to very low speed. To downshift the gear selector must be moved to minus (-). To upshift the gear selector must be moved to plus (+). At start, 3rd is the highest possible gear.

The engine can only be started in position P or N.

THE DIFFERENT GEAR SELECTOR POSITIONS:

Position	Meaning	Function
P	Park	The transmission's output shaft is locked, so that the vehicle does not roll. This position should be selected when the engine is started or the vehicle is parked.
R	Reverse	Reverse gear. This mode may only be engaged when the vehicle is completely

		stationary.
N	Neutral	Neutral means that no gear is engaged. The engine can start and run freely.
D	Drive	When D is engaged, the engine drives the vehicle forward except when idling. The D position is used for all forward motion. Up and down shifting occurs automatically depending on acceleration and speed.
M	Manual	This position allows the driver to change gears manually.

POWER FLOW

Clutches, brakes and freewheel

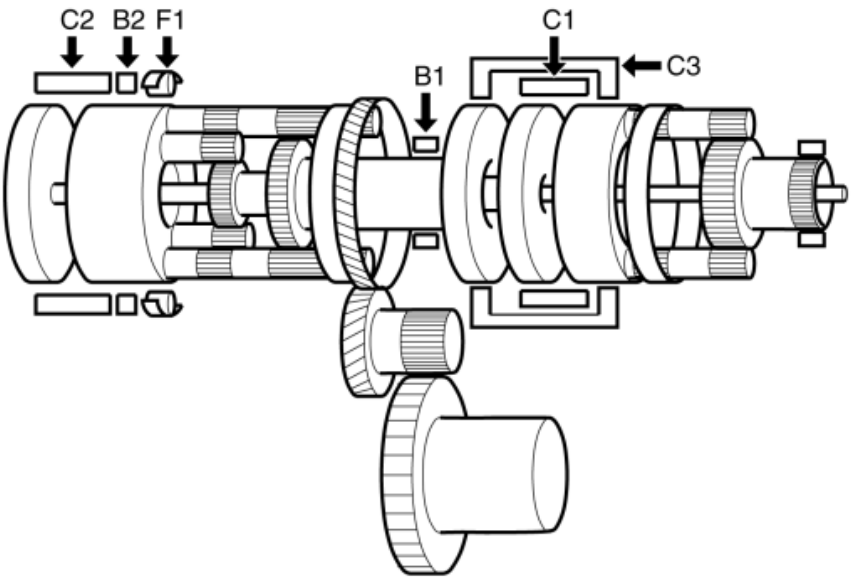

Fig. 147: Identifying Clutches, Brakes And Freewheel
Courtesy of VOLVO CARS CORPORATION

Clutch/Brakes	Function
Clutch C1	Connects the front planetary gear carrier with the rear planetary train's small sun gear.
Clutch C2	Connects the input shaft with the rear planetary gear carrier.
Clutch C3	Connects the front planetary gear carrier with the rear planetary train's large sun gear.

Brake B1	Locks the rear planetary train's large sun gear.
Brake B2	Locks the rear planetary train's planetary gear carrier.
Freewheel F1	Locks the rear planetary gear carrier so that it does not go counter-clockwise.

Position D, 1st gear

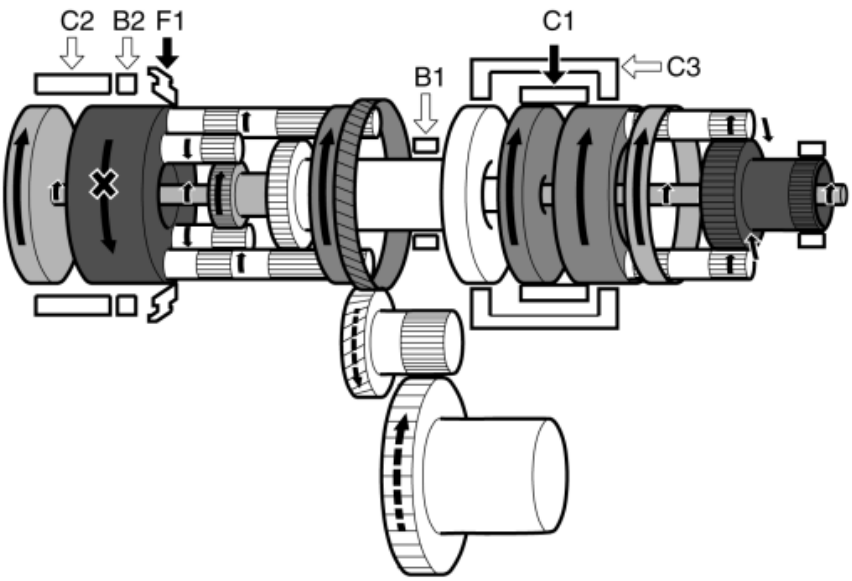

Fig. 148: Identifying Position D For 1st Gear
Courtesy of VOLVO CARS CORPORATION

Solenoid						Clutch			Brakes		Freewheel
SLC1	SLC 2	SLC 3	SLB1	S1	S2	C1	C2	C3	B1	B2	F1
-	X	X	X	-	-	X	-	-	-	-*	X

X = activated

- = not activated

* B2 is only active during engine braking.

Planetary train unit	Power in	Locked	Power out
Front	Ring gear	Sun gear	Planetary gear carrier
Rear	Small sun gear	Planetary gear carrier	Ring gear

The input shaft rotates clockwise, the same direction as the torque converter's turbine rotor.

The front planetary train's ring gear rotates clockwise.

The front planetary train's planetary gear rotates clockwise on its shafts. Because the front planetary train's sun gear is locked by the oil pump, the planetary train's planetary gear presses against the front planetary train's ring gear, and therefore rotates around the sun gear. Because the front planetary train's ring gear has inner teeth, the direction of rotation does not change.

The front planetary gear carrier rotates clockwise.

Clutch C1 rotates clockwise and connects the front planetary gear carrier with the rear planetary train's small sun gear.

Rear planetary train's sun gear rotates clockwise.

The rear planetary train's inner planetary gear rotates counter-clockwise on its shaft. The rear planetary gear carrier attempts to rotate counter-clockwise but is prevented by freewheel F1.

The rear planetary train's outer planetary gear rotates clockwise on its shafts. The rear planetary train's small sun gear rotates counter-clockwise, at idle.

The rear planetary train's ring gear rotates clockwise using the rear planetary train's outer planetary gear. Because the rear planetary train's ring gear has inner teeth, the direction of rotation does not change.

The driven gear rotates clockwise. Because the rear planetary train's ring gear is on the driven gear, the driven gear rotates in the same direction as the rear planetary train's ring gear.

The counter-rotating gear rotates counter-clockwise.

The differential's ring gear rotates clockwise.

Position D, 2nd gear

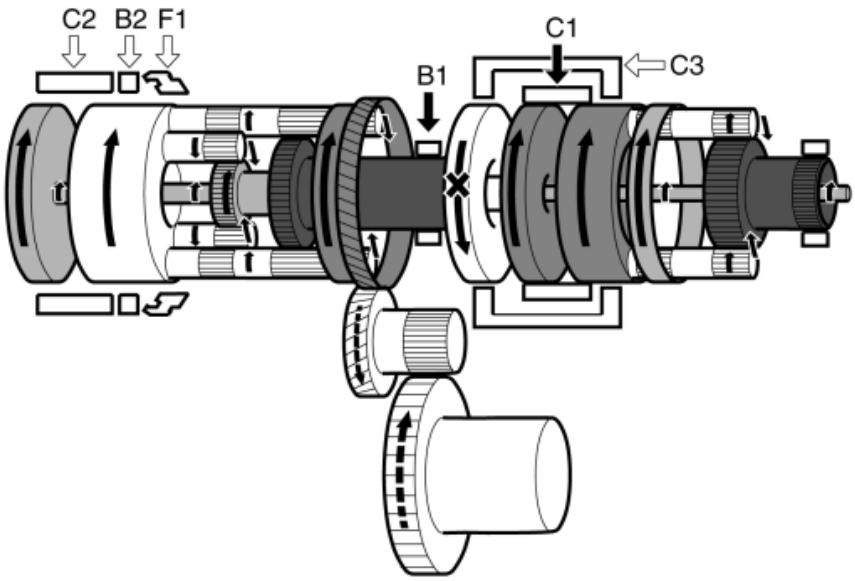

Fig. 149: Identifying Position D For 2nd Gear
Courtesy of VOLVO CARS CORPORATION

Solenoid						Clutch			Brakes		Freewheel
SLC1	SLC 2	SLC 3	SLB1	S1	S2	C1	C2	C3	B1	B2	F1
-	X	X	-	-	-	X	-	-	X	-	-

X = activated

- = not activated

Planetary train unit	Power in	Locked	Power out
Front	Ring gear	Sun gear	Planetary gear carrier
Rear	Small sun gear	Large sun gear	Ring gear

The input shaft rotates clockwise, the same direction as the torque converter's turbine rotor.

The front planetary train's ring gear rotates clockwise.

The front planetary train's planetary gear rotates clockwise on its shafts. Because the front planetary train's sun gear is locked by the oil pump, the planetary train's planetary gear presses against the front planetary train's ring gear, and therefore rotates around the sun gear. Because the front planetary train's ring gear has inner teeth, the

direction of rotation does not change.

The front planetary gear carrier rotates clockwise.

Clutch C1 rotates clockwise and connects the front planetary gear carrier with the rear planetary train's small sun gear.

Rear planetary train's sun gear rotates clockwise.

The rear planetary train's large sun gear is locked by brake B1.

The rear planetary train's inner planetary gear rotates counter-clockwise on its shaft.

The rear planetary train's outer planetary gear rotates clockwise on its shafts.

The rear planetary train's ring gear rotates clockwise using the rear planetary train's outer planetary gear. Because the rear planetary train's ring gear has inner teeth, the direction of rotation does not change.

The driven gear rotates clockwise. Because the rear planetary train's ring gear is on the driven gear, the driven gear rotates in the same direction as the rear planetary train's ring gear.

The counter-rotating gear rotates counter-clockwise.

The differential's ring gear rotates clockwise.

Engine brake

When the engine brake works, the driven force is transferred from the tires.

Position D, 3rd gear

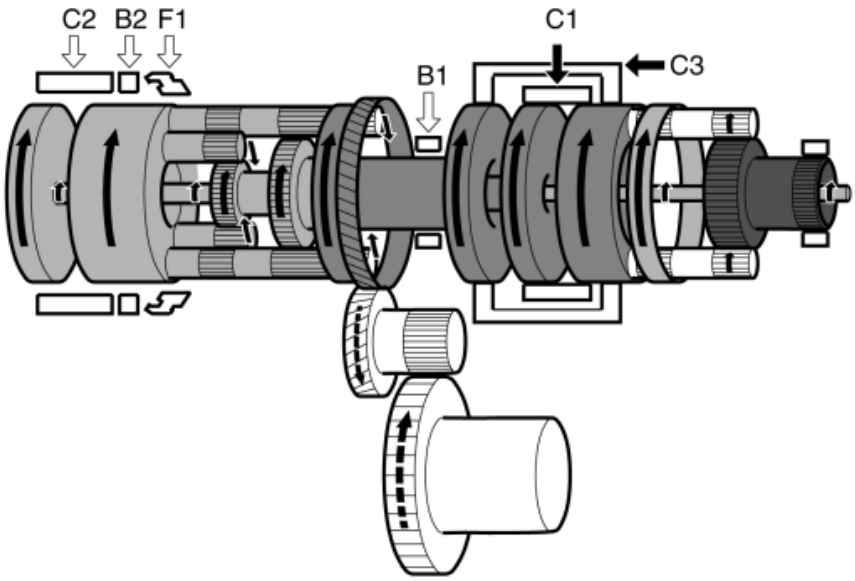

Fig. 150: Identifying Position D For 3rd Gear
Courtesy of VOLVO CARS CORPORATION

Solenoid						Clutch			Brakes		Freewheel
SLC1	SLC 2	SLC 3	SLB1	S1	S2	C1	C2	C3	B1	B2	F1
-	X	-	X	-	-	X	-	X	-	-	-

X = activated

- = not activated

Planetary train unit	Power in	Locked	Power out
Front	Ring gear	Sun gear	Planetary gear carrier
Rear	Small sun gear and large sun gear	No component	Ring gear

The input shaft rotates clockwise, the same direction as the torque converter's turbine rotor.

The front planetary train's ring gear rotates clockwise.

The front planetary train's planetary gear rotates clockwise on its shafts. Because the front planetary train's sun gear is locked by the oil pump, the planetary train's planetary gear presses against the front planetary train's ring

gear, and therefore rotates around the sun gear. Because the front planetary train's ring gear has inner teeth, the direction of rotation does not change.

The front planetary gear carrier rotates clockwise.

Clutch C1 rotates clockwise and connects the front planetary gear carrier with the rear planetary train's small sun gear.

Clutch C3 rotates clockwise and connects the front planetary gear carrier with the rear planetary train's large sun gear.

The rear planetary train rotates clockwise. Because the rear planetary train's inner and outer planetary gears are in constant engagement with each other, they are kinetically locked in relation to each other. The kinetic energy from both the rear planetary train's sun gears is therefore transferred to the rear planetary train's ring gear.

The rear planetary train's ring gear rotates clockwise.

The driven gear rotates clockwise. Because the rear planetary train's ring gear is on the driven gear, the driven gear rotates in the same direction as the rear planetary train's ring gear.

The counter-rotating gear rotates counter-clockwise.

The differential's ring gear rotates clockwise.

Engine brake

When the engine brake works, the driven force is transferred from the tires.

Position D, 4th gear

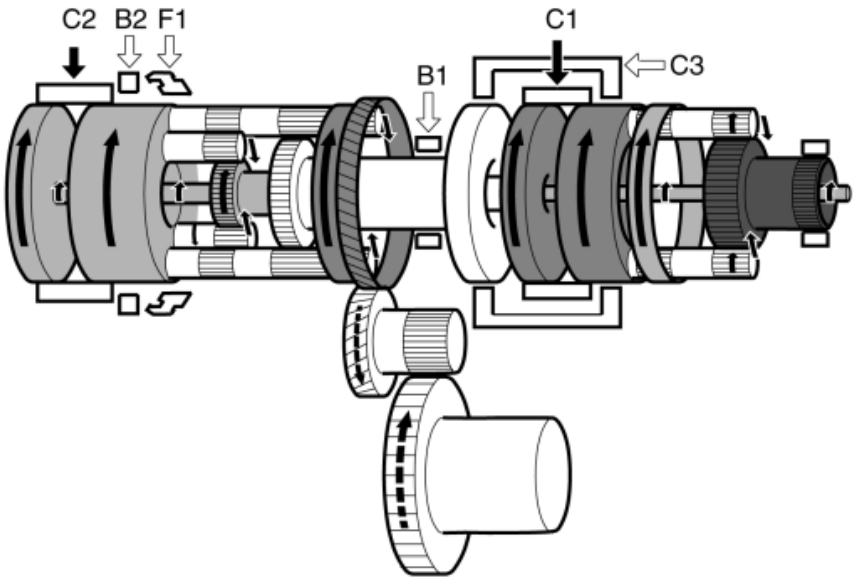

Fig. 151: Identifying Position D For 4th Gear
Courtesy of VOLVO CARS CORPORATION

Solenoid						Clutch			Brakes		Freewheel
SLC1	SLC 2	SLC 3	SLB1	S1	S2	C1	C2	C3	B1	B2	F1
-	-	X	X	-	-	X	X	-	-	-	-

X = activated

- = not activated

Planetary train unit	Power in	Locked	Power out
Front	Ring gear	Sun gear	Planetary gear carrier
Rear	Small sun gear and planetary gear carrier	No component	Ring gear

The input shaft rotates clockwise, the same direction as the torque converter's turbine rotor.

The front planetary train's ring gear rotates clockwise.

The front planetary train's planetary gear rotates clockwise on its shafts. Because the front planetary train's sun gear is locked by the oil pump, the planetary train's planetary gear presses against the front planetary train's ring

gear, and therefore rotates around the sun gear. Because the front planetary train's ring gear has inner teeth, the direction of rotation does not change.

The front planetary gear carrier rotates clockwise.

Clutch C1 rotates clockwise and connects the front planetary gear carrier with the rear planetary train's small sun gear.

The intermediate shaft rotates clockwise, the same direction as the input shaft.

Clutch C2 rotates clockwise.

The rear planetary gear carrier rotates clockwise.

The rear planetary train's inner planetary gear rotates clockwise on its shafts.

The rear planetary train's outer planetary gear rotates counter-clockwise on its shafts.

The rear planetary train's ring gear rotates clockwise. Because the rear planetary train's outer planetary gear rotation pulls away from the rear planetary gear carrier's rotation, the ring gear's speed is lower than the speed at the planetary carrier.

The driven gear rotates clockwise. Because the rear planetary train's ring gear is on the driven gear, the driven gear rotates in the same direction as the rear planetary train's ring gear.

The counter-rotating gear rotates counter-clockwise.

The differential's ring gear rotates clockwise.

Engine brake

When the engine brake works, the driven force is transferred from the tires.

Position D, 5th gear

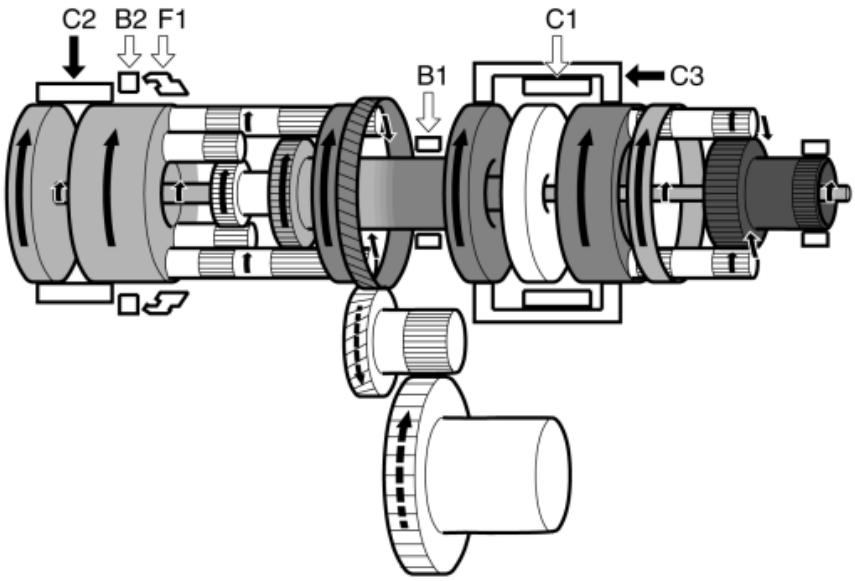

Fig. 152: Identifying Position D For 5th Gear
Courtesy of VOLVO CARS CORPORATION

Solenoid						Clutch			Brakes		Freewheel
SLC1	SLC 2	SLC 3	SLB1	S1	S2	C1	C2	C3	B1	B2	F1
X	-	-	X	-	-	-	X	X	-	-	-

X = activated

- = not activated

Planetary train unit	Power in	Locked	Power out
Front	Ring gear	Sun gear	Planetary gear carrier
Rear	Large sun gear and planetary gear carrier	No component	Ring gear

The input shaft rotates clockwise, the same direction as the torque converter's turbine rotor.

The front planetary train's ring gear rotates clockwise.

The front planetary train's planetary gear rotates clockwise on its shafts. Because the front planetary train's sun gear is locked by the oil pump, the planetary train's planetary gear presses against the front planetary train's ring

gear, and therefore rotates around the sun gear. Because the front planetary train's ring gear has inner teeth, the direction of rotation does not change.

The front planetary gear carrier rotates clockwise.

Clutch C3 rotates clockwise and connects the front planetary gear carrier with the rear planetary train's large sun gear.

The rear planetary train's large sun gear rotated clockwise. Its speed is reduced by the front planetary train so that the speed becomes lower than the speed of the input shaft.

The intermediate shaft rotates clockwise, the same direction as the input shaft.

Clutch C2 rotates clockwise.

The rear planetary gear carrier rotates clockwise.

The rear planetary train's outer planetary gear rotates clockwise. Because the rear planetary gear carrier rotates faster than the rear planetary train's large sun gear, the inner planetary gears are pressed outwards by the speed difference and rotate clockwise on their shafts.

The rear planetary train's ring gear rotates clockwise. Because the rear planetary train's outer planetary gear rotation is added to the rear planetary gear carrier's rotation, the ring gear's speed is greater than the speed at the planetary carrier.

The driven gear rotates clockwise. Because the rear planetary train's ring gear is on the driven gear, the driven gear rotates in the same direction as the rear planetary train's ring gear.

The counter-rotating gear rotates counter-clockwise.

The differential's ring gear rotates clockwise.

Engine brake

When the engine brake works, the driven force is transferred from the tires.

Position D, 6th gear

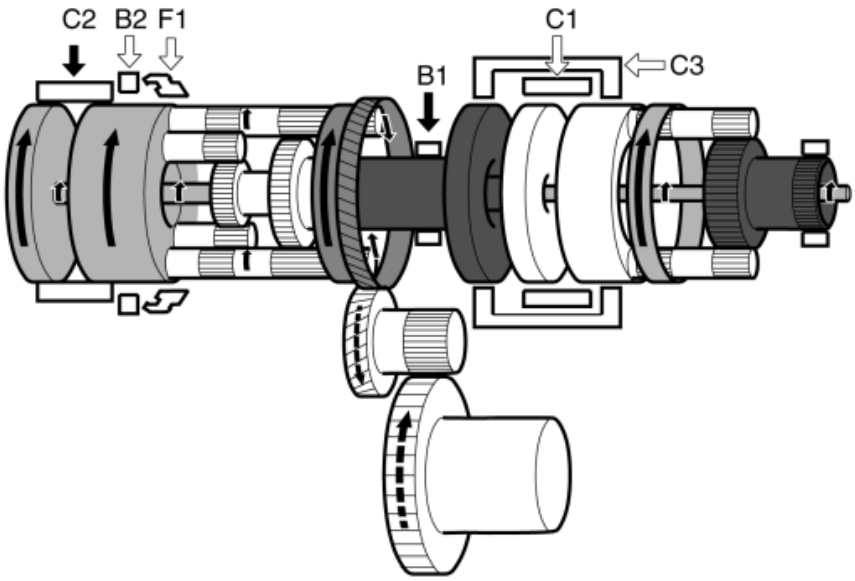

Fig. 153: Identifying Position D For 6th Gear
Courtesy of VOLVO CARS CORPORATION

Solenoid						Clutch			Brakes		Freewheel
SLC1	SLC 2	SLC 3	SLB1	S1	S2	C1	C2	C3	B1	B2	F1
X	-	X	-	-	-	-	X	-	X	-	-

X = activated

- = not activated

Planetary train unit	Power in	Locked	Power out
Front	No component	No component	No component
Rear	Planetary gear carrier	Large sun gear	Ring gear

The input shaft rotates clockwise, the same direction as the torque converter's turbine rotor.

The intermediate shaft rotates clockwise, the same direction as the torque converter's turbine rotor

Brake B1 locks the rear planetary train's large sun gear.

Clutch C2 connects the intermediate shaft with the rear planetary gear carrier.

The rear planetary gear carrier rotates clockwise.

The rear planetary train's outer planetary gear rotates clockwise on its shafts. Because the rear planetary train's large sun gear is locked, the planetary train's outer planetary gear can always increase the speed.

The rear planetary train's ring gear rotates clockwise. Because the rear planetary train's outer planetary gear rotation is added to the rear planetary gear carrier's rotation, the ring gear's speed is greater than the speed at the planetary carrier.

The driven gear rotates clockwise. Because the rear planetary train's ring gear is on the driven gear, the driven gear rotates in the same direction as the rear planetary train's ring gear.

The counter-rotating gear rotates counter-clockwise.

The differential's ring gear rotates clockwise.

Engine brake

When the engine brake works, the driven force is transferred from the tires.

Position R, reverse gear

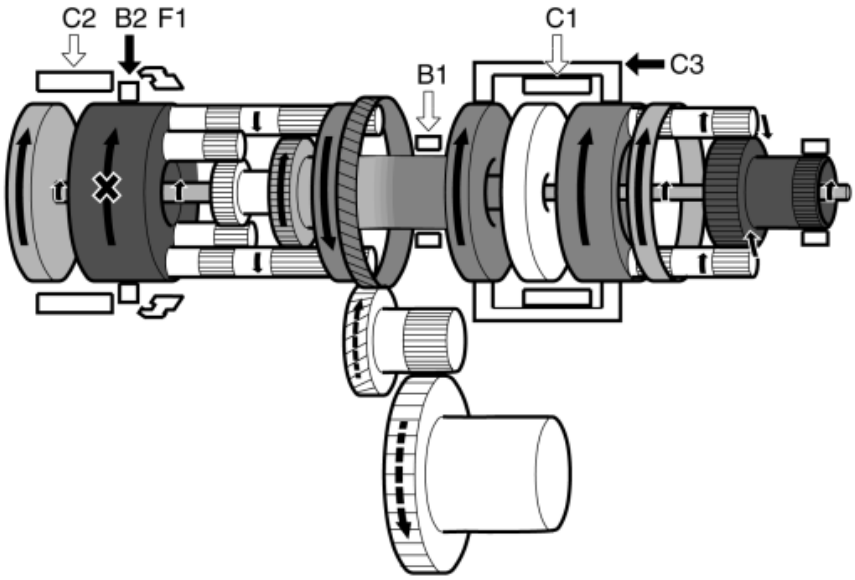

Fig. 154: Identifying Position R For Reverse Gear
Courtesy of VOLVO CARS CORPORATION

speed	Solenoid						Clutch			Brakes		Freewheel
	SLC1	SLC 2	SLC 3	SLB1	S1	S2	C1	C2	C3	B1	B2	F1
Max 7 km/h	X	X	X	-	X	-	-	-	X	-	X	-
Above 7 km/h	X	X	X	X	X	-	-	-	-	-	X	-

X = activated

- = not activated

Planetary train unit	Power in	Locked	Power out
Front	Ring gear	Sun gear	Planetary gear carrier
Rear	Large sun gear	Planetary gear carrier	Ring gear

The input shaft rotates clockwise, the same direction as the torque converter's turbine rotor.

The front planetary train's ring gear rotates clockwise.

The front planetary train's planetary gear rotates clockwise on its shafts. Because the front planetary train's sun gear is locked by the oil pump, the planetary train's planetary gear presses against the front planetary train's ring gear, and therefore rotates around the sun gear. Because the front planetary train's ring gear has inner teeth, the direction of rotation does not change.

The front planetary gear carrier rotates clockwise.

Clutch C3 rotates clockwise and connects the front planetary gear carrier with the rear planetary train's large sun gear.

The rear planetary train's large sun gear rotates clockwise.

Brake B2 locks the rear planetary gear carrier.

The rear planetary train's outer planetary gear rotates counter-clockwise.

The rear planetary train's ring gear rotates counter-clockwise using the rear planetary train's outer planetary gear. Because the rear planetary train's ring gear has inner teeth, the direction of rotation does not change.

The driven gear rotates counter-clockwise. Because the rear planetary train's ring gear is on the driven gear, the driven gear rotates in the same direction as the rear planetary train's ring gear.

The counter-rotating gear rotates clockwise.

The differential's ring gear rotates counter-clockwise.

Engine brake

When the engine brake works, the driven force is transferred from the tires.

DIFFERENTIAL

Fig. 155: Identifying Differential
Courtesy of VOLVO CARS CORPORATION

The differential consists of the differential housing, large and small differential gears, shaft journals and thrust washers. The differential housing is completely sealed so that if a drive shaft is removed no dirt can penetrate and no oil can run out.

The differential distributes power equally between the drive wheels, even if they are rotating at different speeds. When driving straight ahead, the ring gear and differential housing rotate at the same speed as the drive shafts and the driving wheels. When cornering, the differential gears rotate to compensate for the different speeds of the wheels. Because the small differential gears are rotating on the shaft journal, the drive shafts can rotate at different speeds. Power is transferred from the differential housing to the drive shafts via the small differential gears in the same way as when driving straight ahead. Both drive wheels still have the same driven power.

AWD

Cars with four wheel drive have a splined pin on the differential housing. The sleeve on the pin connects the differential housing with the bevel gear. This transfers the power to the rear wheels.

TEST PLUGS

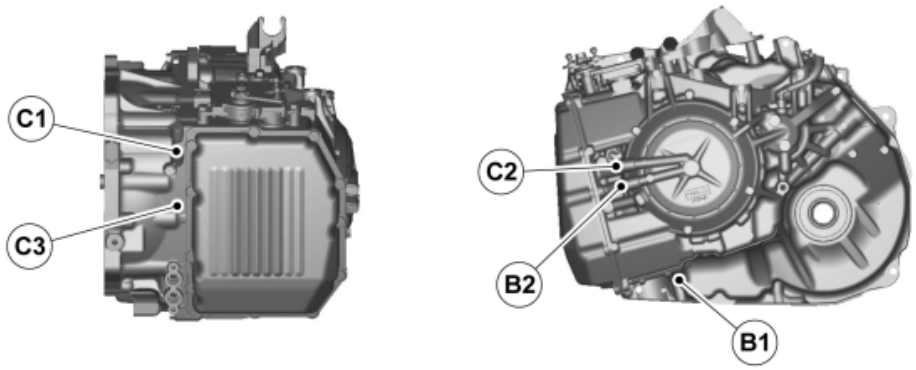

Fig. 156: Locating Test Plugs
Courtesy of VOLVO CARS CORPORATION

IDENTIFICATION PLATE

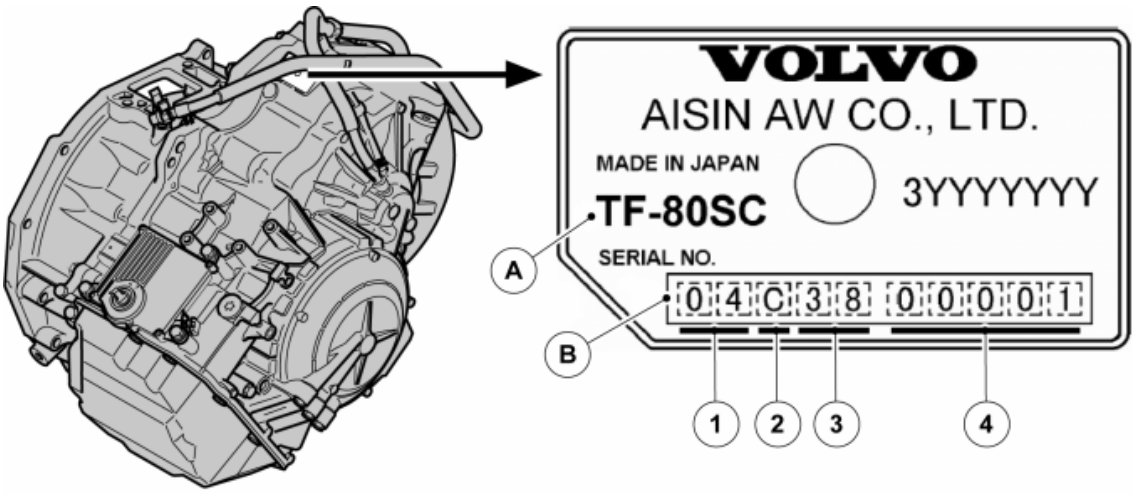

Fig. 157: Identifying Identification (ID) Plate
Courtesy of VOLVO CARS CORPORATION

A. Model number (**T** ransverse **F** wd, **S** lipping lock-up, integrated **C** omputer)

B. Serial number

1. Production year (04 indicates 2004)
2. Production month (C indicates March, see table below)
3. Transmission model (38 indicates TF-80SC)
4. Sequence number

	A	B	C	D	E	F	G	H	J	K	L	M

Month	1	2	3	4	5	6	7	8	9	10	11	12

OVERVIEW

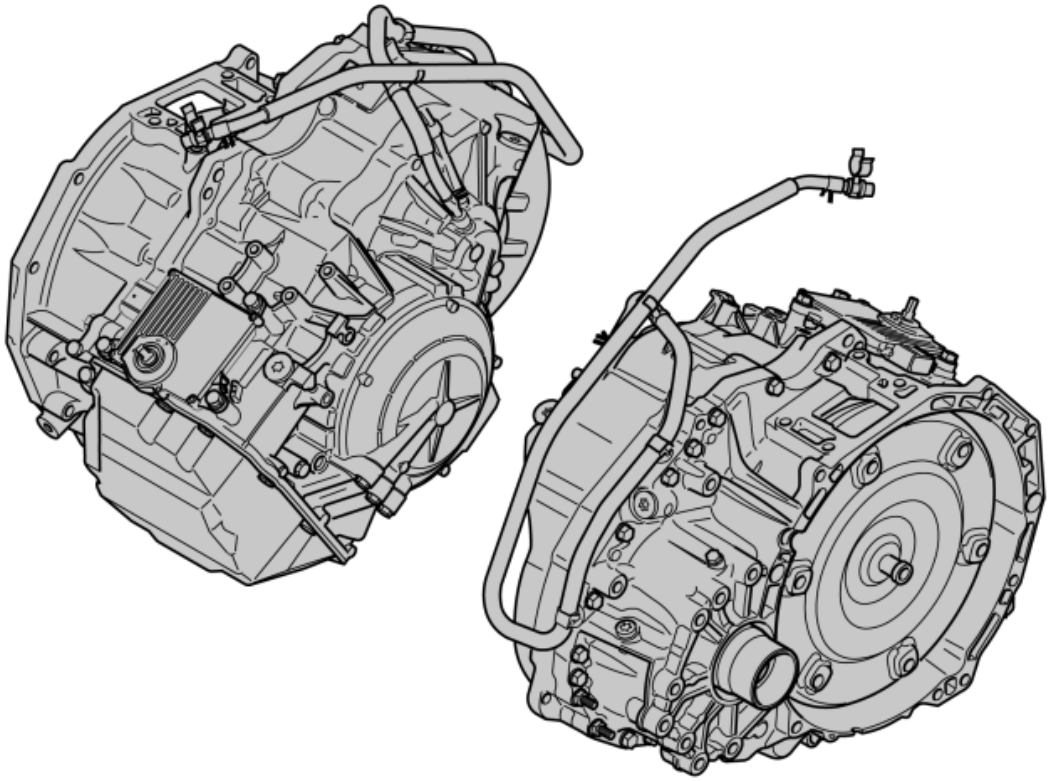

Fig. 158: Identifying Transmission
Courtesy of VOLVO CARS CORPORATION

HINT: The shape of the transmission casing differs depending on which engine is included in the driveline.

TF-80SC (TF-80SC AWD) is an electronically controlled 6-speed automatic transmission with Geartronic.

The Geartronic function combines two transmissions in one. One adaptive 6-gear automatic transmission which enables relaxed driving, and a "manually" shifted transmission which enables more active driving with manual shifting. In case of manual shifting, the gear selector is pushed forward to upshift to a higher gear and it's pulled back to downshift to a lower gear. However, in certain situations the Transmission control module (TCM) assumes the gearshifting decisions.

TF-80SC has a lock-up-function on all forward gears except 1st gear. The torque converter has a locked and slipping lock-up-function.

Gearshifts are controlled by an hydraulic operating system. Gearshifts take place without freewheeling and completely automatically in terms of load and speed.

TF-80SC has two planetary train units, a front and a rear, whose shifts are controlled by a number of clutches and brakes. The rear planetary train is of the Ravigneaux type.

The oil level is checked by level pipe (the transmission does not have a conventional dipstick).

The transmission has a total of 8 solenoids that control the hydraulic flow. 6 of these solenoids control the shift process, 1 solenoid controls the torque converter's lock-up function and 1 solenoid controls the system pressure.

The gear selector sensor is integrated in the Transmission control module (TCM). The Transmission control module (TCM) is integrated in the transmission.

TRANSMISSION (TF-80SC AWD; 2005-2012)

DESIGN AND FUNCTION

see **DESIGN AND FUNCTION**

OVERVIEW

see **OVERVIEW**

TRANSMISSION CONTROL MODULE (TCM) (4T65 AWD; 2003-2006)

DESIGN

CONTROL MODULE

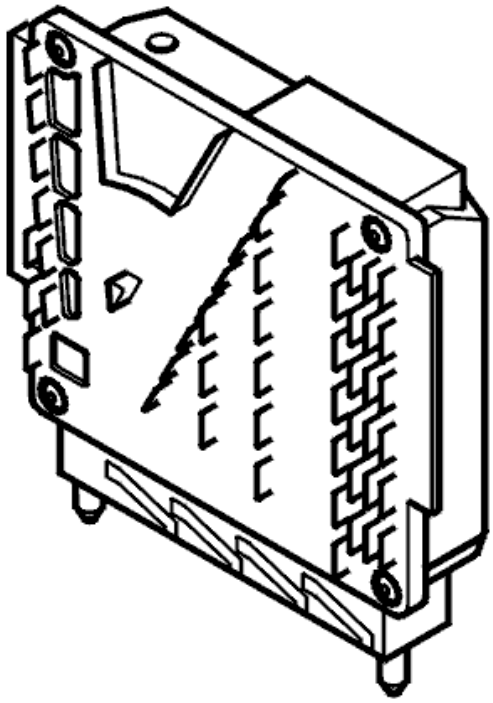

Fig. 159: Identifying Transmission Control Module
Courtesy of VOLVO CARS CORPORATION

The transmission control module (TCM) is positioned in an air cooled plastic box in the engine compartment together with the engine control module (ECM).

SHIFT SOLENOID S1 AND S2

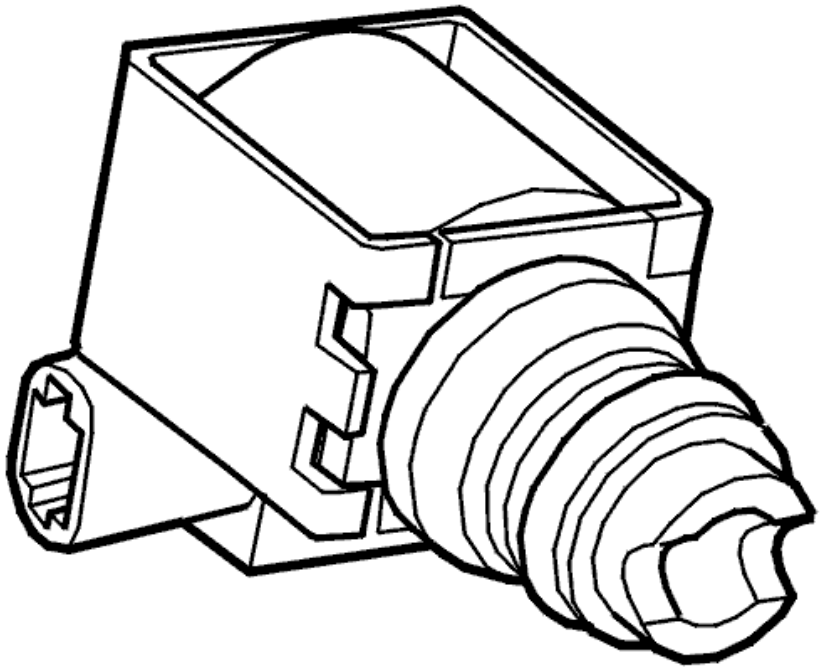

Fig. 160: Identifying Shift Solenoid S1 And S2
Courtesy of VOLVO CARS CORPORATION

The shift solenoids S1 and S2 are positioned in the valve housing, which is mounted behind the side cover of the transmission. The shift solenoids (on/off type), consist of an electrical coil which controls a hydraulic valve. The solenoids are supplied with 12 V via the transmission control module (TCM) and grounded at the ground terminal. The shift solenoids control shifting and the transmission control module (TCM) determines which gear is to be used by activating them in different patterns.

There is a diagnostic for the electrical function of the shift solenoids. There is also a diagnostic for the hydraulic circuit, but not for the hydraulic function of the solenoids.

LOCK-UP SOLENOID, SL

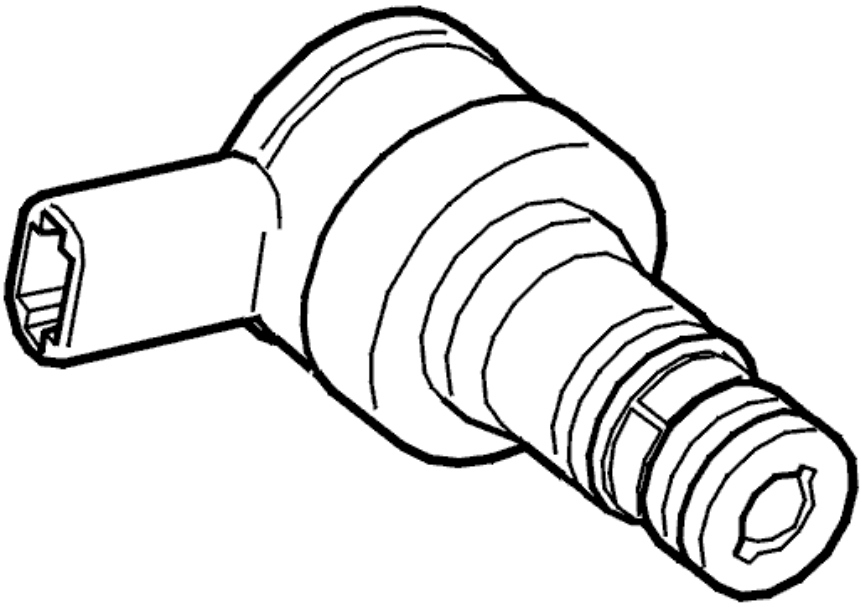

Fig. 161: Identifying Lock-Up Solenoid, SL
Courtesy of VOLVO CARS CORPORATION

Lock-up solenoid SL is positioned in the valve housing, which is mounted behind the side cover on the transmission. The lock-up solenoid consists of an electrical coil which controls a hydraulic valve. The solenoid is controlled by pulse width modulation (PWM) voltage and is grounded at the ground terminal. The solenoid controls lock-up engagement of the torque converter. Engagement occurs through solenoid pulsing which provides a smooth lock-up engagement function. Power transmission then changes to mechanical power transmission through the torque converter. The hydraulic function of the solenoid is linear.

There is a diagnostic for the electrical function of the solenoid, but not for the hydraulic function.

PRESSURE SENSOR LOCK-UP

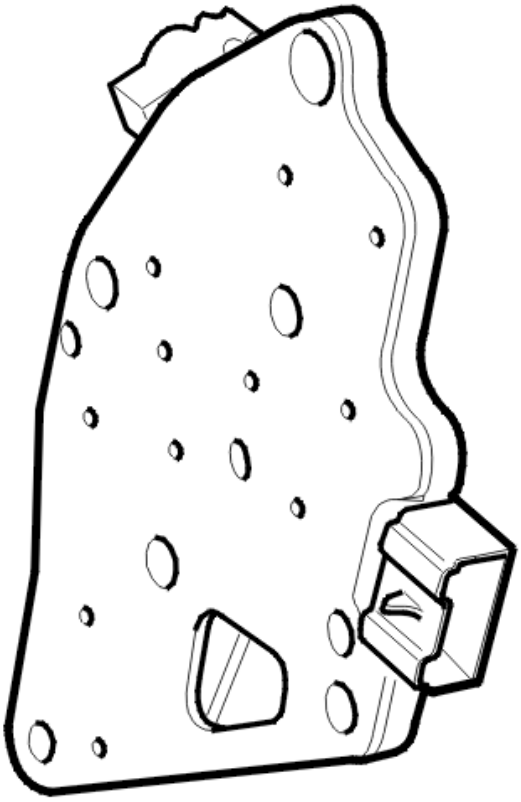

Fig. 162: Pressure Sensor Lock-Up
Courtesy of VOLVO CARS CORPORATION

The lock-up pressure sensor is positioned in the valve housing, which is mounted behind the side cover for the transmission. The lock-up pressure sensor consists of six electrical pressure switches. The pressure switches indicate the hydraulic pressure in the different transmission systems. The pressure sensor provides the transmission control module (TCM) with information about the system pressure and selected gear. The transmission control module (TCM) uses this information to control the lock-up solenoid, SL.

There are diagnostics for the lock-up pressure sensor.

LINE PRESSURE SOLENOID, STH

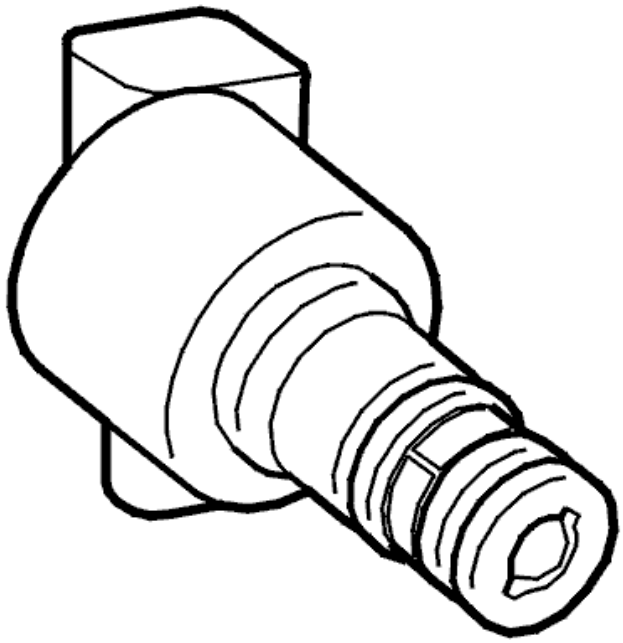

Fig. 163: Identifying Line Pressure Solenoid, STH
Courtesy of VOLVO CARS CORPORATION

The line pressure solenoid, STH, is positioned in the valve housing, which is behind the side cover for the transmission. The line pressure solenoid consists of an electrical coil which controls a hydraulic valve. The solenoid is controlled by pulse width modulation (PWM) voltage and is grounded via the transmission control module (TCM). The function of the solenoid is linear. The hydraulic valve is controlled by the varied current which is the result of the pulse conditions. During high pulse conditions, (at high current (approximately 1A)) the line pressure is low. During low pulse conditions (at low currents) the line pressure is high. In the event of an open-circuit, the line pressure reaches maximum which will result in harsh gear shifting. This can also result in a whining noise from the transmission pump. The hydraulic valve is then completely open.

There are diagnostics for the solenoid. There is a diagnostic for the electrical function of the solenoid. There is also a diagnostic for the hydraulic circuit, but not for the hydraulic function of the solenoid. The hydraulic tests can be carried out using a mechanical pressure gauge. The idle and stop pressure can be checked.

TRANSMISSION INPUT SPEED SENSOR (SPEED OF THE INPUT SHAFT)

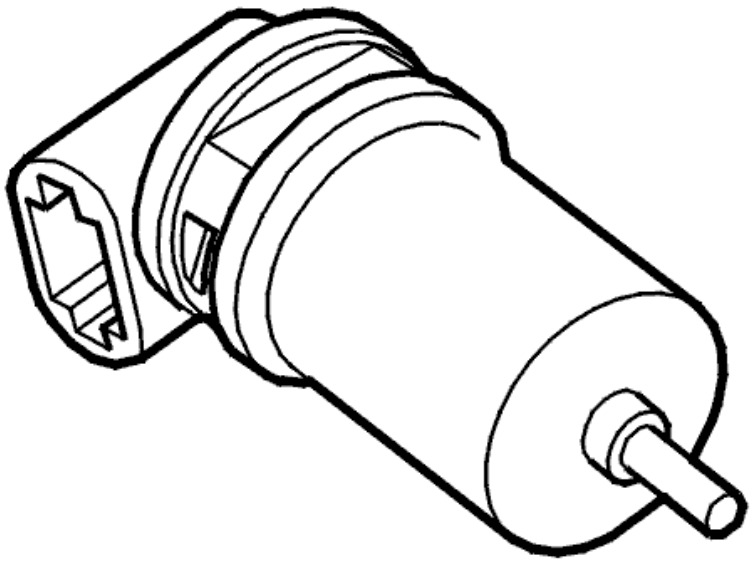

Fig. 164: Identifying Transmission Speed Sensor
Courtesy of VOLVO CARS CORPORATION

The transmission input speed sensor, (input shaft speed) is positioned in the transmission housing. The sensor is an active sensor and is supplied with 12 V. When the driven gearwheel rotates, the sensor generates a pulsed current (quadratic wave) where the strength of the current depends on the position of the pulse wheel. The signals from the coil in the sensor are then effected by a magnetic resistance element, which generates a current which oscillates between 7 mA and 14 mA, and the frequency of which increase with speed. The transmission control module (TCM) calculates the transmission input speed using the signal from the sensor.

The input speed is compared with the transmission output speed from the transmission speed sensor signal to calculate the gear ratio.

There are diagnostics for the transmission input speed sensor.

TRANSMISSION OUTPUT SPEED SENSOR (SPEED OF THE OUTPUT SHAFT)

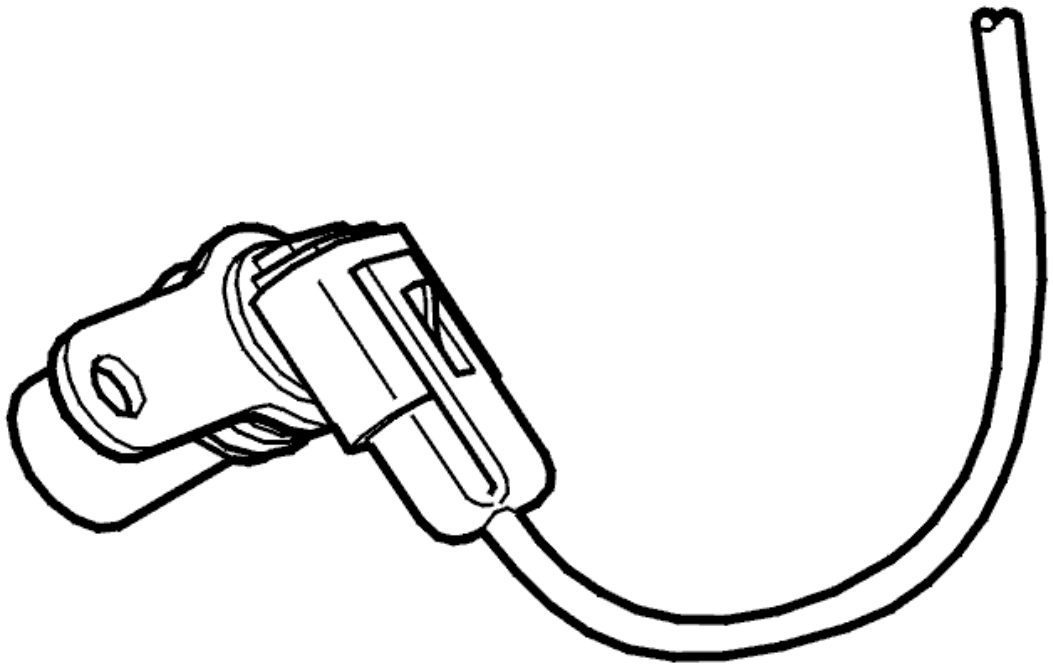

Fig. 165: Identifying Transmission Speed Sensor
Courtesy of VOLVO CARS CORPORATION

The transmission output shaft speed sensor is positioned on the transmission housing. The sensor is electro-magnetic and acts on a toothed pulse wheel. The sensor provides signals to the transmission control module (TCM) about the vehicle speed. The transmission speed sensor is an active sensor and is supplied with 12 V. When the pulse wheel rotates, the sensor generates a pulsed current (quadratic wave) where the strength of the current depends on the position of the pulse wheel. The signals from the coil in the sensor are then effected by a magnetic resistance element, which generates a current which oscillates between 7 mA and 14 mA, and the frequency of which increase with speed. The control module calculates the transmission output speed using the signals from the sensor. The signal is compared with the signal from the transmission input speed sensor and is used to calculate the gear ratio as well as for diagnostics.

There are diagnostics for the transmission output speed sensor.

TEMPERATURE SENSOR

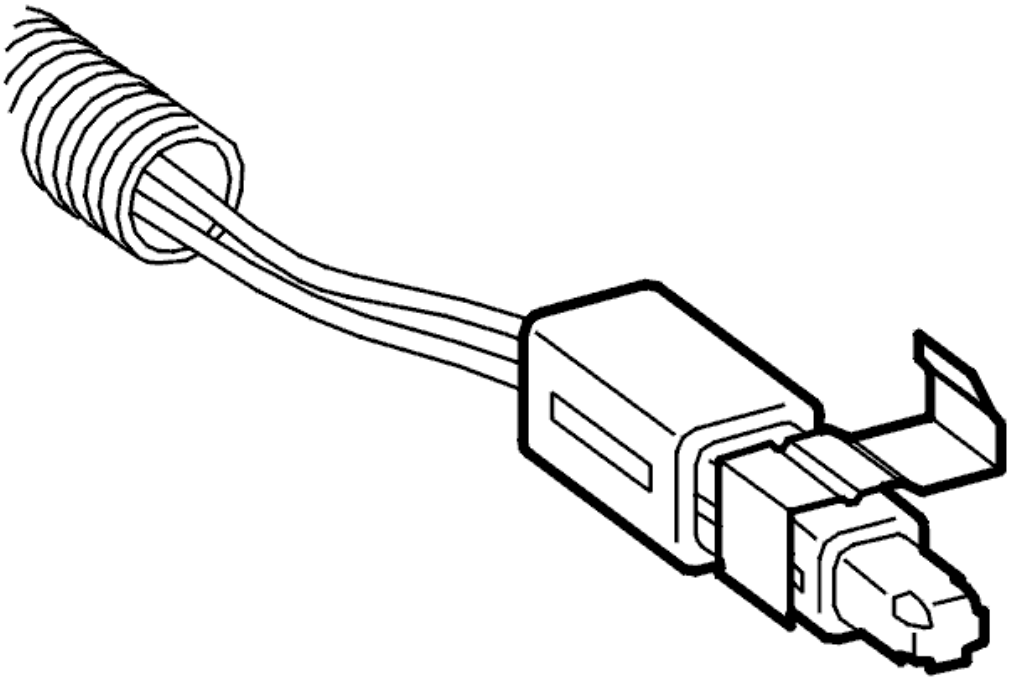

Fig. 166: Identifying Temperature Sensor
Courtesy of VOLVO CARS CORPORATION

The temperature sensor is the NTC resistive type. The temperature sensor is positioned on the valve housing inside the side cover and measures the transmission fluid temperature in the oil pan. The temperature sensor is supplied with 5 V and is grounded via the transmission control module (TCM). The control module can determine the transmission fluid temperature by measuring the voltage drop across the NTC resistor of the sensor. The control module stores the time the temperature has been within a certain temperature range. If a certain temperature and time has been exceeded, a diagnostic trouble code (DTC) indicating that a oil change is necessary is stored.

There are diagnostics for the temperature sensor.

GEAR-SHIFT POSITION SENSOR

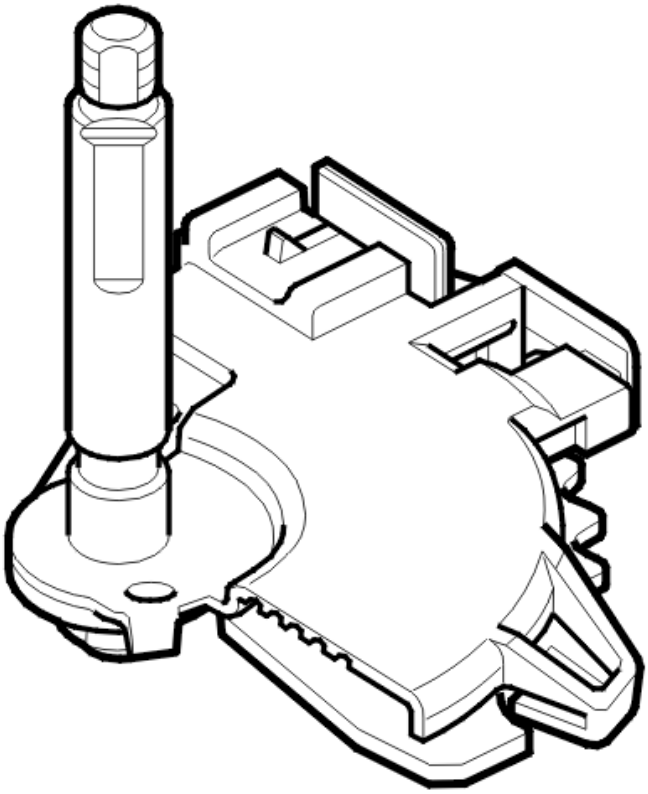

Fig. 167: Gear-Shift Position Sensor
Courtesy of VOLVO CARS CORPORATION

The gear-shift position sensor is located inside the transmission housing. It contains a Park / Neutral position (PNP) switch and switches which inform the transmission control module (TCM) about which gear is selected and whether back-up (reverse) gear is selected so that the reversing lamps are lit. The gear-shift position sensor is a position switch which is grounded via the chassis. The combination of pins A, B, C and PA indicate the current gear selector position (see the table below). The trailing contacts can either be closed or open. The gear-shift position sensor is not available as a replacement part.

There are diagnostics for the gear-shift position sensor.

	A	B	C	PA
P	-	●	●	-
R	-	-	●	●
N	●	-	●	-
D	●	-	-	●
3 (MAN)	-	-	-	-
2	-	●	-	●
1	●	●	-	-

Fig. 168: Table For Gear-Shift Position Sensor
Courtesy of VOLVO CARS CORPORATION

Table for the gear-shift position sensor

The value indicates the position of the gear-shift position sensor (A, B, C and PA), see the table.

• = High signal (open)

- = Low signal (grounded)

GEAR SELECTOR MODULE (GSM)

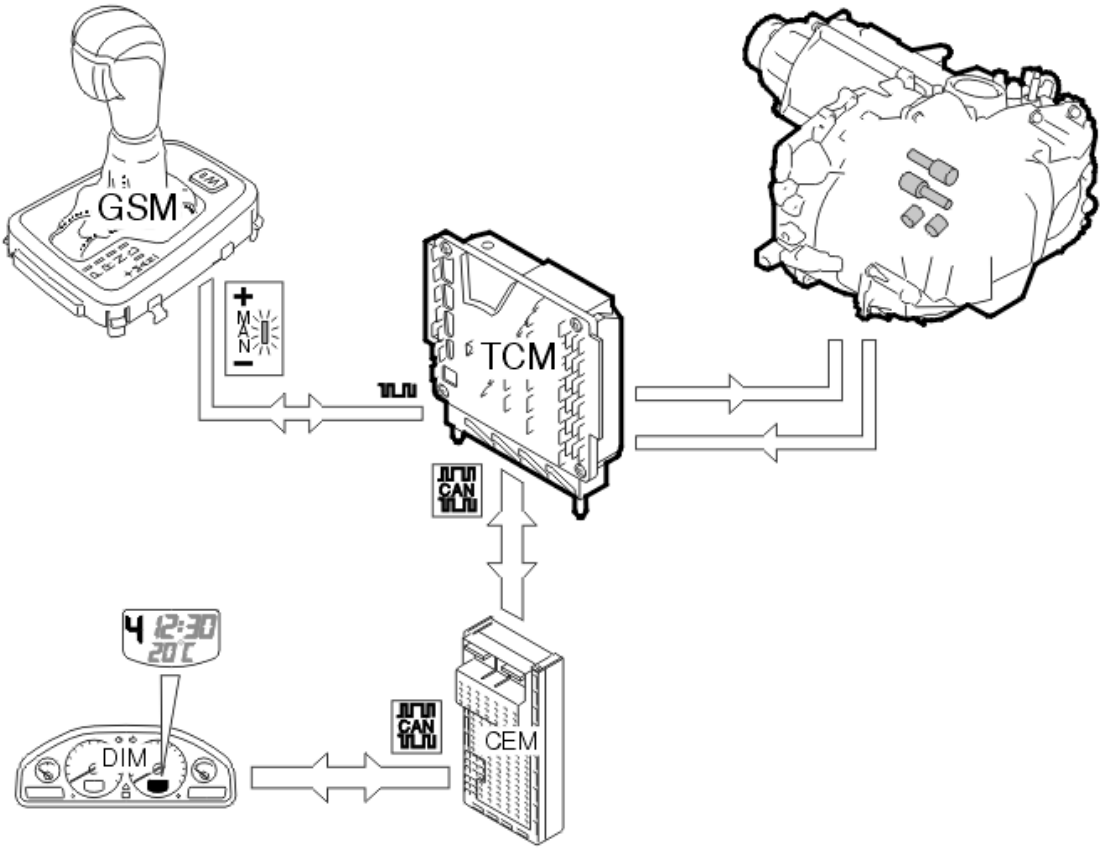

Fig. 169: Gear Selector Module (GSM)
Courtesy of VOLVO CARS CORPORATION

The gear selector assembly is positioned in the center console and is mechanically connected to the transmission by a cable which moves the gear valve in the valve housing. The gear selector module (GSM) is positioned on the top panel of the gear selector assembly.

The gear selector module (GSM) receives gear position signals from the transmission control module (TCM) via serial communication. The transmission control module (TCM) receives the present gear position from the gear-shift position sensor. The LEDs in the top panel indicate the selected gear to the driver. The gear selector module (GSM) communicates serially with the central electronic module (CEM). The central electronic module (CEM) sends a signal to the gear selector module (GSM) to activate the shift-lock. The power supply and ground for the shift-lock solenoid are directly connected to the gear selector module (GSM).

The "W" switch in the gear selector assembly top panel is positioned on the printed circuit board for the gear selector module (GSM) and activates Winter mode. The gear selector module (GSM) checks the back-up (reverse) inhibitor function based on the vehicle speed signal from the transmission control module (TCM).

There are diagnostics for the gear selector module (GSM). Diagnostic trouble codes (DTCs) are stored in the transmission control module (TCM) in the event of a fault.

GEAR SELECTOR ASSEMBLY

There are two types of gear selector assembly for the 4T65EV (-GT). There is one gear selector assembly with

seven positions and one with the Geartronic function.

Gear shift selector, seven positions

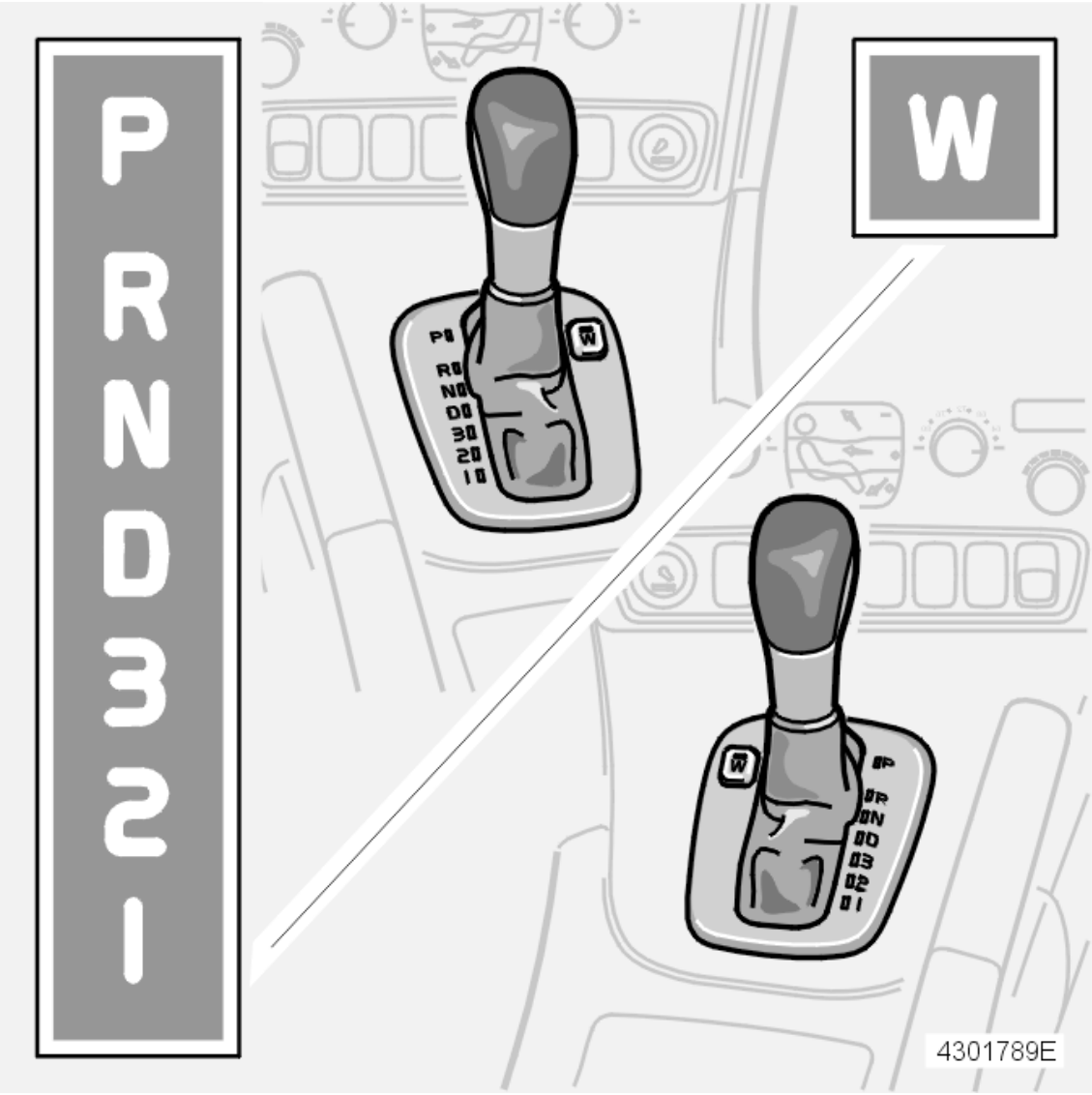

Fig. 170: Gear Shift Selector, Seven Positions
Courtesy of VOLVO CARS CORPORATION

The gear selector has seven positions with the following functions:

- **P** Park position
- **R** Back-up (reverse) position
- **N** Neutral position
- **D** Automatic shifting between all gears. (Does not apply when winter (W) mode is selected)
- **3** Fourth gear is blocked in this position
- **2** Only first and second gear function in this position

- **1** 2nd, 3rd and 4th gears are blocked in this position.

Geartronic gear shift selector

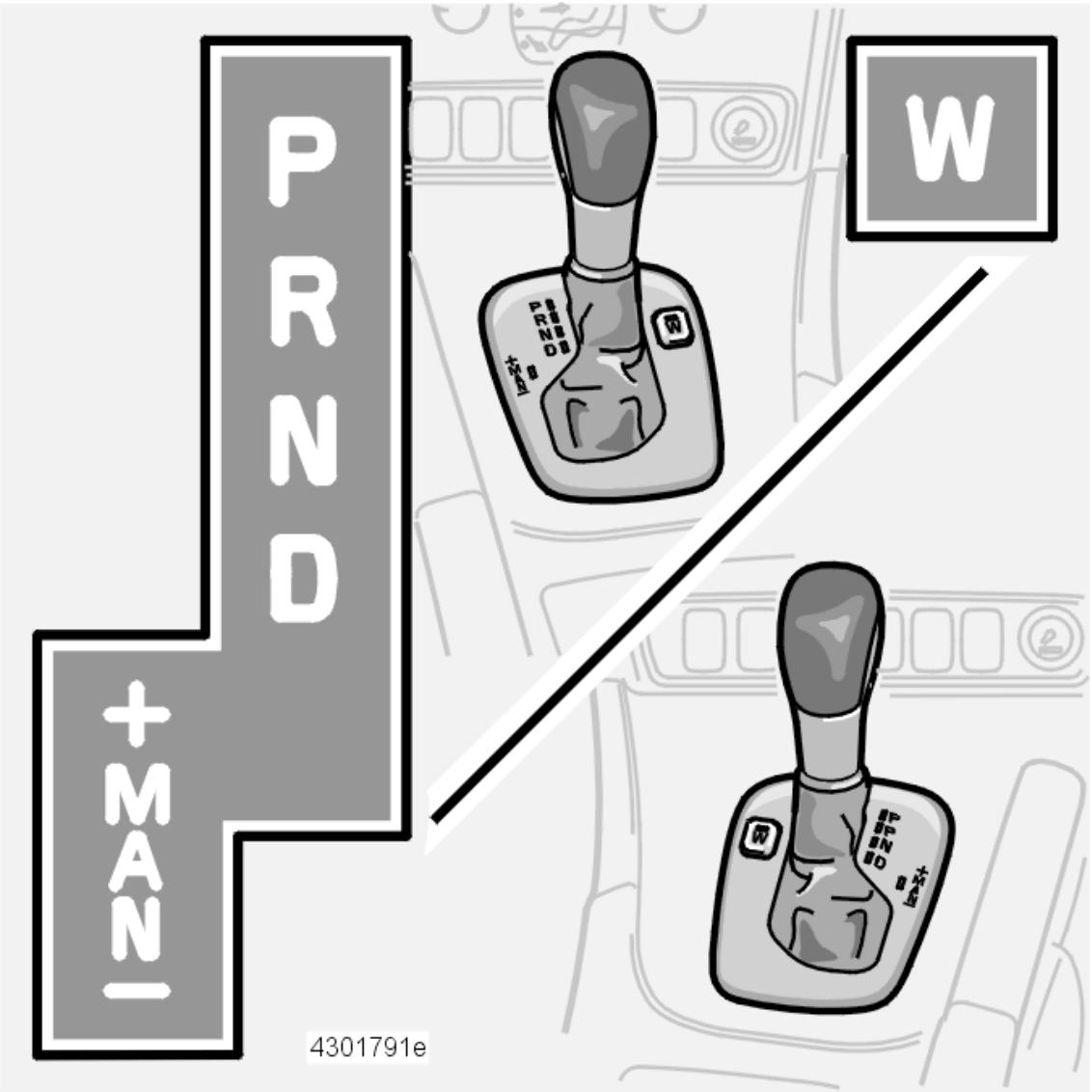

Fig. 171: Geartronic Gear Shift Selector
Courtesy of VOLVO CARS CORPORATION

Gear selector assemblies with Geartronic are unique in appearance and function. In addition to P/R/N/D modes they also have a "manual" (MAN) shifting mode.

The gear selector for Geartronic has the following functions:

- **P** Park position
- **R** Back-up (reverse) position
- **N** Neutral position

- **D** Automatic shifting between all gears. (Does not apply when the mode selector is in winter mode (W), for further information see, Function/Shifting program (Winter mode))
- **MAN** Manual shifting. There are three hall sensors on the gear selector module (GSM). A permanent magnet on the gear selector lever affects the output signals of the sensors to the gear selector module (GSM).

DOWNLOADING SOFTWARE AND REPLACING THE CONTROL MODULE

New software can be downloaded into the transmission control module (TCM). When ordering software, the hardware and the software in the car is compared to the data in the Volvo central database. If the comparison is OK the software is downloaded to the control module. If the comparison between the car and Volvo central database is not OK, the database is updated with the car configuration. When this is complete the software is downloaded.

FUNCTION

CONTROLLING THE SHIFT SOLENOIDS WHEN SHIFTING

The solenoids are activated in a specific pattern to control shifting and the lock-up function. Solenoids S1 and S2 determine which gear is to be used at the time. Solenoids SL and STH determine engagement by adjusting the hydraulic line pressure of the transmission. The basic parameters for the different shifting points are the accelerator pedal (AP) position and the vehicle speed. The shift quality is decided by the control of torque and pressure control of the STH solenoid.

The pressurization of the clutches and the brakes are adjusted by reading the changes of the speed of the transmission input shaft during the shifting process and comparing them to the values calculated in the transmission control module (TCM).

Two shifting patterns can be selected, normal conditions and winter mode (selected using the button).

In normal mode shifting and lock-up occur at relatively low engine speeds to reduce fuel consumption. In the event of rapid accelerator pedal movements, the transmission control module (TCM) automatically shifts to sport mode.

Shifting patterns

Gear	Activated solenoid	
	S1	**S2**
1	ON	ON
2	OFF	ON
3	OFF	OFF
4	ON	OFF
R	ON	ON

SHIFTING PROGRAM

Economy mode

When driving at normal acceleration, the transmission control module (TCM) uses a pre-set shifting program, optimized to shift for economy driving. This shifting program is suitable for "normal" driving which provides earlier up shifts and lock-up. In addition the transmission oil pressure is adjusted to provide smooth gear engagement.

Sport mode

In the sport mode shifting program the shifting points are adjusted to provide the best possible performance. Downshifts occur earlier. The transmission control module (TCM) selects the shifting and lock-up points which provide the best possible performance. The transmission switches from economy mode to sport mode in step 1 or step 2 if the accelerator pedal (AP) is pressed down quickly. The conditions are that the throttle opens and the vehicle speed exceeds 50 km/h. As soon as the accelerator pedal (AP) is released to a certain level economy mode is resumed.

Kick-down program

At wide open throttle (WOT) the kick-down function is engaged which provides quick downshifts for maximum performance. In this way a boost of power is achieved when overtaking for example.

Winter mode

Winter mode is selected using the (W) button on the top panel of the gear selector assembly. Winter mode enables starting off in a high gear to prevent the wheels from spinning on a slippery surface. This mode can also be used in other difficult situations in which the driver needs more direct control over gear selection. Lock-up can be engaged in 1st and 2nd gear. The shifting pattern is optimized to minimize the number of shifts. Depending on the gear position, the following combinations can be obtained:

- **D** The car starts in 2nd gear. Automatic shifting between 2nd and 3rd gears occurs earlier than in Economy mode, D position
- **3** The car starts in 2nd gear. 4th gear is locked out
- **2** The car starts in 2nd gear. There is no up shifting or downshifting
- **1** The car starts in 1st gear. There is no up shifting or downshifting.

The W lamp on the dashboard lights when winter mode is selected.

If kick-down is activated in Winter mode, the transmission uses all gears for maximum performance.

OTHER MODES

Adaptation

The transmission control module (TCM) monitors each shift during all driving conditions to ensure consistent and smooth gear shifts. The control module does this by either lowering or increasing the hydraulic pressure used during the shift itself. The changed pressure levels are stored in the control module memory when the car has been switched off and are retrieved on start-up. This provides improved shifting comfort and increased

service life.

Adaptation occurs when the following conditions have been met:

- Throttle opening is steady
- Oil temperature between 50 °C and 110 °C.

Temperature controlled lock-up

If the transmission temperature increases abnormally as a result of heavy load under high ambient temperature conditions, the torque converter lock-up function is activated as often as possible (temperature controlled lock-up). This reduces slippage and the generation of heat in the transmission. If the temperature is below +20 °C the lock-up function does not engage in order to increase the temperature of the oil more rapidly.

SHIFTING USING GEARTRONIC

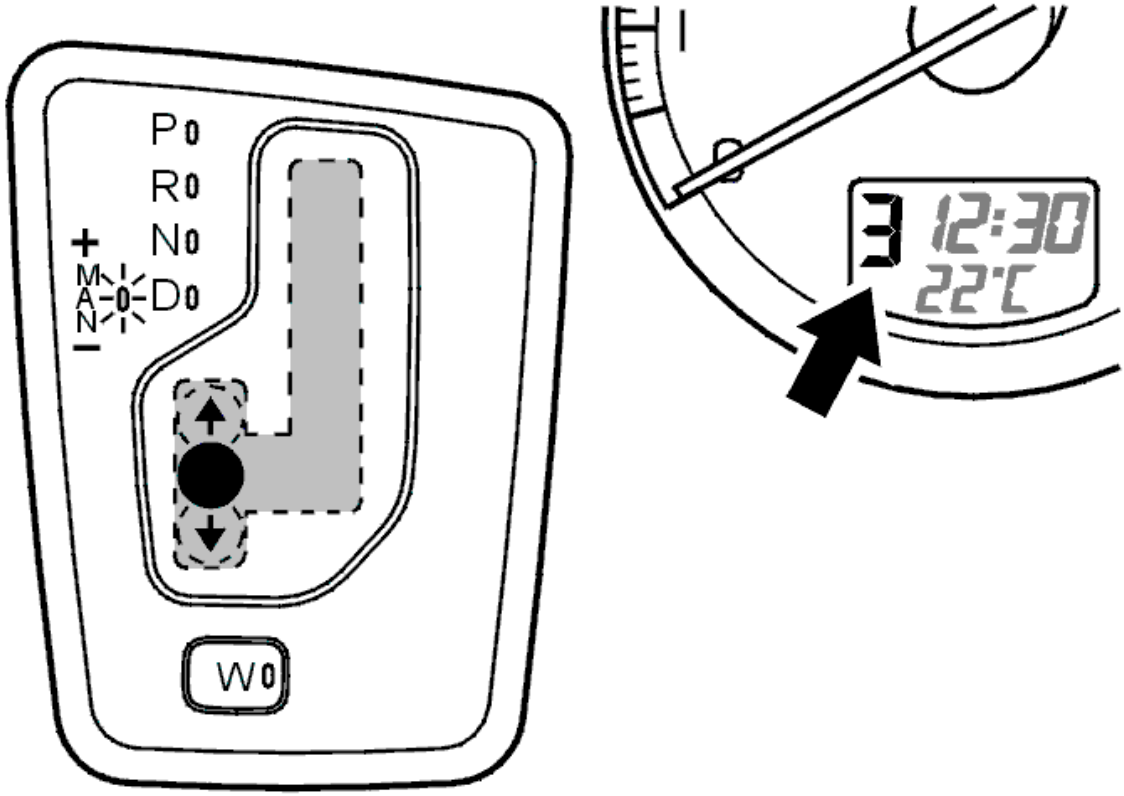

Fig. 172: Checking Shift Positions
Courtesy of VOLVO CARS CORPORATION

When the gear selector is moved to the Geartronic position (MAN) the automatic transmission remains in hydraulic position D, but when the gear selector is moved upwards (+) the gear selector module (GSM) transmits a signal to the transmission control module (TCM) to shift up. When the gear selector is moved downwards (-) a signal is transmitted to the transmission control module (TCM) to shift down. The driver information module (DIM) switches the symbol in the combined instrument panel from D to the current gear,

for example 3, when the gear selector is in the MAN position. A signal is sent to the gear selector module (GSM) to light the M LED and switches off the other LEDs. The transmission control module (TCM) determines if shifting can be carried out and the driver information module (DIM) indicates the current gear. If shifting is permitted the solenoids are activated according to each specific gear pattern.

However, in certain situations the transmission control module (TCM) assumes the shifting decision. The following applies:

- When stationary only 1st, 2nd and 3rd gears can be selected. 4th gear can be selected at speeds exceeding 30 km/h
- Automatic down shifting occurs for all gears below a certain speed. Example: 2nd gear is selected. Automatic down shifting occurs when shifting from 2nd gear to 1st at 2 km/h if the speed, before this has exceeded 25 km/h. in other cases 2nd gear is retained. For example, when 3rd gear is engaged despite the car being stationary
- Manual up shifting is required after automatic down shifting. Kick-down is not available in the Geartronic-position (MAN)
- The permitted speed for manual down shifting corresponds to those for kick-down up shifting, i. e. engine speed at approximately 6, 000 rpm
- If the transmission temperature becomes too high the transmission control module (TCM) determines the shift position. The purpose is to maintain a gear where lock-up is possible at the current speed
- Lock-up is possible in 3rd and 4th gears. (1st and 2nd gears do not have lock-up).

Other

In the MAN position a signal about the lever position is generated for the gear selector module (GSM) as follows:

For each of the three gear selector positions a hall sensor is mounted on the printed circuit board for the gear selector control module (GSM). A permanent magnet on the lever affects the output signals from the sensors to the control module. The control module can read off the position of the lever through the differences in the signal characteristics.

SHIFT-LOCK

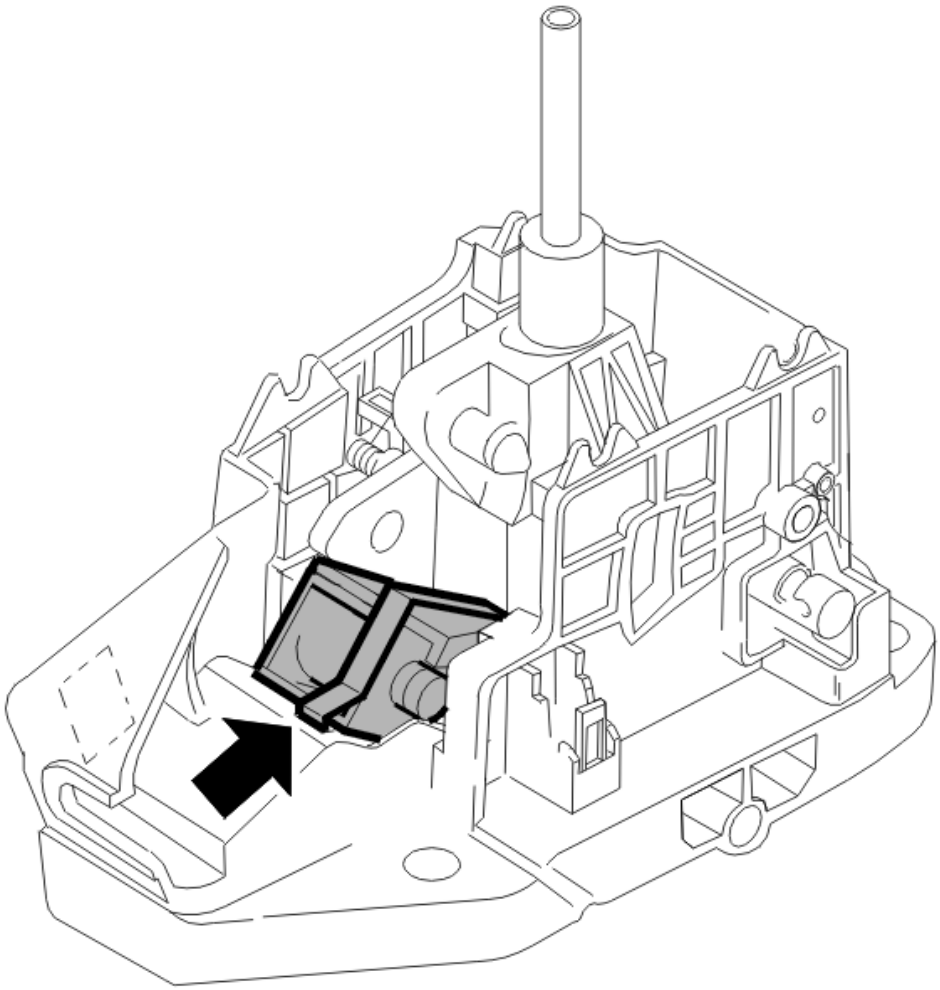

Fig. 173: Identifying Shift-Lock
Courtesy of VOLVO CARS CORPORATION

To avoid any chance of the gear selector inadvertently moving from the P position, the car is also equipped with an electrically operated shift-lock function. This locks the interlock pin in the gear selector lever in the shift-lock section, locking the selector lever in the P position. To move the gear selector from the P position, the ignition must be switched on and the brake pedal depressed. (The stop lamp switch is activated.). The central electronic module (CEM) reads the position of the brake pedal via direct connection to the brake pedal sensor and transmits a signal to the gear selector module (GSM) to deactivate the solenoid in the gear lever selector. The solenoid lock pin is pushed in and the gear selector lock button can be pressed down as usual to select another gear. When the ignition is in position "0", the solenoid is deactivated. In this position the gear selector is mechanically locked by the ignition switch interlock.

IGNITION SWITCH INTERLOCK

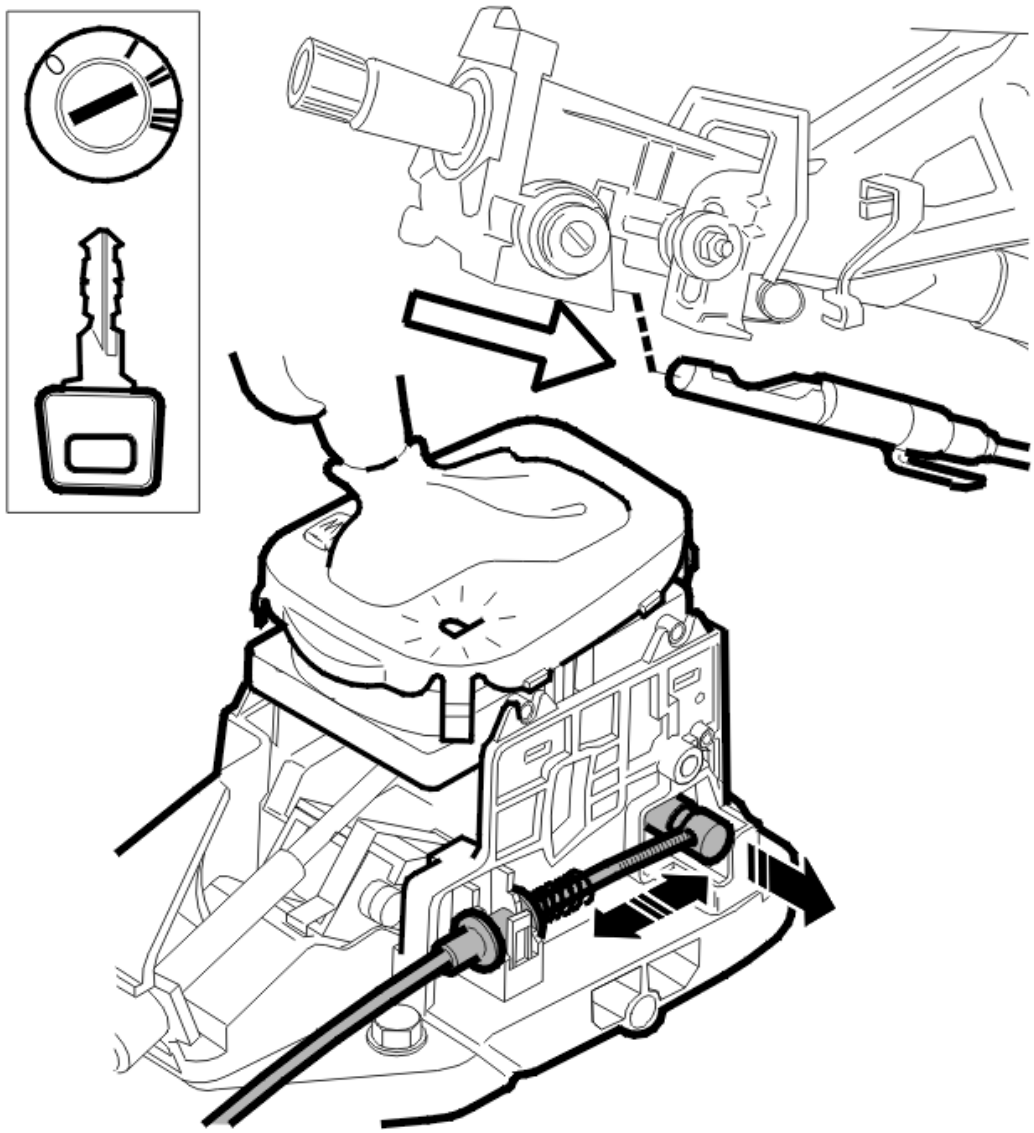

Fig. 174: Identifying Ignition Switch Interlock
Courtesy of VOLVO CARS CORPORATION

An interlock and security feature (ignition switch interlock) is mechanically connected to the ignition switch by a cable. The ignition switch interlock is controlled by the position of the lock cylinder in the ignition switch and by the position of the gear selector. This means that the gear selector must be in the P position for the ignition key to be removed from the ignition switch. The ignition key must be turned to position I or II before the lever can be moved from the P-position. The ignition switch interlock is used only in combination with shift-lock.

PARK / NEUTRAL POSITION (PNP) FUNCTION

The gear-shift position sensor has a park / neutral position (PNP) function to prevent the engine being started with a gear selected.

This function prevents the engine being started unless the P or N positions are selected. This prevents the car from lurching forwards when started.

ADAPTATION DATA

There is a function for resetting adaptation in the transmission control module (TCM) which can be activated via VIDA vehicle communication. This must be carried out after replacing internal components, such as the valve housing or a solenoid, or when replacing the entire transmission.

COUNTER FOR TRANSMISSION FLUID DATA

A counter for transmission oil quality is built into the software for the transmission control module (TCM). The counter counts up the amount of time the oil is above a certain temperature. When the counter has reached the maximum value, the diagnostic trouble code (DTC) for an oil change is stored in the control module. When replacing transmission fluid, the counter must be reset to prevent a diagnostic trouble code (DTC) being stored incorrectly. This applies when the transmission fluid is changed and when the fluid is changed during a repair.

The reset function is activated via the VIDA vehicle communication socket.

EMERGENCY MODE IN THE EVENT OF A FAULT

If the transmission control module (TCM) detects a permanent fault, an emergency mode is activated. The transmission control module (TCM) then implements corrective action to protect the transmission, while leaving the car in the best possible drivable condition. Minor malfunctions do not activate an emergency program. There are different programs depending on the type of fault:

- Emergency mode
- Limp home mode.

Emergency mode is activated for minor faults and the Limp home mode for the most serious faults. If the malfunction is intermittent, the transmission control module (TCM) returns to normal operation the next time the ignition is switched on.

Emergency mode

A text message is displayed in the combined instrument panel for diagnostic trouble codes (DTCs) stored in the transmission control module (TCM).

The transmission shifts in all gears but transmits no signal to the lock-up solenoid. This means that lock-up is not available.

Limp home mode

A text message is displayed in the combined instrument panel for diagnostic trouble codes (DTCs) stored in the transmission control module (TCM).

The transmission control module (TCM) interrupts the activation of all solenoids. This means that no shifting is possible. The transmission only functions in 3rd gear and back-up (reverse) gear.

No regulation of line pressure solenoid STH. Maximum system pressure constantly which results in harsh meshing and harsher shifts when engaging P-R, N-R and N-D. This can also result in a whining noise from the

transmission pump.

SYSTEM OVERVIEW

OVERVIEW

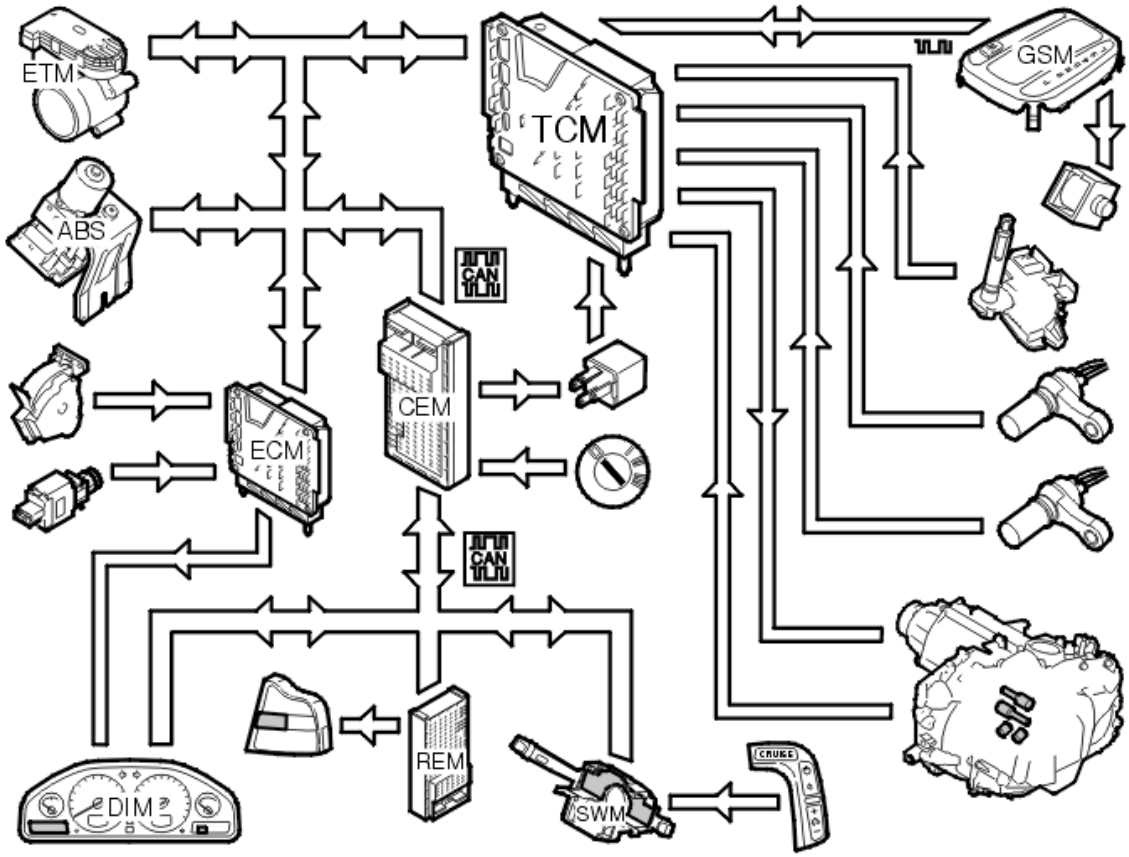

Fig. 175: Transmission Control Module (TCM), 4T65EV-GT System Overview
Courtesy of VOLVO CARS CORPORATION

4T65EV (-GT) is an electronically controlled automatic gearbox with an optional lock-up function on the three highest gears. The gearbox control module (TCM) adapts the gear shifts so that the correct gear is always selected to match the driving style, engine load, the wishes of the driver, vehicle speed etc. This ensures good fuel economy and increased comfort through smoother gear changes and lower sound levels.

The gearbox control module (TCM) receives information about the desired gear position and driving mode from the driver. Unlike with a purely hydraulically controlled gearbox, this information, in conjunction with the signals from a number of sensors in the gearbox and the engine control system, allows the control module to calculate the optimal shifting points and engagement of torque converter lock-up. The control module allows for small changes in the operating conditions and adapts the various gearbox functions to ensure that the correct gear is always selected in relation to the driving mode selected by the driver.

This adaptability guarantees smooth and consistent gear shift quality throughout the operational life of the gearbox.

In order to precisely determine the gear shift and lock-up engagement points based on the driving mode selected, the control module receives information about the following:

- Selected gear position - from the gear-shift position sensor, which is positioned on the inside of the gearbox housing
- Selected driving mode - reactive function programmed in the control module which is controlled by the speed at which the accelerator pedal is depressed. Quick "pedal movement" = sport mode.
- Vehicle speed - from the brake control system via the Controller area network (CAN)
- Gearbox input shaft rpm - from the gearbox speed sensor
- The gearbox output shaft rpm - from the gearbox output speed sensor
- The engine speed (RPM) and torque signal - from the engine management system via the control area network (CAN)
- If the brake pedal is depressed - from the brake system via the control area network (CAN)
- Accelerator pedal (AP) and movement speed - from the engine management system via the control area network (CAN)
- The gearbox fluid temperature - from the temperature sensor in the gearbox.

COMPONENTS

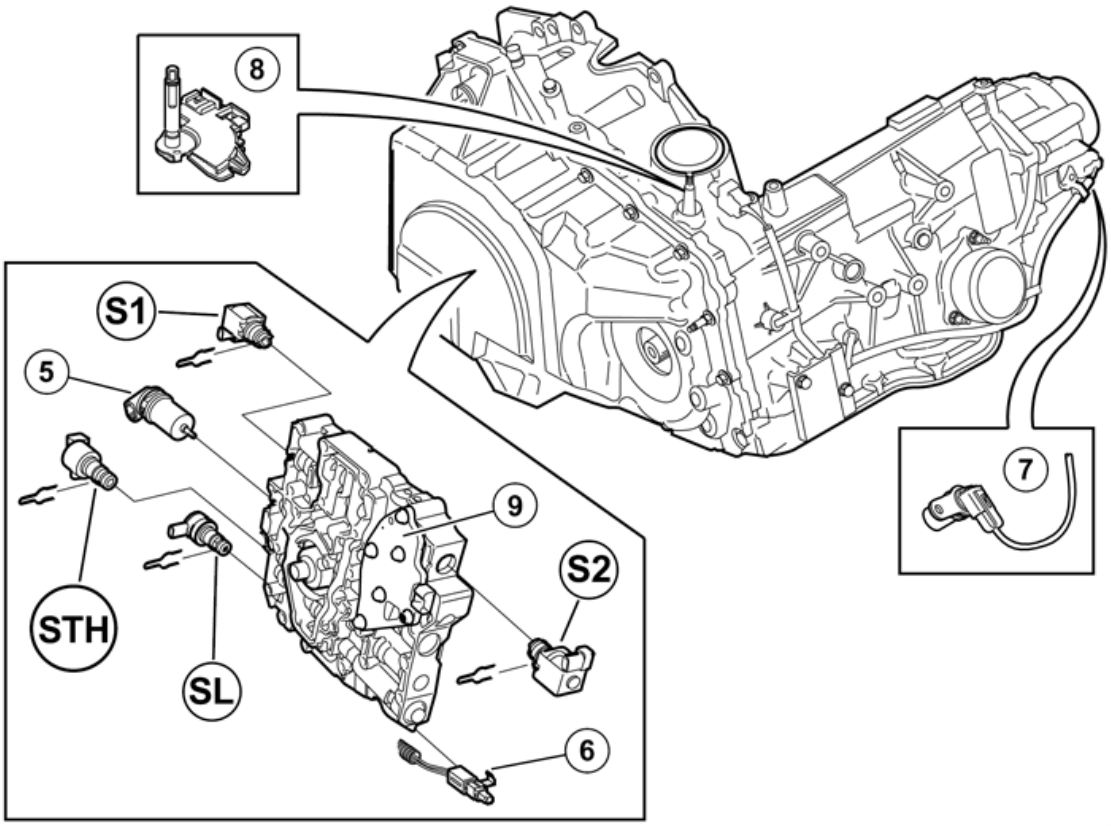

Fig. 176: Locating Transmission Input, Output, Oil Temperature, Gear-Shift Position And Pressure Sensors.
Courtesy of VOLVO CARS CORPORATION

The following components are included in the control system for the automatic gearbox (4T65EV):

- The gearbox control module (TCM) - Controls the solenoids
- Shift solenoid, S1 - Controls shifting in the gearbox
- Shift solenoid, S2 - Controls shifting in the gearbox
- Lock-up solenoid, SL - Controls the torque converter lock-up function
- Line pressure solenoid, STH - Controls the gearbox line pressure
- Gearbox input speed sensor (input shaft speed) (5) - Provides the gearbox control module (TCM) with information about the input shaft speed. This is measured on the turbine side of the torque converter
- Speed sensor (output shaft speed) (7) - Provides the gearbox control module (TCM) with information about the output shaft speed from the gearbox
- Temperature sensor (6) - Provides the gearbox control module (TCM) with information about the oil temperature of the gearbox
- Gear-shift position sensor (8) - Provides the gearbox control module (TCM) with information about the selected gear position (PRND321)
- Pressure sensor lock-up (9) - Provides the gearbox control module (TCM) with information about the gearbox oil pressure and selected gear
- Gear selector module (GSM) - Provides the gearbox control module (TCM) with information about the gear selector position: If the selector is in position D or in the Geartronic mode, or if up or down shifting occurs in the Geartronic position.

SIGNALS

The table below summarizes the input signals to and output signals from the gearbox control module (TCM). The signal types are divided into directly connected signals, serial communication and Controller area network (CAN) communication. The following illustration displays the same information with the Volvo component designations.

Input signals	Output signals
Directly connected: **Speed sensor, input shaft** (7/61). Provides information about the gearbox input speed. Used to calculate the shifting process and to run diagnostics for the hydraulic/mechanical functions in the gearbox. **Speed sensor, output shaft** (7/62). Provides information about the gearbox output speed. Used to calculate the vehicle speed and to run diagnostics for the hydraulic/mechanical functions in the gearbox. **Temperature sensor** (7/74). Provides information about the gearbox oil temperature. **Gear-shift position sensor** (3/71). Provides the gearbox control module (TCM) with information	**Directly connected:** (power supply unless otherwise stated) **Shift solenoids, S1-S2** . The gearbox control module (TCM) checks which gear is active by activating the solenoids in different patterns. **Lock-up solenoid, SL** . Activates the Lock-up function. **Line pressure solenoid, STH** . Adjusts the line pressure of the gearbox when shifting.

about the selected gear position of the gearbox. Enables starting only in position P and N. Four trailing contacts are grounded in a unique pattern for each gear. **Pressure sensor Lock-up** . Provides the gearbox control module (TCM) with information about the gearbox oil pressure and selected gear.	
Via serial communication: **Gear selector module (GSM)** (3/156). Provides information about the gear selector position: If the selector is in position D or in the Geartronic mode, or if up or down shifting occurs in the Geartronic position.	**Via serial communication:** **Gear selector module (GSM)** (3/156). Controls the solenoid for the shift-lock function (8/36). Activated on request by the central electronic module (CEM) (4/56).
Via Controller Area Network (CAN) communication: **Engine control module (ECM)** (4/46). Accelerator pedal (AP) position, used to calculate the gear-shift timing. **Steering wheel module (SWM)** (3/130), via the central electronic module (CEM) (4/56). Cruise control, used to calculate acceleration depending on the position of the Resume and Set buttons. **Brake control module (BCM) / Anti-lock brake system module (ABS)** (4/16). The difference in speed between the right and left-hand wheels. Requests a reduction in torque if the differential speed is too high. **Engine control module (ECM)** (4/46): • Brake lamp switch ON/OFF, used during the torque converter lock-up function • Engine coolant temperature (ECT), used to diagnose the gearbox temperature sensor • Engine speed (RPM) >400 rpm = engine running. Used to start the transmission oil pressure and diagnostic functions • Engine speed (RPM), used to check the slipping rate of the torque converter and the pressure build up, affecting the shifting comfort • Kick-down. If the accelerator pedal (AP) is depressed and the throttle is wide open the engine control module (ECM) transmits a signal to the gearbox control module (TCM) about kick-down • Current engine torque, used to check the line	**Via Controller Area Network (CAN) communication:** **Brake control module (BCM) / Anti-lock brake system module (ABS)** (4/16): • Current gear, used to transmit a signal so there is no STC (Stability and traction control) when shifting • Vehicle speed, used as reverse. **Engine control module (ECM)** (4/46): • Gearbox temperature, used to compensate increased load at low oil temperatures • Selected gear, used by the engine so that it can compensate for different loads • Lock-up, used by the engine so that it can compensate for different loads • Next gear ordered by the gearbox control module (TCM), used by the engine so that it can compensate for different loads • Torque reduction during shifting. This is achieved by retarding the ignition • Torque limiting request, the engine limits the engine torque depending on the current gear. This is achieved by controlling the throttle opening • Lights the malfunction indicator lamp (MIL) in the driver information module (DIM). Checking the malfunction indicator lamp (MIL), lights the lamp in the event of

pressure.	emission related faults. **Driver information module (DIM)** (5/1): • Current gear selector lever position. Used to show the lever position in the driver information module (DIM) • Via the central electronic module (CEM), checking the warning lamps. Lights the orange/yellow warning lamp in the event of a fault • Via the central electronic module (CEM), text message in the driver information module (DIM). The driver can receive up to five error messages from the gearbox control module (TCM). **Rear electrical module (REM)** (4/58). The gearbox control module (TCM) transmits a signal via the central electronic module (CEM) to light the reversing lamp.

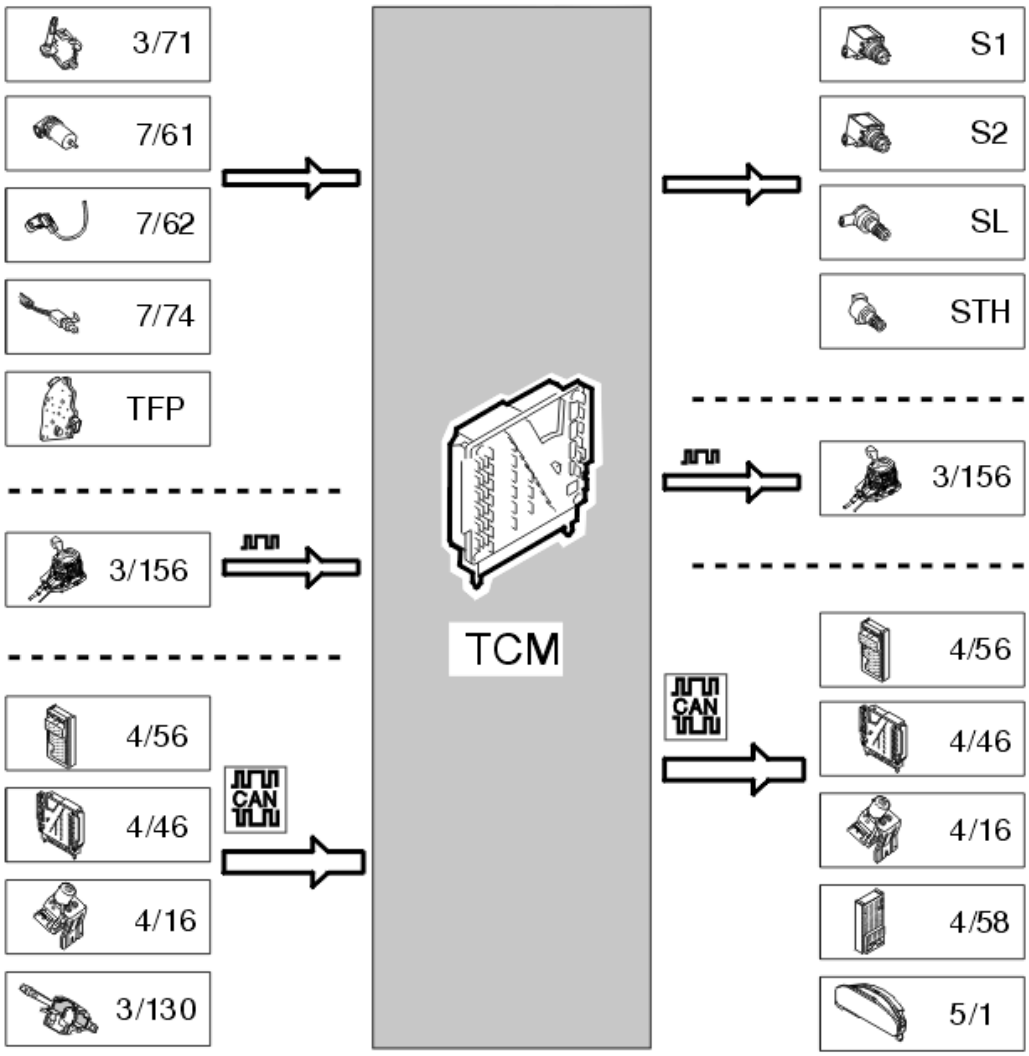

Fig. 177: Transmission Control Module (TCM) Input/Output Signals
Courtesy of VOLVO CARS CORPORATION

TCM DIAGNOSTIC FUNCTIONS

OVERVIEW

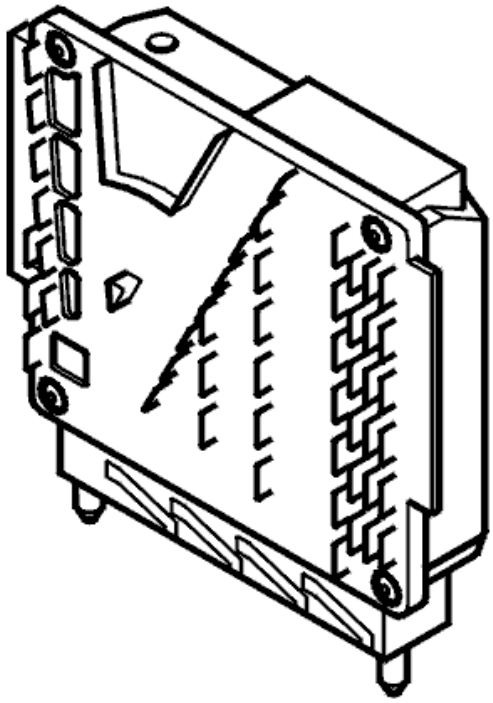

Fig. 178: Identifying Transmission Control Module
Courtesy of VOLVO CARS CORPORATION

The control unit has built-in diagnostics, Volvo Diagnostics, which continually monitor the system and the input and output signals.

DIAGNOSTIC TROUBLE CODES

If the control unit detects a fault, it stores a diagnostic trouble code. If, for any reason, a fault disappears after the diagnostic trouble code has been permanently stored in the control unit, information about the trouble code still remains in the control unit.

READING AND ERASING DIAGNOSTIC TROUBLE CODES

Stored diagnostic trouble codes can be read and erased using this facility.

Erasing diagnostic trouble codes can only be done when all the diagnostic trouble codes have been read at least once.

READING INPUT AND OUTPUT SIGNALS

Status of control unit input and output signals can be continually read using this facility.

For more information about parameters, see **DESCRIPTION OF PARAMETERS**.

ACTIVATION OF COMPONENTS

Using this facility, components can be activated to check their function.

For more information about activations, see **DESCRIPTION OF ACTIVATIONS** .

READING THE CONTROL UNIT IDENTIFICATION

VIDA identifies control units by reading the number of codes from the control unit memory.

The codes contain information on the control unit as follows:

- hardware component number (control unit without software)
- hardware series number (control unit without software)
- software component number
- diagnostic software component number

DESCRIPTION OF PARAMETERS

PARAMETERS, STATUS

GENERAL

Certain values deviate from those contained in the signal specifications, see **SIGNAL DESCRIPTION. TRANSMISSION CONTROL MODULE (TCM)** . This is because read off values are calculated and filtered by the control module. In certain cases the engine must be running to obtain the relevant values.

GEAR-SHIFT POSITION SENSOR POSITION

P/R/N/D/4/3/L = normal gear positions.

OR/OD/OL = Undefined R, D or L positions. The signals from the gear-shift position sensor are outside the normal range but this not interpreted as a fault. This may be because the gear selector is between positions or that the gear-shift position sensor is incorrectly adjusted.

FAULT = the gear-shift position sensor has transmitted the wrong combination of signals and a diagnostic trouble code (DTC) has been stored.

GEAR-SHIFT POSITION SENSOR SIGNAL A

LOW = The signal is grounded in the gear-shift position sensor

HIGH = The signal is not grounded in the gear-shift position sensor

Position P: Signal A= LOW

Position R: Signal A= LOW

Position N: Signal A = HIGH

Position D: Signal A = HIGH

Position 3: Signal A= LOW

Position L: Signal A= LOW

GEAR-SHIFT POSITION SENSOR SIGNAL B

LOW = The signal is grounded in the gear-shift position sensor

HIGH = The signal is not grounded in the gear-shift position sensor

Position P: Signal B= HIGH

Position R: Signal B = LOW

Position N: Signal B = LOW

Position D: Signal B = LOW

Position 3: Signal B = LOW

Position L: Signal B= HIGH

GEAR-SHIFT POSITION SENSOR SIGNAL C

LOW = The signal is grounded in the gear-shift position sensor

HIGH = The signal is not grounded in the gear-shift position sensor

Position P: Signal C= HIGH

Position R: Signal C= HIGH

Position N: Signal C= HIGH

Position D: Signal C= LOW

Position 3: Signal C= LOW

Position L: Signal C= LOW

GEAR-SHIFT POSITION SENSOR SIGNAL PA

LOW = The signal is grounded in the gear-shift position sensor

HIGH = The signal is not grounded in the gear-shift position sensor

Position P: Signal C= LOW

Position R: Signal C= HIGH

Position N: Signal C= LOW

Position D: Signal C= HIGH

Position 3: Signal C= LOW

Position L: Signal C= HIGH

QUICK SHIFT FUNCTION FROM THE GEAR SELECTOR MODULE

Applies only to 4T65EV-GT.

The value indicates whether the quick shift mode is selected or not.

ON = Gear selector in position P/R/N/D

ON = Gear selector in Quick shift mode

QUICK SHIFT SHIFTING FROM GEAR SELECTOR MODULE

Applies only to 4T65EV-GT.

The value indicates the quick shift mode which the gear selector module transmits to the transmission control module (TCM).

No shift = no quick shift function

Increase gear = shift up

Decrease gear = shift down

QUICK SHIFT STATUS ACCORDING TO TRANSMISSION CONTROL MODULE

Applies only to 4T65EV-GT.

This value indicates the shifting program selected by the control module based on the signal from the gear selector.

Normal = P/R/N/D

Quick shift = Quick shift

WINTER MODE STATUS

This value indicates the shifting program selected by the control module based on the signal from the mode selector. W = Winter mode.

Engaged = Winter mode engaged

Disengaged = Winter mode disengaged

CURRENT GEAR (ACCORDING TO GEAR RATIO)

- R, no lock-up
- Gear 1, no lock-up
- Gear 2, no lock-up
- Gear 3, no lock-up
- Gear 4, no lock-up
- Gear 5, no lock-up
- Gear 2, lock-up
- Gear 3, lock-up
- Gear 4, lock-up
- Gear 5, lock-up

NEW GEAR (ACCORDING TO SOLENOIDS)

- R, no lock-up
- Gear 1, no lock-up
- Gear 2, no lock-up
- Gear 3, no lock-up
- Gear 4, no lock-up
- Gear 5, no lock-up
- Gear 2, lock-up
- Gear 3, lock-up
- Gear 4, lock-up
- Gear 5, lock-up

SHIFT SOLENOID STATUS S1

OFF = The solenoid is not activated

ON = The solenoid is activated

SHIFT SOLENOID STATUS S2

OFF = The solenoid is not activated

ON = The solenoid is activated

LOCK-UP SOLENOID SL STATUS

OFF = The lock-up solenoid is not activated

ON = The lock-up solenoid is activated

LOCK-UP PRESSURE SWITCH

Applies only to 4T65EV-GT.

The pressure switch is affected by the transmission line pressure. The control module uses the signal from the pressure switch to check whether the lock-up solenoid is activated when the control module has requested lock-up.

OFF = No lock-up activated

ON = Lock-up activated

STOP (BRAKE) LAMP SWITCH

The engine control module (ECM) transmits a signal on the Control area network (CAN) indicating whether the stop (brake) lamp switch is activated or not. The transmission control module (TCM) uses the signal to disconnect the lock-up function when braking in order to avoid jolts in the transmission.

OFF = Stop (brake) lamp switch unaffected

ON = Stop (brake) lamp switch affected

KICKDOWN

The engine control module (ECM) transmits a signal indicating the accelerator pedal (AP) position. During rapid acceleration, with the accelerator pedal (AP) depressed to approximately 87 %, the transmission control module (TCM) receives a signal about kickdown.

OFF = Kickdown is not activated

ON = Kickdown is activated

TCM DIAGNOSTIC TROUBLE CODES (DTCS) STATUS

The value indicates whether there are any diagnostic trouble codes (DTCs) stored in the transmission control module (TCM).

- At least one diagnostic trouble code (DTC) stored

- No diagnostic trouble code (DTC) stored

TCM DIAGNOSTIC CHECK STATUS

The value indicates whether the transmission control module (TCM) has carried out a complete diagnosis.

- At least one diagnostic test not completed
- All diagnostic tests complete

PARAMETERS, VALUE

ENGINE SPEED (RPM)

The engine control module (ECM) transmits the engine speed (RPM) on the Control area network (CAN) from which the transmission control module (TCM) retrieves the signal which it then compares with its own speed sensor signal.

Measurement range: 0 - 8191 rpm

Idling speed: 850 rpm

TRANSMISSION SPEED SENSOR, INPUT SPEED

The speed can be generated with the engine idling and the gear selector in P/N position. If the gear selector is in any other position, a gear is engaged and the transmission input shaft is connected to the output shaft and an RPM will not be indicated until the car is driven. Depending on slippage in the torque converter the transmission speed and the engine speed will differ when the lock-up function is not engaged. With lock-up engaged the transmission speed should be the same as engine speed (RPM).

Measurement range (rpm): 0 -

Peak = 14 mA

Trough = 7 mA

TCM SPEED SENSOR, CALCULATED SPEED

The control module receives a signal from the transmission speed sensor which is affected by a toothed pulse wheel and calculates the vehicle speed based on the signal. The speed sensor is an "active" sensor, magnet resistive with a current activated interface????. The speed is directly proportional to the frequency.

Measurement range: 0 km/h - top speed

Peak = 14 mA

Trough = 7 mA

VEHICLE SPEED ABS

The ABS control module transmits a signal indicating the vehicle speed on the Control area network (CAN) from where the transmission control module retrieves the signal. The transmission control module (TCM) compares it with the signal from the transmission speed sensor.

Measurement range: 0 km/h - top speed

Peak = 14 mA

Trough = 7 mA

THROTTLE, POSITION

The engine control module (ECM) transmits the accelerator pedal (AP) position on the Control area network (CAN) from where the transmission control module (TCM) retrieves the signal. The signal is used by the transmission to activate the kickdown function.

Measurement range: 0 - 100 %

>87 % = kickdown

CALCULATED BATTERY VOLTAGE

The value indicates the calculated battery voltage at the control module.

Measurement range: 0.0 -25.5 V

BATTERY VOLTAGE

The value indicates battery voltage at the control module.

Measurement range: 0.0 -25.5 V

OIL TEMPERATURE SENSOR SIGNAL

The value indicates the oil temperature sensor signal. Voltage decreases with increased sensor temperature.

Measurement range: 0.0 - 5.0 V

AW 50-42:

Cold transmission (+20°C): approximately 2.4 V

Hot transmission (+100°C): 0.3 -0.5 V

4T65EV/EV-GT:

Cold transmission (+20°C):??? V

Warm transmission (+100°C):??? V

OIL TEMPERATURE

The transmission control module (TCM) calculates the temperature from the oil temperature sensor signal.

Measurement range: -60 - +180°C

LINE PRESSURE SOLENOID STH AMPERAGE

The value indicates the amperage passing through the solenoid circuit. A lower amperage gives a higher reference pressure, which gives a higher line pressure. Solenoid control is directly dependent on the throttle sensor signal. The higher the signal from the throttle sensor the lower the amperage through the solenoid and therefore the higher the line pressure.

Measurement range: 0.0 -1.5 A

Normal value at closed throttle: 280 mA

LINE PRESSURE SOLENOID STH CONTROL

Line pressure solenoid STH controls the reference pressure for the transmission. The reference pressure in turn controls the system pressure in the transmission so that the system pressure in gear D varies between 0.28 - 1.2 MPa (R position: 0.5 - 1.8 MPa). Solenoid control is directly dependent on the signal from the throttle position (TP) sensor. The higher the signal from the throttle position (TP) sensor the greater the reference pressure and therefore line pressure.

Measurement range: 0 - 100 %

0 % control, minimal reference pressure, gives lowest line pressure.

100 % control, maximum reference pressure, gives highest line pressure.

LOCK-UP SOLENOID SL, AMPERAGE

The value indicates the amperage through the solenoid circuit. Control of the solenoid circuit depends on:

- The gear position selected
- Vehicle speed
- The transmission speed - from the transmission speed sensor
- The engine speed (RPM) and load - from the fuel injection system control module
- Throttle opening
- If the brake pedal is depressed - from the stop (brake) lamp switch
- Transmission temperature

TORQUE CONTROL

The control module requests torque-limiting from the engine control module (ECM) in order to limit the torque immediately before shifting to improve shifting quality. The torque is limited by the ignition and fuel injection.

Measurement range: -512 - +512 Nm

ENGINE TORQUE

The transmission control module (TCM) requests torque-limiting from the engine control module (ECM) in order to limit torque immediately before shifting. The signal is used to inform the ABS control module when the driver has requested torque reduction. This is so that the torque will return to the correct level after reduction.

Measurement range: -512 - +511 Nm

511 = No torque limiting request

TORQUE REDUCTION WHEN SHIFTING

The transmission control module (TCM) requests torque-limiting from the engine control module (ECM) in order to limit torque immediately before shifting. Torque limiting can occur at three different levels: 25 %, 35 % or 45 %. Limitation lasts for less than 1 second.

0 = No torque limiting requested

25, 35, 45 % = Torque limiting requested

TORQUE LIMITING REQUESTED

The transmission control module (TCM) requests torque-limiting from the engine control module (ECM) in order to limit torque immediately before shifting. The signal is used to inform the ABS control module when the driver has requested torque reduction. This is so that the torque will return to the correct level after reduction.

Measurement range: -512 - +511 Nm

511 = No torque limiting request

ENGINE CONTROL MODULE (ECM) ENGINE COOLANT TEMPERATURE (ECT)

The engine control module (ECM) transmits a signal indicating the engine coolant temperature (ECT) on the Control area network (CAN). The automatic transmission uses the signal to govern lock-up.

Measurement range: -60 - +195°C

TEXT TRANSMITTED TO THE DRIVER INFORMATION MODULE

In the event of a service reminder indicator fault, the transmission control module (TCM) transmits a message to the driver information module. The text is displayed in the combined instrument panel display.

1 = TRANSMISSION SERVICE URGENT

2 = TRANSMISSION SERVICE REQUIRED

3 = TRANSMISSION FIX NEXT SERVICE

4 = TRANSMISSION OIL TEMP HIGH

5 = CHANGE TRANS OIL AT NEXT SERVICE

TRANSMISSION CONTROL MODULE (TCM) (AW50/51 AWD; AW55-50/51SN; 2003-2007)

DESIGN

CONTROL MODULE

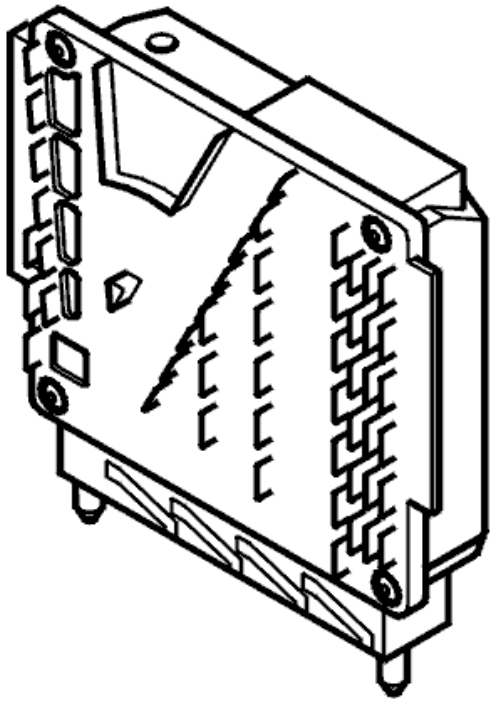

Fig. 179: Identifying Transmission Control Module
Courtesy of VOLVO CARS CORPORATION

The transmission control module (TCM) is positioned in an air cooled plastic box in the engine compartment together with the engine control module (ECM).

SHIFT SOLENOIDS S1, S2, S3, S4 AND S5

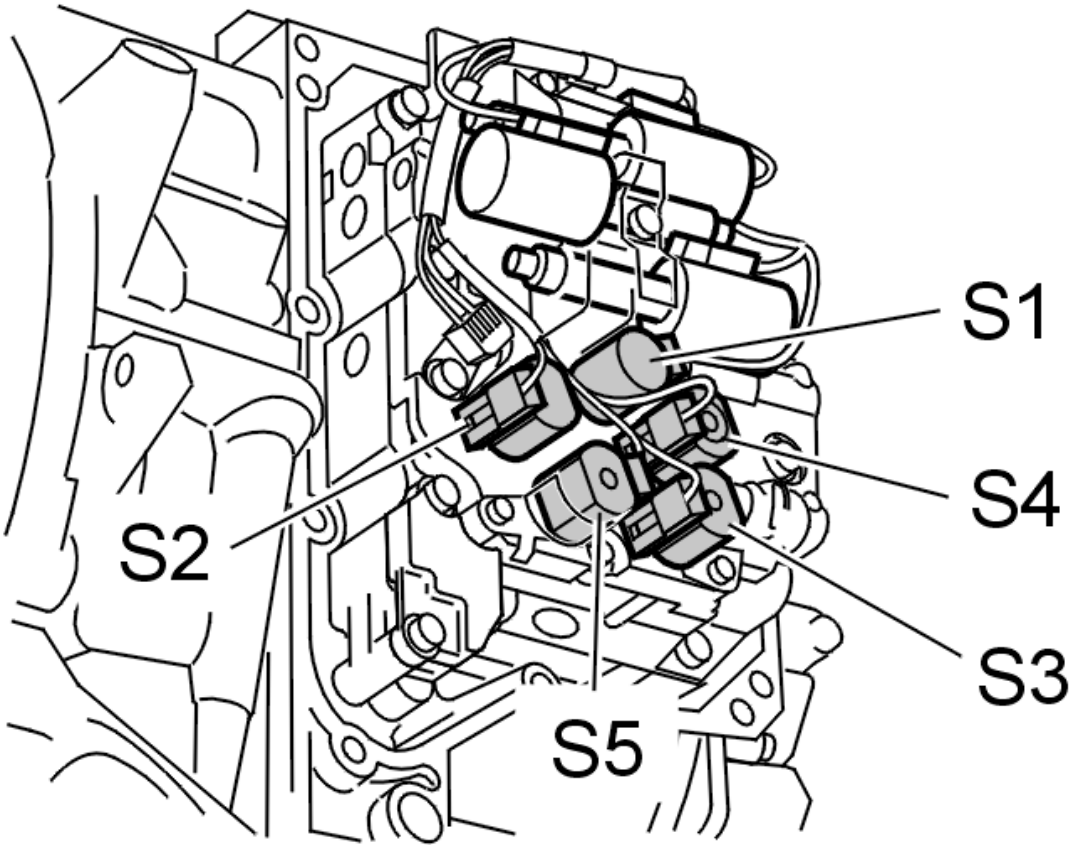

Fig. 180: Identifying Shift Solenoids S1, S2, S3, S4 & S5
Courtesy of VOLVO CARS CORPORATION

The shift solenoids S1, S2, S3, S4 and S5 are positioned in the valve body in the gearbox control system, which is mounted on the front edge of the gearbox. The shift solenoids (on/off type), consist of an electrical coil which controls a hydraulic valve. The solenoids are supplied with 12 V via the transmission control module (TCM) and grounded in the control system. The shift solenoids control shifting and the transmission control module (TCM) determines which gear is to be used by activating them in different patterns.

There is a diagnostic for the shift solenoids.

LOCK-UP SOLENOID, SLU

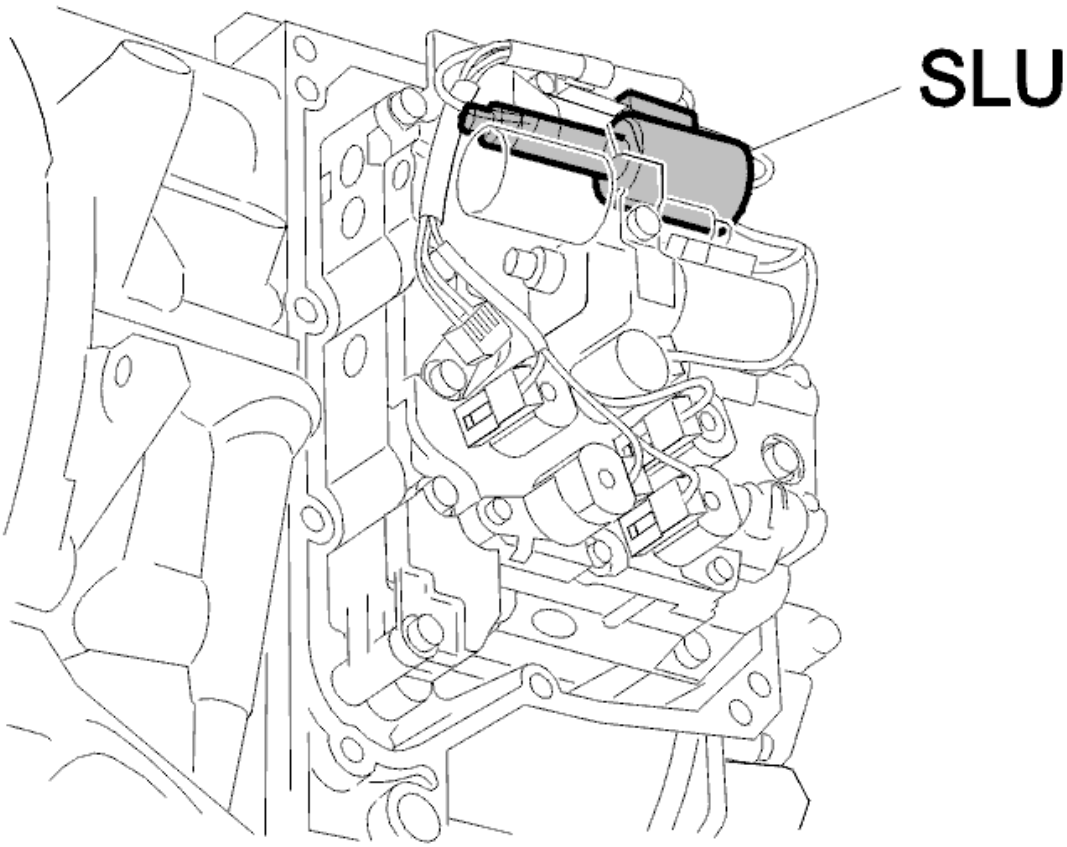

Fig. 181: Identifying Lock-Up Solenoid, SLU
Courtesy of VOLVO CARS CORPORATION

The lock-up-solenoid, SLU is located in the gearbox control system, which is mounted on the front edge of the gearbox.

The lock-up-solenoid, SLU consists of an electric coil that controls a hydraulic valve. The solenoid is controlled, like all linear solenoids in the gearbox, by a pulsed (PWM) current with a frequency of 300Hz and grounded via the Transmission Control Module (TCM). The average value on the current signal that deploys the solenoid varies between 0.1 A and 1 A and the demand controls the deployment.

The solenoid controls the torque converter's Lock-up engagement. Engagement occurs by the solenoid pulsing, which gives a smooth engagement of the lock-up function. The solenoid allows the torque converter to work in one of three positions:

- Open
- Controlled slipping
- Locked.

The hydraulic function of the solenoid is linear.

There is a diagnostic for the lock-up solenoid.

LINE PRESSURE SOLENOID, SLS

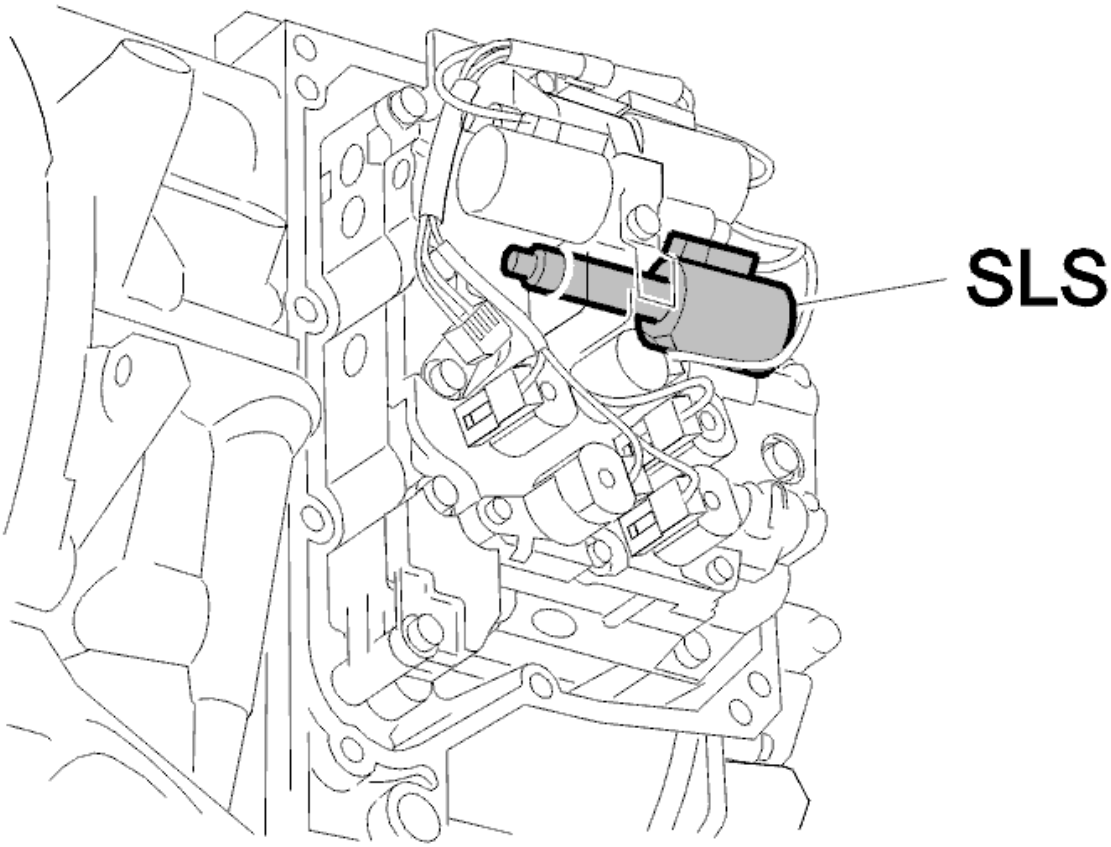

Fig. 182: Identifying Line Pressure Solenoid SLS
Courtesy of VOLVO CARS CORPORATION

The line pressure solenoid, SLS is in the gearbox control system, which is mounted on the front edge of the gearbox. The line pressure solenoid, SLS consists of an electrical coil which controls a hydraulic valve. The solenoid is controlled by pulse width modulation (PWM) voltage and is grounded via the transmission control module (TCM). The hydraulic function of the solenoid is linear. The hydraulic valve is controlled by the varied current which is the result of the current pulse conditions. During high pulse conditions, (at high currents (approximately 1 A)) the line pressure is low. During low pulse conditions (at low currents) the line pressure is high. In the event of an open-circuit the line pressure reaches maximum which causes hard shifting. The hydraulic valve is then completely open.

There are diagnostics for the solenoid.

LINE PRESSURE SOLENOID, SLT

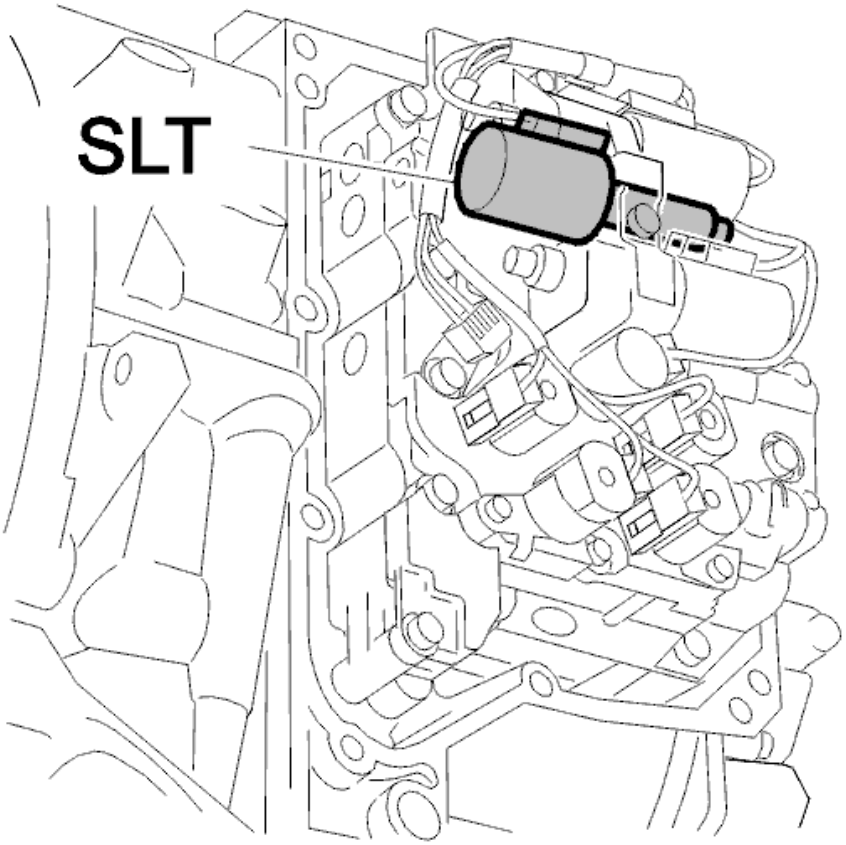

Fig. 183: Identifying Line Pressure Solenoid
Courtesy of VOLVO CARS CORPORATION

The line pressure solenoid, SLT is in the gearbox control system, which is mounted on the front edge of the gearbox. The line pressure solenoid, SLT consists of an electric coil which controls a hydraulic valve. The solenoid is controlled by pulse width modulation (PWM) voltage and is grounded via the control module. The solenoid is linear. The hydraulic valve is controlled by the varied current which is the result of the current pulse conditions. During high pulse conditions, (at high currents (approximately 1 A)) the line pressure is low. During low pulse conditions (at low currents) the line pressure is high. The solenoid also engages and disengages neutral control. In the event of an open-circuit the line pressure reaches maximum which causes hard shifting. The hydraulic valve is then completely open.

There are diagnostics for the solenoid.

GEARBOX INPUT SPEED SENSOR (SPEED OF THE INPUT SHAFT)

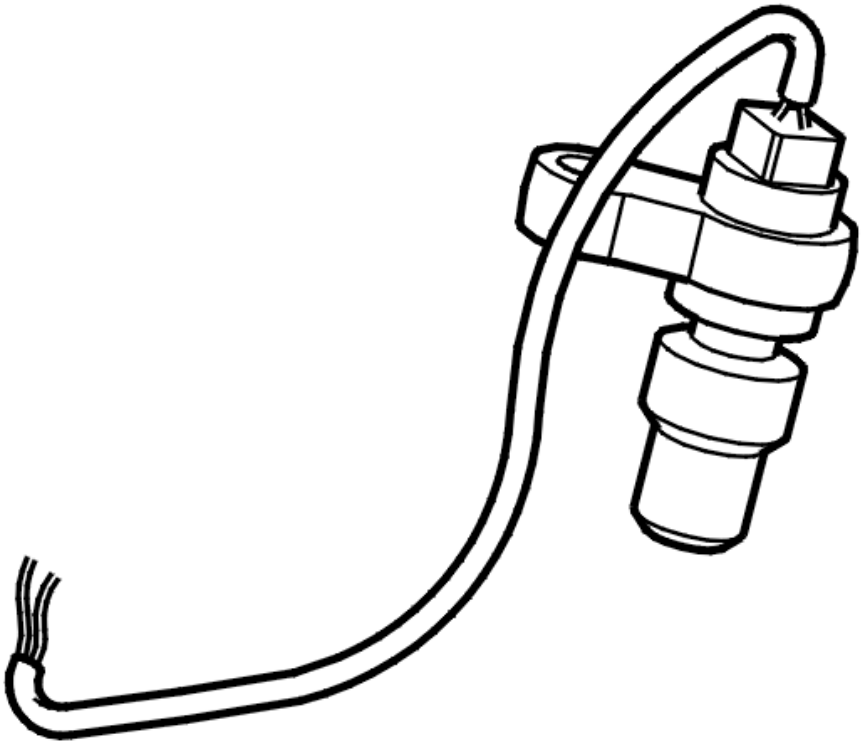

Fig. 184: Identifying Transmission Input Speed Sensor
Courtesy of VOLVO CARS CORPORATION

The gearbox input speed sensor (speed of the input shaft) is on the top of the gearbox housing. The sensor is an active sensor and is supplied with 12 V. When the pulse wheel on clutch C1 rotates, the sensor generates a pulsed current (quadratic wave) where the strength of the current depends on the position of the pulse wheel. The signals from the coils in the sensor are then affected by a magnetic resistance element, which generates a current which oscillates between 7 mA and 14 mA, and whose frequency increases with speed. Using the signal from the sensor, the transmission control module (TCM) calculates the gearbox speed, unit rpm.

The transmission control module (TCM) uses information about the input shaft speed to calculate the torque reduction to be requested from the engine control module (ECM) when shifting. The value is also used to compare the engine speed (RPM) with the speed of the input shaft in order to calculate the slipping rate of the torque converter. The value is also compared with the gearbox speed sensor signal in order to calculate the actual gear ratio. This is done to check whether the value corresponds to the expected gear ratio.

There are diagnostics for the gearbox input speed sensor.

GEARBOX OUTPUT SPEED SENSOR (SPEED OF THE OUTPUT SHAFT)

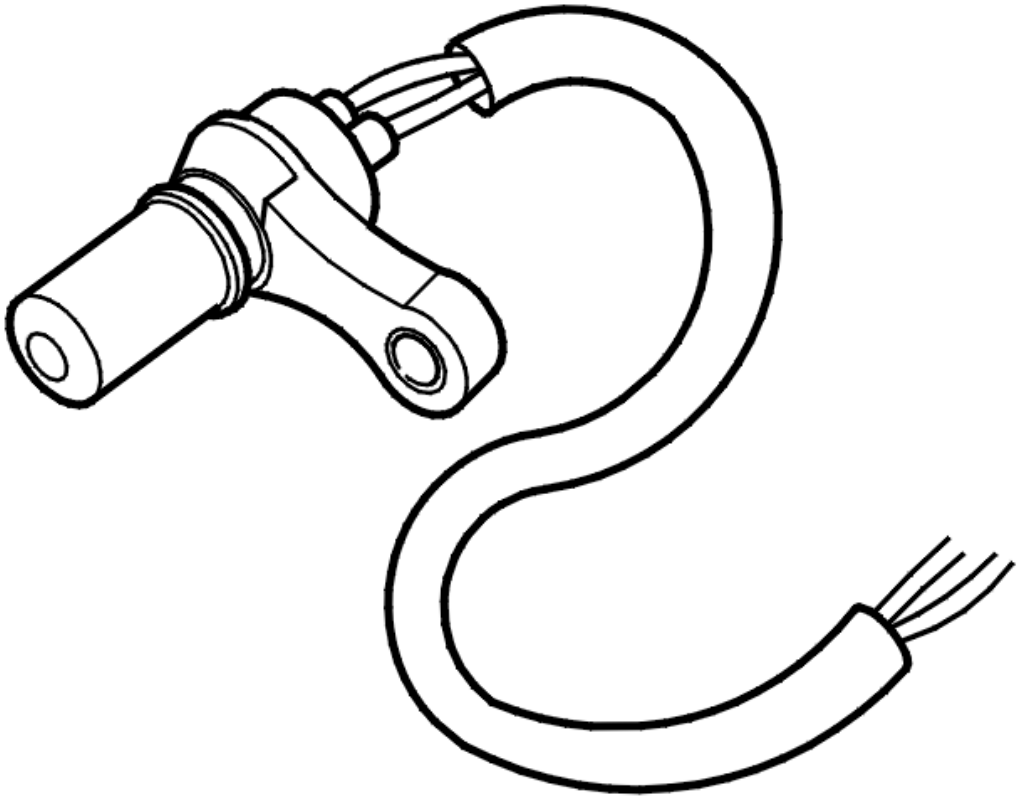

Fig. 185: Identifying Transmission Output Speed Sensor
Courtesy of VOLVO CARS CORPORATION

The gearbox output speed sensor (speed of the output shaft) is on the reverse of the gearbox housing. The sensor provides signals to the transmission control module (TCM) about the vehicle speed. The output shaft speed sensor is an active sensor and is supplied with 12 V. When the pulse wheel (wheel for shift-lock) rotates the sensor generates a pulsed current (quadratic wave) where the strength of the current depends on the position of the pulse wheel. The signals from the coils in the sensor are then affected by a magnetic resistance element, which generates a current which oscillates between 7 mA and 14 mA, and whose frequency increases with speed. The control module calculates the gearbox output speed using the signals from the sensor. The signal is compared with the signal from the gearbox input speed sensor and is used to calculate the gear ratio and is also used for diagnostics.

There are diagnostics for the gearbox output speed sensor.

OIL TEMPERATURE SENSOR

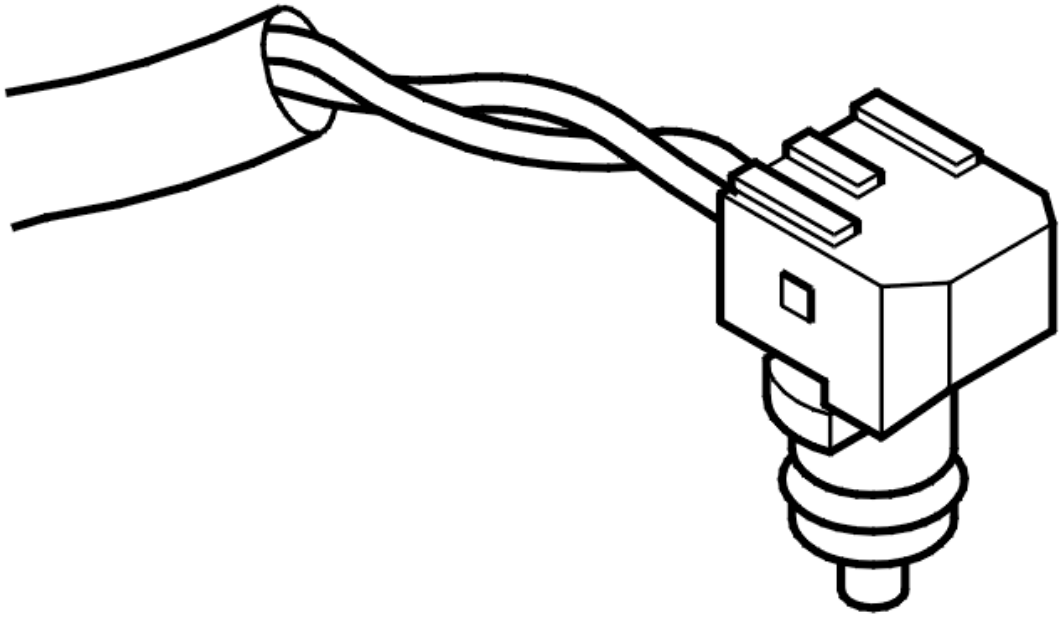

Fig. 186: Identifying Oil Temperature Sensor
Courtesy of VOLVO CARS CORPORATION

The temperature sensor is an NTC sensor. The temperature sensor is on the gearbox control system inside the side cover. It gauges the temperature of the gearbox fluid in the sump. The temperature sensor is integrated in the cable harness. The temperature sensor is supplied with 5 V and is grounded via the transmission control module (TCM). The control module can determine the gearbox fluid temperature by measuring the voltage drop above the NTC resistance of the sensor. The control module stores the time the temperature has been within a certain temperature range. If a certain temperature and time has been exceeded, a diagnostic trouble code (DTC) indicating that a oil change is necessary is stored.

There are diagnostics for the temperature sensor.

GEAR-SHIFT POSITION SENSOR

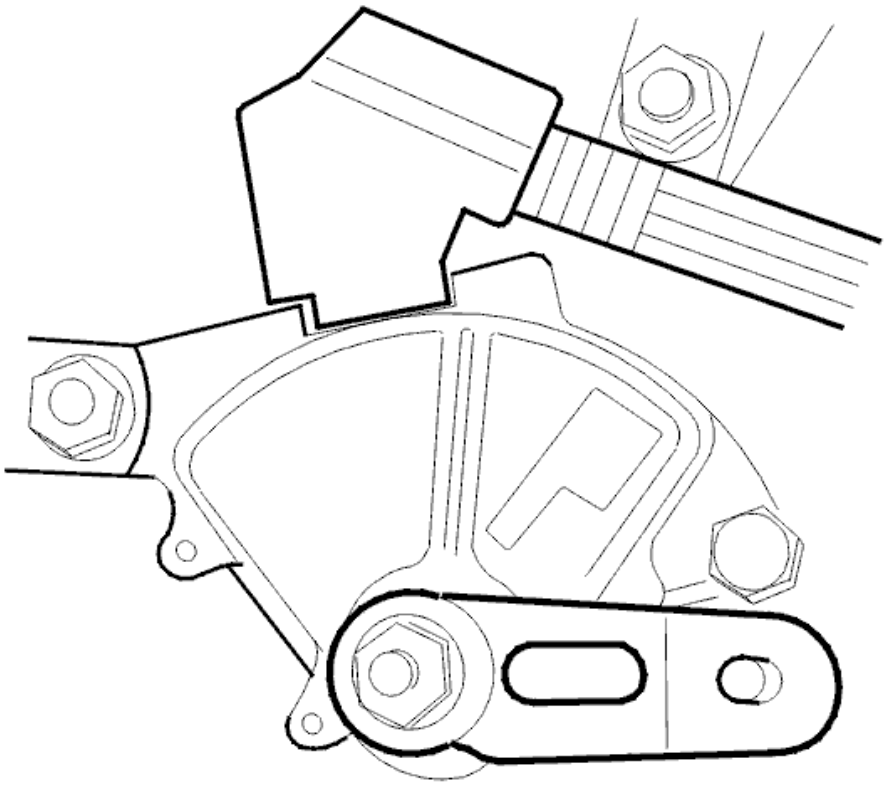

Fig. 187: Gear-Shift Position Sensor
Courtesy of VOLVO CARS CORPORATION

The gear-shift position sensor is mounted on the top of the gearbox housing, on the gear shift linkage rod. The gear selector contains a Park / Neutral position (PNP) switch and connectors which inform the transmission control module (TCM) about which gear is selected and if the reverse gear is selected so that the reversing lamps can be lit. The gear-shift position sensor is a position switch which is supplied via +15. A number of trailing contacts supply power to the sensor outputs. The combination of pins A, B, C and PA indicate the current gear selector position (see the table below). The trailing contacts can either be closed or open.

There are diagnostics for the gear-shift position sensor.

	A	B	C	PA
P	-	●	●	-
R	-	-	●	●
N	●	-	●	-
D(Man)	●	-	-	●
4	-	-	-	-
3	-	●	-	●
L	●	●	-	-

Fig. 188: Identifying The Gear-Shift Position Sensor Table
Courtesy of VOLVO CARS CORPORATION

Table for the gear-shift position sensor

The value indicates the position of the gear-shift position sensor (A, B, C and PA), see the table.

• = High signal (open)

- = Low signal (grounded)

GEAR SELECTOR MODULE (GSM)

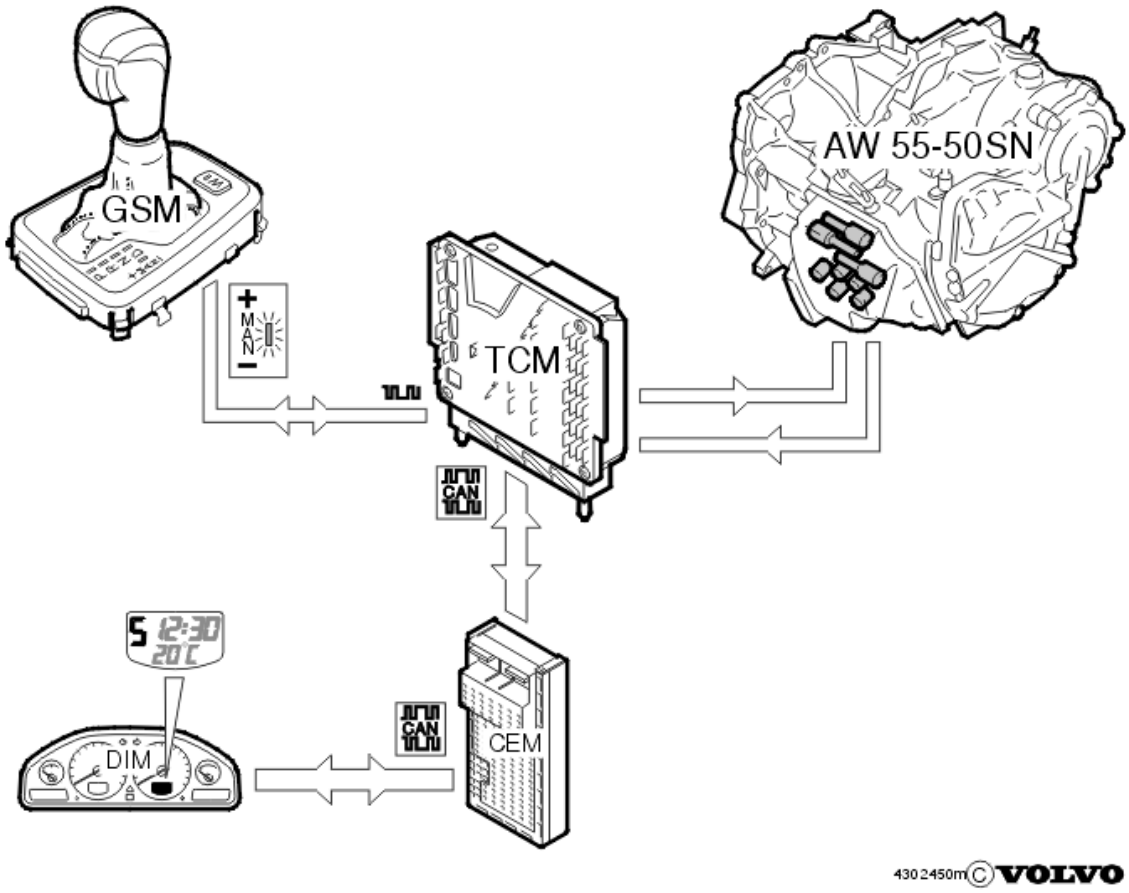

Fig. 189: Gear Selector Module
Courtesy of VOLVO CARS CORPORATION

The gear selector assembly is in the tunnel console. It is mechanically connected to the gearbox by a cable which moves the gear valve in the gearbox control system. The gear selector module (GSM) is positioned on the top panel of the gear selector assembly. The gear selector module (GSM) uses serial communication to communicate with the transmission control module (TCM) to light the gear position indicator. The indication occurs via LEDs in the top panel.

The gear selector control module (GSM) communicates with the central electronic module (CEM) to activate the shift-lock. The shift-lock solenoid power supply and ground is directly connected to the gear selector module (GSM).

The "W" switch in the gear selector assembly top panel is positioned on the printed circuit board for the gear selector module (GSM) and activates Winter mode.

There are diagnostics for the gear selector module (GSM). Diagnostic trouble codes (DTCs) are stored in the transmission control module (TCM) in the event of a fault.

GEAR SELECTOR ASSEMBLY FOR AW55-50

There are two new types of gear selector assembly for the AW55-50. There is one gear selector assembly with

seven positions and one with the Geartronic-function.

Gear selector assembly with 7 positions

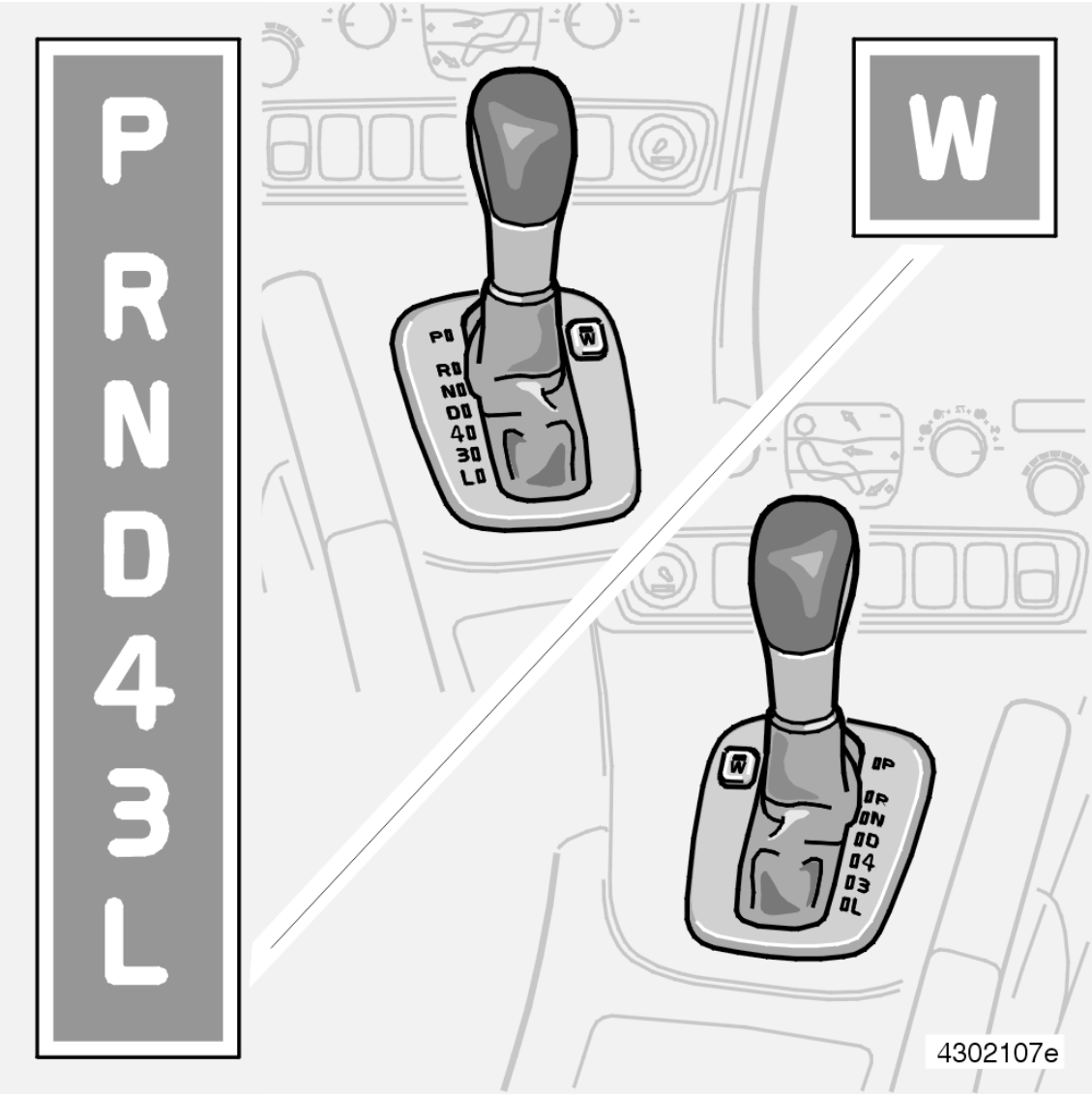

Fig. 190: Gear Selector Assembly With 7 Positions
Courtesy of VOLVO CARS CORPORATION

The gear selector has seven positions with the following functions:

- **P** Park.
- **R** Reverse.
- **N** Neutral.
- **D** Automatic gearshift between all gears (does not apply when the mode selector is in winter mode (W)). For more information see, Function/Shifting program/Winter mode.
- **4** Fifth gear is blocked in this mode

- **3** Fourth and fifth gear are blocked in this mode
- **L** Only first and second gear function in this mode. (Speed variation depends on which engine the gearbox is working with and does not apply when the mode selector is in winter mode (W), for further information see, Function/Shifting program/Winter mode).

Gear selector assembly with Geartronic function

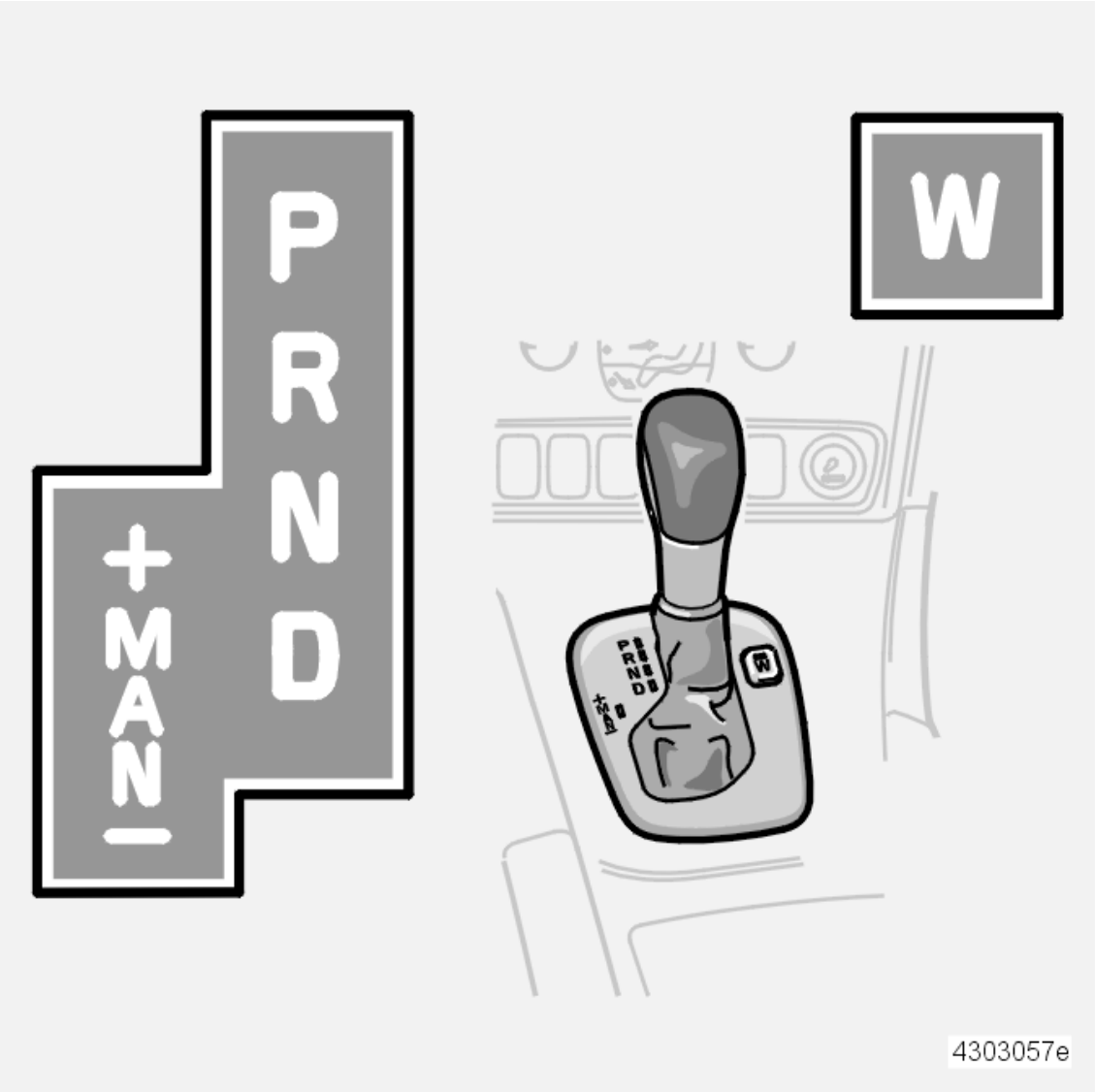

Fig. 191: Gear Selector Assembly With Geartronic Function
Courtesy of VOLVO CARS CORPORATION

The gear selector assembly with Geartronic has a unique appearance and function. In addition to P/R/N/D modes it also has "manual" (MAN) shifting mode.

The gear selector for Geartronic has the following functions:

- **P** Park position
- **R** Reverse position
- **N** Neutral position
- **D** Automatic gearshift between all gears. (Does not apply when the mode selector is in winter mode (W), for further information see, Function/Shifting program/Winter mode)
- **MAN** Manual shifting. There are three hall sensors on the gear selector module (GSM). A permanent magnet on the gear selector lever affects the output signals of the sensors to the gear selector module (GSM).

DOWNLOADING SOFTWARE AND REPLACING THE CONTROL MODULE

New software can be downloaded into the transmission control module (TCM). When ordering software, the hardware and the software in the car is compared to the data in the Volvo central database. If the comparison is OK the software is downloaded to the control module. If the comparison between the car and Volvo central database is not OK, the database is updated with the car configuration. When this is complete the software is downloaded.

FUNCTION

CONTROLLING THE SHIFT SOLENOIDS WHEN SHIFTING

Shifting and the lock-up function is controlled by activating the solenoids in a specific pattern. The solenoids S1-S5 determine which gear is to be used and the SLS, SLU and SLT solenoids determine engagement by adjusting hydraulic line pressure. The basic parameters for the different shifting points are the accelerator pedal (AP) position and the vehicle speed. The shift quality is decided by the control of torque.

The pressurization of the clutches and the brakes are adjusted by reading the changes of the speed of the transmission input shaft during the shifting process and comparing them to the values calculated in the transmission control module (TCM).

Two shifting patterns can be selected, normal conditions and winter mode (selected using the button).

In normal mode shifting and lock-up occur at relatively low speeds to reduce fuel consumption. In the event of rapid accelerator pedal movements, the transmission control module (TCM) automatically shifts to sport mode.

Shifting patterns

Gear	Activated solenoid					
	S1	**S2**	**S3**	**S4**	**S5**	**SLS**
1	ON	ON	ON	OFF	OFF	OFF
2	OFF	OFF	ON	OFF	OFF	ON
3	OFF	OFF	ON	ON	OFF	ON
4	OFF	OFF	OFF	ON	OFF	ON
5	OFF	ON	OFF	ON	OFF	ON
R	OFF	OFF	ON	OFF	ON	OFF

SHIFTING PROGRAM

Economy mode

When driving at normal acceleration the transmission control module (TCM) uses a pre-set shifting program, optimized to shift for economy driving. This shifting program is suitable for "normal" driving which provides earlier up shifts and lock-up. In addition the transmission oil pressure is adjusted to provide smooth gear engagement.

Sport mode

The transmission switches from economy mode to sport mode if the accelerator pedal (AP) is pressed down quickly. The conditions are that the throttle opens and the vehicle speed exceeds 50 km/h. As soon as the accelerator pedal (AP) is moved less quickly economy mode is resumed. In the sport mode shifting program the shifting points are adjusted to provide the best possible performance. Down shifting occurs at lower engine speed (RPM).

Extreme mode

At wide open throttle (WOT) the kick-down function is engaged and the transmission shifts to the lowest possible gear. In this way a boost of power is achieved when overtaking for example.

Winter mode

Winter mode is selected using the (W) button on the top panel of the gear selector assembly. Winter mode enables starting off in a high gear to prevent the wheels from spinning on a slippery surface. This mode can also be used in other difficult situations in which the driver needs more direct control over gear selection. Depending on the gear position, the following combinations can be obtained:

- **D** The car starts in 3rd gear. Automatic shifting between 3rd, 4th and 5th gears
- **4** The car starts in 3rd gear. Automatic shifting between 3rd and 4th gears occurs earlier than in economy mode, D position. 5th gear is locked out
- **3** The car starts in 3rd gear. There is no upshifting or downshifting
- **L** The car starts in 2nd gear. There is no upshifting or downshifting.

The warning lamp on the dashboard lights when winter mode is selected.

If kick-down is activated in Winter mode, the transmission uses all gears for maximum performance.

OTHER MODES

Adaptation

The transmission control module (TCM) monitors each shift during all driving conditions to fulfill optimal and smooth shifting. This is carried out by the control module either lowering or increasing the hydraulic line pressure used during the shift itself. The changed pressure levels are stored in the control module memory when the car has been switched off and are retrieved on start-up. This provides improved shifting comfort and

increased service life.

Adaptation occurs when the following conditions have been met:

- Throttle opening is steady
- Oil temperature between 65° C and 110° C.

Catalytic converter start

Shifting occurs differently during engine warm up. This function is used to help the engine reach its operating temperature by preventing torque converter lock-up and by delaying up shifts. This function works in the D-position but not in the winter mode (W). Because of this function, it is normal for the 1-2 and 2-3 shift to be noticeably delayed when the car engine is cold. This is a normal consequence of this function.

Temperature controlled lock-up

If the transmission temperature increases abnormally as a result of heavy load under high ambient temperature conditions, the torque converter lock-up function is activated as often as possible (temperature controlled lock-up). This reduces slippage and the generation of heat in the transmission. If the temperature drops below +20° C the lock-up function will not be used.

Slipping lock-up

The slipping lock-up function provides smoother engagement with reduced vibration and decreased noise when a gear is engaged. In this mode, the torque converter clutch is engaged, but not fully locked.

The following must be met in order for the function to activate:

- Gear selector in position D, 4 or 3
- Gear 3, 4 or 5
- The transmission input speed is 1100 rpm or more and the throttle opening is 35 % or less
- The transmission oil temperature is 40 - 120°C.

Due to the torque converter slipping between 50-200 rpm, the friction properties of the transmission fluid are very important. The transmission fluid differs from conventional ATF oil properties. Always use the specified fluid for this transmission. Failure to do so may compromise the function and set a diagnostic trouble code (DTC).

The engine coolant must reach a certain temperature before the function engages.

Driving uphill

The transmission control module (TCM) may change the gear shift pattern slightly when driving uphill. This is to avoid busy shifting.

Neutral control (only available on certain models)

This function is activated when the driver stops the car and the car is stationary, at traffic lights for example. The transmission control module (TCM) then disengages the C1 clutch which releases the forward drive of the transmission and reduces the load on the engine. The function improves fuel consumption and reduces vibrations at idle speed. When the driver releases the brake, the C1 clutch engages and drive is resumed.

The following conditions must be met for the Neutral control function to be activated:

- Gear selector in position D, 4, or 3 when Winter mode and Geartronic are not selected
- Oil temperature above + 10° C
- Throttle position < 3 %
- Brake pedal depressed
- Speed 0 km/h
- Engine speed < 1500 rpm.

There are two time factors for engagement: There is a 2 second delay in position D when stationary and a 5 second delay at N to D.

SHIFTING USING GEARTRONIC

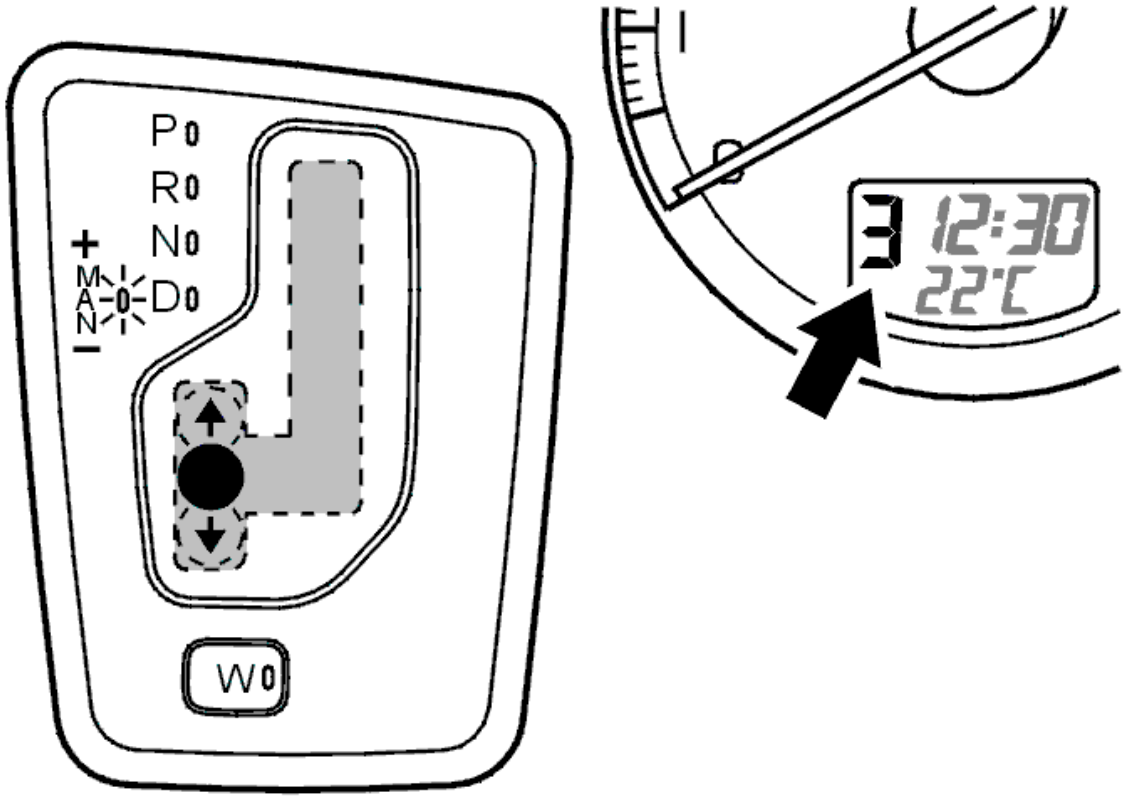

Fig. 192: Checking Shift Positions
Courtesy of VOLVO CARS CORPORATION

When the gear selector is moved to the Geartronic position (MAN) the automatic transmission remains in

hydraulic position D, but when the gear selector is moved upwards (+) the gear selector module (GSM) transmits a signal to the transmission control module (TCM) to shift up. When the gear selector is moved downwards (-) a signal is transmitted to the transmission control module (TCM) to shift down. The driver information module (DIM) switches the symbol in the combined instrument panel from D to the current gear, for example 3, when the gear selector is in the MAN position. A signal is sent to the gear selector module (GSM) to light the M LED and switches off the other LEDs. The transmission control module (TCM) determines if shifting can be carried out and the driver information module (DIM) indicates the current gear. If shifting is permitted the solenoids are activated according to each specific gear pattern.

However, in certain situations the transmission control module (TCM) assumes the shifting decision. The following applies:

- When stationary only 1st, 2nd and 3rd gears can be selected. 4th gear can be selected at speeds in excess 30 km/h and 5th at speeds in excess of 40 km/h
- Automatic down shifting occurs below a certain speed. Example: 2nd gear is selected. Automatic down shifting occurs when shifting from 2nd gear to 1st at 2 km/h if the speed, before then, exceeds 25 km/h. in other cases 2nd gear is retained. For example, when 3rd gear is engaged despite the car being stationary
- Manual up shifting is required after automatic down shifting. Kick-down is not available in the Geartronic-position (MAN)
- The permitted speed for manual down shifting corresponds to those for kick-down downshifting, i. e. engine speed at approximately 6 000 rpm
- If the transmission temperature becomes too high the transmission control module (TCM) determines the shift position. The purpose is to maintain a gear where lock-up is possible at the current speed
- Lock-up is possible in 3rd, 4th and 5th gears. (1st and 2nd gears do not have lock-up).

Other

In position MAN the lever position signal to the gear selector module (GSM) is generated as follows:

For each of the three gear selector positions a hall sensor is mounted on the printed circuit board for the gear selector control module (GSM). A permanent magnet on the lever affects the output signals from the sensors to the control module. The control module can read off the position of the lever through the differences in the signal characteristics.

SHIFT-LOCK

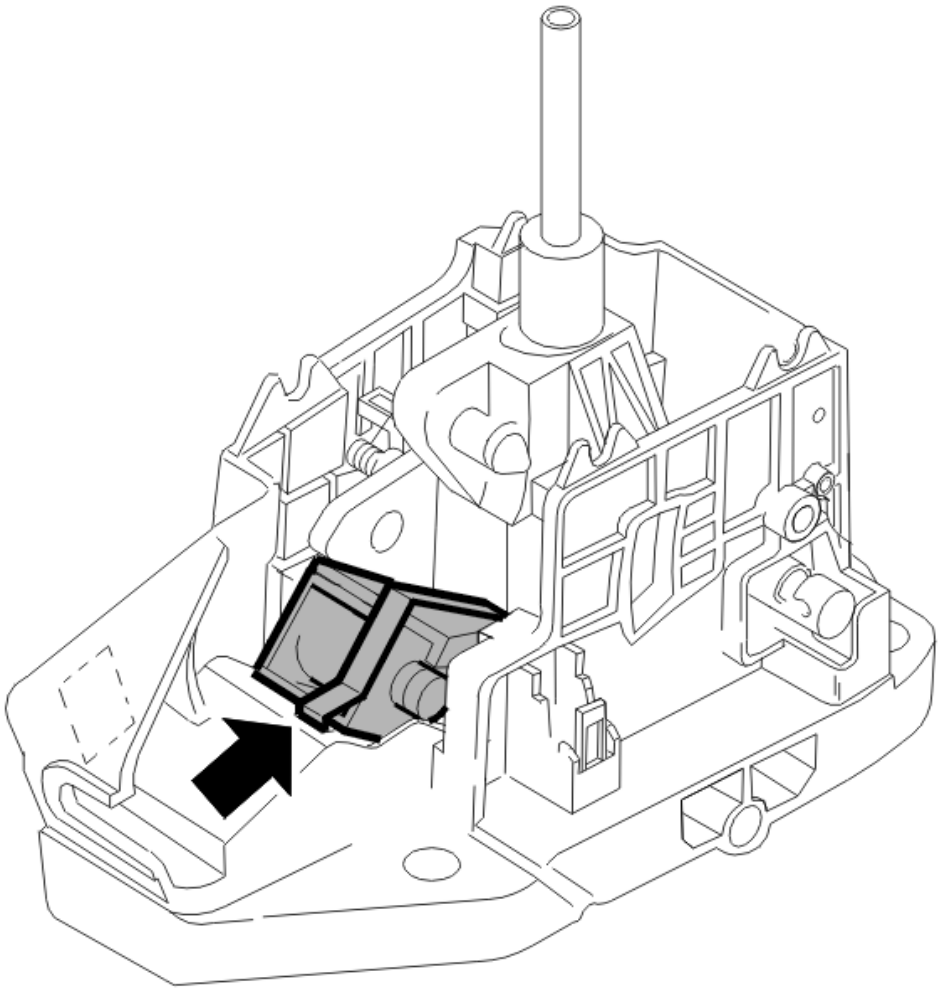

Fig. 193: Identifying Shift-Lock
Courtesy of VOLVO CARS CORPORATION

To avoid any chance of the gear selector inadvertently moving from the P position, the car is also equipped with an electrically operated shift-lock function. This locks the interlock pin in the gear selector lever in the shift-lock section, locking the selector lever in the P position. To move the gear selector from the P position, the ignition must be switched on and the brake pedal depressed. (The stop lamp switch is activated.). The central electronic module (CEM) reads the position of the brake pedal via direct connection to the brake pedal sensor and transmits a signal to the gear selector control module (GSM) to deactivate the solenoid in the gear lever selector. The solenoid lock pin is pushed in and the gear selector lock button can be pressed down as usual to select another gear. When the ignition is in position "0", the solenoid is deactivated. In this position the shifter is mechanically locked by the key lock cable.

IGNITION SWITCH INTERLOCK

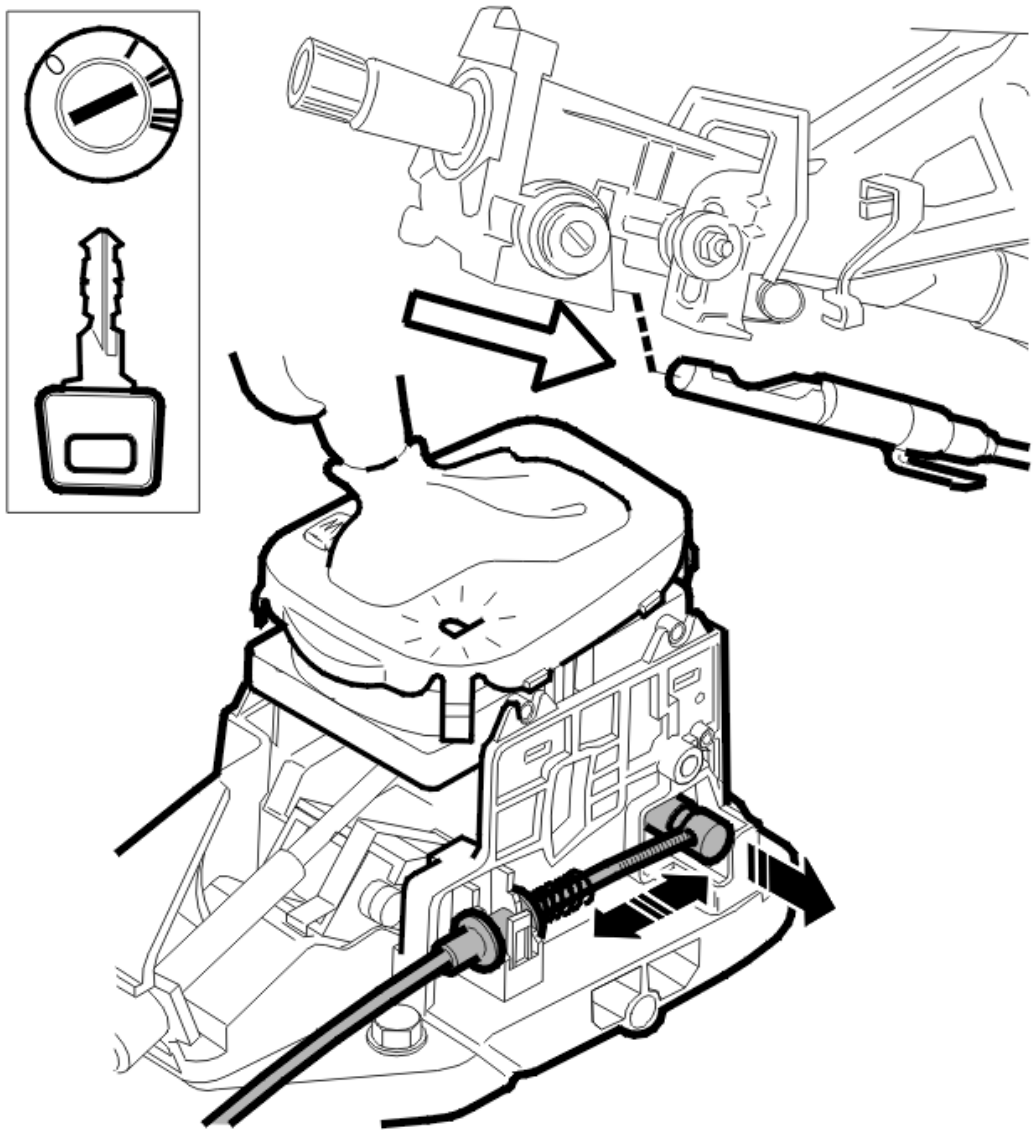

Fig. 194: Identifying Ignition Switch Interlock
Courtesy of VOLVO CARS CORPORATION

An interlock and security feature (ignition switch interlock) is mechanically connected to the ignition switch by a cable. The ignition switch interlock is controlled by the position of the lock cylinder in the ignition switch and by the position of the gear selector. This means that the gear selector must be in the P-position for the ignition key to be removed from the ignition switch. The ignition key must be turned to position I or II before the lever can be moved from the P-position. The ignition switch interlock is used only in combination with shift-lock.

PARK / NEUTRAL POSITION (PNP) FUNCTION

The gear-shift position sensor has a park / neutral position (PNP) function to prevent the engine being started with a gear selected.

This function prevents the engine being started unless the P or N positions are selected. This prevents the car from lurching forwards when started.

ADAPTATION DATA

There are two functions for adaptation in the transmission control module (TCM) software which can be activated:

- Resetting adaptation - carried out after replacing internal components or the entire transmission
  - the transmission control system
  - the transmission fluid
  - the entire transmission
  - the transmission control module (TCM).
- Adaptation function - This function helps the mechanic to adapt the transmission. It makes it easier to reset the function of the transmission after repair or replacement of, for example:
  - the transmission control system
  - the transmission fluid
  - the entire transmission
  - the transmission control module (TCM).

When the adaptation function has been activated, the test drive instructions must be followed. The following shifts can be adapted:

- 1-2
- 2-3
- 3-4
- 4-5
- N-D
- 5-4
- 4-3
- 3-2
- 2-1
- N-R
- Neutral Control engagement and disengagement, if equipped.

While the car is in this mode, the orange/yellow warning lamp in the center of the combined instrument panel is used to indicate when each shift has been adapted to its target value.

When the orange/yellow warning lamp (triangle) flashes after each of the listed shifts, the adaptation is complete.

NOTE: The function is only available in certain software versions.

Adaptation of the transmission is activated via the VIDA vehicle communication socket.

COUNTER FOR TRANSMISSION FLUID DATA

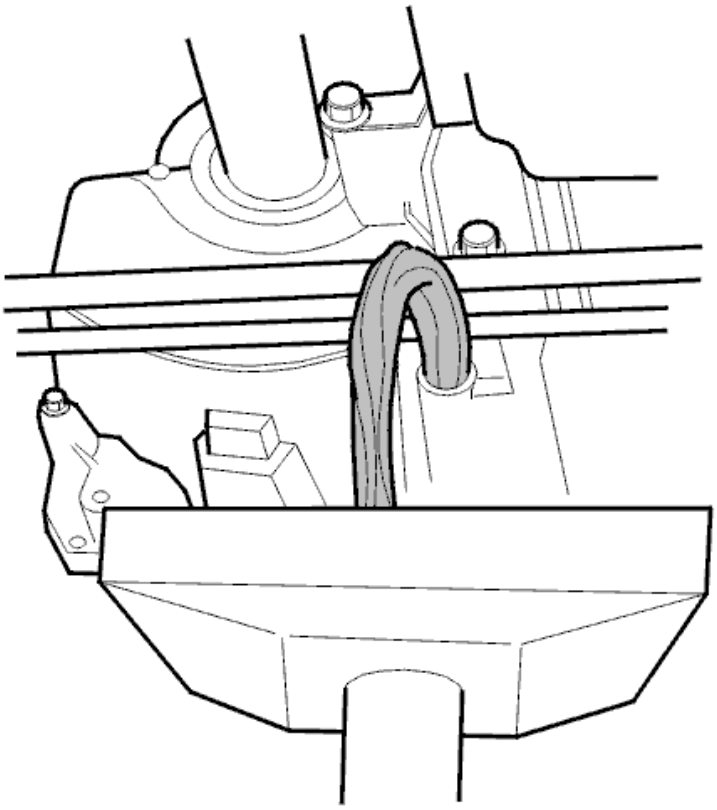

Fig. 195: Draining Oil
Courtesy of VOLVO CARS CORPORATION

A counter for transmission oil quality is built into the software for the transmission control module (TCM). The counter counts up the amount of time the oil is above a certain temperature. When the counter has reached the maximum value, the diagnostic trouble code (DTC) for an oil change is stored in the control module. When replacing transmission fluid the counter must be reset to prevent a diagnostic trouble code (DTC) being stored incorrectly. This applies when the transmission fluid is changed and when the fluid is changed during a repair.

The reset function is activated via the VIDA vehicle communication socket.

EMERGENCY MODE IN THE EVENT OF A FAULT

An emergency program is activated to deal with the fault when the transmission control module (TCM) detects a transmission fault (permanent fault). If the transmission control module (TCM) detects a permanent fault, an emergency mode is activated. The transmission control module (TCM) then implements corrective action to protect the transmission, while leaving the car in the best possible drivable condition. Minor malfunctions do not activate an emergency program. There are different programs depending on the type of fault:

- Emergency mode
- Limp-home mode.

Emergency mode is activated for minor faults and the Limp-home mode for the most serious faults. If the malfunction is intermittent, the transmission control module (TCM) returns to normal operation the next time the ignition is switched on.

Emergency mode

The warning lamp in the combined instrument panel comes on and a or text message is displayed for diagnostic trouble codes (DTCs) stored in the transmission control module (TCM).

The transmission shifts in all gears but transmits no signal to the lock-up solenoid. This means that lock-up is not available.

Limp-home mode

The warning lamp in the combined instrument panel comes on or a text message is displayed for diagnostic trouble codes (DTCs) stored in the transmission control module (TCM).

The transmission control module (TCM) interrupts the activation of all solenoids. This means that no shifting is possible. The transmission operates only in 3rd gear in positions 3 and L, 4th gear in position D and reverse in position R. Shifting can only be carried out manually between 3rd and 4th gear and reverse gear.

No control of line pressure solenoids SLS and SLT. Maximum system pressure constantly which results in harsh upshifting and downshifting and harsher shifts when engaging P-R, N-R and N-D.

SYSTEM OVERVIEW

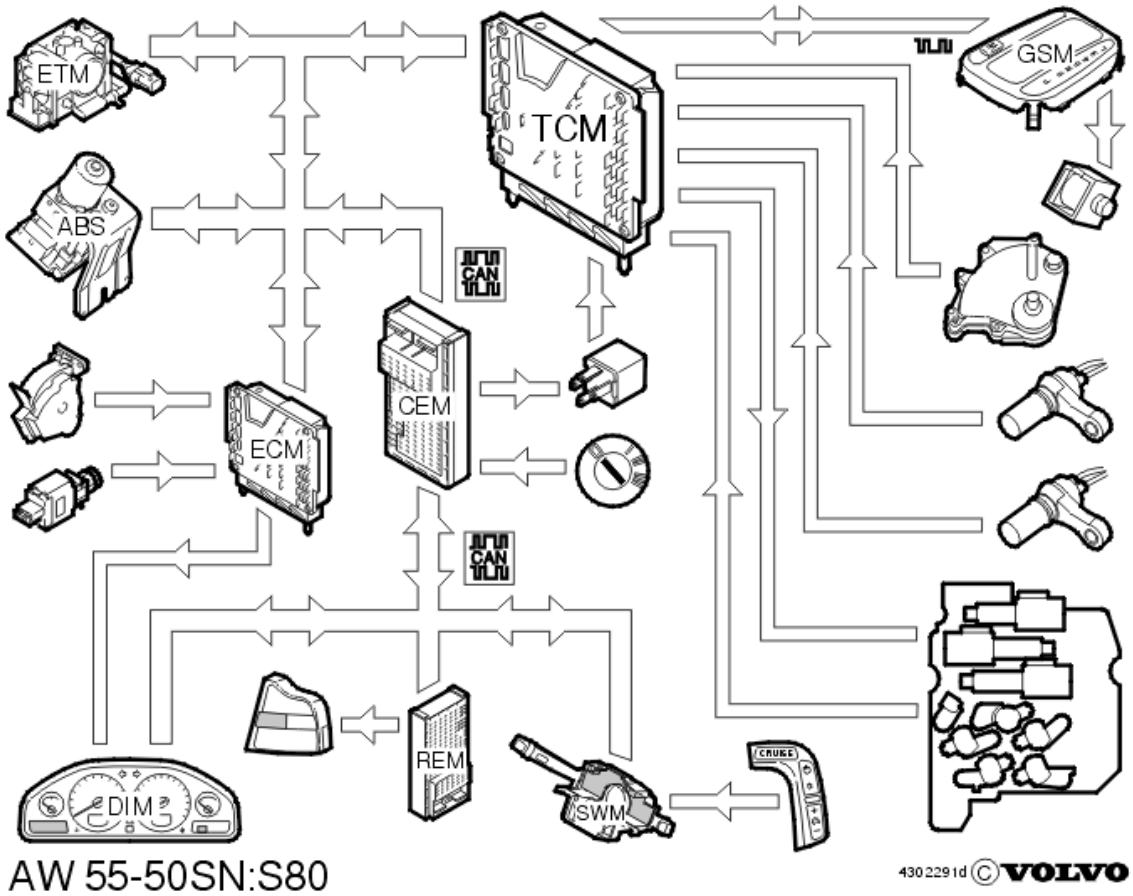

Fig. 196: Identifying Transmission Control Module Input And Output Signals
Courtesy of VOLVO CARS CORPORATION

AW55-50 (and AW50AWD) is a 5-speed electronically controlled automatic transmission with a lock-up function for the three highest gears. The transmission control module (TCM) adapts the gear changes to ensure that the correct gear is selected for the driving mode, engine load, driver requirements, speed etc. This gives good fuel economy combined with increased comfort by ensuring smoother gear changes and lower noise levels.

The transmission control module (TCM) receives information about the desired gear position and driving mode from the driver. In conjunction with the signals from a number of sensors in the transmission and the engine control system, unlike with a purely hydraulically controlled transmission, this allows the control module to calculate the optimal shifting points and engagement of lock-up. The control module allows for small changes in the operating conditions and adapts the various transmission functions to ensure that the correct gear is always selected in relation to the driving mode selected by the driver.

This adaptability guarantees smooth and consistent gear shift quality throughout the operational life of the transmission.

In order to precisely determine the gear shift and lock-up engagement points based on the driving mode selected, the control module receives and processes information about the following:

- Selected gear position - from the gear-shift position sensor
- Selected driving mode economy/sport - reactive function programmed in the control module which is controlled by the speed at which the accelerator pedal (AP) is depressed. Quick "pedal movement" = sport mode. Winter (W) mode is activated using a switch on the gear selector assembly
- Vehicle speed - from the brake control system via the Controller area network (CAN)
- Transmission input shaft rpm - from the transmission speed sensor
- The transmission output shaft rpm - from the transmission output speed sensor
- The engine speed (RPM) and torque and throttle opening - from the engine management system via the Controller area network (CAN)
- If the brake pedal is depressed and to what extent - from the brake control system via the Controller area network (CAN)
- If the accelerator pedal (AP) is depressed and to what extent - from the engine management system via the Controller area network (CAN)
- Transmission fluid temperature - from the temperature sensor in the transmission
- Engine coolant temperature - from the engine control module (ECM) via the Control area network (CAN).

COMPONENTS

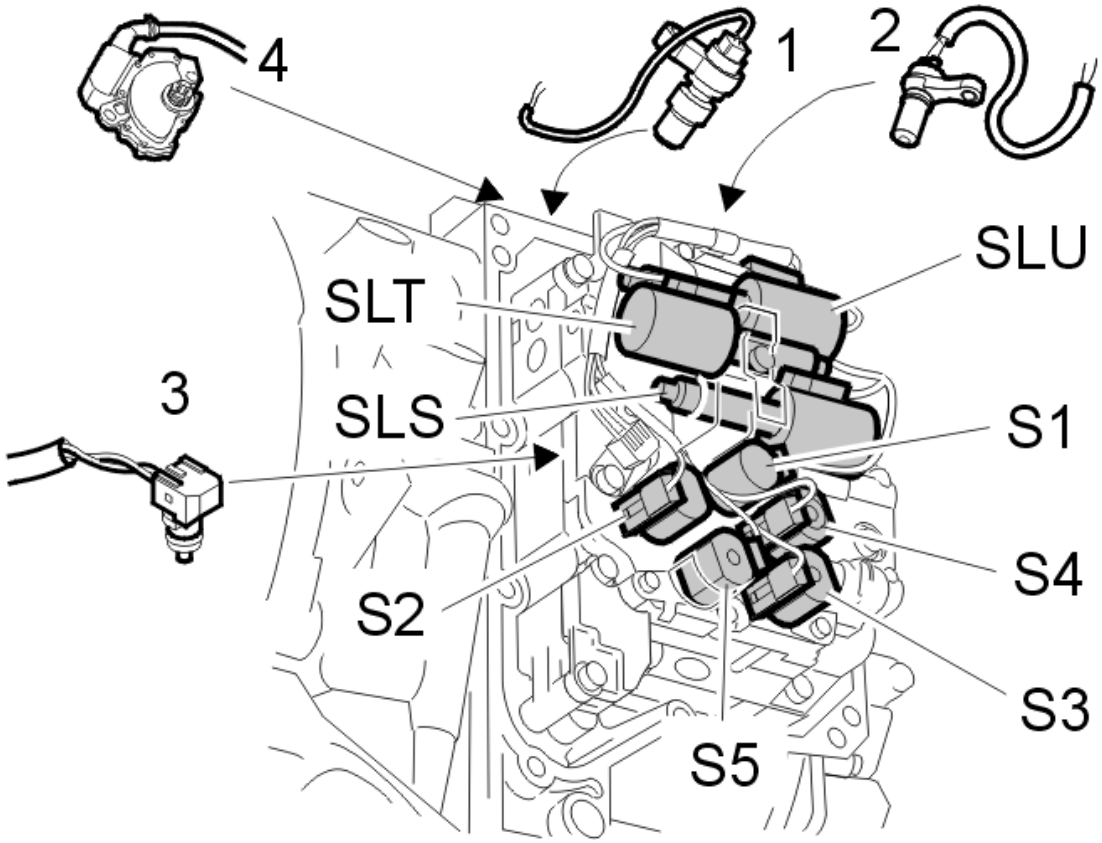

Fig. 197: Identifying Transmission Control Components
Courtesy of VOLVO CARS CORPORATION

The following components are included in the control system for automatic transmissions:

- Transmission control module (TCM) - Controls activation and deactivation of the solenoids by processing the signals from components such as the transmission input and output speed sensors and the temperature sensor. Also stores adaptive data as well as diagnostic trouble codes (DTCs) and frozen values for diagnostics
- Shift solenoid, S1 - Controls shifting in the transmission
- Shift solenoid, S2 - Controls shifting in the transmission
- Shift solenoid, S3 - Controls shifting in the transmission
- Shift solenoid, S4 - Controls shifting in the transmission
- Shift solenoid, S5 - Controls shifting in the transmission
- Lock-up solenoid, SLU - Controls the lock-up function and is also used for certain shifts
- Line pressure solenoid, SLT - Controls the transmission line pressure and neutral control
- Line pressure solenoid, SLS - Controls the transmission shifting pressure and is activated for certain gears
- Transmission input speed sensor (input shaft speed) (1) - Provides the transmission control module (TCM) with information about the input shaft speed from the engine
- Speed sensor (output shaft speed) (2) - Provides the transmission control module (TCM) with information about the output shaft speed from the transmission
- Oil temperature sensor (3) - Provides the transmission control module (TCM) with information about the oil temperature of the transmission
- Gear-shift position sensor (4) - Provides the transmission control module (TCM) with information about the selected gear position
- Gear selector module (GSM) - Provides the transmission control module (TCM) with information about the Geartronic mode and winter mode (W) amongst others.

SIGNALS

The table below summarizes the input signals to and output signals from the transmission control module (TCM). The signal types are divided into directly connected signals, serial communication and Controller area network (CAN) communication. The following illustration displays the same information with the Volvo component designations.

Input signals	Output signals
Directly connected: **Speed sensor, input shaft** (7/61). Provides information about the transmission input speed. Use to calculate the shifting process and to run diagnostics for the hydraulic/mechanical functions in the transmission. **Speed sensor, output shaft** (7/62). Provides information about the transmission output speed. Use to calculate the vehicle speed and to run diagnostics for the hydraulic/mechanical functions	**Directly connected:** (power supply unless otherwise stated) **Shift solenoids, S1-S5** (8/38-39, 8/72-74). The transmission control module (TCM) checks which gear is active by activating the solenoids in different patterns. **Lock-up solenoid, SLU** (8/40). Adjusts the line pressure to a lock-up pressure. Also used for certain shifts. **Line pressure solenoid, SLS** (8/41). Adjusts the line pressure to a shift pressure and is activated for

in the transmission. **Oil temperature sensor** (7/74). Provides information about the transmission oil temperature. **Gear-shift position sensor** (3/71). Provides the transmission control module (TCM) with information about the selected gear position of the transmission. Enables starting only in position P and N. Four trailing contacts are grounded in a unique pattern for each gear.	certain gears. **Line pressure solenoid, SLT** (8/71). Adjusts the linear line pressure when shifting.
Via serial communication: **Gear selector module (GSM)** (3/156). Provides data about the status of the winter (W) mode button and the control signal during geartronic shifting.	**Via serial communication:** **Gear selector module (GSM)** (3/156). Controls the solenoid for the shift-lock function, 8/36. Activated by a signal from the central electronic module (CEM).
Via Controller Area Network (CAN): **Electronic throttle module (ETM)** (4/50) /**Electronic throttle unit** (6/120) via the engine control module (ECM) (4/46): • Throttle opening, used to calculate gear changes. Sport mode and kick-down • Accelerator pedal (AP) position, used to calculate gear-shift timing. **Steering wheel module (SWM)** (3/130), via the central electronic module (CEM) (4/56). Cruise control, used to calculate acceleration depending on the position of the Resume and Set buttons. **Brake control module (BCM) / ABS control module** (4/16). Provides information about the vehicle speed and also the difference in speed between the left and right-hand wheels. Prevents upshifting if the difference in speed is above 40 km/h to protect the differential in the transmission. **Engine control module (ECM)** (4/46): • Stop lamp switch ON/OFF, used during torque converter lock-up • Engine coolant temperature (ECT), used for diagnostics for the transmission temperature sensor and for catalytic converter start-up (Cat-start) • Engine speed (RPM) >400 rpm = engine running. Used to start the transmission oil pressure and diagnostic functions	**Via Controller Area Network (CAN):** **Brake control module (BCM) / ABS control module** (4/16): • Current gear, used to transmit a signal not to regulate when shifting • Vehicle speed, used as back-up. **Engine control module (ECM)** (4/46): • Transmission temperature, used to compensate increased load at low oil temperatures • Selected gear, used by the engine so that the engine can compensate for different loads • Lock-up, used by the engine so that the engine can compensate for different loads • Next gear planned by the transmission control module (TCM), used by the engine so that the engine can compensate for different loads • The request about reduced engine torque when shifting, the engine reduces the engine torque when shifting • Torque limiting request, the engine limits the engine torque, depending on the current gear and if winter mode (W) is selected • Current gear selector lever position. Used to show the lever position in the driver information module (DIM) • Lights the malfunction indicator lamp (MIL)

• Engine speed (RPM), used to check the slipping rate of the torque converter and the pressure build up, affecting the shifting comfort • Kick-down. If the accelerator pedal (AP) is depressed and the throttle is wide open the engine control module (ECM) transmits a signal to the transmission control module (TCM) about kick-down • Current engine torque, used to check the line pressure.	in the driver information module (DIM). Checking the malfunction indicator lamp (MIL), lamp lights in the event of emission related faults. **Driver information module (DIM)** (5/1): • Current gear selector lever position. Used to show the lever position in the driver information module (DIM) • Via the central electronic module (CEM), checking the warning lamps. The warning lamp lights orange in the event of a fault • Via the central electronic module (CEM), text message in the driver information module (DIM). The driver can receive up to five error messages from the transmission control module (TCM). **Rear electrical module (REM)** (4/58). The transmission control module (TCM) transmits signals via the central electronic module (CEM) to light the back-up (reversing) lamp.

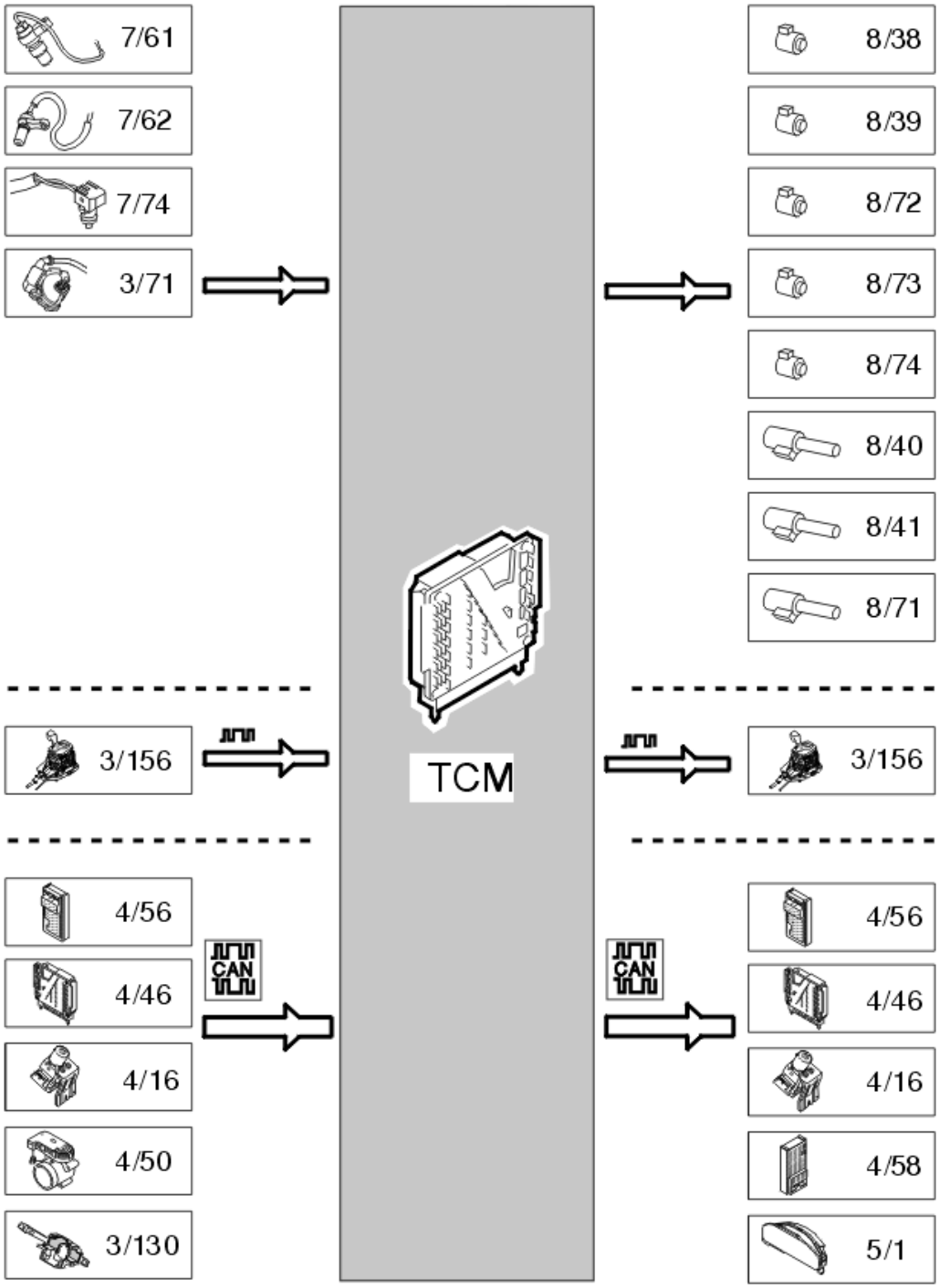

Fig. 198: Identifying Transmission Control Module Input And Output Signals
Courtesy of VOLVO CARS CORPORATION

TRANSMISSION CONTROL MODULE (TCM) DIAGNOSTIC FUNCTIONS

GENERAL

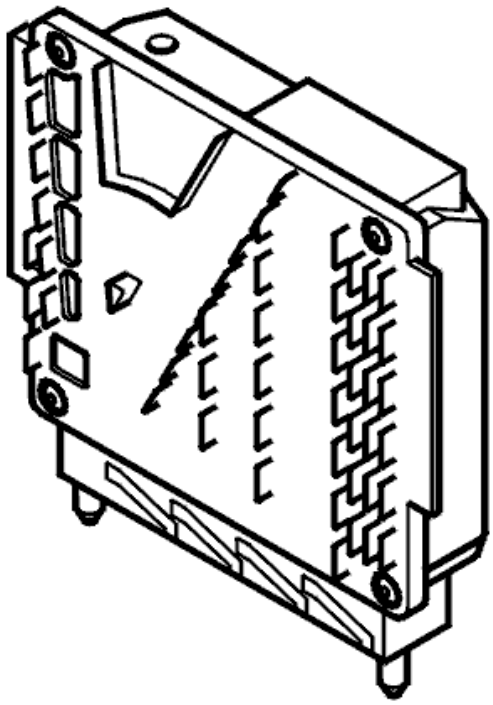

Fig. 199: Identifying Transmission Control Module
Courtesy of VOLVO CARS CORPORATION

The control module has a built-in diagnostic system, the Volvo on-board diagnostic (OBD) system. This system continuously monitors its own system and the input and output signals.

DIAGNOSTIC TROUBLE CODES (DTCS)

The control module will store a diagnostic trouble code (DTC) if it detects a fault. If a fault disappears for any reason after the diagnostic trouble code (DTC) has been permanently stored in the control module, information about the fault remains stored in the control module.

READING AND ERASING DIAGNOSTIC TROUBLE CODES (DTCS)

Stored diagnostic trouble codes (DTCs) can be read off and erased using this function.

Diagnostic trouble codes (DTCs) can only be erased when all diagnostic trouble codes (DTCs) have been read at least once.

READING OFF INPUT AND OUTPUT SIGNALS

Using this function, the status of the control module input and output signals can be continuously read off.

For further information about parameters, see **DESCRIPTION OF PARAMETERS** .

ACTIVATING COMPONENTS

This function allows components to be activated so that their functions can be checked.

For further information about activations, see **DESCRIPTION OF ACTIVATIONS** .

READING OFF THE CONTROL MODULE IDENTIFICATION

VIDA identifies the control modules by reading off a number of codes from the control module memory.

The codes contain the following information about the control module:

- the hardware P/N (control modules without software)
- the hardware serial number (control modules without software)
- the software P/N
- the diagnostic software P/N

TRANSMISSION CONTROL MODULE (TCM) (TF-80SC; 2007-2012)

DESIGN

CONTROL MODULE

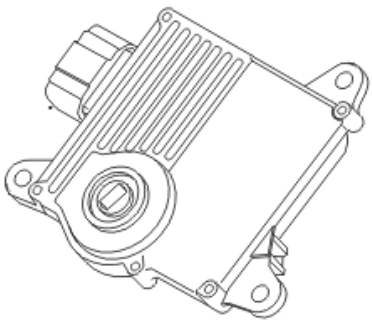

Fig. 200: Identifying Control Module
Courtesy of VOLVO CARS CORPORATION

The Transmission Control Module (TCM) is integrated with the gear position indicator as one unit. The unit is fitted in the top side of the transmission housing, on the gear selector shaft. The control module's connector is directly connected to the transmission.

GEAR POSITION INDICATOR

The gear position indicator is integrated with the Transmission Control Module as one unit.

The gear position indicator informs the Transmission Control Module on the gear selected, and whether reverse gear is engaged to light the reversing lamp. The gear position indicator contains a permanent magnet and a linear Hall sensor. The gear position indicator creates a signal voltage of between 0 and 5 V which equates to current gear selector lever position.

The gear position indicator can be diagnosed.

Voltage level for the different gear positions

SOLENOID AND

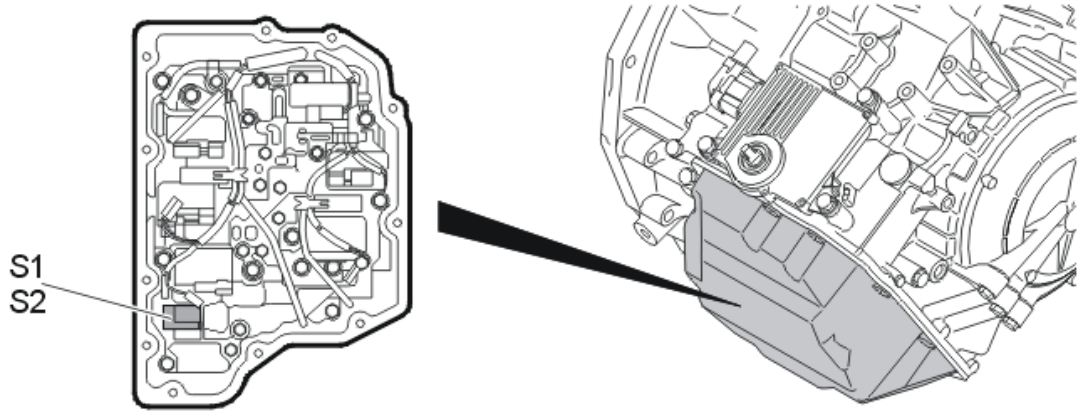

Fig. 201: Identifying S1 & S2 Solenoids In Transmission Control System
Courtesy of VOLVO CARS CORPORATION

The solenoids and S are located in the transmission control system, which is fitted on the front edge of the transmission. The solenoids are the on/off type and consist of an electrical coil that controls a hydraulic valve. The solenoids are supplied 12 V via the transmission control module (TCM) and are grounded in the control system. The solenoids control shifting and the transmission control module (TCM) activates the solenoids with engine braking for 1st gear.

The solenoids can be diagnosed.

LOCK-UP SOLENOID,

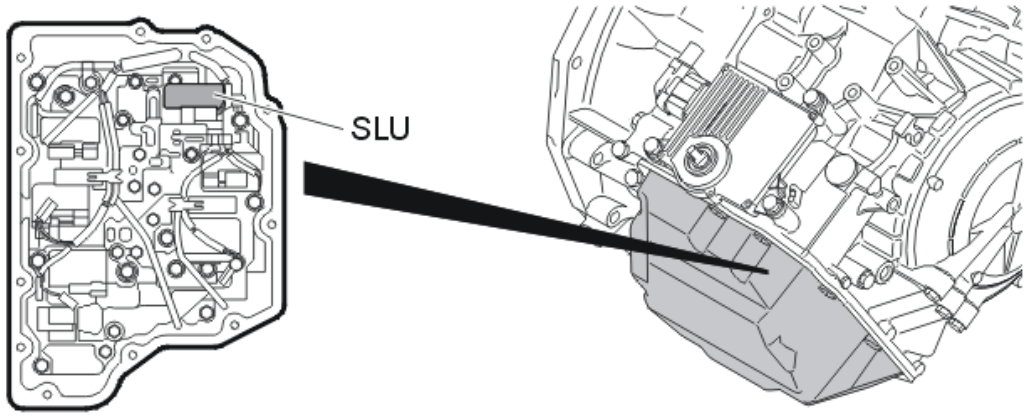

Fig. 202: Identifying SLU Solenoid In Transmission Control System
Courtesy of VOLVO CARS CORPORATION

The lock-up solenoid is located on the transmission control system, which is fitted on the front edge of the transmission. The lock-up solenoid consists of an electrical coil that controls a hydraulic valve. The solenoid is controlled with a pulse width modulated voltage and is grounded via the transmission control module. The control module regulates the lock-up engagement of the torque converter. During lock-up, the solenoid is pulsed in, which makes lock-up engagement gentle. The solenoid allows the torque converter to work in one of three modes: "open", "controlled slippage" and "locked". The solenoid has a linear hydraulic function.

The solenoid can be diagnosed.

LINEAR PRESSURE SOLENOID,

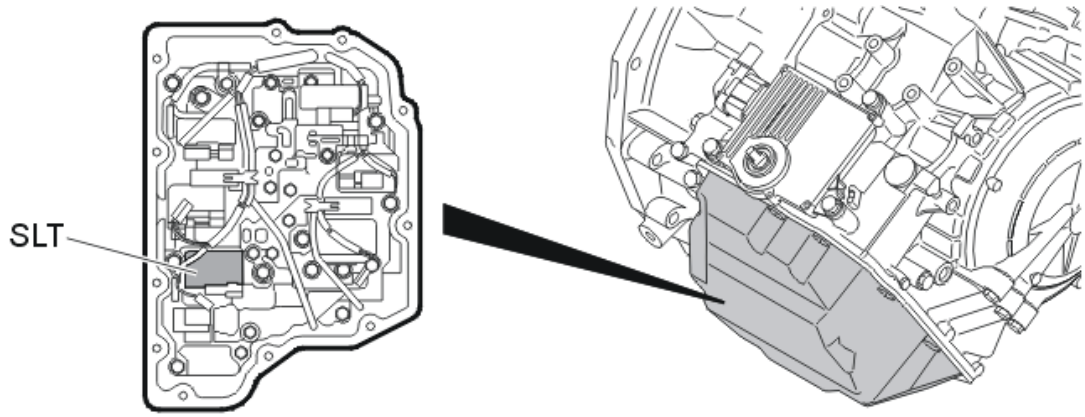

Fig. 203: Identifying SLT Solenoid In Transmission Control System
Courtesy of VOLVO CARS CORPORATION

The linear pressure solenoid,, is located in the transmission control system, which is fitted on the front edge of the transmission. The linear pressure solenoid,, consists of an electrical coil that controls a hydraulic valve. The solenoid is controlled with a pulse width modulated (PWM) voltage and is grounded via the transmission control module. The solenoid has a linear hydraulic function. The hydraulic valve is controlled by the varying current resulting from the current pulse ratio. With a high pulse ratio, i. e. high current strength, the system pressure is low. With a low pulse ratio, i. e. low current strength, the system pressure is high. In the event of an open circuit the system pressure is at a maximum, resulting in hard shifting. The hydraulic valve is then fully open.

The solenoid can be diagnosed.

LINEAR PRESSURE SOLENOID AND

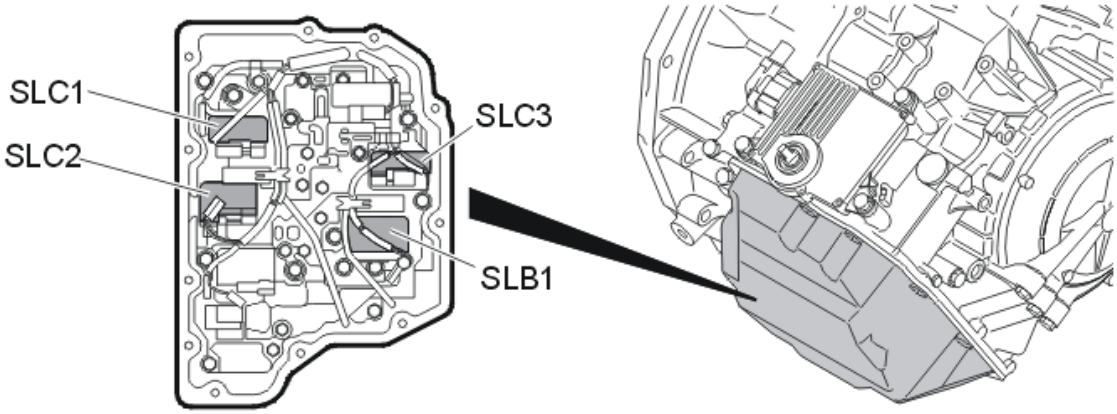

Fig. 204: Identifying Linear Pressure Solenoids In Transmission Control System
Courtesy of VOLVO CARS CORPORATION

The linear pressure solenoids and are located in the transmission control system, which is fitted on the front edge of the transmission. The designation of the solenoid is linked to the component (clutch/brake band) that the solenoid controls. The linear pressure solenoids consist of an electrical coil that controls a hydraulic valve. The solenoids are controlled with a pulse width modulated (PWM) voltage and are grounded via the transmission control module (TCM). The solenoids have a linear hydraulic function. The hydraulic valves are controlled by the varying current resulting from the current pulse ratio. With a high pulse ratio, i. e. high current strength (approx. 1 A), the system pressure is low. With a low pulse ratio, i. e. low current strength, the system pressure is high. In the event of an open circuit the system pressure is at a maximum, resulting in hard shifting. Here, the hydraulic valve is fully open.

The solenoids can be diagnosed.

SPEED SENSOR, INPUT SHAFT

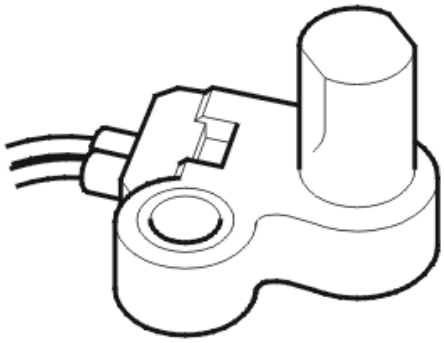

Fig. 205: Identifying Input Shaft Speed Sensor
Courtesy of VOLVO CARS CORPORATION

The speed sensor for the input shaft is located inside the gearbox. The sensor is a so-called "active sensor" (Hall sensor) and is supplied with 12 V power. When the pulse wheel on clutch C2 rotates the sensor generates a pulsed current (square wave), where the strength of the current depends on the position of the pulse wheel. The signals from the coil in the sensor are then acted on by magnetic-sensitive resistance, which means that the

output signal is a current which fluctuates between 7 mA and 14 mA, and whose frequency increases with speed. The Transmission Control Module (TCM) calculates transmission speed using the signal from the sensor.

The Transmission Control Module (TCM) uses information on input shaft speed for:

- calculating how much torque reduction shall be requested from the Engine Control Module (ECM) with gearshifting
- comparing engine speed with input shaft speed to calculate the slipping speed of the torque converter
- calculating gearshift timing
- calculating engagement and disengagement of the lock-up function
- comparing the signal with the signal from the transmission speed sensor for the output shaft, for calculating the current gear ratio. This is performed to identify whether the value corresponds with the expected gear ratio.

The speed sensor for the input shaft can be diagnosed.

SPEED SENSOR, OUTPUT SHAFT

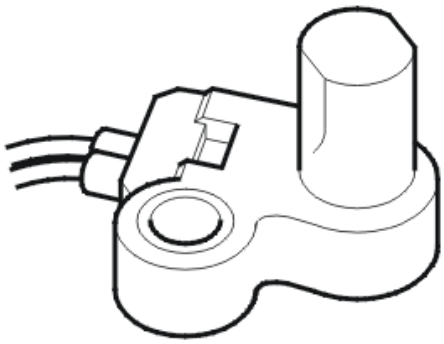

Fig. 206: Identifying Input Shaft Speed Sensor
Courtesy of VOLVO CARS CORPORATION

The speed sensor for the output shaft is located inside the gearbox. The sensor provides a signal to the Transmission Control Module (TCM) on vehicle speed. The sensor is a so-called "active sensor" (Hall sensor) and is supplied with 12 V power. When the pulse wheel rotates (the wheel for shiftlock), the sensor generates a pulsed current (square wave), where the strength of the current depends on the position of the pulse wheel. The signals from the coil in the sensor are then acted on by magnetic-sensitive resistance, which means that the output signal is a current which fluctuates between 7 mA and 14 mA, and whose frequency increases with speed. The Transmission Control Module (TCM) uses information on output shaft speed for:

- calculating how much torque reduction shall be requested from the Engine Control Module (ECM) with gearshifting
- comparing engine speed with output shaft speed to calculate the slipping speed of the torque converter
- calculating gearshift timing
- calculating engagement and disengagement of the lock-up function

- comparing the signal with the signal from the transmission speed sensor for the input shaft, for calculating the current gear ratio. This is performed to identify whether the value corresponds with the expected gear ratio.

The speed sensor for the output shaft can be diagnosed.

OIL TEMPERATURE SENSOR

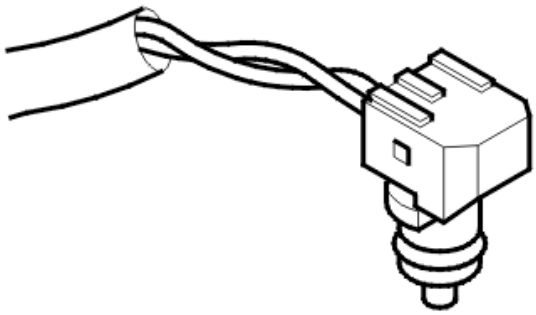

Fig. 207: Identifying Oil Temperature Sensor
Courtesy of VOLVO CARS CORPORATION

The temperature sensor is the NTC type. The temperature sensor is located on the transmission control system inside the side cover and measures the temperature of the transmission oil in the sump. The temperature sensor is an integrated part of the cable harness. The temperature sensor is supplied with 5 V and is grounded via the Transmission Control Module (TCM). By measuring the voltage drop over the sensor's NTC resistor the control module can determine the temperature of the transmission oil. The Transmission Control Module (TCM) uses the information on transmission oil temperature for:

- calculating transmission gearshift timing
- calculating engagement and disengagement of the lock-up function.

The Transmission Control Module (TCM) stores the time for which the temperature has been within a certain temperature range and if a certain temperature and time has been exceeded, then a diagnostic trouble codes (DTC) is generated to indicated that an oil change is necessary.

The temperature sensor can be diagnosed.

GEAR SELECTOR MODULE (GSM)

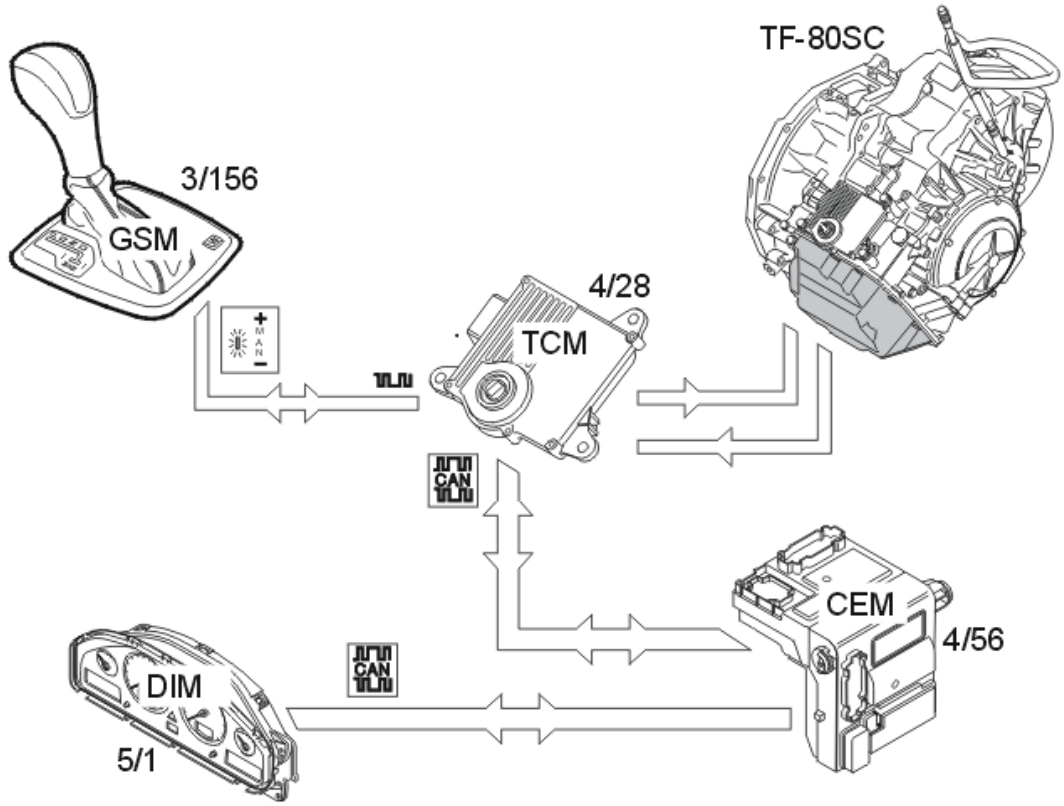

Fig. 208: Identifying Gear Selector Module (GSM)
Courtesy of VOLVO CARS CORPORATION

The gear selector assembly is located in the tunnel console and is mechanically connected to the transmission by a cable which moves the shuttle valve in the transmission control system. The Gear Selector Module (GSM) is located on the top panel of the gear selector assembly. The Gear Selector Module (GSM) is supplied with power from the Central Electronic Module (CEM). The Gear Selector Module (GSM) communicates with the Transmission Control Module (TCM) via serial communication, to light up gear position indication amongst other things. Gear position indication consists of a row of LEDs in the top panel of the gear selector assembly.

The Central Electronic module (CEM) has a cable which is directly connected to the Gear Selector Module (GSM) to control the shiftlock solenoid. The supply of power and ground for the solenoid are directly connected to the Gear Selector Module (GSM).

The switch for winter program (W) is located on the top panel of the gear selector assembly. Upon activation the switch sends a request to activate the winter program (Winter mode) to the Transmission Control Module. The Transmission Control Module then determines whether or not the winter program is possible.

The Gear Selector Module can be diagnosed. In the event of a fault a signal on fault status is sent to the Transmission Control Module which then stores any diagnostic trouble codes.

SHIFTLOCK

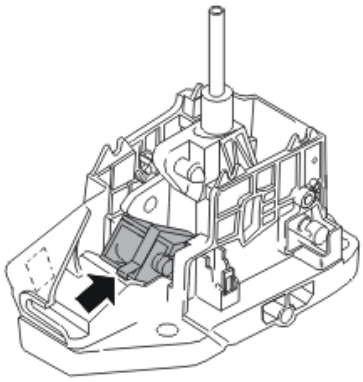

Fig. 209: Identifying Shiftlock
Courtesy of VOLVO CARS CORPORATION

To prevent the gear selector from being unintentionally shifted out of, the vehicle is equipped with an electronic shiftlock. This blocks the gear selector lever's retaining pin in the lock segment, holding the gear selector in the position. The gear selector can only be moved from to another gear position when the ignition is on and the brake pedal is depressed. The central electronic module detects the brake pedal position via a direct connection to the brake pedal sensor. It then sends a signal to the gear selector module to deactivate the electromagnetic solenoid in the gear selector assembly. The solenoid lock pin is pulled in and it is possible to depress the catch in the gear selector lever to select another gear. If the ignition key is in "0", the solenoid is deactivated. In this position, the gear selector is manually locked via the keylock function.

KEYLOCK

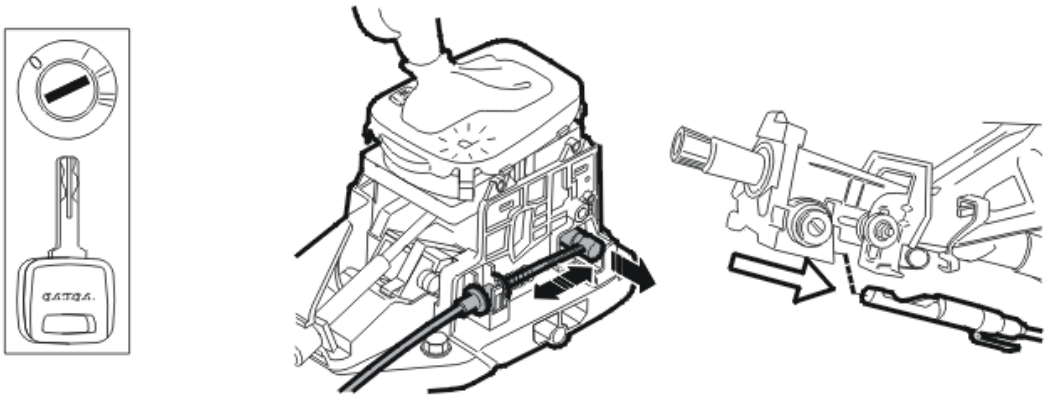

Fig. 210: Identifying Keylock & Mechanical Link
Courtesy of VOLVO CARS CORPORATION

A lock and safety function is mechanically linked to the ignition switch by a cable. The keylock is controlled by the lock piston position in the ignition switch and by the gear selector lever position. This means that the ignition key can only be removed from the ignition switch if the gear selector lever is in. This also means that the gear selector lever can only be moved from if the ignition key has been turned to position I. The keylock is only available in combination with shiftlock. In order to prevent the gear selector from moving, the central electronic module electrically locks the shiftlock solenoid between key positions I and II since the transmission control module is not supplied power until key position II.

GEAR SELECTOR ASSEMBLY

Gear selector assembly with Geartronic function

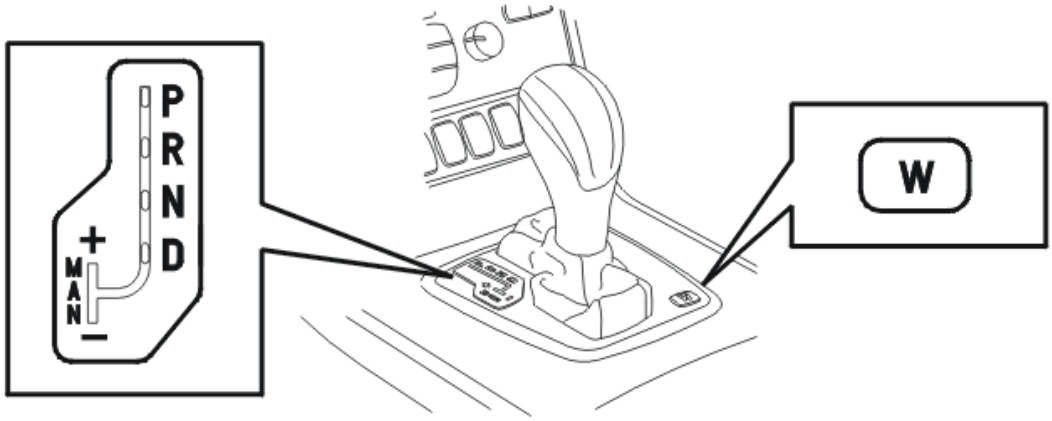

Fig. 211: Identifying Gear Selector With Geartronic Function
Courtesy of VOLVO CARS CORPORATION

The gear selector assembly of Geartronic has a unique design and function. In addition to the lever positions it also has a mode for "manual" shifting.

The gear selector lever for Geartronic has the following functions:

- : Park.
- : Reverse.
- : Neutral
- : Automatic shifting between all gears.
- : Manual shifting. Three Hall sensors are fitted on the gear selector module. A permanent magnet on the gear selector lever acts on the sensor output signals to the gear selector module

DIAGNOSTIC FUNCTIONS

GENERAL

The control modules have a built-in diagnostic system, Volvo Diagnostics, which continuously monitors its own system as well as the input and output signals.

DIAGNOSTIC TROUBLE CODES

If the control module detects a fault then it stores a diagnostic trouble code. If a fault disappears for any reason after a diagnostic trouble code has been permanently stored in the control module then the information on the diagnostic trouble code remains in the control module.

READING AND ERASING DIAGNOSTIC TROUBLE CODES

Stored diagnostic trouble codes can be read off and erased using this function.

Diagnostic trouble codes can only be erased once all the diagnostic trouble codes have been read off at least once.

READING OFF INPUT AND OUTPUT SIGNALS

The status for the control module input and output signals can be continuously read off using this function.

ACTIVATING COMPONENTS

Components can be activated for function checking using this function.

READING OFF THE CONTROL MODULE IDENTIFICATION

The control module can be identified by means of reading off a number of codes.

- hardware P/N
- hardware serial number
- software P/N
- diagnostic software P/N

RESETTING THE ADAPTATION VALUES

There are three functions in the software for the Transmission Control Module for adaptation which can be activated:

- Resetting adaptation. Must be performed after replacing an internal component or the whole transmission.
- Resetting the gauge for oil degradation.
- Adaptation of gear selector lever in neutral position.

CALIBRATING THE GEAR POSITION INDICATOR

When checking or replacing the control module the gear position indicator must be calibrated so that the gear position indicator adopts the correct gear position.

DOWNLOADING SOFTWARE AND REPLACING THE CONTROL MODULE

New software can be downloaded into the Transmission Control Module. When software is ordered the software and hardware of the vehicle are compared with Volvo's central database. If the comparison corresponds then the software is downloaded into the control module.

If the comparison between the car and Volvo's central database does not correspond, then the database is updated with the vehicle's configuration. When this is complete the software is downloaded.

FUNCTION

REGULATING THE SOLENOIDS WHEN GEARSHIFTING

Shifting is regulated by the transmission control module activating the solenoids in a specific pattern. The solenoids and control which gear is engaged. The solenois also control how engagement occurs by adapting hydraulic pressure. The basic parameters for the various shift points are accelerator pedal position and vehicle speed while shift quality is determined by torque control.

The pressurizing of clutches and brakes can be adapted by means of reading off the changes in the rotation speed of the transmission input shaft during the gearshift processes and comparing them with the calculated values in the Transmission Control Module.

Two different shift patterns are available: normal mode and winter mode.

In normal conditions the gearshifts take place at relatively low speeds in order to reduce fuel consumption. With rapid accelerator pedal movements the Transmission Control Module automatically changes over to sport mode.

GEARSHIFT PATTERNS

Gear	Activated solenoid					
	OFF	OFF	*ON*	*ON*	*ON*	*ON*
	OFF	OFF	*ON*	*ON*	OFF	*ON*
	OFF	OFF	*ON*	*ON*	*ON*	*ON*
	OFF	OFF	*ON*	*ON*	*ON*	*ON*
	OFF	OFF	OFF	*ON*	*ON*	*ON*
*)	*ON*	*ON*	OFF	*ON*	*ON*	*ON*
	OFF	OFF	OFF	*ON*	*ON*	OFF
	OFF	OFF	OFF	*ON*	OFF	*ON*
	OFF	OFF	OFF	OFF	*ON*	*ON*
	OFF	OFF	*ON*	OFF	OFF	*ON*
	OFF	OFF	*ON*	OFF	*ON*	OFF

*) with engine braking

REGULATING THE LOCK-UP FUNCTION

Regulating the lock-up function takes place by means of the Transmission Control Module activating the lock-up solenoid. The engagement takes place by means of the Transmission Control Module controlling the lock-up solenoid linearly and adapting the hydraulic pressure. The basic parameters for engagement are the engine speed, accelerator pedal position and the rotation speed of the transmission input and output shafts. The pressurizing of the lock-up function can be adapted by means of reading off the changes in the rotation speed of the transmission input shaft during the gearshift processes and comparing them with the calculated values in the Transmission Control Module.

Two different lock-up functions are integrated: locked lock-up and slipping lock-up.

Locked lock-up

In normal conditions lock-up takes place at relatively low speeds in order to reduce fuel consumption.

Slipping lock-up

Is a function which provides gentler engagement with dampened vibration and lower noise when using the lock-up gear. When this function is activated, lock-up is active but not fully applied.

The requirements for the function to be activated include the following:

- gear selector in or
- gear 2, 3, 4, 5 or 6
- transmission input speed is 1000 rpm
- transmission oil temperature is 20 - 120 °C.

Due to the slipping of the torque converter, between 50-200 rpm, the friction properties of the transmission oil are very important. The transmission oil's properties therefore differ from conventional ATF oil properties. Always use transmission oil specified for this transmission, otherwise the function of the transmission can be impaired.

GEARSHIFT PROGRAM

Normal program

When driving with normal accelerator pedal application the Transmission Control Module uses a preset gearshift program, optimized to shift for economical driving. This gearshift program is designed for "normal" driving which combined provides early upshifting and lock-up. The gearshift program automatically adapts to different driving cases such as driving uphill with a trailer or driving at high altitude. In addition, transmission oil pressure is adapted to provide gentle engagement of the gears.

Winter program

Winter mode is selected with the button on the top panel of the gear selector assembly. Winter mode makes it possible to start in a high gear to prevent wheel spin on a slippery surface. The program is also suitable for other difficult situations where the driver wishes to limit gear selection. When the gear position is the vehicle starts in 3rd gear. Automatic shifting takes place between 3rd, 4th, 5th and 6th gear.

When the winter program is selected a W is lit in the combined instrument panel.

If kickdown is activated in winter mode then the transmission uses all gears for optimum performance.

Sport mode - Only S60R and V70R

On R-models, the function is replaced by. Sport mode is activated with button on the top panel of the gear selector assembly. The program adapts shift points to provide the best possible performance. Downshifting occurs quicker at lower throttle application.

The function can also be activated automatically if the button on the dashboard is pressed.

OTHER PROGRAMS

Adaptation

The Transmission Control Module (TCM) monitors each gearshift to achieve consistent and gentle gearshifting in all driving conditions. This is achieved by means of the control module either lowering or raising the hydraulic system pressure which is used during the gearshift itself. The changes in pressure level are stored in the control module memory when the vehicle is shut down, and are retrieved when starting. This provides improved gearshift comfort and improved service life for the transmission.

Complete adaptation applies when the following conditions have been fulfilled:

- the position of the accelerator pedal is constant
- oil temperature between 65 °C and 110 °C.

Driving uphill

The Transmission Control Module (TCM) can change the gearshift pattern slightly when driving uphill. This is to avoid close gearshifts.

Neutral control (only available on certain models)

This function is activated when the driver stops the car and the car is stationary, at traffic lights for example. The transmission control module (TCM) then disengages the C1 clutch which releases the forward drive of the transmission and reduces the load on the engine. The function improves fuel consumption and reduces vibrations at idle speed. When the driver releases the brake, the C1 clutch engages and drive is resumed.

The following conditions must be met in order for the neutral function to activate:

- gear selector in position D
- oil temperature above + 10 °C
- throttle position less than 3 %
- brake pedal depressed
- speed 0 km/h
- engine speed less than 1500 RPM.

GEARSHIFTING WITH GEARTRONIC

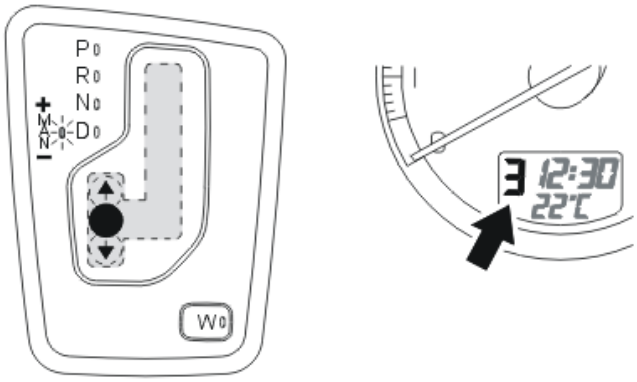

Fig. 212: Locating Geartronic Gearshift Indicator
Courtesy of VOLVO CARS CORPORATION

When the gear selector is moved to Geartronic mode, the automatic transmission is still hydraulically in. If the gear selector is moved up (+), the gear selector module sends a signal to the transmission control module (TCM) to upshift. If the gear selector is moved down (-), a signal is sent to the transmission control module to downshift. When the gear selector is in mode, the driver information moduel will change its symbol from to the currently engaged gear, such as 3. A signal is also sent to the gear selector moduel to light the LED for and deactivate other LEDs. The transmission control moduel (TCM) determines whether the shift is possible. The driver information module (DIM) indicates the current gear. If shifting is permitted, the various solenoids are activated in the pattern specific to the relevant gear.

In certain situations however the Transmission Control Module (TCM) takes over the gearshift decisions. Amongst other things, the following applies:

- When stationary, only gears 1, 2 and 3 can be selected. Gear 4 can be selected at speeds above 40 km/h and gear 5 at speeds above 55 km/h, and gear 6 at speeds above 70 km/h.
- Automatic downshifting takes place on all gears when below a certain speed. Example: Gear 2 is selected. Automatic downshifting then takes place from gear 2 to gear 1 at 2 km/h if the speed before this exceeded 25 km/h. Otherwise gear 2 remains engaged. However, situations can arise where gear 3 remains engaged despite the vehicle stopping.
- A manual upshift is required after an automatic downshift. Kickdown is not available in Geartronic mode.
- Permitted speeds for the manual downshifts equate to those for kickdown upshifts, i. e. an engine speed of approx. 6000 rpm.
- If transmission temperature becomes too high then the Transmission Control Module takes over the gearshift decisions. The purpose of this is to engage a gear where lock-up is possible at the current speed.
- Lock-up is possible for gears 2, 3, 4, 5 and 6.

Other

- In mode, a signal on gear selector lever position is generated for the gear selector module (GSM) as follows: a Hall sensor is fitted on the printed circuit board for the gear selector module (GSM) for each one of the three gear selector lever positions. A permanent magnet on the gear selector lever acts on the sensor output signals to the control module. The control module can read off the position of the gear

selector lever by means of the differences in signal character.

ADAPTATION DATA

The Transmission Control Module (TCM) software includes a service for resetting adaptations that can be activated:

- Resetting adaptation - should be performed after replacing an internal component or the whole transmission.

Resetting adaptation is activated via the vehicle communication input.

GAUGE FOR TRANSMISSION OIL DATA

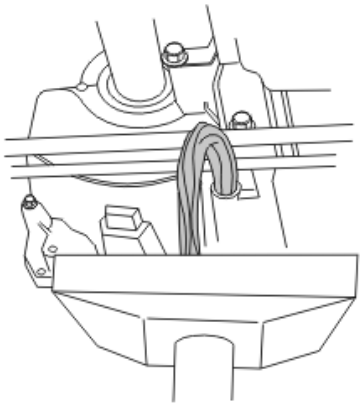

Fig. 213: Identifying Gauge For Transmission Oil Data
Courtesy of VOLVO CARS CORPORATION

There is a gauge for transmission oil quality integrated into the software for the Transmission Control Module (TCM). This gauge calculates the time for which the oil exceeds a certain temperature during a certain period. When the gauge reaches the maximum value a diagnostic trouble code (DTC) for oil change is generated in the control module. When replacing transmission oil the gauge must be reset to zero to avoid generating a diagnostic trouble code (DTC) during incorrect conditions. This applies to changing transmission oil and when changing the oil with a repair.

The resetting function is activated via the vehicle communication input.

EMERGENCY MODE IN THE EVENT OF A FAULT

When a fault has arisen in the transmission (permanent fault) and is registered by the Transmission Control Module (TCM), a help program for dealing with the fault is activated. The Transmission Control Module (TCM) then performs certain actions to protect the transmission while maintaining as much driveability as possible. Minor faults do not activate any help programs. There are different programs depending on the type of fault.

- Emergency/limp-home mode
- Failsafe action (temporary action)

Failsafe action is activated upon first detection of the fault, if the fault disappears then the system returns to normal function. Emergency mode is activated with less serious faults and Limp-home mode is activated with the most serious faults. If the fault disappears (intermittent fault) then the control module returns to normal function as soon as the ignition is next switched on.

The warning lamp in the combined instrument panel comes on, and a text message is displayed in the text window in the combined instrument panel if emergency/limp-home mode has arisen. No text is displayed when the ignition is switched on until the fault has been detected.

SYSTEM OVERVIEW

GENERAL

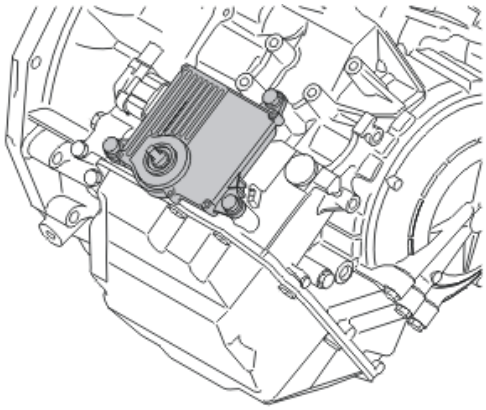

Fig. 214: Identifying Transmission Control Module (TCM)
Courtesy of VOLVO CARS CORPORATION

TF-80SC (TF-80SC AWD) is 6-speed electronically controlled automatic transmission with lock-up function on the five highest gears. The Transmission Control Module (TCM) adapts gearshifts so that the correct gear is always selected with respect to driving style, engine load, driver requirements, speed etc. This provides good fuel economy and increased comfort through gentler gearshifts and lower noise level.

The Transmission Control Module (TCM) receives information on required gear position and required driving style (driving program) from the driver. Together with signals from a number of sensors in the transmission and the engine management system, this enables the calculation of optimum gearshift timing and lock-up engagement, in contrast to a gearbox with only a hydraulic control system. The control module takes consideration of small changes in operating conditions and adapts the different transmission functions so that the correct gear is always selected in accordance with the driving program selected by the driver.

The Transmission Control Module (TCM) has an adaptive capacity intended to ensure even gearshift quality during the whole service life of the transmission.

In order to be able to determine gearshift timing and lock-up engagement precisely, based on the selected

driving program, the control module receives information on the following:

- Selected gear position - from the gear position indicator.
- Speed of transmission input shaft - from transmission speed sensor, input shaft.
- Speed of transmission output shaft - from transmission speed sensor, output shaft.
- Transmission oil temperature - from temperature sensor in the transmission.
- Engine speed and torque, and throttle opening - from Engine Control Module (ECM) via the Controller Area Network (CAN).
- Whether and how much the accelerator pedal is depressed - from Engine Control Module (ECM) via the Controller Area Network (CAN).
- Engine temperature - from Engine Control Module (ECM) via the Controller Area Network (CAN).
- Vehicle speed - from Brake Control Module (BCM) via the Controller Area Network.
- Whether and how much the brake pedal is depressed - from Brake Control Module via the Controller Area Network.

COMPONENTS

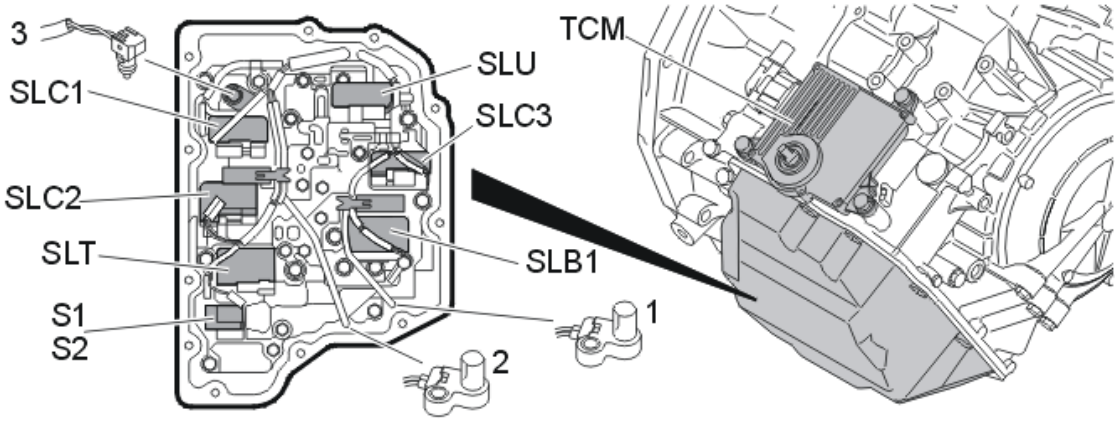

Fig. 215: Identifying Linear Pressure Solenoids In Transmission Control System
Courtesy of VOLVO CARS CORPORATION

The following components are included in the automatic transmission control system:

- Transmission Control Module - Controls activation/deactivation of the solenoids by means of processing the input signals from the transmission speed and temperature sensors. Also stores adaptive data and diagnostic trouble codes and frozen values for diagnostics.
- Gear position indicator, integrated with Transmission Control Module - Provides Transmission Control Module information on selected gear position.
- Solenoid - Controls engine braking on 1st gear.
- Solenoid - Controls engine braking on 1st gear.
- Lock-up solenoid - Controls the lock-up function and also used with certain shiftings.
- Linear pressure solenoid - Controls transmission system pressure.
- Linear pressure solenoid - Controls transmission shift pressure and also used with certain shiftings.

- Linear pressure solenoid - Controls transmission shift pressure and also used with certain shiftings.
- Linear pressure solenoid - Controls transmission shift pressure and also used with certain shiftings.
- Linear pressure solenoid - Controls transmission shift pressure and also used with certain shiftings.
- Speed sensor, input shaft (1) - Provides Transmission Control Module (TCM) information on input shaft speed from the engine.
- Speed sensor, output shaft (2) - Provides Transmission Control Module (TCM) information on output shaft speed from the transmission.
- Oil temperature sensor (3) - Provides Transmission Control Module (TCM) information on transmission oil temperature.
- Gear Selector Module (GSM) - Provides Transmission Control Module (TCM) information on Geartronic position and winter mode (W) etc.

SIGNALS

The table below summarizes the input and output signals to and from the Transmission Control Module (TCM). The signal types are divided into directly connected signals, serial communication and Controller Area Network (CAN) communication. The illustration below displays the same information with the Volvo component designations.

Input signals	Output signals
Directly connected: **Speed sensor, input shaft** (7/61): • Provides information on transmission input speed. Amongst other things, used to calculate the gearshift process, to check lock-up and to diagnose the hydraulic/mechanical function in the transmission. **Speed sensor, output shaft** (7/62): • Provides information on transmission output speed. Amongst other things, used to calculate vehicle speed, and to diagnose the hydraulic/mechanical function in the transmission. **Oil temperature sensor** : • Provides information on transmission oil temperature. The information is used to adjust gearshift timing and oil pressure.	**Directly connected:** (power supply unless otherwise stated) **Solenoids** (8/38-39): • Transmission Control Module activates the solenoids with engine braking on 1st gear. **Lock-up solenoid,** : • Adapts system pressure to a lock-up pressure. Also used with certain gearshifts. **Linear pressure solenoid,** : • Adapts linear system pressure during gearshifts. **Linear pressure solenoid,** : • Adapts system pressure to a gearshift pressure to clutch C1 and is activated with certain gearshifts.

Gear position indicator : • Provides information on selected gear position to the transmission control module. Enables starting only in and. Consists of a permanent magnet that is moved across a number of Hall elements, creating a specific voltage for each gear position.	**Linear pressure solenoid,** : • Adapts system pressure to a gearshift pressure to clutch C2 and is activated with certain gearshifts. **Linear pressure solenoid,** : • Adapts system pressure to a gearshift pressure to clutch C3 and is activated with certain gearshifts. **Linear pressure solenoid,** (8/142): • Adapts system pressure to a gearshift pressure to brake band B1 and is activated with certain gearshifts. **Gear Selector Module (GSM)** (3/156): • Controls shift-lock solenoid for the shift-lock function in the gear selector assembly. **Engine Control Module (ECM)** (4/46): • Start inhibiting. Provides the Engine Control Module (ECM) with a signal on whether or not the engine may be started.
Via serial communication: **Gear Selector Module (GSM)** : • Provides in formation on whether the gear selector is locked in postition plus information on the status of the winter mode (W) button (status of the sport mode button for). • Also provides a control signal with Geartronic shifting, and information on fault status in the Gear Selector Module (GSM) to generate diagnostic trouble codes (DTC) for faults in the Gear Selector Module (GSM).	**Via serial communication:** **Gear Selector Module (GSM)** (3/156): • The Transmission Control Module (TCM) provides the Gear Selector Module (GSM) with signals on which diodes shall be lit on the gear selector assembly panel, depending on gear position selected.
Via Controller Area Network (CAN)	**Via Controller Area Network (CAN)**

communication:
Steering Wheel Module (SWM) (3/254), via Central Electronic Module (CEM) (4/56):

- Cruise control, used when calculating acceleration, depending on Resume and Set button position.

Brake Control Module (BCM) (4/16):

- Provides information on vehicle speed and difference in speed between right and left-hand wheels. Prevents upshifting if the difference in speed is above 40 km/h, in order to protect the differential in the transmission.

Engine Control Module (ECM) (4/46):

- Stop lamp switch OFF/ON, used with torque converter lock-up.
- Engine temperature, used to diagnose the transmission temperature sensor and with the catalytic converter start function (Cat-start).
- Engine speed, more than 400 rpm = engine running. Used to start transmission oil pressure and diagnostic function.
- Engine speed. Used to check torque converter slipping speed and pressure build-up, which increases gearshift comfort.
- Kickdown, if the accelerator pedal is depressed and the throttle is fully open then the Engine Control Module (ECM) sends a signal to the Transmission Control Module (TCM) on kickdown.
- Current engine torque, used to check transmission system pressure.
- Throttle opening, used to calculate gearshifts. Sport mode and kickdown.
- Accelerator pedal position, used to calculate gearshift timing.

Suspension module (SUM) (4/84) (only applies to S60R/V70R):

communication:
Brake Control Module (BCM) (4/16):

- Current gear, used to provide the signal for no control when gearshifting.
- Vehicle speed, used as back-up.

Engine Control Module (ECM) (4/46):

- Transmission temperature, used to compensate increased load at low oil temperatures.
- Selected gear, used by the engine so that the engine can compensate for different loads.
- Lock-up, used by the engine so that the engine can compensate for different loads.
- Next gear planned by Transmission Control Module (TCM), used by the engine so that the engine can compensate for different loads.
- Request for reduction in engine torque when gearshifting, the engine reduces the engine torque when gearshifting.
- Request for torque limitation, the engine limits the engine torque, depending on current gear and whether winter mode (W) is selected.

Driver Information Module (DIM) (5/1):

- Current gear selector lever position. Used to indicate lever position in the Driver Information Module (DIM).
- Via Central Electronic Module (CEM), checking of warning lamps. Lights the general warning lamp in the event of a fault.
- Via Central Electronic Module (CEM), text message in Driver Information Module (DIM). The driver can obtain different fault messages from the Transmission Control Module (TCM).
- The Transmission Control Module (TCM) transmits a signal via the Controller Area Network (CAN) to the Engine Control

• Selected driving mode (Advanced)	Module (ECM) to light the malfunction indicator lamp (MIL) in the Driver Information Module (DIM) in the event of an emission related fault. **Central Electronic Module (CEM)** (4/56): • The Transmission Control Module (TCM) transmits a signal via the Central Electronic Module (CEM) to light the reversing lamp.

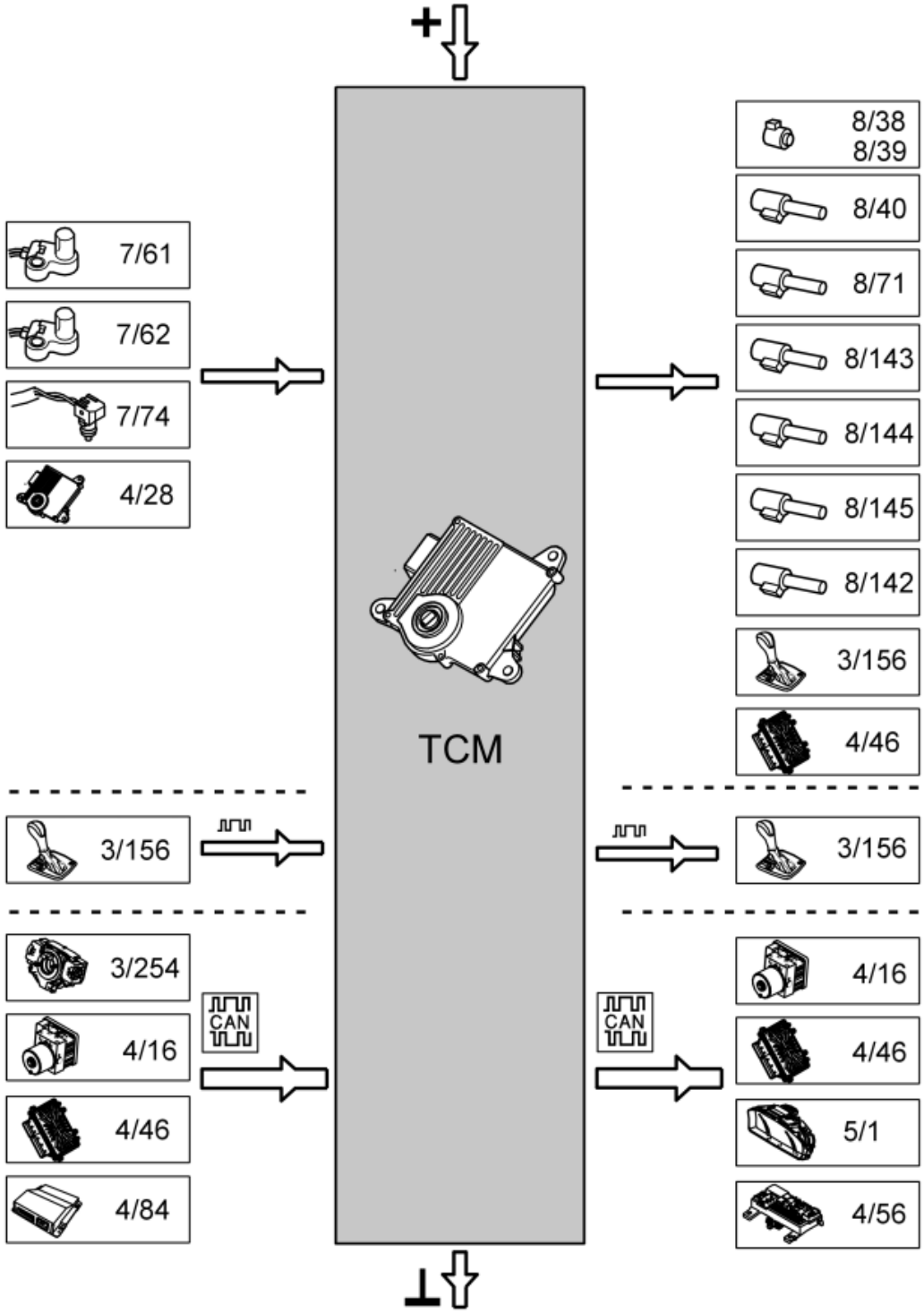
+
7/61
7/62
7/74
4/28
TCM
8/38
8/39
8/40
8/71
8/143
8/144
8/145
8/142
3/156
4/46
3/156
3/156
3/254
4/16
4/46
4/84
CAN
CAN
4/16
4/46
5/1
4/56
⊥

Fig. 216: Identifying TCM Communication Links & Components
Courtesy of VOLVO CARS CORPORATION

TRANSMISSION CONTROL MODULE (TCM) (TF-80SC AWD; 2005-2012)

DESIGN

see **DESIGN**

DIAGNOSTIC FUNCTIONS

see **DIAGNOSTIC FUNCTIONS**

DOWNLOADING SOFTWARE AND REPLACING THE CONTROL MODULE

see **DOWNLOADING SOFTWARE AND REPLACING THE CONTROL MODULE**

FUNCTION

see **FUNCTION**

SYSTEM OVERVIEW

see **SYSTEM OVERVIEW**

UPPER ELECTRONIC MODULE (2003-2004)

DESIGN

SIREN

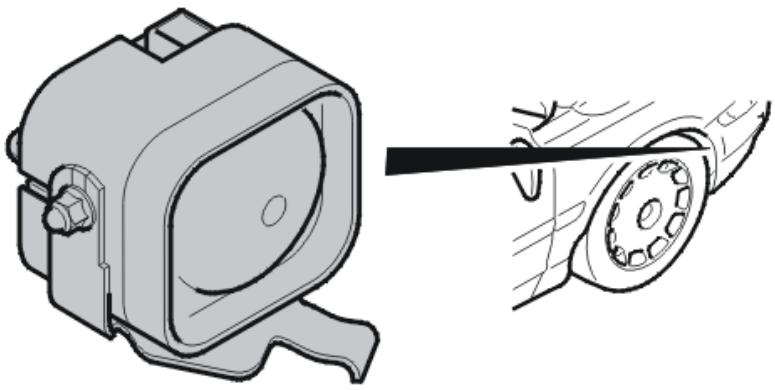

Fig. 217: Locating Siren Control Module
Courtesy of VOLVO CARS CORPORATION

Data from the siren (Siren Control Module) to the upper electronic module contains configuration and status

information. This data is carried via serial communication.

When the alarm is activated the siren sends continuous status signals to the upper electronic module.

The siren is equipped with a battery and a built-in battery charger so that it is independent of the vehicle power supply. The battery charger maintains battery voltage in the integrated battery. When the alarm is activated the power supply is monitored for the siren and serial communication between the siren and the upper electronic module. The siren sounds if the car's power supply to the siren is broken or if communication between the upper electronic module and the siren is interrupted. The battery and the battery charger in the siren cannot be changed separately. The entire siren must be replaced if it is faulty.

The siren is located in a protected position under the fender liner in the front right-hand wheel arch. The siren must be configured after replacement. Configuration is carried out using VIDA (Volvo scan tool).

The siren can be diagnosed.

SUN ROOF

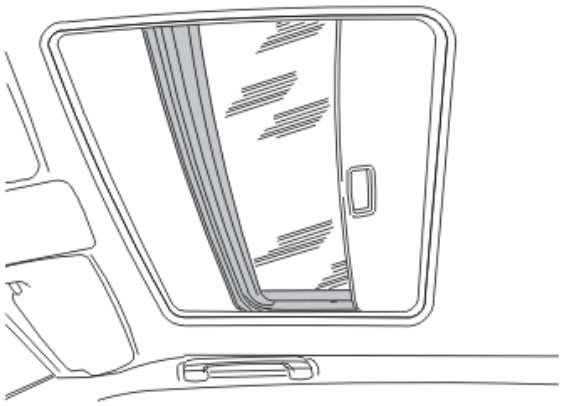

Fig. 218: Identifying Sun Roof Module
Courtesy of VOLVO CARS CORPORATION

The Sun Roof Module is operated by one switch. The switch is located in the same unit in the roof as the front reading lamps and the courtesy lighting. The sun roof can be opened, closed and tilted.

The sun roof is powered by a motor in the roof in front of the sun roof. The position of the sun roof is determined by two optical sensors.

There are diagnostics for the sun roof.

MOVEMENT SENSOR

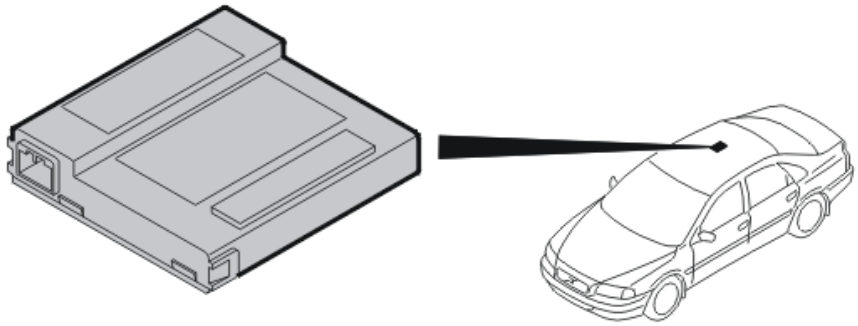

Fig. 219: Locating Mass Movement Sensor
Courtesy of VOLVO CARS CORPORATION

The Mass Movement Sensor detects movement in the passenger compartment using radio waves at 2.450 GHz. The Doppler effect principle is used to determine if the frequency of the received microwave has been modified in comparison to the transmitted microwave. Any change in frequency is interpreted as a movement in the car. When movement is detected, a trigger signal is sent to the upper electronic module which activates the alarm.

The movement sensor is located in the headlining in the center of the car. This allows the sensor to cover as large an area as possible.

There are diagnostics for the movement sensor.

RAIN SENSOR

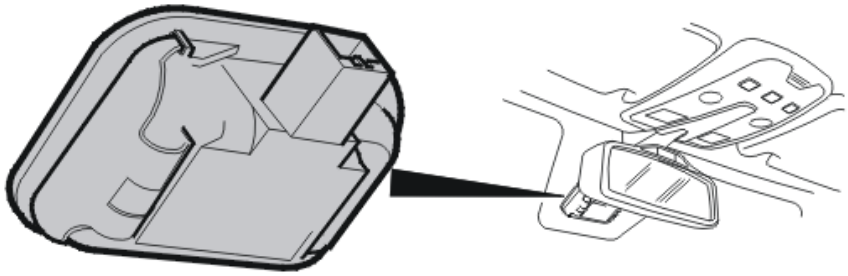

Fig. 220: Locating Rain Sensor Module
Courtesy of VOLVO CARS CORPORATION

The rain sensor module optically senses water on the windshield. An infra red beam of specific intensity lights a section of the windshield. The intensity of the reflected beam is measured and compared to the intensity of the transmitted beam. If there is water on the surface of the windshield, the beam distorts, reducing the intensity of the beam. If the beam is not reflected completely it is interpreted as rain on the windshield and the windshield wipers are started.

The signals from the upper electronic module are carried via serial communication. The rain sensor transmits the signals to the upper electronic module. These signals request a particular windshield wiper speed (depending on the amount of rain falling on the windshield), indicate that a sudden large splash has hit the windshield and register the light conditions outdoors.

The rain sensor is located in front of the rear view mirror on the inner side of the windshield. A special windshield is used on cars with rain sensors.

There are diagnostics for the rain sensor.

INTERIOR ROOF LIGHTING

Fig. 221: Identifying Interior Roof Lighting
Courtesy of VOLVO CARS CORPORATION

There are a number of lamps inside the passenger compartment. The lamps include four reading lamps and a general courtesy lamp.

The front left and front right reading lamps and the courtesy light are located in the same unit in the roof, just above the rear view mirror. The two rear reading lamps are located in the roof above the rear seat.

The five lamps transmit control signals to the control module. These signals allow the control module to determine the status of the lamps and switches This allows faults such as broken bulbs, open circuits or jammed switches to be detected.

The five control signals are distributed as input signals at the four inputs in the upper electronic module. The control signal for the courtesy lighting shares the same inputs as control signals for the front reading lamps. The rear reading lamps each have their own input.

Two different lighting times can be programmed using VIDA depending on the requirements of the customer.

- Short lighting time which is the time from when the door is unlocked or closed or from when the engine is switched off until the interior lighting goes out. The time can be set between 5 and 255 seconds. Normal setting is 30 seconds
- Long lighting time, which is the time from when a door is left open or from when a light is lit using a

button to when the interior lighting goes out. The time can be set between 0 and 255 minutes. Normal setting is 10 minutes.

There are diagnostics for all lamps in the inner roof lighting.

REMOTE CONTROL

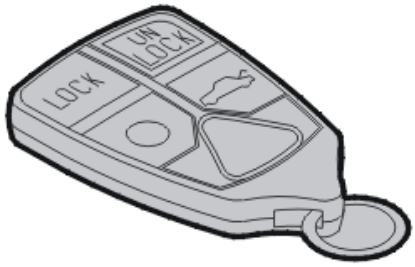

Fig. 222: Identifying Remote Control
Courtesy of VOLVO CARS CORPORATION

The remote control can be used to lock and unlock the doors, unlock the tailgate (V70 and V70XC), open the trunk lid (S80 and S60), to activate the approach lighting, and to activate the panic alarm (certain markets).

The receiver for the remote control is located in the rear view mirror and transmits signals to the upper electronic module. These signals determine:

- which function should be activated
- at which frequency the receiver receives the signal from the remote control
- which of the remote controls transmitted the signal
- the signal strength received from the remote control.

Up to six remote controls can be stored in the upper electronic module. The control module stores the identity and PIN for each remote control.

The remote control identity and PIN are also stored in the central Volvo database When replacing the upper electronic module, this data is transmitted to the car. This means that the remote controls do not need to be replaced and can be used with the new upper electronic module.

There are two different types of remote control, depending on whether the car is a late or an early model. The two variants are programmed into the control module in different ways. The early variant has an 8 digit PIN. The late variant has one 8 digit and one 16 digit PIN.

The early version and late version differ by chassis number.

	Chassis number

Model	**Early version**	**Later version**
S80	-161195	161196-
V70	-045075 (1) -047529 (2)	045076- (1) 047530- (2)
V70 XC	-003972	003973-
S60	-	All

- (1); applies to cars manufactured in production plant 1
- (2); applies to cars manufactured in production plant 2.

Information regarding at which production plant a car was manufactured can be found in the VIN number. The 7th character from the right in the VIN indicates the production plant.

If the seat and power door mirrors in the car have a memory function, these functions are affected by the remote controls which are stored in positions 1, 2 or 3. The memory functions store the seat and power door mirror settings at the time the car was locked using one of these remote controls. Next time the car is unlocked using the same remote control, the seat and the power door mirrors move to the same settings.

The remote control battery can be replaced.

REAR VIEW MIRROR

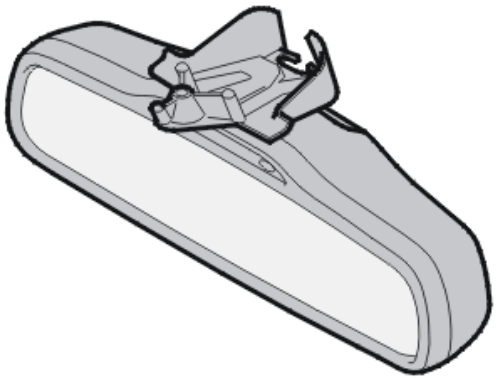

Fig. 223: Identifying Rear View Mirror
Courtesy of VOLVO CARS CORPORATION

The rear view mirror has an automatic anti-dazzle function for when light from behind the car is too bright in the mirror (option in certain markets).

One photo sensor on the front of the rear view mirror, and one on the rear side compare light intensity. When the intensities differ by a specified amount the anti-dazzle function compensates to the required degree. The upper electronic module receives and manages the signals from the two photo sensors.

The anti-dazzle function can be set to the customer requirements. The selectable values are Light, Normal and Dark. Initial setting is Normal.

LEDs for the seat belt reminder are located in the rear view mirror, above the mirror lens.

CAUTION: The rear view mirror with automatic anti-dazzle can only be installed in the factory. Upgrading to, or removing an anti-dazzle rear view mirror cannot be carried out after market due to software limitations.

There are diagnostics for the functions in the rear view mirror.

DIAGNOSTIC FUNCTIONS

GENERAL

The upper electronic module (UEM) has a built-in diagnostic system, the Volvo on-board diagnostic (OBD) system, which continuously monitors itself and the input and output signals.

DIAGNOSTIC TROUBLE CODES (DTCS)

A diagnostic trouble code (DTC) is stored if the control module detects a fault. The control module can store up to 15 diagnostic trouble codes (DTCs).

If a fault disappears for any reason after the diagnostic trouble code (DTC) has been permanently stored in the control module, information about the fault remains in the control module.

READING AND ERASING DIAGNOSTIC TROUBLE CODES (DTCS)

Stored diagnostic trouble codes (DTCs) can be read off and erased using this function.

Diagnostic trouble codes (DTCs) can only be erased once all the diagnostic trouble codes (DTCs) have been read off at least once.

NOTE: Certain functions cannot be carried out before diagnostic trouble codes (DTCs) have been erased.

READING OFF INPUT AND OUTPUT SIGNALS

This function can be used to continuously read off the values and status of the control module's input and output signals.

The following parameters can be read off:

- The number of remote controls
  - **Alarm status 1: Not activated and not deployed, connected sensors.**
  - **Alarm status 2: Activated and not deployed, connected sensors.**
  - **Alarm status 3: Activated and not deployed, disconnected sensors.**
  - **Alarm status 4: Activated and deployed, connected sensors.**
  - **Alarm status 5: Activated and deployed, disconnected sensors.**

- **Alarm status 6: Not activated and not deployed, disconnected sensors.**

- The number of the remote control

NOTE: One of the remote control buttons must be activated when reading off.

- **Alarm status 1: Not activated and not deployed, connected sensors.**
- **Alarm status 2: Activated and not deployed, connected sensors.**
- **Alarm status 3: Activated and not deployed, disconnected sensors.**
- **Alarm status 4: Activated and deployed, connected sensors.**
- **Alarm status 5: Activated and deployed, disconnected sensors.**
- **Alarm status 6: Not activated and not deployed, disconnected sensors.**

- The activated buttons on the remote control

NOTE: One of the remote control buttons must be activated when reading off.

- **Alarm status 1: Not activated and not deployed, connected sensors.**
- **Alarm status 2: Activated and not deployed, connected sensors.**
- **Alarm status 3: Activated and not deployed, disconnected sensors.**
- **Alarm status 4: Activated and deployed, connected sensors.**
- **Alarm status 5: Activated and deployed, disconnected sensors.**
- **Alarm status 6: Not activated and not deployed, disconnected sensors.**

- Voltage to mass movement sensor module (MMS), alternatively movement sensor module (IMS), status

NOTE: Listed as On or Off. The mass movement sensor module (MMS), or movement sensor module (IMS), is supplied with voltage (On) when the alarm is activated and the sensors are connected.

- **Alarm status 1: Not activated and not deployed, connected sensors.**
- **Alarm status 2: Activated and not deployed, connected sensors.**
- **Alarm status 3: Activated and not deployed, disconnected sensors.**
- **Alarm status 4: Activated and deployed, connected sensors.**
- **Alarm status 5: Activated and deployed, disconnected sensors.**
- **Alarm status 6: Not activated and not deployed, disconnected sensors.**

- Alarm status

NOTE: Indicates the alarm setting and alarm sensor setting. Six states can occur:

- **Alarm status 1: Not activated and not deployed, connected sensors.**
- **Alarm status 2: Activated and not deployed, connected sensors.**
- **Alarm status 3: Activated and not deployed, disconnected sensors.**

  - **Alarm status 4: Activated and deployed, connected sensors.**
  - **Alarm status 5: Activated and deployed, disconnected sensors.**
  - **Alarm status 6: Not activated and not deployed, disconnected sensors.**
- Front left reading lamp, status
- The switch for the front left reading lamp
- Front right reading lamp, status
- Switch for the front right reading lamp
- Rear left reading lamp, status
- The switch for the rear left reading lamp
- Rear right reading lamp, status
- The switch for the rear right reading lamp
- Third row reading lamp, status (XC90 only)
- Switch, third row reading lamps (XC90 only)
- The switch for the general lighting
- Extended X-supply, status

NOTE: **X-supply supplies power to the sunroof, mirror lamps and rain sensor module (RSM). X-supply is active when the controller area network (CAN) is active, and for a short time after the controller area network (CAN) is no longer active. This time varies and depends on a number of parameters.**

- Local lighting, status
- Cargo compartment lighting, status

NOTE: **Only applies to V70.**

- The degree of anti-dazzle for the rear view mirror

NOTE: **The parameter can only be read off when the engine is running and back-up (reverse) gear is not selected.**

100 % means that the rear view mirror is fully dimmed.

0 % means that the rear view mirror is not dimmed.

- Supply voltage, sun roof

NOTE: **The following parameters for the sun roof are read off from a separate vehicle communication input for the upper electronic module (UEM).**

-

- Button activation, forward
- Button activation, backward
- Button activation, tilt
- Button activation, auto
- Motor, forward
- Motor, backward.

NOTE: The following parameters for tyre pressure monitoring can only be read off on vehicles with TPMS.

-
- Last received sensor ID
- Last stored tyre pressure

ACTIVATING COMPONENTS AND FUNCTIONS

NOTE: A short delay can occur before a component is activated.

Remote control activations can only be carried out if the key is not in the ignition. Lock activations can only be carried out if the doors are shut.

With this function the components and functions associated with the upper electronic module (UEM) can be activated.

The following components / parameters can be activated in alternative ways:

- General lighting, directly to the lamp
- Front left reading lamp, directly to the lamp
- Front right reading lamp, directly to the lamp
- Rear left reading lamp, directly to the lamp
- Rear right reading lamp, directly to the lamp
- Third row reading lamps, direct to the lamps (XC90 only)
- Extended X-supply
- Voltage to mass movement sensor module (MMS), alternatively movement sensor module (IMS)
- Seat belt reminder
- Indicates that the passenger airbag (PAD) is disconnected (from 2005-)
- Remote control, activate the button
- Local lighting
- Cargo compartment lighting (applies only to the V70 and XC70)

NOTE: The following activations for the sun roof are performed in separate

vehicle communication input for the upper electronic module (UEM).

-
- Button activation, forward
- Button activation, backward
- Motor, forward
- Motor, backward.

READING OFF AND PROGRAMMING DATA

With this option it is possible to read programmed data and to program in data.

NOTE: **If possible, all data must be read out from the control module before replacement. After replacement the relevant data must be programmed into the new control module. The following customer parameters must be read off before the control module is replaced. This is so that the same information can be programmed in the new control module.**

With auto mode:

The general lighting lights and remains lit for 30 seconds when:

The door has been unlocked from outside using a key or remote control.

The engine has been stopped and the ignition key turned to position 0.

The default period is 30 seconds. This can be changed to between 5 seconds and 255 seconds.

The general lighting lights and remains lit for under 10 minutes when:

One of the doors is opened after unlocking.

When the lamp is lit using a button.

The default period can be reprogrammed from 0 to 255 minutes at 10 minute intervals.

The strength of the interior rear view mirror anti-dazzle. There are three positions; a normal position, one with stronger anti-dazzle and one with weaker anti-dazzle.

READING OFF THE CONTROL MODULE IDENTIFICATION

VIDA identifies control modules by reading off a number of codes from the control module memory.

The codes contain information about the control module:

- hardware P/N (control module without software)

- hardware serial number (control module without software)
- software P/N
- diagnostic software P/N.

PROGRAMMING REMOTE CONTROLS

Add remote control

This function is used when the customer wishes to order extra remote controls in addition to those supplied on delivery. The PIN-code for a new remote control must be programmed into the control module memory before the remote control can be used.

The control module memory has room for six remote controls.

Removing remote controls

This function is used when the customer wishes to erase one or more remote controls from the control module memory, so that the remote control cannot be used any longer. All the available remote controls should be at hand when erasing is being carried out.

TIRE PRESSURE MONITORING SYSTEM (TPMS)

The Upper electronic module (UEM) may store diagnostic trouble codes (DTCs) in the event of an error in the actual receiver or in a sensor. In order to carry out a correct evaluation of the function, the vehicle must have traveled faster than 40 km/h (25 mph) for longer than 570 seconds (approximately 9.5 minutes). This time is accumulated time, i. e. the counted time is interrupted if the vehicle travels slower than 40 km/h (25 mph), if for example, stopping at traffic lights. Counting continues as soon as the vehicle exceeds 40 km/h (25 mph). The Upper electronic module (UEM) can store two diagnostic trouble codes (DTCs) per sensor. A diagnostic trouble code (DTC) for lost communication and a diagnostic trouble code (DTC) for low battery voltage. When a diagnostic trouble code (DTC) is stored the ID number is also stored on the sensor which the diagnostic trouble code (DTC) applies to. When a diagnostic trouble code (DTC) is stored a message is shown in the Driver information module (DIM).

QUICK CHECK OF TPMS

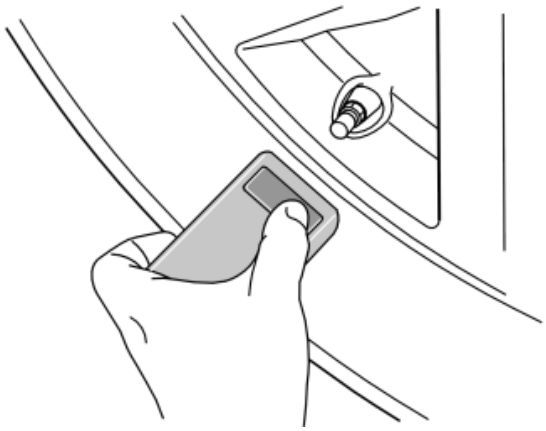

Fig. 224: Checking TPMS
Courtesy of VOLVO CARS CORPORATION

NOTE: Some car/model years require that you are more accurate when aiming the diagnostic tool at the sensor for an activation to succeed. If an activation fails, realign the diagnostic tool and perform the activation again. First after three (3) failed activation attempts can a sensor be regarded as defective.

The system can be checked, using the diagnostic tool, by activating a read off at the same time as activating the sensors using a special tool. The special tool is positioned against the tire where the sensor is located at the same time as the button on the special tool is depressed. The special tool then transmits a signal that activates the sensor so that it starts to send signals to the Upper electronic module (UEM). The activated sensor ID number and tyre pressure is then shown in the display of the diagnostic tool. Note the sensor's id-number and its position.

After activating a sensor, press the "Show data" button for the relevant wheel. Then repeat the activation procedure for all wheels. Different ID numbers should appear. If the same ID number as the previous wheel appears, the activation has failed. Perform the activation again for the relevant wheel and press the "Show data" button again.

DOWNLOADING SOFTWARE AND REPLACING THE CONTROL MODULE

New software can be downloaded into the upper electrical module. When ordering software, the hardware and the software in the car is compared to the Volvo central database. If the comparison is OK the software is downloaded to the control module. The PINs for the existing remote controls are downloaded at the same time.

If the comparison between the car and Volvo central database is not OK, the database is updated with the relevant configuration. When this is complete the software and PINs are downloaded.

When installing a completely new upper electronic module in the car the PINs for the existing remote controls are downloaded to the control module. New remote controls do not need to be ordered after a software download or after the control module is replaced.

The control module is integrated in the rear view mirror. If the control module is replaced, the rear view mirror assembly must also be replaced.

The upper electronic module must be unlocked using a unique PIN to download software or to add remote controls to the upper electronic module. VIDA carries out the unlocking automatically. The PIN is obtained from the Volvo central database and is sent with the software package when ordered, when remote controls are to be added or erased, or when a new upper electronic module is installed in the car and loaded with software.

Because of the unique PIN, the upper electronic modules cannot be moved between cars.

Three customer parameters can be programmed into the upper electronic module. These customer parameters are stored in the control module but not in the Volvo central database. This means that the customer parameters must be reprogrammed when the hardware is replaced.

Two different times for internal lighting can be programmed depending on the requirements of the customer. These times are parameters that are adjusted directly using the diagnostic tool:

- Short lighting time which is the time from when the door is unlocked or closed or from when the engine is switched off until the interior lighting goes out. The time can be set between 5 and 255 seconds. Normal setting is 30 seconds
- Long lighting time, which is the time from when a door is left open or from when a light is lit using a button to when the interior lighting goes out. The time can be set between 0 and 255 minutes. Normal setting is 10 minutes.

In addition the degree of anti-dazzle of rear view mirrors with automatic anti-dazzle function can be set to the customer requirements. The selectable values are Light, Normal and Dark. This programming is carried out by ordering and carrying out software downloads, especially for setting anti-dazzle.

FUNCTION

SUNROOF OPERATION

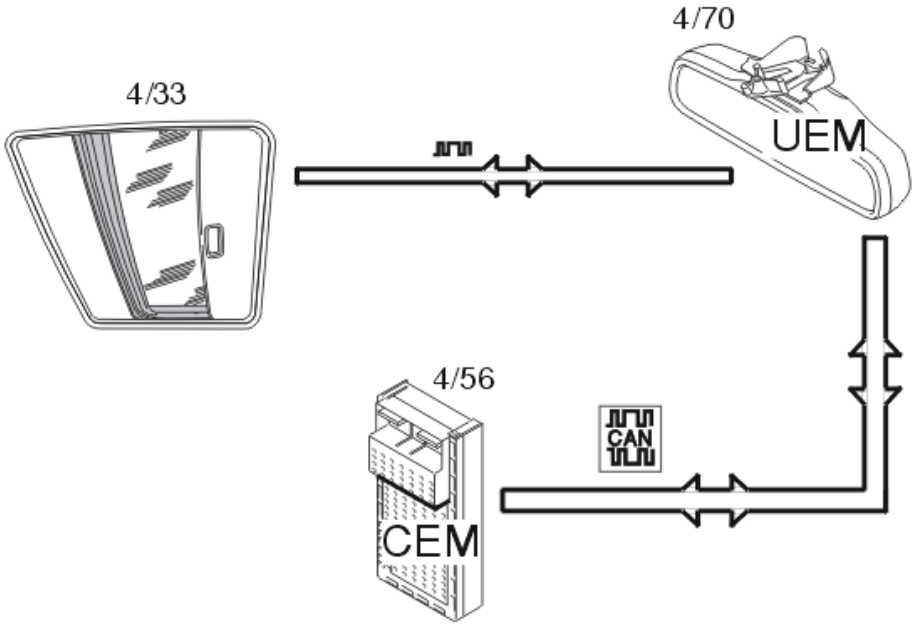

Fig. 225: Identifying Sunroof Operation Overview
Courtesy of VOLVO CARS CORPORATION

The sun roof communicates with the upper electronic module (4/70) via serial communication. The sun roof has an internal control module (4/33) which manages this communication.

Data about the sun roof position and data used for diagnostics is sent from the sun roof to the upper electronic module. Data about the position is sent on to other control modules, including the climate control module via the central electronic module (4/56).

The communication between the upper electronic module and the sun roof consists of diagnostic information.

RAIN SENSOR

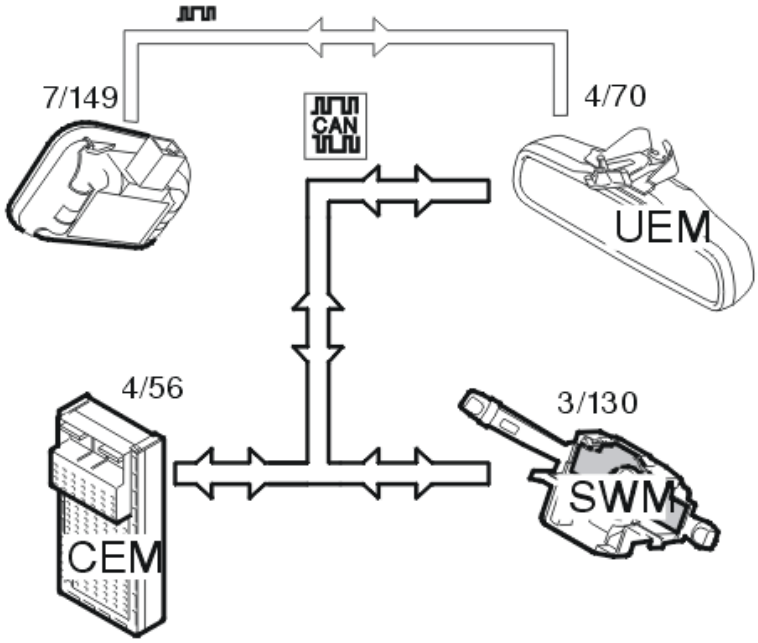

Fig. 226: Identifying Rain Sensor Operation Overview
Courtesy of VOLVO CARS CORPORATION

The rain sensor (7/149) determines that there is water on the windshield. The sensor assesses the volume of water on the windshield and the prevailing exterior light conditions. This data is then sent, via the upper electronic module (4/70), to other control modules in the car on the Control area network (CAN). These control modules in turn ensure that the windshield wipers are set to the correct speed. The rain sensor senses if the windshield is dirty or covered with traffic film and automatically compensates accordingly. The rain sensor also senses heavier splashes on the windshield. The windshield wipers are then operated at top speed.

The rain sensor communicates with the upper electronic module via serial communication. The power supply is from the upper electronic module via the power supply signal EXT. X, when the ignition key is in positions I or II. The rain sensor is active for 10 minutes after the ignition has been switched off.

The steering wheel module (3/130) sends signals via the control area network (CAN) to the central electronic module (4/56) and upper electronic module about the position of the wiper stalk. If the stalk is moved to the

intermittent wiping/rain sensor position, the upper electronic module transmits this data to the rain sensor which is then activated.

The rain sensor transmits data via the upper electronic module to the central electronic module, which then controls the wiper motor. The sensitivity can be adjusted using the collar on the wiper stalk.

The upper electronic module transmits a fault message to the central electronic module if there is a fault in the rain sensor. If there is a fault message when the rain sensor is active, the central electronic module selects top speed for the windshield wipers until the windshield wiper stalk is moved from the intermittent/rain sensor position. If the fault recurs, intermittent wiping will be activated when the wiper stalk is next moved to the intermittent/rain sensor position, although at a fixed interval.

INTERIOR ROOF LIGHTING

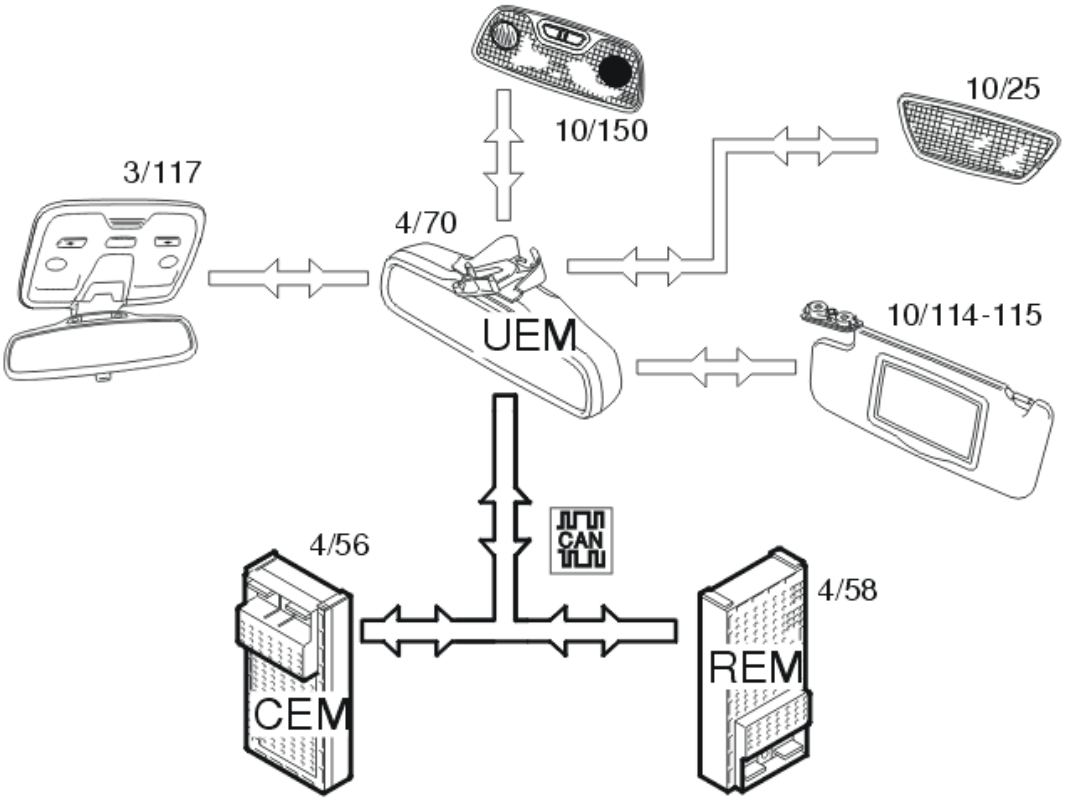

Fig. 227: Identifying Interior Roof Lighting Operation Overview
Courtesy of VOLVO CARS CORPORATION

The interior roof lighting and reading lamps, front (3/117) and rear (10/150), five lamps in total, are controlled via the upper electronic module (4/70) in that they are supplied with voltage directly from the control module when each switch is activated. The courtesy lighting is also activated when the doors are opened or when local lighting is activated.

Data is sent to the upper electronic module from the central electronic module (4/56) via the Control area network (CAN). This data indicates which doors or tailgate/trunk lid are opened or closed.

The request for keyhole lighting, courtesy lighting and cargo compartment lighting is sent from the upper electronic module to the central electronic module (4/56) and rear electrical module (4/58) via the Control area network (CAN).

Cargo compartment lighting in the V70 and the V70XC (10/25) is also supplied with voltage by the upper electronic module. The lamp is activated when the central electronic module indicates to the upper electronic module that the tailgate is open.

Sun visor lighting (10/114-115) is supplied with voltage by the upper electronic module using the voltage supply signal EXT. X. The lamp is activated when the flap covering the mirror in the sun visor is opened.

AUTOMATIC REAR VIEW MIRROR ANTI-DAZZLE

The upper electronic module receives data from two photo sensors, one on the front and one on the reverse of the rear view mirror. If the upper electronic module determines that the anti-dazzle function is required, a signal is sent to the electro-chromatic mirror which diffuses to the level required.

The signal transfer occurs internally in the rear view mirror, and is carried out directly between the upper electronic module and the anti-dazzle function.

CAUTION: The rear view mirror with automatic anti-dazzle can only be installed in the factory. Upgrading to, or removing an anti-dazzle rear view mirror cannot be carried out after market due to software limitations.

SEAT BELT REMINDER

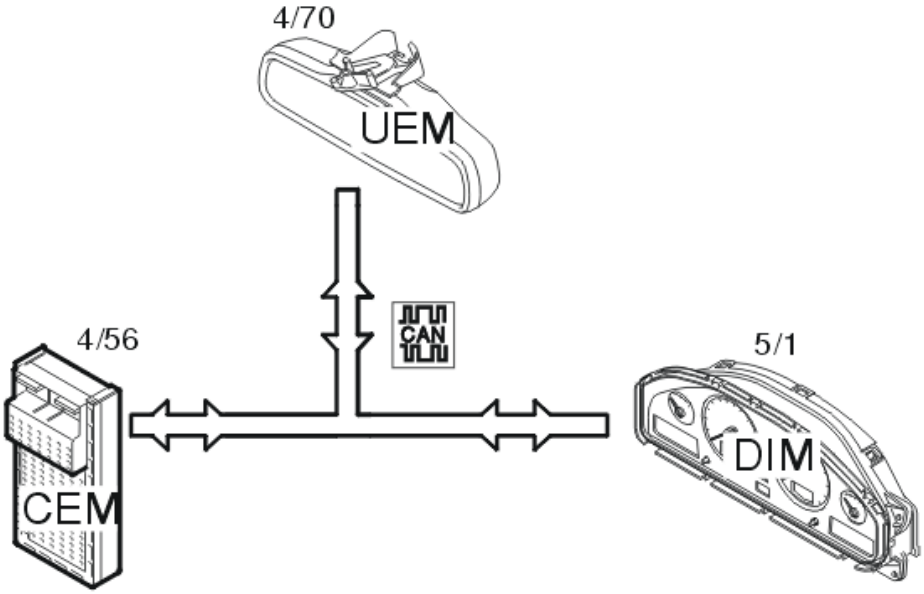

Fig. 228: Identifying Seat Belt Reminder Input And Output Signals
Courtesy of VOLVO CARS CORPORATION

The seat belt reminder is activated when the upper electronic module (4/70) receives a signal from the central electronic module (4/56), via the Control area network (CAN), which indicates that the seat belt is not engaged despite someone sitting in the front seat. Data is also transmitted to the driver information module (5/1) which indicates to the driver that the seat belt is not being used in one of the front seats.

SYSTEM OVERVIEW

CONTROL MODULE

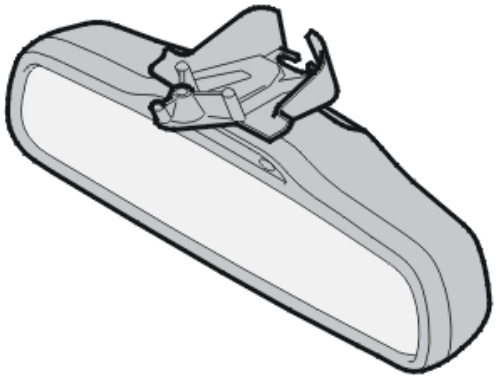

Fig. 229: Identifying Rear View Mirror
Courtesy of VOLVO CARS CORPORATION

The most important task of the upper electronic module is to manage the following functions:

- Siren
- Sun roof
- Movement sensor
- Rain sensor
- Interior roof lighting
- Cargo compartment lighting (V70 and V70XC)
- Sun visor lighting
- Remote control
- Automatic rear view mirror anti-dazzle
- Seat belt reminder.

The control module is integrated in the rear view mirror. If the control module is replaced, the rear view mirror assembly must also be replaced.

The upper electronic module communicates partly with components which are directly connected and partly with other control modules and components via serial communication and the Control area network (CAN).

The control module checks activations and input and output signals through an integrated diagnostic system A diagnostic trouble code (DTC) is stored if the control module detects an error. In certain cases the upper electronic module replaces the faulty signal with a substitute signal.

Diagnostic trouble codes (DTC) are stored in the control module memory. The data can be read off using the VIDA (Volvo scan tool).

A simple way to check that the upper electronic module is supplied with power is to activate the seat belt reminder function Activate the seat belt reminder by sitting in the driver's seat. Switch on the ignition, do not fasten the seat belt. If the seat belt reminder lights, the upper electronic module is supplied with voltage. Another way of checking that the upper electronic module is supplied with voltage is to switch on the rear reading lamps.

SIGNALS

The table below summarizes input and output signals to and from the upper electronic module. The signal types are divided into directly connected signals, serial communication and Control area network (CAN) communication. The illustration below displays the same information and the Volvo part numbers.

Input signals	Output signals
Directly connected:	**Directly connected:** (power supply unless otherwise stated)
Control signal reading lamps (x 4)	Movement sensor (optional extra)

Remote control (data) Remote control (frequency) Remote control (signal strength) Photo sensor rear view mirror (x 2)	Reading lamps (x 4) Roof lighting Cargo compartment lighting Voltage supply signal EXT. X Remote control receiver Anti-dazzle for the rear view mirror (optional extra) Diodes in the rear view mirror
Via serial communication: Siren (optional extra) Sun roof (optional extra) Movement sensor (optional extra) Rain sensor (optional extra)	**Via serial communication:** Siren (optional extra) Sun roof (optional extra) Movement sensor (optional extra) Rain sensor (optional extra)
Via Control area network (CAN) communication: Central electronic module Driver's door module Engine control module (ECM) Carphone module (optional extra) Steering wheel module	**Via Control area network (CAN) communication:** Accessory electronic module (optional extra) Central electronic module Driver's door module Passenger door module Carphone module (optional extra) Rear electronic module

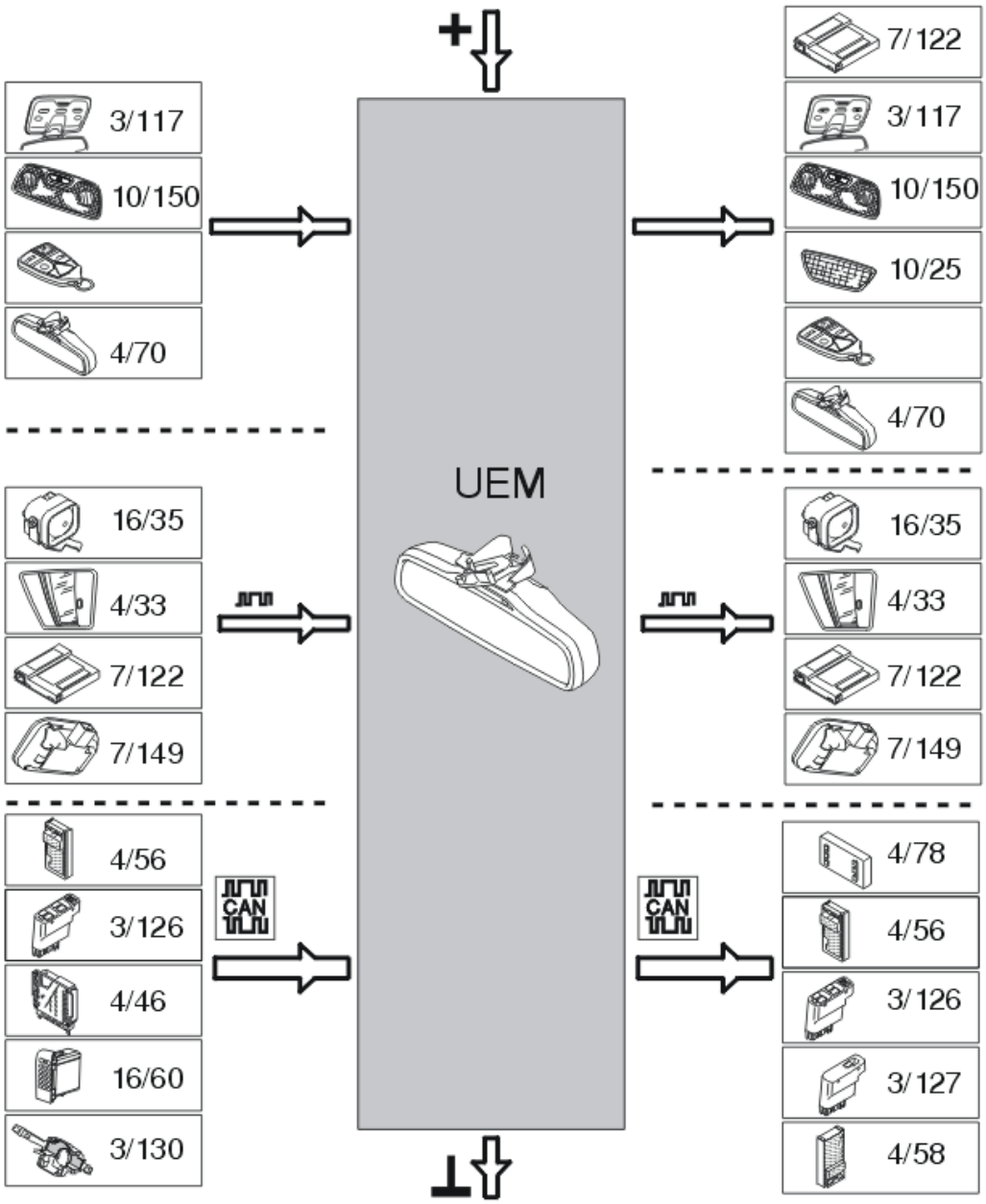

Fig. 230: Identifying Upper Electronic Module (UEM) Input And Output Signals
Courtesy of VOLVO CARS CORPORATION

UPPER ELECTRONIC MODULE (UEM) (2005-2012)

DESIGN

SIREN (SCM) (APPLIES UP TO AND INCLUDING STRUCTURE WEEK 201127)

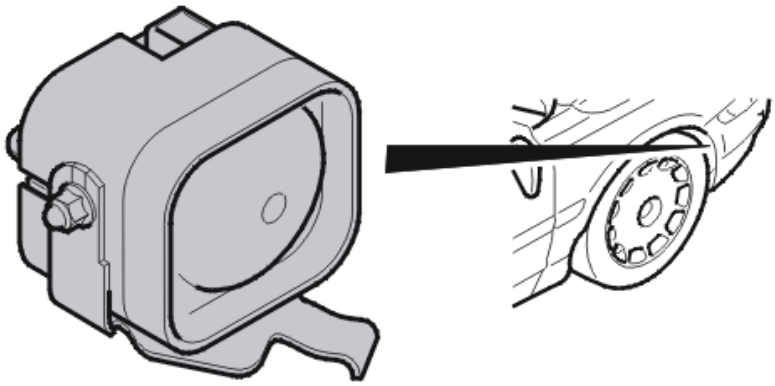

Fig. 231: Locating Siren Control Module
Courtesy of VOLVO CARS CORPORATION

Information transmitted by the siren control module (SCM) to the upper electronic module (UEM) contains configuration and status information. This data is carried via serial communication.

When the alarm is activated the siren sends continuous status signals to the upper electronic module (UEM).

The siren has a battery and a built in battery charger so that it is independent of the power supply in the car. The battery charger maintains battery voltage in the integrated battery. When the alarm is activated, the power supply for the siren and the serial communication between the siren and the upper electronic module (UEM) are monitored. The siren sounds if the car's power supply to the siren is broken or if communication between the upper electronic module (UEM) and the siren is interrupted. The battery and battery charger in the siren cannot be replaced separately. The entire siren must be replaced in the event of a fault.

The siren is in a protected location under the fender liner in the front right-hand wheel arch. The siren must be configured after replacement. Configuration is carried out using VIDA (Volvo scan tool).

There are diagnostics for the siren.

From and including structure week 201128, SCM is replaced by BBS, which is instead then connected to the Rear electronic module (REM).

SUN ROOF

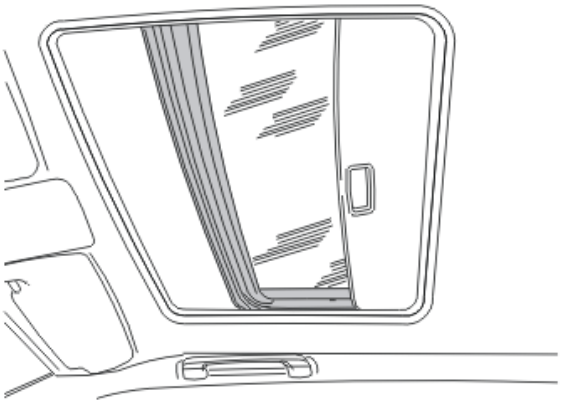

Fig. 232: Identifying Sun Roof Module
Courtesy of VOLVO CARS CORPORATION

The sun roof module (SRM) is operated by one switch. The switch is located in the same unit in the roof as the front reading lamps and the courtesy lighting. The sun roof can be opened and closed as well as angled up slightly at the rear edge.

The sun roof is driven by a motor which is in the roof, in front of the sun roof. The position of the sun roof is determined by two optical sensors. The sun roof has a sun roof module (SRM) which manages communication.

There are diagnostics for the sun roof.

MASS MOVEMENT SENSOR MODULE (MMS)

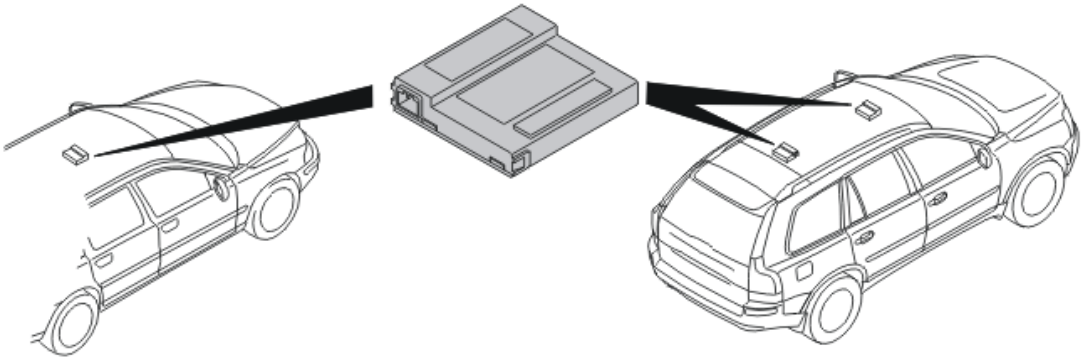

Fig. 233: Locating Mass Movement Sensor Module (MMS)
Courtesy of VOLVO CARS CORPORATION

NOTE: For XC90 MY 2012- the Mass movement sensor module (MMS) is replaced with ultrasonic sensor module (IMS).

The mass movement sensor module (MMS) detects movements inside the passenger compartment using high frequency radio waves. The Doppler effect principle is used to determine whether the frequency of the received microwave is different from the transmitted microwave. If the frequency has changed, this is interpreted as a

movement in the vehicle. If a movement is detected, a trigger signal is transmitted to the upper electronic module (UEM) which activates the alarm.

Mass movement sensors (MMS) are located in the ceiling, in the center of the vehicle, to optimally cover as much as possible of the vehicle's volume. In XC90 there are two mass movement sensors (MMS), one front and one rear. These are connected in parallel to the central electronic module (CEM) and share wiring for voltage supply and communication.

The mass movement sensor module (MMS) is powered from the upper electronic module (UEM) and earthed in the body.

There are diagnostics for the mass movement sensor module (MMS).

ULTRASONIC SENSOR MODULE (IMS) (XC90 MY 2012-).

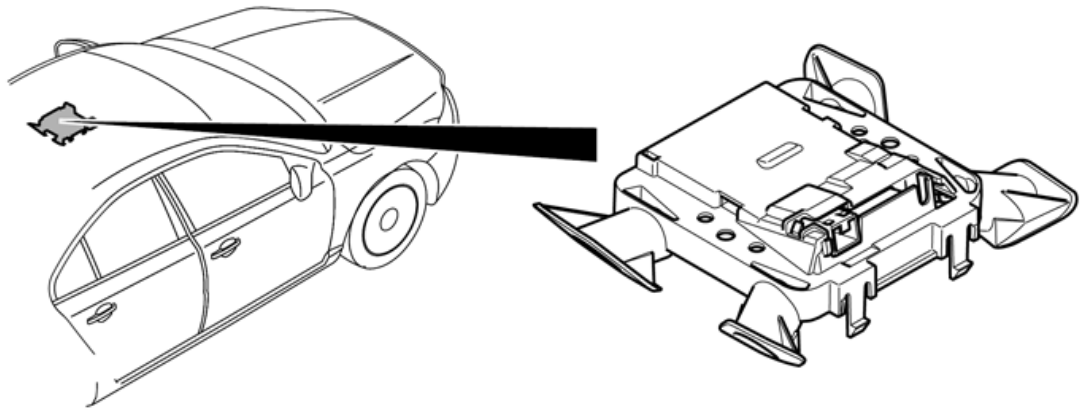

Fig. 234: Identifying Ultrasonic Sensor Module (IMS)
Courtesy of VOLVO CARS CORPORATION

NOTE: Only in XC90 MY 2012-.

The ultrasonic sensor module (IMS) is located in a cover on the ceiling. The ultrasound sensor (IMS) is used to detect movement inside the passenger compartment when the alarm is activated. The aim is to detect, for example, anybody attempting to reach into the vehicle to steal a bag or similar. When the sensor is activated it performs an internal self-test and reports the result to the CEM, if the test failed the CEM sets a DTC. The sensors communicate serially and are powered via the Upper electronic module (UEM). When the sensor is activated, it emits ultrasound in the passenger compartment. The sound waves are reflected back to the sensor and if the sensor detects changes in reflectivity or movements inside the passenger compartment, the alarm is triggered.

NOTE: The sensor performance is affected by air turbulence and therefore all windows and any roof hatches must be closed for the sensor to operate most effectively.

RAIN SENSOR MODULE (RSM)

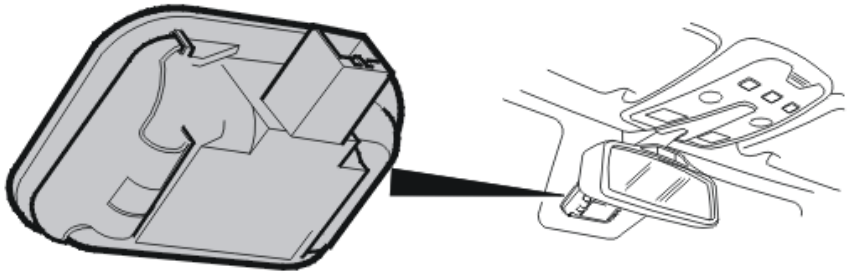

Fig. 235: Locating Rain Sensor Module
Courtesy of VOLVO CARS CORPORATION

The rain sensor module (RSM) uses optical measurement to detect water on the windshield. An infrared beam of a fixed intensity lights part of the windshield. The intensity of the reflected beam is measured and compared to the intensity of the transmitted beam. If there is water on the surface of the windshield, the beam will be distorted and some of its intensity lost. If the beam is not fully reflected, this is interpreted as water on the windshield and the windshield wipers start.

The signals from the rain sensor module (RSM) to the upper electronic module (UEM) are carried via serial communication. The rain sensor module (RSM) transmits the signals to the upper electronic module (UEM). These signals request a particular windshield wiper speed (depending on the amount of rain falling on the windshield), indicate that a sudden large splash has hit the windshield and register the light conditions outdoors.

The rain sensor module (RSM) is in front of the rear view mirror on the inside of the windshield. Cars with rain sensor modules (RSM) have a special windshield.

The rain sensor module (RSM) is powered by the upper electronic module (UEM).

There are diagnostics for the rain sensor module (RSM).

INTERIOR ROOF LIGHTING

Fig. 236: Identifying Interior Roof Lighting

Courtesy of VOLVO CARS CORPORATION

There are a number of lamps inside the passenger compartment. The lamps include four reading lamps and a general courtesy lamp.

In XC90 models with three rows of seats there are 6 reading lamps.

The front left and front right reading lamps and the courtesy light are located in the same unit in the roof, just above the rear view mirror. The other reading lamps are in the roof above the rear seat(s).

These lamps transmit control signals to the control module. These signals allow the control module to determine the status of the lamps and switches. This allows any faults to be detected. For example:

- a blown bulb
- an open-circuit in a cable
- that the switch has jammed in the pressed in position.

The control signals are divided up as input signals at a number of inputs in the upper electronic module (UEM). The control signal for the courtesy lighting shares the same inputs as control signals for the front reading lamps. The rear control signals for the reading lamps each have their own input. If there is a third row of seats, there is a separate input for the control signals for this row.

Two different lighting times can be programmed using VIDA depending on the requirements of the customer. For further information, see: **DOWNLOADING SOFTWARE AND REPLACING THE CONTROL MODULE**

There are diagnostics for all lamps in the inner roof lighting.

REMOTE CONTROL

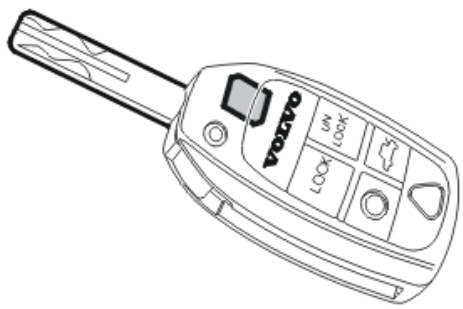

Fig. 237: Identifying Ignition Key
Courtesy of VOLVO CARS CORPORATION

The remote control can be used to:

- lock and unlock the doors
- unlock the tailgate (V70, XC70 and XC90)
- open the trunk lid (S80 and S60)
- activate the approach lighting
- activate the panic alarm (certain markets).

The receiver is in the rear view mirror and transmits signals to the upper electronic module (UEM). These signals determine:

- which function should be activated
- at which frequency the receiver receives the signal from the remote control
- which of the remote controls transmitted the signal
- the signal strength received from the remote control.

Up to six remote controls can be stored in the upper electronic module (UEM). The control module stores the identity and PIN for each remote control.

The remote control identity and PIN are also stored in the Volvo central database When replacing the upper electronic module (UEM), this data is transmitted to the vehicle. This means that the remote controls do not need to be replaced and can be used with the new control module.

The remote control has two PIN codes, one with 16 characters and one with 8.

If the vehicle has seats and door mirrors with memory, these functions are affected by the remote controls stored in positions 1, 2 and 3. When the car is unlocked using one of these remote controls and the driver's door is opened the information about which remote control unlocked the car is stored. The setting for the driver's seat and the door mirrors is stored in that remote control at the same time that the car is put to "sleep mode". (Sleep mode means that the car continues in stand-by mode with low energy consumption, which occurs when the ignition key is removed and no function is activated for approximately 5 minutes). The next time that the car is unlocked using that particular remote control the driving seat and the door mirrors will be set to the same positions that they were in when the car stored the information.

The remote control battery can be replaced.

REAR VIEW MIRROR

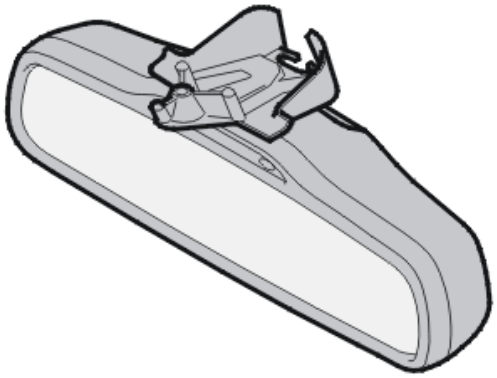

Fig. 238: Identifying Rear View Mirror
Courtesy of VOLVO CARS CORPORATION

The rear view mirror has an automatic anti-dazzle function for when light from behind the car is too bright in the mirror (option in certain markets).

There is one photo sensor on the reverse of the rear view mirror and another on the front. Both sensors compare the intensity of the light through the windshield and from the rear of the vehicle. If the difference exceeds a certain value, the anti-dazzle function is activated to the required degree. The upper electronic module (UEM) receives and processes the signals from the two photo sensors.

The anti-dazzle function can be set to the customer requirements. For further information, see:
DOWNLOADING SOFTWARE AND REPLACING THE CONTROL MODULE

There are diodes in the rear view mirror above the mirror glass. These are for the seat belt reminder and for the PAD (passenger airbag deactivated) lamp.

NOTE: The rear view mirror with automatic anti-dazzle can only be installed in the factory. Upgrading to, or removing an anti-dazzle rear view mirror cannot be carried out after market due to software limitations.

There are diagnostics for the functions in the rear view mirror.

TIRE PRESSURE MONITORING SYSTEM (TPMS)

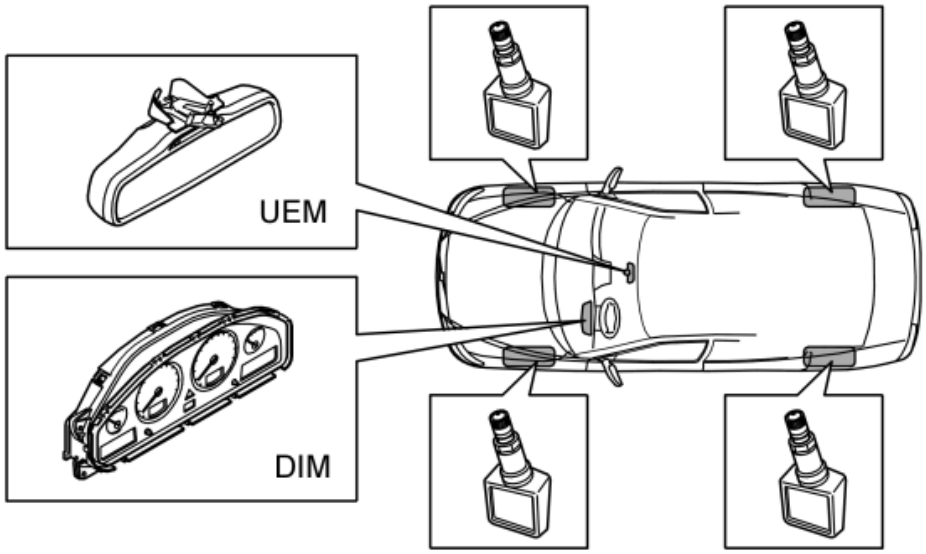

Fig. 239: Locating Tire Pressure Monitoring System (TPMS) Components
Courtesy of VOLVO CARS CORPORATION

The purpose of the tire pressure monitoring system, TPMS, is to enable the driver to have an optimum tire pressure by giving a warning when the pressure in any of the tires becomes too low. Correct tire pressure is important for:

- achieving good fuel economy
- achieving optimum comfort and good driving characteristics
- preventing flat tires due to too low tire pressure.

The function is integrated in the Upper electronic module (UEM). Sensors are installed together with the air valve on each wheel to measure the air pressure in the tires.

NOTE: **The system must be regarded as a driver aid to maintain the correct tire pressure. The system must NOT be regarded as a warning system that indicates that there is a serious problem with the vehicle. No tire is completely sealed - there is always slight leakage as the tire can never be completely sealed to the rim. When inflating the tire with air, you must, as much as possible, ensure that the tires are at same temperature as the outside temperature. Furthermore, "Comfort pressure" should not be applied as this gives a tire pressure that is too close to the parameter for the monitoring system, which means that even small changes in temperature or load can cause the pressure in the tires to be too low for the system to consider acceptable. When inflating with air, the tires must be filled to the pressure stated on the decal located on the car body. The pressure is calculated with regard to fuel economy, comfort and safety. Therefore, these pressures MUST be followed. If the decal is missing or damaged, a new one must be ordered and applied. This is especially important on vehicles with TPMS.**

TIRE PRESSURE SENSOR

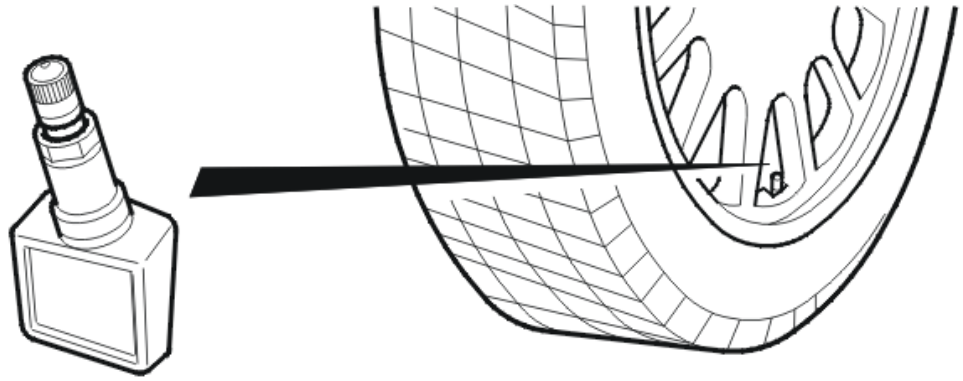

Fig. 240: Identifying Special Tool
Courtesy of VOLVO CARS CORPORATION

The tire pressure sensors are installed together with the air valve on the rim. The sensor consists of a pressure sensor, a communication circuit, an acceleration sensor and a battery.

NOTE: Special procedures are required for removing the tyre from the rim depending on vehicle model and tyre type. This is to prevent damaging the sensor.

SEAT BELT REMINDER

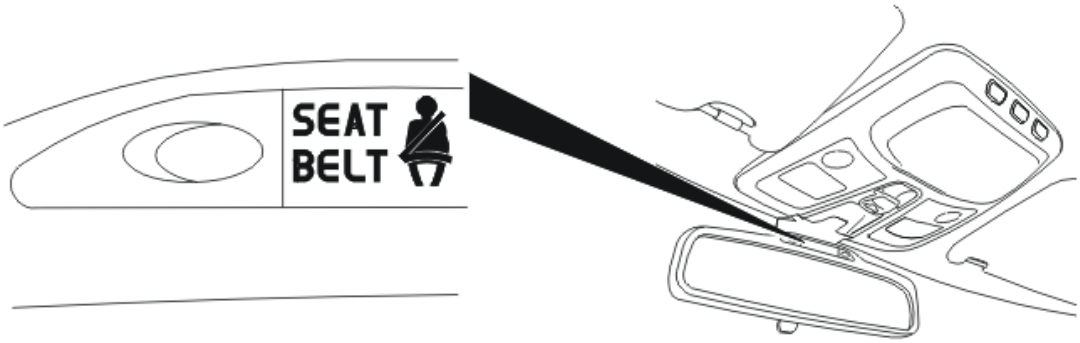

Fig. 241: Identifying Seat Belt Reminder
Courtesy of VOLVO CARS CORPORATION

There is a lamp in the upper electronic module (UEM) for the front seat belt reminder. The sensors for the seat belt reminder are in the seat belt buckles. The upper electronic module (UEM) receives information from the supplemental restraint system module (SRS). This information indicates where the seat belt buckle is engaged and whether there is someone in the seat. If someone is in one of the front seats and the seat belt buckle is engaged, the seat belt reminder lamp goes out.

WARNING LAMP FOR PASSENGER AIRBAG DISCONNECTED (PAD)

Fig. 242: Identifying Passenger Airbag Warning Light
Courtesy of VOLVO CARS CORPORATION

There is a PAD (passenger airbag deactivated) warning lamp in the upper electronic module (UEM). This function varies depending on the market. If the passenger airbag is deactivated or a fault has occurred which will prevent activation of the passenger airbag, this lamp will light up.

COMPASS

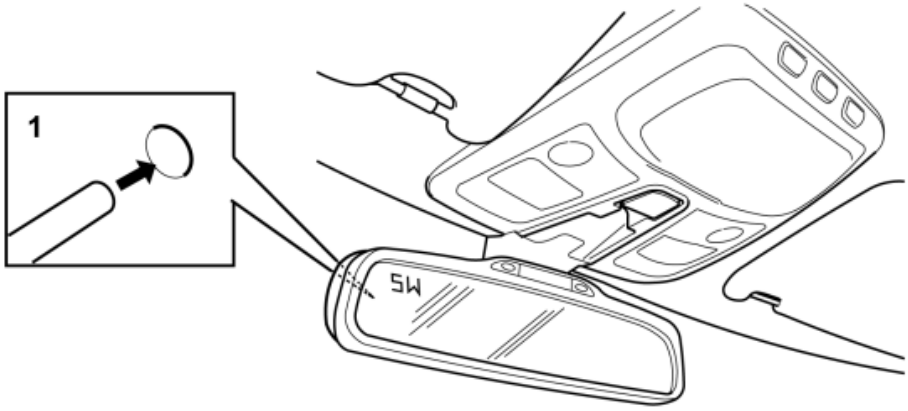

Fig. 243: Identifying Integrated Compass
Courtesy of VOLVO CARS CORPORATION

The compass is integrated in the rear view mirror. The compass display is integrated in the mirror glass. The display is a vacuum-fluorescent type. The display luminance is regulated via the internal light sensor in the rear view mirror. When the vehicle is started, all the segments light up in the display. All the segments then go out after a couple of seconds. The display then functions normally. The compass has a button (1) which is used to:

- set the magnetic zone in which the car is being driven
- calibrate the compass.

Magnetic zones

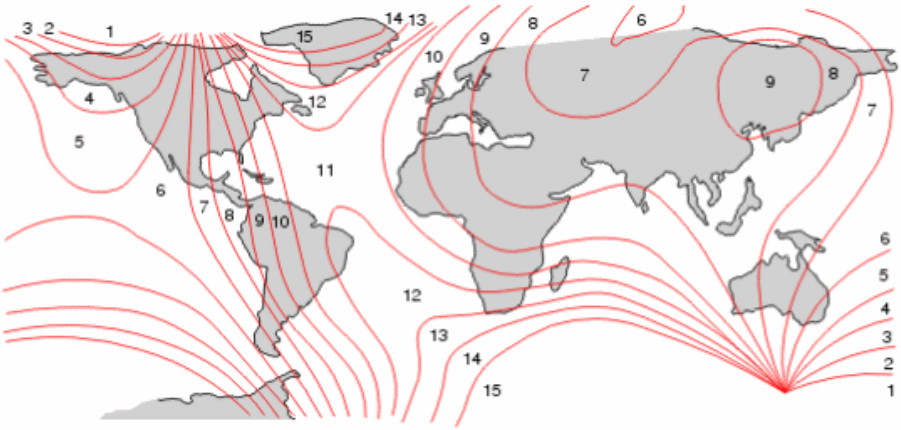

Fig. 244: Identifying Magnetic Zones
Courtesy of VOLVO CARS CORPORATION

In many places, magnetic north is different from true north. In order to compensate for this difference, the compass uses a method that divides the globe into 15 different zones. If the compass is not set for the zone in which the vehicle is being driven, it may display the wrong direction. If the vehicle is transported between different zones, the magnetic zone setting must be altered manually.

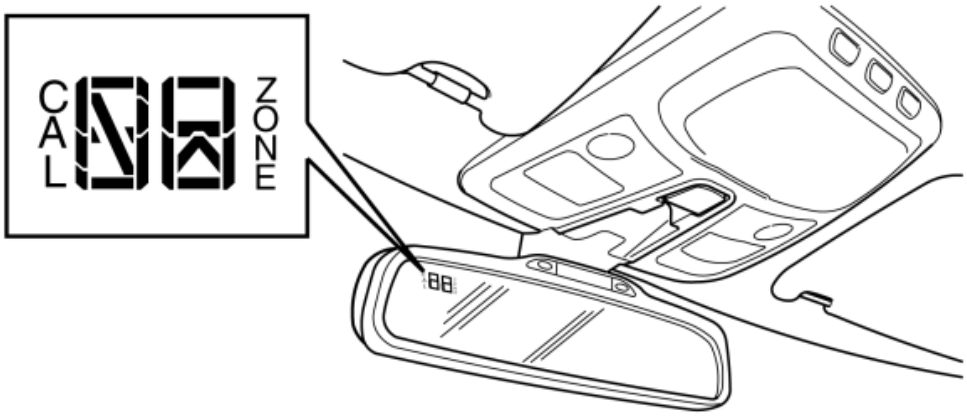

Fig. 245: Identifying Compass Zone Selection
Courtesy of VOLVO CARS CORPORATION

The correct zone must be selected for the compass to work correctly.

1. Ignition position II.
2. Hold the button on the reverse of the rear view mirror in for approximately 3 seconds until ZONE is displayed (use, for example, a straightened paperclip) The number for the actual area is displayed.
3. Press the button repeatedly until the number for the relevant geographical area is displayed.

The display reverts to the compass direction after a few seconds, this means that the zone change is complete.

Calibration

Calibration of the compass is necessary for it to display the correct direction. During calibration, the compass

detects the magnetic field from the vehicle, which must be taken into consideration when calculating the compass direction. If strong magnetic fields affect the compass, such as for example, an antenna close to the mirror, or if changes in direction occur too quickly, the compass shows the last measured direction until a new measurement is successful. The direction will not be updated if the vehicle is stationary.

The compass must be calibrated when:

- the display does not show a compass direction within a couple of seconds. This may be due to a highly magnetic object, such as an antenna, being placed in the vicinity of the compass.
- the compass does not display the correct direction, even though the correct magnetic zone has been set.

The compass may need calibrating to display correctly. For best results, switch off all large power consumers such as interior lighting, blower fan, rear demist etc. and avoid having metal objects and magnetic objects near the mirror.

1. Stop the vehicle in a large open area with the engine running.
2. Hold the button on the reverse of the rear view mirror in until is displayed.
3. Drive slowly in a circle at no more than 8 km/h until disappears from the display. Calibration is complete.

Alternative calibration step: set off as normal, disappears from the display when calibration is complete.

DIAGNOSTIC FUNCTIONS

see **DIAGNOSTIC FUNCTIONS**

DOWNLOADING SOFTWARE AND REPLACING THE CONTROL MODULE

New software can be downloaded into the upper electronic module (UEM). When ordering software, the hardware and the software in the car is compared to the information in the Volvo central database. If the comparison is OK the software is downloaded to the control module. The PINs for the existing remote controls are downloaded at the same time.

If the comparison between the vehicle and Volvo central database is not OK, the database is updated with the relevant configuration. When this is complete the software and PINs are downloaded.

When installing a completely new upper electronic module (UEM) in the car, the PINs for the existing remote controls are downloaded to the control module. New remote controls do not need to be ordered after a software download or after the control module is replaced.

The control module is integrated in the rear view mirror. If the control module is replaced, the rear view mirror assembly must also be replaced.

The upper electronic module (UEM) must be unlocked using a unique PIN to download software or to add remote controls. VIDA automatically unlocks the control module. The PIN is obtained from the Volvo central database. It is sent with the software package if:

- reload software is ordered

- remote controls are being added or erased
- a new control module is installed in the vehicle and loaded with software.

Because of the unique PIN code, the control module cannot be moved between vehicles.

Three customer parameters can be programmed into the upper electronic module (UEM). These customer parameters are stored in the control module but not in the Volvo central database. This means that the customer parameters must be reprogrammed when hardware is replaced.

Two different times for internal lighting can be programmed depending on the requirements of the customer. These times are parameters that are adjusted directly using VIDA:

- **Short lighting time** . This is the time from when the door is unlocked or closed or from when the engine is switched off until the interior lighting goes out. The time can be set between 5 and 255 seconds. Normal setting is 30 seconds
- **Long lighting time** . This is the time from when a door is left open or from when a light is lit using a button to when the interior lighting goes out. The time can be set between 0 and 255 minutes. Normal setting is 10 minutes.

In addition the degree of anti-dazzle of rear view mirrors with automatic anti-dazzle function can be set to customer requirements. The selectable values are Light, Normal and Dark. This programming is carried out by ordering and carrying out software downloads, especially for setting anti-dazzle.

FUNCTION

SUNROOF OPERATION

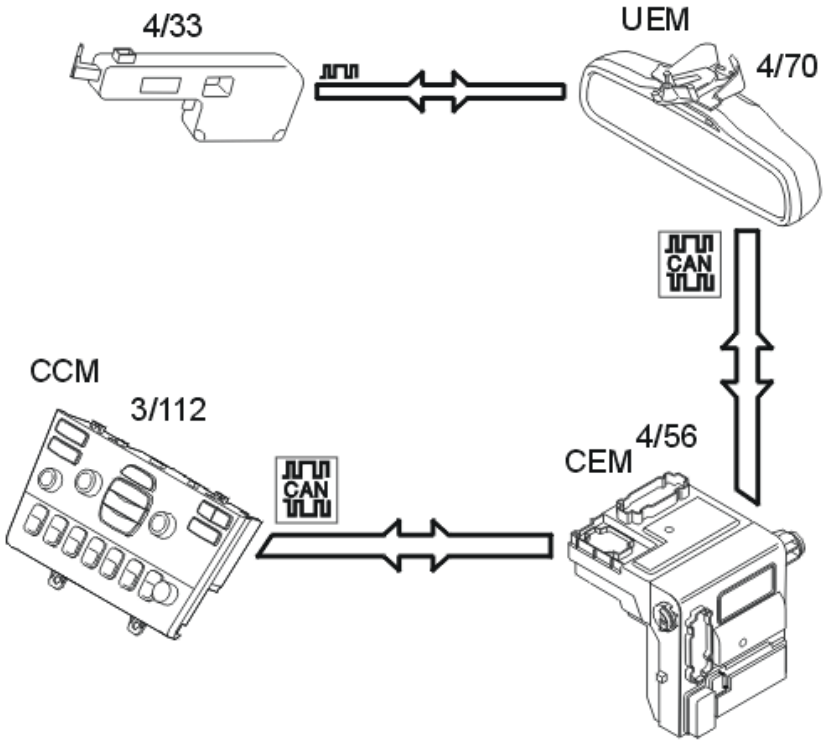

Fig. 246: Identifying Sunroof Communication Links & Components
Courtesy of VOLVO CARS CORPORATION

The sun roof module (SRM) (4/33) communicates with the upper electronic module (UEM) (4/70) using serial communication.

Information about the sun roof position and information to be used for diagnosis is sent from the sun roof module (SRM) to the upper electronic module (UEM). The information about the position is transmitted on to other control modules, such as the climate control module (CCM) (3/112) via the central electronic module (CEM) (4/56).

The communication between the upper electronic module (UEM) and the sun roof module (SRM) mainly consists of diagnostic information.

RAIN SENSOR MODULE (RSM)

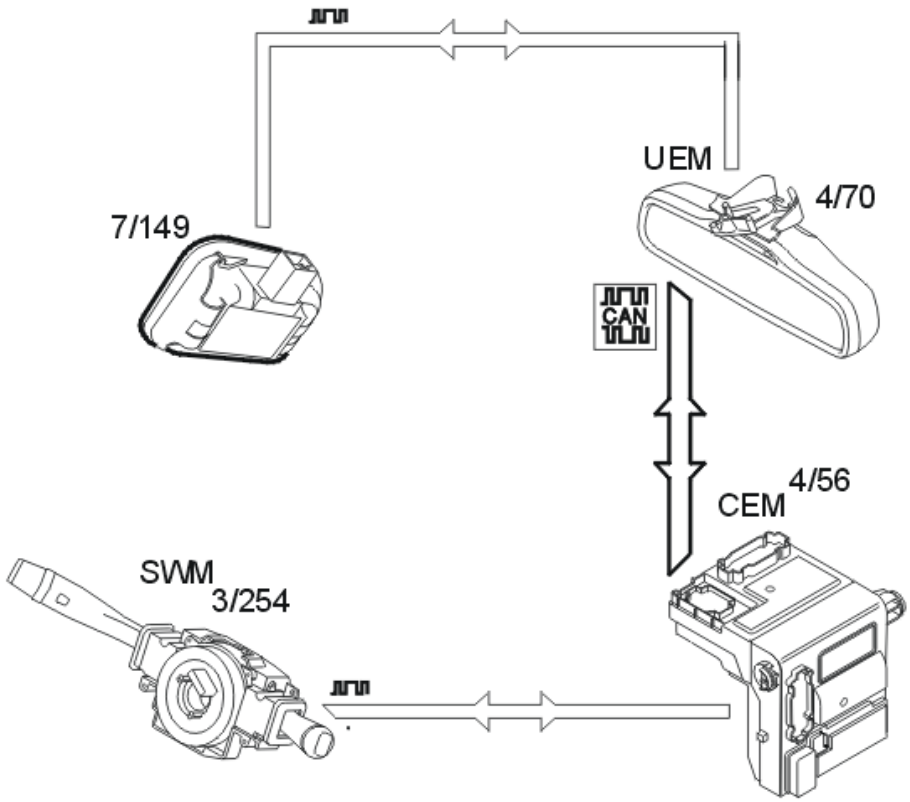

Fig. 247: Identifying Rain sensor module (RSM) Communication Links & Components
Courtesy of VOLVO CARS CORPORATION

The rain sensor module (RSM) (7/149) determines whether there is water on the windshield. The sensor assesses the volume of water on the windshield and the prevailing exterior light conditions. This information is then sent, via the upper electronic module (4/70), to other control modules in the car on the controller area network (CAN). These control modules in turn ensure that the windshield wipers are set to the correct speed. The rain sensor senses if the windshield is dirty or covered with traffic film and automatically compensates accordingly. The rain sensor also senses heavier splashes on the windshield. The windshield wipers are then operated at top speed.

The rain sensor module (RSM) communicate with the upper electronic module (UEM) using serial communication. Power is supplied from the upper electronic module (UEM) via the power supply signal EXT. X, when the ignition key is in positions I or II. The rain sensor is active for 10 minutes after the ignition has been switched off.

The steering wheel module (SWM) (3/254) transmits a signal about the position of the windshield wiper stalk via LIN-communication to the central electronic module (CEM) (4/56). The central electronic module (CEM) sends this information onwards on the controller area network (CAN) to the upper electronic module (UEM). If the stalk is moved to the intermittent wiping/rain sensor position, the upper electronic module (UEM) transmits this data to the rain sensor module (RSM) which is then activated.

The rain sensor module (RSM) sends information via the upper electronic module (UEM) to the central electronic module (CEM) which then deploys the wiper motor. The sensitivity can be adjusted using the collar

on the wiper stalk.

If a fault occurs in the rain sensor module (RSM), the upper electronic module (UEM) transmits an error message to the central electronic module (CEM). If there is a fault message when the rain sensor is active, the central electronic module (CEM) selects top speed for the windshield wipers until the windshield wiper stalk is moved from the intermittent/rain sensor position. If the fault recurs, intermittent wiping will be activated when the wiper stalk is next moved to the intermittent/rain sensor position, although only at a fixed interval.

INTERIOR ROOF LIGHTING

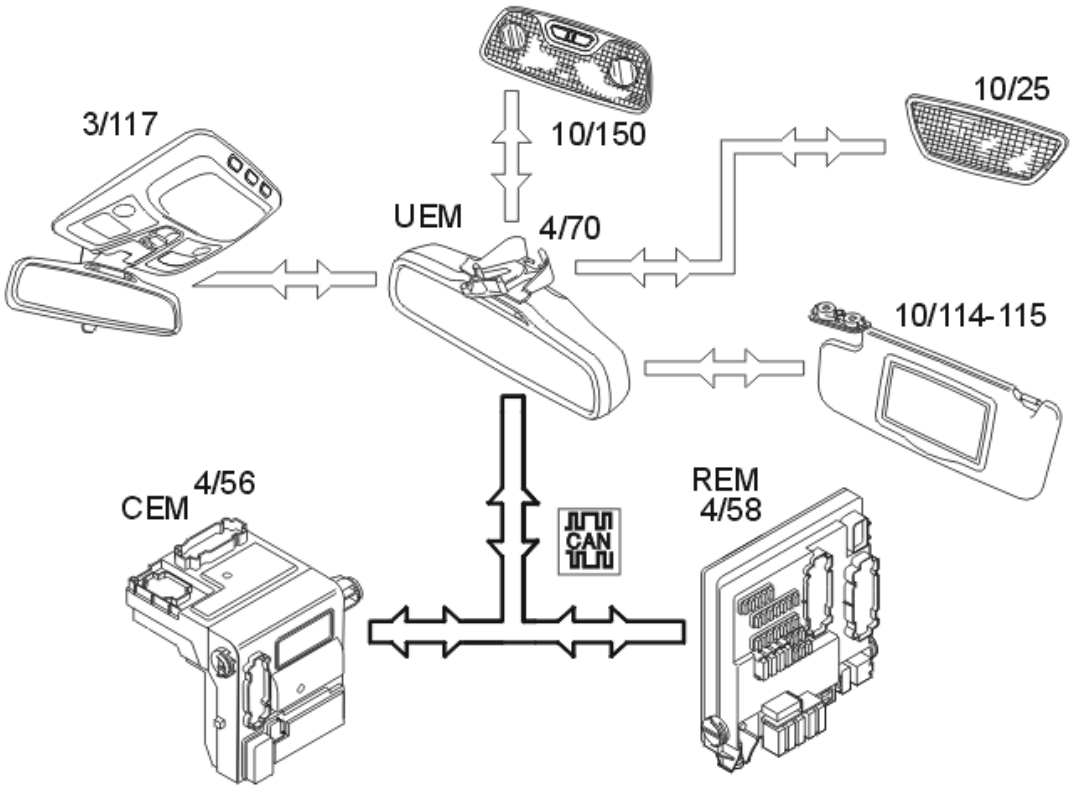

Fig. 248: Identifying Interior Roof Lighting Communication Links & Components
Courtesy of VOLVO CARS CORPORATION

The interior roof lighting and reading lamps, front (3/117) and rear (10/150) are controlled via the upper electronic module (UEM) (4/70) in that they are supplied with voltage directly from the control module when each switch is activated. The courtesy lighting is also activated when the doors are opened or when approach lighting is activated.

Data is sent to the upper electronic module (UEM) from the rear electronic module (REM) (4/58) via the controller area network (CAN). This data indicates which doors or tailgate/trunk lid are opened or closed.

The request for keyhole lighting, courtesy lighting and cargo compartment lighting is sent from the upper electronic module (UEM) to the central electronic module (CEM) (4/56) and rear electrical module (REM) via the controller area network (CAN).

The cargo compartment lighting in the V70 and XC70 (10/25) is powered by the upper electronic module (UEM). The lamp is activated if the upper electronic module (UEM) receives information from the rear electronic module (REM) indicating that the tailgate is open.

The sun visor lighting (10/114-115) is powered by the upper electronic module (UEM) using the voltage supply signal EXT. X. The lamp is activated when the flap covering the mirror in the sun visor is opened.

AUTOMATIC REAR VIEW MIRROR ANTI-DAZZLE

The upper electronic module (UEM) receives data from two photo sensors, one on the front and one on the reverse of the rear view mirror. If the upper electronic module (UEM) determines that the anti-dazzle function is required, a signal is sent to the electro-chromatic mirror which diffuses to the level requested.

The signal transfer occurs internally in the rear view mirror, and is carried out directly between the upper electronic module (UEM) and the anti-dazzle function.

NOTE: The rear view mirror with automatic anti-dazzle can only be installed in the factory. Upgrading to, or removing an anti-dazzle rear view mirror cannot be carried out after market due to software limitations.

SEAT BELT REMINDER

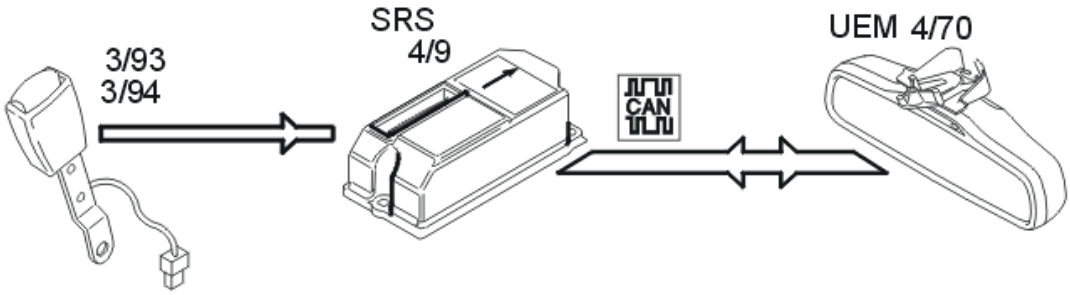

Fig. 249: Identifying Seat Belt Reminder Communication Links & Components
Courtesy of VOLVO CARS CORPORATION

The seat belt reminder is activated when the upper electronic module (UEM) (4/70) receives a signal from the supplemental restraint system module (SRS) (4/9), via the controller area network (CAN), which indicates that the seat belt is not engaged despite someone sitting in the front seat.

TIRE PRESSURE MONITORING SYSTEM (TPMS)

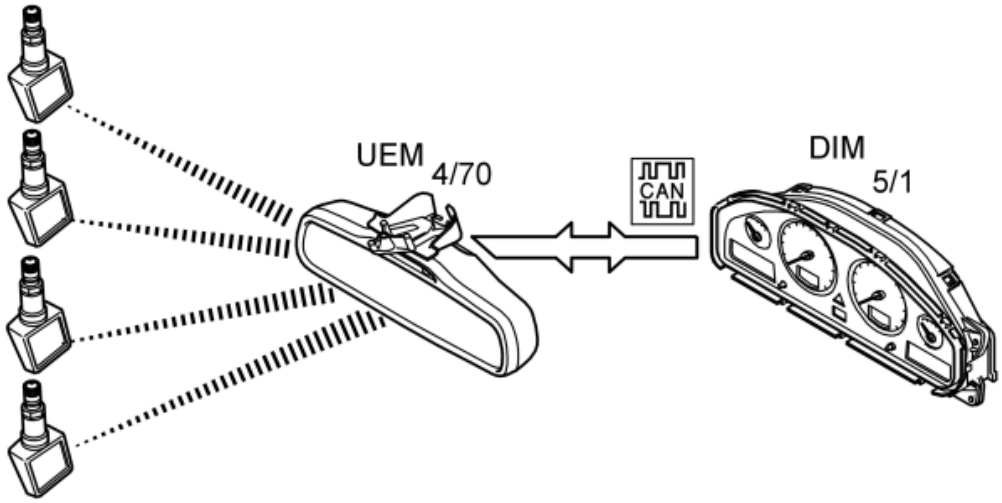

Fig. 250: Identifying Tire Pressure Monitoring System (TPMS) Information Display
Courtesy of VOLVO CARS CORPORATION

The system covers the upper electronic module (UEM) (4/70) and the sensors in the wheels. The sensors in the wheels are activated when the vehicle exceeds 40 km/h (25 mph). The sensors then start to transmit data messages approximately once per minute, which are received by the remote control receiver in the Upper electronic module (UEM). These messages contain the sensor's ID number and air pressure in the tire where the sensor is mounted.

The frequency that the sensors transmit on is the same for all sensors. The control module can also receive signals from other vehicles with the same system installed. However, the ID number in each sensor is unique. The sensors that are mounted on the actual vehicle are determined by an elimination procedure in the Upper electronic module (UEM). When the ignition is switched on, the Upper electronic module starts to listen for messages from the sensors. The control module registers the ID number found in the received messages that the sensors transmit, from the actual vehicle and other vehicles. The Upper electronic module stores all ID numbers that are received in a list in its internal memory. For each ID number that is received, the number of times that that ID number is received is also saved. As the number of ID numbers received increases, the ID numbers received the most times are evaluated. The four ID numbers that have been received the most times receive the highest "calculation" and are considered to belong to the actual vehicle. In this way, any ID numbers that have been received from other vehicles can be differentiated. For example, ID numbers that are in another lane next to the actual vehicle. This evaluation takes approximately 5 minutes if the Upper electronic module has no data.

If the evaluation has been carried out, the sensors that are assumed to belong to the actual vehicle are stored in the control module. The information remains between each driving cycle. In this case, it is sufficient for the control module to receive a message from each sensor with corresponding ID number to complete evaluation.

In Upper Electronic Module there are tables programmed with which air pressure is recommended for this specific vehicle model. This information about air pressure in the tires included in the messages sent from the sensors is compared to the programmed values in Upper Electronic Module.

If the pressure reported from a sensor differs more than 22% from the recommended value, a warning message will be shown in the Driver information module.

There are two warning levels that generate different warning messages, one warning for low pressure and one warning for no pressure. A message will also be shown is a sensor should stop transmitting or should receive too low battery voltage.

To reset a warning it is easiest to stop the vehicle and fill air in the tire where the air pressure is low. In order for the warning to reset air has to be filled so that the air pressure reaches a level that corresponds to at least 95% of the recommended air pressure, and then drive the vehicle faster than 40 km/h for more than 10 minutes, accumulated time.

If the customer has come to the workshop, the warning can also be reset by filling air in the tire where the air pressure is low and then the sensor is activated with the special tool for activating the tire pressure sensor.

When air is filled and the pressure changes, the sensor immediately sends a signal to Upper Electronic Module. If the ignition is on, the warning is reset immediately.

NOTE: Only applies to USA/CDN. A warning lamp also lights in the Driver information module at the same time as the warning message.

COMPASS

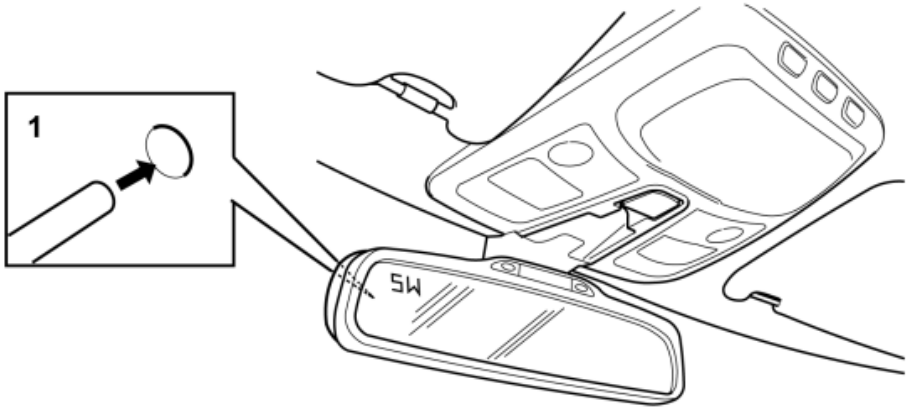

Fig. 251: Identifying Integrated Compass
Courtesy of VOLVO CARS CORPORATION

The compass detects the magnetic pull of the North and South Poles. Using this, the compass calculates the direction in which the front of the vehicle is pointing.

The display in the top right-hand corner of the rear view mirror shows the compass direction. Eight different directions can be displayed, using the abbreviations and.

- North
- North East
- East
- South East
- South

- South West
- West
- North West

SYSTEM OVERVIEW

CONTROL MODULE

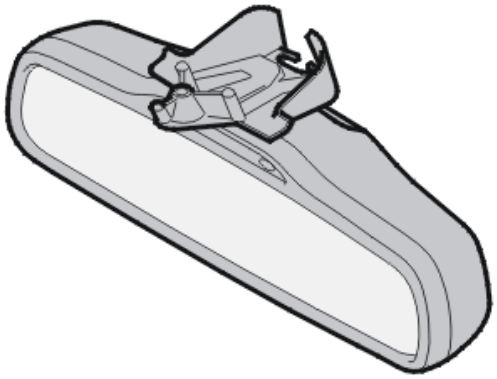

Fig. 252: Identifying Rear View Mirror
Courtesy of VOLVO CARS CORPORATION

The primary task of the upper electronic module (UEM) is to manage the functions of the:

- Siren (SCM) (XC90, applies up to and including structure week 201127)
- Sun roof
- Mass movement sensor module (MMS) (does not apply to the XC90 MY 2012-)
- Ultrasonic sensor module (IMS) (only applies to the XC90 MY 2012-)
- Rain sensor module (RSM)
- Interior roof lighting
- Cargo compartment lighting (V70 and XC70)
- Sun visor lighting
- Remote control
- Automatic rear view mirror anti-dazzle
- Seat belt reminder
- Tire pressure warning
- Indication of disconnected passenger airbag (PAD- Passenger Airbag Deactivated)
- Compass

The control module is integrated in the rear view mirror. If the control module is replaced, the rear view mirror assembly must also be replaced.

The upper electronic module (UEM) communicates with directly connected components and with other control modules and components via serial communication and the controller area network (CAN).

The control module checks activations and input and output signals via an integrated diagnostic system. A diagnostic trouble code (DTC) is stored if the control module detects an error. In certain cases the upper electronic module (UEM) replaces the faulty signal with a substitute value.

Any diagnostic trouble codes (DTCs) are stored in the control module memory. The data can be read off using VIDA (Volvo scan tool).

A simple way to check that the upper electronic module (UEM) is supplied with power is to activate the seat belt reminder function. Activate the seat belt reminder by sitting in the driver's seat. Switch on the ignition, do not fasten the seat belt. If the seat belt reminder lights, the upper electronic module (UEM) is supplied with voltage. Another way of checking that the control module is supplied with voltage is to switch on one of the rear reading lamps.

SIGNALS

The table below summarizes the input signals to and output signals from the upper electronic module (UEM). The signal types are divided into directly connected signals, serial communication and controller area network (CAN) communication. The illustration below displays the same information with the Volvo component designations.

Input signals	Output signals
Directly connected: • Control signal reading lamps (x 4 XC90 x 5) • Remote control (data) • Remote control (frequency) • Remote control (signal strength) • Photo sensor rear view mirror (x 2).	**Directly connected:** (power supply unless otherwise stated) • Mass movement sensor module (MMS) (7/122) (optional extra) and (7/158), or ultrasonic sensor module (IMS) (7/199) (optional extra). (XC90 has MMS (2 x) for MY -2011 which is replaced by IMS (1 x) for MY 2012-) • Reading lamps (x 4, XC90 x 6) • Roof lighting • Cargo compartment lighting • Voltage supply signal EXT. X • Remote control receiver • Anti-dazzle in the rear view mirror (optional extra) • Diodes in the rear view mirror.
Via serial communication: • Siren (SCM) (16/35) (extra equipment) (withdrawn on XC90 from and including structure week 201128)	**Via serial communication:** • Siren (SCM) (16/35) (extra equipment) (withdrawn on XC90 from and including structure week 201128)

• Sun roof module (SRM) (4/33) (optional extra) • Mass movement sensor module (MMS) (7/122) (optional extra) and (7/158) (for XC90 MY -2011), or ultrasonic sensor module (IMS) (7/199) (for XC90 MY 2012-) • Rain sensor module (RSM) (7/149) (optional extra).	• Sun roof module (SRM) (4/33) (optional extra) • Mass movement sensor module (MMS) (7/122) (optional extra) and (7/158) (for XC90 MY -2011), or ultrasonic sensor module (IMS) (7/199) (for XC90 MY 2012-) • Rain sensor module (RSM) (7/149) (optional extra).
Via Controller Area Network (CAN) communication: • Central electronic module (CEM) (4/56) • Driver door module (DDM) (3/126) • Engine control module (ECM) (4/46) • Phone module (PHM) (16/60) (optional equipment). • Supplemental restraint system module (SRS) (4/9).	**Via Controller Area Network (CAN) communication:** • Accessory electronic module (AEM) (4/78) (optional equipment) • Central electronic module (CEM) (4/56) • Driver door module (DDM) (3/126) • Passenger door module (PDM) (3/127) • Phone module (PHM) (16/60) (optional equipment). • Rear electronic module (REM) (4/58).

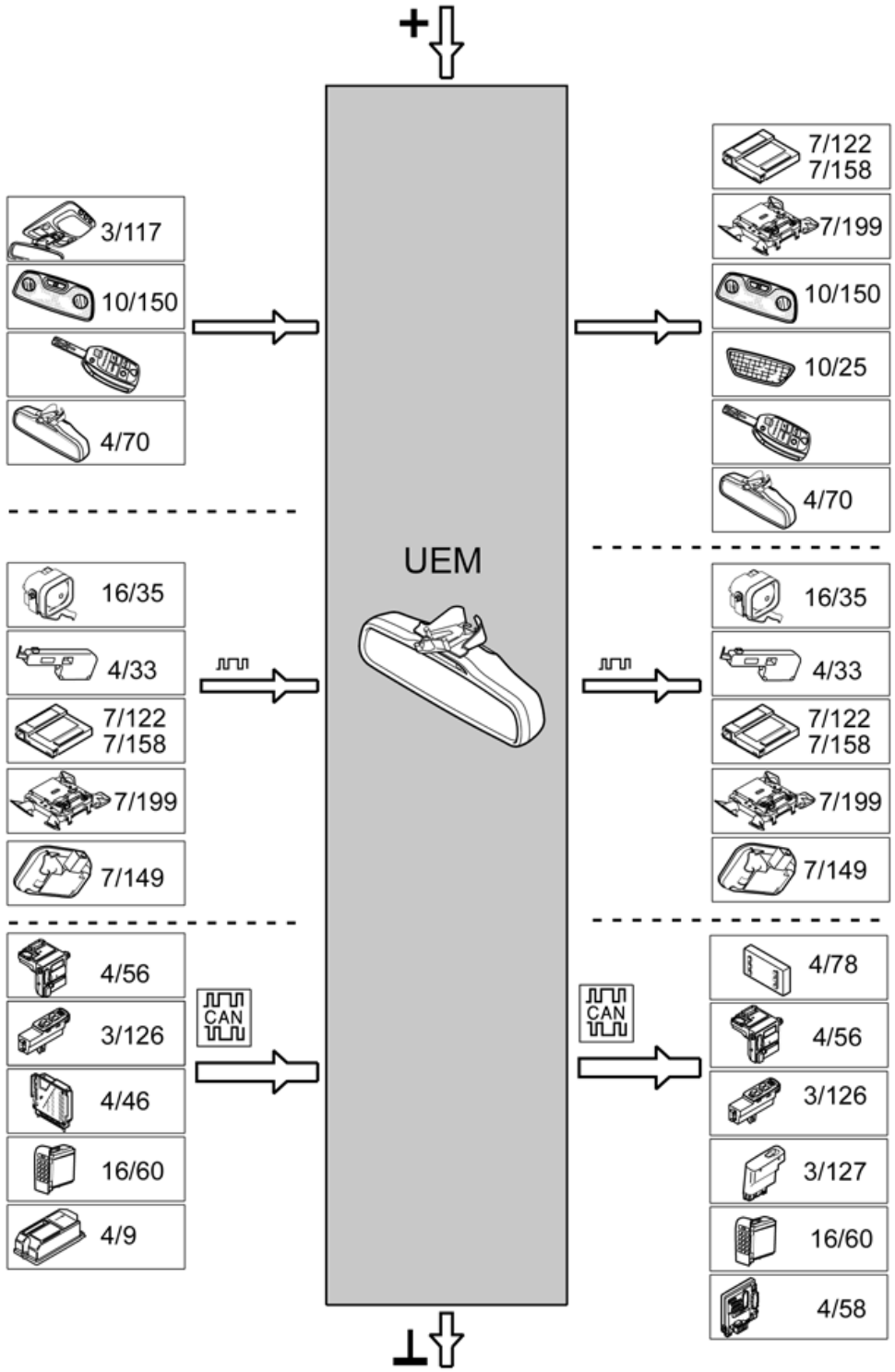
+
3/117
10/150
4/70
16/35
4/33
7/122
7/158
7/199
7/149
4/56
3/126
4/46
16/60
4/9
CAN
UEM
7/122
7/158
7/199
10/150
10/25
4/70
16/35
4/33
7/122
7/158
7/199
7/149
4/78
4/56
3/126
3/127
16/60
4/58
CAN
⊥

Fig. 253: Identifying Volvo Component Designations.
Courtesy of VOLVO CARS CORPORATION

WINDOWS (2003-2012)

WINDOWS

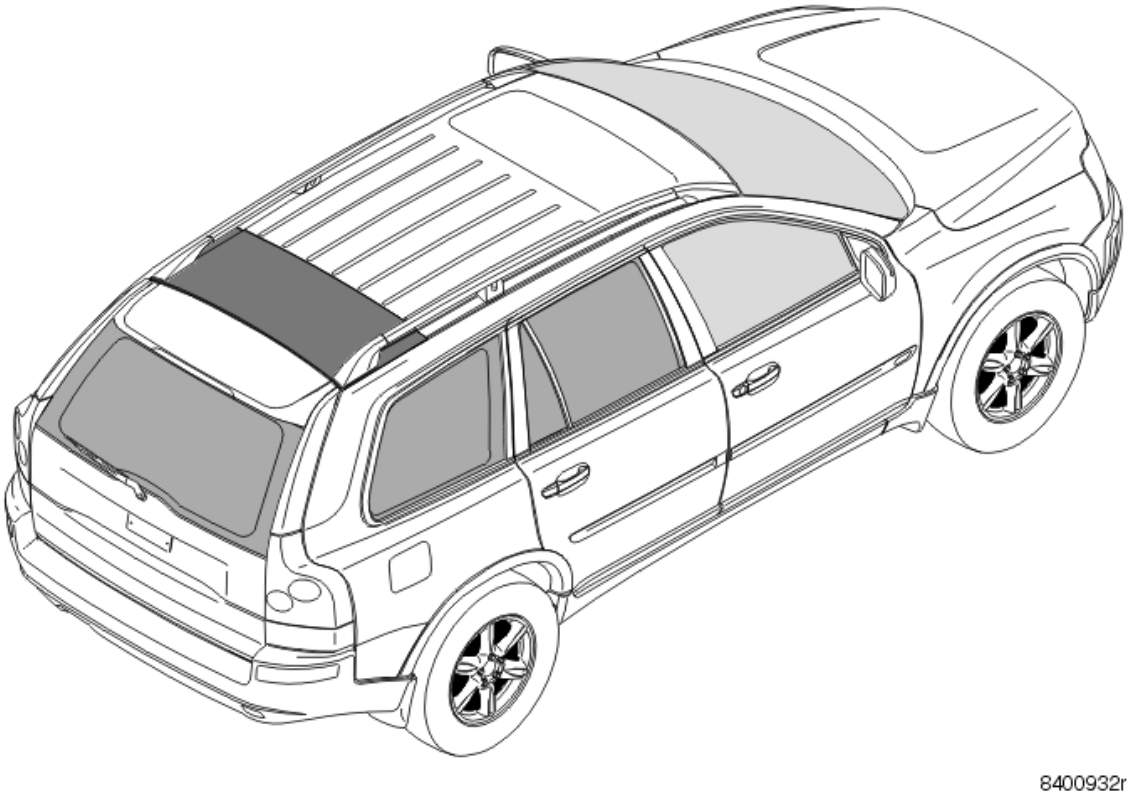

Fig. 254: Identifying Tinted Glass
Courtesy of VOLVO CARS CORPORATION

Windows, general

The windows are tinted and relatively thick to reduce the sound levels in the car.

- Standard 4 mm
- Laminated 5 mm.

The side windows on the XC90 are also laminated (anti smash and grab windows) to provide greater protection against break-ins. This option is market dependent.

Power windows are standard.

PUR bonded windows

The windshield, rear side windows and rear windshield are PUR bonded.

PUR bonded windows must be replaced using the method described in VIDA (Volvo scan tool).

Different versions

- There are four different versions of the windshield. Standard, with rain sensor, with IR glass and with IR glass/rain sensor
- There are two versions of the front door window. Standard and Laminated
- There are three different versions of the two windows in the rear door. Standard, Laminated and dark tint
- There are two different versions available for the rear windshield and the rear side window. Standard and dark tint.

Component	Option			
Windshield	Std	Rain sensor	IR glass	IR glass/rain sensor
Door window front	Std	Laminated (5 mm)		
Door window rear	Std	Dark tint	Laminated (5 mm)	
Door window rear fixed	Std	Dark tint	Laminated (5 mm)	
Rear side window	Std	Dark tint		
Rear windshield	Std	Dark tint		

PUR bonded windows give the body torsional rigidity, which has a positive impact on:

- Handling and collision safety
- Driving comfort
- Reducing rattles and squeaks
- It also reduces the risk of resonance from the driveline and suspension when cornering.

NOTE: **When replacing the rear windshield, ensure that that the PUR adhesive or primer does not come into contact with the electrical loops for the heated rear windshield.**

Cover panel

The cover panel for the antenna module (ATM) is at the rear edge of the roof.

The cover panel is made of plastic.

The cover panel is bonded to the roof using PUR adhesive.

ACCESSORIES AND BODY, CAB

Miscellaneous - Design and Function

CLIMATE CONTROL MODULE (2003-2004)

DESIGN

CLIMATE CONTROL UNIT

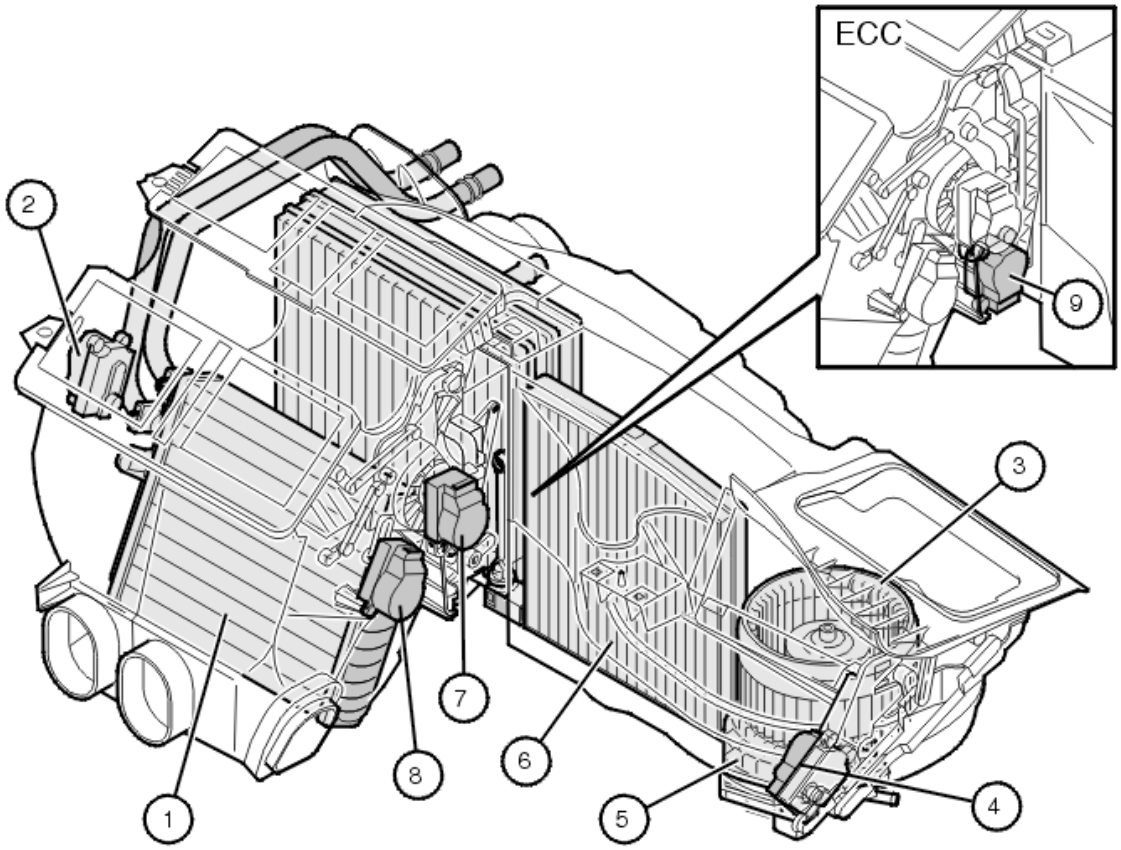

Fig. 1: Climate Control Unit Components
Courtesy of VOLVO CARS CORPORATION

The climate control unit consists of the following components:

1. Heater element
2. Damper motor, temperature, left
3. Blower fan
4. Damper motor, fresh air / recirculation
5. Power unit for blower fan motor
6. Particle filter
7. Damper motor, ventilation and floor (also defroster for MCC/STD)

8. Damper motor, temperature, right
9. Damper motor defroster (ECC).

Engine coolant constantly flows through the heater element. There is no valve to regulate the flow. The selected temperature is achieved using dampers for the right and left-hand sides of the car installed upstream and downstream of the heater element. These control the amount of air to be warmed. There are also dampers downstream of the heater element that guide the airflow to the correct air vent.

The climate control module provides infinitely variable electronic blower fan control. When AUTO mode (only electronic climate control) is engaged the climate control module (CCM) adapts the blower fan speed to the setting of the controls and the vehicle speed. The blower fan can be set to run-on in order to reduce residual moisture in the evaporator.

A timer located in the central electronic module (CEM) controls the run-on time. 50 minutes after the engine has been switched off and the ignition has been turned to position 0 or I the central electronic module (CEM) supplies power to the climate control module (CCM) and the blower fan is activated at full speed for 7 minutes. This run-on dries the evaporator and prevents bad odors.

This function is programmed at the factory, but can be deactivated in the event of customer complaints via programming of customer parameters. Programming is carried out via VIDA (Volvo scan tool).

The function is only available to cars of structure week 199850 and later.

All damper motors are of the stepper type. Their position and speed is controlled electronically.

Manual climate control and standard climate control have four stepper motors controlling the following dampers:

- Ventilation / floor / defroster via a link system
- Recirculation and fresh air via a link system
- Temperature left
- Temperature right.

For electronic climate control (ECC) there is an extra stepper motor which controls the defroster. The wiring between the damper motors and the climate control module (CCM) consists of four cables for supply voltage and directional control and a separate cable for each motor which controls the motor to be activated. Each motor has four coils. The corresponding coils in each motor are supplied with power at the same time. The motors are only supplied with power if they are grounded at the same time. When a new position is selected for the damper motor, the climate control module (CCM) calculates how many steps are required to complete the movement. The climate control module (CCM) then activates the damper motor with the necessary number of steps. When the motor is instructed to move to an end position, the motor is activated until it stops. This end position is then used as a limit position. This means that the damper motors are self-adjusting, but only after the limit positions have been reached. When replacing the damper motors, ensure that the self-adjustment is carried out. Otherwise the customer may experience defective climate control.

There are diagnostics for the blower fan and damper motors.

AIR CONDITIONING (ECC AND MCC ONLY)

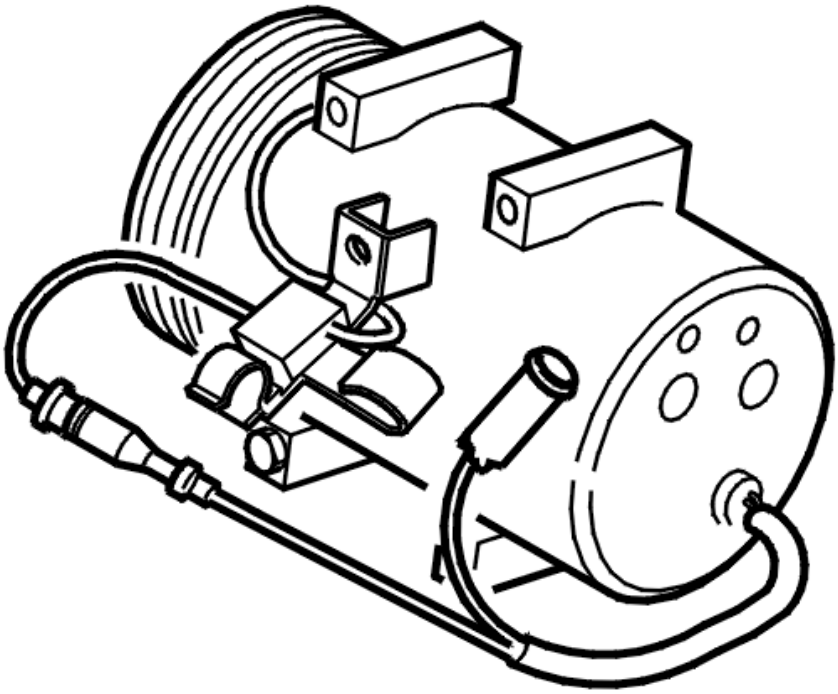

Fig. 2: Identifying A/C Compressor
Courtesy of VOLVO CARS CORPORATION

The engine control module (ECM) controls the A/C compressor. When the A/C switch on the dashboard environment panel is activated, a request to activate the compressor is transmitted via Control area network (CAN) to the engine control module (ECM). The engine control module (ECM) determines when the compressor must operate.

If any of the following conditions are met the compressor is disconnected:

- High engine coolant temperature (ECT)
- Wide open throttle (WOT)
- The engine has just been started
- Overpressure in the air conditioning (A/C) system.

When the engine is started the engine control module (ECM) activates the air conditioning compressor for a short period even if the climate control module (CCM) has not transmitted a request about this. This is carried out for diagnosis. This check is carried out at all temperatures exceeding -6 °C.

The advantage in allowing the engine control module (ECM) to control the air conditioning compressor is that it can delay compressor activation somewhat, if the idling speed must be compensated for the extra load for

example.

SUN SENSOR (ELECTRONIC CLIMATE CONTROL ONLY)

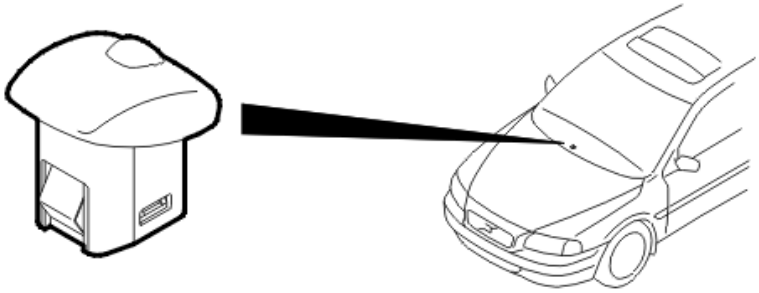

Fig. 3: Locating Sun Sensor
Courtesy of VOLVO CARS CORPORATION

The sun sensor transmits information about sun intensity to the climate control module (CCM).

The sun sensor consists of a photo diode which is supplied with power from the control module. The conductivity of the diode depends on the amount of light to which it is exposed. The diode is located under a diffusing lens which reduces the sensitivity of the photo diode to the angle of the light hitting it. Increased sun intensity reduces the voltage over the photo diode. The control module measures the voltage over the photo diode and compensates for high sun intensity by lowering the ventilation air temperature, changing the distribution of air and increasing the speed of the blower fan.

The climate control module (CCM) starts to compensate the blower fan speed at a sun intensity of 400 W/m^2 and reaches maximum compensation at a sun intensity of 1000 W/m^2 .

The sun sensor is located in the middle of the dashboard by the windshield.

There are diagnostics for the sun sensor.

AIR QUALITY SENSOR (ELECTRONIC CLIMATE CONTROL ONLY, OPTION)

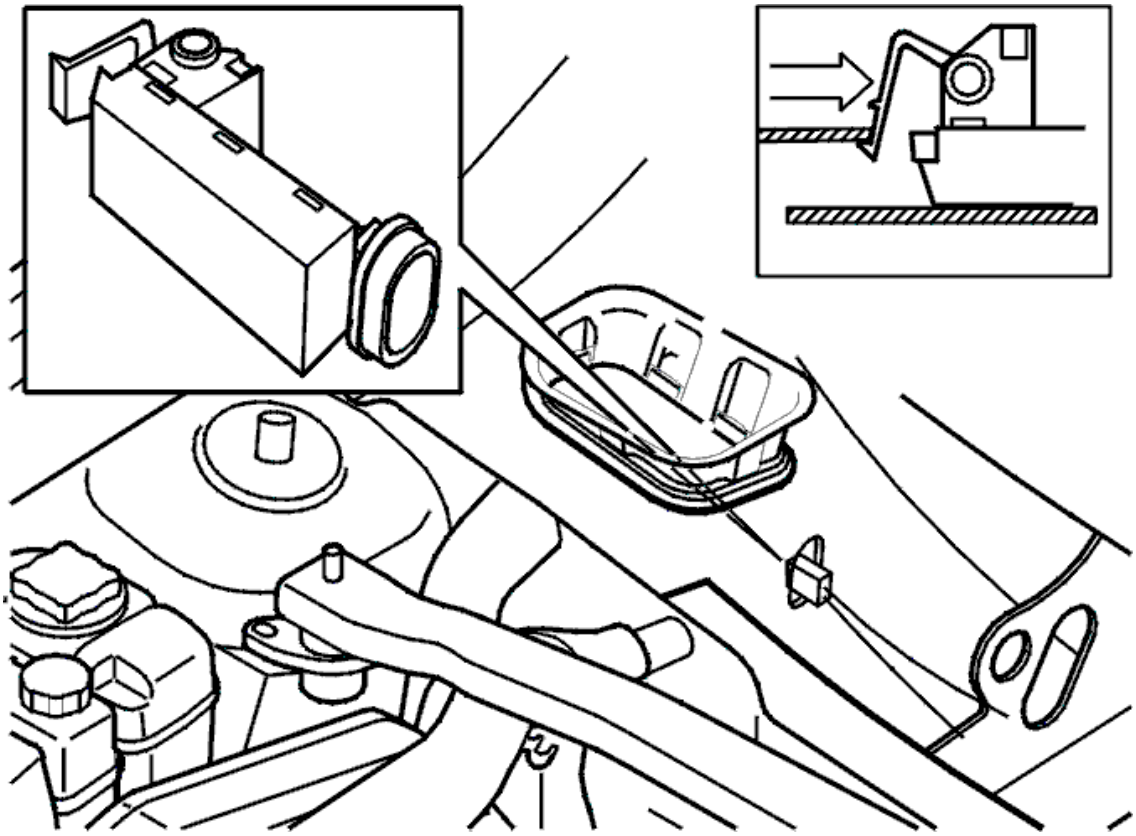

Fig. 4: Air Quality Sensor
Courtesy of VOLVO CARS CORPORATION

The air quality sensor is available as an option for the electronic climate control from model year 2000. Its function is to transmit a signal to the climate control module (CCM) if it detects increased concentrations of pollutants in the outside air.

The air quality sensor measures the CO_x and NO_x content.

The air quality sensor compares current values with previous ones and can calculate changes in pollutant concentrations.

The signal from the air quality sensor to the climate control module (CCM) is a pulse width modulation (PWM) signal and has four stages, 0-3:

- signal 0= no increase in or reduced pollutant level
- signal 1=gradual increase in pollutant level
- signal 2=moderate increase in pollutant level
- signal 3=rapid increase in pollutant level.

The control module uses the signal to control the recirculation damper motor.

The air quality sensor is located on the right-hand side of the fresh air intake under the cowl.

There are diagnostics for the air quality sensor.

SWITCHES, DASHBOARD ENVIRONMENT PANEL, (LOWER SECTION)

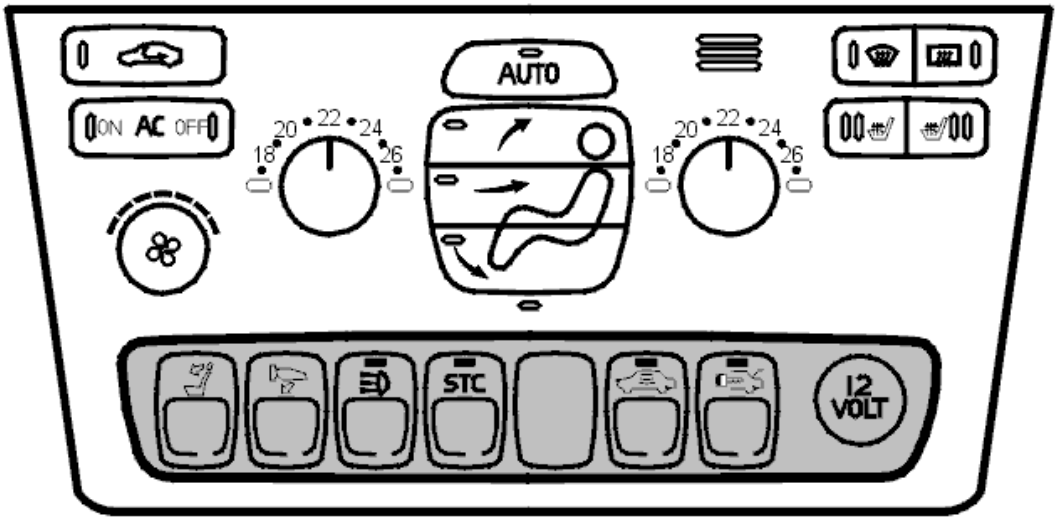

Fig. 5: Identifying Climate Control Module (CCM)
Courtesy of VOLVO CARS CORPORATION

Across the lower section of the dashboard environment panel there is a 12V socket and space for a maximum of seven switches.

Each switch has its own identity. This is unique for the relevant function. The switches can therefore be positioned in any location on the dashboard environment panel, as long as they are installed in the off position. They do not have to be in any particular order. However, the identity of the installed switches must correspond with the car configuration file so that they can be activated.

There are diagnostics for the switches.

REAR A/C (ONLY XC90 WITH THREE ROWS OF SEATS)

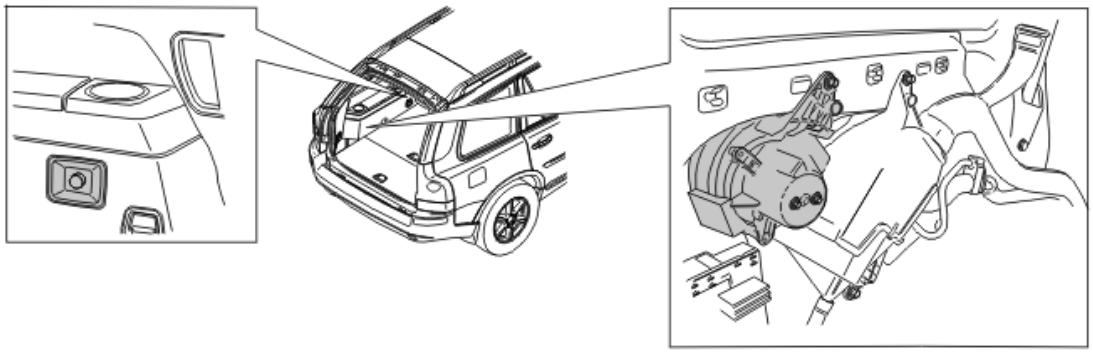

Fig. 6: Identifying Rear A/C
Courtesy of VOLVO CARS CORPORATION

XC90 with three rows of seats is equipped with a rear A/C system. This consists of:

- power unit
- fan
- expansion valve
- blower fan switch.

The rear A/C system is controlled by a switch in the lower section of the dashboard environment panel. When the switch is activated the climate control unit (CCM) transmits a signal to the rear electronic module (REM) via the Control area network (CAN). The rear electronic module (REM) supplies the power unit and the blower fan switch with voltage via a relay. The blower fan switch sends control voltage to the power unit based on the position of the control. The power unit converts the control voltage to supply voltage for the blower fan motor.

The rear A/C is directly connected to the front air conditioning via the high and low pressure pipes and hoses. The only way to control the cooling in the third row of seats is to control the fan speed using the rear fan switch.

The rear electronic module (REM) diagnoses the relay supply, otherwise the rear A/C cannot be diagnosed.

DIAGNOSTIC FUNCTIONS

CLIMATE CONTROL MODULE (CCM)

The climate control module (CCM) has a built-in diagnostic system which continuously monitors internal functions and input and output signals.

DIAGNOSTIC TROUBLE CODES (DTCS)

Diagnostic trouble codes (DTCs) are stored in the control module if the climate control module (CCM) detects a fault. Every diagnostic trouble code (DTC) has a counter which records the number of cycles which have been "fault-free" since the diagnostic trouble code (DTC) was stored. A fault which is detected in each operating cycle is defined as permanent. A fault which is detected in one or more operating cycles (although not the present one) is defined as intermittent.

An operating cycle is the period from when the ignition was switched on, remained on for at least 10 seconds and was finally switched off for at least 10 seconds.

READING AND ERASING DIAGNOSTIC TROUBLE CODES (DTCS)

Stored diagnostic trouble codes (DTCs) can be read off and erased using this function.

READING OFF INPUT AND OUTPUT SIGNALS

Using this function, the status or value of parameters can be read off. The presentation of the status or value can be obtained graphically or digitally.

For further information about the different parameters, see **DESCRIPTION OF PARAMETERS** .

READING OFF EXTENDED FAULT-TRACING INFORMATION

This function can be used to read parameters, status identifiers and counters stored at the same time as a diagnostic trouble code (DTC). These are called frozen values.

For further information, see **FROZEN VALUES CLIMATE CONTROL MODULE, DESCRIPTION**.

DESCRIPTION OF PROGRAMMABLE PARAMETERS, CUSTOMER ADAPTATION

Certain parameters for the climate control module (CCM) can be read off and programmed using this function. The purpose of this programming is to:

- read the programmed parameters before replacing the control module. This is so the same parameters can be entered into the new control module
- to adapt the function of the control module for the equipment levels of the car (passenger compartment ventilation filter, parking heater)
- to adapt the function of the control module to the requirements of the driver.

Passenger compartment ventilation filter compensation, status

Indicates the status for the activation of passenger compartment ventilation filter compensation.

OFF = Compensation not active

ON = Compensation active (preset)

Blower fan run-on, status

Provides the status for activation of the blower fan run-on. The run-on dries the evaporator and prevents bad odors which may otherwise result from residual moisture in the system.

OFF = Run-on inactive

ON = Run-on active (preset)

Blower fan speed, value

Allows the speed to be modified for the blower fan when the climate control system is in AUTO mode. Modifying the parameters means that the climate control system either blows more or less air than the preprogrammed value, to correspond to the request of the driver.

Gives the voltage value for adaptation of the blower fan speed.

-1.0 - +1.0 V (0 V preset)

Setting for air distribution for the floor / defroster residual heat, value

Indicates the setting of the air distribution between the floor and defroster.

10/90 - 90/10% (70/30% preset)

Setting for air distribution for the floor / defroster parking heater, value

Indicates the setting of the air distribution between the floor and defroster.

10/90 - 90/10% (70/30% preset)

Passenger compartment temperature, value

The passenger compartment temperature in relation to the passenger compartment temperature switch position can be adjusted by programming a compensation value.

The passenger compartment temperature can be raised or lowered by a maximum of ±2 °C (±4 °F) from the normal value. This allows the temperature to be adjusted in accordance with the driver's wishes.

0 = -1.0 °C/-2.0 °F

1 = -0.5 °C/-1.0 °F

2 = 0.0 °C / 0.0 °F (default value)

3 = +0.5 °C/+1.0 °F

4 = +1.0 °C/+2.0 °F

DESCRIPTION OF COMPONENTS/FUNCTIONS ACTIVATION

Self-adjustment of damper motors

This function can be used to carry out self adjustment of the limit positions for all the damper motors. Self

adjustment must be carried out if, after checks, one or more of the damper motors do not reach their limit positions or the climate control module (CCM) is replaced. There are a number of possible reasons for a damper motor not reaching its end position. For example, the motor or the damper has been turned manually, the voltage supply may have been cut, or a component has been replaced.

FROZEN VALUES CLIMATE CONTROL MODULE, DESCRIPTION

EXPLANATION

Not all the parameters described need to be implemented in the control module. This varies from system to system.

Parameters can also vary depending on which type of climate control module the car is equipped with.

Frozen values are parameter values that are stored when a diagnostic trouble code (DTC) is stored.

BATTERY VOLTAGE, VALUE

Measurement range: 0-18 V

Normal value when the generator (GEN) is charging: 13.0-14.5 V

The value indicates the voltage at the climate control module. Delayed X supply means that voltage supply is retained for 1 minute after the ignition is switched off. Activation of functions such as blower fan run-on and damper motor self-adjustment must be possible during this time.

DISTANCE, VALUE

Indicates the total mileage of the vehicle. The value is given in km.

TIME, VALUE

The value displays the time that has passed since the diagnostic trouble code (DTC) was stored.

FAN CURRENT, VALUE

Measurement range: 0-10 mA

The climate control module calculates the value based on the signal from the control knob for the blower fan. With electronic climate control, the value is also affected by automatic climate control (AUTO position).

The value is used to control the power supply from the power unit to the blower fan motor.

FAN SWITCH, VALUE

Measurement range: 0-100 %

The value indicates the control signal from the climate control module to the blower fan motor.

BLOWER FAN DIAGNOSTIC SIGNAL, VALUE

Measurement range: 0-5 V

The climate control module generates an analog signal. This is converted to a current which the power unit converts back to an analog signal. The diagnostic signal is an extremely intense signal that cannot be used when checking the blower fan.

PASSENGER COMPARTMENT TEMPERATURE, VALUE

Measurement range: -40 to +85 °C

The climate control module calculates the temperature based on the signal from the passenger compartment temperature sensor.

The value is used to control the passenger compartment temperature and as the input signal to the central electronic module (CEM).

FAN LEVEL, VALUE

Measurement range: 0-7 step

The value indicates the position of the blower fan switch and is used by the climate control module to calculate the control signal to the blower fan motor.

VOLTAGE FAN, VALUE

Measurement range: 1-5 V

The value indicates the position of the blower fan switch and is used by the climate control module to calculate the control signal to the blower fan motor.

LEFT TEMPERATURE DAMPER MOTOR, STATUS

The status displays if the damper motor is activated or not.

Off = not activated

On = activated

RIGHT TEMPERATURE DAMPER MOTOR, STATUS

The status displays if the damper motor is activated or not.

Off = not activated

On = activated

RECIRCULATION DAMPER MOTOR, STATUS

The status displays if the damper motor is activated or not.

Off = not activated

On = activated

DAMPER MOTOR FLOOR / VENTILATION STATUS

The status displays if the damper motor is activated or not.

Off = not activated

On = activated

DAMPER MOTOR, DEFROSTER, STATUS

The status displays if the damper motor is activated or not.

Off = not activated

On = activated

ENGINE RUNNING, STATUS

The status displays if the engine was running when the diagnostic trouble code (DTC) was stored.

No = engine not running

Yes = engine running

PULSES FROM THE TEMPERATURE SENSOR FOR THE FAN MOTOR, VALUE

Measurement range: 0-15 pulses/65 ms

The value indicates the speed of the fan for the passenger compartment temperature sensor. The standard number of pulses is 12-13/65 ms.

TEMPERATURE, VALUE

Measurement range: -60 to +195 °C

The value indicates the engine coolant temperature (ECT). The climate control module uses the value to control the blower fan during cold start when AUTO is selected.

OUTSIDE TEMPERATURE, VALUE

Measurement range: -40 to +80 °C

The climate control module obtains the value via the control area network (CAN) from the passenger door module.

The value is used to control the passenger compartment temperature.

EVAPORATOR TEMPERATURE SENSOR, VALUE

Measurement range: 0-5 V

The climate control module uses the value from the evaporator temperature sensor to calculate the temperature.

The value is used to control the air conditioning (A/C) compressor. The compressor is switched off when there is a risk of freezing.

AIR CONDITIONING (A/C), STATUS, COMPRESSOR STATUS

The status displays if the compressor was running when the diagnostic trouble code (DTC) was stored.

Off = compressor off

On = compressor on

LINEAR PRESSURE, VALUE

Measurement range 0-3100 kPa

The value indicates the pressure in the compressor.

VOLTAGE, PASSENGER COMPARTMENT TEMPERATURE SENSOR, VALUE

Measurement range: 0-5 V

The climate control module uses the value from the passenger compartment temperature sensor to calculate the passenger compartment temperature. The value is used as a compensation parameter to control the passenger compartment temperature.

SUN SENSOR, SENSOR SIGNAL, VALUE

Measurement range: 0-5 V

The climate control module uses the value from the sun sensor to calculate the sun intensity. The value is used as a compensation parameter to control the passenger compartment temperature.

TWILIGHT SENSOR, SENSOR SIGNAL, VALUE

Measurement range: 0-5 V

The climate control module uses the value from the twilight sensor to calculate the degree of darkness. The value is used to control the strength of the lighting of the button LEDs.

TEMPERATURE DAMPER MOTOR, LEFT POSITION, VALUE

Measurement range: 0-100 %

The value indicates how much the damper is open.

The climate control module calculates the value based on the stage movement of the damper motor.

DAMPER MOTOR, TEMPERATURE RIGHT POSITION, VALUE

Measurement range: 0-100 %

The value indicates how much the damper is open.

The climate control module calculates the value based on the stage movement of the damper motor.

RECIRCULATION DAMPER MOTOR POSITION, VALUE

Measurement range: 0-100 %

The value indicates how much the damper is open.

The climate control module calculates the value based on the stage movement of the damper motor.

FLOOR / VENTILATION DAMPER MOTOR POSITION, VALUE

Measurement range: 0-100 %

The value indicates how much the damper is open.

The climate control module calculates the value based on the stage movement of the damper motor.

DAMPER MOTOR DEFROSTER POSITION, VALUE

Measurement range: 0-100%

The value indicates how much the damper is open.

The climate control module calculates the value based on the stage movement of the damper motor.

AUTOMATIC BREAKER, ACTIVATED, STATUS

The status displays if the signal from the air distribution selector to the climate control module was activated when the diagnostic trouble code (DTC) was stored.

Yes = activated

No = not activated

FLOOR, ACTIVATED, STATUS

The status displays if the signal from the air distribution selector to the climate control module was activated when the diagnostic trouble code (DTC) was stored.

Yes = activated

No = not activated

DEFROSTER, ACTIVATED, STATUS

The status displays if the signal from the air distribution selector to the climate control module was activated when the diagnostic trouble code (DTC) was stored.

Yes = activated

No = not activated

MAX DEFROSTER, ACTIVATED, STATUS

The status displays if the signal from the air distribution selector to the climate control module was activated when the diagnostic trouble code (DTC) was stored.

Yes = activated

No = not activated

AIR CONDITIONING (A/C) ON, ACTIVATED, STATUS

The status displays if the signal from the air distribution selector to the climate control module was activated when the diagnostic trouble code (DTC) was stored.

Yes = activated

No = not activated

AIR CONDITIONING (A/C) OFF, ACTIVATED, STATUS

The status displays if the signal from the air distribution selector to the climate control module was activated when the diagnostic trouble code (DTC) was stored.

Yes = activated

No = not activated

RECIRCULATION ACTIVATED, STATUS

The status displays if the signal from the air distribution selector to the climate control module was activated when the diagnostic trouble code (DTC) was stored.

Yes = activated

No = not activated

VENTILATION, ACTIVATED, STATUS

The status displays if the signal from the air distribution selector to the climate control module was activated when the diagnostic trouble code (DTC) was stored.

Yes = activated

No = not activated

SEAT HEATER LEFT FRONT ACTIVATED, STATUS

The status displays if the signal from the seat heater to the climate control module was activated when the diagnostic trouble code (DTC) was stored.

Yes = activated

No = not activated

SEAT HEATER RIGHT FRONT ACTIVATED, STATUS

The status displays if the signal from the seat heater to the climate control module was activated when the diagnostic trouble code (DTC) was stored.

Yes = activated

No = not activated

DEFROSTER / HEATED REAR WINDSHIELD, ACTIVATED, STATUS

The status displays if the signal from the defroster / heated rear windshield to the climate control module was activated when the diagnostic trouble code (DTC) was stored.

Yes = activated

No = not activated

SENSOR SIGNAL, AIR QUALITY SENSOR (AQS), STATUS

The climate control module interprets the pulse width of the air quality sensor and presents it as different levels.

Off

Level 1

Level 2

Level 3

AIR QUALITY SENSOR PULSE WIDTH, VALUE

Measurement range 0-100 %

The climate control unit calculates the air quality using the signal from the air quality sensor. The value is used to control the position of the recirculation motor.

GENERAL INFORMATION ABOUT READING OFF THE STATUS OF THE BUTTONS ON THE DASHBOARD ENVIRONMENT PANEL

The result from reading off the status for buttons on the dashboard environment panel in order from left to right.

DASHBOARD ENVIRONMENT PANEL, BUTTON IDENTITY, STATUS

The status indicates the function of the button.

The following alternatives are available:

- Empty position

  Adjustable head restraints

  Folding door mirrors

  Private locking

  STC

  DSTC

  Auxiliary lamps

  Reduced alarm

  Bi-fuel

  Child-proof lock.

DASHBOARD ENVIRONMENT PANEL, BUTTON ACTIVATED, STATUS

The status displays if the button was activated when the diagnostic trouble code (DTC) was stored.

Yes = activated

No = not activated

DASHBOARD ENVIRONMENT PANEL, BUTTON STATUS

The status displays if the function for the button corresponds to the configuration for the central electronic module (CEM).

Unknown = the status could not be determined

Not permitted = the button function does not correspond to the configuration of the central electronic module

Permitted = the button function corresponds to the configuration of the central electronic module

CARCONFIGSTATUS, ADJUSTABLE HEAD RESTRAINT, STATUS

The status displays whether the identity of a certain switch is permissible or missing compared with the permitted switch identities in the Car Configuration File.

Not defined = comparison failed

Not permitted = identity not permitted

OK = identity permitted

Button missing = button missing on the dashboard environment panel in comparison to the information in the Car Config File

CARCONFIGSTATUS, FOLDING DOOR MIRRORS, STATUS

The status displays whether the identity of a certain switch is permissible or missing compared with the permitted switch identities in the Car Configuration File.

Not defined = comparison failed

Not permitted = identity not permitted

OK = identity permitted

Button missing = button missing on the dashboard environment panel in comparison to the information in the Car Config File

CARCONFIGSTATUS, BIFUEL, STATUS

The status displays whether the identity of a certain switch is permissible or missing compared with the

permitted switch identities in the Car Configuration File.

Not defined = comparison failed

Not permitted = identity not permitted

OK = identity permitted

Button missing = button missing on the dashboard environment panel in comparison to the information in the Car Config File

CARCONFIGSTATUS, PRIVATE LOCKING, STATUS

The status displays whether the identity of a certain switch is permissible or missing compared with the permitted switch identities in the Car Configuration File.

Not defined = comparison failed

Not permitted = identity not permitted

OK = identity permitted

Button missing = button missing on the dashboard environment panel in comparison to the information in the Car Config File

CARCONFIGSTATUS, STC (STABILITY AND TRACTION CONTROL), STATUS

The status displays whether the identity of a certain switch is permissible or missing compared with the permitted switch identities in the Car Configuration File.

Not defined = comparison failed

Not permitted = identity not permitted

OK = identity permitted

Button missing = button missing on the dashboard environment panel in comparison to the information in the Car Config File

CARCONFIGSTATUS, DSTC (DYNAMIC STABILITY AND TRACTION CONTROL), STATUS

The status displays whether the identity of a certain switch is permissible or missing compared with the permitted switch identities in the Car Configuration File.

Not defined = comparison failed

Not permitted = identity not permitted

OK = identity permitted

Button missing = button missing on the dashboard environment panel in comparison to the information in the Car Config File

CARCONFIGSTATUS, AUXILIARY LAMPS, STATUS

The status displays whether the identity of a certain switch is permissible or missing compared with the permitted switch identities in the Car Configuration File.

Not defined = comparison failed

Not permitted = identity not permitted

OK = identity permitted

Button missing = button missing on the dashboard environment panel in comparison to the information in the Car Config File

CARCONFIGSTATUS, REDUCED ALARM, STATUS

The status displays whether the identity of a certain switch is permissible or missing compared with the permitted switch identities in the Car Configuration File.

Not defined = comparison failed

Not permitted = identity not permitted

OK = identity permitted

Button missing = button missing on the dashboard environment panel in comparison to the information in the Car Config File

CARCONFIGSTATUS, CHILD-PROOF LOCK, STATUS

The status displays whether the identity of a certain switch is permissible or missing compared with the permitted switch identities in the Car Configuration File.

Not defined = comparison failed

Not permitted = identity not permitted

OK = identity permitted

Button missing = button missing on the dashboard environment panel in comparison to the information in the Car Config File

DOWNLOADING SOFTWARE AND REPLACING THE CONTROL MODULE

New software can be downloaded into the climate control module. When ordering software, the hardware and the software in the car is compared to the Volvo central database. If the comparison is OK the software is downloaded to the control module.

If the comparison between the car and Volvo central database is not OK, the database is updated with the car configuration. When this is complete the software is downloaded.

The entire climate control module must be replaced as one unit. The exceptions are the fan for the passenger compartment temperature sensor and the switches on the lower section of the dashboard environment panel.

Five customer parameters can be programmed into the climate control module. These customer parameters are stored in the control module but not in the Volvo central database. This means that the customer parameters must be reprogrammed when the hardware is replaced.

FUNCTION

CONTROLLING THE CLIMATE IN THE PASSENGER COMPARTMENT

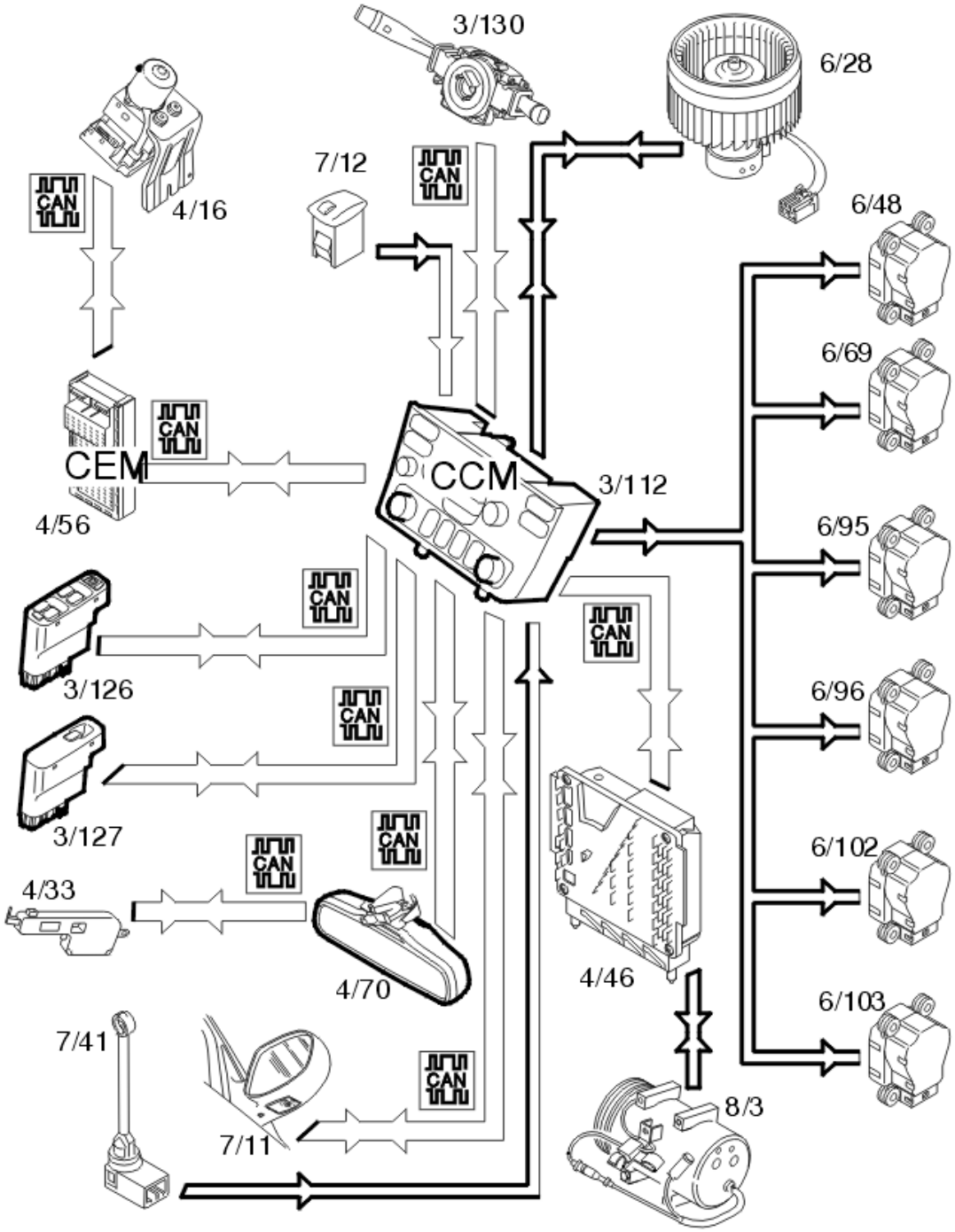

Fig. 7: Climate Control Module Input And Output Signals
Courtesy of VOLVO CARS CORPORATION

The way in which the climate in the passenger compartment is regulated depends on the type of climate control module (CCM) in the car.

Electronic climate control

Electronic climate control means that either manual settings or the AUTO function can be used. In the latter case the control module automatically regulates heat, air conditioning, recirculation and air distribution until the selected temperature is achieved.

Manual climate control

Manual climate control means that heat, air conditioning, recirculation and air distribution must be selected manually.

STD

STD means that heat, recirculation and air distribution must be selected manually.

The climate control module (CCM) (3/112) regulates the following:

- Activation of the air conditioning (A/C) compressor (8/3) with a request via the Controller area network (CAN) to the engine control module (ECM) (4/46)
- Controlling the damper motors. For electronic climate control (6/48), (6/95), (6/96), (6/102) and (6/103). For manual climate control; (6/48), (6/69), (6/95) and (6/96)
- Blower fan speed (6/28).

The climate control module (CCM) regulates the climate in the passenger compartment based on the following input signals:

- The passenger compartment temperature, signal from the internal passenger compartment temperature sensor
- The outside temperature, signal from the outside temperature sensor (7/11)
- The evaporator temperature, signal from the evaporator temperature sensor (7/41)
- Sun roof status. Signal from the sun roof control module (4/33) via the upper electronic module (UEM) (4/70) over the Controller area network (CAN)
- Side window status. Signals from the driver door module (DDM) (3/126) and passenger door module (PDM) (3/127) via the Controller area network (CAN)
- Door status. Signal from the central electronic module (CEM) (4/56) via the Controller area network (CAN)
- Sun intensity. Signal from the sun sensor (7/12)
- Speed. Signal from the brake control module (BCM) (4/16) (previously ABS), via the Controller area network (CAN)
- Windshield wiper status. Signal from the steering wheel module (SWM) (3/130) via the Controller area network (CAN).

The climate control module (CCM) (for electronic climate control) uses information about the status of the sun roof, side windows and doors to determine how it should compensate for changes in the passenger compartment temperature. If side windows, doors or the sun roof are opened, the climate control module (CCM) will not compensate for a change in passenger compartment temperature. Instead it maintains the same level of climate control for the compressor and blower fan as before.

The climate control module (CCM) (for electronic climate control) uses the signal from the steering wheel module (SWM) to establish whether the windshield wipers are switched on. This is to regulate the blower fan and the damper motor to remove any mist from the inside of the windshield when it rains.

The climate control module (CCM) (for electronic climate control) uses the signal from the sun sensor to compensate for high sun intensity by decreasing the temperature of ventilation air, changing air distribution and increasing the speed of the blower fan.

The climate control module (CCM) (for electronic climate control and manual climate control) uses the signal from the evaporator temperature sensor to control the activation of the air conditioning (A/C) compressor. If the signal from the evaporator temperature sensor indicates an evaporator temperature below 6 °C, the compressor cannot be activated because of the risk of freezing.

To maintain a constant flow of air in the passenger compartment the climate control module (CCM) (for electronic climate control) uses the speed signal from the brake control module (BCM) to regulate the speed of the blower fan. Generally, as the speed of the car increases the speed of the blower fan decreases.

At higher speeds the flow of air into the fresh air damper is adjusted.

SEAT HEATERS

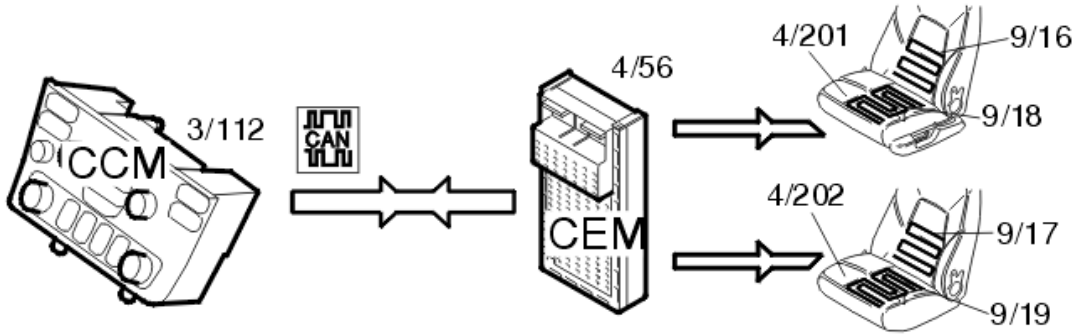

Fig. 8: Seat Heaters Input And Output Signals
Courtesy of VOLVO CARS CORPORATION

The seat heaters are activated by pressing the switches on the climate control module (CCM) (3/112). The climate control module (CCM) transmits information via the Controller area network (CAN) about the status selected for each seat to the central electronic module (CEM) (4/56). The central electronic module (CEM) then transmits the information to the relevant control module for seat heating (4/201, 4/202). The control modules for the seat heaters then control the current to the heater pad for the left-hand seat (9/16, 9/18) and right-hand seat (9/17, 9/19).

The central electronic module (CEM) also transmits information to the climate control module (CCM) about whether the seat heaters are activated or not. The climate control module (CCM) uses this information to light / turn off the LEDs on the buttons.

RECIRCULATION CONTROL (ELECTRONIC CLIMATE CONTROL ONLY)

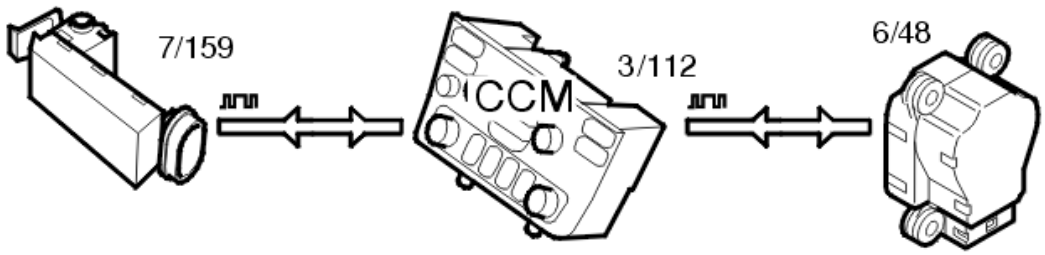

Fig. 9: Recirculation Control Input And Output Signals
Courtesy of VOLVO CARS CORPORATION

The climate control module (CCM) (3/112) controls the recirculation during the following conditions for electronic climate control:

- The recirculation switch is on (the LED lights orange)
- The system is in AUTO position and there is a large difference between the desired and current temperature
- The car is equipped with an air quality sensor, and the recirculation switch is on (the LED light green).

The air quality sensor transmits a signal to the climate control module (CCM) if it detects high concentrations of pollutants in the outside air. When this occurs the climate control module (CCM) transmits a signal to the damper motor for recirculation (6/48) to close the fresh air damper and to use recirculated air. The level of recirculation is controlled by the signal from the air quality sensor:

- signal 1 provides partial recirculation for speeds below 85 km/h, no recirculation for speeds exceeding 85 km/h
- signals 2 and 3 provide 100% recirculation.

If the high level of pollutants remains the system stays in recirculation for a certain time, maximum of 10 minutes. The time that the system is recirculating is determined by the outside temperature, if the air conditioning (A/C) is on and if the windshield wipers are activated. The system returns to fresh air for a short time before recirculation is resumed. The particle filter absorbs most of the pollutants entering the passenger compartment during this time. The maximum time prevents misting and musty air.

The air quality transmits information about the content of pollutants to the climate control module (CCM). This information is graded into four levels, and the information used for diagnosis.

Recirculation is never permitted if the defroster is selected. The climate control module (CCM) requests the compressor when the evaporator temperature exceeds 3 °C.

HEATED REAR WINDSHIELD AND DOOR MIRRORS

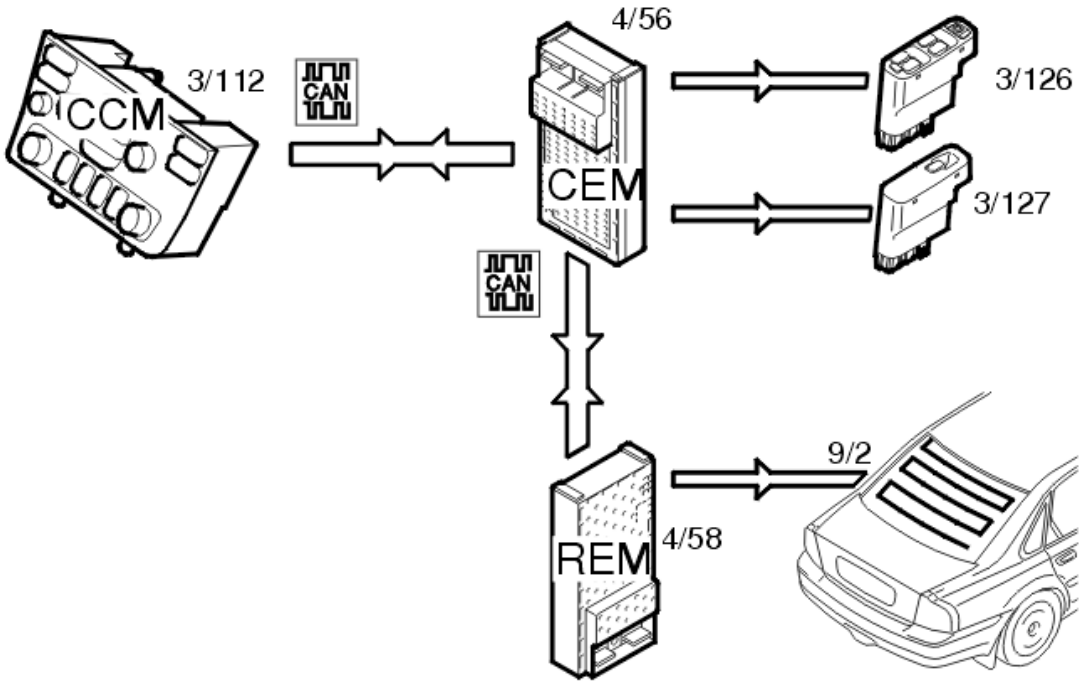

Fig. 10: Heated Rear Windshield And Door Mirrors Input And Output Signals
Courtesy of VOLVO CARS CORPORATION

The heated rear windshield and door mirrors are activated by pressing the switch on the climate control module (CCM) (3/112). The climate control module (CCM) transmits information to the central electronic module (CEM) (4/56) about the selected heating status. The central electronic module (CEM) transmits a signal to the driver's door module (3/126) and passenger door module (PDM) (3/127) for the heated door mirrors and to the rear electronic module (REM) (4/58) for the heated rear windshield.

The central electronic module (CEM) also transmits information to the climate control module (CCM) about whether the seat heaters are activated or not. The climate control module (CCM) uses this information to light / turn off the LED on the button.

SWITCH FUNCTIONS, DASHBOARD ENVIRONMENT PANEL, (LOWER SECTION)

The following functions can be activated using the switches on the dashboard environment panel:

- Folding head restraint, rear seat (S60/S80)
- Folding door mirrors (market dependent)
- Bi-fuel, on / off (market dependent)
- Valet lock, on/off
- Child lock, on / off (market dependent)
- STC, off / on (option)
- DSTC, off / on (option)
- Auxiliary lamps, off / on (option)

- Reduced alarm, on / off (option).

In order for certain functions to be activated the engine must be switched on and/or the master key must be in position II.

Folding head restraints, rear seat

When the switch for the folding head restraints is activated, information is transmitted by the climate control module (CCM) (3/112) to the rear electrical module (4/58) via the Controller area network (CAN).

Folding door mirrors

When the switch for the folding door mirrors is activated, information is transmitted by the climate control module (CCM) to the driver's door module (3/126) and the passenger door module (PDM) (3/127) via the Controller area network (CAN).

Bi-fuel

When the bi-fuel switch is activated, a signal is transmitted from the climate control module (CCM) to the engine control module (ECM) (4/46) on the Controller area network (CAN) via the central electronic module (CEM). The engine control module (ECM) transmits a signal to the climate control module (CCM) about the type of fuel being used. The climate control module (CCM) uses this signal to light / turn off the LED on the switch.

Valet lock / child-proof lock

When activating the valet lock switch or the child lock switch information is transmitted to the rear electronic module (REM) via the Controller area network (CAN).

STC or DSTC

When the STC or DSTC switch is activated, a signal is transmitted from the climate control module (CCM) to the brake control module (BCM) (previously ABS) (4/16) via the Controller area network (CAN). The brake control module (BCM) transmits a signal to the climate control module (CCM) about whether the STC or DSTC functions are operating. The climate control module (CCM) uses this signal to light / turn off the LED on the switch.

Auxiliary lamps

When the auxiliary lamps switch is activated, information is transmitted from the climate control module (CCM) to the central electronic module (CEM). The central electronic module (CEM) transmits a signal to the climate control module (CCM) about whether the auxiliary lamps are on or not. The climate control module (CCM) uses this information to light / turn off the LED on the switch

Reduced alarm

When activating the reduced alarm switch information is transmitted via the Controller area network (CAN) to

the upper electronic module (UEM) and rear electronic module (REM).

Rear A/C

When activating the switch for rear A/C information is transmitted via the Controller area network (CAN) to the rear electronic module (REM). From this signal and the signal from the engine control module (ECM) indicating whether the engine is running or not, the rear electronic module (REM) will activate/deactivate the relay supply to the rear A/C system. The rear electronic module (REM) transmits a signal indicating whether the rear A/C is on or not to the climate control module (CCM) via the control area network (CAN). The climate control module (CCM) uses this information to light / turn off the LED in the switch.

SYSTEM OVERVIEW

CONTROL MODULE

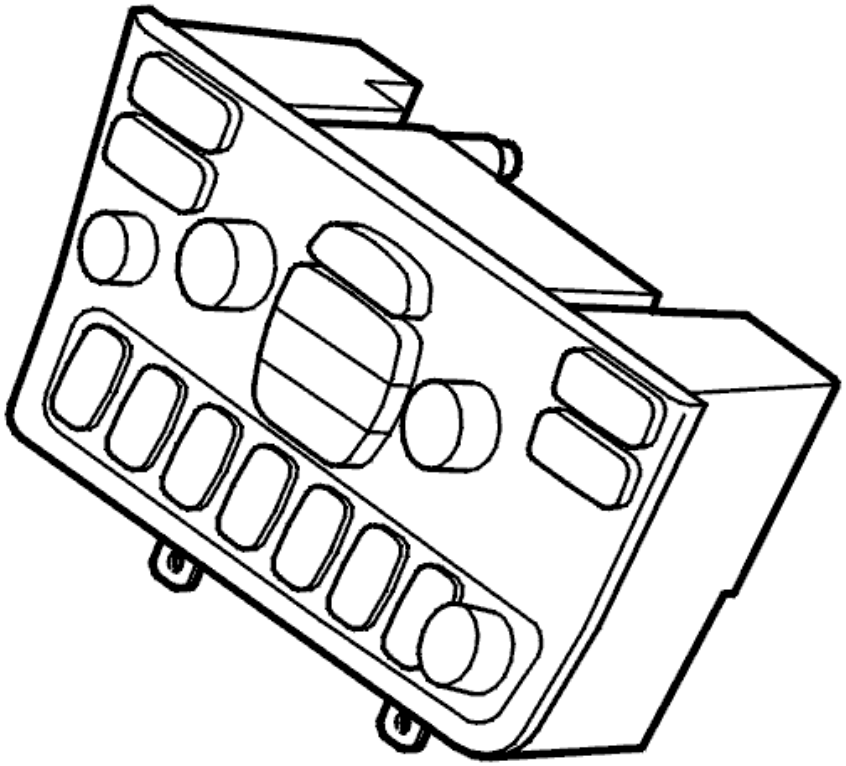

Fig. 11: Climate Control Module
Courtesy of VOLVO CARS CORPORATION

The climate control module controls the climate control system and the buttons in the dashboard environment panel.

The climate control module is located in the center console. There are three versions of control module (market dependent). These are:

- Electronic Climate Control. This fully automatic climate control system has air conditioning and the option of manual settings
- Manual Climate Control. A manual climate control system with air conditioning
- Standard Heater. A manual climate control system without air conditioning.

The climate control module (for the electronic climate control and manual climate control) obtains the current passenger compartment temperature from a sensor integrated into the control module.

The intensity of the dashboard lighting is regulated based on a signal from the twilight sensor. The twilight sensor is located at the front of the dashboard environment panel under the button for air distribution to the floor.

The climate control module communicates with components which are directly connected and with other control modules and also with components via serial communication and Control area network (CAN).

The control module checks input and output signals and carried out activations via an integrated diagnostic system. A diagnostic trouble code (DTC) is stored if the control module detects an error. In certain cases the control module replaces the faulty signal with a substitute value.

Diagnostic trouble codes (DTC) are stored in the control module memory. This information can be read off using the diagnostic tool via the data link connector (DLC) in the car.

A simple method for checking that the climate control module has a power supply and is grounded is to increase or decrease the blower fan speed. Another method is to activate one of the functions controlled by the buttons on the dashboard environment panel.

SIGNALS

The table below summarizes input and output signals to and from the climate control module. The signal types are divided into directly connected signals, serial communication and Controller area network (CAN) communication. The illustration below displays the same information with the Volvo component designations.

Input signals	Output signals
Directly connected:	**Directly connected:**
Sun sensor (7/12), (ECC)	Blower fan motor (6/28), control signal
Blower fan motor (6/28), diagnostic signal	Damper motors for electronic climate control (6/48, 6/95-96, 6/102-103), control signal
Evaporator temperature sensor (7/41), control signal	Damper motors for manual climate control (6/48, 6/69, 6/95-96), control signal
Air quality sensor (7/159), (ECC, option)	Sun sensor (7/12), (ECC)
Via Controller Area Network (CAN):	**Via Controller Area Network (CAN):**
The central electronic module (CEM) (4/56)	The central electronic module (CEM) (4/56)
The engine control module (ECM) (4/46)	Driver's door module (DDM) (3/126)
Rear electronic module (4/58)	Passenger door module (3/127)
Brake control module (ABS-control module) (4/16)	Brake control module (ABS-control module) (4/16)
Driver's door module (DDM) (3/126)	Rear electronic module (4/58)

Passenger door module (3/127) Upper electronic module (4/70) Steering wheel module (3/130)	The engine control module (ECM) (4/46)

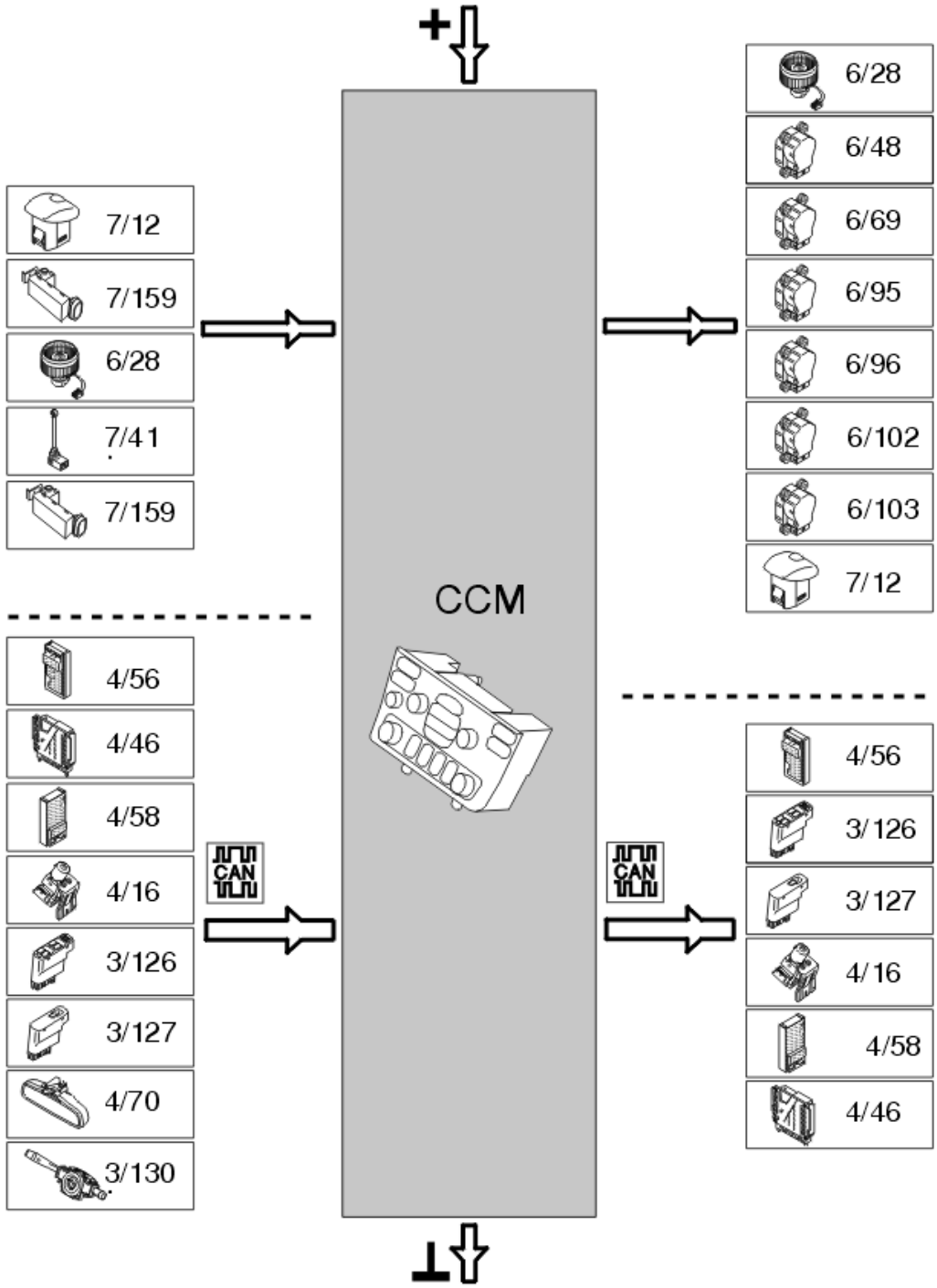

Fig. 12: Climate Control Module Input And Output Signals
Courtesy of VOLVO CARS CORPORATION

CLIMATE CONTROL MODULE (CCM) (2005-2012)

DESIGN

CLIMATE CONTROL UNIT

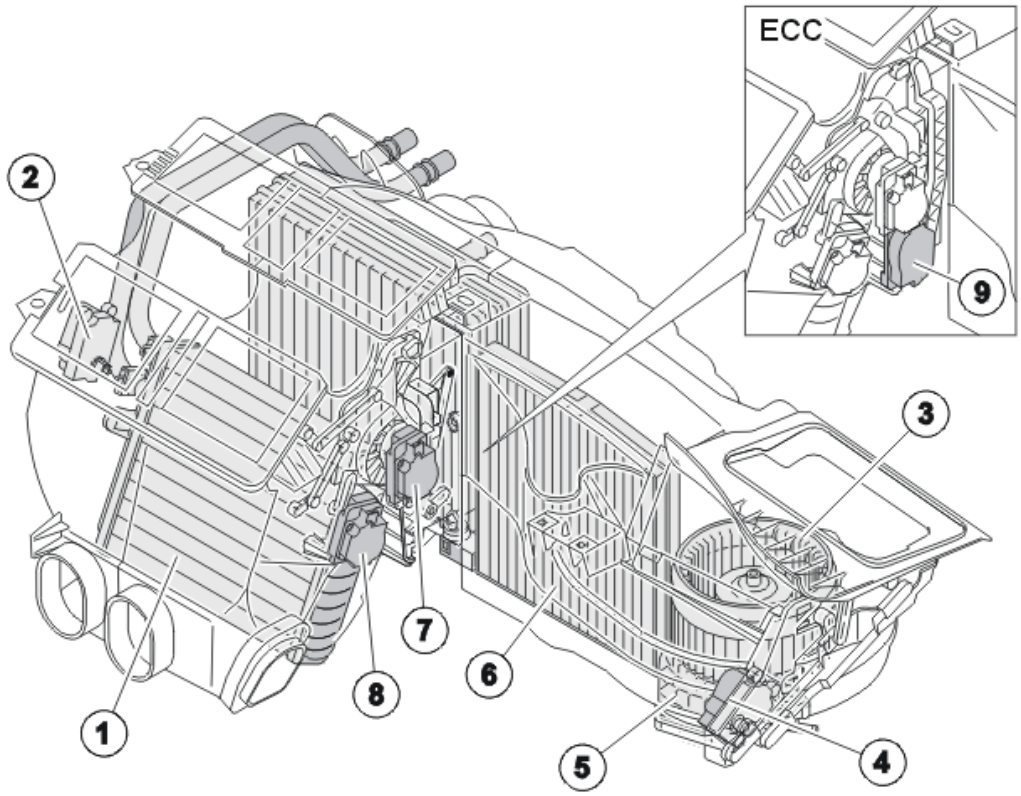

Fig. 13: Climate Control Unit
Courtesy of VOLVO CARS CORPORATION

The climate control unit consists of the following components:

1. Heater element
2. Damper motor module (DMM), temperature left
3. Blower fan
4. Damper motor module (DMM), fresh air/recirculation
5. Power unit for blower fan motor
6. Particle filter
7. Damper motor module, ventilation and floor (also defroster for MCC)
8. Damper motor module (DMM), temperature right
9. Damper motor module (DMM), defroster (ECC).

Engine coolant constantly flows through the heater element. There is no valve to regulate the flow. The selected temperature is achieved using dampers for the right and left-hand sides of the car installed upstream and downstream of the heater element. These control the amount of air to be warmed. There are also dampers downstream of the heater element that guide the airflow to the correct air vent.

The climate control module provides infinitely variable electronic blower fan control. When AUTO mode (ECC only) is engaged the climate control module (CCM) adapts the blower fan speed to the setting of the controls and the vehicle speed. The blower fan can be set to run-on in order to reduce residual moisture in the evaporator (the function is not available for vehicle's with engine B8444S).

A timer located in the central electronic module (CEM) controls the run-on time. 50 minutes after the engine has been switched off and the ignition has been turned to position 0 or I, the central electronic module (CEM) supplies power to the climate control module (CCM) and the blower fan is activated at full speed for 7 minutes. This run-on dries the evaporator and prevents bad odors.

This function is programmed at the factory, but can be deactivated in the event of customer complaints via programming of customer parameters. Programming is carried out via VIDA (Volvo scan tool).

DAMPER MOTOR MODULE (DMM)

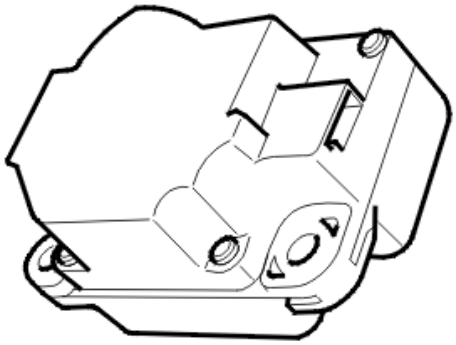

Fig. 14: Damper Motor Module
Courtesy of VOLVO CARS CORPORATION

The damper motor module (DMM) consists of a control unit and a stepper motor. The different versions of the climate control system have up to 5 damper motor modules (DMM). These are for the different functions such as defroster and recirculation. The climate control module (CCM) communicates with the other damper motor modules (DMM) via two LIN buses, LIN bus 1 and LIN bus 2.

When regulating the different dampers, the climate control module (CCM) transmits a request for a new damper position to the each damper motor module (DMM). The damper motor module (DMM) calculates and then regulates the required direction and number of steps required to obtain the requested position. The damper motor module (DMM) then transmits information to the climate control module (CCM) indicating the actual damper position and status.

When replacing the damper motor module (DMM), the new damper motor must be identified by the climate control module (CCM). This is carried out via VIDA (Volvo scan tool). When replacing the damper motors,

ensure that identification is carried out.

Each damper motor module (DMM) is powered via a relay in the central electronic module (CEM).

There are diagnostics for the damper motor module (DMM).

COOLING SYSTEM (NOT B8444S)

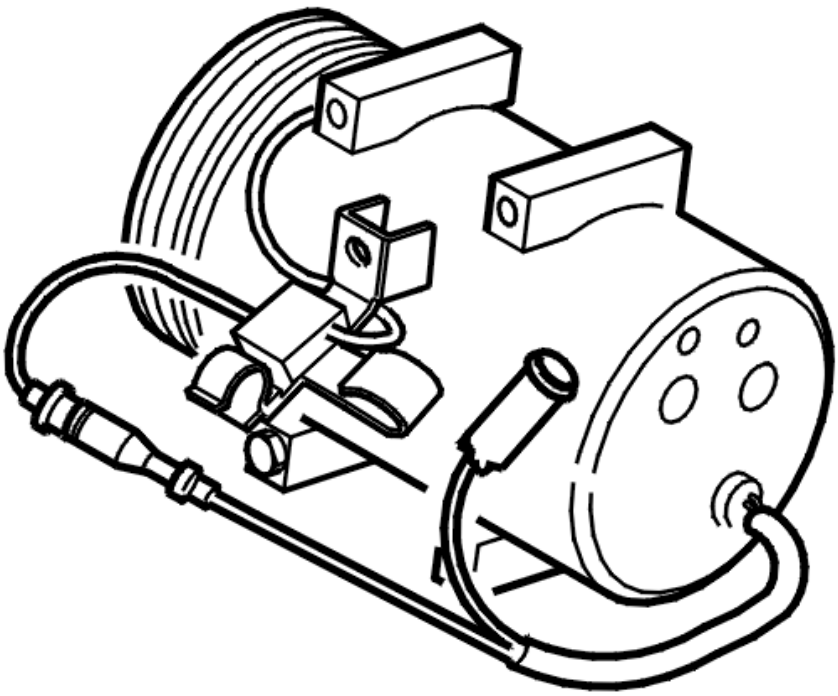

Fig. 15: Identifying A/C Compressor
Courtesy of VOLVO CARS CORPORATION

The engine control module (ECM) controls the A/C compressor. When the air conditioning (A/C) compressor on the dashboard environment panel is activated, a request is transmitted via the control area network (CAN) to the engine control module (ECM) about the activation of the compressor. The engine control module (ECM) determines when the compressor must operate. If any of the following conditions are met the compressor is disconnected:

- high engine coolant temperature (ECT)
- wide open throttle (WOT)
- the engine has just been started
- overpressure in the air conditioning (A/C) system.

When the engine is started the engine control module (ECM) activates the air conditioning compressor for a

short period even if the climate control module (CCM) has not transmitted a request for this. This is carried out for diagnosis. This check is carried out at all temperatures exceeding -6 °C.

The advantage in allowing the engine control module (ECM) to control the air conditioning compressor is that it can delay compressor activation somewhat, if the idling speed must be compensated for the extra load for example.

COOLING SYSTEM (B8444S ONLY)

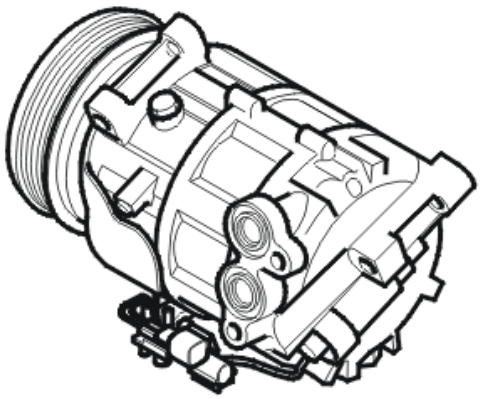

Fig. 16: Identifying A/C Compressor (B8444S Only)
Courtesy of VOLVO CARS CORPORATION

The engine control module (ECM) controls the variable A/C compressor. When the A/C switch on the dashboard environment panel is activated, a request is transmitted via the control area network (CAN) to the engine control module (ECM) about the activation of the compressor. The engine control module (ECM) calculates the current to open the valve to control the variable A/C compressor. If any of the following conditions are met, the valve that activates the compressor is not opened:

- high engine coolant temperature (ECT)
- wide open throttle (WOT)
- the engine has just been started
- overpressure in the air conditioning (A/C) system.

When the engine is started the engine control module (ECM) activates the air conditioning compressor for a short period even if the climate control module (CCM) has not transmitted a request for this.

This is carried out for diagnosis and maintenance at all temperatures exceeding 0 °C.

SUN SENSOR (ELECTRONIC CLIMATE CONTROL ONLY)

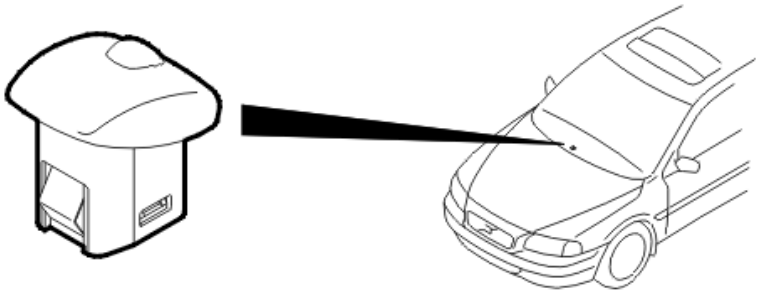

Fig. 17: Locating Sun Sensor
Courtesy of VOLVO CARS CORPORATION

TWILIGHT SENSOR

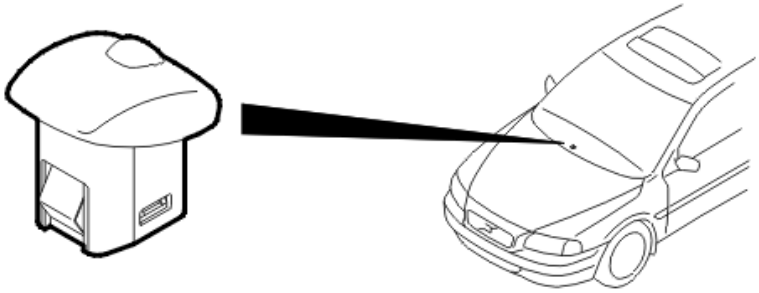

Fig. 18: Locating Sun Sensor
Courtesy of VOLVO CARS CORPORATION

EVAPORATOR TEMPERATURE SENSOR

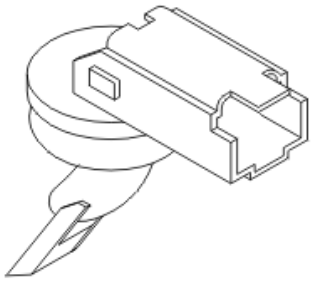

Fig. 19: Identifying Evaporator Temperature Sensor
Courtesy of VOLVO CARS CORPORATION

The evaporator temperature sensor is installed on the heater. Its role is to inform the climate control module (CCM) of the temperature of the refrigerant. The climate control module (CCM) controls the request from the evaporator temperature sensor to activate the air conditioning compressor. The evaporator temperature sensor is directly connected to the climate control module (CCM).

There are diagnostics for the evaporator temperature sensor.

AIR QUALITY SENSOR (AQS) (ECC ONLY, OPTION)

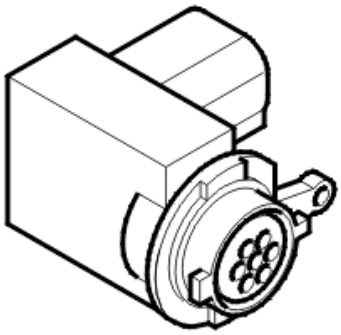

Fig. 20: Air Quality Sensor
Courtesy of VOLVO CARS CORPORATION

The air quality sensor (AQS) is available as an option for ECC. The air quality sensor (AQS) is, together with a particle filter, part of a system which has the role of ensuring that the air in the passenger compartment is free of pollutants. The role of the air quality sensor (AQS) is to transmit a signal to the climate control module (CCM) if it detects increased concentrations of pollutants in the outside air.

The air quality sensor (AQS) measures concentrations of COx and NOx.

The air quality sensor (AQS) compares the present values with previous ones and can calculate changes in pollutant concentrations.

The air quality sensor (AQS) communicates with the climate control module (CCM) via a LIN bus.

The signal from the air quality sensor (AQS) to the climate control module (CCM) has four steps, 0-3:

- off = no increase or reduction in pollutant level
- signal 1 = gradual increase in pollutant level
- signal 2 = medium increase in pollutant level
- signal 3 = rapid increase in pollutant level.

The climate control module (CCM) uses the signal to control the recirculation damper motor.

There are diagnostics for the air quality sensor (AQS).

SEAT HEATERS

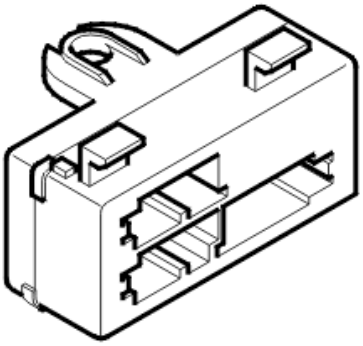

Fig. 21: Identifying Left Seat Heating Module (SHM)
Courtesy of VOLVO CARS CORPORATION

The system for the seat heaters consists of three different parts:

- a seat heating module (SHM) which controls the function for communicating with the climate control module (CCM)
- two heater pads
- a temperature sensor.

The seat heating module (SHM) is under the left and right-hand front seat. The heater pads are in the seat and backrest. The temperature sensor is in the seat.

The seat heating module (SHM) is directly connected to the heater pad and temperature sensor. The seat heating module (SHM) communicates with the climate control module (CCM) via a LIN bus.

There are diagnostics for the seat heating module (SHM).

SWITCHES, DASHBOARD ENVIRONMENT PANEL, (LOWER SECTION)

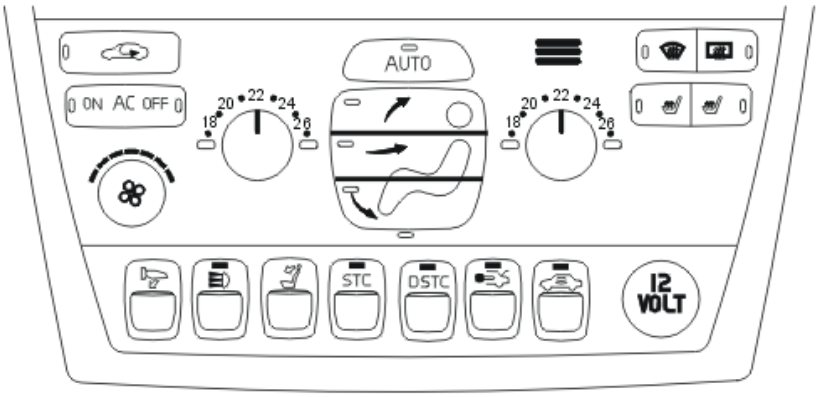

Fig. 22: Dashboard Environment Panel

Courtesy of VOLVO CARS CORPORATION

Across the lower section of the dashboard environment panel there is a 12V socket and space for a maximum of seven switches.

Each switch has its own identity. This is unique for the relevant function. The switches can therefore be positioned in any location on the dashboard environment panel, as long as they are installed in the off position. They do not have to be in any particular order. However, the identity of the installed switches must correspond with the car configuration file so that they can be activated.

There are diagnostics for the switches.

REAR A/C (ONLY XC90 WITH THREE ROWS OF SEATS)

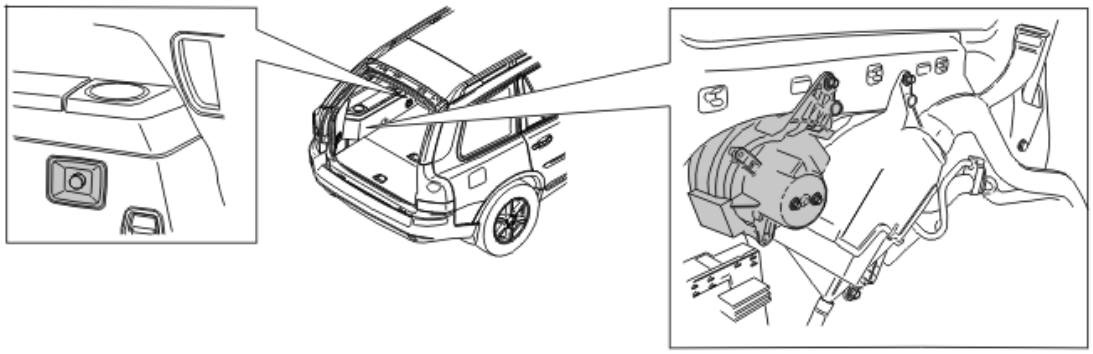

Fig. 23: Identifying Rear A/C
Courtesy of VOLVO CARS CORPORATION

XC90 with three rows of seats is equipped with a rear A/C system. This consists of:

- power unit
- fan
- expansion valve
- blower fan switch.

The rear A/C system is controlled by a switch in the lower section of the dashboard environment panel. When the switch is activated, the climate control unit (CCM) transmits a signal to the rear electronic module (REM) via the controller area network (CAN). The rear electronic module (REM) supplies the power unit and the blower fan switch with voltage via a relay. The blower fan switch sends control voltage to the power unit based on the position of the control. The power unit converts the control voltage to supply voltage for the blower fan motor.

The rear A/C is directly connected to the front air conditioning via the high and low pressure pipes and hoses. The only way to control the cooling in the third row of seats is to control the fan speed using the rear fan switch.

The rear electronic module (REM) diagnoses the relay supply, otherwise the rear A/C cannot be diagnosed.

DIAGNOSTIC FUNCTIONS

CLIMATE CONTROL MODULE (CCM)

The climate control module (CCM) has a built-in diagnostic system which continuously monitors internal functions and input and output signals.

DIAGNOSTIC TROUBLE CODES (DTCS)

Diagnostic trouble codes (DTCs) are stored in the control module if the climate control module (CCM) detects a fault. Each diagnostic trouble code (DTC) has a counter which records the number of operating cycles which have been fault-free since the diagnostic trouble code (DTC) was last stored. A fault which is detected in the present operating cycle is defined as permanent. A fault which is detected in one or more operating cycles (although not the present one) is defined as intermittent.

An operating cycle is the period from when the ignition has been off, then on for at least 10 seconds and finally off for at least 10 seconds.

READING AND ERASING DIAGNOSTIC TROUBLE CODES (DTCS)

Stored diagnostic trouble codes (DTCs) can be read off and erased using this function.

READING OFF INPUT AND OUTPUT SIGNALS

Using this function, the status or value of parameters can be read off. The presentation of the status or value can be graphic or digital.

For further information about the different parameters, see: **DESCRIPTION OF PARAMETERS**

READING OFF EXTENDED FAULT-TRACING INFORMATION

This function can be used to read parameters, status identifiers and counters stored at the same time as a diagnostic trouble code (DTC). These are called frozen values.

For further information, see: **DESCRIPTION OF FROZEN VALUES**

PROGRAMMING THE CLIMATE CONTROL MODULE (CCM), CUSTOMER ADAPTATION

Certain parameters for the climate control module (CCM) can be read off and programmed using this function. The purpose of this programming is to:

- read the programmed parameters before replacing the control module. This is so the same parameters can be entered into the new control module
- adapt the function of the control module to the requirements of the driver (customer adaptation)
- adapt the function of the control module for the equipment levels of the vehicle (passenger compartment ventilation filter, parking heater).

Blower fan run-on, status

Provides the status for activation of the blower fan run-on. The run-on dries the evaporator and prevents bad odors which may otherwise result from residual moisture in the system.

OFF = Run-on inactive

ON = Run-on active (preset)

Air distribution floor/defroster when residual heater is active (NOTE Accessory)

Parameter programming controls the desired setting of air distribution between the floor and defroster when the residual heater is active.

The function means that the coolant can circulate for around 20 minutes after the engine has been switched off. In this way, the passenger compartment can be heated for up to 20 minutes without the engine having to be running. The function is started via the control stalk.

The function can be activated for a further 20 minutes, however, the temperature of the coolant will have cooled considerably and the residual heat will therefore be lower.

Possible settings (70/30% preset):

- 90/10 (90% floor, 10% defroster)
- 80/20 (80% floor, 20% defroster)
- 70/30 (70% floor, 30% defroster)
- 60/40 (60% floor, 40% defroster)
- 50/50 (50% floor, 50% defroster)
- 30/70 (30% floor, 70% defroster)
- 10/90 (10% floor, 90% defroster).

Programming the seat temperature

Enter the setting for the high and low temperature levels for heating the front seat.

IDENTIFYING THE DAMPER MOTORS

This function is used to identify the damper motor module (DMM) after a replacement. When replacing the damper motor module (DMM), the new unit will have a general identity on the LIN bus. The damper motor module (DMM) must then be run to its limit positions. The number of steps the motor can be run between the limit positions is unique for each damper. This determines the functionality of the new damper motor module (DMM) for the climate control module (CCM).

CALIBRATION OF CLIMATE CONTROL MODULE (CCM)

This function is used to check the components communicating with the climate control module (CCM) via LIN bus 1 and LIN bus 2. A diagnostic trouble code (DTC) between CCM-0070 and CCM-0072 will be stored, depending on the fault, if there is a fault in one of the LIN buses. These diagnostic trouble codes (DTCs) can

only be stored for this diagnostic function.

DOWNLOADING SOFTWARE AND REPLACING THE CONTROL MODULE

New software can be downloaded into the climate control module (CCM). When ordering software, the hardware and the software in the car is compared to the information in the Volvo central database. If the comparison is OK the software is downloaded to the control module.

If the comparison between the car and Volvo central database is not OK, the database is updated with the car configuration. When this is complete the software is downloaded.

The entire climate control module (CCM) must be replaced as one unit.

Different customer parameters can be programmed into the climate control module (CCM). These customer parameters are stored in the control module but not in the Volvo central database. This means that the customer parameters must be reprogrammed when hardware is replaced.

For further information about programmable customer parameters, see: **DIAGNOSTIC FUNCTIONS**

FUNCTION

CONTROLLING THE CLIMATE IN THE PASSENGER COMPARTMENT

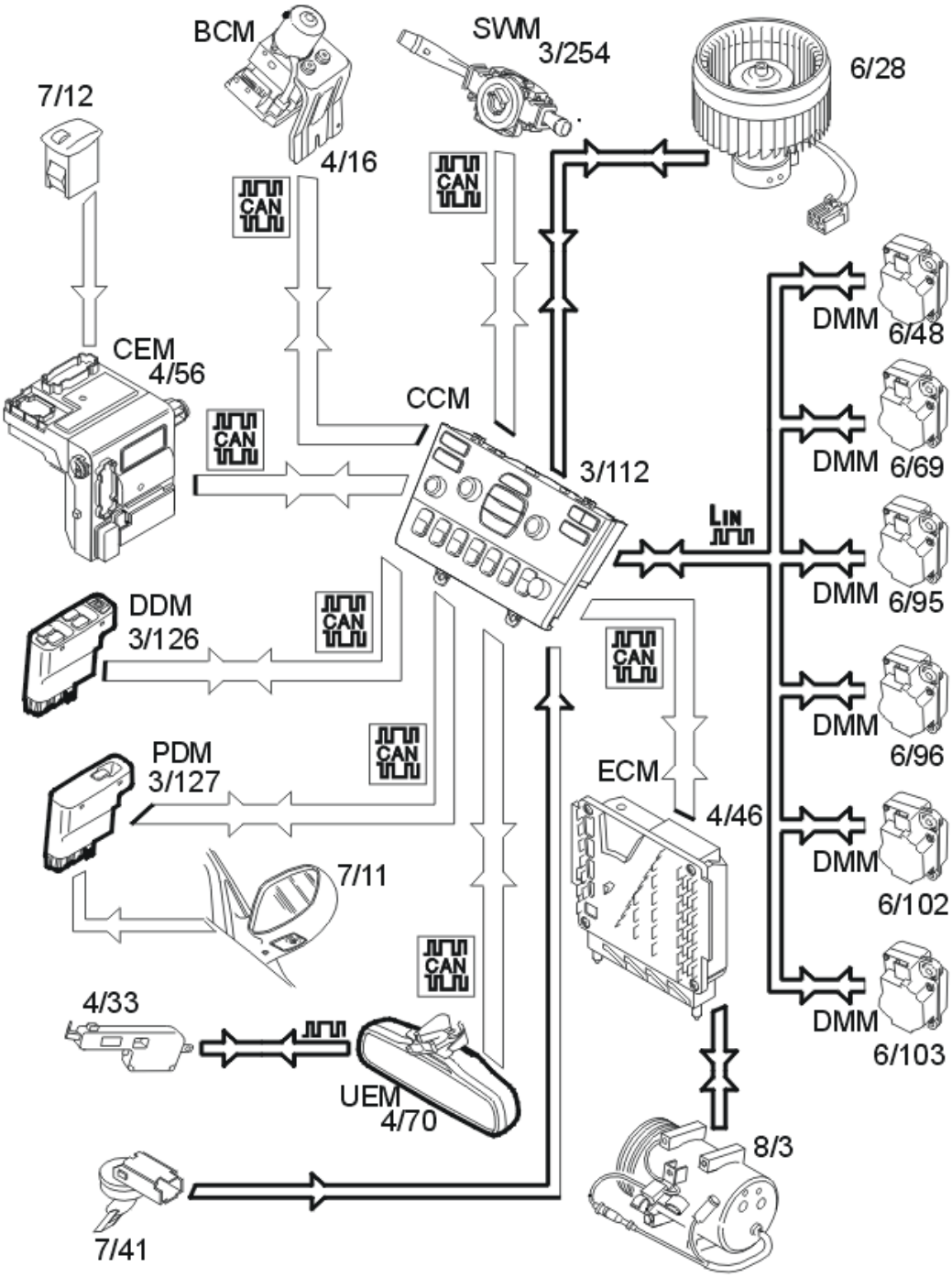

Fig. 24: Identifying Climate Control System & Components
Courtesy of VOLVO CARS CORPORATION

The way in which the climate in the passenger compartment is regulated depends on the type of climate control module (CCM) in the car.

Electronic climate control (ECC)

Electronic climate control means that either manual settings or the AUTO function can be used. In the latter case the control module automatically regulates heat, air conditioning, recirculation and air distribution until the selected temperature is achieved.

Manual climate control (MCC)

Manual climate control means that heat, air conditioning, recirculation and air distribution must be selected manually.

Climate control module (CCM) (3/112) regulates the following:

- Activation of the air conditioning (A/C) compressor (8/3) using a request via the controller area network (CAN) to the engine control module (ECM) (4/46)
- Controlling the damper motors. For ECC (6/48), (6/95), (6/96), (6/102) and (6/103). For MCC (6/48), (6/69), (6/95) and (6/96)
- Blower fan speed (6/28).

The climate control module (CCM) regulates the climate in the passenger compartment based on the following input signals:

- The passenger compartment temperature, signal from the internal passenger compartment temperature sensor
- Outside temperature, signal from the outside temperature sensor (7/11) via the passenger door module (PDM) (3/127) on the controller area network (CAN)
- The evaporator temperature, signal from the evaporator temperature sensor (7/41)
- Sun roof status. Signal from the sun roof control module (4/33) via the upper electronic module (UEM) (4/70) over the controller area network (CAN)
- Status of the side window, signals from the driver door module (DDM) (3/126) and passenger door module (PDM) (3/127) via the controller area network (CAN)
- Status of the doors, signal from the central electronic module (CEM) via the controller area network (CAN)
- Sun intensity, signal from the sun sensor (7/12) via the central electronic module (CEM)
- Speed, signal from the brake control module (BCM) (4/16) via the controller area network (CAN)
- Status of the windshield wipers, signal from the steering wheel module (SWM) (3/254) via the controller area network (CAN).

The climate control module (CCM) (for ECC) uses information about the status of the sun roof, side windows and doors to determine how it should compensate for changes in the passenger compartment temperature. If any side windows, doors or the sun roof are opened, the climate control module (CCM) will not compensate for a change in the passenger compartment temperature. Instead it maintains the same level of climate control for the compressor and blower fan as before.

The climate control module (CCM) (for ECC) uses the signal from the steering wheel module (SWM) indicating that the windshield wipers are on. This is to regulate the blower fan and the damper motor to remove any mist from the inside of the windshield when it rains.

The climate control module (CCM) (for ECC) uses the signal from the sun sensor to compensate for high sun intensity. This is done by lowering the temperature of the ventilation air, altering air distribution and increasing the speed of the blower fan.

The climate control module (CCM) uses the signal from the evaporator temperature sensor to control a request for:

- activation of the A/C compressor (not B8444S)
- control of the A/C compressor (B8444S only)

If the signal from the evaporator temperature sensor displays an evaporator temperature of below 4.5 °C, the compressor is not permitted to run due to the risk of ice formation.

To maintain a constant flow of air in the passenger compartment, the climate control module (CCM) (for ECC) uses the speed signal from the brake control module (BCM) to regulate the speed of the blower fan. Generally, as the speed of the car increases the speed of the blower fan decreases.

At higher speeds the flow of air into the fresh air damper is adjusted.

REGULATING SEAT HEAT

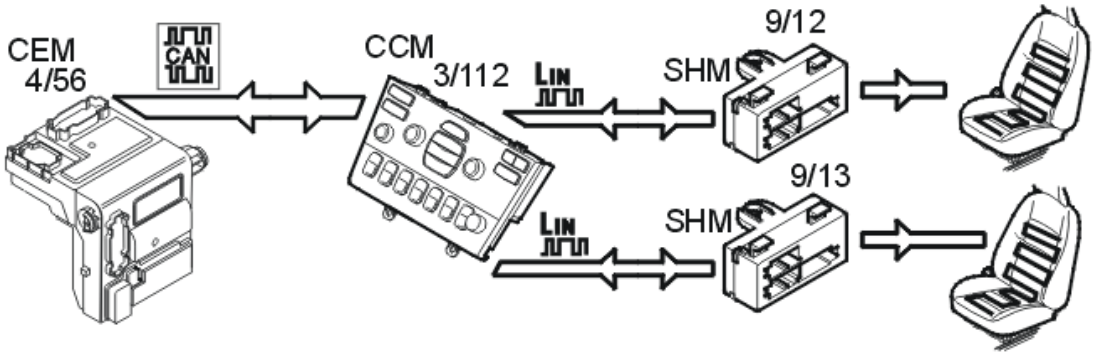

Fig. 25: Identifying Seat Heat Regulation System & Components
Courtesy of VOLVO CARS CORPORATION

The seat heaters are activated using the switches on the climate control module (CCM) (3/112). The function is normally switched off. When activating the seat heaters, the first position is high temperature. If the button is pressed again, the temperature will be low. The status of the indication is displayed via LEDs. The climate control module (CCM) transmits information about the selected temperature to the relevant seat heating module (SHM) on the relevant LIN bus. The seat heating module (SHM) then controls the current to the heater pads.

Each seat heating module (SHM) then transmits its present status to the climate control module (CCM).

Communication between the climate control module (CCM) and each seat heating module (SHM) takes place in the following way:

- seat heating module (SHM), driver's side (9/12) on LIN bus 1
- seat heating module (SHM), passenger side (9/13) on LIN bus 2.

The climate control module (CCM) receives information from the central electronic module (CEM) (4/56) about the type of seat and upholstery via the controller area network (CAN). The levels for high and low temperature are adapted for the relevant seat and upholstery by the climate control module (CCM). To a certain extent, the levels for high and low temperature can be adapted to the wishes of the customer using VIDA (Volvo scan tool).

RECIRCULATION CONTROL (ELECTRONIC CLIMATE CONTROL ONLY)

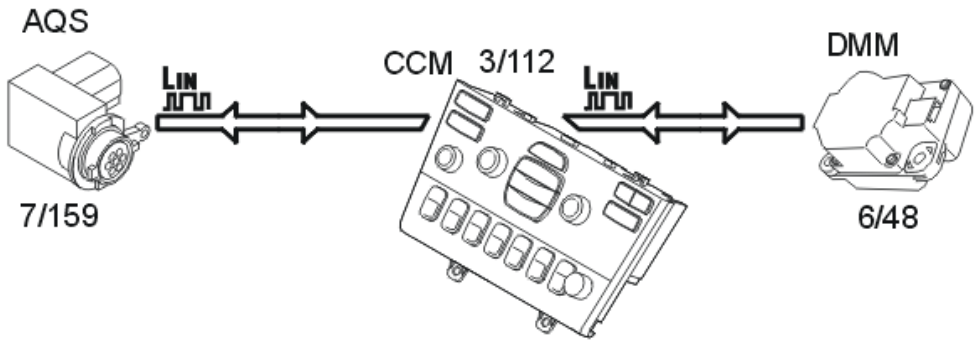

Fig. 26: Identifying Air Recirculation Control System & Components
Courtesy of VOLVO CARS CORPORATION

For ECC, the climate control module (CCM) (3/112) controls the recirculation during the following conditions:

- the recirculation switch is on (the LED lights orange)
- the system is in AUTO mode and there is a large difference between the desired and current temperature
- the car is equipped with an air quality sensor (AQS), and the recirculation switch is on (the LED lights green).

The air quality sensor (AQS) (7/159) transmits a signal to the climate control module (CCM) if it detects raised concentrations of pollutants in the outside air. When this occurs, the climate control module (CCM) transmits a signal to the damper motor for recirculation (6/48) to close the fresh air damper and to use recirculated air.

The degree of recirculation is controlled by the signal from the air quality sensor (AQS):

- signal 1 provides partial recirculation for speeds below 85 km/h, no recirculation for speeds exceeding 85 km/h
- signals 2 and 3 provide 100% recirculation.

If the high level of pollutants remains, the system stays in recirculation for a certain time, maximum of 10 minutes. The time that the system is recirculating is determined by the outside temperature, whether the air conditioning (A/C) is on or if the windshield wipers are activated. The system returns to fresh air for a short

time before recirculation is resumed. The particle filter absorbs most of the pollutants entering the passenger compartment during this time. The maximum time prevents misting and musty air.

The air quality sensor (AQS) transmits information about the content of pollutants to the climate control module (CCM). This information is graded into four levels, and the information used for diagnosis.

Recirculation is never permitted if the defroster is selected. The climate control module (CCM) also requests compressor activation when the evaporator temperature exceeds 3 °C.

HEATED REAR WINDSHIELD AND DOOR MIRRORS

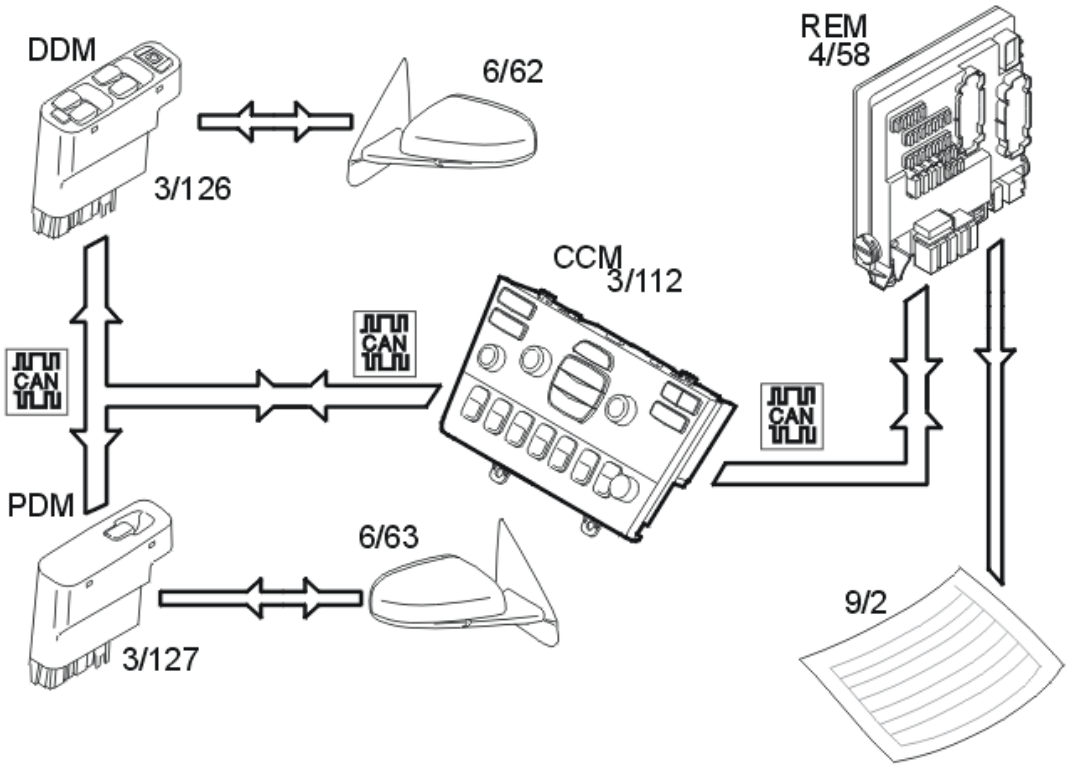

Fig. 27: Identifying Heated Rear Windshield & Door Mirror System Components
Courtesy of VOLVO CARS CORPORATION

The heated rear windshield and door mirrors are activated by pressing the switch on the climate control module (CCM) (3/112). The climate control module (CCM) transmits information via the controller area network (CAN) indicating the status of the electrical heating to the following:

- rear electronic module (REM) (4/58)
- driver door module (DDM) (3/126)
- passenger door module (PDM) (3/127).

SWITCH FUNCTIONS, DASHBOARD ENVIRONMENT PANEL, (LOWER SECTION)

The following functions can be activated using the switches on the dashboard environment panel:

- Folding head restraint, rear seat (S60/S80)
- Folding door mirrors (market dependent)
- Bi-fuel, on / off (market dependent)
- Valet lock, on/off
- Child-proof lock, on/off (market dependent)
- Rear air conditioning (A/C) (XC90, option)
- STC, off / on (option)
- DSTC, off / on (option)
- BLIS, off / on (option)
- Auxiliary lamps, off / on (option)
- Parking assistance (option)
- Reduced alarm, on / off (option)
- Four-C (Continuously Controlled Chassis Concept), (option).

In order for certain functions to be activated the engine must be switched on and/or the master key must be in position II.

Folding head restraints, rear seat

When the switch for the folding head restraints is activated, information is transmitted by the climate control module (CCM) (3/112) to the rear electrical module (4/58) via the control area network (CAN).

Folding door mirrors

When the switch for the folding door mirrors is activated, information is transmitted by the climate control module (CCM) to the driver door module (3/126) and the passenger door module (PDM) (3/127) via the control area network (CAN).

Bi-fuel

When the bi-fuel switch is activated, a signal is transmitted from the climate control module (CCM) to the engine control module (ECM) (4/46) on the control area network (CAN) via the central electronic module (CEM) (4/56). The engine control module (ECM) transmits a signal to the climate control module (CCM) about the type of fuel being used. The climate control module (CCM) uses this information to light and turn off the LED in the switch.

Valet lock / child-proof lock

When activating the valet lock switch or the child lock switch information is transmitted to the rear electronic module (REM) via the control area network (CAN).

Rear A/C

When activating the switch for rear A/C information is transmitted via the Controller area network (CAN) to the rear electronic module (REM). From this signal and the signal from the engine control module (ECM) indicating whether the engine is running or not, the rear electronic module (REM) will activate/deactivate the relay supply to the rear A/C system. The rear electronic module (REM) transmits a signal indicating whether the rear A/C is on or not to the climate control module (CCM) via the control area network (CAN). The climate control module (CCM) uses this information to light and turn off the LED in the switch.

STC or DSTC (applies to model year -2006)

When the STC or DSTC switch is activated, a signal is transmitted from the climate control module (CCM) to the brake control module (BCM) (4/16) via the controller area network (CAN). The brake control module (BCM) then transmits a signal to the climate control module (CCM) indicating that the STC or DSTC function is on or off. The climate control module (CCM) uses this information to light and turn off the LED in the switch.

BLIS (applies to model year 2007-)

When activating the switch for Blind Spot Information System, the information is transmitted via the CAN network to the Driver door module (DDM) / Passenger door module (PDM). The Driver door module (DDM) / Passenger door module (PDM) transmit the signal to the Climate control module (CCM) about whether the BLIS function is on or off.

The Climate control module (CCM) uses the signal to switch the LED on or off the switch

Auxiliary lamps

When the auxiliary lamps switch is activated, information is transmitted from the climate control module (CCM) to the central electronic module (CEM). The central electronic module (CEM) transmits a signal to the climate control module (CCM) about whether the auxiliary lamps are on or not. The climate control module (CCM) uses this information to light and turn off the LED in the switch.

Back-up warning

When activating the switch for parking assistance, information is transmitted via the Controller area network (CAN) to the rear electronic module (REM).

Reduced alarm

When activating the switch for reduced alarm, information is transmitted via the Controller area network (CAN) to the rear electronic module (REM).

Four-C (Continuously Controlled Chassis Concept)

When activating the switch for Four-C, information is transmitted via the Controller area network (CAN) to the suspension module (SUM).

SYSTEM OVERVIEW

CONTROL MODULE

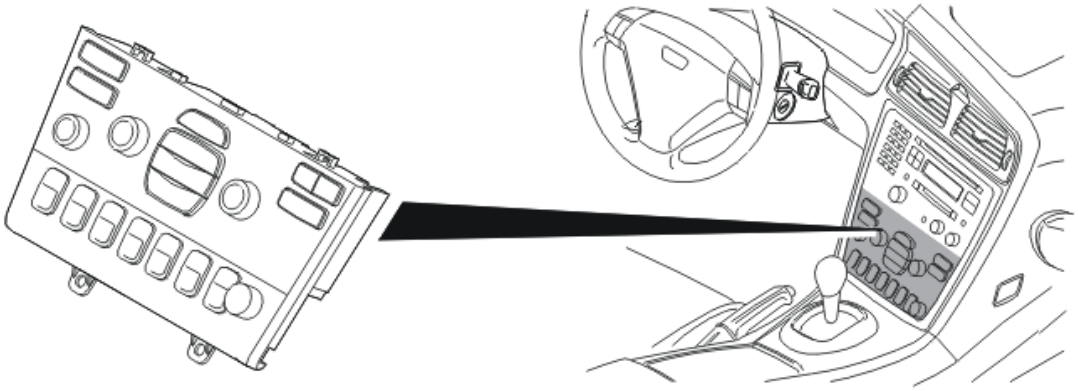

Fig. 28: Identifying Climate Control Module (CCM)
Courtesy of VOLVO CARS CORPORATION

The climate control module (CCM) controls the climate control system and the buttons in the dashboard environment panel.

The climate control module (CCM) is located in the center console. There are two versions of control module (market dependent). These are:

- Electronic climate control (ECC)
- Manual climate control (MCC).

ECC is a fully automatic climate control system with air conditioning. It also allows manual settings.

MCC is a manual climate control system with air conditioning.

The climate control module (CCM) communicates with components which are directly connected and also with other control modules and components via LIN and CAN communication.

The climate control module (CCM) communicates with the damper motors, air quality sensor (AQS) and the seat heaters via two separate LIN buses. The number of components on the LIN buses varies, depending on the equipment level of the car (ECC/MCC and any accessories).

The following components communicate on LIN bus 1:

- the damper motor module (DMM) for air distribution
- the damper motor module (DMM) for temperature left
- the left-hand seat heater.

The following components communicate on LIN bus 2:

- the damper motor module (DMM) for the defroster (ECC only)

- the damper motor module (DMM) for temperature right
- the damper motor module (DMM) for recirculation
- the air quality sensor (AQS)
- the right-hand seat heater.

The control module checks input and output signals and carries out activations via an integrated diagnostic system. A diagnostic trouble code (DTC) is stored if the control module detects an error. In certain cases the control module replaces the faulty signal with a substitute value.

Any diagnostic trouble codes (DTCs) are stored in the control module memory. This information can be read off using VIDA via the data link connector (DLC) in the vehicle.

A simple method for checking that the climate control module (CCM) has a power supply and is grounded is to increase or decrease the blower fan speed. Another method is to activate one of the functions controlled by the buttons on the dashboard environment panel.

SIGNALS

The table below summarizes the input signals to and output signals from the climate control module (CCM). The signal types are divided into directly connected signals, LIN and CAN communication. The illustration below displays the same information with the Volvo component designations.

Input signals	Output signals
Directly connected: • Blower fan motor (6/28), diagnostic signal • Evaporator temperature sensor (7/41), control signal.	**Directly connected:** • Blower fan motor (6/28), control signal.
Via LIN communication: • Damper motor module (DMM) for ECC (6/48, 6/95-96, 6/102-103) • Damper motor module (DMM) for MCC (6/48, 6/69, 6/95-96) • Air quality sensor (AQS) (7/159) • Seat heating module (SHM), passenger side (9/13) • Seat heating module (SHM), driver's side (9/12).	**Via LIN communication:** • Damper motor module (DMM) for ECC (6/48, 6/95-96, 6/102-103) • Damper motor module (DMM) for MCC (6/48, 6/69, 6/95-96) • Air quality sensor (AQS) (7/159) • Seat heating module (SHM), passenger side (9/13) • Seat heating module (SHM), driver's side (9/12).
Via Controller Area Network (CAN) communication: • Central electronic module (CEM) (4/56) • Engine control module (ECM) (4/46) • Rear electronic module (REM) (4/58) • Brake control module (BCM) (4/16)	**Via Controller Area Network (CAN) communication:** • Central electronic module (CEM) (4/56) • Driver door module (DDM) (3/126) • Passenger door module (PDM) (3/127) • Brake control module (BCM) (4/16)

• Driver door module (DDM) (3/126) • Passenger door module (PDM) (3/127) • Upper electronic module (UEM) (4/70) • Steering wheel module (SWM) (3/254).	• Rear electronic module (REM) (4/58) • Engine control module (ECM) (4/46).

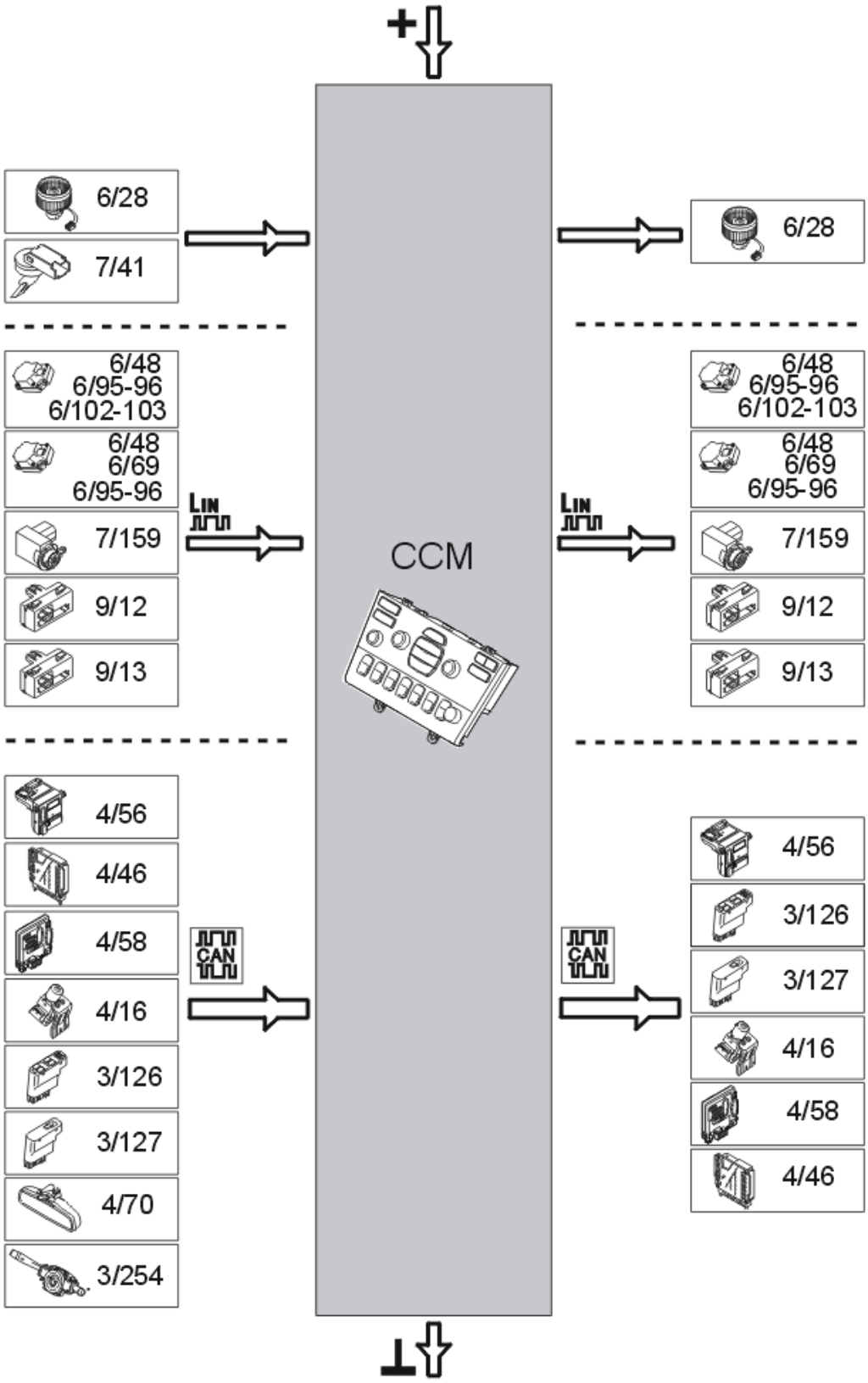
+
6/28
7/41
6/28
6/48
6/95-96
6/102-103
6/48
6/69
6/95-96
7/159
9/12
9/13
LIN
CCM
6/48
6/95-96
6/102-103
6/48
6/69
6/95-96
7/159
9/12
9/13
LIN
4/56
4/46
4/58
4/16
3/126
3/127
4/70
3/254
CAN
CAN
4/56
3/126
3/127
4/16
4/58
4/46
⊥

Fig. 29: Identifying Volvo Component Designations (Climate Control)
Courtesy of VOLVO CARS CORPORATION

COMBUSTION PREHEATER MODULE (CPM) (2005-2012)

INFORMATION

GENERAL

Combustion preheater module (CPM) is not a CAN-node, it is a slave node for Central electronic module (CEM), that communicates via serial communication (LIN).

CONTROL MODULE FOR THE STEERING WHEEL ANGLE SENSOR (2003-2004)

DESIGN

CONTROL MODULE FOR THE STEERING WHEEL ANGLE SENSOR

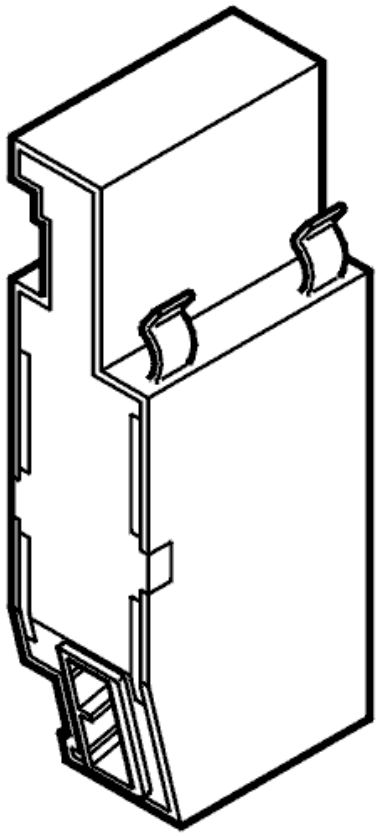

Fig. 30: Control Module For Steering Wheel Angle Sensor
Courtesy of VOLVO CARS CORPORATION

After initiation, with the ignition key in position II and when the steering wheel is turned 4.5 degrees in any

direction, the control module for the steering wheel angle sensor continuously transmits information about the steering wheel angle position to the brake control unit to calculate the driving style of the driver. The brake control module was called ABS-control module up to and including model year 2001.

Communication between the Steering wheel angle sensor control module and the brake control module occurs on the high speed side of the Controller area network (CAN). The control module for the steering wheel angle sensor is positioned on a bracket inside the central electronic module.

The control module for the steering wheel angle sensor is supplied with power from the overload relay.

STEERING WHEEL ANGLE SENSOR

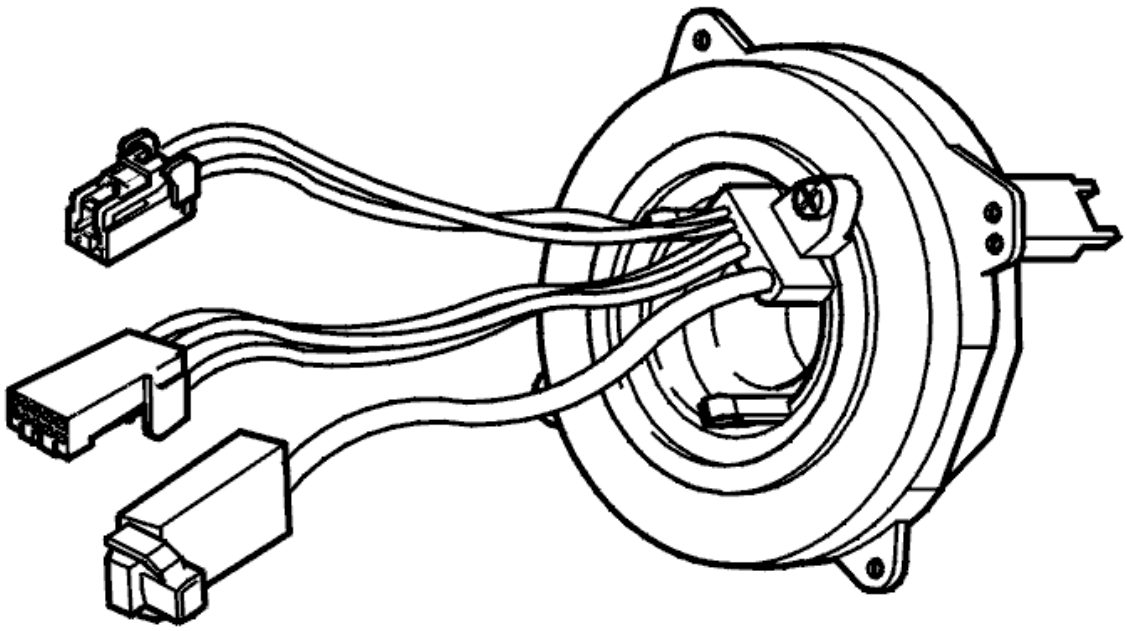

Fig. 31: Identifying Steering Wheel Angle Sensor
Courtesy of VOLVO CARS CORPORATION

The steering wheel angle sensor is incorporated with the SRS contact reel, which in turn is installed on the steering wheel module. The steering wheel angle sensor is equipped with a disc with two code paths. Two circuits with light diodes read off a code path each. One circuit measures the steering angle up to 360 degrees and the other records how many complete turns the steering wheel has turned. Both circuits measure within +/- 700 degrees with a precision of 4.5 degrees. This information is transmitted to the control module for the Steering wheel angle sensor as digital signals.

Due to the reliance of the DSTC (Dynamic stability and traction control) on information from the steering angle sensor it is extremely important that the contact reel has been centered correctly and that only an original Volvo

steering wheel is used.

SRS

SAS DIAGNOSTIC FUNCTIONS

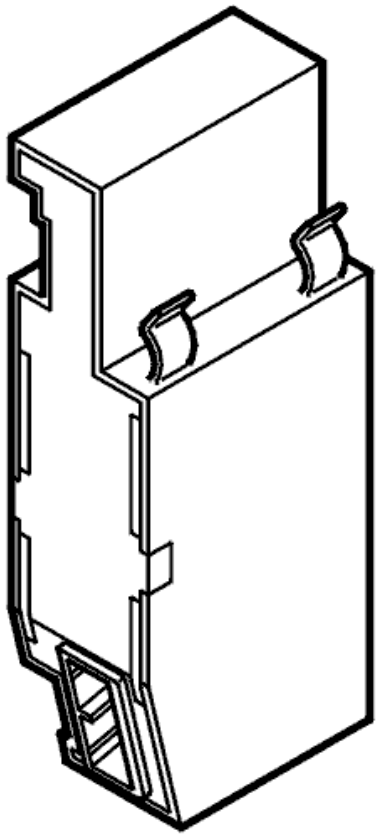

Fig. 32: Control Module For Steering Wheel Angle Sensor
Courtesy of VOLVO CARS CORPORATION

General

The control unit has built-in diagnostics, Volvo Diagnostics, which continually monitor the unit and the input and output signals.

Diagnostic trouble codes

If the control unit detects a fault, it stores a diagnostic trouble code. If, for any reason, a fault disappears after the diagnostic trouble code has been permanently stored in the control unit, information about the trouble code still remains in the control unit.

Reading and erasing diagnostic trouble codes

Stored diagnostic trouble codes can be read from the control unit using this facility.

Diagnostic trouble codes may be erased but only after they have been read at least once.

Reading input and output signals

Status of control unit input and output signals can be continually read using this facility.

For more information about parameters, see **DESCRIPTION OF PARAMETERS (STEERING ANGLE SENSOR)**.

Reading the control unit identity

VIDA identifies control units by reading the number of codes from the control unit memory. The codes contain information on the control unit as follows:

- hardware component number (control units without software)
- software component number (control units without software)
- software component number
- diagnostic software component number

DESCRIPTION OF PARAMETERS (STEERING ANGLE SENSOR)

INTRODUCTION / STATUS

INTRODUCTION

The steering angle sensor is integrated with the contact roller for the SRS-system and is installed on the steering wheel lever module. The function of the sensor is to sense the driver's steering wheel movements. The steering angle sensor consists of a steel disc with two hole-patterned grooves illuminated by several installed pairs of light-emitting diodes and phototransistors. The disc is mounted so that it follows the steering column's movements and then the phototransistors can sense the disc's movement. One pair of light-emitting diodes (IY, IX) reads an index groove with a unique groove pattern. The other pair (A, B) reads a groove with a repeated pattern around the disc (dark, light, dark, light, etc. The grooves' resolution is 1.5 degrees. Since the steering wheel can be turned several revolutions an additional two groups of light-emitting diodes must be used (R1, R2, R3, R4) to read off which steering wheel revolution one is at (normal <3). During the movement the SAS control module (Steering Angle Sensor) processes all information about the steering wheel's absolute position. In connection with start of the vehicle one has to turn the steering wheel a small angle, approx. 5 degrees in any direction to enable the control module to determine the steering wheel's position. This means that the wheel's angle and direction can be determined in relation to the driving direction. The information is used in the DSTC-system (together with other information about the vehicle's driving situation) to decide if the vehicle is driven stable and safe or is in a skid situation.

STEERING WHEEL ANGLE

The value displays the steering wheel angle in degrees.

0° = Steering wheel in the straight forward position

1° to 720° = Angle of the steering wheel when turning to the left

-1° to -720° = Angle of the steering wheel when turning to the right

LED IY STATUS

The value displays the status of LED IY.

ON = LED IY active

OFF = LED IY not active

LED IX STATUS

The value displays the IX status.

ON = LED IX active

OFF = LED IX not active

LED A STATUS

The value displays the A status.

ON = LED A active

OFF = LED A not active

LED B STATUS

The value displays the B status.

ON = LED B active

OFF = LED B not active

LED R1 STATUS

The value displays the R1 status.

ON = LED R1 active

OFF = LED R1 not active

LED R2 STATUS

The value displays the R2 status.

ON = LED R2 active

OFF = LED R2 not active

LED R3 STATUS

The value displays the R3 status.

ON = LED R3 active

OFF = LED R3 not active

LED R4 STATUS

The value displays the R4 status.

ON = LED R4 active

OFF = LED R4 not active

POWER SUPPLY, STEERING WHEEL ANGLE SENSOR MODULE (SAS)

The value indicates battery voltage at the steering wheel angle sensor module (SAS).

Measurement range: 5 to 15 V

POWER SUPPLY, CENTRAL ELECTRONIC MODULE (CEM)

The value indicates battery voltage at the Central electronic module (CEM).

Measurement range: 5 to 15 V

LED CIRCUIT 1 STATUS

The value displays the status of LED circuit 1

ON = LED circuit 1 is active

OFF = LED circuit 1 is not activate

LED CIRCUIT 2 STATUS

The value displays the status of LED circuit 1

ON = LED circuit 2 is active

OFF = LED circuit 2 is not activate

SIGNAL VOLTAGE, SIGNAL A

The value indicates the signal voltage for signal A.

Measurement range: 0 to 16 V

SIGNAL VOLTAGE, SIGNAL B

The value indicates the signal voltage for signal B.

Measurement range: 0 to 16 V

LED CIRCUIT 1 CURRENT

The value displays the current through LED circuit 1.

Measurement range: 0 to 50 mA

LED CIRCUIT 2 CURRENT

The value displays the current through LED circuit 2.

Measurement range: 0 to 50 mA

SOFTWARE DOWNLOADING

New software can be downloaded into the control module for the Steering wheel angle sensor. When ordering software, the hardware and the software in the car is compared to the Volvo central database. If the comparison is OK the software is downloaded to the control module. If the comparison between the car and Volvo central database is not OK, the database is updated with the car configuration. When this is complete the software is downloaded.

SYSTEM OVERVIEW

CONTROL MODULE

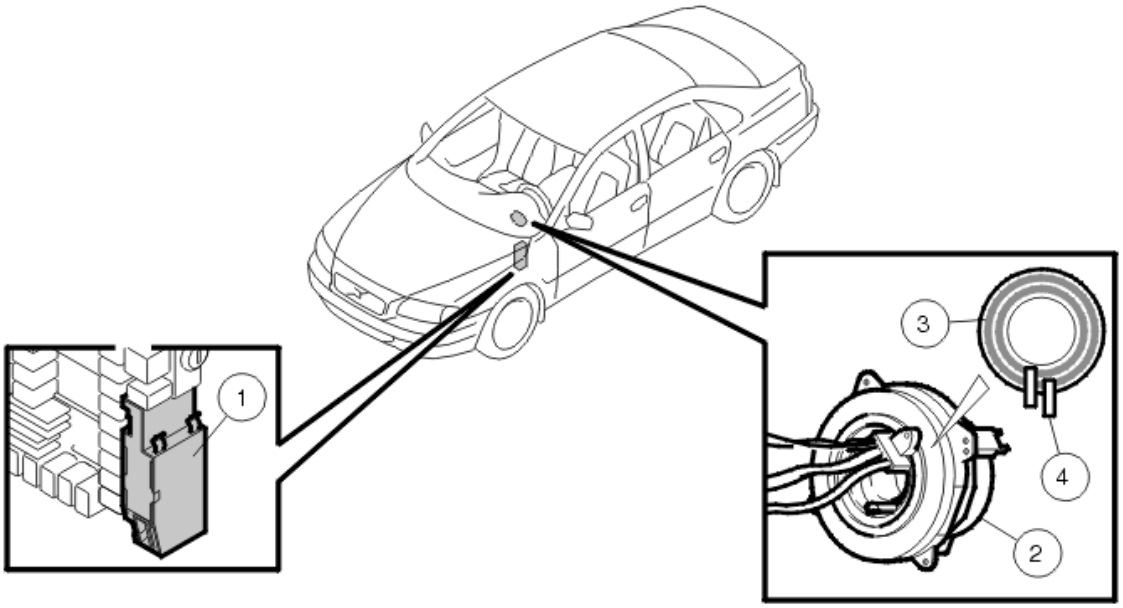

Fig. 33: Control Module For Steering Wheel Angle Sensor
Courtesy of VOLVO CARS CORPORATION

1. Control module for the steering wheel angle sensor
2. Steering wheel angle sensor
3. Reference groove
4. Encoder for steering movements.

Only cars equipped with DSTC (dynamic stability and traction control) have a steering wheel angle sensor control module. The easiest way to determine if a car is equipped with DSTC (Dynamic stability and traction control) is to search for a switch, marked DSTC, positioned in the panel on the climate control module.

The Steering wheel Angle Sensor Module is positioned on the side of the central electronic module. The only function of the steering wheel angle sensor is to process the signals from the steering wheel angle sensor. The signals used by the DSTC system. The steering wheel angle sensor is mounted on the steering wheel module and is directly connected to the steering angle sensor via a connector on the steering wheel module. The Steering wheel angle sensor control module transmits signal information via the high-speed side of the Controller area network (CAN) to the brake control module, model year 2002-or the ABS control module, model year 1999-2001.

If a fault occurs the control module for the steering angle sensor detects this and a diagnostic trouble code (DTC) is stored at the same time as the DSTC function is switched off.

Diagnostic trouble codes (DTCs) stored in the control module for the steering wheel angle sensor. This information can be read off using the diagnostic tool via the data link connector (DLC) in the car.

SIGNALS FOR THE CONTROL MODULE FOR THE STEERING WHEEL ANGLE SENSOR

The table below summarizes input and output signals to and from the Steering wheel angle sensor control module. The signal types are divided into directly connected signals, serial communication and Controller area

network (CAN) communication.

Input signals	Output signals
Via Controller Area Network (CAN): -	**Via Controller Area Network (CAN):** **The brake control module (or ABS-control module)** (4/16). Transmits relevant information about the steering wheel angle from the straight ahead position, the speed of the steering wheel movements and about which direction the steering wheel is turned.
Directly connected: **The steering wheel angle sensor** (7/91). Provides the control module with relevant information about the steering wheel angle from the straight ahead position, the speed of the steering wheel movements and about which direction the steering wheel is turned.	**Directly connected:** -

DIAGNOSIS (2003-2012)

BACKGROUND

GENERAL

Factors that have improved safety, increased comfort, added functions and increased environmental friendliness, have made modern vehicles more and more complicated.

The more complicated the vehicle is, the more important is the diagnostics system in the vehicle with the diagnostics tool when it comes to ensuring fast, safe and economic test, service and repair.

To reduce emissions from the vehicle, the diagnostic systems shall also, according to legislation, detect emission-influencing problems as well as defects that may cause follow-up damage on emission-related components.

LEGAL REQUIREMENTS EMISSIONS

OBD I - On Board Diagnostic I

On Board Diagnostic I (diagnostic system in the vehicle) was 1988 a requirement from CARB (California Air Resource Board) which is an air quality board. The purpose of these regulations was to ensure that component or function defects that affected exhaust emissions are detected by the control module's diagnostic functions.

OBD I included diagnosis of control module, emission-related components connected to the control module as well as exhaust gas recirculation.

Using the diagnostic socket in the engine compartment, the information about the system was accessible to all, both brand-name workshops and independent workshops.

In case of a detected emission-related problem, a warning light is activated in the driver information module (MIL= Malfunction Indicator Light), when the problem is confirmed as a real malfunction. Thus, the light is not activated immediately upon detection, only first when the malfunction is confirmed, which may be, e. g., following a few driving cycles.

OBD II - On Board Diagnostic II

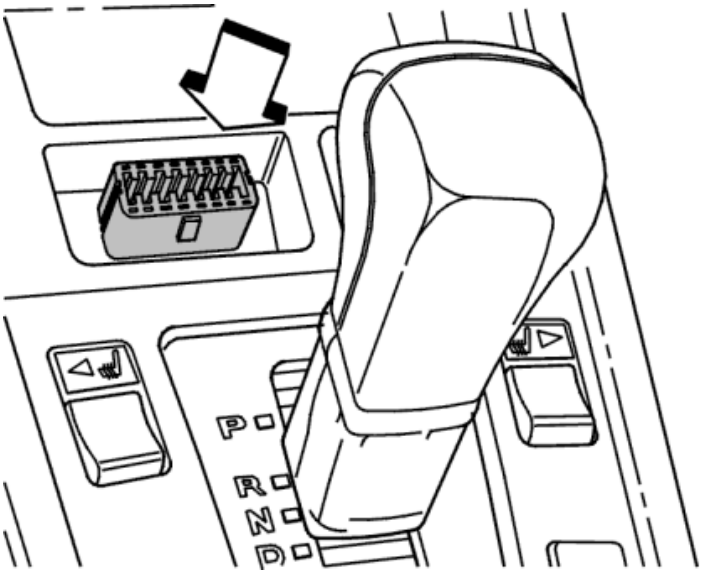

Fig. 34: Locating OBD II - On Board Diagnostic II
Courtesy of VOLVO CARS CORPORATION

On Board Diagnostic II was another requirement from CARB that applied from 1996. CARB demanded additional and refined diagnosis for emission-related component and systems in the drivetrain (engine and transmission).

Also, a standardized communication method was required for reading out of diagnosis (Standard SAE J1979 and J2190, where J2190 is voluntary and includes Enhanced Diagnostics - the vehicle manufacturer's own diagnosis in addition to legal requirements).

It should be possible to read out diagnostic trouble codes and their format, information connected to diagnostic trouble codes as well as parameters*, according to this standard. OBD II's diagnostic trouble codes are five-digit and begin with the letter P followed by four digits.

This standardized communication method means that anyone shall be able to manufacture and sell an instrument for reading out, a so-called Generic Scan Tool. Thus, the vehicle owner is not dependent on using a brand-name workshop.

The standard OBD II requires a standardized diagnostic socket in the passenger compartment near the driver's seat, where this instrument is to be plugged in. This means that the diagnostic socket (connector) is the same on all vehicles regardless of manufacturer or model.

However, there is a difference between manufacturers regarding which pins are used in the connector. This depends on the OBD II standard supports four types of communication protocols.

A protocol may be said to be the "language" that is to be used for communication with the control module.

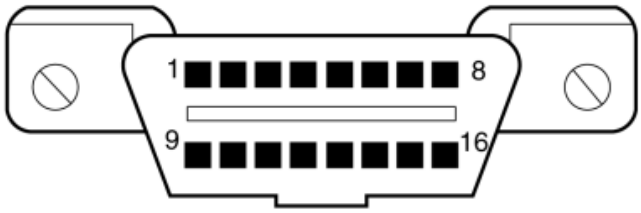

Fig. 35: Identifying Standardized Pins On OBD II-Connector
Courtesy of VOLVO CARS CORPORATION

Standardized pins on OBD II-connector:

- Pin 2 SAE J-1850 bus +
- Pin 4 Chassis ground
- Pin 5 Signal ground
- Pin 6 SAE J-2284, CAN-bus (CAN-H)
- Pin 7 SAE J1979, ISO 9141-2 / ISO14230-4, K-line
- Pin 10 SAE J-1850 bus -
- Pin 14 SAE J.2284, CAN-bus (CAN-L)
- Pin 15 ISO 9141-2 / ISO14230-4, L-line
- Pin 16 Voltage feed

Other pins in the connector are permitted for the vehicle manufacturer's own specific use. On pin 7 (K-line), two-way communication is permitted, on pin 15 (L-line) only one-way communication is permitted to the control module. Therefore, the L-line is missing in many vehicles.

ISO14230-4 = Protocol KWP2000.

OBD II was first introduced for Volvo on engine management system Motronic 4.3, Motronic 4.4, and automatic transmission AW 50 42, AW 30 40/43 in model 850/960 for market USA/CDN.

With time, OBD II-communication with control modules via CAN is introduced.

The legal requirement also includes the function Readiness Monitoring.

* Parameter refers to, e. g., rpm, engine temperature, battery voltage, etc., with associated value 800 rpm, 87 °C as well as 14, 2 V, etc.

DIAGNOSTIC VERSIONS AND COMMUNICATION METHODS

GENERAL

Since the end of the 1980s, the control module's diagnosis has developed from detecting simple problems and storing a small amount of information to including more complicated tests and checks.

Today a large amount of information can be read out both about the detected problem as well as parameters from the control module's input and output signals.

VOLVO DIAGNOSTICS II - FIRST VERSION

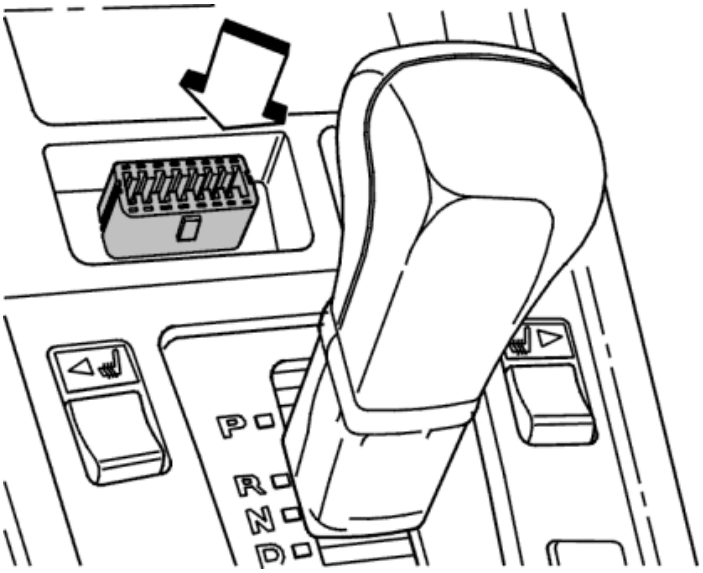

Fig. 36: Locating OBD II - On Board Diagnostic II
Courtesy of VOLVO CARS CORPORATION

Volvo Diagnostics II - first version was a new Volvo standard introduced in *1996* . This meant that control modules communicated serially in the same way, and that diagnostic functions in the different systems were designed in a similar manner.

The communication cable in the vehicle used for this communication is common to all control modules in question. The control modules are connected to the same connection in the diagnostic socket (pin 7).

The diagnostic socket is located in the passenger compartment and for certain markets it is common with the diagnostics system OBD II.

Volvo Diagnostics II, first version, was introduced in 1996 on, among others:

- Engine management system Motronic 4.4
- Automatic transmission AW 50 42/AW 30 40/43
- Control module Airbag SRS6.2
- Immobilizer

- Control module Brakes ABS 850
- Combined instrument panel 850
- Power seat 850/960
- and was gradually introduced for additional systems and car models.

For certain models, the diagnostics tool for this diagnosis is still Volvo System Tester (car models from and incl. model year 1998 as well as certain systems for model year 1999).

The diagnostics tool VIDA, now replacing VADIS, is used for car models of model year 1999 and later.

VOLVO DIAGNOSTICS II - SECOND VERSION

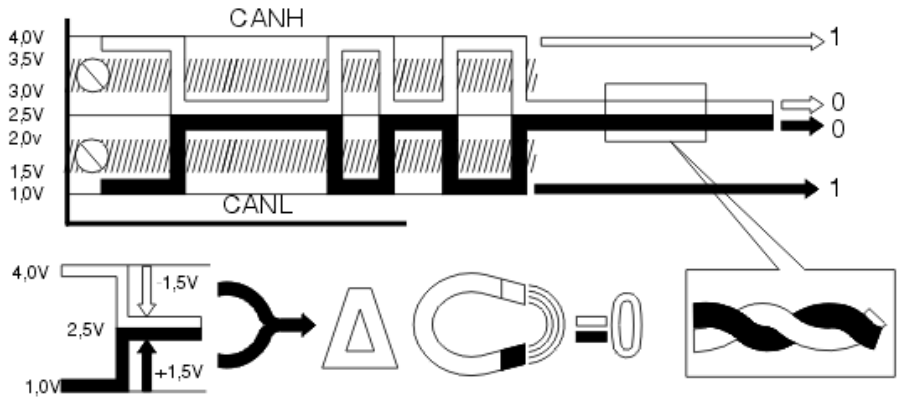

Fig. 37: Communication Via CAN-Communication
Courtesy of VOLVO CARS CORPORATION

Volvo Diagnostics II - second version was introduced in *1999* and is a development of the first version. The major difference is that communication between the diagnostics tool and the control modules takes place via CAN-communication instead of on a communication cable.

The control modules also communicate with each other to exchange information on the CAN-net instead of via separate cables between the control modules.

This version introduced the possibility to download software to the control modules.

With the introduction of this version, the rate in the low-speed network was (LS CAN) 125 kbit/s and the rate in the low-speed network was (HS CAN) 250 kbit/s. Depending on model and model year, the speed of the network has increased with time.

The diagnostics tool VIDA, now replacing VADIS, is used for car models of model year 1999 and later.

GENERIC GLOBAL DIAGNOSTICS (GGD)

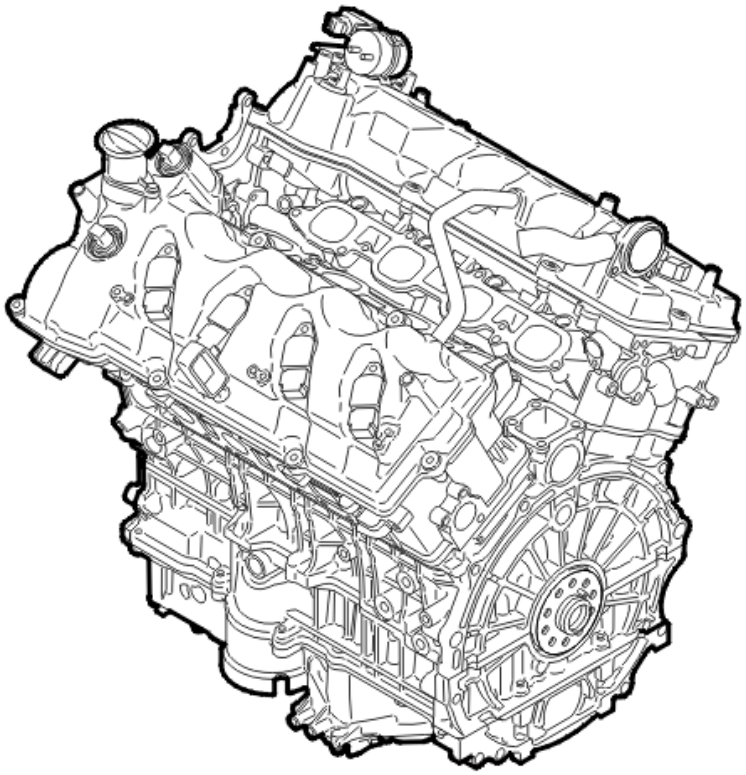

Fig. 38: Engine Block
Courtesy of VOLVO CARS CORPORATION

Generic Global Diagnostics (GGD) is a mutually developed diagnostics concept within the Ford company.

Communication and services are similar to Volvo Diagnostics II - first version. Communication between the diagnostics tool and control modules takes place via CAN-communication. The services that can be performed are similar.

Designation of trouble codes adheres to standard ISO/DIS 15031-6.4 and consist of a letter and six characters.

The control modules also communicate on the CAN-net with each other to exchange information.

It is also possible to download other software to the control modules.

Volvo Diagnostics, fifth version, was introduced in model XC90 model year *2005* with engine B8444S (only high-speed network) and then in model S80 (07-).

The diagnostics tool VIDA, now replacing VADIS, is used for car models of model year 2005 and later.

DIAGNOSTICS AND SERVICES

GENERAL

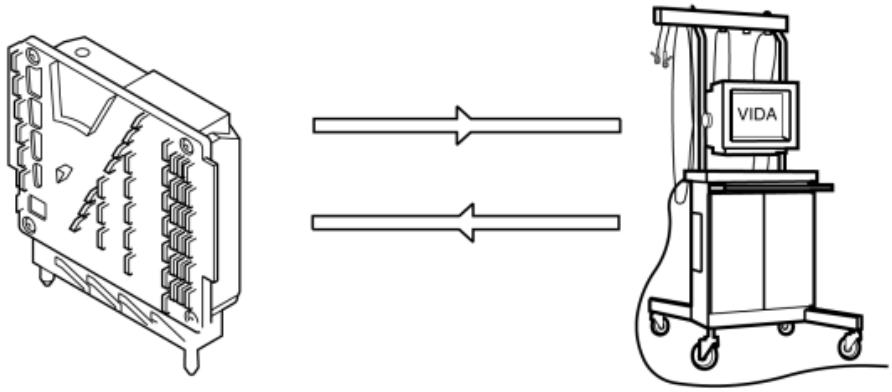

Fig. 39: Control Module And Diagnostics Tool
Courtesy of VOLVO CARS CORPORATION

The control module's diagnostics can perform and present the following using a connected diagnostics tool:

- Store malfunction indicator (diagnostic trouble codes) and in certain cases activate warning light or show text message.
  - Counter that indicates how frequent the malfunction is
  - Status indicators for the diagnostic trouble code test.
  - Frozen values that were generated when malfunction was detected for the first time.
- Store information about the nature of the malfunction:
  - Counter that indicates how frequent the malfunction is
  - Status indicators for the diagnostic trouble code test.
  - Frozen values that were generated when malfunction was detected for the first time.
- Erase information about malfunction and its information.
- Present values (parameters) for different connected input signals and output signals from, e. g., components as well as other calculated values.
- Present part number, version number, component number, etc. for both software and hardware.
- Present and change certain special customer settings and configurations.
- Trigger/control (activate) the connected output signals.
- Start special built-in check programs/tester such as, e. g., calibrations of gear position sensor, quick-test of tank system.
- Access check to limit access to certain parameters and functions. Accessible first after unlocking with, e. g., PIN-code.

Exactly what each control module's diagnostics can perform depends both on model year and system.

DIAGNOSTIC TROUBLE CODES (MALFUNCTION INDICATOR)

- see **IDENTIFYING MALFUNCTION**
- see **CONDITIONS FOR DIAGNOSIS TO FIND A MALFUNCTION**

- see **DRIVING CYCLE/OPERATION CYCLE**
- see **EMERGENCY MODE, BACK-UP MODE "LIMP-HOME"**
- see **CLASSIFICATION OF DIAGNOSTIC TROUBLE CODES**
- see **DESIGNATION OF TROUBLE CODES**
- see **STATUS IDENTIFIER**
- see **COUNTER**
- see **FROZEN VALUES**
- see **ERASING DIAGNOSTIC TROUBLE CODES**
- see **READINESS MONITOR (CERTAIN MARKETS ONLY)**

PARAMETERS

Parameters or values are data that are read out from the control module's memory positions to, e. g., check the signal from a sensor or identify the control module's software version.

In principle, parameters can be divided into two parts:

- one for **dynamic values** continuously updated in the control module
- one for **static values** not changed by the control module and always stored.

Parameters, dynamic

Fig. 40: Dynamic Parameters
Courtesy of VOLVO CARS CORPORATION

The *dynamic values* are stored in the control module's RAM-memory, which means that the values disappear when the memory's power supply is turned off (control module is turned off). As soon as the control module's power is turned on (ignition on), values are stored again.

Example of values are:

- Outside temperature
- Engine speed

- Load
- Coolant temperature
- Vehicle speed
- Battery voltage

Values are updated continuously after a pre-determined time interval. This means that certain values are updated with very short time interval, while other values are updated more seldom. Update rate is determined by how important the value is to the control module.

By reading off the value from, e. g., a sensor or switch, it can be decided if the signal is correct or not.

NOTE: **When a malfunction is detected and a diagnostic trouble code is stored, it may well be that the displayed value is a replacement value and not the real value. If the value does not change, e. g., if the sensor is disconnected, it may be the replacement value that is shown.**

Parameters, static

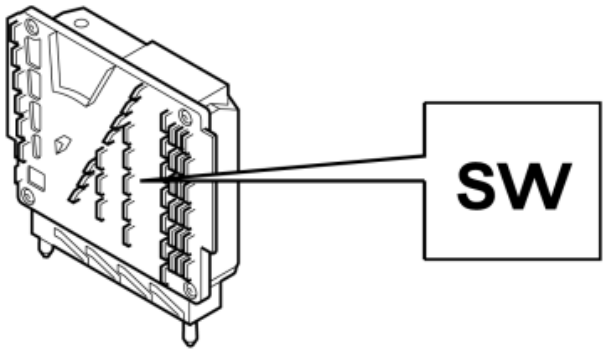

Fig. 41: Identifying Static Parameters
Courtesy of VOLVO CARS CORPORATION

The *static values* are stored in the control module's EEPROM, which means that these values are always stored regardless of if the control module is on or off. These values are normally not updated by the control module, instead they are only changed using, e. g., the diagnostics tool at vehicle manufacture in the factory or reprogramming during a workshop visit.

Example of values are:

- Hardware P/N (control module without software).
- Hardware serial number (control module without software).
- Software P/N.
- Diagnostic software P/N.
- Customer-programmed values, e. g., passenger compartment temperature, alarm on and off.

- The vehicle's configuration, that is, the vehicle's content and equipment that can be used to compare the vehicle's equipment physically with how the vehicle is configured. The configuration may be affected/changed, e. g., when downloading software.

ACTIVATIONS

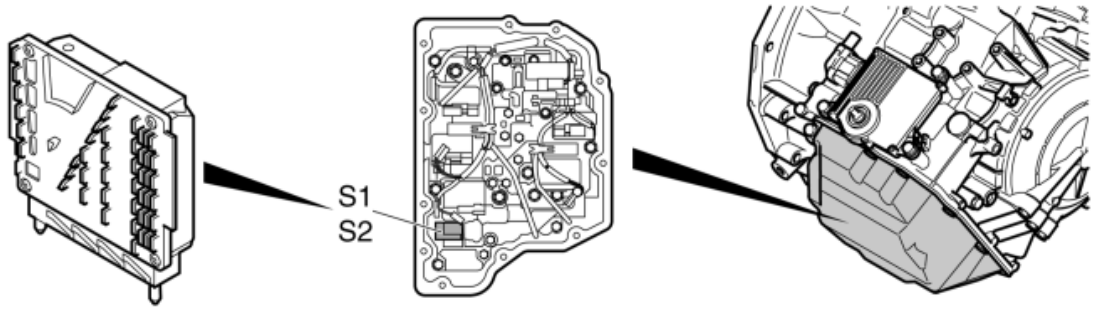

Fig. 42: Control Module Activation Of Components
Courtesy of VOLVO CARS CORPORATION

Wit this service it is possible to trigger (activate) the components that are connected to the control module. Examples of components are:

- Relays
- Solenoids
- Lock motors
- Damper motors
- Signals to other control modules.

NOTE: If a malfunction is detected, diagnostic trouble code is stored and emergency functions or modes, etc. are activated to "protect" the system, the control module can prevent activation.

Depending on the system, the control module or diagnostics tool can perform activations in different ways, for some the component is activated according to a certain pattern, e. g., OFF, ON, OFF, ON, OF, ON, etc. in a sequence.

For other systems, the component is activated, e. g., ON, and remain on until the activation is stopped.

QUICK-TESTS, CALIBRATIONS

Quick-tests or calibrations are functions or checks that are integrated in the control module's software and are started by the control module using commands from the diagnostics tool.

Wit this service it is possible to start certain pre-defined checks or teach-ins. Examples of these are:

- Quick-test of fuel tank system
- Quick-test of camshaft control
- Resetting of adaptions and counter for oil
- Calibration of gear position sensor
- Calibration of components for Brake control module (BCM)

NOTE: To enable start and running of these services, it is often that certain start conditions must be fulfilled.

SOFTWARE DOWNLOADING

New software can be downloaded to the control modules. When ordering software the vehicle software and hardware are compared to Volvo's central database. If the comparison corresponds the new software is downloaded to the control module.

If the comparison between the car and Volvo's central database does not correspond, then the database is updated with the vehicle's configuration. When this is complete the software is downloaded.

ERASING DIAGNOSTIC TROUBLE CODES

Stored diagnostic trouble codes (DTCs) can be read off and erased using this function. Diagnostic trouble codes (DTCs) can only be erased once all the diagnostic trouble codes (DTCs) have been read off at least once.

When erasing diagnostic trouble codes, the diagnostic trouble code's counter, status identifier as well as frozen values are also erased.

For certain systems, stored adaptions may also be reset when erasing.

DRIVING CYCLE/OPERATION CYCLE

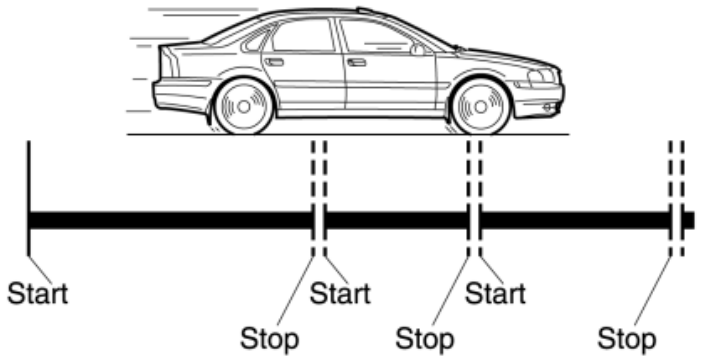

Fig. 43: Driving Cycle/Operation Cycle
Courtesy of VOLVO CARS CORPORATION

All control modules' diagnostics require that some form of driving cycle or operation cycle is run for

diagnostics to be considered as complete. The terms driving cycle or operation cycle appear, these mean the same, they are only different designations.

Example

The illustration above shows an example of a driving cycle or operation cycle. The vehicle is started and driven *(Start)* , is stopped sometime and the ignition is turned off *(Stop)* . When the ignition is turned on again *(Start)* a new driving cycle starts.

A new driving cycle or operation cycle usually starts every time the ignition is turned on, which means that you should turn on the ignition, turn off the ignition, and then turn on the ignition again.

However, the condition varies from control module to control module, there are also, e. g., speed and temperature conditions, before a driving cycle or operation cycle is considered to be complete.

When a malfunction is detected and then is confirmed as a real malfunction and is stored, various counters are also stored, indicating how frequent the malfunction is. These counters use driving cycles or operation cycles as basis for updating the counters' values.

READINESS MONITOR (CERTAIN MARKETS ONLY)

This is a function in Engine control module (ECM) that controls the control module's emission-related sub-system. With the function you can read out if the control module has run all diagnostics for the following sub-systems:

- Misfiring
- Fuel system
- Catalytic converter
- Evaporative emission (EVAP) system
- Heated oxygen sensors (HO2S)
- Other related components

Thus, Readiness refers only to if the diagnostics (tests) have been run or not, not if a malfunction was found or not. If a malfunction is found during the test, a diagnostic trouble code is stored and the malfunction light (MIL-light) is lit.

If the tests are run in the driving cycle without detecting a malfunction, then "Readiness" is immediately generated to OK.

However, if a malfunction is found in the driving cycle, then Readiness is generated to Not Ok, and another driving cycle is required where the test is run to generate Readiness to Ok.

The following alternatives are possible:

- Readiness is run (Ok), no malfunction detected, which means that the vehicle can be approved in a check.
- Readiness is run (Ok), with malfunction detected, which means that the vehicle cannot be approved in a

check.
- Readiness is not run (Not ok), which means that the vehicle cannot be approved in a check.

Readiness was originally a requirement from the American authority, United States Environmental Protection Agency (EPA), and is used there for Inspection and maintenance test (IM-test) (corresponds to annual inspection). Depending on legal requirements, the function may also be found on other markets.

EMERGENCY MODE, BACK-UP MODE "LIMP-HOME"

When a malfunction has occurred in the system that is confirmed (permanent malfunction) and is registered by the control module, modes are activated for certain systems and functions to handle the malfunction.

The purpose of these actions is to "protect" the control system and at the same time retain as much functionality or driving function as possible.

The minor malfunctions do not activate any back-up modes, there are different programs depending on type of malfunction and which control system to which it applies. All control systems do not have emergency modes or back-up modes.

Sometimes emergency modes must be activated immediately when a malfunction is detected, even if there has been no time to confirm and store any diagnostic trouble code. This is to maintain certain function, e. g., in case of malfunction of the mass air floe sensor for the engine management system, when the emergency program tries to prevent the engine from stopping.

HINT: Limp-home, emergency mode or back-up mode that may appear in case of malfunction is described in diagnostic trouble code information under replacement values.

For, e. g., automatic transmission TF-80SC AWD (XC90, B8444S) there are two back-up modes:

- Failsafe action (temporary action)
- Emergency/limp-home mode

Failsafe action is activated at the first detection of the malfunction, if the malfunction disappears the system returns to normal function.

Emergency mode is activated in case of less serious malfunctions Limp-home mode is activated for the most serious malfunctions.

The warning light in the driver information module lights up, and a text message is shown in the text window in the driver information module that emergency/limp-home mode has been activated. When the ignition is turned off and on again, no text is shown until the malfunction is detected again.

NOTE: If the malfunction disappears (intermittent malfunction) the control module returns to normal function first when the ignition is turned on the next time.

For automatic transmission's emergency mode, the following may take place, e. g.:

- Adaption function is blocked.
- Lock-up function is blocked.
- Function slipping lock-up is blocked.
- Function neutral check is blocked.
- The transmission only shifts to 3rd gear and reverse gear. All other shifting is blocked.

The above actions will be noticed by the driver since only one gear can be sued. Some may also notice that lock-up is not engaged. Then the vehicle comes to the workshop with a *symptom* for some form of lost driving function, probably also with the warning light on.

This symptom shall not be confused with the malfunction itself, instead it is a symptom of the back-up mode. The symptom that the malfunction itself causes (it it causes any) may be noticed briefly or not at all.

NOTE: If the malfunction is confirmed (permanent) it may be that the control module resumes normal function at ignition off and on again (symptom does not exist any longer). First when the malfunction is detected again (diagnostic trouble code test started and conditions fulfilled), the back-up mode is activated. The malfunction may then first be interpreted as if it was intermittent (non-existent or not active).

FROZEN VALUES

For every diagnostic trouble code, pre-defined parameters are frozen and stored in the control module. The frozen values are stored immediately after the malfunction has been detected and gives a "picture" of the conditions when the malfunction was stored.

NOTE: Status identifier, Counter and Frozen values are the most important factors to deciding the malfunction's nature, that is, to decide:

- when the malfunction was detected (frozen values, counters)
- what the driving conditions were at the time (frozen values)
- status for the test (self-diagnosis) (status identifier)
- how frequent the malfunction is (counter).

In newer car models, frozen values consist of a number of global (common) general parameters as well as a number of control model-unique parameters. Global may be:

- Road distance
- Battery voltage
- Passenger compartment temperature
- Outside temperature
- Engine running

In addition to these, the diagnostic trouble code-unique parameters are stored which are especially selected

parameters for the diagnostic trouble code.

Most parameters in the frozen values are the same for all malfunctions and indicate a general condition when a malfunction was detected, for example:

- Road distance
- Outside temperature
- Engine speed
- Load
- Coolant temperature
- Vehicle speed
- Battery voltage
- etc.

Some of them have been selected to give a better understanding of the specific malfunction.

NOTE: When erasing diagnostic trouble codes, stored frozen values are also erased.

HINT: Reading out and interpreting these frozen values make it easier to understand when in time the malfunction occurred, as well as under what driving and environment conditions the malfunction was detected, related to when and how the customer experienced the symptom.

IDENTIFYING MALFUNCTION

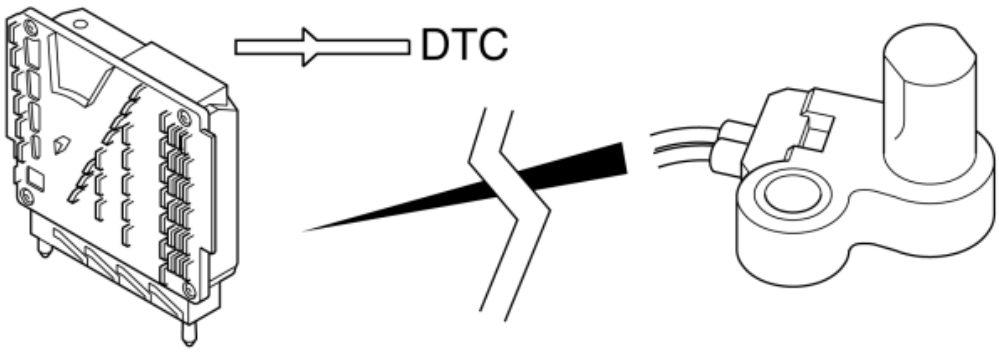

Fig. 44: Identifying Detected Malfunction
Courtesy of VOLVO CARS CORPORATION

A malfunction that is detected is assessed by the control module's self-diagnosis. First after, e. g., a certain time, a certain number of driving cycles, certain driving/operation or other conditions, the control module decides if it is a real malfunction or not.

When self-diagnosis has determined that a real malfunction exists, you can say that the *malfunction is confirmed* and the malfunction is stored in the control module's trouble code memory in the form of diagnostic

trouble codes.

If a malfunction disappears, the diagnostic trouble code will remain for a tome in the diagnostic trouble code memory, but the status of the diagnostic trouble code changes. How long the diagnostic trouble code is stored in the diagnostic trouble code memory is different from control module to control module, as well as between different vehicle models (generation of vehicle model).

In some systems the diagnostic trouble code will be stored until it is erased with the diagnostics tool. In other systems the diagnostic trouble code is erased automatically by the control module after, e. g., a certain number of malfunction-free driving cycles. A new driving cycle (operation cycle) is usually started every time the ignition is turned on.

Information about the nature of the malfunction is stored for every diagnostic trouble code:

- when the malfunction was detected (frozen values, counters)
- what the driving conditions were at the time (frozen values)
- status for the test (diagnosis) (status identifier)
- how frequent the malfunction is (counter).

Exactly what is stored is different from control module to control module,, as well as between different vehicle models (generation of vehicle model).

If the system is provided with warning light, it is lit when the ignition key is turned to position II. The warning light will go off after a certain number of seconds when no malfunction is detected on the control system.

The warning light will be on in case of a malfunction of the control system. The warning light will be lit first after the malfunction is confirmed as a real malfunction.

DESIGNATION OF TROUBLE CODES

The diagnostics tool VIDA shows the diagnostic trouble code in plain text according to the following example:

TCM-001F Speed sensor Signal missing Permanent malfunction

This diagnostic trouble code consists of the following parts:

- Prefix for control system in question (**TCM**) to show what system the diagnostic trouble code belongs to. *
    - If the qualifier is, e. g., "Too high signal", the control module interprets that the signal from the sensor is too high. This may mean that, e. g., the voltage is too high, current is too high, frequency is too high, or the pulse ratio (% duty) is too high, all depending on which type of signal it is. Malfunction causes may be, e. g., open circuit or short-circuiting to voltage.
    - If the qualifier is "Too low signal", the control module interprets that the signal from the sensor is too low. Malfunction causes may be, e. g., open circuit, short-circuiting to ground, contact resistance in connections.

NOTE: **Information about which type of signal that the control module detects and what conditions are required to detect that a malfunction is found again in the diagnostic trouble code information.**

- Diagnostic trouble code number (**001F**) to decide which diagnostic trouble code is stored. Number of digits in the diagnostic trouble code number may vary. *, **
  - If the qualifier is, e. g., "Too high signal", the control module interprets that the signal from the sensor is too high. This may mean that, e. g., the voltage is too high, current is too high, frequency is too high, or the pulse ratio (% duty) is too high, all depending on which type of signal it is. Malfunction causes may be, e. g., open circuit or short-circuiting to voltage.
  - If the qualifier is "Too low signal", the control module interprets that the signal from the sensor is too low. Malfunction causes may be, e. g., open circuit, short-circuiting to ground, contact resistance in connections.

NOTE: **Information about which type of signal that the control module detects and what conditions are required to detect that a malfunction is found again in the diagnostic trouble code information.**

- Title (**Speed sensor**) is a text that shows to which component/function the diagnostic trouble code refers. *
  - If the qualifier is, e. g., "Too high signal", the control module interprets that the signal from the sensor is too high. This may mean that, e. g., the voltage is too high, current is too high, frequency is too high, or the pulse ratio (% duty) is too high, all depending on which type of signal it is. Malfunction causes may be, e. g., open circuit or short-circuiting to voltage.
  - If the qualifier is "Too low signal", the control module interprets that the signal from the sensor is too low. Malfunction causes may be, e. g., open circuit, short-circuiting to ground, contact resistance in connections.

NOTE: **Information about which type of signal that the control module detects and what conditions are required to detect that a malfunction is found again in the diagnostic trouble code information.**

- Qualifier (**Signal missing**) is used to show *how the control module has perceived the signal from, e. g., the sensor, or how it detected the monitored function.* In this case, the control module has perceived that the signal is missing. There a re a number of other qualifiers for, e. g., too high signal, incorrect signal, too high flow, too low flow, etc. *, **.
  - If the qualifier is, e. g., "Too high signal", the control module interprets that the signal from the sensor is too high. This may mean that, e. g., the voltage is too high, current is too high, frequency is too high, or the pulse ratio (% duty) is too high, all depending on which type of signal it is. Malfunction causes may be, e. g., open circuit or short-circuiting to voltage.
  - If the qualifier is "Too low signal", the control module interprets that the signal from the sensor is

too low. Malfunction causes may be, e. g., open circuit, short-circuiting to ground, contact resistance in connections.

NOTE: Information about which type of signal that the control module detects and what conditions are required to detect that a malfunction is found again in the diagnostic trouble code information.

-
- Status (**Permanent malfunction**) to show the malfunction's status, that is, if the malfunction has been detected in the present driving cycle or not. There are two different status texts, permanent or intermittent. When the control module's diagnosis cannot decide the malfunction's status, the diagnostic trouble code is shown without status text. *

* When reading out diagnostic trouble codes using diagnostic socket with light-emitting diode, you get a three-digit flash code. Then this code is translated to a diagnostic trouble code text using the service information.

For example, if the control module flashes the code 1-2-3 from Engine control module (ECM), it can be translated to, e. g., diagnostic trouble code 1-2-3 Engine temperature sensor. Volvo Diagnostic Key and Volvo System Tester translate these flash codes directly to plain text (add a title). In these diagnostic systems it is not possible to show qualifier or status.

** For systems with diagnostic version called Generic Global Diagnostics (GGD) (adheres to standard ISO/DIS 15031-6.4) the diagnostic trouble code number consists of a letter and six characters. The letter alternatives are B, C, P and N, which means Body, Chassis, Powertrain and Network and indicate to which "function" in the vehicle the diagnostic trouble code belongs. The six following characters may consist of both letters (A-F) and digits (0-9) and indicate the component to which the malfunction refers as well as what type of malfunction. See following example.

BCM-C006A16 Multi-axial acceleration sensor. General electric malfunction. Too low voltage

CLASSIFICATION OF DIAGNOSTIC TROUBLE CODES

In principle, malfunctions can be classified in two categories, intermittent or permanent.

Permanent malfunctions.

The easiest malfunctions to identify and confirm as a malfunction are the permanent malfunctions. A permanent malfunction is a malfunction when something has "broken" and remains like that until it is repaired.

Intermittent malfunctions.

The intermittent malfunctions are, as opposed to the permanent malfunctions, are both difficult to identify and confirm. The malfunction exists but is neither active nor present all the time. The malfunction comes and goes briefly under very rare conditions.

For the intermittent malfunctions, the degree of intermittence can also be determined, that is, how intermittent the malfunction is (how often/seldom the malfunction appears).

HINT: For assessment of intermittence, stored counters are used together with the diagnostic trouble code.

Common permanent malfunction causes are:

- Open circuits or short-circuits on cables or in connectors caused by mechanical damage, vibrations, corrosion, oxidation, moisture, etc.

Common intermittent malfunction causes are:

- Loose connections or contact resistance caused by vibrations, corrosion, oxidation, moisture, etc.
- Brief short-circuits to both ground and voltage caused by damage to cables, moisture in connectors, etc.
- Electro-magnetic interference.

Malfunction causes may be both electrical, mechanical or related to software.

Intermittent malfunctions (or malfunctions that occur under unknown conditions) may also be malfunctions that only occur during certain operation or ambient conditions.

E. g., that the window or seat for some reason jams in its end-position when using automatic function, or that the climate control unit supplies poor heat in a certain position when it rains outside.

CONDITIONS FOR DIAGNOSIS TO FIND A MALFUNCTION

For the control module's self-diagnosis of a component or function to start and run (one or several times) special conditions must be fulfilled. Conditions for diagnosis varies depending on which component or function is to be monitored. When the diagnosis has started and is run, the signal, value or function must go above or below the limit value for the control module to detect a malfunction.

Example of conditions for the control module to start the diagnosis/test:

- Engine speed higher than 500 rpm.
- Ignition position II.
- Speed above 40 km/h.
- 4th gear selected.

Example of limit values for detecting malfunction:

- Direct voltage from outside temperature sensor lower than 0.495 V for a time longer than 1 second.
- After the engine has run for approx. 10 minutes, the control module receives an unchanged signal from the oil temperature sensor even though the signal should have changed according to a set pattern.
- Malfunction shall be active (permanent) for at least 2 driving cycles.

Example

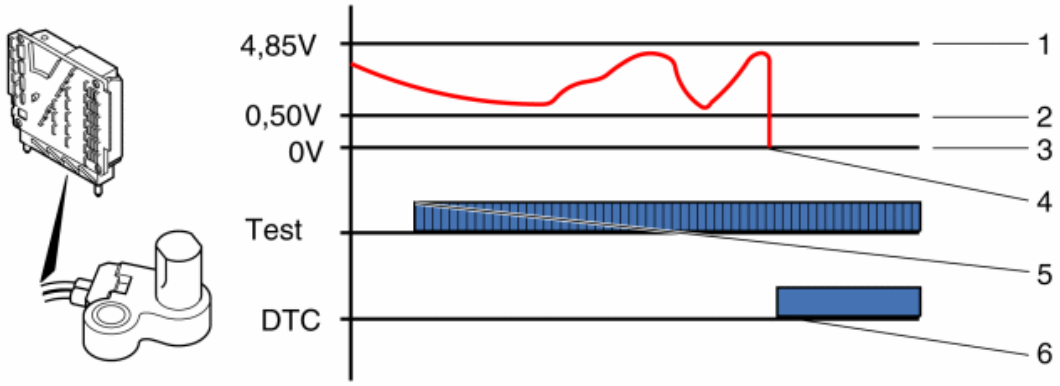

Fig. 45: Example Of Limit Values For Detecting Malfunction (1 Of 2)
Courtesy of VOLVO CARS CORPORATION

The illustration shows an imagined scenario when a malfunction occurs in a circuit for a signal.

First the signal varies normally during driving. The diagnostic trouble code test starts after some time (5), is then run cyclically in a pre-defined pattern and monitors the signal. Limit values for monitoring to consider the signal as incorrect is a voltage lower than 0.50 V (2) or higher than 4.85 V (1). An open circuit occurs in the circuit and the signal becomes 0 V (4). Monitoring detects this, waits so that the malfunction is confirmed and then stores a diagnostic trouble code (6).

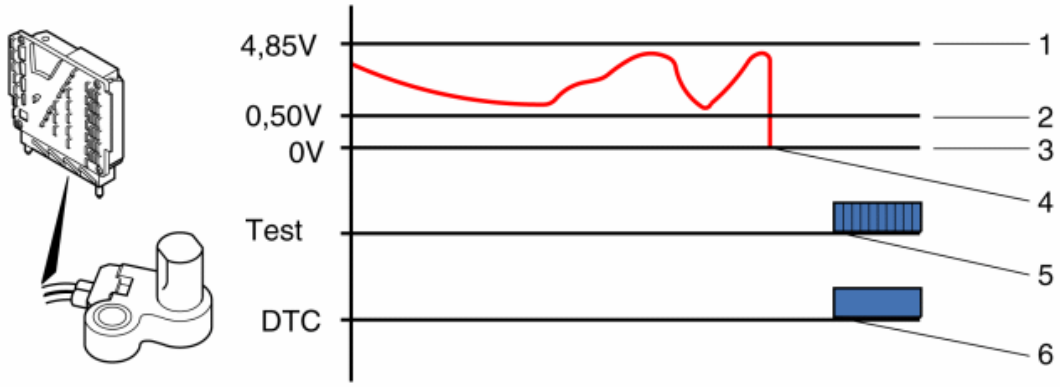

Fig. 46: Example Of Limit Values For Detecting Malfunction (2 Of 2)
Courtesy of VOLVO CARS CORPORATION

If the diagnostic trouble code test (5) starts after the malfunction (4) occurs, then monitoring will detect the malfunction fist when the test starts. Then monitoring waits so that the malfunction is confirmed and then stores a diagnostic trouble code (6). If you want the control module to detect a malfunction in the vehicle, you have to make sure that the control module's diagnostic trouble code test starts or is started.

HINT: If a malfunction occurs which has not yet been detected by the control module's monitoring, since the diagnostic trouble code test has not started, the vehicle may still exhibit a symptom.

NOTE: Conditions for diagnosis are described in the diagnostic trouble code

information for every diagnostic trouble code.

Most diagnosis (at least non-emission-related diagnosis) are repeated periodically during the driving cycle, and every time they are repeated, a test is run that either results in a malfunction being detected or no malfunction being detected.

To enable the emission-related diagnosis to be completed and the diagnostic trouble code to be confirmed (with MIL-light activated as a result), several driving cycles in a row must be completed with a detected malfunction.

To enable the non-emission-related diagnosis to be completed (at least once), in principle the start conditions must be fulfilled for a certain time (from fractions of a second to a number of seconds).

Certain diagnoses require a completed driving cycle (e. g., ignition on, ignition off, and ignition on again) for the diagnosis to be considered as complete. Other diagnoses requires several other conditions to be fulfilled, e. g., with regards to:

- vehicle speed
- engine coolant temperature (ECT)
- time since start
- different load and engine speed relationships in the same trip
- a certain event (for example, that the component operates).

HINT: To assess if a test/diagnosis for the diagnostic trouble code is started or completed, status identifiers can be used. Turning off the ignition and then turning it on again often results in start of a new driving cycle/operation cycle, which results in update of status identifiers.

When, e. g., the engine control module (ECM) has run all diagnostics, the control module has completed a "trip". An extensive driving schedule in various conditions is required to complete a trip. The engine may also need to be shut off for a certain amount of time and then switched on again to complete a trip.

Emissions related diagnostic functions

Control modules that have and control emission-related components or functions, e. g., Engine control module (ECM) and Transmission control module (TCM), check that emission-related systems work. These systems are checked by running a diagnostic function. The diagnostic function checks the included components and that the function itself works in the system.

Lighting the malfunction indicator lamp (MIL)

In the event of emissions related diagnostic trouble codes (DTCs), a counter counts down to determine when to light the malfunction indicator lamp (MIL). The conditions for lighting the malfunction indicator lamp (MIL) vary depending on which diagnostic trouble code (DTC) is stored.

NOTE: **If a malfunction becomes intermittent or the malfunction disappears, then the MIL-light turns off first after 3 driving cycles in a row are completed with malfunction detection.**

Self-erasing of emission-related diagnostic trouble codes

After 40 driving cycles without detected malfunction with start of cool engine, where the engine temperature (coolant temperature) increases more than 5 °C (approx. 9 °F) and the final temperature is above approx. +71 ° C (159.8 °F), then the diagnostic trouble code is erased. Diagnoses (diagnostic trouble code tests) for misfire and fuel adaptions require 80 driving cycles. These driving cycles are defined as a "warm-up cycle".

COUNTER

GENERAL

For every diagnostic trouble code, the control modules stores a number of counters. These counters count the number of driving cycles that have been performed in the control module with or without malfunctions, if the malfunction is detected or not. In control systems older than model year 1999, there may be control systems, depending on control system, without counters or with few counters. From model year 1999, there are systems with several counters. The following counters may appear:

- Counter 1
- Counter 2 *
- Counter 3
- Counter 4
- Counter 5**
- Counter 6
- Counter 7
- Counter 8

The text uses the term driving cycle, which may also be called Operation cycle.

* In principle, only systems with the diagnostic concept Generic Global Diagnostic (GGD).

** Only for emission-related systems.

When erasing diagnostic trouble codes, the diagnostic trouble code's counter is erased.

NOTE: Status identifier, Counter and Frozen values are the most important factors to deciding the malfunction's nature, that is, to decide:

- when the malfunction was detected (frozen values, counters)
- what the driving conditions were at the time (frozen values)
- status for the test (self-diagnosis) (status identifier)
- how frequent the malfunction is (counter).

COUNTER VOLVO DIAGNOSTICS II

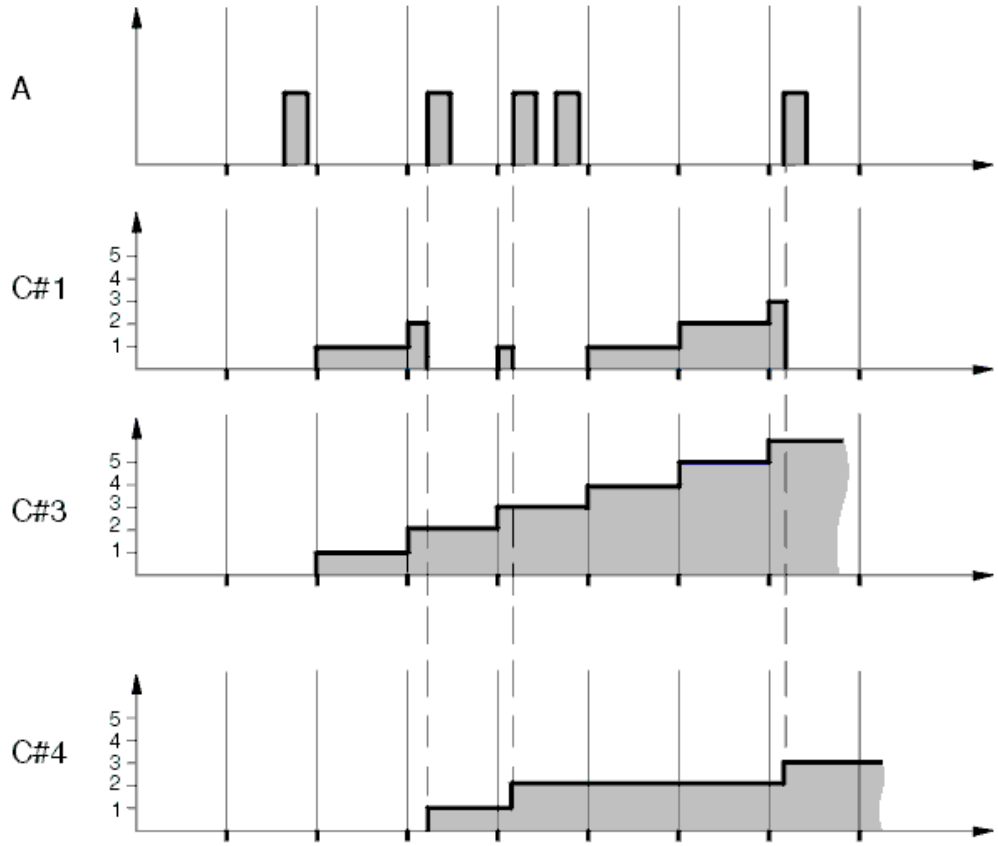

Fig. 47: Counter Volvo Diagnostics II Graph
Courtesy of VOLVO CARS CORPORATION

Graph A illustrates when in time that the malfunction occurs. In the illustration, the control module has detected a malfunction in the second driving cycle (graph's x-axis) and this malfunction then appears 4 more times, a total of 5 times. Counters can be read out for every diagnostic trouble code in the control module which have this introduced. Driving cycles are marked with vertical lines. A driving cycle often begins with ignition on and ends with ignition off.

Counter 1 (C#1). Counts number of cycles performed since the malfunction was confirmed *last* . As soon as a malfunction is detected and confirmed, the value is reset.

When the malfunction is both detected and disappears in the second driving cycle (graph A), counter 1 will count up to 1 first in the following driving cycle (driving cycle 3), that is, a driving cycle has been run through since the last time the malfunction was confirmed.

In driving cycle 4, the counter is updated again, now to value 2. Just after that, the malfunction is detected (graph A), the malfunction is confirmed and the counter's value is reset. This sequence is repeated once again in driving cycle 5.

With other words, one can say that if the value is zero, the malfunction exists now or has existed earlier in the current driving cycle. If the vehicle is restarted so that a new driving cycle is initiated (often requires ignition off and on again) in this position and the counter's value still is 0, then you probably have a permanent malfunction.

Values near zero indicate that the malfunction has been detected recently. It may also be that the malfunction exists but the diagnostic trouble code test has not started in these driving cycles, which means that the counter has not been reset. A high counter value indicates that the malfunction was last detected a number of driving cycles ago.

Counter 3 (C#3) (see graph). Counts the number of driving cycles performed since the malfunction was confirmed the *first* time. When a malfunction is confirmed the first time, the counter will count up by 1 for every subsequent driving cycle, regardless of if the malfunction is detected or not. Thus, the counter tracks the number of driving cycles since the malfunction was detected the first time. See graph where the counter increases by 1 for every subsequent driving cycle and the value of the counter is finally 6.

A low value indicates that the malfunction was detected for the first time relatively recently. However, a high value indicates that a first detection was performed some time ago.

Counter 4 (C#4) (see graph). Counts the number of driving cycles in which the malfunction has been confirmed since it was confirmed the first time. The graph shows that after the malfunction was detected the first time, the malfunction has been detected in 3 driving cycles. Thus, after the malfunction was detected the first time, another 6 driving cycles (counter 3), have passed and in these the malfunction has been detected 3 times (counter 3). Simplified, one can say that in this example, the malfunction has occurred/been detected in every other driving cycle, and the malfunction can be assessed as relatively frequent.

A certain indication of a malfunction's intensity can be obtained if you compare the value for counter 4 with counter 3. The closer the value for counter 4 the value is to the value of counter 3, the more frequent the malfunction.

If counters 3 and 4 have the same value, the malfunction has been detected in every driving cycle, which means that the malfunction is frequent.

Counter 5 (C#5). The counter sums up the time in seconds that *the control module has been operating* since the malfunction first was confirmed and the diagnostic trouble code was stored. The time that the control module has been operating is only counted when it is active, not in "sleep mode". The counter is not shown in the illustration.

Counter 6 (C#6). The counter sums up the time in seconds that *the diagnostic trouble code test has been in progress* since the malfunction first was confirmed and the diagnostic trouble code was stored. The counter is not shown in the illustration.

Counter 7 (C#7). The counter sums up the time in seconds that *malfunction has been confirmed* since it first was confirmed and the diagnostic trouble code was stored. The counter is not shown in the illustration.

COUNTER GENERIC GLOBAL DIAGNOSTICS (GGD)

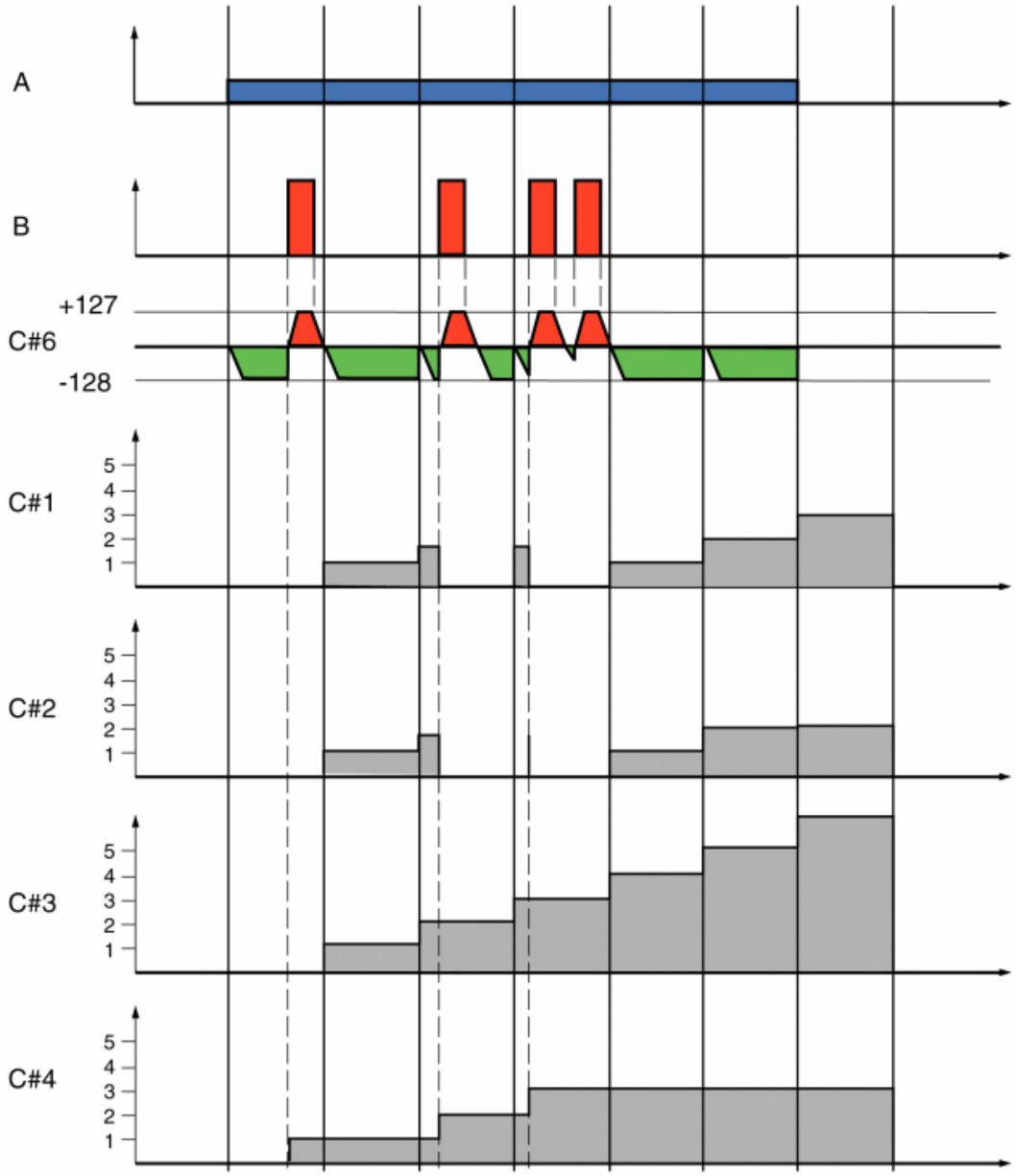

Fig. 48: Counter Generic Global Diagnostics (GGD) Graph
Courtesy of VOLVO CARS CORPORATION

Graph A. Diagnostic trouble code test active

Shows if the control module's diagnostic trouble code test is active or not. The blue surface indicates when the test is active. Not included as a status identifier.

Graph B. Malfunction active

Shows if the malfunction in the vehicle is active or not. The red surface indicates when the malfunction is present (active). Not included as a status identifier.

In the illustration, the control module has detected a malfunction in the second driving cycle, and this malfunction occurs a total of 4 times. Counters can be read out for every diagnostic trouble code in the control module which has this implemented. Driving cycles are indicated with vertical lines. A driving cycle often begins with ignition on and ends with ignition off.

Counter 1 (C#1). Counts number of driving cycles performed since the malfunction was confirmed *last* . As soon as a malfunction is detected and confirmed, the value is reset. When the malfunction is both detected and disappears in the second driving cycle (graph A), counter 1 will count up to 1 first in the following driving cycle (driving cycle 3), that is, a driving cycle has been run through since the last time the malfunction was confirmed.

In driving cycle 4, the counter is updated again, now to value 2. Just after that, the malfunction is detected (graph A), the malfunction is confirmed and the counter's value is reset. This sequence is repeated once again in driving cycle 5.

With other words, one can say that if the value is zero, the malfunction exists now or has existed earlier in the current driving cycle. If the vehicle is restarted (often requires ignition off and on again) in this position and the counter's value still is 0, then you probably have a permanent malfunction.

Values near zero indicate that the malfunction has been detected recently. It may also be that the malfunction exists but the diagnostic trouble code test has not started in these driving cycles, which means that the counter has not been reset. A high counter value indicates that the malfunction was last detected a number of driving cycles ago.

Counter 2 (C#2). Counts the number of driving cycles since the last confirmation of the malfunction and where the diagnostic trouble code was performed *without* detecting malfunction and confirmation of malfunction. Thus, when diagnostic trouble code is performed and no malfunction is detected, the counter will count up by 1 for every driving cycle. As soon as a malfunction is detected and confirmed, the value is reset.

When the malfunction is detected and disappears in the second driving cycle (graph A), counter 2 will count up to 1 first in the following driving cycle (run cycle 3). In driving cycle 4 the counter is updated again (diagnostic trouble code test has been run without detecting malfunction), now to value 2. Immediately after that the malfunction is detected (graph A), the malfunction is confirmed and the counter's value is reset. This sequence is repeated once again in driving cycle 5.

During driving cycle 6 and 7, the diagnostic trouble code test was run without detecting malfunction and the counter receives the value 2. In driving cycle 8, the diagnostic trouble code test is not run and thus the counter is not updated.

Counter 3 (C#3) . Counts the number of driving cycles performed since the malfunction was confirmed the *first* time. When a malfunction is confirmed the first time, the counter will count up by 1 for every subsequent driving cycle, regardless of if the malfunction is detected or not. Thus, the counter tracks the number of driving cycles since the malfunction was detected the first time. See graph where the counter increases by 1 for every subsequent driving cycle and the value of the counter is finally 6.

A low value indicates that the malfunction was detected for the first time relatively recently. However, a high value indicates that a first detection was performed some time ago.

Counter 4 (C#4). Counts the number of driving cycles in which the counter's value has been updated first when the malfunction was detected in the driving cycle. The counter has a final value of 3.

A certain indication of a malfunction's intensity can be obtained if you compare the value for counter 4 with counter 3. The closer the value for counter 4 the value is to the value of counter 3, the more frequent the malfunction.

Counter 5 warm-up (C#5). Counts the number of warm-up cycles that have been run since the malfunction light (MIL) has gone off. The counter is not shown in the illustration. Note: Only applies to emission-related systems.

Counter 6 malfunction detection (C#6). The counter counts the number of internal detections of the malfunction that have been run for the diagnostic trouble code. When this counter reaches value +127, the control modules decides that the malfunction is active right now.

When the counter is at value -128, the malfunction is not active. The value is reset for every new driving cycle.

If the value increases towards +127, the control module has detected a malfunction, and for every internal test the value is counted up. When the malfunction no longer exists, the control module counts down to minimum -128.

The value on the control module can only be changed when it has started the test for the diagnostic trouble code. How big each step is that the control module counts up or down the value by to reach the limits +127 or -128 may vary between control modules. Limits +127 and -128 are pre-defined limits in the control module.

In the graph, the counter first counts down to -128 when the diagnostic trouble code test starts. When a malfunction occurs (graph B) and the diagnostic trouble code test detects the malfunction, first the counter's value is reset to 0, then it scrolls up to +127. Only then the malfunction is considered to exist. If the malfunction disappears and the diagnostic trouble code test is active, the counter counts down to -128.

Counter 7 malfunction detection - max. current (C#7). Shows maximal value that counter 6 has in the present driving cycle.

The counter is not shown in the illustration.

Counter 8 malfunction detection - max. earlier (C#8). Shows maximal value that counter 6 has in the present and/or has had in earlier driving cycle.

The counter is not shown in the illustration.

STATUS IDENTIFIER

GENERAL

There are status indicator (status identifiers) that can be read out for every diagnostic trouble code. The control module tests every connection (signal) or function more or less periodically, depending on the self-diagnosis' conditions for start.

By reading out the diagnostic trouble code with associated status identifier, then you obtain *status for the diagnostic trouble code test that detects the malfunction, as well as if the malfunction exists now or not.*

NOTE: Status identifier, Counter and Frozen values are the most important factors to deciding the malfunction's nature, that is, to decide:

- when the malfunction was detected (frozen values, counters)
- what the driving conditions were at the time (frozen values)
- status for the test (self-diagnosis) (status identifier)
- how frequent the malfunction is (counter).

All status identifiers (or malfunction detection counters) do not have to be introduced in one control module, this varies from system too system. All status identifiers restarts the count every time a new driving cycle/operation cycle starts or when erasing diagnostic trouble codes. Status identifiers should be read off continuously as the different identifiers can be updated later on.

The following describes possible status identifiers.

NOTE: Status identifiers for systems with diagnostics Volvo Diagnoses II is slightly different from status identifiers for diagnostic version Generic Global Diagnostics (GGD).

When erasing diagnostic trouble codes, the diagnostic trouble code's status identifier is erased.

STATUS IDENTIFIER VOLVO DIAGNOSTICS II

The following identifiers are available (showed values apply until updated with a new read-out):

- SB 01 Diagnostic trouble code test run in progress.
- SB 02 Diagnostic trouble code test run at least once during current driving cycle.
- SB 03 Sporadic/single malfunctions found the last time diagnostic trouble code test was run during current driving cycle/operation cycle.
- SB 04 Sporadic/single malfunctions found at least once during current driving cycle.
- SB 05 Request light warning light/text message due to detected malfunction.
- SB 06 Diagnostic trouble code test blocked due to malfunction found by another diagnostic trouble code test.
- SB 08 Malfunction detection counter, current value.
- SB 09 Malfunction detection counter, maximum value reached some time during current operation cycle.

Abbreviation SB is from the English 'Status Bit'.

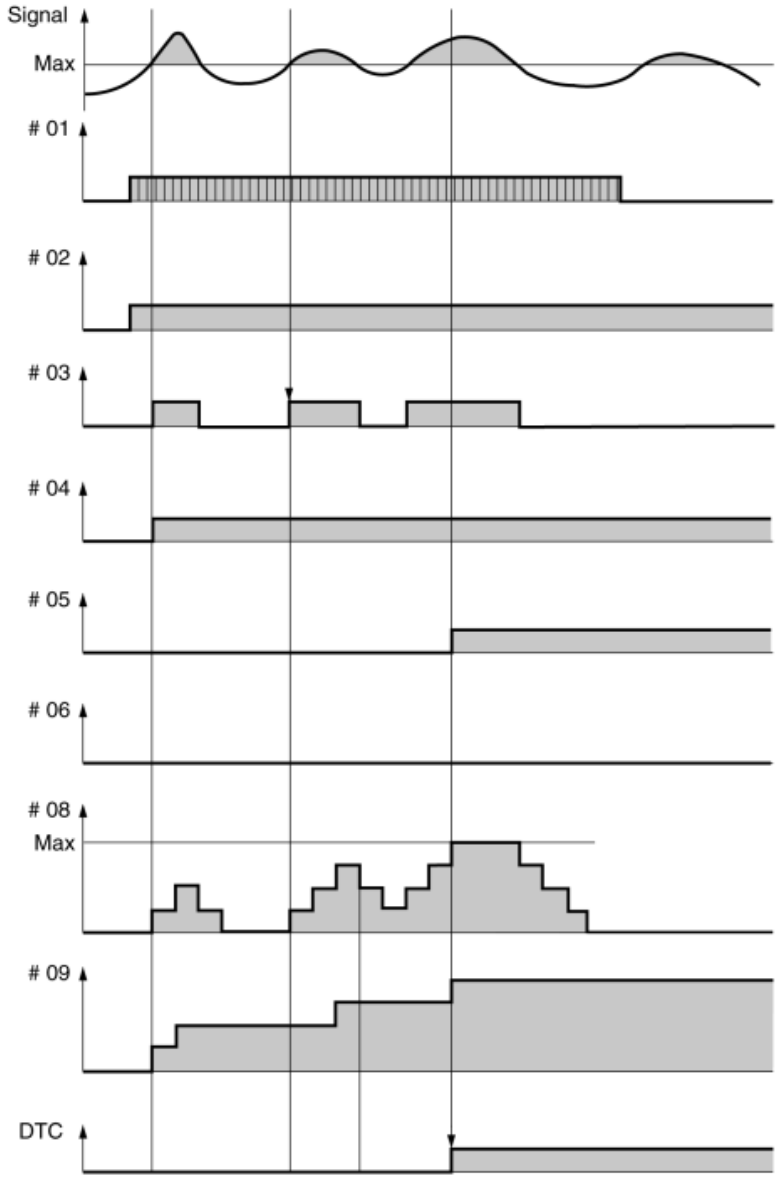

Fig. 49: Identifying Status Identifier Volvo Diagnostics II Graph
Courtesy of VOLVO CARS CORPORATION

The upper graph shows a varying signal value. If the signal value exceeds a max. value, which is considered a malfunction by the control module, then a sporadic malfunction is registered, that is, a malfunction is about to occur. Then the grey-marked surface indicates the signal considered to be incorrect.

The text below uses the term Driving cycle, which may also be called Operation cycle.

NOTE: If the diagnostic trouble codes are erased, the status identifiers are also erased

SB01 Diagnostic trouble code test run in progress (second paragraph from top).

Shows if the diagnostic trouble code test runs or not right now (in current driving cycle). It is only when the test runs that the control module can detect malfunctions and generate diagnostic trouble codes.

Grey-marked surface means that the test runs and can detect a malfunction if it occurs. The surface is "dashed", showing that when the diagnostic trouble codes runs, it runs in a cyclic, pre-determined pattern.

Status identifier 03 and 04 shows if a malfunction is detected or not. In this case, a malfunction is detected 3 times.

Status alternative when reading out is Yes (test runs now) or No (test is not run now).

SB02 Diagnostic trouble code test run at least once during current driving cycle (third graph from the top).

Shows if the diagnostic trouble code test has been run or not during the current driving cycle. If it has been possible for the control module to detect malfunctions and generate diagnostic trouble code any time during the current driving cycle.

Grey-marked surface means that the diagnostic trouble code test has been run at some time. If the diagnostic trouble code test has been run at some time in this driving cycle, status will always be Yes and remain so until the ignition is turned on off and a new driving cycle starts. When a new driving cycle starts, status identifiers are "reset" and is initially No.

Status identifier 03 and 04 shows if a malfunction is detected or not.

Status alternative when reading out is Yes (test completed) or No (test not completed).

SB03 Sporadic/single malfunctions found the last time diagnostic trouble code test was run during current driving cycle (fourth graph from the top).

A sporadic malfunction (intermittent malfunction) has been detected 3 times *the last* time the diagnostic trouble code test was run during current driving cycle. During the diagnostic trouble code test run the last time (status identifier 01) a malfunction has been detected 3 times.

Status alternative when reading out is Yes (sporadic malfunction found) or No (no sporadic malfunction found).

NOTE: **When the control module detects the malfunction for the first time(status identifier 03 and 04), a diagnostic trouble code has not yet been stored. It is first when the malfunction detection counter 08 reaches a certain value that the control module considers that a real malfunction exists (a confirmed malfunction) and the diagnostic trouble code is stored.**

SB 04 Sporadic/single malfunctions found at least once during current driving cycle (fifth graph from the top).

A sporadic malfunction (intermittent malfunction) has been detected at some time during current driving cycle. Grey. marked surface means that a malfunction has been detected at some time.

If the diagnostic trouble code test has been run at some time in this driving cycle, status will always be Yes and remain so until the ignition is turned on off and a new driving cycle starts. When a new driving cycle starts, status identifiers are "reset" and is initially No. Status identifier 03 and 04 shows if a malfunction is detected or not.

Status alternative when reading out is Yes (test has been run earlier) or No (test has not been run).

SB 05 Request light warning light/text message due to detected malfunction (sixth paragraph from the top).

Information that diagnostic trouble code activates a warning light or text message in driver information module. In this case, lighting of warning light is requested when the diagnostic trouble code has been confirmed and stored.

Status alternative when reading out is Yes (request performed) or No (no request).

SB06 Diagnostic trouble code test blocked (seventh graph from top).

Information that diagnostic trouble code test is turned off as a result of another malfunction and diagnostic trouble code is generated where the root cause is detected. If this in turn results in subsequent malfunctions, it prevents generation of subsequent diagnostic trouble codes. In this case, the diagnostic trouble code test is not blocked.

Status alternative when reading out is Yes (diagnostic trouble code test blocked) or No (diagnostic trouble code test not blocked).

SB08 Malfunction detection counter, current value (eight graph from top).

When a sporadic malfunction is detected by the control module the malfunction detection counter counts up as long as the malfunction exists.

When the malfunction no longer exists the counter counts down again. This is the basis for the control module's decision to store the diagnostic trouble code and the diagnostic trouble code is stored in the vehicle first when the counter reaches a certain max. value. This max. value varies between different diagnostic trouble codes.

Count rate of the counter is controlled as long as the malfunction exists before it causes customer symptom. The counter is used to decide if it is a real malfunction that has occurred and that has existed for some time. It is the control module's way of confirming the diagnostic trouble code, that is, confirming that a real malfunction exists.

SB09 Malfunction detection counter, max. value during current operation cycle

Shows max. value that status identifier 08 has reached during current driving cycle. When a new driving cycle starts, the counter is "reset".

STATUS IDENTIFIER GENERIC GLOBAL DIAGNOSTICS (GGD)

The following identifiers are available (showed values apply until updated with a new read-out):

- SB 00 Malfunction found the last time that the diagnostic trouble code test was run during current driving cycle
- SB 01 Malfunction found at least once during the current driving cycle
- SB 02 Malfunction found at least once during the current and previous driving cycles
- SB 03 Malfunction found recently since erasing of diagnostic trouble codes
- SB 04 Diagnostic trouble code test run at least once since erasing of diagnostic trouble codes
- SB 05 Malfunction found at least once since erasing of diagnostic trouble codes
- SB 06 Diagnostic trouble code test run at least once during current operation cycle.
- SB 07 Request light warning light/text message due to detected malfunction.

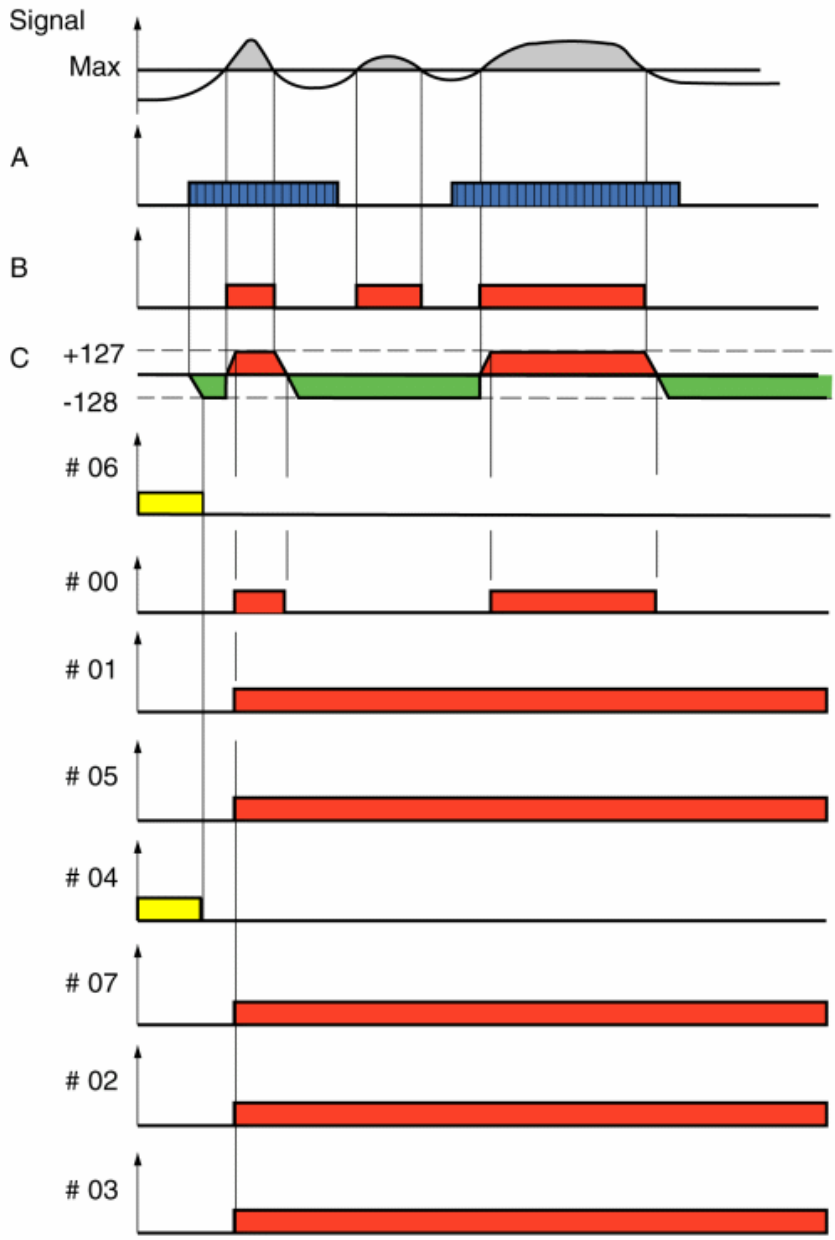

Fig. 50: Identifying Status Identifier Generic Global Diagnostics (GGD) Graph
Courtesy of VOLVO CARS CORPORATION

The upper graph shows a varying signal value. If the signal value exceeds a max. value, which is considered a malfunction by the control module, then a sporadic malfunction is registered, that is, a malfunction is about to occur. Then the grey-marked surface indicates the signal considered to be incorrect.

The text below uses the term Driving cycle, which may also be called Operation cycle. The order of status identifiers in illustration and in the list below are presented as they belong to each other, not in numerical order.

NOTE: If the diagnostic trouble codes are restored, the status identifiers are also restored

Graph A Diagnostic trouble code test active

Shows if the control module's diagnostic trouble code test is active or not. The blue surface indicates when the test is active. The surface is "dashed", which shows when the diagnostic trouble code test runs it runs in a cyclically pre-determined pattern. Not included as a status identifier.

Graph B Malfunction active

Shows if the malfunction in the vehicle is active or not. The red surface indicates when the malfunction is present (active). Not included as a status identifier.

Graph C Counter 6 malfunction detection (C#6)

The counter counts the number of internal detections of the malfunction that have been performed for the diagnostic trouble code. Not included as a status identifier. When this counter reaches value +127 the control module considers the malfunction to be active right now.

When the counter is at value -128, the malfunction is not active. The value is reset for every new driving cycle.

If the value increases towards +127, the control module has detected a malfunction and for every internal test the value is counted up. When the malfunction no longer exists, the control module counts down to minimum -128.

The value on the control module can only be changed when it has started the test for the diagnostic trouble code. How big each step is that the control module counts up or down the value by to reach the limits +127 or -128 may vary between control modules. Limits +127 and -128 are pre-defined limits in the control module.

In the graph, the counter first counts down to -128 when the diagnostic trouble code test starts (graph A). When a malfunction occurs (graph B) and the diagnostic trouble code test detects the malfunction, first the counter's value is reset to 0, then it scrolls up to +127. Only then the malfunction is considered to exist. If the malfunction disappears and the diagnostic trouble code test is active, the counter counts down to -128.

SB **06 Diagnostic trouble code test run at least once during current operation cycle**

Shows if the control module has performed diagnostic trouble code test for this diagnostic trouble code in *current* driving cycle. When the diagnostic trouble code test starts and counter 6 (malfunction detection) counts down to -128 (no malfunction found) or up to +127 (malfunction found), the control module considers that diagnostic trouble code test has been run.

Yellow-marked surface means that diagnostic trouble code test *is not yet* run.

Status alternative when reading out is Run or Not run.

SB **00 Malfunction found the last time that the diagnostic trouble code test was run during current driving cycle**

Shows if the control module detects the malfunction right now. It is only when the test runs that the control module can detect malfunctions and generate diagnostic trouble codes. A malfunction has been detected 2 times during the current driving cycle. Note that only when counter 6 (malfunction detection) reaches the value +127 is it considered to be a malfunction. When the value gas dropped from +127 to 0, it is considered that there is no longer a malfunction.

Status alternative when reading out is Yes (malfunction detected right now) or No (no malfunction detected right now).

SB **01 Malfunction found at least once during the current driving cycle**

Shows if the control module has detected the malfunction *anytime during the current driving cycle.* It is only when the test runs that the control module can detect malfunctions and generate diagnostic trouble codes. The diagnostic trouble code test has started and a malfunction has been detected at least 1 time during the current driving cycle.

Status alternative when reading out is Yes (malfunction found) or No (malfunction not found).

This status identifier is generated at the same time as status identifier SB00 and will remain in status Yes for the rest of the current driving cycle. At start of a new driving cycle, it has changed to status No until a malfunction is detected again.

SB **05 Malfunction found at least once since erasing of diagnostic trouble codes**

Shows if the control module has detected the malfunction during *earlier* driving cycle. A malfunction has been detected at least 1 time since the diagnostic trouble code was erased the last time.

Status alternative when reading out is Yes (malfunction found) or No (malfunction not found).

This status identifier is generated at the same time as status identifier SB 00 and will remain in status Yes until diagnostic trouble codes are erased once again.

SB **04 Diagnostic trouble code test run at least once since erasing of diagnostic trouble codes**

Shows if the control module has performed diagnostic trouble code test for this diagnostic trouble code in

current and/or earlier driving cycle since the diagnostic trouble code was erased the last time. This means that if diagnostic trouble code test has been run after erasing of diagnostic trouble codes, it will remain in Run until diagnostic trouble codes are erased once again.

Yellow-marked surface means that diagnostic trouble code test *has been* run.

Status alternative when reading out is Run or Not run.

This status identifier is generated at the same time as status identifier SB 06.

SB **07 Request for lit warning light/text message**

Information about the diagnostic trouble code activates a warning light or text message. In this case, lighting of the warning light is requested when a diagnostic trouble code is stored.

Status alternative when reading out is Yes (request performed) or No (no request).

SB **02 Malfunction found at least once during the current and previous driving cycles**

Pending not yet confirmed diagnostic trouble code.

Status alternative when reading out is Yes (malfunction found but not confirmed) or No (no malfunction found).

This status identifier is generated at the same time as status identifier SB 00 is generated for the first time and will remain in status Yes until certain driving cycle conditions are fulfilled and no malfunctions are detected. After a certain number of driving cycles without detected malfunction, it returns to status No. Number of driving cycles required depends on the system.

SB **03 Malfunction found recently since erasing of diagnostic trouble codes**

Confirmed diagnostic trouble code.

Status alternative when reading out is Yes (malfunction found and confirmed) or No (no malfunction found).

This status identifier is generated at the same time as status identifier SB 00 is generated for the first time and will remain in status Yes until certain driving cycle conditions are fulfilled and no malfunctions are detected. After a certain number of driving cycles without detected malfunction, it returns to status No. That is, if a malfunction becomes intermittent and no longer is detected, the status will change to No. Number of driving cycles required depends on the system.

NOTE: **For emission-related control system, this status identifier is generated to status Yes (Malfunction found and confirmed), first after status identifier SB02 has had status Yes (Malfunction found but not confirmed) for 2 driving cycles in a row with malfunction detected.**

INTRODUCTION

Volvo has developed a wide range of tools and information for easier and faster troubleshooting of the vehicle and its different systems. The range includes service and troubleshooting information, integrated self-diagnostics in control modules, measuring instrument for exhaust analysis, diagnostic tools, etc.

Troubleshooting or diagnostics are performed by the mechanic using two different concepts; Off Board Diagnostics (diagnostics outside the vehicle) or On Board Diagnostics (diagnostics system in the vehicle).

Off Board Diagnostics (diagnostics outside the vehicle) is done *without* help from the control module's self-diagnosis. Examples of these are:

- Breakout box and multimeter to measure signals.
- Mechanic's troubleshooting using hearing, touch, and vision as well as experience.
- Diagnostic tools that are connected in parallel between control module and connector.
- Cylinder leak tester.

On Board Diagnostics (diagnostic systems in the vehicle) *is done using the control module's self-diagnosis* and is read out and presented using a diagnostics tool.

	Off Board Diagnostics	On Board Diagnostics
Advantages	• A few tools to develop compared to functionality/software in all control modules. • Can probably be used for several models.	• Store information about the nature of the malfunction (malfunction frequency, test status, driving conditions), making it possible to troubleshoot intermittent malfunctions. • Require a diagnostic tool to convey information to the mechanic.
Disadvantages	• If the malfunction has disappeared (intermittent), the malfunction will probably not be found.	• Software and its functionality must be in every control module (great quantity). • If a malfunction in the software is detected, many units must be updated.

Fig. 51: Identifying Vehicle Diagnostics
Courtesy of VOLVO CARS CORPORATION

The term **Diagnostics** refers to true recognition and designation of an illness. The term comes from the Greek **dia** = through, and **gnosis** = knowledge. The purpose of a diagnosis is to give a summarized term for the different symptoms that the "sick" describes, and thus be able to give a specific treatment.

The control module in the vehicle includes software to manage intended function (e. g., control all functions of an engine), to monitor the system's components and functions. Monitoring (self-diagnosis) detects any malfunctions, stores these, activates protective actions (back-up modes) and, in some cases, warns the driver.

Monitoring (diagnosis) is always activated when the system is on but tests are started and run according to different pre-defined conditions. A malfunction that is detected is first assessed by monitoring, after, e. g., a certain time, a certain number of driving cycles, certain driving/operation cases or other conditions, the control module decides if it is a real malfunction or not. When monitoring determines that a real malfunction exists, it can be said that the malfunction is confirmed and the malfunction is stored.

The basic goal of self-diagnosis in control modules is to detect and report malfunctions in a control module or its connected components and cables. Part of the goal (found in legal requirements) is also to detect malfunctions that affect emissions as well as malfunctions that may cause subsequent damage to emission-related components.

Self-diagnosis shall also warn for malfunctions that mean a safety risk for drivers, passengers, and vehicles that otherwise would not cause a symptom and thus not be detected. This applies to, e. g., brake system and SRS-system.

Self-diagnosis shall be used by workshops as one of the tools for taking care of the symptom (property/malfunction) that the customer experiences. After the malfunction cause is found (via troubleshooting) and taken care of (via repair), self-diagnosis can also be used to verify that the malfunction cause has been fixed and that the customer's symptom does not exist any longer.

NOTE: **The control module's self-diagnosis (diagnostic trouble code tests) cannot detect all malfunctions that may occur in a vehicle. This primarily applies to mechanical malfunctions but also some electrical malfunctions, e. g., poor connection to battery, or relay spools for a relay are monitored but the**

function/circuit that the relay controls is not monitored.

Unfortunately, sometimes the control module's self-diagnosis can *miss to generate* a diagnostic trouble code for a malfunction where the customer experiences a symptom (malfunction), and sometimes it may generate a diagnostic trouble code despite the customer *not* experiencing any symptom (malfunction). This is because customers have different sensitivity to malfunctions (how easily the symptom is detected) and because it is not always to optimize self-diagnosis for all conditions that may occur during the vehicle's life. That is why you should *not entirely rely* on the vehicle's diagnostic trouble codes.

Diagnostic trouble codes should only be regarded as *indicators* of probably malfunction sources. *If the customer experiences a symptom (malfunction) but diagnostic trouble codes are not stored, this does not mean that the vehicle is trouble-free.*

Worth keeping in mind when troubleshooting:

- When there is so much electronic equipment in the vehicles, it is easy to blame the "complex" electronics and forget the normal basics for, e. g., an engine's function. But the basics are the same today as when we had carburetor engines.
- A common mistake in troubleshooting is to quickly restricting yourself to a certain area without having checked basic functions, e. g., that the ignition system and engine are in good mechanical condition, the battery is fully charged, fuses are intact.
- Troubleshooting information gives very good guidance when troubleshooting and is almost impossible to do without. By using the customer's symptom, developed troubleshooting methods with, e. g., diagnostic trouble code information, you are quickly guided to being able to pin-point the malfunction.

NOTE: The electronic components in the control systems are very reliable and seldom cause any malfunctions.

This document describes the following:

- Background to why self-diagnosis is found in the vehicle.
- Diagnostic services, what they do.
- Using the self-diagnosis.
- Diagnostic versions and its communication method.
- Tools for reading out diagnosis.
- Where I find the information.

PRACTICAL USE OF DIAGNOSTICS

GENERAL

There are several ways to decide if the malfunction is active right now or not as well as when the malfunction occurred:

- **Read off the diagnostic trouble code's counter, status identifier and frozen values.** By interpreting these you can find out when the malfunction was stored, how often the malfunction has occurred (intermittence) and what the driving conditions were when the malfunction was stored.
- **Read off a parameter** for component/system and decide if the value is correct or not. By, e. g., manually affecting the sensor or the switch, you can decide immediately if the parameter (signal) with its circuit is correct.
- **Trigger a component** (activate) and decide if the component/function is affected or not. By triggering, e. g., the relay and listening for its clicking sound or the function which is to be affected, it is possible to decide immediately if the component is correct.
- **Decide if the vehicle shows any symptom (malfunction).** If the vehicle no longer shows the symptom, one may suspect that the malfunction no longer is active.

The following accounts in detail for some of the above.

TO DECIDE THE INTENSITY OF A MALFUNCTION

NOTE: Examples 1-5 (below) are based on counters for diagnostic concept Generic Global Diagnostic (GGD).

When a malfunction is intermittent or has unknown status, the diagnostic trouble code's counter is very useful to decide:

- How many driving cycles that have passed since the malfunction was detected the first time as well as since the malfunction was detected.
- During how many driving cycles that the control module has detected the malfunction during a certain period, as well as how many driving cycles that the control module has not detected the malfunction. That the control module has not detected the malfunction may be due to the control module not having started the test for the malfunction, conditions to detect the malfunction are not fulfilled, or that the malfunction no longer exists.

The purpose of interpreting the counters is that it is possible to understand the malfunction's intensity, that is, show "how much" intermittent the malfunction is, as well as help in assessing if the chances to repeat the malfunction and customer symptom, and then succeed with troubleshooting.

If you read out the diagnostic trouble code information and it shows that the diagnostic trouble code test runs at least once every driving cycle (e. g., when driving), the counters' value may be very important when assessing the diagnostic trouble code's status and actions. However, if start of diagnostic trouble code test and its conditions are difficult to achieve, the counters' values should be considered to be of less importance.

Counters 1 and 3 show driving cycles. Counters 2 and 4 also show driving cycles, but then really a "share" of counters 1 and 3, respectively. In principle, counter 4 shows how many times that the customer should have detected symptoms.

NOTE: ***For systems with diagnostic concept Generic Global Diagnostics (GGD).*** **If many diagnostic trouble codes are stored at the same time, then certain diagnostic trouble codes (the oldest) will have these frozen values/counters erased, this to save memory in the control module. These diagnostic trouble codes will then only have counter 2 left. Note also that counter 2 will also be erased when the memory is full, but often later than when other counters are erased.**

NOTE: ***For system with diagnostic concept Volvo Diagnostics II.*** **If many diagnostic trouble codes are stored at the same time, the control module keeps at least half of the oldest and half of the newest diagnostic trouble codes in the trouble code memory.**

NOTE: **For diagnostic trouble codes where the malfunction is not detected for many driving cycles and where the malfunction is detected again, then frozen values and counter values are written over with new values, that is, the diagnostic trouble code is considered "new".**

Example 1, Intermittent malfunction

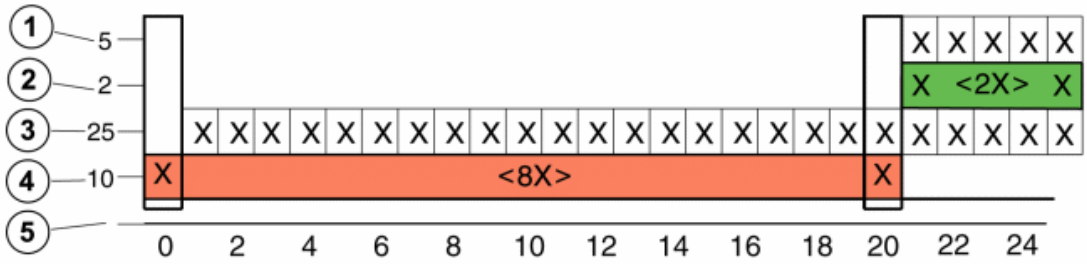

Fig. 52: Identifying Intermittent Malfunction Example 1
Courtesy of VOLVO CARS CORPORATION

1. Counter 1 = 5
2. Counter 2 = 2
3. Counter 3 = 25
4. Counter 4 = 10
5. Driving cycles

After the malfunction has been detected for the first time (driving cycle 0) the malfunction has been detected again in 9 of the first 20 driving cycles. Using this, the conclusion can be drawn that in 11 driving cycles the test has not been run or the malfunction has not been found, or a combination of these. After the last time that the malfunction was detected, 5 driving cycles have passed, where the test was run in 2 driving cycles without

detecting a malfunction.

Conclusion: Intermittent malfunction

Assessment: Good possibility to repeat the malfunction and customer symptom, and thus succeed with troubleshooting, as the malfunction has been found quite recently in several driving cycles.

Example 2, Permanent malfunction

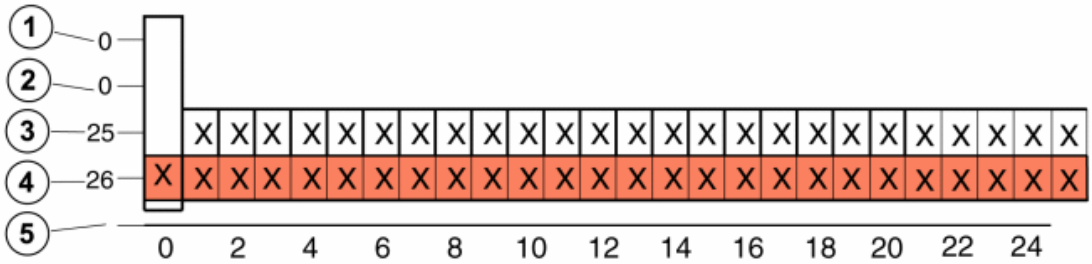

Fig. 53: Identifying Permanent Malfunction Example 2
Courtesy of VOLVO CARS CORPORATION

1. Counter 1 = 0
2. Counter 2 = 0
3. Counter 3 = 25
4. Counter 4 = 26
5. Driving cycles

After the malfunction has been detected for the first time the malfunction has been detected again in all following driving cycles.

Conclusion: Permanent malfunction

Assessment: Very good possibility to repeat the customer symptom and thus succeed with troubleshooting, as the malfunction has been found in every driving cycle. Since the malfunction has been detected during the present driving cycle it does not really matter for troubleshooting if the malfunction has been detected in all previous driving cycles or not.

The counter show more how "sure" the malfunction is as well as that it can confirm if the customer experienced the malfunction as the counter indicates.

Example 3, Intermittent malfunction

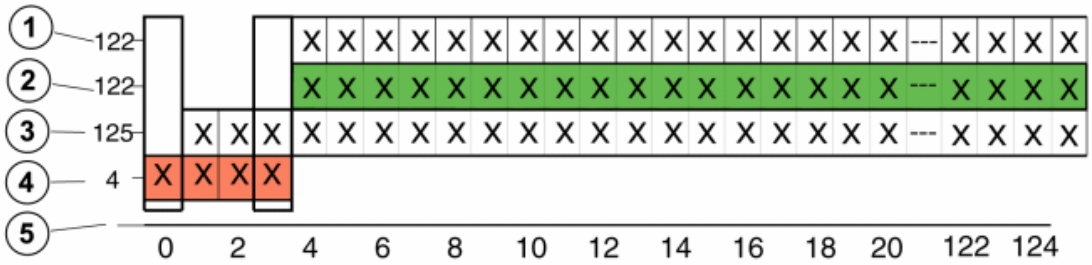

Fig. 54: Identifying Intermittent Malfunction Example 3
Courtesy of VOLVO CARS CORPORATION

1. Counter 1 = 122
2. Counter 2 = 122
3. Counter 3 = 125
4. Counter 4 = 4
5. Driving cycles

After the malfunction has been detected for the first time the malfunction has been detected again in the 3 following driving cycles. After the last time that the malfunction was detected, 122 driving cycles have passed, where the test has been run in 122 driving cycles without detecting a malfunction.

Conclusion: Intermittent malfunction

Assessment: Not very good chance to repeat the malfunction and the customer symptom and thus succeed with troubleshooting, as the malfunction has only been detected in a few driving cycles a very long time ago.

The less driving cycles a malfunction has been detected in and the greater the number of driving cycles since the malfunction was detected the last time, the more difficult it is expected to be to repeat the malfunction and the customer symptom and thus succeed with troubleshooting.

This can be read off by the lower value is on counter 4 and the higher the value is on counter 1 and 2, as well as the lower the difference is between the value on counter 3 and counter 2, the more difficult it is expected to be to repeat the malfunction and the customer symptom and thus succeed with troubleshooting.

Example 4, Intermittent malfunction

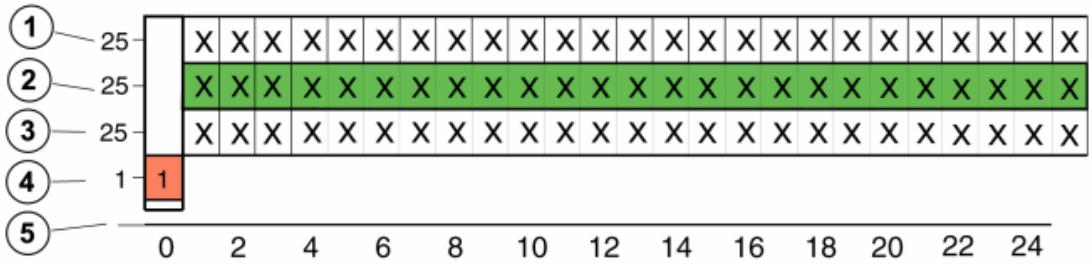

Fig. 55: Identifying Intermittent Malfunction Example 4
Courtesy of VOLVO CARS CORPORATION

1. Counter 1 = 25
2. Counter 2 = 25
3. Counter 3 = 25
4. Counter 4 = 1
5. Driving cycles

After the malfunction has been detected for the first time, the malfunction has never been detected again. After the last time that the malfunction was detected, 25 driving cycles have passed, where the test has run in 25 driving cycles without detecting a malfunction.

Conclusion: Intermittent malfunction

Assessment: Not very good chance to repeat the malfunction and the customer symptom and thus succeed with troubleshooting, as the malfunction has only been detected in one driving cycle quite a long time ago.

Example 5 Unknown status

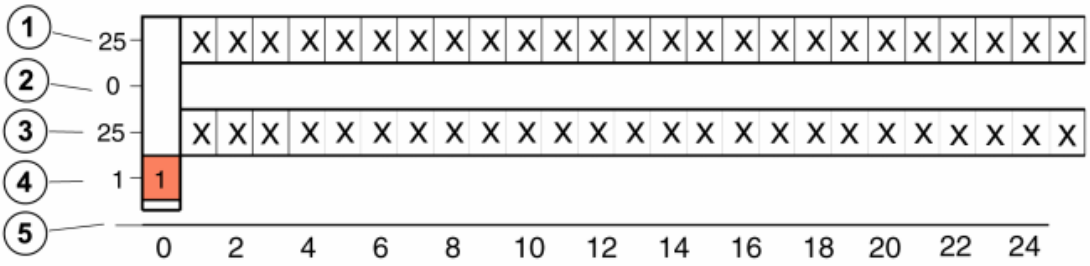

Fig. 56: Identifying Unknown Status Example 5
Courtesy of VOLVO CARS CORPORATION

1. Counter 1 = 25
2. Counter 2 = 0
3. Counter 3 = 25
4. Counter 4 = 1
5. Driving cycles

After the malfunction has been detected for the first time, the malfunction has never been tested and/or detected. After the last time that the malfunction was detected, 25 driving cycles have passed where the test has not been started. Since the diagnostic trouble code test has not started anymore, it cannot be decided if the malfunction exists or not.

Conclusion: Unknown status

Assessment: Read diagnostic trouble code information and try to achieve condition so that the diagnostic trouble code test is started and run, which makes it possible to detect the malfunction. If the malfunction is detected, chances are very good to repeat the customer symptom, and thus succeed with troubleshooting when the malfunction has been found in the current driving cycle.

If the malfunction was not detected even though conditions are fulfilled, then chances are less good to repeat the customer symptom, and thus succeed with troubleshooting as the malfunction has not been found in the current driving cycle.

TO DECIDE DIAGNOSTIC TROUBLE CODE TEST'S STATUS

By reading out the diagnostic trouble code with associated status identifier, then *status for the diagnostic trouble code test that detects the malfunction and generates the diagnostic trouble code, is obtained.*

Example 1, Permanent malfunction

Status identifier:

	Malfunction found the last time that the diagnostic trouble code test was run during current driving cycle	=	Yes
	Malfunction found at least once during the current driving cycle	=	Yes
	Malfunction found at least once during the current and previous driving cycles	=	Yes
	Malfunction found recently since erasing of diagnostic trouble codes	=	Yes
	Diagnostic trouble code test run at least once since erasing of diagnostic trouble codes	=	Test run
	Malfunction found at least once since erasing of diagnostic trouble codes	=	Yes
	Diagnostic trouble code test run at least once during the current driving cycle	=	Test run

	Request for lit warning light/text message	=	Yes

The diagnostic trouble code test has been run in both current driving cycle and in earlier driving cycles. Malfunction has been detected both in current driving cycle and in previous driving cycle, which indicates that the malfunction is active right now. The control module has requested lighting of the warning light.

Conclusion: Permanent malfunction.

Assessment: Very good chance to repeat the customer symptom and thus succeed with troubleshooting, as the malfunction has been found in current and in previous driving cycle. Since the malfunction has been detected during the present run cycle, it does not really matter for troubleshooting if the malfunction has been detected in all previous driving cycles or not. If this information is supplemented with the counters' values you can decide how "permanent" the malfunction is.

If the vehicle is stationary, e. g., with the ignition on, this means that the test runs directly when the ignition is turned on. This makes it easier to both fins the malfunction and to verify that the malfunction cause has been take care of.

Example 2, Unknown status

Status identifier:

	Malfunction found the last time that the diagnostic trouble code test was run during current driving cycle	=	No
	Malfunction found at least once during the current driving cycle	=	No
	Malfunction found at least once during the current and previous driving cycles	=	Yes
	Malfunction found recently since erasing of diagnostic trouble codes	=	Yes
	Diagnostic trouble code test run at least once since erasing of diagnostic trouble codes	=	Test run
	Malfunction found at least once since erasing of diagnostic trouble codes	=	Yes
	Diagnostic trouble code test run at least once during the current driving cycle	=	Test not run
	Request for lit warning light/text message	=	No

The diagnostic trouble code test has been run in previous run cycles but not in current driving cycle. Malfunction has been detected in previous run cycle, but not in current driving cycle since the test has not started. Warning light is on.

Conclusion: Unknown status

Assessment: Since the test has not started in the current driving cycle it is not possible to decide if the malfunction is "active" right now. First read the diagnostic trouble code information and try to obtain conditions

so that the test is started and run, which enables detection of the malfunction. If the malfunction is detected, chances are very good to repeat the customer symptom, and thus succeed with troubleshooting as the malfunction has been found in the current driving cycle.

If the malfunction was not detected even though conditions are fulfilled, then chances are less good to repeat the customer symptom, and thus succeed with troubleshooting as the malfunction has not been found in the current driving cycle.

TO DECIDE OPERATION CONDITIONS WHEN THE MALFUNCTION WAS DETECTED

Malfunctions in a system may be intermittent. It is important to remember this when troubleshooting a possible malfunction cause. If the malfunction is not in the vehicle when it is in the workshop you can miss a malfunction cause since the values may be correct when troubleshooting takes place. A good indication of when the malfunction first occurred for the first time are the frozen values that can be read out for every diagnostic trouble code.

The frozen values are stored immediately after a malfunction has been detected. Most parameters in the frozen values are the same for all malfunctions and indicate a general condition when a malfunction has been detected, e. g., engine rpm, load, coolant temperature, vehicle speed and battery voltage. Some of them have been selected to give a better understanding of the specific malfunction.

Diagnostic trouble code *ECM-903F Electronic throttle unit, internal malfunction* cam be used as an example of how frozen values can be used.

The first possible source indicated in VIDA is the voltage feed to the electronic throttle unit and then continues by suggesting that you check the battery and charging system. However, the battery's condition when the vehicle is in the workshop does not necessarily show the battery voltage when the malfunction was detected.

Instead, the best information is found in the frozen values, that is, voltage that the Engine control module (ECM) detects when Electronic throttle module (ETM) indicated the malfunction.

However, you should remember that this is not an indication of voltage feed to Electronic throttle module (ETM), it is voltage feed to Engine control module (ECM). If Engine control module (ECM) according to frozen values has had good voltage the battery was okay. Therefore, voltage feed to Electronic throttle module (ETM) should be checked separately.

Frozen values for ECM 903F:

- Condition, heated oxygen sensor control bank 1 = LR: Closed circuit with two sensors
- Condition, heated oxygen sensor control bank 2 = LR: Closed circuit with two sensors
- Calculated load = 4.71%
- Engine temperature = 87 °C
- Fuel adaption, quick adjustment, bank 1 = 15.63%
- Fuel adaption, slow adjustment, bank 1 = -0.78%
- Fuel adaption, quick adjustment, bank 2 = 23.44%
- Fuel adaption, slow adjustment, bank 2 = -0.78%

- Engine speed = 760 rpm
- Vehicle speed = 0 km/h
- Boost pressure = 30%
- Battery voltage = 12.50 V
- Throttle angle, desired value = 14.84%
- Air mass = 23.8 kg/h
- Outside temperature = 33 °C

In this case we assume that the vehicle had low battery voltage in the workshop. However, as can be seen in the frozen values, battery voltage was okay when the malfunction occurred, so this was probably not the cause.

This is an example of how frozen values can be used to increase efficiency of troubleshooting and avoid using too much time for incorrect troubleshooting. This prevents troubleshooting and fixing a malfunction that was not the real cause of the problem that was to be solved.

The odometer reading (km) is sometimes included in frozen values in Engine control module (ECM). This enables a quick comparison with the odometer so that you can assess if the malfunction occurred as part of the troubleshooting and can be ignored. For example, CAN-network-related diagnostic trouble codes are saved when the battery voltage drops during work on the vehicle since passenger compartment lighting and other loads drain the battery.

The frozen values indicate odometer reading in km. If you multiply this value by factor 0.62 you obtain driving distance in miles. Current driving distance in both miles and km can be read out with VIDA (Volvo scan tool).

Keep the following in mind when using frozen values for troubleshooting.

The frozen values to be used with care are those stored for the CAN-net and are related to diagnostic trouble codes for Electronic throttle module (ETM).

If Electronic throttle module (ETM) detects that communication to Engine control module (ECM) is interrupted, then malfunction flags will be generated in Electronic throttle module (ETM). These malfunction flags will be sent to Engine control module (ECM) first when communication on the CAN-net works again.

This means that Engine control module (ECM) will store the diagnostic trouble codes first when Electronic throttle module (ETM) delivers them, which in turn means that it is at this point in time that the frozen values are saved. For Electronic throttle module (ETM) this means that the frozen values will be from a point in time after the malfunction first occurred.

DIFFERENTIAL ELECTRONIC MODULE (DEM) (4T65 AWD; 2005-2006)

DESIGN

see **DESIGN**

DIAGNOSTIC FUNCTIONS

GENERAL

The control module has a built-in diagnostic system, Volvo Diagnostic, which continuously monitors internal functions as well as input and output signals.

DIAGNOSTIC TROUBLE CODES (DTCS)

A diagnostic trouble code (DTC) is stored if the control module detects a fault. Should a fault disappear for any reason after being permanently stored in the control module as a diagnostic trouble code (DTC), the information remains stored in the control module.

READING AND ERASING DIAGNOSTIC TROUBLE CODES (DTCS)

Stored diagnostic trouble codes (DTCs) can be read off and erased using this function.

Diagnostic trouble codes (DTCs) can only be erased once all the diagnostic trouble codes (DTCs) have been read off at least once.

READING OFF INPUT AND OUTPUT SIGNALS

This function can be used to continuously read off the status of the control module's input and output signals.

For further information about parameters, see **DESCRIPTION OF PARAMETERS**

READING OFF THE CONTROL MODULE IDENTIFICATION

VIDA identifies control modules by reading off a number of codes from the control module memory.

The codes contain information about the control module:

- hardware P/N (control module without software)
- hardware serial number (control module without software)
- software P/N
- diagnostic software P/N.

DOWNLOADING SOFTWARE AND REPLACING THE CONTROL MODULE

see **DOWNLOADING SOFTWARE AND REPLACING THE CONTROL MODULE**

FUNCTION

see **FUNCTION**

SYSTEM OVERVIEW

see **SYSTEM OVERVIEW**

DIFFERENTIAL ELECTRONIC MODULE (DEM) (AW50/51 AWD; 2005-2007)

DESIGN

see **DESIGN**

DIAGNOSTIC FUNCTIONS

see **DIAGNOSTIC FUNCTIONS**

DOWNLOADING SOFTWARE AND REPLACING THE CONTROL MODULE

see **DOWNLOADING SOFTWARE AND REPLACING THE CONTROL MODULE**

FUNCTION

see **FUNCTION**

SYSTEM OVERVIEW

see **SYSTEM OVERVIEW**

DIFFERENTIAL ELECTRONIC MODULE (DEM) (TF-80SC AWD; 2005-2008)

DESIGN

CONTROL MODULE

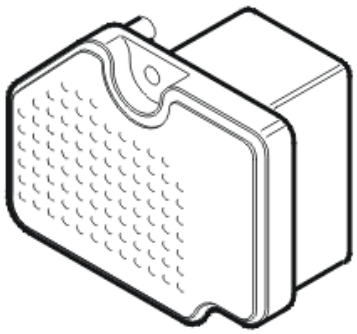

Fig. 57: Identifying Differential Electronic Module (DEM)
Courtesy of VOLVO CARS CORPORATION

Differential Electronic Module (DEM) is directly secured onto the clutch unit housing and together with the axial solenoid constitutes one unit. The axial solenoid controls the control valve.

The Differential Electronic Module (DEM) receives signals via the Controller Area Network (CAN)

from:

- Engine Control Module (ECM)
- Central Electronic Module (CEM)
- Brake Control Module (BCM)
- Driver Information Module (DIM).

Conducted by these signals, the Differential Electronic Module (DEM) determines how high the oil pressure to the clutch unit should be. The oil pressure to the clutch driven plates is decisive for how much torque can be transferred to the rear wheels.

Four-wheel drive does not function in the event of a fault in the Differential Electronic Module (DEM).

OIL PRESSURE AND TEMPERATURE SENSOR

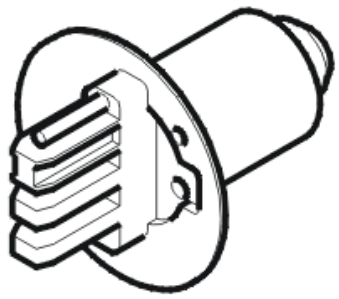

Fig. 58: Identifying Oil Pressure And Temperature Sensor
Courtesy of VOLVO CARS CORPORATION

The oil pressure and temperature sensor is fitted close to the axial solenoid in the Differential Electronic Module (DEM) housing. The sensor is flushed with hydraulic oil. The sensor measures the temperature and pressure (measurement range 0 - 4 MPa) of the hydraulic oil. The sensor sends a signal on temperature and pressure to the control module. The control module uses the signal to adapt the function of the system when the temperature of the oil and its subsequent viscosity is changed.

If the temperature of the oil exceeds 105 °C then the clutch is depressurized and four-wheel drive is disconnected. When the temperature falls below 101 °C the clutch is pressurized again. The pressure of the oil is limited to max. 10.3 MPa by the safety valve.

Four-wheel drive does not function in the event of any fault in the temperature sensor, and the function is significantly reduced in the event of a fault in the pressure sensor.

The oil pressure and temperature sensor can be diagnosed.

CONTROL VALVE/AXIAL SOLENOID

Fig. 59: Identifying Control Valve / Axial Solenoid
Courtesy of VOLVO CARS CORPORATION

The control valve/axial solenoid is located in the Differential Electronic Module (DEM) housing.

The control module supplies a variable pulse width modulated (PWM) signal to the axial solenoid. The solenoid changes the position of the control valve in accordance with the control signal. The pressure to the working piston of the clutch driven plates is controlled in this way.

Four-wheel drive does not function in the event of a fault in the control valve/axial solenoid.

The control valve/axial solenoid can be diagnosed.

ELECTRICAL FEED PUMP

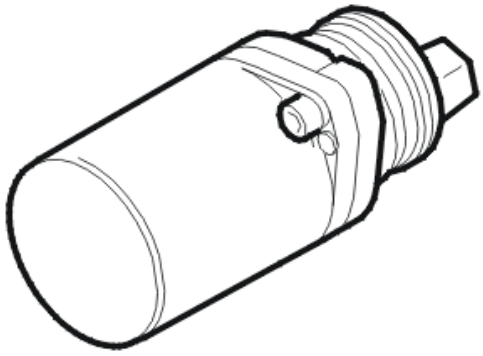

Fig. 60: Identifying Electrical Feed Pump
Courtesy of VOLVO CARS CORPORATION

The electrical feed pump is fitted on the clutch unit and is supplied with voltage from the Differential Electronic Module (DEM). When the engine is started and reaches an engine speed of over 400 rpm the electrical feed pump is supplied with voltage from the control module.

The feed pump pumps oil to the axial pistons whose rollers are applied to the cam disc. At the same time oil flows to the working piston so that the play in the disc package is eliminated and the clutch's capacity for rapid

reaction and control is prepared.

Four-wheel drive does not function in the event of a fault in the feed pump.

The feed pump can be diagnosed.

DIAGNOSTIC FUNCTIONS

GENERAL

The control module has an integrated diagnostic system, which continuously monitors its own system as well as the input and output signals.

DIAGNOSTIC TROUBLE CODES (DTC)

If the control module detects a fault then it stores a diagnostic trouble code (DTC). If a fault disappears for any reason after a diagnostic trouble code (DTC) has been permanently stored in the control module then the information on the diagnostic trouble code (DTC) remains in the control module.

READING AND ERASING DIAGNOSTIC TROUBLE CODES (DTC)

Stored diagnostic trouble codes (DTC) can be read off and erased using this function.

NOTE: Diagnostic trouble codes (DTC) can be erased even if all diagnostic trouble codes (DTC) have not been read off at least once.

READING OFF INPUT AND OUTPUT SIGNALS

The status for the control module input and output signals can be continuously read off using this function.

For more information on parameters, see: **DESCRIPTION OF PARAMETERS**

READING OFF THE CONTROL MODULE IDENTIFICATION

The control module can be identified by means of reading off a number of codes.

The codes contain information about the control module:

- hardware P/N (control module without software)
- hardware serial number (control module without software)
- software P/N
- diagnostic software P/N

DOWNLOADING SOFTWARE AND REPLACING THE CONTROL MODULE

New software can be downloaded into the Differential Electronic Module (DEM). When software is ordered the software and hardware of the vehicle are compared with Volvo's central database. If the comparison

corresponds then the software is downloaded into the control module.

If the comparison between the car and Volvo's central database does not correspond, then the database is updated with the vehicle's configuration. When this is complete the software is downloaded.

The control module is fitted on the clutch unit and can be replaced. Control module replacement also involves replacing the control valve/axial solenoid, this is because the control module and control valve/axial solenoid are fitted and calibrated in the factory as one unit.

FUNCTION

ELECTRONIC FUNCTION

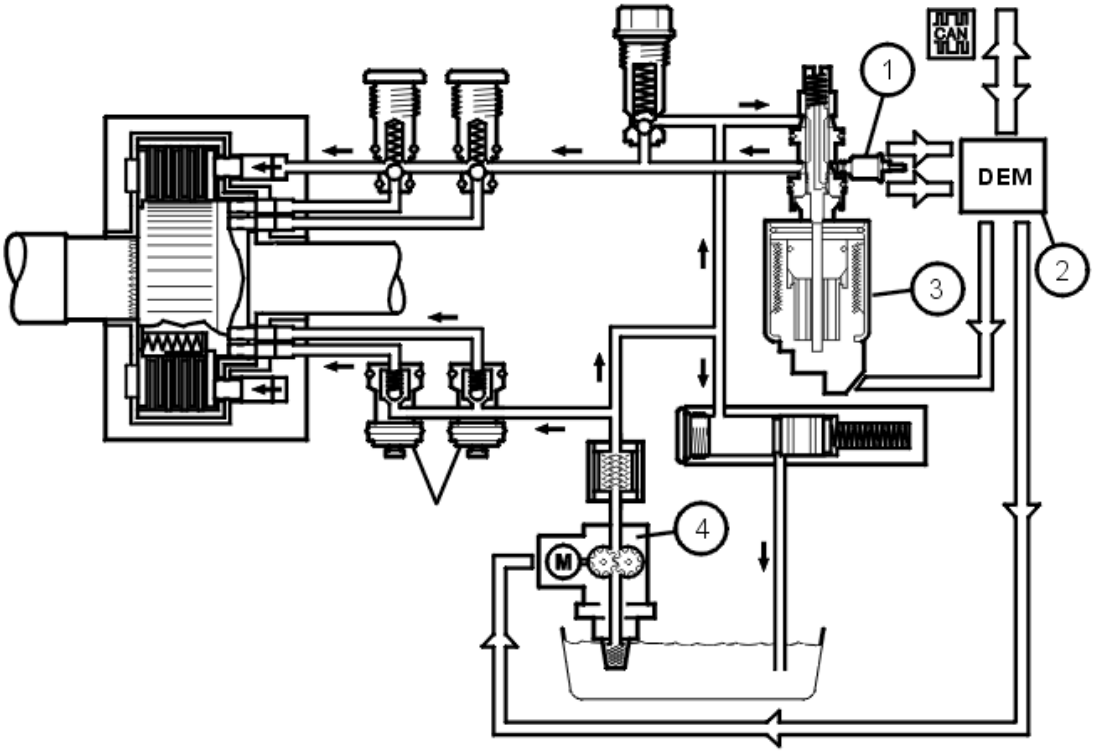

Fig. 61: Active On Demand Coupling Electronic Function
Courtesy of VOLVO CARS CORPORATION

1. Oil pressure and temperature sensor
2. Differential Electronic Module (DEM)
3. Control valve/axial solenoid
4. Electrical feed pump

The Differential Electronic Module (DEM) is directly secured onto the clutch unit and together with the axial solenoid and control valve constitutes one unit. Amongst other things the Differential Electronic Module

(DEM) communicates with the Engine Control Module (ECM) and the Brake Control Module (BCM) via the Controller Area Network (CAN). Conducted by the sensor signals, the Differential Electronic Module (DEM) controls the oil pressure to the clutch driven plates by adjusting the axial solenoid. The axial solenoid has variable control over the control valve by means of a pulse width modulated (PWM) signal. The basic pressure in the system is built up by the electrical feed pump. The oil pressure to the clutch driven plates is decisive for how much torque can be transferred to the rear wheels.

NOTE: If the car has dynamic stability and traction control (DSTC), the required stability control is applied before four wheel drive.

Active On demand Coupling (AOC) is equipped with an oil pressure and temperature sensor, which measures the prevailing temperature and pressure in the hydraulic oil. The oil pressure and temperature sensor informs the Differential Electronic Module (DEM) on the temperature and the pressure. If the temperature is too high, above 105 °C, then the four-wheel drive is disconnected to protect the clutch unit from damage. When the temperature falls below 101 °C the clutch unit is reconnected with full functionality.

To protect driveshafts and joints, the Differential Electronic Module (DEM) has functions that reduce the torque that is transferred to the rear wheels in certain situations.

"Trailer detection" is an example of one of these functions. This function is based means that if a trailer is coupled to the vehicle and the driving conditions are such that the front wheels slip on the surface, the Differential Electronic Module (DEM) will transfer less torque to the rear wheels than it would have done without a trailer.

This results in most of the torque remaining on the front wheels, which protects the rear wheel driveshafts and drive joints from extreme loads.

MECHANICAL FUNCTION, OVERVIEW

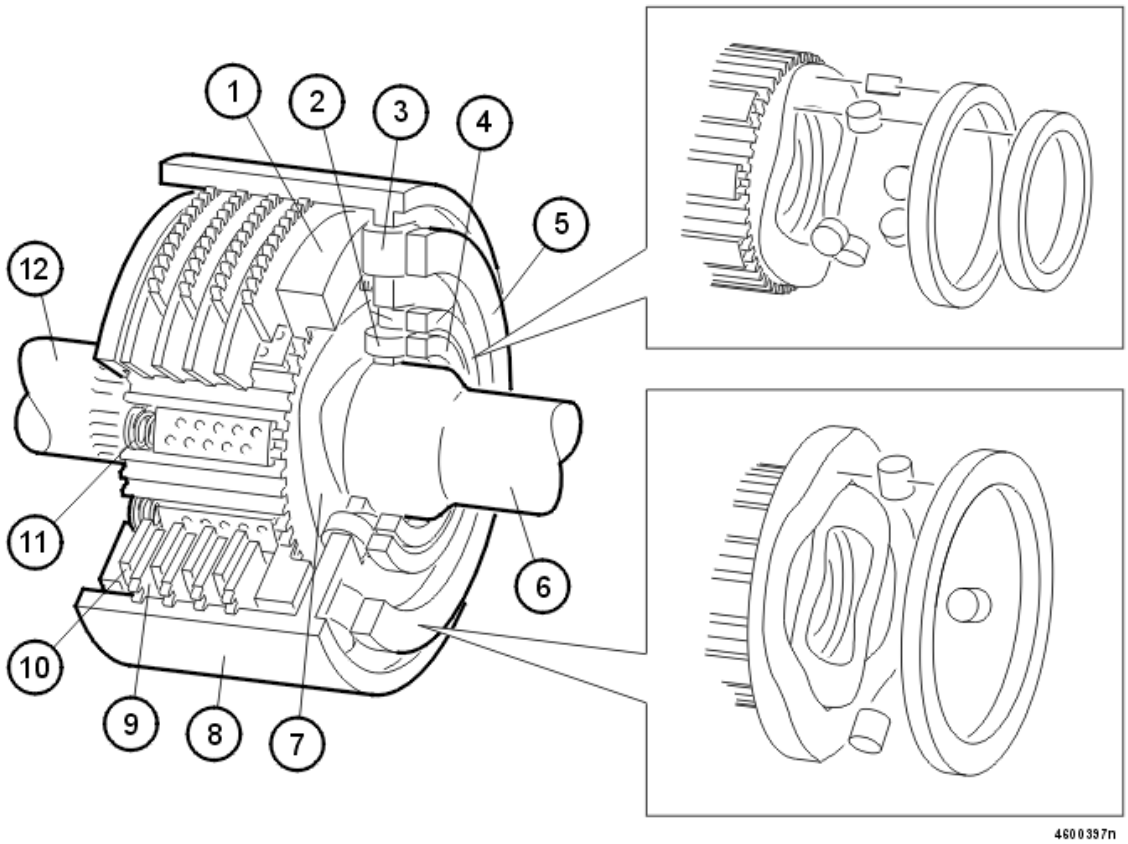

Fig. 62: Active On Demand Coupling Mechanical Function Overview
Courtesy of VOLVO CARS CORPORATION

1. Pressure plate
2. Rollers for axial piston
3. Rollers for working piston
4. Axial piston
5. Working piston
6. Input shaft
7. Cam disc
8. Housing for outer clutch driven plates
9. Outer clutch driven plates
10. Inner clutch driven plates
11. Compression springs
12. Output shaft

The engine torque is transferred to the propeller shaft via the transmission. The input shaft is separated from the output shaft. The disc package must be applied to transfer torque to the rear axle. Inner and outer wet clutch plates are the power transmission points between the input and output shafts.

The cam disc, which is sine shaped, rotates at the same speed as the propeller shaft. The axial piston rollers run

on the cam disc's roller coaster and press the axial piston in and out, which creates an oil pressure which acts on the working piston, which in turn applies the disc package.

HYDRAULIC FUNCTION, OVERVIEW

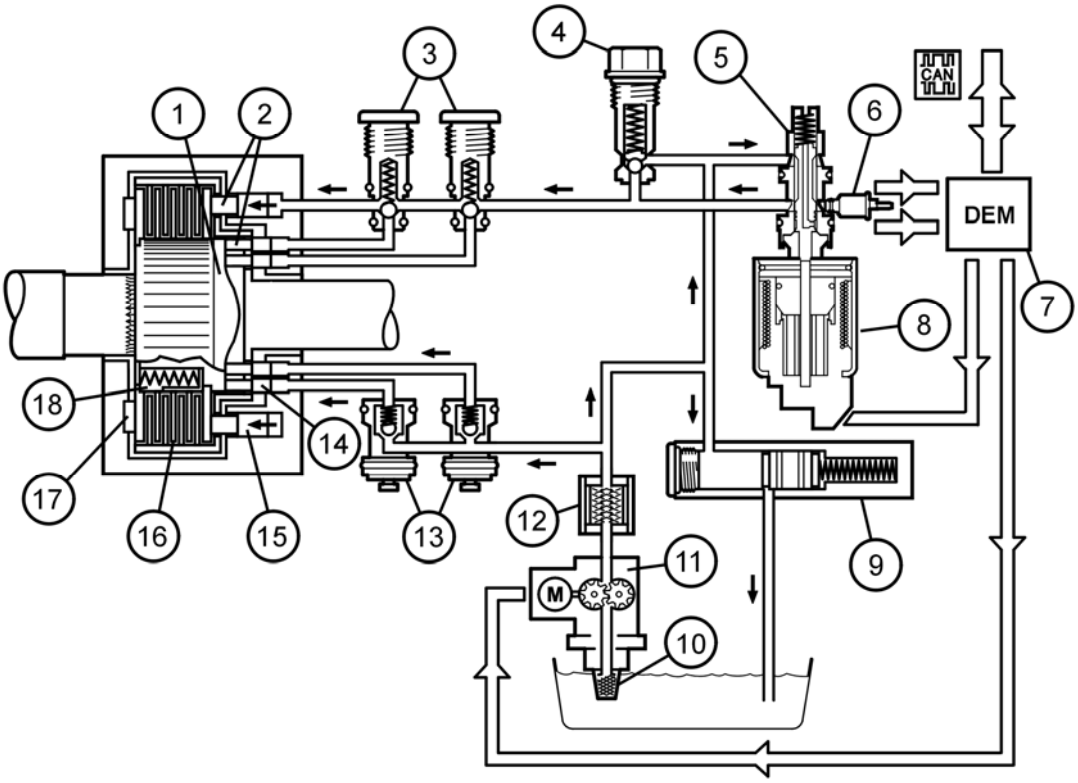

Fig. 63: Identifying Hydraulic Function Overview
Courtesy of VOLVO CARS CORPORATION

1. Cam disc
2. Rollers
3. Pressure valves
4. Pressure limiting valve
5. Control valve cover
6. Oil pressure and temperature sensor
7. Differential Electronic Module (DEM)
8. Control valve/axial solenoid
9. Accumulator
10. Oil strainer
11. Electrical feed pump
12. Oil filter
13. Suction valves

14. Piston pump
15. Working piston
16. Wet disc package
17. Bearings
18. Compression springs

Active On demand Coupling (AOC) can be explained as a hydraulic pump.

The basic pressure in the system is built up by the electrical feed pump. This way the axial pistons are pressurized with oil so that they are pressed against the cam disc via the rollers. The axial piston builds up a working pressure which is conducted to the working piston via the pressure valves. This pressure creates a fixed connection between the input and output shafts. The maximum pressure is limited by the pressure limiting valve. The difference in speed between the input and output shafts is proportional in accordance with the oil pressure to the axial pistons. A large difference in speed between the input and output shafts provides high oil pressure to the axial pistons. The same speed on the input and output shafts provides lower oil pressure to the axial pistons. The oil pressure on the clutch driven plates is controlled by the control valve. The axial solenoid controls the control valve. A closed control valve provides maximum pressure to the clutch driven plates, which provides maximum power transmission. An open control valve provides minimum pressure to the clutch driven plates, which provides a limited power transmission.

The accumulator maintains the basic pressure in the system. The oil filter keeps the oil free from dirt and small particles which can damage the system.

PRETENSIONING

The function of the four-wheel drive system is based in there being a difference in speed between front and rear wheels. This difference in speed can affect traction performance in certain driving situations. The role of the pretensioning function is to improve traction performance, primarily in starting off from being stationary, without affecting other properties of the system to achieve this.

The pretensioning function is obtained by means of the feed pump building up a basic pressure. A pretensioning of the clutch unit is generated by means of this increase in pressure, and the engine torque can be transferred to both rear and front wheels. The pretensioning functionality is controlled by software so that activation only takes place when necessary.

SYSTEM OVERVIEW

ACTIVE ON DEMAND COUPLING (AOC)

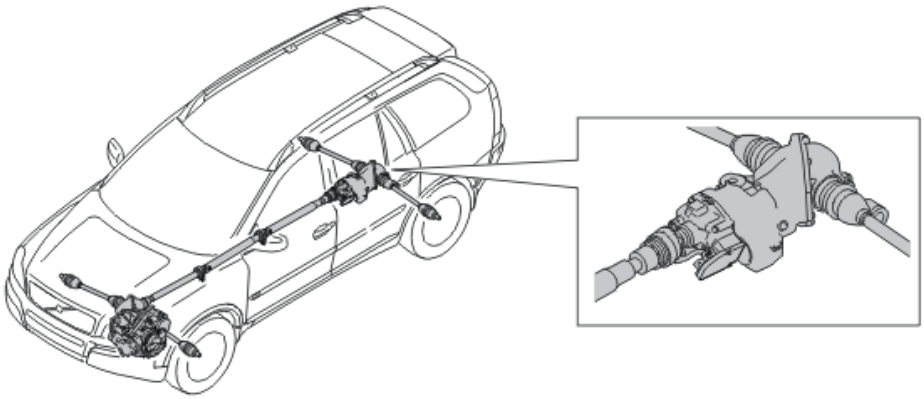

Fig. 64: Active On Demand Coupling (AOC)
Courtesy of VOLVO CARS CORPORATION

The most important function of Active On demand Coupling (AOC) and its Differential Electronic Module (DEM) is to control the four-wheel drive function, i. e. power distribution between front and rear axles. The system consists of a clutch assembly with a mechanical, hydraulic and electronic section. The clutch unit is located on the rear axle, between the final drive and the propeller shaft. The mechanical section is driven by the propeller shaft. The hydraulic section is driven by the difference in speed arising between propeller shaft rotation and rear axle rotation.

Active On demand Coupling (AOC) enables the following characteristics:

- Permanent four-wheel drive with electronic control of transferred torque.
- A driving character equivalent to front-wheel drive.
- Rapid reactions.
- No opposing forces when maneuvering or parking.
- The system is not so sensitive to differences between the tires, e. g. when driving with the spare wheel.
- Not sensitive to towing with an axle lifted.
- Not sensitive to brake testing on a chassis dynamometer.

CLUTCH UNIT AND CONTROL MODULE

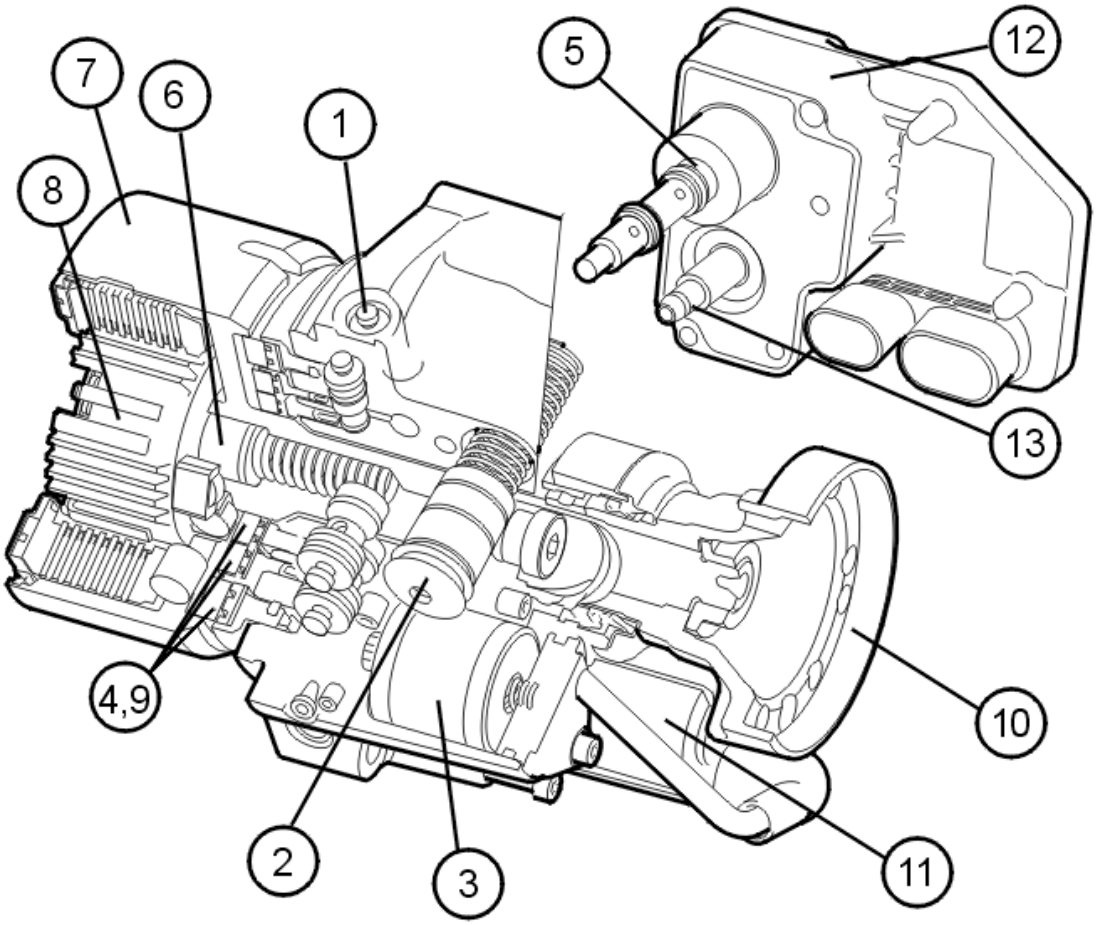

Fig. 65: Coupling Unit And Control Module
Courtesy of VOLVO CARS CORPORATION

The hydraulic section consists of 1-5, the mechanical consists of 6-10 and the electronic section consists of 11-13:

1. Pressure valves
2. Accumulator
3. Oil filter
4. Ring pistons
5. Control valve/axial solenoid
6. Input shaft
7. Inner and outer wet clutch plates
8. Inner clutch hub with sine shape cam disc
9. Rollers with ring pistons
10. Output shaft
11. Electrical feed pump

12. Differential Electronic Module (DEM)
13. Oil pressure and temperature sensor

The Differential Electronic Module (DEM) is fitted on the clutch unit housing.

The Differential Electronic Module (DEM) communicates with other control modules via Controller Area Network (CAN) communication:

The control module has an integrated diagnostic system.

SIGNALS

The table below summarizes input and output signals to and from the Differential Electronic Module (DEM). The illustration below displays the same information with the Volvo component designations.

Input signals	Output signals
Directly connected: • **Oil pressure and temperature sensor**	**Directly connected:** (supply voltage unless otherwise specified) • **Electrical feed pump** • **Axial solenoid** - pulse width modulated (PWM) signal
Via Controller Area Network (CAN) communication: • **Central Electronic Module (CEM)** (4/56), informs on the position of the ignition key and reverse gear status amongst other things. • **Brake Control Module (BCM)** (4/16), informs on the speed of the wheels from the wheel speed sensors and ABS modulation status amongst other things. • **Driver Information Module (DIM)** (5/1), informs on parking brake switch status. • **Engine Control Module (ECM)** (4/46), informs on engine speed, driver engine torque request, calculated engine torque, accelerator pedal position, stop lamp switch status and clutch pedal switch status, amongst other things.	**Via Controller Area Network (CAN) communication:** • **Brake Control Module (BCM)** (4/16), receives information on clutch unit status and torque transferred to the rear axle. • **Central Electronic Module (CEM)** (4/56), receives information on the diagnostic status of the Differential Electronic Module (DEM).

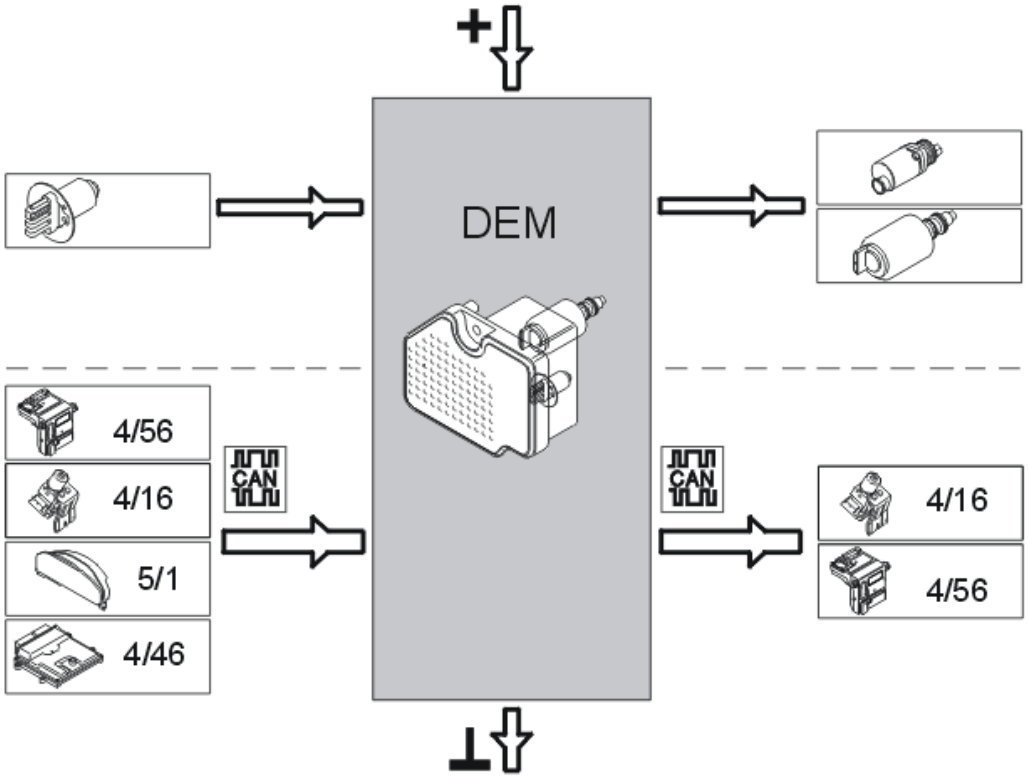

Fig. 66: Differential Electronic Module (DEM) Network
Courtesy of VOLVO CARS CORPORATION

DIFFERENTIAL ELECTRONIC MODULE (DEM) (TF-80SC AWD; 2009-2012)

DESIGN

CONTROL MODULE

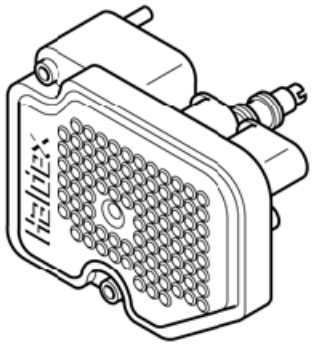

Fig. 67: Differential Electronic Module (DEM)
Courtesy of VOLVO CARS CORPORATION

The differential electronic module (DEM) is secured directly to the coupling unit's housing and makes up unit with the pressure reducing valve. The control module and the pressure reducing valve are calibrated together at the factory and can therefore only be replaced together.

Via the controller area network (CAN), the differential electronic module (DEM) receives signals from:

- engine control module (ECM).
- central electronic module (CEM)
- brake system control module (BCM)
- driver information module (DIM).

Conducted by these signals, the Differential Electronic Module (DEM) determines how high the oil pressure to the clutch unit should be. The oil pressure to the clutch driven plates is decisive for how much torque can be transferred to the rear wheels.

In case of Differential electronic module (DEM) failure, four-wheel drive may be reduced or lost completely.

PRESSURE REDUCING VALVE

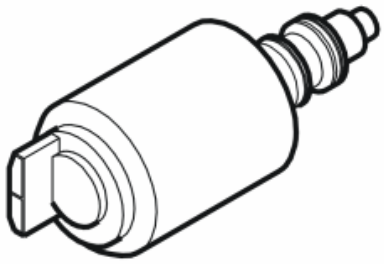

Fig. 68: View of Pressure Reducing Valve
Courtesy of VOLVO CARS CORPORATION

The pressure reducing valve is located in the Differential electronic module (DEM).

The pressure reducing valve receives a constant pulse width modulated (PWM) signal from the control module. The control signal from the control module changes the position of the pressure reducing valve. This regulates the pressure to the discs' operating piston.

In case of diagnostics failure of the pressure reducing valve, four-wheel drive is lost.

The pressure reducing valve can be diagnosed.

ELECTRICAL FEED PUMP.

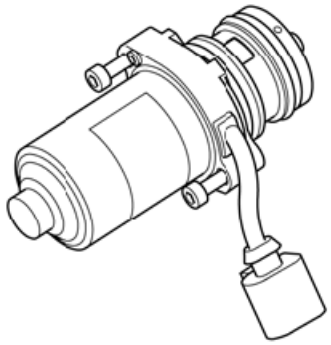

Fig. 69: View of Electrical Feed Pump
Courtesy of VOLVO CARS CORPORATION

The electric feed pump is located on the clutch unit and is supplied with voltage from the Differential electronic module (DEM).

The pump starts at ignition on and then works up a max. oil pressure of 35 bar. This is to always enable request for full torque. Then the pump is shut off until the pressure has dropped to 50%, then it starts again. If the pump does not reach max. pressure within 15 seconds, it is shut off and is then started again. This is calculated via a current measuring algorithm in the Differential electronic module (DEM). The pump works in intervals so that it is not damaged in case of a malfunction, e. g., leakage, in the system. The time interval that the pump works between depends on the temperature. At normal room temperature the pump runs at approx. 20-30 second intervals.

Four-wheel drive does not function in the event of a fault in the feed pump.

The feed pump can be diagnosed.

OIL FILTER WITH NON-RETURN VALVE

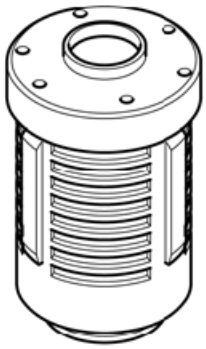

Fig. 70: View of Oil Filter With Non-Return Valve
Courtesy of VOLVO CARS CORPORATION

The hydraulic oil is pumped to the accumulator tank via an oil filter. The oil filter keeps the oil free from dirt

and small particles that can damage the system. There is a non-return valve installed in the oil filter.

In case of oil filter malfunction, a trouble code may be generated.

The oil filter can be diagnosed

DIAGNOSTIC FUNCTIONS

GENERAL

The control module has an integrated diagnostic system, which continuously monitors its own system as well as the input and output signals.

DIAGNOSTIC TROUBLE CODES (DTCS)

If the control module detects a fault then it stores a diagnostic trouble code. If a fault disappears for any reason after a diagnostic trouble code has been permanently stored in the control module then the information on the diagnostic trouble code remains in the control module in a number of driving cycles that can be calibrated.

READING AND ERASING DIAGNOSTIC TROUBLE CODES (DTCS)

Stored diagnostic trouble codes (DTCs) can be read off and erased using this function.

NOTE: Diagnostic trouble codes (DTCs) can be erased without having been read off.

READING OFF INPUT AND OUTPUT SIGNALS

This function can be used to continuously read off the status of the control module's input and output signals.

READING OFF THE CONTROL MODULE IDENTIFICATION

The control module can be identified by means of reading off a number of codes.

The codes contain information about the control module:

- hardware P/N (control module without software)
- hardware serial number (control module without software)
- software P/N
- diagnostic software P/N.

DOWNLOADING SOFTWARE AND REPLACING THE CONTROL MODULE

New software can be downloaded into the Differential Electronic Module (DEM). When software is ordered the software and hardware of the vehicle are compared with Volvo's central database. If the comparison corresponds then the software is downloaded into the control module.

If the comparison between the car and Volvo's central database does not correspond, then the database is

updated with the vehicle's configuration. When this is complete the software is downloaded.

The control module is fitted on the clutch unit and can be replaced. Control module replacement also involves replacing the pressure reducing valve, this is because the control module and pressure reducing valve are installed and calibrated in the factory as one unit.

FUNCTION

ELECTRONIC HYDRAULIC FUNCTION

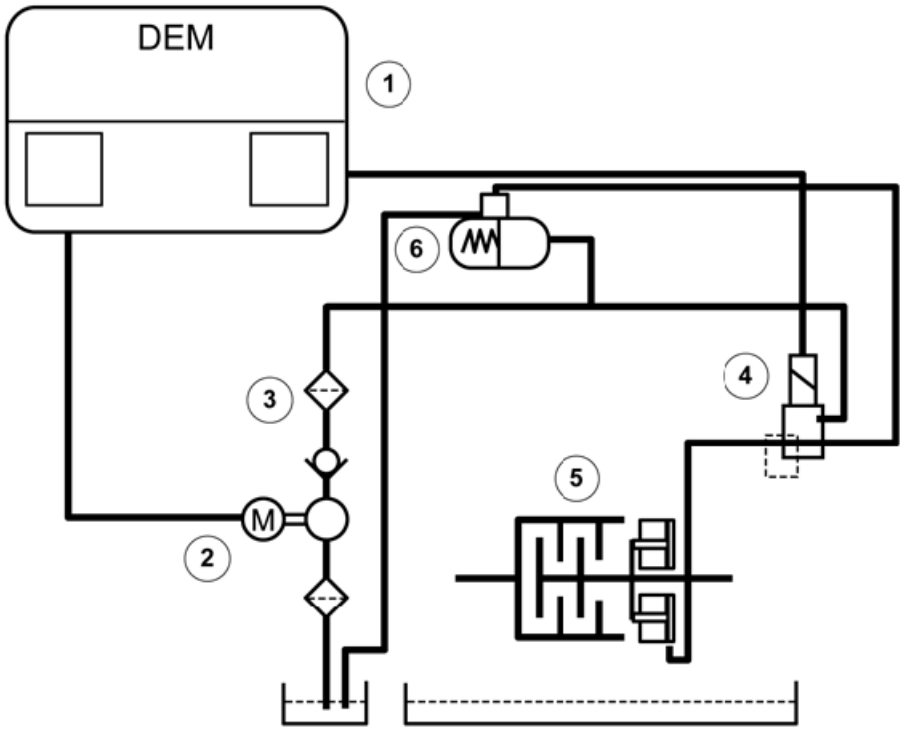

Fig. 71: Electronic Hydraulic Schematic
Courtesy of VOLVO CARS CORPORATION

1. Differential electronic module (DEM)
2. Electrical feed pump.
3. Oil filter with non-return valve
4. Pressure reducing valve (installed on Differential electronic module (DEM))
5. Disc pack
6. Accumulator tank

Differential electronic module (DEM) is mounted directly on the clutch unit and makes up a unit together with the pressure reducing valve.

Differential electronic module (DEM) communicates with, among others, Engine control module (ECM) and Brake control module (BCM) via the CAN-net. With guidance of the sensor signals, Differential Electronic Module (DEM) controls the oil pressure to the discs through the pressure reducing valve.

The pressure reducing valve is controlled endlessly by a pulse-width modulated (PWM)-signal.

The electric feed pump starts at ignition on and immediately works up a maximal hydraulic pressure in the accumulator. When max. pressure has been reached, the feed pump shuts off until the pressure has dropped below 50% again. Then the feed pump starts again and builds up the max. pressure.

This procedure is calculated by Differential electronic module (DEM) using various parameters. In the accumulator the pressurized oil is routed to the clutch via the pressure reducing valve. Differential electronic module (DEM) controls the valve so that correct working pressure is obtained, 0-27.5 bar. The oil pressure to the discs is decisive to how much torque can be transmitted to the rear wheels.

MECHANICAL FUNCTION, OVERVIEW

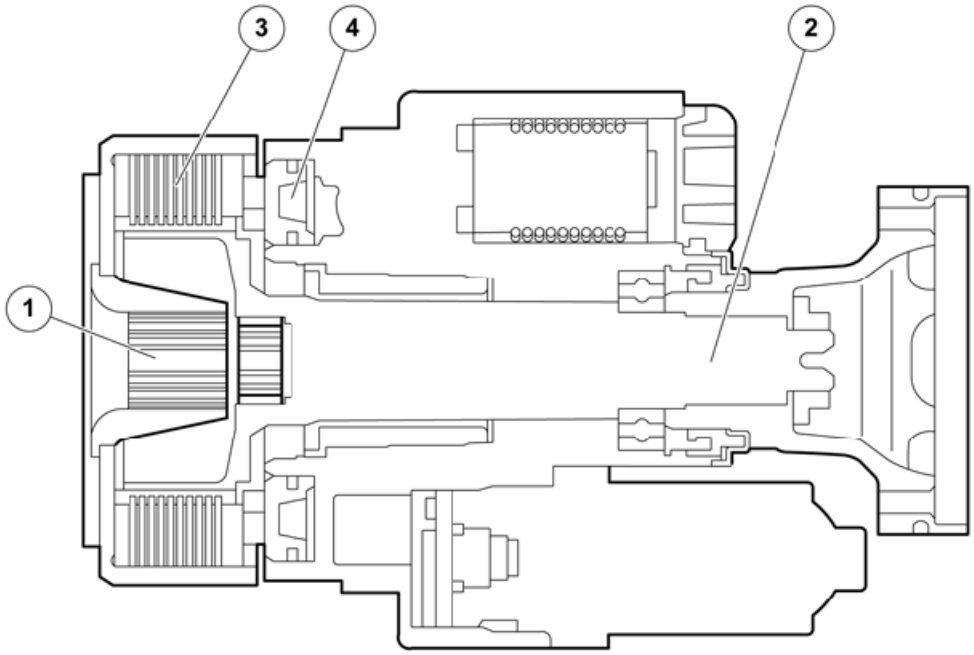

Fig. 72: Cutaway View
Courtesy of VOLVO CARS CORPORATION

1. Output shaft.
2. Input shaft
3. Inner and outer wet clutch plates

4. Operating piston

The transmission and bevel gear transfers engine torque to the propeller shaft. The input shaft is joined to the clutch's output shaft via the multi-plate clutch pack. The multi-plate clutch in the coupling must be engaged to transfer torque to the rear axle. The inner and outer wet multi-plate clutch are the transfer point between the input and output shafts.

The feed pump builds up an oil pressure which then Differential electronic module (DEM) controls via the pressure reducing valve, so that correct pressure is obtained. Then the working piston is applied against the disc pack so that the clearance is eliminated and the clutch is prepared to enable quick reaction and control. At 27.5 bar deployed pressure from the pressure reducing valve max. torque is reached, 1, 500 Nm, through the clutch to the rear wheels already at start.

SYSTEM OVERVIEW

POWER TRANSMISSION

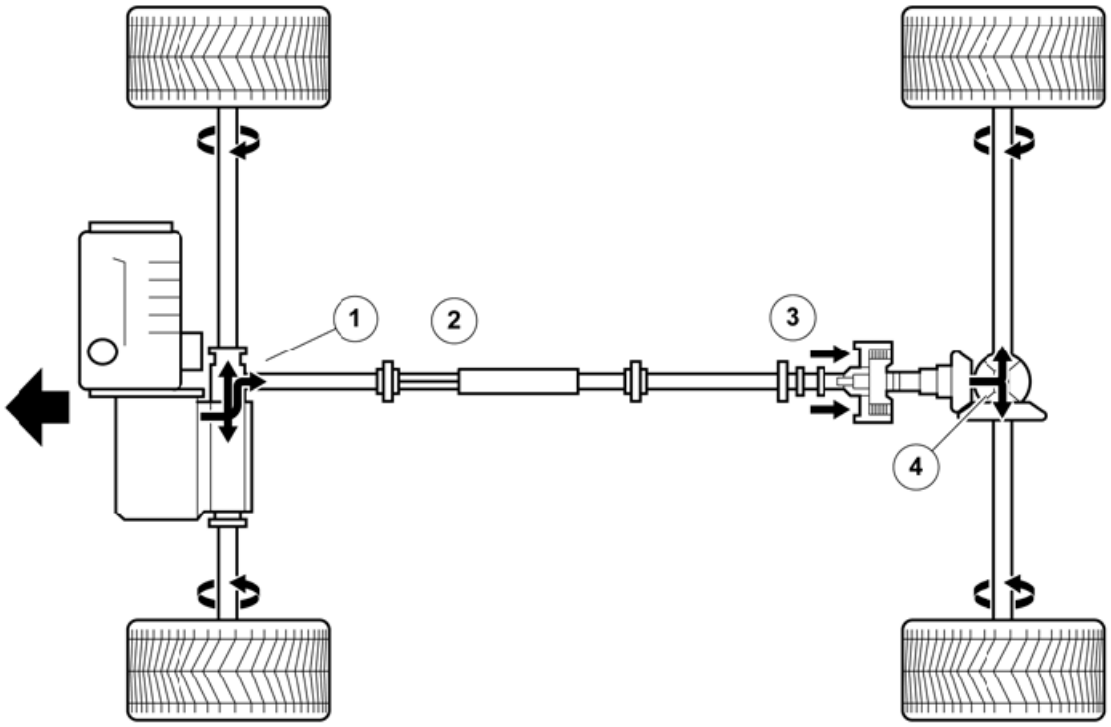

Fig. 73: Power Transmission Overview
Courtesy of VOLVO CARS CORPORATION

1. **Bevel gear:** Transmits torque from transmission to propeller shaft. Always rotates at the same rate as the front wheel pair.
2. **Propeller shaft:** Transmits torque from front axle (bevel gear) to rear axle. Always rotates at the same

rate as the front wheel pair.

3. **Active On demand Coupling (AOC):** At four-wheel drive, the AOC transmits torque from the propeller shaft to the rear wheel pair. Rotates at four-wheel drive.
4. **Differential gear:** Transmits the force to the rear wheel pairs. Rotates at the same rate as the front wheels at four-wheel drive.

ACTIVE ON DEMAND COUPLING (AOC)

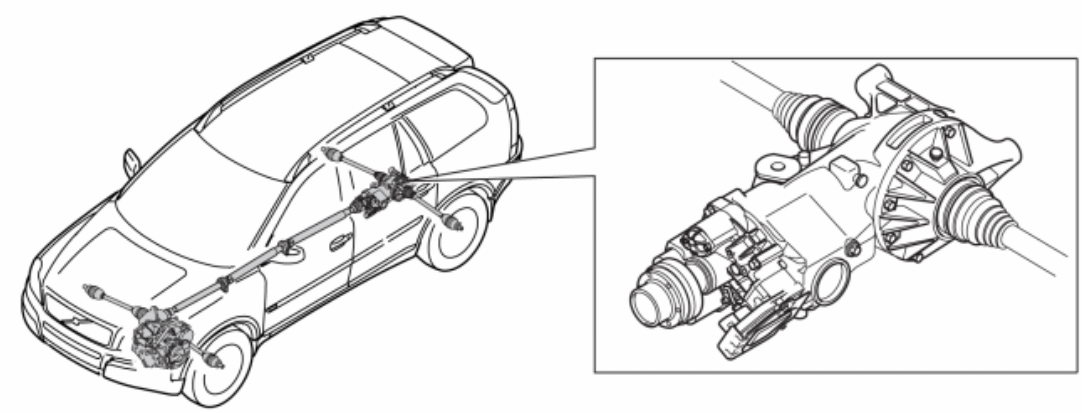

Fig. 74: View of Active On Demand Coupling (AOC)
Courtesy of VOLVO CARS CORPORATION

Active On demand Coupling (AOC) and its Differential electronic module (DEM), has as its most important function to control the function for four-wheel drive, that is, power distribution between front and rear axle.

The system consists of an integrated clutch with a mechanical, a hydraulic, and an electronic part.

The clutch unit is located on the rear axle, between the final drive and the propeller shaft. The mechanical part is driven by the propeller shaft. The hydraulic part is driven by an electric pump.

Active On demand Coupling (AOC) generation 4 enables the following characteristics:

- Continuous control of four wheel drive, with electronic control of torque transfer.
- Rapid reactions
- No opposing forces when maneuvering or parking.
- Improved stability.
- Reduction of oversteering/understeering.
- Permanent capacity for four-wheel drive.

CLUTCH UNIT AND CONTROL MODULE

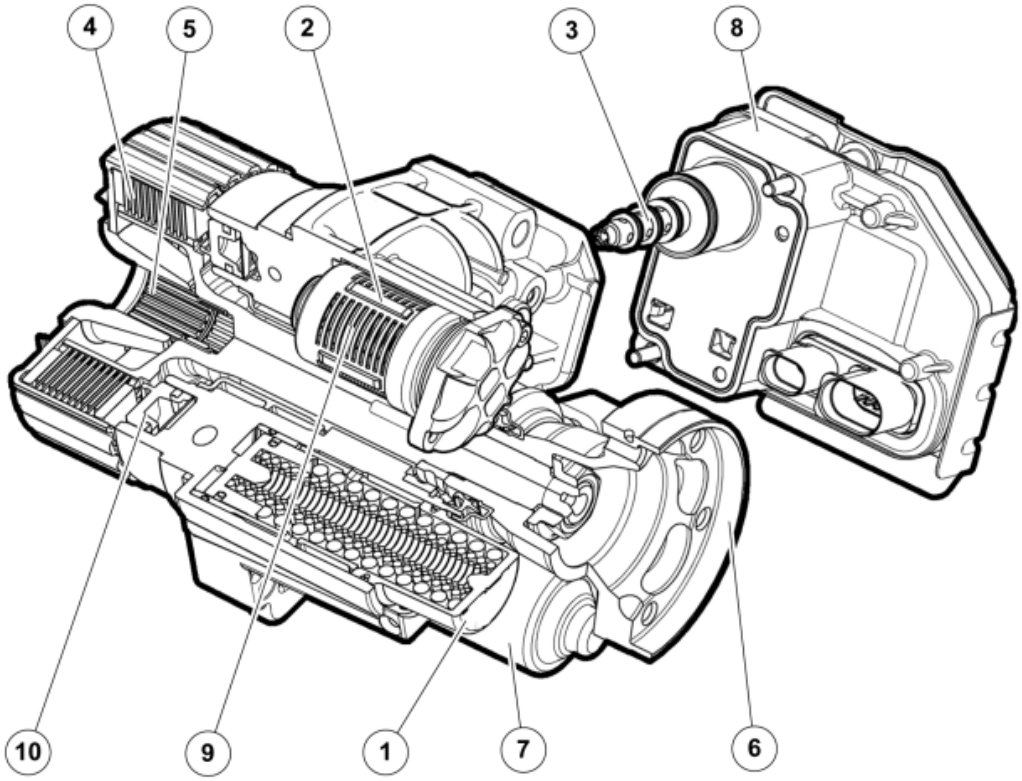

Fig. 75: Cutaway View of Clutch Unit And Control Module
Courtesy of VOLVO CARS CORPORATION

1. Accumulator
2. Oil filter
3. Pressure reducing valve
4. Inner and outer wet clutch plates
5. Inner connection hub with splines for output shaft. The hub has a sinusoidal cam curve
6. Input shaft
7. Electrical feed pump.
8. Differential electronic module (DEM)
9. Non-return valve
10. Annular piston

The Differential Electronic Module (DEM) is fitted on the clutch unit housing.

The Differential Electronic Module (DEM) communicates with other control modules via Controller Area Network (CAN) communication:

The control module has integrated diagnostics for its own components and functions.

SIGNALS

The table below summarizes input and output signals to and from the Differential Electronic Module (DEM). The illustration below displays the same information with the Volvo component designations.

Input signals	Output signals
Directly connected: -	**Directly connected:** (power supply unless otherwise stated) • **Electric feed pump** (internal in AOC) - pulse-width modulated (PWM) signal • **Pressure reducing valve** (internal in AOC) - pulse-width modulated (PWM) signal
Via Controller Area Network (CAN) communication: • **central electronic module (CEM)** (4/56), provides the status of, among other things, the ignition position and the back-up (reverse) gear. • **Brake Control Module (BCM)** (4/16), informs on the speed of the wheels from the wheel speed sensors and ABS modulation status amongst other things. • **Driver Information Module (DIM)** (5/1), informs on parking brake switch status. • **Engine Control Module (ECM)** (4/46), informs on engine speed, driver engine torque request, calculated engine torque, accelerator pedal position, stop lamp switch status and clutch pedal switch status, amongst other things. • **Trailer module (TRM)** (4/110), provides information about whether a trailer is connected to the vehicle or not.	**Via Controller Area Network (CAN) communication:** • **Brake control module (BCM)** (4/16), receives information about the status of the coupling unit and current torque capacity for the rear axle. • **Central Electronic Module (CEM)** (4/56), receives information on the diagnostic status of the Differential Electronic Module (DEM). • **Driver information module (DIM)** (5/1), via Central electronic module (CEM) receives information about malfunction messages from Differential electronic module (DEM). These are shown to the driver as text messages and warning symbols.

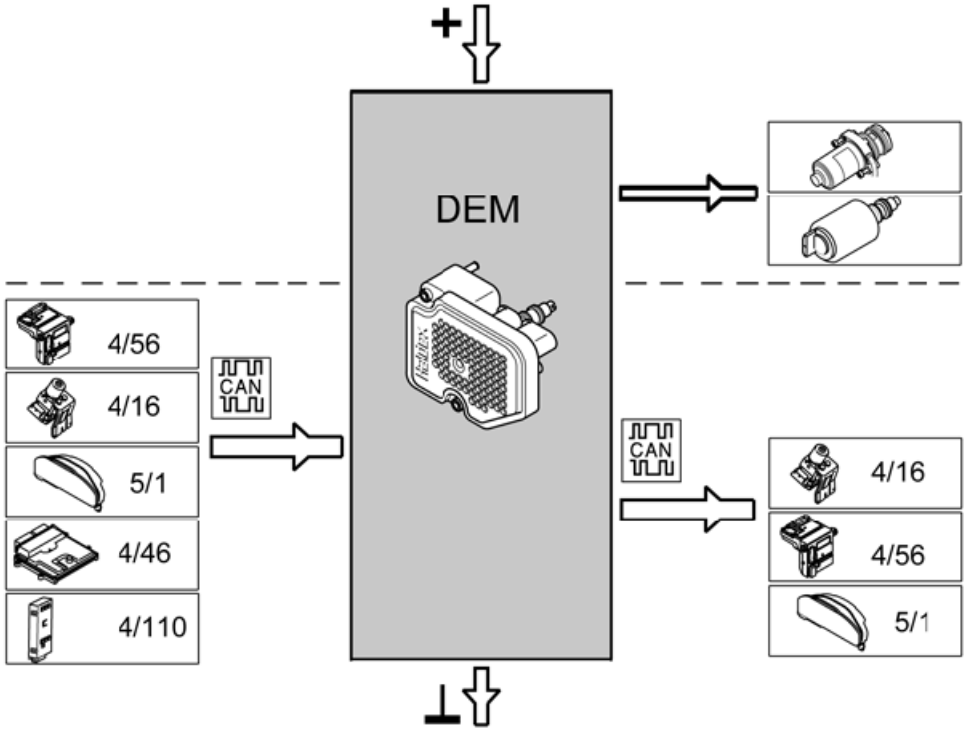

Fig. 76: Network Diagram
Courtesy of VOLVO CARS CORPORATION

DRIVER DOOR MODULE (DDM) AND PASSENGER DOOR MODULE (PDM) (2003-2012)

DESIGN

THE DOOR LOCK

The passenger door module (PDM) and driver door module (DDM) have diagnostics for the front door locks.

THE POWER WINDOW MECHANISM

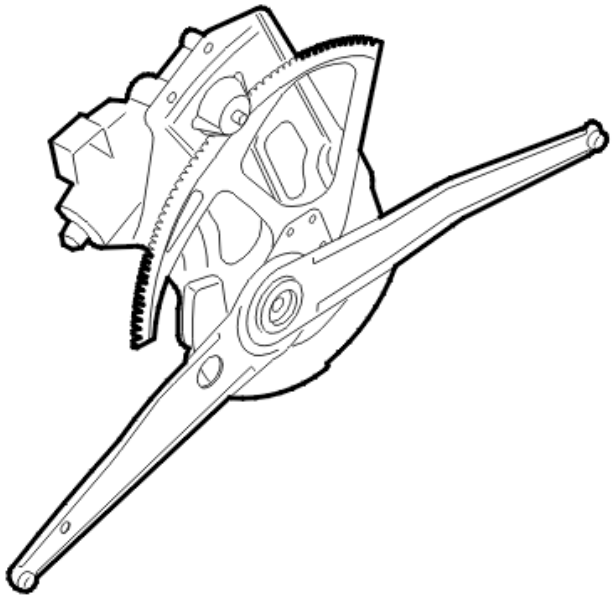

Fig. 77: Identifying Power Window Mechanism
Courtesy of VOLVO CARS CORPORATION

The window lift mechanism on the driver's side is operated via the driver door module (DDM). The window lift mechanism on the passenger side is operated either via the passenger door module (PDM) or via the driver door module (DDM).

The window lift mechanisms in both rear doors can be operated via the driver door module (DDM). The window lift mechanisms in the front and rear doors can be operated when the ignition key is in position I or II. The power windows can be operated from when the ignition is switched off until one of the front doors is opened.

The driver door module (DDM) has four spring loaded switches which operate the individual front and rear windows.

The passenger door module (PDM) has a spring loaded switch which operates the window in the front passenger door. The switches in the driver door module (DDM) which control the rear windows can only be activated up or down. The rear windows move up or down for as long as the switch is activated.

The switches for the front windows have five positions which control the position of the window:

0) Normal position where the function is passive.

1) step 1 upwards, raises the window for as long as the button is activated.

2) step 2 upwards, automatically fully closes the window (AUTO-UP).

-1) step 1 downwards, lowers the window for as long as the button is activated.

-2) step 2 downwards, fully opens the window automatically (AUTO-DOWN).

The rear windows are powered via the central electronic module (CEM). However they can be disabled using a child lock switch on the driver door module (DDM). When the child lock is activated, the rear windows cannot be operated from the rear seats. They can still be operated however from the driver door module (DDM).

The front window lift mechanisms have a Hall sensor which measures the rotation speed of each lift mechanism, allowing them to determine the position of the window. If a Hall sensor is not functioning in one of the window lift mechanisms, the AUTO-UP or AUTO-DOWN function for that window is not available. The power window lift mechanism, power window lift motor and Hall sensor form one unit and cannot be replaced separately.

The window lift mechanisms in the front doors have an inbuilt function to prevent trapping. When AUTO-UP is activated, the window lift mechanism detects whether there is any resistance, i. e. whether too much force is required to close the window. If so, the window stops and then lowers slightly. The anti-trapping system is active during AUTO-UP if the window is open more than 3 mm.

A diagnostic trouble code (DTC) is stored if for any reason the power window mechanism is unable to determine the window position. If this should happen, the power window mechanism must be re-initialized. This is carried out via a diagnostic function in VIDA (Volvo scan tool).

The passenger door module (PDM) and driver door module (DDM) have diagnostics for the window lift mechanisms and Hall sensors in the front doors.

DOOR MIRROR

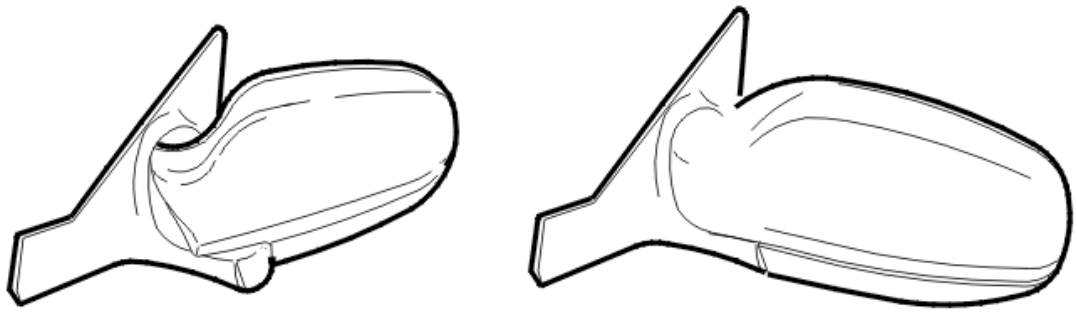

Fig. 78: Door Mirror
Courtesy of VOLVO CARS CORPORATION

Motors

The motors for the door mirrors are operated via the driver door module (DDM).

The mirrors can be adjusted in the X and Y axes via the two motors for each mirror. Two buttons on the driver door module (DDM), marked L and R, are used to select either the right or left-hand mirror for adjustment. An LED lights in the button that is activated. Only one button can be activated at any one time (left or right). X and Y axis adjustment is made using a control which maneuvers the mirror in the selected direction for as long as the button is pressed (or until the mirror reaches a limit position). To deactivate the adjustment control, press the

left or right-hand button again so that the LEDs are off. The mirrors can be adjusted when the ignition key is in position I or II.

Power seats with memories for the door mirrors are optional equipment. This function requires that the position of the mirrors is saved when the car is locked. Two sensors in each mirror register the mirror position in the X and Y axes. This function has been available as an option since structure week 199950.

The door windows can be equipped as an option with a motor that allows the mirror housing to be folded in. The driver door module (DDM) and passenger door module (PDM) have diagnostics for the motor for folding in the door mirrors. However the activation signal is transmitted by the climate control module (CCM).

The motors and sensors used to set the position of the door mirrors form one unit and cannot be replaced separately.

Heating

The door mirrors contain a heating loop to defrost the glass. The heating loop is on the reverse of the mirror glass. In the event of a fault, the entire mirror glass must be replaced. The heating loops are supplied with power and ground by the driver door module (DDM) and passenger door module (PDM), which also have diagnostics for the loops. However the function is activated by the climate control module (CCM).

Lights in the door mirrors

As an option, the door mirrors can be equipped with lights. The lights are mounted on the underneath of the mirror housing. The driver door module (DDM) and passenger door module (PDM) have diagnostics for the outputs for the lights. However the function is activated by the upper electronic module (UEM) and the remote control.

Outside temperature

In the right-hand mirror there is a temperature sensor which measures the outside temperature. This temperature data is used by the combined instrument panel.

NOTE: This temperature sensor must not be confused with the temperature sensor in the left-hand mirror housing which is used by the engine control module (ECM).

The temperature sensor in the right-hand mirror housing can be replaced separately. The passenger door module (PDM) has diagnostics for the temperature sensor.

DOOR OPEN WARNING LAMP

Fig. 79: Door Open Warning Lamp
Courtesy of VOLVO CARS CORPORATION

There is a door open warning lamp in each front door which lights when the door is opened. The lamps are supplied with power via the driver door module (DDM) and passenger door module (PDM).

Since structure week 199950 door open warning lamps are no longer installed.

The driver door module (DDM) and passenger door module (PDM) have diagnostics for the door open warning lamps.

DIAGNOSTIC FUNCTIONS

DRIVER'S DOOR MODULE

See **DIAGNOSTIC FUNCTIONS, DRIVER'S DOOR MODULE (DDM)**.

PASSENGER DOOR MODULE (PDM)

See **DIAGNOSTIC FUNCTIONS, PASSENGER DOOR MODULE (PDM)**.

DIAGNOSTIC FUNCTIONS, PASSENGER DOOR MODULE (PDM)

GENERAL

The control module has a built-in diagnostic system, Volvo Diagnostic, which continuously monitors internal functions as well as input and output signals.

DIAGNOSTIC TROUBLE CODES (DTCS)

A diagnostic trouble code (DTC) is stored if the control module detects a fault. The passenger door module can store up to 10 diagnostic trouble codes (DTCs).

Should a fault disappear for any reason after being permanently stored in the control module as a diagnostic trouble code (DTC), the information remains stored in the control module.

READING AND ERASING DIAGNOSTIC TROUBLE CODES (DTCS)

Diagnostic trouble codes (DTCs) can only be erased once all the diagnostic trouble codes (DTCs) have been read off at least once.

READING OFF INPUT AND OUTPUT SIGNALS

This function can be used to continuously read off the values and status of the control module's input and output signals.

The key must not be in the ignition when reading off the status of the door mirror lamp.

Lock cable M1, status, is active while locking the central locking

Lock cable M2, status, is active while unlocking the central locking and / or deadlocks

Lock cable M3, status, is active while locking the deadlocks

The following parameters can be read off:

- The status of the front passenger window up-control
- The status of the front passenger window down-control
- The status of the front passenger window auto-control
- The status of the up-motor for the power window
- The status of the down-motor for the power window
- Lock cable M1, status
- Lock cable M2, status
- Lock cable M3, status
- The status of the door open warning lamp (does not apply to all cars)
- The status of the control for the door mirror
- Defroster, status
- Door mirror lamp, status
- Outside temperature, value

NOTE: The outside temperature can only be read off from the control module on the right-hand side of the car.

- Power supply, value
- Signal supply, value
- Door mirror position X axis, value (does not apply to all cars)
- Door mirror position Y axis, value (does not apply to all cars).

ACTIVATING COMPONENTS AND FUNCTIONS

Use this option to activate components / functions in the passenger door module.

The following components / parameters can be activated in alternative ways:

- The up / down control for the front passenger window
- Power window motor, up / down
- Lock cable M1
- Lock cable M2
- Door mirror motor
- Defroster
- Door mirror lamp
- Door open warning lamp (does not apply to all cars).

READING OFF AND PROGRAMMING DATA

With this option it is possible to read programmed data and to program in data.

NOTE: If the control module has been replaced, the position of the windows must be initiated using a diagnostic function. A window must be in its uppermost position before it can be initiated.

No customer related programming is available in the control module.

READING OFF THE CONTROL MODULE IDENTIFICATION

The diagnostic tool identifies control modules by reading off a number of codes from the control module memory.

The codes contain information about the control module:

- hardware P/N (control module without software)
- hardware serial number (control module without software)
- software P/N
- diagnostic software P/N.

DIAGNOSTIC FUNCTIONS, DRIVER'S DOOR MODULE (DDM)

GENERAL

The control module has a built-in diagnostic system, Volvo Diagnostic, which continuously monitors internal functions as well as input and output signals.

DIAGNOSTIC TROUBLE CODES (DTCS)

The control module will store a diagnostic trouble code (DTC) if it detects a fault. The driver's door module can

store up to 10 diagnostic trouble codes (DTCs).

Should a fault disappear for any reason after being permanently stored in the control module as a diagnostic trouble code (DTC), the information remains stored in the control module.

READING AND ERASING DIAGNOSTIC TROUBLE CODES (DTCS)

Diagnostic trouble codes (DTCs) can only be erased once all the diagnostic trouble codes (DTCs) have been read off at least once.

READING OFF INPUT AND OUTPUT SIGNALS

This function can be used to continuously read off the values and status of the control module's input and output signals.

The key must not be in the ignition when reading off the status of the door mirror lamp.

Lock cable M1, status, is active while locking the central locking

Lock cable M2, status, is active while unlocking the central locking and / or deadlocks

Lock cable M3, status, is active while locking the deadlocks

The following parameters can be read off:

- The status of the front left window up-control
- The status of the front left window down-control
- The status of the front left window auto-control
- The status of the front right window up-control
- The status of the front right window down-control
- The status of the front right window auto-control
- The status of the rear left window up-control
- The status of the rear left window down-control
- The status of the rear right window up-control
- The status of the rear right window down-control
- The status of the child safety button

NOTE: A diagnostic trouble code (DTC) is stored if the child safety button is activated for 10 seconds.

- The status of the selection of control for the left door mirror
- The status of the selection of control for the right door mirror
- The status of the upward control for the door mirror
- The status of the downward control for the door mirror

- The status of the control for the left door mirror
- The status of the control for the right door mirror
- The status of the up-motor for the power window
- The status of the down-motor for the power window
- Lock cable M1, status
- Lock cable M2, status
- Lock cable M3, status
- The status of the door open warning lamp (does not apply to all cars)
- Defroster, status
- Door mirror lamp, status
- Outside temperature, value

NOTE: The outside temperature can only be read off from the control module on the right-hand side of the car.

- Power supply, value
- Signal supply, value
- Door mirror position X axis, value (does not apply to all cars)
- Door mirror position Y axis, value (does not apply to all cars).

ACTIVATING COMPONENTS AND FUNCTIONS

Use this option to activate components / functions in the driver's door module.

The following components / parameters can be activated in alternative ways:

- The up / down control for the front left window
- The up / down control for the front right window
- The up / down control for the rear windows
- The selection of the left or right door mirror control
- Upwards / downwards / left / right door mirror control
- Power window motor, up / down
- Lock cable M1
- Lock cable M2
- Door mirror motor
- Defroster
- Door mirror lamp
- Door open warning lamp (does not apply to all cars).

READING OFF AND PROGRAMMING DATA

With this option it is possible to read programmed data and to program in data.

NOTE: **If the control module has been replaced, the position of the windows must be initiated using a diagnostic function. A window must be in its uppermost position before it can be initiated.**

No customer related programming is available in the control module.

READING OFF THE CONTROL MODULE IDENTIFICATION

The diagnostic tool identifies control modules by reading off a number of codes from the control module memory.

The codes contain information about the control module:

- hardware P/N (control module without software)
- hardware serial number (control module without software)
- software P/N
- diagnostic software P/N.

DOWNLOADING SOFTWARE AND REPLACING THE CONTROL MODULE

New software can be downloaded into the driver door module (DDM) and passenger door module (PDM). When ordering software, the hardware and the software in the car is compared to the data in the Volvo central database. If the comparison is OK the software is downloaded to the control module.

If the comparison between the car and Volvo central database is not OK, the database is updated with the car configuration. When this is complete the software is downloaded.

The window positions must be re-initialized after the driver door module (DDM) or passenger door module (PDM) is replaced. This is so that the new control module stores the closed position of the window. Initialization is carried out using VIDA (Volvo scan tool).

If the car has power seats with memory for the door mirrors, this function can be switched off. This means that the personal settings for the door mirrors, based on the remote control used to unlock the door, can be deactivated. Deactivation is carried out using VIDA (Volvo scan tool). This function can be switched off on cars from model year 2003. This setting will be stored in the control module after deactivation, but not in the Volvo Central Database. This means that the deactivation must be repeated when hardware is replaced.

FUNCTION

OPERATING WINDOWS

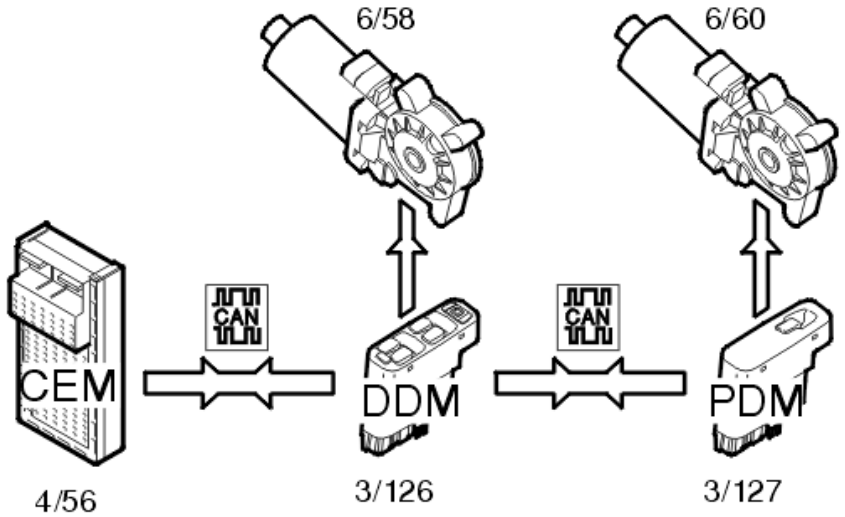

Fig. 80: Identifying Window Control Input And Output Signals
Courtesy of VOLVO CARS CORPORATION

Window control is activated via switches on the driver door module (DDM) (3/126) and passenger door module (PDM) (3/127). The motor for the power window on the driver's side (6/58) is controlled directly from the driver door module (DDM). The motor for the power window on the passenger side (6/60) is controlled via CAN communication from the driver door module (DDM) to the passenger door module (PDM). The signals for operating the rear windows are transmitted from the driver door module (DDM) via the controller area network (CAN) to the central electronic module (CEM) (4/56), which manages the rear window functions.

The passenger door module (PDM) only operates the front window on the passenger side. The signal for operating the front passenger window is transmitted from the passenger door module (PDM) to the window lift mechanism motor on the passenger side (6/60).

If the child lock is activated from the driver door module (DDM), the rear windows cannot be operated from the rear seat. When the child lock switch is activated, a signal is transmitted from the driver door module (DDM) on the controller area network (CAN) to the central electronic module (CEM) which disables rear window operation.

FUNCTIONS IN THE DOOR MIRRORS

The functions in the door mirrors (6/62 left) (6/63 right) which are controlled from the driver door module (DDM) (3/126) or passenger door module (PDM) (3/127) are: mirror position adjustment, folding in the mirrors, mirror heating, local lighting/guide lighting, and temperature measurement.

Adjusting the mirror position

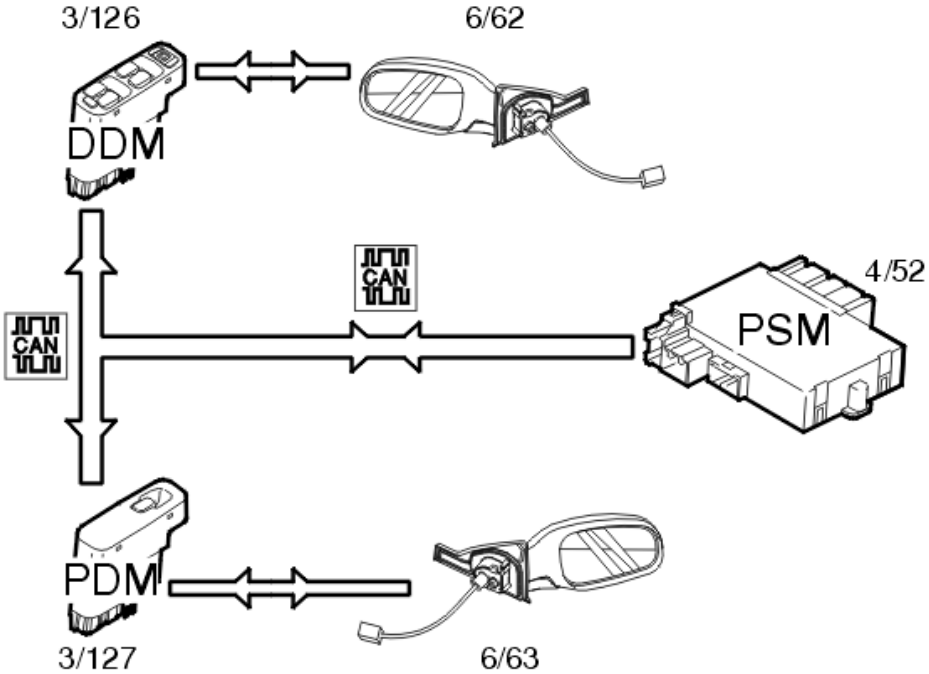

Fig. 81: Identifying Mirror Position Adjusting Input And Output Signals
Courtesy of VOLVO CARS CORPORATION

The position of the mirror is controlled using buttons on the driver door module (DDM) (3/126). The driver door module (DDM) transmits a signal directly to the mirror on the driver's side (6/62). When adjusting the mirror on the passenger side (6/63), a signal is transmitted from the driver door module (DDM) to the passenger door module (PDM) (3/127) on the Controller area network (CAN).

If the car has power seats with memory for the door mirrors, the position of the mirrors is stored by two potentiometers. The signal indicating the position in the X and Y axes is received by the driver door module (DDM) and passenger door module (PDM). When one of the buttons on the control unit for the power seat is activated, a signal is transmitted from the power seat module (PSM) (4/52) to the driver door module (DDM) and passenger door module (PDM). This adjusts the door mirrors to the stored position. The stored position can also be set according to which remote control is used to unlock the car.

Folding in the door mirrors

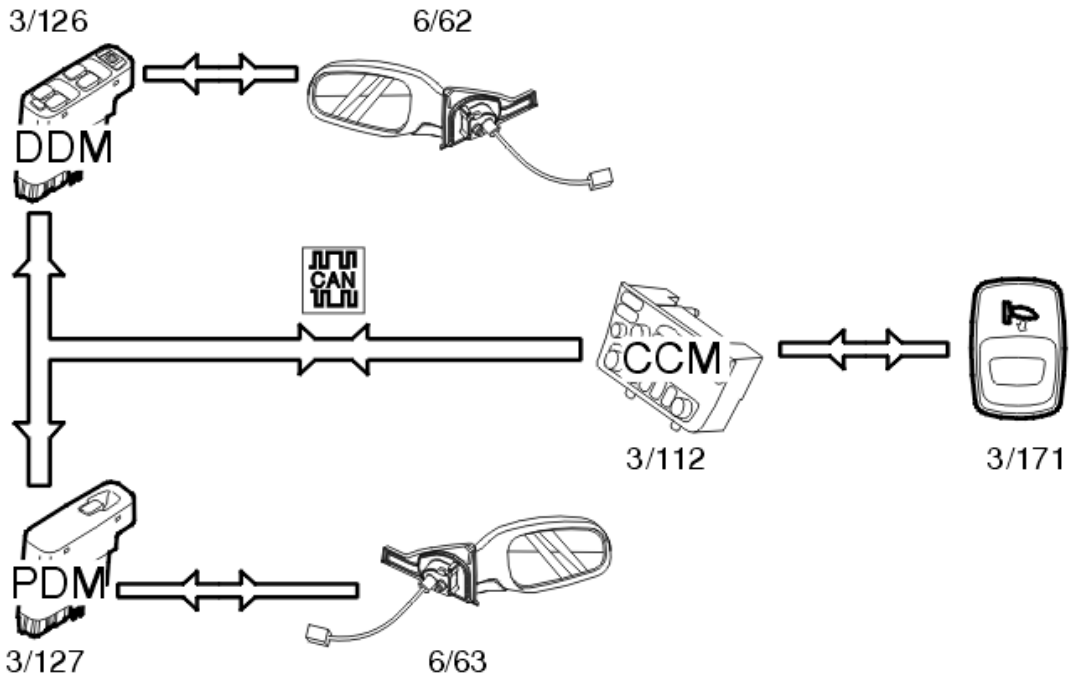

Fig. 82: Door Mirrors Folding Input And Output Signals
Courtesy of VOLVO CARS CORPORATION

Mirror folding is activated via the switch for folding door mirrors (3/171), which is on the climate control module (CCM) (3/112). A signal is transmitted via the Controller area network (CAN) to the driver door module (DDM) (3/126) and passenger door module (PDM) (3/127). These in turn send the signal on to each door mirror (6/62 and 6/63), which fold each mirror in or out. There is a delay between the button being pressed and the door mirrors folding in or out.

Heating the mirrors

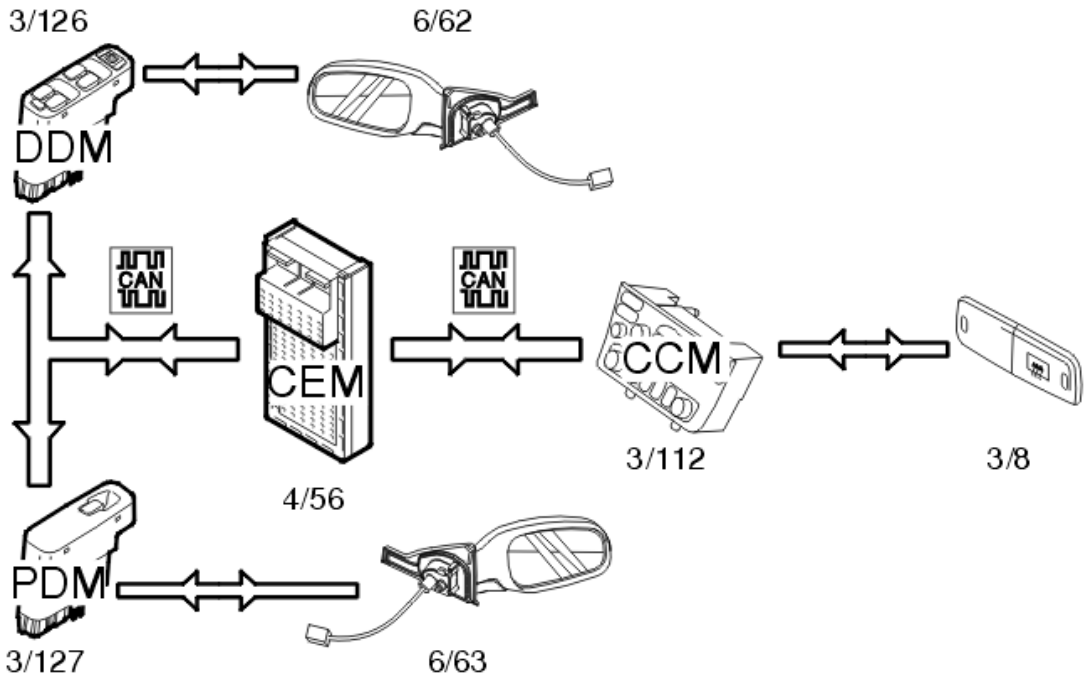

Fig. 83: Identifying Mirrors Input Heating And Output Signals
Courtesy of VOLVO CARS CORPORATION

Mirror heating is activated at the same time as the rear windshield defroster. When the switch for rear demist/mirror demist (3/8) is pressed, the climate control module (CCM) (3/112) transmits a signal to the central electronic module (CEM) (4/56). The central electronic module (CEM) activates the rear demist and transmits a signal to the driver door module (DDM) (3/126) and passenger door module (PDM) (3/127) to activate mirror heating. When the driver door module (DDM) and passenger door module (PDM) receive the signal, the outputs for each door mirror are powered (6/62 and 6/63). The function is switch off at the same time as the rear demist. This can happen in three different ways:

- If the switch for rear demist/mirror demist is pressed again after activation the function is switched off, using a signal from the central electronic module (CEM)
- The heating switches off automatically 12 minutes after activation. The driver door module (DDM) and passenger door module (PDM) then receive a signal from the central electronic module (CEM) requesting that the function be deactivated
- The heating is also switched off if the ignition is switched off.

Local lighting/Guide lighting

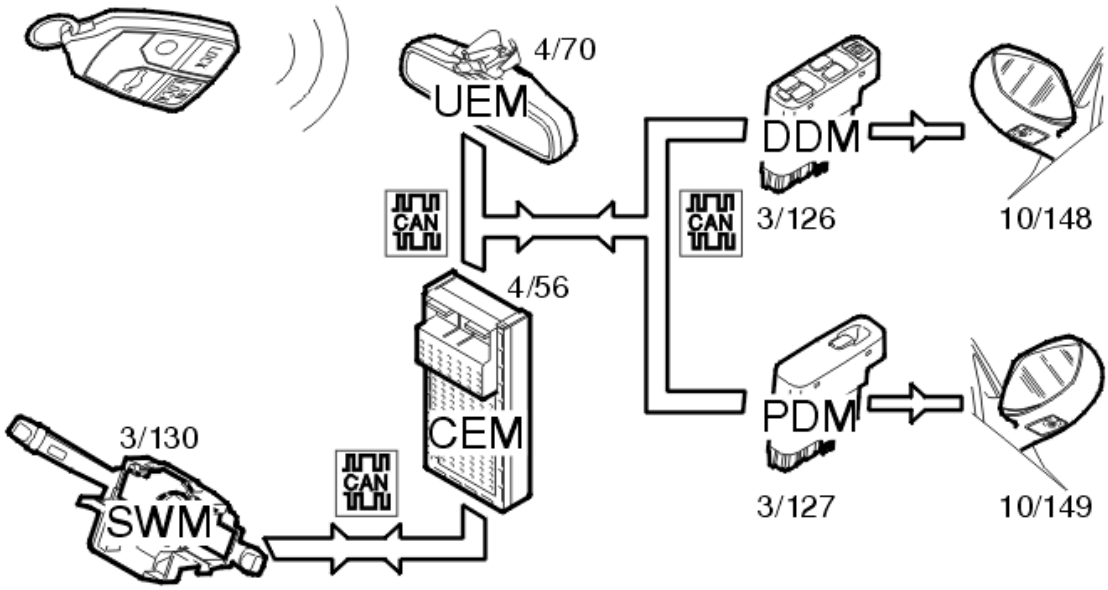

Fig. 84: Identifying Local Lighting / Guide Lighting Input And Output Signals
Courtesy of VOLVO CARS CORPORATION

The local lighting is activated using the remote control for the car. The function can only be activated when the ignition is off. When the yellow button on the remote control is pressed, the upper electronic module (UEM) (4/70) receives an activation signal which is sent onwards on the Controller area network (CAN). The driver door module (DDM) (3/126) and passenger door module (PDM) (3/127) receive the signal and switch on the lighting for the left door mirror (10/148) and the lighting for the right door mirror (10/149). The function is deactivated by pressing the button on the remote control again. A signal is then sent from the upper electronic module (UEM) to the driver door module (DDM) and passenger door module (PDM) requesting that the function is switched off. The function is also switched off when the ignition is switched on.

The guide lighting is activated using the left-hand control stalk (the key must be removed from the ignition switch). The steering wheel module (SWM) (3/130) then transmits a signal via the controller area network (CAN) to the central electronic module (CEM) (4/56). When the car is then locked, the central electronic module (CEM) sends a signal onwards via the controller area network to the driver door module (DDM) (3/126) and passenger door module (PDM) (3/127), which turn on the lights in the door mirrors (10/148 and 10/149). The lights are part of the guide lighting function and remain on for a set time (30, 60 or 90 seconds).

Measuring the outside temperature

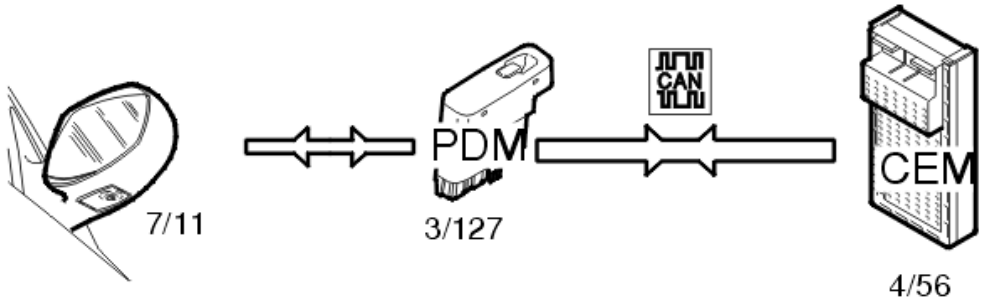

Fig. 85: Identifying Outside Temperature Measuring Input And Output Signals
Courtesy of VOLVO CARS CORPORATION

The outside temperature is continuously measured (in ignition positions I and II) by the outside temperature sensor (7/11), which is always in the right-hand door mirror. The analog signal is received by the passenger door module. The signal is converted to a digital signal. This signal is then transmitted on the controller area network (CAN) and used by the central electronic module (CEM) (4/56), which sends the signal on to the driver information module (DIM) (5/1).

DOOR OPEN WARNING LAMP

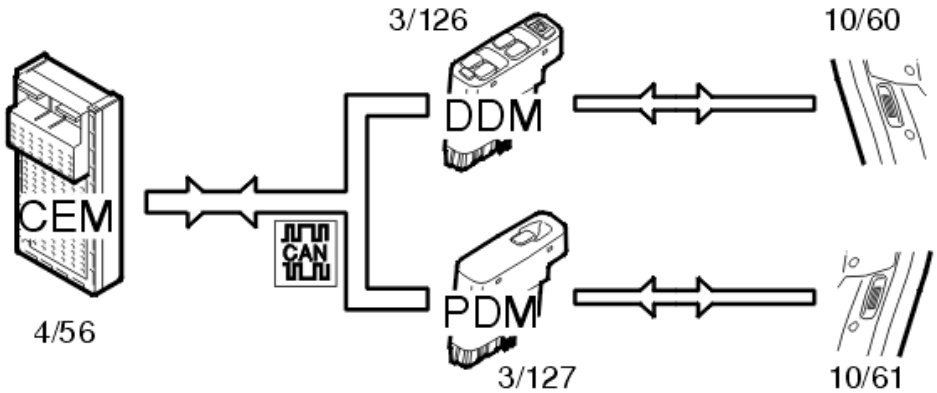

Fig. 86: Door Open Warning Lamp Input And Output Signals
Courtesy of VOLVO CARS CORPORATION

The door open warning lamp function is on cars from between structure weeks 199820 and 199950. The function utilizes the signal transmitted by the central electronic module (CEM) (4/56) on the controller area network (CAN) when a door is opened. The signal is received by the driver door module (DDM) and passenger door module (PDM). The door open warning lamp is then lit in the left (10/60) and right-hand (10/61) front doors. When the door is closed, the central electronic module (CEM) transmits a new signal on the controller area network (CAN). The signal is received by the driver door module (DDM) and passenger door module (PDM) which turns off the relevant door open warning lamp.

SYSTEM OVERVIEW

CONTROL MODULE

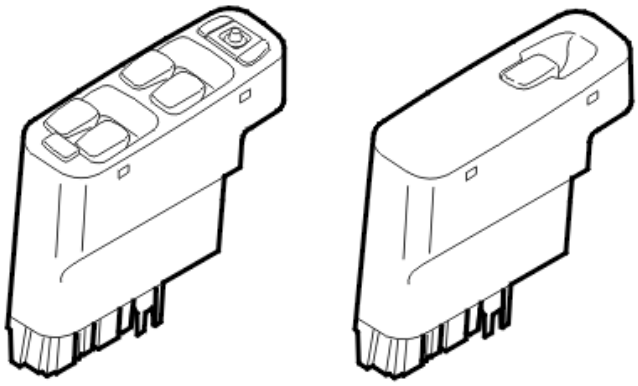

Fig. 87: Driver Door Module And Passenger Door Module Control Modules
Courtesy of VOLVO CARS CORPORATION

The driver door module (DDM) and the passenger door module (PDM) are broadly similar in terms of functionality. The information in this document is common to both the driver door module (DDM) and the passenger door module (PDM) unless otherwise indicated. The main task of both control modules is to manage:

- The power window mechanism
- The door lock
- Door mirror adjustment
- Door mirror folding
- Door mirror heating
- Outside temperature measurement
- Local lighting
- Door open warning lamp.

The control modules are in their respective doors. The driver door module (DDM) is on the driver's side and the passenger door module (PDM) is on the passenger side. The switches for the power windows are mounted directly on top of the control modules. The appearance and physical versions of the two control modules is different.

The driver door module (DDM) and passenger door module (PDM) communicate with directly connected components and with other control modules and components connected via Controller area network (CAN) communication.

Both control modules check activations and input and output signals via an integrated diagnostic system. A diagnostic trouble code (DTC) is stored if either of the control module detects a fault.

Any diagnostic trouble codes (DTCs) are stored in the relevant control module memory. The data can be read off using VIDA (Volvo scan tool).

A simple way to ensure that the control modules are powered and grounded is to activate one of the functions

that are operated via the switches on the driver door module (DDM) or passenger door module (PDM). The control module is powered and grounded if any of the functions are working.

SIGNALS

The following table summarizes the input signals to and output signals from the driver door module (DDM) and the passenger door module (PDM). The signal types are divided into directly connected signals and Controller area network (CAN) communication. The following illustration displays the same information with the Volvo component designations.

Input signals	Output signals
Directly connected: • Door lock (3/74, 3/75) • Sensors used to set the position of the door mirror (2 per mirror) • Outside temperature sensor (7/11).	**Directly connected:** (power supply unless otherwise stated) • Window lift mechanisms (Front doors) (6/58, 6/60) • Door locks (Front doors) (3/74, 3/75) • Door mirror motors (3 per mirror) (6/62, 6/63) • Heating, door mirror (9/33, 9/34) • Lights in the door mirrors (10/148, 10/149) (optional equipment) • Door open warning lamps (10/60, 10/61).
Via Controller Area Network (CAN) communication: • Climate control module (CCM) (3/112) • Central electronic module (CEM) (4/56) • Driver door module (DDM) (3/126) (Applies only to the passenger door module (PDM)) • Power seat module (PSM) (4/52) • Upper electronic module (UEM) (4/70).	**Via Controller Area Network (CAN) communication:** • Climate control module (CCM) (3/112) • Central electronic module (CEM) (4/56) • Passenger door module (PDM) (3/127) (Applies only to the driver door module (DDM)) • Phone module (PHM) (16/60) (optional equipment) • Upper electronic module (UEM) (4/70) (Applies only to the driver door module (DDM)).

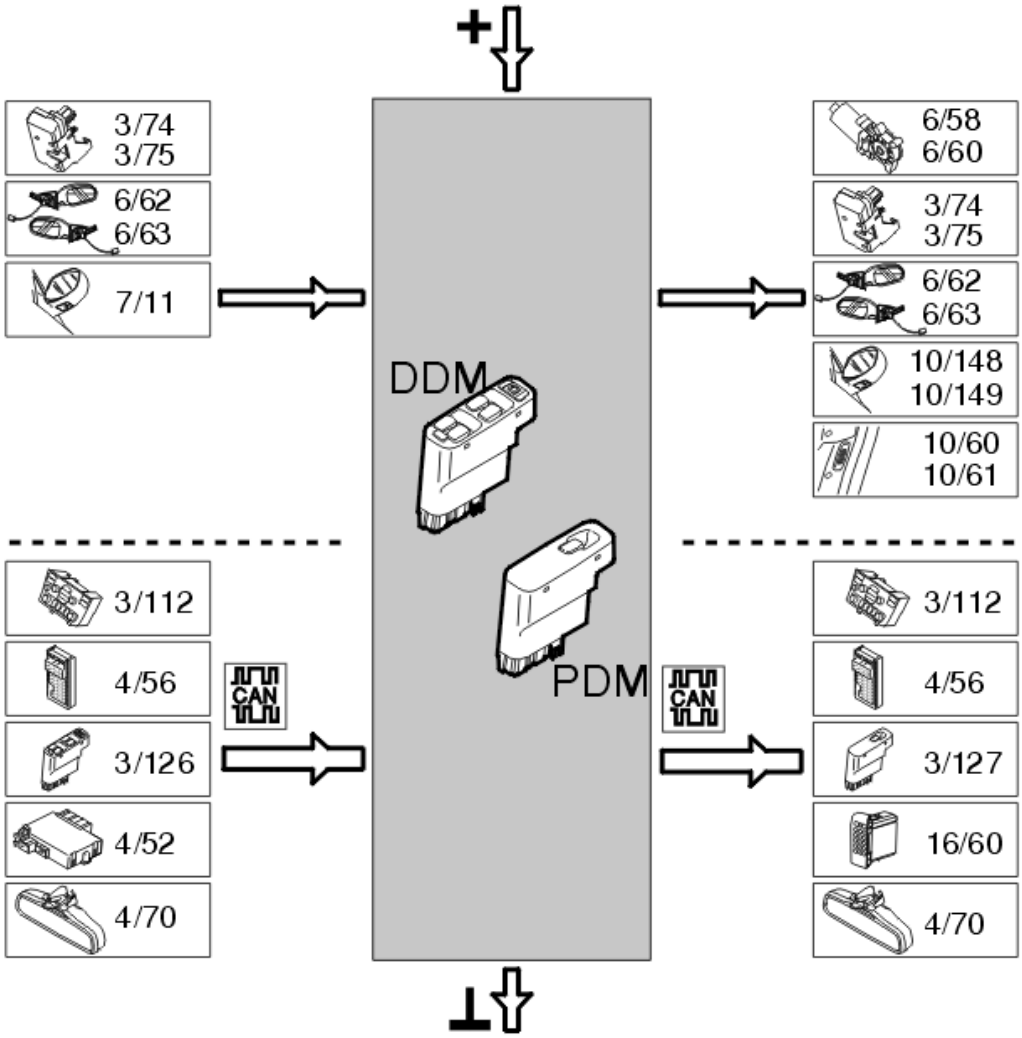

Fig. 88: Driver Door Module And Passenger Door Module Input And Output Signals
Courtesy of VOLVO CARS CORPORATION

DRIVER INFORMATION MODULE (DIM). (2003-2012)

DESIGN

ILLUMINATION IN DRIVER INFORMATION MODULE (DIM)

Up to and including model year 2003, filament bulbs were used for illuminating the Driver Information Module (DIM). These bulbs can be changed separately.

LEDs have been used for illumination purposes as from model year 2004. If any of the LEDs blow, the entire Driver Information Module (DIM) will have to be changed.

DIAGNOSTIC FUNCTIONS

DESCRIPTION OF THE SCROLLING VALUES (LAMPS)

Warning lamp seat belts, value

Indicates whether the lamp is on or off according to the control module.

SRS warning lamp, value

Indicates whether the lamp is on or off according to the control module.

Brake system warning lamp, value

The ABS control module lights or extinguishes the lamp via the control area network. The lamp may assume the value on or off.

Lamp parking brake warning, value

Indicates whether the lamp is on or off according to the control module.

Lamp low oil pressure, value

The oil pressure signal can be read off. The signal comes from the engine control module (ECM). One can read off whether the low oil pressure lamp should be on or off.

Charge lamp, value

Indicates whether the lamp is on or off according to the control module.

Indicator lamp fog lamp rear, value

Indicates whether the lamp is on or off according to the control module.

Malfunction indicator lamp (MIL), value

Indicates whether the lamp is on or off according to the control module.

ABS warning lamp, value

Indicates whether the lamp is on or off according to the control module.

Traction control warning lamp, value

The Brake Control Module (BCM) transmits the lamp signal to the driver information module (DIM) via the Control area network (CAN). Indicates whether the lamp is on or off according to the Driver Information Module (DIM).

Trailer warning lamp, value

Indicates whether the lamp is on or off according to the control module.

General orange warning lamp, value

Indicates whether the lamp is on or off according to the control module.

General red warning lamp, value

Indicates whether the lamp is on or off according to the control module.

High beam, value

Indicates whether the lamp is on or off according to the control module.

Lamp low fuel level, value

Indicates whether the lamp is on or off according to the control module.

DESCRIPTION OF THE SCROLLING VALUES (OTHER SIGNALS)

Fuel level, value

Signal from the two fuel level sensors in the rear electronic module (REM). The value displays between 0 and 80 liters depending on the amount of fuel in the tank.

Engine coolant temperature, value

An engine coolant temperature (ECT) display. The signal comes from the engine control module (ECM) and the temperature is displayed in Celsius.

Engine speed (RPM), value

An engine speed (RPM) display. The signal is between 0 and 8000 rpm and comes from the engine control module (ECM).

Vehicle speed, value

The vehicle speed can be read off. The signal comes from the Brake Control Module (BCM) or the transmission control module (TCM) via the Control area network (CAN).

Brake fluid level, value

The sensor is directly connected to the driver information module (DIM). Indicates whether the control module interprets the signal as low or high level.

Parking brake, value

The sensor is directly connected to the driver information module (DIM). Indicates whether the control module interprets the signal as activated or not activated. With the parking brake applied the sensor is activated.

The SRS indicator lamp status, value

The Driver Information Module (DIM) informs the Supplemental Restraint System Module (SRS) if the indicator lamp is working or is defective.

Cruise control, value

Indicates whether the cruise control status is on or off.

DESCRIPTION OF THE CUSTOMER PARAMETERS IN THE DRIVER INFORMATION MODULE (DIM)

Total mileage, value

Measurement range 0-999999 km, 0-999999 miles. The parameter can only be programmed once before the read off mileage exceeds 500 km or 310 miles. Programmed by the Central Electronic Module (CEM) after the control module has been replaced.

Distance conditions for service, value

Indicates the mileage required to display the service indicator message. The available values for metric calibrated instruments are 5000, 7500, 10000, 12000, 15000 or 20000 km. The available values for imperial calibrated instruments are 2500, 5000, 6000, 7500, 10000 or 12500 miles.

Time conditions for service, value

Indicates the time required to display the service indication message. The values set are 6, 12, 18 or 24 months.

Engine run time conditions for service, value

Indicates the time the engine must have been running before the service indication message will be displayed. The value set is 500, 750 or 1000 hours.

Displaying zeroes, value

Setting the instrument panel to display or not display the zeroes.

Temperature unit, value

The temperature unit of measurement can be selected. The temperature display can be selected between Celsius or Fahrenheit.

Unit trip computer, value

Setting the trip computer (applies only to cars with trip computer). It is possible to select liters, Imperial gallons or US gallons.

Clock position, value

12- or 24- hour display.

Mileage at service, value

Reading off the mileage at service. The parameter can be programmed between 0-999999 km or miles. When resetting the service reminder indicator (SRI) the parameter is reprogrammed by copying the mileage.

CAUTION: Mileage at service should be used with total mileage to determine whether a service is due

Time at service, value

Reading off global time at service. The parameter can be between 0 -163 months (13.6 years). When resetting the service reminder message, the parameter is reprogrammed by copying the global time in the central electronic module (CEM) to the driver information module (DIM).

CAUTION: Time at service and global time should be used with time conditions to determine whether a service is due.

Engine hours since service, value

Parameter read off. Indicates how many hours the engine has run since the last service. The parameter can be between 0 -65536 hours. Resets when service reminder message is reset.

CAUTION: Engine time since service should be used with engine hours to service to determine whether a service is due

Global time, value

Reading off the clock in the central electronic module (CEM). The parameter can be between 0 -163 months (13.6 years).

CAUTION: Time at service and global time should be used with time conditions to determine whether a service is due.

Parking brake warning

Setting the sound signal for the parking brake warning. Parking brake warning can be on or off. The default position is on.

DESCRIPTION OF COMPONENT / FUNCTION ACTIVATION

Lamps and displays

The combined instrument panel lamps flash and the gauges sweep from minimum to maximum for 4 seconds.

Warning lamp seat belts, value

Activating the instrument lamp.

SRS warning lamp, value

Activating the instrument lamp.

Brake system warning lamp, value

Activating the instrument lamp.

Lamp parking brake warning, value

Activating the instrument lamp.

Lamp low oil pressure, value

Activating the instrument lamp.

Charge lamp, value

Activating the instrument lamp.

Indicator lamp fog lamp rear, value

Activating the instrument lamp.

Malfunction indicator lamp (MIL), value

Activating the instrument lamp.

ABS warning lamp, value

Activating the instrument lamp.

Traction control warning lamp, value

Activating the instrument lamp.

Trailer warning lamp, value

Activating the instrument lamp.

General orange warning lamp, value

The orange triangular warning lamp in the center of the instrument panel is activated.

General red warning lamp, value

The red triangular warning lamp in the center of the instrument panel is activated.

High beam indicator lamp, value 1

Activating the instrument lamp.

Lamp low fuel level, value

Activating the instrument lamp.

DOWNLOADING SOFTWARE AND REPLACING THE CONTROL MODULE

New software can be downloaded into the driver information module. When ordering software, the hardware and the software in the car is compared to the Volvo central database. If the comparison is OK the software is downloaded to the control module.

If the comparison between the car and Volvo central database does not correspond, the database is updated with the configuration of the car. The software download then begins.

The driver information module is integrated in the combined instrument panel. When replacing the control module the entire combined instrument panel must also be replaced.

The language in the combined instrument panel can be changed. This is done by ordering new software for the driver information module from the replacement parts catalogue. In the replacement parts catalogue there is software for reloading the driver information module (reloading driver information module) and software for changing to 15 different languages. Reloading reloads the same software that was installed before the control module was replaced.

There are other functions for the combined control module which can be ordered. However, these are not downloaded into the driver information module but into the central electronic module. There are functions such as the trip computer.

A number of customer parameters can be programmed into the driver information module.

The following data can be programmed into the driver information module. Programming:

- Conditions for the service reminder indicator (SRI) to light, mileage, time and engine hours
- If the instrument panel should display zeroes for the mileage
- Unit for temperature. Fahrenheit or Celsius
- Unit in the trip computer (only applies to cars with trip computers). Fuel consumption can be displayed in liters per 100 km, miles per GB Gallon, miles per US Gallon and kilometers per liter
- 12 or 24 hour clock display.

These customer parameters are stored in the control module but not in the Volvo central database. This means that the customer parameters must be reprogrammed when the hardware is replaced.

FUNCTION

TEXT MESSAGES

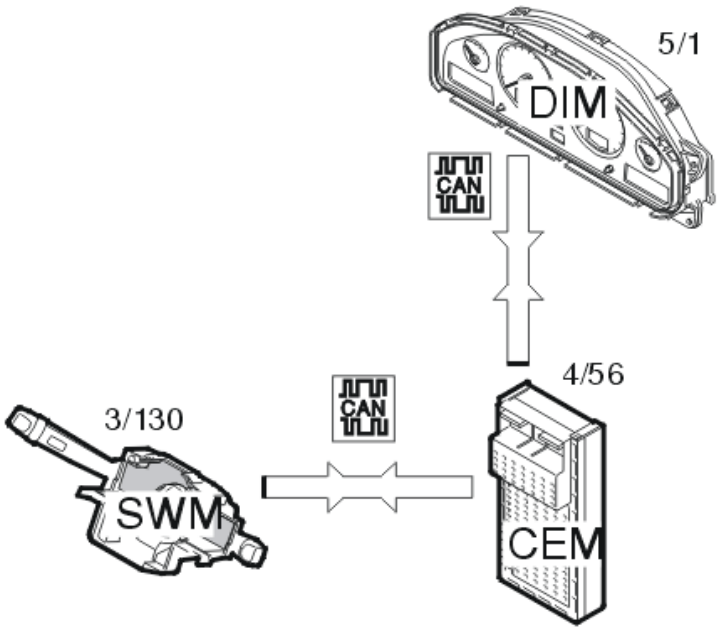

Fig. 89: Identifying Text Messages Input And Output Signals
Courtesy of VOLVO CARS CORPORATION

In the lower left section of the combined instrument panel (driver information module) (5/1) there is a small window where text messages are displayed. This gives the driver supplementary information for the different warning symbols in order to reduce the number of different symbols in the combined instrument panel. Other types of messages are also displayed, such as the functions of the trip odometer. There is an order of priority where warning signals are displayed first.

Depending on the circumstances, a request for these messages may come from the central electronic module (4/56) or the steering wheel module (3/130). The signals are transmitted via the Control Area Network (CAN).

OUTSIDE TEMPERATURE

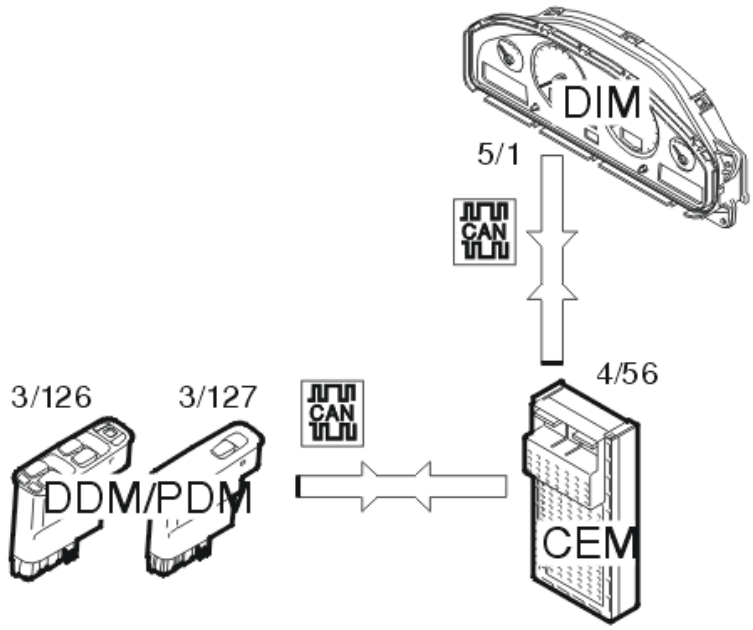

Fig. 90: Identifying Outside Temperature Input And Output Signals
Courtesy of VOLVO CARS CORPORATION

The outside temperature gauge is integrated in the tachometer. Its function is to display the outside temperature and to warn the driver when the conditions are icy by displaying a symbol of a snowflake. The snowflake is displayed at a range of -5 to +2 °C.

A sensor which detects the outside temperature is mounted in the right-hand door mirror. The temperature signal is then read off by either the passenger door module (3/127). The value is transmitted via the Control area network (CAN) to the central electronic module (4/56) which then forwards the message to the driver's information module (5/1). The temperature is displayed in Celsius or Fahrenheit, depending on the market, in increments of one degree. The temperature unit can be changed when reprogramming.

CLOCK

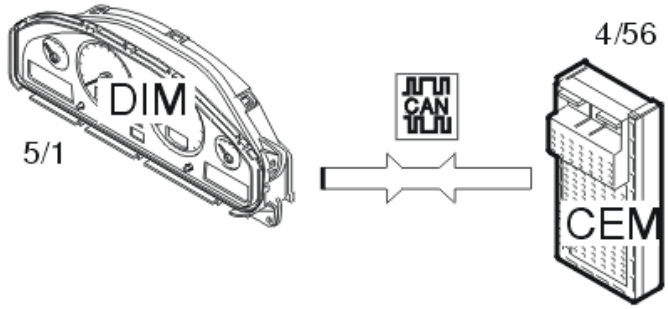

Fig. 91: Clock Input And Output Signals
Courtesy of VOLVO CARS CORPORATION

The only function of the clock is to display the time in hours and minutes.

The data is transmitted via the control area network (CAN) from the central electronic module (4/56) to the driver information module (5/1).

The customer can adjust the time using a knob on the clock display. The driver information module then transmits the new time to the central electronic module which registers the new data and updates its clock accordingly. The customer can select whether the time will be displayed using the 12 or 24 hour clock. If the 12 hour clock is selected AM or PM is automatically displayed.

SEAT BELT REMINDER

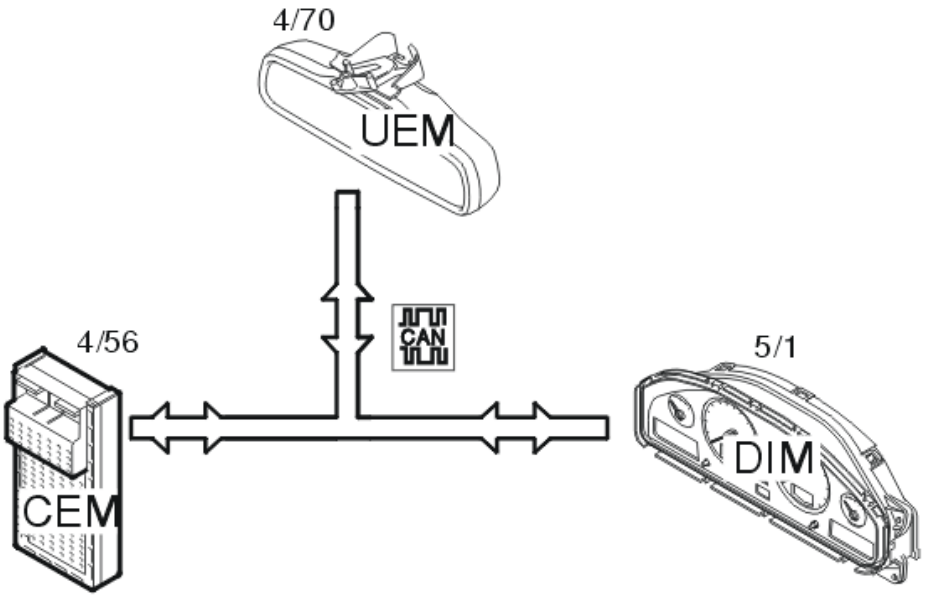

Fig. 92: Identifying Seat Belt Reminder Input And Output Signals
Courtesy of VOLVO CARS CORPORATION

The seat belt reminder reminds the driver to put on the seat belt. There are two versions of the seat belt reminder - European and American. They are slightly different, which is outlined below. The signals which indicate the variant in the car (European or American) are transmitted by the central electronic module (4/56) via the Control Area Network (CAN). Two small symbols light in the upper electronic module (4/70) and indicate when a seat belt is not fastened. The driver information module (5/1) emits an audible signal to warn the driver that no seat belt is fastened. From model year 2002 inclusive, there is also a display on the combined instrument

panel (5/1) which warns the driver if their belt is not fastened.

European version

If the seat belt is not fastened when the ignition is switched on, the symbols in the upper electronic module will light and there will be an audible signal from the driver information module. This continues for 6 seconds until either the seat belt is fastened or reverse gear is selected. If the car travels at 10 km/h or more, the audible signal reactivates if the driver has not fastened his/her seat belt.

American version

When the ignition is switched on, the symbols in the upper electronic module will light continuously for 6 seconds, or until the driver's seat belt is fastened. At the same time there will be a ringing sound from the driver information module for the same period of time. If the driver releases the belt after fastening it, the audible signal will not resume if more than 6 seconds have passed since the ignition was switched on.

TRIP ODOMETER / ODOMETER

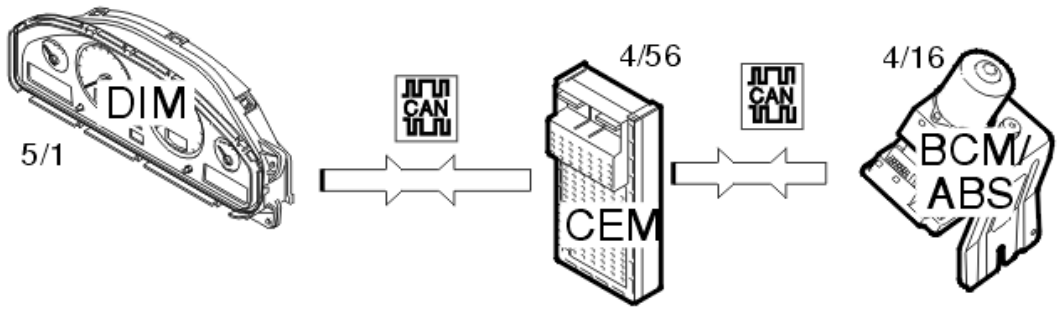

Fig. 93: Brake Warning Lamp Input And Output Signals
Courtesy of VOLVO CARS CORPORATION

The function of the trip odometers and the odometer is to display the three available odometer modes. The two settings are the total mileage of the car and the mileage since the two trip odometers were last set to zero. These two can be reset individually. The odometer and one of the two trip odometers are always displayed. The central electronic module (4/56) receives a speed signal from the brake control module (ABS) (4/16) which is transmitted on the high speed section of the Control Area Network (CAN). The central electronic module then transmits the signal on to the driver information module (5/1) via the low speed section of the Control Area Network (CAN). The distance traveled is saved every fourth kilometre and the value is stored in the central electronic module (4/56). Press the button briefly to switch between the two trip odometers. Hold the button in longer to reset the trip odometer. There must be a power supply to the driver information module (5/1) before the odometer can be reset.

SERVICE REMINDER INDICATOR (SRI)

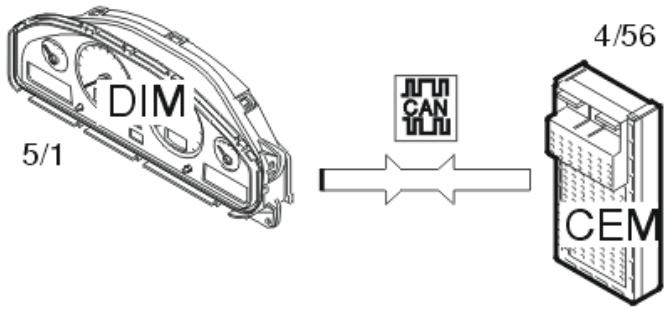

Fig. 94: Clock Input And Output Signals
Courtesy of VOLVO CARS CORPORATION

The service reminder indicator (SRI) lights the first time the ignition is switched on after the service interval has been reached. The service reminder indicator (SRI) will continue to light and remain lit for 2 minutes, every time the ignition is switched on until it is reset. The service indicator has changed from model year 2002. The need for a service is indicated partly by a lamp and partly by a text message - "time for service". Previously only the lamp indicated "Service". The service reminder indicator (SRI) can be programmed in three different ways: distance traveled, time since last service and engine hours since last service. The service reminder indicator (SRI) can be reset using VIDA or as follows:

Hold down the reset button for the trip odometer and turn the key to position II. Continue holding the button down until the service reminder indicator (SRI) begins to flash. Release the button.

ENGINE COOLANT TEMPERATURE (ECT) GAUGE

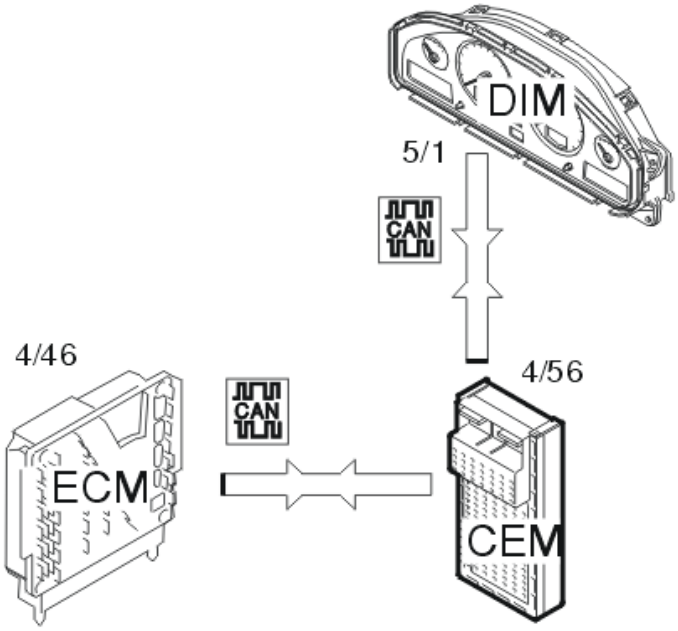

Fig. 95: Engine Coolant Temperature Gauge Input And Output Signals
Courtesy of VOLVO CARS CORPORATION

The engine control module (ECM), (4/46) processes the value from the coolant temperature sensor (7/16). The processed value is then transmitted to the central electronic module (4/56) on the high speed section of the Control Area Network (CAN). The central electronic module receives the signal and generates a corresponding signal on the low speed section of the Control Area Network (CAN). The driver information module (5/1) reads the signal from the low speed section of the Control Area Network (CAN). The driver receives information about the temperature from the engine coolant temperature gauge in the combined instrument panel. If the value is too high a red lamp lights and a text message is displayed outlining the fault.

HANDBRAKE

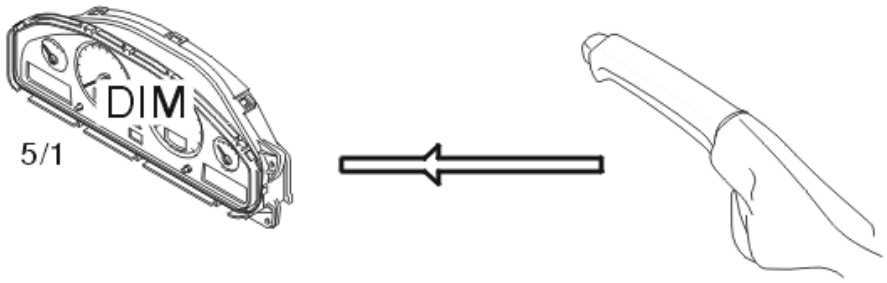

Fig. 96: Hand Brake Input And Output Signals
Courtesy of VOLVO CARS CORPORATION

A switch is connected to the combined instrument panel (driver information module) (5/1) which detects the incoming signal indicating whether the handbrake is applied or not. The switch is activated and the lamp is lit when the handbrake is applied. This signal is directly connected.

SRS LAMP

Fig. 97: Identifying SRS Lamp Input And Output Signals
Courtesy of VOLVO CARS CORPORATION

The supplementary restraint system (SRS) (4/9) contacts the driver information module (5/1) if there is a problem in the system. A signal is transmitted via the Control area network (CAN) and the driver information module lights a lamp and displays a text message. The combined instrument panel also informs the supplementary restraint system (SRS) whether the lamp is working or not.

BRAKE WARNING LAMP

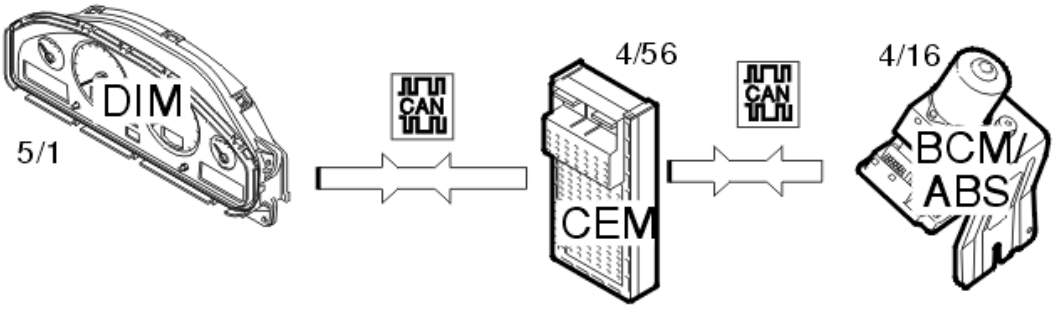

Fig. 98: Brake Warning Lamp Input And Output Signals
Courtesy of VOLVO CARS CORPORATION

The brake control module (4/16) (called ABS module on model years up to and including 2001) informs the driver information module (5/1) via the Control area network (CAN) if there is a fault in the brake system. The

driver information module indicates this to the driver by lighting the red general warning lamp and displaying a text message.

The brake fluid level sensor detects the level of the brake fluid in the reservoir. When the level is low, a switch in the sensor closes and the warning lamp lights. This function is directly connected to the driver information module.

FUEL GAUGE

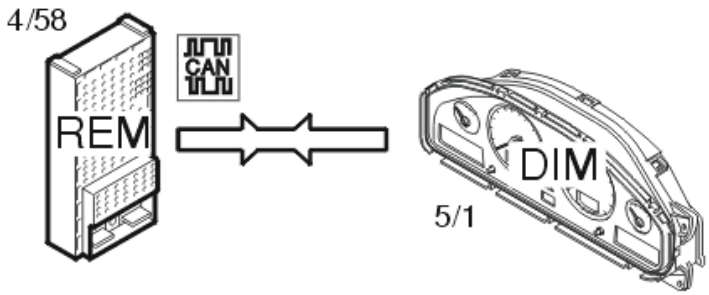

Fig. 99: Fuel Gauge Input And Output Signals
Courtesy of VOLVO CARS CORPORATION

There are two sensors in the fuel tank which transmit signals about the fuel level to the rear electronic module (REM). The rear electronic module (4/58) sends the values on to the driver information module (5/1), which receives the signals, interprets them and displays the fuel level on the fuel gauge. When the fuel level is low a yellow lamp lights to inform the driver.

The fuel gauge is not sensitive to rapid change. This is to prevent incorrect values being displayed when cornering or driving on slopes for example.

SPEEDOMETER

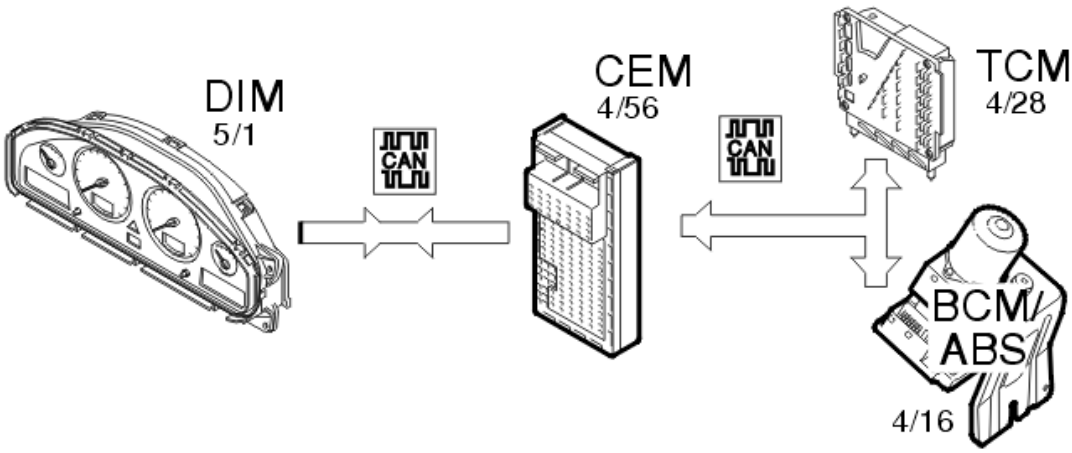

Fig. 100: Identifying Speedometer Input And Output Signals

Courtesy of VOLVO CARS CORPORATION

The speedometer displays the actual speed the car is traveling at.

Information about the vehicle speed comes from the speed sensor which is connected to the brake control module (BCM) (called the ABS module on cars up to and including model year 2001) and the gearbox control module (TCM) (4/28). The brake control module (BCM) (4/16) and the gearbox control module (TCM) calculate an average speed based on the signals sent from the two front wheels by the speed sensors. The calculated speed signal is then transmitted to the central electronic module (CEM) (4/56) from the brake control module and the gearbox control module on the high speed section of the Control Area Network (CAN). Depending on the quality of the signal, the central electronic module uses the signal from the brake control module or the gearbox control module (TCM). The central electronic module then transmits this data on to the driver information module (DIM) (5/1) where it is displayed.

Only cars with automatic gearbox have a gearbox control module (TCM). In cars with manual transmissions, the speed signal is transmitted to the central electronic module by only the brake control module on the high speed section of the Control Area Network (CAN).

TACHOMETER

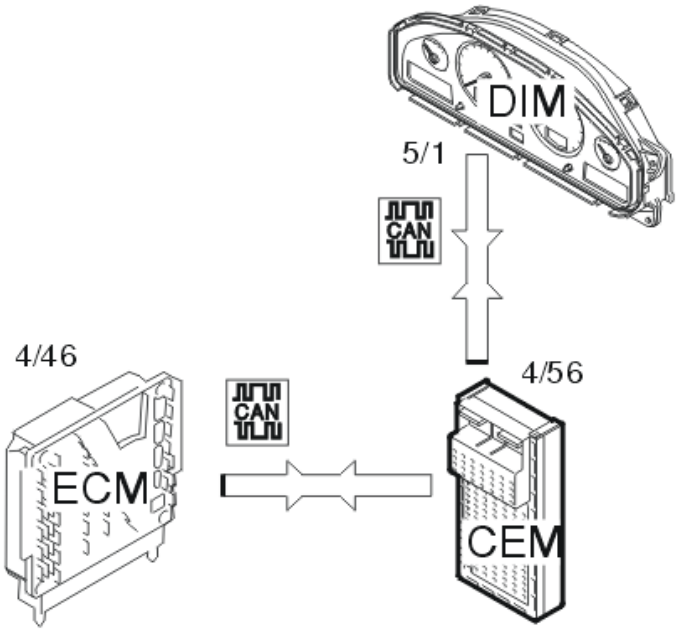

Fig. 101: Engine Coolant Temperature Gauge Input And Output Signals
Courtesy of VOLVO CARS CORPORATION

A flywheel sensor (7/25) is connected to the engine control module (ECM) (4/46). The engine control module (ECM) transmits the engine speed signal onwards via the high speed section of the Control Area Network (CAN). The central electronic module (CEM) (4/56) receives the signal and generates a corresponding signal on the low speed section of the Control Area Network (CAN). The driver information module (DIM) (5/1) reads the signal from the low speed section of the Control Area Network (CAN). The driver information module

receives the value and presents the actual engine speed for the driver.

LAMP FOR LOW OIL PRESSURE (ONLY APPLIES TO VERSIONS WITH OIL PRESSURE SENSOR)

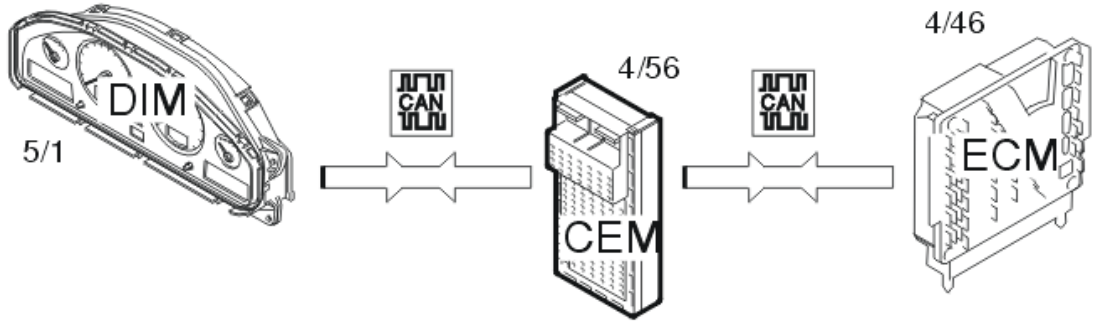

Fig. 102: Identifying Lamp For Low Oil Pressure Input And Output Signals
Courtesy of VOLVO CARS CORPORATION

The oil pressure sensor (7/6) is connected to the engine control module (ECM) (4/46). The engine control module transmits the oil pressure signal onwards via the high speed section of the Control Area Network (CAN). The central electronic module (4/56) receives the signal, and generates a corresponding signal on the low speed section of the Control Area Network (CAN). If the oil pressure is low, the driver information module (DIM) (5/1) reads the signal from the low speed section of the Control Area Network (CAN). The driver information module indicates this to the driver by lighting a red warning lamp and displaying a text string with explanatory information.

HINT: In vehicles with an oil level sensor, the general warning lamp comes on and a text message appears when the oil level is too low.

GENERAL WARNING LAMP

The function is to display different "faults" in the car. When a lamp lights this is followed by a text message which presents the driver with additional information about why the lamp has lit. From model year 2002 inclusive the color of the lamp has changed from orange to yellow / red. The lamp lights red in the event of serious faults, or yellow for less serious faults.

MALFUNCTION INDICATOR LAMP (MIL)

The malfunction indicator lamp (MIL) only lights in the combined instrument panel (driver information module) (5/1), if certain emissions related diagnostic trouble codes (DTCs) are stored in the engine control module (ECM) (4/46) or gearbox control module (TCM) (4/28). The signal between the driver information module and engine control module (ECM) is directly connected.

SYSTEM OVERVIEW

CONTROL MODULE

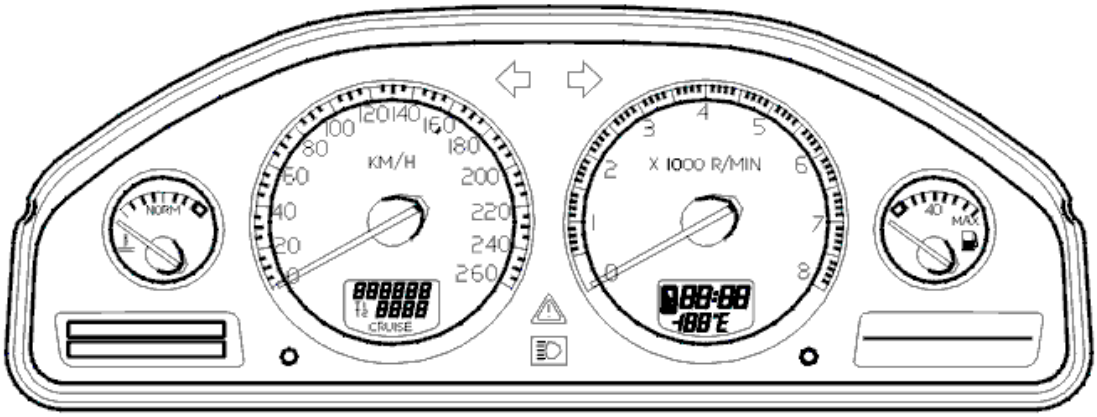

Fig. 103: Driver Information Module
Courtesy of VOLVO CARS CORPORATION

The most important role of the Driver Information Module is to display the status of the systems in the car for the driver. This covers functions such as:

- Vehicle speed
- Engine speed
- Fuel level
- Engine coolant temperature (ECT)
- Various warning signals.

The control module is integrated in the combined instrument panel. When replacing the driver information module, the entire combined instrument panel must also be replaced.

The driver information module mostly communicates with other control modules and components via CAN communication. However some functions are connected directly.

The control module checks input and output signals through an integrated diagnostic system. A diagnostic trouble code (DTC) is stored if the control module detects an error. In certain cases the driver information module replaces the faulty signal with a substitute signal.

Diagnostic trouble codes (DTC) are stored in the control module memory. The data can be read off using the diagnostic tool.

An easy way of checking that the driver information module is both powered and grounded is to check whether the following warning lamps light when the ignition is switched on: Parking brake, Malfunction indicator lamp

and Brake fluid level.

SIGNALS

The table below summarizes input and output signals to and from the driver information module. The signal types are divided into directly connected signals, serial communication and Control area network (CAN) communication. The illustration below displays the same information with the Volvo part numbers.

Input signals	Output signals
Directly connected: Parking brake switch, 3/47 Malfunction indicator lamp (MIL) Brake fluid level sensor, 7/4	**Directly connected:**
Via Control Area Network (CAN): Brake control module (ABS), 4/16 Central electronic module, 4/56 ECM, 4/46 Phone module, 16/60 SRS, 4/9 TCM (4/28) Rear electrical module, 4/58 Steering wheel module, 3/130	**Via Control Area Network (CAN):** Brake control module (ABS), 4/16 Central electronic module, 4/56 Phone module, 16/60 SRS, 4/9 RTI, 16/45 Climate control module, 3/112

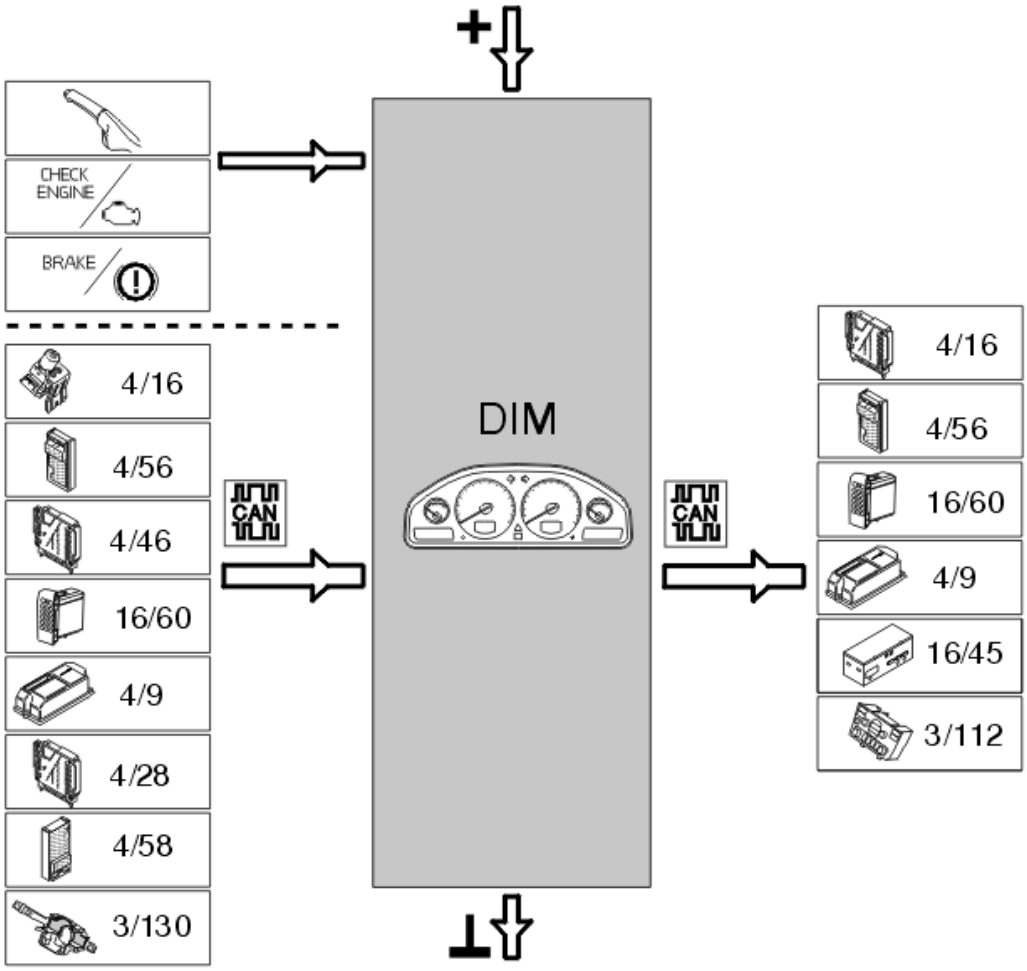

Fig. 104: Driver Information Module Input And Output Signals
Courtesy of VOLVO CARS CORPORATION

ENGINE (B6324S; 2007-2010)

DESIGN AND FUNCTION

ENGINE BLOCK

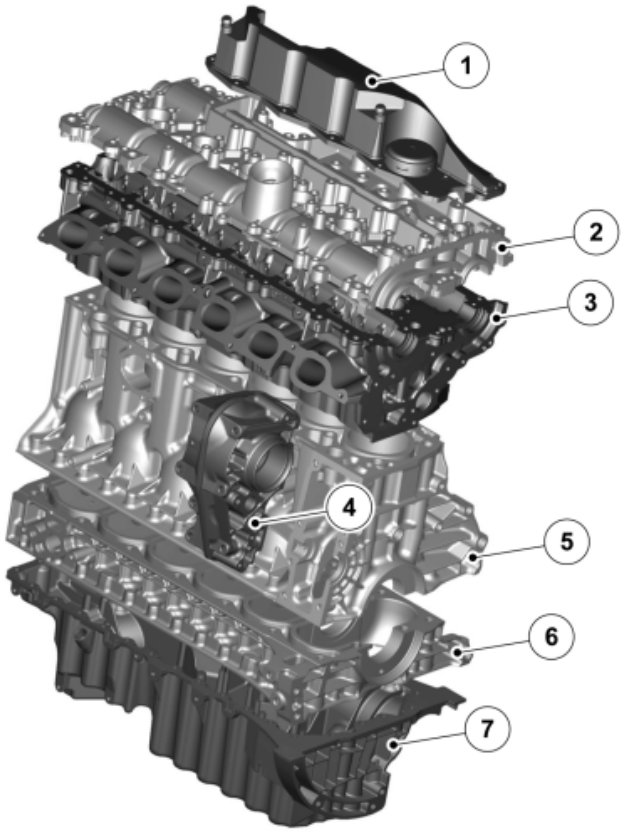

Fig. 105: Expanded View of Engine Components
Courtesy of VOLVO CARS CORPORATION

Number	Designation	Number	Designation
1	Oil separator	5	Cylinder block
2	Camshaft cover	6	Intermediate section
3	Cylinder head	7	Oil pan
4	Gear housing		

CYLINDER HEAD, CAMSHAFT BEARING HOUSING

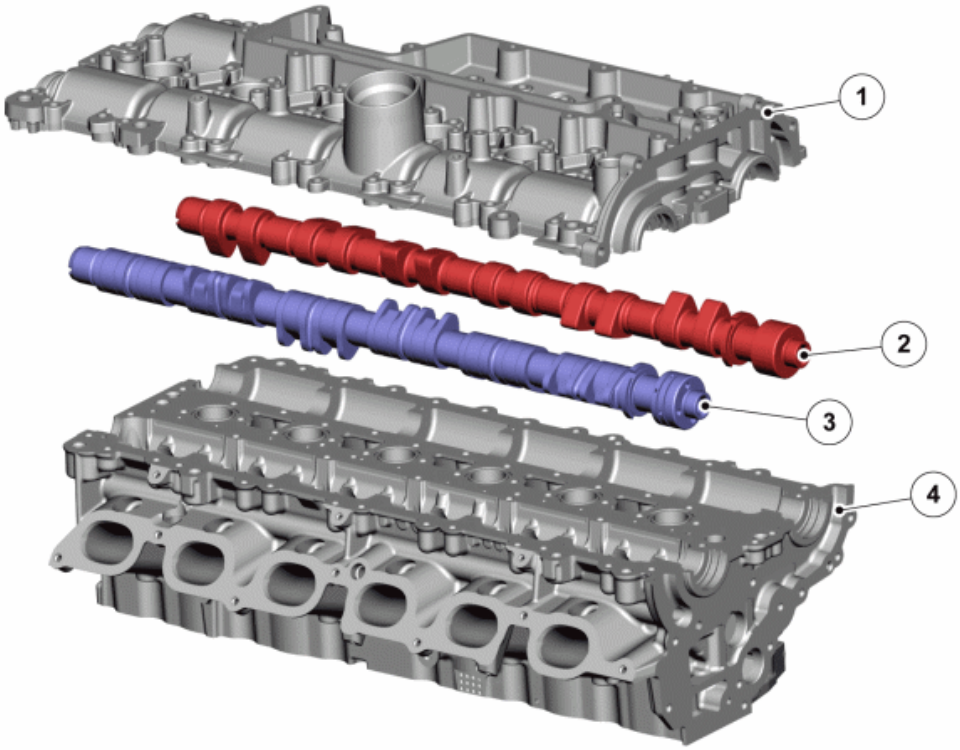

Fig. 106: View of Cylinder Head, Camshaft Bearing Housing
Courtesy of VOLVO CARS CORPORATION

Number	Designation	Number	Designation
1	Camshaft cover	3	Induction camshaft
2	Exhaust camshaft	4	Cylinder head

The cylinder head is of the cross-flow type, (Cross-flow = in from one side and out from the other side).

The two camshafts are supported by seven bearing caps each, directly in the cylinder head and camshaft cover. The camshaft cover works like a combined valve cover and camshaft bearing cap. The camshaft cover has cast oil ducts on the underneath which ensure good oil supply to the camshafts and the valve lifters.

The maintenance-free valve lifters, valve springs and valves are in the cylinder head.

CYLINDER HEAD GASKET

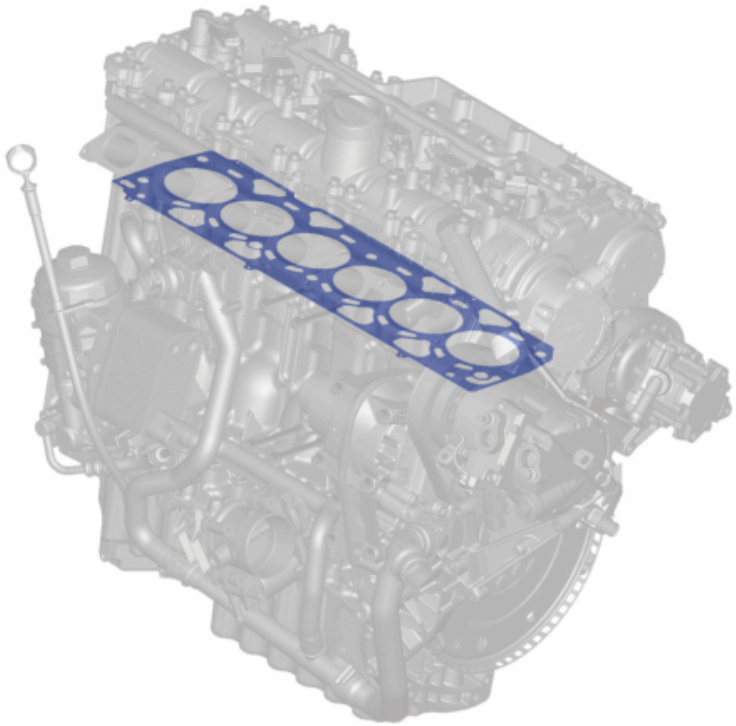

Fig. 107: Identifying Cylinder Head Gasket
Courtesy of VOLVO CARS CORPORATION

The seal between the cylinder head and cylinder block is a conventional cylinder head gasket. The seal between the other gasket faces is a liquid gasket.

The cylinder head gasket is made of steel and has multiple layers.

For exact adaptation to the relevant piston height there are different thicknesses available. This is to absorb the differences between pistons, connecting rods etc and thereby obtain the correct compression.

CYLINDER BLOCK

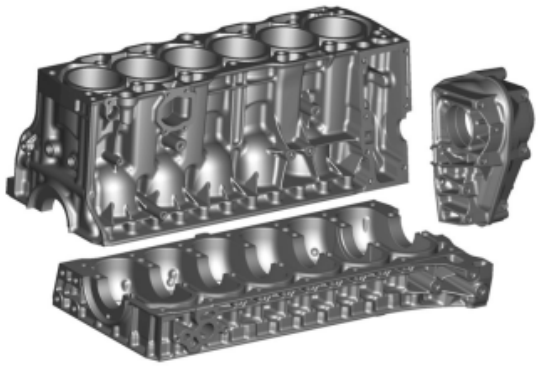

Fig. 108: View Of Cylinder Block
Courtesy of VOLVO CARS CORPORATION

The cylinder block consists of 3 sections.

- Cylinder block
- Intermediate section
- Gear housing

All three sections are made of die cast aluminum, molded under high pressure.

The mating flange between the cylinder block and intermediate section is in the center line of the crankshaft. The gear housing for the camshaft drive is secured on top of the cylinder block.

The cylinder block houses six cast iron cylinder sleeves. These cylinder sleeves cannot be replaced. The stroke length of the cylinders is greater than the cylinder diameter. This produces good torque and competitive power.

The intermediate section's seven main bearing caps have cast iron reinforcements.

On the top of the intermediate section there are cast oil channels which distribute the oil to the main bearings and on via the crankshaft to the big ends.

OIL PAN

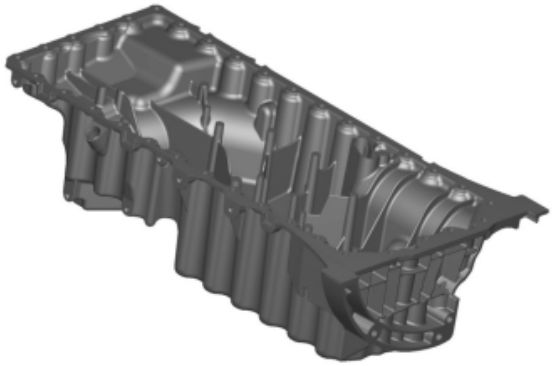

Fig. 109: Identifying Engine Oil Pan
Courtesy of VOLVO CARS CORPORATION

The oil pan is made of die cast aluminum with baffles. This is so that the oil does not splash excessively. Liquid gasket creates a seal between the cylinder block and the oil sump.

The oil pan is designed to reduce mechanical noise from the engine, at the same time as providing a reliable supply of oil at different angles. A composite oil scraper keeps the larger section of the oil volume away from the rotating crankshaft. It minimizes power loss, improves fuel economy and prevents the oil from foaming.

The oil suction line, which runs from the oil pan, is made of plastic. The oil pan is equipped with an oil level sensor.

The oil pan contributes to the rigid design and operates as an extra reinforcement of the cylinder block.

PISTON

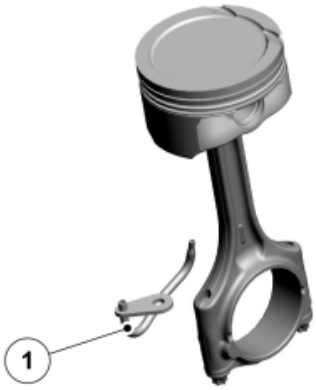

Fig. 110: Identifying Piston Cooling Nozzle
Courtesy of VOLVO CARS CORPORATION

1. Piston cooling nozzle

The pistons are die cast in aluminum and the connecting rods are forged in steel.

The heat received by the pistons from combustion, is cooled, partly via the coolant jacket in the block but also by the oil from the six piston cooling nozzles.

CRANK SYSTEM

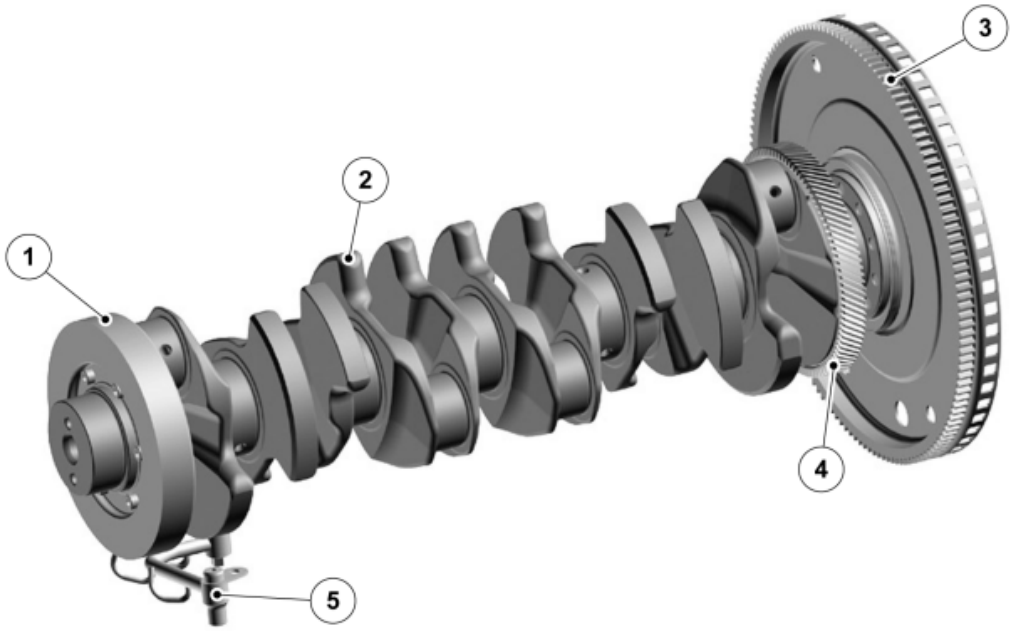

Fig. 111: Identifying Crankshaft System
Courtesy of VOLVO CARS CORPORATION

Number	Designation	Number	Designation
1	Vibration damper	4	Gear wheel
2	Crankshaft	5	Oil cooler pipe
3	Carrier plate		

The crankshaft is made from forged steel with induction hardened bearing surfaces.

The sprocket is crimped on the crankshaft's rearmost shank.

The crankshaft is supported by seven main bearings. The main bearings are replaceable main bearing shells. The sixth main bearing is a thrust bearing that holds the crankshaft in a determined position along the length of

the axle.

An internal vibration damper is on the front end of the crankshaft. Inside the enclosed vibration damper, a circular flywheel works on a silicone fluid, which dampens the crankshaft torsion oscillations. The vibration damper gives longer service life for the crankshaft and smoother engine operation.

The energy that is generated in the vibration damper, is converted to heat, therefore, the unit is cooled with oil via the oil cooler pipe.

INTERMEDIATE SHAFT

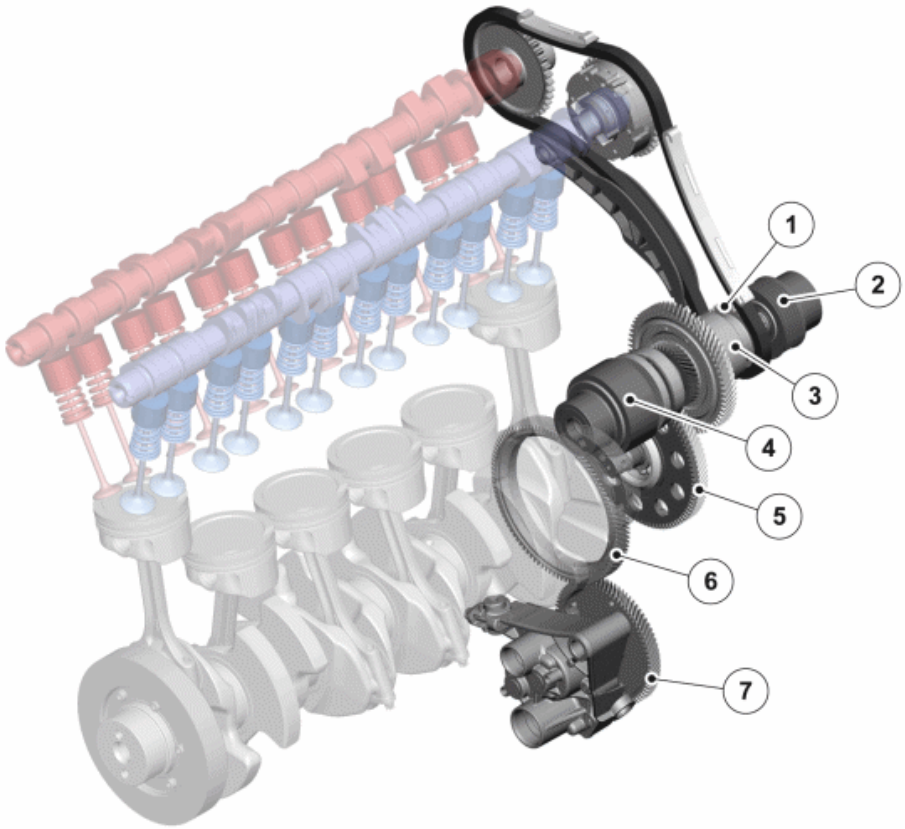

Fig. 112: Identifying Intermediate Shaft
Courtesy of VOLVO CARS CORPORATION

Number	Designation	Number	Designation
1	Camshaft transmission sprocket	5	Intermediate wheel
2	Drive wheel for the auxiliary unit	6	Crankshaft sprocket
3	Intermediate shaft	7	Oil pump
4	Freewheel clutch		

The intermediate shaft is located in the gear housing on the cylinder block. The intermediate shaft drives the

camshafts and the auxiliary unit.

There is a sprocket on the rear section of the crankshaft, which drives the intermediate shaft via an intermediate wheel. The intermediate wheel drives the intermediate shaft via the intermediate shaft's centrally mounted gear. The intermediate shaft has a further two gear wheels of different sizes.

The intermediate shaft's front gear wheel has a freewheel clutch that drives the alternator at 2.7 times the engine speed. A free wheel clutch drives in one direction and slips/freewheels in the other direction.

The rear gear wheel drives the overhead camshafts.

CAMSHAFT TRANSMISSION

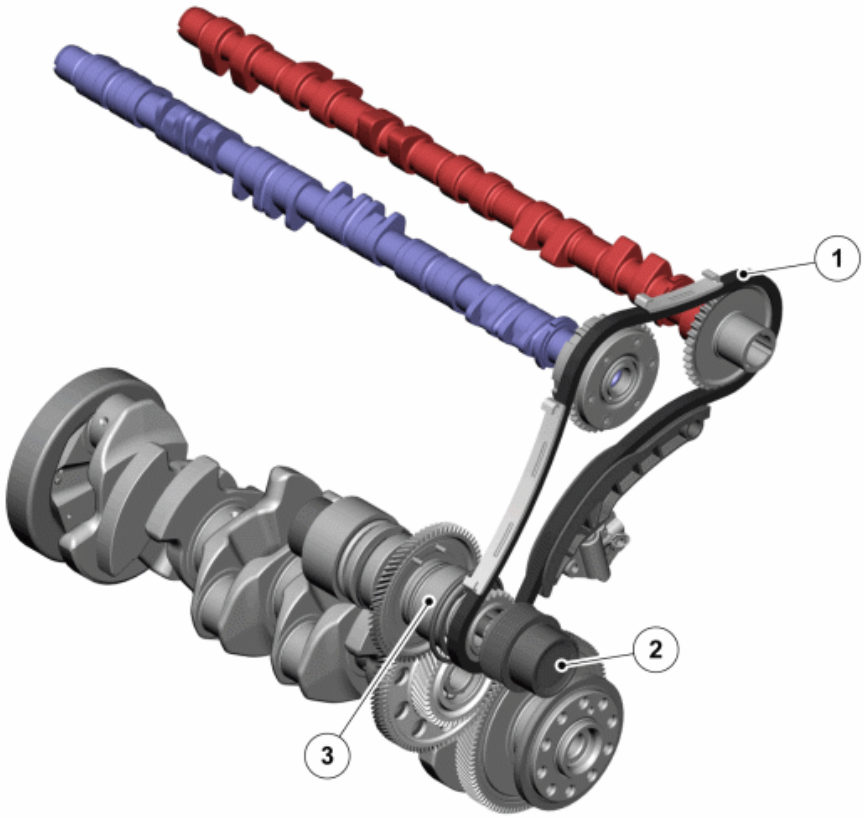

Fig. 113: Identifying Camshaft Transmission
Courtesy of VOLVO CARS CORPORATION

Number	Designation	Number	Designation
1	Camshaft chain	3	Intermediate shaft
2	Auxiliary unit sprocket		

Both camshafts are driven by a camshaft chain, which in turn, is driven by the crankshaft via the intermediate shaft. The camshaft chain has inverted teeth, so called, "silent chain".

The chain drive is maintenance free.

The exhaust side's camshaft has a vibration damper, which guarantees optimum balance in the gear and chain sprockets.

Timing cover

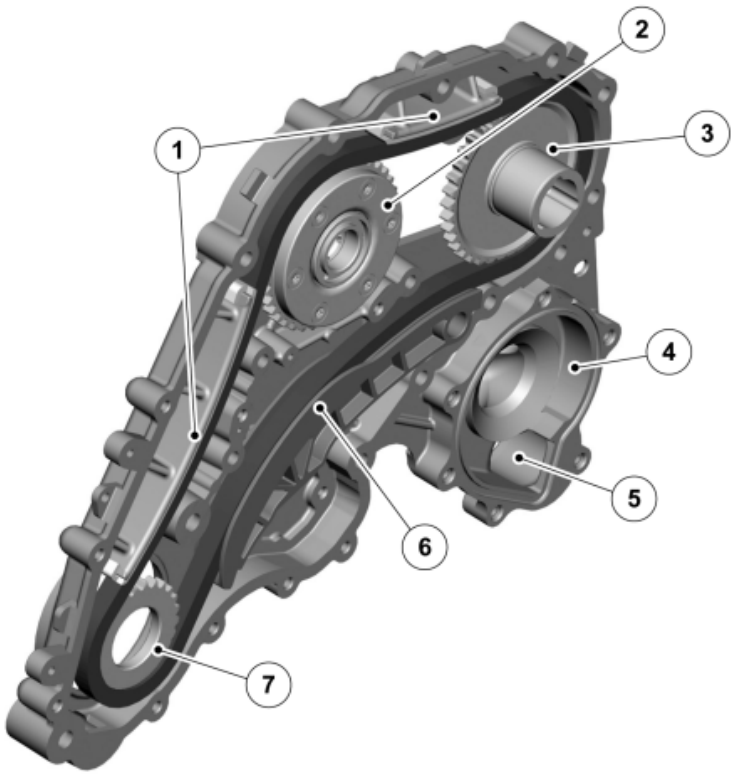

Fig. 114: Identifying Timing Chain Cover
Courtesy of VOLVO CARS CORPORATION

Number	Designation	Number	Designation
1	Chain guide	5	Coolant pump outlet
2	Induction camshaft	6	Hydraulic chain tensioner
3	Exhaust camshaft	7	Intermediate shaft
4	Coolant pump shell		

The timing cover is cast in aluminum.

The coolant pump shell is integrated in the timing cover. This saves weight. The coolant pump is still driven by the auxiliary unit's transmission.

The chain us tensioned by a hydraulic chain tensioner, which is located in the timing cover. Oil injection pipes supply the chain with oil.

VARIABLE CAMSHAFT PROFILE (CPS), ONLY APPLIES TO B6324S

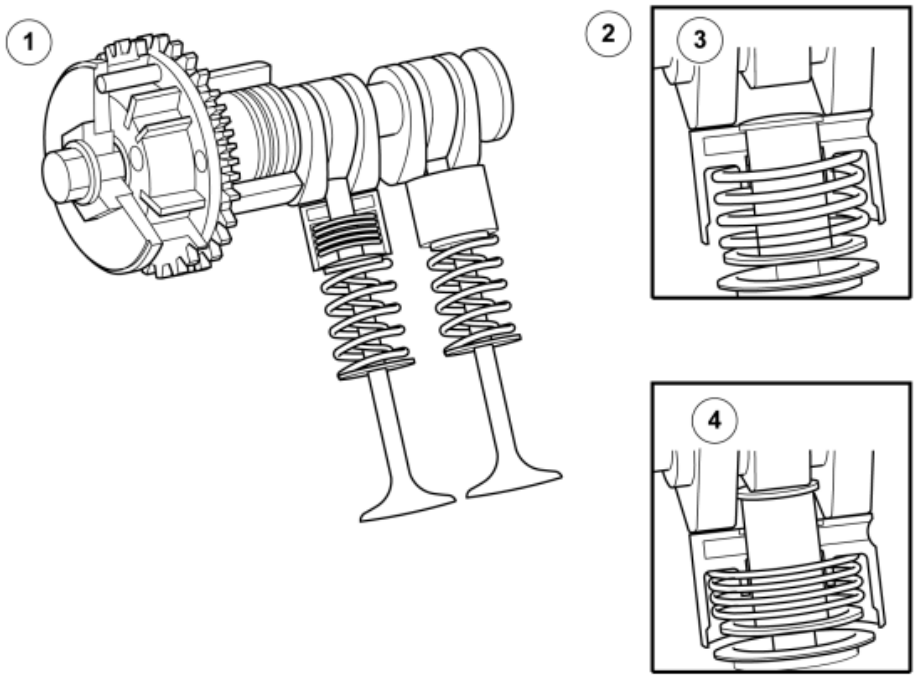

Fig. 115: Identifying Variable Camshaft
Courtesy of VOLVO CARS CORPORATION

Number	Designation	Number	Designation
1	Camshaft phase setting	3	High lift
2	Shift lobe	4	Low lift

The ideal engine should have low valve lift for low engine RPMs and loads, and high valve lift at high RPMs and loads.

To achieve this, an engine with two completely different camshaft profiles is required.

This engine has a patented system for camshaft profile switching. The system uses two completely different cam profiles designed on the same camshaft.

The inlet camshaft is provided with three cams for each valve, one centrally located with small lift height, 3.6 mm, and two equally sized outer cams with big lift height, 10.0 mm. With a small lift height at low load and at engine speeds up to approx. 3000 rpm, the primary benefit is lower fuel consumption.

In principle, during the time that the lift height is small, the air damper is completely open. Control of the incoming air volume to the cylinders takes place through control of the camshaft's opening times. Hereby the

pump losses are reduced, which in turn gives lower fuel consumption.

Low lift

At small lift height (4), only the centrally placed cam acts on the valve, which takes place through the inner valve depressor. The outer cams act on the outer valve depressors, which follow the cams' movement. Since the centrally located valve depressor and the outer depressor are not connected, the outer depressor moves without affecting the valve. Thus, lift height becomes small.

High lift

At high lift height (3), the inner valve depressor is connected with the outer valve depressor with lock pins. The outer camshaft cams' movement is transmitted through the outer valve depressor, on through the lock pins and the inner valve depressor to the valve. Thus, lift height becomes big.

The position of the lock pins is controlled hydraulically with two electro-hydraulic valves. One electro-hydraulic valve controls the valves for cylinders 1, 2 and 4, while the other controls the valve for cylinders 3, 5 and 6. Thus, the electro-hydraulic valves control 6 valves each (as the engine has 2 inlet valves and 2 exhaust valves per cylinder).

The position, on/off, of the electro-hydraulic valves is controlled by the Engine control module (ECM).

The inner valve depressor works like a hydraulic valve depressor, which compensates any wear. Thus the valve clearance is "0".

The exhaust camshaft is conventional and has a lift height of 10.0 mm. The valve depressors are mechanical, that is, they "have" valve clearance.

LUBRICATION SYSTEM

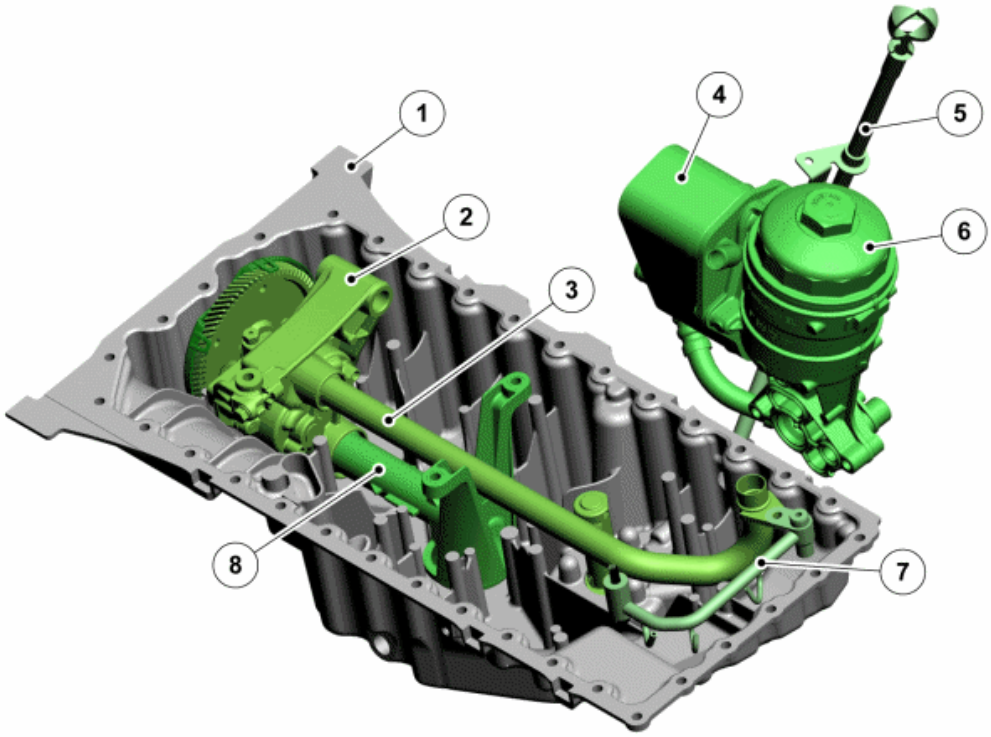

Fig. 116: Identifying Lubrication System
Courtesy of VOLVO CARS CORPORATION

Number	Designation	Number	Designation
1	Oil pan	5	Oil dipstick
2	Oil pump	6	Housing for the oil filter
3	Oil pressure line	7	Supply to the vibration damper's cooling nozzle.
4	Oil cooler	8	Oil suction line

The task of the lubrication system is to build-up a protective film of oil between the moving parts of the engine. The lubrication system must also transport dirt particles away from the moving parts and cool hot engine parts.

This is carried out by the oil pump supplying oil to the oil filter through an oil pressure line of treated steel.

Clean oil is supplied to the oil cooler from the oil filter to the oil cooler. From there the oil is further distributed, through a duct system, out to the various engine functions.

A pressure sensitive valve controls the oil flow to the vibration damper's oil cooler pipe if necessary.

Oil pump

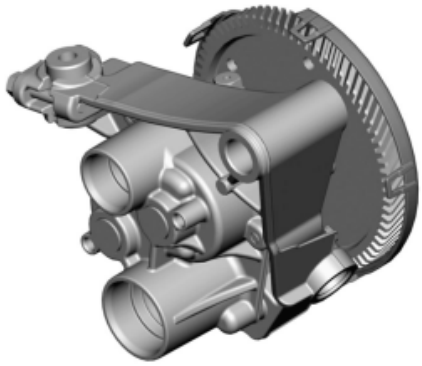

Fig. 117: Identifying Oil Pump
Courtesy of VOLVO CARS CORPORATION

The oil pump is in the oil pan, mounted underneath the intermediate section. The oil pump has an integrated relief valve. The pump is directly driven by the sprocket on the rear end of the crankshaft.

The oil pump draws oil from a centrally located nozzle in the sump.

The pump increases the pressure of the oil for lubrication, cooling and hydraulic functions.

Oil filter module

Fig. 118: Identifying Oil Filter Module
Courtesy of VOLVO CARS CORPORATION

The oil filter module consists of an oil filter reservoir and an oil cooler. It is mounted on the intermediate section. The oil filter module is element based and can be taken apart.

The oil cooler is connected to the coolant system. Coolant is led through the oil cooler.

COOLING SYSTEM

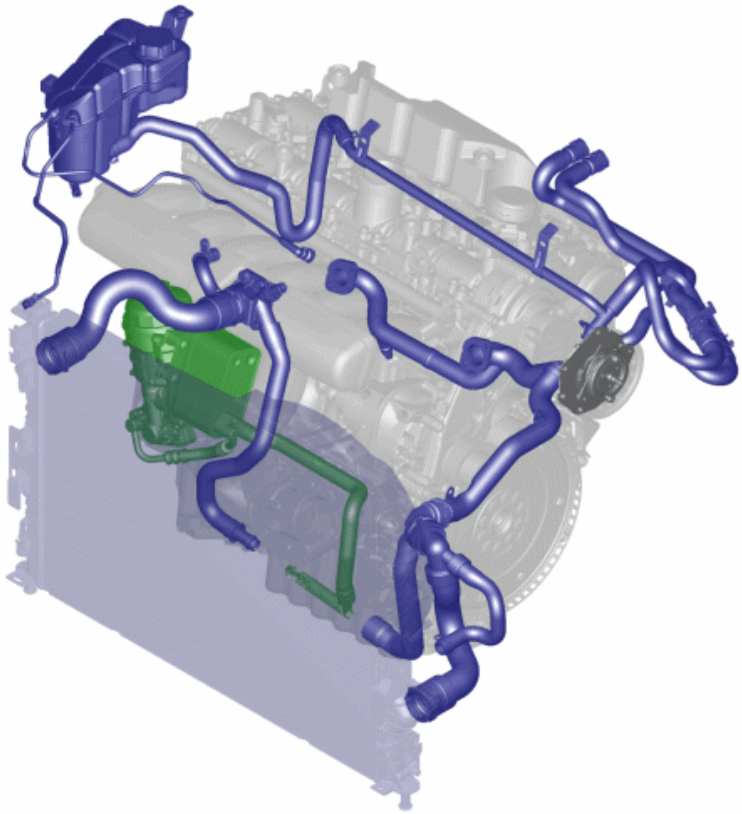

Fig. 119: Identifying Cooling System
Courtesy of VOLVO CARS CORPORATION

The coolant pump shell is integrated in the timing cover. The pump wheel is still driven by the auxiliary unit's transmission.

The coolant pump pumps coolant through the cylinder block, and also cools the cylinder head, cylinder sleeves, spark plug wells, intake ducts and fuel injection nozzles.

The coolant flows in at the coolant pump and passes through a number of channels before it collects and then flows out to the thermostat housing. If the thermostat housing is closed, the coolant passes via the by-pass channel directly to the coolant pump to then circulate through the cylinder block again.

For the turbocharged engine, the task of the cooling system is to supply the turbocharger with coolant.

CRANKCASE VENTILATION

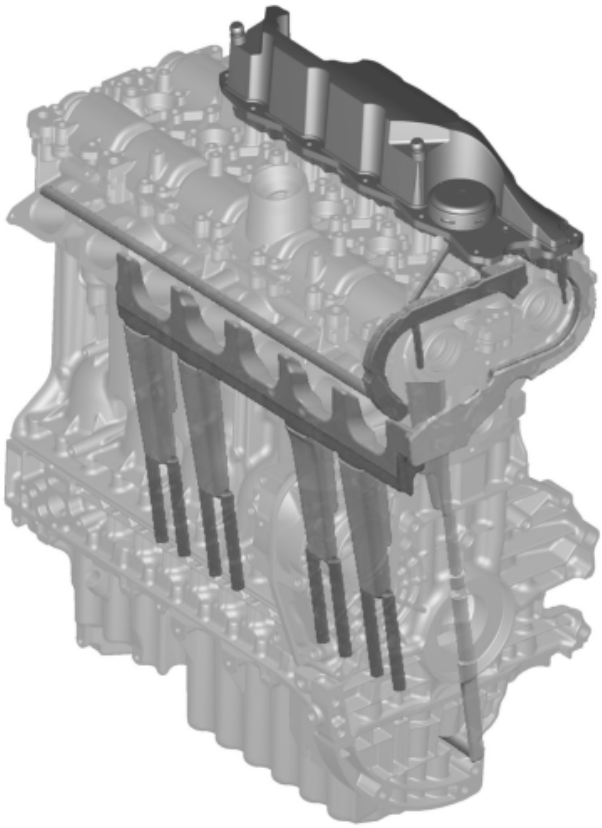

Fig. 120: Identifying Crankcase Ventilation System
Courtesy of VOLVO CARS CORPORATION

The crankcase ventilation is maintained internally in the engine.

An oil separator is on top of the engine's camshaft cover. It separates the oil drops from the air in the crankcase. The drops are collected in a separator and flow back inside the engine to the oil pan. This prevents extra weight and space for external pipes.

AUXILIARY UNIT TRANSMISSION

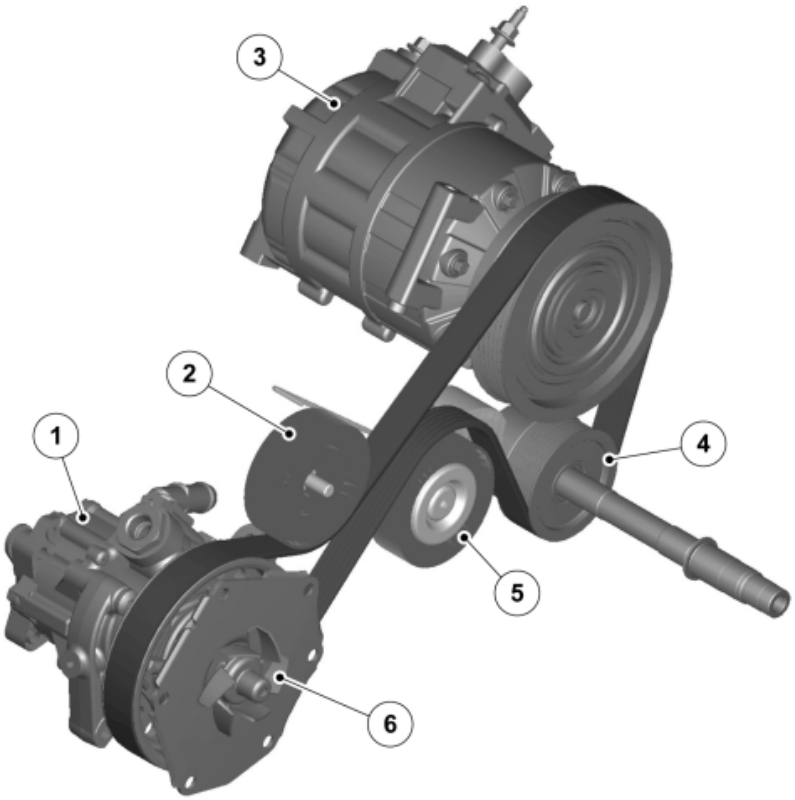

Fig. 121: Auxiliary Unit Drive
Courtesy of VOLVO CARS CORPORATION

Number	Designation	Number	Designation
1	Servo pump	4	Intermediate shaft
2	Guide pulley	5	Belt tensioner
3	Air conditioning (A/C) compressor	6	Coolant pump

The auxiliary units are located at the upper edge of the cylinder block, above the transmission. They are driven by two systems, a Poly-V-belt driven system and a clutch system. These two systems are driven by the intermediate shaft transmission.

The belt system consists of a 6-ribbed Poly-V belt, an automatic belt tensioner and a guide pulley. This system drives the servo pump and AC compressor. The coolant pump is driven by the servo pump via the clutch system.

TURBOCHARGER (TC)

NOTE: Only applies to turbocharged engines.

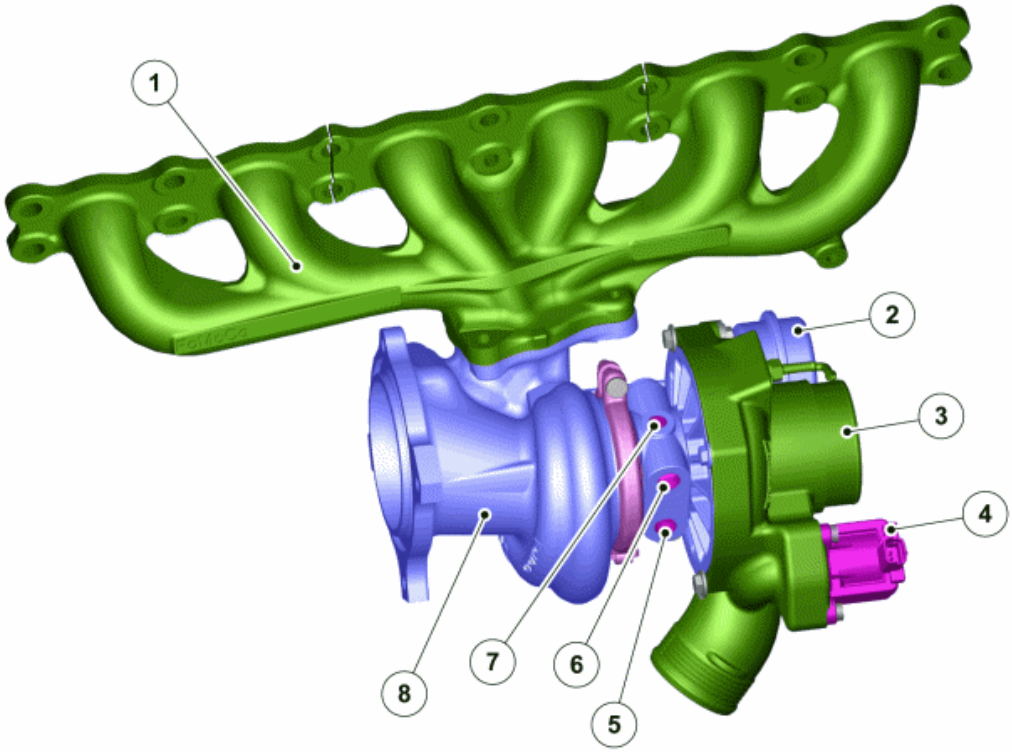

Fig. 122: View of Turbocharger System
Courtesy of VOLVO CARS CORPORATION

The exhaust gases enter via the manifold (1) down to the turbine housing (8) and out to the exhaust system via a downpipe and catalytic converter.

The turbine expels the exhaust gases and rotates the compressor wheel (3). The compressor wheel creates a certain amount of suction using the intake air. This intake air enters the compressor via the air filter and uses a rotational movement to speed up the air, creating the boost pressure. The air then continues into the intake system via the charge air pipe and charge air cooler.

The electronically controlled By-pass valve (4) then controls the boost pressure in the turbocharger by determining the amount of exhaust gases which must pass the turbine. The turbine transfers drive to the compressor. The wastegate valve (2) is a membrane which equalizes the pressure of the intake and exhaust air to eliminate noise.

The turbocharger is lubricated by the engine's oil system (7). The oil system also acts as a supplement to the coolant system (5 and 6).

OVERVIEW

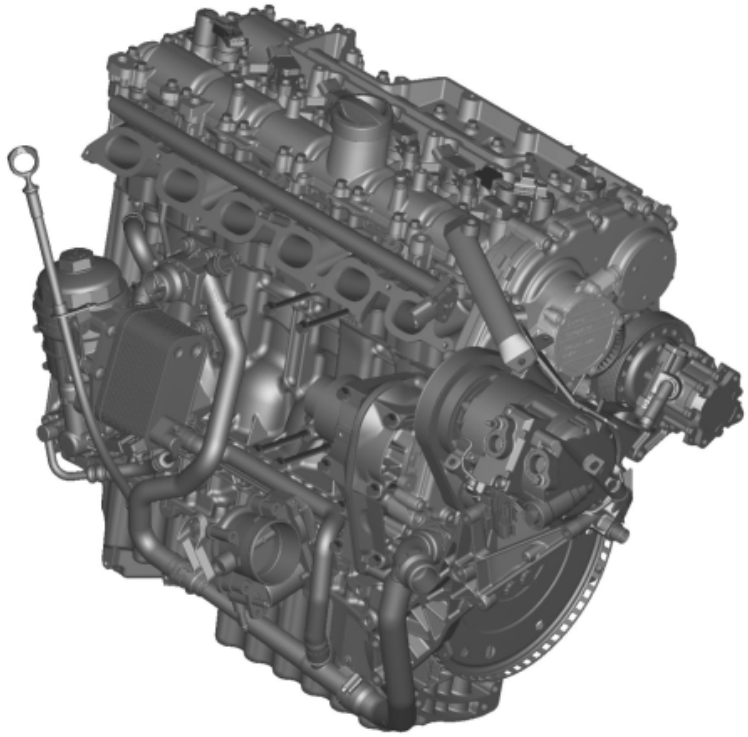

Fig. 123: ENGINE (B6324S; 2007-2010)
Courtesy of VOLVO CARS CORPORATION

The engine has been developed by Volvo.

It is a 6 cylinder transverse in-line engine with a cylinder capacity of 3.2 L for naturally aspirated engines and 3.0 L for turbocharged engines.

The engine is extremely compact. When it was introduced it was the shortest 6-cylinder engine of 3.2 L on the market. Conventional straight 6-cylinder engines are too long to fit between the collision members in the engine compartment. The special design of this engine solves the problem.

The engine has an extremely short drive train, its length is only 625 mm from the front edge of the engine block to the rear edge of the carrier plate.

Great attention has been paid to creating a very rigid engine. Middle part, cylinder block and cylinder head have been structurally optimized to combine low weight with high rigidity.

Even the camshaft cover is structurally optimized.

The engine has double overhead camshafts and 24 valves.

Camshafts, servo pump, AC-compressor, coolant pump and alternator are driven by an auxiliary unit drive, mounted on the back of the engine.

This placement of the auxiliary unit drive gives completely new possibilities of creating a good collision-protective structure around the straight 6-cylinder drive unit.

The entire engine block and the cylinder head is made from aluminum.

The engine has a compact "pent-roof" designed combustion chamber and V-arranged valves. This gives optimal and fast filling and direct flushing via the inlet manifold followed by the combustion chamber (cross-flow) and the exhaust channel.

The squish surfaces together with the centrally positioned spark plug provide optimal combustion of the air/fuel mixture, low knock sensitivity and low, stable exhaust emissions.

The engine's firing order is 1 - 5 - 3 - 6 - 2 - 4. The firings occur every 120 degrees that the crankshaft rotates.

ENGINE (B6324S5; 2011-2012)

DESIGN AND FUNCTION

ENGINE BLOCK

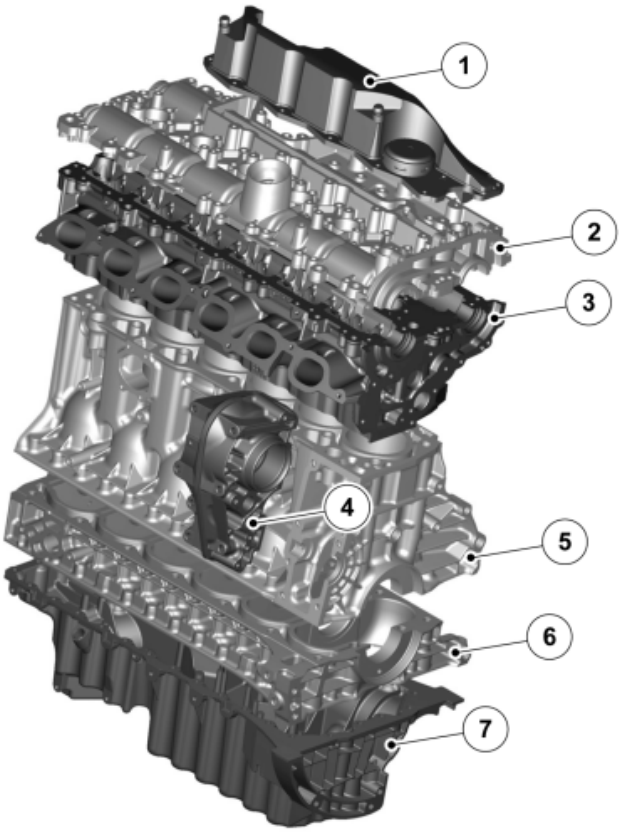

Fig. 124: Expanded View of Engine Components
Courtesy of VOLVO CARS CORPORATION

Number	Designation	Number	Designation
1	Oil separator	5	Cylinder block
2	Camshaft cover	6	Intermediate section
3	Cylinder head	7	Oil pan
4	Gear housing		

CYLINDER HEAD, CAMSHAFT BEARING HOUSING

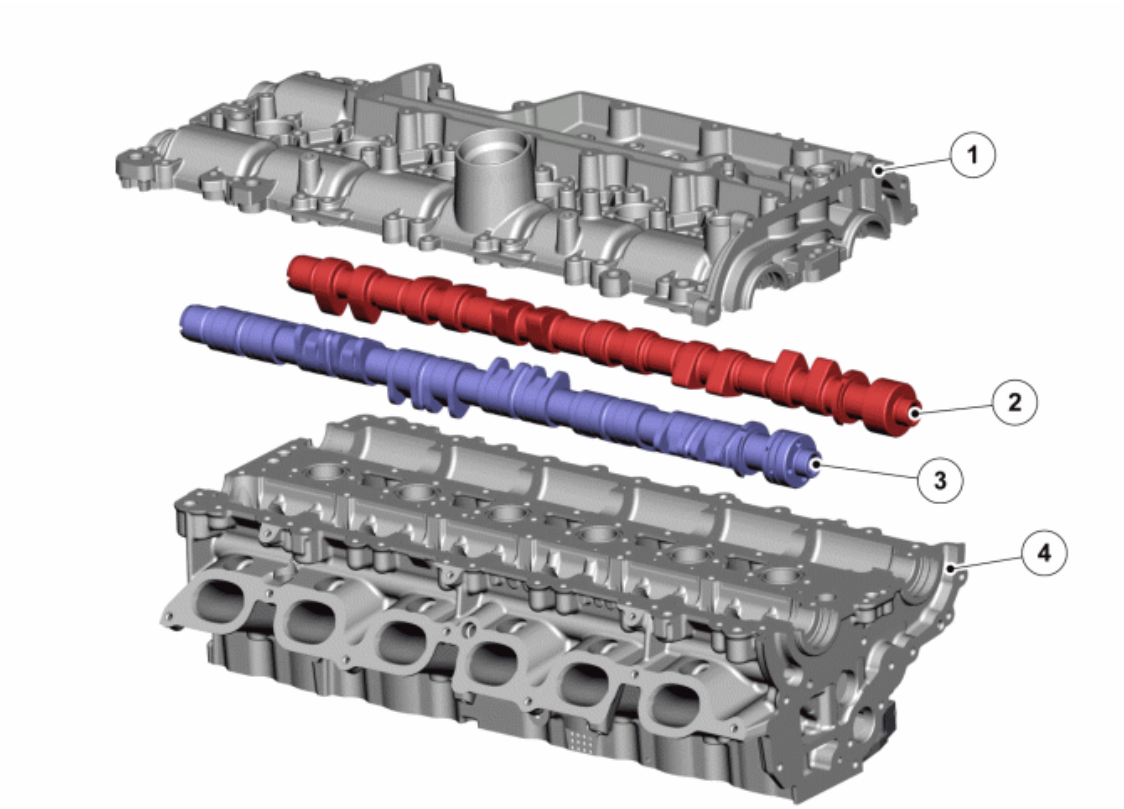

Fig. 125: View of Cylinder Head, Camshaft Bearing Housing
Courtesy of VOLVO CARS CORPORATION

Number	Designation	Number	Designation
1	Camshaft cover	3	Induction camshaft
2	Exhaust camshaft	4	Cylinder head

The cylinder head is of the cross-flow type, (Cross-flow = in from one side and out from the other side).

The two camshafts are supported by seven bearing caps each, directly in the cylinder head and camshaft cover. The camshaft cover works like a combined valve cover and camshaft bearing cap. The camshaft cover has cast oil ducts on the underneath which ensure good oil supply to the camshafts and the valve lifters.

The maintenance-free valve lifters, valve springs and valves are in the cylinder head.

CYLINDER HEAD GASKET

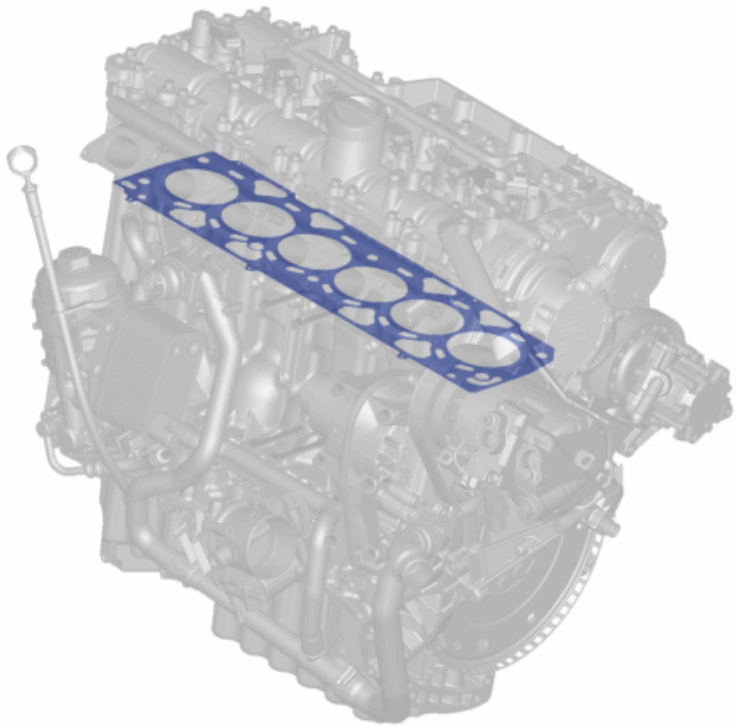

Fig. 126: Identifying Cylinder Head Gasket
Courtesy of VOLVO CARS CORPORATION

The seal between the cylinder head and cylinder block is a conventional cylinder head gasket. The seal between the other gasket faces is a liquid gasket.

The cylinder head gasket is made of steel and has multiple layers.

CYLINDER BLOCK

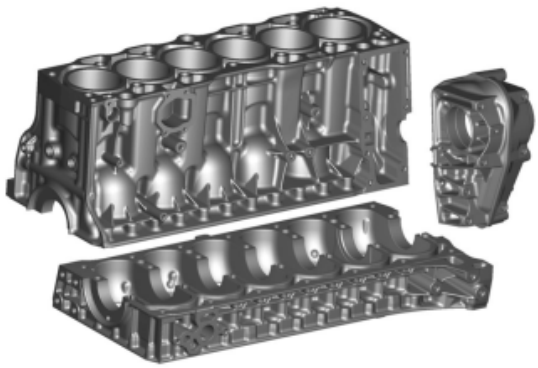

Fig. 127: View Of Cylinder Block
Courtesy of VOLVO CARS CORPORATION

The cylinder block consists of 3 sections.

- Cylinder block
- Intermediate section
- Gear housing

All three sections are made of die cast aluminum, molded under high pressure.

The mating flange between the cylinder block and intermediate section is in the center line of the crankshaft. The gear housing for the camshaft drive is secured on top of the cylinder block.

The cylinder block houses six cast iron cylinder sleeves. These cylinder sleeves cannot be replaced. The stroke length of the cylinders is greater than the cylinder diameter. This produces good torque and competitive power.

The intermediate section's seven main bearing caps have cast iron reinforcements.

On the top of the intermediate section there are cast oil channels which distribute the oil to the main bearings and on via the crankshaft to the big ends.

OIL SUMP AND OIL VOLUME

Fig. 128: View of Oil Sump and Dipstick
Courtesy of VOLVO CARS CORPORATION

The oil sump is made of die-cast aluminum with baffles (splash walls). This is so that the oil stays in the sump during active driving (heavy braking/acceleration, sharp turns, etc). Liquid gasket ensures the seal between the cylinder block and the oil sump.

The oil pan is designed to reduce mechanical noise from the engine, at the same time as providing a reliable supply of oil at different angles. A composite oil scraper keeps the larger section of the oil volume away from the rotating crankshaft. It minimizes power loss, improves fuel economy and prevents the oil from foaming.

The oil suction line, which runs from the oil pan, is made of plastic. The oil pan is equipped with an oil level sensor.

The oil pan contributes to the rigid design and operates as an extra reinforcement of the cylinder block.

The oil volume for engines B6324S4/S5 and B6304T4 have been reduced by 0.6 litres. Reasons for reducing the oil volume are, among others, lower service costs (cost of ownership), lower friction, and increased power. Lower friction and higher power are attained by facilitating the engine's internal 'breathing' with a lower oil surface, that is, easier evacuation of gases under the pistons.

The change of the oil volume is partly connected to a changed oil scraper plate, which means that the oil system also works with a reduced oil volume, as well as cooling for **IVD** (**I** nternal **V** iscous **D** amper), which is removed since 09w11. Since the volume reduction is partly connected to IVD-cooling it is not possible to

reduce the oil volume on an older engine with IVD-cooling, even if the new oil scraper plate is retrofitted. Due to the volume reduction, a new oil dipstick is introduced with adapted markings.

OIL SCRAPER PLATE

Fig. 129: Identifying Oil Scraper Plate
Courtesy of VOLVO CARS CORPORATION

Under the crankshaft there is an oil scraper plate that is to prevent the oil from following along with the crankshaft in the crank movement. The plate is updated and is now located closer to the crankshaft and has integrated drain pipes. With these changes it has been possible to reduce the oil volume.

PISTON

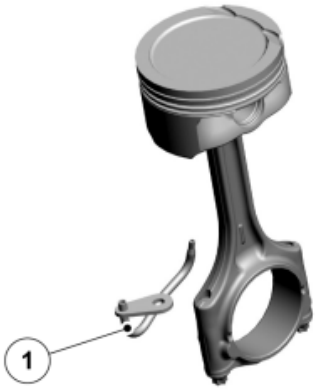

Fig. 130: Identifying Piston Cooling Nozzle
Courtesy of VOLVO CARS CORPORATION

1. Piston cooling nozzle

The pistons are die cast in aluminum and the connecting rods are forged in steel.

The heat received by the pistons from combustion, is cooled, partly via the coolant jacket in the block but also by the oil from the six piston cooling nozzles.

SPARKPLUGS

Fig. 131: View of SIP-spark plug
Courtesy of VOLVO CARS CORPORATION

To further improve the engine's features, a new type of spark plug is used, from Denso. The designation is "**SIP** " which means **S** uper **I** gnition spark **P** lug.

An SIP-spark plug has a special design which improves a number of features with a more stable spark. By using a special alloy for both the centre and side electrode, these can have a smaller diameter than normally. The smaller diameter of the electrodes minimizes heat losses during the flame build process, concentrates the electric field, and gives a stronger spark. The stronger spark gives higher engine power, improved fuel economy, better cold-cranking performance, and longer service life. It is the same spark plug for all versions of engine B63x4x, and can also be used for older versions. Electrode gap is 1.0 mm.

CRANK SYSTEM

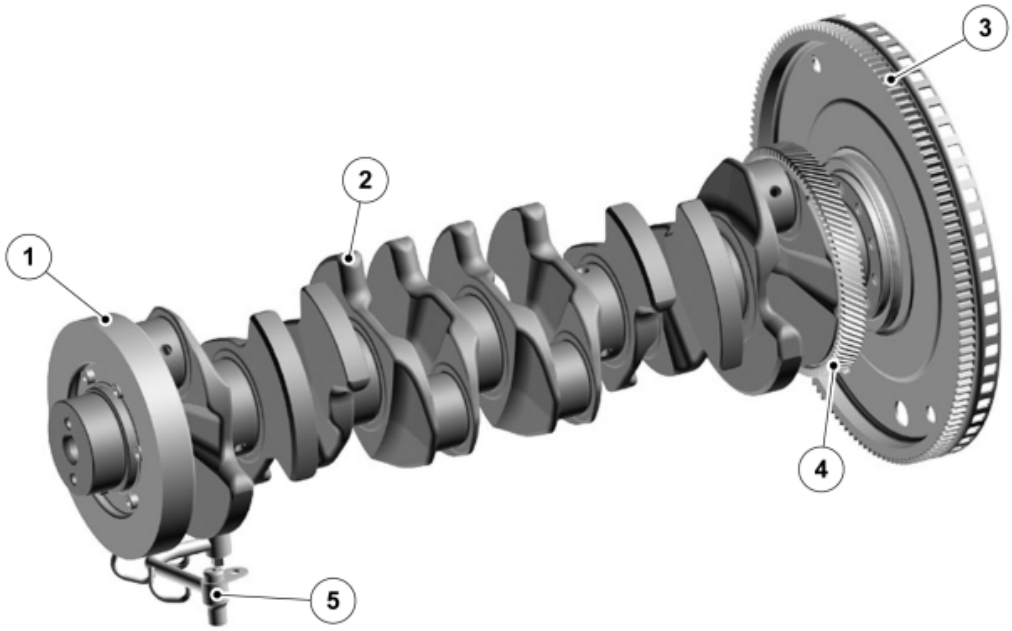

Fig. 132: Identifying Crankshaft System
Courtesy of VOLVO CARS CORPORATION

Number	Designation	Number	Designation
1	Vibration damper	4	Gear wheel
2	Crankshaft	5	Oil cooler pipe
3	Carrier plate		

The crankshaft is made from forged steel with induction hardened bearing surfaces.

The sprocket is crimped on the crankshaft's rearmost shank.

The crankshaft is supported by seven main bearings. The main bearings are replaceable main bearing shells. The sixth main bearing is a thrust bearing that holds the crankshaft in a determined position along the length of the axle.

An internal vibration damper is on the front end of the crankshaft. Inside the enclosed vibration damper, a circular flywheel works on a silicone fluid, which dampens the crankshaft torsion oscillations. The vibration damper gives longer service life for the crankshaft and smoother engine operation.

Engine versions without turbo were changed 10w20 with a modified crankshaft. The goal is to reduce the crankshaft's torsion vibrations at high engine speeds (4, 500 rpm and up) and to save weight. The reduced torsion vibration means reduced noise level at high RPMs at the same time as it reduces the load (torque) on the

geartrain that drives the camshafts and auxiliary unit drive. It is the crankshaft's forged blank that is changed, reworking is unchanged.

To reduce vibrations material has been added between crank pin and main pin for the rear cylinders, which gives increased stiffness. At the crankshaft's front end, material has been removed instead, to reduce the crankshaft's oscillating mass. A new strategy has been used to design the crankshaft's balance weights to reduce weight. This can be seen by some balance weights having become small while others have become bigger. The changes have reduced the crankshaft's weight by a total of 1 kg. The change does not apply to turbo engines, but can be used on earlier versions of aspiration engines.

Main bearing

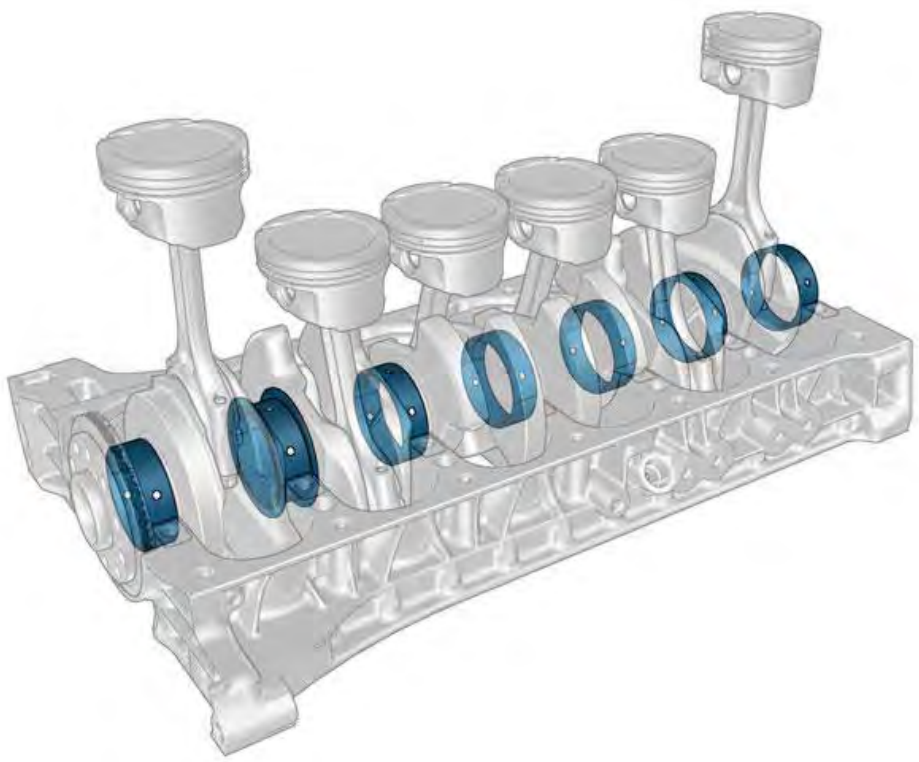

Fig. 133: Identifying Main Bearings
Courtesy of VOLVO CARS CORPORATION

To improve the cold-cranking capacity, all main bearings have a changed appearance. In the middle of the bearing the thickness is unchanged but toward the end of the bearing the thickness is approx. 10µm thinner. The new type of bearing is possible to use on all versions of engine B63x4x, also those built earlier than 10w20.

INTERMEDIATE SHAFT

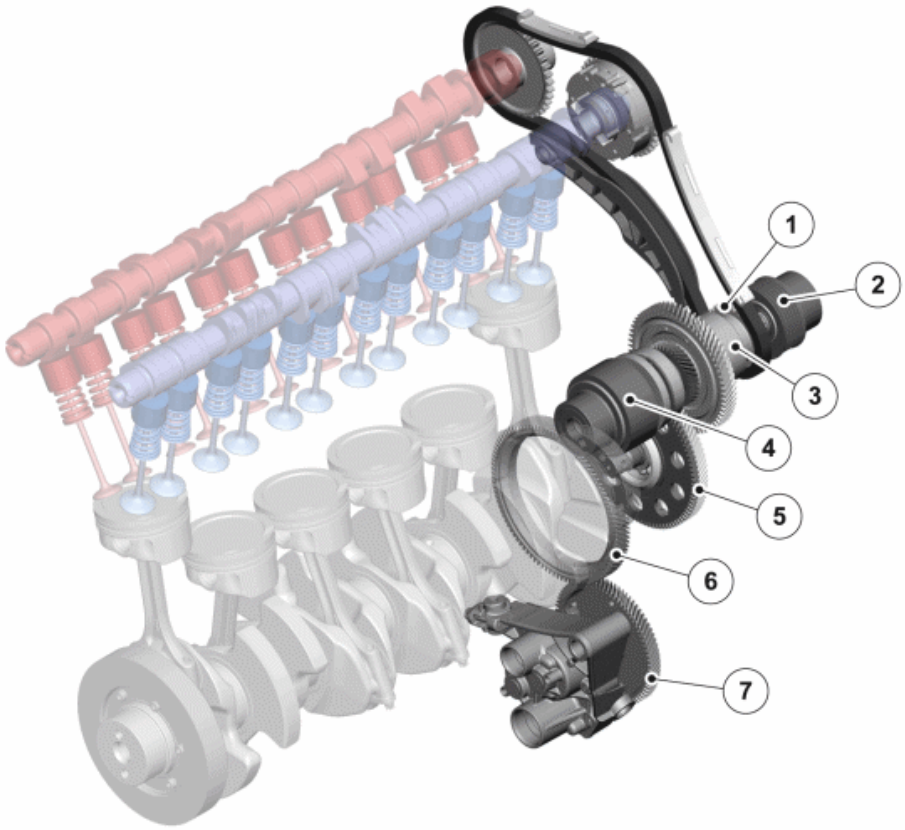

Fig. 134: Identifying Intermediate Shaft
Courtesy of VOLVO CARS CORPORATION

Number	Designation	Number	Designation
1	Camshaft transmission sprocket	5	Intermediate wheel
2	Drive wheel for the auxiliary unit	6	Crankshaft sprocket
3	Intermediate shaft	7	Oil pump
4	Freewheel clutch		

The intermediate shaft is located in the gear housing on the cylinder block. The intermediate shaft drives the camshafts and the auxiliary unit.

There is a sprocket on the rear section of the crankshaft, which drives the intermediate shaft via an intermediate wheel. The intermediate wheel drives the intermediate shaft via the intermediate shaft's centrally mounted gear. The intermediate shaft has a further two gear wheels of different sizes.

The intermediate shaft's front gear wheel has a freewheel clutch that drives the alternator at 2.7 times the engine speed. A free wheel clutch drives in one direction and slips/freewheels in the other direction.

The rear gear wheel drives the overhead camshafts.

CAMSHAFT TRANSMISSION

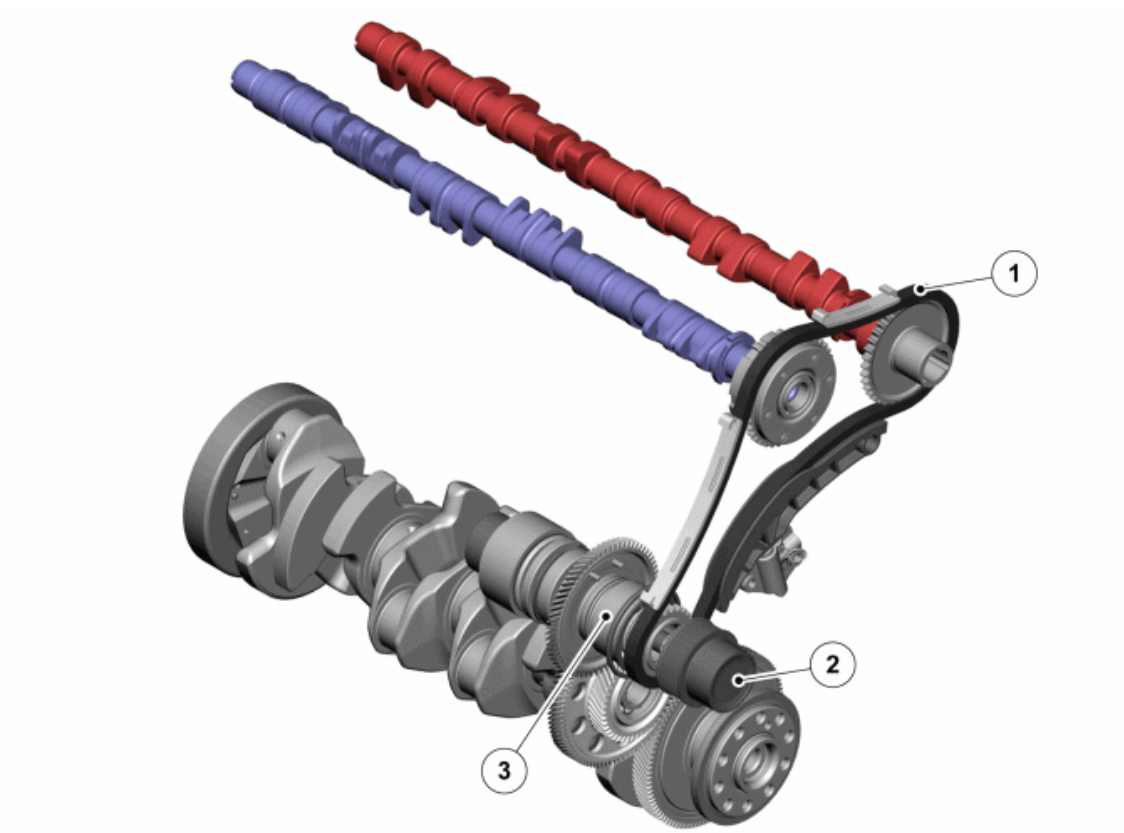

Fig. 135: Identifying Camshaft Transmission
Courtesy of VOLVO CARS CORPORATION

Number	Designation	Number	Designation
1	Camshaft chain	3	Intermediate shaft
2	Auxiliary unit sprocket		

Both camshafts are driven by a camshaft chain, which in turn is driven by the crankshaft via the intermediate shaft. The camshaft chain has inverted teeth, so called, "silent chain".

The chain drive is maintenance free.

The exhaust side's camshaft has a vibration damper, which guarantees optimum balance in the gear and chain sprockets.

Timing cover

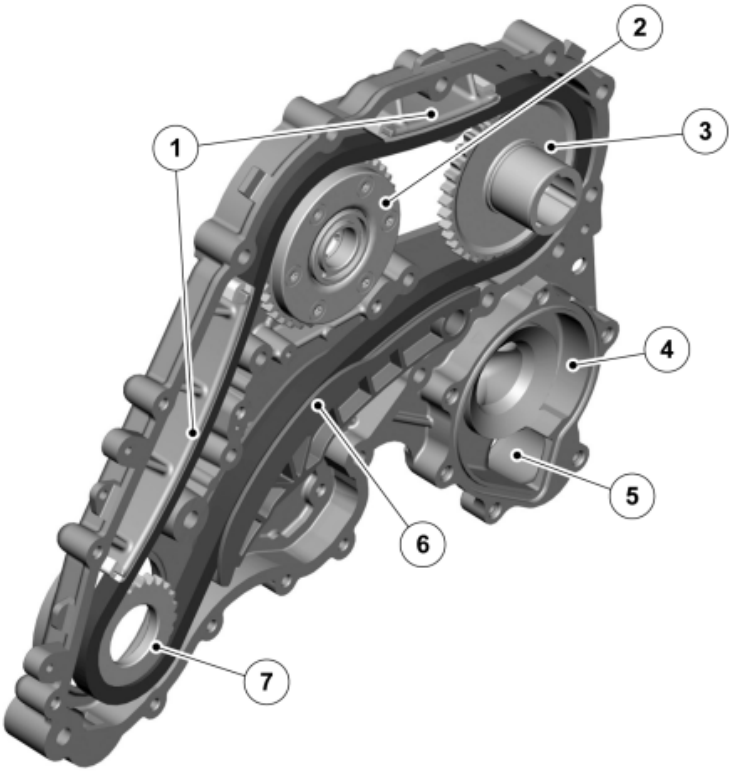

Fig. 136: Identifying Timing Chain Cover
Courtesy of VOLVO CARS CORPORATION

Number	Designation	Number	Designation
1	Chain guide	5	Coolant pump outlet
2	Induction camshaft	6	Hydraulic chain tensioner
3	Exhaust camshaft	7	Intermediate shaft
4	Coolant pump shell		

The timing cover is cast in aluminum.

The coolant pump shell is integrated in the timing cover. This saves weight. The coolant pump is still driven by the auxiliary unit's transmission.

The chain us tensioned by a hydraulic chain tensioner, which is located in the timing cover. Oil injection pipes supply the chain with oil.

VARIABLE CAMSHAFT PROFILE (CPS), ONLY APPLIES TO B6324S5

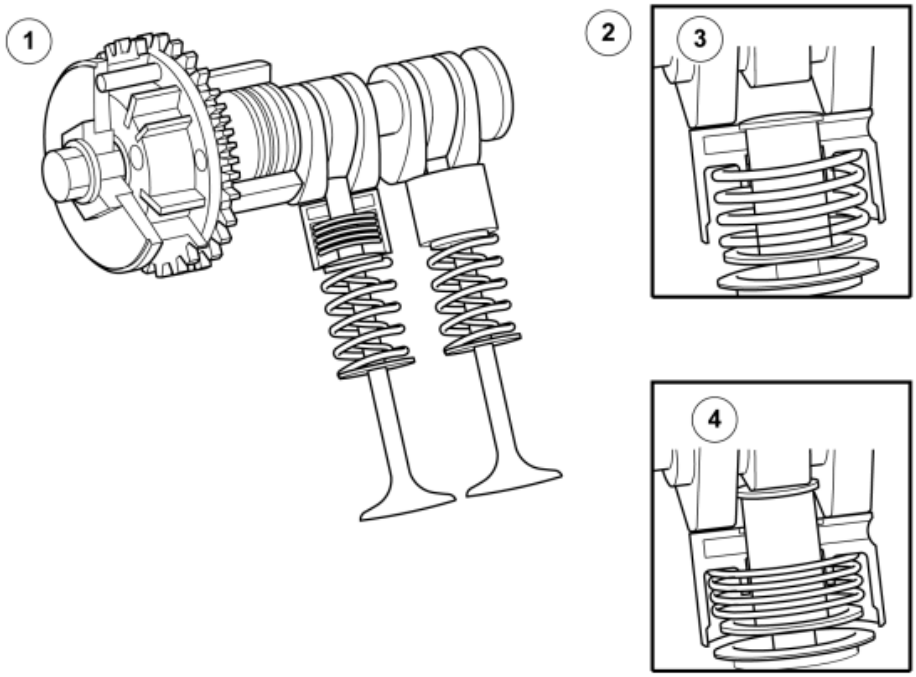

Fig. 137: Identifying Variable Camshaft
Courtesy of VOLVO CARS CORPORATION

Number	Designation	Number	Designation
1	Camshaft phase setting	3	High lift
2	Shift lobe	4	Low lift

The ideal engine should have low valve lift for low engine RPMs and loads, and high valve lift at high RPMs and loads.

To achieve this, an engine with two completely different camshaft profiles is required.

This engine has a patented system for camshaft profile switching. The system uses two completely different cam profiles designed on the same camshaft.

The inlet camshaft is provided with three cams for each valve, one centrally located with small lift height, 3.6 mm, and two equally sized outer cams with big lift height, 10.0 mm. With a small lift height at low load and at engine speeds up to approx. 3000 rpm, the primary benefit is lower fuel consumption.

In principle, during the time that the lift height is small, the air damper is completely open. Control of the incoming air volume to the cylinders takes place through control of the camshaft's opening times. Hereby the pump losses are reduced, which in turn gives lower fuel consumption.

Low lift

At small lift height (4), only the centrally placed cam acts on the valve, which takes place trough the inner valve depressor. The outer cams act on the outer valve depressors, which follow the cams' movement. Since the centrally located valve depressor and the outer depressor are not connected, the outer depressor moves without affecting the valve. Thus, lift height becomes small.

High lift

At high lift height (3), the inner valve depressor is connected with the outer valve depressor with lock pins. The outer camshaft cams' movement is transmitted through the outer valve depressor, on through the lock pins and the inner valve depressor to the valve. Thus, lift height becomes big.

The position of the lock pins is controlled hydraulically with two electro-hydraulic valves. One electro-hydraulic valve controls the valves for cylinders 1, 2 and 4, while the other controls the valve for cylinders 3, 5 and 6. Thus, the electro-hydraulic valves control 6 valves each (as the engine has 2 inlet valves and 2 exhaust valves per cylinder).

The position, on/off, of the electro-hydraulic valves is controlled by the Engine control module (ECM).

The inner valve depressor works like a hydraulic valve depressor, which compensates any wear. Thus, the valve clearance is "0".

The exhaust camshaft is conventional and has a lift height of 10.0 mm. The valve depressors are mechanical, that is, they "have" valve clearance.

VALVE DEPRESSOR

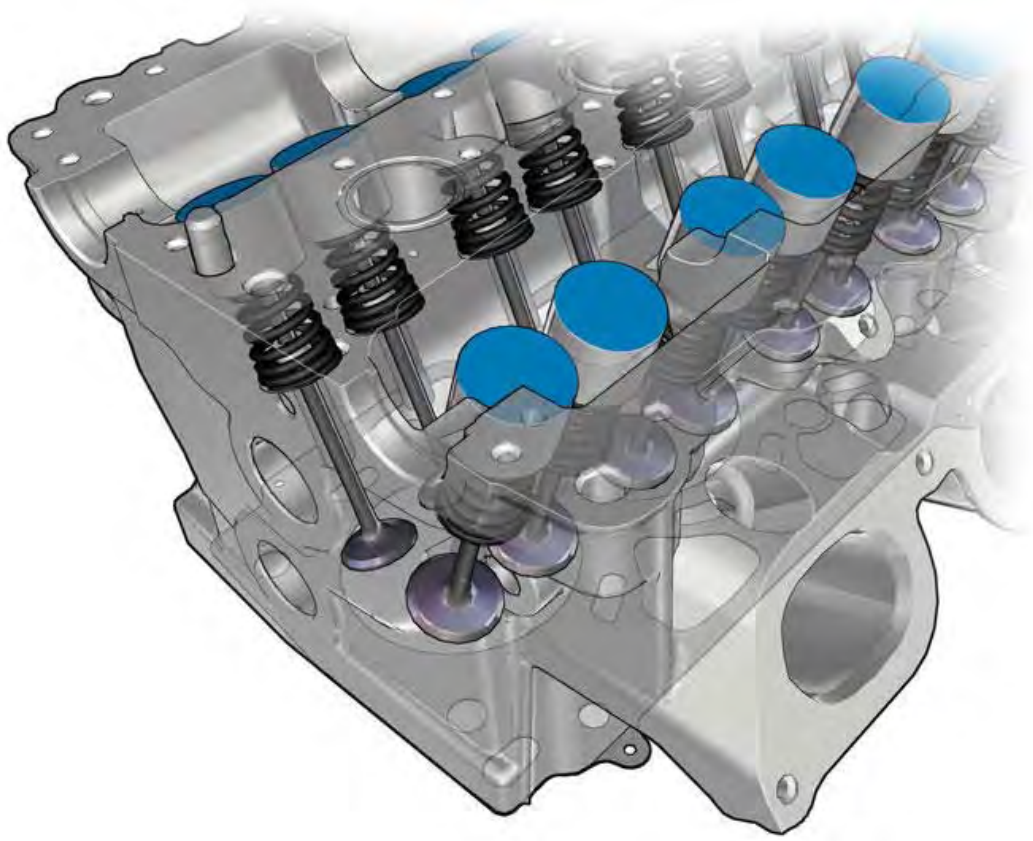

Fig. 138: Identifying Valve Depressors
Courtesy of VOLVO CARS CORPORATION

Valve depressors without **CPS** -functionality (**C** amshaft **P** rofile **S** hifting) have a coating of **DLC** (**D** iamond **L** ike **C** arbon).

It is the tops of the valve depressors that are coated with DLC. The layer with diamond-like carbon structure has a depth of 2µm, is very hard and has self-lubricating properties. The surface reduces the friction against the camshaft lobes and thus gives lower fuel consumption and longer service life.

Thanks to very good adhesion and toughness the DLC-coating can handle very high loads. The change applies to valve depressors without CPS-functionality.

This means that it concerns depressors in position:

- Engine B6304T4 (Ulev2) Exhaust, inlet
- Engine B6324S4 (Pzev) Exhaust, inlet
- Engine B6324S5 (Ulev) Exhaust

If needed the DLC-coated depressors can also be used on older engines.

LUBRICATION SYSTEM

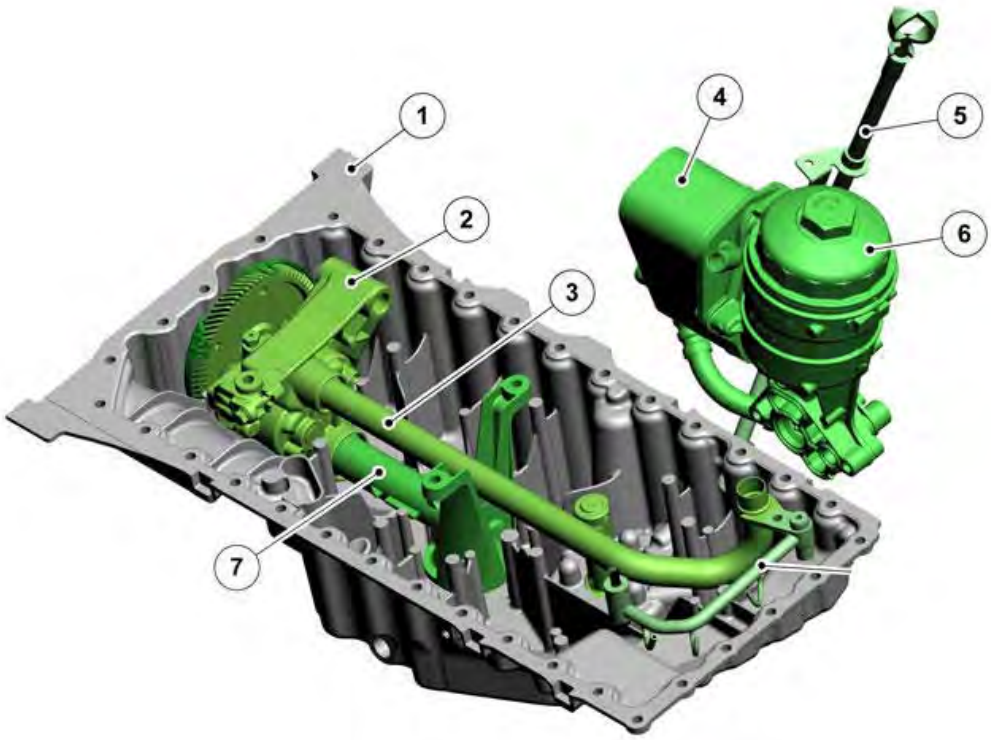

Fig. 139: View Of Lubrication System
Courtesy of VOLVO CARS CORPORATION

Number	Designation	Number	Designation
1	Oil pan	5	Oil dipstick
2	Oil pump	6	Housing for the oil filter
3	Oil pressure line	7	Oil suction line
4	Oil cooler		

The task of the lubrication system is to build-up a protective film of oil between the moving parts of the engine. The lubrication system must also transport dirt particles away from the moving parts and cool hot engine parts.

This is carried out by the oil pump supplying oil to the oil filter through an oil pressure line of treated steel.

Clean oil is supplied from the oil filter to the oil cooler. From there the oil is further distributed, through a duct system, out to the various engine functions.

A pressure sensitive valve controls the oil flow to the vibration damper's oil cooler pipe if necessary.

Oil pump

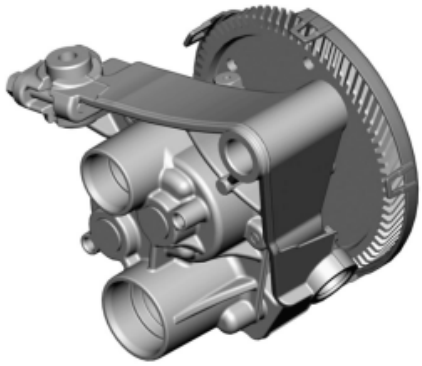

Fig. 140: Identifying Oil Pump
Courtesy of VOLVO CARS CORPORATION

The oil pump is in the oil pan, mounted underneath the intermediate section. The oil pump has an integrated relief valve. The pump is directly driven by the sprocket on the rear end of the crankshaft.

The oil pump draws oil from a centrally located nozzle in the sump.

The pump increases the pressure of the oil for lubrication, cooling and hydraulic functions.

Oil filter module

Fig. 141: Identifying Oil Filter Module
Courtesy of VOLVO CARS CORPORATION

The oil filter module consists of an oil filter reservoir and an oil cooler. It is mounted on the intermediate section. The oil filter module is element based and can be taken apart.

The oil cooler is connected to the coolant system. Coolant is led through the oil cooler.

COOLING SYSTEM

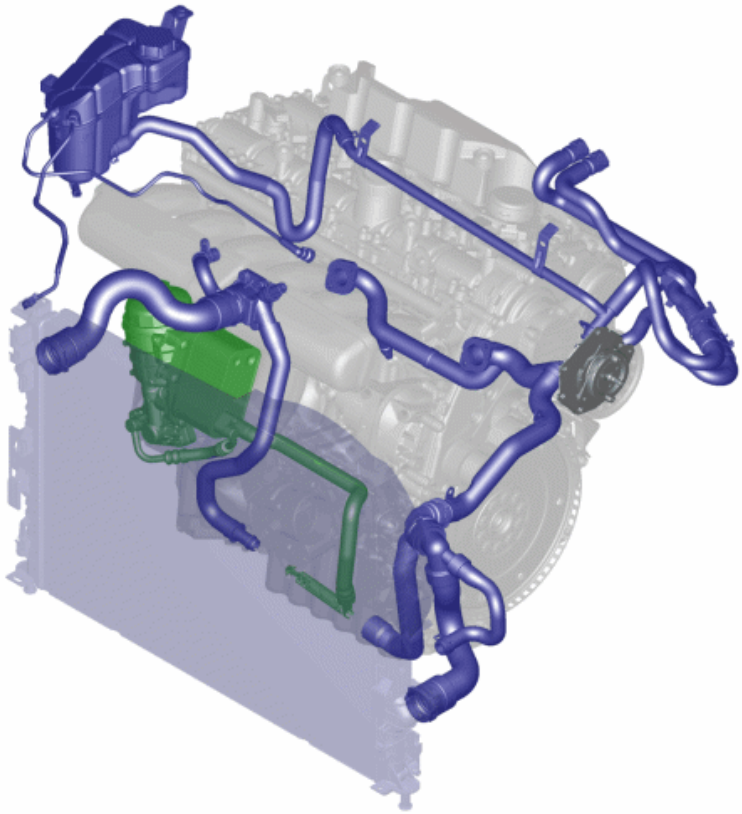

Fig. 142: Identifying Cooling System
Courtesy of VOLVO CARS CORPORATION

The coolant pump shell is integrated in the timing cover. The pump wheel is still driven by the auxiliary unit's transmission.

The coolant pump pumps coolant through the cylinder block, and also cools the cylinder head, cylinder sleeves, spark plug wells, intake ducts and fuel injection nozzles.

The coolant flows in at the coolant pump and passes through a number of channels before it collects and then flows out to the thermostat housing. If the thermostat housing is closed, the coolant passes via the by-pass channel directly to the coolant pump to then circulate through the cylinder block again.

For the turbocharged engine, the task of the cooling system is to supply the turbocharger with coolant.

Coolant pump and drive gear

Fig. 143: Identifying Coolant Pump And Pulley
Courtesy of VOLVO CARS CORPORATION

Alternator/clutch

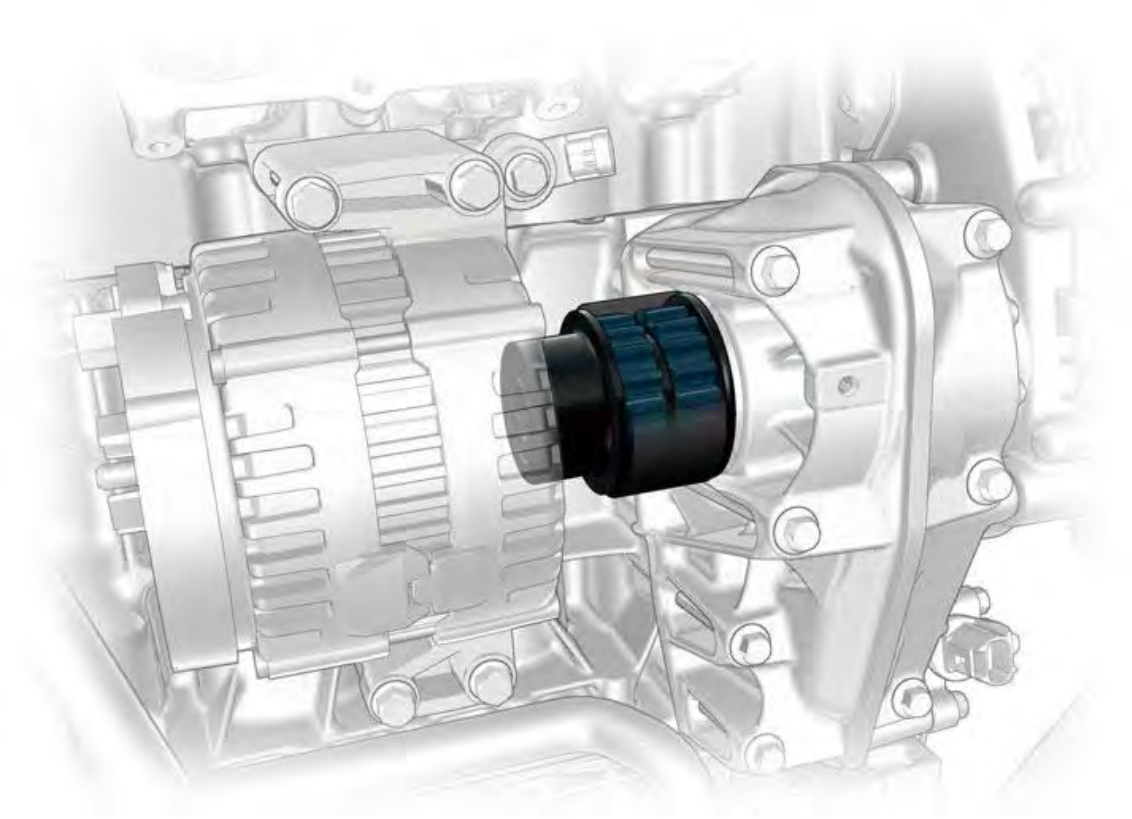

Fig. 144: View of Alternator and Freewheel
Courtesy of VOLVO CARS CORPORATION

The belt pulleys on alternator and intermediate shaft have improved surface treatment.

On the alternator shaft between alternator and intermediate shaft there is a clutch with a freewheel (one-way clutch) at each end. The function is to filter the engine's different irregular shape and thus avoid gear rattle/noise in the geartrain.

In connection with introduction of **EHPAS** (electric servo pump), the belt-driven servo pump with its heavy steel belt pulley is discontinued as well as the clutch for the coolant pump. The reduced rotating moment of inertia means more freewheeling, primarily when idling.

To reduce/avoid wear, the drive gears' outer ring (against the one-way clutch's friction band), are treated with nitride.

AC bracket

Fig. 145: Identifying A/C Compressor Bracket
Courtesy of VOLVO CARS CORPORATION

The AC compressor's fastening bracket is simplified. Earlier solution with a main bracket and three separate stays, is replaced by a modified bracket which has the front reinforcement stay integrated and a new fastening point in the transmission. The change means, except that the fastener assembly has 9 fewer bolts, that the installation method becomes easier and there is no longer a need for any special tools when assembling.

CRANKCASE VENTILATION

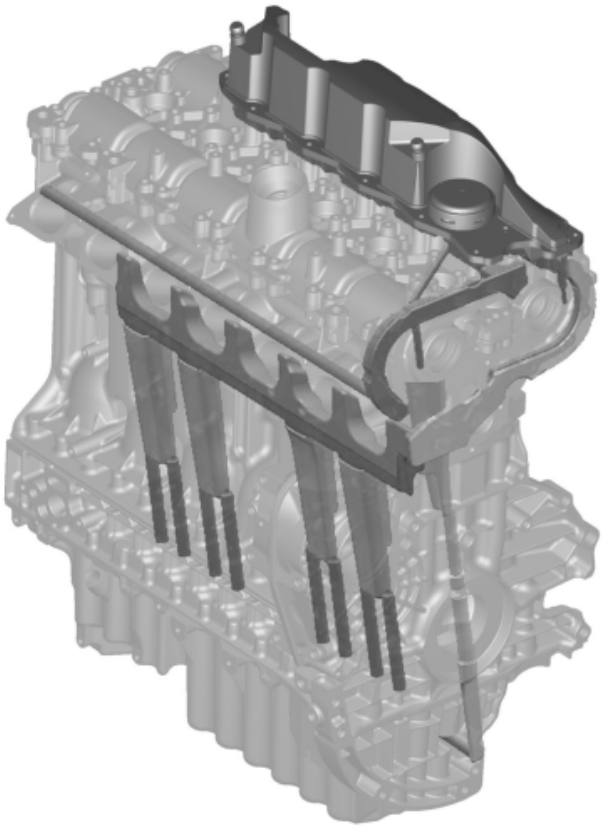

Fig. 146: Identifying Crankcase Ventilation System
Courtesy of VOLVO CARS CORPORATION

The crankcase ventilation is maintained internally in the engine.

An oil separator is on top of the engine's camshaft cover. It separates the oil drops from the air in the crankcase. The drops are collected in a separator and flow back inside the engine to the oil pan. This prevents extra weight and space for external pipes.

AUXILIARY UNIT TRANSMISSION

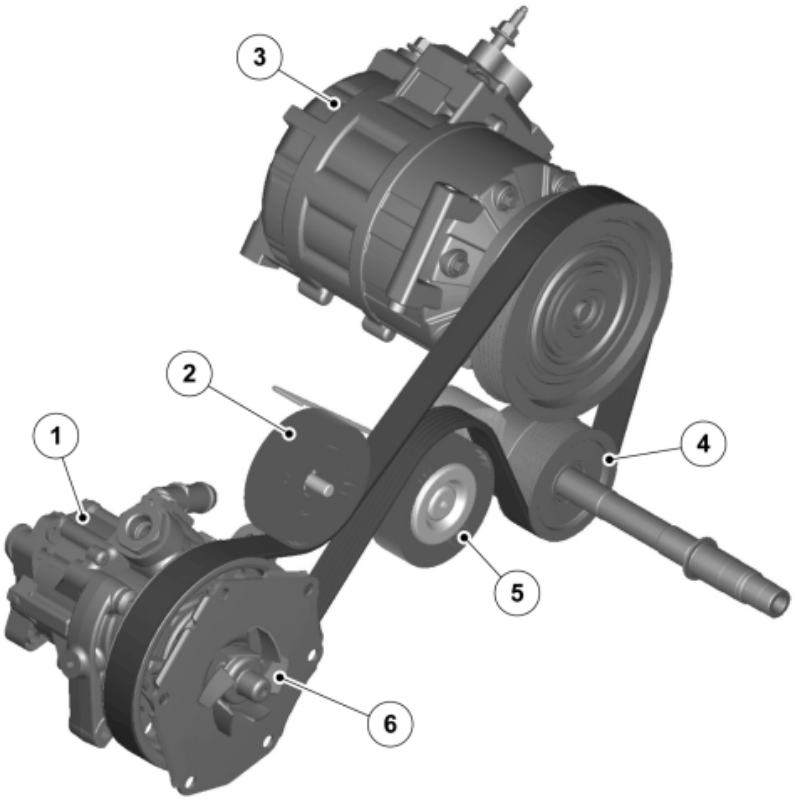

Fig. 147: Auxiliary Unit Drive
Courtesy of VOLVO CARS CORPORATION

Number	Designation	Number	Designation
1	Servo pump (only XC90)	4	Intermediate shaft
2	Guide pulley	5	Belt tensioner
3	Air conditioning (A/C) compressor	6	Coolant Pump

The auxiliary units are located at the upper edge of the cylinder block, above the transmission. They are driven by two systems, a Poly-V-belt driven system and a clutch system. These two systems are driven by the intermediate shaft transmission.

The belt system consists of a 6-ribbed Poly-V belt, an automatic belt tensioner and a guide pulley. This system drives the servo pump and AC compressor. The coolant pump is driven by the servo pump via the clutch system.

TURBOCHARGER (TC)

NOTE: Only applies to turbocharged engines.

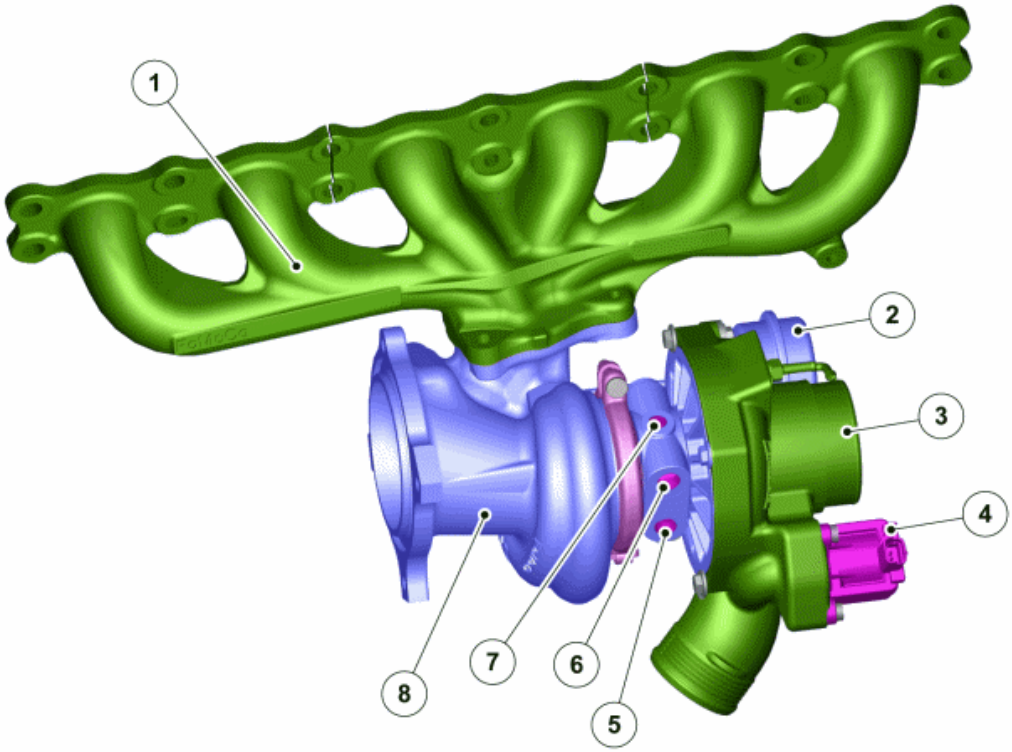

Fig. 148: View of Turbocharger System
Courtesy of VOLVO CARS CORPORATION

The exhaust gases enter via the manifold (1) down to the turbine housing (8) and out to the exhaust system via a downpipe and catalytic converter.

The turbine expels the exhaust gases and rotates the compressor wheel (3). The compressor wheel creates a certain amount of suction using the intake air. This intake air enters the compressor via the air filter and uses a rotational movement to speed up the air, creating the boost pressure. The air then continues into the intake system via the charge air pipe and charge air cooler.

The electronically controlled By-pass valve (4) then controls the boost pressure in the turbocharger by determining the amount of exhaust gases which must pass the turbine. The turbine transfers drive to the compressor. The wastegate valve (2) is a membrane which equalizes the pressure of the intake and exhaust air to eliminate noise.

The turbocharger is lubricated by the engine's oil system (7). The oil system also acts as a supplement to the coolant system (5 and 6).

EXHAUST MANIFOLD / CATALYTIC CONVERTER

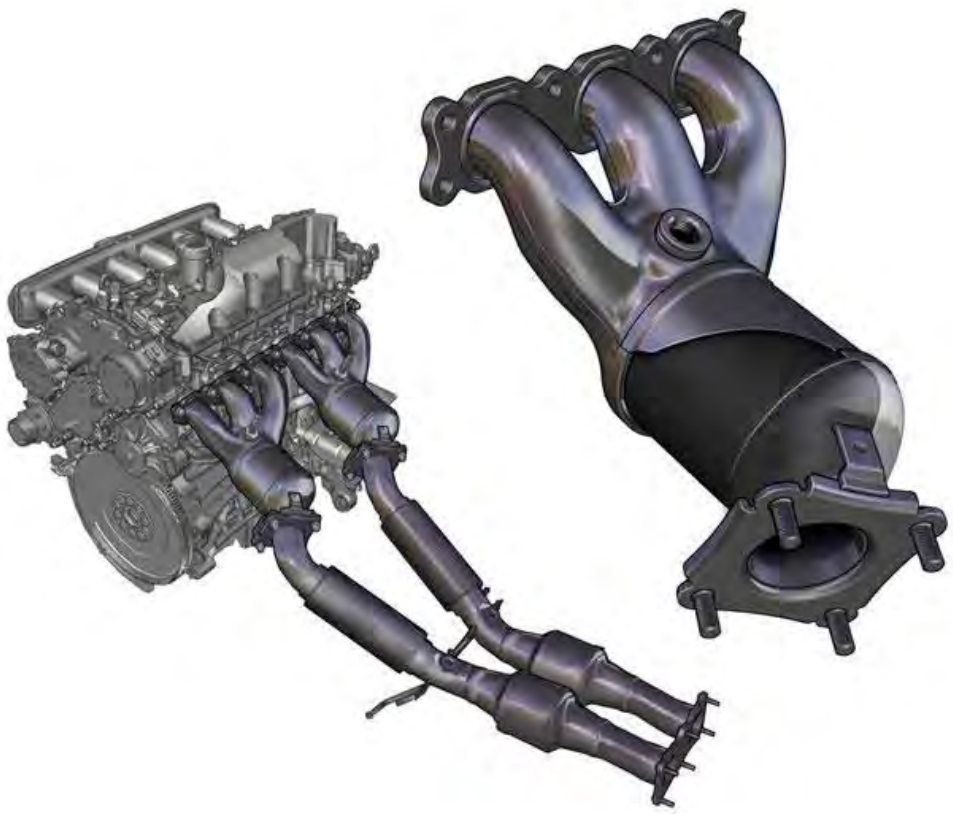

Fig. 149: Identifying Manifold With Catalytic Converter
Courtesy of VOLVO CARS CORPORATION

Exhaust manifold/**CCC** (**C** lose **C** oupled **C** atalyst) and front exhaust pipe/catalytic converter for engine are improved with regards to weight and efficiency. Heat shield plates are modified.

Manifold with catalytic converter

The catalytic converter's cross-section is changed from oval to round, which means better contact pattern of the exhaust flow against the catalytic converter's substrate. This means that the amount of precious metals in the coating on the catalytic converter can be reduced at the same time as the emission standards are fulfilled. In addition to a great cost-saving, reducing the need for precious metals also results in less environmental impact.

The outlet flange is changed from a thickness of 8 mm with threaded holes (x4) to a 4 mm thick plate with press bolts (x4). This gives weight and cost-savings. Gaskets are changed to 1.2 mm flat gaskets.

Downpipe/Catalytic converter

The catalytic converter's inlet flange is also changed from 8 mm to 4 mm thick, which gives a weight and cost-saving. The bellows is more flexible which gives less noise from resonance and vibrations as well as longer service life. Also, the rear catalytic converters have a reduced amount of precious metals in the substrate's coating at the same time as the emission standards still are fulfilled, which gives another big cost-saving.

OVERVIEW

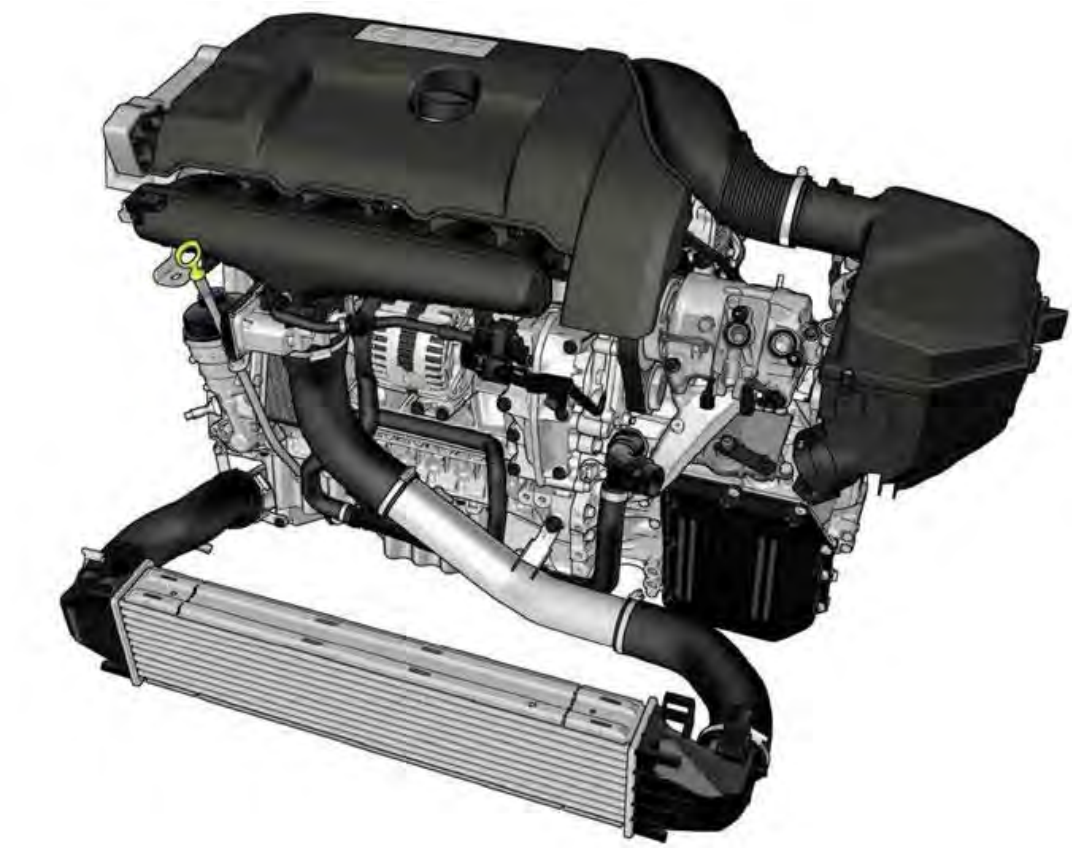

Fig. 150: ENGINE (B6324S5; 2011-2012)
Courtesy of VOLVO CARS CORPORATION

The engine has been developed by Volvo.

It is a 6 cylinder transverse in-line engine with a cylinder capacity of 3.2 L for naturally aspirated engines and 3.0 L for turbocharged engines.

After having been relatively unchanged since the introduction 0620, this engine family has been updated on several points. Most modifications have their basis in an effort to achieve lower fuel consumption and thus less environmental impact.

Engine power has increased, at the same time as fuel consumption has decreased.

- B6304T4: (ULEV2 Ultra Low Emission Vehicle): 300(US)/ 304 hp / 440 Nm
- B6324S4 (PZEV - Partial Zero Emission Vehicle): 230(US) 233 hp (torque unchanged 300 Nm)
- B6324S5 (ULEV - Ultra Low Emission Vehicle): 240(US) /243 hp (torque unchanged 320 Nm)

All of these engines meet the emission standards for Euro5.

The engines' idle speed 650 rpm.

The engine is extremely compact. When it was introduced it was the shortest 6-cylinder engine of 3.2 L on the

market. Conventional straight 6-cylinder engines are too long to fit between the collision members in the engine compartment. The special design of this engine solves the problem.

The engine has an extremely short drive train, its length is only 625 mm from the front edge of the engine block to the rear edge of the carrier plate.

Great attention has been paid to creating a very rigid engine. Middle part, cylinder block and cylinder head have been structurally optimized to combine low weight with high rigidity.

Even the camshaft cover is structurally optimized.

The engine has double overhead camshafts and 24 valves.

Camshafts, AC-compressor, coolant pump and alternator are driven by an auxiliary unit drive, mounted on the back of the engine.

This placement of the auxiliary unit drive enables new possibilities for creating a good collision-protecting structure around the straight 6-cylinder drive unit. In the latest update of the engine family the servo pump has been replaced by an electrically driven pump (EHPAS).

The entire engine block and the cylinder head is made from aluminum.

The engine has a compact "pent-roof" designed combustion chamber and V-arranged valves. This gives optimal and fast filling and direct flushing via the inlet manifold followed by the combustion chamber (cross-flow) and the exhaust channel.

The squish surfaces together with the centrally positioned spark plug provide optimal combustion of the air/fuel mixture, low knock sensitivity and low, stable exhaust emissions.

The engine's firing order is 1 - 5 - 3 - 6 - 2 - 4. The firings occur every 120 degrees that the crankshaft rotates.

ENGINE (B8444S; 2005-2011)

DESIGN

ENGINE BLOCK

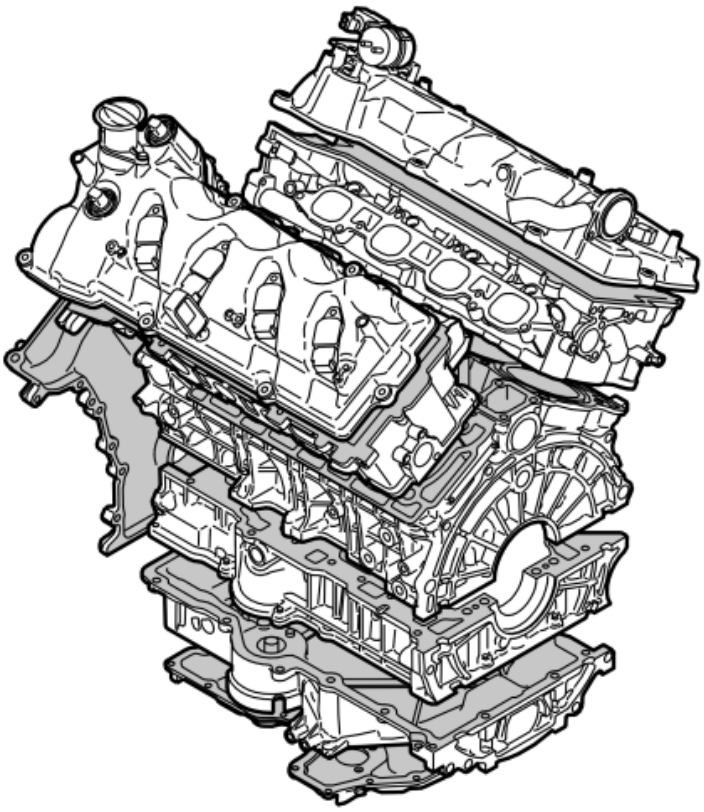

Fig. 151: Engine (B8444S; 2005-2011)
Courtesy of VOLVO CARS CORPORATION

The cylinder heads and valve covers are made of aluminum.

The seal between the cylinder head and cylinder block occurs using two cylinder head gaskets, one for each cylinder head. The cylinder head gasket is made up of three layers of stainless steel. Two outer and a center which act as a seal around the cylinders. The outer surfaces of the gasket are covered by a rubber layer which functions as a seal. The seal between the other planes is made using liquid gasket.

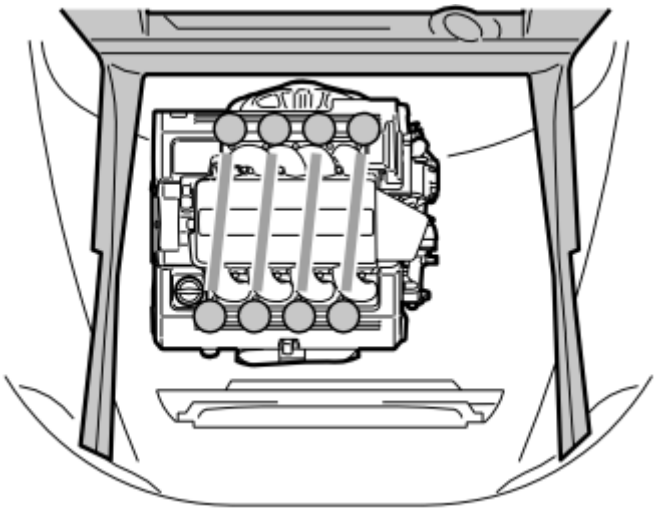

Fig. 152: Identifying Cylinder Bank Offset
Courtesy of VOLVO CARS CORPORATION

The engine has two cylinder banks. The left cylinder bank is slightly offset compared to the right. This allows the use of the vehicle's existing member system and crumple zones.

The engine has double pairs of overhead camshafts - one intake camshaft and one exhaust camshaft in each cylinder head. The camshafts are chain-driven.

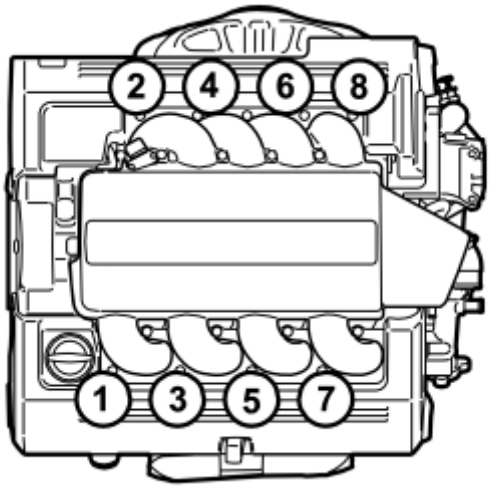

Fig. 153: Identifying Cylinder Number
Courtesy of VOLVO CARS CORPORATION

The cylinders are numbered in the order in which they are installed on the crankshaft when seen from the front (from the camshaft's timing gear).

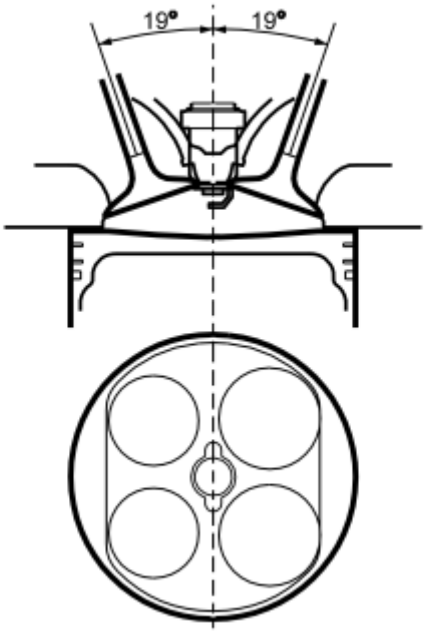

Fig. 154: View of Four Valves Per Cylinder
Courtesy of VOLVO CARS CORPORATION

The engine has four valves per cylinder. The valves are angled at 19 degrees. The valve diameter of the intake valves is 35 mm and the exhaust valve's is 30 mm. The valves are stellite coated. The valve stem diameter for both inlet and exhaust is 5.5 mm.

The combustion chamber is the "Pent roof" type. Together with the V arranged valves this gives optimal and fast filling and direct flushing via the intake channel followed by the combustion chamber (cross-flow) and exhaust channel.

The squish surfaces together with the centrally positioned spark plug provide optimal combustion of the air/fuel mixture, low knock sensitivity and low, stable exhaust emissions.

CYLINDER HEAD

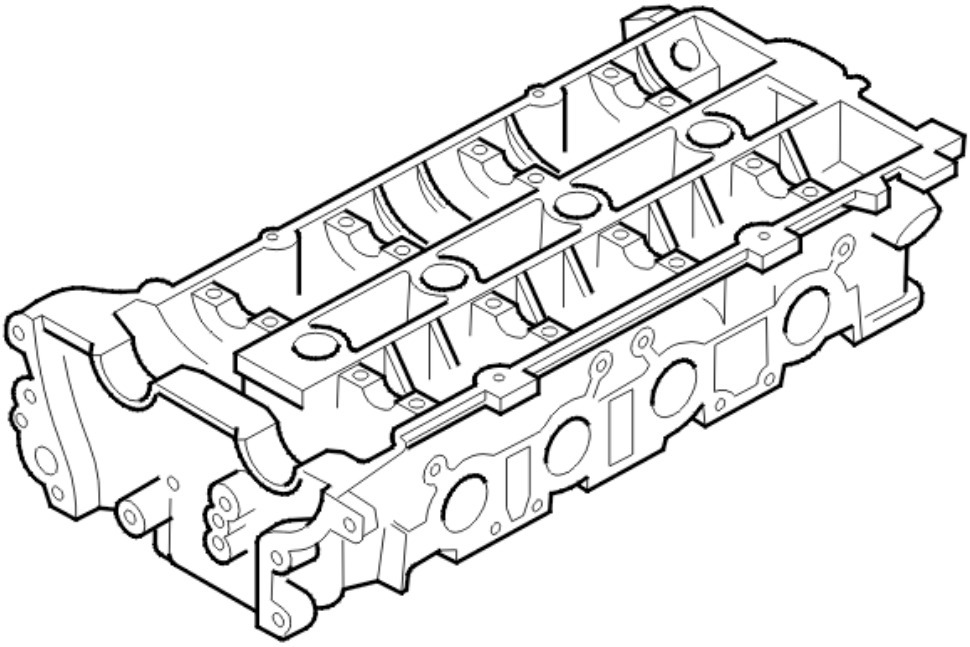

Fig. 155: Identifying Cylinder Head
Courtesy of VOLVO CARS CORPORATION

The engine's two cylinder heads are in principle mirror images of each other. The cast oil galleries in the cylinder head ensures good oil supply to the camshafts and the mechanical valve lifters.

CYLINDER BLOCK

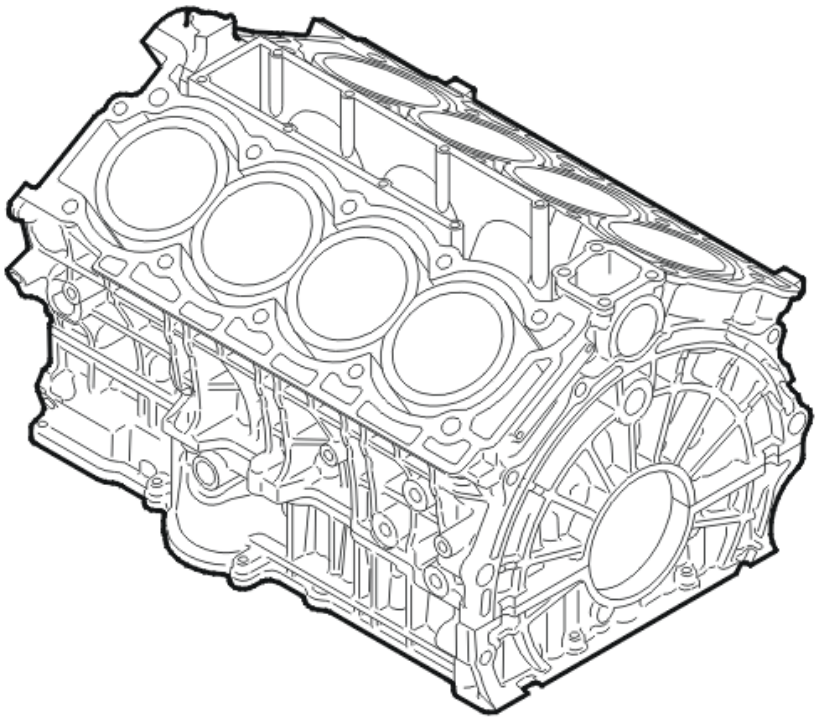

Fig. 156: Identifying Cylinder Block
Courtesy of VOLVO CARS CORPORATION

The cylinder block is made of cast aluminum. It has a stiff rib structure for better rigidity and thereby better sound and vibration properties.

The cylinder block has eight cast-iron cylinder liners molded into the cylinder block. They cannot be replaced.

The coolant jacket goes halfway down the cylinders to ensure quicker heating and thereby reduce hydrocarbon emissions. Certain sections of the coolant jacket are deeper to reduce the risk of the cylinder deformation.

INTERMEDIATE SECTION

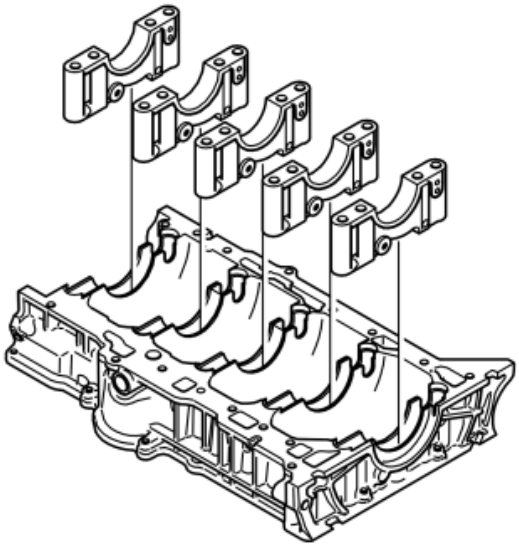

Fig. 157: Identifying Intermediate Section
Courtesy of VOLVO CARS CORPORATION

The intermediate section is made of aluminum. The crankshaft bearing caps are integrated in the intermediate section. The bearing caps are made of cast iron. The caps are fixed with four screws per cap.

OIL SUMP

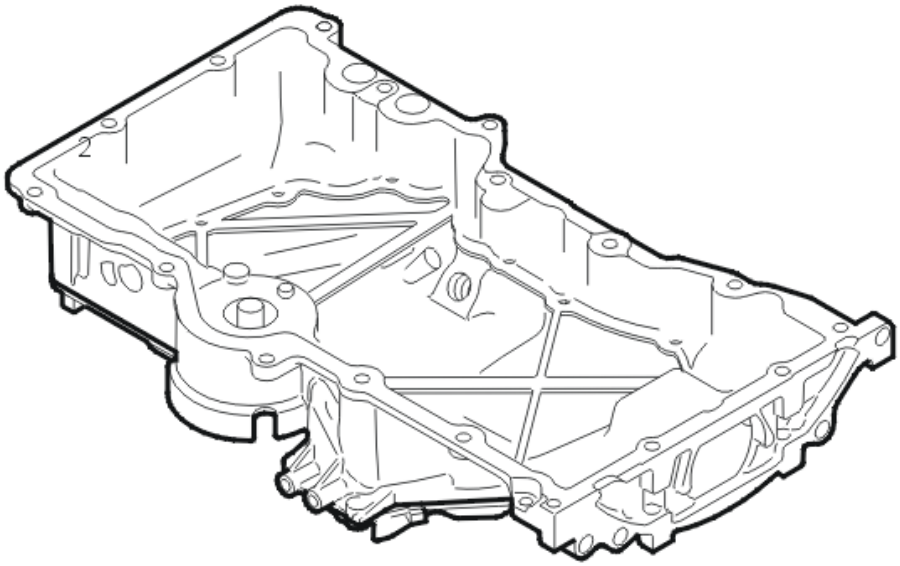

Fig. 158: Identifying Oil Pan
Courtesy of VOLVO CARS CORPORATION

The oil pan is made of pressed aluminum. It has baffles to prevent the oil moving too much. Because of the exterior dimensions of the engine, the oil pan has a unique shape in order to hold the necessary oil volume. The oil pan is made in two parts for manufacturing reasons.

An electric oil level sensor is located in the pan. There is also a normal oil dipstick for manual checks of the oil volume.

PISTONS AND CONNECTING RODS

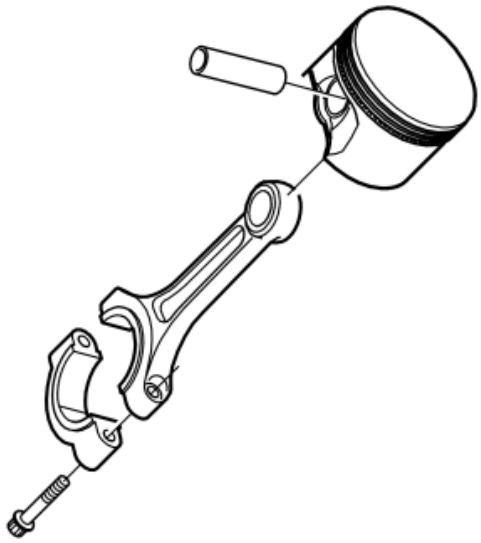

Fig. 159: Identifying Piston And Connecting Rod
Courtesy of VOLVO CARS CORPORATION

The pistons are cast and are made of a light metal alloy. The piston mantle is coated with graphite. The first groove is hard anodized to minimize wear.

The piston is equipped with two compression rings and a three piece oil ring.

The connecting rods are forged. The contact surface between the bearing cap and the connecting rod is treated. Guide pins contribute to good alignment. The connecting rod bearings are aluminum bearings. The bearings are lead free.

The piston transfers the compressive force of the ignited fuel/air mixture to the crankshaft via the connecting rod. The piston rings form a seal so that the fuel/air mixture does not force its way down past the piston. The top ring ensures a seal between the piston and the cylinder. The second ring also seals and scrapes away any oil during the downward movement of the piston. The third ring makes sure the oil drains via the drain hole.

The pistons are oil-cooled. This is necessitated by the short distance between the piston head and the top piston ring.

CRANKSHAFT AND BALANCER SHAFT

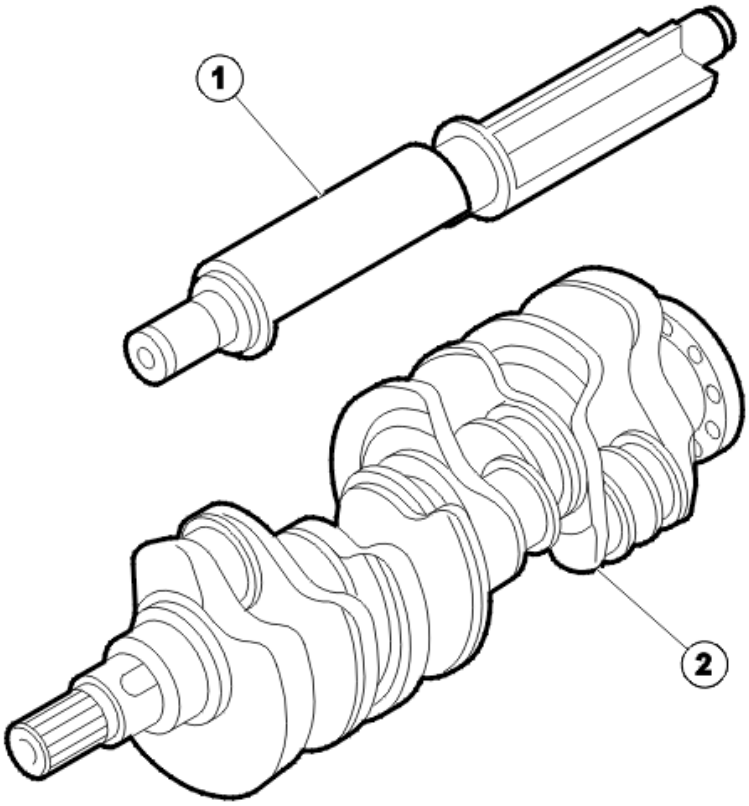

Fig. 160: Identifying Crank and Balancer Shafts
Courtesy of VOLVO CARS CORPORATION

1. Balancer shaft
2. Crankshaft

The crankshaft is made of carbon steel with a nitride hardened surface. The crankshaft bearings have separate caps, the intermediate section of the cylinder block makes up the lower half of the bearing. The crankshaft has five main bearings where the third also acts as an axial bearing. The main bearings are aluminum bearings.

The crankshaft has offset pins. Two connecting rods are mounted on each crankshaft pin with an internal offset of 30°.

Big-end bearings and axial bearings are lead-free.

Two splined joints are located at the front end of the crankshaft, the inner one drives the oil pump. The timing chain gear is located on the outer joint.

The crankshaft has a three part vibration damper consisting of a hub and two active masses. The hub is located between the inner and outer masses. The crankshaft vibration damper drives the auxiliary belt.

The 60 degree angle between the two cylinder banks means that the engine is equipped with a balancer shaft.

This is to give the vibration characteristic which corresponds to a 90 degree V8. The balancer shaft is located in the center of the engine, above the crankshaft. The balancer shaft rotates in the opposite direction to the crankshaft. It is driven by the crankshaft using the same chain that drives the intake camshafts. The balancer shaft rotates at the same speed as the crankshaft.

The balancer shaft is made of spherolitic cast iron (nodular iron).

CAMSHAFTS AND VALVE SYSTEM

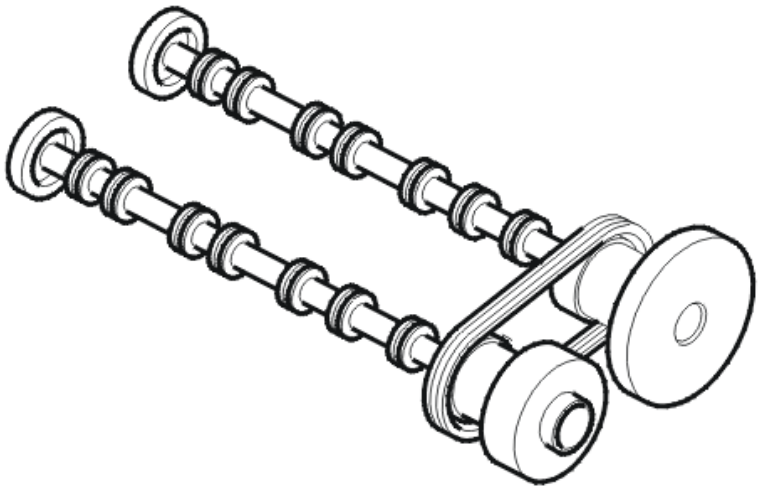

Fig. 161: Identifying Camshafts
Courtesy of VOLVO CARS CORPORATION

The engine has double pairs of overhead camshafts, one intake camshaft and one exhaust camshaft in each cylinder bank. The intake camshafts are located in the middle of the engine while the exhaust camshafts are placed on the outside.

The camshafts are made of cast iron. They are hollow to keep the weight down. Each camshaft pair is mounted in its respective cylinder head with five loose bearing caps per camshaft.

The camshafts work directly on the valve stem via the valve lifters. There is a certain amount of play (valve play) between the valve depressors and the cam lobes. Valve play is adjusted to make up for the longitudinal differences between the valve and cylinder head that occur upon warm-up. The valve depressors are solid and made of steel.

Each camshaft has a CVVT unit. The reset angle is 40.5 crankshaft degrees for the intake camshafts and 42.5 crankshaft degrees for exhaust camshafts.

- Intake camshafts open -8° to 32, 5° before top dead center (BTDC) and close 60° to 19.5° after the bottom dead center.
- Exhaust camshafts open 62° to 19.5° before bottom dead center and close -10° to 32.5° after the top dead center (TDC).

CAMSHAFT CHAIN DRIVE

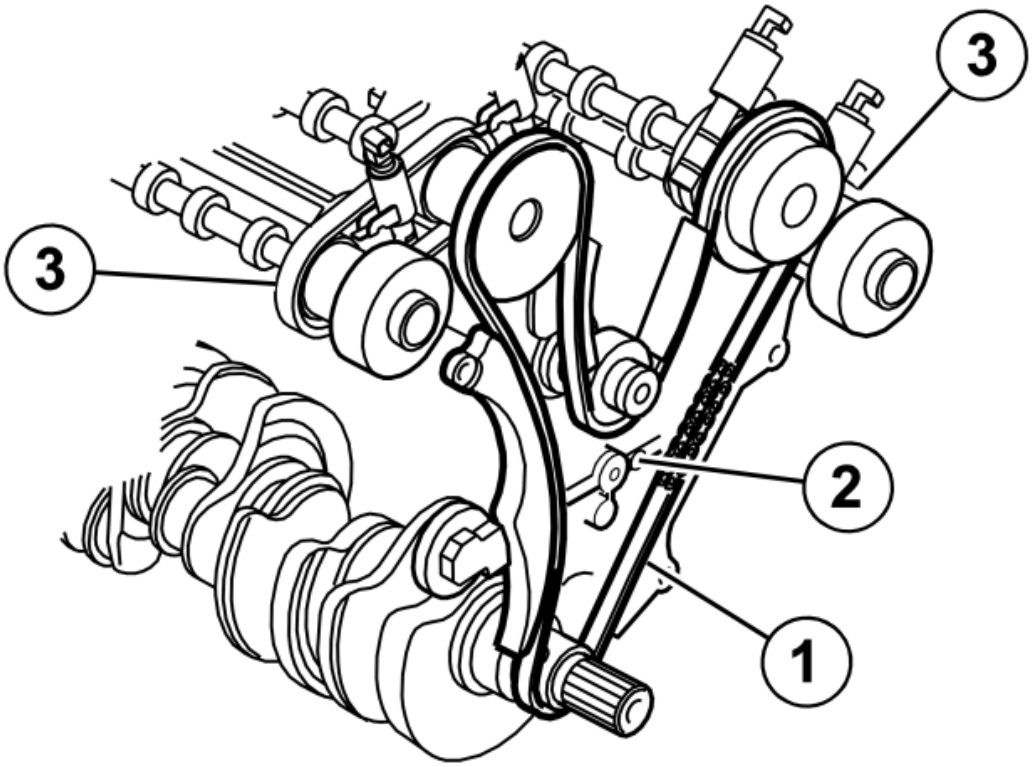

Fig. 162: Identifying Camshaft Chain Drive
Courtesy of VOLVO CARS CORPORATION

The crankshaft drives the intake camshafts and the balancer shaft using a camshaft chain (1). The camshaft is tensioned by a hydraulic chain tensioner. The tensioner is supplied with oil from the normal lubrication system. The camshaft chain is lubricated with oil via a separate nozzle (2).

The intake camshafts in turn drive the respective exhaust camshafts via their chain (3). This intermediate drive means that the outer exhaust camshafts can have smaller pulley wheels which reduces the size of the engine. The intermediate drive chains each have their own hydraulic tensioner. The tensioner is supplied with oil from the normal lubrication system.

A cover seals the area for the camshaft chain drive.

The system requires no maintenance during the entire life of the engine. Both the chain guide and the chain tensioner have plastic inserts on the treads for quiet operation.

LUBRICATION SYSTEM

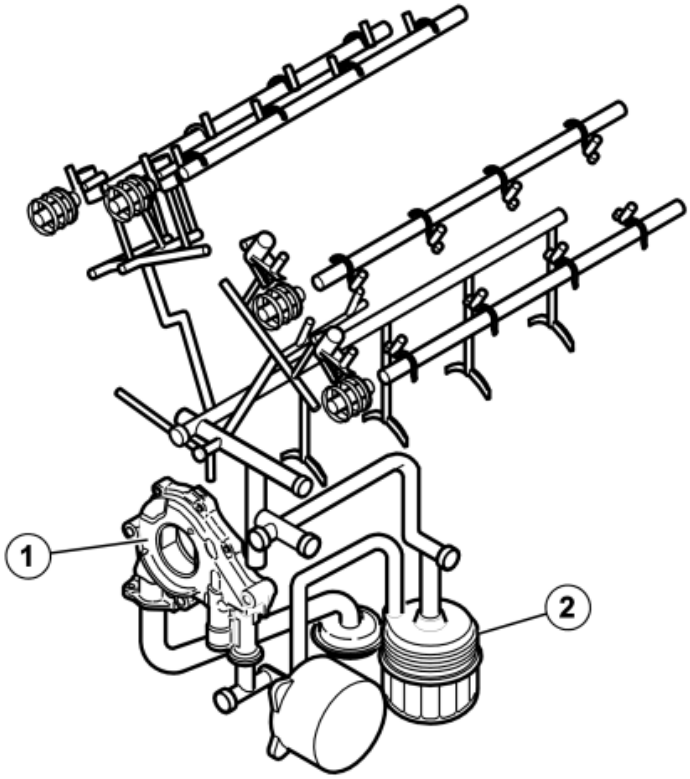

Fig. 163: View of Lubrication System
Courtesy of VOLVO CARS CORPORATION

The lubrication system has a large supply line with a strainer which prevents large contaminants from reaching the oil pump.

The oil pump (1) is driven by the crankshaft. The oil pump is a rotor pump with integrated pressure control valve. The valve opens at approximately 5.0 bar and prevents excessively high pressure which could damage the oil cooler.

The oil cooler is a flat oil cooler. The space for oil and coolant is divided alternately between the plates.

The oil filter (2) is a loose filter element placed in a housing. The overflow valve for a blocked filter is in the cover.

FUEL SYSTEM

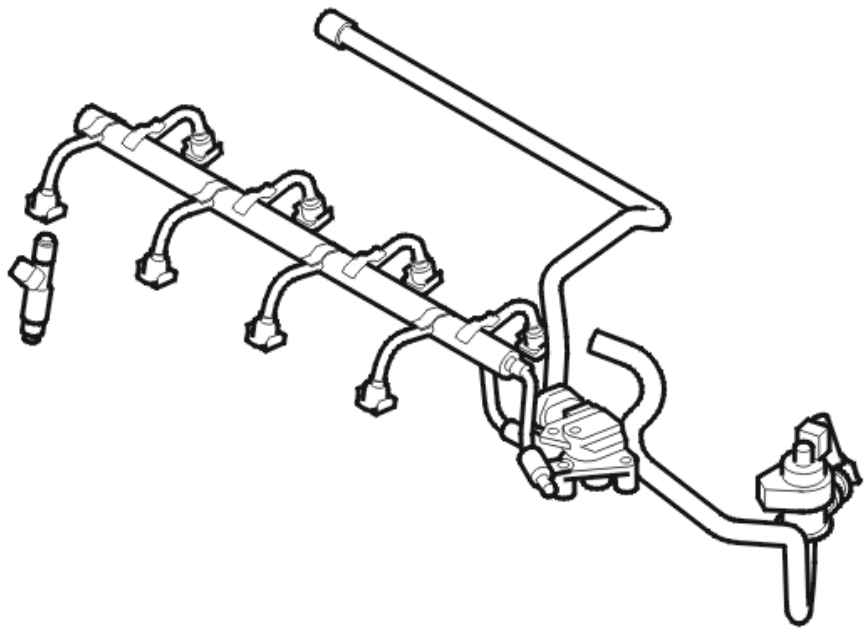

Fig. 164: Identifying Fuel Injection System
Courtesy of VOLVO CARS CORPORATION

A specially designed fuel system is used to reduce the height of the engine.

The fuel system is made of stainless steel to ensure reliability. The fuel hose is made of nylon to reduce the weight of the engine.

INTAKE SYSTEM

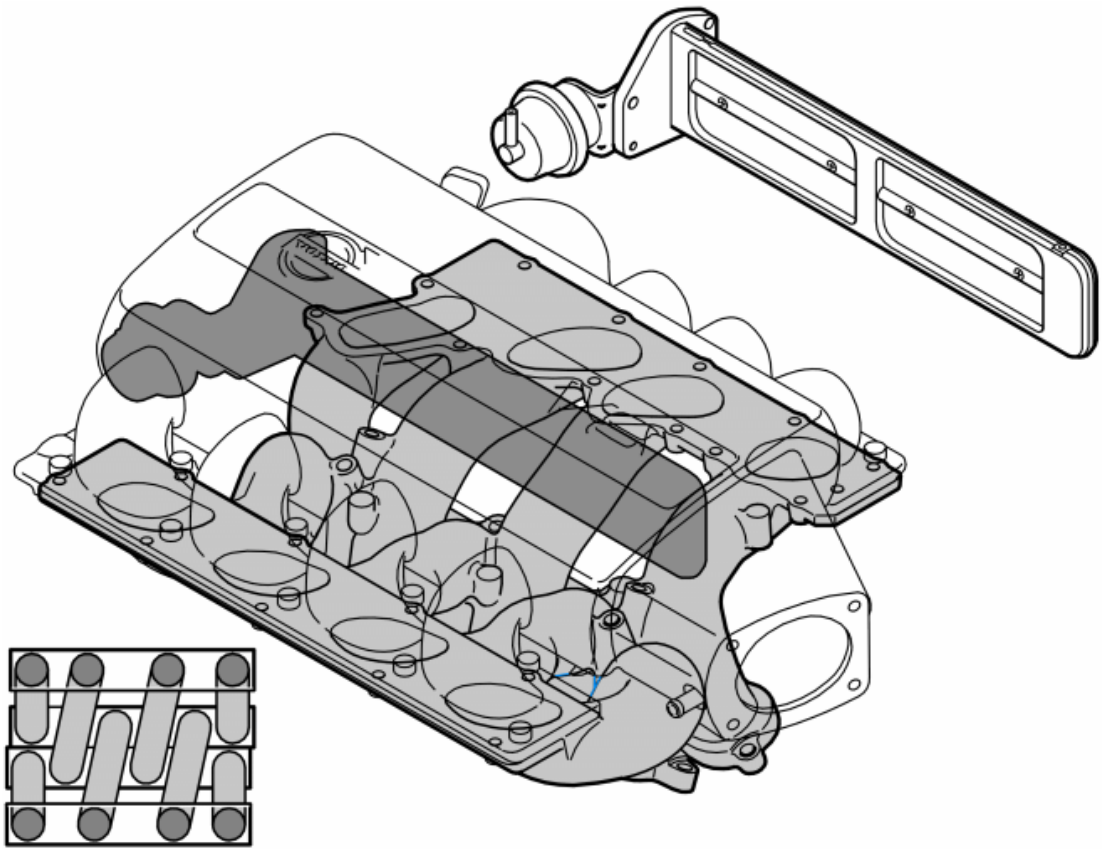

Fig. 165: View of Two Mode Induction System
Courtesy of VOLVO CARS CORPORATION

An induction system with two modes is used to increase torque at low engine speed. Both the intake manifold and the equalizer tank are made of aluminum.

A moveable damper is located in the common area of the intake pipe. The damper separates the area lengthways into two chambers. The damper is controlled from completely closed to completely open, with no intermediate position. Up to an engine speed of 3200 rpm the damper is closed and the damper is open at higher engine speeds.

By dividing the area into two separate chambers, the area functions as two secondary intake pipes. The primary pipes are the cast pipes which lead to the inlet valves of the respective cylinder's intake valves from the collection volume. A closed damper provides secondary pipes while an open damper gives short secondary pipes.

Engine speeds up to 3200 rpm

The combined length and volume of the pipes is tuned to the piston movement and the valve opening times. The result is that the air pulses in time with the valve opening times. this means that the air is pumped into the cylinders when the inlet valves are open. The system gives a high a volumetric efficiency, that is, fills the cylinders and therefore produces a high torque.

In order not to disturb the pulse frequency the left chamber supplies 1, 4, 6 and 7 while the right chamber

supplies cylinders 8, 3, 5 and 2, this is to interact with the firing order 1-8-4-3-6-5-7-2.

Engine speed (RPM) greater than 3200 rpm

At engine speeds greater than 3200 rpm the throttle opens. At these speeds the character of the pulses change character at the same time as a greater volume is required to supply the cylinders with air. The whole area/volume now supplies all cylinders. The common volume and the shape of the pipes is designed to exploit the pulses which occur in this engine speed (rpm) range.

If the damper does not open at 3200 rpm there is marked deterioration in performance from 3200 rpm up to 5000 rpm.

THROTTLE BODY

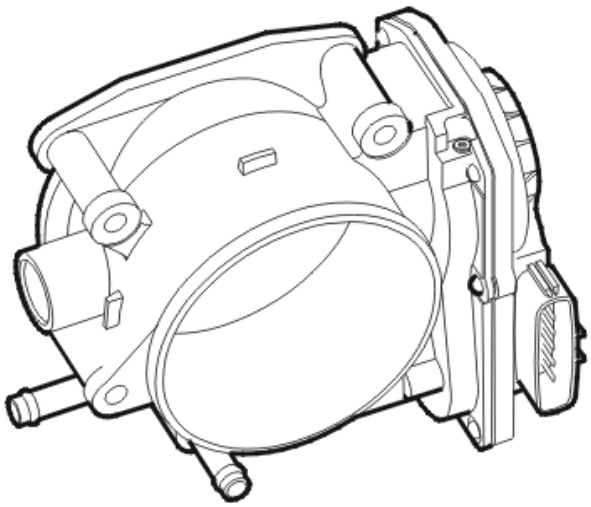

Fig. 166: Identifying Throttle Body
Courtesy of VOLVO CARS CORPORATION

The throttle body is made of cast aluminum. The position sensor, which is located under the plastic cover, reads the position of the throttle disc and two engine connections that turn the throttle disc. The throttle disc position is determined by how much the driver depresses the accelerator pedal. The throttle body is warmed via engine coolant.

COOLING SYSTEM

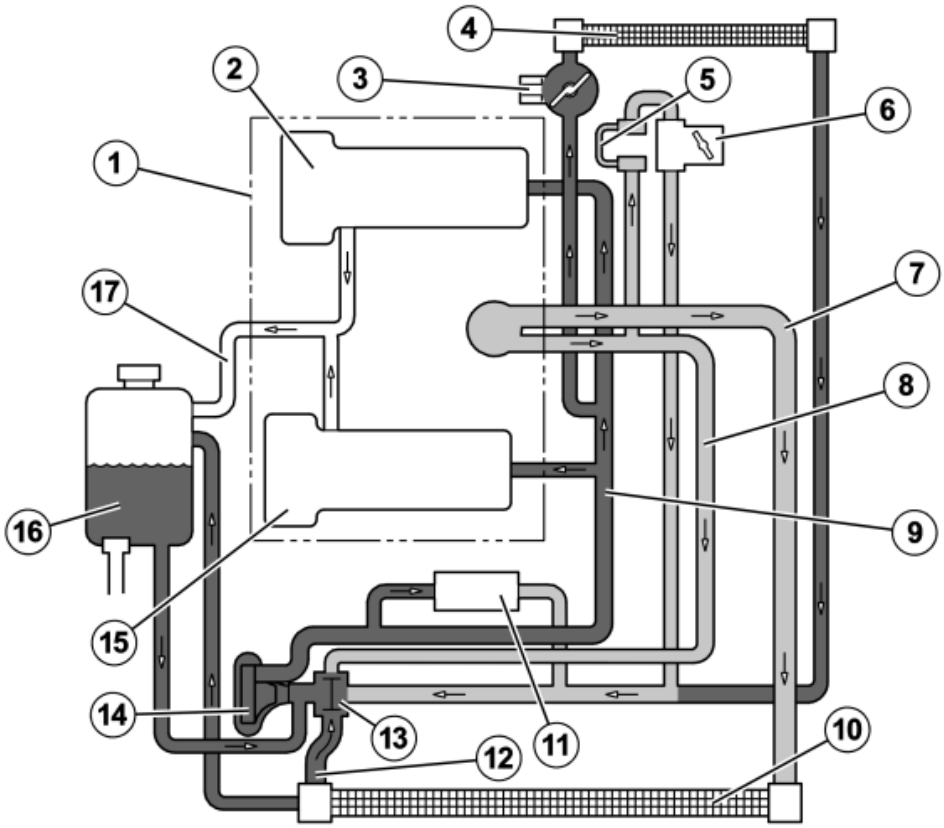

Fig. 167: Schematic of Cooling System
Courtesy of VOLVO CARS CORPORATION

1. Cylinder block
2. Right cylinder head
3. Electric coolant pump
4. Heat exchanger (passenger compartment)
5. Preheating crankcase ventilation
6. Throttle body
7. Upper cooling hose
8. Bypass pipe
9. To cylinder head
10. Radiator
11. Oil cooler
12. Lower cooling hose
13. Thermostat housing
14. Coolant pump
15. Left cylinder head
16. Expansion tank with level sensor
17. Air bleed circuit

The engine is cooled used reversed cooling, that is, the cylinder head is cooled first. The system gives fast heating and contributes to reducing emissions.

The radiator is made of aluminum to withstand thermal fatigue as the radiator is alternately cooled with cold air and heated with hot coolant. The cooling system is regulated by a mechanical thermostat, which is located in the thermostat housing. The thermostat housing, in turn, is located on the inlet side of the coolant pump, between the radiator and the coolant pump.

The heart of the thermostat is a wax body which expands when energy, in the form of heat, is applied. A jiggle pin is located in the thermostat. Any air in the cooling system can be evacuated from the system using the jiggle pin.

Cold air is sucked through the cooler using an electric engine cooling fan installed on the fan shroud behind the radiator. The engine cooling fan is brushless and has six fixed stages. It is controlled by the engine control module (ECM).

Oil cooler

The oil cooler is round and has an inlet and outlet for oil as well as for coolant. The oil cooler is structured in layers, with alternating layers of coolant and oil flow. Because the oil cooler has very small slits, there is a large pressure drop here.

AUXILIARIES BELT

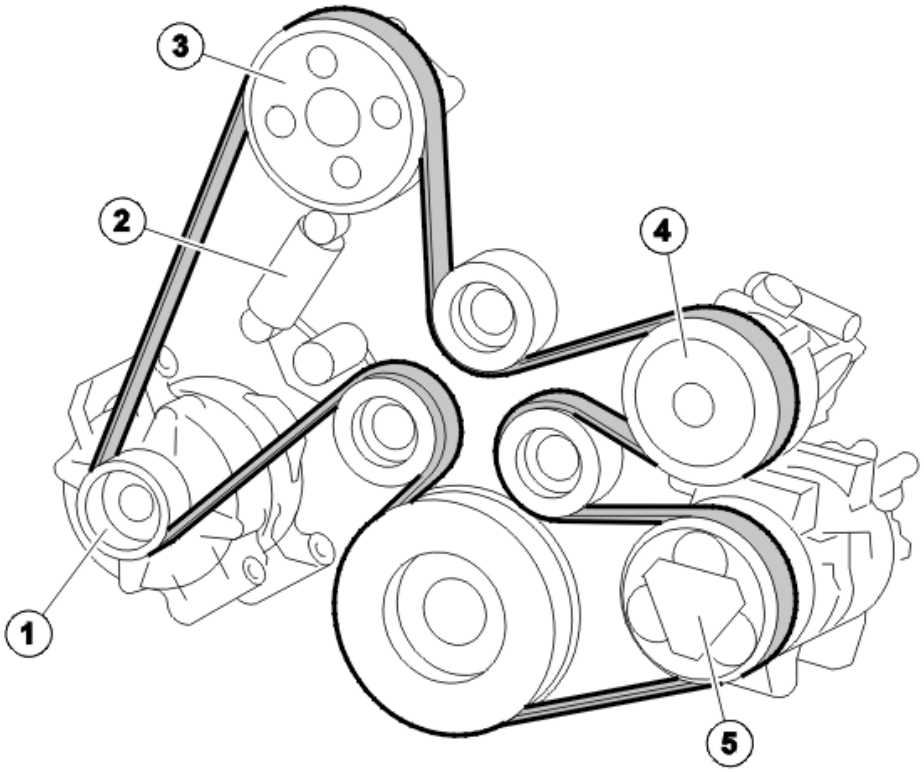

Fig. 168: Auxiliaries Belt Routing
Courtesy of VOLVO CARS CORPORATION

1. Generator (GEN)
2. Belt tensioner
3. Servo pump
4. Water pump
5. air conditioning (A/C) compressor.

All auxiliary units, the alternator, servo pump and A/C compressor are directly mounted in the engine block. They are driven by the vibration damper via an auxiliaries belt. This solution gives a compact design.

The coolant pump is also driven by the auxiliaries belt.

The auxiliaries belt has a mechanical belt tensioner.

EXHAUST SYSTEM

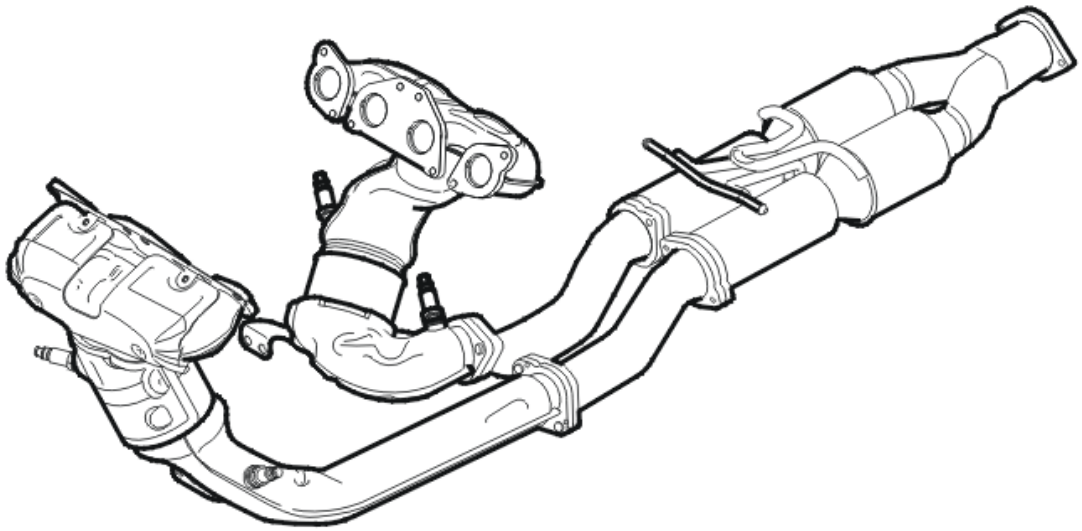

Fig. 169: Identifying Exhaust System
Courtesy of VOLVO CARS CORPORATION

HINT: The illustration displays the exhaust system for the XC90.

The exhaust system is made of double-layer sheeting to keep the temperature down. The inner sheet is 1.0 mm thick while the outer is 1.5 mm thick. There is 4-8 mm of space between the sheets.

An exhaust system extends from each cylinder bank. Each side consists of a manifold with close-coupled catalytic converter, pipes, bellows and a rear catalytic converter. Both sides join to form a common pipe after the rear catalytic converter.

The pipes are designed in such a way that the gas flow from the cylinders is not disruptive and there is good flow distribution to the catalytic converters. Bellows in front of the two rear catalytic converters absorb engine movements and compensate for manufacturing and assembly tolerances.

A catalytic converter consists of perforated stones of ceramic or metal (known as substrate). These are coated with a surface enlarger (washcoat) on which the precious metals platinum, palladium and rhodium, the catalysts, are applied.

The catalytic converter has an extra heat shield toward the radiator fan to reduce the temperature.

Four oxygen sensors are used to regulate the engine and monitor the catalytic converter. There is an oxygen sensor upstream and downstream of each close-coupled catalytic converter.

The two banks are almost exactly the same length to ensure good sound. The exhaust system provides the engine's characteristic V8 sound.

FUNCTION

CRANKSHAFT MOVEMENT

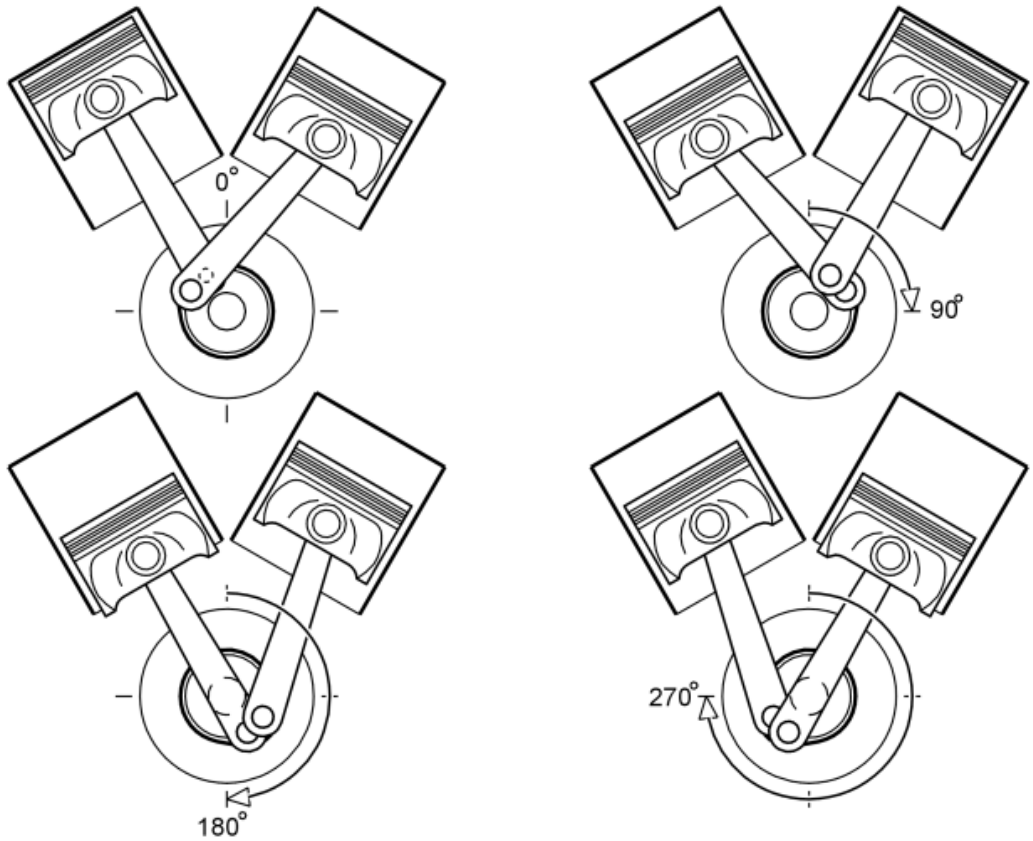

Fig. 170: View Of Crankshaft Relationships
Courtesy of VOLVO CARS CORPORATION

To achieve an even running and characteristic V8 sound, the ignition impulse interval is 90 crankshaft degrees. To reach this in an engine with a 60 degree angle between the cylinder banks, the crankshaft pins for the opposing cylinder pairs are offset by 30 degrees.

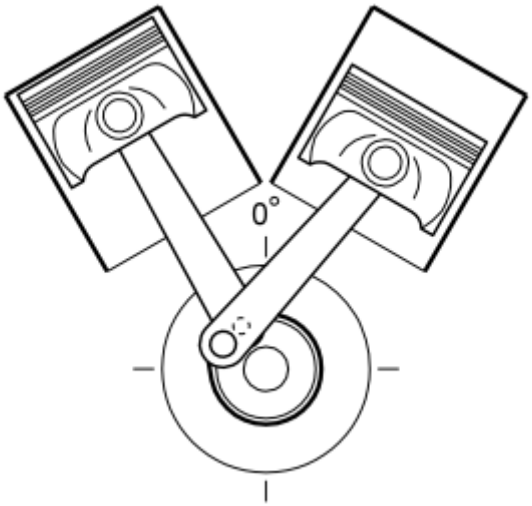

Fig. 171: Identifying Crankshaft Pins Offset By 30 Degrees.
Courtesy of VOLVO CARS CORPORATION

When the left hand piston is at the top, the right hand piston is halfway between the upper and lower turn points. This is because the crankshaft pins are internally offset by 30 degrees.

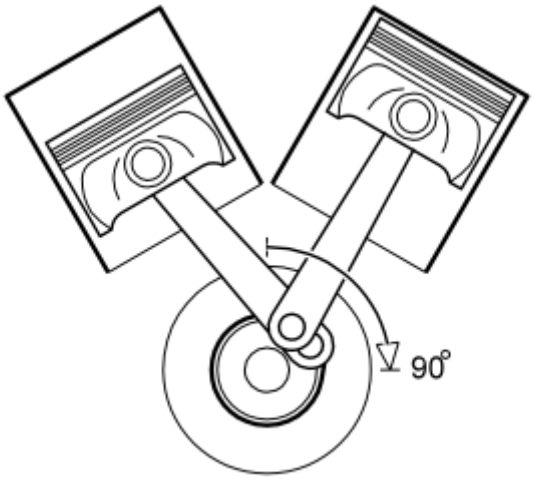

Fig. 172: Crankshaft Rotated 90 Degrees
Courtesy of VOLVO CARS CORPORATION

When the crankshaft has rotated 90 degrees the right hand piston is at the top and the left hand piston is halfway between the upper and lower turning points.

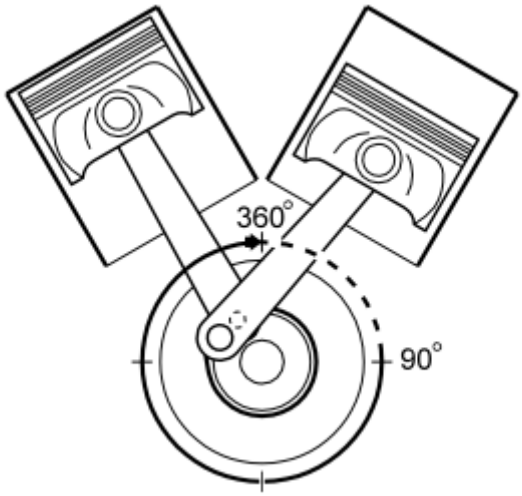

Fig. 173: Ignition Impulses Occur Every 90° Crankshaft Rotation
Courtesy of VOLVO CARS CORPORATION

When the crankshaft has rotated a further 270 degrees the left hand piston is at the top and the right hand piston is halfway between the upper and lower turning points.

By offsetting the crankshaft pins by 30 degrees in this way the ignition impulses will occur every 90th crankshaft degree.

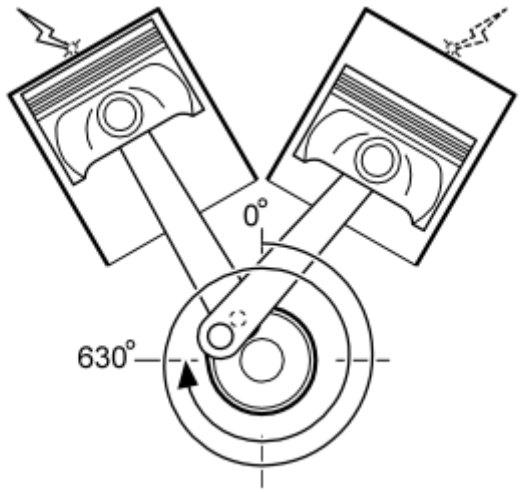

Fig. 174: Identifying Ignition Impulses
Courtesy of VOLVO CARS CORPORATION

The Example shows the principle for cylinder 1 and 2. With the firing order 1-8-4-3-6-5-7-2 the following occurs:

- Cylinder 1 fires.
- The crankshaft then rotates 360°+270°=630° until cylinder 2 fires.
- The next ignition impulse, now again for cylinder 1, occurs when the crankshaft has rotated a further 90 degrees.

LUBRICATION SYSTEM

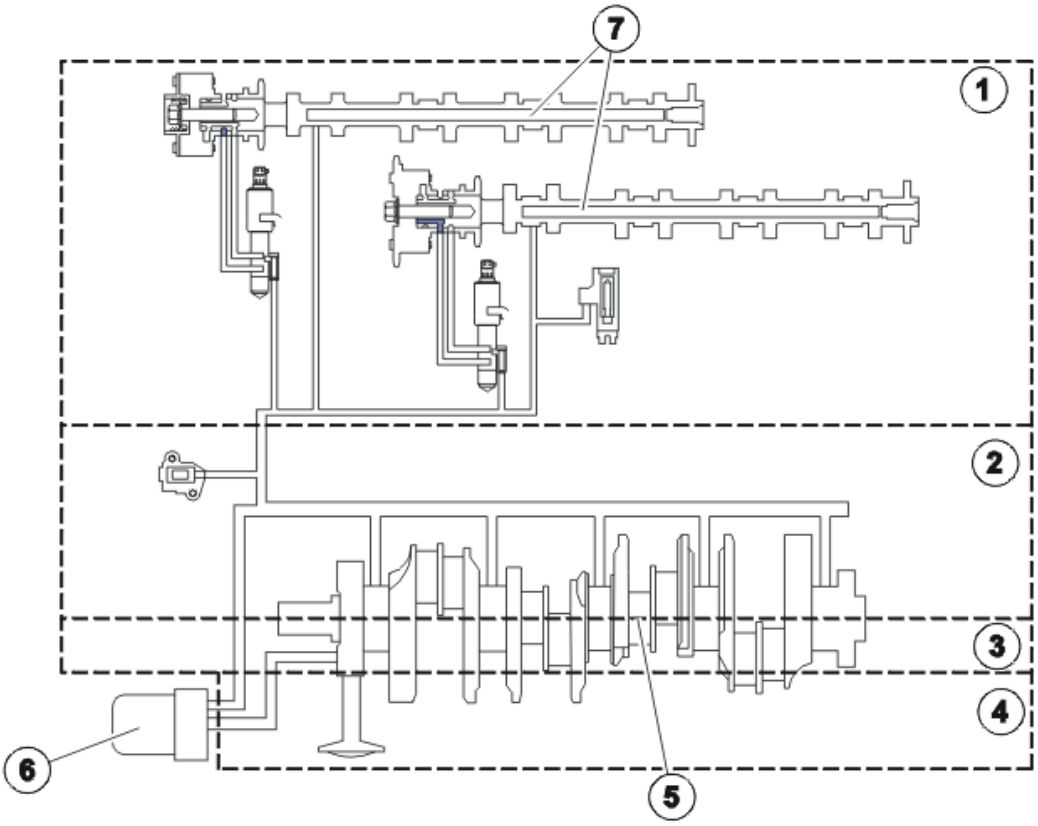

Fig. 175: Identifying Lubrication System
Courtesy of VOLVO CARS CORPORATION

1. Cylinder head
2. Cylinder block
3. Intermediate section
4. Oil sump
5. Crankshaft
6. Oil filter
7. Camshafts

Oil is led from the oil sump via a suction nozzle to the oil pump, which is located on the crankshaft. The oil pump suction function is facilitated by a purge valve that eliminates any air from the system.

The oil is pumped on to the oil cooler system and then on to the oil filter. The oil is led from the filter through a cast oil duct in the intermediate section to the main bearings. The oil is distributed to the big-end bearings via drilled channels in the crankshaft.

The camshafts receive their oil supply via drilled channels in the cylinder block. The channels continue up through the cylinder heads where they open out on the underside of the lower half of the cylinder head. There is a cross channel in the channels to the cylinder heads which leads oil to the pistons. From here the oil is moved further via the oil channels to the intake camshaft bearings and valve lifters.

The exhaust camshaft bearings are supplied via two cast cross channels at the front of the upper halves. The oil is led via drains in the block from the cylinder heads and from the crankshaft bearings back to the oil pan.

CRANKCASE VENTILATION

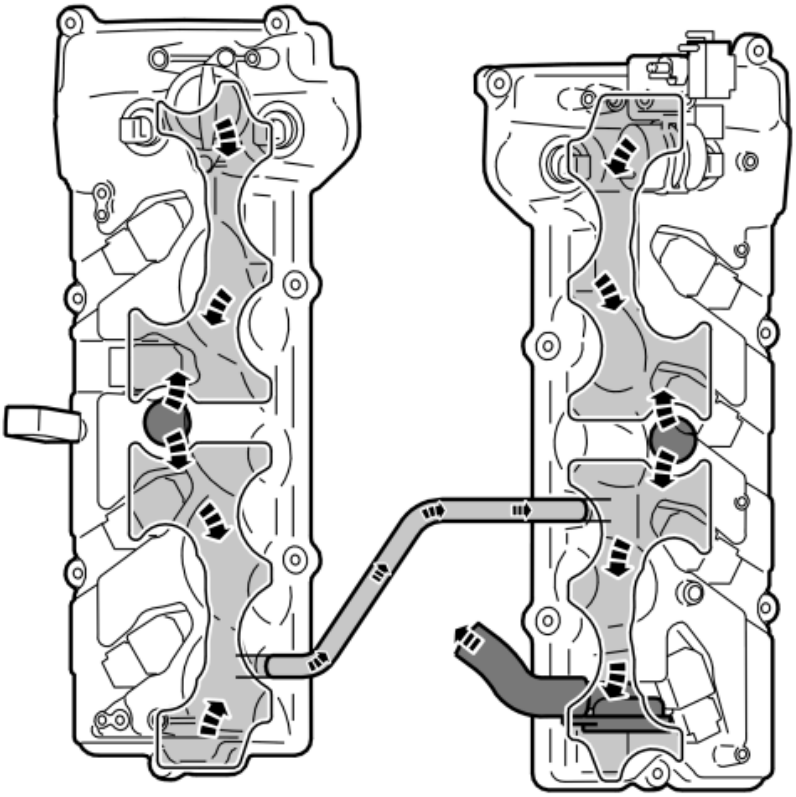

Fig. 176: Identifying Crankcase Ventilation
Courtesy of VOLVO CARS CORPORATION

The system is pressure controlled and completely enclosed.

Crankcase gases flow up to both the valve covers. There is a hose connecting the valve covers. A labyrinth system of plates is installed in the valve covers. The oil in the gases condenses on the plates and drains back to the oil pan.

The ventilation is pressure controlled to retain stable pressure in the crankcase. A pressure regulator is installed on the rear edge of the right valve cover. The gases which are evacuated are led from the regulator through a hose to a connection on the inlet pipe. Coolant is circulated around the connection to prevent freezing.

The pressure in the crankcase is approximately - 0.03 bar.

COOLING SYSTEM

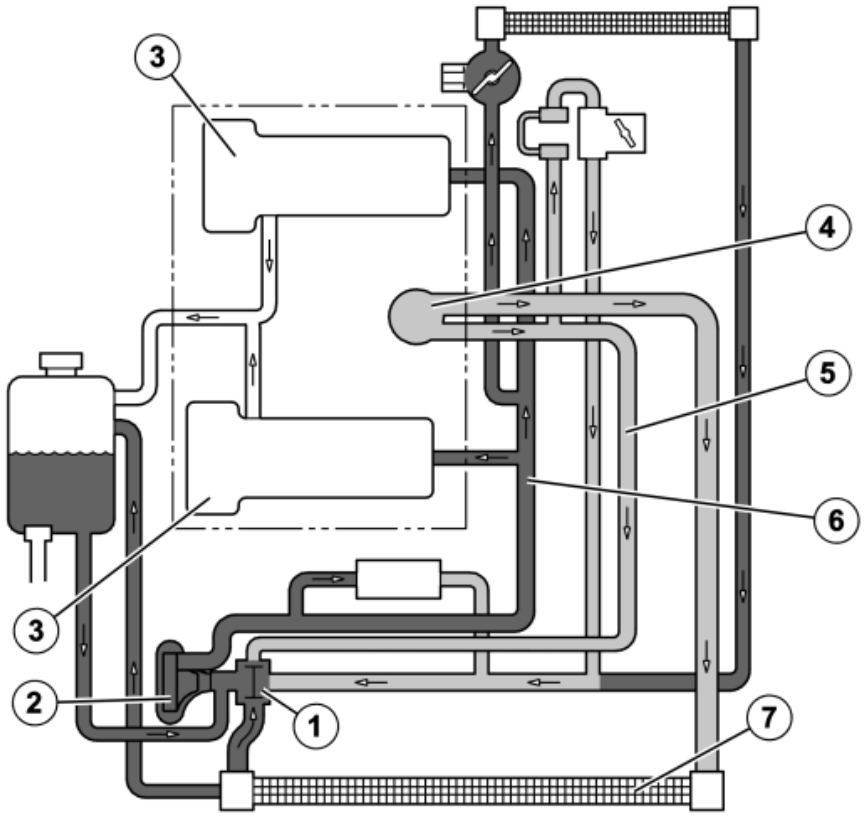

Fig. 177: Diagram Of Cooling System
Courtesy of VOLVO CARS CORPORATION

The combustion of fuel in the vehicle engine produces both mechanical motion and excess energy. The excess energy takes the form of heat that is led away from the engine via:

- exhaust gases
- convection to the air in the engine compartment
- transfer to the coolant in the cooling system
- the engine oil.

The thermostat (1) regulates the amount of coolant to the engine. The wax body in the thermostat expands when subjected to heat.

The coolant is pumped by the coolant pump (2) to the inlets (6) for the cylinder heads (3). The coolant flows forward through the relevant cylinder head and on through the cylinder banks back to the common outlet (4). After passing the engine the coolant flows by:

- Closed thermostat through the bypass pipe (5) back to the coolant pump without cooling off.
- Open thermostat through the radiator (7) to the coolant pump. The coolant also flows through the bypass pipe back to the coolant pump.

EXHAUST SYSTEM

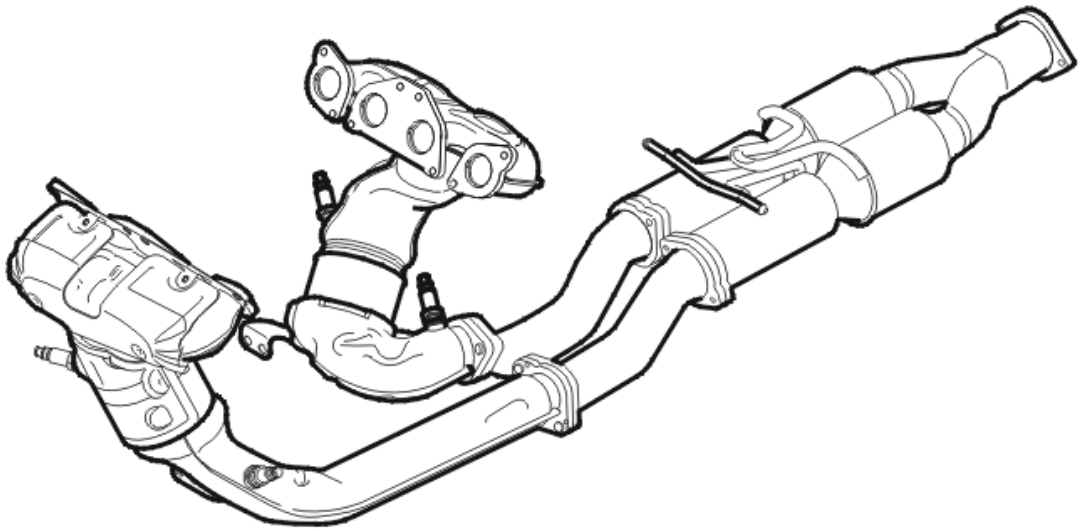

Fig. 178: Identifying Exhaust System
Courtesy of VOLVO CARS CORPORATION

HINT: The illustration displays the exhaust system for the XC90.

The three-way catalytic converters clean by oxidizing carbon monoxide (CO) and hydrocarbons (HC) to water and carbon dioxide (CO_2). Nitrous oxides (NO_x) are reduced to nitrogen and water. The catalytic converter transforms over 98 percent of these substances during normal operation. Lead contaminates in the fuel can damage the catalytic converter, quickly rendering it inoperable.

OVERVIEW

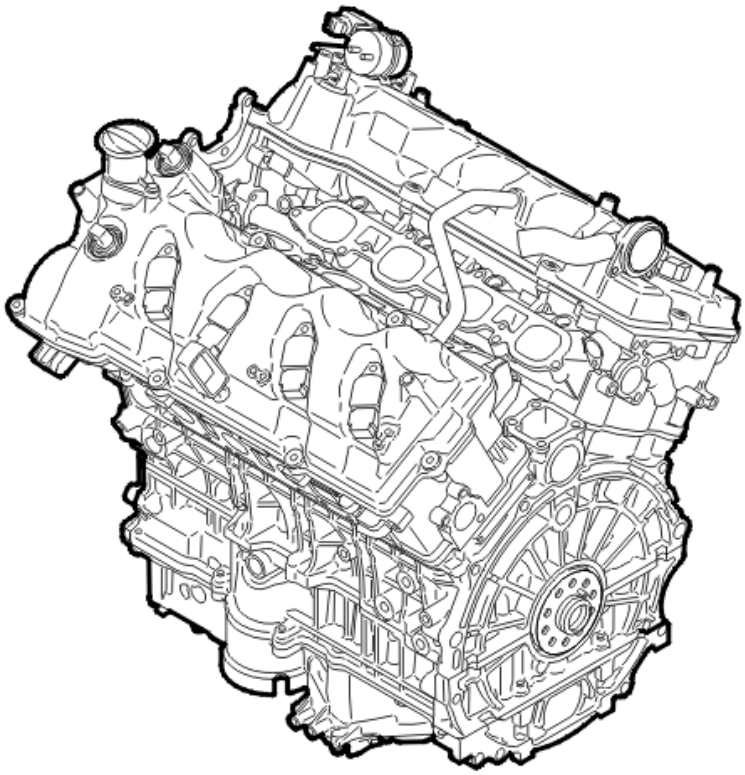

Fig. 179: ENGINE (B8444S; 2005-2011)
Courtesy of VOLVO CARS CORPORATION

The engine is an 8 cylinder V-engine with 60 degrees angle between the two cylinder banks. A specially adapted exhaust system together with the offset crankshaft pins gives the characteristic V8 sound. The engine is transverse and is only available in combination with AWD.

The engine is mounted vertically on the subframe.

Displacement is 4.4 dm^3 . Each cylinder has four valves.

The engine has a variable intake system which gives high torque at low engine speeds (rpm) and high performance at high engine speeds (rpm).

The ignition system has directly installed ignition coils.

The engine has mechanical valve lifters and electronic throttle. The throttle body is heated by coolant which means that pre-heating of intake air is not required.

The engine has double pairs of overhead camshafts, driven by three maintenance-free chains.

The engine has a counter rotating balancer shaft which gives vibration free running.

The cylinder block is made of a light metal alloy.

The direction of cooling system flow allows the coolant to first cool the cylinder heads and then the engine block.

All auxiliary units, the alternator, servo pump and A/C compressor are directly mounted on the engine block.

95 RON fuel can be used for normal operation. 98 RON is recommend for maximum performance and lowest possible fuel consumption. When driving in climates hotter than +38 °C, fuel with the highest possible octane rating is recommended to ensure the best possible performance and fuel consumption.

The engine is regulated by the Engine Control Module (ECM).

ENGINE CONTROL MODULE (ECM) (B6324S; 2007-2010)

DESIGN

IGNITION SWITCH

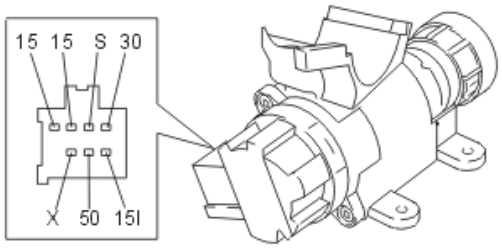

Fig. 180: Identifying Ignition Switch
Courtesy of VOLVO CARS CORPORATION

The Engine Control Module (ECM) uses the signal from the ignition switch to detect when the ignition key has been turned to position II or III. When the key is in the ignition position (position II) or starting position (position III) a high signal (U_{bat}) is transmitted from the ignition switch to the engine control module (ECM).
The engine management system prepares for start-up (for example, temporarily activates the fuel pump (FP) relay). When the flywheel in the engine rotates, the engine speed (RPM) sensor signal is used to keep the fuel pump (FP) relay activated.

The fuse in the fusebox in the passenger compartment supplies current to the ignition switch.

The central electronic module (CEM) has diagnostics for the ignition switch.

TRANSMISSION CONTROL MODULE (TCM)

The engine control module (ECM) uses a directly connected signal from the transmission control module (TCM) in the start function (activating the starter motor).

ENGINE SPEED (RPM) SENSOR

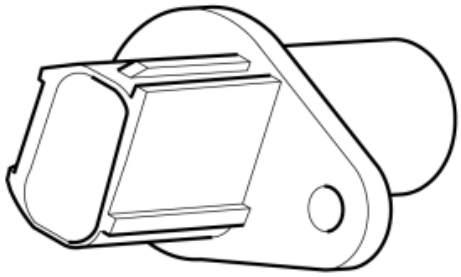

Fig. 181: Identifying Engine Speed (RPM) Sensor
Courtesy of VOLVO CARS CORPORATION

The engine speed (RPM) sensor provides the engine control module (ECM) with information about the speed and position of the crankshaft. The engine control module (ECM) is able to use the signal from the engine speed (RPM) sensor to determine when a piston is approaching top dead center (TDC).

The signal from the engine speed (RPM) sensor is also used to check the engine for misfires. For further information, see: **MISFIRE DIAGNOSTIC**

The impulse sensor is located on the engine's flywheel side, pointing forward. The sensor is inductive with permanent magnet. When the flywheel/drive flange plate passes the impulse sensor, an alternating voltage is induced in the sensor. The generated voltage and frequency increase when the engine speed increases.

The signal varies between 0.1-100 V depending on the engine speed (RPM).

The Engine Control Module (ECM) is able to determine the engine speed (RPM) by counting the number of holes per time unit. When the reference position passes the engine speed (RPM) sensor, the voltage and frequency drop momentarily to zero, even though the engine is still running. This allows the engine control module (ECM) to determine the position of the crankshaft.

If the signal from the engine speed (RPM) sensor is incorrect or missing, the control module will use signals from the camshaft position (CMP) sensor.

The engine speed sensor can be diagnosed by the engine control module (ECM) and the sensor signal (engine speed) can be read out.

CAMSHAFT POSITION (CMP) SENSOR

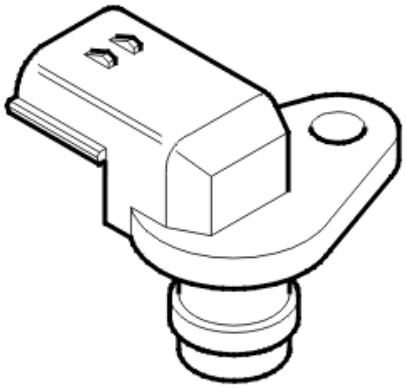

Fig. 182: Identifying Camshaft Position (CMP) Sensor
Courtesy of VOLVO CARS CORPORATION

The function of the camshaft position (CMP) sensor is to detect the flanks of the camshaft rotor. The signal from the sensor is used by the engine control module (ECM) to determine the angle of the camshaft.

Each camshaft is divided into a number of flanks (segments) per camshaft revolution. A pulse wheel on the camshaft consisting of teeth (the teeth are positioned by each flank) is used by the camshaft position sensor (CMP) to detect the flanks and the position of the camshaft.

In the event of misfire or engine knock, the control module is able to determine which cylinder is misfiring or knocking using the camshaft position (CMP) sensor's signal.

Data about the camshaft position is used during camshaft control (CVVT). See: **CAMSHAFT CONTROL (CVVT)**

The sensor, which is a magnetic resistor with a permanent magnet, is grounded in the control module and supplied with 5 V from the control module. When one of the teeth on the camshaft pulse wheel passes the camshaft position (CMP) sensor, a signal is transmitted to the control module from the camshaft position (CMP) sensor. The signal varies between 0 and 5 V and is high when a tooth is in contact with the camshaft position (CMP) sensor and low when the tooth leaves the camshaft position (CMP) sensor.

There is camshaft position (CMP) sensor for each camshaft.

The camshaft sensors are located by the camshafts on the engine's left side, closest to the flywheel.

The engine control module (ECM) can diagnose the camshaft position (CMP) sensors.

KNOCK SENSOR (KS)

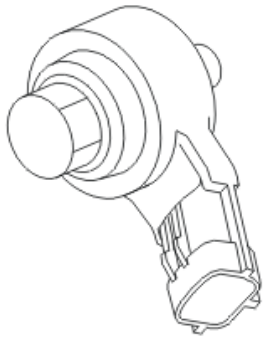

Fig. 183: Identifying Knock Sensor (Ks)
Courtesy of VOLVO CARS CORPORATION

The function of the knock sensor (KS) is to monitor combustion knocking from the engine. Knocking may damage the engine and reduces the efficiency of engine combustion.

If the engine control module (ECM) registers knocking from any of the cylinders, the ignition will be retarded for that cylinder at the next combustion stage. If repeated ignition retardation does not prevent knocking, the injection period will be increased. This has a cooling effect.

The sensor is made up of a piezo electrical crystal. If there is engine knock, vibrations (sound waves) spread through the cylinder block to the knock sensor (KS). The resultant mechanical stress in the piezo electrical material in the knock sensors generates a voltage. This signal is transmitted to the Engine Control Module (ECM). The signal corresponds to the frequency and amplitude of the sound waves. This allows the Engine Control Module (ECM) to determine if the engine is knocking. The camshaft position (CMP) sensor and engine speed (RPM) sensor are used to determine the operating cycle of the engine (which cylinder is igniting) and thereby which cylinder is knocking.

The knock sensors (KS) are located on the cylinder block under the intake manifold.

The engine control module (ECM) can diagnose the knock sensors (KS).

ENGINE COOLANT TEMPERATURE (ECT) SENSOR

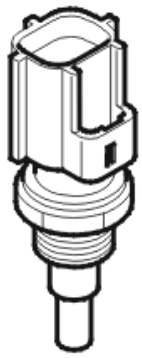

Fig. 184: Identifying Engine Coolant Temperature (ECT) Sensor
Courtesy of VOLVO CARS CORPORATION

The engine coolant temperature (ECT) sensor checks the temperature of the engine coolant. The temperature of the engine coolant is required so that the engine control module (ECM) can regulate:

- the injection period
- the idle speed
- the engine cooling fan (FC)
- the ignition advance
- engagement and disengagement of the A/C compressor
- diagnostic functions.

The sensor is a negative temperature coefficient (NTC) type which is supplied with power from the control module (signal) and is grounded in the control module.

The resistance in the sensor changes depending on the temperature of the coolant. Depending on the resistance in the sensor, voltage (signal) is transmitted to the engine control module (ECM). The lower the temperature the higher the voltage (high resistance). A high temperature results in low voltage (low resistance).

The engine temperature sensor is located by the thermostat under the intake manifold.

The engine temperature sensor can be diagnosed by the engine control module (ECM) and the sensor value can be read out.

MASS AIR FLOW (MAF) SENSOR/INTAKE AIR TEMPERATURE (IAT) SENSOR

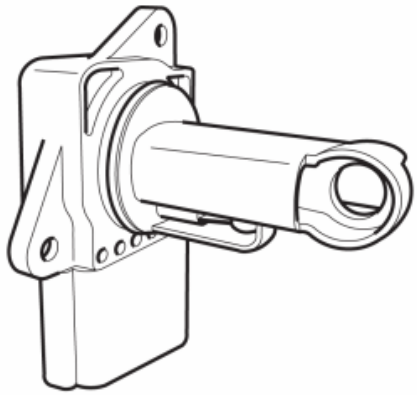

Fig. 185: Identifying Mass Air Flow (MAF) Sensor/Intake Air Temperature (IAT) Sensor
Courtesy of VOLVO CARS CORPORATION

Overview

The mass air flow (MAF) sensor is a combined sensor and contains two sensors in the same component:

- Mass air flow (MAF) sensor
- intake air temperature (IAT) sensor.

The mass air flow sensor is located by the air filter housing.

Mass air flow (MAF) sensor

The mass air flow (MAF) sensor gauges the air mass sucked into the engine. It continuously transmits signals to the engine control module (ECM) about the mass of the intake air. This data is used by the engine control module (ECM) to calculate:

- the injection period
- the fuel pressure
- the ignition timing
- the engine load.

The gearbox control module (TCM) also uses this data for its gear shift calculations. This data is transmitted to the gearbox control module (TCM) from the engine control module (ECM) via the high speed side of the Controller area network (CAN).

The mass air flow (MAF) sensor is a hot wire type. Unlike other hot wire types, the mass air flow sensor in the Denso system uses a hot wire which has a ceramic casing. This eliminates the need for a clean burn function.

The mass air flow (MAF) sensor is supplied with battery voltage by the system relay and is grounded in the engine control module (ECM). The signal from the sensor is analog and varies between approximately between 0.5 - 4.5 V. Low air flow (low mass) results in low voltage, high air flow (high mass) gives high voltage.

The mass air flow (MAF) sensor can be diagnosed by the engine control module (ECM) and the sensor signal can be read off.

Intake air temperature (IAT) sensor

The temperature sensor checks the temperature of the intake air in the intake manifold. This data is used by the engine control module (ECM) to calculate injection period. The control module also controls certain diagnostic functions using the signal from the temperature sensor.

The sensor, which is an NTC resistor, is grounded in the control module and supplied with power (signal) from the control module.

The resistance in the sensor changes according to the intake air temperature. This provides the control module with a signal of between 0.5 - 5 V. The lower the temperature the higher the voltage (high resistance). A high temperature results in low voltage (low resistance).

The temperature sensor can be diagnosed by the engine control module (ECM) and the sensor signal can be read off.

HEATED OXYGEN SENSORS (HO2S)

Front heated oxygen sensor (HO2S)

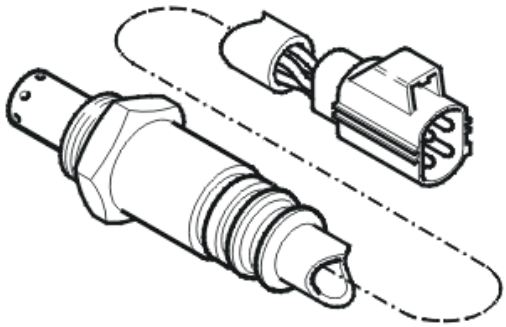

Fig. 186: Identifying Heated Oxygen Sensors (HO2S)
Courtesy of VOLVO CARS CORPORATION

CAUTION: The air lines for the heated oxygen sensors (HO2S) must not be trapped or damaged in any way. The connectors for the heated oxygen sensors (HO2S) must not be greased under any circumstances. The oil in the grease would disrupt the reference air and the function of the heated oxygen sensors (HO2S).

Front heated oxygen sensor (HO2S) is used to provide the engine control module (ECM) with information about the remaining oxygen content of the exhaust gases before the three-way catalytic converter (TWC). This is so that the engine control module (ECM) can continually check the combustion so that lambda=1 is achieved. lambda=1 is the ideal fuel-air ratio, with 14.7 kg air per 1 kg fuel.

The heated oxygen sensor uses current regulation and its signal characteristic is linear. With a linear signal characteristic, the amplitude of the signal curve is low when changing the oxygen content in the exhaust gases. The probe consists of a preheating element and the actual lambda sensor. The lambda sensor is an oxygen sensitive ceramic body consisting of zirconium oxide. The control module supplies power to the ceramic body, which reacts to the oxygen content of the exhaust gases. This in turn affects the signal to the engine control module (ECM). In order to determine the oxygen content in the exhaust pipe, the heated oxygen sensor needs reference air from the surrounding air. This reference air reaches the heated oxygen sensor via the air lines.

There are two front heated oxygen sensors; one for bank 1 and one for bank 2.

The heated oxygen sensors (HO2S) are diagnosed by the engine control module (ECM) and the signals from them can be read off. For further information, see: **HEATED OXYGEN SENSOR (HO2S) DIAGNOSTIC**

The control module can be used to read off the calculated lambda value from the heated oxygen sensor (HO2S) signal.

Rear heated oxygen sensor (HO2S)

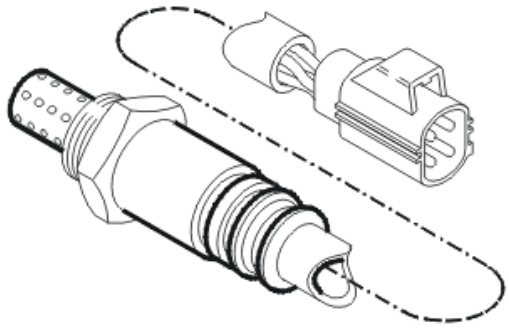

Fig. 187: Identifying Heated Oxygen Sensors (HO2S)
Courtesy of VOLVO CARS CORPORATION

CAUTION: The air lines for the heated oxygen sensors (HO2S) must not be trapped or damaged in any way. The connectors for the heated oxygen sensors (HO2S) must not be greased under any circumstances. The oil in the grease would disrupt the reference air and the function of the heated oxygen sensors (HO2S).

The rear heated oxygen sensor (HO2S) is used to provide the Engine Control Module (ECM) with information about the remaining oxygen content of the exhaust gases behind the three-way catalytic converter (TWC). This information is used by the Engine Control Module (ECM) to check the function of the three-way catalytic converter (TWC). This check is carried out when the conditions for the Rear heated oxygen sensors (HO2S) are used to provide the Engine Control Module (ECM) with information about the remaining oxygen content of the exhaust gases behind the three-way catalytic converter (TWC). This information is used by the Engine Control Module (ECM) to check the function of the three-way catalytic converter (TWC). This check is carried out when the conditions for the catalytic converter diagnostics have been met. Rear heated oxygen sensors (HO2S) have no direct effect on regulation of the fuel/air mixture. However the Engine Control Module (ECM) uses the signal to optimize the signal from front heated oxygen sensors (HO2S). For further information, see: **THREE-WAY CATALYTIC CONVERTER (TWC) DIAGNOSTICS**

The heated oxygen sensor (HO2S) uses voltage control. The signal characteristic is binary. With a binary signal characteristic, the amplitude of the signal curve changes considerably when changing the oxygen content in the exhaust gases. Otherwise its components and function are the same as the front heated oxygen sensor (HO2S).

There are two rear heated oxygen sensors; one for bank 1 and one for bank 2.

The heated oxygen sensors (HO2S) can be diagnosed by the engine control module (ECM), and signals from them can be read off

Preheating of the heated oxygen sensors (HO2S)

The heated oxygen sensor (HO2S) only functions above a certain temperature, approximately 300 °C. The normal operating temperature is between 300-900 °C. The heated oxygen sensors (HO2S) are electrically pre-heated so that operating temperature is rapidly reached. They are also pre-heated to ensure that the heated

oxygen sensors (HO2S) maintain a normal operating temperature and to prevent condensation which could damage the heated oxygen sensor (HO2S).

The sensor's heating coil consists of a PTC-resistor. The heating coil is supplied with voltage from the system relay and is grounded internally in the Engine control module (ECM).

When the control module grounds the connection, a current will pass through the PTC-resistor. When the heated oxygen sensor is cold, the resistance in the PTC-resistor is low and a high current will pass through the circuit. To avoid condensation damage to the heated oxygen sensor the current is pulsed from the Engine control module (ECM) in the beginning. Depending on the temperature, consideration is given to dew point and, as the temperature increases in the PTC-resistor, the resistance increases in the resistor, the current is reduced and transfers gradually to non-pulsing current.

The heating period for the front heated oxygen sensor is short, approx. 20 seconds.

The heater element heats the heated oxygen sensors (HO2S) to approximately 350 °C. The probes maintain this as a minimum temperature.

The engine control module (ECM) can diagnose the heater element.

BRAKE LIGHT SWITCH

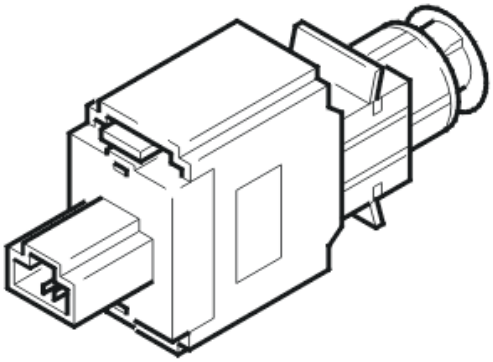

Fig. 188: Identifying Brake Light Switch
Courtesy of VOLVO CARS CORPORATION

The purpose of the brake light switch is to provide the engine control module (ECM) with information indicating whether the brake pedal is depressed.

When the brake pedal is pressed down, a signal is sent to the Engine control module (ECM), which turns off the cruise control (if it is activated). The brake pedal position sensor also handles the function for switching off cruise control.

The brake light switch is supplied with power from the ignition switch (terminal 30). When the brake pedal is depressed the switch closes and a high signal (12 V) is transmitted to the engine control module (ECM).

The stop lamp switch can be diagnosed by the engine control module (ECM) and its status (depressed or not)

can be read off.

The brake light switch is on the pedal box by the brake pedal.

A/C PRESSURE SENSOR

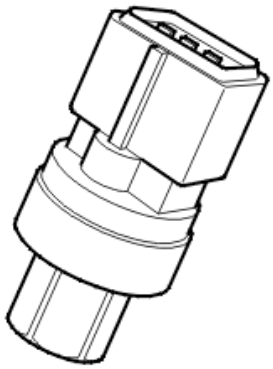

Fig. 189: Identifying A/C Pressure Sensor
Courtesy of VOLVO CARS CORPORATION

The air conditioning (A/C) pressure sensor detects the pressure in the high-pressure side of the air conditioning (A/C) system. See: **REGULATING THE AIR CONDITIONING (A/C) COMPRESSOR**

The sensor is linear. It is grounded in the control module and supplied with a 5 Volt current from the control module. A linear signal (between 0-5 V depending on the pressure in the air conditioning (A/C)) is transmitted to the control module. Low pressure produces low voltage, high pressure produces high voltage. The air conditioning (A/C) pressure sensor is affected by the pressure in the high-pressure pipe of the air conditioning (A/C) system (narrow pipe).

The engine control module (ECM) can diagnose the air conditioning (A/C) pressure sensor. The sensor value can be read off using the diagnostic tool.

ACCELERATOR PEDAL (AP) POSITION SENSOR

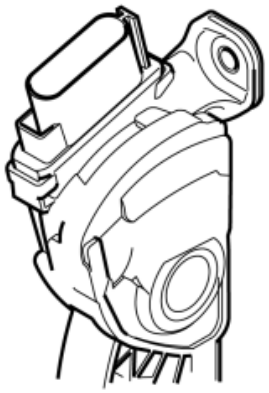

Fig. 190: Identifying Accelerator Pedal (AP) Position Sensor

Courtesy of VOLVO CARS CORPORATION

The function of the accelerator pedal position sensor is to provide the engine control module (ECM) and central electronic module (CEM) information on the position of the accelerator pedal. The engine control module (ECM) uses this data to deploy the shutter in the throttle unit to the correct angle.

The accelerator pedal position sensor consists of a plastic housing with two potentiometers, and an Analog/Digital converter. The potentiometers are connected to a common shaft which is affected by the position of the accelerator pedal.

The accelerator pedal (AP) position sensor transmits an analog and a pulse width modulated (PWM-signal to the engine control module (ECM). These signals indicate the position of the accelerator pedal (AP). The digital signal is generated by the sensors Analog/Digital converter.

The analog and digital signals are used at the same time by the engine control module (ECM) to regulate the throttle shutter angle.

The power supply to the two potentiometers is different. The analog potentiometer is supplied with 5 V via the engine control module (ECM). The digital potentiometer is supplied with 12 V via the system relay and is grounded in the car body.

The digital signal is used together with the analog signal for diagnostics of the accelerator pedal position sensor.

Accelerator pedal (AP) position sensor's signals can be read off.

A diagnostic trouble code (DTC) is stored if the engine control module (ECM) detects a difference between the analog and digital signals. The engine control module (ECM) then uses a minimal value to ensure the function (limp home).

The accelerator pedal (AP) position sensor is located on the accelerator pedal bracket.

OUTSIDE TEMPERATURE SENSOR

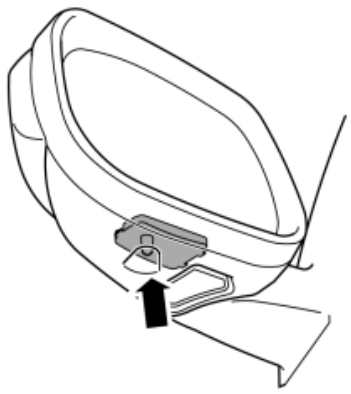

Fig. 191: Locating Outside Temperature Sensor
Courtesy of VOLVO CARS CORPORATION

The outside temperature sensor detects the temperature in the surrounding air. The signal is used by the engine control module (ECM) as a substitute value in the event of a fault in certain components or functions and to control certain diagnostic functions.

The sensor is a negative temperature coefficient (NTC) type which is supplied with power from the control module (signal). The resistance in the sensor changes with the outside temperature. This alters the signal to the engine control module (ECM). The lower the temperature the higher the voltage (high resistance). A high temperature results in low voltage (low resistance).

The outside temperature sensor is positioned in the left door mirror.

The outside temperature sensor can be diagnosed by the engine control module (ECM) and the sensor value can be read off.

ENGINE COOLANT LEVEL SENSOR

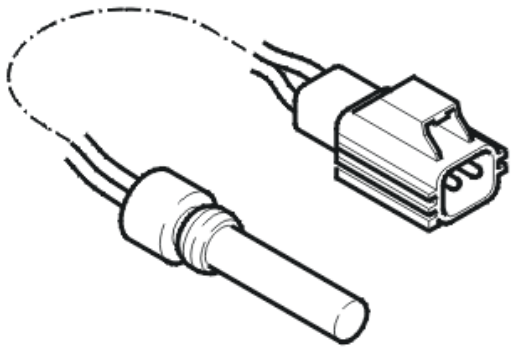

Fig. 192: Identifying Engine Coolant Level Sensor
Courtesy of VOLVO CARS CORPORATION

The function of the engine coolant level sensor is to alert the driver if the engine coolant level in the expansion tank is too low.

The sensor is a magnetic reed switch, which is enclosed in a pipe on the bottom of the expansion tank. Around the pipe, on the inside of the expansion tank is a float. This float contains a magnet. When the engine coolant level is above minimum, the float is too high in the tank to affect the switch. However if the engine coolant level falls below the minimum level, the magnetic field acts on the switch.

The sensor is supplied with voltage (signal) from the engine control module (ECM) and grounded in the body. When the engine coolant level in the expansion tank is over a certain level the circuit closes, which produces a low signal. When the engine coolant level is below a certain level the circuit is opened by the engine coolant level sensor, which produces a high signal. When the engine control module (ECM) detects a high signal the information about low engine coolant level is transmitted via the Controller area network (CAN) to the driver information module (DIM), which warns the driver.

NOTE: There are no functions controlled by the engine which are directly connected to

the low coolant level warning lamp. The Engine Control Module (ECM) only transfers the signal which is used by the Driver Information Module (DIM).

The engine control module (ECM) cannot diagnose the engine coolant level sensor.

MANIFOLD ABSOLUTE PRESSURE (MAP) SENSOR, INTAKE

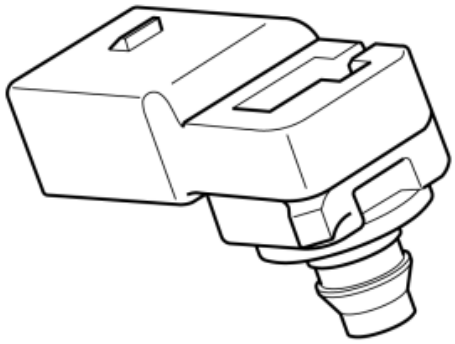

Fig. 193: Identifying Manifold Absolute Pressure (Map) Sensor
Courtesy of VOLVO CARS CORPORATION

The manifold absolute pressure (MAP) sensor detects quick pressure changes in the intake manifold after the throttle. The signal from the sensor is used by the engine control module (ECM) to supplement the mass air flow (MAF) sensor when calculating injection period.

Manifold absolute pressure (MAP) sensor, intake is located on the lower part of the intake manifold at the electronic throttle module.

The semi-conductor sensor is grounded in the control module and is supplied with power from the control module.

The resistance in the intake manifold moves the silicone membrane in the sensor, giving a signal of 0.5 - 4.5 V to the control module. Low pressure results in low voltage, high pressure gives high voltage.

The pressure sensor can be diagnosed by the engine control module (ECM) and the sensor signal can be read off.

FUEL PRESSURE SENSOR / FUEL TEMPERATURE SENSOR

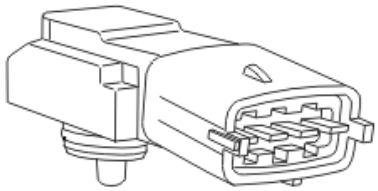

Fig. 194: Identifying Fuel Pressure Sensor / Fuel Temperature Sensor
Courtesy of VOLVO CARS CORPORATION

Overview

The fuel pressure, fuel temperature sensor is combined and consists of both the fuel pressure sensor and the fuel temperature sensor. The sensor detects the fuel pressure (the absolute pressure) and the temperature of the fuel in the fuel rail.

The fuel pressure sensor is located on the fuel rail's end.

The fuel pressure-/fuel temperature sensor can be diagnosed by the engine control module (ECM) and its signals (pressure and temperature) can be read off.

Fuel pressure sensor

The pressure sensor is a Piezo resistive type resistor, the resistance of which changes with the pressure. Depending on the pressure in the fuel rail, an analog signal of 0 - 5 V is transmitted to the engine control module (ECM). Low pressure results in low voltage, high pressure gives high voltage.

The engine control module (ECM) then uses this signal to adjust the pressure in the fuel rail using the fuel pump control module. See also: **FUEL PRESSURE REGULATION**

The pressure sensor is supplied with 5 V and grounded in the engine control module (ECM). The pressure sensor transmits a signal indicating the fuel pressure to the engine control module (ECM) on a separate cable.

NOTE: The absolute pressure is displayed when using parameter read outs to read off the fuel pressure. If there is no pressure at the fuel rail, the atmospheric pressure will be displayed.

HINT: The relative pressure (absolute pressure minus atmospheric pressure) is displayed when reading off the fuel pressure via a manometer connected to the fuel rail.

Fuel temperature sensor

The temperature sensor is an NTC sensor. The sensor is supplied with voltage (signal) from and grounded in the engine control module (ECM).

The resistance in the sensor changes according to the temperature of the fuel. This provides the engine control module (ECM) with a signal of between 0 - 5 V. Low temperature results in high voltage (high resistance). High temperature results in low voltage (low resistance).

The engine control module (ECM) uses the signal to calculate the volume of the fuel.

OIL LEVEL SENSOR

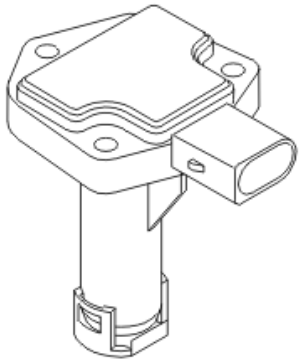

Fig. 195: Identifying Oil Level Sensor
Courtesy of VOLVO CARS CORPORATION

The function of the oil level sensor is to provide the engine control module (ECM) with information regarding the level of engine oil in the oil sump.

The sensor consists of:

- a terminal with three pins
- integrated electronics
- 2 capacitive gauge elements
- a PTC resistor.

The oil level sensor is supplied with 5 V by the engine control module (ECM). The oil level sensor generates a pulse width modulated (PWM) signal for the engine control module (ECM).

The oil level sensor can be diagnosed by the engine control module (ECM).

The pulse-width modulated (PWM) signal from the oil level sensor can be read using parameter readout.

MAIN RELAY (SYSTEM RELAY)

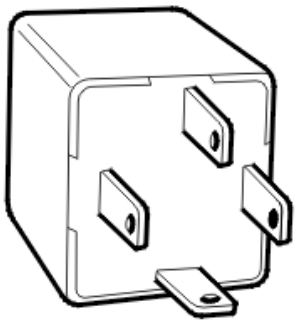

Fig. 196: Identifying Main Relay
Courtesy of VOLVO CARS CORPORATION

The function of the main relay (system relay) is to supply certain components with voltage.

The relay is mechanical and has a closing and opening function. In the rest position the circuit in the relay is open.

The main relay terminals (#30 and #86) are supplied with voltage by the battery. When the ignition key has been turned and the engine control module (ECM) is powered, the terminal (#85) on the main relay is grounded by the engine control module (ECM).

When the terminal (#85) is grounded, the relay is activated and a number of components are powered via the relay terminal (#87).

The main relay is in the integrated relay/fuse box in the engine compartment and is diagnosed by the engine control module (ECM).

INJECTORS

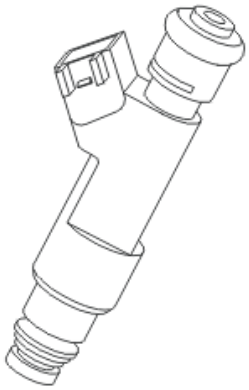

Fig. 197: Identifying Fuel Injector
Courtesy of VOLVO CARS CORPORATION

The function of the injectors is to spray fuel into the cylinders in the correct spray patterns. This happens

sequentially.

The injectors are located along the intake pipe.

The engine control module (ECM) controls the injectors by grounding the valves in pulses.

The injectors can be diagnosed by the engine control module (ECM) and can be activated.

IGNITION COILS

Fig. 198: Identifying Ignition Coil
Courtesy of VOLVO CARS CORPORATION

The ignition coils supply the spark plugs with high voltage to produce sparks. The engine control module (ECM) controls the ignition coils so that sparks are generated at the correct time. The signal reconnects to the engine control module (ECM) so that diagnostics can be carried out.

Each ignition coil has an integrated power stage.

The ignition coils are in the sparkplug wells above each spark plug.

The control module checks the ignition coils' function using one separate diagnostic lead.

CAMSHAFT RESET VALVE (CVVT)

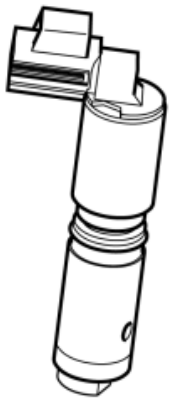

Fig. 199: Identifying Camshaft Reset Valve
Courtesy of VOLVO CARS CORPORATION

The camshaft reset valve controls the oil flow to the CVVT unit (camshaft pulley).

The valve consists of an electro-magnetic valve with a spring-loaded piston. There are slits in the piston which channel the engine lubricating oil to the CVVT unit by moving the piston in the reset valve. The continuous variable valve timing (CVVT) unit turns the camshaft (the camshaft timing changes). The direction in which the camshaft turns depends on the chamber in the CVVT unit which is supplied with oil (pressure). See also: **CAMSHAFT CONTROL (CVVT)**

An oil filter is mounted at the intake channel for the valves to prevent oil contaminants from affecting the function of the reset valves.

The system relay supplies the reset valve with voltage via a fuse. The valve is grounded (control stage) internally in the engine control module (ECM). When the valve is grounded using a pulse width modulation (PWM) signal, the oil flow in the valve can be regulated to the different chambers in the continuous variable valve timing (CVVT) unit at variable rates. This allows the angle position to be changed precisely and steplessly.

The engine control module (ECM) can diagnose the camshaft reset valve.

The valve is located on the cylinder head above the camshaft. There is a valve for intake camshaft.

There is no valve for the exhaust camshaft.

EVAPORATIVE EMISSION SYSTEM (EVAP) VALVE

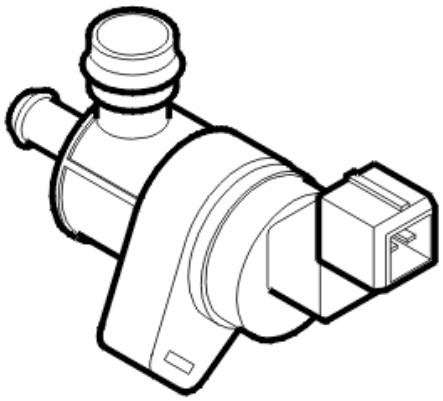

Fig. 200: Identifying Evaporative Emission System (EVAP) Valve
Courtesy of VOLVO CARS CORPORATION

The evaporative emission system (EVAP) valve is used to open and close the connection between the EVAP canister and the intake manifold. The valve controls the flow of hydro-carbons (fuel vapor) from the EVAP canister to the engine intake manifold using the vacuum in the intake manifold. This ensures that hydro-carbons stored in the EVAP canister are used in the engine combustion process.

The valve is an electromagnetic valve and is powered from the system relay. When the valve needs to be opened, it is grounded internally in the engine control module (ECM). The evaporative emission system (EVAP) valve is closed when in the standby position (open-circuit).

When the control module requests that the EVAP canister should be drained (the hydrocarbons stored in the canister should be released into the engine), the control module deploys the evaporative emission system (EVAP) valve by grounding it. A pulse width modulation (PWM) signal is used to ground the valve and to control the degree to which the valve will open. In this way, the drainage of the EVAP canister is matched to the volumetric efficiency of the EVAP canister, the engine speed (RPM) and the engine load.

The evaporative emission system (EVAP) valve can be diagnosed by the engine control module (ECM) and can be activated.

The EVAP-valve is located by the intake manifold (by the electronic throttle module) on the front of the engine.

LEAK DIAGNOSTIC UNIT

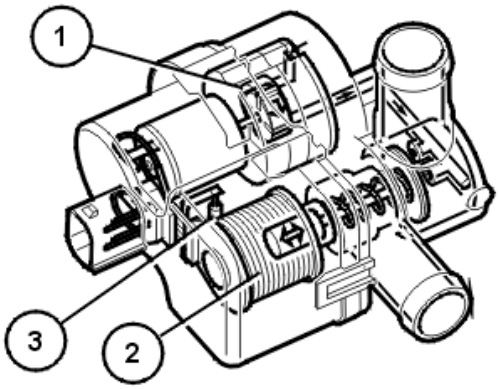

Fig. 201: View of Leak Diagnostic Unit
Courtesy of VOLVO CARS CORPORATION

The function of the leak diagnostic unit is to pressurize the fuel tank system during leak diagnostics and to open the fuel tank system to the surrounding air during evaporative emissions control.

The leak diagnostic unit consists of a plastic housing with:

1. electrical air pump
2. a valve / solenoid which governs the air flow in the unit
3. a heater element (PTC resistor) which warms up the pump.

The electrical pump, valve and heater element in the unit are supplied with voltage by the system relay. The pump, valve and heater element are grounded (control) in the engine control module (ECM).

During leak diagnostics the pump in the leak diagnostic unit starts. The valve in the unit is operated by the engine control module (ECM) by grounding the different circuits internally in the engine control module (ECM). Operation depends on whether the diagnostic phase is checking for leakage or checking the function of the diagnostic system. The engine control module (ECM) gauges the power consumption of the pump during pressurization. The power consumption corresponds to a certain pressure in the fuel tank system. See also:**LEAK DIAGNOSTIC UNIT**

The engine control module (ECM) can diagnose the leak diagnostic unit.

The valve in the leak diagnostic unit can be activated and the power consumption of the pump can be read off.

The leak diagnostic unit is at the upper front edge of the fuel tank.

AIR CONDITIONING (A/C) COMPRESSOR.

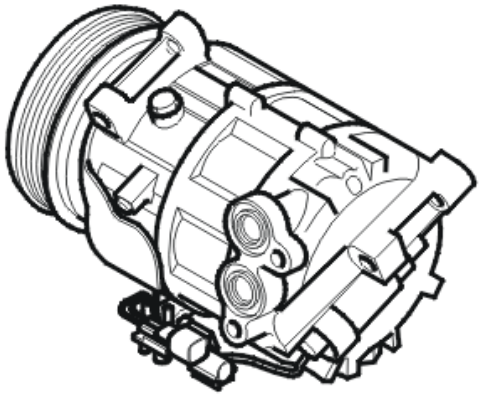

Fig. 202: Identifying (A/C) Compressor
Courtesy of VOLVO CARS CORPORATION

The air conditioning (A/C) compressor transports refrigerant, which is necessary for air conditioning (A/C) operation. It is an axial piston compressor with variable displacement. I. E. The compressor has adjustable cylinder displacement which is controlled by a check valve (solenoid). The valve, which is underneath the compressor, can be replaced.

The A/C compressor is mounted on the cylinder block and is driven by the engine's crankshaft via the auxiliaries belt.

AIR CONDITIONING (A/C) RELAY

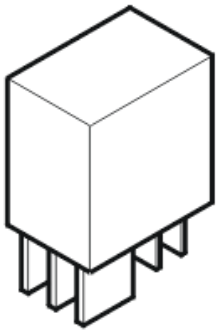

Fig. 203: Identifying (A/C) relay
Courtesy of VOLVO CARS CORPORATION

The air conditioning (A/C) relay supplies the A/C compressor with voltage. The relay is controlled by the engine control module (ECM) based on information from different signals:

- the climate control module (CCM) (via the control area network (CAN))
- the engine coolant temperature
- the position of the accelerator pedal (AP)
- the pressure in the system.

The engine control module (ECM) can temporarily disengage the A/C compressor during wide open throttle (WOT) acceleration.

The relay is mechanical. It has a closing / opening function and is supplied with power from the system relay.

In the rest position the circuit in the relay is open.

The system relay supplies the coil and the relay with power. The relay activates when the coil is grounded in the engine control module (ECM), the circuit closes and the A/C compressor is supplied with power via the relay voltage output.

The relay coil is grounded (signal) when the engine control module (ECM) receives a signal via the CAN network from the climate control module (CCM) to activate the relay and start the compressor.

STARTER MOTOR RELAY

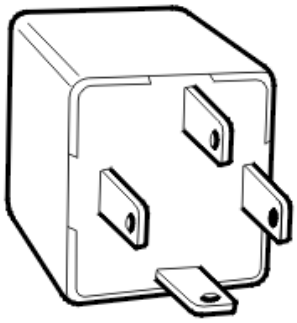

Fig. 204: Identifying Main Relay
Courtesy of VOLVO CARS CORPORATION

The function of the starter motor relay is to supply power to the starter motor. See also: **START**

The starter motor relay is in the relay/fusebox in the engine compartment.

ENGINE COOLING FAN (FC) / ENGINE COOLING FAN (FC) CONTROL MODULE

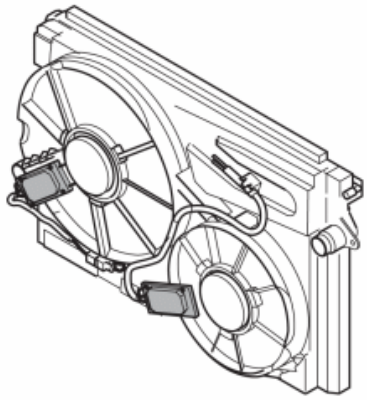

Fig. 205: Identifying Engine Cooling Fans (FC) and Control Modules
Courtesy of VOLVO CARS CORPORATION

NOTE: The engine cooling fan may have a post-run of up to approx. 6 minutes after the engine has been turned off. The time for the fan's post-run depends on engine temperature, temperature in the engine compartment and pressure level in the AC-system.

WARNING: Be careful since the engine cooling fan may have a post-run after the engine has been turned off.

The engine cooling fan (FC) consists of two fans and two control modules. The control modules are controlled by the same signal from the engine control module (ECM).

HINT: For different reasons, there are variants where the engine cooling fan consists of two fans and one control module.

The engine cooling fan (FC) has two functions. One is to cool the engine compartment, the other is to cool the condenser when the air conditioning (A/C) compressor is working.

The engine control module (ECM) transmits a pulse width modulated (PWM) signal to the engine cooling fan (FC) control modules. The control modules then activate the fans at different speeds. The speed is determined by the engine control module (ECM), depending on the coolant temperature and the vehicle speed.

The temperature conditions for engagement of the different engine cooling fan (FC) stages may vary slightly, depending on the engine variant and the equipment level. The temperature conditions apply when:

- the A/C is off
- no faults are detected by the engine control module (ECM).

The engine cooling fan (FC) is located behind the radiator and its control module is grounded and powered with battery voltage via a fuse.

There are diagnostics for the engine cooling fan (FC). The engine cooling fan (FC) transmits a diagnostic signal

to the engine control module (ECM).

FUEL PUMP (ONLY US)

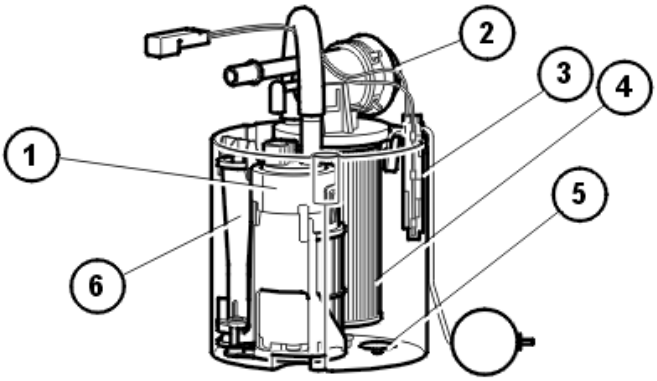

Fig. 206: Identifying Fuel Pump Module
Courtesy of VOLVO CARS CORPORATION

The function of the fuel pump is to ensure that the pressure is correct at the delivery lines for the injectors when requested by the fuel pump control module.

The fuel pump consists of:

1. An electrical pump with an integrated safety valve
2. A pressure equalization valve. This valve equalizes rapid pressure peaks which occur, for example, when the injectors close during engine braking. It also contains a non-return valve which ensures that the pressure in the system does not drop when the engine is switched off
3. Fuel level sensor
4. Fuel filter, cannot be replaced separately
5. Relief valve, releases fuel into the pump housing
6. Ejector pump, continuously fills the pump housing with fuel. The fuel always flows from the fuel pump through the ejector and back to the pump housing.

The fuel pump is supplied with battery voltage by the fuel pump control module and is grounded in the car body via the fuel pump control module.

The engine control module (ECM) has diagnostics for the fuel pump function to ensure that the pressure is correct. See also: **FUEL PRESSURE REGULATION, DIAGNOSTICS**

The fuel pump can be activated and its status can be read off.

The pressure in the fuel rail can be measured by connecting a manometer to a nipple. This nipple is on the right-hand end of the fuel rail.

FUEL PUMP CONTROL MODULE

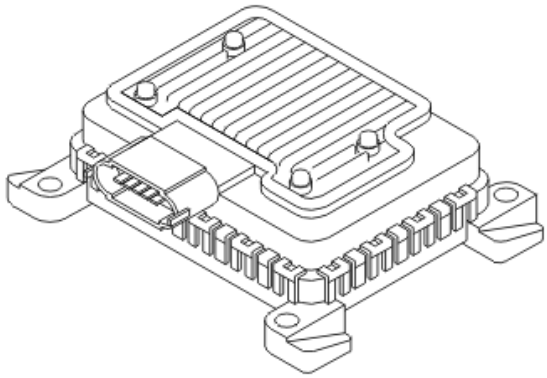

Fig. 207: Identifying Fuel Pump
Courtesy of VOLVO CARS CORPORATION

The fuel pump control module is called PEM (Pump Electronic Module). It powers the fuel pump and regulates the output of the pump. The fuel pressure changes with the output of the pump.

The fuel pump control module is supplied with battery voltage by the fuel pump (FP) relay and is grounded in the car body. The fuel pump (FP) relay is controlled by the central electronic module (CEM) when requested by the engine control module (ECM).

The engine cannot be started if the power supply to the fuel pump control module is faulty because the fuel pump will not then be powered.

The fuel pump control module is controlled by the engine control module (ECM) via serial communication. The fuel pump control module then controls the fuel pump by transmitting pulse width modulated (PWM) voltage on the ground lead for the fuel pump. This means that the voltage drop across the pump changes, and with it the output of the fuel pump. See also: **FUEL PRESSURE REGULATION**

There are no diagnostics for the fuel pump control module. The engine control module (ECM) has diagnostics for fuel pressure regulation and the associated components. See also: **FUEL PRESSURE REGULATION, DIAGNOSTICS**

The pulse width modulated (PWM) signal from the engine control module (ECM) to the fuel pump control module can be read off using the diagnostic tool.

The fuel pump control module is on the outside on the right-hand side of the fuel tank.

ACTUATOR VARIABLE INTAKE MANIFOLD

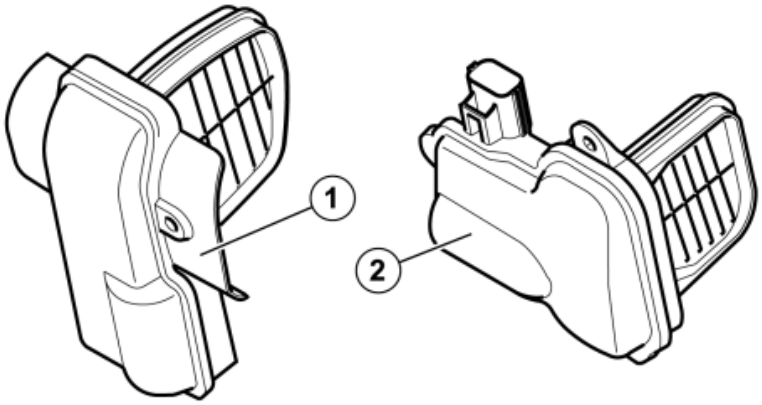

Fig. 208: Identifying Actuators, Variable, Intake Manifold
Courtesy of VOLVO CARS CORPORATION

1. Primary actuator with throttle (upper)
2. Secondary actuator with throttle (lower)

The function of the actuators is to vary the length of the intake manifold, via throttles installed in the intake manifold.

The actuators are supplied with voltage from the system relay via fuse and ground (control) internally in the engine control module (ECM).

see **VARIABLE INTAKE SYSTEM**

The actuators for variable intake can be diagnosed by the engine control module (ECM).

The actuators are bolted directly to the intake manifold.

CAM PROFILE SOLENOID (CPS)

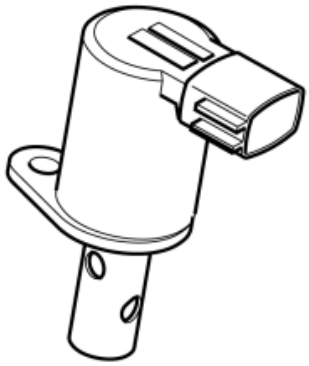

Fig. 209: Identifying Cam Profile Solenoid (CPS)
Courtesy of VOLVO CARS CORPORATION

The function of the solenoid is to control (trigger) oil pressure to the hydraulic valve depressors.

The solenoid is supplied with voltage from the system relay via fuse and ground (control) internally in the engine control module (ECM).

The system has two solenoids that each supplies a number of cylinders.

The solenoids are located on each side of the engine between the camshafts.

The solenoids can be diagnosed by the Engine control module (ECM).

see **VARIABLE CAMSHAFT PROFILE (CPS)**

EMISSIONS WARNING LAMP

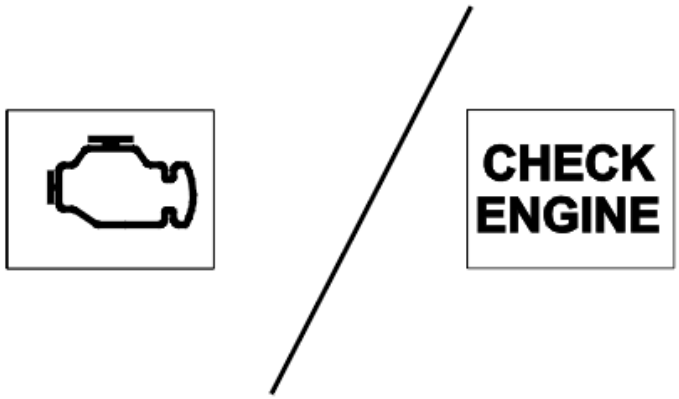

Fig. 210: Identifying Malfunction Indicator Lamp
Courtesy of VOLVO CARS CORPORATION

The emissions warning lamp in the Driver Information Module (DIM) has a warning symbol. This warning symbol varies depending on the market. The warning symbols are:

- "Engine symbol" (not USA)
- "CHECK ENGINE" (MIL - Malfunction Indicator Lamp, USA only).

The warning lamp lights when the ignition key is turned to position II. The warning lamp will go out after approximately 15 seconds or if the engine is started when no fault is found in the engine management system.

If Readiness is not complete (certain diagnostic functions not completed), the warning lamp will flash instead of going out when the ignition key is in position II.

The warning lamp will light if there is a fault in one of the parameters in the engine management system. The warning lamp will also light in response to a request transmitted via the control area network (CAN) if there is a fault in the transmission control module (TCM) which affects emissions.

ELECTRONIC THROTTLE UNIT

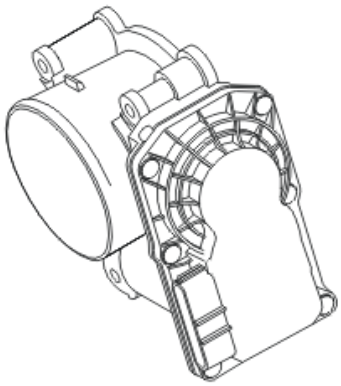

Fig. 211: Identifying Electronic Throttle Unit
Courtesy of VOLVO CARS CORPORATION

The electronic throttle unit, using the PWM control signal from the engine control module (ECM), regulates the amount of air for engine combustion. This is done using an electronically controlled shutter.

The aluminum electronic throttle unit consists of a round throttle disc on a spindle. The spindle is driven by a DC motor (damper motor), gear wheel and two springs; one for opening and one for return.

By changing the polarity of the power supply, the DC motor can be run in both directions. At one of the limit positions the throttle disc is closed so that minimal air can pass the throttle unit. In the other limit position, the throttle disc is parallel to the air flow. This provides maximum airflow through the electronic throttle unit.

Two permanent magnets in the gear sector on the throttle spindle are used to check the position of the throttle disc. The permanent magnets affect two throttle position (TP) Hall sensors in the cover. The analog signals from the two sensors are transmitted to the engine control module (ECM). The signals are offset. The engine control module (ECM) compares these signals with the stored desired values to check if they are plausible.

The electronic throttle unit is located on the engine intake manifold. In the event of a fault, the throttle unit must be replaced as a single unit.

The engine control module (ECM) can diagnose the electronic throttle unit.

THROTTLE POSITION (TP) SENSOR

Electronic throttle unit.

LEAK DIAGNOSTICS (CERTAIN MARKETS ONLY)

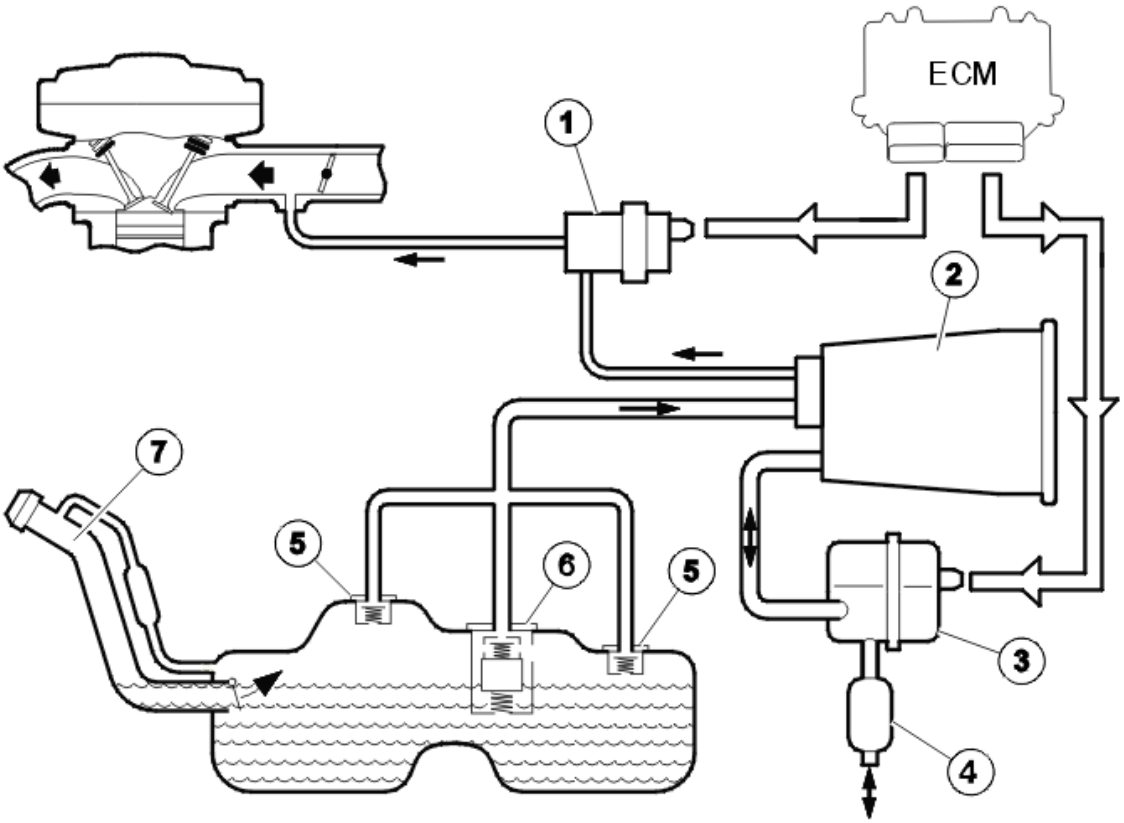

Fig. 212: Fuel Tank System Leak Overview
Courtesy of VOLVO CARS CORPORATION

All gases that evaporate from fuel in the fuel tank must be led to and stored in the evaporative emission system (EVAP) canister so that they can be directed into the engine for combustion. In order to detect leakages which cause evaporation of gases into the air, the fuel tank system is diagnosed for leakage. The fuel tank system consists of:

- fuel tank
- Canister purge (CP) valve (1)
- EVAP canister (2)
- leak diagnostic unit (3)
- air cleaner (ACL) (4)
- Roll-over valve (5)
- Float Limit Vent Valve (6)
- fuel filler pipe (7)
- all lines between the above components.

The fuel tank system has a leak diagnostic unit to diagnose any leakage. The leak diagnostic unit pressurizes the fuel tank system when the ignition is off, if the conditions for diagnosis have been met. The control module can detect faults in the function of the leak diagnostic unit and leakage that is 0.5 mm or greater. Minor leak; leakage greater than 0.5 mm but less than 1.0 mm. Major leak; leakage greater than 1.0 mm.

The leak diagnostic unit consists of a pump and a valve that controls the air flow in the unit. The fuel tank system tests for leaks by measuring the power consumption of the pump. The power consumption of the pump corresponds to a certain pressure in the fuel tank system. During diagnosis, the rate at which the pressure can build up is checked, taking into account the quantity of fuel in the tank. The quicker the pressurization the better the fuel tank system is sealed.

Conditions for diagnosis

The diagnosis begins when all the following conditions are met:

- There must be no diagnostic trouble code (DTC) stored for the following components or functions:
  - the power stage for the pump in the leak diagnostic unit
  - the power stage for the valve in the leak diagnostic unit
  - the power stage for the EVAP canister purge valve
  - the EVAP canister purge valve.
  - the engine coolant temperature (ECT) sensor
  - atmospheric pressure sensor
  - outside temperature sensor.
- The engine is switched off until the engine coolant temperature (ECT) has fallen to a few degrees above the outside temperature, then engine running for at least 10 minutes.
- Ignition off
- Vehicle speed 0 km/h
- Engine coolant temperature (ECT) -5 °C or higher.
- Maximum altitude of 2500 meters above sea level
- Outside temperature between -5 and +35 °C.
- Fuel volume in the tank less than 85%. The engine control module (ECM) ignores these parameters if a diagnostic trouble code (DTC) is stored for the fuel level sensor and the fuel volume cannot be determined.
- Battery voltage between 11.0-15.0 V. The voltage must be stable.
- EVAP canister purge valve closed
- Low volume in the canister.
- Fuel tank filler cap locked. Tip. Locking occurs when the vehicle speed exceeds approximately 20 km/h.

Diagnostic phases

The diagnostic is divided into the following phases and is carried out in sequence when all conditions for the diagnostic have been met.

- reference phase
- function test
- Leak diagnostic

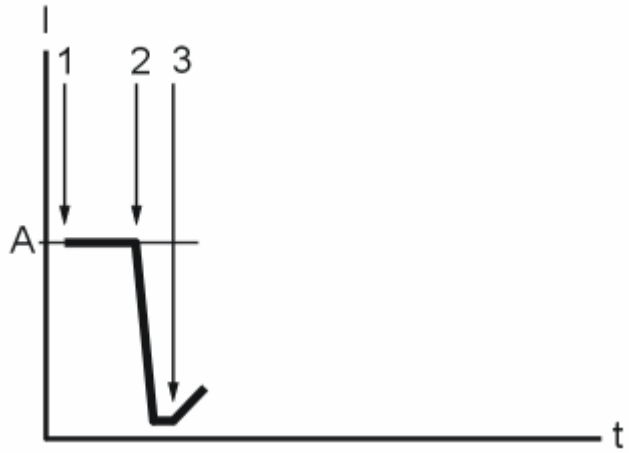

Fig. 213: Identifying Fault Free Fuel Tank System Diagram Phase 1
Courtesy of VOLVO CARS CORPORATION

Reference phase (1-2)

The illustration is a diagram of a fault free fuel tank system.

Before the leak diagnostic begins, the control module runs reference phase for leakage. Reference phase (1-2) for leakage that is 0.5 mm is carried out by the pump in the leak diagnostic unit pumping ambient air through a 0.5 mm hole and back out to the ambient air. At the same time, the power consumption (A) of the pump is measured and stored in the control module. The stored value (A) for the power consumption of the pump corresponds to a leakage of 0.5 mm. This value is then compared by the engine control module (ECM) to determine the leak status of the fuel tank system.

Function test (1-3)

If the value for the power consumption of the pump is too high or low during reference phase (1-2), or if the value for pump power consumption varies too much during reference phase (1-2), the diagnostic is cancelled and starts again the next time the conditions for the diagnostic are met. A diagnostic trouble code (DTC) is stored if the diagnostic is cancelled because the power consumption of the pump is varying excessively.

After reference phase the valve (2) in the leak diagnostic unit is activated and controls the air flow to the fuel tank to pressurize the fuel tank system. This change of air flow will cause the power consumption of the pump to fall briefly before the pressure builds up in the fuel tank system (3). A diagnostic trouble code is stored if the value for the power consumption of the pump drops too quickly, slowly or not at all.

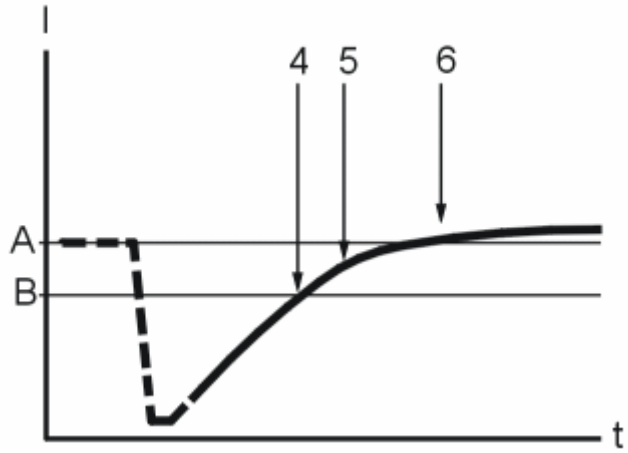

Fig. 214: Identifying Leak Diagnostic, Major Leak Diagram
Courtesy of VOLVO CARS CORPORATION

Leak diagnostic, major leak (leakage greater than 1.0 mm)

The diagnostic for "major leaks" is carried out each time when the conditions for the diagnostic are met. The leak diagnostic unit pressurizes the fuel tank system, measures the power consumption of the pump (4) and compares this with a calculated desired value (B). A diagnostic trouble code (DTC) for a major leak is stored if the measured value does not reach the calculated desired value within a certain time (the time is determined by the fuel level in the tank).

Leak diagnostic, minor leak (leakage greater than 0.5 mm but less than 1.0 mm)

The diagnostic for minor leaks is run every other time that the conditions for the diagnostic are met. The diagnostic for major leaks is always run before the diagnostic for minor leaks. The leak diagnostic unit continues to pressurize the fuel tank system (5-6). After a certain amount of time (the time varies depending on the fuel level in the tank), the engine control module (ECM) checks the fuel tank system for leaks. This is determined from calculations based on:

- time
- the measured reference current consumption of the pump (A)
- the measured power consumption of the pump when the assessment is made
- the shape and character of the current curve during pressurization.

A diagnostic trouble code (DTC) is stored if a minor leak is detected.

DIAGNOSTIC FUNCTIONS

LEAK DIAGNOSTICS, ORIGINAL VERSION (CERTAIN MARKETS ONLY)

LEAK DIAGNOSTICS, ORIGINAL VERSION

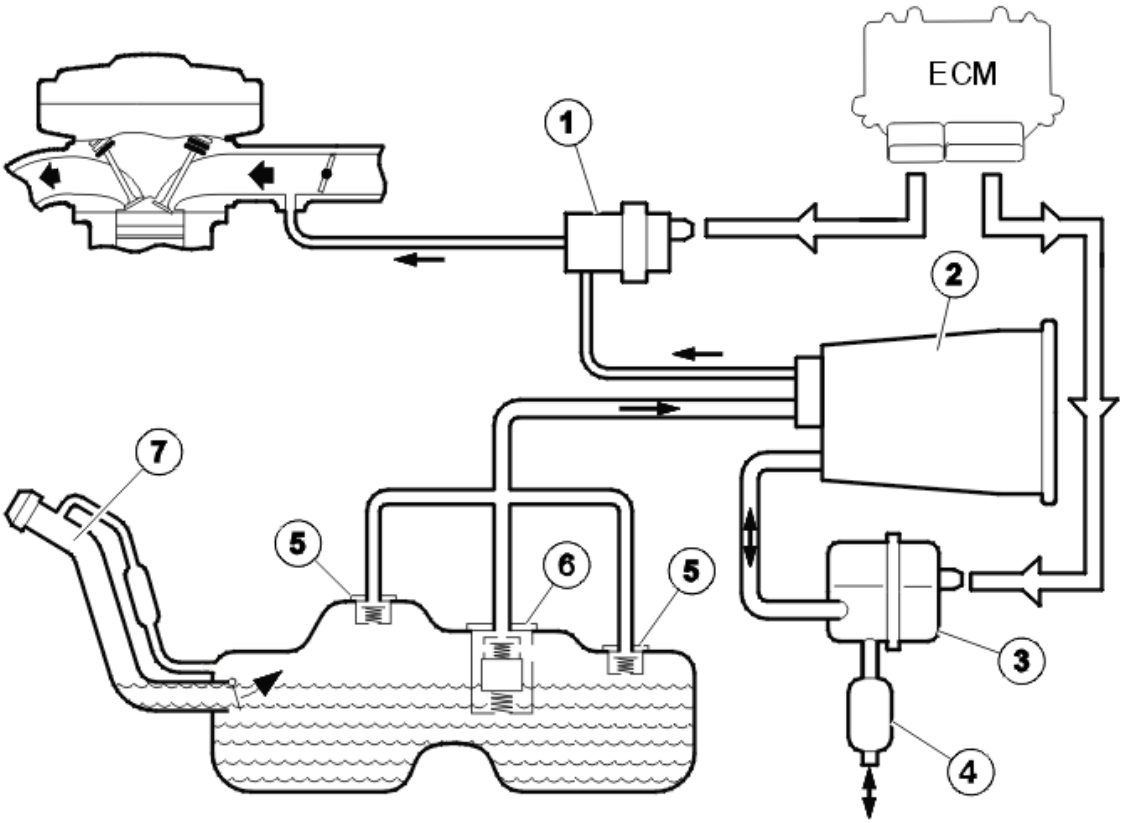

Fig. 215: Fuel Tank System Leak Overview
Courtesy of VOLVO CARS CORPORATION

To minimize false detection of leakage, new software has been released for the Engine control module (ECM). The software has been released afterwards, in order of priority, started at the end of 2006.

The improved software version makes diagnostics more robust and durable against aging and wear of the leak diagnostic unit. It affects strategies, behavior and to a degree also read off parameters.

All gases that evaporate from fuel in the fuel tank must be led to and stored in the evaporative emission system (EVAP) canister so that they can be directed into the engine for combustion. In order to detect leakages which cause evaporation of gases into the air, the fuel tank system is diagnosed for leakage. The fuel tank system consists of:

- fuel tank
- Canister purge (CP) valve (1)
- EVAP canister (2)
- leak diagnostic unit (3)
- air cleaner (ACL) (4)
- Roll-over valve (5)
- Float Limit Vent Valve (6)
- fuel filler pipe (7)

- all lines between the above components.

The fuel tank system has a leak diagnostic unit to diagnose any leakage. The leak diagnostic unit pressurizes the fuel tank system when the ignition is off, if the conditions for diagnosis have been met. The control module can detect faults in the function of the leak diagnostic unit and leakage that is 0.5 mm or greater. Minor leak; leakage greater than 0.5 mm but less than 1.0 mm. Major leak; leakage greater than 1.0 mm.

The leak diagnostic unit consists of a pump and a valve that controls the air flow in the unit. The fuel tank system tests for leaks by measuring the power consumption of the pump. The power consumption of the pump corresponds to a certain pressure in the fuel tank system. During diagnosis, the rate at which the pressure can build up is checked, taking into account the quantity of fuel in the tank. The quicker the pressurization the better the fuel tank system is sealed.

Conditions for diagnosis

The diagnosis begins when all the following conditions are met:

- There must be no diagnostic trouble code (DTC) stored for the following components or functions:
  - the power stage for the pump in the leak diagnostic unit
  - the power stage for the valve in the leak diagnostic unit
  - the power stage for the EVAP canister purge valve
  - the EVAP canister purge valve.
  - the engine coolant temperature (ECT) sensor
  - atmospheric pressure sensor
  - outside temperature sensor.
- The engine is switched off until the engine coolant temperature (ECT) has fallen to a few degrees above the outside temperature, then engine running for at least 10 minutes.
- Ignition off
- Vehicle speed 0 km/h
- Engine coolant temperature (ECT) -5°C or higher.
- Maximum altitude of 2500 meters above sea level.
- Outside temperature between -5 and +35°C.
- Fuel volume in the tank less than 85%. The engine control module (ECM) ignores these parameters if a diagnostic trouble code (DTC) is stored for the fuel level sensor and the fuel volume cannot be determined.
- Battery voltage between 11.0-15.0 V. The voltage must be stable.
- EVAP canister purge valve closed
- Low volume in the canister.
- Fuel tank filler cap locked. Tip. Locking occurs when the vehicle speed exceeds approximately 20 km/h.

Diagnostic phases

The diagnostic is divided into the following phases and is carried out in sequence when all conditions for the

diagnostic have been met.

- reference phase
- function test
- leak diagnostic

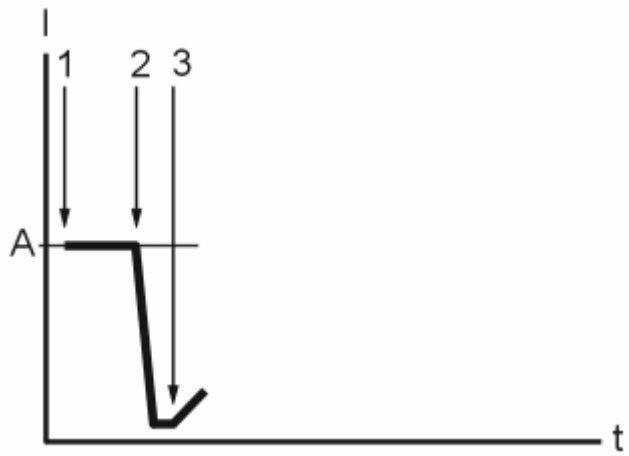

Fig. 216: Identifying Fault Free Fuel Tank System Diagram Phase 1
Courtesy of VOLVO CARS CORPORATION

Reference phase (1-2)

The illustration is a diagram of a fault free fuel tank system.

Before the leak diagnostic begins, the control module runs a reference phase for leakage. During the reference phase (1-2) for leakage that is 0.5 mm, the pump in the leak diagnostic unit pumps ambient air through a 0.5 mm hole and back out to the ambient air. At the same time, the power consumption (A) of the pump is measured and stored in the control module. The stored value (A) for the power consumption of the pump corresponds to a leakage of 0.5 mm. This value is then used by the engine control module (ECM) to determine the leak status of the fuel tank system.

Function test (1-3)

If the value for the power consumption of the pump is too high or low during reference phase (1-2), or if the value for pump power consumption varies too much during reference phase (1-2), the diagnostic is cancelled and starts again the next time the conditions for the diagnostic are met. A diagnostic trouble code (DTC) is stored if the diagnostic is cancelled because the power consumption of the pump is varying excessively.

After the reference phase, the valve (2) in the leak diagnostic unit is activated and controls the air flow to the fuel tank to pressurize the fuel tank system. This change of air flow will cause the power consumption of the pump to fall briefly before the pressure builds up in the fuel tank system (3). A diagnostic trouble code is stored if the value for the power consumption of the pump drops too quickly, slowly or not at all.

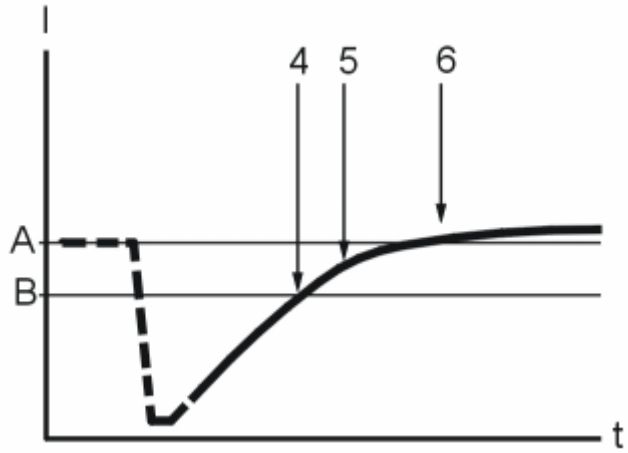

Fig. 217: Identifying Leak Diagnostic, Major Leak Diagram
Courtesy of VOLVO CARS CORPORATION

Leak diagnostic, major leak (leakage greater than 1.0 mm)

The diagnostic for "major leaks" is carried out each time when the conditions for the diagnostic are met. The leak diagnostic unit pressurizes the fuel tank system, measures the power consumption of the pump (4) and compares this with a calculated desired value (B). A diagnostic trouble code (DTC) for a major leak is stored if the measured value does not reach the calculated desired value within a certain time (the time is determined by atmospheric pressure and the fuel level in the tank).

Leak diagnostic, minor leak (leakage greater than 0.5 mm but less than 1.0 mm)

The diagnostic for minor leaks is run every other time that the conditions for the diagnostic are met. The diagnostic for major leaks is always run before the diagnostic for minor leaks. The leak diagnostic unit continues to pressurize the fuel tank system (5-6). After a certain amount of time (the time varies depending on the fuel level in the tank), the engine control module (ECM) checks that the fuel tank system for leaks. This is determined based on:

- time
- the measured reference current consumption of the pump (A)
- the measured power consumption of the pump when the assessment is made
- the shape and character of the current curve during pressurization.

A diagnostic trouble code (DTC) is stored if a minor leak is detected.

OVERVIEW

OVERVIEW

General

The engine control module (ECM) diagnoses both internal signals and functions as well as signals and functions

from connected components.

Conditions for diagnosis

For the diagnosis of a component or function to start, certain specific conditions must be met. The conditions for diagnostics vary depending on the component or function being diagnosed.

Conditions must be met during the diagnostic in order for the diagnostic to be completed. The time and conditions for the diagnostic vary depending on the component or function being diagnosed. Certain diagnostics only require the ignition to be switched on and off for a diagnostic to be run. Other diagnostics require that several different conditions are met. For example:

- vehicle speed
- engine coolant temperature (ECT)
- time since start
- different load and engine speed relationships in the same trip
- a certain event (for example the evaporative emission system (EVAP) valve is operating).

When the engine control module (ECM) has run all the implemented diagnostics, the control module has completed a "trip". An extensive driving schedule in various conditions is required to complete a trip. The engine may also need to be shut off for a certain amount of time and then switched on again to complete a trip.

Emissions related diagnostic functions

The engine control module (ECM) checks that the emissions related systems are working. These systems are checked by running a diagnostic function. The diagnostic function checks the components and that the system is functioning.

Diagnostic trouble code (DTC) memory

When the engine control module (ECM) detects a fault, the diagnostic trouble code and status are stored in the diagnostic trouble code memory and are visible during normal diagnostic trouble code readout. If the diagnostic trouble code (DTC) lights the malfunction indicator lamp (MIL), this occurs at the same time. If an existing fault disappears and does not recur, the engine control module changes the status of the diagnostic trouble code after a certain number of fault-free operating cycles (depending on the nature of the diagnostic trouble code). This means that it can no longer be read during normal diagnostic trouble code readout. In this status, the diagnostic trouble code remains until the engine control module (ECM) erases diagnostic trouble codes or is disconnected from power.

Substitute value

For certain types of diagnostic trouble codes (DTCs), the missing signal is replaced with a substitute value so that the system can continue functioning.

LEAK DIAGNOSIS, IMPROVED VERSION (CERTAIN MARKETS ONLY)

LEAK DIAGNOSTICS, IMPROVED VERSION

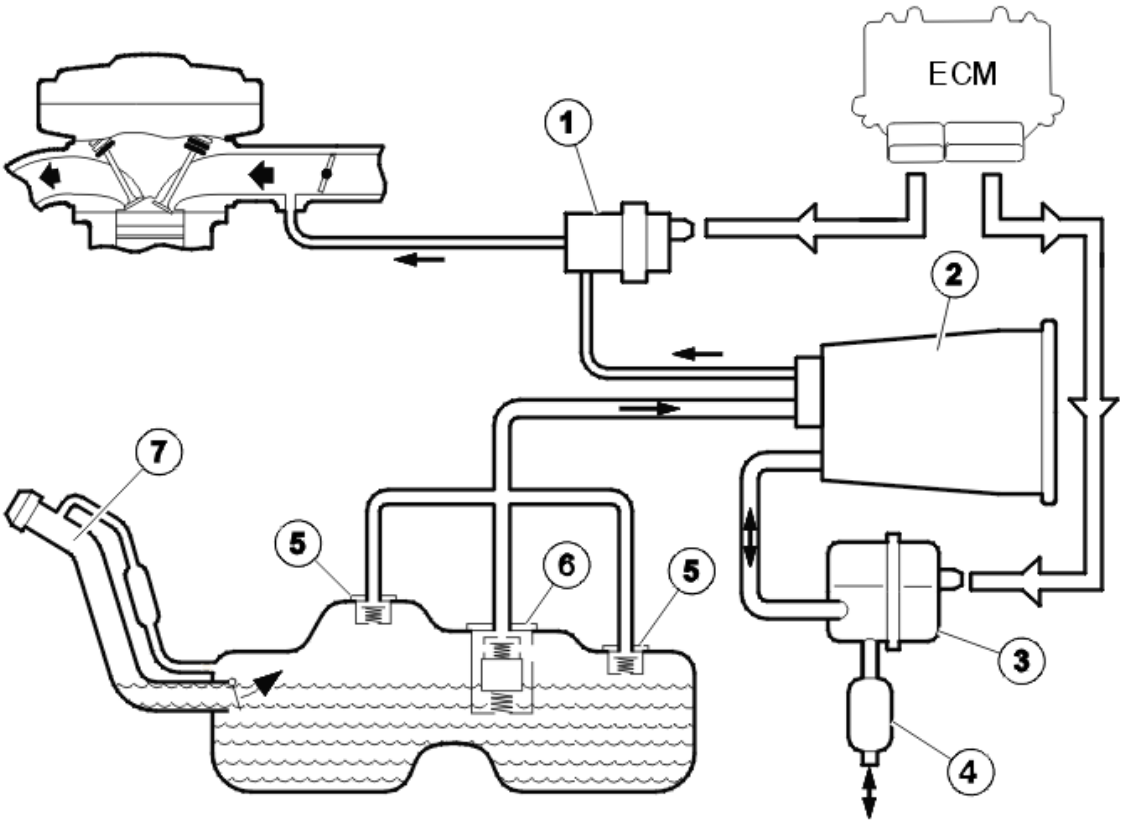

Fig. 218: Fuel Tank System Leak Overview
Courtesy of VOLVO CARS CORPORATION

All gases that evaporate from fuel in the fuel tank must be led to and stored in the evaporative emission system (EVAP) canister so that they can be directed into the engine for combustion. In order to detect leakages which cause evaporation of gases into the air, the fuel tank system is diagnosed for leakage. The fuel tank system consists of:

- fuel tank
- Canister purge (CP) valve (1)
- EVAP canister (2)
- leak diagnostic unit (3)
- air cleaner (ACL) (4)
- Roll-over valve (5)
- Float Limit Vent Valve (6)
- fuel filler pipe (7)
- all lines between the above components.

The fuel tank system has a leak diagnostic unit to diagnose any leakage. The leak diagnostic unit pressurizes the fuel tank system when the conditions for diagnosis have been met. The control module can detect faults in the function of the leak diagnostic unit and leakage that is 0.5 mm or greater. Minor leak; leakage greater than 0.5 mm but less than 1.0 mm. Major leak; leakage greater than 1.0 mm.

The leakage diagnostic consists of a pump and a valve that control the flow in the unit. Engine control module (ECM) checks sealing in the tank system by measuring the relationship between obtained pressure and flow from the leakage diagnostic pump when pressurized.

If a certain pressure is not obtained with a pre-determined (with known mass) the Engine control module (ECM) interprets it as a leakage from the fuel tank system.

Leakage diagnostics start in normal operation when specific conditions have been fulfilled, see below. Diagnostics can also be started by command using VIDA when you disregard some of these conditions.

Conditions for diagnosis

The diagnosis begins when all the following conditions are met:

NOTE: Slightly different conditions apply when diagnostics are started by command using VIDA (Volvo scan tool).

- No diagnostic trouble codes for EVAP-valve or atmospheric pressure sensor may be stored.
- The engine is switched off until the engine coolant temperature (ECT) has fallen to a few degrees above the outside temperature, then engine running for at least 10 minutes.
- Ignition off
- Vehicle speed 0 km/h
- Engine temperature 4-35 °C.
- Maximum altitude of 2500 meters above sea level.
- Outdoor temperature between 4-35 °C.
- Fuel volume in the tank between 0-85%. The engine control module (ECM) ignores these parameters if a diagnostic trouble code (DTC) is stored for the fuel level sensor and the fuel volume cannot be determined.
- Battery voltage between 11-15 V. The voltage must be stable.
- EVAP canister purge valve closed
- Low volume in the canister.
- Tank hatch locked.

NOTE: Locking occurs when the vehicle speed exceeds 20 km/h.

Diagnostic phases

The diagnostic is divided into the following phases and is carried out in sequence when all conditions for the diagnostic have been met.

- reference phase
- function test
- checking tank system.

Reference phase

Before leakage diagnosis itself can be started, the control module performs a reference phase for leakage. Reference phase for leakage which is 0.5 mm is performed by the leakage diagnostic unit's pump pumping ambient air through a hole which is 0.5 mm and back out to the ambient air. During that time, the pump is monitored n the leakage diagnostic unit and reference values are stored away for later use in assessing the tank system's sealing.

If any reference value for the pump is unreasonably high or low, or varies too much, then diagnosis is interrupted and a diagnostic trouble code is generated.

Function test

After the reference phase, the leakage diagnostic unit's valve is activated and the air flow is controlled to the tank system to pressurize the tank system. This shift in air flow means that the pump load drops briefly before the pressure builds up in the tank system. If the load does not change within reasonable limits within reasonable time, then diagnosis is interrupted and a diagnostic trouble code is generated.

Checking tank system, major leakage (leakage bigger than 1.0 mm)

Diagnosis are performed every time conditions for diagnosis are fulfilled.

The leakage diagnostic unit pressurizes the tank system and checks sealing by monitoring the pressure in the tank system. The pressure is a calculated pressure, calculated using measured power consumption on the pump. If the pressure stabilizes and/or does not go above 1500 Pa within 450 seconds, this is interpreted as a leakage from the fuel tank system. Diagnosis is interrupted and a diagnostic trouble code for major leakage is generated.

Checking tank system, minor leakage (leakage bigger than 0.5 mm but smaller than 1.0 mm)

Diagnosis for minor leakage is performed every other time conditions for diagnosis are fulfilled. Otherwise, diagnosis finishes after checking for major leakage.

The leakage diagnosis unit continues pressurizing the tank system. Engine control module (ECM) checks sealing in the tank system by measuring the relationship between reached pressure and flow from the leakage diagnosis pump when pressurizing. In a sealed system the relationship between these shall be linear. Any deviations from the linear relationship is calculated and used to assess the tank system's sealing.

If the assessment, performed within 15 minutes, is that a minor leakage has been detected in the tank system, a diagnostic trouble code for minor leakage is generated.

DOWNLOADING SOFTWARE AND REPLACING THE CONTROL MODULE

New software can be downloaded into the engine control module (ECM). When ordering software, the hardware and the software in the car is compared to the information in the Volvo central database. If the comparison is OK the software is downloaded to the control module. If the comparison between the car and Volvo central database is not OK, the database is updated with the car configuration. When this is complete the software is downloaded.

The Engine control module (ECM) is located on the air filter box, under a plastic cover.

The engine control module (ECM) contains a unique code for each car for the immobilizer. The central electronic module (CEM) checks this code at engine start up. The engine will not start if the central electronic module (CEM) detects an incorrect code for the immobilizer. This means that the engine control module (ECM) cannot be switched from vehicle to vehicle.

The engine control module (ECM) must first be "unlocked" using a unique PIN for each car before it can be programmed with a code for the immobilizer. When the PIN has been approved by the engine control module (ECM), the code for the immobilizer can be programmed.

The PIN and the code for the immobilizer are obtained from the Volvo central database and sent out with the software package when software for downloading has been ordered.

All new engine control modules (ECM) have the same PIN which is preprogrammed by the control module supplier. When the engine control module (ECM) has been programmed successfully the original PIN for the car will be programmed in the engine control module (ECM) memory and will replace the preprogrammed PIN code.

FUNCTION

START

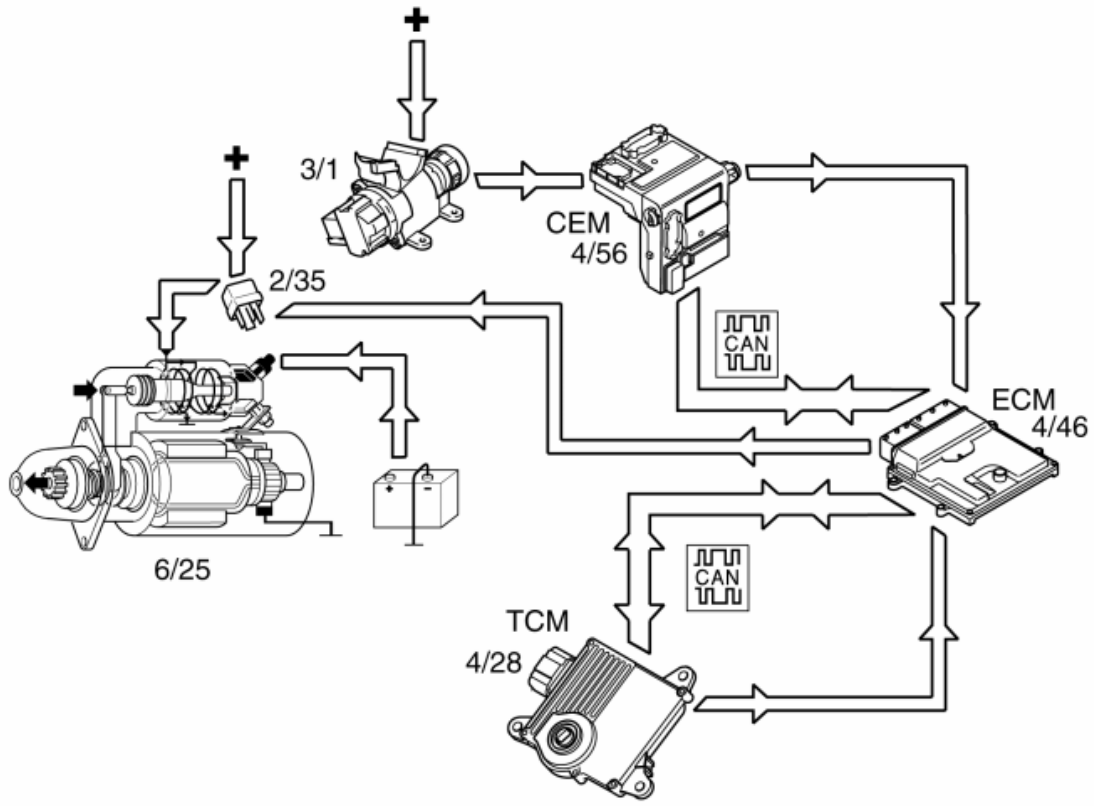

Fig. 219: Identifying Starting System

Courtesy of VOLVO CARS CORPORATION

The starter motor (6/25) is supplied with power via the starter motor relay (2/35), the starter motor relay is controlled by the engine control module (ECM) (4/46).

The start process is as follows:

1. The ignition key is turned to start position (position III)
2. A high signal (U_{bat}) from the ignition switch (3/1) is transmitted to the engine control module (ECM) via the central electronic module (CEM) (4/56). The engine control module (ECM) interprets this high signal as a request to activate the starter motor.
3. The engine control module (ECM) activates the starter motor solenoid by grounding and powering the coil for the starter motor relay.
4. The relay closes the circuit between the starter motor solenoid and the fuse in the relay/fuse box in the engine compartment, activating the starter motor.
5. The engine control module (ECM) activates the starter motor until the engine starts (the engine speed (rpm) exceeds a certain value)

Auto start

If the ignition key returns to ignition position (position II) before the engine is started, the starter motor continues to run. The starter motor runs until the engine is started or until a certain time has elapsed. The engine temperature dictates the running time of the starter motor:

- 0 °C or higher, approximately 3 seconds
- less than 0 °C, up to approximately 5 seconds.

If the engine does not turn or if the engine speed is extremely low when the start relay is activated, the engine control module (ECM) interrupts start relay activation.

Activation of the starter motor is not permitted or is interrupted if:

- the engine is running (the engine speed (RPM) above a certain value)
- the immobilizer function does not allow a start.
- the gear selector is not in position "P" or "N" (automatic transmissions). The engine control module (ECM) receives a signal indicating the position of the gear selector from the transmission control module (TCM) (4/28) via both the controller area network (CAN) and from a directly connected cable between the engine control module (ECM) and transmission control module (TCM).

CAMSHAFT CONTROL (CVVT)

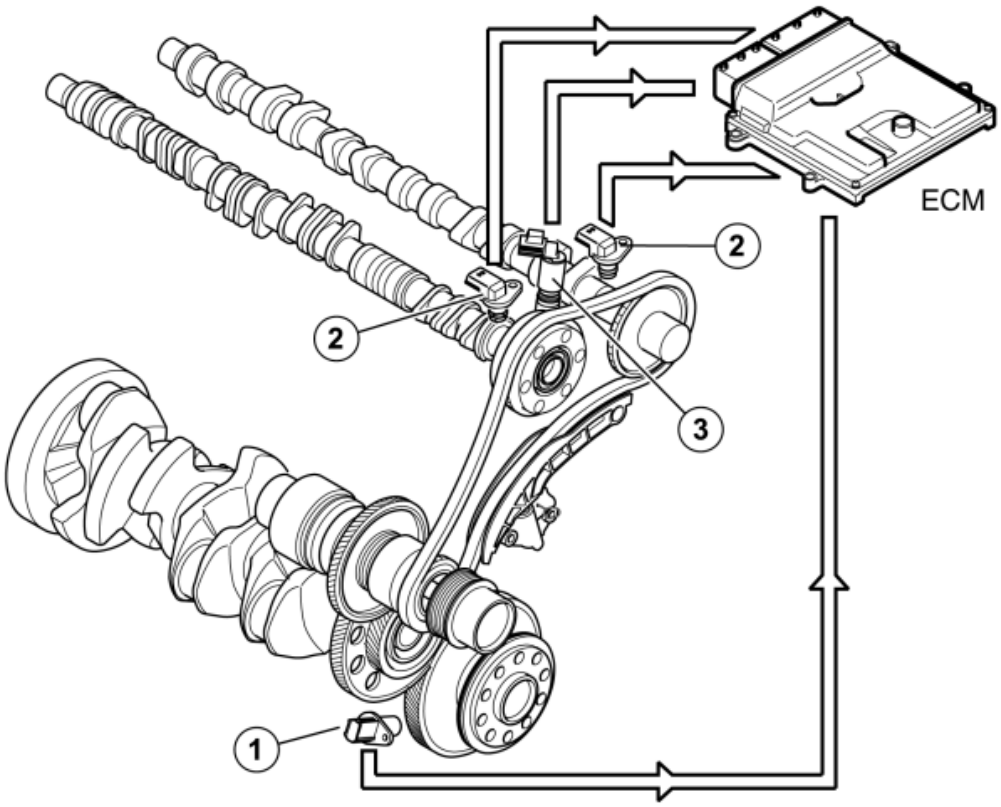

Fig. 220: Identifying Camshaft Control (CVVT) System
Courtesy of VOLVO CARS CORPORATION

Only the intake camshaft can be controlled by the Engine control module (ECM) via a reset valve.

The intake camshaft is located in the engine's leading edge (in the travel direction) and the exhaust camshaft in the trailing edge (towards the passenger compartment).

The camshafts are driven by the crankshaft via a gear housing located on the engine's top side.

When each camshaft is adjusted in the factory, its position is aligned with the crankshaft's position. The camshaft's position at alignment against the crankshaft is called the **camshaft's 0-position** (basic setting).

At camshaft control (CVVT), the camshaft's 0-position is displaced so that the camshaft's angle position is changed. Thus, opening and closing of the exhaust and inlet valves changes relative to the crankshaft.

By controlling the camshaft's angle position, the engine's performance can be increased, idle quality can be improved, and emissions can be reduced.

The engine control module (ECM) detects the position of the camshafts by comparing the signals from the engine speed (RPM) sensor (1) (crankshaft position) and the camshaft position (CMP) sensors (2) (camshaft positions). The engine control module (ECM) then controls the angle of the camshaft by controlling the oil flow to the CVVT unit using the reset valve camshaft (3).

There are diagnostics for this function. See also: **CAMSHAFT DIAGNOSTICS (CVVT)**

Controlling, reset valve camshaft

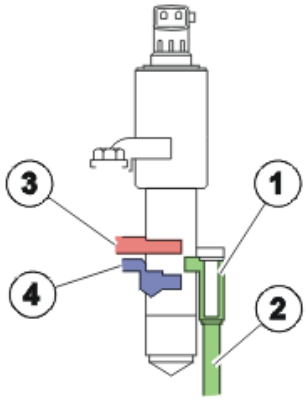

Fig. 221: Diagram of Camshaft Reset Valve
Courtesy of VOLVO CARS CORPORATION

1. Oil filter reset valve camshaft.
2. Oil channel (pressure, inlet).
3. Channel connected with CVVT-unit's chamber (triggering).
4. Channel connected with CVVT-unit's chamber (re-triggering).

The camshaft reset valve controls the oil flow to the continuous variable valve timing (CVVT) unit. The engine control module (ECM) uses a pulse width modulation (PWM) signal to control the valve. See also: **CAMSHAFT RESET VALVE (CVVT)**

The continuous variable valve timing (CVVT) unit allows the position of the camshaft to be adjusted relative to the crankshaft.

The camshaft is secured to the CVVT-unit's rotor. The rotor (and thus, the camshaft) can rotate in relation to the timing belt pulley by the oil pressure building up on one or the other side of the rotor's vanes in the CVVT-unit.

Control occurs according to the following during deployment/return of the camshaft.

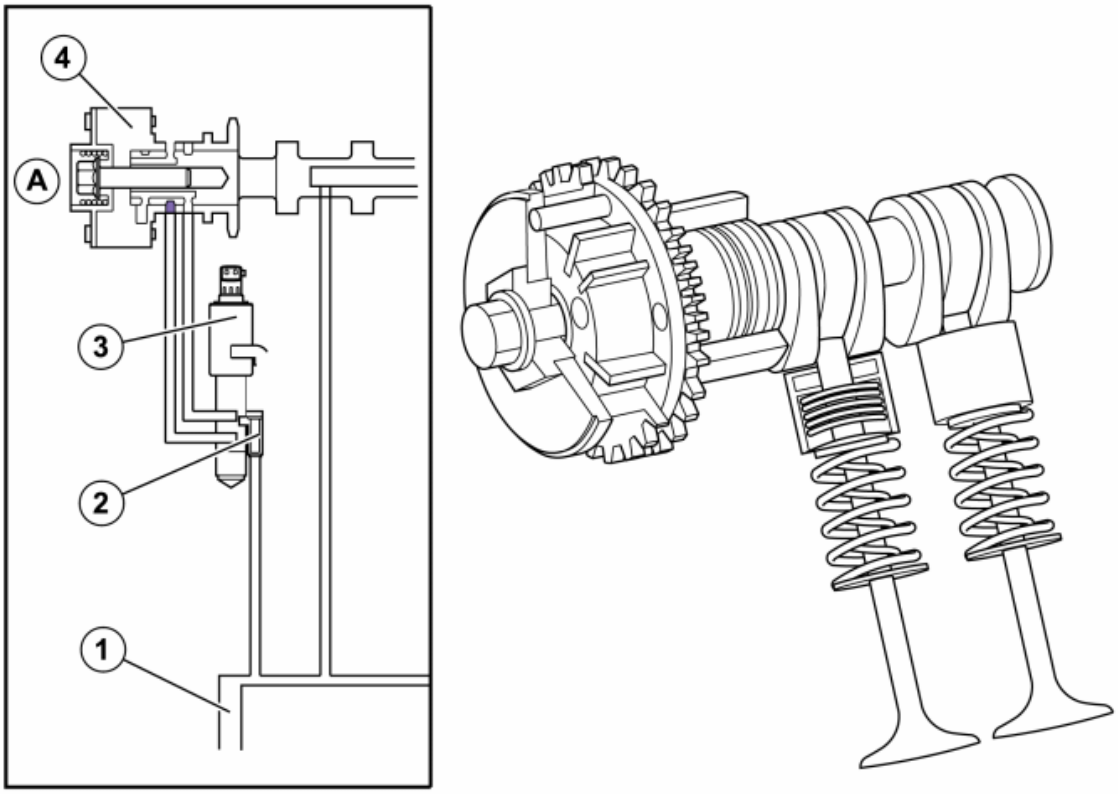

Fig. 222: Action of Camshaft Reset Valve
Courtesy of VOLVO CARS CORPORATION

A: Inlet camshaft

- Oil pressure from the lubrication system (1) of the engine.
- The oil passes the filter for the camshaft reset valve (2) and then on to the reset valve (3).
- The engine control module (ECM) controls the oil flow to one of the CVVT unit chambers (4) depending on whether it is to be deployed/returned by the camshaft.

The reset valve is controlled by the engine control module (ECM) by high frequency, switching for deployment and return. This results in rapid and precise control. The inlet camshaft can be triggered up to approx. 40 crankshaft degrees.

CONTROLLING THE GENERATOR

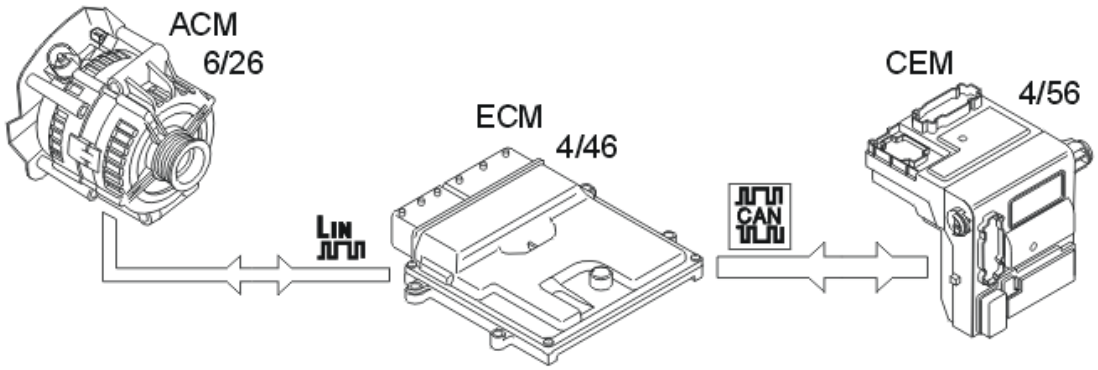

Fig. 223: Controlling The Generator
Courtesy of VOLVO CARS CORPORATION

The engine control module (ECM) (4/46) regulates the charge voltage of the alternator (GEN) (6/26) (via LIN communication) when requested by the central electronic module (CEM) (4/56) (via CAN communication).

The engine control module (ECM) can change the requested charging voltage from the central electronic module (CEM) in order to adapt it to certain operating conditions such as starting, idling or high engine loads.

The value of requested charge voltage from the engine control module (ECM) and the charge current of the generator can be read off.

The alternator control module (ACM) (6/26) transmits information to the engine control module (ECM) regarding any faults). The diagnostic trouble codes (DTCs) are stored in the engine control module (ECM) in the event of a fault. In the event of certain faults, information about these faults is also transmitted to the central electronic module (CEM).

VARIABLE INTAKE SYSTEM

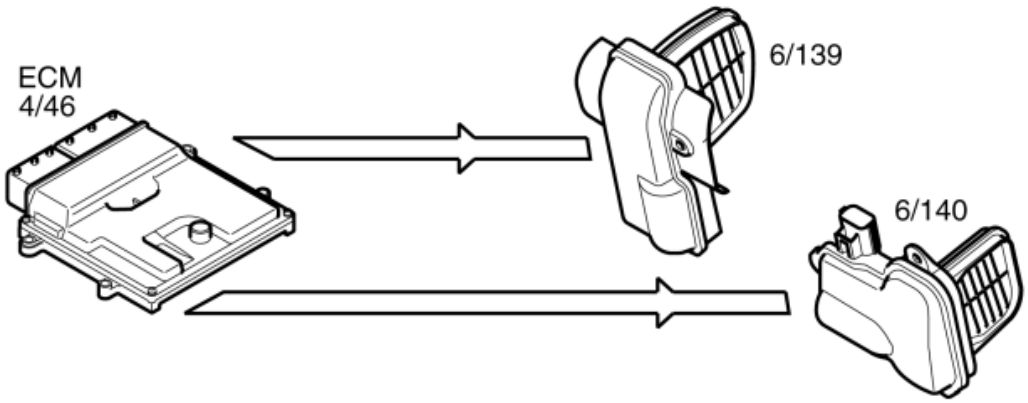

Fig. 224: Controlling The Variable Intake System
Courtesy of VOLVO CARS CORPORATION

General

Today's modern car engines often utilize systems with variable length of the intake manifolds.

In older engines with fixed lengths, the length had to be adapted to a certain specific engine speed range.

Today's system gives greater flexibility as well as additional torque without any costs in the form of, e. g., fuel consumption or emissions.

In the variable intake system, there are two actuators with associated throttles to change the length of the intake manifolds. These are:

- Actuator variable intake manifold, upper (6/139)
- Actuator variable intake manifold, lower (6/140)

The primary throttle is activated at engine speed over approx. 4800 rpm and the secondary throttle is activated between approx. 3800 rpm and 4800 rpm (applies at + 20 °C).

Different throttle combinations:

- **Position 1:** Both throttles are closed at engine speeds lower than approx. 3800 rpm.
- **Position 2:** The secondary throttle opens at approx. 3800 rpm and this shortens the length some more.
- **Position 3:** Both throttles are fully open to minimize the length at higher engine speeds (over 4800 rpm).

The valve for variable intake is controlled by the engine control module (ECM) (4/46).

The actuators for variable intake function can be activated and the function for variable intake can be diagnosed by the engine control module (ECM).

VARIABLE CAMSHAFT PROFILE (CPS)

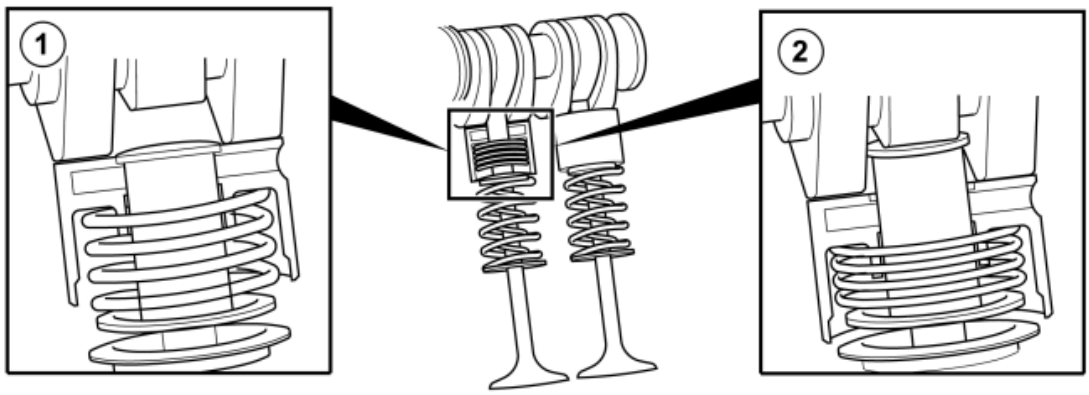

Fig. 225: Viewing Variable Camshaft Profile (CPS)
Courtesy of VOLVO CARS CORPORATION

1. High lift
2. Low lift

To maintain low fuel consumption at different loads and engine speeds, there is a system for variable camshaft profile (CPS, Cam Profile Shifting) that can vary the duration and lift height of the valves on the intake camshaft.

Duration = part of the rotating camshaft's revolution that the camshaft acts on the valve.

The system is made up of hydraulic valve depressors where the Engine control module (ECM), via oil channels, can set the valve depressors in two positions, one low position and one high position.

At start and at low temperatures (oil temperature below +40 °C, the system is pressureless and thus in its low position (spring loaded).

To minimize stresses the Engine control module (ECM) pressurizes the depressors that are not loaded at the moment. For this, two cam profile solenoids are needed.

Cam profile solenoid 1 (CPS1) supplies cylinder 1, 2, and 4, and cam profile solenoid 2 (CPS2) supplies cylinder 3, 5, and 6 with pressurized oil.

OIL MONITORING

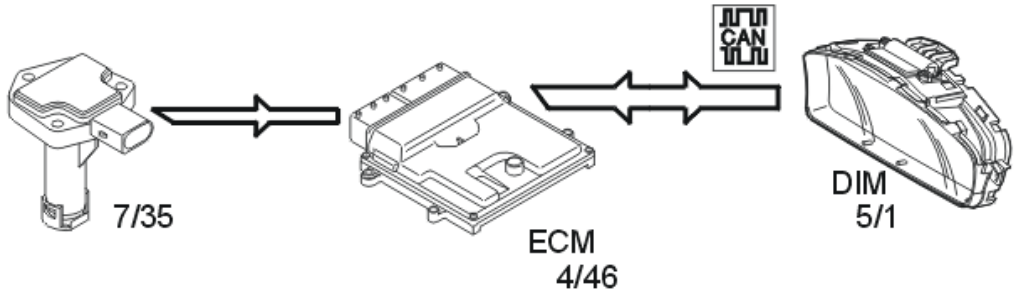

Fig. 226: Monitoring Oil Level
Courtesy of VOLVO CARS CORPORATION

General

The following components are used for oil monitoring:

- oil level sensor (7/35)
- engine control module (ECM) (4/46)
- driver information module (DIM) (5/1).

The oil level sensor, via the driver information module (DIM), is used to inform the driver if oil filling is required.

Detecting the oil level

The integrated electronics of the sensor calculates the oil level using the measured value for the oil temperature.

For the correct oil level to be calculated, temporary oil level changes in the oil trough must also be included in the calculation, which can occur when driving on hills, around bends or similar for example. The engine control module (ECM) makes these calculations using the oil level sensor signal and a number of other parameters, for example, vehicle speed signal and load signal.

CONTROLLING THE CRUISE CONTROL

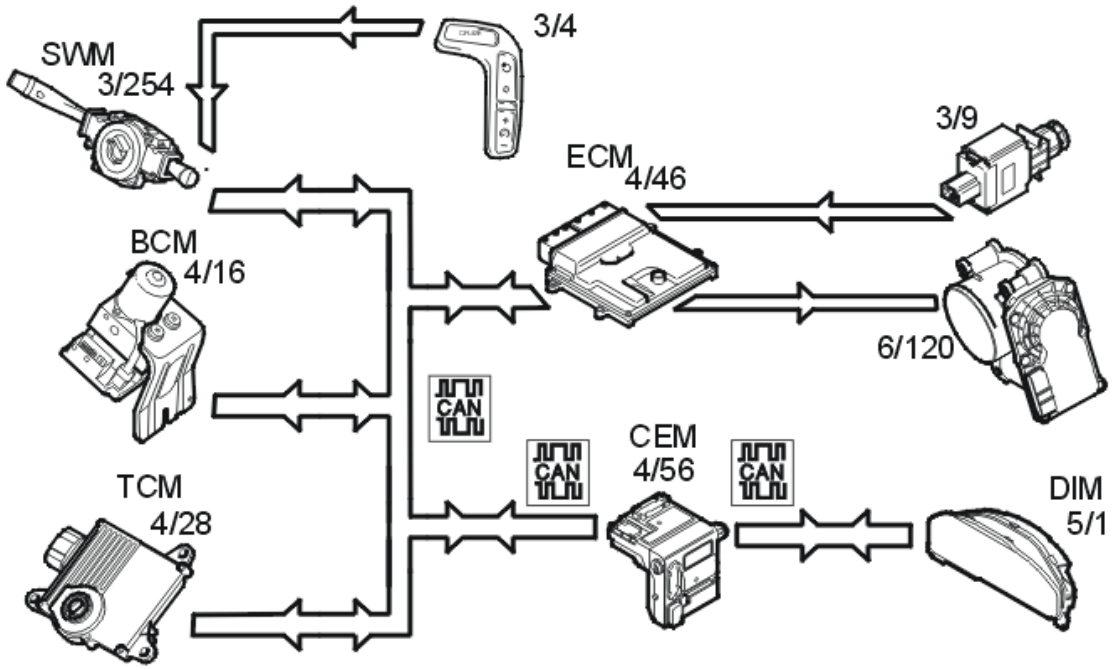

Fig. 227: Identifying Cruise Control Components
Courtesy of VOLVO CARS CORPORATION

The following components are used when controlling the cruise control:

- engine control module (ECM) (4/46)
- steering wheel module (SWM) (3/254)
- control unit cruise control (3/4)
- central electronic module (CEM) (4/56)
- brake control module (BCM) (4/16) (brake pedal position, speed signal)
- driver information module (DIM) (5/1) (cruise control light)
- transmission control module (TCM) (4/28)
- electronic throttle unit (6/120)

- brake light switch (3/9).

To activate cruise control, the function must be switched on using the "CRUISE" button. Then a light is activated in the driver information module (DIM).

The driver activates the function by pressing the SET+ or SET- button. A message is then transmitted via the low speed side of the CAN network to the central electronic module (CEM) which then transmits the message on via the high speed side of the CAN network to the engine control module (ECM).

The engine control module (ECM) controls the throttle angle so that a constant speed is maintained using the vehicle speed signal from the Brake Control Module (BCM). The transmission control module (TCM) also receives a message indicating that cruise control is active via the Controller area network (CAN), so that the transmission follows certain shifting patterns when the cruise control is active.

If the accelerator pedal (AP) is depressed the vehicle speed increases as normal and then resumes the stored value when the driver releases the accelerator pedal (AP) again.

The engine control module (ECM) continually stores the speed. If the cruise control is disengaged, for example, if the driver depresses the brake pedal, the previous speed can be resumed by pressing the "RESUME" button.

The cruise control cannot be activated below a certain speed.

Cruise control is switched off:

- when the driver depresses the brake pedal
- when the driver presses the "CRUISE" button on the steering wheel
- when the driver depresses the "0" button on the steering wheel
- if "P" or "N" position is transmitted on the controller area network (CAN)
- if the speed deviates too much from the set value
- when the control system detects a fault that prevents activation.

FUEL TRIM

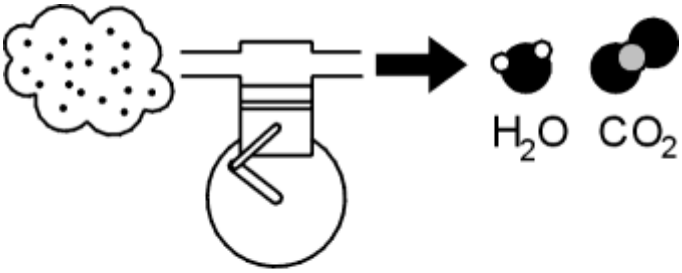

Fig. 228: Graphic of Exhaust Emissions
Courtesy of VOLVO CARS CORPORATION

Overview

Fuel trim reduces exhaust emissions. Fuel trim reduces nitrous oxides (NO_x), carbon monoxide (CO) and hydrocarbon (HC) emissions.

Theoretically, if the correct amount of oxygen is added during combustion, fuel can be converted to water (H_2O) and carbon dioxide (CO_2). Emissions would then be completely safe.

In practice considerable amounts of hydro-carbons (HC) and varying amounts of carbon monoxide (CO) and carbon dioxide (CO_2) remain.

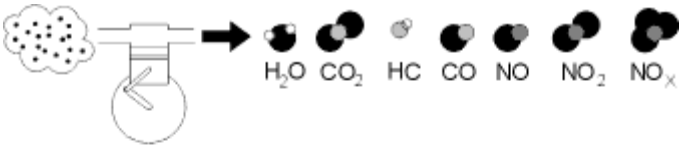

Fig. 229: Identifying Nitrous Oxides
Courtesy of VOLVO CARS CORPORATION

Due to the high temperature and pressure, nitrous oxides such as NO and NO_2 are also formed. The common designation for these gases is nitrous oxides NO_x .

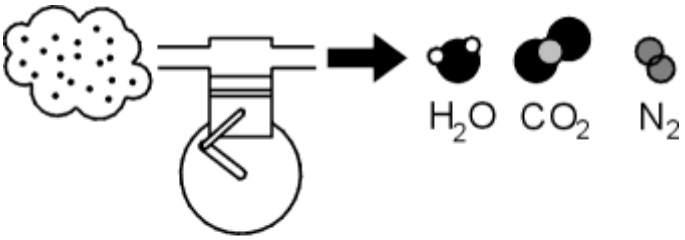

Fig. 230: Graphic of Exhaust Emissions
Courtesy of VOLVO CARS CORPORATION

By speeding up the reaction between the remaining reactive components using a catalytic converter, these can be converted to water (H_2 O), carbon dioxide (CO_2) and nitrogen (N_2).

However this can only happen if the balance of hydro-carbons (HC), carbon monoxide (CO), oxygen (O_2) and nitrous oxides (NO_x) is exactly right in the exhaust. This happens when the fuel air mixture before combustion is 14.7 kg of air per kg of fuel. The Lambda value is then said to be one, (lambda=1).

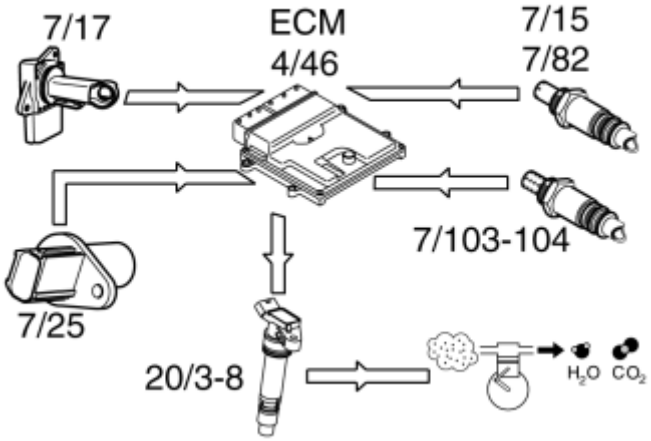

Fig. 231: Diagram of Engine Control Components
Courtesy of VOLVO CARS CORPORATION

A base program in the engine control module (ECM) calculates the injection period based on data about load, i.

e. the measured air mass and engine speed (rpm). The calculated injection time (from the base program) is then modified by a circuit (short-term fuel trim). The signal from the heated oxygen sensor (HO2S) is used to finely adjust the injection period so that lambda=1 is reached. The short-term fuel trim is a circuit that finely adjusts the injection period so that the fuel/air mixture is optimized (lambda=1). The control module also used the signals from the front and rear heated oxygen sensors (HO2S) to correct the front heated oxygen sensor (HO2S) (offset adjustment) and thereby the injection period. This gives a higher degree of accuracy during fuel trim. Fuel trim is a rapid process which may take place several times a second. Adjustment of the injection period calculated in the base program is limited.

The short-term fuel trim can be read off.

Adaptive functions

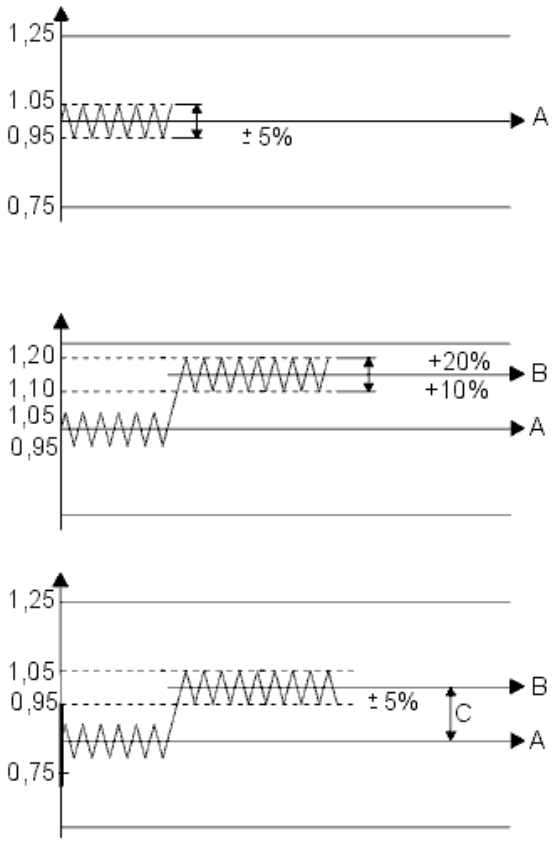

Fig. 232: Graphed View Of Adaptive Function
Courtesy of VOLVO CARS CORPORATION

Certain factors, for example, tolerance deviations on certain components such as mass air flow (MAF) sensor and injectors, air leakage on the intake side, fuel pressure etc. affect the fuel / air mix. In order to compensate for this, the engine control module (ECM) has adaptive (self learning) functions. When the engine is new the short term fuel trim varies cyclically around a nominal central line (A) 1.00, with, for example, a ±5% change of injection time when fuel trim is in operation.

If there is air leakage for example, the short-term fuel trim will quickly be offset to a new position (B) and will then work for example between 1.10 (+10%) and 1.20 (+20%), although still at an amplitude of 5%, but with an

offset in relation to the original center line (A). The injection period has then been increased to compensate the increase in the amount of air.

The adaptive functions will correct the change, so that the short-term fuel trim will work around the new center line (B) where it will again have its full range of control available.

Put simply, fuel trim is a measurement of the difference (C) between the original short-term fuel trim center line (A) and the new center line (B).

The adaptive functions are split into various operational ranges based on the load and speed of the engine.

The different adaption ranges can be read off.

The adaptive adjustments of injection time are continuously stored in the engine control module (ECM). This means that, at different operating ratios, the correct mixture ratio is achieved before the heated oxygen sensor (HO2S) reaches operating temperature.

The diagnostic trouble code (DTC) is stored in the engine control module (ECM) if any adaption value is too high or too low.

INDIVIDUAL CYLINDER FUEL TRIM (-2009)

General

The Engine control module (ECM) controls the fuel according to the description in Fuel trim above, but has another refined system for improving exhaust values, namely individual cylinder fuel trim.

In short, this means that the Engine control module (ECM) can detect the fuel/air mixture composition for each individual (6 cylinders).

To achieve this requires, among others, refined heated oxygen sensors that are very sensitive to the oxygen content in the exhausts.

Should problems occur, which would mean that the sensors, "lose" their extra sensitivity, the Engine control module (ECM) will return to traditional fuel trim.

This will not force the vehicle outside any limit values for exhausts, since this is more than enough to give "clean" exhausts.

FUEL PRESSURE REGULATION

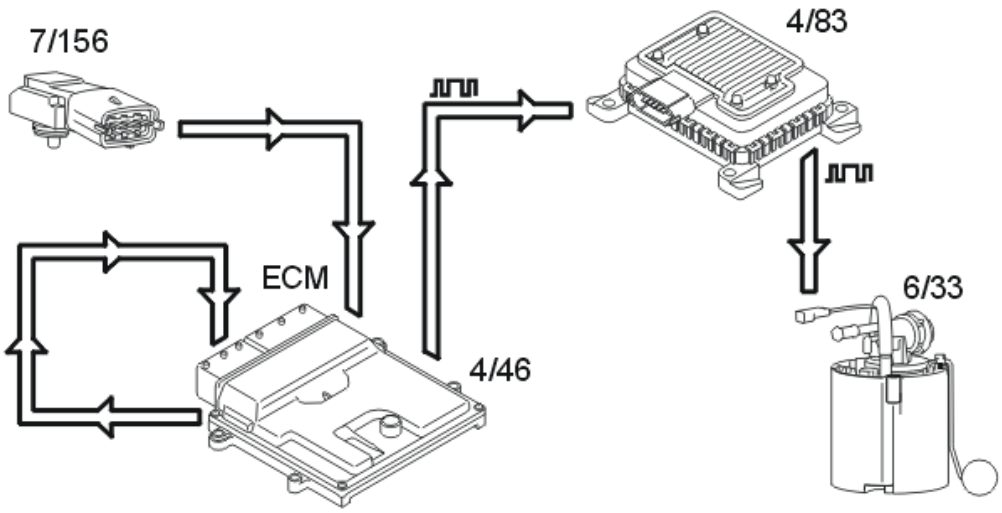

Fig. 233: Identifying Fuel Pressure Control Components
Courtesy of VOLVO CARS CORPORATION

General

Fuel pressure regulation for demand controlled fuel pumps (DECOS - DEmand COntrolled fuel Supply) means that the fuel pressure is controlled steplessly by varying the output of the fuel pump. The design of the system allows a greater maximum pressure (approximately 650kPa) in the fuel pump. This pressure is used in extreme situations, such as heavy engine load for example

The following components are used for fuel pressure regulation:

- engine control module (ECM) (4/46) with integrated atmospheric pressure sensor
- fuel pump control module (4/83)
- fuel pressure sensor with fuel temperature sensor (7/156)
- fuel pump with by-pass valve (6/33).

The time taken for the engine start procedure can be reduced by rapidly increasing the pressure in the fuel rail when the engine control module (ECM) receives a signal about the position of the ignition switch from the central electronic module (CEM).

The engine control module (ECM) is better able to calculate the injection period using the signal from the atmospheric pressure sensor and fuel pressure sensor. This particularly improves the cold starting characteristics of the engine.

The advantages of varying the output of the fuel pump so that it is not always at full power are:

- the total power consumption of the fuel pump (FP) is reduced, reducing the load on the power supply system
- the service life of the fuel pump (FP) is increased

- fuel pump noise is reduced.

Control

The engine control module (ECM) calculates the desired fuel pressure. A signal is then transmitted to the fuel pump control module indicating the desired fuel pressure. Serial communication between the engine control module (ECM) and the fuel pump control module is used to carry the signal. The fuel pump control module then operates the fuel pump unit to obtain the desired pressure using a pulse width modulation voltage on the ground lead. The fuel pump (FP) can be controlled steplessly by changing the pulse width modulation (PWM) signal. Only that pressure which is required at that specific time will then be released to the fuel rail/injectors. The value of the pulse width modulation (PWM) signal is a measurement of the operational load of the fuel pump (FP) (% duty, 100% = maximum pressure).

The engine control module (ECM) continuously monitors the fuel pressure using the signal from the fuel pressure sensor. This allows the desired fuel pressure to be reached, and if necessary a signal is transmitted to the fuel pump control module requesting that the fuel pressure is adjusted.

The engine control module (ECM) attempts too obtain a constant fuel pressure (approximately 380kPa relative to atmospheric pressure with the engine running).

By-pass valve

When the injectors close when the pressure is too great (during engine braking for example) there is a pressure peak. The by-pass valve in the fuel pump (FP) is used to even out the pressure peak. The opening pressure of the valve is approximately 650 kPa.

The by-pass valve also functions as a non-return valve, ensuring that the fuel pressure in the system is maintained when the engine is switched off.

There is high pressure before the engine is started. This high pressure means that the valve in the by-pass valve opens and the system is "flushed".

Passive safety

For safety reasons, the engine control module (ECM) shuts off the fuel pump (FP) if the supplemental restraint system module (SRS) detects a collision.

KNOCK CONTROL

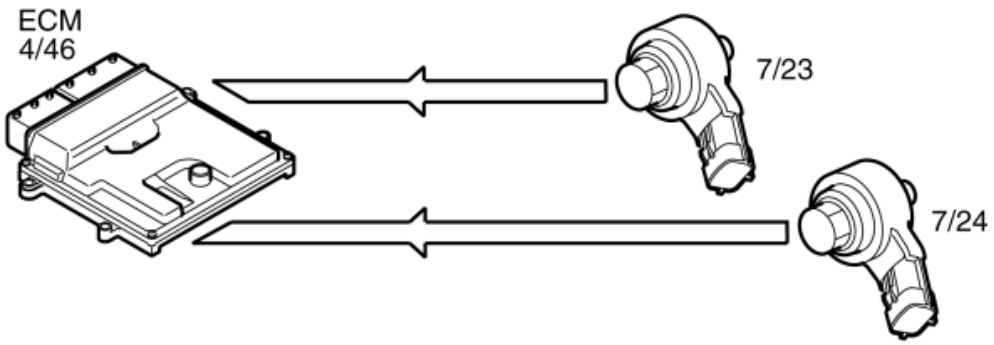

Fig. 234: Identifying Knock Sensors
Courtesy of VOLVO CARS CORPORATION

Knock occurs in the combustion chamber when the fuel and air mixture self ignites. This can occur either before or after the spark plug has produced an ignition spark. In both cases the gas in two or more places ignites in the combustion chamber.

This results in an extremely fast combustion process with flames from several directions. When these flames collide, the pressure in the cylinder increases rapidly and there is a mechanical knocking sound.

If any cylinder knocks, then certain types of vibrations in the engine block. These vibrations are transmitted to the knock sensors (7/23-24), which are bolted in the engine block.

One knock sensor detects knock on cylinders 1, 2, 3. The other knock sensor detects knock on cylinders 4, 5, and 6.

The mechanical stress generated in the knock sensors' piezo-electric materials result in generation of a voltage. The Engine control module (ECM) (4/46) can then, using the camshaft sensors (7/172-173) and the impulse sensor (7/25), decide which cylinder is knocking.

The knock sensors (KS) also interpret a proportion of normal engine sound. The control module is able to recognize the vibrations which correspond to knocking by filtering, amplifying and using software to evaluate the signal.

If the knock sensors (KS) detect knocking in the engine above a certain threshold value, the ignition timing is first retarded and then the fuel/air mixture is enriched to eliminate knocking.

IGNITION CONTROL

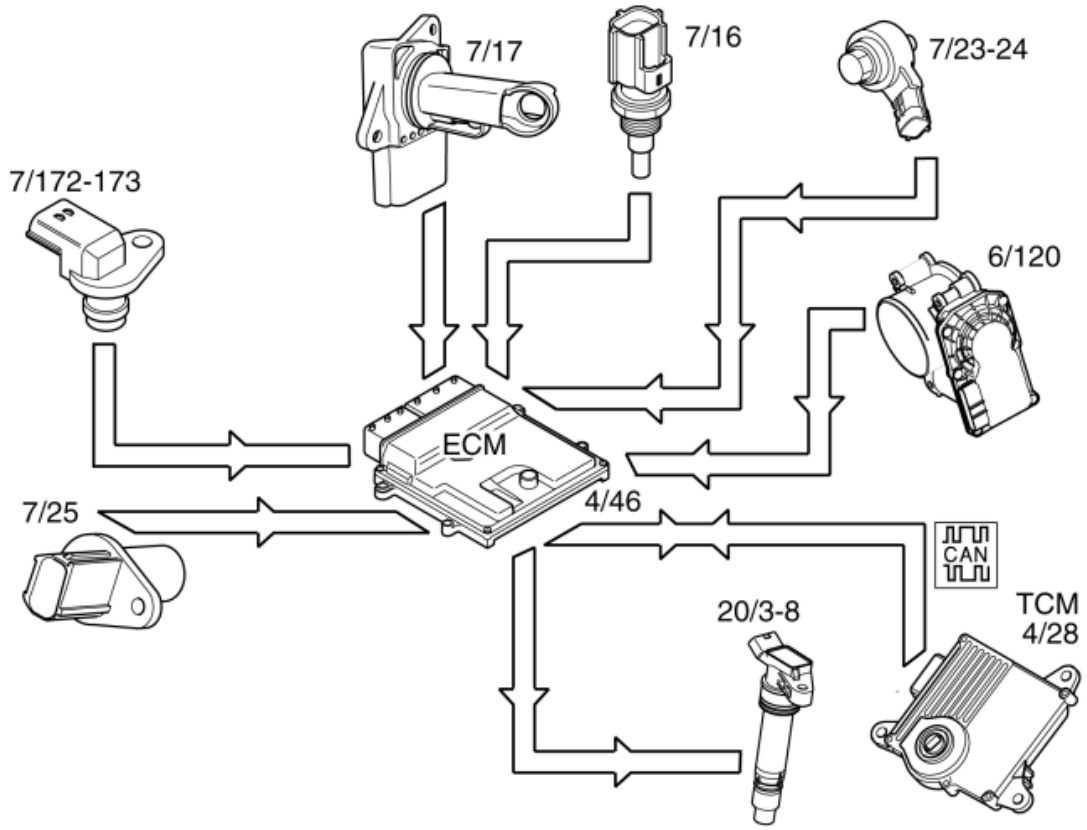

Fig. 235: Identifying Ignition Control Components
Courtesy of VOLVO CARS CORPORATION

The following components are used for ignition control:

- engine speed (RPM) sensor (7/25)
- Camshaft sensor (7/172-173)
- mass air flow (MAF) sensor (7/17)
- engine coolant temperature (ECT) sensor (7/16)
- throttle position (TP) sensor on the electronic throttle unit (6/120)
- knock sensor (KS) (7/23-24)
- transmission control module (TCM) (4/28)
- spark plugs with ignition coils (20/3-8).

The engine control module (ECM) calculates the optimum ignition advance based on the software and information from the sensors. The engine control module (ECM) cuts the current to the ignition coil mounted on the cylinder to be ignited and produces a spark.

During the starting phase the engine control module (ECM) produces a fixed ignition setting. When the engine has started and the vehicle is being driven, the engine control module (ECM) calculates the optimum ignition setting, taking factors such as the following into account:

- engine speed (RPM)
- load
- temperature.

The engine control module (ECM) analyses the signal from the knock sensors (KS) when the engine reaches operating temperature. If any of the cylinders knock, the ignition is retarded for that specific cylinder until the knocking ceases.

The ignition then advanced to the normal position or until the knock recurs.

Before the Transmission control module (TCM) is going to shift, sometimes it sends a request for torque limitation to the Engine control module (ECM). Which then lowers the ignition momentarily to reduce the torque and thus give smoother shifting and reduced load on the transmission.

Lowering of ignition can be done in several levels, where the levels depend on the signals from the Transmission control module (TCM). The return signal from the Engine control module (ECM) to the Transmission control module (TCM) confirms that the signal reached the Engine control module (ECM).

For further information, also see: **MISFIRE DIAGNOSTIC**

The engine misfires if the fuel does not ignite correctly. For further information, also see: **MISFIRE DIAGNOSTIC**

REGULATING THE AIR CONDITIONING (A/C) COMPRESSOR

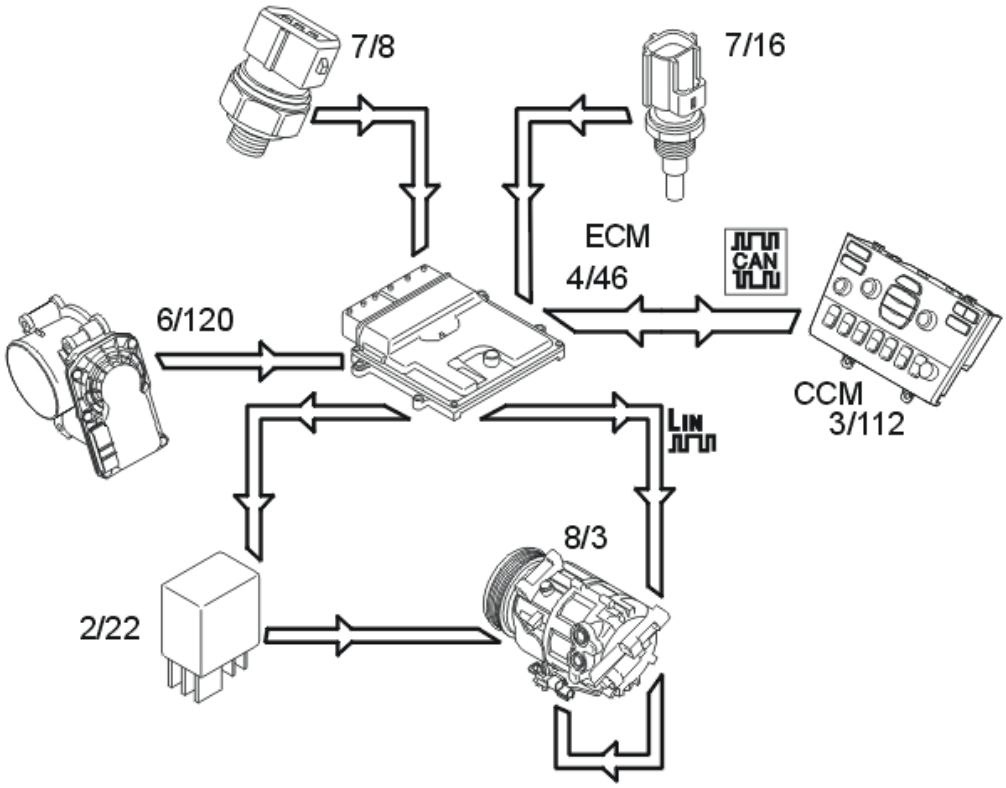

Fig. 236: (A/C) Compressor Regulating System
Courtesy of VOLVO CARS CORPORATION

The air conditioning (A/C) compressor is controlled by the engine control module (ECM) (4/46) on request from the climate control module (CCM) (4/6) via the controller area network (CAN). When the engine control module (ECM) receives a signal from the climate control module (CCM) to activate the air conditioning (A/C) compressor, the engine control module (ECM) grounds the circuit for the relay coil for the A/C compressor. See also: **AIR CONDITIONING (A/C) RELAY**

The relay (2/22) closes the circuit between the integrated relay/fusebox in the engine compartment and the clutch for the air conditioning (A/C) compressor (8/3). The air conditioning (A/C) compressor which has a variable cylinder displacement is always running during normal driving. Displacement in the compressor is regulated by a solenoid which is controlled by the engine control module (ECM).

The engine control module (ECM) controls the solenoid (displacement) from the driver's and vehicle's various driving characteristics. On Startup of the engine, pulling off and at acceleration etc, displacement is controlled so that the A/C compressor has the least possible effect on the engine torque. The climate control module (CCM) controls all functions in the climate control system that are related to the vehicle's interface for driver and passenger. I. E. the climate control system buttons on the dashboard environment panel.

The climate control module (CCM) transmits information to the engine control module (ECM), which determines what must be prioritized. For example, the air conditioning (A/C) compressor in certain extreme cases is switched off completely, regardless of the climate control module (CCM) request. This is to prevent negative engine performance and to protect the air conditioning (A/C) system. As well as the information from

the climate control module (CCM), the engine control module (ECM) controls the air conditioning (A/C) compressor based on the information from:

- Air conditioning (A/C) pressure sensor (high pressure side) (7/8)
- the throttle position (TP) sensor (6/120)
- the engine coolant temperature (ECT) sensor (7/16).

THROTTLE CONTROL

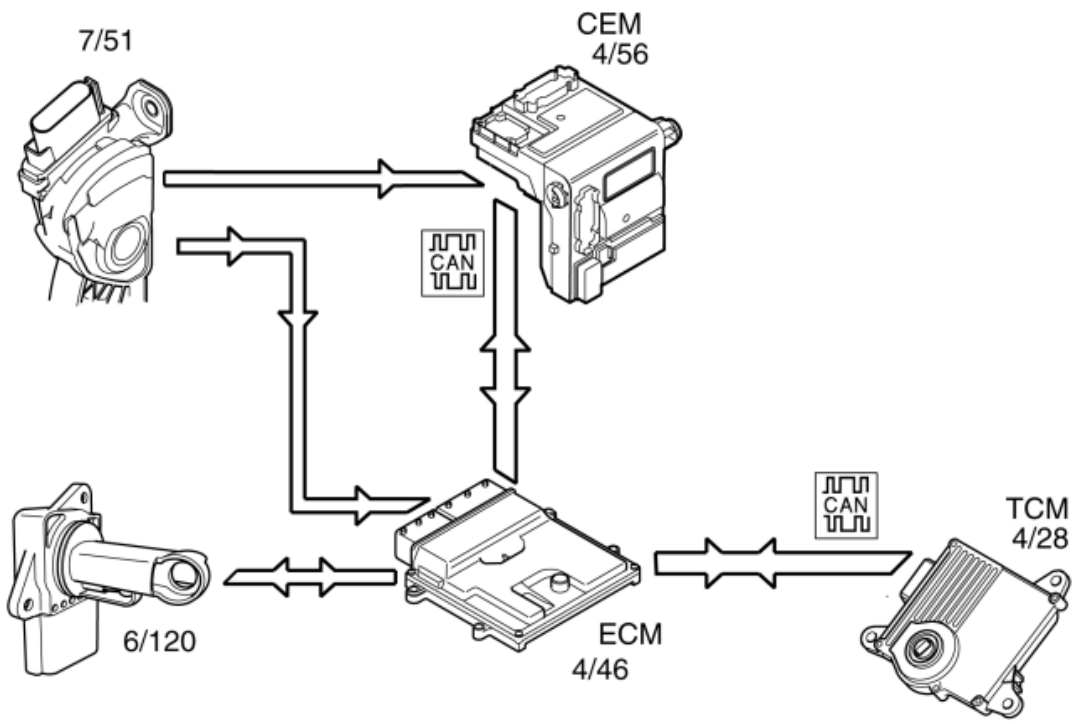

Fig. 237: Identifying Throttle Control
Courtesy of VOLVO CARS CORPORATION

To ensure that the correct throttle angle is reached, the engine control module (ECM) (4/46) controls the throttle shutter in the throttle unit (6/120), mainly using the signal from:

- Accelerator pedal (AP) position sensor (7/51)
- the throttle position (TP) sensor on the electronic throttle unit.

Additional signals and parameters are used to ensure optimum throttle control. By example by compensating for:

- the load from the air conditioning (A/C) compressor
- the load from the transmission depending on the selected gear mode

- engine coolant temperature (ECT)
- mass air flow through the intake manifold
- manifold absolute pressure (MAP) in the intake manifold.

The position of the throttle is measured by two potentiometers, in the throttle position (TP) sensor, which are on the throttle unit. These are connected, so that potentiometer 1 produces a higher voltage as the throttle angle increases, while potentiometer 2 does the opposite.

In a combustion engine, the difference between the minimum and maximum airflow is considerable. The smaller air flows need more thorough regulation, so the potentiometer signal from potentiometer 1 is amplified approximately 4 times in the engine control module (ECM) before it reaches the AC/DC converter in the engine control module (ECM). This means that there are three, two real and one fictitious, input signals available to the engine control module (ECM). These signals are used to determine the position of the throttle and to deploy the damper motor to the correct position. In general the amplified signal is primarily used for small throttle angles (small air flows), which are desirable when a high degree of accuracy is required, for idle air trim for example.

Because the signal is amplified, it reaches its maximum value as early as approximately a quarter of maximum deployment.

The engine control module (ECM) primarily uses the signal from potentiometer 1 as a measurement of throttle opening. The signal from potentiometer 2 is mainly to check that potentiometer 1 is working. The engine control module (ECM) then uses the signal to calculate a throttle angle (actual value). This is the actual throttle angle. The value for the actual throttle angle is used by those functions in the engine control module (ECM) which depend on this information so that the throttle can be correctly regulated.

There is an adaptation (learning) in the engine control module (ECM) so that the control module can calculate how the damper motor needs to be controlled. See "Adaptation of the throttle unit" below.

The throttle angle is regulated so that the actual angle (actual value) is the same as the angle calculated by the engine control module (ECM) (desired value). The engine control module (ECM) also uses the values that were stored during adaptation of the throttle angle, and the actual signals from the potentiometers.

The damper motor is deployed by the integrated power stage in the engine control module (ECM) using a pulse width modulation (PWM) signal. The torsion from the opening and return springs in the electronic throttle unit is also used. If there is a fault in the engine control module (ECM) so that the throttle unit cannot be operated or powered, the springs in the throttle unit will turn the throttle disc to the limp home position (return position). This return position gives a throttle angle large enough to allow the car to be driven to a workshop, although with considerably reduced driveability.

Throttle angle

The throttle angle is usually gauged by potentiometer 1. For small angles the amplified signal is used to obtain a clearer signal. The engine control module (ECM) also monitors the throttle unit signals from the potentiometers to check that they are plausible, that they are within the minimum and maximum limits and that the signals correspond to the same throttle angle. If there is a difference in the signals, a fictitious throttle signal is calculated from the load signal, the engine speed (rpm) and the prevailing conditions, particularly pressure and temperature.

The potentiometer whose signal is closest to the calculated throttle angle will then be assumed to be correct. The other potentiometer is then classified as not functioning and a diagnostic trouble code (DTC) is generated. The system then constantly monitors the throttle angle of the remaining potentiometer in comparison to the calculated throttle angle. If there is a difference between these values, the engine control module (ECM) will not rely on any of the throttle unit potentiometers. The power stage in the throttle unit is then disengaged, and the throttle switches to limp home mode.

Adaptation of the throttle unit

In ignition position II, the engine control module (ECM) carries out adaptation of the electronic throttle unit. Adaptation is carried out by the throttle disc being mechanically controlled to the closed position and the current throttle position being read off. If previous adaptation values are missing in the engine control module (ECM), for example, if the control module has not been powered, the current throttle angle is stored as the adaptation value. If, in addition, there is a previously stored value, the average value of the previous one and the current throttle angle is stored as the new adaptation value.

HINT: When replacing the electronic throttle unit, the engine control module (ECM) must therefore always be switched off.

SYSTEM OVERVIEW

CONTROL MODULE

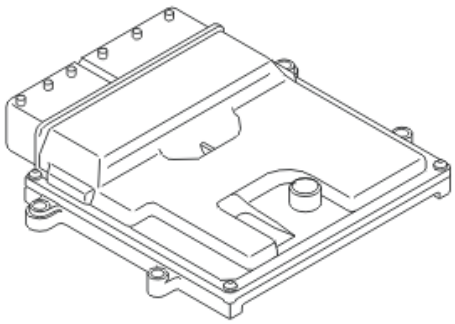

Fig. 238: Identifying Engine Control Module (ECM)
Courtesy of VOLVO CARS CORPORATION

The engine control module (ECM) controls, amongst others, the following functions:

- injectors
- ignition
- camshafts (CVVT)
- Evaporative emission system (EVAP) valve
- throttle angle
- engine cooling fan (FC)

- air conditioning (A/C) compressor.
- fuel pump
- Variable intake system
- variable camshaft profile.

The engine control module (ECM) is supplied with battery voltage (U_{bat}) via fuses in the central electronic module (CEM) and in the integrated relay/fusebox in the engine compartment.

To prevent certain stored date from being erased from the engine control module (ECM) when the ignition is switched off, the control module also has a 30-supply. This supply is from the integrated relay/fusebox in the engine compartment.

The control module is grounded via the wiring which is connected at the right-hand suspension turret.

The engine control module (ECM) contains a voltage regulator which maintains a low voltage (5 V) in internal components in the control module such as:

- Analog/Digital converter
- Digital/Analog converter
- Micro-processor.

Functions which require battery power (U_{bat}) and high output are controlled by external or internal power stages. For example ignition coils have external power stages (integrated into the ignition coils) while the power stages for the injectors are integrated in the engine control module (ECM).

The micro-processor in the engine control module (ECM) receives signals from the different sensors and control modules in the vehicle. The micro-processor uses a program which interprets the signals from the different sensors and how the components and functions should be controlled.

The engine control module (ECM) has several self-learning (adaptive) functions. It continually adapts ongoing calculations to changing circumstances (such as wear, air leaks, differences between different fuels).

Emissions are kept low through efficient management of the injection period, ignition, evaporative emission system (EVAP) valve and camshafts etc. Faults which affect emissions can be detected by running diagnostics for functions and components.

The Engine control module (ECM) is located on the air filter box, under a plastic cover.

The engine control module (ECM) communicates with other control modules using controller area network (CAN) communication or LIN communication.

The engine control module (ECM) checks activations, input and output signals and functions using an integrated diagnostic system. A diagnostic trouble code (DTC) is stored if, after validation, the control module detects a fault. In certain cases the faulty signal is also replaced with a substitute value or certain functions are limited.

For example, substitute values can be set for:

- engine coolant temperature (ECT) sensor
- Mass air flow (MAF) sensor
- throttle position (TP) sensor
- air pressure
- fuel pressure.

Mathematical calculations and signals from certain components are used to calculate the substitute values. Other substitute values are fixed, predefined values in the engine control module (ECM).

The substitute value allows the vehicle to be driven and for the emissions to be kept at a reasonable level even though vital functions or components are malfunctioning.

Functions which may be limited are for example:

- camshaft control (CVVT)
- fuel trim
- throttle angle
- fuel pressure regulation.

The substitute values are used and functions restricted so that the system is still able to work while protecting components that are required for safety reasons (for example the throttle angle).

Any diagnostic trouble codes (DTCs) are stored in the internal memory of the engine control module (ECM). The information can be read off via the data link connector (DLC) in the vehicle.

SIGNALS

The table below summarizes the input signals to and output signals from the Engine Control Module (ECM). The signal types are divided into directly connected signals, LIN and CAN communication. The illustration below gives the same information as the Volvo component designations.

Input signals	Output signals
Directly connected: • Ignition switch (3/1) • Air conditioning (A/C) pressure sensor (7/8) • Brake light switch (from the central electronic module (CEM)) (3/9) • Accelerator pedal (AP) position sensor (7/51) • Electronic throttle unit (6/120)	**Directly connected:** • Air conditioning (A/C) relay (2/22) • Air conditioning (A/C) compressor (8/3) • Electronic throttle unit (6/120) • Engine cooling fan (FC) control module (4/71) • Evaporative emission system (EVAP) valve (8/18) • Injectors (8/6-11)

• Camshaft position sensor, intake (7/172) • Camshaft position sensor, exhaust (7/173) • Engine coolant temperature (ECT) sensor (7/16) • Engine speed (RPM) sensor (7/25) • Fuel pressure sensor / fuel temperature sensor (7/156) • Knock sensor (KS) (7/23-24) • Mass air flow (MAF) sensor/air temperature sensor (7/17) • Manifold absolute pressure (MAP) sensor (7/81) • Front oxygen sensor, bank 1 (7/15) • Front oxygen sensor, bank 2 (7/82) • Rear oxygen sensor, bank 1 (7/103) • Rear oxygen sensor, bank 2 (7/104) • Oil level sensor (7/35) • Outside temperature sensor (6/62) • Ignition coils (20/3-8) • Engine cooling fan (FC) control module (4/71) • Leak diagnostic unit (6/67), (certain markets only). • Gear position status (P/N engaged/disengaged) (from the transmission control module (TCM) (4/28)) • Engine coolant level sensor (7/73)	• Fuel pump (FP) control module (4/83) • Ignition coils (20/3-8) • Leak diagnostic unit (6/67), (certain markets only). • Front oxygen sensor, bank 1 preheating (7/15) • Front oxygen sensor, bank 2 preheating (7/82) • Rear oxygen sensor, bank 1 preheating (7/103) • Rear oxygen sensor, bank 2 preheating (7/104) • Main relay (system relay) (2/32) • Starter motor relay (2/35) • Camshaft reset valve (CVVT), intake (8/19) • Emissions warning lamp (5/1) • Actuator variable intake manifold, upper (6/139) • Actuator variable intake manifold, lower (6/140) • Cam profile solenoid 1 (CPS1) (8/125) • Cam profile solenoid 2 (CPS2) (8/126)

Via LIN communication:
• **Alternator control module (ACM) (6/26):**
  • fault status
  • magnetization for charging
	Via LIN communication:
	• **Alternator control module (ACM) (6/26):**
	  • requested voltage for charging.

Via CAN communication:	**Via CAN communication:**
	• **Central electronic module (CEM) (4/56):**
	  • outside temperature
	  • request for fuel pump (FP)
	  • engine speed
	  • load
	  • request for the malfunction indicator lamp (MIL) to be lit
	  • engine status (on/off)
	  • immobilizer codes

- **Central electronic module (CEM) (4/56):**
  - accelerator pedal position, (analog and PWM-signal)
  - quantity of fuel in the tank
  - start function inhibiting
  - the time since the engine was switched off
  - request for increased idle speed
  - request for battery charging
  - charging status
  - request for cruise control
  - steering angle
  - status engine heater (on/off)
- **Brake control module (BCM) (4/16):**
  - status brake pedal
  - vehicle speed
  - active control function
  - front wheel spin to detect "rough roads"
  - torque limiting request
- **Climate control module (CCM) (3/112):**
  - air conditioning (A/C) compressor request
  - request for increased fan speed
  - request for lowest permitted idle speed
  - evaporator temperature
- **Transmission control module (TCM) (4/28):**
  - vehicle speed
  - torque limiting request
  - transmission oil temperature
  - gear position
  - status gear position (P/N engaged/disengaged)
  - "Lock-up" status (engaged/disengaged)
  - request for lowest permitted idle speed
  - gear ratio
  - torque loss in transmission
- **Rear electronic module (REM) (4/58).**
  - status cruise control (on/off)
  - alternator control module (ACM) load
  - fault status alternator control module (ACM)
- **Climate control module (CCM) (3/112):**
  - air conditioning (A/C) compressor status
  - atmospheric pressure
  - engine coolant temperature (ECT)
  - engine speed
  - engine status (on/off)
- **Transmission control module (TCM) (4/28):**
  - gear position
  - load
  - status cruise control (on/off)
  - engine coolant temperature (ECT)
  - engine speed
  - accelerator pedal position
  - status brake pedal
  - speed set in the cruise control
  - engine status (on/off)
  - "kickdown" request
- **Driver information module (DIM) (5/1):**
  - engine coolant temperature (ECT)
  - warning texts related to the engine control module (ECM)
  - engine speed
  - status cruise control (on/off)
  - calculated fuel consumption
  - engine status (on/off)
  - oil pressure status
  - oil level

• **Steering wheel module (SWM) (3/254).**	• time for service
	• **Brake control module (BCM) (4/16):**
	  • torque after transmission
	  • engine speed
	  • accelerator pedal position
	  • engine status (on/off)
	• **Differential electronic module (DEM) (4/82):**
	  • engine speed
	  • engine torque (calculated)
	  • accelerator pedal position
	  • status brake pedal
	• **Rear electronic module (REM) (4/58).**
	• **Steering wheel module (SWM) (3/254).**

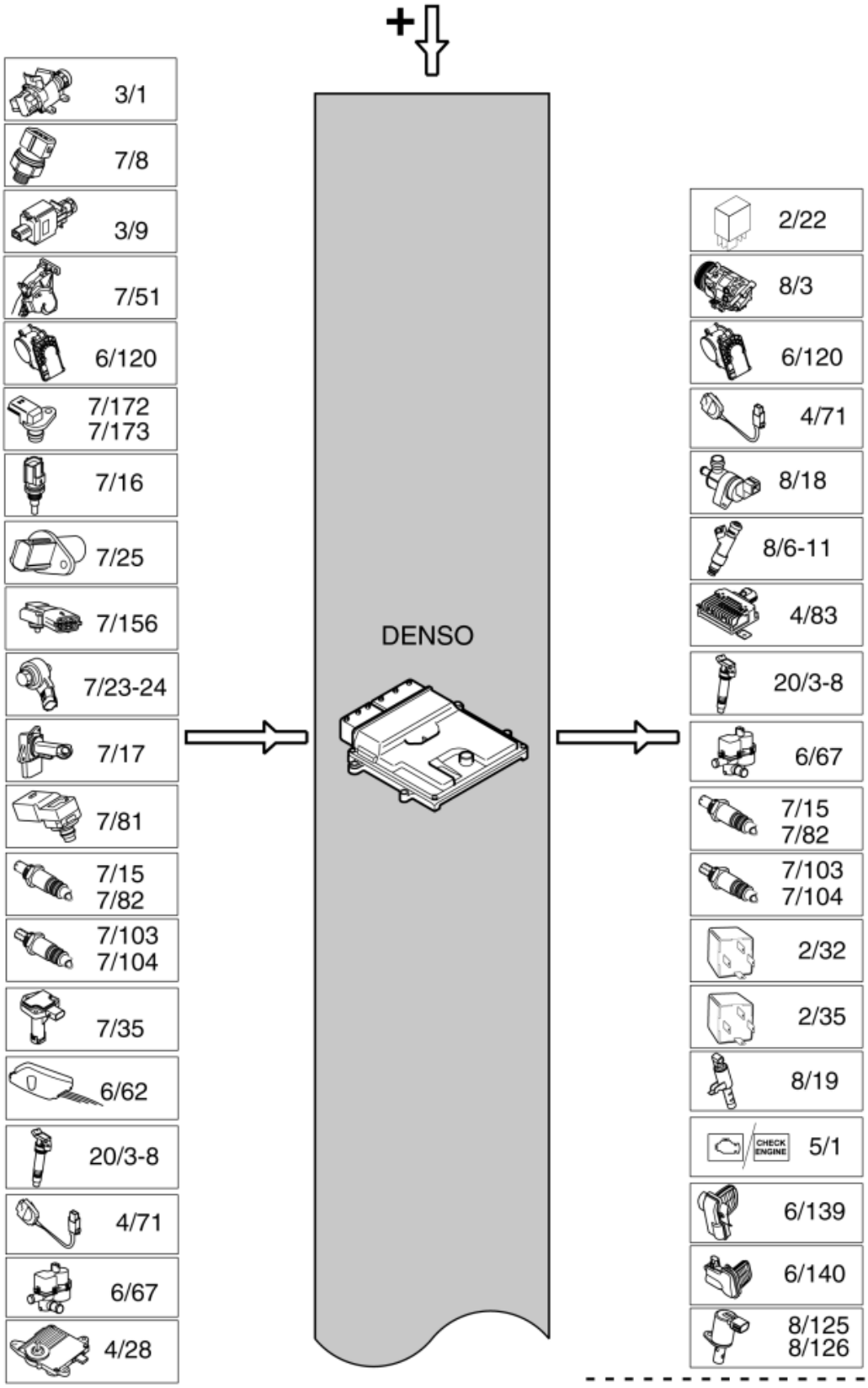
+
3/1
7/8
3/9
7/51
6/120
7/172
7/173
7/16
7/25
7/156
7/23-24
7/17
7/81
7/15
7/82
7/103
7/104
7/35
6/62
20/3-8
4/71
6/67
4/28
DENSO
2/22
8/3
6/120
4/71
8/18
8/6-11
4/83
20/3-8
6/67
7/15
7/82
7/103
7/104
2/32
2/35
8/19
CHECK ENGINE
5/1
6/139
6/140
8/125
8/126

Fig. 239: Identifying Volvo Component Designations
Courtesy of VOLVO CARS CORPORATION

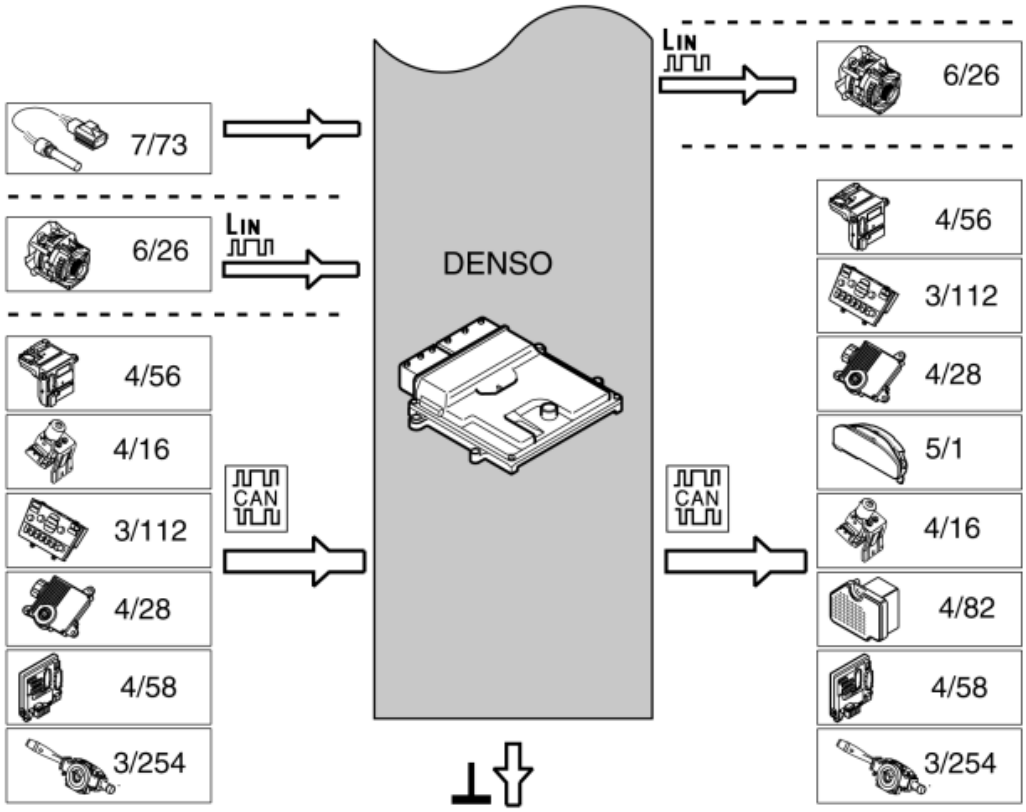

Fig. 240: Identifying Volvo Component Designations
Courtesy of VOLVO CARS CORPORATION

ENGINE CONTROL MODULE (ECM) (B6324S5; 2011-2012)

DESIGN

see **DESIGN**

DIAGNOSTIC FUNCTIONS

see **DIAGNOSTIC FUNCTIONS**

DOWNLOADING SOFTWARE AND REPLACING THE CONTROL MODULE

see **DOWNLOADING SOFTWARE AND REPLACING THE CONTROL MODULE**

FUNCTION

see **FUNCTION**

SYSTEM OVERVIEW

see **SYSTEM OVERVIEW**

ENGINE CONTROL MODULE (ECM) (B8444S; 2005-2011)

DESIGN

IGNITION SWITCH

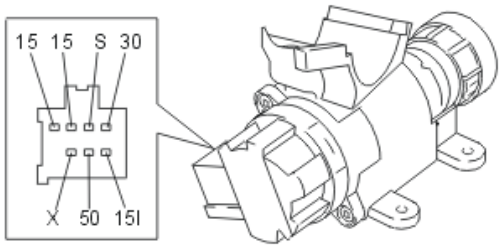

Fig. 241: Identifying Ignition Switch And Connector Terminals
Courtesy of VOLVO CARS CORPORATION

The Engine Control Module (ECM) uses the signal from the ignition switch to detect when the ignition key has been turned to position II or III. When the key is in the ignition position (position II) or starting position (position III) a high signal (U_{bat}) is transmitted from the ignition switch to the engine control module (ECM).

The engine management system prepares for start-up (for example, temporarily activates the fuel pump (FP) relay). When the flywheel in the engine rotates, the engine speed (RPM) sensor signal is used to keep the fuel pump (FP) relay activated.

The fuse in the fuse box in the passenger compartment supplies current to the ignition switch.

The central electronic module (CEM) has diagnostics for the ignition switch.

ENGINE SPEED (RPM) SENSOR

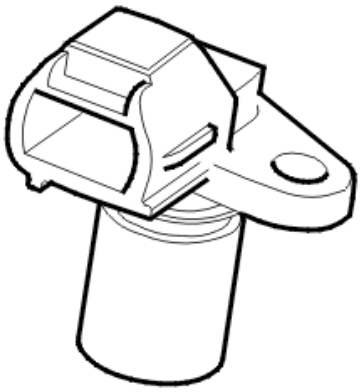

Fig. 242: Identifying Engine Speed (RPM) Sensor
Courtesy of VOLVO CARS CORPORATION

The engine speed (RPM) sensor provides the engine control module (ECM) with information about the speed and position of the crankshaft. The engine control module (ECM) is able to use the signal from the engine speed (RPM) sensor to determine when a piston is approaching top dead center (TDC).

The signal from the engine speed (RPM) sensor is also used to check the engine for misfires. For further information, see: **MISFIRE DIAGNOSTIC**

The engine speed (RPM) sensor is at the rear of the engine above the flywheel.

The sensor is inductive with a permanent magnet. An alternating current is induced in the sensor when the flywheel/carrier plate passes the engine speed (RPM) sensor. The generated voltage and frequency increases with the engine speed (rpm).

The signal varies between 0.1-100 V depending on the engine speed (RPM).

The Engine Control Module (ECM) is able to determine the engine speed (RPM) by counting the number of holes per time unit. When the reference position passes the engine speed (RPM) sensor, the voltage and frequency drop momentarily to zero, even though the engine is still running. This allows the engine control module (ECM) to determine the position of the crankshaft.

If the signal from the engine speed (RPM) sensor is incorrect or missing, the control module will use signals from the camshaft position (CMP) sensor.

The engine speed (RPM) sensor can be diagnosed by the engine control module (ECM) and the sensor signal (engine speed (RPM)) can be read off.

CAMSHAFT POSITION (CMP) SENSOR

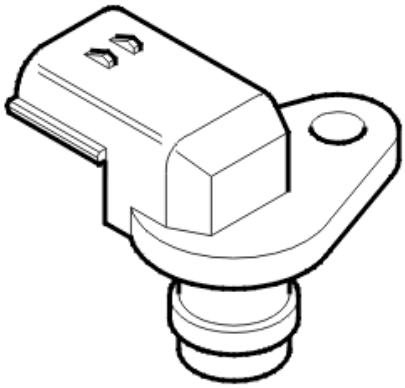

Fig. 243: Camshaft Position Sensor
Courtesy of VOLVO CARS CORPORATION

The function of the camshaft position (CMP) sensor is to detect the flanks of the camshaft rotor. The signal from the sensor is used by the engine control module (ECM) to determine the angle of the camshaft.

Each camshaft is divided into a number of flanks (segments) per camshaft revolution. A pulse wheel on the camshaft consisting of teeth (the teeth are positioned by each flank) is used by the camshaft position sensor (CMP) to detect the flanks and the position of the camshaft.

In the event of misfire or engine knock, the control module is able to determine which cylinder is misfiring or knocking using the camshaft position (CMP) sensor signal. Also, see **KNOCK SENSOR (KS)** and **ENGINE SPEED (RPM) SENSOR**.

Data about the camshaft position is used during camshaft control (CVVT). See: **CAMSHAFT CONTROL (CVVT)**

The sensor, which is a magnetic resistor with a permanent magnet, is grounded in the control module and supplied with 5 V from the control module. When one of the teeth on the camshaft pulse wheel passes the camshaft position (CMP) sensor, a signal is transmitted to the control module from the camshaft position (CMP) sensor. The signal varies between 0 - 5 V and is high when a tooth is close to the camshaft position (CMP) sensor and low when the tooth leaves the camshaft position (CMP) sensor.

There is camshaft position (CMP) sensor for each camshaft.

The camshaft position (CMP) sensors are located by the camshafts on the rear edge of the engine (left-hand side of the vehicle, closest to the flywheel).

The engine control module (ECM) can diagnose the camshaft position (CMP) sensors.

KNOCK SENSOR (KS)

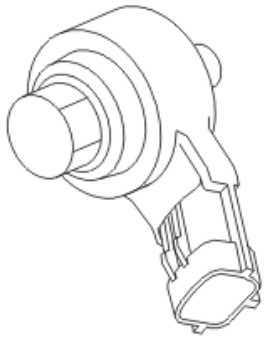

Fig. 244: Identifying Knock Sensor
Courtesy of VOLVO CARS CORPORATION

The function of the knock sensor (KS) is to monitor combustion knocking from the engine. Knocking may damage the engine and reduces the efficiency of engine combustion.

If the engine control module (ECM) registers knocking from any of the cylinders, the ignition will be retarded for that cylinder at the next combustion stage. If repeated ignition retardation does not prevent knocking, the injection period will be increased. This has a cooling effect.

The sensor is made up of Piezo electrical crystals. If there is engine knock, vibrations (sound waves) spread through the cylinder block to the knock sensor (KS). The resultant mechanical stress in the Piezo electrical material in the knock sensors generates a voltage. This signal is transmitted to the engine control module (ECM). The signal corresponds to the frequency and amplitude of the sound waves. This allows the Engine Control Module (ECM) to determine if the engine is knocking. The camshaft position (CMP) sensor and engine speed (RPM) sensor are used to determine the operating cycle of the engine (which cylinder is igniting) and therefore which cylinder is knocking.

The knock sensors are located on the engine block between the cylinder rows.

Knock sensor 1 detects knock on cylinders 5, 6, 7 and 8. Knock sensor 2 detects knock on cylinders 1, 2, 3 and 4.

The engine control module (ECM) can diagnose the knock sensors (KS).

ENGINE COOLANT TEMPERATURE (ECT) SENSOR

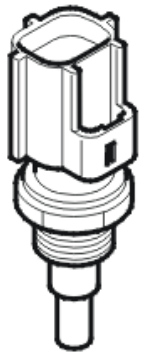

Fig. 245: View of Engine Coolant Temperature (ECT) Sensor
Courtesy of VOLVO CARS CORPORATION

The engine coolant temperature (ECT) sensor checks the temperature of the engine coolant. The temperature of the engine coolant is required so that the engine control module (ECM) can regulate:

- the injection period
- the idle speed
- the engine cooling fan (FC)
- the ignition advance
- engagement and disengagement of the A/C compressor
- diagnostic functions.

The sensor is a negative temperature coefficient (NTC) type which is supplied with power from the control module (signal) and is grounded in the control module.

The resistance in the sensor changes depending on the temperature of the coolant. Depending on the resistance in the sensor, voltage (signal) is transmitted to the engine control module (ECM). The lower the temperature the higher the voltage (high resistance). A high temperature results in low voltage (low resistance).

The engine coolant temperature (ECT) sensor is located beside the thermostat.

The engine coolant temperature (ECT) can be diagnosed by the engine control module (ECM) and the value of the sensor can be read off.

MASS AIR FLOW (MAF) SENSOR/INTAKE AIR TEMPERATURE (IAT) SENSOR

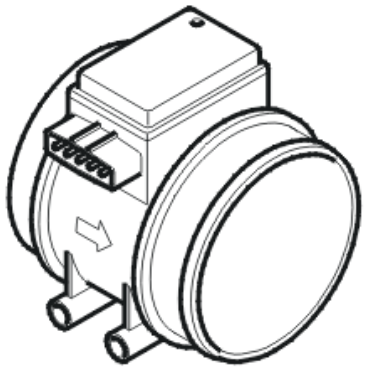

Fig. 246: Identifying Mass Air Flow Sensor
Courtesy of VOLVO CARS CORPORATION

Overview

The mass air flow (MAF) sensor is a combined sensor and contains two sensors in the same component:

- mass air flow (MAF) sensor
- intake air temperature (IAT) sensor.

The mass air flow (MAF) sensor is positioned between the air cleaner (ACL) housing and the intake manifold.

Mass air flow (MAF) sensor

The mass air flow (MAF) sensor gauges the air mass sucked into the engine. It continuously transmits signals to the engine control module (ECM) about the mass of the intake air. This data is used by the engine control module (ECM) to calculate:

- the injection period
- the fuel pressure
- the ignition timing
- the engine load.

The transmission control module (TCM) also uses this data for its gear shift calculations. This data is transmitted to the transmission control module (TCM) from the engine control module (ECM) via the high speed side of the Controller area network (CAN).

The mass air flow (MAF) sensor is a hot wire type. Unlike other hot wire types, the mass air flow sensor in the Denso system uses a hot wire which has a ceramic casing. This eliminates the need for a clean burn function.

The mass air flow (MAF) sensor is supplied with battery voltage by the system relay and is grounded in the engine control module (ECM). The signal from the sensor is analog and varies between approximately between 0.5 - 4.5 V. Low air flow (low mass) results in low voltage, high air flow (high mass) gives high voltage.

The mass air flow (MAF) sensor can be diagnosed by the engine control module (ECM) and the sensor signal can be read off.

Intake air temperature (IAT) sensor

The temperature sensor checks the temperature of the intake air in the intake manifold. This data is used by the engine control module (ECM) to calculate injection period. The control module also controls certain diagnostic functions using the signal from the temperature sensor.

The sensor, which is an NTC resistor, is grounded in the control module and supplied with power (signal) from the control module.

The resistance in the sensor changes according to the intake air temperature. This provides the control module with a signal of between 0.5 - 5 V. The lower the temperature the higher the voltage (high resistance). A high temperature results in low voltage (low resistance).

The temperature sensor can be diagnosed by the engine control module (ECM) and the sensor signal can be read off.

HEATED OXYGEN SENSORS (HO2S)

Front heated oxygen sensor (HO2S)

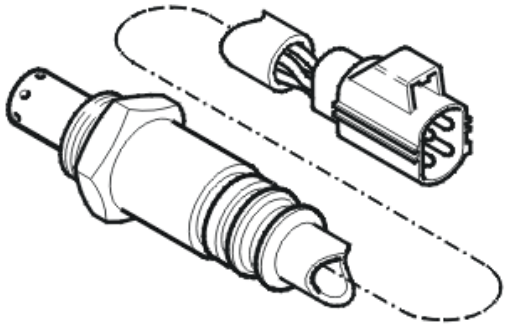

Fig. 247: View of Heated Oxygen Sensor (HO2S)
Courtesy of VOLVO CARS CORPORATION

CAUTION: The air lines for the heated oxygen sensors (HO2S) must not be trapped or damaged in any way. The connectors for the heated oxygen sensors (HO2S) must not be greased under any circumstances. The oil in the grease would disrupt the reference air and the function of the heated oxygen sensors (HO2S).

Front heated oxygen sensor (HO2S) is used to provide the engine control module (ECM) with information about the remaining oxygen content of the exhaust gases before the three-way catalytic converter (TWC). This is so that the engine control module (ECM) can continually check the combustion so that lambda=1 is achieved.

lambda=1 is the ideal fuel-air ratio, with 14.7 kg air per 1 kg fuel.

The heated oxygen sensor (HO2S) uses current control and its signal characteristic is linear. With a linear signal characteristic, the amplitude of the signal curve is low when changing the oxygen content in the exhaust gases. The probe consists of a preheating element and the actual lambda sensor. The lambda sensor is an oxygen sensitive ceramic body consisting of zirconium oxide. The control module supplies power to the ceramic body, which reacts to the oxygen content of the exhaust gases. This in turn affects the signal to the engine control module (ECM). In order to determine the oxygen content in the exhaust pipe, the heated oxygen sensor (HO2S) needs reference air from the surrounding air. This reference air reaches the heated oxygen sensor (HO2S) via the air lines.

CAUTION: The air lines for the heated oxygen sensors (HO2S) must not be trapped or damaged in any way. The connectors for the heated oxygen sensors (HO2S) must not be greased under any circumstances. The oil in the grease would disrupt the reference air and the function of the heated oxygen sensors (HO2S).

There are two front heated oxygen sensors; one for bank 1 and one for bank 2.

Bank 1 (front cylinder row); cylinders 1, 3, 5 and 7.

Bank 2 (rear cylinder row, closest to the passenger compartment); cylinders 2, 4, 6 and 8.

The heated oxygen sensors (HO2S) can be diagnosed by the engine control module (ECM), and signals from them can be read off. For further information: **HEATED OXYGEN SENSOR (HO2S) DIAGNOSTIC**

The control module can be used to read off the calculated lambda value from the heated oxygen sensor (HO2S) signal.

Rear heated oxygen sensor (HO2S)

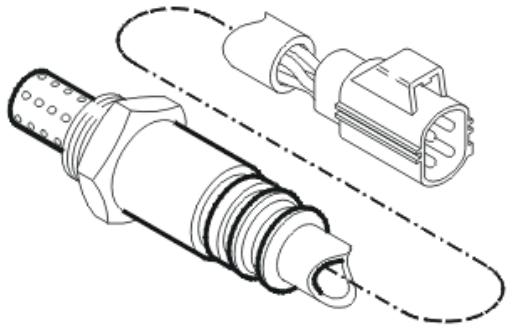

Fig. 248: View of Heated Oxygen Sensor (HO2S)
Courtesy of VOLVO CARS CORPORATION

CAUTION: The air lines for the heated oxygen sensors (HO2S) must not be trapped or

damaged in any way. The connectors for the heated oxygen sensors (HO2S) must not be greased under any circumstances. The oil in the grease would disrupt the reference air and the function of the heated oxygen sensors (HO2S).

The rear heated oxygen sensor (HO2S) is used to provide the engine control module (ECM) with information about the remaining oxygen content of the exhaust gases beyond the three-way catalytic converter (TWC). This information is used by the Engine Control Module (ECM) to check the function of the three-way catalytic converter (TWC). This check is carried out when the conditions for the catalytic converter diagnostics have been met. The rear heated oxygen sensor (HO2S) has no direct effect on regulation of the fuel/air mixture. However the engine control module (ECM) uses the signal to optimize the signal from the front heated oxygen sensor (HO2S). For further information, see: **THREE-WAY CATALYTIC CONVERTER (TWC) DIAGNOSTICS**

The heated oxygen sensor (HO2S) uses voltage control. The signal characteristic is binary. With a binary signal characteristic, the amplitude of the signal curve changes considerably when changing the oxygen content in the exhaust gases. Otherwise its components and function are the same as the front heated oxygen sensor (HO2S).

CAUTION: The air lines for the heated oxygen sensors (HO2S) must not be trapped or damaged in any way. The connectors for the heated oxygen sensors (HO2S) must not be greased under any circumstances. The oil in the grease would disrupt the reference air and the function of the heated oxygen sensors (HO2S).

There are two rear heated oxygen sensors; one for bank 1 and one for bank 2.

Bank 1 (front cylinder row); cylinders 1, 3, 5 and 7.

Bank 2 (rear cylinder row, closest to the passenger compartment); cylinders 2, 4, 6 and 8.

The heated oxygen sensors (HO2S) can be diagnosed by the engine control module (ECM), and signals from them can be read off

Preheating of the heated oxygen sensors (HO2S)

The heated oxygen sensor (HO2S) only functions above a certain temperature, approximately 300 °C. The normal operating temperature is between 300-900 °C. The heated oxygen sensors (HO2S) are electrically pre-heated so that operating temperature is rapidly reached. They are also pre-heated to ensure that the heated oxygen sensors (HO2S) maintain a normal operating temperature and to prevent condensation which could damage the heated oxygen sensor (HO2S).

The heater element in the probe consists of a positive temperature coefficient (PTC) resistor. The system relay supplies the heater element with voltage. The element is grounded in the engine control module (ECM). When the control module grounds the connection a current flows through the PTC resistor. When the heated oxygen sensor (HO2S) is cold, the resistance in the PTC resistor is low and a large current will flow through the circuit. The current from the engine control module (ECM) is pulsed at first to prevent condensation damage to the heated oxygen sensor (HO2S). Depending on the temperature, allowances are made for factors such as the dew

point. As the temperature in the PTC resistor rises, the resistance rises, the current falls and switches in stages to a constant current. The pre-heating time for front heated oxygen sensor (HO2S) is short, approximately 20 seconds.

The heater element heats the heated oxygen sensors (HO2S) to approximately 350 °C. The probes maintain this as a minimum temperature.

The engine control module (ECM) can diagnose the heater element.

STOP LAMP SWITCH

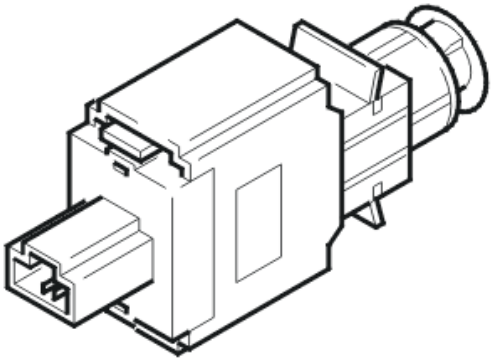

Fig. 249: Brake Light Switch
Courtesy of VOLVO CARS CORPORATION

The purpose of the stop lamp switch is to provide the engine control module (ECM) with information indicating whether the brake pedal is depressed or not.

A signal is transmitted to the engine control module (ECM) when the brake pedal is pressed. The engine control module (ECM) disengages the cruise control (if activated). The brake pedal sensor also disengages cruise control.

The stop lamp switch is supplied with power from the ignition switch (terminal 30). When the brake pedal is depressed the switch closes and a high signal (12 V) is transmitted to the engine control module (ECM).

The stop lamp switch can be diagnosed by the engine control module (ECM) and its status (depressed or not) can be read off.

The stop lamp switch is on the pedal box by the brake pedal.

A/C PRESSURE SENSOR

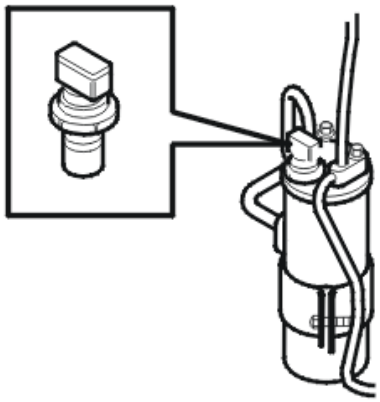

Fig. 250: A/C Pressure Sensor
Courtesy of VOLVO CARS CORPORATION

The air conditioning (A/C) pressure sensor detects the pressure in the high-pressure side of the air conditioning (A/C) system.

The sensor is linear. It is grounded in the control module and supplied with 5 V from the control module. A linear signal (which depends on the pressure in the air conditioning (A/C) system) is transmitted to the engine control module (ECM). Low pressure produces low voltage, high pressure produces high voltage.

The air conditioning (A/C) pressure sensor can be diagnosed by the engine control module (ECM) and the sensor value can be read off.

The air conditioning (A/C) pressure sensor is directly mounted on the air conditioning receiver drier.

TRANSMISSION CONTROL MODULE (TCM)

The engine control module (ECM) uses a directly connected signal from the transmission control module (TCM) in the start function (activating the starter motor).

ACCELERATOR PEDAL (AP) POSITION SENSOR

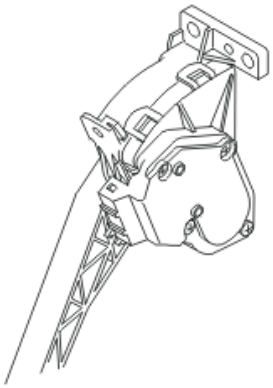

Fig. 251: Identifying Accelerator Pedal (AP) Position Sensor
Courtesy of VOLVO CARS CORPORATION

The function of the accelerator pedal (AP) position sensor is to provide the engine control module (ECM) and central electronic module (CEM) with information about the position of the accelerator pedal. This data is used by the engine control module (ECM) to deploy the shutter in the throttle unit to the correct angle.

The accelerator pedal (AP) position sensor consists of a plastic housing with two potentiometers, and an Analog/Digital converter. The potentiometers are connected to a common shaft which is affected by the position of the accelerator pedal (AP).

The accelerator pedal (AP) position sensor transmits an analog and a pulse width modulated (PWM signal to the engine control module (ECM). These signals indicate the position of the accelerator pedal (AP). The digital signal is generated by the sensors Analog/Digital converter.

The analog and digital signals are used at the same time by the engine control module (ECM) to regulate the throttle shutter angle.

The power supply to the two potentiometers is different. The analog potentiometer is supplied with 5 V via the engine control module (ECM). The digital potentiometer is supplied with 12 V via the system relay and is grounded in the car body.

The digital signal is also used in conjunction with the analog signal for accelerator pedal (AP) position sensor diagnostics.

Accelerator pedal (AP) position sensor signals can be read off.

A diagnostic trouble code (DTC) is stored if the engine control module (ECM) detects a difference between the analog and digital signals. The engine control module (ECM) then uses a minimal value to ensure the function (limp home).

The accelerator pedal (AP) position sensor is located on the accelerator pedal bracket.

OUTSIDE TEMPERATURE SENSOR

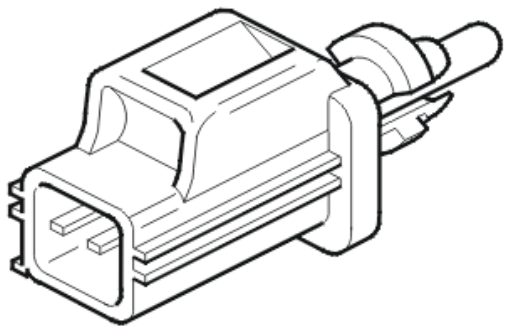

Fig. 252: Identifying Outside Temperature Sensor
Courtesy of VOLVO CARS CORPORATION

The outside temperature sensor detects the temperature in the surrounding air. The signal is used by the engine

control module (ECM) as a substitute value in the event of a fault in certain components or functions and to control certain diagnostic functions.

The sensor is a negative temperature coefficient (NTC) type which is supplied with power from the control module (signal). The resistance in the sensor changes with the outside temperature. This alters the signal to the engine control module (ECM). The lower the temperature the higher the voltage (high resistance). A high temperature results in low voltage (low resistance).

The outside temperature sensor is positioned in the left door mirror.

The outside temperature sensor can be diagnosed by the engine control module (ECM) and the sensor value can be read off.

ENGINE COOLANT LEVEL SENSOR

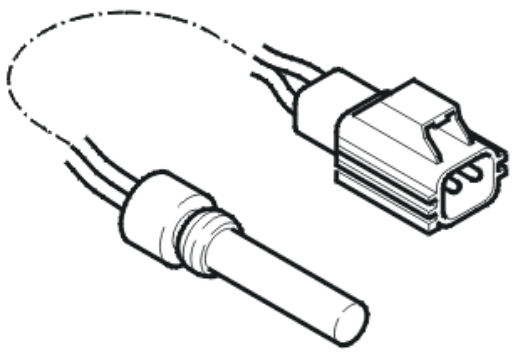

Fig. 253: Engine Coolant Level Sensor
Courtesy of VOLVO CARS CORPORATION

The function of the engine coolant level sensor is to alert the driver if the engine coolant level in the expansion tank is too low.

The sensor is a magnetic reed switch, which is enclosed in a pipe on the bottom of the expansion tank. Around the pipe, on the inside of the expansion tank is a float. This float contains a magnet. When the engine coolant level is above minimum, the float is too high in the tank to affect the switch. However if the engine coolant level falls below the minimum level, the magnetic field acts on the switch.

The sensor is supplied with voltage (signal) from the engine control module (ECM) and grounded in the body. When the engine coolant level in the expansion tank is over a certain level the circuit closes, which produces a low signal. When the engine coolant level is below a certain level the circuit is opened by the engine coolant level sensor, which produces a high signal. When the engine control module (ECM) detects a high signal the information about low engine coolant level is transmitted via the Controller area network (CAN) to the driver information module (DIM), which warns the driver.

NOTE: There are no functions controlled by the engine which are directly connected to the low coolant level warning lamp. The Engine Control Module (ECM) only

transfers the signal which is used by the Driver Information Module (DIM).

The engine control module (ECM) cannot diagnose the engine coolant level sensor.

OIL PRESSURE SWITCH

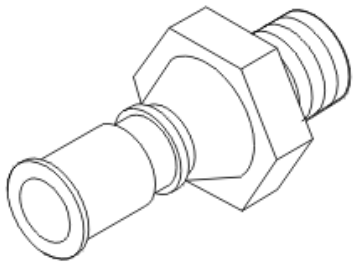

Fig. 254: Identifying Oil Pressure Sensor
Courtesy of VOLVO CARS CORPORATION

The function of the oil pressure switch is to warn the driver about low oil pressure via the driver information module (DIM).

The oil pressure switch has a pressure sensing switch which is powered (signal) by the engine control module (ECM) and grounded in the cylinder block. The oil pressure switch is affected by the oil pressure of the engine.

When the oil pressure exceeds a certain value, the switch in the oil pressure switch will open. A high signal is then sent to the engine control module (ECM).

If the oil pressure is below a certain value, the switch in the oil pressure switch will close and a low signal will be sent to the engine control module (ECM). The engine control module (ECM) then transmits a CAN signal to the driver information module (DIM) to light the indicator lamp for low oil pressure.

The oil pressure sensor is on the cylinder block.

The engine control module (ECM) cannot diagnose the oil pressure switch.

MANIFOLD ABSOLUTE PRESSURE (MAP) SENSOR, INTAKE

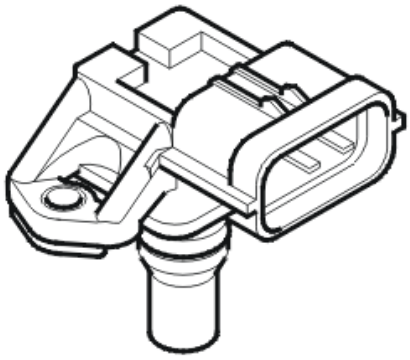

Fig. 255: Identifying Manifold Absolute Pressure (MAP) Sensor
Courtesy of VOLVO CARS CORPORATION

The manifold absolute pressure (MAP) sensor detects quick pressure changes in the intake manifold after the throttle. The signal from the sensor is used by the engine control module (ECM) to supplement the mass air flow (MAF) sensor when calculating injection period.

The manifold absolute pressure (MAP) sensor intake is located on the upper rear edge of the engine (passenger compartment side).

The semi-conductor sensor is grounded in the control module and is supplied with power from the control module.

The resistance in the intake manifold moves the silicone membrane in the sensor, giving a signal of 0.5 - 4.5 V to the control module. Low pressure results in low voltage, high pressure gives high voltage.

The pressure sensor can be diagnosed by the engine control module (ECM) and the sensor signal can be read off.

FUEL PRESSURE SENSOR / FUEL TEMPERATURE SENSOR

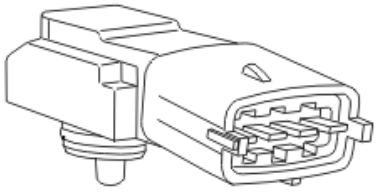

Fig. 256: Fuel Pressure Sensor And Fuel Temperature Sensor
Courtesy of VOLVO CARS CORPORATION

Overview

The fuel pressure and fuel temperature sensors are combined.

The sensor detects the fuel pressure (absolute pressure) and the temperature of the fuel in the fuel rail.

The fuel pressure sensor is on the right-hand end of the fuel rail.

The fuel pressure-/fuel temperature sensor can be diagnosed by the engine control module (ECM) and its signals (pressure and temperature) can be read off.

Fuel pressure sensor

The pressure sensor is a Piezo resistive type resistor, the resistance of which changes with the pressure. Depending on the pressure in the fuel rail, an analog signal of 0 - 5 V is transmitted to the engine control module (ECM). Low pressure results in low voltage, high pressure gives high voltage.

The engine control module (ECM) then uses this signal to adjust the pressure in the fuel rail using the fuel pump control module. See also: **FUEL PRESSURE REGULATION**

The pressure sensor is supplied with 5 V and grounded in the engine control module (ECM). The pressure sensor transmits a signal indicating the fuel pressure to the engine control module (ECM) on a separate cable.

NOTE: The absolute pressure is displayed when using parameter read outs to read off the fuel pressure. If there is no pressure at the fuel rail, the atmospheric pressure will be displayed.

HINT: The relative pressure (absolute pressure minus atmospheric pressure) is displayed when reading off the fuel pressure via a manometer connected to the fuel rail.

Fuel temperature sensor

The temperature sensor is an NTC sensor. The sensor is supplied with voltage (signal) from and grounded in the engine control module (ECM).

The resistance in the sensor changes according to the temperature of the fuel. This provides the engine control module (ECM) with a signal of between 0 - 5 V. Low temperature results in high voltage (high resistance). High temperature results in low voltage (low resistance).

The engine control module (ECM) uses the signal to calculate the volume of the fuel.

OIL LEVEL SENSOR

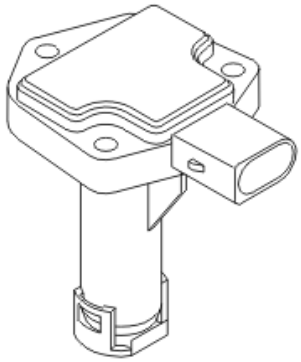

Fig. 257: Identifying Oil Level Sensor
Courtesy of VOLVO CARS CORPORATION

The function of the oil level sensor is to provide the engine control module (ECM) with information regarding the level of engine oil in the oil sump.

The sensor consists of:

- a terminal with three pins
- integrated electronics
- 2 capacitive gauge elements
- a PTC resistor.

The oil level sensor is supplied with 5 V by the engine control module (ECM). The oil level sensor generates a pulse width modulated (PWM) signal for the engine control module (ECM).

The oil level sensor can be diagnosed by the engine control module (ECM).

The pulse-width modulated (PWM) signal from the oil level sensor can be read using parameter readout.

MAIN RELAY (SYSTEM RELAY)

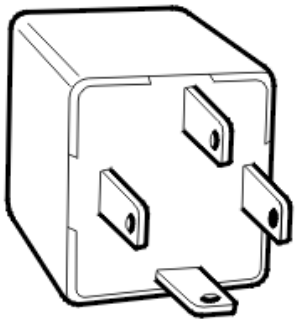

Fig. 258: Identifying Main Relay

Courtesy of VOLVO CARS CORPORATION

The function of the main relay (system relay) is to supply certain components with voltage.

The relay is mechanical and has a closing and opening function. In the rest position the circuit in the relay is open.

The main relay terminals (#30 and #86) are supplied with voltage by the battery. When the ignition key has been turned and the engine control module (ECM) is powered, the terminal (#85) on the main relay is grounded by the engine control module (ECM).

When the terminal (#85) is grounded, the relay is activated and a number of components are powered via the relay terminal (#87).

The main relay is in the integrated relay/fuse box in the engine compartment and is diagnosed by the engine control module (ECM).

INJECTORS

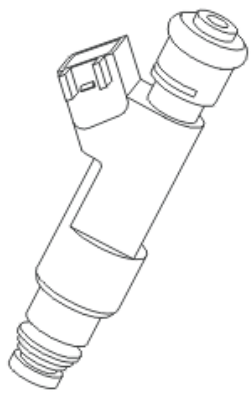

Fig. 259: Identifying Fuel Injector
Courtesy of VOLVO CARS CORPORATION

The function of the injectors is to spray fuel into the cylinders in the correct spray patterns. This happens sequentially.

The injectors are located under the intake manifold.

The engine control module (ECM) controls the injectors by grounding the valves in pulses.

The injectors can be diagnosed by the engine control module (ECM) and can be activated.

IGNITION COILS

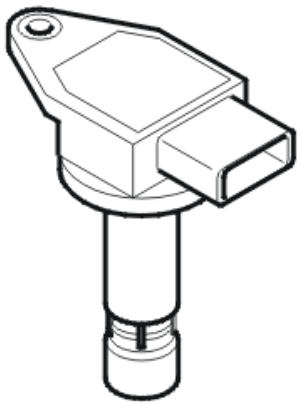

Fig. 260: Identifying Ignition Coil
Courtesy of VOLVO CARS CORPORATION

The ignition coils supply the spark plugs with high voltage to produce sparks. The engine control module (ECM) controls the ignition coils so that sparks are generated at the correct time. The signal reconnects to the engine control module (ECM) so that diagnostics can be carried out.

Each ignition coil has an integrated power stage.

The ignition coils are in the sparkplug wells above each spark plug.

The engine control module (ECM) can diagnose the ignition coils.

CAMSHAFT RESET VALVE (CONTINUOUS VARIABLE VALVE TIMING (CVVT))

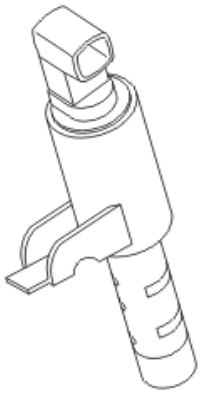

Fig. 261: Identifying Camshaft Reset Valve
Courtesy of VOLVO CARS CORPORATION

The camshaft reset valve controls the oil flow to the CVVT unit (camshaft pulley).

The valve consists of an electro-magnetic valve with a spring-loaded piston. There are slits in the piston which channel the engine lubricating oil to the CVVT unit by moving the piston in the reset valve. The continuous variable valve timing (CVVT) unit turns the camshaft (the camshaft timing changes). The direction in which the camshaft turns depends on the chamber in the CVVT unit which is supplied with oil (pressure). See also:

CAMSHAFT CONTROL (CVVT)

An oil filter is mounted at the intake channel for the valves to prevent oil contaminants from affecting the function of the reset valves.

The system relay supplies the reset valve with voltage via a fuse. The valve is grounded (control) in the engine control module (ECM). When the valve is grounded using a pulse width modulation (PWM) signal, the oil flow in the valve can be regulated to the different chambers in the continuous variable valve timing (CVVT) unit at variable rates. This allows the cam timing to be changed precisely and steplessly.

It is important not to mix up the pipes for the valves when removing/installing the reset valve camshaft.

The engine control module (ECM) can diagnose the camshaft reset valve.

The valves are on the cylinder head above the camshafts. There are four reset valves, two for the inlet camshaft and two for the exhaust camshaft.

EVAPORATIVE EMISSION SYSTEM (EVAP) VALVE

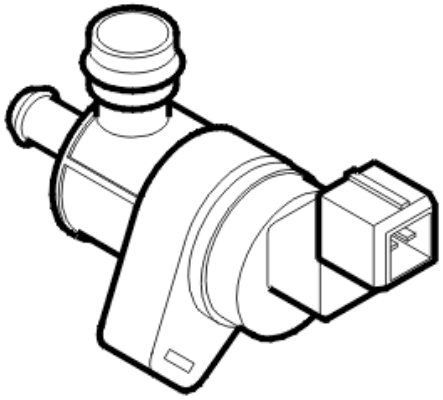

Fig. 262: Evaporative Emission System Valve
Courtesy of VOLVO CARS CORPORATION

The evaporative emission system (EVAP) valve is used to open and close the connection between the EVAP canister and the intake manifold. The valve controls the flow of hydro-carbons (fuel vapor) from the EVAP canister to the engine intake manifold using the vacuum in the intake manifold. This ensures that hydro-carbons stored in the EVAP canister are used in the engine combustion process.

The valve is an electromagnetic valve and is powered from the system relay. When the valve needs to be opened, it is grounded internally in the engine control module (ECM). The evaporative emission system (EVAP) valve is closed when in the standby position (open-circuit).

When the control module requests that the EVAP canister should be drained (the hydrocarbons stored in the canister should be released into the engine), the control module deploys the evaporative emission system (EVAP) valve by grounding it. A pulse width modulation (PWM) signal is used to ground the valve and to control the degree to which the valve will open. In this way, the drainage of the EVAP canister is matched to the volumetric efficiency of the EVAP canister, the engine speed (RPM) and the engine load.

The evaporative emission system (EVAP) valve can be diagnosed by the engine control module (ECM) and can be activated.

The evaporative emission system (EVAP) valve is on the rear edge of the engine (passenger compartment side).

LEAK DIAGNOSTIC UNIT (CERTAIN MARKETS ONLY)

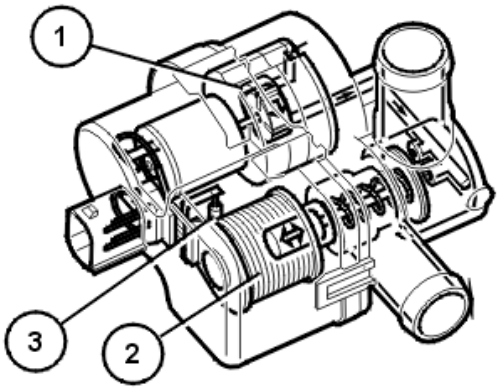

Fig. 263: Identifying Leak Diagnostic Unit
Courtesy of VOLVO CARS CORPORATION

The function of the leak diagnostic unit is to pressurize the fuel tank system during leak diagnostics.

The leak diagnostic unit consists of a plastic housing with:

1. electrical air pump
2. a valve / solenoid which governs the air flow in the unit
3. a heater element (PTC resistor) which warms up the pump.

The electrical pump, valve and heater element in the unit are supplied with voltage by the system relay. The pump, valve and heater element are grounded (control) in the engine control module (ECM).

When leak diagnostics are not active, the valve is held open to ambient air for EVAP control to be carried out.

During leak diagnostics the pump in the leak diagnostic unit starts. The valve in the unit is operated by the engine control module (ECM) by grounding the different circuits internally in the engine control module (ECM).

The Engine control module (ECM) checks the fuel tanks system for leaks by pressurizing the system and at the same time monitoring a number of relevant parameters. Also see: **LEAK DIAGNOSTICS (CERTAIN MARKETS ONLY)**

The engine control module (ECM) can diagnose the leak diagnostic unit.

The valve in the leak diagnostic unit can be activated.

The leak diagnostic unit is at the upper front edge of the fuel tank.

AIR CONDITIONING (A/C) COMPRESSOR (CHECK VALVE AIR CONDITIONING (A/C) COMPRESSOR)

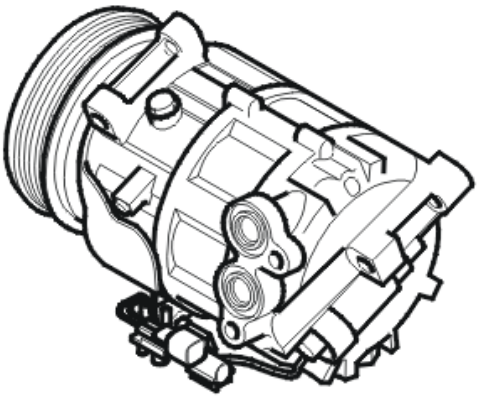

Fig. 264: Identifying A/C Compressor (B8444S Only)
Courtesy of VOLVO CARS CORPORATION

The air conditioning (A/C) compressor transports refrigerant, which is necessary for air conditioning (A/C) operation. It is an axial piston compressor with variable displacement. I. E. The compressor has adjustable cylinder displacement which is controlled by a check valve (solenoid). The valve, which is underneath the compressor, can be replaced.

The air conditioning (A/C) compressor is directly mounted on the engine block and is powered by the engine crankshaft via the auxiliaries belt.

AIR CONDITIONING (A/C) RELAY

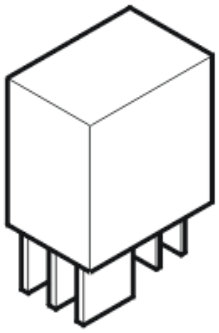

Fig. 265: Air Conditioning Relay
Courtesy of VOLVO CARS CORPORATION

The air conditioning (A/C) relay supplies the A/C compressor with voltage. The relay is controlled by the engine control module (ECM) based on information from different signals:

- the climate control module (CCM) (via the control area network (CAN))

- the engine coolant temperature
- the position of the accelerator pedal (AP)
- the pressure in the system.

The engine control module (ECM) can temporarily disengage the A/C compressor during wide open throttle (WOT) acceleration.

The relay is mechanical. It has a closing / opening function and is supplied with power from the system relay.

In the rest position the circuit in the relay is open.

The system relay supplies the coil and the relay with power. The relay activates when the coil is grounded in the engine control module (ECM), the circuit closes and the A/C compressor is supplied with power via the relay voltage output.

The relay coil is grounded (signal) when the engine control module (ECM) receives a signal via the Controller area network (CAN) from the climate control module (CCM) to activate the relay and start the compressor.

STARTER MOTOR RELAY

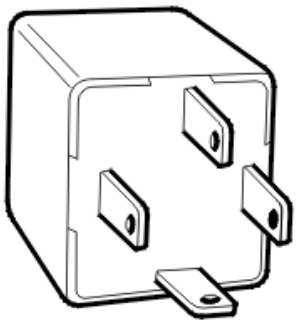

Fig. 266: Identifying Main Relay
Courtesy of VOLVO CARS CORPORATION

The function of the starter motor relay is to supply power to the starter motor. See also: **START**

The starter motor relay is in the relay/fuse box in the engine compartment.

ENGINE COOLING FAN (FC) / ENGINE COOLING FAN (FC) CONTROL MODULE

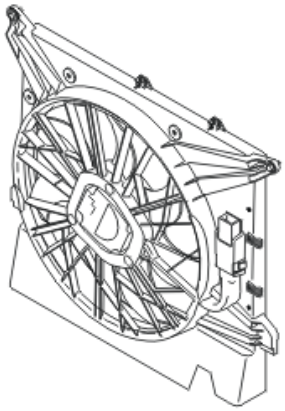

Fig. 267: Identifying Engine Cooling Fans (FC) and Control Modules
Courtesy of VOLVO CARS CORPORATION

NOTE: The engine cooling fan may have a post-run of up to approx. 6 minutes after the engine has been turned off. The time for the fan's post-run depends on engine temperature, temperature in the engine compartment and pressure level in the AC-system.

WARNING: Be careful since the engine cooling fan may have a post-run after the engine has been turned off.

The engine cooling fan (FC) cools the coolant, engine compartment and the condenser when the air conditioning (A/C) compressor is running.

The engine control module (ECM) transmits a pulse width modulated (PWM) signal to the engine cooling fan (FC) control module. The control module then activates the fan at different speeds. The speed of the engine cooling fan (FC) is determined by the engine control module (ECM), depending on the coolant temperature (based on the signal from the engine coolant temperature (ECT) sensor) and the vehicle speed.

The temperature conditions for engagement of the different engine cooling fan (FC) stages may vary slightly, depending on the engine variant and the equipment level. The temperature conditions apply when:

- the A/C is off
- no faults are detected by the Engine Control Module (ECM).

There is an internal diagnostic function in the engine cooling fan (FC). This function transmits a signal to the engine control module (ECM) if the fan is partially or fully blocked. To do this, the engine cooling fan (FC) control module grounds the pulse width modulation (PWM) signal based on a predetermined pattern.

The engine cooling fan (FC) and its control module are behind the radiator.

The engine cooling fan (FC) can be diagnosed by the engine control module (ECM) and can be activated.

FUEL PUMP

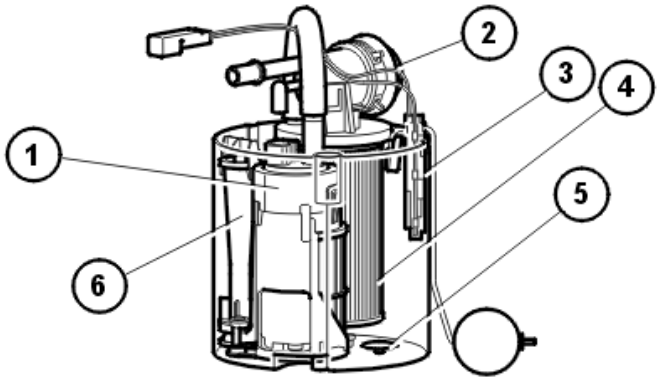

Fig. 268: Fuel Pump
Courtesy of VOLVO CARS CORPORATION

The function of the fuel pump is to ensure that the pressure is correct at the delivery lines for the injectors when requested by the fuel pump control module.

The fuel pump consists of:

1. An electrical pump with an integrated safety valve
2. A pressure equalization valve. This valve equalizes rapid pressure peaks which occur, for example, when the injectors close during engine braking. It also contains a non-return valve which ensures that the pressure in the system does not drop when the engine is switched off
3. Fuel level sensor
4. Fuel filter, cannot be replaced separately
5. Relief valve, releases fuel into the pump housing
6. Ejector pump, continuously fills the pump housing with fuel. The fuel always flows from the fuel pump through the ejector and back to the pump housing.

The fuel pump is supplied with battery voltage by the fuel pump control module and is grounded in the car body via the fuel pump control module.

The engine control module (ECM) has diagnostics for the fuel pump function to ensure that the pressure is correct. See also: **FUEL PRESSURE REGULATION, DIAGNOSTICS**

The fuel pump can be activated and its status can be read off.

The pressure in the fuel rail can be measured by connecting a manometer to a nipple. This nipple is on the right-hand end of the fuel rail.

FUEL PUMP (FP) CONTROL MODULE

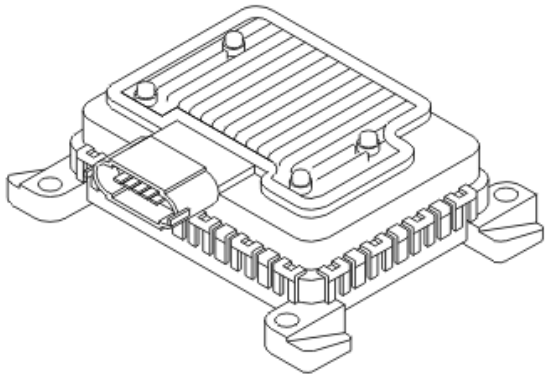

Fig. 269: Fuel Pump Control Module
Courtesy of VOLVO CARS CORPORATION

The fuel pump control module powers the fuel pump and regulates the output of the pump. The fuel pressure changes with the output of the pump.

The fuel pump (FP) control module is supplied with battery voltage by the fuel pump relay and grounded in the car body. The fuel pump relay is controlled by the central electronic module (CEM) at the request of the engine control module (ECM).

The engine cannot be started if the power supply to the fuel pump control module is faulty because the fuel pump will not then be powered.

The fuel pump control module is controlled by the engine control module (ECM) via serial communication. The fuel pump control module then controls the fuel pump by transmitting pulse width modulated (PWM) voltage on the ground lead for the fuel pump. This means that the voltage drop across the pump changes, and with it the output of the fuel pump. See also: **FUEL PRESSURE REGULATION**

There are no diagnostics for the fuel pump control module. The engine control module (ECM) has diagnostics for fuel pressure regulation and the associated components. See also: **FUEL PRESSURE REGULATION, DIAGNOSTICS**

The pulse width modulated (PWM) signal from the engine control module (ECM) to the fuel pump control module can be read off.

The fuel pump control module is on the outside on the right-hand side of the fuel tank.

VALVE VARIABLE INTAKE

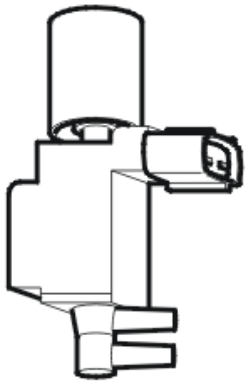

Fig. 270: Identifying Variable Intake Control Valve
Courtesy of VOLVO CARS CORPORATION

The valve for variable intake controls the vacuum motor for the damper in the variable intake manifold.

The valve consists of an electro-magnetic valve which controls the air flow between the vacuum tank and the vacuum valve for the damper in the variable intake manifold.

The valve is supplied with voltage from the system relay via fuse and ground (control) internally in the engine control module (ECM). Also see: **VARIABLE INTAKE SYSTEM**

The valve for variable intake can be diagnosed by the engine control module (ECM).

The valve for variable intake is on the right-hand side of the engine beside the intake manifold.

EMISSIONS WARNING LAMP

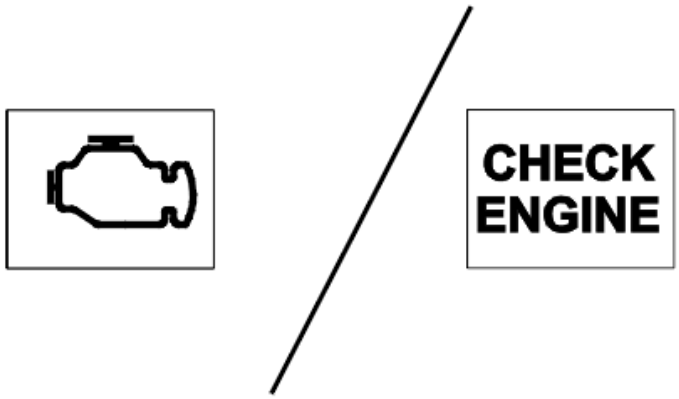

Fig. 271: Emissions Warning Lamp
Courtesy of VOLVO CARS CORPORATION

The emissions warning lamp in the Driver Information Module (DIM) has a warning symbol. This warning symbol varies depending on the market. The warning symbols are:

- "Engine symbol" (not USA)

- "CHECK ENGINE" (MIL - Malfunction Indicator Lamp, USA only).

The warning lamp lights when the ignition key is turned to position II. The warning lamp will go out after approximately 15 seconds or if the engine is started when no fault is found in the engine management system.

If Readiness is not complete (certain diagnostic functions not completed), the warning lamp will flash instead of going out when the ignition key is in position II.

The warning lamp will light if there is a fault in one of the parameters in the engine management system. The warning lamp will also light in response to a request transmitted via the control area network (CAN) if there is a fault in the transmission control module (TCM) which affects emissions.

ELECTRONIC THROTTLE UNIT

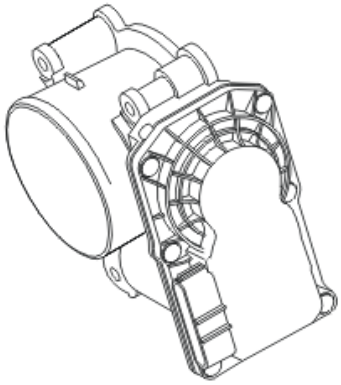

Fig. 272: Electronic Throttle Unit
Courtesy of VOLVO CARS CORPORATION

The electronic throttle unit, using the PWM control signal from the engine control module (ECM), regulates the amount of air for engine combustion. This is done using an electronically controlled shutter.

The aluminum electronic throttle unit consists of a round throttle disc on a spindle. The spindle is driven by a DC motor (damper motor), gear wheel and two springs; one for opening and one for return.

By changing the polarity of the power supply, the DC motor can be run in both directions. At one of the limit positions the throttle disc is closed so that minimal air can pass the throttle unit. In the other limit position, the throttle disc is parallel to the air flow. This provides maximum airflow through the electronic throttle unit.

Two permanent magnets in the gear sector on the throttle spindle are used to check the position of the throttle disc. The permanent magnets affect two throttle position (TP) Hall sensors in the cover. The analog signals from the two sensors are transmitted to the engine control module (ECM). The signals are offset. The engine control module (ECM) compares these signals with the stored desired values to check if they are plausible.

The electronic throttle unit is located on the engine intake manifold. In the event of a fault, the throttle unit must be replaced as a single unit.

The engine control module (ECM) can diagnose the electronic throttle unit.

THROTTLE POSITION (TP) SENSOR

Electronic throttle unit.

DIAGNOSTIC FUNCTIONS

OVERVIEW

See: **OVERVIEW**

MISFIRE DIAGNOSTIC

See: **MISFIRE DIAGNOSTIC**

CAMSHAFT DIAGNOSTICS (CVVT)

See: **CAMSHAFT DIAGNOSTICS (CVVT)**

LEAK DIAGNOSTICS (CERTAIN MARKETS ONLY)

See: **LEAK DIAGNOSTICS (CERTAIN MARKETS ONLY)**

HEATED OXYGEN SENSOR (HO2S) DIAGNOSTIC

See: **HEATED OXYGEN SENSOR (HO2S) DIAGNOSTIC**

THREE-WAY CATALYTIC CONVERTER (TWC) DIAGNOSTICS

See: **THREE-WAY CATALYTIC CONVERTER (TWC) DIAGNOSTICS**

FUEL PRESSURE REGULATION, DIAGNOSTICS

See: **FUEL PRESSURE REGULATION, DIAGNOSTICS**

OVERVIEW

GENERAL

The engine control module (ECM) diagnoses both internal signals and functions as well as signals and functions from connected components.

CONDITIONS FOR DIAGNOSIS

For the diagnosis of a component or function to start, certain specific conditions must be met. The conditions for diagnostics vary depending on the component or function being diagnosed.

Conditions must be met during the diagnostic in order for the diagnostic to be completed. The time and conditions for the diagnostic vary depending on the component or function being diagnosed. Certain diagnostics only require the ignition to be switched on and off for a diagnostic to be run. Other diagnostics require that several different conditions are met. For example:

- vehicle speed
- engine coolant temperature (ECT)
- time since start
- different load and engine speed relationships in the same trip
- a certain event (for example the evaporative emission system (EVAP) valve is operating).

When the engine control module (ECM) has run all the implemented diagnostics, the control module has completed a "trip". An extensive driving schedule in various conditions is required to complete a trip. The engine may also need to be shut off for a certain amount of time and then switched on again to complete a trip.

EMISSION-RELATED DIAGNOSTIC FUNCTIONS

The engine control module (ECM) checks that the emission-related systems are working. These systems are checked by running a diagnostic function. The diagnostic function checks the components and that the system is functioning.

DIAGNOSTIC TROUBLE CODE MEMORY

When the engine control module (ECM) detects a fault, the diagnostic trouble code (DTC) and status are stored in the diagnostic trouble code (DTC) memory and are now visible at normal diagnostic trouble code (DTC) read out. If the diagnostic trouble code (DTC) lights the malfunction indicator lamp (MIL) this occurs at the same time. If an existing fault disappears and does not recur, the engine control module, after a certain number of fault-free operating cycles and depending on the DTC, changes the status of the diagnostic trouble code (DTC). This means that it can no longer be read off at normal DTC read out. In this status, the diagnostic trouble code (DTC) remains until the engine control module (ECM) erases diagnostic trouble code (DTC) or is disconnected from power.

SUBSTITUTE VALUE

For certain types of diagnostic trouble codes (DTCs), the missing signal is replaced with a substitute value so that the system can continue functioning.

DOWNLOADING SOFTWARE AND REPLACING THE CONTROL MODULE

New software can be downloaded into the engine control module (ECM). When ordering software, the hardware and the software in the car is compared to the information in the Volvo central database. If the comparison is OK the software is downloaded to the control module. If the comparison between the car and Volvo central database is not OK, the database is updated with the car configuration. When this is complete the software is downloaded.

The engine control module (ECM) is located on the air cleaner (ACL) box in the engine compartment.

The engine control module (ECM) contains a unique code for each car for the immobilizer. The central electronic module (CEM) checks this code at engine start up. The engine will not start if the central electronic module (CEM) detects an incorrect code for the immobilizer. This means that the engine control module (ECM) cannot be switched from vehicle to vehicle.

The engine control module (ECM) must first be "unlocked" using a unique PIN for each car before it can be programmed with a code for the immobilizer. When the PIN has been approved by the engine control module (ECM), the code for the immobilizer can be programmed.

The PIN and the code for the immobilizer are obtained from the Volvo central database and sent out with the software package when software for downloading has been ordered.

All new engine control modules (ECM) have the same PIN which is preprogrammed by the control module supplier. When the engine control module (ECM) has been programmed successfully the original PIN for the car will be programmed in the engine control module (ECM) memory and will replace the preprogrammed PIN code.

FUNCTION

STARTING MOTOR

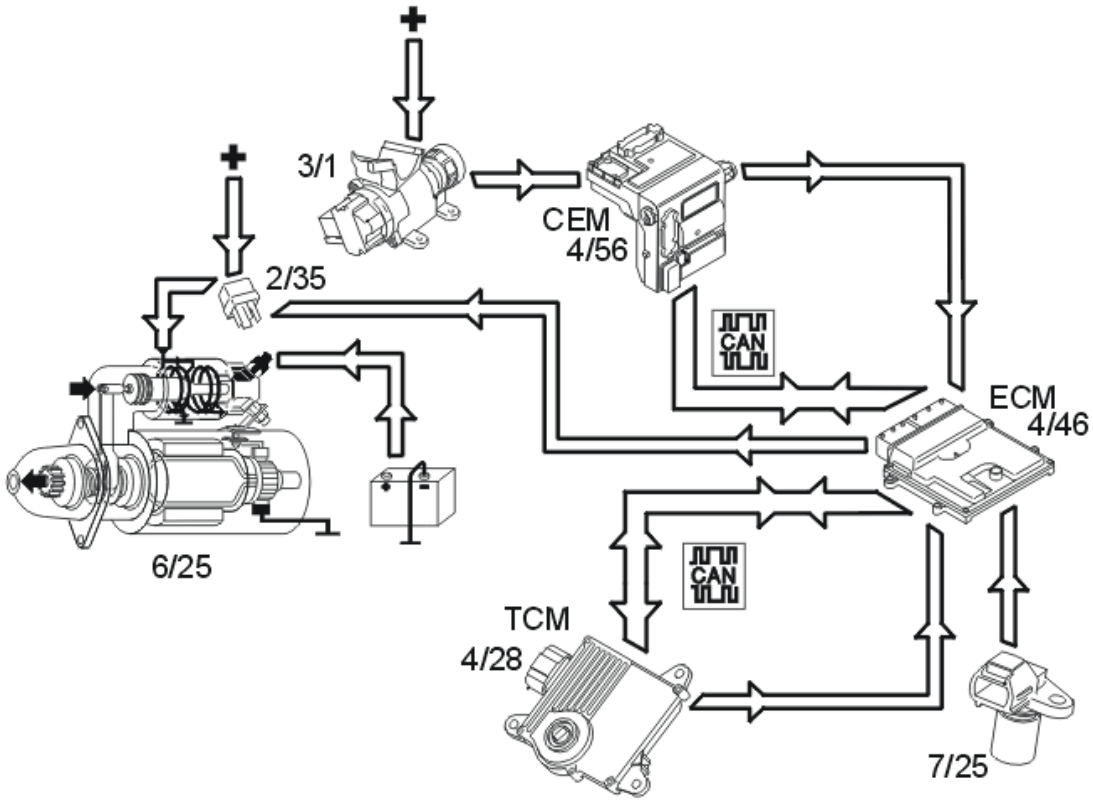

Fig. 273: Identifying Starter Motor System
Courtesy of VOLVO CARS CORPORATION

The starter motor (6/25) is supplied with power via the starter motor relay (2/35), the starter motor relay is controlled by the engine control module (ECM) (4/46).

The start process is as follows:

1. The ignition key is turned to start position (position III)
2. A high signal (U_{bat}) from the ignition switch (3/1) is transmitted to the engine control module (ECM) via the central electronic module (CEM). The engine control module (ECM) interprets this high signal as a request to activate the starter motor.
3. The engine control module (ECM) activates the starter motor solenoid by grounding and powering the coil for the starter motor relay.
4. The relay closes the circuit between the starter motor solenoid and the fuse in the relay/fuse box in the engine compartment, activating the starter motor.
5. The engine control module (ECM) activates the starter motor until the engine starts (the engine speed (rpm) exceeds a certain value)

Auto start

If the ignition key returns to ignition position (position II) before the engine is started, the starter motor continues to run. The starter motor runs until the engine is started or until a certain time has elapsed. The engine temperature dictates the running time of the starter motor:

- 0 °C or higher, approximately 3 seconds
- less than 0 °C, up to approximately 5 seconds.

If the engine does not turn or if the engine speed is extremely low when the start relay is activated, the engine control module (ECM) interrupts start relay activation.

Activation of the starter motor is not permitted or is interrupted if:

- the engine is running (the engine speed (RPM) above a certain value)
- the immobilizer function does not allow a start.
- the gear selector is not in position "P" or "N" (automatic transmissions). The engine control module (ECM) receives a signal indicating the position of the gear selector from the transmission control module (TCM) (4/28) via both the controller area network (CAN) and from a directly connected cable between the engine control module (ECM) and transmission control module (TCM).

CAMSHAFT CONTROL (CVVT)

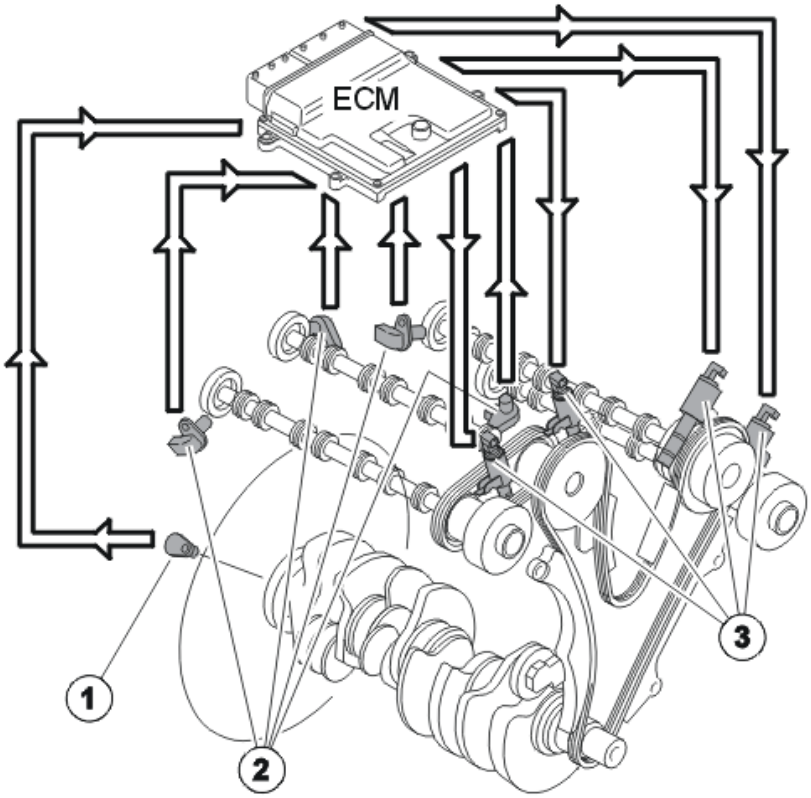

Fig. 274: Identifying Camshaft Control (CVVT System)
Courtesy of VOLVO CARS CORPORATION

Both intake camshafts and exhaust camshafts are regulated by the Engine Control Module (ECM). The intake camshafts are located in the middle of the engine, while the exhaust camshafts are located furthest out. The camshafts are divided into two banks.

Bank 1 (front cylinder row); cylinders 1, 3, 5 and 7.

Bank 2 (rear cylinder row, closest to the passenger compartment); cylinders 2, 4, 6 and 8.

The inlet camshafts are driven primarily by the crankshaft and chain, while the exhaust camshafts are driven by a chain from the inlet camshafts.

When each camshaft is set at the factory, it is aligned with the position of the crankshaft. The position of the camshaft in relation to the crankshaft is designated **the camshaft 0 position** (default setting). During camshaft control (CVVT) the camshaft 0-position is offset so that the cam timing changes. The opening and closing of the intake and exhaust valves can be changed to match the camshaft. Engine performance can be increased, idle quality increased and emissions reduced by regulating the camshaft timing changes.

The engine control module (ECM) detects the position of the camshafts by comparing the signals from the engine speed (RPM) sensor (1) (crankshaft position) and the camshaft position (CMP) sensors (2) (camshaft positions). The engine control module (ECM) then controls the angle of the camshaft by controlling the oil flow to the CVVT unit using the reset valve camshaft (3).

There are diagnostics for this function. See also: **CAMSHAFT DIAGNOSTICS (CVVT)**

Controlling, reset valve camshaft

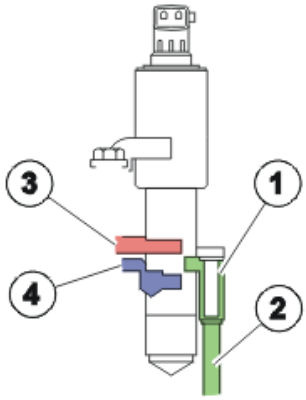

Fig. 275: Diagram of Camshaft Reset Valve
Courtesy of VOLVO CARS CORPORATION

1: Oil filter reset valve camshaft.

2: Oil duct (pressure, inlet).

3: Duct leading to CVVT unit chamber (deployment).

4: Duct leading to CVVT unit chamber (deployment).

The camshaft reset valve controls the oil flow to the continuous variable valve timing (CVVT) unit. The engine control module (ECM) uses a pulse width modulation (PWM) signal to control the valve. See also: **CAMSHAFT RESET VALVE (CONTINUOUS VARIABLE VALVE TIMING (CVVT))**

Controlling, CVVT units

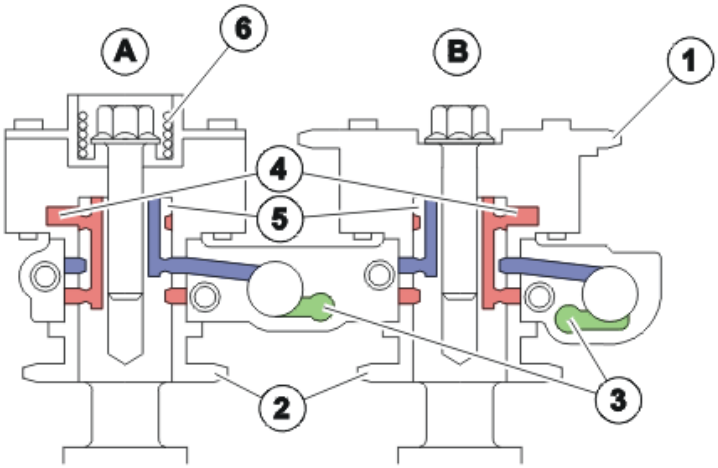

Fig. 276: Diagram Of The Continuous Variable Valve Timing CVVT Units
Courtesy of VOLVO CARS CORPORATION

The CVVT units are the "Vane" type which means that the CVVT unit rotors are turned by oil pressure on one, or the other, side of the rotor wings.

A: CVVT unit exhaust

B: CVVT unit inlet

1: Timing belt pulley inlet camshaft (primary, inlet camshaft driven by the crankshaft).

2: Timing belt pulley inlet -/exhaust camshaft (secondary, exhaust camshaft driven by inlet camshaft).

3: Oil duct reset valve camshaft (pressure).

4: Oil duct for controlling CVVT unit.

5: Oil duct for return CVVT unit.

6: Spring (CVVT unit exhaust camshaft only).

The continuous variable valve timing (CVVT) unit allows the position of the camshaft to be adjusted relative to the crankshaft.

The camshaft is secured to the CVVT unit rotor. The rotor (and with it the camshaft) rotates in relation to the timing belt pulley (1) by the oil pressure building up on one or both sides of the rotor vanes in the CVVT unit.

The difference in function between the exhaust camshaft (A) and inlet camshaft (B) CVVT unit is that the exhaust camshaft CVVT unit is equipped with a spring. The force of the spring makes the CVVT unit deploy the camshaft. The function causes faster deployment of the exhaust camshaft at engine start-up, before the oil pressure build in the engine.

Control occurs according to the following during deployment/return of the camshaft.

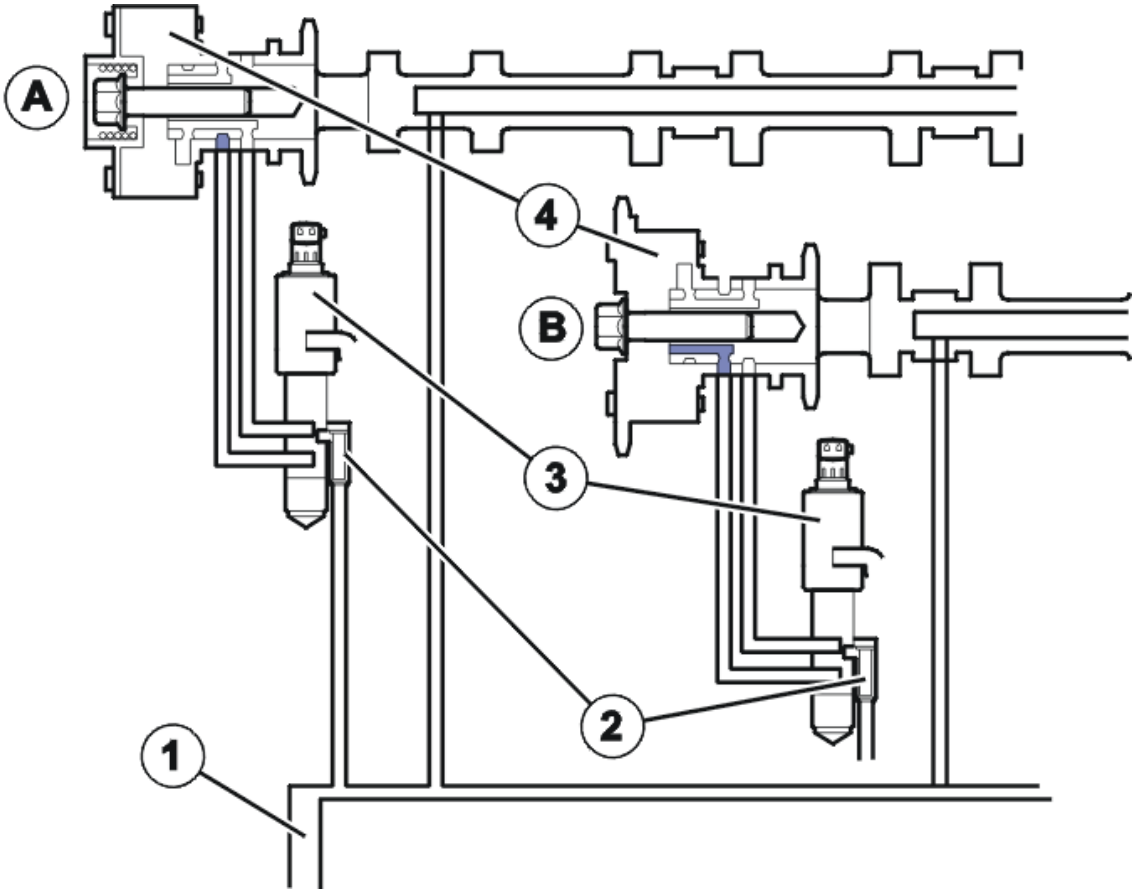

Fig. 277: Diagram Of The Continuous Variable Valve Timing CVVT System
Courtesy of VOLVO CARS CORPORATION

A: Exhaust camshaft

B: Inlet camshaft

- Oil pressure from the lubrication system (1) of the engine.
- The oil passes the filter for the camshaft reset valve (2) and then on to the reset valve (3).
- The engine control module (ECM) controls the oil flow to one of the CVVT unit chambers (4) depending on whether it is to be deployed/returned by the camshaft.

The reset valve is controlled by the engine control module (ECM) by high frequency, switching for deployment and return. This results in rapid and precise control. Both camshafts can be controlled up to 40 crankshaft degrees.

CONTROLLING THE GENERATOR

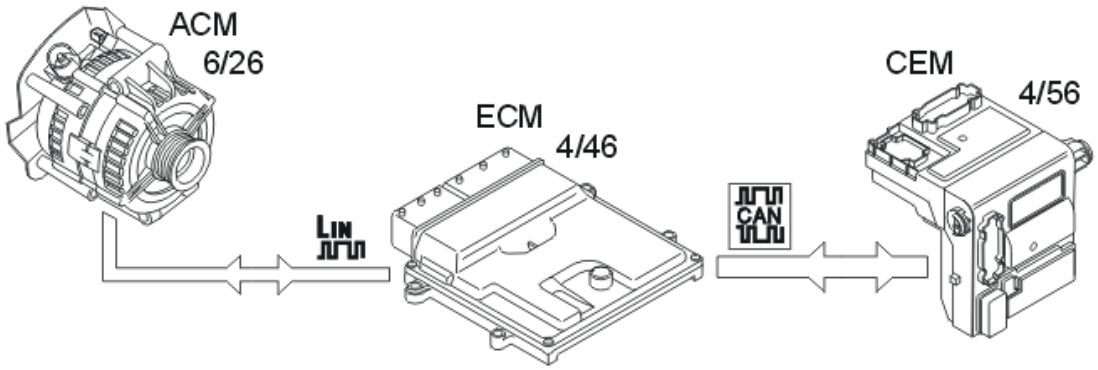

Fig. 278: Identifying ACM, ECM & CEM Communication Link
Courtesy of VOLVO CARS CORPORATION

The engine control module (ECM) (4/46) regulates the charge voltage of the generator (GEN) (6/26) (via LIN communication) when requested by the central electronic module (CEM) (4/46) (via CAN communication).

The engine control module (ECM) can change the charge voltage requested by the central electronic module (CEM). to suit certain operating conditions such as engine start, idle speed or high engine load.

The value of requested charge voltage from the engine control module (ECM) and the charge current of the generator can be read off.

The alternator control module (ACM) (6/26) transmits information to the engine control module (ECM) regarding any faults). The diagnostic trouble codes (DTCs) are stored in the engine control module (ECM) in the event of a fault. In the event of certain faults, information about these faults is also transmitted to the central electronic module (CEM).

VARIABLE INTAKE SYSTEM

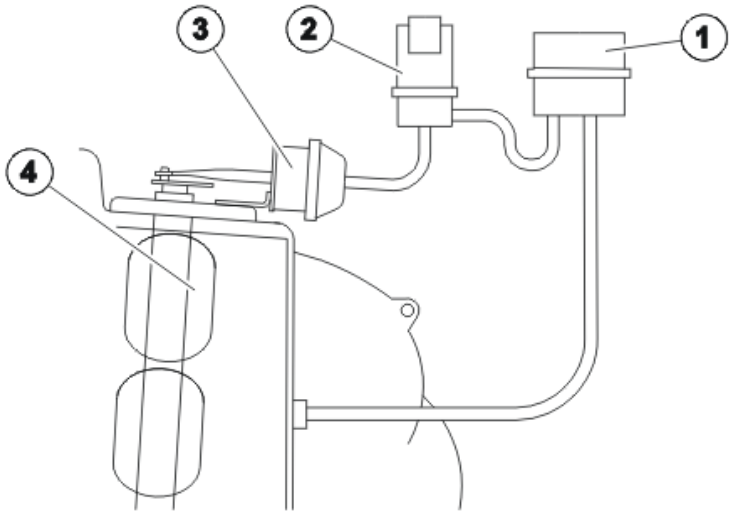

Fig. 279: View of Variable Intake System Components

Courtesy of VOLVO CARS CORPORATION

The variable intake system components consist mainly of:

1. Vacuum tank
2. Valve for variable intake
3. Vacuum motor
4. Throttle discs

In order to maintain a high volume of intake air at different engine speeds (RPM) and engine loads, B8444S is equipped with the Variable Intake System. The Variable Intake System divides drawn in air into two volumes. The engine control module (ECM) then regulates the air flow between these volumes using dampers in order to achieve the optimum air flow at specific operating temperatures.

The vacuum from the engine is stored in a vacuum tank (1). The vacuum is then guided to the vacuum motor (3) using the variable intake valves (2). The vacuum motor affects the damper in the intake system.

The variable intake valve is controlled by the engine control module (ECM) (4/46).

The variable intake valve can be activated and the variable intake function can be diagnosed by the engine control module (ECM).

OIL MONITORING

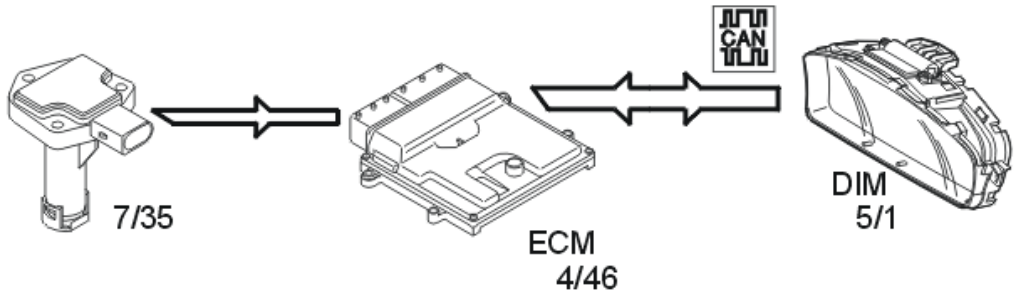

Fig. 280: Identifying oil monitoring components
Courtesy of VOLVO CARS CORPORATION

General

The following components are used for oil monitoring:

- oil level sensor (7/35)
- engine control module (ECM) (4/46)
- driver information module (DIM) (5/1).

The oil level sensor, via the driver information module (DIM), is used to inform the driver if oil filling is required.

Detecting the oil level

The integrated electronics of the sensor calculates the oil level using the measured value for the oil temperature.

In order for the correct oil level to be calculated, temporary oil level changes in the oil sump must be added to the calculation, for example when driving on an incline, during cornering and the like. These calculations are performed by the engine control module (ECM) using the oil level sensor signal and a number of other parameters such as the vehicle speed signal and load signal.

REGULATING THE CRUISE CONTROL

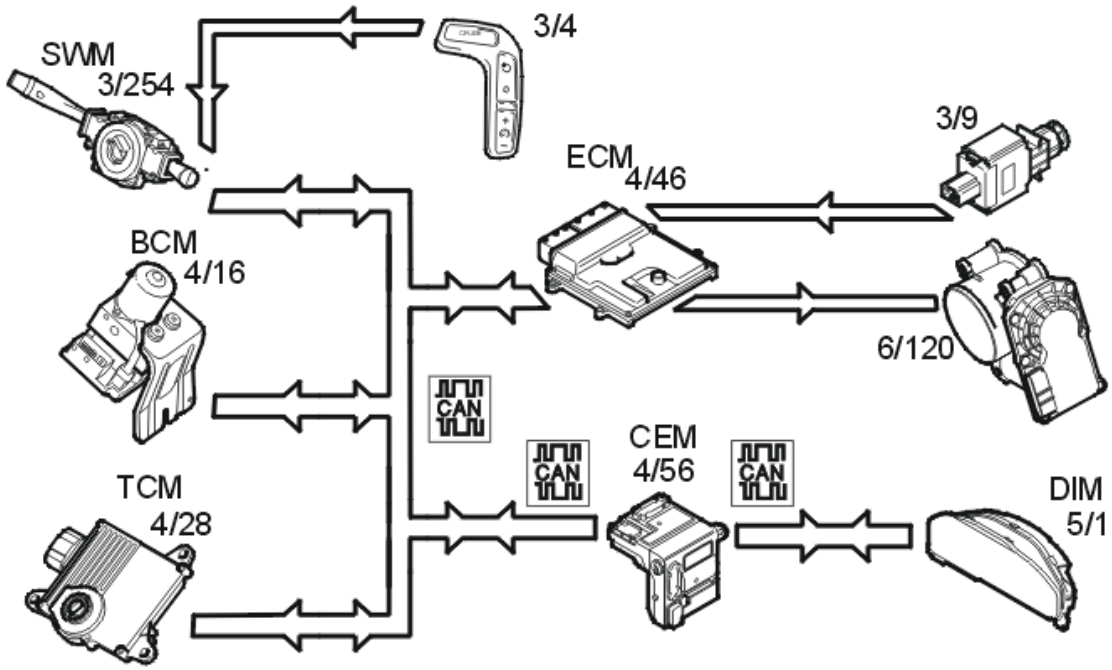

Fig. 281: Components Regulating Cruise Control
Courtesy of VOLVO CARS CORPORATION

The cruise control function is an example of distributed functionality.

The following components are used when regulating the cruise control:

- engine control module (ECM) (4/46)
- steering wheel module (SWM) (3/254)
- cruise control, control unit (3/4)
- central electronic module (CEM) (4/56)
- brake control module (BCM) (4/16) (brake pedal position, speed signal)

- driver information module (DIM) (5/1) (cruise control lamp)
- transmission control module (TCM) (4/28)
- electronic throttle unit (6/120)
- stop lamp switch (3/9).

To activate cruise control the function must be switched on using the "CRUISE" button. A lamp lights up in the driver information module (DIM).

The driver activates the function by pressing the SET+ or SET- button. A message is then transmitted via the low speed side of the Controller area network (CAN) to the central electronic module (CEM) which then transmits the message on via the high speed side of the Controller area network (CAN) to the engine control module (ECM).

The engine control module (ECM) controls the throttle angle so that a constant speed is maintained using the vehicle speed signal from the Brake Control Module (BCM). The transmission control module (TCM) also receives a message indicating that cruise control is active via the Controller area network (CAN), so that the transmission follows certain shifting patterns when the cruise control is active.

If the accelerator pedal (AP) is depressed the speed increases as normal and then resumes to the stored value when the driver releases the accelerator pedal (AP) again.

The engine control module (ECM) continually stores the speed. If the cruise control is disengaged, if for example the driver depresses the brake pedal, the previous speed can be resumed by pressing the "RESUME" button.

The cruise control cannot be activated below a certain speed.

Cruise control is disengaged:

- when the driver depresses the brake pedal
- when the driver presses the "CRUISE" button on the steering wheel
- when the driver depresses the "0" button on the steering wheel
- if "P" or "N" position is transmitted on the controller area network (CAN)
- if the speed deviates too much from the set value
- when the control system detects a fault that prevents activation.

FUEL TRIM

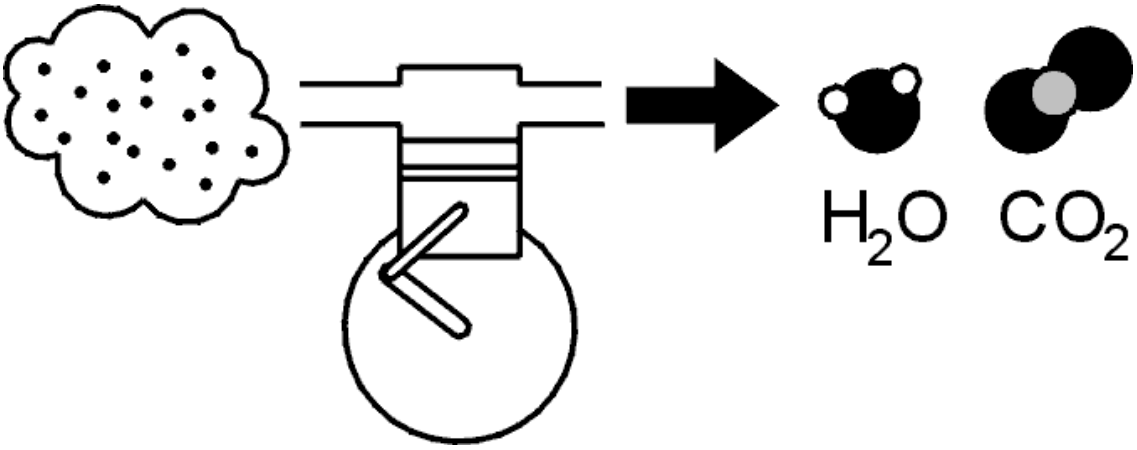

Fig. 282: Fuel Trim
Courtesy of VOLVO CARS CORPORATION

Overview

Fuel trim reduces exhaust emissions. Fuel trim reduces nitrous oxides (NO_x), carbon monoxide (CO) and hydrocarbon (HC) emissions.

Theoretically, if the correct amount of oxygen is added during combustion, fuel can be converted to water (H_2O) and carbon dioxide (CO_2). Emissions would then be completely safe.

In practice considerable amounts of hydro-carbons (HC) and varying amounts of carbon monoxide (CO) and carbon dioxide (CO_2) remain.

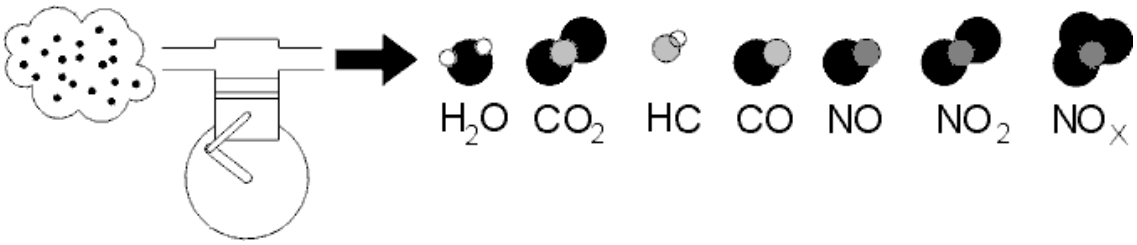

Fig. 283: Fuel Trim
Courtesy of VOLVO CARS CORPORATION

Due to the high temperature and pressure, nitrous oxides such as NO and NO_2 are also formed. The common designation for these gases is nitrous oxides NO_x .

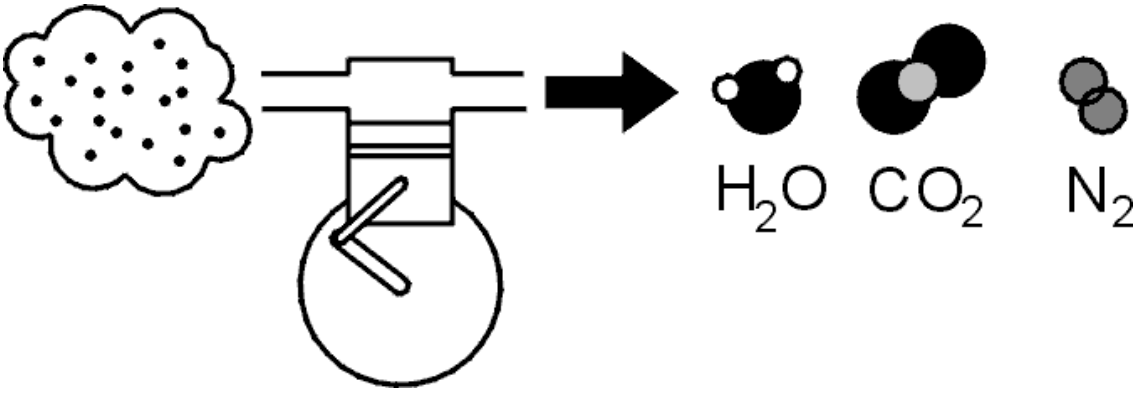

Fig. 284: Converting Exhaust To H2O And CO2
Courtesy of VOLVO CARS CORPORATION

By speeding up the reaction between the remaining reactive components using a catalytic converter, these can be converted to water (H_2 O), carbon dioxide (CO_2) and nitrogen (N_2).

However this can only happen if the balance of hydro-carbons (HC), carbon monoxide (CO), oxygen (O_2) and nitrous oxides (NO_x) is exactly right in the exhaust. This happens when the fuel air mixture before combustion is 14.7 kg of air per kg of fuel. The Lambda value is then said to be one, (lambda=1).

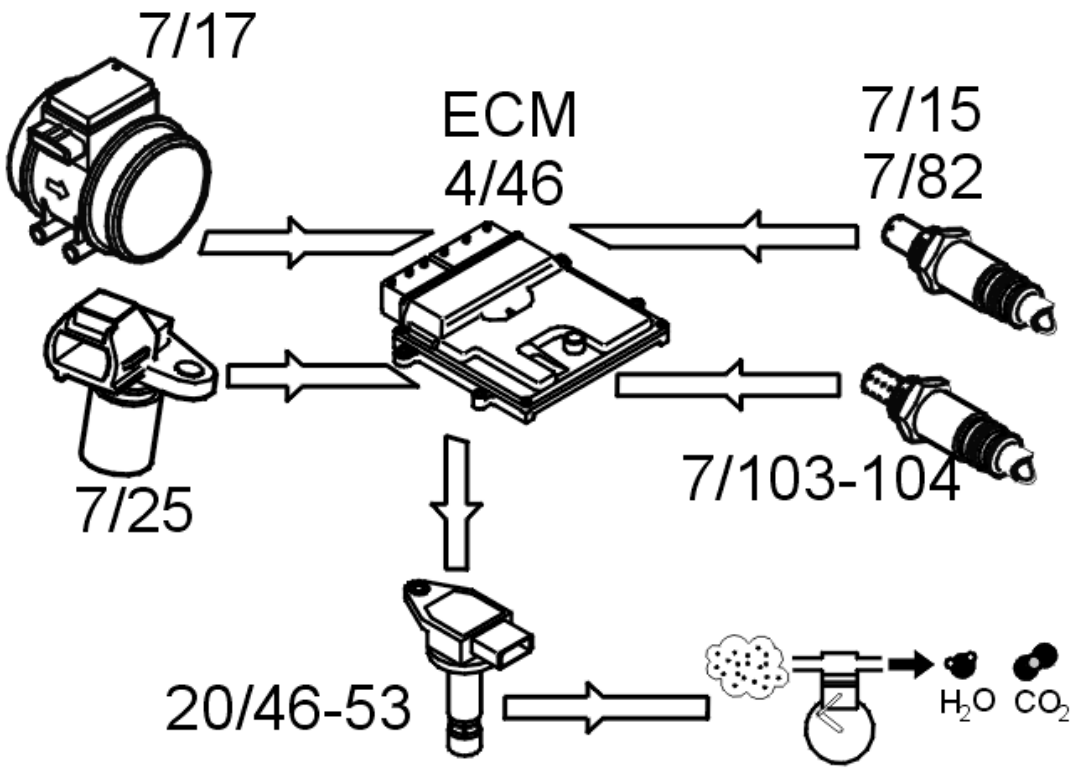

Fig. 285: Fuel Control Components
Courtesy of VOLVO CARS CORPORATION

A base program in the engine control module (ECM) calculates the injection period based on data about load, i. e. the measured air mass and engine speed (rpm). The calculated injection time (from the base program) is then modified by a circuit (short-term fuel trim). The signal from the heated oxygen sensor (HO2S) is used to finely adjust the injection period so that lambda=1 is reached. The short-term fuel trim is a circuit that finely adjusts the injection period so that the fuel/air mixture is optimized (lambda=1). The control module also used the signals from the front and rear heated oxygen sensors (HO2S) to correct the front heated oxygen sensor (HO2S) (offset adjustment) and thereby the injection period. This gives a higher degree of accuracy during fuel trim. Fuel trim is a rapid process which may take place several times a second. Adjustment of the injection period calculated in the base program is limited.

The short-term fuel trim can be read off.

Adaptive functions

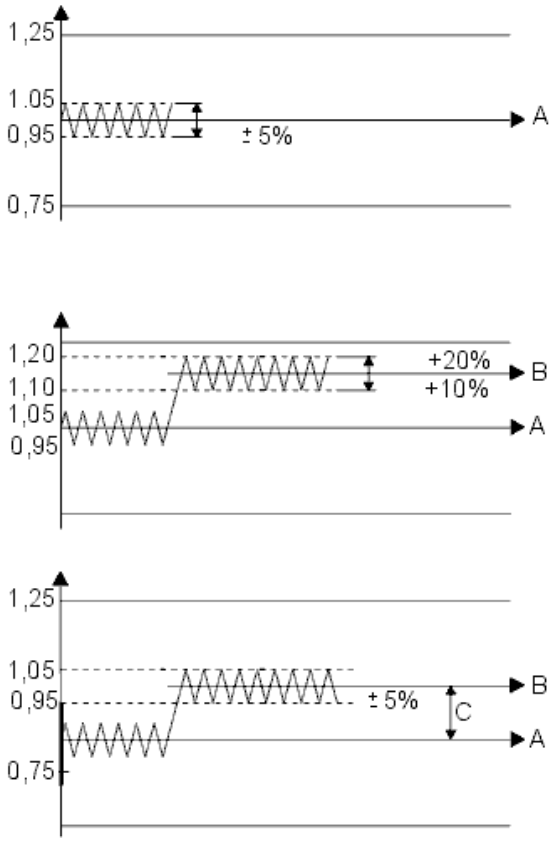

Fig. 286: Adaptive Function Charts
Courtesy of VOLVO CARS CORPORATION

Certain factors, for example, tolerance deviations on certain components such as mass air flow (MAF) sensor and injectors, air leakage on the intake side, fuel pressure etc. affect the fuel / air mix. In order to compensate for this, the engine control module (ECM) has adaptive (self learning) functions. When the engine is new the short term fuel trim varies cyclically around a nominal central line (A) 1.00, with, for example, a 5% change of injection time when fuel trim is in operation.

If there is air leakage for example, the short-term fuel trim will quickly be offset to a new position (B) and will

then work for example between 1.10 (+10%) and 1.20 (+20%), although still at an amplitude of 5%, but with an offset in relation to the original center line (A). The injection period has then been increased to compensate the increase in the amount of air.

The adaptive functions will correct the change, so that the short-term fuel trim will work around the new center line (B) where it will again have its full range of control available.

Put simply, fuel trim is a measurement of the difference (C) between the original short-term fuel trim center line (A) and the new center line (B).

The adaptive functions are split into various operational ranges based on the load and speed of the engine.

The different adaption ranges can be read off.

The adaptive adjustments of injection time are continuously stored in the engine control module (ECM). This means that, at different operating ratios, the correct mixture ratio is achieved before the heated oxygen sensor (HO2S) reaches operating temperature.

The diagnostic trouble code (DTC) is stored in the engine control module (ECM) if any adaption value is too high or too low.

FUEL PRESSURE REGULATION

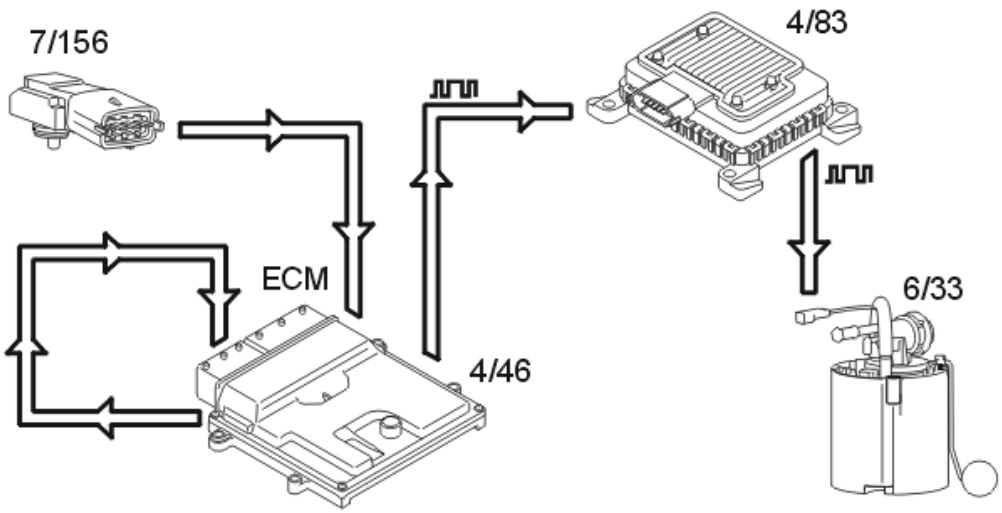

Fig. 287: Identifying Fuel Pressure Control Components
Courtesy of VOLVO CARS CORPORATION

General

Fuel pressure regulation for demand controlled fuel pumps (DECOS - DEmand COntrolled fuel Supply) means that the fuel pressure is controlled steplessly by varying the output of the fuel pump. The design of the system allows a greater maximum pressure (approximately 650kPa) in the fuel pump. This pressure is used in extreme situations, such as heavy engine load for example

The following components are used for fuel pressure regulation:

- engine control module (ECM) (4/46) with integrated atmospheric pressure sensor
- fuel pump control module (4/83)
- fuel pressure sensor with fuel temperature sensor (7/156)
- fuel pump with by-pass valve (6/33).

The time taken for the engine start procedure can be reduced by rapidly increasing the pressure in the fuel rail when the engine control module (ECM) receives a signal about the position of the ignition switch from the central electronic module (CEM).

The engine control module (ECM) is better able to calculate the injection period using the signal from the atmospheric pressure sensor and fuel pressure sensor. This particularly improves the cold starting characteristics of the engine.

The advantages of varying the output of the fuel pump so that it is not always at full power are:

- the total power consumption of the fuel pump (FP) is reduced, reducing the load on the power supply system
- the service life of the fuel pump (FP) is increased
- fuel pump noise is reduced.

Control

The engine control module (ECM) calculates the desired fuel pressure. A signal is then transmitted to the fuel pump control module indicating the desired fuel pressure. Serial communication between the engine control module (ECM) and the fuel pump control module is used to carry the signal. The fuel pump control module then operates the fuel pump unit to obtain the desired pressure using a pulse width modulation voltage on the ground lead. The fuel pump (FP) can be controlled steplessly by changing the pulse width modulation (PWM) signal. Only that pressure which is required at that specific time will then be released to the fuel rail/injectors. The value of the pulse width modulation (PWM) signal is a measurement of the operational load of the fuel pump (FP) (% duty, 100% = maximum pressure).

The engine control module (ECM) continuously monitors the fuel pressure using the signal from the fuel pressure sensor. This allows the desired fuel pressure to be reached, and if necessary a signal is transmitted to the fuel pump control module requesting that the fuel pressure is adjusted.

The engine control module (ECM) attempts too obtain a constant fuel pressure (approximately 380kPa relative to atmospheric pressure with the engine running).

By-pass valve

When the injectors close when the pressure is too great (during engine braking for example) there is a pressure peak. The by-pass valve in the fuel pump (FP) is used to even out the pressure peak. The opening pressure of the valve is approximately 650 kPa.

The by-pass valve also functions as a non-return valve, ensuring that the fuel pressure in the system is maintained when the engine is switched off.

There is high pressure before the engine is started. This high pressure means that the valve in the by-pass valve opens and the system is "flushed".

Passive safety

For safety reasons, the engine control module (ECM) shuts off the fuel pump (FP) if the supplemental restraint system module (SRS) detects a collision.

KNOCK CONTROL

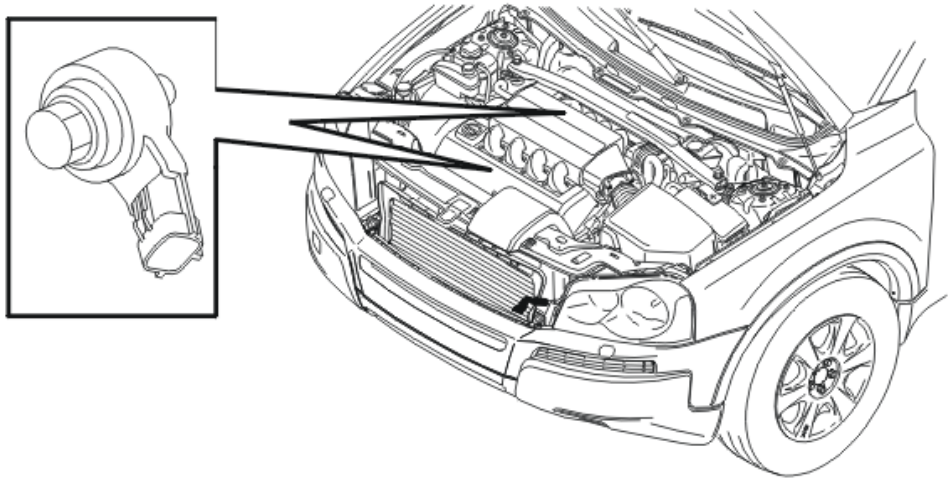

Fig. 288: Locating Knock Sensors
Courtesy of VOLVO CARS CORPORATION

Knock occurs in the combustion chamber when the fuel and air mixture self ignites. This can occur either before or after the spark plug has produced an ignition spark. In both cases the gas in two or more places ignites in the combustion chamber.

This results in an extremely fast combustion process with flames from several directions. When these flames collide, the pressure in the cylinder increases rapidly and there is a mechanical knocking sound.

If one of the cylinders starts knocking there will be a certain type of vibration in the engine block. This vibration is transferred to the knock sensor, which are screwed to the engine block. One knock sensor detects knocking on cylinders 1, 2, 3 and 4. The other one detects knocking on cylinders 5, 6, 7 and 8. The mechanical stress that arises in the piezoelectric material of the knock sensors makes them generate a voltage. With the help of the camshaft position sensor and the impulse sensor, the Engine Control Module (ECM) can then determine which cylinder is knocking.

The knock sensors (KS) also interpret a proportion of normal engine sound. The control module is able to recognize the vibrations which correspond to knocking by filtering, amplifying and using software to evaluate

the signal.

If the knock sensors (KS) detect knocking in the engine above a certain threshold value, the ignition timing is first retarded and then the fuel/air mixture is enriched to eliminate knocking.

IGNITION CONTROL

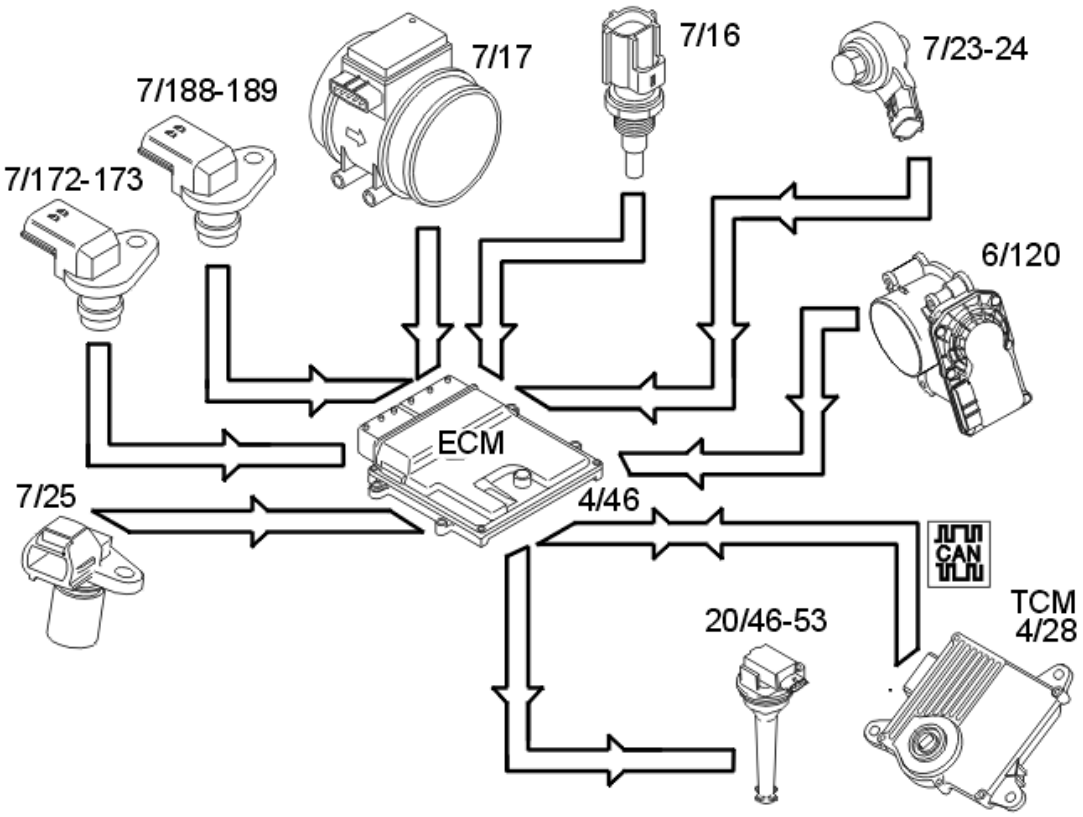

Fig. 289: Components Used For Ignition Control
Courtesy of VOLVO CARS CORPORATION

The following components are used for ignition control:

- engine speed (RPM) sensor (7/25)
- camshaft position (CMP) sensor (7/172-173, 7/188-189)
- mass air flow (MAF) sensor (7/17)
- engine coolant temperature (ECT) sensor (7/16)
- throttle position (TP) sensor on the electronic throttle unit (6/120)
- knock sensor (KS) (7/23-24)
- transmission control module (TCM) (4/28)
- spark plugs with ignition coils (20/46-53).

The engine control module (ECM) calculates the optimum ignition advance based on the software and

information from the sensors. The engine control module (ECM) cuts the current to the ignition coil mounted on the cylinder to be ignited and produces a spark.

During the starting phase the engine control module (ECM) produces a fixed ignition setting. When the engine has started and the vehicle is being driven, the engine control module (ECM) calculates the optimum ignition setting, taking factors such as the following into account:

- engine speed (RPM)
- load
- temperature.

The engine control module (ECM) analyses the signal from the knock sensors (KS) when the engine reaches operating temperature. If any of the cylinders knock, the ignition is retarded for that specific cylinder until the knocking ceases.

The ignition then advanced to the normal position or until the knock recurs.

Before the transmission control module (TCM) changes gear, it sometimes transmits a torque limiting request to the engine control module (ECM). The engine control module (ECM) then retards the ignition momentarily to reduce the torque, resulting in smoother gear changes and reducing the load on the transmission. There are different ignition retardation levels depending on the signals from the transmission control module (TCM). The return signal from the engine control module (ECM) to the transmission control module (TCM) confirms that the signal reached the engine control module (ECM).

For further information, also see: **MISFIRE DIAGNOSTIC**

The engine misfires if the fuel does not ignite correctly. For further information, also see: **MISFIRE DIAGNOSTIC**

REGULATING THE AIR CONDITIONING (A/C) COMPRESSOR

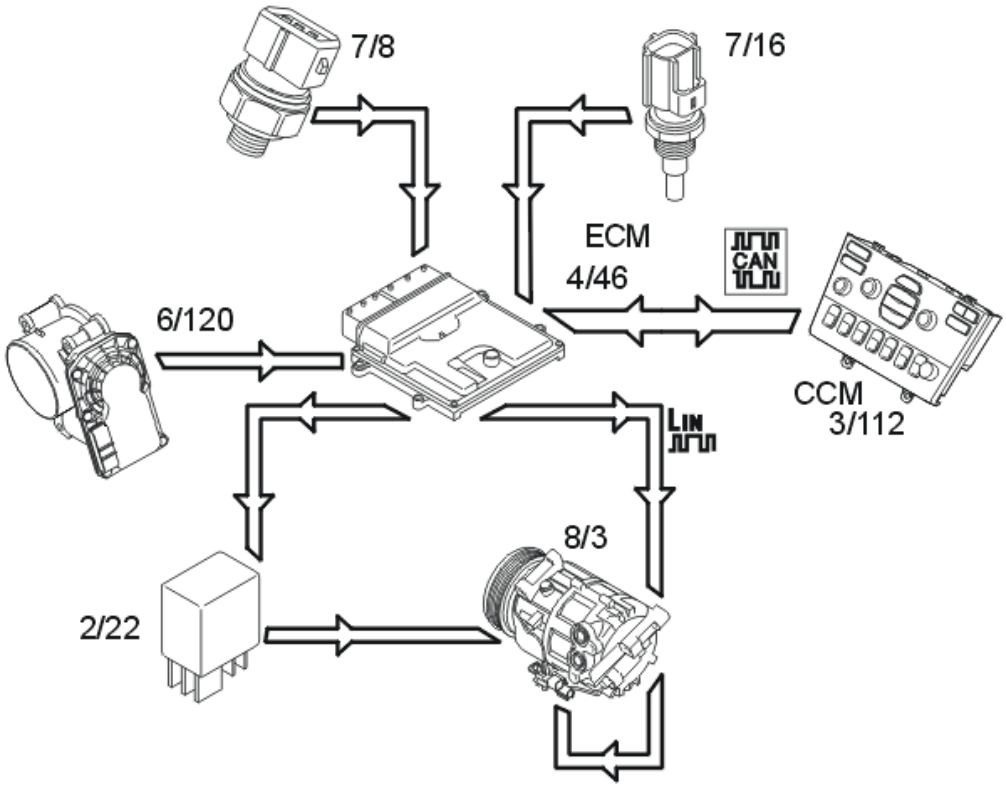

Fig. 290: (A/C) Compressor Regulating Components
Courtesy of VOLVO CARS CORPORATION

The air conditioning (A/C) compressor is controlled by the engine control module (ECM) (4/46) on request from the climate control module (CCM) (3/112) via the controller area network (CAN). When the engine control module (ECM) receives a signal from the climate control module (CCM) to activate the air conditioning (A/C) compressor, the engine control module (ECM) grounds the circuit for the relay coil for the A/C compressor. See also: **AIR CONDITIONING (A/C) RELAY**

The relay (2/22) closes the circuit between the integrated relay/fusebox in the engine compartment and the clutch for the air conditioning (A/C) compressor (8/3). The air conditioning (A/C) compressor which has a variable cylinder displacement is always running during normal driving. Displacement in the compressor is regulated by a solenoid which is controlled by the engine control module (ECM).

The engine control module (ECM) regulates the solenoid (displacement) in relation to the driver's and vehicles' different driving styles. Starting the engine, moving off and acceleration means more regulated displacement so that the A/C compressor has less possible effect on engine torque. The climate control module (CCM) controls all functions in the climate control module which are related to the vehicle interface with the driver and passenger. I. E. the climate control buttons on the dashboard environment panel.

The climate control module (CCM) transmits information to the engine control module (ECM), which determines what must be prioritized. For example, the air conditioning (A/C) compressor in certain extreme cases is switched off completely, regardless of the climate control module (CCM) request. This is to prevent negative engine performance and to protect the air conditioning (A/C) system. As well as the information from

the climate control module (CCM), the engine control module (ECM) controls the air conditioning (A/C) compressor based on the information from:

- Air conditioning (A/C) pressure sensor (high pressure side) (7/8)
- the throttle position (TP) sensor (6/120)
- the engine coolant temperature (ECT) sensor (7/16).

SYSTEM OVERVIEW

CONTROL MODULE

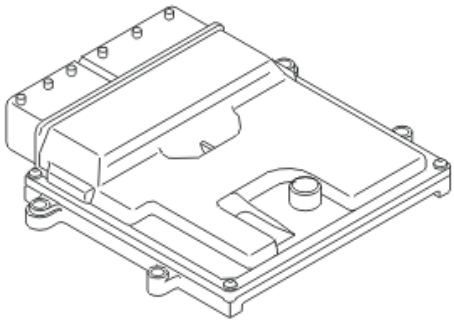

Fig. 291: Identifying Engine Control Module (ECM)
Courtesy of VOLVO CARS CORPORATION

The engine control module (ECM) controls, amongst others, the following functions:

- injectors
- ignition
- camshafts (CVVT)
- Evaporative emission system (EVAP) valve
- throttle angle
- engine cooling fan (FC)
- Air conditioning (A/C) compressor
- fuel pump.

The engine control module (ECM) is supplied with battery power (U_{bat}) via fuses in the central electronic module (CEM) and in the relay/fuse box, engine compartment.

To prevent certain stored data from being erased from the engine control module (ECM) when the ignition is switched off, the control module also has a 30-supply. This supply is from the integrated relay/fusebox, engine compartment.

The control module is grounded via the wiring which is connected at the right-hand suspension turret.

The engine control module (ECM) contains a voltage regulator which maintains a low voltage (5 V) in internal components in the control module such as:

- AC/DC converter
- DC/AC converter
- Micro-processor.

The functions which require battery power (U_{bat}) and high output are controlled by external or internal power stages. For example, ignition coils have external power stages (integrated into the ignition coils) while the power stages for the injectors are integrated in the engine control module (ECM).

The micro-processor in the engine control module (ECM) receives signals from the different sensors and control modules in the vehicle. The micro-processor uses a program which interprets the signals from the different sensors and how the components and functions should be controlled.

The engine control module (ECM) has several self-learning (adaptive) functions. It continually adapts ongoing calculations to changing circumstances (such as wear, air leaks, differences in fuel).

Emissions are kept low through efficient management of the injection period, ignition, evaporative emission system (EVAP) valve, camshafts etc. Faults which affect emissions for example can be detected by running diagnostics for functions and components.

The engine control module (ECM) is located on the air cleaner (ACL) box in the engine compartment. A temperature sensor and atmospheric pressure sensor are integrated in the engine control module (ECM).

The engine control module (ECM) communicates with other control modules using controller area network (CAN) communication or LIN communication.

The engine control module (ECM) checks activations, input and output signals and functions using an integrated diagnostic system. A diagnostic trouble code (DTC) is stored if, after validation, the control module detects a fault. In certain cases the faulty signal is also replaced with a substitute value or certain functions are limited.

For example, substitute values can be set for:

- engine temperature sensor
- mass air flow (MAF) sensor
- throttle position (TP) sensor
- air pressure
- fuel pressure.

Mathematical calculations and signals from certain components are used to calculate the substitute values. Other substitute values are fixed, predefined values in the engine control module (ECM).

The substitute value allows the vehicle to be driven and the emissions to be kept at a reasonable level, even though vital functions or components are malfunctioning.

Functions which may be limited are for example:

- camshaft control (CVVT)
- fuel trim
- throttle angle
- fuel pressure regulation.

The substitute values are used and functions restricted so that the system is still able to work while protecting components that are required for safety reasons (for example the throttle angle).

Any diagnostic trouble codes (DTCs) are stored in the internal memory of the engine control module (ECM). The information can be read off via the data link connector (DLC) in the vehicle.

SIGNALS

The table below summarizes the input signals to and output signals from the Engine Control Module (ECM). The signal types are divided into directly connected signals, LIN and controller area network (CAN) communication. The illustration below displays the same information with the Volvo component designations.

Input signals	Output signals
Directly connected: • Ignition switch (3/1) • Air conditioning (A/C) pressure sensor (7/8) • Stop lamp switch (3/9) • Accelerator pedal (AP) position sensor (7/51) • Electronic throttle unit (6/120) • Camshaft position (CMP) sensor, intake bank 2 (7/172) • Camshaft position (CMP) sensor, intake bank 1 (7/188) • Camshaft position (CMP) sensor, exhaust bank 2 (7/173) • Camshaft position (CMP) sensor, exhaust bank 1 (7/189) • Engine coolant temperature (ECT) sensor (7/16) • Engine speed (RPM) sensor (7/25) • Fuel pressure sensor / fuel temperature sensor (7/156) • Knock sensor (KS) (7/23-24) • Mass air flow (MAF) sensor/air temperature sensor (7/17)	**Directly connected:** • Air conditioning (A/C) relay (2/22) • Air conditioning (A/C) compressor (8/3) • Electronic throttle unit (6/120) • Engine cooling fan (FC) control module (4/71) • Evaporative emission system (EVAP) valve (8/18) • Injectors (8/146-153) • Fuel pump (FP) control module (4/83) • Ignition coils (20/46-53) • Leak diagnostic unit (6/67) (certain markets only) • Front oxygen sensor, bank 2 preheating (7/15) • Front oxygen sensor, bank 1 preheating (7/82) • Rear oxygen sensor, bank 2 preheating (7/103) • Rear oxygen sensor, bank 1 preheating (7/104) • Main relay (system relay) (2/32) • Starter motor relay (2/35) • Camshaft reset valve (Continuous variable

• Manifold absolute pressure (MAP) sensor (7/81) • Oil pressure switch (7/6) • Front oxygen sensor, bank 2 (7/15) • Front oxygen sensor, bank 1 (7/82) • Rear oxygen sensor, bank 2 (7/103) • Rear oxygen sensor, bank 1 (7/104) • Oil level sensor (7/35) • Outside temperature sensor (7/105) • Engine coolant level sensor (7/73) • Ignition coils (20/46-53) • Engine cooling fan (FC) control module (4/71) • Leak diagnostic unit (6/67) (certain markets only)	valve timing (CVVT)), intake bank 2 (8/19) • Camshaft reset valve (Continuous variable valve timing (CVVT)), intake bank 1 (8/117) • Camshaft reset valve (Continuous variable valve timing (CVVT)), exhaust bank 2 (8/81) • Camshaft reset valve (Continuous variable valve timing (CVVT)), exhaust bank 1 (8/118) • Emissions warning lamp (5/1) • Valve variable intake (8/107)
Via LIN communication: • Alternator control module (ACM) (6/26)	**Via LIN communication:** • Alternator control module (ACM) (6/26)
Via Controller Area Network (CAN) communication: • Central electronic module (CEM) (4/56) • Brake Control Module (BCM) (4/16) • Climate Control Module (CCM) (3/112) • Rear electronic module (REM) (4/58) • Transmission control module (TCM) (4/28) • Steering wheel module (SWM) (3/254)	**Via Controller Area Network (CAN) communication:** • Central electronic module (CEM) (4/56) • Brake Control Module (BCM) (4/16) • Climate Control Module (CCM) (3/112) • Rear electronic module (REM) (4/58) • Transmission control module (TCM) (4/28) • Steering wheel module (SWM) (3/254) • Driver Information Module (DIM) (5/1)

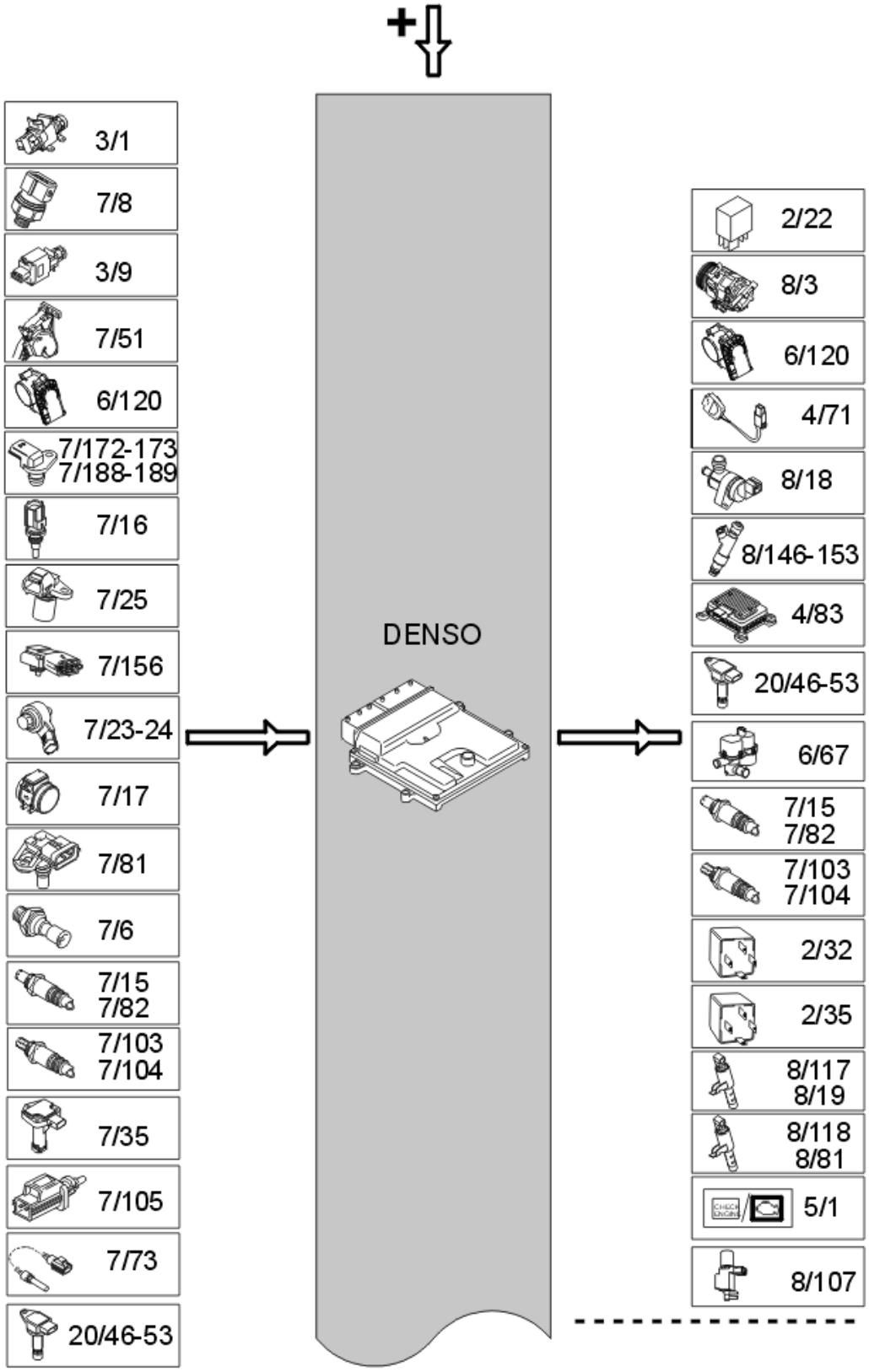
+
3/1
7/8
3/9
7/51
6/120
7/172-173
7/188-189
7/16
7/25
7/156
7/23-24
7/17
7/81
7/6
7/15
7/82
7/103
7/104
7/35
7/105
7/73
20/46-53
DENSO
2/22
8/3
6/120
4/71
8/18
8/146-153
4/83
20/46-53
6/67
7/15
7/82
7/103
7/104
2/32
2/35
8/117
8/19
8/118
8/81
5/1
8/107

Fig. 292: Identifying Volvo Component Designations
Courtesy of VOLVO CARS CORPORATION

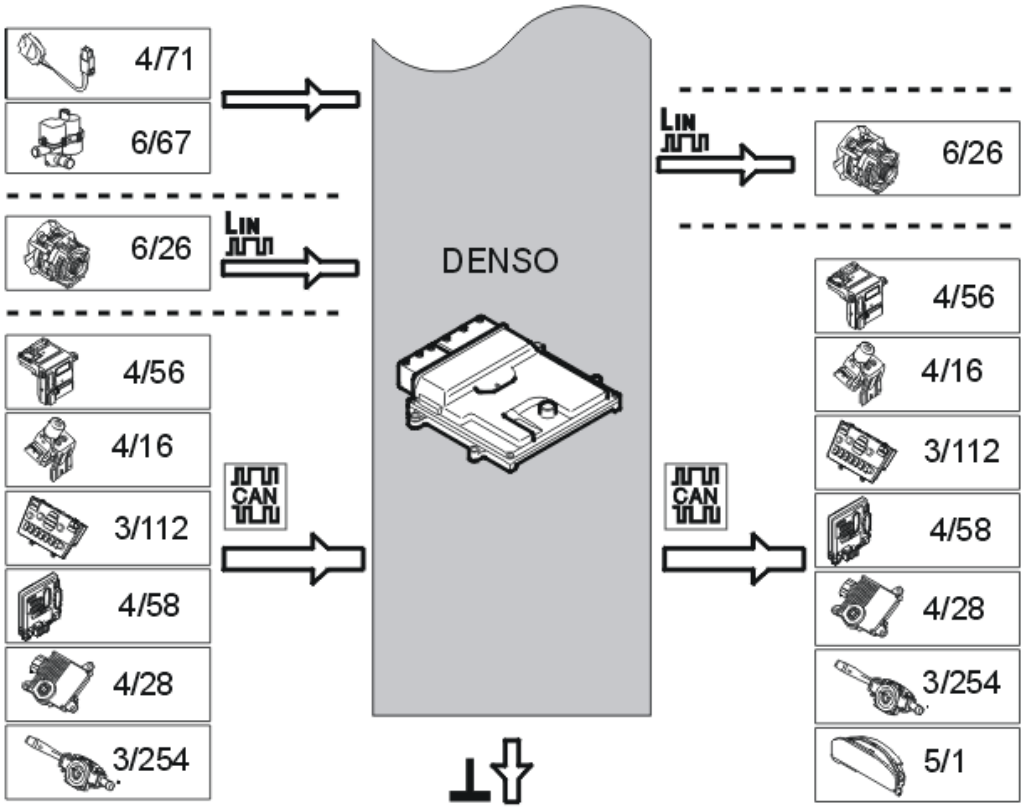

Fig. 293: Identifying Volvo Component Designations
Courtesy of VOLVO CARS CORPORATION

GDL BULBS (2003-2004)

DESIGN

HEADLAMP SYSTEM, BI-XENON

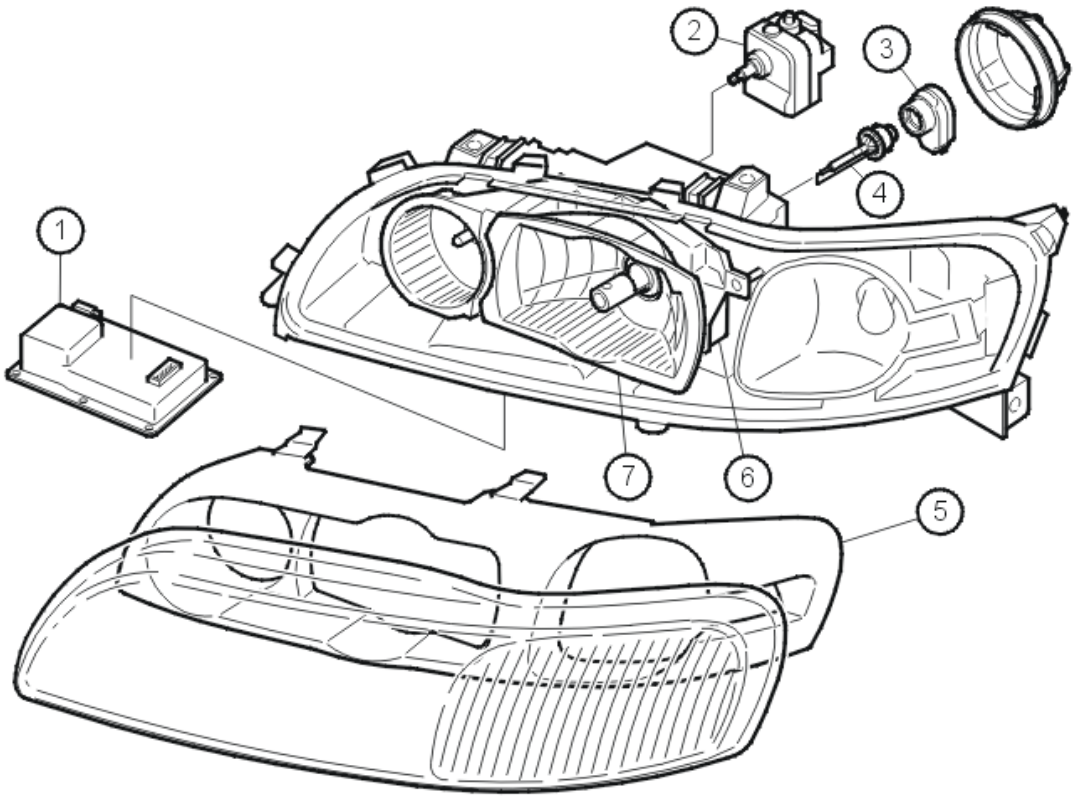

Fig. 294: Bi-Xenon Headlamp System
Courtesy of VOLVO CARS CORPORATION

1.	Ballast	5.	Internal headlamp surround
2.	Motor, headlamp range adjustment	6.	Motor, high and low beam
3.	Bulb connector, high tension	7.	Moving reflector
4.	Bulb		

Bi-Xenon uses gas discharge technology and is a headlamp system with moving reflectors. The system combines high and low beams in the same bulb.

It is a statutory requirement (for low beam) for vehicles with this type of bulb to be equipped with headlamps with automatic level control.

Xenon versus Halogen

Xenon:

- has higher color temperature which gives a whiter light
- reflects from road signs and markings better
- has lower power consumption. (approximately 2/3).

Worth knowing:

- Daylight has a color temperature of approximately 5000°K. The nearer to natural light, the easier the light is on the eye. Normal H4 bulb: approximately 3200 °K. Volvos gas discharge lamp : approximately 4200 °K
- The Bi-Xenon system also has the advantage of the high and low beam having the same color light. The human eye finds it easier to react between changes.

BULB

The light source consists of a discharge pipe surrounded by glass which filters out damaging UV radiation.

- The discharge tube is filled with a number of chemical compounds including the noble gas Xenon
- A light arc is created by an electrical discharge between two tungsten electrodes
- Because the bulb does not have a filament it is less susceptible to bumps and vibration
- Bulb designation: (special for reflector system).
- Power consumption: 35 W.

CAUTION: The bulb contains mercury (less than 0.5 mg) and when discarded must be treated as hazardous waste. Hazardous waste must be handled according to the relevant statutory regulations.

BALLAST

An electronic ballast is connected to each headlamp. The ballast functions as a voltage regulator and generates alternating current (AC).

Main tasks:

1. Light the bulb
2. Control the light during operation.

To light the bulb an initial voltage of approximately 24, 000 V is required for a very short time (less than 1ms).

The ballast transforms the vehicles 12 V (DC) to 1000 V (AC).

The high tension switch amplifies the voltage a further 25 times.

When the lamp is lit the voltage is reduced to the 100 V required to keep the lamp lit.

Power consumption: 10 W.

FUNCTION

HEADLAMPS, BI-XENON

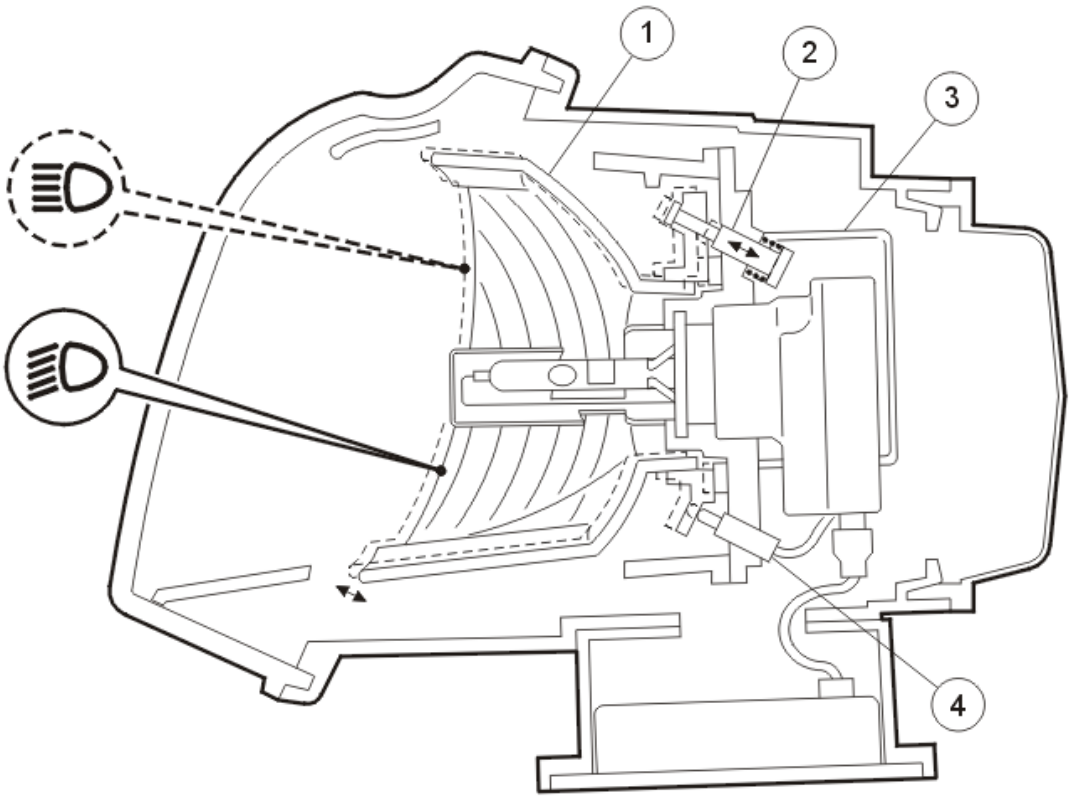

Fig. 295: Bi-Xenon Headlamps
Courtesy of VOLVO CARS CORPORATION

1.	Moving reflector	3.	Motor, high and low beam
2.	Controls for reflector	4.	Position sensor, reflector

LIGHTING THE HEADLAMP

It normally takes 3 seconds from activation at the light switch with the ignition on to the lamp lighting.

- Like conventional headlamps the headlamps are out while the engine is cranking and do not light until the engine is running

- On each occasion that voltage is supplied to the ballast 3 attempts, within 1 second, are made to light the lamp.

COMBINED HIGH AND LOW BEAM

Reflector, left-hand headlamp

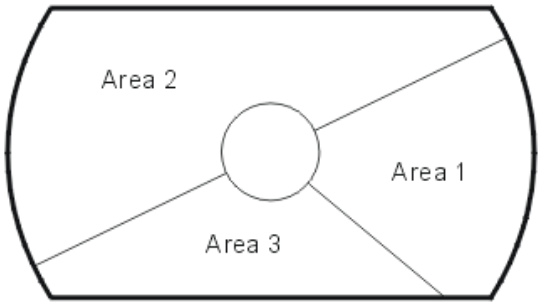

Fig. 296: Identifying Left-Hand Headlamp Reflector
Courtesy of VOLVO CARS CORPORATION

The illustration is a principle sketch showing the different segments of the moving reflector.

The reflector has a complex design where different segments are used depending on whether in high or low beam position.

The reflector is adjustable and can be moved between two fixed points.

- The reflector is moved 2 mm axially in relation to the bulb
- The direction of the movement means that position of reflector is also moved slightly vertically.

The bulb is fixed.

The headlamp lens is clear.

AUTOMATIC LEVEL CONTROL

Sensor

The following applies to vehicles without Four-C (Continuously Controlled Chassis Concept)

An inductive position sensor reads off the angle between the bodywork and the left rear control arm. The angle is a measurement of how much the vehicle is leaning (chassis height) and is dependent on weight distribution.

- The sensor is mounted differently in FWD to AWD
- The rear electronic module (REM) reads an analog signal (0.5-4.5 V) from the position sensor and

converts it to an angle value (±35°), which is transmitted to the central electronic module (CEM)
- Fully laden vehicles give a signal of 0.5 V which corresponds to minus 35°.
- The central electronic module (CEM) controls the motors for the headlamp range adjustment (PWM signal) and sets the headlamps vertically.

The following applies to vehicles with Four-C

Two sensors read off the angle between the bodywork and the left and right rear control arms. The angle is a measurement of how much the vehicle is leaning (chassis height) and is dependent on weight distribution.

The sensors are mounted differently in FWD to AWD.

The suspension module (SUM) reads the signals from the sensors and converts them to an angle value. The value is transmitted via the control area network (CAN) to the central electronic module (CEM). The central electronic module (CEM) uses this information to control the motors for headlamp range adjustment.

Level control

Controlled at speeds *below 4 km/h*

When the ignition is switched on, the position sensor is read off and the headlamp range adjustment motors set the headlamps.

Controlled at speeds *above 4 km/h*

At greater angle changes during driving the headlamps are controlled. Control is dependent on the time for the system not to react to short term changes such as uneven road surfaces etc.

Calibration

The position sensor must be calibrated after work on the rear suspension. Carry out calibration according to tab DIAGNOSTICS/VEHICLE COMMUNICATION, rear electronic module (REM).

CAUTION: Calibration must be carried out after work such as removing/installing the sensors and replacing the sensors, rear axle, bushings, shock absorbers or springs.

In vehicles with Four C, calibration is carried out via the suspension module (SUM).

Beam adjustment is carried out conventionally (via adjustment screws by the headlamp).

The light switch must be in the "on" position while calibrating.

SAFETY

- In the event of a short-circuit on the high tension side the power supply cuts in less than 10 ms
- If the high tension circuit is broken (for example by a broken cable, blown bulb or no bulb in the bulb connector) the system attempts to activate the lamp for a time of 700 ms. During this time the high voltage is outside the ballast
- Approximate temperatures on the components during operation are; Ballast = 130 °C, Bulb holder = 170 ° C, Bulb = 400 °C
- The glass body of the Bi-Xenon-lamp is filled with different gases and metal vapors which are under pressure. The lamp can explode as it is under gas pressure.

WARNING: **Follow the safety instructions and recommendations in VIDA carefully when working with high voltage.**

Use safety goggles when handling the bulb. Risk of explosion

The electrical system must be switched off before starting work.

Risk of burn injury. The components operate at very high temperatures.

HIGH VOLTAGE UNIT

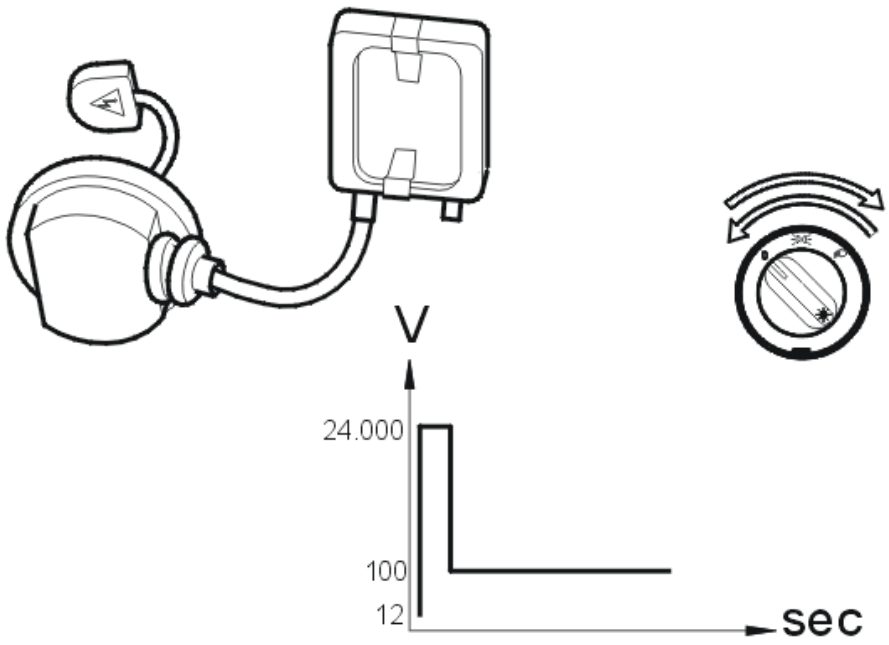

Fig. 297: High Voltage Unit
Courtesy of VOLVO CARS CORPORATION

- High voltage is required to light the Xenon lamp
- A high voltage unit is attached to each Xenon lamp. It transforms 12 V voltage to approximately 24 000 V, which is necessary to light the lamp. When the lamp is lit the voltage is reduced to the 100 V required to keep the lamp lit
- On each occasion that voltage is supplied to the high voltage unit an attempt is made to light the Xenon lamp. If this voltage does not exceed 9.5 V within a time span of 200 ms the lamp does not light. If the voltage is too low, after a power consuming start for cold start, the lamp does not light until the engine is running and the generator starts to charge. A new start attempt of the lamp must be made by turning the knob of the light switch till "0" position or parking lamp position and then back to low beam again.

WARNING: Because of the high voltage it is important to follow the instructions for working with the Xenon lamps and high voltage unit

SYSTEM OVERVIEW

HEADLAMPS, BI-XENON

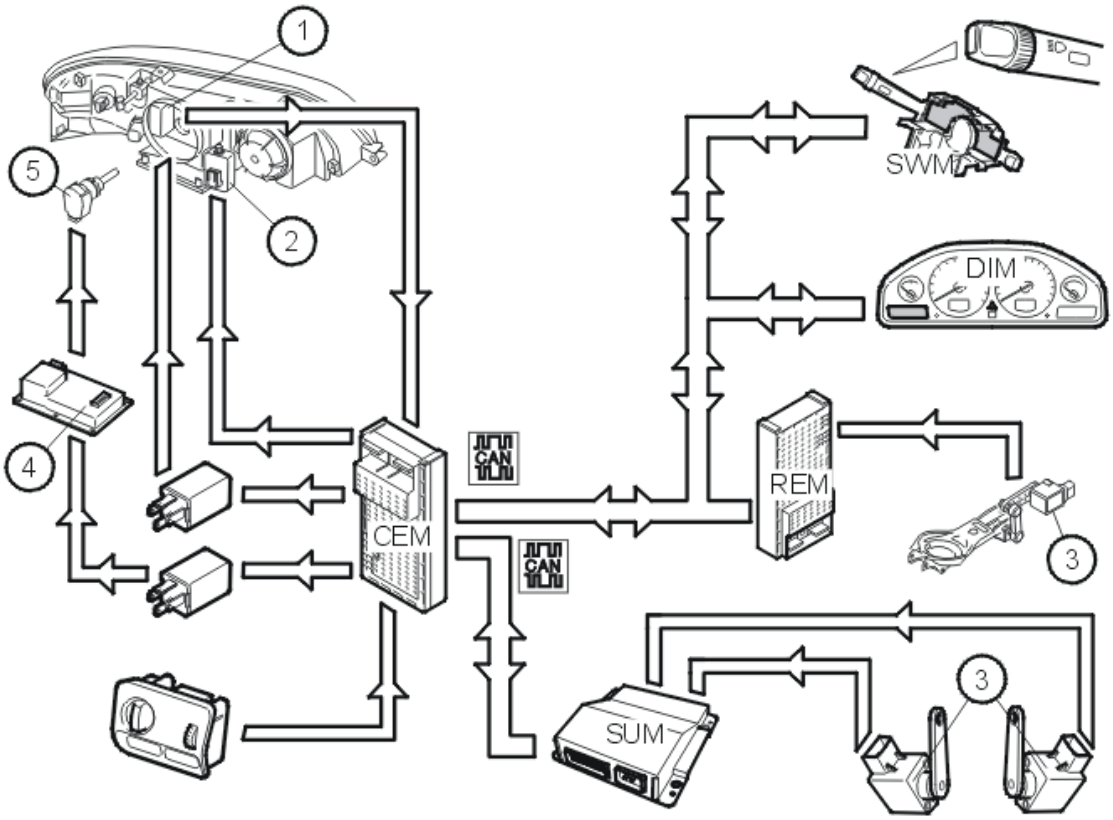

Fig. 298: Bi-Xenon Headlamps Input And Output Signals
Courtesy of VOLVO CARS CORPORATION

		Power supply via relay.

1.	Motor, high / low beam	Reconnected PWM signal provides information about the position of the reflector to the central electronic module (CEM).
2.	Motor, headlamp range adjustment	Controlled by the central electronic module (CEM) using a PWM signal.
3.	Position sensor	Inductive sensor which sends an analog signal (voltage) to the rear electronic module (REM) (Does not apply to vehicles with Four-C (Continuously Controlled Chassis Concept)). In vehicles with Four C the signal travels via the suspension module.
4.	Ballast	High voltage regulator for switch and lamp.
5.	Gas discharge lamp	Socket

CONTROL

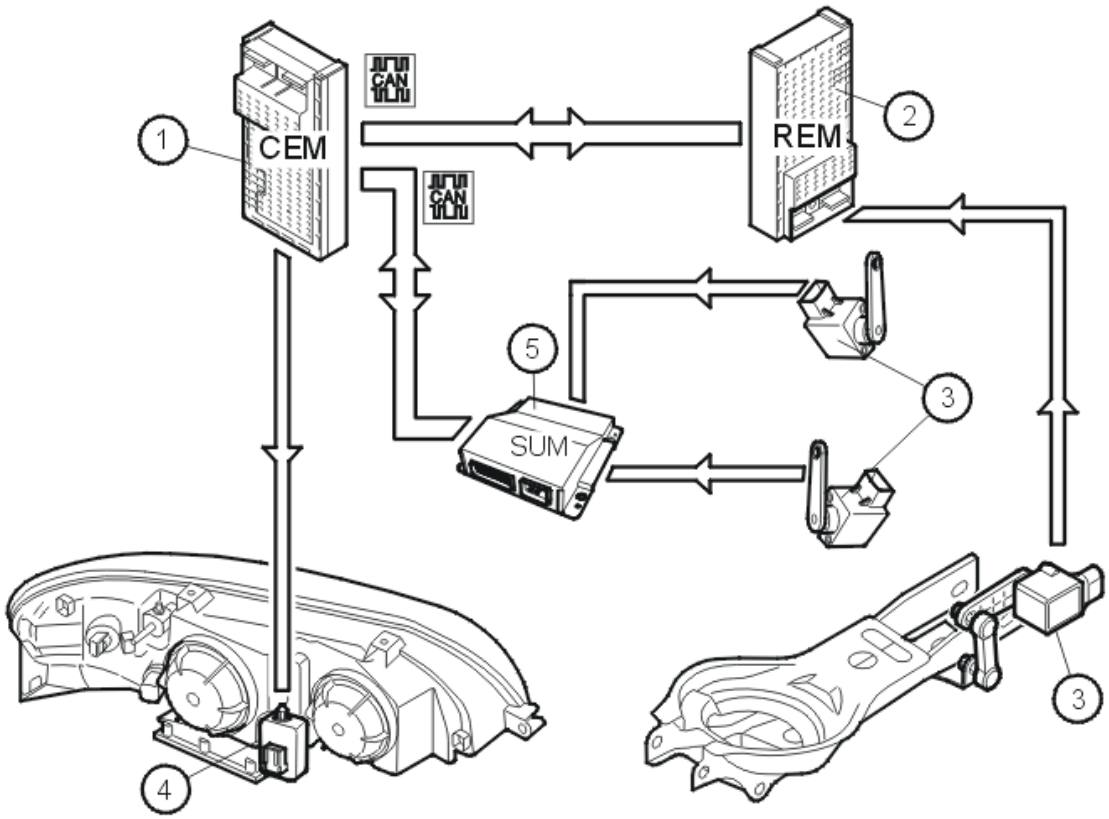

Fig. 299: Bi-Xenon Headlamps Control Input And Output Signals
Courtesy of VOLVO CARS CORPORATION

1.	Central electronic module (CEM)	4.	Motor, headlamp range adjustment
2.	Rear electronic module (REM)	5.	Suspension module (SUM) (vehicles with Four-C (Continuously Controlled Chassis Concept) only)
3.	Position sensor		

An electric motor is controlled by the central electronic module (CEM) via a relay (ordinary high beam relay).

The motor drives a gear wheel which moves the reflector along its guides.

A sensor which detects the position of the reflector is connected to the motor.

- The electronics in the motor interprets the sensor information and generates a signal
- The signal is reconnected to the central electronic module (CEM).

If the reflectors are in the wrong position during high beam the reflectors are forced into a safety position;

- the warning lamp (orange) lights in the driver information module (DIM)
- an error message is also shown in the display in the driver information module (DIM).

If the high beam is activated with the light switch in 0 position, the high beam is only activated as long as the high beam lever is activated for a high beam flash. The headlamp switch must be in the "on" position in order for the high beam lamps to remain active.

GDL BULBS (2005-2012)

DESIGN

BI-XENON HEADLIGHT SYSTEM

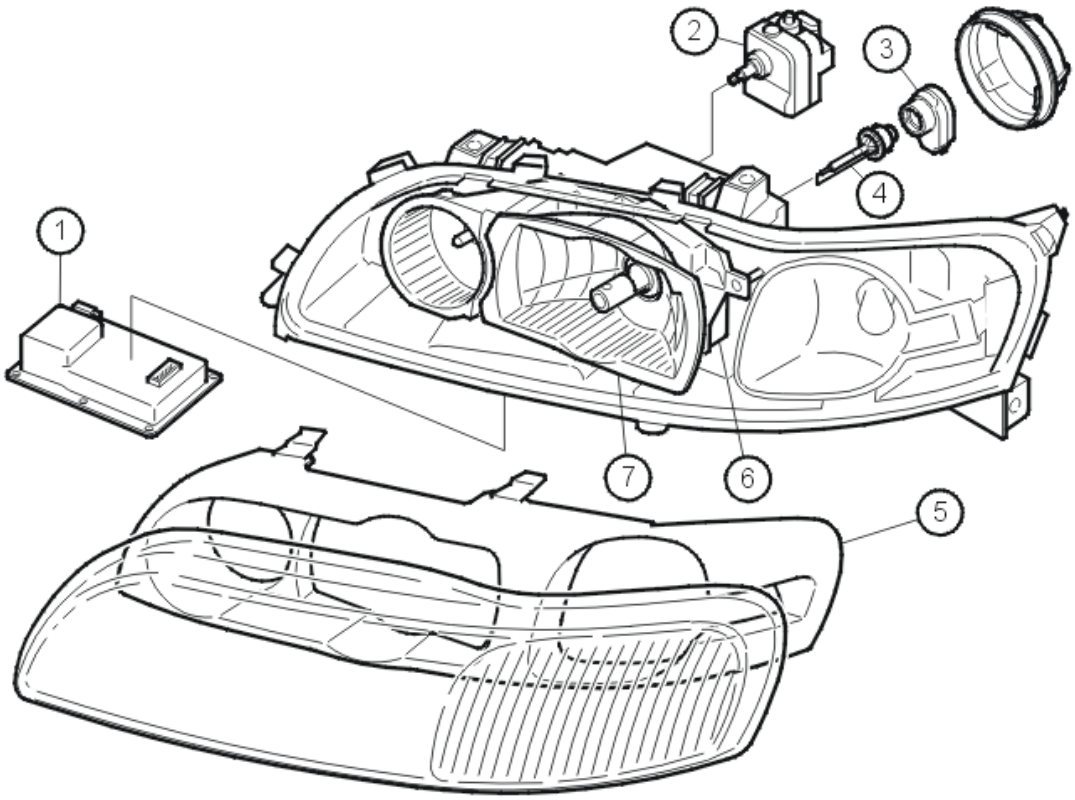

Fig. 300: Identifying Bi-Xenon Headlight System Assembly

Courtesy of VOLVO CARS CORPORATION

1.	Ballast	5.	Internal headlight edge
2.	Motor, headlight levelling	6.	Motor, high and low beam
3.	Lamp contact, high voltage	7.	Movable reflector
4.	Lamp		

Bi-Xenon, a headlight system with moveable reflector, is based on gas discharge technology. The system combines high and low beam into the same lamp.

Due to legal requirements (regarding low beam) for this type of lamp, the vehicle must be equipped with automatic headlight levelling.

Xenon vs. Halogen

Xenon:

- higher color temperature, which produces a whiter light
- better reflection of road signs and road markings
- has lower power consumption.

Good to know:

- Daylight has a color temperature of about 5000 °K. The closer to natural light, the less strain on the eyes. Standard H4 bulb: 3200 °K. Volvo's gas discharge bulb: about 4200 °K.
- With the Bi-Xenon system, high and low beam generates the same light color. The human eye thus has an easier time adjusting to switches between high and low beam.

LAMP

The light source consists of a discharge tube surrounded by a glass that filters out harmful UV radiation.

- The discharge tube is filled with a blend of chemical compounds, including the inert gas Xenon.
- An electric arch is created through an electrical discharge between two tungsten electrodes.
- Because the lamp does not have a filament, it is less sensitive to bumps and vibrations.
- Bulb designation: (special for reflector system).
- Power consumption: 35 W.

CAUTION: The bulb contains mercury (less than 0.5 mg) and when discarded must be treated as hazardous waste. Hazardous waste must be handled according to the relevant statutory regulations.

BALLAST

An electronic ballast is connected to each headlight. The ballast serves as a voltage regulator and generates

alternating current (AC).

Primary tasks:

1. Light the bulb.
2. Regulate light during operation.

A initial voltage of about 24, 000 V for a very brief period (less than 1 ms) is required to light the bulb.

The ballast transforms the vehicle's 12 V (DC) to 1000 V (AC).

The high voltage contact amplifies the voltage an addition 25 times.

Once the bulb has been lit, voltage is regulated down to about 100 V, which is required to keep the bulb lit.

Power consumption: 10 W.

FUNCTION

BI-XENON HEADLIGHTS

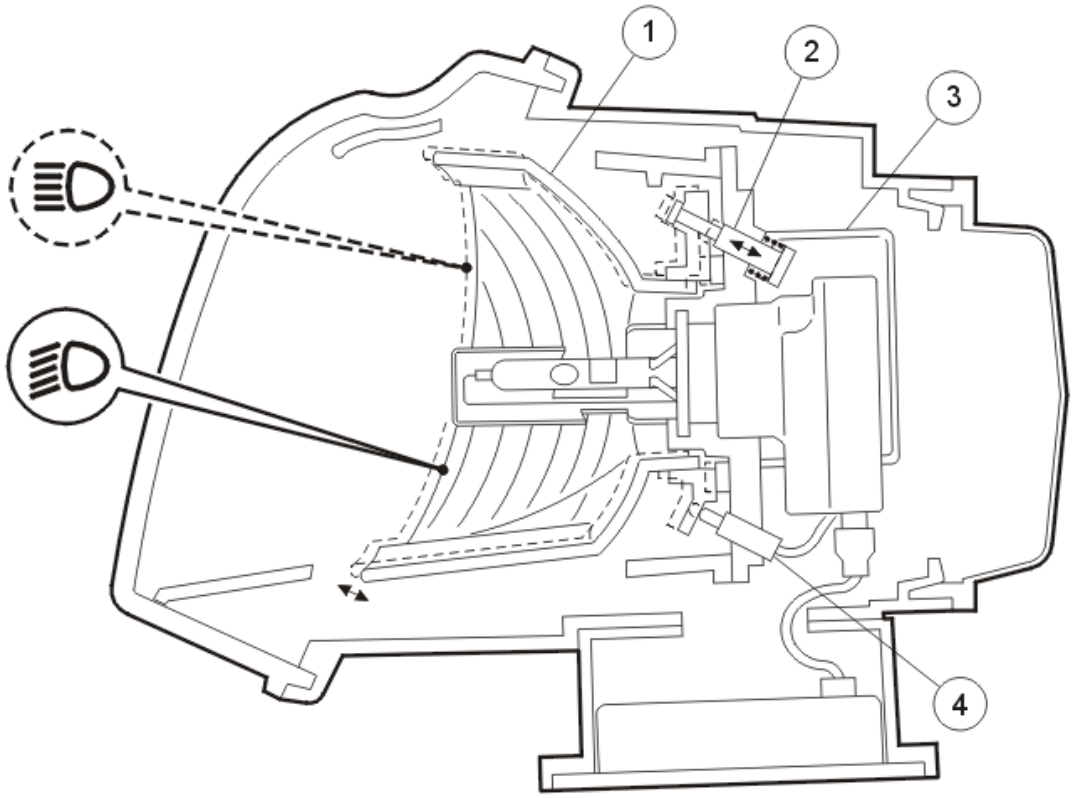

Fig. 301: Identifying Bi-Xenon Headlight Assembly
Courtesy of VOLVO CARS CORPORATION

1.	Movable reflector	3.	Motor, high and low beam
2.	Reflector control	4.	Reflector position sensor

LIGHTING THE LAMP

There is normally a 3 second delay between activation with the light switch or ignition on and the lamp coming on.

- As with normal headlights, the lamps remain off while the starter motor is cranking and come on once the engine is running.
- Each time voltage is supplied to the ballast, 3 one-second attempts are made to light the lamp.

COMBINED HIGH AND LOW BEAM

Reflector, left headlight

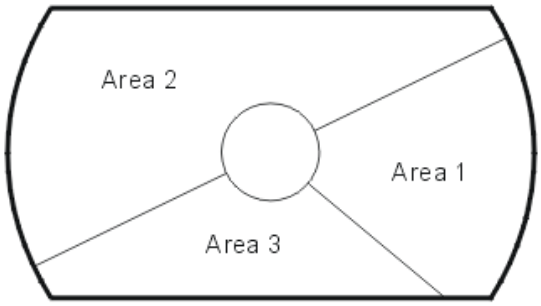

Fig. 302: Identifying Segments Of Moveable Reflector
Courtesy of VOLVO CARS CORPORATION

The illustration is an outline diagram showing the various segments of the moveable reflector.

The reflector has a complex shape in which different segments are used depending on whether high beam or low beam is in use.

The reflector is moveable suspended and is moved between two fixed positions.

- The reflector is moved 2 mm (0.08 in) axially in relationship to the lamp.
- The direction of the movements also causes the reflector to shift slightly vertically.

The lamp remains in a fixed position.

The headlight lens is clear.

AUTOMATIC LEVEL CONTROL

Sensor

The following applies to cars without Four-C (Continuously Controlled Chassis Concept)

An inductive position sensor reads the angle between the body and the left rear control arm. The angle is a indication of how much the vehicle is leaning (chassis height) and depends on weight distribution.

- The sensor is mounted slightly differently for FWD and AWD.
- The rear electronic module (REM) reads off an analog signal (0.5 - 4.5 V) from the position sensor and converts it to an angle value (±35°), which is sent to the central electronic module (CEM).
- A fully loaded vehicle generates a signal of 0.5 V, which corresponds to negative 35°.
- The central electronic module (CEM) regulates the headlight levelling motors (PWM signal) to adjust the headlights vertically.

The following applies to vehicles with Four-C

Two sensors read the angle between the body and the left and right rear control arm. The angle is a indication of how much the vehicle is leaning (chassis height) and depends on weight distribution.

The sensors are mounted slightly differently for FWD and AWD.

The suspension module (SUM) reads off the signals from the sensors and converts them to an angle value. The value is sent to the central electronic module (CEM) via the CAN network. The central electronic module (CEM) uses the information to regulate the headlight levelling motors.

Level control

Regulation at speeds *below 4 km/h (2.5 mph)*

When the ignition is switched on, the position sensor is read and the headlight levelling motors adjust the headlights.

Regulation at speeds *above 4 km/h (2.5 mph)*

The headlights are regulated if there are great angle changes while driving. Regulation is time-dependant so that the system does not react to short changes, such as unevenness in the road surface.

Calibration

The position sensor must be calibrated after work on the rear suspension. Perform calibration as described in the tab DIAGNOSTICS/VEHICLE COMMUNICATION, Rear electronic module (REM).

CAUTION: Calibration must be carried out after work such as removing/installing the sensors and replacing the sensors, rear axle, bushings, shock absorbers or springs.

In vehicles with Four C, calibration is carried out via the suspension module (SUM).

Beam adjustment is carried out conventionally (via adjustment screws by the headlight).

The light switch must be in the "on" position while calibrating.

SAFETY

- In the event of a short-circuit on the high voltage side, the power supply is cut off for less than 10 ms.
- If the high voltage circuit is broken (such as due to an open circuit, defective bulb or no bulb in the lamp socket), during each activation the system attempts to light the lamp for a period of 700 ms. During the period, there is high voltage across the ballast.
- Approximate component temperatures during operation: Ballast = 130 °C (266 °F), Bulb holder = 170 °C (338 °F), Bulb = 400 °C (752 °F).
- The glass body of the Bi-Xenon lamp is filled with various gases and metal vapors and is under pressure. Because the lamp is subjected to gas pressure, it could explode.

WARNING: **Follow the safety instructions and recommendations in VIDA carefully when working with high voltage.**

Use safety goggles when handling the bulb. Risk of explosion

The electrical system must be switched off before starting work.

Risk of burn injury. The components operate at very high temperatures.

HIGH VOLTAGE UNIT

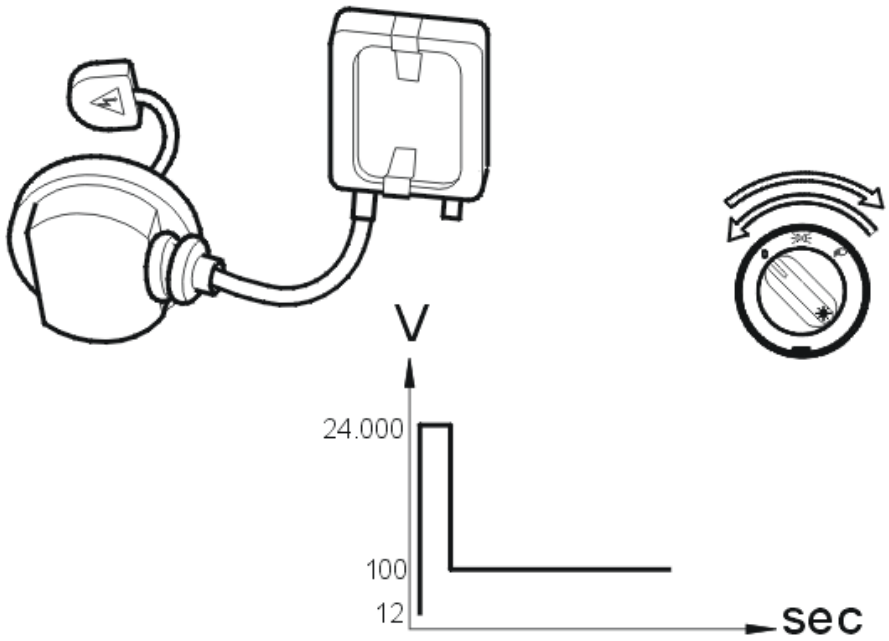

Fig. 303: Identifying High Voltage Unit & Graph
Courtesy of VOLVO CARS CORPORATION

- High voltage is required to light the Xenon lamp.
- A high voltage unit is connected to each Xenon lamp. This transforms 12-V voltage to the approximately 24, 000 V required to light the lamp. Once the lamp is on, voltage is lowered to the approximately 100 V required to keep the lamp lit.
- Each time voltage is supplied to the high voltage unit, an attempt is made to light the Xenon lamp. If this voltage does not exceed 9.5 V during a time period of 200 ms, the lamp does not light. If voltage is too low, such as after a voltage-consuming cold start, the lamp does not light just because the engine is running and the alternator begins charging. A new attempt must be made to start the lamp by turning the light switch to the "0" or parking light position and then back to the low beam position.

WARNING: **Because of the high voltage it is important to follow the instructions for working with the Xenon lamps and high voltage unit**

SYSTEM OVERVIEW

BI-XENON HEADLIGHTS

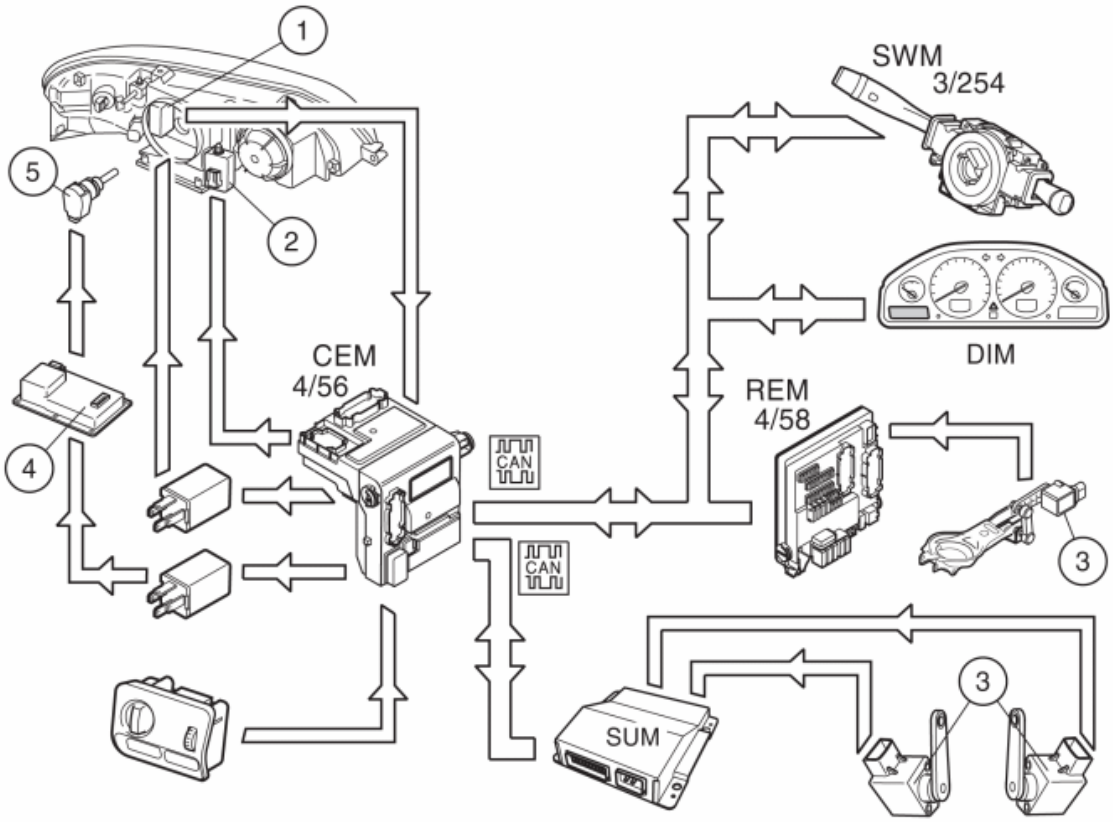

Fig. 304: Identifying Bi-Xenon Headlight Communication System & Components
Courtesy of VOLVO CARS CORPORATION

1.	Motor, high/low beam	Power supply via relay. Feedback PWM signal gives central electronic module (CEM) information on reflector position.
2.	Motor, headlight levelling	Regulated by central electronic module (CEM) via PWM signal.
3.	Position sensors	Inductive sensor that transmits an analogue signal (voltage) to the rear electronic module (REM) (not vehicles equipped with Four-C (Continuously Controlled Chassis Concept)). On vehicles with Four-C, the signal travels via the suspension module.
4.	Ballast	High voltage regulator for contact and lamp.
5.	Gas discharge lamp	Socket

CONTROL

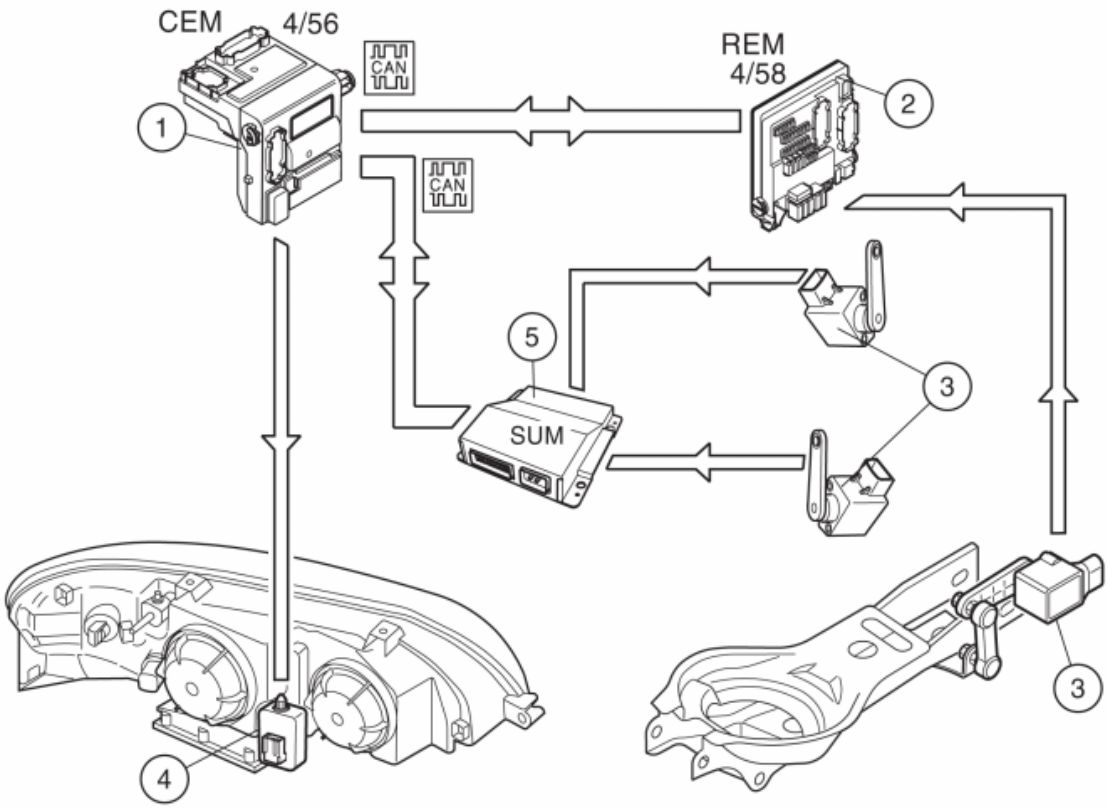

Fig. 305: Identifying Bi-Xenon Headlight Control System Diagram
Courtesy of VOLVO CARS CORPORATION

1.	Central electronic module (CEM)	4.	Motor, headlight levelling
2.	Rear electronic module (REM)	5.	Suspension module (SUM) (only vehicles with Four-C (Continuously Controlled Chassis Concept))
3.	Position sensors		

An electric motor is controlled by the central electronic module (CEM) via a relay (standard high beam relay).

The motor drives a gear that moves the reflector along its guides.

A sensor connected to the motor detects the position of the reflector.

- The motor electronics interpret the sensor information and generate a signal.
- The signal is fed back to the central electronic module (CEM).

If the reflectors are in the wrong position for high beam, the are forced down into a so-called safety position;

- the warning lamp (orange) in the driver information module (DIM) illuminates
- an error message appears in the driver information module (DIM) display.

If high beam is activated with the light switch in position 0, high beam is only activated while the stalk is in the high beam position, so-called high beam flash. In order for high beam to remain on, the light switch must be in the "On" position.

GENERATOR (GEN) (2003-2004)

DESIGN

GENERATOR (GEN) DESIGN

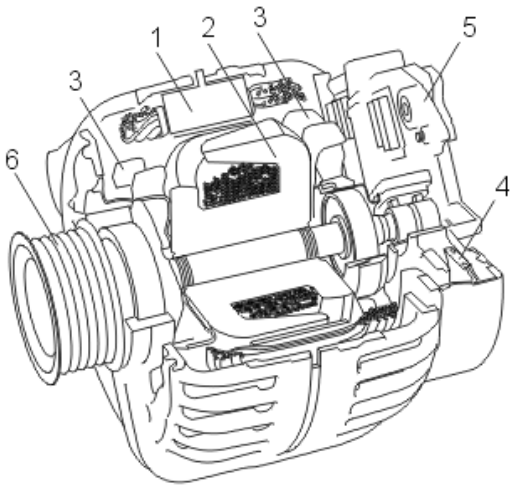

Fig. 306: Cutaway View of Generator
Courtesy of VOLVO CARS CORPORATION

The main components of the generator (GEN) consist of:

1. Stator
2. Rotor with slip rings
3. Integrated cooling fans
4. DC bridge
5. Charge regulator
6. Pulley.

Generator (GEN) terminals:

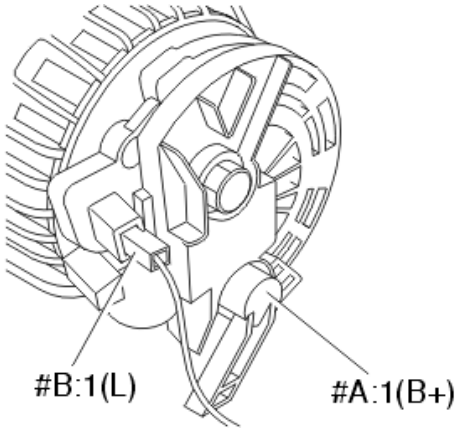

Fig. 307: Generator Terminals
Courtesy of VOLVO CARS CORPORATION

- #A:1 (B+)
- #B:1 (L)

Ground terminal via the cylinder block.

STATOR

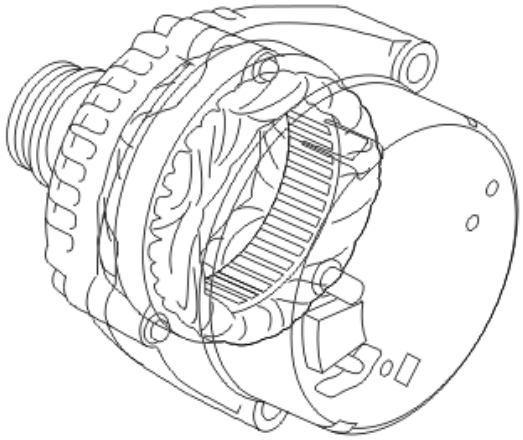

Fig. 308: Identifying Stator
Courtesy of VOLVO CARS CORPORATION

The stator is secured and consists of grooved plates which are insulated and pressed onto a secured plate unit. The stator winding coils are positioned in the grooves. They are delta connected at 120° and provide a three phase alternating current to the DC bridge.

ROTOR WITH SLIP RINGS

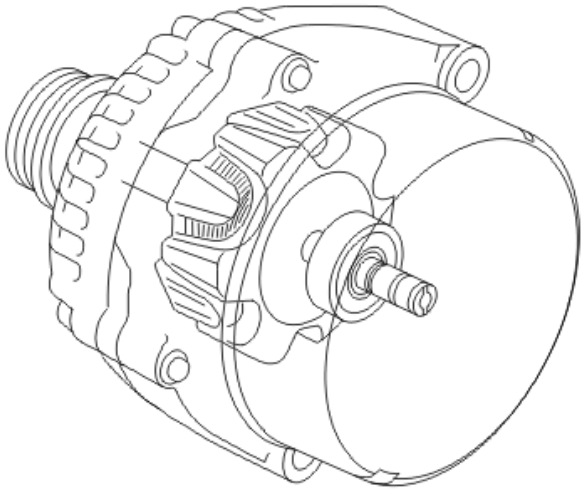

Fig. 309: Identifying Rotor With Slip Rings
Courtesy of VOLVO CARS CORPORATION

The rotor consists of two halves (claw-poles) which engage each other. The halves are pressed onto the rotor shaft. There are twelve claws on the rotor, i. e twelve poles. One half consists of six north poles and the other half six south poles. The excitation winding is secured on the rotor shaft between the claw-pole halves. The excitation winding (also known as rotor winding) consists of a circular coil winding which is connected to the slip rings and surrounded by the claw-poles. The charge regulator supplies a current to the rotor winding through the brushes which lie against the slip rings. The greater the current in the rotor the stronger the magnetic field in the rotor becomes, and thus a greater current is generated in the stator windings.

COOLING FANS

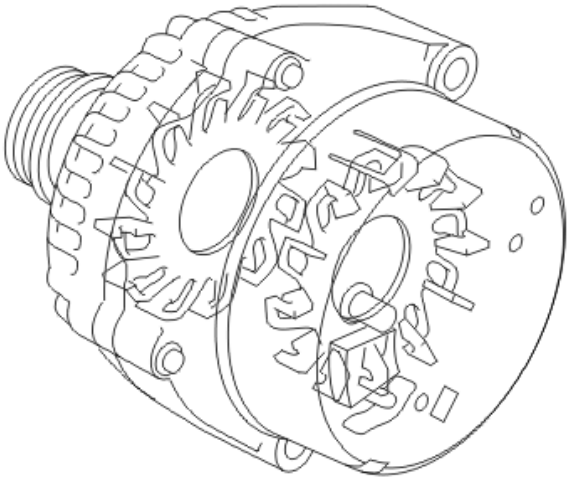

Fig. 310: Cooling Fans
Courtesy of VOLVO CARS CORPORATION

The heat distributed in the generator (GEN) is, in principle, proportional to the current generated and must be

directed away so that the insulation and diodes are not damaged. The generator (GEN) is therefore air cooled and equipped with two integrated cooling fans on the rotor shaft.

RECTIFIER

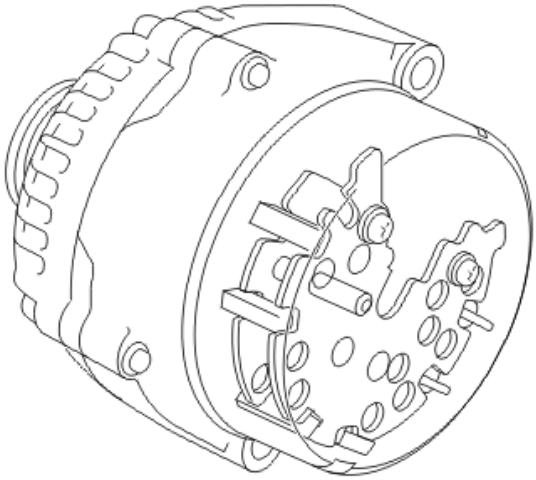

Fig. 311: Identifying Rectifier
Courtesy of VOLVO CARS CORPORATION

The current created in the generator (GEN) stator winding is AC and must be converted to DC before it can be used in the electrical system of the car. The conversion (rectifying) occurs using a DC bridge consisting of six diodes, two diodes per phase windings.

The stator windings generate three phases and are delta connected An exciter diode is connected to each of the three stator windings. The six rectifier diodes are bridge connected. The diodes are pressed into a diode holder.

CHARGE REGULATOR

General

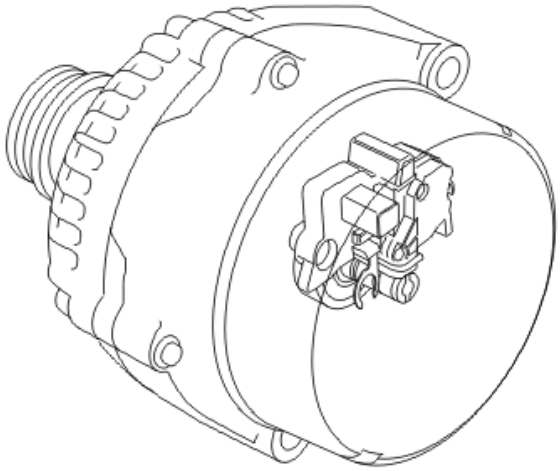

Fig. 312: Charge Regulator
Courtesy of VOLVO CARS CORPORATION

The charge regulator is mounted at the rear edge of the generator (GEN). The role of the charge regulator is to constantly maintain the generator current at engine speeds, depending on the load and speed of the generator.

If the voltage produced exceeds the preset desired value depending on the load, the charge regulator reduces or cuts the magnetic current to the rotor. This, in turn, lowers the magnetic field. The voltage from the stator windings decreases. When the voltage is below the desired value, the current increases through the rotor so that magnetization increases as does the generator voltage until the desired value is exceeded again. This process is repeated continuously.

Charge voltage

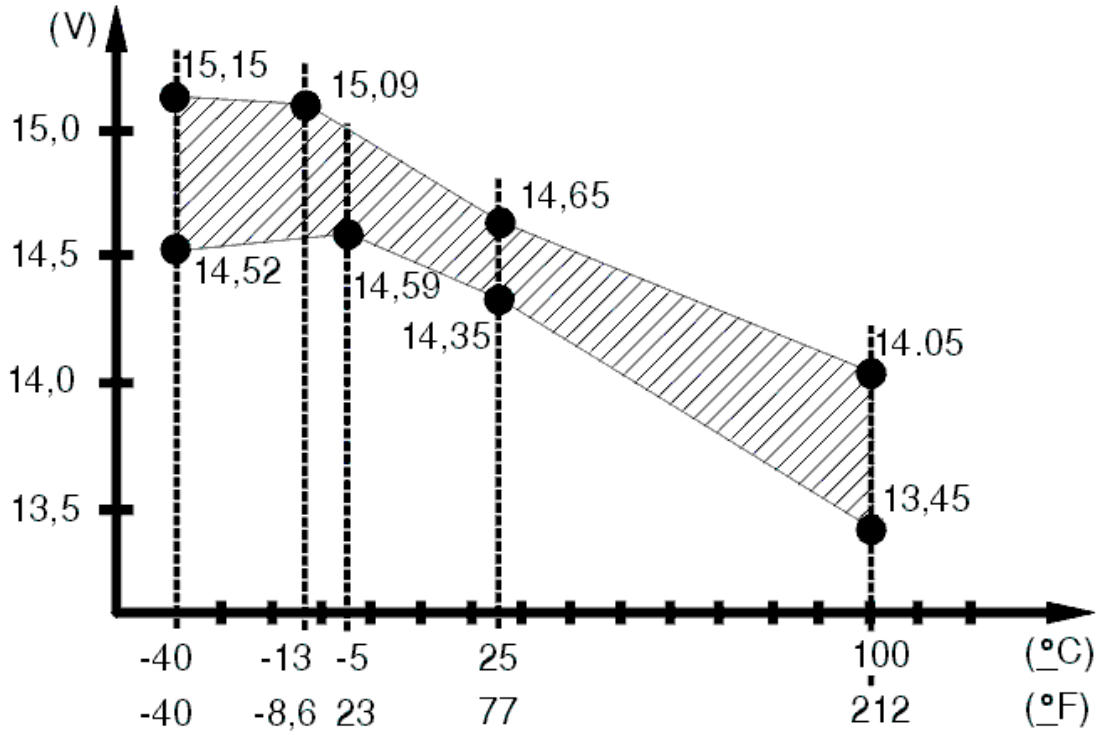

Fig. 313: Charge Regulator Graph
Courtesy of VOLVO CARS CORPORATION

At room temperature a fully charged battery cell produces 2.12 V. A 12 V battery has 6 cells and therefore produces 12.72 V when the battery is fully charged. The battery has an internal resistance which must be overcome for charging to occur. At room temperature 0.2 V per cell or 1.2 V for the entire battery is required. 13.92 V (12.72 V+1.2 V) is required to charge a battery at room temperature. In cold weather conditions the chemical reactions are slower and the inner resistance becomes higher. This requires a greater voltage when charging to overcome the internal resistance.

The charge regulator controls the output voltage, depending on the engine compartment temperature, following a predetermined curve, see the illustration.

The charge regulator calculates the engine compartment temperature using integrated semi-conductor electronics. In cold conditions the charge regulator allows a higher voltage. At higher temperatures the voltage is lowered. This ensures full battery charging regardless of the temperature. A battery must have a greater charge voltage at lower temperature for charging to occur.

L-signal for the central electronic module (CEM)

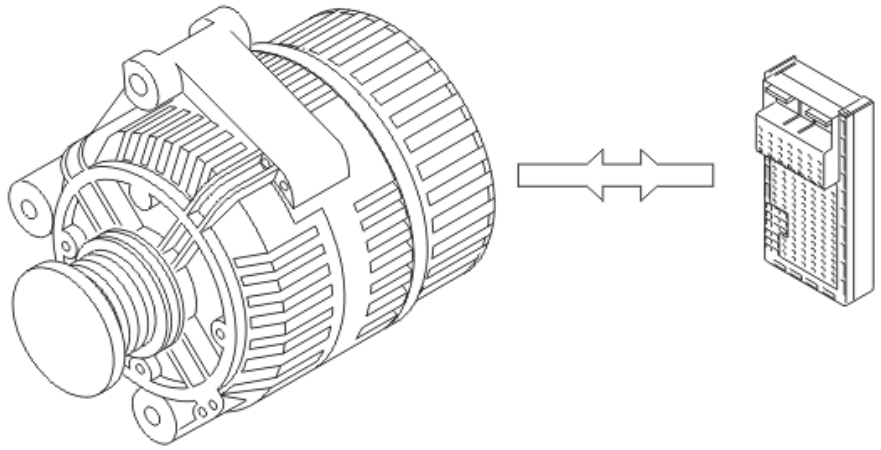

Fig. 314: Generator And CEM Input And Output Signals
Courtesy of VOLVO CARS CORPORATION

The charge regulator is connected to the central electronic module via an L-signal.

The L-signal is used to pre-magnetize the generator rotor and to transmit signals to the central electronic module telling the central electronic module that the generator is charging or not when the engine is running.

When the engine is starting, the generator (GEN) does not charge. When the engine speed (RPM) passes approximately 550 rpm a delay of approximately 3 seconds occurs. After the delay a successive increase of charging begins. When the generator (GEN) is at full load the increase ranges from 0-100% for a period of 6 seconds.

If the engine speed (RPM) passes approximately 1300 rpm during the delay or the successive increase breaks the increase, full charging is obtained immediately. This is to successively increase the load on the engine during the start-up phase and to ensure the engine starts.

If the L-signal is missing the generator will not start charging on start-up. Charge regulator can self magnetize the rotor and start charging in this way. This only happens at speeds in excess of approximately 2300 rpm. There is no successive charge engagement with self magnetization, the generator operates at full charge immediately.

DF-signal to the engine control module (ECM)

FREEWHEEL

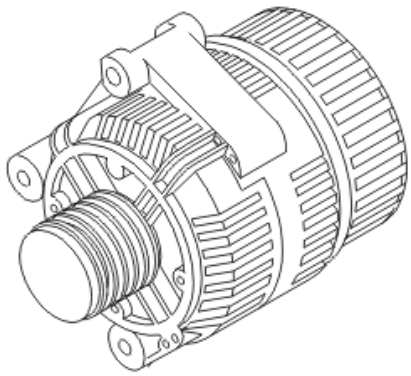

Fig. 315: Freewheel Generator
Courtesy of VOLVO CARS CORPORATION

Certain generators are equipped with a freewheel between the rotor shaft and the pulley. The cover over the pulley nut in the center of the pulley indicates whether a freewheel is installed. Using the freewheel, the generator rotor shaft can only rotate freely in one direction. This means that any jerking in the belt transmission is minimized.

FUNCTION

CHARGING

When the ignition key is turned to position II (and III) current goes from the central electronic module to connection L on the charge regulator. The regulator directs current to the excitation winding rotor and is then grounded via the regulator. When the current travels through the rotor a magnetic field is formed around the rotor. When the engine is started and the rotor begins to rotate, the magnetic field also rotates and then produces alternating current in the stator windings.

Alternating current is rectified when it passes the diodes and is then fed to the electrical system of the car. The voltage obtained from the stator winding also passes to the regulator via the rectifier and affects the control functions.

When the voltage exceeds the permitted value, the charge regulator reduces the current through the excitation winding. The strength of the magnetic field decreases as does the stator winding supplied alternating current.

The charge indicator lamp in the combined instrument panel is controlled by the driver information module via signals from the Controller area network (CAN).

SYSTEM OVERVIEW

GENERAL

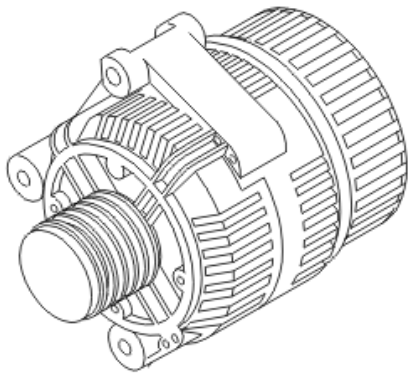

Fig. 316: Freewheel Generator
Courtesy of VOLVO CARS CORPORATION

The purpose of the generator (GEN) is to supply the power consumers with power and to ensure that the battery remains charged. The generator (GEN) is mounted on the front edge of the engine.

The power handling capacity of the generator (GEN) depends on the engine speed (RPM). When the engine is idling the generator (GEN) only supplies approximately half the maximum power handling capacity. When the engine is idling with many power consumers connected battery recharge is negatively affected i. e, the battery does not charge. Battery charging is less efficient in cold conditions than at room temperature. This means that when the engine is idling for a long time, with large power consumers connected the battery can drain.

If the generator fails to charge the power consuming components will take their supply exclusively from the battery. In the end this will drain the battery completely.

The generator (GEN) first generates AC current which is converted to DC current in the DC bridge. the generator (GEN) has a built-in charge regulator.

The auxiliaries belt transfers power from the crankshaft pulley to the auxiliaries such as the power steering pump, air conditioning (A/C) compressor and generator (GEN). The belt tension is tensioned using an automatic belt tensioner. The belt is a Poly-v-belt.

The generator (GEN) with charge regulator can be diagnosed through the central electronic module.

ACCESSORIES AND EQUIPMENT

Miscellaneous - General Information

EXTERNAL EQUIPMENT (2003-12)

TRIM PANEL KIT (BODYKIT), SPRAYING

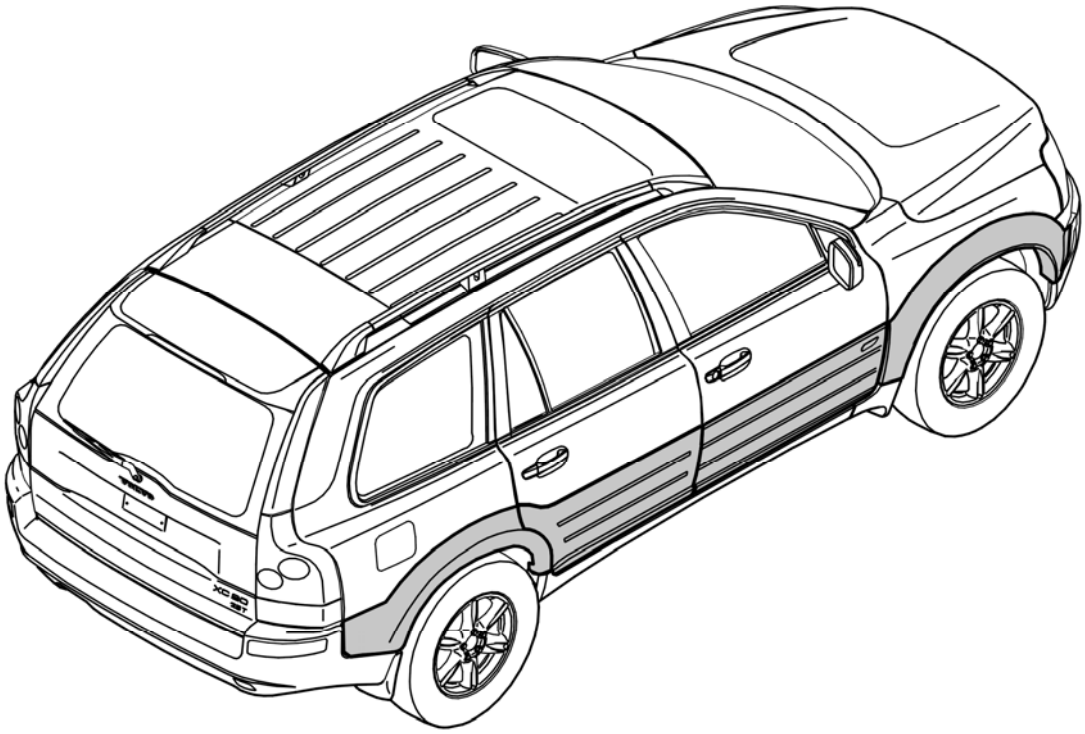

Fig. 1: Identifying Bodykit
Courtesy of VOLVO CARS CORPORATION

The Bodykit as shown is made of PUR-plastic. PUR-plastic can deform. If the plastic components are not sufficiently supported when stored, or hung after painting, there is a risk that the plastic will change shape.

CAUTION: Locating pins or other protruding components must not bear the weight of the plastic components.

HINT: Place the plastic components with supports on a large surface.

CAUTION: Heat causes the plastic to deform further. Oven drying must not be carried out at temperatures exceeding 50°C. Allow plastic components to dry at room temperature.

NOTE: Spraying must be carried out according to the instructions of the paint supplier.

Install the components in the bodykit according to the Installation Instructions, accessories.

INSTRUCTIONAL AND INFORMATIONAL PLATES (2003-12)

SPARE PART MARKING (R-DOT)

Some of the spare parts are selected to be marked with R-dot, which is an anti-theft marking that is only applicable in the USA.

Fig. 2: Identifying Side Door (R-Dot)
Courtesy of VOLVO CARS CORPORATION

The following components are R-dot marked:

- front and rear bumper cover
- all side doors
- bonnet
- tailgate
- left and right fender
- left and right fender (full side)
- engine (sump)
- the gearbox

Note that in certain cases the components may be punched or scribed.

Fig. 3: Identifying Side Door (R-Dot)
Courtesy of VOLVO CARS CORPORATION

On vehicles for USA, these components are marked with the vehicle's VIN number.

APPLIES TO VEHICLES IN THE USA

Repairing without spare parts - fixing:

Keep the VIN marking for as long as possible, for example, by masking before grinding and painting. However, the marking can be removed and/or affected without being replaced with a new one if required to achieve the correct quality and surface finish.

Repairing with spare parts - replacement:

Keep the R-dot marking for as long as possible, for example, by masking before grinding and painting. However, the marking can be removed and/or affected without being replaced with a new one if required to achieve the correct quality and surface finish.

Note that the labels, neither R-dot or VIN, are not available as separate spare parts.

ACCESSORIES AND BODY, CAB

Miscellaneous - Installation instructions, accessories

ADAPTER EXTRA BICYCLE (2003-2008)

ADAPTER EXTRA BICYCLE

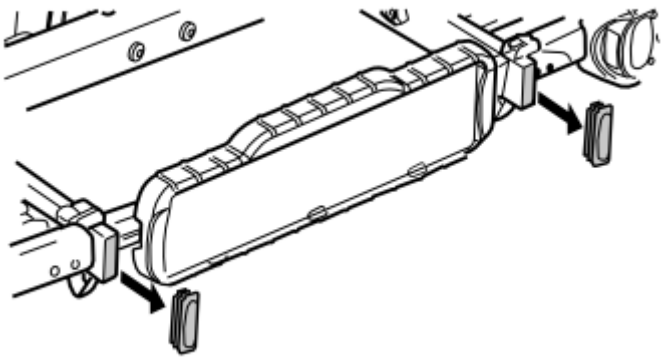

Fig. 1: Identifying Cover Removal
Courtesy of VOLVO CARS CORPORATION

- Remove the cover.

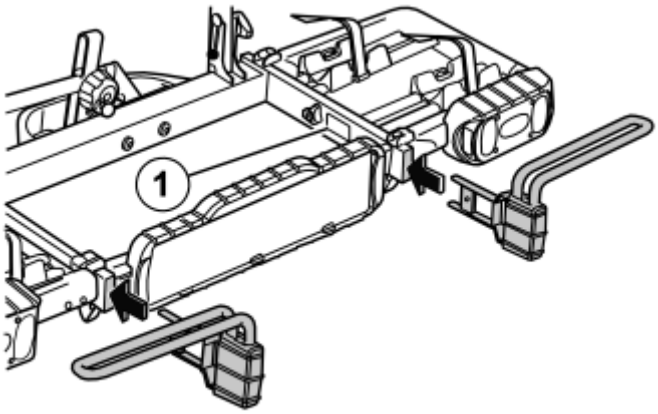

Fig. 2: Identifying Labels For Holes And Adapters
Courtesy of VOLVO CARS CORPORATION

- Remove the labels (1) for the holes
- Install the adapters. Turn them as displayed.

12"-16"

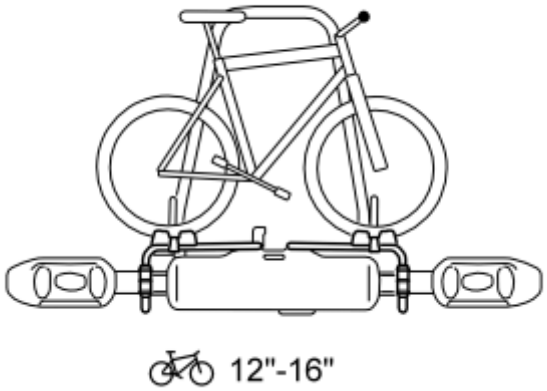

Fig. 3: Identifying Holder Position For 12-16 Inches Bicycles
Courtesy of VOLVO CARS CORPORATION

- For 12"-16" bicycles the holders are positioned as displayed.

16"-28"

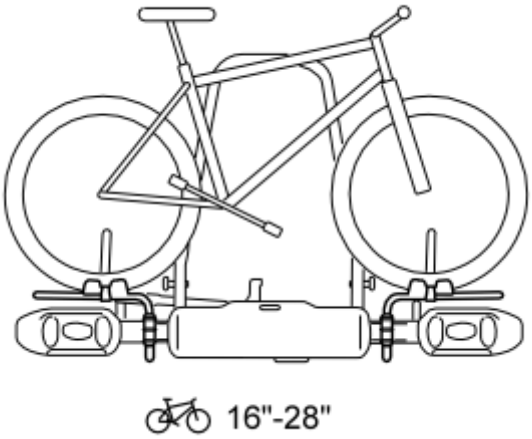

Fig. 4: Identifying Holder Position For 16-28 Inches Bicycles
Courtesy of VOLVO CARS CORPORATION

- For 16"-28" bicycles the holders are positioned as displayed.

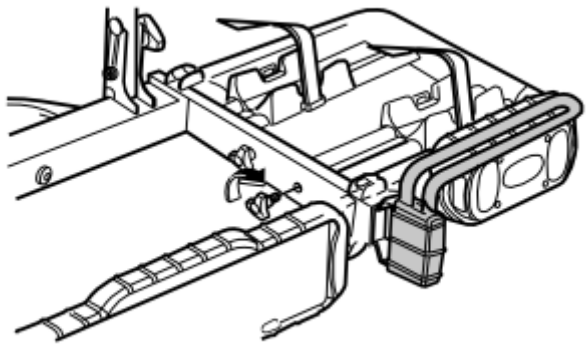

Fig. 5: Identifying Mounting Screws And Adapters
Courtesy of VOLVO CARS CORPORATION

- Install the mounting screws and tighten the adapters.

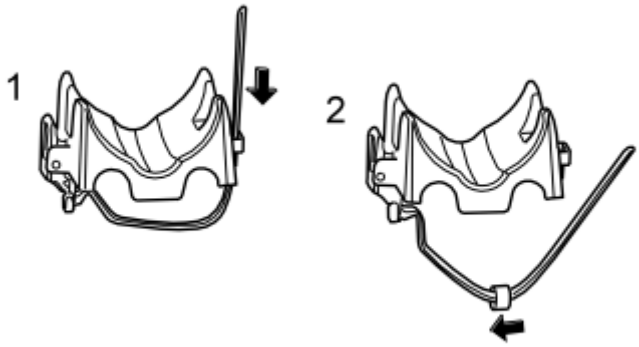

Fig. 6: Identifying Rings Threaded Onto Straps
Courtesy of VOLVO CARS CORPORATION

- Thread the rings onto the straps.

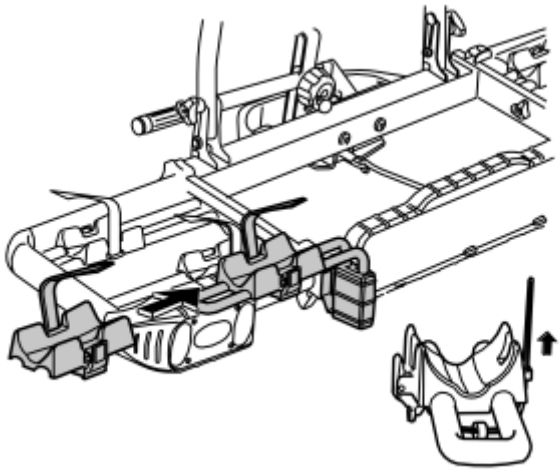

Fig. 7: Identifying Wheel Holders
Courtesy of VOLVO CARS CORPORATION

- Install the wheel holders so that they are locked with a "click".

ADAPTER KIT, BICYCLE HOLDER (2003-2005)

ADAPTER KIT, BICYCLE HOLDER

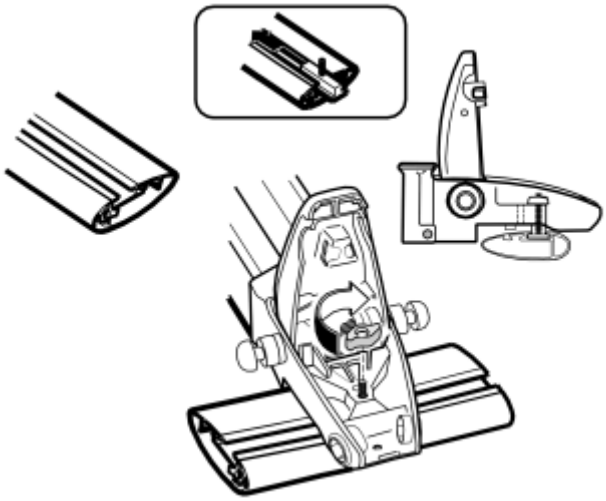

Fig. 8: Adapter Kit, Bicycle Holder
Courtesy of VOLVO CARS CORPORATION

BICYCLE HOLDER FOR EXTRA BICYCLE, MOUNTED ON THE TOW BAR (2003-2008)

BICYCLE HOLDER FOR EXTRA BICYCLE, MOUNTED ON THE TOW BAR

MOUNTING THE BRACKETS FOR THE EXTRA BICYCLE HOLDER

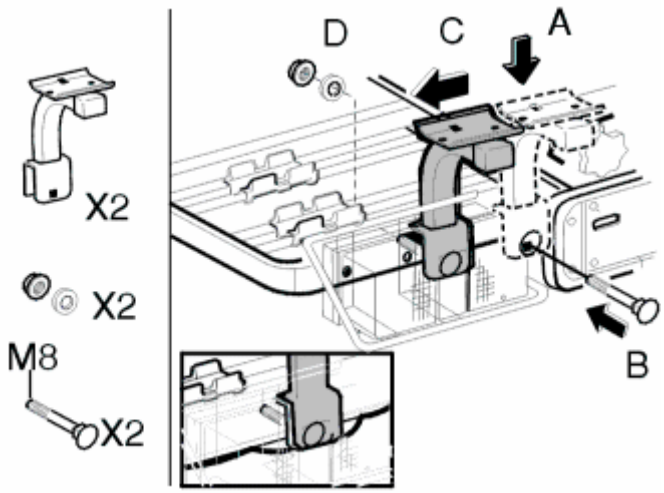

Fig. 9: Identifying Mounting Bracket Installation And Adjustment
Courtesy of VOLVO CARS CORPORATION

- Push the cable to one side when installing.

MOUNTING THE EXTRA BICYCLE HOLDER

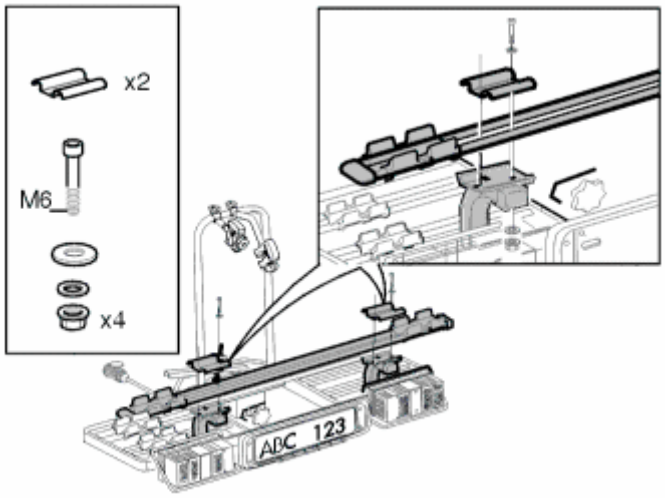

Fig. 10: Identifying Extra Bicycle Holder
Courtesy of VOLVO CARS CORPORATION

INSTALLING THE WHEEL STRAP AND THE BICYCLE FRAME HOLDER

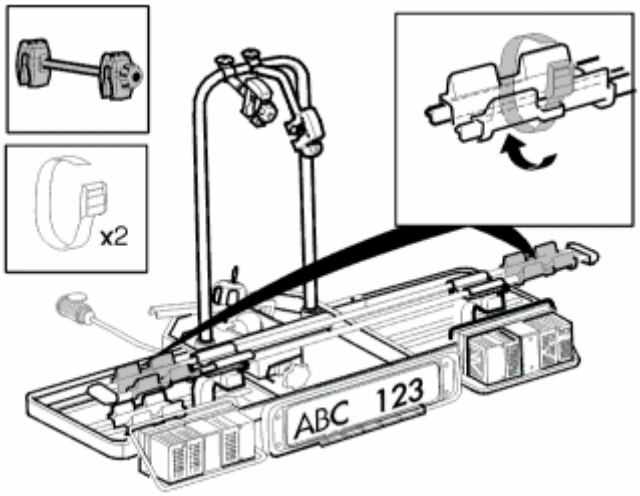

Fig. 11: Identifying Wheel Strap And Bicycle Frame Holder
Courtesy of VOLVO CARS CORPORATION

NOTE: **When transporting an extra bicycle install the supplied bicycle frame holder high up on the frames on the second and third bicycles. Do not obstruct the high-mounted stop (brake) lamp (if applicable).**

BICYCLE HOLDER WITH HOIST (2003-2012)

BICYCLE HOLDER WITH HOIST

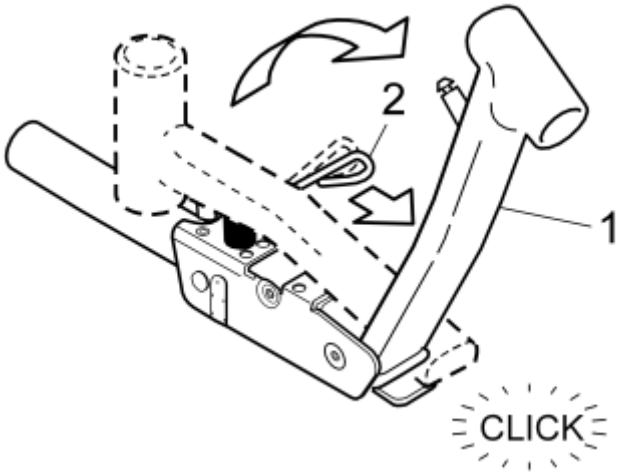

Fig. 12: Folding Up Lever And Releasing Lever By Pulling Red Catch
Courtesy of VOLVO CARS CORPORATION

- Fold up the lever (1). Release the lever by pulling the red catch (2).

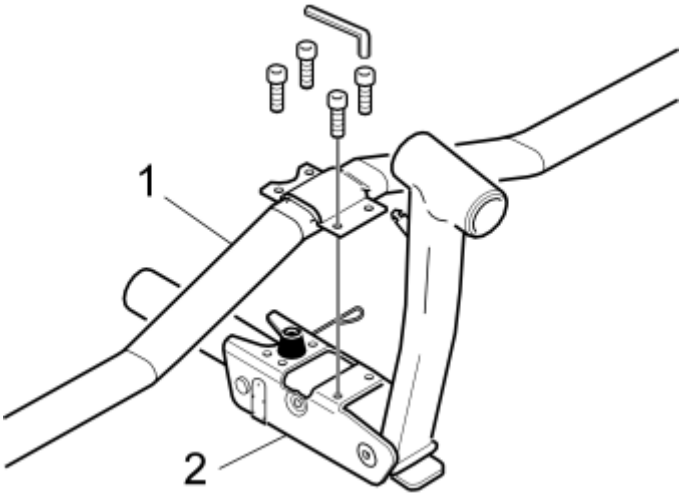

Fig. 13: Identifying Front-Rear Strut Positioned And Secured On Bracket For Lever
Courtesy of VOLVO CARS CORPORATION

- Position the front-rear strut (1) as illustrated
- Secure the strut on the bracket for the lever (2). Use the short Allen screws from the kit. Tighten crosswise. Tighten to **9-11 Nm (6.5-8 lbf. ft.)** .

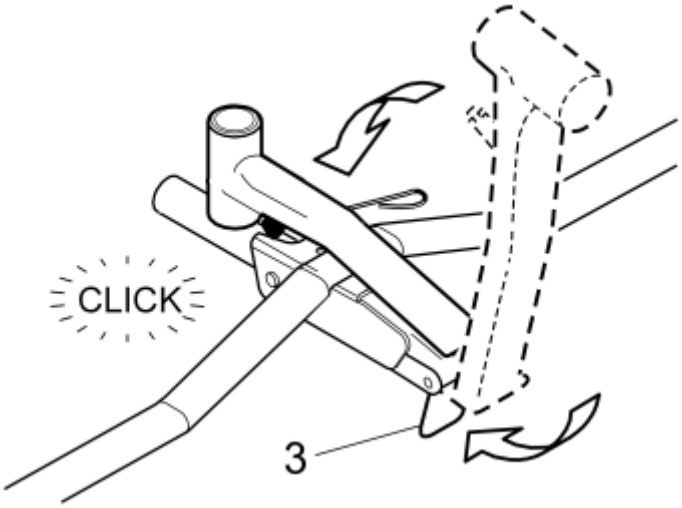

Fig. 14: Folding Lever Back Into Place By Pressing Red Plate
Courtesy of VOLVO CARS CORPORATION

- Fold the lever back into place by pressing the red plate (3).

NOTE: **If the lever does not release with the red plate, the lever will spring back under considerable tension.**

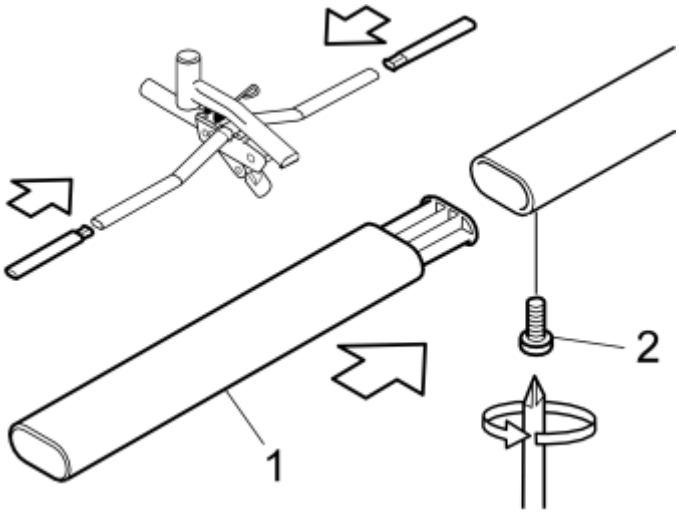

Fig. 15: Identifying Extensions, Front-Rear Strut And Locked Into Place Using Screw
Courtesy of VOLVO CARS CORPORATION

- Slide the extensions (1) into the front-rear strut. Lock into place using the screw (2).

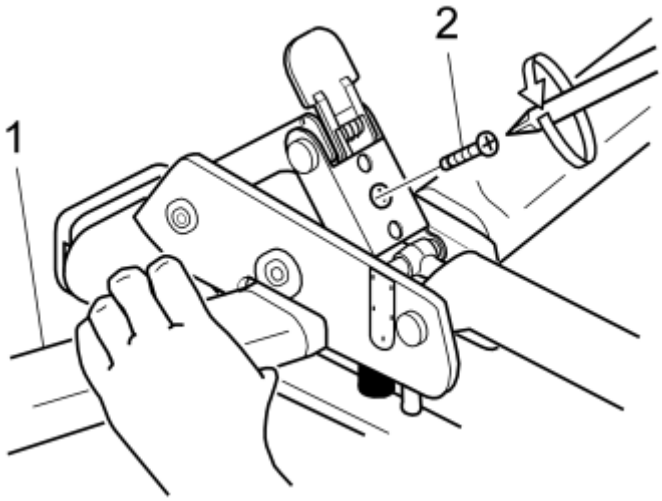

Fig. 16: Holding Front-Rear Strut, Turning Bicycle Holder And Removing Transportation Screw
Courtesy of VOLVO CARS CORPORATION

WARNING: **Hold the front-rear strut (1) as illustrated to avoid trapping fingers.**

- Turn the bicycle holder and remove the transportation screw (2).

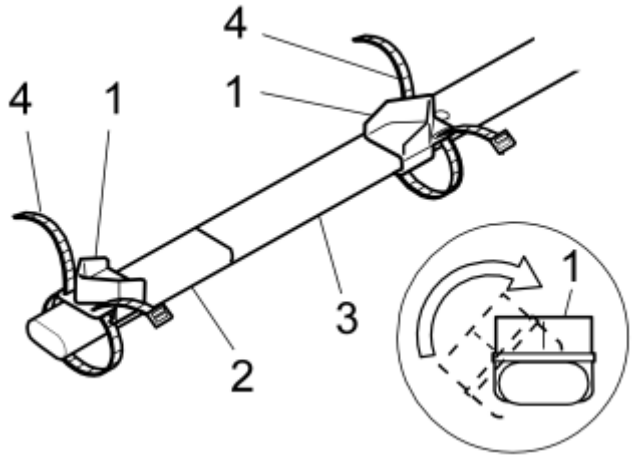

Fig. 17: Identifying Installed Wheel Holders
Courtesy of VOLVO CARS CORPORATION

- Install the wheel holders (1) by twisting them. One wheel holder must be on the extension (2) and one on the strut (3).

NOTE: Only one wheel holder may be positioned on the extension.

- Position the short straps (4).

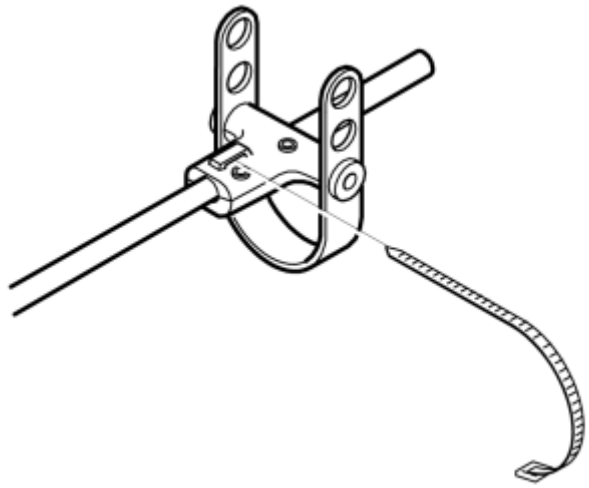

Fig. 18: Identifying Strap For Saddle Holder
Courtesy of VOLVO CARS CORPORATION

- Insert the strap for the saddle holder.

BICYCLE HOLDER, INTERIOR (2003-2008)

BICYCLE HOLDER, INTERIOR

INSTALLING THE BICYCLE HOLDER

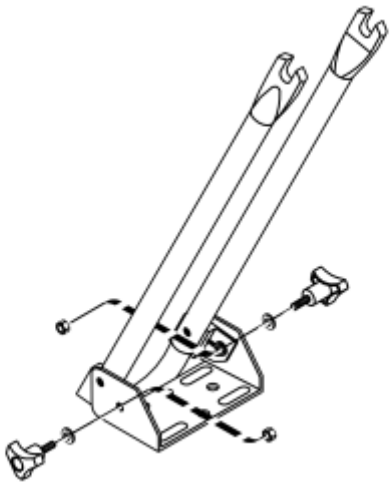

Fig. 19: Identifying Two M6 Knobs With Threads, Two Washers And Two M6 Nuts On Wheel Holder
Courtesy of VOLVO CARS CORPORATION

- Install the two M6 knobs with threads, two washers and two M6 nuts (from the kit) on the sides of the wheel holder
- Repeat the operation on the wheel holder.

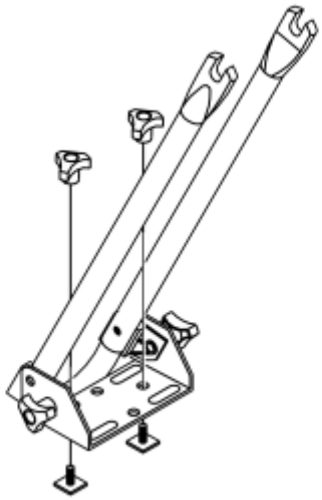

Fig. 20: Identifying Two T-Groove Screws And Two M6 Knobs
Courtesy of VOLVO CARS CORPORATION

- Take two T-groove screws and two M6 knobs from the kit. Install the T-groove screws underneath the wheel holder. Screw in the two knobs a few turns
- Repeat the operation on the wheel holder.

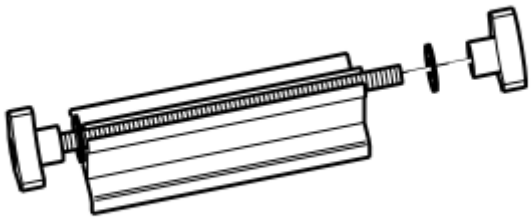

Fig. 21: Identifying M8 Knob With Washer And Screw On Fork Mounting
Courtesy of VOLVO CARS CORPORATION

- Take an M8 knob with a screw and washer from the kit. Position the washer against the knob
- Install the M8 knob with the washer and screw in the fork mounting
- Take another washer and M8 knob from the kit and position on the other end of the screw
- Repeat the operation with the other fork mounting.

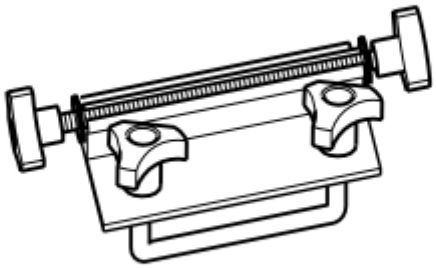

Fig. 22: Identifying Two M6 Knobs And Mounting Underneath Fork Mounting
Courtesy of VOLVO CARS CORPORATION

- Take two M6 knobs and a mounting bracket from the kit. Install the bracket on the underside of the fork mounting. Screw in the two M6 knobs a few turns
- Repeat the operation with the other fork mounting.

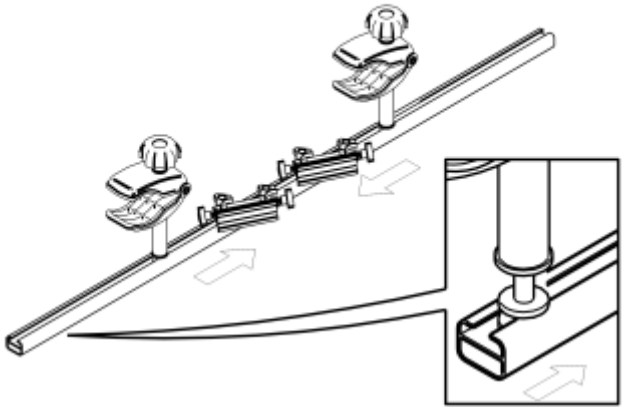

Fig. 23: Positioning Fork Mountings In The Aluminum Rod
Courtesy of VOLVO CARS CORPORATION

- Position both the fork mountings in the center of the aluminum rod. They must be slightly apart and at an angle
- Tighten the knobs on top of the fork mountings so that both fork mountings are secure
- Compress both halves on the saddle holders
- Install the saddle holders on the aluminum rod, outside the fork mountings.

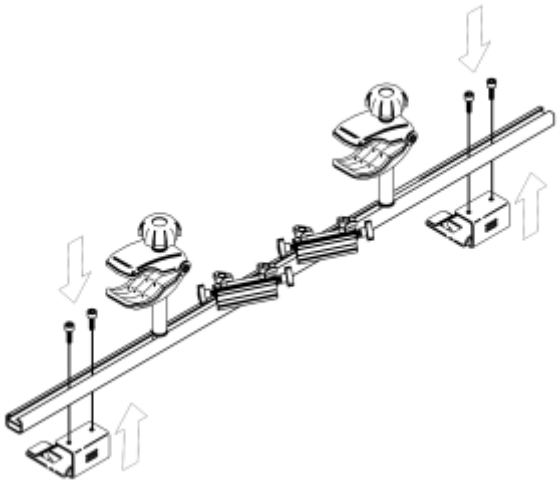

Fig. 24: Identifying Four Screws And Two Mountings
Courtesy of VOLVO CARS CORPORATION

- Take the four screws and the two mountings from the kit. Install the mountings underneath the aluminum rod outside of the saddle holders. Tighten the mountings.

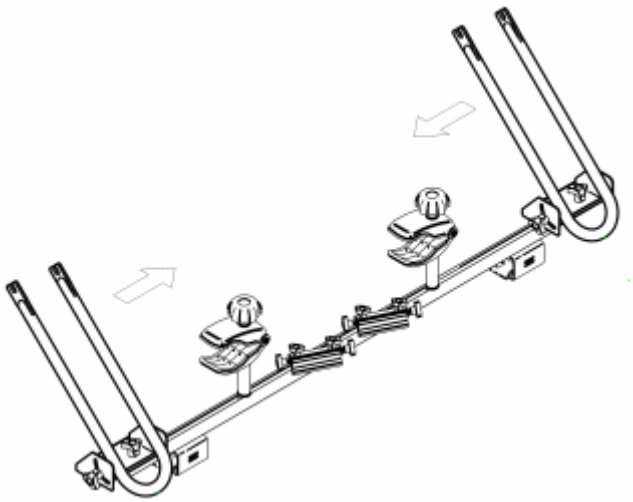

Fig. 25: Installing The Wheel Holders
Courtesy of VOLVO CARS CORPORATION

- Install both the wheel holders at the top of the aluminum rod
- Tighten the knobs on the side so that both wheel holders are secure.

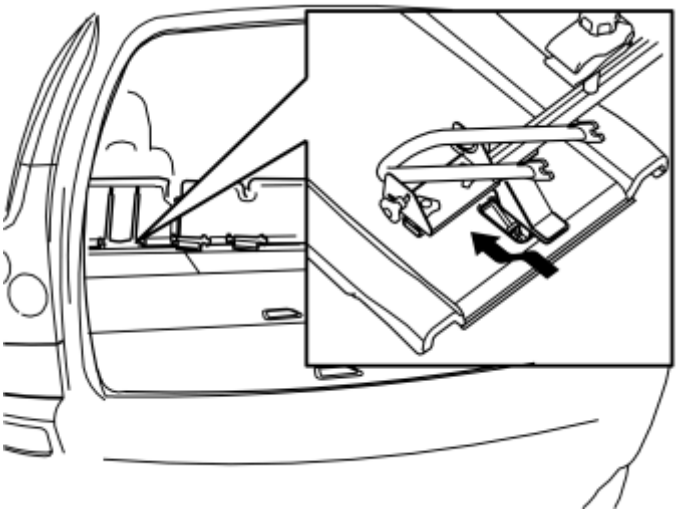

Fig. 26: Lifting In The Bicycle Holder
Courtesy of VOLVO CARS CORPORATION

- Fold the rear backrests forwards
- Lift in the bicycle holder through one of the rear doors
- Slide the two mountings on the bicycle holder into the eyelets at the bottom of the outer rear backrests.

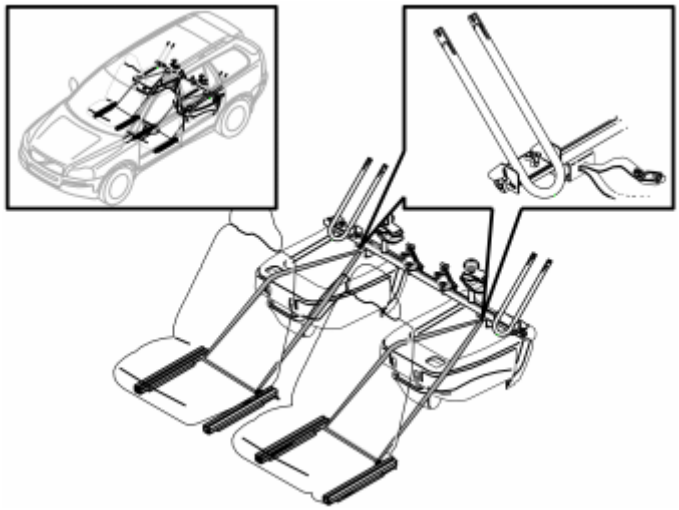

Fig. 27: Securing The Bicycle Holder In The Eyelets
Courtesy of VOLVO CARS CORPORATION

- Secure the bicycle holder in the eyelets on the rear mountings on the front seats. Use the straps from the kit
- Tighten the straps fully.

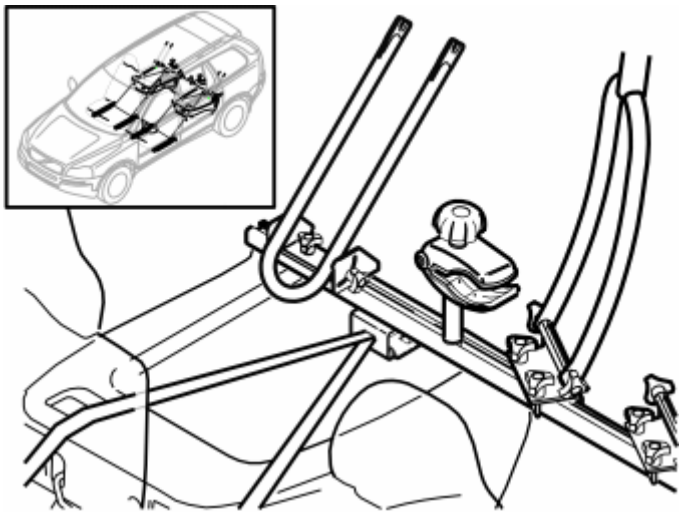

Fig. 28: Securing The Front Forks
Courtesy of VOLVO CARS CORPORATION

- Remove the front wheel and the saddle from the bicycle
- Lift the bicycle into the car through the boot
- Secure the front forks in the right-hand fork mounting. Tighten the two knobs on the sides fully.

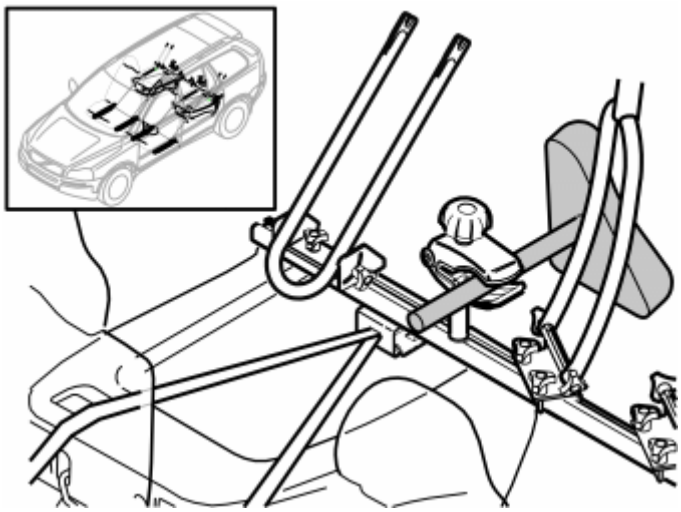

Fig. 29: Identifying Saddle Holder
Courtesy of VOLVO CARS CORPORATION

- Secure the saddle in the saddle holder. Tighten the knob fully.

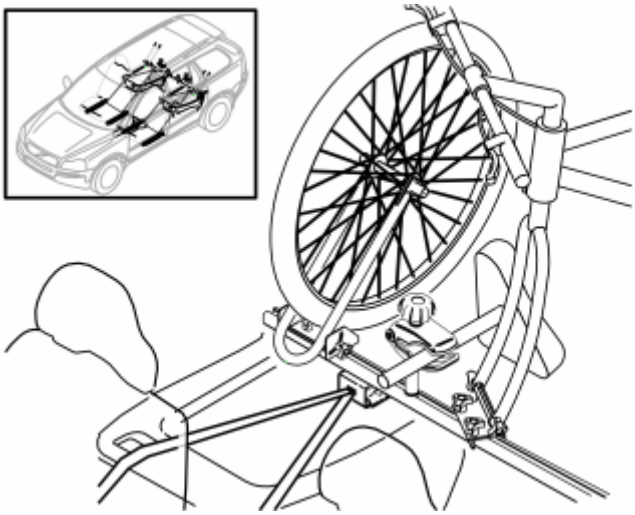

Fig. 30: Securing The Front Wheel
Courtesy of VOLVO CARS CORPORATION

- Secure the front wheel in the right-hand wheel holder
- Adjust the angle of the wheel holder using the two knobs on the sides so that the wheel is correctly positioned in the wheel holder
- Install the wheel. Secure the wheel using the wheel nuts
- Tighten the wheel holder fully using the two knobs on the sides when the wheel is resting against the folded backrest.

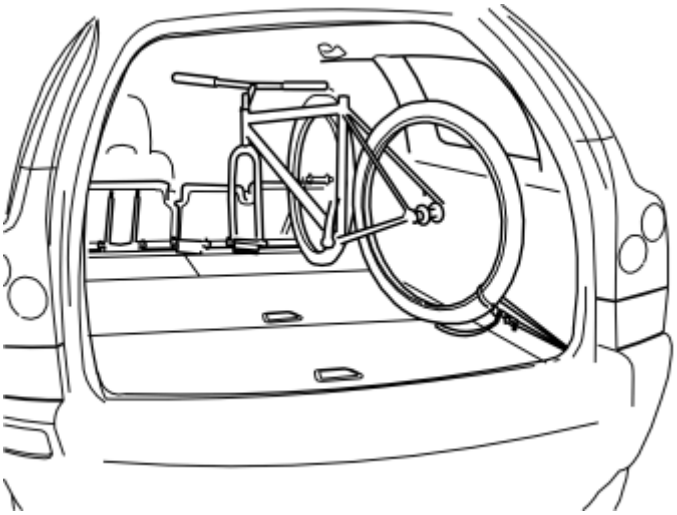

Fig. 31: Securing The Bicycle Using A Strap
Courtesy of VOLVO CARS CORPORATION

- Secure the bicycle using a retaining strap through the rear wheel and through the load securing eyelet as illustrated. Tighten the bicycle so that it cannot move.

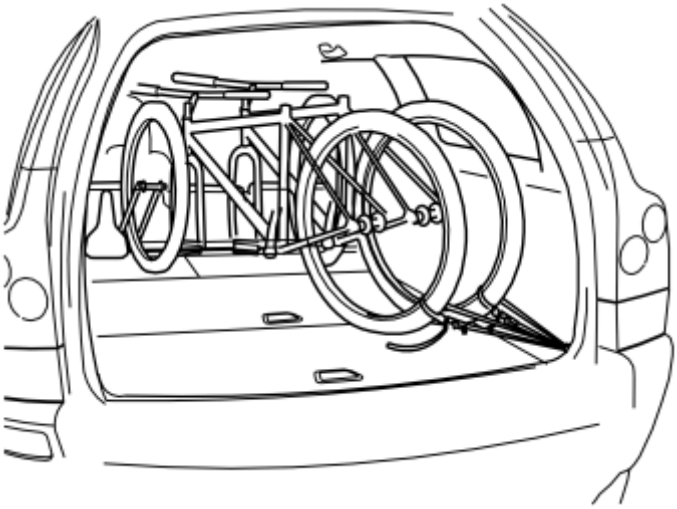

Fig. 32: Repeating Procedure When Loading Another Bicycle
Courtesy of VOLVO CARS CORPORATION

- Carry out the same procedure when loading further bicycles. Turn the other bicycle in the same direction as the first to ensure optimal utilization of the cargo compartment. Secure the bicycle using a strap as before.

BICYCLE HOLDER, ROOF MOUNTED (2003-2008)

BICYCLE HOLDER, ROOF MOUNTED

NOTE: Important:

- **Regularly check that the load carriers are properly secured**
- **Regularly check that the bicycle and bicycle holder are properly secured**
- **Handling is affected by the actual load and its position. The center of gravity of the car changes when driving with a load, which affects the handling of the car. Adjust your speed accordingly**
- **The load increases the total height of the car which affects accessibility. Be aware of low roofs and entrances.**

- Install the load carriers according to the separate Installation Instructions. If there are no set positions for the load carriers, they should be positioned approximately **800 mm (32")** apart
- **Applies to cars with rails:** Position the load carriers so that there is no risk of the tailgate catching the bicycle holder when it is opened.

ASSEMBLING THE BICYCLE HOLDER

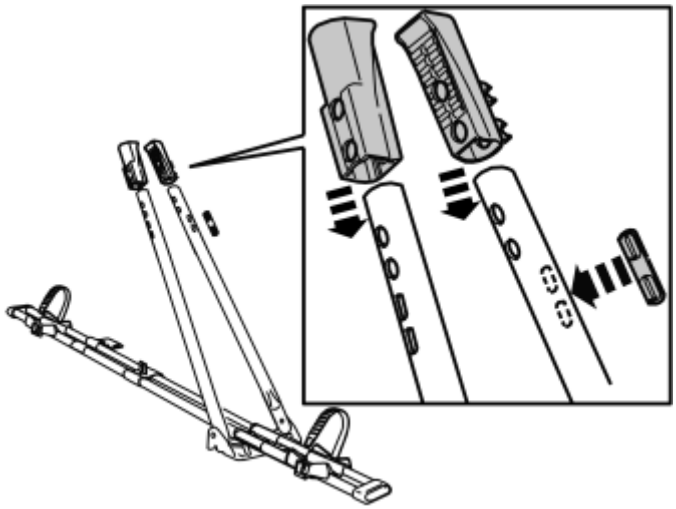

Fig. 33: Identifying Frame Holders On Tubes
Courtesy of VOLVO CARS CORPORATION

- Install the frame holders (from the kit) on the tubes. Ensure that the frame holders are on the correct side for bicycle holders mounted on the left or right-hand sides. This is to ensure that the lock can be reached
- Cover the holes using the rubber blind cover plugs from the kit.

NOTE: Do not cover the holes where the latch will be positioned.

- Measure the diameter of the bicycle frame to determine which installation version applies for the bicycle.

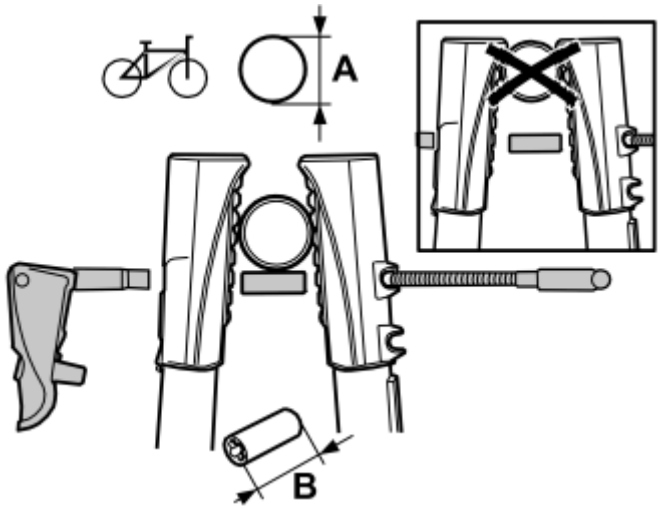

Fig. 34: Identifying Bicycle Frame Diameter (1 Of 2)
Courtesy of VOLVO CARS CORPORATION

Frame diameter (A): 22 - 58 mm (0.87" - 2.28")

- Install the frame holder screw (from the kit) in the upper hole in the frame holder
- Take the short frame protection (B) from the kit. Thread the frame protection onto the screw
- Screw the latch (from the kit) on to the frame holder screw
- Secure the frame holder screw in its cut out.

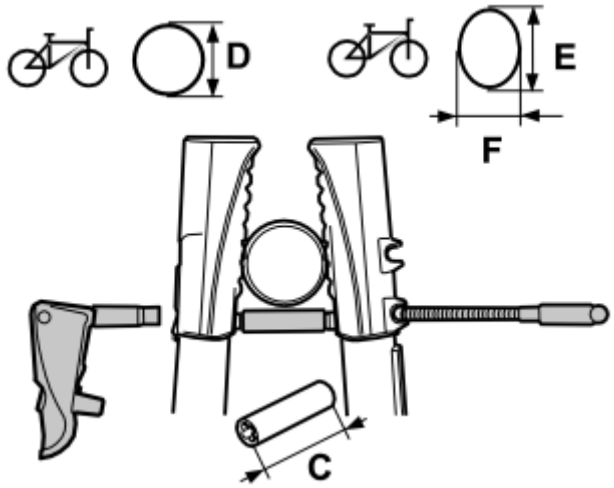

Fig. 35: Identifying Bicycle Frame Diameter (2 of 2)
Courtesy of VOLVO CARS CORPORATION

Frame diameter (D): 59 - 70 mm (2.32" - 2.75") and Oval frame (E, F): max 65 x 80 mm (2.56" x 3.15")

- Install the frame holder screw (from the kit) in the lower hole in the frame holder
- Take the long frame protection (C) from the kit. Thread the frame protection onto the screw
- Screw the latch (from the kit) onto the frame holder screw

- Secure the frame holder screw in its cut out.

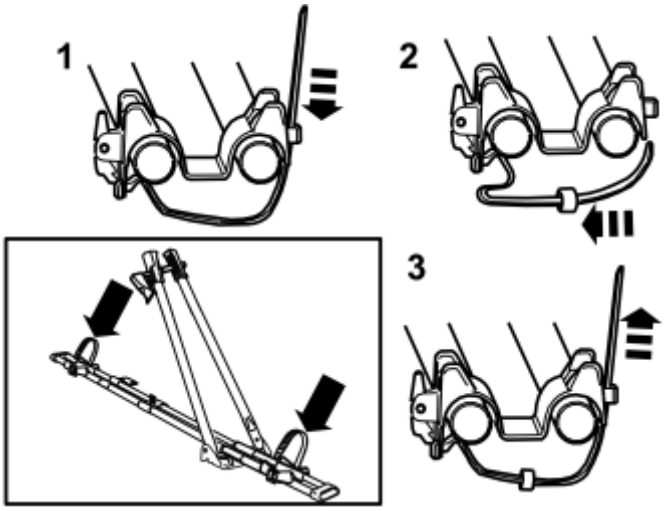

Fig. 36: Identifying Tensioner Straps On Bicycle Holders Mounted On Left Or Right-Hand Sides
Courtesy of VOLVO CARS CORPORATION

- Ensure that the tensioner straps are on the correct side for bicycle holders mounted on the left or right-hand sides. This is done by turning the entire bicycle holder. Thread the rubber straps (from the kit) onto the tensioner straps, as illustrated.

INSTALLING THE BICYCLE HOLDER ON THE LOAD CARRIERS

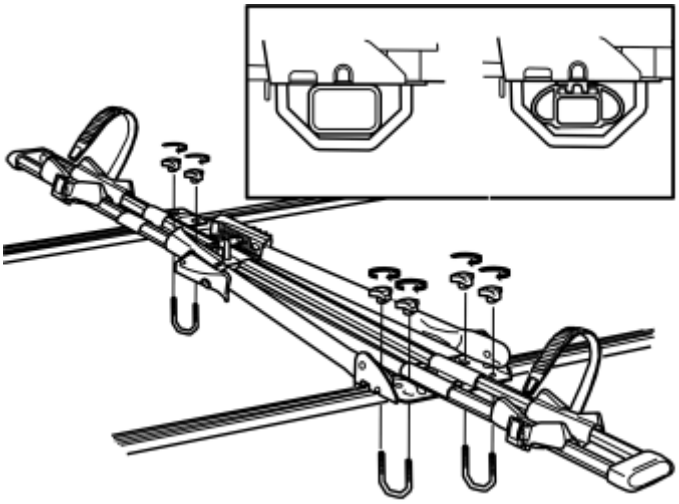

Fig. 37: Identifying Bicycle Holder On Load Carriers
Courtesy of VOLVO CARS CORPORATION

- Take mounting strips, U-shaped screws and knobs from the kit. Install the bicycle holder on the load carriers, as illustrated. Tighten to **3 Nm (2.2 lbf. ft.)** .

SECURING BICYCLES

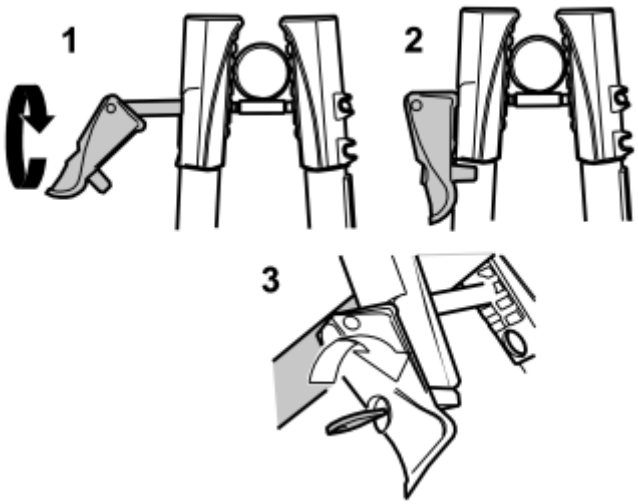

Fig. 38: Identifying Frame Holders Squeezed Together Around Frame
Courtesy of VOLVO CARS CORPORATION

- Position the bicycle on the bicycle holder
- Squeeze the frame holders together around the frame. Tighten the frame holders using the lock handle
- Secure with the lock handle and engage the lock.

NOTE: **Always ensure that the lock handle is locked during transit to prevent the bicycle from shaking loose.**

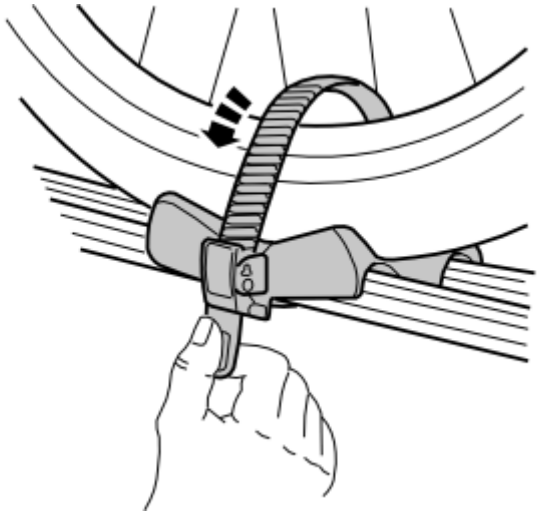

Fig. 39: Securing Wheels With Tensioner Straps
Courtesy of VOLVO CARS CORPORATION

- Secure the wheels with the tensioner straps. Ensure that the bicycle is stable.

WARNING: **The bicycle can shake loose if it is not properly secured**

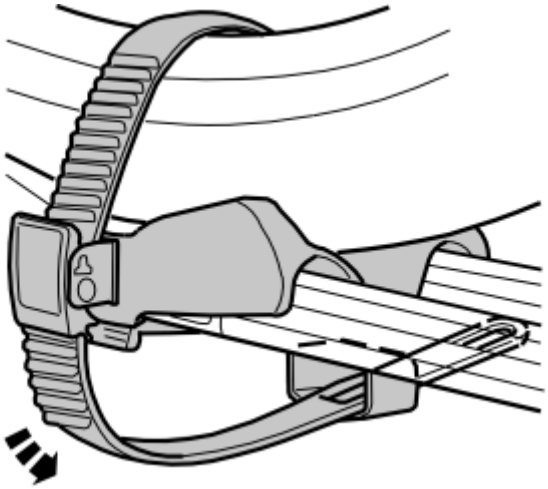

Fig. 40: Identifying Tensioner Strap Threaded Into Rubber Straps
Courtesy of VOLVO CARS CORPORATION

- Thread any excess tensioner strap into the rubber straps that were installed earlier. This holds the straps in place and prevents them rubbing against or hitting the roof of the car.

NOTE:

- **Check that the bicycle and bicycle holder are properly secured**
- **Check again after driving a short distance**
- **Repeat the check at suitable intervals**
- **Tighten the tensioning straps and frame holders if necessary.**

CARGO RACK, HITCH (2003)

CARGO RACK, HITCH

INSTALLING THE CARGO RACK

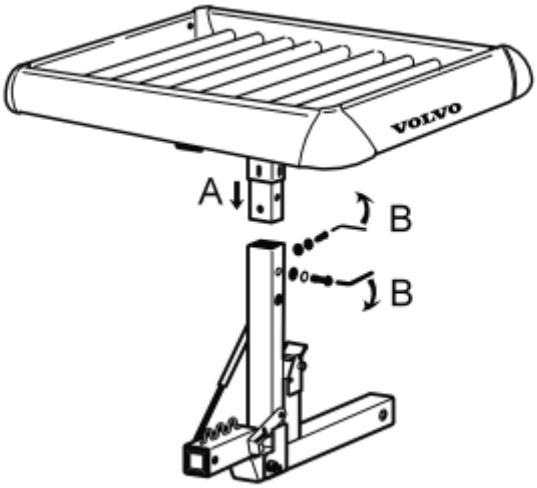

Fig. 41: Identifying Load Basket Installed In Base Unit's Square Pipe
Courtesy of VOLVO CARS CORPORATION

- Install the cargo rack on the square section tube on the base unit
- Tighten the cargo rack. Use the two screws, the sprung washers and the flat washers.

TILTING THE CARGO RACK

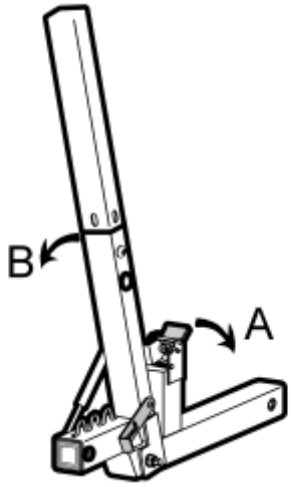

Fig. 42: Identifying Catch Pressed Down To Lower Base Unit
Courtesy of VOLVO CARS CORPORATION

- Press down the catch (A) to tilt the cargo rack
- Fold the cargo rack (B) downwards until the stop catches engage.

NOTE: The load may fall off when tilting if it is not secured properly.

TILTING THE CARGO RACK BACK INTO POSITION

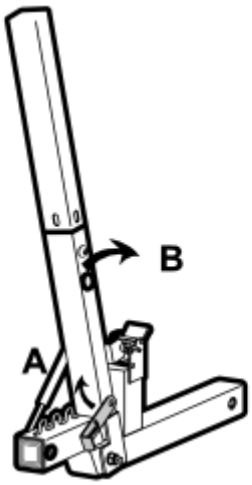

Fig. 43: Identifying Lifted Up Stop Catch And Folded Back Load Basket
Courtesy of VOLVO CARS CORPORATION

- Lift the catch (A) and fold the cargo rack back into position (B).

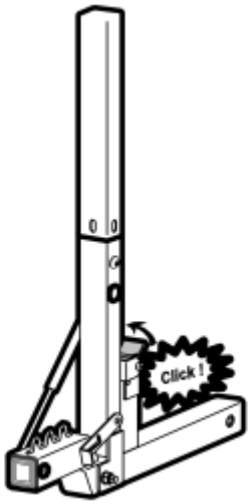

Fig. 44: Folding Back Load Basket Until Two Clear Clicks Can Be Heard And Catch Rises
Courtesy of VOLVO CARS CORPORATION

- Fold the cargo rack forwards until two clicks are heard and the catch goes up.

SAFETY CHECKS BEFORE TRAVELLING

CAUTION: Ensure that all the screws, nuts and retaining straps are securely tightened before travelling. Check these regularly.

Any damaged straps must be replaced with new straps.

The base unit/cargo rack must not be used as a mounting point when towing.

Do not use the base unit/cargo rack when driving off road.

NOTE: If the car registration is covered by the base unit and cargo, an additional registration plate holder with lighting is available as an accessory. It must then be used.

CAUTION: The load must not protrude outside the cargo rack.

Do not exceed the maximum load on the base unit specified on the tow hitch identification plate (MAX TONGUE WEIGHT).

Note that the center of gravity and handling of the car are affected by the

load.

The base unit with accompanying cargo system must not be used to transport animals or people.

CRUISE CONTROL (2003-2008)

CARS EQUIPPED WITH SRS/SIPS (AIRBAG)

see **CARS EQUIPPED WITH SRS/SIPS (AIRBAG)**

CAUTION.

see **CAUTION.**

CRUISE CONTROL

NOTE: This accessory requires software unique to the car

PREPARATIONS

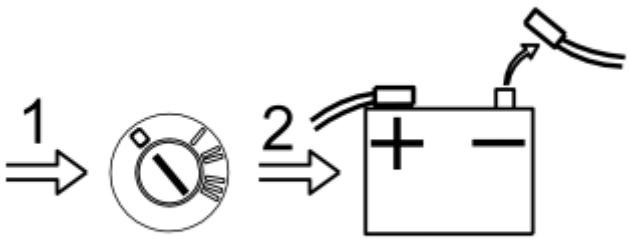

Fig. 45: Disconnect Battery Negative Lead
Courtesy of VOLVO CARS CORPORATION

- Turn the ignition key to position "0". Remove the ignition key from the ignition switch
- Disconnect the battery negative lead.

NOTE: Wait at least five minutes before disassembling the connectors or removing other electrical equipment.

DISASSEMBLING, THE STEERING WHEEL

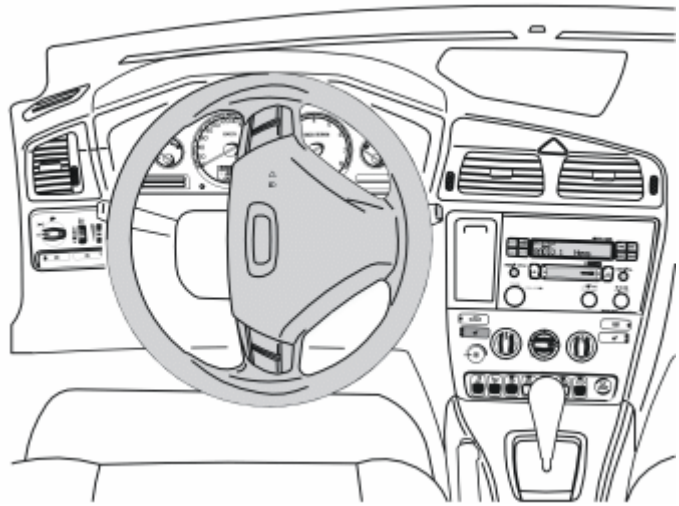

Fig. 46: Identifying Steering Wheel Turned To Access Holes On Back
Courtesy of VOLVO CARS CORPORATION

- Turn the steering wheel a quarter turn so that the holes on the reverse of the steering wheel are accessible.

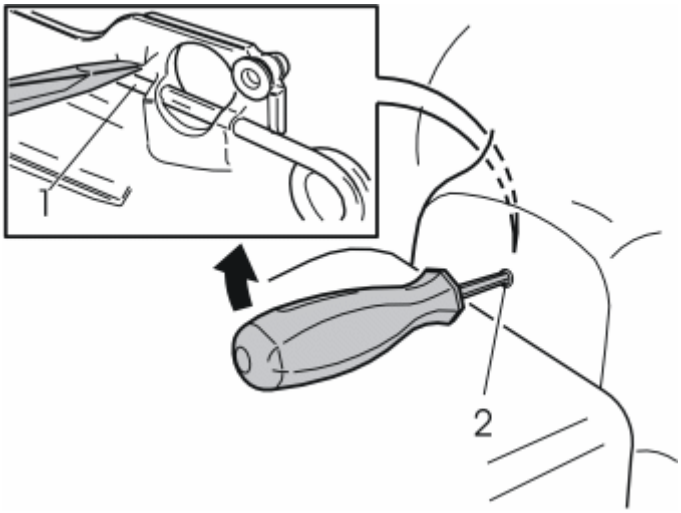

Fig. 47: Screwdriver Inserted In Back Of Steering Wheel & Locating End Of Locking Spring
Courtesy of VOLVO CARS CORPORATION

- Insert a screwdriver in the hole (2) on the reverse of the steering wheel, at right angles to the rear surface of the steering wheel. Insert a screwdriver as far as possible to determine the position of the end of the spring clip (1)
- Position the end of the screwdriver on the top of the spring clip as illustrated
- Pry the screwdriver upwards towards the upper edge of the hole (2) so that the end of the screwdriver presses the spring clip down (1) until one side of the steering wheel module springs out and releases from the mounting
- Turn the steering wheel a half turn in the opposite direction. Carry out the same operation on the other side
- Turn the steering wheel to the neutral position.

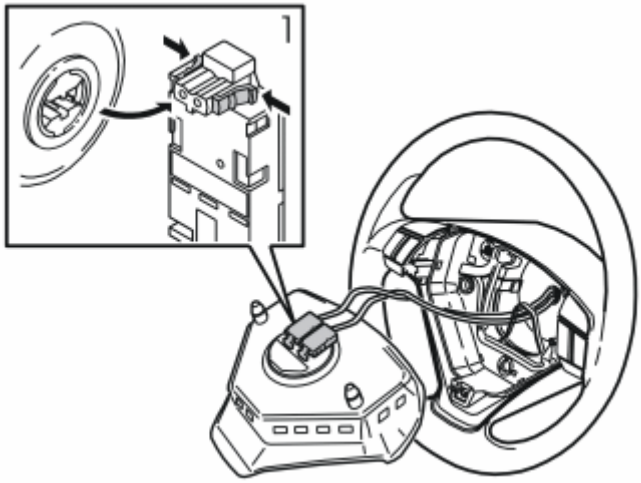

Fig. 48: Identifying Airbag Cable Connectors
Courtesy of VOLVO CARS CORPORATION

- Fold the steering wheel module out
- Remove the two connectors (1) for the ignition cables for the airbag. First press in the catches on the sides. Then pull the connectors straight out.

NOTE: The connectors are tightly secured. However, tools must not be used when removing.

- Place the steering wheel module to one side.

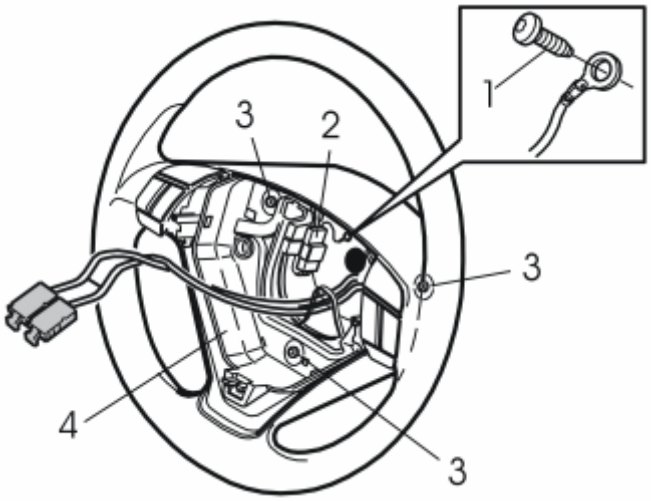

Fig. 49: Identifying Steering Wheel, Horn And Keypads
Courtesy of VOLVO CARS CORPORATION

- Remove the screw (1). Remove the ground lead
- Disconnect the connector (2) for the horn and the keypads
- Remove the three screws (3). Lift the horn out (4).

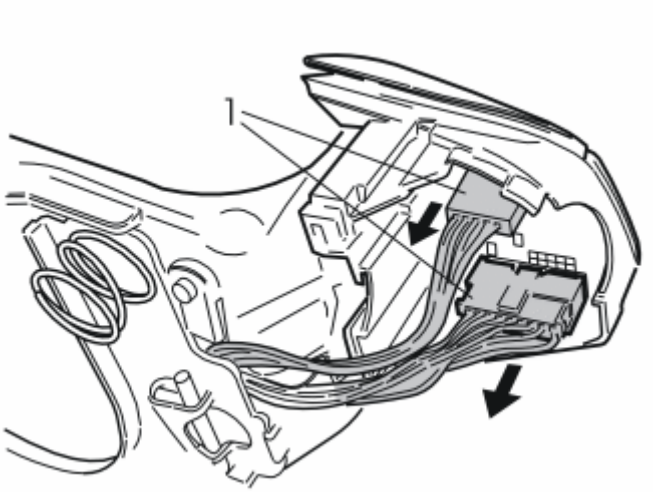

Fig. 50: Identifying Catches On Dummy Button Connectors
Courtesy of VOLVO CARS CORPORATION

Applies to cars with pre-routed wiring

- Press in the catch (1) on the connectors for the left dummy button. Remove the connectors.

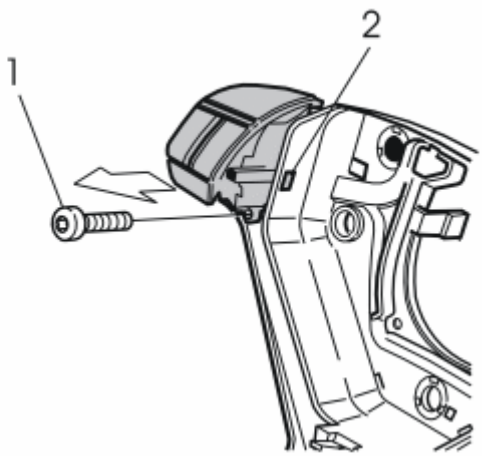

Fig. 51: Identifying Screw And Catch
Courtesy of VOLVO CARS CORPORATION

Applies to all cars

- Remove the screw (1) in the dummy button on the left hand side of the horn
- Press in the catch (2). At the same time pull the dummy button from its socket. Place the dummy button to one side. If there is existing wiring: continue with point **10** .

NOTE: If there is no existing wiring the horn must be replaced. A new horn is in the kit. Carry out points 8- 9.

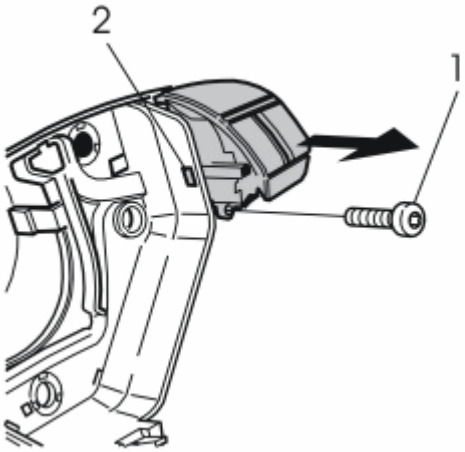

Fig. 52: Identifying Screw And Catch
Courtesy of VOLVO CARS CORPORATION

Applies to cars without existing wiring

- Remove the screw (1) in the dummy button on the right hand side of the horn
- Press in the catch (2). At the same time pull the dummy button from its socket.

NOTE: Take care of the dummy button, it will be reused.

- Place the old horn to one side. The horn will not be reused.

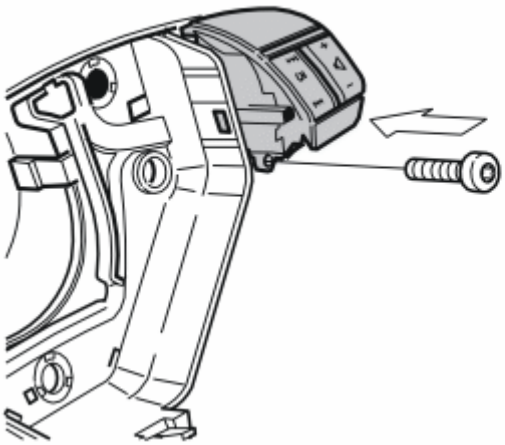

Fig. 53: Identifying Screw Installation
Courtesy of VOLVO CARS CORPORATION

Applies to cars without existing wiring

- Install the new horn in position

- Insert the right dummy button into the groove until the catch engages
- Install the screw. Tighten the dummy button
- Connect the connector to the dummy button.

INSTALLING, THE KEYPAD FOR THE CRUISE CONTROL

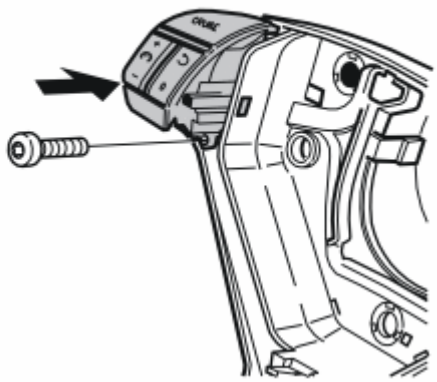

Fig. 54: Identifying Keypad Installation
Courtesy of VOLVO CARS CORPORATION

Applies to all cars

- Insert the new keypad for the cruise control into the grooves until the catch engages
- Install the screw. Tighten the keypad
- Connect both the connectors to the keypad.

- Reinstall the horn. Ensure that the three springs are positioned correctly. Check that the ground lead is not trapped
- Tighten the screws crosswise. Tighten to **6.5 Nm (5 lbf. ft.)**
- Reinstall the ground lead using the screw. Tighten the ground lead
- Connect the connector for the horn and the keypads
- Check the function of the horn. Press the horn all the way around its circumference. (A metallic noise should be heard).

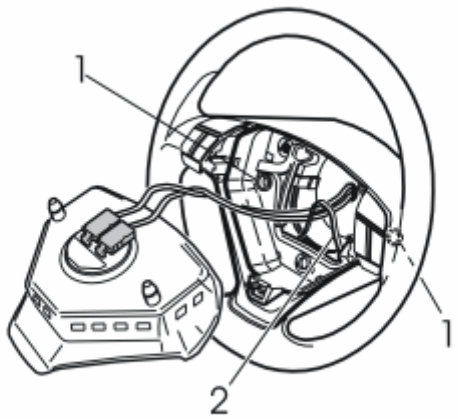

Fig. 55: Checking That Springs Are In Position
Courtesy of VOLVO CARS CORPORATION

- Check that the two springs (1) are in position
- Connect the two connectors for the ignition cables for the steering wheel module
- Insert the two pins on the reverse of the steering wheel module in the two springs. Ensure that the ignition cables are not trapped
- Press the steering wheel module into the mountings (two clicks should be heard).

FINISHING WORK

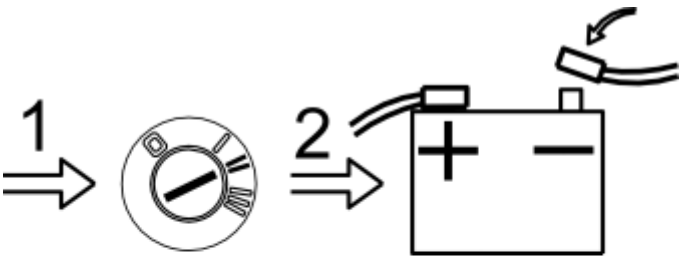

Fig. 56: Connecting Negative Battery Lead
Courtesy of VOLVO CARS CORPORATION

- Turn the ignition key to position "II".
- Connect the battery negative lead
- Program the software according to the service information in VIDA (Volvo scan tool).

DETACHABLE TOW HITCH (2003-2005)

CARS EQUIPPED WITH SRS/SIPS (AIRBAG)

see **CARS EQUIPPED WITH SRS/SIPS (AIRBAG)**

CAUTION.

see **CAUTION.**

TOW HITCH, DETACHABLE

NOTE: **The ball and ball holder with the accompanying components are separate component kits and are not included in the kit but must be purchased separately.**

NOTE: **Kit contents:**

1. **Cross member**
2. **Screw M12x110 (x6)**
3. **Spacer washer, left-hand**
4. **Spacer washer, right-hand**
5. **Strap (purchased separately)**
6. **Bracket (purchased separately)**
7. **Nut M6 (purchased separately)**
8. **Protective cover (purchased separately)**
9. **Ball (purchased separately)**
10. **Washer (purchased separately)**
11. **Nut (purchased separately)**
12. **Ball holder (purchased separately)**
13. **Rubber tabs (x4) (purchased separately)**
14. **Locking bolt (purchased separately)**
15. **Cotter pin (purchased separately)**
16. **Cover**
17. **Mounting pin (x2).**

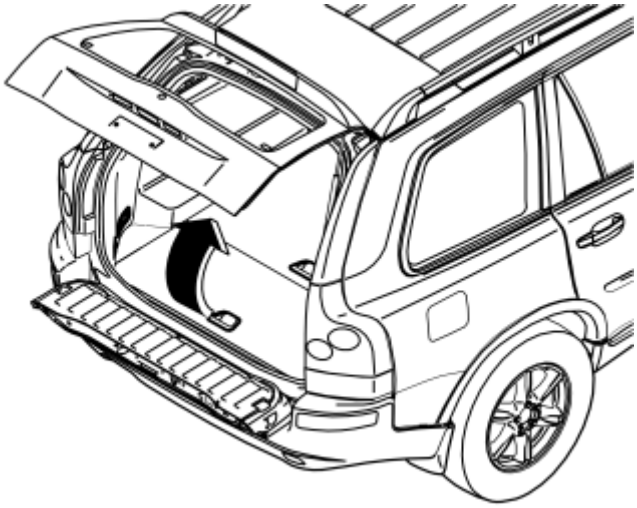

Fig. 57: Folding Up The Rear Floor Hatch
Courtesy of VOLVO CARS CORPORATION

Applies to cars with two rows of seats

- Fold up the center rear floor hatch (1) slightly
- Remove it by pulling it off the mountings at the front edge
- Remove the storage box underneath and lift it out. If the floor hatch has a carrier bag holder on the underneath, it is secured by a strap on each of the shorter sides of the storage box. The straps must be undone.

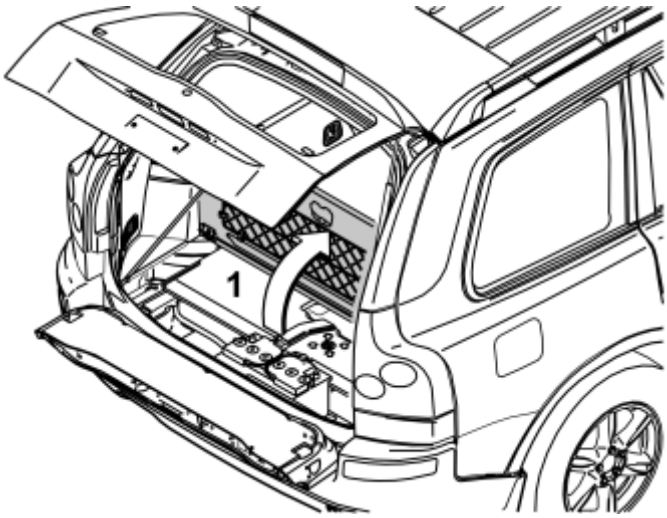

Fig. 58: Folding Up The Centre Rear Floor Hatch (1)
Courtesy of VOLVO CARS CORPORATION

Applies to cars with three rows of seats and integrated carrier bag holder on the underside of the center floor hatch

- Fold up the center rear floor hatch (1)

- Release the two straps on the panel underneath. Lift up the panel at the rear edge. Fold back the floor hatch towards the panel. Lift out the floor hatch and panel.

Applies to cars with three rows of seats without an integrated carrier bag holder

- Lift up the center rear floor hatch (1) at the rear edge and lift it out.

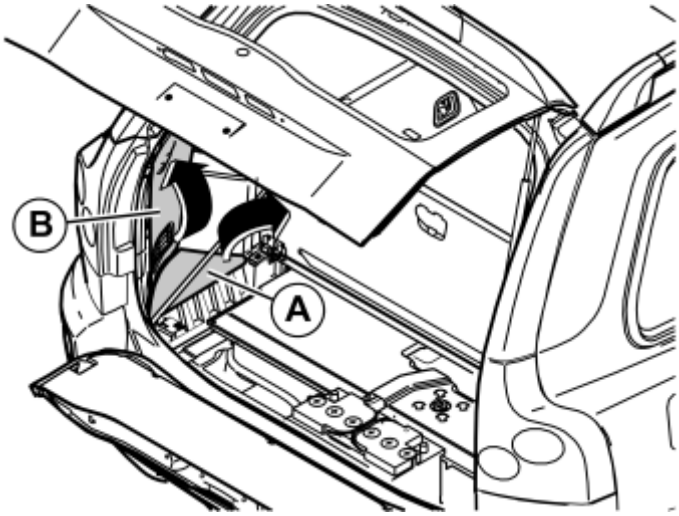

Fig. 59: Removing The Side Floor Hatches
Courtesy of VOLVO CARS CORPORATION

Applies to all models

- Remove the side floor hatches (A) and the folding side panels (B) on the right and left-hand sides in the cargo compartment.

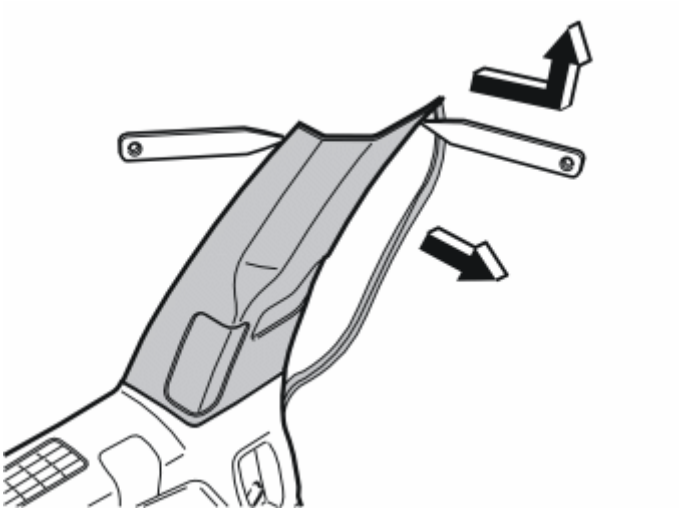

Fig. 60: Identifying Left-Hand C-Post Panel And Plastic Weatherstrip Tools
Courtesy of VOLVO CARS CORPORATION

- Pull off the rubber strip at the rear edge of the door opening to the left-hand rear door opposite the left C-

post panel

- Carefully pry off the left-hand C-post panel at the sides in the top edge using a plastic weatherstrip tool. Pull off until the three clips on the inside release. Do not damage the headlining or the panel
- Remove the panel by pulling upwards slightly and unhooking it from the side panel
- Repeat the operation on the right-hand side.

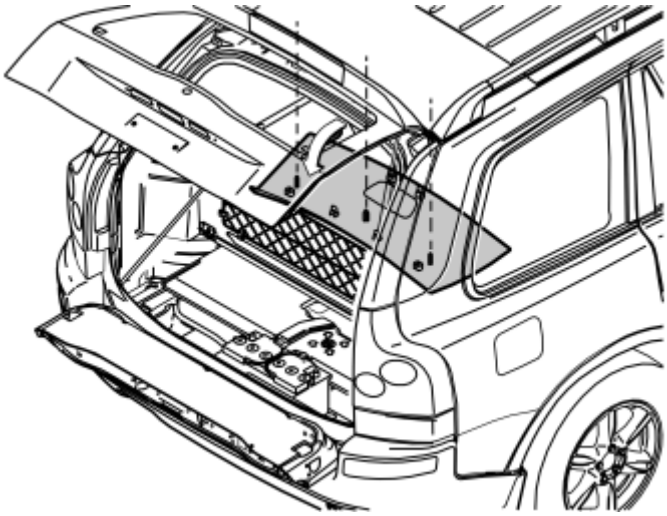

Fig. 61: Removing Cover And Screws For The Rear Headlining
Courtesy of VOLVO CARS CORPORATION

- Remove the cover and the screws underneath for the rear headlining
- Carefully pry off the panel at the rear edge. Use a plastic weatherstrip tool
- Pull the rear edge of the panel downwards until all clips on the inside have released
- If the car has lighting in the panel, disconnect the connector
- Pull the panel backwards to release it.

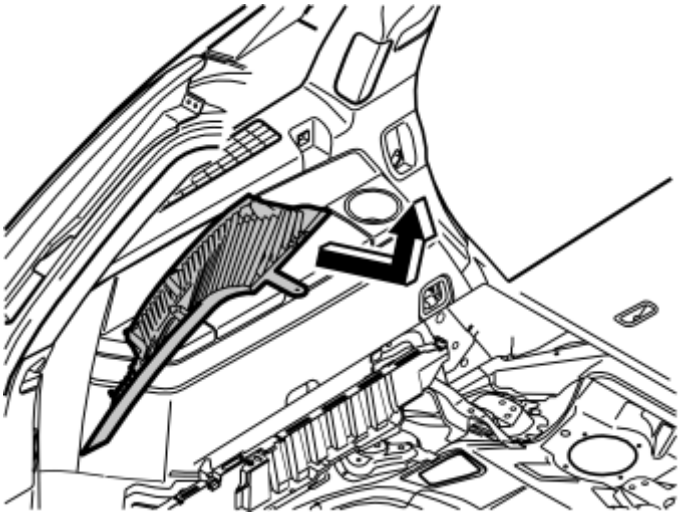

Fig. 62: Identifying D-Post Panel Removal From Side Panel
Courtesy of VOLVO CARS CORPORATION

- Pull off the left-hand D-post panel starting at the top edge. Then pull downwards until the three clips on the inside have released. Do not damage the panel
- Remove the panel by pulling upwards slightly and unhooking it from the side panel
- Disconnect the connector if the car has a loudspeaker in the D-post
- Repeat the operation on the right-hand side.

Illustration shows the removal of the cover for the load securing eyelets

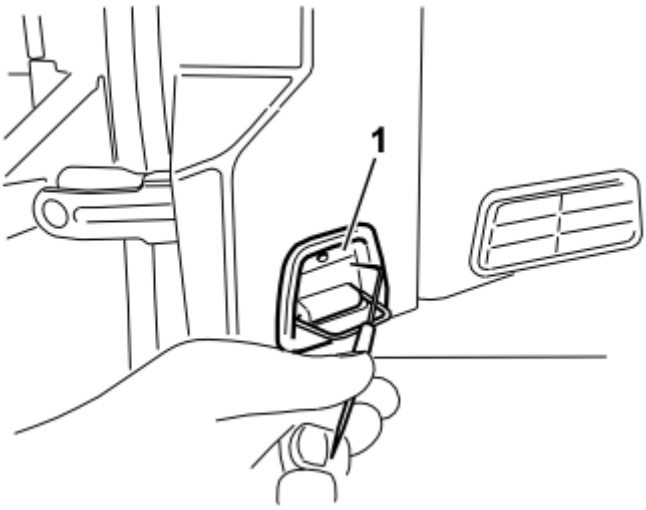

Fig. 63: Identifying Load Securing Eyelet
Courtesy of VOLVO CARS CORPORATION

Applies to all models

- Fold out the load securing eyelet
- Insert a scriber with an angled tip into the hole in the top of the cover
- Turn the scriber so that the angled tip engages in the reverse of the cover (1). Pull the cover off
- Repeat the operation on the right-hand side.

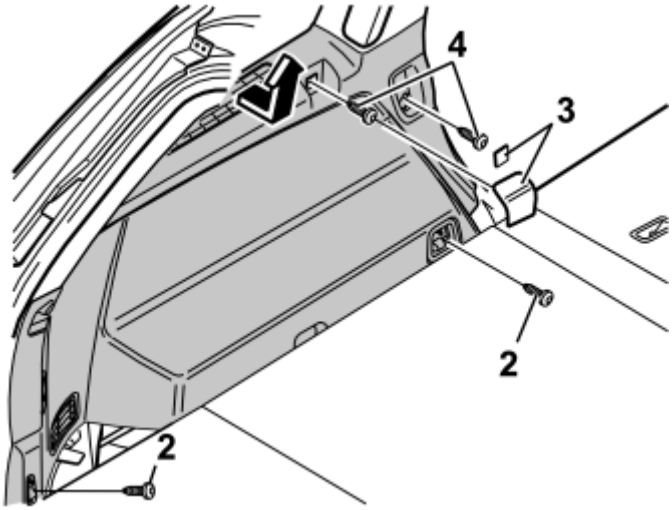

Fig. 64: Cars With Two Rows Of Seats
Courtesy of VOLVO CARS CORPORATION

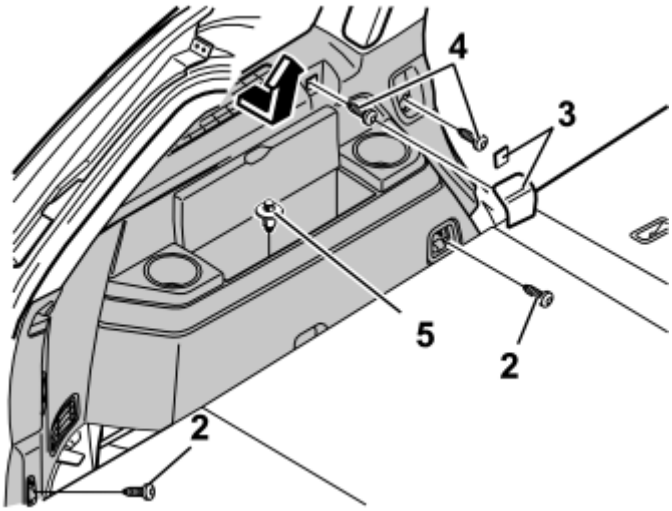

Fig. 65: Cars With Three Rows Of Seats
Courtesy of VOLVO CARS CORPORATION

- Fold up the seats in the third row (applies to cars with three rows of seats)
- Remove the screws (2) for the load securing eyelets in the left-hand side panel
- Remove the covers (3) over the front mountings for the left-hand side panel. Pry the covers off. Use a plastic weatherstrip tool or a small screwdriver
- Remove the screws (4)
- Remove the clip (5) at the bottom of the storage compartment in the panel (Applies to cars with three rows of seats)
- Pull up the panel slightly at the top edge so that the clips on the inside release. Remove the panel by pulling it straight upwards.

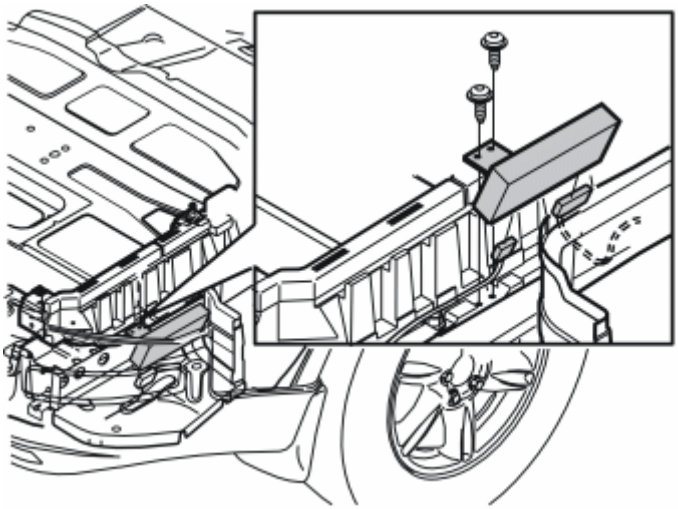

Fig. 66: Removing Panel By Pulling It Straight Up And Unhook It From Side Panel (1 Of 2)
Courtesy of VOLVO CARS CORPORATION

Applies to cars with accessory electronic modules (AEM)

- Remove the brackets with the accessory electronic module (AEM). If necessary disconnect the connectors.

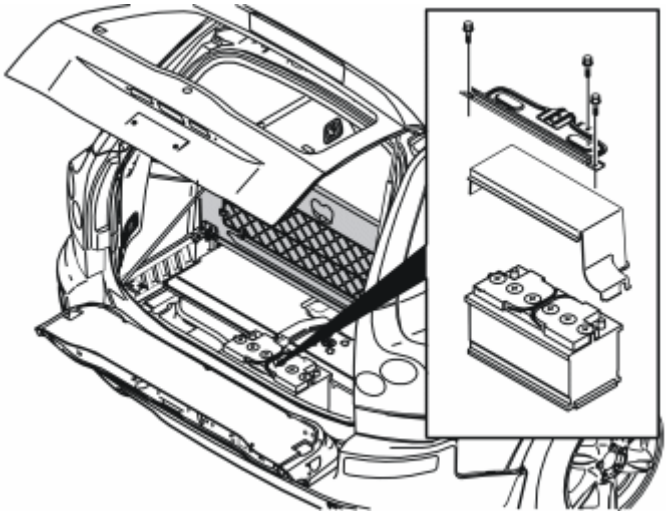

Fig. 67: Removing Three Screws In Battery Holder
Courtesy of VOLVO CARS CORPORATION

- Remove the three screws in the battery holder. Lift the battery holder out
- Remove the battery cover
- Lower and remove the spare wheel.

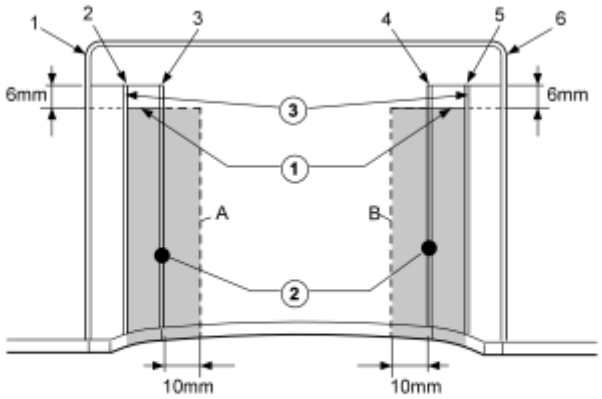

Fig. 68: Making Two Parallel Slits In The Bumper Cover
Courtesy of VOLVO CARS CORPORATION

From underneath the car

1. Measure and draw a horizontal line 6 mm below the top of the ribs and a vertical line (A and B) 10 mm in towards the center from ribs 3 and 4. See the illustration
2. Cut along the inside of rib 2 and the new line A up to the line drawn 6 mm below the top of the ribs. Do the same between rib 5 and the new line B. Remove the shaded areas by cutting between the cuts along the horizontal line so that two parallel slits are made in the bumper cover
3. Cut away the remaining pieces of ribs 3 and 4 parallel to the bumper cover.

- Use a file to smooth off the edges of the cut outs.

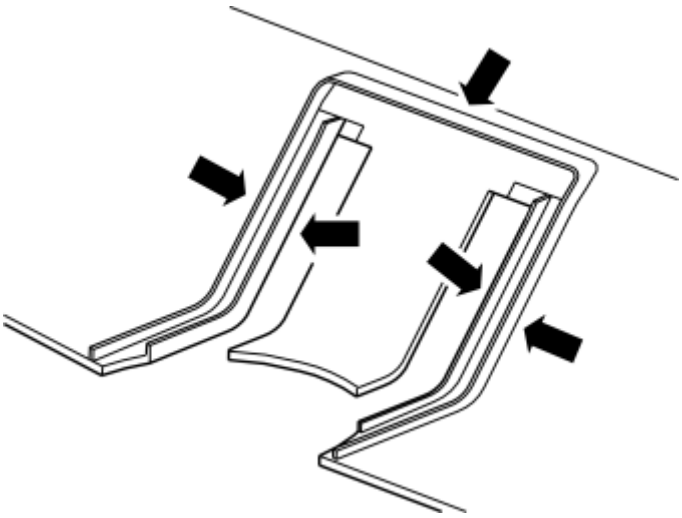

Fig. 69: Cutting Away The Upright Ribs
Courtesy of VOLVO CARS CORPORATION

- Cut away all the upright ribs.

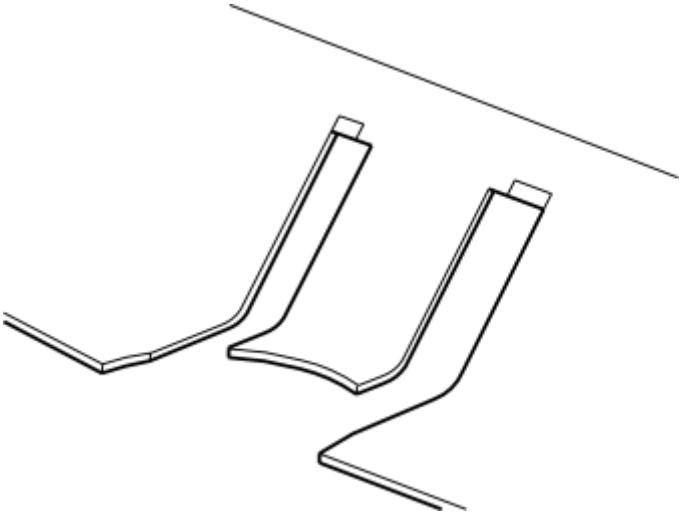

Fig. 70: Identifying the End Result
Courtesy of VOLVO CARS CORPORATION

- The end result must be as illustrated.

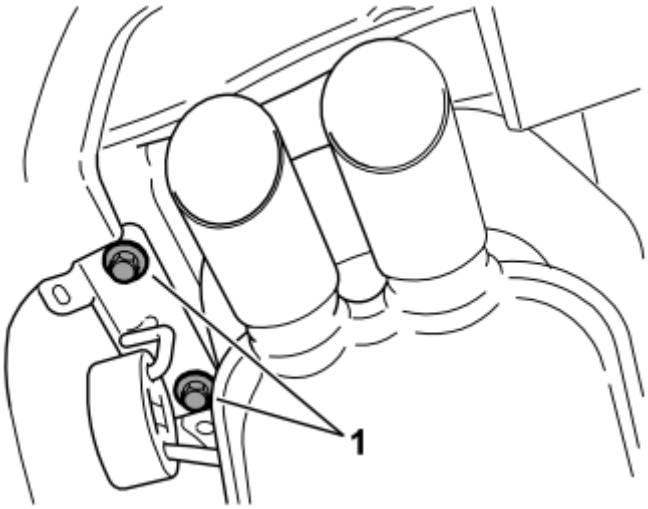

Fig. 71: Identifying The Rear Mounting
Courtesy of VOLVO CARS CORPORATION

- Remove the rear mounting for the silencer with the bracket from the underneath of the left-hand rear side member by removing the screws (1). Remove the silencer to gain access when installing the tow hitch.

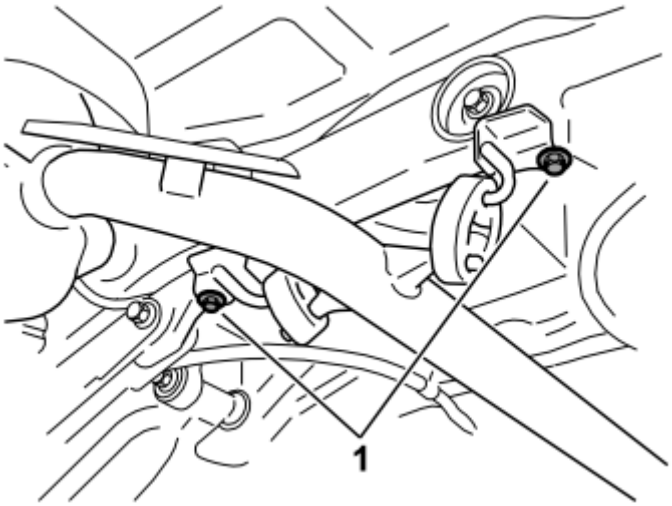

Fig. 72: Identifying Front Mounting
Courtesy of VOLVO CARS CORPORATION

- Remove the front mounting for the rear silencer at the rear sub-frame by removing the screws (1)
- Carefully bend the heat deflector plate at the side member to one side, to gain more work space
- Remove the protective flaps covering the mounting holes on the inside of the side members (one on each side)
- Remove any sealant from the surface where the tow hitch member will be mounted.

APPLIES TO CARS EQUIPPED WITH A REVERSING WARNING SYSTEM

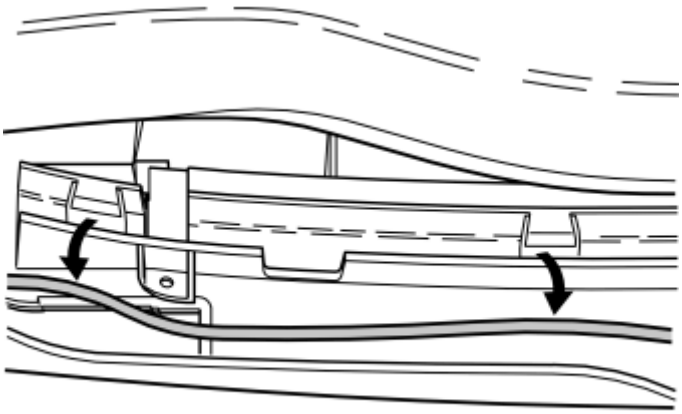

Fig. 73: Identifying The Right-Hand Side
Courtesy of VOLVO CARS CORPORATION

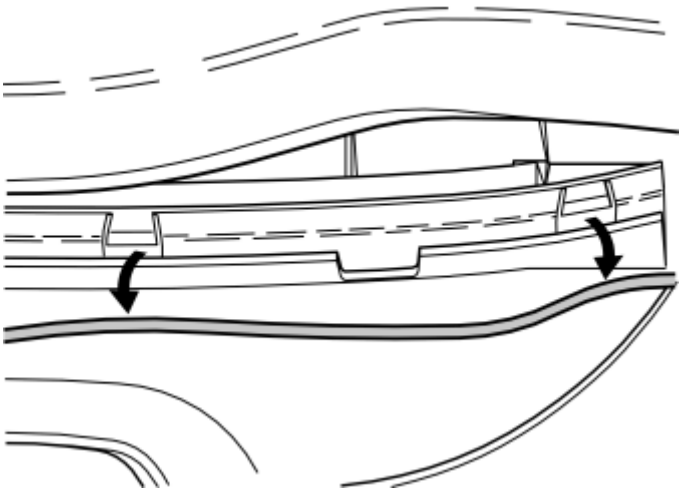

Fig. 74: Identifying The Left-Hand Side
Courtesy of VOLVO CARS CORPORATION

- Disconnect the cable for the reverse warning sensor from its clips in the rear section of the bumper.

APPLIES TO ALL MODELS

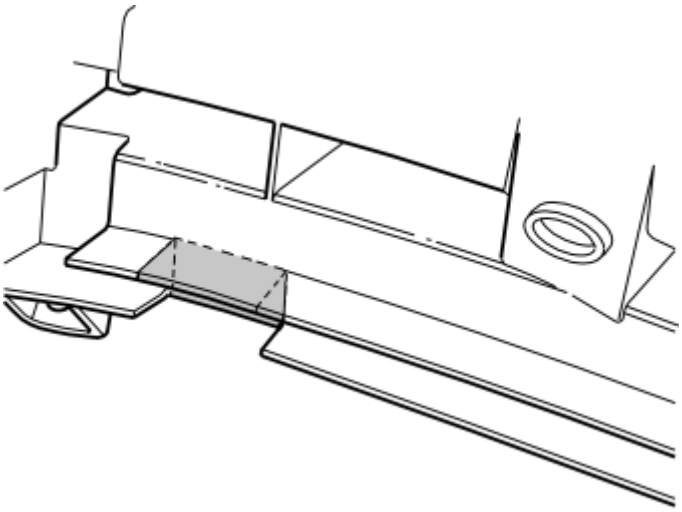

Fig. 75: Cut Out As Marked
Courtesy of VOLVO CARS CORPORATION

Right-hand side:

- Cut out the rear section at the existing cut out as marked in the illustration.

APPLIES TO CARS WITH REVERSING WARNING SYSTEMS

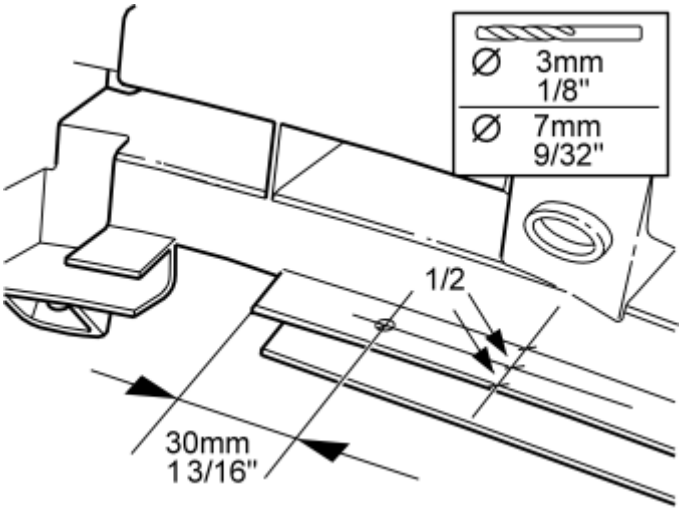

Fig. 76: Measuring Location of Hole
Courtesy of VOLVO CARS CORPORATION

Right-hand side:

- Measure up to drill the cable lead-in in the upper of the rear section plates as illustrated
- Pre-drill using a **3 mm (1/8")** diameter drill bit. Then drill out the hole to a diameter of **8 mm (5/16")** . Use an angle drill and short drill bits.

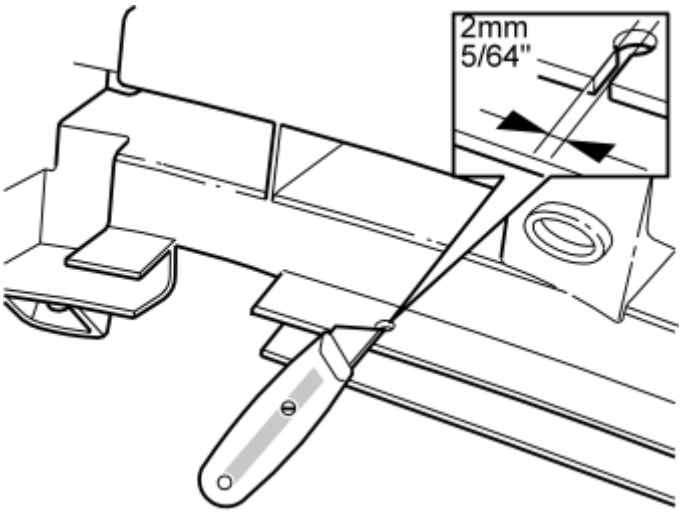

Fig. 77: Cutting a 2 mm (5/64") Groove
Courtesy of VOLVO CARS CORPORATION

- Cut a 2 mm (5/64") wide groove through the plate leading in to the hole.

APPLIES TO ALL MODELS

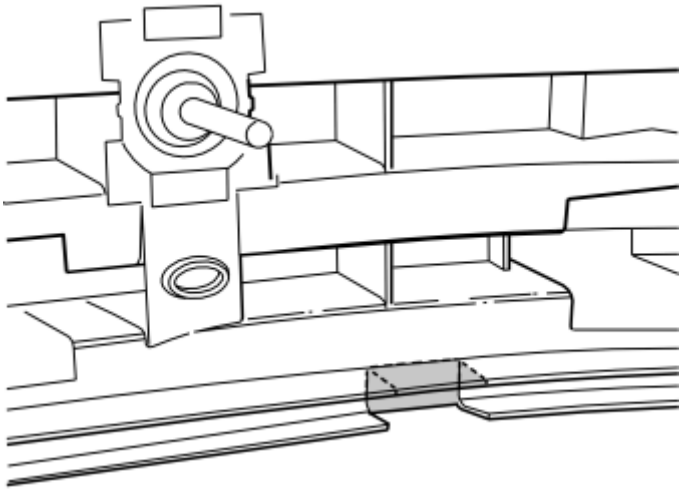

Fig. 78: Cutting Out As Marked
Courtesy of VOLVO CARS CORPORATION

Left-hand side:

- Cut out the rear section at the existing cut out as marked in the illustration.

APPLIES TO CARS WITH REVERSING WARNING SYSTEMS

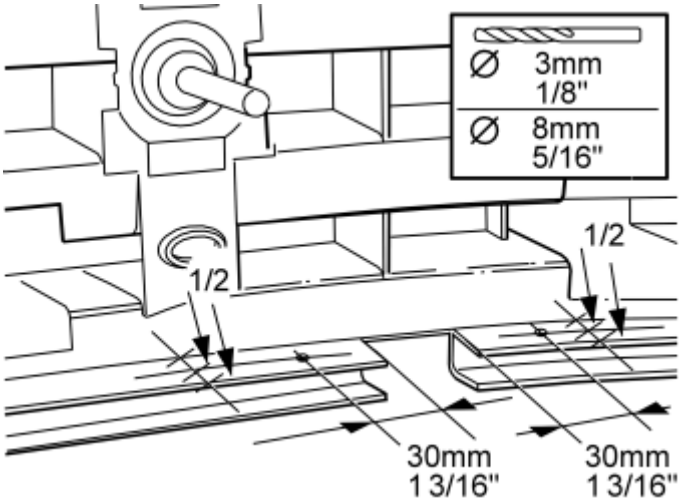

Fig. 79: Measuring Hole Locations
Courtesy of VOLVO CARS CORPORATION

Left-hand side:

- Measure up to drill the cable lead-in on the left and right-hand sides of the cut-out in the upper of the rear section plates as illustrated
- Pre-drill using a **3 mm (1/8")** diameter drill bit. Then drill out the holes to a diameter of **8 mm (5/16")** . Use an angle drill and short drill bits.

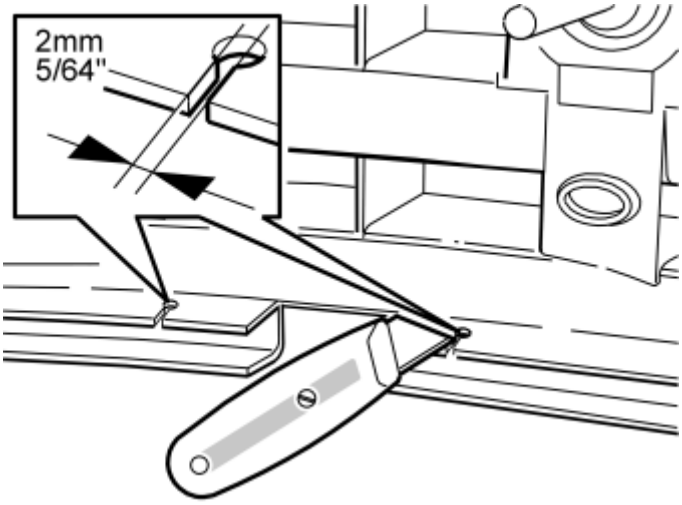

Fig. 80: Cutting a 2 mm (5/64") Slot
Courtesy of VOLVO CARS CORPORATION

- Cut a 2 mm (5/64") wide groove through the plate leading in to the holes on both sides of the cut-out.

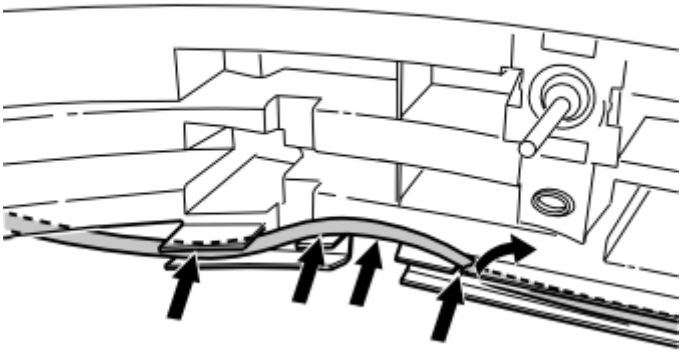

Fig. 81: Routing Cable
Courtesy of VOLVO CARS CORPORATION

Right-hand side:

- Press up the tab on the plate. Insert the cable in the previously drilled hole. The cable must be positioned as illustrated.

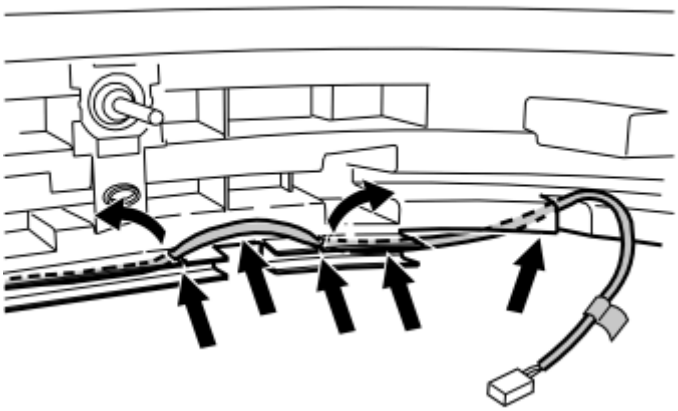

Fig. 82: Routing Cable
Courtesy of VOLVO CARS CORPORATION

Left-hand side:

- Press up the tabs on the plate and inset the cable in the holes drilled earlier. The cable must be positioned as illustrated.

HINT: It is recommended that two people carry out this procedure.

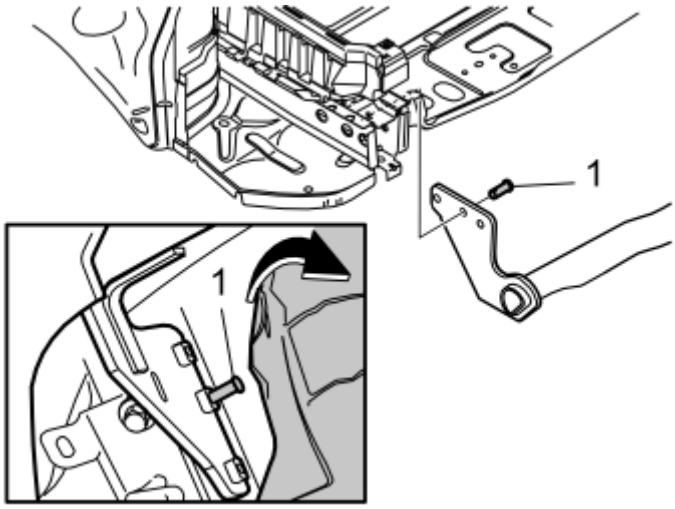

Fig. 83: Positioning The Tow Hitch Between The Two Side Members
Courtesy of VOLVO CARS CORPORATION

- Take the two mounting pins (1) from the kit
- With one person at each end, lift and position the tow hitch on the inside between the two side members, in between the holes. Start by angling up the face of the left-hand side above the tail pipe on the silencer and up between the heat deflector plate and the side member. Then angle the right-hand side face up to the side member

- Press the mounting pins into the center hole in the side members while holding the tow bar member in position so that the bar can hang freely without falling off
- Carefully lower the car.

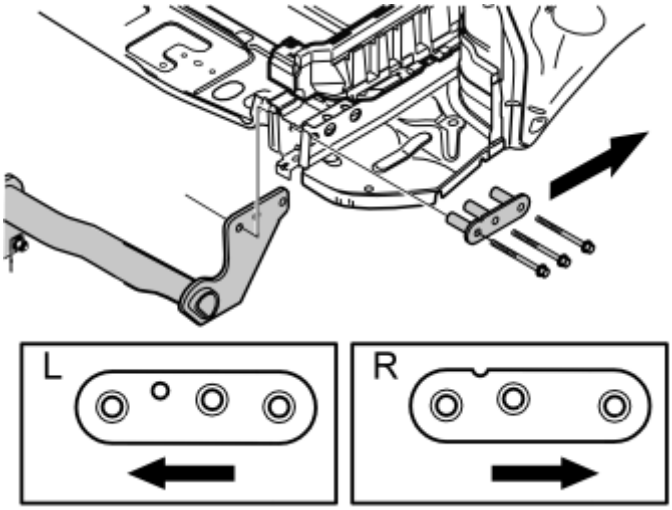

Fig. 84: Inserting The Spacer Sleeves
Courtesy of VOLVO CARS CORPORATION

- Fold down the lower tailgate.

From the inside of the cargo compartment:

- Remove the protective flaps covering the mounting holes on the outside of the side members (one on each side)
- Remove any sealant from the surfaces where the spacer washers will be positioned
- Insert the spacer sleeves using only the front and rear screws on the outside of the two side members.

NOTE: Do not press out the mounting pins so that the tow bar detaches.

- Screw the front and rear screws in fully but do not tighten them
- Insert the center screws so that the mounting pins are pressed out. Screw the screws in fully but do no tighten them
- Hold the bar in the horizontal position. Tighten the screws.

NOTE: Rustproofing agent must be applied under the car before the screws are tightened. Apply the rustproofing agent to the side members all around the ends where any sealant was scraped off.

- Tighten all screws from inside the car. Tighten to **120 Nm (86 lbf. ft.)** in the following order:

1. The rear screws

2. The front screws

3. The center screws

NOTE: Wait five minutes so that the joint settles. Then re-check the torque.

- Raise the car again.

From underneath the car

- Carefully bend the heat deflector plate back so it does not touch the silencer
- Reinstall the front mounting for the rear silencer. Tighten the screws. Tighten to **24 Nm (18 lbf. ft.)**
- Reinstall the rear mounting for the rear silencer. Tighten the screws. Tighten to **48 Nm (35 lbf. ft.)** .

- Install the cable harness connector for the tow hitch according to point 1D in the installation instructions for the appropriate cable harness.

- Install the cable harness according to point 3 onwards in the Installation instructions for the appropriate cable harness.

NOTE: Ensure that the cable harness does not rub against the lower edge of the bumper and is not pressed back.

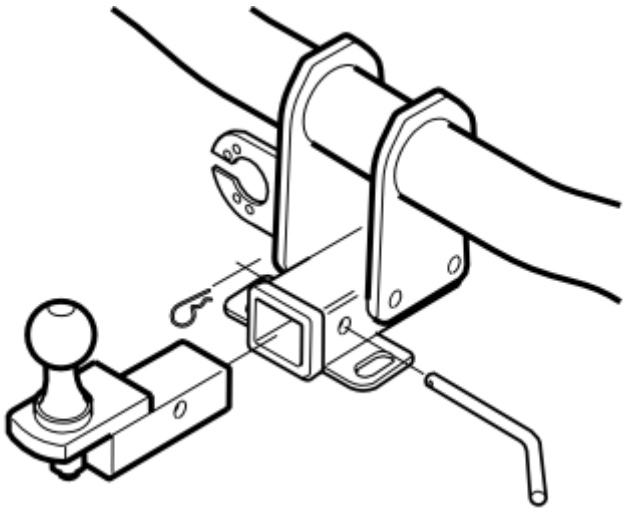

Fig. 85: Installing The Tow Hitch In The Square Section
Courtesy of VOLVO CARS CORPORATION

Securing the tow hitch

- Insert the tow hitch in the square section tube for the tow hitch member so that the tow hitch and holes in the tow hitch member and square section tube correspond
- Insert the pin through the holes and lock using the locking pin.

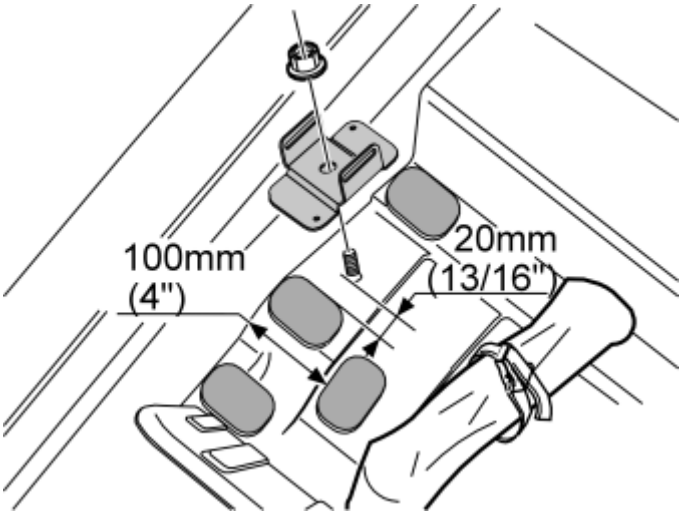

Fig. 86: Identifying Four Foam Rubber Pieces (From The Kit)
Courtesy of VOLVO CARS CORPORATION

- Position the four foam rubber pieces (from the kit) on the floor on the left-hand side of the battery, as illustrated, to prevent the tow hitch rattling when it is stored there.

Installing the bracket

- Install the bracket and M6 flange nut (from the kit) on the welded screw in the compartment to the left of the battery as illustrated. Tighten to **10 Nm (7.3 lbf. ft.)** .

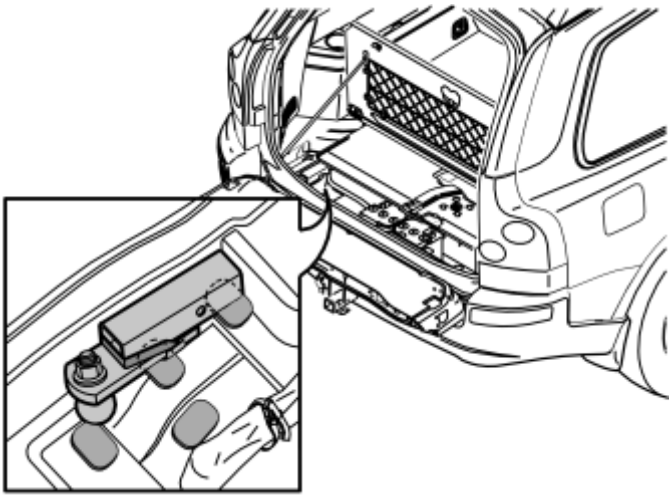

Fig. 87: Stowing The Tow Hitch
Courtesy of VOLVO CARS CORPORATION

Storing the tow hitch

- Remove the tow hitch and place it in the supplied protective bag. Pull the string tight
- Take the tension strap from the tow hitch kit. Thread the strap through the two grooves in the rear bracket which is positioned to the left of the battery

- Place the cloth bag with the tow hitch over the bracket. Secure in position using the tension strap as illustrated.

FINISHING WORK

- Reinstall the cover and holder for the battery
- Reinstall the spare wheel.

Applies to cars with two rows of seats

- Reinstall the storage box.

Applies to cars with accessory electronic modules (AEM)

- Reinstall the bracket with the accessory electronic module (AEM). Connect the connectors if disconnected.

Applies to all models

- Reinstall the panels, storage boxes and floor hatches
- Tighten the screws in the load securing eyelets. Tighten to **24 Nm (18 lbf. ft.)** .

DETACHABLE TOW HITCH (2003-2005)

CARS EQUIPPED WITH SRS/SIPS (AIRBAG)

see **CARS EQUIPPED WITH SRS/SIPS (AIRBAG)**

CAUTION.

see **CAUTION.**

TOW HITCH, DETACHABLE

NOTE: **Kit contents:**

1. **Cross member**
2. **Screw M12x110 (x6)**
3. **Spacer washer, left-hand**
4. **Spacer washer, right-hand**
5. **Protective cover, assembly**
6. **Strap**
7. **Bracket**
8. **Nut M6**

9. **Protective bag**
10. **Decal**
11. **Detachable tow hitch**
12. **Cover plate (x4)**
13. **Mounting pin (x2).**

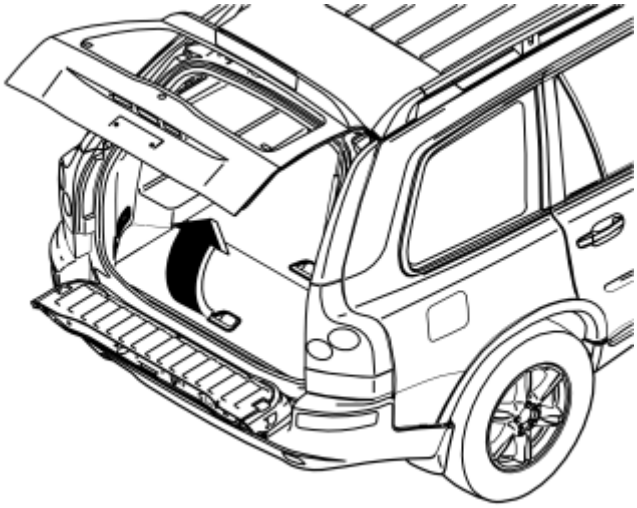

Fig. 88: Folding Up The Rear Floor Hatch
Courtesy of VOLVO CARS CORPORATION

Applies to cars with two rows of seats

- Fold up the center rear floor hatch (1) slightly
- Remove the hatch by pulling it off the mountings at the front edge
- Remove the storage box underneath and lift it out. If the floor hatch has a carrier bag holder on the underneath, it is secured by a strap on each of the shorter sides of the storage box. These straps must be undone.

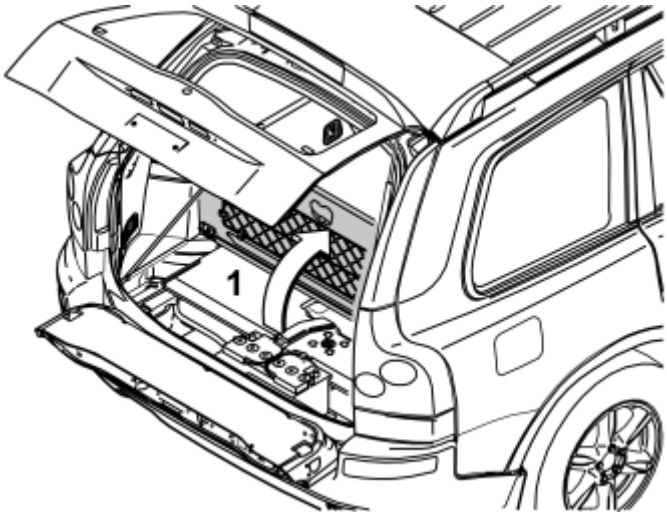

Fig. 89: Folding Up The Centre Rear Floor Hatch (1)
Courtesy of VOLVO CARS CORPORATION

Applies to cars with three rows of seats and the integrated carrier bag holder on the underside of the center floor hatch

- Fold up the center rear floor hatch (1)
- Release the two straps on the panel underneath. Lift up the panel at the rear edge. Fold back the floor hatch towards the panel. Lift out the floor hatch and panel.

Applies to cars with three rows of seats without an integrated carrier bag holder

- Fold up the center rear floor hatch (1) at the rear edge and lift it out.

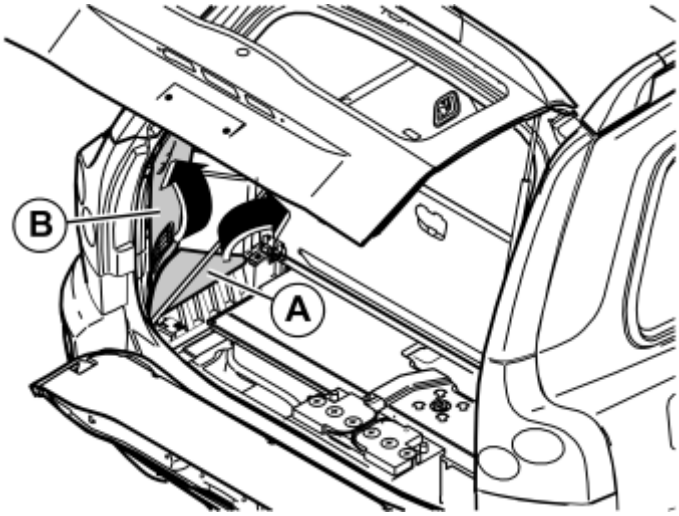

Fig. 90: Removing The Side Floor Hatches
Courtesy of VOLVO CARS CORPORATION

Applies to all models

- Remove the side floor hatches (A) and the folding side panels (B) on the right and left-hand sides in the cargo compartment.

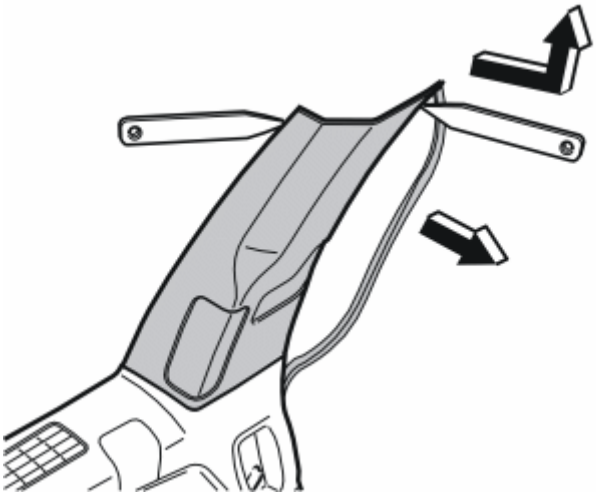

Fig. 91: Identifying Left-Hand C-Post Panel And Plastic Weatherstrip Tools
Courtesy of VOLVO CARS CORPORATION

- Pull off the rubber strip at the rear edge of the door opening for the left-hand rear door opposite the left C-post panel
- Carefully pry off the left-hand C-post panel at the sides at the top edge. Use a plastic weatherstrip tool. Pull off until the three clips on the inside release. Do not damage the headlining or the panel
- Remove the panel by pulling upwards slightly and unhooking it from the side panel
- Repeat the operation on the right-hand side.

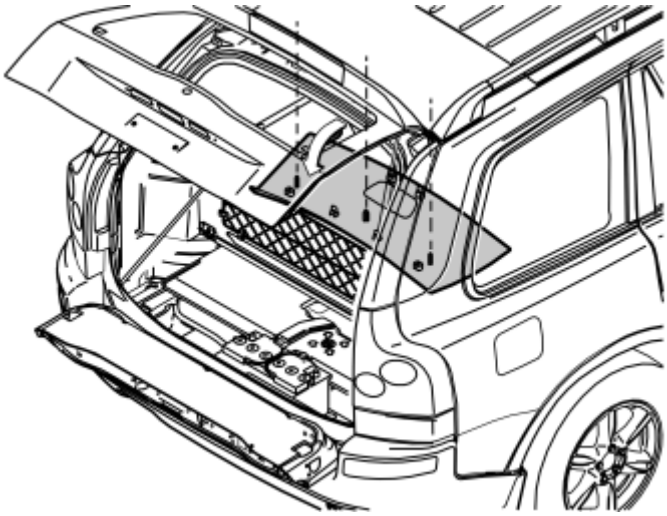

Fig. 92: Removing Cover And Screws For The Rear Headlining
Courtesy of VOLVO CARS CORPORATION

- Remove the covers and the screws underneath for the rear headlining
- Carefully pry off the panel at the rear edge. Use a plastic weatherstrip tool
- Pull the rear edge of the panel downwards until all clips on the inside have released
- If the car has lighting in the panel, disconnect the connector

- Pull the panel backwards to release it.

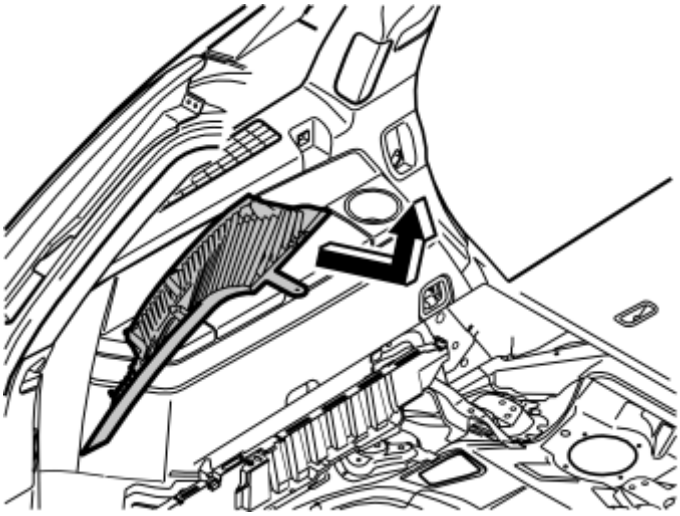

Fig. 93: Identifying D-Post Panel Removal From Side Panel
Courtesy of VOLVO CARS CORPORATION

- Carefully pull off the left-hand D-post panel starting at the top edge. Then pull downwards until the three clips on the inside have released. Do not damage the panel
- Remove the panel by pulling upwards slightly and unhooking it from the side panel
- Disconnect the connector if the car has a loudspeaker in the D-post
- Repeat the operation on the right-hand side.

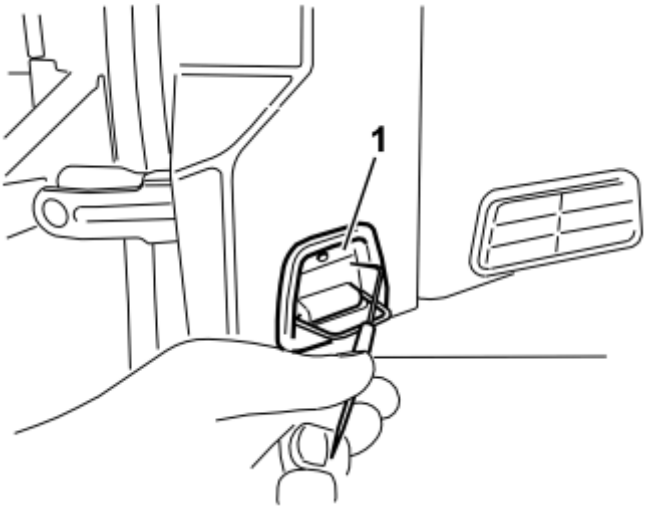

Fig. 94: Identifying Load Securing Eyelet
Courtesy of VOLVO CARS CORPORATION

Applies to all models

- Fold out the load securing eyelet
- Insert a scriber with an angled tip into the hole in the top of the cover

- Turn the scriber so that the angled tip engages in the reverse of the cover (1). Pull the cover off
- Repeat the operation on the right-hand side.

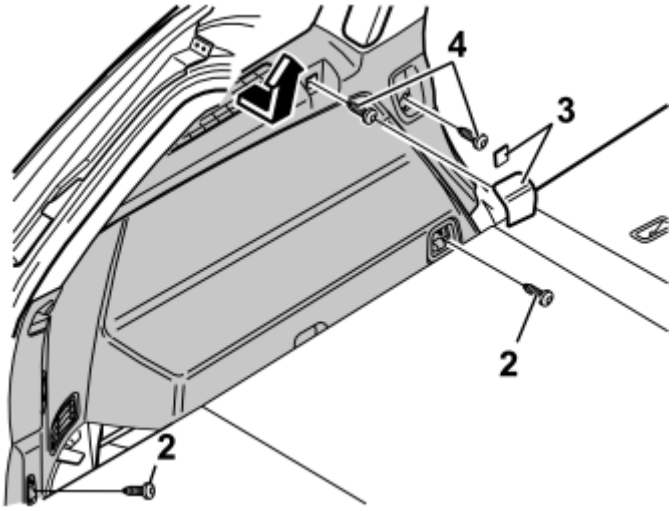

Fig. 95: Cars With Two Rows Of Seats
Courtesy of VOLVO CARS CORPORATION

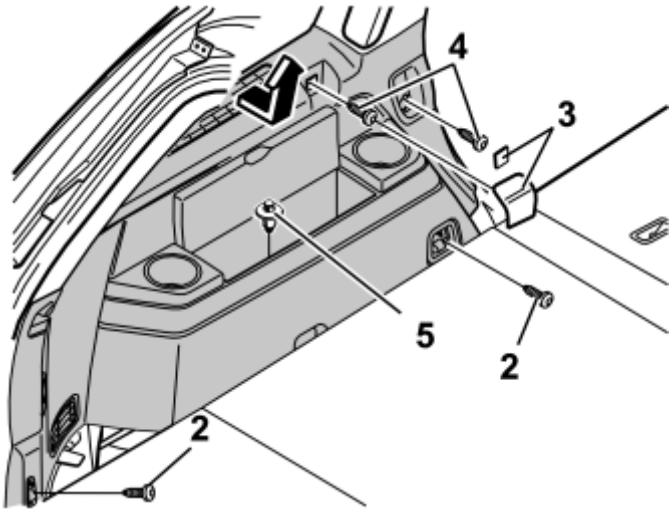

Fig. 96: Cars With Three Rows Of Seats
Courtesy of VOLVO CARS CORPORATION

- Fold up the seats in the third row (applies to cars with three rows of seats)
- Remove the screws (2) for the load securing eyelets in the left-hand side panel
- Remove the covers (3) over the front mountings for the left-hand side panel. Pry the covers off. Use a plastic weatherstrip tool or a small screwdriver
- Remove the screws (4)
- Remove the clip (5) at the bottom of the storage compartment in the panel (Applies to cars with three rows of seats)
- Pull up the panel slightly at the top edge so that the clips on the inside release. Remove the panel by

pulling it straight upwards.

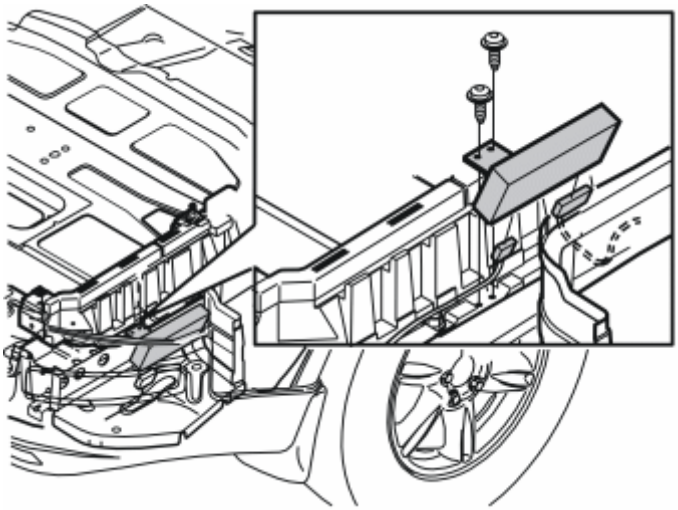

Fig. 97: Removing Panel By Pulling It Straight Up And Unhook It From Side Panel (1 Of 2)
Courtesy of VOLVO CARS CORPORATION

Applies to cars with accessory electronic modules (AEM)

- Remove the bracket and the accessory electronic module (AEM). If necessary disconnect the connectors.

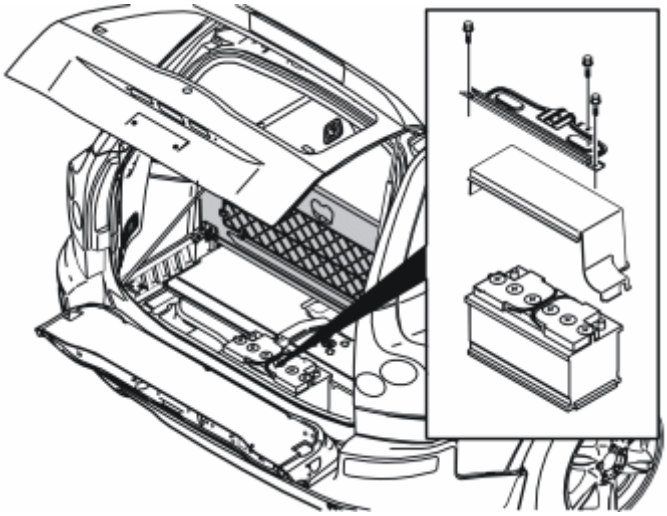

Fig. 98: Removing Three Screws In Battery Holder
Courtesy of VOLVO CARS CORPORATION

- Remove the three screws in the battery holder. Lift the battery holder out
- Remove the battery cover
- Lower and remove the spare wheel.

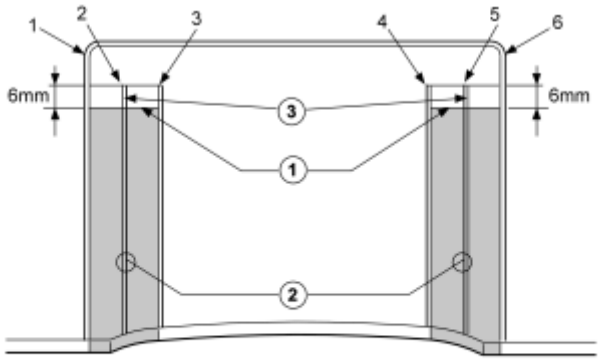

Fig. 99: Measure and Cut
Courtesy of VOLVO CARS CORPORATION

From underneath the car

1. Measure and draw a horizontal line 6 mm below the top of the ribs as illustrated
2. Cut along the inside of ribs 1 and 3 (the sides which face rib 2) up to the line drawn 6 mm below the top edge of the ribs. Do the same between ribs 6 and 4. Remove the shaded areas by cutting/sawing between the cuts along the horizontal line so that two parallel slits are made in the bumper cover
3. Cut away the remaining pieces of ribs 2 and 5 parallel to the bumper cover.

- Use a file to smooth off the edges of the cut outs.

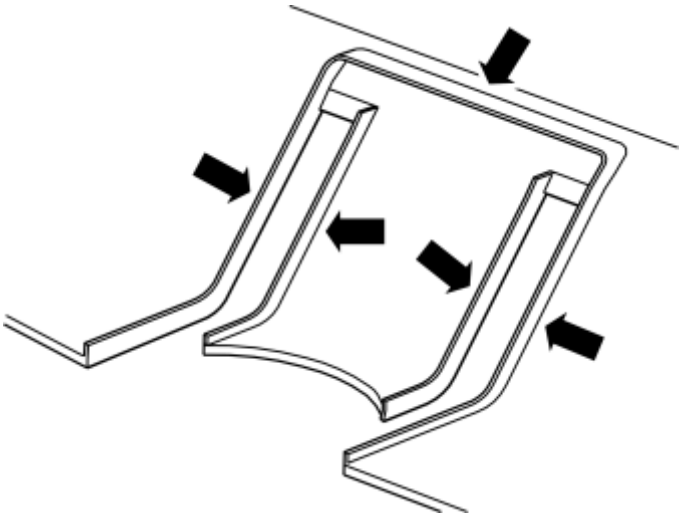

Fig. 100: Cut Away The Upright Ribs
Courtesy of VOLVO CARS CORPORATION

- Cut away all the upright ribs.

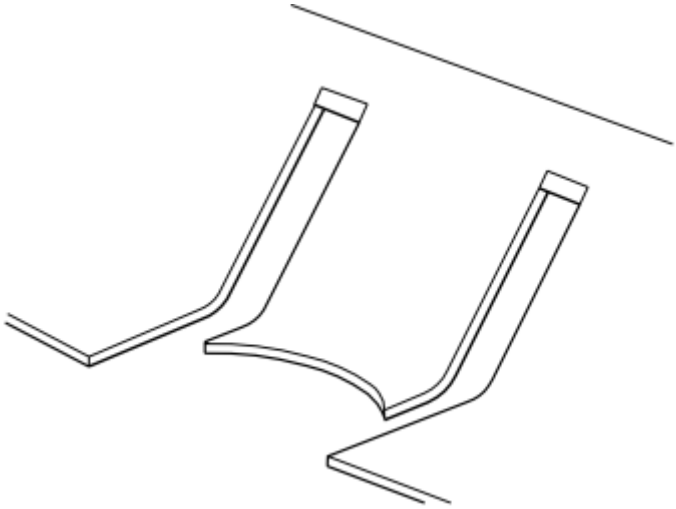

Fig. 101: Identifying the End Result
Courtesy of VOLVO CARS CORPORATION

- The end result must be as illustrated.

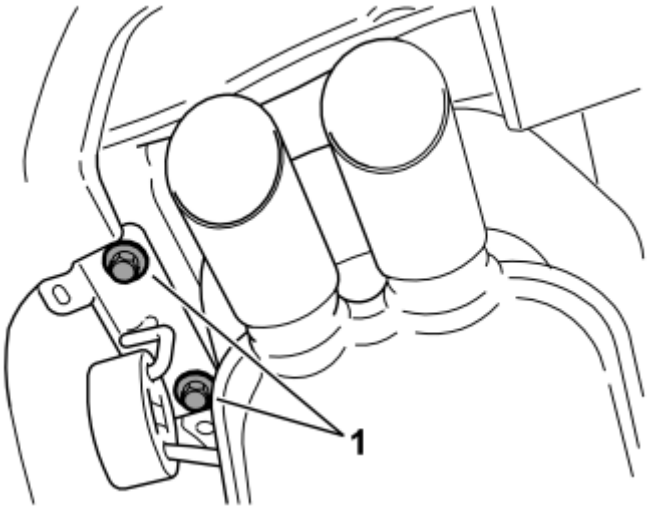

Fig. 102: Identifying The Rear Mounting
Courtesy of VOLVO CARS CORPORATION

- Remove the rear mounting for the silencer and the bracket from the underneath of the left-hand rear side member by removing the screws (1). Remove the silencer to gain access when installing the tow hitch.

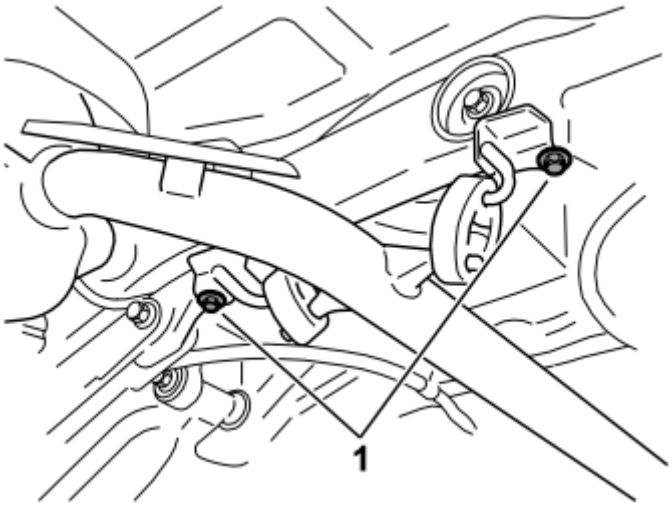

Fig. 103: Identifying Front Mounting
Courtesy of VOLVO CARS CORPORATION

- Remove the front mounting for the rear silencer at the rear sub-frame by removing the screws (1)
- Carefully bend the heat deflector plate at the side member to one side, to gain more work space
- Remove the protective flaps covering the mounting holes on the inside of the side members (one on each side)
- Remove any sealant from the surface where the tow hitch member will be mounted.

APPLIES TO CARS EQUIPPED WITH A REVERSING WARNING SYSTEM

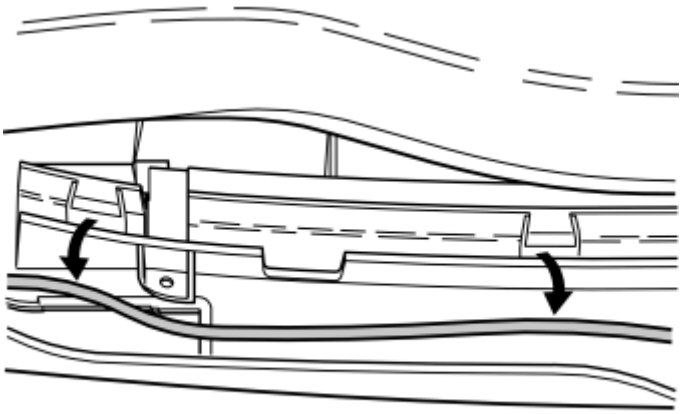

Fig. 104: Identifying The Right-Hand Side
Courtesy of VOLVO CARS CORPORATION

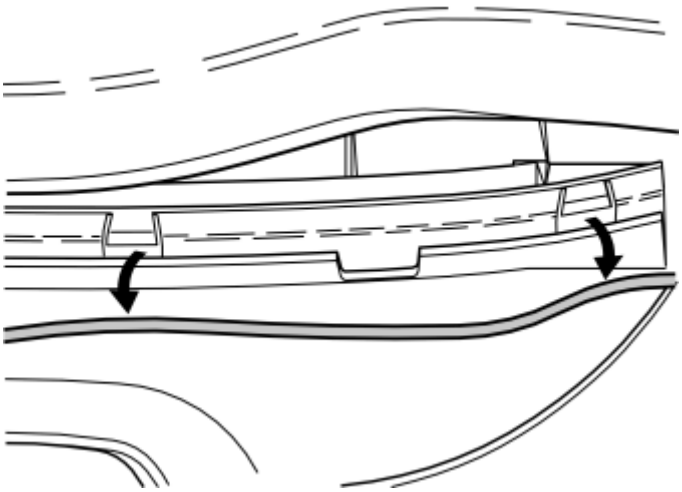

Fig. 105: Identifying The Left-Hand Side
Courtesy of VOLVO CARS CORPORATION

- Disconnect the cable for the reverse warning sensor from its clips in the rear section of the bumper.

APPLIES TO ALL MODELS

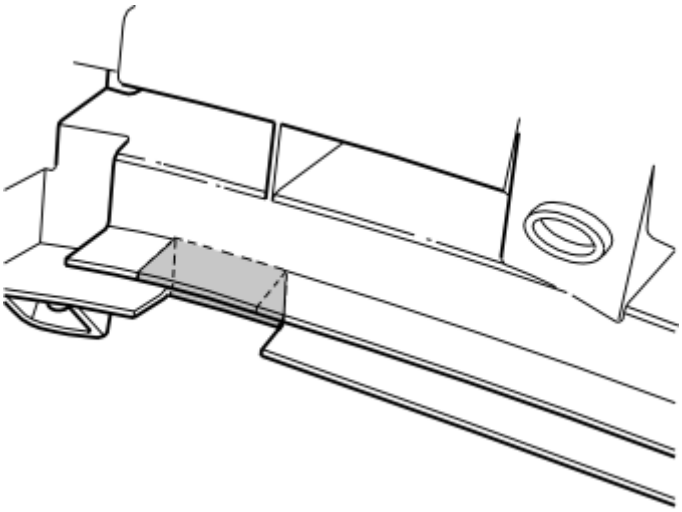

Fig. 106: Cut Out As Marked
Courtesy of VOLVO CARS CORPORATION

Right-hand side:

- Cut out the rear section at the existing cut out as marked in the illustration.

APPLIES TO CARS WITH REVERSING WARNING SYSTEMS

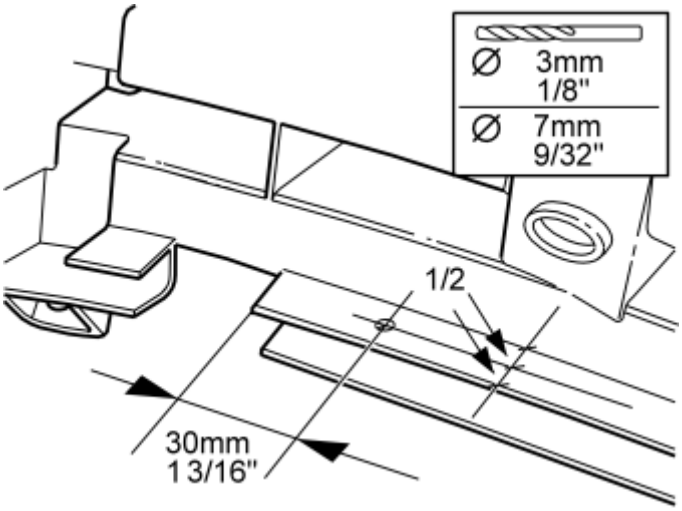

Fig. 107: Measuring Location of Hole
Courtesy of VOLVO CARS CORPORATION

Right-hand side:

- Measure up to drill the cable lead-in in the upper of the rear section plates as illustrated
- Pre-drill using a **3 mm (1/8")** diameter drill bit. Then drill out the hole to a diameter of **8 mm (5/16")** . Use an angle drill and short drill bits.

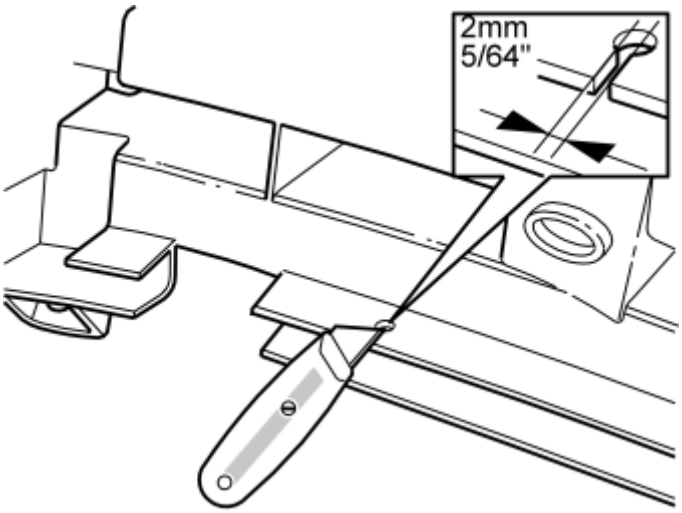

Fig. 108: Cutting a 2 mm (5/64") Groove
Courtesy of VOLVO CARS CORPORATION

- Cut a 2 mm (5/64") wide groove through the plate leading in to the hole.

APPLIES TO ALL MODELS

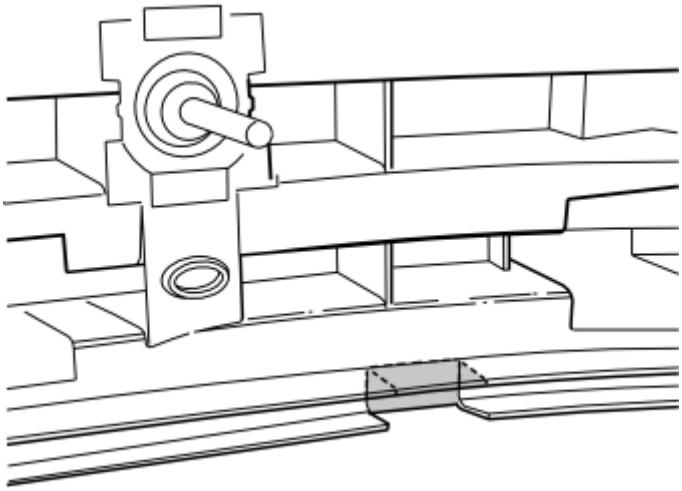

Fig. 109: Cutting Out As Marked
Courtesy of VOLVO CARS CORPORATION

Left-hand side:

- Cut out the rear section at the existing cut out as marked in the illustration.

APPLIES TO CARS WITH REVERSING WARNING SYSTEMS

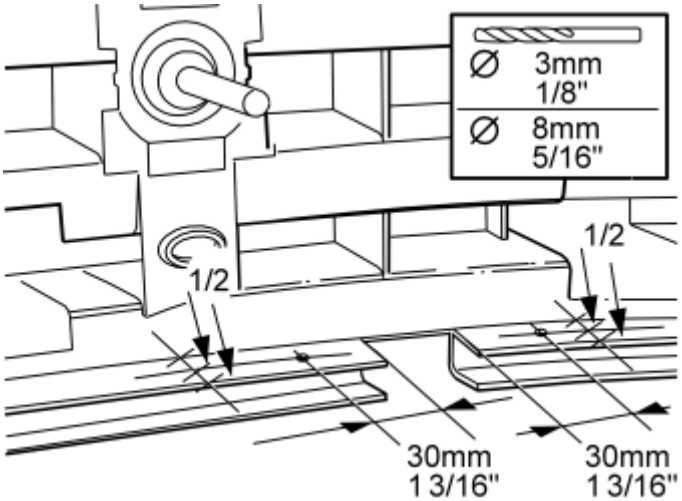

Fig. 110: Measuring Hole Locations
Courtesy of VOLVO CARS CORPORATION

Left-hand side:

- Measure up to drill the cable lead-in on the left and right-hand sides of the cut-out in the upper of the rear section plates as illustrated
- Pre-drill using a **3 mm (1/8")** diameter drill bit. Then drill out the holes to a diameter of **8 mm (5/16")** . Use an angle drill and short drill bits.

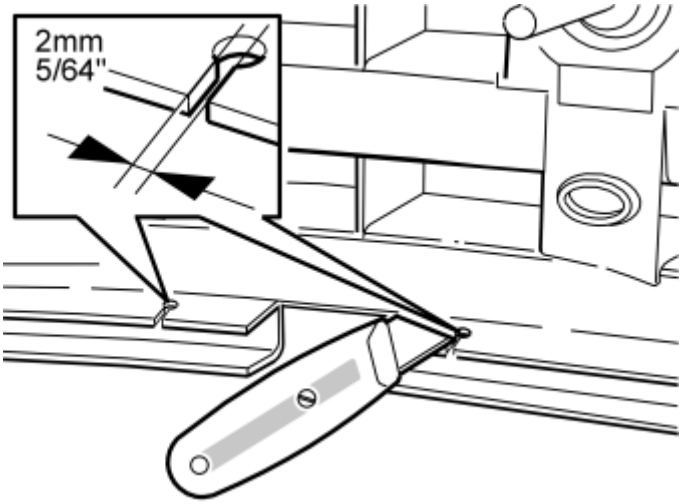

Fig. 111: Cutting a 2 mm (5/64") Slot
Courtesy of VOLVO CARS CORPORATION

- Cut a 2 mm (5/64") wide groove through the plate leading in to the holes on both sides of the cut-out.

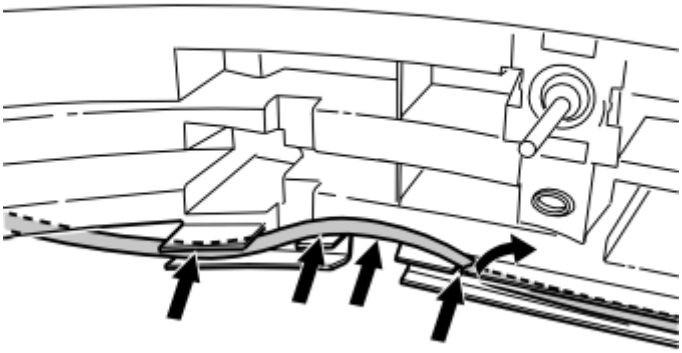

Fig. 112: Routing Cable
Courtesy of VOLVO CARS CORPORATION

Right-hand side:

- Press up the tab on the plate. Insert the cable in the previously drilled hole. The cable must be positioned as illustrated.

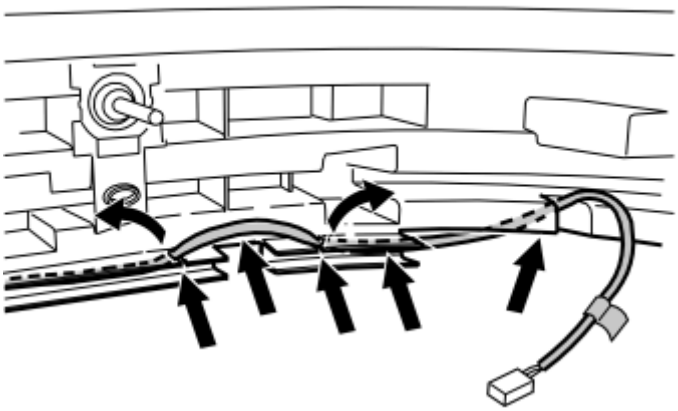

Fig. 113: Routing Cable
Courtesy of VOLVO CARS CORPORATION

Left-hand side:

- Press up the tabs on the plates and insert the cable in the holes drilled earlier. The cable must be positioned as illustrated.

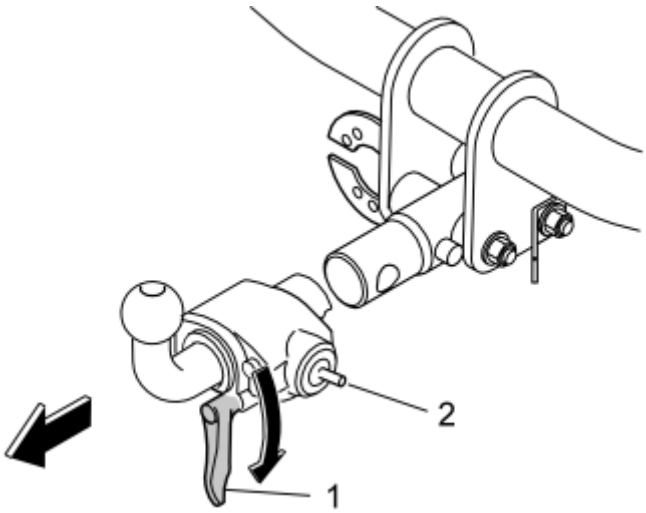

Fig. 114: Removing The Tow Hitch
Courtesy of VOLVO CARS CORPORATION

- Remove the tow hitch by turning the handle (1) to the right until a click is heard and the pin (2) is in the outer position. Pull out the hitch.

NOTE: The shaft is greased.

HINT: It is recommended that two people carry out this procedure.

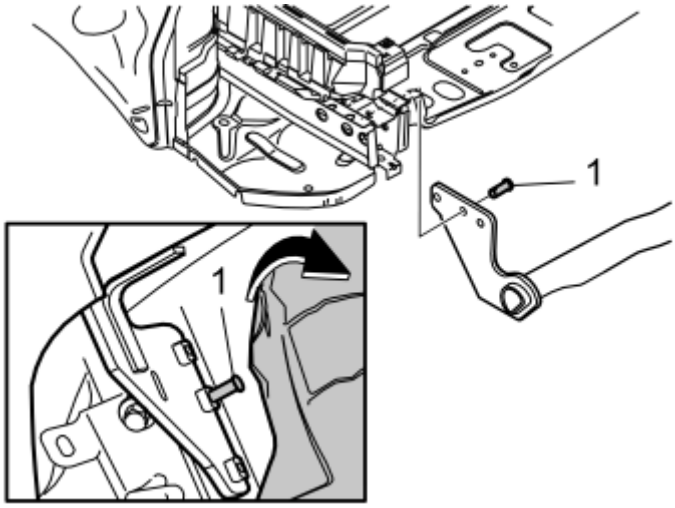

Fig. 115: Positioning The Tow Hitch Between The Two Side Members
Courtesy of VOLVO CARS CORPORATION

- Take the two mounting pins (1) from the kit
- With one person at each end, lift and position the tow hitch on the inside between the two side members, in between the holes. Start by angling up the face of the left-hand side above the tail pipe on the silencer and up between the heat deflector plate and the side member. Then angle the right-hand side face up to the side member
- Press the mounting pins into the center hole in the side members while holding the tow bar member in position so that the bar can hang freely without falling off
- Carefully lower the car.

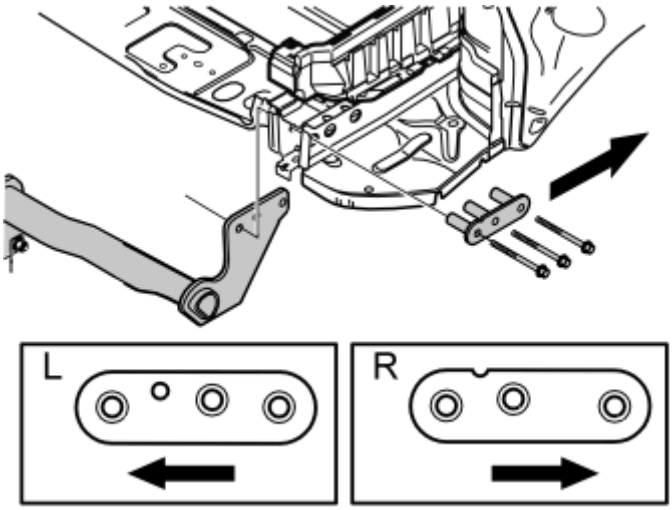

Fig. 116: Inserting The Spacer Sleeves
Courtesy of VOLVO CARS CORPORATION

- Fold down the lower tailgate.

From the inside of the cargo compartment:

- Remove the protective flaps covering the mounting holes on the outside of the side members (one on each side)
- Remove any sealant from the surfaces where the spacer washers will be positioned
- Insert the spacer sleeves using only the front and rear screws on the outside of the two side members.

NOTE: Be careful when installing the spacer sleeves and screws so that they do not press out the mounting pins, causing the tow bar to detach.

- Screw the front and rear screws in fully but do not tighten them
- Insert the center screws so that the mounting pins are pressed out. Screw the screws in fully but do no tighten them
- Hold the bar in the horizontal position. Tighten the screws.

NOTE: Rustproofing agent must be applied under the car before the screws are tightened. Apply the rustproofing agent to the side members all around the ends where any sealant was scraped off.

- Tighten all screws from inside the car. Tighten to **120 Nm (86 lbf. ft.)** in the following order:

1. The rear screws

2. The front screws

3. The center screws

NOTE: Wait five minutes so that the joint settles. Then re-check the torque.

- Raise the car again.

From underneath the car

- Carefully bend the heat deflector plate back into position so that it is not against the silencer
- Reinstall the front mounting for the rear silencer. Tighten the screws. Tighten to **24 Nm (18 lbf. ft.)**
- Reinstall the rear mounting for the rear silencer. Tighten the screws. Tighten to **48 Nm (35 lbf. ft.)** .

- Install the cable harness connector for the tow hitch according to point 1D in the installation instructions for the appropriate cable harness.

- Install the cable harness according to point 3 onwards in the installation instructions for the appropriate cable harness.

NOTE: Ensure that the cable harness does not rub against the lower edge of the bumper and is not pressed back.

- Check the function of the detachable tow hitch.

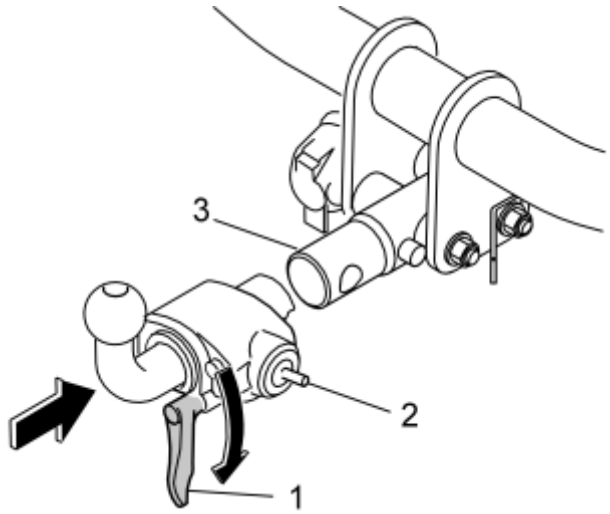

Fig. 117: Installing The Tow Hitch
Courtesy of VOLVO CARS CORPORATION

- Turn the handle (1) clockwise until a click is heard and the indicator pin (2) is in the outer position
- Install the tow hitch by pressing the tow hitch onto the connection stud (3).

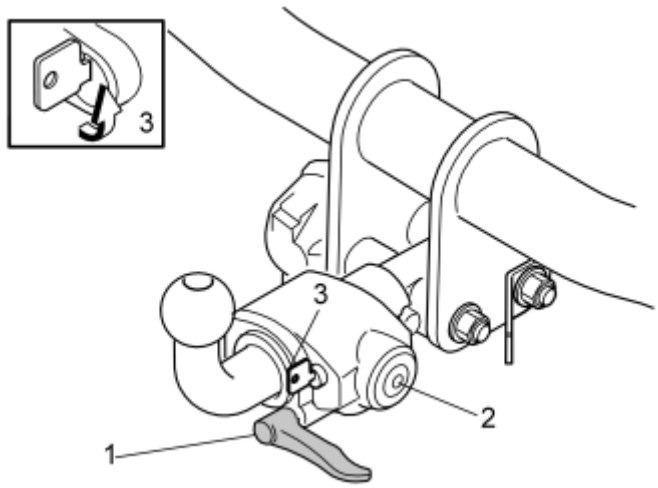

Fig. 118: Locking The Tow Hitch
Courtesy of VOLVO CARS CORPORATION

- Check that the indicator pin (2) is in the inner position and that the handle (1) is horizontal
- Turn the lock cylinder (3) to the position illustrated.

STORING THE TOW HITCH

APPLIES TO CARS WITH THREE ROWS OF SEATS

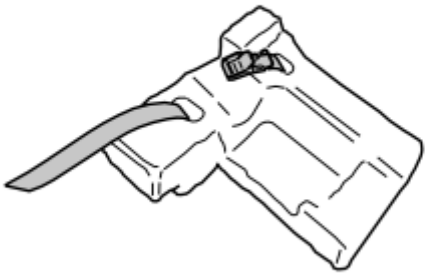

Fig. 119: Installing The Storage Box Strap
Courtesy of VOLVO CARS CORPORATION

- Remove the storage box and the strap from the kit. Thread the strap through the holes in the storage box. See the illustration.

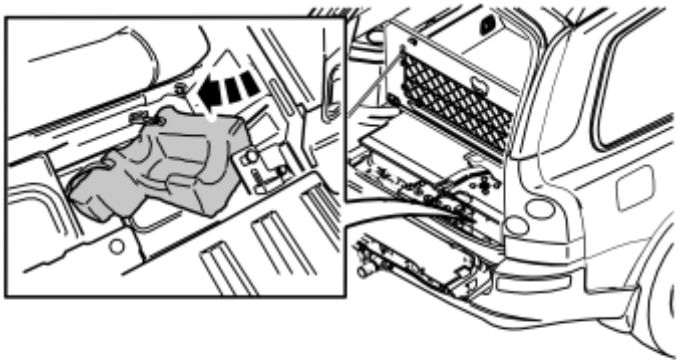

Fig. 120: Installing The Storage Box
Courtesy of VOLVO CARS CORPORATION

- Insert the storage box in the space to the right of the battery. Press the box into place against the floor. Be careful with the storage box. It is made of Frigolite which is brittle.

Fig. 121: Stowing The Tow Hitch
Courtesy of VOLVO CARS CORPORATION

- Thread the supplied protective bag over the towing ball before removing the tow hitch
- Remove the tow hitch. Pull the string tight on the protective bag
- Position the removed tow hitch and bag in the storage box. The ball must be pointing forwards to the right. Tighten in position using the strap.

APPLIES TO CARS WITH TWO ROWS OF SEATS

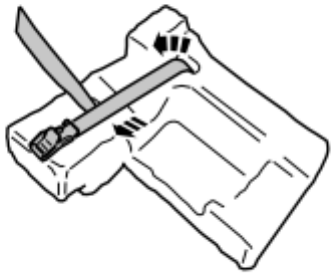

Fig. 122: Installing The Storage Box Strap
Courtesy of VOLVO CARS CORPORATION

- Remove the storage box and the strap from the kit. Thread the strap through the holes in the storage box. See the illustration.

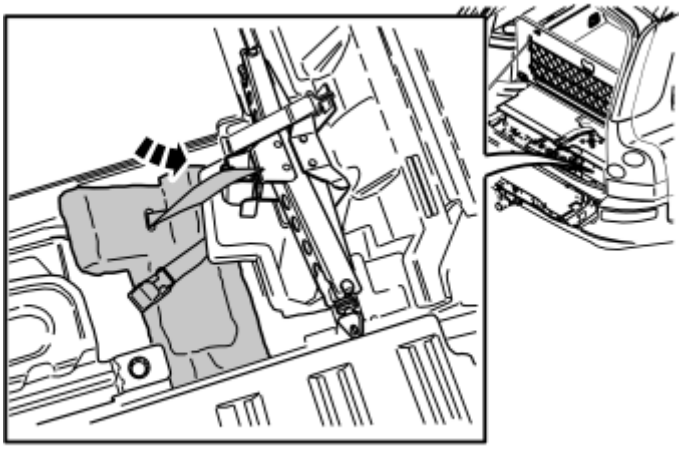

Fig. 123: Installing The Storage Box
Courtesy of VOLVO CARS CORPORATION

- Insert the storage box in the space to the right of the battery. Press the box into place against the floor. Be careful with the storage box. It is made of Frigolite which is brittle.

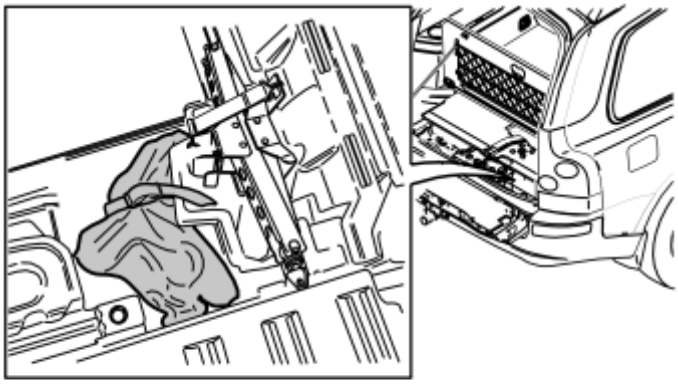

Fig. 124: Stowing The Tow Hitch
Courtesy of VOLVO CARS CORPORATION

- Thread the supplied protective bag over the towing ball before removing the tow hitch
- Remove the tow hitch. Pull the string tight on the protective bag
- Position the removed tow hitch and bag in the storage box. The ball must be pointing forwards to the right. Tighten in position using the strap.

FINISHING WORK

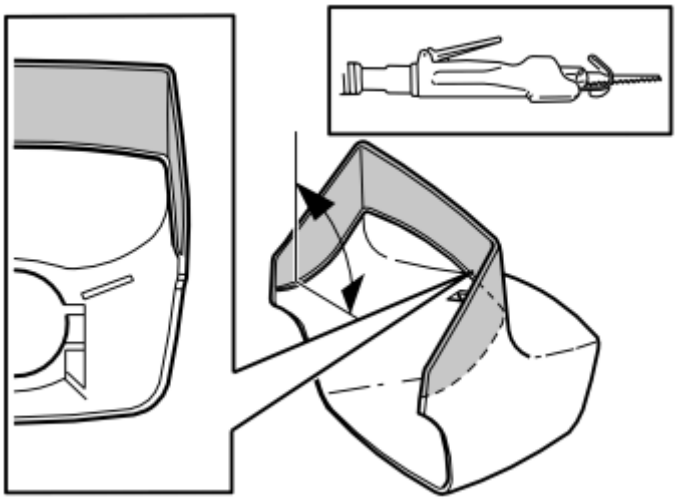

Fig. 125: Cutting Along The Markings
Courtesy of VOLVO CARS CORPORATION

Applies to cars with a rear skid plate

- Saw or cut along the top of the markings on the inside of the cover as illustrated. Cut the material at right-angles. After cutting, smooth off the edges using a file.

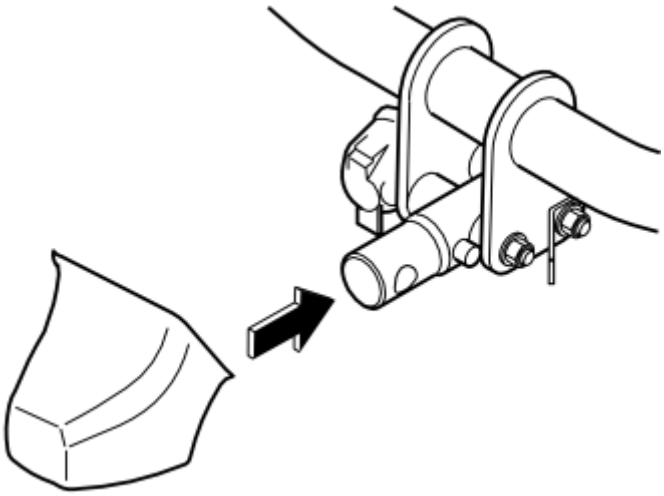

Fig. 126: Install The Cover On The Connection Stud
Courtesy of VOLVO CARS CORPORATION

Applies to all models

- Install the cover on the connection stud. Press so that the cover is secure.

CAUTION: Do not use the cover as a step. There is a risk of personal injury by standing on the cover.

- Reinstall the protective cover and holder for the battery
- Reinstall the spare wheel.

Applies to cars with accessory electronic modules (AEM)

- Reinstall the bracket with the accessory electronic module (AEM). Connect the connectors if disconnected.

Applies to all models

- Reinstall the panels, storage boxes and floor hatches
- Tighten the screws in the load securing eyelets. Tighten to **24 Nm (18 lbf. ft.)** .

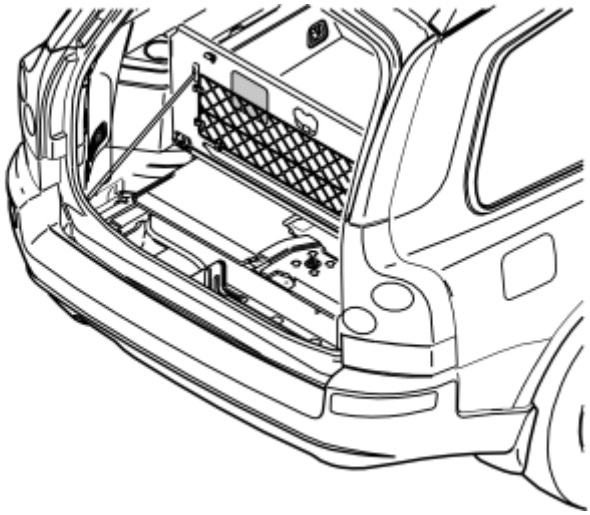

Fig. 127: Apply The Decal Supplied
Courtesy of VOLVO CARS CORPORATION

- Apply the decal supplied to the underside of the rear floor hatch as illustrated.

DYNAMIC SPACE BOX 65/85 (2003-2004)

DYNAMIC SPACE BOX 65/85

NOTE: **This space box is not suitable for the V40 with rails.**

NOTE: **The space box may only be opened on one side at a time.**

NOTE: **Regularly check that the load carriers are secured properly on the roof and that the space box is tightly secured on the load carriers. Be aware of the changed height and driving characteristics of the car with load carriers and box. Check that the box is properly locked and the key removed before travelling. The load must not exceed 75 kg and must always be secured. The total roof load capacity**

of the car must not be exceeded. See the owner's handbook. Highest permitted load = load carrier weight + box weight + load weight. For safety reasons the car should not be driven at top speed (maximum 130 km/h). Speeds should be adjusted to the load being carried and of course to legal speed limits. Note that there may be wind noise when the space box is installed. These installation instructions should be stored with the car handbook. Damage to the car and surroundings may occur if the instructions are not followed.

PREPARATIONS

APPLIES TO THE DYNAMIC 85 SPACE BOX

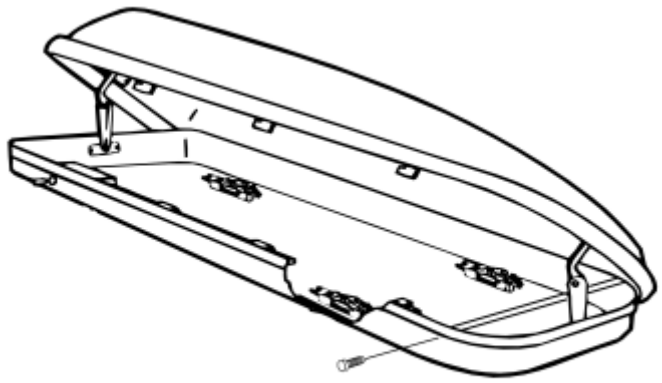

Fig. 128: Identifying Unlocked And Opened Space Box
Courtesy of VOLVO CARS CORPORATION

- Unlock and open the space box on one side. Ensure that the other side is locked
- Remove the transportation support at the front edge of the space box by slackening off one screw at the side and then pulling the support off. Ensure that the reinforcement rod which is secured with the same screw is secure
- Close the space box.

INSTALLING THE SPACE BOX

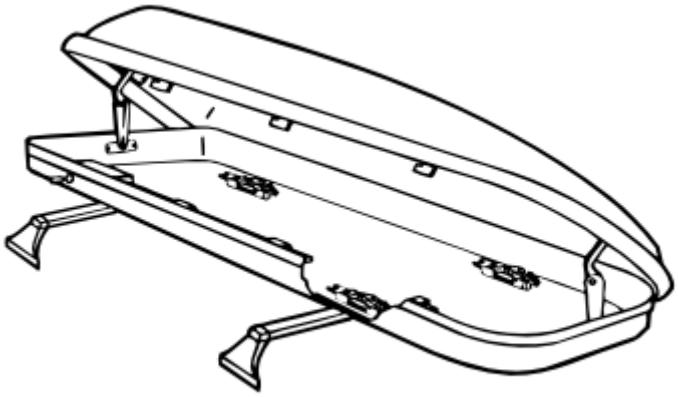

Fig. 129: Identifying Open Space Box
Courtesy of VOLVO CARS CORPORATION

- Place the space box on the load carriers parallel to the car. Ensure that the box and load carriers do not prevent the tailgate from opening fully
- Open the space box on one side. Ensure that the other side is locked.

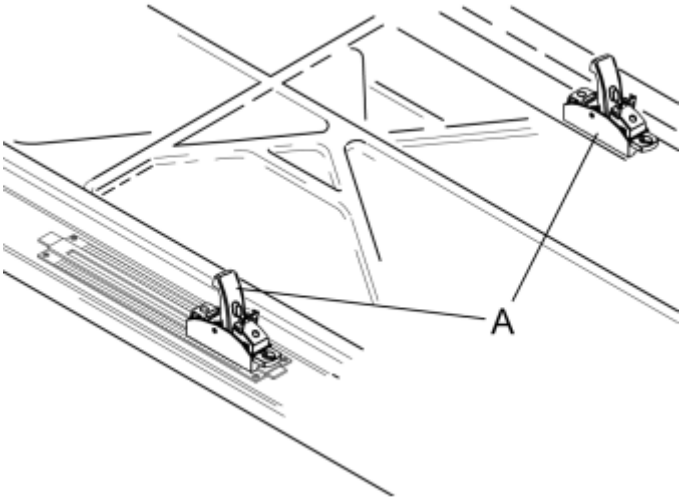

Fig. 130: Identifying Quick-Release Mountings
Courtesy of VOLVO CARS CORPORATION

- If the quick-release mountings (A) are loose: turn them in the same direction and secure them in the bottom of the space box. The quick-release mountings must be turned in the same direction before the ski holders can be installed.

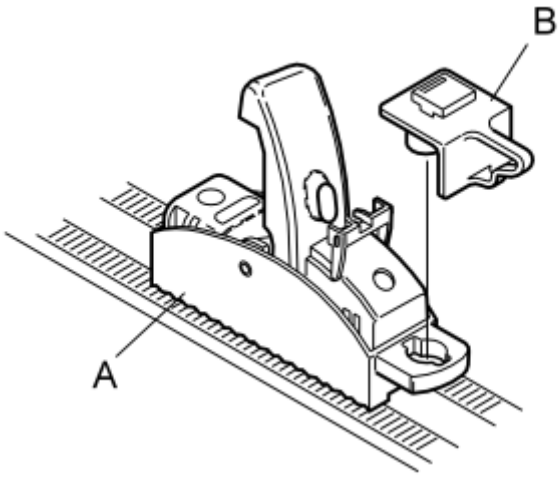

Fig. 131: Identifying Quick-Release Mounting
Courtesy of VOLVO CARS CORPORATION

- Take the clips (B) from the kit and press them into place in the quick-release mountings (A).

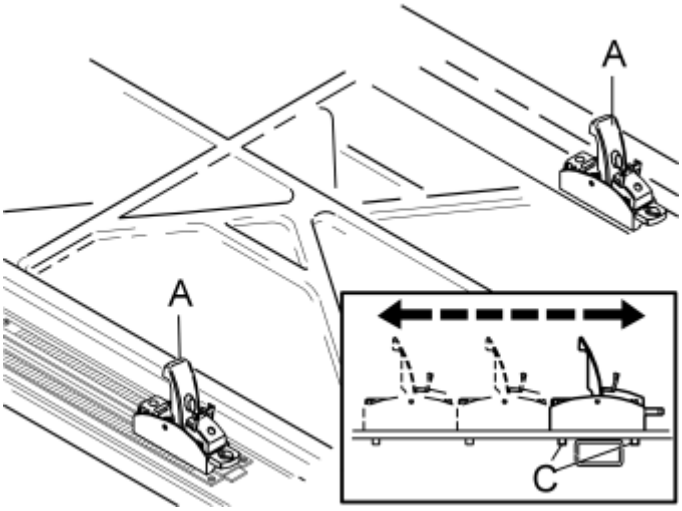

Fig. 132: Identifying Aligning Quick-Release Mountings To Load Carriers
Courtesy of VOLVO CARS CORPORATION

- Move the four quick-release mountings (A) in the bottom of the space box so that the two lugs (C) on each quick release mounting are on each side of the load carrier tubes
- Check that the box is centered on the roof and does not hit the tailgate when opened.

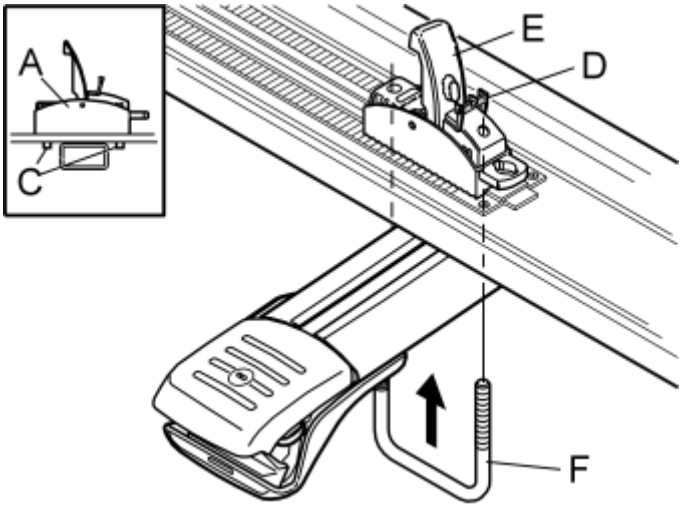

Fig. 133: Identifying U Bracket On Quick-Release Mounting
Courtesy of VOLVO CARS CORPORATION

Points 6-8 apply to all the quick-release mountings

- Fold up the red safety catches (D)
- Fold the lock handle (E) to the vertical position
- Insert a U bracket (F) upwards through the lugs (C) on the quick-release mounting (A).

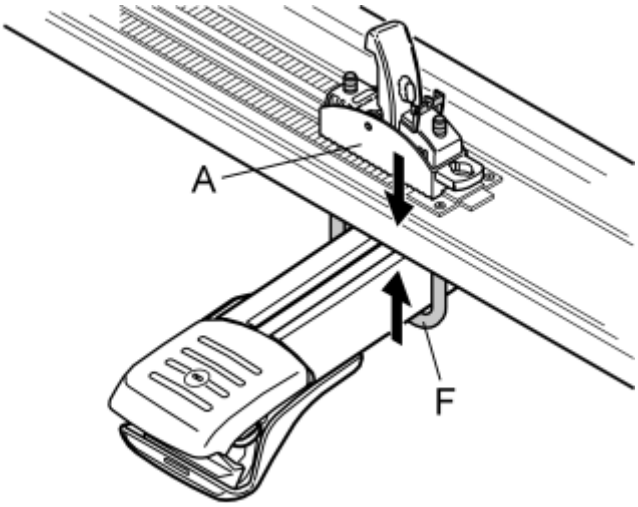

Fig. 134: Identifying Quick-Release Mounting Engagement
Courtesy of VOLVO CARS CORPORATION

- Press the quick-release mounting (A) downwards towards the bottom of the space box. At the same time press the U bracket (F) upwards until it is against the underneath of the load carrier.

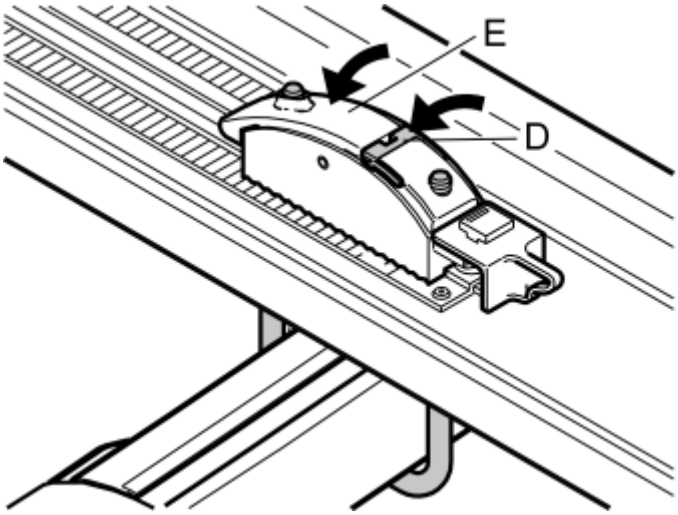

Fig. 135: Folding Lock Handle Down To Horizontal Position And Safety Catch Over Lock Handle
Courtesy of VOLVO CARS CORPORATION

- Fold the lock handle (E) down to the horizontal position. This requires a force of approximately 50 N. There should be considerable resistance. If this is not the case the U-bracket installation must be repeated
- Fold the safety catch (D) over the lock handle until it snaps into place. If this cannot be done, check that the lock handle has snapped shut in the final position.

NOTE: Regularly check that the box is securely fixed to the load carrier.

INSTALLING THE SKI HOLDER

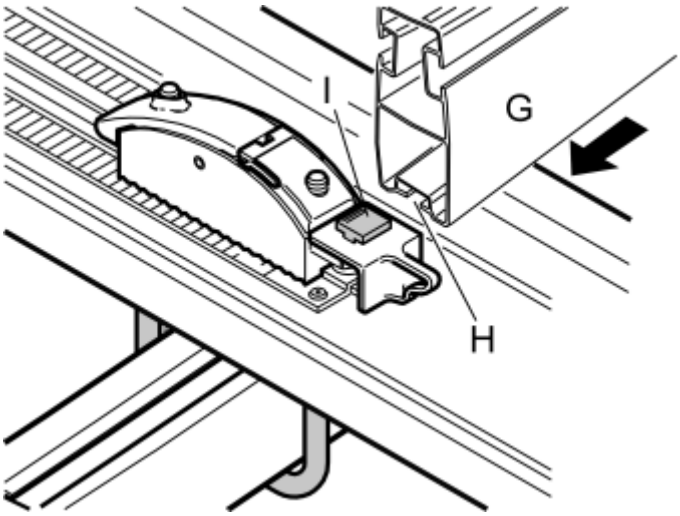

Fig. 136: Identifying T-Shaped Groove On Ski Holders And T-Shaped Lug
Courtesy of VOLVO CARS CORPORATION

- Install the ski holders (G) by sliding the T-shaped groove (H) on the ski holders on to the T-shaped lug (I)
- Press the ski holders so that they are against the side of the box
- Close and lock the space box

- Open the space box on the other side. Slide the T-shaped groove on the ski holders on to the T-shaped lug on the clips. Ensure that the ends of the ski holders protrude by the same amount in relation to the T-shaped lugs.

APPLIES WHEN TRANSPORTING

TRANSPORTING SKIS

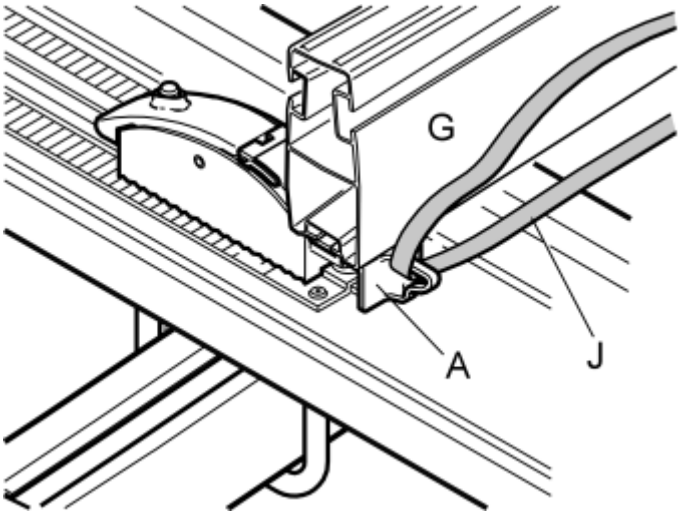

Fig. 137: Identifying Tensioning Strap Threaded Through Eyelets On Clips
Courtesy of VOLVO CARS CORPORATION

- Thread the tensioning strap (J) through the eyelets on the clips (A)
- Place the skis on the holders (G). Tighten them using the tensioning strap (J).

TRANSPORTING SHORTER GOODS

- Remove the ski holders and the clips for the quick-release mountings
- Insert the tensioning strap through the holes on the quick-release mountings where the clips were positioned
- Secure the goods using the tensioning strap.

ALL TRANSPORT

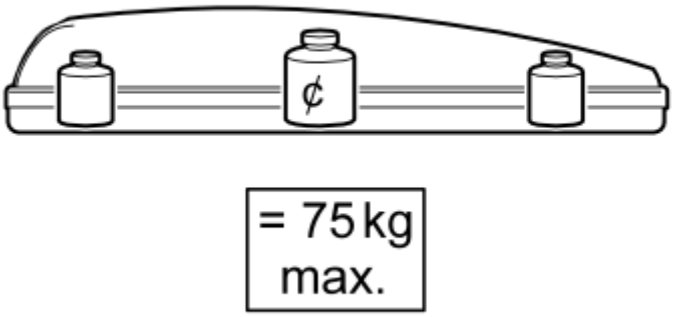

Fig. 138: Identifying Tensioning Straps Max Load
Courtesy of VOLVO CARS CORPORATION

- The load must be distributed as evenly as possible. **The maximum permitted load is 75 kg.** The maximum roof load of the vehicle must never be exceeded.
- Check that the tensioning straps are fully tightened regularly.

OPENING AND CLOSING THE SPACE BOX

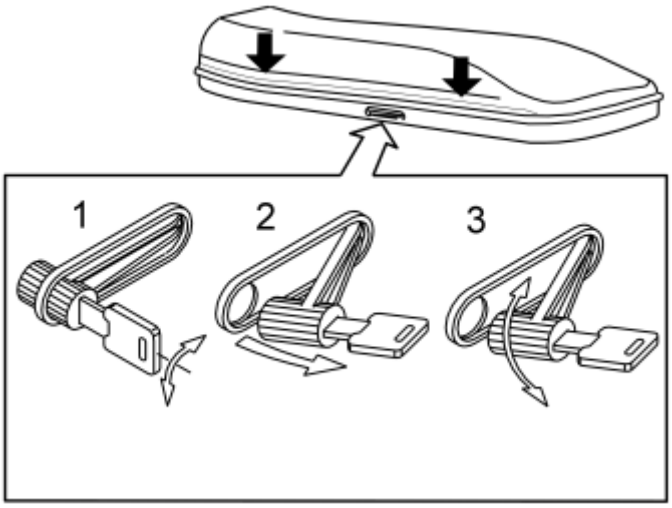

Fig. 139: Ensuring That Each Locking Shackle Engages In Its Lock When Space Box Is Closed
Courtesy of VOLVO CARS CORPORATION

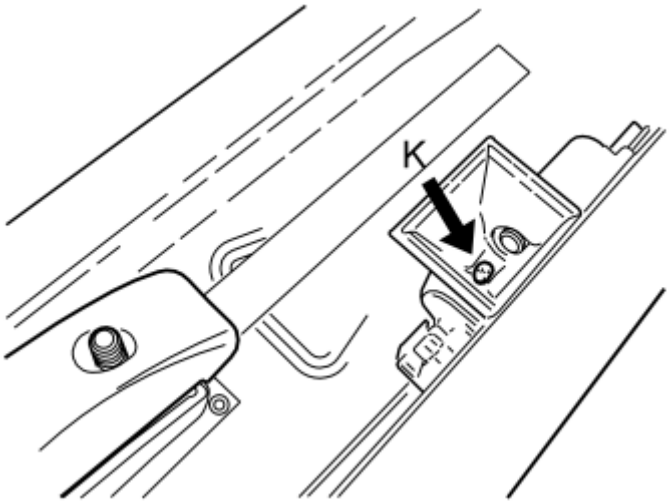

Fig. 140: Identifying Security System Released When Lug Is Pressed Down
Courtesy of VOLVO CARS CORPORATION

- The space box has a double sided locking system. When opening the box ensure that the opposite side is locked
- The lock system has a safety system which prevents the space box from locking if the cover is not correctly closed. Ensure that each locking shackle engages in its lock when the space box is closed. The security system releases when the lug (K) is pressed down
- If the space box cannot be locked, there may be snow or debris in the locking mechanism which prevents the safety system from disengaging. Clean and try to lock it again.

REMOVING THE SPACE BOX

- Open the space box and remove the load.

Applies to all quick-release mountings

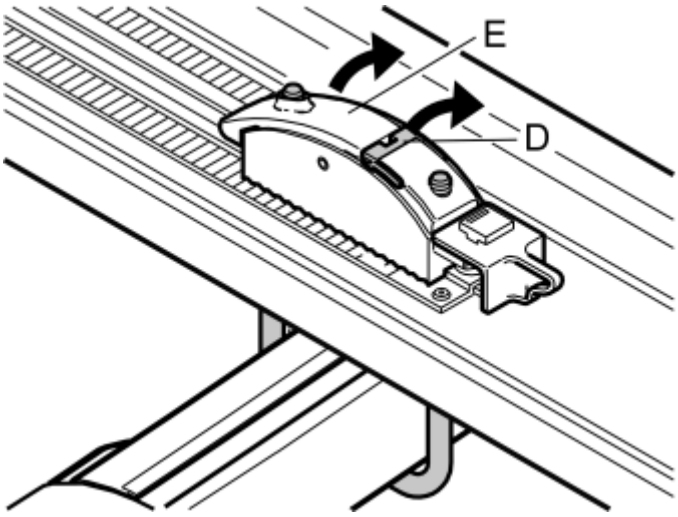

Fig. 141: Identifying Safety Catches
Courtesy of VOLVO CARS CORPORATION

- Fold up the safety catches (D)
- Fold the lock handle (E) to the vertical position.

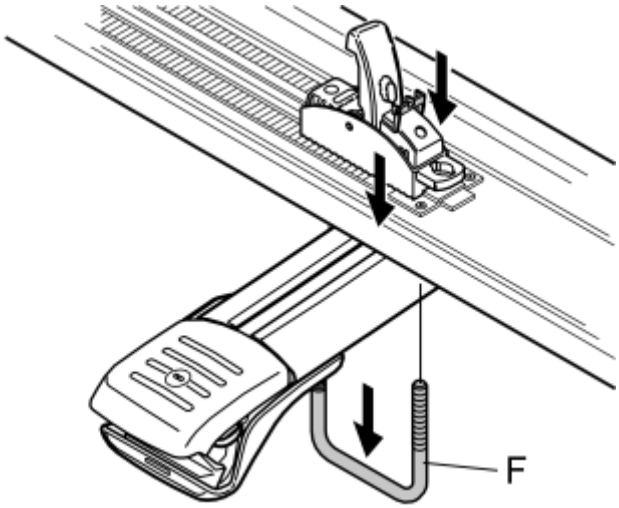

Fig. 142: Identifying U-Shaped Bracket
Courtesy of VOLVO CARS CORPORATION

- Press the quick-release mountings down towards the bottom of the space box. At the same time pull out the U-shaped bracket (F).

NOTE: Do not damage the roof.

FUEL DRIVEN HEATER 912-B (2003-2008)

FUEL DRIVEN HEATER 912-B

see **FUEL DRIVEN HEATER 912-B**

INSTALLATION KIT SPACE BOX (2003-2004)

INSTALLATION KIT SPACE BOX

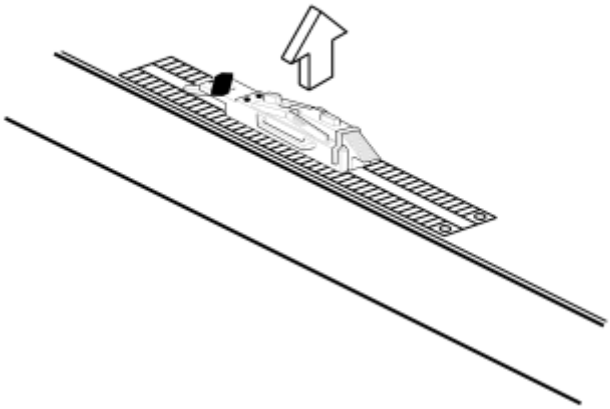

Fig. 143: Identifying Mounting Removal
Courtesy of VOLVO CARS CORPORATION

- Remove the old mountings. Remove by tugging straight up. Put to one side.

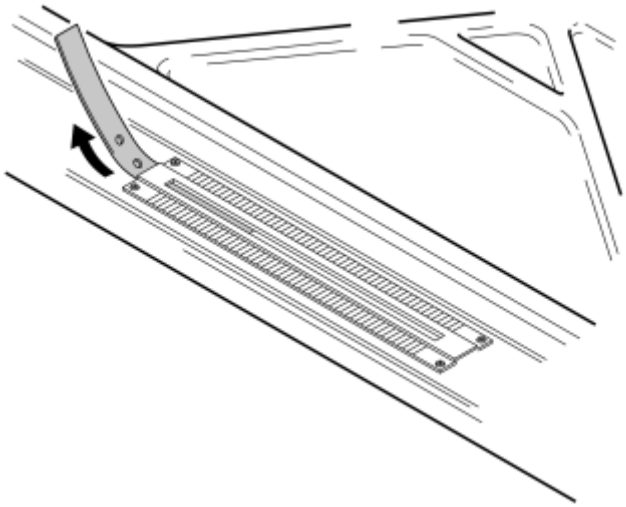

Fig. 144: Identifying Cover Strip Removal
Courtesy of VOLVO CARS CORPORATION

- Pull out the old cover strip from the groove. Put to one side.

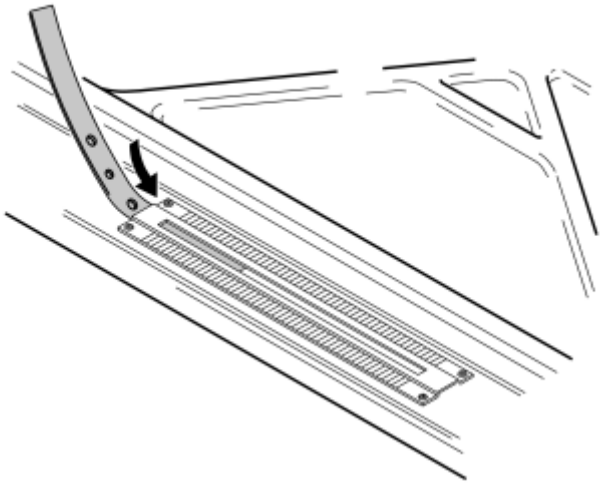

Fig. 145: Identifying Cover Strip
Courtesy of VOLVO CARS CORPORATION

- Take the new cover strip from the kit. Install the cover strip in the groove.

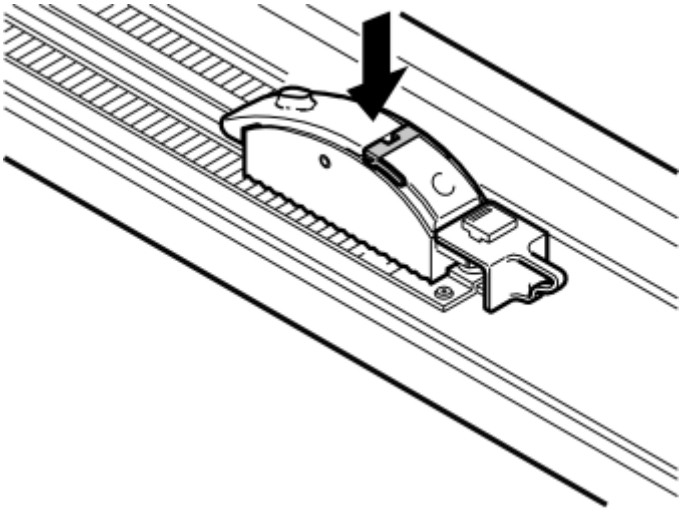

Fig. 146: Identifying Quick-Release Mounting Pressed Into Hole In Cover Strip
Courtesy of VOLVO CARS CORPORATION

- Take the quick release mounting from the kit. Press the quick-release mounting into the hole in the cover strip. Ensure that the hooks grip correctly
- When installing several quick-release mountings: turn all the quick-release mountings in the same directions.

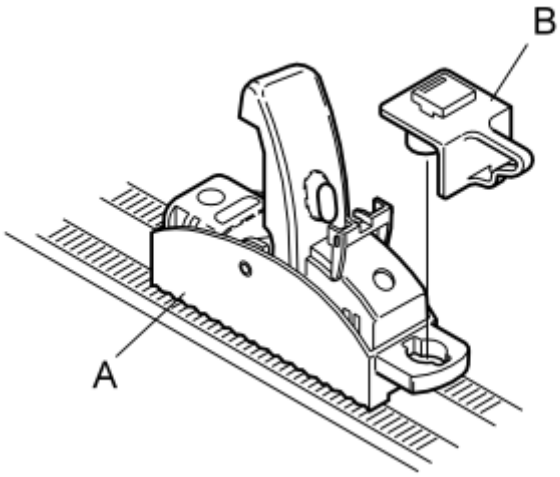

Fig. 147: Identifying Quick-Release Mounting
Courtesy of VOLVO CARS CORPORATION

- Take a clip (B) from the kit and press them into place in the quick-release mounting (A). Ensure that the hooks grip correctly.

SECURING THE SPACE BOX ON THE LOAD CARRIERS

The space box is secured to the load carriers using the new U brackets from the kit.

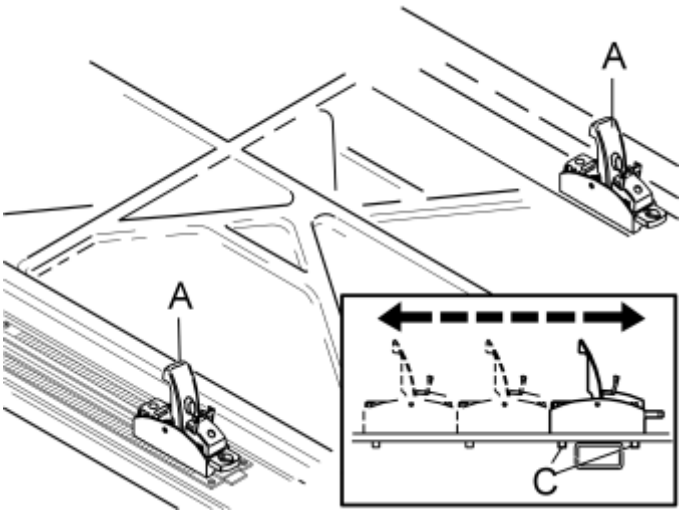

Fig. 148: Identifying Aligning Quick-Release Mountings To Load Carriers
Courtesy of VOLVO CARS CORPORATION

- Move the quick-release mounting (A) in the bottom of the space box so that the two pins (C) are on either side of the load carriers.

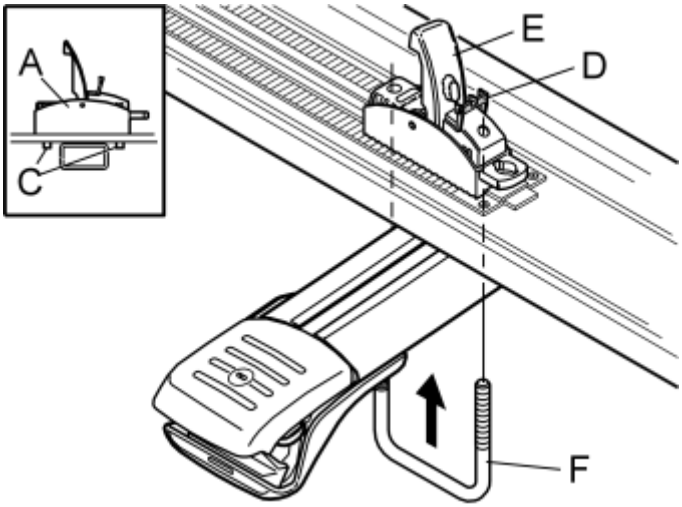

Fig. 149: Identifying U Bracket On Quick-Release Mounting
Courtesy of VOLVO CARS CORPORATION

- Fold up the red safety catches (D)
- Fold the lock handle (E) to the vertical position
- Insert a U bracket (F) upwards through the lugs (C) on the quick-release mounting (A).

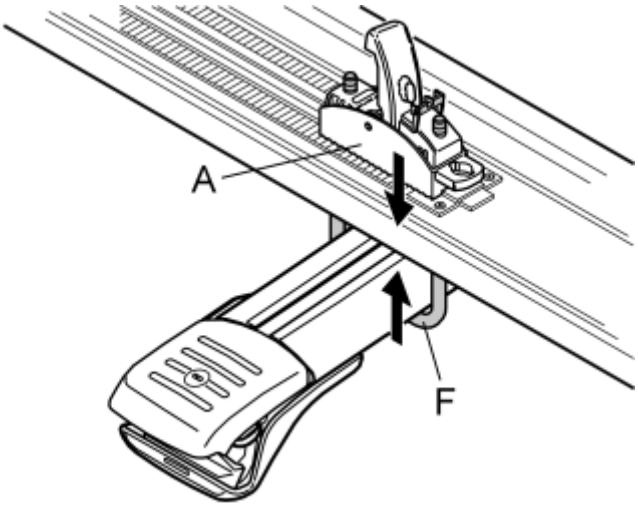

Fig. 150: Identifying Quick-Release Mounting Engagement
Courtesy of VOLVO CARS CORPORATION

- Press the quick-release mounting (A) downwards towards the bottom of the space box. At the same time press the U bracket (F) upwards until it is against the underneath of the load carrier.

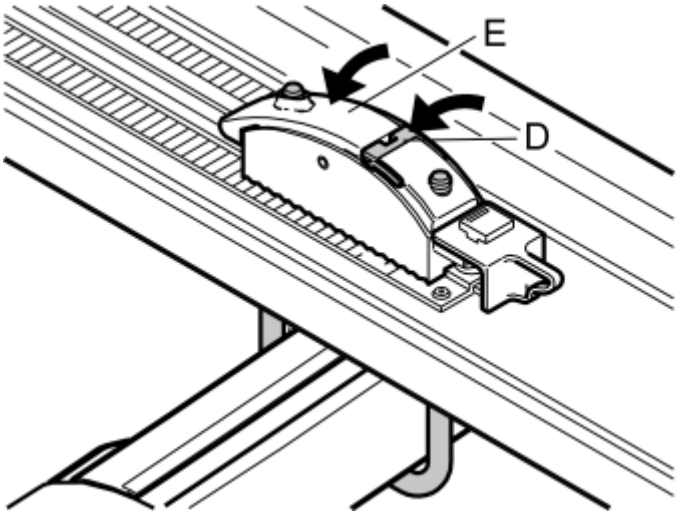

Fig. 151: Folding Lock Handle Down To Horizontal Position And Safety Catch Over Lock Handle
Courtesy of VOLVO CARS CORPORATION

- Fold the lock handle (E) down to the horizontal position. This requires a force of approximately 50 N, there should be considerable tension. If this is not the case the U-bracket installation must be repeated
- Fold the safety catch (D) over the lock handle until it snaps into place. If this cannot be done, check that the lock handle has snapped shut in the final position.

NOTE: Check that the box is securely fixed to the load carrier at regular intervals.

LOAD BASKET, HITCH (2003-2008)

LOAD BASKET, HITCH

INSTALLING THE LOAD BASKET

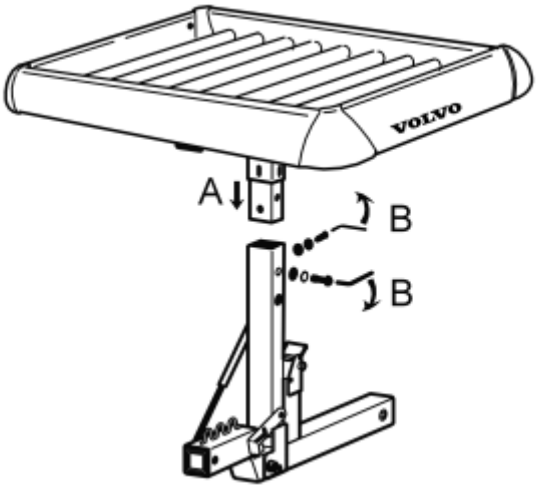

Fig. 152: Identifying Load Basket Installed In Base Unit's Square Pipe
Courtesy of VOLVO CARS CORPORATION

- Install the load basket in the base unit's square pipe.
- Tighten in the load basket using the two screws, the spring washers and the flat washers.

TILTING THE LOAD BASKET

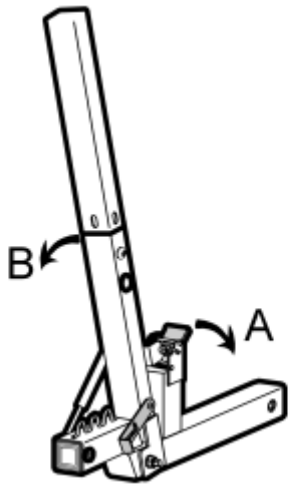

Fig. 153: Identifying Catch Pressed Down To Lower Base Unit
Courtesy of VOLVO CARS CORPORATION

- Press catch (A) down to tilt the load basket.
- Lower the load basket (B) until the stop catch engages.

NOTE: If the load is not secured firmly then it may fall out during tilting.

UNTILTING THE LOAD BASKET

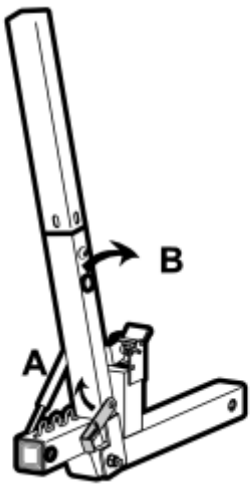

Fig. 154: Identifying Lifted Up Stop Catch And Folded Back Load Basket
Courtesy of VOLVO CARS CORPORATION

- Lift up the stop catch (A) and fold back the load basket (B).

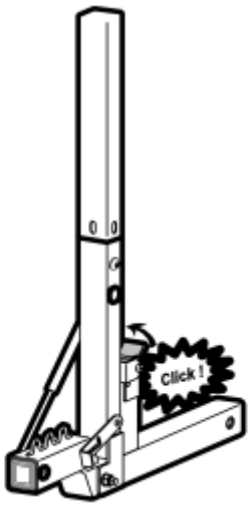

Fig. 155: Folding Back Load Basket Until Two Clear Clicks Can Be Heard And Catch Rises
Courtesy of VOLVO CARS CORPORATION

- Fold back the load basket until two clear clicks can be heard and the catch rises.

SAFETY CHECKS BEFORE A JOURNEY

CAUTION: Make sure that all screws, nuts and tensioning straps are firmly tightened before setting off. Check them at regular intervals.

Damaged tensioning straps must be replaced with new ones.

The base unit/load basket must not be used as an attachment point for towing.

The base unit/load basket must not be used when driving over terrain.

NOTE: If the car's number plate is obscured by a loaded base unit there is an extra number plate holder with lighting that is available as an accessory. This should then be used.

CAUTION: Do not allow the load to shift outside of the load basket.

Do not load more onto the base unit than what is specified on the original towbar's type plate (MAX TONGUE WEIGHT).

Remember that the car's center of gravity, and accordingly its driving characteristics, can be changed by the load.

The base unit and associated loading systems must not be used for

carrying animals or people.

LOAD CARRIERS FOR RAILS (2003-2010)

LOAD CARRIERS FOR RAILS

Applies to both types of load carriers

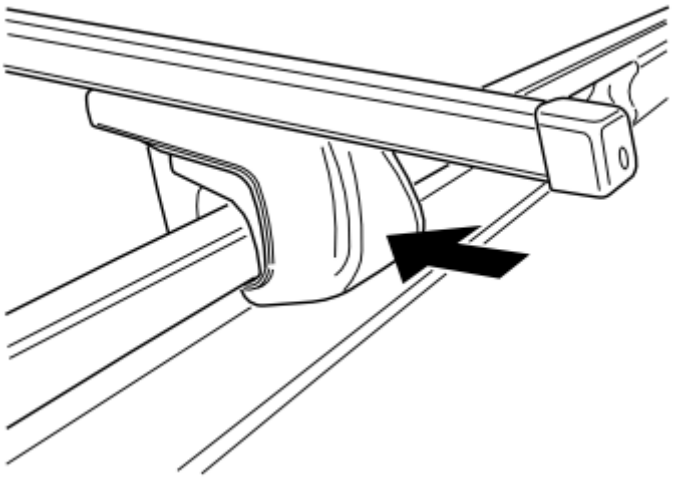

Fig. 156: Position Load Carrier On Rails For Car (1 Of 2)
Courtesy of VOLVO CARS CORPORATION

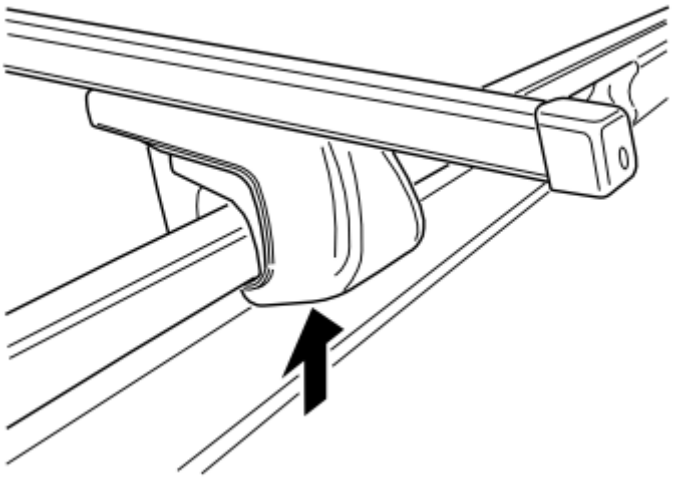

Fig. 157: Position Load Carrier On Rails For Car (2 Of 2)
Courtesy of VOLVO CARS CORPORATION

- Position the load carrier on the rails for the car. Ensure that the load carrier is symmetrical. (Positioned so that the ends protrude the same distance from the mountings on both sides)
- Adjust the position of the load carrier before mounting. Press the mountings inwards and upwards as illustrated.

Illustration applies to load carriers with T-grooves

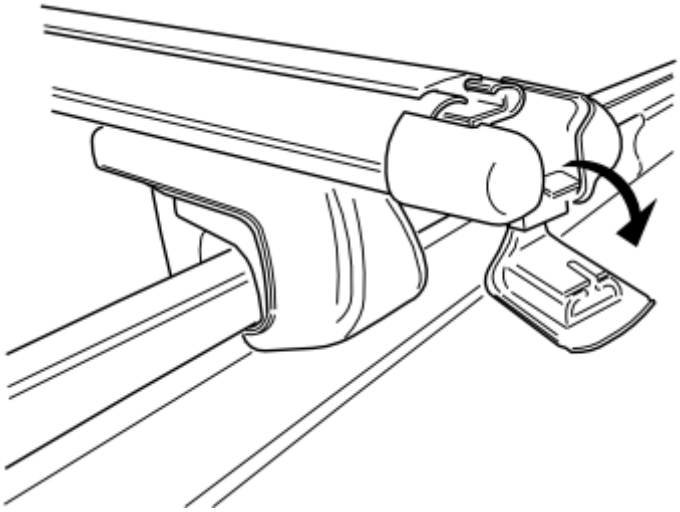

Fig. 158: Identifying Load Carrier End Cover
Courtesy of VOLVO CARS CORPORATION

- Open the cover on the end of the load carrier to access the screw.

Illustration applies to both types of load carriers

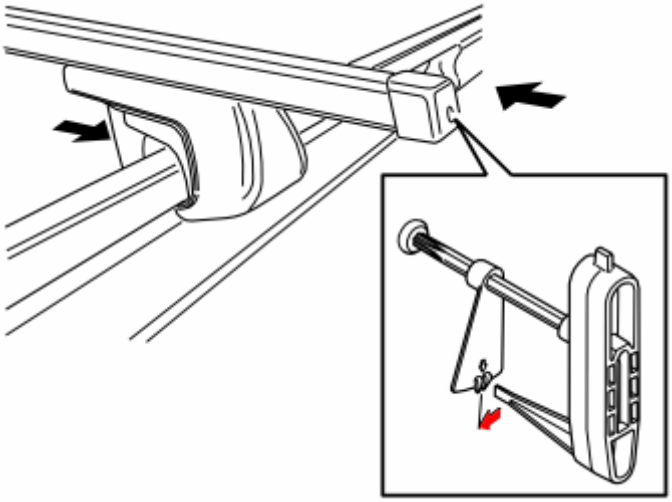

Fig. 159: Insert A Torque Wrench In The End Of The Load Carrier
Courtesy of VOLVO CARS CORPORATION

- Insert a torque wrench in the end of the load carrier. Tighten until the mountings encircle the rails
- Repeat the operation on the other mountings.

Applies to both types of load carriers

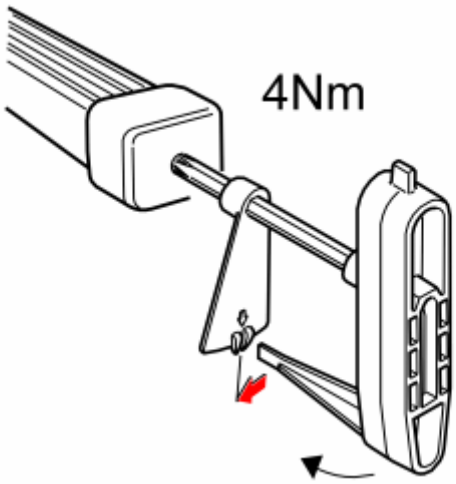

Fig. 160: Tightening Screws In Ends Of Load Carriers Until Indicator On Wrench Handle Is In Between Two Markings
Courtesy of VOLVO CARS CORPORATION

- Tighten the screws in the ends of the load carriers until the indicator on the wrench handle is in between the two markings. The correct torque of **4 Nm (3 lbf. ft.)** has then been reached.

Applies to load carriers with T-grooves

- Fold the cover back into place on the end.

LOCK, HITCH (2003-2005)

LOCK, HITCH

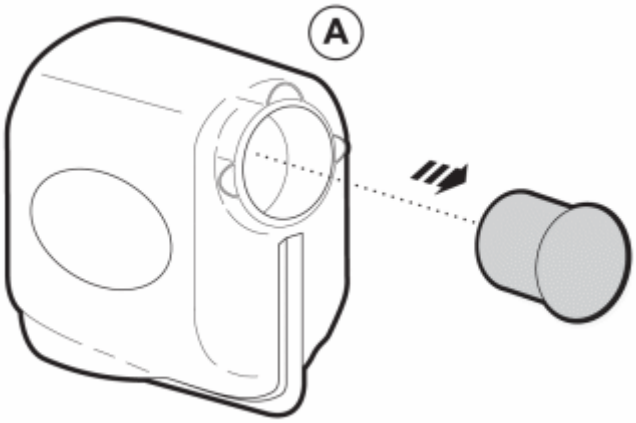

Fig. 161: Identifying Lock Base
Courtesy of VOLVO CARS CORPORATION

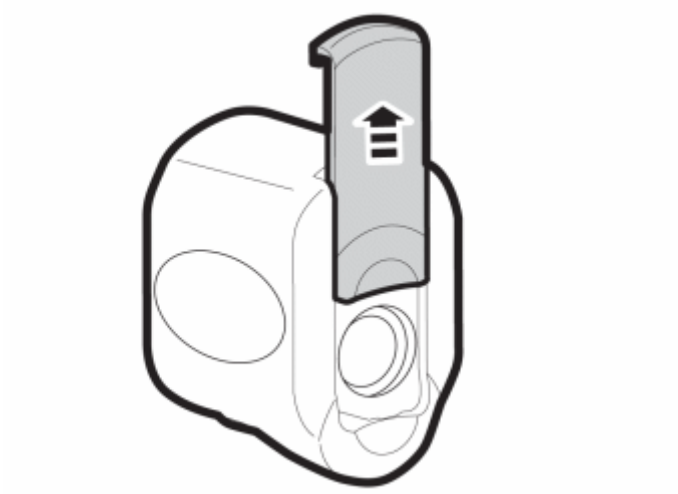

Fig. 162: Identifying Lock, Hitch
Courtesy of VOLVO CARS CORPORATION

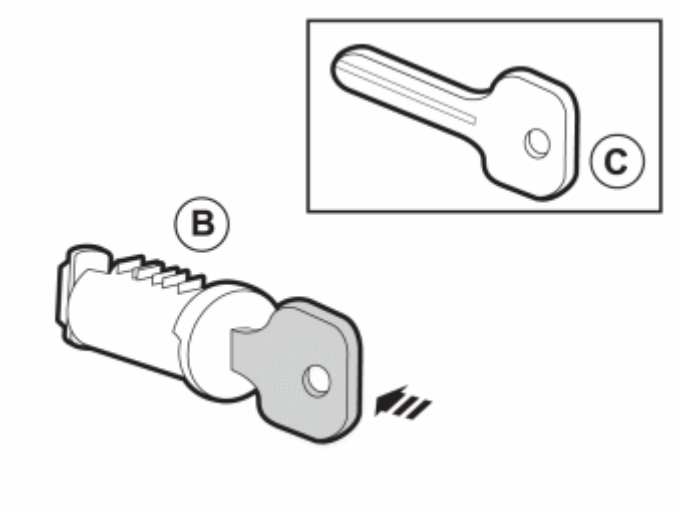

Fig. 163: Identifying Key And Lock Assembly
Courtesy of VOLVO CARS CORPORATION

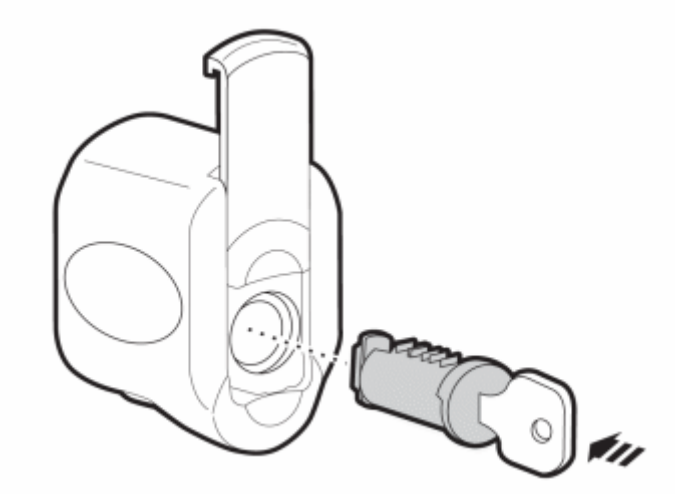

Fig. 164: Identifying Insertion Of Lock Into Base
Courtesy of VOLVO CARS CORPORATION

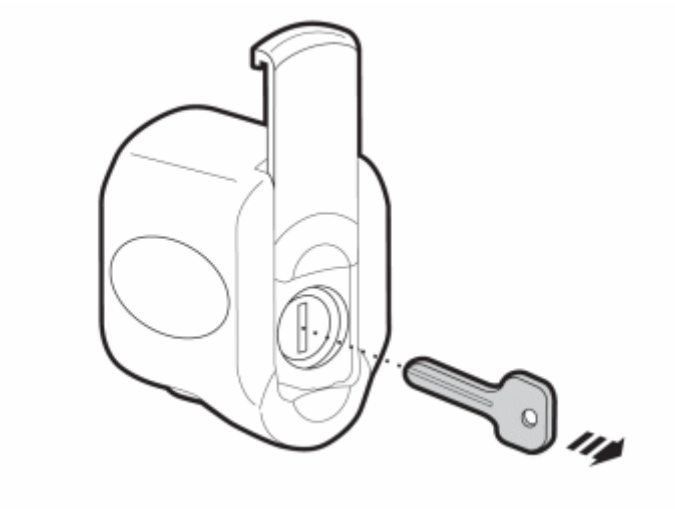

Fig. 165: Identifying Lock, Hitch
Courtesy of VOLVO CARS CORPORATION

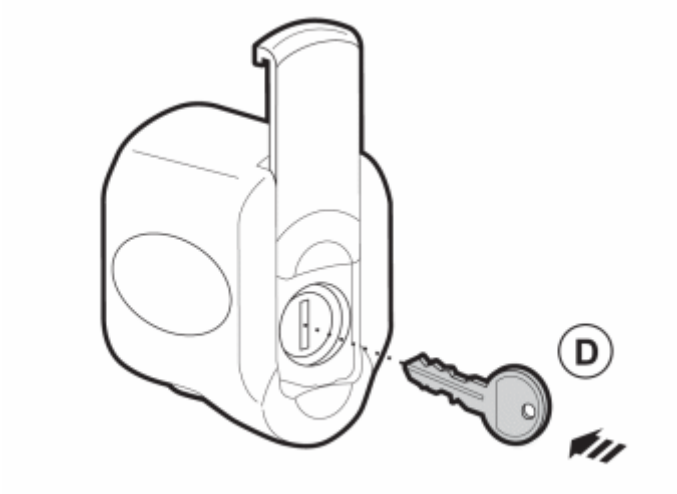

Fig. 166: Identifying Insertion Of Key Into Lock
Courtesy of VOLVO CARS CORPORATION

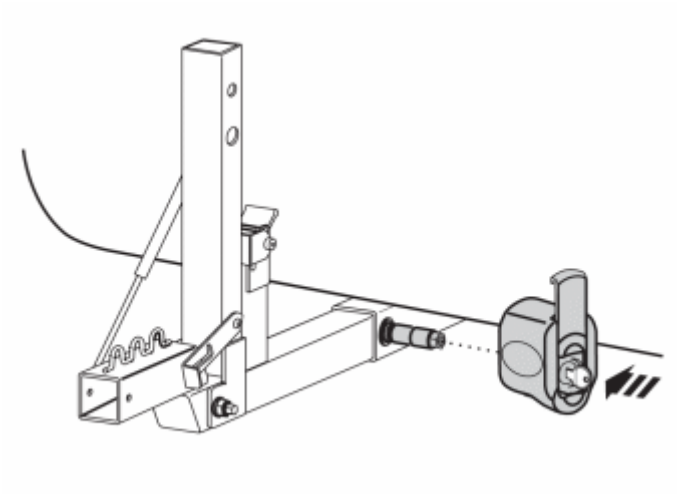

Fig. 167: Identifying Insertion Of Base On Hitch
Courtesy of VOLVO CARS CORPORATION

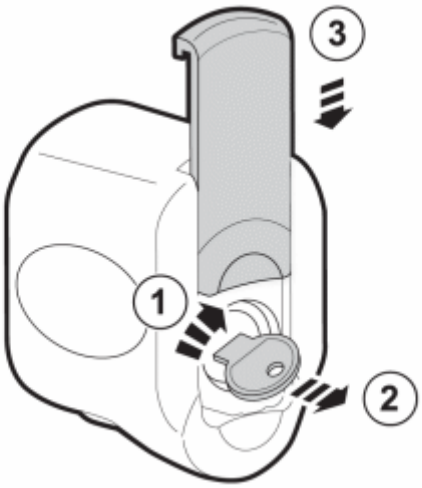

Fig. 168: Identifying Engagement Of Lock
Courtesy of VOLVO CARS CORPORATION

RAILS (2003-2008)

RAILS

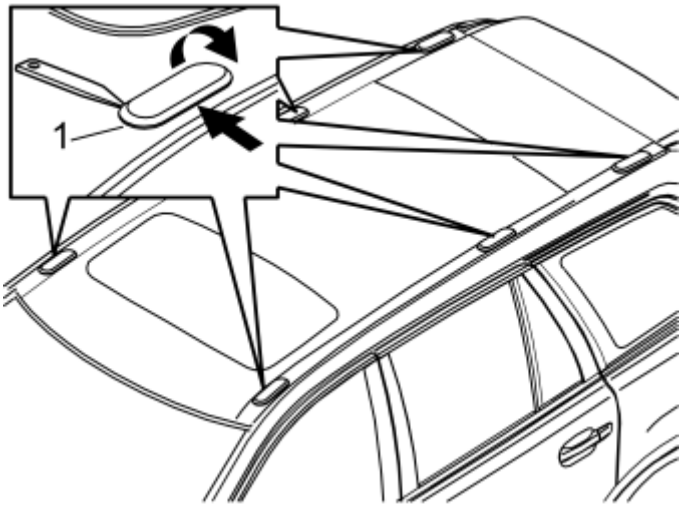

Fig. 169: Identifying Six Covers (1)
Courtesy of VOLVO CARS CORPORATION

- Carefully pry off the six covers (1) using a plastic weatherstrip tool.

NOTE: **Be careful not to damage the paint. The covers are securely tightened. The best way of removing the covers is to grasp them at one of the longer sides. Then pull them outwards and pry up the other side.**

- Remove the screws and sealing washers underneath both sides of the car. The screws and sealing washers will not be reused.

INSTALLING RAILS

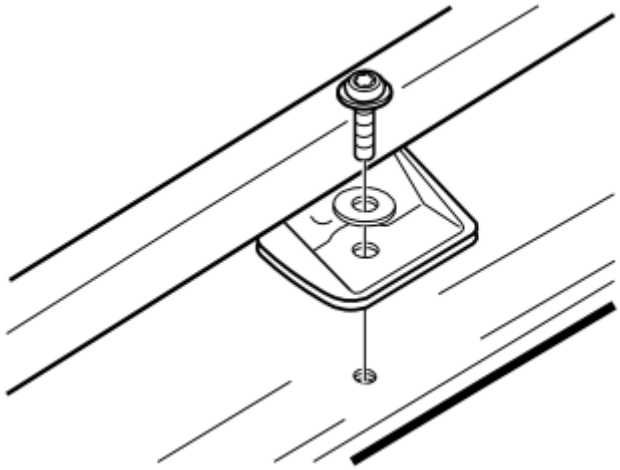

Fig. 170: Identifying Installing Rails
Courtesy of VOLVO CARS CORPORATION

- Remove one rail and three screws with washers and the rubber liner from the kit
- Carefully position the rail
- Using short screws, screw in the center mounting loosely
- Using short screws, screw in the front mounting loosely
- Using long screws, screw in the rear mounting
- Tighten all mounting screws. Tighten to 8 Nm (6 lbf. ft.). Carry out the work in two stages to prevent misalignment of the mountings.

INSTALLING THE FRONT COVER

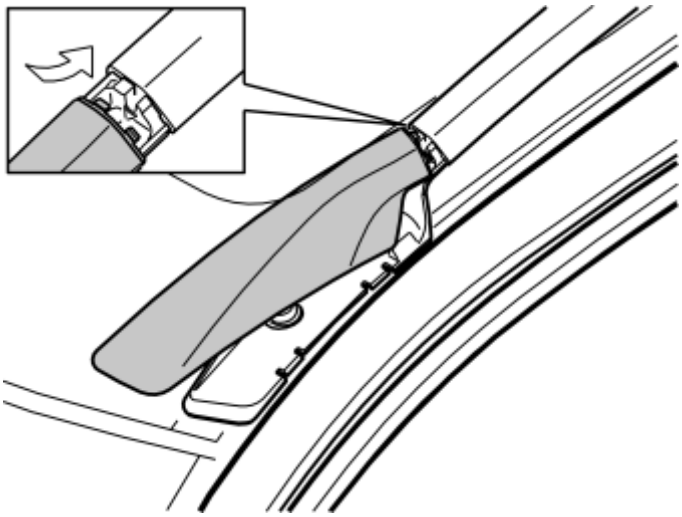

Fig. 171: Identifying The Front Cover
Courtesy of VOLVO CARS CORPORATION

- Install the cover on the front mounting for the rail. (check that the correct cover is on the correct side, right/left)
- Insert the two locating pins for the cover in the load carrier
- Fold the cover down towards the front mounting. Press into place
- Repeat the operation on the rear mounting.

INSTALLING THE CENTER MOUNTING COVER

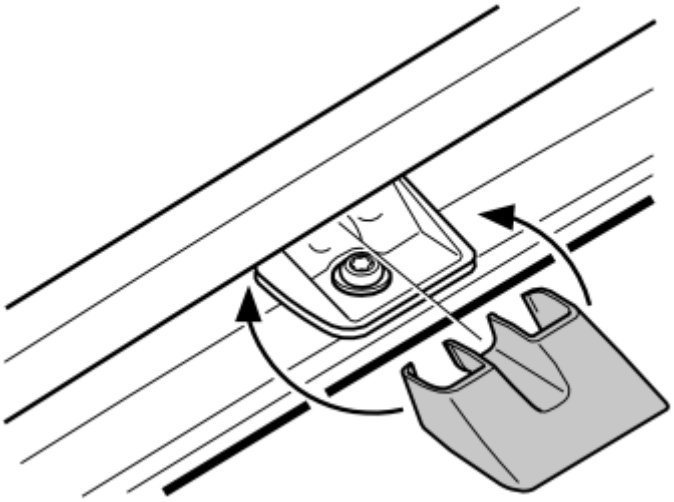

Fig. 172: Identifying The Center Mounting Cover
Courtesy of VOLVO CARS CORPORATION

- Install the cover on the center mounting
- Hook the cover onto the front edge of the mounting
- Press the cover backward. At the same time press the cover towards the rear edge of the mounting
- Carry outs points, see **INSTALLING RAILS** and **INSTALLING THE CENTER MOUNTING COVER** for the other rail.

RELAY KIT REAR FOG LAMP + RELAY KIT POSITIVE POWER SUPPLY (2003-2010)

CARS EQUIPPED WITH SRS/SIPS (AIRBAG)

see **CARS EQUIPPED WITH SRS/SIPS (AIRBAG)**

CAUTION

see **CAUTION**

RELAY KIT REAR FOG LAMP + RELAY KIT POSITIVE POWER SUPPLY

PREPARATORY WORK

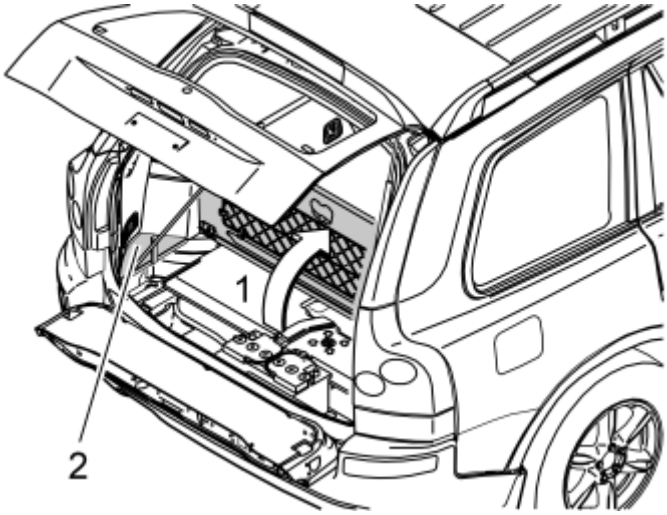

Fig. 173: Folding Up The Middle, Rear Floor Hatch (1
Courtesy of VOLVO CARS CORPORATION

XC90 with two seating rows

- Fold up the middle, rear floor hatch (1)
- Remove it by pulling it away from the forefront.
- Remove storage bins underneath and lift out.
- Remove the front floor hatch

With three rows of seats and integrated mounts underside of the middle trapdoor

- Fold up the middle, rear floor hatch (1)
- Remove the storage box underneath and lift it out. If the floor hatch has a carrier bag holder on the underneath, it is secured by a strap on each of the shorter sides of the storage box. The straps must be undone

With three rows of seats, without integrated mounts

- Fold up the middle, rear floor hatch (1) at the rear and lift it out
- Remove lateral floor plate (2).

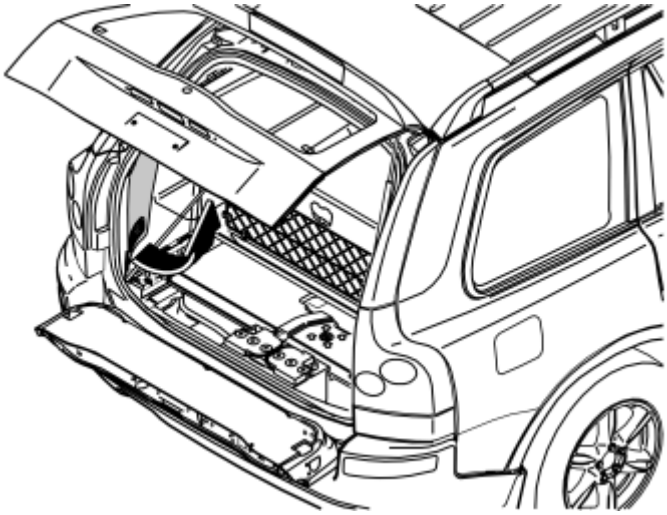

Fig. 174: Removing Panel
Courtesy of VOLVO CARS CORPORATION

- Remove panel.

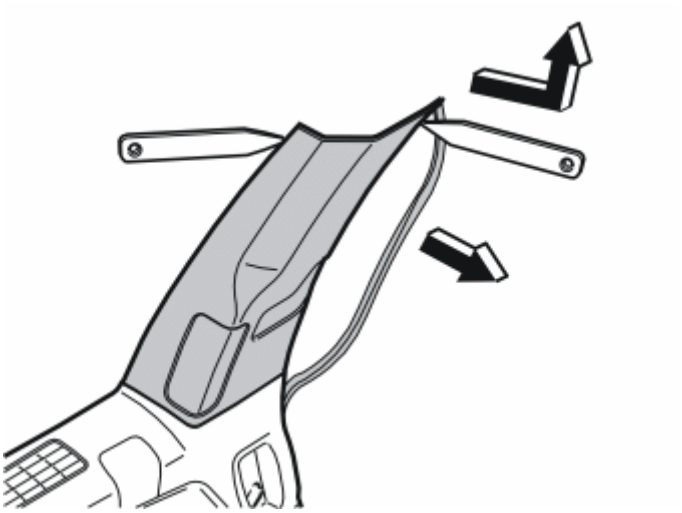

Fig. 175: Identifying Left-Hand C-Post Panel And Plastic Weatherstrip Tools
Courtesy of VOLVO CARS CORPORATION

- Pull the rubber seal at the rear of backdoor for C-pillar panel.
- Bend gentle off C-pillar panel to the sides at the top with a weatherstrip tool of plastic and pull it until the three clips on the inside are loose.
- Remove the panel by pulling it up and unhook from the side panel.

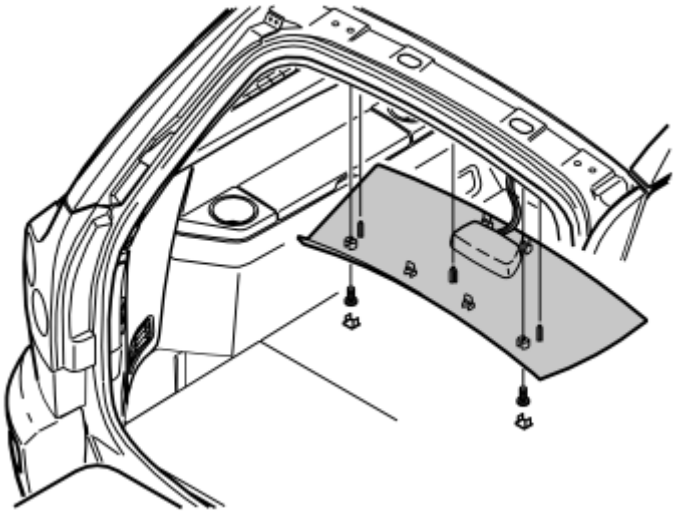

Fig. 176: Identifying Cover And Screws Underneath Rear Headlining
Courtesy of VOLVO CARS CORPORATION

- Remove cover and screws underneath rear headlining
- Carefully remove the panel in the back with a plastic tool.
- Pull the panel down at rear until all clips on the inside have released.
- If the car is provided with lighting in the panel, remove the connector.
- Pull the panel back

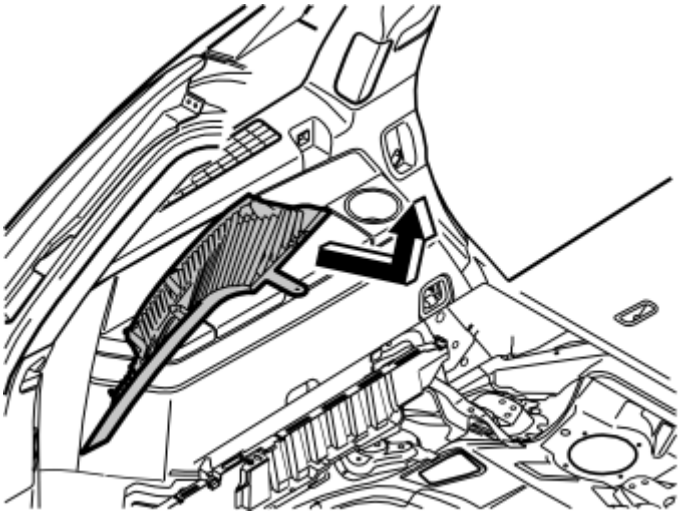

Fig. 177: Identifying D-Post Panel Removal From Side Panel
Courtesy of VOLVO CARS CORPORATION

- Take off the D-pillar panel beginning at the top and then down until the three clips on the inside have released. Be careful of the panel.
- Remove the panel by pulling it up and unhook from the side panel
- If the car is provided with D-pillar speaker, loosen the connector to it.

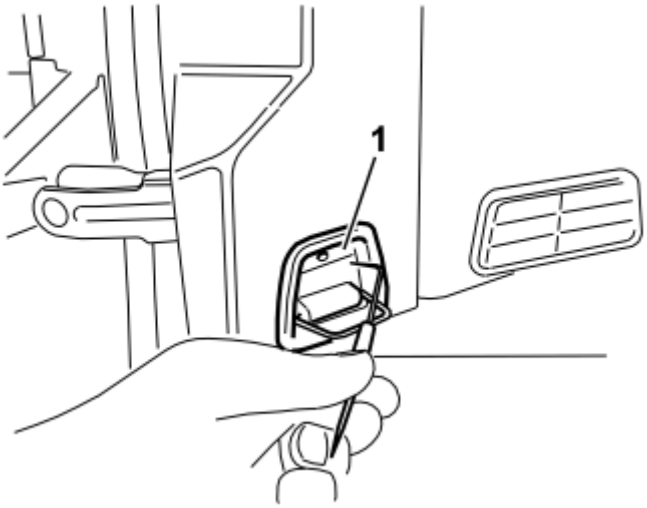

Fig. 178: Identifying Load Securing Eyelet
Courtesy of VOLVO CARS CORPORATION

- Remove load securing eyelet
- Take a scribe with angled tip and pry at the top of the lid.
- Turn the scribe's angled tip on the back of the cover (1) and pull it away.

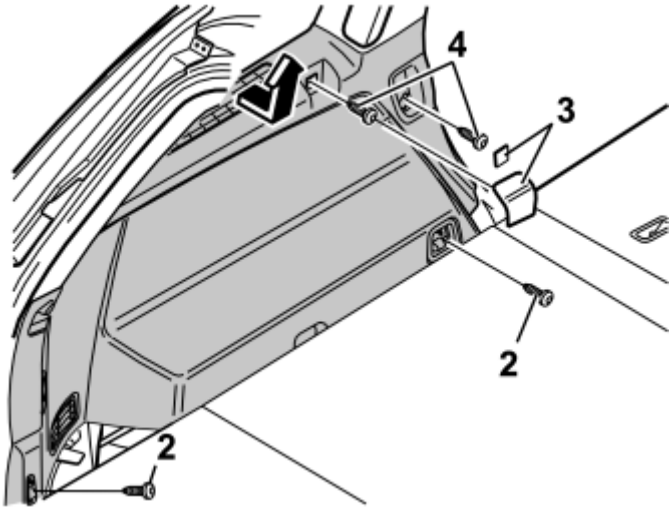

Fig. 179: Cars With Two Rows Of Seats
Courtesy of VOLVO CARS CORPORATION

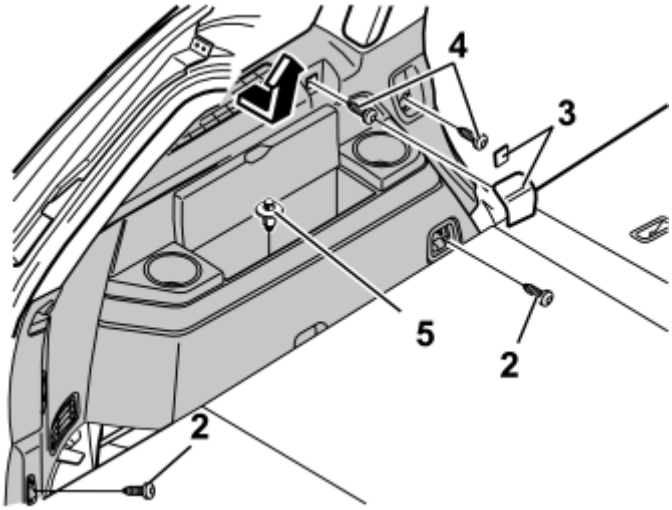

Fig. 180: Cars With Three Rows Of Seats
Courtesy of VOLVO CARS CORPORATION

- Collapse the seats in the third row
- Remove the screws (2) to load securement at the left side panel
- Remove caps (3) to the left-hand side panel front using a plastic weatherstrip tool or small screwdriver.
- Remove the screws (4).
- Remove the clip (5) in the bottom of the storage compartment
- Pull out the panel at the top. (Clips on the inside.) Remove it by pulling panel straight up.

CONNECTION

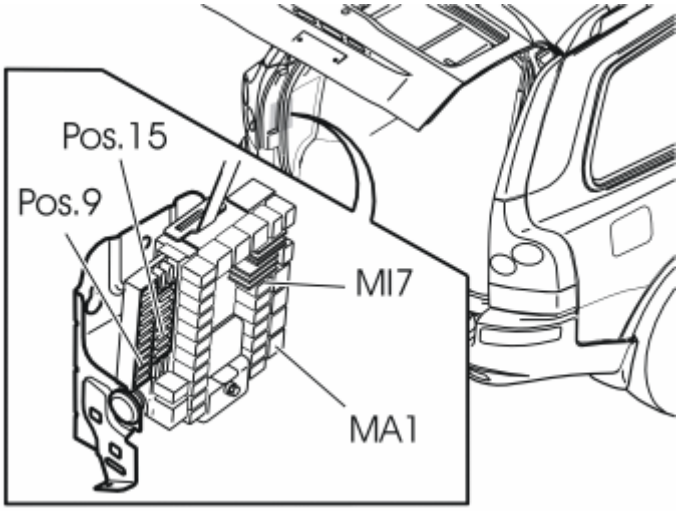

Fig. 181: Identifying Fuse Panel
Courtesy of VOLVO CARS CORPORATION

Install the correct fuse

Applies to connection of the rear fog lights

- Install relay in the rear electronics module (REM), position MI7

Applies to connection of automatic shutdown feature of the rear fog lights

NOTE: The function requires specific software

- Program the software according to the service information in VIDA (Volvo scan tool).

- Install relay in the rear electronics module (REM) position MA 1.
- Install 20A fuse in the rear electronics module (REM), position 9, and 15A fuse in the position 15.

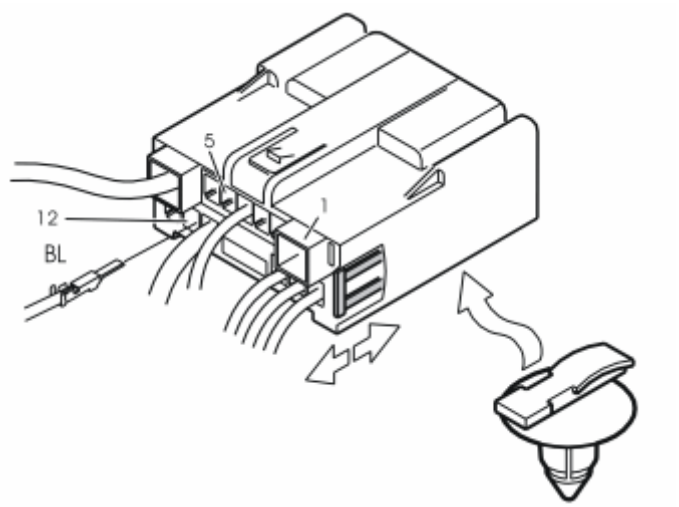

Fig. 182: Identifying Connector For Towbar Wiring
Courtesy of VOLVO CARS CORPORATION

- Loosen towing harness connector. Contact is found by following the wiring coming up through the rubber seal in the floor of the luggage compartment where the battery is vented.
- Release the red locks by pushing them forward.
- Connect the blue (BL) wire to the 1, 5 or 12, depending on the desired function. Positions: 1 = Charging, 5 = Rear fog light, 12 = Back-up lights.
- Return the levers to the locked position.

NOTE: Note. If the "Charge" is used cut the existing wire shoe and replace the line shoe from the kit.

- Reinstall the towing wiring harness connector.

FINISHING WORK

- Replace the panels, drawers and floor hatches

- Torque the anchor ring bolts to **24 Nm (18 lbf. ft.)** .

Figure A

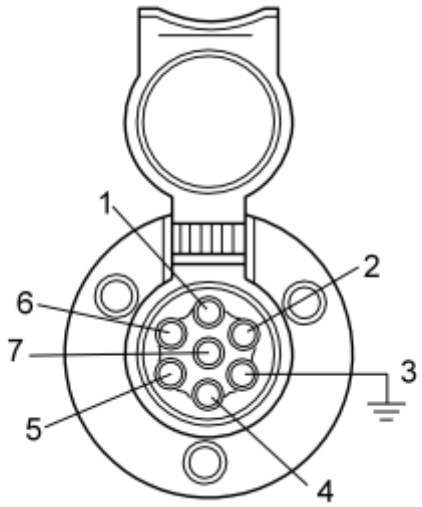

Fig. 183: Diagram 7-Pin Connector
Courtesy of VOLVO CARS CORPORATION

Diagram 7-Pin Connector

1	Left turn signals
2	Rear fog / Reverse lights / Charge
3	Ground
4	Right turn signal
5	Right sidemarker
6	Brake light
7	Left sidemarker

Figure B

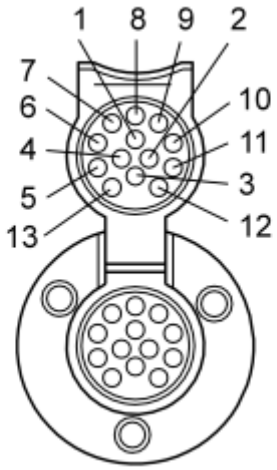

Fig. 184: Diagram 13-Pin Connector

Courtesy of VOLVO CARS CORPORATION

Diagram 13-Pin Connector

1	Left turn signals
2	Rear fog
3	Ground
4	Right turn signal
5	Right sidemarker
6	Brake light
7	Left sidemarker
8	Reverse lights
9	+30 feed
10	Charging
11	not used
12	not used
13	Ground

CAUTION STATEMENT

see **CAUTION STATEMENT**

ROOF CARGO BASKET (2003-2008)

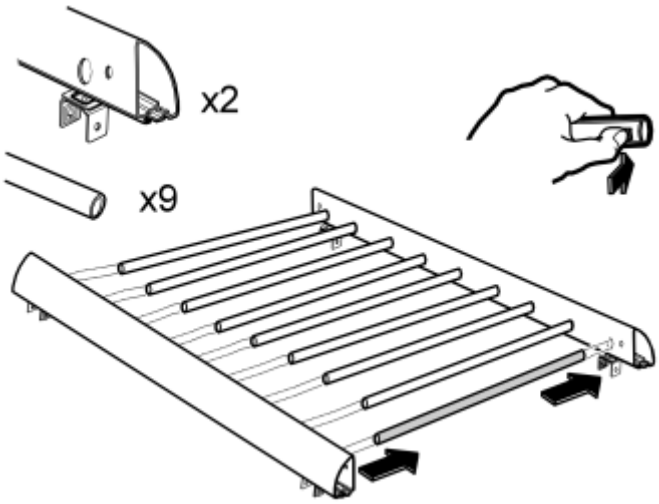

Fig. 185: Identifying Load Basket Components (1 Of 7)
Courtesy of VOLVO CARS CORPORATION

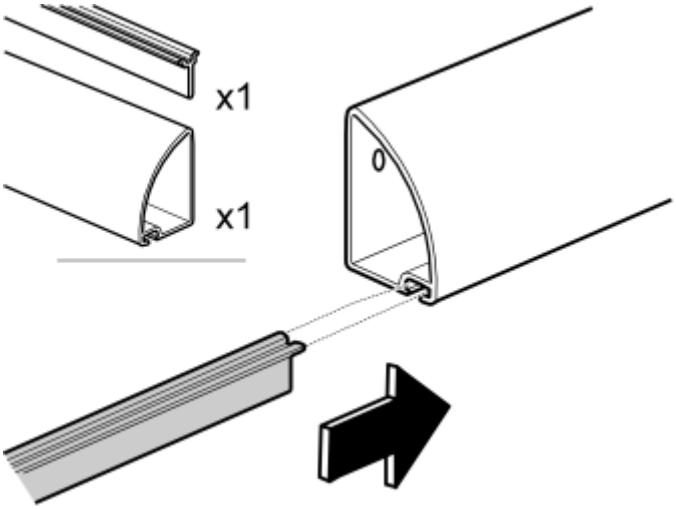

Fig. 186: Identifying Load Basket Components (2 Of 7)
Courtesy of VOLVO CARS CORPORATION

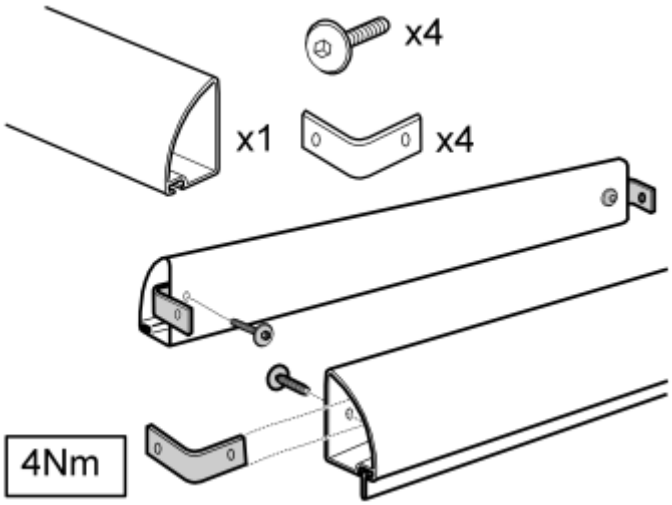

Fig. 187: Identifying Load Basket Components (3 Of 7)
Courtesy of VOLVO CARS CORPORATION

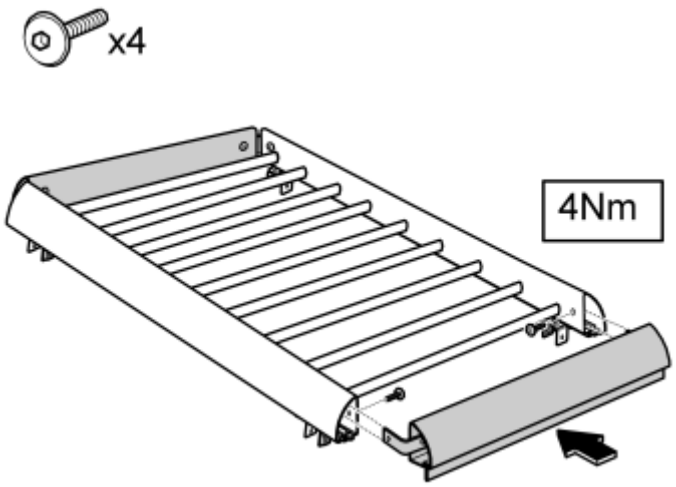

Fig. 188: Identifying Load Basket Components (4 Of 7)
Courtesy of VOLVO CARS CORPORATION

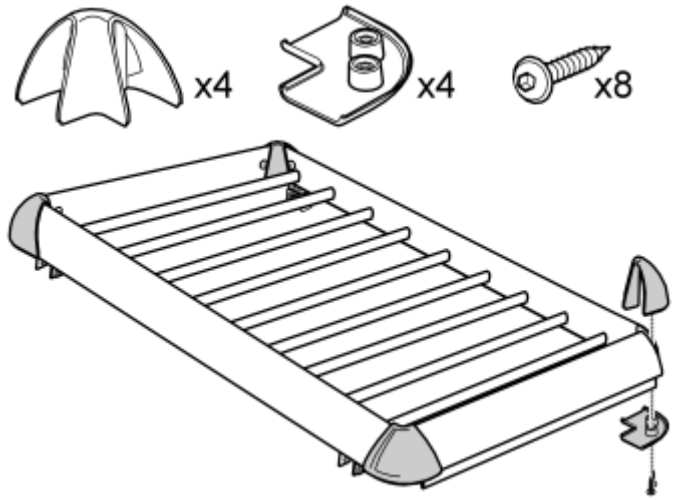

Fig. 189: Identifying Load Basket Components (5 Of 7)
Courtesy of VOLVO CARS CORPORATION

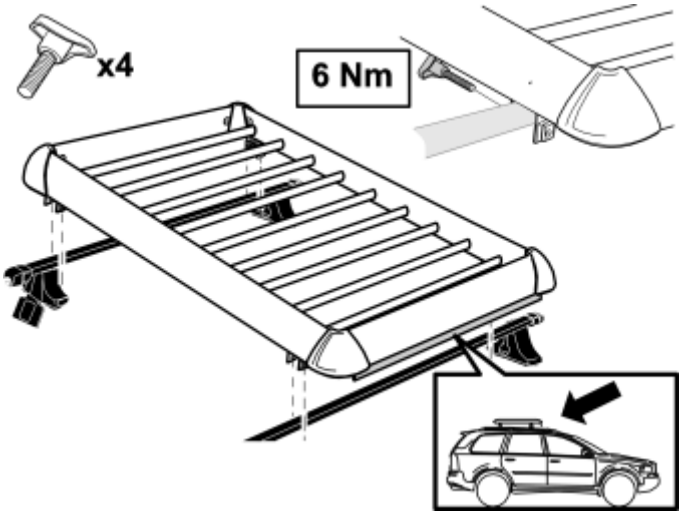

Fig. 190: Identifying Load Basket Components (6 Of 7)
Courtesy of VOLVO CARS CORPORATION

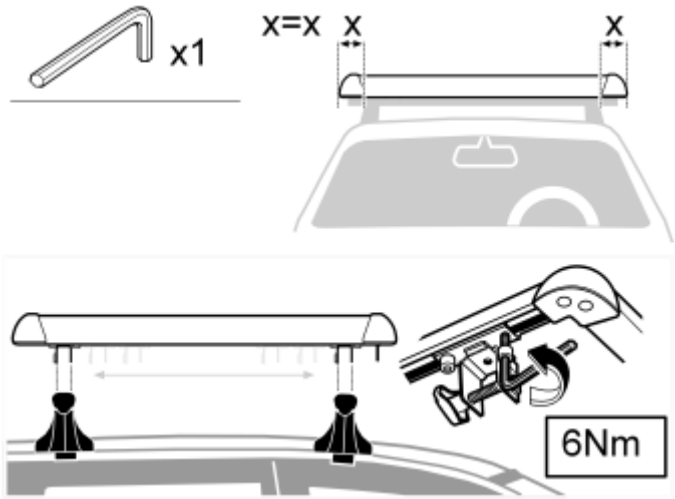

Fig. 191: Identifying Load Basket Components (7 Of 7)
Courtesy of VOLVO CARS CORPORATION

ROOF PROTECTION RIBS (2003-2004)

ROOF PROTECTOR RIBS

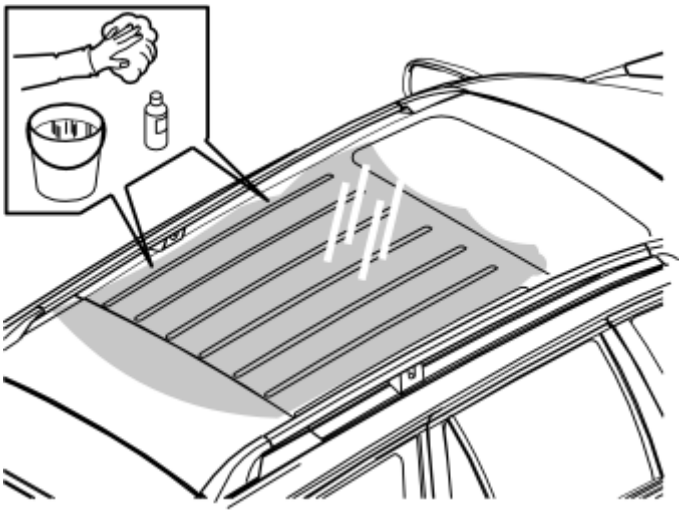

Fig. 192: Washing The Area
Courtesy of VOLVO CARS CORPORATION

- Remove the load carriers from the car (if equipped)
- Wash the car
- Wash the area of the car roof where the roof protector ribs are to be installed using a mixture of windscreen washer fluid and water. Mix 30%/70%. The temperature of the car must be at least **15°C (60° F)** when installing the roof protector ribs.

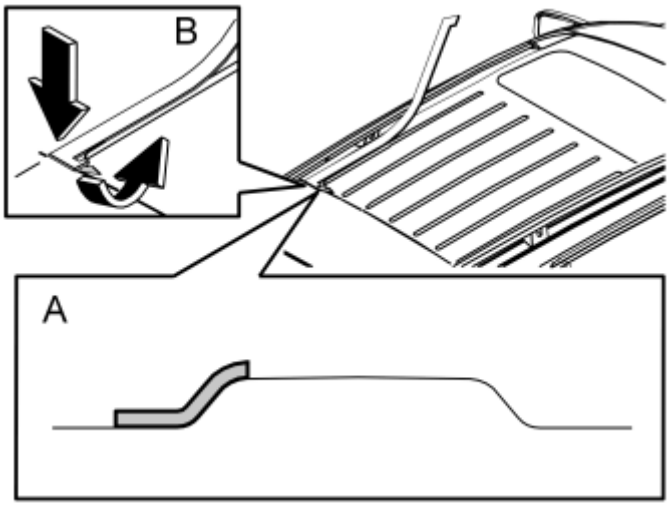

Fig. 193: Positioning The Guide Moulding
Courtesy of VOLVO CARS CORPORATION

- Take the guide moulding from the kit. Pull off a piece of the tape.

NOTE: **Take care when installing the guide moulding. The front-rear edge of the guide moulding must be positioned on the raised ridge where the flat surface starts to bend. The rear edge of the guide moulding must be positioned in the corresponding way at the roof joint.**

- Position the guide moulding as above at one of the front-rear raised ridges on the roof
- Pull the backing off the guide moulding as it is pressed over the raised ridge.

NOTE: Use pieces of tape to secure the guide moulding so that it does not move when installing the roof protector rib.

- Check that the guide moulding is straight by standing behind the car and looking along the guide moulding and the embossing on the roof.

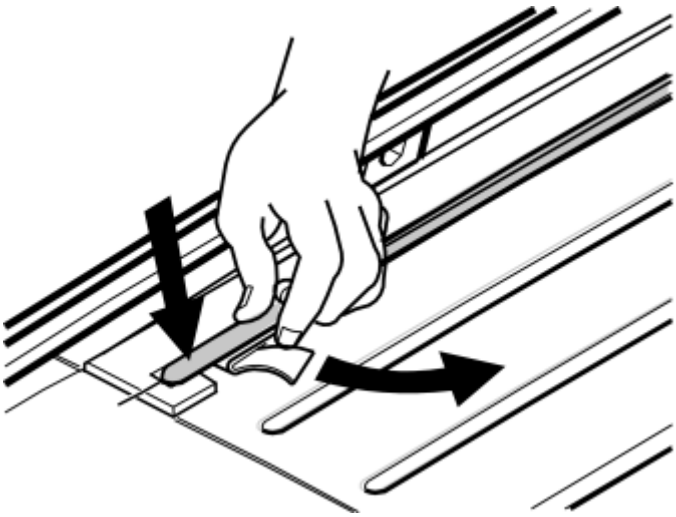

Fig. 194: Position The Rib Along The Edge Of The Guide
Courtesy of VOLVO CARS CORPORATION

- Take a roof protector rib from the kit (one at a time). Position the rib on the raised ridge along the edge of the guide moulding edge to edge with the rear end on the guide moulding cut-out
- Lift the rear end of the roof protection rib and pull off the backing.

NOTE: The tape on the roof protector ribs bonds immediately and can be moved from side to side. The tape on the roof protector ribs is easily stretched.

It is important that force is applied at right angles to the roof protector ribs so that the ribs do not stretch and will not align with the cut-out in the guide moulding.

Take great care during the installation. Ensure that the ribs are positioned along and parallel to the installed guide moulding.

- Pull the backing off while pressing down the roof protector rib following the guide moulding
- Lift off the guide moulding

CAUTION: Carefully press the roof protector rib by hand so that the tape secures over the entire contact surface. Press hard repeatedly along

the entire length of the roof protector rib. It is particularly important at the end of the roof protector ribs.

- Repeat points 2 and 3 for the remaining roof protector ribs.

NOTE: After installing the roof protector ribs, the car must not be exposed to temperatures lower than 15°C (60°C) for 8 hours. Do not wash the car for 72 hours after installing the roof protector ribs.

SKI BOX (2003)

SKI BOX

NOTE: Regularly check that the load carriers are secured properly on the roof and that the ski box is tightly secured on the load carriers. Be aware of the changed height and driving characteristics of the car with load carriers and box. Always secure loads. Check that the box is properly locked and the key removed before travelling. The total roof load capacity of the car must not be exceeded. Highest permitted load = load carrier weight + box weight + load weight. For safety the car should not be driven at top speed. The speed should be adjusted to the load transported and of course to appropriate speed limits. Remember the following with the box mounted: - The increased height of the car. - Wind noise may occur. These installation instructions should be stored with the car handbook. Damage to the car and surroundings may occur if the instructions are not followed.

INSTALLING THE SKI BOX

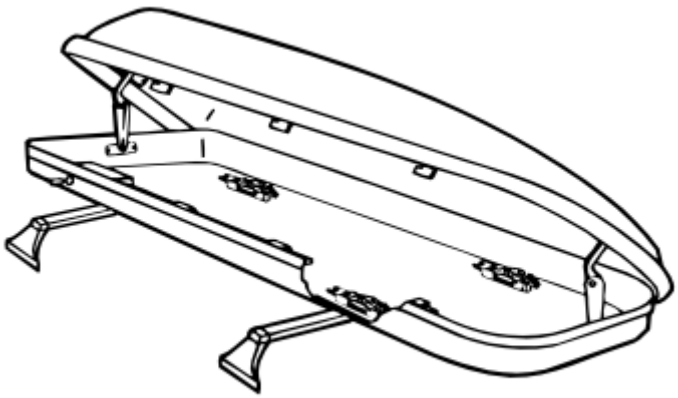

Fig. 195: Identifying Open Space Box
Courtesy of VOLVO CARS CORPORATION

- Place the ski box on the load carriers parallel to the car. Ensure that neither the ski box nor the load

carrier obstruct the tailgate.

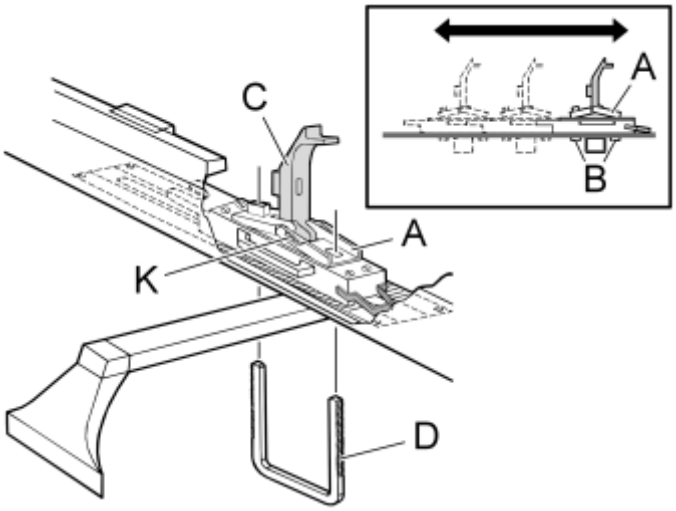

Fig. 196: Identifying Securing Plates And Grommets
Courtesy of VOLVO CARS CORPORATION

- When opening the box ensure that the opposite side is locked. The four moveable securing plates (A) in the bottom of the box should be moved so that they lie above the load carrier rails between the grommets (B) in the relevant securing plate (A).

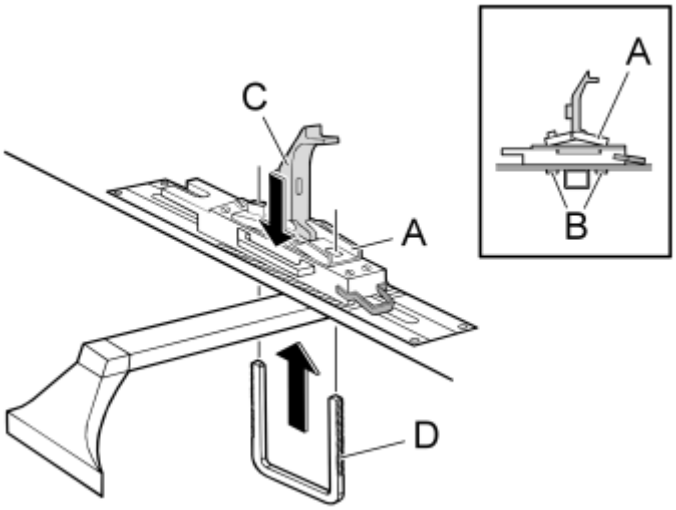

Fig. 197: Identifying U-Bracket Inserted Upwards Through Grommets
Courtesy of VOLVO CARS CORPORATION

- Position the locking handle (C) in each securing plate in the vertical position. Insert the first U-bracket (D) upwards through the grommets (B).

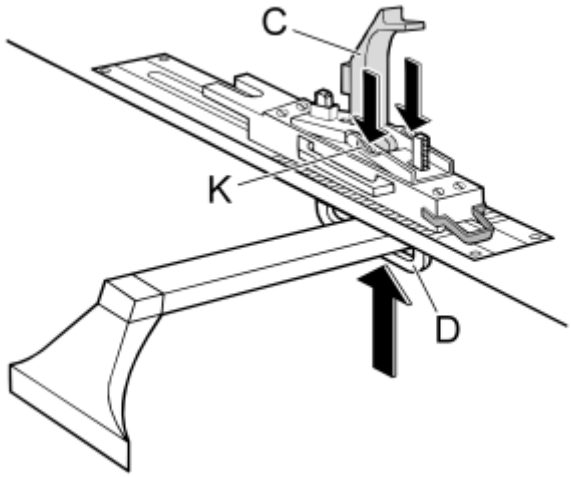

Fig. 198: Identifying Center Section Of Securing Plates Pressed Downward And Against Indicated Pressure Point Beside Lock Handle
Courtesy of VOLVO CARS CORPORATION

- Press the center section of the securing plates downward, pressing against the indicated pressure point (K) beside the lock handle (C). Press the U-bracket (D) upwards until it is tight against the load carrier.

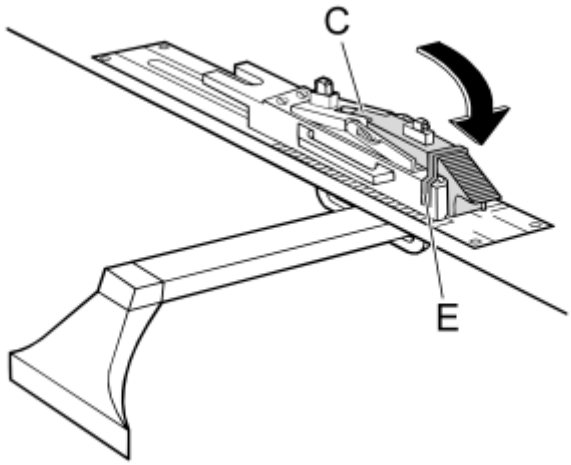

Fig. 199: Folding Down Lock Handle To Horizontal Position
Courtesy of VOLVO CARS CORPORATION

- Fold down the lock handle (C) to the horizontal position. This requires a force of approximately 50 N, there should be considerable tension. If this is not the case the U-bracket installation must be repeated
- Then fold the safety bracket (E) over the lock handle (C) until it snaps shut. If this cannot be done, check that the lock handle is snapped shut in the final position. Install the other three securing plates in the same way.

NOTE: Check that the box is securely fixed to the load carrier at regular intervals.

INSTALLING THE SKI HOLDER

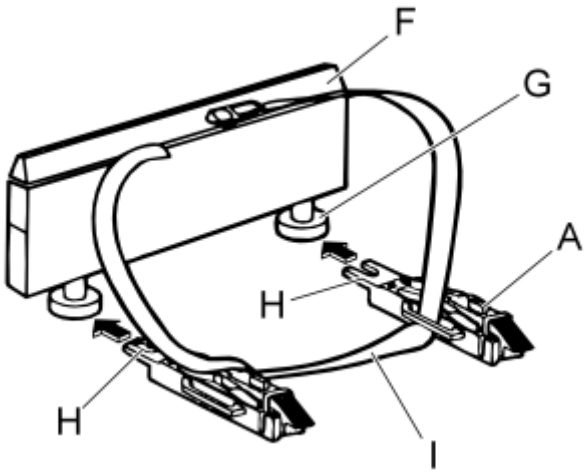

Fig. 200: Identifying Ski Holder Installation
Courtesy of VOLVO CARS CORPORATION

- Install the ski holders (f) by first pressing the first and then the second bolt (G) onto the underneath of the ski holder and in fork (H) on the securing plate (A)
- Thread the tensioning strap (I) through the eyelets on the securing plates (A). When transporting skis, the skis must be placed on the ski holder (F) and tightened securely using the tensioning strap (I).

TRANSPORTING OTHER GOODS

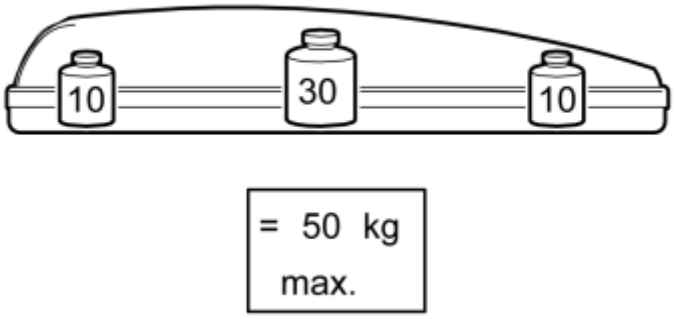

Fig. 201: Identifying Load Distribution And Limits
Courtesy of VOLVO CARS CORPORATION

When transporting other goods other than skis the ski holders can be removed. Goods must be secured using the tensioning strap to prevent sliding. The strap must be tightened evenly. The load must be distributed evenly. **The maximum permitted load weight is 50 kg** . The maximum roof load must not be exceeded.

OPENING AND CLOSING THE SKI BOX

Fig. 202: Identifying Ski Box Closure
Courtesy of VOLVO CARS CORPORATION

- The ski box is equipped with a double sided locking system. When opening the box ensure that the opposite side is locked. The locking system is equipped with safety springs which prevent the keys from being removed if the box is not completely closed. Check that both sides are locked and the keys have been removed before a journey.

REMOVING THE SKI BOX

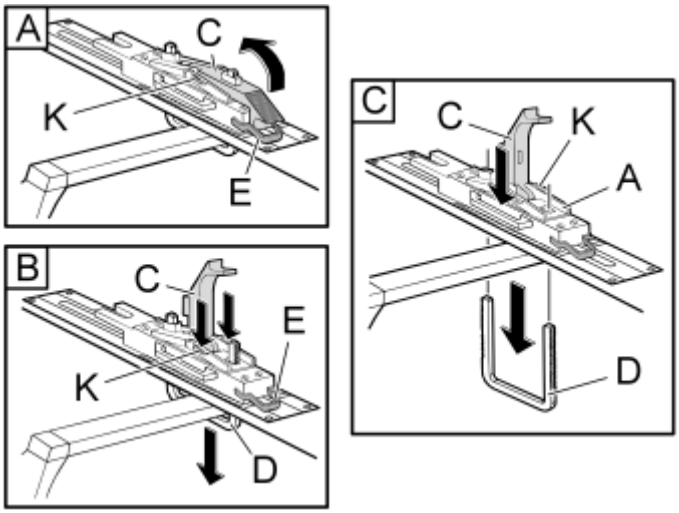

Fig. 203: Identifying Ski Box Removal
Courtesy of VOLVO CARS CORPORATION

- Open the ski box and remove the load and ski holders. Fold down the safety bracket (E), open the locking handle (C) and fold it to the vertical position. Press down the center of the securing plate in the roof box with one hand. Press against the pressure points (K) beside the lock handle (C) compare with illustration C. At the same time pull the U bracket (D) down from the mounting unit (A) using the other hand.

SKI HOLDER (2003-2009)

SKI HOLDER

INSTALLING THE COVER

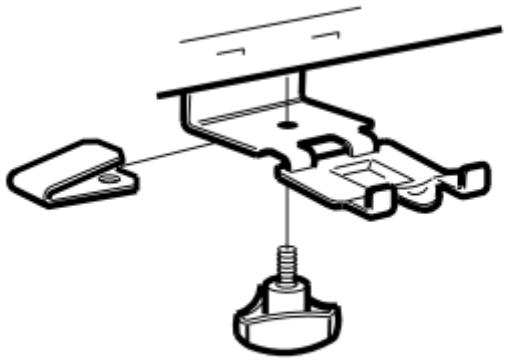

Fig. 204: Identifying Cover Attachment Assembly
Courtesy of VOLVO CARS CORPORATION

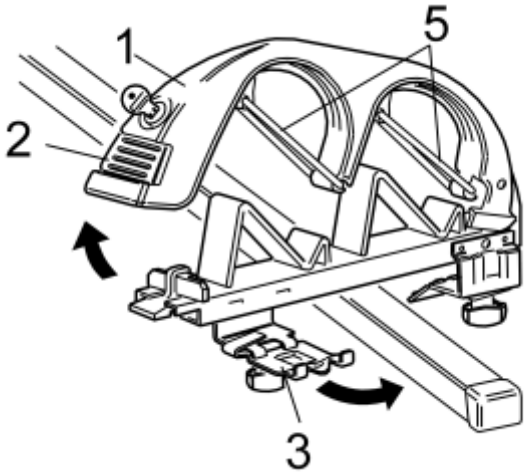

Fig. 205: Identifying Latch And Upper Section
Courtesy of VOLVO CARS CORPORATION

- Unlock the holder (1)
- Press in the latch (2). Press the upper section upwards
- Install the rubber rings (5) as illustrated
- Open the lock facing (3). Place the holder on the load carrier by turning it over the load carrier.

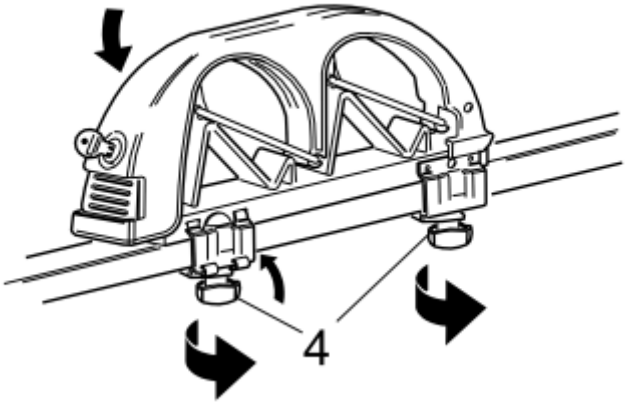

Fig. 206: Identifying Lock And Screws
Courtesy of VOLVO CARS CORPORATION

- Press the lock facing up and tighten the screws (4)
- Press the upper section down and lock it in place.

SKI HOLDER, HITCH (2003-2004)

SKI HOLDER, HITCH

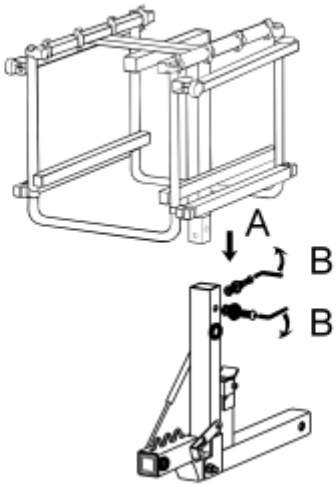

Fig. 207: Identifying Ski Holder And Base Unit
Courtesy of VOLVO CARS CORPORATION

- Install the ski holder in the square section pipe on the base unit
- Tighten the ski holder using the two screws, the sprung washers and the flat washers from the base unit kit.

ILLUSTRATIONS A-D SHOW HOW TO INSTALL THE LOCK CYLINDERS AND HOW TO LOCK THE SKI

HOLDER

Illustration A

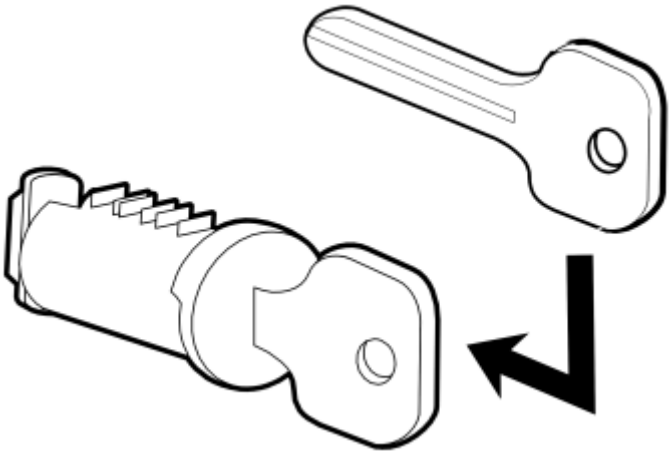

Fig. 208: Identifying How To Lock The Base Unit With The Accessories For The Tow Hitch (1 of 4)
Courtesy of VOLVO CARS CORPORATION

Illustration B

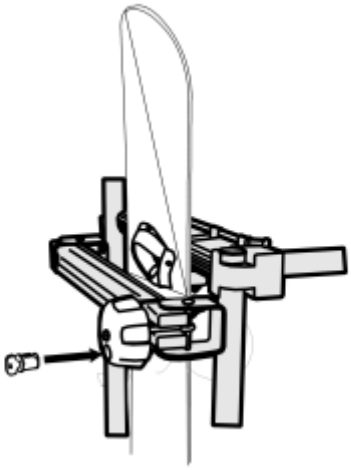

Fig. 209: Identifying Lock Cylinders And How To Lock The Ski Holder (2 of 4)
Courtesy of VOLVO CARS CORPORATION

Illustration C

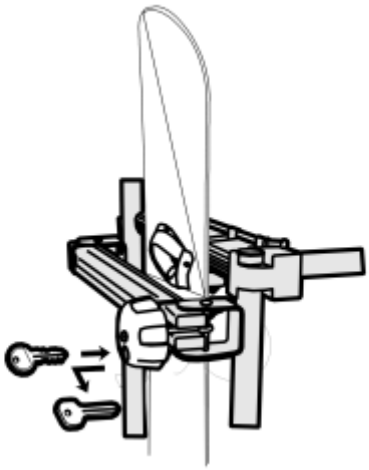

Fig. 210: Identifying Lock Cylinders And How To Lock The Ski Holder (3 of 4)
Courtesy of VOLVO CARS CORPORATION

Illustration D

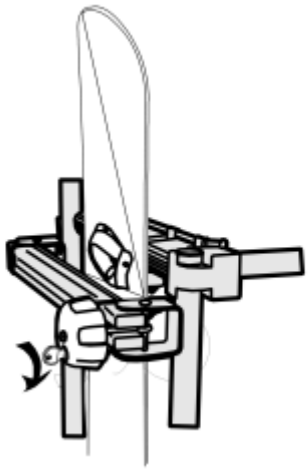

Fig. 211: Identifying Lock Cylinders And How To Lock The Ski Holder (4 of 4)
Courtesy of VOLVO CARS CORPORATION

ILLUSTRATIONS A-G SHOW HOW TO LOCK THE BASE UNIT WITH THE ACCESSORIES FOR THE TOW HITCH. USE THE LOCK HOUSING FROM THE BASE UNIT KIT AND THE LOCK CYLINDER USING THE KEYS FROM THE ACCESSORY KIT

Illustration A

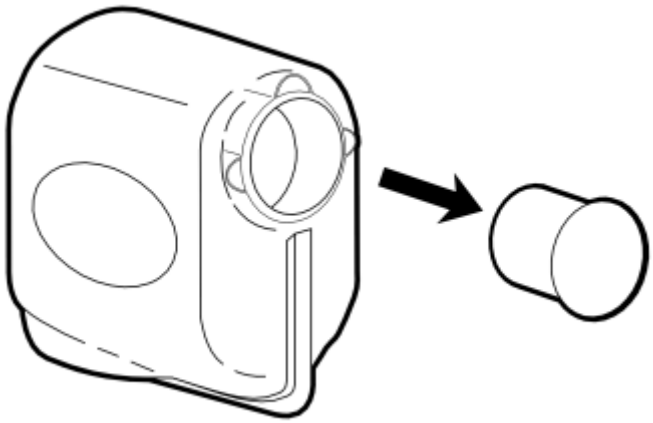

Fig. 212: Identifying How To Lock The Base Unit With The Accessories For The Tow Hitch (1 of 7)
Courtesy of VOLVO CARS CORPORATION

Illustration B

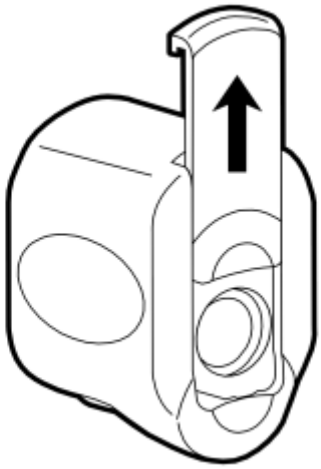

Fig. 213: Identifying How To Lock The Base Unit With The Accessories For The Tow Hitch (2 of 7)
Courtesy of VOLVO CARS CORPORATION

Illustration C

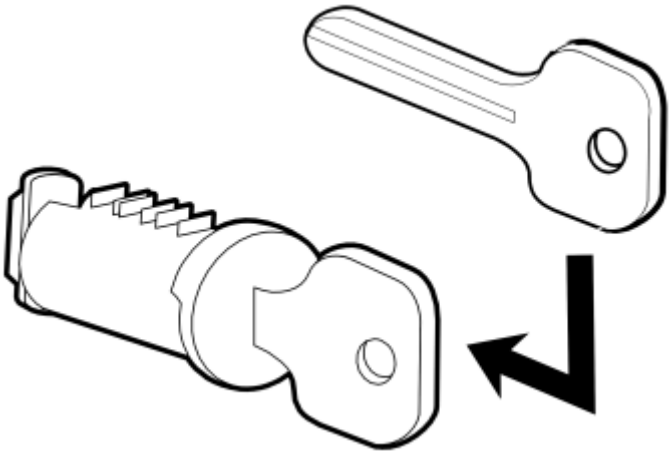

Fig. 214: Identifying How To Lock The Base Unit With The Accessories For The Tow Hitch (1 of 4)
Courtesy of VOLVO CARS CORPORATION

Illustration D

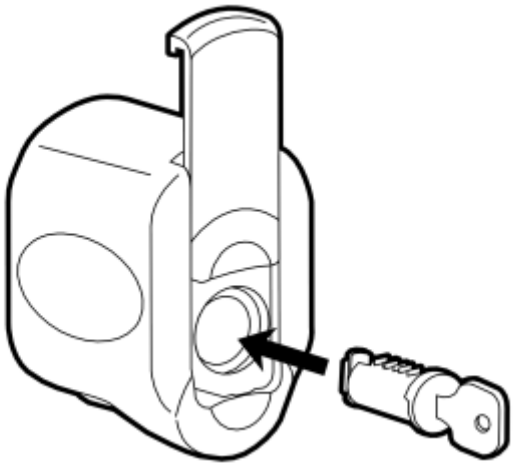

Fig. 215: Identifying How To Lock The Base Unit With The Accessories For The Tow Hitch (4 of 7)
Courtesy of VOLVO CARS CORPORATION

Illustration E

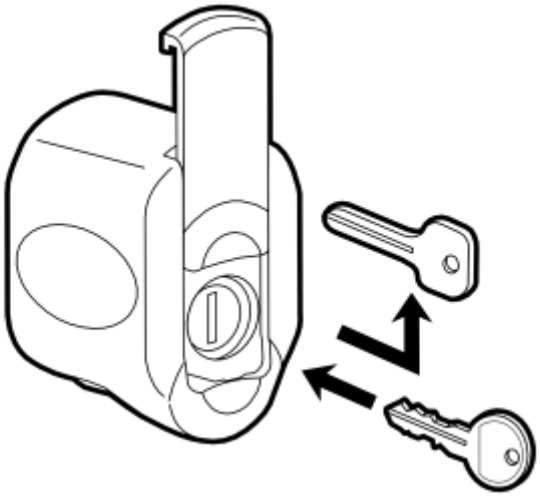

Fig. 216: Identifying How To Lock The Base Unit With The Accessories For The Tow Hitch (5 of 7)
Courtesy of VOLVO CARS CORPORATION

Illustration F

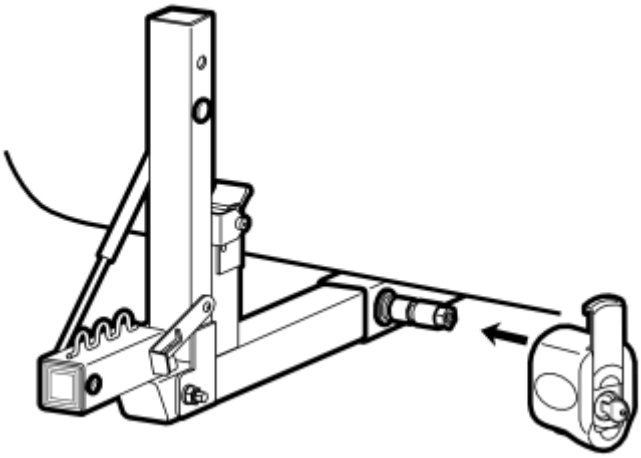

Fig. 217: Identifying How To Lock The Base Unit With The Accessories For The Tow Hitch (6 of 7)
Courtesy of VOLVO CARS CORPORATION

Illustration G

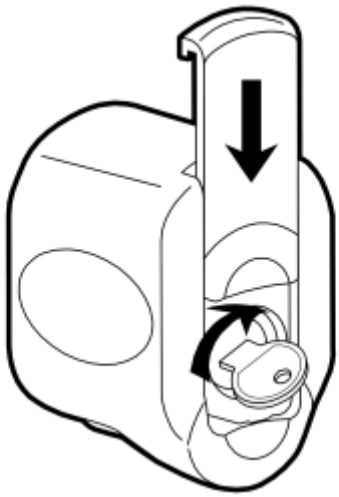

Fig. 218: Identifying How To Lock The Base Unit With The Accessories For The Tow Hitch (7 of 7)
Courtesy of VOLVO CARS CORPORATION

SKI HOLDER

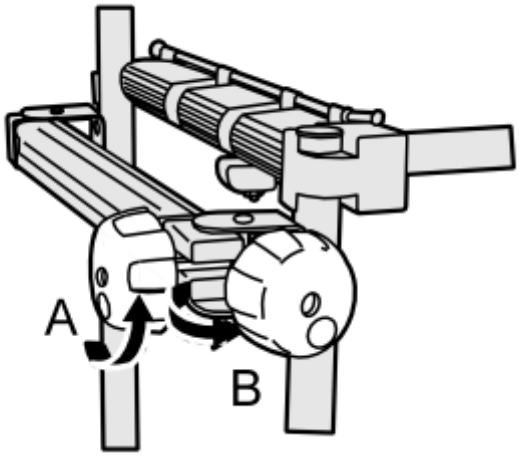

Fig. 219: Identifying Ski Holder Locking Knob
Courtesy of VOLVO CARS CORPORATION

- Remove the mounting bracket for the ski holder by turning the locking knob anti-clockwise and then folding the locking knob outwards from the mounting bracket.

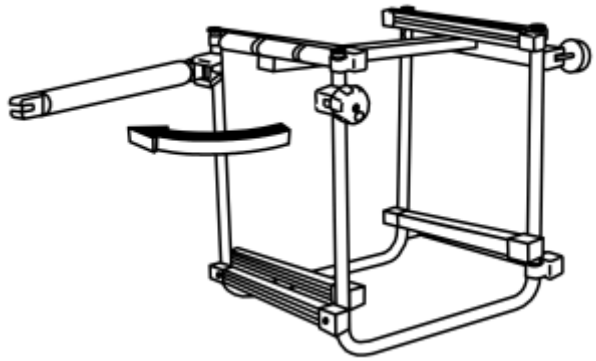

Fig. 220: View Of Folding Mounting Bracket Outward
Courtesy of VOLVO CARS CORPORATION

- Fold the mounting bracket outward.

SKI HOLDER

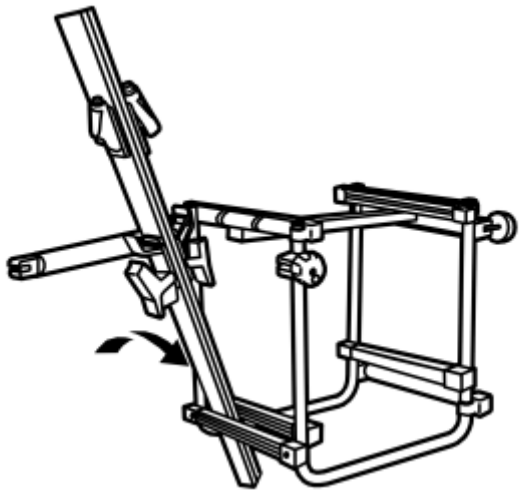

Fig. 221: Identifying Installation Of A Pair Of Skis
Courtesy of VOLVO CARS CORPORATION

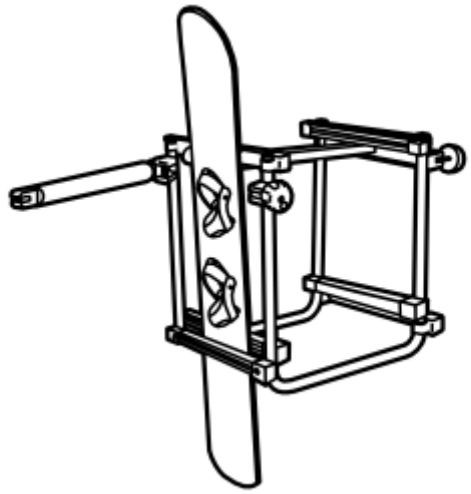

Fig. 222: Identifying Installation Of One Snowboard
Courtesy of VOLVO CARS CORPORATION

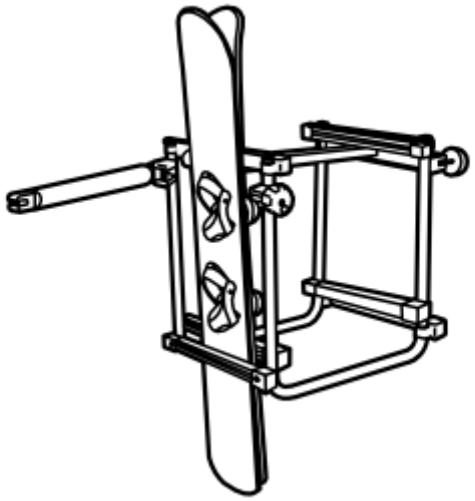

Fig. 223: Identifying Installation Of Two Snowboards
Courtesy of VOLVO CARS CORPORATION

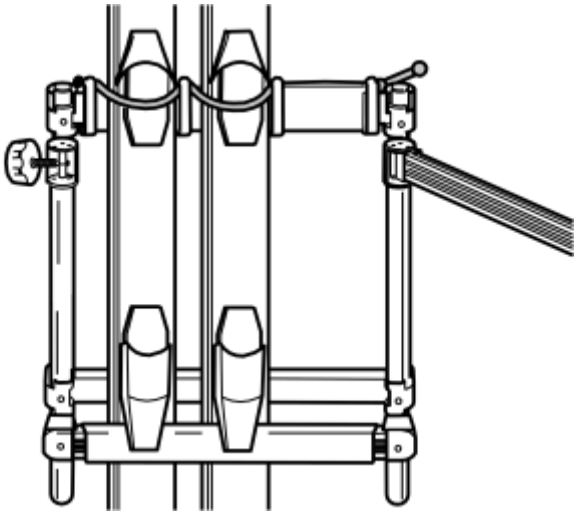

Fig. 224: View Of Secured Rubber Straps
Courtesy of VOLVO CARS CORPORATION

- Slide the skis or snowboard down into the lower holder
- Hold them against the rear section of the upper holder
- Secure them against the rear section using the rubber straps to keep them in place while other skis/snowboards are positioned in the holder when the mounting bracket is closed.

SKI HOLDER

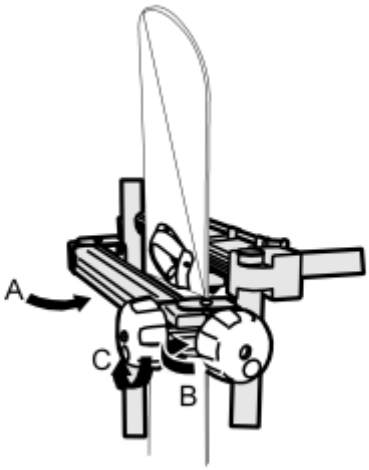

Fig. 225: Folding Mounting Bracket And Locking Knob Back Into Position
Courtesy of VOLVO CARS CORPORATION

- Fold the mounting bracket and locking knob back into position. Tighten the locking knob.

CAUTION: Check that the load on the ski holder is secured properly so there is no risk of it falling off. Regularly check the load during the journey. The load must not obstruct the number plate or lighting. Tighten all the screws,

nuts and knobs regularly to prevent any section of the accessory or the load from falling off.

The ski holder must not be used when driving off road.

Any damaged straps must be replaced with new straps.

The load must not protrude outside the ski holder.

Do not overload the car. The center of gravity can alter when loads are transported on the hitch unit.

An extra number plate holder with lighting is available as an accessory and must be used if the number plate for the car is hidden by the loaded ski holder.

SPACE BOX XPERIENCE (2003-2009)

SPACE BOX XPERIENCE

NOTE: **This space box is not suitable for the V40 with rails.**

NOTE: **The space box may only be opened on one side at a time.**

NOTE: **Regularly check that the load carriers are secured properly on the roof and that the space box is tightly secured on the load carriers. Be aware of the changed height and driving characteristics of the car with load carriers and box. Check that the box is properly locked and the key removed before travelling. The load must not exceed 75 kg and must always be secured. The total roof load capacity of the car must not be exceeded. Highest permitted load = load carrier weight + box weight + load weight. For safety reasons the car must not be driven at top speed (maximum 130 km/h). Speeds should be adjusted to the load being carried and of course to legal speed limits. Note that there may be wind noise when the space box is installed. These installation instructions should be stored with the car handbook. Damage to the car and surroundings may occur if the instructions are not followed.**

INSTALLING THE SPACE BOX

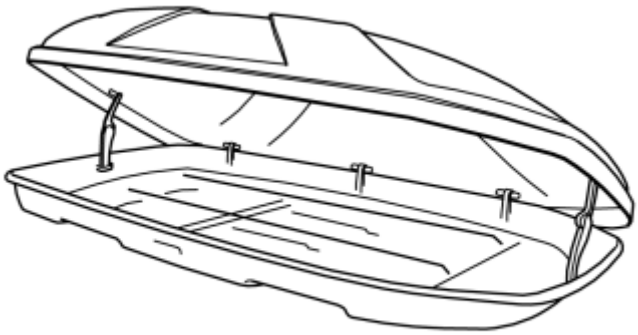

Fig. 226: Identifying Opening Space Box On One Side
Courtesy of VOLVO CARS CORPORATION

- Place the space box on the load carriers parallel to the car. Ensure that the box and load carriers do not prevent the tailgate from opening fully
- Open the space box on one side. Ensure that the other side is locked.

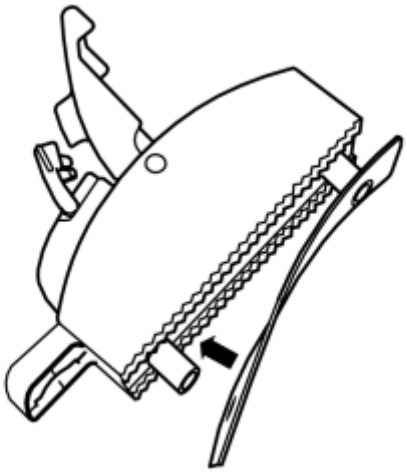

Fig. 227: Assembling Quick-Release Mounting And Rubber Liner
Courtesy of VOLVO CARS CORPORATION

- Assemble a quick-release mounting and a rubber liner from the kit
- Do the same with all the quick-release mountings.

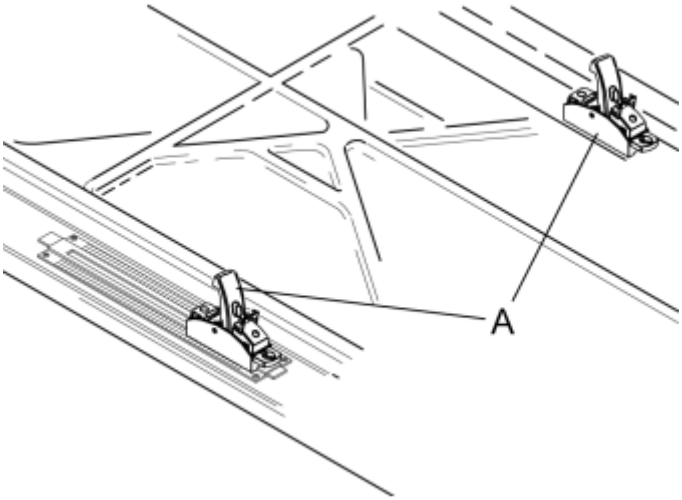

Fig. 228: Identifying Quick-Release Mountings
Courtesy of VOLVO CARS CORPORATION

- Secure the quick-release mountings (A) in the bottom of the space box. Turn all the quick-release mountings in the same direction. Press them down properly.

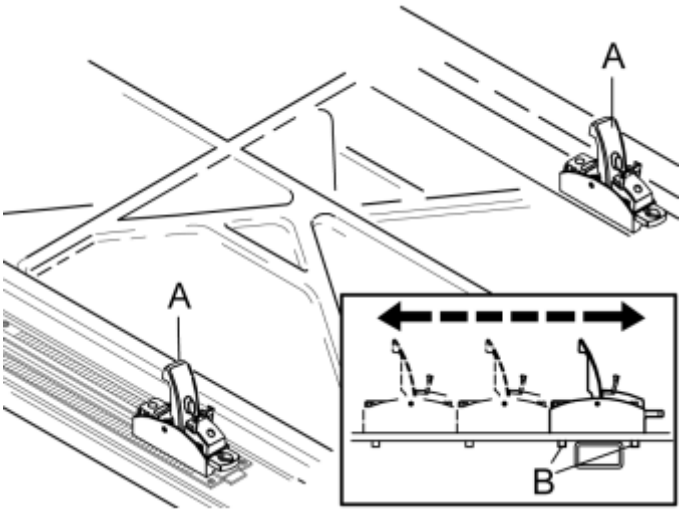

Fig. 229: Identifying Quick-Release Mountings And Lugs
Courtesy of VOLVO CARS CORPORATION

- Move the four quick-release mountings (A) in the bottom of the space box so that the two lugs (B) on each quick-release mounting are on each side of the load carrier tubes
- Check that the box is centered on the roof and does not come into contact with the tailgate when open.

Points 5-7 apply to all the quick-release mountings

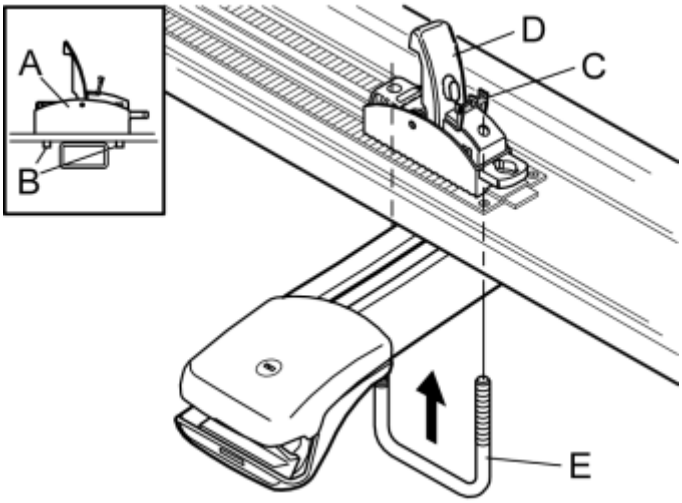

Fig. 230: Identifying U-Bracket And Lugs On Quick-Release Mounting
Courtesy of VOLVO CARS CORPORATION

- Fold up the red safety catches (C)
- Fold the lock handle (D) to the vertical position
- Insert a U-bracket (E) upwards through the lugs (B) on the quick-release mounting (A).

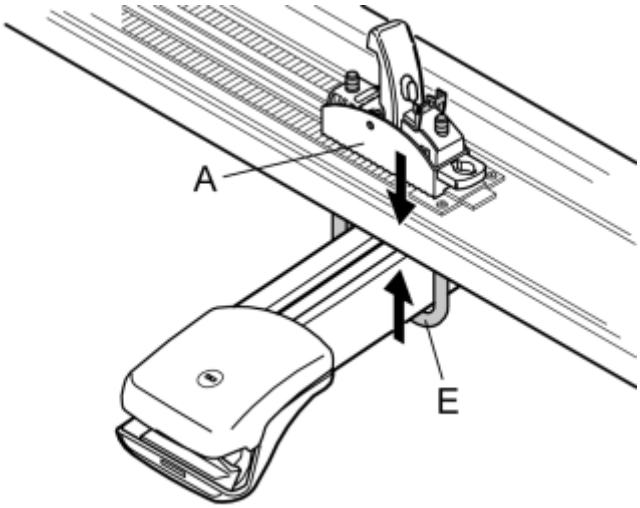

Fig. 231: Identifying Engagement Of Quick-Release Mounting
Courtesy of VOLVO CARS CORPORATION

- Press the quick-release mounting (A) downwards towards the bottom of the space box. At the same time press the U-bracket (E) upwards until it is against the underneath of the load carrier.

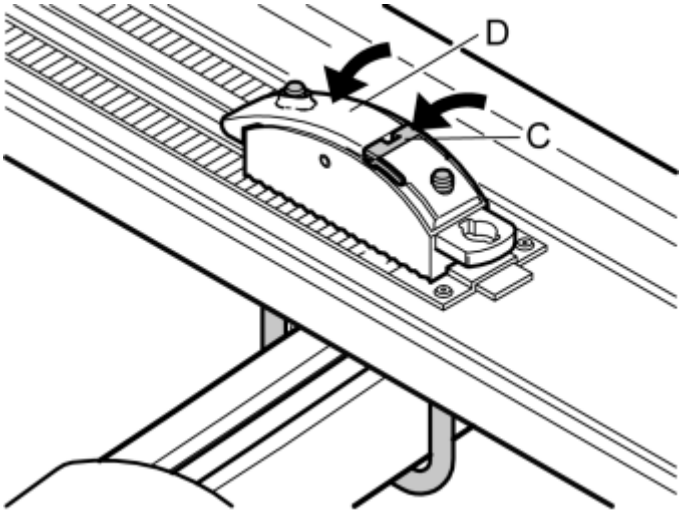

Fig. 232: Folding Lock Handle Down To Horizontal Position
Courtesy of VOLVO CARS CORPORATION

- Fold the lock handle (D) down to the horizontal position. This requires a force of approximately 50 N. There should be considerable resistance. If this is not the case the U-bracket installation must be repeated
- Fold the safety catch (C) over the lock handle until it snaps into place. If this cannot be done, check that the lock handle has snapped shut in the final position.

NOTE: Regularly check that the box is securely fixed to the load carrier.

APPLIES WHEN TRANSPORTING

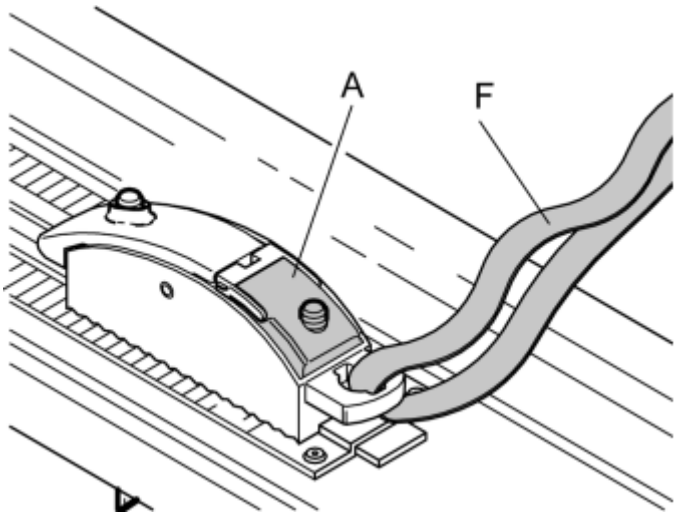

Fig. 233: Identifying Tensioning Strap Threaded Through Holes On Quick-Release Mountings
Courtesy of VOLVO CARS CORPORATION

- Thread the tensioning strap (F) through the holes on the quick-release mountings (A)
- Secure the goods using the tensioning strap.

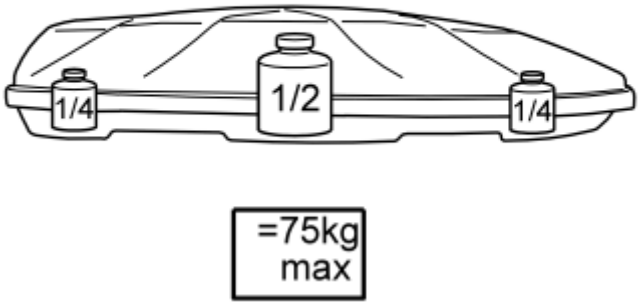

Fig. 234: Identifying Load Distribution
Courtesy of VOLVO CARS CORPORATION

- The load must be distributed as evenly as possible. **The maximum permitted load is 75 kg.** The maximum roof load of the vehicle must never be exceeded
- Check that the tensioning straps are fully tightened regularly.

OPENING AND CLOSING THE SPACE BOX

Opening the space box:

1. The space box has a double sided locking system. This means that it may only be opened on one side at a time.

- Unlock the space box on one side. Ensure that the other side is locked
- Fold up the cover.

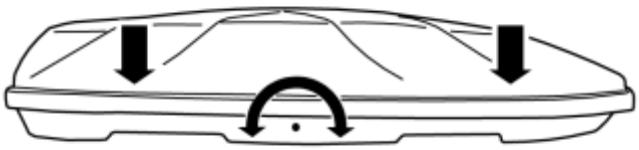

Fig. 235: Identifying Pressed Down And Locked Cover

Courtesy of VOLVO CARS CORPORATION

Closing the space box:

1. The lock system has a safety system which prevents the space box from locking if the cover is not correctly closed. Ensure that each locking shackle engages in its lock when the space box is closed. The safety system releases when the lug (G) is pressed down.

- Press the cover down properly opposite the front and rear locks.

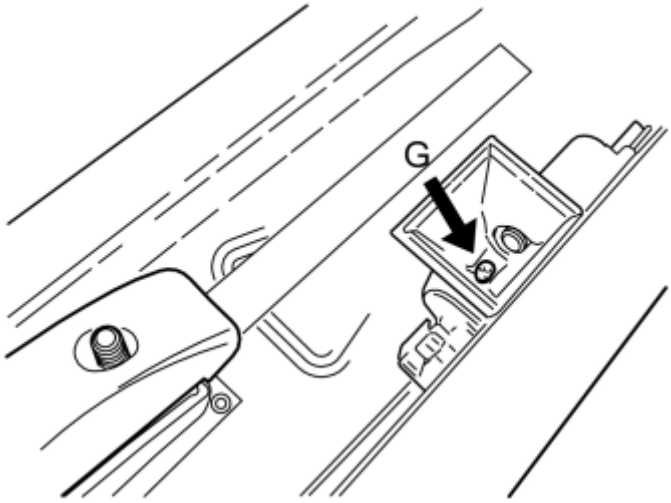

Fig. 236: Identifying Locked Space Box
Courtesy of VOLVO CARS CORPORATION

- Lock the space box. If the key cannot be turned, this may be because:
  - the cover is not properly pressed down. Press the cover and try locking again
  - there is snow or litter in the lock mechanism. Clean and try to lock it again.

REMOVING THE SPACE BOX

- Open the space box and remove the load.

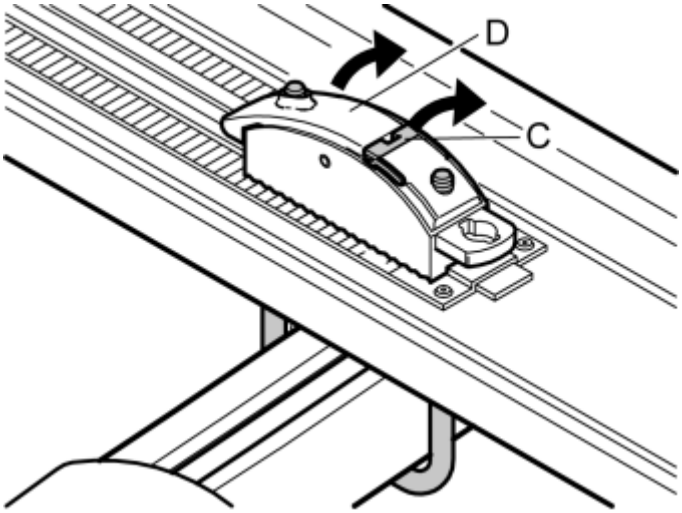

Fig. 237: Identifying Safety Catches
Courtesy of VOLVO CARS CORPORATION

- Fold up the safety catches (C)
- Fold the lock handle (D) to the vertical position.

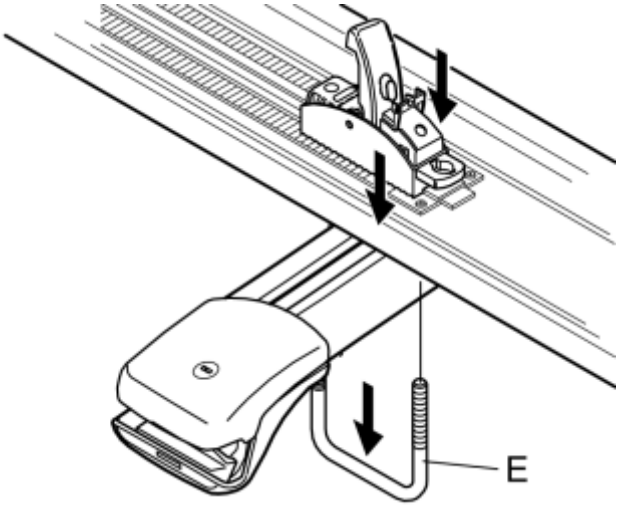

Fig. 238: Identifying U-Bracket
Courtesy of VOLVO CARS CORPORATION

- Press the quick-release mountings down towards the bottom of the space box. At the same time pull out the U-bracket (E).

NOTE: Do not damage the roof.

SPACE BOX, SPACER (2003-2012)

SPACE BOX, SPACER

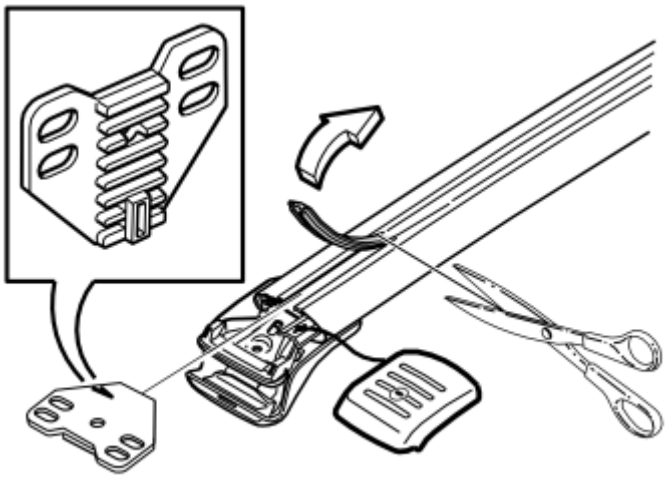

Fig. 239: Cutting The Rubber Strip
Courtesy of VOLVO CARS CORPORATION

- Cut off the rubber strip so that the spacer can be slid into the groove.

MOUNTING USING A SCREW IN THE T-GROOVE

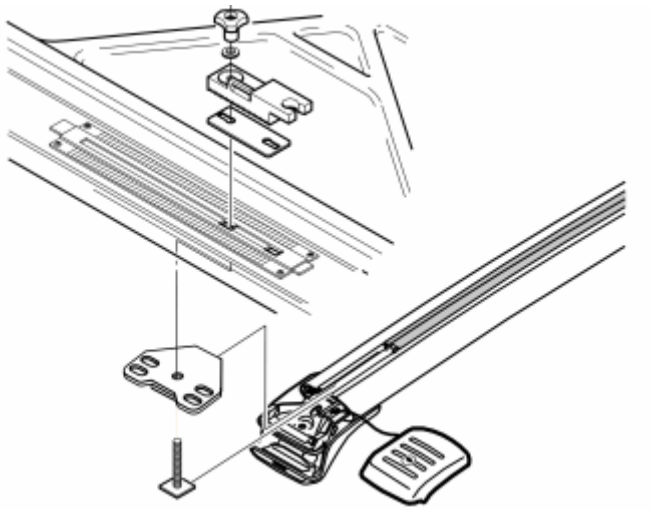

Fig. 240: Identifying The T-Groove
Courtesy of VOLVO CARS CORPORATION

MOUNTING WITH A BROAD BRACKET

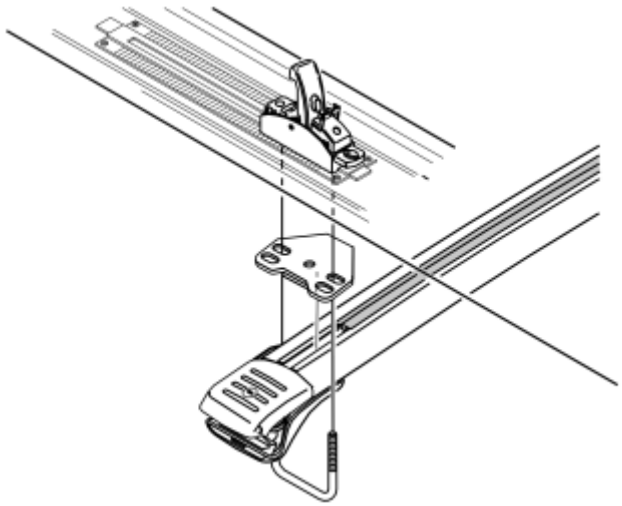

Fig. 241: Mounting With A Broad Bracket (Illustration A)
Courtesy of VOLVO CARS CORPORATION

Illustration A applies to the Dynamic 85 space box

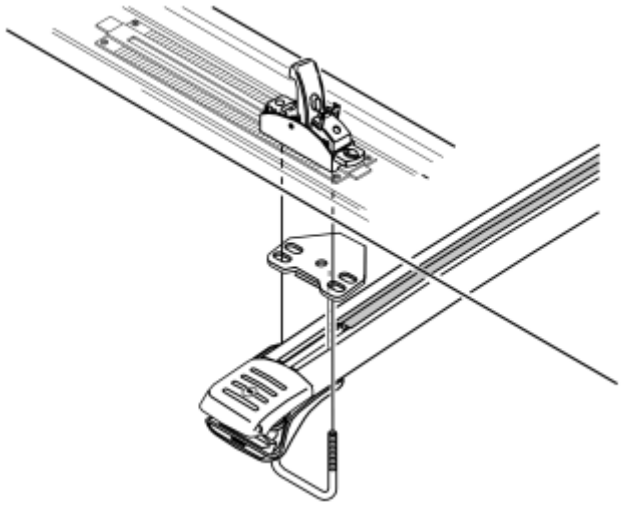

Fig. 242: Mounting With A Broad Bracket (Illustration B)
Courtesy of VOLVO CARS CORPORATION

Illustration B applies to the Experience space box

T GROOVE KIT, LOAD BASKET (2003-2005)

T-GROOVE KIT, CARGO RACK

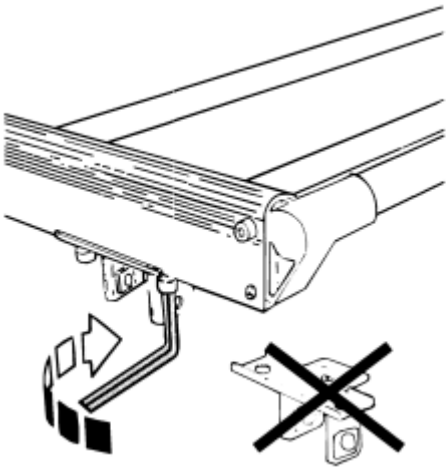

Fig. 243: Identifying Cargo Rack T-Groove Kit Components (1 Of 4)
Courtesy of VOLVO CARS CORPORATION

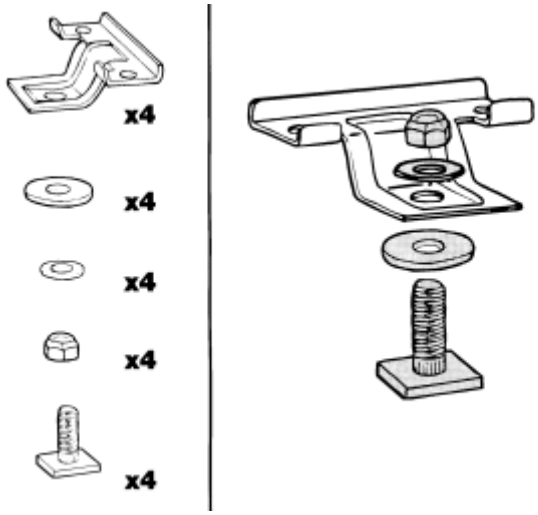

Fig. 244: Identifying Cargo Rack T-Groove Kit Components (2 Of 4)
Courtesy of VOLVO CARS CORPORATION

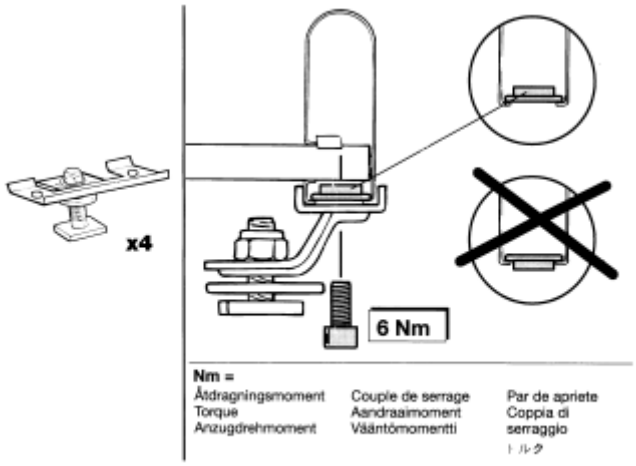

Fig. 245: Identifying Cargo Rack T-Groove Kit Components (3 Of 4)
Courtesy of VOLVO CARS CORPORATION

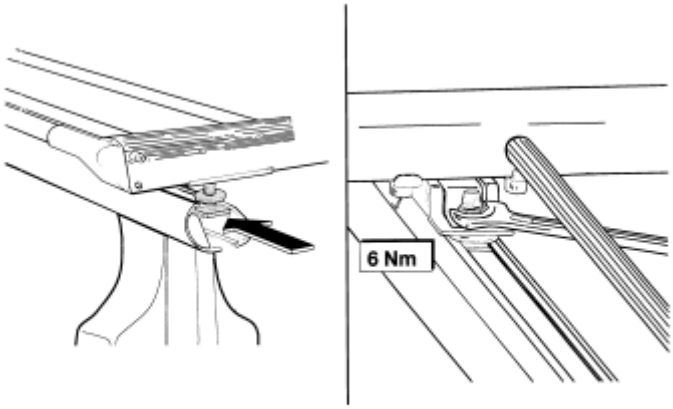

Fig. 246: Identifying Cargo Rack T-Groove Kit Components (4 Of 4)
Courtesy of VOLVO CARS CORPORATION

T-GROOVE KIT, BICYCLE HOLDER, FORK MOUNTED (2003)

T-GROOVE KIT, BICYCLE HOLDER, FORK MOUNTED

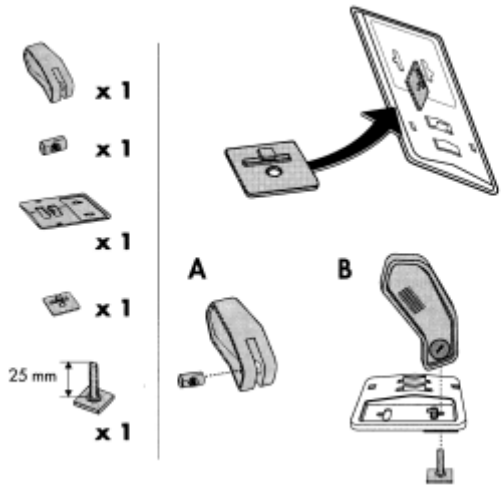

Fig. 247: Identifying T-Groove Kit, Bicycle Holder, Fork Mounted Components (1 of 7)
Courtesy of VOLVO CARS CORPORATION

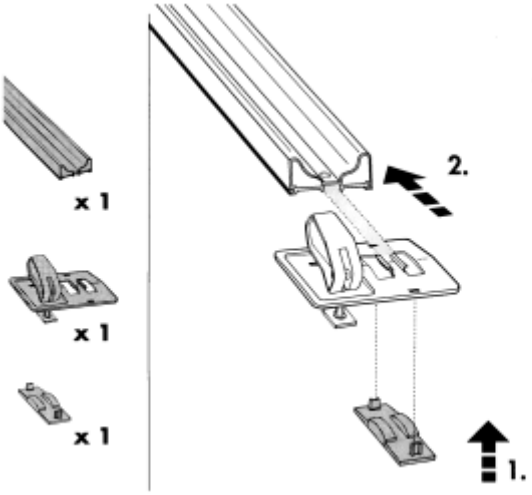

Fig. 248: Identifying T-Groove Kit, Bicycle Holder, Fork Mounted Components (2 of 7)
Courtesy of VOLVO CARS CORPORATION

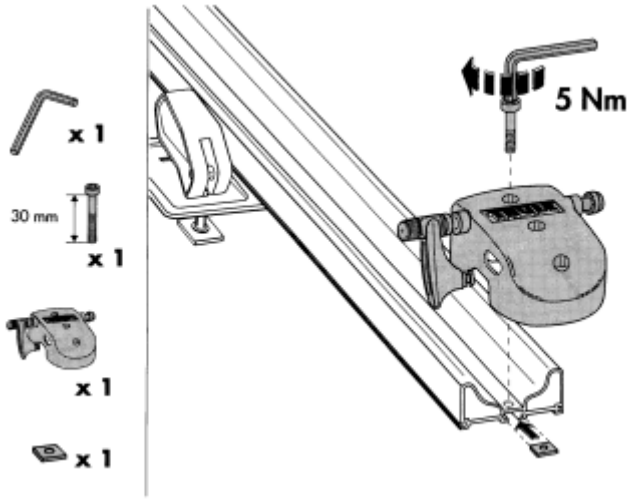

Fig. 249: Identifying T-Groove Kit, Bicycle Holder, Fork Mounted Components (3 of 7)
Courtesy of VOLVO CARS CORPORATION

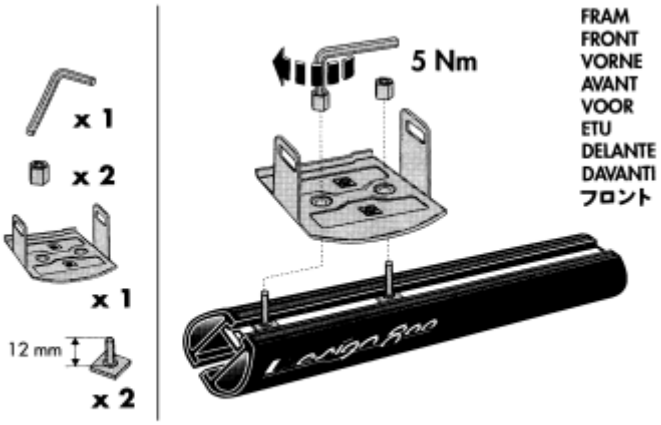

Fig. 250: Identifying T-Groove Kit, Bicycle Holder, Fork Mounted Components (4 of 7)
Courtesy of VOLVO CARS CORPORATION

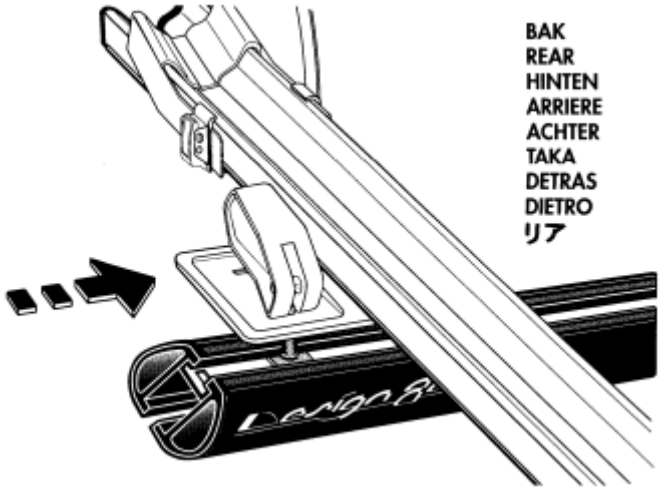

Fig. 251: Identifying T-Groove Kit, Bicycle Holder, Fork Mounted Components (5 of 7)
Courtesy of VOLVO CARS CORPORATION

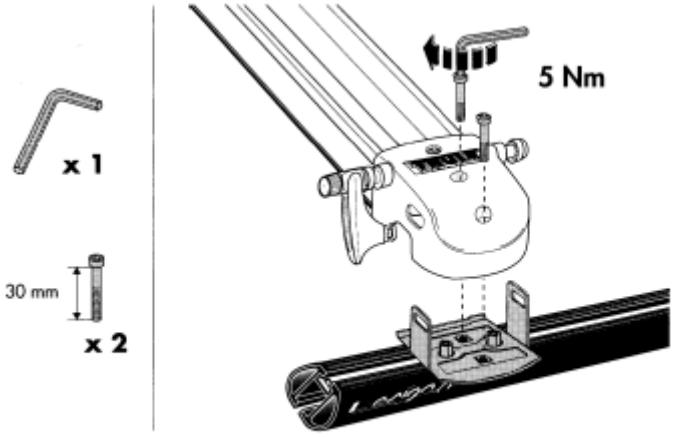

Fig. 252: Identifying T-Groove Kit, Bicycle Holder, Fork Mounted Components (6 of 7)
Courtesy of VOLVO CARS CORPORATION

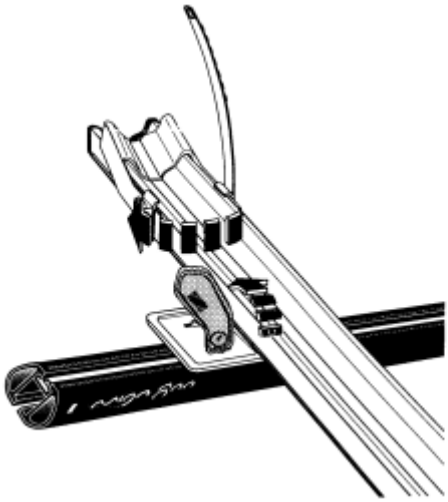

Fig. 253: Identifying T-Groove Kit, Bicycle Holder, Fork Mounted Components (7 of 7)
Courtesy of VOLVO CARS CORPORATION

T-GROOVE KIT, BIKE LIFT (2003-2012)

T-GROOVE KIT, BIKE LIFT

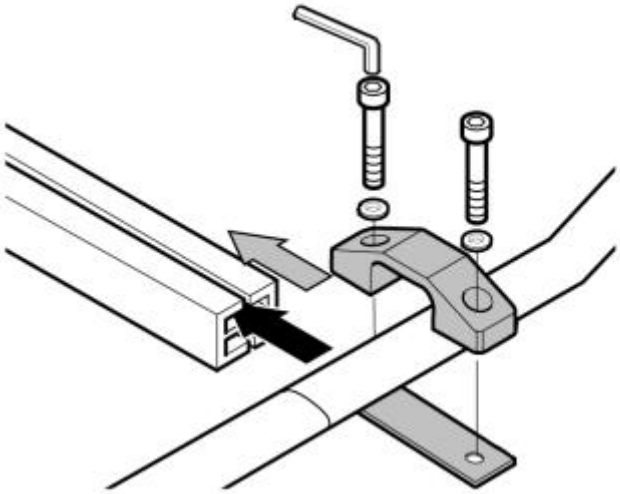

Fig. 254: Identifying T-Groove Kit, Bike Lift Fasteners
Courtesy of VOLVO CARS CORPORATION

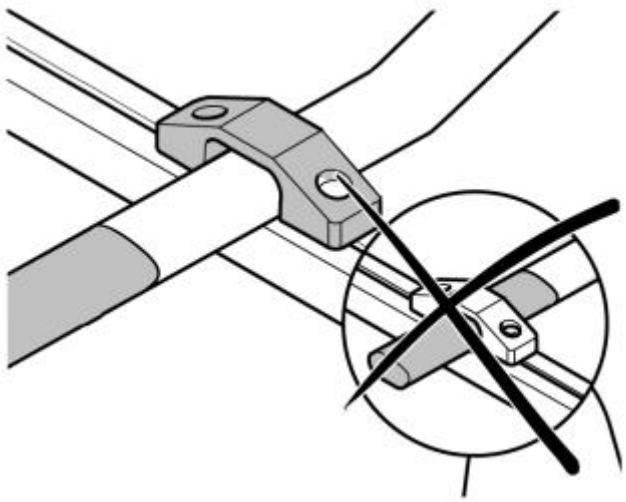

Fig. 255: Identifying Improper Installation Of T-Groove Kit, Bike Lift Fasteners
Courtesy of VOLVO CARS CORPORATION

T-GROOVE KIT, SKI HOLDER (2003-2010)

T-GROOVE KIT, SKI HOLDER

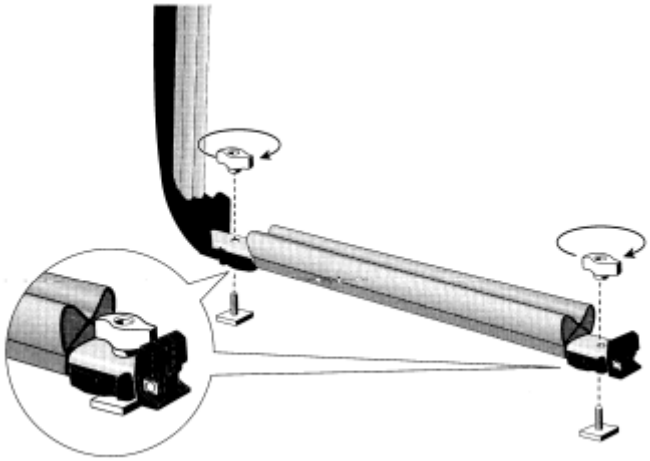

Fig. 256: Identifying Square Screws
Courtesy of VOLVO CARS CORPORATION

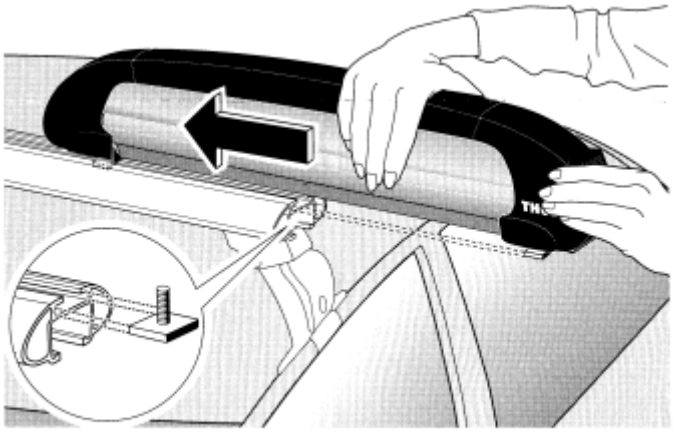

Fig. 257: View Of Square Screws Into T-Groove
Courtesy of VOLVO CARS CORPORATION

- Follow the instructions in the packaging for the ski holder, but replace metal bracket A with square screw B.

T-GROOVE KIT, SKI HOLDER (2003-2005)

T-GROOVE KIT, SKI HOLDER

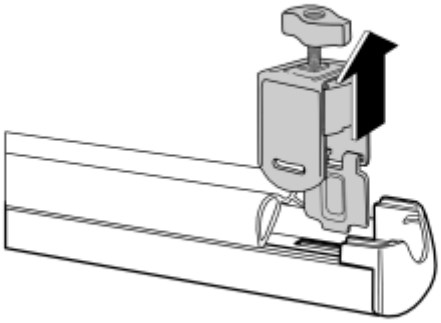

Fig. 258: Identifying Ski Holder T-Groove Kit Components (1 Of 3)
Courtesy of VOLVO CARS CORPORATION

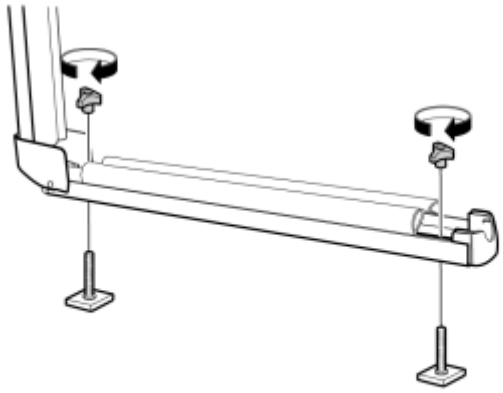

Fig. 259: Identifying Ski Holder T-Groove Kit Components (2 Of 3)
Courtesy of VOLVO CARS CORPORATION

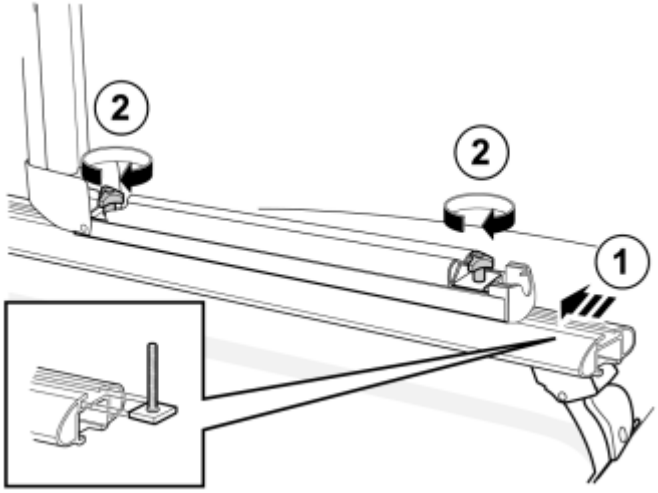

Fig. 260: Identifying Ski Holder T-Groove Kit Components (3 Of 3)
Courtesy of VOLVO CARS CORPORATION

T-GROOVE KIT, WHEEL HOLDER (2003-2012)

T-TRACK KIT, WHEEL HOLDER

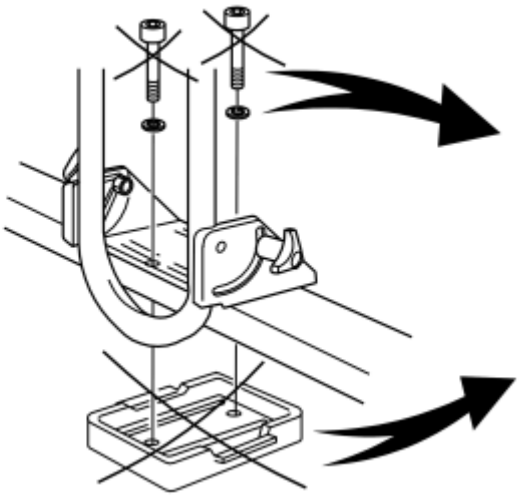

Fig. 261: Identifying T-Track Kit, Wheel Holder Components (1 Of 4)
Courtesy of VOLVO CARS CORPORATION

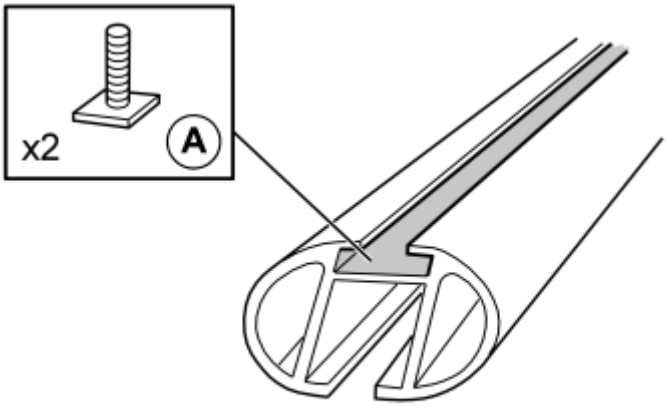

Fig. 262: Identifying T-Track Kit, Wheel Holder Components (2 Of 4)
Courtesy of VOLVO CARS CORPORATION

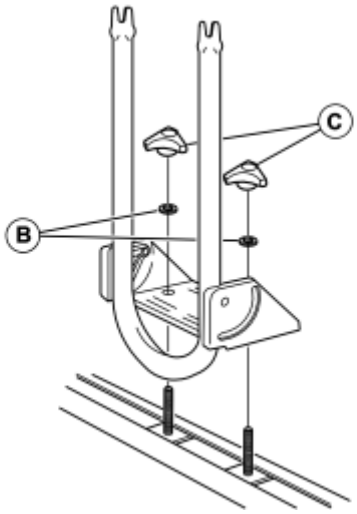

Fig. 263: Identifying T-Track Kit, Wheel Holder Components (3 Of 4)
Courtesy of VOLVO CARS CORPORATION

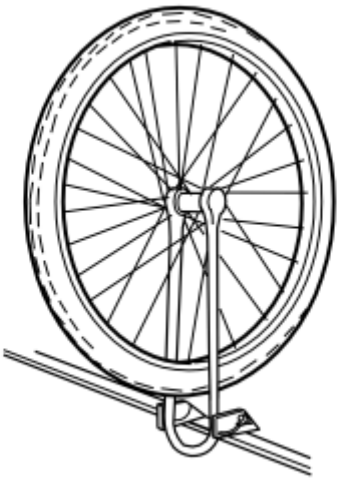

Fig. 264: Identifying T-Track Kit, Wheel Holder Components (4 Of 4)
Courtesy of VOLVO CARS CORPORATION

TOW BAR WIRING, 13-PIN (2003-2004)

CARS EQUIPPED WITH SRS/SIPS (AIRBAG)

see **CARS EQUIPPED WITH SRS/SIPS (AIRBAG)**

CAUTION

see **CAUTION**

CAUTION STATEMENT

see **CAUTION STATEMENT**

TOW BAR WIRING, 13-PIN

NOTE: The relay and fuses are not included in the kit.

INSTALLING THE CONNECTOR XC90

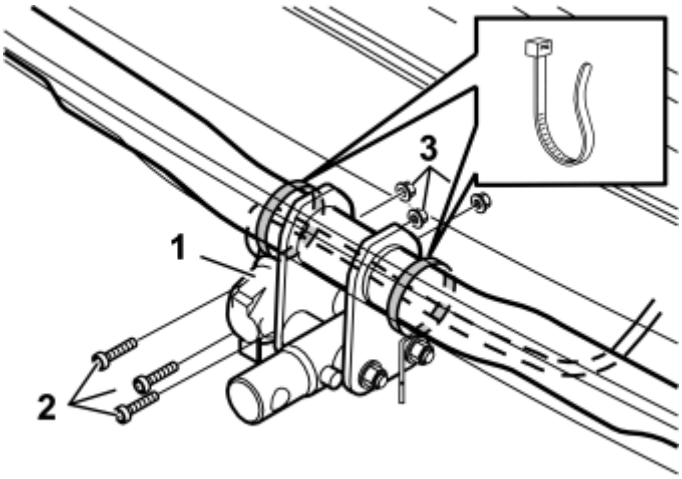

Fig. 265: Install Trailer Connector Using Three Screws And Nuts
Courtesy of VOLVO CARS CORPORATION

On the XC90 the cable harness is routed in the same way regardless of the tow hitch type

- Install the trailer connector (1). Use the three screws (2) and the nuts (3). Tighten
- Route the cable harness to the right along the front edge of the tow hitch member

NOTE: If the cable harness is stretched too far it may be worn through by the lower edge of the bumper.

- Ensure that the cable harness forms a small loop around the lower edge of the bumper as illustrated.
- Secure the cable harness using a tie strap on each side of the brackets for the tow hitch member.

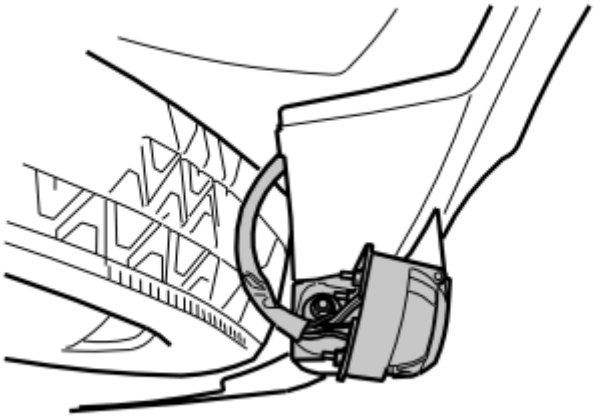

Fig. 266: Secure Cable Harness Using A Tie Strap On Each Side Of Brackets For Tow Hitch Member
Courtesy of VOLVO CARS CORPORATION

CARGO COMPARTMENT PREPARATIONS

PREPARATIONS

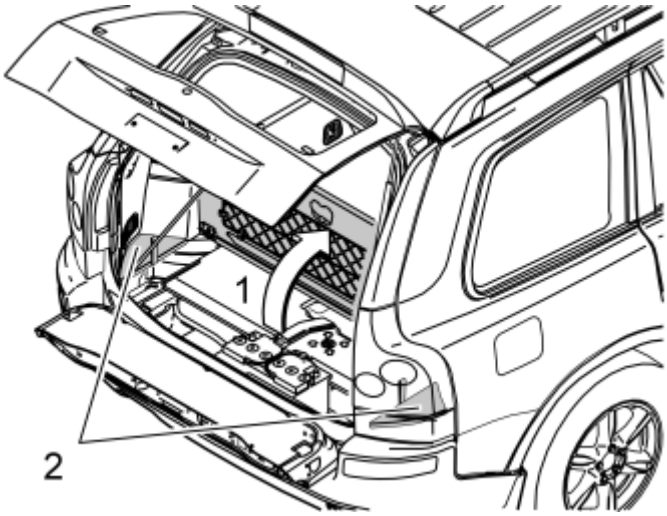

Fig. 267: Removing Storage Boxes
Courtesy of VOLVO CARS CORPORATION

Applies to cars with two rows of seats

- Fold up the center rear floor hatch (1)
- If the floor hatch is equipped with a carrier bag holder, it is secured by a strap on each of the shorter sides of the storage box. Release the straps and remove the carrier bag holder
- Remove the storage box
- If the fog tail lamp and/or positive power supply / charge function is being connected, remove the floor hatch completely by folding it almost all the way down and pulling it out backwards from its mountings.

Applies to cars with three rows of seats and integrated carrier bag holder on the underside of the center floor hatch

- Fold the rear center floor hatch up
- Detach the two straps from the panel. Lift up the rear edge of the panel. Fold the floor hatch back towards the panel and lift out the floor hatch and the panel.

Applies to cars with three rows of seats without integrated carrier bag holders

- Lift up the center, rear floor hatch at the rear edge and lift it out.

For all XC90

- Remove the two side floor hatches (2).

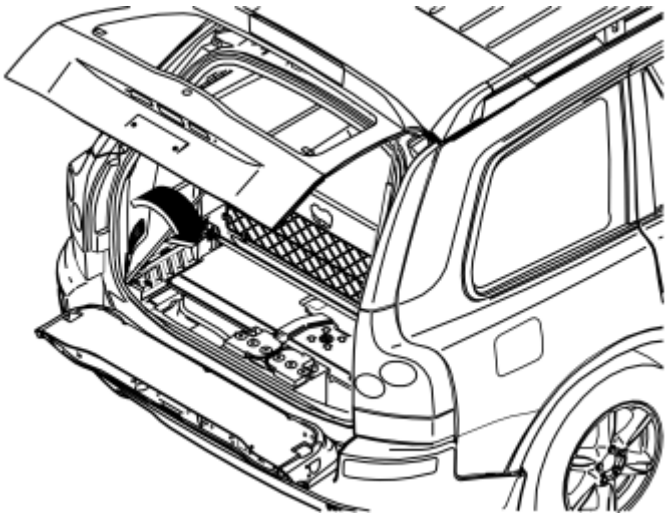

Fig. 268: Identifying Left-Hand Side Folding Side Panel
Courtesy of VOLVO CARS CORPORATION

- Remove the folding side panel on the left and right-hand sides of the cargo compartment.

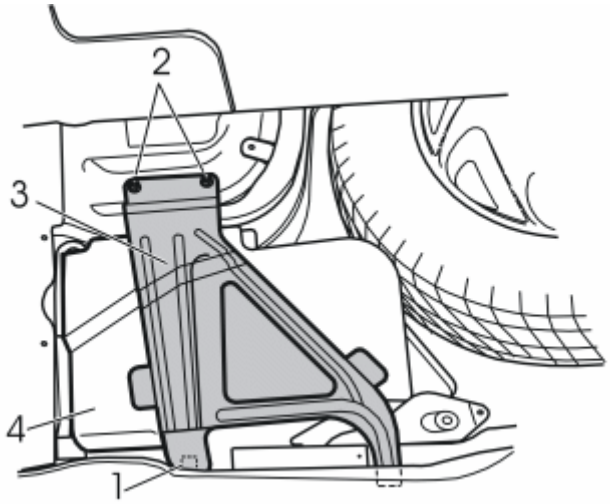

Fig. 269: Identifying Screw, Nuts And Bracket
Courtesy of VOLVO CARS CORPORATION

- Remove the screw (1), the nuts (2) and then the bracket (3) (pull the bracket forwards)
- Lift off the protective cover (4).

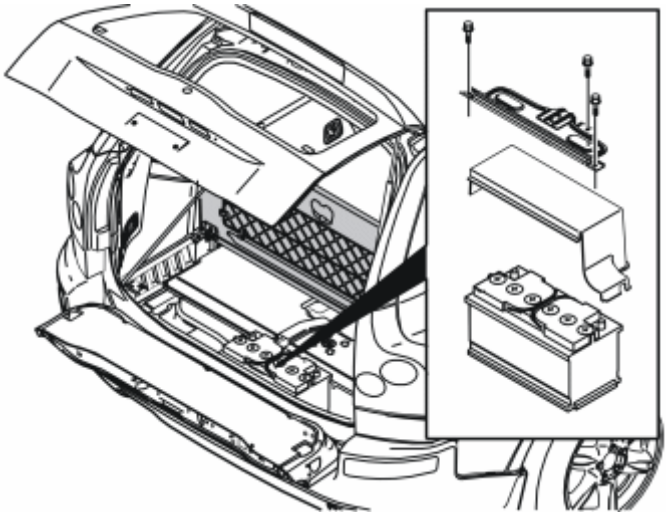

Fig. 270: Removing Three Screws In Battery Holder
Courtesy of VOLVO CARS CORPORATION

- Remove the three screws in the battery holder. Lift the battery holder out
- Remove the cover from the battery.

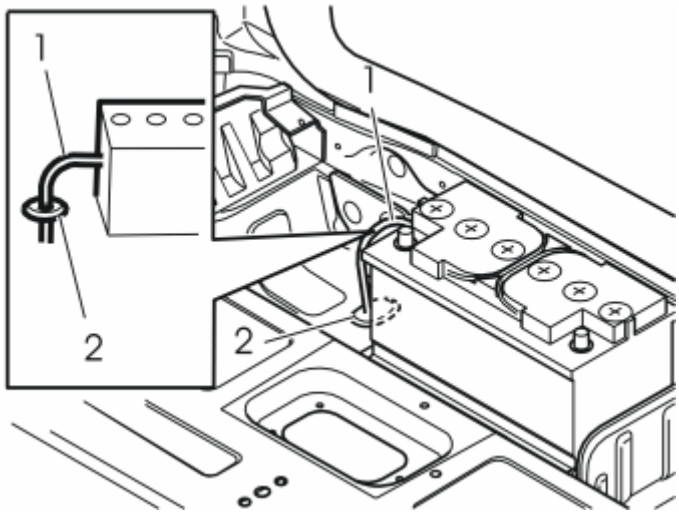

Fig. 271: Identifying Drain Hose (1)
Courtesy of VOLVO CARS CORPORATION

- Remove the drainage hose (1) from the battery
- Remove the rubber seal (2). The rubber seal will not be used again
- Pull off the small narrow rubber strap on the new rubber seal
- Thread the old drainage hose through the new rubber seal. Ensure that the hose is unimpeded and is not kinked.

CABLE ROUTING

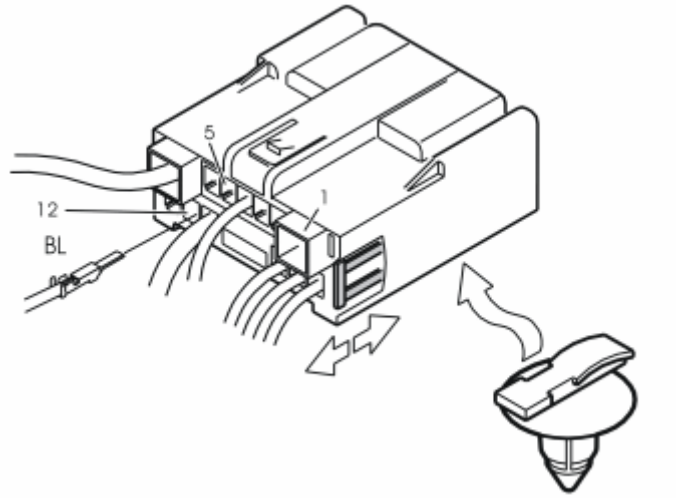

Fig. 272: Identifying Connector For Towbar Wiring
Courtesy of VOLVO CARS CORPORATION

- Install the new holder for the connector
- Release the red catches by pressing them forward
- Connect the blue (BL) cable to terminals 1, 5 or 12, depending on the desired function. Terminals: 1 = Charging; 5 = Fog tail lamp; 12 = Reversing lamp

- Return the catches to the locked position.

NOTE: **If the "Charging" function is to be used, the existing cable terminal must be cut off and replaced with the cable terminal from the kit.**

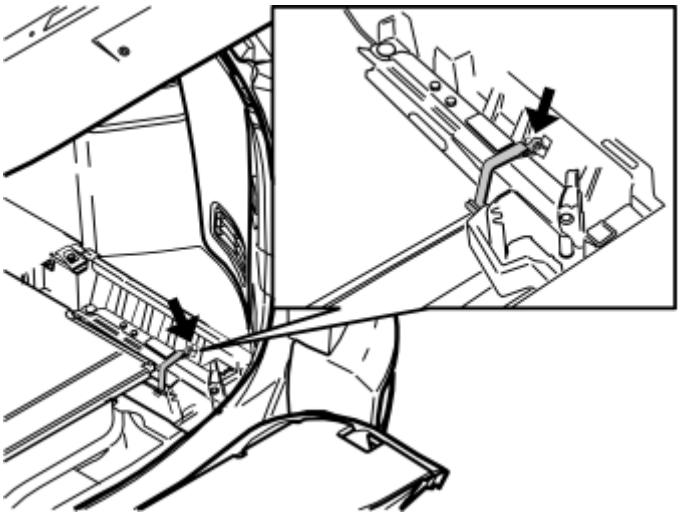

Fig. 273: Identifying Restraining Strap For Jack
Courtesy of VOLVO CARS CORPORATION

Applies to cars with two rows of seats

1. Release the restraining strap for the jack and lift it out.

Illustration A applies to cars with two rows of seats

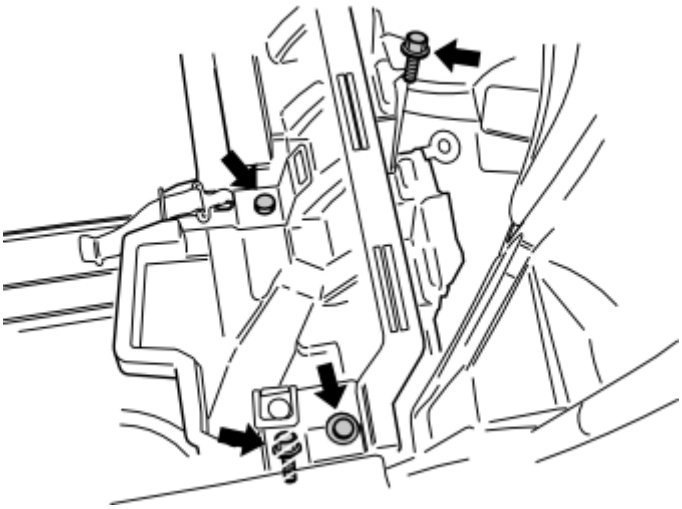

Fig. 274: Cars With Two Rows Of Seats (Illustration A)
Courtesy of VOLVO CARS CORPORATION

Illustration B applies to cars with three rows of seats

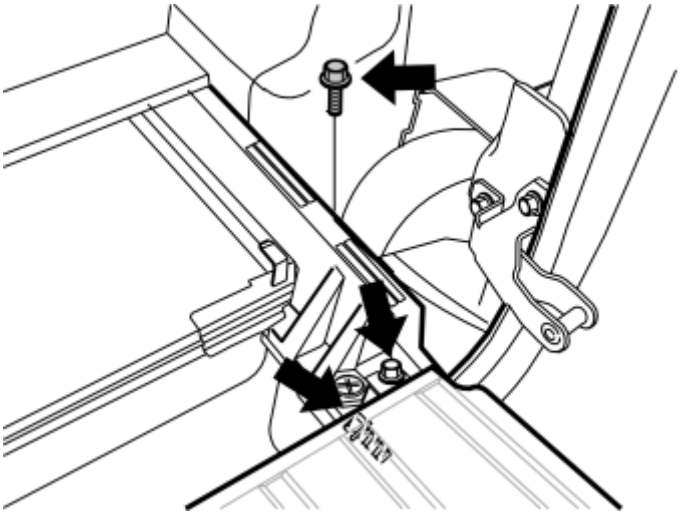

Fig. 275: Cars With Three Rows Of Seats (Illustration B)
Courtesy of VOLVO CARS CORPORATION

1. Remove the screws holding the support for the floor in the cargo compartment at the rear edge.

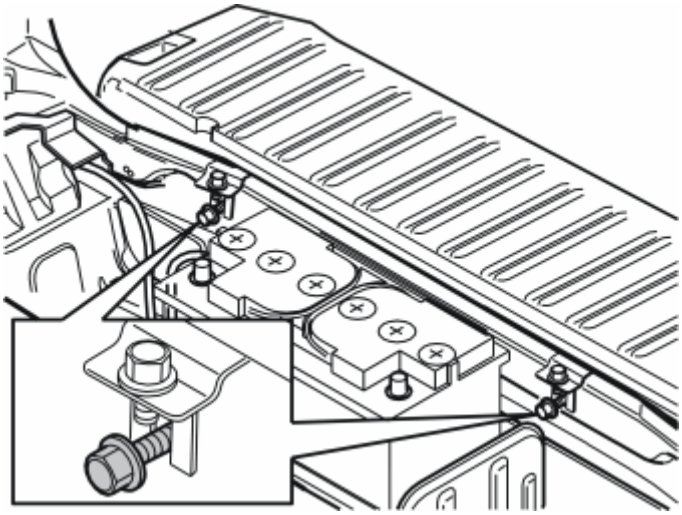

Fig. 276: Identifying Screws
Courtesy of VOLVO CARS CORPORATION

1. Slacken off the two screws for the floor extension brackets.

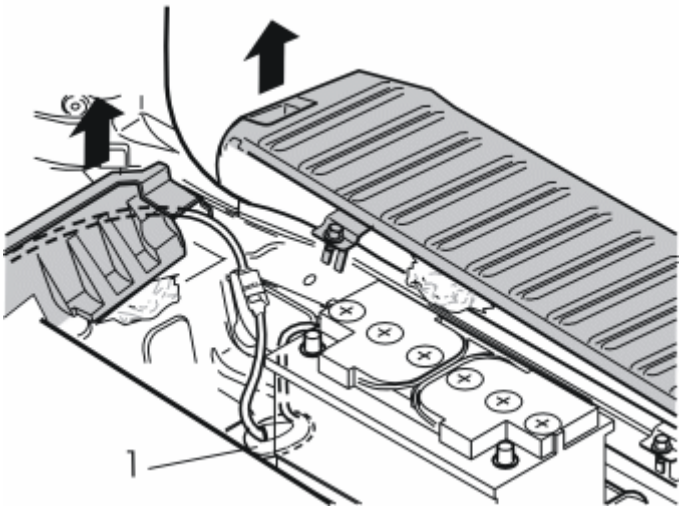

Fig. 277: Routing The Cable Harness
Courtesy of VOLVO CARS CORPORATION

- Route the cable harness from the tow bar socket through the hole in the floor. It may be necessary to remove the spare wheel which partially obstructs the hole in the floor
- Adjust the position of the rubber seal (1) so that there is not too much slack in the cable under the car
- Install the rubber seal in the hole
- Pull up the floor extension on the right-hand side. Position a shim underneath it
- Pull up the rear edge of the support for the floor in the cargo compartment. Push the connector into the space behind the right-hand rear wheel well.

NOTE: Do not damage the support for the floor in the cargo compartment. It is brittle.

- Position the cable in the cut-out at the rear edge of the support for the floor in the cargo compartment
- Reinstall the support for the floor in the cargo compartment and the floor extension. Tighten the three screws
- Applies to cars with two rows of seats: reinstall the jack.

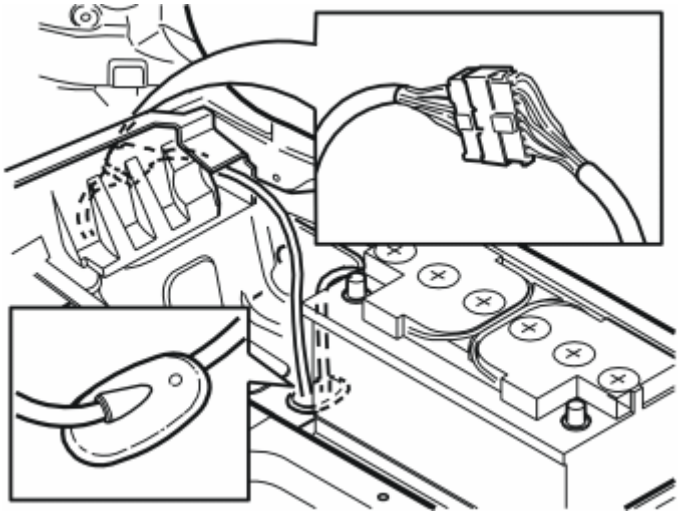

Fig. 278: Connecting The Routed Cable Harness
Courtesy of VOLVO CARS CORPORATION

- Connect the routed cable harness to the existing pre-routed cable harness in the space
- Route the excess cable into the small space and secure to the existing cable harness. Ensure that the connectors are secured so that they do not rattle
- Reinstall the drain hose for the battery
- If the fog tail lamp and/or positive power supply / charge function is being connected for the XC90, continue, otherwise go directly to point 25.

CONNECTING THE FOG TAIL LAMP AND/OR POSITIVE POWER SUPPLY / CHARGE FUNCTION

NOTE: To connect the positive power supply / charge function for the XC90, remove the side panel on the left-hand side of the cargo compartment

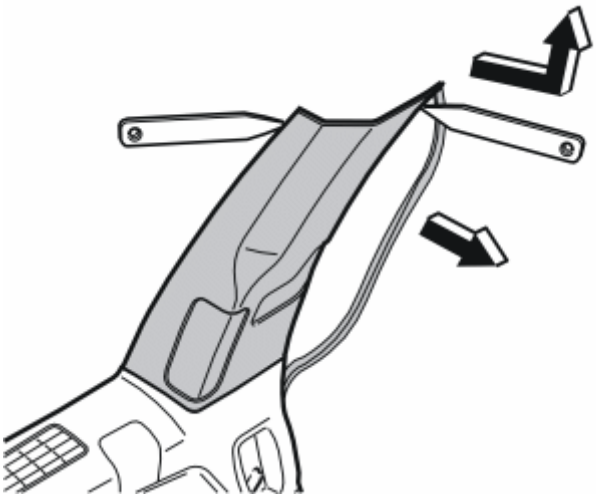

Fig. 279: Identifying Left-Hand C-Post Panel And Plastic Weatherstrip Tools
Courtesy of VOLVO CARS CORPORATION

- Pull off the rubber strip at the rear edge of the door opening to the left-hand rear door opposite the left C-post panel
- Carefully pry off the left-hand C-post panel sides at the top using a plastic weatherstrip tool Then pull until the three clips on the inside release. Do not damage the headlining or the panel
- Remove the panel by pulling upwards slightly and unhooking it from the side panel.

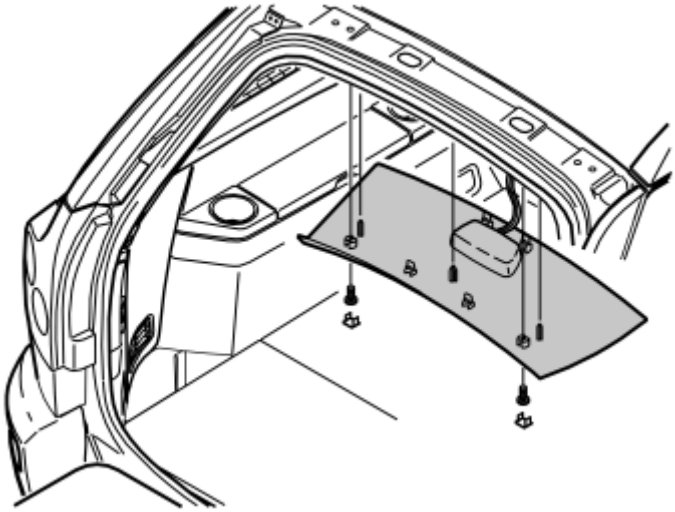

Fig. 280: Identifying Cover And Screws Underneath Rear Headlining
Courtesy of VOLVO CARS CORPORATION

- Remove the rear headlining covers and the screws underneath the covers
- Carefully pry off the panel at the rear edge using a plastic weatherstrip tool
- Pull the rear edge of the panel downwards until the four clips on the top have released
- If the car has lighting in the panel, disconnect the connector
- Pull the panel backwards to release it.

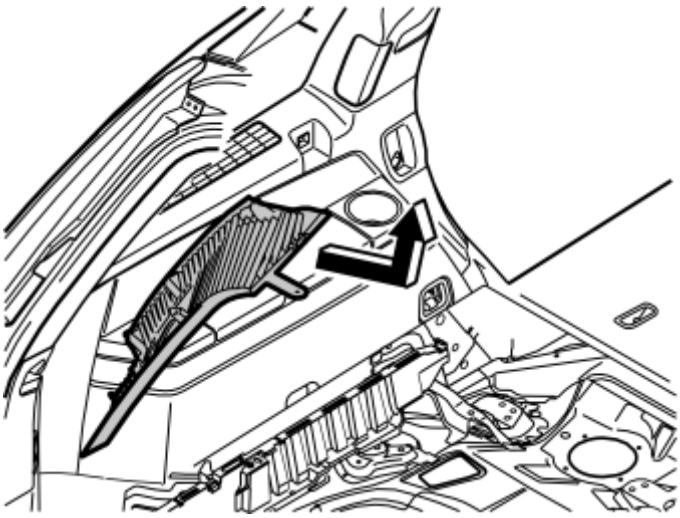

Fig. 281: Identifying D-Post Panel Removal From Side Panel
Courtesy of VOLVO CARS CORPORATION

- Carefully pull off the D-post panel. Start at the top edge then pull down until the three clips on the inside release. Do not damage the panel
- Disconnect the connector on the D-post panel (if the car has a loudspeaker in the D-post there is a connector in the loudspeaker)
- Remove the panel by pulling upwards slightly and unhooking it from the side panel.

Illustration shows the removal of the cover for the load securing eyelets

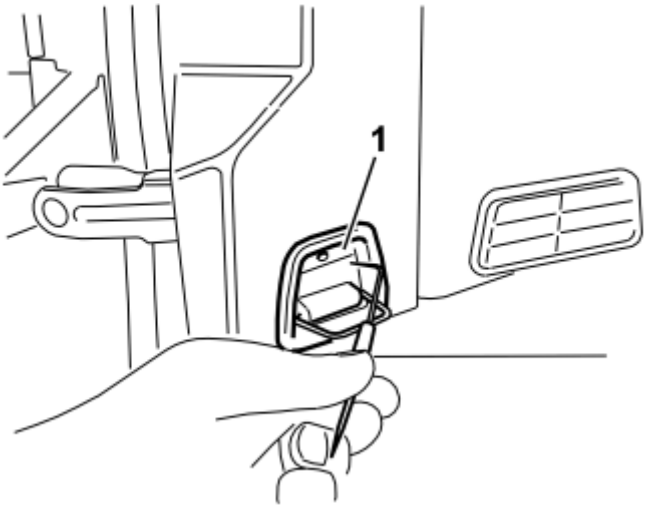

Fig. 282: Identifying Load Securing Eyelet
Courtesy of VOLVO CARS CORPORATION

- Fold out the load securing eyelet
- Insert a scriber with an angled tip into the hole in the top of the cover
- Turn the scriber so that the angled tip engages in the reverse of the cover (1). Pull off the cover.

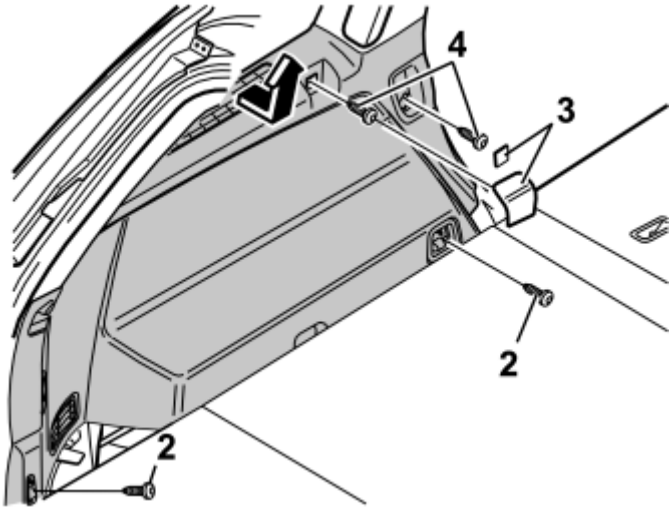

Fig. 283: Cars With Two Rows Of Seats
Courtesy of VOLVO CARS CORPORATION

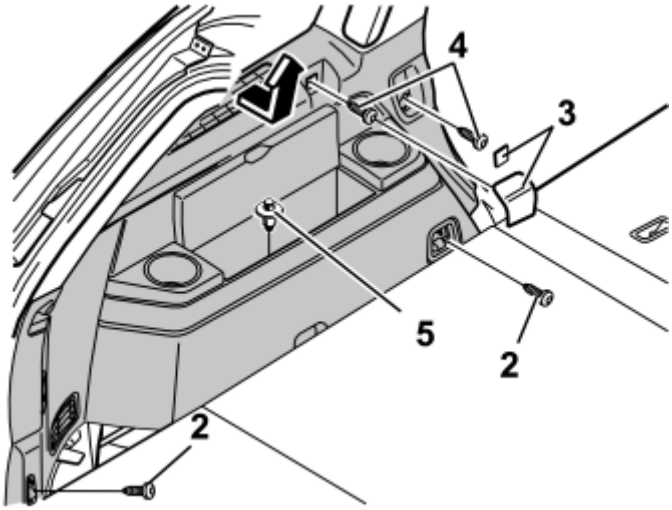

Fig. 284: Cars With Three Rows Of Seats
Courtesy of VOLVO CARS CORPORATION

- Fold up the seats in the third row (applies to cars with three rows of seats)
- Remove the screws (2) for the load securing eyelets in the left-hand side panel
- Remove the covers (3) over the front mountings for the left-hand side panel. Pry them off using a plastic weatherstrip tool or a small screwdriver
- Remove the screws (4)
- Remove the clip (5) at the bottom of the storage compartment in the panel (applies to cars with three rows of seats)
- Remove the panel by pulling it slightly at the top edge so that the clips on the inside release. Remove the panel by pulling it straight upwards.

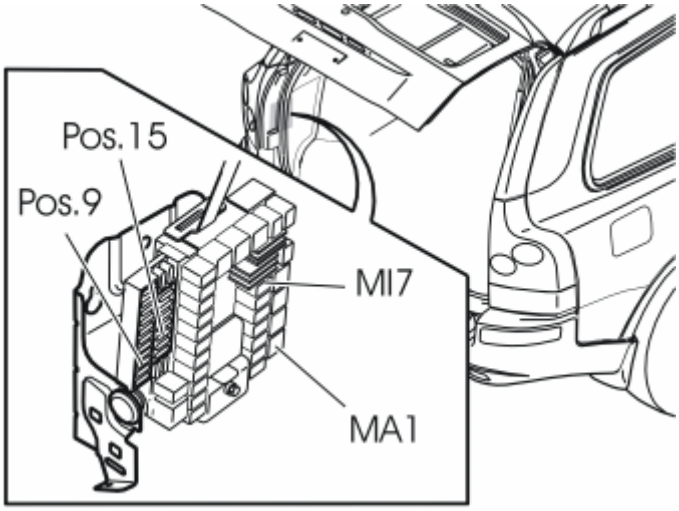

Fig. 285: Identifying Fuse Panel
Courtesy of VOLVO CARS CORPORATION

Install the correct fuse / relay depending on the model (year) and desired function

Applies when connecting the fog tail lamp function

- Install the relay in the rear electronic module, terminal MI 7.

Applies when connecting the automatic shut-off function for the fog tail lamp

NOTE: This function requires software unique to the car.

- Program the software according to the service information in VIDA (Volvo scan tool).

Applies when connecting the positive power supply / charging function (15 I supply)

- Install the relay in the rear electronic module, terminal MA 1.

NOTE: The relay is already installed in MA1 on cars with all wheel drive and cars with reverse warning as an accessory.

- Install a 20A fuse in the rear electronic module (REM), terminal 15, and a 15A fuse in terminal 9.

FINISHING WORK

FINISHING

Reinstall:

- the left-hand side panel using the screws and cover. Tighten the screws in the load securing eyelets. Tighten to **24 Nm (18 lbf. ft.)**
- the covers for the load securing eyelets
- The D-post panel with the connector
- the rear roof lighting connector (if applicable)
- the rear headlining
- C-post panel.

- Reinstall the protective cover and the bracket for the battery.

- Reinstall the panels
- Re-position the cargo compartment carpet. Alternatively, reinstall the storage compartment and the floor hatches.

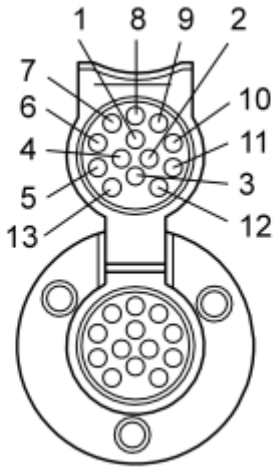

Fig. 286: 13-Pin Connector
Courtesy of VOLVO CARS CORPORATION

Checking the 13-pin connector:

1	Left indicators
2	Fog tail lamp
3	Ground
4	Right indicators
5	Right parking lamps
6	Brake lamp
7	Left parking lamps
8	Reversing lamp
9	+30 supply
10	Charging
11	Not used
12	Not used
13	Ground

TOW BAR WIRING, 7-PIN (2003-2004)

CARS EQUIPPED WITH SRS/SIPS (AIRBAG)

see **CARS EQUIPPED WITH SRS/SIPS (AIRBAG)**

CAUTION

see **CAUTION**

CAUTION STATEMENT

see **CAUTION STATEMENT**

TOW BAR WIRING, 7-PIN

NOTE: The relay and fuses are not included in the kit.

INSTALLING THE CONNECTOR XC90

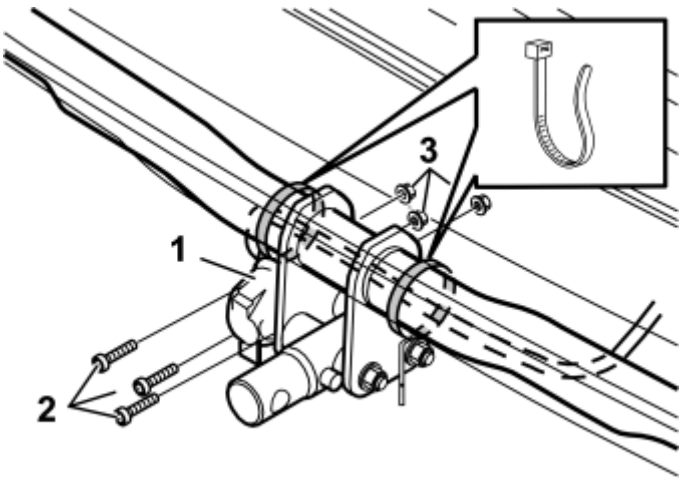

Fig. 287: Install Trailer Connector Using Three Screws And Nuts
Courtesy of VOLVO CARS CORPORATION

On the XC90 the cable harness is routed in the same way regardless of the tow hitch type

- Install the trailer connector (1). Use the three screws (2) and the nuts (3). Tighten
- Route the cable harness to the right along the front edge of the tow hitch member

NOTE: If the cable harness is stretched too far it may be worn through by the lower edge of the bumper.

- Ensure that the cable harness forms a small loop around the lower edge of the bumper as illustrated in illustration B
- Secure the cable harness using a tie strap on each side of the brackets for the tow hitch member.

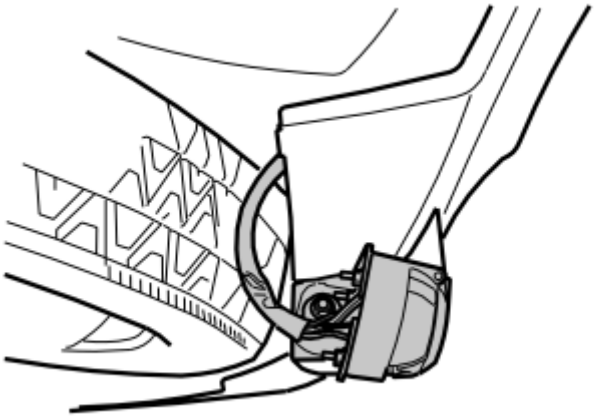

Fig. 288: Secure Cable Harness Using A Tie Strap On Each Side Of Brackets For Tow Hitch Member
Courtesy of VOLVO CARS CORPORATION

CARGO COMPARTMENT PREPARATIONS

PREPARATION

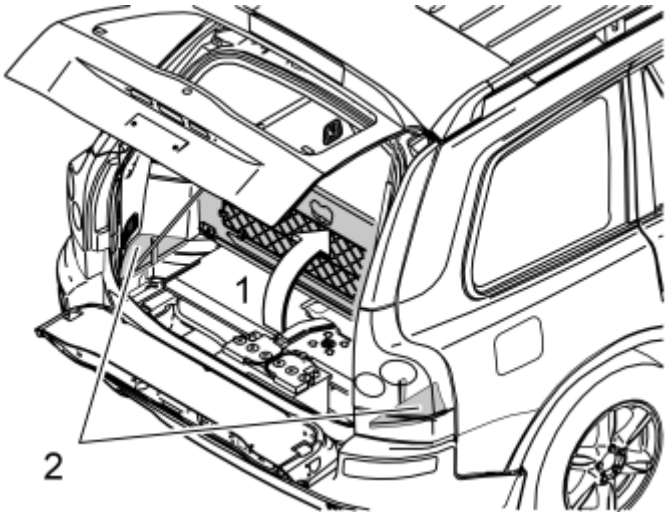

Fig. 289: Removing Storage Boxes
Courtesy of VOLVO CARS CORPORATION

Applies to cars with two rows of seats

- Fold up the center rear floor hatch (1)
- If the floor hatch is equipped with a carrier bag holder, it is secured by a strap on each of the shorter sides of the storage box. Release the straps and remove the carrier bag holder
- Remove the storage box
- If the fog tail lamp and/or positive power supply / charge function is being connected, remove the floor hatch completely by folding it almost all the way down and pulling it out backwards from its mountings.

Applies to cars with three rows of seats and integrated carrier bag holder on the underside of the center floor hatch

- Fold the rear center floor hatch up
- Detach the two straps from the panel. Lift up the rear edge of the panel. Fold the floor hatch back towards the panel and lift out the floor hatch and the panel.

Applies to cars with three rows of seats without integrated carrier bag holders

- Lift up the center rear floor hatch at the rear edge and lift it out
- Remove the two side floor hatches (2).

For all CX90

- Remove the two side floor hatches (2).

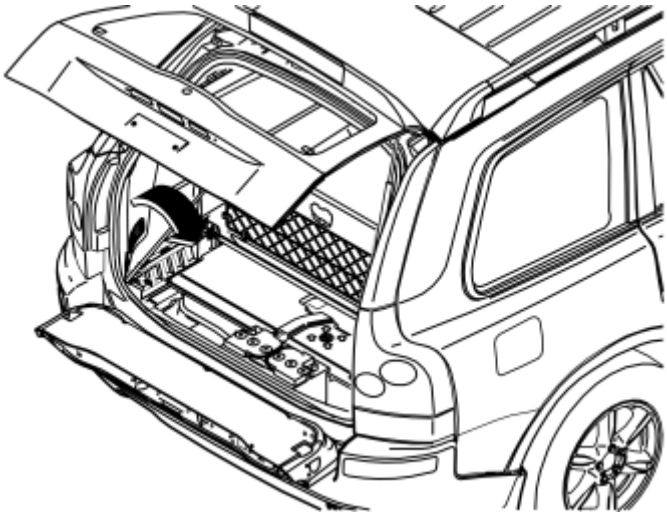

Fig. 290: Identifying Left-Hand Side Folding Side Panel
Courtesy of VOLVO CARS CORPORATION

- Remove the folding side panel on the left and right-hand sides of the cargo compartment.

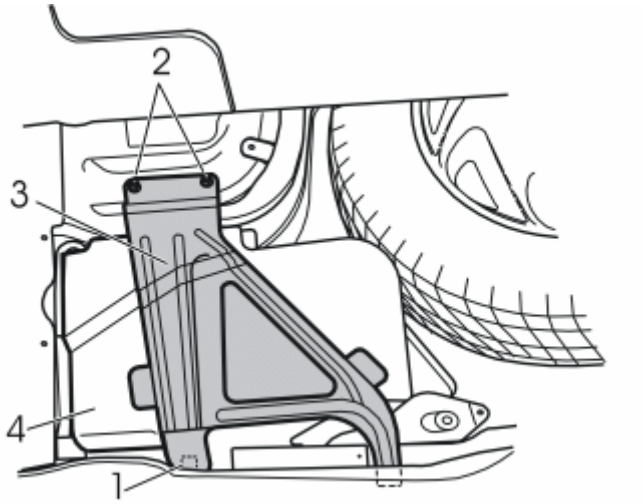

Fig. 291: Identifying Screw, Nuts And Bracket
Courtesy of VOLVO CARS CORPORATION

- Remove the screw (1), the nuts (2) and then the bracket (3) (pull the bracket forwards)
- Lift off the protective cover (4).

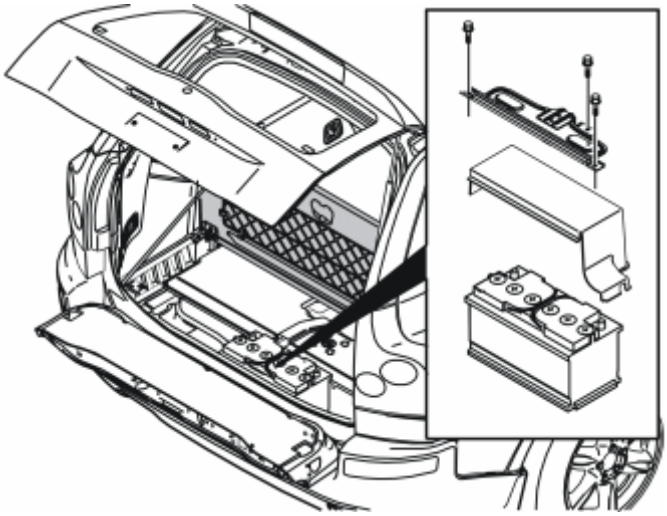

Fig. 292: Removing Three Screws In Battery Holder
Courtesy of VOLVO CARS CORPORATION

- Remove the three screws in the battery holder. Lift out the battery holder
- Remove the cover from the battery.

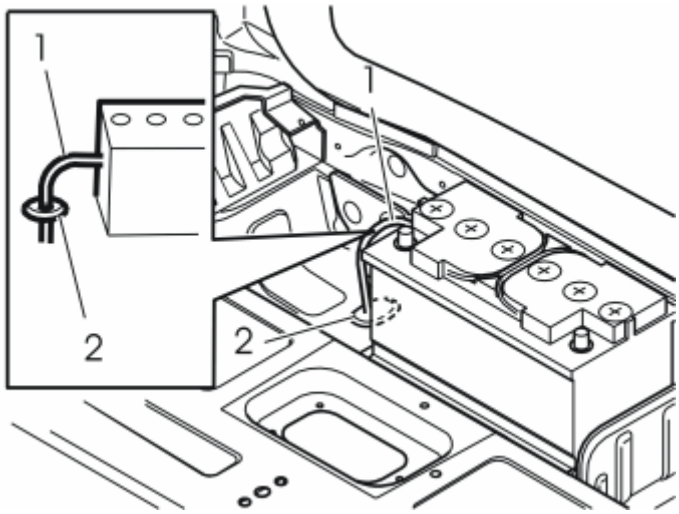

Fig. 293: Identifying Drain Hose (1)
Courtesy of VOLVO CARS CORPORATION

- Remove the drainage hose (1) from the battery
- Remove the rubber seal (2). The rubber seal will not be used again
- Pull off the small narrow rubber strap on the new rubber seal
- Thread the old drainage hose through the new rubber seal. Ensure that the hose is unimpeded and is not kinked.

CABLE ROUTING

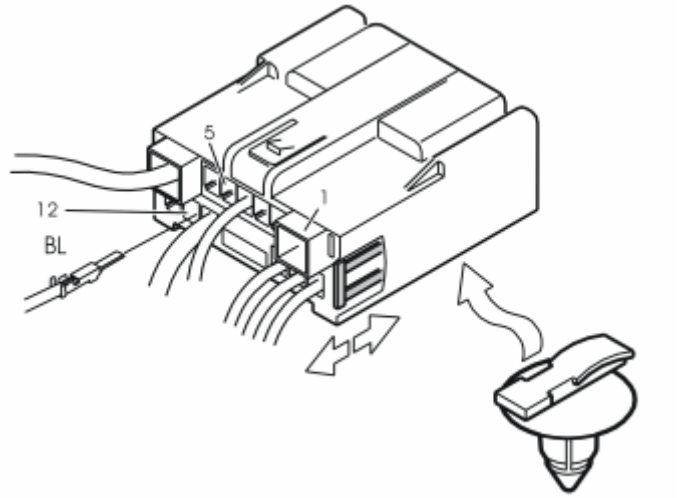

Fig. 294: Identifying Connector For Towbar Wiring
Courtesy of VOLVO CARS CORPORATION

- Install the new holder for the connector
- Unlock the red catches: Press the catches forward
- Connect the blue (BL) cable to terminals 1, 5 or 12, depending on the desired function. Terminals: 1 = Charging; 5 = Fog tail lamp; 12 = Reversing lamp

- Return the catches to the locked position.

NOTE: **If the "Charging" function is to be used, the existing cable terminal must be cut off and replaced with the cable terminal from the kit.**

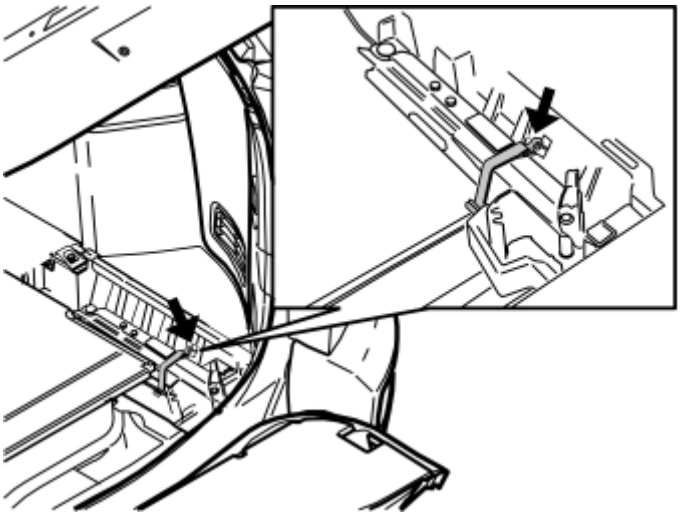

Fig. 295: Identifying Restraining Strap For Jack
Courtesy of VOLVO CARS CORPORATION

Applies to cars with two rows of seats

1. Release the restraining strap for the jack and lift it out.

Illustration A applies to cars with two rows of seats

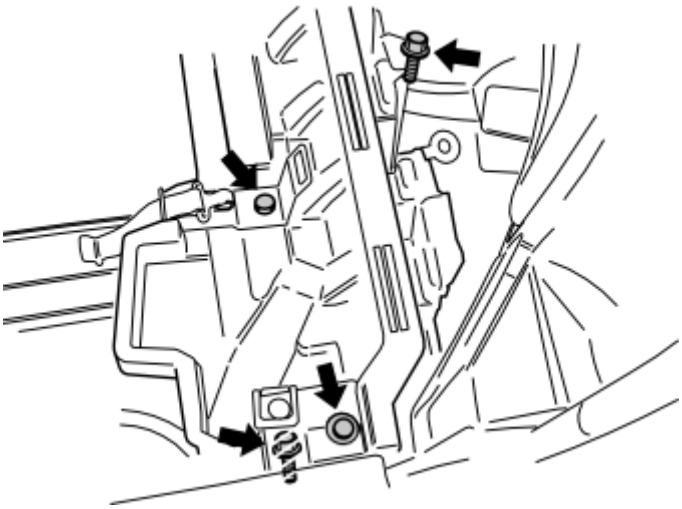

Fig. 296: Cars With Two Rows Of Seats (Illustration A)
Courtesy of VOLVO CARS CORPORATION

Illustration B applies to cars with three rows of seats

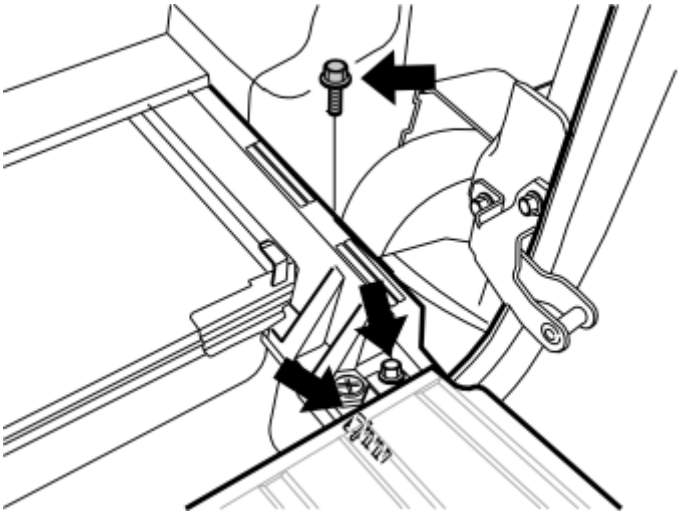

Fig. 297: Cars With Three Rows Of Seats (Illustration B)
Courtesy of VOLVO CARS CORPORATION

1. Remove the screws holding the support for the floor in the cargo compartment at the rear edge.

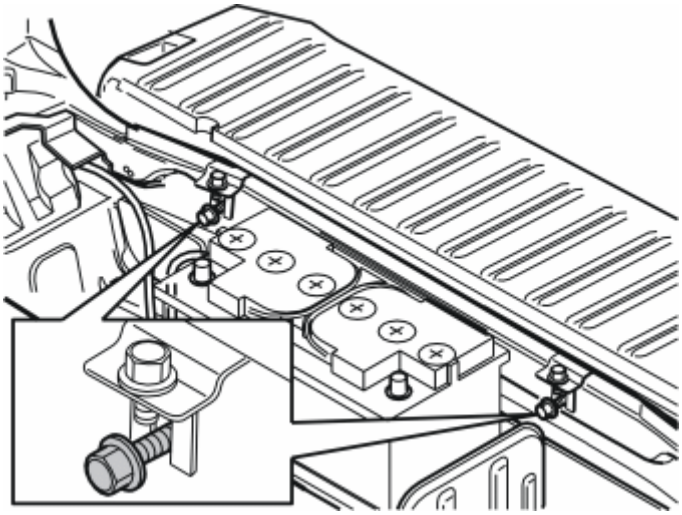

Fig. 298: Identifying Screws
Courtesy of VOLVO CARS CORPORATION

1. Slacken off the two screws for the floor extension brackets.

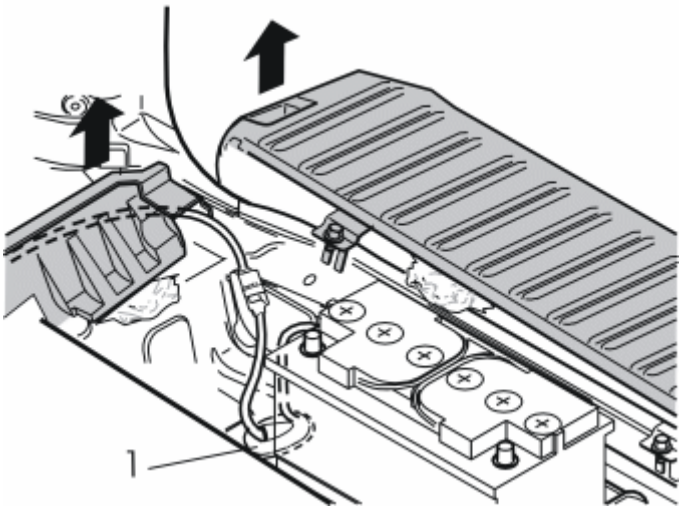

Fig. 299: Routing The Cable Harness
Courtesy of VOLVO CARS CORPORATION

- Route the cable harness from the tow bar socket through the hole in the floor. It may be necessary to remove the spare wheel which partially obstructs the hole in the floor
- Adjust the position of the rubber seal (1) so that there is not too much slack in the cable under the car
- Install the rubber seal in the hole
- Pull up the floor extension on the right-hand side. Position a shim underneath it
- Pull up the rear edge of the support for the floor in the cargo compartment. Push the connector into the space behind the right-hand rear wheel well.

NOTE: Do not damage the support for the floor in the cargo compartment. It is brittle.

- Position the cable in the cut-out at the rear edge of the support for the floor in the cargo compartment
- Reinstall the support for the floor in the cargo compartment and the floor extension. Tighten the three screws
- Applies to cars with two rows of seats: reinstall the jack.

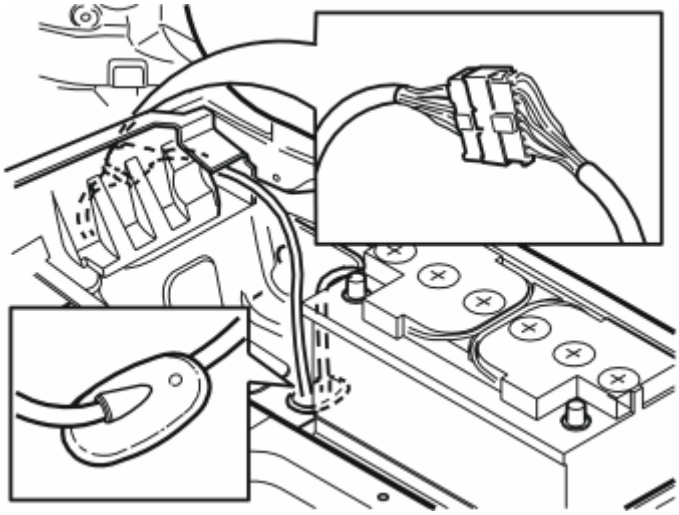

Fig. 300: Connecting The Routed Cable Harness
Courtesy of VOLVO CARS CORPORATION

- Connect the routed cable harness to the existing pre-routed cable harness in the space
- Route the excess cable into the small space and secure to the existing cable harness. Ensure that the connectors are secured so that they do not rattle
- Reinstall the drain hose for the battery
- If the fog tail lamp and/or positive power supply / charge function is being connected for the XC90, continue with point 21. Otherwise go directly to point 25.

CONNECTING THE FOG TAIL LAMP AND/OR POSITIVE POWER SUPPLY / CHARGE FUNCTION

NOTE: To connect the positive power supply / charge function for the XC90, remove the side panel on the left-hand side of the cargo compartment according to points 21-24.

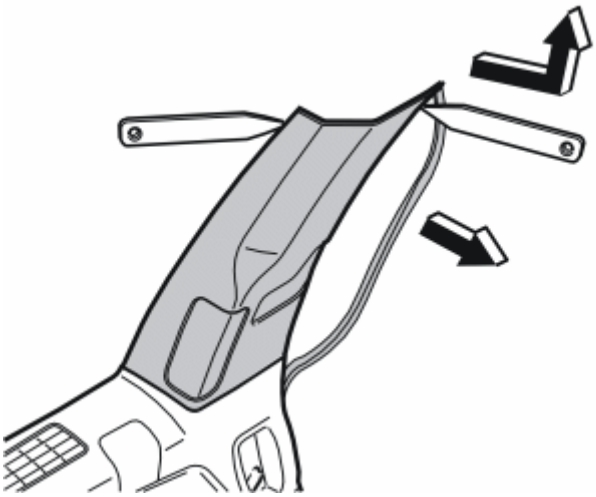

Fig. 301: Identifying Left-Hand C-Post Panel And Plastic Weatherstrip Tools
Courtesy of VOLVO CARS CORPORATION

- Pull off the rubber strip at the rear edge of the door opening to the left-hand rear door opposite the left C-post panel
- Carefully pry off the left-hand C-post panel sides at the top using a plastic weatherstrip tool Then pull until the three clips on the inside release. Do not damage the headlining or the panel
- Remove the panel by pulling upwards slightly and unhooking it from the side panel.

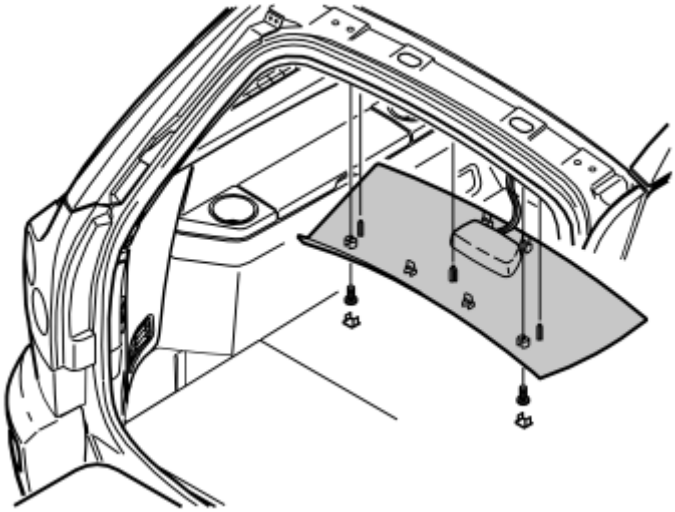

Fig. 302: Identifying Cover And Screws Underneath Rear Headlining
Courtesy of VOLVO CARS CORPORATION

- Remove the rear headlining covers and the screws underneath the covers
- Carefully pry off the panel at the rear edge using a plastic weatherstrip tool
- Pull the rear edge of the panel downwards until the four clips on the top have released
- If the car has lighting in the panel, disconnect the connector
- Pull the panel backwards to release it.

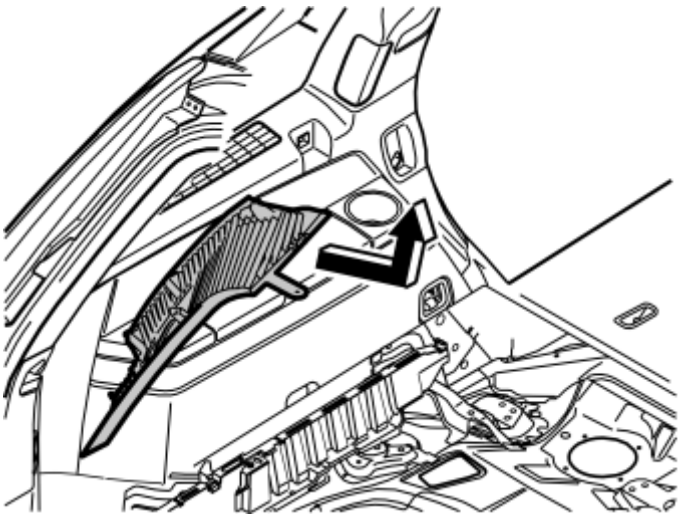

Fig. 303: Identifying D-Post Panel Removal From Side Panel
Courtesy of VOLVO CARS CORPORATION

- Carefully pull off the D-post panel. Start at the top edge then pull down until the three clips on the inside release. Do not damage the panel
- Disconnect the connector on the D-post panel (if the car has a loudspeaker in the D-post there is a connector in the loudspeaker)
- Remove the panel by pulling upwards slightly and unhooking it from the side panel.

Illustration shows the removal of the cover for the load securing eyelets

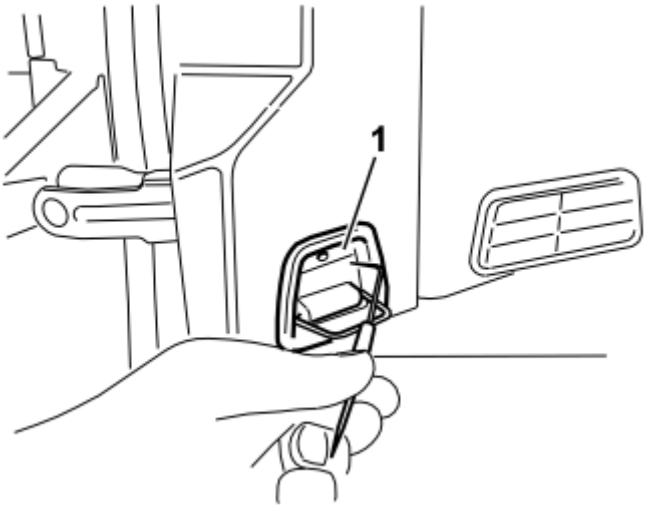

Fig. 304: Identifying Load Securing Eyelet
Courtesy of VOLVO CARS CORPORATION

- Fold out the load securing eyelet
- Insert a scriber with an angled tip into the hole in the top of the cover
- Turn the scriber so that the angled tip engages in the reverse of the cover (1). Pull off the cover.

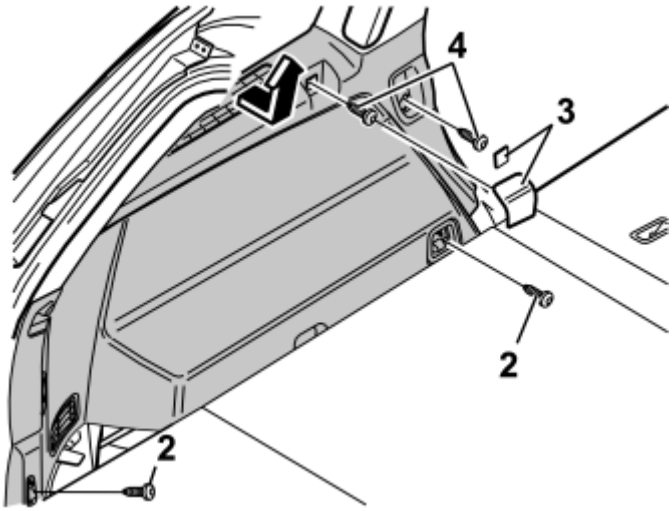

Fig. 305: Cars With Two Rows Of Seats
Courtesy of VOLVO CARS CORPORATION

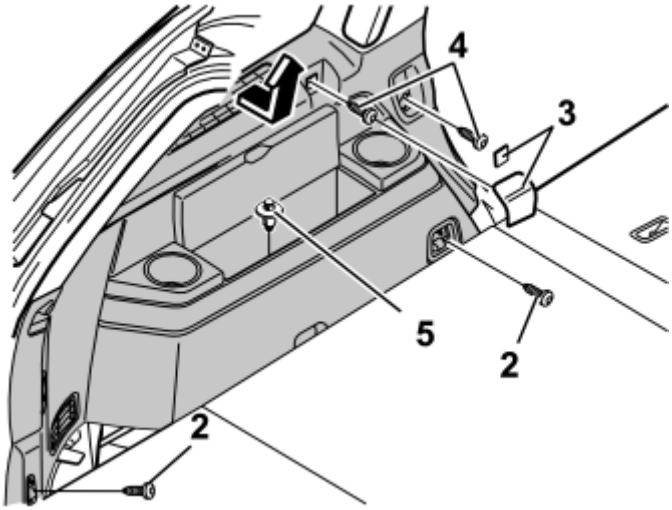

Fig. 306: Cars With Three Rows Of Seats
Courtesy of VOLVO CARS CORPORATION

- Fold up the seats in the third row (applies to cars with three rows of seats)
- Remove the screws (2) for the load securing eyelets in the left-hand side panel
- Remove the covers (3) over the front mountings for the left-hand side panel. Pry them off using a plastic weatherstrip tool or a small screwdriver
- Remove the screws (4)
- Remove the clip (5) at the bottom of the storage compartment in the panel (applies to cars with three rows of seats)
- Remove the panel by pulling it slightly at the top edge so that the clips on the inside release. Remove the panel by pulling it straight upwards.

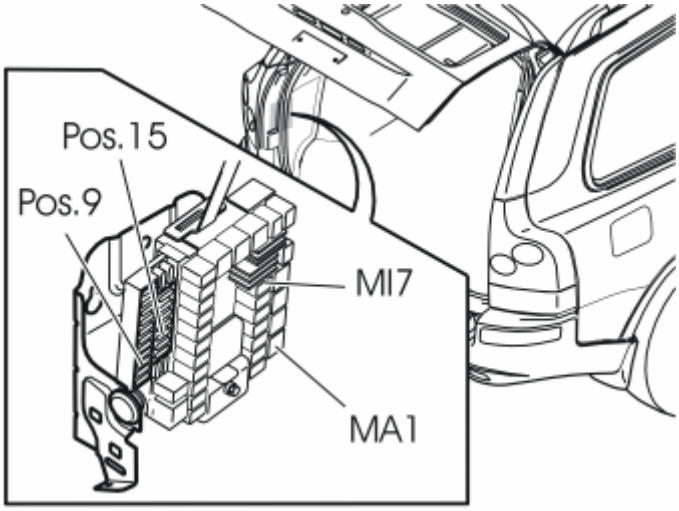

Fig. 307: Identifying Fuse Panel
Courtesy of VOLVO CARS CORPORATION

Install the correct fuse / relay depending on the model (year) and desired function

Applies when connecting the fog tail lamp function

- Install the relay in the rear electronic module, terminal MI 7.

Applies when connecting the automatic shut-off function for the fog tail lamp

NOTE: This function requires software unique to the car.

- Program the software according to the service information in VIDA (Volvo scan tool).

Applies when connecting the positive power supply / charging function (15 l supply)

- Install the relay in the rear electronic module, terminal MA 1.

NOTE: The relay is already installed in MA1 on cars with all wheel drive and cars with reverse warning as an accessory.

- Install a 20A fuse in the rear electronic module (REM), terminal 15, and a 15A fuse in terminal 9.

FINISHING WORK

FINISHING

Reinstall:

- the left-hand side panel using the screws and cover. Tighten the screws in the load securing eyelets. Tighten to **24 Nm (18 lbf. ft.)**
- the covers for the load securing eyelets
- The D-post panel with the connector
- the rear roof lighting connector (if applicable)
- the rear headlining
- C-post panel.

- Reinstall the protective cover and the bracket for the battery.

- Reinstall the panels
- Re-position the cargo compartment carpet. Alternatively, reinstall the storage compartment and the floor hatches.

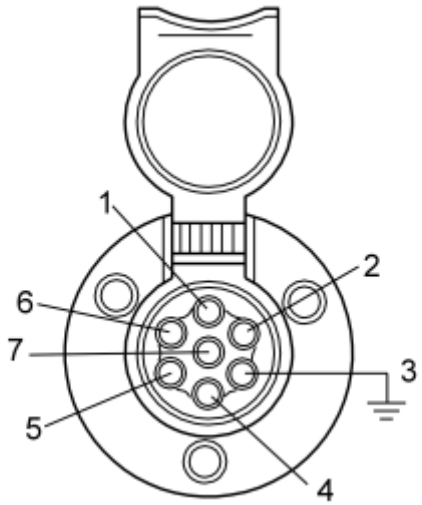

Fig. 308: 7-Pin Connector
Courtesy of VOLVO CARS CORPORATION

Checking the 7-pin connector:

1	Left indicators
2	Fog tail lamp / reversing lamp / charging
3	Ground
4	Right indicators
5	Right parking lamps
6	Brake lamp
7	Left parking lamps

TOW HITCH WIRING, 7/4-PIN (2003)

CARS EQUIPPED WITH SRS/SIPS (AIRBAG)

see **CARS EQUIPPED WITH SRS/SIPS (AIRBAG)**

CAUTION

see **CAUTION**

CAUTION STATEMENT

see **CAUTION STATEMENT**

TOW HITCH WIRING, 7/4-PIN

NOTE: The relay and fuses are not included in the kit.

INSTALLING THE TOW HITCH CONNECTOR

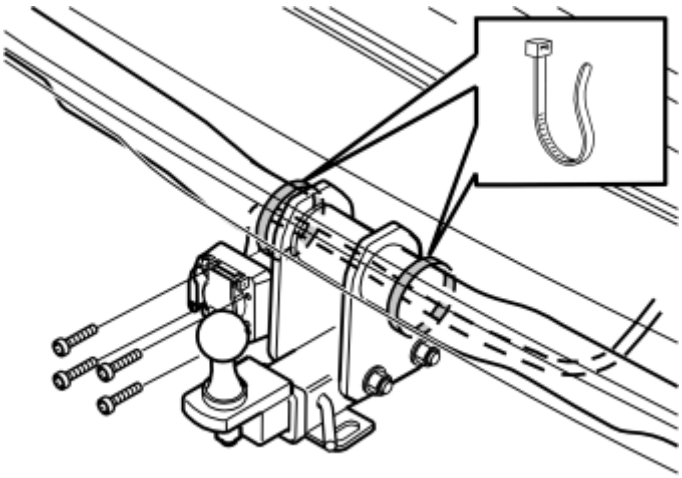

Fig. 309: Installing The Tow Hitch Connector
Courtesy of VOLVO CARS CORPORATION

- Install the tow hitch connector using the four screws and nuts. Tighten
- Route the cable harness to the right along the front edge of the tow hitch member The cable harness is routed the same way regardless of the type of tow hitch
- Secure the cable harness using a tie strap on each side of the brackets for the tow hitch member.

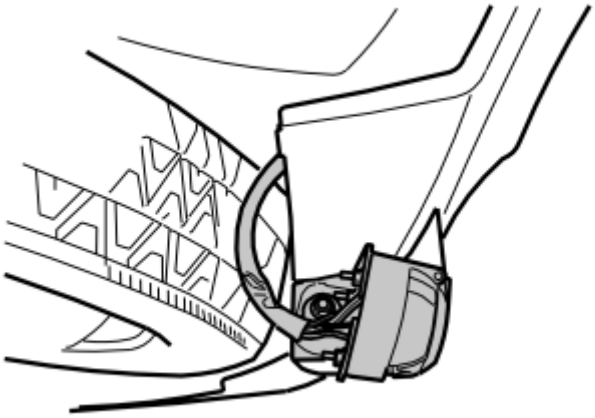

Fig. 310: Secure Cable Harness Using A Tie Strap On Each Side Of Brackets For Tow Hitch Member
Courtesy of VOLVO CARS CORPORATION

NOTE: If the cable harness is stretched too far it may be worn through by the lower edge of the bumper.

- Ensure that the cable harness forms a small loop around the lower edge of the bumper as illustrated.

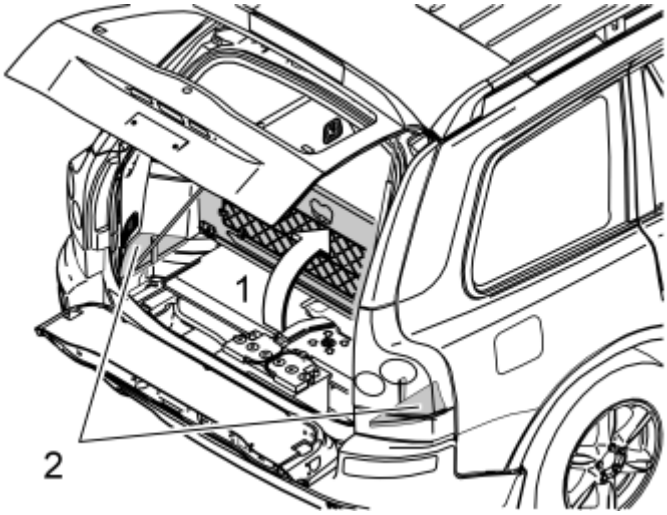

Fig. 311: Removing Storage Boxes
Courtesy of VOLVO CARS CORPORATION

Applies to cars with two rows of seats

- Fold up the center rear floor hatch (1). If the floor hatch is equipped with a carrier bag holder on its underside, it secured by a strap on each of the shorter sides of the storage box. These must be removed
- Remove the storage box underneath
- Remove the floor hatch completely by folding it almost all the way down and pulling it out backwards from its mountings.

Applies to cars with three rows of seats and integrated carrier bag holder on the underside of the center floor hatch

- Fold up the center rear floor hatch (1)
- Detach the two straps from the panel underneath. Lift up the rear edge of the panel. Fold the floor hatch back towards the panel and lift out the floor hatch and the panel.

Applies to cars with three rows of seats without integrated carrier bag holders

- Fold up the center rear floor hatch (1) at the rear edge and lift it out.

Applies to all models

- Remove the right and left-hand side floor hatches (2).

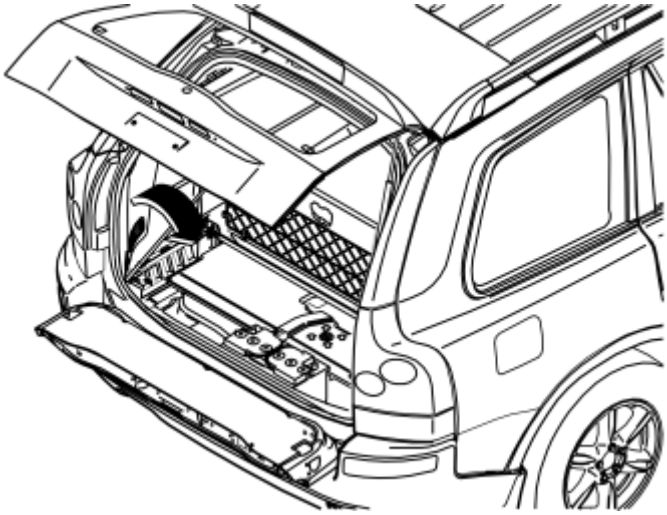

Fig. 312: Identifying Left-Hand Side Folding Side Panel
Courtesy of VOLVO CARS CORPORATION

- Remove the folding side panel on the left and right-hand sides of the cargo compartment.

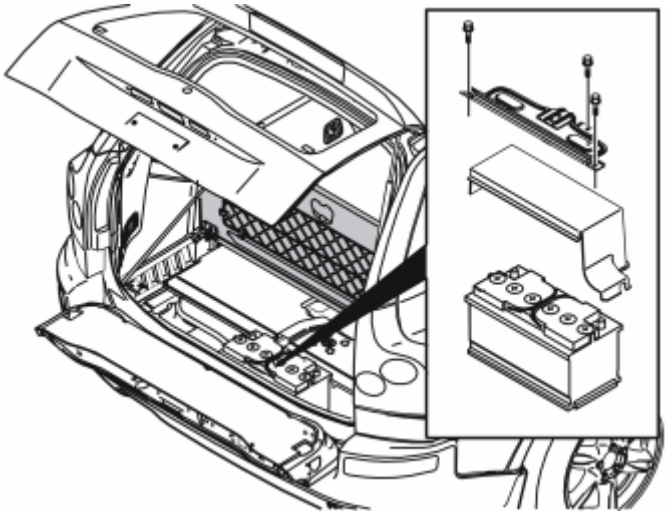

Fig. 313: Removing Three Screws In Battery Holder
Courtesy of VOLVO CARS CORPORATION

- Remove the three screws in the battery holder. Lift out the battery holder
- Remove the cover from the battery.

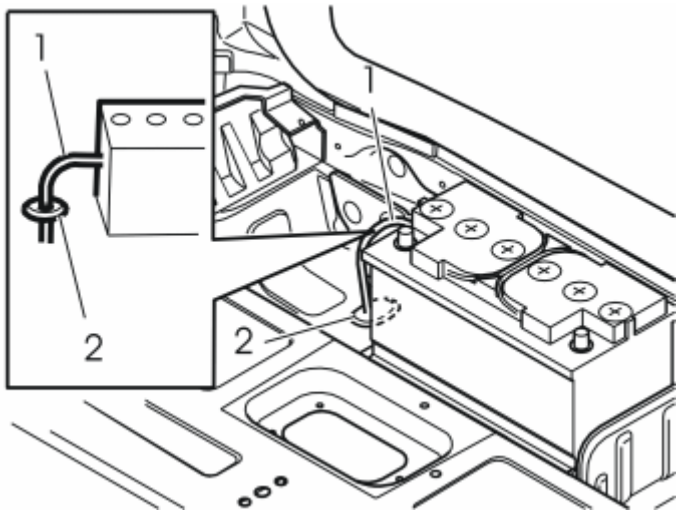

Fig. 314: Identifying Drain Hose (1)
Courtesy of VOLVO CARS CORPORATION

- Remove the drainage hose (1) from the battery
- Remove the rubber seal (2). This will not be used again
- Open up the pre-punched hole for the drain hose in the new rubber bushing
- Thread the old drainage hose through the new rubber bushing. Ensure that the hose is unimpeded and is not kinked.

CABLE ROUTING AND CONNECTION

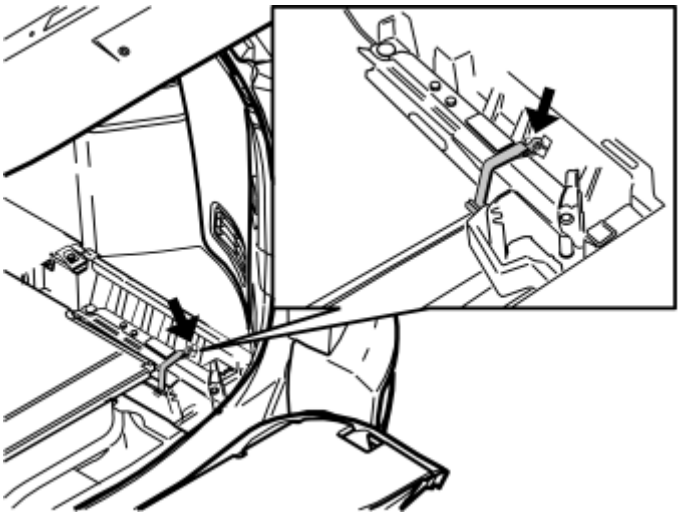

Fig. 315: Identifying Restraining Strap For Jack
Courtesy of VOLVO CARS CORPORATION

Applies to cars with two rows of seats

- Release the tensioning strap for the jack and lift it out.

Illustration A applies to cars with two rows of seats

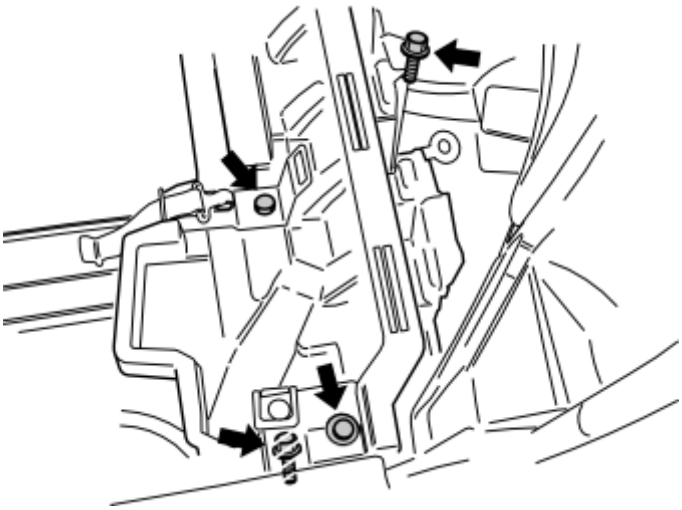

Fig. 316: Cars With Two Rows Of Seats (Illustration A)
Courtesy of VOLVO CARS CORPORATION

Illustration B applies to cars with three rows of seats

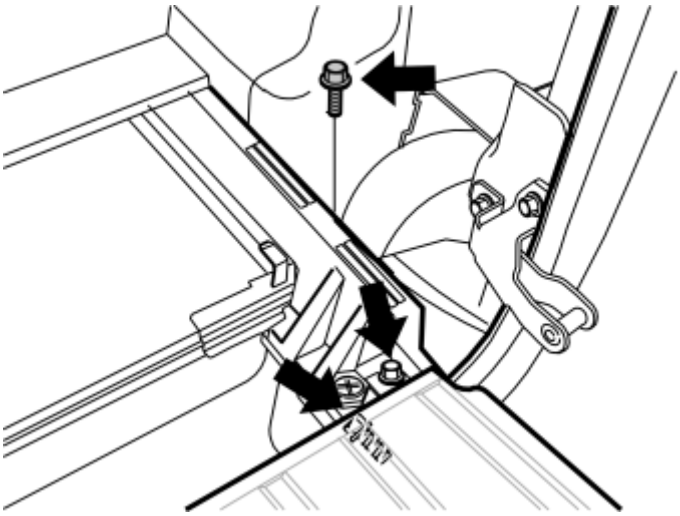

Fig. 317: Cars With Three Rows Of Seats (Illustration B)
Courtesy of VOLVO CARS CORPORATION

- Remove the screws holding the support for the floor in the cargo compartment at the rear edge.

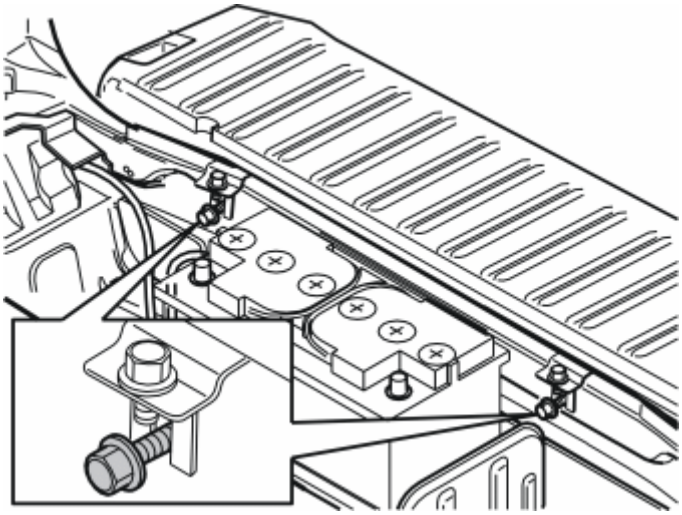

Fig. 318: Identifying Screws
Courtesy of VOLVO CARS CORPORATION

- Slacken off the two screws for the floor extension brackets.

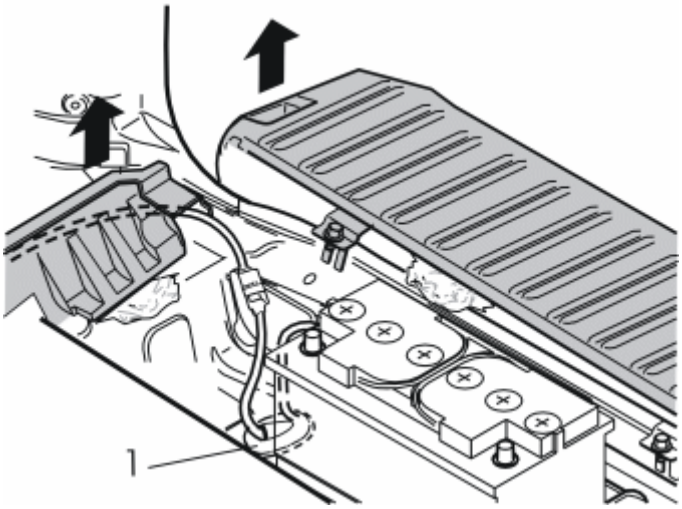

Fig. 319: Routing The Cable Harness
Courtesy of VOLVO CARS CORPORATION

- Route the cable harness from the tow bar socket through the hole in the floor. It may be necessary to remove the spare wheel which partially obstructs the hole in the floor
- Adjust the position of the rubber seal (1) so that there is not too much slack in the cable under the car
- Install the rubber seal in the hole
- Pull up the floor extension on the right-hand side. Position a shim underneath it
- Pull up the rear edge of the support for the floor in the cargo compartment. Push the connector into the space behind the right-hand rear wheel well.

NOTE: Do not damage the support for the floor in the cargo compartment. It is brittle.

- Position the cable in the cut-out at the rear edge of the support for the floor in the cargo compartment. Reinstall the support for the floor and the floor extension in the cargo compartment
- Tighten the support for the floor in the cargo compartment and floor extension. **Applies to cars with two rows of seats:** Reinstall the jack.

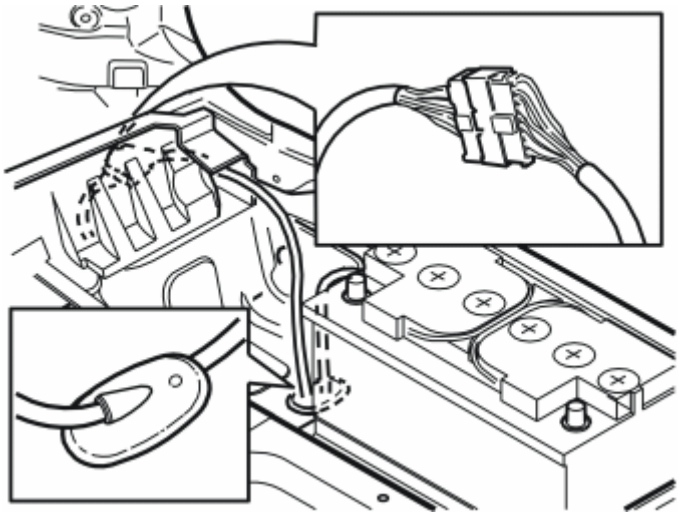

Fig. 320: Connecting The Routed Cable Harness
Courtesy of VOLVO CARS CORPORATION

- Connect the routed cable harness to the existing cable harness in the space
- Pull the excess cable into the small space. Secure everything to the existing cable harness using the tie straps from the kit. Ensure that the connectors are secured so that they do not rattle
- Reinstall the drain hose on the battery.

CONNECTING THE POSITIVE POWER SUPPLY / CHARGE FUNCTION

To connect the positive power supply / charge function, remove the side panel on the left-hand side of the cargo compartment in order to access the rear fusebox.

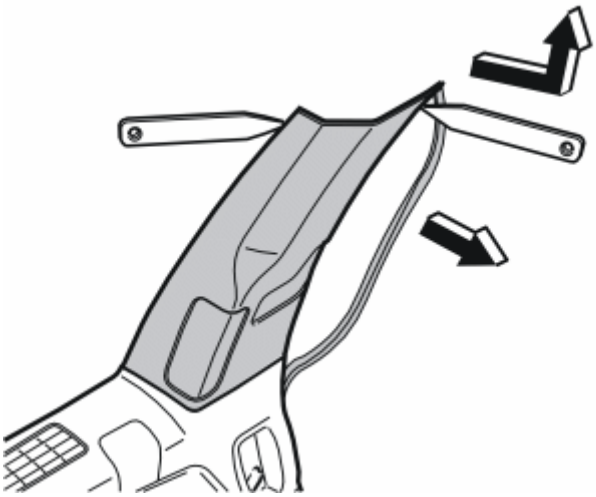

Fig. 321: Identifying Left-Hand C-Post Panel And Plastic Weatherstrip Tools
Courtesy of VOLVO CARS CORPORATION

- Pull off the rubber strip at the rear edge of the door opening to the left-hand rear door opposite the left C-post panel
- Carefully pry off the left-hand C-post panel sides at the top using a plastic weatherstrip tool Then pull until the three clips on the inside release.

NOTE: Do not damage the headlining or the panel.

- Remove the panel by pulling upwards slightly and unhooking it from the side panel.

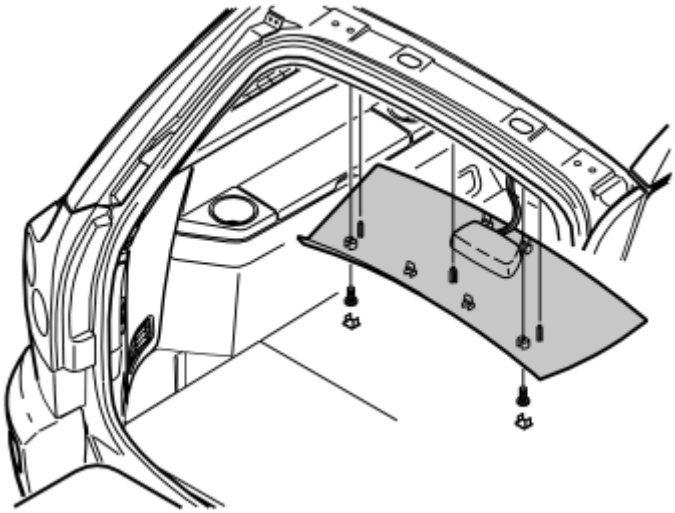

Fig. 322: Identifying Cover And Screws Underneath Rear Headlining
Courtesy of VOLVO CARS CORPORATION

- Remove the panel and the screws for the rear headlining
- Carefully pry off the panel at the rear edge using a plastic weatherstrip tool
- Pull the rear edge of the panel downwards until the four clips on the top have released
- If the car has lighting in the panel, disconnect the connector
- Pull the panel backwards to release it.

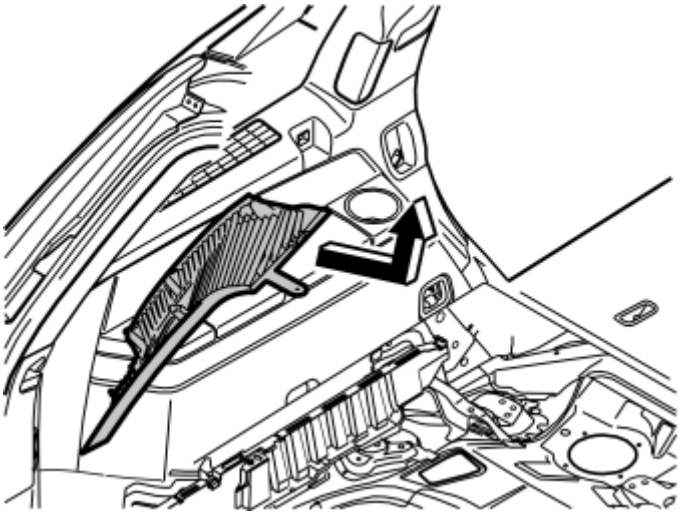

Fig. 323: Identifying D-Post Panel Removal From Side Panel
Courtesy of VOLVO CARS CORPORATION

- Carefully detach the D-post panels starting at the top edge. Then pull down until the three clips on the inside release.

NOTE: Do not damage the panel.

- Disconnect the connector for the D-post loudspeaker if applicable
- Remove the panel by pulling upwards slightly and unhooking it from the side panel.

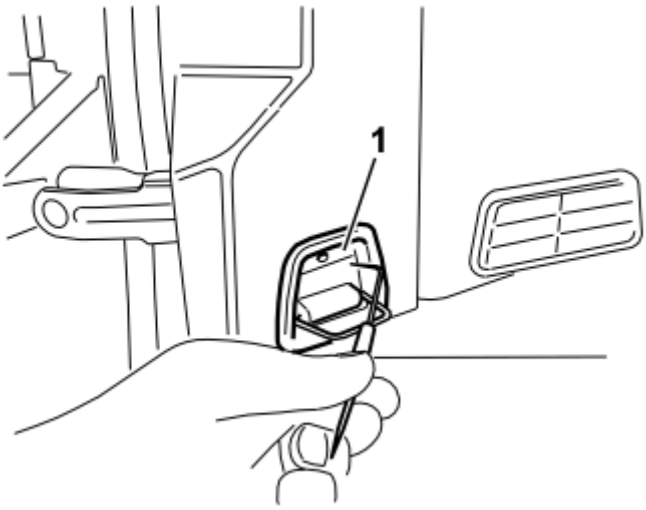

Fig. 324: Identifying Load Securing Eyelet
Courtesy of VOLVO CARS CORPORATION

Illustration shows the removal of the cover for the load securing eyelets

- Fold out the load securing eyelet
- Insert a scriber with an angled tip into the hole in the top of the cover

- Turn the scriber so that the angled tip engages in the reverse of the cover (1). Pull off the cover.

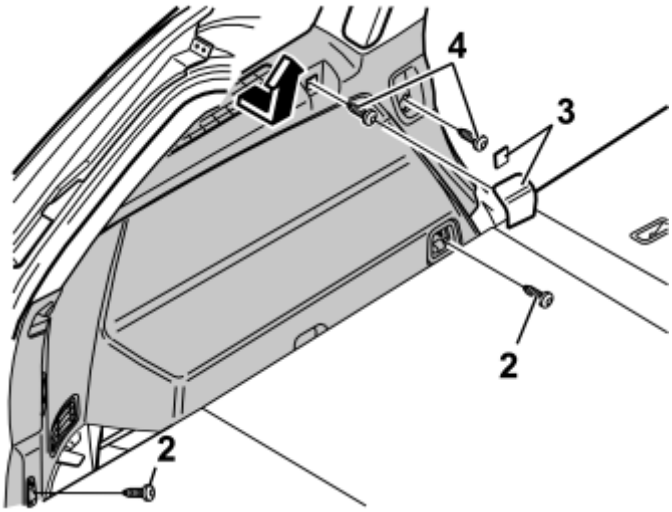

Fig. 325: Cars With Two Rows Of Seats
Courtesy of VOLVO CARS CORPORATION

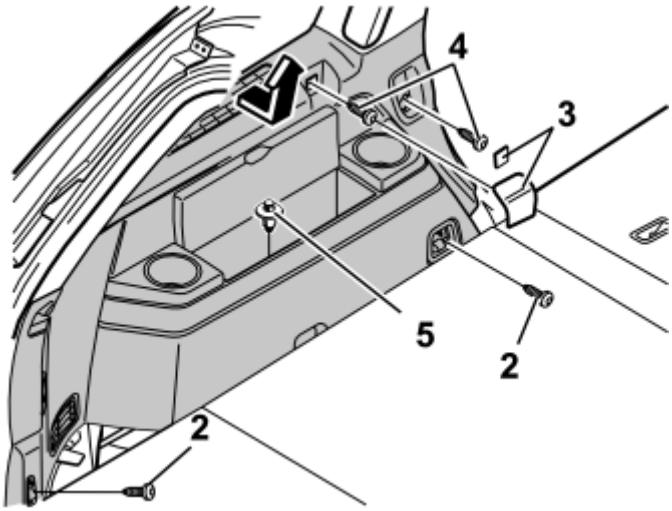

Fig. 326: Cars With Three Rows Of Seats
Courtesy of VOLVO CARS CORPORATION

- **Applies to cars with three rows of seats:** Fold down the third row of seats
- Remove the screws (2) for the load securing eyelets in the left-hand side panel
- Remove the covers (3) over the front mountings for the left-hand side panel. Pry them off using a plastic weatherstrip tool or a small screwdriver
- Remove the screws (4)
- **Applies to cars with three rows of seats:** Remove the clip (5) at the bottom of the storage compartment in the panel
- Pull out the upper edge of the panel a little to release the clips on the inside. Remove the panel by pulling it straight upwards.

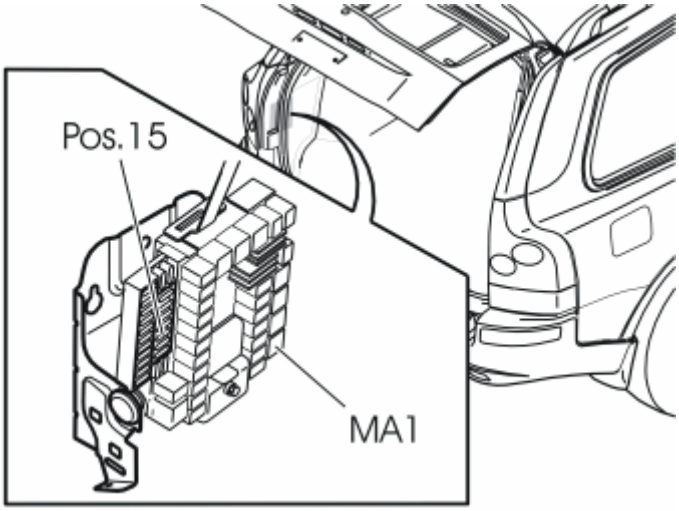

Fig. 327: Identifying Fuse and Relay Locations
Courtesy of VOLVO CARS CORPORATION

Connecting the positive power supply / charging function (15 I supply)

- Install the relay in the rear electronic module (REM) terminal MA 1.

NOTE: The relay is already installed in MA1 on cars with all wheel drive and cars with reverse warning as an accessory.

- Install a 20A fuse in the rear electronic module (REM) terminal 15.

FINISHING WORK

Reinstall:

- the left-hand side panel using the screws and cover if these were removed. Tighten the load securing eyelet screws. Tighten to **24 Nm (18 lbf. ft.)**
- the covers for the load securing eyelets
- the D-post panel and the connector for the D-post loudspeaker (if applicable)
- the rear roof lighting connector (if applicable)
- the rear headlining
- the C-post panel
- the protective cover and the bracket for the battery
- the folding side panels
- the storage compartment and floor hatches.

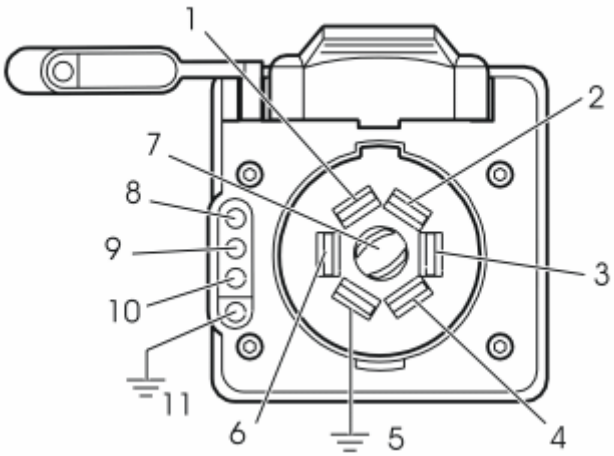

Fig. 328: Identifying 7-Pin Connector
Courtesy of VOLVO CARS CORPORATION

Checking the 7-pin connector

1. Parking lamps
2. Charging
3. Right indicators
4. Electrical brake
5. Ground
6. Left indicators
7. Reserve
8. Right indicators
9. Left indicators
10. Parking lamps
11. Ground.

TOW HITCH, FIXED (2003-2005)

CARS EQUIPPED WITH SRS/SIPS (AIRBAG)

see **CARS EQUIPPED WITH SRS/SIPS (AIRBAG)**

CAUTION

see **CAUTION**

CAUTION STATEMENT

see **CAUTION STATEMENT**

TOW HITCH, FIXED

NOTE: Kit contents:

1. **Cross member**
2. **Screw M12x110 (x6)**
3. **Spacer washer, left-hand**
4. **Spacer washer, right-hand**
5. **Mounting pin (x2)**
6. **Protective cover for the towing ball.**

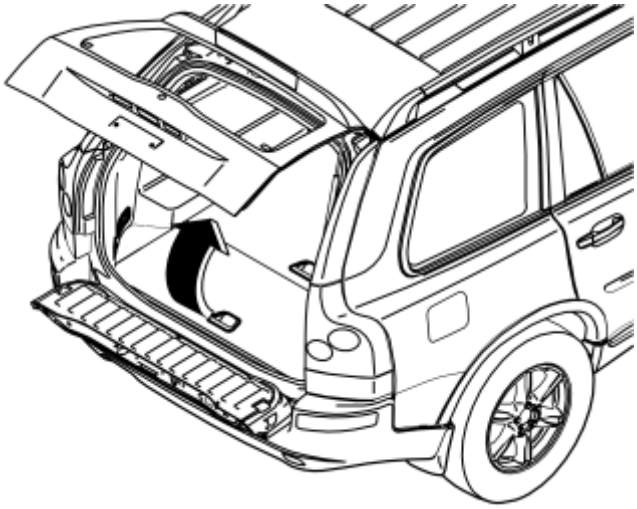

Fig. 329: Folding Up The Rear Floor Hatch
Courtesy of VOLVO CARS CORPORATION

Applies to cars with two rows of seats

- Fold up the center rear floor hatch (1) slightly
- Remove it by pulling it off the mountings at the front edge
- Remove the storage box underneath and lift it out. If the floor hatch has a carrier bag holder on the underneath, it is secured by a strap on each of the shorter sides of the storage box. The straps must be undone.

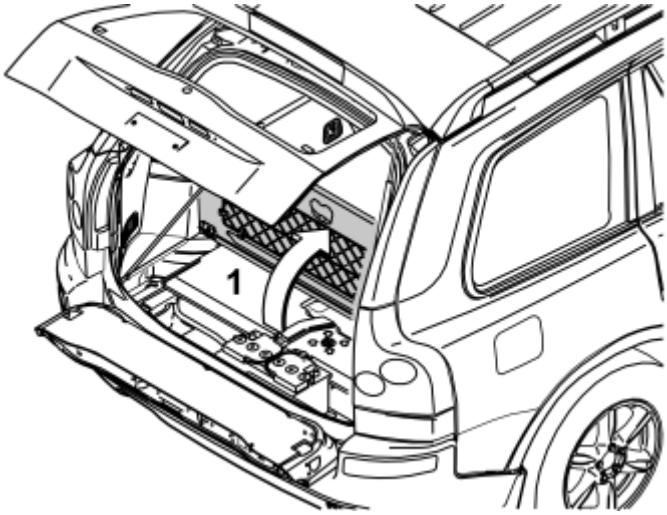

Fig. 330: Folding Up The Centre Rear Floor Hatch (1)
Courtesy of VOLVO CARS CORPORATION

Applies to cars with three rows of seats and the integrated carrier bag holder on the underside of the center floor hatch

- Fold up the center rear floor hatch (1)
- Release the two straps on the panel underneath. Lift up the panel at the rear edge. Fold back the floor hatch towards the panel. Lift out the floor hatch and panel.

Applies to cars with three rows of seats without integrated carrier bag holders

- Lift up the center rear floor hatch (1) at the rear edge and lift it out.

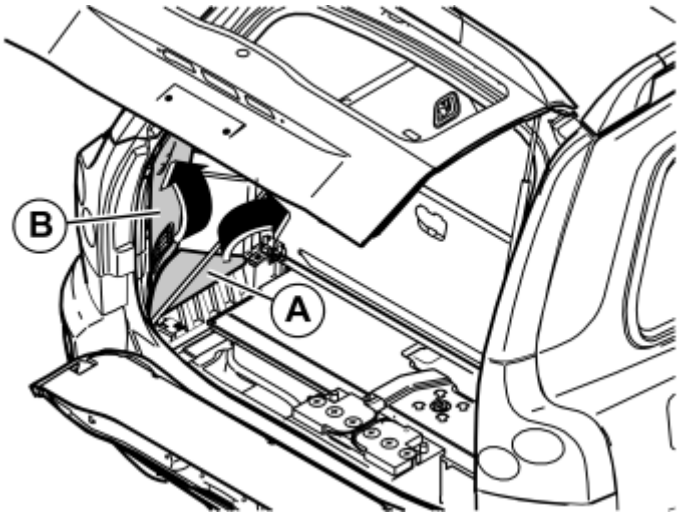

Fig. 331: Removing The Side Floor Hatches
Courtesy of VOLVO CARS CORPORATION

Applies to all models

- Remove the side floor hatches (A) and the folding side panels (B) on the right and left-hand sides in the cargo compartment.

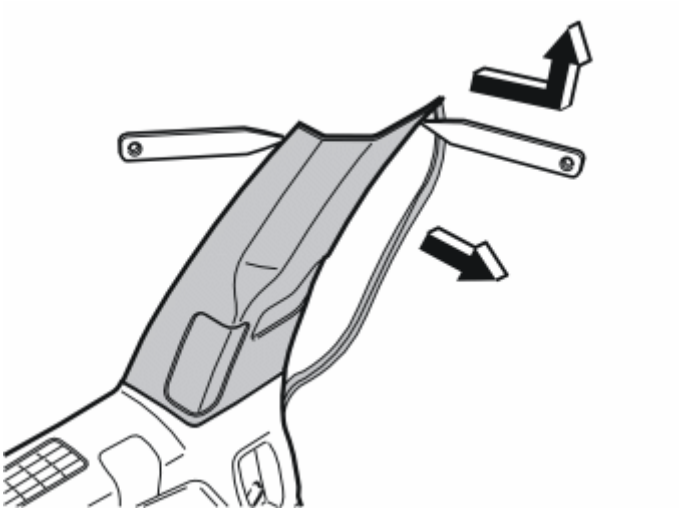

Fig. 332: Identifying Left-Hand C-Post Panel And Plastic Weatherstrip Tools
Courtesy of VOLVO CARS CORPORATION

- Pull off the rubber strip at the rear edge of the door opening to the left-hand rear door opposite the left C-post panel
- Carefully pry off the left-hand C-post panel at the sides in the top edge using a plastic weatherstrip tool. Pull off until the three clips on the inside release. Do not damage the headlining or the panel
- Remove the panel by pulling upwards slightly and unhooking it from the side panel
- Repeat the operation on the right-hand side.

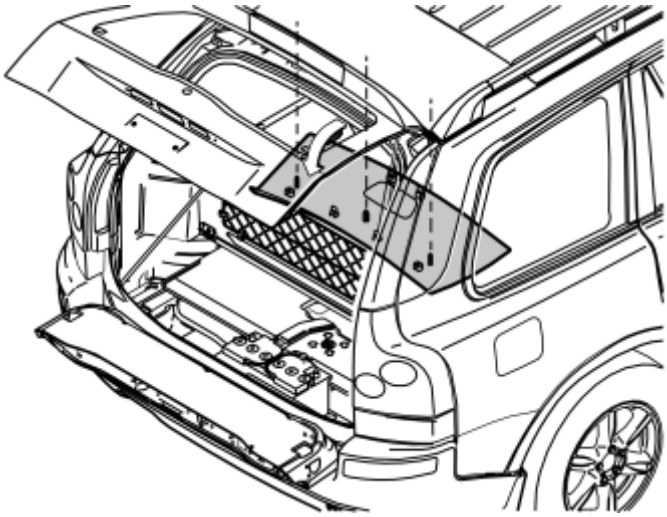

Fig. 333: Removing Cover And Screws For The Rear Headlining
Courtesy of VOLVO CARS CORPORATION

- Remove the cover and the screws underneath for the rear headlining
- Carefully pry off the panel at the rear edge. Use a plastic weatherstrip tool

- Pull the rear edge of the panel downwards until all clips on the inside have released
- If the car has lighting in the panel, disconnect the connector
- Pull the panel backwards to release it.

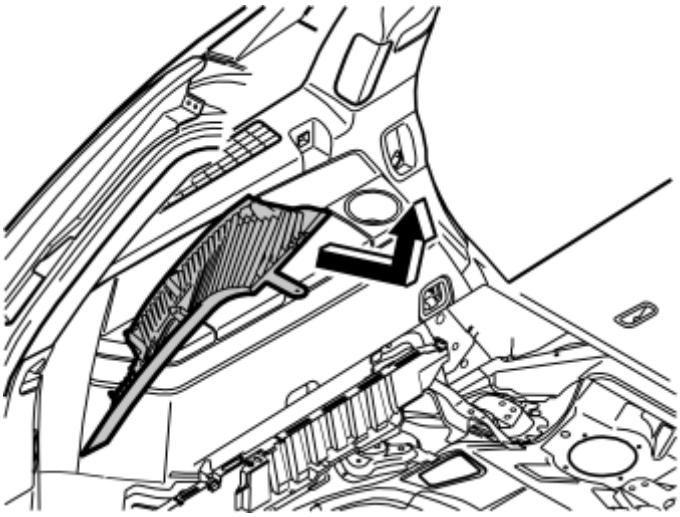

Fig. 334: Identifying D-Post Panel Removal From Side Panel
Courtesy of VOLVO CARS CORPORATION

- Pull off the left-hand D-post panel starting at the top edge. Then pull downwards until the three clips on the inside have released. Do not damage the panel
- Remove the panel by pulling upwards slightly and unhooking it from the side panel
- Disconnect the connector if the car has a loudspeaker in the D-post
- Repeat the operation on the right-hand side.

Illustration shows the removal of the cover for the load securing eyelets

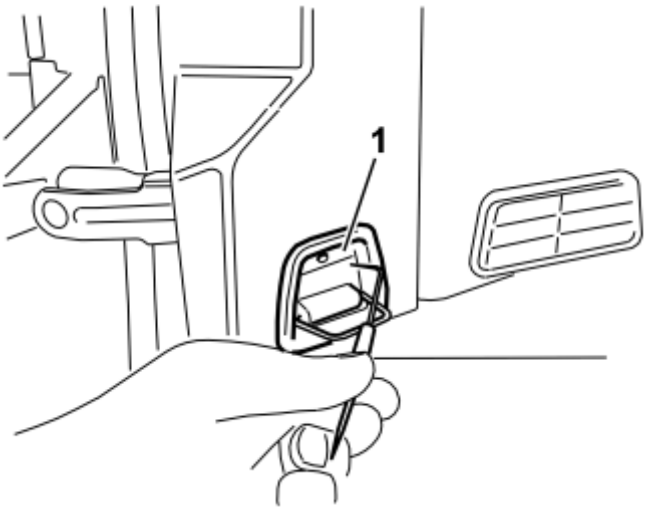

Fig. 335: Identifying Load Securing Eyelet
Courtesy of VOLVO CARS CORPORATION

Applies to all models

- Fold out the load securing eyelet
- Insert a scriber with an angled tip into the hole in the top of the cover
- Turn the scriber so that the angled tip engages in the reverse of the cover (1). Pull the cover off
- Repeat the operation on the right-hand side.

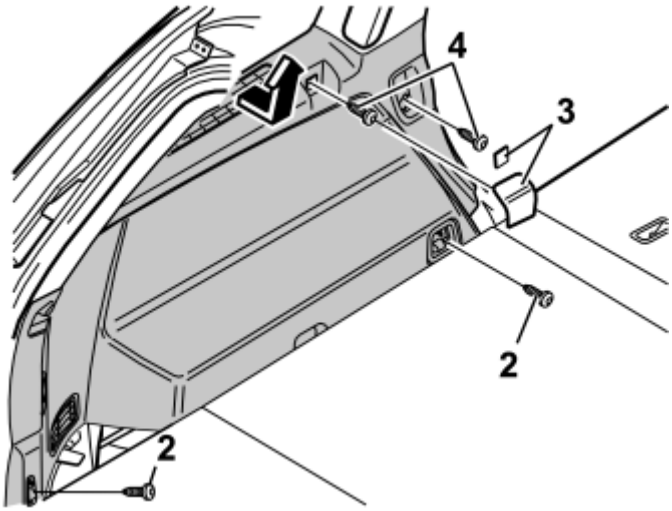

Fig. 336: Cars With Two Rows Of Seats
Courtesy of VOLVO CARS CORPORATION

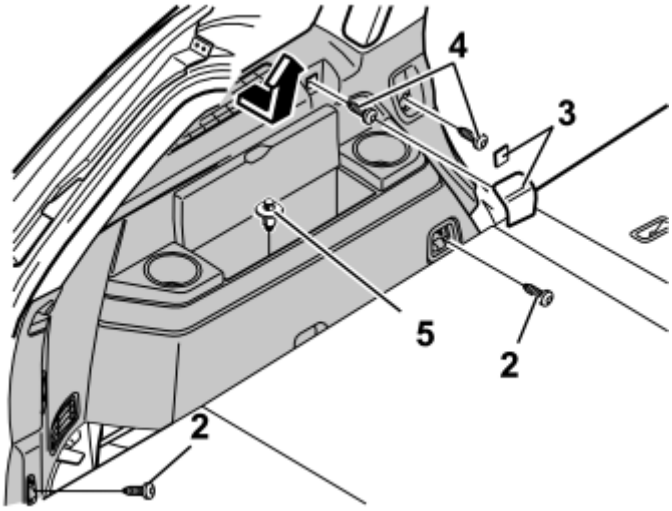

Fig. 337: Cars With Three Rows Of Seats
Courtesy of VOLVO CARS CORPORATION

- Fold up the seats in the third row (applies to cars with three rows of seats)
- Remove the screws (2) for the load securing eyelets in the left-hand side panel
- Remove the covers (3) over the front mountings for the left-hand side panel. Pry the covers off. Use a plastic weatherstrip tool or a small screwdriver

- Remove the screws (4)
- Remove the clip (5) at the bottom of the storage compartment in the panel (Applies to cars with three rows of seats)
- Pull up the panel slightly at the top edge so that the clips on the inside release. Remove the panel by pulling it straight upwards.

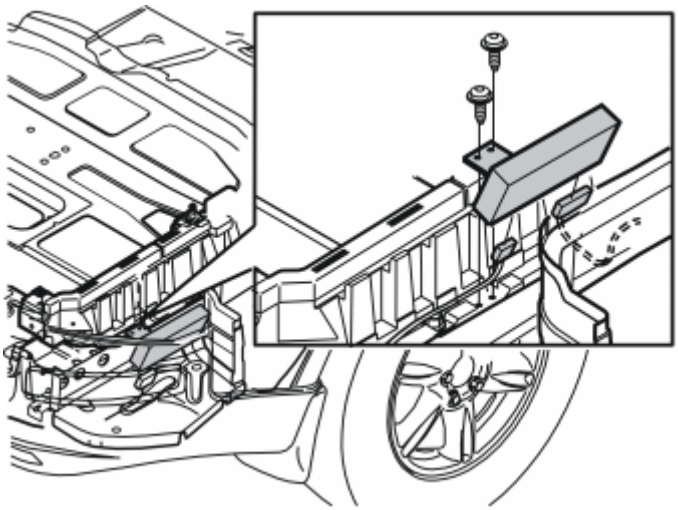

Fig. 338: Removing Panel By Pulling It Straight Up And Unhook It From Side Panel (1 Of 2)
Courtesy of VOLVO CARS CORPORATION

Applies to cars with accessory electronic modules (AEM)

- Remove the bracket with the accessory electronic module. If necessary disconnect the connectors.

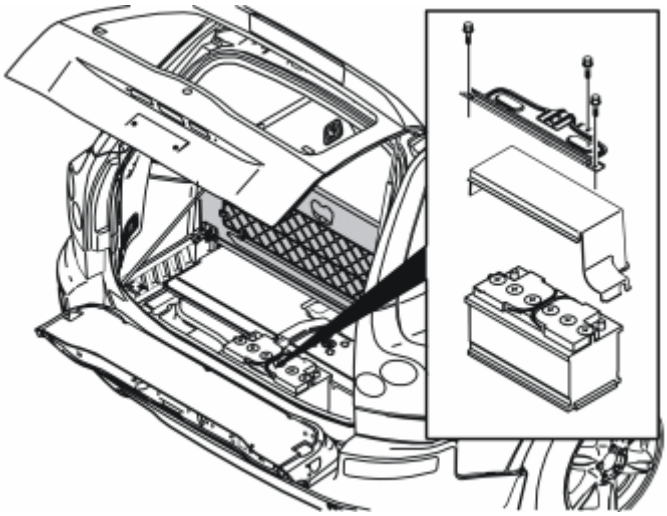

Fig. 339: Removing Three Screws In Battery Holder
Courtesy of VOLVO CARS CORPORATION

- Remove the three screws in the battery holder. Lift the battery holder out
- Remove the battery cover

- Lower and remove the spare wheel.

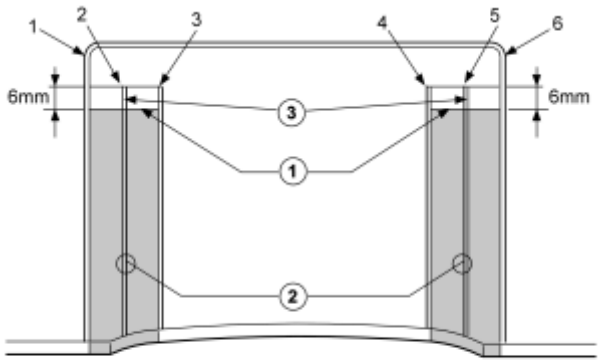

Fig. 340: Measure and Cut
Courtesy of VOLVO CARS CORPORATION

From underneath the car

1. Measure and draw a horizontal line 6 mm below the top of the ribs as illustrated
2. Cut along the inside of ribs 1 and 3 (the sides which face rib 2) up to the line drawn 6 mm below the top edge of the ribs. Do the same between ribs 6 and 4. Remove the shaded areas by cutting between the cuts along the horizontal line so that two parallel slits are made in the bumper cover
3. Cut away the remaining pieces of ribs 2 and 5 parallel to the bumper cover.

- Use a file to smooth off the edges of the cut outs.

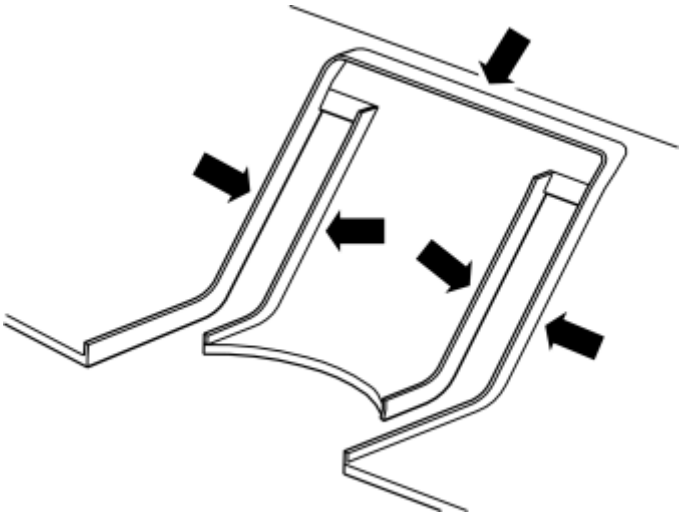

Fig. 341: Cut Away The Upright Ribs
Courtesy of VOLVO CARS CORPORATION

- Cut away all the upright ribs.

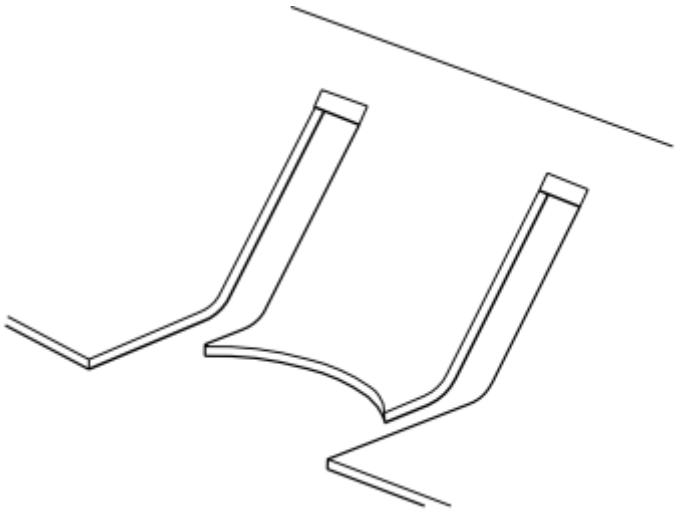

Fig. 342: Identifying the End Result
Courtesy of VOLVO CARS CORPORATION

- The end result must be as illustrated.

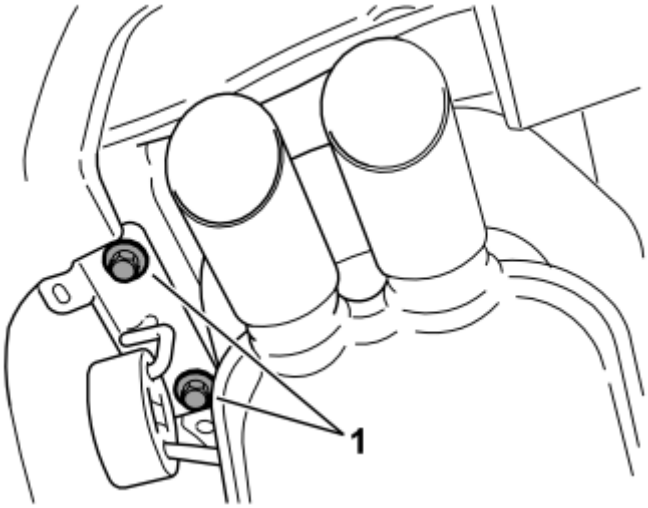

Fig. 343: Identifying The Rear Mounting
Courtesy of VOLVO CARS CORPORATION

- Remove the rear mounting for the silencer with the bracket from the underneath of the left-hand rear side member by removing the screws (1). Remove the silencer to gain access when installing the tow hitch.

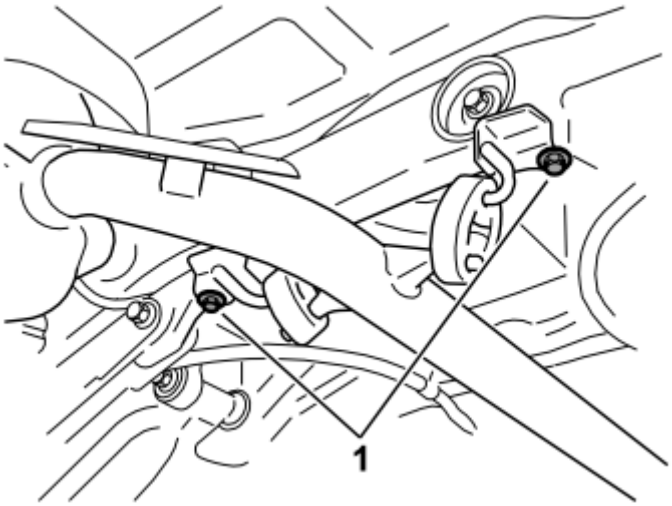

Fig. 344: Identifying Front Mounting
Courtesy of VOLVO CARS CORPORATION

- Remove the front mounting for the rear silencer at the rear sub-frame by removing the screws (1)
- Carefully bend the heat deflector plate at the side member to one side, to gain more work space
- Remove the protective flaps covering the mounting holes on the inside of the side members (one on each side)
- Remove any sealant from the surface where the tow hitch member will be mounted.

APPLIES TO CARS EQUIPPED WITH A REVERSING WARNING SYSTEM

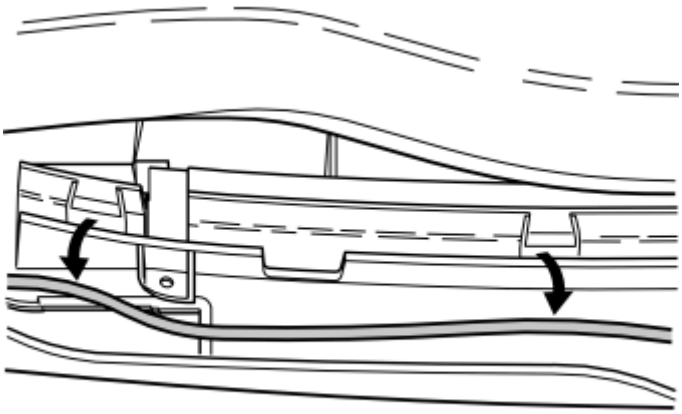

Fig. 345: Identifying The Right-Hand Side
Courtesy of VOLVO CARS CORPORATION

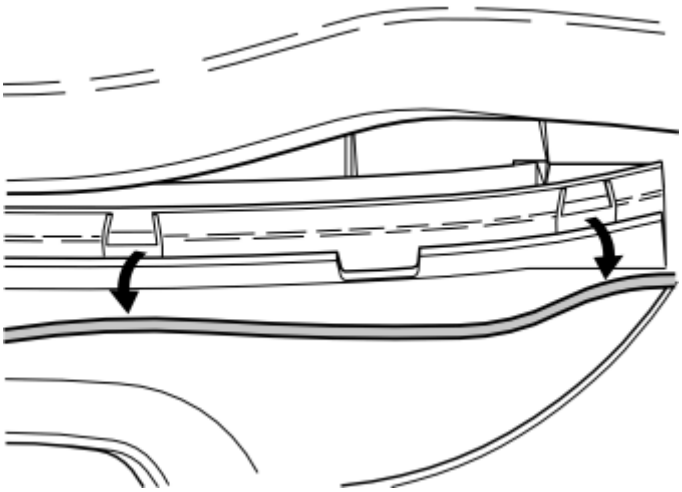

Fig. 346: Identifying The Left-Hand Side
Courtesy of VOLVO CARS CORPORATION

- Disconnect the cable for the reverse warning sensor from its clips in the rear section of the bumper.

APPLIES TO ALL MODELS

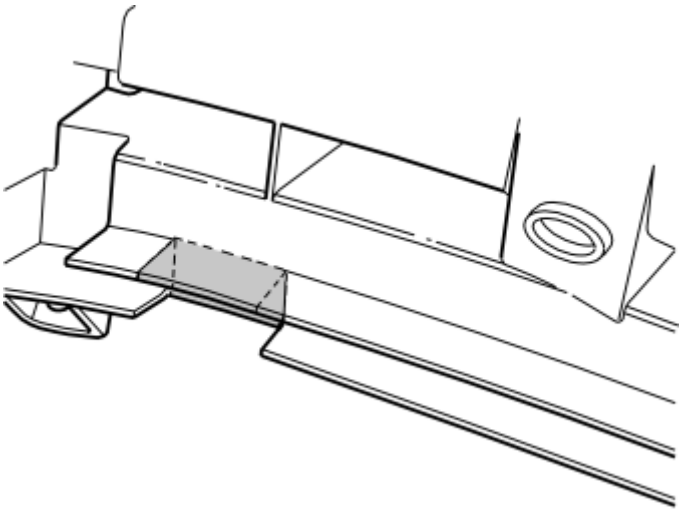

Fig. 347: Cut Out As Marked
Courtesy of VOLVO CARS CORPORATION

Right-hand side:

- Cut out the rear section at the existing cut out as marked in the illustration.

APPLIES TO CARS WITH REVERSING WARNING SYSTEMS

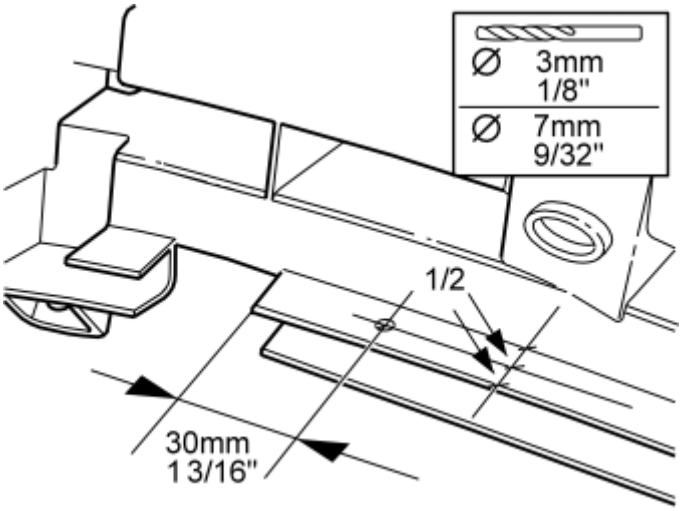

Fig. 348: Measuring Location of Hole
Courtesy of VOLVO CARS CORPORATION

Right-hand side:

- Measure up to drill the cable lead-in in the upper of the rear section plates as illustrated
- Pre-drill using a **3 mm (1/8")** diameter drill bit. Then drill out the hole to a diameter of **8 mm (5/16")** . Use an angle drill and short drill bits.

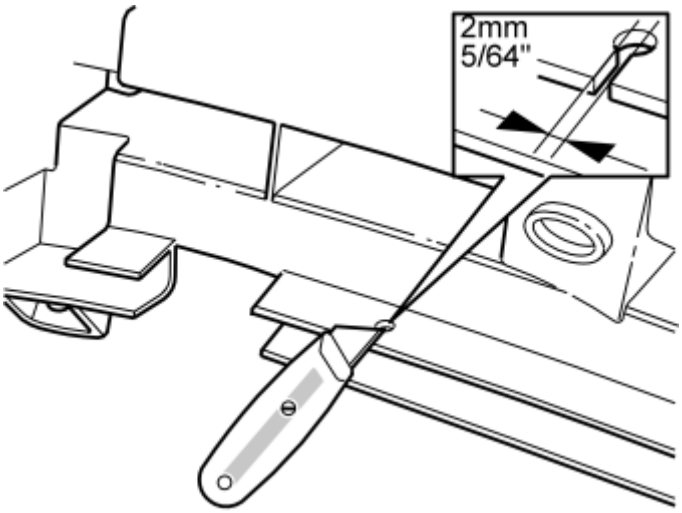

Fig. 349: Cutting a 2 mm (5/64") Groove
Courtesy of VOLVO CARS CORPORATION

- Cut a 2 mm (5/64") wide groove through the plate leading in to the hole.

APPLIES TO ALL MODELS

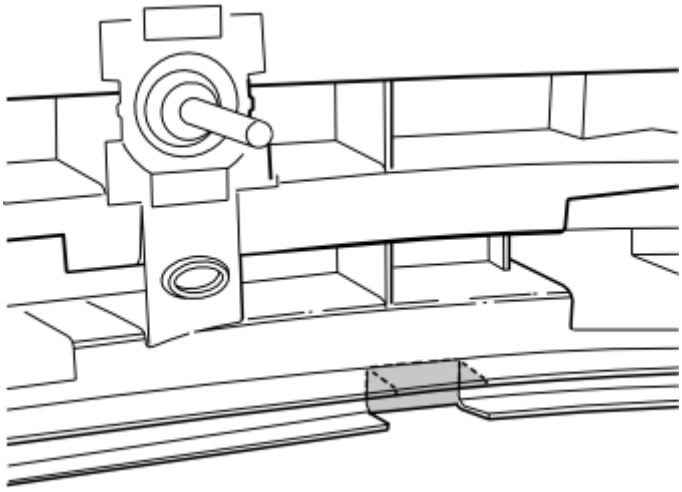

Fig. 350: Cutting Out As Marked
Courtesy of VOLVO CARS CORPORATION

Left-hand side:

- Cut out the rear section at the existing cut out as marked in the illustration.

APPLIES TO CARS WITH REVERSING WARNING SYSTEMS

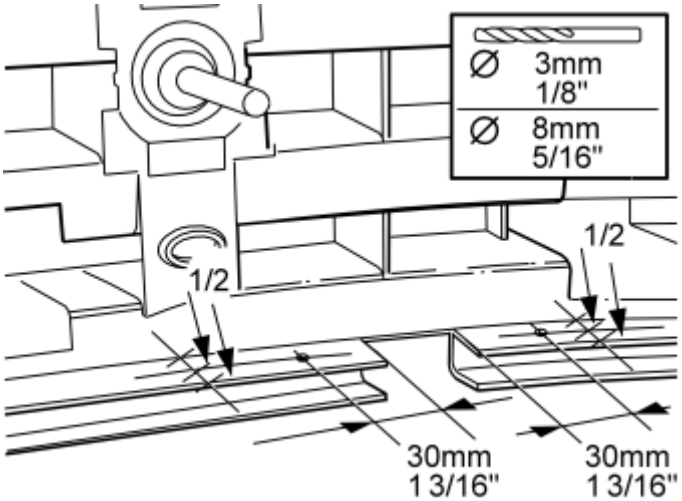

Fig. 351: Measuring Hole Locations
Courtesy of VOLVO CARS CORPORATION

Left-hand side:

- Measure up to drill the cable lead-in on the left and right-hand sides of the cut-out in the upper of the rear section plates as illustrated
- Pre-drill using a **3 mm (1/8")** diameter drill bit. Then drill out the holes to a diameter of **8 mm (5/16")** . Use an angle drill and short drill bits.

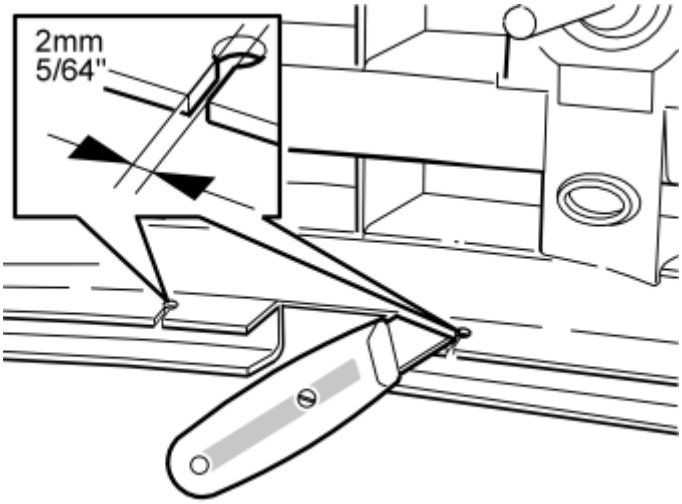

Fig. 352: Cutting a 2 mm (5/64") Slot
Courtesy of VOLVO CARS CORPORATION

- Cut a 2 mm (5/64") wide groove through the plate leading in to the holes on both sides of the cut-out.

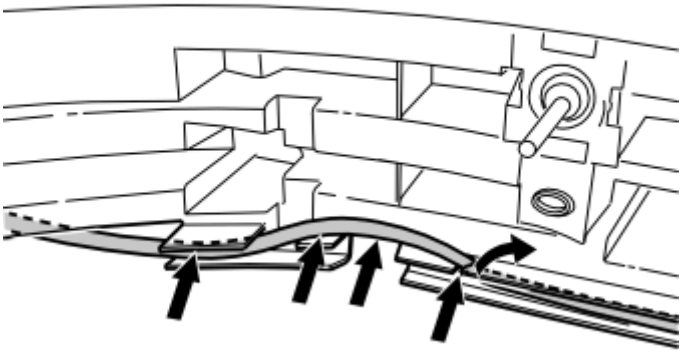

Fig. 353: Routing Cable
Courtesy of VOLVO CARS CORPORATION

Right-hand side:

- Press up the tab on the plate. Insert the cable in the previously drilled hole. The cable must be positioned as illustrated.

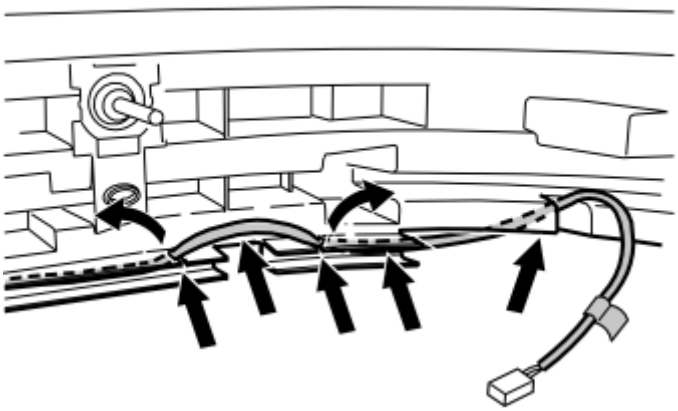

Fig. 354: Routing Cable
Courtesy of VOLVO CARS CORPORATION

Left-hand side:

- Press up the tabs on the plate and inset the cable in the holes drilled earlier. The cable must be positioned as illustrated.

HINT: It is recommended that two people carry out this procedure.

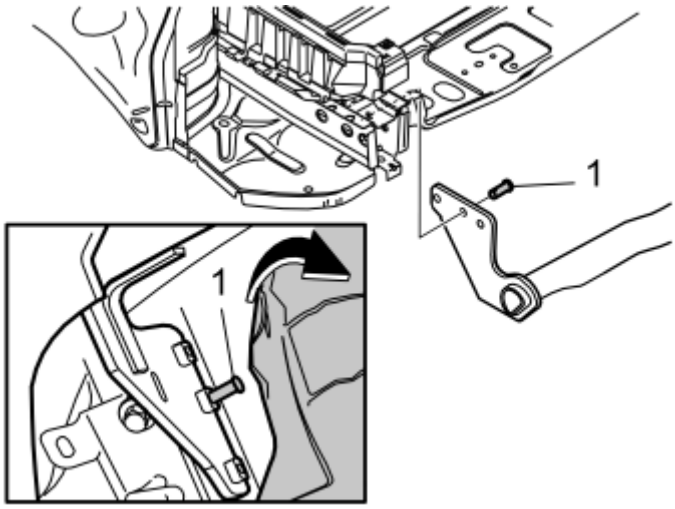

Fig. 355: Positioning The Tow Hitch Between The Two Side Members
Courtesy of VOLVO CARS CORPORATION

- Take the two mounting pins (1) from the kit
- With one person at each end, lift and position the tow hitch on the inside between the two side members, in between the holes. Start by angling up the face of the left-hand side above the tail pipe on the silencer and up between the heat deflector plate and the side member. Then angle the right-hand side face up to the side member

- Press the mounting pins (1) into the center hole in the side members while holding the tow bar member in position so that the bar can hang freely without falling off
- Carefully lower the car.

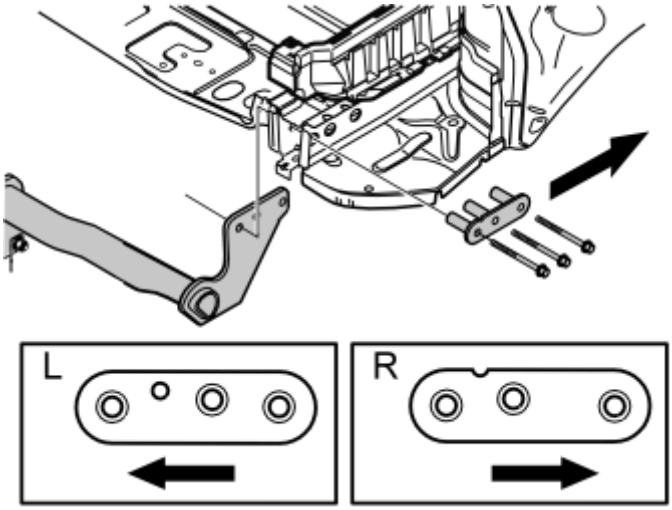

Fig. 356: Inserting The Spacer Sleeves
Courtesy of VOLVO CARS CORPORATION

- Fold down the lower tailgate.

From the inside of the cargo compartment:

- Remove the protective flaps covering the mounting holes on the outside of the side members (one on each side)
- Remove any sealant from the surfaces where the spacer washers will be positioned
- Insert the spacer sleeves using only the front and rear screws on the outside of the two side members.

NOTE: Do not press out the mounting pins so that the tow bar detaches.

- Screw the front and rear screws in fully but do not tighten them
- Insert the center screws so that the mounting pins are pressed out. Screw the screws in fully but do no tighten them
- Hold the bar in the horizontal position. Tighten the screws.

NOTE: Rustproofing agent must be applied under the car before the screws are tightened. Apply the rustproofing agent to the side members all around the ends where any sealant was scraped off.

- Tighten all screws from inside the car. Tighten to **120 Nm (86 lbf. ft.)** in the following order:

1. The rear screws

2. The front screws

3. The center screws

NOTE: Wait five minutes so that the joint settles. Then re-check the torque.

- Raise the car again.

From underneath the car

- Carefully bend the heat deflector plate back so it does not touch the silencer
- Reinstall the front mounting for the rear silencer. Tighten the screws. Tighten to **24 Nm (18 lbf. ft.)**
- Reinstall the rear mounting for the rear silencer. Tighten the screws. Tighten to **48 Nm (35 lbf. ft.)** .
- Install the cable harness connector for the tow hitch according to point 1D in the installation instructions for the appropriate cable harness.
- Install the cable harness according to point 3 onwards in the Installation instructions for the appropriate cable harness.

NOTE: Ensure that the cable harness does not rub against the lower edge of the bumper and is not pressed back.

- Reinstall the cover and holder for the battery
- Reinstall the spare wheel.

Applies to cars with accessory electronic modules (AEM)

- Reinstall the bracket with the accessory electronic module (AEM). Connect the connectors if disconnected.

Applies to all models

- Reinstall the panels, storage boxes and floor hatches
- Tighten the screws in the load securing eyelets. Tighten to **24 Nm (18 lbf. ft.)** .

TOW HITCH, FLANGE (2004-2005)

CAUTION STATEMENT

The impact sensor control module is located on the tunnel below the center console in front of the parking brake.

WARNING

The airbag inflation areas must be free from obstructions. Do not place any objects, e. g. clothes or accessories, within these areas. The panels must be able to open the exact right way at the exact right time. Otherwise there is a greater risk of injury in the event of an accident.

TOW HITCH, FLANGE

NOTE: Kit content:

1. **Crossmember**
2. **Screw M12X110 (x5)**
3. **Spacer washer, left**
4. **Spacer washer, right**
5. **Retaining pin (x2)**
6. **Screw M16x50 (x2)**
7. **Nut M16 (x2)**
8. **Tow ball**
9. **Tow ball protective cap**

PREPARATION

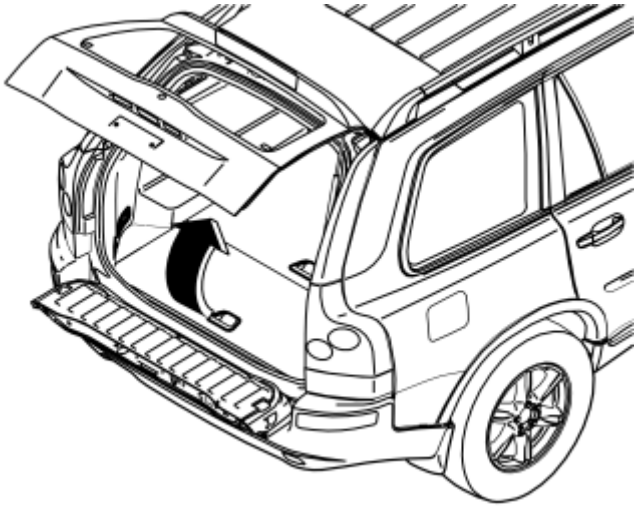

Fig. 357: Folding Up The Rear Floor Hatch
Courtesy of VOLVO CARS CORPORATION

Applies to cars with two rows of seats

- Raise the center, rear floor hatch (1) a bit.
- Remove it by pulling it out of its mountings at the front edge.
- Remove the storage box underneath and lift it out. If the floor hatch has a grocery bag holder on the underside, it is secured with a strap on each short side of the storage box. These must be detached.

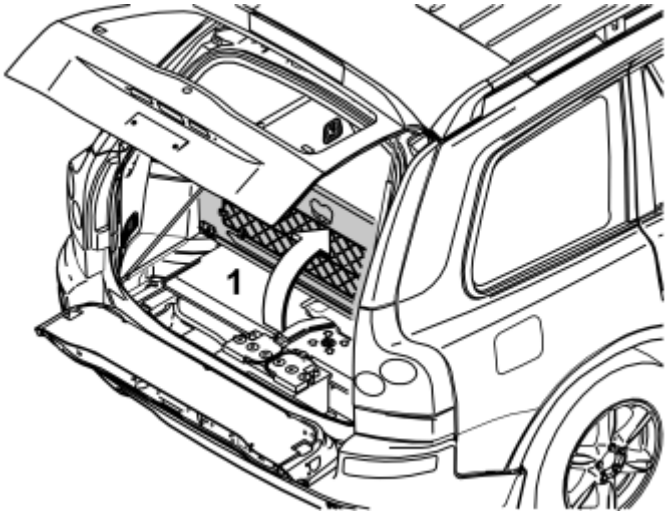

Fig. 358: Folding Up The Centre Rear Floor Hatch (1)
Courtesy of VOLVO CARS CORPORATION

Applies to cars with three rows of seats and integrated grocery bag holder on the underside of the center floor hatch

- Raise the center, rear floor hatch (1).
- Undo the two straps on the panel underneath. Lift up the panel at the rear edge, lower the floor hatch toward the panel and lift out the floor hatch with panel.

Applies to cars with three rows of seats without integrated grocery bag holder

- Raise the center, rear floor hatch (1) at the rear edge and lift it out.

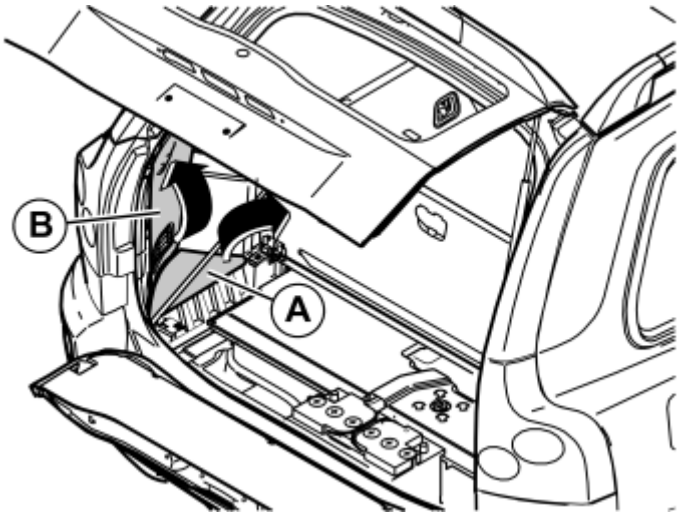

Fig. 359: Removing The Side Floor Hatches
Courtesy of VOLVO CARS CORPORATION

Applies to all

- Remove the side floor hatches (A) and the foldable panels (B) on the right and left side of the cargo compartment.

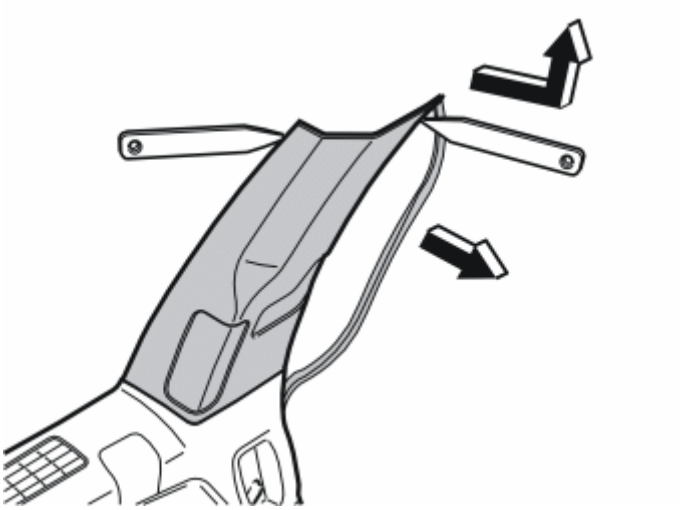

Fig. 360: Prying Loose The Left-Hand C-Post Panel
Courtesy of VOLVO CARS CORPORATION

- Pull off the rubber strip at the rear edge of the left rear door opening in front of the left-hand C-post panel.
- Carefully pry loose the left-hand C-post panel at the sides of the top edge using a plastic weatherstrip tool. Pull it until the three clips on the inside have released. Be careful not to damage the headlining and panel.
- Remove the panel by pulling it up and releasing it from the side panel.
- Do the same on the right-hand side.

WARNING

The ignition key must be set to position '0' and removed from the ignition switch before any connector for the SRS system is unplugged. Then wait at least one minute. Disconnect the negative lead of the battery before unplugging any of the connectors. After work is complete, turn the ignition key to position 'II' before reconnecting the negative lead of the battery.

TOWBAR, FLANGE (2003-2005)

CARS EQUIPPED WITH SRS/SIPS (AIRBAG)

see **CARS EQUIPPED WITH SRS/SIPS (AIRBAG)**

CAUTION

see **CAUTION**

CAUTION STATEMENT

see **CAUTION STATEMENT**

TOW HITCH, FLANGE

NOTE: Kit contents:

1. **Cross member**
2. **Screw M12x110 (x6)**
3. **Spacer washer, left-hand**
4. **Spacer washer, right-hand**
5. **Mounting pin (x2)**
6. **Screw M16x50 (x2)**
7. **Nut M16 (x2)**
8. **Towing ball**
9. **Protective cover for the towing ball.**

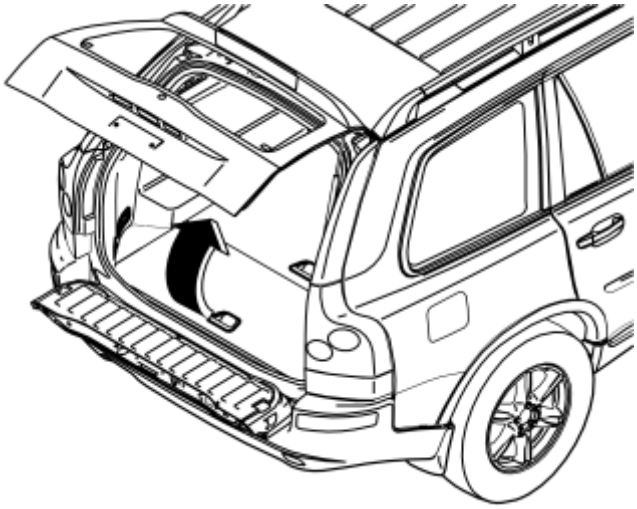

Fig. 361: Folding Up The Rear Floor Hatch
Courtesy of VOLVO CARS CORPORATION

Applies to cars with two rows of seats

- Fold up the center rear floor hatch (1) slightly
- Remove it by pulling it off the mountings at the front edge
- Remove the storage box underneath and lift it out. If the floor hatch has a carrier bag holder on the underneath, it is secured by a strap on each of the shorter sides of the storage box. The straps must be undone.

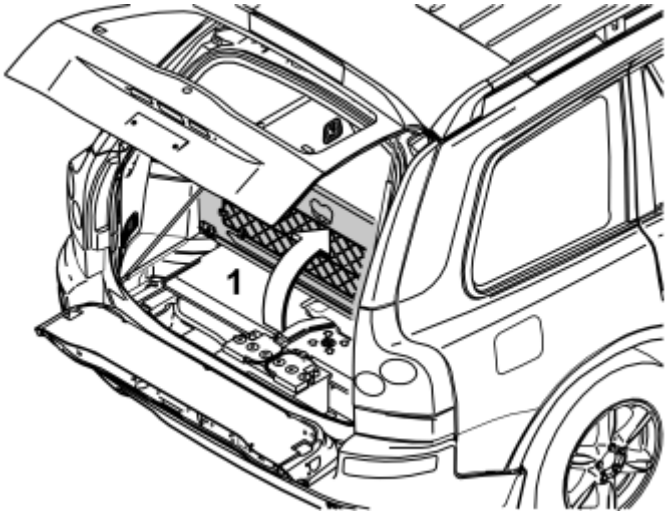

Fig. 362: Folding Up The Centre Rear Floor Hatch (1)
Courtesy of VOLVO CARS CORPORATION

Applies to cars with three rows of seats and the integrated carrier bag holder on the underside of the center floor hatch

- Fold up the center rear floor hatch (1)
- Release the two straps on the panel underneath. Lift up the panel at the rear edge. Fold back the floor hatch towards the panel. Lift out the floor hatch and panel.

Applies to cars with three rows of seats without integrated carrier bag holders

- Lift up the center rear floor hatch (1) at the rear edge and lift it out.

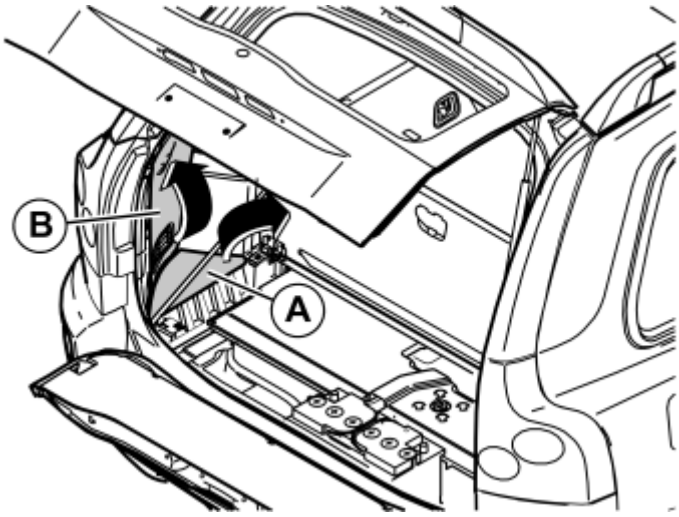

Fig. 363: Removing The Side Floor Hatches
Courtesy of VOLVO CARS CORPORATION

Applies to all models

- Remove the side floor hatches (A) and the folding side panels (B) on the right and left-hand sides in the cargo compartment.

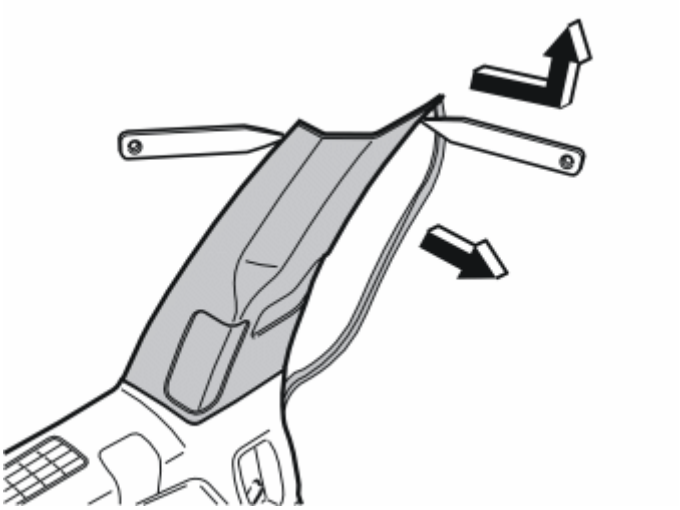

Fig. 364: Identifying Left-Hand C-Post Panel And Plastic Weatherstrip Tools
Courtesy of VOLVO CARS CORPORATION

- Pull off the rubber strip at the rear edge of the door opening to the left-hand rear door opposite the left C-post panel
- Carefully pry off the left-hand C-post panel at the sides in the top edge using a plastic weatherstrip tool. Pull off until the three clips on the inside release. Do not damage the headlining or the panel
- Remove the panel by pulling upwards slightly and unhooking it from the side panel
- Repeat the operation on the right-hand side.

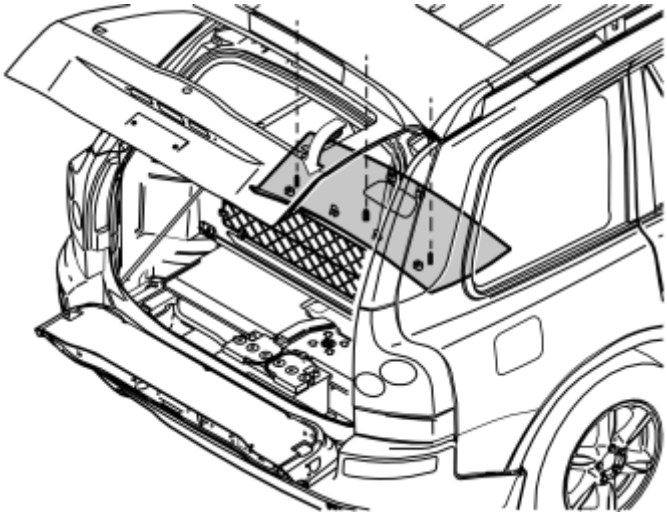

Fig. 365: Removing Cover And Screws For The Rear Headlining
Courtesy of VOLVO CARS CORPORATION

- Remove the cover and the screws underneath for the rear headlining
- Carefully pry off the panel at the rear edge. Use a plastic weatherstrip tool

- Pull the rear edge of the panel downwards until all clips on the inside have released
- If the car has lighting in the panel, disconnect the connector
- Pull the panel backwards to release it.

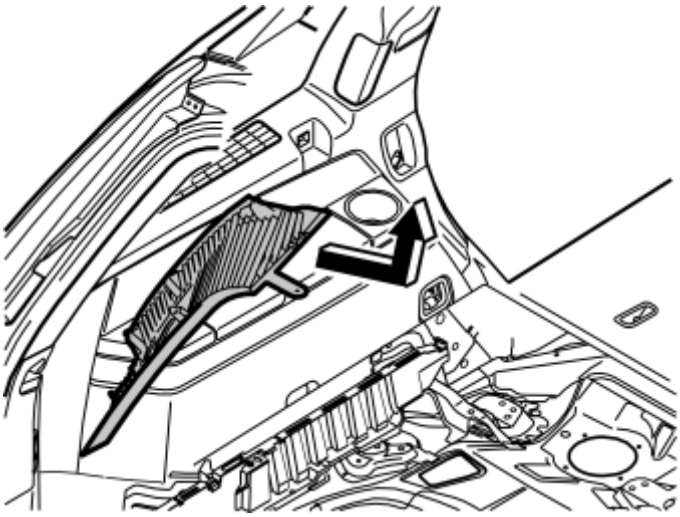

Fig. 366: Identifying D-Post Panel Removal From Side Panel
Courtesy of VOLVO CARS CORPORATION

- Pull off the left-hand D-post panel starting at the top edge. Then pull downwards until the three clips on the inside have released. Do not damage the panel
- Remove the panel by pulling upwards slightly and unhooking it from the side panel
- Disconnect the connector if the car has a loudspeaker in the D-post
- Repeat the operation on the right-hand side.

Illustration shows the removal of the cover for the load securing eyelets

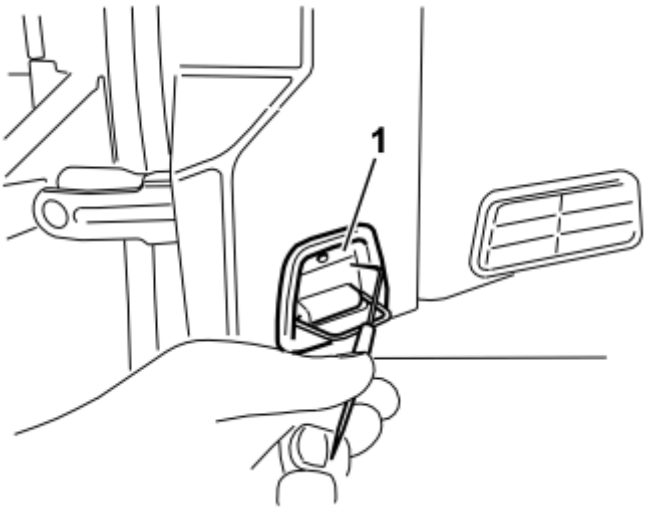

Fig. 367: Identifying Load Securing Eyelet
Courtesy of VOLVO CARS CORPORATION

Applies to all models

- Fold out the load securing eyelet
- Insert a scriber with an angled tip into the hole in the top of the cover
- Turn the scriber so that the angled tip engages in the reverse of the cover (1). Pull the cover off
- Repeat the operation on the right-hand side.

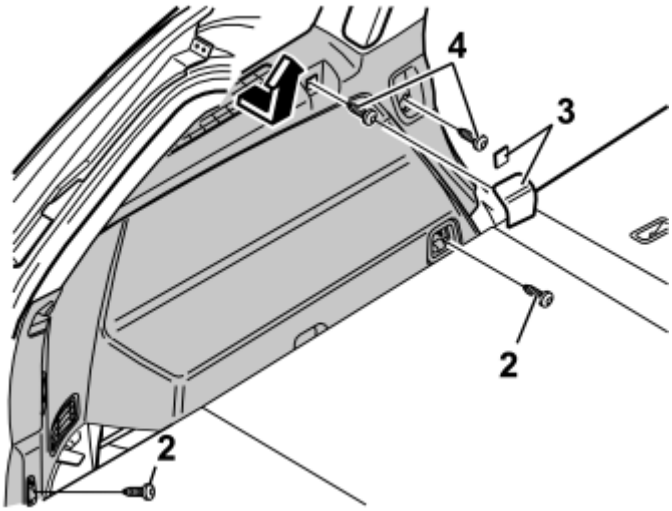

Fig. 368: Cars With Two Rows Of Seats
Courtesy of VOLVO CARS CORPORATION

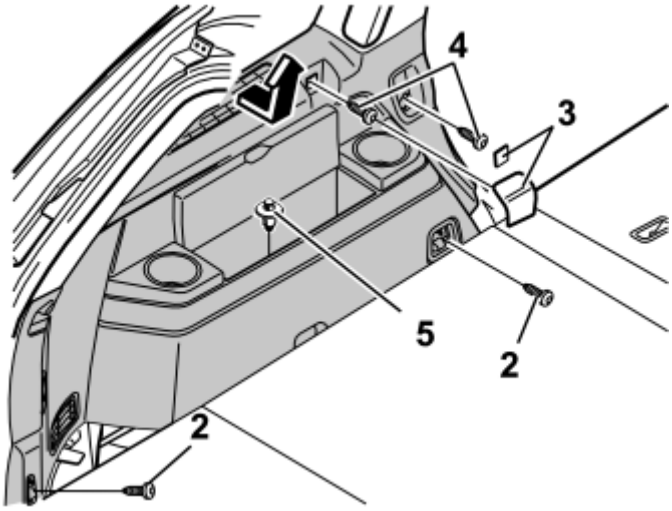

Fig. 369: Cars With Three Rows Of Seats
Courtesy of VOLVO CARS CORPORATION

- Fold up the seats in the third row (applies to cars with three rows of seats)
- Remove the screws (2) for the load securing eyelets in the left-hand side panel
- Remove the covers (3) over the front mountings for the left-hand side panel. Pry the covers off. Use a plastic weatherstrip tool or a small screwdriver

- Remove the screws (4)
- Remove the clip (5) at the bottom of the storage compartment in the panel (Applies to cars with three rows of seats)
- Pull up the panel slightly at the top edge so that the clips on the inside release. Remove the panel by pulling it straight upwards.

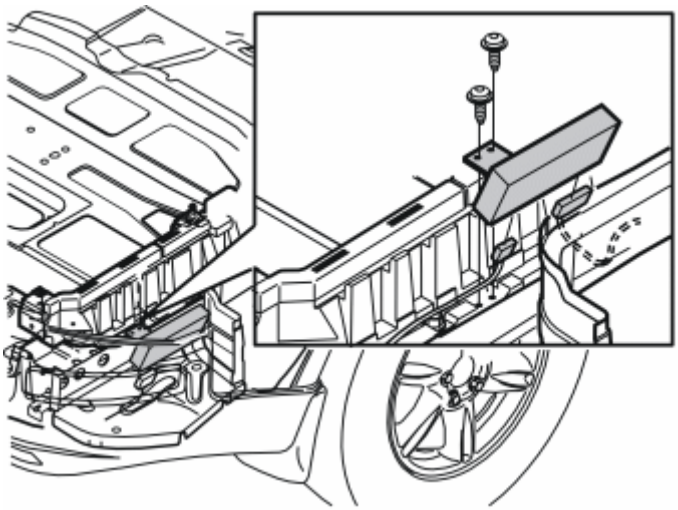

Fig. 370: Removing Panel By Pulling It Straight Up And Unhook It From Side Panel (1 Of 2)
Courtesy of VOLVO CARS CORPORATION

Applies to cars with accessory electronic modules (AEM)

- Remove the bracket with the accessory electronic module. If necessary disconnect the connectors.

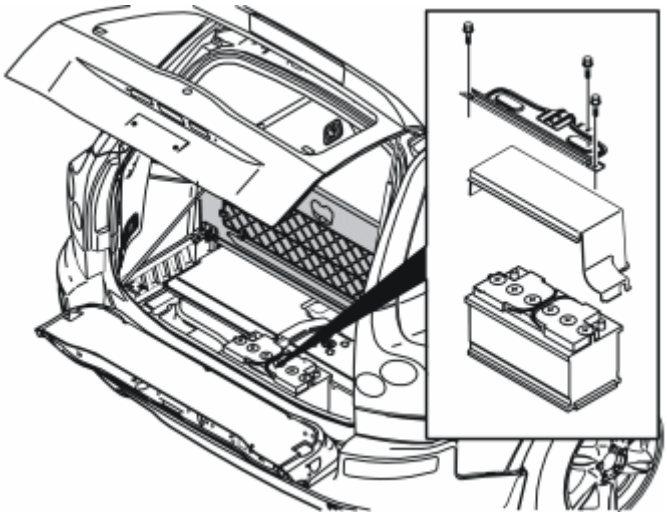

Fig. 371: Removing Three Screws In Battery Holder
Courtesy of VOLVO CARS CORPORATION

- Remove the three screws in the battery holder. Lift the battery holder out
- Remove the battery cover

- Lower and remove the spare wheel.

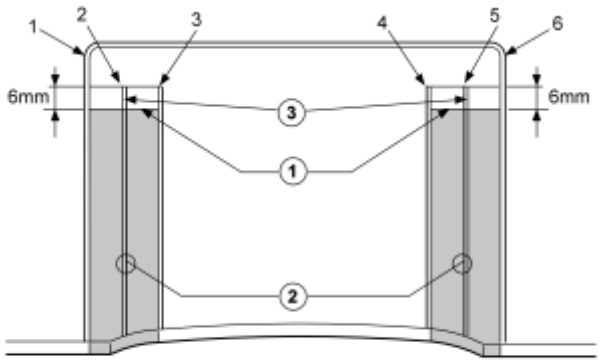

Fig. 372: Measure and Cut
Courtesy of VOLVO CARS CORPORATION

From underneath the car

1. Measure and draw a horizontal line 6 mm below the top of the ribs as illustrated
2. Cut along the inside of ribs 1 and 3 (the sides which face rib 2) up to the line drawn 6 mm below the top edge of the ribs. Do the same between ribs 6 and 4. Remove the shaded areas by cutting between the cuts along the horizontal line so that two parallel slits are made in the bumper cover
3. Cut away the remaining pieces of ribs 2 and 5 parallel to the bumper cover.

- Use a file to smooth off the edges of the cut outs.

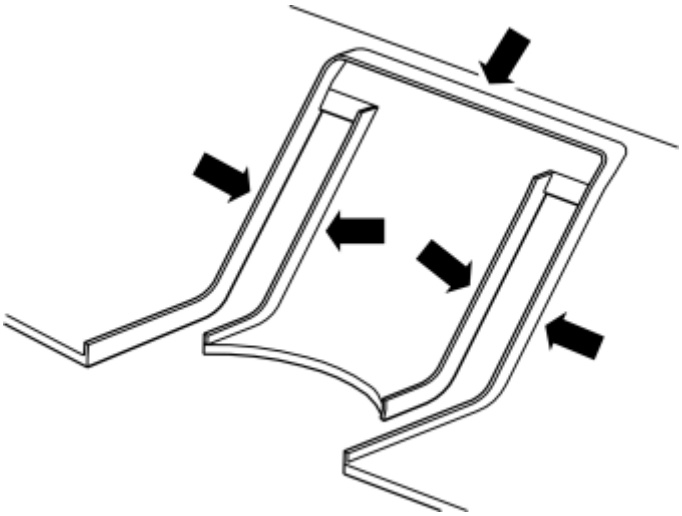

Fig. 373: Cut Away The Upright Ribs
Courtesy of VOLVO CARS CORPORATION

- Cut away all the upright ribs.

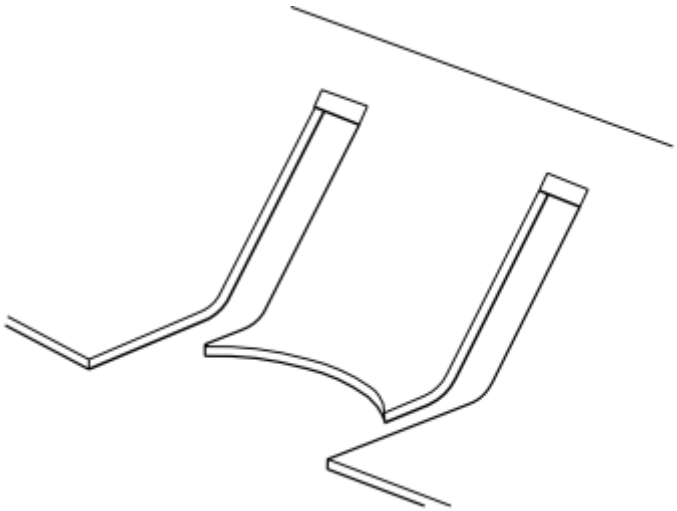

Fig. 374: Identifying the End Result
Courtesy of VOLVO CARS CORPORATION

- The end result must be as illustrated.

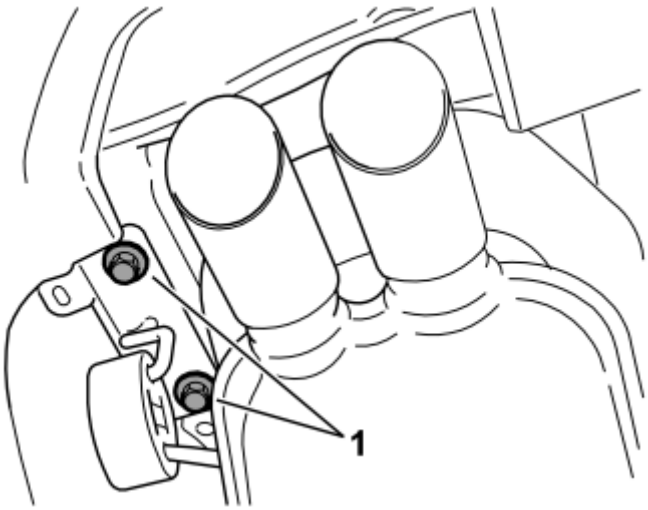

Fig. 375: Identifying The Rear Mounting
Courtesy of VOLVO CARS CORPORATION

- Remove the rear mounting for the silencer with the bracket from the underneath of the left-hand rear side member by removing the screws (1). Remove the silencer to gain access when installing the tow hitch.

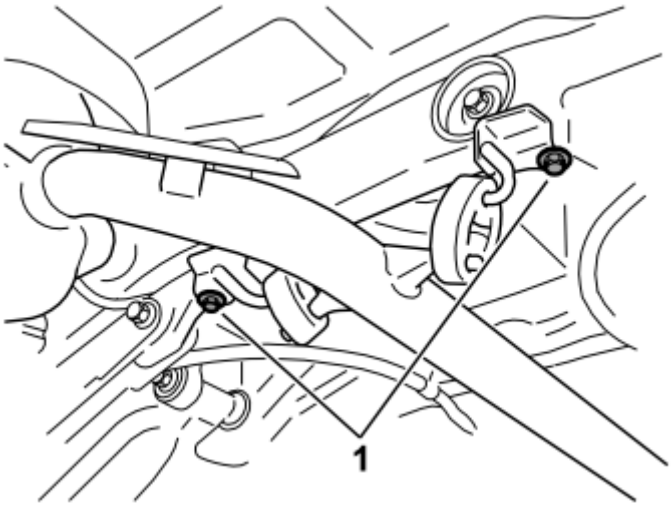

Fig. 376: Identifying Front Mounting
Courtesy of VOLVO CARS CORPORATION

- Remove the front mounting for the rear silencer at the rear sub-frame by removing the screws (1)
- Carefully bend the heat deflector plate at the side member to one side, to gain more work space
- Remove the protective flaps covering the mounting holes on the inside of the side members (one on each side)
- Remove any sealant from the surface where the tow hitch member will be mounted.

APPLIES TO CARS EQUIPPED WITH A REVERSING WARNING SYSTEM

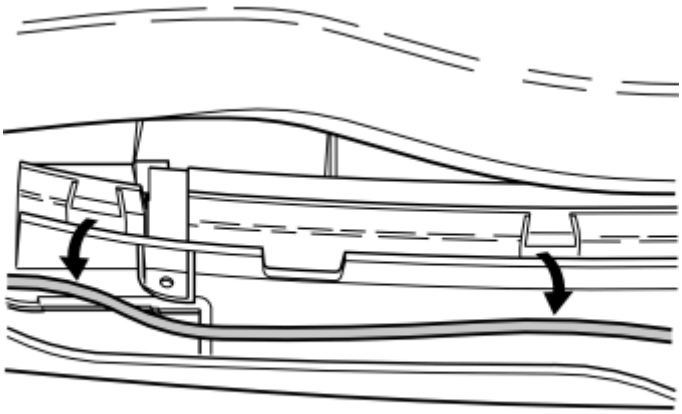

Fig. 377: Identifying The Right-Hand Side
Courtesy of VOLVO CARS CORPORATION

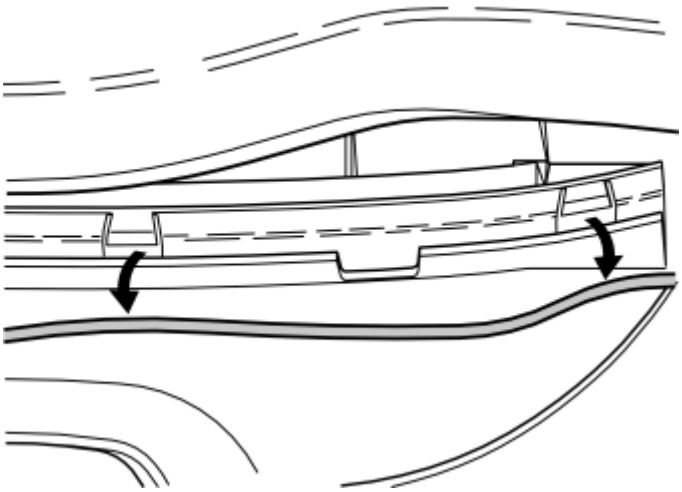

Fig. 378: Identifying The Left-Hand Side
Courtesy of VOLVO CARS CORPORATION

- Disconnect the cable for the reverse warning sensor from its clips in the rear section of the bumper.

APPLIES TO ALL MODELS

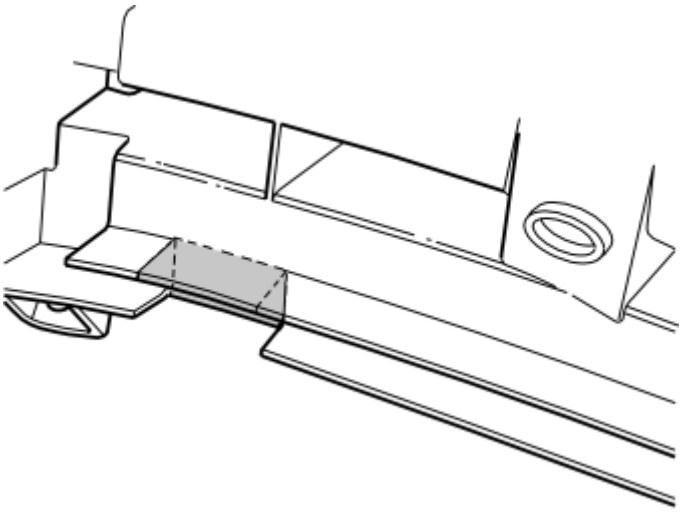

Fig. 379: Cut Out As Marked
Courtesy of VOLVO CARS CORPORATION

Right-hand side:

- Cut out the rear section at the existing cut out as marked in the illustration.

APPLIES TO CARS WITH REVERSING WARNING SYSTEMS

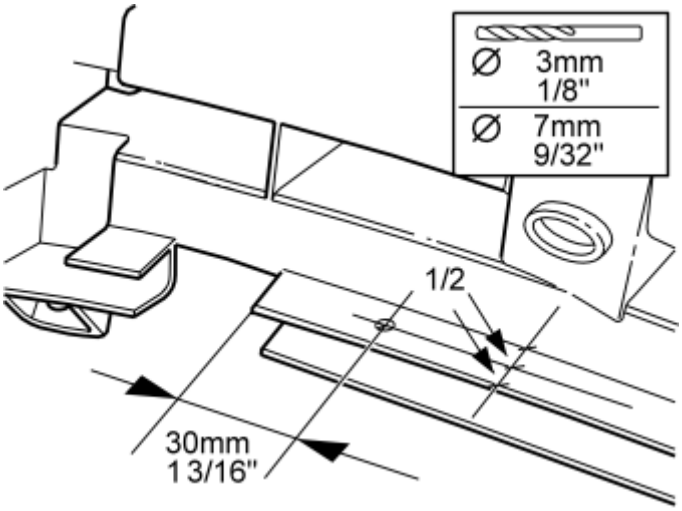

Fig. 380: Measuring Location of Hole
Courtesy of VOLVO CARS CORPORATION

Right-hand side:

- Measure up to drill the cable lead-in in the upper of the rear section plates as illustrated
- Pre-drill using a **3 mm (1/8")** diameter drill bit. Then drill out the hole to a diameter of **8 mm (5/16")** . Use an angle drill and short drill bits.

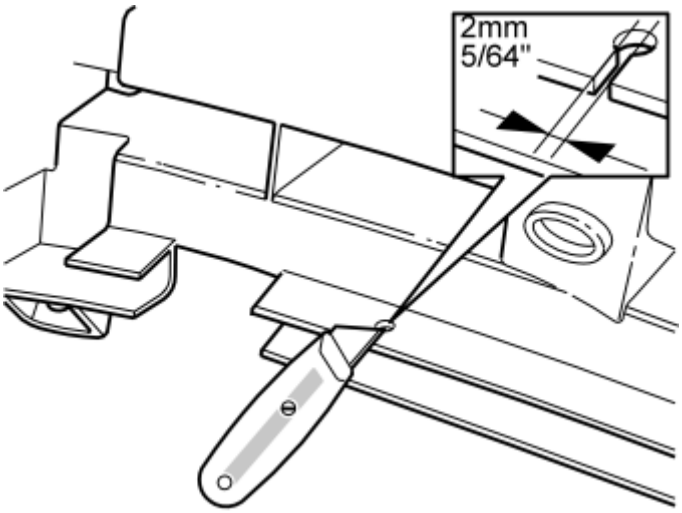

Fig. 381: Cutting a 2 mm (5/64") Groove
Courtesy of VOLVO CARS CORPORATION

- Cut a 2 mm (5/64") wide groove through the plate leading in to the hole.

APPLIES TO ALL MODELS

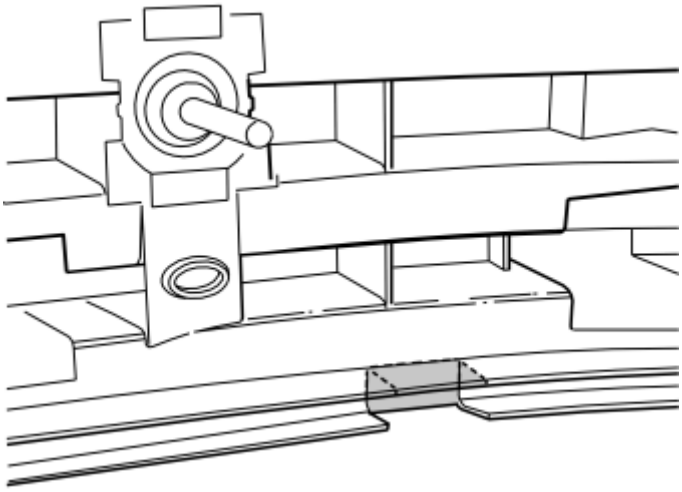

Fig. 382: Cutting Out As Marked
Courtesy of VOLVO CARS CORPORATION

Left-hand side:

- Cut out the rear section at the existing cut out as marked in the illustration.

APPLIES TO CARS WITH REVERSING WARNING SYSTEMS

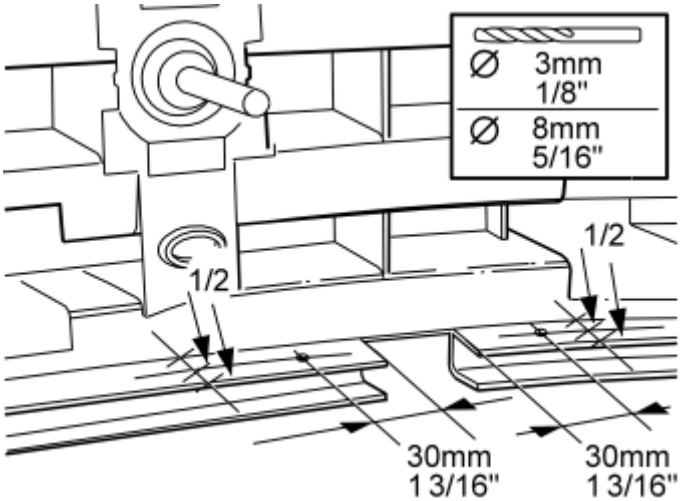

Fig. 383: Measuring Hole Locations
Courtesy of VOLVO CARS CORPORATION

Left-hand side:

- Measure up to drill the cable lead-in on the left and right-hand sides of the cut-out in the upper of the rear section plates as illustrated
- Pre-drill using a **3 mm (1/8")** diameter drill bit. Then drill out the holes to a diameter of **8 mm (5/16")** . Use an angle drill and short drill bits.

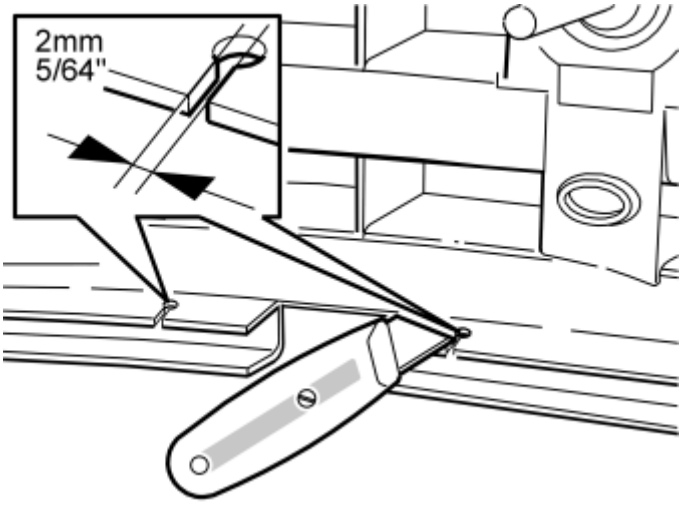

Fig. 384: Cutting a 2 mm (5/64") Slot
Courtesy of VOLVO CARS CORPORATION

- Cut a 2 mm (5/64") wide groove through the plate leading in to the holes on both sides of the cut-out.

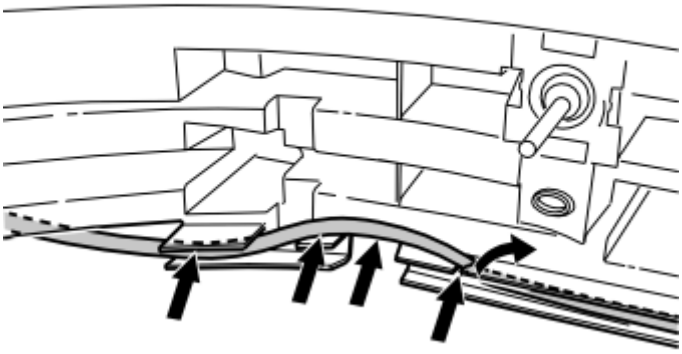

Fig. 385: Routing Cable
Courtesy of VOLVO CARS CORPORATION

Right-hand side:

- Press up the tab on the plate. Insert the cable in the previously drilled hole. The cable must be positioned as illustrated.

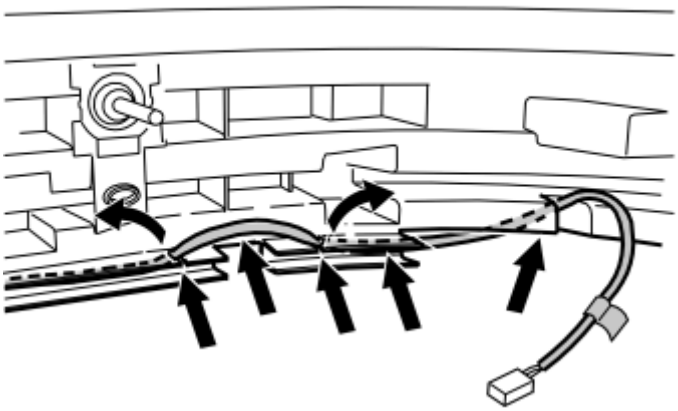

Fig. 386: Routing Cable
Courtesy of VOLVO CARS CORPORATION

Left-hand side:

- Press up the tabs on the plate and inset the cable in the holes drilled earlier. The cable must be positioned as illustrated.

HINT: It is recommended that two people carry out this procedure.

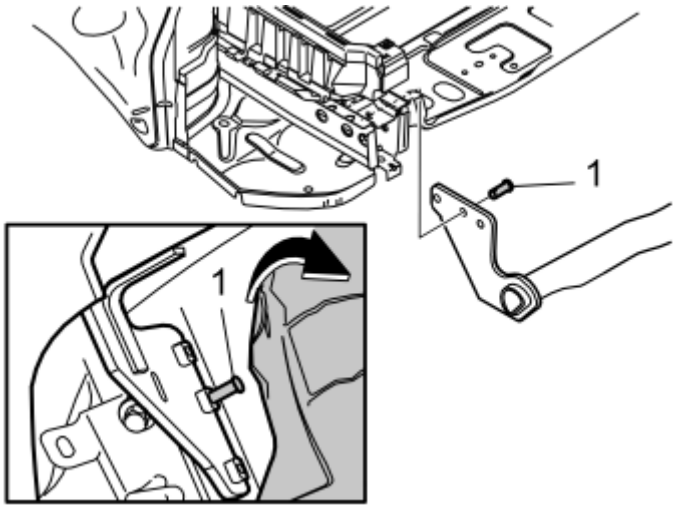

Fig. 387: Positioning The Tow Hitch Between The Two Side Members
Courtesy of VOLVO CARS CORPORATION

- Take the two mounting pins (1) from the kit
- With one person at each end, lift and position the tow hitch on the inside between the two side members, in between the holes. Start by angling up the face of the left-hand side above the tail pipe on the silencer and up between the heat deflector plate and the side member. Then angle the right-hand side face up to the side member

- Press the mounting pins (1) into the center hole in the side members while holding the tow bar member in position so that the bar can hang freely without falling off
- Carefully lower the car.

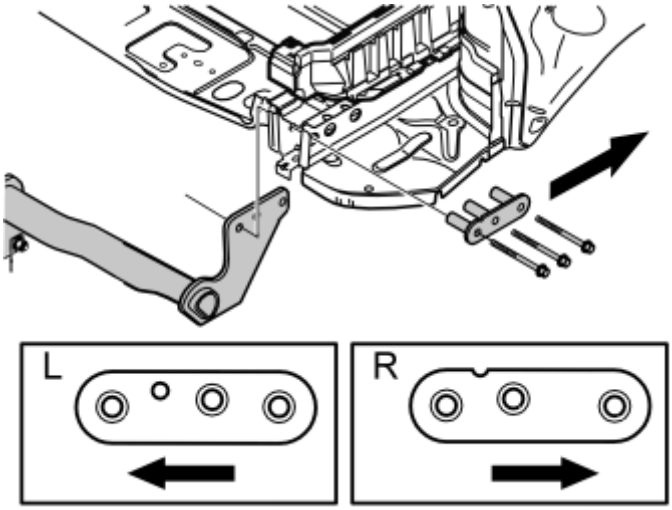

Fig. 388: Inserting The Spacer Sleeves
Courtesy of VOLVO CARS CORPORATION

- Fold down the lower tailgate.

From the inside of the cargo compartment:

- Remove the protective flaps covering the mounting holes on the outside of the side members (one on each side)
- Remove any sealant from the surfaces where the spacer washers will be positioned
- Insert the spacer sleeves using only the front and rear screws on the outside of the two side members.

NOTE: Do not press out the mounting pins so that the tow bar detaches.

- Screw the front and rear screws in fully but do not tighten them
- Insert the center screws so that the mounting pins are pressed out. Screw the screws in fully but do no tighten them
- Hold the bar in the horizontal position. Tighten the screws.

NOTE: Rustproofing agent must be applied under the car before the screws are tightened. Apply the rustproofing agent to the side members all around the ends where any sealant was scraped off.

- Tighten all screws from inside the car. Tighten to **120 Nm (86 lbf. ft.)** in the following order:

1. The rear screws

2. The front screws

3. The center screws

NOTE: Wait five minutes so that the joint settles. Then re-check the torque.

- Raise the car again.

From underneath the car

- Carefully bend the heat deflector plate back so it does not touch the silencer
- Reinstall the front mounting for the rear silencer. Tighten the screws. Tighten to **24 Nm (18 lbf. ft.)**
- Reinstall the rear mounting for the rear silencer. Tighten the screws. Tighten to **48 Nm (35 lbf. ft.)** .
- Install the cable harness connector for the tow hitch for the appropriate cable harness.
- Install the cable harness according to point 3 onwards in the Installation instructions for the appropriate cable harness.

NOTE: Ensure that the cable harness does not rub against the lower edge of the bumper and is not pressed back.

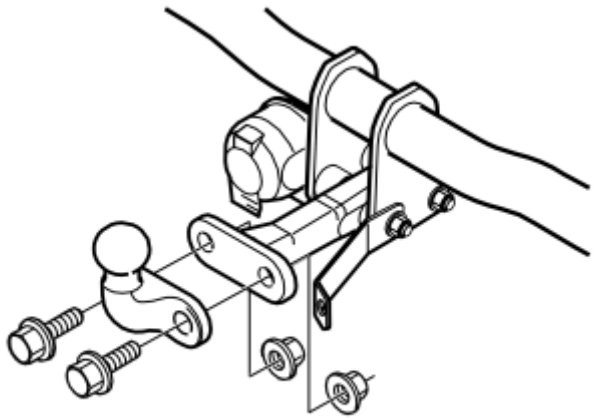

Fig. 389: Installing The Towing Ball On The Tow Bar (Observe Torque Specs)
Courtesy of VOLVO CARS CORPORATION

- Reinstall the cover and holder for the battery
- Reinstall the spare wheel.

Applies to cars with accessory electronic modules (AEM)

- Reinstall the bracket with the accessory electronic module (AEM). Connect the connectors if disconnected.

Applies to all models

- Reinstall the panels, storage boxes and floor hatches
- Tighten the screws in the load securing eyelets. Tighten to **24 Nm (18 lbf. ft.)**
- Install the towing ball on the tow bar using the screws and nuts from the kit. The nuts must be on the inside
- Tighten the towing ball. Tighten to **195 Nm (144 lbf. ft.)** .

CAUTION: The nuts for the towing ball may only be used once. Use new nuts if the towing ball has been removed.

TOWBAR, HITCH, BASE UNIT (2003-2012)

TOWBAR, HITCH, BASE UNIT

INSTALLATION OF THE BASE UNIT

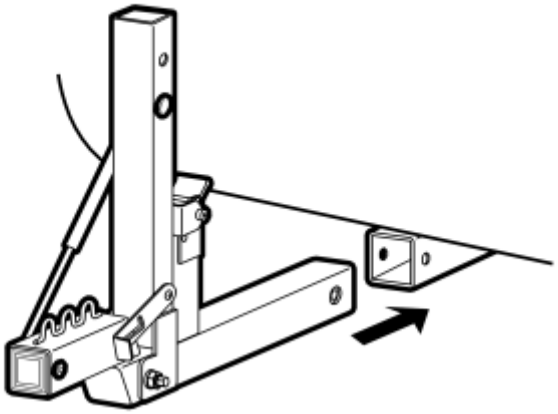

Fig. 390: Identifying Installation Of Base Unit
Courtesy of VOLVO CARS CORPORATION

TIGHTENING THE BASE UNIT TO THE TOWBAR HITCH

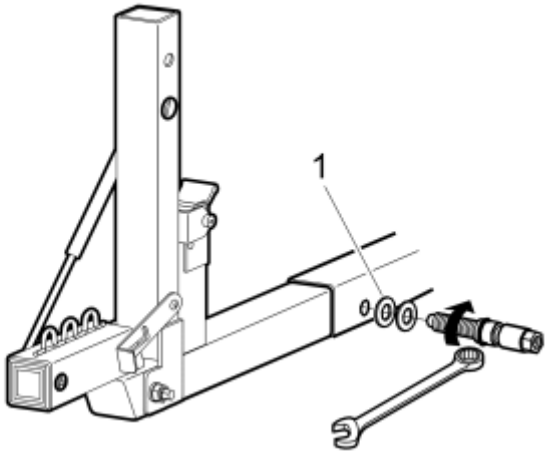

Fig. 391: Identifying Installation Of Bolt, Sprung Washer And Flat Washer In Towbar Hitch
Courtesy of VOLVO CARS CORPORATION

- Install the bolt, as illustrated. The sprung washer (1) must be positioned between the towbar hitch and the flat washer.
- Use a fixed wrench when tightening. Tighten securely.

TILTING THE BASE UNIT

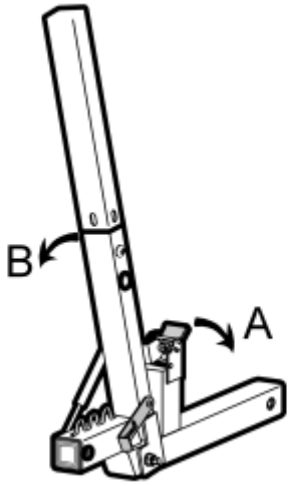

Fig. 392: Identifying Catch Pressed Down To Lower Base Unit
Courtesy of VOLVO CARS CORPORATION

- Press catch (A) down to tilt the base unit.
- Lower the base unit (B) until the stop catch engages.

TILTING THE BASE UNIT BACK

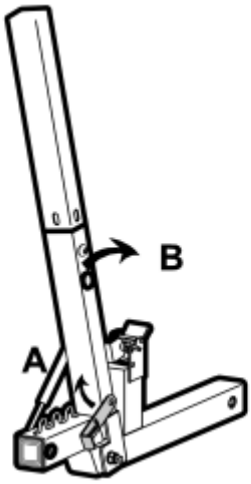

Fig. 393: Identifying Lifted Up Stop Catch And Folded Back Load Basket
Courtesy of VOLVO CARS CORPORATION

- Lift up the stop catch (A) and fold back the base unit (B).

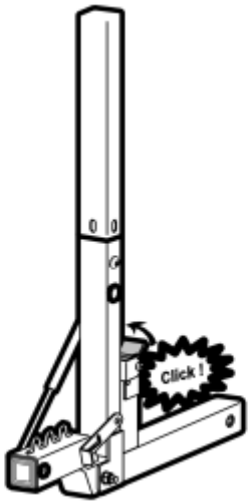

Fig. 394: Folding Back Load Basket Until Two Clear Clicks Can Be Heard And Catch Rises
Courtesy of VOLVO CARS CORPORATION

- Fold the base unit back until two clicks are heard and the catch pops up.

LOCKING THE BASE UNIT

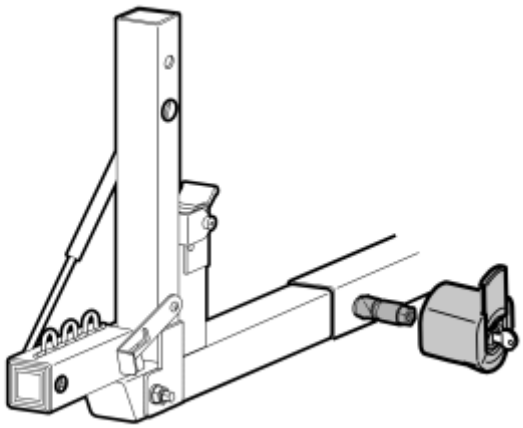

Fig. 395: Identifying Locking Cylinder And Lock Housing
Courtesy of VOLVO CARS CORPORATION

- The base unit can be equipped with a lock which is supplied with the kits for the different load units that can be combined with the base unit. Install the locking cylinder in the lock housing.

NOTE: On certain car models it may be necessary to saw/cut a piece out of the bumper casing to obtain room for the lock.

SAFETY CHECKS BEFORE A JOURNEY

CAUTION: Make sure that all screws, nuts and tensioning straps are firmly tightened before setting off. Check them at regular intervals.

Damaged tensioning straps must be replaced with new ones.

The base unit must not be used as an attachment point for towing.

The base unit must not be used when driving over terrain.

NOTE: If the car's license plate is obscured by the base unit there is an extra license plate holder with lighting that is available as an accessory. This should then be used.

CAUTION: Do not allow the load to shift outside of the base unit.

Do not load more onto the base unit than what is specified on the original towbar's type plate (MAX TONGUE WEIGHT).

Remember that the car's center of gravity, and consequently its driving characteristics, can be changed by the load.

The base unit and associated loading systems must not be used for carrying animals or people.

TOWBAR, HITCH, BICYCLE CARRIER (2003-2008)

TOWBAR, HITCH, BICYCLE CARRIER

ASSEMBLING AND ATTACHING TO THE CAR

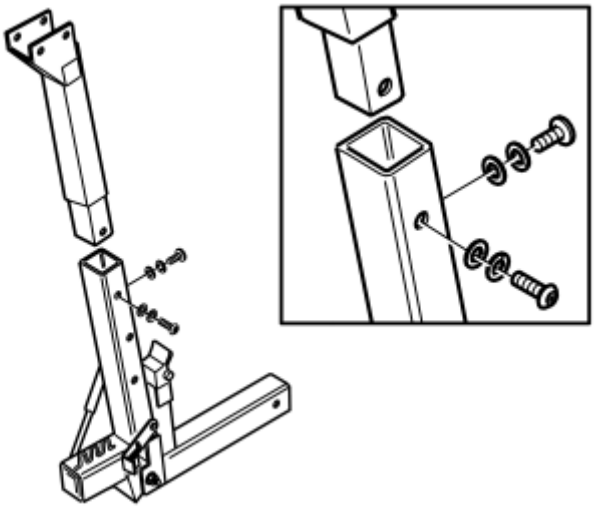

Fig. 396: Identifying Bicycle Carrier's Vertical Mounting And Hitch Hook's Square Tube
Courtesy of VOLVO CARS CORPORATION

- Install the bicycle carrier's vertical mounting in the hitch hook's square tube.
- Tighten the mounting using the two screws, spring washers and flat washers.

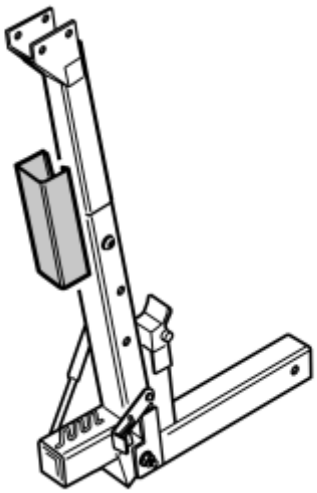

Fig. 397: Identifying Plastic Protection Pressed In Position On Vertical Mounting
Courtesy of VOLVO CARS CORPORATION

- Press the plastic protection onto the vertical mounting in the position illustrated.

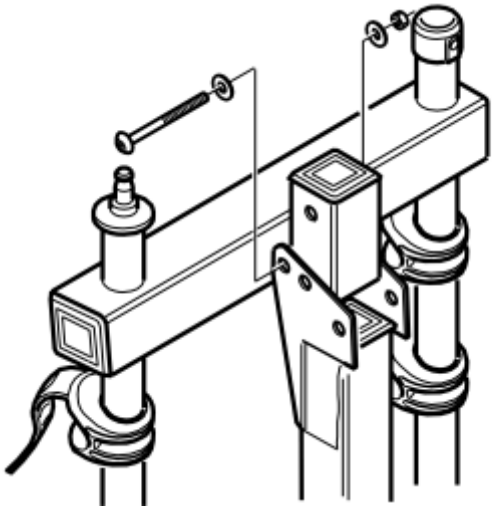

Fig. 398: Identifying Bicycle Carrier Installed On Vertical Mounting Using Screws, Flat Washers And Lock Nuts
Courtesy of VOLVO CARS CORPORATION

- Install the bicycle carrier on the vertical mounting using screws, flat washers and lock nuts.
- Tighten the screws and nuts. Do not overtighten so that the bicycle carrier can be tilted in the mounting.

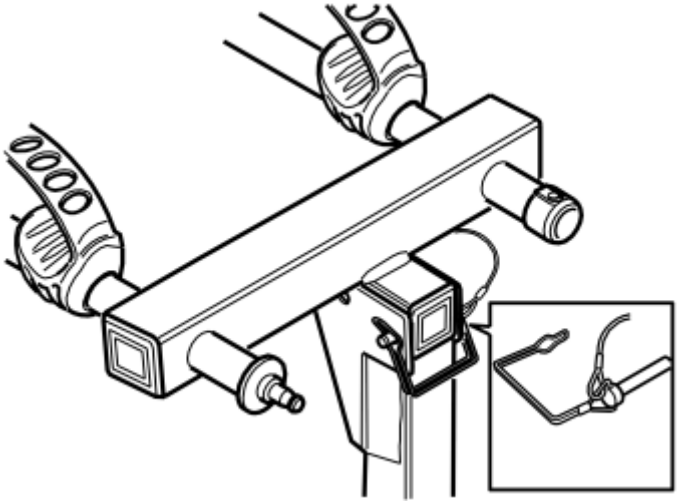

Fig. 399: Identifying Locking Bracket Removal From Locking Pin
Courtesy of VOLVO CARS CORPORATION

- Remove the locking bracket from the locking pin and pull it out.
- Fold the bicycle carrier up, insert the locking pin through the hole and lock using the locking bracket.

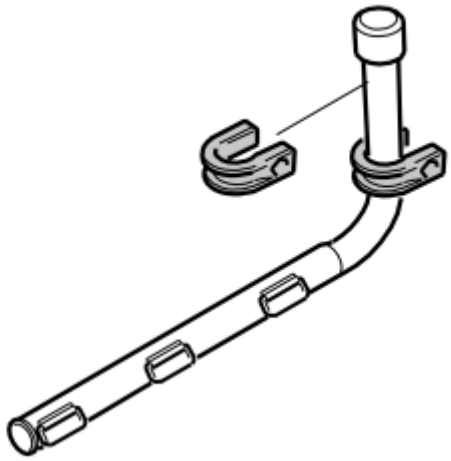

Fig. 400: Identifying Mounting Brackets Secured Onto Bicycle Carrier's Lower Mounting
Courtesy of VOLVO CARS CORPORATION

- Secure the two mounting brackets onto the bicycle carrier's lower mounting

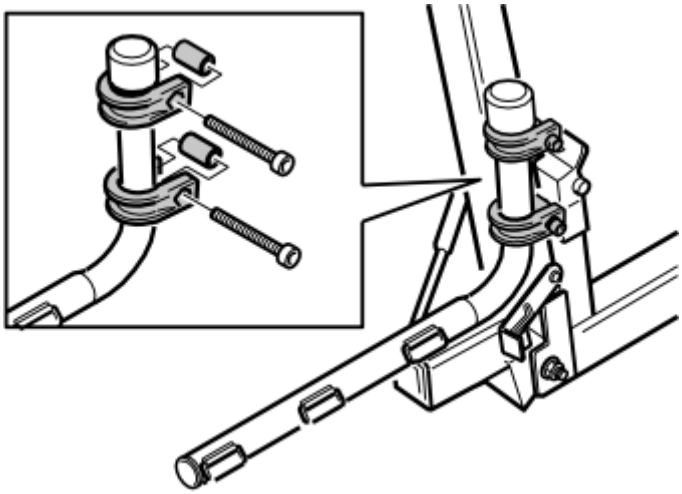

Fig. 401: Identifying Installation Of Long Screw And Spacer In Mounting Brackets
Courtesy of VOLVO CARS CORPORATION

- Install a long screw and spacer in the mounting brackets. Install the brackets on the bicycle carrier's square tube in the existing nuts. Adjust the lower bicycle carrier to the desired position and tighten to **10 Nm (7.5 lbf. ft.)** .

INSTALLING THE BICYCLE

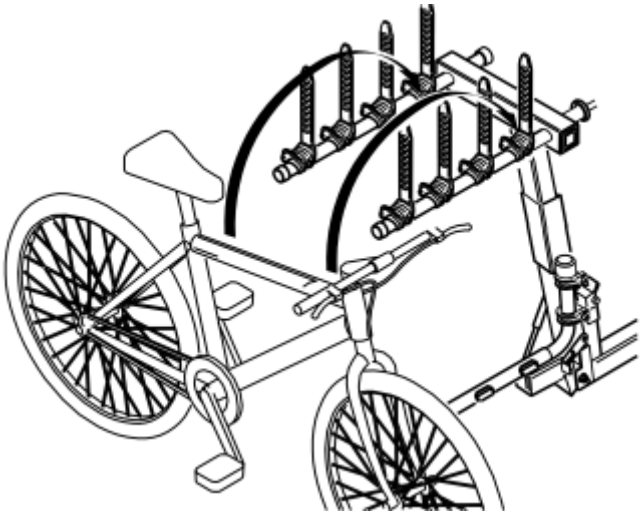

Fig. 402: Always Place Heaviest Bicycle Innermost
Courtesy of VOLVO CARS CORPORATION

- Always place the heaviest bicycle innermost.

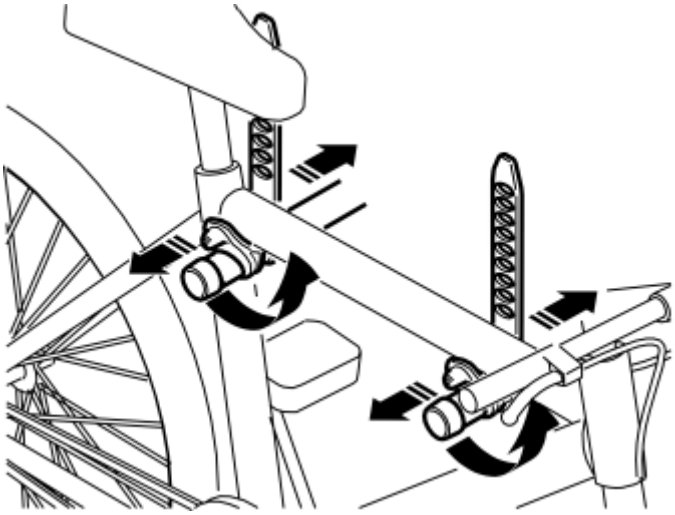

Fig. 403: Identifying Mounting Strap Procedure
Courtesy of VOLVO CARS CORPORATION

- The carriers on the two tubes can be adjusted to suit different bicycles. Place the bicycles so that every other bicycle is turned the opposite direction.

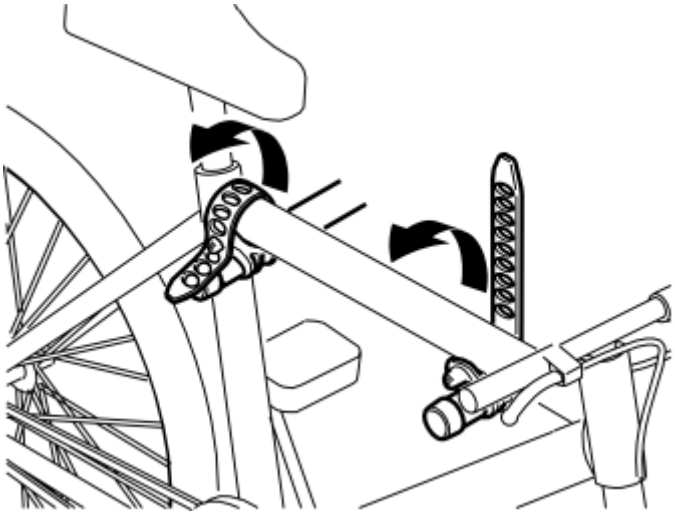

Fig. 404: Ensure That Mounting Straps Are Properly Tightened Around Bicycle Frames
Courtesy of VOLVO CARS CORPORATION

- Ensure that the mounting straps are properly tightened around the bicycle frames.

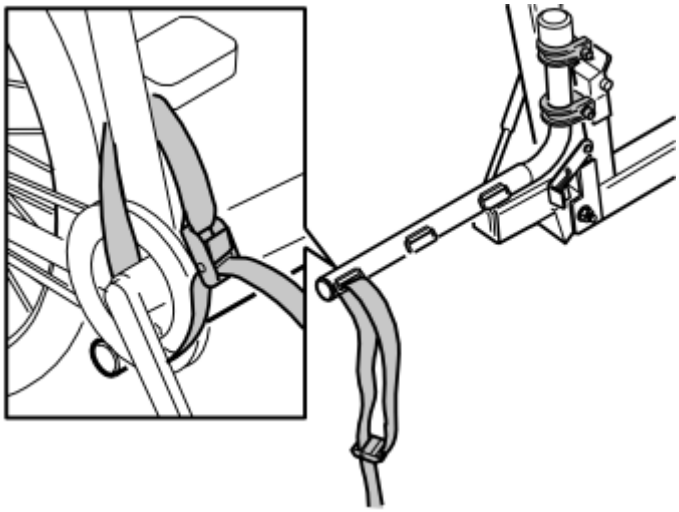

Fig. 405: Identifying Strap, Mounting Eyelet And Bicycle Carrier's Lower Mounting
Courtesy of VOLVO CARS CORPORATION

- Thread the strap through the mounting eyelet on the bicycle carrier's lower mounting.
- Insert the strap around a suitable location on the bicycle's lower section and then through its own buckle. Tighten securely.
- Tie up the excess of the strap.

CAUTION: Ensure that all screws, nuts, mounting straps and tensioning straps are properly tightened before traveling with the bicycle carrier. Make regular checks during the journey.

- The bicycle carrier must not be used when driving over terrain.

- Do not transport more than four bicycles at a time on the bicycle carrier.
- The bicycle carrier must not be used to transport tandem bicycles, recumbent bicycles or tricycles.
- Damaged tensioning straps and mounting straps must be replaced with new ones.
- If the car's license plate is concealed by a loaded bicycle carrier, an extra license plate holder with lighting must be used. The license plate holder must be purchased separately.

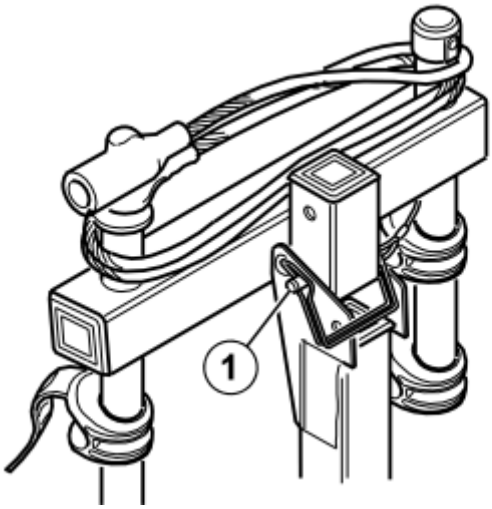

Fig. 406: Identifying Locking Pin And Locking Bracket
Courtesy of VOLVO CARS CORPORATION

The bicycle carrier can be folded as illustrated when no bicycles are being transported.

- Detach the locking bracket, pull out the locking pin and fold the bicycle carrier down.
- Insert the locking pin into the hole (1) and lock with the locking bracket.

SECURING BICYCLES WITH CABLE LOCKS

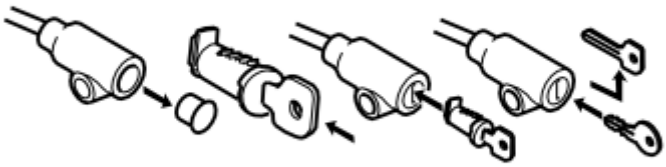

Fig. 407: Identifying Installation Of Lock Cylinder To Cable Lock
Courtesy of VOLVO CARS CORPORATION

- Install the lock cylinder to the cable lock as illustrated.

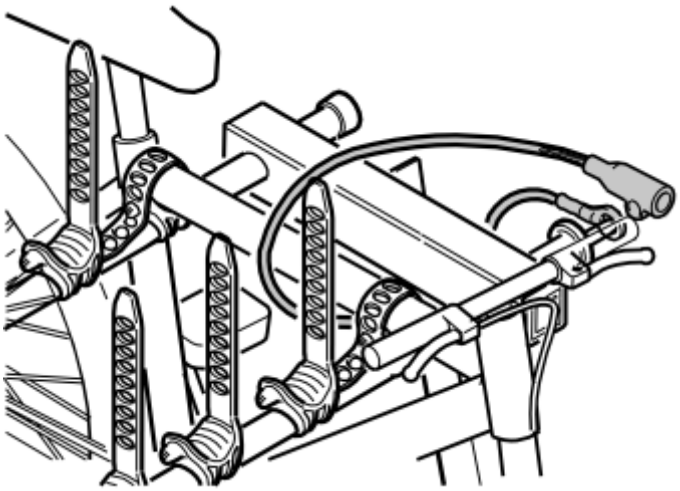

Fig. 408: View Of Locking The Bicycle Using The Cable Lock
Courtesy of VOLVO CARS CORPORATION

- Lock the bicycle using the cable lock as illustrated.

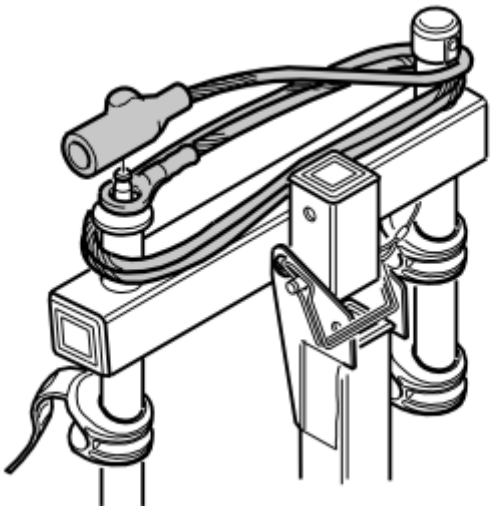

Fig. 409: Identifying Stowed Bicycle Cable Lock
Courtesy of VOLVO CARS CORPORATION

- When the cable lock is not in use, it can be locked to the bicycle carrier as illustrated

TOWBAR, HITCH, LICENSE PLATE HOLDER (2003-2008)

TOWBAR, HITCH, LICENSE PLATE HOLDER

Image A applies when mounting on the holder's horizontal square tube

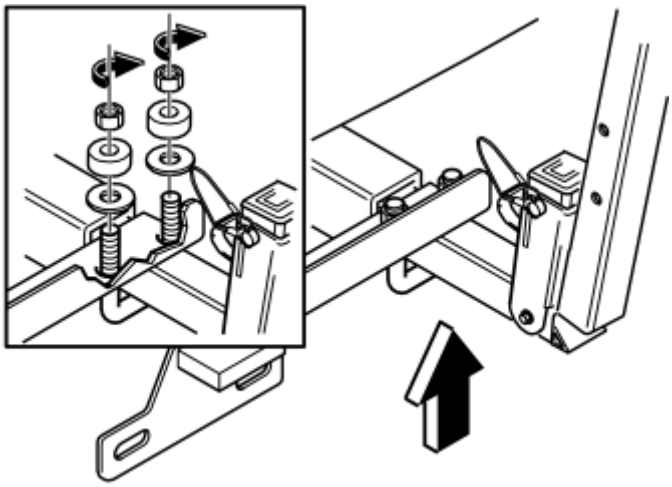

Fig. 410: Identifying Installation Of Mounting On Holder's Horizontal Square Tube
Courtesy of VOLVO CARS CORPORATION

Image B applies when mounting on the holder's vertical square tube

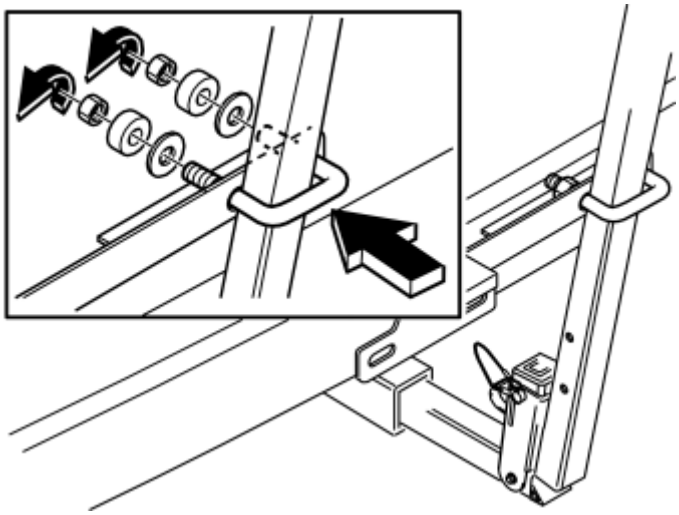

Fig. 411: Identifying Installation Of Mounting On Holder's Vertical Square Tube
Courtesy of VOLVO CARS CORPORATION

- Take the license plate holder and tighten it at the holder with the clamp, spacer sleeves and nuts from the kit as illustrated. Tighten the nuts to **7 Nm (5.2 lbf. ft)** .

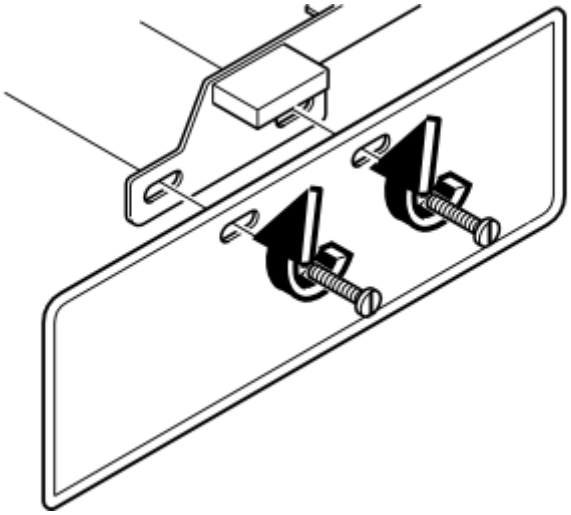

Fig. 412: Identifying Screws To Tighten License Plate Into Place
Courtesy of VOLVO CARS CORPORATION

- Take the two screws from the kit and tighten the license plate into place.

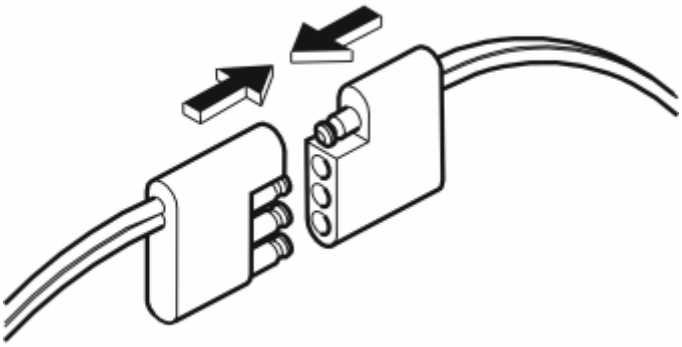

Fig. 413: Connect Connector For License Plate Holder's Lighting To Corresponding Connector From Car
Courtesy of VOLVO CARS CORPORATION

- Connect the connector for the license plate holder's lighting to the corresponding connector from the car.

TOWBAR, HITCH, SKI CARRIER (2003-2008)

TOWBAR, HITCH, SKI CARRIER

NOTE: **Some steps in these installation instructions are presented with illustration only.**

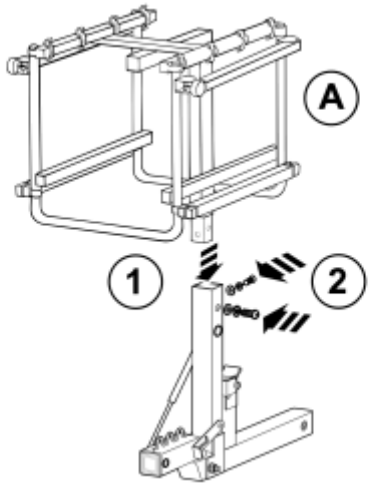

Fig. 414: Identifying Installation Of Ski Holder In Base Unit's Square Pipe
Courtesy of VOLVO CARS CORPORATION

- Install the ski holder in the base unit's square pipe.
- Tighten in the ski holder using the two screws, the spring washers and the flat washers from the base unit kit.

ILLUSTRATIONS A-D SHOW INSTALLATION OF LOCK CYLINDERS AND LOCKING THE SKI HOLDER

Illustration A

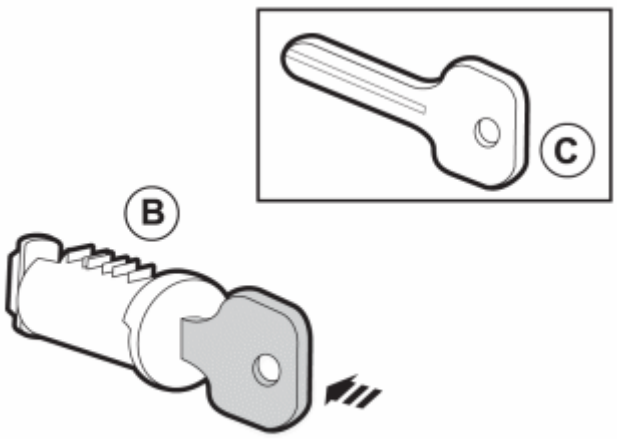

Fig. 415: Identifying Key And Lock Assembly
Courtesy of VOLVO CARS CORPORATION

Illustration B

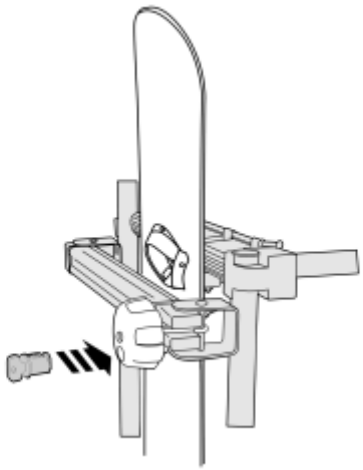

Fig. 416: Identifying Lock Inserted In Ski Holder
Courtesy of VOLVO CARS CORPORATION

Illustration C

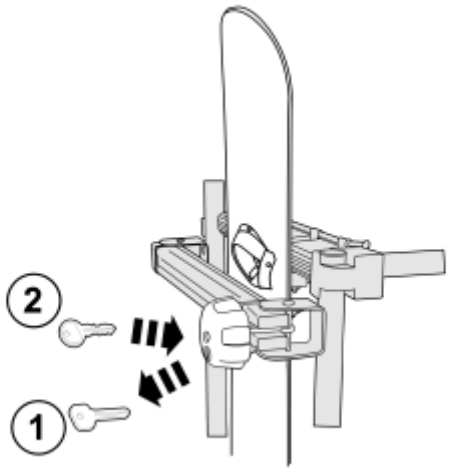

Fig. 417: Identifying Key Inserted In Ski Holder Lock
Courtesy of VOLVO CARS CORPORATION

Illustration D

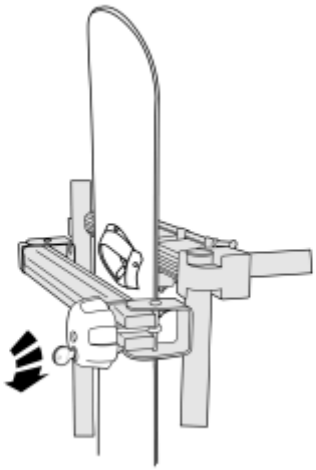

Fig. 418: Identifying Lock, Hitch Components (4 of 4)
Courtesy of VOLVO CARS CORPORATION

ILLUSTRATIONS A-H SHOW LOCKING THE BASE UNIT WITH ACCESSORIES FOR TOWBAR HITCH. USE THE LOCK HOUSING FROM THE BASE UNIT KIT AS WELL AS LOCK CYLINDER WITH KEYS FROM THE ACCESSORY KIT.

Illustration A

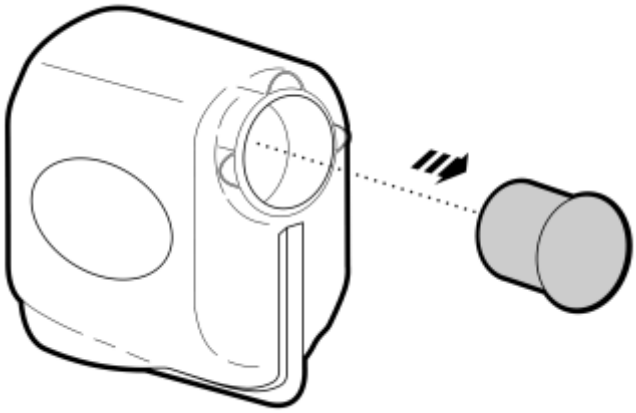

Fig. 419: Identifying Lock Base Unit
Courtesy of VOLVO CARS CORPORATION

Illustration B

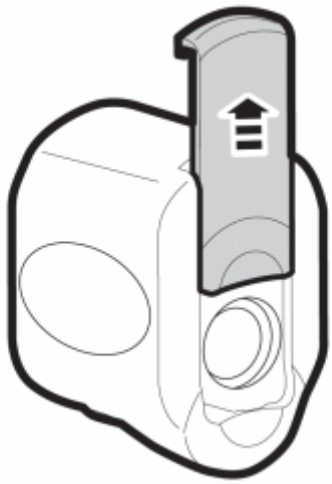

Fig. 420: Identifying Lock, Hitch
Courtesy of VOLVO CARS CORPORATION

Illustration C

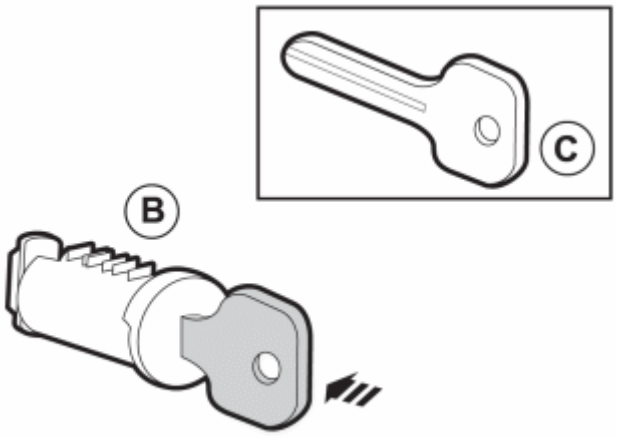

Fig. 421: Identifying Key And Lock Assembly
Courtesy of VOLVO CARS CORPORATION

Illustration D

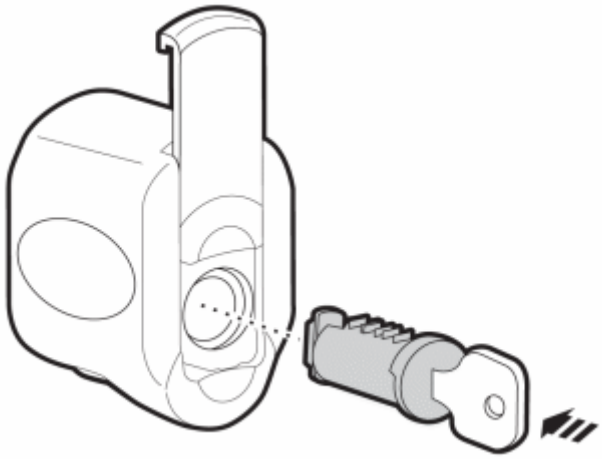

Fig. 422: Identifying Insertion Of Lock Into Base
Courtesy of VOLVO CARS CORPORATION

Illustration E

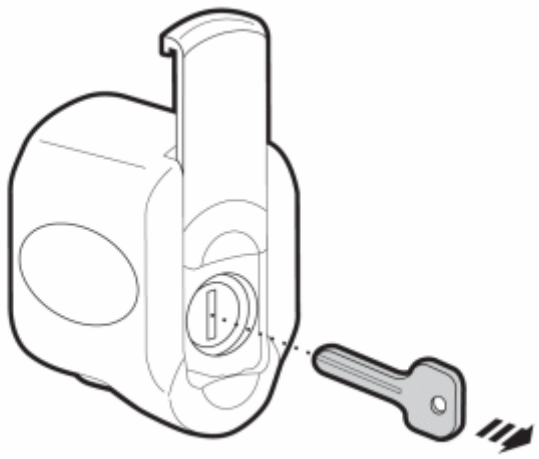

Fig. 423: Identifying Lock, Hitch
Courtesy of VOLVO CARS CORPORATION

Illustration F

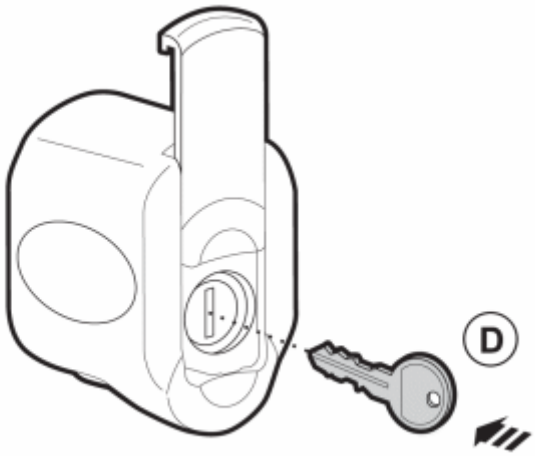

Fig. 424: Identifying Insertion Of Key Into Lock
Courtesy of VOLVO CARS CORPORATION

Illustration G

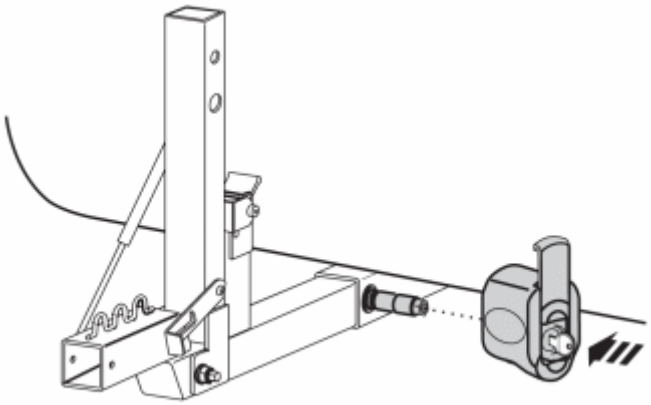

Fig. 425: Identifying Insertion Of Base On Hitch
Courtesy of VOLVO CARS CORPORATION

Illustration H

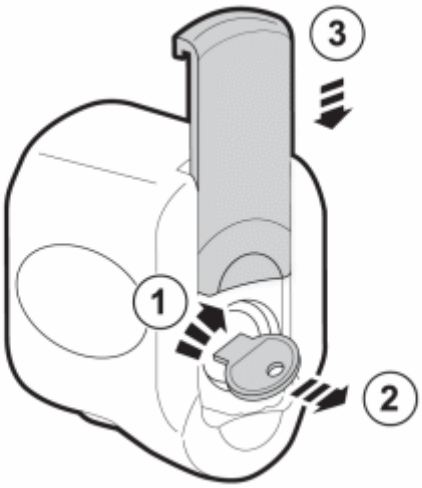

Fig. 426: Identifying Engagement Of Lock
Courtesy of VOLVO CARS CORPORATION

UNDO THE ATTACHING BRACE

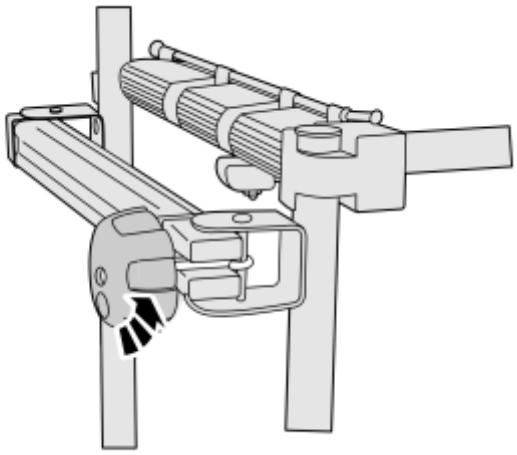

Fig. 427: Identifying Locking Wheel Counter-Clockwise
Courtesy of VOLVO CARS CORPORATION

- Turn the locking wheel anticlockwise.

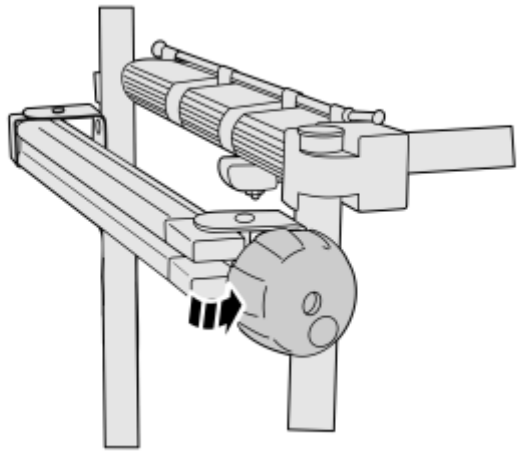

Fig. 428: Folding The Locking Wheel Out From The Brace
Courtesy of VOLVO CARS CORPORATION

- Undo the ski holder's attaching brace by folding the locking wheel out from the brace.

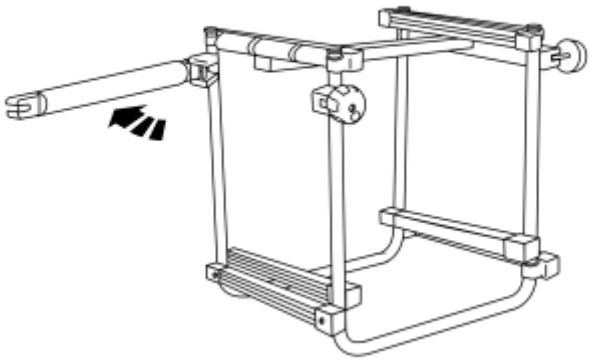

Fig. 429: View Of Folding Out The Attaching Brace
Courtesy of VOLVO CARS CORPORATION

- Fold out the attaching brace.

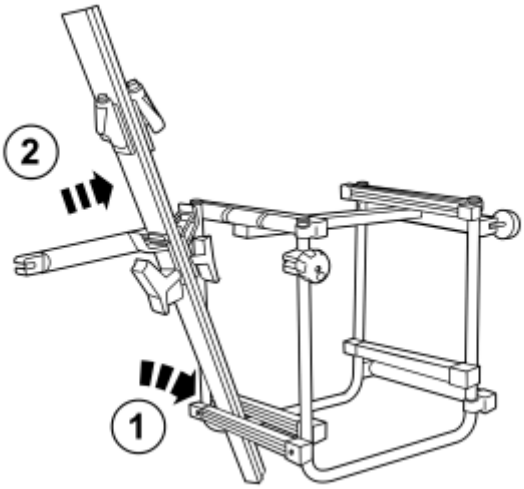

Fig. 430: Identifying The Installation Of A Pair Of Skis
Courtesy of VOLVO CARS CORPORATION

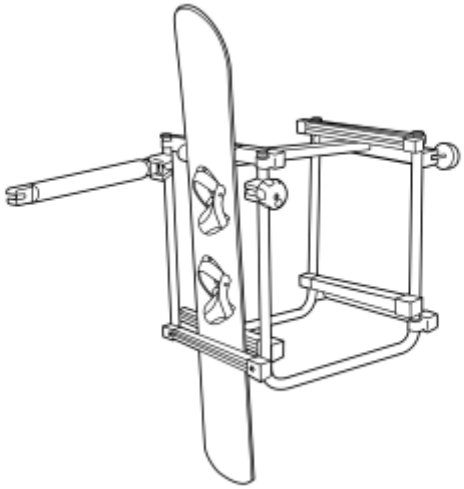

Fig. 431: Identifying The Installation Of One Snowboard
Courtesy of VOLVO CARS CORPORATION

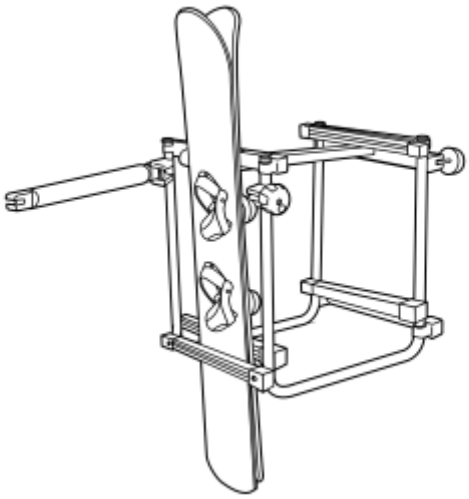

Fig. 432: Identifying The Installation Of Two Snowboards
Courtesy of VOLVO CARS CORPORATION

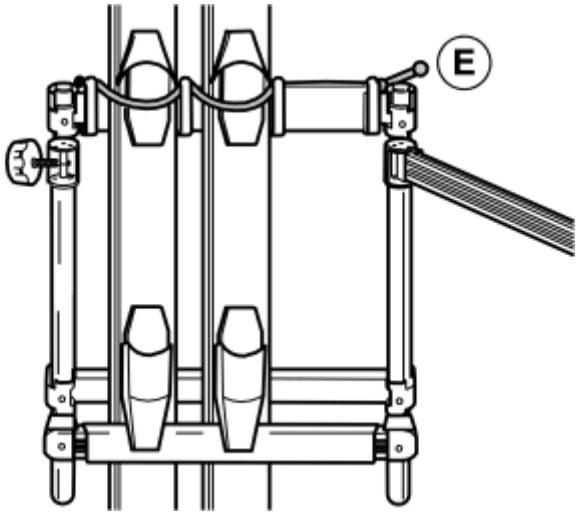

Fig. 433: Identifying Tensioning With A Rubber Strap
Courtesy of VOLVO CARS CORPORATION

- Guide the skis or snowboard down into the lower holder.
- Hold them in against the upper holder's rear section.
- Tension them in against the rear section using the rubber strap in order that they shall be held in place while more skis/snowboards are installed in the holder as well as when the attaching brace is closed.

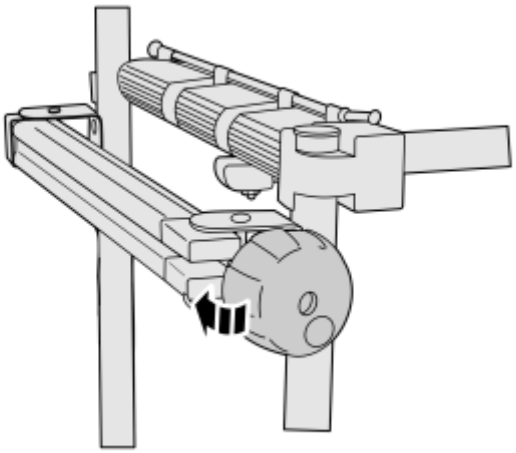

Fig. 434: Fold Back Attaching Brace And Locking Wheel
Courtesy of VOLVO CARS CORPORATION

- Fold back the attaching brace and the locking wheel.

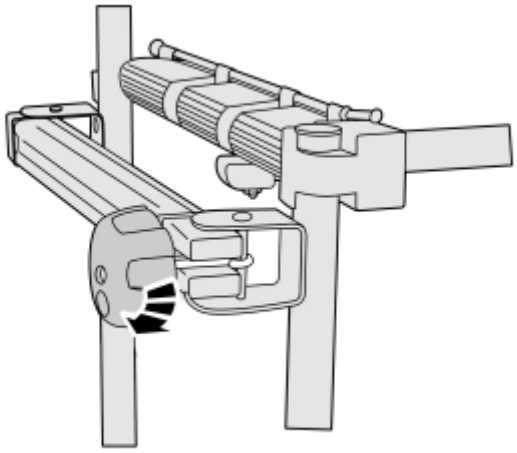

Fig. 435: Identifying Tightening Of Locking Wheel
Courtesy of VOLVO CARS CORPORATION

- Tighten the locking wheel.

CAUTION: Check that the load on the ski holder is well-tensioned so that there is no risk of it falling off. In addition, check periodically during the journey. The load must not obscure the number plate or lighting. Retighten all screws, nuts and locking wheels regularly to avoid the risk that any part of the accessory or load may fall off.

The ski holder must not be used when driving over terrain.

Damaged tensioning straps and mounting straps must be replaced with new ones.

Do not allow the load to shift outside of the ski holder.

Remember not to load too heavily and that the car's center of gravity can be changed by carrying a hitch unit load.

If the car's number plate could be obscured by a loaded ski holder there is an extra number plate holder with lighting that is available as an accessory and which should then be used.

TRAILER MODULE (TRM) (2005-2012)

TRAILER MODULE (TRM)

INSTALLING

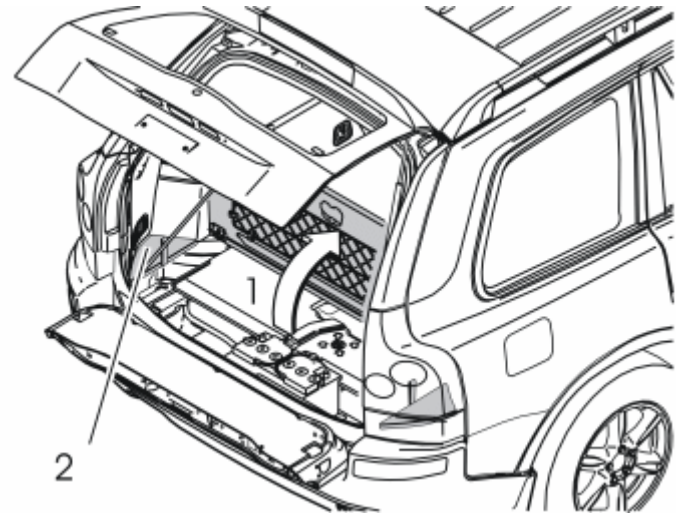

Fig. 436: Folding Up The Centre Rear Floor Hatch (1)
Courtesy of VOLVO CARS CORPORATION

Applies to cars with two rows of seats

- Fold up the center rear floor hatch (1). If the floor hatch is equipped with a grocery bag holder, the holder is secured with a strap on both ends of the storage compartment. Detach the straps.
- Remove the underlying storage compartment.
- Remove the floor hatch by folding it almost completely closed then pulling it backward from its mountings until it releases.

Applies to cars with three rows of seats and integrated carrier bag holder on the underside of the center floor hatch

- Fold up the center rear floor hatch (1).
- Detach the two straps on the underlying panel. Lift up the rear edge of the panel, fold the floor hatch back towards the panel and lift out the floor hatch with the panel.

Applies to cars with three rows of seats without an integrated carrier bag holder

- Fold up the center rear floor hatch (1) at the rear edge and lift it out.

Applies to all models

- Remove the left-hand side floor hatch (2).

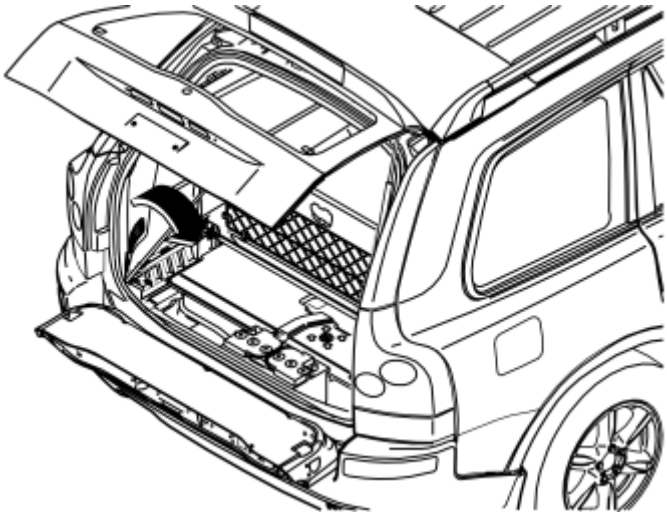

Fig. 437: Identifying Left-Hand Side Folding Side Panel
Courtesy of VOLVO CARS CORPORATION

- Remove the folding side panel on the left-hand side of the cargo compartment.

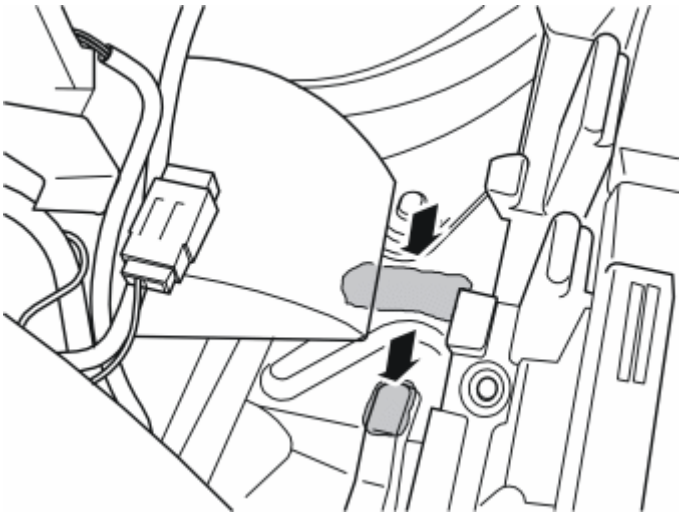

Fig. 438: Cleaning The Marked Surfaces
Courtesy of VOLVO CARS CORPORATION

- Clean the marked surfaces on the embossing on the rear edge of the left-hand rear wheel housing under the fuse holder with a mixture of 20 % isopropyl alcohol (P/N 1161721) and 80 % water.
- Wipe dry.

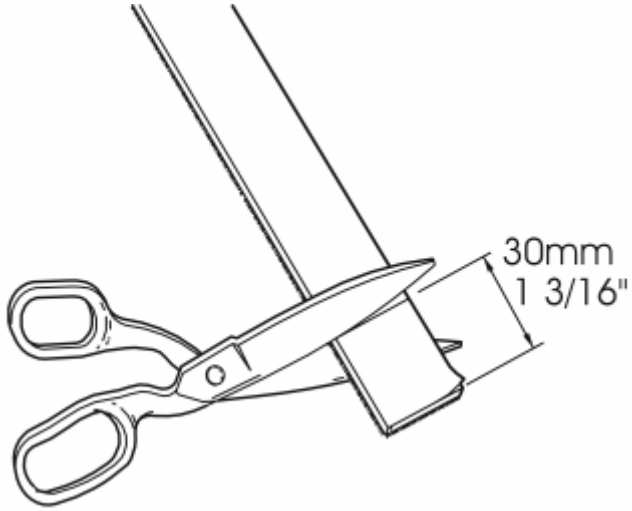

Fig. 439: Cutting A Velcro Fastener (1 3/16")
Courtesy of VOLVO CARS CORPORATION

- Take a Velcro fastener from the kit and cut a piece that is 30 mm (1 3/16") long.

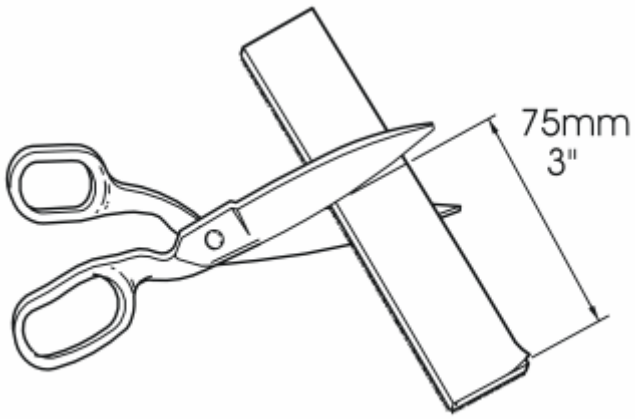

Fig. 440: Cutting A Velcro Fastener (3")
Courtesy of VOLVO CARS CORPORATION

- Cut a piece that is 75 mm (3") long from the same Velcro fastener.

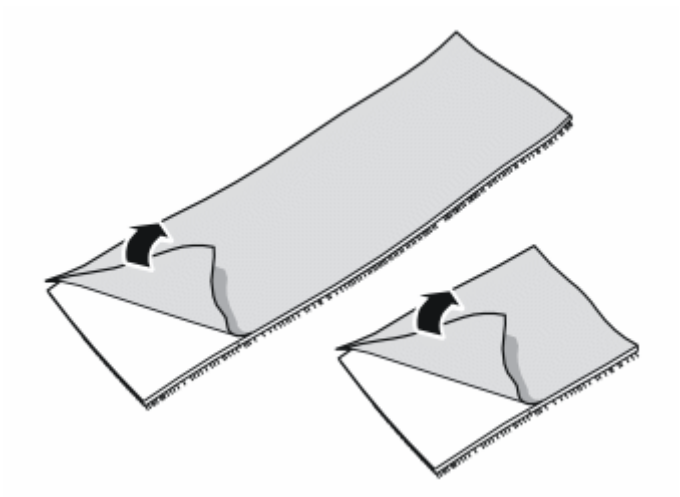

Fig. 441: Removing Protective Tape
Courtesy of VOLVO CARS CORPORATION

- Remove the protective tape from the Velcro fasteners.

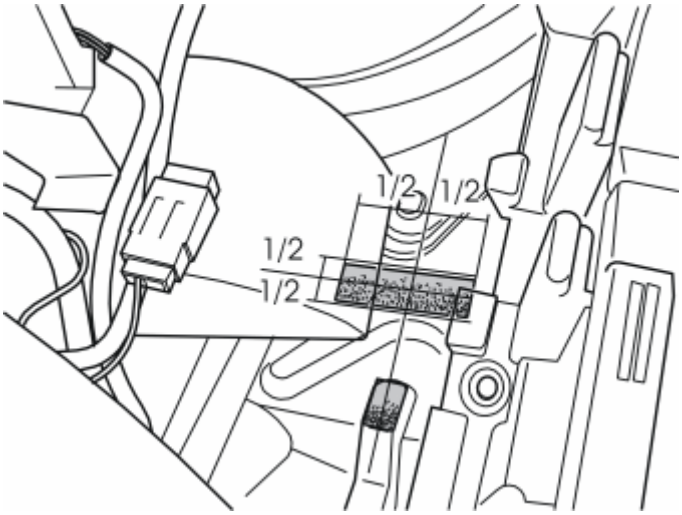

Fig. 442: Attaching Velcro Fasteners
Courtesy of VOLVO CARS CORPORATION

- Attach both Velcro fasteners to the embossing as illustrated.

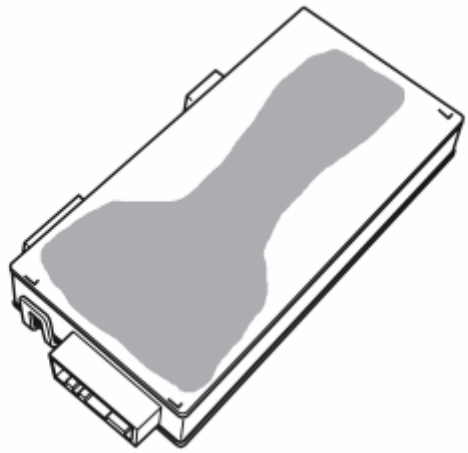

Fig. 443: Cleaning the Trailer Module
Courtesy of VOLVO CARS CORPORATION

- Take the trailer module from the kit and clean the flat surface with a mixture of 20 % isopropyl alcohol (P/N 1161721) and 80 % water.
- Wipe dry.

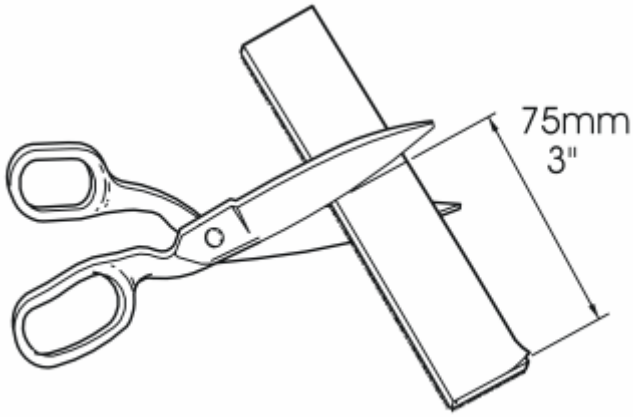

Fig. 444: Cutting A Velcro Fastener (3")
Courtesy of VOLVO CARS CORPORATION

- Take a new Velcro fastener from the kit and cut a piece that is 75 mm (3") long.

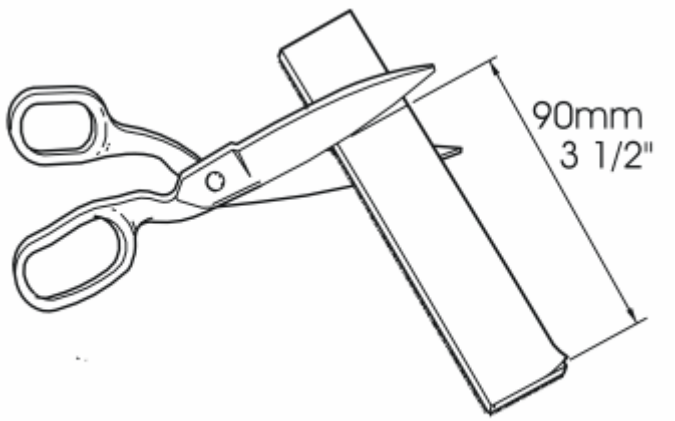

Fig. 445: Identifying Velcro Fastener
Courtesy of VOLVO CARS CORPORATION

- Cut a piece that is 90 mm (3 1/2") long from the same Velcro fastener.

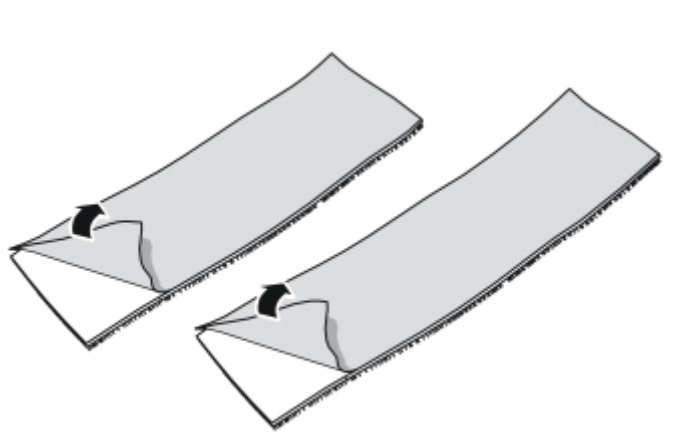

Fig. 446: Removing Protective Tape
Courtesy of VOLVO CARS CORPORATION

- Remove the protective tape from the Velcro fasteners.

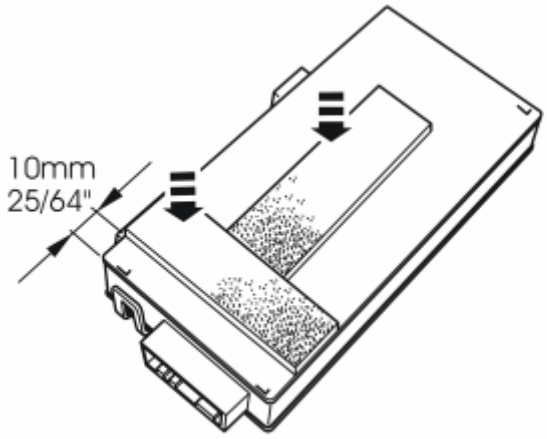

Fig. 447: Attaching Velcro Fasteners
Courtesy of VOLVO CARS CORPORATION

- Attach both Velcro fasteners to the trailer module.

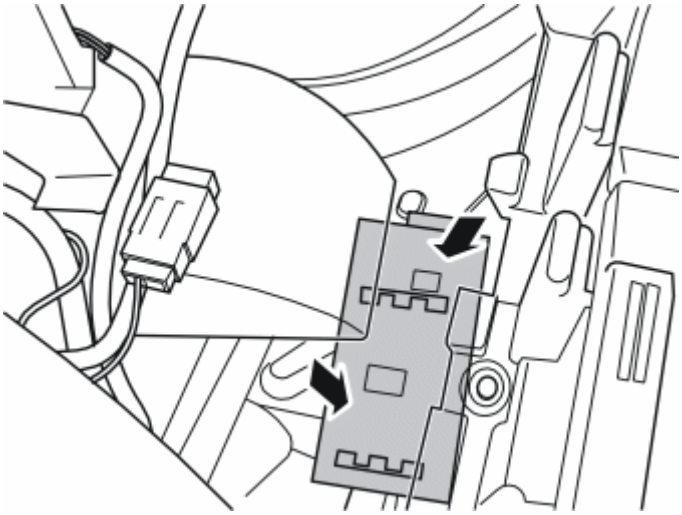

Fig. 448: Attaching The Trailer Module To The Velcro Fasteners
Courtesy of VOLVO CARS CORPORATION

- Attach the trailer module to the newly installed Velcro fasteners on the rear edge of the left-hand rear wheel housing. Press firmly so that it is secured.

- Reinstall the folding panel.
- Reinstall the side floor hatch.
- Reinstall the storage compartment (if applicable).
- Reinstall the center rear floor hatch.

T-TRACK KIT, BICYCLE HOLDER (2003-2005)

T-TRACK KIT, BICYCLE HOLDER

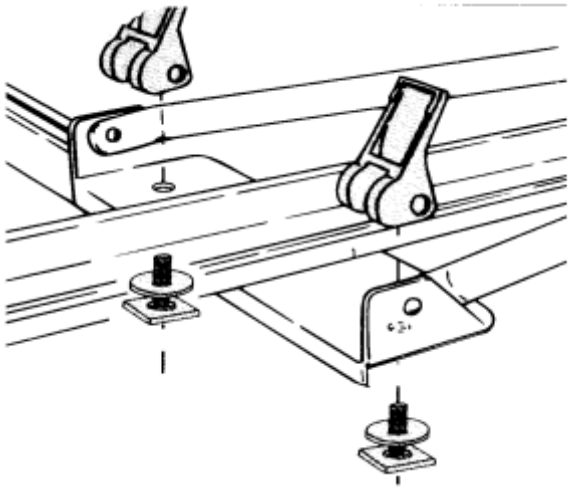

Fig. 449: Identifying T-Track Kit, Bicycle Holder Components (1 Of 4)
Courtesy of VOLVO CARS CORPORATION

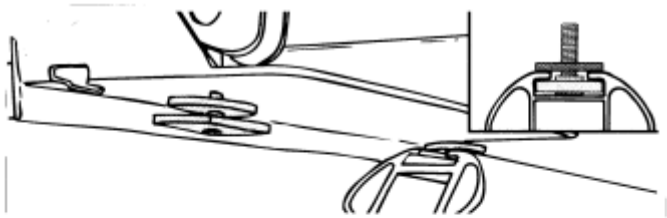

Fig. 450: Identifying T-Track Kit, Bicycle Holder Components (2 Of 4)
Courtesy of VOLVO CARS CORPORATION

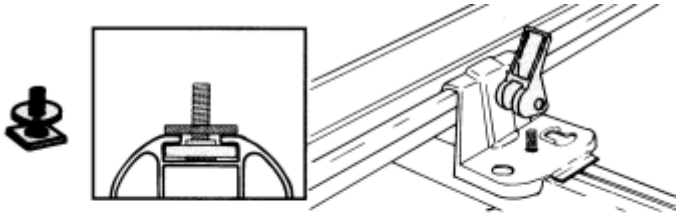

Fig. 451: Identifying T-Track Kit, Bicycle Holder Components (3 Of 4)
Courtesy of VOLVO CARS CORPORATION

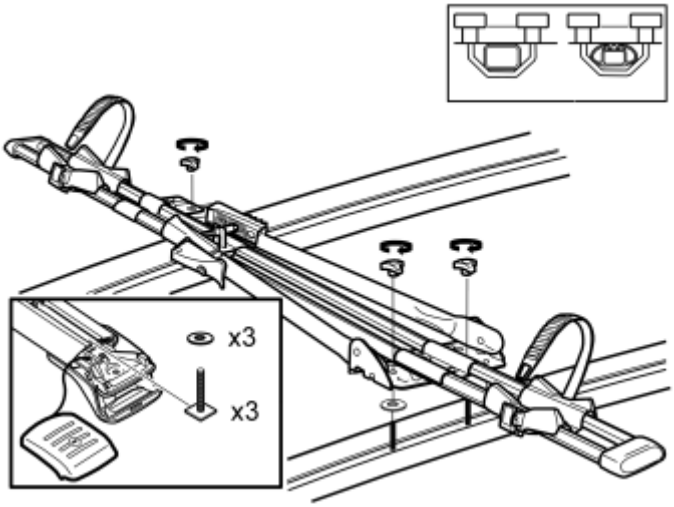

Fig. 452: Identifying T-Track Kit, Bicycle Holder Components (4 Of 4)
Courtesy of VOLVO CARS CORPORATION

T-TRACK KIT, SPACE BOX (2003)

T-TRACK KIT, SPACE BOX

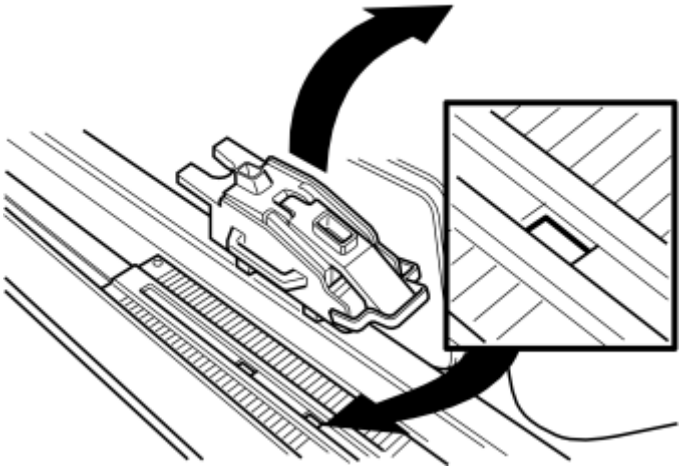

Fig. 453: Identifying T-Track Kit, Space Box Components (1 Of 5)
Courtesy of VOLVO CARS CORPORATION

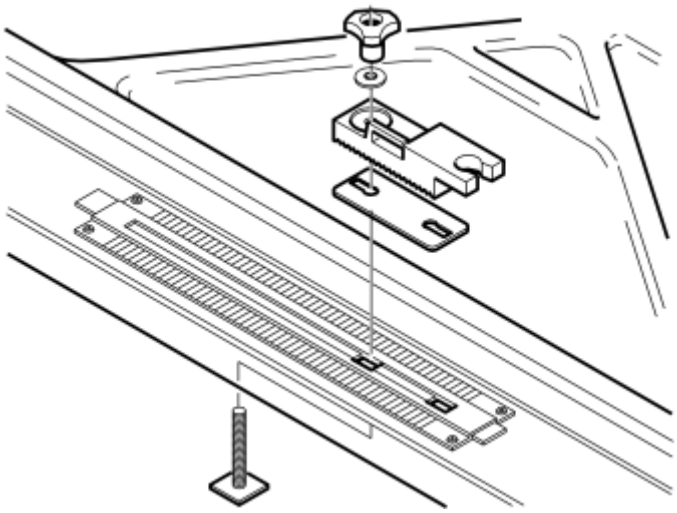

Fig. 454: Identifying T-Track Kit, Space Box Components (2 Of 5)
Courtesy of VOLVO CARS CORPORATION

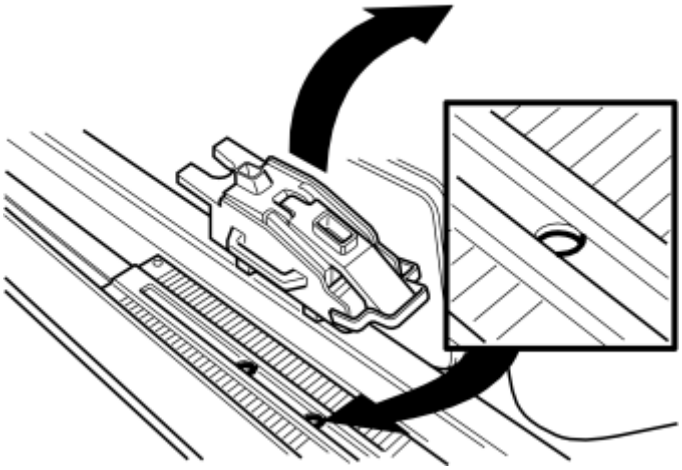

Fig. 455: Identifying T-Track Kit, Space Box Components (3 Of 5)
Courtesy of VOLVO CARS CORPORATION

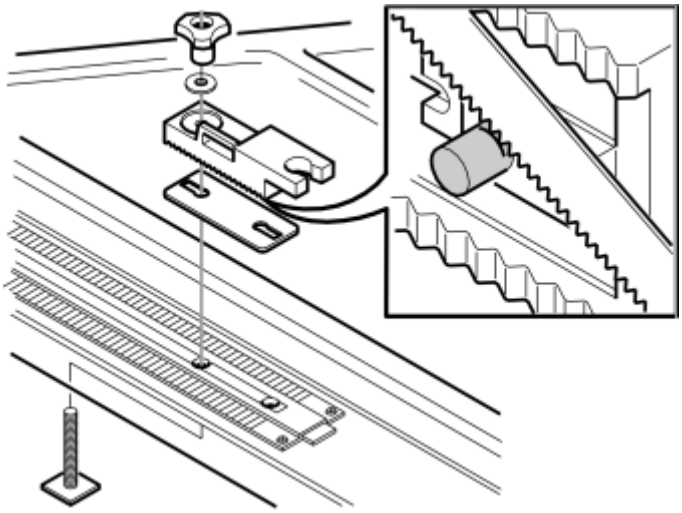

Fig. 456: Identifying T-Track Kit, Space Box Components (4 Of 5)
Courtesy of VOLVO CARS CORPORATION

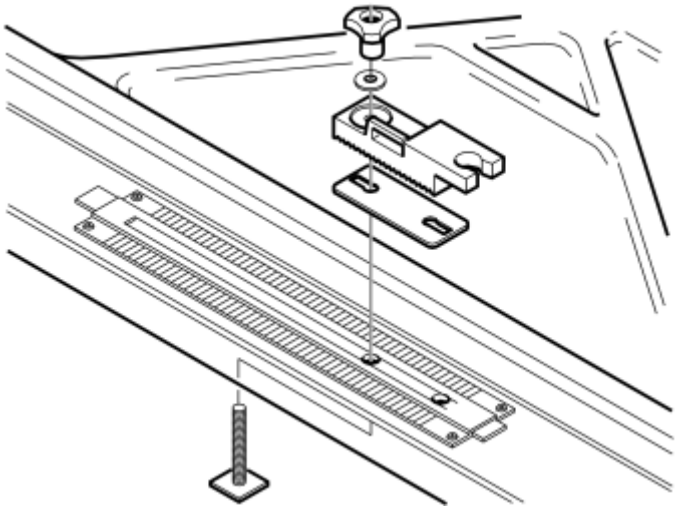

Fig. 457: Identifying T-Track Kit, Space Box Components (5 Of 5)
Courtesy of VOLVO CARS CORPORATION

WHEEL HOLDER (2003)

MA TITLE

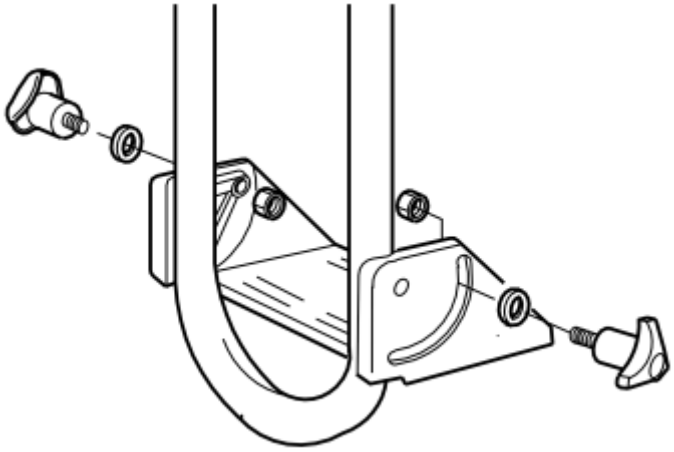

Fig. 458: Identifying Wheel Holder Components (1 of 3)
Courtesy of VOLVO CARS CORPORATION

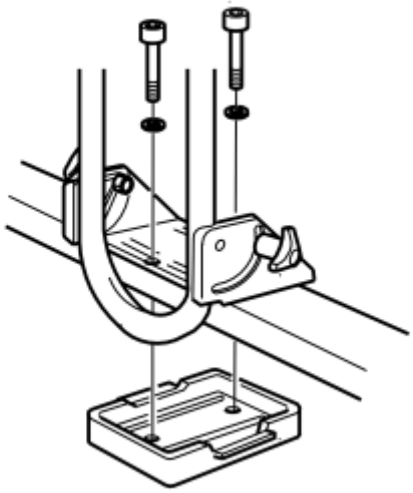

Fig. 459: Identifying Wheel Holder Components (2 of 3)
Courtesy of VOLVO CARS CORPORATION

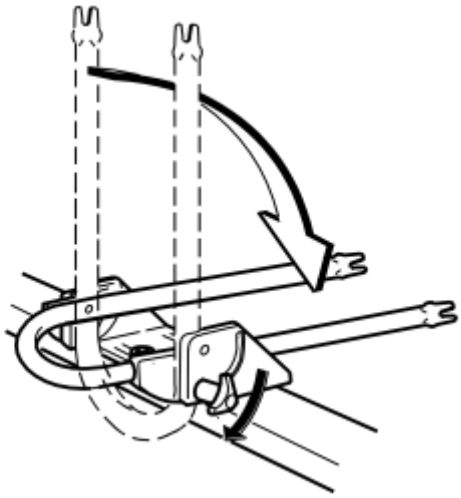

Fig. 460: Identifying Wheel Holder Components (3 of 3)
Courtesy of VOLVO CARS CORPORATION

- Fold the wheel holder down when not in use.

WIND SURFER HOLDER, T-GROOVES (2003-2010)

WIND SURFER HOLDER, T-GROOVES

NOTE: Important

- **Regularly check that the load carriers are properly secured**
- **The maximum roof load is 100 kg**
- **Distribute the load evenly over the load carriers. Do not load at an angle**

- **Position the heaviest load underneath**
- **Remove the load carriers when not in use. Air resistance is thus reduced which improves fuel consumption and reduces wind noise**
- **Handling is affected by the actual load and its position. The center of gravity of the car changes when driving with a load, which affects the handling of the car. Adjust speed accordingly.**

SECURING THE WIND SURFER HOLDER ON THE WING PROFILE LOAD CARRIERS

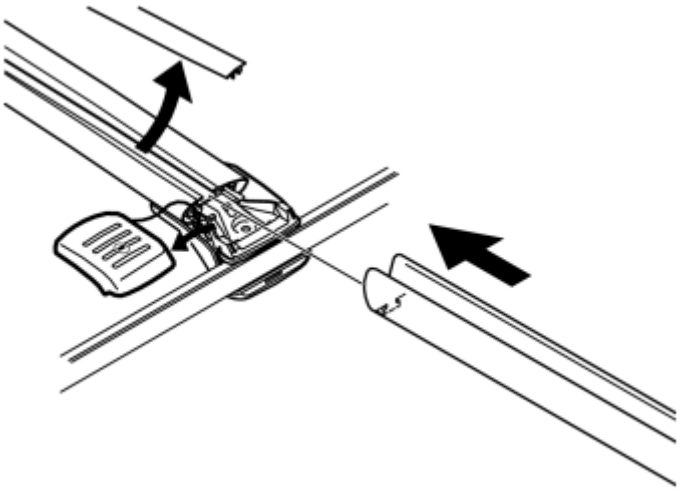

Fig. 461: Identifying Load Carrier Cover, Rubber Seal, And T-Groove
Courtesy of VOLVO CARS CORPORATION

- Remove the cover on the load carriers
- Remove the rubber seal for the T-grooves
- Slide on the wind surfer holder in the T-groove to the desired position.

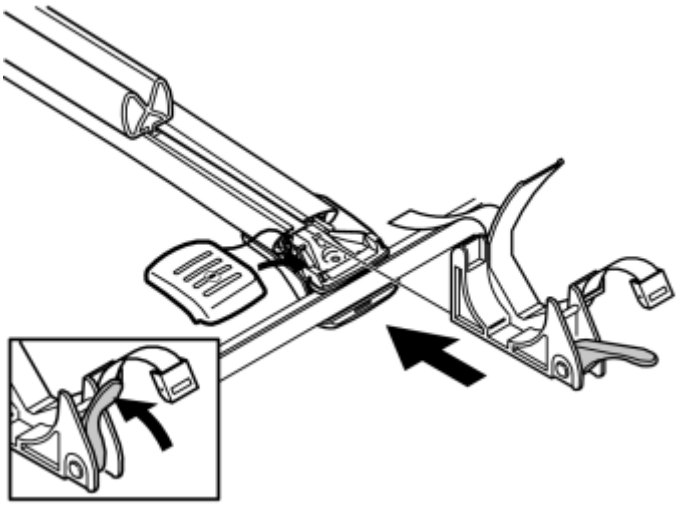

Fig. 462: Identifying Mast Holder, Latch, T-Groove, And Cover

Courtesy of VOLVO CARS CORPORATION

- Take the mast holder and position the latch on the horizontal position
- Slide on the mast holder in the T-groove to the desired position
- Twist the latch upwards to the vertical limit position
- Reinstall the cover.

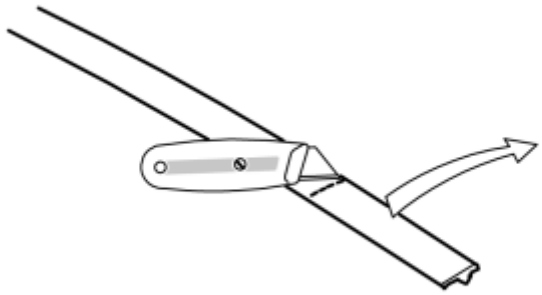

Fig. 463: Cutting Out T-Groove Seals
Courtesy of VOLVO CARS CORPORATION

- Measure and cut-out and reinstall the T-groove seals so that they cover the sections of the T-grooves which are not covered by the holders. This is to reduce wind noise.

SECURING THE WIND SURFER HOLDER ON THE OVAL PROFILE LOAD CARRIERS

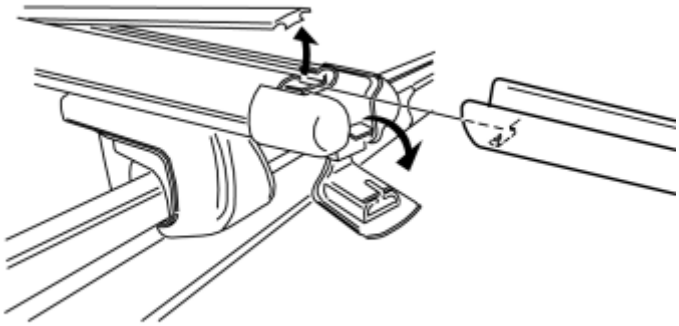

Fig. 464: Identifying T-Groove, Rubber Seal, And Load Carrier Cover
Courtesy of VOLVO CARS CORPORATION

- Fold out the cover on the end of the load carriers.
- Remove the rubber seal for the T-grooves
- Slide on the wind surfer holder in the T-groove to the desired position.

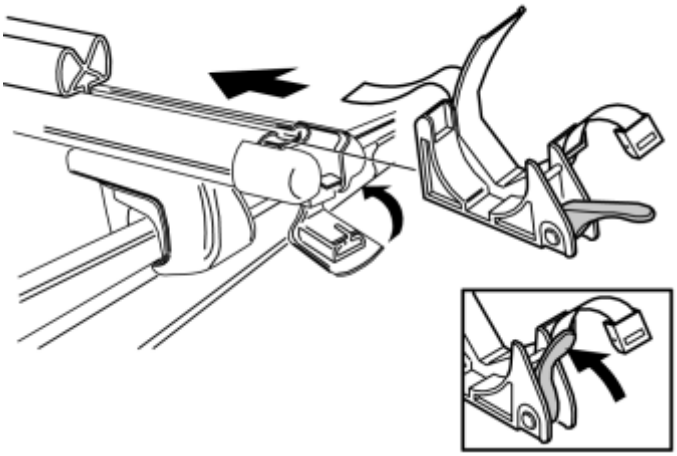

Fig. 465: Identifying Mast Holder, T-Groove, Latch, And Cover
Courtesy of VOLVO CARS CORPORATION

- Take the mast holder and position the latch on the horizontal position
- Slide on the mast holder in the T-groove to the desired position
- Twist the latch upwards to the vertical limit position
- Fold the cover back into place.

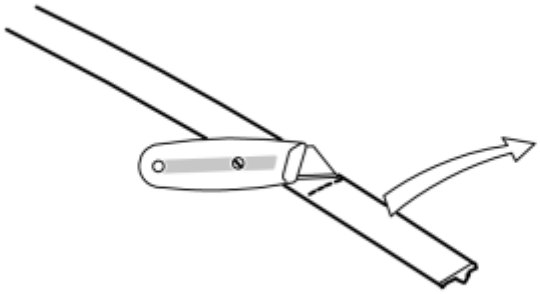

Fig. 466: Cutting Out T-Groove Seals
Courtesy of VOLVO CARS CORPORATION

- Measure and cut-out and reinstall the T-groove seals so that they cover the sections of the T-grooves which are not covered by the holders. This is to reduce wind noise.

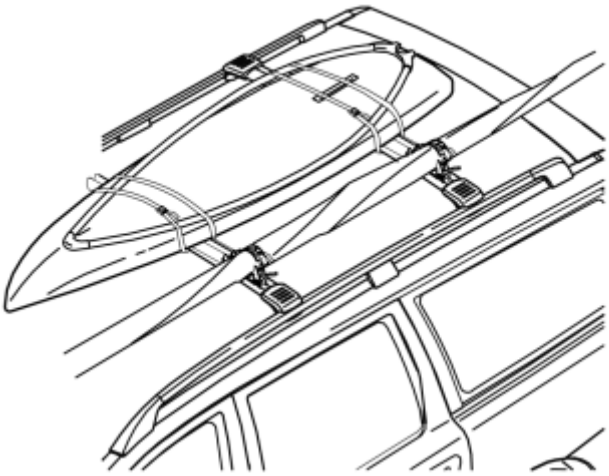

Fig. 467: Identifying Securing Of Wind Surfer Board With Mast On Car
Courtesy of VOLVO CARS CORPORATION

Securing the wind surfer board with the mast on the car as illustrated.

WINDSURFER HOLDER, SQUARE PROFILE (2003-2010)

WINDSURFER HOLDER, SQUARE PROFILE

Assembling the mast holder

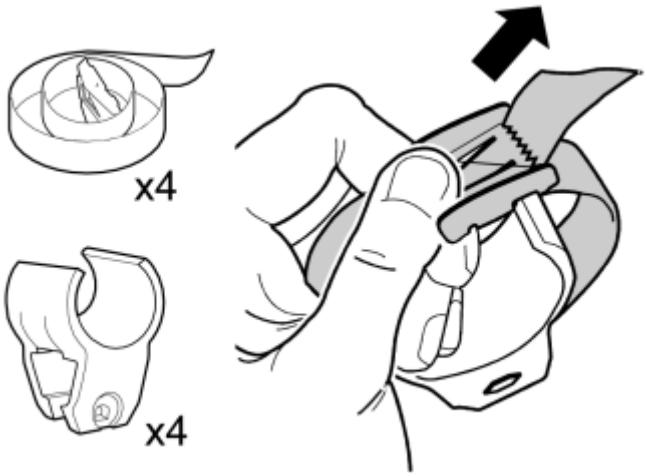

Fig. 468: Assembling Mast Holder
Courtesy of VOLVO CARS CORPORATION

Installing the mast holder on the load carriers

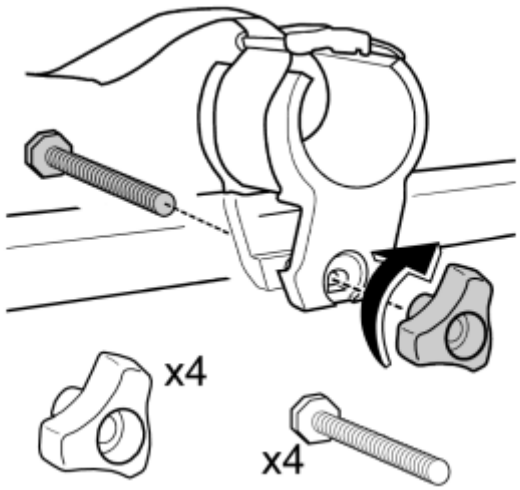

Fig. 469: Identifying Mast Holder Installed On Load Carriers
Courtesy of VOLVO CARS CORPORATION

Installing the guard

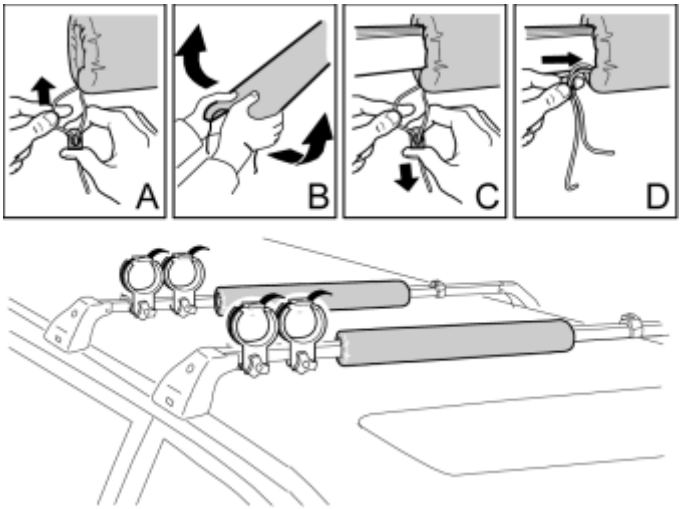

Fig. 470: Installing Guard
Courtesy of VOLVO CARS CORPORATION

- Poke in the strings into the guard so that they do not hit the roof of the car.

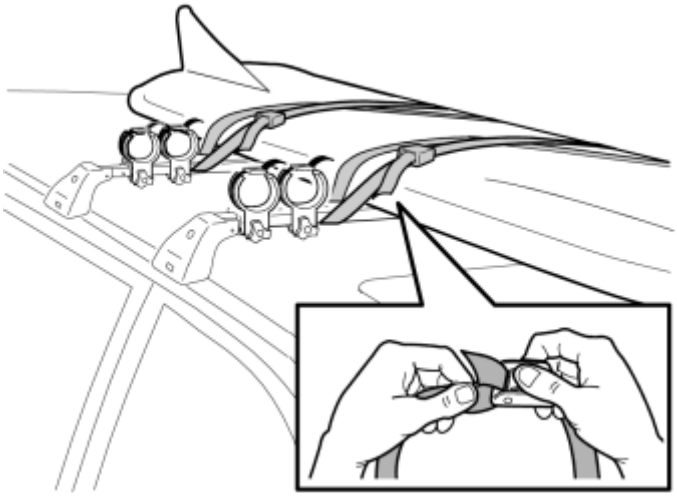

Fig. 471: Securing The Windsurf Board
Courtesy of VOLVO CARS CORPORATION

Secure the windsurf board with the front facing forward and the underside upwards as illustrated.

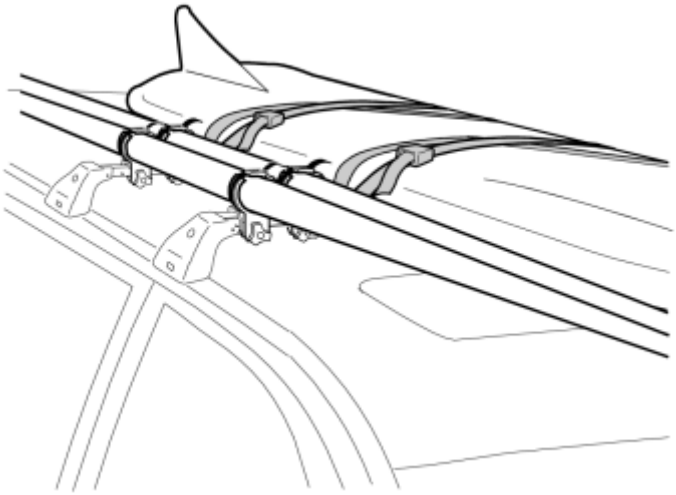

Fig. 472: Identifying Secured Mast
Courtesy of VOLVO CARS CORPORATION

NOTE: Important

- **Regularly check that the load carriers are properly secured**
- **The maximum roof load is 100 kg**
- **Distribute the load evenly over the load carriers. Do not load at an angle**
- **Position the heaviest load underneath**
- **Remove the load carriers when not in use. This reduces air resistance which improves fuel consumption and reduces wind noise**
- **Handling is affected by the actual load and its position. The center of**

gravity of the car changes when driving with a load, which affects the handling of the car. Adjust the speed accordingly.

CABLE HARNESS KIT FOR TOWBAR, 7/4-PIN (2005-2012)

see **ACCESSORY ELECTRONIC MODULE (AEM)**

CABLE HARNESS KIT FOR TOWBAR, 7/4-PIN

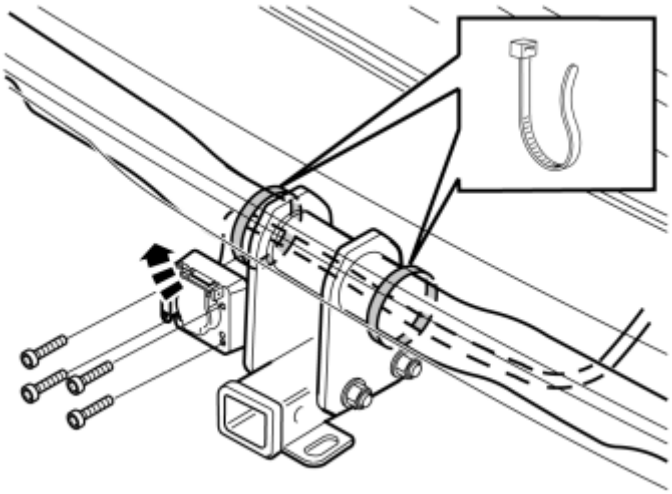

Fig. 473: Installing The Trailer Connector With Four Screws And Nuts
Courtesy of VOLVO CARS CORPORATION

- Install the trailer connector with the four screws and the nuts. Tighten.
- Pull the cable harness out towards the right along the front edge of the tow bar member.
- Secure the cable harness with a tie strap on the sides of the tow bar member brackets.

Figure B applies to cars with R-design Skidplate

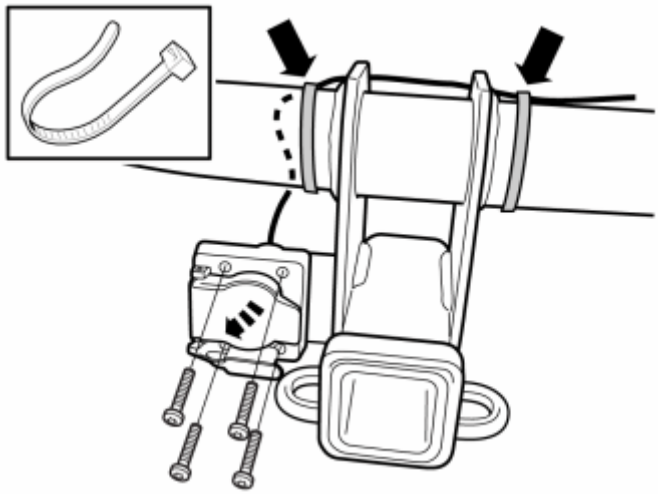

Fig. 474: Figure B
Courtesy of VOLVO CARS CORPORATION

On cars with Skidplate, the contact shall be turned 90° counter-clockwise in relation to the placement in Figure A.

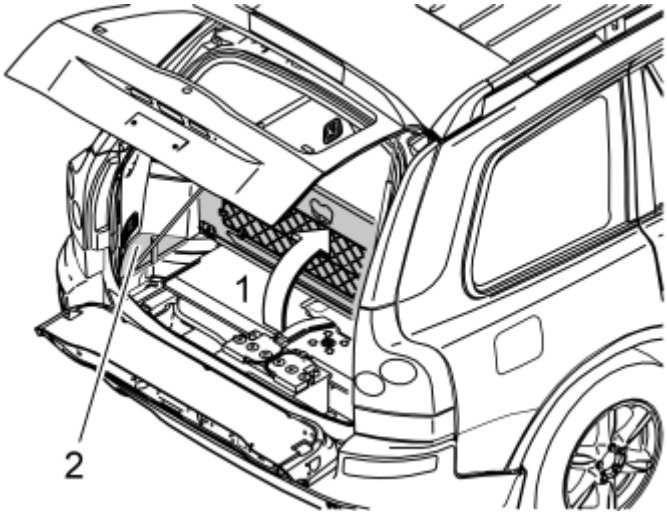

Fig. 475: Folding Up The Centre Rear Floor Hatch (1)
Courtesy of VOLVO CARS CORPORATION

Applies to cars with two rows of seats

- Fold up the center rear floor hatch (1). If the underside of the floor hatch is equipped with a grocery bag holder, the holder is secured with a strap on both ends of the storage compartment. Detach the straps.
- Remove the underlying storage compartment.
- Remove the floor hatch by folding it almost completely closed and pulling it backwards from the mountings until it releases.

Applies to cars with three rows of seats and integrated carrier bag holder on the underside of the center floor hatch

- Fold up the center rear floor hatch (1).
- Detach the two straps on the underlying panel. Lift up the rear edge of the panel, fold the floor hatch back towards the panel and lift out the floor hatch with the panel.

Applies to cars with three rows of seats without an integrated carrier bag holder

- Fold up the center rear floor hatch (1) at the rear edge and lift it out.

Applies to all models

- Remove the left-hand side floor hatch (2).

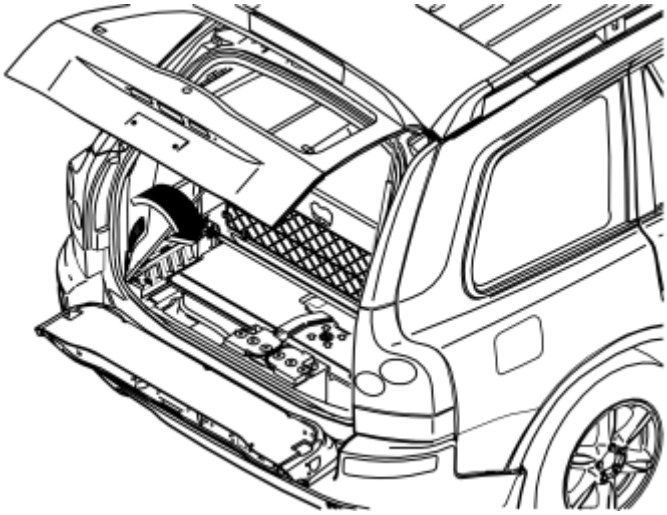

Fig. 476: Identifying Left-Hand Side Folding Side Panel
Courtesy of VOLVO CARS CORPORATION

- Remove the folding side panel from the left-hand side in the cargo compartment.

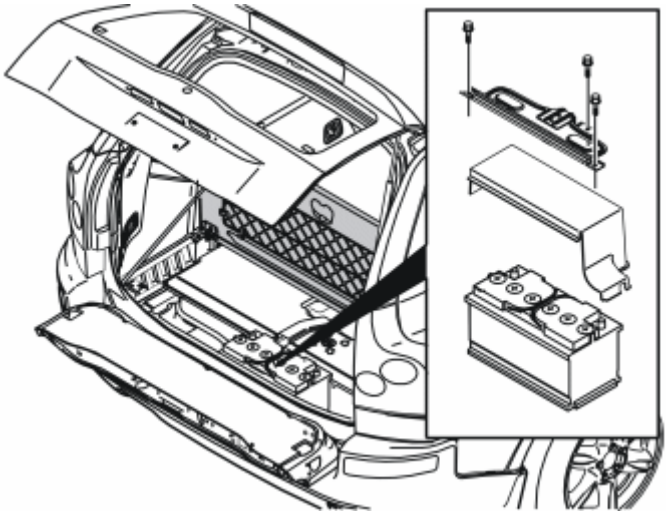

Fig. 477: Removing Three Screws In Battery Holder
Courtesy of VOLVO CARS CORPORATION

- Remove the three screws in the battery holder. Lift the battery holder out.
- Remove the battery cover.

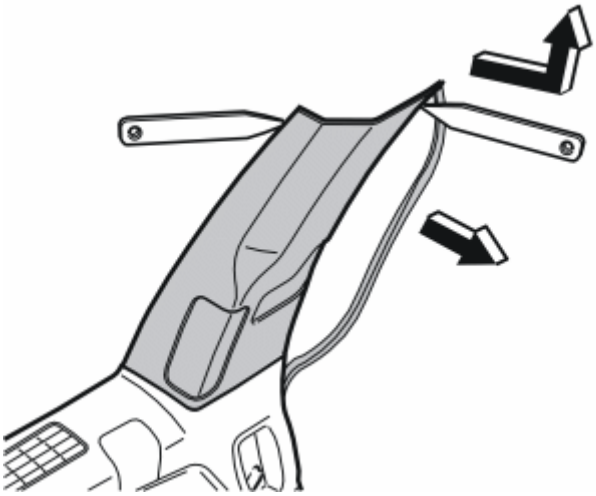

Fig. 478: Identifying Left-Hand C-Post Panel And Plastic Weatherstrip Tools
Courtesy of VOLVO CARS CORPORATION

- Pull off the rubber strip at the rear edge of the door opening for the left-hand rear door opposite the left-hand C-post panel.
- Carefully pry off the left-hand C-post panel sides at the top. Use a plastic weatherstrip tool. Then pull until the three clips on the inside release. Do not damage the headlining or the panel.
- Remove the panel by pulling upwards slightly and unhooking it from the side panel.

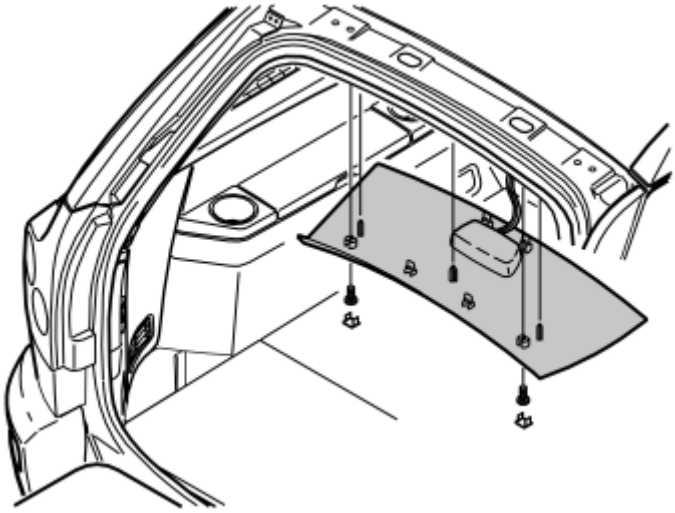

Fig. 479: Identifying Cover And Screws Underneath Rear Headlining
Courtesy of VOLVO CARS CORPORATION

- Remove the rear roof panel covers and the screws beneath them.
- Carefully pry off the panel at the rear edge. Use a plastic weatherstrip tool.
- Pull the rear edge of the panel downwards until the four clips on the top release.
- If the car is equipped with lighting in the panel, unplug the connector from the panel.
- Pull the panel backwards to release it.

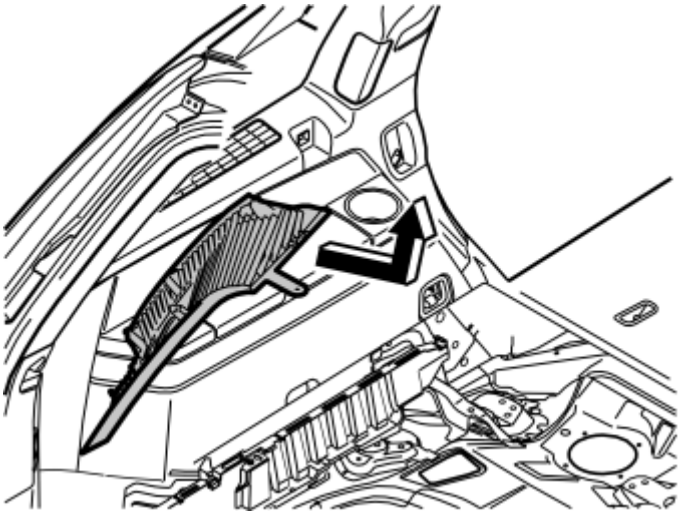

Fig. 480: Identifying D-Post Panel Removal From Side Panel
Courtesy of VOLVO CARS CORPORATION

- Carefully pull off the D-post panel. Start at the top edge then pull down until the three clips on the inside release. Do not damage the panel.
- Disconnect the connector on the D-post panel (if the car has a loudspeaker in the D-post, the connector is in the loudspeaker).
- Remove the panel by pulling upwards slightly and unhooking it from the side panel.

Illustration shows the removal of the cover for the load securing eyelets

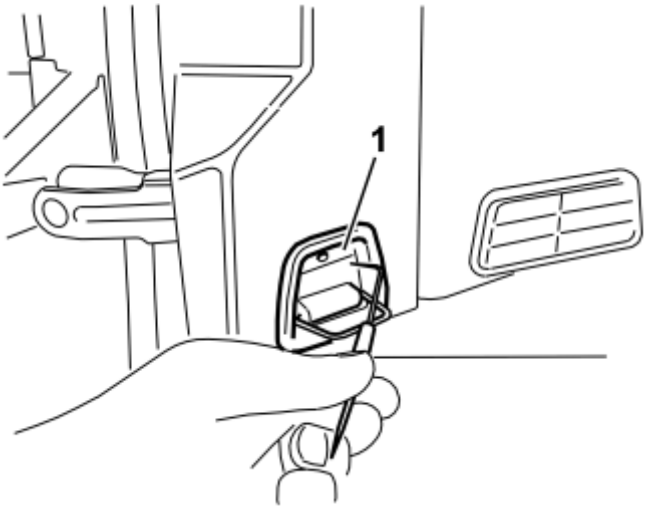

Fig. 481: Identifying Load Securing Eyelet
Courtesy of VOLVO CARS CORPORATION

- Fold out the load securing eyelet.
- Insert a scriber with an angled tip into the hole in the top of the cover.
- Turn the scriber so that the angled tip engages in the reverse of the cover (1). Pull the cover off.

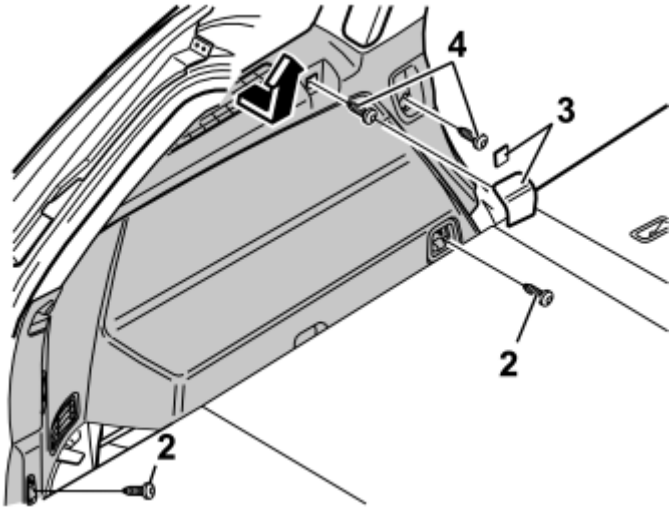

Fig. 482: Cars With Two Rows Of Seats
Courtesy of VOLVO CARS CORPORATION

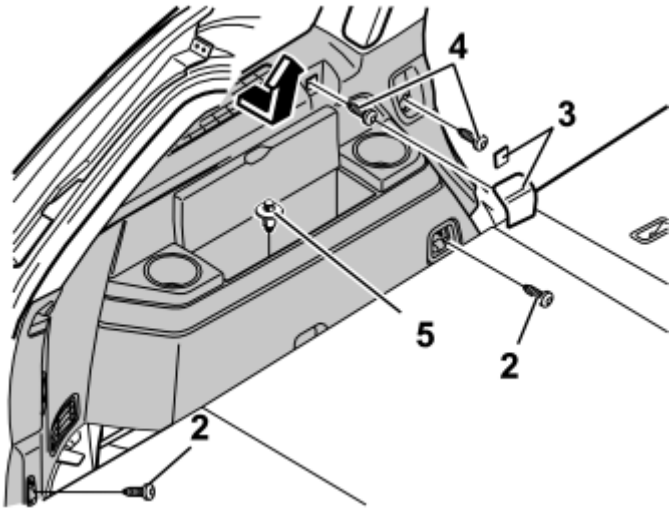

Fig. 483: Cars With Three Rows Of Seats
Courtesy of VOLVO CARS CORPORATION

- Fold up the seats in the third row (applies to cars with three rows of seats).
- Remove the screws (2) for the load securing eyelets in the left-hand side panel.
- Remove the covers (3) over the front mountings for the left-hand side panel. Pry the covers off. Use a plastic weatherstrip tool or a small screwdriver.
- Remove the screws (4).
- Remove the clip (5) at the bottom of the storage compartment in the panel (Applies to cars with three rows of seats).
- Remove the panel by pulling out the upper edge slightly so that the clips on the inside release. Pull the panel straight up.

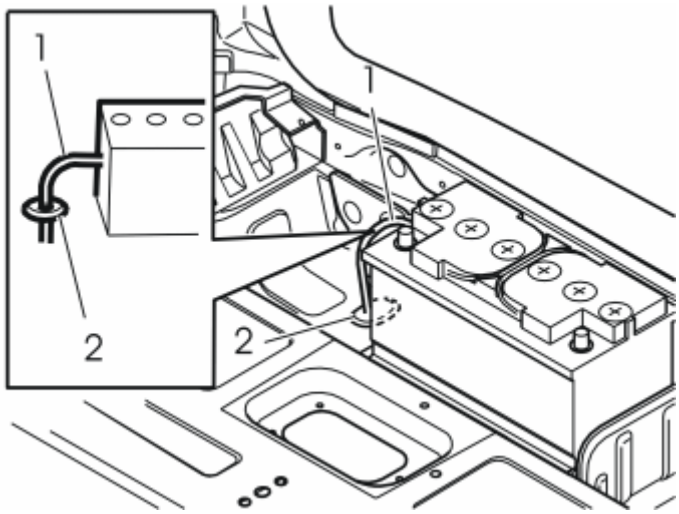

Fig. 484: Identifying Drain Hose (1)
Courtesy of VOLVO CARS CORPORATION

- Remove the drain hose (1) from the battery.
- Remove the rubber seal (2). It will not be re-used.
- Pull off the small, thin rubber strap on the new rubber seal.
- Insert the old drain hose through the new rubber seal. Make sure the hose is not obstructed and that it is not folded.

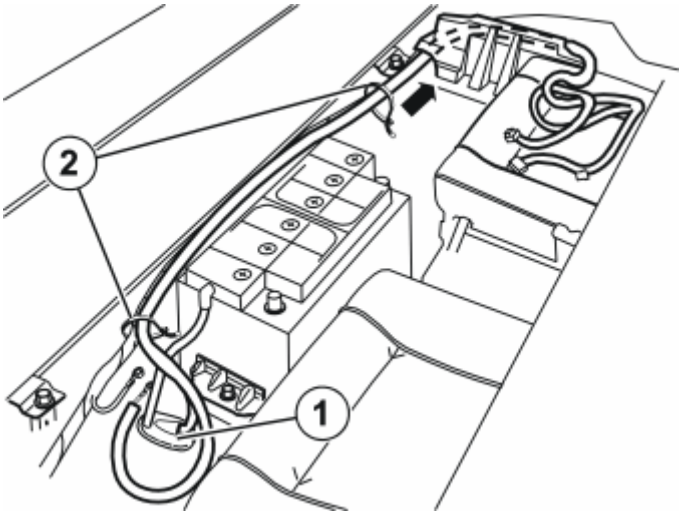

Fig. 485: Routing The Cable Harness
Courtesy of VOLVO CARS CORPORATION

- Route the cable harness from the tow bar connector through the hole in the floor.
- Adjust the position of the rubber seal (1) so that there is not excessive cable slack under the car.
- Install the rubber seal in the hole.
- Route the cable harness as illustrated. Insert it through the hole along the rear edge of the left-hand cargo floor support.

- Secure the cable harness to the cable harness behind the battery with tie straps (2) from the kit.

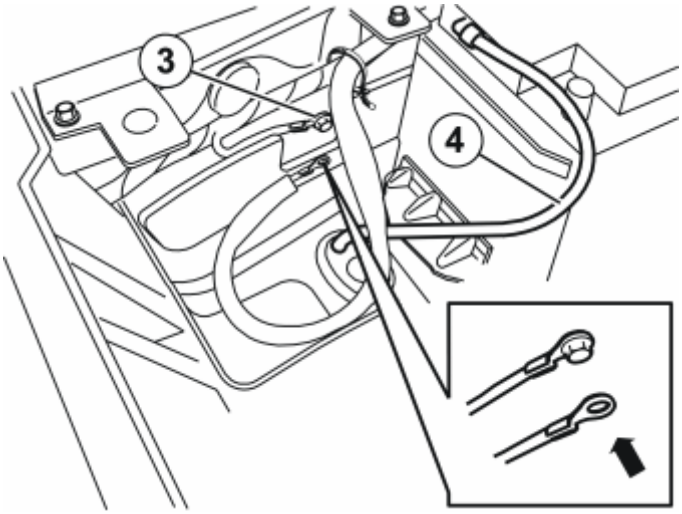

Fig. 486: Connecting the Ground Cable
Courtesy of VOLVO CARS CORPORATION

- Connect the routed ground cable to the grounding point (3) behind the battery and tighten the grounding screw securely.
- Connect the drain hose (4) to the battery.

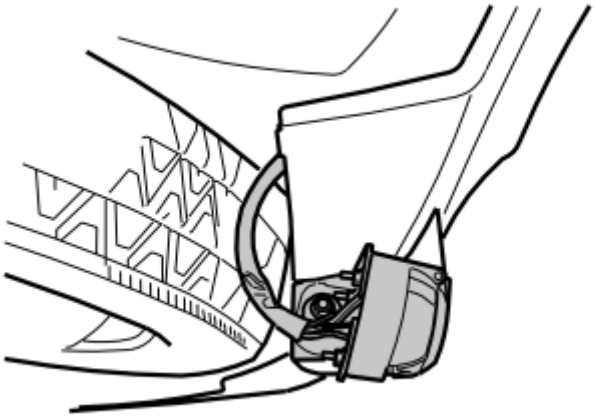

Fig. 487: Secure Cable Harness Using A Tie Strap On Each Side Of Brackets For Tow Hitch Member
Courtesy of VOLVO CARS CORPORATION

- Make sure the cable harness curves around the lower edge of the bumper as shown in the illustration.

NOTE: **If the cable harness is stretched too tightly, it can scrape against the lower edge of the bumper and become damaged.**

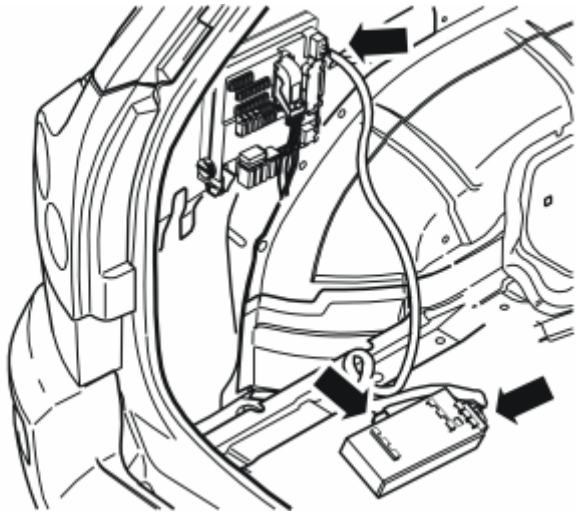

Fig. 488: Identifying Trailer Module (TRM)
Courtesy of VOLVO CARS CORPORATION

NOTE: **On the XC90 Executive, T-wiring is already installed in the fuse holder. As this is a cable with a black connector taped to it. The tow bar wiring's black connector is then connected to this.**

- Detach the trailer module (TRM) from the Velcro fastener on the floor along the rear edge of the left-hand rear wheel housing.

  green (GN) and grey (GR) connectors to the control module.

  black (SB) connector to the fuse holder.
- Plug in the tow bar wiring connectors:

  green (GN) and grey (GR) connectors to the control module.

  black (SB) connector to the fuse holder.
- Reinstall the control module.
- Secure the excess cable with a tie strap from the kit.

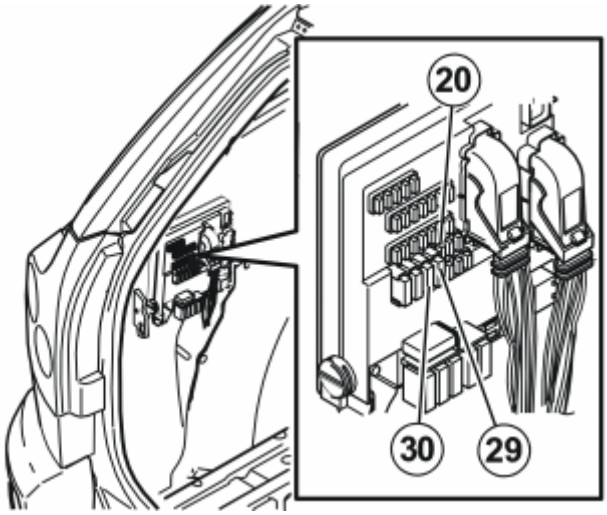

Fig. 489: Inserting Fuses From The Kit
Courtesy of VOLVO CARS CORPORATION

- Insert fuses from the kit in the following positions in the fuse holder (REM):
  20A in position 20 (mini fuse) if the charging function will be used
  25A in position 29
  25A in position 30.

Reinstall:

- the left-hand side panel using the screws and cover. Tighten the screws in the load securing eyelets. Tighten to **24 Nm (18 lbf ft)** .
- the covers for the load securing eyelets.
- D-post panel with connector.
- the connector for the rear roof lighting (if applicable).
- the rear headlining.
- C-post panel.
- protective cover and bracket for the battery.
- side floor hatch and folding panel.
- storage compartment and floor hatch.

CHECKING THE TRAILER CONNECTOR

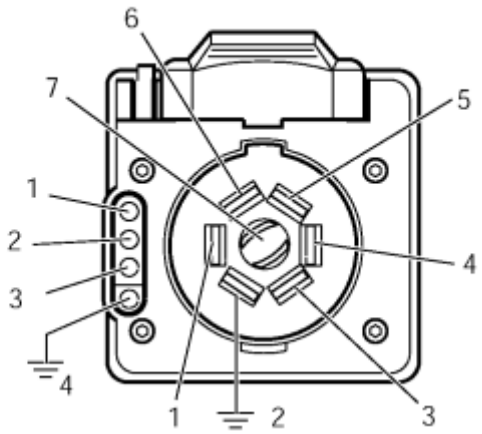

Fig. 490: Identifying 7-Pin Connection
Courtesy of VOLVO CARS CORPORATION

7-pin connection

1. Brake lamp / Left-hand indicator lamp
2. Ground

3. Spare (Brake lamp, Electric brakes)
4. Brake lamp / Right-hand indicator lamp
5. Charging
6. Position lamps
7. Spare (Reversing lamp)

The cable to pin 3 is blue (BL) and the cable to pin 7 is violet (VO). They are taped to the wiring approximately 1 meter from the connector.

4-pin connection

1. Brake lamp / Right-hand indicator lamp
2. Brake lamp / Left-hand indicator lamp
3. Position lamps
4. Ground

NOTE: The following steps (16-25) only apply if further functions are desired.

These parts are not included in the kit. Specified part numbers can be purchased separately from Volvo dealerships.

STEPS ONLY APPLY IF ELECTRIC BRAKES ARE TO BE INSTALLED.

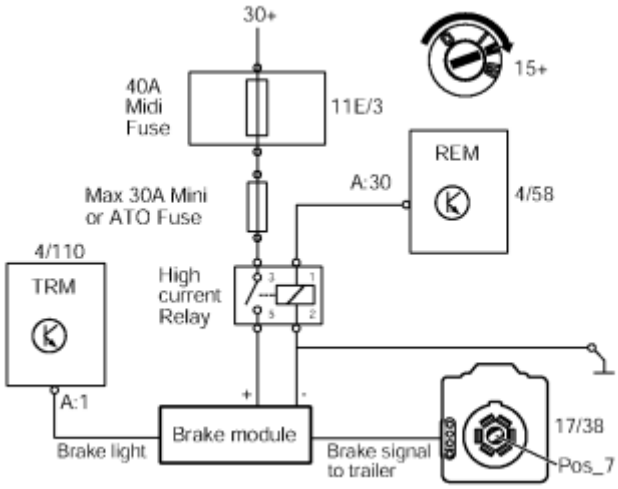

Fig. 491: Electric Brake Connecting
Courtesy of VOLVO CARS CORPORATION

The image with wiring diagram shows the principle of electric brake connection.

The system must be fused with quick-acting fuse, maximum 30A, and controlled with relay, see diagrammatic illustration. Use Maxi fuse (P/N 9441158), quick-acting fuse max. 30A by ATO (P/N 966331) or Mini (P/N 8470580) type. A separate holder must be used for these.

NOTE: **Installation of equipment for the electric brakes must be carried out according to the supplier's instructions. Volvo takes no responsibility for such equipment.**

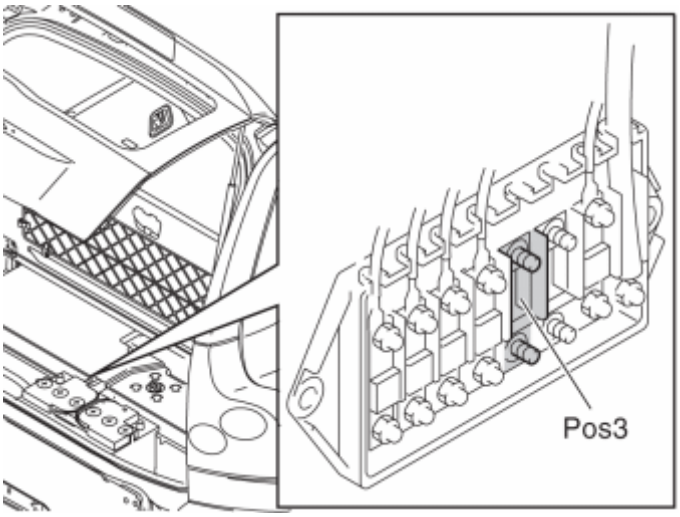

Fig. 492: Identifying Position 3 In The Main Fuse Box
Courtesy of VOLVO CARS CORPORATION

- Obtain positive feed (30+) from position 3 in the main fuse box, which is located beside the battery. Insert a 40A Midi fuse in the holder (P/N 9441937).

CONNECTION OF RELAY CONTROL TO "IGNITION ON" IN THE REAR ELECTRONIC MODULE (REM)

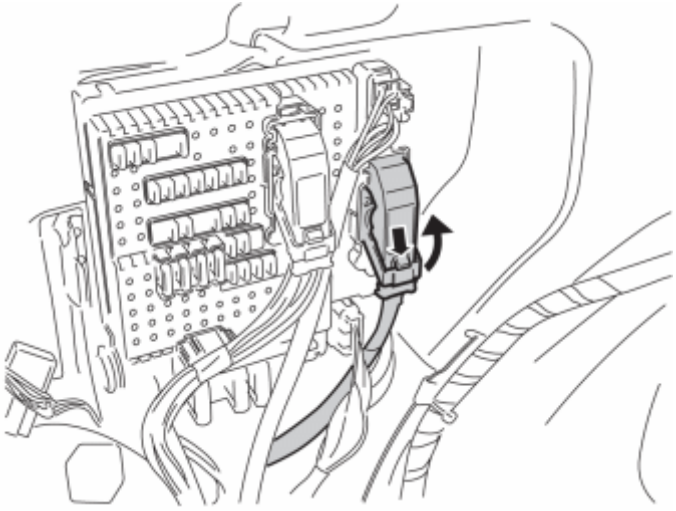

Fig. 493: Identifying Front Black Connector
Courtesy of VOLVO CARS CORPORATION

- Press in the catch on the front black connector in the cargo compartment fuse holder. Turn up the lock arm as far as possible and pull out the connector.

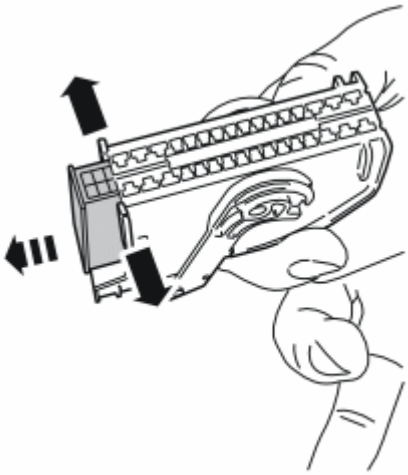

Fig. 494: Pull Apart Sides Of Holder For Connector And Pull Out Connector
Courtesy of VOLVO CARS CORPORATION

- Carefully pry apart the sides of the connector holder in the ends so that the connector can pass by the retaining hooks.
- Pull the connector out from the holder.

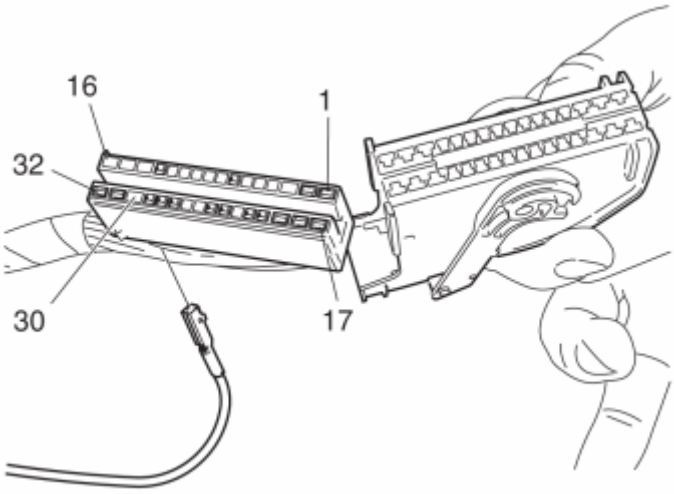

Fig. 495: Connecting a Replacement Terminal (P/N 30656727) To Position 30
Courtesy of VOLVO CARS CORPORATION

- Connect a replacement part terminal (P/N 30656727) to position 30 in the connector.
- Reinstall the connector in the holder and reinstall the whole unit in the fuse holder.

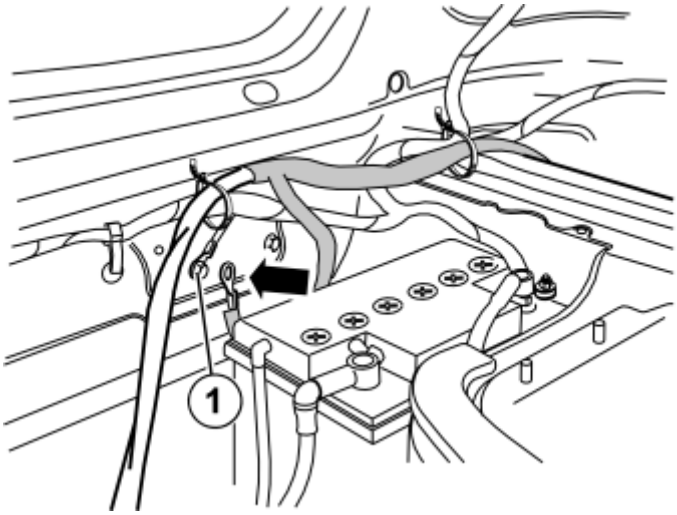

Fig. 496: Connecting Routed Ground Lead To Grounding Point Behind Battery
Courtesy of VOLVO CARS CORPORATION

- Connect ground lead (31-) to the relay with a conductor with cable terminal (P/N 970784) to the existing ground terminal (1) behind the battery. Tighten the ground screw firmly.

Only applies if the brake lamp signal is to be connected to the electric brakes

- Connect a replacement part terminal (P/N 30656647) to position 1 in the tow hitch wiring's gray connector on the trailer module (TRM). Splice it with the cable for the brake lamp's input signal from the brake equipment, with a yellow butt connector (P/N 9130477).

- Connect the electric brakes after the relay with a fuse, maximum 30A. Connect the electric brake output to the trailer connector via pin 3,(spare).

  The cables should have a minimum 4 mm^2 cross-section if a 30A fuse is used.

  The equipment will be supplied with power as long as the car has its ignition on.

NOTE: **If the electric brakes are connected without relay control in accordance with above, then there is a risk that the car's battery will be discharged.**

ONLY APPLIES IF THE BRAKE LAMP FUNCTION IS TO BE USED.

- Connect a replacement part terminal (P/N 30656647) to position 1 in the tow hitch wiring's gray connector on the trailer module (TRM). Splice it with the blue (BL) cable that is taped to the wiring, with a yellow butt connector (P/N 9130477).

  The brake lamp signal is now in position 3 in the trailer connector.

ONLY APPLIES IF THE REVERSE LAMP FUNCTION IS TO BE USED.

- Connect a replacement part terminal (P/N 30656724) to position H in the tow hitch wiring's black

connector on the fuse holder (REM). Splice it with the violet (VO) cable that is taped to the wiring, with a yellow butt connector (P/N 9130477).

The reverse lamp signal is now in position 7 in the trailer connector.

CARS EQUIPPED WITH SRS/SIPS (AIRBAG)

see **CARS EQUIPPED WITH SRS/SIPS (AIRBAG)**

SUPPLEMENTAL RESTRAINT SYSTEM MODULE, SRS

see **SUPPLEMENTAL RESTRAINT SYSTEM MODULE, SRS**

TOW BAR WIRING, 13-PIN (2005-2012)

see **ACCESSORY ELECTRONIC MODULE (AEM)**

CARS EQUIPPED WITH SRS/SIPS (AIRBAG)

see **CARS EQUIPPED WITH SRS/SIPS (AIRBAG)**

SUPPLEMENTAL RESTRAINT SYSTEM MODULE, SRS

see **SUPPLEMENTAL RESTRAINT SYSTEM MODULE, SRS**

TOW BAR WIRING, 13-PIN

INSTALLING THE CONNECTOR FOR FIXED/DETACHABLE TOW BARS

APPLIES TO THE XC90

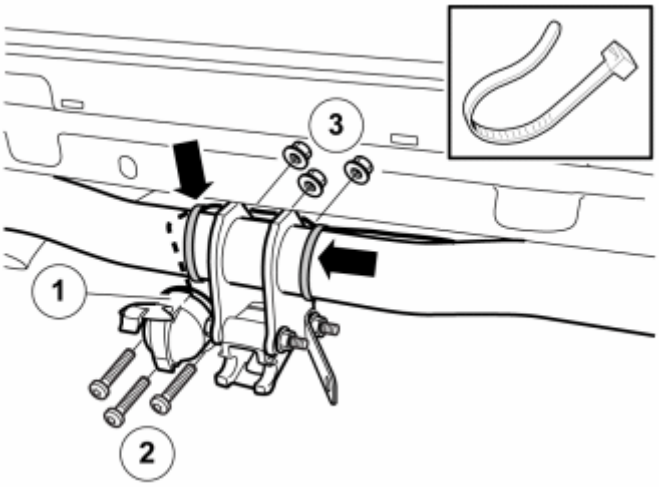

Fig. 497: Installing the Trailer Connector (1)
Courtesy of VOLVO CARS CORPORATION

- Install the trailer connector (1). Use the three screws (2) and the nuts (3). Tighten.
- Pull the cable harness out towards the right along the front edge of the tow bar member.
- Secure the cable harness with a tie strap on the sides of the tow bar member brackets.

Figure B applies to cars with R-design Skidplate

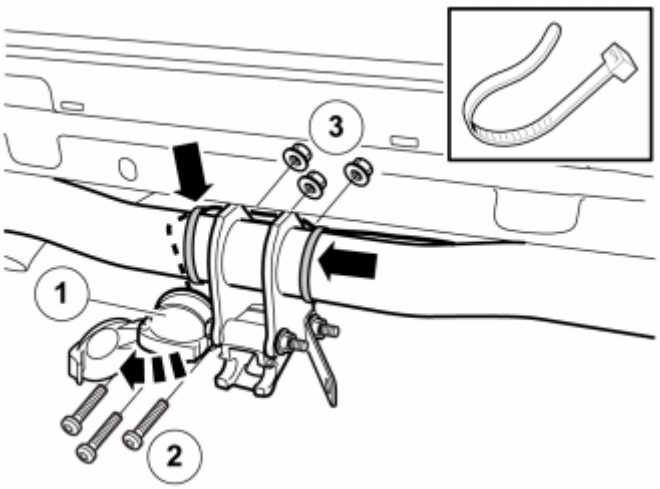

Fig. 498: Identifying Connector Turned 90°
Courtesy of VOLVO CARS CORPORATION

On cars with Skidplate, the connector shall be turned 90° counter-clockwise in relation to the placement in Figure A.

STEPS APPLY TO THE XC90

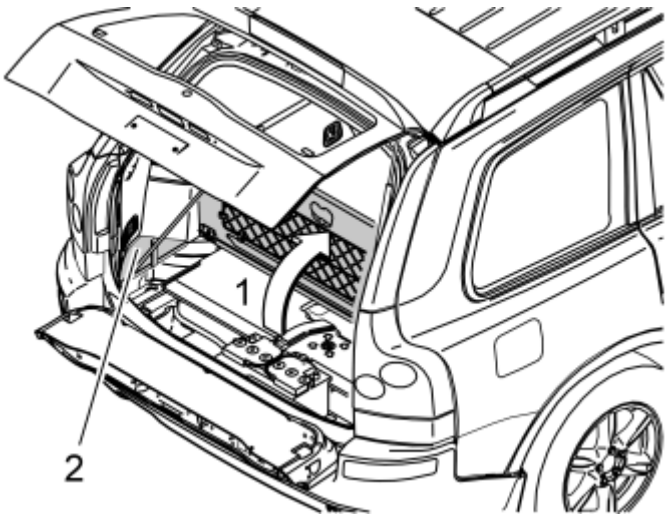

Fig. 499: Folding Up The Centre Rear Floor Hatch (1)
Courtesy of VOLVO CARS CORPORATION

Applies to cars with two rows of seats

- Fold up the center rear floor hatch (1). If the underside of the floor hatch is equipped with a grocery bag holder, the holder is secured with a strap on both ends of the storage compartment. Detach the straps.
- Remove the underlying storage compartment.
- Remove the floor hatch by folding it almost completely closed and pulling it backwards from the mountings until it releases.

Applies to cars with three rows of seats and integrated carrier bag holder on the underside of the center floor hatch

- Fold up the center rear floor hatch (1).
- Detach the two straps on the underlying panel. Lift up the rear edge of the panel, fold the floor hatch back towards the panel and lift out the floor hatch with the panel.

Applies to cars with three rows of seats without an integrated carrier bag holder

- Fold up the center rear floor hatch (1) at the rear edge and lift it out.

Applies to all models

- Remove the left-hand side floor hatch (2).

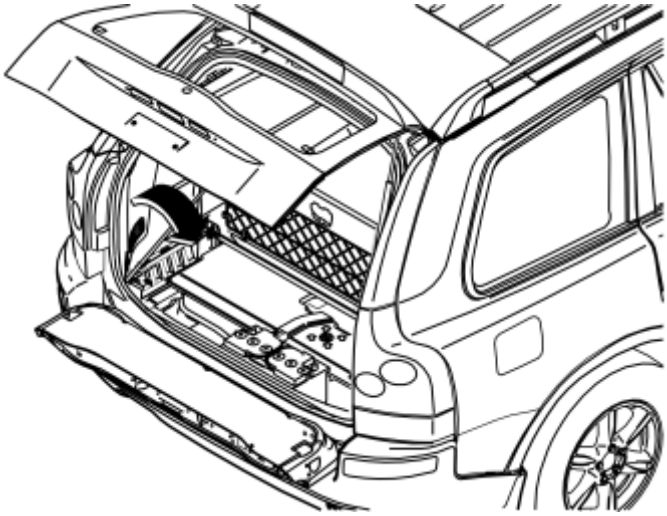

Fig. 500: Identifying Left-Hand Side Folding Side Panel
Courtesy of VOLVO CARS CORPORATION

- Remove the folding side panel from the left-hand side in the cargo compartment.

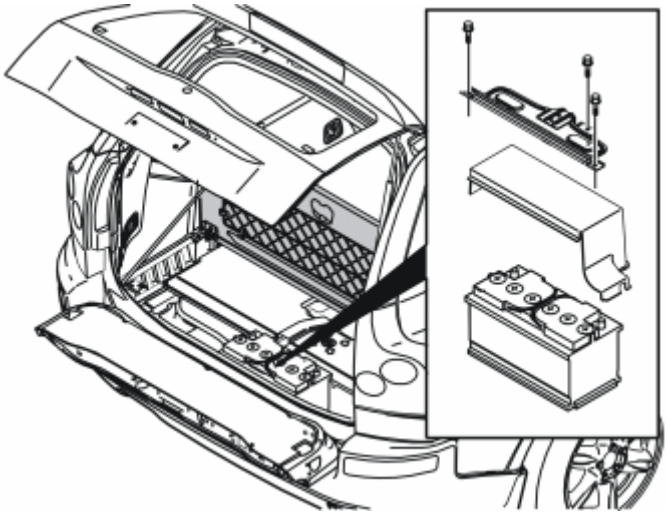

Fig. 501: Removing Three Screws In Battery Holder
Courtesy of VOLVO CARS CORPORATION

- Remove the three screws in the battery holder. Lift the battery holder out.
- Remove the battery cover.

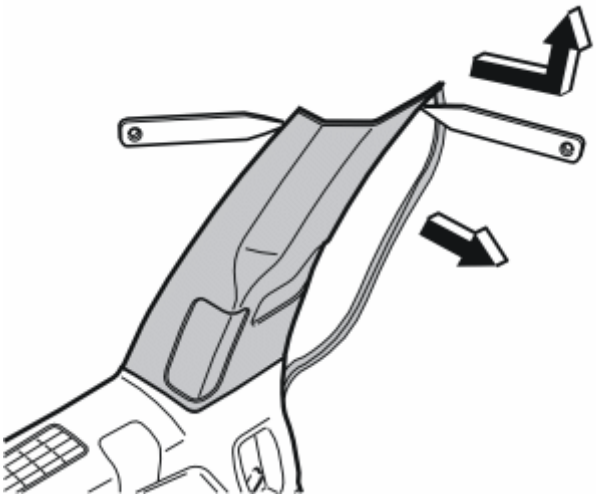

Fig. 502: Identifying Left-Hand C-Post Panel And Plastic Weatherstrip Tools
Courtesy of VOLVO CARS CORPORATION

- Pull off the rubber strip at the rear edge of the door opening for the left-hand rear door opposite the left-hand C-post panel.
- Carefully pry off the left-hand C-post panel sides at the top. Use a plastic weatherstrip tool. Then pull until the three clips on the inside release. Do not damage the headlining or the panel.
- Remove the panel by pulling upwards slightly and unhooking it from the side panel.

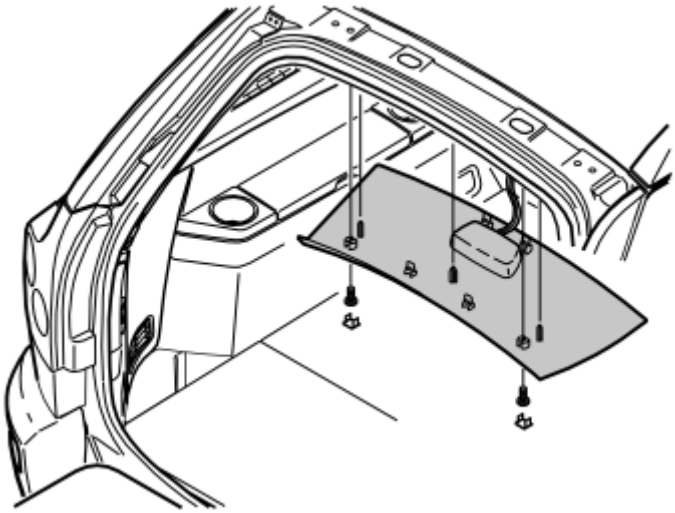

Fig. 503: Identifying Cover And Screws Underneath Rear Headlining
Courtesy of VOLVO CARS CORPORATION

- Remove the rear roof panel covers and the screws beneath them.
- Carefully pry off the panel at the rear edge. Use a plastic weatherstrip tool.
- Pull the rear edge of the panel downwards until the four clips on the top release.
- If the car is equipped with lighting in the panel, unplug the connector from the panel.
- Pull the panel backwards to release it.

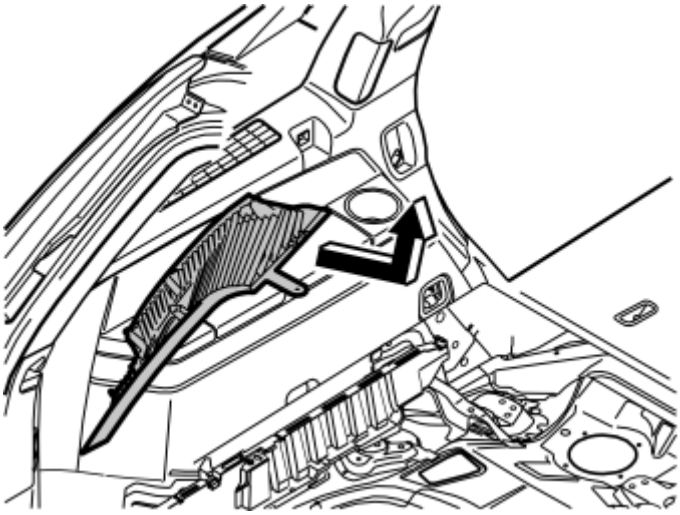

Fig. 504: Identifying D-Post Panel Removal From Side Panel
Courtesy of VOLVO CARS CORPORATION

- Carefully pull off the D-post panel. Start at the top edge then pull down until the three clips on the inside release. Do not damage the panel.
- Disconnect the connector on the D-post panel (if the car has a loudspeaker in the D-post, the connector is in the loudspeaker).
- Remove the panel by pulling upwards slightly and unhooking it from the side panel.

Illustration shows the removal of the cover for the load securing eyelets

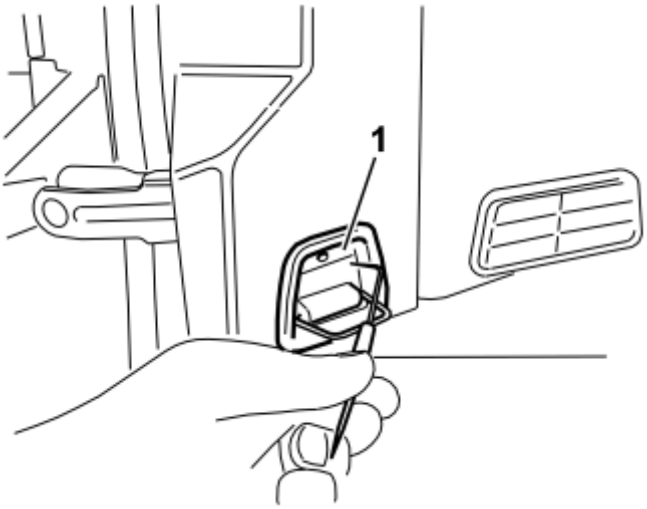

Fig. 505: Identifying Load Securing Eyelet
Courtesy of VOLVO CARS CORPORATION

- Fold out the load securing eyelet.
- Insert a scriber with an angled tip into the hole in the top of the cover.
- Turn the scriber so that the angled tip engages in the reverse of the cover (1). Pull the cover off.

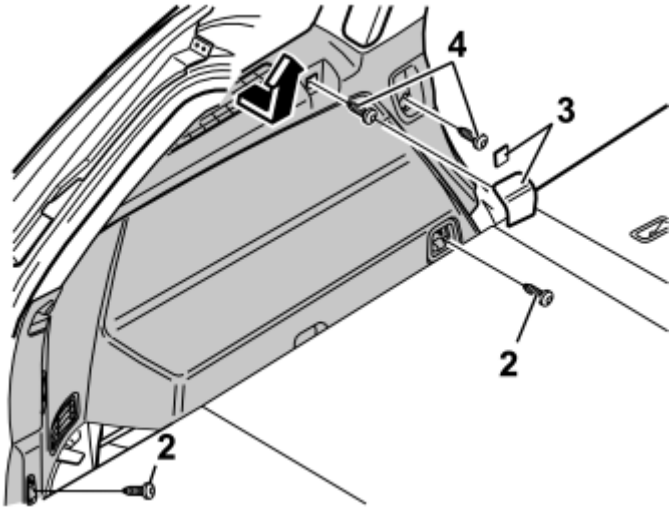

Fig. 506: Cars With Two Rows Of Seats
Courtesy of VOLVO CARS CORPORATION

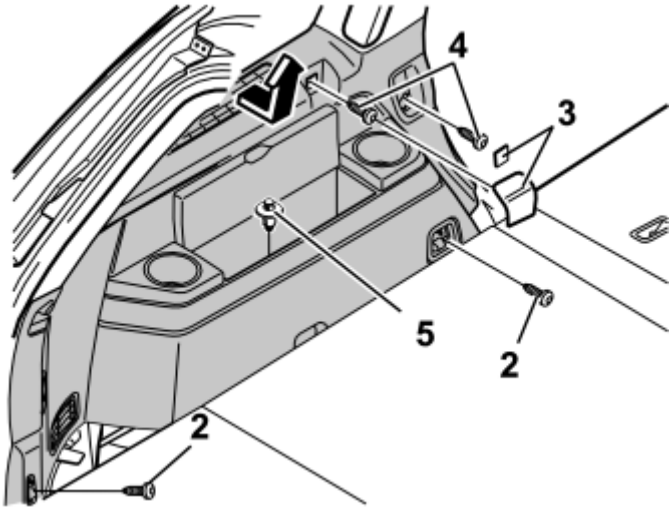

Fig. 507: Cars With Three Rows Of Seats
Courtesy of VOLVO CARS CORPORATION

- Fold up the seats in the third row (applies to cars with three rows of seats).
- Remove the screws (2) for the load securing eyelets in the left-hand side panel.
- Remove the covers (3) over the front mountings for the left-hand side panel. Pry the covers off. Use a plastic weatherstrip tool or a small screwdriver.
- Remove the screws (4).
- Remove the clip (5) at the bottom of the storage compartment in the panel (Applies to cars with three rows of seats).
- Remove the panel by pulling out the upper edge slightly so that the clips on the inside release. Pull the panel straight up.

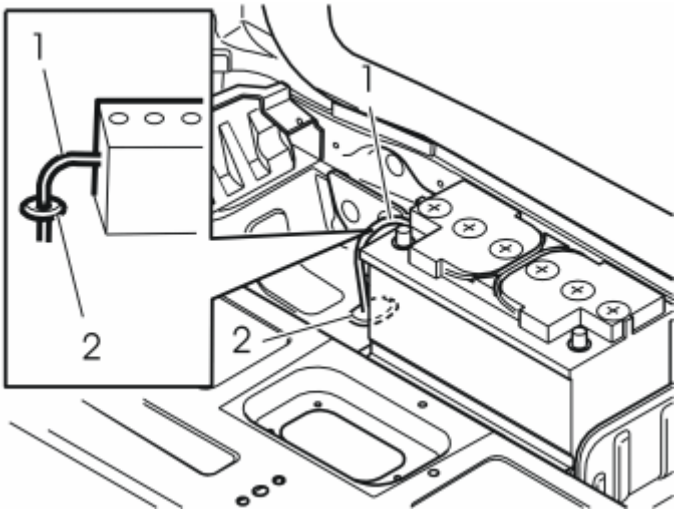

Fig. 508: Identifying Drain Hose (1)
Courtesy of VOLVO CARS CORPORATION

- Remove the drain hose (1) from the battery.

- Remove the rubber seal (2). It will not be re-used.
- Pull off the small, thin rubber strap on the new rubber seal.
- Insert the old drain hose through the new rubber seal. Make sure the hose is not obstructed and that it is not folded.

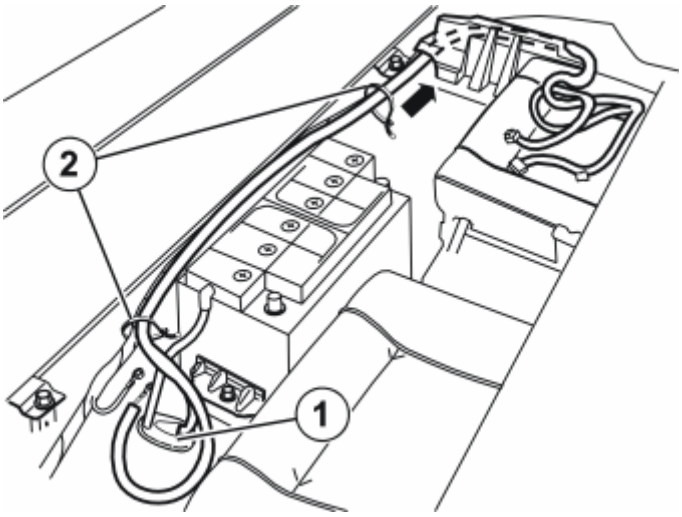

Fig. 509: Routing The Cable Harness
Courtesy of VOLVO CARS CORPORATION

- Route the cable harness from the tow bar connector through the hole in the floor.
- Adjust the position of the rubber seal (1) so that there is not excessive cable slack under the car.
- Install the rubber seal in the hole.
- Route the cable harness as illustrated. Insert it through the hole along the rear edge of the left-hand cargo floor support.
- Secure the cable harness to the cable harness behind the battery with tie straps (2) from the kit.

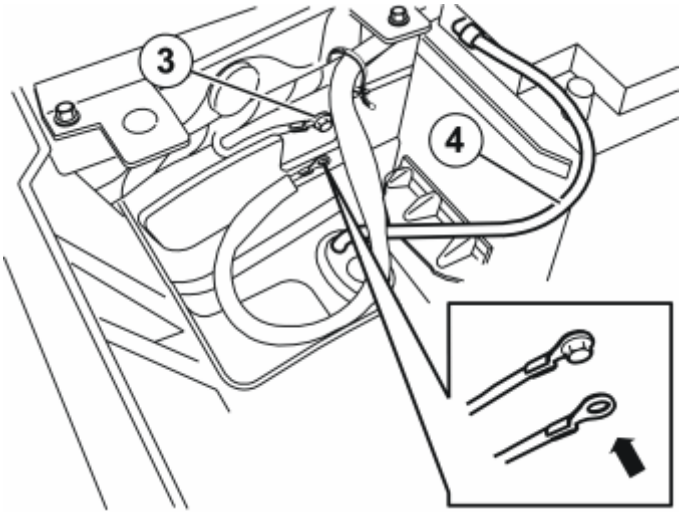

Fig. 510: Connecting the Ground Cable
Courtesy of VOLVO CARS CORPORATION

- Connect the routed ground cable to the grounding point (3) behind the battery and tighten the grounding screw securely.
- Connect the drain hose (4) to the battery.

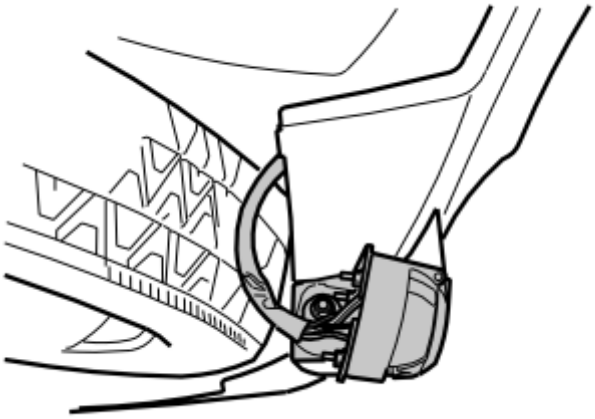

Fig. 511: Secure Cable Harness Using A Tie Strap On Each Side Of Brackets For Tow Hitch Member
Courtesy of VOLVO CARS CORPORATION

NOTE: If the cable harness is stretched too tightly, it can scrape against the lower edge of the bumper and become damaged.

- Make sure the cable harness curves around the lower edge of the bumper as shown in the illustration.

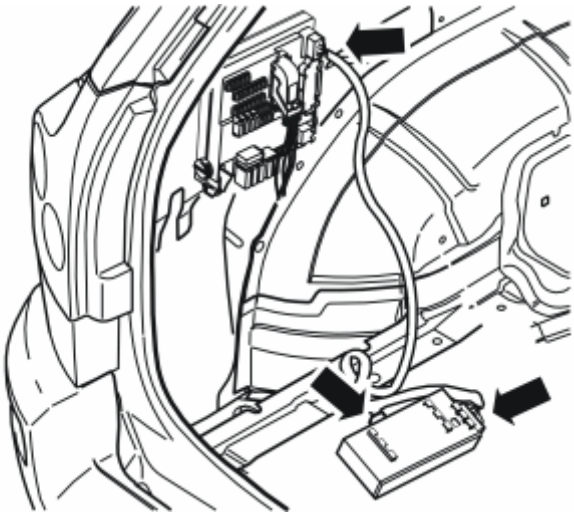

Fig. 512: Identifying Trailer Module (TRM)
Courtesy of VOLVO CARS CORPORATION

NOTE: On the XC90 Executive, T-wiring is already installed in the fuse holder. A cable with a black connector is taped to this. The tow bar wiring's black connector is then connected to this cable.

- Detach the trailer module (TRM) from the Velcro fastener on the floor along the rear edge of the left-hand rear wheel housing.
  - green (GN) and grey (GR) connectors to the control module.
  - black (SB) connector to the fuse holder.
- Plug in the tow bar wiring connectors:
  - green (GN) and grey (GR) connectors to the control module.
  - black (SB) connector to the fuse holder.
- Reinstall the control module.
- Secure the excess cable with a tie strap from the kit.

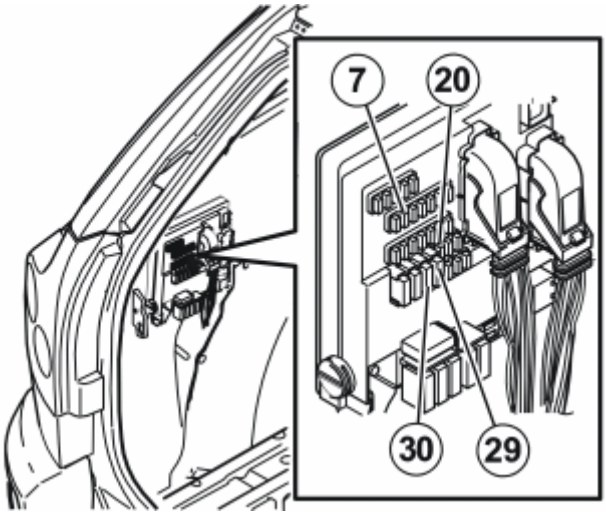

Fig. 513: Inserting Fuses From The Kit
Courtesy of VOLVO CARS CORPORATION

- Insert fuses from the kit in the following positions in the fuse holder (REM):
  - 15A in position 7 (mini fuse) if the power supply function will be used
  - 20A in position 20 (mini fuse) if the charging function will be used
  - 25A in position 29
  - 25A in position 30.

Reinstall:

- the left-hand side panel using the screws and cover. Tighten the screws in the load securing eyelets. Tighten to **24 Nm (18 lbf ft)** .
- the covers for the load securing eyelets.
- D-post panel with connector.
- the connector for the rear roof lighting (if applicable).
- the rear headlining.
- C-post panel.

- protective cover and bracket for the battery.
- side floor hatch and folding panel.
- storage compartment and floor hatch.

Applies to connection of the function for automatic rear fog lamp deactivation

NOTE: The function requires car-specific software. Program the software according to the service information described in VIDA (Volvo scan tool).

CHECKING THE 13-PIN CONNECTOR:

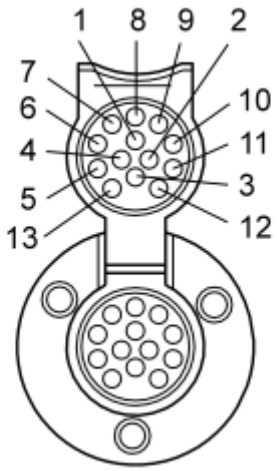

Fig. 514: 13-Pin Connector
Courtesy of VOLVO CARS CORPORATION

1. Left indicator lamps
2. Rear fog lamps
3. Ground
4. Right indicator lamps
5. Right parking lamps
6. Brake lamp
7. Left parking lamps
8. Reversing lamp
9. Power supply
10. Charging
11. Ground
12. Not used
13. Ground

TOW BAR WIRING, 7-PIN (2005-2012)

see **ACCESSORY ELECTRONIC MODULE (AEM)**

CARS EQUIPPED WITH SRS/SIPS (AIRBAG)

see **CARS EQUIPPED WITH SRS/SIPS (AIRBAG)**

SUPPLEMENTAL RESTRAINT SYSTEM MODULE, SRS

see **SUPPLEMENTAL RESTRAINT SYSTEM MODULE, SRS**

TOW BAR WIRING, 7-PIN

INSTALLING THE CONNECTOR FOR FIXED/DETACHABLE TOW BARS

APPLIES TO THE XC90

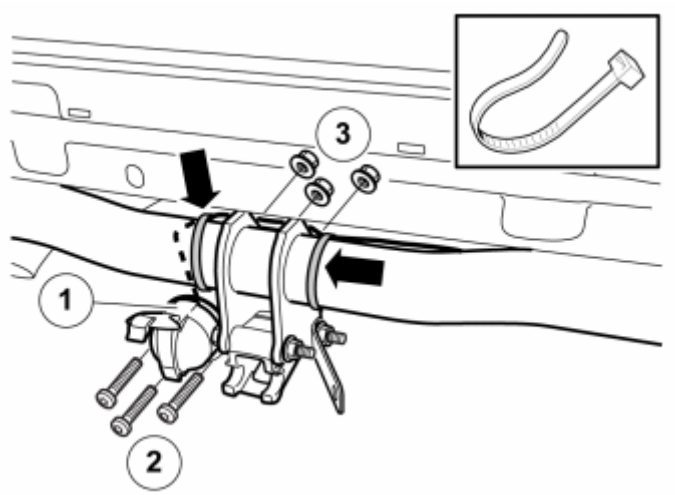

Fig. 515: Installing the Trailer Connector (1)
Courtesy of VOLVO CARS CORPORATION

- Install the trailer connector (1). Use the three screws (2) and the nuts (3). Tighten.
- Pull the cable harness out towards the right along the front edge of the tow bar member.
- Secure the cable harness with a tie strap on the sides of the tow bar member brackets.

Figure applies to cars with R-design Skidplate

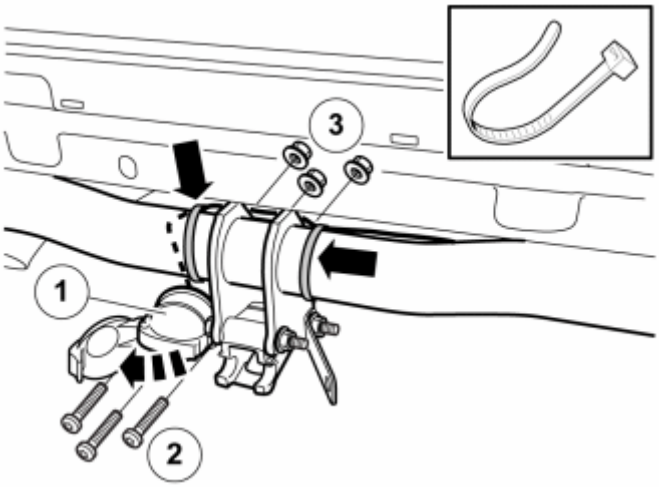

Fig. 516: Identifying Connector Turned 90°
Courtesy of VOLVO CARS CORPORATION

On cars with Skidplate, the contact shall be turned 90° counter-clockwise in relation to the placement in Figure A.

STEPS APPLY TO THE XC90

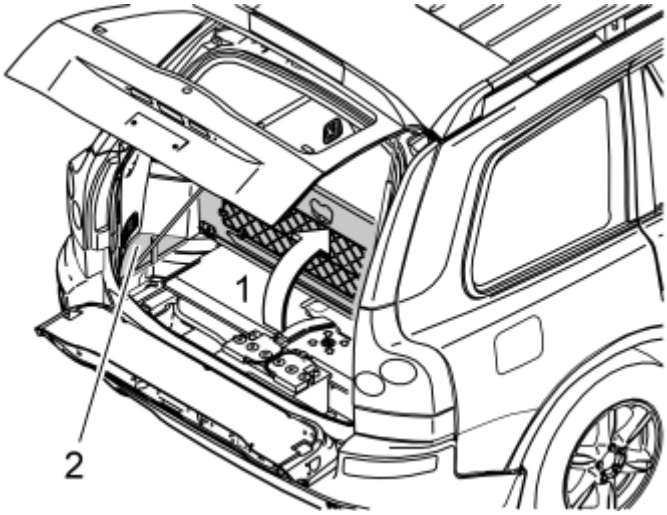

Fig. 517: Folding Up The Centre Rear Floor Hatch (1)
Courtesy of VOLVO CARS CORPORATION

Applies to cars with two rows of seats

- Fold up the center rear floor hatch (1). If the underside of the floor hatch is equipped with a grocery bag holder, the holder is secured with a strap on both ends of the storage compartment. Detach the straps.
- Remove the underlying storage compartment.
- Remove the floor hatch by folding it almost completely closed and pulling it backwards from the mountings until it releases.

Applies to cars with three rows of seats and integrated carrier bag holder on the underside of the center floor hatch

- Fold up the center rear floor hatch (1).
- Detach the two straps on the underlying panel. Lift up the rear edge of the panel, fold the floor hatch back towards the panel and lift out the floor hatch with the panel.

Applies to cars with three rows of seats without an integrated carrier bag holder

- Fold up the center rear floor hatch (1) at the rear edge and lift it out.

Applies to all models

- Remove the left-hand side floor hatch (2).

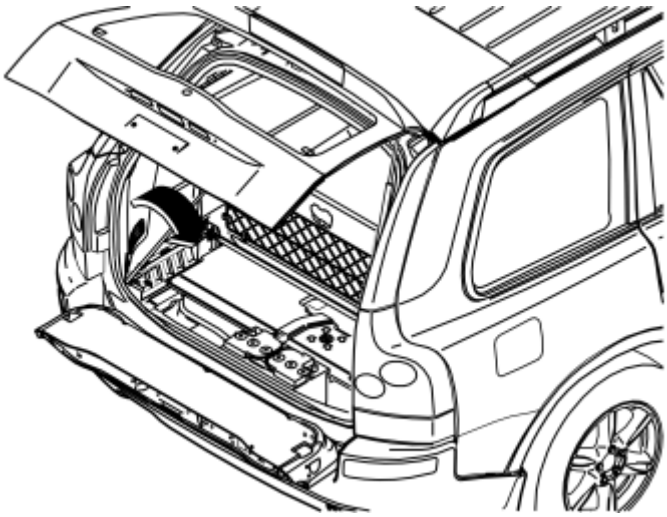

Fig. 518: Identifying Left-Hand Side Folding Side Panel
Courtesy of VOLVO CARS CORPORATION

- Remove the folding side panel from the left-hand side in the cargo compartment.

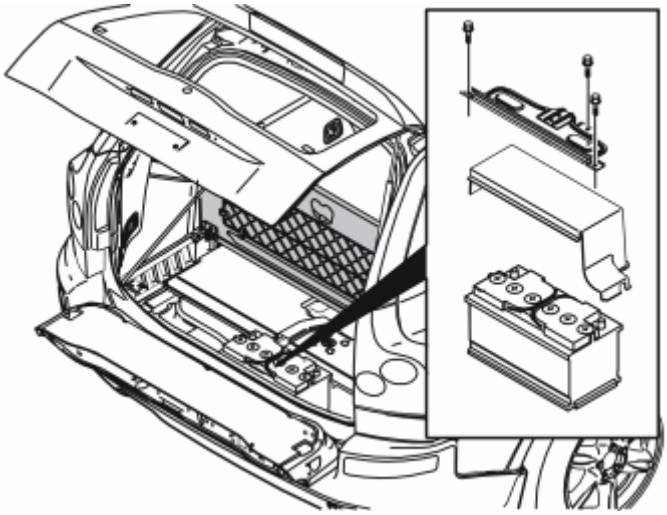

Fig. 519: Removing Three Screws In Battery Holder
Courtesy of VOLVO CARS CORPORATION

- Remove the three screws in the battery holder. Lift the battery holder out.
- Remove the battery cover.

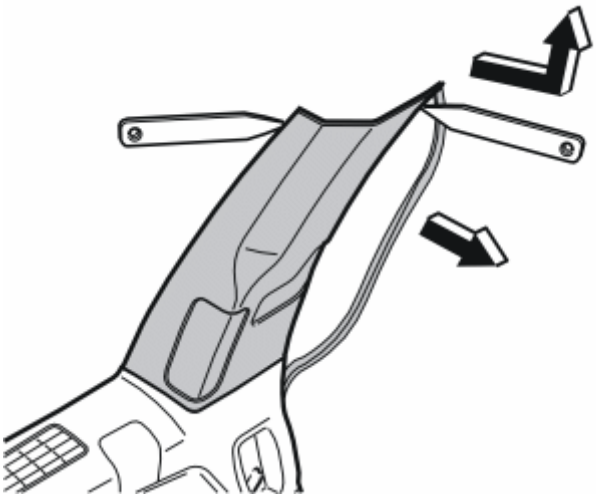

Fig. 520: Identifying Left-Hand C-Post Panel And Plastic Weatherstrip Tools
Courtesy of VOLVO CARS CORPORATION

- Pull off the rubber strip at the rear edge of the door opening for the left-hand rear door opposite the left-hand C-post panel.
- Carefully pry off the left-hand C-post panel sides at the top. Use a plastic weatherstrip tool. Then pull until the three clips on the inside release. Do not damage the headlining or the panel.
- Remove the panel by pulling upwards slightly and unhooking it from the side panel.

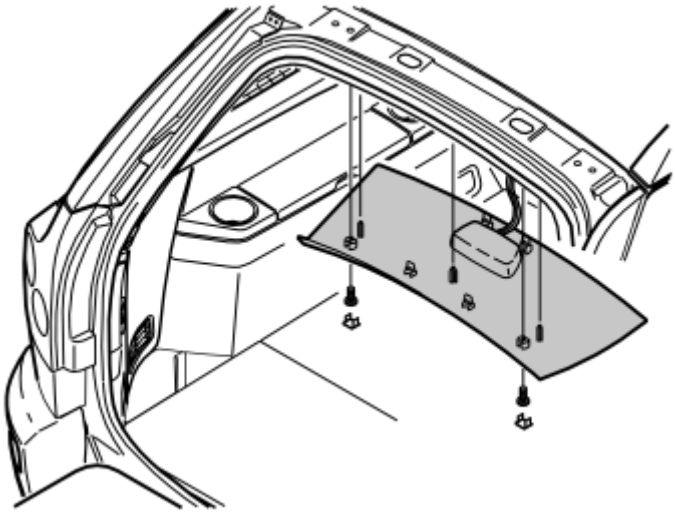

Fig. 521: Identifying Cover And Screws Underneath Rear Headlining
Courtesy of VOLVO CARS CORPORATION

- Remove the rear roof panel covers and the screws beneath them.
- Carefully pry off the panel at the rear edge. Use a plastic weatherstrip tool.
- Pull the rear edge of the panel downwards until the four clips on the top release.
- If the car is equipped with lighting in the panel, unplug the connector from the panel.
- Pull the panel backwards to release it.

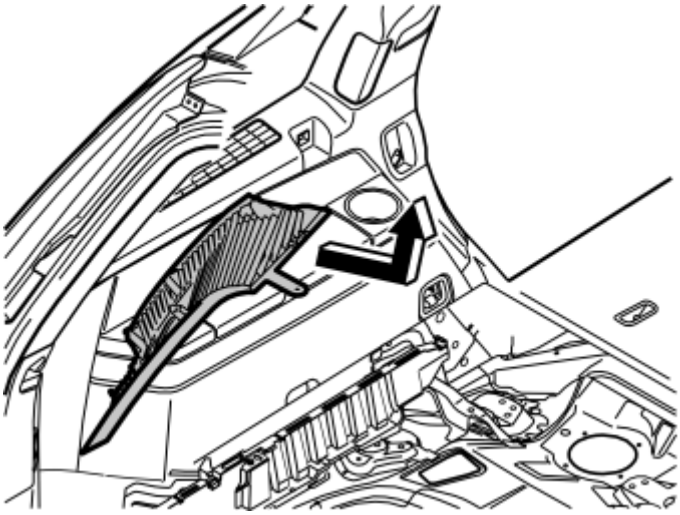

Fig. 522: Identifying D-Post Panel Removal From Side Panel
Courtesy of VOLVO CARS CORPORATION

- Carefully pull off the D-post panel. Start at the top edge then pull down until the three clips on the inside release. Do not damage the panel.
- Disconnect the connector on the D-post panel (if the car has a loudspeaker in the D-post, the connector is in the loudspeaker).
- Remove the panel by pulling upwards slightly and unhooking it from the side panel.

Illustration shows the removal of the cover for the load securing eyelets

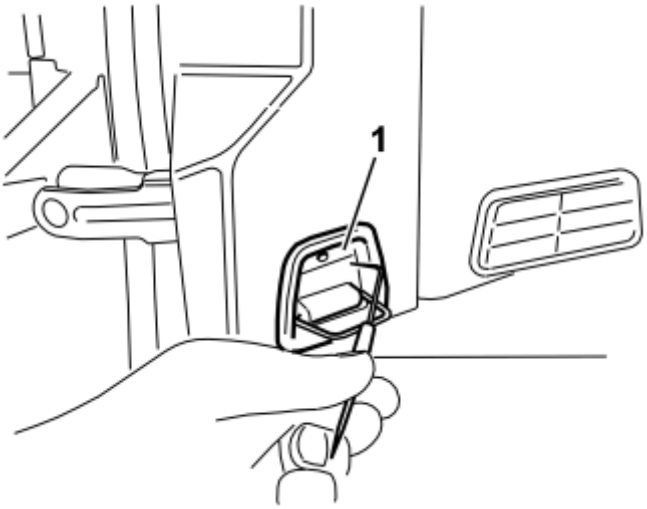

Fig. 523: Identifying Load Securing Eyelet
Courtesy of VOLVO CARS CORPORATION

- Fold out the load securing eyelet.
- Insert a scriber with an angled tip into the hole in the top of the cover.
- Turn the scriber so that the angled tip engages in the reverse of the cover (1). Pull the cover off.

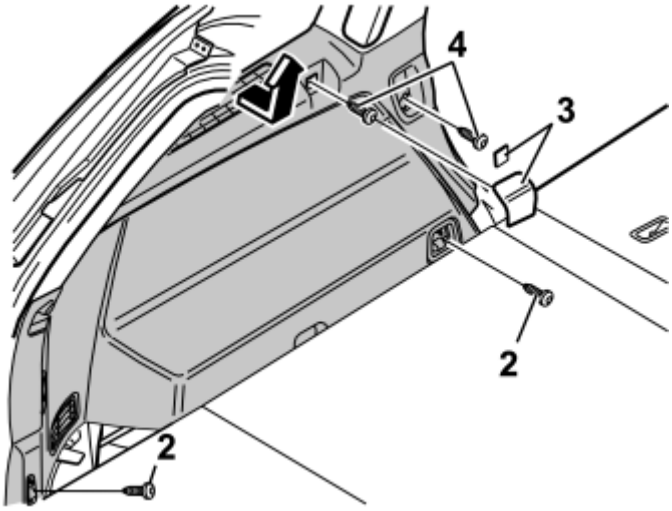

Fig. 524: Cars With Two Rows Of Seats
Courtesy of VOLVO CARS CORPORATION

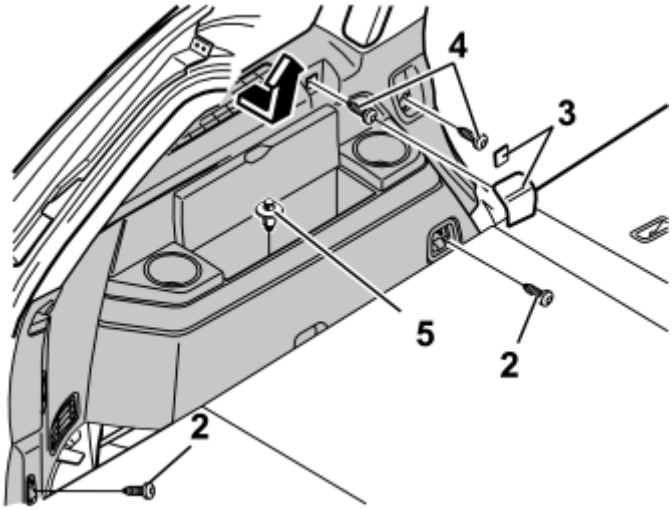

Fig. 525: Cars With Three Rows Of Seats
Courtesy of VOLVO CARS CORPORATION

- Fold up the seats in the third row (applies to cars with three rows of seats).
- Remove the screws (2) for the load securing eyelets in the left-hand side panel.
- Remove the covers (3) over the front mountings for the left-hand side panel. Pry the covers off. Use a plastic weatherstrip tool or a small screwdriver.
- Remove the screws (4).
- Remove the clip (5) at the bottom of the storage compartment in the panel (Applies to cars with three rows of seats).
- Remove the panel by pulling out the upper edge slightly so that the clips on the inside release. Pull the panel straight up.

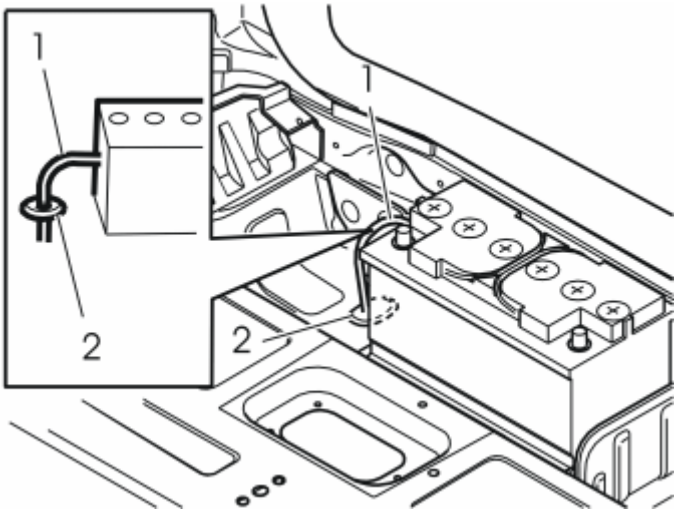

Fig. 526: Identifying Drain Hose (1)
Courtesy of VOLVO CARS CORPORATION

- Remove the drain hose (1) from the battery.

- Remove the rubber seal (2). It will not be re-used.
- Pull off the small, thin rubber strap on the new rubber seal.
- Insert the old drain hose through the new rubber seal. Make sure the hose is not obstructed and that it is not folded.

CONNECTING THE FUNCTIONS

NOTE: It is only possible to connect one of the functions (rear fog lamps, charging or reversing lamps) according to steps, see CONNECTING THE FUNCTIONS or CONNECTING THE FUNCTIONS. You can also choose not to connect any of the functions.

If the rear fog lamp function will be used:

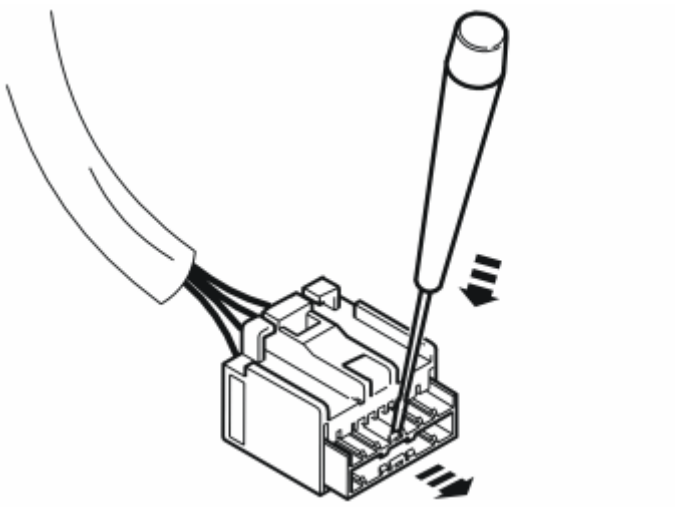

Fig. 527: Identifying 12-Pin Connector
Courtesy of VOLVO CARS CORPORATION

- Carefully press down the small catch in the locking mechanism for the grey (GR) 12-pin connector with a small screwdriver. Pull out the locking mechanism until it stops.

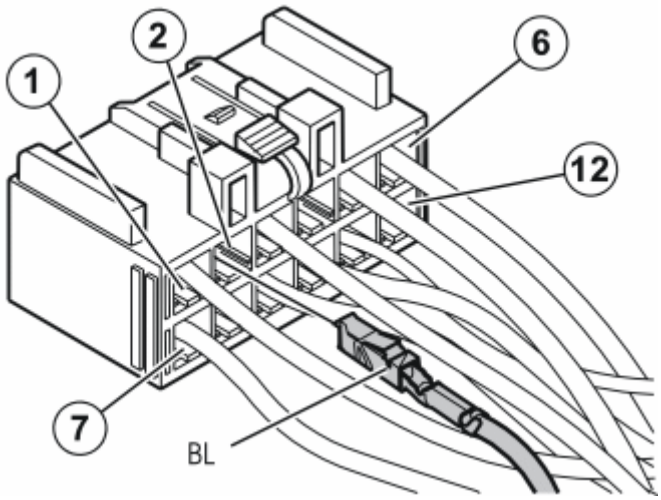

Fig. 528: Identifying Blue Cable To Position 2 In The Connector
Courtesy of VOLVO CARS CORPORATION

- Connect the blue (BL) cable to position 2 in the connector.
- Move the locking mechanism back to locked position.
- Insulate the cable terminal and secure the blue (BL) cable if it is not intended for connection.

CONNECTING THE CHARGING FUNCTION

If the charging function will be used:

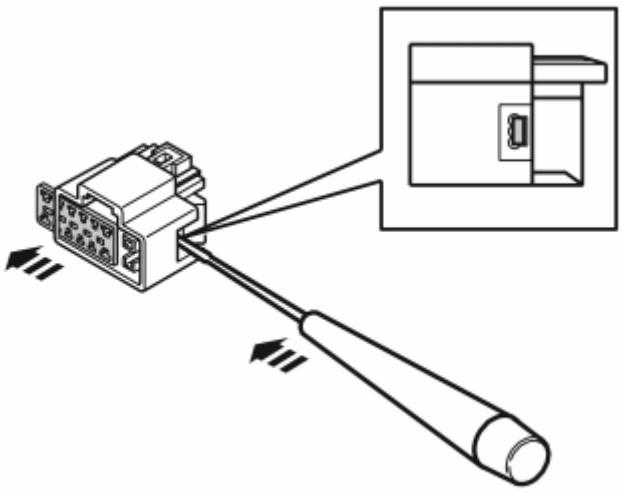

Fig. 529: Identifying Blue Locking Mechanism In The Black 12-Pin Connector
Courtesy of VOLVO CARS CORPORATION

- Carefully press out the blue locking mechanism in the black 12-pin connector with a small screwdriver.

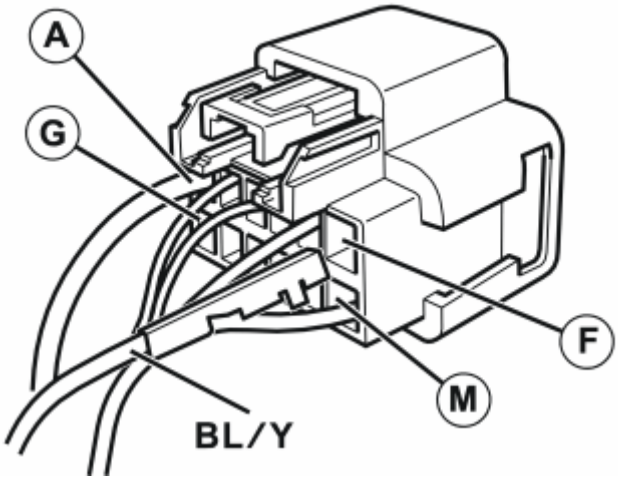

Fig. 530: Identifying Blue/Yellow (BL/Y) Cable To Position F In The Black (SB) 12-Pin Connector
Courtesy of VOLVO CARS CORPORATION

- Connect the blue/yellow (BL/Y) cable to position F in the black (SB) 12-pin connector.
- Move the locking mechanism back to locked position.
- Insulate the cable terminal on the unused black/yellow (SB/Y) cable and secure the cable to the cable harness. If neither cable is intended for connection, insulate and secure both cables.

CONNECTING THE FUNCTIONS

If the reversing light function will be used:

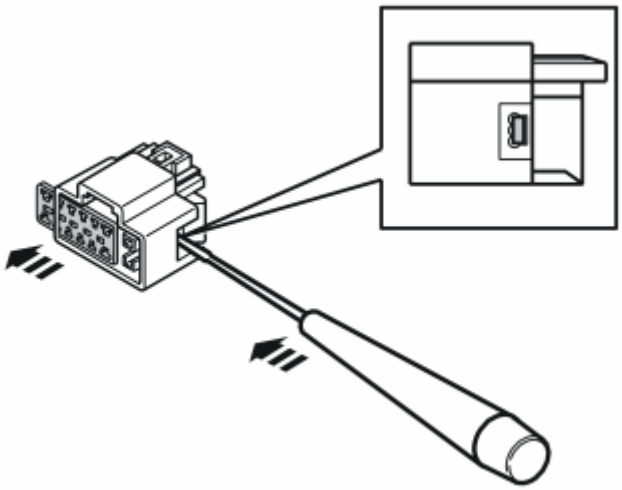

Fig. 531: Identifying Blue Locking Mechanism In The Black 12-Pin Connector
Courtesy of VOLVO CARS CORPORATION

- Carefully press out the blue locking mechanism in the black 12-pin connector with a small screwdriver.

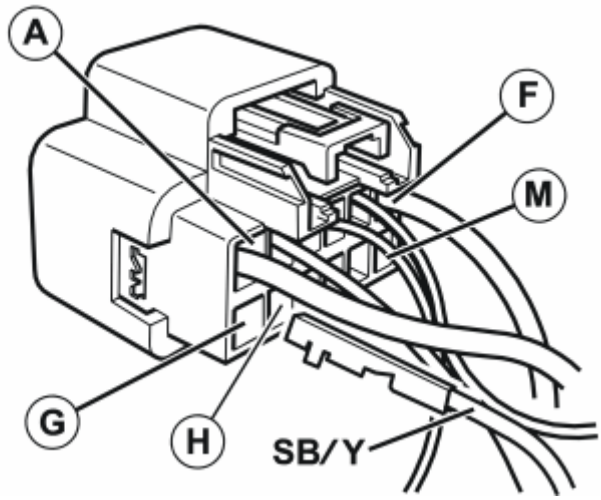

Fig. 532: Identifying Black/Yellow (SB/Y) Cable To Position H In The Black (SB) 12-Pin Connector
Courtesy of VOLVO CARS CORPORATION

- Connect the black/yellow (SB/Y) cable to position H in the black (SB) 12-pin connector.
- Move the locking mechanism back to locked position.
- Insulate the cable terminal on the unused blue/yellow (BL/Y) cable and secure the cable to the cable harness. If neither cable is intended for connection, insulate and secure both cables.

CONNECTING THE FUNCTIONS

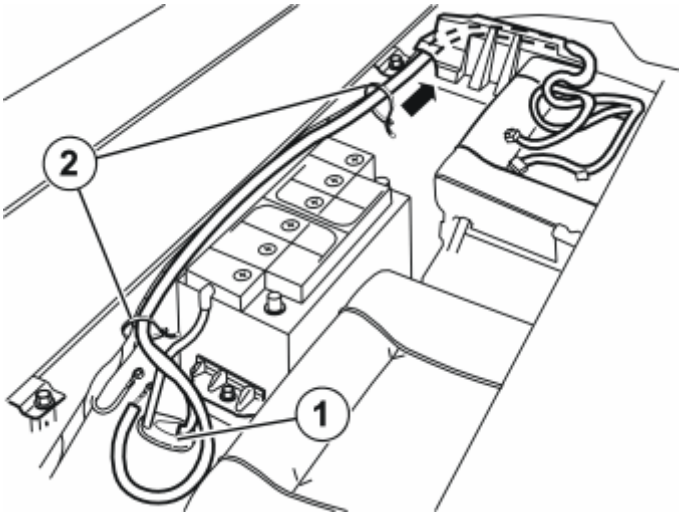

Fig. 533: Routing The Cable Harness
Courtesy of VOLVO CARS CORPORATION

- Route the cable harness from the tow bar connector through the hole in the floor.
- Adjust the position of the rubber seal (1) so that there is not excessive cable slack under the car.
- Install the rubber seal in the hole.
- Route the cable harness as illustrated. Insert it through the hole along the rear edge of the left-hand cargo floor support.

- Secure the cable harness to the cable harness behind the battery with tie straps (2) from the kit.

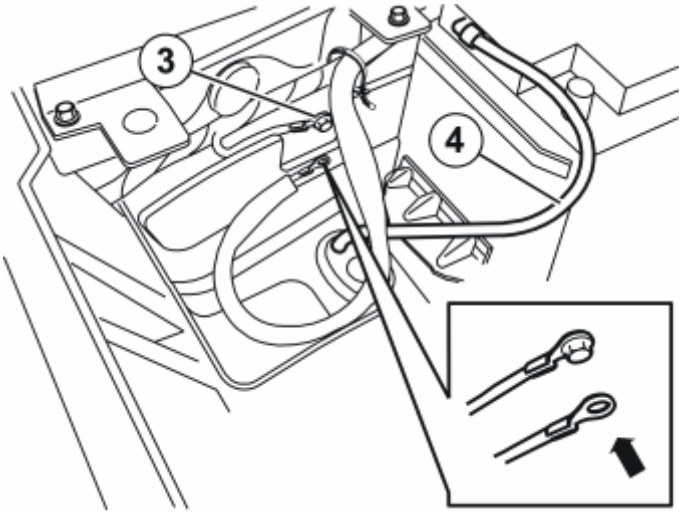

Fig. 534: Connecting the Ground Cable
Courtesy of VOLVO CARS CORPORATION

- Connect the routed ground cable to the grounding point (3) behind the battery and tighten the grounding screw securely.
- Connect the drain hose (4) to the battery.

CONNECTING THE FUNCTIONS

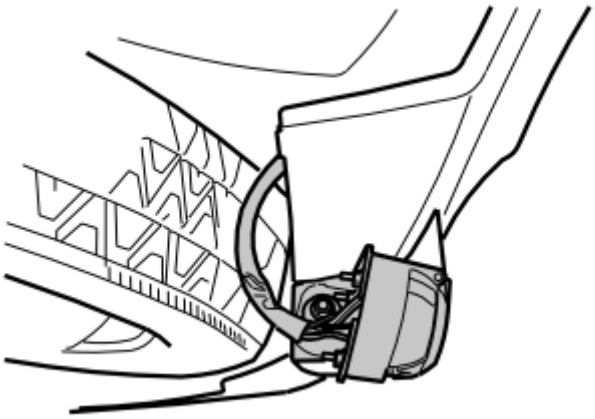

Fig. 535: Secure Cable Harness Using A Tie Strap On Each Side Of Brackets For Tow Hitch Member
Courtesy of VOLVO CARS CORPORATION

NOTE: If the cable harness is stretched too tightly, it can scrape against the lower edge of the bumper and become damaged.

- Make sure the cable harness curves around the lower edge of the bumper as shown in the illustration.

CONNECTING THE FUNCTIONS

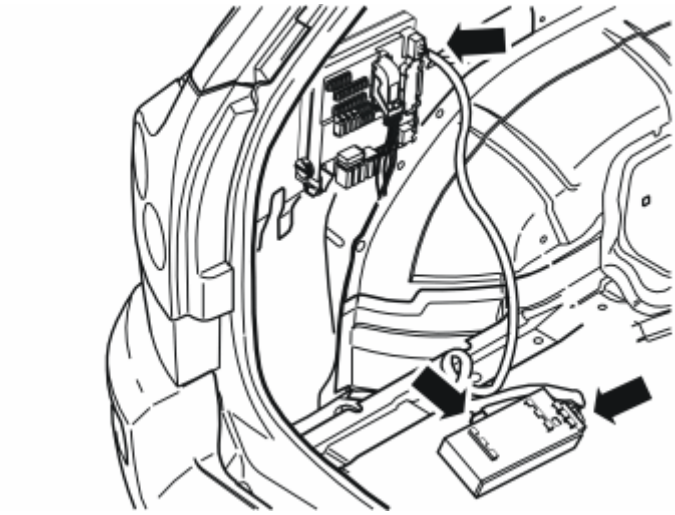

Fig. 536: Identifying Trailer Module (TRM)
Courtesy of VOLVO CARS CORPORATION

NOTE: On the XC90 Executive, T-wiring is already installed in the fuse holder. A cable with a black connector is taped to this. The tow bar wiring's black connector is then connected to this cable.

- Detach the trailer module (TRM) from the Velcro fastener on the floor along the rear edge of the left-hand rear wheel housing.

  green (GN) and grey (GR) connectors to the control module.

  black (SB) connector to the fuse holder.
- Plug in the tow bar wiring connectors:

  green (GN) and grey (GR) connectors to the control module.

  black (SB) connector to the fuse holder.
- Reinstall the control module.
- Secure the excess cable with a tie strap from the kit.

CONNECTING THE FUNCTIONS

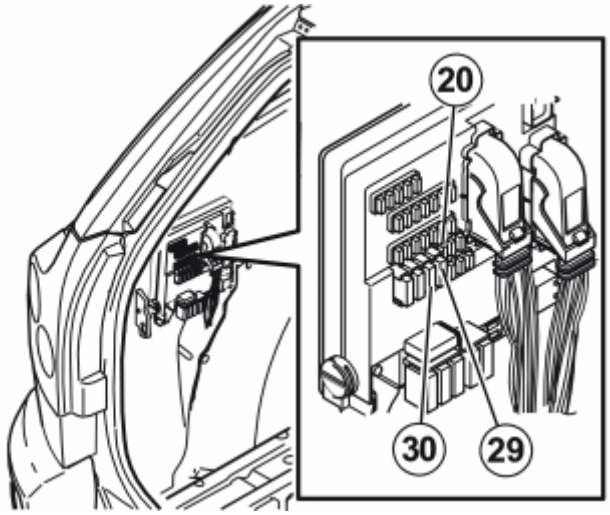

Fig. 537: Inserting Fuses From The Kit
Courtesy of VOLVO CARS CORPORATION

- Insert fuses from the kit in the following positions in the fuse holder (REM):

  20A in position 20 (mini fuse) if the charging function according to step, see **CONNECTING THE CHARGING FUNCTION** has been selected

  25A in position 29

  25A in position 30

FINISHING

Reinstall:

- the left-hand side panel using the screws and cover. Tighten the screws in the load securing eyelets. Tighten to **24 Nm (18 lbf ft)** .
- the covers for the load securing eyelets.
- D-post panel with connector.
- the connector for the rear roof lighting (if applicable).
- the rear headlining.
- C-post panel.
- protective cover and bracket for the battery.
- side floor hatch and folding panel.
- storage compartment and floor hatch.

Applies to connection of the function for automatic rear fog lamp deactivation

NOTE: The function requires car-specific software. Program the software according to the service information described in VIDA (Volvo scan tool).

CHECKING THE 7-PIN CONNECTOR:

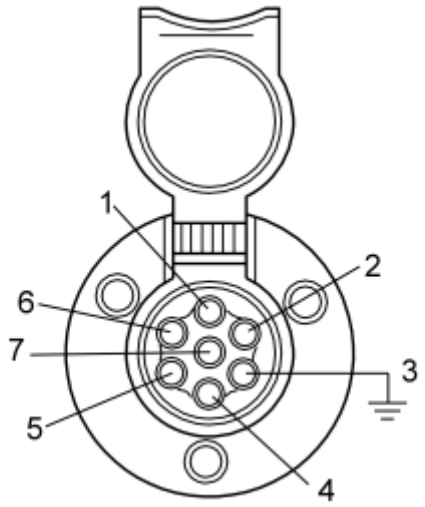

Fig. 538: 7-Pin Connector
Courtesy of VOLVO CARS CORPORATION

1. Left indicator lamps
2. Rear fog lamp / reversing lamp / charging
3. Ground
4. Right indicator lamps
5. Right parking lamps
6. Brake lamp
7. Left parking lamps

TOWBAR, INSTALLATION KIT, XC90 R-DESIGN (2009-2010)

TOWBAR, INSTALLATION KIT, XC90 R-DESIGN

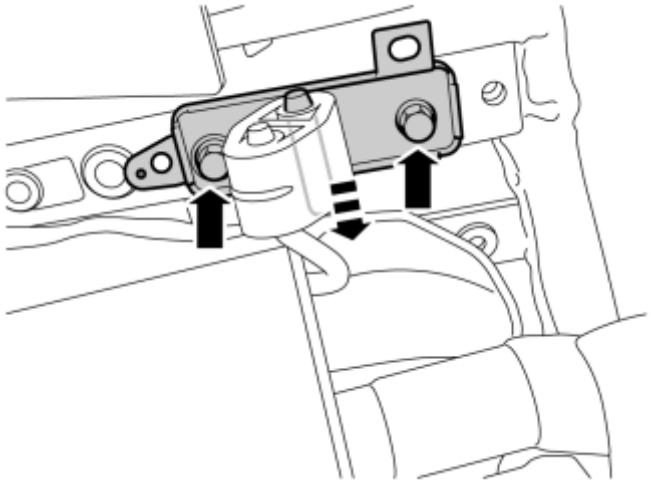

Fig. 539: Identifying Two Screws For The Rear Silencer Mounting Bracket
Courtesy of VOLVO CARS CORPORATION

- Remove the two screws from the bracket for the rear silencer mounting and lower the exhaust pipe towards the stop.
- Detach the bracket from the rubber mounting and place to one side. There is a new bracket in the kit.
- Repeat the operation on the other side.
- Carefully bend the radiated heat shield to one side by the left-hand silencer next to the side member for easier access.

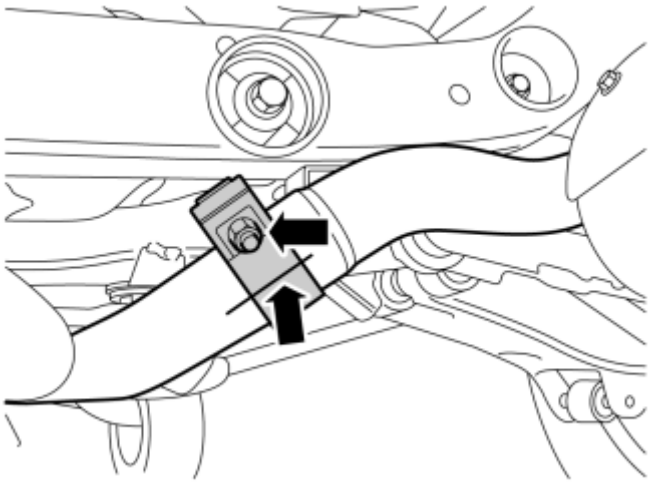

Fig. 540: Make A Mark On The Exhaust Pipe
Courtesy of VOLVO CARS CORPORATION

- Make a mark on the exhaust pipe and pipe for the silencer so that the silencer's end pipe is correctly positioned in the skid plate cut-out when the towbar and skid plate are installed.
- Remove the screw in the joint for the right-hand silencer and angle downwards.

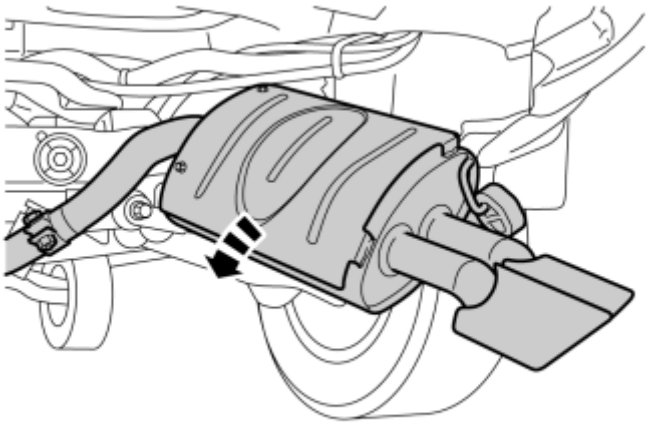

Fig. 541: Angling The Right-Hand Silencer Downwards
Courtesy of VOLVO CARS CORPORATION

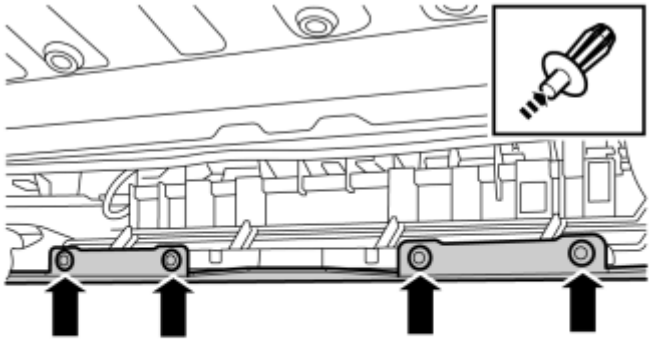

Fig. 542: Removing The Four Clips
Courtesy of VOLVO CARS CORPORATION

- Remove the four clips that hold the skid plate to the inside of the lower edge by pressing in their central pins and removing them.

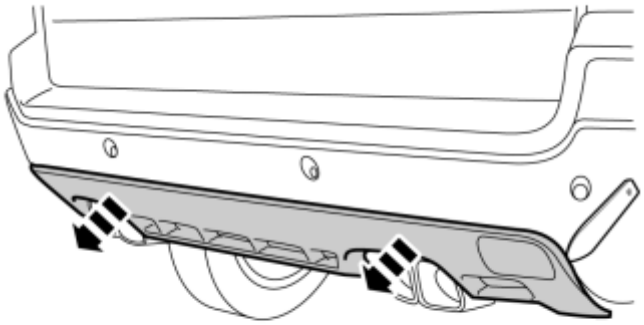

Fig. 543: Prying The Skid Plate Away
Courtesy of VOLVO CARS CORPORATION

- Carefully pry the skid plate away from the bumper cover using a weatherstrip tool. Start at the lowermost edge. The skid plate is secured by surrounding catches.

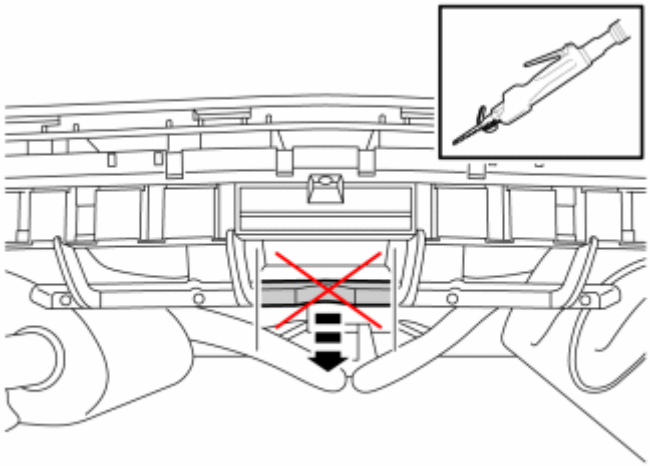

Fig. 544: Identifying The Cradle's Middle Section
Courtesy of VOLVO CARS CORPORATION

- Carefully saw off the cradle's middle section at the two marks and discard them.

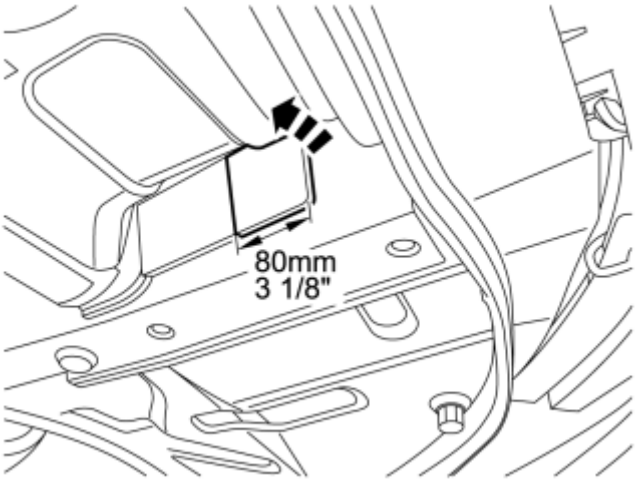

Fig. 545: Identifying Protective Tags
Courtesy of VOLVO CARS CORPORATION

- Lift up the rear edge of the protective tags that cover the mounting holes in inside of the side members (one per side) and cut off **80 mm (3 1/8")** .
- Remove any sealant from all surfaces that the towbar with reinforcement plates are tightened to.

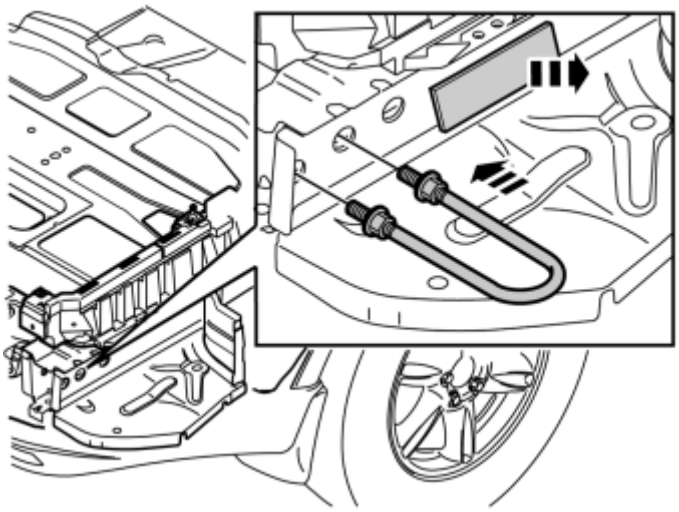

Fig. 546: Installing The Mounting Bracket Through Two Rear Holes
Courtesy of VOLVO CARS CORPORATION

- Remove the protective tags which cover the mounting holes on the outside of the side members.
- Fit the mounting bracket through the two rear holes in the outer wall of the side member. The threaded sections of the mounting bracket should now protrude through to the underside of the car. Repeat on the other side.
- Secure the mounting brackets using butyl tape in order to prevent them from falling back.

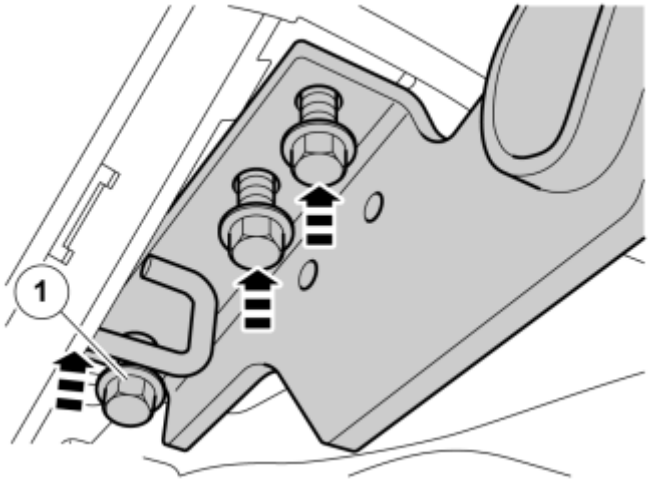

Fig. 547: Installing The Towing Member
Courtesy of VOLVO CARS CORPORATION

NOTE: This part should be performed by two persons.

- Remove the towbar from the towing member according to the handling instructions for the relevant towbar.
- Lift up the towing member. Start by angling up the left-hand side's end face above the silencer's end pipe and up behind the bumper to the side member. Following which, angle up the right-hand side's end face to

the side member, and position it opposite their holes on the side members.

NOTE: Ensure that the skid plate cradle does not crack.

- Fit an **M12x40** screw (1) in the front hole on each side, while holding the towing member in position.
- Install the remaining screws.
- Insert the screws all the way without tightening them.

NOTE: Apply rustproofing agent under the car and on the side members around the end faces, scraping away any sealing compound, before torque tightening the screws.

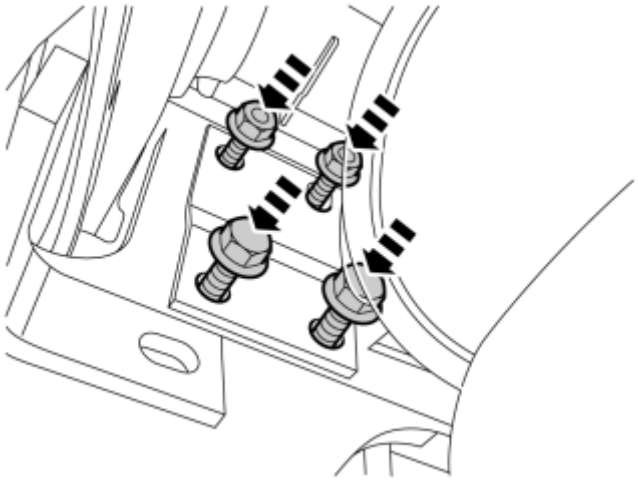

Fig. 548: Installing Reinforcement Plate
Courtesy of VOLVO CARS CORPORATION

- Take a reinforcement plate from the kit, place it on the mounting bracket with the oval holes facing upwards and install the flange nuts.
- Install the two screws in the lower edge.
- Screw in the nuts until they bottom out but do not tighten yet.
- Repeat the operation on the other side.

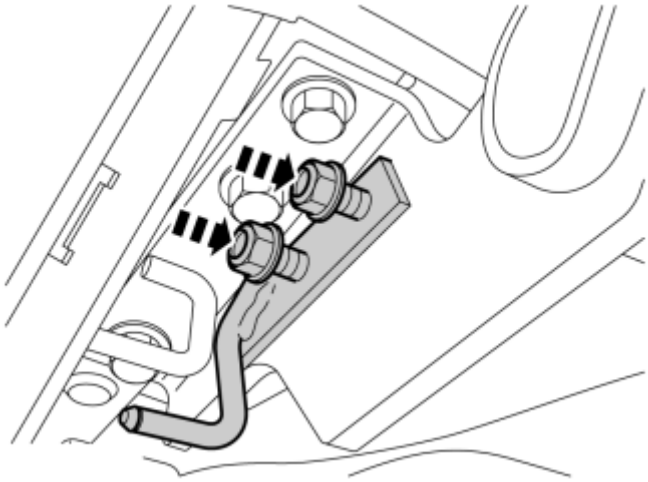

Fig. 549: Installing A Support Hook
Courtesy of VOLVO CARS CORPORATION

- Take a support hook with nuts from the kit. Install the hook on the screws.
- Install and tighten the nuts until they stop but do not tighten yet.
- Repeat the operation on the other side.

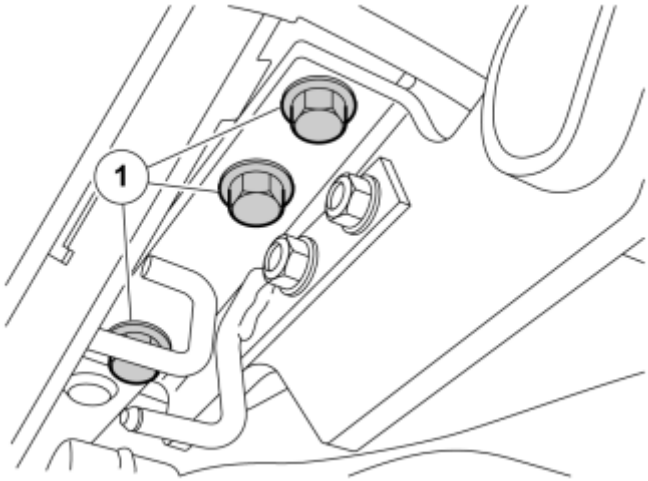

Fig. 550: Locating Screws (1)
Courtesy of VOLVO CARS CORPORATION

- Torque tighten the screws (1) to **120 Nm** on both sides.
- Torque tighten the upper and lower bolted joint for the mounting bracket to **50 Nm** . Use joint socket P/N **9814017** when tightening the upper bolted joint. Repeat on the other side.
- Bend back the heat deflector plate.

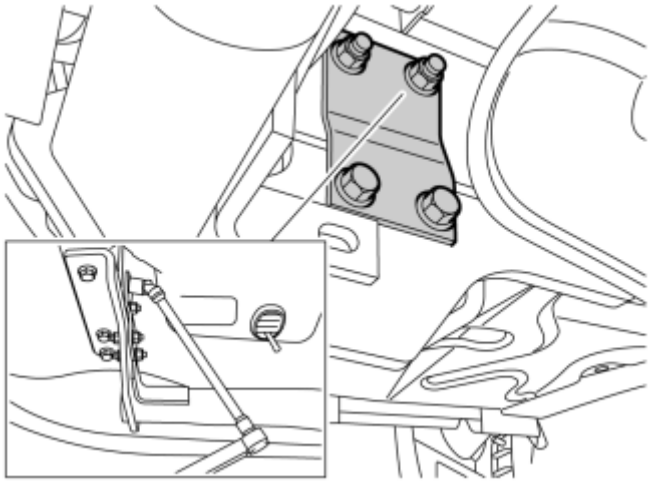

Fig. 551: Identifying Joint Socket P/N 9814017
Courtesy of VOLVO CARS CORPORATION

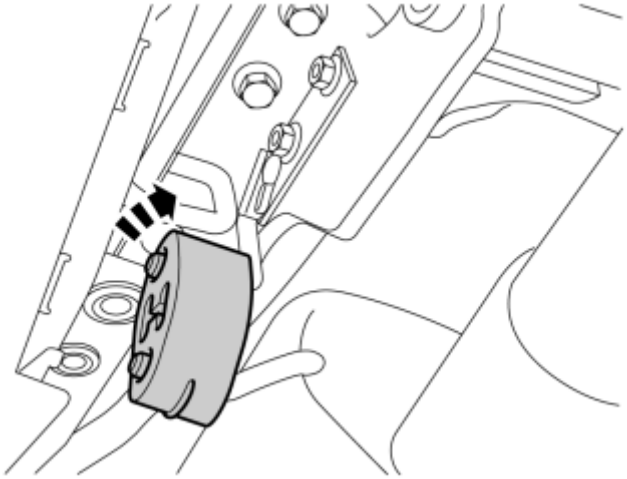

Fig. 552: Locating Rubber Mounting On The New Hook
Courtesy of VOLVO CARS CORPORATION

- Hook the silencer's rubber mounting on the new hook.

A

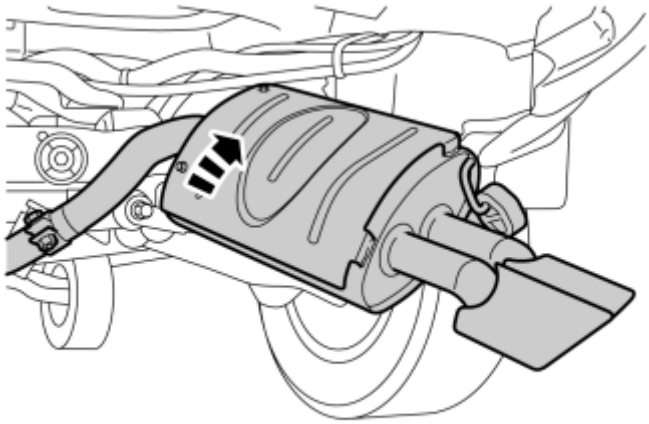

Fig. 553: Angling The Right Silencer Back
Courtesy of VOLVO CARS CORPORATION

- Angle the right silencer back and hook the rubber silencer onto the new hook.

B

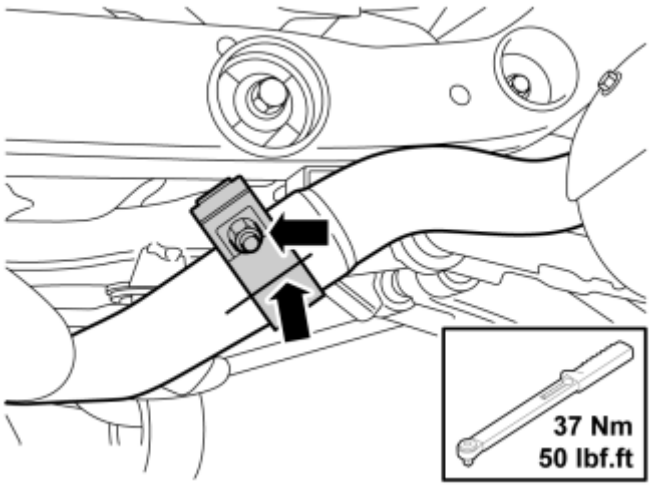

Fig. 554: Adjusting The Position To The Markings
Courtesy of VOLVO CARS CORPORATION

- Adjust the position of the silencer on the exhaust pipe according to the markings.

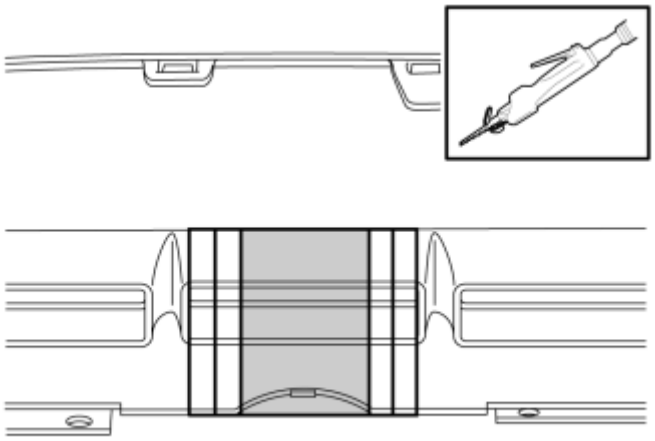

Fig. 555: Identifying Shaded Area To Be Removed (A)
Courtesy of VOLVO CARS CORPORATION

- Saw out the skid plate according to the markings. The shaded area is to be removed.

NOTE: Do not damage the paintwork of the bumper cover.

- Smooth off the sawn edges with a fine toothed file.

A Detachable towbar

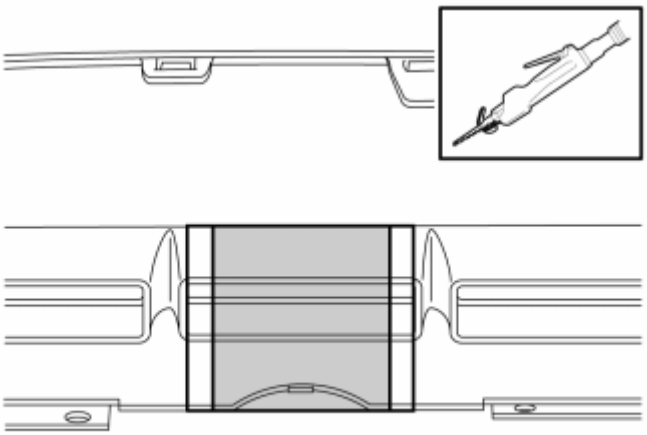

Fig. 556: Identifying Shaded Area To Be Removed (B)
Courtesy of VOLVO CARS CORPORATION

B Fixed towbar

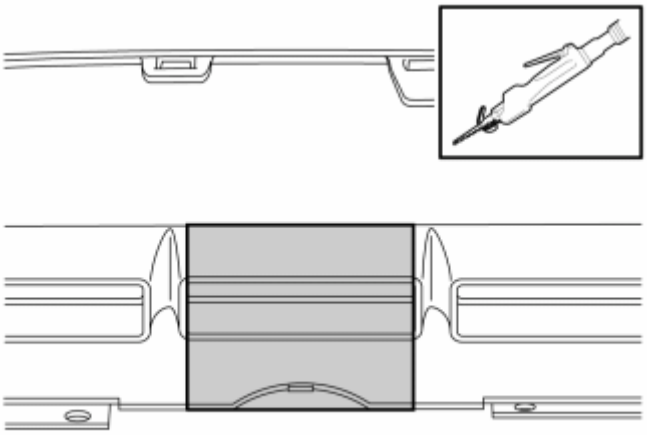

Fig. 557: Identifying Shaded Area To Be Removed (C)
Courtesy of VOLVO CARS CORPORATION

C Hitch towbar

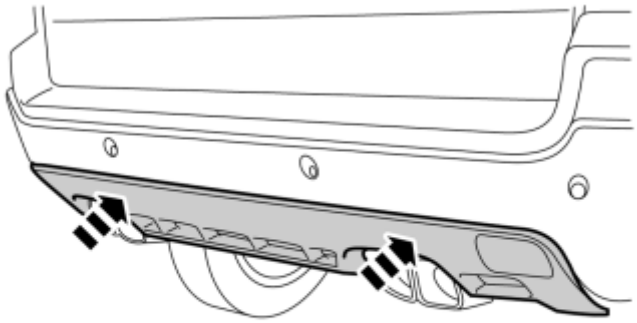

Fig. 558: Installing Skidplate
Courtesy of VOLVO CARS CORPORATION

A

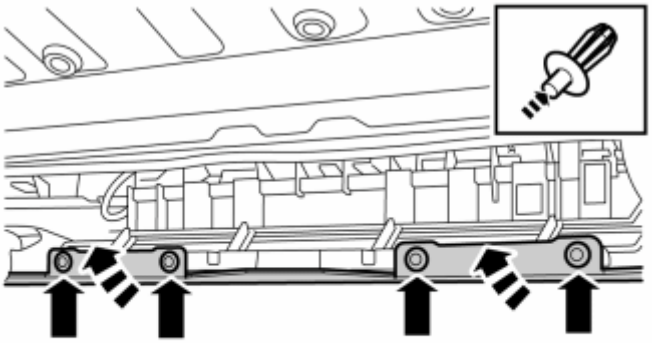

Fig. 559: Installing Skidplate Clips
Courtesy of VOLVO CARS CORPORATION

B

TOWBAR, ADAPTER (2003-2004)

TOWBAR, ADAPTER

NOTE: Some steps in these installation instructions are presented with illustration only.

PREPARATIONS

APPLIES TO THE XC90

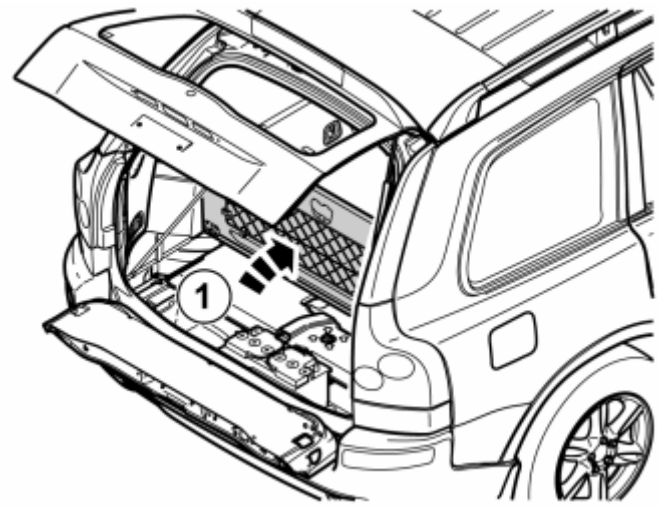

Fig. 560: Fold Up Center Rear Floor Hatch
Courtesy of VOLVO CARS CORPORATION

Applies to cars with two rows of seats

- Fold up the center rear floor hatch (1). If the underside of the floor hatch is equipped with a grocery bag holder, the holder is secured with a strap on both ends of the storage compartment. Detach the straps.
- Remove the underlying storage compartment.
- Remove the floor hatch by folding it almost completely closed and pulling it backwards from the mountings until it releases.

Applies to cars with three rows of seats and integrated carrier bag holder on the underside of the center floor hatch

- Fold up the center rear floor hatch (1).
- Detach the two straps on the underlying panel. Lift up the rear edge of the panel, fold the floor hatch back towards the panel and lift out the floor hatch with the panel.

Applies to cars with three rows of seats without an integrated carrier bag holder

- Fold up the center rear floor hatch (1) at the rear edge and lift it out.

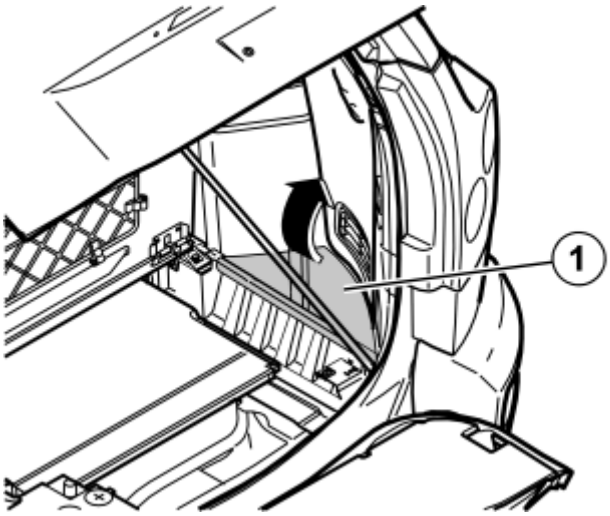

Fig. 561: Remove Right And Left Side Glove Box
Courtesy of VOLVO CARS CORPORATION

- Remove the right and left side glove box (1).

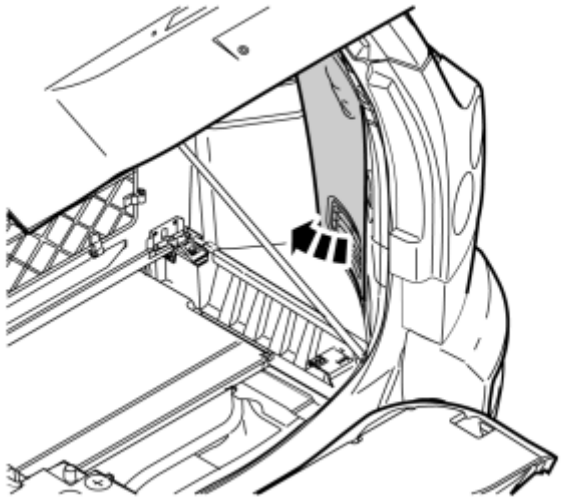

Fig. 562: Remove Folding Side Panel From Left And Right-Hand Sides In Cargo Compartment
Courtesy of VOLVO CARS CORPORATION

- Remove the folding side panel from the left and right-hand sides in the cargo compartment.

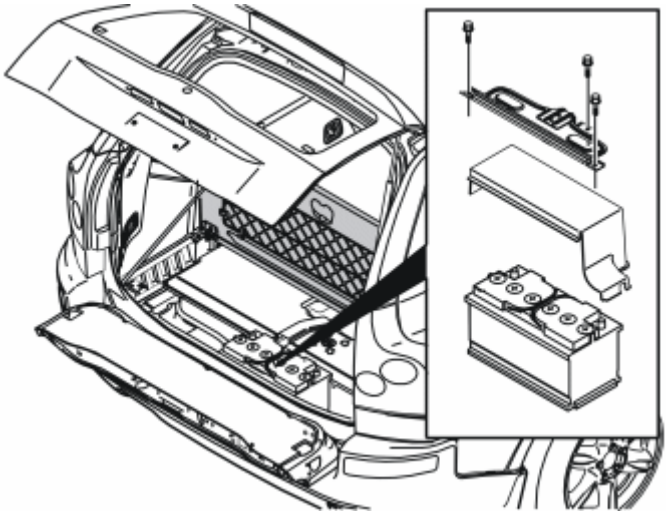

Fig. 563: Removing Three Screws In Battery Holder
Courtesy of VOLVO CARS CORPORATION

- Remove the two screws and the nut from the holder for the battery cover and lift out.
- Remove the battery cover.

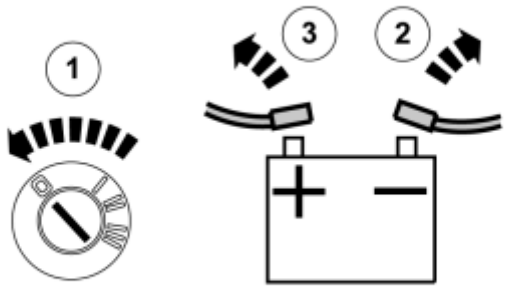

Fig. 564: Disconnect Battery Positive And Negative Lead
Courtesy of VOLVO CARS CORPORATION

- Turn the ignition key to position 0.
- Disconnect the battery negative lead.
- Disconnect the battery positive lead.

NOTE: **Wait at least three minutes before unplugging the connectors or removing other electrical equipment.**

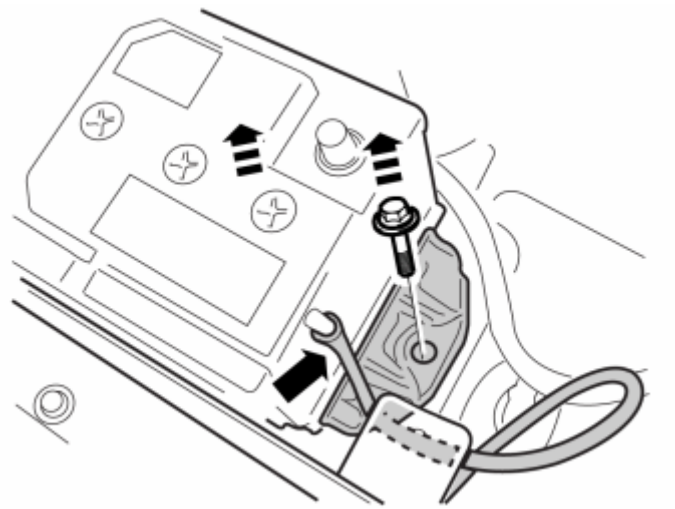

Fig. 565: Remove Screw And Floor Mount For Battery
Courtesy of VOLVO CARS CORPORATION

- Remove the screw and floor mount for the battery.
- Remove the battery's drainage and place to one side.

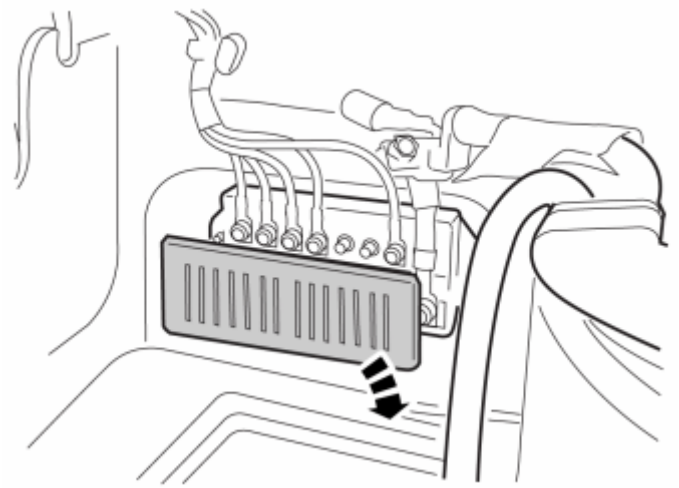

Fig. 566: Remove Cover In Fuse Holder For Main Fuses
Courtesy of VOLVO CARS CORPORATION

- Remove the cover in the fuse holder for the main fuses.

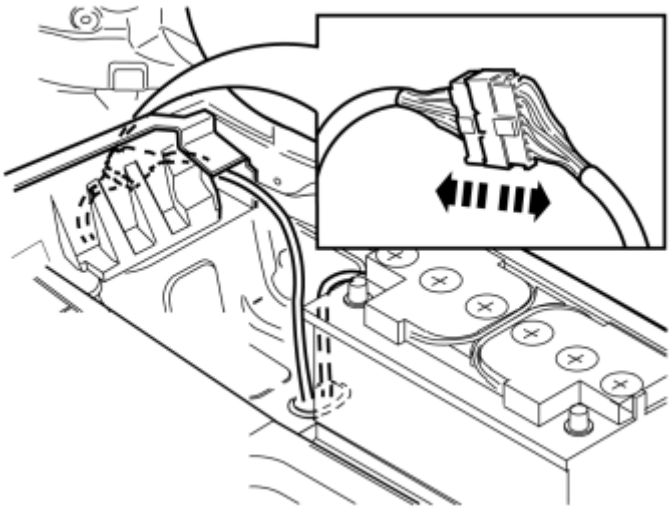

Fig. 567: Disconnect Connectors For Towbar Wiring In Space Under Right-Hand Tail Lamp
Courtesy of VOLVO CARS CORPORATION

- Disconnect the connectors for the towbar wiring in the space under the right-hand tail lamp.

INSTALLATION

APPLIES TO THE XC90

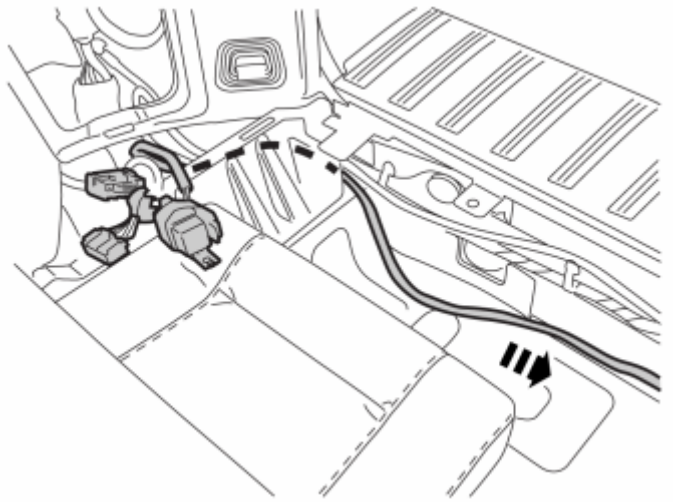

Fig. 568: Route Long Cable From Space Where Towbar Wiring Is Connected And Up To Holder For Main Fuses
Courtesy of VOLVO CARS CORPORATION

- Take the adapter wiring from the kit. Route the long cable from the space where the towbar wiring is connected and up to the holder for the main fuses.

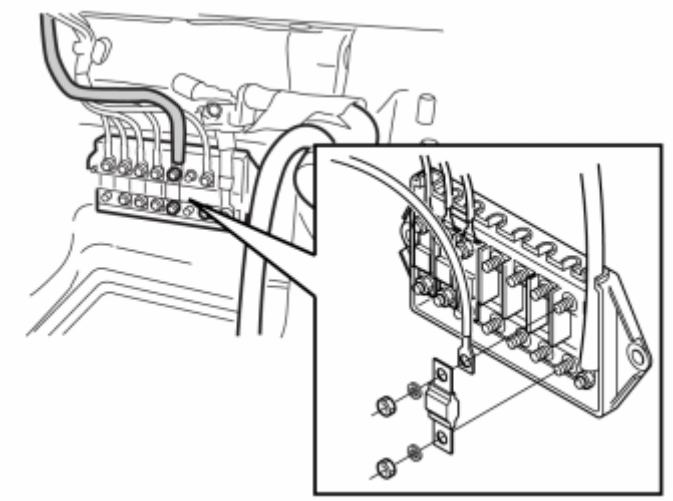

Fig. 569: Connect Cable With Small Ring Cable Terminal
Courtesy of VOLVO CARS CORPORATION

- Take a fuse, two nuts and two washers from the kit. Install the fuse in any free terminal.
- Connect the cable with the small ring cable terminal.
- Install washers and nuts. Torque tighten the nuts to **10 Nm (7.5 lbf. ft.)** .

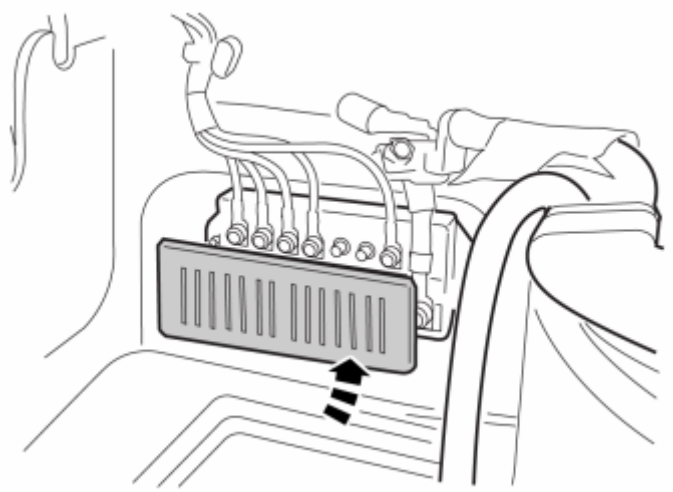

Fig. 570: Close Fuse Box Cover
Courtesy of VOLVO CARS CORPORATION

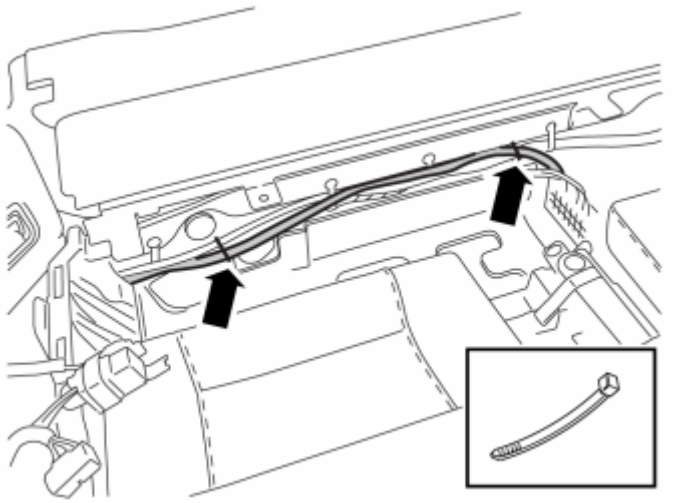

Fig. 571: Secure Cable To Holder For Main Fuses Using Cable Ties From Kit
Courtesy of VOLVO CARS CORPORATION

- Secure the cable to the holder for the main fuses using cable ties from the kit.
- Route the excess cable in the space under the tail lamp.
- Make sure that the wiring does not chafe against sharp edges.

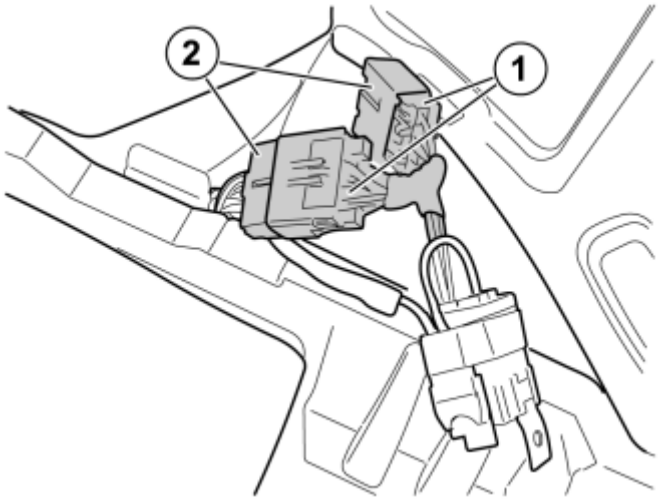

Fig. 572: Connect Adapter Cable's Gray Male And Female Connector To Corresponding Connectors For Towbar Wiring
Courtesy of VOLVO CARS CORPORATION

- Connect the adapter cable's gray male and female connector (1) to the corresponding connectors (2) for the towbar wiring.

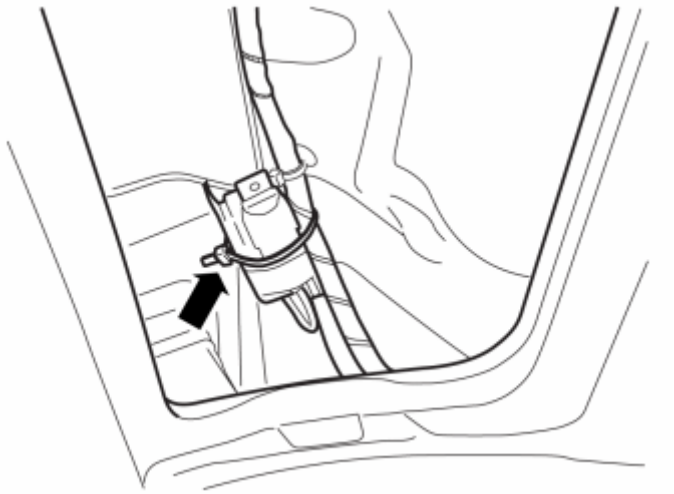

Fig. 573: Secure Relay Holder With Relay And Fuse Holder With Fuse Around Existing Cable Harness
Courtesy of VOLVO CARS CORPORATION

- Secure the relay holder with relay and fuse holder with fuse around the existing cable harness.

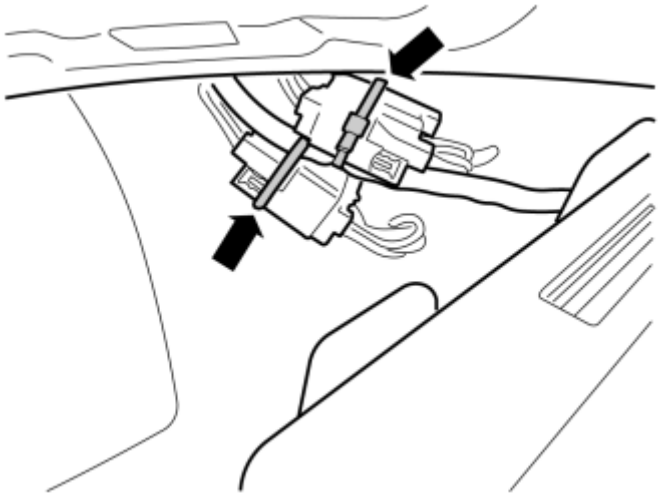

Fig. 574: Secure Four Gray Connected Connectors Around Existing Cable Harnesses Using Their Relevant Cable Ties From Kit
Courtesy of VOLVO CARS CORPORATION

- Secure the four gray connected connectors around the existing cable harnesses using their relevant cable ties from the kit.

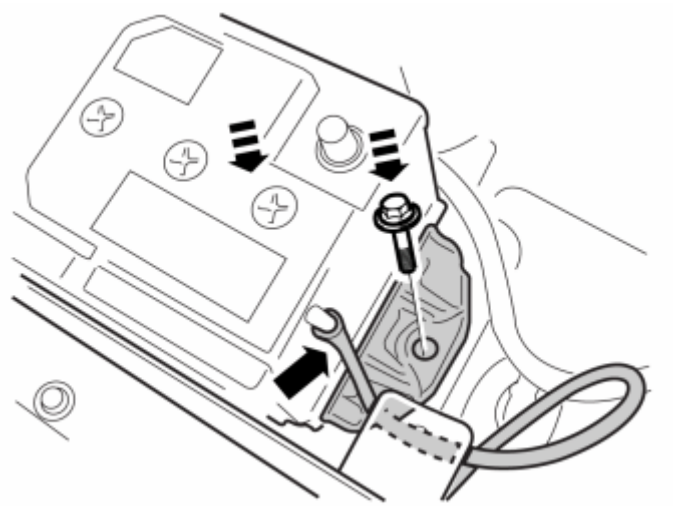

Fig. 575: Connect Battery's Drainage Hose
Courtesy of VOLVO CARS CORPORATION

- Reinstall the battery.
- Install the mounting with the screw. Torque tighten to **24 Nm (18 lbf. ft.)** .
- Connect the battery's drainage hose.

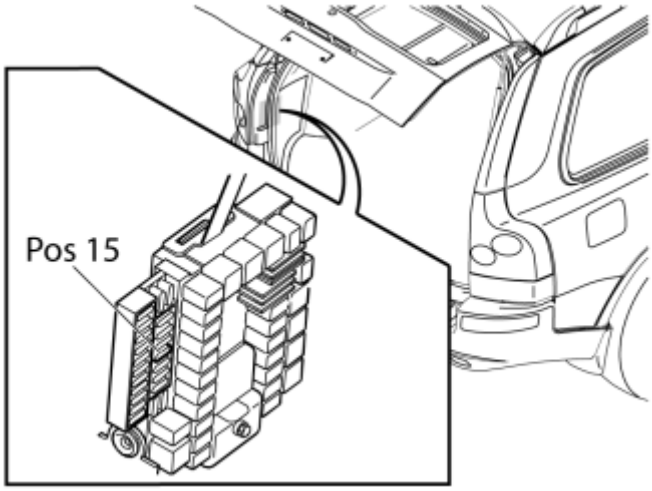

Fig. 576: Remove 20A Fuse In Rear Fuse Holder In Terminal 15
Courtesy of VOLVO CARS CORPORATION

- Remove the **20A** fuse in the rear fuse holder in terminal **15** . Replace it with the **5A** fuse from the kit.

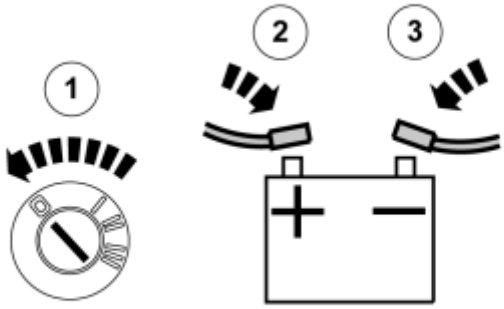

Fig. 577: Connect Positive And Negative Battery Lead
Courtesy of VOLVO CARS CORPORATION

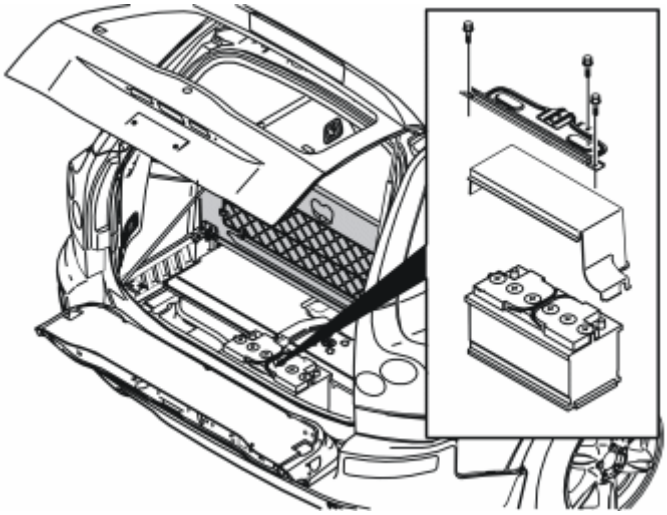

Fig. 578: Removing Three Screws In Battery Holder
Courtesy of VOLVO CARS CORPORATION

- Reinstall the battery cover with holder, screws and nuts.
- Tighten screws and nuts to **24 Nm (18 lbf. ft)** .

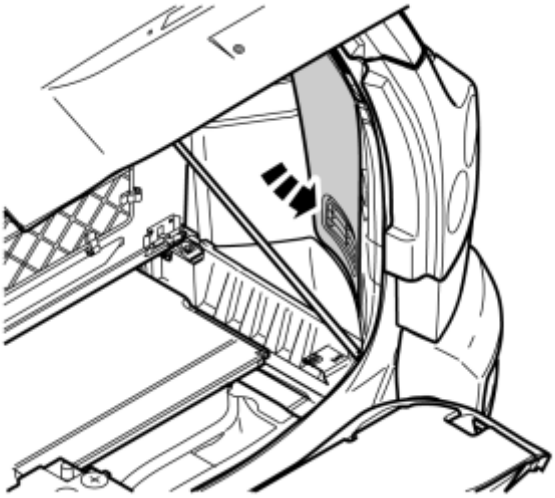

Fig. 579: Reinstall Battery Cover With Holder, Screws And Nuts (1 Of 3)
Courtesy of VOLVO CARS CORPORATION

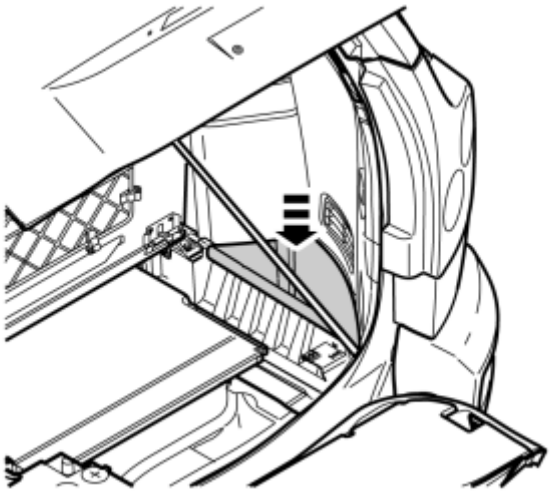

Fig. 580: Reinstall Battery Cover With Holder, Screws And Nuts (2 Of 3)
Courtesy of VOLVO CARS CORPORATION

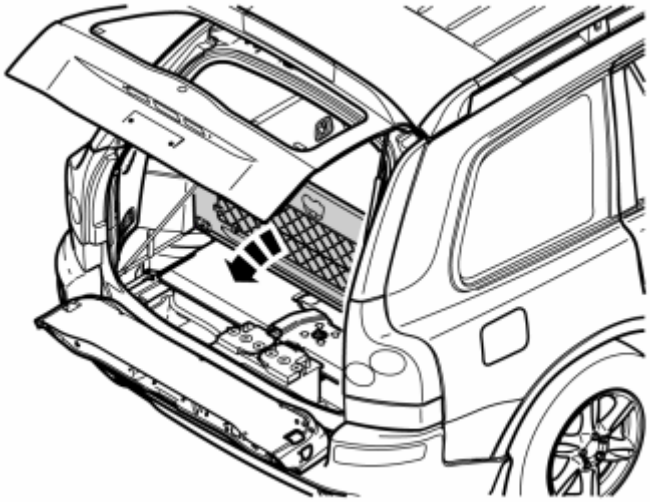

Fig. 581: Reinstall Battery Cover With Holder, Screws And Nuts (3 Of 3)
Courtesy of VOLVO CARS CORPORATION

TOWBAR, ADAPTER (2005-2009)

TOWBAR, ADAPTER

NOTE: **Some steps in these installation instructions are presented with illustration only.**

PREPARATIONS

APPLIES TO THE XC90

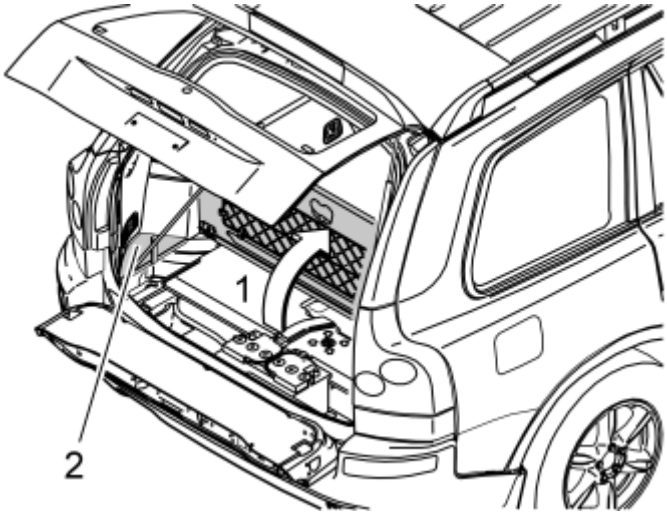

Fig. 582: Folding Up The Centre Rear Floor Hatch (1)
Courtesy of VOLVO CARS CORPORATION

Applies to cars with two rows of seats

- Fold up the center rear floor hatch (1). If the underside of the floor hatch is equipped with a grocery bag holder, the holder is secured with a strap at each end of the storage compartment. Detach the straps.
- Remove the underlying storage compartment.
- Remove the floor hatch by folding it almost completely closed and pulling it backwards from the mountings until it releases.

Applies to cars with three rows of seats and integrated carrier bag holder on the underside of the center floor hatch

- Fold up the center rear floor hatch (1).
- Detach the two straps on the underlying panel. Lift up the rear edge of the panel, fold the floor hatch back towards the panel and lift out the floor hatch with the panel.

Applies to cars with three rows of seats without an integrated carrier bag holder

- Fold up the center rear floor hatch (1) at the rear edge and lift it out.

Applies to all models

- Remove the left-hand side floor hatch (2).

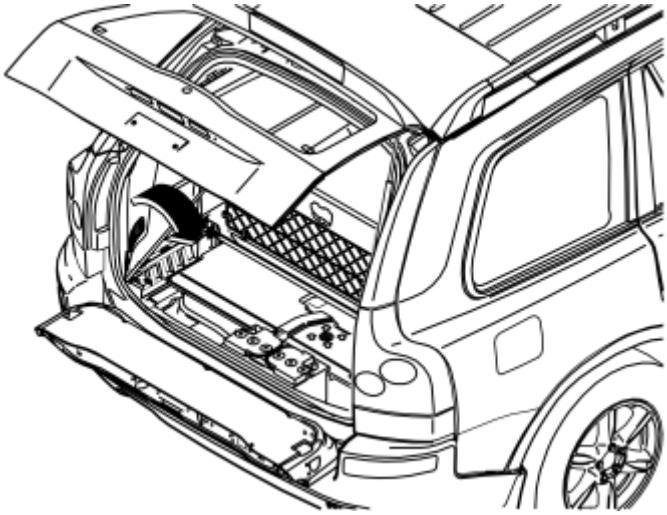

Fig. 583: Identifying Left-Hand Side Folding Side Panel
Courtesy of VOLVO CARS CORPORATION

- Remove the folding side panel from the left-hand side in the cargo compartment.

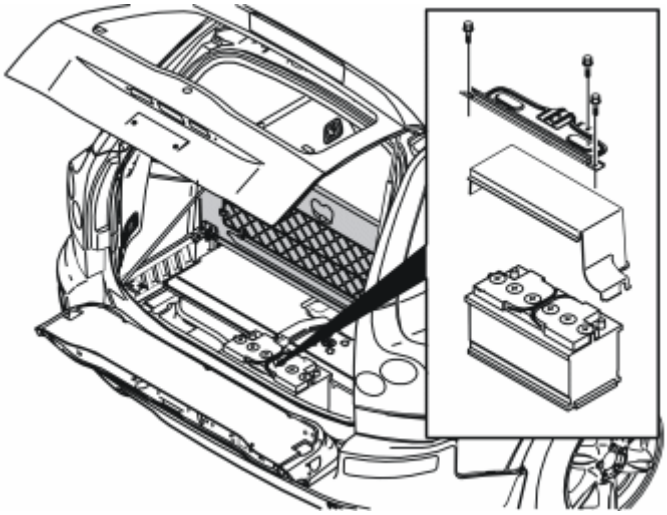

Fig. 584: Removing Three Screws In Battery Holder
Courtesy of VOLVO CARS CORPORATION

- Remove the two screws and the nut from the holder for the battery cover and lift out.
- Remove the battery cover.

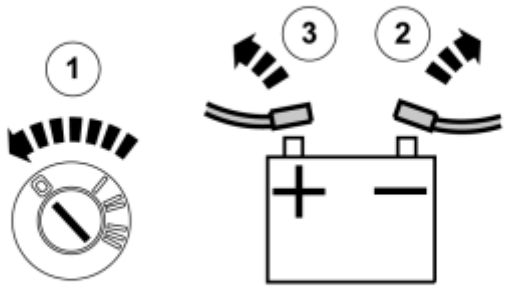

Fig. 585: Disconnect Battery Positive And Negative Lead
Courtesy of VOLVO CARS CORPORATION

- Turn the ignition key to position 0.
- Disconnect the battery negative lead.
- Disconnect the battery positive lead.

NOTE: **Wait at least three minutes before unplugging the connectors or removing other electrical equipment.**

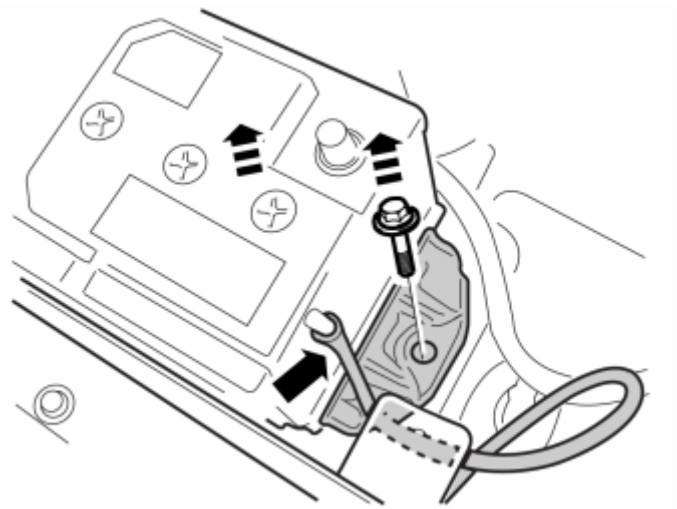

Fig. 586: Remove Screw And Floor Mount For Battery
Courtesy of VOLVO CARS CORPORATION

- Remove the screw and floor mount for the battery.
- Remove the battery's drainage and place to one side.

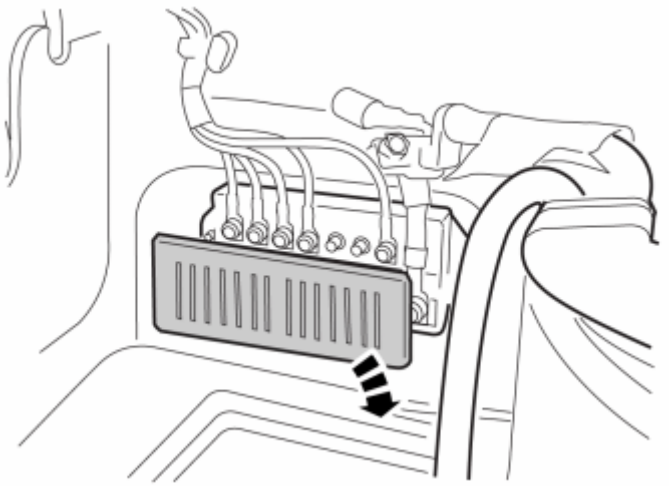

Fig. 587: Remove Cover In Fuse Holder For Main Fuses
Courtesy of VOLVO CARS CORPORATION

- Remove the cover in the fuse holder for the main fuses.

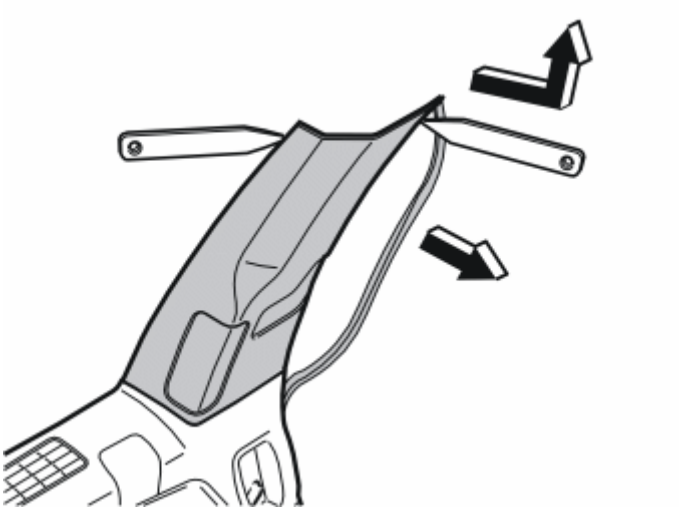

Fig. 588: Identifying Left-Hand C-Post Panel And Plastic Weatherstrip Tools
Courtesy of VOLVO CARS CORPORATION

- Pull off the rubber strip at the rear edge of the door opening for the left-hand rear door opposite the left-hand C-post panel.
- Carefully pry off the left-hand C-post panel sides at the top. Use a plastic weatherstrip tool. Then pull until the three clips on the inside release. Do not damage the headlining or the panel.
- Disconnect the connector from any headset sockets.
- Remove the panel by pulling upwards slightly and unhooking it from the side panel.

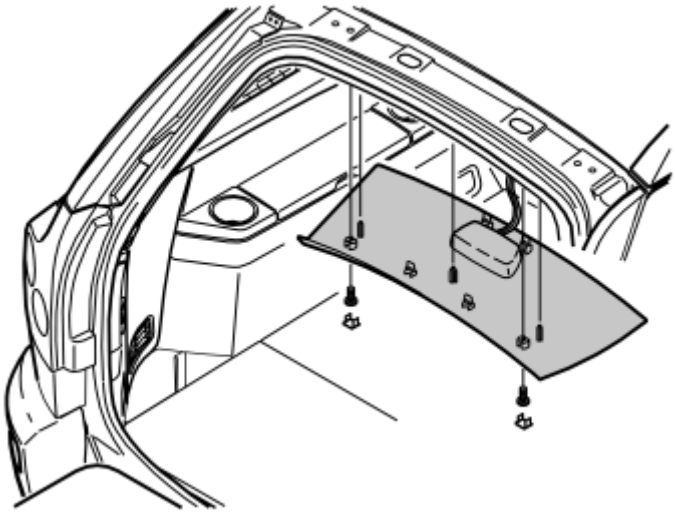

Fig. 589: Identifying Cover And Screws Underneath Rear Headlining
Courtesy of VOLVO CARS CORPORATION

- Remove the rear roof panel covers and the screws beneath them.
- Carefully pry off the panel at the rear edge. Use a plastic weatherstrip tool.
- Pull the rear edge of the panel downwards until the four clips on the top release.
- If the car is equipped with lighting in the panel, unplug the connector from the panel.
- Pull the panel backwards to release it.

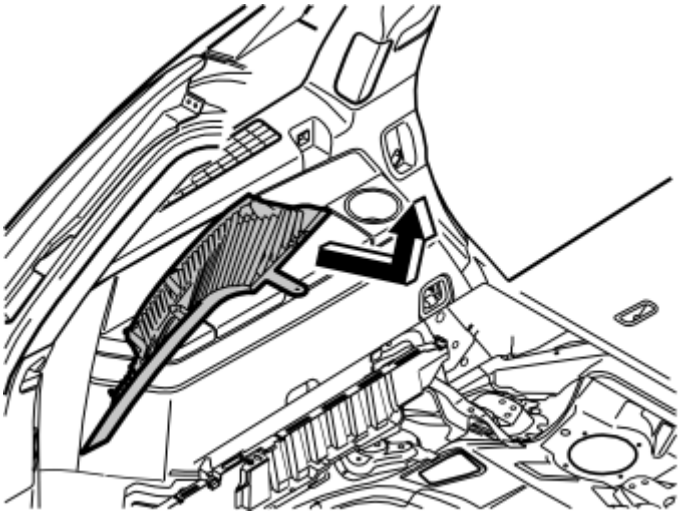

Fig. 590: Identifying D-Post Panel Removal From Side Panel
Courtesy of VOLVO CARS CORPORATION

- Carefully pull off the D-post panel. Start at the top edge then pull down until the three clips on the inside release. Do not damage the panel.
- Disconnect the connector on the D-post panel (if the car has a loudspeaker in the D-post, the connector is in the loudspeaker).
- Remove the panel by pulling upwards slightly and unhooking it from the side panel.

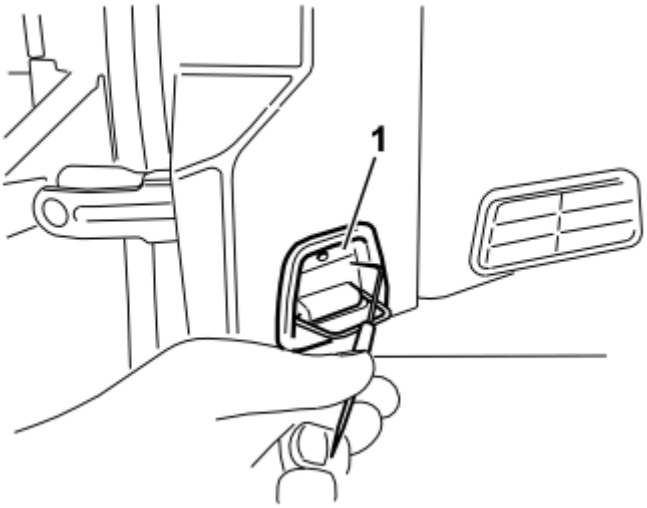

Fig. 591: Identifying Load Securing Eyelet
Courtesy of VOLVO CARS CORPORATION

- Fold out the load securing eyelet.
- Insert a scriber with an angled tip into the hole in the top of the cover.
- Turn the scriber so that the angled tip engages in the reverse of the cover (1). Pull the cover off.

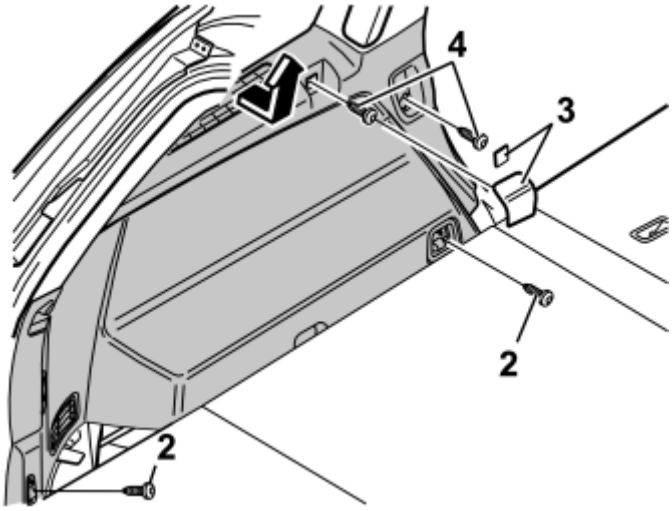

Fig. 592: Cars With Two Rows Of Seats
Courtesy of VOLVO CARS CORPORATION

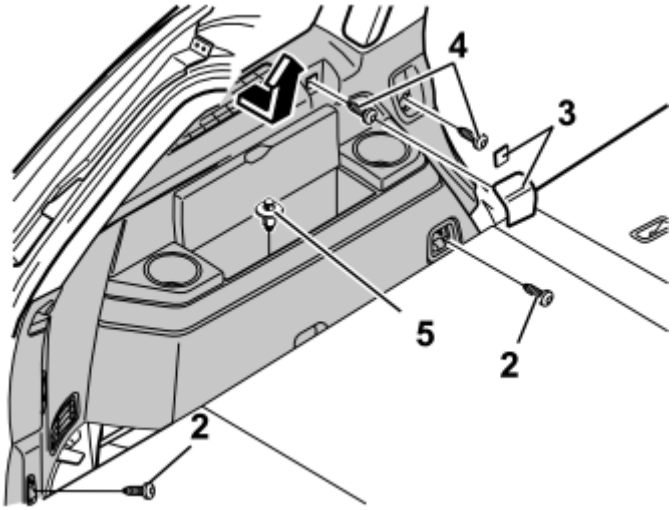

Fig. 593: Cars With Three Rows Of Seats
Courtesy of VOLVO CARS CORPORATION

- Fold up the seats in the third row (applies to cars with three rows of seats).
- Remove the screws (2) for the load securing eyelets in the left-hand side panel.
- Remove the covers (3) over the front mountings for the left-hand side panel. Pry the covers off. Use a plastic weatherstrip tool or a small screwdriver.
- Remove the screws (4).
- Remove the clip (5) at the bottom of the storage compartment in the panel (Applies to cars with three rows of seats).
- Remove the panel by pulling out the upper edge slightly so that the clips on the inside release. Pull the panel straight up.

INSTALLATION

APPLIES TO THE XC90

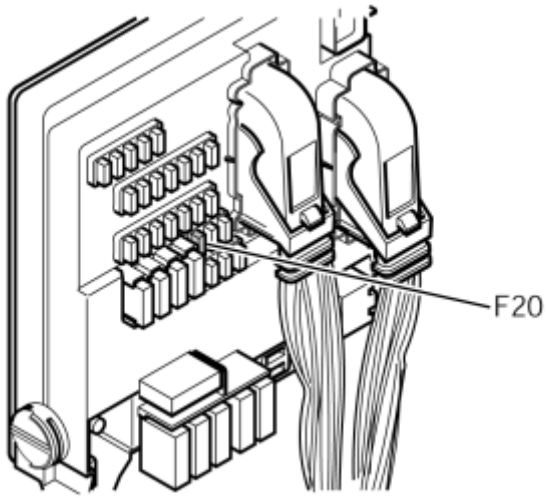

Fig. 594: Identifying F20 Fuse Location

Courtesy of VOLVO CARS CORPORATION

- Remove the **20A** fuse in the rear fuse holder in terminal **F20** . Replace it with the **5A** fuse from the kit.

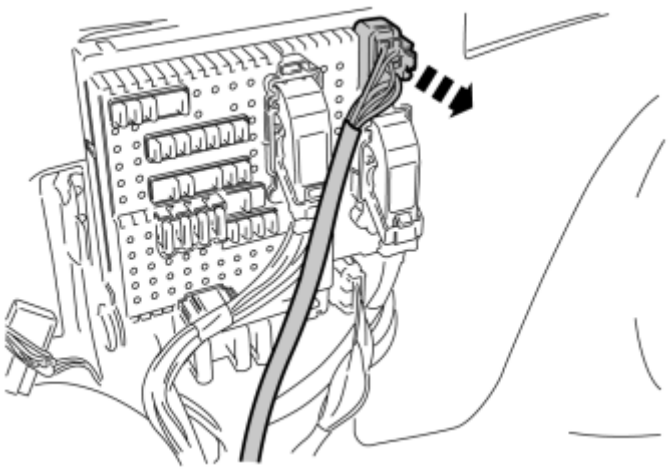

Fig. 595: View Of Disconnect The Connector
Courtesy of VOLVO CARS CORPORATION

- Disconnect the connector for the cable harness for the towbar.

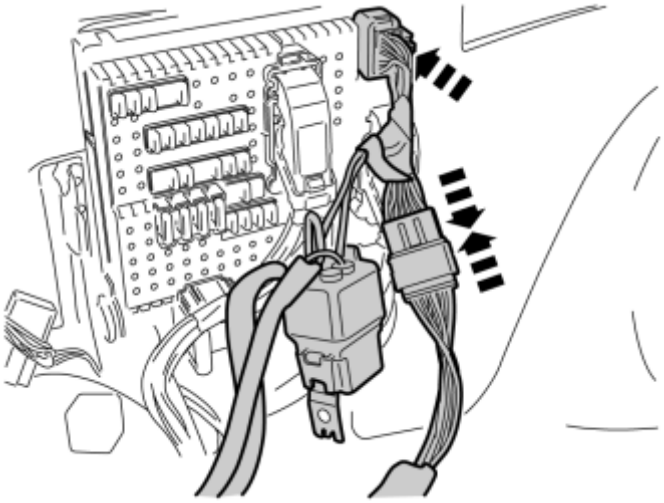

Fig. 596: Connect The Black Female Connector
Courtesy of VOLVO CARS CORPORATION

- Take the cable harness from the kit and connect the black female connector to the socket where the connector for the cable for the towbar was removed.
- Plug the remaining black connectors into each other.

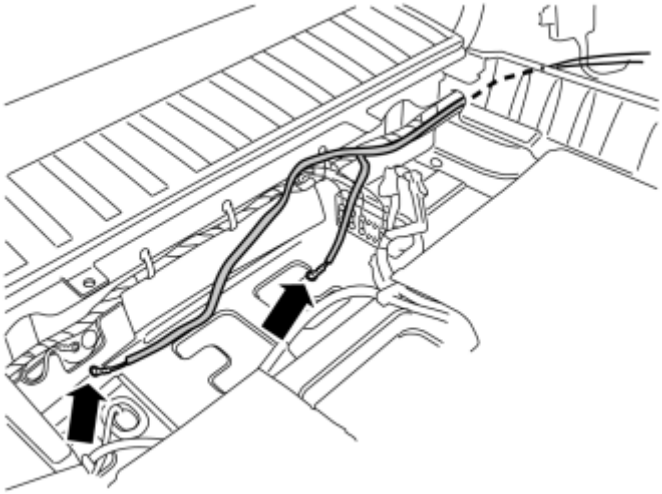

Fig. 597: View Of Long Cable Route To Ground Terminal
Courtesy of VOLVO CARS CORPORATION

- Route the long cable ends out through the socket at the rear edge of the floor support and up to the ground terminal. Route the longer of the cables on the rear member's right-hand side, and the shorter to the holder for the main fuses.

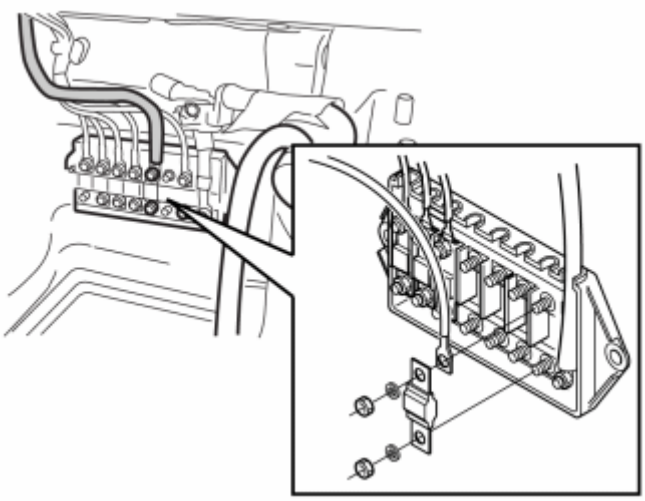

Fig. 598: Connect Cable With Small Ring Cable Terminal
Courtesy of VOLVO CARS CORPORATION

- Take a fuse, two nuts and two washers from the kit and install the fuse in any free terminal.
- Connect the cable with the small ring cable terminal.
- Install washers and nuts. Torque tighten the nuts to **5 Nm (4 lbf. ft.)** .

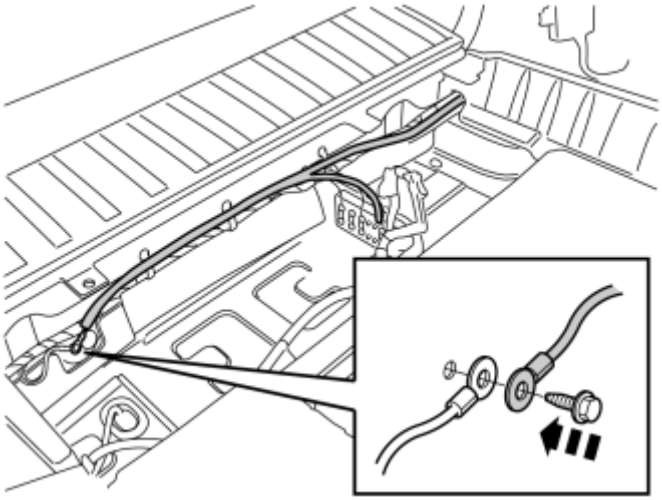

Fig. 599: Identifying Larger Ring Cable Terminal
Courtesy of VOLVO CARS CORPORATION

- Connect the larger ring cable terminal to the ground terminal on the right-hand side in the rear member. Torque tighten to **24 Nm (18 lbf. ft.)** .

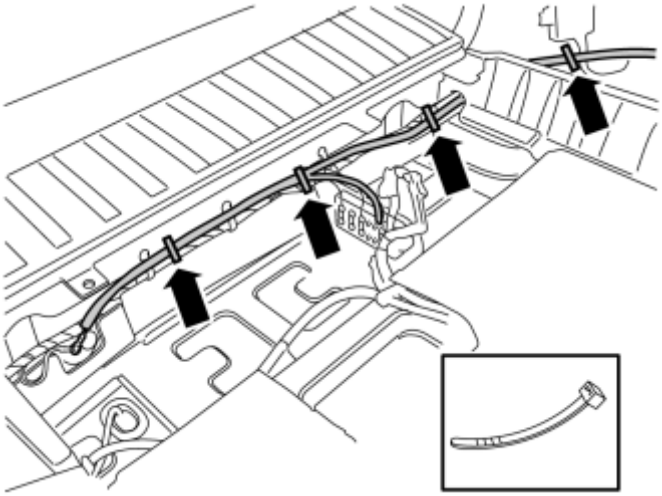

Fig. 600: Identifying Rear Fuse Holder Excess Cable
Courtesy of VOLVO CARS CORPORATION

- Route the cable excess to the rear fuse holder.
- Secure the wiring using cable ties from the kit.

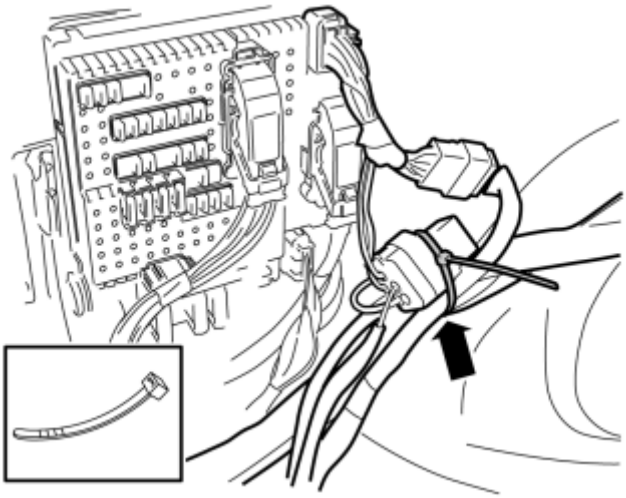

Fig. 601: View Of Secured Relay Holder
Courtesy of VOLVO CARS CORPORATION

- Secure the relay holder with relay and fuse holder with fuse, at existing cable harnesses with cable ties from the kit.

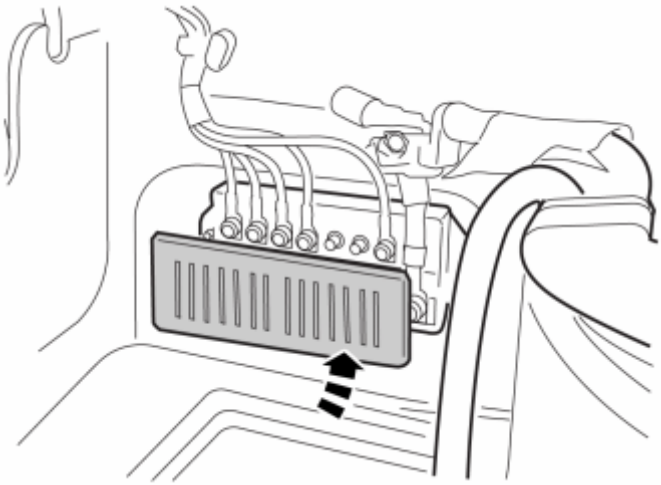

Fig. 602: Close Fuse Box Cover
Courtesy of VOLVO CARS CORPORATION

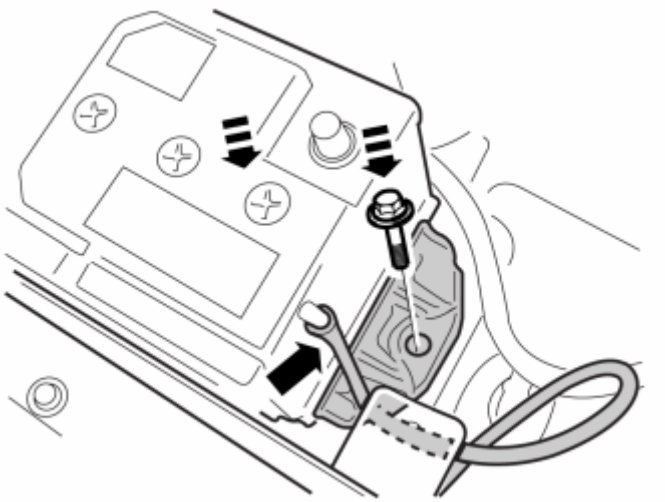

Fig. 603: Connect Battery's Drainage Hose
Courtesy of VOLVO CARS CORPORATION

- Reinstall the battery.
- Tighten the mounting with the screw. Torque tighten to **24 Nm (18 lbf. ft.)** .
- Connect the battery's drainage hose.

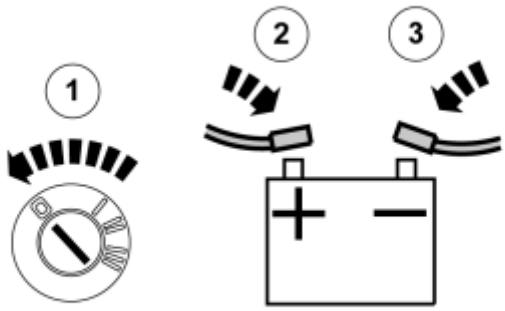

Fig. 604: Connect Positive And Negative Battery Lead
Courtesy of VOLVO CARS CORPORATION

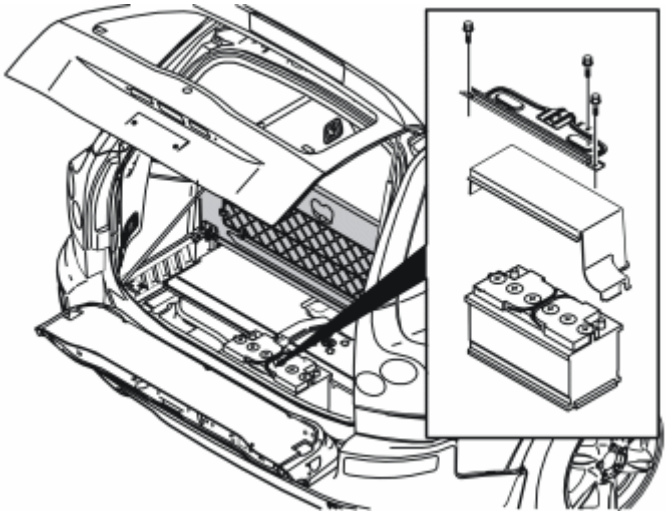

Fig. 605: Removing Three Screws In Battery Holder
Courtesy of VOLVO CARS CORPORATION

- Reinstall the battery cover with holder, screws and nuts.
- Tighten screws and nuts to **24 Nm (18 lbf. ft)** .

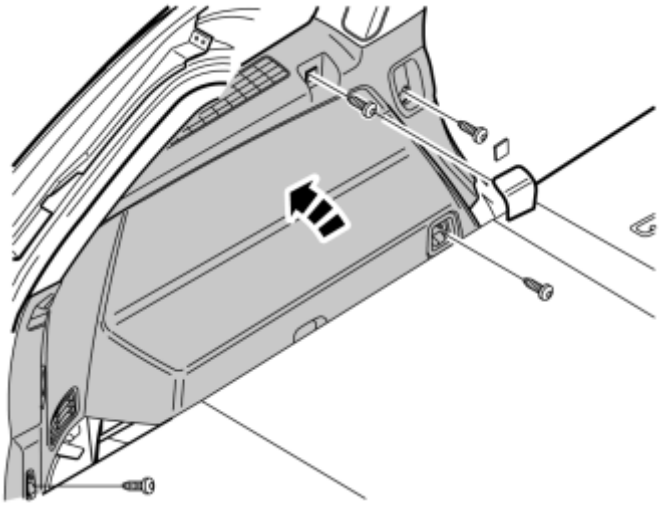

Fig. 606: Identifying Left-Hand Side Panel (1 of 3)
Courtesy of VOLVO CARS CORPORATION

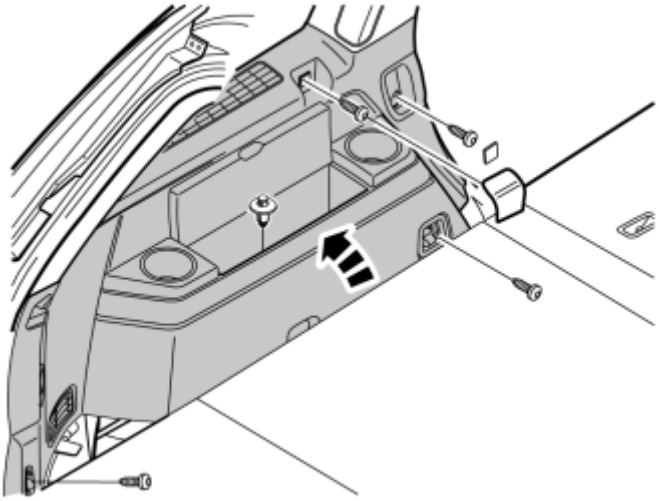

Fig. 607: Identifying Left-Hand Side Panel (2 of 3)
Courtesy of VOLVO CARS CORPORATION

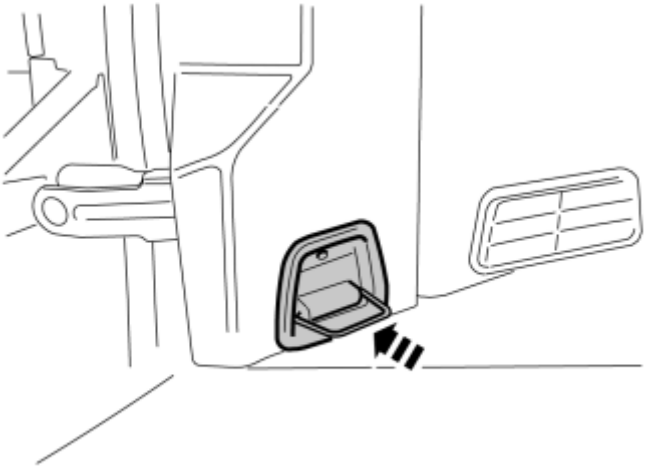

Fig. 608: Identifying Left-Hand Side Panel (3 of 3)
Courtesy of VOLVO CARS CORPORATION

- Reinstall the left-hand side panel with screws and cover. Tighten the screws in the load securing eyelets. Tighten to **24 Nm (18 lbf ft)** .

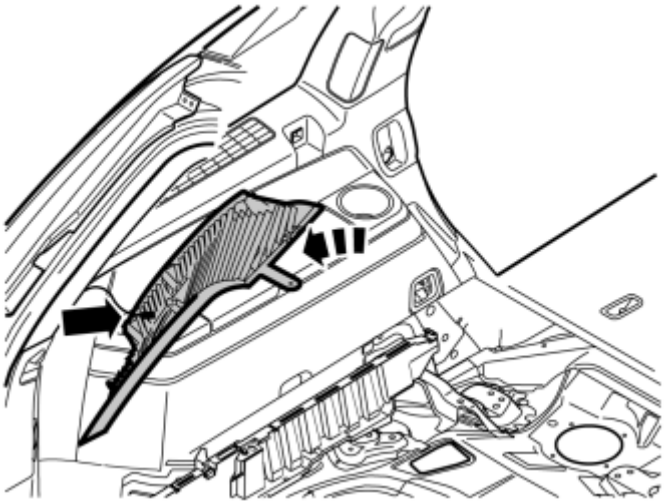

Fig. 609: Reinstalling The Left-Hand Side Panel
Courtesy of VOLVO CARS CORPORATION

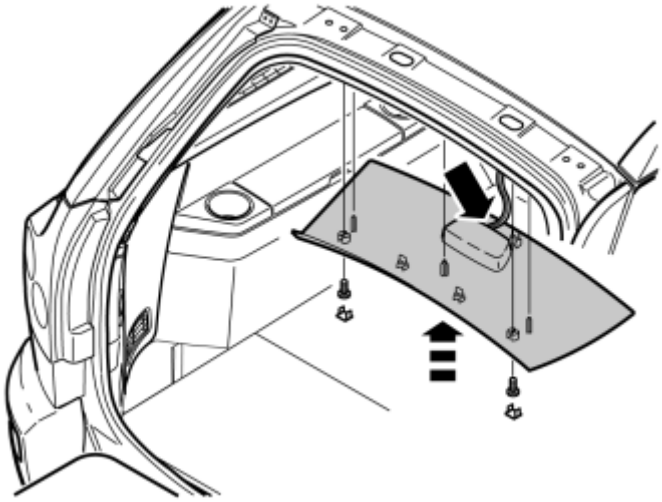

Fig. 610: Installing Roof Panel
Courtesy of VOLVO CARS CORPORATION

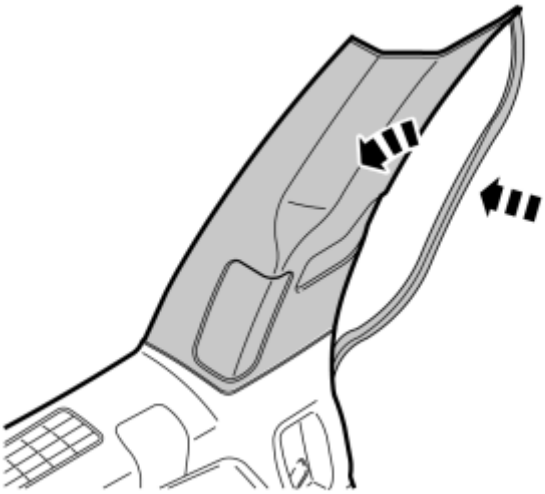

Fig. 611: Installing C-Pillar Cover
Courtesy of VOLVO CARS CORPORATION

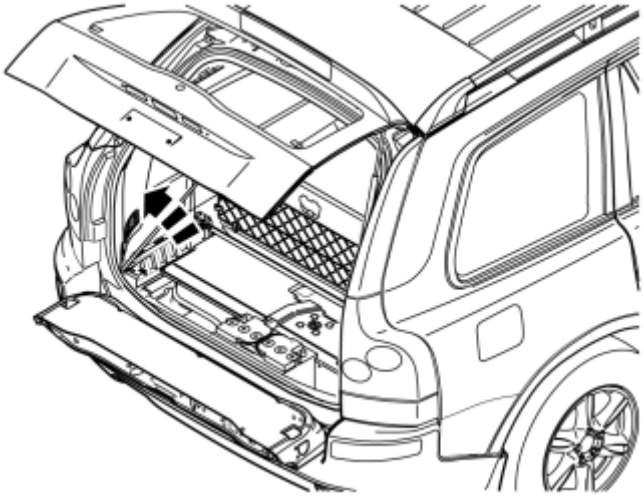

Fig. 612: Installing Storage Bins
Courtesy of VOLVO CARS CORPORATION

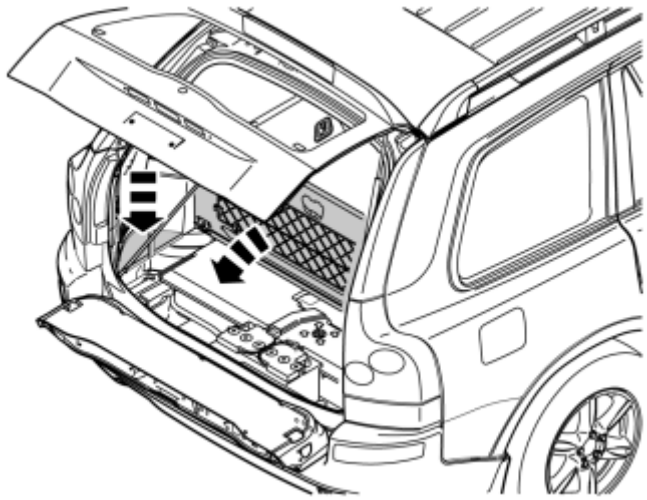

Fig. 613: Installing Floor Panels
Courtesy of VOLVO CARS CORPORATION

TOWBAR, DETACHABLE (2003-2012)

TOWBAR, DETACHABLE

PREPARATIONS

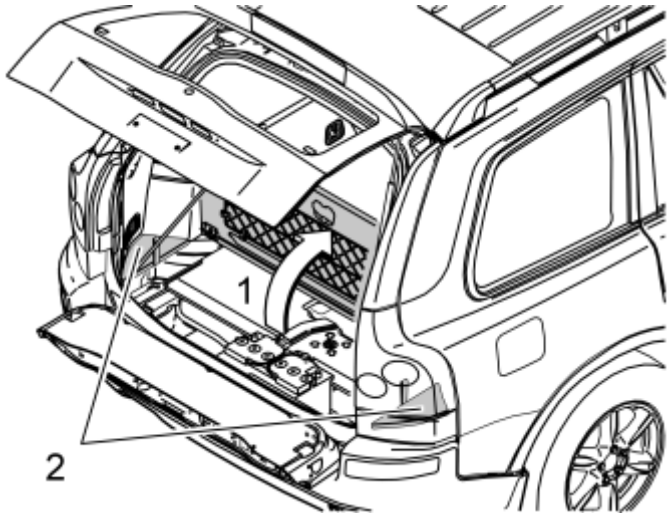

Fig. 614: Removing Storage Boxes
Courtesy of VOLVO CARS CORPORATION

- Fold up the center rear floor hatch (1). If the floor hatch is equipped with a grocery bag holder on the underside then it is fixed with a strap on each short side of the storage box, and these must be detached.
- Remove the storage box underneath and lift it out.
- Remove the side floor hatches (2) on the right and left-hand sides in the cargo compartment.
- If the car is equipped with a spare wheel, remove it.

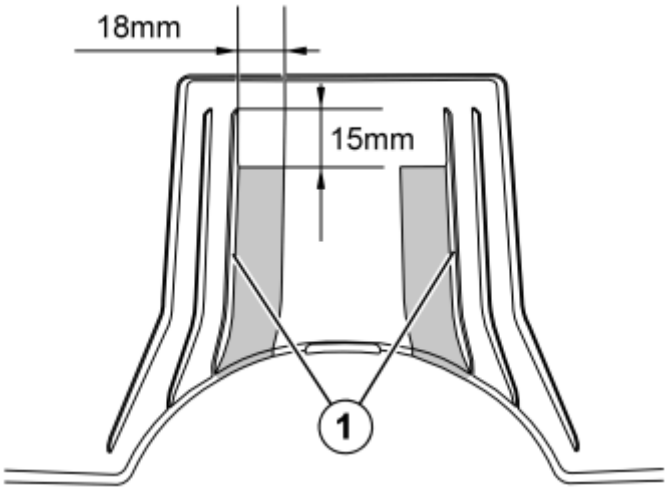

Fig. 615: Measuring On The Inside Of The Rear Bumper Cover
Courtesy of VOLVO CARS CORPORATION

- Raise the car.
- Measure out and draw a horizontal line **15 mm (9/16")** under the top edge of the grooves (1), on the inside of the rear bumper cover.
- Draw a vertical line **18 mm (11/16)** from the inside of the grooves (1).
- Cut/saw along the drawn lines so that two parallel slits are formed in the bumper cover.
- Smooth off all edges with a file.

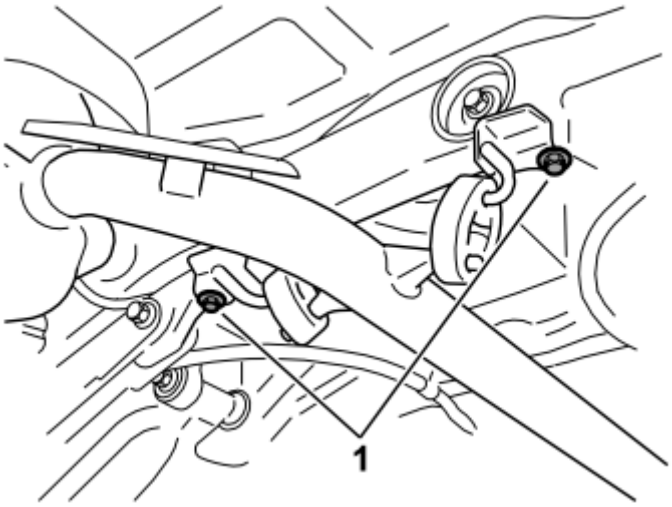

Fig. 616: Identifying Front Mounting
Courtesy of VOLVO CARS CORPORATION

- Detach the silencer's front mounting in the rear subframe by removing the screws (1).

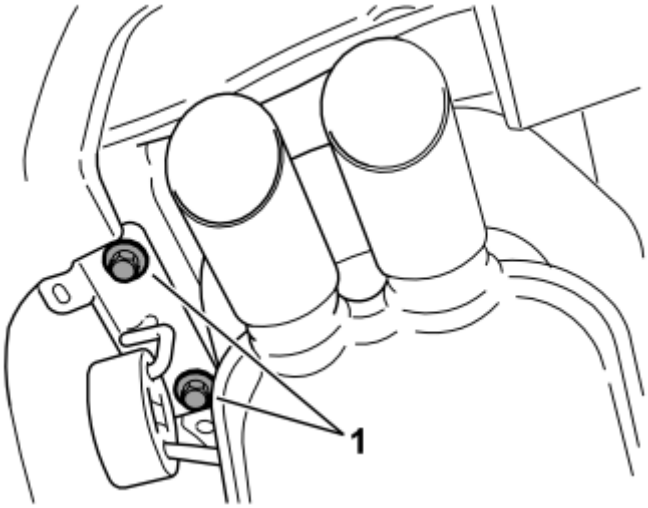

Fig. 617: Identifying The Rear Mounting
Courtesy of VOLVO CARS CORPORATION

- Detach the rubber mounting (1).
- Detach the silencer's rear mounting bracket from the lower edge of the left-hand side member by removing the screws (2).
- Carefully bend aside the heat deflector plate at the side member to make more space to work in.

APPLIES TO CARS WITH REAR PARKING ASSISTANCE

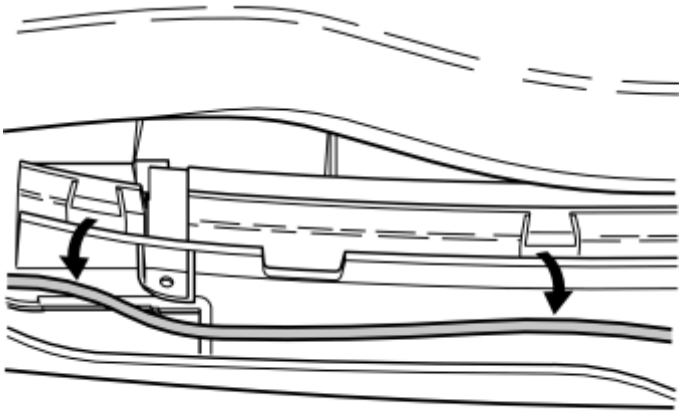

Fig. 618: Identifying The Right-Hand Side
Courtesy of VOLVO CARS CORPORATION

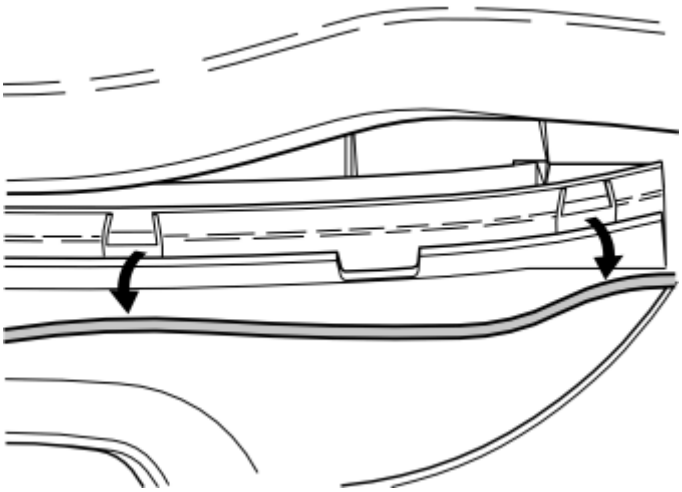

Fig. 619: Identifying The Left-Hand Side
Courtesy of VOLVO CARS CORPORATION

- Detach the cable to the parking assistance sensors from its clips in the rear section of the bumper.

APPLIES TO ALL MODELS

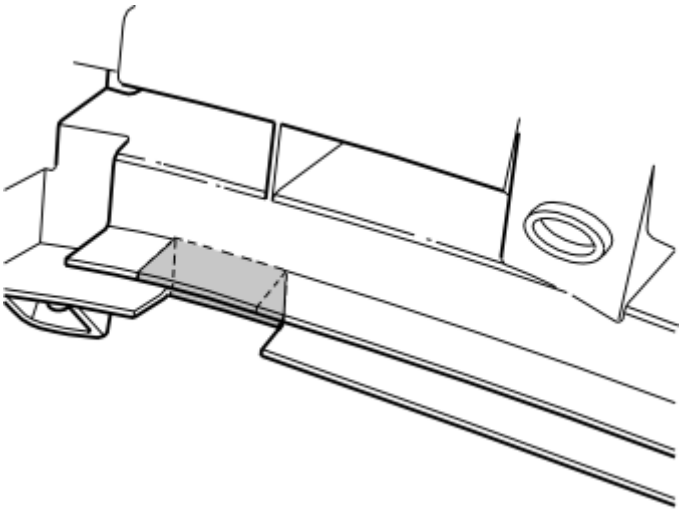

Fig. 620: Cut Out As Marked
Courtesy of VOLVO CARS CORPORATION

Right-hand side:

- Cut/saw out the rear section at the existing cut-out in accordance with the markings in the illustration.

APPLIES TO CARS WITH REAR PARKING ASSISTANCE

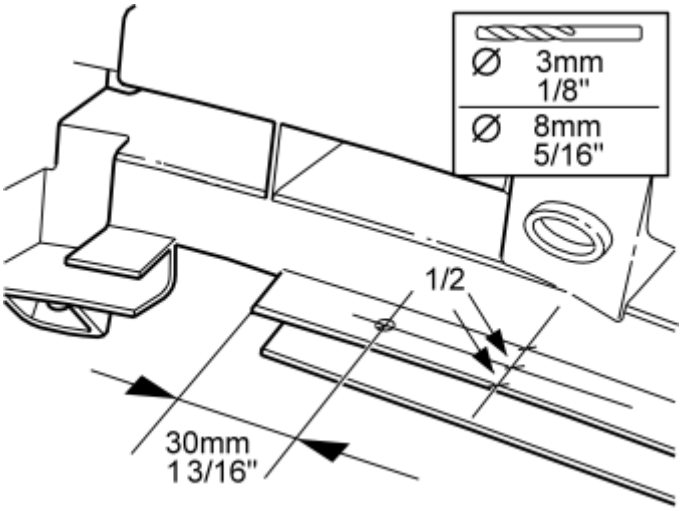

Fig. 621: Measuring Hole Locations
Courtesy of VOLVO CARS CORPORATION

Right-hand side:

- Measure out for drilling the hole for the cable grommet in the upper of the rear section's plates as illustrated.
- Pre-drill using a **O3 mm (1/8")** diameter drill bit, and then drill out the hole to **O8 mm (5/16")** . Use an angle drilling machine and short drill bits.

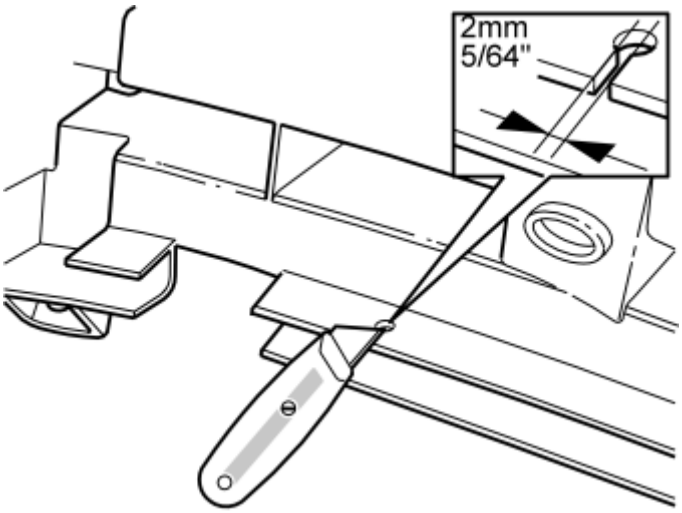

Fig. 622: Cutting a 2 mm (5/64") Groove
Courtesy of VOLVO CARS CORPORATION

- Cut open a **2 mm (5/64")** wide slot through the plate up to the hole.

APPLIES TO ALL MODELS

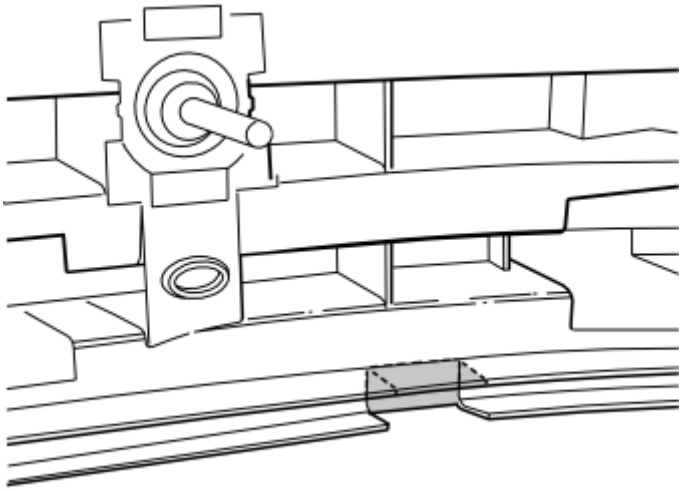

Fig. 623: Cutting Out As Marked
Courtesy of VOLVO CARS CORPORATION

Left-hand side:

- Cut/saw out the rear section at the existing cut-out in accordance with the markings in the illustration.

APPLIES TO CARS WITH REAR PARKING ASSISTANCE

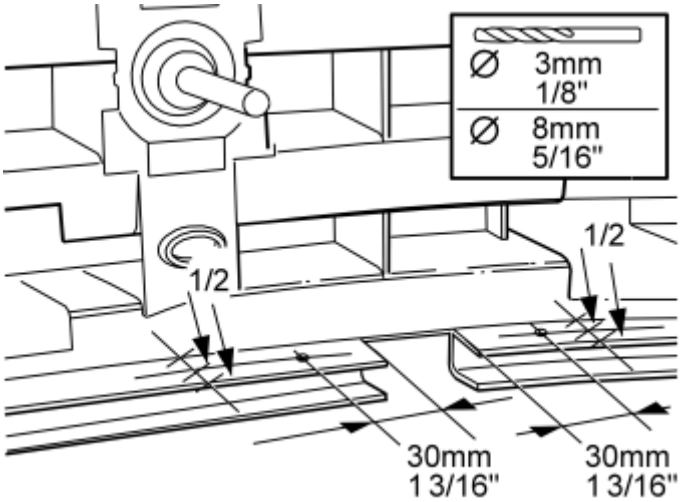

Fig. 624: Measuring Hole Locations
Courtesy of VOLVO CARS CORPORATION

Left-hand side:

- Measure out for drilling the hole for the cable grommet on the right and left-hand sides of the cut-out, in the upper of the rear section's plates as illustrated.
- Pre-drill using a **O3 mm (1/8")** diameter drill bit, and then drill out the holes to **O8 mm (5/16")** . Use an angle drilling machine and short drill bits.

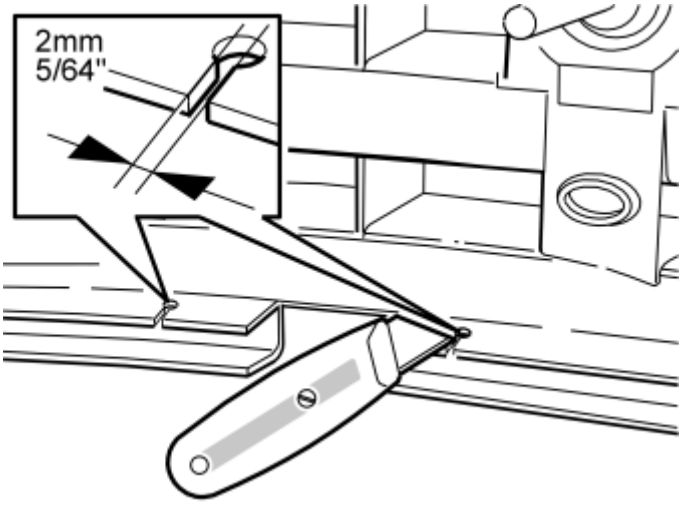

Fig. 625: Cutting a 2 mm (5/64") Slot
Courtesy of VOLVO CARS CORPORATION

- Cut open a **2 mm (5/64")** wide slot through the plate up to the holes on both sides of the cut-out.

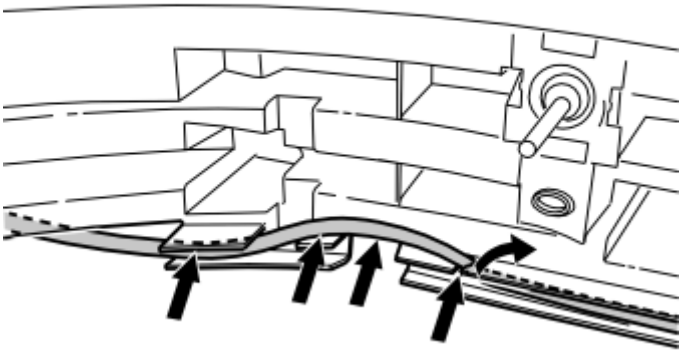

Fig. 626: Routing Cable
Courtesy of VOLVO CARS CORPORATION

Right-hand side:

- Press up one of the plate's tabs and guide the cable into the previously drilled hole. The cable must be routed as illustrated.

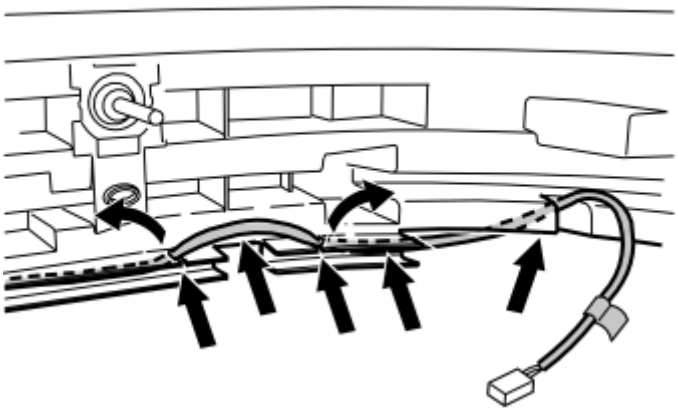

Fig. 627: Routing Cable
Courtesy of VOLVO CARS CORPORATION

Left-hand side:

- Press up the plate's tabs and guide the cable into the previously drilled holes. The cable must be routed as illustrated.

INSTALLING THE TOWING MEMBER

APPLIES TO ALL MODELS

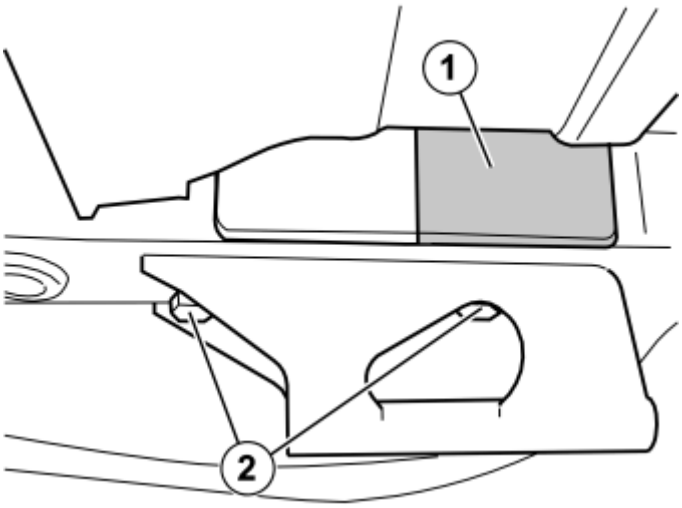

Fig. 628: Identifying The Protective Tags (1)
Courtesy of VOLVO CARS CORPORATION

- Lift up the protective tags (1) (at the rear edge) which cover the mounting holes on the inside of the side members (one on each side) and cut away 80 mm.
- Remove the bracket for the towing eye by removing the screws (2).
- Remove any sealing compound from the surface where the end faces of the towing member shall be

located.

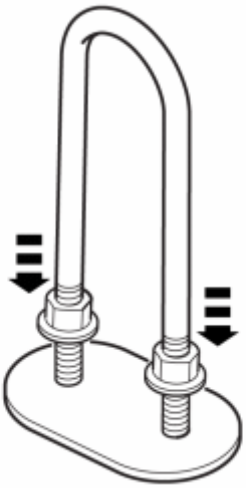

Fig. 629: Leaving An Imprint On The Plate
Courtesy of VOLVO CARS CORPORATION

- Get a brace and a foam rubber plate from the kit.

  Centre the brace on the plate and press, so that the threaded ends leave an imprint on the plate

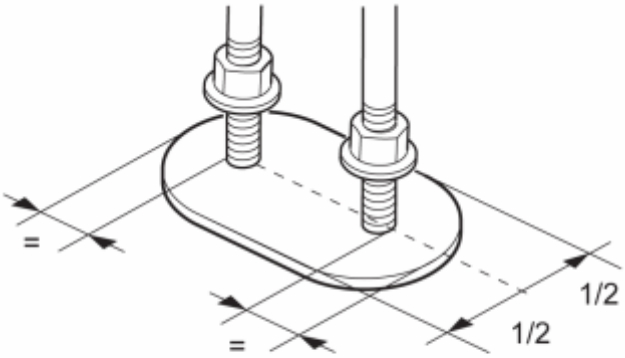

Fig. 630: Locating Measurements
Courtesy of VOLVO CARS CORPORATION

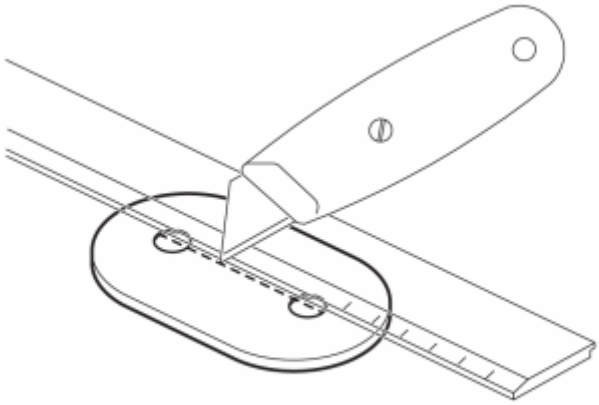

Fig. 631: Cutting Between The Circles
Courtesy of VOLVO CARS CORPORATION

- Get a knife and ruler, and place a straight cut between the outsides of both circles.

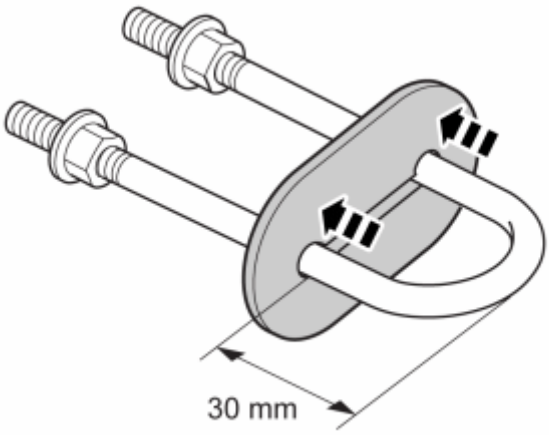

Fig. 632: Pressing The Plate On The Brace
Courtesy of VOLVO CARS CORPORATION

- Press down the plate on the brace approx. **30 mm** , with protective tape facing the two nuts.

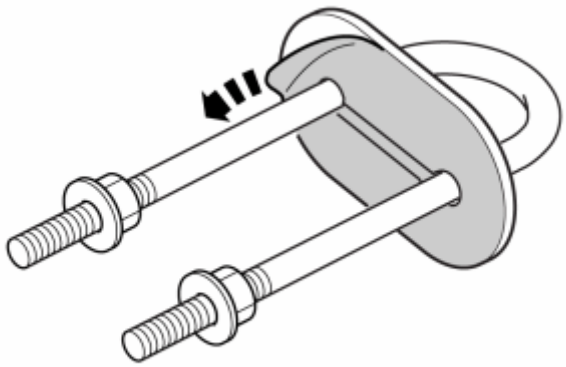

Fig. 633: Removing The Protective Tape
Courtesy of VOLVO CARS CORPORATION

- Remove the protective tape from the foam rubber plate.
- Repeat steps for the other brace.

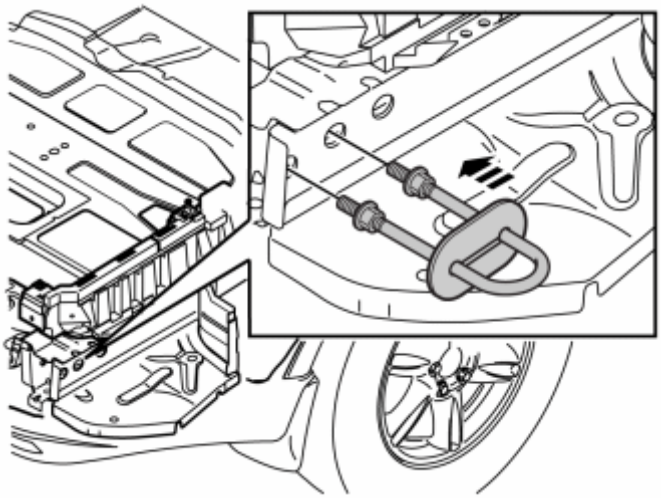

Fig. 634: Fitting The Mounting Bracket Through Two Holes
Courtesy of VOLVO CARS CORPORATION

- Lower the car.
- Remove the protective tags which cover the mounting holes on the outside of the side members.
- Fit the mounting bracket through the two rear holes in the outer wall of the side member. The threaded sections of the mounting bracket should now protrude through to the underside of the car. Repeat on the other side.
- Secure the mounting brackets using butyl tape for example in order to prevent them from falling back.

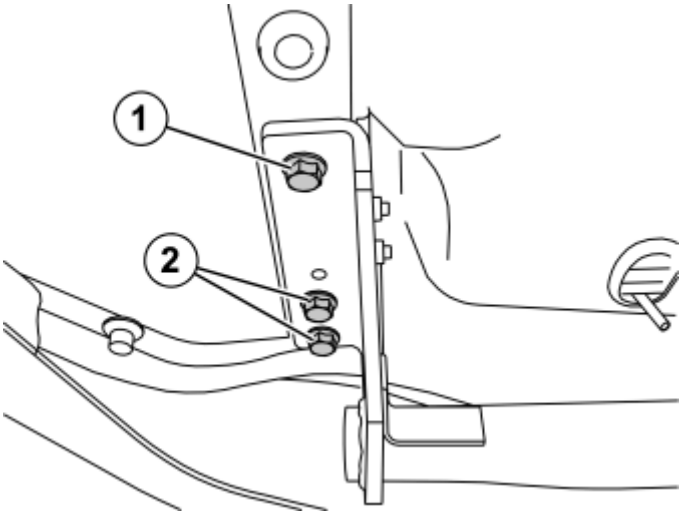

Fig. 635: Fitting The M12X40 Screws (1) On Each Side
Courtesy of VOLVO CARS CORPORATION

- Raise the car.
- Remove the towbar from the towing member.
- Lift up the towing member. Start by angling up the left-hand side's end face above the silencer's end pipe and up behind the bumper to the side member. Following which, angle up the right-hand side's end face to the side member, and position it on the side members, opposite their holes.
- Fit the M12x40 screw (1) in the front hole on each side, while holding the towing member in position.
- Install the remaining screws (2).
- Insert the screws all the way without tightening them.

NOTE: **Apply rustproofing agent under the car and on the side members around the end faces, scraping away any sealing compound, before torque tightening the screws.**

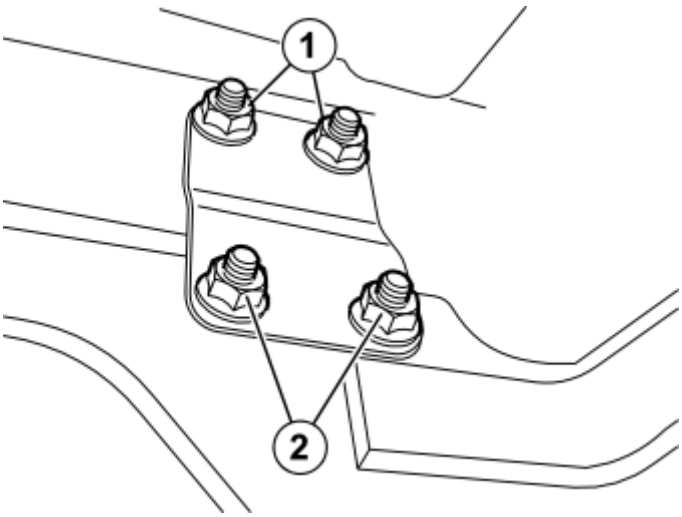

Fig. 636: Installing The Reinforcing Plate

Courtesy of VOLVO CARS CORPORATION

- Install the reinforcing plate with the oval holes facing up.
- Install the flange nuts (1) on the mounting bracket.
- Install the bolts and the flange nuts (2).
- Insert the screws all the way without tightening them. Carry out the above procedure on the other side too.

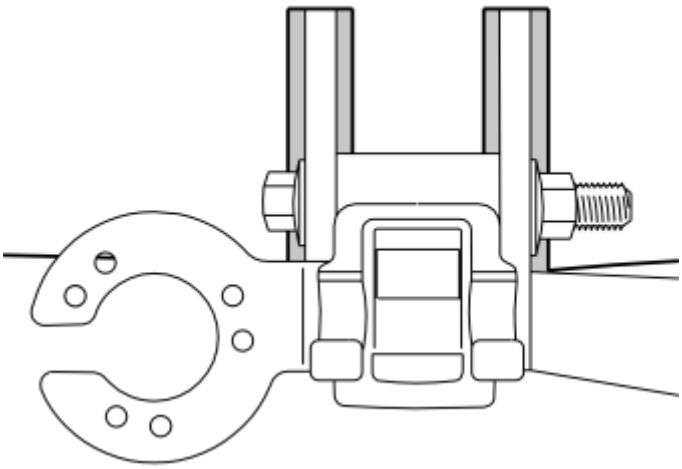

Fig. 637: Centering The Towbar In Relation To The Bumper.
Courtesy of VOLVO CARS CORPORATION

- Centre the towbar in relation to the cut-out in the bumper.

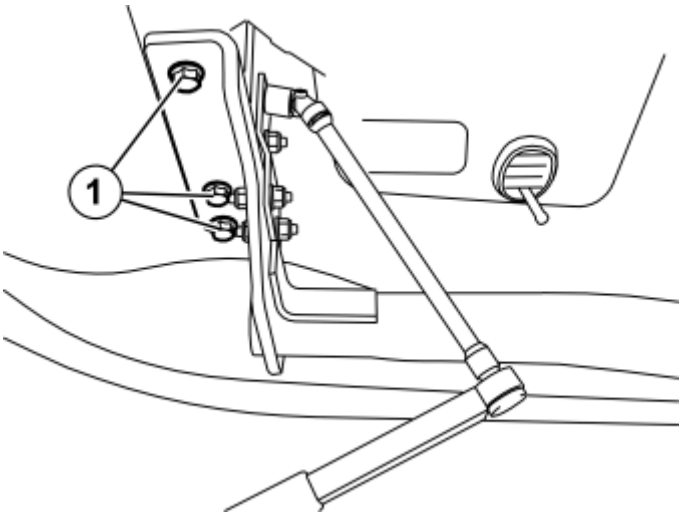

Fig. 638: Identifying Joint Socket (P/N 9814017)
Courtesy of VOLVO CARS CORPORATION

- Torque tighten the screws (1) to **120 Nm** on both sides.
- Torque tighten the upper and lower bolted joint for the mounting bracket to **50 Nm** . Use joint socket

(P/N 9814017) when tightening the upper one. Repeat on the other side.

- Bend back the heat deflector plate.
- Reinstall the silencer's rear mounting.
- Reinstall the silencer's front mounting. Torque tighten the screws to **24 Nm** .

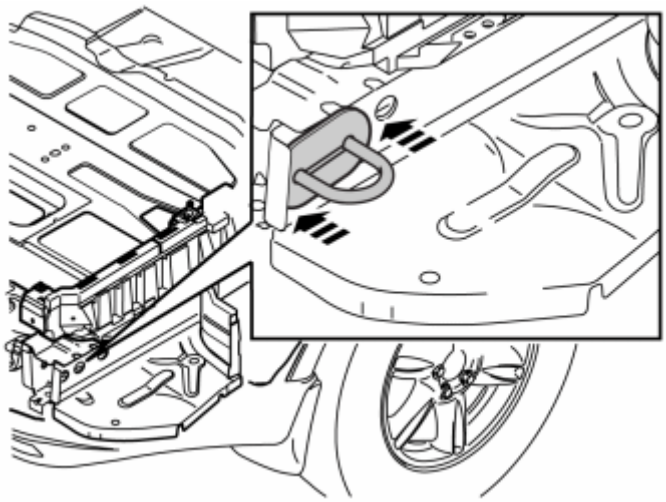

Fig. 639: Pressing The Foam Rubber Plate So It Seals Around The Holes
Courtesy of VOLVO CARS CORPORATION

- Remove the pieces of butyl tape, if used to secure the brace.
- Press on the foam rubber plate against the side member so that it seals tightly around the holes.
- Repeat the operation on the other side.

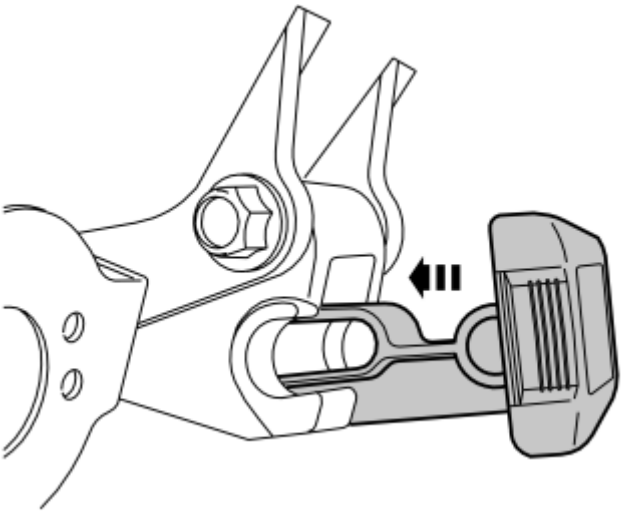

Fig. 640: Installing The Protective Plug
Courtesy of VOLVO CARS CORPORATION

- Check the function of the detachable towbar.
- Install the protective plug.

- Fit the towbar wiring in accordance with the separate installation instructions.

INSTALLING THE HOLDER

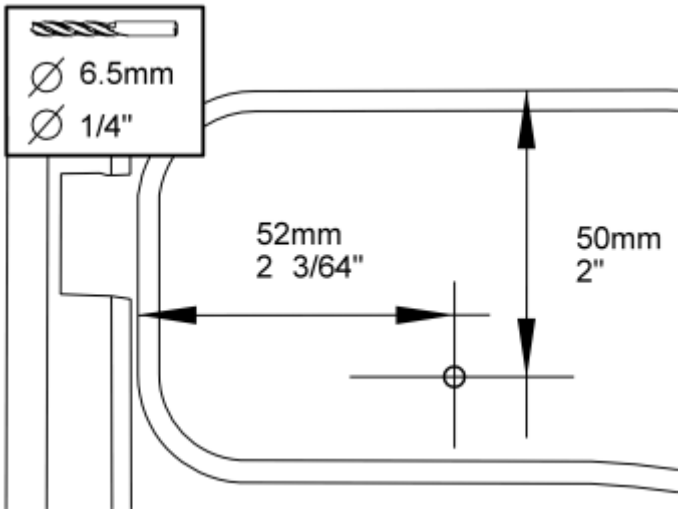

Fig. 641: Measurement For Drilling
Courtesy of VOLVO CARS CORPORATION

- Measure out for drilling the hole for the towbar holder, to the right of the battery as illustrated. Use a **O6.5 mm (1/4")** diameter drill bit.

  NOTE: Remove any spare wheel before drilling.

- Remove any shavings.

  Apply rustproofing agent to the hole.

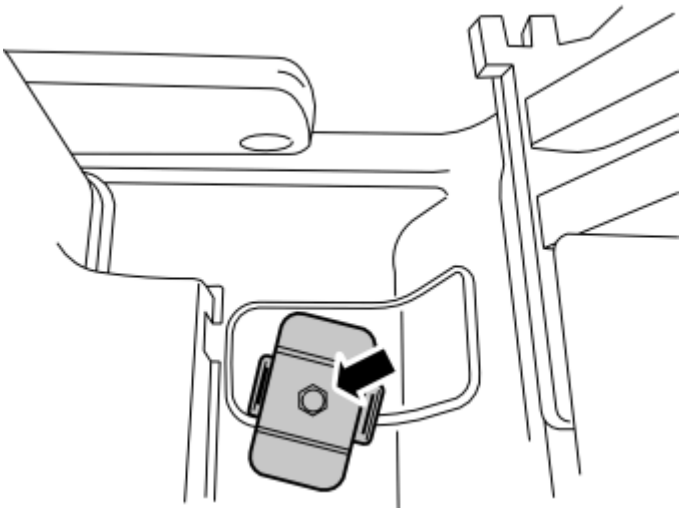

Fig. 642: Installing The Holder
Courtesy of VOLVO CARS CORPORATION

- Install the holder using an M6 x 10 screw and M6 nut. Torque tighten to **10 Nm** .

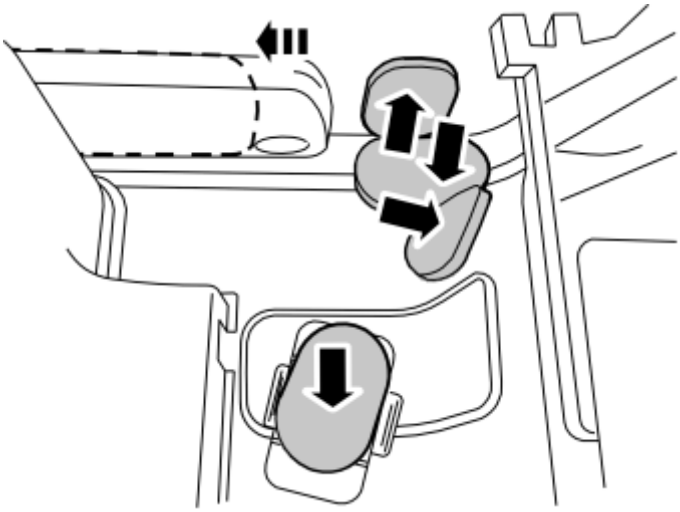

Fig. 643: Fitting The Four Foam Plastic Pieces
Courtesy of VOLVO CARS CORPORATION

- Fit the four foam plastic pieces as illustrated. This is to avoid rattling when the towbar is stored there.

Applies to cars with warning triangle

- Move the warning triangle approx. 80 mm sideways into the center to make space for the towbar. Mark out the inner wall locations for the warning triangle's Velcro fasteners.
- Secure two Velcro fasteners at the markings on the inner wall. Install the warning triangle.

STORING THE TOWBAR

Fig. 644: Stowing The Towbar
Courtesy of VOLVO CARS CORPORATION

- Take the retaining strap and thread it through the holder's two eyelets.
- Thread the accompanying protective bag over the towbar and tighten the protective bag's cord. Position the towbar with bag in the holder with the ball section to the rear, and tighten with the strap.

FINISHING WORK

- Put the spare wheel back in place.
- Reinstall the storage box and floor hatches.
- Affix the accompanying decal to the underside of the floor hatch, as illustrated.
- Fill in the registration card and send it to the local Volvo dealer.

TOWBAR, FIXED (2006-2012)

TOWBAR, FIXED

PREPARATIONS

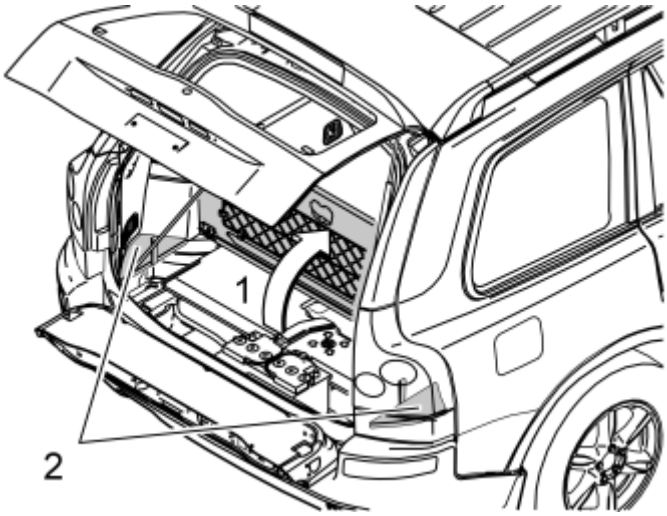

Fig. 645: Removing Storage Boxes
Courtesy of VOLVO CARS CORPORATION

- Fold up the center rear floor hatch (1). If the floor hatch is equipped with a grocery bag holder on the underside then it is fixed with a strap on each short side of the storage box, and these must be detached.
- Detach the storage box underneath and lift it out.
- Remove the side floor hatches (2) on the right and left-hand sides in the cargo compartment.
- If the car is equipped with a spare wheel, remove it.

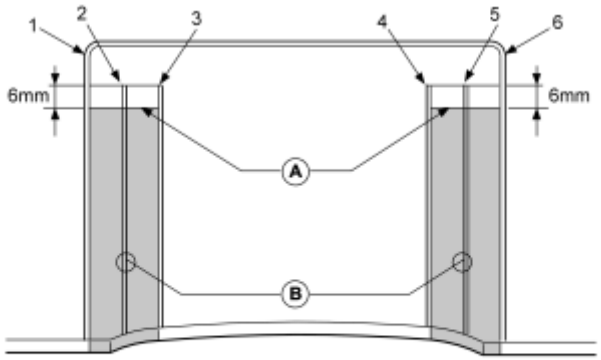

Fig. 646: Measure And Cut Along The Inside Of Groove 1 And Groove 3
Courtesy of VOLVO CARS CORPORATION

- Raise the car.
- Measure out and draw a horizontal line (A) **6 mm (1/4")** under the top edge of the grooves, on the inside of the rear bumper cover.
- Cut/saw along the inside of groove 1 and groove 3 (the sides which face groove 2) up to the horizontal line which was drawn.
- Repeat this between groove 6 and groove 4. Remove the shadowed areas (B) by cutting/sawing between the cuts along the horizontal line, so that two parallel slits are formed in the bumper cover.

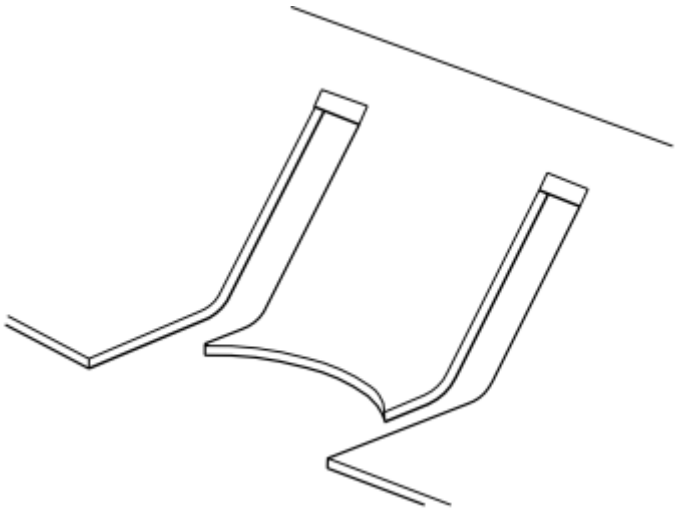

Fig. 647: Identifying the End Result
Courtesy of VOLVO CARS CORPORATION

- Smooth off all edges with a file.
- Cut away all of the grooves' ridges level with the bumper cover. The end result should appear as illustrated.

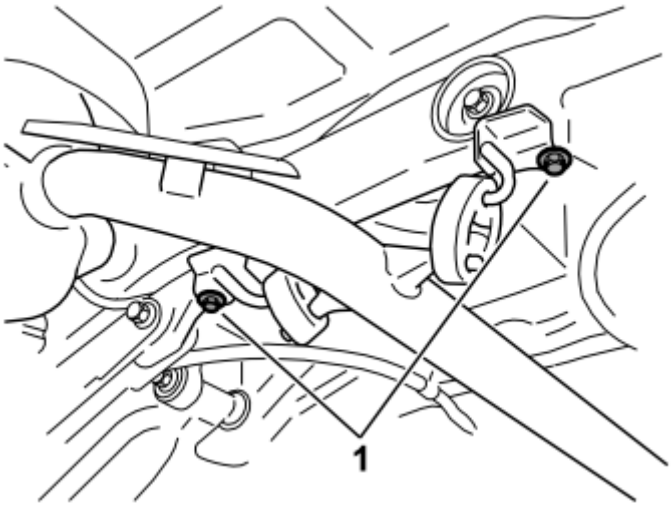

Fig. 648: Identifying Front Mounting
Courtesy of VOLVO CARS CORPORATION

- Detach the silencer's front mounting in the rear subframe by removing the screws (1).

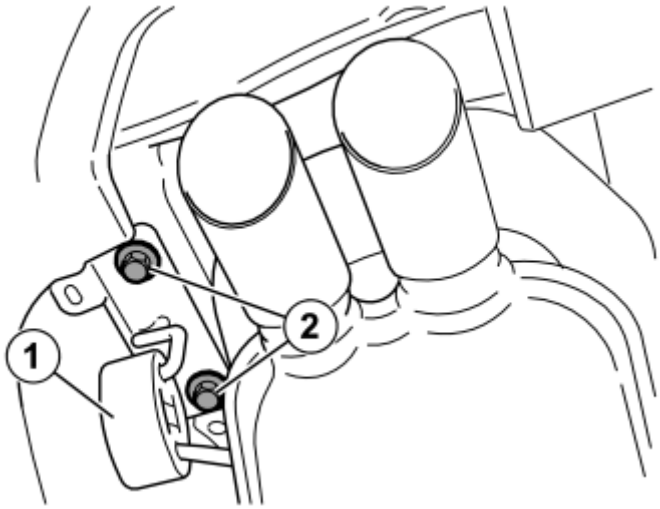

Fig. 649: Identifying The Screws (2)
Courtesy of VOLVO CARS CORPORATION

- Detach the rubber mounting (1).
- Detach the silencer's rear mounting bracket from the lower edge of the left-hand side member by removing the screws (2).
- Carefully bend aside the heat deflector plate at the side member to make more space to work in.

APPLIES TO CARS WITH REAR PARKING ASSISTANCE

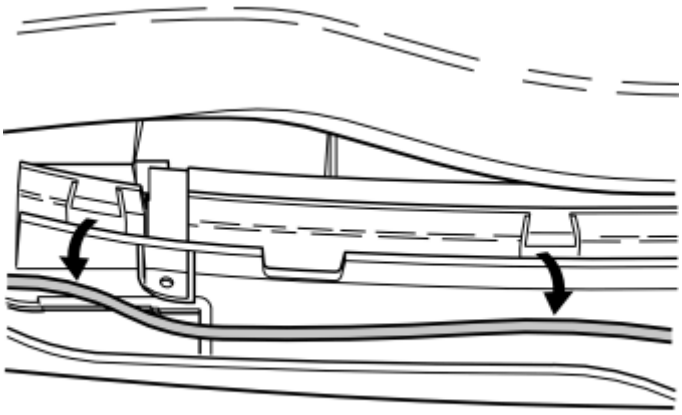

Fig. 650: Identifying The Right-Hand Side
Courtesy of VOLVO CARS CORPORATION

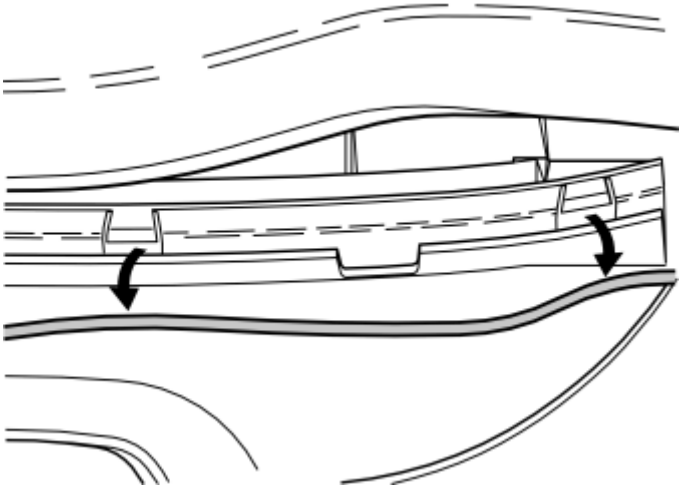

Fig. 651: Identifying The Left-Hand Side
Courtesy of VOLVO CARS CORPORATION

- Detach the cable to the parking assistance sensors from its clips in the rear section of the bumper.

APPLIES TO ALL MODELS

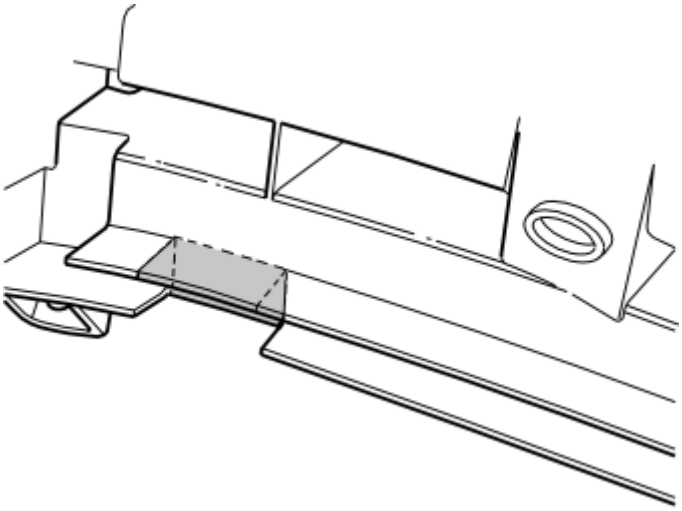

Fig. 652: Cut Out As Marked
Courtesy of VOLVO CARS CORPORATION

Right-hand side:

- Cut/saw out the rear section at the existing cut-out in accordance with the markings in the illustration.

APPLIES TO CARS WITH REAR PARKING ASSISTANCE

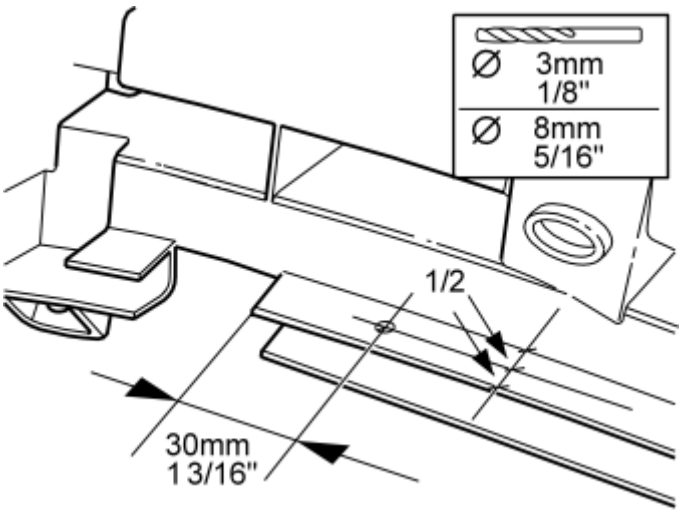

Fig. 653: Measuring Hole Locations
Courtesy of VOLVO CARS CORPORATION

Right-hand side:

- Measure out for drilling the hole for the cable grommet in the upper of the rear section's plates as illustrated.
- Pre-drill using a **O3 mm (1/8")** diameter drill bit, and then drill out the hole to **O8 mm (5/16")** . Use an angle drilling machine and short drill bits.

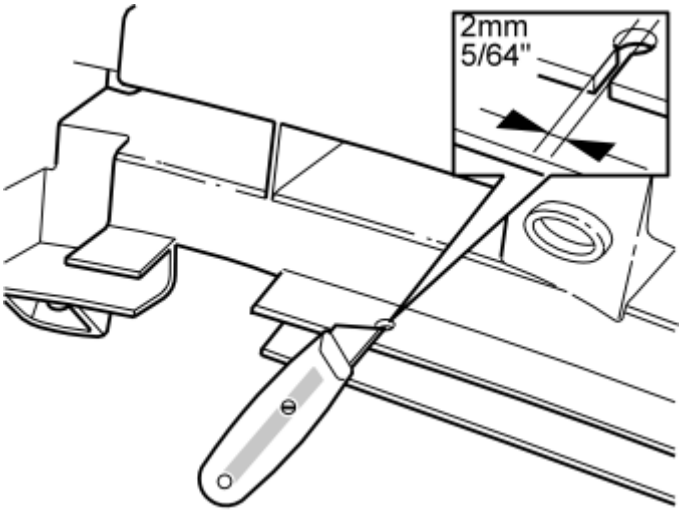

Fig. 654: Cutting a 2 mm (5/64") Groove
Courtesy of VOLVO CARS CORPORATION

- Cut open a **2 mm (5/64")** wide slot through the plate up to the hole.

APPLIES TO ALL MODELS

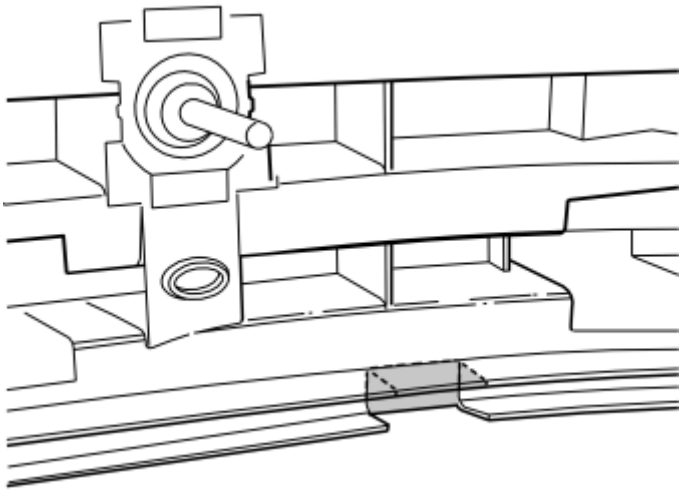

Fig. 655: Cutting Out As Marked
Courtesy of VOLVO CARS CORPORATION

Left-hand side:

- Cut/saw out the rear section at the existing cut-out in accordance with the markings in the illustration.

APPLIES TO CARS WITH REAR PARKING ASSISTANCE

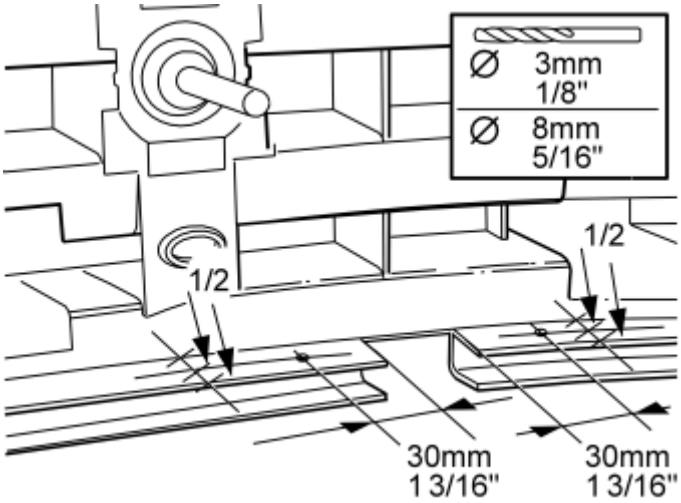

Fig. 656: Measuring Hole Locations
Courtesy of VOLVO CARS CORPORATION

Left-hand side:

- Measure out for drilling the hole for the cable grommet on the right and left-hand sides of the cut-out, in the upper of the rear section's plates as illustrated.
- Pre-drill using a**O3 mm (1/8")** diameter drill bit, and then drill out the holes to **O8 mm (5/16")** . Use an angle drilling machine and short drill bits.

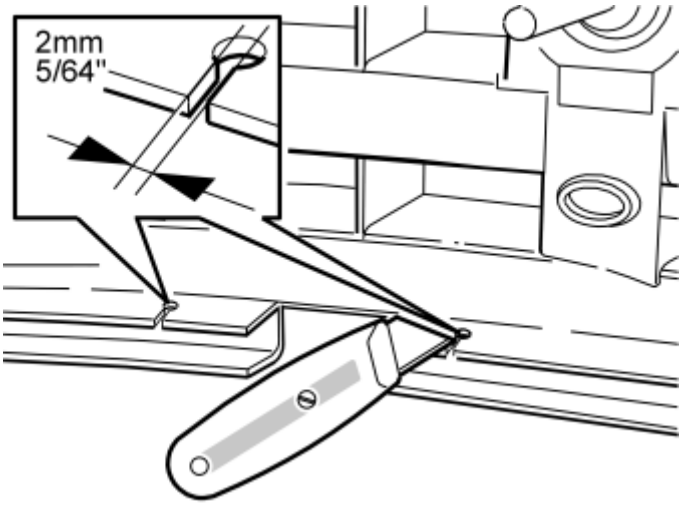

Fig. 657: Cutting a 2 mm (5/64") Slot
Courtesy of VOLVO CARS CORPORATION

- Cut open a **2 mm (5/64")** wide slot through the plate up to the holes on both sides of the cut-out.

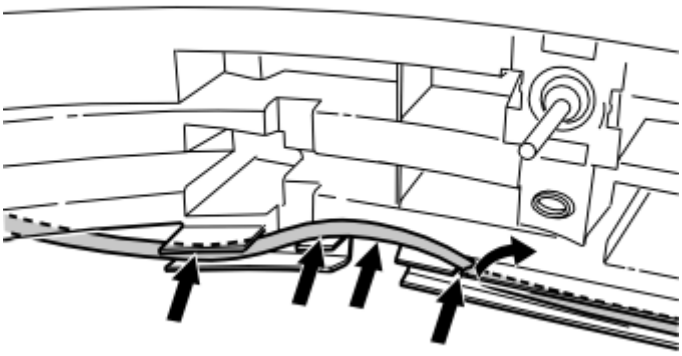

Fig. 658: Routing Cable
Courtesy of VOLVO CARS CORPORATION

Right-hand side:

- Press up one of the plate's tabs and guide the cable into the previously drilled hole. The cable must be routed as illustrated.

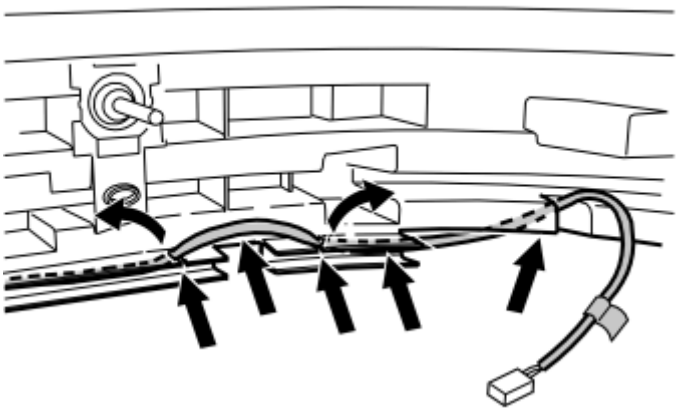

Fig. 659: Routing Cable
Courtesy of VOLVO CARS CORPORATION

Left-hand side:

- Press up the plate's tabs and guide the cable into the previously drilled holes. The cable must be routed as illustrated.

INSTALLING THE TOWING MEMBER

APPLIES TO ALL MODELS

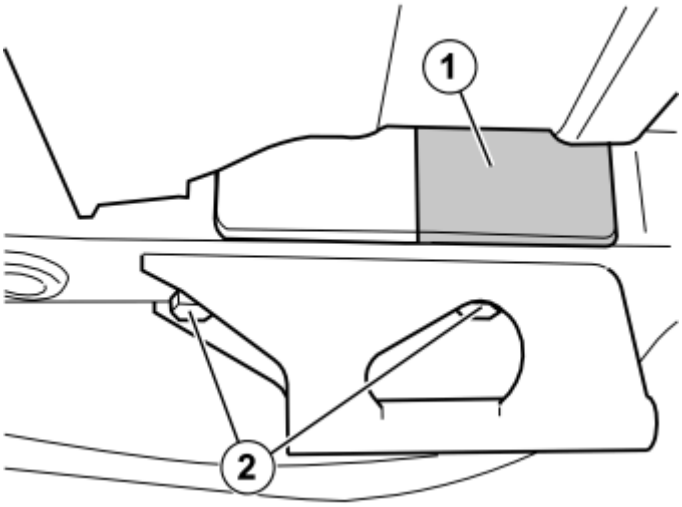

Fig. 660: Identifying The Protective Tags (1)
Courtesy of VOLVO CARS CORPORATION

- Lift up the protective tags (1) (at the rear edge) which cover the mounting holes on the inside of the side members (one on each side) and cut away 80 mm.
- Remove the bracket for the towing eye by removing the screws (2).
- Remove any sealing compound from the surface where the end faces of the towing member shall be located.

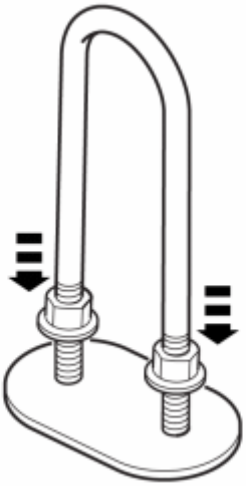

Fig. 661: Leaving An Imprint On The Plate
Courtesy of VOLVO CARS CORPORATION

- Get a brace and a foam rubber plate from the kit.

  Centre the brace on the plate and press, so that the threaded ends leave an imprint on the plate

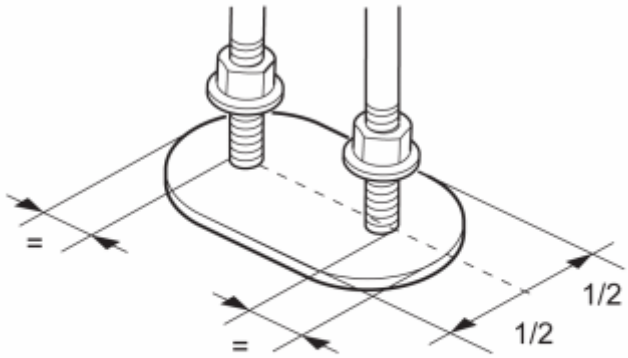

Fig. 662: Locating Measurements
Courtesy of VOLVO CARS CORPORATION

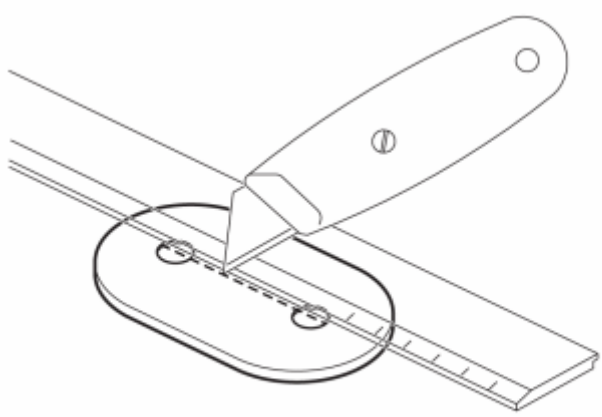

Fig. 663: Cutting Between The Circles
Courtesy of VOLVO CARS CORPORATION

- Get a knife and ruler, and place a straight cut between the outsides of both circles.

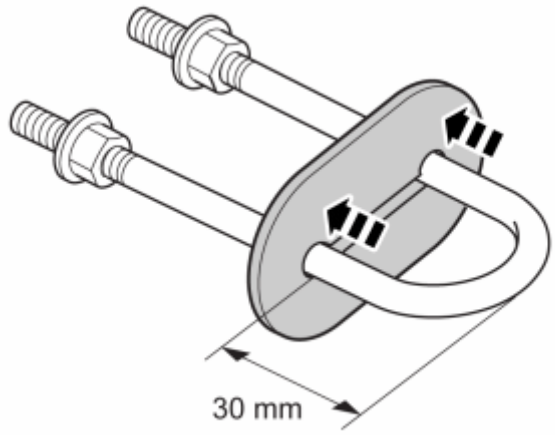

Fig. 664: Pressing The Plate On The Brace
Courtesy of VOLVO CARS CORPORATION

- Press down the plate on the brace approx. **30 mm** , with protective tape facing the two nuts.

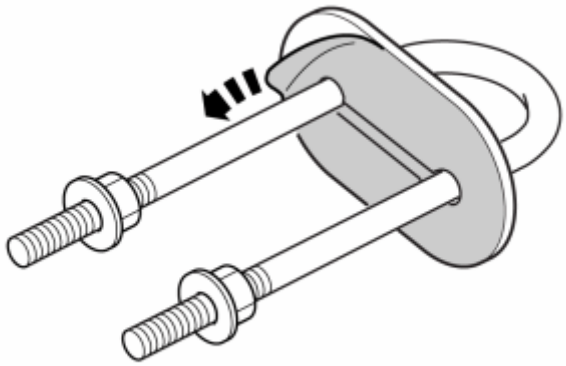

Fig. 665: Removing The Protective Tape
Courtesy of VOLVO CARS CORPORATION

- Remove the protective tape from the foam rubber plate.
- Repeat steps 16-19 for the other brace.

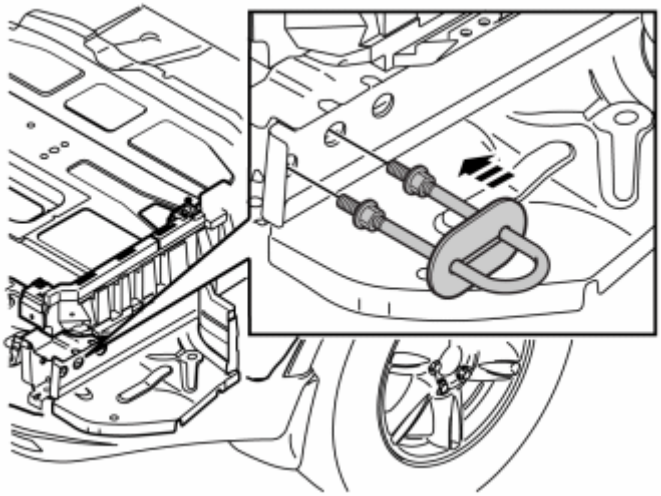

Fig. 666: Fitting The Mounting Bracket Through Two Holes
Courtesy of VOLVO CARS CORPORATION

- Lower the car.
- Remove the protective tags which cover the mounting holes on the outside of the side members.
- Fit the mounting bracket through the two rear holes in the outer wall of the side member. The threaded sections of the mounting bracket should now protrude through to the underside of the car. Repeat on the other side.
- Secure the mounting brackets using butyl tape for example in order to prevent them from falling back.

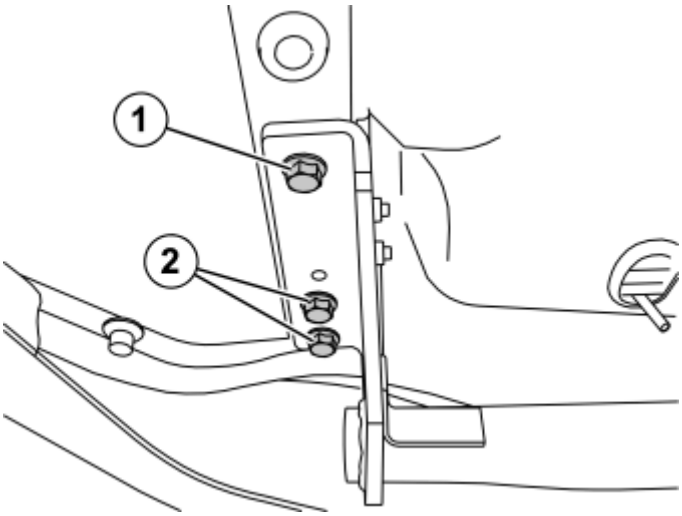

Fig. 667: Fitting The M12X40 Screws (1) On Each Side
Courtesy of VOLVO CARS CORPORATION

- Raise the car.
- Lift up the towing member. Start by angling up the left-hand side's end face above the silencer's end pipe and up behind the bumper to the side member. Following which, angle up the right-hand side's end face to the side member, and position it on the side members, opposite their holes.
- Fit the M12x40 screw (1) in the front hole on each side, while holding the towing member in position.

- Install the remaining screws (2).
- Insert the screws all the way without tightening them.

NOTE: Apply rustproofing agent under the car and on the side members around the end faces, scraping away any sealing compound, before torque tightening the screws.

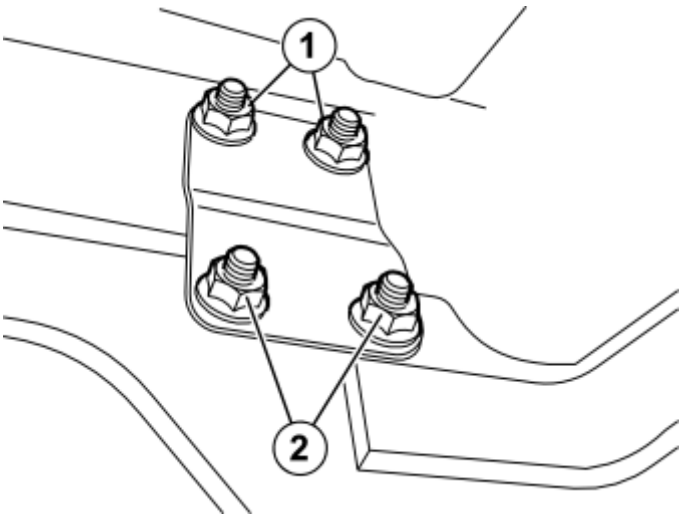

Fig. 668: Installing The Reinforcing Plate
Courtesy of VOLVO CARS CORPORATION

- Install the reinforcing plate with the oval holes facing up.
- Install the flange nuts (1) on the mounting bracket.
- Install the bolts and the flange nuts (2) as illustrated.
- Insert the screws all the way without tightening them. Carry out the above procedure on the other side too.

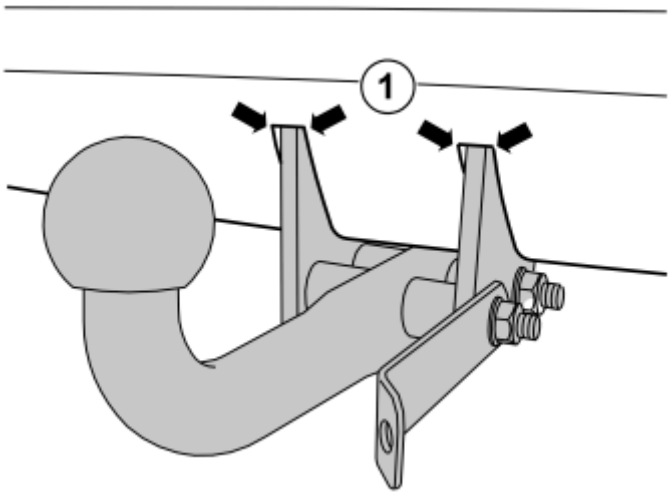

Fig. 669: Centering The Towbar In Relation To The Bumper.

Courtesy of VOLVO CARS CORPORATION

- Centre the towbar in relation to the cut-out (1) in the bumper.

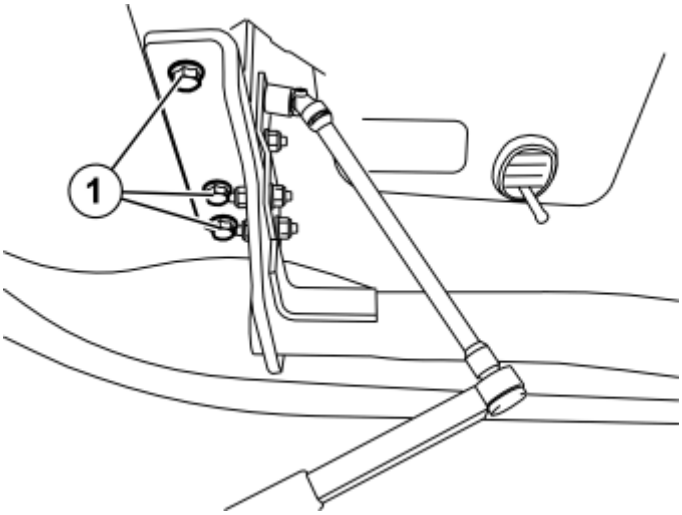

Fig. 670: Identifying Joint Socket (P/N 9814017)
Courtesy of VOLVO CARS CORPORATION

- Torque tighten the screws (1) to **120 Nm** on both sides.
- Torque tighten the upper and lower bolted joint for the mounting bracket to **50 Nm** . Use joint socket (P/N 9814017) when tightening the upper one. Repeat on the other side.
- Bend back the heat deflector plate.
- Reinstall the silencer's rear mounting.
- Reinstall the silencer's front mounting. Torque tighten the screws to **24 Nm** .

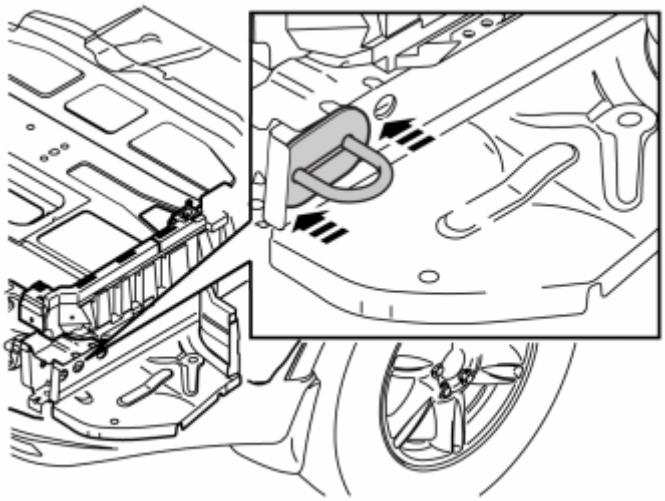

Fig. 671: Pressing The Foam Rubber Plate So It Seals Around The Holes
Courtesy of VOLVO CARS CORPORATION

- Remove the pieces of butyl tape, if used to secure the brace.

- Press on the foam rubber plate against the side member so that it seals tightly around the holes.
- Repeat the operation on the other side.

FINISHING WORK

- Fit the towbar wiring in accordance with the separate installation instructions.
- Put the spare wheel back in place.
- Reinstall the panels, storage box and floor hatches.

TOWBAR, HITCH (2006-2012)

TOWBAR, HITCH

NOTE: **Member kit**

1. **Cross member**
2. **Mounting bracket (x2)**
3. **Screw M10x30 (x4)**
4. **Flange nuts (x8)**
5. **Screw M12x40 (x6)**
6. **Reinforcing plate (x2)**
7. **Cover plug**

Ball holder kit

8. **Storage bag**
9. **Flange nut M6**
10. **Holder**
11. **Strap**
12. **Ball holder**
13. **Foam plastic (x4)**
14. **Lock bolt**
15. **Locking pin**
16. **Screw M6X10**
17. **Velcro fastener (x2)**

Ball kit

18. **Washer**
19. **Ball**
20. **Nut**

PREPARATIONS

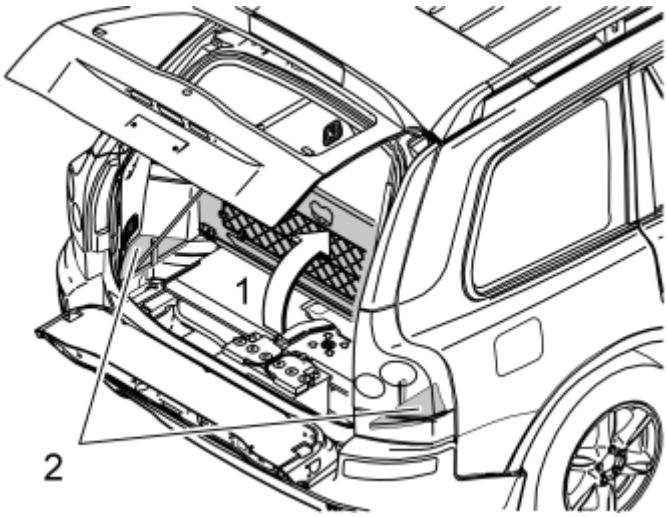

Fig. 672: Removing Storage Boxes
Courtesy of VOLVO CARS CORPORATION

- Fold up the center rear floor hatch (1). If the floor hatch is equipped with a grocery bag holder on the underside, it is fixed with a strap on each short side of the storage box, and these must be detached.
- Remove the storage box underneath and lift it out.
- Remove the side floor hatches (2) on the right and left-hand sides in the cargo compartment.
- If the car is equipped with a spare wheel, remove it.

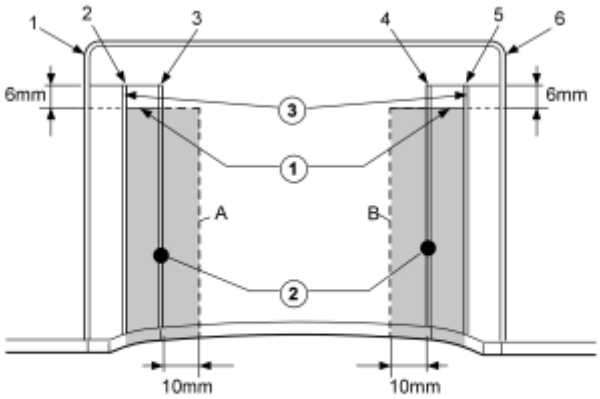

Fig. 673: Making Two Parallel Slits In The Bumper Cover
Courtesy of VOLVO CARS CORPORATION

- Raise the car.
- Measure out and draw a horizontal line **6 mm (1/4")** under the top edge of the grooves, on the inside of the rear bumper cover.
- Draw a vertical line (A and B) **10 mm (3/8")** in towards the center of each side from groove 3 and 4.

- Cut/saw along the inside of groove 2 and line A up to the line which was drawn 6 mm (1/4") under the top edge of the grooves. Repeat this between groove 5 and line B. Remove the shadowed areas by cutting/sawing between the cuts along the horizontal line, so that two parallel slits are formed in the bumper cover.
- Cut away the remaining pieces of groove 3 and 4 level with the bumper.
- Smooth off all edges with a file.

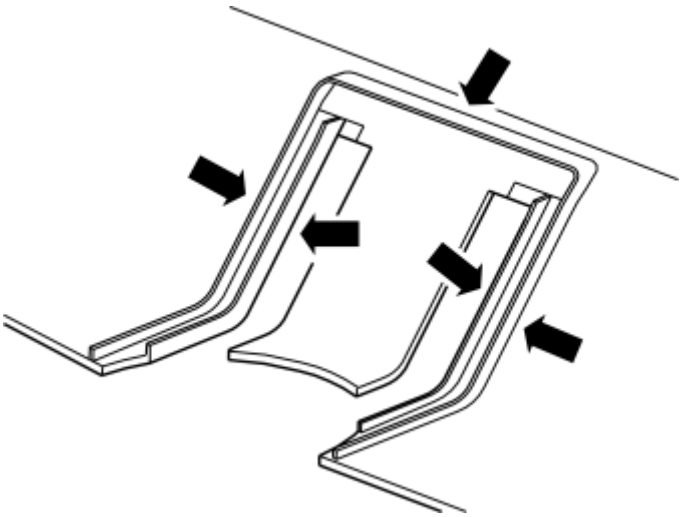

Fig. 674: Cutting Away The Upright Ribs
Courtesy of VOLVO CARS CORPORATION

- Cut away all of the grooves' ridges.

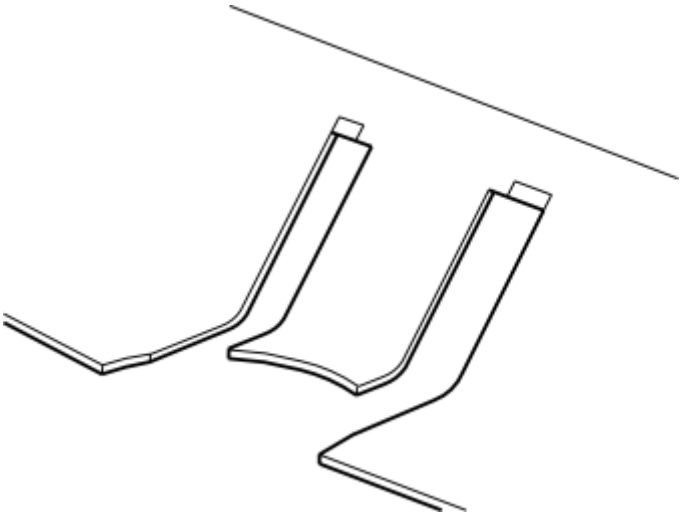

Fig. 675: Identifying the End Result
Courtesy of VOLVO CARS CORPORATION

- The end result should appear as illustrated.

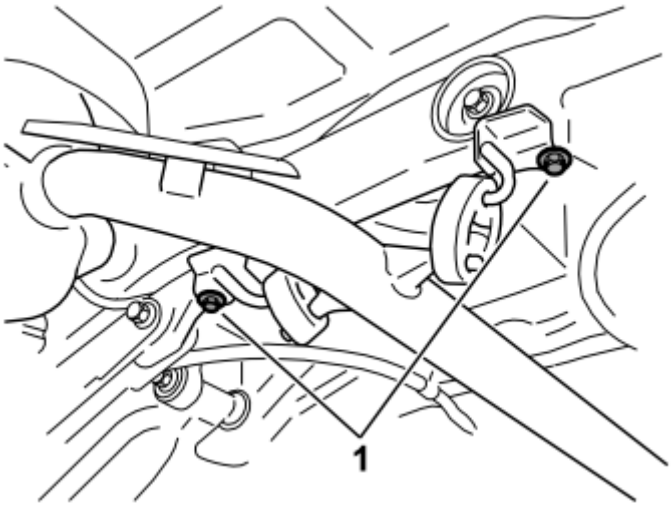

Fig. 676: Identifying Front Mounting
Courtesy of VOLVO CARS CORPORATION

- Detach the silencer's front mounting in the rear subframe by removing the screws (1).

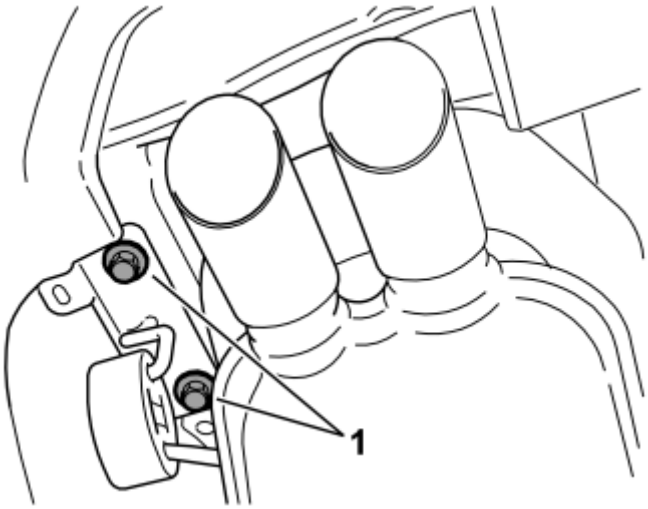

Fig. 677: Identifying The Rear Mounting
Courtesy of VOLVO CARS CORPORATION

- Detach the rubber mounting (1).
- Detach the silencer's rear mounting bracket from the lower edge of the left-hand side member by removing the screws (2).
- Carefully bend aside the heat deflector plate at the side member to make more space to work in.

APPLIES TO CARS WITH REAR PARKING ASSISTANCE

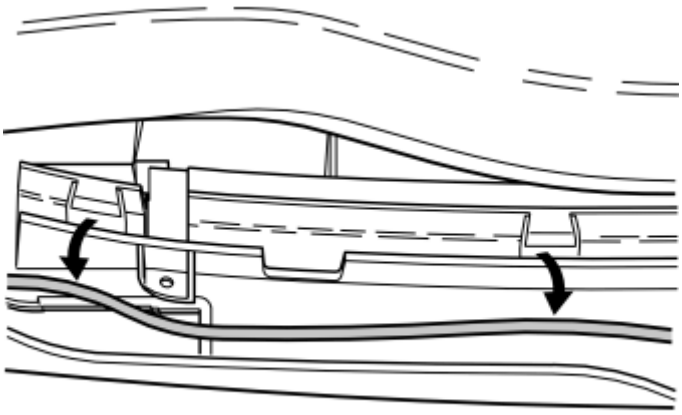

Fig. 678: Identifying The Right-Hand Side
Courtesy of VOLVO CARS CORPORATION

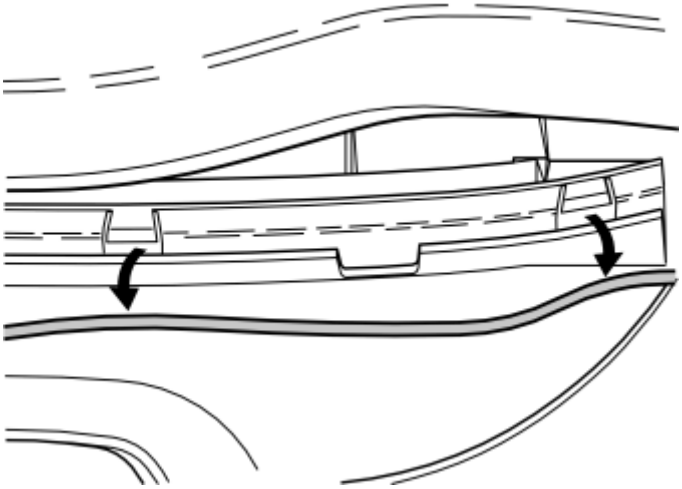

Fig. 679: Identifying The Left-Hand Side
Courtesy of VOLVO CARS CORPORATION

- Detach the cable to the parking assistance sensors from its clips in the rear section of the bumper.

APPLIES TO ALL MODELS

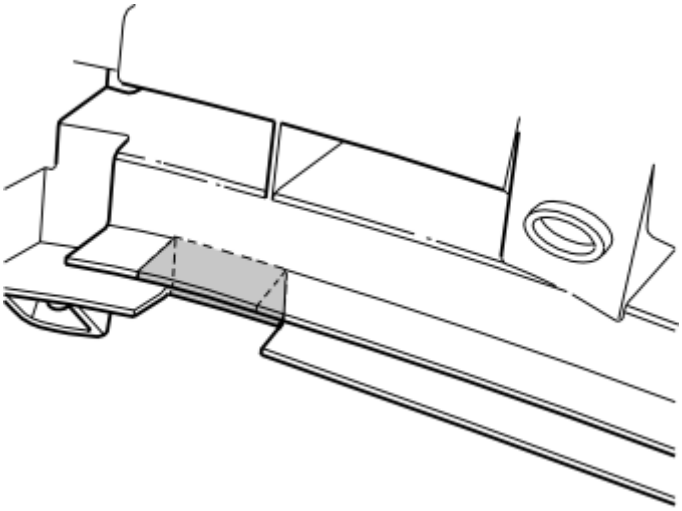

Fig. 680: Cut Out As Marked
Courtesy of VOLVO CARS CORPORATION

Right-hand side:

- Cut/saw out the rear section at the existing cut-out in accordance with the markings in the illustration.

APPLIES TO CARS WITH REAR PARKING ASSISTANCE

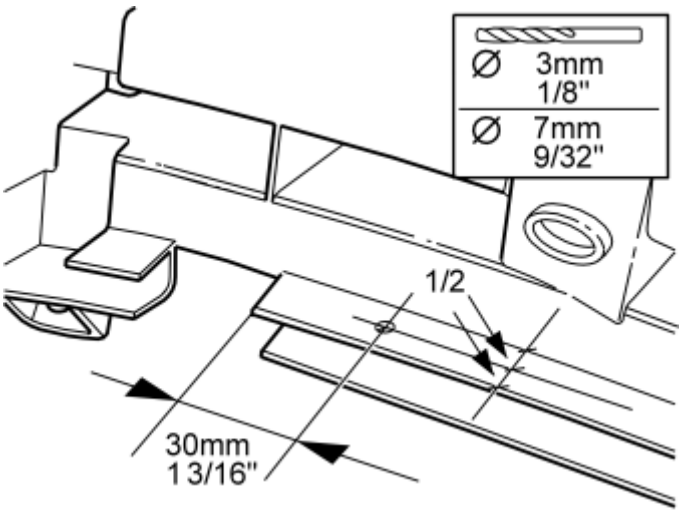

Fig. 681: Measuring Location of Hole
Courtesy of VOLVO CARS CORPORATION

Right-hand side:

- Measure out for drilling the hole for the cable grommet in the upper of the rear section's plates as illustrated.
- Pre-drill using a **O3 mm (1/8")** diameter drill bit, and then drill out the hole to **O8 mm (5/16")** . Use an angle drilling machine and short drill bits.

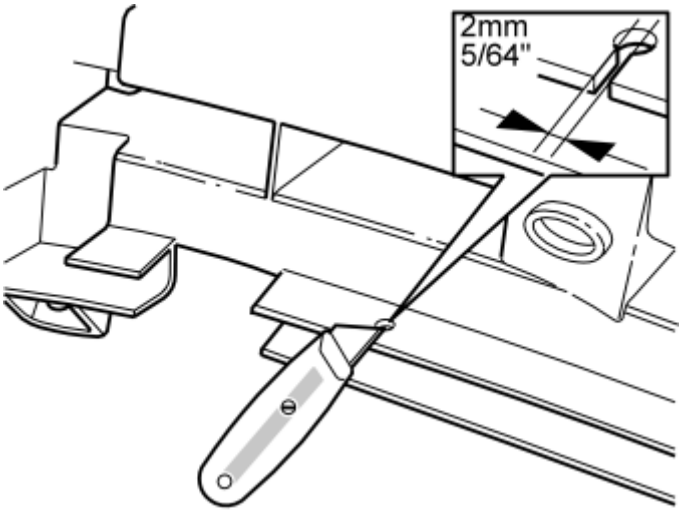

Fig. 682: Cutting a 2 mm (5/64") Groove
Courtesy of VOLVO CARS CORPORATION

- Cut open a **2 mm (5/64")** wide slot through the plate up to the hole.

APPLIES TO ALL MODELS

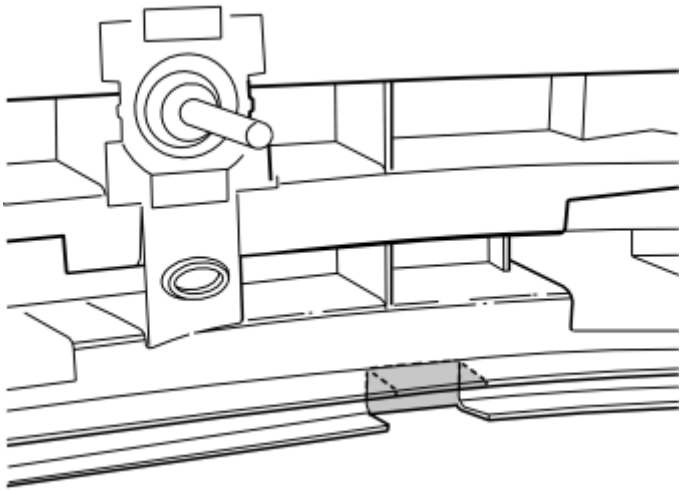

Fig. 683: Cutting Out As Marked
Courtesy of VOLVO CARS CORPORATION

Left-hand side:

- Cut/saw out the rear section at the existing cut-out in accordance with the markings in the illustration.

APPLIES TO CARS WITH REAR PARKING ASSISTANCE

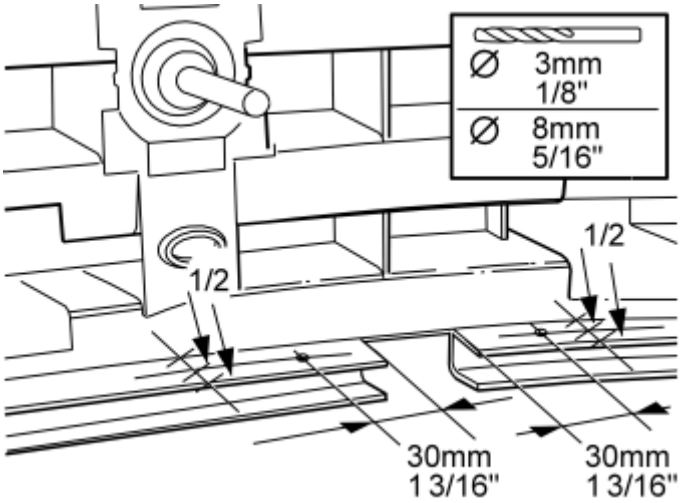

Fig. 684: Measuring Hole Locations
Courtesy of VOLVO CARS CORPORATION

Left-hand side:

- Measure out for drilling the hole for the cable grommet on the right and left-hand sides of the cut-out, in the upper of the rear section's plates as illustrated.
- Pre-drill using a **O3 mm (1/8")** diameter drill bit, and then drill out the holes to **O8 mm (5/16")** . Use an angle drilling machine and short drill bits.

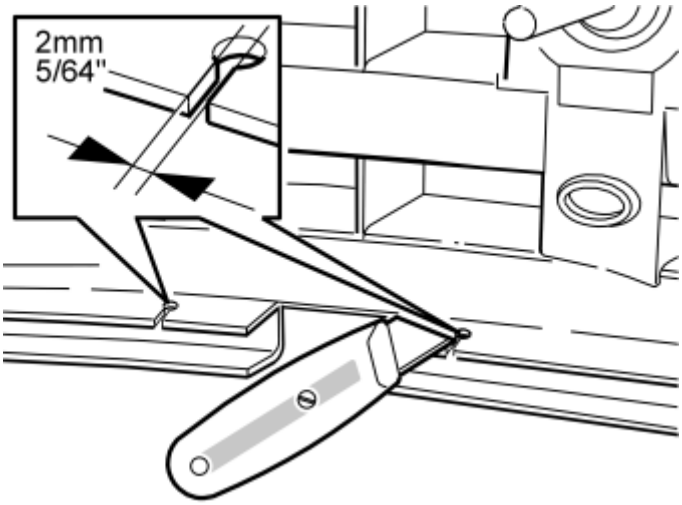

Fig. 685: Cutting a 2 mm (5/64") Slot
Courtesy of VOLVO CARS CORPORATION

- Cut open a **2 mm (5/64")** wide slot through the plate up to the holes on both sides of the cut-out.

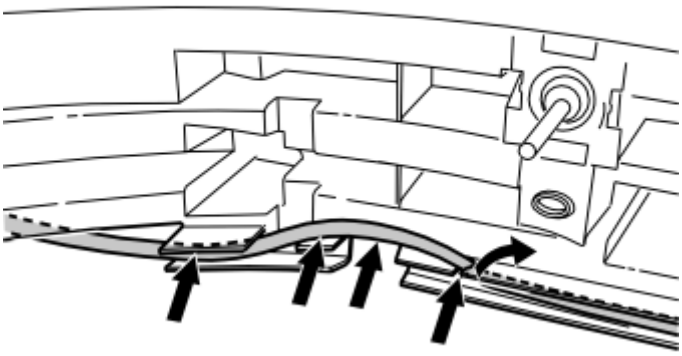

Fig. 686: Routing Cable
Courtesy of VOLVO CARS CORPORATION

Right-hand side:

- Press up one of the plate's tabs and guide the cable into the previously drilled hole. The cable must be routed as illustrated.

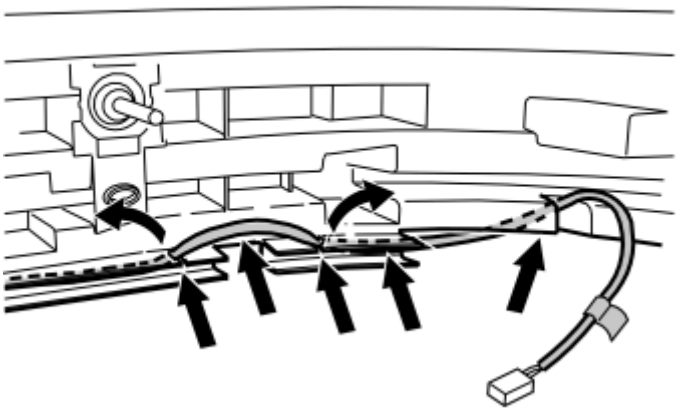

Fig. 687: Routing Cable
Courtesy of VOLVO CARS CORPORATION

Left-hand side:

- Press up the plate's tabs and guide the cable into the previously drilled holes. The cable must be routed as illustrated.

INSTALLING THE TOWING MEMBER

APPLIES TO ALL MODELS

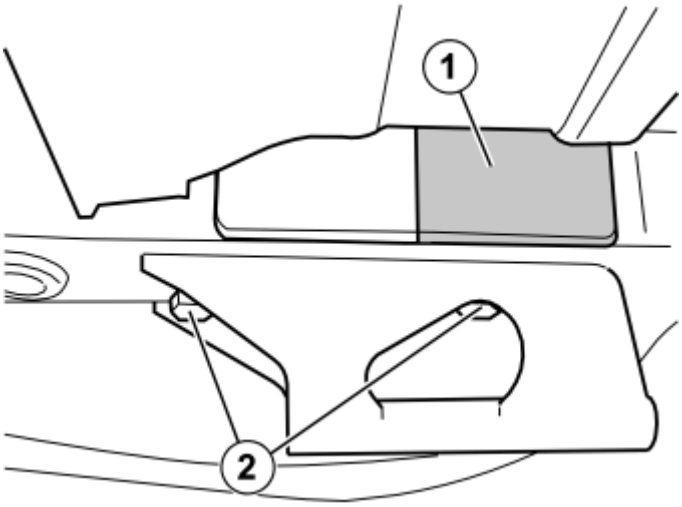

Fig. 688: Identifying The Protective Tags (1)
Courtesy of VOLVO CARS CORPORATION

- Lift up the protective tags (1) (at the rear edge) which cover the mounting holes on the inside of the side members (one on each side) and cut away 80 mm.
- Remove the bracket for the towing eye by removing the screws (2).
- Remove any sealing compound from the surface where the end faces of the towing member shall be located.

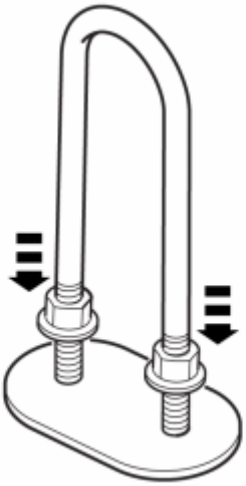

Fig. 689: Leaving An Imprint On The Plate
Courtesy of VOLVO CARS CORPORATION

- Get a brace and a foam rubber piece from the kit.

  Centre the brace on the plate and press, so that the threaded ends leave an imprint on the plate.

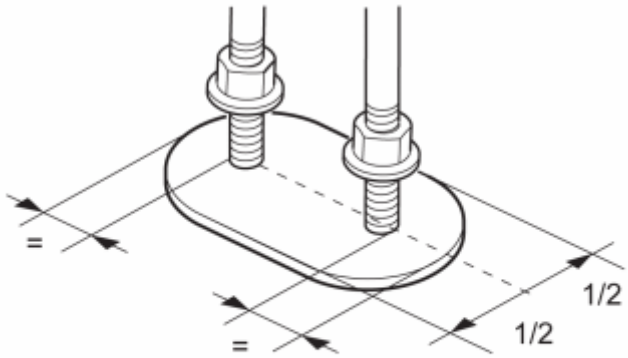

Fig. 690: Locating Measurements
Courtesy of VOLVO CARS CORPORATION

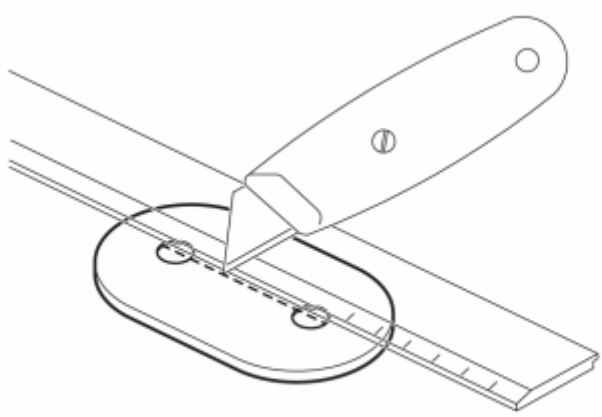

Fig. 691: Cutting Between The Circles
Courtesy of VOLVO CARS CORPORATION

- Get a knife and a ruler, and cut a straight line between the outsides of both circles.

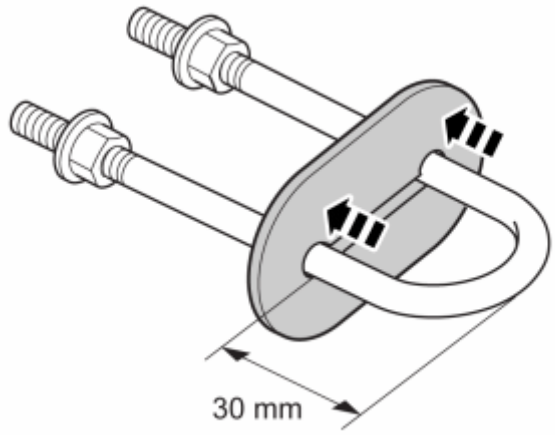

Fig. 692: Pressing The Plate On The Brace
Courtesy of VOLVO CARS CORPORATION

- Press down the plate on the brace approx. **30 mm** with the protective tape facing the two nuts.

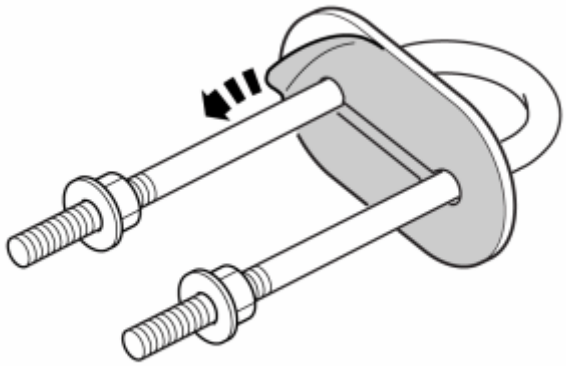

Fig. 693: Removing The Protective Tape
Courtesy of VOLVO CARS CORPORATION

- Remove the protective tape from the foam rubber plate.
- Repeat steps 16-19 for the other brace.

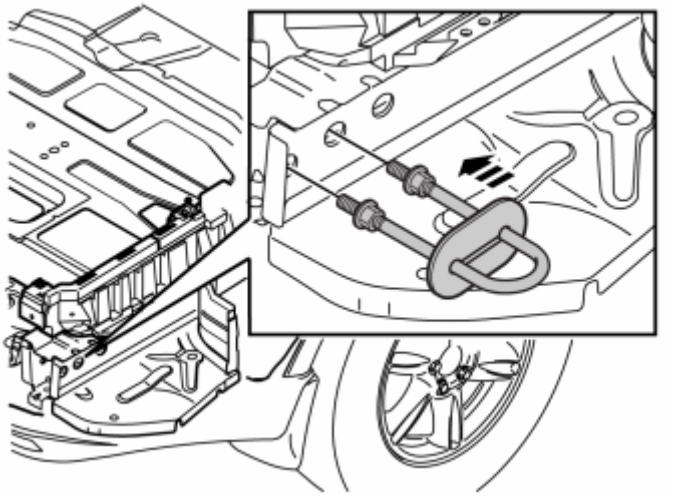

Fig. 694: Fitting The Mounting Bracket Through Two Holes
Courtesy of VOLVO CARS CORPORATION

- Lower the car.
- Remove the protective tags which cover the mounting holes on the outside of the side members.
- Fit the mounting bracket through the two rear holes in the outer wall of the side member. The threaded sections of the mounting bracket should now protrude through to the underside of the car. Repeat on the other side.
- Secure the mounting brackets using butyl tape for example in order to prevent them from falling back.

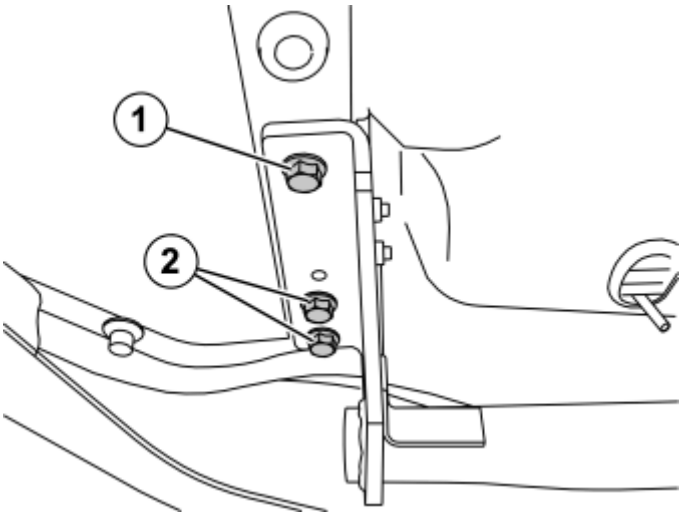

Fig. 695: Fitting The M12X40 Screws (1) On Each Side
Courtesy of VOLVO CARS CORPORATION

- Raise the car.
- Remove the towbar from the towing member.
- Lift up the towing member. Start by angling up the left-hand side's end face above the silencer's end pipe and up behind the bumper to the side member. Following which, angle up the right-hand side's end face to the side member, and position it on the side members, opposite their holes.

- Fit the M12x40 screw (1) in the front hole on each side, while holding the towing member in position.
- Install the remaining screws (2).
- Insert the screws all the way without tightening them.

NOTE: Apply rustproofing agent under the car and on the side members around the end faces, scraping away any sealing compound, before torque tightening the screws.

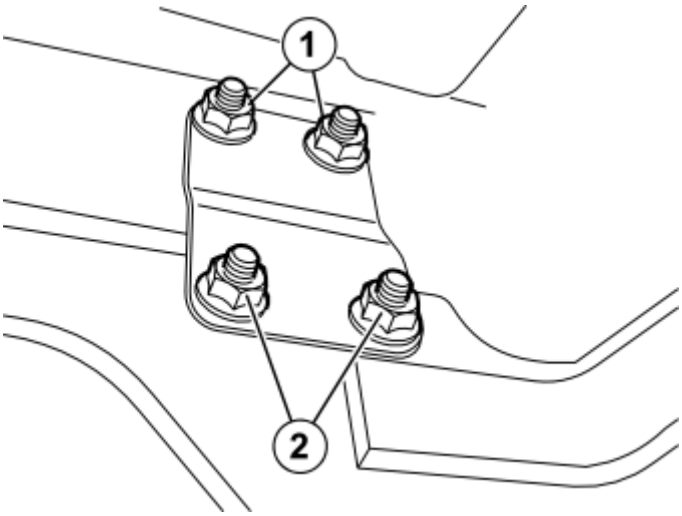

Fig. 696: Installing The Reinforcing Plate
Courtesy of VOLVO CARS CORPORATION

- Install the reinforcing plate with the oval holes facing up.
- Install the flange nuts (1) on the mounting bracket.
- Install the bolts and the flange nuts (2).
- Insert the screws all the way without tightening them. Carry out the above procedure on the other side too.

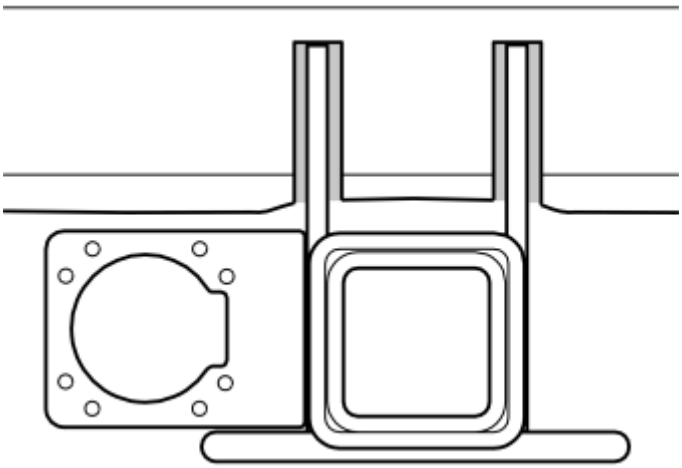

Fig. 697: Centering The Towbar In Relation To The Bumper
Courtesy of VOLVO CARS CORPORATION

- Centre the towbar in relation to the cut-out in the bumper.

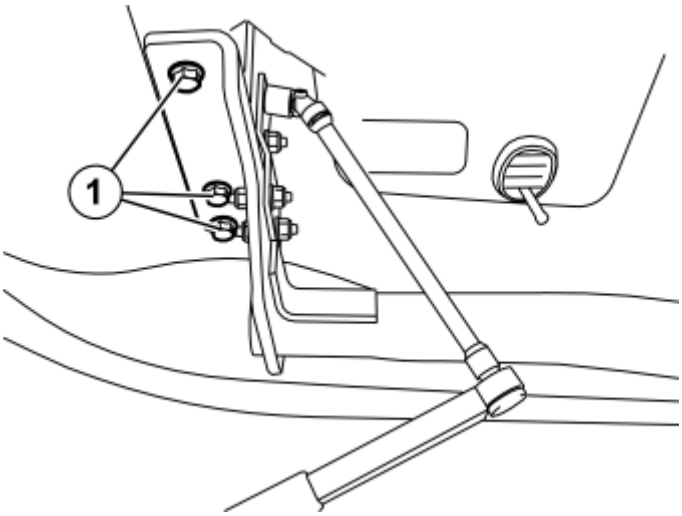

Fig. 698: Identifying Joint Socket (P/N 9814017)
Courtesy of VOLVO CARS CORPORATION

- Torque tighten the screws (1) to **120 Nm** on both sides.
- Torque tighten the upper and lower bolted joint for the mounting bracket to **50 Nm** . Use joint socket (P/N 9814017) when tightening the upper one. Repeat on the other side.
- Bend back the heat deflector plate.
- Reinstall the silencer's rear mounting.
- Reinstall the silencer's front mounting. Torque tighten the screws to **24 Nm** .

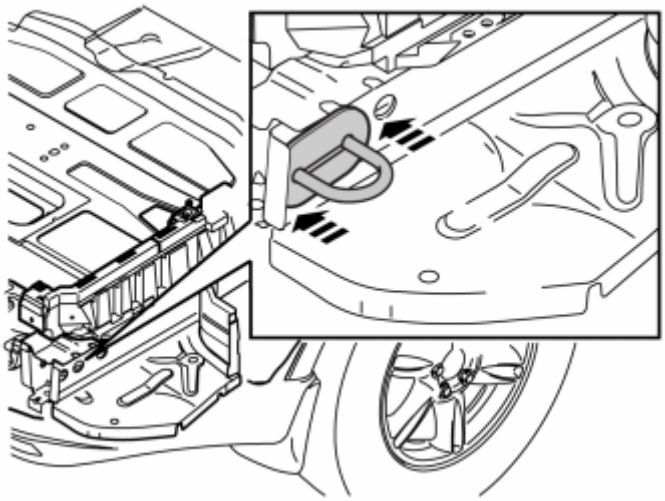

Fig. 699: Pressing The Foam Rubber Plate So It Seals Around The Holes
Courtesy of VOLVO CARS CORPORATION

- Remove the pieces of butyl tape, if it has been used to secure the brace.
- Press the foam rubber plate against the side member so that it seals tight around the holes.
- Repeat the operation on the other side.

INSTALLING THE BALL HOLDER AND BALL

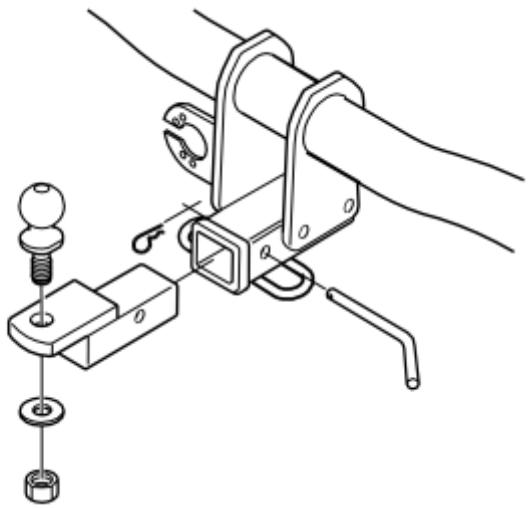

Fig. 700: Installing The Ball and Holder (Observe Torque Spec.)
Courtesy of VOLVO CARS CORPORATION

- Take the ball holder and insert it into the towing member's square tube until the holes in the ball holder and towing member correspond. Insert the lock bolt through the holes and secure it with the locking pin.
- Position the ball in the hole on the ball holder.
- Install washer and nut, torque tighten to **244 Nm (180 lbf. ft)** .

INSTALLING THE HOLDER

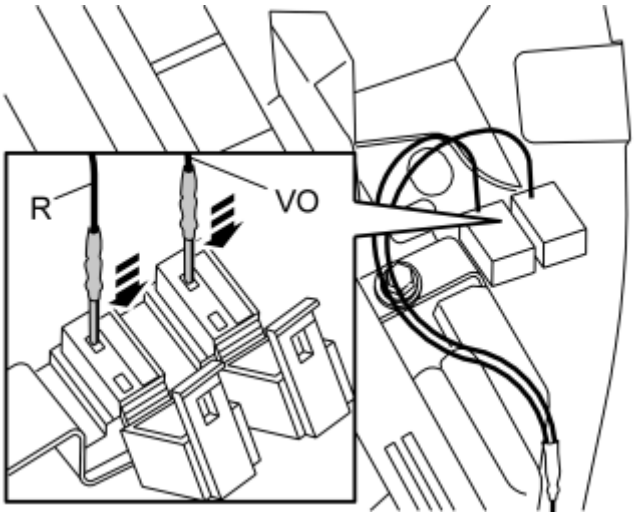

Fig. 701: Measuring For Drilling
Courtesy of VOLVO CARS CORPORATION

- Measure out for drilling the hole for the towbar holder, to the right of the battery as illustrated. Use a **O6.5 mm (1/4")** diameter drill bit.
- Remove any shavings.

  Apply rustproofing agent to the hole.

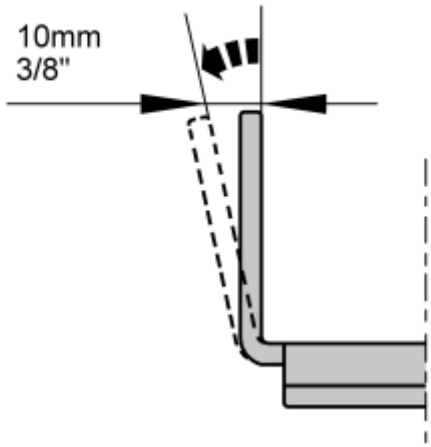

Fig. 702: Bending The Holder's Mounting Eyelets Out Approx. 10 Mm
Courtesy of VOLVO CARS CORPORATION

- Bend both of the holder's mounting eyelets out approx. 10 mm (3/8").

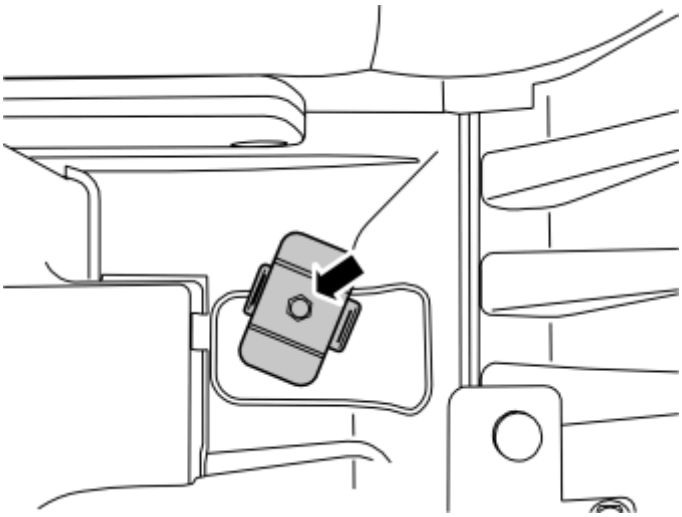

Fig. 703: Installing The Holder With M6 X 10 Screw And M6 Nut
Courtesy of VOLVO CARS CORPORATION

- Install the holder using an M6 x 10 screw and M6 nut. Torque tighten to **10 Nm** .

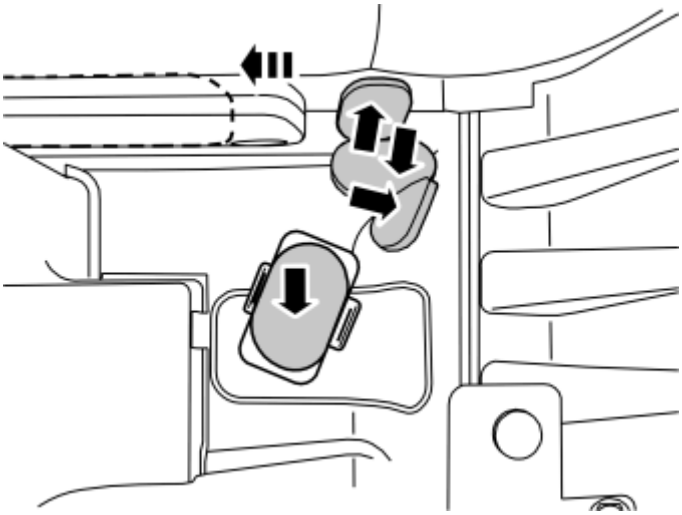

Fig. 704: Fitting The Four Foam Plastic Pieces
Courtesy of VOLVO CARS CORPORATION

- Fit the four foam plastic pieces as illustrated. This is to avoid rattling when the towbar is stored there.

Applies to cars with warning triangle

- Move the warning triangle approx. 80 mm sideways into the center to make space for the towbar. Mark out the inner wall locations for the warning triangle's Velcro fasteners.
- Secure two Velcro fasteners at the markings on the inner wall. Install the warning triangle.

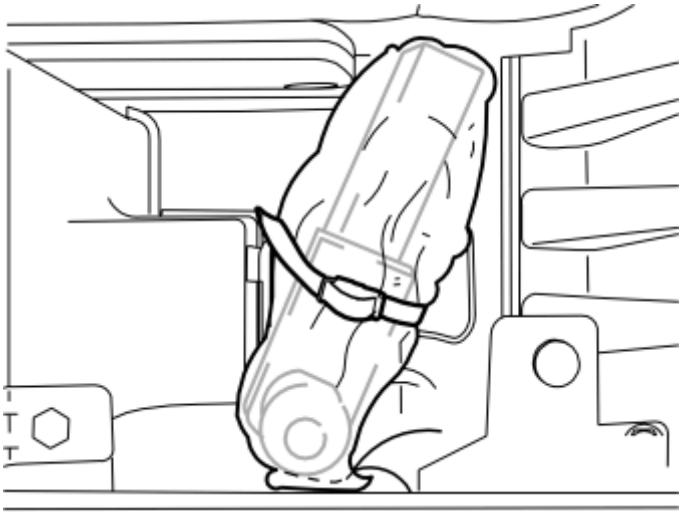

Fig. 705: Stowing the Towbar
Courtesy of VOLVO CARS CORPORATION

- Take the retaining strap and thread it through the holder's two eyelets.
- Take the towbar and insert it into the protective bag. Tighten the protective bag's cord
- Position the protective bag with the towbar over the holder and secure it with the retaining strap as illustrated.

- Install the cover plug in the socket for the towbar.

FINISHING WORK

- Fit the towbar wiring in accordance with the separate installation instructions.
- Put the spare wheel back in place.
- Reinstall the panels, storage box and floor hatches.

ACCESSORIES AND EQUIPMENT

Miscellaneous - Removal, Replacement And Installation

BODYKIT AND ROOF RAILS

BODYKIT, REPLACING

Special tools:

see **9512942**

see **9512949**

NOTE: **The graphics in this service information are used for different model years and/or models. Some variation may occur. However, the essential information in the graphics is always correct.**

PREPARATORY WORK

CLEANING

NOTE: **Wash and degrease the car before replacing the body kit.**

METHOD CONTENT

This method consists of:

- see **REPLACING THE BODYKIT PANEL FRONT FENDER**
- see **REPLACING BODYKIT PANEL REAR FENDER**
- see **REPLACING BODYKIT PANEL REAR SIDE DOOR**
- see **REPLACING BODYKIT PANEL FRONT SIDE DOOR**.

REPLACING THE BODYKIT PANEL FRONT FENDER

REMOVING THE BODYKIT PANEL FRONT FENDER

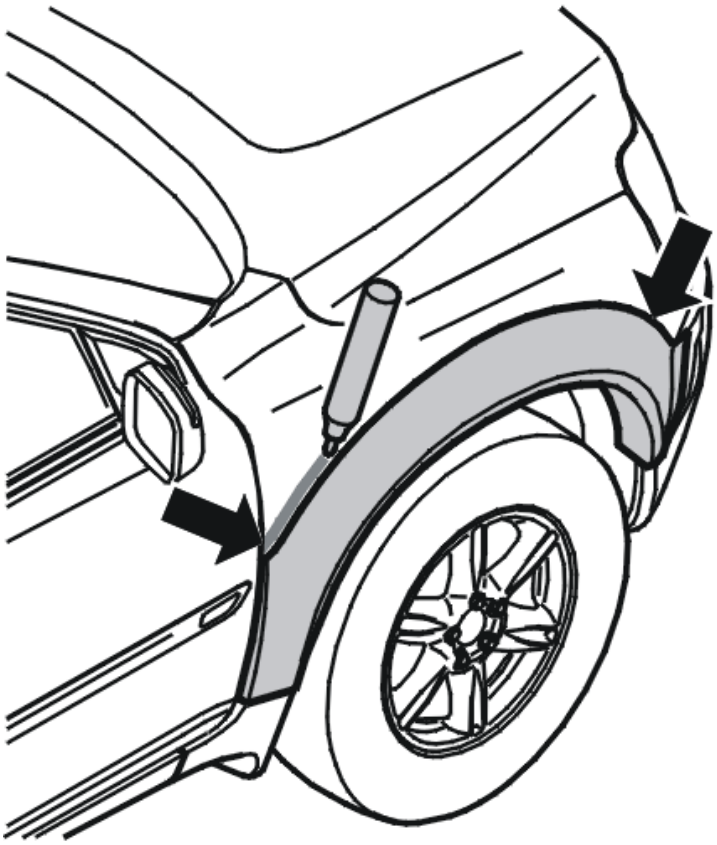

Fig. 1: Marking Location Of Bodykit Panel
Courtesy of VOLVO CARS CORPORATION

Mark the location of the bodykit panel against the bodywork using a whiteboard marker pen.

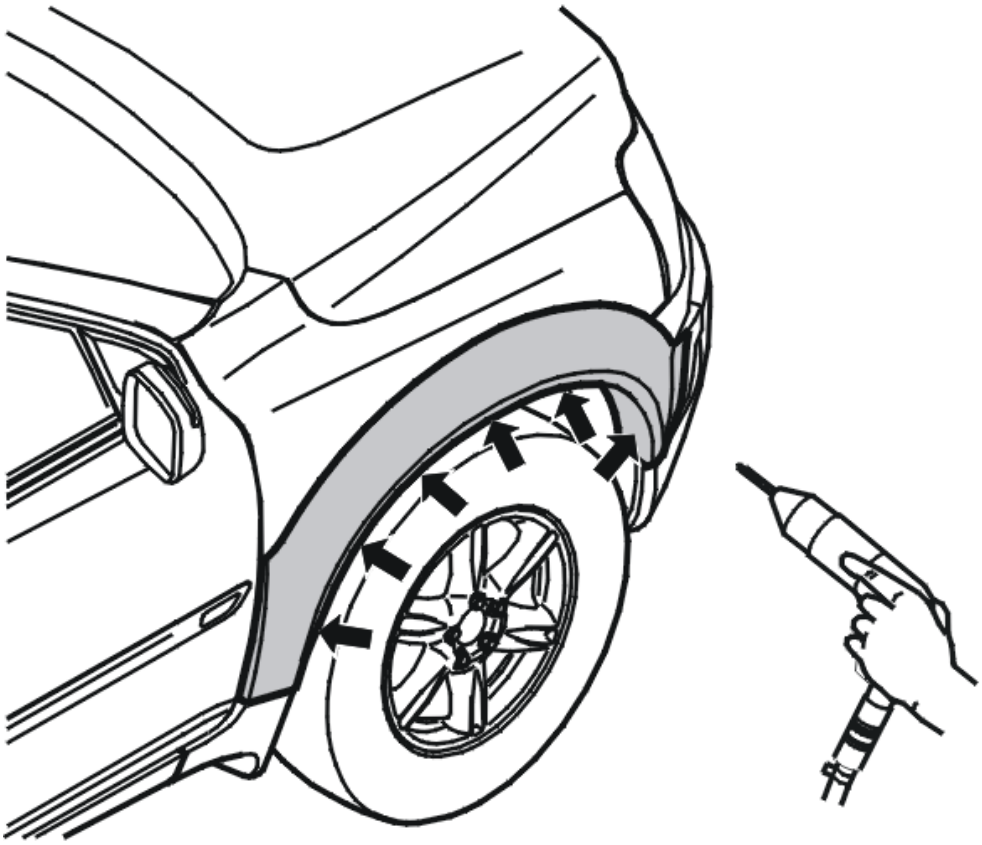

Fig. 2: Drilling Out Rivets
Courtesy of VOLVO CARS CORPORATION

Drill out the rivets in the front wheel arch. Use a **6 mm (1/4")** diameter drill bit.

Remove the remains of the rivets from the wheel arch.

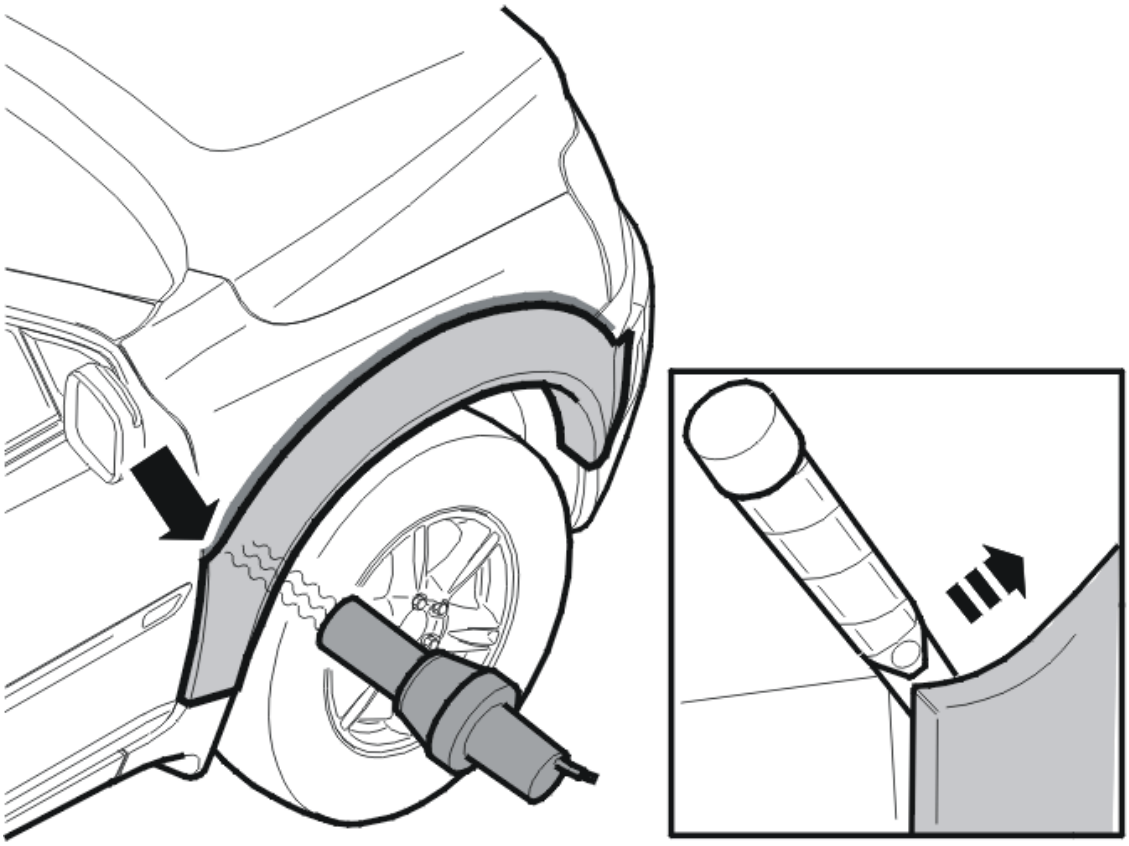

Fig. 3: Using Plastic Weatherstrip Tool
Courtesy of VOLVO CARS CORPORATION

Use a plastic weatherstrip tool to detach the bodykit panel. Start at the rear corner.

CAUTION: Do not damage painted surfaces.

HINT: If the tape is difficult to remove, use a hot-air gun and heat gently until the tape softens up.

CLEANING THE BODYWORK AROUND THE BODYKIT PANEL FRONT FENDER

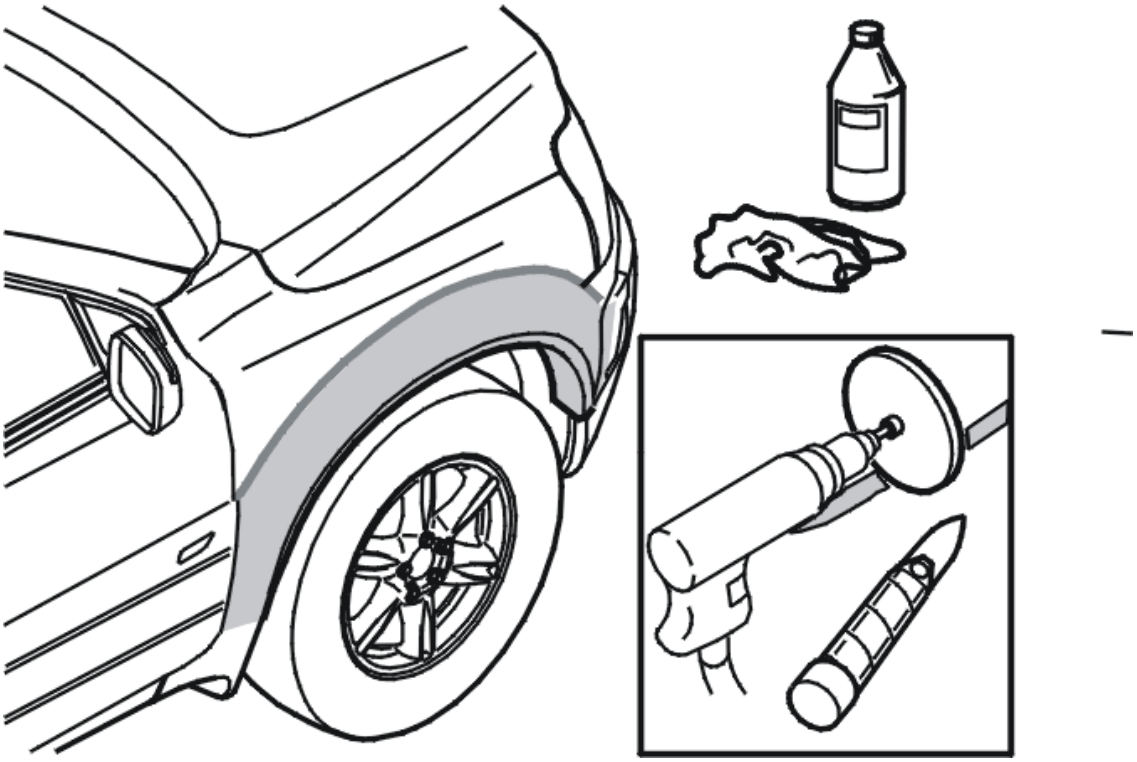

Fig. 4: Cleaning Adhesive Residue Off Bodywork
Courtesy of VOLVO CARS CORPORATION

Clean any adhesive residue off the bodywork. Use see **9512942** . Clean using Isopropanol.

CAUTION: Do not use the tool on painted surfaces with plastic carriers.

All adhesive residue must be removed from painted surfaces with plastic carriers mechanically. Use a plastic weatherstrip tool and then clean using Isopropanol.

PREPARING THE BODYKIT PANEL FRONT FENDER

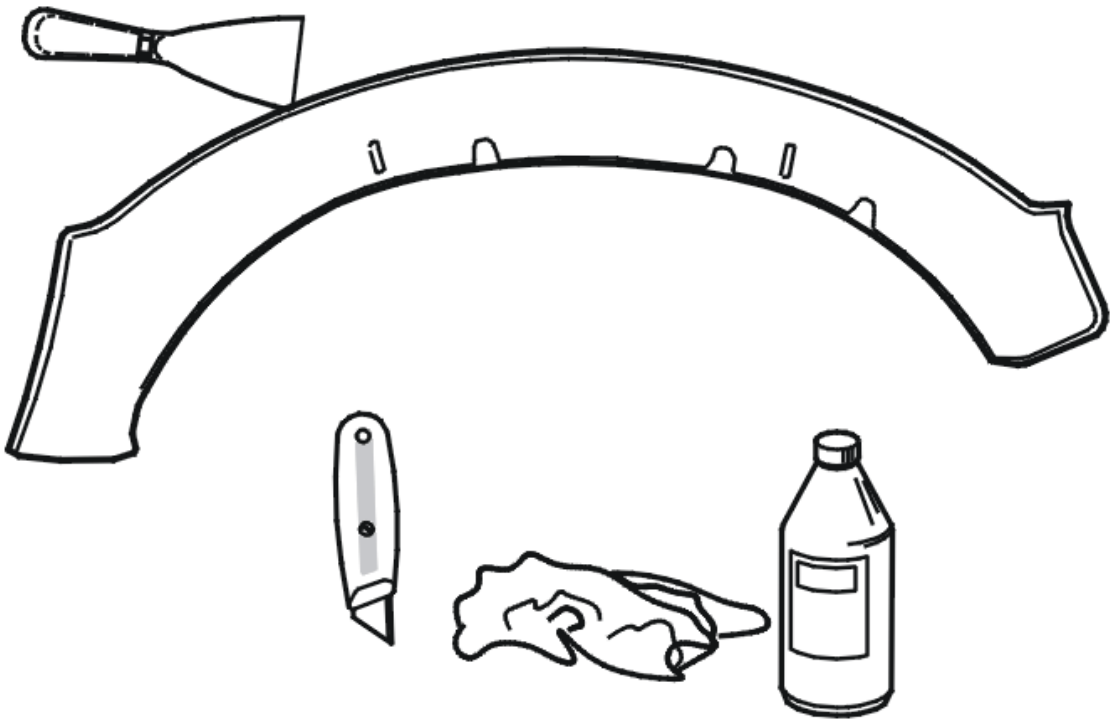

Fig. 5: Cleaning Tape Residue From Bodykit Panel
Courtesy of VOLVO CARS CORPORATION

Clean tape residue from the bodykit panel. Use a knife or putty knife.

Clean and dry the area for the tape. Use isopropanol.

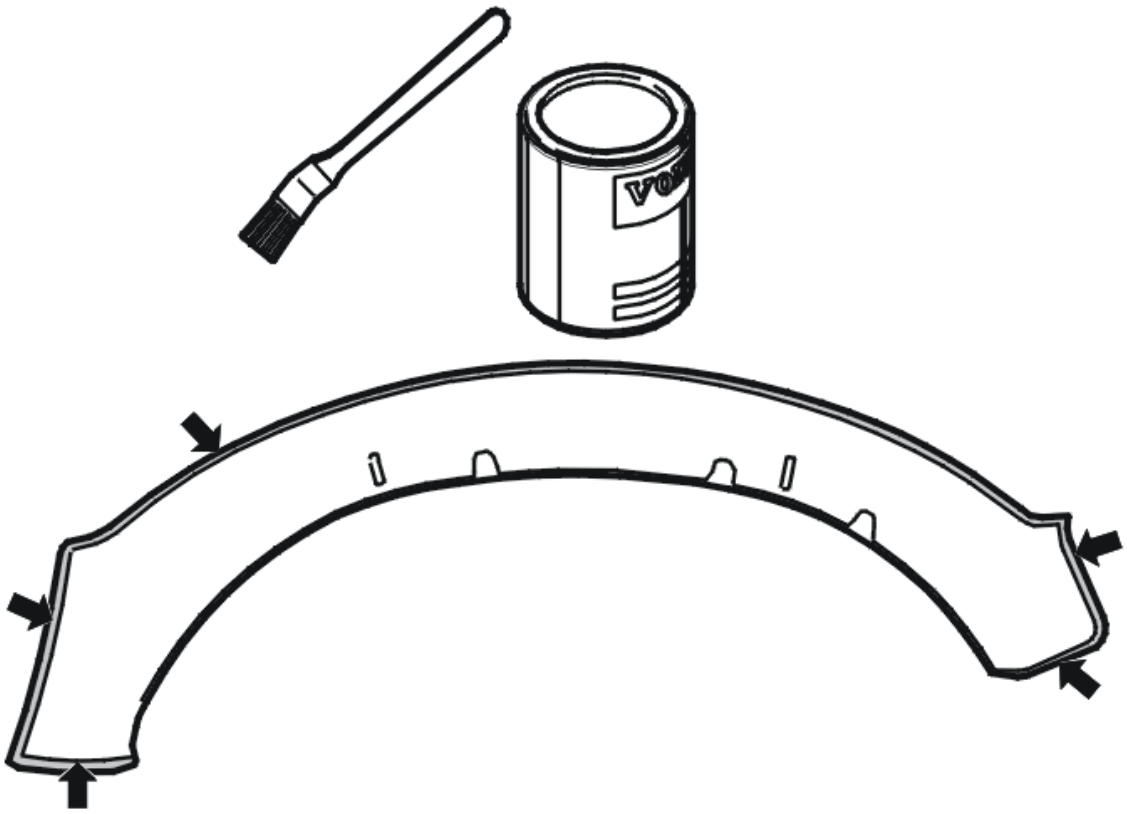

Fig. 6: Applying Enamel Primer
Courtesy of VOLVO CARS CORPORATION

Apply enamel primer to the surfaces for the tape on the bodykit panel.

CAUTION: Install the tape after 15 minutes, and within 3 hours, of applying the primer.

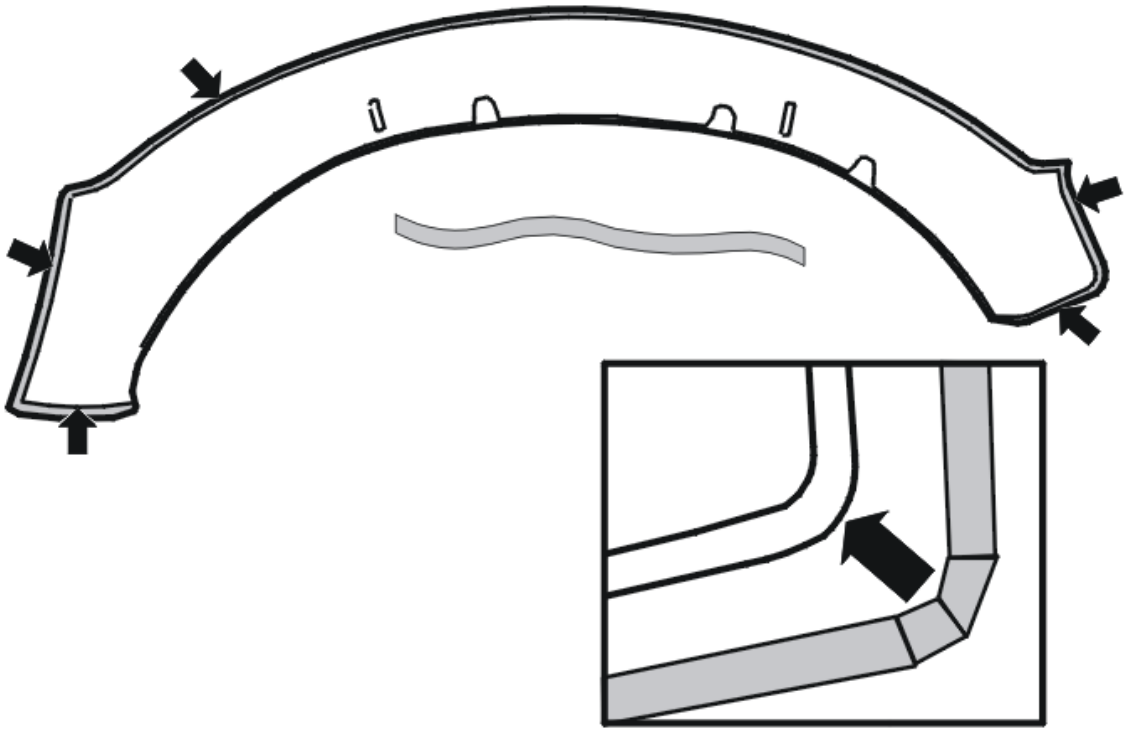

Fig. 7: Identifying Tape On Bodykit Panel
Courtesy of VOLVO CARS CORPORATION

Install the tape on the bodykit panel as shown.

INSTALLING THE BODYKIT PANEL FRONT FENDER

Installing the bodykit panel front fender, see

Installation instructions, accessory

86, Bumper, mudguard

Side panel

Step 15: "Securing the rear fender side panel".

REPLACING BODYKIT PANEL REAR FENDER

REMOVING THE BODYKIT PANEL REAR FENDER

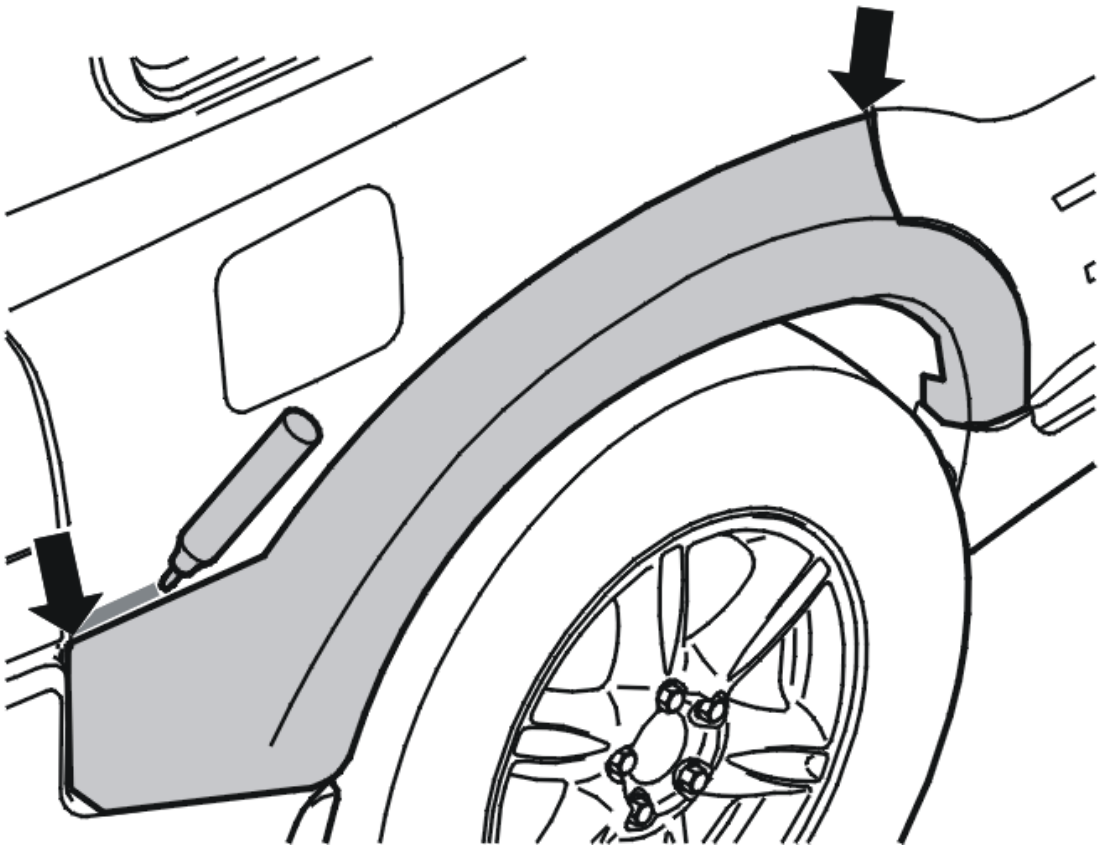

Fig. 8: Marking Location Of Bodykit Panel
Courtesy of VOLVO CARS CORPORATION

Mark the location of the bodykit panel against the bodywork using a whiteboard marker pen.

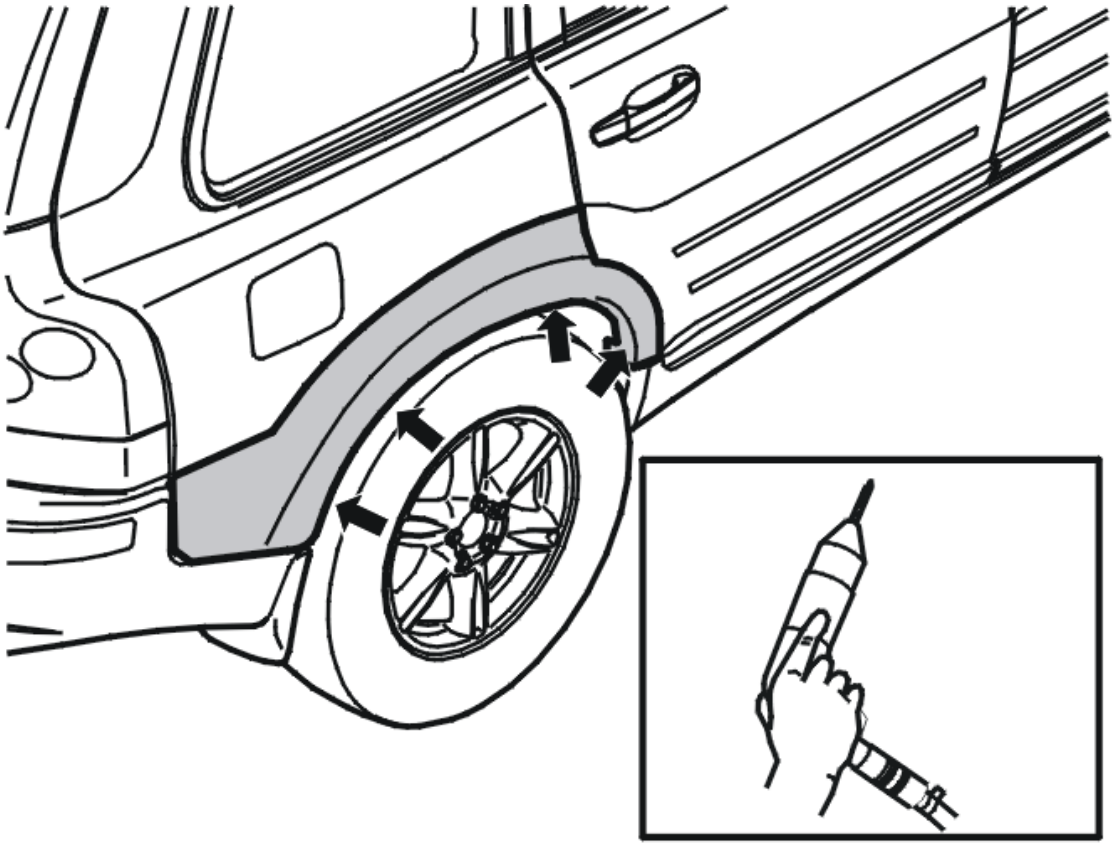

Fig. 9: Drilling Out Rivets
Courtesy of VOLVO CARS CORPORATION

Drill out the rivets in the rear wheel arch. Use a **6 mm (1/4)** diameter drill bit.

Remove the remains of the rivets from the wheel arch.

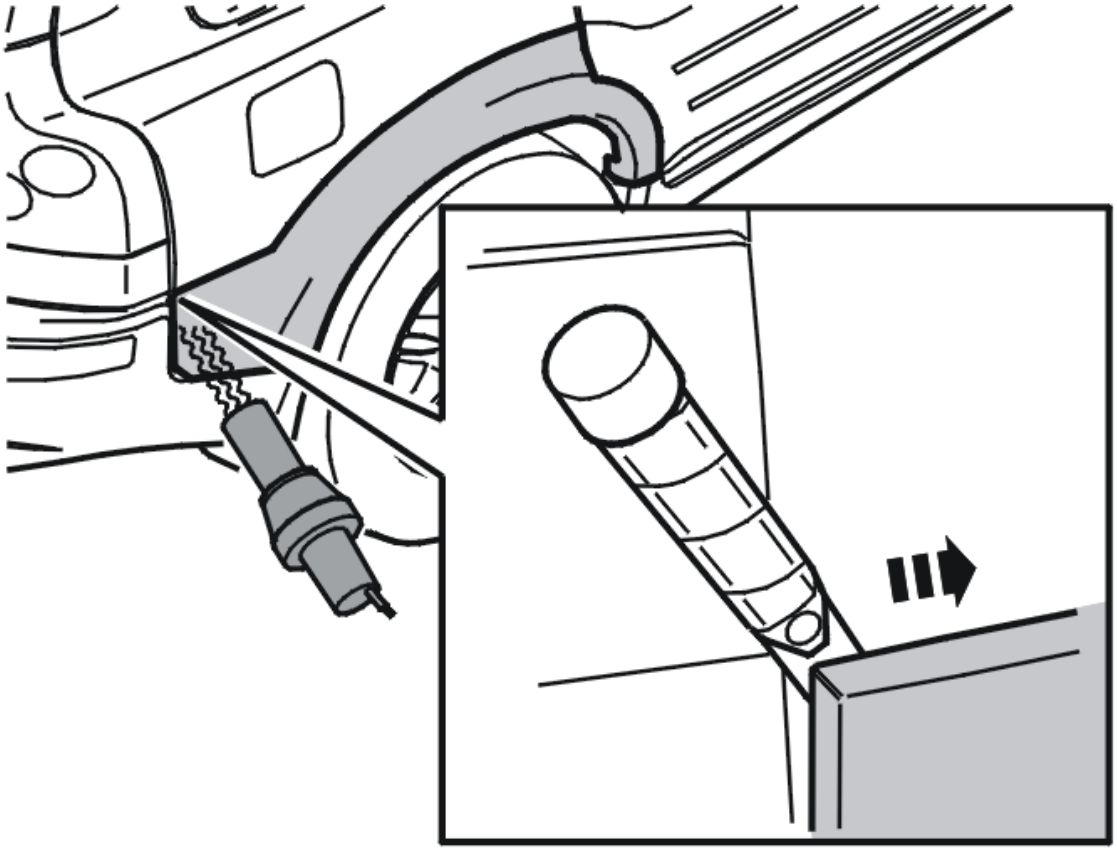

Fig. 10: Using Plastic Weatherstrip Tool
Courtesy of VOLVO CARS CORPORATION

Use a plastic weatherstrip tool to detach the bodykit panel. Start at the rear corner.

CAUTION: Do not damage painted surfaces.

HINT: If the tape is difficult to remove, use a hot-air gun and heat gently until the tape softens up.

CLEANING THE BODYWORK AROUND THE BODYKIT PANEL REAR FENDER

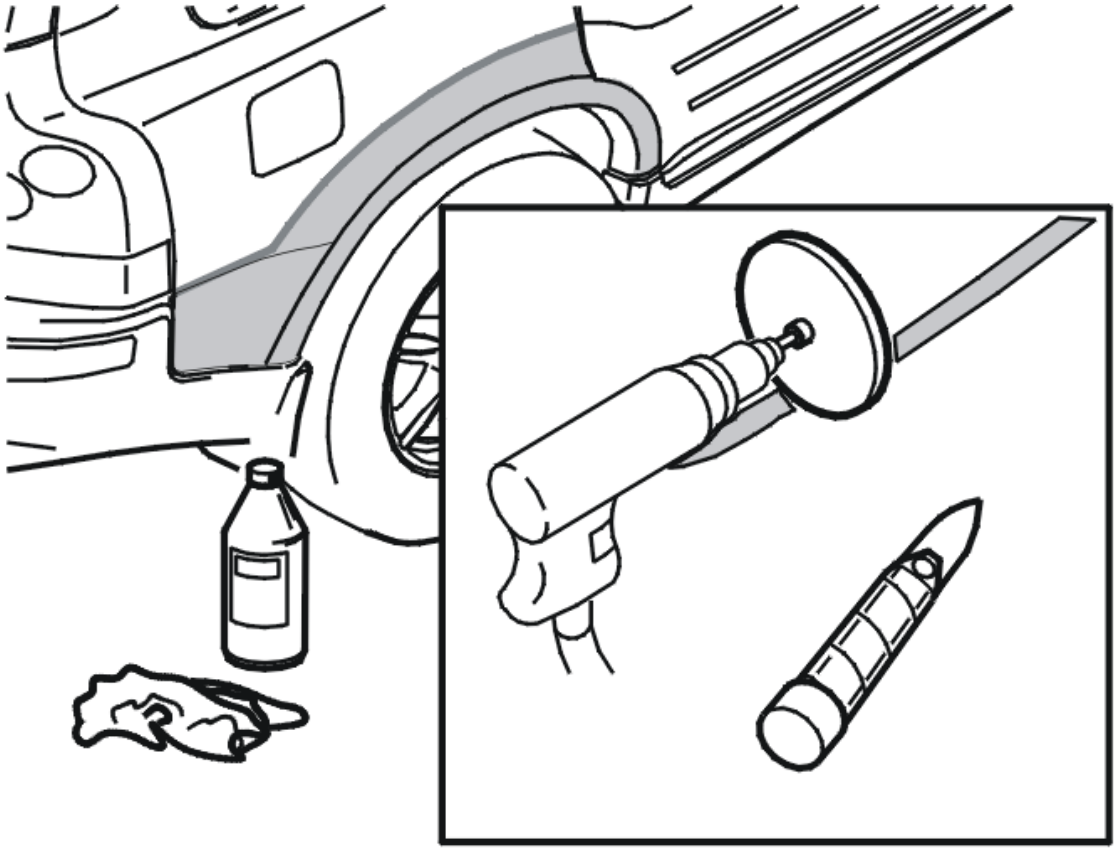

Fig. 11: Cleaning Adhesive Residue
Courtesy of VOLVO CARS CORPORATION

Clean any adhesive residue off the bodywork. Use see **9512942** . Clean using Isopropanol.

CAUTION: Do not use the tool on painted surfaces with plastic carriers.

All adhesive residue must be removed from painted surfaces with plastic carriers mechanically. Use a plastic weatherstrip tool and then clean using Isopropanol.

PREPARING BODYKIT PANEL REAR FENDER

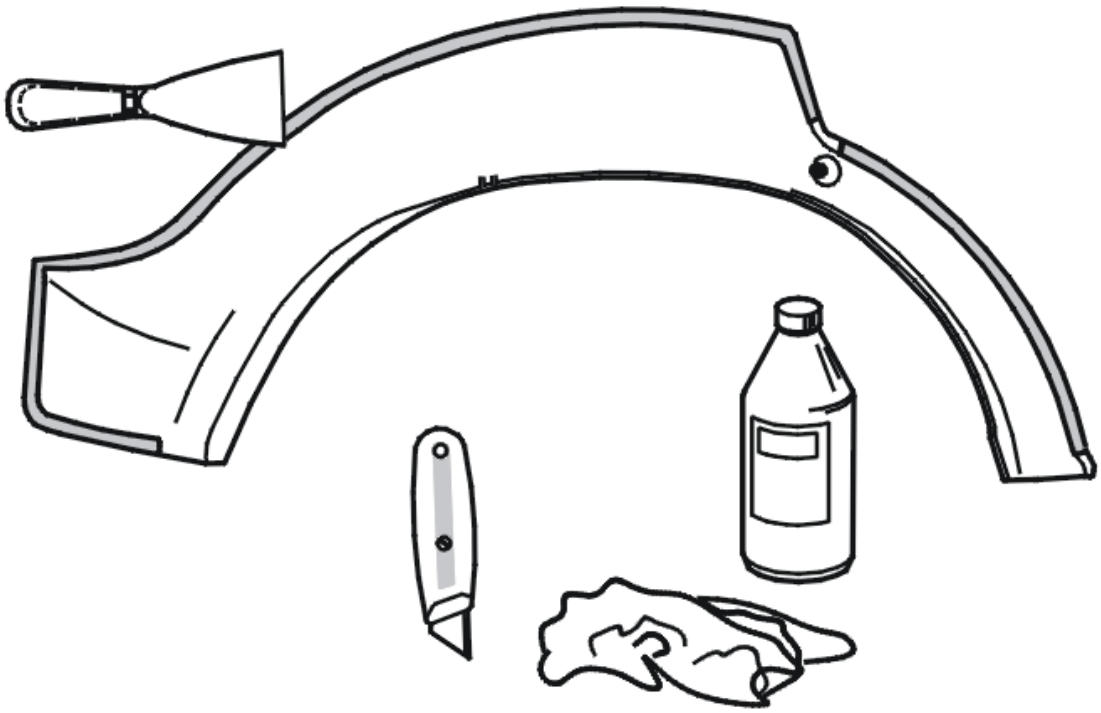

Fig. 12: Cleaning Tape Residue
Courtesy of VOLVO CARS CORPORATION

Clean tape residue from the bodykit panel. Use a knife or putty knife.

Clean and dry the area for the tape. Use isopropanol.

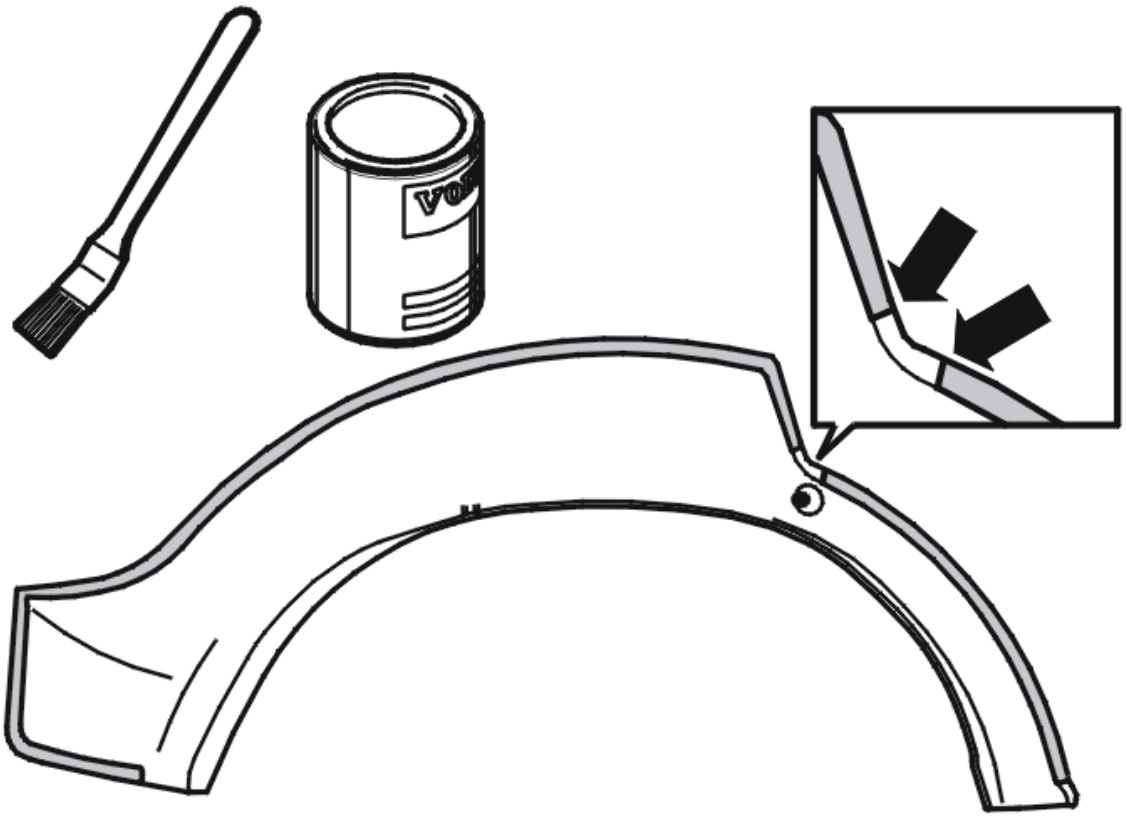

Fig. 13: Applying Enamel Primer
Courtesy of VOLVO CARS CORPORATION

Apply enamel primer to the surfaces for the tape on the bodykit panel.

CAUTION: Install the tape after 15 minutes, and within 3 hours, of applying the primer.

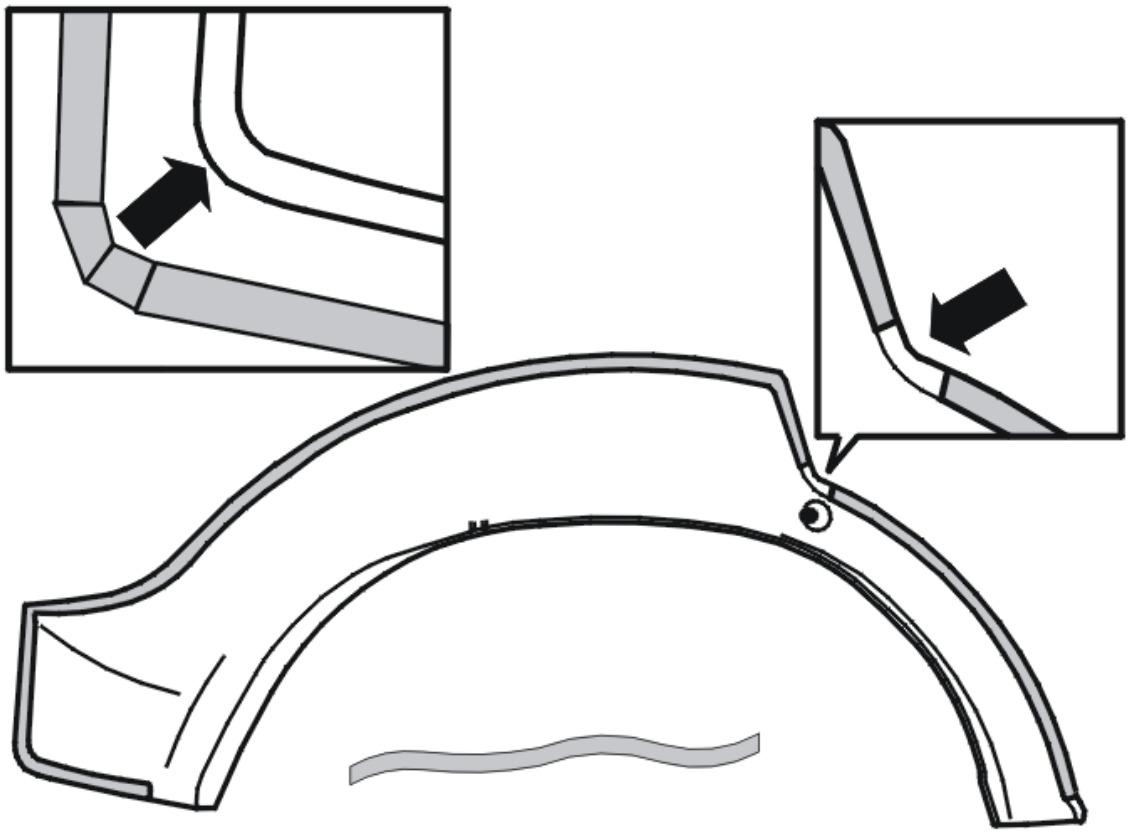

Fig. 14: Identifying Tape On Bodykit Panel
Courtesy of VOLVO CARS CORPORATION

Install the tape on the bodykit panel as shown.

INSTALLING THE BODYKIT PANEL REAR FENDER

Installing the bodykit panel rear fender, see

Installation instructions, accessory

86, Bumper, mudguard

Side panel

Step 16: "Securing the rear fender side panel".

REPLACING BODYKIT PANEL REAR SIDE DOOR

REMOVING THE BODYKIT PANEL REAR SIDE DOOR

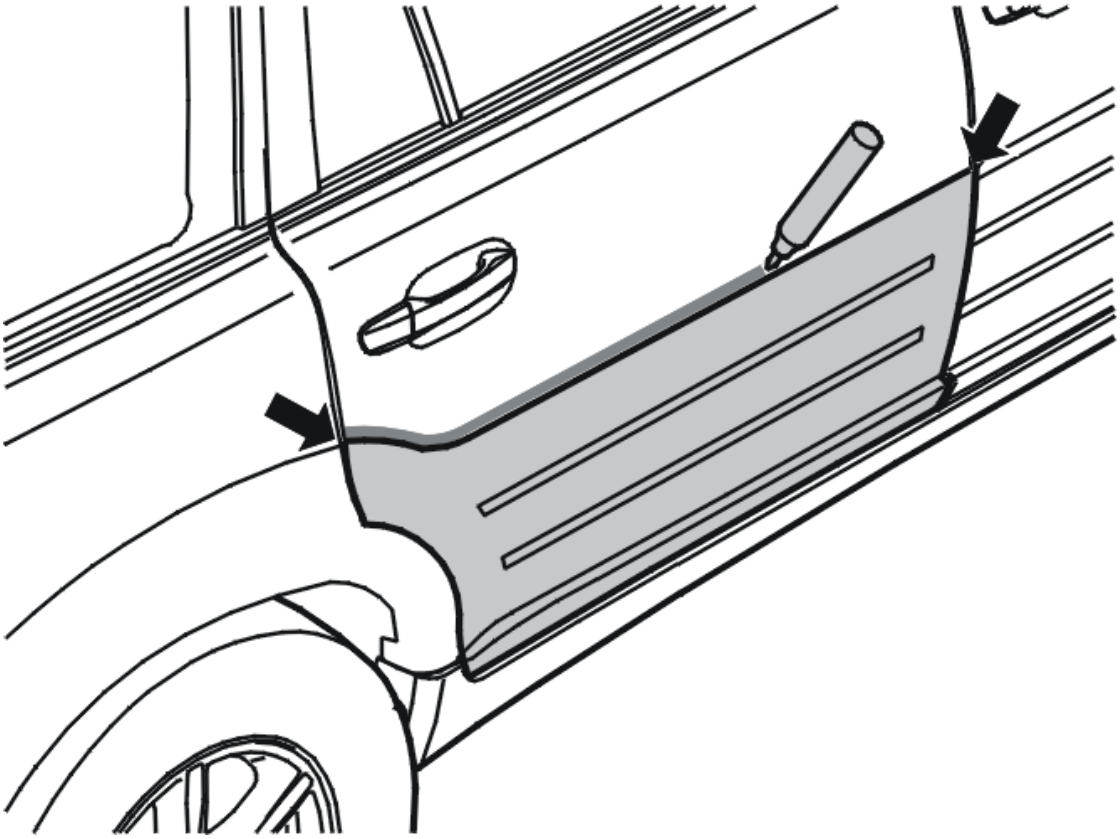

Fig. 15: Marking Location Of Bodykit Panel
Courtesy of VOLVO CARS CORPORATION

Mark the location of the bodykit panel against the bodywork using a whiteboard marker pen.

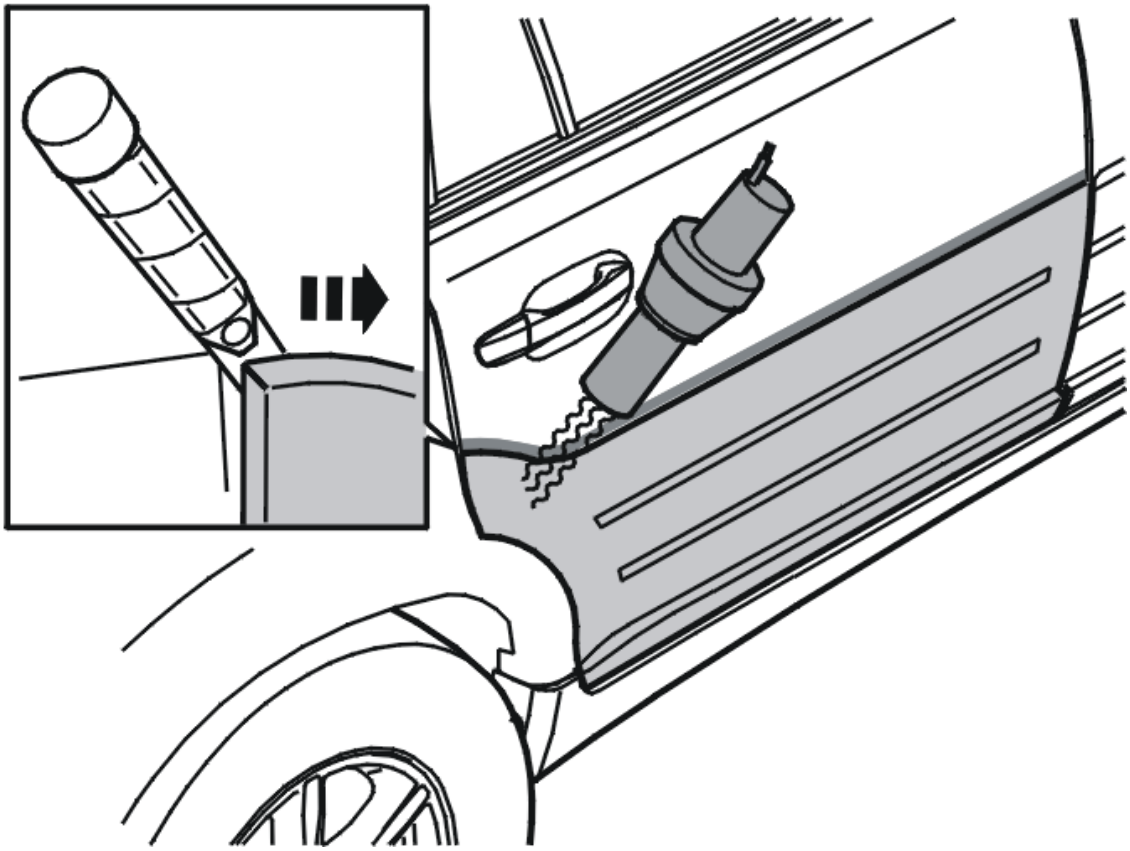

Fig. 16: Using Plastic Weatherstrip Tool
Courtesy of VOLVO CARS CORPORATION

Use a plastic weatherstrip tool to detach the bodykit panel. Start at the rear corner.

CAUTION: Do not damage painted surfaces.

HINT: If the tape is difficult to remove, use a hot-air gun and heat gently until the tape softens up.

CLEANING THE BODYWORK AROUND THE BODYKIT PANEL REAR SIDE DOOR

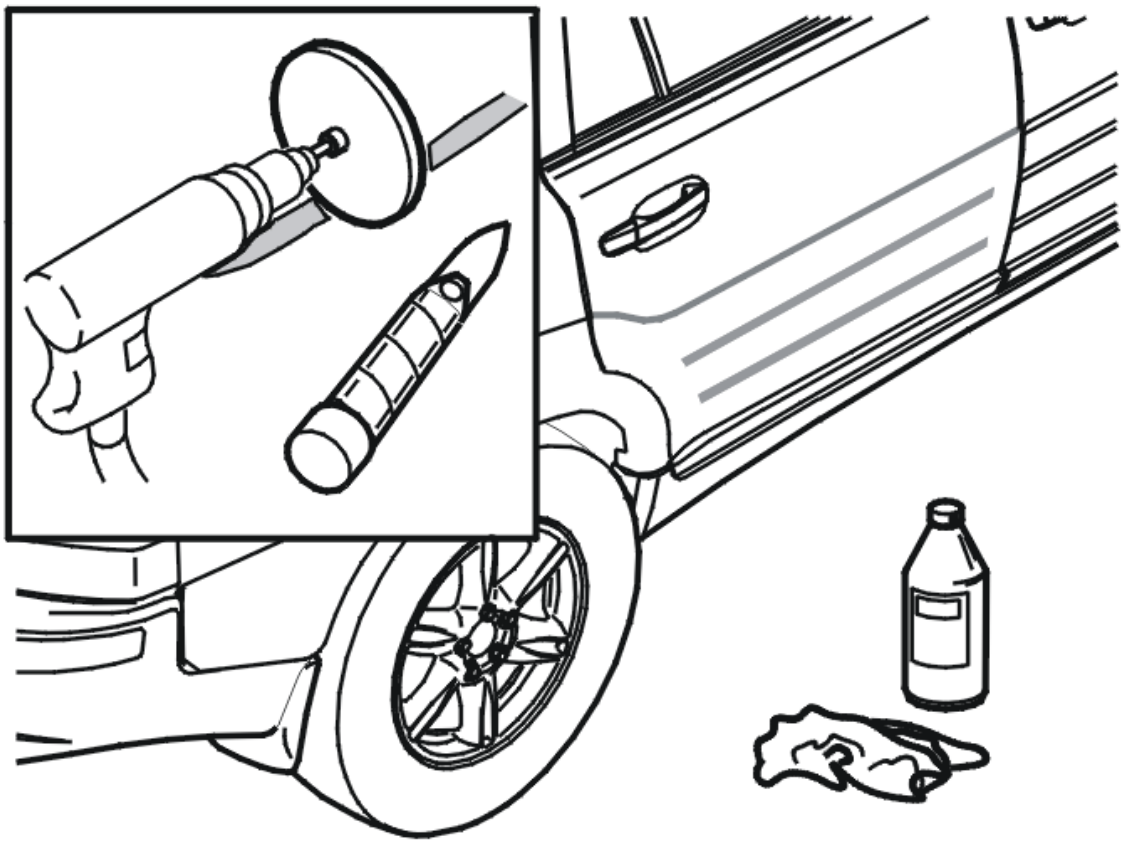

Fig. 17: Cleaning Adhesive Residue
Courtesy of VOLVO CARS CORPORATION

Clean any adhesive residue off the bodywork. Use see **9512942** . Clean using Isopropanol.

PREPARING THE BODYKIT PANEL REAR SIDE DOOR

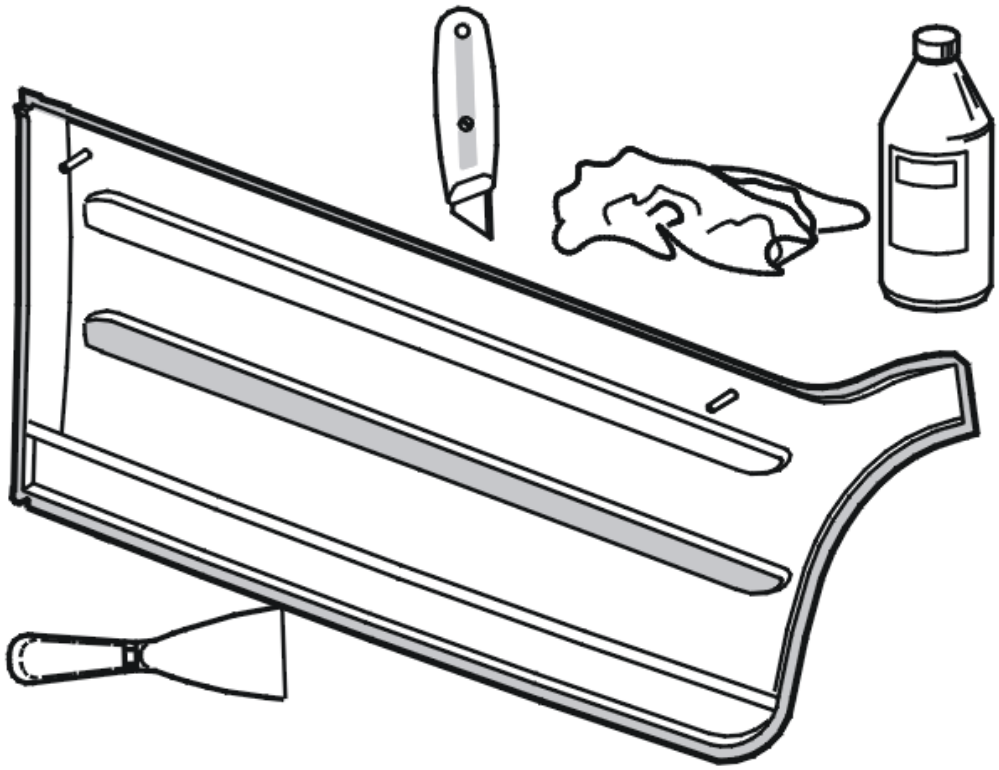

Fig. 18: Cleaning Tape Residue
Courtesy of VOLVO CARS CORPORATION

Clean tape residue from the bodykit panel. Use a knife or putty knife.

Clean and dry the area for the tape. Use isopropanol.

Install the tape on the bodykit panel as shown.

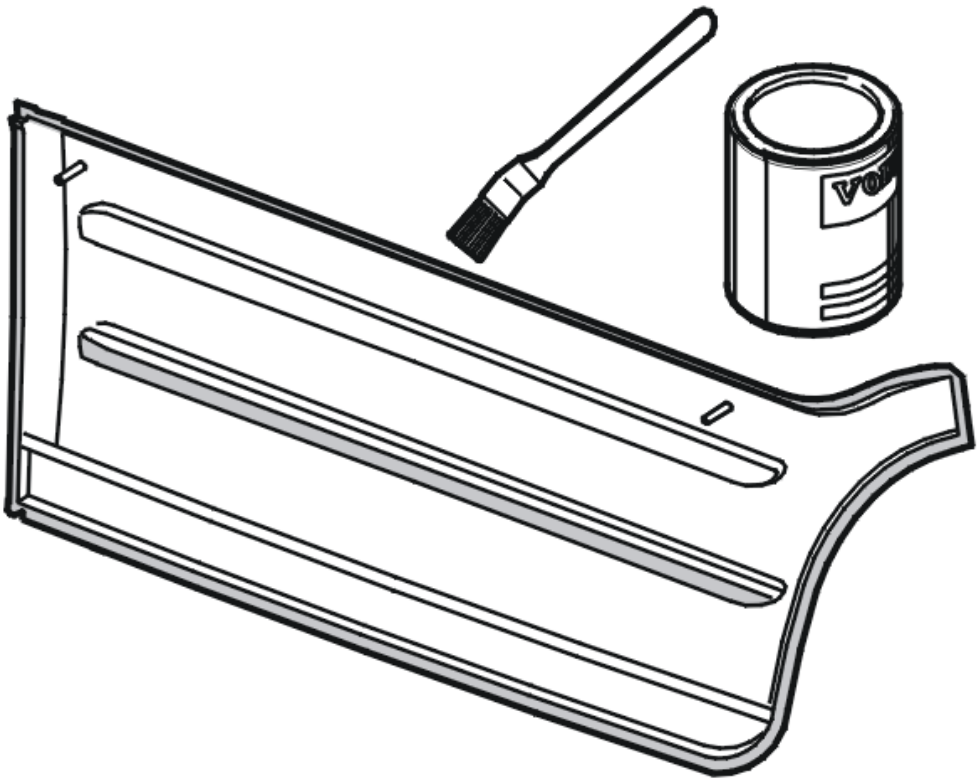

Fig. 19: Applying Enamel Primer
Courtesy of VOLVO CARS CORPORATION

Apply enamel primer to the surfaces for the tape on the bodykit panel.

CAUTION: Install the tape after 15 minutes, and within 3 hours, of applying the primer.

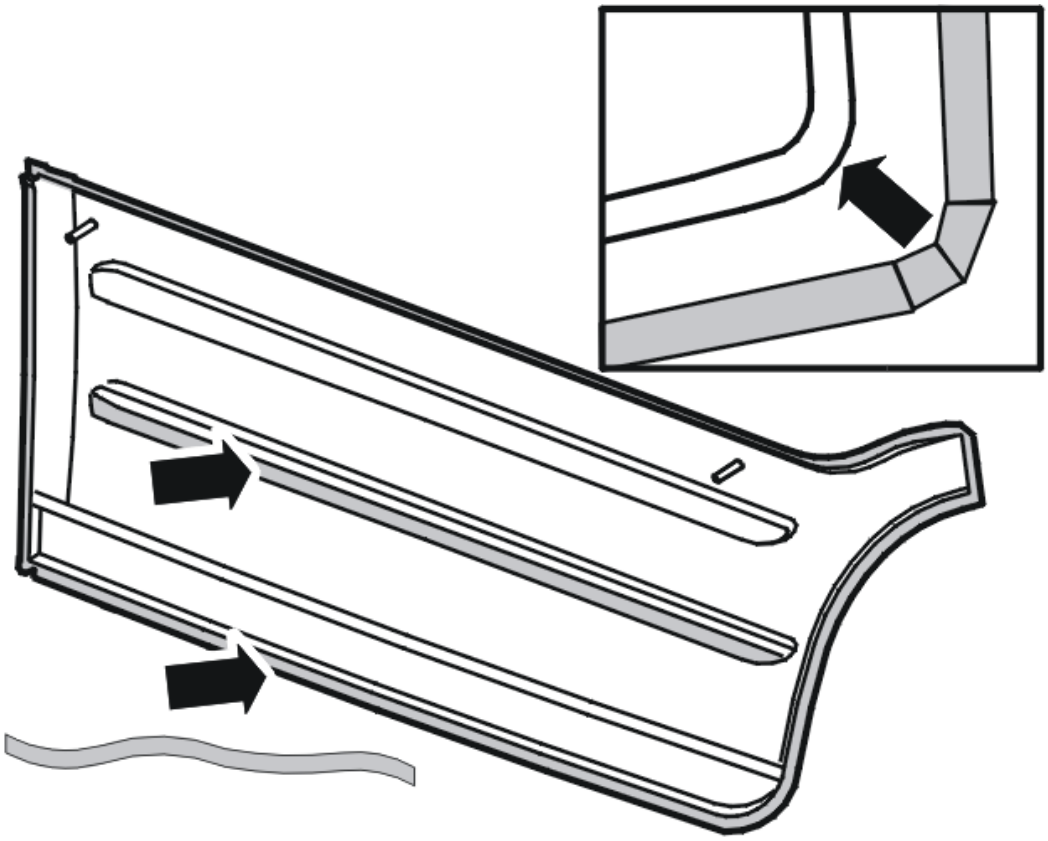

Fig. 20: Identifying Tape On Bodykit Panel
Courtesy of VOLVO CARS CORPORATION

Install the tape on the bodykit panel as shown.

INSTALLING THE BODYKIT PANEL REAR SIDE DOOR

Installing the bodykit panel rear side door, see

Installation instructions, accessory

86, Bumper, mudguard

Side panel

Step 17: "Securing the rear door side panel".

REPLACING BODYKIT PANEL FRONT SIDE DOOR

REMOVING THE BODYKIT FRONT SIDE DOOR

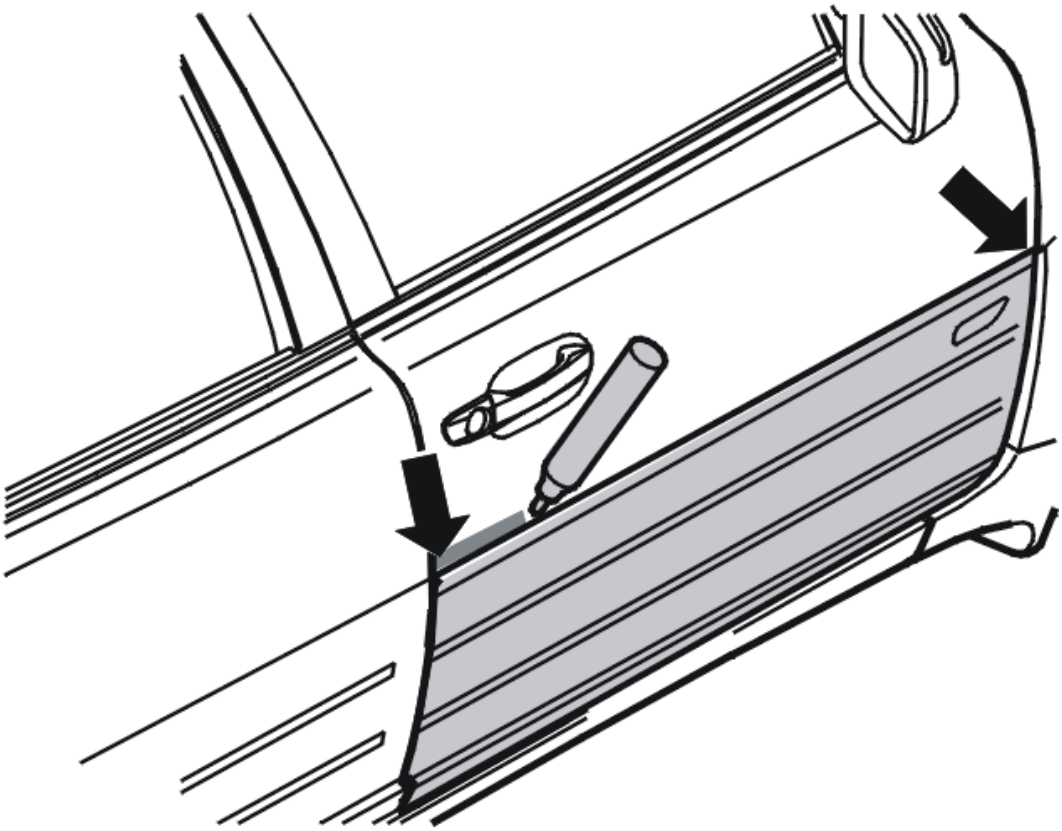

Fig. 21: Marking Location Of Bodykit Panel
Courtesy of VOLVO CARS CORPORATION

Mark the location of the bodykit panel against the bodywork using a whiteboard marker pen.

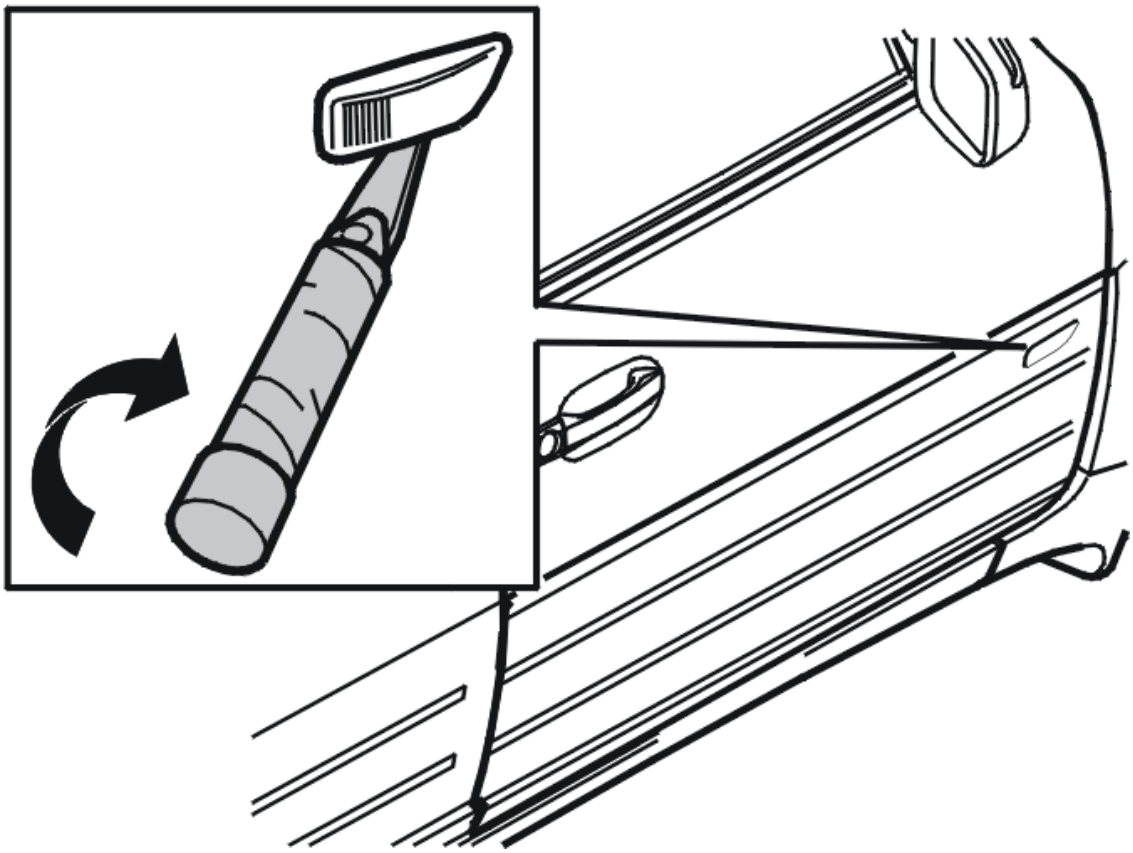

Fig. 22: Using Plastic Weatherstrip Tool (1 Of 2)
Courtesy of VOLVO CARS CORPORATION

Remove the parking lamp. Carefully pry off in the cut out in the lower edge of the parking lamp. Use a plastic weatherstrip tool.

NOTE: Ensure that the connector does not fall into the door.

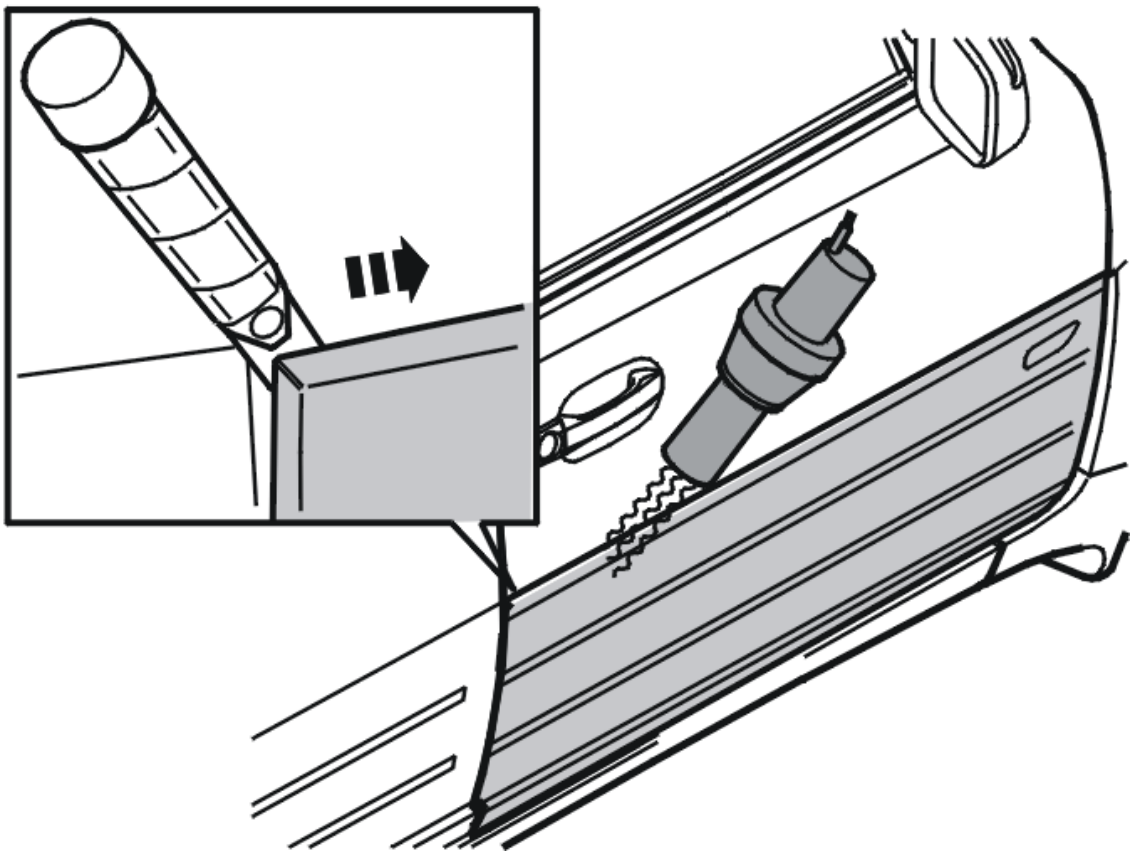

Fig. 23: Using Plastic Weatherstrip Tool (2 Of 2)
Courtesy of VOLVO CARS CORPORATION

Use a plastic weatherstrip tool to detach the bodykit panel. Start at the rear corner.

CAUTION: Do not damage painted surfaces.

HINT: If the tape is difficult to remove, use a hot-air gun and heat gently until the tape softens up.

CLEANING THE BODYWORK AROUND THE BODYKIT PANEL FRONT SIDE DOOR

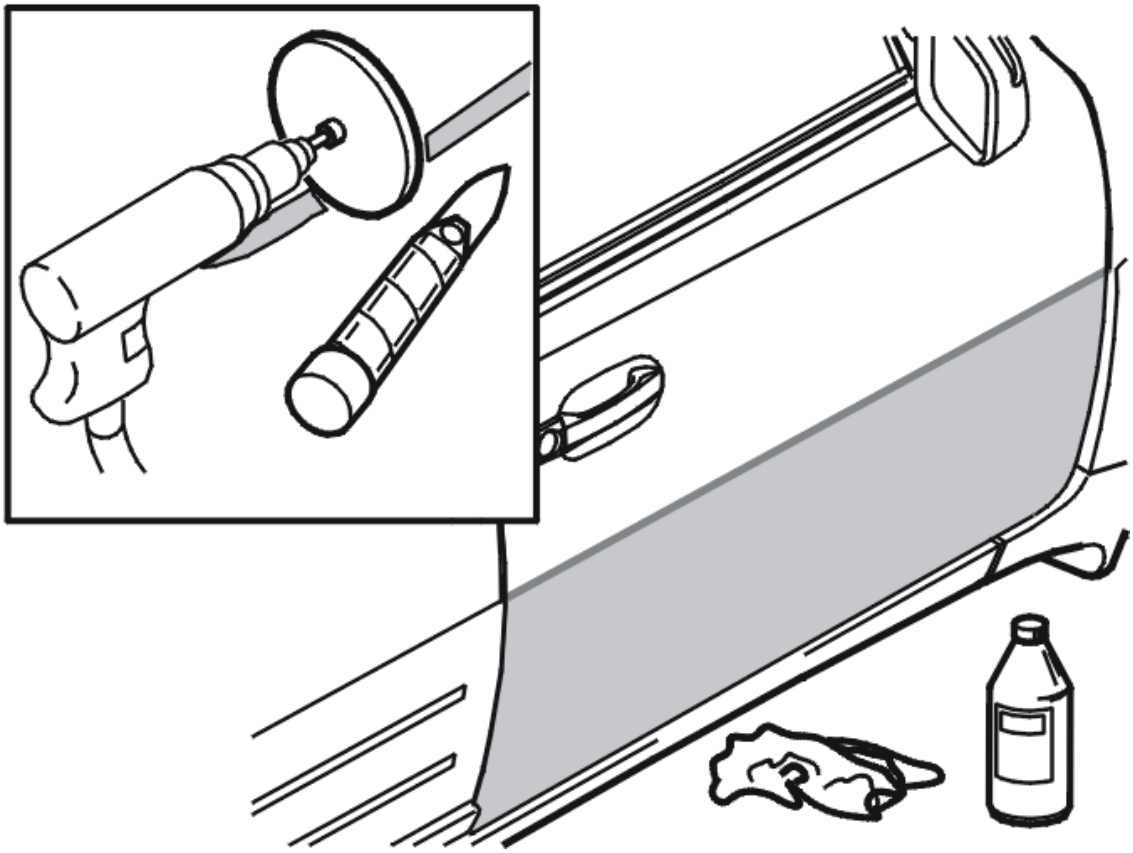

Fig. 24: Cleaning Adhesive Residue
Courtesy of VOLVO CARS CORPORATION

Clean any adhesive residue off the bodywork. Use see **9512942** . Clean using Isopropanol.

PREPARING THE BODYKIT PANEL REAR SIDE DOOR

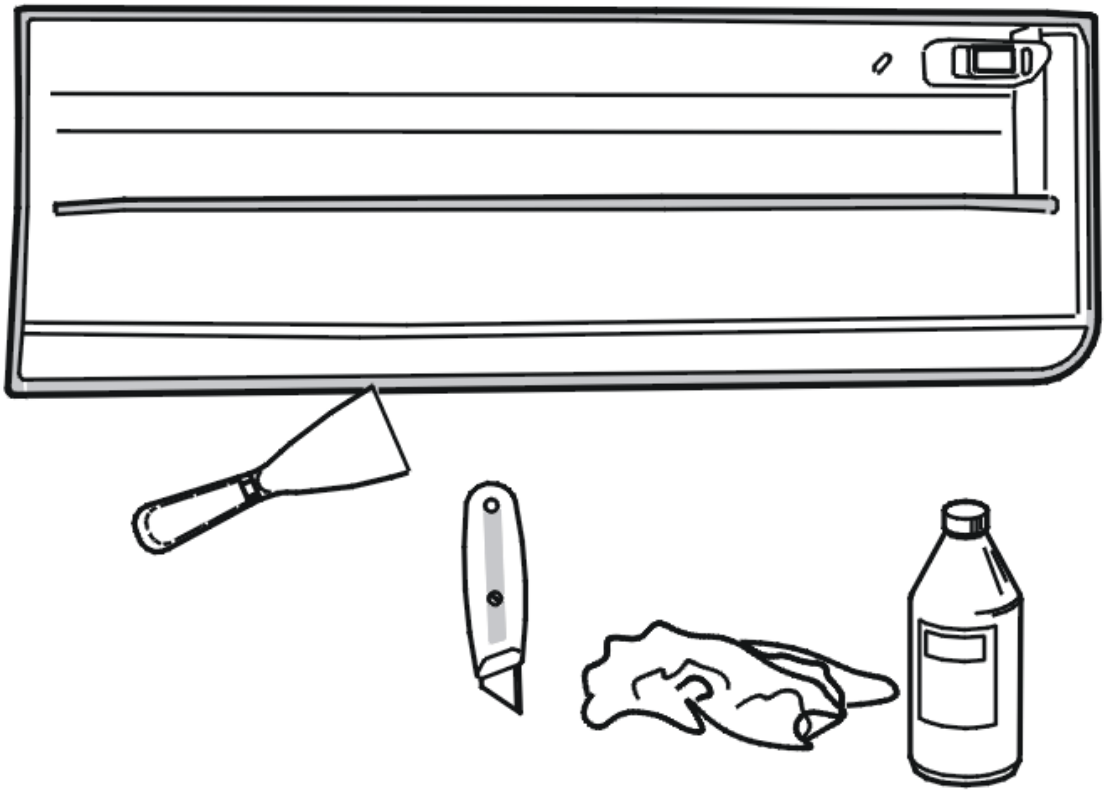

Fig. 25: Installing Tape On Bodykit Panel
Courtesy of VOLVO CARS CORPORATION

Clean tape residue from the bodykit panel. Use a knife or putty knife.

Clean and dry the area for the tape. Use isopropanol.

Install the tape on the bodykit panel as shown.

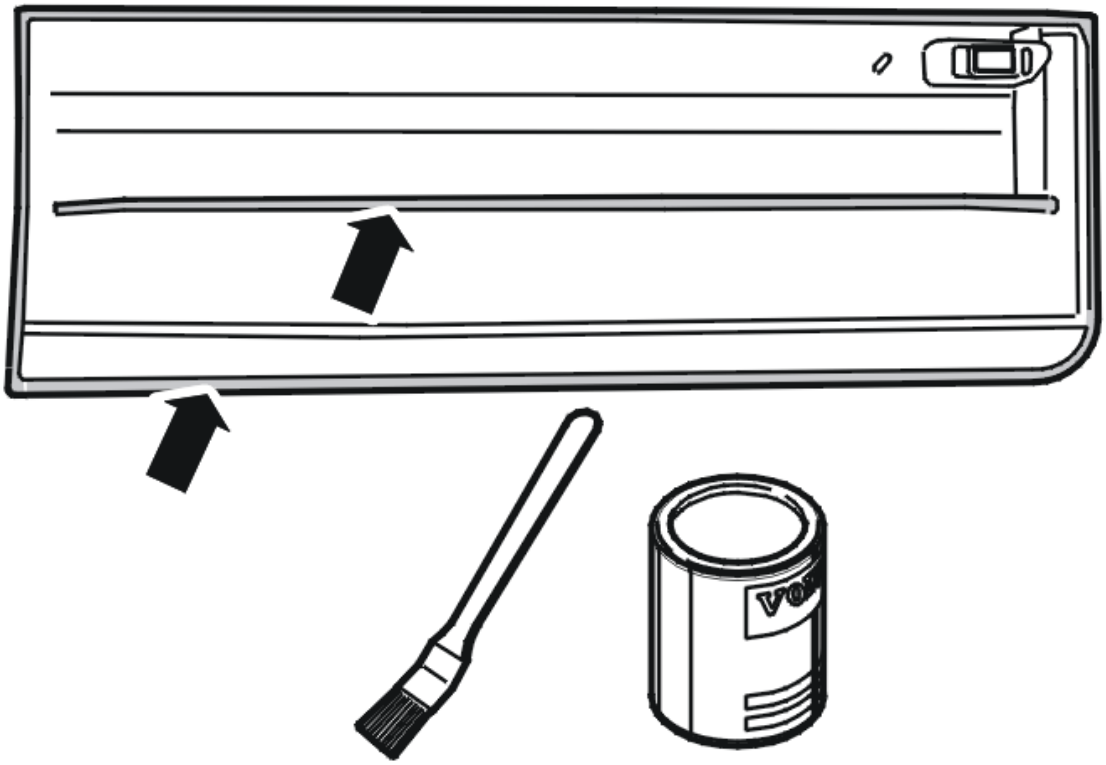

Fig. 26: Applying Enamel Primer
Courtesy of VOLVO CARS CORPORATION

Apply enamel primer to the surfaces for the tape on the bodykit panel.

CAUTION: Install the tape after 15 minutes, and within 3 hours, of applying the primer.

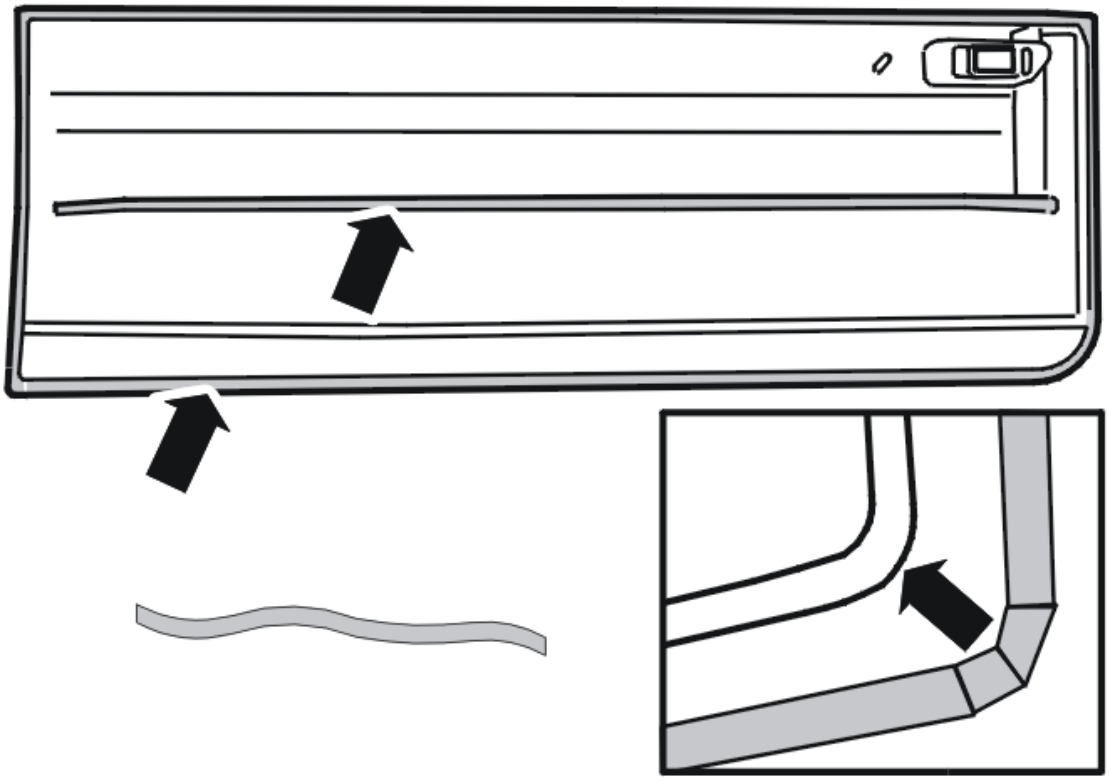

Fig. 27: Installing Tape On Bodykit Panel
Courtesy of VOLVO CARS CORPORATION

Install the tape on the bodykit panel as shown.

INSTALLING THE BODYKIT PANEL FRONT SIDE DOOR

Installing the bodykit panel front side door, see

Installation instructions, accessory

86, Bumper, mudguard

Side panel

Step 18: "Securing the front door side panel".

ROOF RAILS, REPLACING

NOTE: **As the graphics in this service information are used for different model years and / or models, some variation may occur. However, the essential information in the graphics is always correct.**

REMOVING RAILS

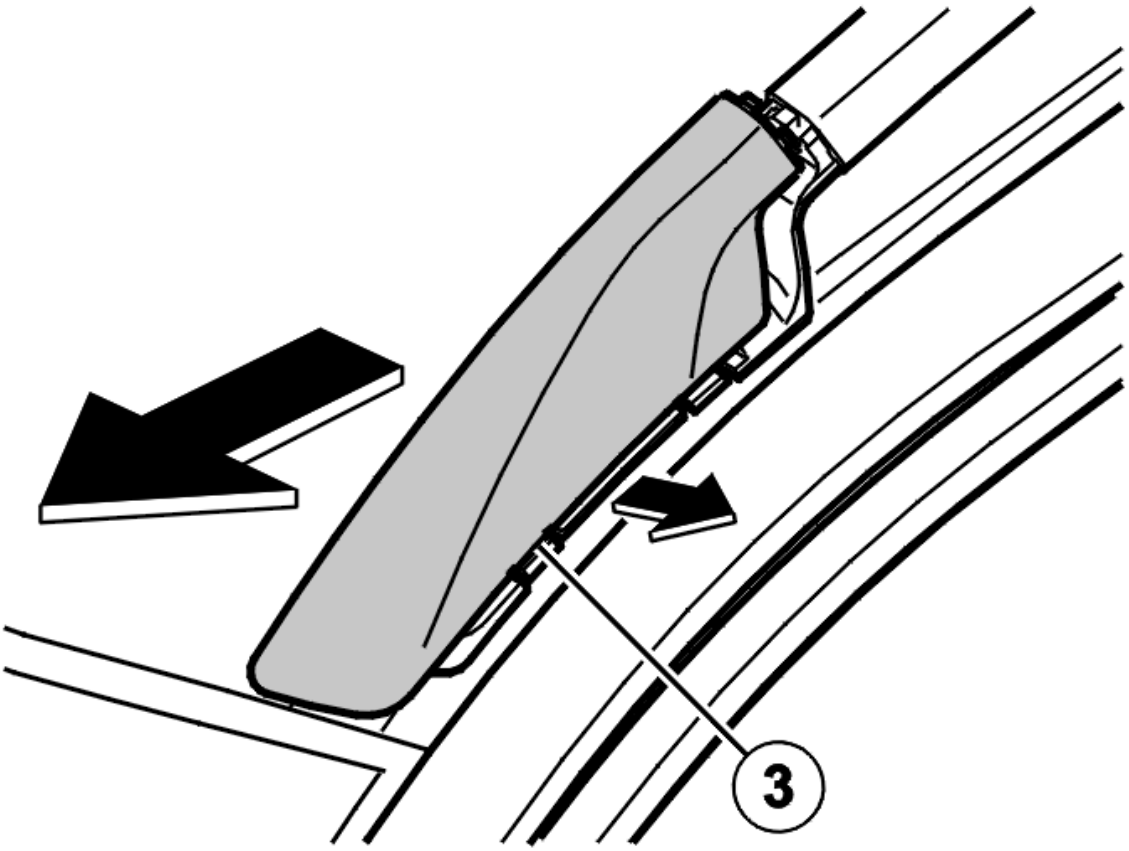

Fig. 28: Identifying Lug
Courtesy of VOLVO CARS CORPORATION

Remove:

- the front and the rear cover by pulling them to the side so that the lug (3) releases. Pull forwards.

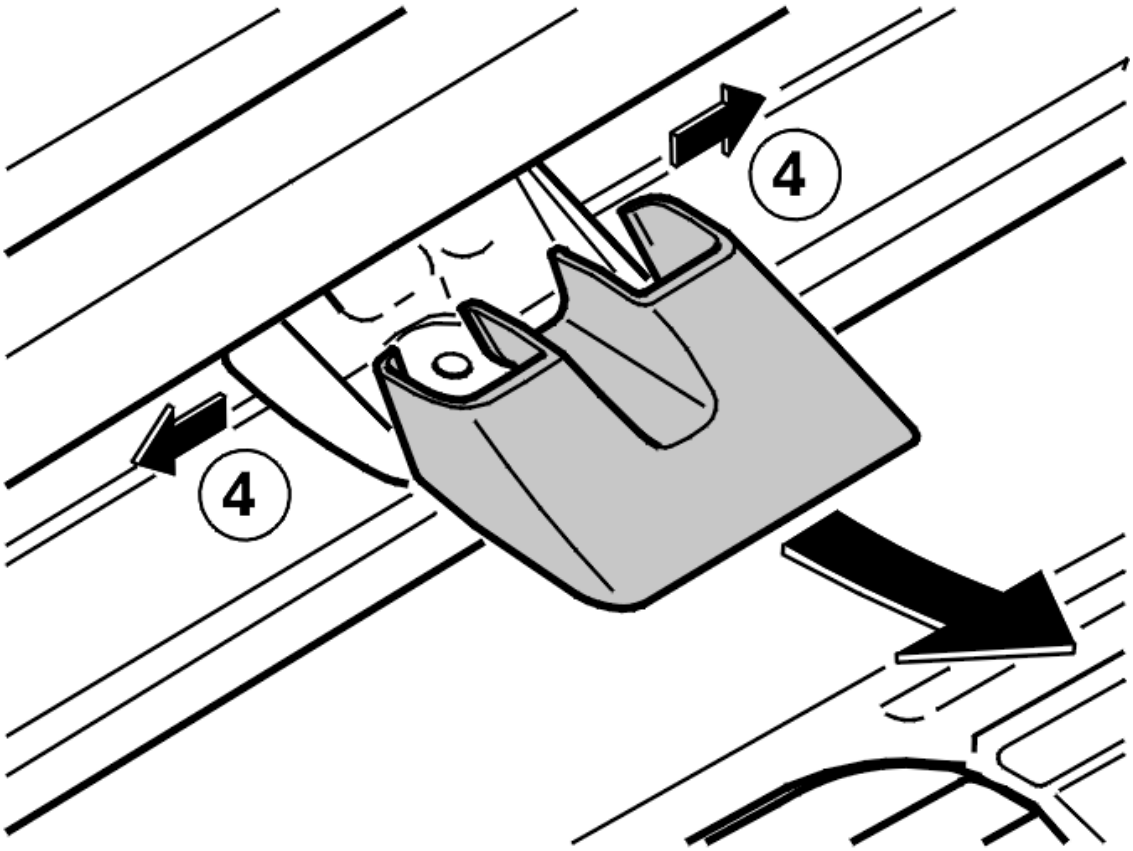

Fig. 29: Identifying Side
Courtesy of VOLVO CARS CORPORATION

- the center cover by grasping the lower corner and pulling up at an angle and to the side (4).

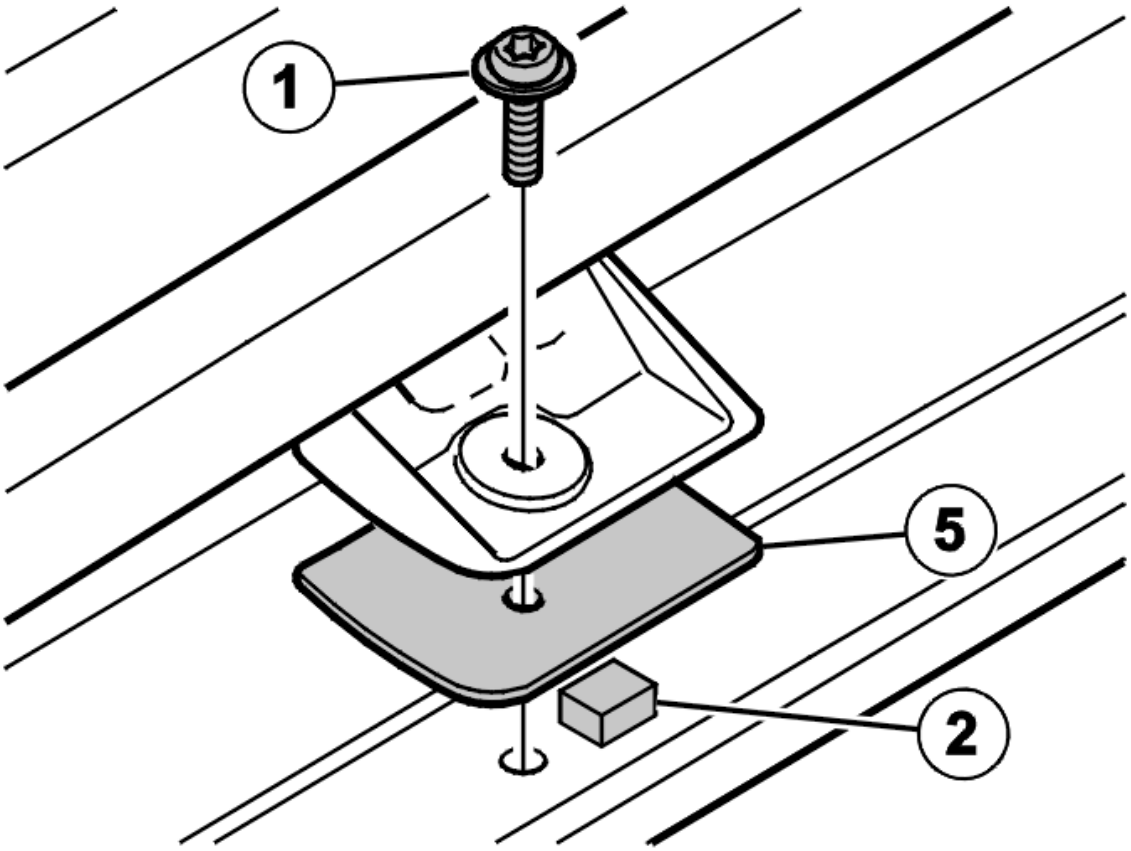

Fig. 30: Identifying Screw, Rubber Seal And Small Foam Seal
Courtesy of VOLVO CARS CORPORATION

- the 5 screws on each side
- the 3 rubber seals on each side
- the 3 small foam seals on each side
- 1 large foam seal from each side and the center foot.

NOTE: **The foam seals and the screws must be replaced during installation. Replace the rubber seals if necessary.**

INSTALLING RAILS

Install:

- the 3 rubber seals on each side
- the 3 small foam seals on each side
- 1 large foam seal each side at the center mounting.

NOTE: **Ensure that the foam seals are completely undamaged.**

Install:

- the center mounting but do not tighten the screw
- the front and the rear mounting but do not tighten the screws
- the 5 screws on each side. See **SUMMARY OF TIGHTENING TORQUES FOR SPECIFIC COMPONENTS** .

Check that the screw threads engage.

NOTE: Do not over tighten. The gasket may no longer seal correctly.

HINT: Tighten the screws in two stages to prevent misalignment.

Install the 3 covers.

ACCESSORIES AND BODY, CAB

Roof Panel, Replacing - General Information

HOOD, EMERGENCY OPENING

NOTE: **As the illustrations in this service information are used for different model years and / or models, some variation may occur. However, the essential information in the illustrations is always correct.**

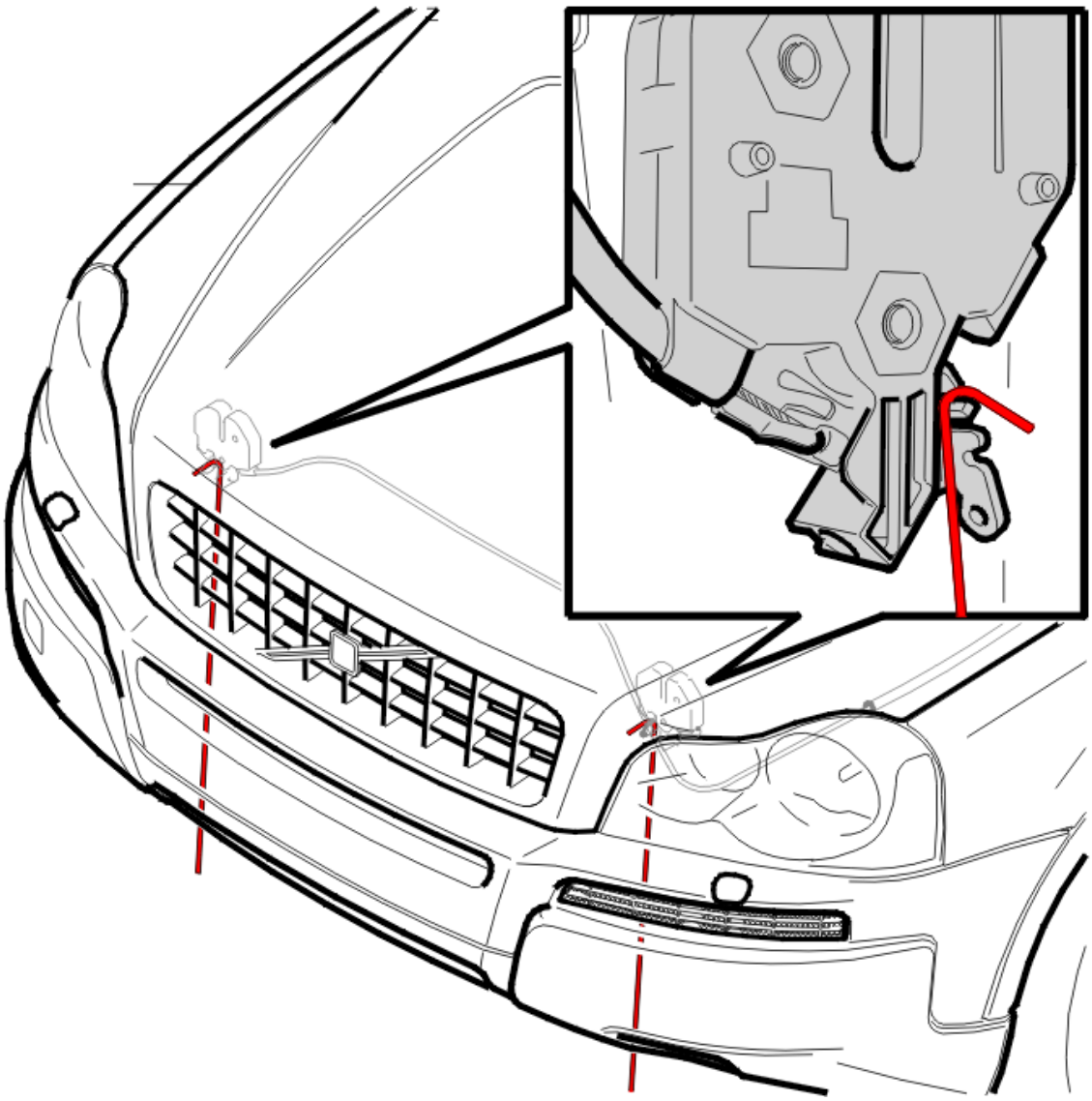

Fig. 1: Identifying Emergency Hood Opening Location
Courtesy of VOLVO CARS CORPORATION

Make a stable hook from a piece of wire, approximately 1.5 mm thick.

Insert the hook up beside the radiator (see the illustration).

Secure the hook on the arm on the right-hand side of the hood catch. It will be difficult to hook the wire into place if it is too thick.

Hook the hook onto the latch and pull downwards.

ACCESSORIES AND EQUIPMENT

Roof Panel, Replacing - Installation Instructions, Accessories

FENDER PANELS, BODY KIT (2003-06)

WARNING: PUR adhesive can cause respiratory difficulties similar to asthma. Vapours with isocyanate content from non-hardened primer or adhesive can cause allergy in respiratory tracts. Persons with the allergy will react to very low contents. The risk remains as long as the material has not fully hardened. Ensure good ventilation. Use a fresh air mask. Never touch the adhesive surface with fingers. Use protective gloves.

NOTE: The PUR adhesive kit must be ordered separately. P/N 1161694

INSTALLING THE REAR WING (FENDER) PANELS

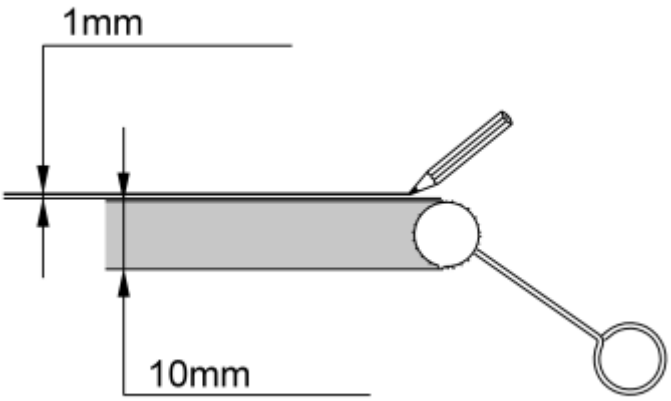

Fig. 1: Applying Primer To Bodywork
Courtesy of VOLVO CARS CORPORATION

NOTE: The temperature of the car must be at least 20°C (68°F) when installing the side panels. Two people must help each other to align and secure the side panels.

For cleaning and washing the bodywork, see the normal Installation Instructions 30730138.

Mark the body for the outer contours of the panels before priming in accordance with steps 14 and 15 B in the normal Installation Instructions 30730138.

Applying primer to the bodywork

- Take the primer (part no. 1161727) and cotton buds from the kit.

CAUTION: The side panels must be installed at the earliest 15 minutes, and at the latest 3 hours, after applying the primer.

NOTE: The primer must be applied to the whole car in one operation. Any spillage must be wiped up immediately.

- Apply the primer inside the outer contours of the panels. It is important that nothing goes outside the markings, particularly on the upper sides of the panels, where there should be a space of approximately 1 mm between the primer and the marking.
- Allow the primer to harden for 15 minutes.

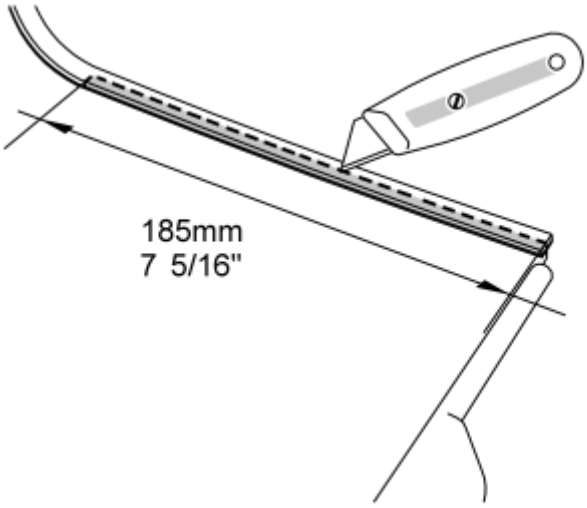

Fig. 2: Cutting Away Marked Section Of Tape
Courtesy of VOLVO CARS CORPORATION

Preparatory work, rear wings' panels

Applies to cars where the rear section of the side panel's tape is not rubbed away

- Cut away the marked section of the tape to a length of **185 mm (7 5/16")** . Make sure the knife is sharp and thin. Half of the width of the tape must be cut away so that the intermediate space A between the two tape surfaces is uncovered. This is so that any excess PUR adhesive can be collected here. Make sure that the tape residue is removed.

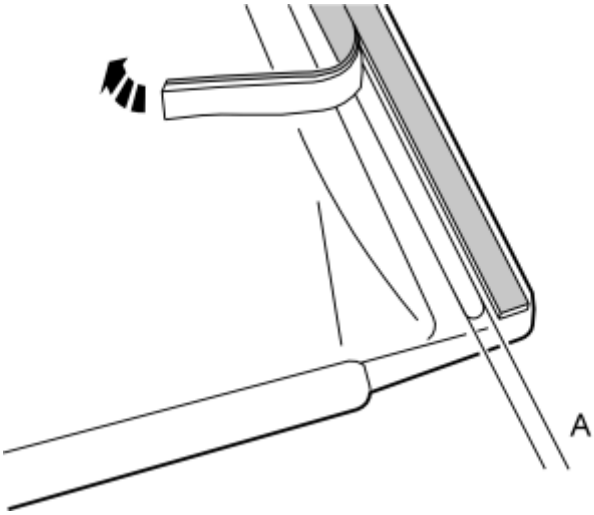

Fig. 3: Peeling Tape Away From Intermediate Space
Courtesy of VOLVO CARS CORPORATION

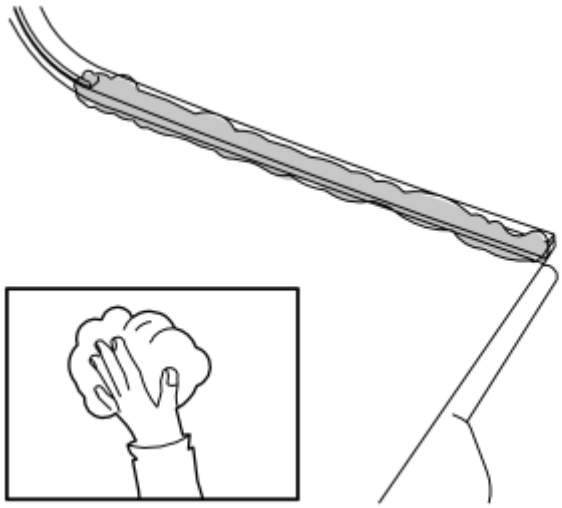

Fig. 4: Cleaning Surface
Courtesy of VOLVO CARS CORPORATION

Applies to cars where the rear section of the side panel's tape is not rubbed away

- Clean the surface where the tape is removed from using Cleaner H (P/N 1161436).
- Wipe dry.

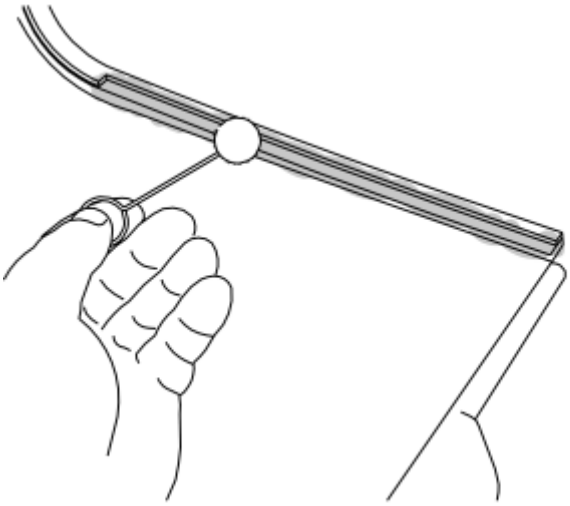

Fig. 5: Applying Primer On Cleaned Surface Of Side Panel
Courtesy of VOLVO CARS CORPORATION

Applies to all models

- Take the primer (part no. 1161727) and cotton buds from the kit.
- Apply the primer on the cleaned surface of the side panel.
- Allow the primer to harden for 15 minutes.

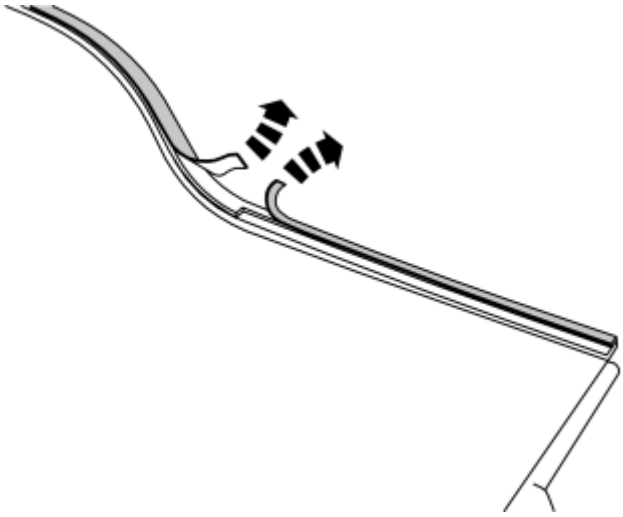

Fig. 6: Folding Up Ends Of Protective Film
Courtesy of VOLVO CARS CORPORATION

- Fold up the ends of the protective film **(NOTE: Do not remove the protective film yet)** so that it can be easily pulled off after the side panel has been positioned using the guide pins. Detach and fold up the protective film for the long pieces of tape at both ends.

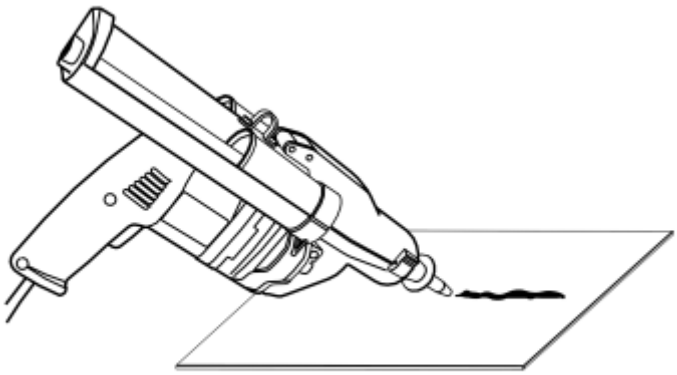

Fig. 7: Identifying Long Bead Of Adhesive
Courtesy of VOLVO CARS CORPORATION

Applies when using mixing injector gun P/N 1161394 (220 V) or 1161395 (110 V).

- Take the mixing injector gun P/N 1161394 (220 V) or 1161395 (110 V) and install both tubes of PUR adhesive P/N 1161698 and 1161699 from the kit.
- Run out a 100 mm (4 ") long bead on a piece of cardboard and discard it. This is to ensure that the contents of both tubes have mixed thoroughly.

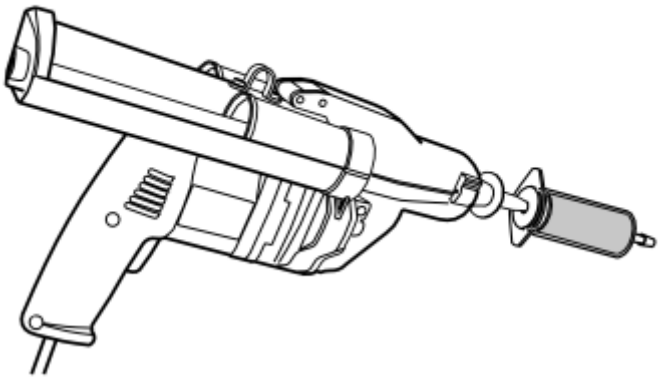

Fig. 8: Identifying Small Syringe
Courtesy of VOLVO CARS CORPORATION

- Take the small syringe from the kit and fill it with the mixed PUR adhesive.

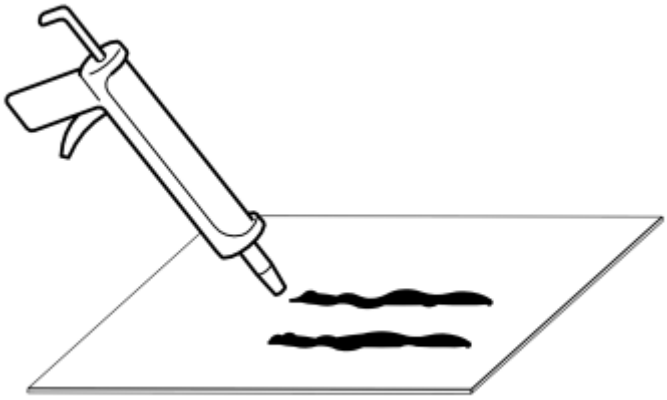

Fig. 9: Identifying Adhesive On Plate Of Glass
Courtesy of VOLVO CARS CORPORATION

Applies to manual mixing of the PUR adhesive

- Take the PUR adhesive from the accompanying kit P/N 1161694 and press out an equal quantity of P/N 1161698 and 1161699 on a plate of glass or similar using a syringe.

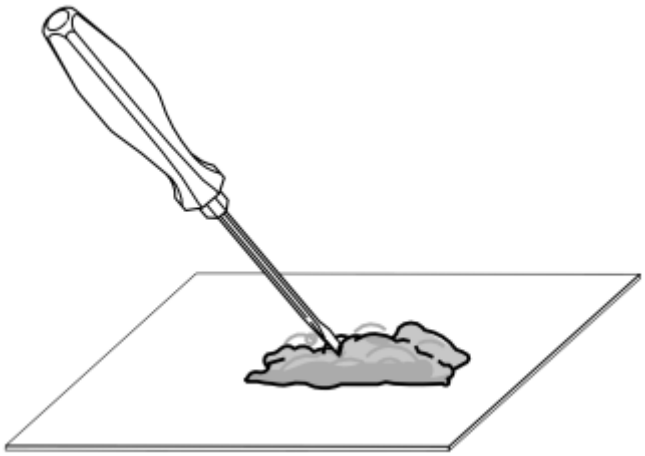

Fig. 10: Identifying Mixture
Courtesy of VOLVO CARS CORPORATION

- Mix thoroughly for 1-2 minutes.

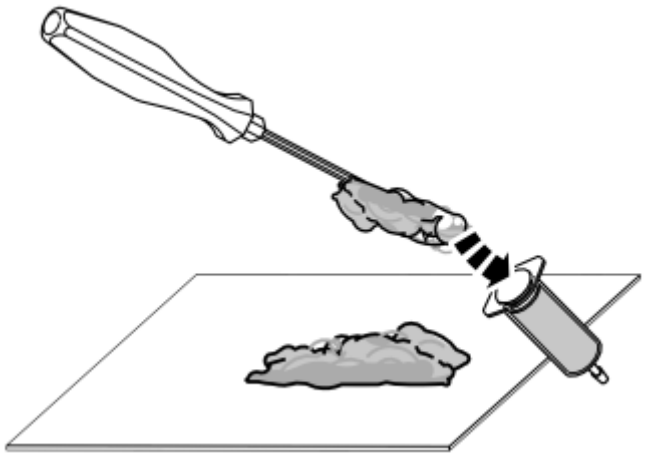

Fig. 11: Filling Mixture In Syringe
Courtesy of VOLVO CARS CORPORATION

- Fill the mixture in the syringe from the kit. Avoid getting air into it as this makes it difficult to apply an even bead to the panel.

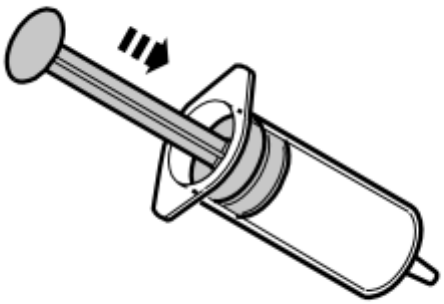

Fig. 12: Identifying Plunger In Syringe
Courtesy of VOLVO CARS CORPORATION

- Install the plunger into the syringe.

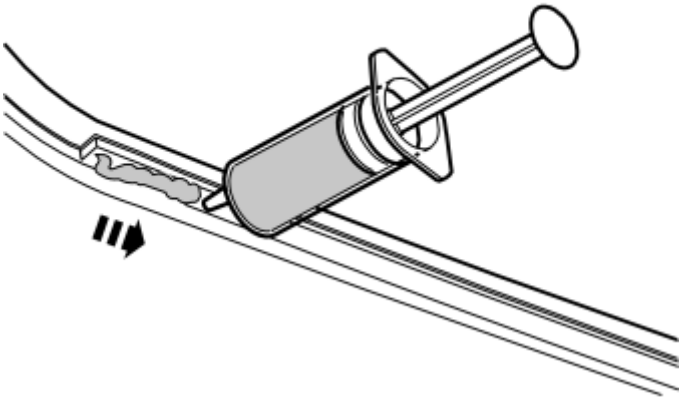

Fig. 13: Applying PUR Adhesive On Primed Surface
Courtesy of VOLVO CARS CORPORATION

- Now take the syringe and carefully apply an even bead of PUR adhesive on the primed surface starting inwards on the panel and out. Apply an even bead **3.5 mm (25/64")** . The bead of PUR adhesive must not be higher than the level of the tape. Apply the bead of adhesive in one sequence without a break.

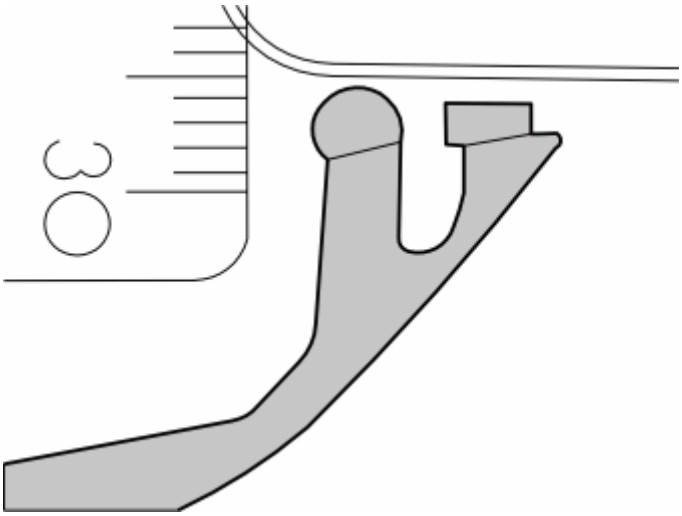

Fig. 14: Identifying Tape
Courtesy of VOLVO CARS CORPORATION

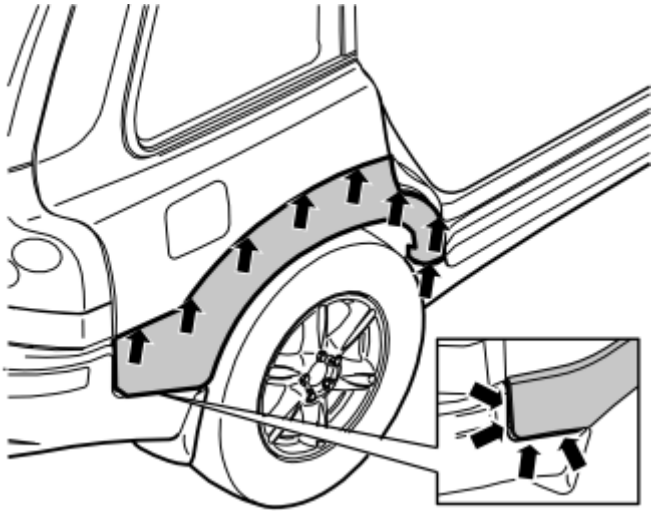

Fig. 15: Identifying Rear Wing Side Panel
Courtesy of VOLVO CARS CORPORATION

NOTE: This procedure should be carried out by two people, one at the front and one at the back of the side panel:

Securing the rear wing side panel

- Insert the four mounting hooks in the rear edge of the side panel in the corresponding recess in the bumper shell end.
- Bend the panel in toward the rear wing while making sure that each side panel locating pin fits in the corresponding hole in the edge of the wheel arch.
- Move the panel as close as possible to the wing without the tape in the corners sticking.
- Pull away the protective film by carefully pulling the upturned ends.

NOTE: Ensure that the protective film does not come off on the reverse of the panel as the panel may be firmly attached to the front wing.

- Press in the upper section of the side panel against the rear wing at all points where there is tape and PUR adhesive.
- Apply a pressure of **1-2 kg/cm^2 (14-28 lbf/in^2)** around the entire panel so that the tape sticks firmly.
- Apply a constant pressure against the section of the panel bonded with PUR adhesive, using a piece of styrofoam and suction clamp kit P/N 9512841, or if this is not available, a pole with a fixed object as shown. Place a piece of cardboard between the paintwork and tensioning yoke to protect the paintwork as shown. Apply the force at right-angles so that the panel is not displaced. The rear section of the panel must be pressurized in this way for 4-5 hours.
- Remove the tensioning tools after the adhesive has hardened.

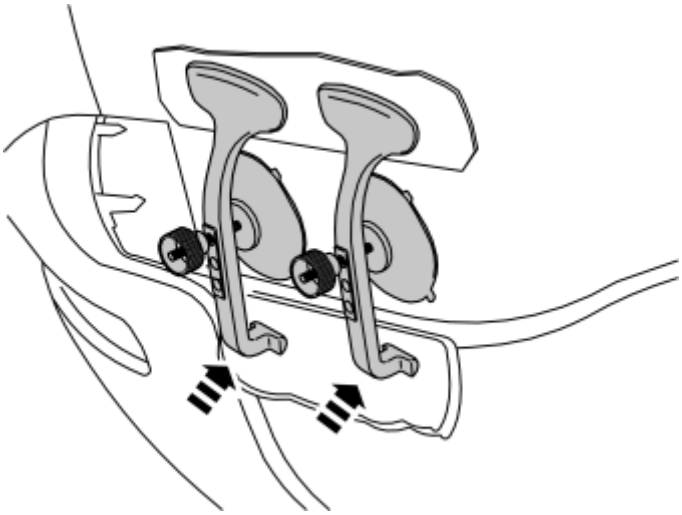

Fig. 16: Identifying Suction Clamp Kit
Courtesy of VOLVO CARS CORPORATION

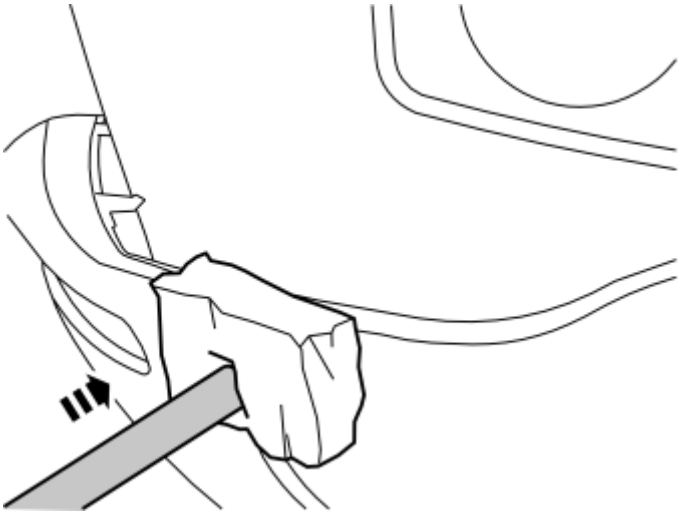

Fig. 17: Identifying Pole With Fixed Object
Courtesy of VOLVO CARS CORPORATION

ACCESSORIES AND BODY, CAB

Roof Panel, Replacing - Removal, Replacement And Installation

FRONT END, FRONT SECTION (2003-2011)

BUMPER RAIL FRONT, REPLACING

As the illustrations in this service information are used for different model years and / or models, some variation may occur. However, the essential information in the illustrations is always correct.

REMOVING THE FRONT BUMPER RAIL

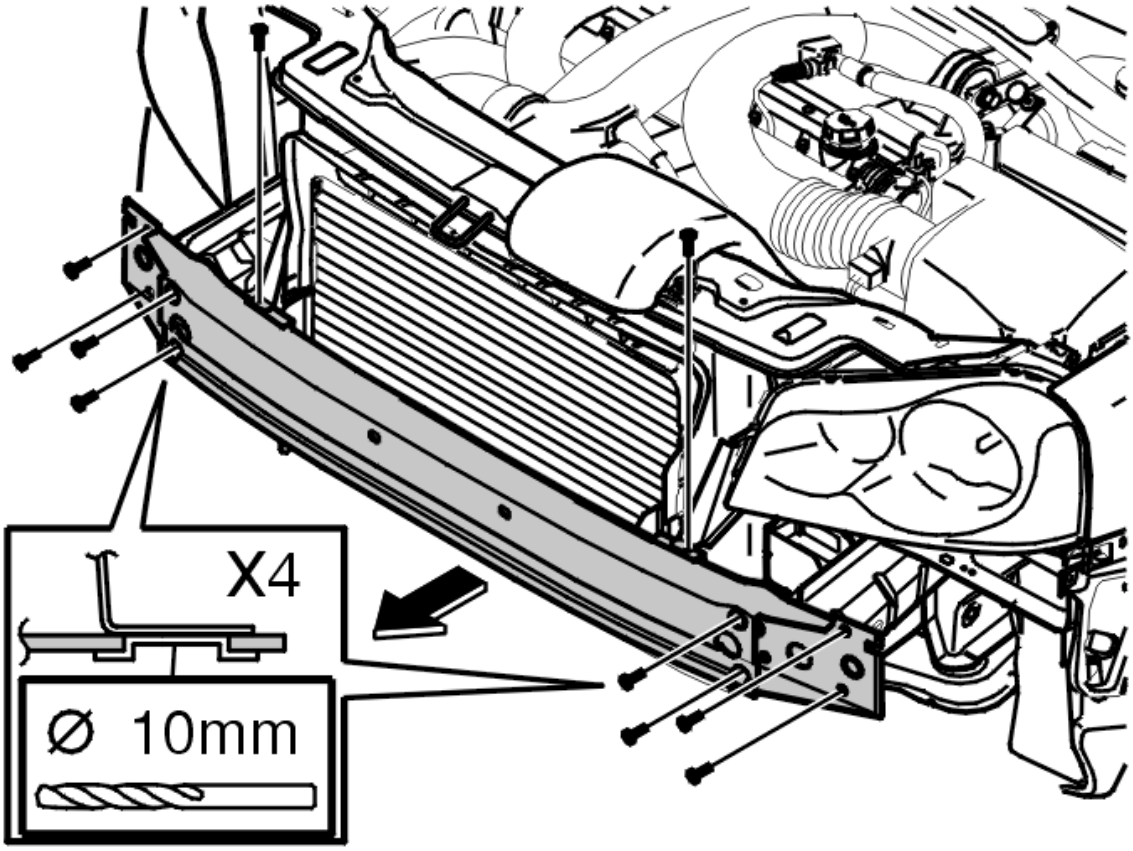

Fig. 1: Removing The Front Bumper Rail
Courtesy of VOLVO CARS CORPORATION

The bumper rail is secured to the side members using four screws and two plug welds on each side. The plug welds are in metal washers pressed into the aluminum member.

Check that the general dimensions of the car are correct. See **SIDE MEMBERS / WHEEL ARCHES FRONT, ALIGNMENT CHART** .

Remove:

- the components. See **FRONT SECTION, EXPOSING** .
- the 4 screws.

Drill out the spot welds.

Grind clean.

Apply welding primer.

INSTALLING THE FRONT BUMPER RAIL

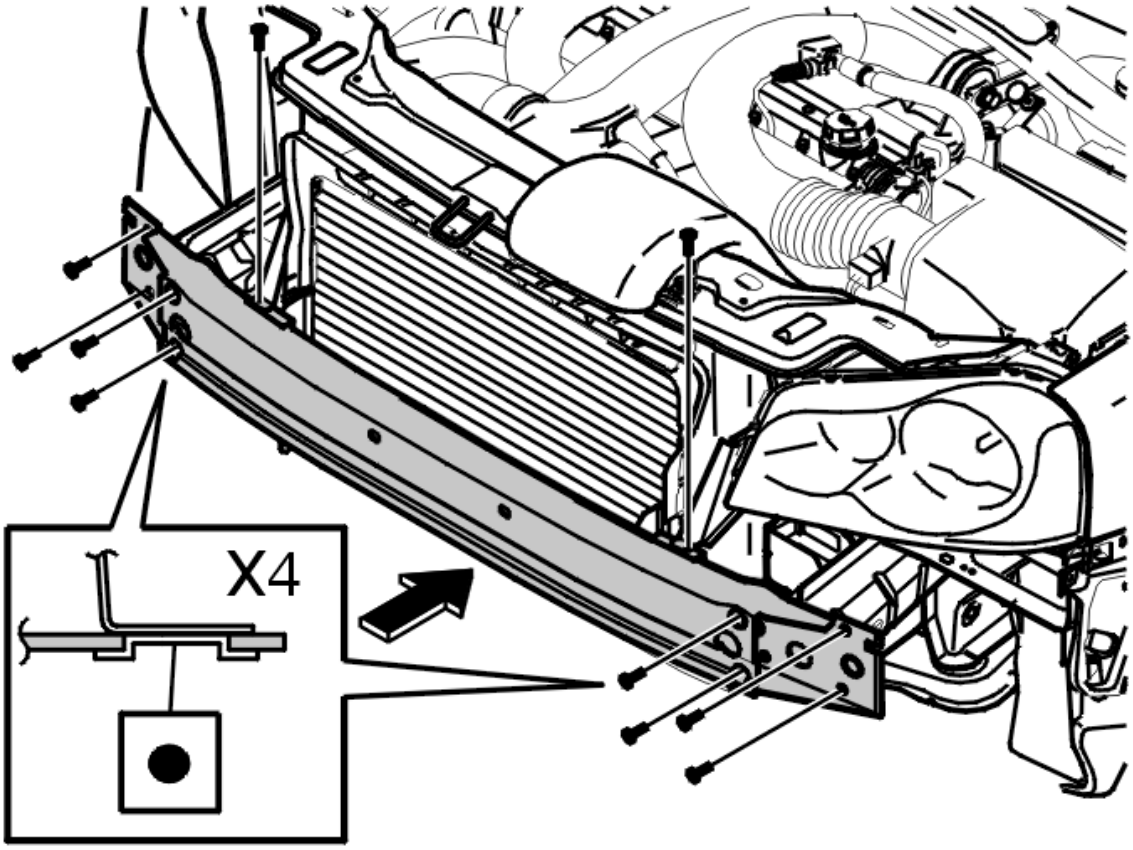

Fig. 2: Installing The Front Bumper Rail
Courtesy of VOLVO CARS CORPORATION

Install:

- the member
- the 4 screws. M10. Tighten.

Spot-weld.

HOOD (2003-2011)

CABLE HOOD CATCH, REPLACING

As the illustrations in this service information are used for different model years and / or models, some variation may occur. However, the essential information in the illustrations is always correct.

REMOVING THE HOOD CATCH CABLE

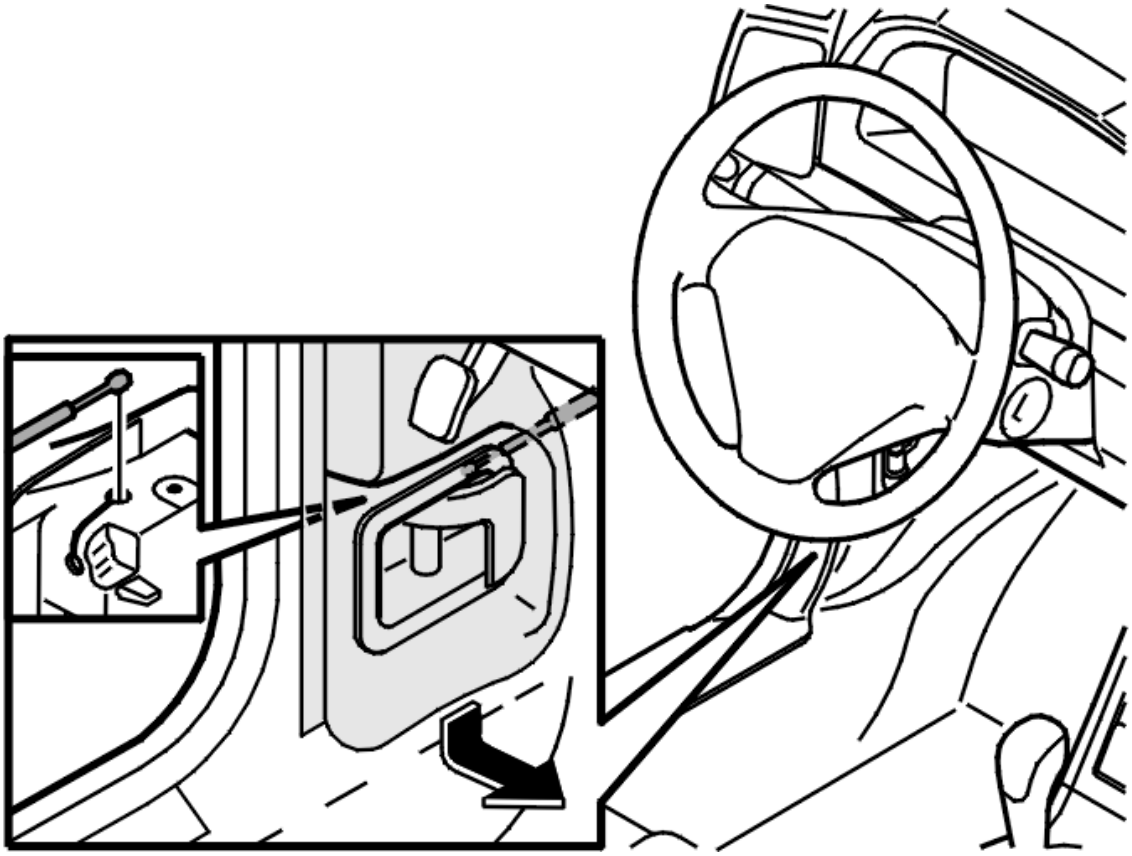

Fig. 3: Removing The Hood Catch Cable
Courtesy of VOLVO CARS CORPORATION

Disconnect the mechanical cable. See **HOOD CATCH, REPLACING**.

Remove:

- the sill trim panel. See **SILL TRIM PANEL, REPLACING**
- the hood catch mechanism
- the panel for the hood catch mechanism.

Unhook the cable from the hood catch mechanism.

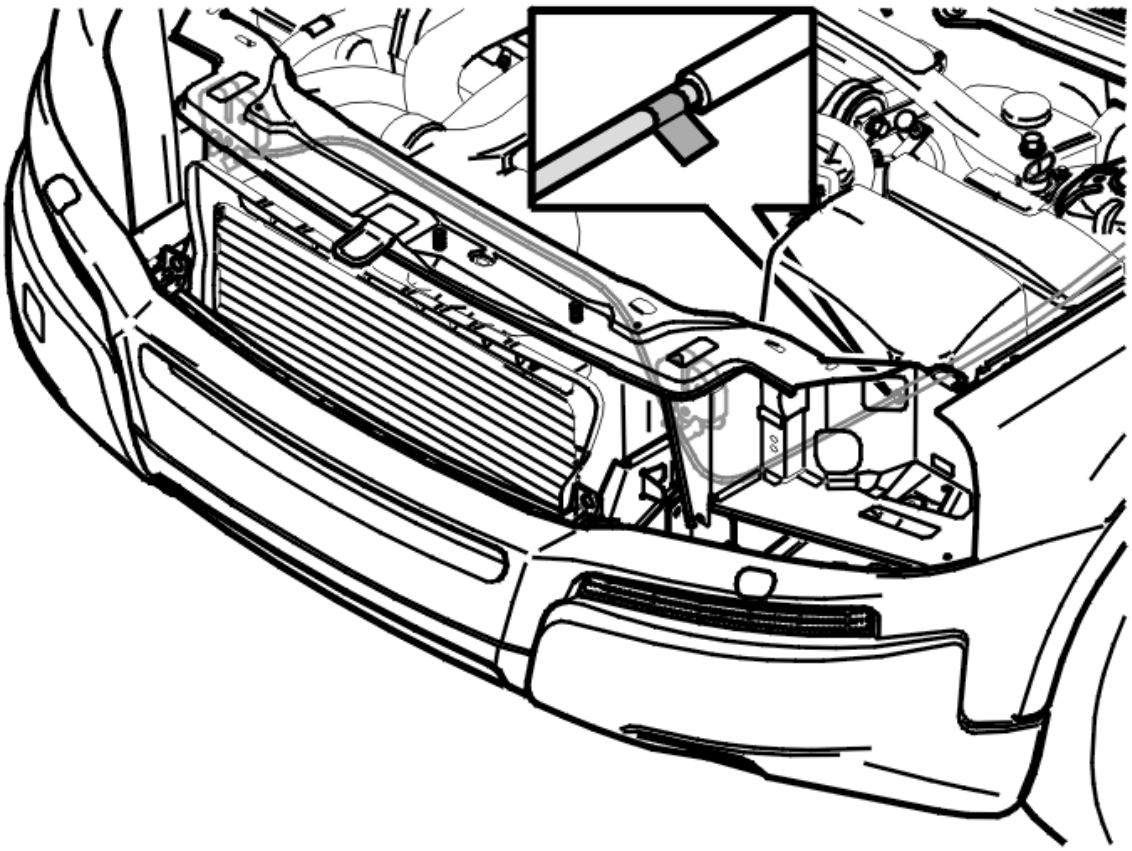

Fig. 4: Identifying Hood Catch Mechanism
Courtesy of VOLVO CARS CORPORATION

HINT: Before pulling out the cable sleeve, mark the sleeve using tape or a marker pen. Then install the new cable sleeve following the old one, so that the marking is in the correct place.

Pull the cable sleeve out of the engine compartment. Leave the plastic pipe in position.

NOTE: Note how the cable sleeve is routed to the hood catches.

INSTALLING THE MECHANICAL CABLE FOR THE HOOD CATCHES

NOTE: For tightening torques, see TIGHTENING TORQUE .

Feed the cable sleeve into the plastic pipe to its correct position. Ensure that the marking is at the front of the plastic pipe.

NOTE: Note how the cable sleeve is routed to the hood catches.

Install the panel for the hood catch mechanism. Hook the cable into place.

Install:

- the hood catch mechanism
- the 1 M6 screw for the hood catch mechanism. Tighten
- the sill trim panel. See **SILL TRIM PANEL, REPLACING**
- the hood catch cable. See **HOOD CATCH, REPLACING**.

HOOD CATCH, REPLACING

The illustrations in this service information are used for different model years and / or models. Some variation may occur. However, the essential information in the illustrations is always correct.

HOOD RELEASE CATCH (LEFT-HAND SIDE), REPLACING

REMOVING THE HOOD RELEASE CATCH (LEFT-HAND SIDE)

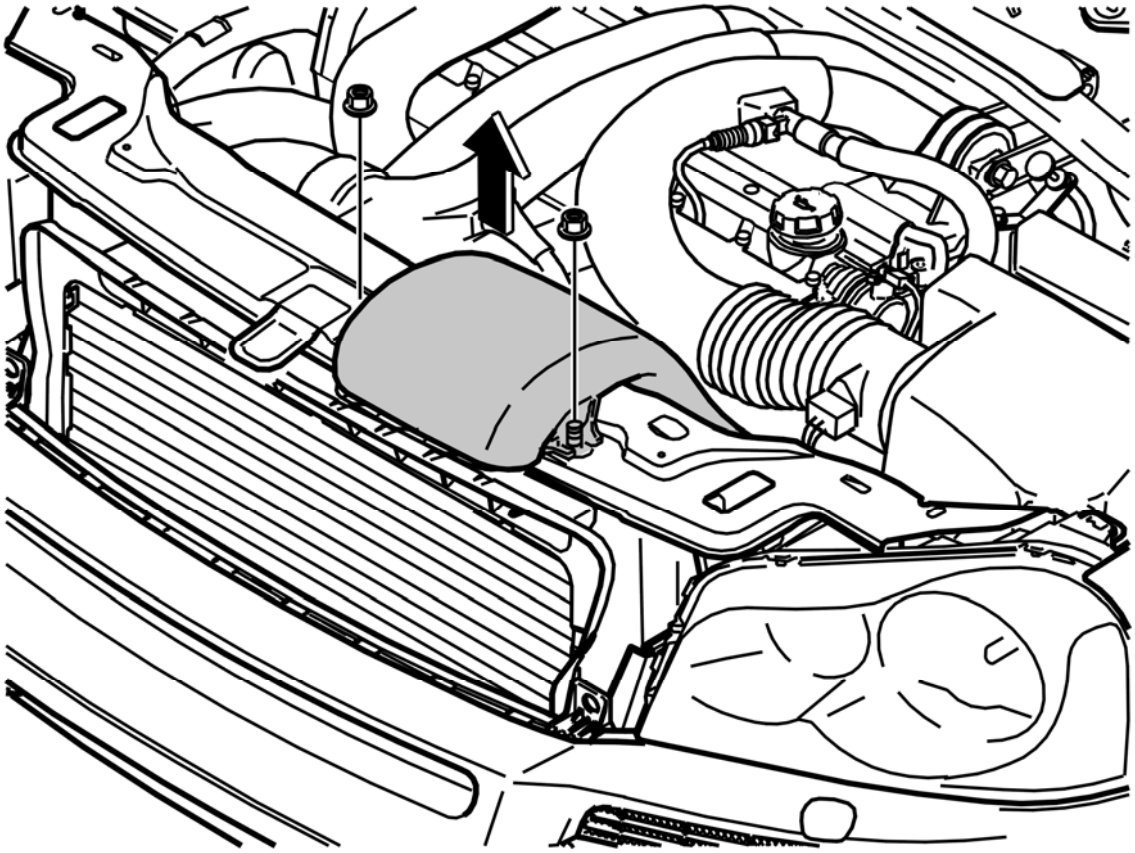

Fig. 5: Identifying Air Baffle For The Air Cleaner (ACL) Box
Courtesy of VOLVO CARS CORPORATION

Remove:

- the air baffle for the air cleaner (ACL) box.

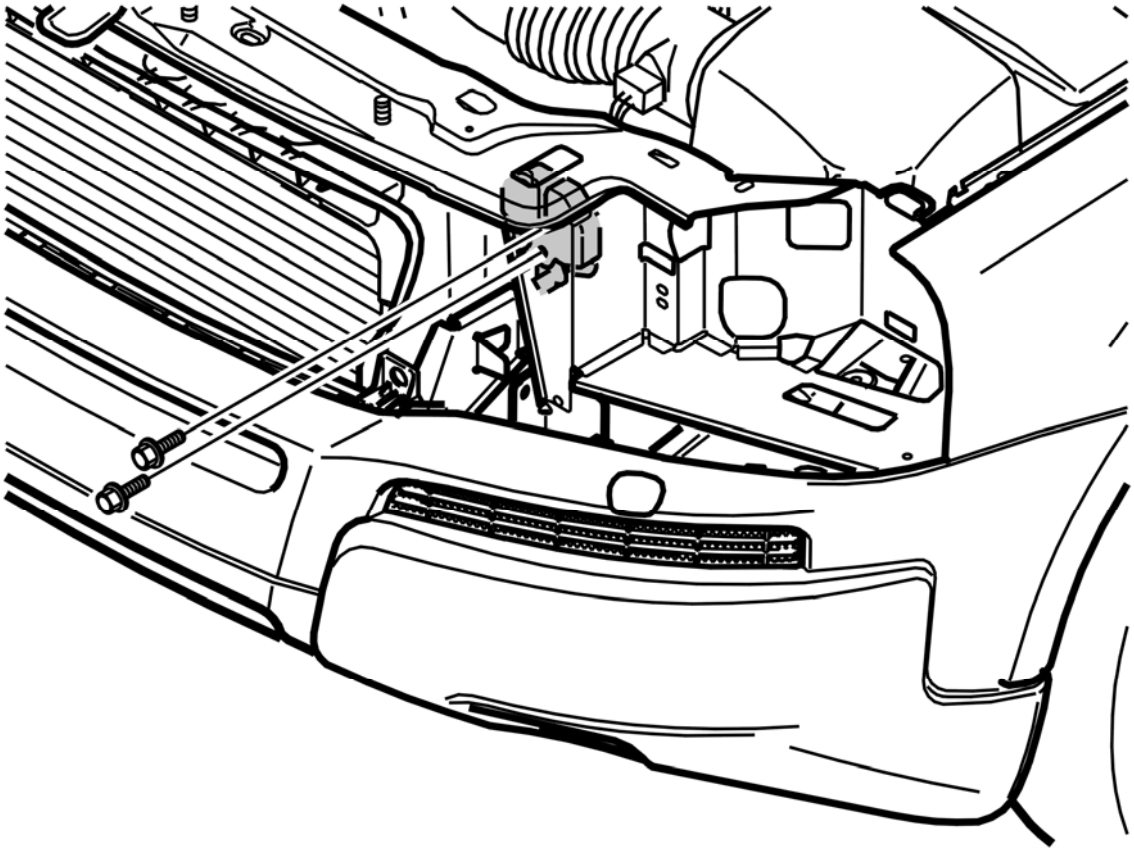

Fig. 6: Identifying Screws For The Hood Catch
Courtesy of VOLVO CARS CORPORATION

- the headlamp. See **HEADLIGHT/BULB, REPLACING** (2003-2006) or **HEADLIGHT/BULB, REPLACING** (2007-2012).
- the 2 screws for the hood catch.

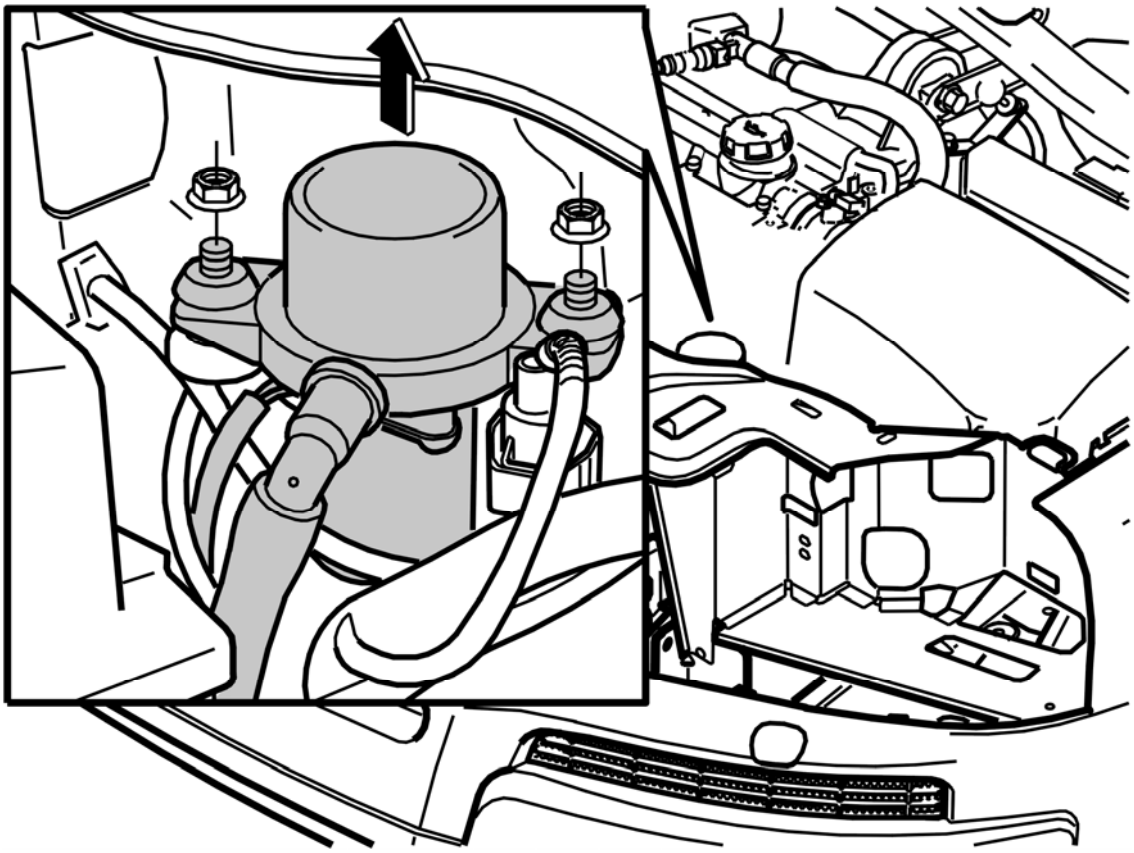

Fig. 7: View Of Nuts For The Vacuum Pump
Courtesy of VOLVO CARS CORPORATION

- the 2 nuts for the vacuum pump.

Move the vacuum pump to one side.

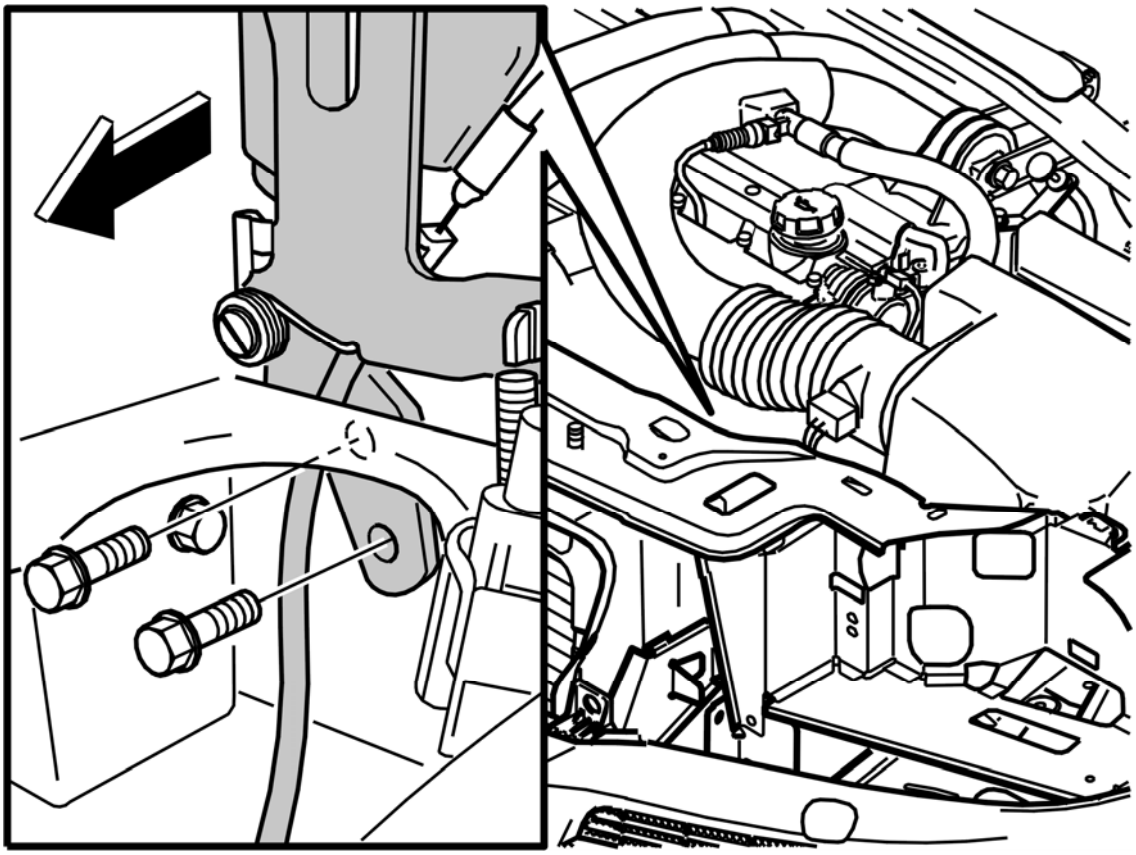

Fig. 8: View Of 2 Screws For The Latch
Courtesy of VOLVO CARS CORPORATION

Remove:

- the 2 screws for the latch
- the latch.

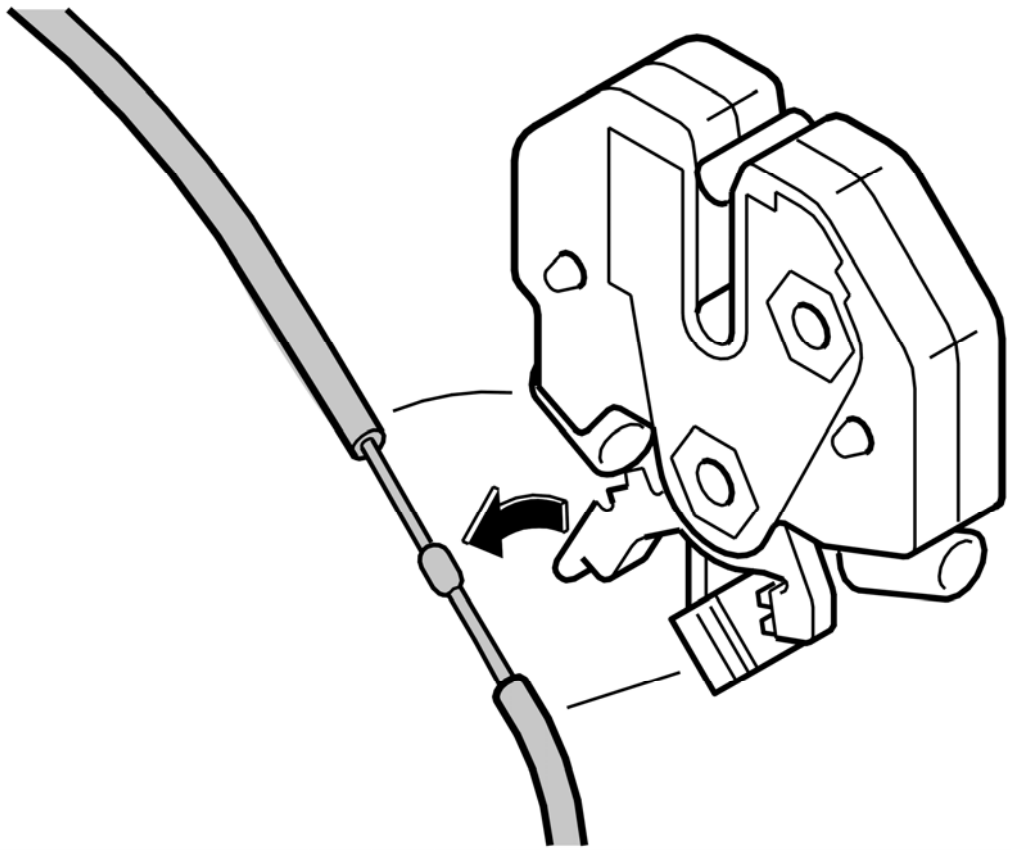

Fig. 9: Identifying Lock Cable Position
Courtesy of VOLVO CARS CORPORATION

Unhook the cable.

NOTE: Note the position of the lock cable.

Replace the lock.

INSTALLING THE HOOD RELEASE CATCH (LEFT-HAND SIDE)

NOTE: For tightening torques, see TIGHTENING TORQUE .

Angle in the hood catch together with the latch.

Secure the hood catch using the 2 M6 screws. Finger tighten.

HINT: Do not tighten the screws for the hood catch until the hood is closed (see the illustration).

Install:

- the 2 M8 screws for the latch. Tighten
- the vacuum pump

- 2 M6 nuts. Tighten
- the air baffle
- the 2 M6 screws. Tighten.

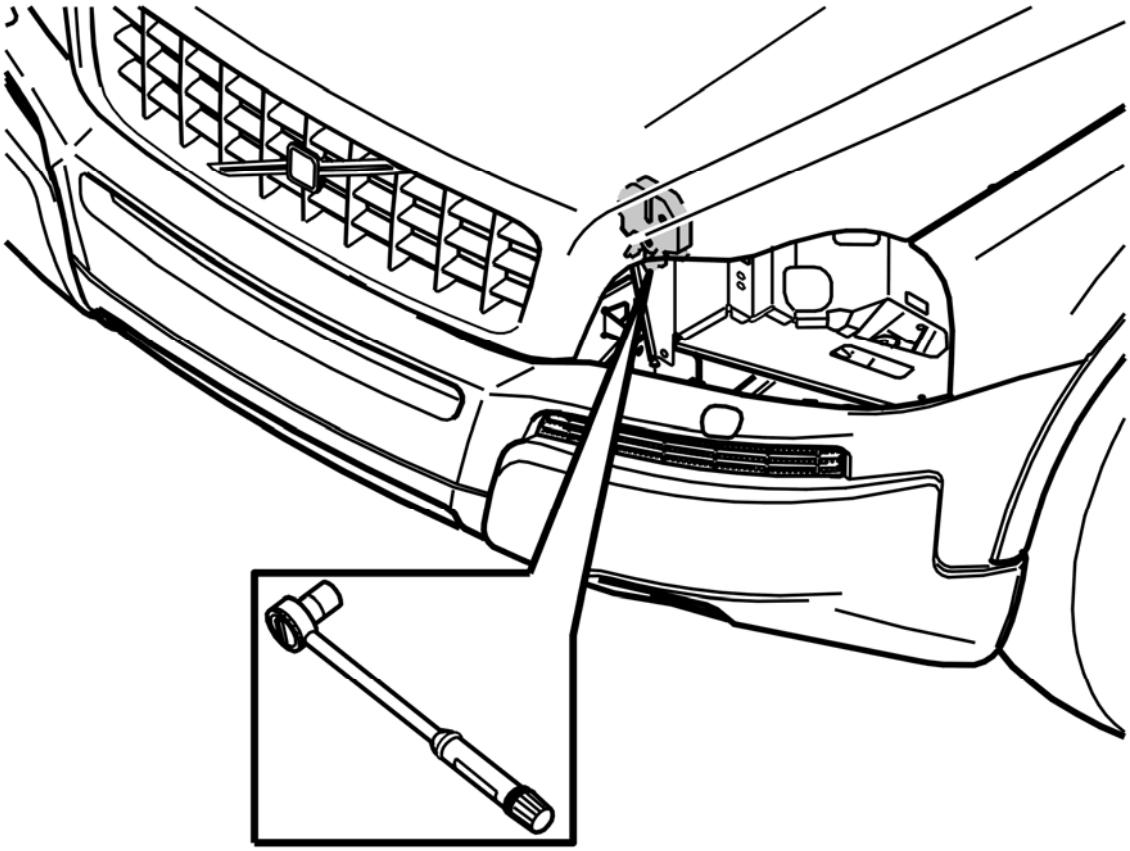

Fig. 10: Tighten The 2 M6 Screws For The Hood Catch
Courtesy of VOLVO CARS CORPORATION

Close the hood.

Tighten the 2 M6 screws for the hood catch.

Open the hood.

Install the headlamp. See **HEADLIGHT/BULB, REPLACING** (2003-2006) or **HEADLIGHT/BULB, REPLACING** (2007-2012).

HOOD RELEASE CATCH (RIGHT-HAND SIDE), REPLACING

REMOVING THE HOOD RELEASE CATCH (RIGHT-HAND SIDE)

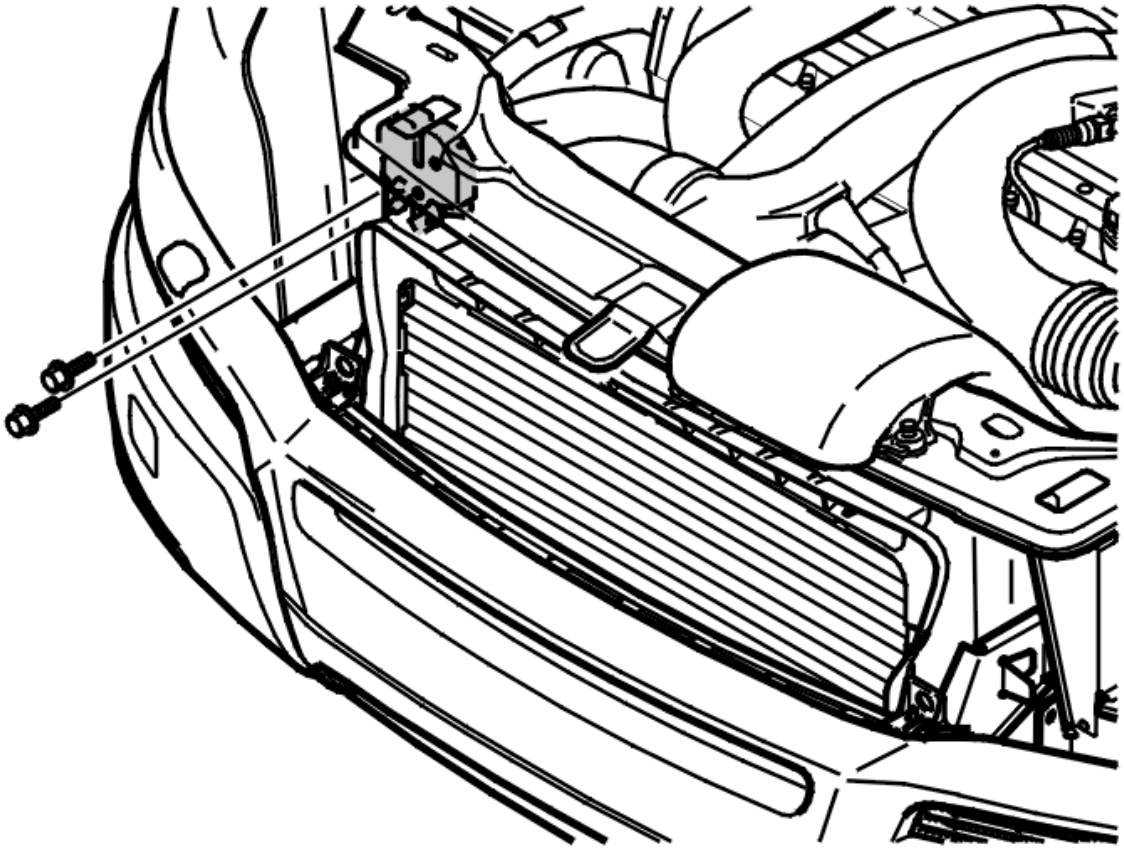

Fig. 11: Removing The Hood Release Catch (Right-Hand Side)
Courtesy of VOLVO CARS CORPORATION

Remove:

- the headlamp. See **HEADLIGHT/BULB, REPLACING** (2003-2006) or **HEADLIGHT/BULB, REPLACING** (2007-2012).
- the 2 screws for the hood catch.

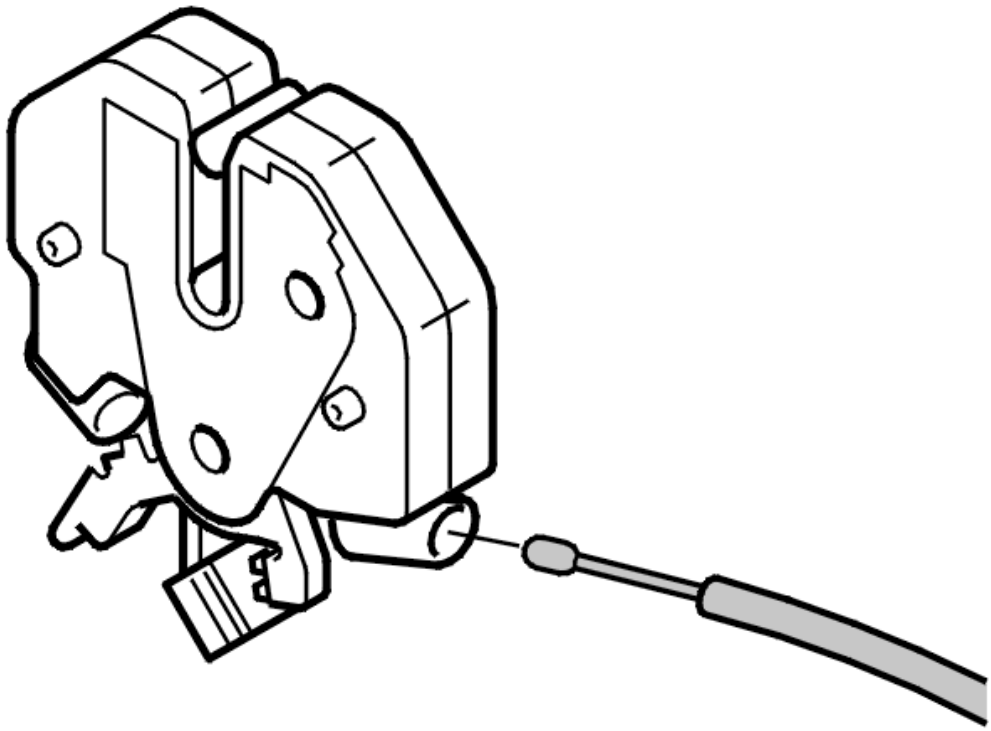

Fig. 12: Unhooking The Lock Cable
Courtesy of VOLVO CARS CORPORATION

Move the hood catch to one side.

Unhook the cable.

NOTE: Note the position of the lock cable.

Replace the lock.

INSTALLING THE HOOD RELEASE CATCH (RIGHT-HAND SIDE)

NOTE: For tightening torques, see TIGHTENING TORQUE .

Install the hood catch.

Secure the hood catch using the 2 M6 screws. Finger tighten.

HINT: Do not tighten the screws for the hood catch until the hood is closed (see the illustration).

Close the hood.

Tighten the 2 M6 screws for the hood catch.

Open the hood.

Install the headlamp. See **HEADLIGHT/BULB, REPLACING** (2003-2006) or **HEADLIGHT/BULB, REPLACING** (2007-2012).

RADIATOR MASKING (2003-2011)

RADIATOR GRILLE, REPLACING

As the illustrations in this service information are used for different model years and / or models, some variation may occur. However, the essential information in the illustrations is always correct.

REMOVING THE RADIATOR GRILLE

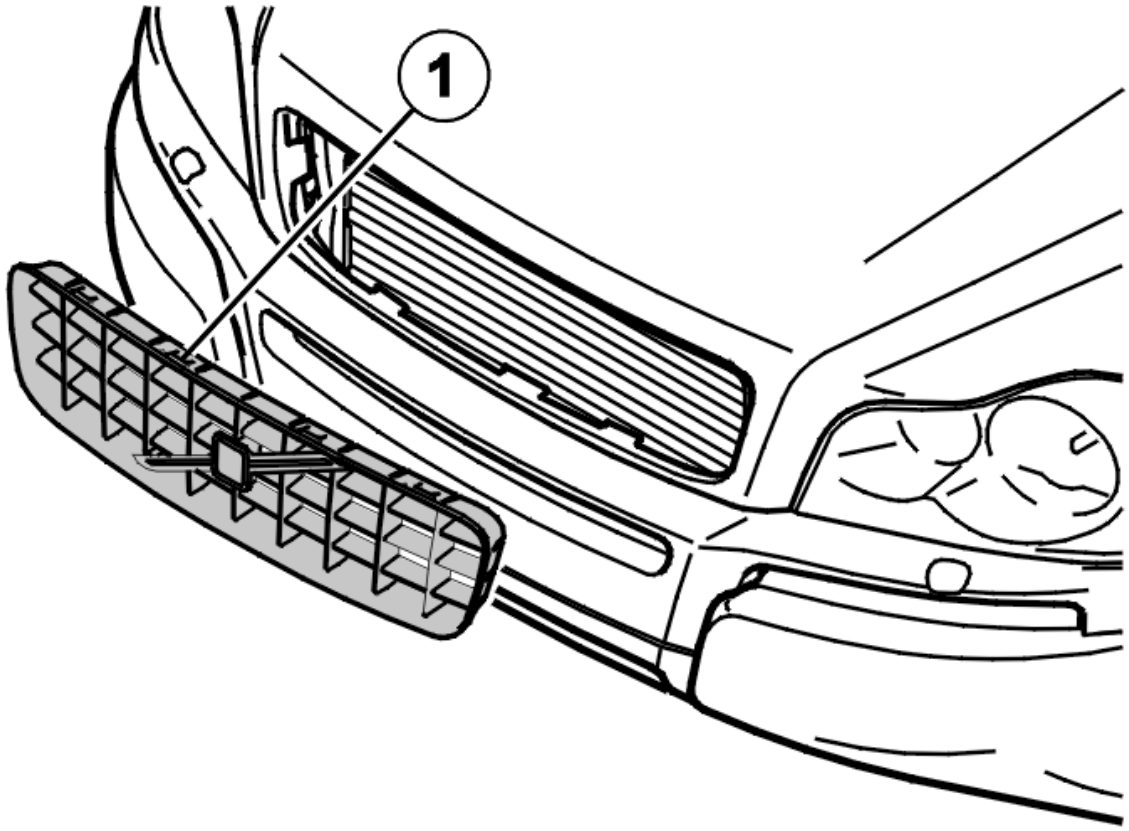

Fig. 13: Remove The Radiator Grille
Courtesy of VOLVO CARS CORPORATION

Remove the radiator grille (1) by pressing in the seven hooks on the inside of the grille while pulling outwards.

HINT: Use a weatherstrip tool to carefully release the hooks.

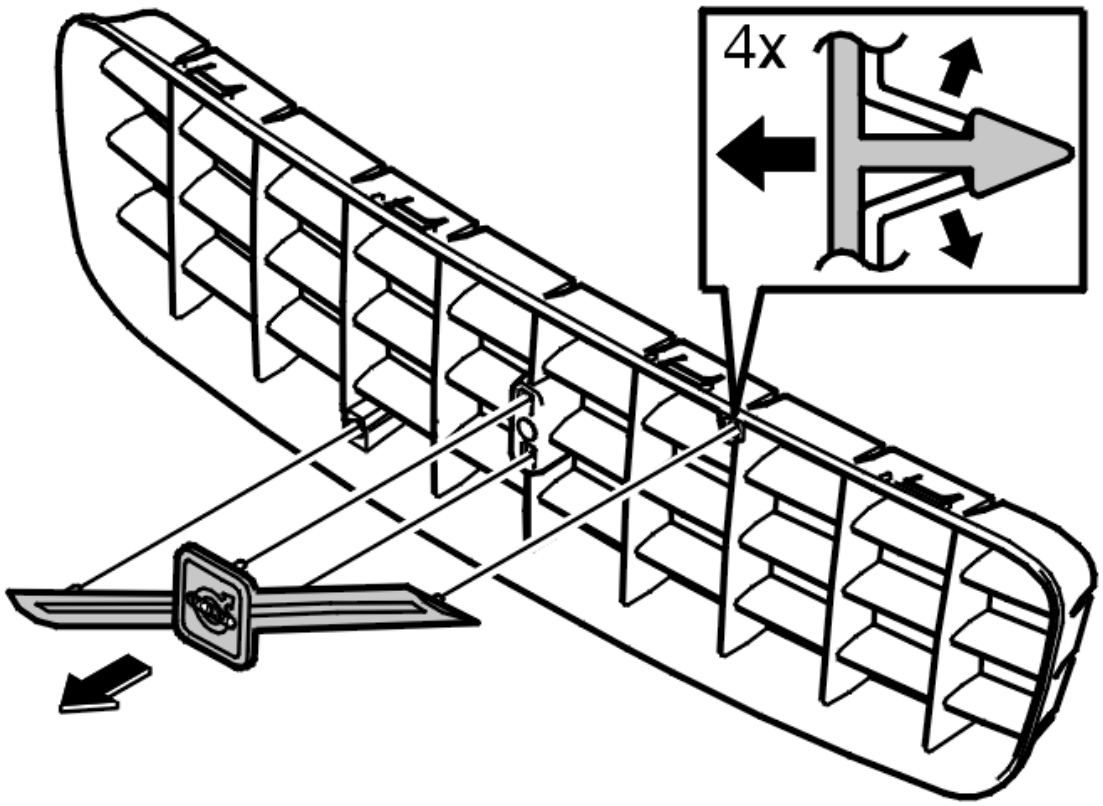

Fig. 14: Remove The Radiator Grille Trim Strip
Courtesy of VOLVO CARS CORPORATION

Remove the trim strip by carefully releasing the four hooks holding it in place.

HINT: Use a small screwdriver to carefully release the hooks.

INSTALLING THE RADIATOR GRILLE

Install:

- the trim strip and badge
- the radiator grille.

NOTE: Check that all the hooks have engaged.

FRONT MUDGUARD (2003-2011)

FRONT FENDER WIDENER

Special tools:

see **9512942**

see **9512949**

The illustrations in this service information are used for different model years and/or models. Some variation may occur. However, the essential information in the illustrations is always correct.

REMOVING THE FENDER EXTENSION

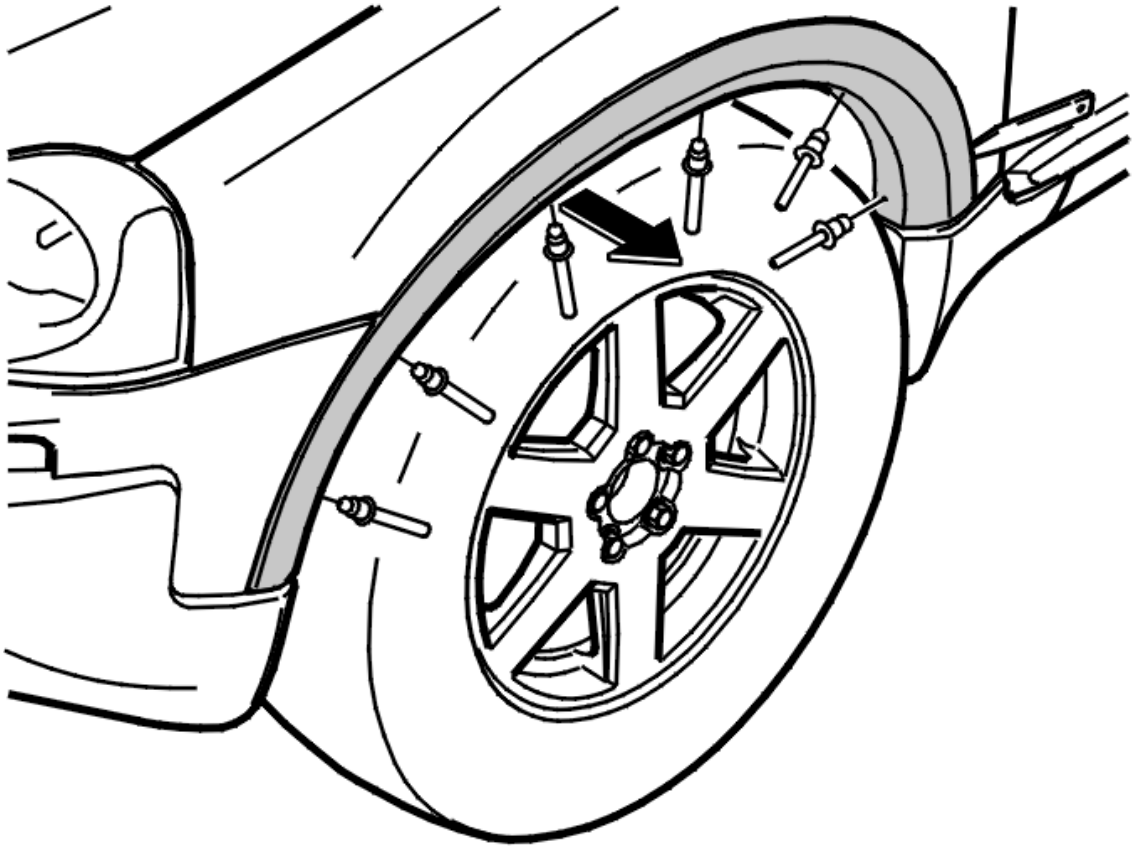

Fig. 15: Removing Front Inner Fender
Courtesy of VOLVO CARS CORPORATION

Remove:

- the pop rivets from the front inner fender, 6 x, according to **REMOVING RIVET** .

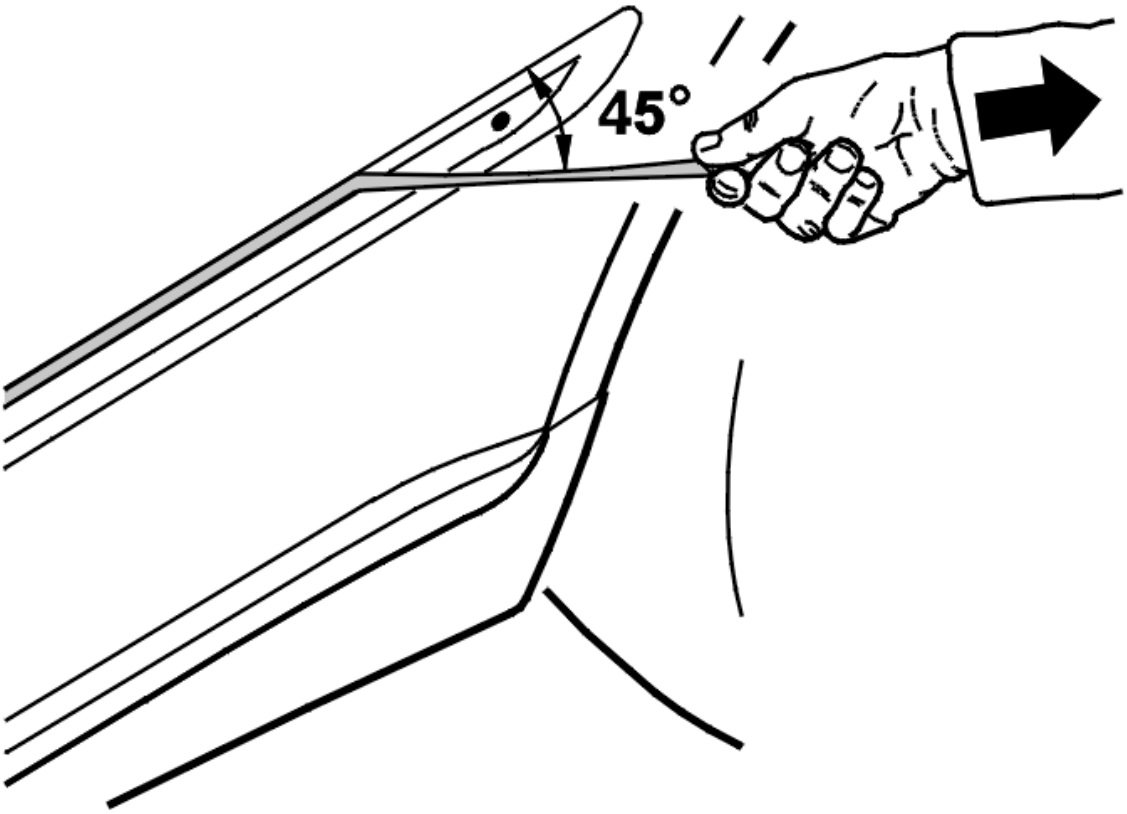

Fig. 16: Removing Tape Residue
Courtesy of VOLVO CARS CORPORATION

Remove the covered clips and the double-sided tape by pulling straight out.

The front moulding has five clips and the rear has six clips.

HINT: Use a weatherstrip tool to facilitate removal. Start at the front or rear edge of the moulding.

Remove any tape residue. Use: see **9512942** and: see **9512949** .

INSTALLING FENDER EXTENSION

NOTE: **Always use a new molding and new clips when installing.**

NOTE: **The car must be at least room temperature, i. e. warmer than 20°C in order for the tape to bond correctly.**

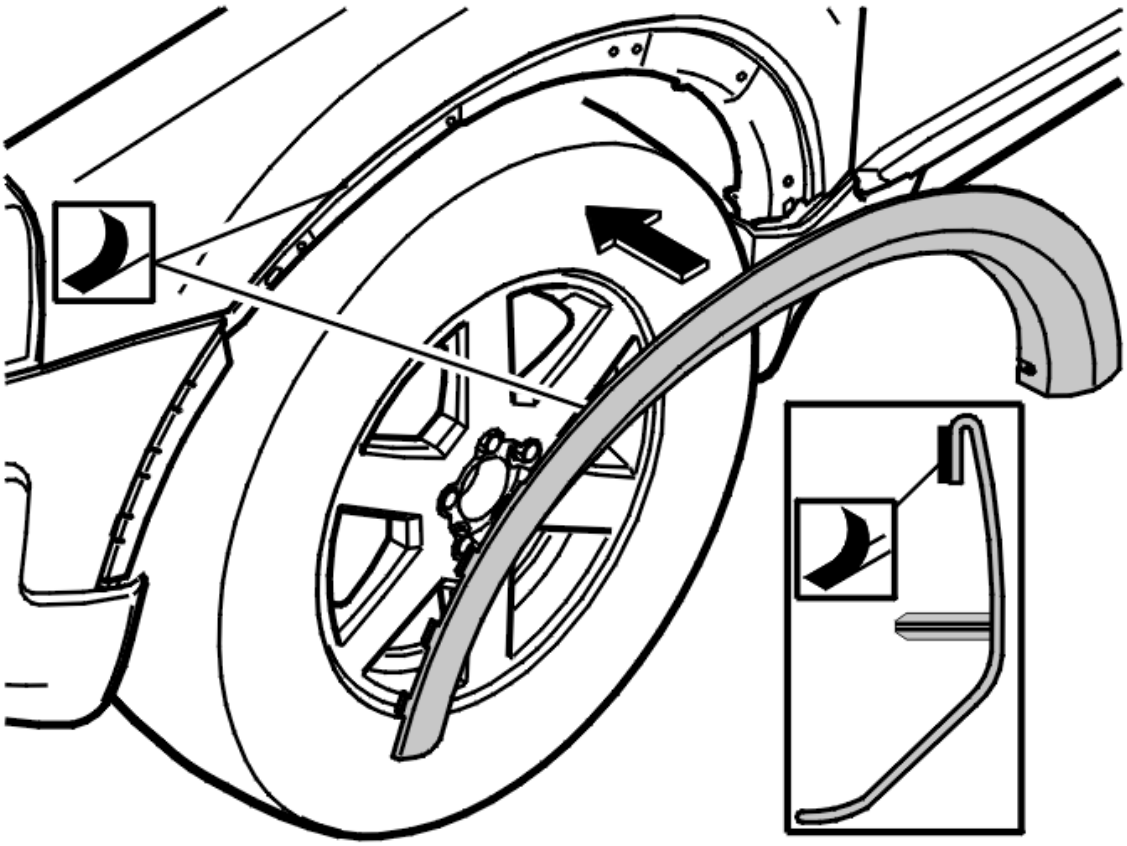

Fig. 17: Identifying Fender Extension Tape
Courtesy of VOLVO CARS CORPORATION

Wash the area for the moulding with isopropanol and water, 50/50 mix.

Wipe dry using a lint-free cloth or similar.

Locate the locating pins and clips in the holes.

Press down firmly across the entire moulding and check that the clips engage in the fender.

HINT: Detach about 50 mm of the tape's protective film before pressing the moulding in place. This facilitates when removing the remaining protective film.

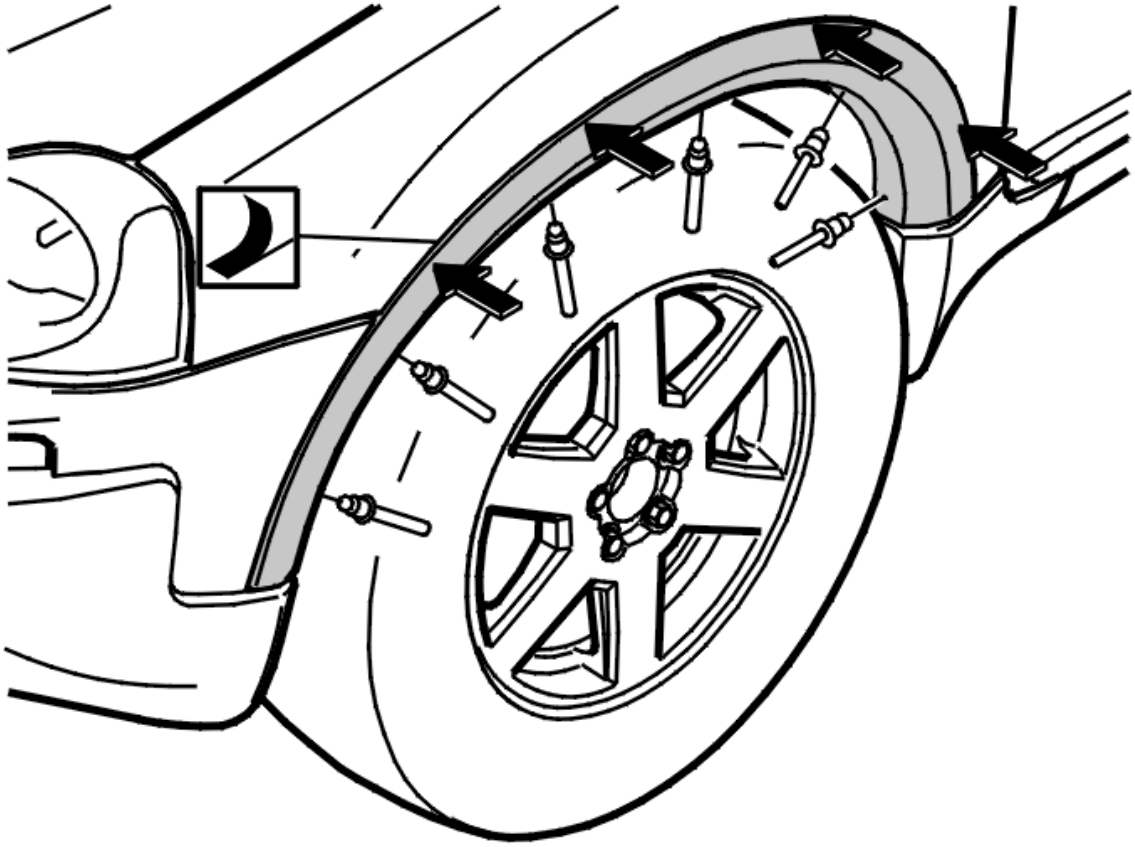

Fig. 18: Installing Fender Extension
Courtesy of VOLVO CARS CORPORATION

Check the position of the moulding.

Remove the rest of the tape's protective film, and apply firm pressure to the moulding with your hand so that the tape adheres to the fender.

Install 5 new pop rivets on the front moulding.

NOTE: To ensure optimal adhesion, do not wash the car for 72 hours.

FRONT WING, REPLACING

REMOVING THE FRONT WING

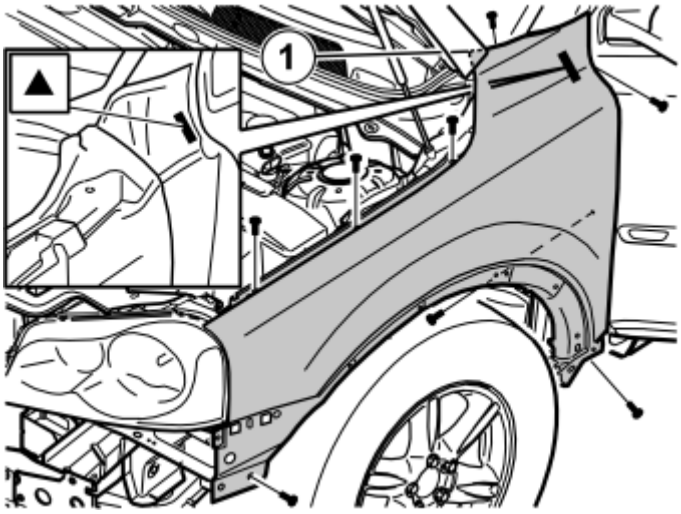

Fig. 19: Identifying Upper Rear Corner Rubber
Courtesy of VOLVO CARS CORPORATION

Remove:

- the rubber at the upper rear corner (1) by pressing down and lifting out the front corner first. Repeat the procedure for the rear section
- the bumper. See **CASING BUMPER FRONT, REPLACING**
- the bracket for the bumper
- the wing liner which is secured by three plastic nuts and twelve rivets. To remove the rivets, see **REMOVING RIVET**
- the wing edge is secured with double-sided adhesive tape, five clips and the rivets securing the wing lining
- the front section of the plastic sill.

Slacken off the eight screws for the front wing (see the illustration).

INSTALLING THE FRONT WING

Apply adhesive 116 1767 to the foam in the upper, rear corner.

Clean using an alcohol cloth 919 2678.

Apply an adhesive bead, approximately 20 mm in height, approximately 8 mm wide, according to the adhesive symbol in the illustration above.

Install:

- the front wing. Then adjust the wing at the rear edge and against the bonnet
- the wing liner. Do not use rivets
- the wing edge

- the front section of the plastic sill
- the bumper. See **CASING BUMPER FRONT, REPLACING**
- the rivets in the wing edge, wing liner and sill
- the rubber cover.

REAR MUDGUARD (2003-2011)

REAR FENDER EXTENSION

Special tools:

see **9512942**

see **9512949**

The illustrations in this service information are used for different model years and/or models. Some variation may occur. However, the essential information in the illustrations is always correct.

REMOVING THE FENDER EXTENSION

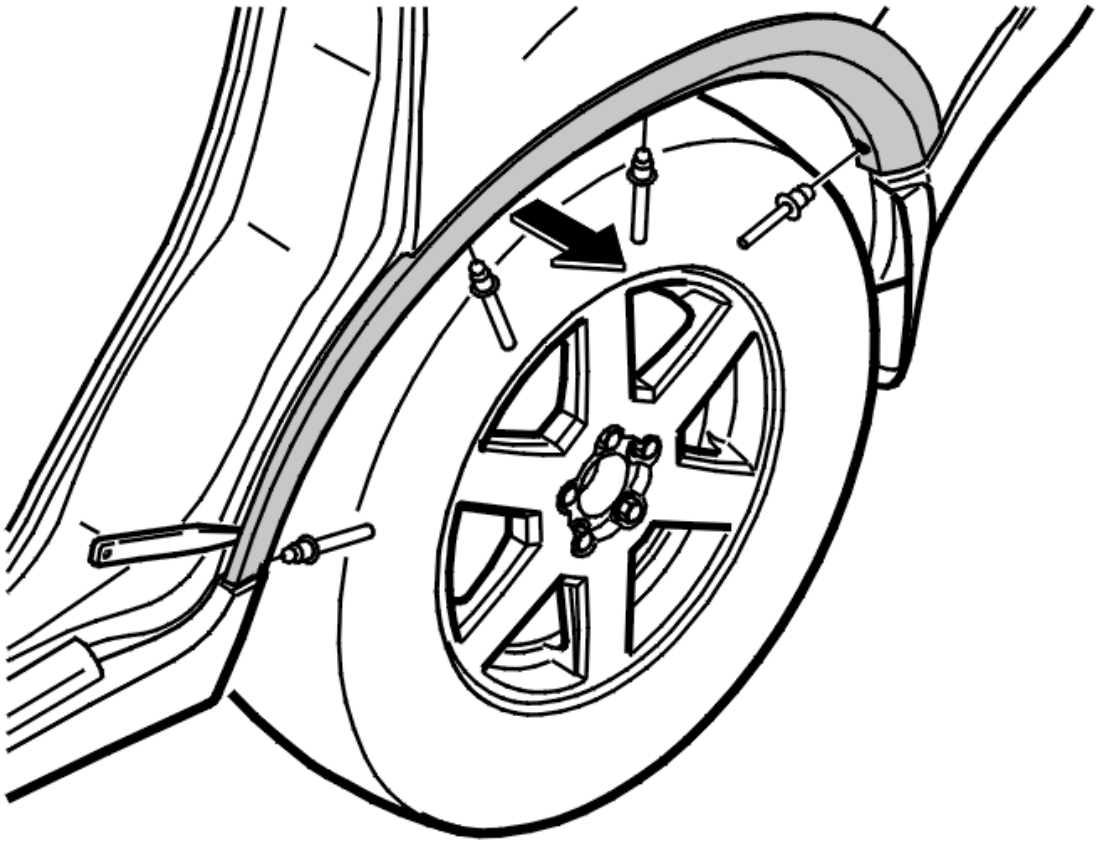

Fig. 20: Identifying Rear Inner Fender
Courtesy of VOLVO CARS CORPORATION

Remove:

- the pop rivets from the rear inner fender, 4 x, according to **REMOVING RIVET** .

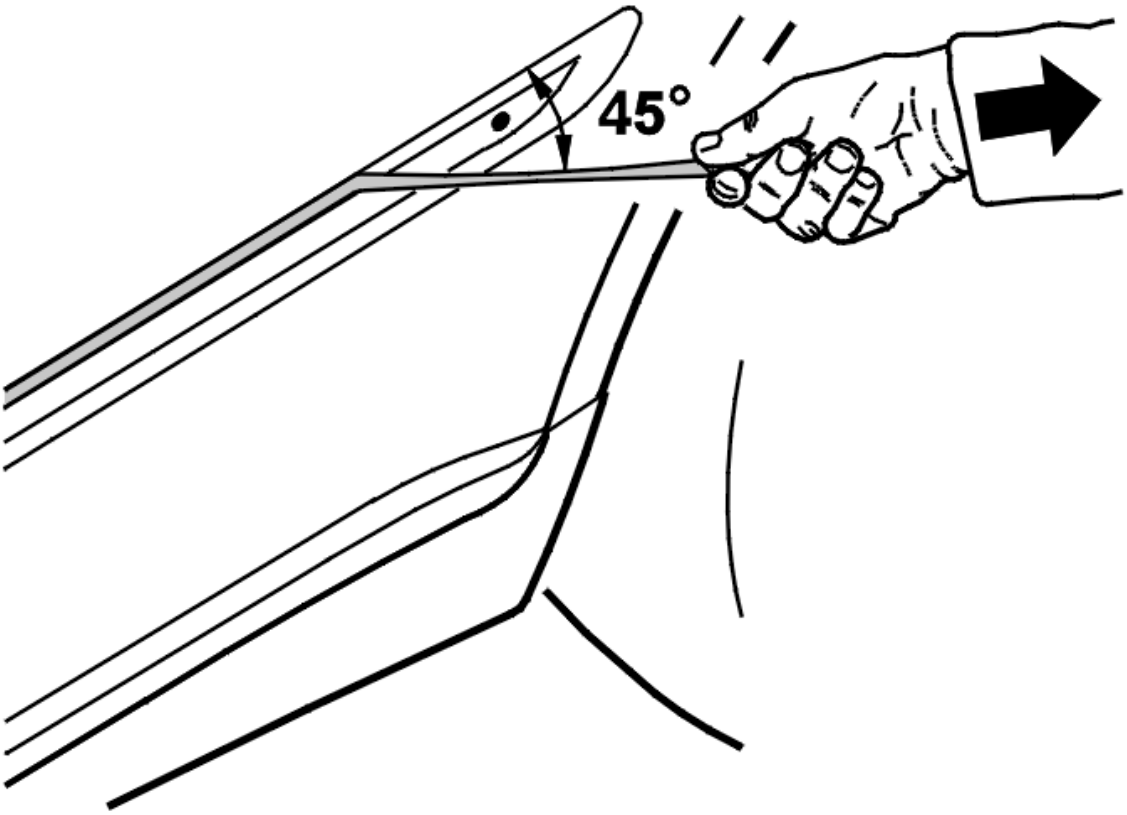

Fig. 21: Removing Tape Residue
Courtesy of VOLVO CARS CORPORATION

Remove the covered clips and the double-sided tape by pulling straight out.

The front moulding has five clips and the rear has six clips.

HINT: Use a weatherstrip tool to facilitate removal. Start at the front or rear edge of the moulding.

Remove any tape residue. Use: see **9512942** and: see **9512949** .

INSTALLING FENDER EXTENSION

NOTE: Always use a new molding and new clips when installing.

NOTE: The car must be at least room temperature, i. e. warmer than 20°C in order for the tape to bond correctly.

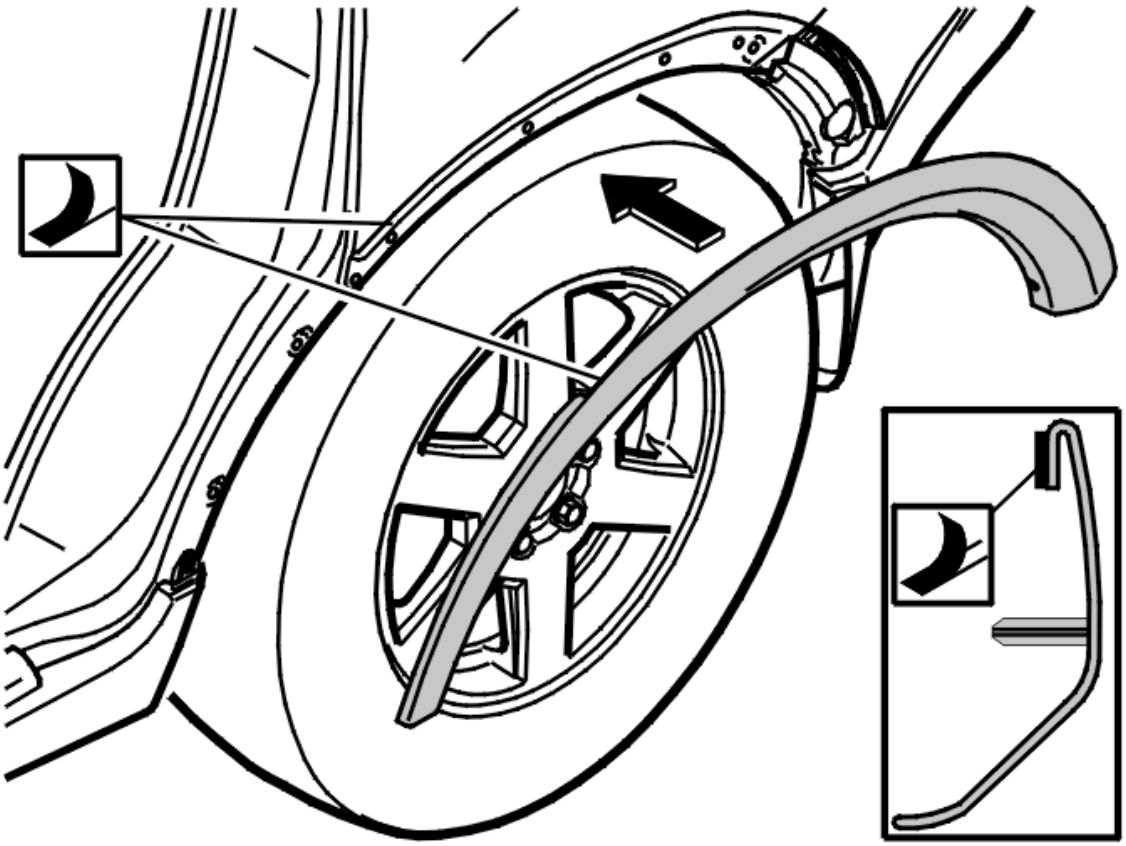

Fig. 22: Identifying Fender Extension Tape
Courtesy of VOLVO CARS CORPORATION

Wash the area for the moulding with isopropanol and water, 50/50 mix.

Wipe dry using a lint-free cloth or similar.

Locate the locating pins and clips in the holes.

Press down firmly across the entire moulding and check that the clips engage in the fender.

HINT: Detach about 50 mm of the tape's protective film before pressing the moulding in place. This facilitates when removing the remaining protective film.

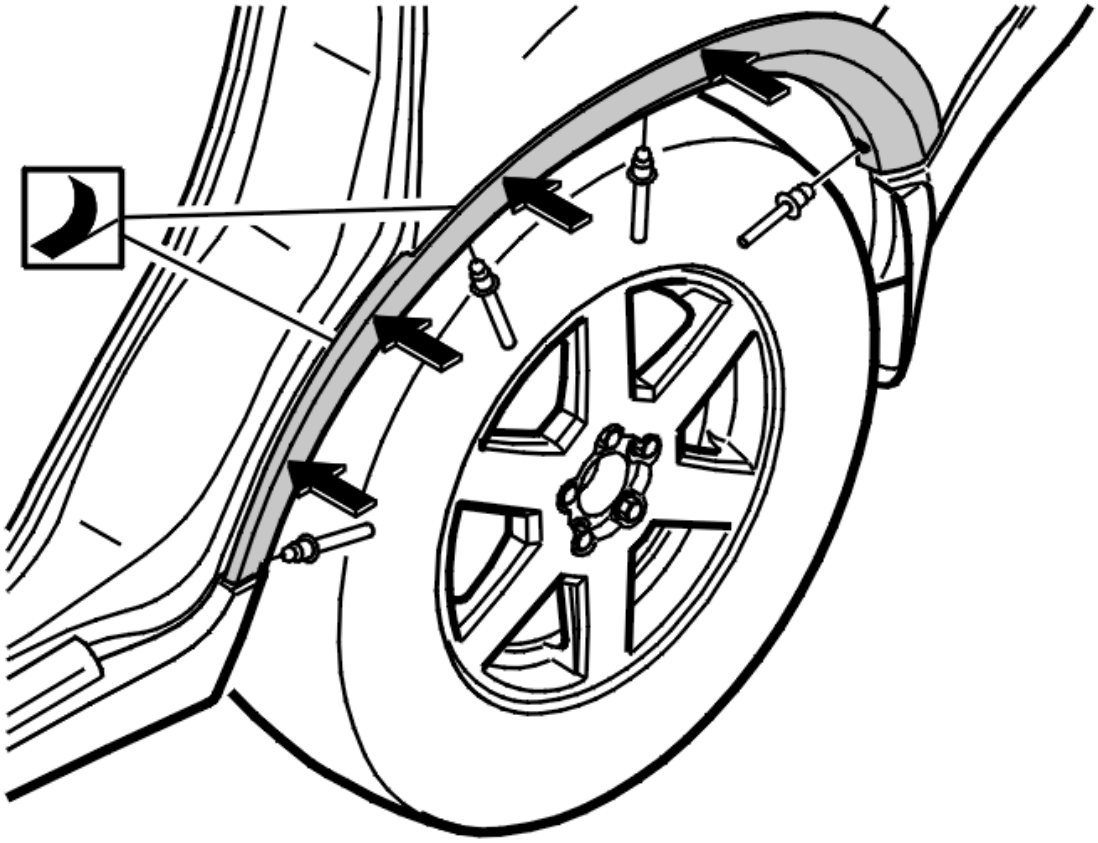

Fig. 23: Installing Fender Extension
Courtesy of VOLVO CARS CORPORATION

Check the position of the moulding.

Remove the rest of the tape's protective film, and apply firm pressure to the moulding with your hand so that the tape adheres to the fender.

Install 4 new pop rivets on the rear moulding.

NOTE: To ensure optimal adhesion, do not wash the car for 72 hours.

REAR FENDER, REPLACING

As the illustrations in this service information are used for different model years and / or models, some variation may occur. However, the essential information in the illustrations is always correct.

REMOVING THE REAR FENDER

Remove the components. See **REAR SECTION, EXPOSING** and **SIDE SECTION, EXPOSING** .

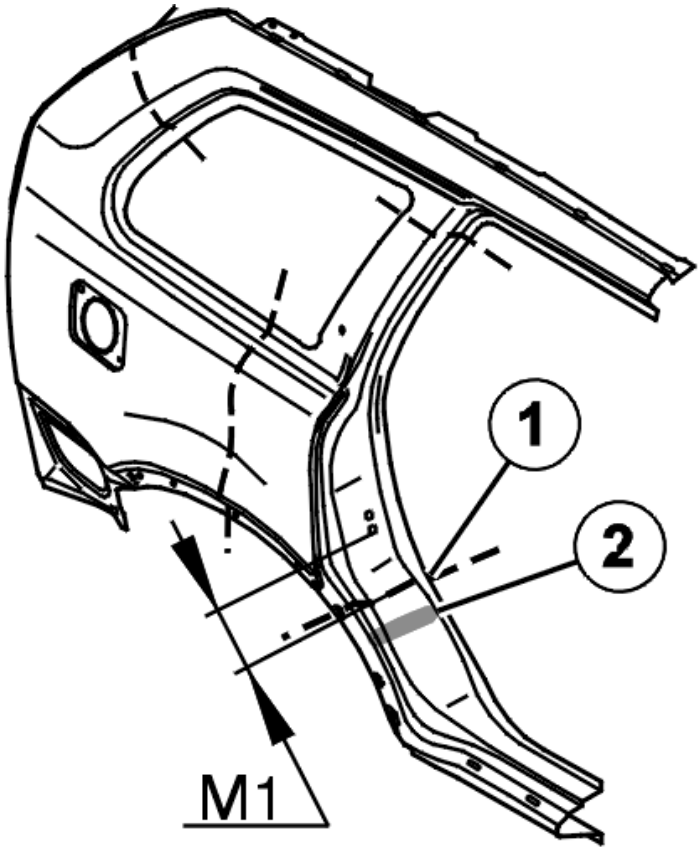

Fig. 24: Identifying Rear Fender Cut Points
Courtesy of VOLVO CARS CORPORATION

Pull out the damaged section to make it easier to re-align internal components.

Determine the extent of the damage. See **REAR END, ALIGNMENT CHART** and **BODY SIDE, ALIGNMENT CHART** .

Roughly cut at an appropriate point. See the recommended cutting points in the illustration.

The join marked (1) is recommended so that the foam seal does not need to be replaced with foam substitute. Cut 60 mm below the lower hole on the striker plate.

30 mm below the cutting point the foam seal (2) is positioned.

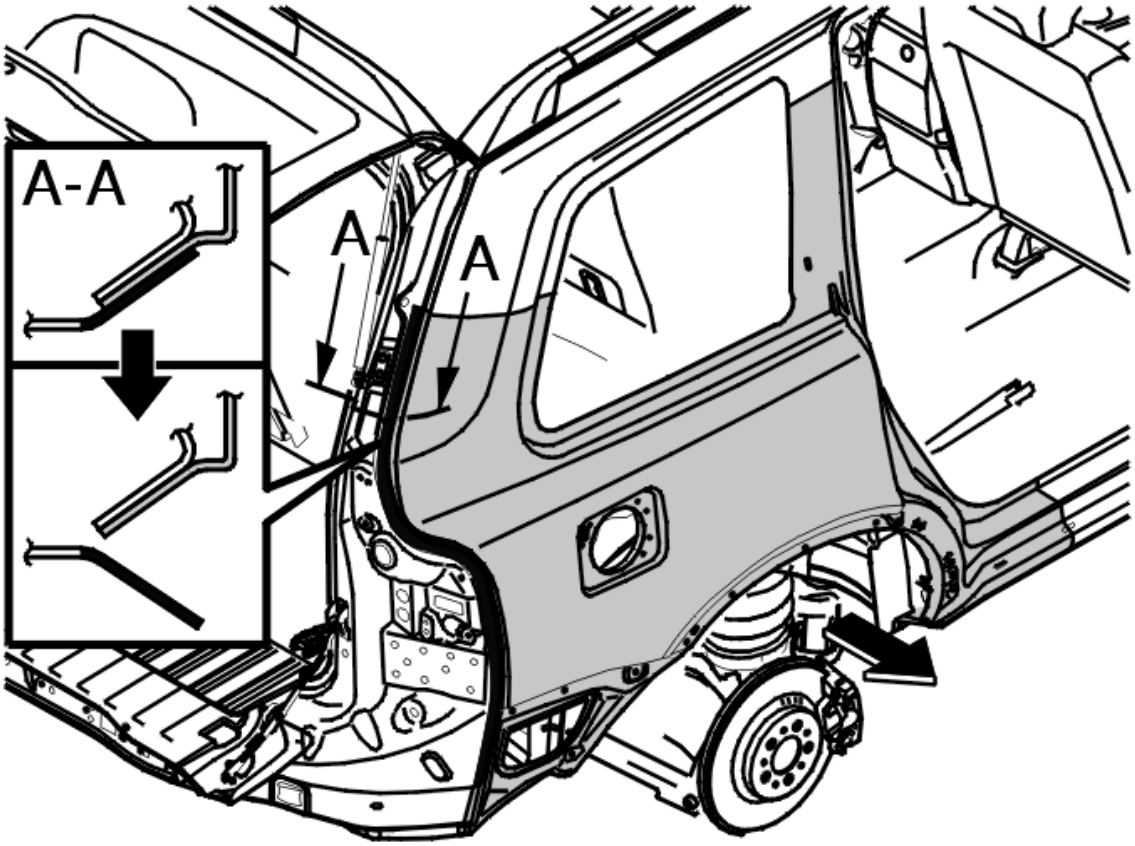

Fig. 25: View Of Panel Spot Weld Sections
Courtesy of VOLVO CARS CORPORATION

The inner flange of the rear fender is inside the tail panel.

Drill out the spot welds through all three panels.

Angle out the flange along the score (A-A) so that the spot welds in the two inner sections can be accessed. This also makes installation easier.

Drill out the spot welds in the rear fender and pry it off.

Grind clean and apply welding primer.

INSTALLING THE REAR FENDER

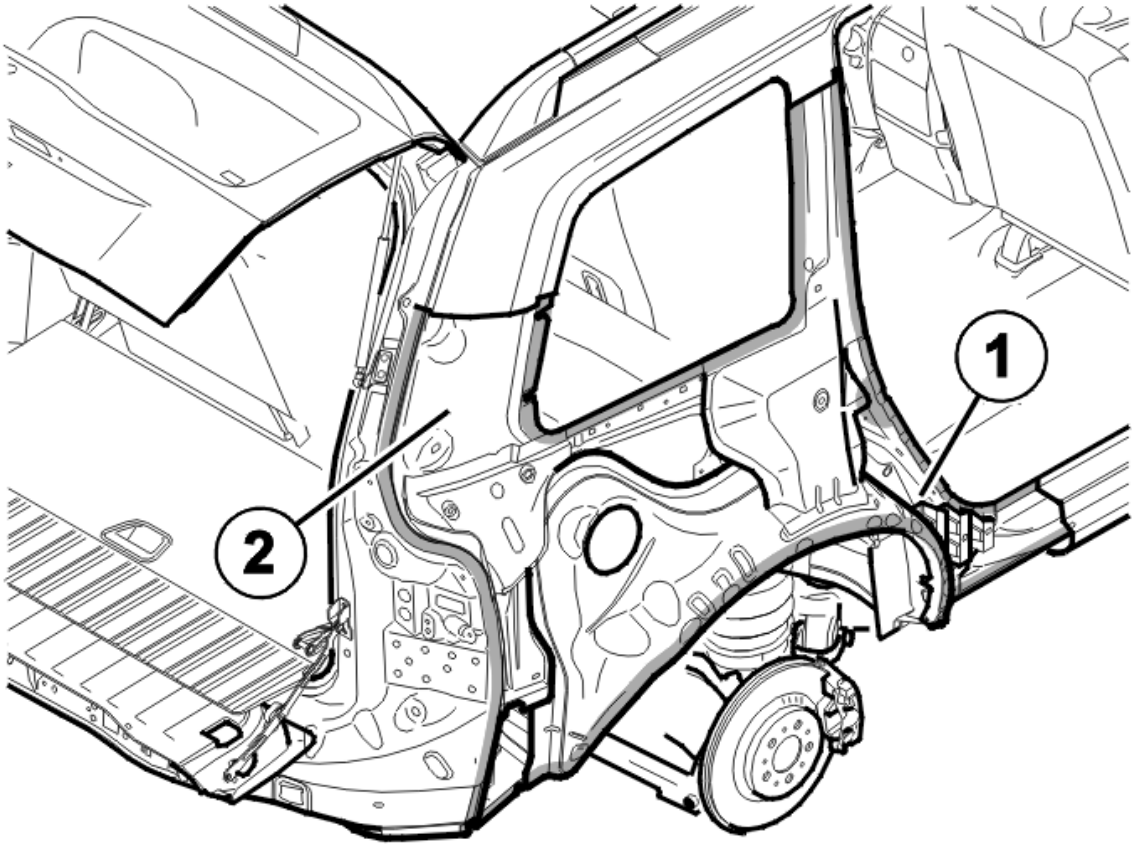

Fig. 26: Installing Rear Fender Foam Rubber Replacement Points
Courtesy of VOLVO CARS CORPORATION

Rough cut the replacement part so that the replacement part overlaps at the cutting points.

Knock the wheel arch out of the way slightly to obtain more freedom when aligning the rear fender.

Weld the threaded plate to the striker plate if it was removed.

Use foam rubber replacement at points (1) and (2). This is to prevent noise spreading through the car body.

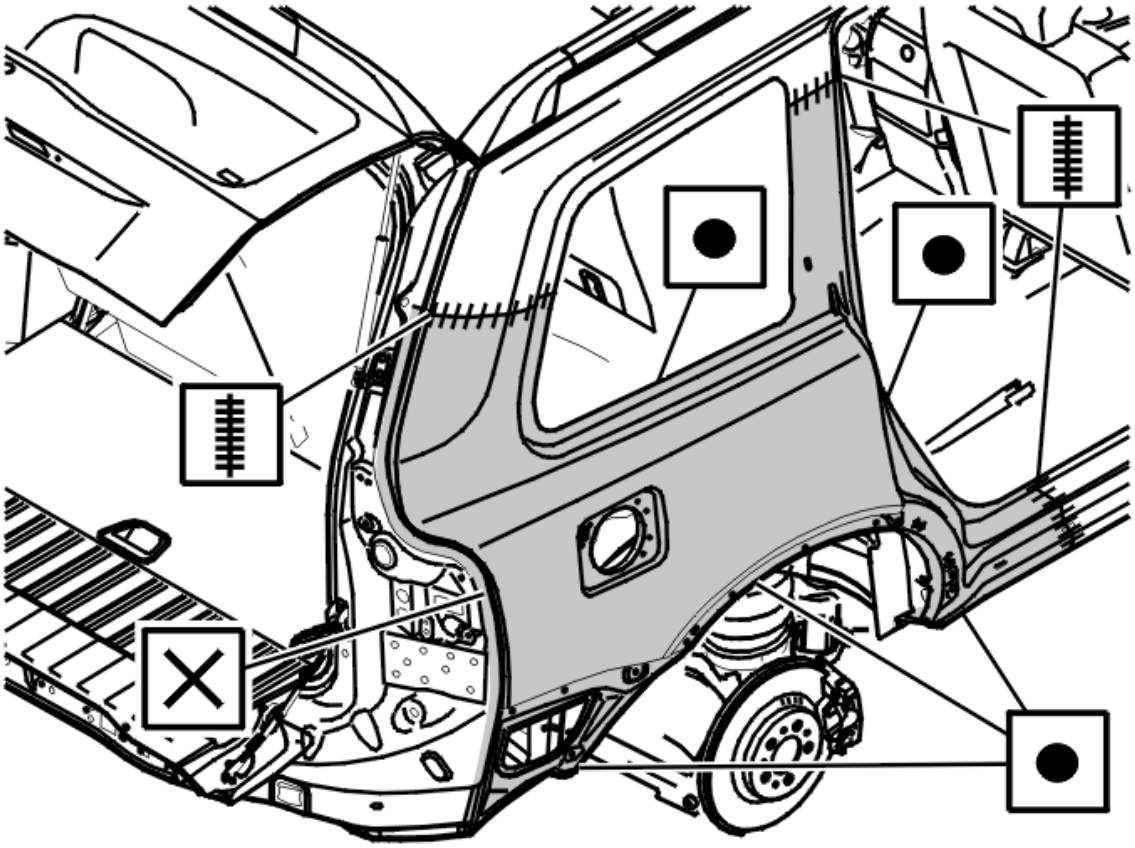

Fig. 27: View Of Welding The Tail Panel And Rear Fender
Courtesy of VOLVO CARS CORPORATION

Secure the rear fender.

Install the rear door, the tail lamps and the tailgate to check the alignment.

Saw the cutting points.

Drill holes for plug welding through the tail panel and rear fender so that the plug weld secures against the inner D-post.

Weld the rear fender into place.

Seal the seams and joins. See **BODY SEAL** .

BRAKES

Brake Control System - Cleaning, Inspection and Adjustment

ANTI-LOCK BRAKES

TEST DRIVE FORM (ABS), DESCRIPTION

NOTE: **To test drive the DSTC functions, see TEST DRIVE FORM (DSTC (DYNAMIC STABILITY AND TRACTION CONTROL) /BRAKE CONTROL MODULE), DESCRIPTION.**

WARNING: **Problems with the brakes may make the car difficult to maneuver. Always test drive cars under safe, controlled conditions. Follow the appropriate traffic and speed regulations.**

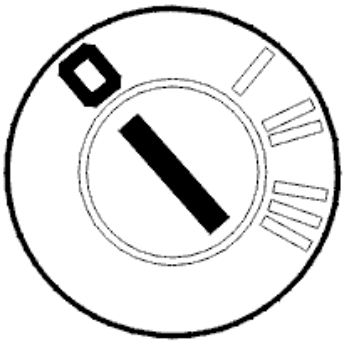

Fig. 1: Identifying Ignition In Off Position
Courtesy of VOLVO CARS CORPORATION

- The ignition must be switched off so that the control module can engage the ABS system
- Start the engine and watch for the brake failure warning lamp. If this comes on, do not drive car. Check the brake fluid level. The hydraulic braking system must be checked for leaks if the brake fluid level is too low. Fault-trace according to the fault symptom "Brake circuit out of function, warning lamp lit" if the brake fluid level is OK.
- Drive at a speed of at least 50 km/h. If the ABS warning lamp lights or does not go out, read off any diagnostic trouble codes (DTCs) that have been stored and fault-trace accordingly. If no diagnostic trouble code (DTC)s are stored but the light comes on, fault-trace according to the fault symptoms
- Brake several times to stop from a suitable speed on an even, dry road. At least one braking should activate ABS control from a speed above 50 km/h. Make a note of any unusual noise or abnormal behavior. Listen particularly for clicks or bangs. See whether the car pulls to one side or if the brake pedal does not seem to be working normally. Fault-trace according to the relevant symptom.

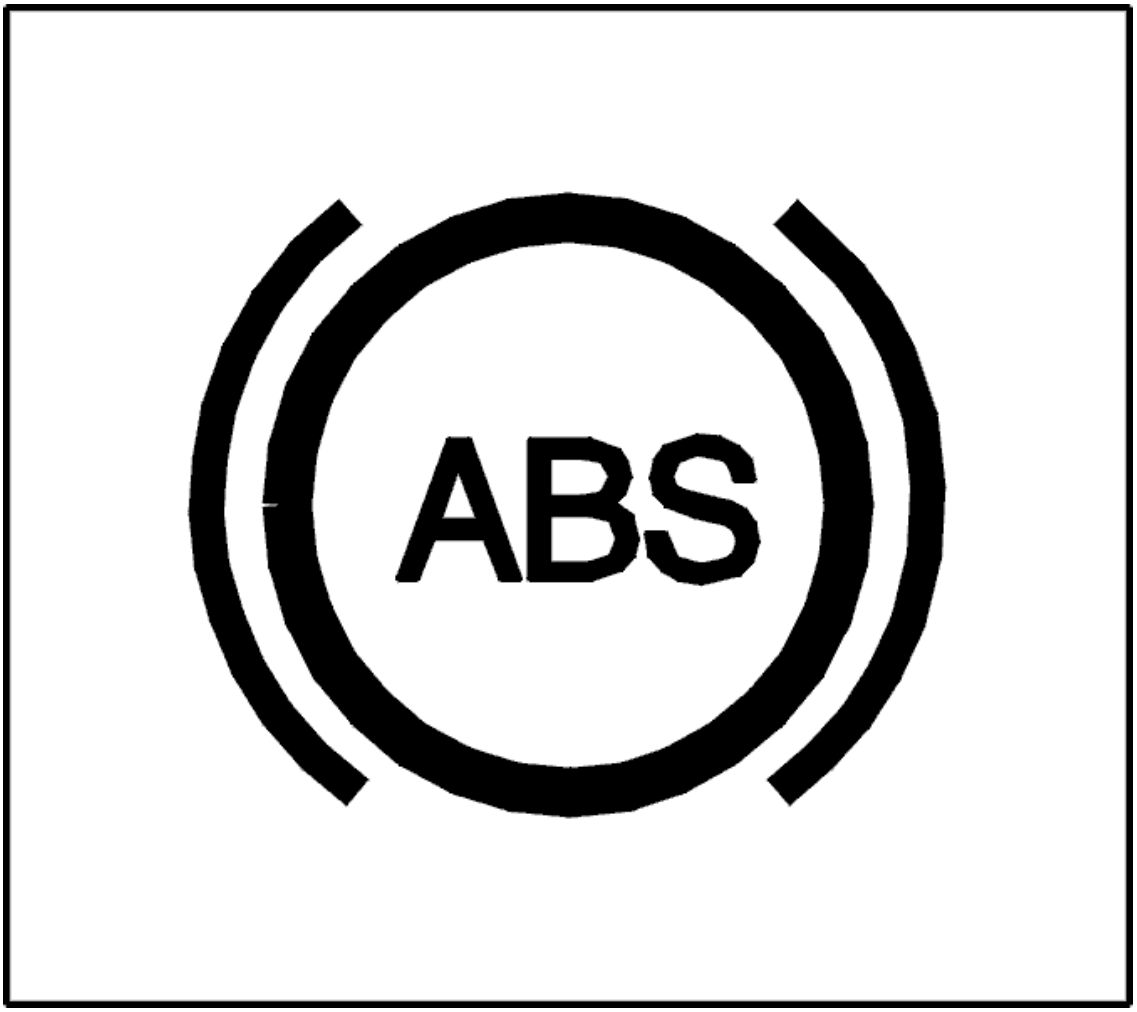

Fig. 2: ABS Warning Indicator
Courtesy of VOLVO CARS CORPORATION

If the ABS (Anti-spin) warning indicator comes on, return to the workshop and read off any diagnostic trouble codes (DTCs) which have been stored. Make a note of the driving conditions under which the warning lamp(s) came on. Carry out fault-tracing according to the diagnostic trouble code (DTC) that is stored.

TEST DRIVE FORM (DSTC (DYNAMIC STABILITY AND TRACTION CONTROL) /BRAKE CONTROL MODULE), DESCRIPTION

NOTE: **To test drive the ABS/STC (stability and traction control) / TRACS (traction control system) functions, see TEST DRIVE FORM (ABS), DESCRIPTION.**

WARNING: **Problems with the brakes may make the car difficult to maneuver. Always test drive cars under safe, controlled conditions. Follow the appropriate traffic and speed regulations.**

TEST DRIVING CARS WITH MODEL YEAR -2001

NOTE: Drive where other traffic will not be disrupted

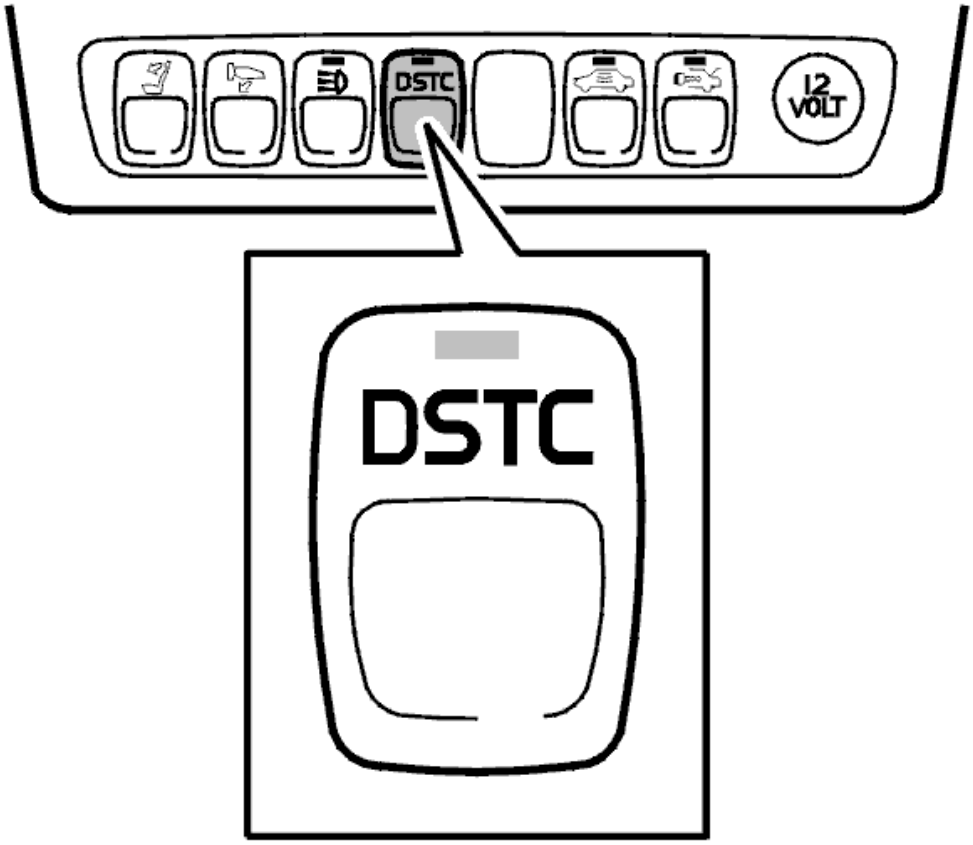

Fig. 3: DSTC Warning Lamp
Courtesy of VOLVO CARS CORPORATION

The car must **first be calibrated** and then test driven if work is carried out on any vital components in the DSTC-system (steering wheel angle sensor, control module DSTC, control module steering angle sensor, brake pressure sensor (1 and 2), power brake booster, yaw rate sensor (1 and 2) or lateral acceleration sensor). Calibrating is carried out using VIDA vehicle communication or according to the last description in this document.

When calibrating in the workshop, position the car on a flat surface with the wheels pointing forward. Turn the steering wheel with the ignition turned on at least 15° to the right or left. Then turn the steering wheel to the center position and start calibrating.

The test drive must include at least one right and one left turn (more than 45°), cover at least 100 meters and a braking from 70 km/h to 50 km/h.

The test is passed if the DSTC warning lamp does not light.

Calibrate and test drive as above if any work that may have affected the steering and /or the wheel alignment (straight ahead position) has been carried out.

TEST DRIVING CARS MODEL YEAR 2002-

NOTE: Drive where other traffic will not be disrupted.

The car must **first be calibrated** and then test driven if work is carried out on any vital components in the DSTC-system (steering wheel angle sensor, control module DSTC, control module steering angle sensor, brake pressure sensor (1 and 2), power brake booster or active yaw control sensor). Calibrating is carried out using VIDA vehicle communication or according to the last description in this document.

When calibrating in the workshop, position the car on a flat surface with the wheels pointing forward. Turn the steering wheel with the ignition turned on at least 15° to the right or left. Then turn the steering wheel to the center position and start calibrating.

The test drive must include at least one right and one left turn (more than 45°), cover at least 100 meters and a braking from 50 km/h to a standstill.

The car has passed the test if the dynamic stability and traction control (DSTC) system does not light any lamps (the traction control lamp, the ABS warning lamp or the general brake warning lamp).

Calibrate and test drive as above if any work that may have affected the steering and /or the wheel alignment (straight ahead position) has been carried out.

CALIBRATING (ADAPTATION) WITHOUT DIAGNOSTIC TOOLS

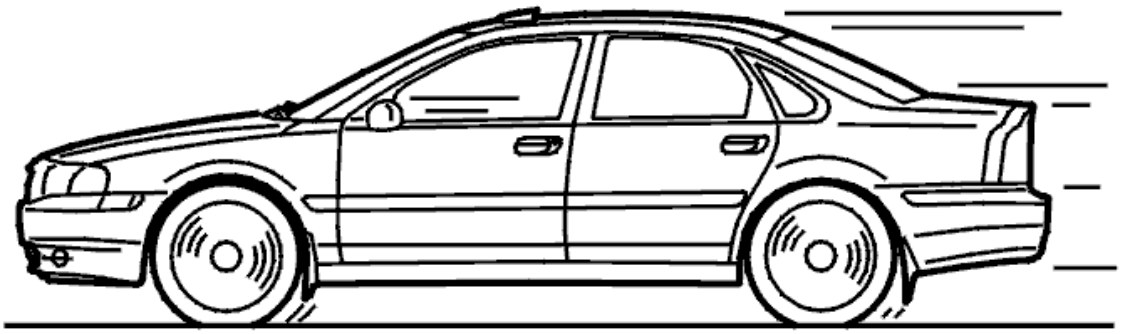

Fig. 4: Identifying Test Drive
Courtesy of VOLVO CARS CORPORATION

A special test drive can be carried out as an alternative to using VIDA for calibration. Two basic requirements needed in order to carry out the calibration is that the lateral acceleration whilst driving must not be too high (no sharp turns) and the road surface must be even, smooth (no potholes, grooves etc) and not slippery.

1. Erase diagnostic trouble codes (DTCs). Certain diagnostic trouble codes (DTCs) corresponding to calibration cannot be erased until calibration has been successfully carried out
2. Drive the car a distance of 30 km (18.64 miles) with regard to the above requirements. Calibration (adaptation)has been carried out 100% after driving the recommended distance. Driving a distance of 10 km (6.21 miles) gives a calibration of up to 75-80%. Calibration is not cancelled if diagnostic trouble codes (DTCs) are stored, which means that the test drive can continue
3. Return to the workshop and read off the diagnostic trouble codes (DTCs). Calibration has been successful if no diagnostic trouble codes (DTCs) have been stored
4. If diagnostic trouble codes (DTCs) have been stored again, erase the diagnostic trouble codes (DTCs) and test drive again.

BRAKES

Brake Control System - Component location

BRAKE ELECTRONICS, COMPONENT LOCATION

BRAKE ELECTRONICS

LOCATION OF COMPONENTS FOR BRAKE ELECTRONICS

NOTE: **In week 35 year 2001 a new brake control module is being introduced along with a new sensor in the brake electronics.**

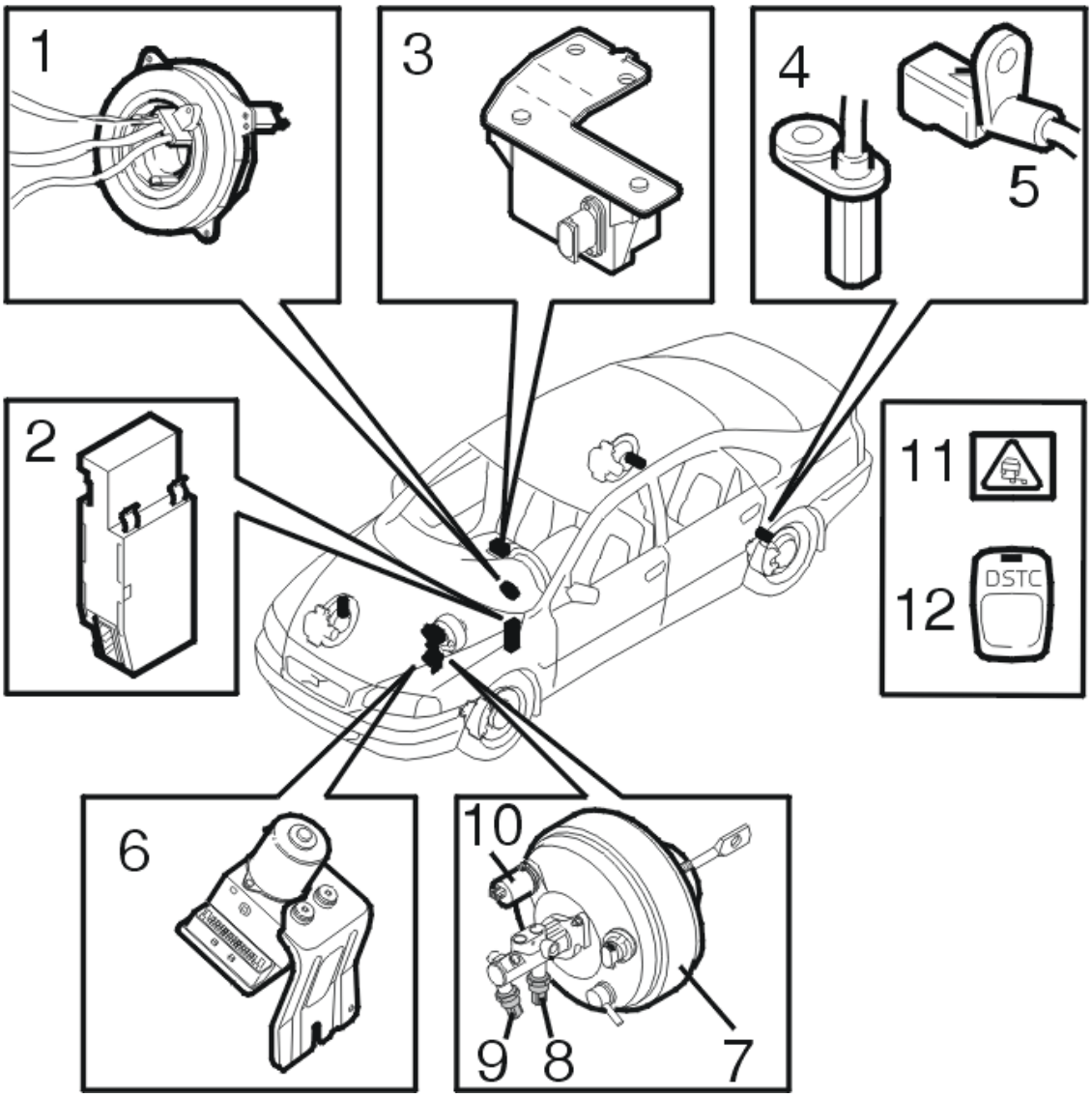

Fig. 1: Location Of Components For Brake Electronics
Courtesy of VOLVO CARS CORPORATION

1. Contact reel / steering wheel angle sensor (Applies only to cars with DSTC (dynamic stability and traction control))
2. Control module for the steering wheel angle sensor (Applies only to cars with DSTC (dynamic stability and traction control))
3. Active yaw control sensor (Applies only to cars with DSTC (dynamic stability and traction control))
4. Front wheel sensor
5. Rear wheel sensor
6. ABS modulator with control module
7. Servo unit
8. Pressure sensor.
9. Pressure sensor.
10. Pedal position sensor
11. Warning lamp
12. Switch.

BRAKES

Brake Control System - Design and Function

ABBREVIATIONS

BRAKE SYSTEM, ABBREVIATIONS

ABBREVIATIONS

NOTE: **All functions below are not available in all vehicles or vehicle models. The brake system can consist of only ABS or ABS including TRACS, STC, or DSTC.**

Function	Description
ABS (Anti-lock Braking System)	Anti-lock braking. Prevents wheels from locking when braking.
AYC (Active Yaw Control)	Stability control. Prevents oversteering and understeering with active braking.
BA (Brake Assistance)	Brake assistance. Boosts braking force in case of sudden heavy braking. Brake assistance is electronic for vehicles with DSTC, mechanical for others.
EBD (Electronic Brake Distribution)	Electronic distribution of braking force. Distributes braking force between front and rear brakes.
SC (Stability Control)	Stability control. Reduces engine torque to obtain increased lateral stability when the wheels spin at speeds from 0 km/h to top speed.
TC (Traction Control)	Traction control. Brakes spinning wheel from 0 km/h - top speed.
RSC (Roll over Stability Control)	Monitors the car's inclination angle and acts on the brakes if the car is at risk of rolling over.

System	Description
ABS (Anti-lock Braking System)	Anti-lock braking. Includes the functions ABS and EBD.
DSTC (Dynamic STC)	Dynamic stability and traction control. Includes the functions ABS, EBD, SC, TC and AYC.
STC (Stability and Traction Control)	Traction and stability control. Includes the functions ABS, EBD, SC and TC.
TRACS (Traction Control System)	Traction control system for four-wheel drive cars. Includes the functions ABS, EBD and TC.

Other abbreviations	Description
BCM (Brake Control Module)	Name of control module for brake system (BCM). Includes functions such as ABS, AYC, EBA, EBD,

	SC, TC and RSC.
CAN (Controller Area Network)	Standardized protocol for serial communication between control modules.

BRAKE CONTROL SYSTEM

CALIBRATING DSTC (DYNAMIC STABILITY AND TRACTION CONTROL)

see **CALIBRATING DSTC (DYNAMIC STABILITY AND TRACTION CONTROL)**

DESIGN

see **DESIGN**

DIAGNOSTIC FUNCTIONS

see **DIAGNOSTIC FUNCTIONS**

FUNCTION

see **FUNCTION**

SOFTWARE DOWNLOADING

see **SOFTWARE DOWNLOADING**

SYSTEM OVERVIEW

see **SYSTEM OVERVIEW**

BRAKES

Brake Control System - Diagnostic Trouble Codes and Associated Procedures

BCM-0117: COMMUNICATION WITH THE ACTIVE YAW CONTROL SENSOR. AN INCORRECT ACTIVE YAW CONTROL SENSOR HAD BEEN INSTALLED (B5254T2; 2005-2007)

AN INCORRECT ACTIVE YAW CONTROL SENSOR HAD BEEN INSTALLED

see **AN INCORRECT ACTIVE YAW CONTROL SENSOR HAD BEEN INSTALLED**

DIAGNOSTIC TROUBLE CODE (DTC) INFORMATION

see **DIAGNOSTIC TROUBLE CODE (DTC) INFORMATION**

BCM-0117: COMMUNICATION WITH THE ACTIVE YAW CONTROL SENSOR. AN INCORRECT ACTIVE YAW CONTROL SENSOR HAD BEEN INSTALLED (B6294T; 2005-2006)

AN INCORRECT ACTIVE YAW CONTROL SENSOR HAD BEEN INSTALLED

see **AN INCORRECT ACTIVE YAW CONTROL SENSOR HAD BEEN INSTALLED**

DIAGNOSTIC TROUBLE CODE (DTC) INFORMATION

see **DIAGNOSTIC TROUBLE CODE (DTC) INFORMATION**

BCM-0118: POWER SUPPLY FOR THE ACTIVE YAW CONTROL SENSOR. VOLTAGE TOO HIGH (2003-2004)

DIAGNOSTIC TROUBLE CODE (DTC) INFORMATION

Condition

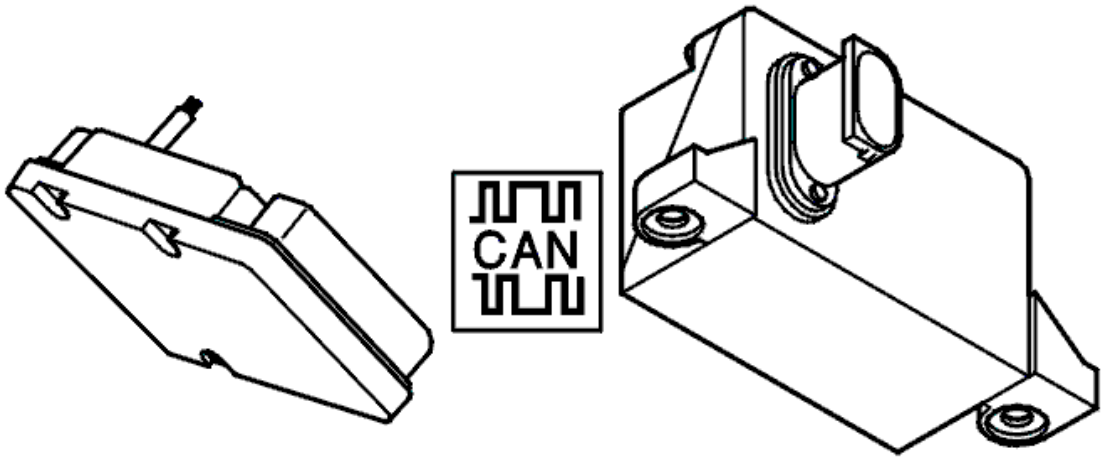

Fig. 1: Identifying Brake Control Module & Active Yaw Control Sensor
Courtesy of VOLVO CARS CORPORATION

NOTE: The diagnostic trouble code (DTC) applies only to cars with dynamic stability and traction control (DSTC).

Diagnostic trouble code (DTC) BCM-0118 is stored if the brake control module (BCM) registers that the power supply from the active yaw control sensor exceeds 17 V.

Substitute Value

- Traction control is blocked
- Stability control is blocked
- Active yaw control is blocked.

HINT: For information about abbreviations, see BRAKE SYSTEM, ABBREVIATIONS .

Possible Source

- Short-circuit to supply voltage in the power supply cable
- Internal fault in the active yaw control sensor.

NOTE: This diagnostic trouble code (DTC) is not due to an internal hardware fault in the Brake control module (BCM) and must not be remedied by replacing the control module.

Fault symptom[s]

- The anti-spin warning lamp is lit (up to and including 2002 model year)
- General yellow warning lamp lit (from model year 2003 inclusive)

- Anti-spin does not function
- The stability control system does not function
- The traction control system does not function.

VOLTAGE TOO HIGH

CHECKING THE WIRING

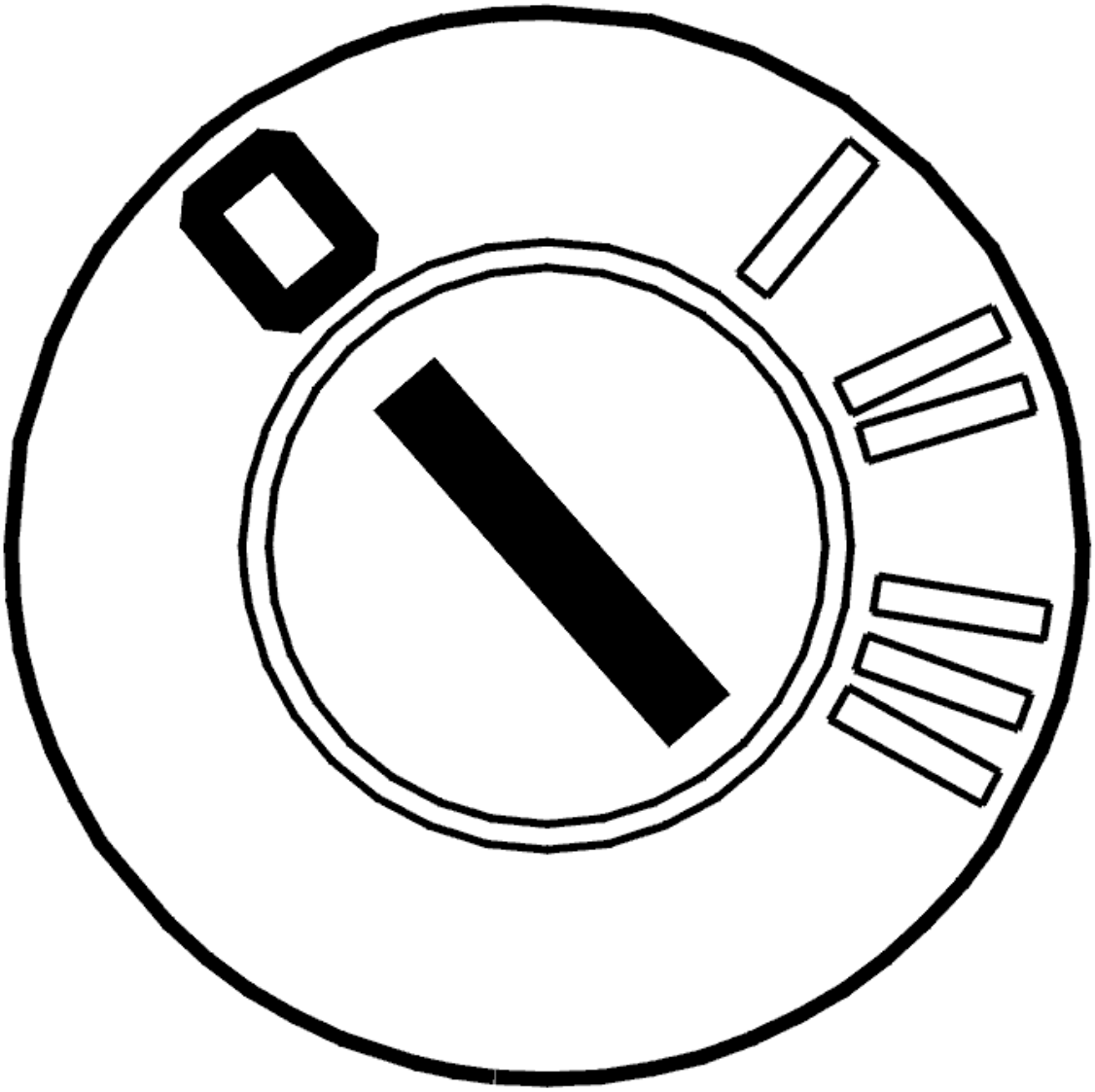

Fig. 2: Identifying Ignition OFF
Courtesy of VOLVO CARS CORPORATION

- Ignition off
- Connect the breakout box.

  Check the wiring between the connector for the active yaw control sensor

- terminal #3 and control module terminal #6 (#A6)
- terminal #5 and control module terminal #39 (terminal #A39).

check for a short-circuit to supply voltage.

Other information

- To connect the breakout box, see **CONNECTING THE BREAKOUT BOX, BRAKE CONTROL MODULE (BCM)**
- To access and replace the active yaw control sensor, see **ACTIVE YAW CONTROL SENSOR, REPLACING**
- For information about signals, see **SIGNAL SPECIFICATION, BRAKE CONTROL MODULE (BCM) WITH DSTC (DYNAMIC STABILITY AND TRACTION CONTROL)**
- see **CONTENTS**

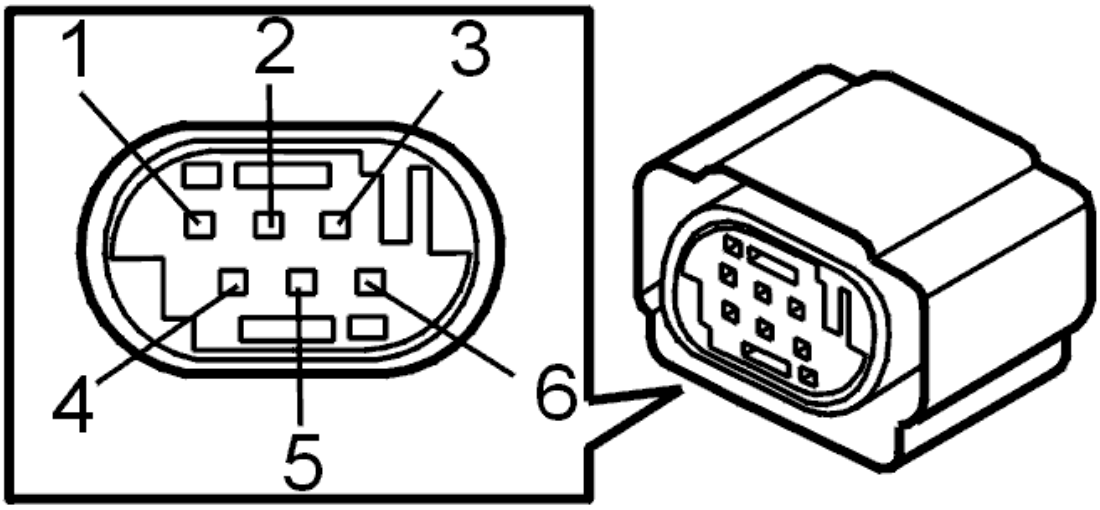

Fig. 3: Identifying Active Yaw Control Sensor Connector Terminals
Courtesy of VOLVO CARS CORPORATION

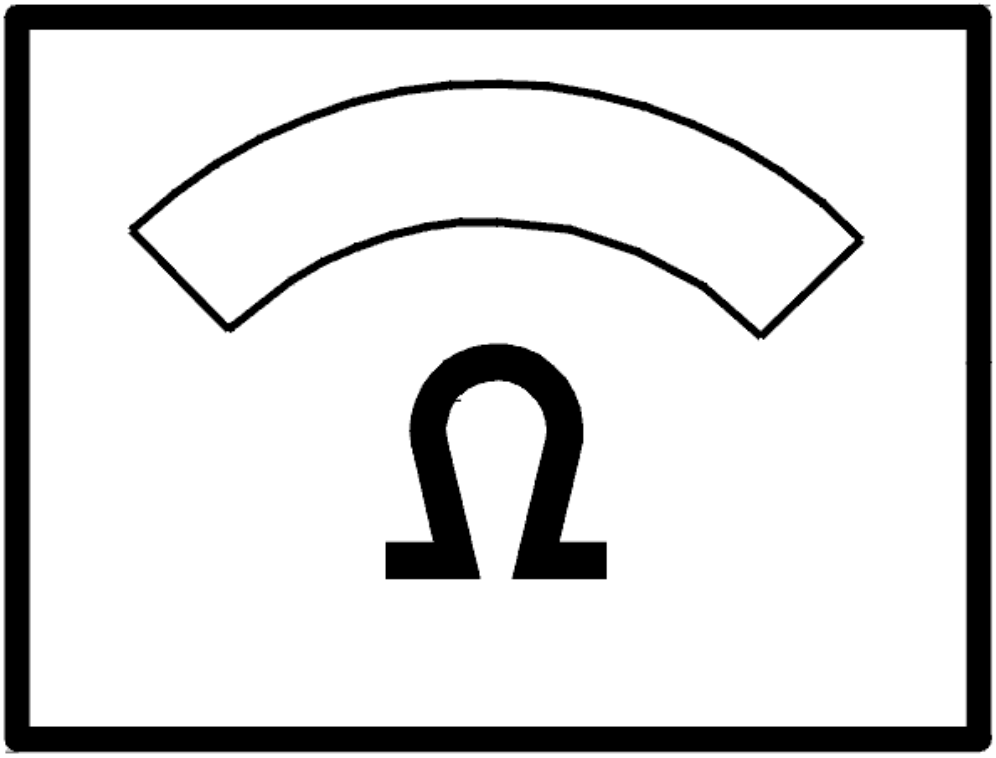

Fig. 4: Identifying Ohm Meter
Courtesy of VOLVO CARS CORPORATION

Was a fault detected?

- **YES**

  see **VERIFICATION**

- **NO**

  see **CHECKING THE CONTROL MODULE**

CHECKING THE CONTROL MODULE

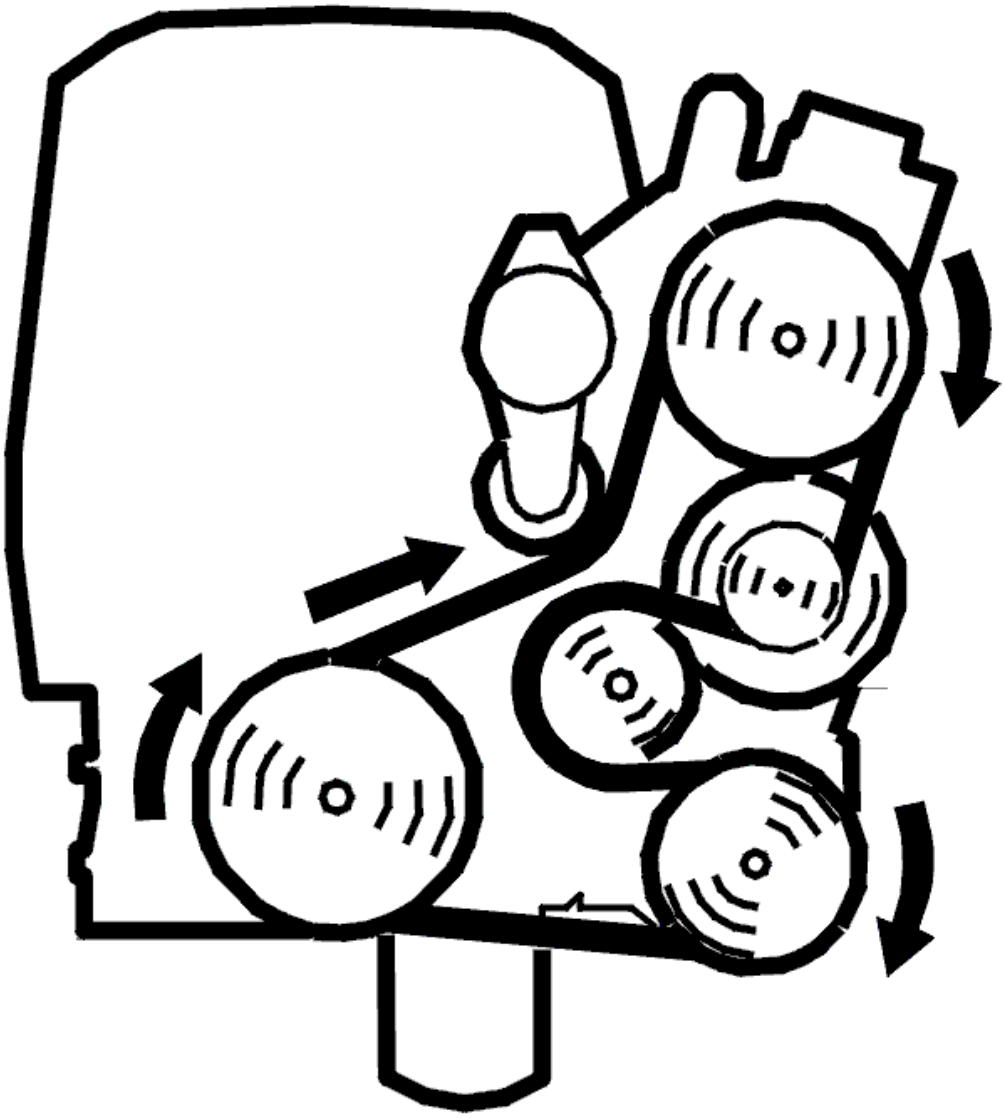

Fig. 5: Belt Routing / Engine Idling - Volvo
Courtesy of VOLVO CARS CORPORATION

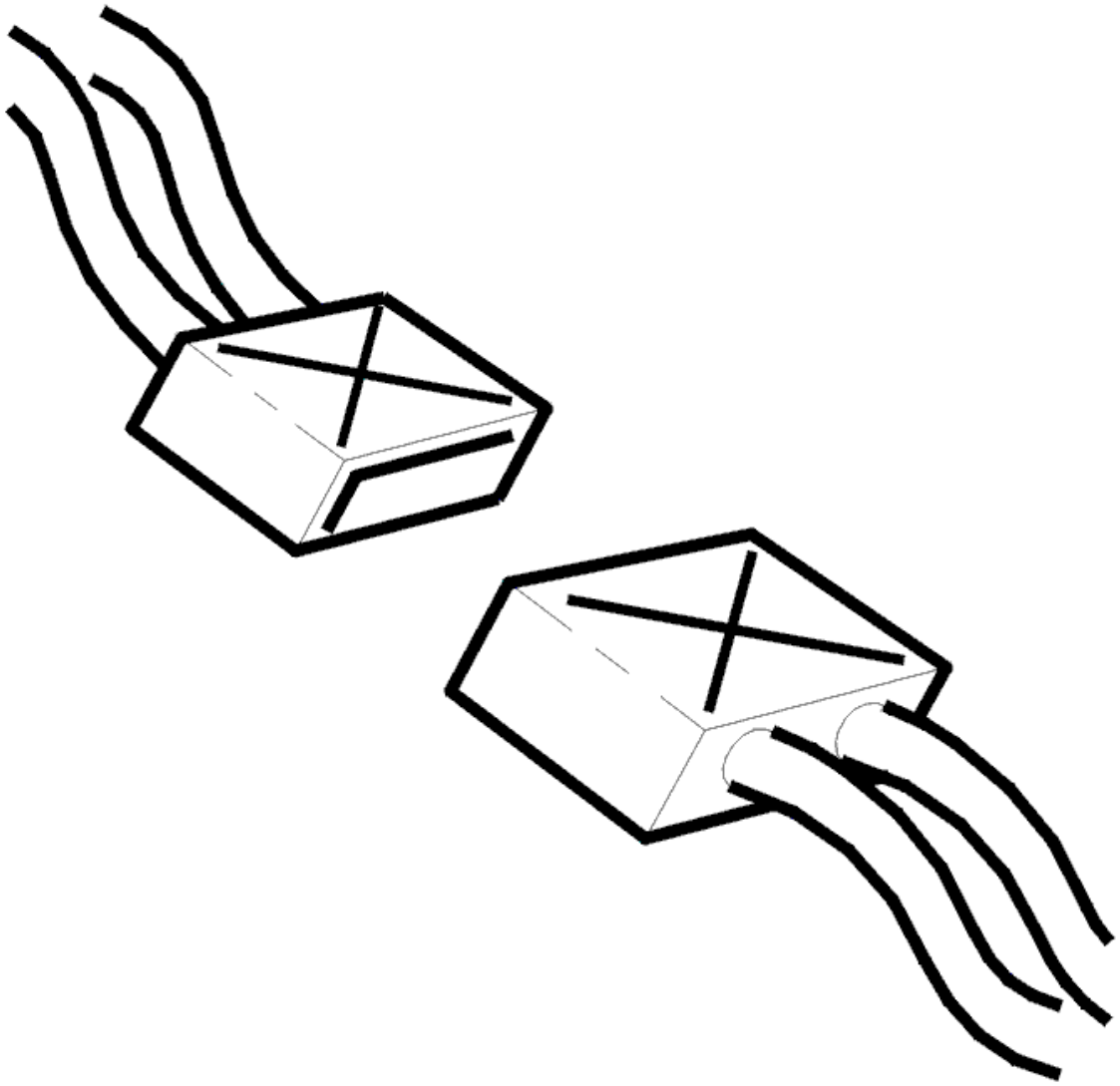

Fig. 6: Identifying Connector
Courtesy of VOLVO CARS CORPORATION

- Ignition off
- Breakout box connected to the brake control module (BCM)
- The active yaw control sensor disconnected
- Start the engine
- Read off the power supply to the brake control module (BCM).

  Check the power supply to the active yaw control sensor by connecting a voltmeter between brake control module (BCM) terminals #6 (#A6) and #39 (#A39).

  Check that the voltage is approximately the same as the value read from the brake control module (BCM).

  Replace the active yaw control sensor if the power supply to the sensor is OK.

Check the charging system if the voltage to the brake control module (BCM) is too high.

Remedy as necessary.

Other information

- To connect the breakout box, see **CONNECTING THE BREAKOUT BOX, BRAKE CONTROL MODULE (BCM)**
- To access and replace the active yaw control sensor, see **ACTIVE YAW CONTROL SENSOR, REPLACING**
- For information about signals, see **SIGNAL SPECIFICATION, BRAKE CONTROL MODULE (BCM) WITH DSTC (DYNAMIC STABILITY AND TRACTION CONTROL)** .

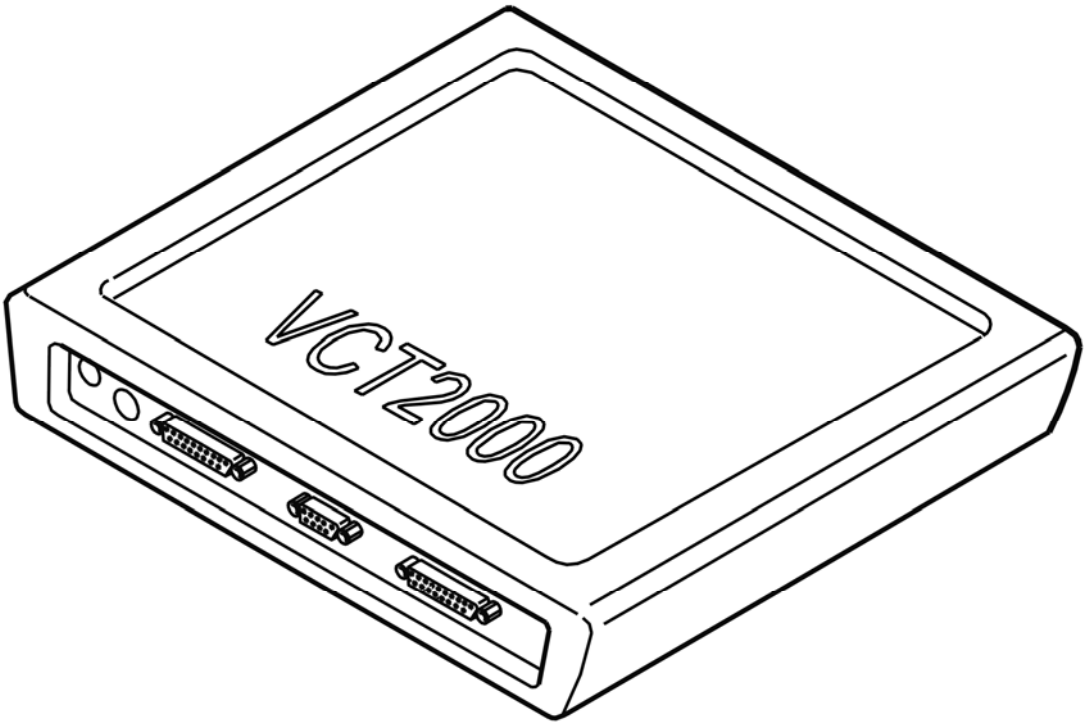

Fig. 7: Identifying VCT2000 Diagnostic Tool Symbol In VIDA
Courtesy of VOLVO CARS CORPORATION

- **Continue**

  see **VERIFICATION**

VERIFICATION

VERIFICATION

HINT: After carrying out the repair, check that the fault has been remedied.

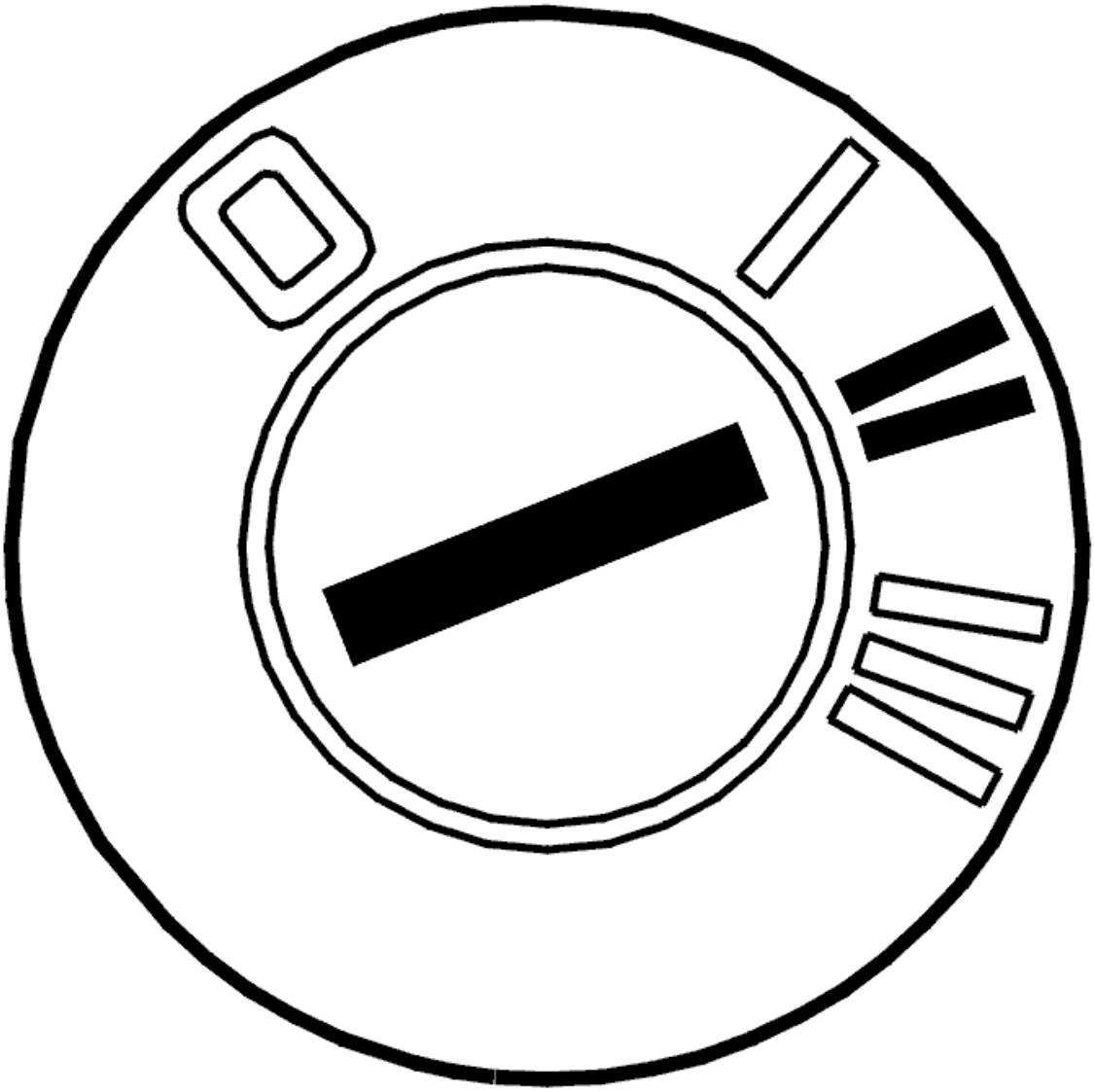

Fig. 8: Identifying Ignition ON
Courtesy of VOLVO CARS CORPORATION

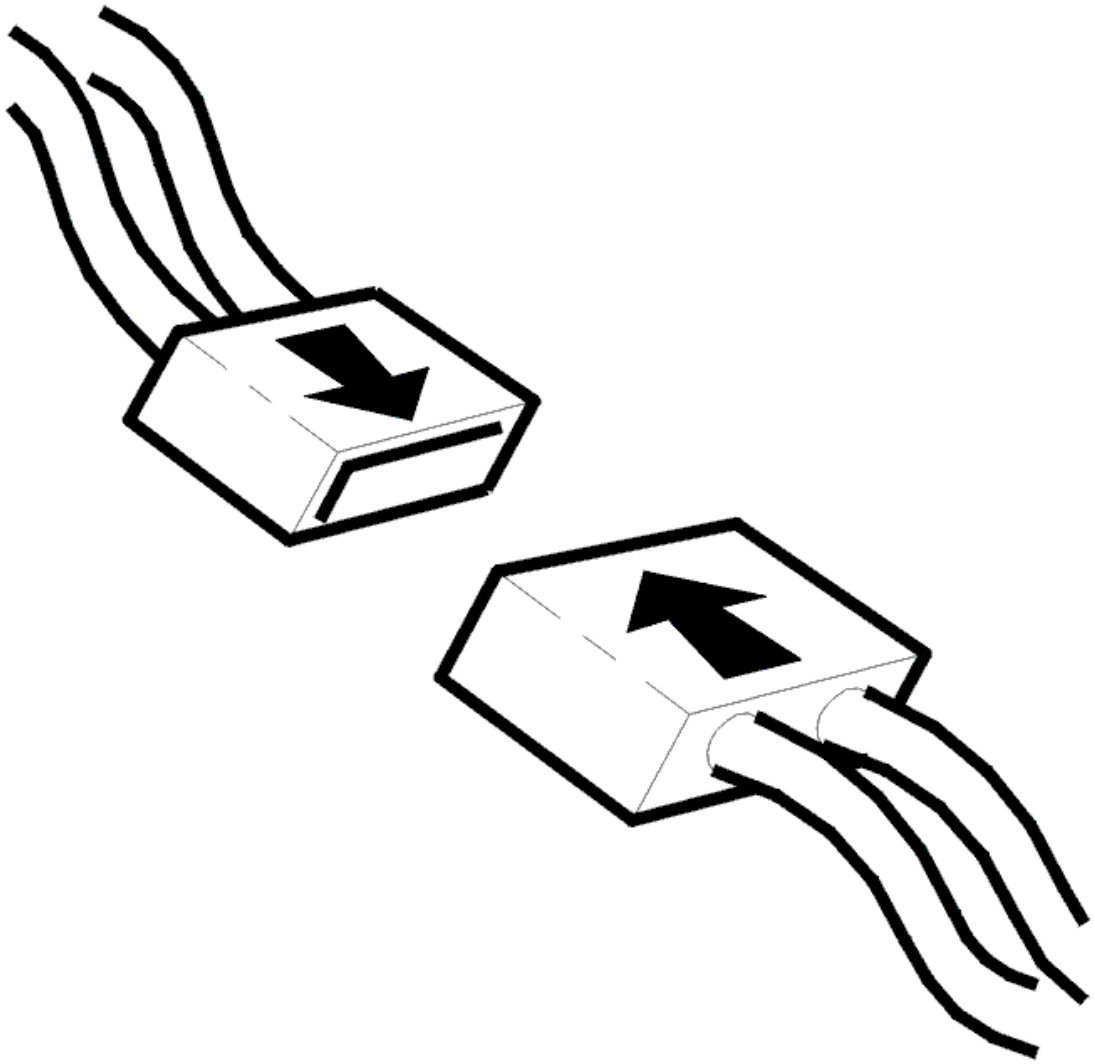

Fig. 9: Connecting Connector
Courtesy of VOLVO CARS CORPORATION

- Ignition off
- Reconnect the connectors, reinstall components etc.
- Test drive the car. See **TEST DRIVE FORM (DSTC (DYNAMIC STABILITY AND TRACTION CONTROL) /BRAKE CONTROL MODULE), DESCRIPTION**
- Ignition on.

  Read off the status of the diagnostic trouble code (DTC).

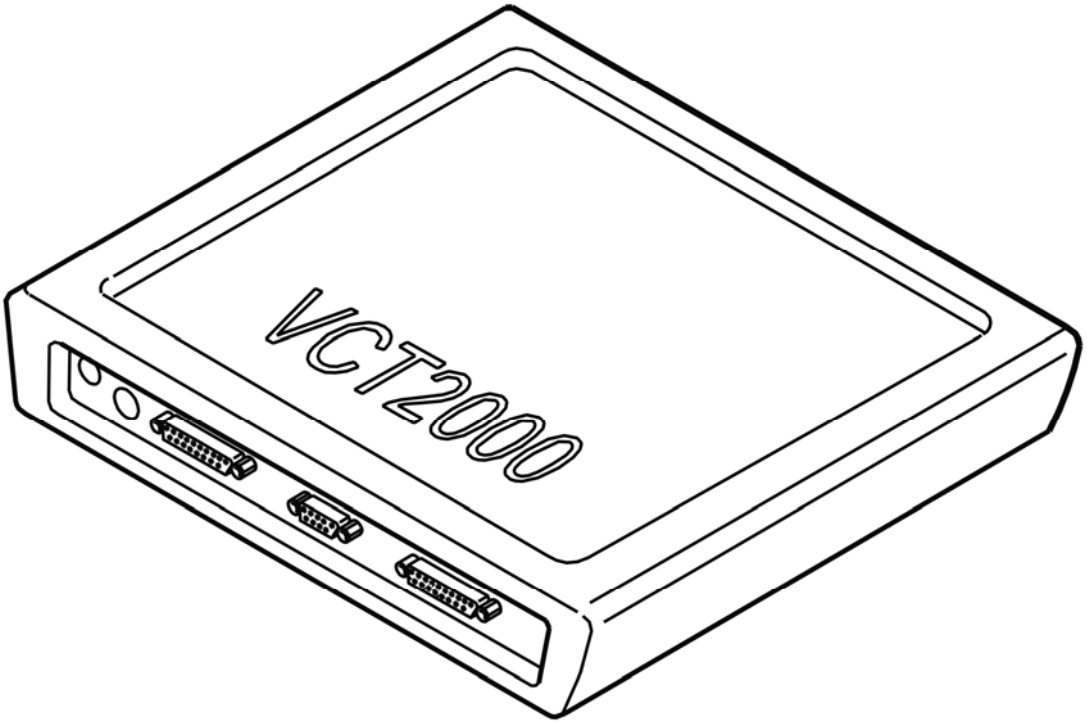

Fig. 10: Identifying VCT2000 Diagnostic Tool Symbol In VIDA
Courtesy of VOLVO CARS CORPORATION

Is the status of the diagnostic trouble code (DTC) intermittent?

- **YES**

  VERIFIED: Troubleshooting has been completed.

- **NO**

  see **INFORMATION**

INFORMATION

FAULT-TRACING INFORMATION

The fault should have been detected and remedied. As this is not the case fault-tracing has failed.

Exit fault-tracing for this diagnostic trouble code (DTC) or make another attempt.

BCM-0118: POWER SUPPLY FOR THE ACTIVE YAW CONTROL SENSOR. VOLTAGE TOO HIGH (B5254T2; 2005-2007)

DIAGNOSTIC TROUBLE CODE (DTC) INFORMATION

see **DIAGNOSTIC TROUBLE CODE (DTC) INFORMATION**

VOLTAGE TOO HIGH

see **VOLTAGE TOO HIGH**

BCM-0118: POWER SUPPLY FOR THE ACTIVE YAW CONTROL SENSOR. VOLTAGE TOO HIGH (B6294T; 2005-2006)

DIAGNOSTIC TROUBLE CODE (DTC) INFORMATION

see **DIAGNOSTIC TROUBLE CODE (DTC) INFORMATION**

VOLTAGE TOO HIGH

see **VOLTAGE TOO HIGH**

BCM-0119: POWER SUPPLY FOR THE ACTIVE YAW CONTROL SENSOR. VOLTAGE TOO LOW (2003-2004)

DIAGNOSTIC TROUBLE CODE (DTC) INFORMATION

Condition

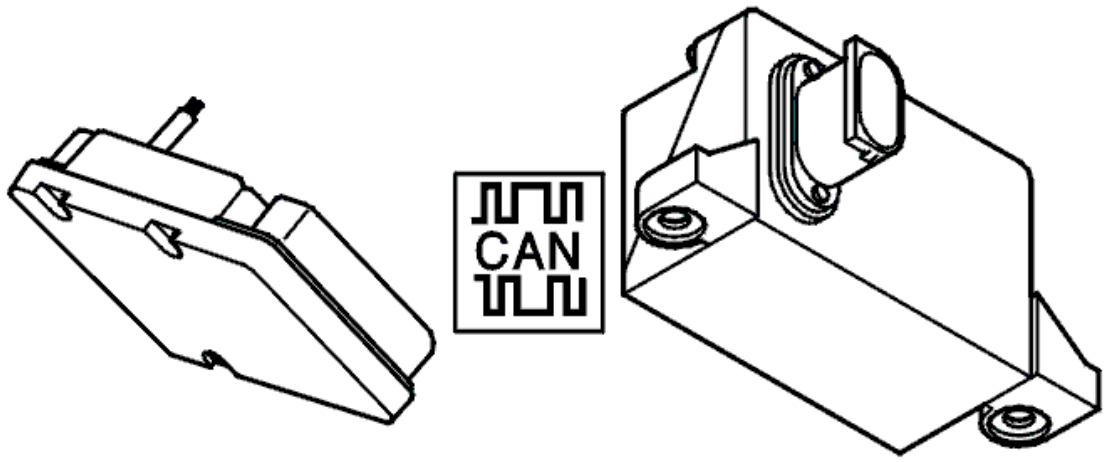

Fig. 11: Identifying Brake Control Module & Active Yaw Control Sensor
Courtesy of VOLVO CARS CORPORATION

NOTE: **The diagnostic trouble code (DTC) applies only to cars with dynamic stability**

and traction control (DSTC).

Diagnostic trouble code (DTC) BCM-0119 is stored if the brake control module (BCM) registers that the power supply to the active yaw control sensor is below 6 V ±0.5 V.

Substitute Value

- Traction control is blocked
- Stability control is blocked
- Active yaw control is blocked.

HINT: For information about abbreviations, see BRAKE SYSTEM, ABBREVIATIONS .

Possible Source

- Contact resistance in the terminals on the active yaw control sensor
- Short-circuit to ground in the wiring
- Open-circuit in the wiring
- Internal fault in the active yaw control sensor

NOTE: This diagnostic trouble code (DTC) is not due to an internal hardware fault in the Brake control module (BCM) and must not be remedied by replacing the control module.

Fault symptom[s]

- The anti-spin warning lamp is lit (up to and including 2002 model year)
- General yellow warning lamp lit (from 2003)
- Anti-spin does not function
- The stability control system does not function
- The traction control system does not function.

VOLTAGE TOO LOW

CHECKING THE STATUS OF THE DIAGNOSTIC TROUBLE CODE (DTC)

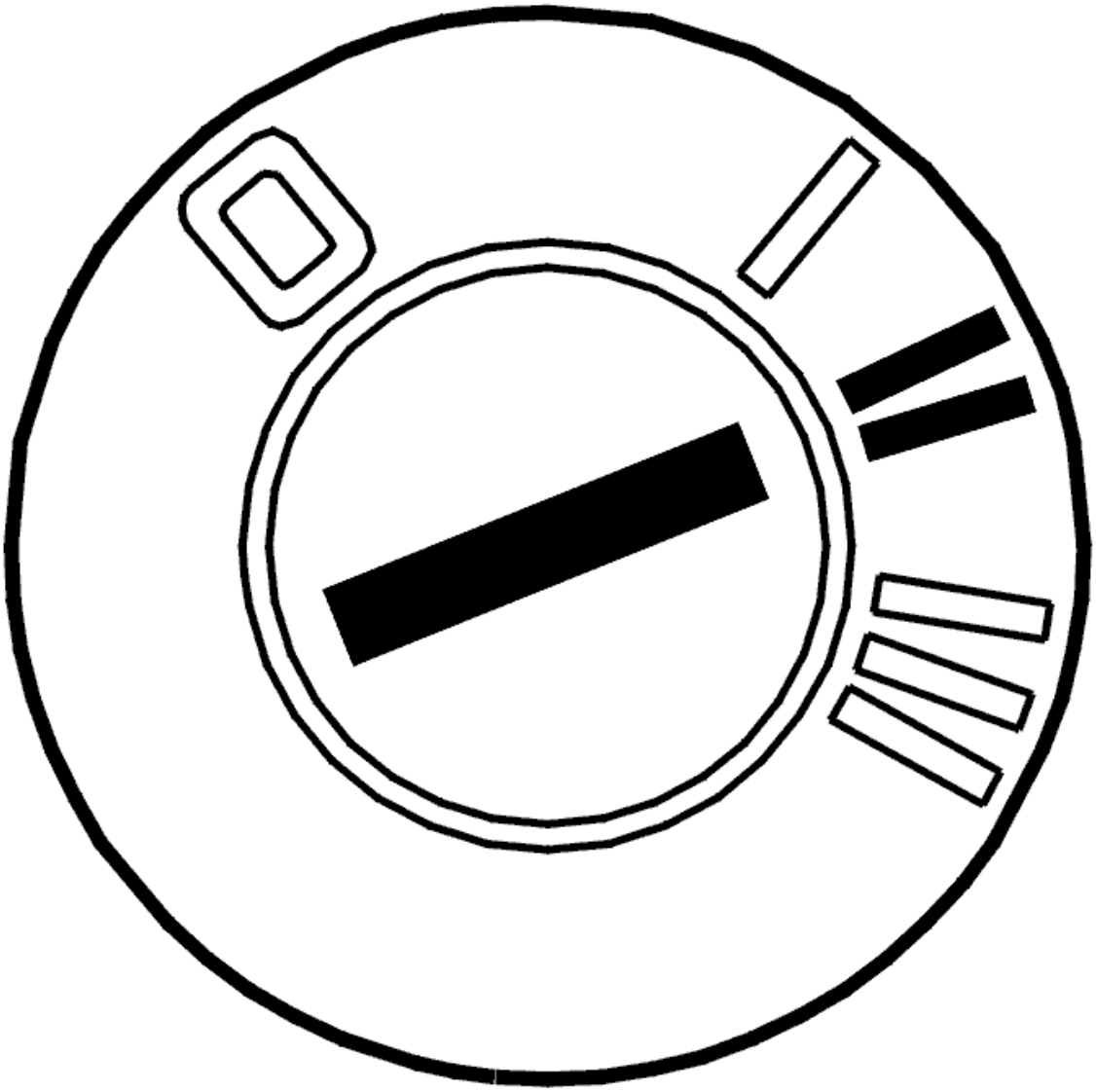

Fig. 12: Identifying Ignition ON
Courtesy of VOLVO CARS CORPORATION

- Ignition off
- Check the connectors for the brake control module (BCM) and the active yaw control sensor. Check for contact resistance and oxidation
- Test drive the car. See **TEST DRIVE FORM (DSTC (DYNAMIC STABILITY AND TRACTION CONTROL) /BRAKE CONTROL MODULE), DESCRIPTION**
- Ignition on
- Wait approximately 60 seconds
- Read off diagnostic trouble codes (DTCs).

  If the status of the diagnostic trouble code (DTC) intermittent, the cause of the fault was probably contact resistance or oxidation in the connectors for the control module or the active yaw control sensor.

Other information

- To remove the control module connector, see **CONNECTING THE BREAKOUT BOX, BRAKE CONTROL MODULE (BCM)**
- To access the active yaw control sensor, see **ACTIVE YAW CONTROL SENSOR, REPLACING**
- see **CONTENTS**

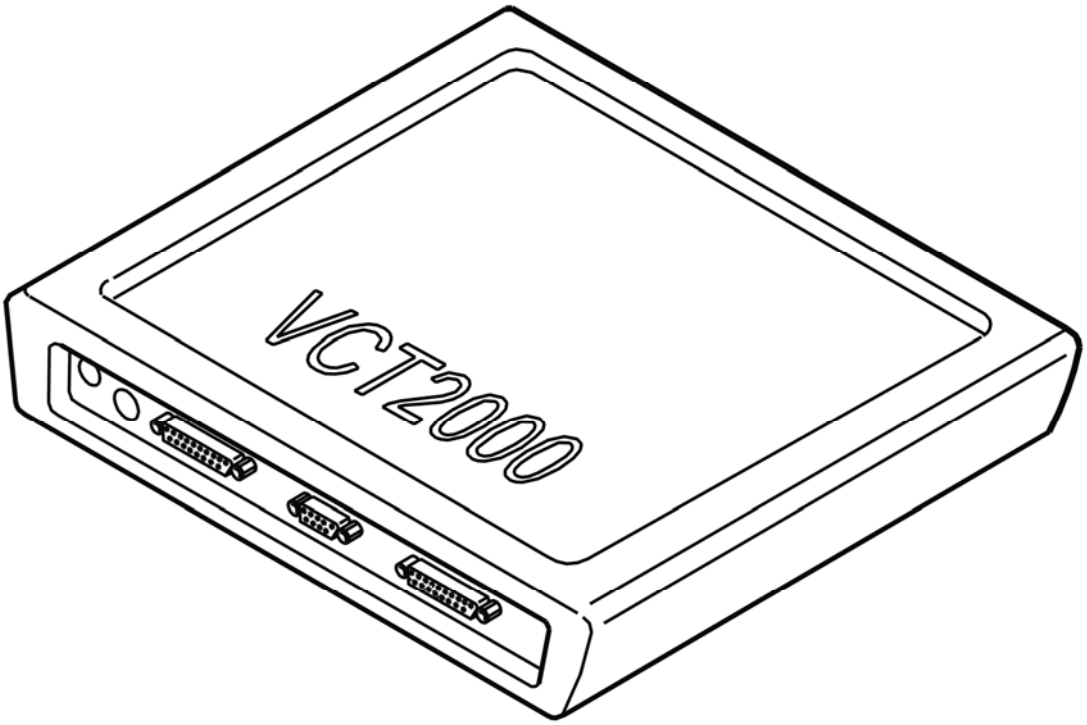

Fig. 13: Identifying VCT2000 Diagnostic Tool Symbol In VIDA
Courtesy of VOLVO CARS CORPORATION

Is the status of the diagnostic trouble code (DTC) intermittent?

- **YES**

  OKAY: Troubleshooting has been completed.

- **NO**

  see **CHECKING THE WIRING**

CHECKING THE WIRING

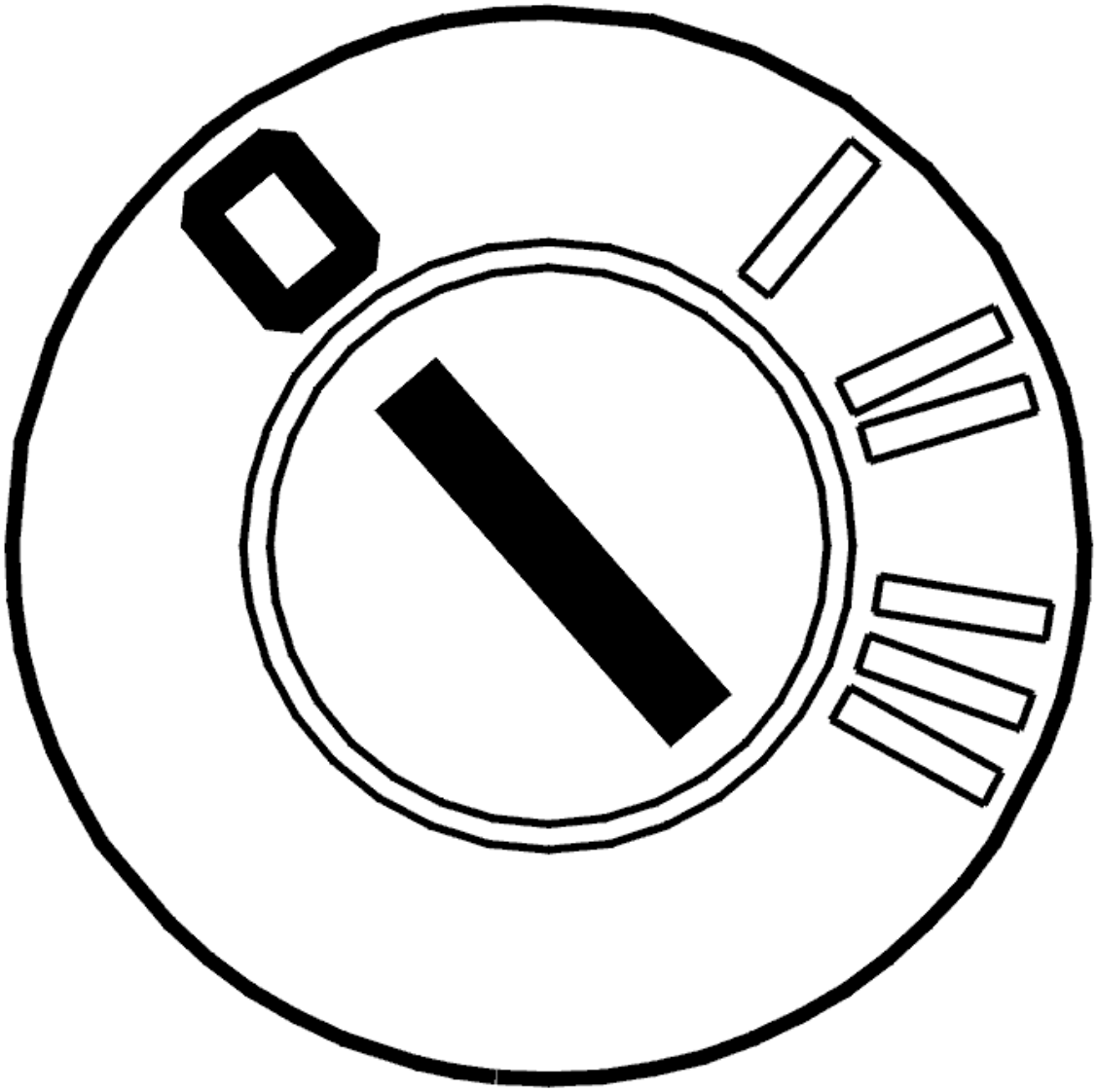

Fig. 14: Identifying Ignition OFF
Courtesy of VOLVO CARS CORPORATION

- Ignition off
- Connect the breakout box.

  Check the wiring between the connector for the active yaw control sensor:

  - terminal #3 and control module terminal #6 (#A6)
  - terminal #5 and control module terminal #39 (terminal #A39).

  check for an open-circuit or short-circuit to ground.

  Other information

- To connect the breakout box, see **CONNECTING THE BREAKOUT BOX, BRAKE CONTROL MODULE (BCM)**
- To access and replace the active yaw control sensor, see **ACTIVE YAW CONTROL SENSOR, REPLACING**
- For information about signals, see **SIGNAL SPECIFICATION, BRAKE CONTROL MODULE (BCM) WITH DSTC (DYNAMIC STABILITY AND TRACTION CONTROL)**
- see **CONTENTS** .

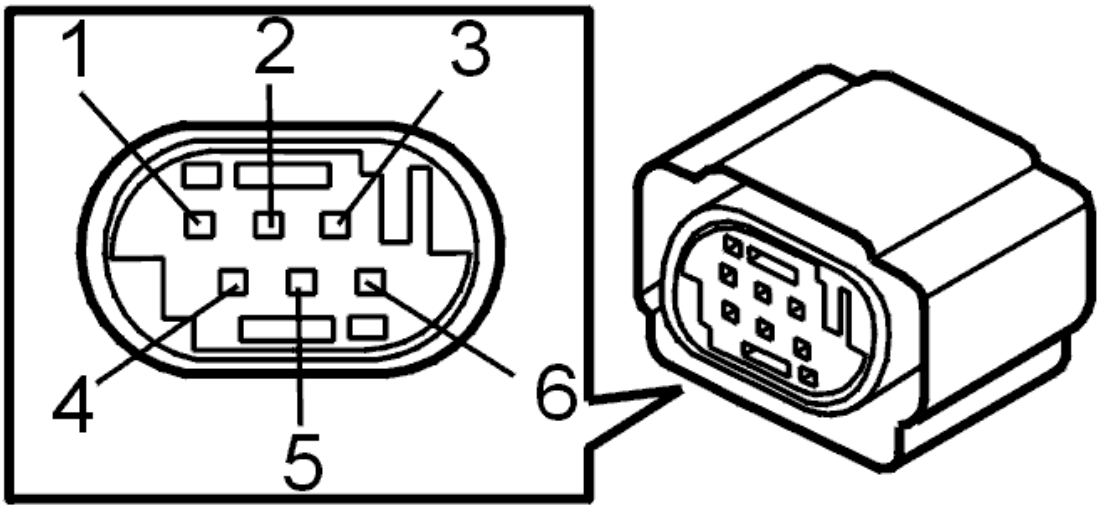

Fig. 15: Identifying Active Yaw Control Sensor Connector Terminals
Courtesy of VOLVO CARS CORPORATION

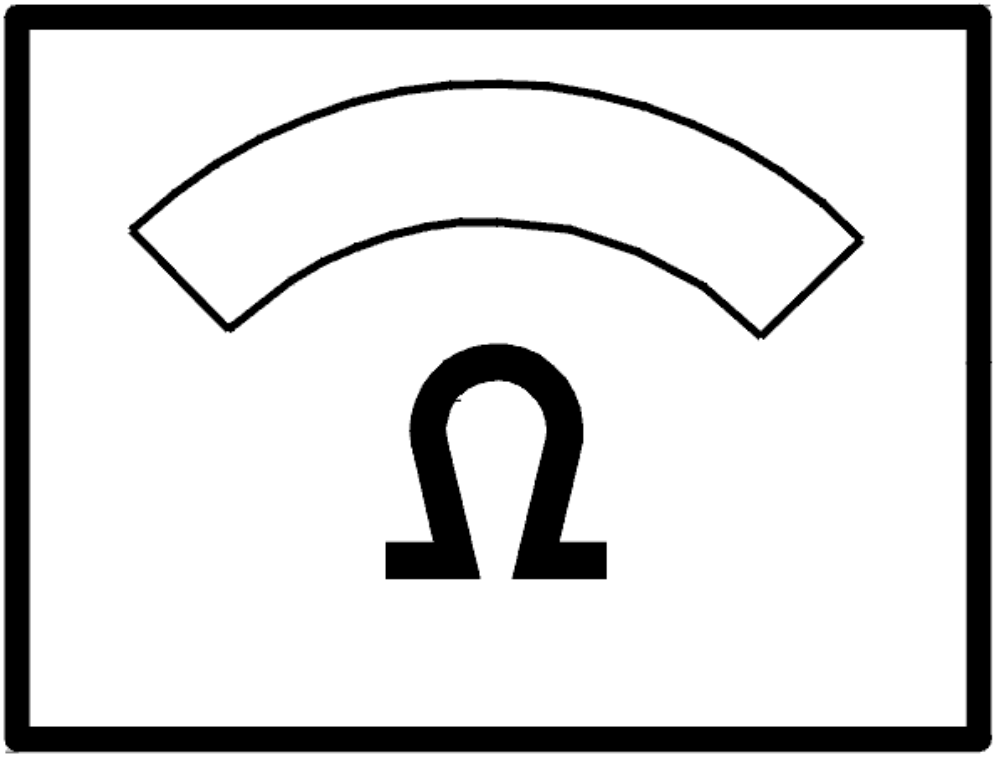

Fig. 16: Identifying Ohm Meter
Courtesy of VOLVO CARS CORPORATION

Was a fault detected?

- **YES**

  see **VERIFICATION**

- **NO**

  see **CHECKING THE POWER SUPPLY**

CHECKING THE POWER SUPPLY

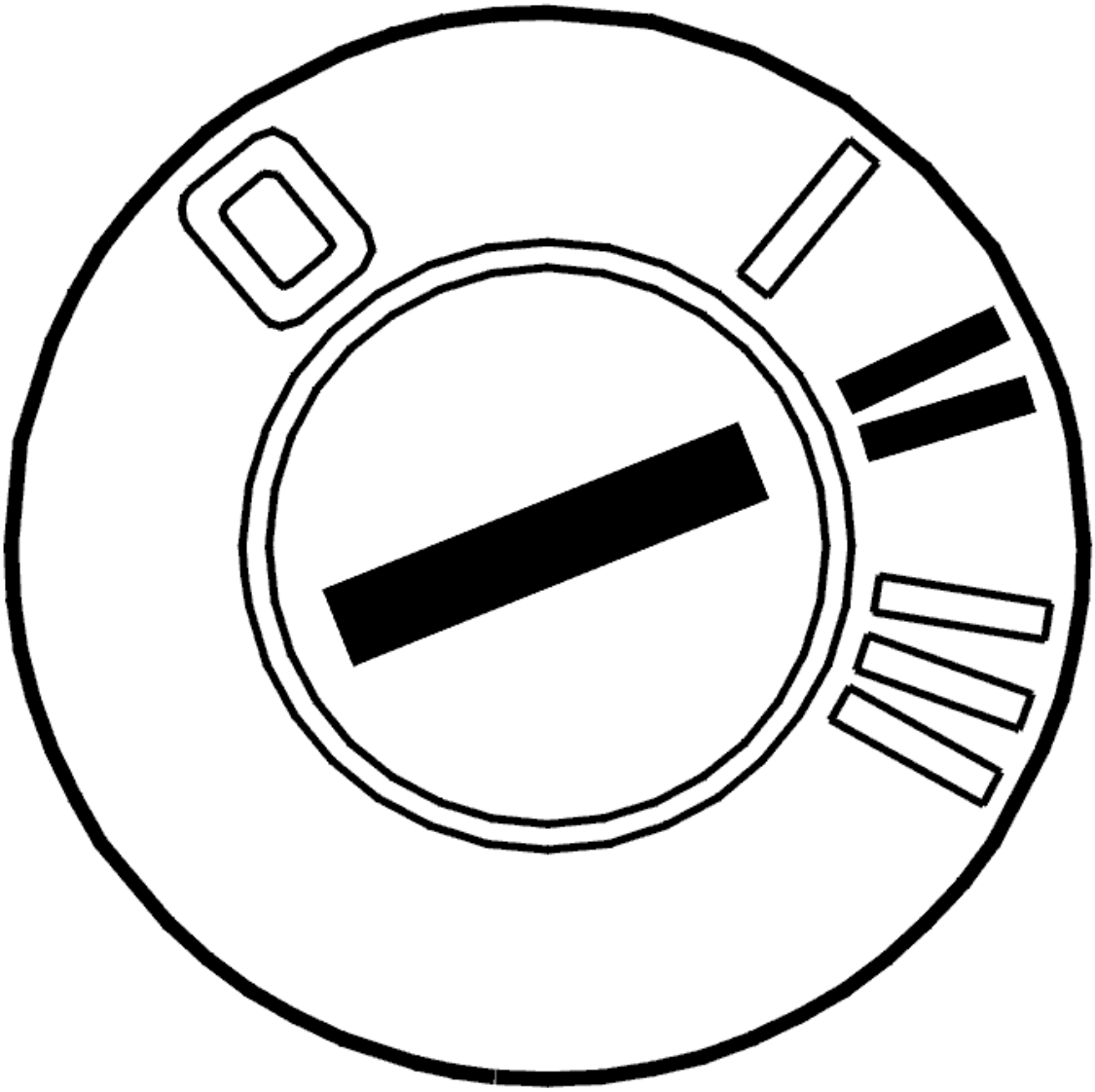

Fig. 17: Identifying Ignition ON
Courtesy of VOLVO CARS CORPORATION

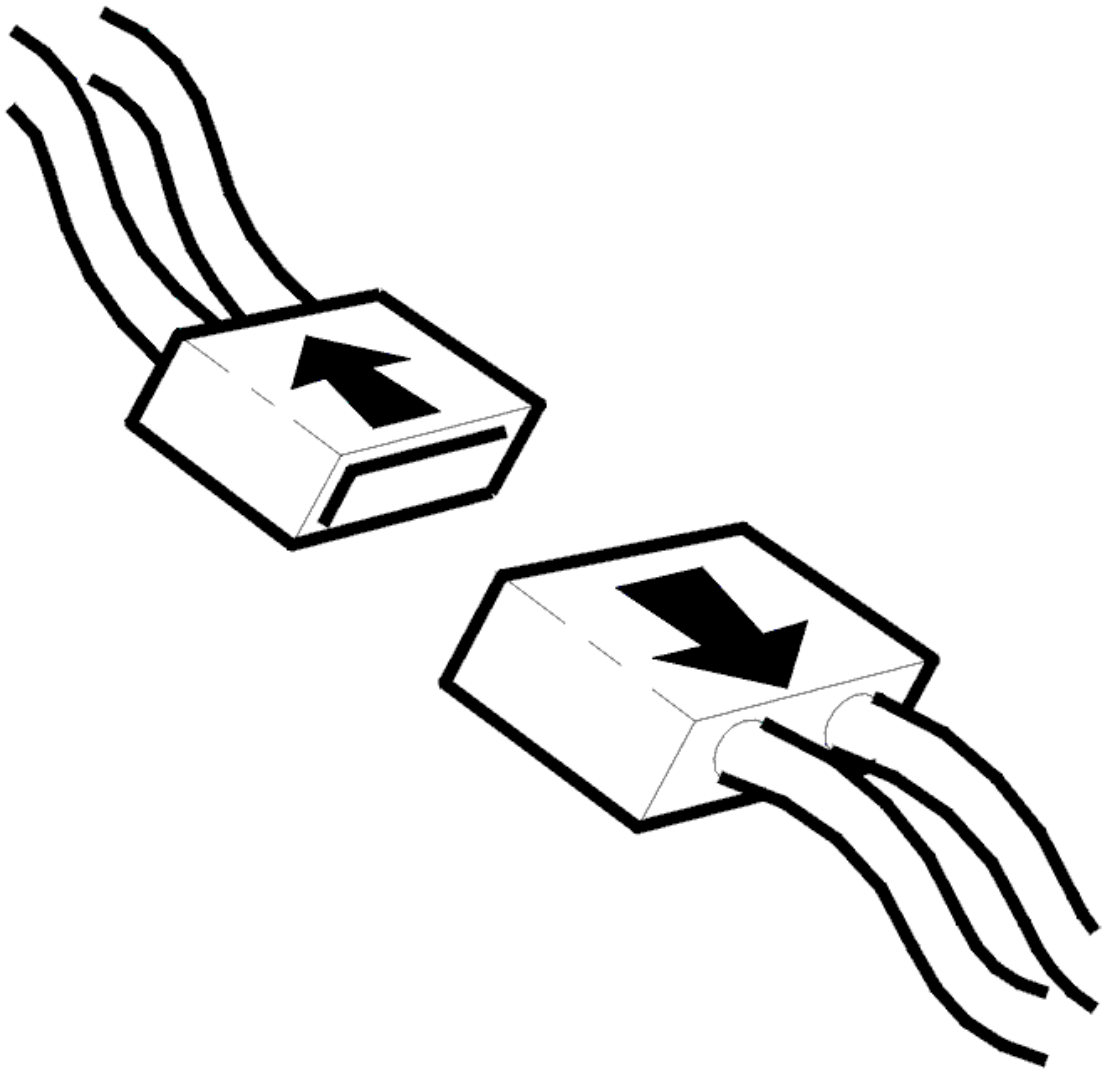

Fig. 18: Disconnecting Connector
Courtesy of VOLVO CARS CORPORATION

- Ignition off
- The breakout box connected
- Disconnect the connector for the active yaw control sensor
- Ignition on.

  Connect a voltmeter to terminals #6 (#A6) and #39 (#A39) on the breakout box.

  The voltage must be normal system voltage.

  Replace the active yaw control sensor if the voltage is OK.

  Replace the control module if the voltage is incorrect.

Other information

- To access and replace the active yaw control sensor, see **ACTIVE YAW CONTROL SENSOR, REPLACING**
- To access or replace the brake control module (BCM), see **BRAKE CONTROL MODULE (BCM), REPLACING**
- For information about signals, see **SIGNAL SPECIFICATION, BRAKE CONTROL MODULE (BCM) WITH DSTC (DYNAMIC STABILITY AND TRACTION CONTROL)** .

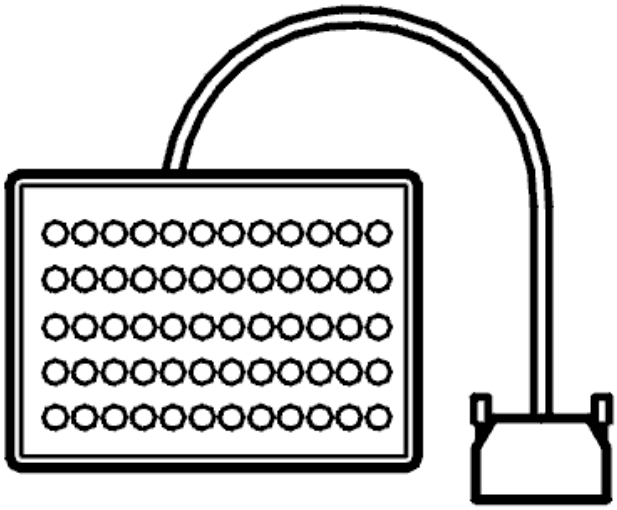

Fig. 19: Breakout Box
Courtesy of VOLVO CARS CORPORATION

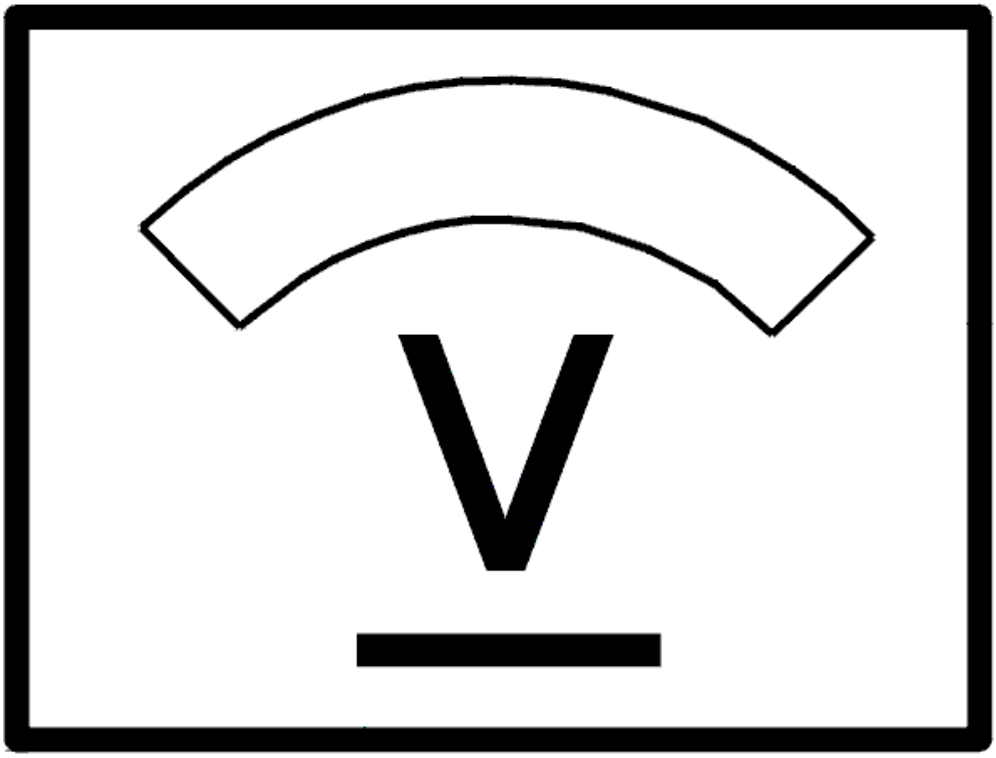

Fig. 20: Identifying Voltage Display
Courtesy of VOLVO CARS CORPORATION

- **Continue**

  see **VERIFICATION**

INTERMITTENT FAULT

HINT: The status of the diagnostic trouble code (DTC) indicates that the control module has previously registered a fault but that the fault is not now active.

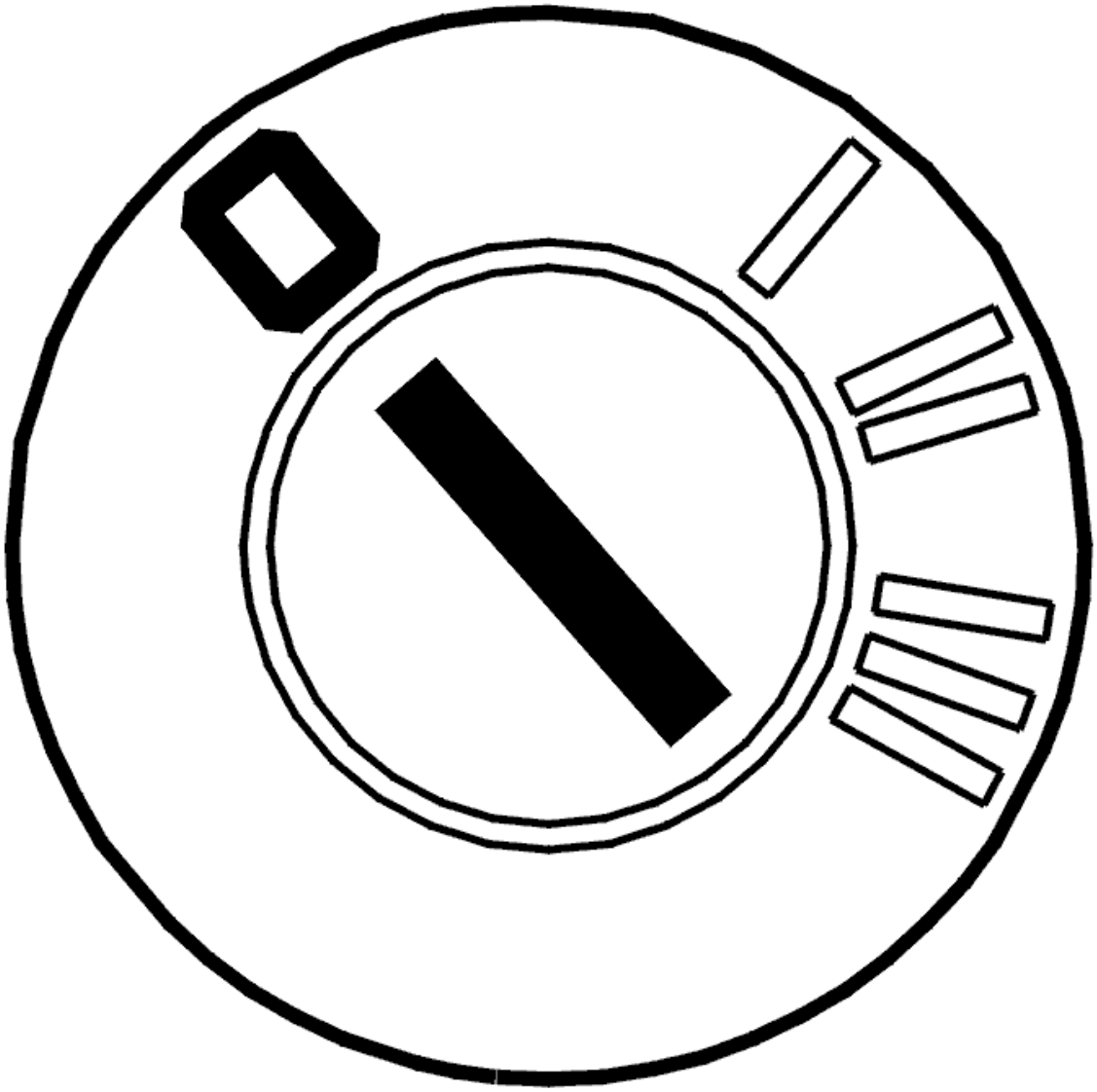

Fig. 21: Identifying Ignition OFF
Courtesy of VOLVO CARS CORPORATION

- Ignition off.

  Check the connectors for the brake control module (BCM) and the active yaw control sensor. Check for contact resistance and oxidation.

  Check the wiring between the connector for the active yaw control sensor:

  - terminal #3 and control module terminal #6 (#A6)
  - terminal #5 and control module terminal #39 (terminal #A39).

  check for an intermittent open-circuit or short-circuit to ground.

  Other information

- To connect the breakout box, see **CONNECTING THE BREAKOUT BOX, BRAKE CONTROL MODULE (BCM)**
- To access and replace the active yaw control sensor, see **ACTIVE YAW CONTROL SENSOR, REPLACING**
- For information about signals, see **SIGNAL SPECIFICATION, BRAKE CONTROL MODULE (BCM) WITH DSTC (DYNAMIC STABILITY AND TRACTION CONTROL)**
- see **CONTENTS** .

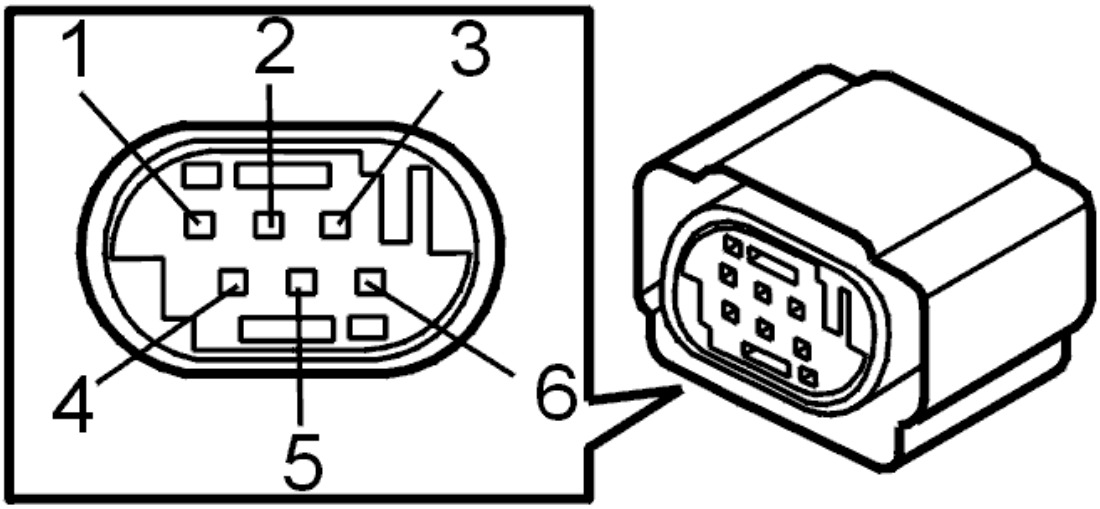

Fig. 22: Identifying Active Yaw Control Sensor Connector Terminals
Courtesy of VOLVO CARS CORPORATION

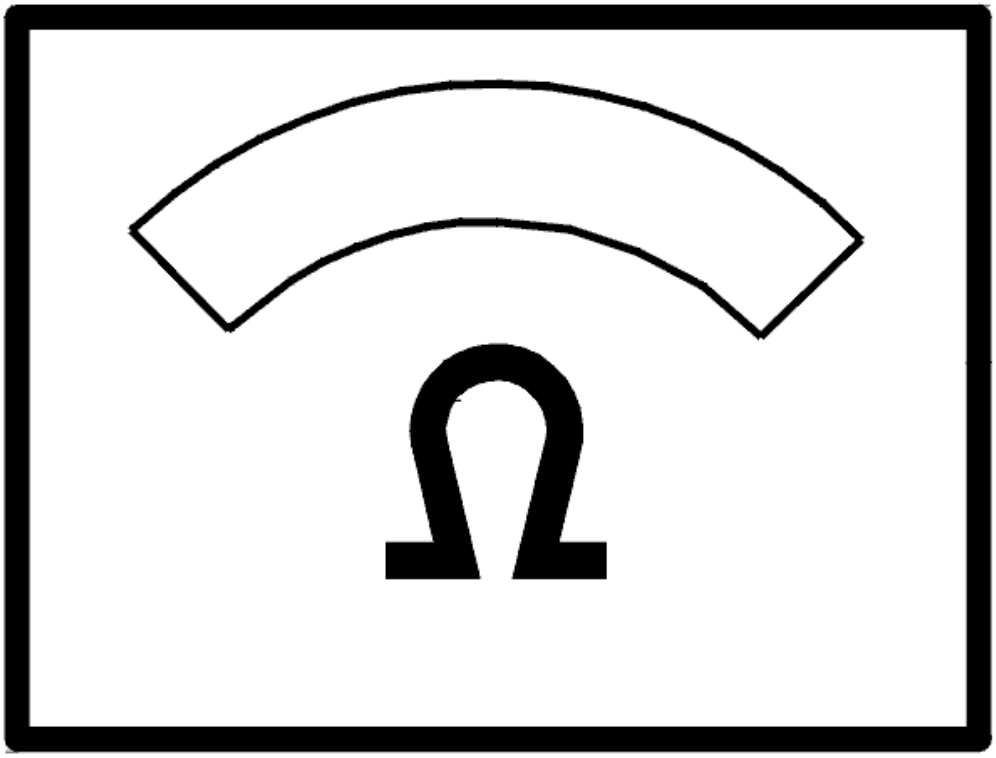

Fig. 23: Identifying Ohm Meter
Courtesy of VOLVO CARS CORPORATION

VERIFICATION

VERIFICATION

HINT: After carrying out the repair, check that the fault has been remedied.

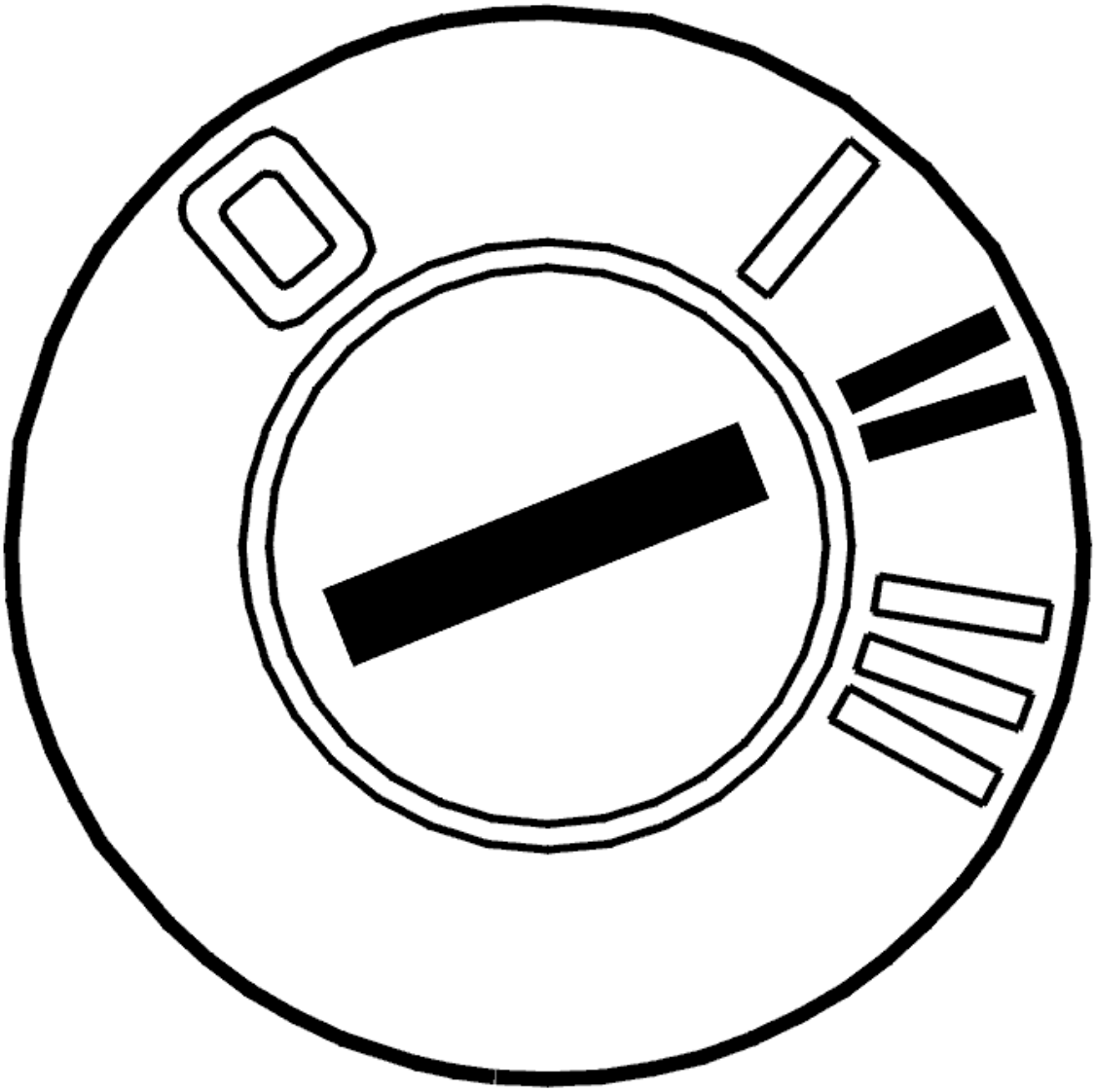

Fig. 24: Identifying Ignition ON
Courtesy of VOLVO CARS CORPORATION

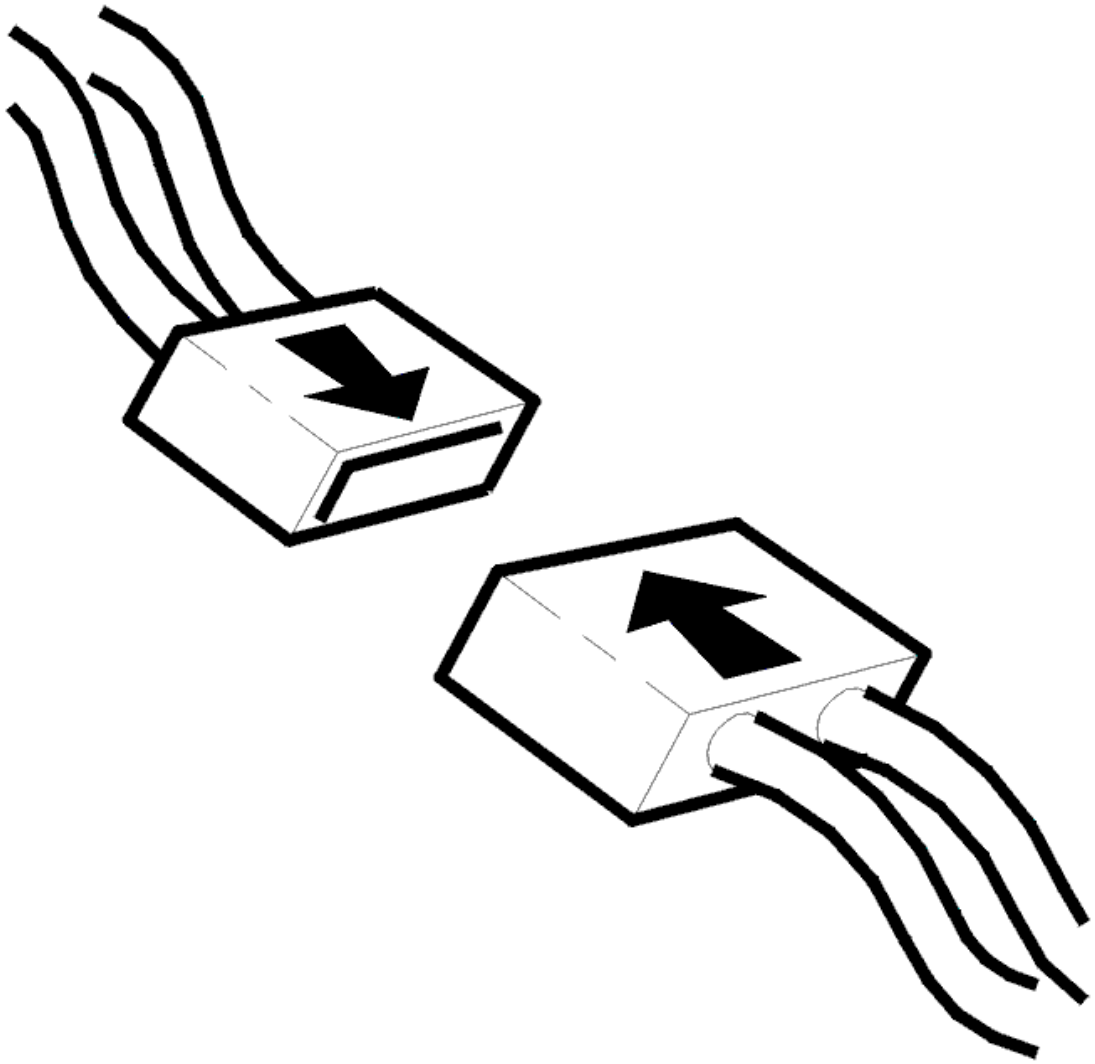

Fig. 25: Connecting Connector
Courtesy of VOLVO CARS CORPORATION

- Ignition off
- Reconnect the connectors, reinstall components etc.
- Test drive the car. See **TEST DRIVE FORM (DSTC (DYNAMIC STABILITY AND TRACTION CONTROL) /BRAKE CONTROL MODULE), DESCRIPTION**
- Ignition on.

  Read off the status of the diagnostic trouble code (DTC).

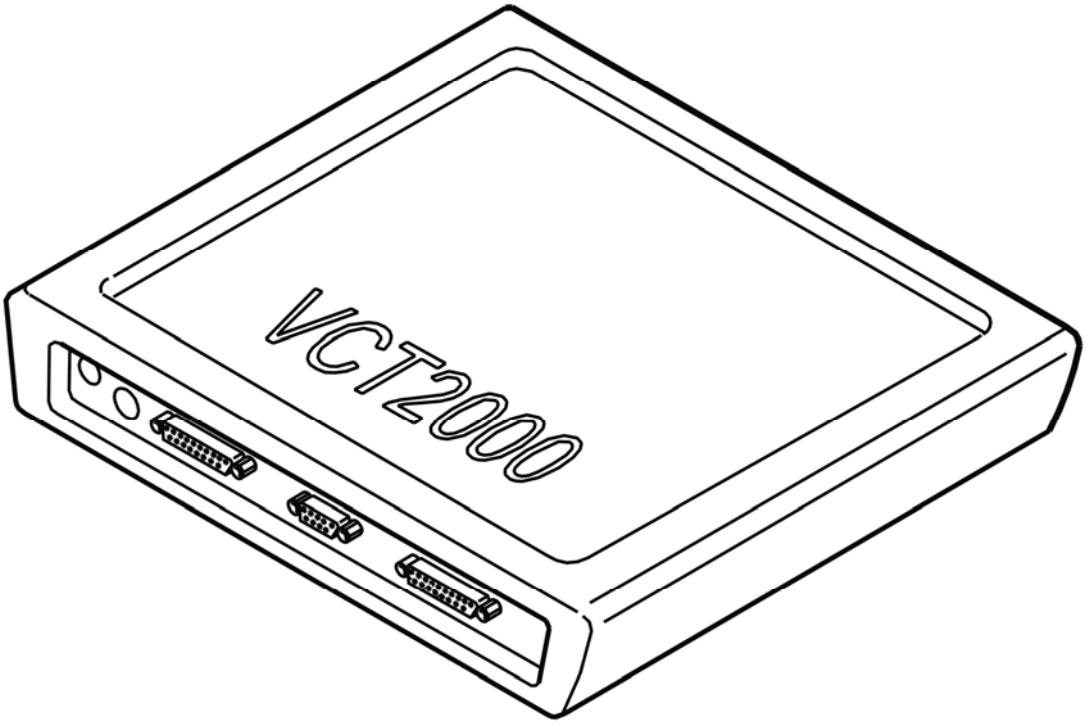

Fig. 26: Identifying VCT2000 Diagnostic Tool Symbol In VIDA
Courtesy of VOLVO CARS CORPORATION

Is the status of the diagnostic trouble code (DTC) intermittent?

- **YES**

  VERIFIED: Troubleshooting has been completed.

- **NO**

  see **INFORMATION**

INFORMATION

FAULT-TRACING INFORMATION

The fault should have been detected and remedied. As this is not the case fault-tracing has failed.

Exit fault-tracing for this diagnostic trouble code (DTC) or make another attempt.

INFORMATION

FAULT-TRACING INFORMATION

If the fault is intermittent, do not verify fault-tracing if the fault does not recur.

It is possible to view the information again, or leave fault-tracing for this diagnostic trouble code (DTC).

BCM-0119: POWER SUPPLY FOR THE ACTIVE YAW CONTROL SENSOR. VOLTAGE TOO LOW (B5254T2; 2005-2007)

DIAGNOSTIC TROUBLE CODE (DTC) INFORMATION

see **DIAGNOSTIC TROUBLE CODE (DTC) INFORMATION**

VOLTAGE TOO LOW

see **VOLTAGE TOO LOW**

BCM-0119: POWER SUPPLY FOR THE ACTIVE YAW CONTROL SENSOR. VOLTAGE TOO LOW (B6294T; 2005-2006)

DIAGNOSTIC TROUBLE CODE (DTC) INFORMATION

see **DIAGNOSTIC TROUBLE CODE (DTC) INFORMATION**

VOLTAGE TOO LOW

see **VOLTAGE TOO LOW**

BCM-0121: YAW RATE SENSOR. SIGNAL OUTSIDE ITS PERMITTED RANGE (2003-2004)

DIAGNOSTIC TROUBLE CODE (DTC) INFORMATION

Condition

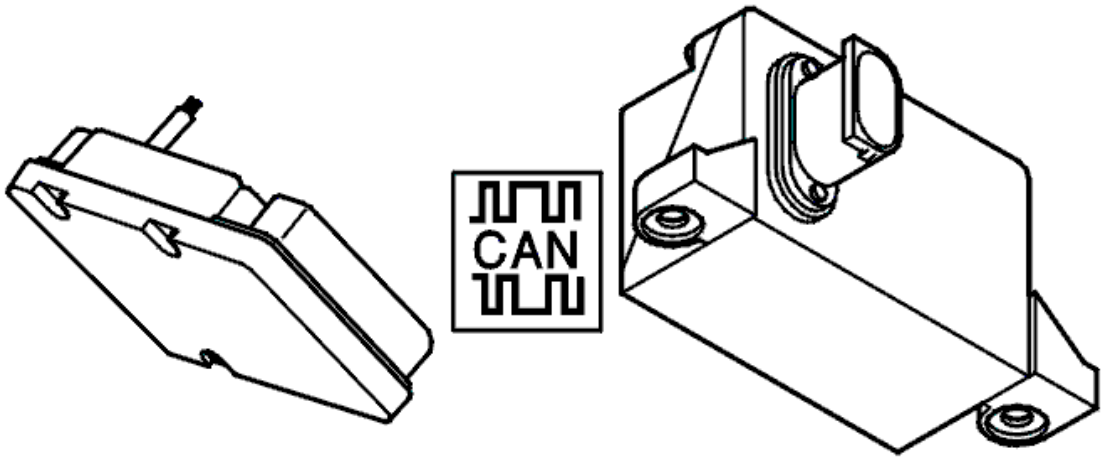

Fig. 27: Identifying Brake Control Module & Active Yaw Control Sensor
Courtesy of VOLVO CARS CORPORATION

NOTE: The diagnostic trouble code (DTC) applies only to cars with dynamic stability and traction control (DSTC).

The yaw rate sensor, lateral accelerometer, accelerometer (only AWD) and angle of lean sensor (only RSC) are integrated in the active yaw control sensor. This in turn is connected to the brake control module (BCM) via its own Control area network (CAN) cable. The sensors transmit information to the brake control module (BCM) indicating the size of the yaw angle, the lateral acceleration of the car, the forward acceleration and the car's lateral angle of lean.

Diagnostic trouble code (DTC) BCM-0121, BCM-0125, BCM-0127 or BCM-0129 is stored, depending on the sensor, if the control module registers that the signal from any of the sensors is outside its permitted range.

- BCM-0121: Yaw rate sensor
- BCM-0125: Lateral acceleration sensor
- BCM-0127: Tilt angle sensor
- BCM-0129: Accelerometer.

Substitute Value

- Traction control is blocked
- Stability control is blocked
- Active yaw control is blocked
- RSC is blocked (cars equipped with RSC only).

HINT: For information about abbreviations, see BRAKE SYSTEM, ABBREVIATIONS .

Possible Source

- Interference or noise on the wiring has disrupted the active yaw control sensor calculations
- The power supply to the active yaw control sensor is too low
- Incorrect wheel alignment
- Internal fault in the active yaw control sensor.

NOTE: **This diagnostic trouble code (DTC) is not due to an internal hardware fault in the Brake control module (BCM) and must not be remedied by replacing the control module.**

Fault symptom[s]

- The anti-spin warning lamp is lit (up to and including 2002 model year)
- General yellow warning lamp lit (from model year 2003)
- Anti-spin does not function
- The stability control system does not function
- The traction control system does not function.

SIGNAL OUTSIDE ITS PERMITTED RANGE

CHECKING THE CONNECTORS

NOTE: **If diagnostic trouble codes (DTCs) other than BCM-0121, BCM-0125, BCM-0127 or BCM-0129 are stored in the brake control module (BCM), select cancel and fault trace these diagnostic trouble codes (DTCs) first.**

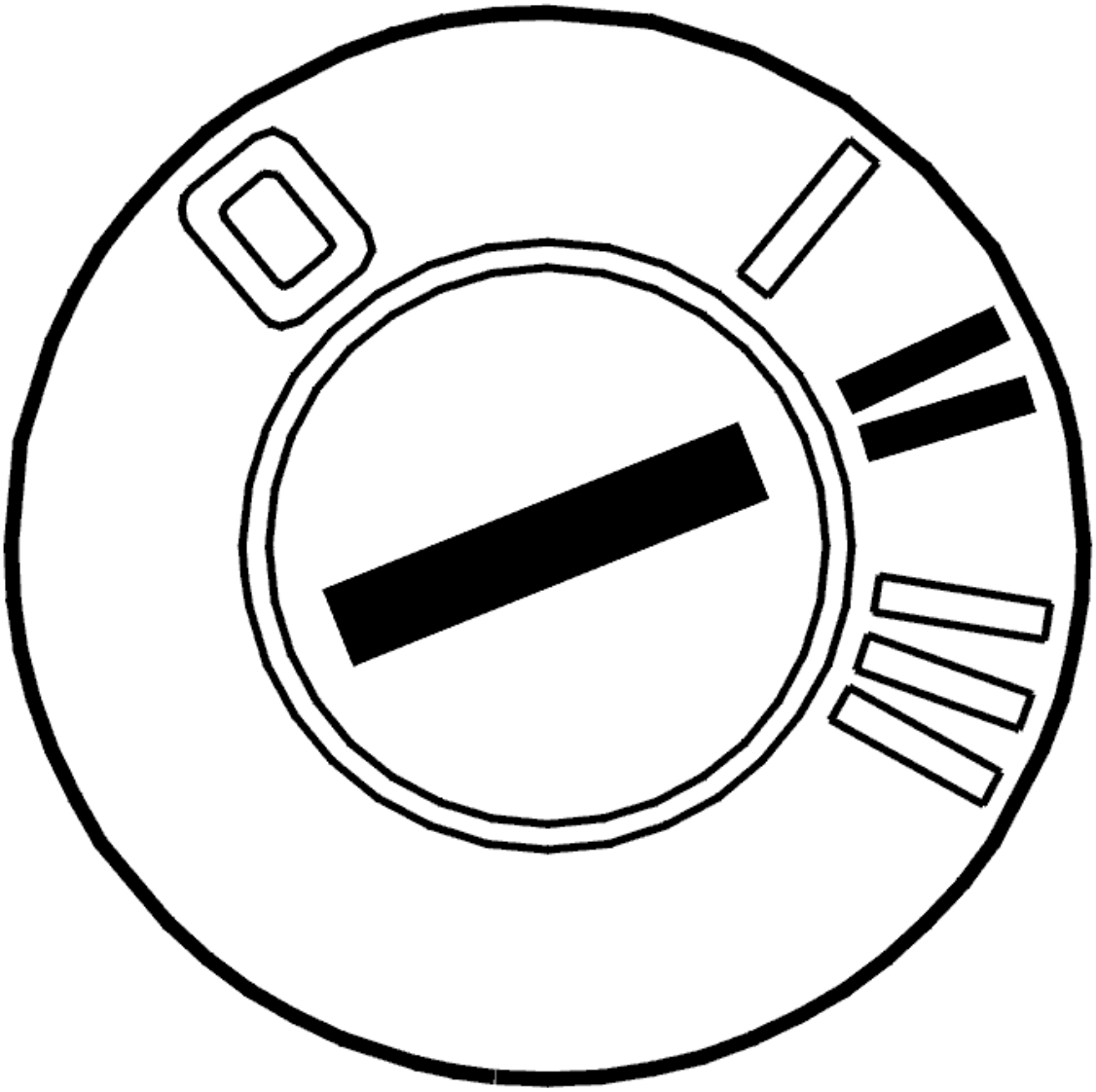

Fig. 28: Identifying Ignition ON
Courtesy of VOLVO CARS CORPORATION

- Ignition off
- Check the brake control module (BCM) and the active yaw control sensor connectors. Check for contact resistance and oxidation
- Ensure that no sources of interference, such as a mobile telephone or radio receiver, are in the vicinity of the active yaw control sensor
- Test drive the car. See the test drive schedule. See **TEST DRIVE FORM (DSTC (DYNAMIC STABILITY AND TRACTION CONTROL) /BRAKE CONTROL MODULE), DESCRIPTION**
- Ignition on
- Read off diagnostic trouble codes (DTCs).

  If the diagnostic trouble code (DTC) status is intermittent the cause of the fault was probably either contact resistance in the control module or active yaw control sensor connectors, or a source of

interference too close to the sensor.

Other information

- To remove the connector for the active yaw control sensor, see **ACTIVE YAW CONTROL SENSOR, REPLACING**
- To remove the brake control module (BCM) connector, see **CONNECTING THE BREAKOUT BOX, BRAKE CONTROL MODULE (BCM)** .

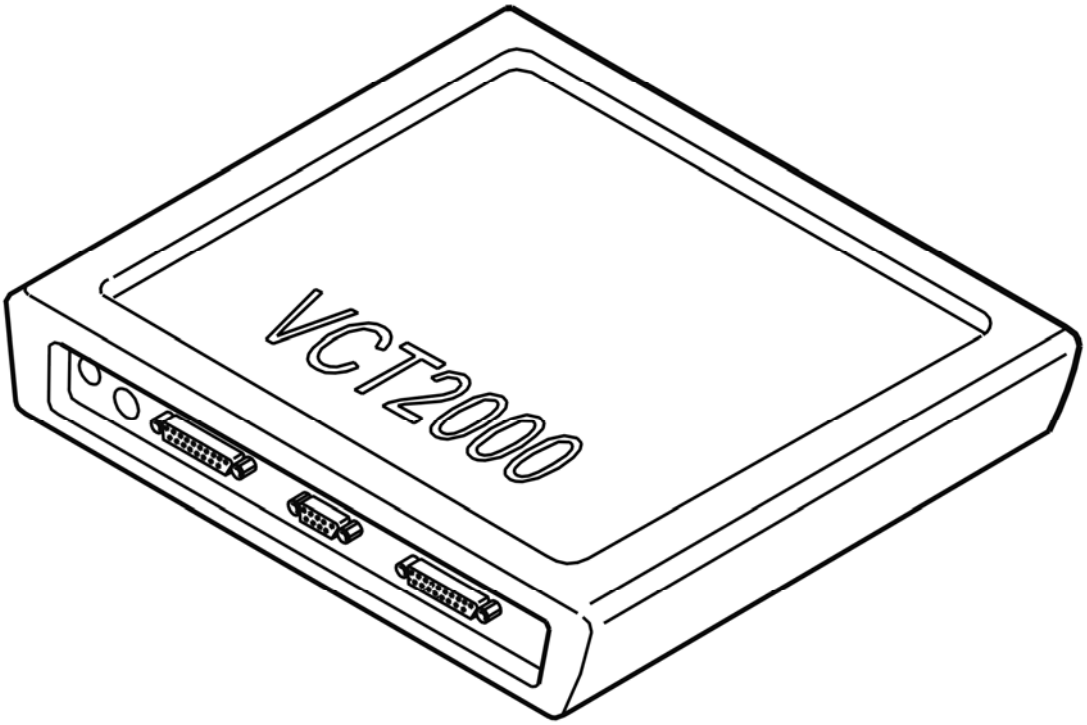

Fig. 29: Identifying VCT2000 Diagnostic Tool Symbol In VIDA
Courtesy of VOLVO CARS CORPORATION

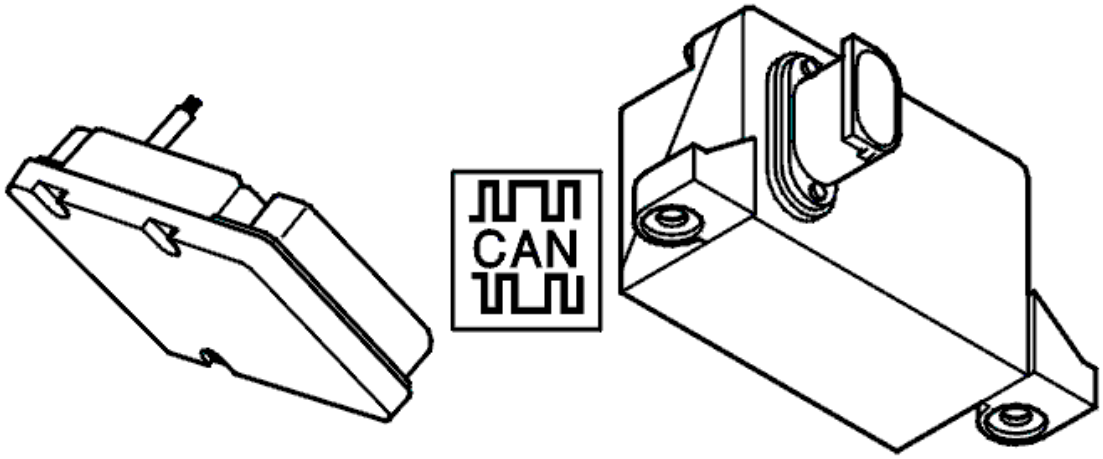

Fig. 30: Identifying Brake Control Module & Active Yaw Control Sensor
Courtesy of VOLVO CARS CORPORATION

Was the status of the diagnostic trouble code (DTC) permanent?

- **YES**

  see **CHECKING THE WIRING**

- **NO**

  OKAY: Troubleshooting has been completed.

CHECKING THE WIRING

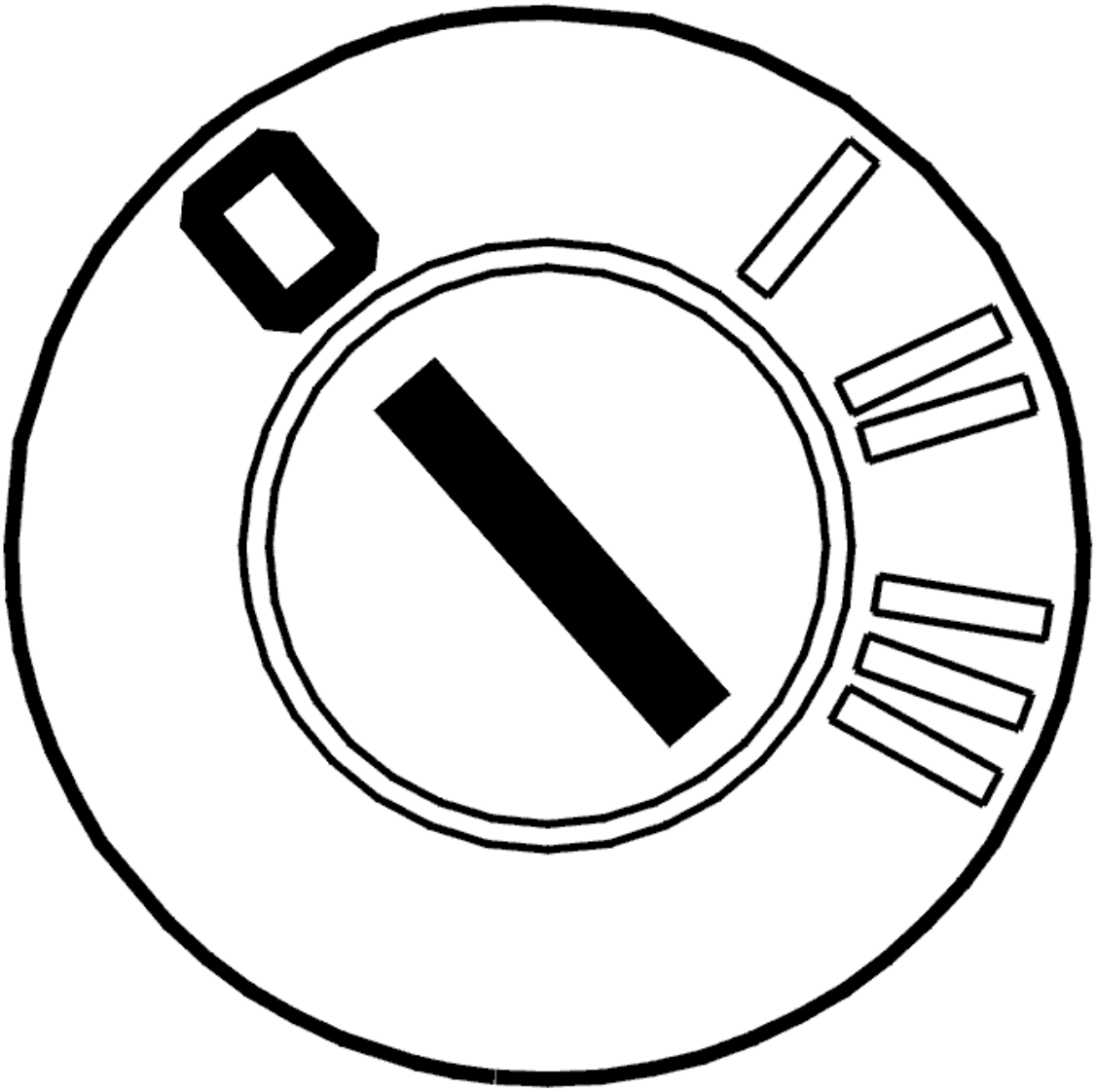

Fig. 31: Identifying Ignition OFF
Courtesy of VOLVO CARS CORPORATION

- Ignition off.

  Check the brake control module (BCM) and the active yaw control sensor connectors. Check for contact resistance and oxidation.

  Check the wiring between the connector for the active yaw control sensor:

  - terminal #1 and control module terminal #A25 (#A25)
  - terminal #2 and control module terminal #A29 (#A29)
  - terminal #3 and control module terminal #A6 (#A6)
  - terminal #5 and control module terminal #A39 (#A39).

Check for an open-circuit.

Check the wheel alignment.

Remedy as necessary.

Other information

- To connect the breakout box, see **CONNECTING THE BREAKOUT BOX, BRAKE CONTROL MODULE (BCM)**
- For information about signals, see **SIGNAL SPECIFICATION, BRAKE CONTROL MODULE (BCM) WITH DSTC (DYNAMIC STABILITY AND TRACTION CONTROL)**
- To check the wheel alignment, see **WHEEL ALIGNMENT, CHECKING / ADJUSTING**
- To replace the active yaw control sensor, see **ACTIVE YAW CONTROL SENSOR, REPLACING**
- see **CONTENTS**

- **Continue**

  see **VERIFICATION**

VERIFICATION

VERIFICATION

HINT: After carrying out the repair, check that the fault has been remedied.

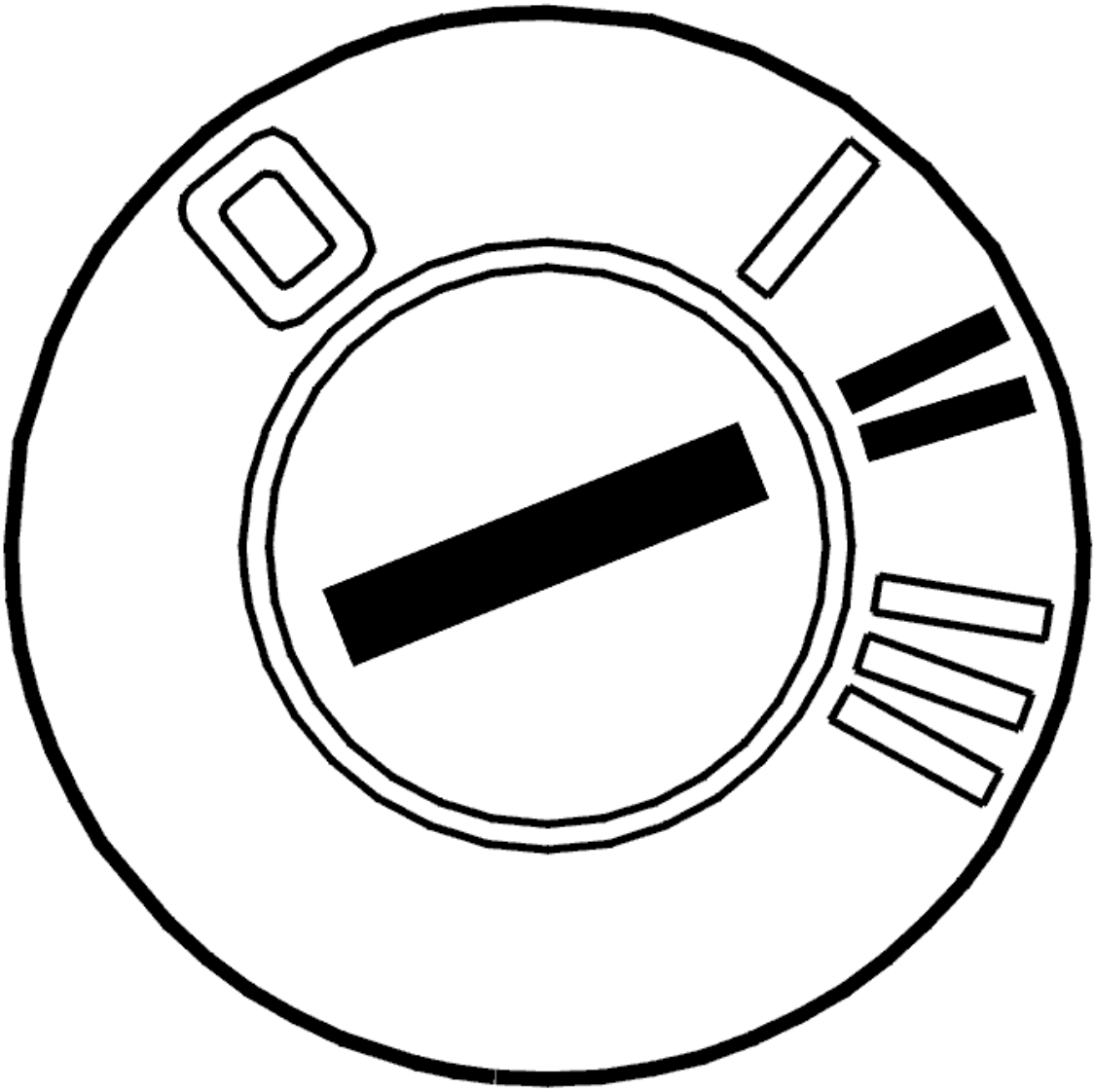

Fig. 32: Identifying Ignition ON
Courtesy of VOLVO CARS CORPORATION

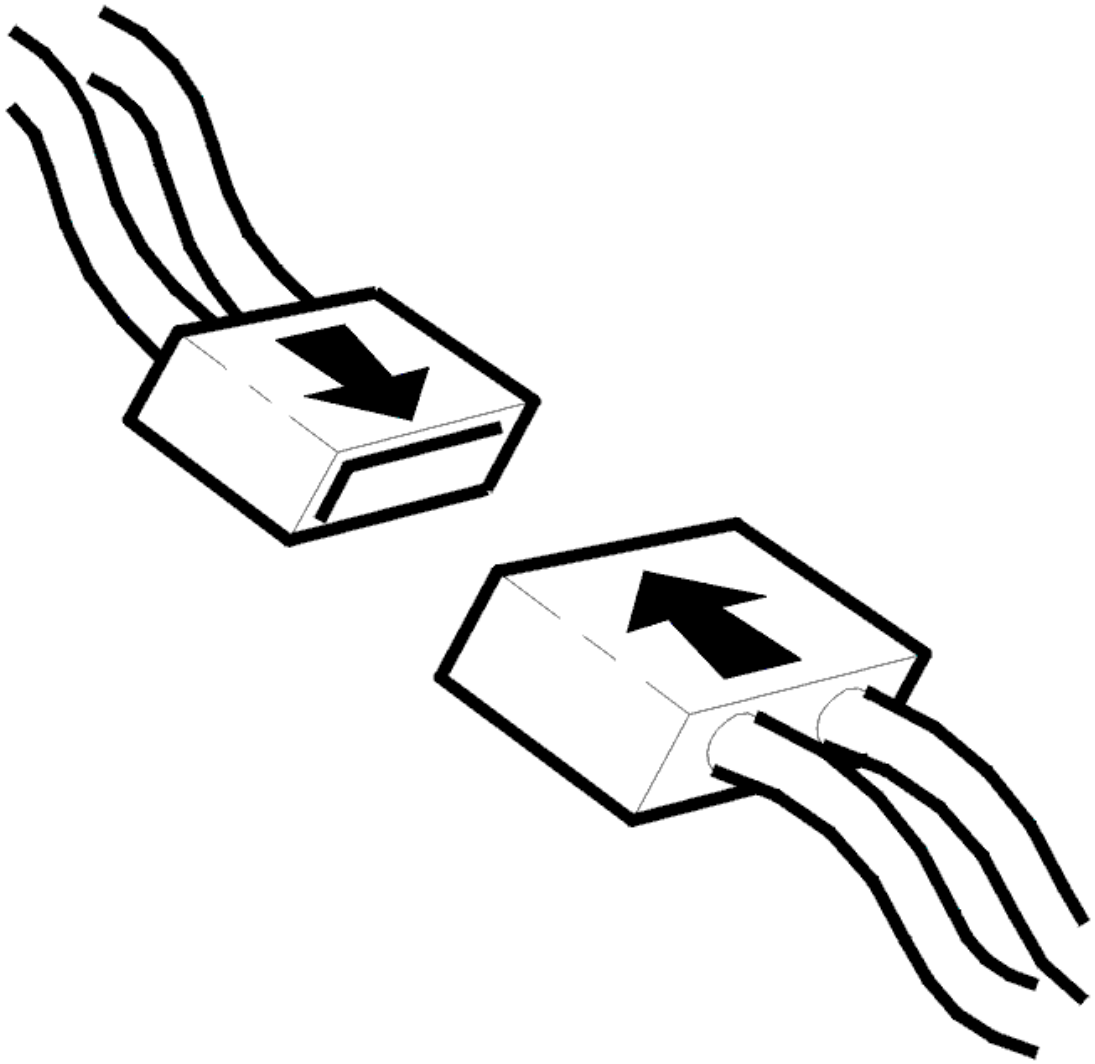

Fig. 33: Connecting Connector
Courtesy of VOLVO CARS CORPORATION

- Ignition off
- Reconnect the connectors, reinstall components etc.
- Test drive the car. See **TEST DRIVE FORM (DSTC (DYNAMIC STABILITY AND TRACTION CONTROL) /BRAKE CONTROL MODULE), DESCRIPTION**
- Ignition on.

  Read off the status of the diagnostic trouble code (DTC).

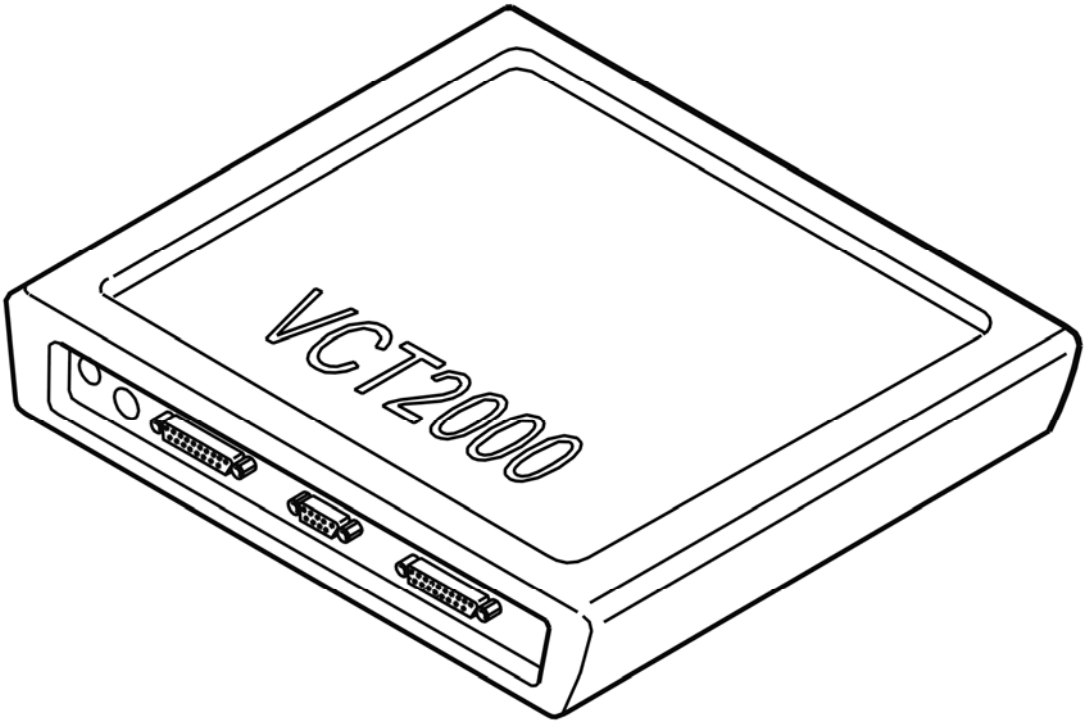

Fig. 34: Identifying VCT2000 Diagnostic Tool Symbol In VIDA
Courtesy of VOLVO CARS CORPORATION

Is the status of the diagnostic trouble code (DTC) intermittent?

- **YES**

  VERIFIED: Troubleshooting has been completed.

- **NO**

  see **INFORMATION**

INFORMATION

FAULT-TRACING INFORMATION

The fault should have been detected and remedied. As this is not the case fault-tracing has failed.

Exit fault-tracing for this diagnostic trouble code (DTC) or make another attempt.

BCM-0121: YAW RATE SENSOR. SIGNAL OUTSIDE ITS PERMITTED RANGE (B5254T2; 2005-2007)

DIAGNOSTIC TROUBLE CODE (DTC) INFORMATION

see **DIAGNOSTIC TROUBLE CODE (DTC) INFORMATION**

SIGNAL OUTSIDE ITS PERMITTED RANGE

see **SIGNAL OUTSIDE ITS PERMITTED RANGE**

BCM-0121: YAW RATE SENSOR. SIGNAL OUTSIDE ITS PERMITTED RANGE (B6294T; 2005-2006)

DIAGNOSTIC TROUBLE CODE (DTC) INFORMATION

see **DIAGNOSTIC TROUBLE CODE (DTC) INFORMATION**

SIGNAL OUTSIDE ITS PERMITTED RANGE

see **SIGNAL OUTSIDE ITS PERMITTED RANGE**

BCM-0123: ACTIVE YAW CONTROL SENSOR. INTERNAL FAULT (2003-2004)

DIAGNOSTIC TROUBLE CODE (DTC) INFORMATION

Condition

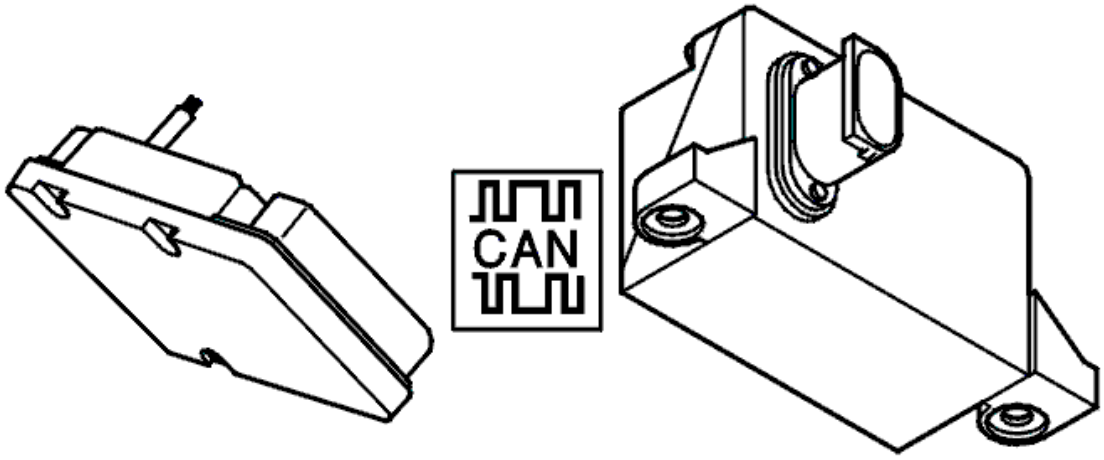

Fig. 35: Identifying Brake Control Module & Active Yaw Control Sensor
Courtesy of VOLVO CARS CORPORATION

NOTE: **The diagnostic trouble code (DTC) applies only to cars with dynamic stability**

and traction control (DSTC).

The active yaw control sensor is supplied with 12 V. The signal voltage of the sensors to the brake control module (BCM) is approximately 2.5 V for a stationary car. The control module compares the voltage with a reference value.

Diagnostic trouble code (DTC) BCM-0123 is stored if the voltage is outside the reference value or if an internal fault in the active yaw control sensor is registered.

Substitute Value

- Traction control is blocked
- Stability control is blocked
- Active yaw control is blocked.

HINT: For information about abbreviations, see BRAKE SYSTEM, ABBREVIATIONS .

Possible Source

- Signals which disrupt the active yaw control sensor
- Voltage to the active yaw control sensor is too low
- Internal fault in the active yaw control sensor.

Fault symptom[s]

- The anti-spin warning lamp is lit (up to and including 2002 model year)
- General yellow warning lamp lit (from model year 2003 inclusive)
- Anti-spin does not function
- The stability control system does not function
- The traction control system does not function.

INTERNAL FAULT

CHECKING THE PRESENT VALUE OF THE SENSORS

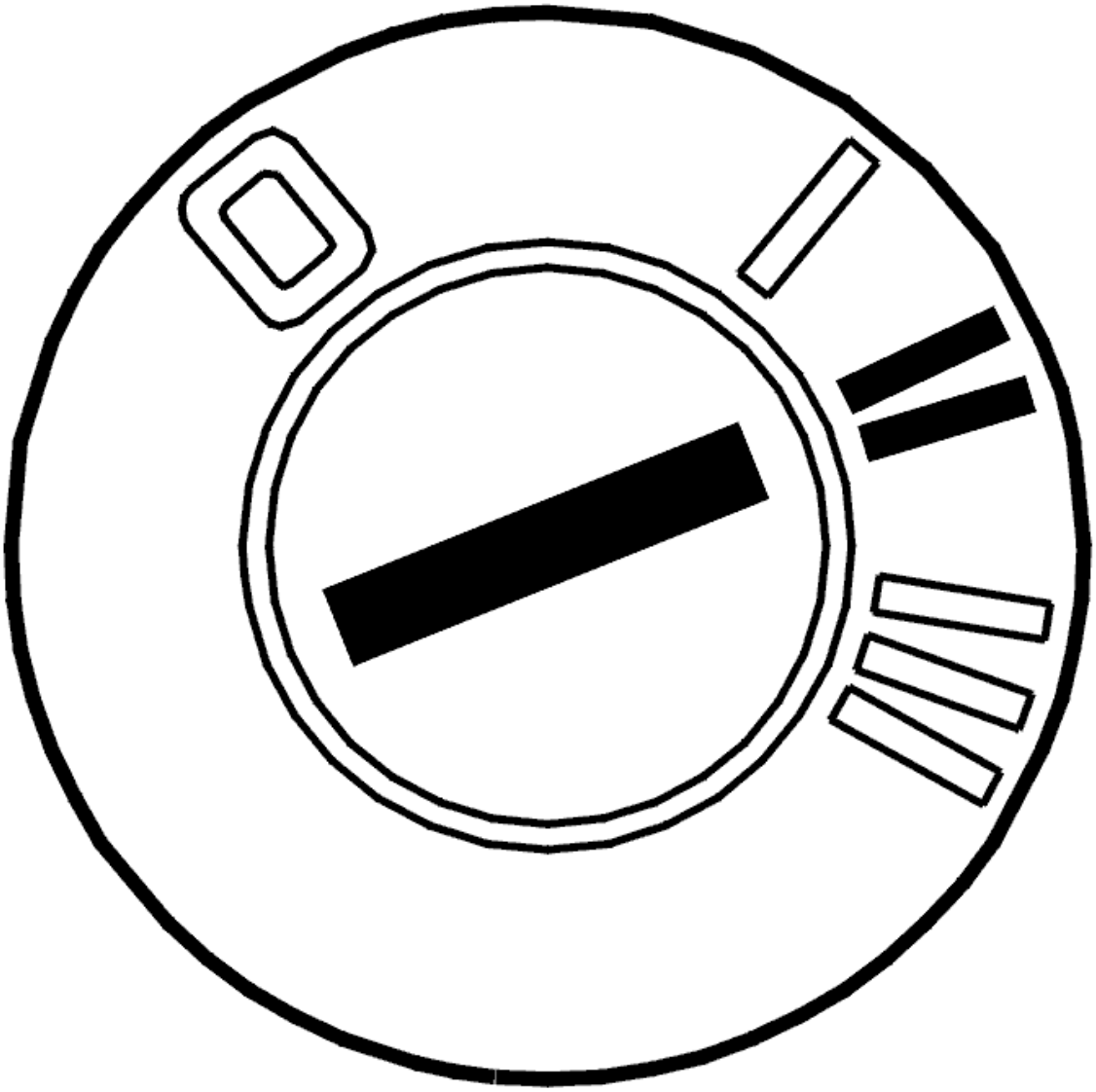

Fig. 36: Identifying Ignition ON
Courtesy of VOLVO CARS CORPORATION

- Ignition off
- Check the connectors for the brake control module (BCM) and the active yaw control sensor. Check for contact resistance and oxidation
- Ignition on
- Read off the present value.

  Check the read off value for the relevant component against the value in the table.

Component	Value
Yaw rate sensor	-6°/s - +6°/s
Lateral accelerometer	-1.7 m/s^2 - +1.7 m/s^2

Accelerometer	-1.7 m/s^2 - +1.7 m/s^2

NOTE: The accelerometer can only be read off if the car is four wheel drive.

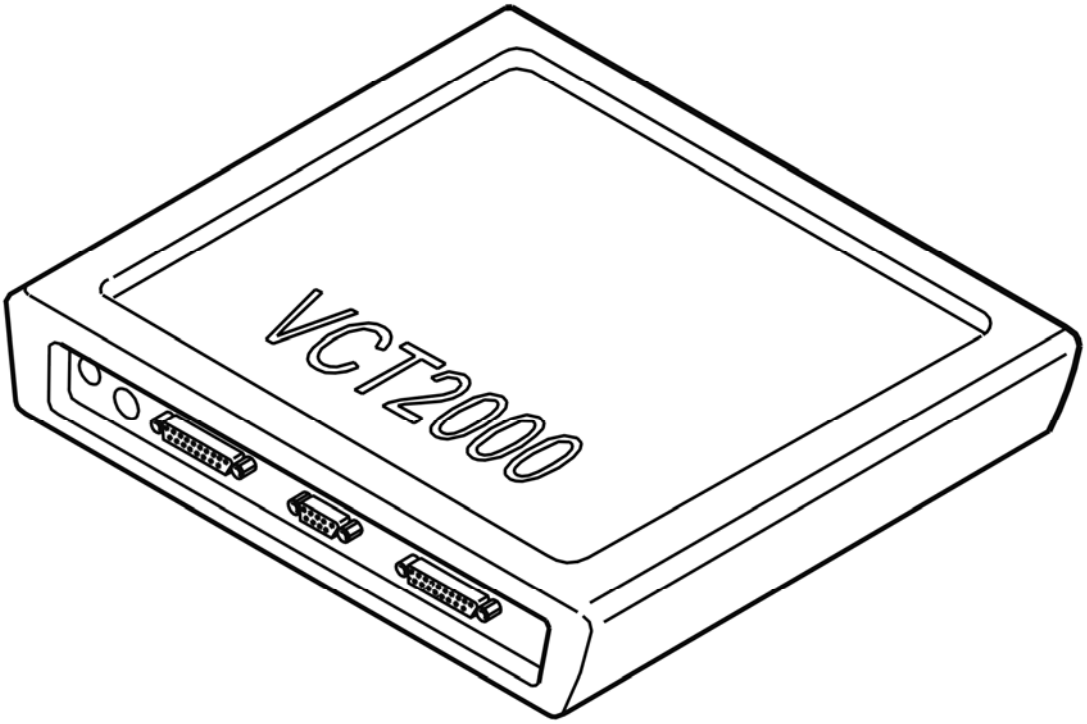

Fig. 37: Identifying VCT2000 Diagnostic Tool Symbol In VIDA
Courtesy of VOLVO CARS CORPORATION

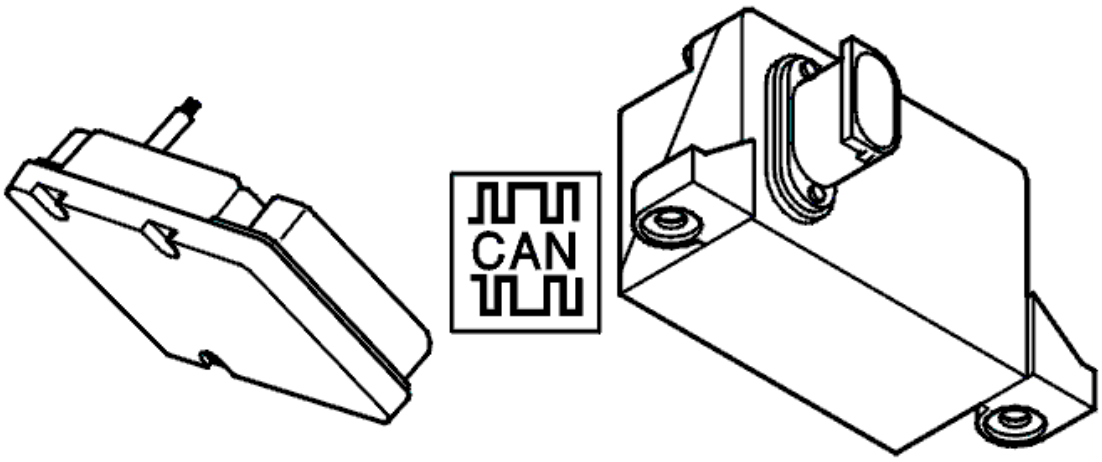

Fig. 38: Identifying Brake Control Module & Active Yaw Control Sensor
Courtesy of VOLVO CARS CORPORATION

Are the present values OK?

- **YES**

  OKAY: Troubleshooting has been completed.

- **NO**

  see **CHECKING THE POWER SUPPLY**

CHECKING THE POWER SUPPLY

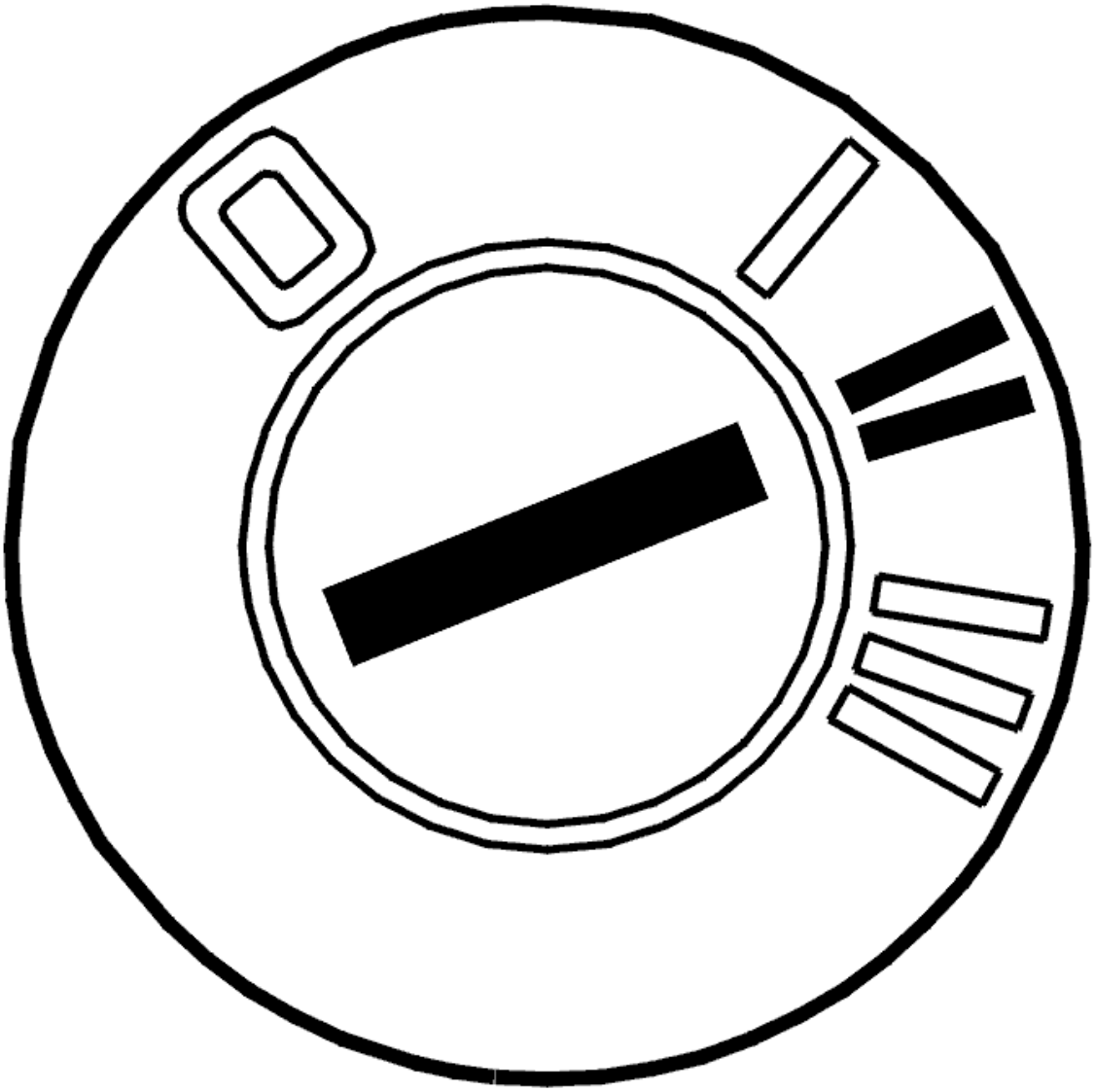

Fig. 39: Identifying Ignition ON

Courtesy of VOLVO CARS CORPORATION

- Ignition off
- Connect the breakout box to the brake control module (BCM)
- Ignition on.

  Check the power supply to the active yaw control sensor by connecting a voltmeter between terminals #6 (#A6) and #39 (#A39) on the breakout box. The voltage must be normal system voltage.

  Replace the control module if the voltage is incorrect.

  If the voltage is OK check the power supply cables between the active yaw control sensor:

  - terminal #3 and control module terminal #6 (#A6)
  - terminal #5 and control module terminal #39 (terminal #A39).

  check for an open-circuit.

  Replace the active yaw control sensor if the wiring is OK.

  Other information

  - To connect the breakout box, see **CONNECTING THE BREAKOUT BOX, BRAKE CONTROL MODULE (BCM)**
  - To replace the control module, see **BRAKE CONTROL MODULE (BCM), REPLACING**
  - To access and replace the active yaw control sensor, see **ACTIVE YAW CONTROL SENSOR, REPLACING**
  - For information about signals, see **SIGNAL SPECIFICATION, BRAKE CONTROL MODULE (BCM) WITH DSTC (DYNAMIC STABILITY AND TRACTION CONTROL)**
  - see **CONTENTS** .

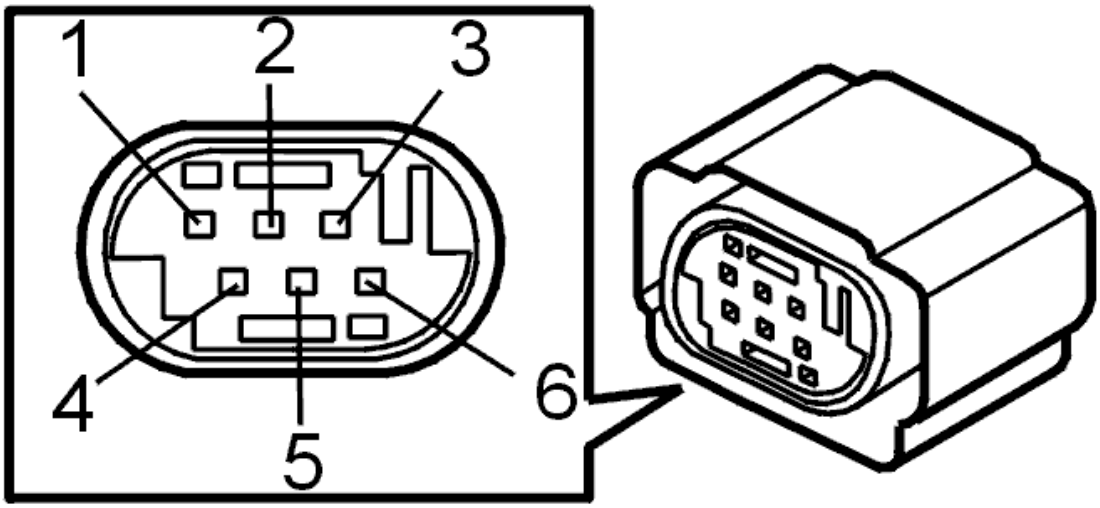

Fig. 40: Identifying Active Yaw Control Sensor Connector Terminals
Courtesy of VOLVO CARS CORPORATION

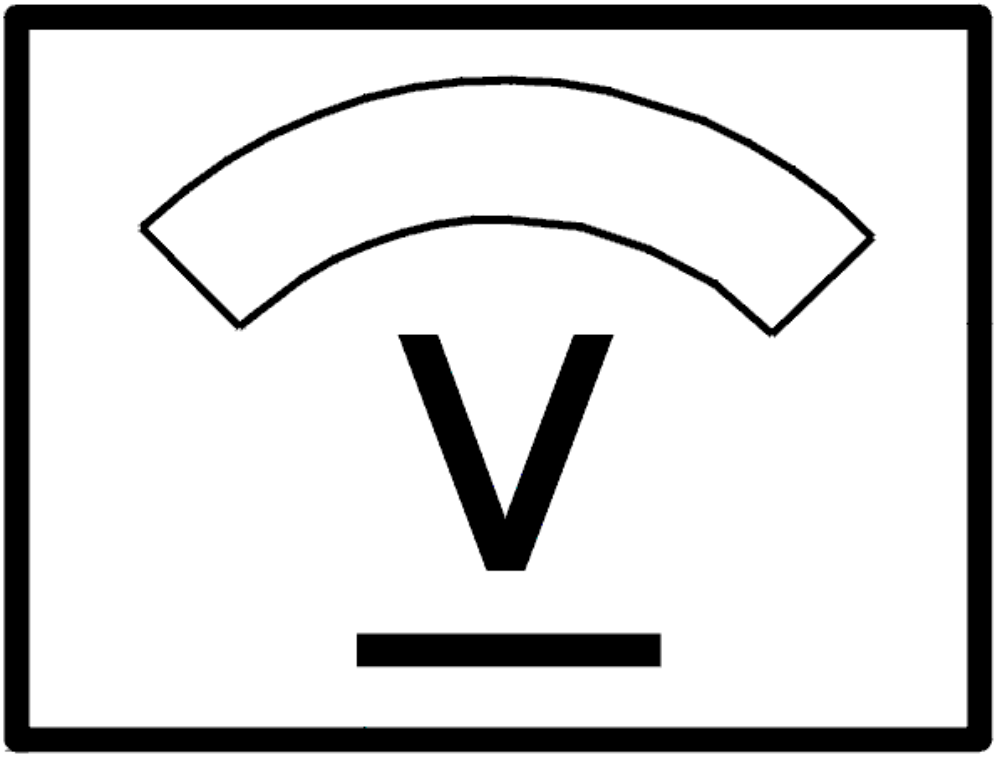

Fig. 41: Identifying Voltage Display
Courtesy of VOLVO CARS CORPORATION

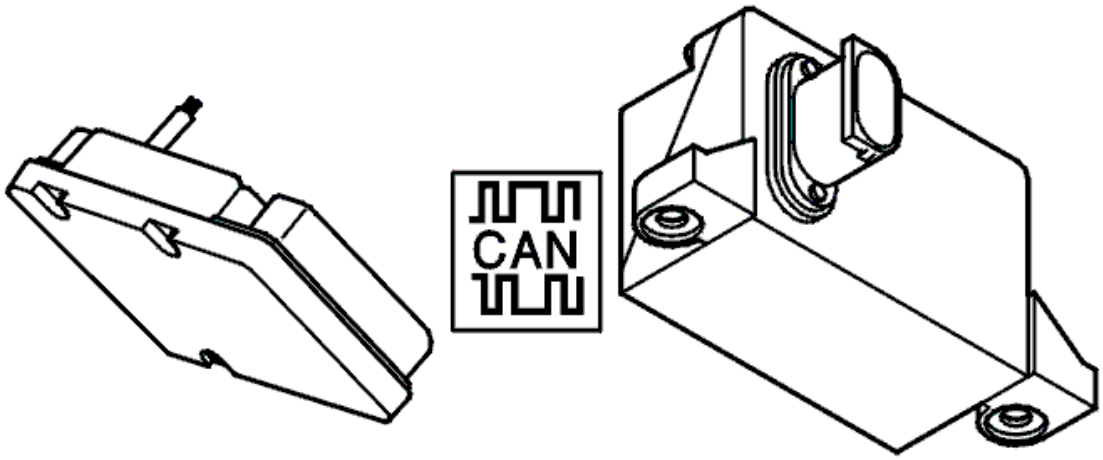

Fig. 42: Identifying Brake Control Module & Active Yaw Control Sensor
Courtesy of VOLVO CARS CORPORATION

- **Continue**

  see **VERIFICATION**

VERIFICATION

VERIFICATION

HINT: After carrying out the repair, check that the fault has been remedied.

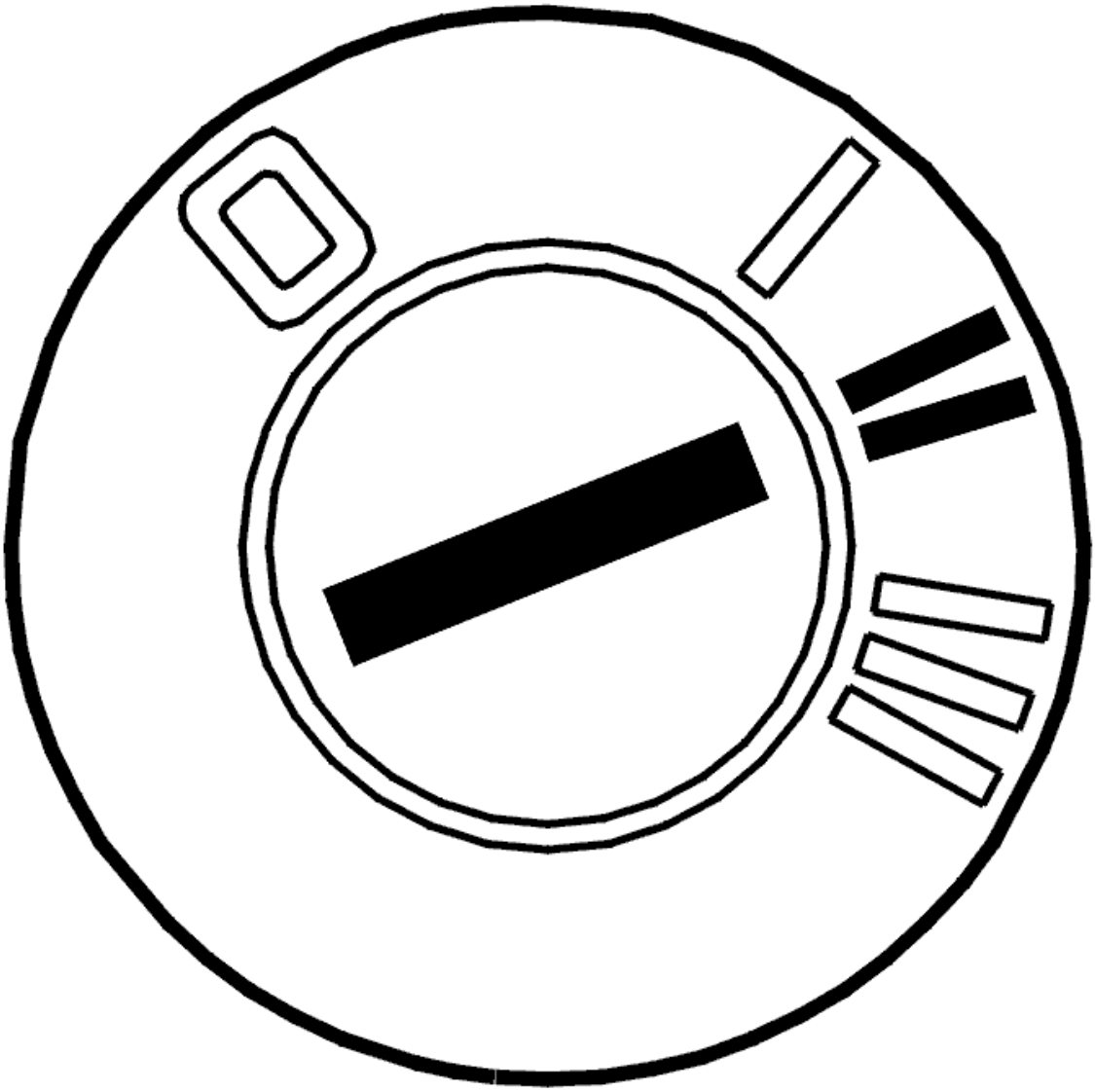

Fig. 43: Identifying Ignition ON
Courtesy of VOLVO CARS CORPORATION

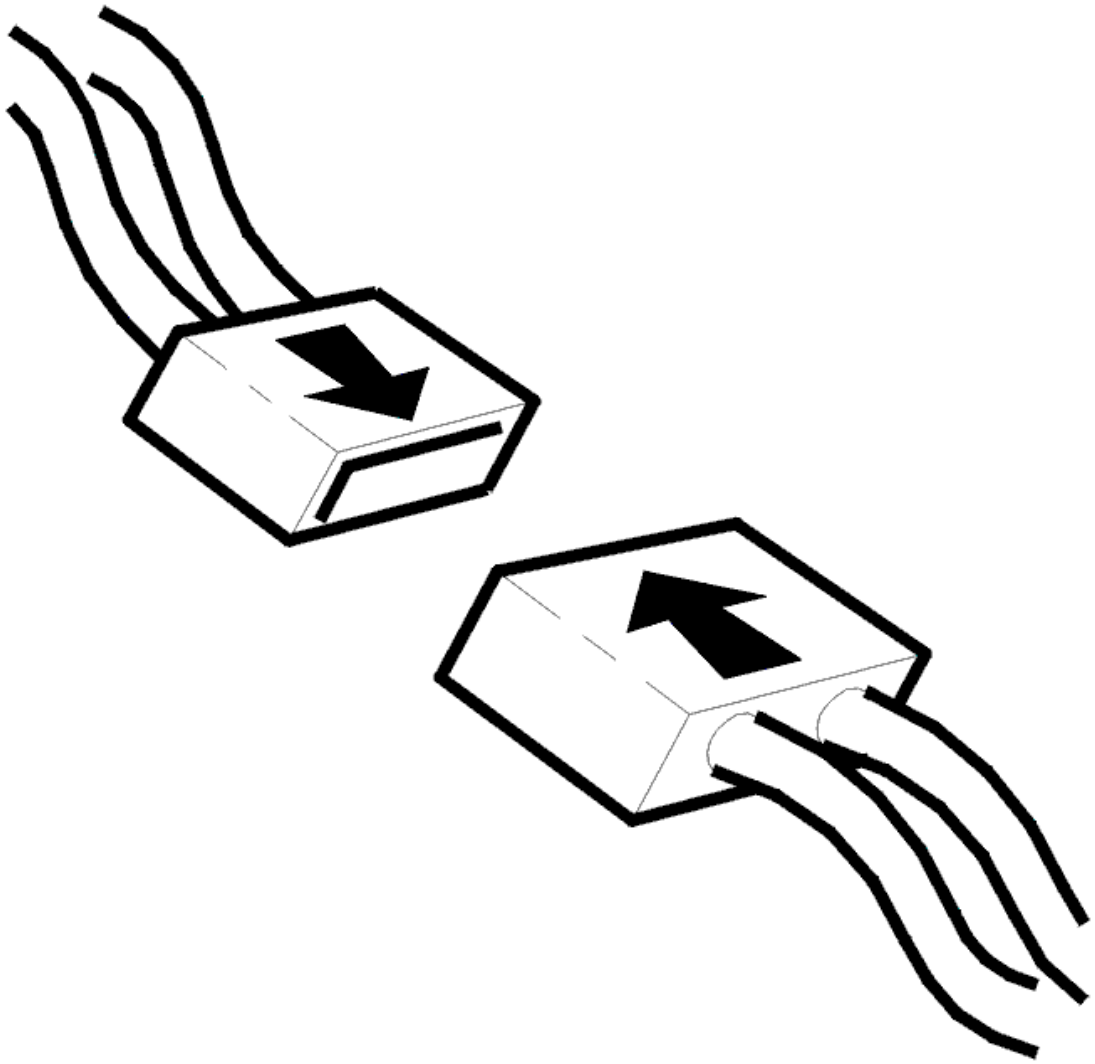

Fig. 44: Connecting Connector
Courtesy of VOLVO CARS CORPORATION

- Ignition off
- Reconnect the connectors, reinstall components etc.
- Test drive the car. See **TEST DRIVE FORM (DSTC (DYNAMIC STABILITY AND TRACTION CONTROL) /BRAKE CONTROL MODULE), DESCRIPTION**
- Ignition on.

  Read off the status of the diagnostic trouble code (DTC).

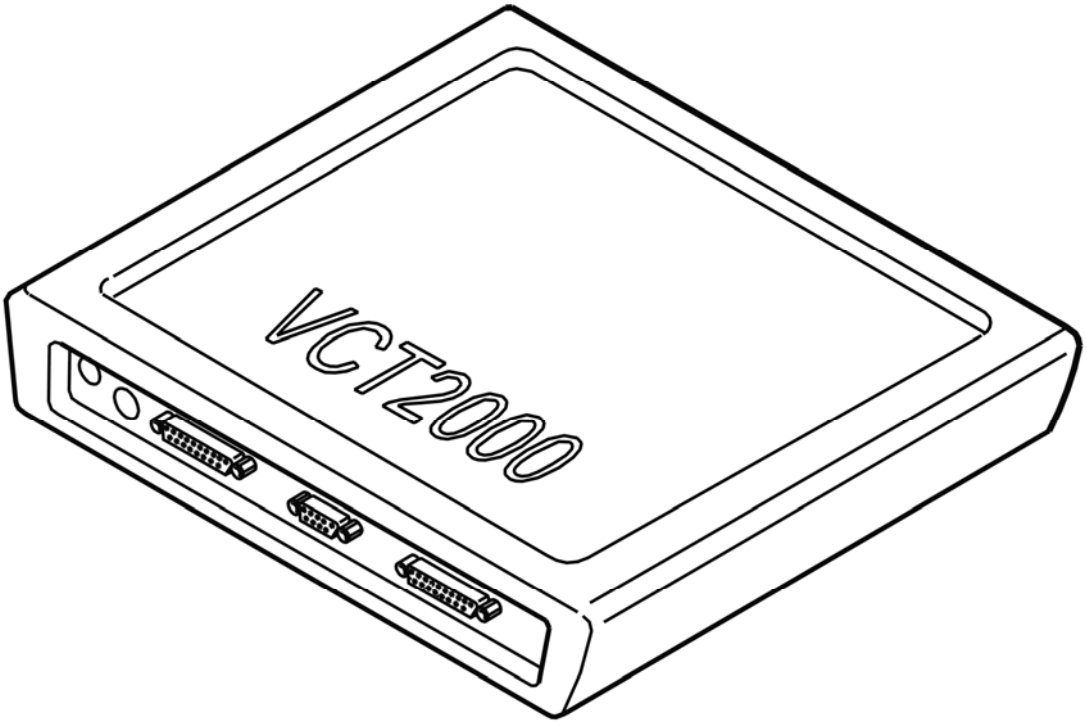

Fig. 45: Identifying VCT2000 Diagnostic Tool Symbol In VIDA
Courtesy of VOLVO CARS CORPORATION

Is the status of the diagnostic trouble code (DTC) intermittent?

- **YES**

  VERIFIED: Troubleshooting has been completed.

- **NO**

  see **INFORMATION**

INFORMATION

FAULT-TRACING INFORMATION

The fault should have been detected and remedied. As this is not the case fault-tracing has failed.

Exit fault-tracing for this diagnostic trouble code (DTC) or make another attempt.

BCM-0123: ACTIVE YAW CONTROL SENSOR. INTERNAL FAULT (B5254T2; 2005-2007)

DIAGNOSTIC TROUBLE CODE (DTC) INFORMATION

see **DIAGNOSTIC TROUBLE CODE (DTC) INFORMATION**

INTERNAL FAULT

CHECKING THE PRESENT VALUE OF THE SENSORS

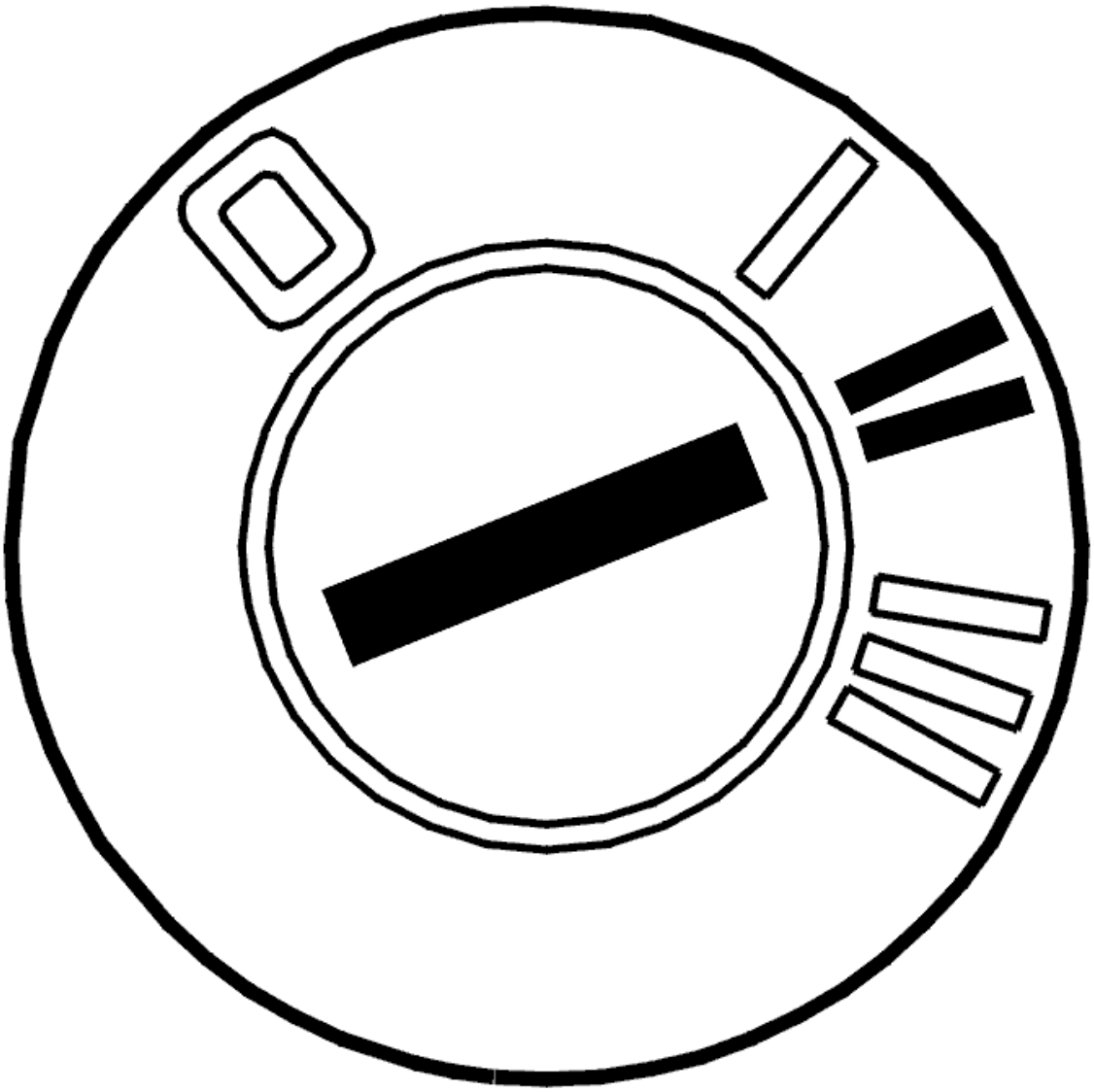

Fig. 46: Identifying Ignition ON
Courtesy of VOLVO CARS CORPORATION

- Ignition off
- Check the connectors for the brake control module (BCM) and the active yaw control (AYC) sensor. Check for contact resistance. Check for oxidation
- Ignition on

- Read off the present value.

  Check the read off value for the relevant component against the value in the table.

Component	Value
Yaw rate sensor	-6°/s - +6°/s
Lateral accelerometer	-1.7 m/s^2 - +1.7 m/s^2
Accelerometer	-1.7 m/s^2 - +1.7 m/s^2

NOTE: The accelerometer can only be read off if the car is four wheel drive.

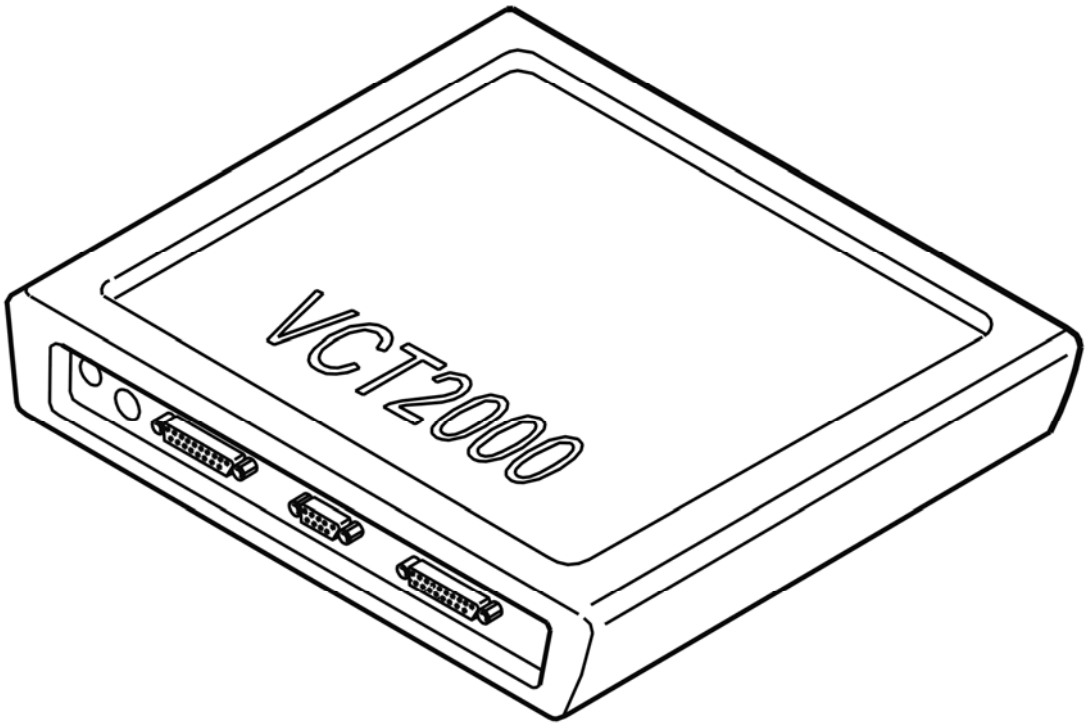

Fig. 47: Identifying VCT2000 Diagnostic Tool Symbol In VIDA
Courtesy of VOLVO CARS CORPORATION

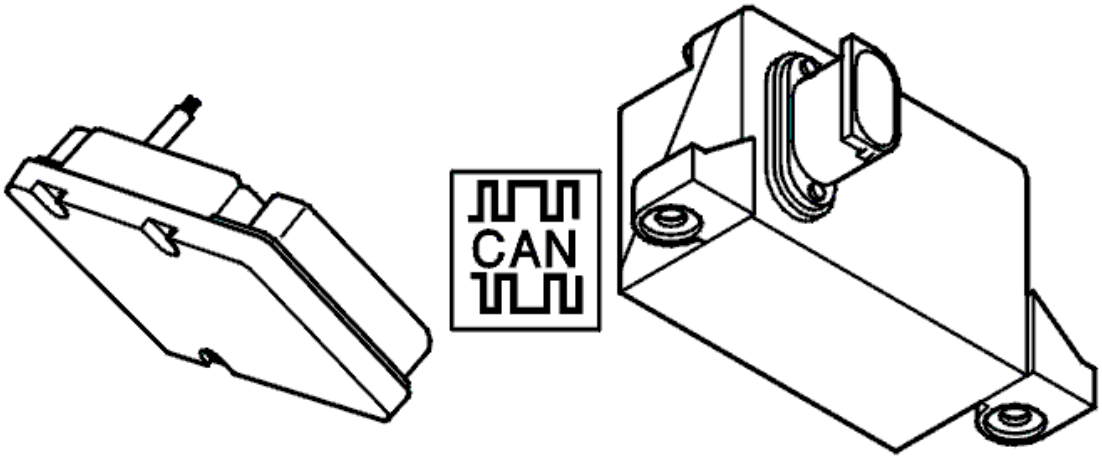

Fig. 48: Identifying Brake Control Module & Active Yaw Control Sensor
Courtesy of VOLVO CARS CORPORATION

Are the present values OK?

- **YES**

  OKAY: Troubleshooting has been completed.

- **NO**

  see **CHECKING THE POWER SUPPLY**

CHECKING THE POWER SUPPLY

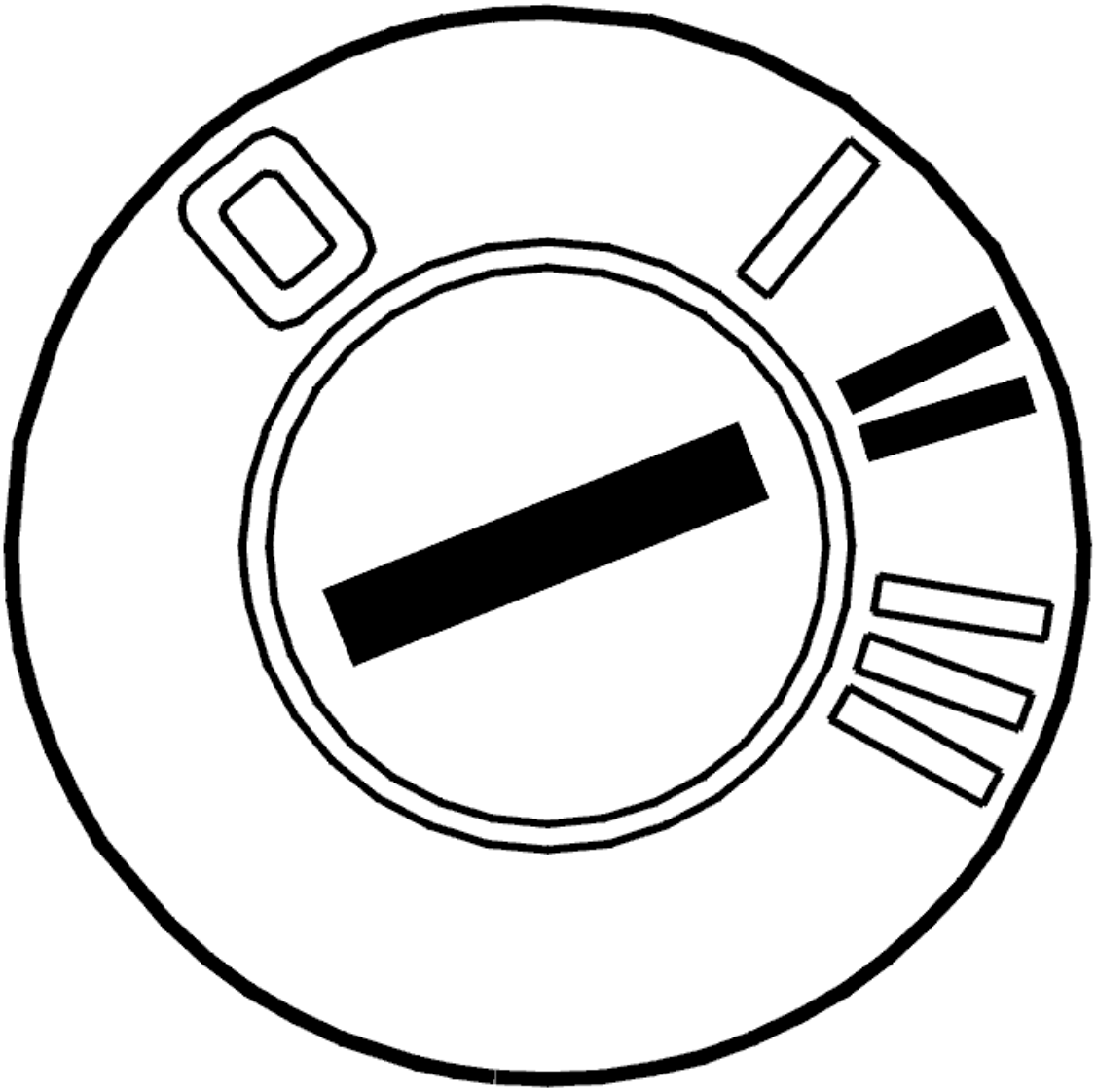

Fig. 49: Identifying Ignition ON
Courtesy of VOLVO CARS CORPORATION

- Ignition off
- Connect the breakout box to the brake control module (BCM)
- Ignition on.

  Check the power supply to the active yaw control sensor by connecting a voltmeter between terminals #6 (#A6) and #39 (#A39) on the breakout box. The voltage must be normal system voltage.

  Replace the control module if the voltage is incorrect.

  If the voltage is OK, check the power supply cables between the active yaw control sensor (AYC):

  - terminal #3 and control module terminal #6 (#A6)

- terminal #5 and control module terminal #39 (terminal #A39).

check for an open-circuit.

Replace the active yaw control sensor if the wiring is OK.

Other information

- To connect the breakout box, see **CONNECTING THE BREAKOUT BOX, BRAKE CONTROL MODULE (BCM)**
- To replace the control module, see **BRAKE CONTROL MODULE (BCM), REPLACING**
- To access and replace the active yaw control sensor (AYC), see **ACTIVE YAW CONTROL SENSOR, REPLACING**
- For information about signals, see **SIGNAL SPECIFICATION, BRAKE CONTROL MODULE (BCM) WITH DSTC (DYNAMIC STABILITY AND TRACTION CONTROL)**
- see **CONTENTS** .

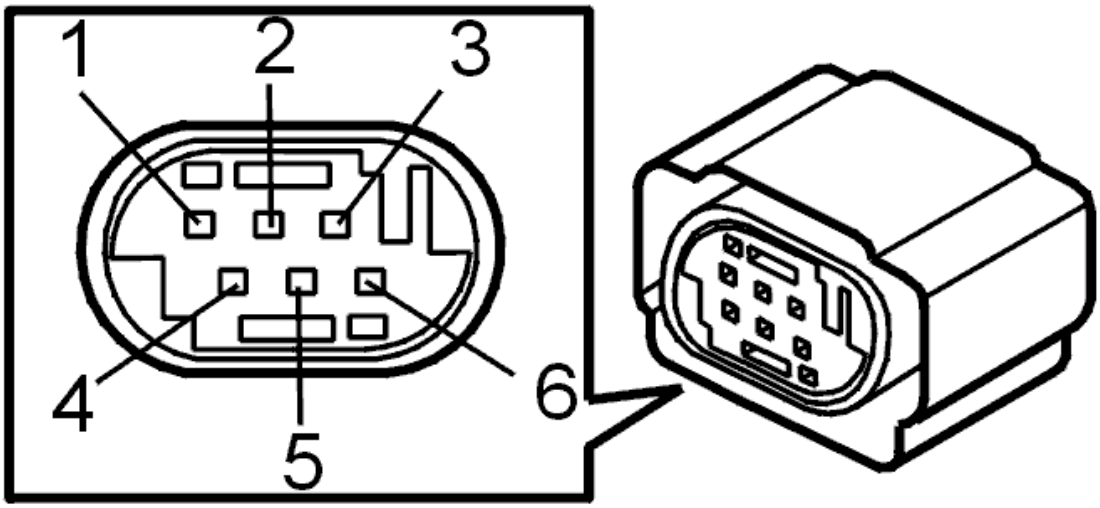

Fig. 50: Identifying Active Yaw Control Sensor Connector Terminals
Courtesy of VOLVO CARS CORPORATION

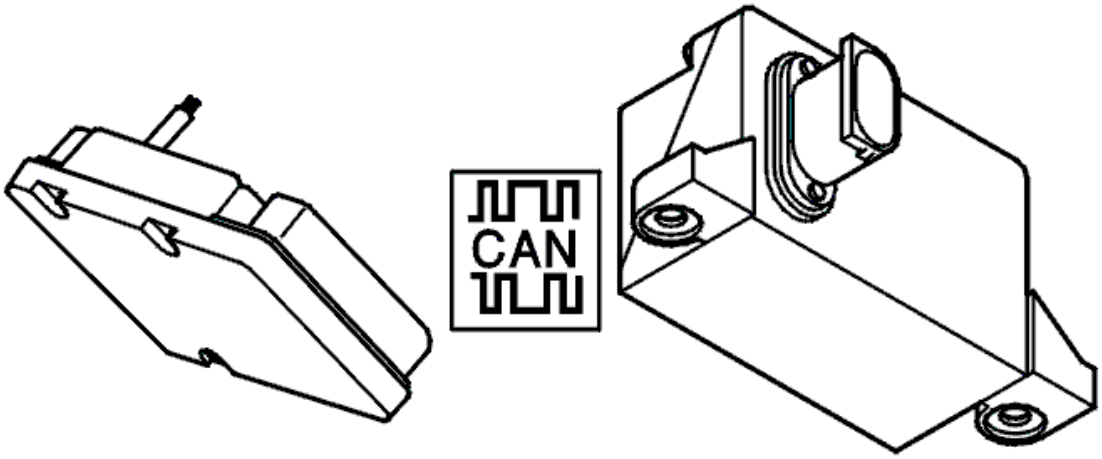

Fig. 51: Identifying Brake Control Module & Active Yaw Control Sensor
Courtesy of VOLVO CARS CORPORATION

- **Continue**

  see **VERIFICATION**

VERIFICATION

VERIFICATION

HINT: After carrying out the repair, check that the fault has been remedied.

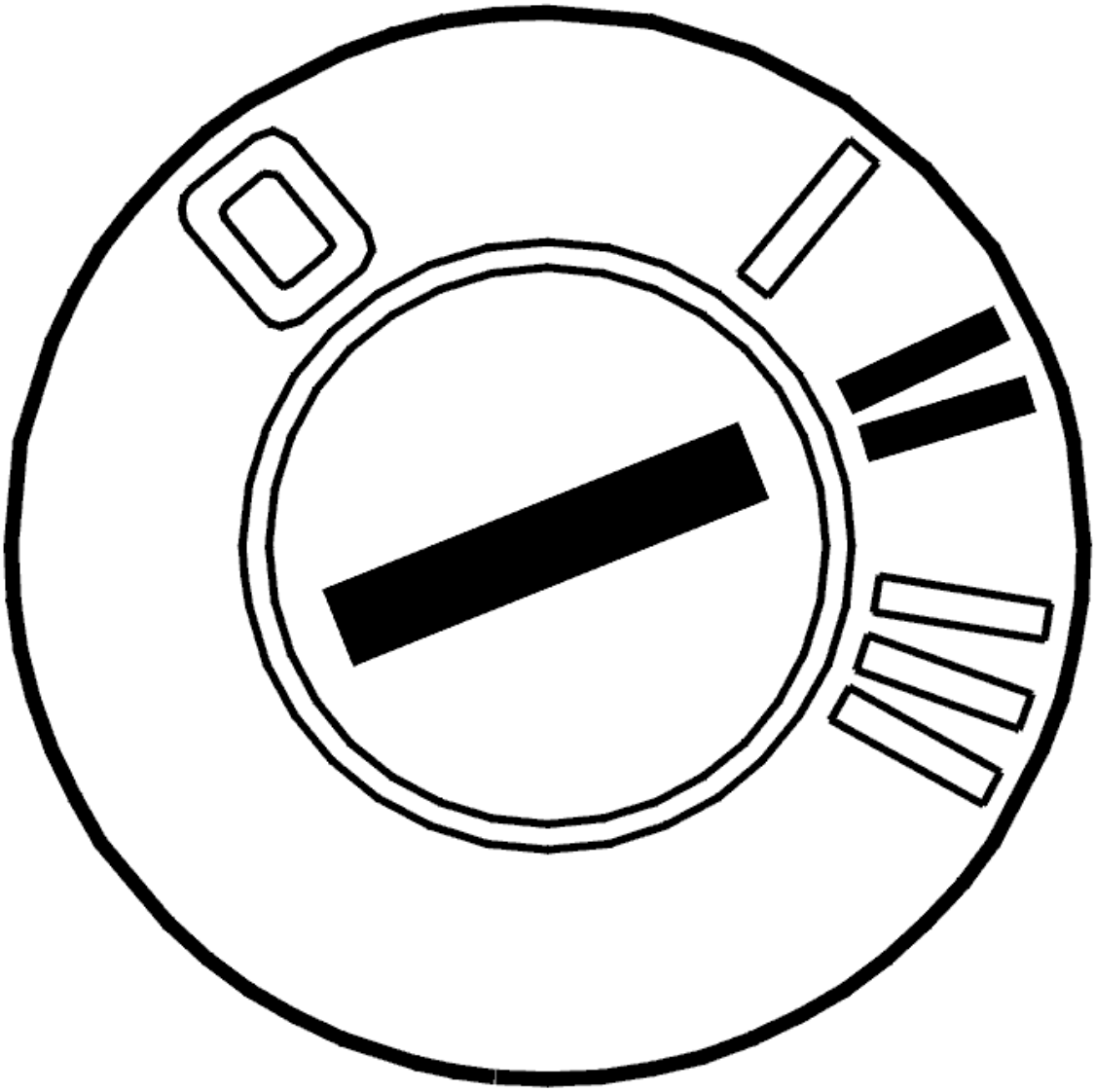

Fig. 52: Identifying Ignition ON
Courtesy of VOLVO CARS CORPORATION

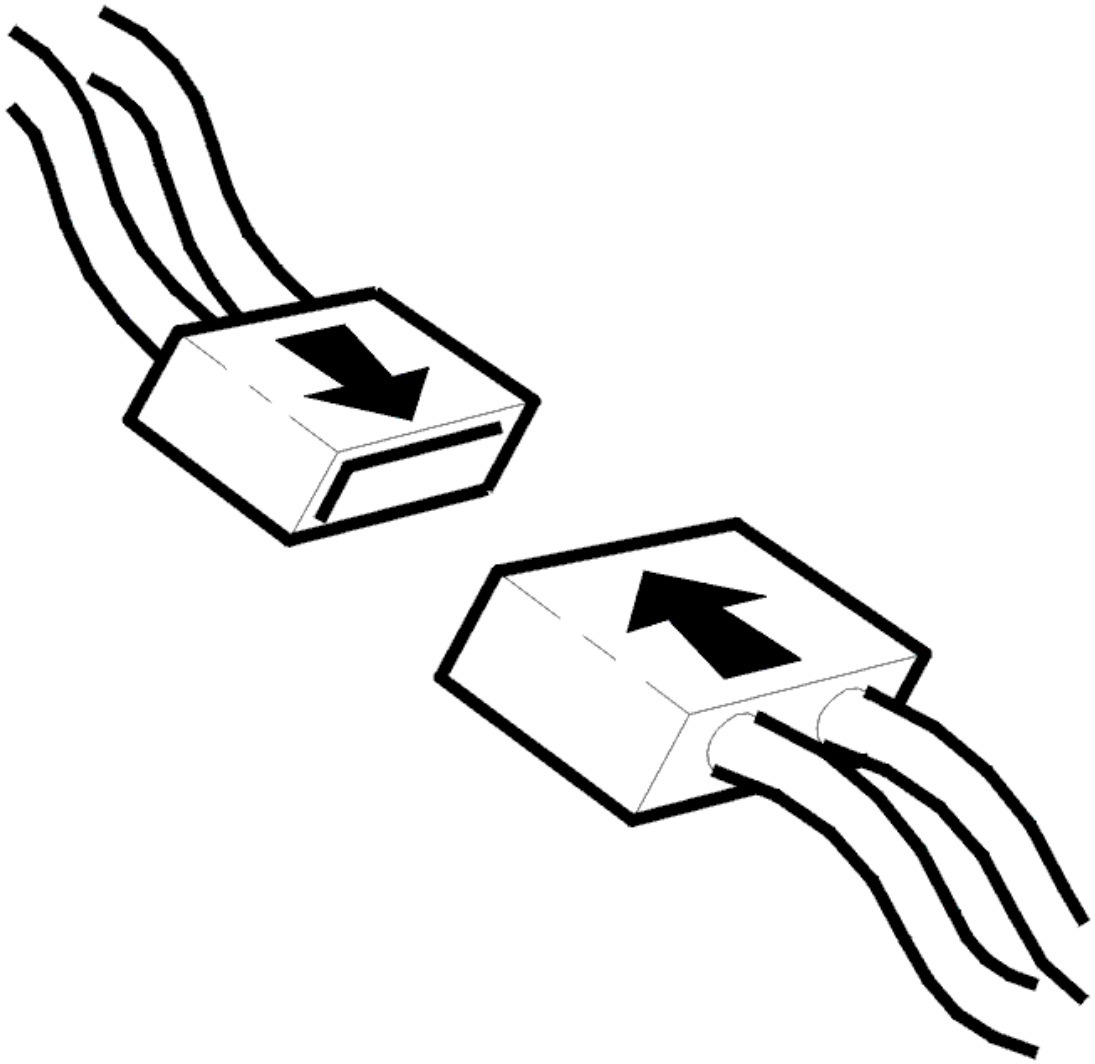

Fig. 53: Connecting Connector
Courtesy of VOLVO CARS CORPORATION

- Ignition off
- Reconnect the connectors, reinstall components etc.
- Test drive the car. See **TEST DRIVE FORM (DSTC (DYNAMIC STABILITY AND TRACTION CONTROL) /BRAKE CONTROL MODULE), DESCRIPTION**
- Ignition on.

  Read off the status of the diagnostic trouble code (DTC).

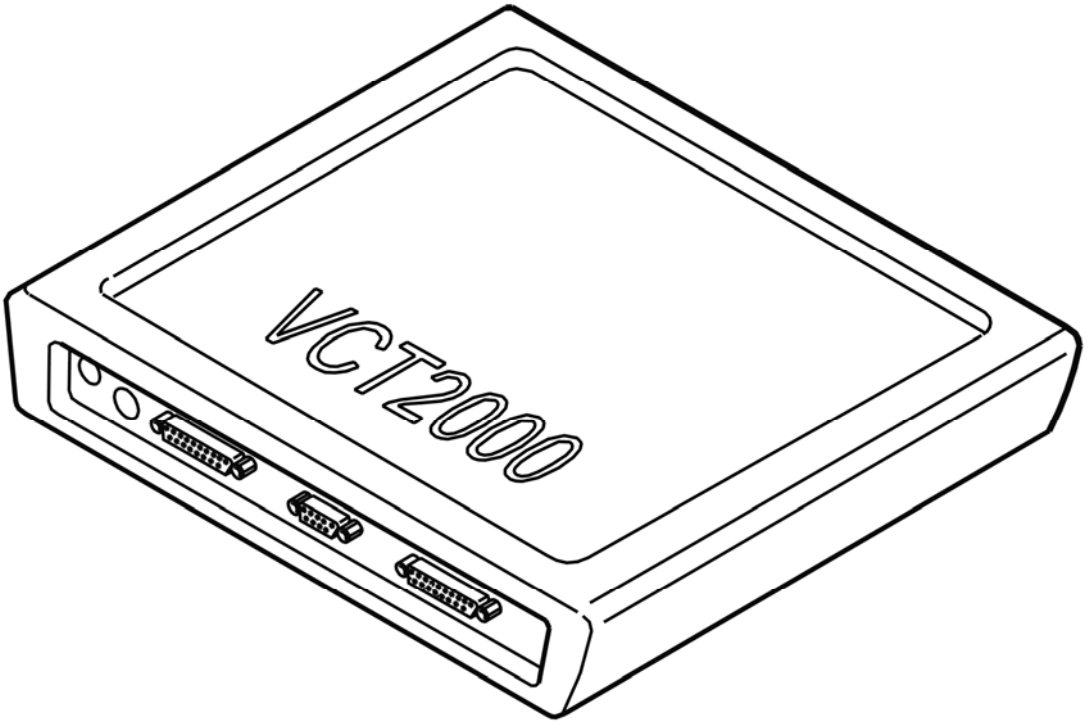

Fig. 54: Identifying VCT2000 Diagnostic Tool Symbol In VIDA
Courtesy of VOLVO CARS CORPORATION

Is the status of the diagnostic trouble code (DTC) intermittent?

- **YES**

  VERIFIED: Troubleshooting has been completed.

- **NO**

  see **INFORMATION**

INFORMATION

FAULT-TRACING INFORMATION

The fault should have been detected and remedied. As this is not the case fault-tracing has failed.

Exit fault-tracing for this diagnostic trouble code (DTC) or make another attempt.

BCM-0123: ACTIVE YAW CONTROL SENSOR. INTERNAL FAULT (B6294T; 2005-2006)

DIAGNOSTIC TROUBLE CODE (DTC) INFORMATION

see **DIAGNOSTIC TROUBLE CODE (DTC) INFORMATION**

INTERNAL FAULT

see **INTERNAL FAULT**

BCM-0130: BRAKE PRESSURE SENSOR 1. SIGNAL TOO LOW (2003-2004)

DIAGNOSTIC TROUBLE CODE (DTC) INFORMATION

Condition

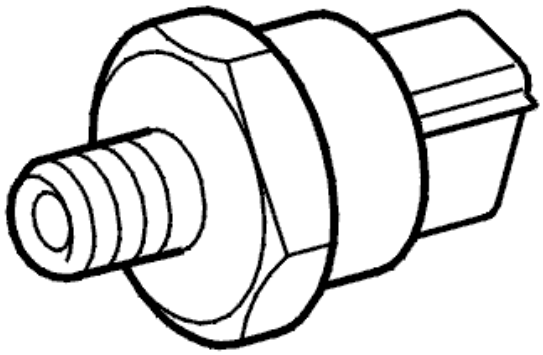

Fig. 55: Identifying Brake Pressure Sensor
Courtesy of VOLVO CARS CORPORATION

NOTE: This diagnostic trouble code (DTC) applies only to vehicles with dynamic stability and traction control (DSTC).

The brake pressure sensors transmit signals to the brake control module (BCM) indicating the pressure in the brake system. If the control module registers an incorrect signal from any brake pressure sensor, then trouble code BCM-0130 or BCM-0133 is generated depending on sensor.

NOTE: **As the cables to the brake pressure sensors can be switched physically upon installation, both sensors must be fault-traced when DTC BCM-0130 or BCM-0133 has been detected.**

Substitute Value

- Traction control is blocked.
- SC is blocked.
- Active yaw control is blocked.

HINT: For more information about abbreviations, see: BRAKE SYSTEM, ABBREVIATIONS

Possible Source

- Open-circuit in the wiring.
- Wiring is short-circuited to ground or supply voltage.
- Damaged pressure sensor.
- Internal fault in the control module.

Fault symptom[s]

- Warning light antispinn on (applies to model year -2002)
- General yellow warning light on (applies to model year 2003-)
- Anti-spin not working
- Stability function is not working
- Anti skid function is not working

SIGNAL TOO LOW

CHECKING THE CONNECTORS

NOTE: **As the cables to the brake pressure sensors can be switched physically upon installation, both sensors must be fault-traced when DTC BCM-0130 or BCM-0133 has been detected.**

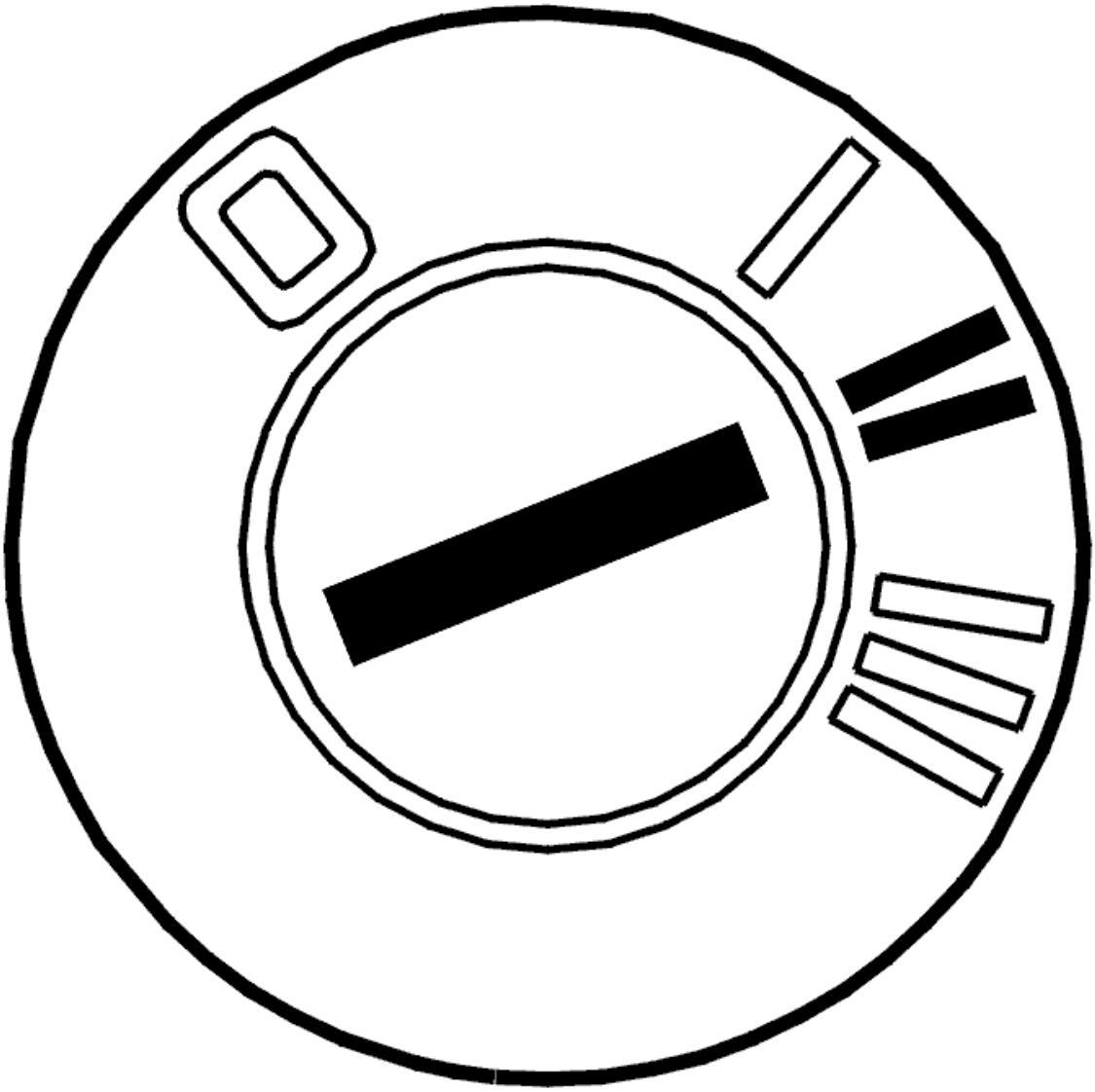

Fig. 56: Identifying Ignition ON
Courtesy of VOLVO CARS CORPORATION

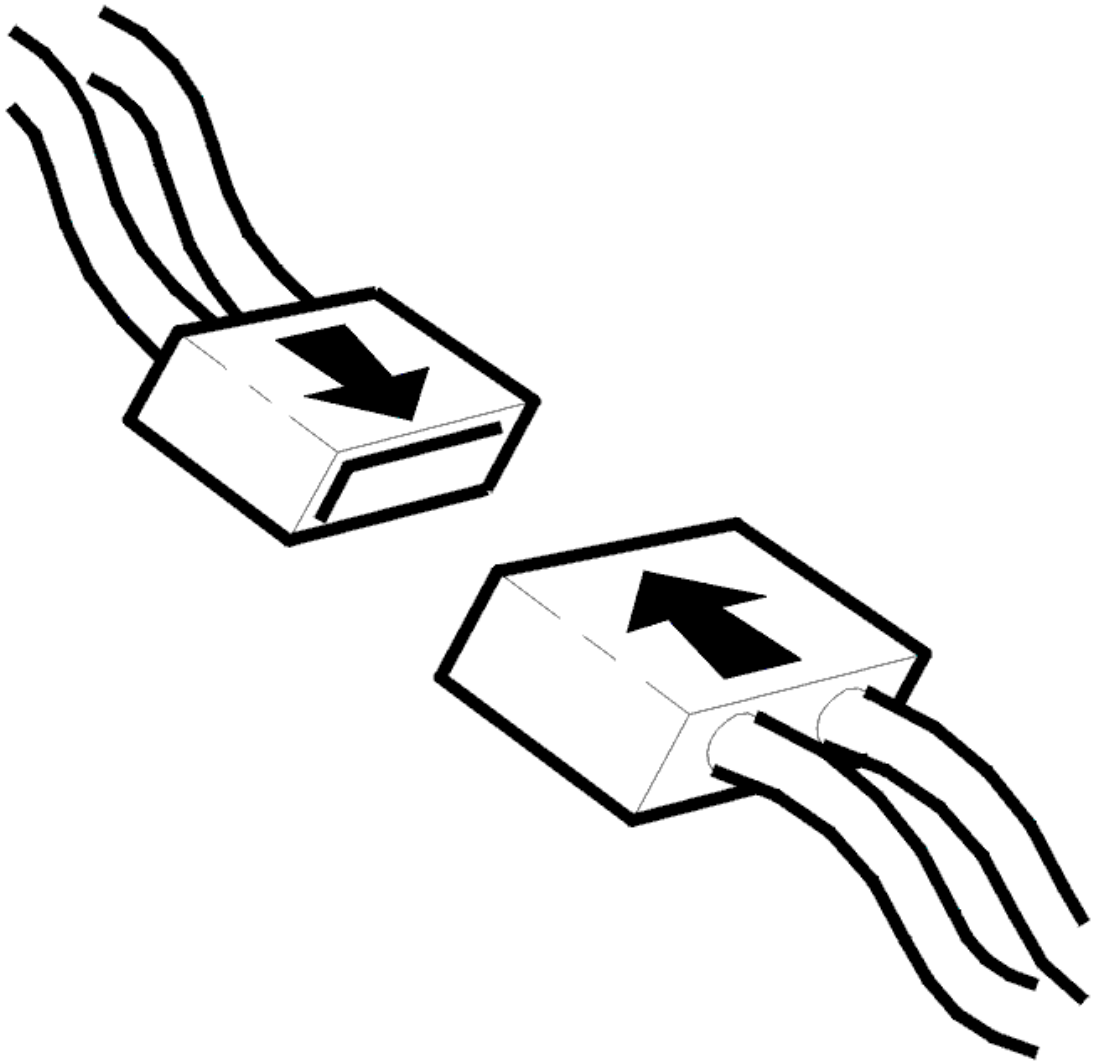

Fig. 57: Connecting Connector
Courtesy of VOLVO CARS CORPORATION

- Ignition off
- Check the brake control module (BCM) and the brake pressure sensor connectors. Check for contact resistance and oxidation
- Reinstall the components, reconnect the connectors etc.
- Ignition on
- Read off the pressure in the brake system from the relevant pressure sensor
- Depress the brake pedal.

  The brake pressure must increase with increased pedal pressure. If the brake pressure increases the cause of the fault was probably contact resistance or oxidation in the control module or pressure sensor connectors.

Other information

- To remove the control module connector, see **CONNECTING THE BREAKOUT BOX, BRAKE CONTROL MODULE (BCM)**
- see **CONTENTS**

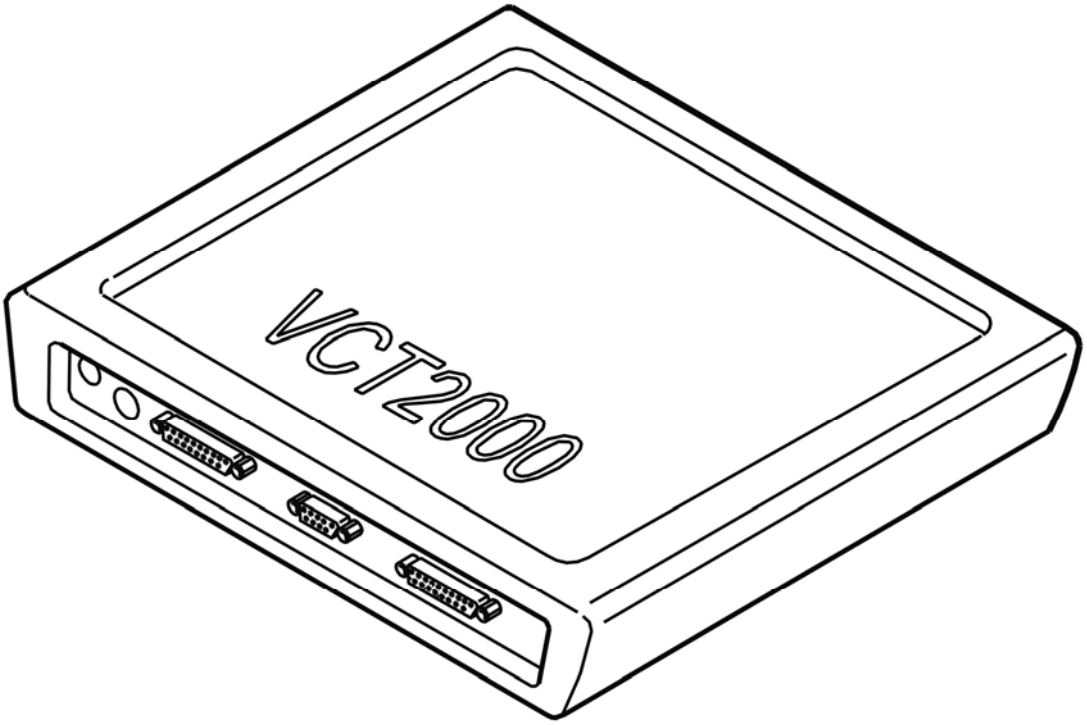

Fig. 58: Identifying VCT2000 Diagnostic Tool Symbol In VIDA
Courtesy of VOLVO CARS CORPORATION

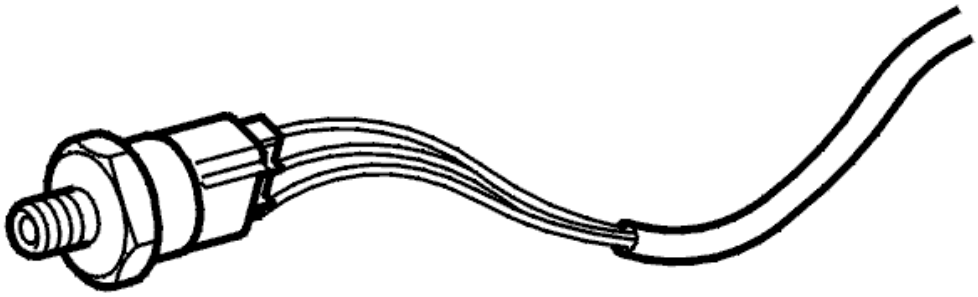

Fig. 59: Brake Pressure Sensor
Courtesy of VOLVO CARS CORPORATION

Does the brake pressure increase?

- **YES**

  OKAY: Troubleshooting has been completed.

- **NO**

  see **CHECKING THE CONTROL MODULE**

CHECKING THE CONTROL MODULE

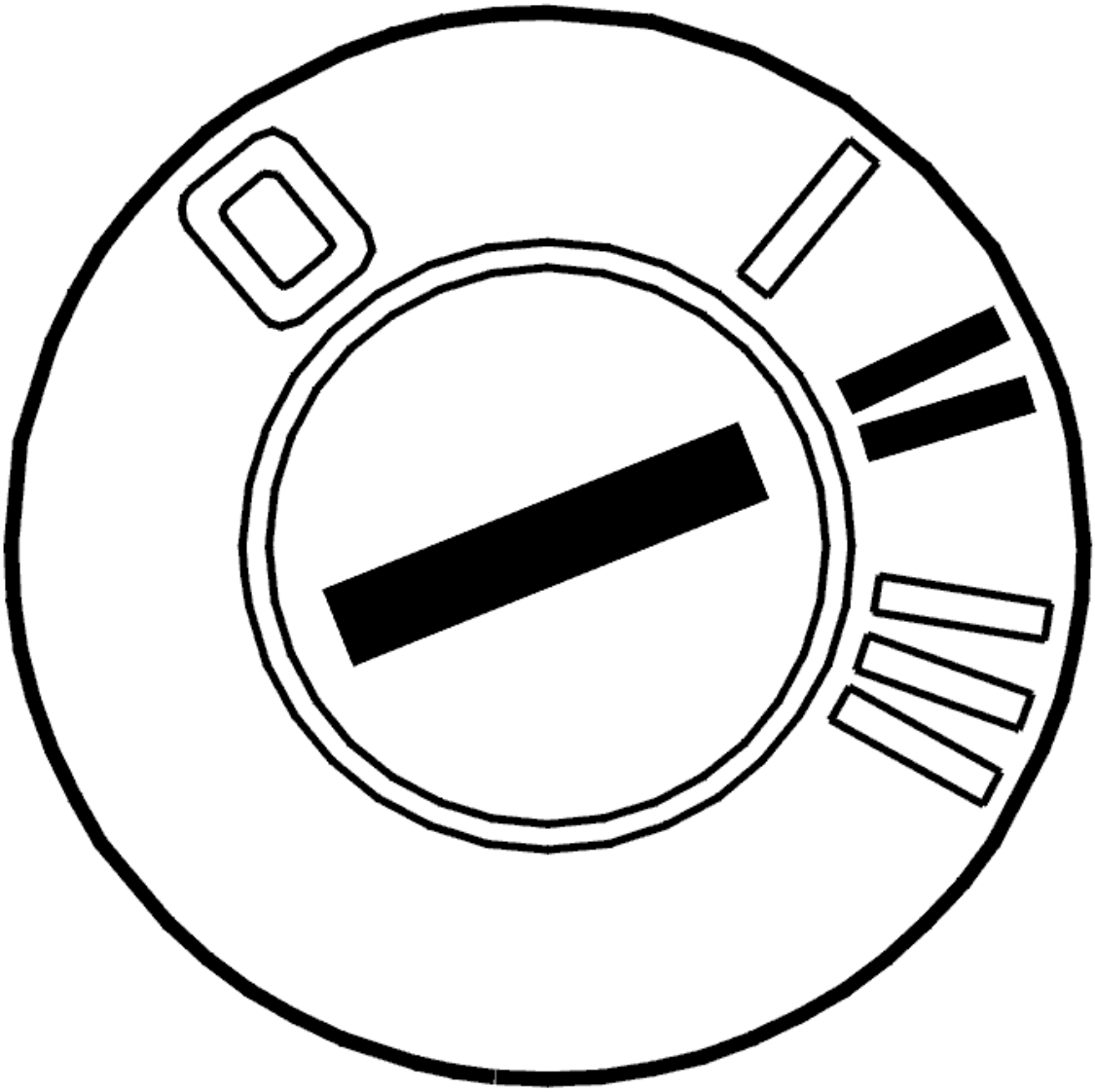

Fig. 60: Identifying Ignition ON
Courtesy of VOLVO CARS CORPORATION

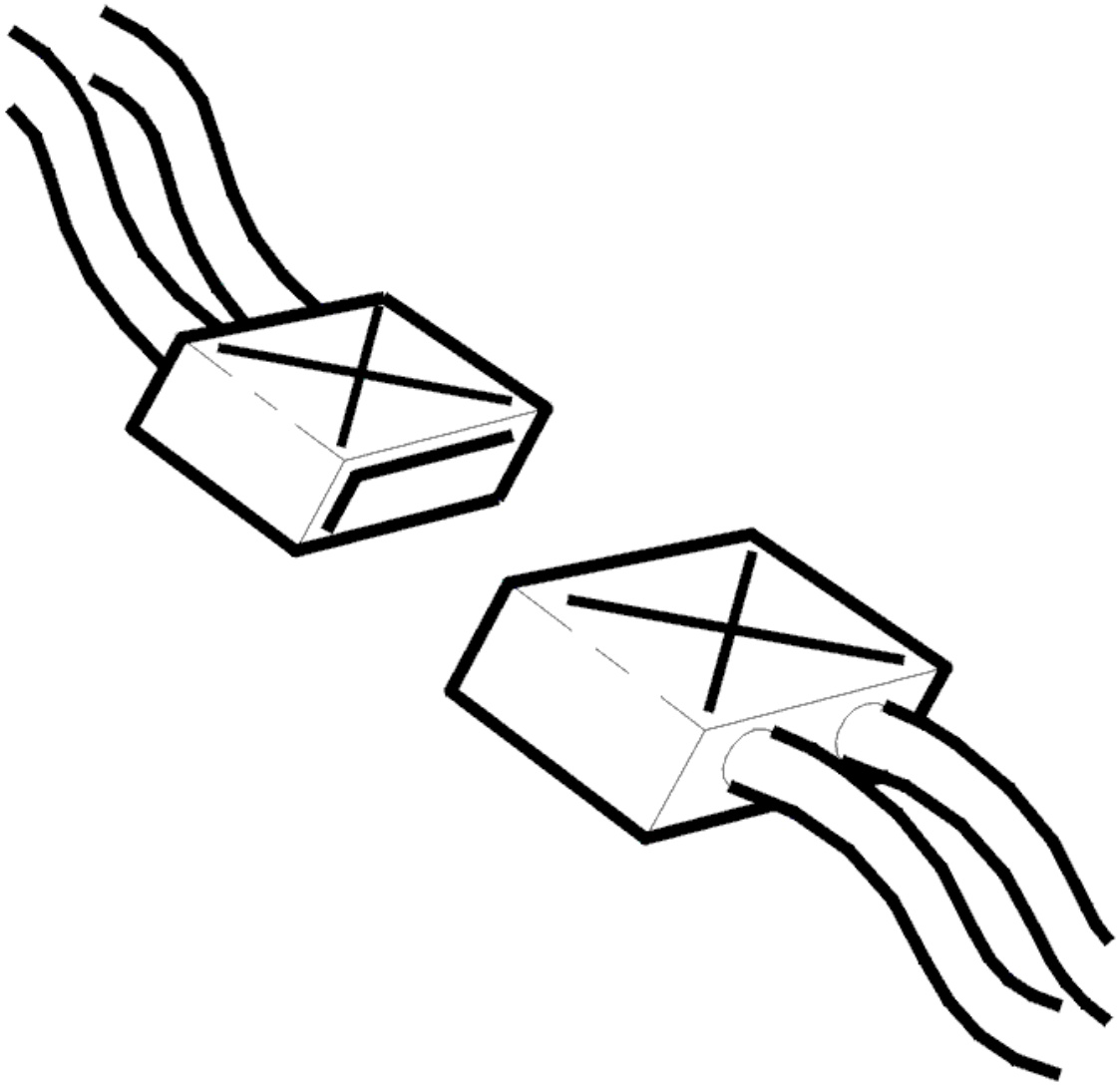

Fig. 61: Identifying Connector
Courtesy of VOLVO CARS CORPORATION

- Ignition on
- Pressure sensor connector disconnected
- The breakout box connected.

Check the voltage supply using a voltmeter:

Pressure sensor 1

- between terminal #A21 and terminal #A22 on the breakout box.

Pressure sensor 2

- between terminal #A18 and terminal #A19 on the breakout box.

The voltage must be approximately 5 V. Replace the brake control module (BCM) if the voltage is incorrect.

Other information

- To connect the breakout box, see **CONNECTING THE BREAKOUT BOX, BRAKE CONTROL MODULE (BCM)**
- To replace the control module, see **BRAKE CONTROL MODULE (BCM), REPLACING**
- For information about signals, see **SIGNAL SPECIFICATION, BRAKE CONTROL MODULE (BCM) WITH DSTC (DYNAMIC STABILITY AND TRACTION CONTROL)** .

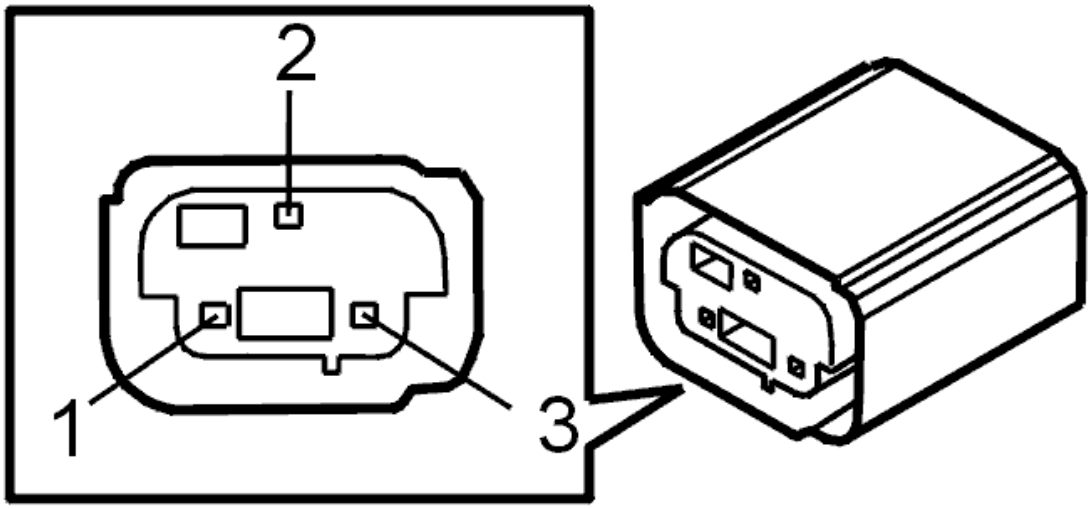

Fig. 62: Identifying Pedal Position Sensor Connector
Courtesy of VOLVO CARS CORPORATION

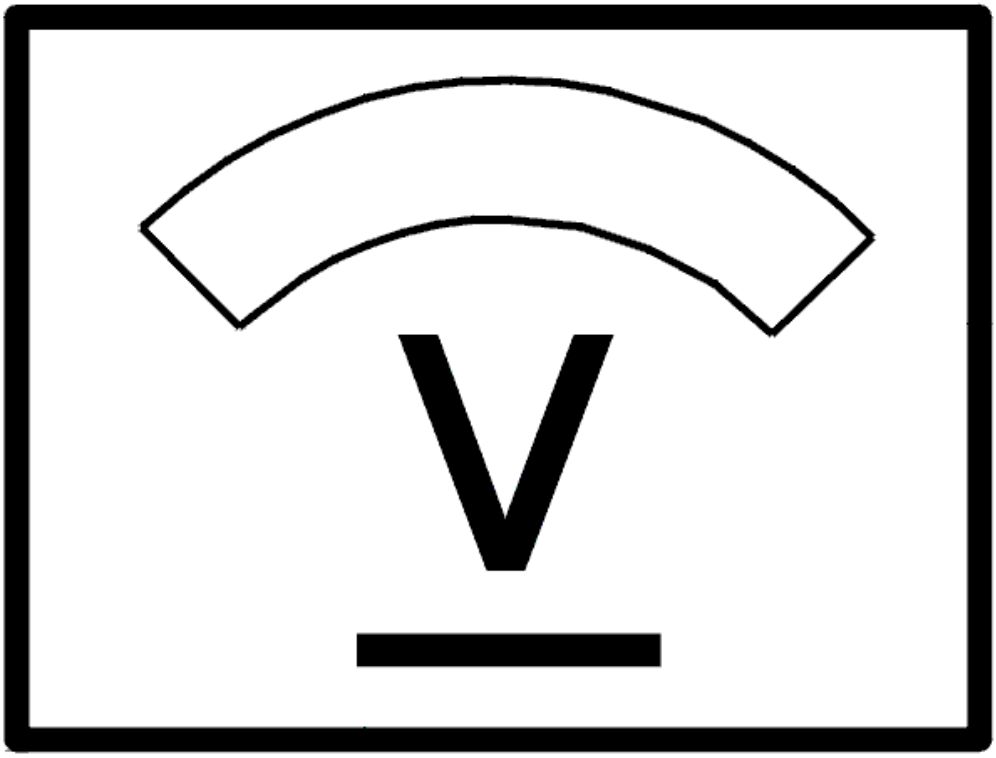

Fig. 63: Identifying Voltage Display
Courtesy of VOLVO CARS CORPORATION

Was the voltage OK?

- **YES**

  see **CHECKING WIRING AND SENSORS**

- **NO**

  see **VERIFICATION**

CHECKING WIRING AND SENSORS

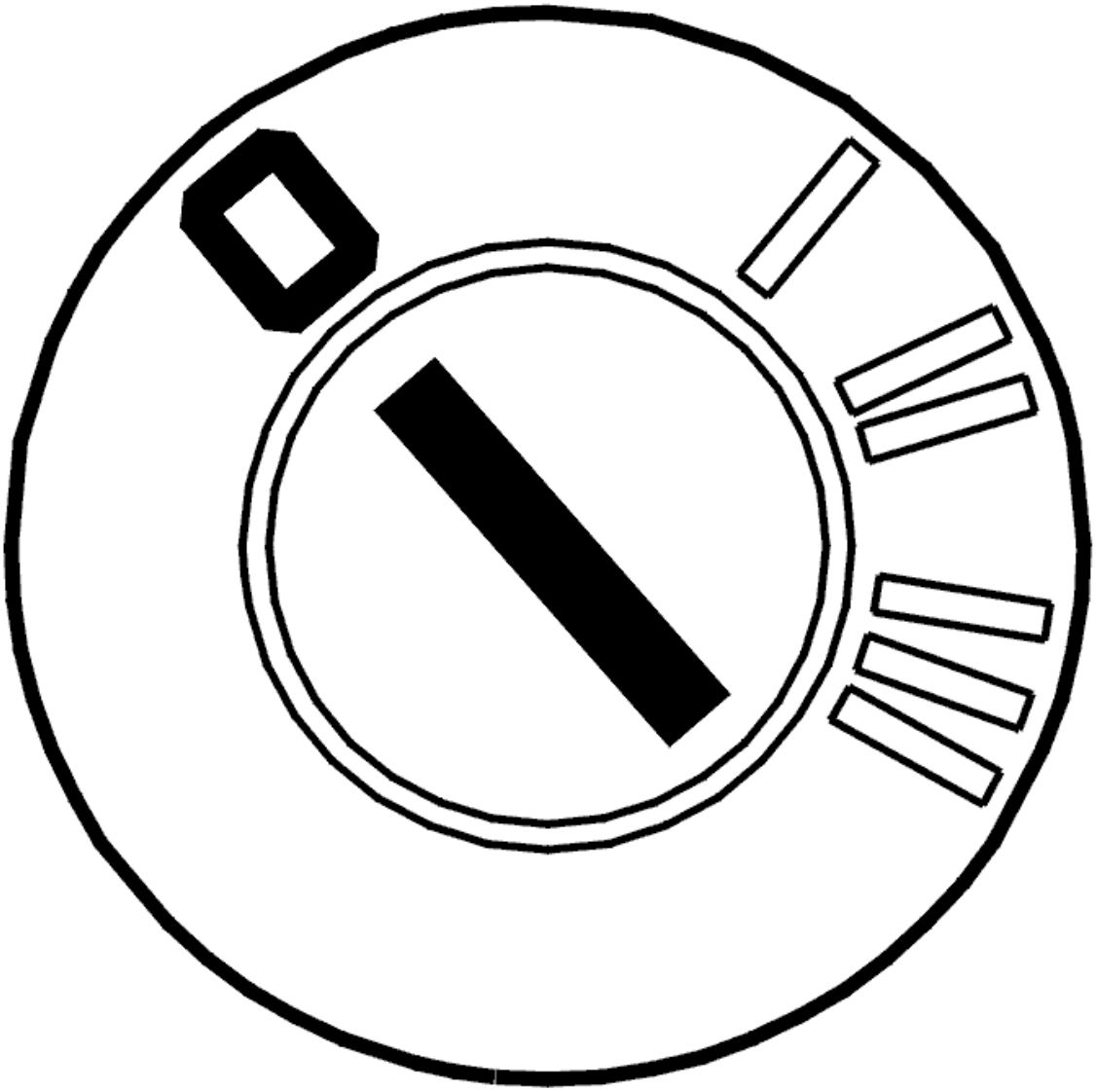

Fig. 64: Identifying Ignition OFF
Courtesy of VOLVO CARS CORPORATION

- Ignition off
- Connect the breakout box.

  Check the wiring between the pressure sensor and the control module. Check for an open-circuit. Check for a short-circuit to ground.

  For pressure sensor 1, check the wiring

  - between pressure sensor terminal #1 and control module terminal #21 (#A21)
  - between pressure sensor terminal #2 and control module terminal #23 (#A23)
  - between pressure sensor terminal #3 and control module terminal #22 (#A22).

For pressure sensor 2, check the wiring

- between pressure sensor terminal #1 and control module terminal #19 (#A19)
- between pressure sensor terminal #2 and control module terminal #20 (#A20)
- between pressure sensor terminal #3 and control module terminal #18 (#A18).

HINT: Check the relevant brake pressure sensor by measuring the signal from the sensor, with the ignition switched on and the breakout box connected:

Pressure sensor 1

- between terminal #A21 and terminal #A22 on the breakout box. The voltage must be approximately 5 V
- between terminal #A21 and terminal #A23 on the breakout box. Voltage must be between 0.25-4.75 V, depending on brake pressure.

Pressure sensor 2

- between terminal #A18 and terminal #A19 on the breakout box. The voltage must be approximately 5 V
- between terminal #A19 and terminal #A20 on the breakout box. Voltage must be between 0.25-4.75 V, depending on brake pressure.

Replace the pressure sensor if the voltage does not change when the brake pedal is depressed.

Other information

- To connect the breakout box, see **CONNECTING THE BREAKOUT BOX, BRAKE CONTROL MODULE (BCM)**
- To replace the pressure sensor, see **PRESSURE SENSOR, MASTER CYLINDER, REPLACING**
- For information about signals, see **SIGNAL SPECIFICATION, BRAKE CONTROL MODULE (BCM) WITH DSTC (DYNAMIC STABILITY AND TRACTION CONTROL)** .

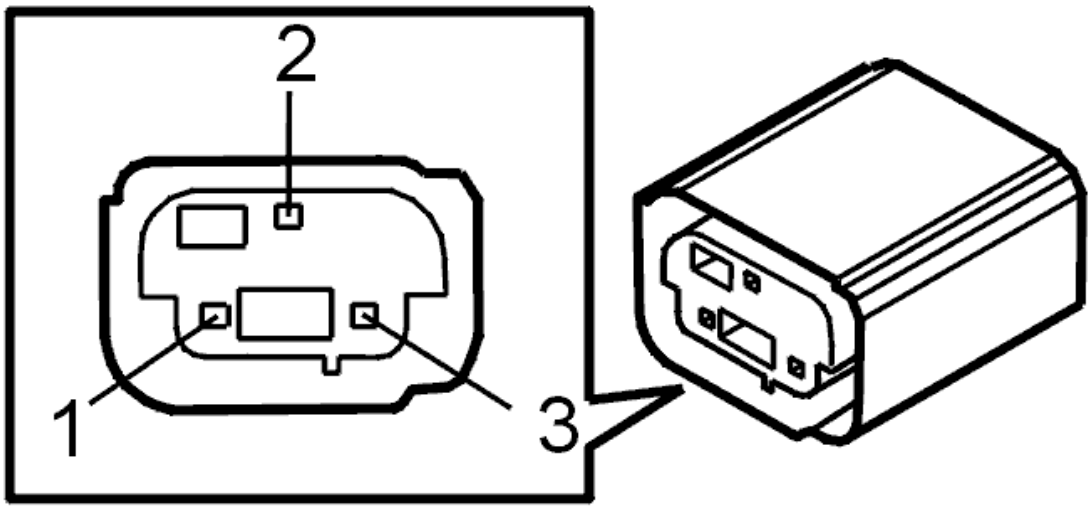

Fig. 65: Identifying Pedal Position Sensor Connector
Courtesy of VOLVO CARS CORPORATION

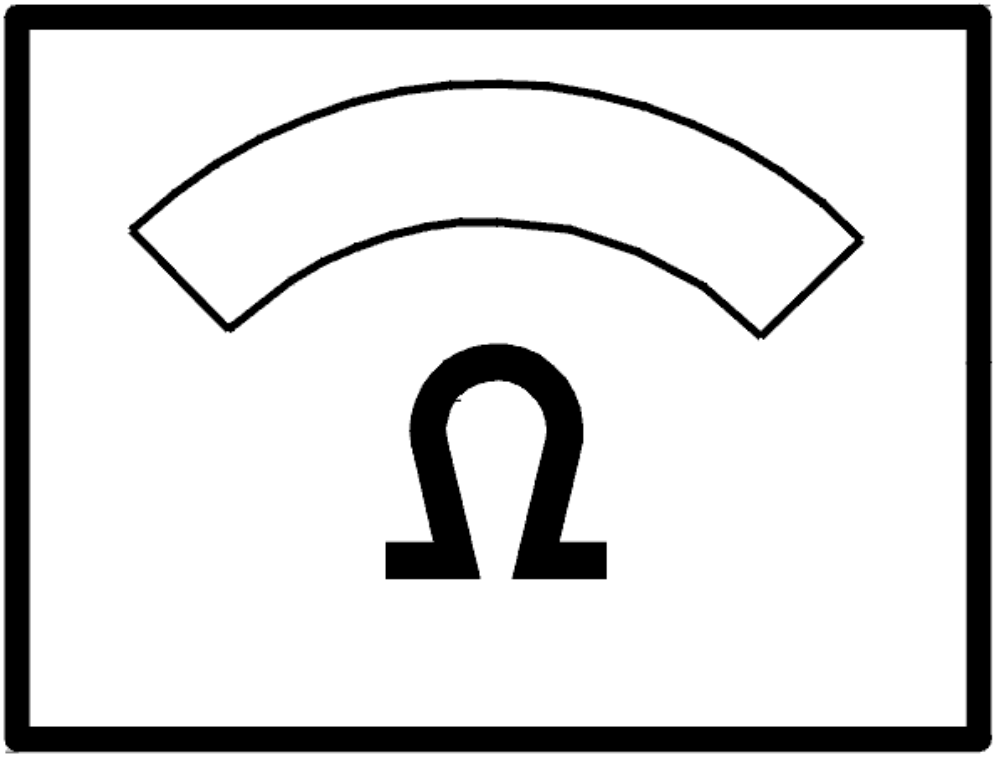

Fig. 66: Identifying Ohm Meter
Courtesy of VOLVO CARS CORPORATION

Was a fault detected?

- **YES**

  see **VERIFICATION**

- **NO**

  FAULT NOT FOUND: Troubleshooting has been completed.

VERIFICATION

VERIFICATION

HINT: After carrying out the repair, check that the fault has been remedied.

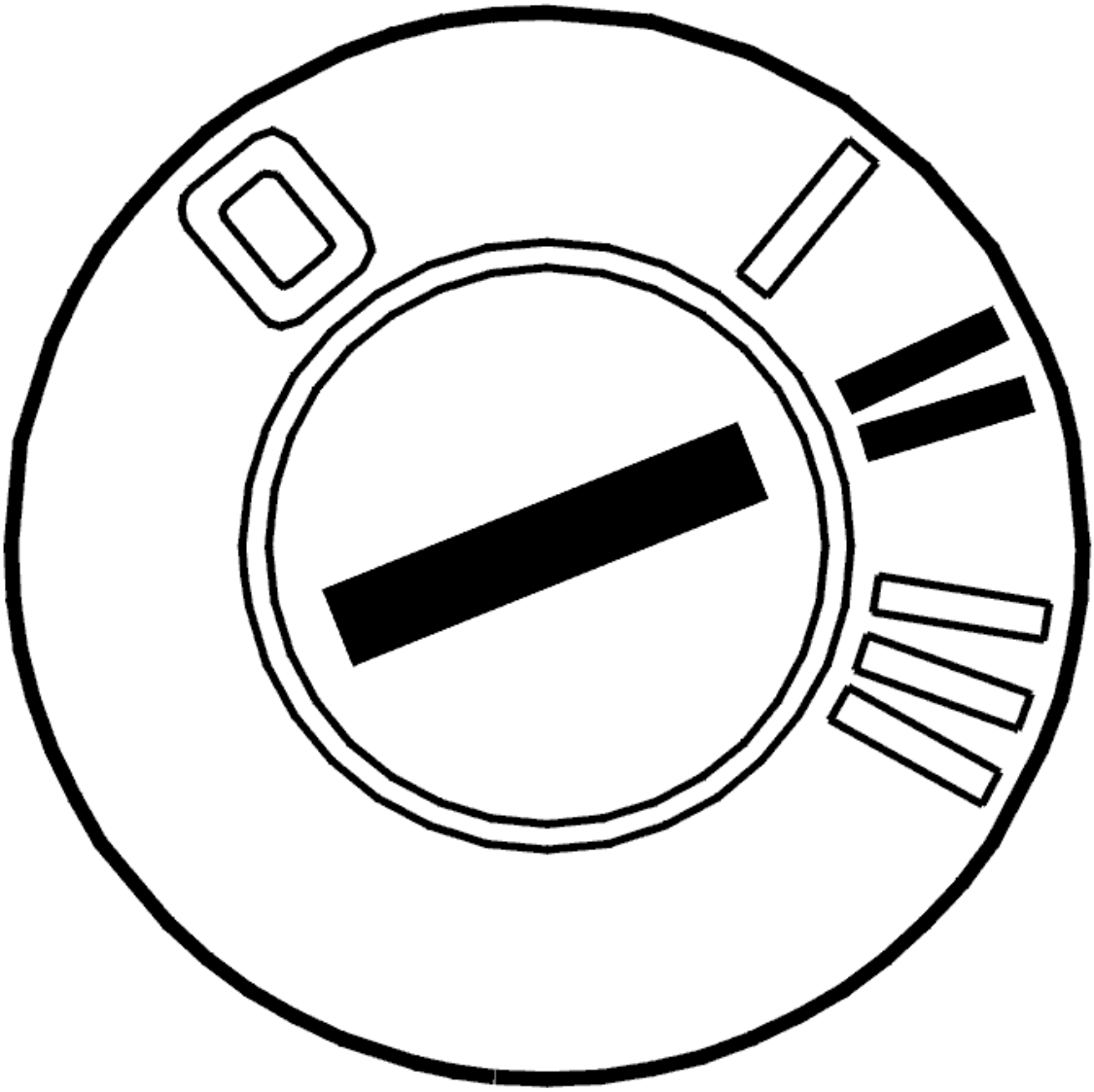

Fig. 67: Identifying Ignition ON
Courtesy of VOLVO CARS CORPORATION

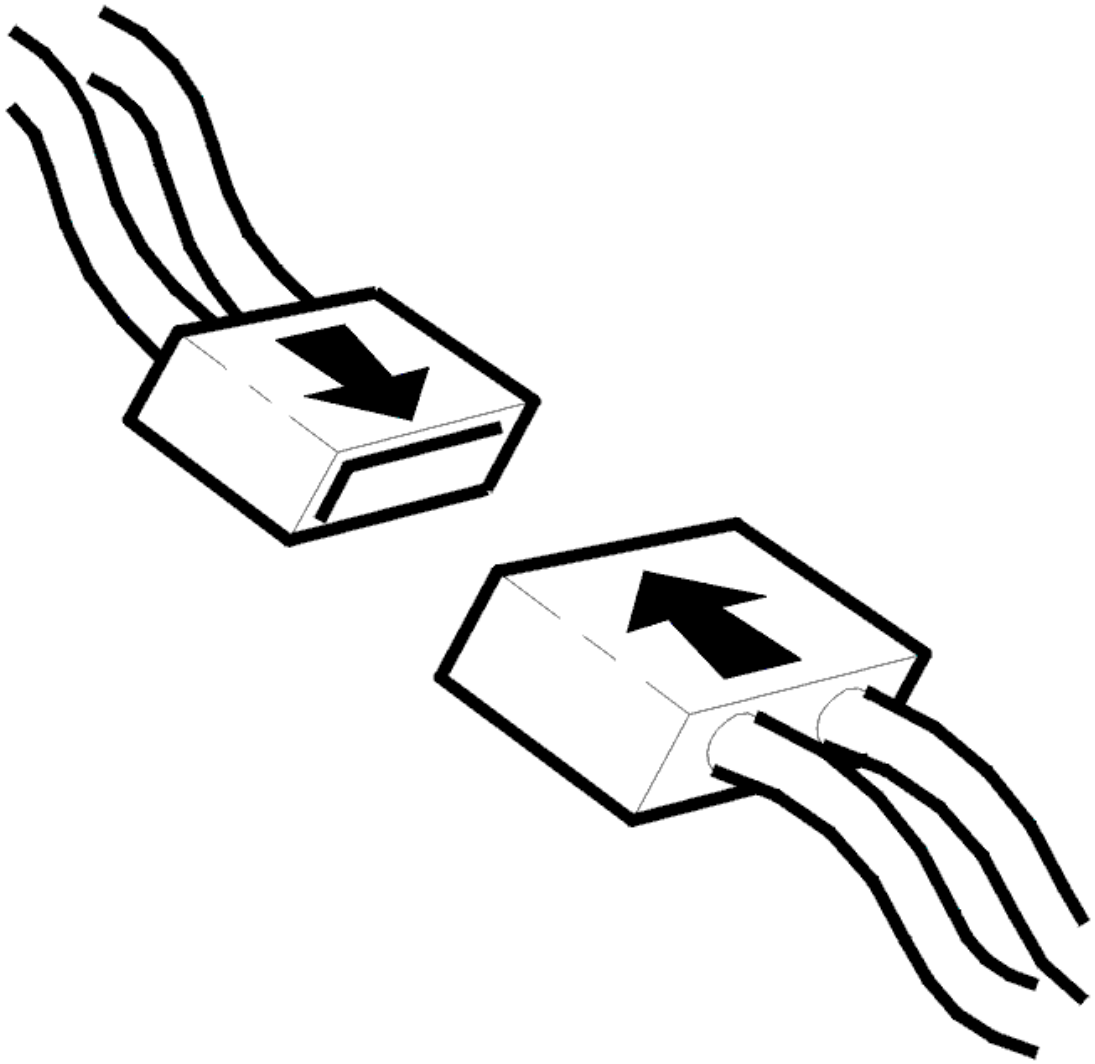

Fig. 68: Connecting Connector
Courtesy of VOLVO CARS CORPORATION

- Ignition off
- Reconnect the connectors, reinstall components etc.
- Ignition on
- Read off the pressure in the brake system from the relevant pressure sensor
- Depress the brake pedal.

  The brake pressure must increase with increased pedal pressure.

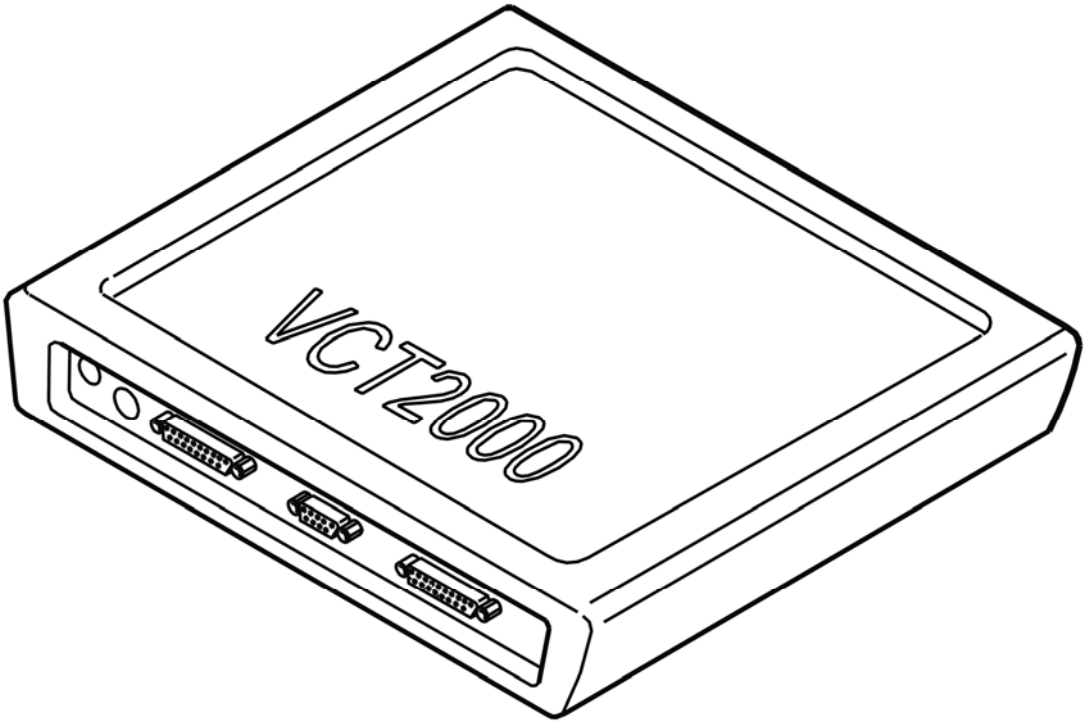

Fig. 69: Identifying VCT2000 Diagnostic Tool Symbol In VIDA
Courtesy of VOLVO CARS CORPORATION

Does the brake pressure increase?

- **YES**

  VERIFIED: Troubleshooting has been completed.

- **NO**

  see **INFORMATION**

INFORMATION

FAULT-TRACING INFORMATION

The fault should have been detected and remedied. As this is not the case fault-tracing has failed.

Exit fault-tracing for this diagnostic trouble code (DTC) or make another attempt.

BCM-0130: BRAKE PRESSURE SENSOR 1. SIGNAL TOO LOW (B5254T2; 2005-2007)

DIAGNOSTIC TROUBLE CODE (DTC) INFORMATION

see **DIAGNOSTIC TROUBLE CODE (DTC) INFORMATION**

SIGNAL TOO LOW

see **SIGNAL TOO LOW**

BCM-0130: BRAKE PRESSURE SENSOR 1. SIGNAL TOO LOW (B6294T; 2005-2006)

DIAGNOSTIC TROUBLE CODE (DTC) INFORMATION

see **DIAGNOSTIC TROUBLE CODE (DTC) INFORMATION**

SIGNAL TOO LOW

see **SIGNAL TOO LOW**

BCM-0136: BRAKE PRESSURE SENSOR 1 AND 2. SIGNAL OUTSIDE ITS PERMITTED RANGE (2003-2004)

DIAGNOSTIC TROUBLE CODE (DTC) INFORMATION

Condition

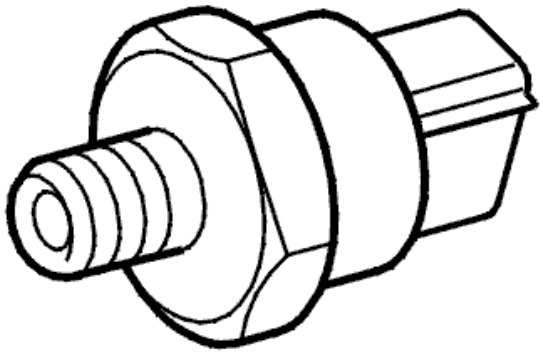

Fig. 70: Identifying Brake Pressure Sensor
Courtesy of VOLVO CARS CORPORATION

NOTE: The diagnostic trouble code (DTC) applies only to ABS systems equipped with dynamic stability and traction control (DSTC).

Brake pressure sensors 1 and 2 provide a signal with the brake system pressure to the brake control module (BCM). Diagnostic trouble code (DTC) BCM-0136 is stored if the control module registers that the signal from any of the pressure sensors is outside its permitted range.

Substitute Value

- Traction control is blocked
- Stability control is blocked
- Active yaw control is blocked.

HINT: For information about abbreviations, see BRAKE SYSTEM, ABBREVIATIONS .

Possible Source

- Open-circuit in the ground lead
- Fault in the brake circuit

- Defective pressure sensor.

Fault symptom[s]

- The anti-spin warning lamp is lit (up to and including 2002 model year)
- General yellow warning lamp lit (from model year 2003 inclusive)
- Anti-spin does not function
- The stability control system does not function
- The traction control system does not function.

SIGNAL OUTSIDE ITS PERMITTED RANGE

CHECKING THE CONNECTORS

NOTE: **As the cables to the brake pressure sensors can be switched physically upon installation, both sensors must be fault-traced when DTC BCM-0136 has been detected.**

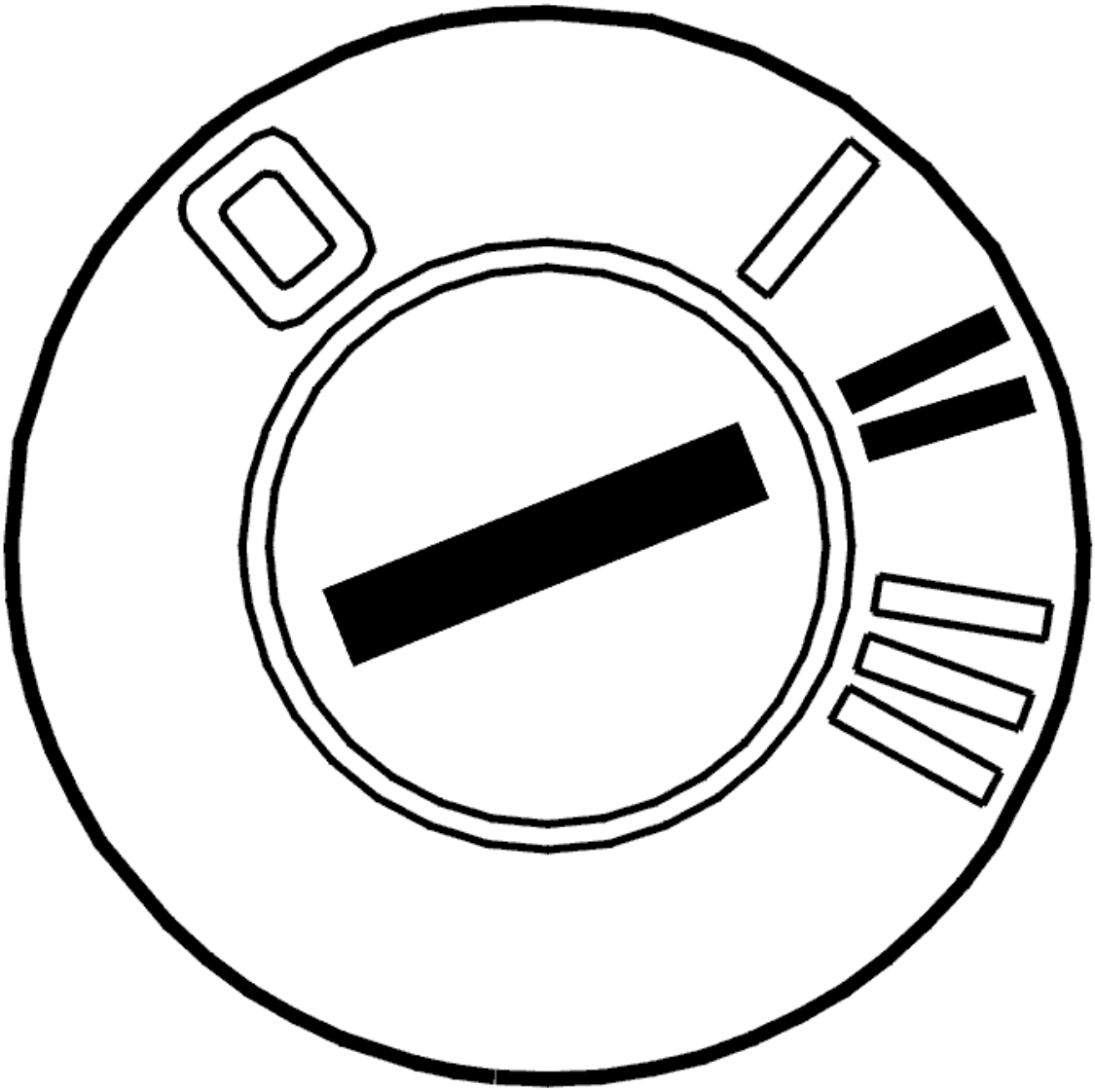

Fig. 71: Identifying Ignition ON
Courtesy of VOLVO CARS CORPORATION

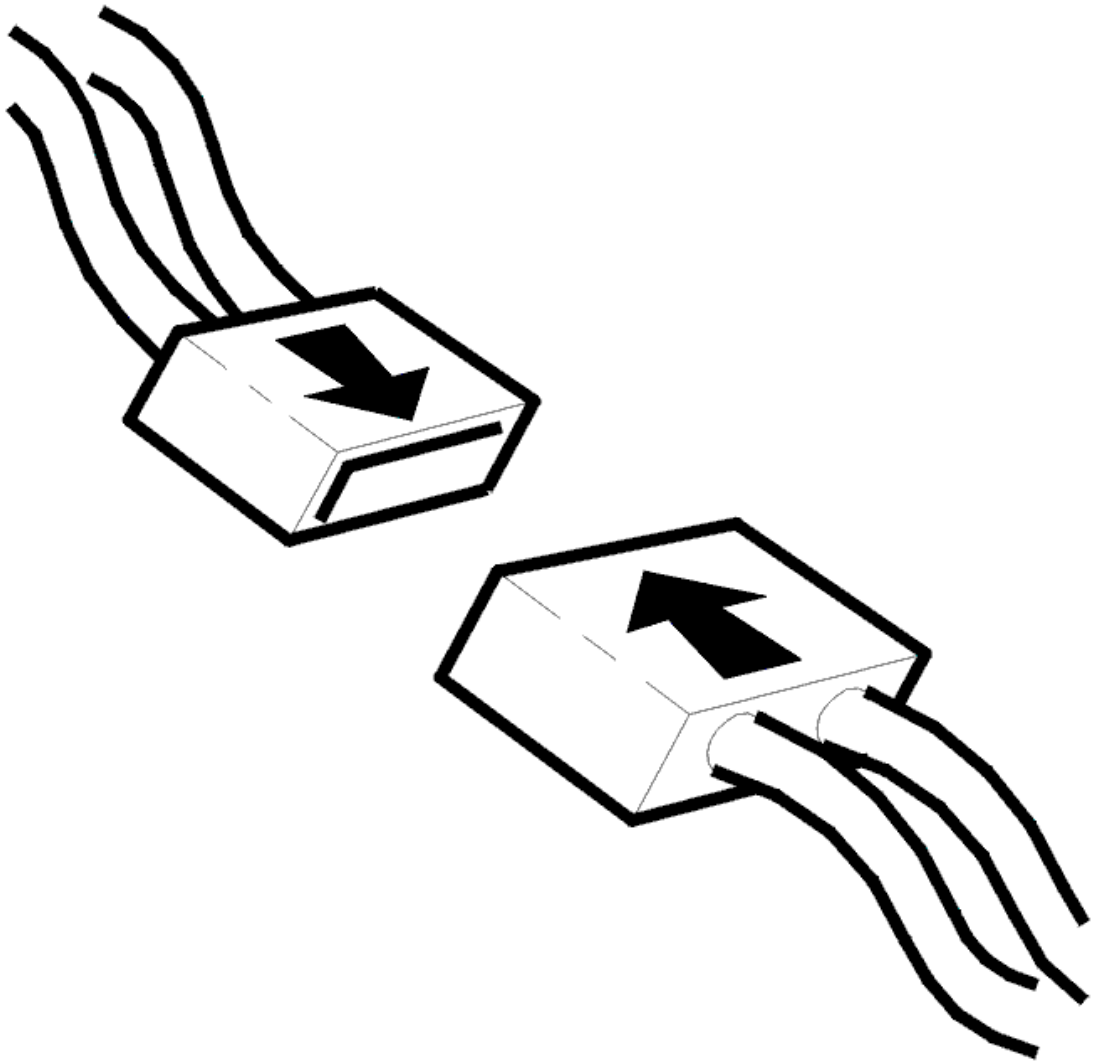

Fig. 72: Connecting Connector
Courtesy of VOLVO CARS CORPORATION

- Ignition off
- Check the brake control module (BCM) and the brake pressure sensor connectors. Check for contact resistance and oxidation
- Reinstall the components, reconnect the connectors etc.
- Ignition on
- Read off the pressure from the brake system
- Depress the brake pedal.

  The brake pressure must increase in both pressure sensors with increased pedal pressure. If the brake pressure increases for both pressure sensors, the cause of the fault was probably contact resistance or oxidation in the control module or pressure sensor connectors.

Other information

- To access the control module connector, see **CONNECTING THE BREAKOUT BOX, BRAKE CONTROL MODULE (BCM)**
- see **CONTENTS**

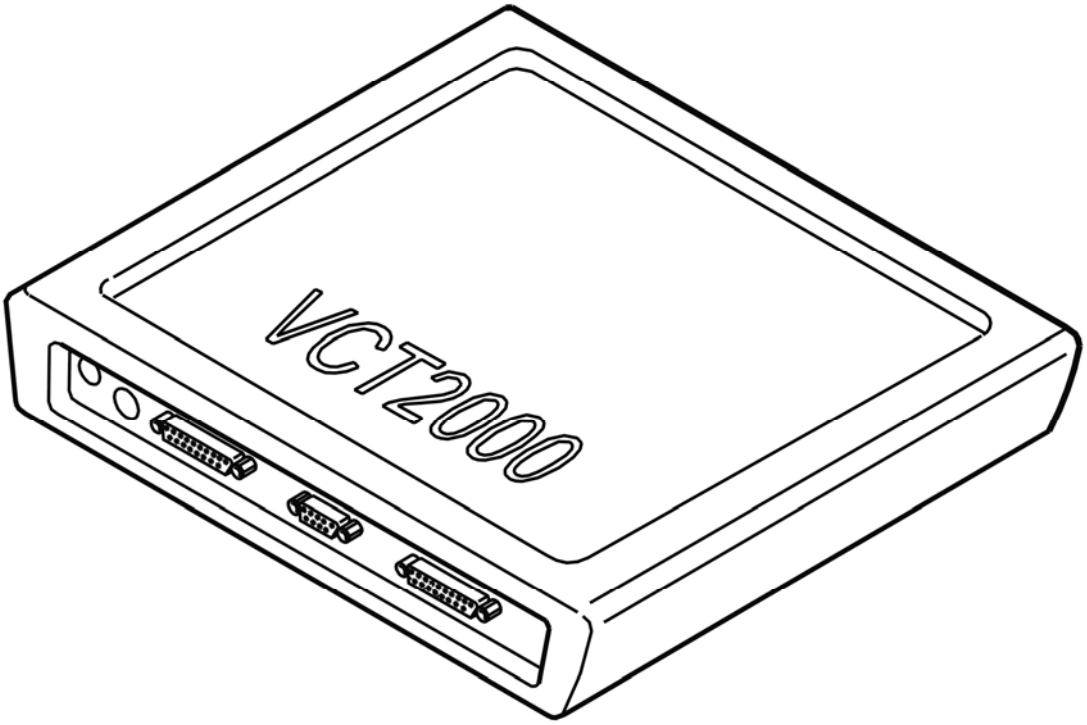

Fig. 73: Identifying VCT2000 Diagnostic Tool Symbol In VIDA
Courtesy of VOLVO CARS CORPORATION

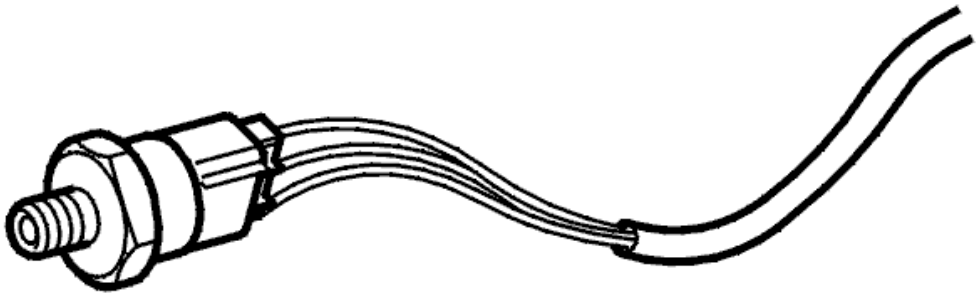

Fig. 74: Brake Pressure Sensor
Courtesy of VOLVO CARS CORPORATION

Does the pressure increase?

- **YES**

  OKAY: Troubleshooting has been completed.

- **NO**

  see **CHECKING WIRING AND SENSORS**

CHECKING WIRING AND SENSORS

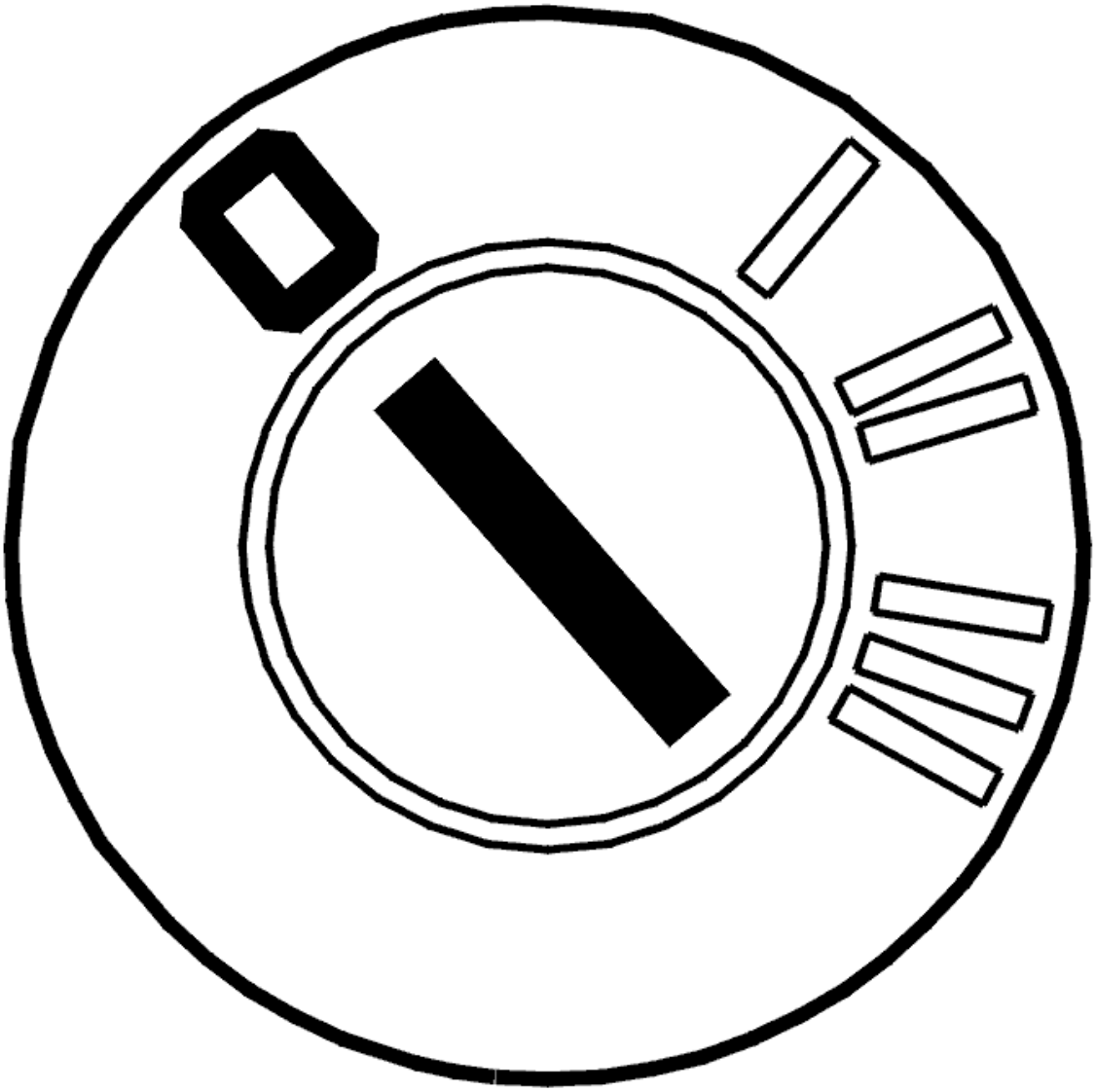

Fig. 75: Identifying Ignition OFF
Courtesy of VOLVO CARS CORPORATION

- Ignition off
- Connect the breakout box.

  Check the ground lead between the relevant brake pressure sensor and the brake control module (BCM). Check for an open-circuit.

  For pressure sensor 1, check the cable between pressure sensor terminal #1 and brake control module (BCM) terminal #19 (#A19).

  For pressure sensor 2, check the cable between pressure sensor terminal #1 and control module terminal #21 (#A21).

  Try another pressure sensor if the cable is OK.

Other information

- To connect the breakout box, see **CONNECTING THE BREAKOUT BOX, BRAKE CONTROL MODULE (BCM)**
- To replace the pressure sensor, see **PRESSURE SENSOR, MASTER CYLINDER, REPLACING**
- For information about signals, see **SIGNAL SPECIFICATION, BRAKE CONTROL MODULE (BCM) WITH DSTC (DYNAMIC STABILITY AND TRACTION CONTROL)** .

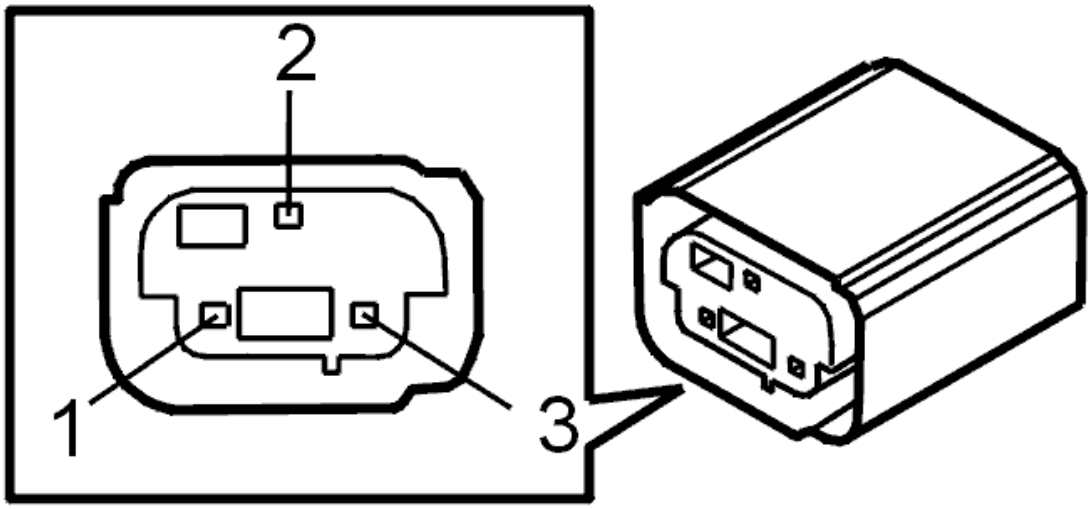

Fig. 76: Identifying Pedal Position Sensor Connector
Courtesy of VOLVO CARS CORPORATION

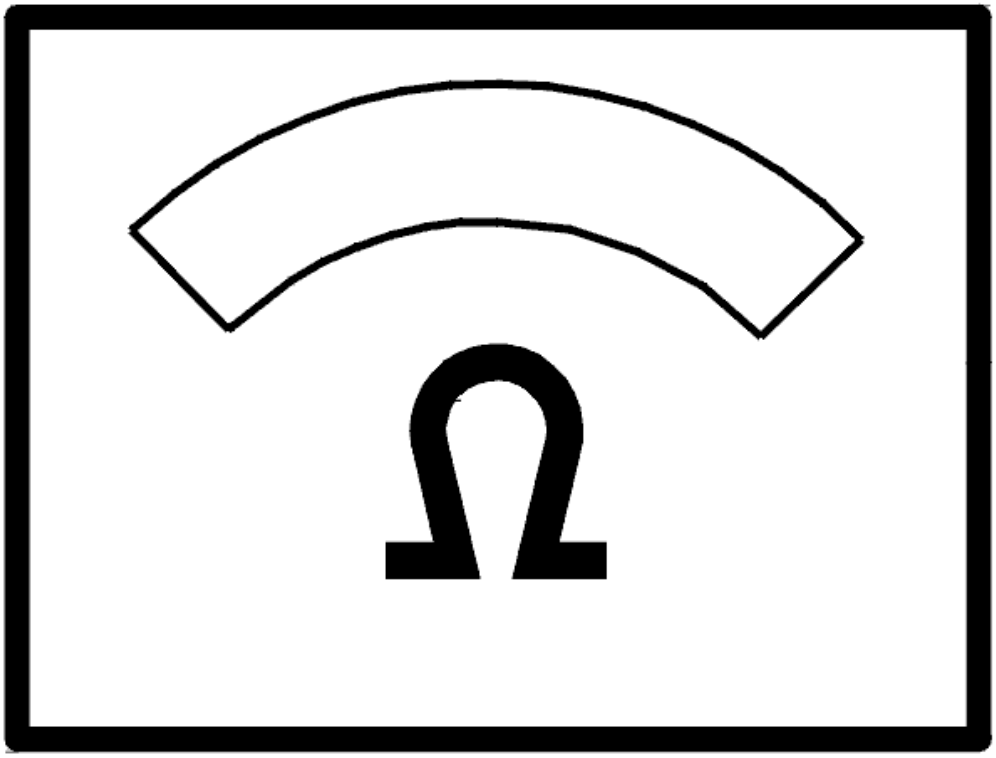

Fig. 77: Identifying Ohm Meter
Courtesy of VOLVO CARS CORPORATION

Were any faults found in the cable?

- **YES**

  see **VERIFICATION**

- **NO**

  see **CHECKING THE CONTROL MODULE**

CHECKING THE CONTROL MODULE

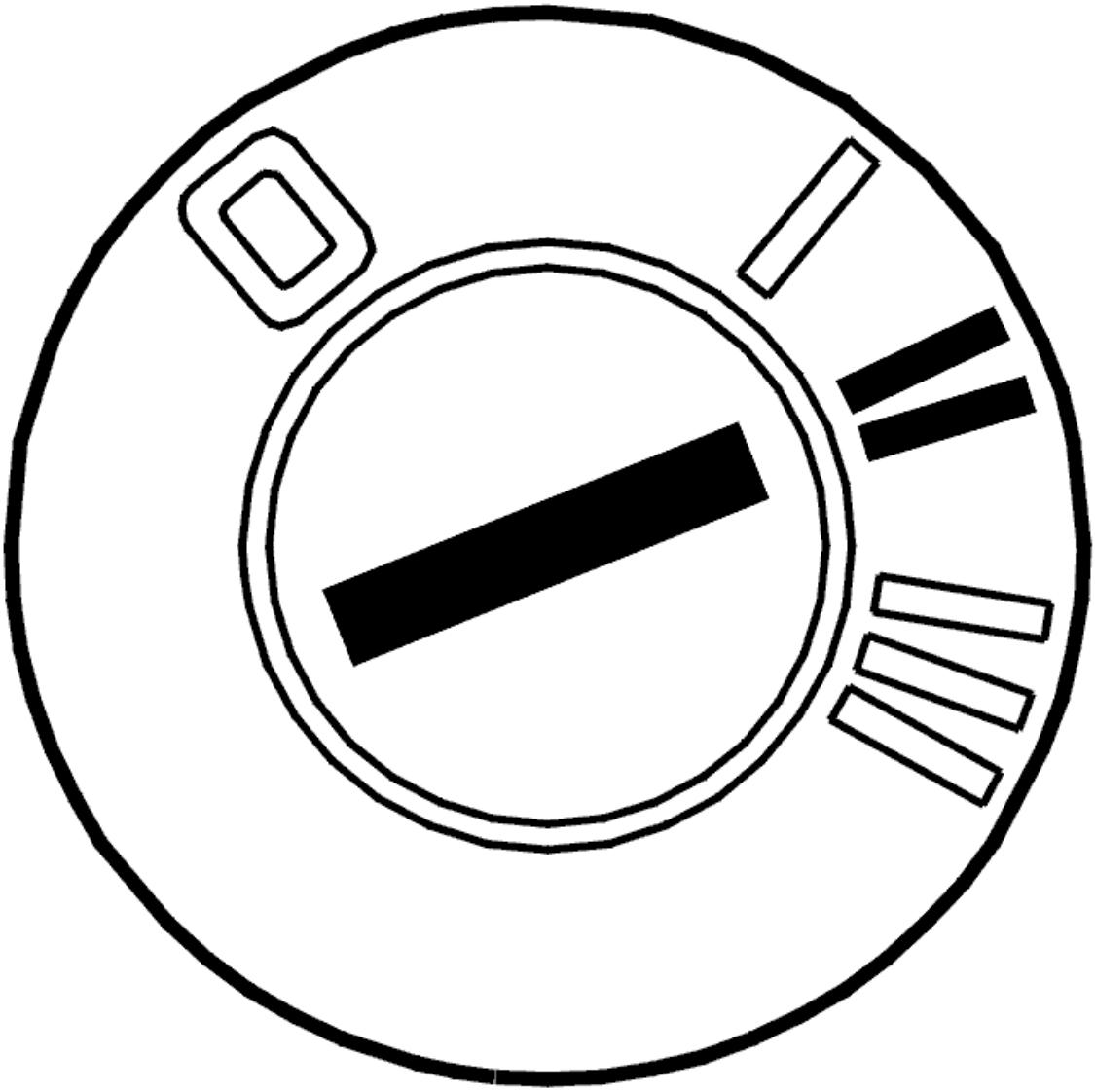

Fig. 78: Identifying Ignition ON
Courtesy of VOLVO CARS CORPORATION

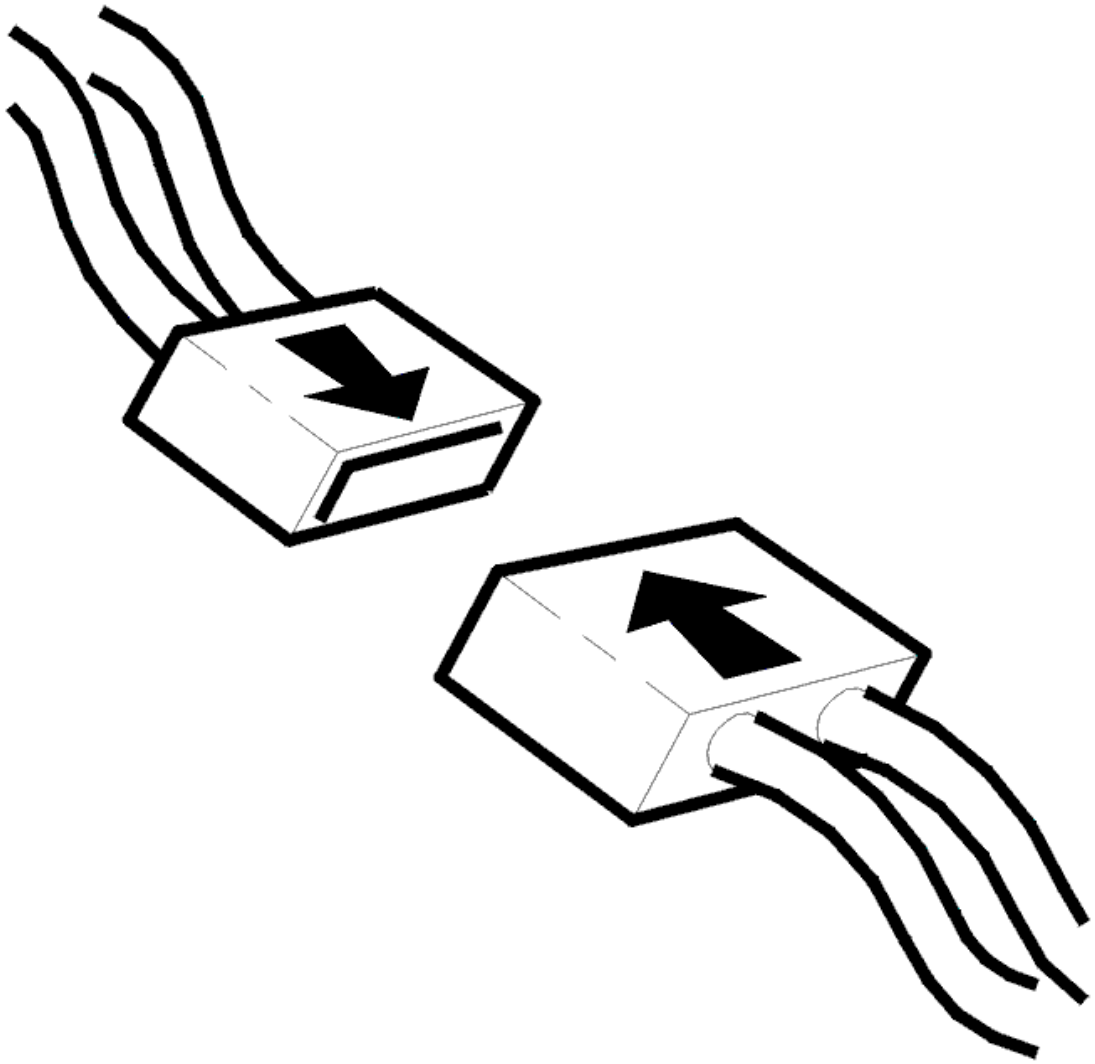

Fig. 79: Connecting Connector
Courtesy of VOLVO CARS CORPORATION

- Ignition off
- Reinstall the components, reconnect the connectors etc.
- Ignition on
- Read off the pressure in the brake system from the relevant pressure sensor
- Depress the brake pedal.

  The brake pressure must increase with increased pedal pressure.

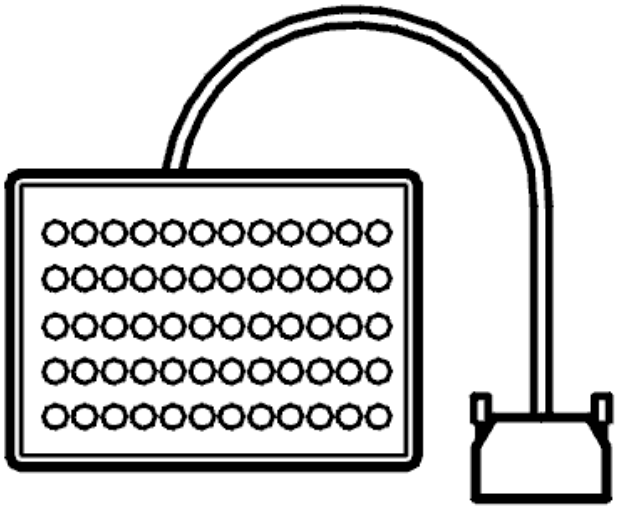

Fig. 80: Breakout Box
Courtesy of VOLVO CARS CORPORATION

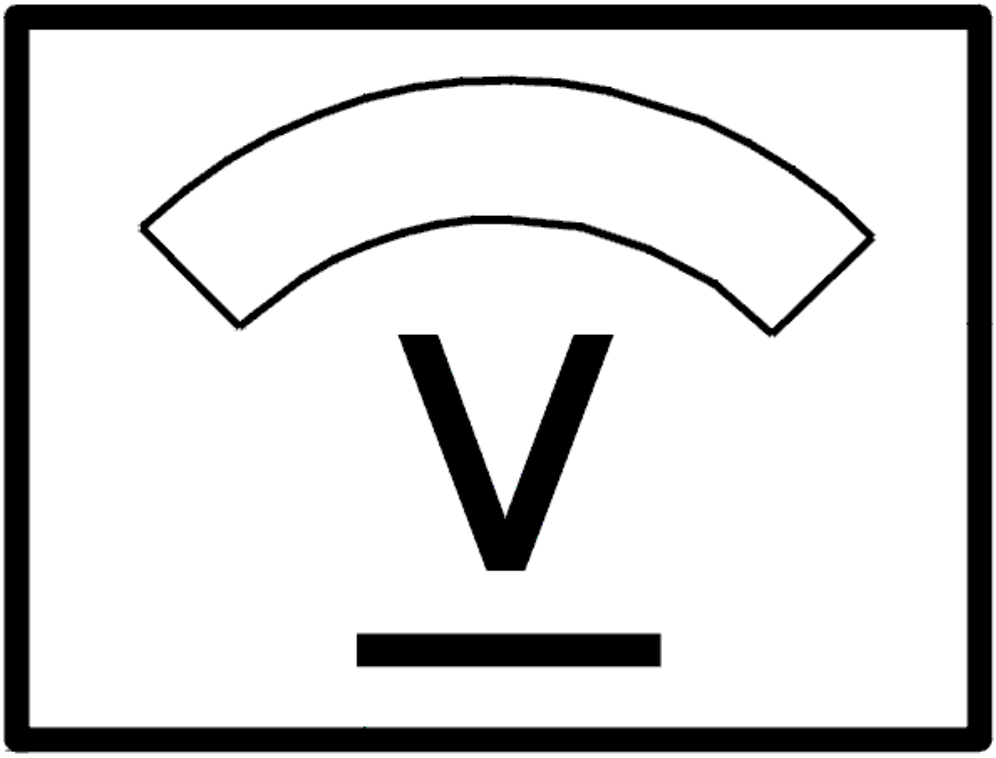

Fig. 81: Identifying Voltage Display
Courtesy of VOLVO CARS CORPORATION

Does the brake pressure increase?

- **YES**

  see **VERIFICATION**

- **NO**

  see **INFORMATION**

VERIFICATION

VERIFICATION

HINT: After carrying out the repair, check that the fault has been remedied.

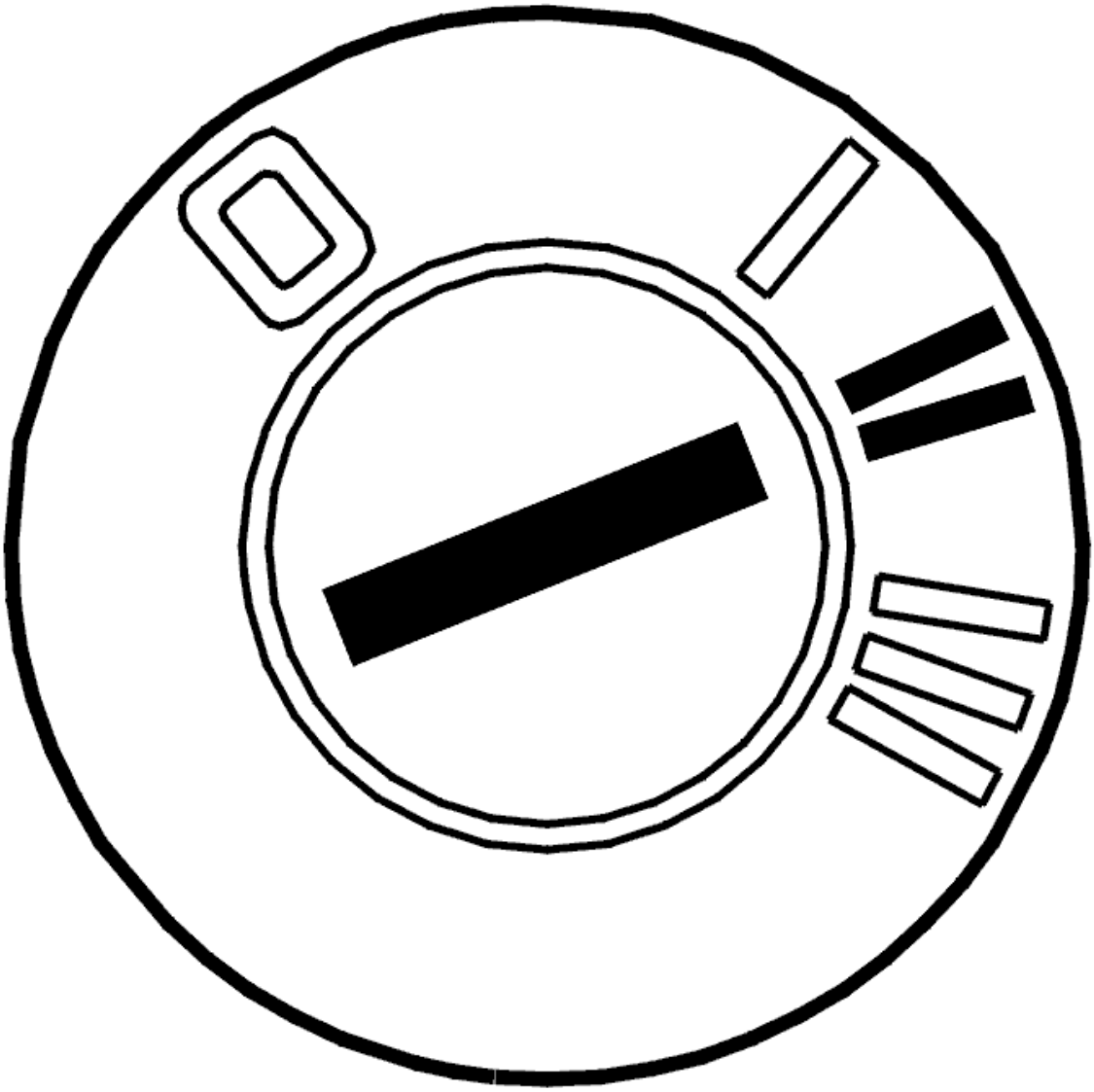

Fig. 82: Identifying Ignition ON
Courtesy of VOLVO CARS CORPORATION

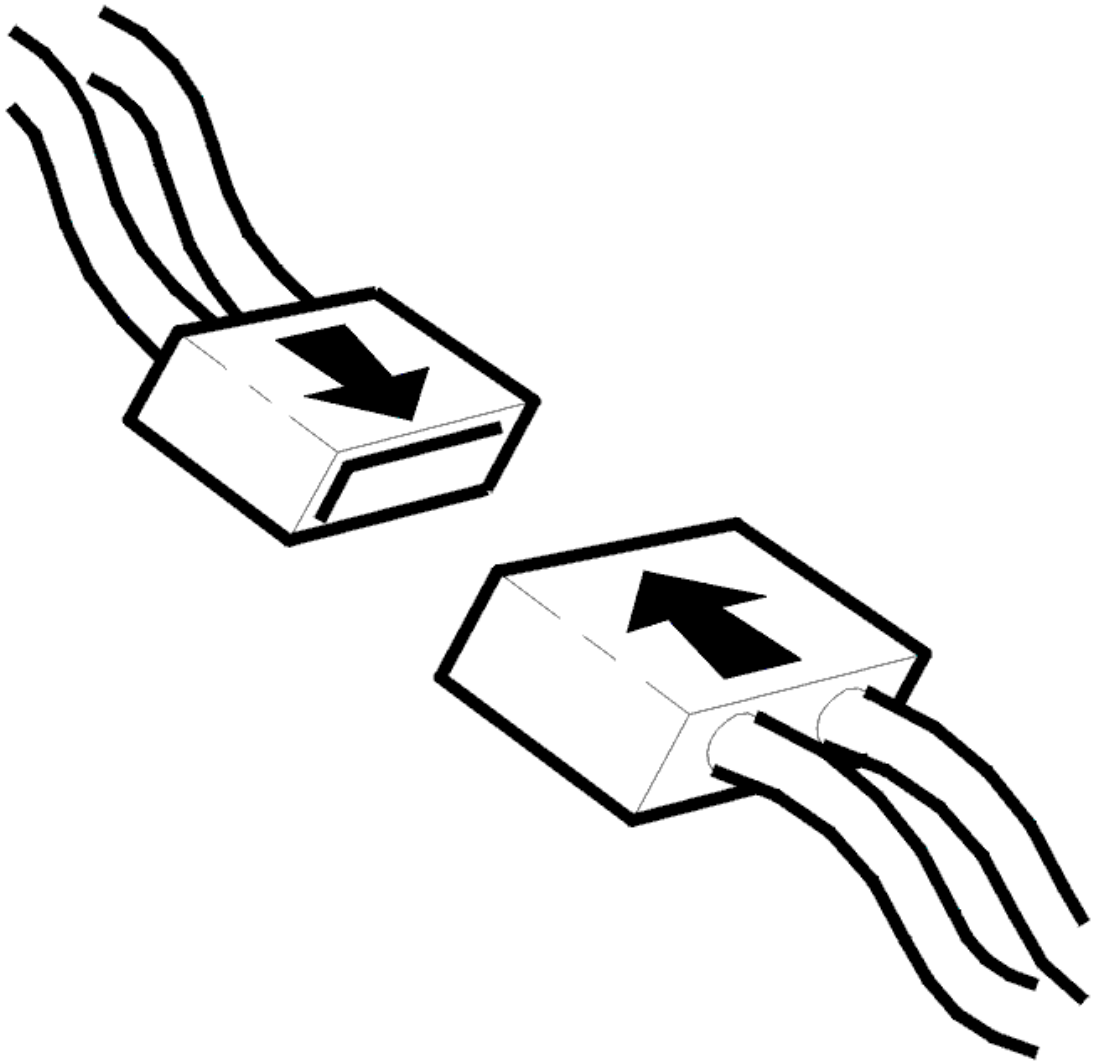

Fig. 83: Connecting Connector
Courtesy of VOLVO CARS CORPORATION

- Ignition off
- Reconnect the connectors, reinstall components etc.
- Ignition on
- Read off the pressure in the brake system from the relevant pressure sensor
- Depress the brake pedal.

  The brake pressure must increase with increased pedal pressure.

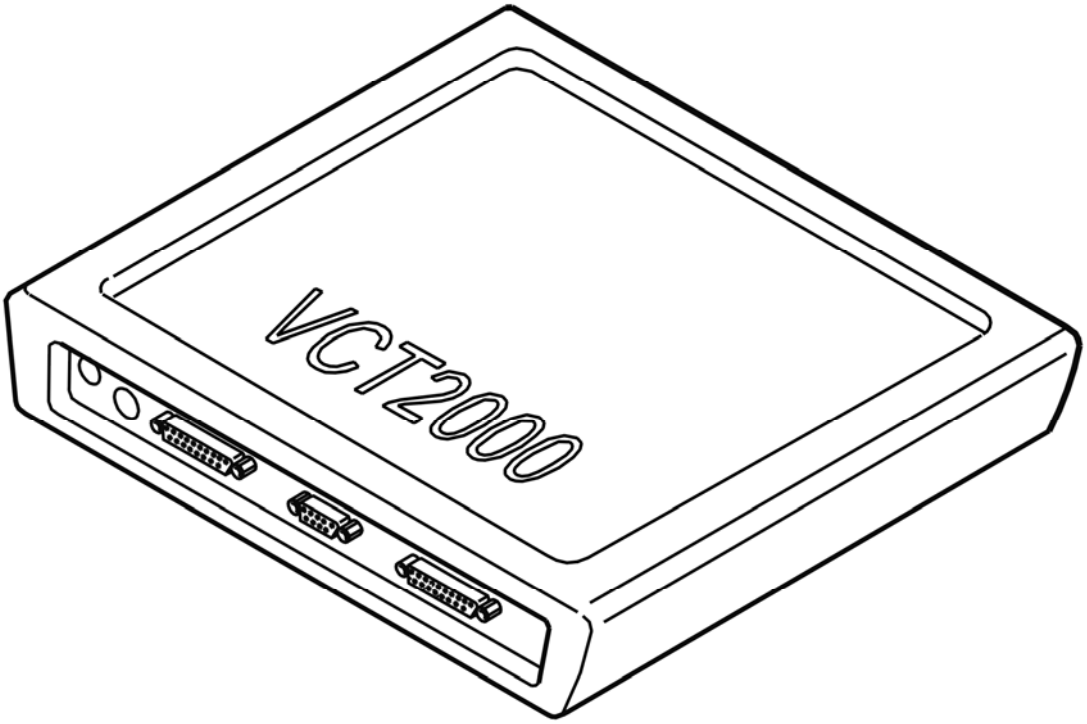

Fig. 84: Identifying VCT2000 Diagnostic Tool Symbol In VIDA
Courtesy of VOLVO CARS CORPORATION

Does the brake pressure increase?

- **YES**

  VERIFIED: Troubleshooting has been completed.

- **NO**

  see **INFORMATION**

INFORMATION

FAULT-TRACING INFORMATION

The fault should have been detected and remedied. As this is not the case fault-tracing has failed.

Exit fault-tracing for this diagnostic trouble code (DTC) or make another attempt.

INFORMATION

FAULT-TRACING INFORMATION

The fault should be diagnosed and remedied. Since this is not the case the fault-tracing process has failed.

Complete the fault-tracing for those fault or try again.

BCM-0136: BRAKE PRESSURE SENSOR 1 AND 2. SIGNAL OUTSIDE ITS PERMITTED RANGE (B5254T2; 2005-2007)

DIAGNOSTIC TROUBLE CODE (DTC) INFORMATION

see **DIAGNOSTIC TROUBLE CODE (DTC) INFORMATION**

SIGNAL OUTSIDE ITS PERMITTED RANGE

see **SIGNAL OUTSIDE ITS PERMITTED RANGE**

BCM-0136: BRAKE PRESSURE SENSOR 1 AND 2. SIGNAL OUTSIDE ITS PERMITTED RANGE (B6294T; 2005-2006)

DIAGNOSTIC TROUBLE CODE (DTC) INFORMATION

see **DIAGNOSTIC TROUBLE CODE (DTC) INFORMATION**

SIGNAL OUTSIDE ITS PERMITTED RANGE

see **SIGNAL OUTSIDE ITS PERMITTED RANGE**

BCM-0138: POWER SUPPLY FOR THE ACTIVE YAW CONTROL SENSOR. FAULTY VOLTAGE (2003-2004)

DIAGNOSTIC TROUBLE CODE (DTC) INFORMATION

Condition

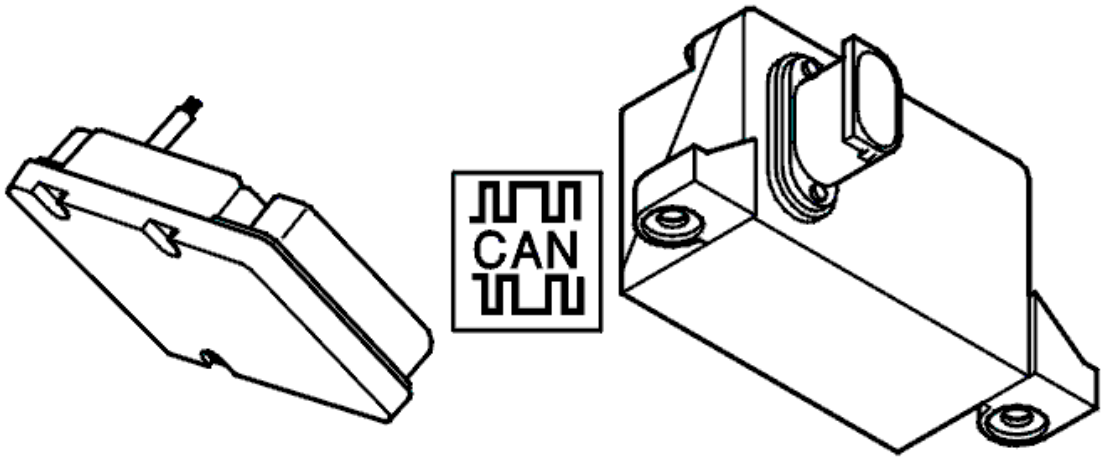

Fig. 85: Identifying Brake Control Module & Active Yaw Control Sensor
Courtesy of VOLVO CARS CORPORATION

NOTE: This diagnostic trouble code (DTC) applies only to brake systems with dynamic stability and traction control (DSTC).

The active yaw control sensor is supplied with 12 V.

Diagnostic trouble code (DTC) BCM-0138 is stored if the brake control module (BCM) registers that the supply voltage to the active yaw control sensor is too high or too low.

Substitute Value

- Traction control is blocked
- Stability control is blocked
- Active yaw control is blocked.

HINT: For information about abbreviations, see BRAKE SYSTEM, ABBREVIATIONS .

Possible Source

- Contact resistance or oxidation in the terminals or connections
- Short-circuit to ground or to supply voltage in the power supply wiring for the active yaw control sensor
- Open-circuit in the power supply cable for the active yaw control sensor
- Internal fault in the active yaw control sensor
- Internal fault in the control module.

Fault symptom[s]

- The anti-spin warning lamp is lit (up to and including 2002 model year)

- General yellow warning lamp lit (from model year 2003 inclusive)
- Anti-spin does not function
- The stability control system does not function
- The traction control system does not function.

FAULTY VOLTAGE

CHECKING THE CONNECTORS

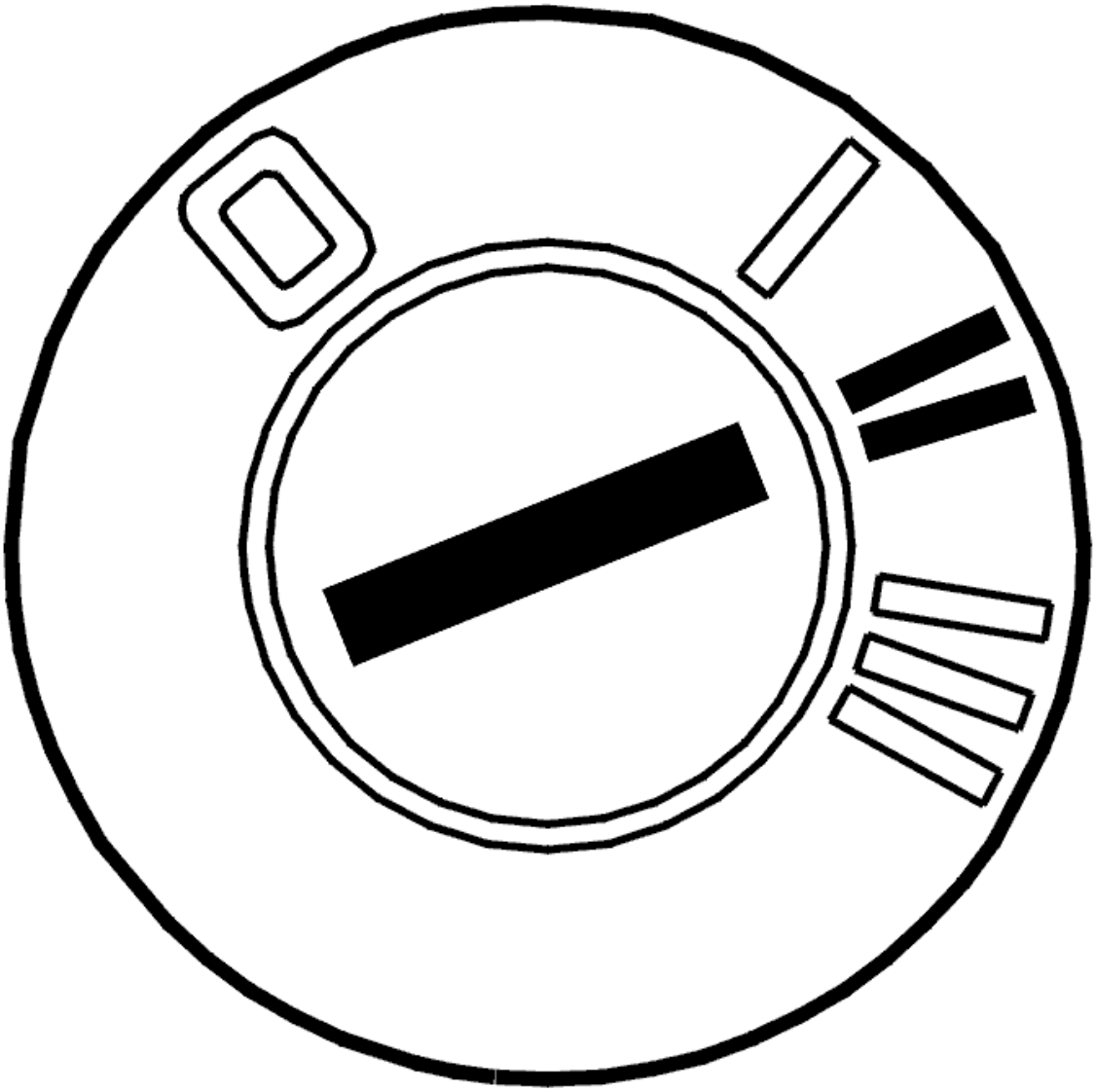

Fig. 86: Identifying Ignition ON
Courtesy of VOLVO CARS CORPORATION

- Ignition off
- Check the connectors for the brake control module (BCM) and the active yaw control sensor. Check for contact resistance and oxidation

- Ignition on
- Wait approximately 60 seconds
- Read off diagnostic trouble codes (DTCs).

  If the status of the diagnostic trouble code (DTC) is intermittent, the cause of the fault was probably contact resistance or oxidation in the connectors for the control module or the active yaw control sensor.

  Other information

  - To access the control module connector, see **CONNECTING THE BREAKOUT BOX, BRAKE CONTROL MODULE (BCM)**
  - To access the active yaw control sensor, see **ACTIVE YAW CONTROL SENSOR, REPLACING**
  - see **CONTENTS**

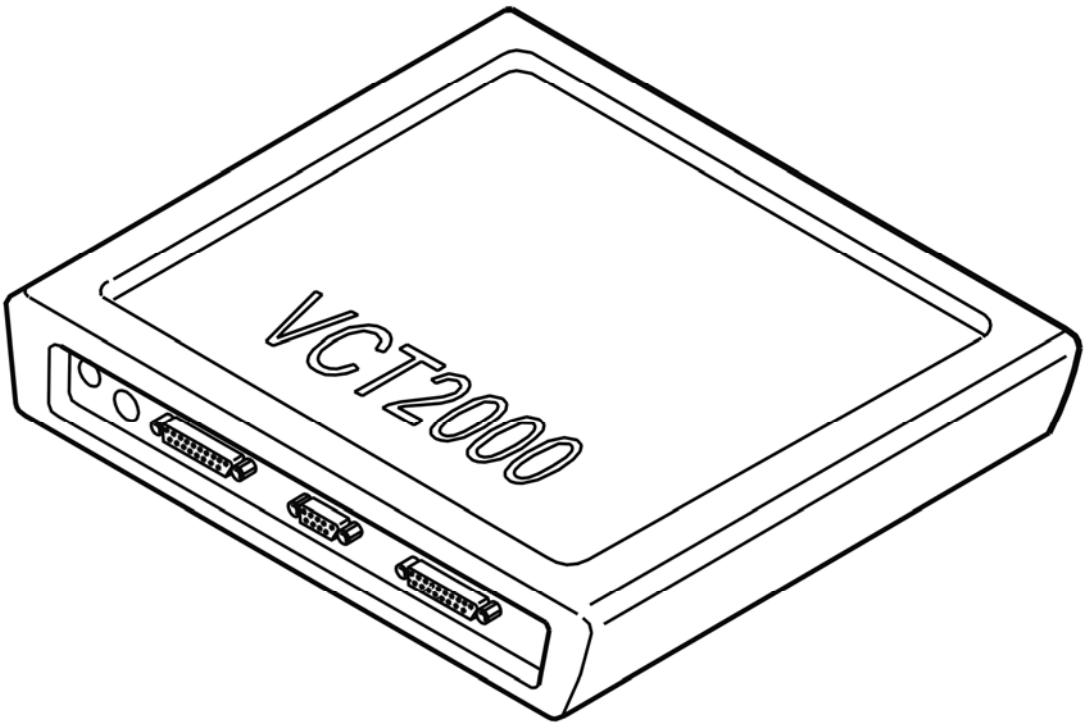

Fig. 87: Identifying VCT2000 Diagnostic Tool Symbol In VIDA
Courtesy of VOLVO CARS CORPORATION

Is the status of the diagnostic trouble code (DTC) intermittent?

- **YES**

OKAY: Troubleshooting has been completed.

- **NO**

  see **CHECKING THE ACTIVE YAW CONTROL SENSOR**

CHECKING THE ACTIVE YAW CONTROL SENSOR

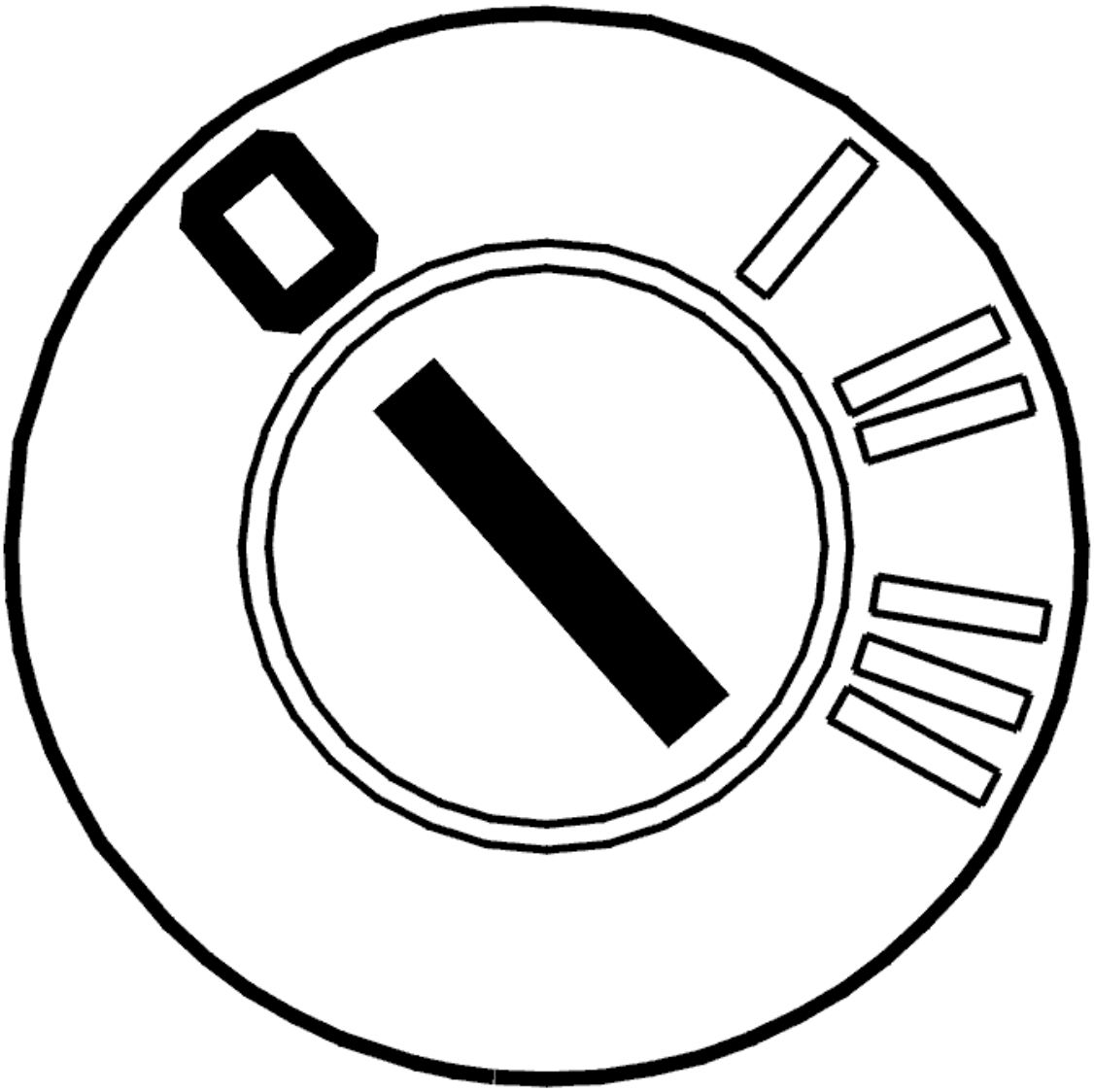

Fig. 88: Identifying Ignition OFF
Courtesy of VOLVO CARS CORPORATION

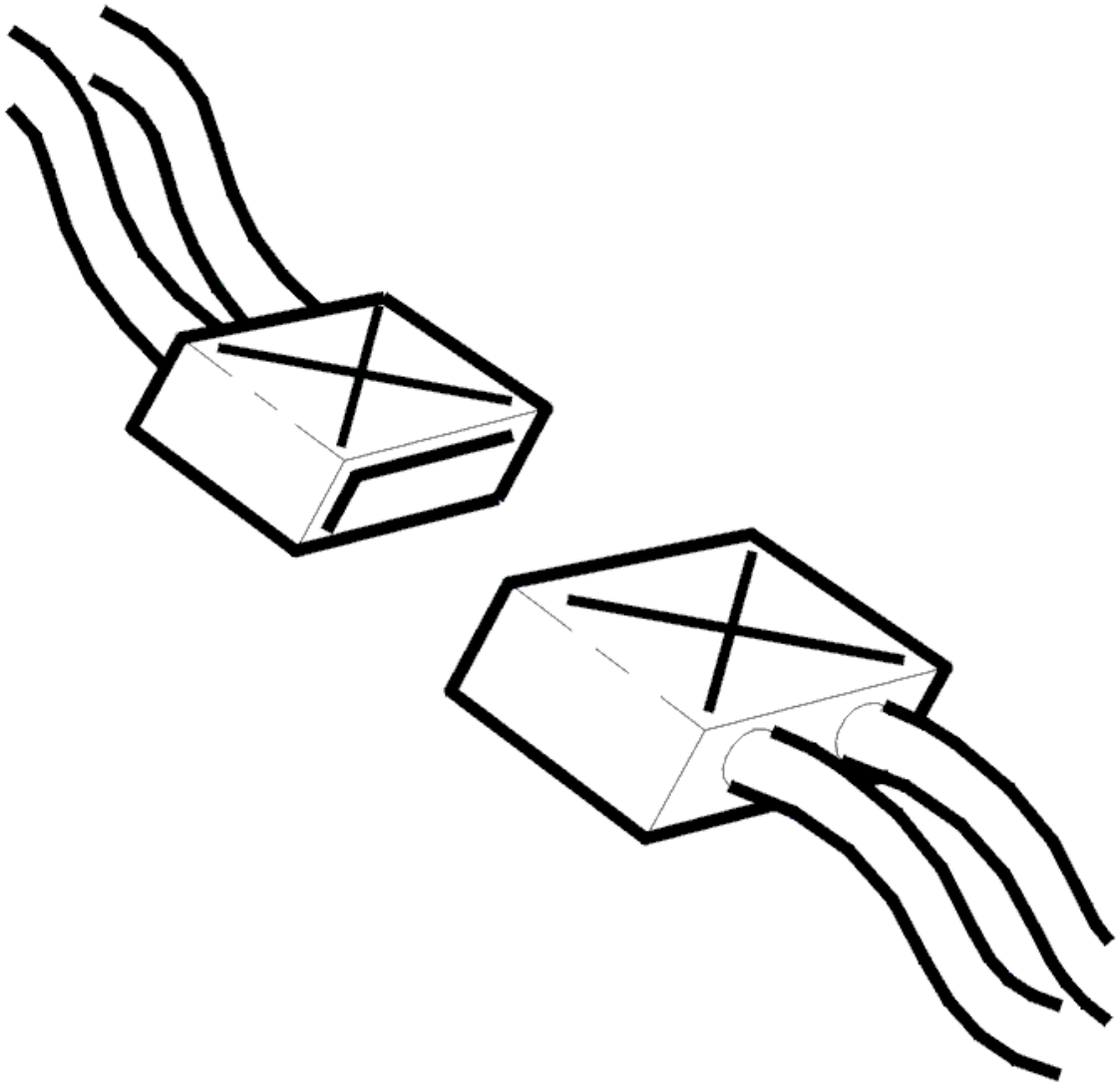

Fig. 89: Identifying Connector
Courtesy of VOLVO CARS CORPORATION

- Ignition off
- Breakout box connected to the brake control module (BCM)
- Ignition on
- Read off the power supply to the brake control module (BCM).

  Check the power supply to the active yaw control sensor by connecting a voltmeter between control module terminals #6 (#A6) and #39 (#A39). The voltage must be approximately the same as the read off value for the brake control module (BCM).

  Replace the active yaw control sensor if the power supply to the sensor is OK.

  Remedy as necessary.

Other information

- To connect the breakout box, see **CONNECTING THE BREAKOUT BOX, BRAKE CONTROL MODULE (BCM)**
- To replace the active yaw control sensor, see **ACTIVE YAW CONTROL SENSOR, REPLACING**
- For information about signals, see **SIGNAL SPECIFICATION, BRAKE CONTROL MODULE (BCM) WITH DSTC (DYNAMIC STABILITY AND TRACTION CONTROL)** .

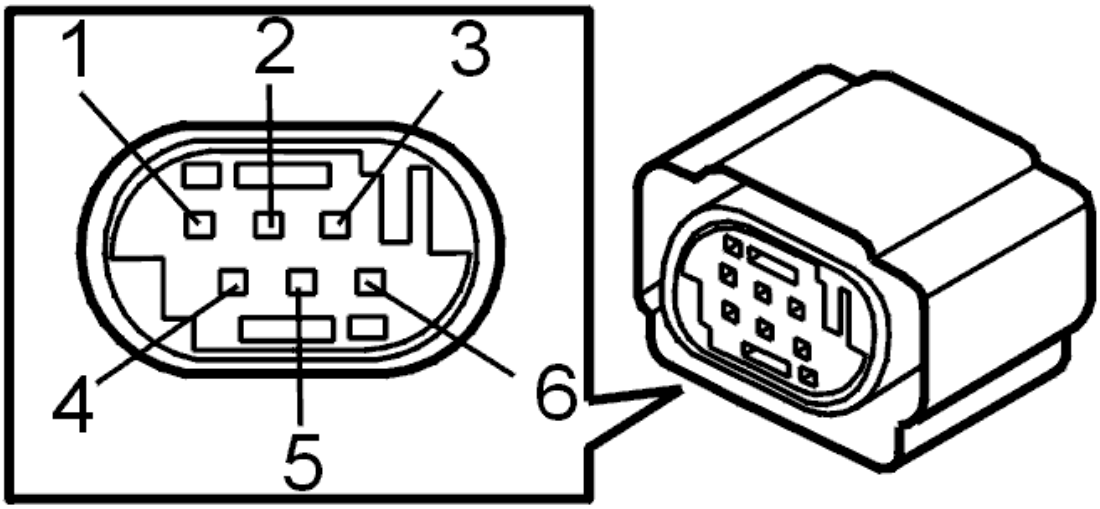

Fig. 90: Identifying Active Yaw Control Sensor Connector Terminals
Courtesy of VOLVO CARS CORPORATION

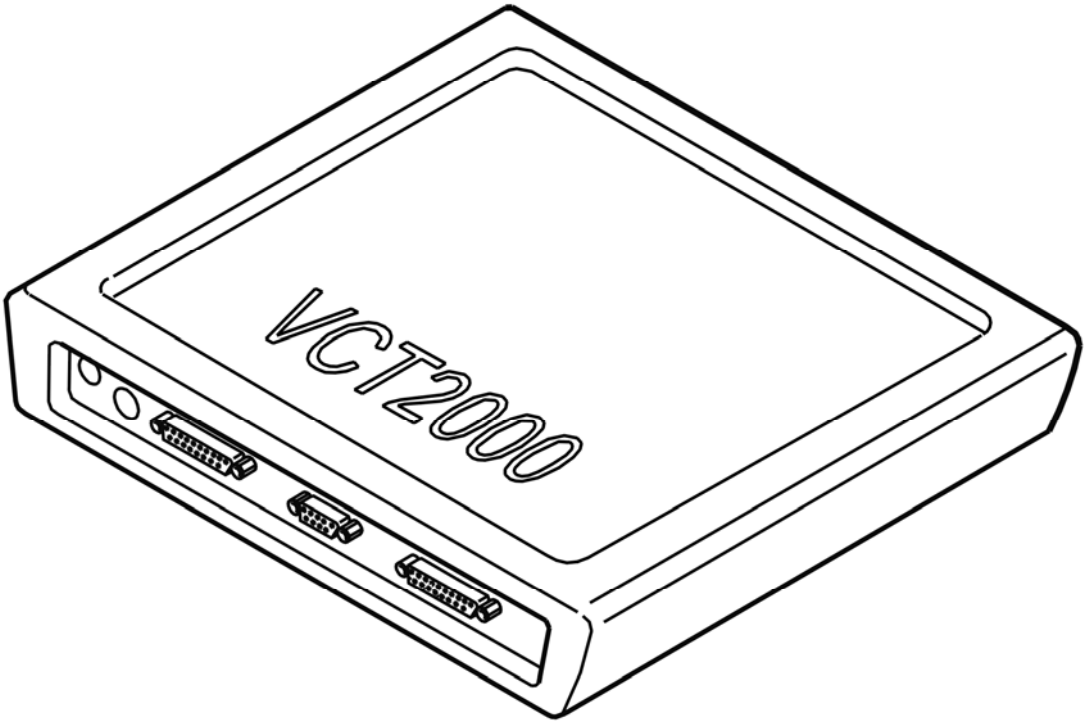

Fig. 91: Identifying VCT2000 Diagnostic Tool Symbol In VIDA
Courtesy of VOLVO CARS CORPORATION

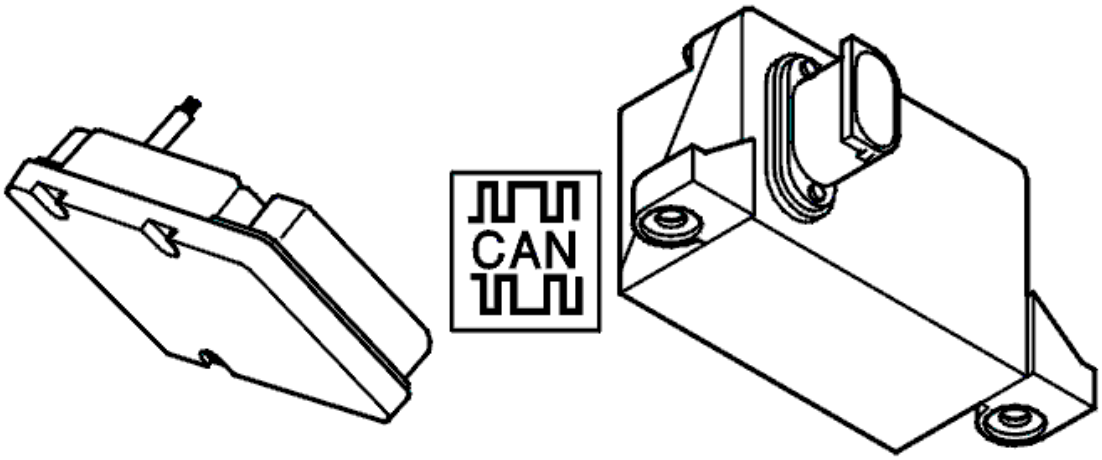

Fig. 92: Identifying Brake Control Module & Active Yaw Control Sensor
Courtesy of VOLVO CARS CORPORATION

Was the voltage OK?

- **YES**

  see **CHECKING THE WIRING**

- **NO**

  see **VERIFICATION**

CHECKING THE WIRING

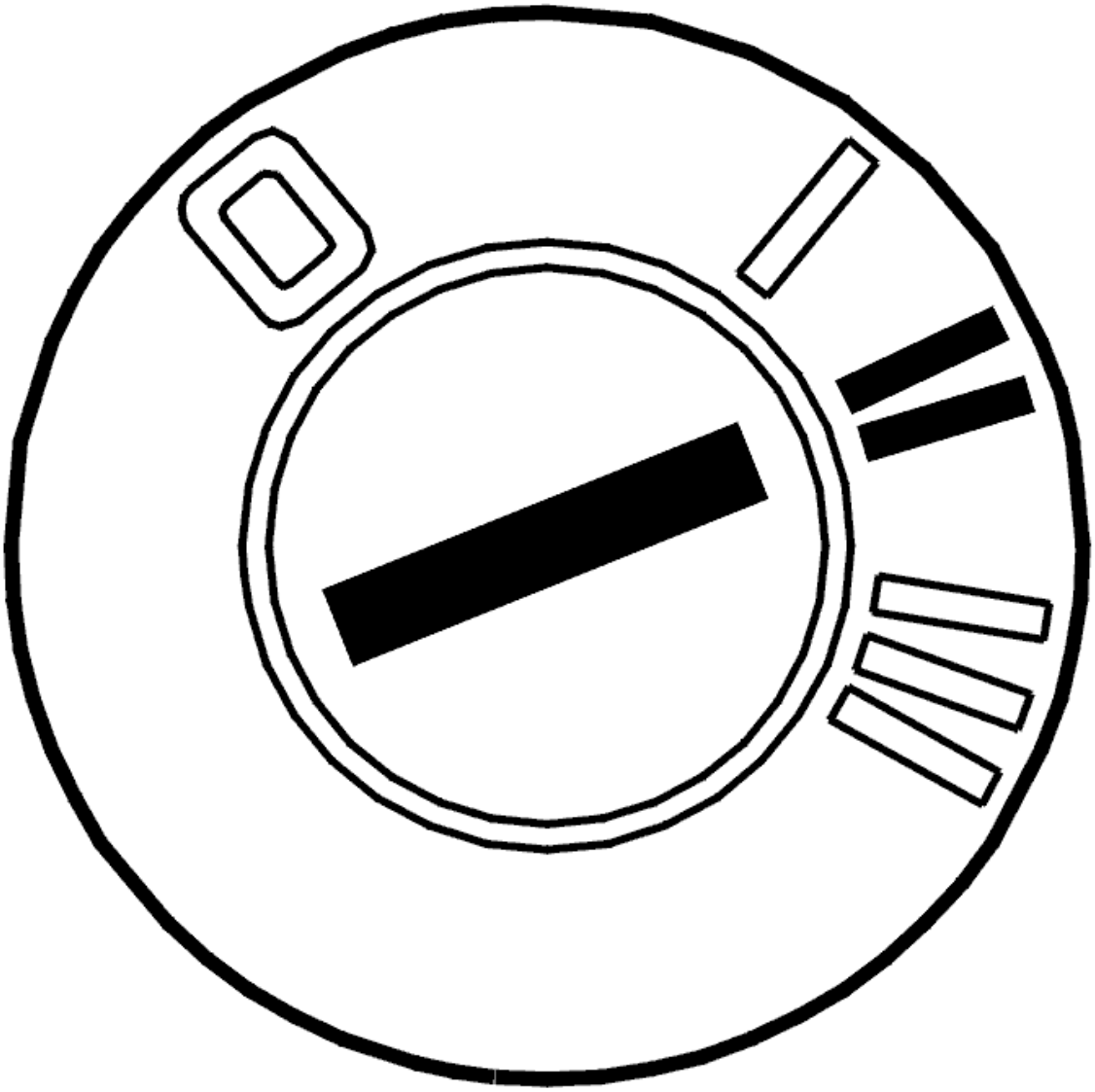

Fig. 93: Identifying Ignition ON
Courtesy of VOLVO CARS CORPORATION

- Ignition off.

  Check the power supply wiring between the active yaw control sensor:

- terminal #3 and brake control module (BCM) terminal #6 (#A6)
- terminal #5 and brake control module (BCM) terminal #39 (#A39).

check for a short-circuit to ground. Check for a short-circuit to supply voltage.

Replace the control module if the wiring is OK.

Other information

- To connect the breakout box, see **CONNECTING THE BREAKOUT BOX, BRAKE CONTROL MODULE (BCM)**
- To replace the control module, see **BRAKE CONTROL MODULE (BCM), REPLACING**
- For information about signals, see **SIGNAL SPECIFICATION, BRAKE CONTROL MODULE (BCM) WITH DSTC (DYNAMIC STABILITY AND TRACTION CONTROL)**
- see **CONTENTS** .

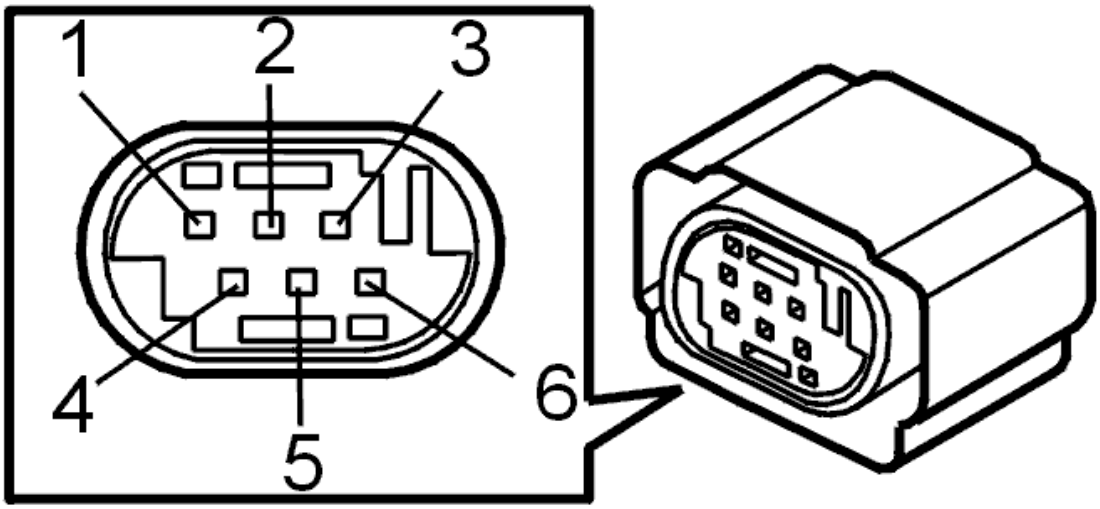

Fig. 94: Identifying Active Yaw Control Sensor Connector Terminals
Courtesy of VOLVO CARS CORPORATION

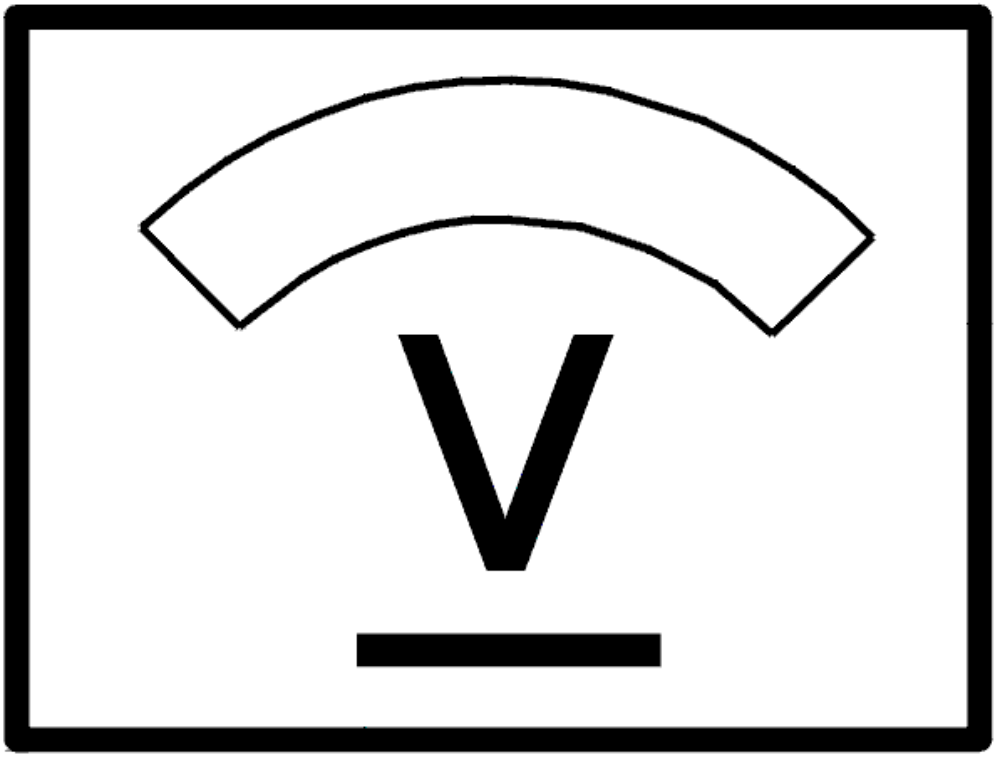

Fig. 95: Identifying Voltage Display
Courtesy of VOLVO CARS CORPORATION

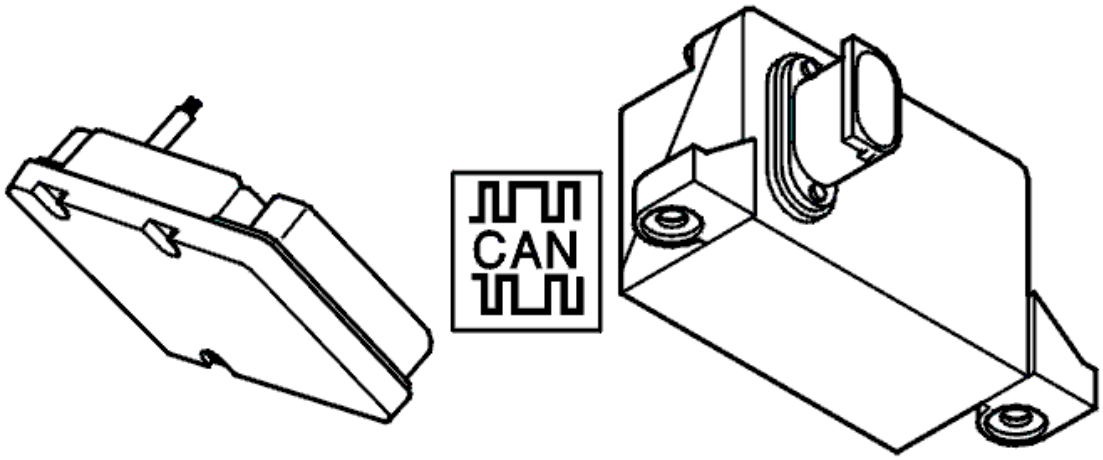

Fig. 96: Identifying Brake Control Module & Active Yaw Control Sensor
Courtesy of VOLVO CARS CORPORATION

- **Continue**

  see **VERIFICATION**

VERIFICATION

VERIFICATION

HINT: After carrying out the repair, check that the fault has been remedied.

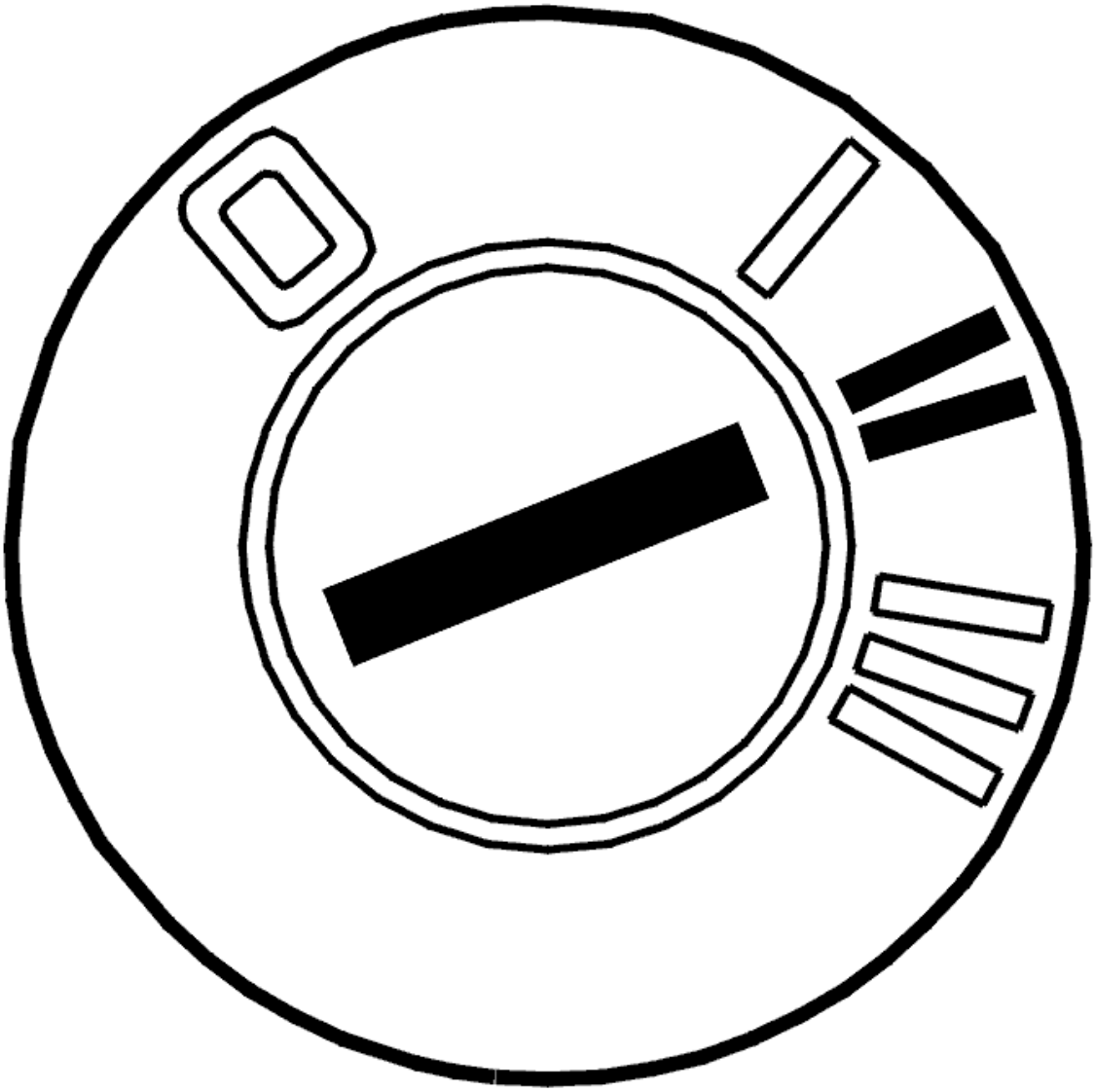

Fig. 97: Identifying Ignition ON
Courtesy of VOLVO CARS CORPORATION

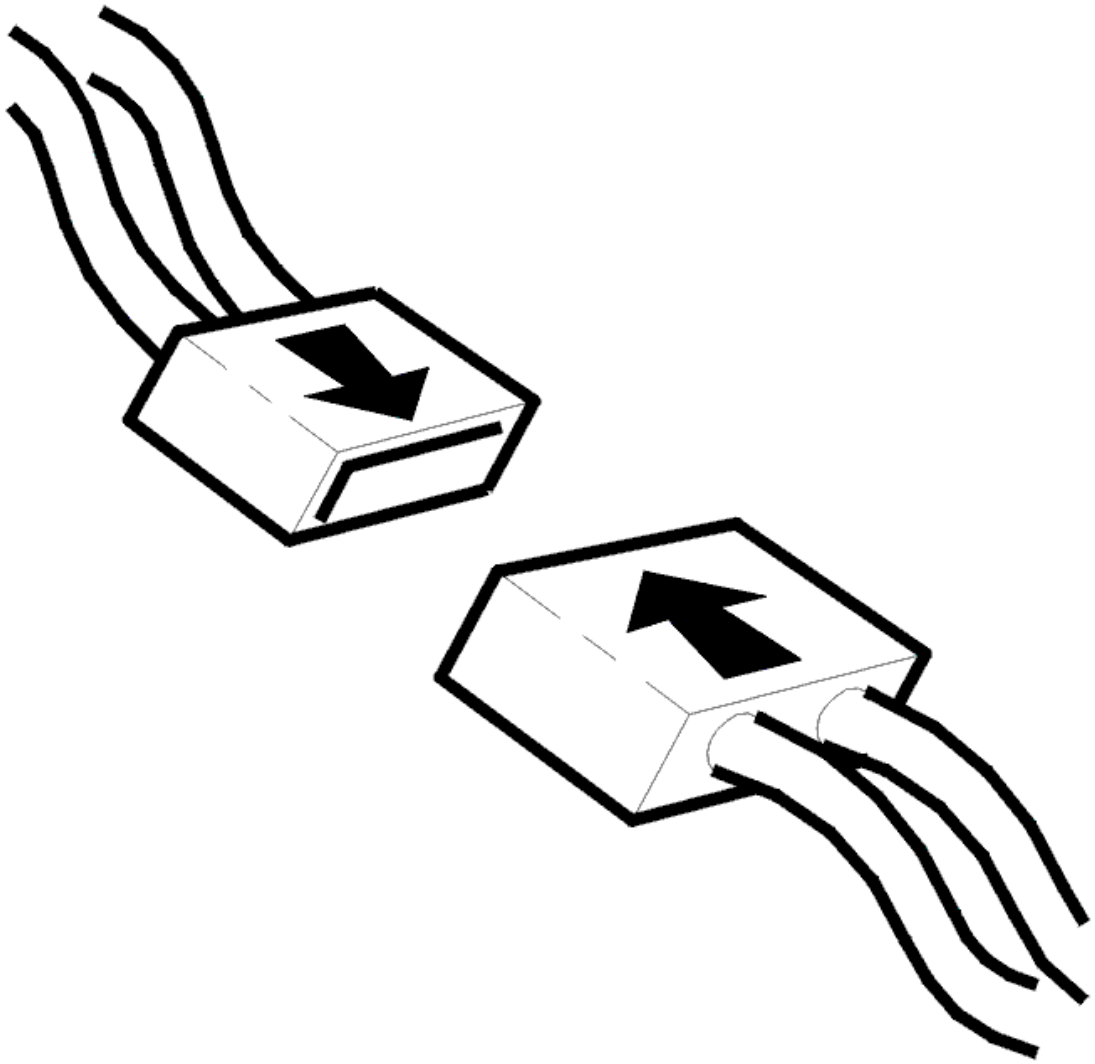

Fig. 98: Connecting Connector
Courtesy of VOLVO CARS CORPORATION

- Ignition off
- Reconnect the connectors, reinstall components etc.
- Test drive the car. See **TEST DRIVE FORM (DSTC (DYNAMIC STABILITY AND TRACTION CONTROL) /BRAKE CONTROL MODULE), DESCRIPTION**
- Ignition on.

  Read off the status of the diagnostic trouble code (DTC).

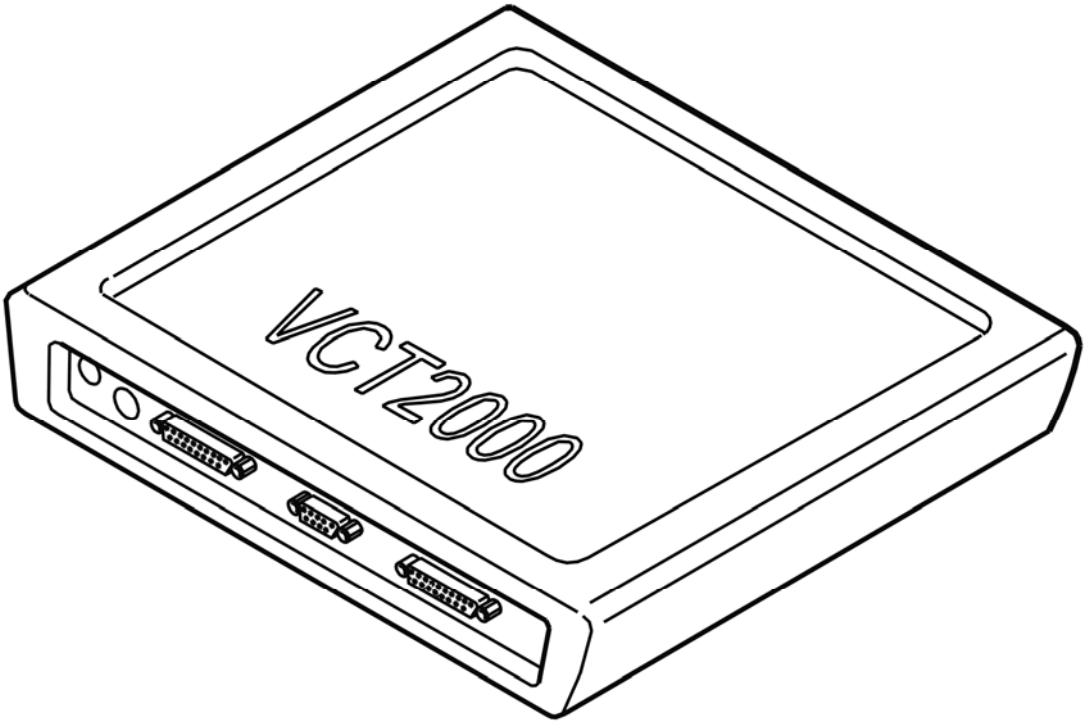

Fig. 99: Identifying VCT2000 Diagnostic Tool Symbol In VIDA
Courtesy of VOLVO CARS CORPORATION

Is the status of the diagnostic trouble code (DTC) intermittent?

- **YES**

  VERIFIED: Troubleshooting has been completed.

- **NO**

  see **INFORMATION**

INFORMATION

FAULT-TRACING INFORMATION

The fault should have been detected and remedied. As this is not the case fault-tracing has failed.

Exit fault-tracing for this diagnostic trouble code (DTC) or make another attempt.

BCM-0138: POWER SUPPLY FOR THE ACTIVE YAW CONTROL SENSOR. FAULTY VOLTAGE (B5254T2; 2005-2007)

DIAGNOSTIC TROUBLE CODE (DTC) INFORMATION

see **DIAGNOSTIC TROUBLE CODE (DTC) INFORMATION**

FAULTY VOLTAGE

see **FAULTY VOLTAGE**

BCM-0138: POWER SUPPLY FOR THE ACTIVE YAW CONTROL SENSOR. FAULTY VOLTAGE (B6294T; 2005-2006)

DIAGNOSTIC TROUBLE CODE (DTC) INFORMATION

see **DIAGNOSTIC TROUBLE CODE (DTC) INFORMATION**

FAULTY VOLTAGE

see **FAULTY VOLTAGE**

BCM-0139: PRESSURE BUILD-UP VALVE, POWER BRAKE BOOSTER. SIGNAL OUTSIDE ITS PERMITTED RANGE (2003-2004)

DIAGNOSTIC TROUBLE CODE (DTC) INFORMATION

Condition

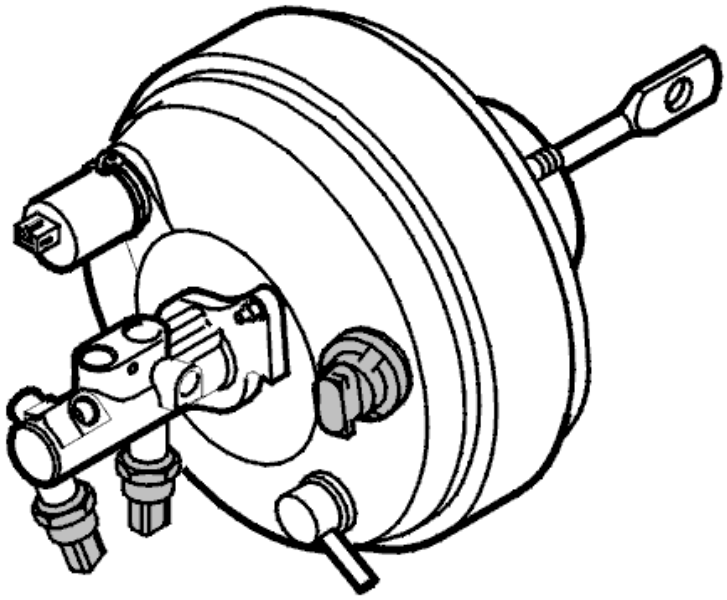

Fig. 100: Identifying Brake Booster
Courtesy of VOLVO CARS CORPORATION

NOTE: This diagnostic trouble code (DTC) applies only to brake systems with dynamic stability and traction control (DSTC).

During stability control the brake control module (BCM) transmits a signal to the pressure build-up valve. The valve opens and releases atmospheric pressure into the brake power booster. This increases the brake pressure in the brake system automatically. The function is used for traction control and in active brake assistance.

Diagnostic trouble code (DTC) BCM-0139 is stored if the control module registers an implausible signal from the pressure build-up valve.

Substitute Value

- Traction control is blocked
- Stability control is blocked
- Active yaw control is blocked
- Brake assistance is blocked.

HINT: For information about abbreviations, see BRAKE SYSTEM, ABBREVIATIONS .

Possible Source

- Contact resistance or oxidation in the terminals or connections
- Short-circuit to ground or supply voltage in the wiring
- Incorrectly installed sensor
- Defective pressure build-up valve
- Internal fault in the control module.

Fault symptom[s]

- General warning lamp lit
- The anti-spin warning lamp is lit (up to and including 2002 model year)
- Anti-spin does not function
- The stability control system does not function
- The traction control system does not function.

SIGNAL OUTSIDE ITS PERMITTED RANGE

CHECKING THE CONNECTORS

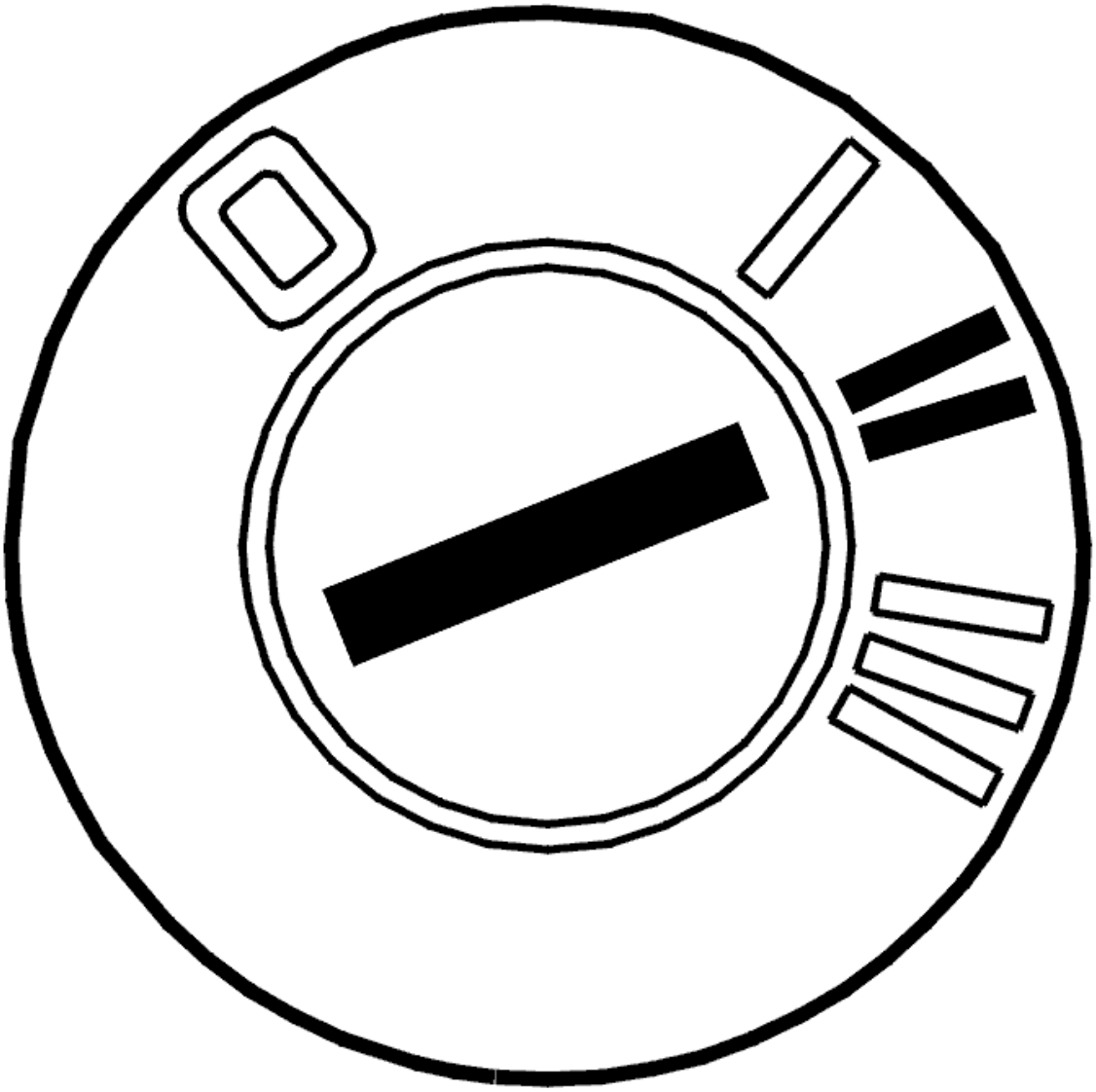

Fig. 101: Identifying Ignition ON
Courtesy of VOLVO CARS CORPORATION

- Ignition off
- Check the connectors of the brake control module (BCM) and the pressure build-up valve/pedal pressure sensor for contact resistance and oxidation.
- Reinstall the components, reconnect the connectors etc.
- Ignition on
- Use the Activation function to activate the pressure build-up valve.

  A mechanical pumping sound should be audible from the engine compartment and the pedal should move slightly.

  Other information

- For removal of the control module connectors: **CONNECTING THE BREAKOUT BOX, BRAKE CONTROL MODULE (BCM)**
- see **CONTENTS**

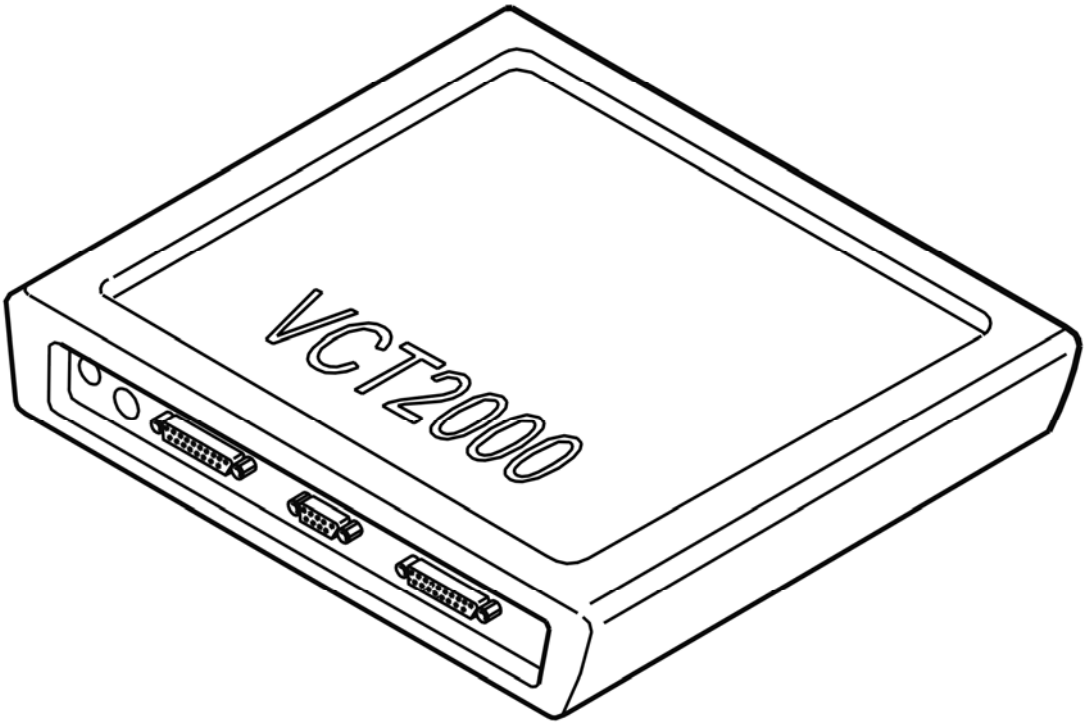

Fig. 102: Identifying VCT2000 Diagnostic Tool Symbol In VIDA
Courtesy of VOLVO CARS CORPORATION

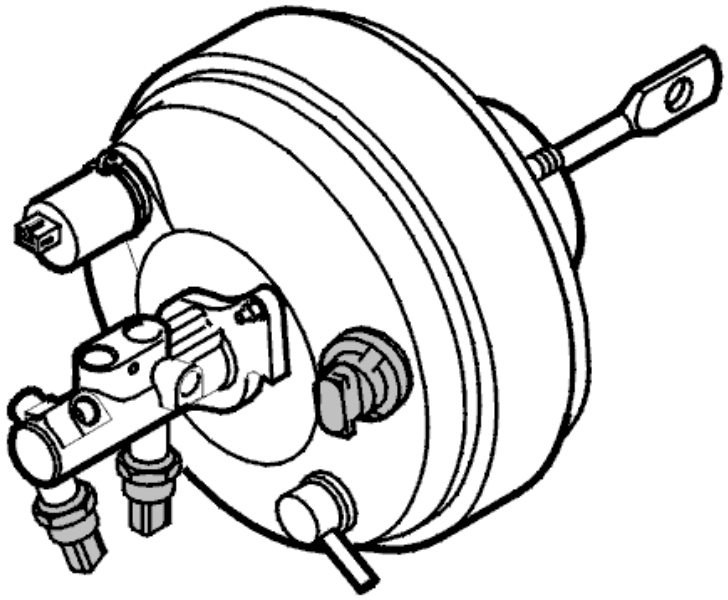

Fig. 103: Identifying Brake Booster
Courtesy of VOLVO CARS CORPORATION

Was the function OK?

- **YES**

  OKAY: Troubleshooting has been completed.

- **NO**

  see **CHECKING WIRING AND SENSORS**

CHECKING WIRING AND SENSORS

Check the cables between the pressure build-up valve:

- #3 and brake control module (BCM) #31 (#A31)
- #4 and brake control module (BCM) #17 (#A17)

check for an open-circuit, a short-circuit to ground and a short-circuit to supply voltage.

HINT: Check the pressure build-up valve by, with the ignition off and the breakout box connected,

reading the resistance between terminals #17 and #31 on the breakout box. Resistance must be approximately 3ohms.

Remedy as necessary.

Other information

- see **CONNECTING THE BREAKOUT BOX, BRAKE CONTROL MODULE (BCM)**
- see **SIGNAL SPECIFICATION, BRAKE CONTROL MODULE (BCM) WITH DSTC (DYNAMIC STABILITY AND TRACTION CONTROL)**
- For replacing the pressure build-up valve (brake booster):
  - For B6xxxx, see **POWER BRAKE BOOSTER, REPLACING**
  - For B5xxxx, see **POWER BRAKE BOOSTER, REPLACING** .

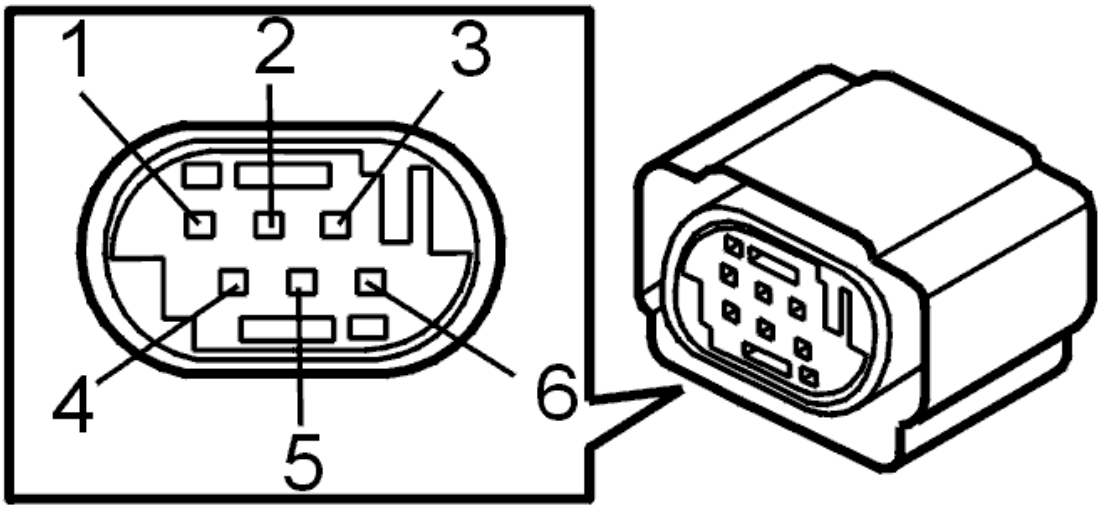

Fig. 104: Identifying Active Yaw Control Sensor Connector Terminals
Courtesy of VOLVO CARS CORPORATION

Was a fault detected?

- **YES**

  see **VERIFICATION**

- **NO**

  FAULT NOT FOUND: Troubleshooting has been completed.

VERIFICATION

HINT: After carrying out the repair, check that the fault has been remedied.

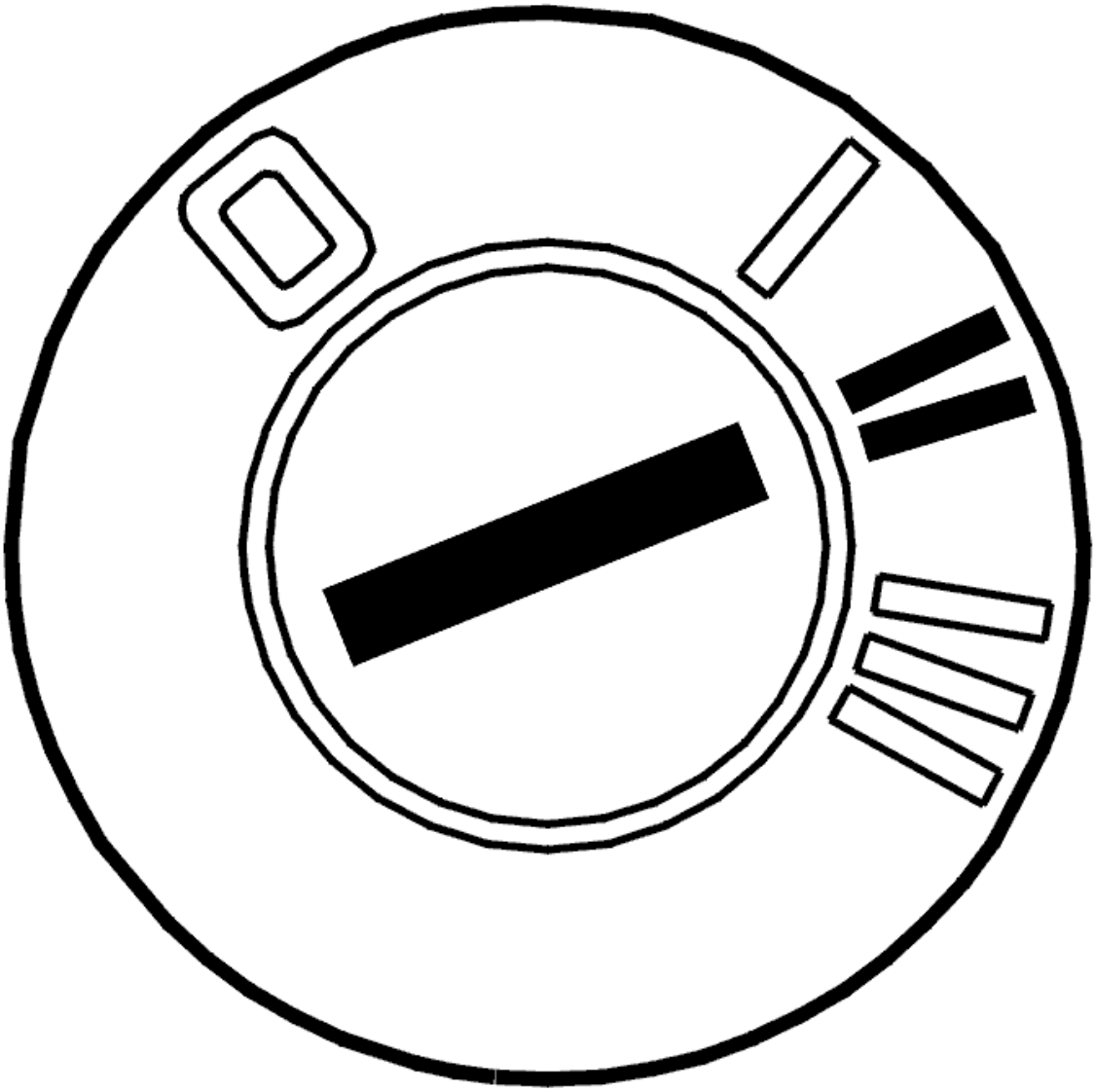

Fig. 105: Identifying Ignition ON
Courtesy of VOLVO CARS CORPORATION

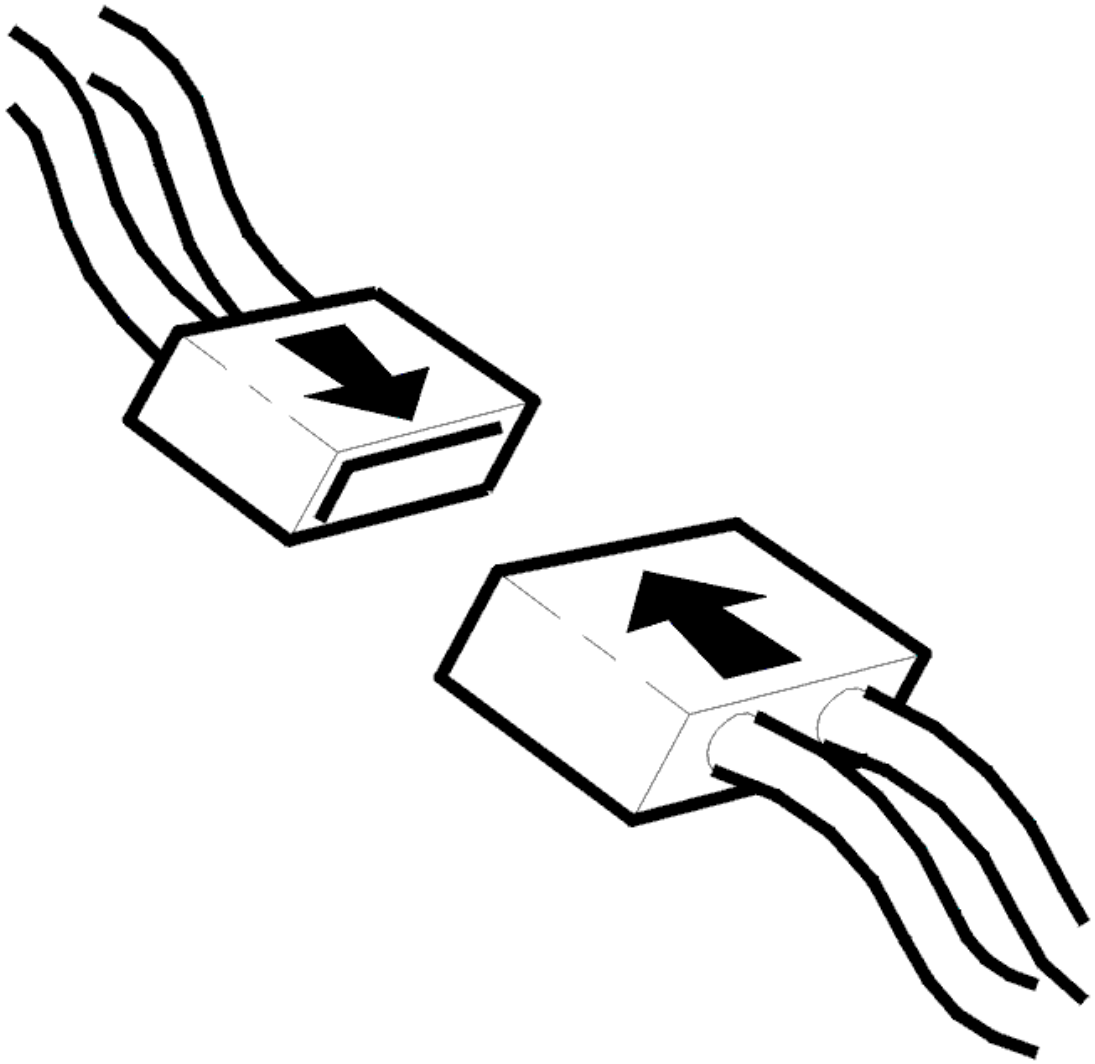

Fig. 106: Connecting Connector
Courtesy of VOLVO CARS CORPORATION

- Ignition off
- Reinstall the components, reconnect the connectors etc.
- Ignition on
- Use the Activation function to activate the pressure build-up valve.

  A mechanical pumping sound should be audible from the engine compartment and the pedal should move slightly.

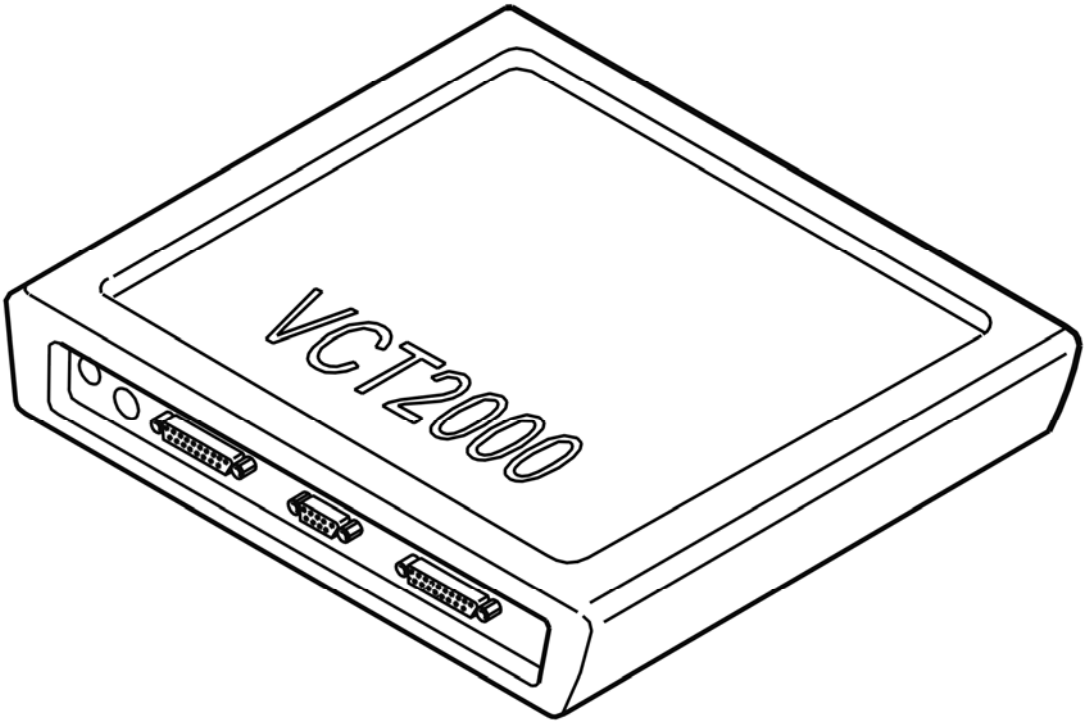

Fig. 107: Identifying VCT2000 Diagnostic Tool Symbol In VIDA
Courtesy of VOLVO CARS CORPORATION

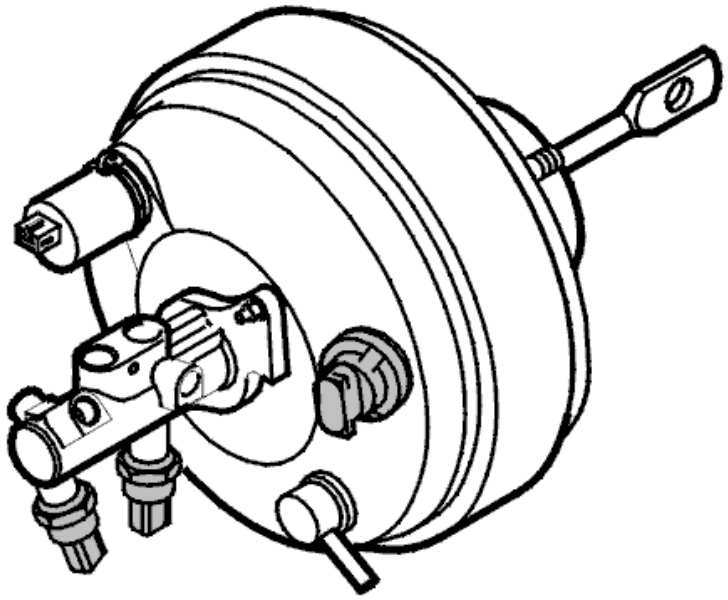

Fig. 108: Identifying Brake Booster
Courtesy of VOLVO CARS CORPORATION

Was the function OK?

- **YES**

  OKAY: Troubleshooting has been completed.

- **NO**

  see **INFORMATION**

INFORMATION

FAULT-TRACING INFORMATION

The fault should have been detected and remedied. As this is not the case fault-tracing has failed.

Exit fault-tracing for this diagnostic trouble code (DTC) or make another attempt.

BCM-0139: PRESSURE BUILD-UP VALVE, POWER BRAKE BOOSTER. SIGNAL OUTSIDE ITS PERMITTED RANGE (B5254T2; 2005-2007)

DIAGNOSTIC TROUBLE CODE (DTC) INFORMATION

see **DIAGNOSTIC TROUBLE CODE (DTC) INFORMATION**

SIGNAL OUTSIDE ITS PERMITTED RANGE

see **SIGNAL OUTSIDE ITS PERMITTED RANGE**

BCM-0139: PRESSURE BUILD-UP VALVE, POWER BRAKE BOOSTER. SIGNAL OUTSIDE ITS PERMITTED RANGE (B6294T; 2005-2006)

DIAGNOSTIC TROUBLE CODE (DTC) INFORMATION

see **DIAGNOSTIC TROUBLE CODE (DTC) INFORMATION**

SIGNAL OUTSIDE ITS PERMITTED RANGE

see **SIGNAL OUTSIDE ITS PERMITTED RANGE**

BCM-0140: PEDAL PRESSURE SENSOR. SIGNAL OUTSIDE ITS PERMITTED RANGE (2003-2004)

DIAGNOSTIC TROUBLE CODE (DTC) INFORMATION

Condition

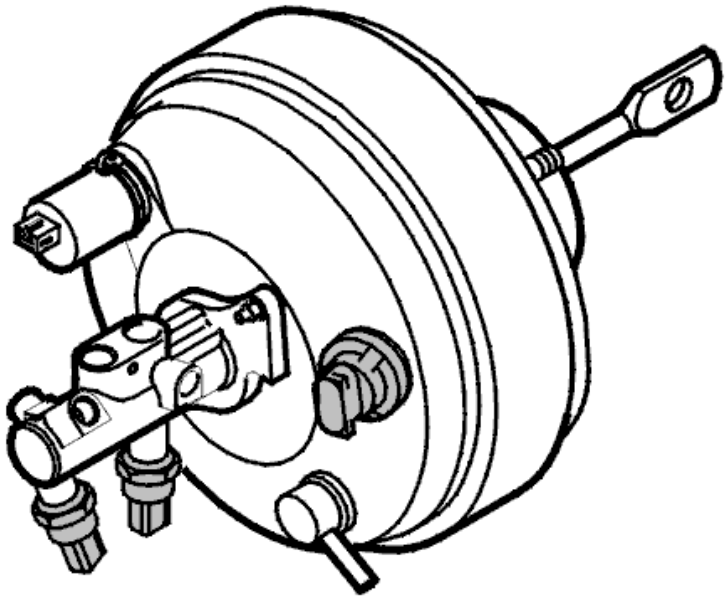

Fig. 109: Identifying Brake Booster
Courtesy of VOLVO CARS CORPORATION

NOTE: This diagnostic trouble code (DTC) applies only to brake systems with dynamic stability and traction control (DSTC).

The pedal pressure sensor is located in the power brake booster and informs the brake control module (BCM) when the brake pedal is pressed. The control module uses the information to disengage active yaw control and active brake assistance if the functions are activated and the driver presses the brake pedal.

Diagnostic trouble code (DTC) BCM-0140 is stored if the control module registers an implausible signal from the pedal pressure sensor.

Substitute Value

- Traction control is blocked
- Stability control is blocked
- Active yaw control is blocked
- Brake assistance is blocked.

HINT: For information about abbreviations, see BRAKE SYSTEM, ABBREVIATIONS .

Possible Source

- Contact resistance or oxidation in the terminals or connections
- Open-circuit in the wiring
- Short-circuit to ground or supply voltage in the wiring
- Defective pedal pressure sensor
- Defective brake control module (BCM).

Fault symptom[s]

- The anti-spin warning lamp is lit (up to and including 2002 model year)
- General warning lamp lit
- Anti-spin does not function
- The stability control system does not function
- The traction control system does not function.

SIGNAL OUTSIDE ITS PERMITTED RANGE

CHECKING THE CONNECTORS

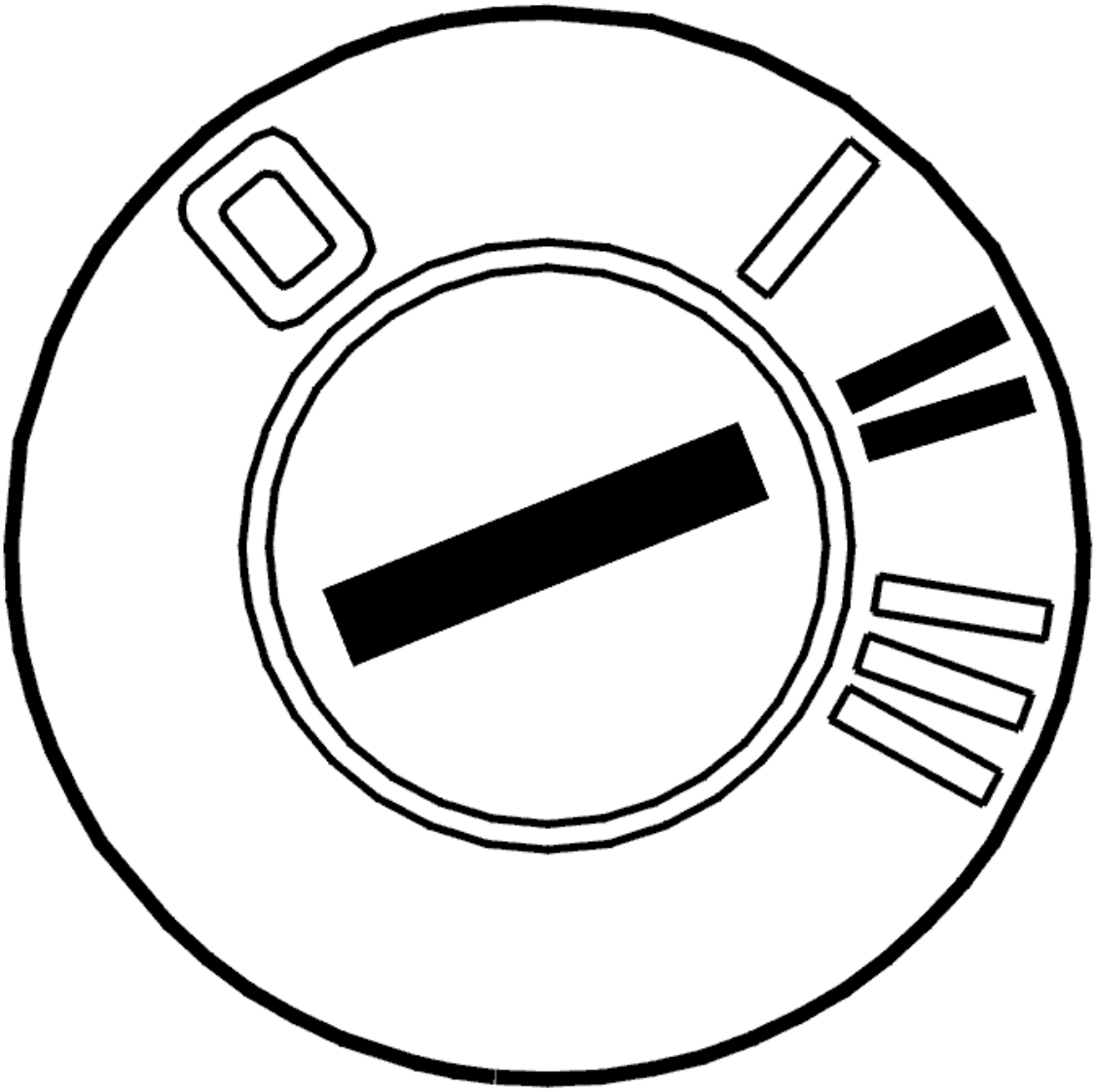

Fig. 110: Identifying Ignition ON
Courtesy of VOLVO CARS CORPORATION

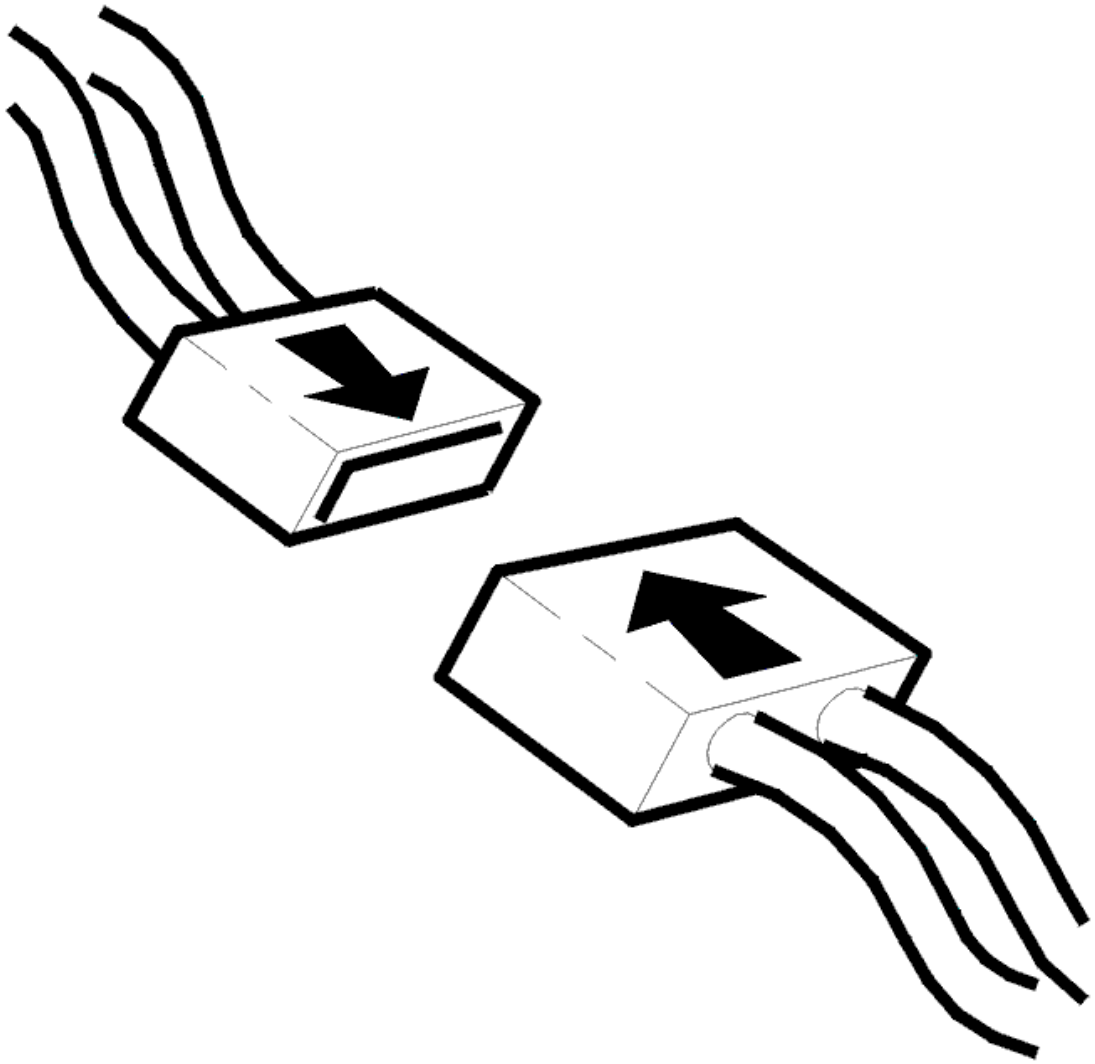

Fig. 111: Connecting Connector
Courtesy of VOLVO CARS CORPORATION

- Ignition off
- Check the brake control module (BCM) and pedal pressure sensor connectors. Check for contact resistance and oxidation
- Reinstall the components, reconnect the connectors etc.
- Ignition on
- Read off the status of the pedal pressure sensor.

  The status must be OFF with the brake pedal unaffected and change to ON when the brake pedal is pressed. If the status changes, the cause of the fault was probably contact resistance or oxidation in the control module or in the pedal pressure sensor connectors.

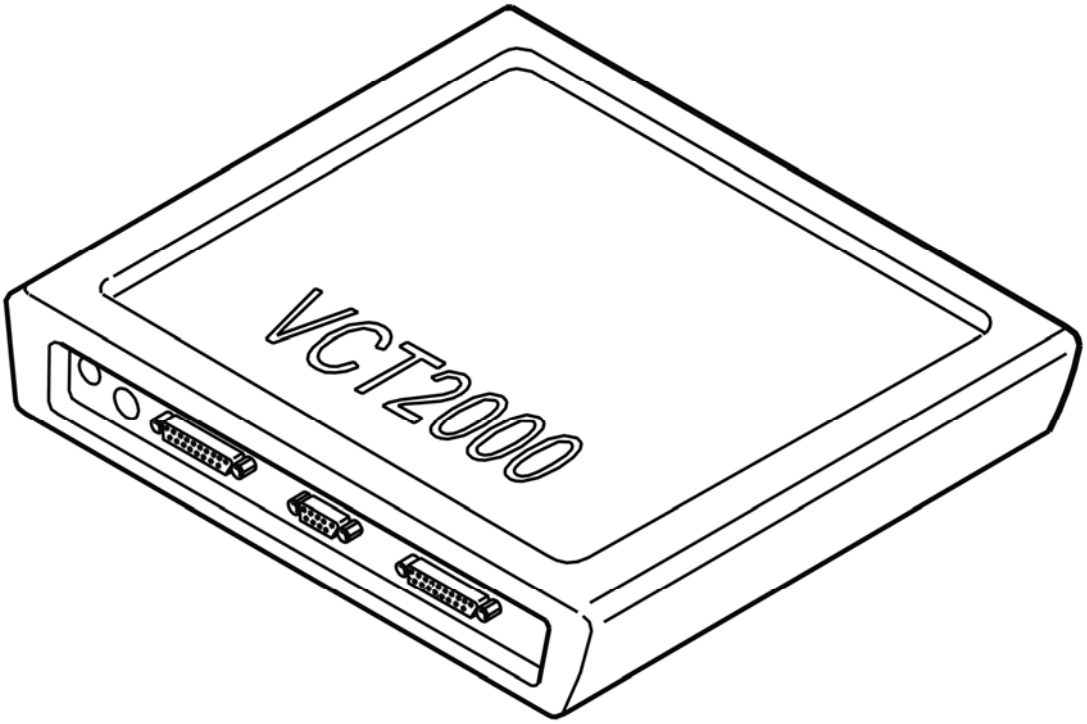

Fig. 112: Identifying VCT2000 Diagnostic Tool Symbol In VIDA
Courtesy of VOLVO CARS CORPORATION

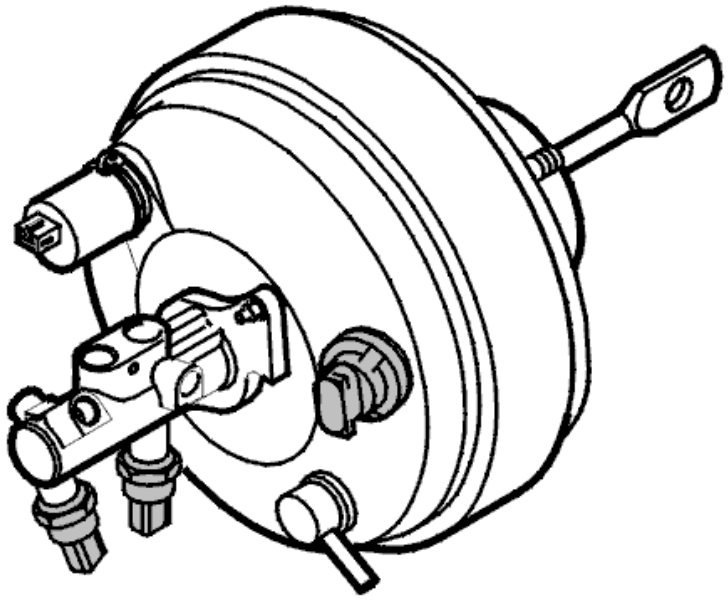

Fig. 113: Identifying Brake Booster
Courtesy of VOLVO CARS CORPORATION

Does the status change?

- **YES**

  OKAY: Troubleshooting has been completed.

- **NO**

  see **CHECKING THE WIRING**

CHECKING THE WIRING

Check the wiring between the pedal pressure sensor:

- terminal #1 and control module terminal #27 (#A27)
- terminal #2 and control module terminal #30 (#A30)
- terminal #5 and control module terminal #28 (#A28).

check for an open-circuit, a short-circuit to ground and a short-circuit to supply voltage.

Remedy as necessary.

Other information

- To connect the breakout box, see **CONNECTING THE BREAKOUT BOX, BRAKE CONTROL MODULE (BCM)**
- To fault-trace the wiring and connections, see **CONTENTS**
- To replace the pedal pressure sensor (power brake booster):
  - For B6xxxx, see **POWER BRAKE BOOSTER, REPLACING**
  - For B5xxxx, see **POWER BRAKE BOOSTER, REPLACING** .
- For information about signals, see **SIGNAL SPECIFICATION, BRAKE CONTROL MODULE (BCM) WITH DSTC (DYNAMIC STABILITY AND TRACTION CONTROL)** .

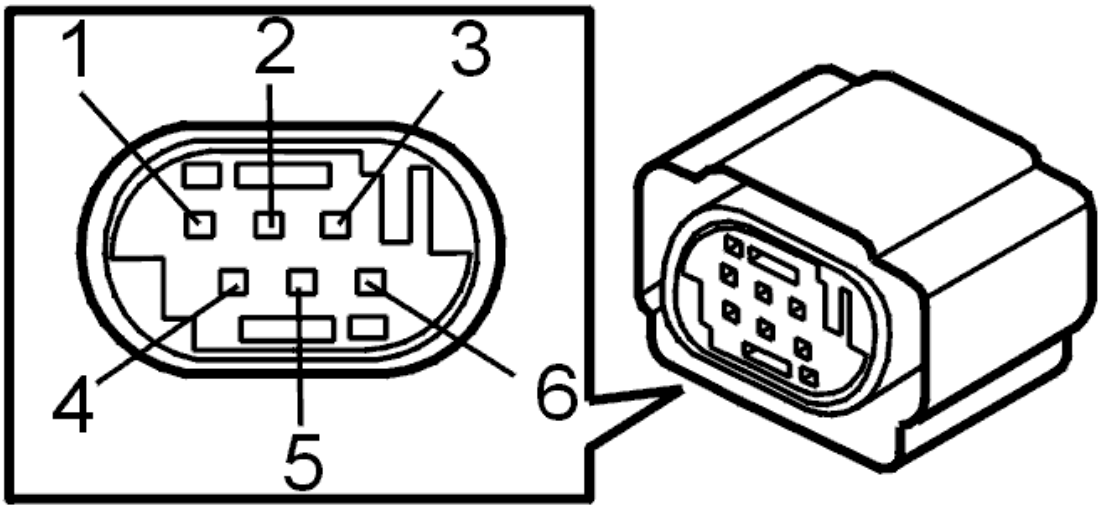

Fig. 114: Identifying Active Yaw Control Sensor Connector Terminals
Courtesy of VOLVO CARS CORPORATION

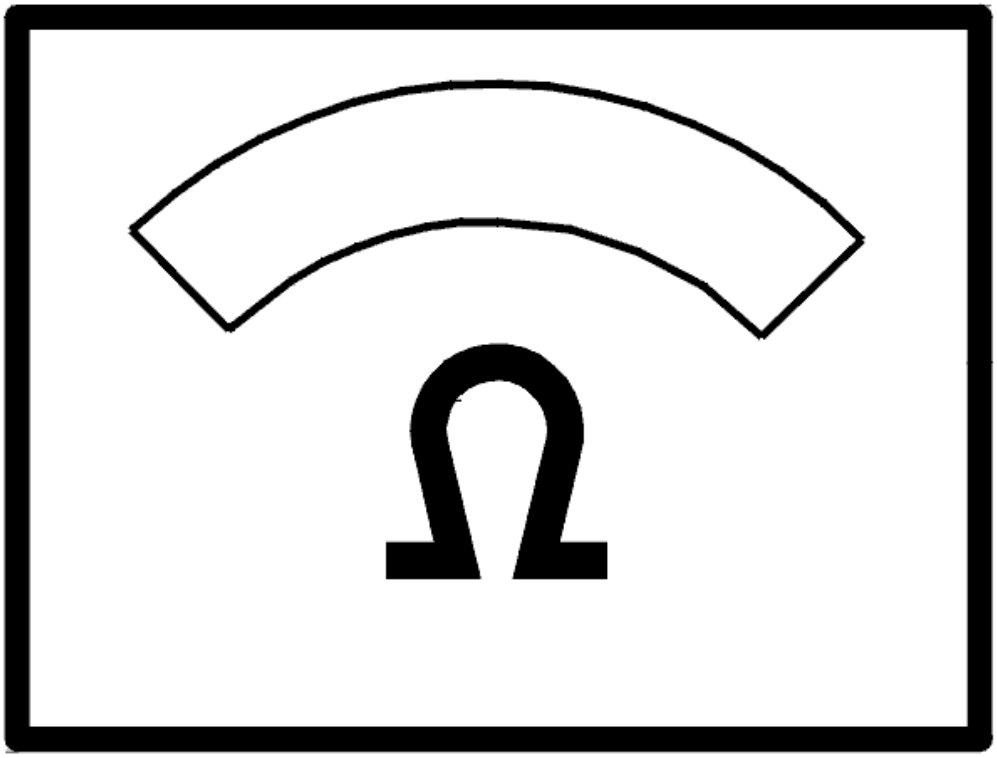

Fig. 115: Identifying Ohm Meter
Courtesy of VOLVO CARS CORPORATION

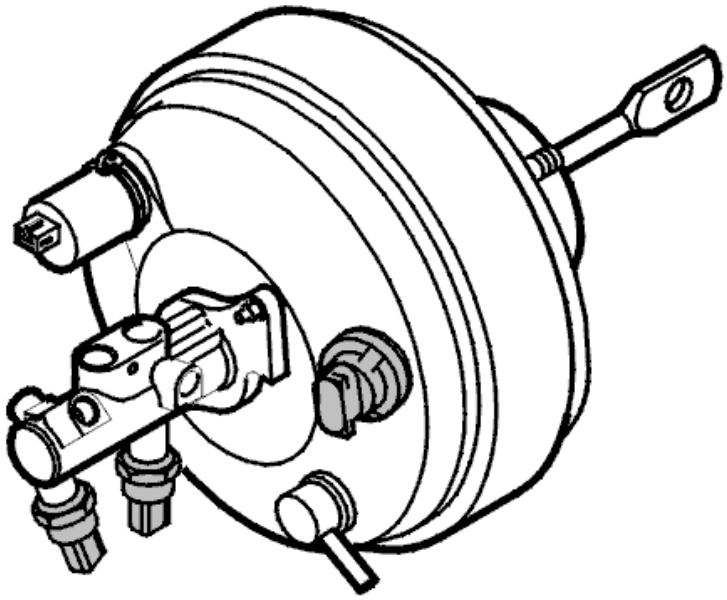

Fig. 116: Identifying Brake Booster
Courtesy of VOLVO CARS CORPORATION

Was a fault detected?

- **YES**

  see **VERIFICATION**

- **NO**

  see **CHECKING THE CONNECTORS**

CHECKING THE CONNECTORS

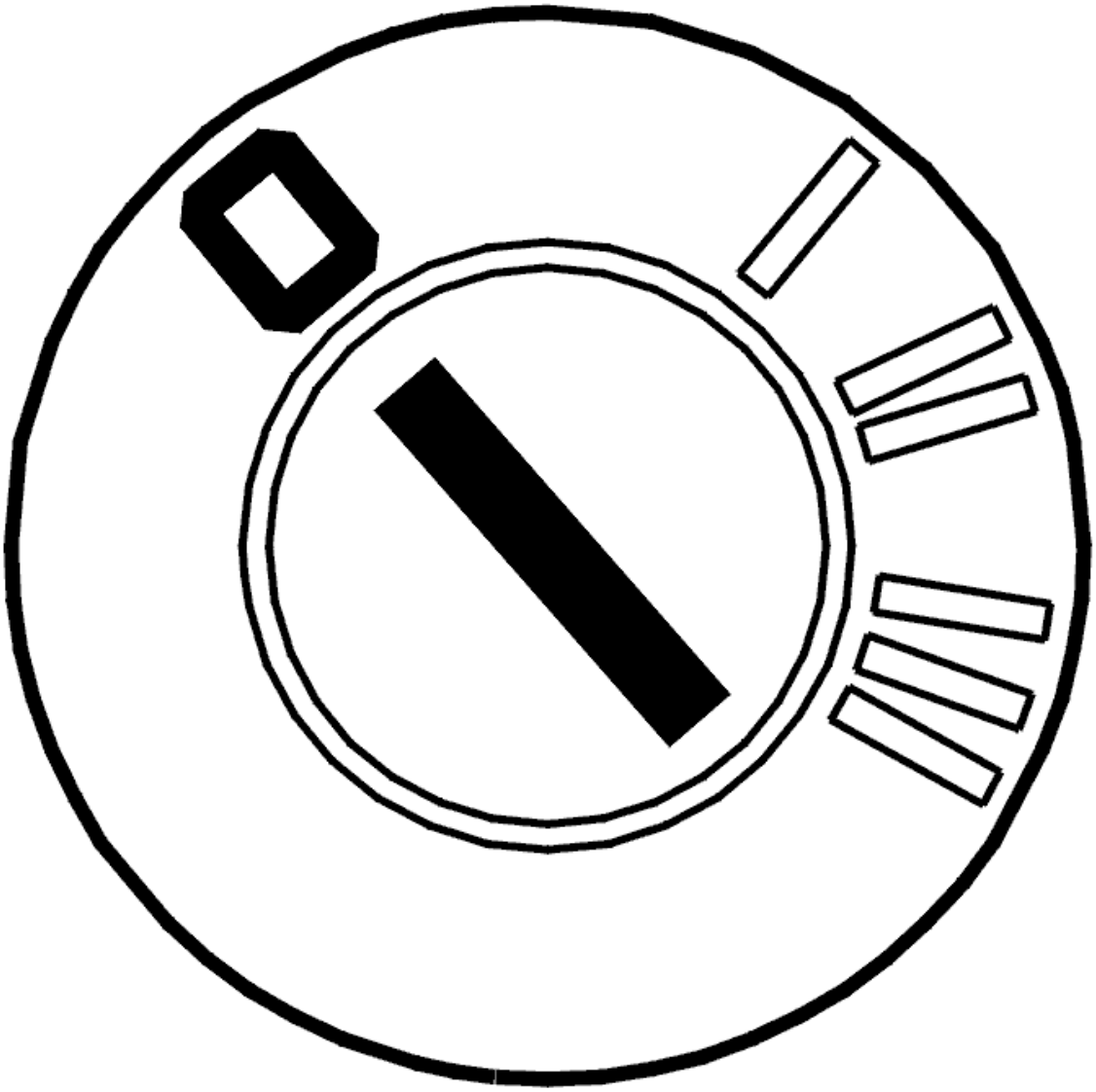

Fig. 117: Identifying Ignition OFF
Courtesy of VOLVO CARS CORPORATION

- Ignition off
- Connect the breakout box to the cable harness (not control module side).

  Connect an ohmmeter between terminals #28 and #27 on the breakout box. When the brake pedal is not depressed the resistance must be infinite. When the brake pedal is depressed the resistance must be 0 ohms.

  Connect an ohmmeter between terminals #28 and #30 on the breakout box. When the brake pedal is not depressed the resistance should be 0 ohms. When the brake pedal is depressed the resistance should be infinite.

  Replace the power brake booster if the resistance is incorrect.

Other information

- To connect the breakout box, see **CONNECTING THE BREAKOUT BOX, BRAKE CONTROL MODULE (BCM)**
- To replace the power brake booster:
  - For B6xxxx, see **POWER BRAKE BOOSTER, REPLACING**
  - For B5xxxx, see **POWER BRAKE BOOSTER, REPLACING** .

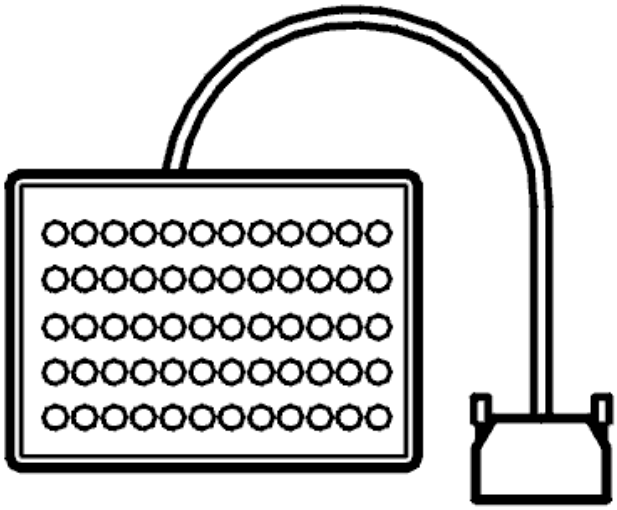

Fig. 118: Breakout Box
Courtesy of VOLVO CARS CORPORATION

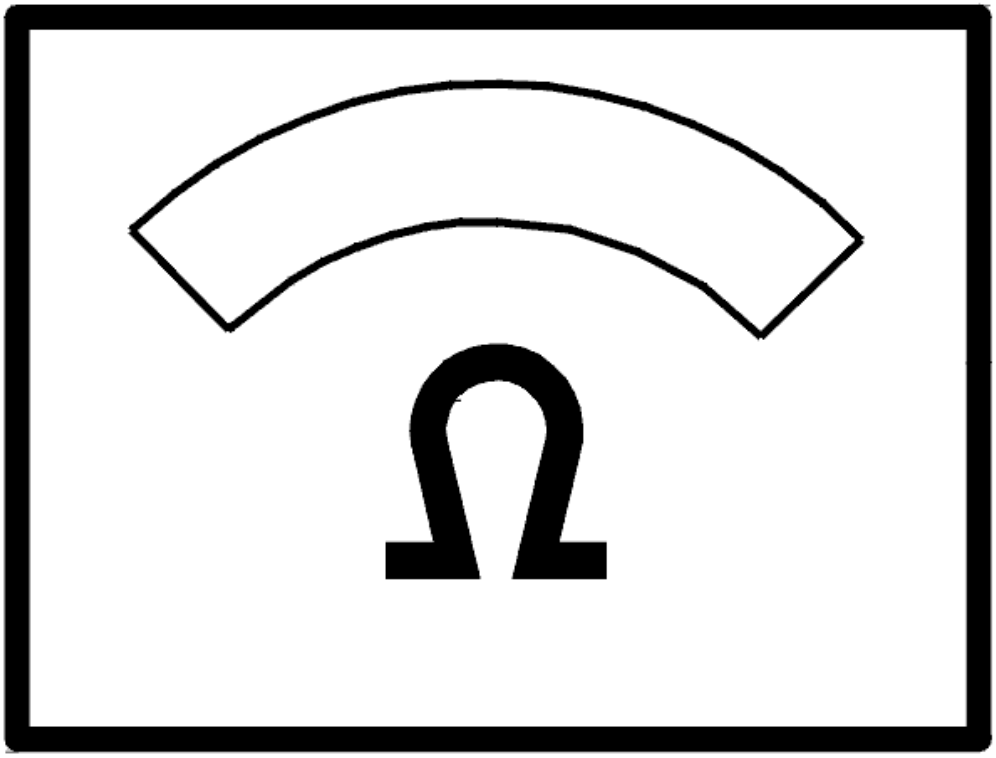

Fig. 119: Identifying Ohm Meter
Courtesy of VOLVO CARS CORPORATION

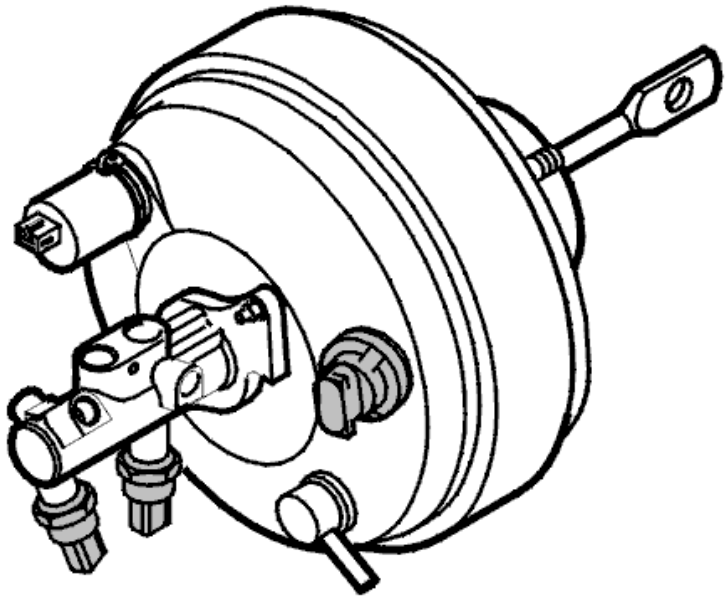

Fig. 120: Identifying Brake Booster
Courtesy of VOLVO CARS CORPORATION

Was the resistance OK?

- **YES**

  FAULT NOT FOUND: Troubleshooting has been completed.

- **NO**

  see **VERIFICATION**

VERIFICATION

VERIFICATION

HINT: After carrying out the repair, check that the fault has been remedied.

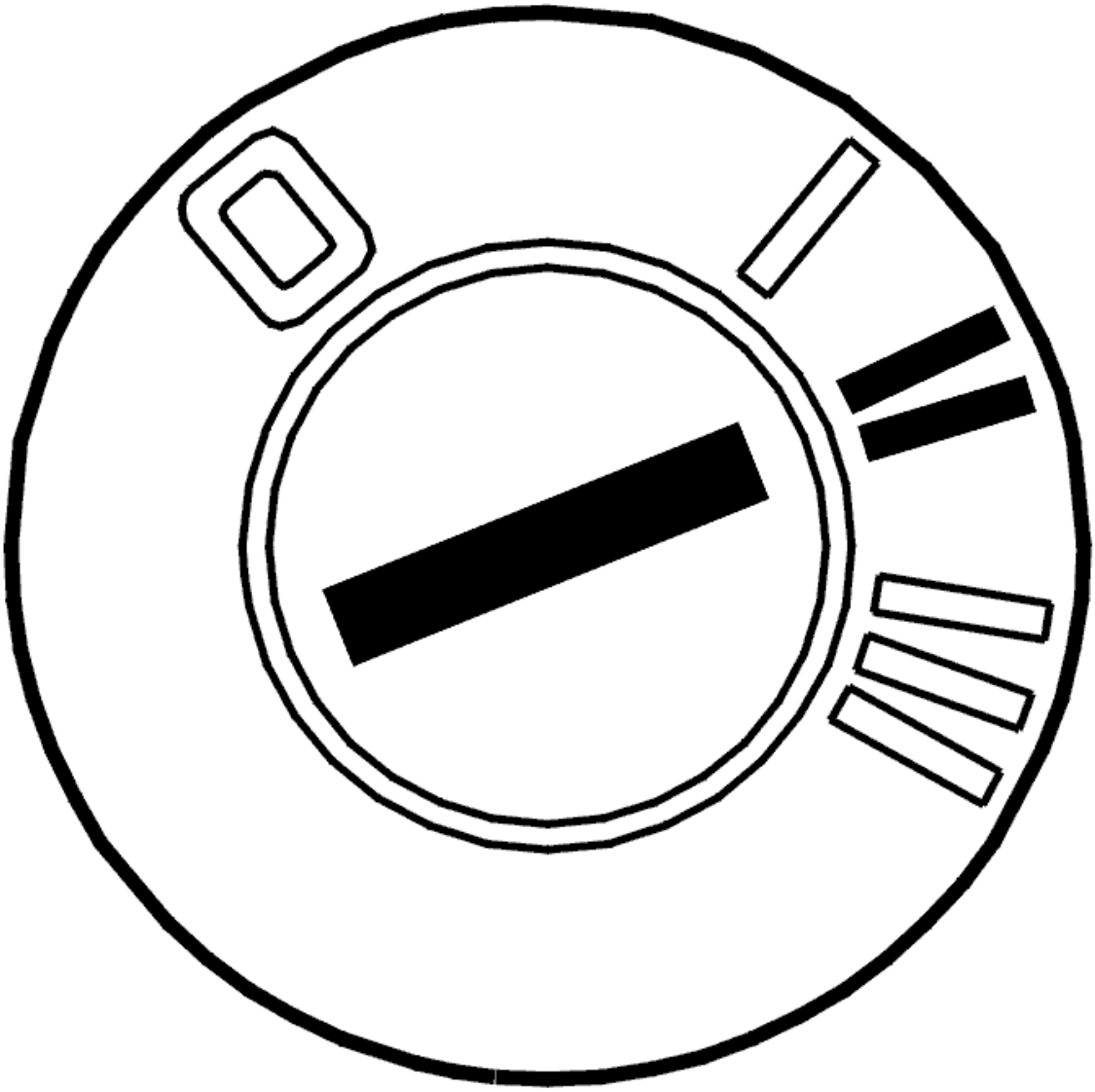

Fig. 121: Identifying Ignition ON
Courtesy of VOLVO CARS CORPORATION

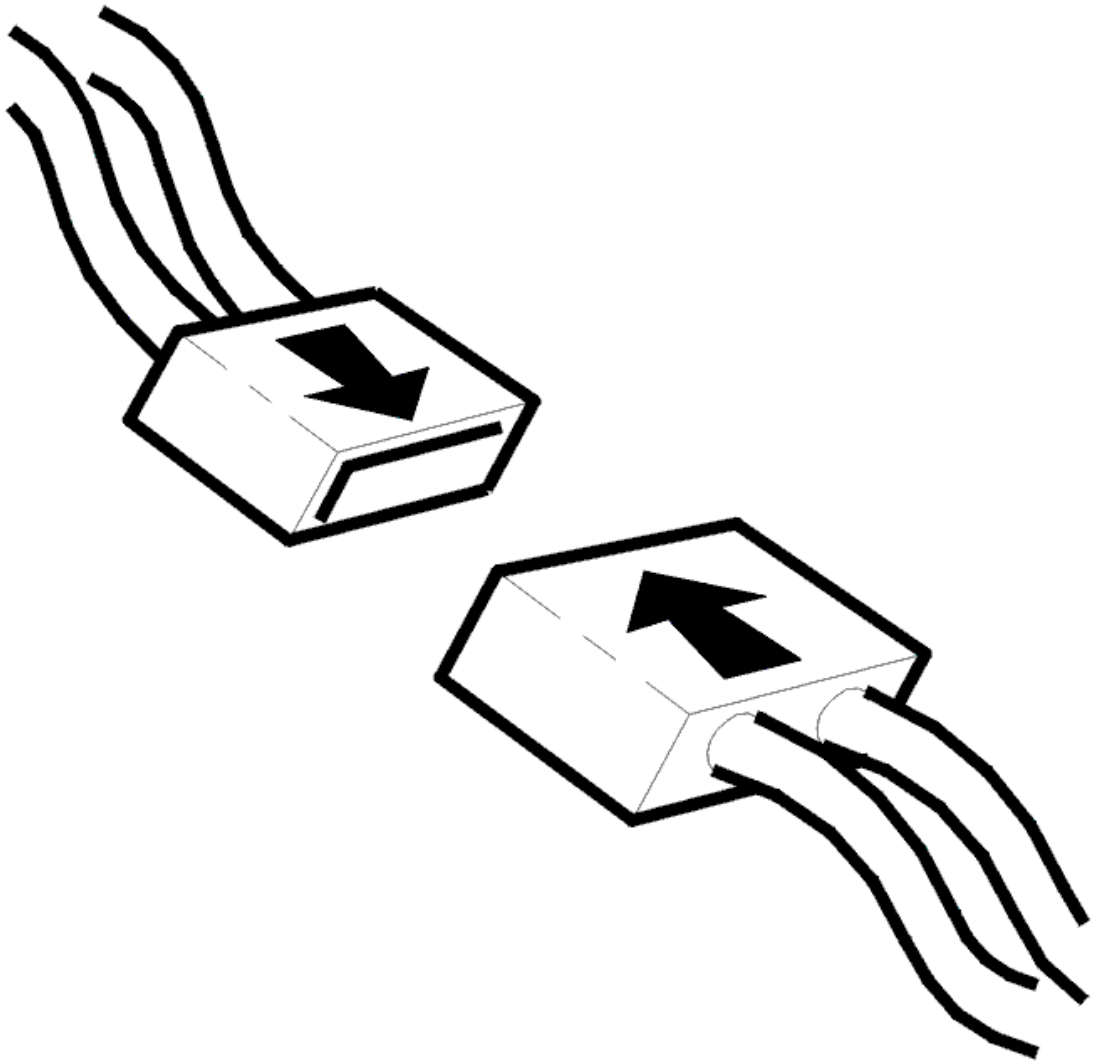

Fig. 122: Connecting Connector
Courtesy of VOLVO CARS CORPORATION

- Ignition off
- Reconnect the connectors, reinstall components etc.
- Test drive the car. See **TEST DRIVE FORM (DSTC (DYNAMIC STABILITY AND TRACTION CONTROL) /BRAKE CONTROL MODULE), DESCRIPTION**
- Ignition on.

  Read off the status of the diagnostic trouble code (DTC).

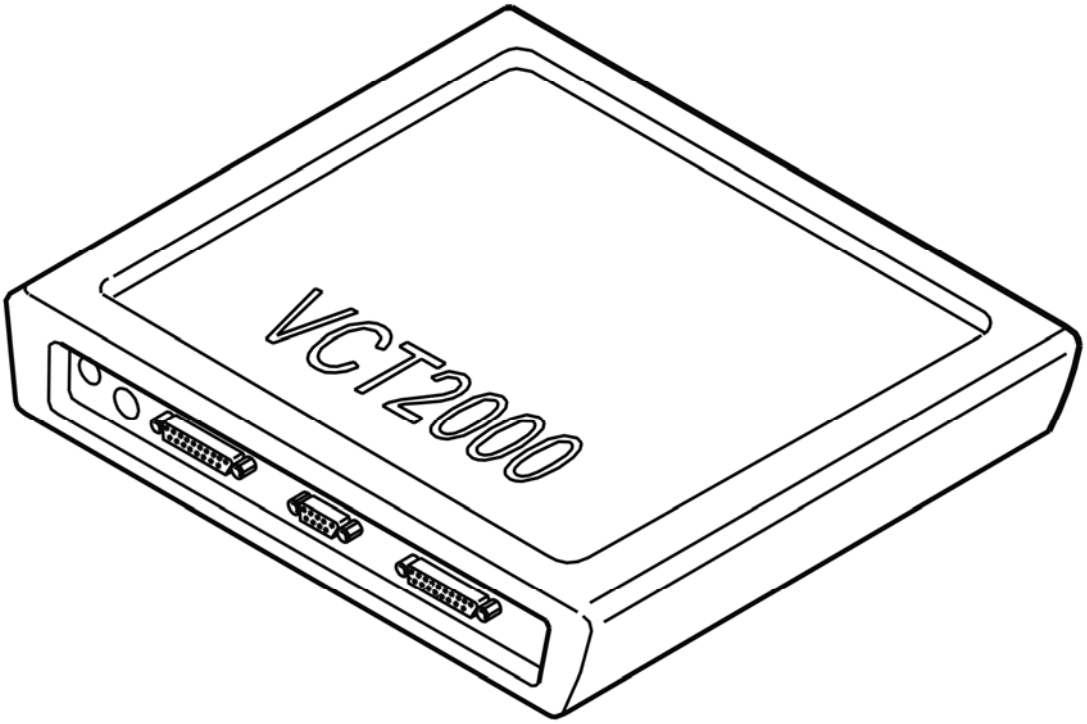

Fig. 123: Identifying VCT2000 Diagnostic Tool Symbol In VIDA
Courtesy of VOLVO CARS CORPORATION

Is the status of the diagnostic trouble code (DTC) intermittent?

- **YES**

  VERIFIED: Troubleshooting has been completed.

- **NO**

  see **INFORMATION**

INFORMATION

FAULT-TRACING INFORMATION

The fault should have been detected and remedied. As this is not the case fault-tracing has failed.

Exit fault-tracing for this diagnostic trouble code (DTC) or make another attempt.

BCM-0140: PEDAL PRESSURE SENSOR. SIGNAL OUTSIDE ITS PERMITTED RANGE (B5254T2; 2005-2007)

DIAGNOSTIC TROUBLE CODE (DTC) INFORMATION

see **DIAGNOSTIC TROUBLE CODE (DTC) INFORMATION**

SIGNAL OUTSIDE ITS PERMITTED RANGE

see **SIGNAL OUTSIDE ITS PERMITTED RANGE**

BCM-0140: PEDAL PRESSURE SENSOR. SIGNAL OUTSIDE ITS PERMITTED RANGE (B6294T; 2005-2006)

DIAGNOSTIC TROUBLE CODE (DTC) INFORMATION

see **DIAGNOSTIC TROUBLE CODE (DTC) INFORMATION**

SIGNAL OUTSIDE ITS PERMITTED RANGE

see **SIGNAL OUTSIDE ITS PERMITTED RANGE**

BCM-0145: STABILITY CONTROL. TOO LONG STABILITY CONTROL (2003-2004)

DIAGNOSTIC TROUBLE CODE (DTC) INFORMATION

Condition

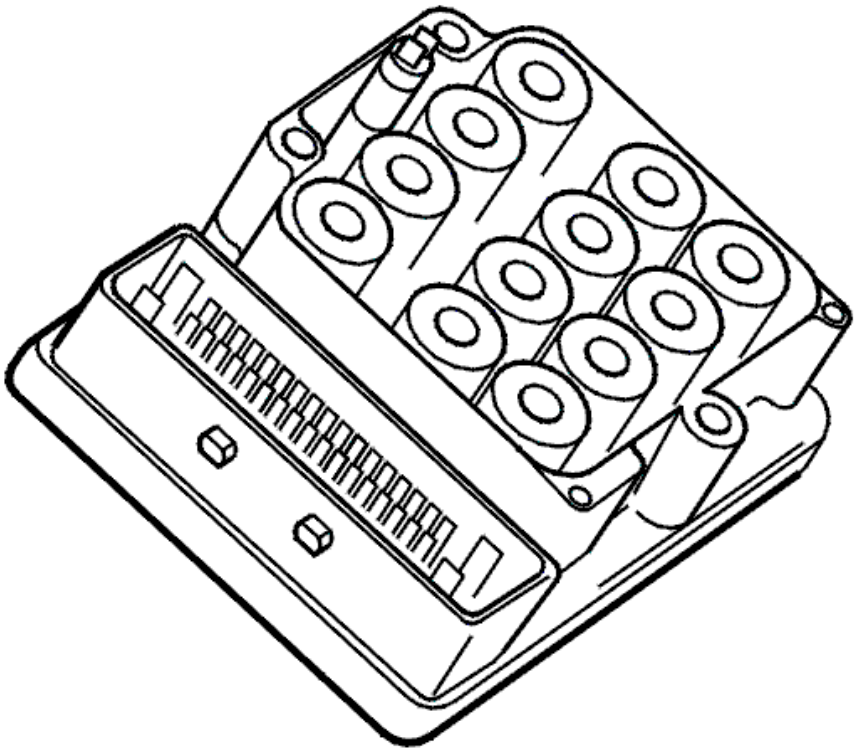

Fig. 124: ABS Control Module
Courtesy of VOLVO CARS CORPORATION

NOTE: The diagnostic trouble code (DTC) applies only to cars with dynamic stability and traction control (DSTC).

Diagnostic trouble code (DTC) BCM-0145 is stored If the brake control module (BCM) registers that the stability function operates for more than 15 seconds non-stop.

Substitute Value

- Traction control is blocked
- Stability control is blocked
- Active yaw control is blocked.

HINT: For information about abbreviations, see BRAKE SYSTEM, ABBREVIATIONS .

Possible Source

- Incorrectly installed steering wheel
- Incorrect wheel alignment
- Loose or incorrectly installed active yaw control sensor

- Defective active yaw control sensor.

NOTE: **This diagnostic trouble code (DTC) is not due to an internal hardware fault in the Brake control module (BCM) and must not be remedied by replacing the control module.**

Fault symptom[s]

- The anti-spin warning lamp is lit (up to and including 2002 model year)
- General yellow warning lamp lit (from model year 2003 inclusive)
- Anti-spin does not function
- The stability control system does not function
- The traction control system does not function.

TOO-LONG: STABILITY CONTROL

VISUALLY CHECKING THE BRAKES

HINT: The diagnostic trouble code (DTC) indicates that the stability function has been active for too long.

Check the front and rear brakes. Check there is no overheating damage to brake caliper, brake pads or brake disc. Replace damaged components.

Tell the customer why the anti-spin function was temporarily blocked and why the ABS warning lamp was lit.

Other information

- To remove or replace brake calipers, see **BRAKE CALIPERS FRONT, REPLACING** and **BRAKE CALIPERS REAR, REPLACING**
- To remove or replace brake pad, see **BRAKE PADS FRONT, REPLACING** and **BRAKE PADS REAR, REPLACING**
- To remove or replace brake disc, see **BRAKE DISC FRONT, REPLACING** and **BRAKE DISC REAR, REPLACING** .

BCM-0145: STABILITY CONTROL. TOO LONG STABILITY CONTROL (B5254T2; 2005-2007)

DIAGNOSTIC TROUBLE CODE (DTC) INFORMATION

see **DIAGNOSTIC TROUBLE CODE (DTC) INFORMATION**

TOO-LONG: STABILITY CONTROL

see **TOO LONG STABILITY CONTROL**

BCM-0145: STABILITY CONTROL. TOO LONG STABILITY CONTROL (B6294T; 2005-2006)

DIAGNOSTIC TROUBLE CODE (DTC) INFORMATION

see **DIAGNOSTIC TROUBLE CODE (DTC) INFORMATION**

TOO-LONG: STABILITY CONTROL

see **TOO LONG STABILITY CONTROL**

BCM-0146: FACTORY TEST, DYNAMIC STABILITY AND TRACTION CONTROL (DSTC). TEST CYCLE NOT APPROVED (2003-2004)

DIAGNOSTIC TROUBLE CODE (DTC) INFORMATION

Condition

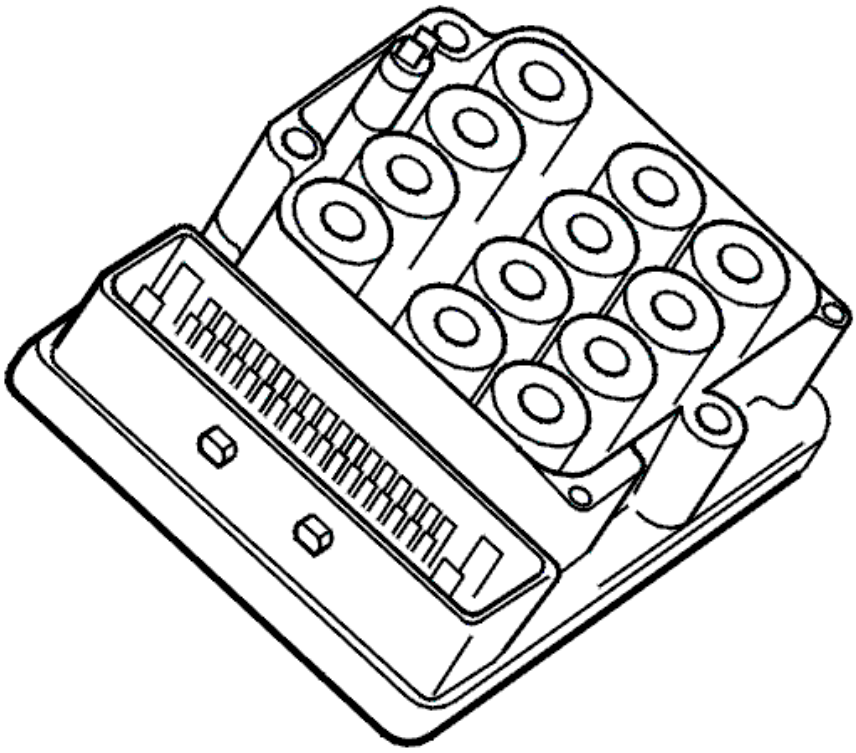

Fig. 125: ABS Control Module
Courtesy of VOLVO CARS CORPORATION

NOTE: **The diagnostic trouble code (DTC) applies only to cars with dynamic stability**

and traction control (DSTC).

Diagnostic trouble code (DTC) BCM-0146 is stored if the brake control module (BCM) registers that the factory test was not completed.

Substitute Value

- Traction control is blocked
- Stability control is blocked
- Active yaw control is blocked.

HINT: For information about abbreviations, see BRAKE SYSTEM, ABBREVIATIONS .

Possible Source

- Active yaw control operation during the factory test
- Factory test not completed satisfactorily.

NOTE: This diagnostic trouble code (DTC) is not due to an internal hardware fault in the Brake control module (BCM) and must not be remedied by replacing the control module.

Fault symptom[s]

- The anti-spin warning lamp is lit (up to and including 2002 model year)
- General yellow warning lamp lit (from model year 2003 inclusive)
- Anti-spin does not function
- The stability control system does not function
- The traction control system does not function.

TEST CYCLE NOT APPROVED

FAULT-TRACING INFORMATION

The diagnostic trouble code (DTC) indicates that active yaw control has been active. This means that the test cycle was not completed correctly and must be repeated.

BCM-0146: FACTORY TEST, DYNAMIC STABILITY AND TRACTION CONTROL (DSTC). TEST CYCLE NOT APPROVED (B5254T2; 2005-2007)

DIAGNOSTIC TROUBLE CODE (DTC) INFORMATION

see DIAGNOSTIC TROUBLE CODE (DTC) INFORMATION

TEST CYCLE NOT APPROVED

see **TEST CYCLE NOT APPROVED**

BCM-0146: FACTORY TEST, DYNAMIC STABILITY AND TRACTION CONTROL (DSTC). TEST CYCLE NOT APPROVED (B6294T; 2005-2006)

DIAGNOSTIC TROUBLE CODE (DTC) INFORMATION

see **DIAGNOSTIC TROUBLE CODE (DTC) INFORMATION**

TEST CYCLE NOT APPROVED

see **TEST CYCLE NOT APPROVED**

BCM-0147: PEDAL POSITION SENSOR. SIGNAL OUTSIDE ITS PERMITTED RANGE (2003-2004)

DIAGNOSTIC TROUBLE CODE (DTC) INFORMATION

Condition

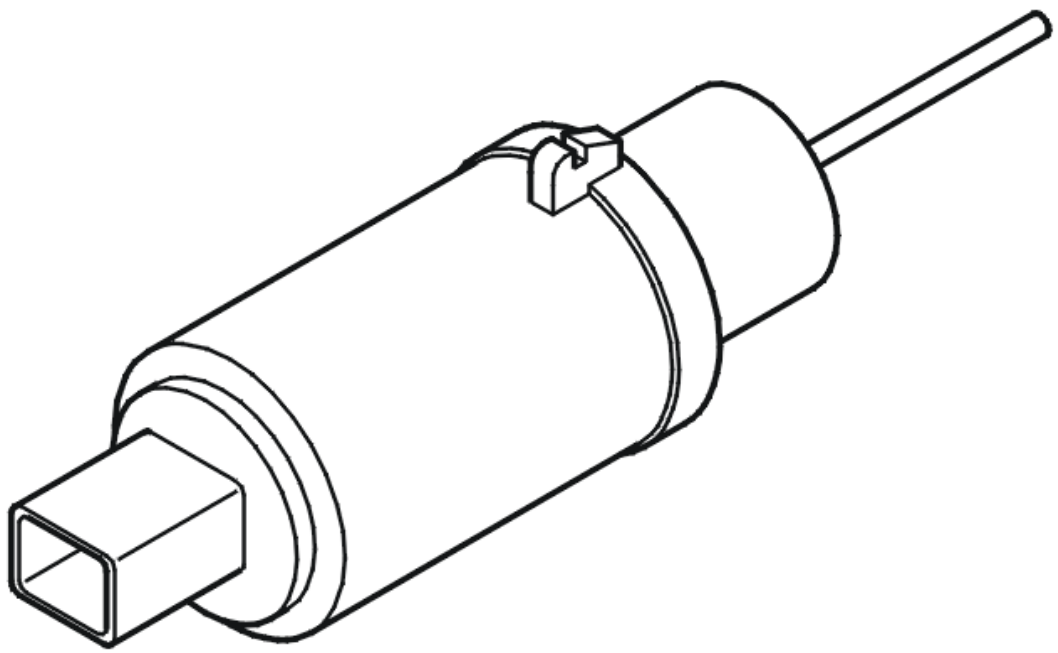

Fig. 126: Identifying Pedal Position Sensor

Courtesy of VOLVO CARS CORPORATION

The brake pedal position sensor is part of "Active brake assistance". The sensor transmits a signal to the brake control module about the position of the brake pedal and the speed at which it is pressed. These signals are required to determine how much brake power is required in each brake situation.

The pedal position sensor is included on cars without brake assistance and is then used by the control module to check the operation of the stop lamp switch.

Diagnostic trouble code (DTC) BCM-0147 is stored if the control module registers a faulty signal from the pedal position sensor.

The diagnostic trouble code (DTC) can be diagnosed after the brake pedal has been depressed to the maximum, the engine has been started, and the brake pedal released. After having been stationary for approximately 10 seconds and then driven faster than 10 km/h for at least 10 seconds. Then stopped the car by braking.

Substitute Value

- Brake assistance is blocked.

HINT: For information about abbreviations, see BRAKE SYSTEM, ABBREVIATIONS .

Possible Source

- Open-circuit in the wiring
- Short-circuit to ground or supply voltage in the wiring
- Incorrectly installed pedal position sensor
- Defective pedal position sensor
- Defective brake control module.

Fault symptom[s]

- General yellow warning lamp lit.

FAULTY SIGNAL

see **FAULTY SIGNAL**

BCM-0147: PEDAL POSITION SENSOR. SIGNAL OUTSIDE ITS PERMITTED RANGE (B5254T2; 2005-2007)

DIAGNOSTIC TROUBLE CODE (DTC) INFORMATION

see **DIAGNOSTIC TROUBLE CODE (DTC) INFORMATION**

FAULTY SIGNAL

see **FAULTY SIGNAL**

BCM-0147: PEDAL POSITION SENSOR. SIGNAL OUTSIDE ITS PERMITTED RANGE (B6294T; 2005-2006)

DIAGNOSTIC TROUBLE CODE (DTC) INFORMATION

see **DIAGNOSTIC TROUBLE CODE (DTC) INFORMATION**

FAULTY SIGNAL

see **FAULTY SIGNAL**

BCM-0148: COMMUNICATION BETWEEN CONTROL MODULES. FAULTY CONFIGURATION ID (2003-2004)

DIAGNOSTIC TROUBLE CODE (DTC) INFORMATION

Condition

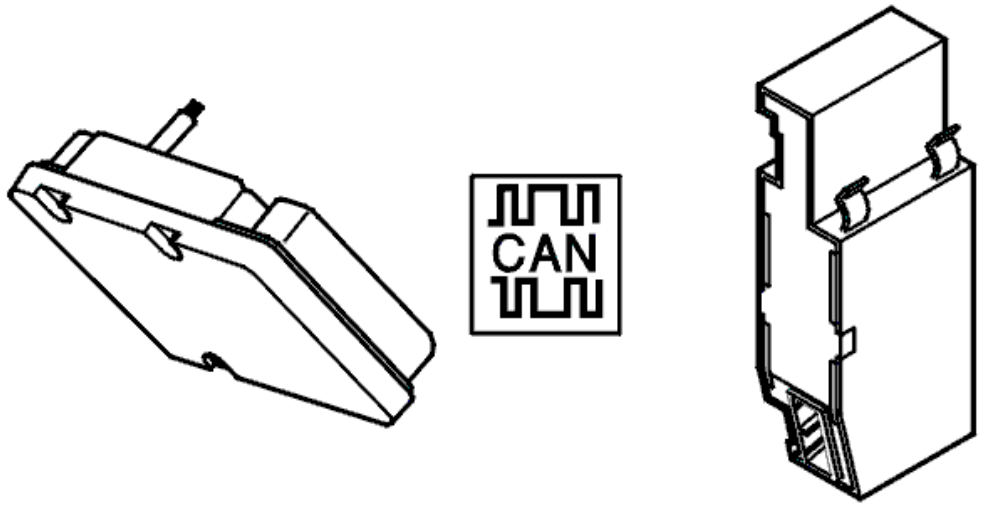

Fig. 127: Identifying Brake Control Module (BCM) & Steering Wheel Angle Sensor
Courtesy of VOLVO CARS CORPORATION

The control module for the steering angle sensor communicates with the brake control module (BCM) with data which is transmitted in "small packages". Each package has an ID number.

Diagnostic trouble code (DTC) BCM-0148 is stored if the brake control module (BCM) registers an ID number that does not correspond to what the brake control module (BCM) expects.

The diagnostic trouble code (DTC) can be diagnosed when the ignition is switched on.

Substitute Value

- Traction control is blocked
- Stability control is blocked
- Active yaw control is blocked.

HINT: For information about abbreviations, see BRAKE SYSTEM, ABBREVIATIONS .

Possible Source

- Disruption or intermittent open-circuit on the Control area network (CAN)
- Internal fault in the control module for the steering wheel angle sensor.

NOTE: This diagnostic trouble code (DTC) is not due to an internal hardware fault in the Brake control module (BCM) and must not be remedied by replacing the control module.

Fault symptom[s]

- The anti-spin warning lamp is lit (up to and including 2002 model year)
- General yellow warning lamp lit (from model year 2003 inclusive)
- Anti-spin does not function
- The stability control system does not function
- The traction control system does not function.

FAULTY CONFIGURATION ID

INFORMATION

HINT: Diagnostic trouble code (DTC) BCM-0148 can be stored when programming the brake control module. If this is the case, erase the diagnostic trouble code (DTC).

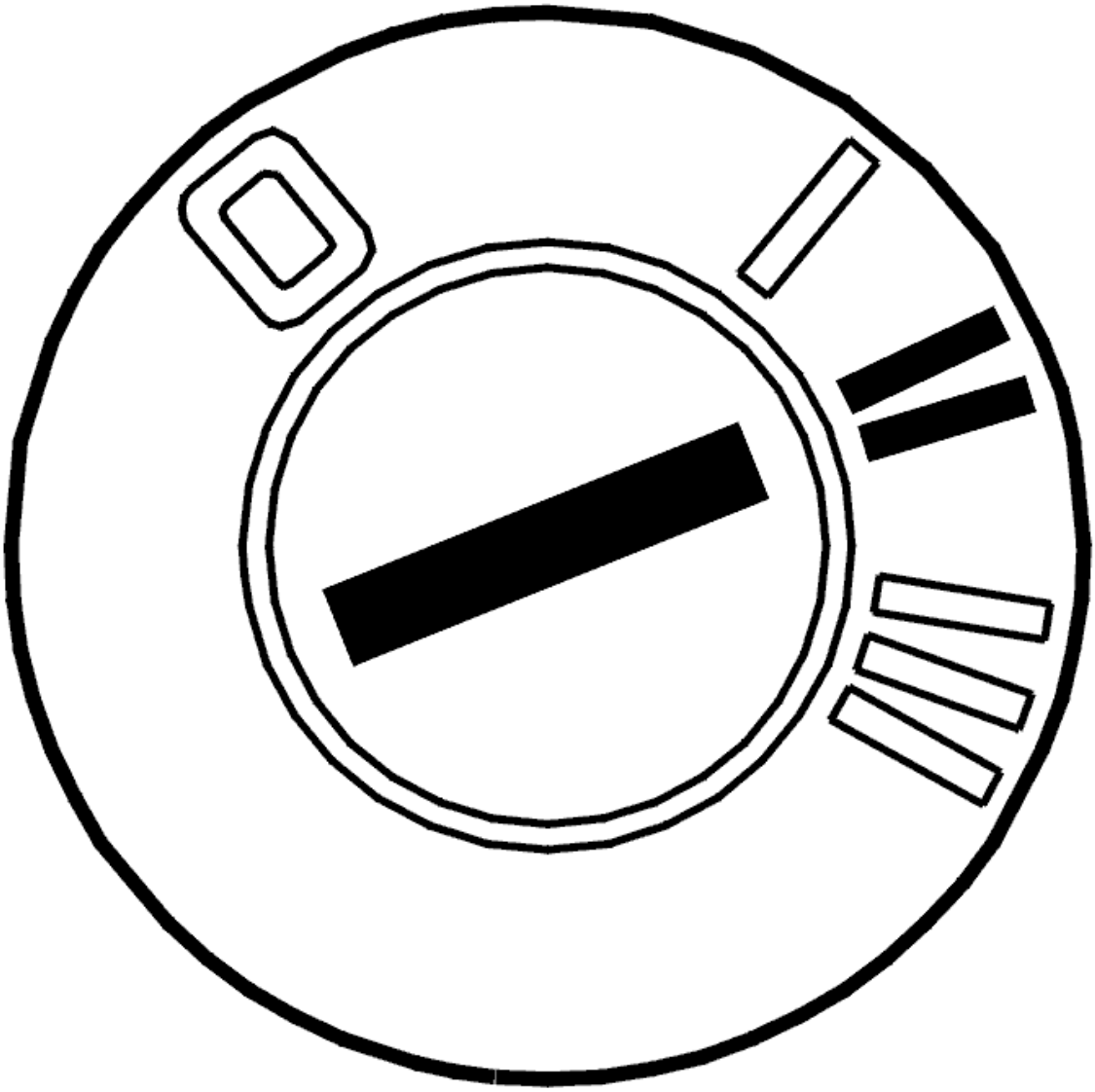

Fig. 128: Identifying Ignition ON
Courtesy of VOLVO CARS CORPORATION

- Ignition on
- Erase the diagnostic trouble code (DTC) if it was stored during programming.

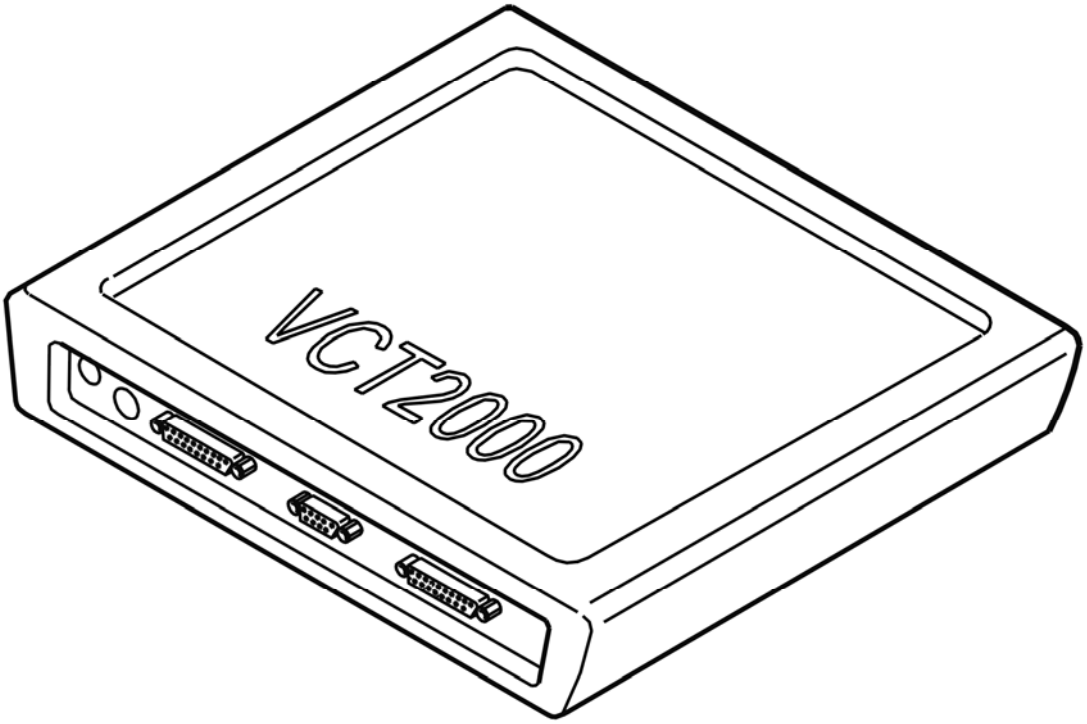

Fig. 129: Identifying VCT2000 Diagnostic Tool Symbol In VIDA
Courtesy of VOLVO CARS CORPORATION

Was the diagnostic trouble code (DTC) stored when programming the brake control module?

- **YES**

  OKAY: Troubleshooting has been completed.

- **NO**

  see **CHECKING DIAGNOSTIC TROUBLE CODES (DTCS) IN THE CENTRAL ELECTRONIC MODULE**

CHECKING DIAGNOSTIC TROUBLE CODES (DTCS)

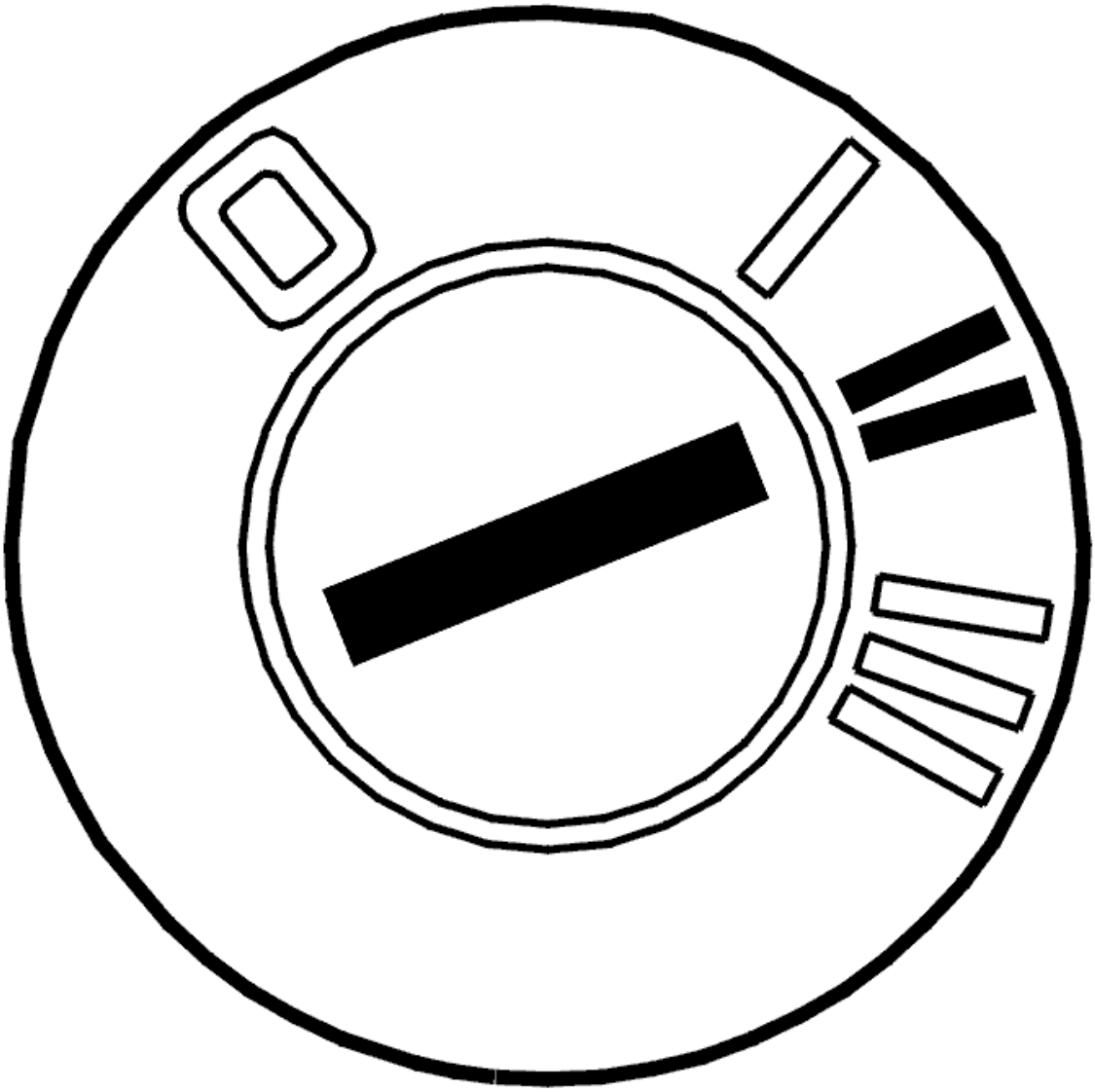

Fig. 130: Identifying Ignition ON
Courtesy of VOLVO CARS CORPORATION

- Ignition on
- Read off the status of the diagnostic trouble code (DTC).

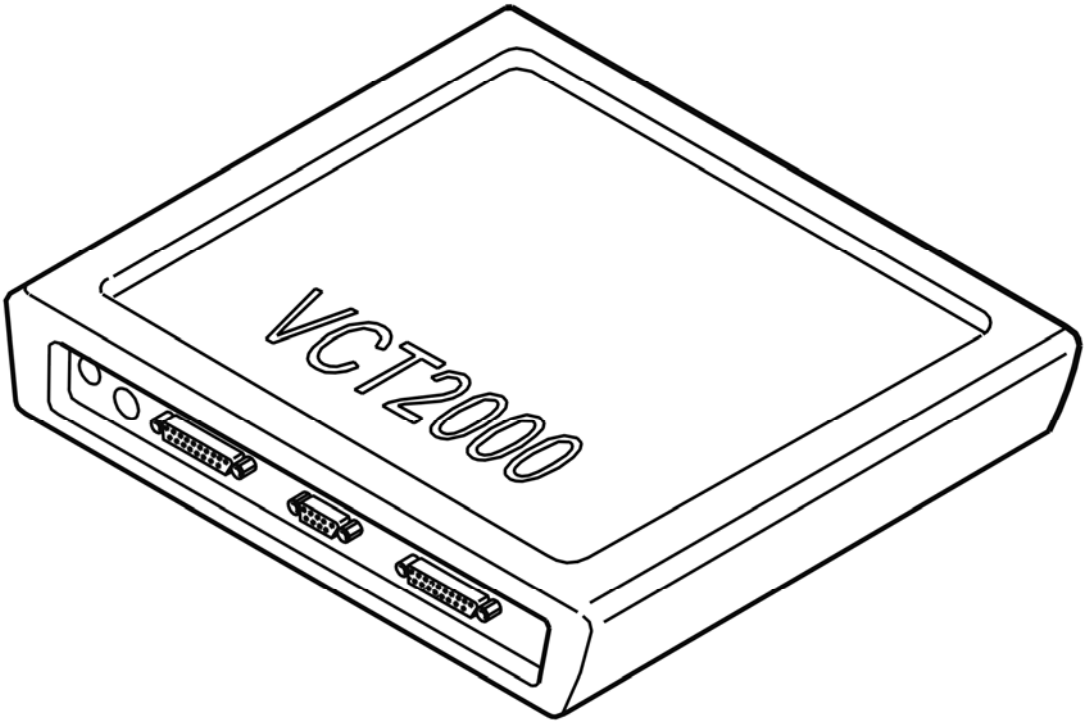

Fig. 131: Identifying VCT2000 Diagnostic Tool Symbol In VIDA
Courtesy of VOLVO CARS CORPORATION

Is the status of the diagnostic trouble code (DTC) intermittent?

- **YES**

  see **INTERMITTENT FAULT**

- **NO**

  see **FAULT-TRACING INFORMATION**

FAULT-TRACING INFORMATION

The diagnostic trouble code (DTC) indicates that the fault is in the control module for the steering wheel angle sensor.

Fault-trace according to the relevant information. If no fault is found, replace the control module for the steering angle sensor.

INTERMITTENT FAULT

HINT: The status of the diagnostic trouble code (DTC) indicates that the control module has previously

registered a fault but that the fault is not now active.

Check the connectors for the brake control module and the control module for the steering wheel angle sensor. Check for contact resistance and oxidation.

Check that the communication wiring is not too close to a source of interference such as a carphone etc.

Remedy as necessary.

Other information

- see **CONNECTING THE BREAKOUT BOX, BRAKE CONTROL MODULE (BCM)**
- For connection of breakout box to Steering wheel angle sensor module (SAS), see: **CONNECTING THE BREAKOUT BOX TO THE STEERING ANGLE SENSOR**
- see **CONTENTS** .
- **Continue**

  see **INFORMATION**

CHECKING DIAGNOSTIC TROUBLE CODES (DTCS) IN THE CENTRAL ELECTRONIC MODULE

CHECKING OTHER DIAGNOSTIC TROUBLE CODES (DTCS)

In the event of communication problems, the fault may exist in other parts of the communications network.

The role of the central electronic module is to generally control the communications network and to store diagnostic trouble codes (DTCs) in the event of communication problems between control modules.

If there are diagnostic trouble codes (DTCs) stored for communication problems in the central electronic module, stop the fault tracing and fault trace the central electronic module.

Were diagnostic trouble codes (DTCs) for communication problems stored in the central electronic module?

- **YES**

  OKAY: Troubleshooting has been completed.

- **NO**

  see **CHECKING DIAGNOSTIC TROUBLE CODES (DTCS)**

INFORMATION

FAULT-TRACING INFORMATION

The fault should have been detected and remedied. As this is not the case fault-tracing has failed.

Exit fault-tracing for this diagnostic trouble code (DTC) or make another attempt.

VERIFICATION

VERIFICATION

HINT: After carrying out the repair, check that the fault has been remedied.

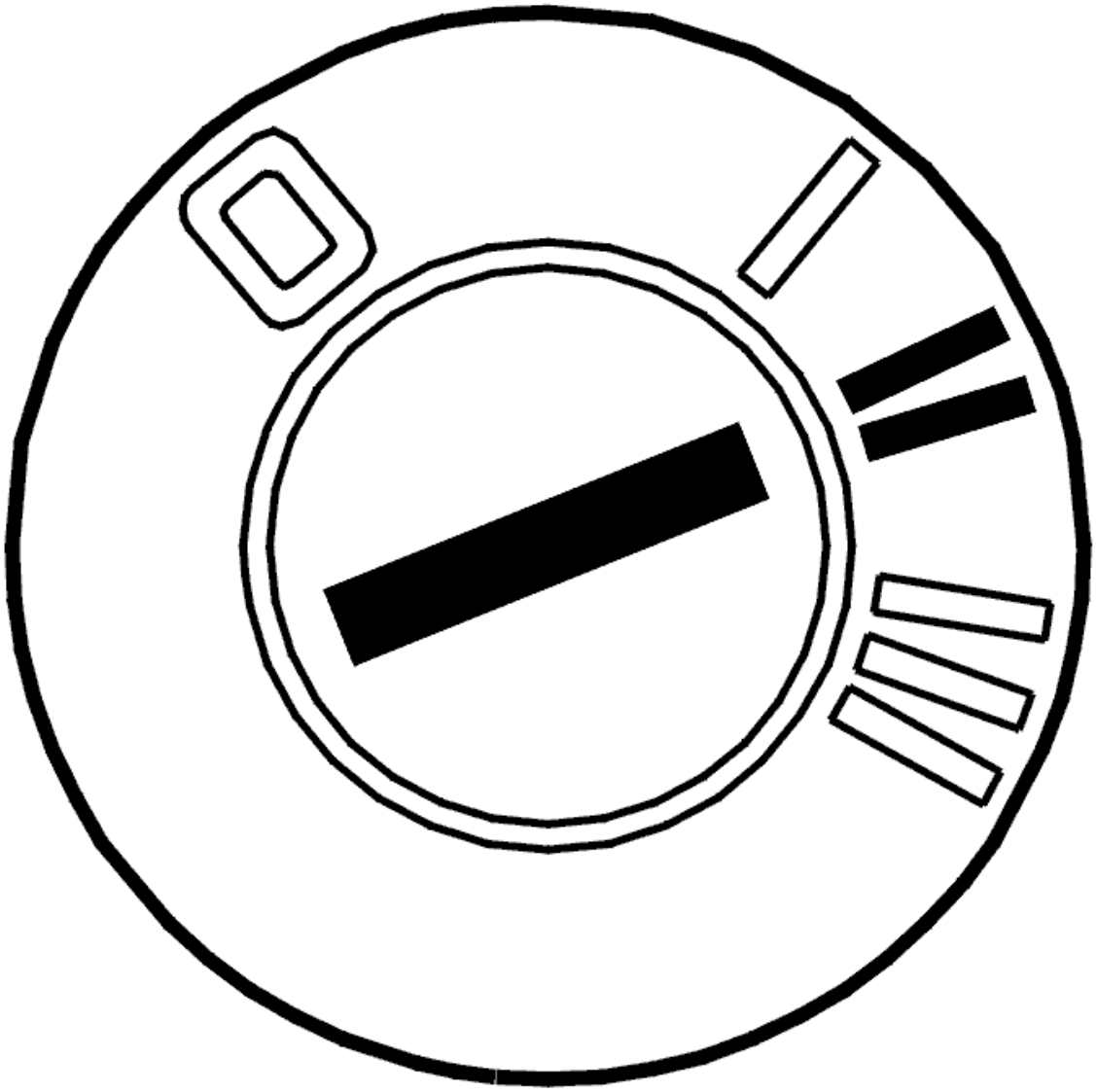

Fig. 132: Identifying Ignition ON
Courtesy of VOLVO CARS CORPORATION

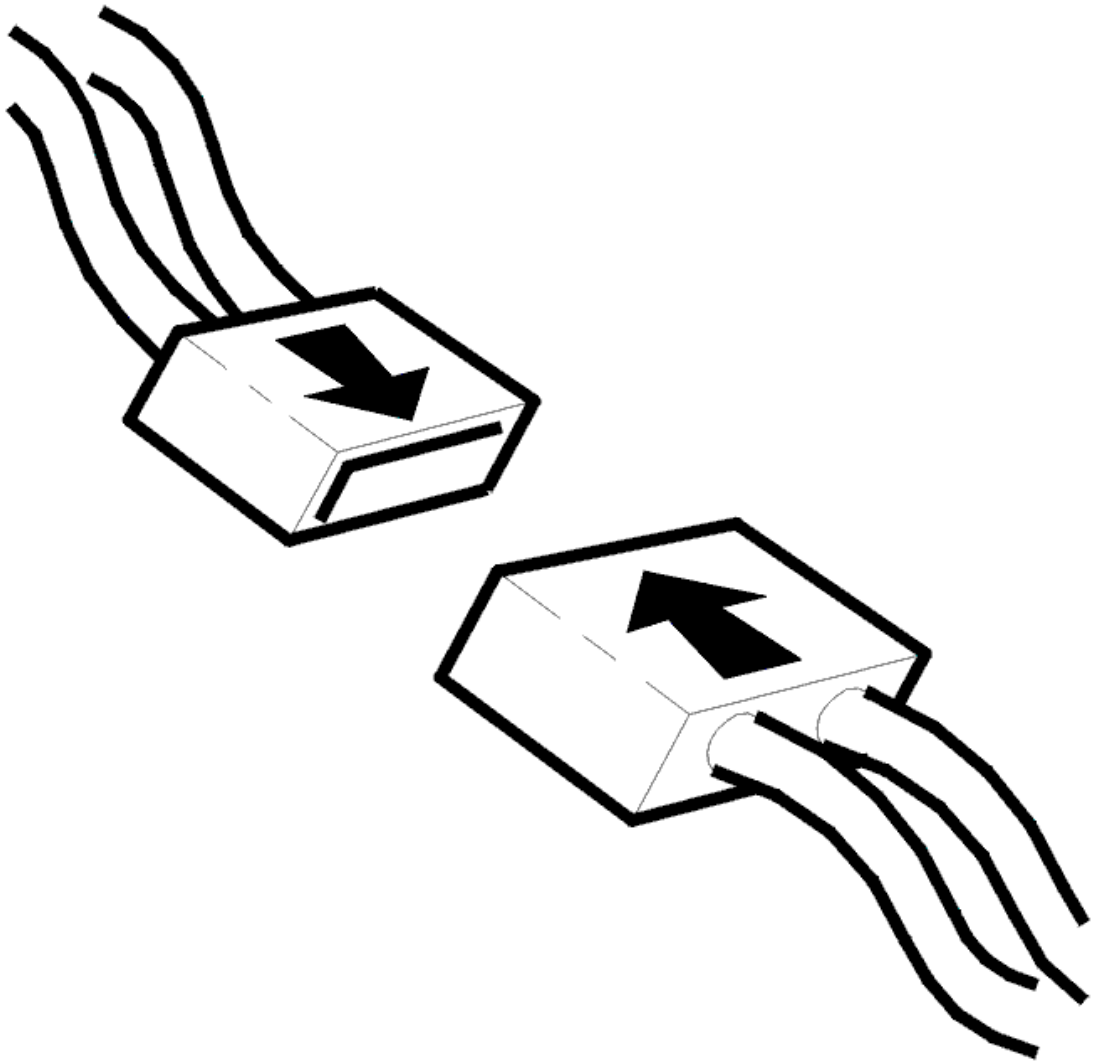

Fig. 133: Connecting Connector
Courtesy of VOLVO CARS CORPORATION

- Ignition off
- Reconnect the connectors, reinstall components etc.
- Test drive the car. See **TEST DRIVE FORM (DSTC (DYNAMIC STABILITY AND TRACTION CONTROL) /BRAKE CONTROL MODULE), DESCRIPTION**
- Ignition on.

  Read off the status of the diagnostic trouble code (DTC).

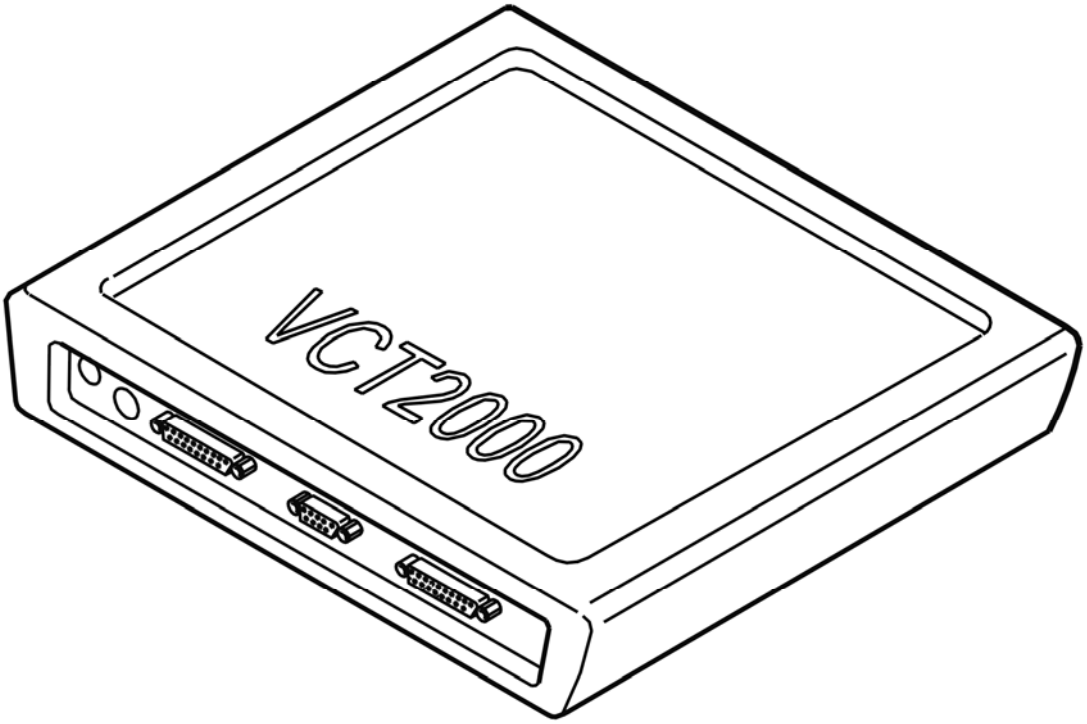

Fig. 134: Identifying VCT2000 Diagnostic Tool Symbol In VIDA
Courtesy of VOLVO CARS CORPORATION

Is the status of the diagnostic trouble code (DTC) intermittent?

- **YES**

  VERIFIED: Troubleshooting has been completed.

- **NO**

  see **INFORMATION**

INFORMATION

FAULT-TRACING INFORMATION

If the fault is intermittent, do not verify fault-tracing if the fault does not recur.

It is possible to view the information again, or leave fault-tracing for this diagnostic trouble code (DTC).

BCM-0148: COMMUNICATION BETWEEN CONTROL MODULES. FAULTY CONFIGURATION ID (B5254T2; 2005-2007)

DIAGNOSTIC TROUBLE CODE (DTC) INFORMATION

see **DIAGNOSTIC TROUBLE CODE (DTC) INFORMATION**

FAULTY CONFIGURATION ID

INFORMATION

HINT: Diagnostic trouble code (DTC) BCM-0148 can be stored when programming the brake control module. If this is the case, erase the diagnostic trouble code (DTC).

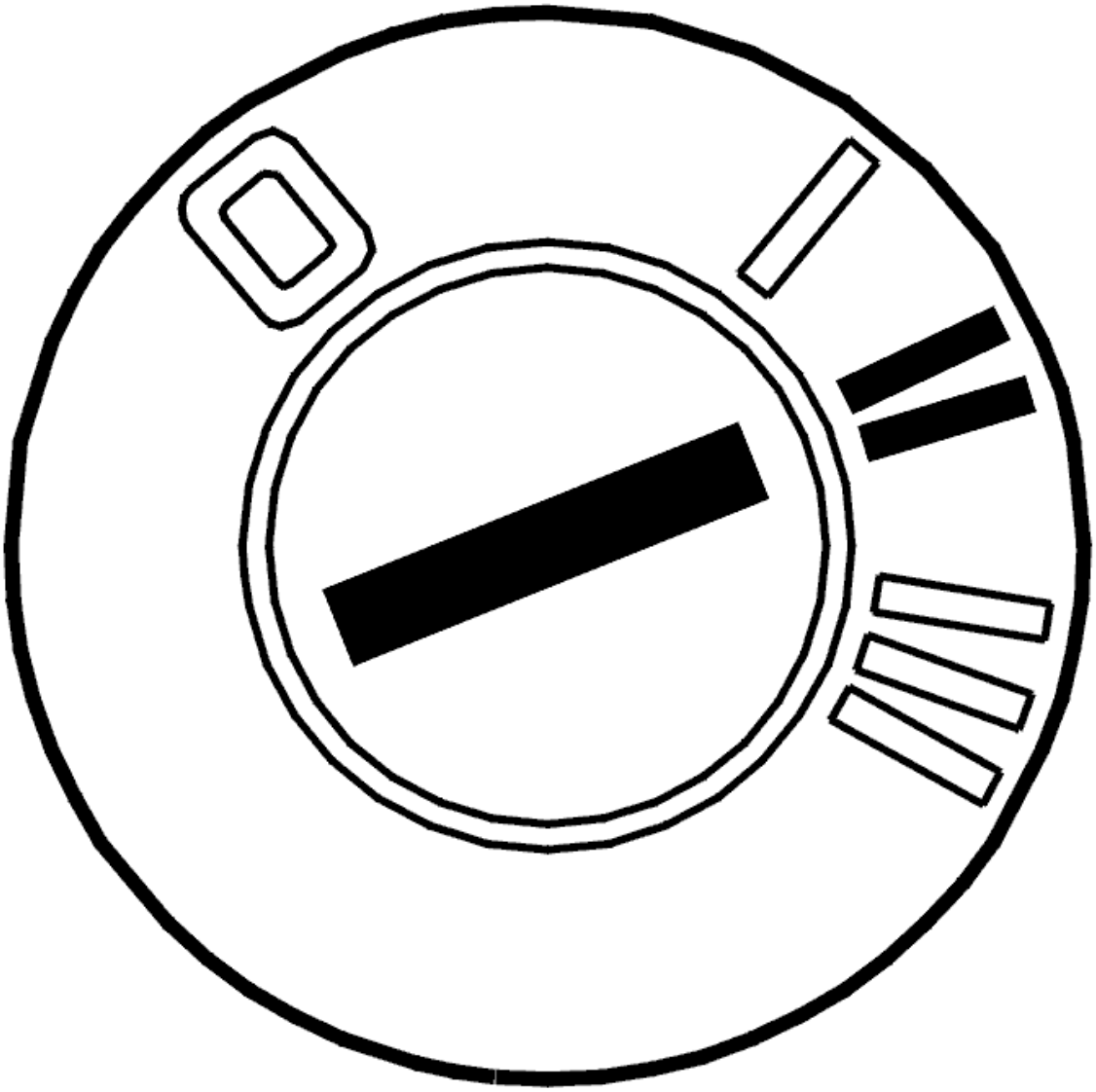

Fig. 135: Identifying Ignition ON
Courtesy of VOLVO CARS CORPORATION

- Ignition on
- Erase the diagnostic trouble code (DTC) if it was stored during programming.

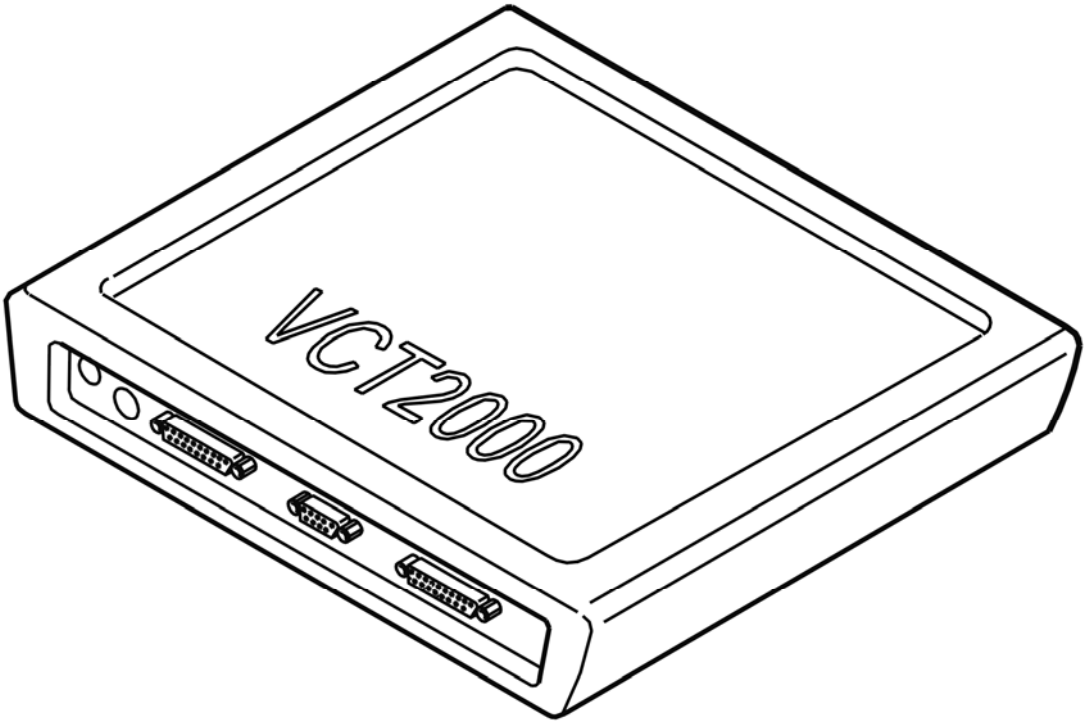

Fig. 136: Identifying VCT2000 Diagnostic Tool Symbol In VIDA
Courtesy of VOLVO CARS CORPORATION

Was the diagnostic trouble code (DTC) stored when programming the brake control module?

- **YES**

  OKAY: Troubleshooting has been completed.

- **NO**

  see **CHECKING DIAGNOSTIC TROUBLE CODES (DTCS) IN THE CENTRAL ELECTRONIC MODULE**

CHECKING DIAGNOSTIC TROUBLE CODES (DTCS)

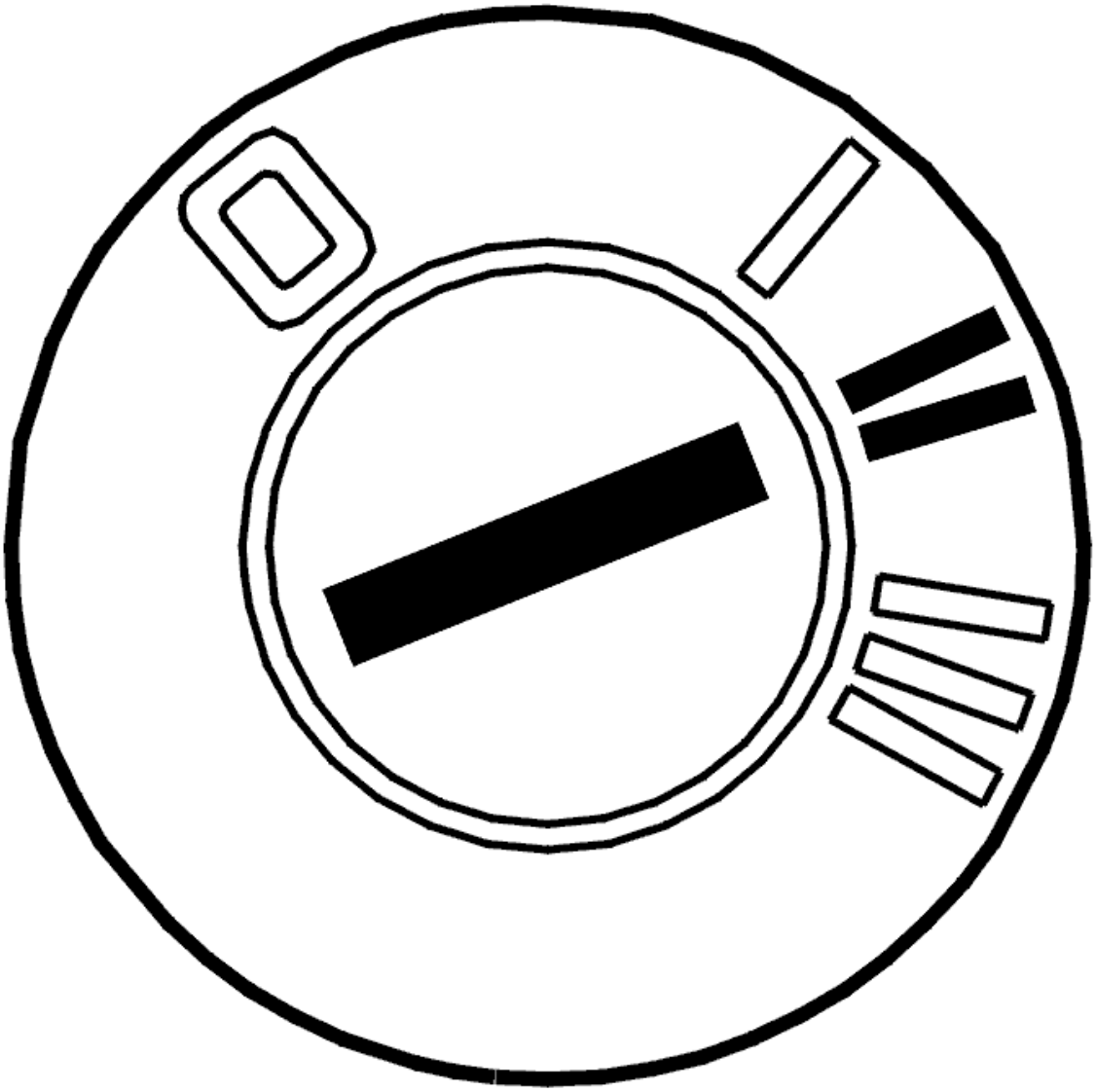

Fig. 137: Identifying Ignition ON
Courtesy of VOLVO CARS CORPORATION

- Ignition on
- Read off the status of the diagnostic trouble code (DTC).

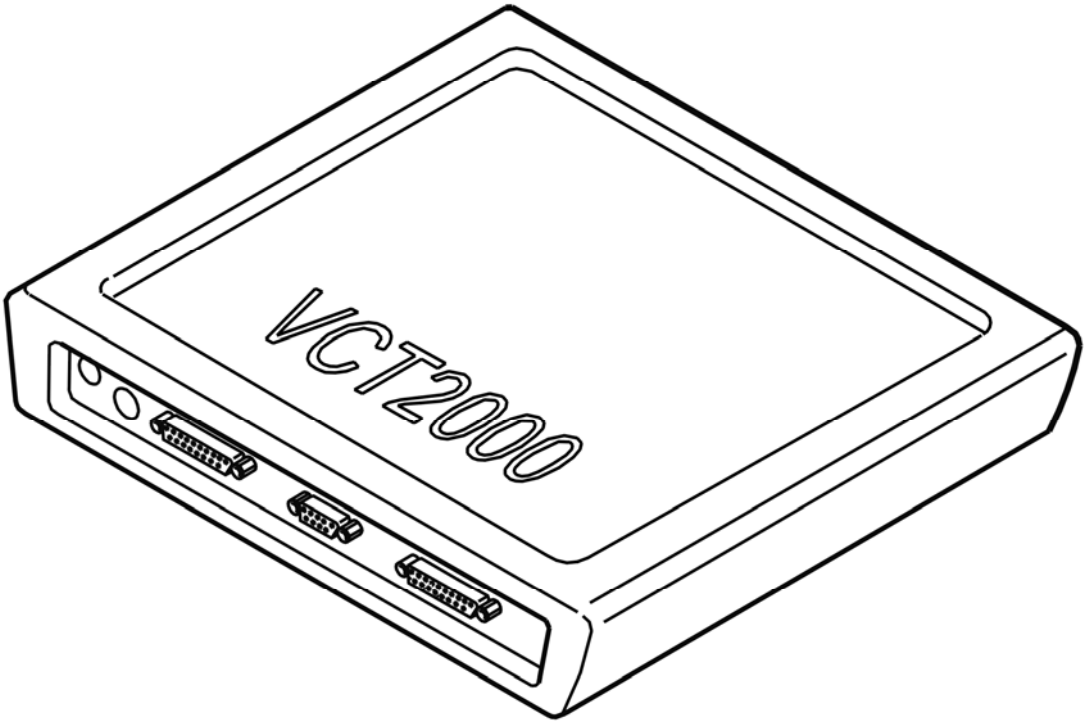

Fig. 138: Identifying VCT2000 Diagnostic Tool Symbol In VIDA
Courtesy of VOLVO CARS CORPORATION

Is the status of the diagnostic trouble code (DTC) intermittent?

- **YES**

  see **INTERMITTENT FAULT**

- **NO**

  see **FAULT-TRACING INFORMATION**

FAULT-TRACING INFORMATION

The diagnostic trouble code (DTC) indicates that the fault is in the control module for the steering wheel angle sensor.

Fault-trace according to the relevant information. If no fault is found, replace the control module for the steering angle sensor.

INTERMITTENT FAULT

HINT: The status of the diagnostic trouble code (DTC) indicates that the control module has previously

registered a fault but that the fault is not now active.

Check the connectors for the brake control module and the control module for the steering wheel angle sensor. Check for contact resistance and oxidation.

Check that the communication wiring is not too close to a source of interference such as a carphone etc.

Remedy as necessary.

Other information

- see **CONNECTING THE BREAKOUT BOX, BRAKE CONTROL MODULE (BCM)**
- For connection of breakout box to Steering wheel angle sensor module (SAS), see: **CONNECTING THE BREAKOUT BOX**
- see **CONTENTS** .
- **Continue**

  see **INFORMATION**

CHECKING DIAGNOSTIC TROUBLE CODES (DTCS) IN THE CENTRAL ELECTRONIC MODULE

CHECKING OTHER DIAGNOSTIC TROUBLE CODES (DTCS)

In the event of communication problems, the fault may exist in other parts of the communications network.

The role of the central electronic module is to generally control the communications network and to store diagnostic trouble codes (DTCs) in the event of communication problems between control modules.

If there are diagnostic trouble codes (DTCs) stored for communication problems in the central electronic module, stop the fault tracing and fault trace the central electronic module.

Were diagnostic trouble codes (DTCs) for communication problems stored in the central electronic module?

- **YES**

  OKAY: Troubleshooting has been completed.

- **NO**

  see **CHECKING DIAGNOSTIC TROUBLE CODES (DTCS)**

INFORMATION

FAULT-TRACING INFORMATION

The fault should have been detected and remedied. As this is not the case fault-tracing has failed.

Exit fault-tracing for this diagnostic trouble code (DTC) or make another attempt.

VERIFICATION

VERIFICATION

HINT: After carrying out the repair, check that the fault has been remedied.

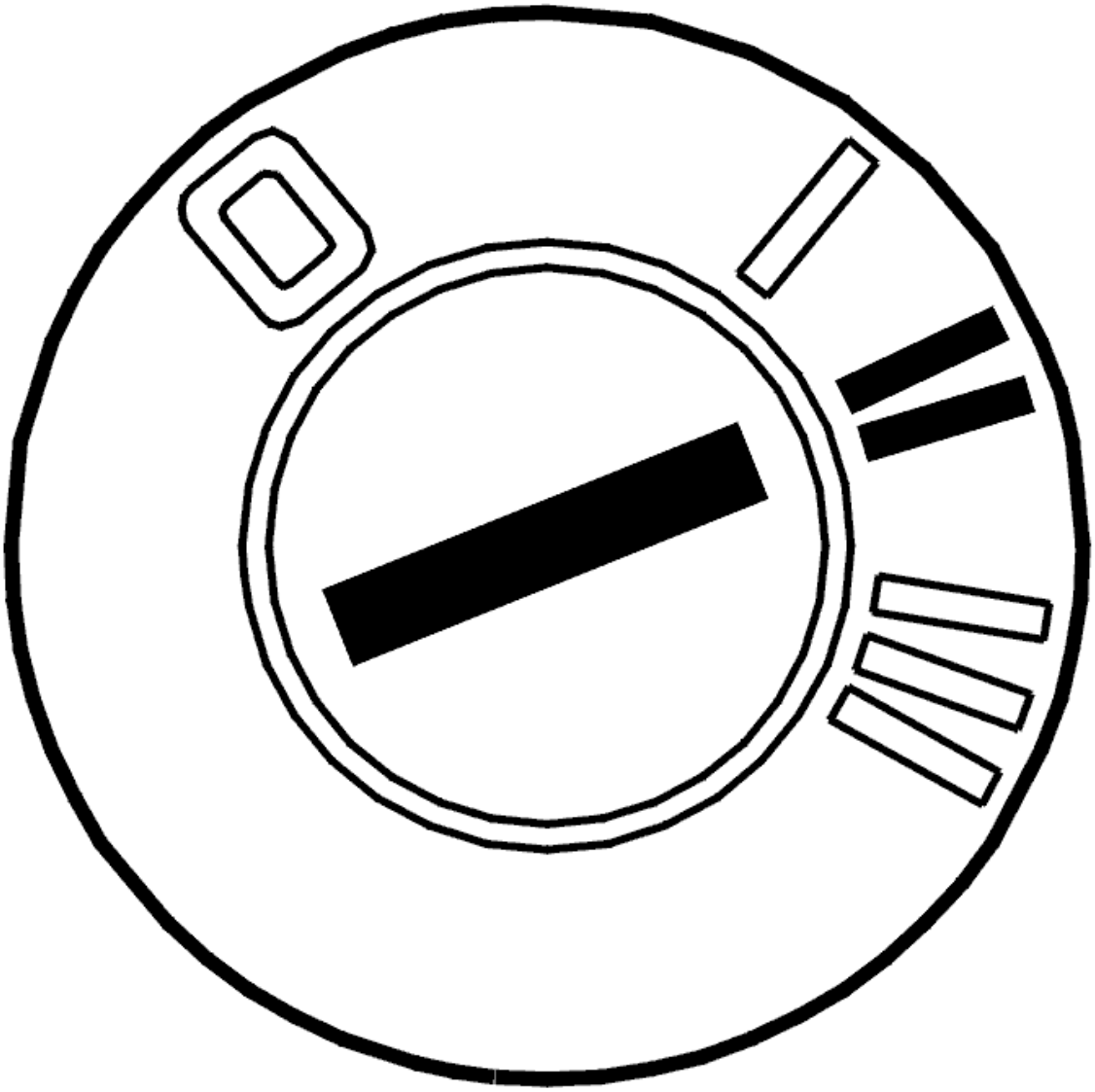

Fig. 139: Identifying Ignition ON
Courtesy of VOLVO CARS CORPORATION

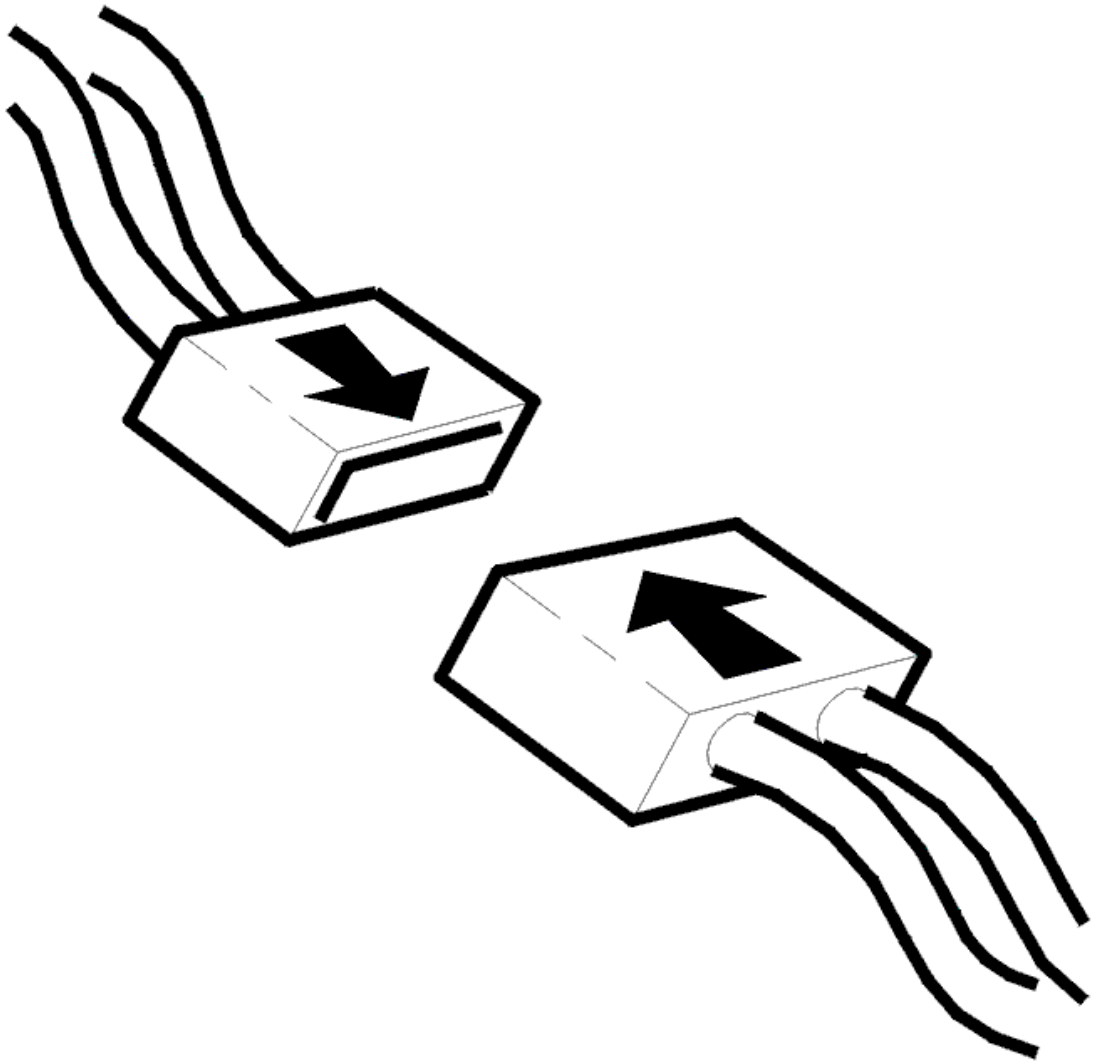

Fig. 140: Connecting Connector
Courtesy of VOLVO CARS CORPORATION

- Ignition off
- Reconnect the connectors, reinstall components etc.
- Test drive the car. See **TEST DRIVE FORM (DSTC (DYNAMIC STABILITY AND TRACTION CONTROL) /BRAKE CONTROL MODULE), DESCRIPTION**
- Ignition on.

  Read off the status of the diagnostic trouble code (DTC).

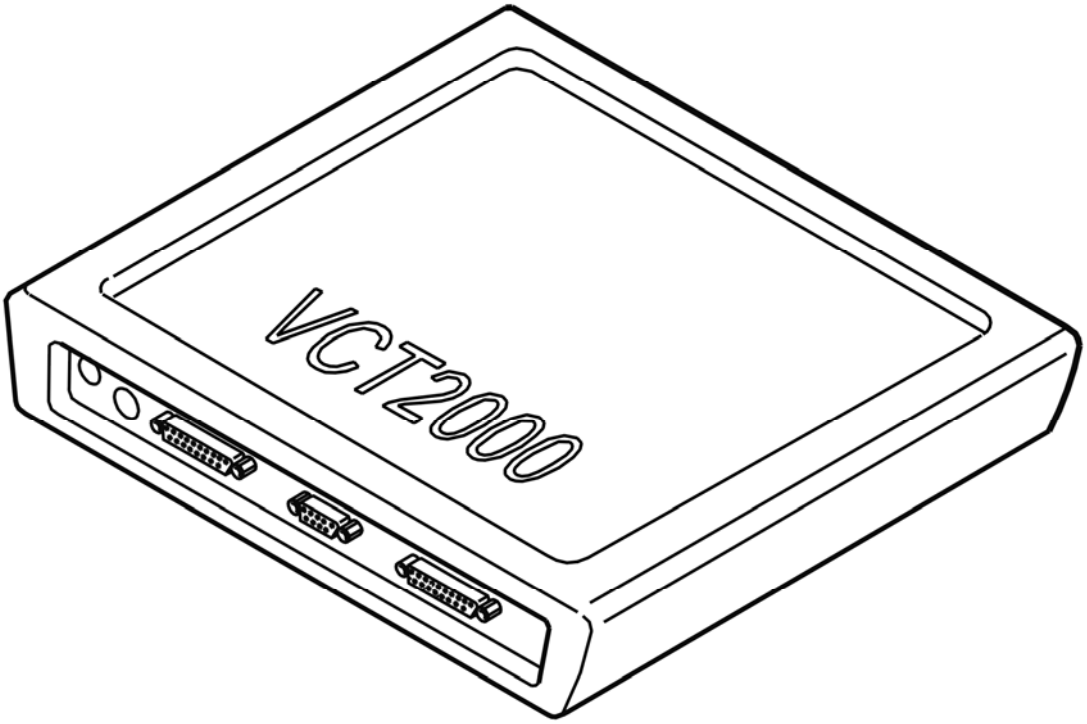

Fig. 141: Identifying VCT2000 Diagnostic Tool Symbol In VIDA
Courtesy of VOLVO CARS CORPORATION

Is the status of the diagnostic trouble code (DTC) intermittent?

- **YES**

  VERIFIED: Troubleshooting has been completed.

- **NO**

  see **INFORMATION**

INFORMATION

FAULT-TRACING INFORMATION

If the fault is intermittent, do not verify fault-tracing if the fault does not recur.

It is possible to view the information again, or leave fault-tracing for this diagnostic trouble code (DTC).

BCM-0148: COMMUNICATION BETWEEN CONTROL MODULES. FAULTY CONFIGURATION ID (B6294T; 2005-2006)

DIAGNOSTIC TROUBLE CODE (DTC) INFORMATION

see **DIAGNOSTIC TROUBLE CODE (DTC) INFORMATION**

FAULTY CONFIGURATION ID

see **FAULTY CONFIGURATION ID**

BCM-0150: STOP LAMP SWITCH. SIGNAL OUTSIDE ITS PERMITTED RANGE (2003-2004)

DIAGNOSTIC TROUBLE CODE (DTC) INFORMATION

Condition

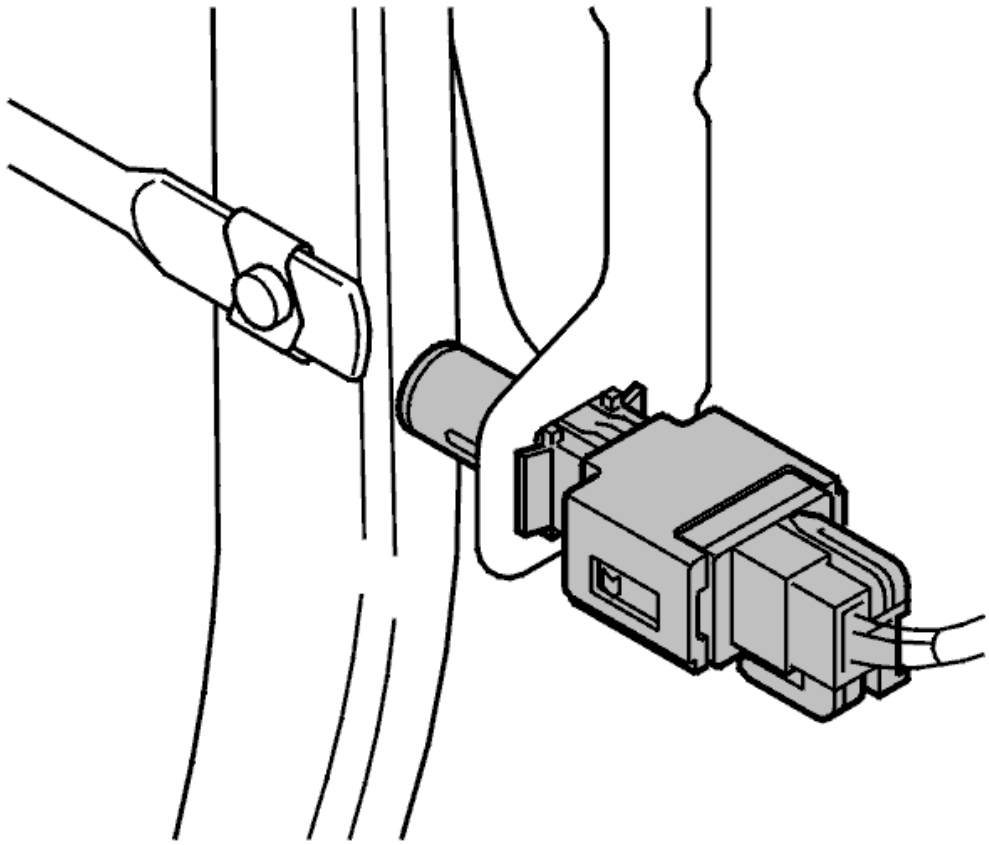

Fig. 142: Brake Light Switch
Courtesy of VOLVO CARS CORPORATION

Diagnostic trouble code (DTC) BCM-0150 is stored if the brake control module (BCM) registers that the stop (brake) lamp switch is not activated when the brake pedal is depressed.

There are diagnostics for this diagnostic trouble code (DTC) when the ignition is on and in the following cases:

- Braking from a speed in excess of 40 km/h to standstill 3 times in succession within the same ignition cycle without control
- The brake pedal is kept pressed down and the stop lamp switch is activated for longer than 6 minutes.

Substitute Value

- None.

Possible Source

- Mechanical fault in the stop lamp switch.

NOTE: **This diagnostic trouble code (DTC) is not due to an internal hardware fault in the Brake control module (BCM) and must not be remedied by replacing the control module.**

Fault symptom[s]

- None.

SIGNAL OUTSIDE ITS PERMITTED RANGE

CHECKING THE CONTROL MODULE AND WHEEL SENSOR CONNECTORS

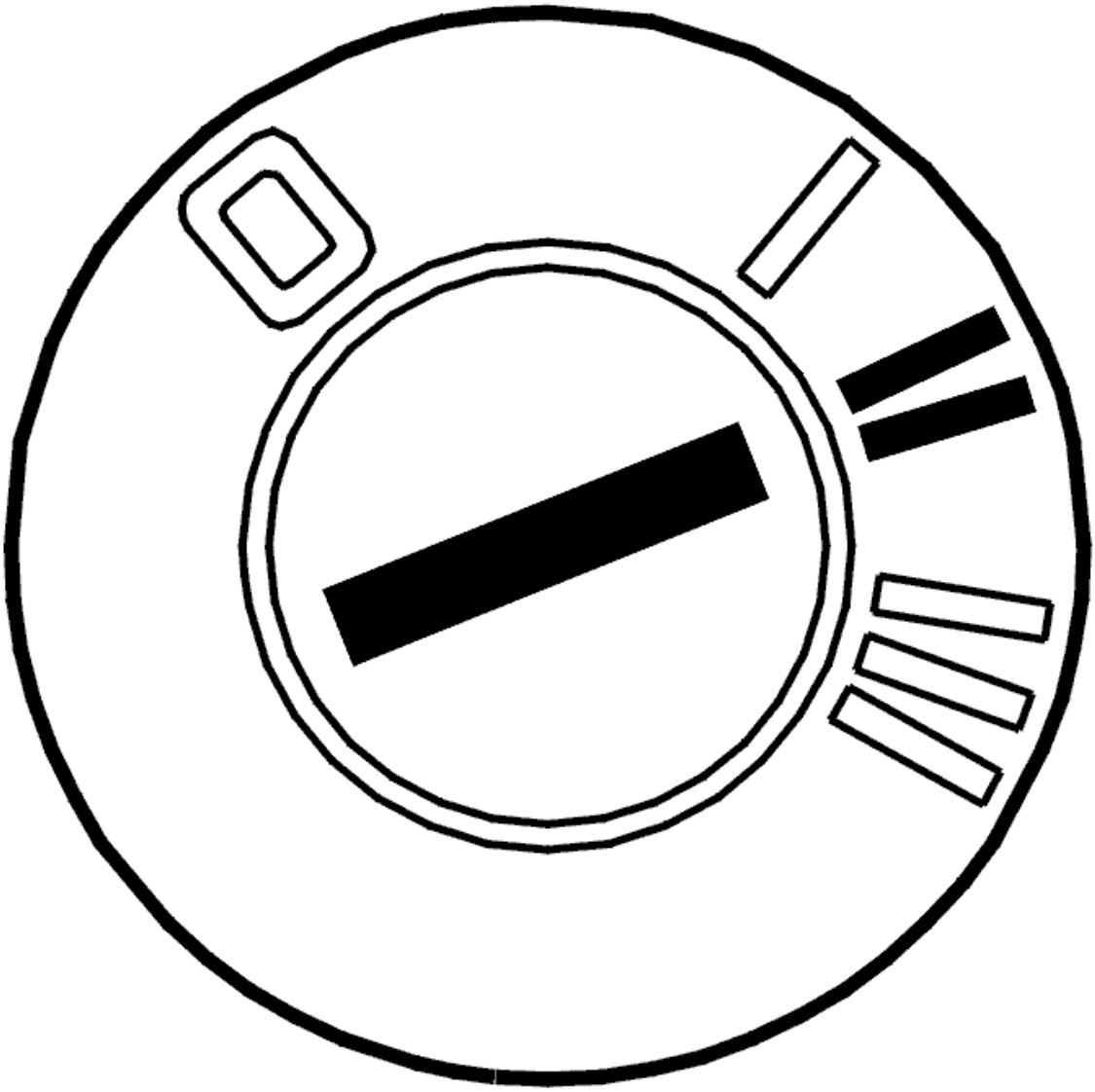

Fig. 143: Identifying Ignition ON
Courtesy of VOLVO CARS CORPORATION

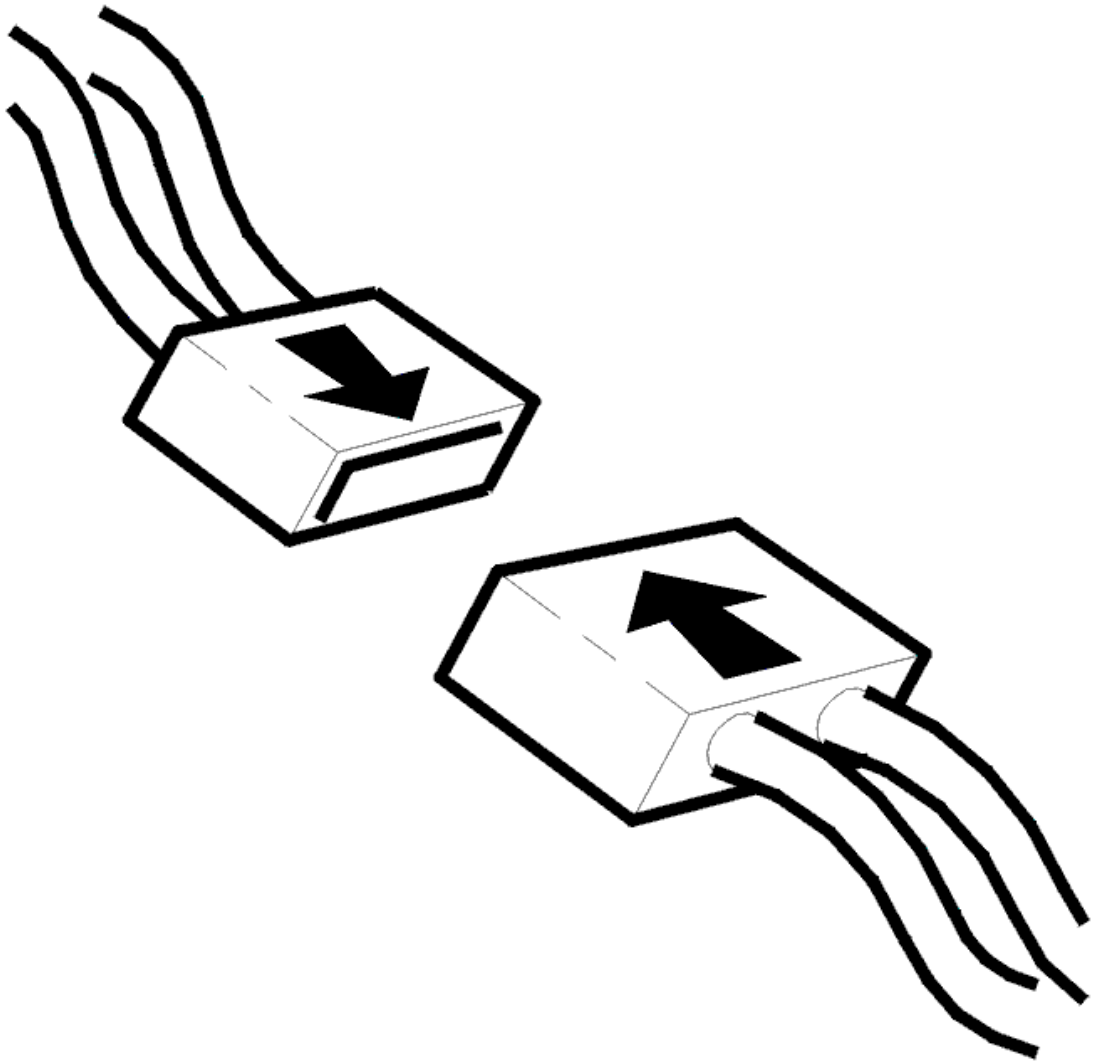

Fig. 144: Connecting Connector
Courtesy of VOLVO CARS CORPORATION

- Ignition off
- Check the brake control module (BCM) and stop (brake) lamp switch connectors. Check for contact resistance and oxidation
- Reinstall the components, reconnect the connectors etc.
- Ignition on
- Read off the status of the stop lamp switch.

  Depress and release the brake pedal. The value must change between OFF and ON.

  If the value changes, the cause of the fault was loose connections in the control module or wheel sensor connectors.

Other information

- For information about removing the brake control module (BCM) connector, see **CONNECTING THE BREAKOUT BOX, BRAKE CONTROL MODULE (BCM)**
- To fault-trace the wiring and connections, see **CONTENTS** .

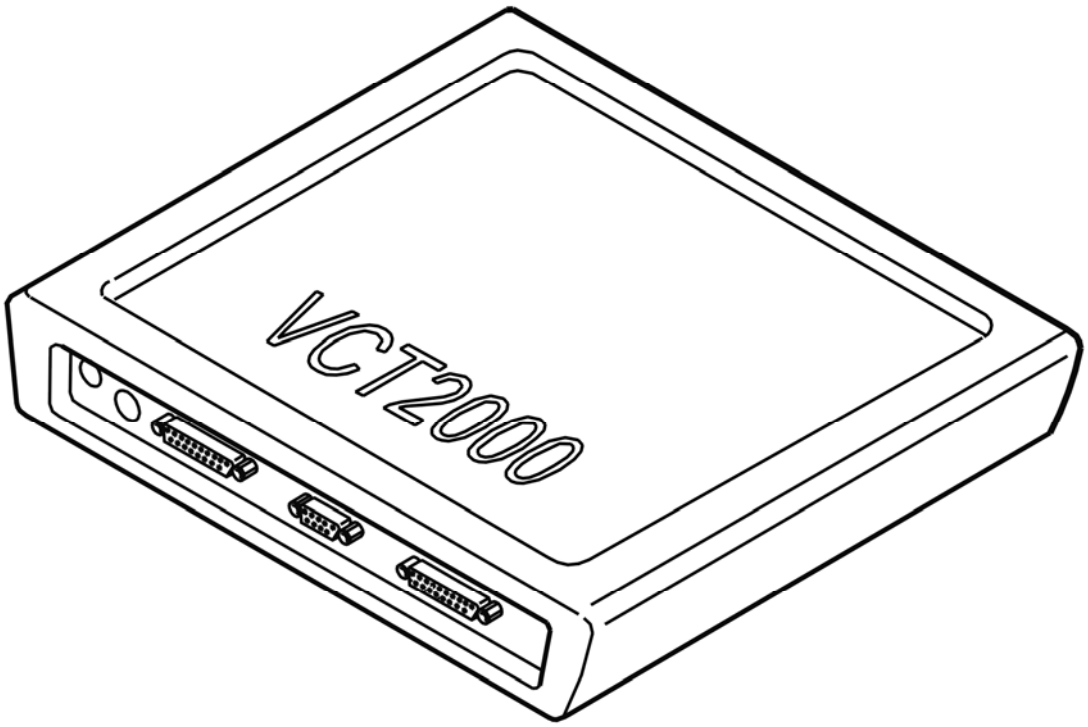

Fig. 145: Identifying VCT2000 Diagnostic Tool Symbol In VIDA
Courtesy of VOLVO CARS CORPORATION

Does the value change?

- **YES**

  OKAY: Troubleshooting has been completed.

- **NO**

  see **CHECKING THE FUSE, WIRING AND SENSORS**

CHECKING THE FUSE, WIRING AND SENSORS

Check that the fuse for the stop (brake) lamp switch in the integrated relay / fusebox in the engine compartment is intact.

Check the cable between stop lamp switch terminal #1 and the fuse in the integrated relay / fusebox in the engine compartment and between stop lamp switch terminal #5 and the splice. Check for an open-circuit. Check for a short-circuit to ground. Check for a short-circuit to supply voltage.

Check the cable between the splice and central electronic module (CEM) terminal #B4 and between the splice and engine control module (ECM) terminal #B26. Check for an open-circuit. Check for a short-circuit to ground. Check for a short-circuit to supply voltage.

HINT: Check the stop lamp switch by measuring the resistance between terminals #1 and #5 on the stop lamp switch. When the brake pedal is depressed the resistance should be infinite. When the brake pedal is not depressed the resistance should be 0 ohms.

Remedy as necessary.

Other information

- To connect the breakout box to the brake control module (BCM), see **CONNECTING THE BREAKOUT BOX, BRAKE CONTROL MODULE (BCM)**
- To connect the breakout box to the Engine control module (ECM), see: **CONNECTING THE BREAKOUT BOX**
- For connection of breakout box to central electronic module (CEM), see: **CONNECTING THE BREAKOUT BOX**
- To replace the stop lamp switch, see **STOP LAMP SWITCH, REPLACING**
- see **CONTENTS**

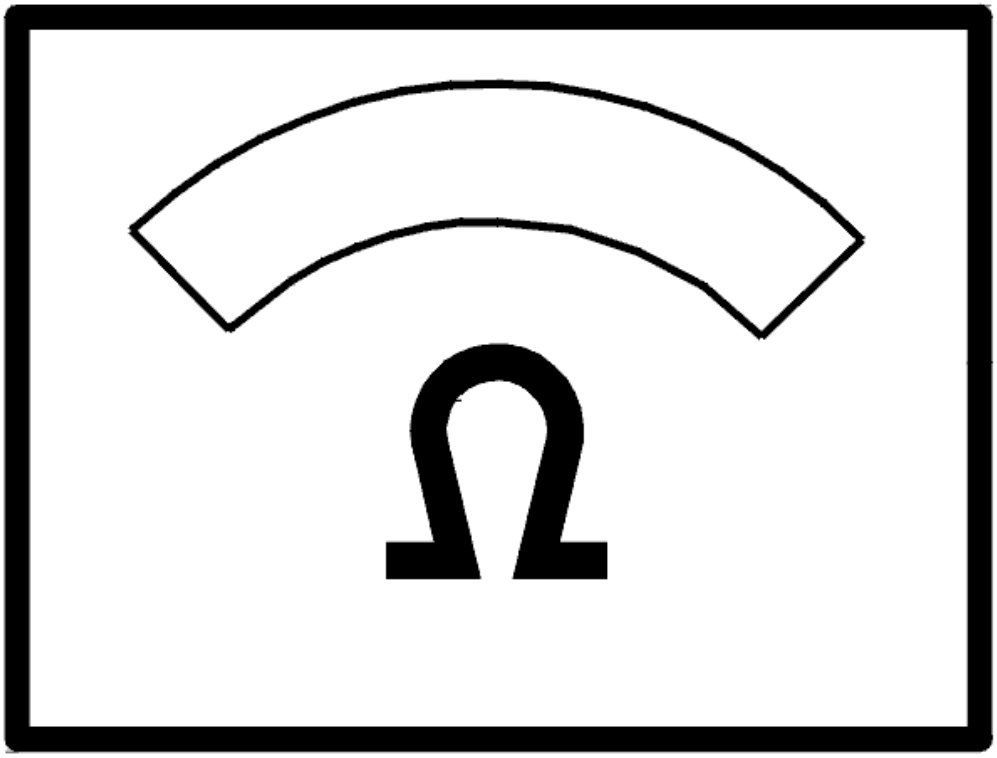

Fig. 146: Identifying Ohm Meter
Courtesy of VOLVO CARS CORPORATION

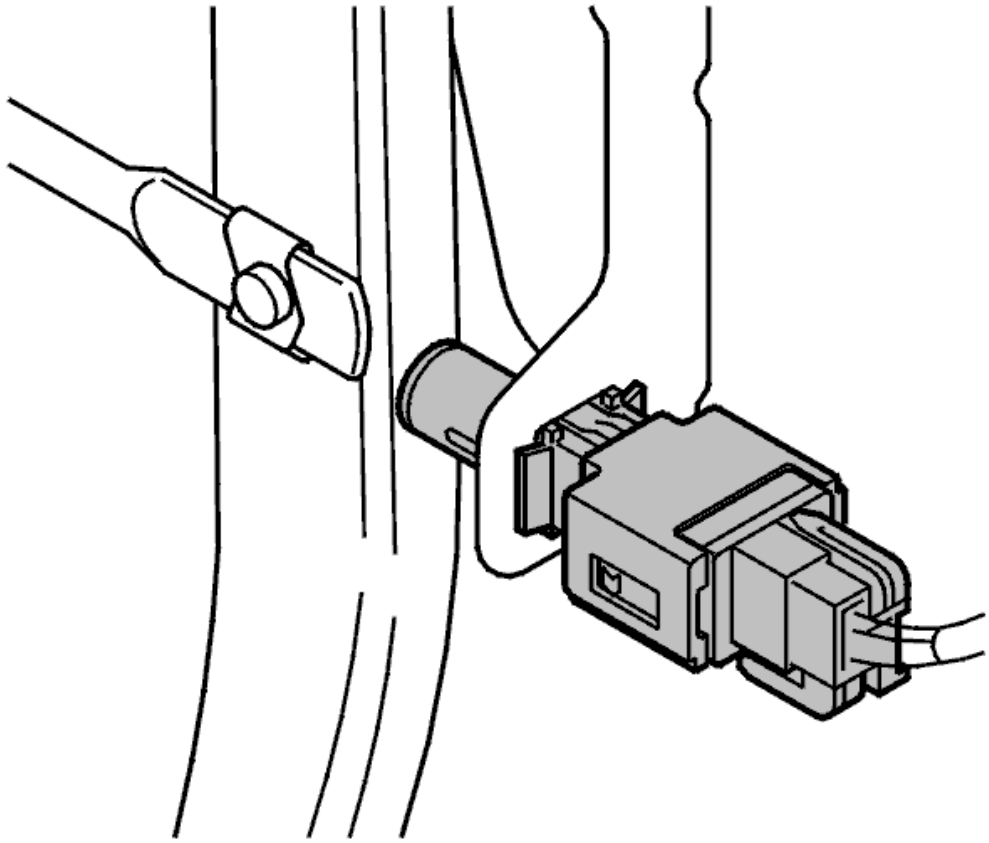

Fig. 147: Brake Light Switch
Courtesy of VOLVO CARS CORPORATION

Was a fault detected?

- **YES**

  see **VERIFICATION**

- **NO**

  FAULT NOT FOUND: Troubleshooting has been completed.

VERIFICATION

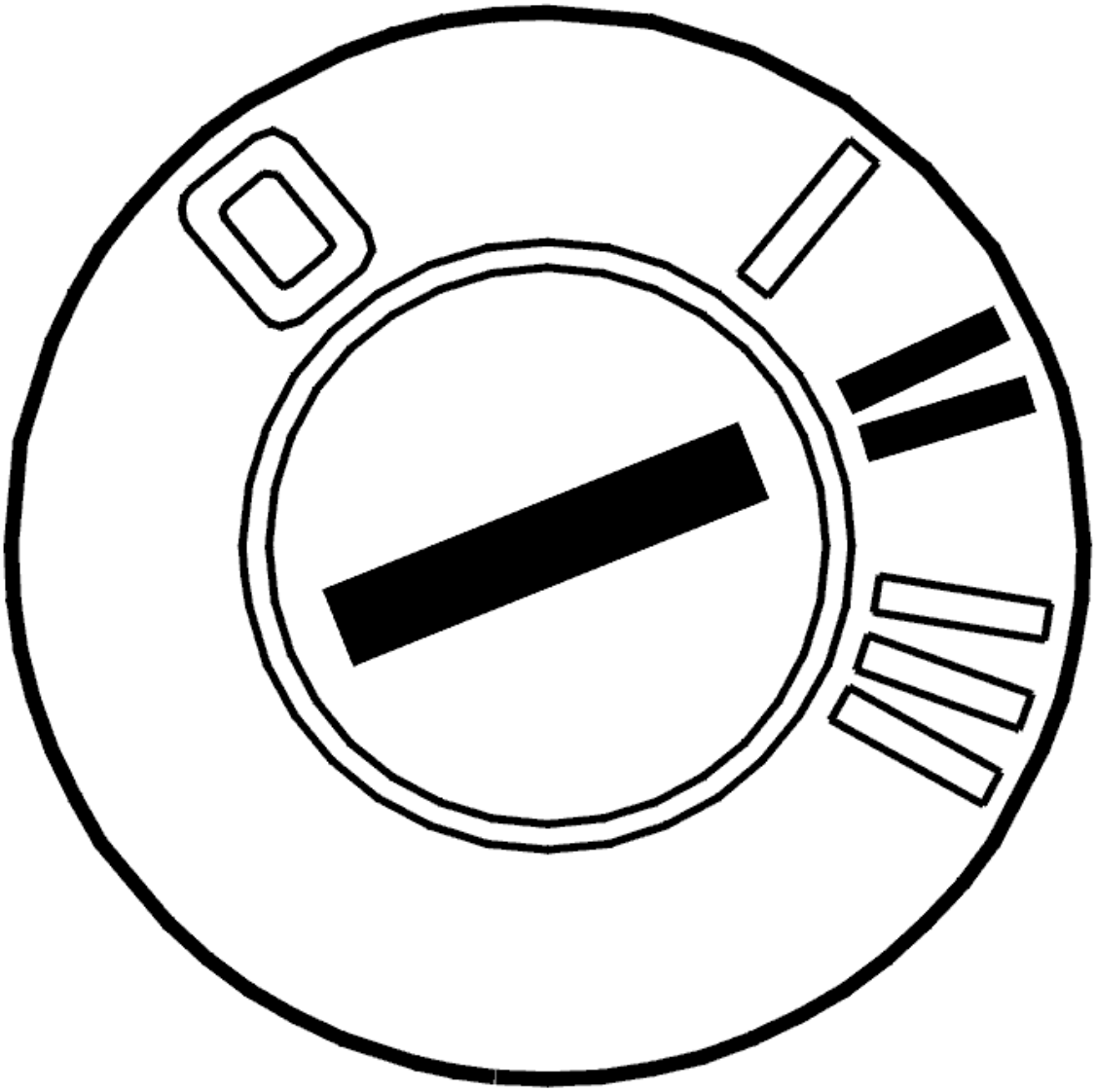

Fig. 148: Identifying Ignition ON
Courtesy of VOLVO CARS CORPORATION

- Ignition off
- Reinstall the components, reconnect the connectors etc.
- Ignition on
- Read off the status of the stop lamp switch.

  Depress and release the brake pedal. The value must change between OFF and ON.

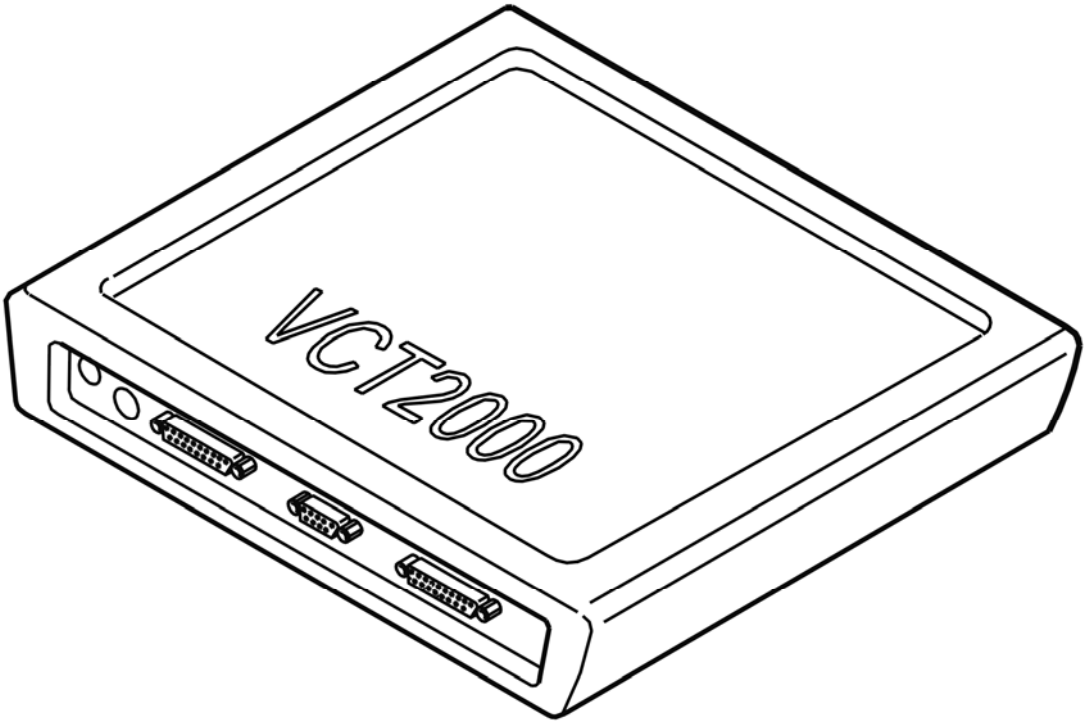

Fig. 149: Identifying VCT2000 Diagnostic Tool Symbol In VIDA
Courtesy of VOLVO CARS CORPORATION

Does the value change?

- **YES**

  OKAY: Troubleshooting has been completed.

- **NO**

  see **INFORMATION**

INFORMATION

FAULT-TRACING INFORMATION

The fault should have been detected and remedied. As this is not the case fault-tracing has failed.

Exit fault-tracing for this diagnostic trouble code (DTC) or make another attempt.

BCM-0150: STOP LAMP SWITCH. SIGNAL OUTSIDE ITS PERMITTED RANGE (B5254T2; 2005-2007)

DIAGNOSTIC TROUBLE CODE (DTC) INFORMATION

see **DIAGNOSTIC TROUBLE CODE (DTC) INFORMATION**

SIGNAL OUTSIDE ITS PERMITTED RANGE

CHECKING THE CONTROL MODULE AND WHEEL SENSOR CONNECTORS

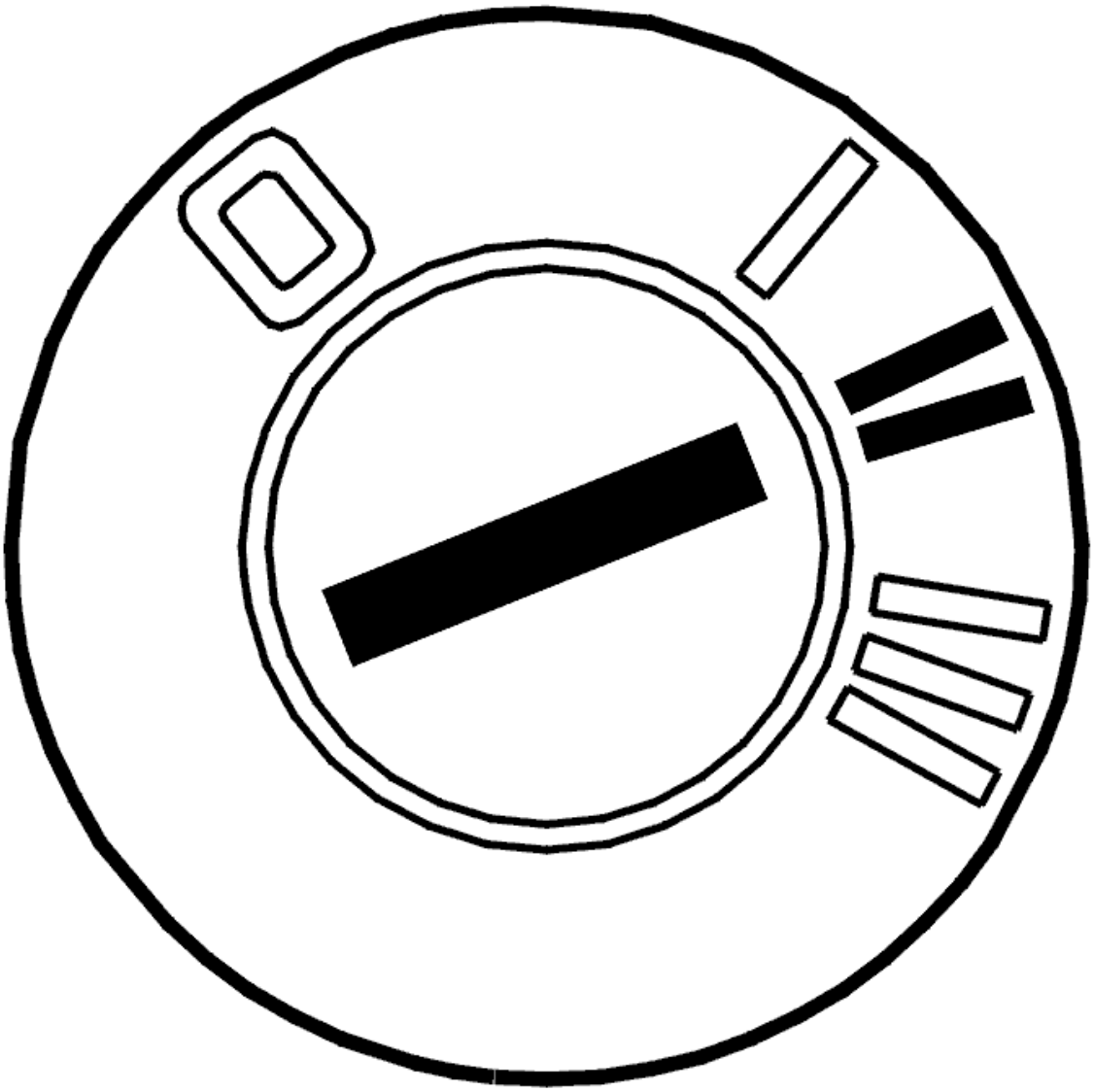

Fig. 150: Identifying Ignition ON
Courtesy of VOLVO CARS CORPORATION

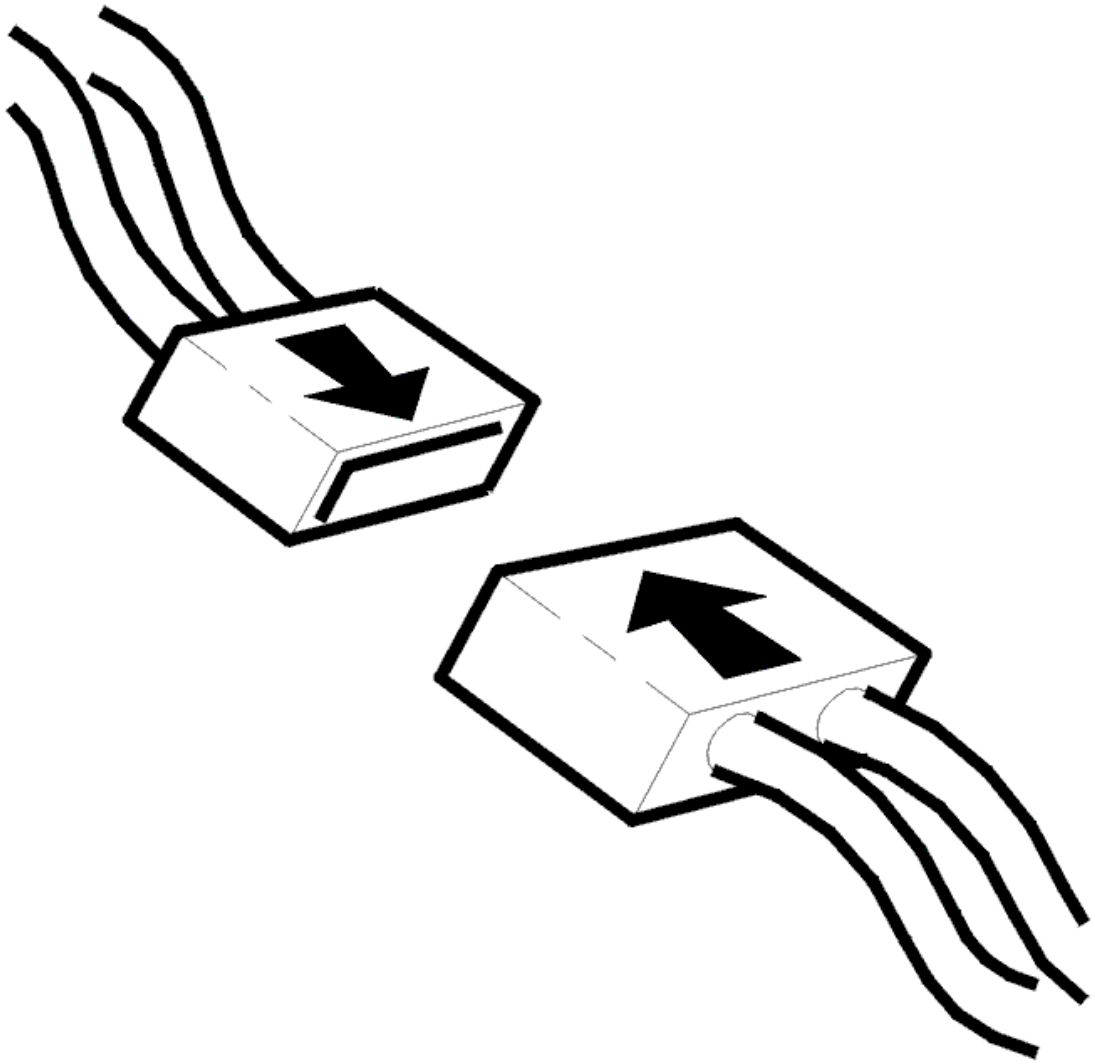

Fig. 151: Connecting Connector
Courtesy of VOLVO CARS CORPORATION

- Ignition off
- Check the brake control module (BCM) and stop (brake) lamp switch connectors. Check for contact resistance and oxidation
- Reinstall the components, reconnect the connectors etc.
- Ignition on
- Read off the status of the stop lamp switch.

  Depress and release the brake pedal. The value must change between OFF and ON.

  If the value changes, the cause of the fault was loose connections in the control module or wheel sensor connectors.

Other information

- For information about removing the brake control module (BCM) connector, see **CONNECTING THE BREAKOUT BOX, BRAKE CONTROL MODULE (BCM)**
- To fault-trace the wiring and connections, see **CONTENTS** .

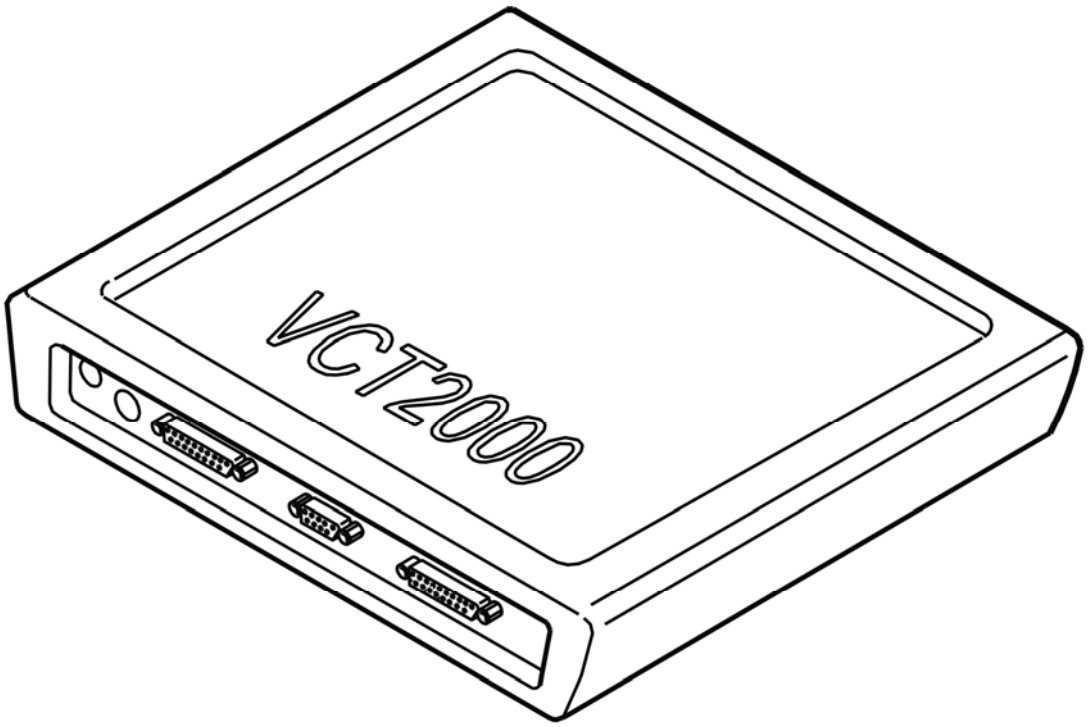

Fig. 152: Identifying VCT2000 Diagnostic Tool Symbol In VIDA
Courtesy of VOLVO CARS CORPORATION

Does the value change?

- **YES**

  OKAY: Troubleshooting has been completed.

- **NO**

  see **CHECKING THE FUSE, WIRING AND SENSORS**

CHECKING THE FUSE, WIRING AND SENSORS

Check that the fuse for the stop (brake) lamp switch in the integrated relay / fusebox in the engine compartment is intact.

Check the cable between stop lamp switch terminal #1 and the fuse in the integrated relay / fusebox in the engine compartment and between stop lamp switch terminal #5 and the splice. Check for an open-circuit. Check for a short-circuit to ground. Check for a short-circuit to supply voltage.

Check the cable between the splice and central electronic module (CEM) terminal #B4 and between the splice and engine control module (ECM) terminal #B26. Check for an open-circuit. Check for a short-circuit to ground. Check for a short-circuit to supply voltage.

HINT: Check the stop lamp switch by measuring the resistance between terminals #1 and #5 on the stop lamp switch. When the brake pedal is depressed the resistance should be infinite. When the brake pedal is not depressed the resistance should be 0 ohms.

Remedy as necessary.

Other information

- To connect the breakout box to the brake control module (BCM), see **CONNECTING THE BREAKOUT BOX, BRAKE CONTROL MODULE (BCM)**
- To connect the breakout box to the Engine control module (ECM), see: **CONNECTING THE BREAKOUT BOX**
- For connection of breakout box to central electronic module (CEM), see: **CONNECTING THE BREAKOUT BOX**
- To replace the stop lamp switch, see **STOP LAMP SWITCH, REPLACING**
- see **CONTENTS**

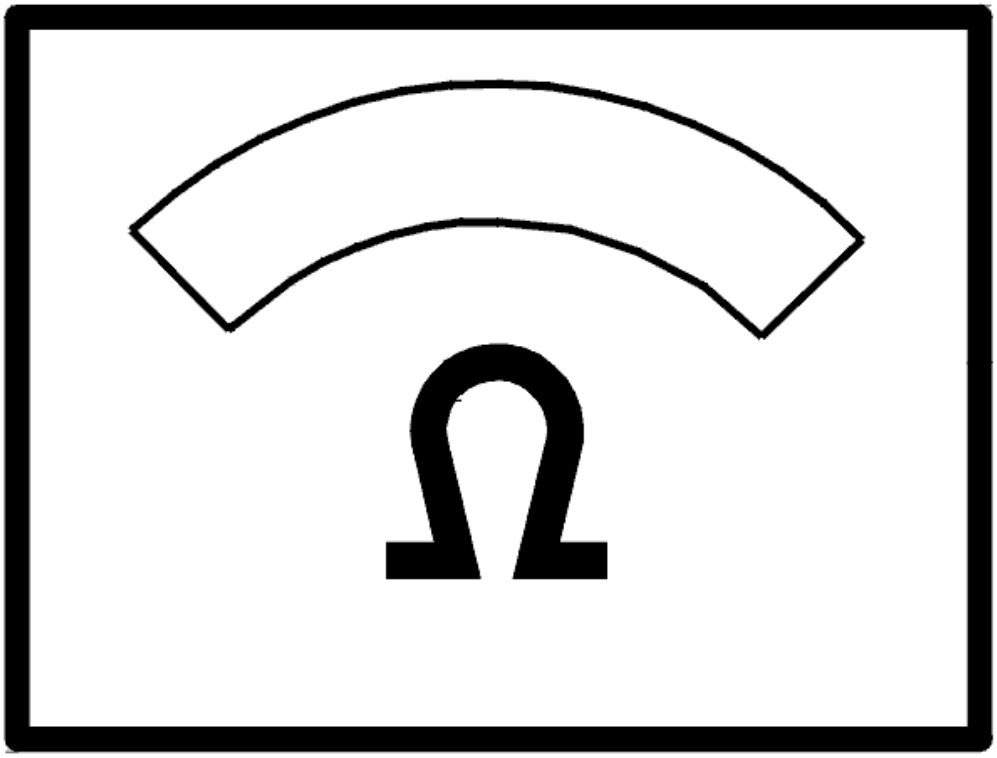

Fig. 153: Identifying Ohm Meter
Courtesy of VOLVO CARS CORPORATION

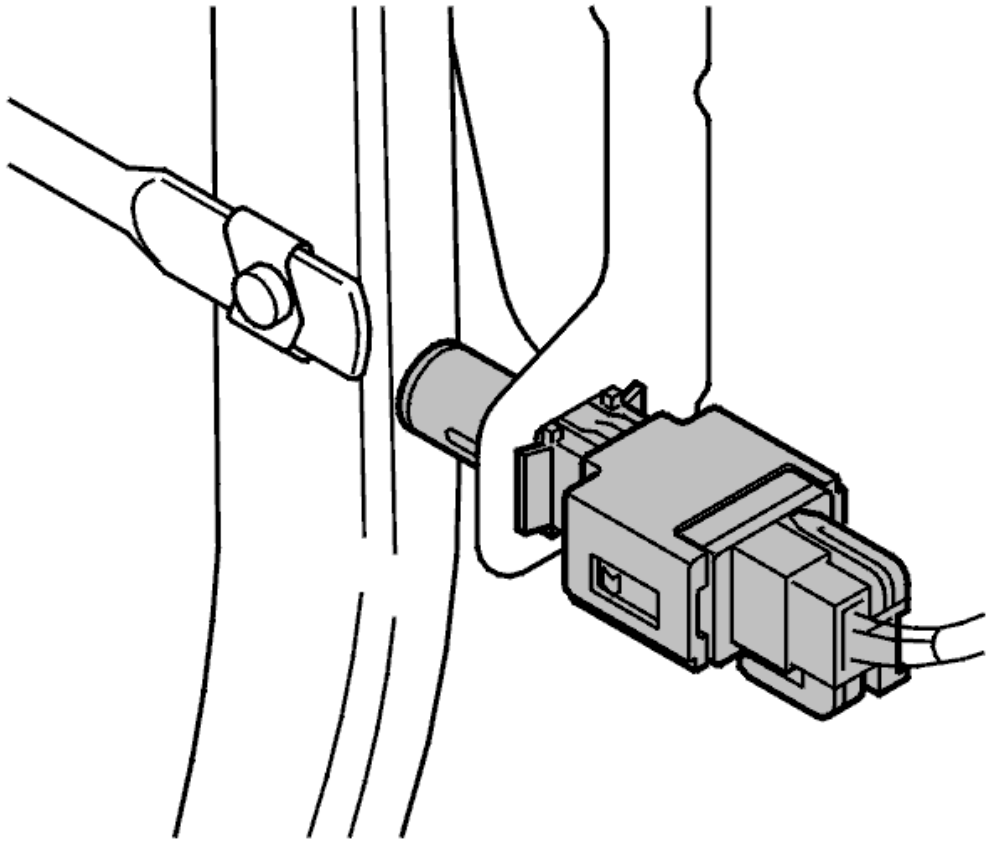

Fig. 154: Brake Light Switch
Courtesy of VOLVO CARS CORPORATION

Was a fault detected?

- **YES**

  see **VERIFICATION**

- **NO**

  FAULT NOT FOUND: Troubleshooting has been completed.

VERIFICATION

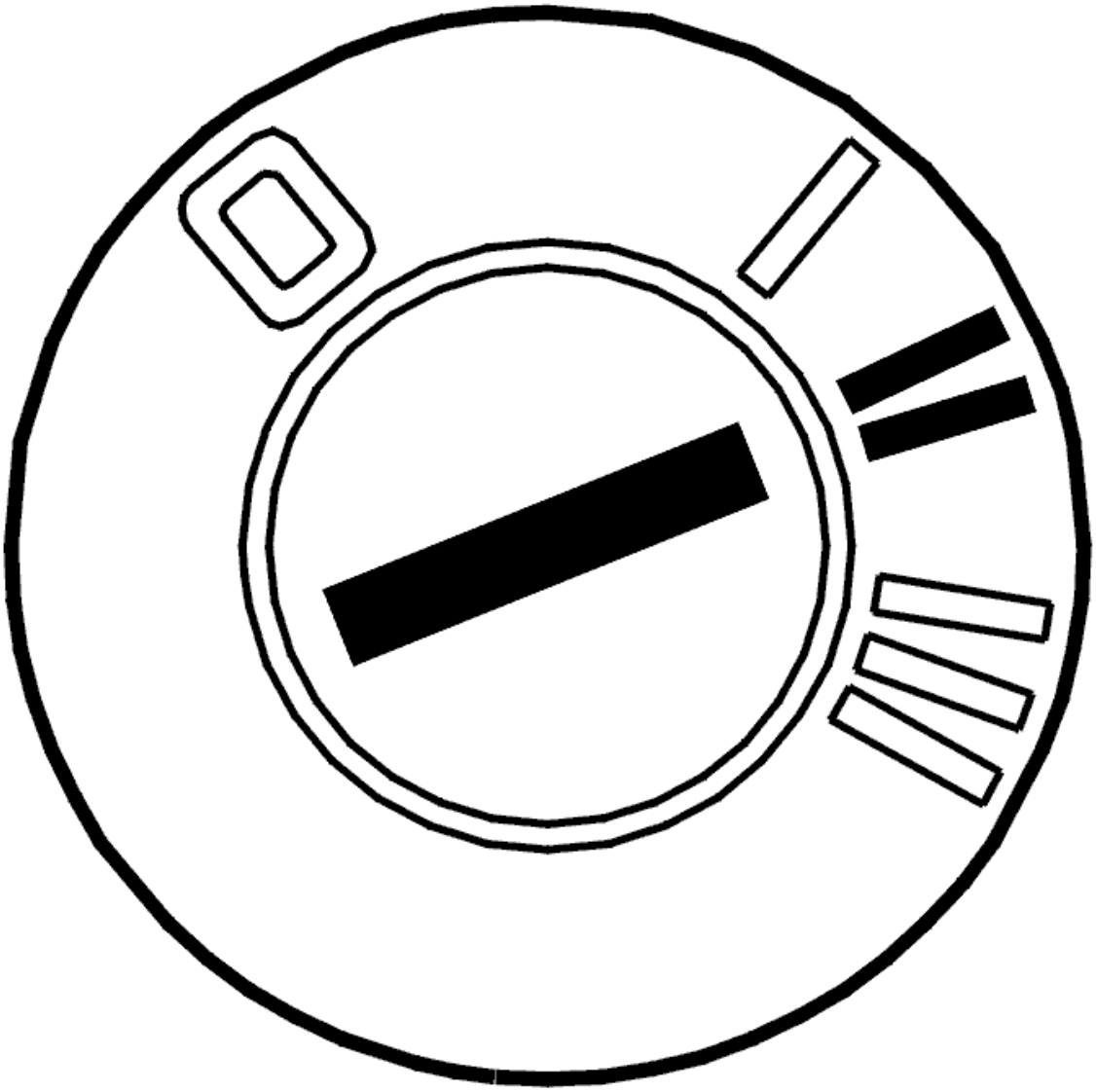

Fig. 155: Identifying Ignition ON
Courtesy of VOLVO CARS CORPORATION

- Ignition off
- Reinstall the components, reconnect the connectors etc.
- Ignition on
- Read off the status of the stop lamp switch.

  Depress and release the brake pedal. The value must change between OFF and ON.

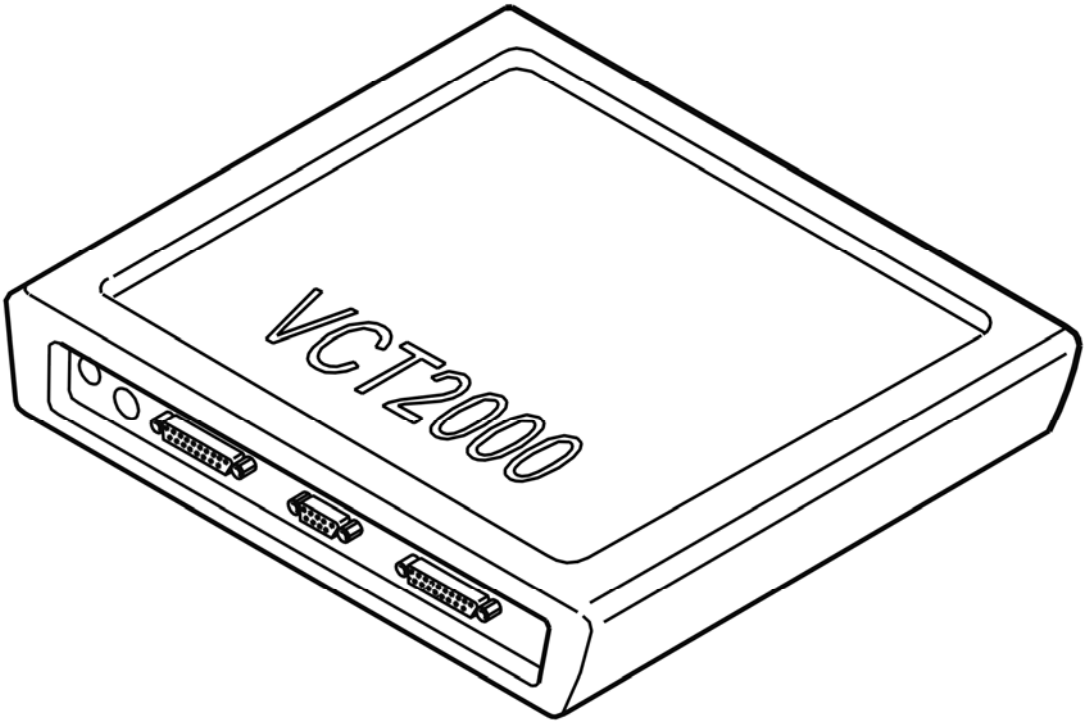

Fig. 156: Identifying VCT2000 Diagnostic Tool Symbol In VIDA
Courtesy of VOLVO CARS CORPORATION

Does the value change?

- **YES**

  OKAY: Troubleshooting has been completed.

- **NO**

  see **INFORMATION**

INFORMATION

FAULT-TRACING INFORMATION

The fault should have been detected and remedied. As this is not the case fault-tracing has failed.

Exit fault-tracing for this diagnostic trouble code (DTC) or make another attempt.

BCM-0150: STOP LAMP SWITCH. SIGNAL OUTSIDE ITS PERMITTED RANGE (B6294T; 2005-2006)

DIAGNOSTIC TROUBLE CODE (DTC) INFORMATION

see **DIAGNOSTIC TROUBLE CODE (DTC) INFORMATION**

SIGNAL OUTSIDE ITS PERMITTED RANGE

see **SIGNAL OUTSIDE ITS PERMITTED RANGE**

BCM-0151: CONTROL MODULE. INTERNAL MEMORY FAULT (2003-2004)

DIAGNOSTIC TROUBLE CODE (DTC) INFORMATION

Condition

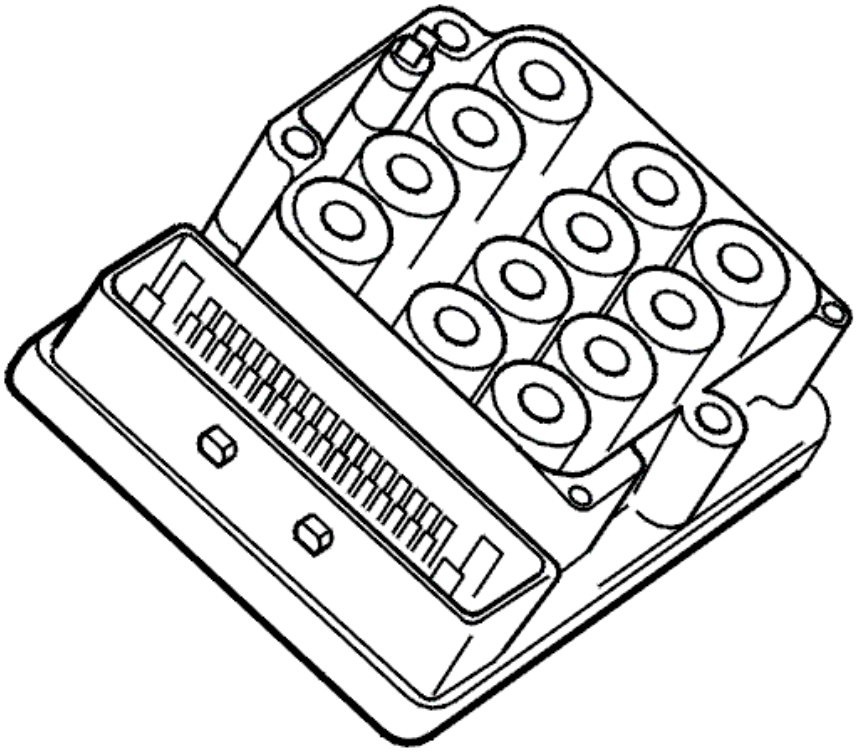

Fig. 157: ABS Control Module
Courtesy of VOLVO CARS CORPORATION

The control modules in the car continually transmit and receive information over the data network (Controller Area Network). When the brake control module (BCM) is supplied with voltage the CAN controller which handles Controller Area Network communication is initialized.

Diagnostic trouble code (DTC) BCM-0151 is stored if initialization of the CAN controller fails.

The diagnostic trouble code (DTC) can be diagnosed while the ignition is switched on.

Substitute Value

- Traction control is blocked
- Stability control is blocked
- Active yaw control is blocked
- All communication to and from the brake control module (BCM) is shut off.

HINT: For information about abbreviations, see BRAKE SYSTEM, ABBREVIATIONS .

Possible Source

- Internal fault in the brake control module (BCM).

Fault symptom[s]

- The anti-spin warning lamp is lit (up to and including 2002 model year)
- General yellow warning lamp lit (from model year 2003 inclusive)
- The stability control system does not function
- The traction control system does not function.

INTERNAL MEMORY FAULT

CHECKING DIAGNOSTIC TROUBLE CODES (DTCS)

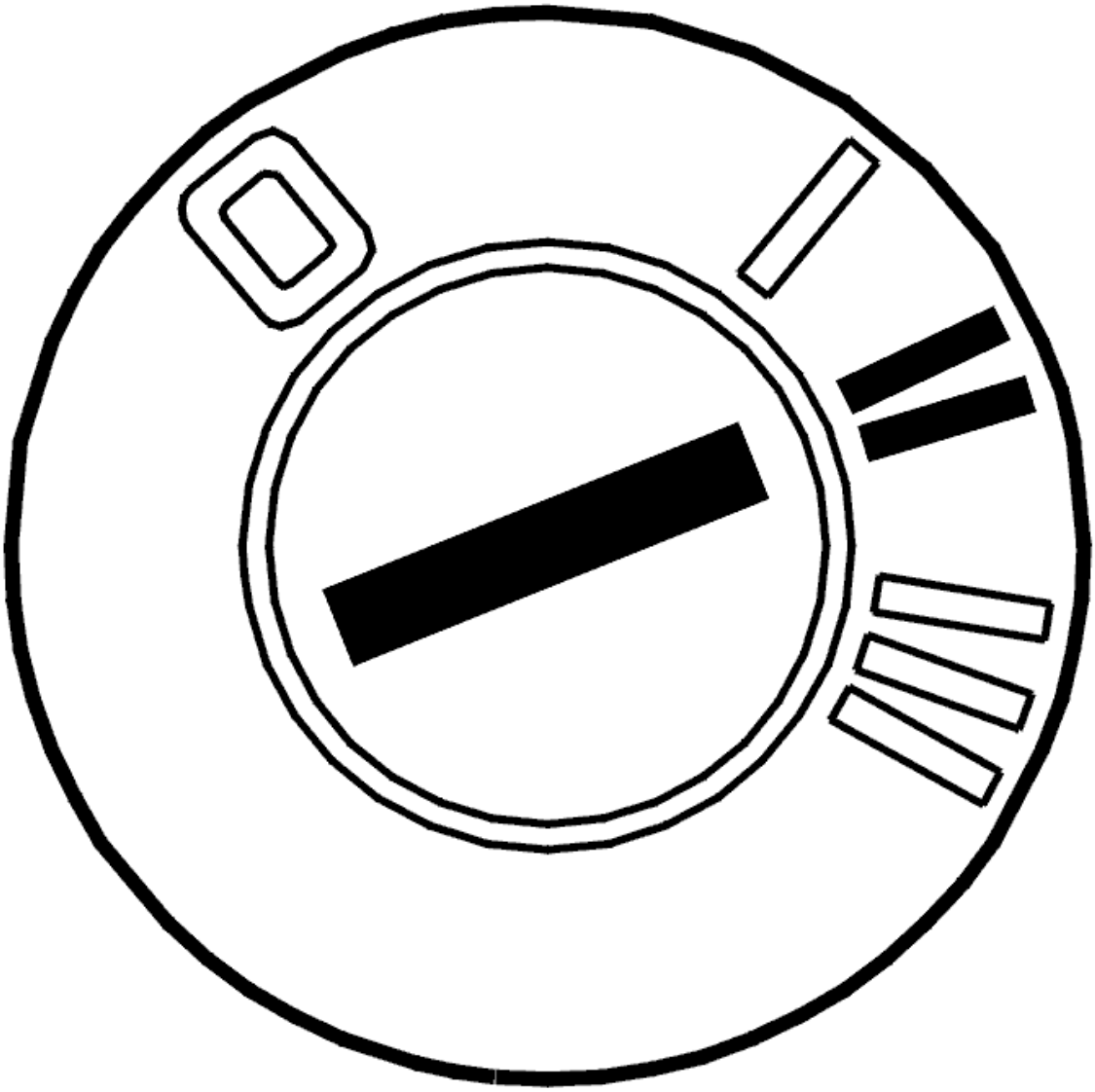

Fig. 158: Identifying Ignition ON
Courtesy of VOLVO CARS CORPORATION

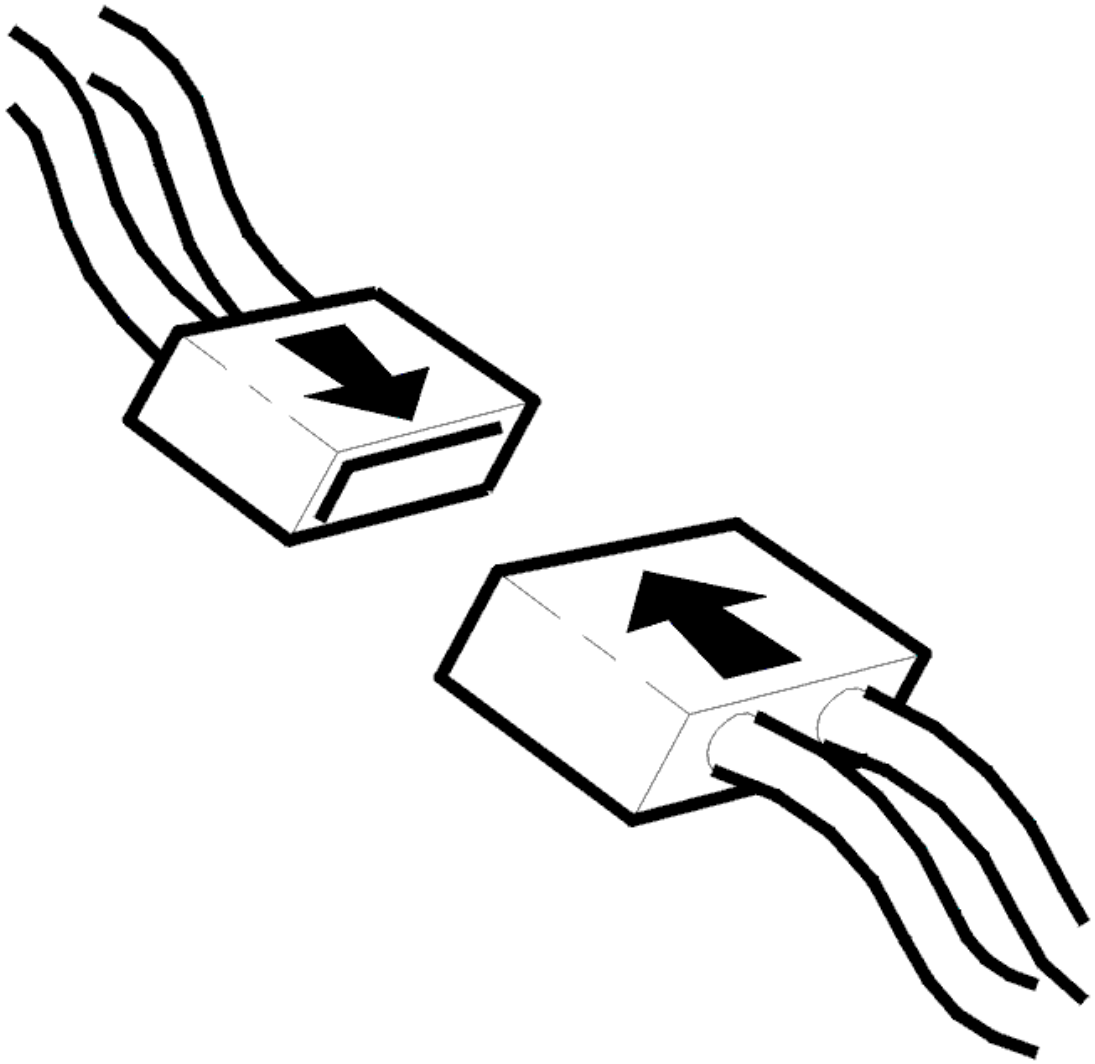

Fig. 159: Connecting Connector
Courtesy of VOLVO CARS CORPORATION

- Ignition off
- Check the brake control module (BCM) connector. Check for contact resistance and oxidation
- Reinstall the components, reconnect the connectors etc.
- Ignition on
- Wait approximately 60 seconds
- Read off the status of the diagnostic trouble code (DTC).

  Replace the brake control module (BCM) if the status of the fault is permanent.

  Other information

  - To access the control module connector, see **CONNECTING THE BREAKOUT BOX, BRAKE**

CONTROL MODULE (BCM)

- To replace the brake control module (BCM), see **BRAKE CONTROL MODULE (BCM), REPLACING**
- see **CONTENTS**

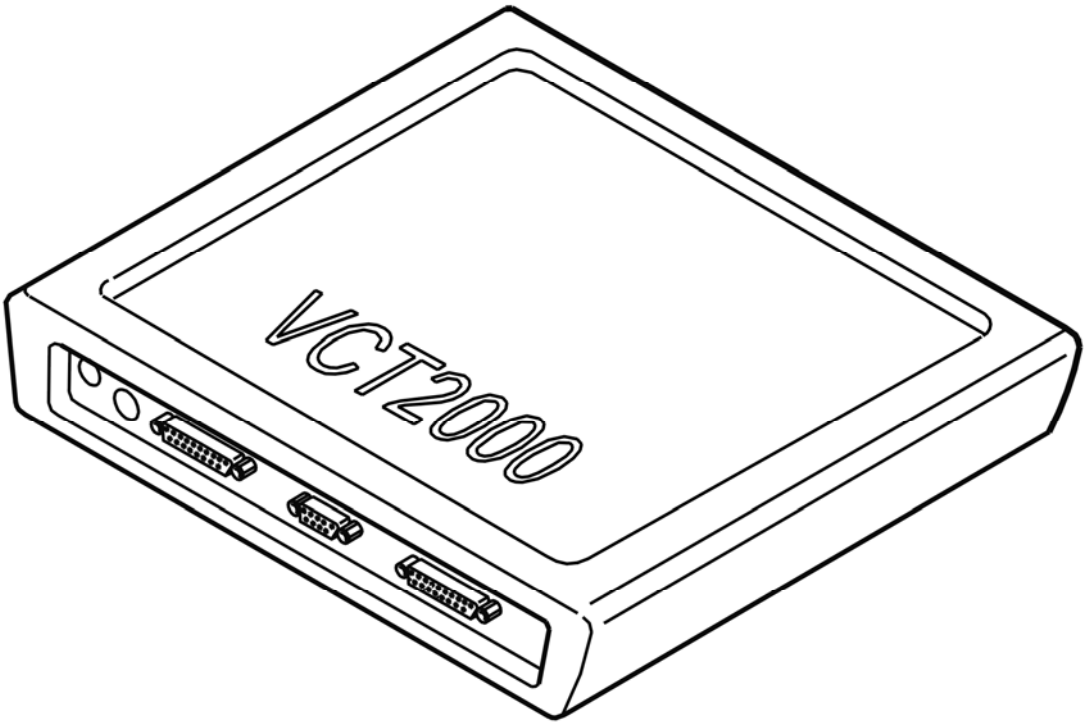

Fig. 160: Identifying VCT2000 Diagnostic Tool Symbol In VIDA
Courtesy of VOLVO CARS CORPORATION

Was the status of the diagnostic trouble code (DTC) permanent?

- **YES**

  OKAY: Troubleshooting has been completed.

- **NO**

  see **INFORMATION**

INFORMATION

FAULT-TRACING INFORMATION

If the fault is intermittent, do not verify fault-tracing if the fault does not recur.

It is possible to view the information again, or leave fault-tracing for this diagnostic trouble code (DTC).

BCM-0151: CONTROL MODULE. INTERNAL MEMORY FAULT (B5254T2; 2005-2007)

DIAGNOSTIC TROUBLE CODE (DTC) INFORMATION

see **DIAGNOSTIC TROUBLE CODE (DTC) INFORMATION**

INTERNAL MEMORY FAULT

see **INTERNAL MEMORY FAULT**

BCM-0151: CONTROL MODULE. INTERNAL MEMORY FAULT (B6294T; 2005-2006)

DIAGNOSTIC TROUBLE CODE (DTC) INFORMATION

see **DIAGNOSTIC TROUBLE CODE (DTC) INFORMATION**

INTERNAL MEMORY FAULT

see **INTERNAL MEMORY FAULT**

BCM-A030: COMMUNICATION BETWEEN CONTROL MODULES. STEERING ANGLE SENSOR. INITIALIZATION CHECK NOT RUN (2003-2004)

DIAGNOSTIC TROUBLE CODE (DTC) INFORMATION

Condition

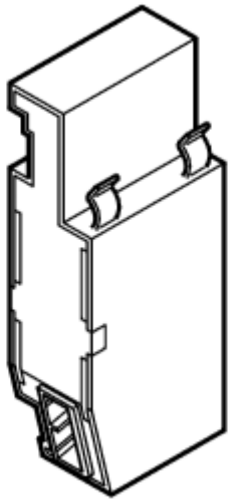

Fig. 161: Identifying Control Unit
Courtesy of VOLVO CARS CORPORATION

The steering wheel angle sensor is initialized when the steering wheel is moved at least ±5° within a certain amount of time of the ignition being switched on.

Diagnostic trouble code (DTC) BCM-A030 is stored if the steering angle is not initialized after 2 minutes driving at a speed above 10 km/h.

The initialization can be run before the ignition is switched off even after diagnostic trouble code (DTC) BCM-A030 has been stored. The anti spin warning lamp then goes out. Diagnostic trouble code (DTC) BCM-0108 is also stored if the initialization is not completed before the ignition is switched off.

Substitute Value

- Active yaw control is blocked.

Possible Source

- The steering wheel angle sensor is uninitiated after two minutes driving above 10 km/h.

NOTE: **This diagnostic trouble code (DTC) is not due to an internal hardware fault in the Brake control module (BCM) and must not be remedied by replacing the control module.**

Fault symptom[s]

- The anti-spin warning lamp is lit (up to and including 2002 model year)
- General yellow warning lamp lit (from model year 2003 inclusive)
- The traction control system does not function.

THE-INITIALIZATION: CHECK HAS NOT BEEN RUN

CHECKING DIAGNOSTIC TROUBLE CODES (DTCS)

If diagnostic trouble code (DTC) BCM-A030 is stored on its own it must be erased.

If diagnostic trouble code (DTC) BCM-0108 is stored at the same time as BCM-A030, read off the diagnostic trouble codes (DTCs) from the control module for the steering angle sensor. Fault-trace the system.

Select an option:

1. Diagnostic trouble code (DTC) BCM-A030 is stored on its own

   see **ERASING DIAGNOSTIC TROUBLE CODES (DTCS)**

2. Diagnostic trouble codes (DTCs) BCM-0108 and BCM-A030 are stored at the same time.

OKAY: Troubleshooting has been completed.

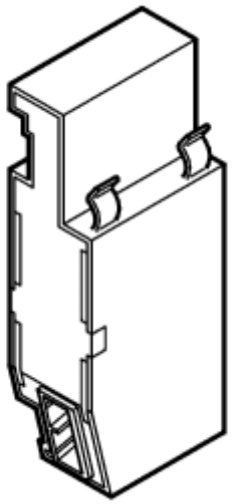

Fig. 162: Identifying Control Unit
Courtesy of VOLVO CARS CORPORATION

ERASING DIAGNOSTIC TROUBLE CODES (DTCS)

ERASING DIAGNOSTIC TROUBLE CODES (DTCS)

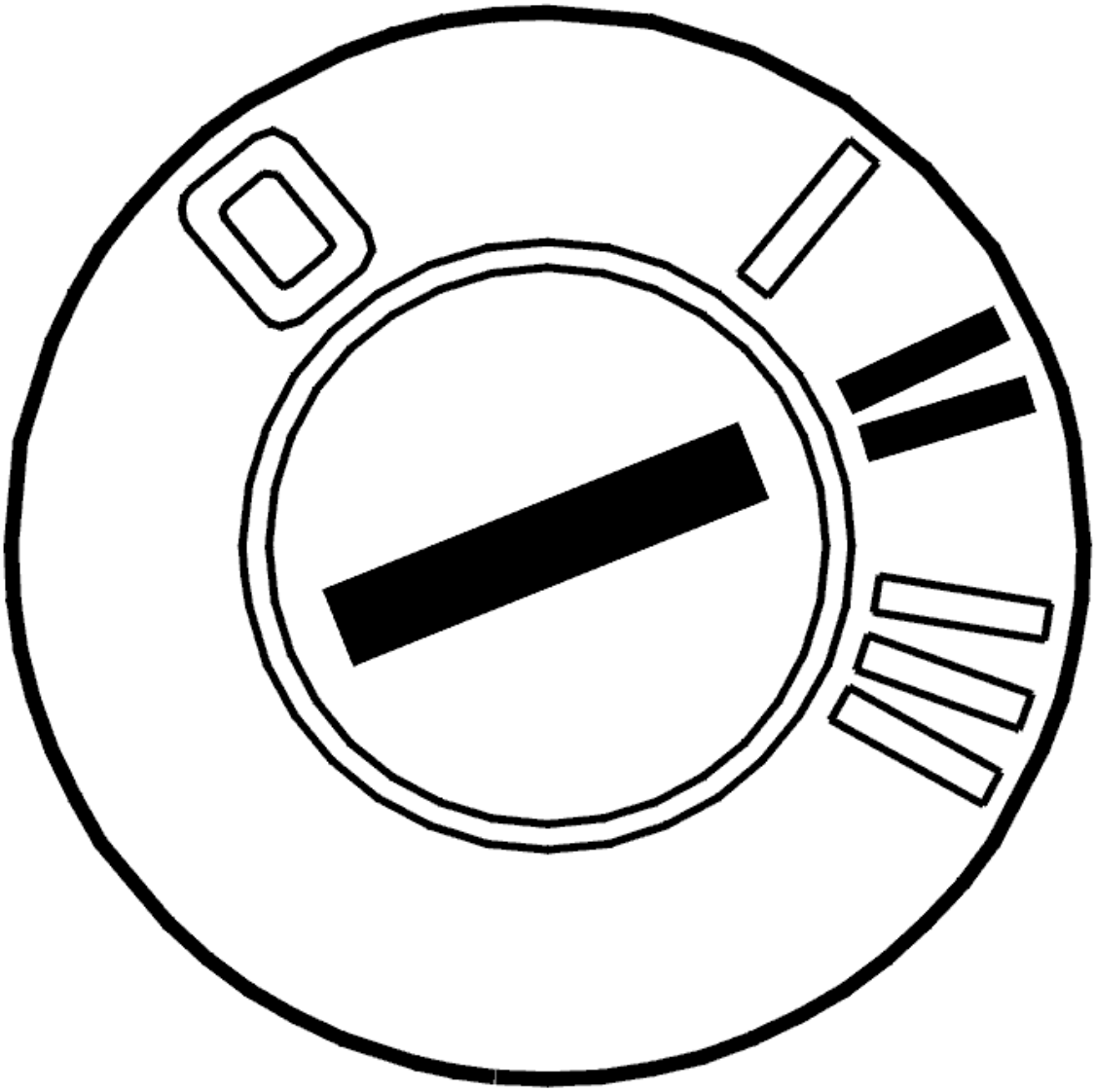

Fig. 163: Identifying Ignition ON
Courtesy of VOLVO CARS CORPORATION

- Ignition on.

  Erase diagnostic trouble codes (DTCs).

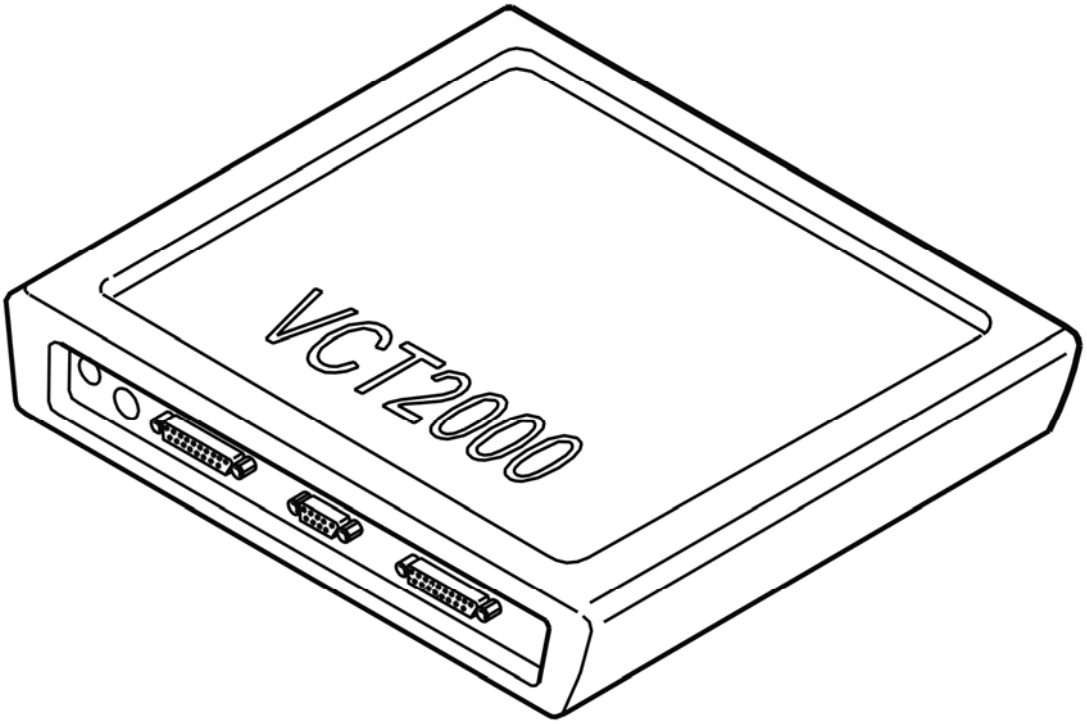

Fig. 164: Identifying VCT2000 Diagnostic Tool Symbol In VIDA
Courtesy of VOLVO CARS CORPORATION

BCM-A030: COMMUNICATION BETWEEN CONTROL MODULES. STEERING ANGLE SENSOR. INITIALIZATION CHECK NOT RUN (B5254T2; 2005-2007)

DIAGNOSTIC TROUBLE CODE (DTC) INFORMATION

Condition

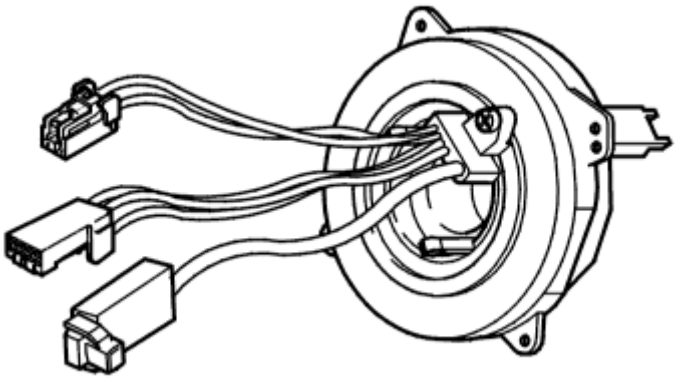

Fig. 165: Identifying Steering Wheel Angle Sensor, Cables & Connectors
Courtesy of VOLVO CARS CORPORATION

The steering wheel angle sensor is initialized when the steering wheel is moved at least ±5° within a certain amount of time of the ignition being switched on.

Diagnostic trouble code (DTC) BCM-A030 is stored if the steering angle is not initialized after 2 minutes driving at a speed above 10 km/h.

The initialization can be run before the ignition is switched off even after diagnostic trouble code (DTC) BCM-A030 has been stored. The anti spin warning lamp then goes out. Diagnostic trouble code (DTC) BCM-0108 is also stored if the initialization is not completed before the ignition is switched off.

Substitute Value

- Active yaw control is blocked.

Possible Source

- The steering wheel angle sensor is uninitiated after two minutes driving above 10 km/h.

NOTE: **This diagnostic trouble code (DTC) is not due to an internal hardware fault in the Brake control module (BCM) and must not be remedied by replacing the control module.**

Fault symptom[s]

- The anti-spin warning lamp is lit (up to and including 2002 model year)
- General yellow warning lamp lit (from model year 2003 inclusive)
- The traction control system does not function.

THE-INITIALIZATION: CHECK HAS NOT BEEN RUN

CHECKING DIAGNOSTIC TROUBLE CODES (DTCS)

If diagnostic trouble code (DTC) BCM-A030 is stored on its own it must be erased.

If diagnostic trouble code (DTC) BCM-0108 is stored at the same time as BCM-A030, read off the diagnostic trouble codes (DTCs) from the control module for the steering angle sensor. Fault-trace the system.

Select an option:

1. Diagnostic trouble code (DTC) BCM-A030 is stored on its own

   see **ERASING DIAGNOSTIC TROUBLE CODES (DTCS)**

2. Diagnostic trouble codes (DTCs) BCM-0108 and BCM-A030 are stored at the same time.

   OKAY: Troubleshooting has been completed.

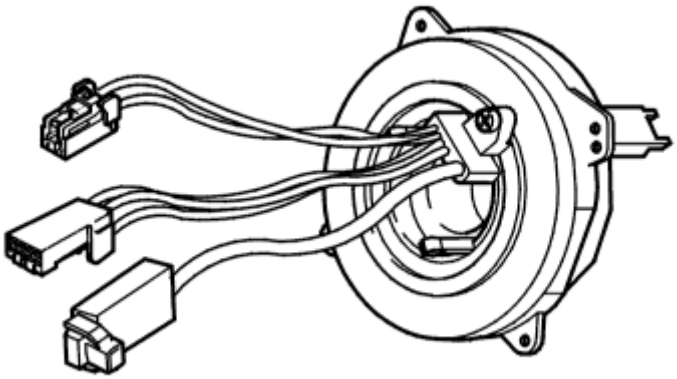

Fig. 166: Identifying Steering Wheel Angle Sensor, Cables & Connectors
Courtesy of VOLVO CARS CORPORATION

ERASING DIAGNOSTIC TROUBLE CODES (DTCS)

ERASING DIAGNOSTIC TROUBLE CODES (DTCS)

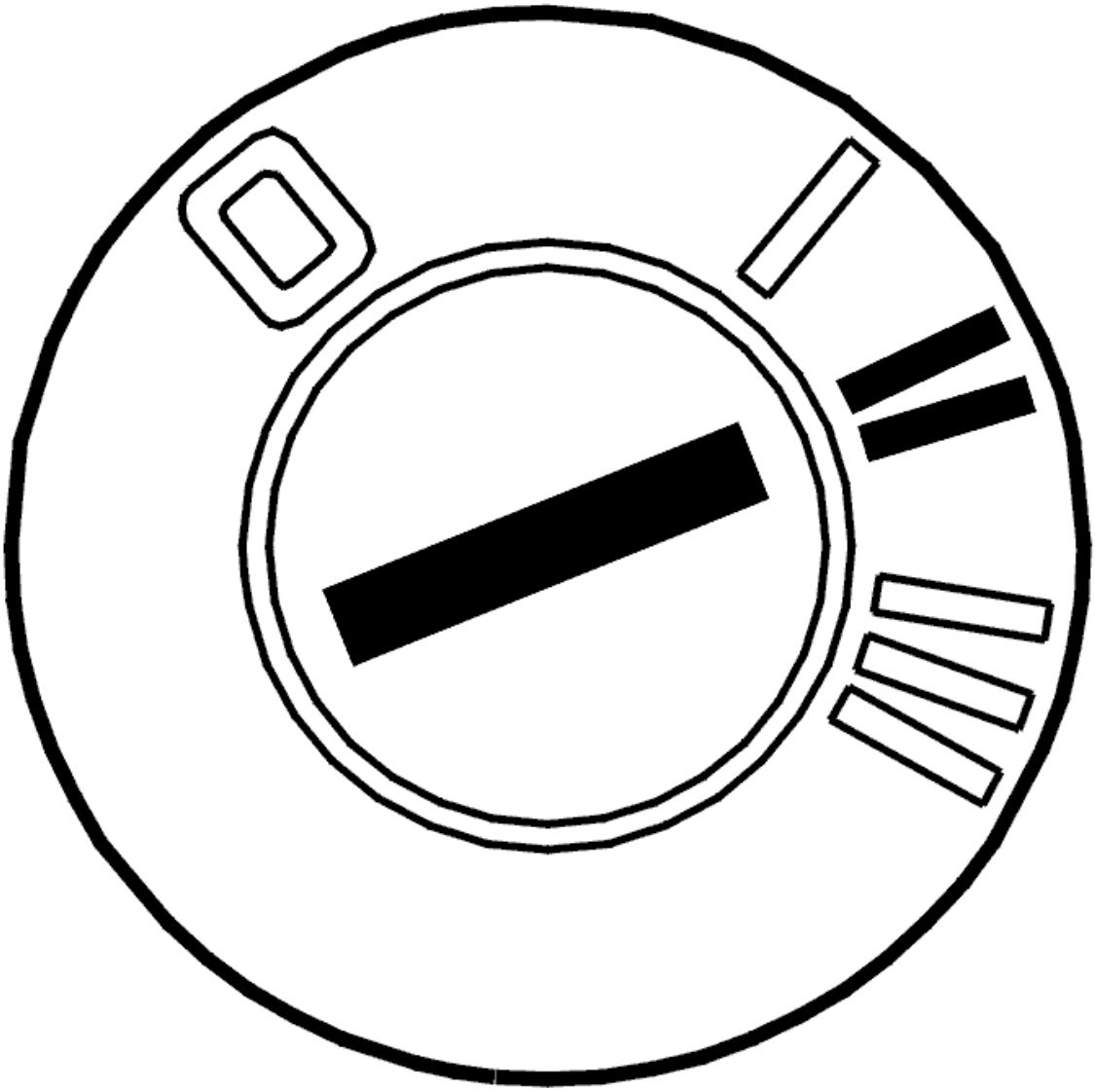

Fig. 167: Identifying Ignition ON
Courtesy of VOLVO CARS CORPORATION

- Ignition on.

  Erase diagnostic trouble codes (DTCs).

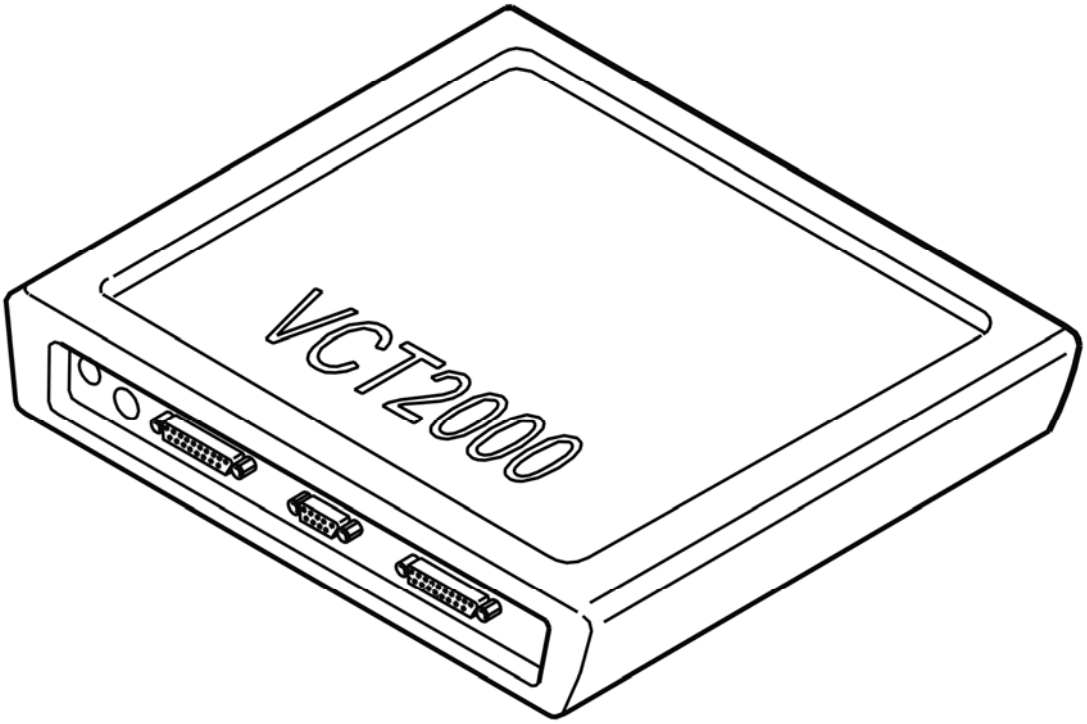

Fig. 168: Identifying VCT2000 Diagnostic Tool Symbol In VIDA
Courtesy of VOLVO CARS CORPORATION

BCM-A030: COMMUNICATION BETWEEN CONTROL MODULES. STEERING ANGLE SENSOR. INITIALIZATION CHECK NOT RUN (B6294T; 2005-2006)

DIAGNOSTIC TROUBLE CODE (DTC) INFORMATION

see **DIAGNOSTIC TROUBLE CODE (DTC) INFORMATION**

THE-INITIALIZATION: CHECK HAS NOT BEEN RUN

see **THE INITIALIZATION CHECK HAS NOT BEEN RUN**

BCM-A031: COMMUNICATION BETWEEN CONTROL MODULES. STEERING ANGLE SENSOR. TOLERANCE CHECK NOT RUN (2003-2004)

DIAGNOSTIC TROUBLE CODE (DTC) INFORMATION BCM-A031

Condition

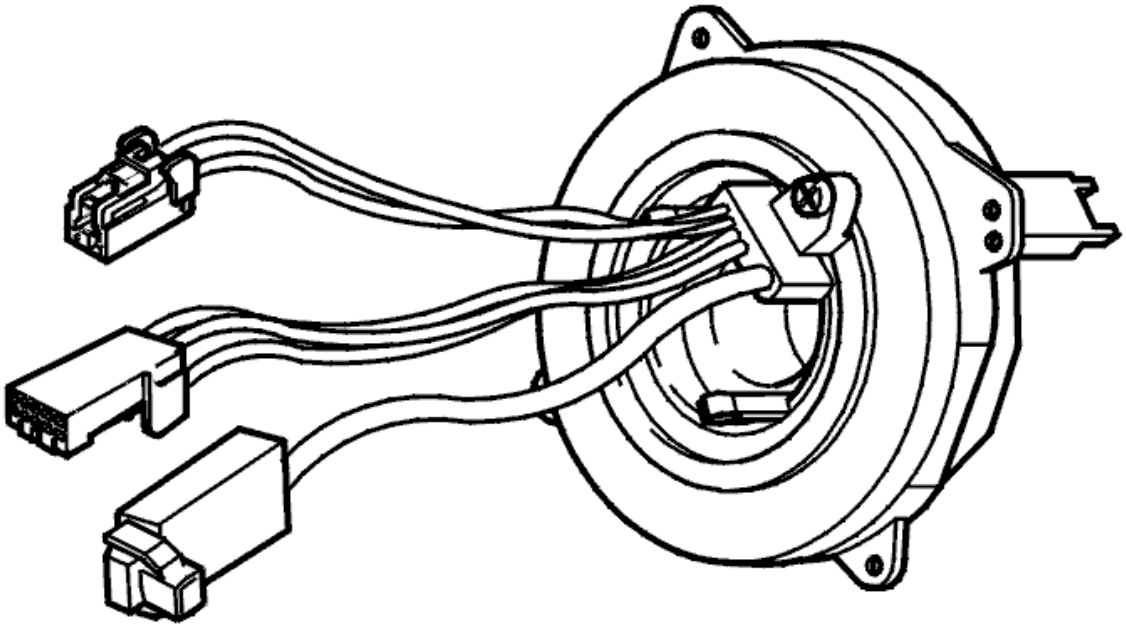

Fig. 169: Identifying Steering Wheel Angle Sensor
Courtesy of VOLVO CARS CORPORATION

After the steering wheel angle sensor has been initialized, a check of the plausibility of the steering wheel angle is run.

The diagnostic trouble code (DTC) is stored if the check is not approved and speed exceeds 50 km/h.

The feasibility check can be performed after the relevant diagnostic trouble code is generated, but before the ignition is switched off. If the check is not complete within one minute, BCM-0111 is also generated.

Substitute Value

- Active yaw control is blocked.

Possible Source

- The plausibility check of the steering wheel angle is not approved.

NOTE: **This diagnostic trouble code is not due to an internal hardware fault in the Brake control module and must not be remedied by replacing the control module.**

Fault symptom[s]

- Anti-spin warning lamp lit
- General warning lamp lit
- Anti skid function is not working

PLAUSIBILITY CHECK NOT RUN

CHECKING DIAGNOSTIC TROUBLE CODES (DTCS)

If diagnostic trouble code (DTC) BCM-A031 is stored on its own it must be erased.

If diagnostic trouble code (DTC) BCM-0111 is stored at the same time as BCM-A031, read off the diagnostic trouble codes (DTCs) from the control module for the steering angle sensor. Fault-trace the system.

Select an option:

1. Diagnostic trouble code (DTC) BCM-A031 is stored on its own

   see **ERASING DIAGNOSTIC TROUBLE CODES (DTCS)**

2. Diagnostic trouble codes (DTCs) BCM-0111 and BCM-A031 are stored at the same time.

   OKAY: Troubleshooting has been completed.

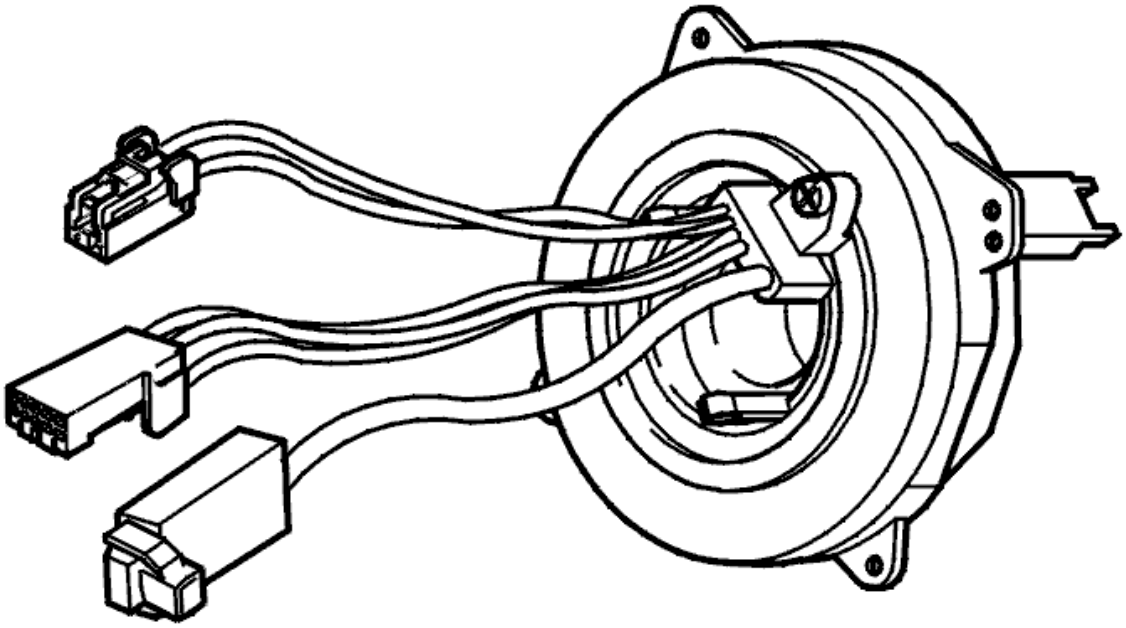

Fig. 170: Identifying Steering Wheel Angle Sensor
Courtesy of VOLVO CARS CORPORATION

ERASING DIAGNOSTIC TROUBLE CODES (DTCS)

ERASING DIAGNOSTIC TROUBLE CODES (DTCS)

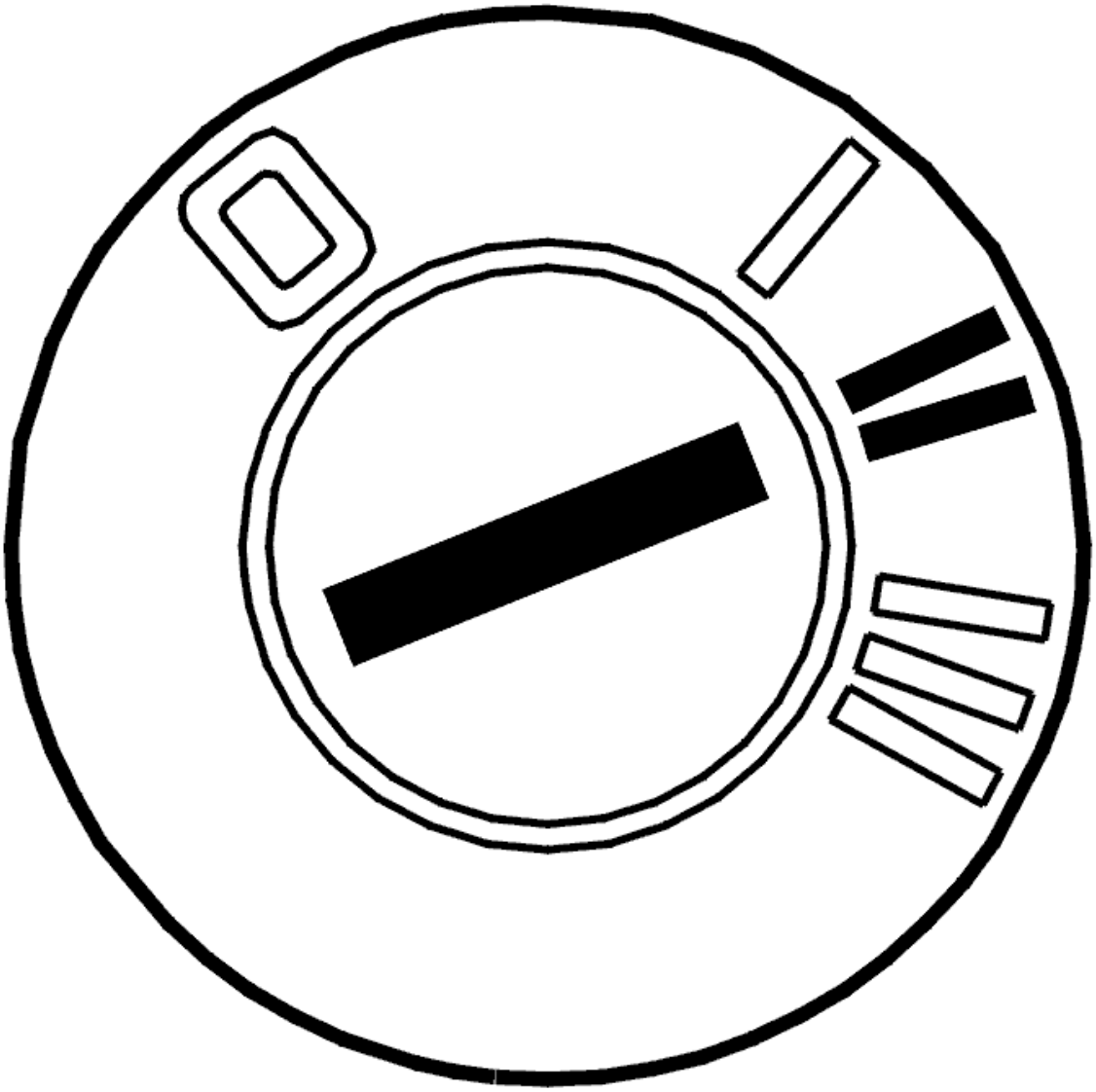

Fig. 171: Identifying Ignition ON
Courtesy of VOLVO CARS CORPORATION

- Ignition on.

  Erase diagnostic trouble codes (DTCs).

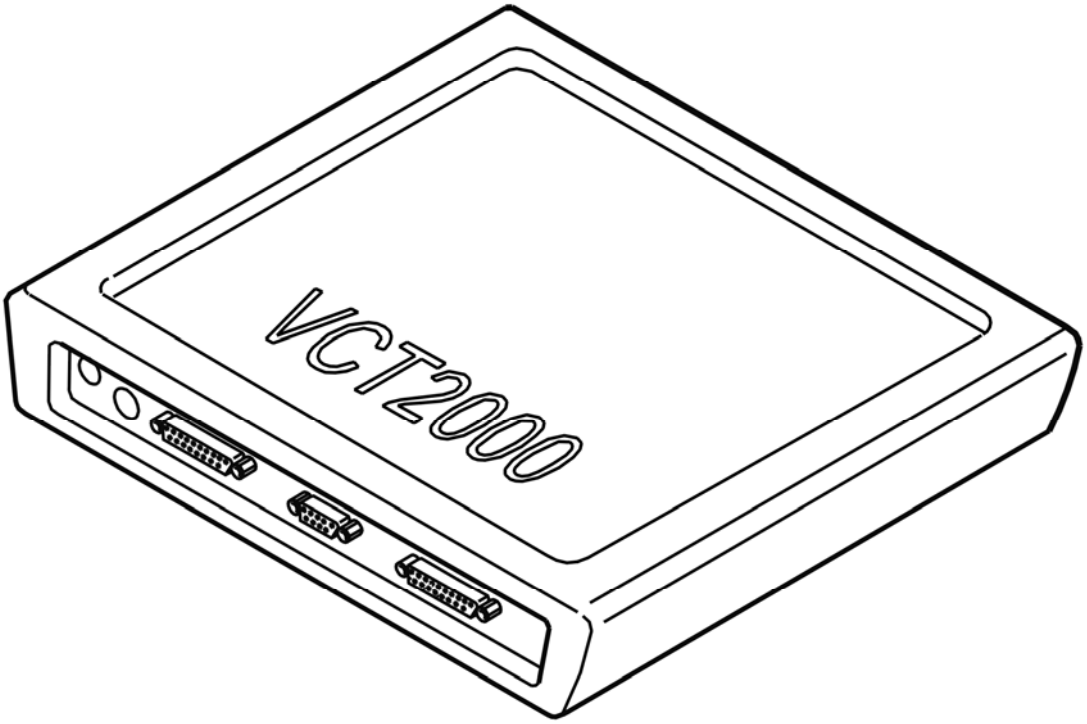

Fig. 172: Identifying VCT2000 Diagnostic Tool Symbol In VIDA
Courtesy of VOLVO CARS CORPORATION

BCM-A031: COMMUNICATION BETWEEN CONTROL MODULES. STEERING ANGLE SENSOR. TOLERANCE CHECK NOT RUN (B5254T2; 2005-2007)

DIAGNOSTIC TROUBLE CODE (DTC) INFORMATION BCM-A031

see **DIAGNOSTIC TROUBLE CODE (DTC) INFORMATION BCM-A031**

PLAUSIBILITY CHECK NOT RUN

see **PLAUSIBILITY CHECK NOT RUN**

BCM-A031: COMMUNICATION BETWEEN CONTROL MODULES. STEERING ANGLE SENSOR. TOLERANCE CHECK NOT RUN (B6294T; 2005-2006)

DIAGNOSTIC TROUBLE CODE (DTC) INFORMATION BCM-A031

see **DIAGNOSTIC TROUBLE CODE (DTC) INFORMATION BCM-A031**

PLAUSIBILITY CHECK NOT RUN

see **PLAUSIBILITY CHECK NOT RUN**

BCM-A032: STABILITY FUNCTION. TOO LONG STABILITY CONTROL (2003-2004)

DIAGNOSTIC TROUBLE CODE (DTC) INFORMATION BCM-A032

Condition

The diagnostic trouble code (DTC) is stored in the subsequent operating cycle (ignition off and ignition on) if the brake control module (BCM) performs an extended start up check of the DSTC system due to a number of different faults during the previous operating cycle.

Substitute Value

- None.

Possible Source

- The diagnostic trouble code (DTC) has been stored in the previous operating cycle.

NOTE: **This diagnostic trouble code (DTC) is not due to an internal hardware fault in the Brake control module (BCM) and must not be remedied by replacing the control module.**

Fault symptom[s]

- The information lamp is lit.

TOO-LONG: STABILITY CONTROL

CHECKING THE DIAGNOSTIC TROUBLE CODES (DTCS)

If diagnostic trouble code (DTC) BCM-A032 is stored on its own it must be erased.

If diagnostic trouble code (DTC) BCM-0145 is stored at the same time as BCM-A032, fault-tracing must be carried out according to the relevant information for diagnostic trouble code (DTC) BCM-0145.

Select an option:

1. Only BCM-A032 stored

   see **ERASING DIAGNOSTIC TROUBLE CODES (DTCS)**

2. Diagnostic trouble codes (DTCs) BCM-0145 and BCM-A032 are stored at the same time.

OKAY: Troubleshooting has been completed.

ERASING DIAGNOSTIC TROUBLE CODES (DTCS)

ERASING DIAGNOSTIC TROUBLE CODES (DTCS)

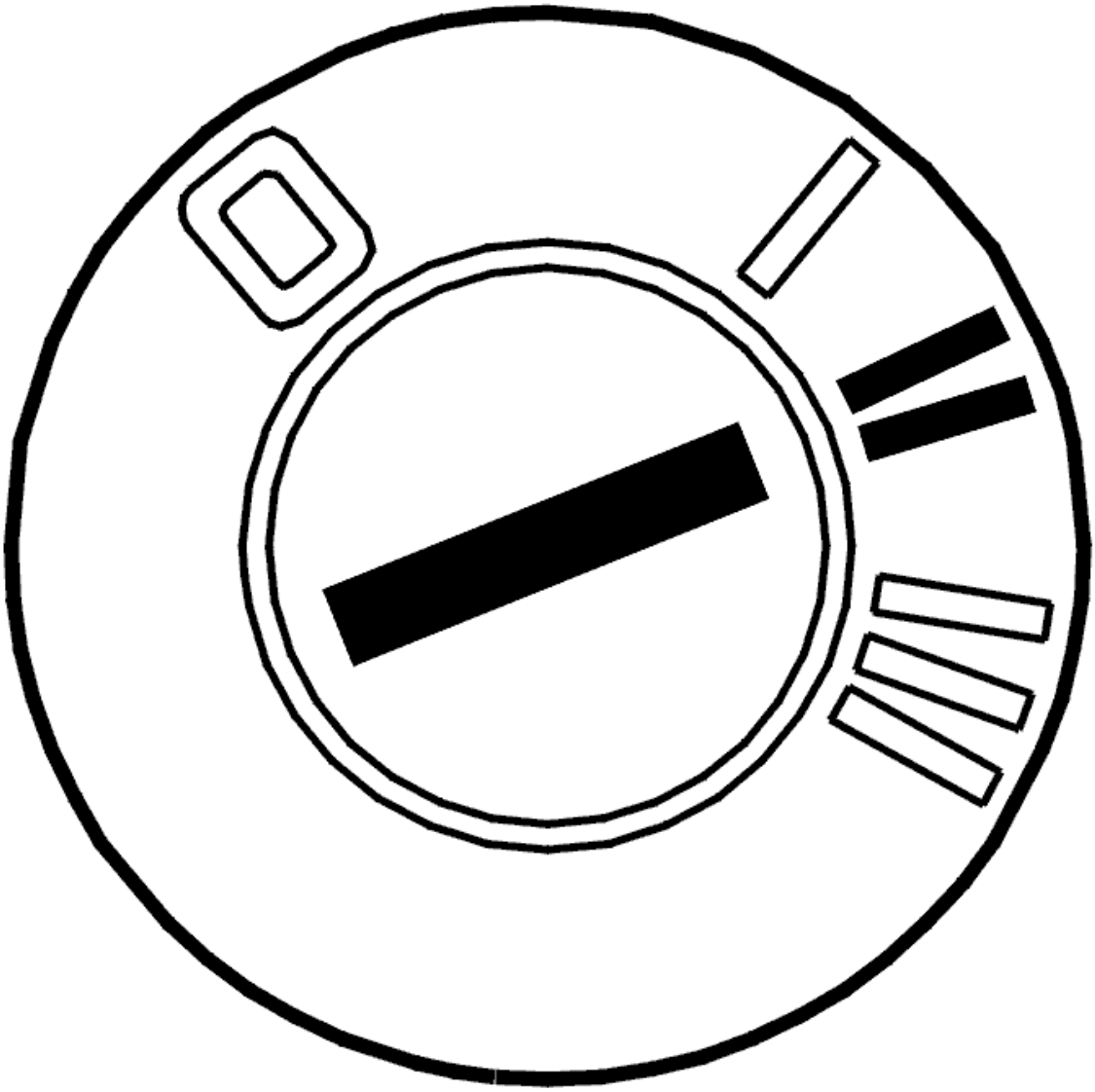

Fig. 173: Identifying Ignition ON
Courtesy of VOLVO CARS CORPORATION

- Ignition on.

  Erase diagnostic trouble codes (DTCs).

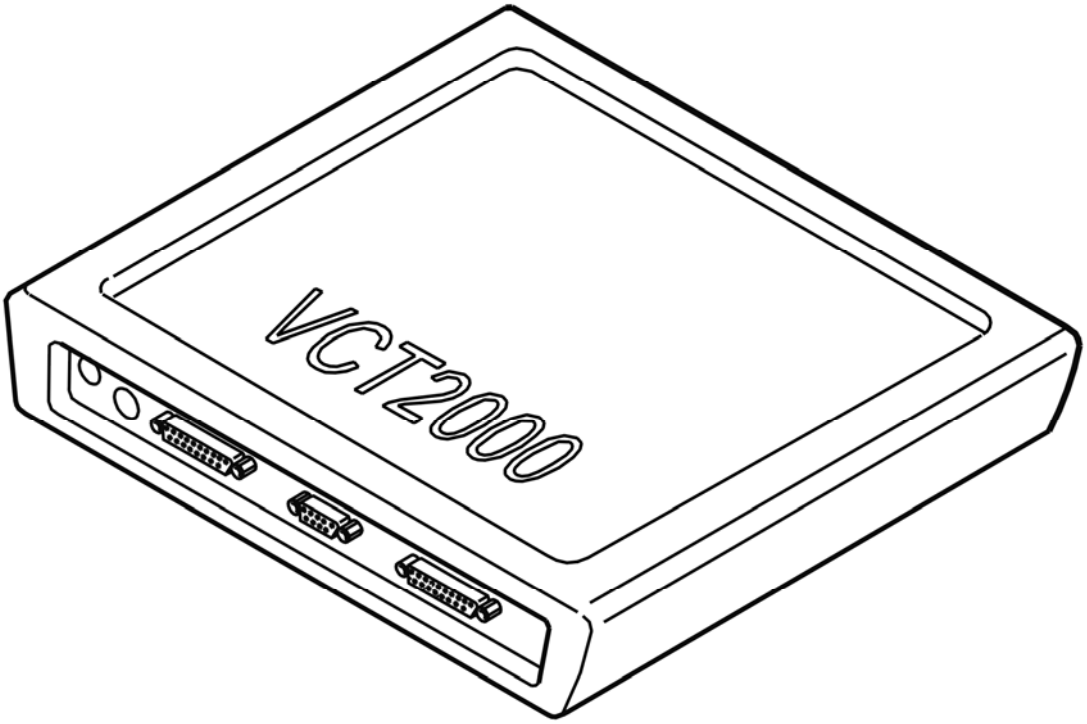

Fig. 174: Identifying VCT2000 Diagnostic Tool Symbol In VIDA
Courtesy of VOLVO CARS CORPORATION

BCM-A032: STABILITY FUNCTION. TOO LONG STABILITY CONTROL (B5254T2; 2005-2007)

DIAGNOSTIC TROUBLE CODE (DTC) INFORMATION BCM-A032

see **DIAGNOSTIC TROUBLE CODE (DTC) INFORMATION BCM-A032**

TOO-LONG: STABILITY CONTROL

see **TOO LONG STABILITY CONTROL**

BCM-A032: STABILITY FUNCTION. TOO LONG STABILITY CONTROL (B6294T; 2005-2006)

DIAGNOSTIC TROUBLE CODE (DTC) INFORMATION BCM-A032

see **DIAGNOSTIC TROUBLE CODE (DTC) INFORMATION BCM-A032**

TOO-LONG: STABILITY CONTROL

see **TOO LONG STABILITY CONTROL**

BCM-C002001: ABS PUMP MOTOR CONTROL. GENERAL MALFUNCTION INFORMATION. GENERAL ELECTRICAL MALFUNCTION (B6324S; 2007-2010)

DIAGNOSTIC TROUBLE CODE INFORMATION BCM-C002001

Condition

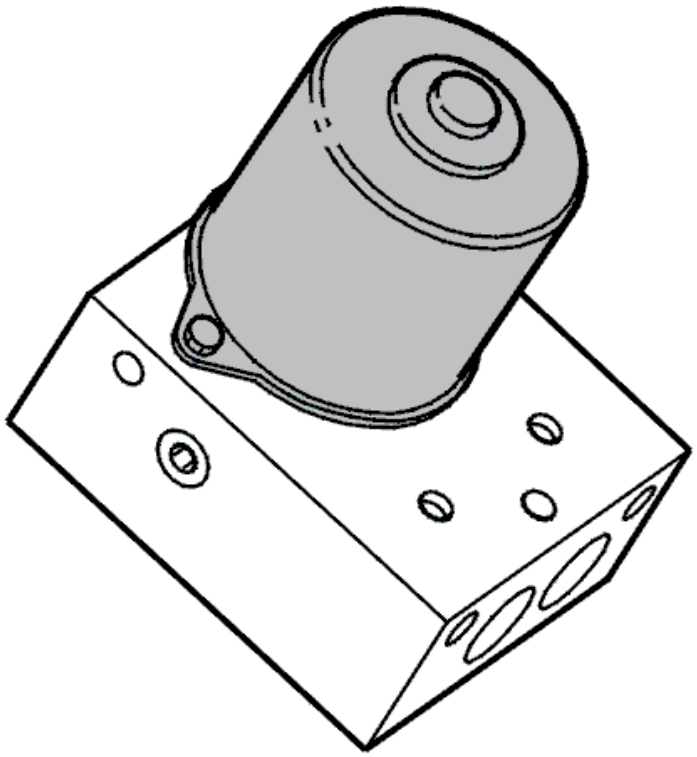

Fig. 175: Identifying Brake Pump Motor
Courtesy of VOLVO CARS CORPORATION

Diagnostic trouble code BCM-C002001 is generated if the brake control module registers that the pump motor does not start or if there is no pump motor signal.

The diagnostic trouble code can be diagnosed when the ignition is on.

Substitute Value

- ABS is blocked.
- TC is blocked.

- SC is blocked.
- AYC is blocked.
- BA is blocked.

HINT: For information on brake system abbreviations: BRAKE SYSTEM, ABBREVIATIONS

Possible Source

- Contact resistance in the terminals
- Defective pump motor fuse.
- Open circuit on voltage feed to pump motor.
- Open circuit on pump motor ground cable.
- Defective pump motor.
- Defective brake control module (BCM).

Fault symptom[s]

- General warning light on.
- ABS warning light on.
- ABS is not operational.
- Anti-spin is not operational.
- The stability function is not operational.
- The anti-skid function is not operational.

TROUBLESHOOTING BCM-C002001

CHECKING PUMP MOTOR FUNCTION

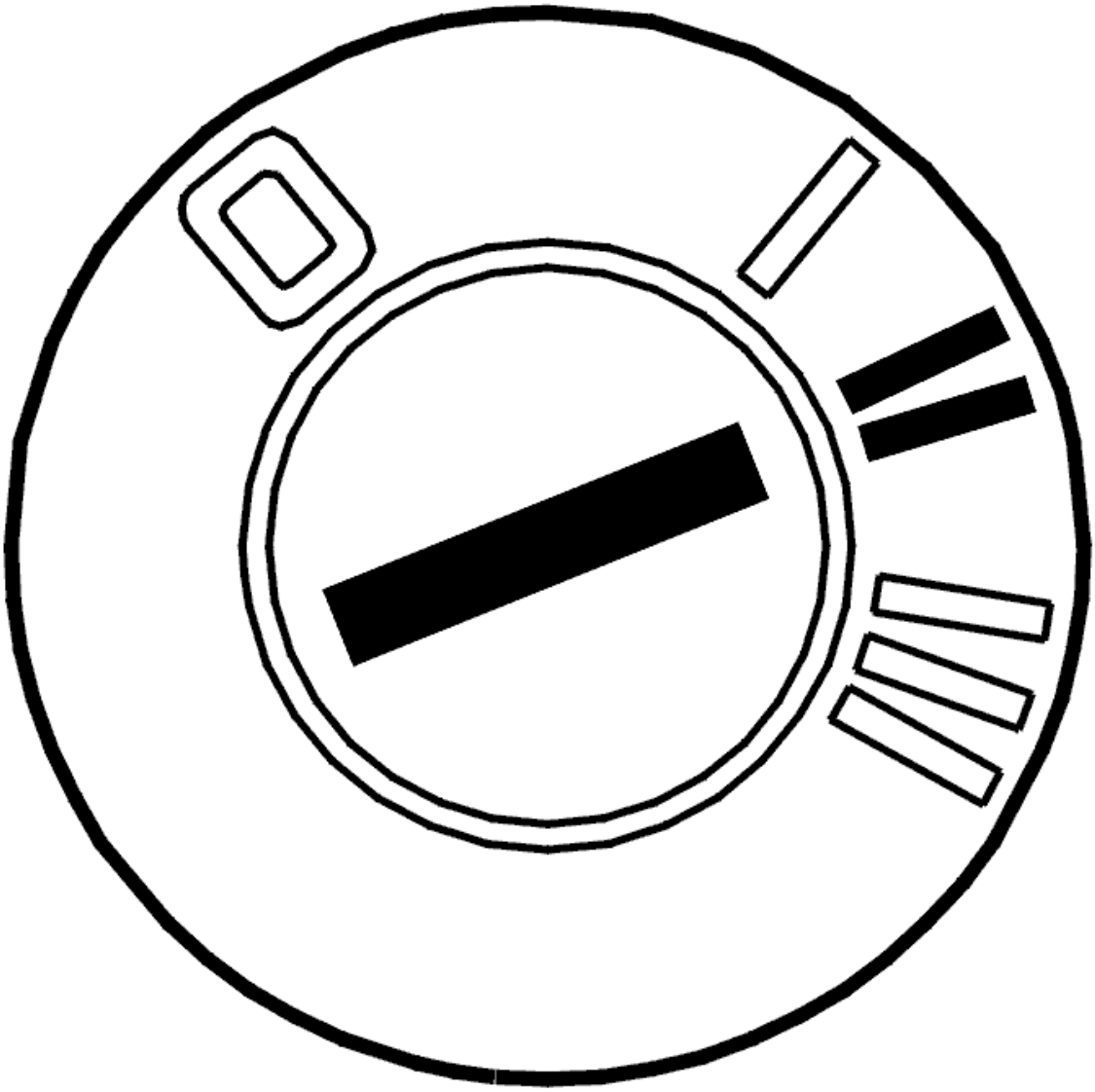

Fig. 176: Identifying Ignition ON
Courtesy of VOLVO CARS CORPORATION

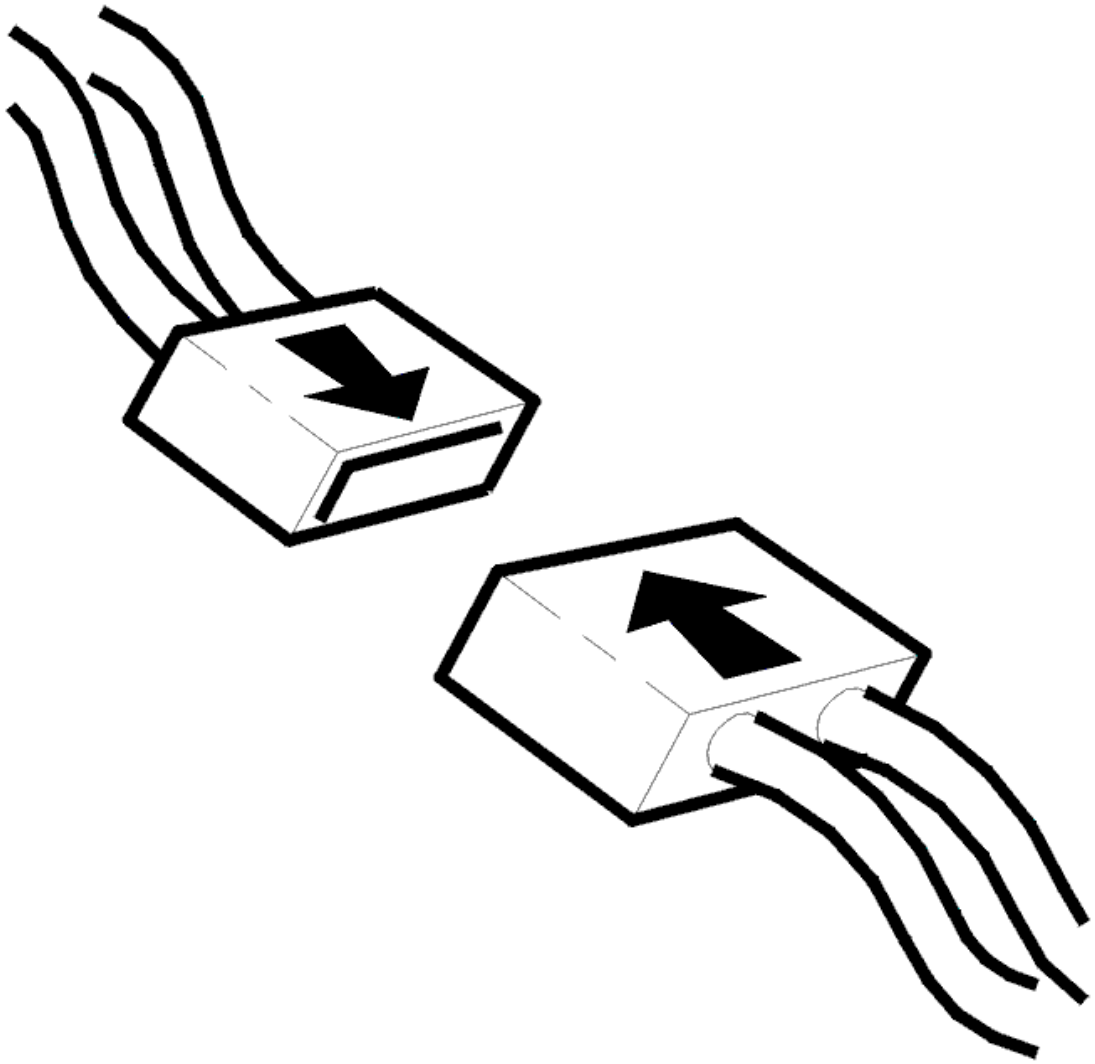

Fig. 177: Connecting Connector
Courtesy of VOLVO CARS CORPORATION

- Ignition off
- Check the connectors of the brake control module (BCM) and the pump motor for contact resistance and oxidation.
- Reconnect the connectors, components, etc.
- Ignition on
- Activate the pump motor.

  Check that the pump motor starts and runs normally.

  If the pump motor starts and runs normally, the malfunction was probably caused by contact resistance and oxidation in the brake control module (BCM) or pump motor connectors.

Other information

- see **BRAKE CONTROL MODULE (BCM), REPLACING**
- see **CHECKING WIRING AND TERMINALS**

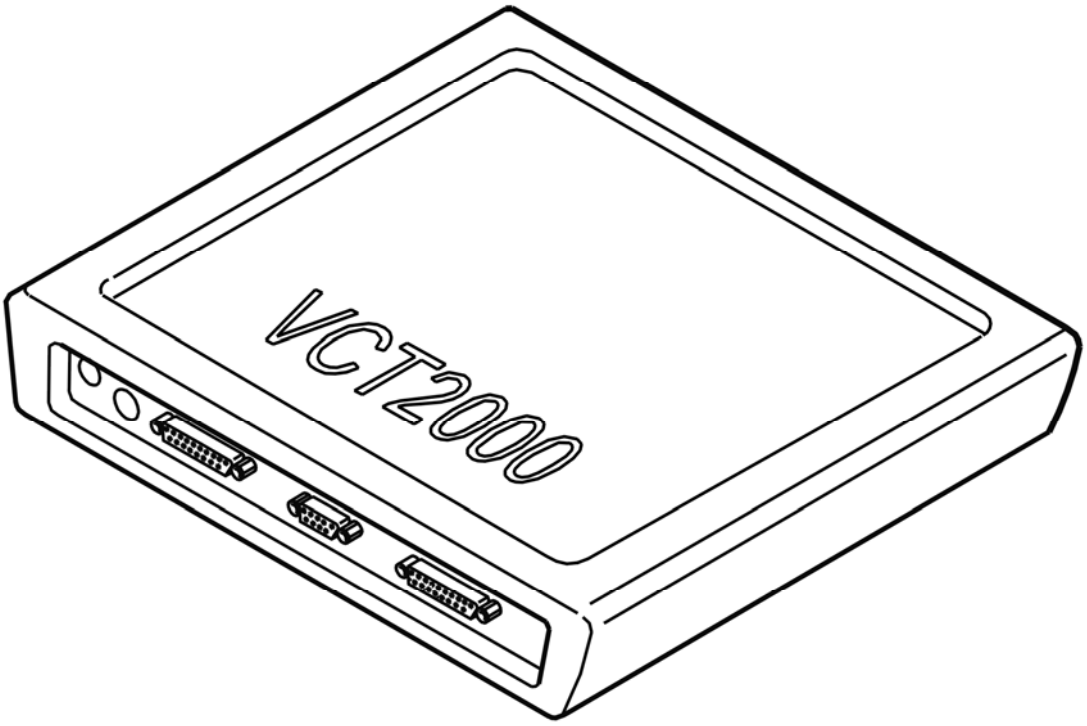

Fig. 178: Identifying VCT2000 Diagnostic Tool Symbol In VIDA
Courtesy of VOLVO CARS CORPORATION

Is pump function OK?

- **YES**

  OKAY: Troubleshooting has been completed.

- **NO**

  see **CHECKING THE WIRING AND COMPONENT**

CHECKING THE WIRING AND COMPONENT

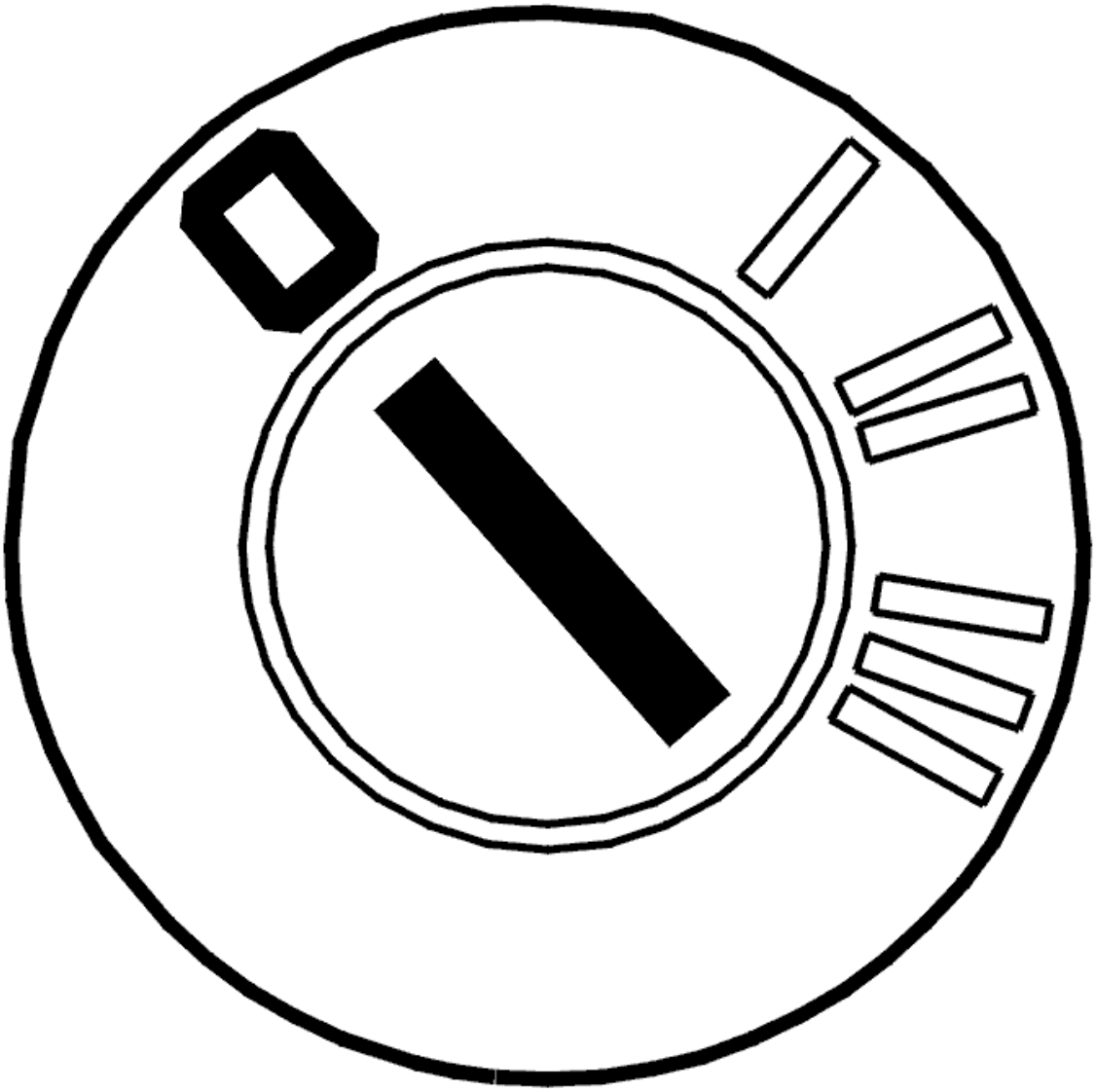

Fig. 179: Identifying Ignition OFF
Courtesy of VOLVO CARS CORPORATION

- Ignition off

  Check the pump motor circuit between brake control module (BCM) terminal #1 (#A1) and the battery for open circuit and short circuit to ground.

  Check if the brake system fuse is damaged. If so, check the cable between the fuse and brake control module (BCM) terminal #1 (#A1) for short circuit to ground and then replace the fuse.

  Check the pump motor circuit by connecting an ohmmeter between pump motor connector #2 and ground. The ohmmeter should indicate infinite resistance.

  Remedy as necessary.

Other information

- see **CONNECTING THE BREAKOUT BOX, BRAKE CONTROL MODULE (BCM)**
- see **CHECKING WIRING AND TERMINALS** .

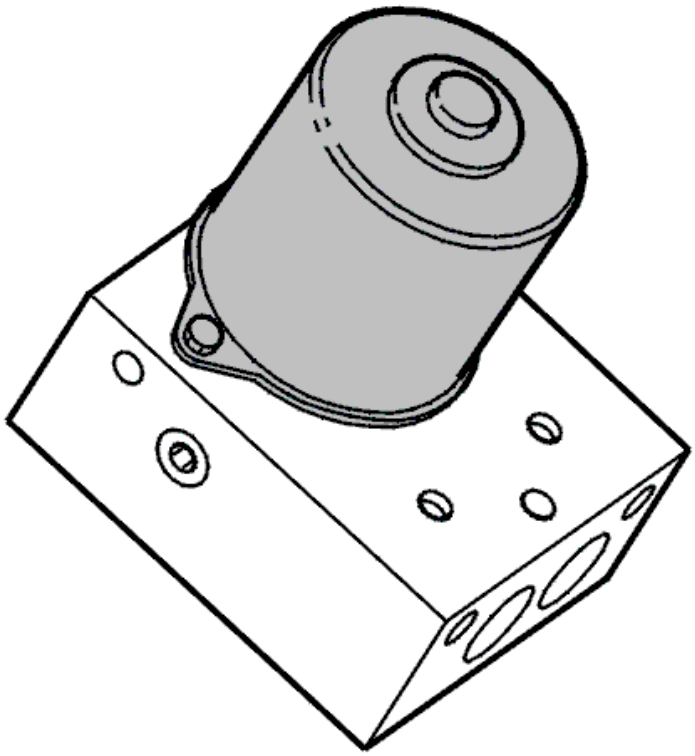

Fig. 180: Identifying Brake Pump Motor
Courtesy of VOLVO CARS CORPORATION

Was a malfunction detected?

- **YES**

  see **VERIFICATION**

- **NO**

  see **CHECKING THE PUMP MOTOR CIRCUIT**

CHECKING THE PUMP MOTOR CIRCUIT

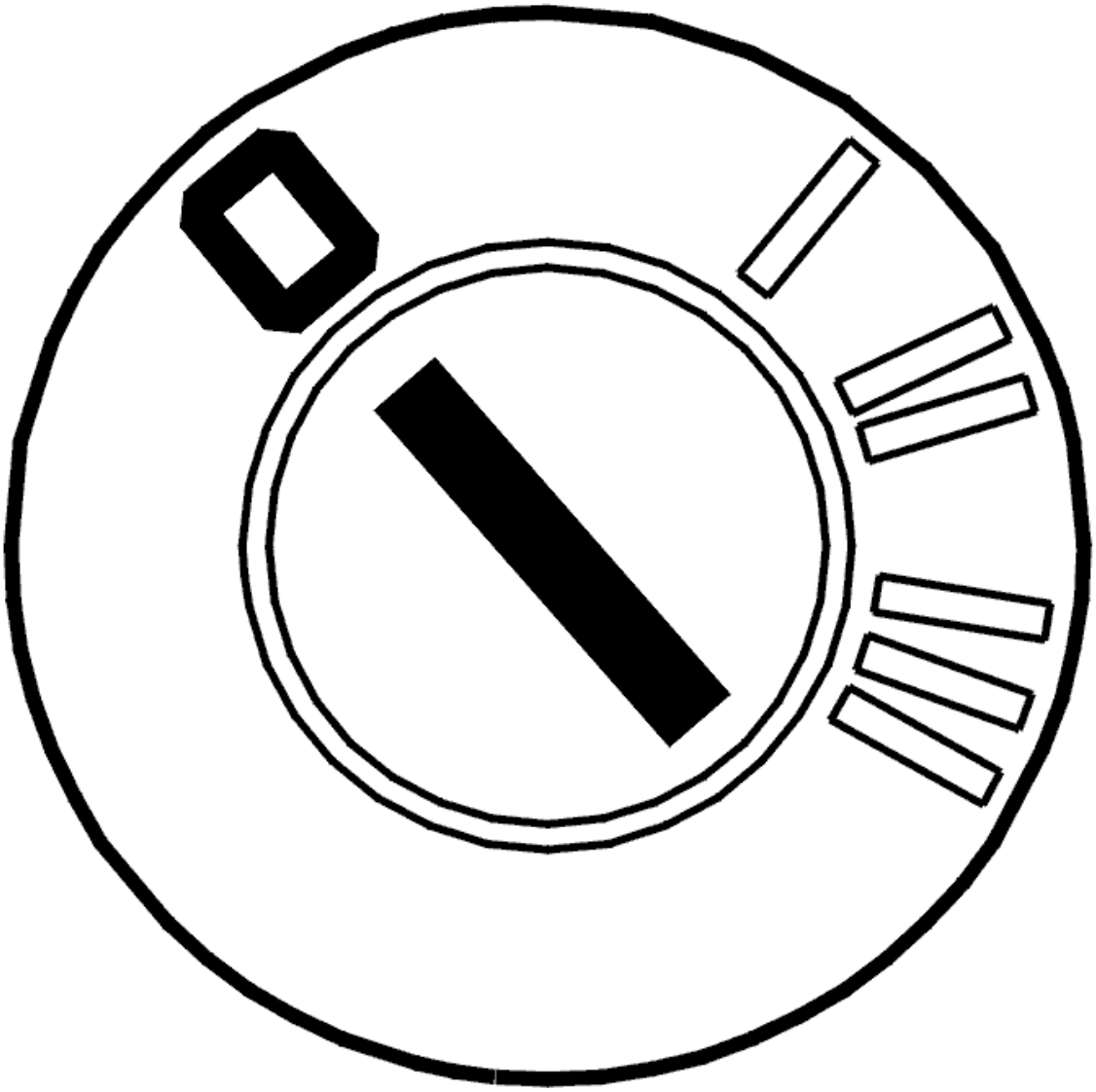

Fig. 181: Identifying Ignition OFF
Courtesy of VOLVO CARS CORPORATION

- Ignition off
- Remove the brake control module (BCM).
- Connect adapter see **9512856** to the pump motor voltage connection.
- Connect the red cable, connected across a fuse, to battery voltage. The black cable should be connected to a grounding point.

  The pump motor should start when the cable is connected. Run for maximum 10 seconds.

  If the pump motor starts and runs normally, replace the brake control module (BCM).

  If the pump motor does not start, replace the hydraulic unit.

Other information

- see **BRAKE CONTROL MODULE (BCM), REPLACING**
- see **HYDRAULIC UNIT, REPLACING**

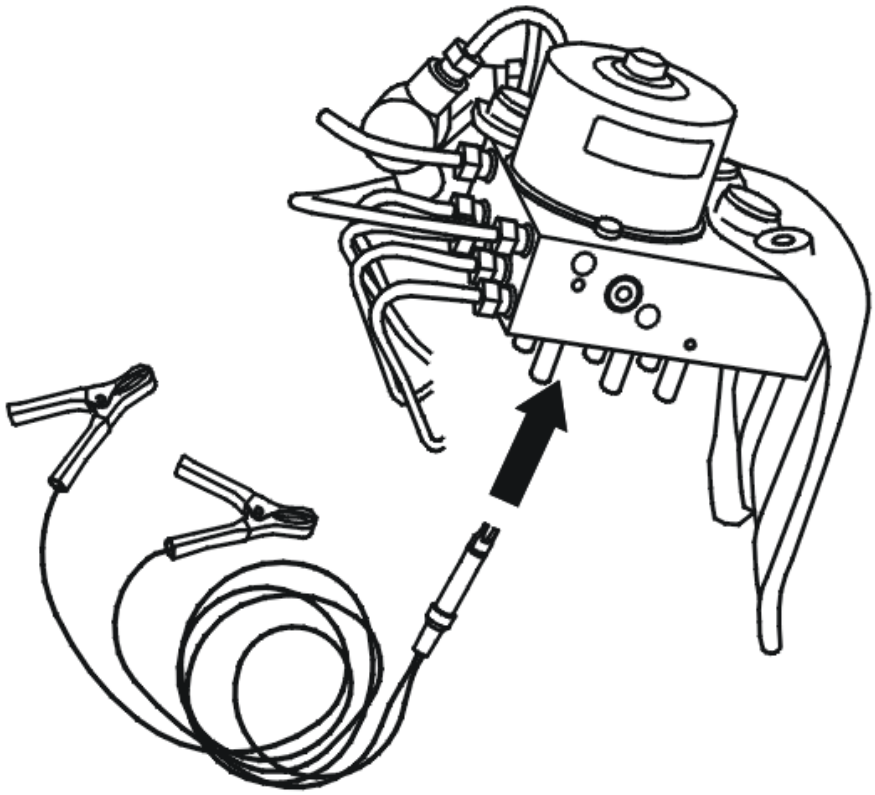

Fig. 182: Identifying Battery Cable Adapter & Brake Pump Motor Assemblies
Courtesy of VOLVO CARS CORPORATION

- **Continue**

  see **VERIFICATION**

VERIFICATION

VERIFICATION

HINT: After carrying out the repair, check that the malfunction has been remedied.

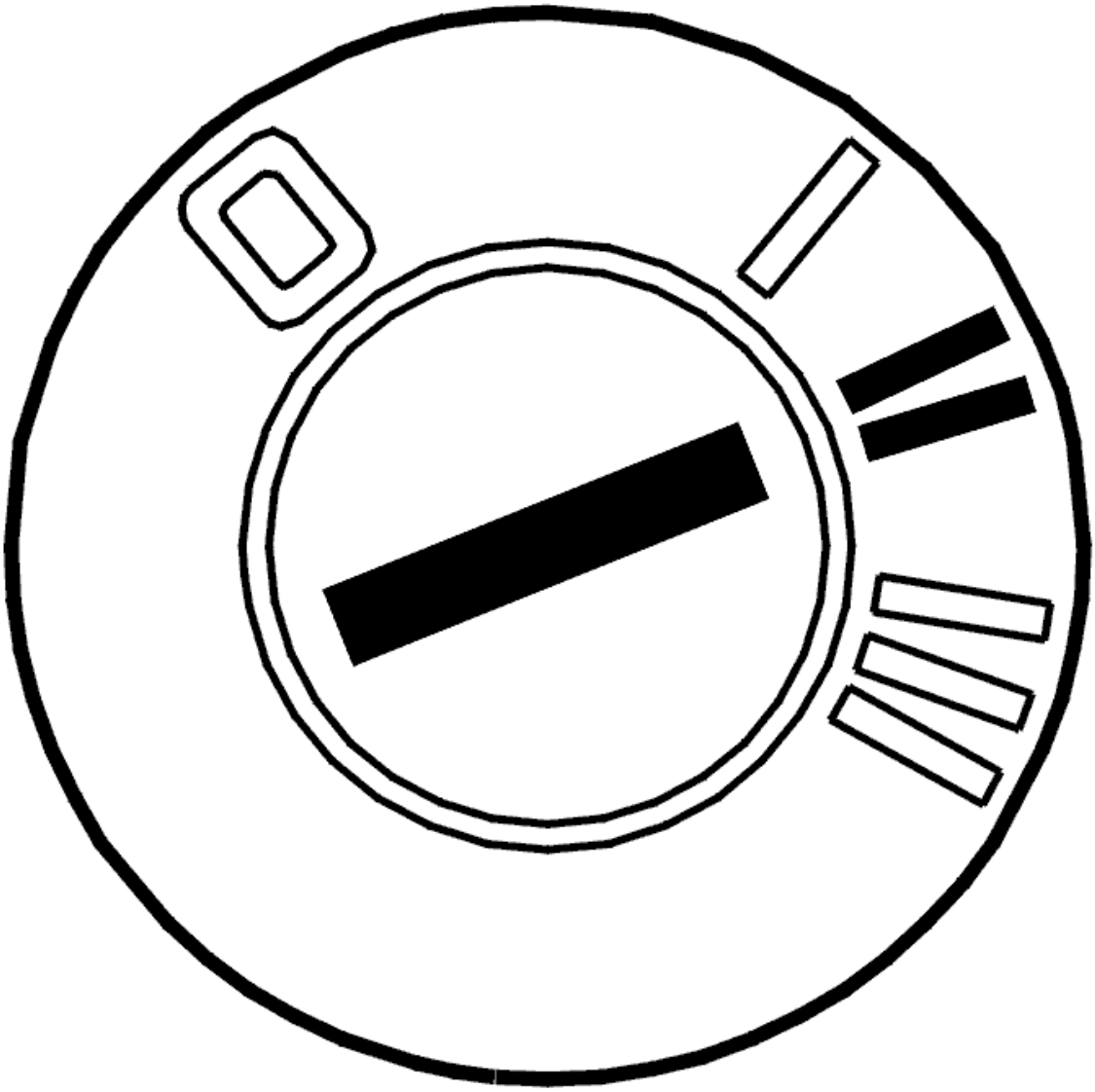

Fig. 183: Identifying Ignition ON
Courtesy of VOLVO CARS CORPORATION

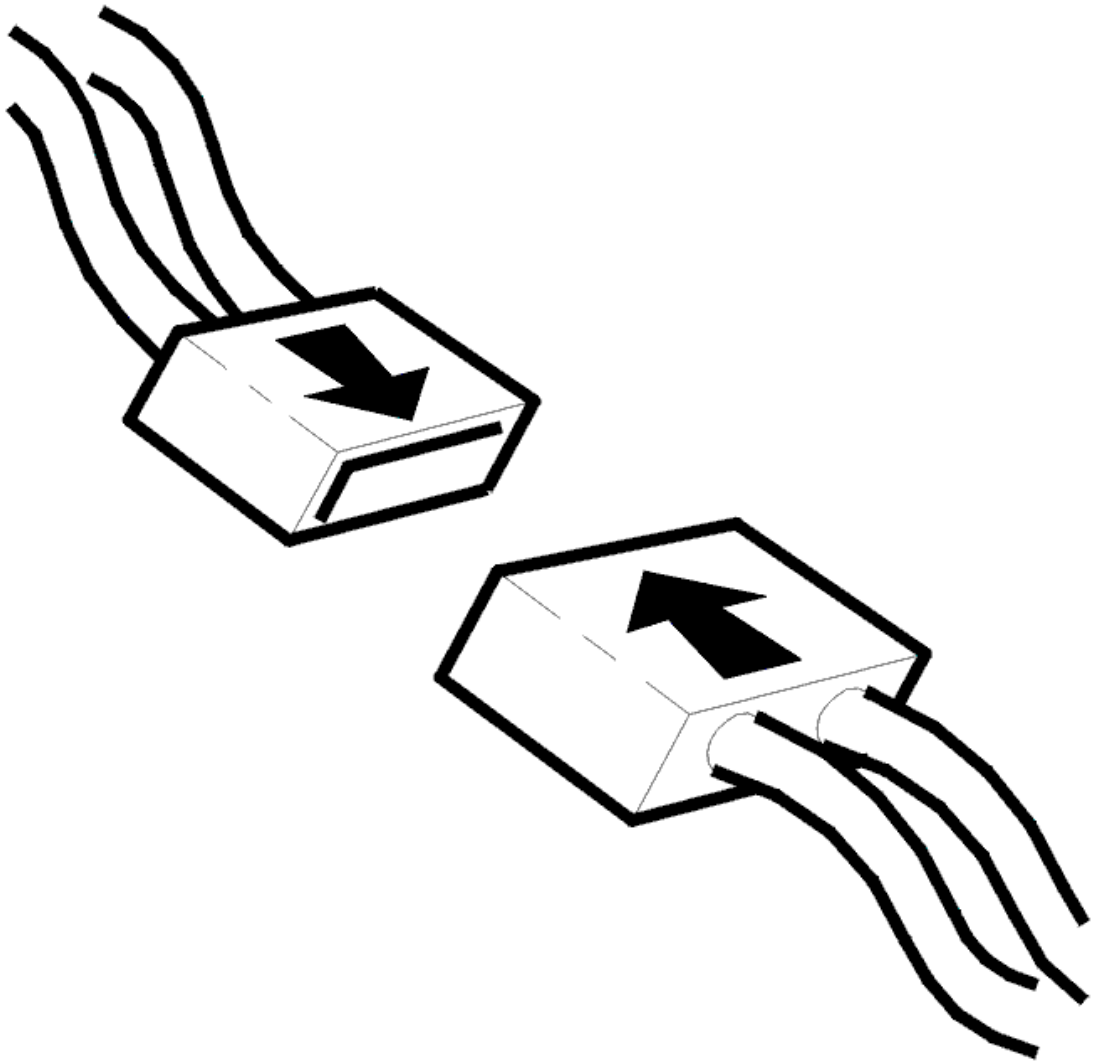

Fig. 184: Connecting Connector
Courtesy of VOLVO CARS CORPORATION

- Ignition off
- Reconnect the connectors, components, etc.
- Ignition on
- Activate the pump motor.

  Check that the pump motor starts and seems to run normally.

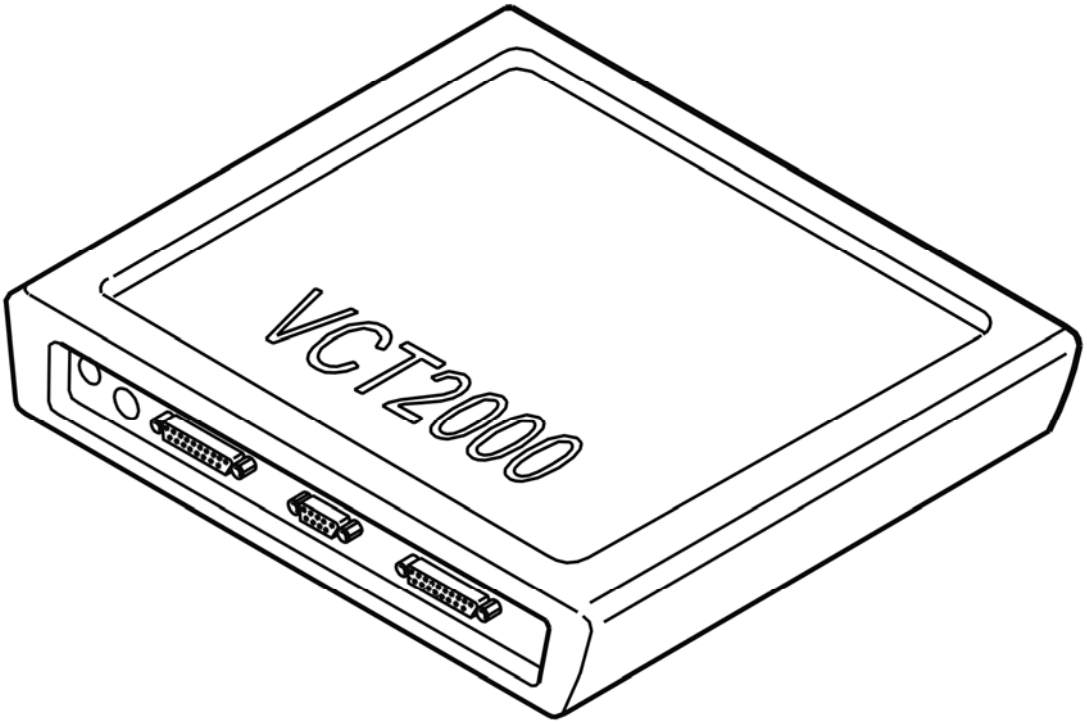

Fig. 185: Identifying VCT2000 Diagnostic Tool Symbol In VIDA
Courtesy of VOLVO CARS CORPORATION

Is pump function OK?

- **YES**

  VERIFIED: Troubleshooting has been completed.

- **NO**

  see **INFORMATION**

INFORMATION

FAULT-TRACING INFORMATION

The fault should have been detected and remedied. As this is not the case fault-tracing has failed.

Exit fault-tracing for this diagnostic trouble code (DTC) or make another attempt.

BCM-C002001: ABS PUMP MOTOR CONTROL. GENERAL MALFUNCTION INFORMATION. GENERAL ELECTRICAL MALFUNCTION (B6324S5; 2011-

2012)

DIAGNOSTIC TROUBLE CODE INFORMATION BCM-C002001

see **DIAGNOSTIC TROUBLE CODE INFORMATION BCM-C002001**

TROUBLESHOOTING BCM-C002001

see **TROUBLESHOOTING BCM-C002001**

BCM-C002001: ABS PUMP MOTOR CONTROL. GENERAL MALFUNCTION INFORMATION. GENERAL ELECTRICAL MALFUNCTION (B8444S; 2005-2011)

DIAGNOSTIC TROUBLE CODE INFORMATION BCM-C002001

see **DIAGNOSTIC TROUBLE CODE INFORMATION BCM-C002001**

TROUBLESHOOTING BCM-C002001

see **TROUBLESHOOTING BCM-C002001**

BCM-C00201C: ABS PUMP MOTOR CONTROL. GENERAL ELECTRICAL MALFUNCTION. INCORRECT VOLTAGE (B6324S; 2007-2010)

DIAGNOSTIC TROUBLE CODE INFORMATION BCM-C00201C

Condition

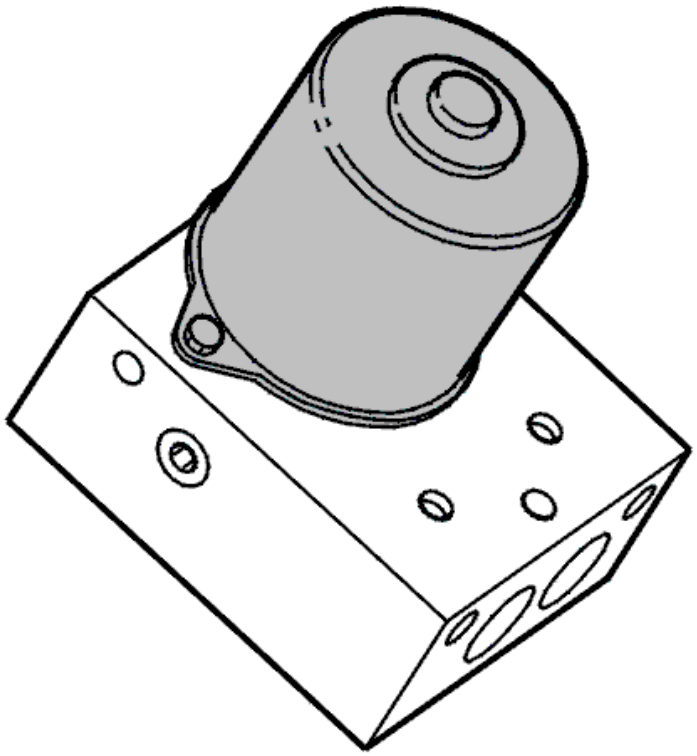

Fig. 186: Identifying Brake Pump Motor
Courtesy of VOLVO CARS CORPORATION

Diagnostic trouble code BCM-C00201C is generated if the brake control module registers that voltage to the pump motor is incorrect.

The diagnostic trouble code can be diagnosed when the ignition is on.

Substitute Value

- ABS is blocked.
- TC is blocked.
- SC is blocked.
- AYC is blocked.
- BA is blocked.

HINT: For information on brake system abbreviations: BRAKE SYSTEM, ABBREVIATIONS

Possible Source

- Contact resistance in the terminals
- Defective pump motor fuse.

- Open circuit on voltage feed to pump motor.
- Open circuit on pump motor ground cable.
- Open circuit on voltage feed (30-feed) to pump motor control module.
- Defective pump motor.
- Defective brake control module (BCM).

Fault symptom[s]

- General warning light on.
- ABS warning light on.
- ABS is not operational.
- Anti-spin is not operational.
- The stability function is not operational.
- The anti-skid function is not operational.

TROUBLESHOOTING BCM-C00201C

CHECKING PUMP MOTOR FUNCTION

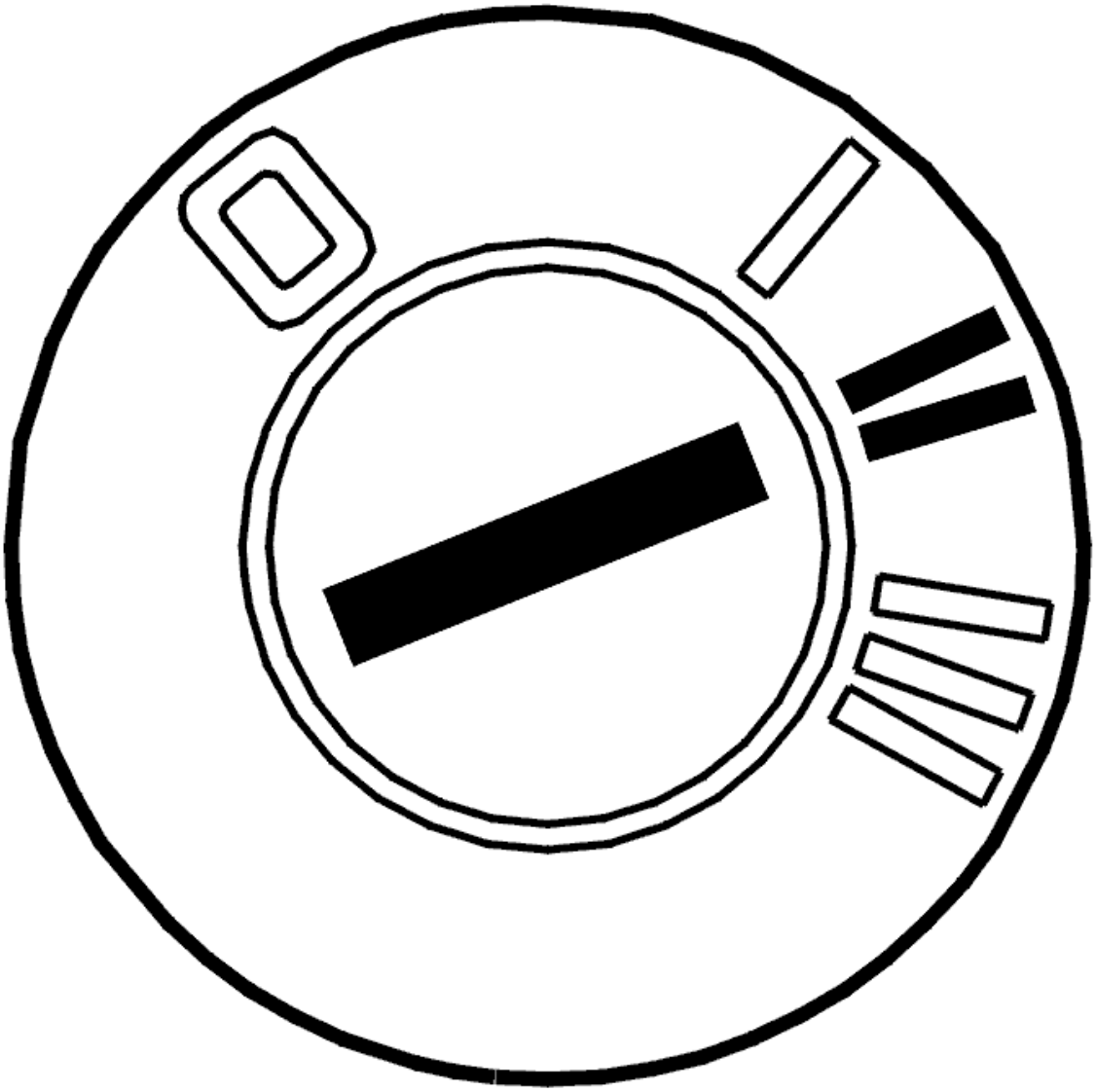

Fig. 187: Identifying Ignition ON
Courtesy of VOLVO CARS CORPORATION

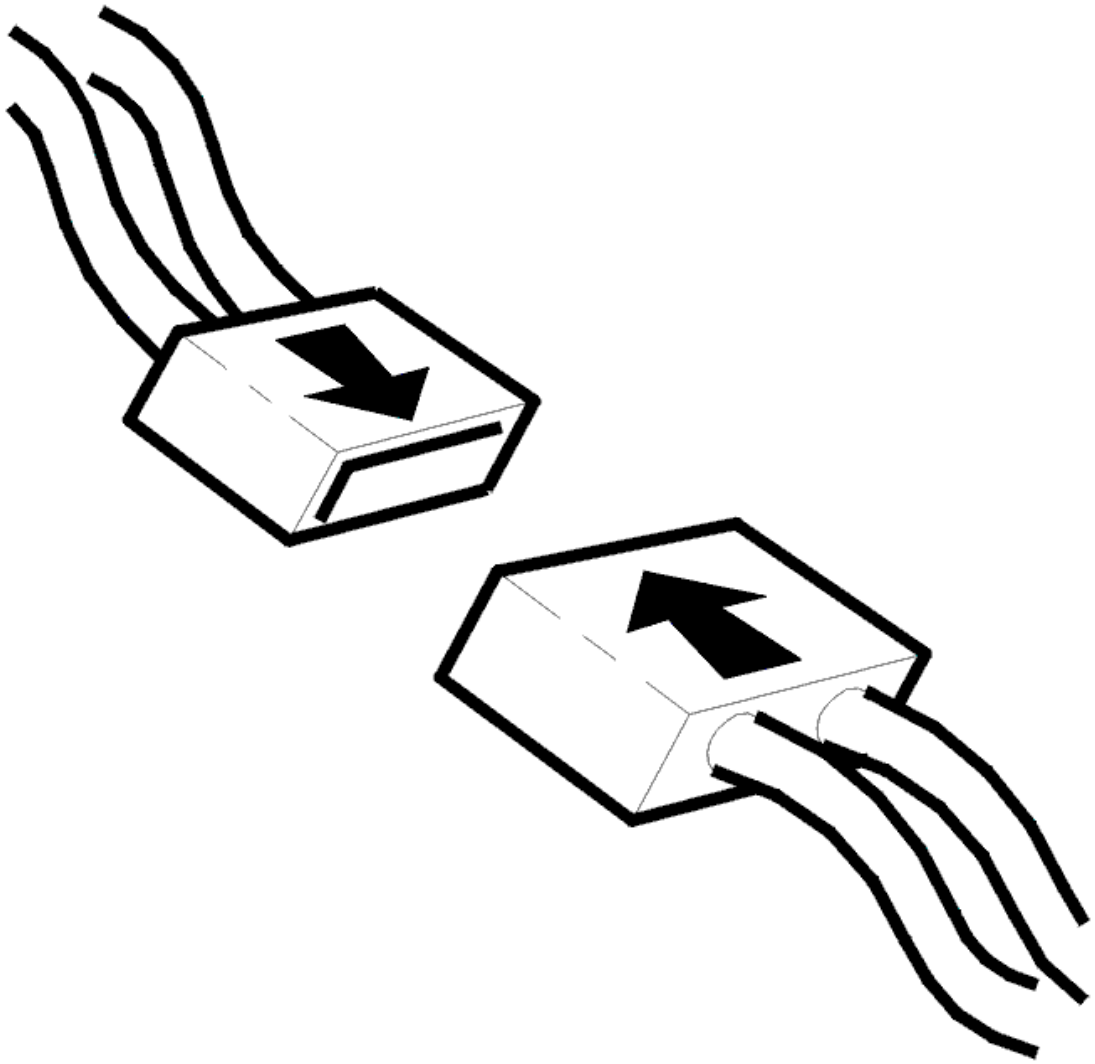

Fig. 188: Connecting Connector
Courtesy of VOLVO CARS CORPORATION

- Ignition off
- Check the connectors of the brake control module (BCM) and the pump motor for contact resistance and oxidation.
- Reconnect the connectors, components, etc.
- Ignition on
- Activate the pump motor.

  Check that the pump motor starts and runs normally.

  If the pump motor starts and runs normally, the malfunction was probably caused by contact resistance and oxidation in the control module or pump motor connectors.

Other information

- For control module and pump motor disconnection: **CONNECTING THE BREAKOUT BOX, BRAKE CONTROL MODULE (BCM)**
- see **CHECKING WIRING AND TERMINALS**

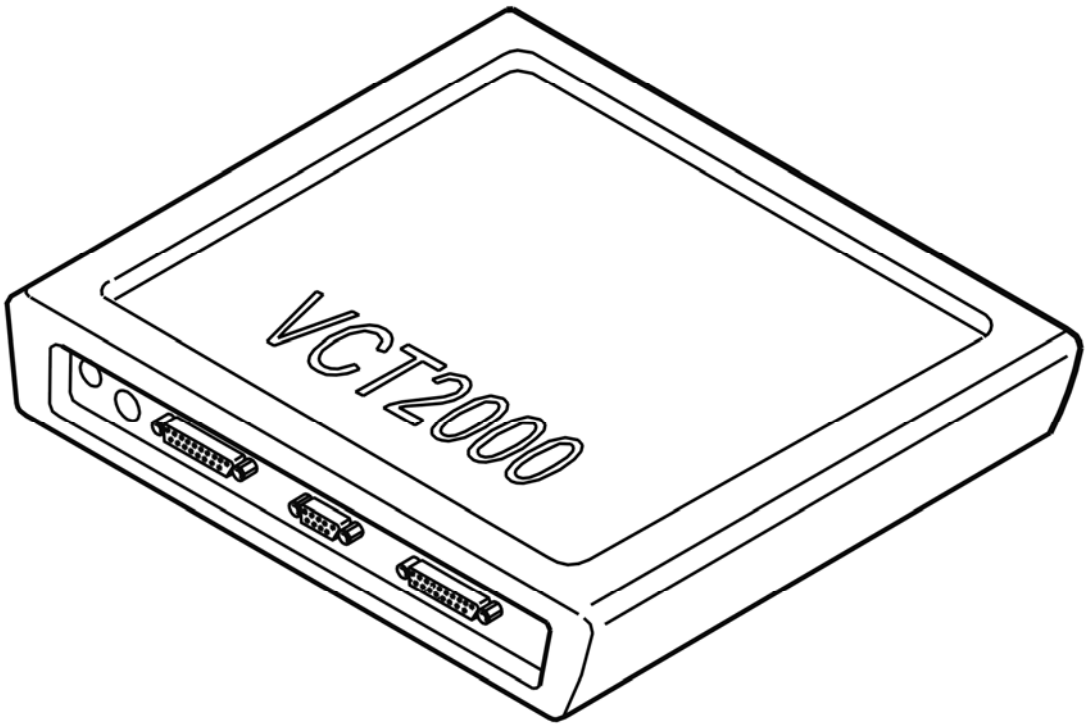

Fig. 189: Identifying VCT2000 Diagnostic Tool Symbol In VIDA
Courtesy of VOLVO CARS CORPORATION

Is pump function OK?

- **YES**

  OKAY: Troubleshooting has been completed.

- **NO**

  see **CHECKING THE WIRING AND COMPONENT**

CHECKING THE WIRING AND COMPONENT

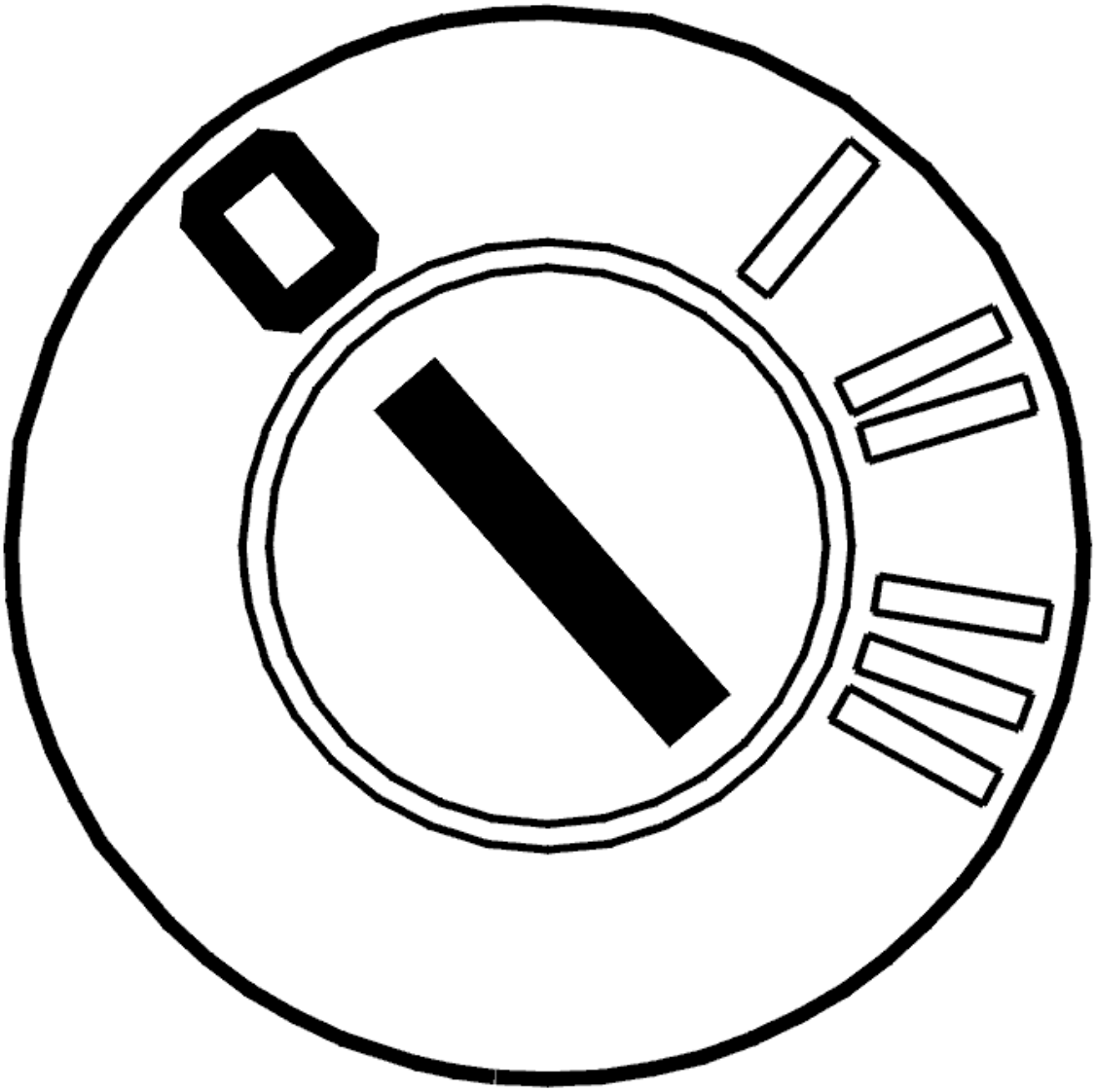

Fig. 190: Identifying Ignition OFF
Courtesy of VOLVO CARS CORPORATION

- Ignition off

  Check the pump motor circuit between brake control module (BCM) terminal #1 (#A1) and the fuse in the engine compartment relay/fuse box for open circuit or short circuit to ground.

  Check the fuse in the engine compartment relay/fuse box. If the fuse is damaged, check the cable between the fuse and brake control module (BCM) terminal #1 (#A1) for short circuit to ground and then replace the fuse.

  Remedy as necessary.

  Other information

- see **CONNECTING THE BREAKOUT BOX, BRAKE CONTROL MODULE (BCM)**
- see **CHECKING WIRING AND TERMINALS**

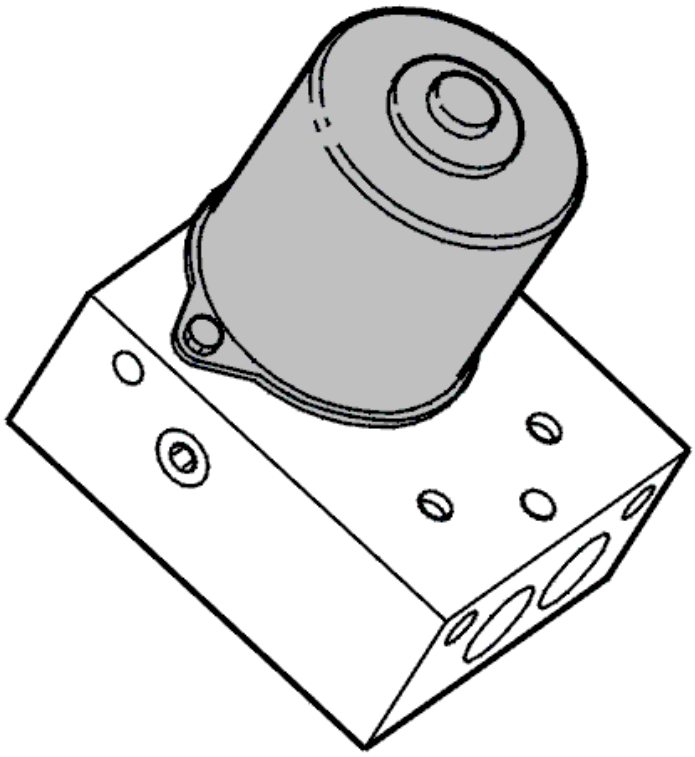

Fig. 191: Identifying Brake Pump Motor
Courtesy of VOLVO CARS CORPORATION

Was a malfunction detected?

- **YES**

  see **VERIFICATION**

- **NO**

  see **CHECKING THE PUMP MOTOR CIRCUIT**

CHECKING THE PUMP MOTOR CIRCUIT

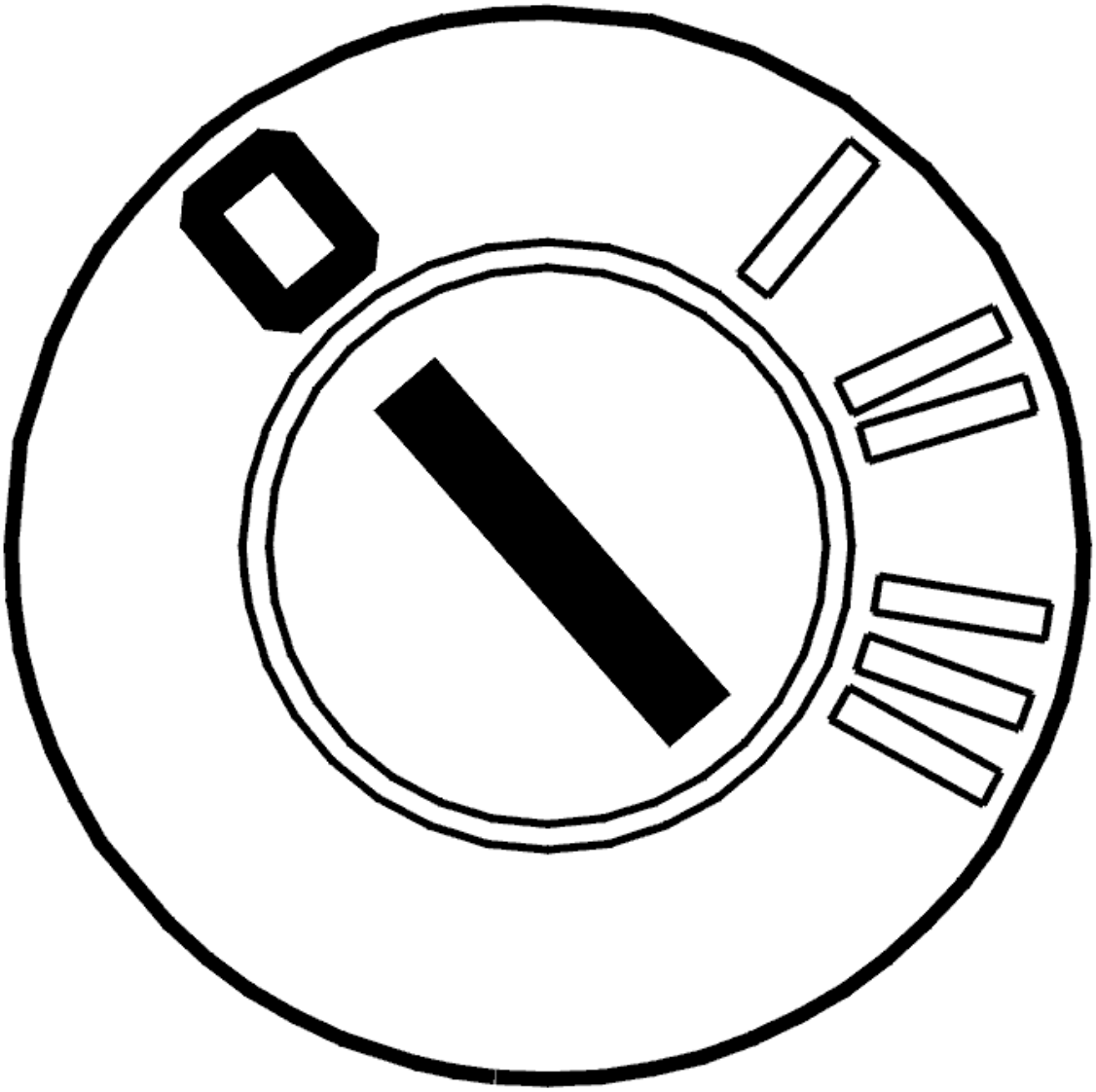

Fig. 192: Identifying Ignition OFF
Courtesy of VOLVO CARS CORPORATION

- Ignition off
- Remove the brake control module (BCM).
- Connect adapter see **9512856** to the pump motor voltage connection.
- Connect the red cable, connected across a fuse, to battery voltage. The black cable should be connected to a grounding point.

  The pump motor should start when the cable is connected. Run for maximum 10 seconds.

  If the pump motor starts and runs normally, replace the brake control module (BCM).

  If the pump motor does not start, replace the hydraulic unit.

Other information

- see **BRAKE CONTROL MODULE (BCM), REPLACING**
- see **HYDRAULIC UNIT, REPLACING**

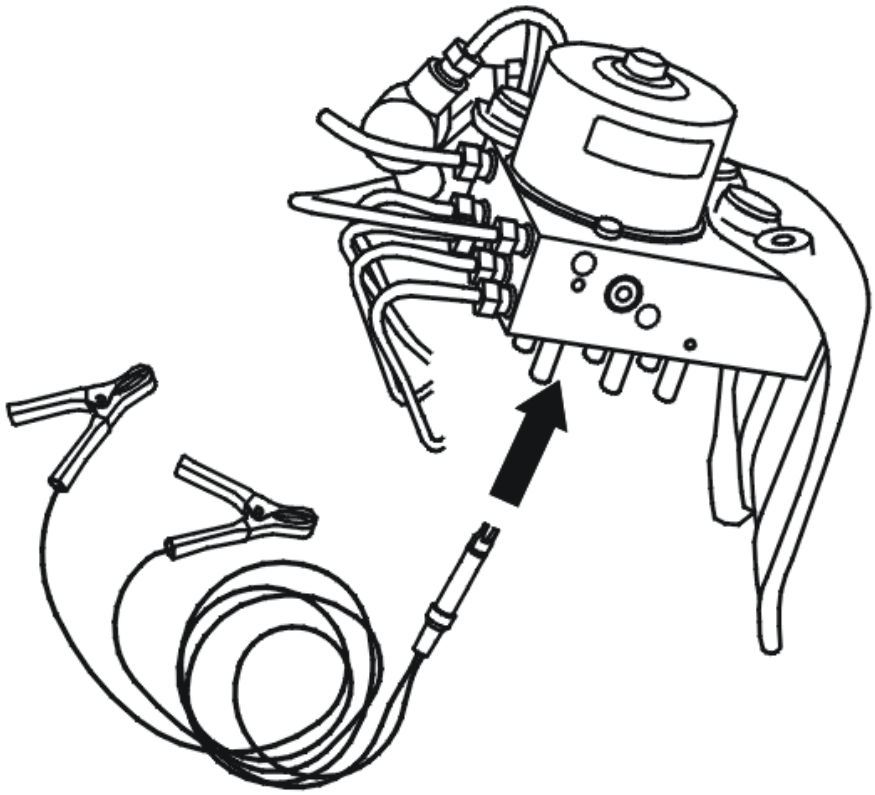

Fig. 193: Identifying Battery Cable Adapter & Brake Pump Motor Assemblies
Courtesy of VOLVO CARS CORPORATION

- **Continue**

  see **VERIFICATION**

VERIFICATION

VERIFICATION

HINT: After carrying out the repair, check that the malfunction has been remedied.

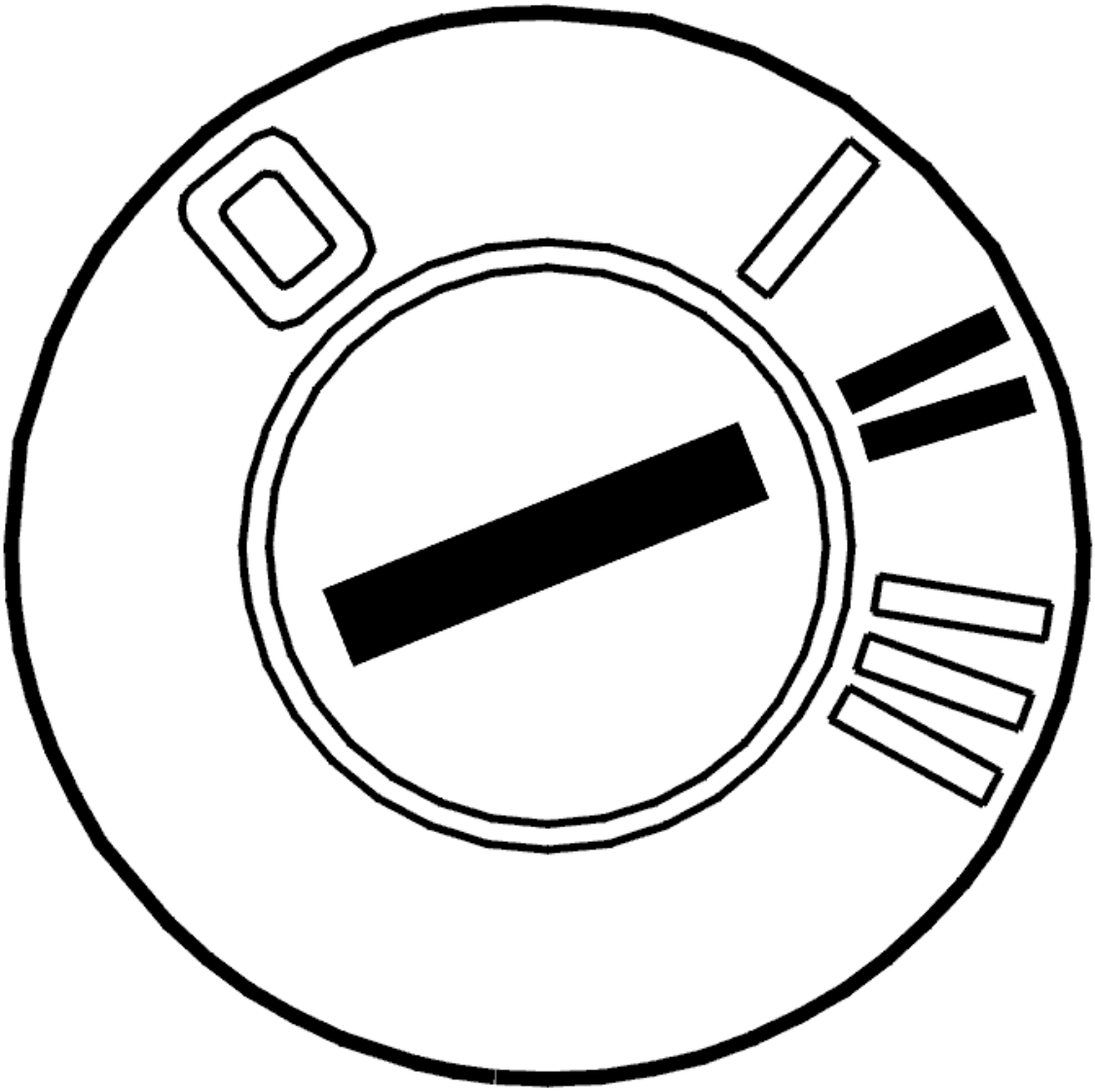

Fig. 194: Identifying Ignition ON
Courtesy of VOLVO CARS CORPORATION

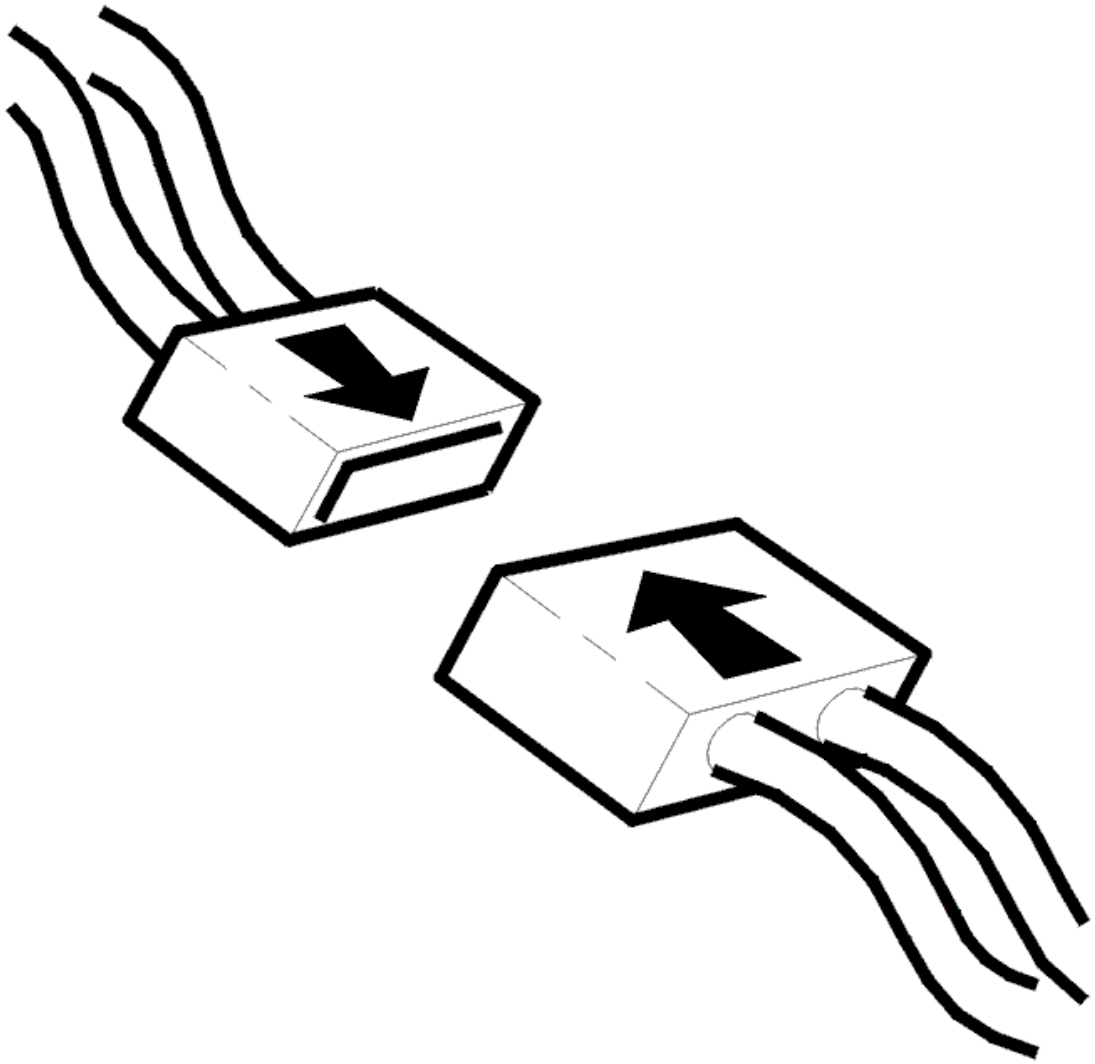

Fig. 195: Connecting Connector
Courtesy of VOLVO CARS CORPORATION

- Ignition off
- Reconnect the connectors, components, etc.
- Ignition on
- Activate the pump motor.

  Check that the pump motor starts and seems to run normally.

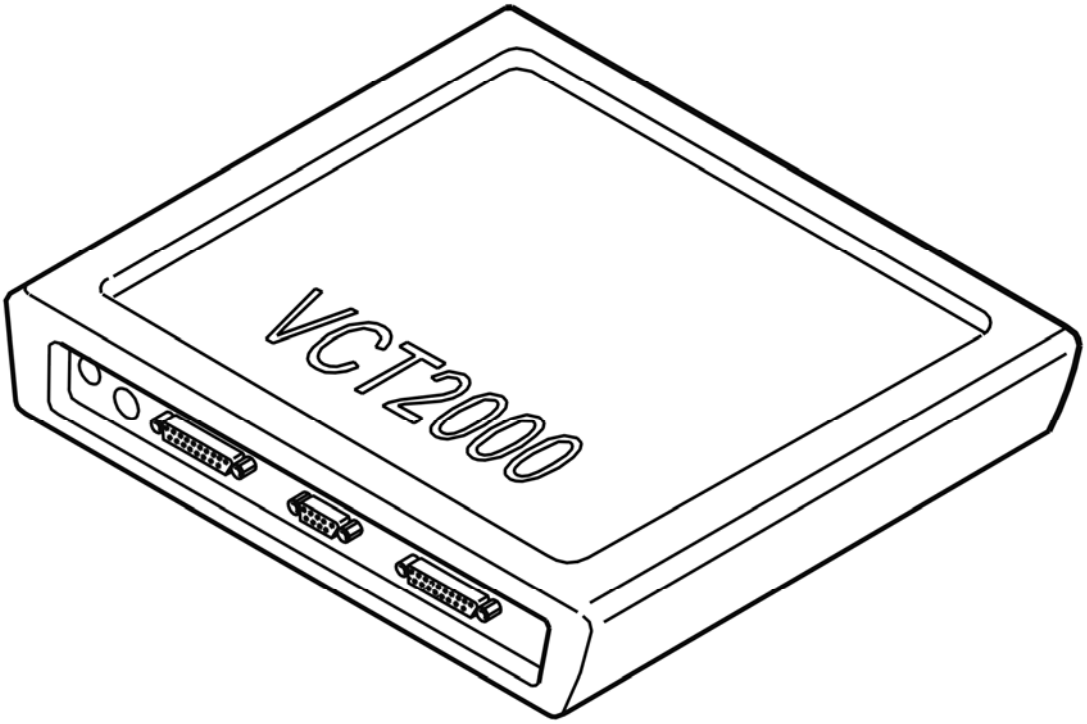

Fig. 196: Identifying VCT2000 Diagnostic Tool Symbol In VIDA
Courtesy of VOLVO CARS CORPORATION

Is pump function OK?

- **YES**

  VERIFIED: Troubleshooting has been completed.

- **NO**

  see **INFORMATION**

INFORMATION

FAULT-TRACING INFORMATION

The fault should have been detected and remedied. As this is not the case fault-tracing has failed.

Exit fault-tracing for this diagnostic trouble code (DTC) or make another attempt.

BCM-C00201C: ABS PUMP MOTOR CONTROL. GENERAL ELECTRICAL MALFUNCTION. INCORRECT VOLTAGE (B6324S5; 2011-2012)

DIAGNOSTIC TROUBLE CODE INFORMATION BCM-C00201C

see **DIAGNOSTIC TROUBLE CODE INFORMATION BCM-C00201C**

TROUBLESHOOTING BCM-C00201C

see **TROUBLESHOOTING BCM-C00201C**

BCM-C00201C: ABS PUMP MOTOR CONTROL. GENERAL ELECTRICAL MALFUNCTION. INCORRECT VOLTAGE (B8444S; 2005-2011)

DIAGNOSTIC TROUBLE CODE INFORMATION BCM-C00201C

see **DIAGNOSTIC TROUBLE CODE INFORMATION BCM-C00201C**

TROUBLESHOOTING BCM-C00201C

see **TROUBLESHOOTING BCM-C00201C**

BCM-C002071: ABS PUMP MOTOR CONTROL. MECHANICAL MALFUNCTION. JAMMED (B6324S; 2007-2010)

DIAGNOSTIC TROUBLE CODE INFORMATION BCM-C002071

Condition

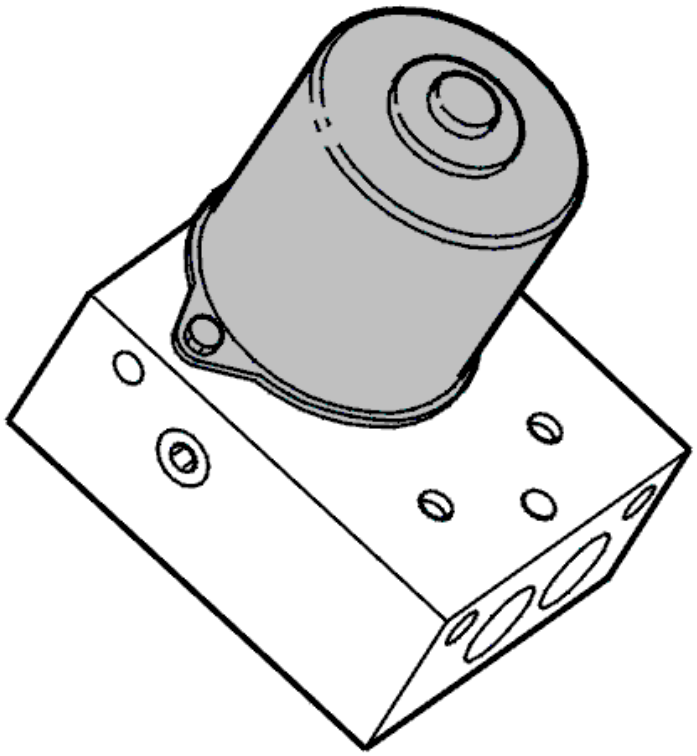

Fig. 197: Identifying Brake Pump Motor
Courtesy of VOLVO CARS CORPORATION

Diagnostic trouble code BCM-C002071 is generated if the brake control module registers that the pump motor does not start.

The diagnostic trouble code can be diagnosed when the ignition is on.

Substitute Value

- ABS is blocked.
- TC is blocked.
- SC is blocked.
- AYC is blocked.
- BA is blocked.

HINT: For information on brake system abbreviations: BRAKE SYSTEM, ABBREVIATIONS

Possible Source

- Contact resistance in the terminals
- Defective pump motor fuse.

- Open circuit on voltage feed to pump motor.
- Open circuit on pump motor ground cable.
- Defective pump motor.
- Defective control module.

Fault symptom[s]

- General warning light on.
- ABS warning light on.
- ABS is not operational.
- Anti-spin is not operational.
- The stability function is not operational.
- The anti-skid function is not operational.

TROUBLESHOOTING BCM-C002071

CHECKING PUMP MOTOR FUNCTION

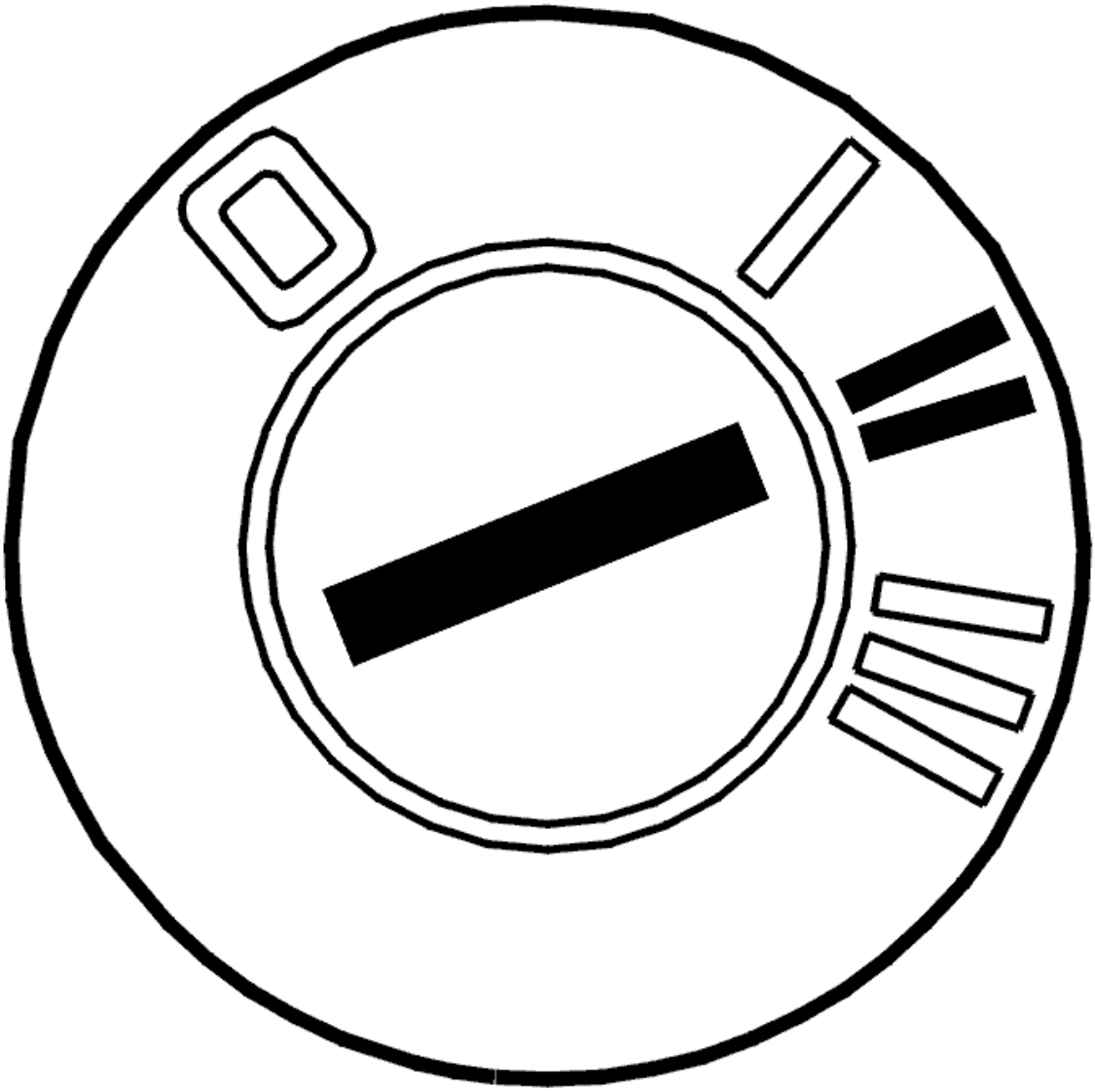

Fig. 198: Identifying Ignition ON
Courtesy of VOLVO CARS CORPORATION

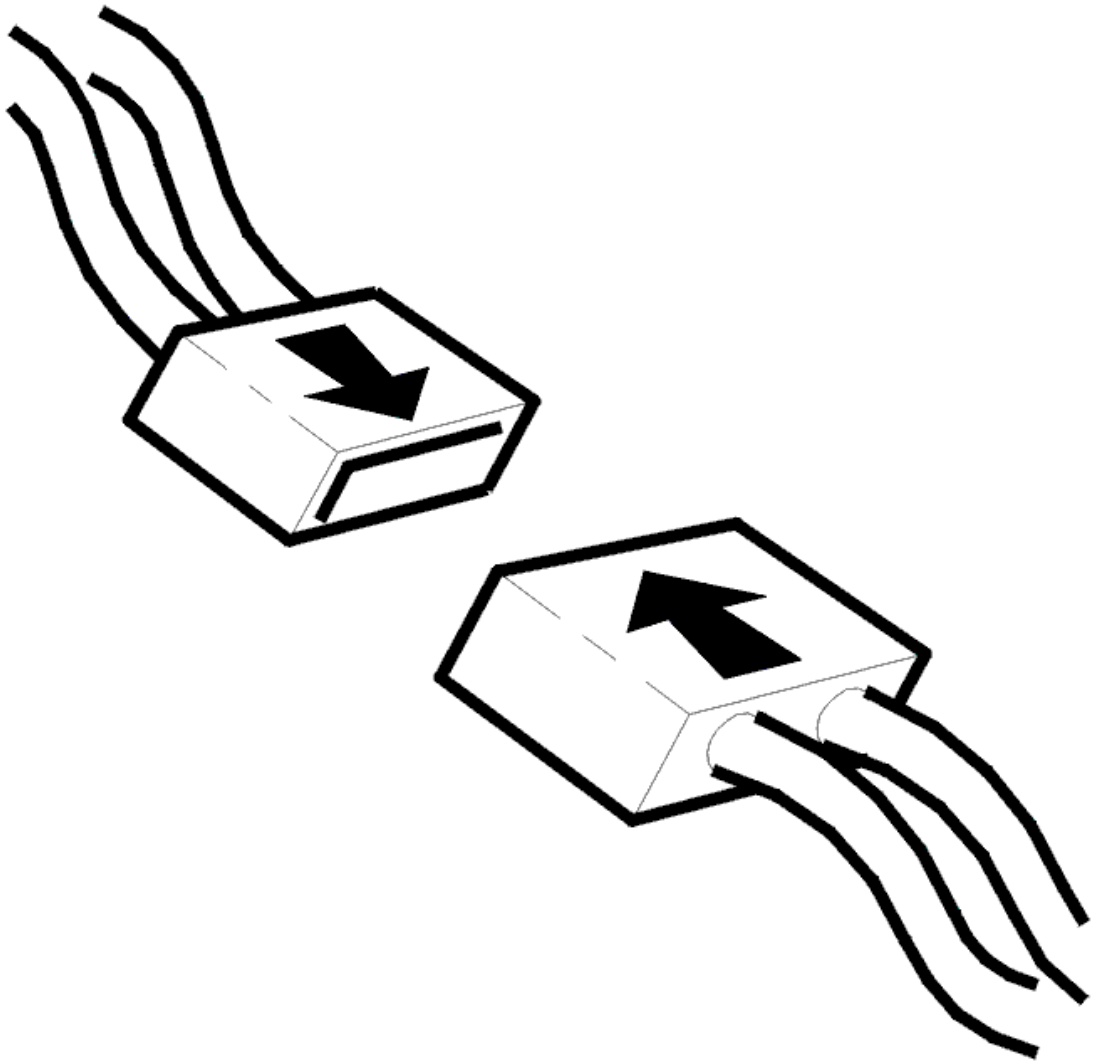

Fig. 199: Connecting Connector
Courtesy of VOLVO CARS CORPORATION

- Ignition off
- Check the connectors of the brake control module (BCM) and the pump motor for contact resistance and oxidation.
- Reconnect the connectors, components, etc.
- Ignition on
- Activate the pump motor.

  Check that the pump motor starts and runs normally.

  If the pump motor starts and runs normally, the malfunction was caused by contact resistance and oxidation in the control module or pump motor connectors.

Other information

- For brake control module (BCM) and pump motor disconnection: **BRAKE CONTROL MODULE (BCM), REPLACING**
- see **CHECKING WIRING AND TERMINALS**

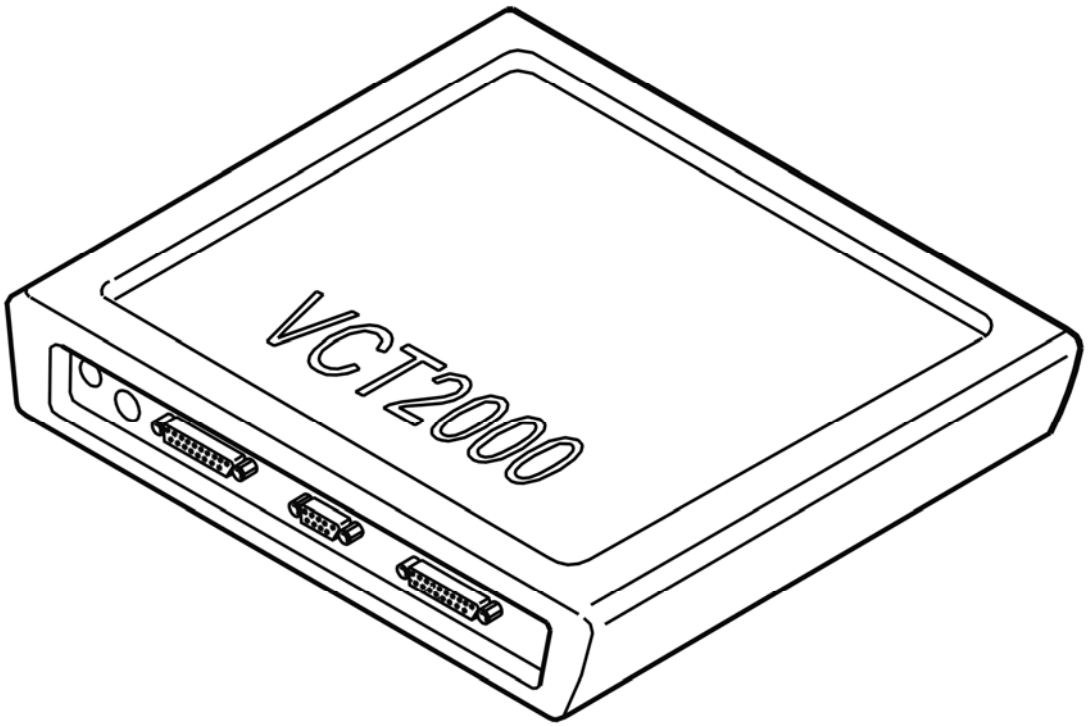

Fig. 200: Identifying VCT2000 Diagnostic Tool Symbol In VIDA
Courtesy of VOLVO CARS CORPORATION

Is pump function OK?

- **YES**

  OKAY: Troubleshooting has been completed.

- **NO**

  see **CHECKING THE WIRING AND COMPONENT**

CHECKING THE WIRING AND COMPONENT

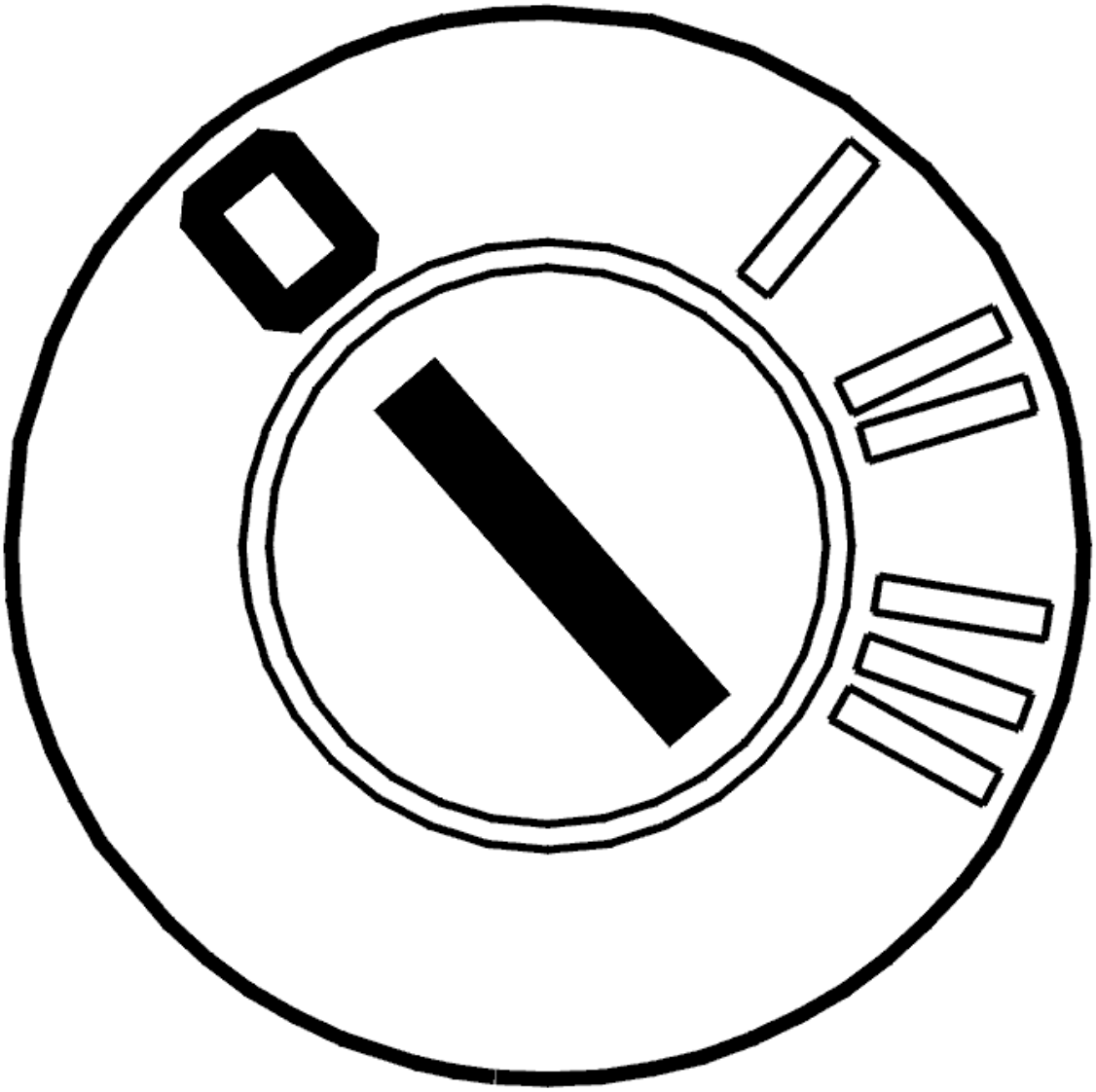

Fig. 201: Identifying Ignition OFF
Courtesy of VOLVO CARS CORPORATION

- Ignition off

  Check the cables between brake control module (BCM) terminal #1 (#A1) and the battery for open circuit and short circuit to ground.

  Check if the brake system fuse in the engine compartment relay/fuse box is damaged. If the fuse is damaged, check the cable between the fuse and brake control module (BCM) terminal #1 (#A1) for short circuit to ground and then replace the fuse.

  Check the pump motor circuit by connecting an ohmmeter between pump motor connector #2 and ground. The ohmmeter should indicate infinite resistance.

  Remedy as necessary.

Other information

- see **CONNECTING THE BREAKOUT BOX, BRAKE CONTROL MODULE (BCM)**
- see **CHECKING WIRING AND TERMINALS**

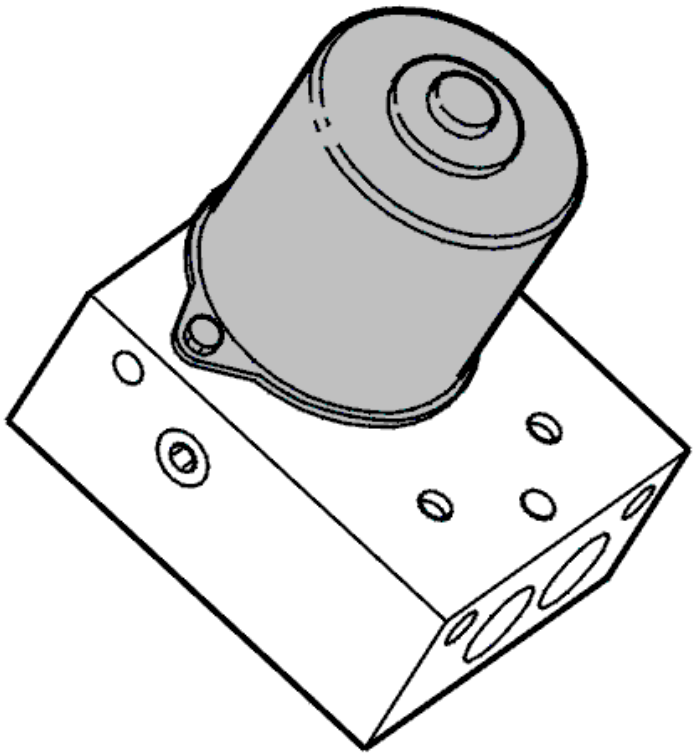

Fig. 202: Identifying Brake Pump Motor
Courtesy of VOLVO CARS CORPORATION

Was a malfunction detected?

- **YES**

  see **VERIFICATION**

- **NO**

  see **CHECKING THE PUMP MOTOR CIRCUIT**

CHECKING THE PUMP MOTOR CIRCUIT

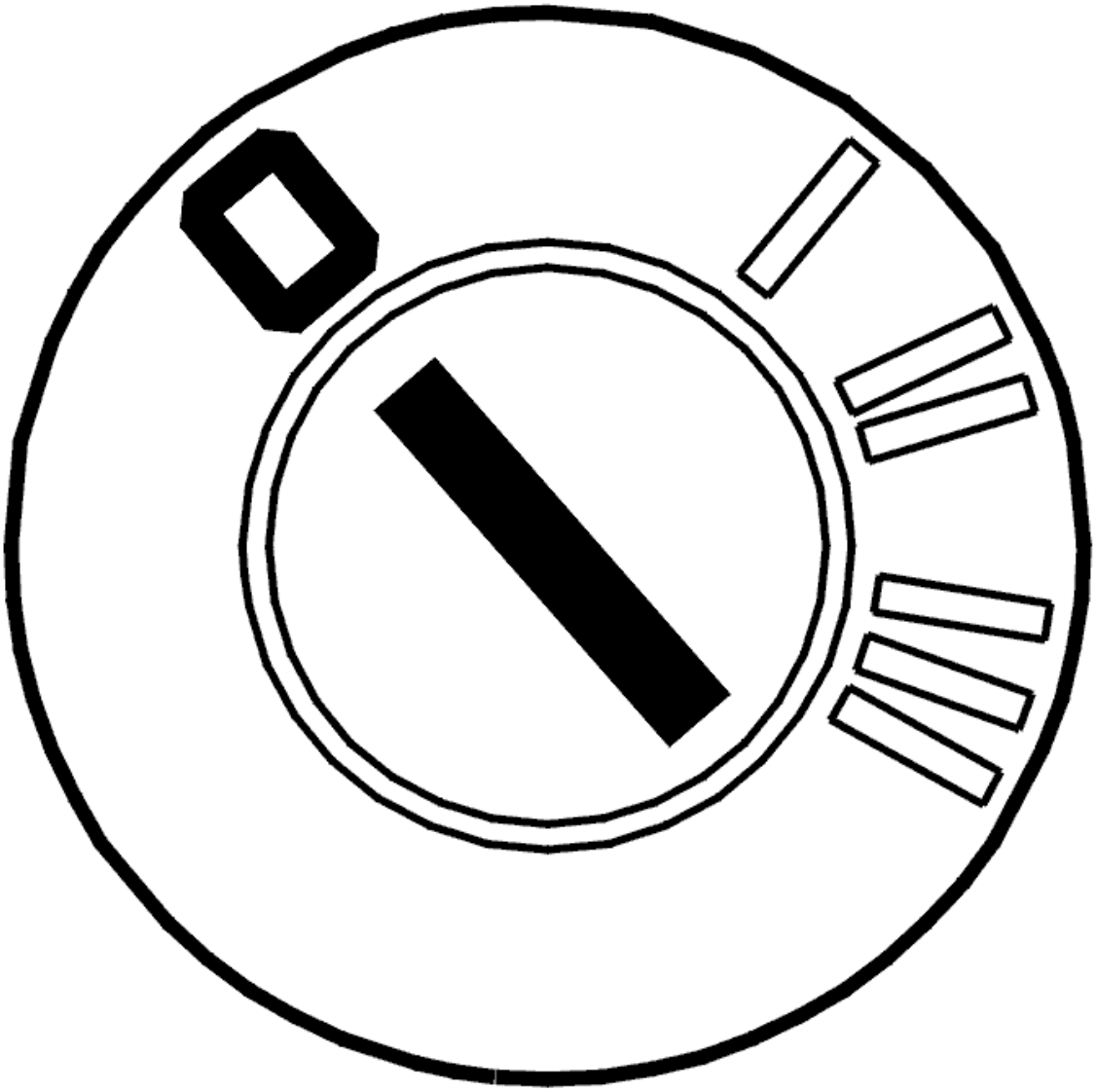

Fig. 203: Identifying Ignition OFF
Courtesy of VOLVO CARS CORPORATION

- Ignition off
- Remove the brake control module (BCM).
- Connect adapter see **9512856** to the pump motor voltage connection.
- Connect the red cable, connected across a fuse, to battery voltage. The black cable should be connected to a grounding point.

  The pump motor should start when the cable is connected. Run for maximum 10 seconds.

  If the pump motor starts and runs normally, replace the control module.

  If the pump motor does not start, replace the hydraulic unit.

Other information

- see **BRAKE CONTROL MODULE (BCM), REPLACING**
- see **HYDRAULIC UNIT, REPLACING**

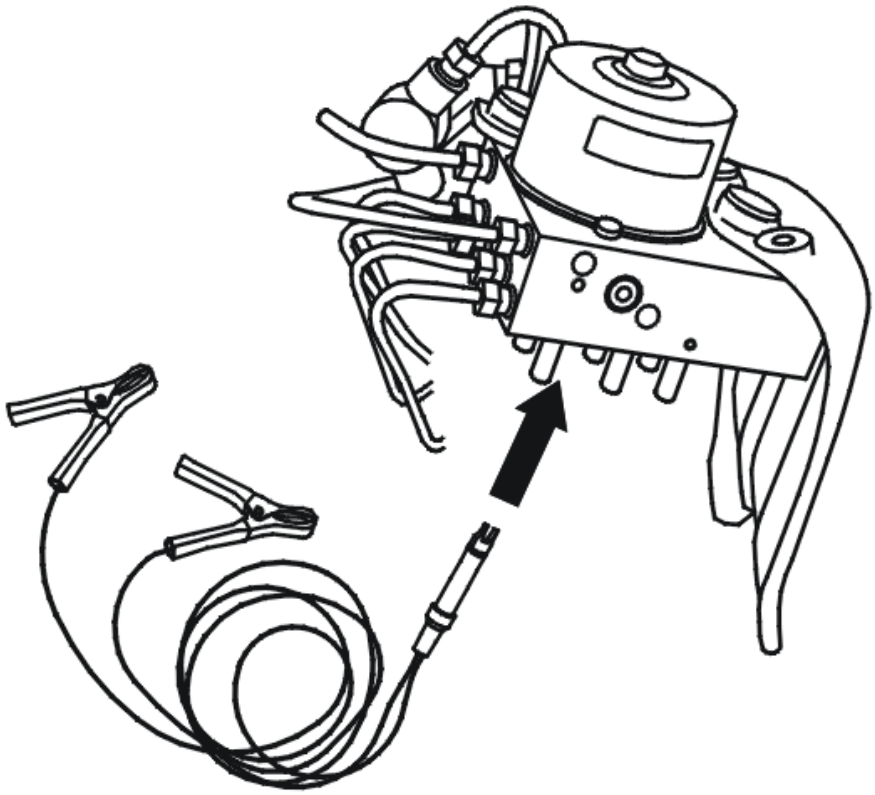

Fig. 204: Identifying Battery Cable Adapter & Brake Pump Motor Assemblies
Courtesy of VOLVO CARS CORPORATION

- **Continue**

  see **VERIFICATION**

VERIFICATION

VERIFICATION

HINT: After carrying out the repair, check that the malfunction has been remedied.

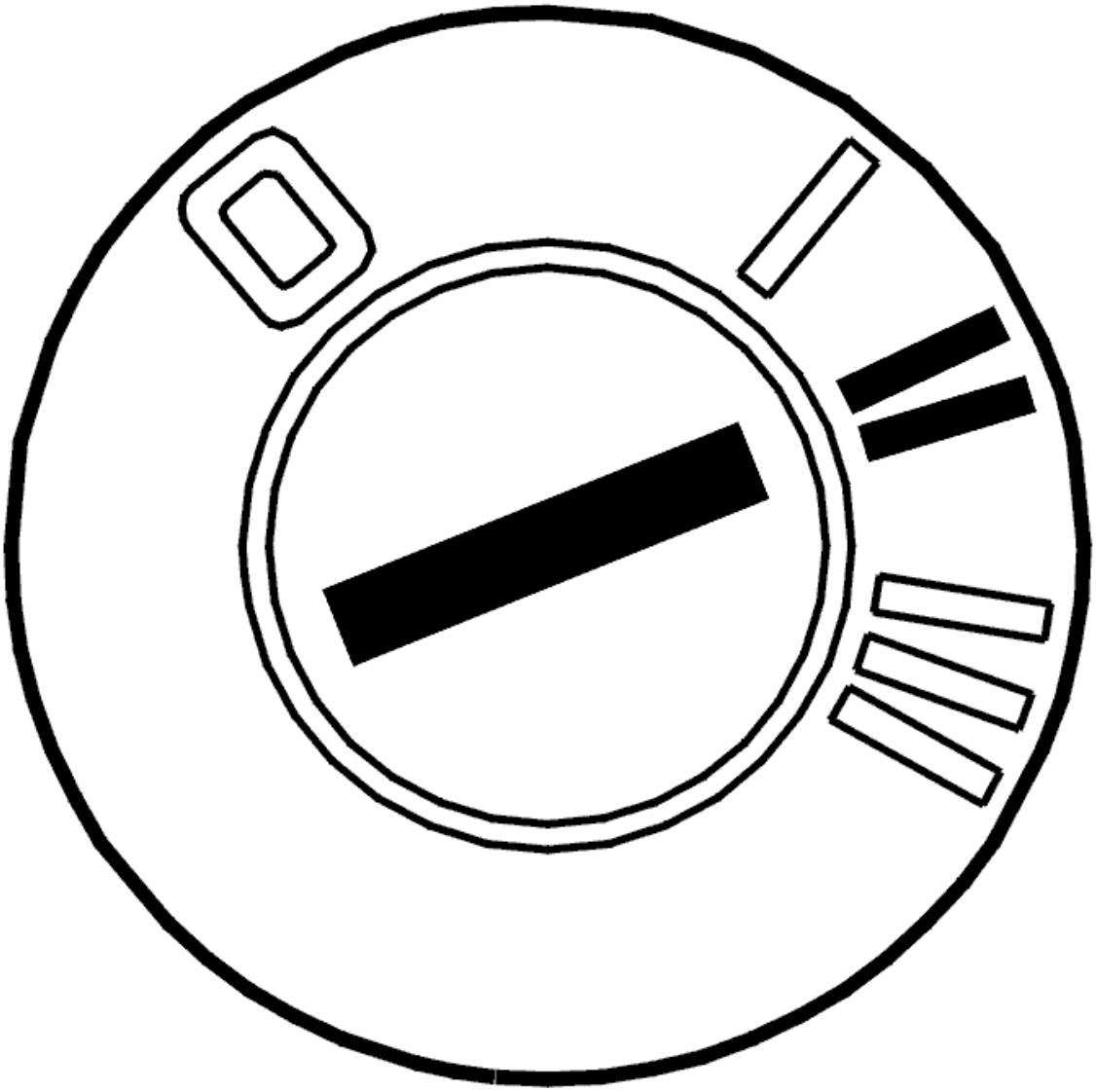

Fig. 205: Identifying Ignition ON
Courtesy of VOLVO CARS CORPORATION

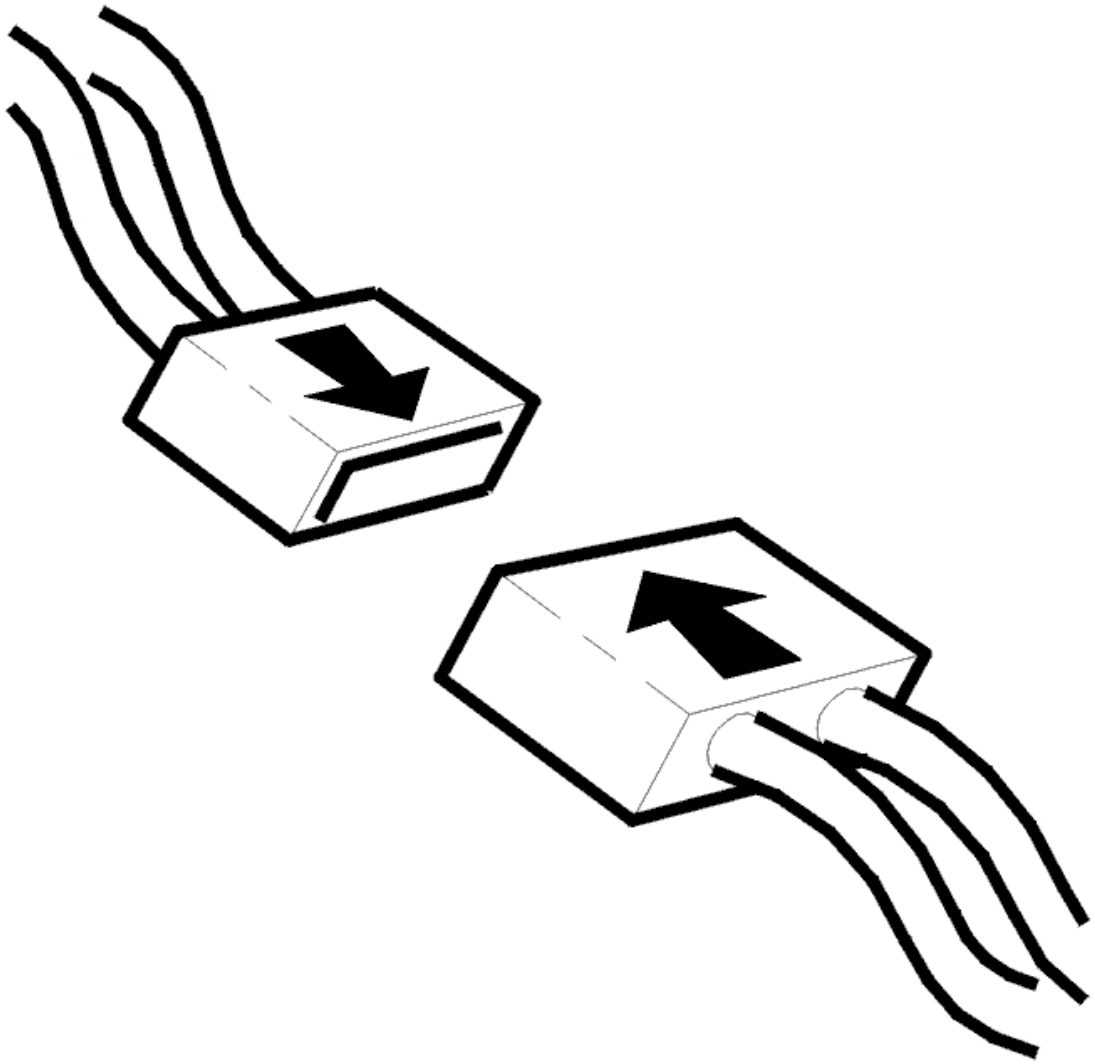

Fig. 206: Connecting Connector
Courtesy of VOLVO CARS CORPORATION

- Ignition off
- Reconnect the connectors, components, etc.
- Ignition on
- Activate the pump motor.

  Check that the pump motor starts and seems to run normally.

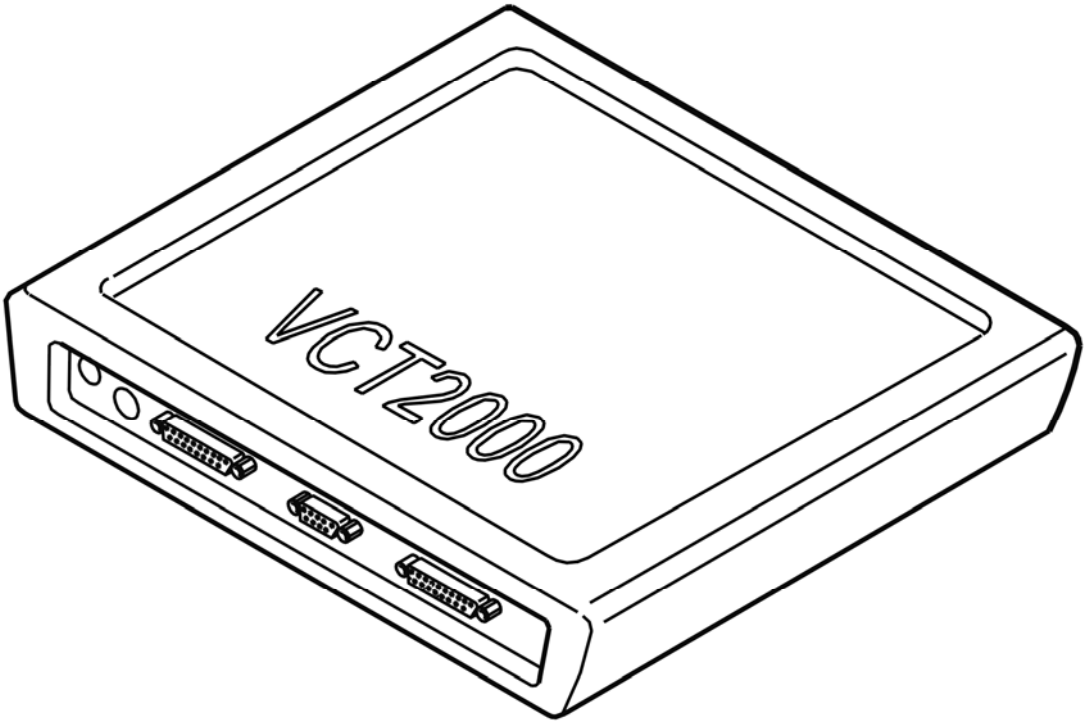

Fig. 207: Identifying VCT2000 Diagnostic Tool Symbol In VIDA
Courtesy of VOLVO CARS CORPORATION

Is pump function OK?

- **YES**

  VERIFIED: Troubleshooting has been completed.

- **NO**

  see **INFORMATION**

INFORMATION

FAULT-TRACING INFORMATION

The fault should have been detected and remedied. As this is not the case fault-tracing has failed.

Exit fault-tracing for this diagnostic trouble code (DTC) or make another attempt.

BCM-C002071: ABS PUMP MOTOR CONTROL. MECHANICAL MALFUNCTION. JAMMED (B6324S5; 2011-2012)

DIAGNOSTIC TROUBLE CODE INFORMATION BCM-C002071

see **DIAGNOSTIC TROUBLE CODE INFORMATION BCM-C002071**

TROUBLESHOOTING BCM-C002071

see **TROUBLESHOOTING BCM-C002071**

BCM-C002071: ABS PUMP MOTOR CONTROL. MECHANICAL MALFUNCTION. JAMMED (B8444S; 2005-2011)

DIAGNOSTIC TROUBLE CODE INFORMATION BCM-C002071

see **DIAGNOSTIC TROUBLE CODE INFORMATION BCM-C002071**

TROUBLESHOOTING BCM-C002071

see **TROUBLESHOOTING BCM-C002071**

BCM-C002201: BRAKE SERVO SOLENOID. GENERAL MALFUNCTION INFORMATION. GENERAL ELECTRICAL MALFUNCTION (B6324S; 2007-2010)

DIAGNOSTIC TROUBLE CODE INFORMATION BCM-C002201

Condition

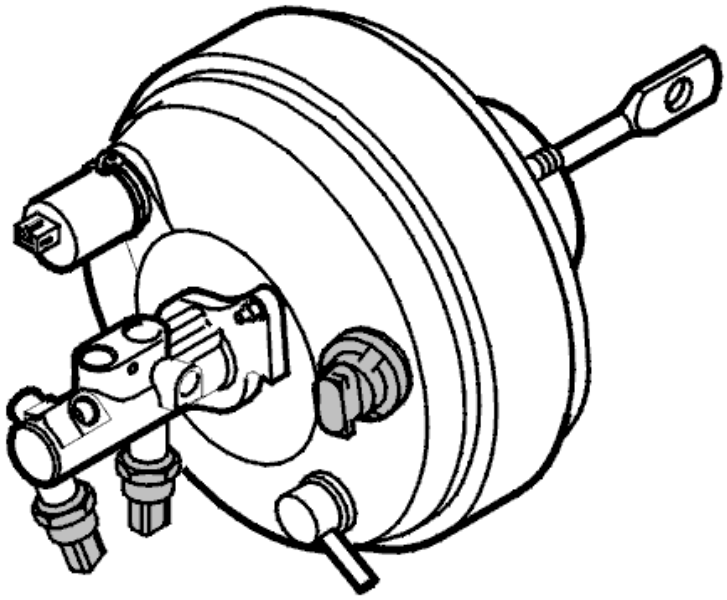

Fig. 208: Identifying Brake Booster
Courtesy of VOLVO CARS CORPORATION

NOTE: The diagnostic trouble code only applies to brake systems with DSTC.

During stability control, the brake control module (BCM) sends a signal to the pressure build-up valve, which opens and allows atmospheric pressure to enter the brake booster, which automatically increases brake pressure in the brake system. This function is used by the anti-skid function and active brake assist (BA).

Diagnostic trouble code BCM-C002201 is generated if the brake control module (BCM) registers an unreasonable signal from the pressure build-up valve.

Substitute Value

- TC is blocked.
- SC is blocked.
- AYC is blocked.
- BA is blocked.

HINT: For information on abbreviations: BRAKE SYSTEM, ABBREVIATIONS

Possible Source

- Contact resistance or oxidation in the connectors or connections.
- The cables are short-circuited to ground or voltage.
- Improperly installed sensor.
- Defective pressure build-up valve.
- Internal malfunction in brake control module (BCM).

Fault symptom[s]

- General warning light on.
- Anti-spin is not operational.
- The stability function is not operational.
- The anti-skid function is not operational.

TROUBLESHOOTING BCM-C002201

CHECKING THE CONNECTORS

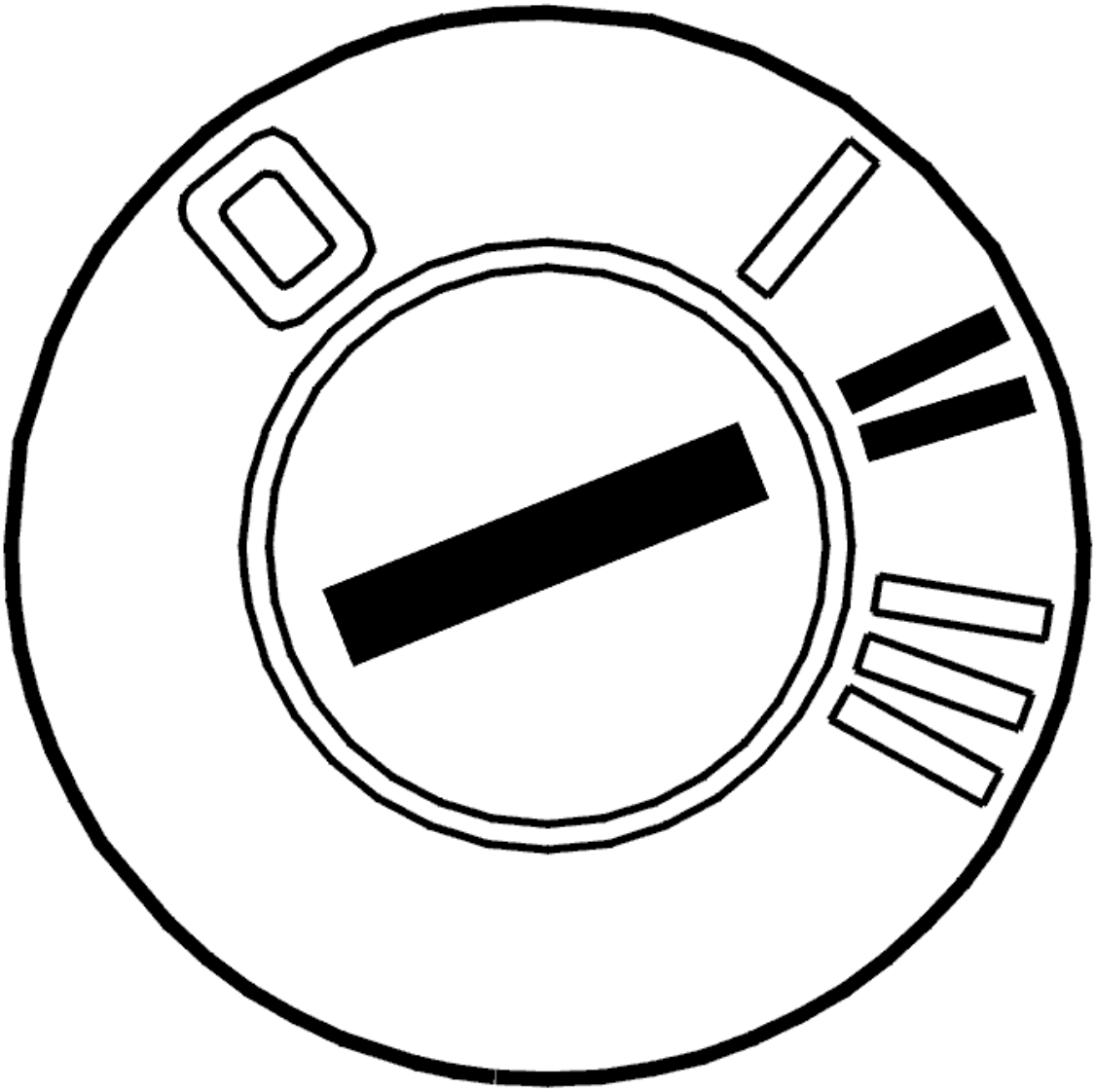

Fig. 209: Identifying Ignition ON
Courtesy of VOLVO CARS CORPORATION

- Ignition off
- Check the connectors of the brake control module (BCM) and the pressure build-up valve/pedal pressure sensor for contact resistance and oxidation.
- Reinstall the components, reconnect the connectors etc.
- Ignition on
- Use the Activation function to activate the pressure build-up valve.

  The status should switch between OFF and ON.

  Other information

  - For removal of the control module connectors: **CONNECTING THE BREAKOUT BOX,**

BRAKE CONTROL MODULE (BCM)

- see **CONTENTS**

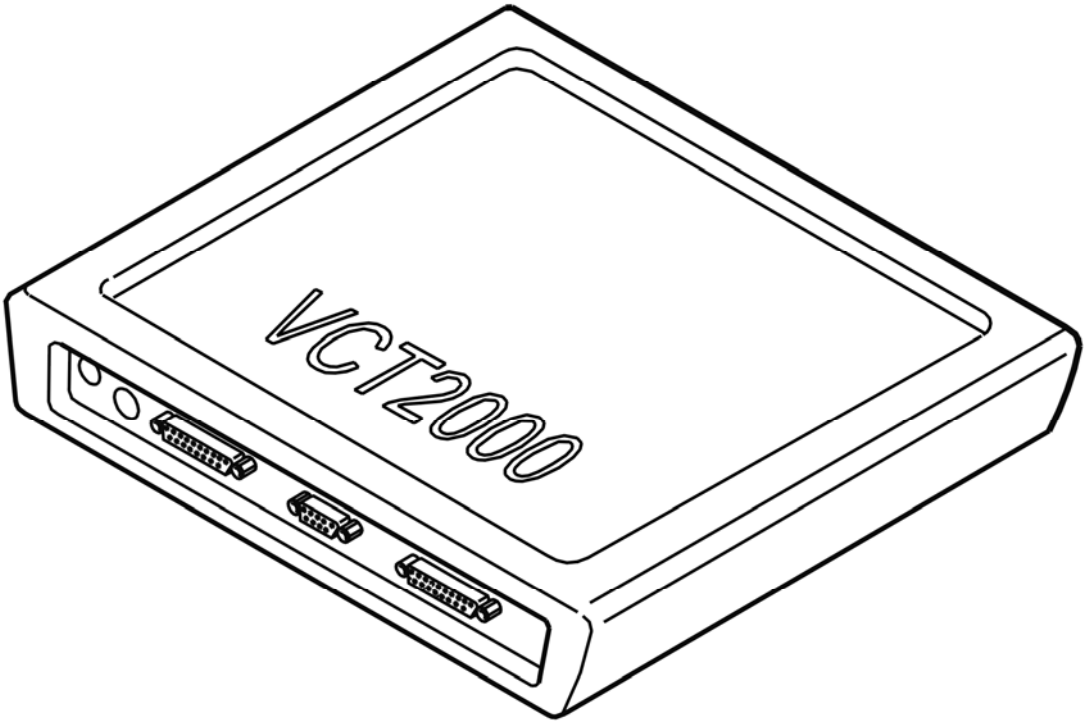

Fig. 210: Identifying VCT2000 Diagnostic Tool Symbol In VIDA
Courtesy of VOLVO CARS CORPORATION

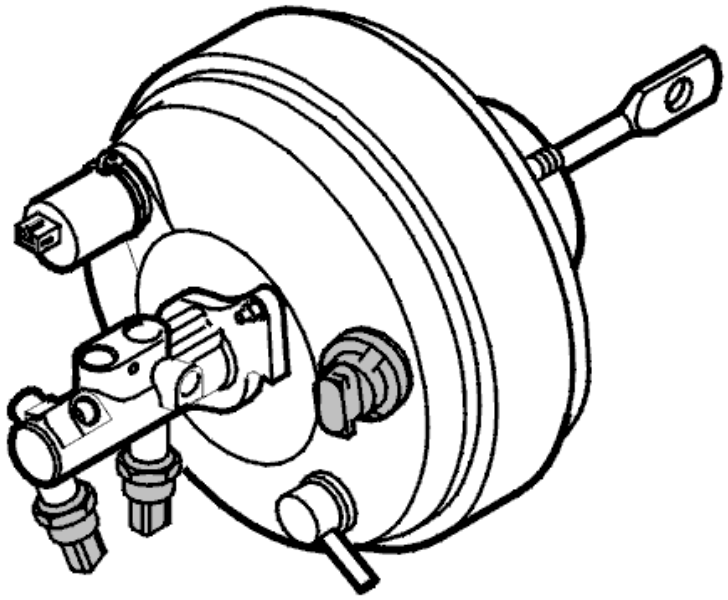

Fig. 211: Identifying Brake Booster
Courtesy of VOLVO CARS CORPORATION

Does the status switch between OFF and ON?

- **YES**

  OKAY: Troubleshooting has been completed.

- **NO**

  see **CHECKING WIRING AND SENSORS**

CHECKING WIRING AND SENSORS

Check the cables between the pressure build-up valve for open circuit, short-circuit to ground and short circuit to voltage.

Measure between:

- Pressure build-up valve terminal #3 and brake control module (BCM) terminal #31 (#A31).
- Pressure build-up valve terminal #4 and brake control module (BCM) terminal #17 (#A17).

HINT: With the ignition off and the pressure build-up valve disconnected, check the pressure build-up valve by measuring the resistance between pressure build-up valve connector terminals #3 and #4 on the breakout box. The resistance must be approximately 3 ohms.

Remedy as necessary.

Other information

- see **CONNECTING THE BREAKOUT BOX, BRAKE CONTROL MODULE (BCM)** .
- see **SIGNAL SPECIFICATION, BRAKE CONTROL MODULE (BCM) WITH DSTC (DYNAMIC STABILITY AND TRACTION CONTROL)**
- For replacing the pressure build-up valve (brake booster):
  - For B6xxxx, see **POWER BRAKE BOOSTER, REPLACING**
  - For B5xxxx, see **POWER BRAKE BOOSTER, REPLACING** .

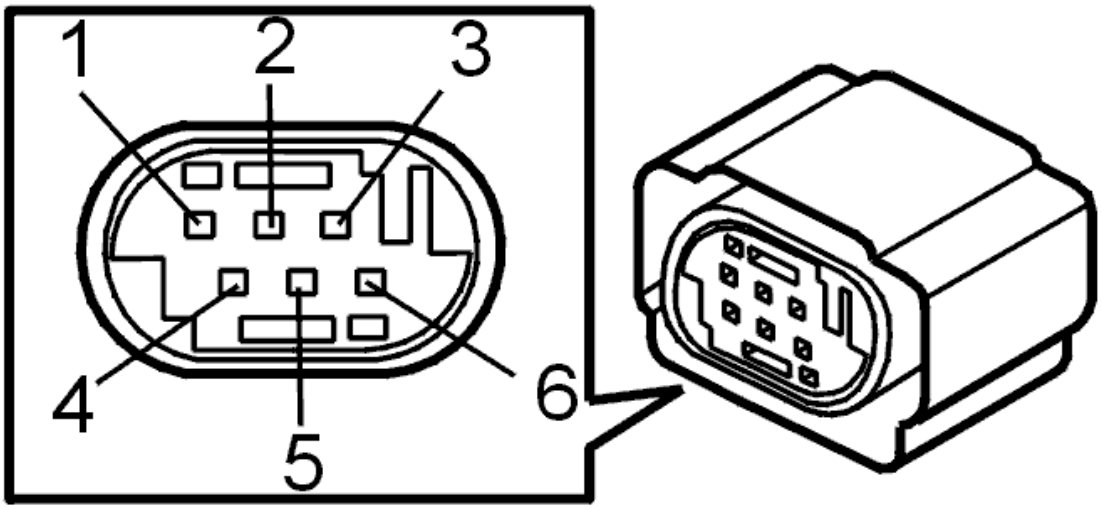

Fig. 212: Identifying Active Yaw Control Sensor Connector Terminals
Courtesy of VOLVO CARS CORPORATION

Was a malfunction detected?

- **YES**

  see **VERIFICATION**

- **NO**

  FAULT NOT FOUND: Troubleshooting has been completed.

VERIFICATION

HINT: After carrying out the repair, check that the malfunction has been remedied.

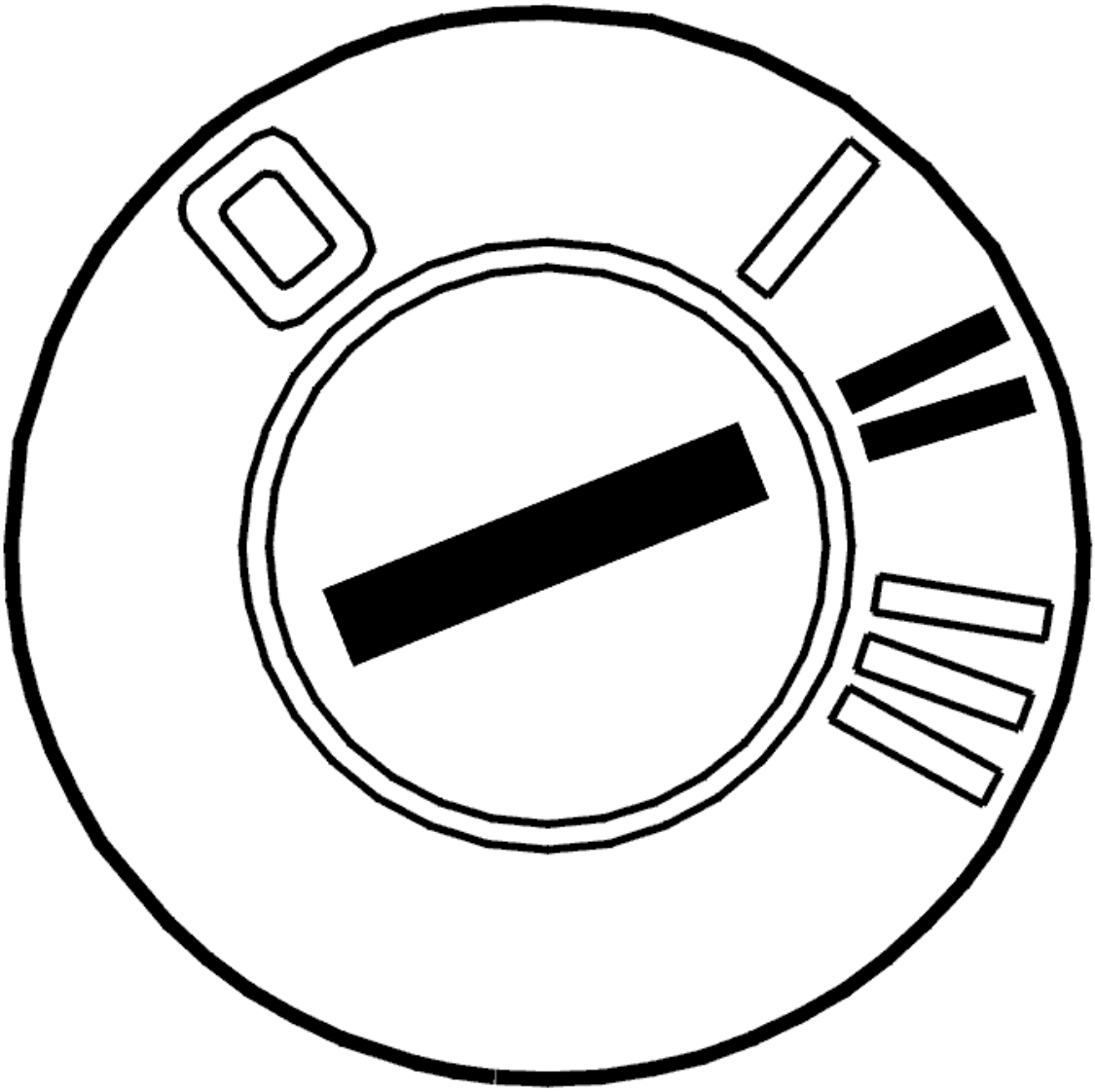

Fig. 213: Identifying Ignition ON
Courtesy of VOLVO CARS CORPORATION

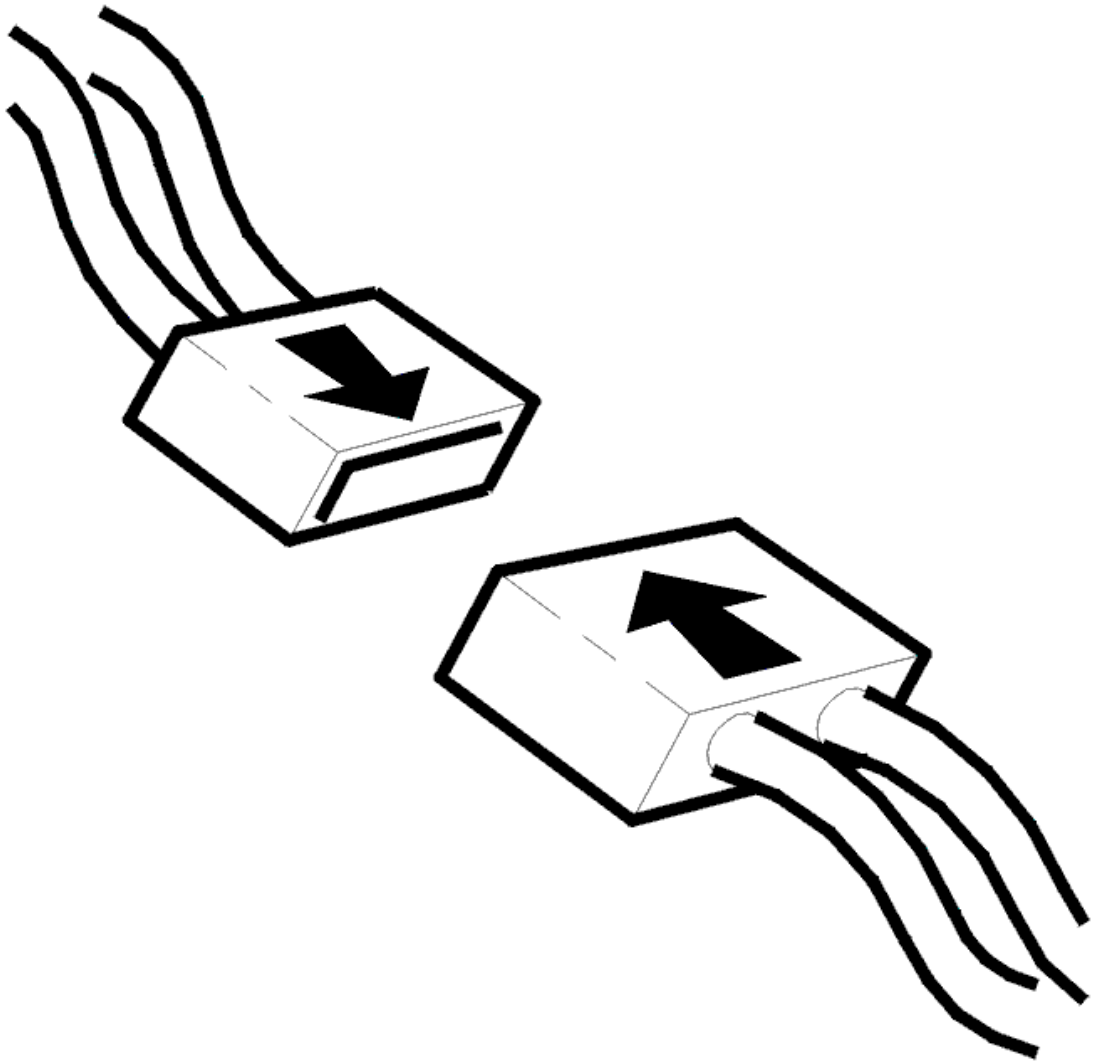

Fig. 214: Connecting Connector
Courtesy of VOLVO CARS CORPORATION

- Ignition off
- Reinstall the components, reconnect the connectors etc.
- Ignition on
- Use the Activation function to activate the pressure build-up valve.

  The status should switch between OFF and ON.

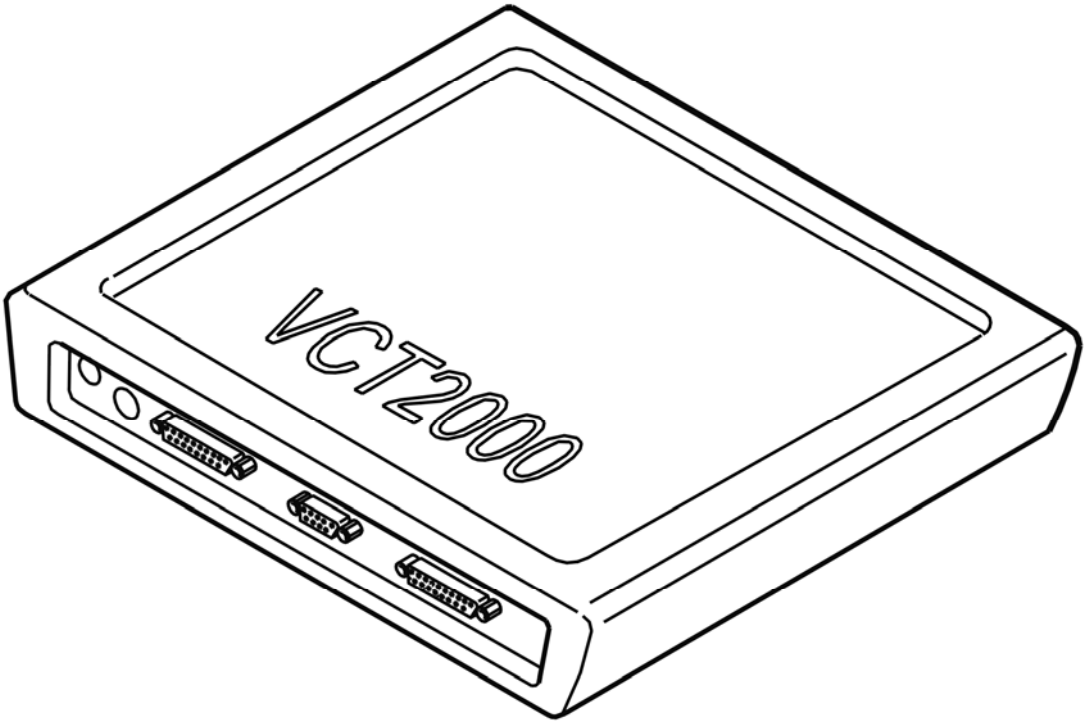

Fig. 215: Identifying VCT2000 Diagnostic Tool Symbol In VIDA
Courtesy of VOLVO CARS CORPORATION

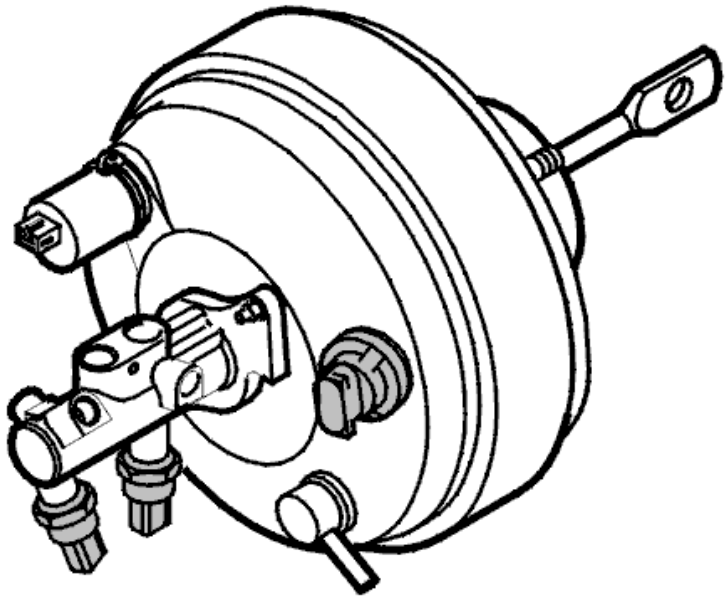

Fig. 216: Identifying Brake Booster
Courtesy of VOLVO CARS CORPORATION

Does the status switch between OFF and ON?

- **YES**

  OKAY: Troubleshooting has been completed.

- **NO**

  see **INFORMATION**

INFORMATION

FAULT-TRACING INFORMATION

The fault should have been detected and remedied. As this is not the case fault-tracing has failed.

Exit fault-tracing for this diagnostic trouble code (DTC) or make another attempt.

BCM-C002201: BRAKE SERVO SOLENOID. GENERAL MALFUNCTION INFORMATION. GENERAL ELECTRICAL MALFUNCTION (B6324S5; 2011-

2012)

DIAGNOSTIC TROUBLE CODE INFORMATION BCM-C002201

see **DIAGNOSTIC TROUBLE CODE INFORMATION BCM-C002201**

TROUBLESHOOTING BCM-C002201

see **TROUBLESHOOTING BCM-C002201**

BCM-C002201: BRAKE SERVO SOLENOID. GENERAL MALFUNCTION INFORMATION. GENERAL ELECTRICAL MALFUNCTION (B8444S; 2005-2011)

DIAGNOSTIC TROUBLE CODE INFORMATION BCM-C002201

see **DIAGNOSTIC TROUBLE CODE INFORMATION BCM-C002201**

TROUBLESHOOTING BCM-C002201

see **TROUBLESHOOTING BCM-C002201**

BCM-C003007: TOOTHED WHEEL LEFT FRONT. GENERAL MALFUNCTION INFORMATION. MECHANICAL MALFUNCTION (B6324S; 2007-2010)

DIAGNOSTIC TROUBLE CODE (DTC) INFORMATION

Condition

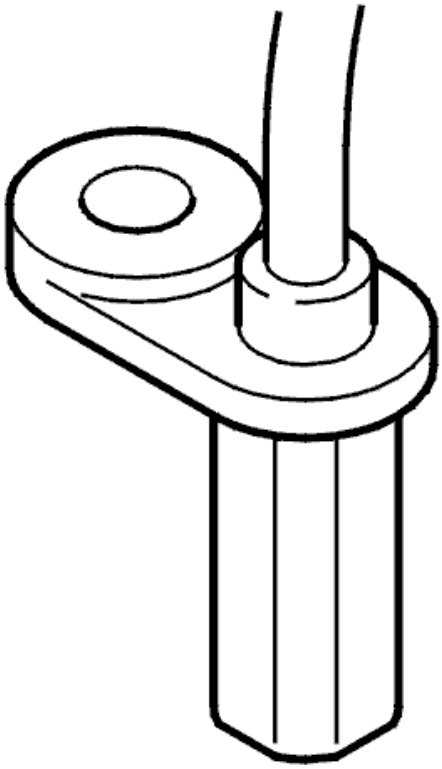

Fig. 217: Identifying Wheel Sensor
Courtesy of VOLVO CARS CORPORATION

The brake control module (BCM) receives wheel speed information for the wheel in question by the wheel sensors, which are housed in the wheel mounting, reading off a toothed wheel on the wheel axle.

If the control module registers that the wheel sensor signal is distorted or interrupted too many times, diagnostic trouble code BCM-C003007, BCM-C003307, BCM-C003607 or BCM-C003907 is generated depending on the wheel sensor.

- BCM-C003007: Wheel sensor, front left
- BCM-C003307: Wheel sensor, front right
- BCM-C003607: Wheel sensor, rear left
- BCM-C003907: Wheel sensor, rear right

The diagnostic trouble code can be diagnosed at speeds over 10 km/h (6.2 mph).

Substitute Value

- ABS is blocked.
- TC is blocked.
- SC is blocked.

- AYC is blocked.
- BA is blocked.
- EBD is blocked if two or more wheel sensors are inoperable.

HINT: For information on abbreviations: BRAKE SYSTEM, ABBREVIATIONS

Possible Source

- Loose wheel sensor.
- Damaged cables.
- Damaged toothed wheel.

NOTE: This diagnostic trouble code (DTC) is not due to an internal hardware fault in the Brake control module (BCM) and must not be remedied by replacing the control module.

Fault symptom[s]

- ABS warning light on.
- General warning light is on.
- ABS is not operational.
- Anti-spin is not operational.
- The anti-skid function is not operational.

NOTE: If the malfunction is intermittent, the ABS warning light will go out when speed exceeds 10 km/h (6.2 mph) in the next operating cycle.

TROUBLESHOOTING

CHECKING WHEEL SENSOR AND TOOTHED WHEEL

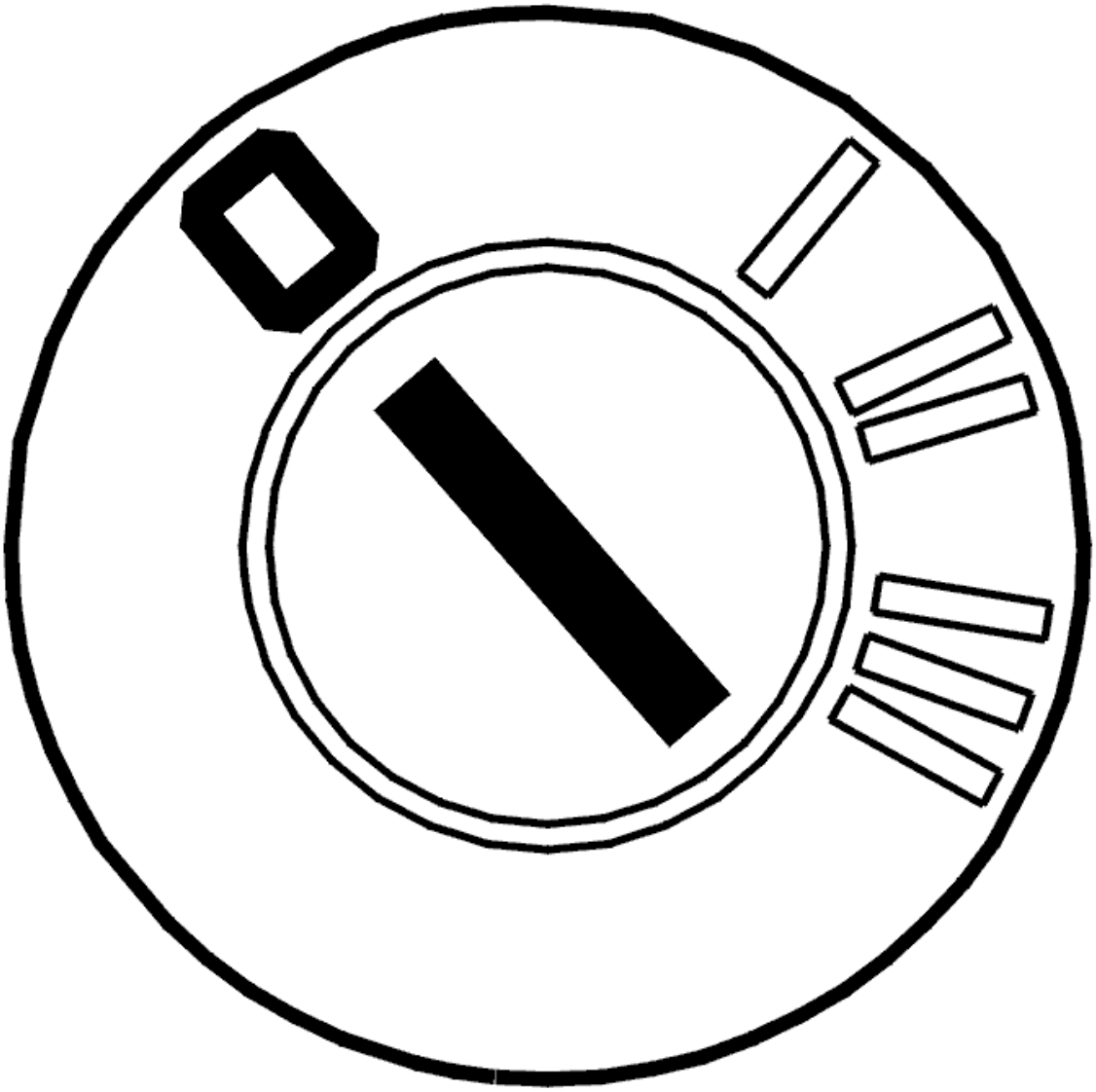

Fig. 218: Identifying Ignition OFF
Courtesy of VOLVO CARS CORPORATION

- Ignition off
- Remove the wheel for better accessibility.

  Check that the wheel sensor is mounted close to the spindle/hub. There must not be any dirt between the sensor and the contact surface.

  Check that the toothed wheel is properly mounted and is free from damage (all teeth intact, no scratches or deformity, etc.)

  Remedy as necessary.

  Other information

- For wheel sensor access/replacement: **WHEEL SENSOR FRONT, REPLACING** or **WHEEL SENSOR REAR, REPLACING** .

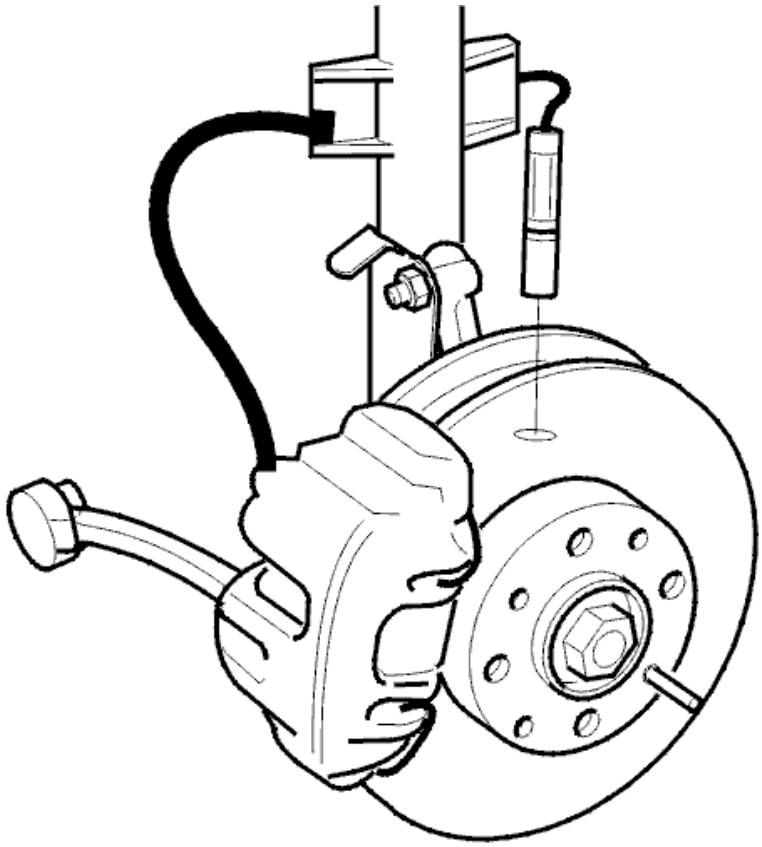

Fig. 219: Identifying Brake Rotor Test Assembly
Courtesy of VOLVO CARS CORPORATION

Was a malfunction detected?

- **YES**

  see **VERIFICATION**

- **NO**

  see **CHECKING CONNECTORS AND CABLES**

CHECKING CONNECTORS AND CABLES

Check the connectors of the brake control module (BCM) and the relevant wheel sensors for contact resistance and oxidation.

Check the connectors and wiring harness insulation for damage.

Check that the wheel sensor cables are not positioned too close to a source of interference.

Remedy as necessary.

Other information

- see **CONNECTING THE BREAKOUT BOX, BRAKE CONTROL MODULE (BCM)**
- see **SIGNAL SPECIFICATION, BRAKE CONTROL MODULE (BCM) WITH STC/ TRACS**
- see **SIGNAL SPECIFICATION, BRAKE CONTROL MODULE (BCM) WITH DSTC (DYNAMIC STABILITY AND TRACTION CONTROL)**
- For wheel sensor check/replacement: **WHEEL SENSOR FRONT, REPLACING** or **WHEEL SENSOR REAR, REPLACING**
- see **CHECKING WIRING AND TERMINALS**

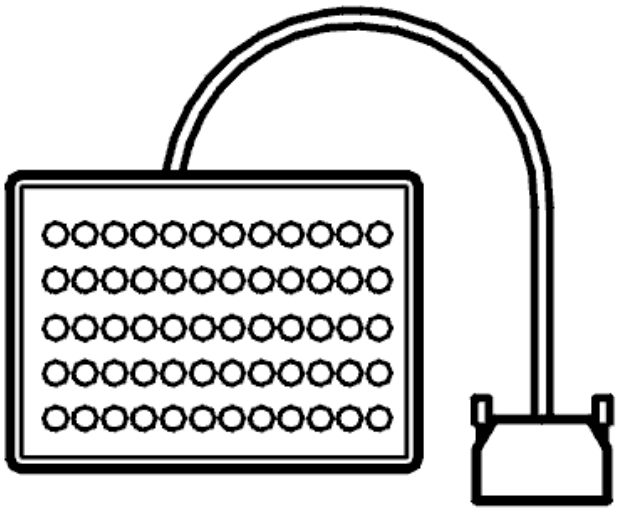

Fig. 220: Breakout Box
Courtesy of VOLVO CARS CORPORATION

Was a malfunction detected?

- **YES**

  see **VERIFICATION**

- **NO**

  FAULT NOT FOUND: Troubleshooting has been completed.

VERIFICATION

VERIFICATION

HINT: After carrying out the repair, check that the fault has been remedied.

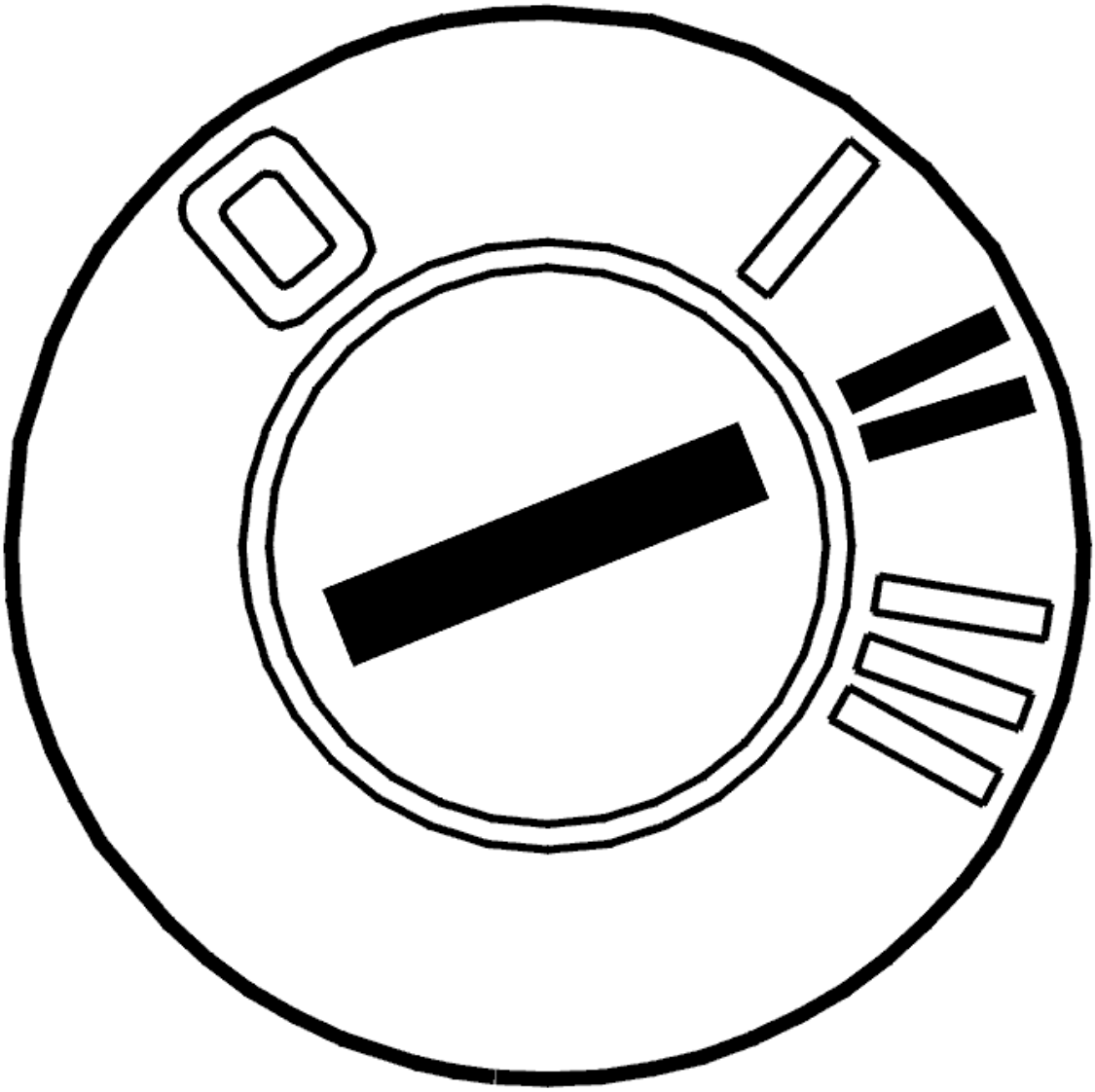

Fig. 221: Identifying Ignition ON
Courtesy of VOLVO CARS CORPORATION

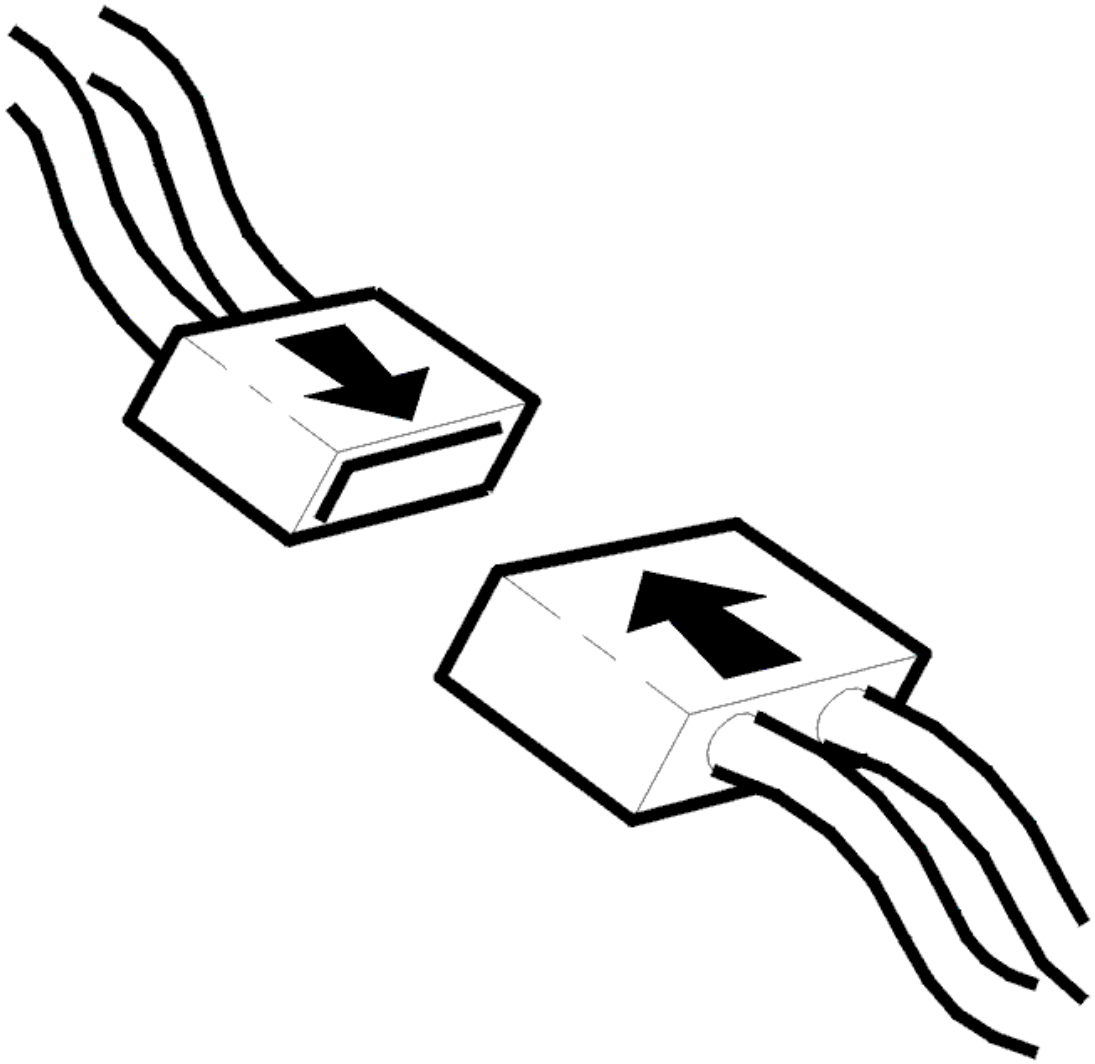

Fig. 222: Connecting Connector
Courtesy of VOLVO CARS CORPORATION

- Ignition off
- Reinstall the components, reconnect the connectors etc.
- Ignition on
- Test drive the car. See **TEST DRIVE FORM (DSTC (DYNAMIC STABILITY AND TRACTION CONTROL) /BRAKE CONTROL MODULE), DESCRIPTION** .

  Check the ABS warning lamp during the test drive.

  If the fault has been remedied the lamp will go out when the speed exceeds 20 km/h.

  If the warning lamp does not go out, return to the workshop and read off the diagnostic trouble codes (DTCs).

Does the ABS warning lamp go out and remain unlit?

- **YES**

  VERIFIED: Troubleshooting has been completed.

- **NO**

  see **INFORMATION**

INFORMATION

FAULT-TRACING INFORMATION

The fault should have been detected and remedied. As this is not the case fault-tracing has failed.

Exit fault-tracing for this diagnostic trouble code (DTC) or make another attempt.

BCM-C003007: TOOTHED WHEEL LEFT FRONT. GENERAL MALFUNCTION INFORMATION. MECHANICAL MALFUNCTION (B6324S5; 2011-2012)

DIAGNOSTIC TROUBLE CODE (DTC) INFORMATION

see **DIAGNOSTIC TROUBLE CODE (DTC) INFORMATION**

TROUBLESHOOTING

see **TROUBLESHOOTING**

BCM-C003007: TOOTHED WHEEL LEFT FRONT. GENERAL MALFUNCTION INFORMATION. MECHANICAL MALFUNCTION (B8444S; 2005-2011)

DIAGNOSTIC TROUBLE CODE (DTC) INFORMATION

see **DIAGNOSTIC TROUBLE CODE (DTC) INFORMATION**

TROUBLESHOOTING

see **TROUBLESHOOTING**

BCM-C003101: WHEEL SPEED SENSOR LEFT FRONT. GENERAL MALFUNCTION INFORMATION. GENERAL ELECTRICAL MALFUNCTION (B6324S; 2007-2010)

DIAGNOSTIC TROUBLE CODE (DTC) INFORMATION

Condition

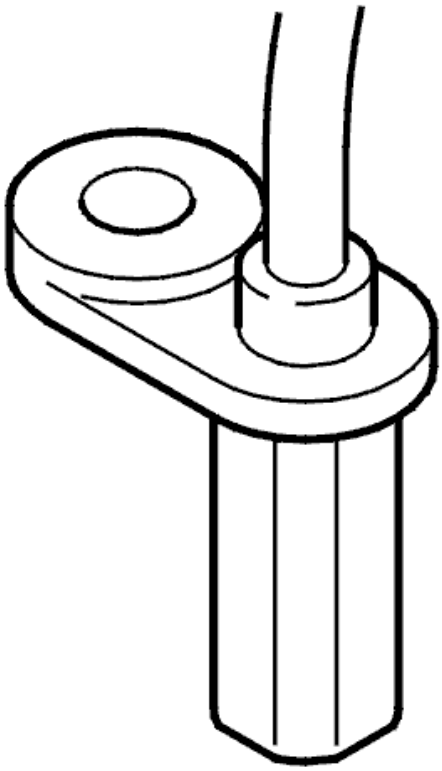

Fig. 223: Identifying Wheel Sensor
Courtesy of VOLVO CARS CORPORATION

The brake control module (BCM) receives wheel speed information by the wheel sensors, which are housed in the wheel mounting, reading off a toothed wheel on the wheel axle. If the control module registers that the signal from a wheel sensor is distorted or cut off too many times, diagnostic code BCM-C003101, BCM-C003401, BCM-C003701 or BCM-C003A01 is generated depending on which wheel sensor was involved.

- BCM-C003101: Wheel sensor, front left
- BCM-C003401: Wheel sensor, front right
- BCM-C003701: Wheel sensor, rear left
- BCM-C003A01: Wheel sensor, rear right

The diagnostic trouble code can be diagnosed at speeds over 10 km/h (6.2 mph).

Substitute Value

- ABS is blocked.
- EBD is blocked if two or more wheel sensors are inoperable.
- TC is blocked.

- SC is blocked.
- AYC is blocked.
- BA is blocked.

HINT: For information on brake system abbreviations: BRAKE SYSTEM, ABBREVIATIONS

Possible Source

- Contact resistance in the terminals
- Open circuit, short circuit to ground or supply voltage on voltage feed to wheel sensor.
- The signal cables are short-circuited to one another.
- The signal cable is short-circuited to ground or supply voltage.
- Open circuit on signal cable.
- Damaged wheel sensor.
- Internal error in the control module

Fault symptom[s]

- General warning light on.
- ABS warning light on.
- Brake circuit not working; warning light on.
- ABS is not operational.
- Anti-spin is not operational.
- The stability function is not operational.
- The anti-skid function is not operational.

NOTE: If the malfunction is intermittent, the ABS warning light will go out when speed exceeds 10 km/h (6.2 mph) in the next operating cycle.

TROUBLESHOOTING

CHECKING BRAKE CONTROL MODULE (BCM) AND WHEEL SENSOR'S CONNECTOR

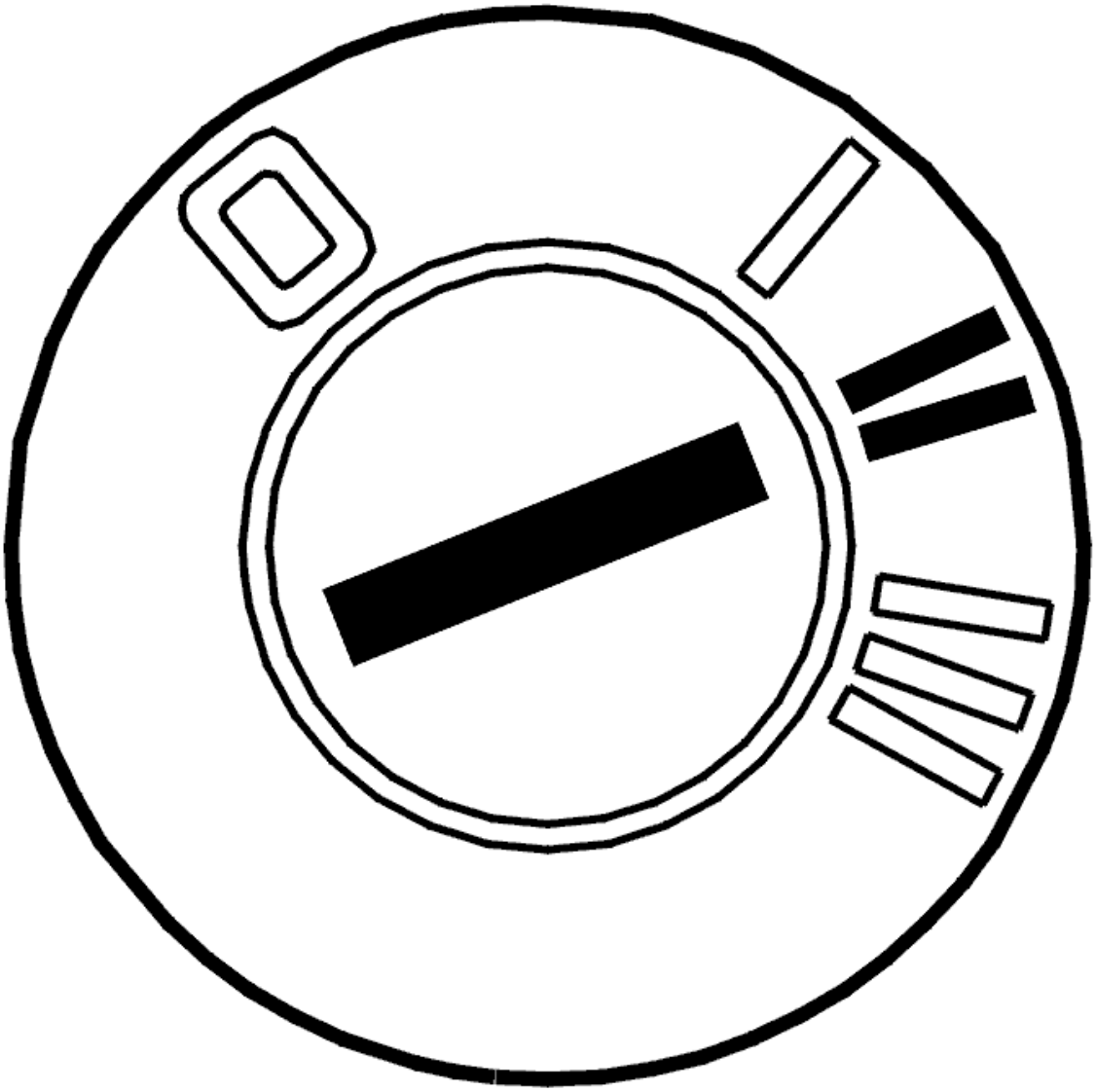

Fig. 224: Identifying Ignition ON
Courtesy of VOLVO CARS CORPORATION

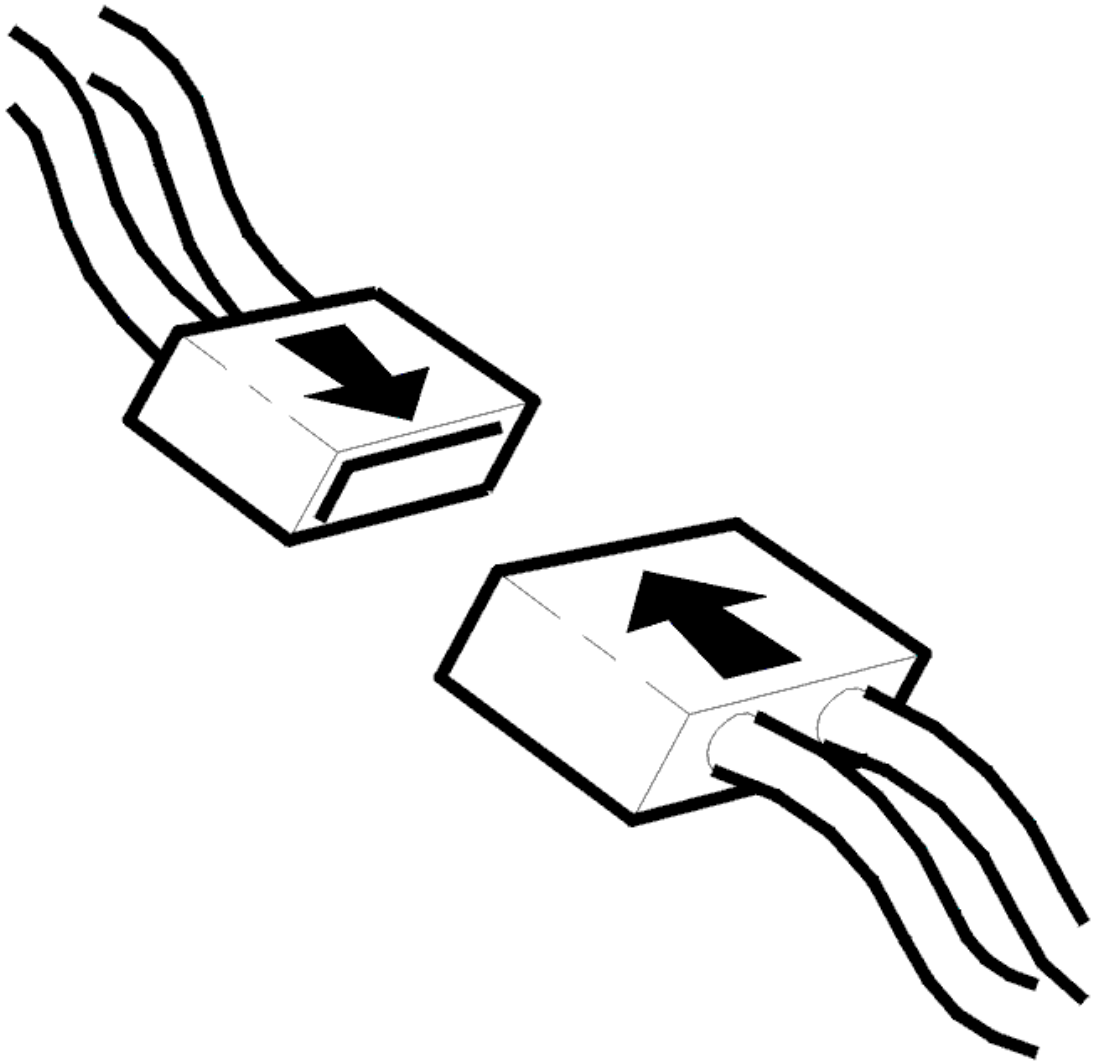

Fig. 225: Connecting Connector
Courtesy of VOLVO CARS CORPORATION

- Ignition off
- Check the connectors of the brake control module (BCM) and the wheel sensors for contact resistance and oxidation.
- Reinstall the components, reconnect the connectors etc.
- Lift the vehicle so that the wheel in question hangs freely.
- Ignition on
- Read off the speed for the wheel in question.

  Rotate the wheel in question and check that wheel speed is updated.

  If wheel speed is updated, the malfunction was caused by poor contact in the control module's or wheel sensor's connector.

NOTE: **The wheel signal will only be active for approx. 20 seconds. Activate the service again if necessary.**

Other information

- Disconnecting the brake control module's connector: **CONNECTING THE BREAKOUT BOX, BRAKE CONTROL MODULE (BCM)**
- Disconnecting the wheel sensor's connector: **WHEEL SENSOR FRONT, REPLACING**
- see **CHECKING WIRING AND TERMINALS**

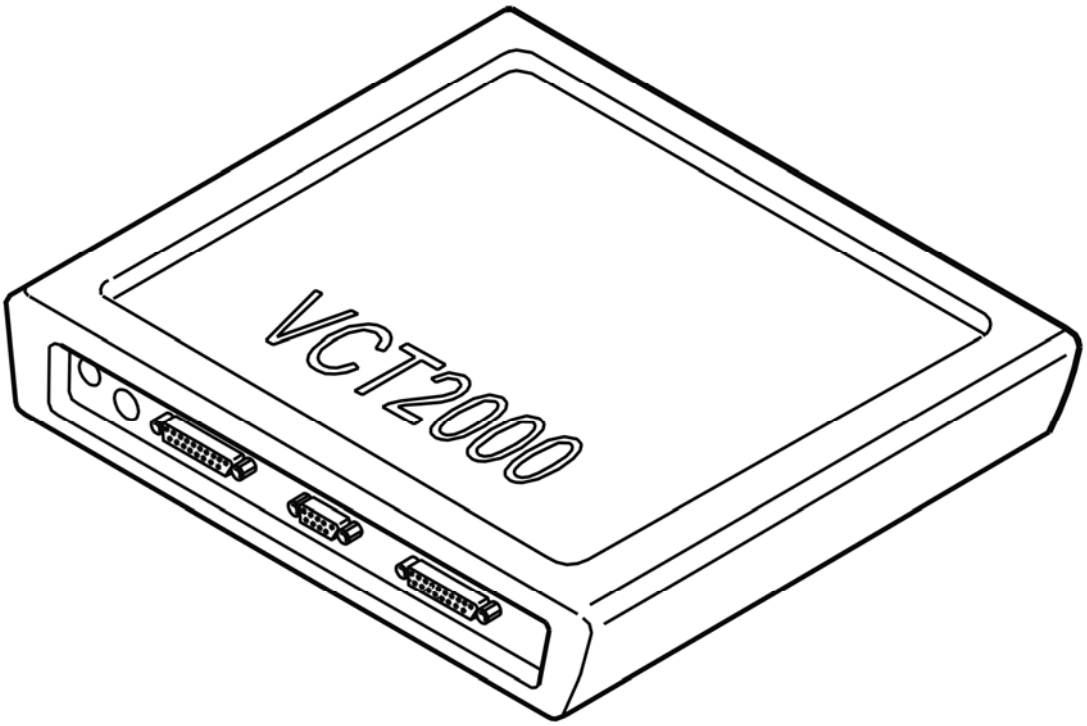

Fig. 226: Identifying VCT2000 Diagnostic Tool Symbol In VIDA
Courtesy of VOLVO CARS CORPORATION

Is wheel speed updated?

- **YES**

  OKAY: Troubleshooting has been completed.

- **NO**

  see **CHECKING WIRING AND SENSORS**

CHECKING WIRING AND SENSORS

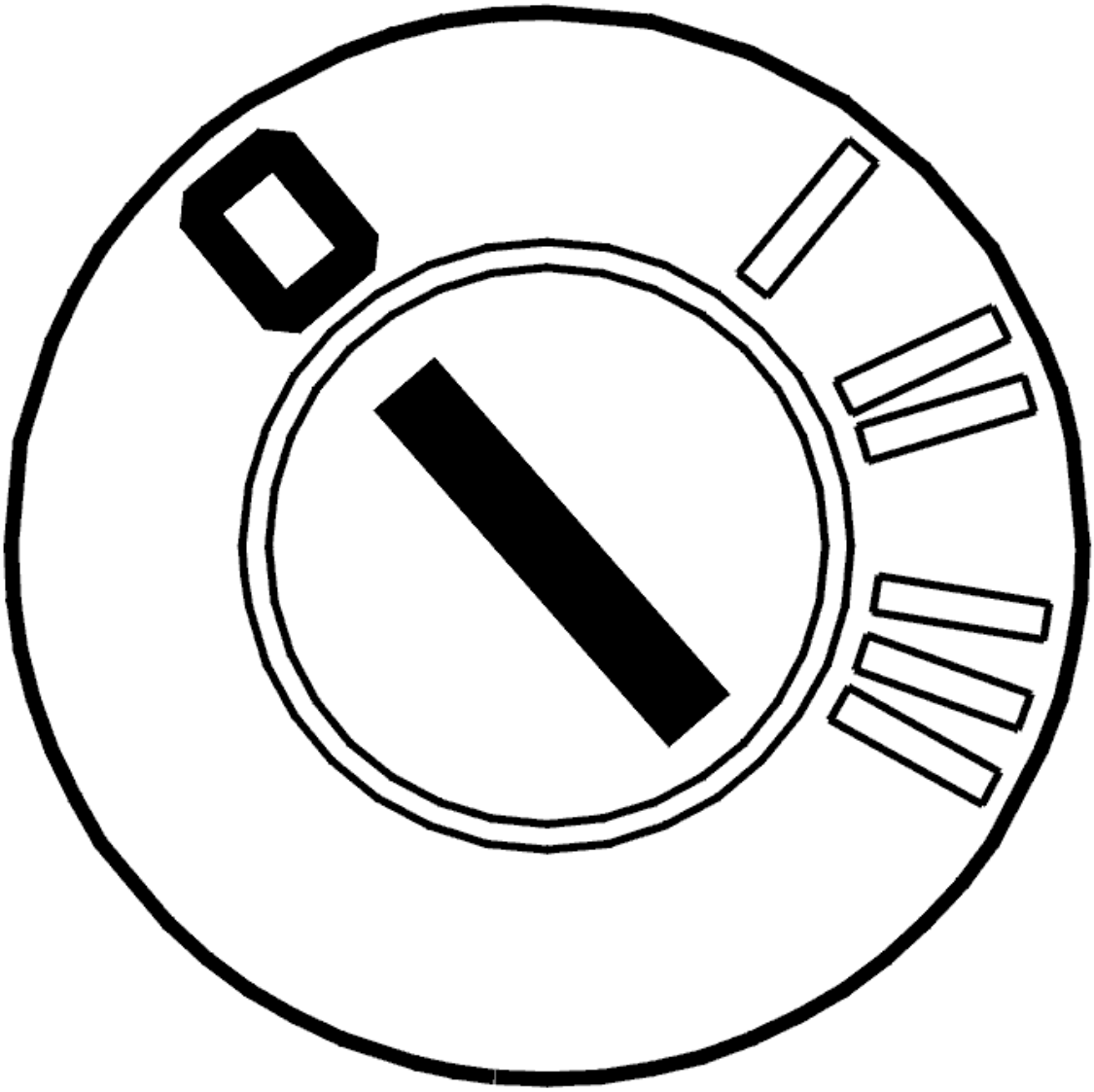

Fig. 227: Identifying Ignition OFF
Courtesy of VOLVO CARS CORPORATION

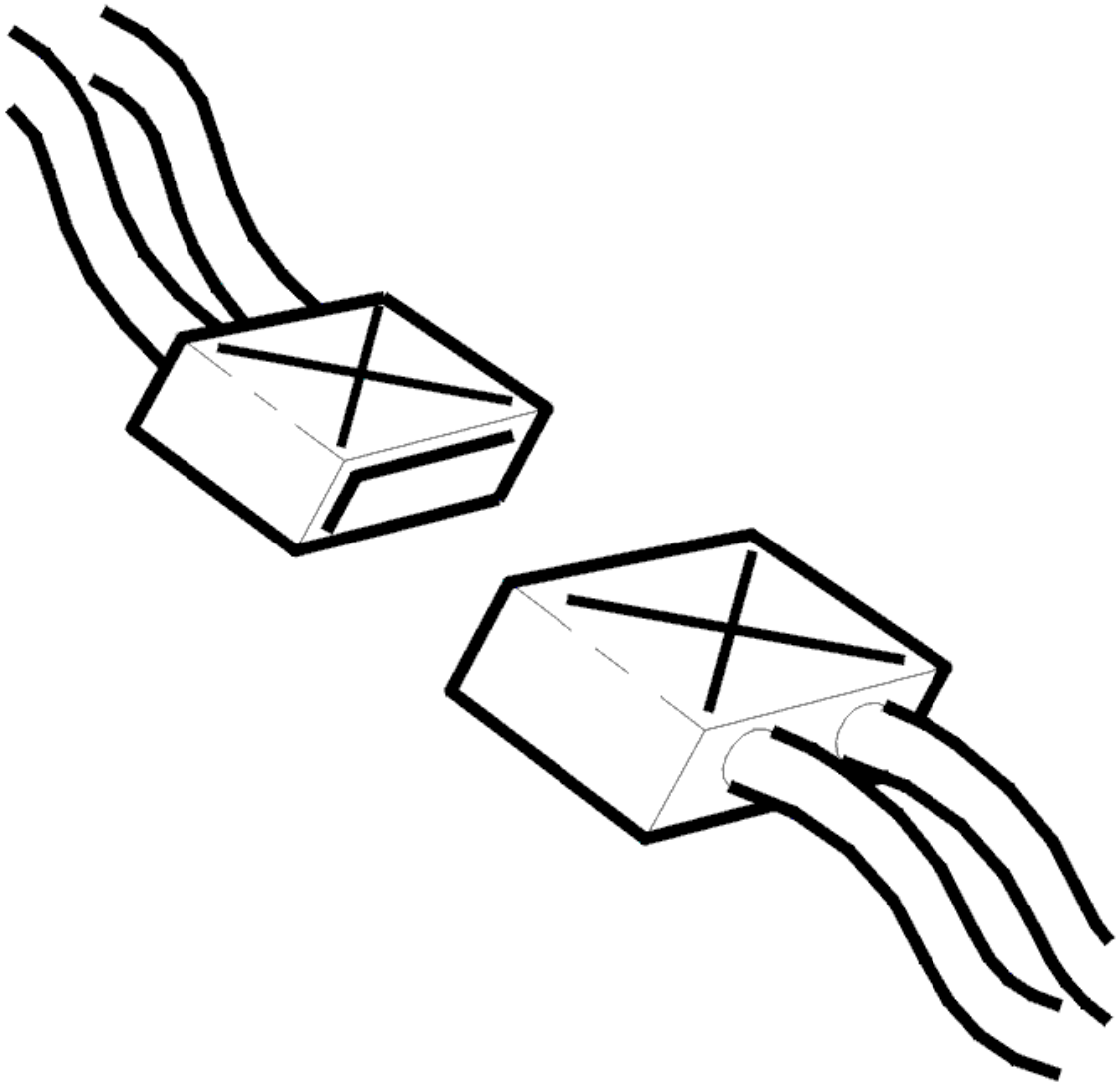

Fig. 228: Identifying Connector
Courtesy of VOLVO CARS CORPORATION

Checking the voltage feed

Check the signal cable for open circuit, short circuit to ground and short circuit to supply voltage.

Measure between:

- Brake control module (BCM) terminal #45 (#A45) (front left) and terminal #1 of the relevant sensor.
- Brake control module (BCM) terminal #34 (#A34) (front right) and terminal #1 of the relevant sensor.

Checking the signal cable

Check the signal cable for open circuit, short circuit to ground and short circuit to supply voltage.

Measure between:

- Brake control module (BCM) terminal #46 (#A46) (front left) and terminal #2 of the relevant sensor.
- Brake control module (BCM) terminal #33 (#A33) (front right) and terminal #2 of the relevant sensor.

Checking sensor function

With the sensor connected and the ignition on, check the sensor by connecting a breakout box and measuring the signal from the sensor.

Measure on the breakout box between:

- #45 (#A45) and #46 (#A46) (front left).
- #34 (#A34) and #33 (#A33) (front right).

Voltage should vary approx. 1 V when the toothed wheel rotates. If voltage is incorrect, replace the wheel sensor.

Remedy as necessary.

Other information

- see **CONNECTING THE BREAKOUT BOX, BRAKE CONTROL MODULE (BCM)**
- see **SIGNAL SPECIFICATION, BRAKE CONTROL MODULE (BCM) WITH STC/ TRACS**
- see **SIGNAL SPECIFICATION, BRAKE CONTROL MODULE (BCM) WITH DSTC (DYNAMIC STABILITY AND TRACTION CONTROL)**
- see **WHEEL SENSOR FRONT, REPLACING**
- see **CHECKING WIRING AND TERMINALS**

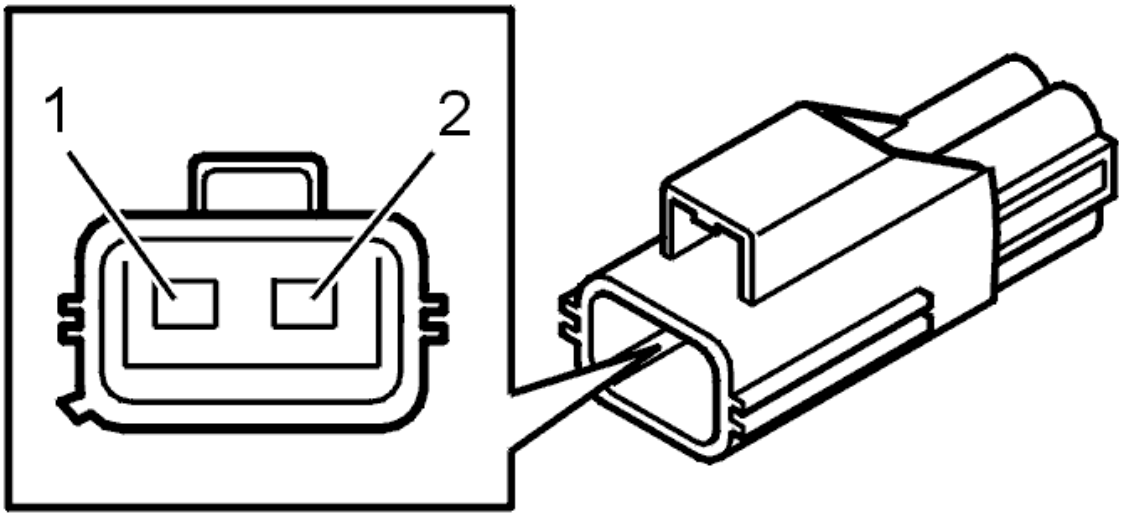

Fig. 229: Identifying Engine Coolant Temperature (ECT) Sensor And Connector Terminals
Courtesy of VOLVO CARS CORPORATION

- **Continue**

  see **VERIFICATION**

VERIFICATION

VERIFICATION

HINT: After carrying out the repair, check that the malfunction has been remedied.

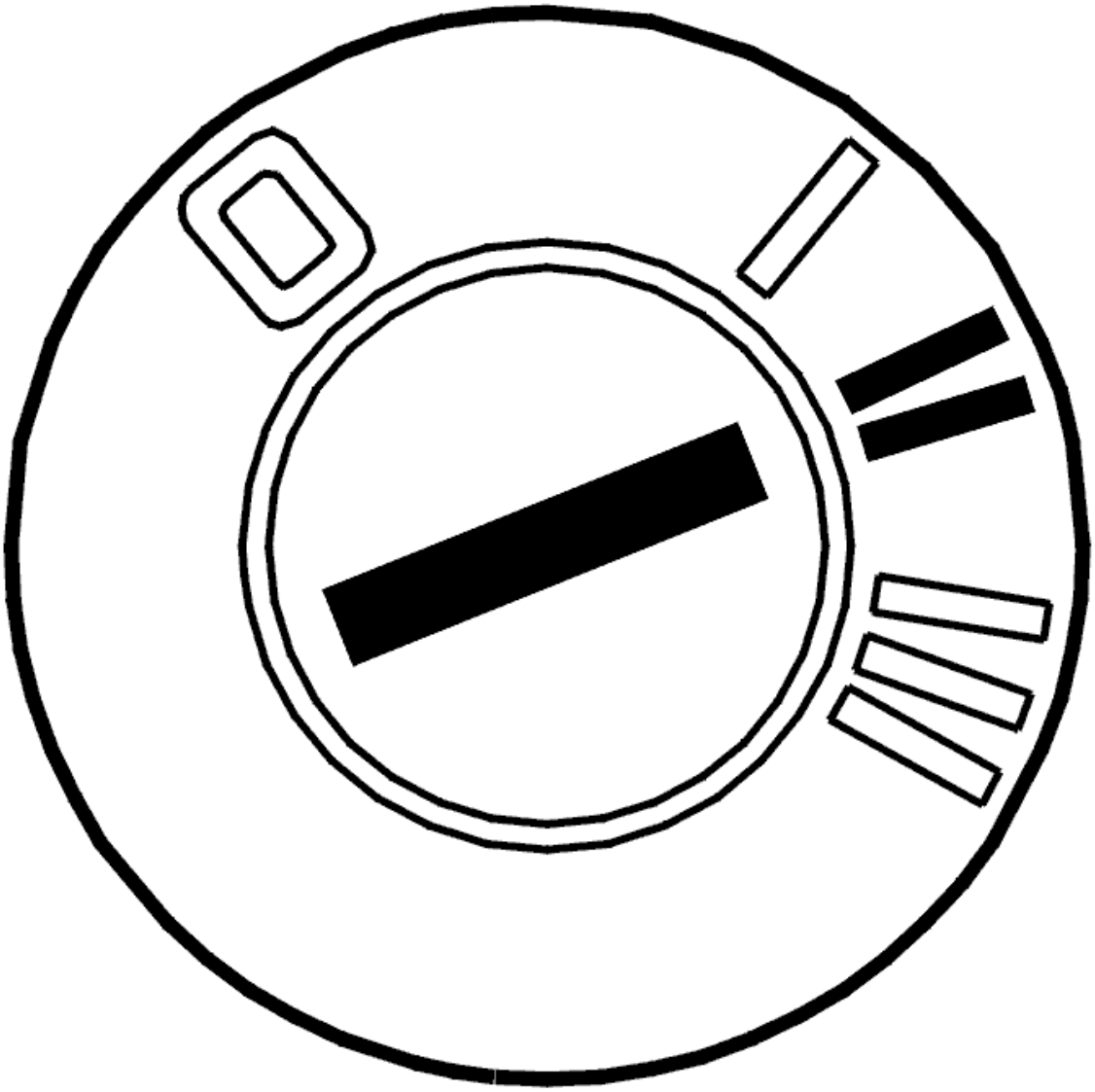

Fig. 230: Identifying Ignition ON
Courtesy of VOLVO CARS CORPORATION

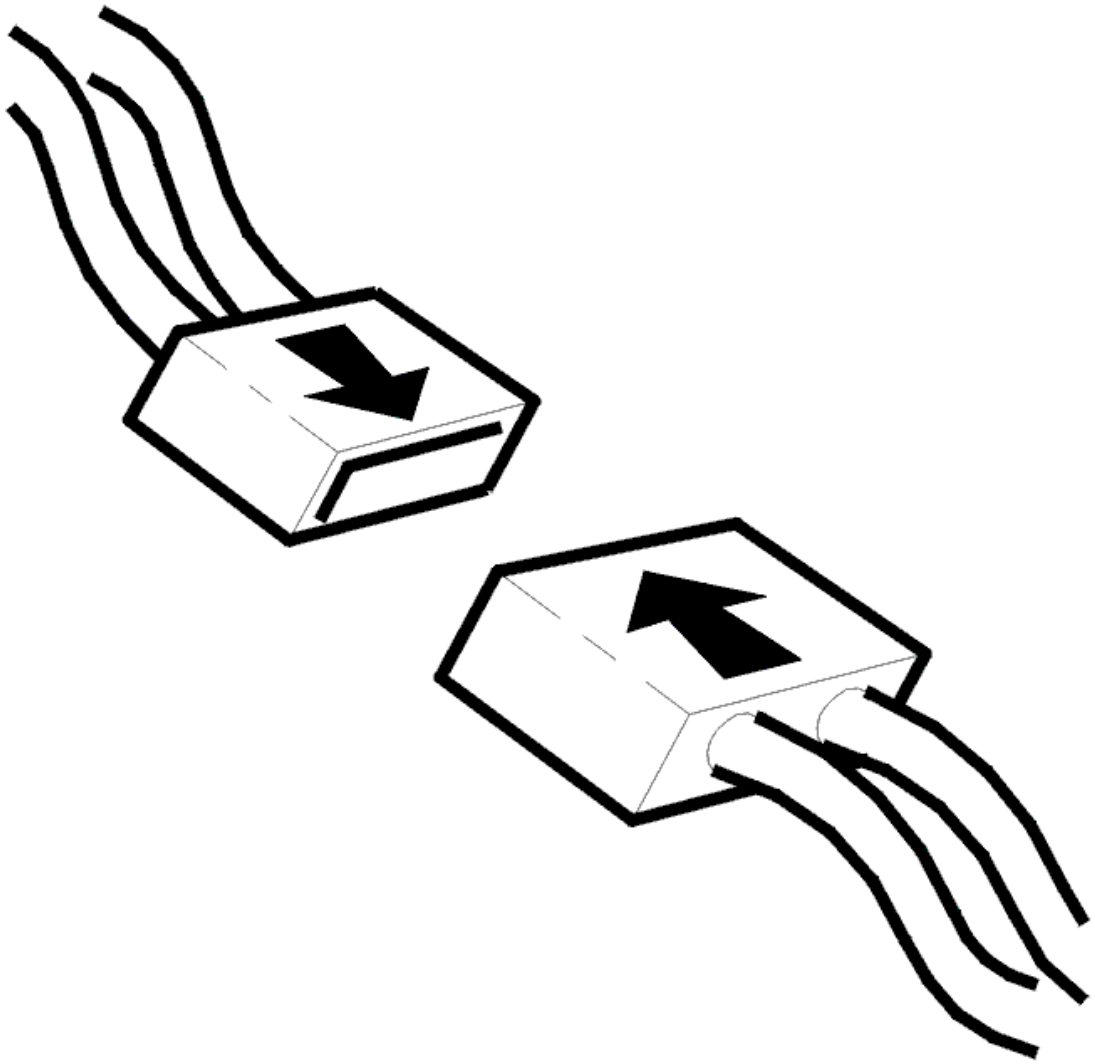

Fig. 231: Connecting Connector
Courtesy of VOLVO CARS CORPORATION

- Ignition off
- Reinstall the components, reconnect the connectors etc.
- Lift the vehicle so that the wheel in question hangs freely.
- Ignition on
- Read off the speed of the wheel in question.

  Rotate the wheel and check that wheel speed is updated.

NOTE: **The wheel signal will only be active for approx. 20 seconds. Activate the service again if necessary.**

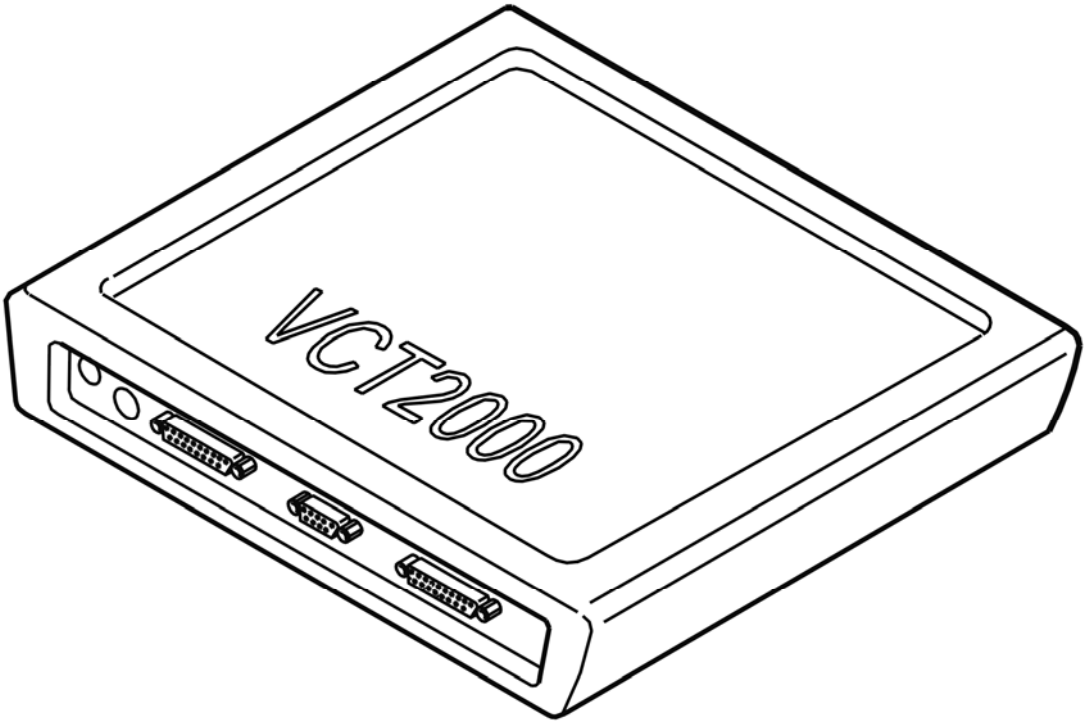

Fig. 232: Identifying VCT2000 Diagnostic Tool Symbol In VIDA
Courtesy of VOLVO CARS CORPORATION

Is wheel speed updated?

- **YES**

  VERIFIED: Troubleshooting has been completed.

- **NO**

  see **INFORMATION**

INFORMATION

FAULT-TRACING INFORMATION

The fault should have been detected and remedied. As this is not the case fault-tracing has failed.

Exit fault-tracing for this diagnostic trouble code (DTC) or make another attempt.

BCM-C003101: WHEEL SPEED SENSOR LEFT FRONT. GENERAL MALFUNCTION INFORMATION. GENERAL ELECTRICAL MALFUNCTION

(B6324S5; 2011-2012)

DIAGNOSTIC TROUBLE CODE (DTC) INFORMATION

see **DIAGNOSTIC TROUBLE CODE (DTC) INFORMATION**

TROUBLESHOOTING

see **TROUBLESHOOTING**

BCM-C003101: WHEEL SPEED SENSOR LEFT FRONT. GENERAL MALFUNCTION INFORMATION. GENERAL ELECTRICAL MALFUNCTION (B8444S; 2005-2011)

DIAGNOSTIC TROUBLE CODE (DTC) INFORMATION

see **DIAGNOSTIC TROUBLE CODE (DTC) INFORMATION**

TROUBLESHOOTING

see **TROUBLESHOOTING**

BCM-C003107: WHEEL SPEED SENSOR LEFT FRONT. GENERAL MALFUNCTION INFORMATION. MECHANICAL MALFUNCTION (B6324S; 2007-2010)

DIAGNOSTIC TROUBLE CODE (DTC) INFORMATION

Condition

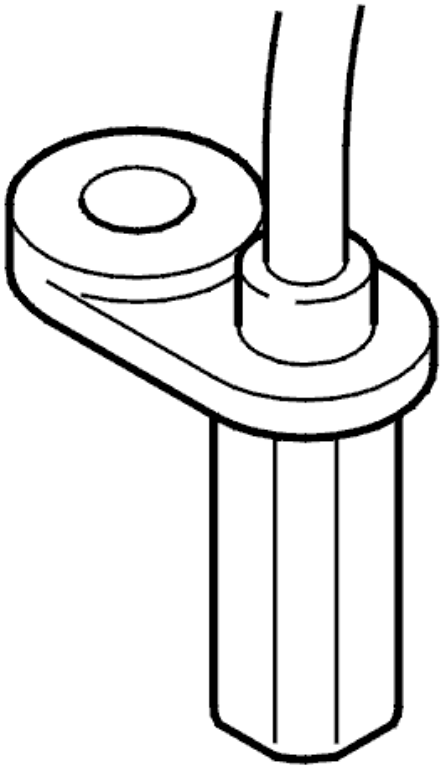

Fig. 233: Identifying Wheel Sensor
Courtesy of VOLVO CARS CORPORATION

Control module for the brake system (BCM) can for diagnostic trouble codes BCM-C003107 (wheel sensor left front), BCM-C003407 (wheel sensor right front), BCM-C003707 (wheel sensor left rear) and BCM-C003A07 (wheel sensor right rear) register malfunctions in three different ways:

1. When the wheel sensor indicates to the control module that the wheel has stopped or rotates too slowly in relation to the vehicle reference speed while driving or during ABS control when speed exceeds 20 km/h (12.4 mph), diagnostic trouble code BCM-C003107, BCM-C003407, BCM-C003707 or BCM-C003A07 is generated depending on the wheel sensor.
2. The control module has an extrapolation counter that counts the number of times the wheel's change of speed is too large compared to what is permitted (calculated). If wheel acceleration is greater than that of the other wheel sensors, BCM-C003107, BCM-C003407, BCM-C003707 or BCM-C003A07 is generated depending on the wheel sensor.
3. If the control module registers that there is no signal from the wheel sensor when starting off from a speed below 6 km/h (3.7 mph) or if the slowest wheel rotates at a speed less than 40-60 % (depending on vehicle speed) that of the fastest wheel but the wheel sensor circuit remains unbroken, diagnostic trouble code BCM-C003107, BCM-C003407, BCM-C003707 or BCM-C003A07 is generated depending on the wheel sensor.

The diagnostic trouble code can be diagnosed at speeds over 10 km/h (6.2 mph).

Substitute Value

- ABS is blocked.
- EBD is blocked if two or more wheel sensors are inoperable.
- TC is blocked.
- SC is blocked.
- AYC is blocked.
- BA is blocked.

HINT: For information on brake system abbreviations: BRAKE SYSTEM, ABBREVIATIONS

Possible Source

- A wheel was blocked while driving.
- Loose wheel sensor.
- Too little or too large of a gap between wheel sensor and toothed wheel.
- Wheel bearing play or axle vibrations.
- Damaged toothed wheel.
- Damaged wheel sensor.
- Dirt between wheel sensor and pulse wheel.

NOTE: **This diagnostic trouble code (DTC) is not due to an internal hardware fault in the Brake control module (BCM) and must not be remedied by replacing the control module.**

Fault symptom[s]

- General warning light on.
- ABS warning light on.
- ABS is not operational.
- Anti-spin is not operational.
- The stability function is not operational.
- The anti-skid function is not operational.

TROUBLESHOOTING

CHECKING WHEEL SENSOR AND TOOTHED WHEEL

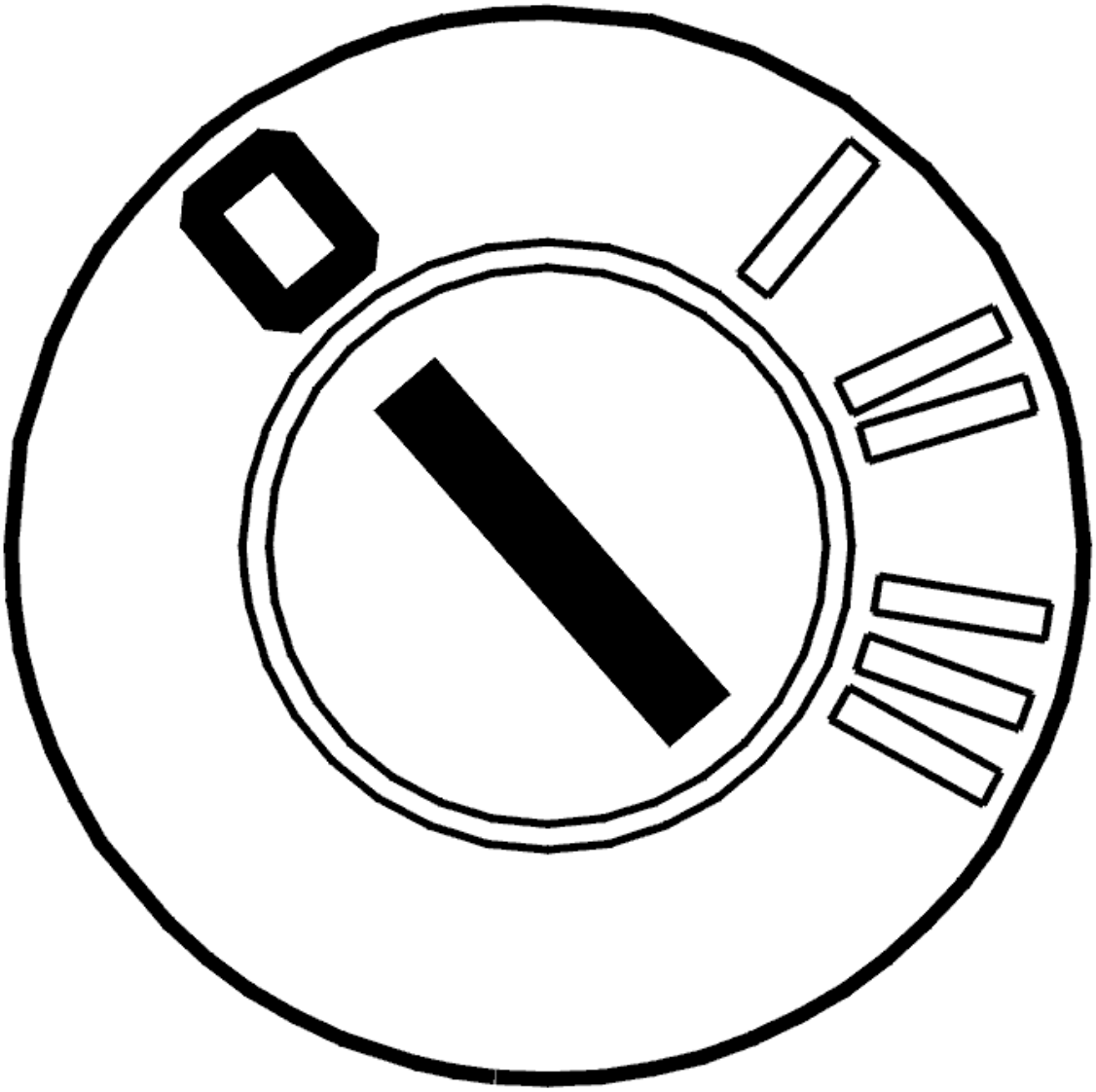

Fig. 234: Identifying Ignition OFF
Courtesy of VOLVO CARS CORPORATION

- Ignition off
- Remove the wheel for better accessibility.

  Check that the wheel sensor is mounted close to the spindle/hub. There must not be any dirt between the sensor and the contact surface.

  Check that the toothed wheel is properly mounted and is free from damage (all teeth intact, no scratches or deformity, etc.)

  Remedy as necessary.

  Other information

- For wheel sensor removal/replacement: **WHEEL SENSOR FRONT, REPLACING** or **WHEEL SENSOR REAR, REPLACING**

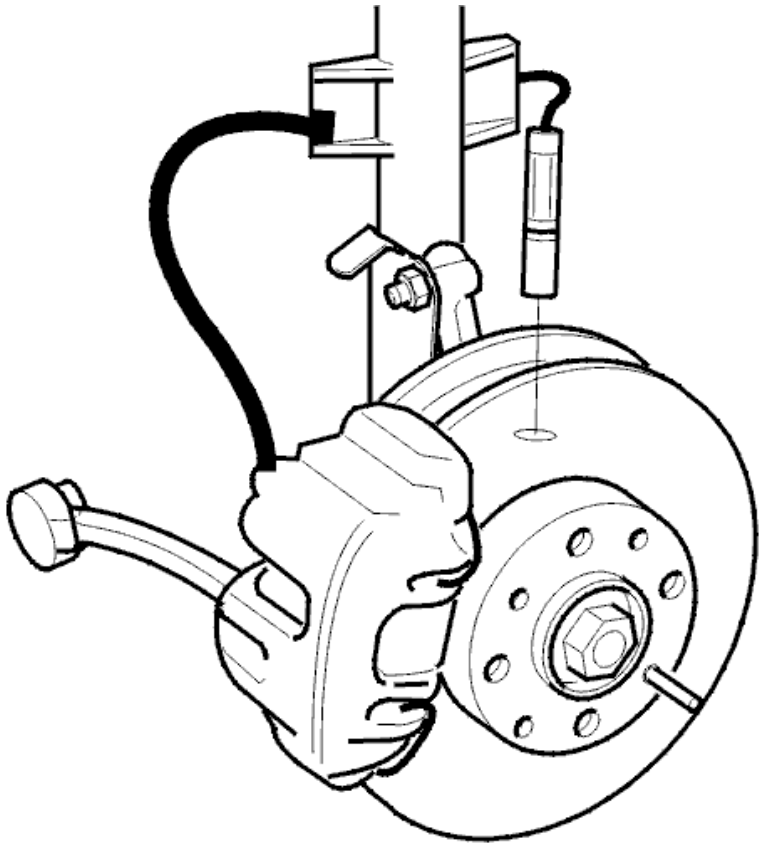

Fig. 235: Identifying Brake Rotor Test Assembly
Courtesy of VOLVO CARS CORPORATION

Was a malfunction detected?

- **YES**

  see **VERIFICATION**

- **NO**

  see **CHECKING BRAKES AND WHEEL BEARINGS**

CHECKING BRAKES AND WHEEL BEARINGS

HINT: A binding brake can block one or both wheels when driving. This leads to loss of the wheel sensor signal.

Check that the brake caliper does not bind, thereby blocking the wheels.

Check that the wheel bearing of the wheel is question has no play and does not bind.

Remedy as necessary.

Other information

- see **BRAKE CALIPERS FRONT, REPLACING**
- see **BRAKE CALIPERS REAR, REPLACING**
- see **FRONT WHEEL HUB, REPLACING**
- see (RWD) see **REAR WHEEL HUB, REPLACING** or (AWD)**REAR WHEEL HUB, REPLACING**

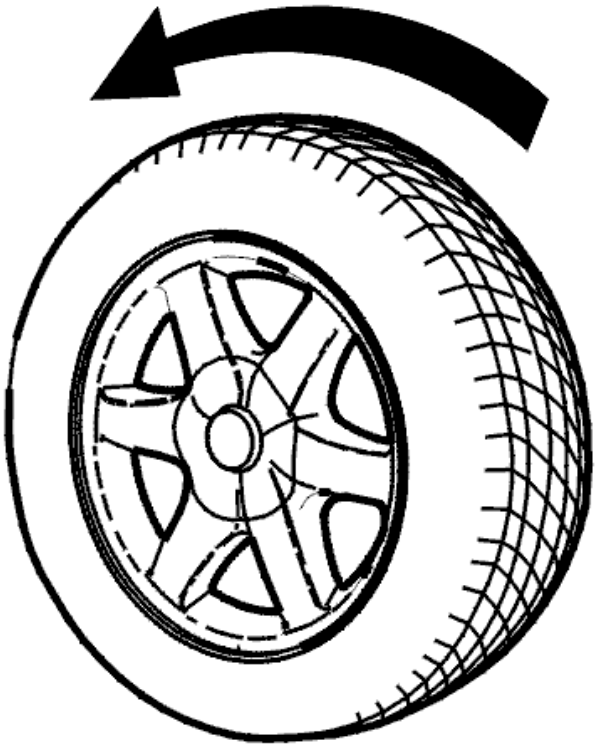

Fig. 236: Checking Wheel
Courtesy of VOLVO CARS CORPORATION

Select Continue once the malfunction has been remedied.

- **Continue**

  see **VERIFICATION**

VERIFICATION

VERIFICATION

HINT: After carrying out the repair, check that the fault has been remedied.

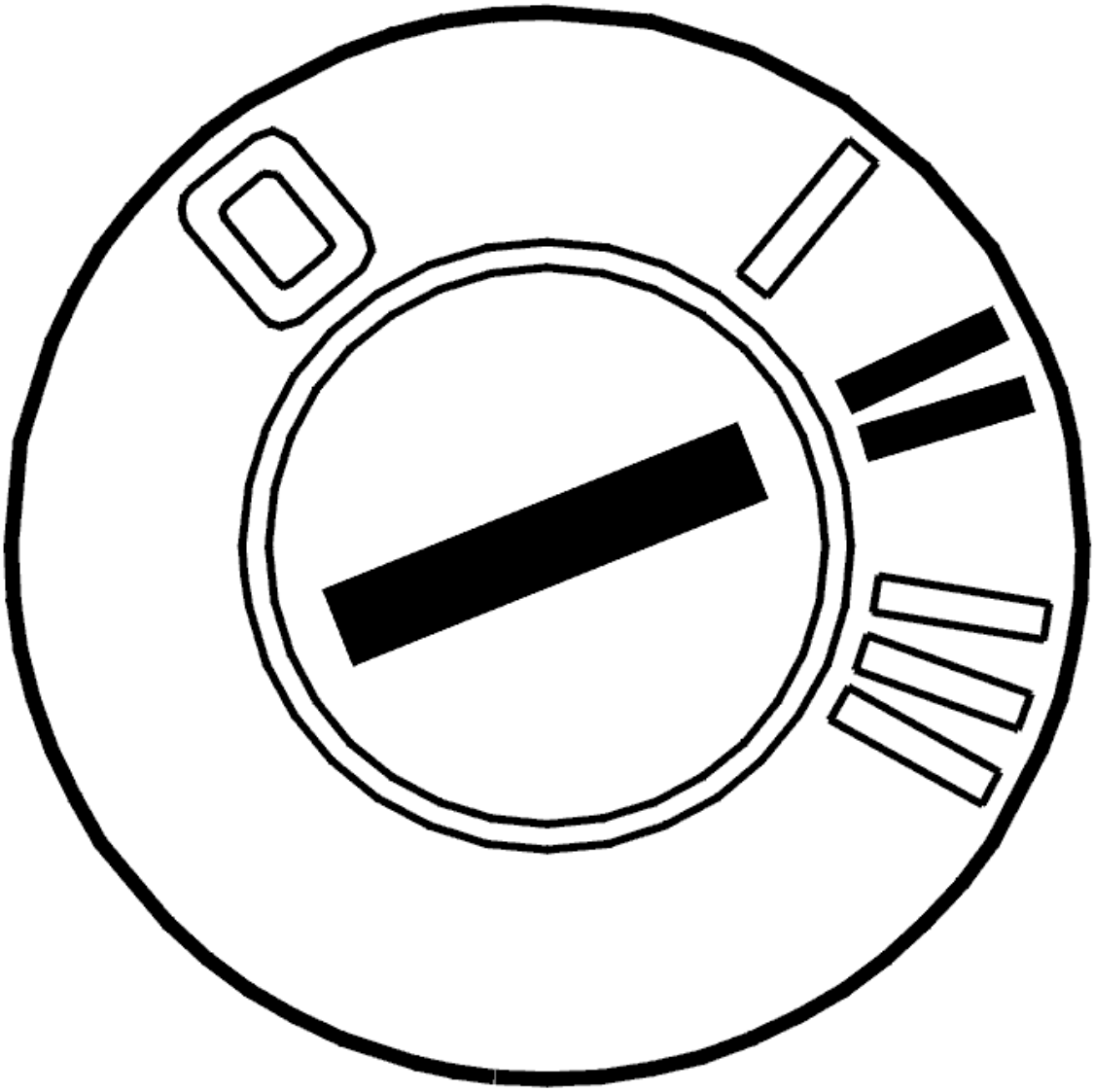

Fig. 237: Identifying Ignition ON
Courtesy of VOLVO CARS CORPORATION

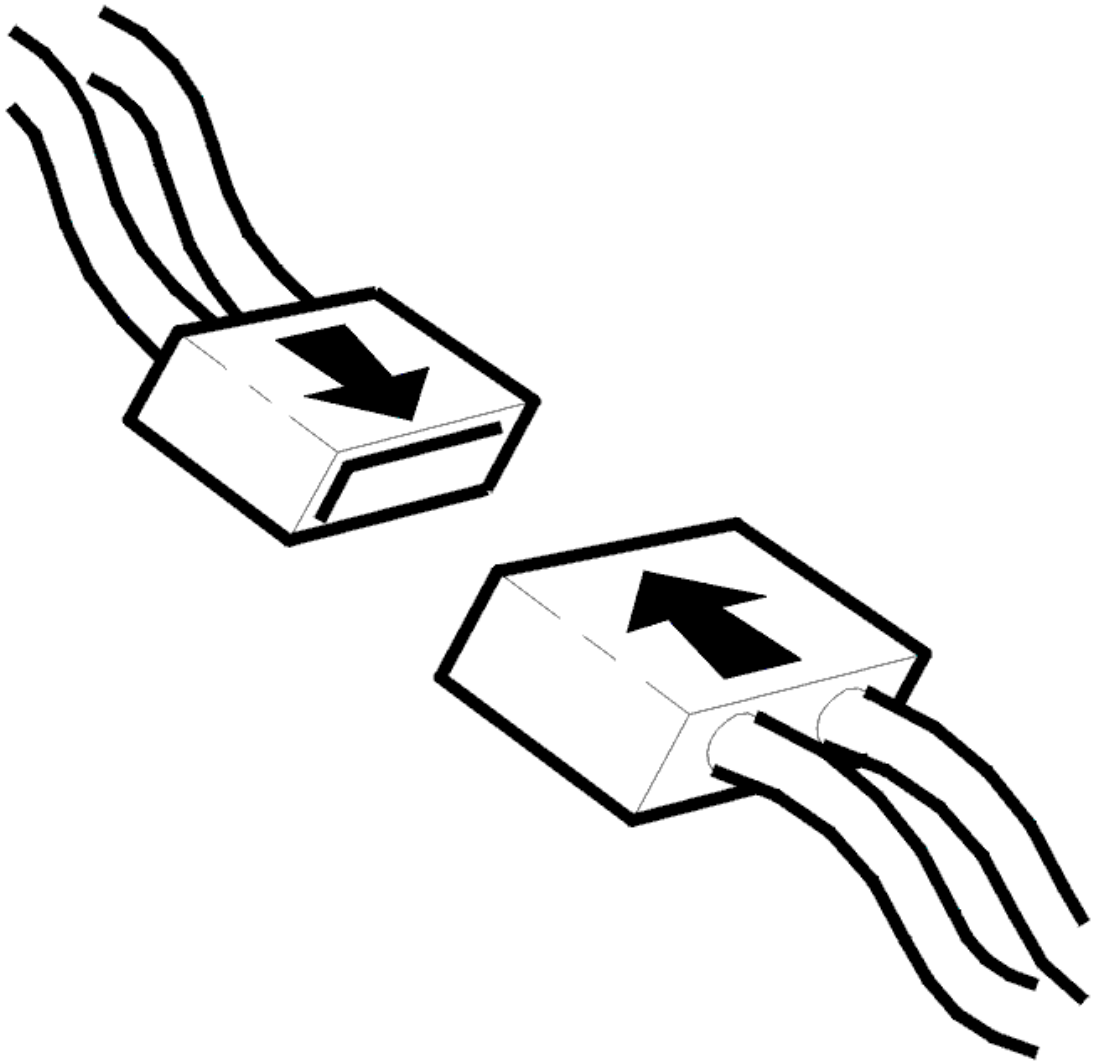

Fig. 238: Connecting Connector
Courtesy of VOLVO CARS CORPORATION

- Ignition off
- Reinstall the components, reconnect the connectors etc.
- Ignition on
- Test drive the car. See **TEST DRIVE FORM (DSTC (DYNAMIC STABILITY AND TRACTION CONTROL) /BRAKE CONTROL MODULE), DESCRIPTION** .

  Check the ABS warning lamp during the test drive.

  If the fault has been remedied the lamp will go out when the speed exceeds 20 km/h.

  If the warning lamp does not go out, return to the workshop and read off the diagnostic trouble codes (DTCs).

Does the ABS warning lamp go out and remain unlit?

- **YES**

  VERIFIED: Troubleshooting has been completed.

- **NO**

  see **INFORMATION**

INFORMATION

FAULT-TRACING INFORMATION

The fault should have been detected and remedied. As this is not the case fault-tracing has failed.

Exit fault-tracing for this diagnostic trouble code (DTC) or make another attempt.

BCM-C003107: WHEEL SPEED SENSOR LEFT FRONT. GENERAL MALFUNCTION INFORMATION. MECHANICAL MALFUNCTION (B6324S5; 2011-2012)

DIAGNOSTIC TROUBLE CODE (DTC) INFORMATION

see **DIAGNOSTIC TROUBLE CODE (DTC) INFORMATION**

TROUBLESHOOTING

see **TROUBLESHOOTING**

BCM-C003107: WHEEL SPEED SENSOR LEFT FRONT. GENERAL MALFUNCTION INFORMATION. MECHANICAL MALFUNCTION (B8444S; 2005-2011)

DIAGNOSTIC TROUBLE CODE (DTC) INFORMATION

see **DIAGNOSTIC TROUBLE CODE (DTC) INFORMATION**

TROUBLESHOOTING

see **TROUBLESHOOTING**

BCM-C003701: WHEEL SPEED SENSOR LEFT REAR. GENERAL MALFUNCTION INFORMATION. GENERAL ELECTRICAL MALFUNCTION (B6324S; 2007-2010)

DIAGNOSTIC TROUBLE CODE (DTC) INFORMATION

see **DIAGNOSTIC TROUBLE CODE (DTC) INFORMATION**

TROUBLESHOOTING

CHECKING BRAKE CONTROL MODULE (BCM) AND WHEEL SENSOR'S CONNECTOR

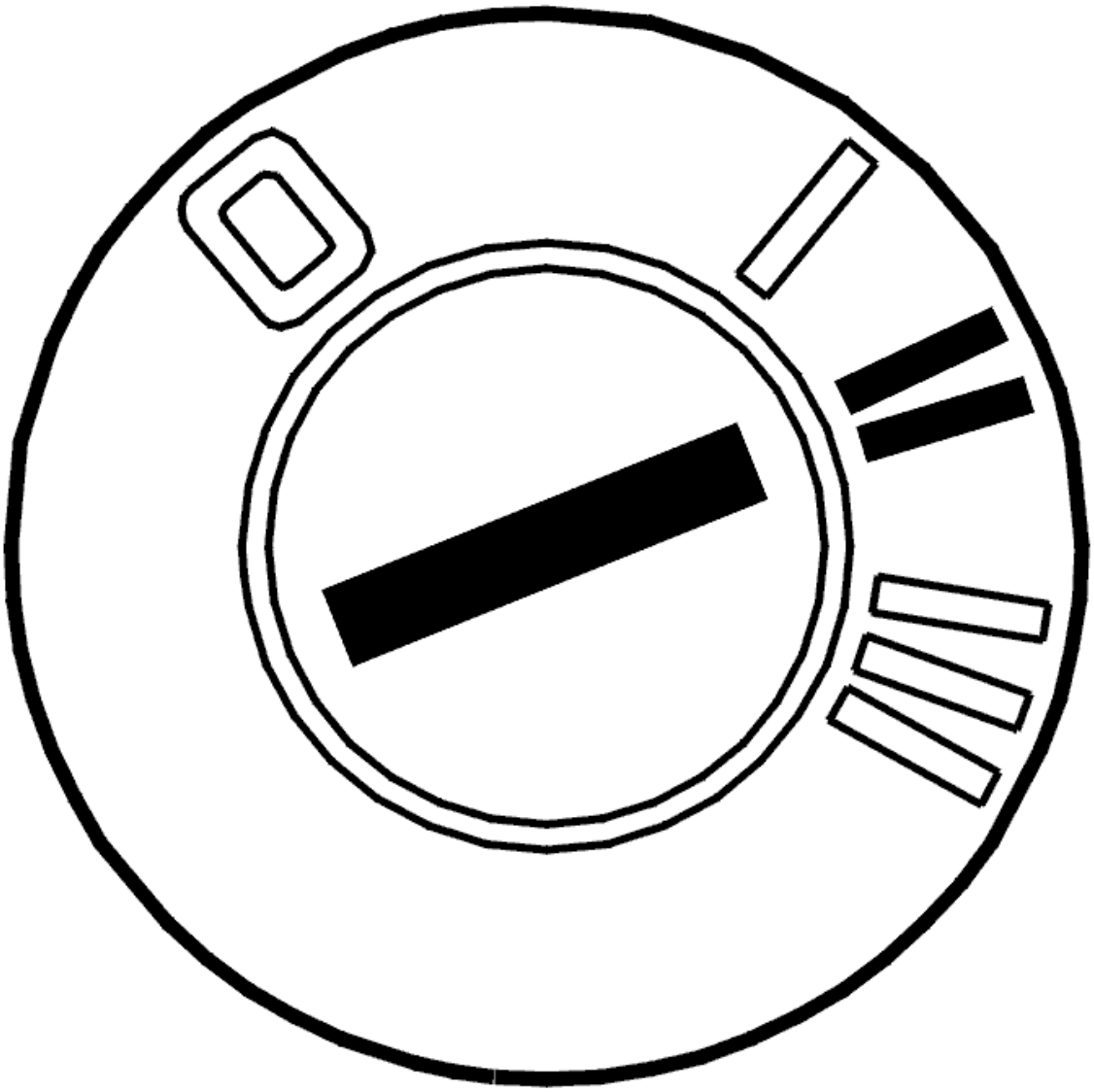

Fig. 239: Identifying Ignition ON
Courtesy of VOLVO CARS CORPORATION

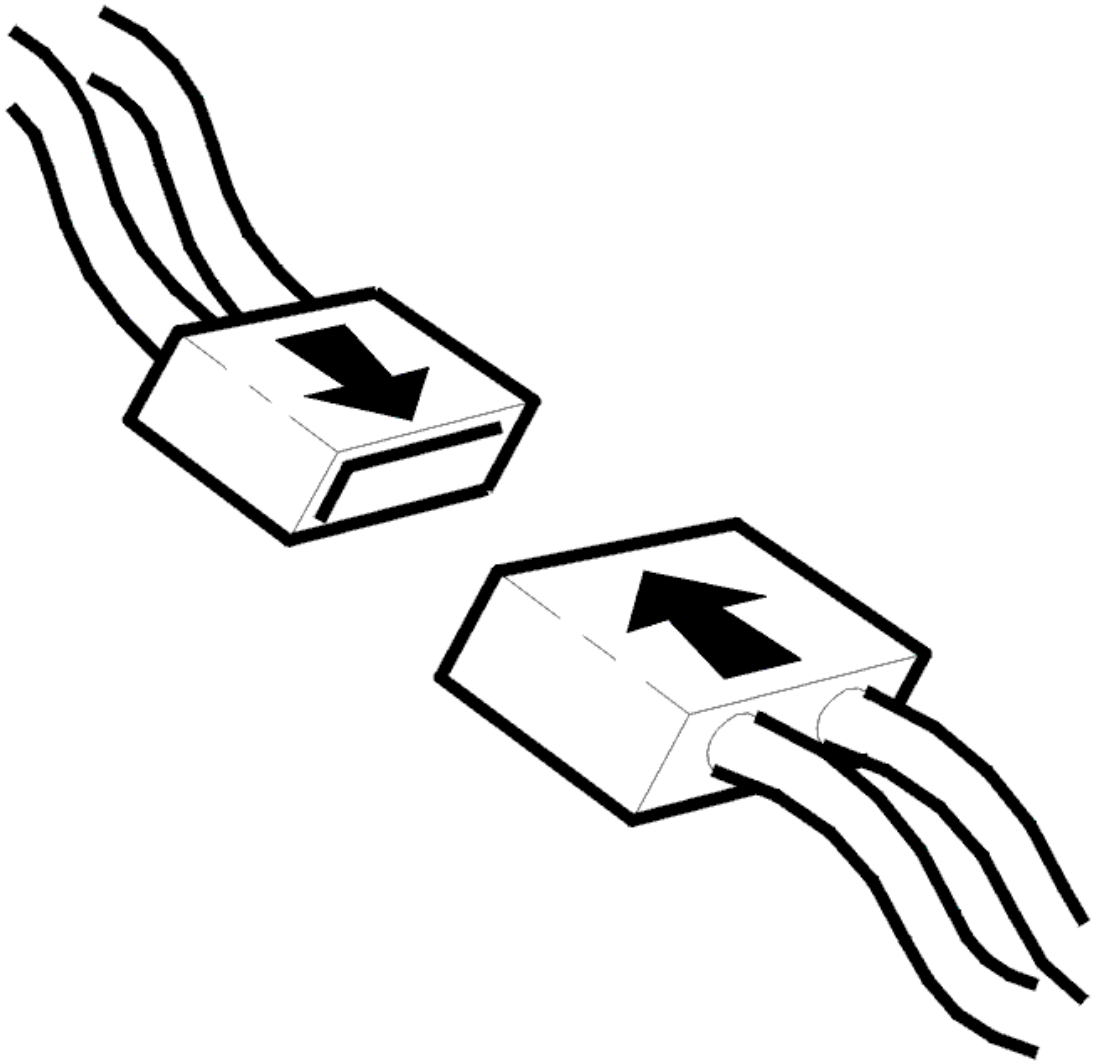

Fig. 240: Connecting Connector
Courtesy of VOLVO CARS CORPORATION

- Ignition off
- Check the connector of the brake control module (BCM) and wheel sensor for contact resistance and oxidation.
- Reinstall the components, reconnect the connectors etc.
- Lift the vehicle so that the wheel in question hangs freely.
- Ignition on
- Read off the speed of the wheel in question.

  Rotate the wheel and check that wheel speed is updated.

  If wheel speed is updated, the malfunction was caused by poor contact in the control module or wheel sensor connector.

NOTE: **The wheel signal will only be active for approx. 20 seconds. Activate the service again if necessary.**

Other information

- For disconnection of the wheel sensor connector: **WHEEL SENSOR REAR, REPLACING**
- For disconnection of the control module connectors: **CONNECTING THE BREAKOUT BOX, BRAKE CONTROL MODULE (BCM)**
- see **CHECKING WIRING AND TERMINALS**

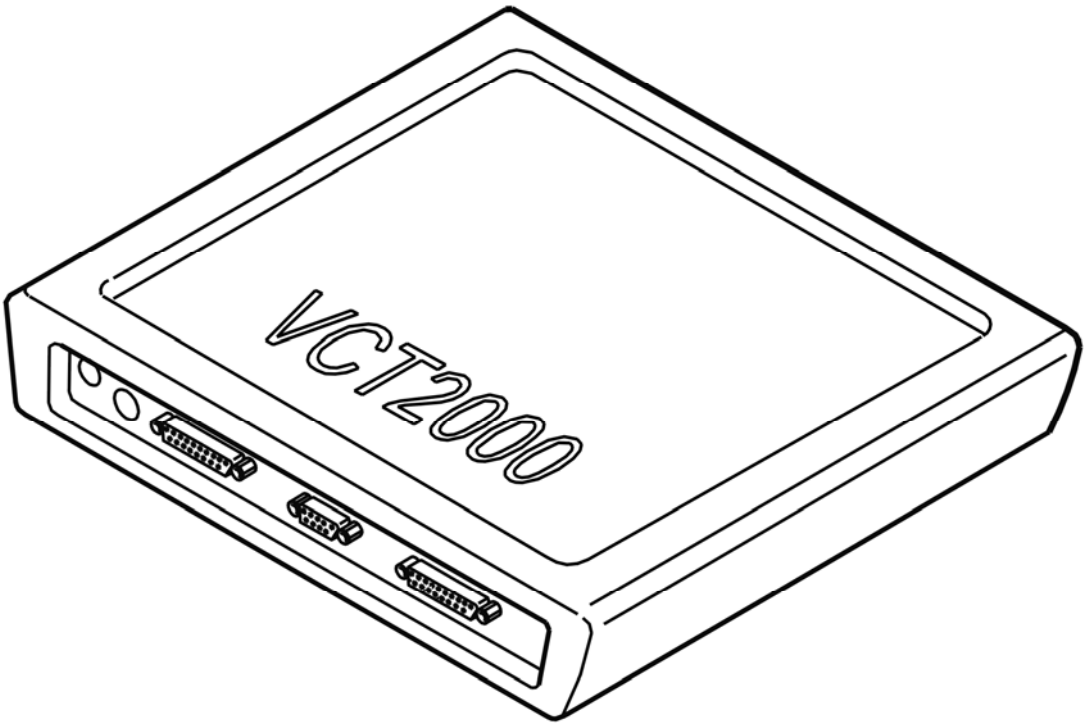

Fig. 241: Identifying VCT2000 Diagnostic Tool Symbol In VIDA
Courtesy of VOLVO CARS CORPORATION

Is wheel speed updated?

- **YES**

  OKAY: Troubleshooting has been completed.

- **NO**

  see **CHECKING WIRING AND SENSORS**

CHECKING WIRING AND SENSORS

Checking the voltage feed

Check the voltage supply cable for open circuit, short-circuit to ground and short-circuit to voltage.

Measure between:

- Brake control module (BCM) terminal #36 (#A36) (rear left) and terminal #1 of the relevant sensor.
- Brake control module (BCM) terminal #43 (#A43) (rear right) and terminal #1 of the relevant sensor.

HINT: With the ignition on, voltage on the cable should be approx. 1 V below Ubat measured at the grounding point.

Checking the signal cable

Check the voltage cable for open circuit, short-circuit to ground and short-circuit to voltage.

Measure between:

- Brake control module (BCM) terminal #37 (#A37) (rear left) and terminal #2 of the relevant sensor.
- Brake control module (BCM) terminal #42 (#A42) (rear right) and terminal #2 of the relevant sensor.

Checking sensor function

With the sensor connected and the ignition on, check the sensor by connecting a breakout box and measuring the signal from the sensor.

Measure on the breakout box between:

- #36 (#A36) and #37 (#A37) (front left).
- #43 (#A43) and #42 (#A42) (front right).

Voltage should vary approx. 1 V when the toothed wheel rotates. If voltage is incorrect, replace the wheel sensor.

Remedy as necessary.

Other information

- see **CONNECTING THE BREAKOUT BOX, BRAKE CONTROL MODULE (BCM)**
- see **SIGNAL SPECIFICATION, BRAKE CONTROL MODULE (BCM) WITH STC/ TRACS**
- see **SIGNAL SPECIFICATION, BRAKE CONTROL MODULE (BCM) WITH DSTC (DYNAMIC STABILITY AND TRACTION CONTROL)**
- see **WHEEL SENSOR REAR, REPLACING**
- see **CHECKING WIRING AND TERMINALS**

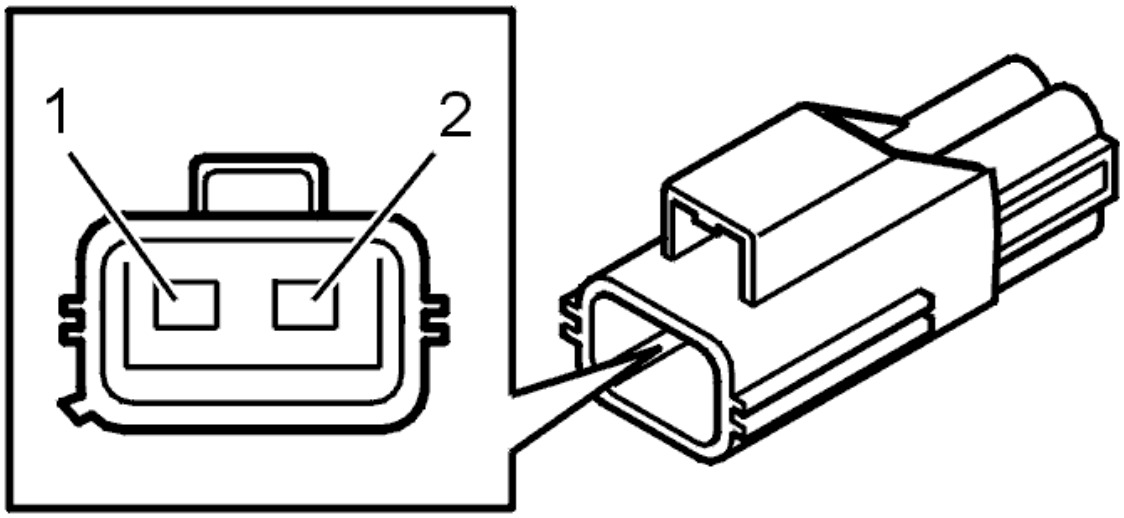

Fig. 242: Identifying Engine Coolant Temperature (ECT) Sensor And Connector Terminals
Courtesy of VOLVO CARS CORPORATION

Select Continue once the malfunction has been remedied.

- **Continue**

  see **VERIFICATION**

VERIFICATION

VERIFICATION

HINT: After carrying out the repair, check that the malfunction has been remedied.

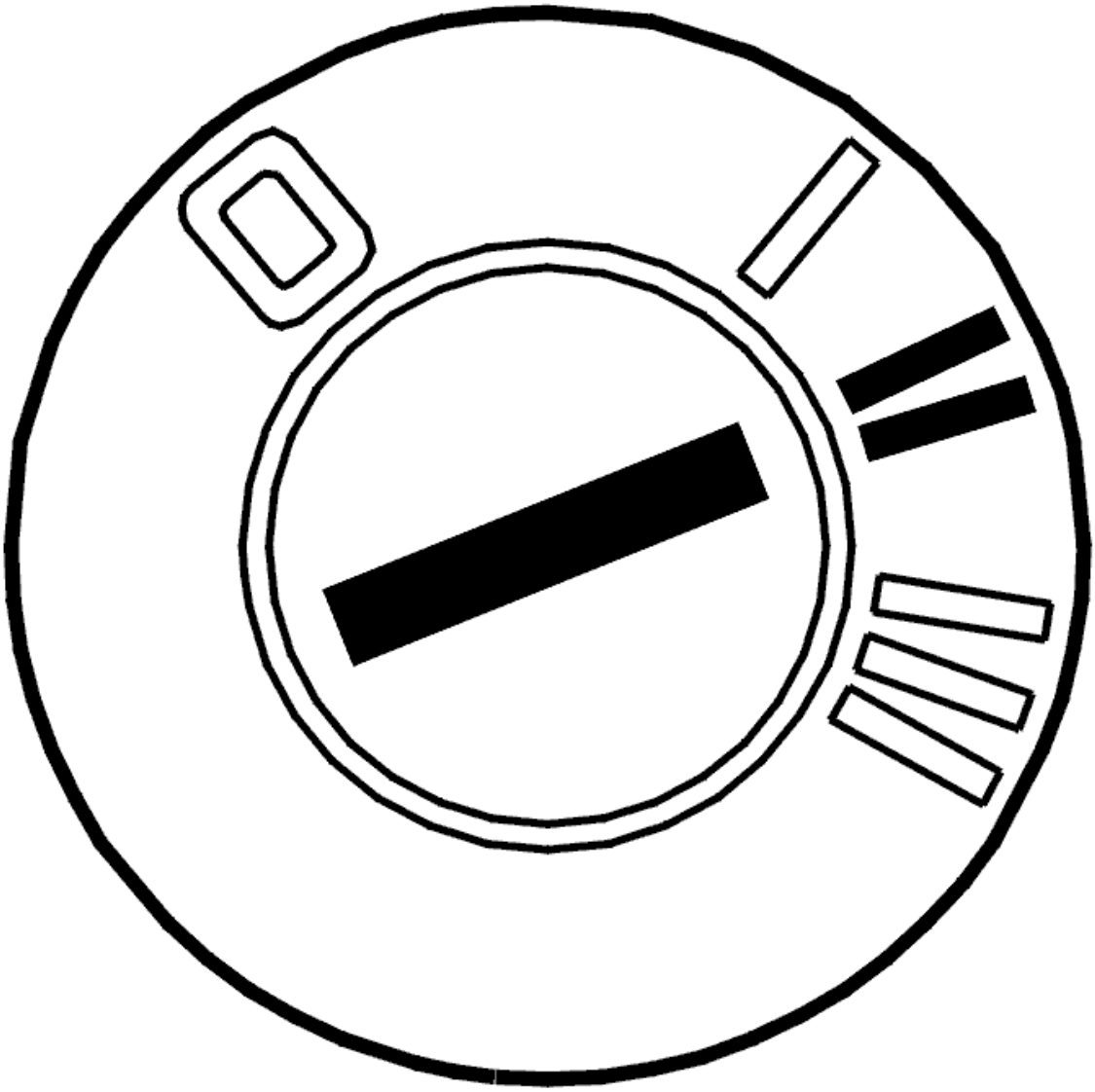

Fig. 243: Identifying Ignition ON
Courtesy of VOLVO CARS CORPORATION

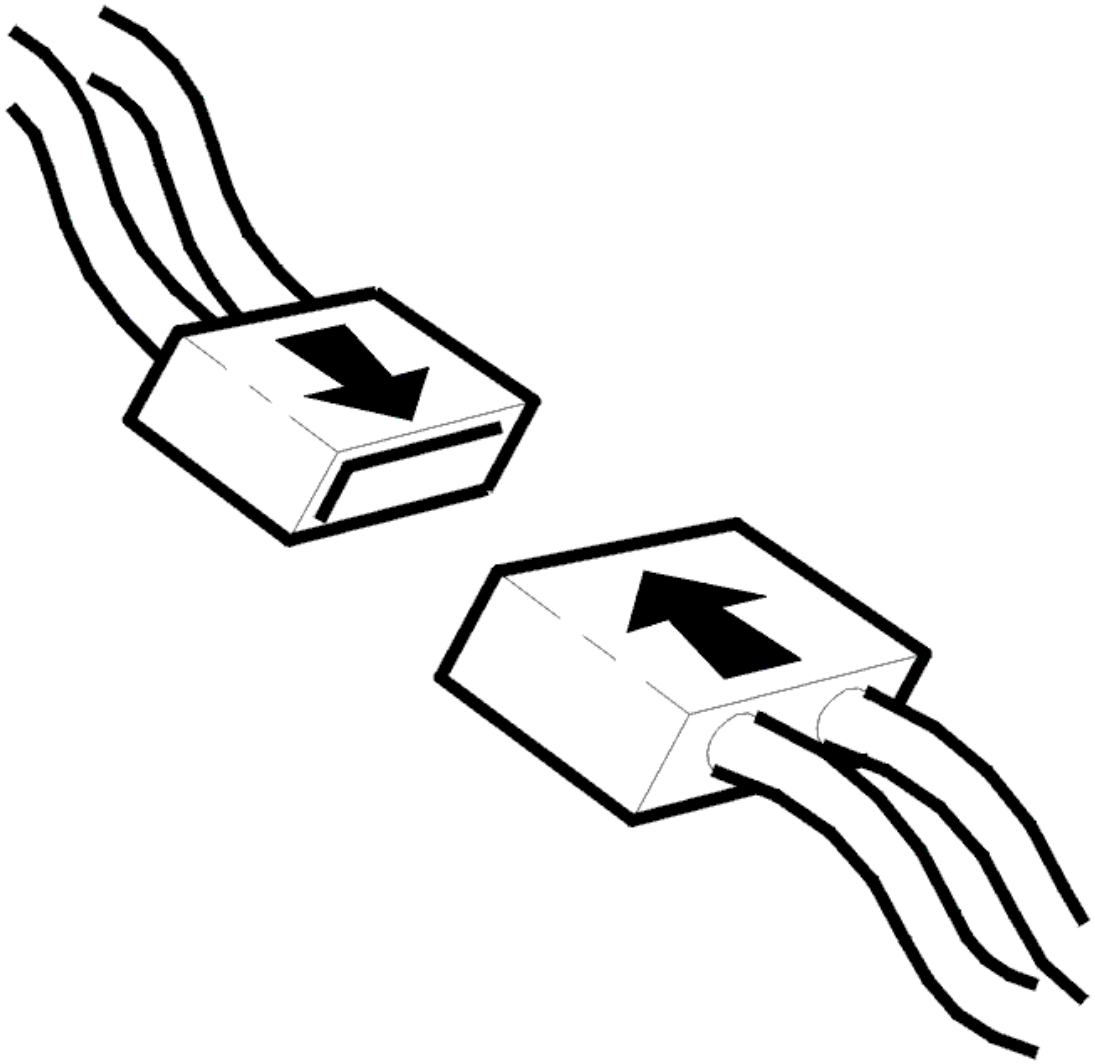

Fig. 244: Connecting Connector
Courtesy of VOLVO CARS CORPORATION

- Ignition off
- Reinstall the components, reconnect the connectors etc.
- Lift the vehicle so that the wheel in question hangs freely.
- Ignition on
- Read off the speed of the wheel in question.

  Rotate the wheel and check that wheel speed is updated.

NOTE: **The wheel signal will only be active for approx. 20 seconds. Activate the service again if necessary.**

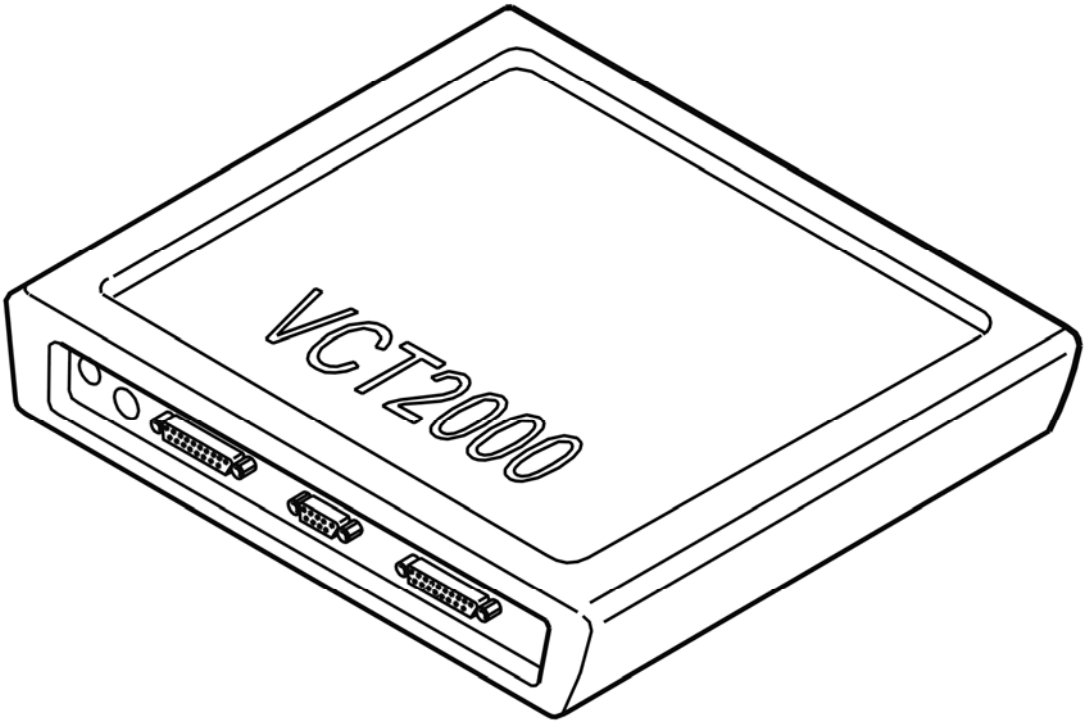

Fig. 245: Identifying VCT2000 Diagnostic Tool Symbol In VIDA
Courtesy of VOLVO CARS CORPORATION

Is wheel speed updated?

- **YES**

  VERIFIED: Troubleshooting has been completed.

- **NO**

  see **INFORMATION**

INFORMATION

FAULT-TRACING INFORMATION

The fault should have been detected and remedied. As this is not the case fault-tracing has failed.

Exit fault-tracing for this diagnostic trouble code (DTC) or make another attempt.

BCM-C003701: WHEEL SPEED SENSOR LEFT REAR. GENERAL MALFUNCTION INFORMATION. GENERAL ELECTRICAL MALFUNCTION

(B6324S5; 2011-2012)

DIAGNOSTIC TROUBLE CODE (DTC) INFORMATION

see **DIAGNOSTIC TROUBLE CODE (DTC) INFORMATION**

TROUBLESHOOTING

see **TROUBLESHOOTING**

BCM-C003701: WHEEL SPEED SENSOR LEFT REAR. GENERAL MALFUNCTION INFORMATION. GENERAL ELECTRICAL MALFUNCTION (B8444S; 2005-2011)

DIAGNOSTIC TROUBLE CODE (DTC) INFORMATION

see **DIAGNOSTIC TROUBLE CODE (DTC) INFORMATION**

TROUBLESHOOTING

see **TROUBLESHOOTING**

BCM-C004064: BRAKE PEDAL SWITCH "A". ALGORITHM ERROR. SIGNAL OUTSIDE PERMITTED RANGE (B6324S; 2007-2010)

DIAGNOSTIC TROUBLE CODE INFORMATION BCM-C004064

Condition

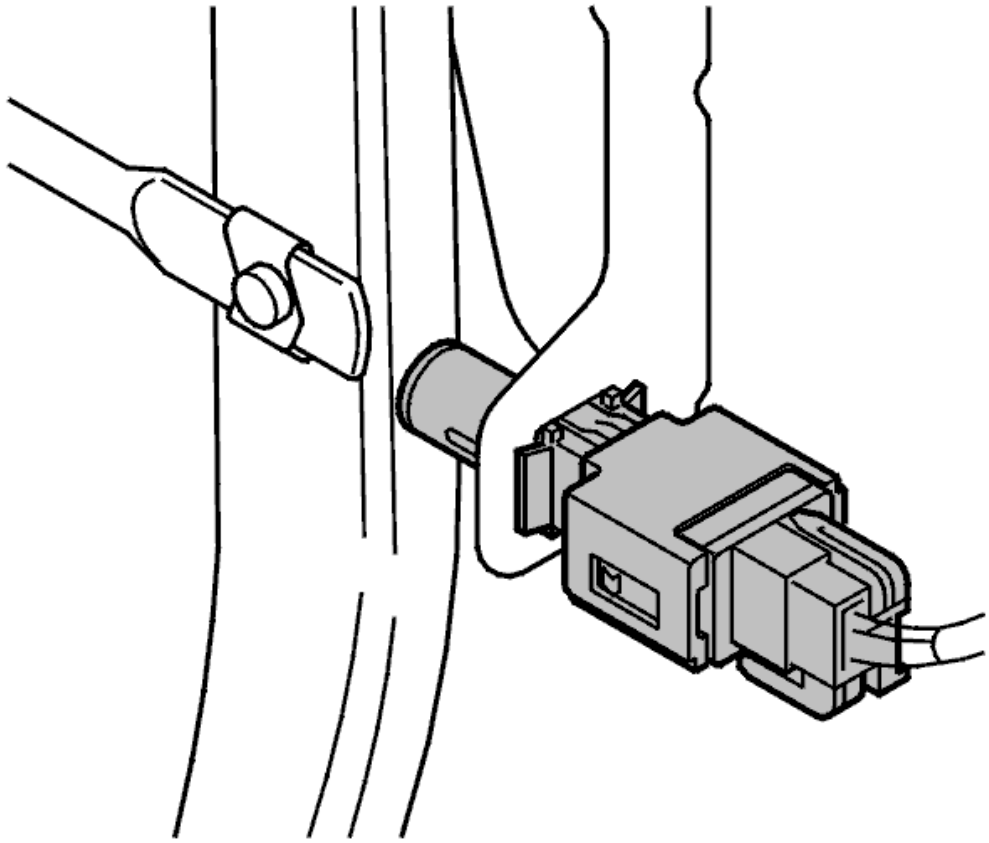

Fig. 246: Brake Light Switch
Courtesy of VOLVO CARS CORPORATION

Diagnostic trouble code BCM-CO04064 is generated if the brake control module (BCM) registers that brake light switch is not active when the brake pedal is depressed.

The diagnostic trouble code can be diagnosed when the ignition is on and in the following cases:

- Braking from a speed over 40 km/h (25 mph) to stationary 3 times in the same ignition cycle without regulation.
- The brake pedal is held depressed and the brake light switch is active for more than 6 minutes.

Substitute Value

- Nothing.

Possible Source

- Mechanical defect in the brake light switch.

NOTE: **This diagnostic trouble code (DTC) is not due to an internal hardware fault in the Brake control module (BCM) and must not be remedied by replacing the control module.**

Fault symptom[s]

- Nothing.

TROUBLESHOOTING BCM-C004064

CHECKING THE BRAKE CONTROL MODULE (BCM) AND THE BRAKE LIGHT SWITCH CONNECTOR

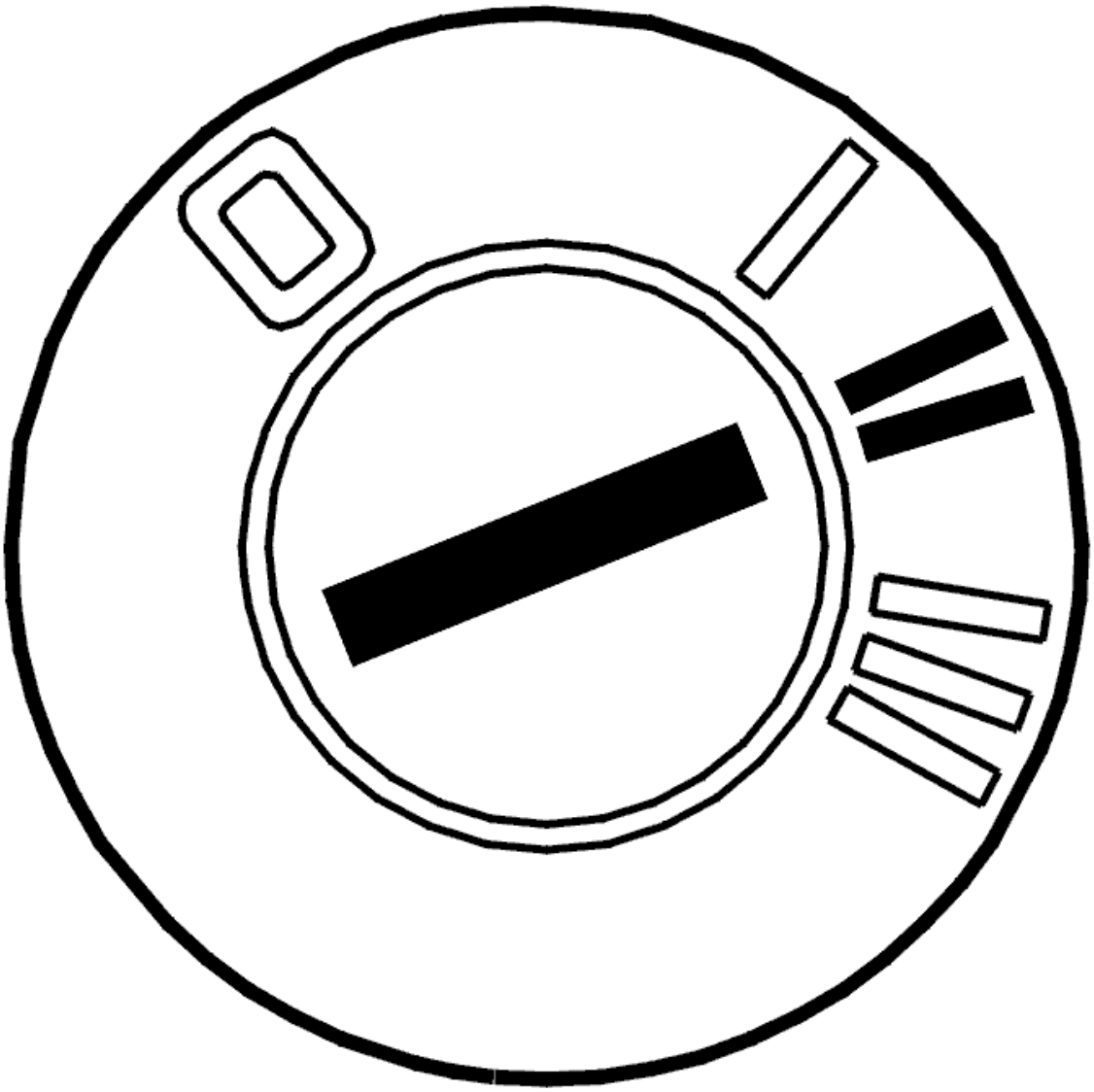

Fig. 247: Identifying Ignition ON
Courtesy of VOLVO CARS CORPORATION

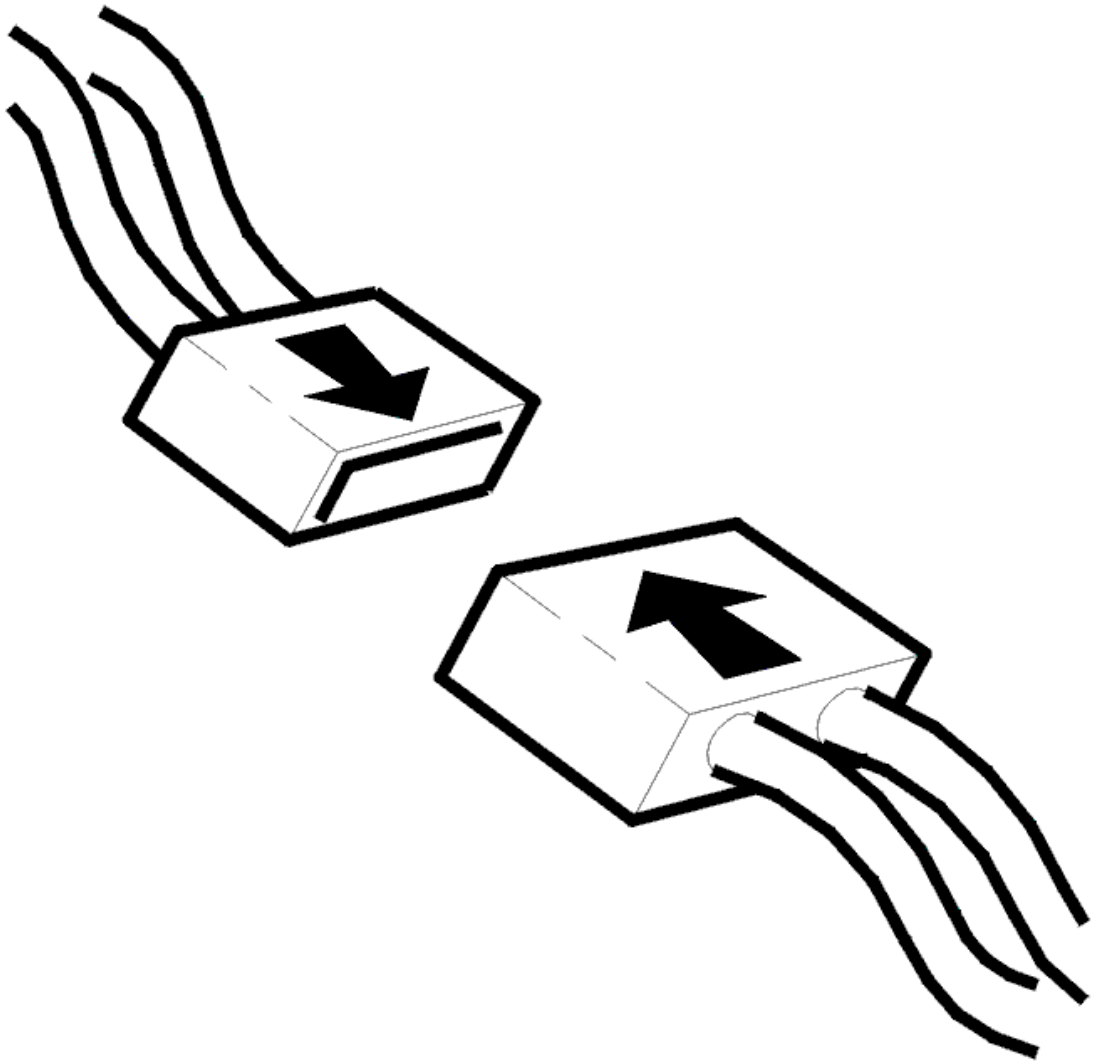

Fig. 248: Connecting Connector
Courtesy of VOLVO CARS CORPORATION

- Ignition off
- Check the connectors of the brake control module (BCM) and the brake light switch for contact resistance and oxidation.
- Reinstall the components, reconnect the connectors etc.
- Ignition on
- Read the status of the brake light switch.

  Depress the brake pedal and release it. The value should change between OFF and ON.

  If the value changes, the malfunction was caused by poor contact in the brake control module (BCM) or brake light switch connector.

Other information

- For information on brake control module (BCM) connector removal: **CONNECTING THE BREAKOUT BOX, BRAKE CONTROL MODULE (BCM)**
- see **CONTENTS**

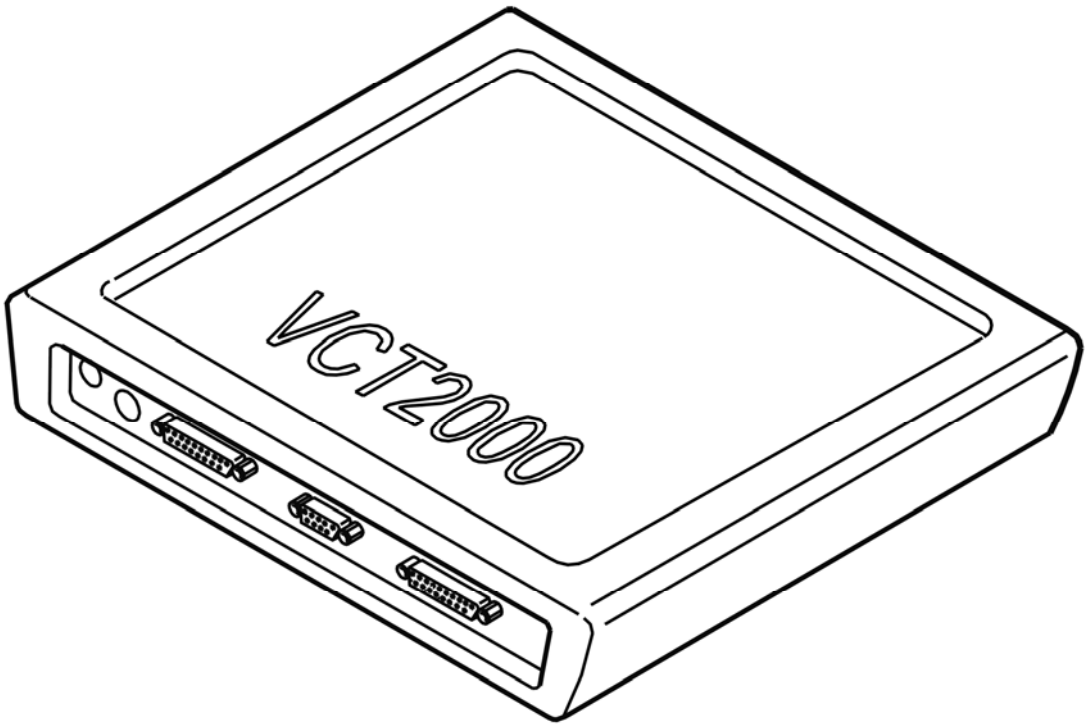

Fig. 249: Identifying VCT2000 Diagnostic Tool Symbol In VIDA
Courtesy of VOLVO CARS CORPORATION

Does the value change?

- **YES**

  OKAY: Troubleshooting has been completed.

- **NO**

  see **CHECKING FUSES, WIRING AND SENSORS**

CHECKING FUSES, WIRING AND SENSORS

Check that the brake light switch fuse in the engine compartment relay/fuse box is intact.

Check the cable between brake light switch terminal #1 and the fuse in the engine compartment relay/fuse box as well as between brake light switch terminal #5 and the connector for open circuit, short-circuit to ground and short-circuit to voltage.

Check the cable between the connector and central electronic module (CEM) terminal #B4 and between the connector and engine electronic module (ECM) terminal #B26 for open circuit, short-circuit to ground and short-circuit to voltage.

HINT: Check the brake light switch by measuring the resistance between terminals #1 and #5 on the brake light switch. Resistance should be infinite when the brake light switch is activated and 0 ohms when the brake light switch is not activated.

Remedy as necessary.

Other information

- see **CONNECTING THE BREAKOUT BOX, BRAKE CONTROL MODULE (BCM)**
- To connect the breakout box to the Engine control module (ECM), see: **CONNECTING THE BREAKOUT BOX**
- For connection of the breakout box to the central electronic module (CEM): **CONNECTING THE BREAKOUT BOX**
- see **STOP LAMP SWITCH, REPLACING**
- see **CONTENTS**

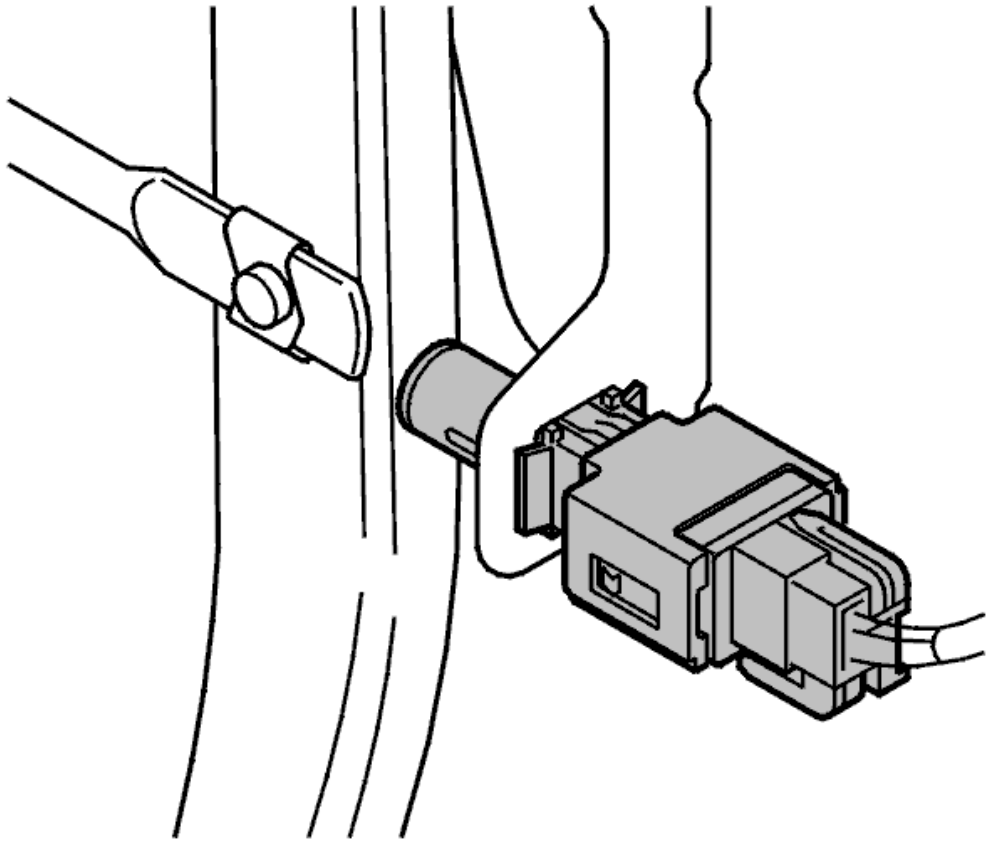

Fig. 250: Brake Light Switch
Courtesy of VOLVO CARS CORPORATION

Was a malfunction detected?

- **YES**

  see **VERIFICATION**

- **NO**

  FAULT NOT FOUND: Troubleshooting has been completed.

VERIFICATION

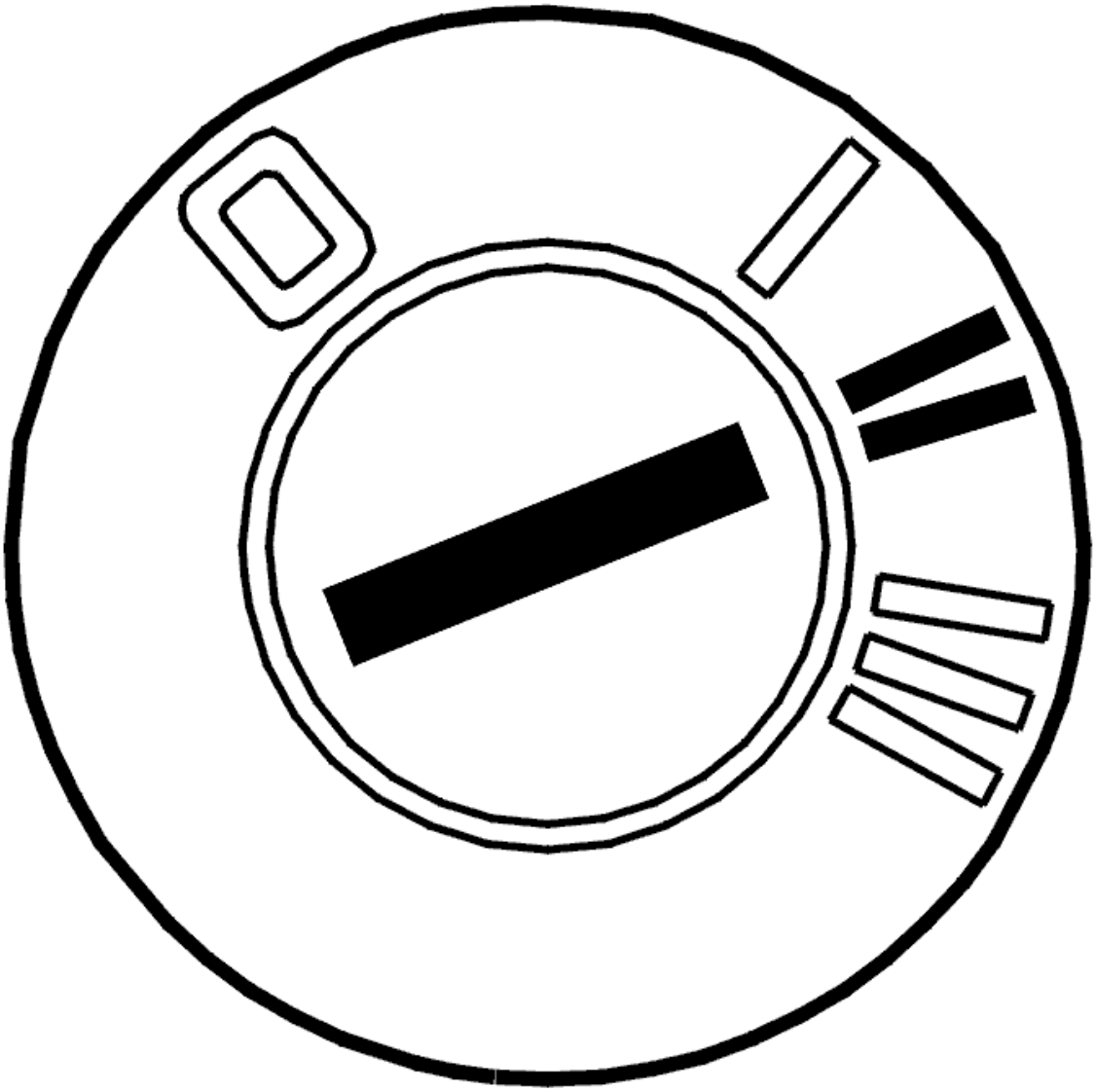

Fig. 251: Identifying Ignition ON
Courtesy of VOLVO CARS CORPORATION

- Ignition off
- Reinstall the components, reconnect the connectors etc.
- Ignition on
- Read the status of the brake light switch.

  Depress the brake pedal and release it. The value should change between OFF and ON.

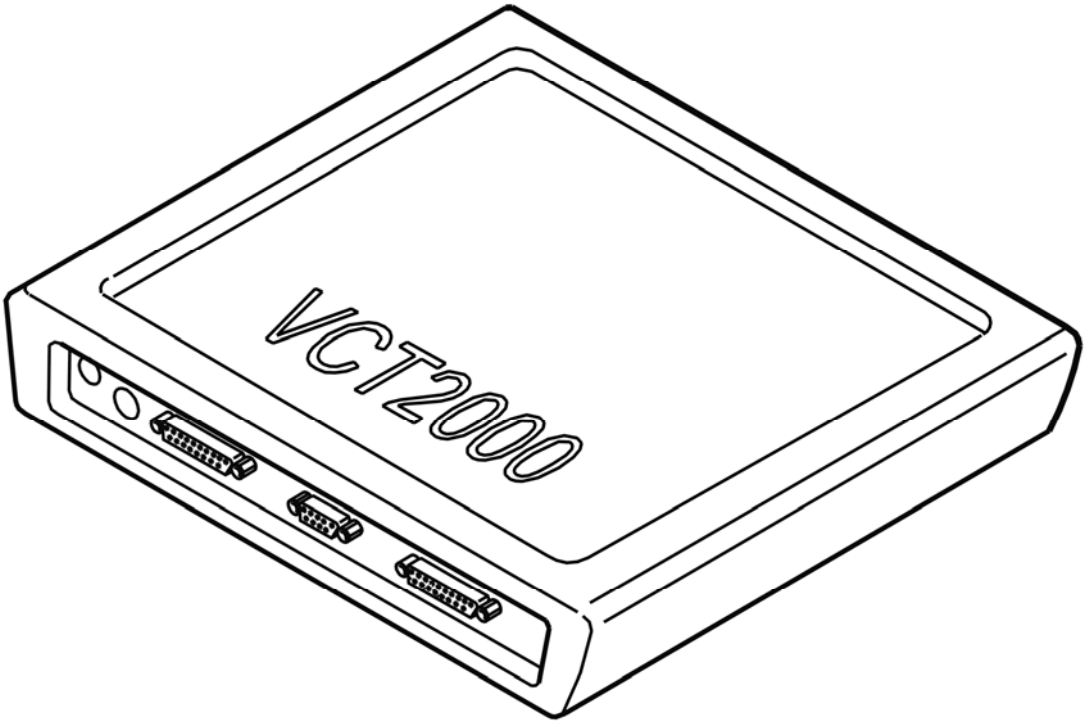

Fig. 252: Identifying VCT2000 Diagnostic Tool Symbol In VIDA
Courtesy of VOLVO CARS CORPORATION

Does the value change?

- **YES**

  OKAY: Troubleshooting has been completed.

- **NO**

  see **INFORMATION**

INFORMATION

FAULT-TRACING INFORMATION

The fault should have been detected and remedied. As this is not the case fault-tracing has failed.

Exit fault-tracing for this diagnostic trouble code (DTC) or make another attempt.

BCM-C004064: BRAKE PEDAL SWITCH "A". ALGORITHM ERROR. SIGNAL OUTSIDE PERMITTED RANGE (B6324S5; 2011-2012)

DIAGNOSTIC TROUBLE CODE INFORMATION BCM-C004064

see **DIAGNOSTIC TROUBLE CODE INFORMATION BCM-C004064**

TROUBLESHOOTING BCM-C004064

see **TROUBLESHOOTING BCM-C004064**

BCM-C004064: BRAKE PEDAL SWITCH "A". ALGORITHM ERROR. SIGNAL OUTSIDE PERMITTED RANGE (B8444S; 2005-2011)

DIAGNOSTIC TROUBLE CODE INFORMATION BCM-C004064

see **DIAGNOSTIC TROUBLE CODE INFORMATION BCM-C004064**

TROUBLESHOOTING BCM-C004064

CHECKING THE BRAKE CONTROL MODULE (BCM) AND THE BRAKE LIGHT SWITCH CONNECTOR

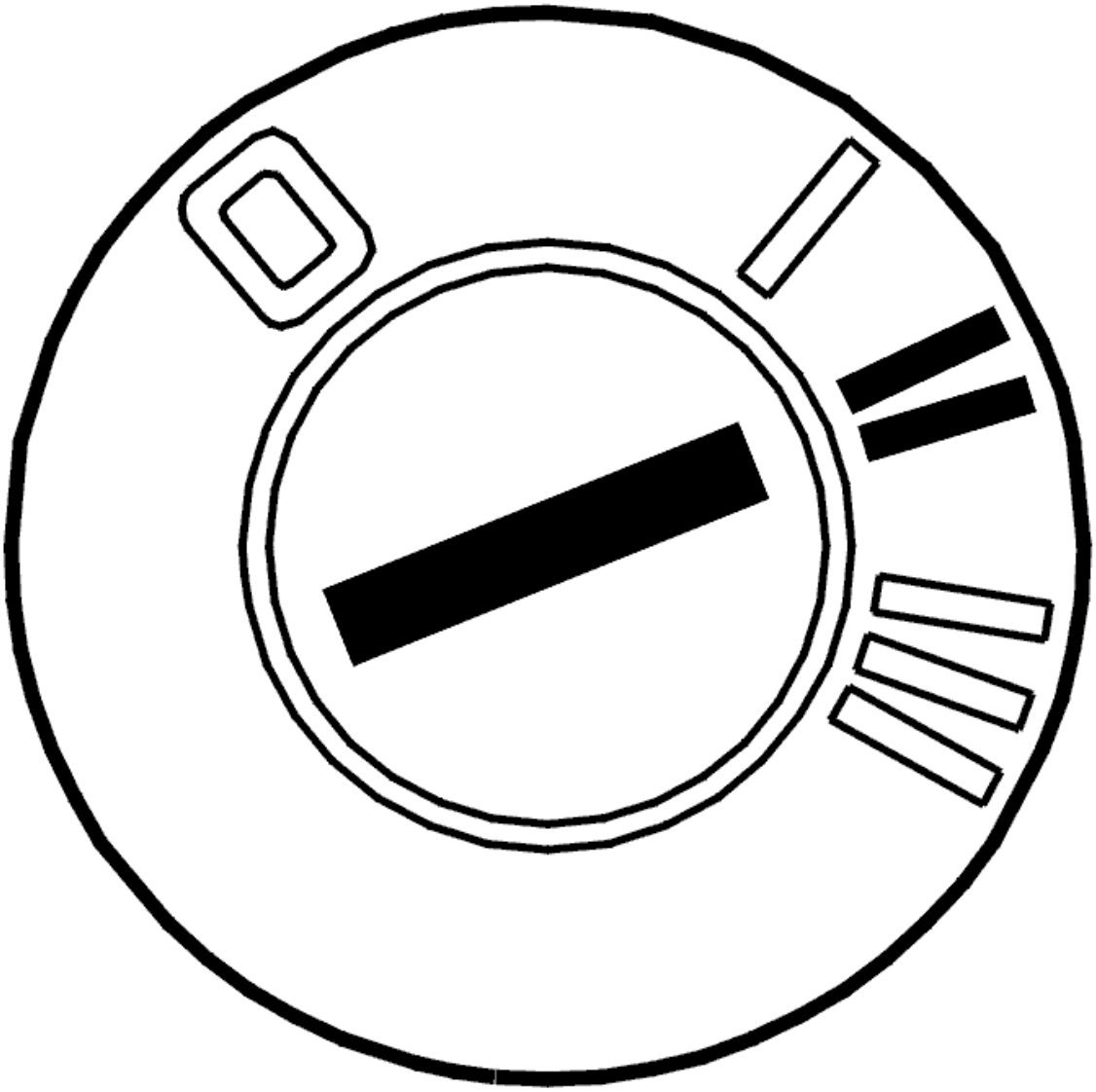

Fig. 253: Identifying Ignition ON
Courtesy of VOLVO CARS CORPORATION

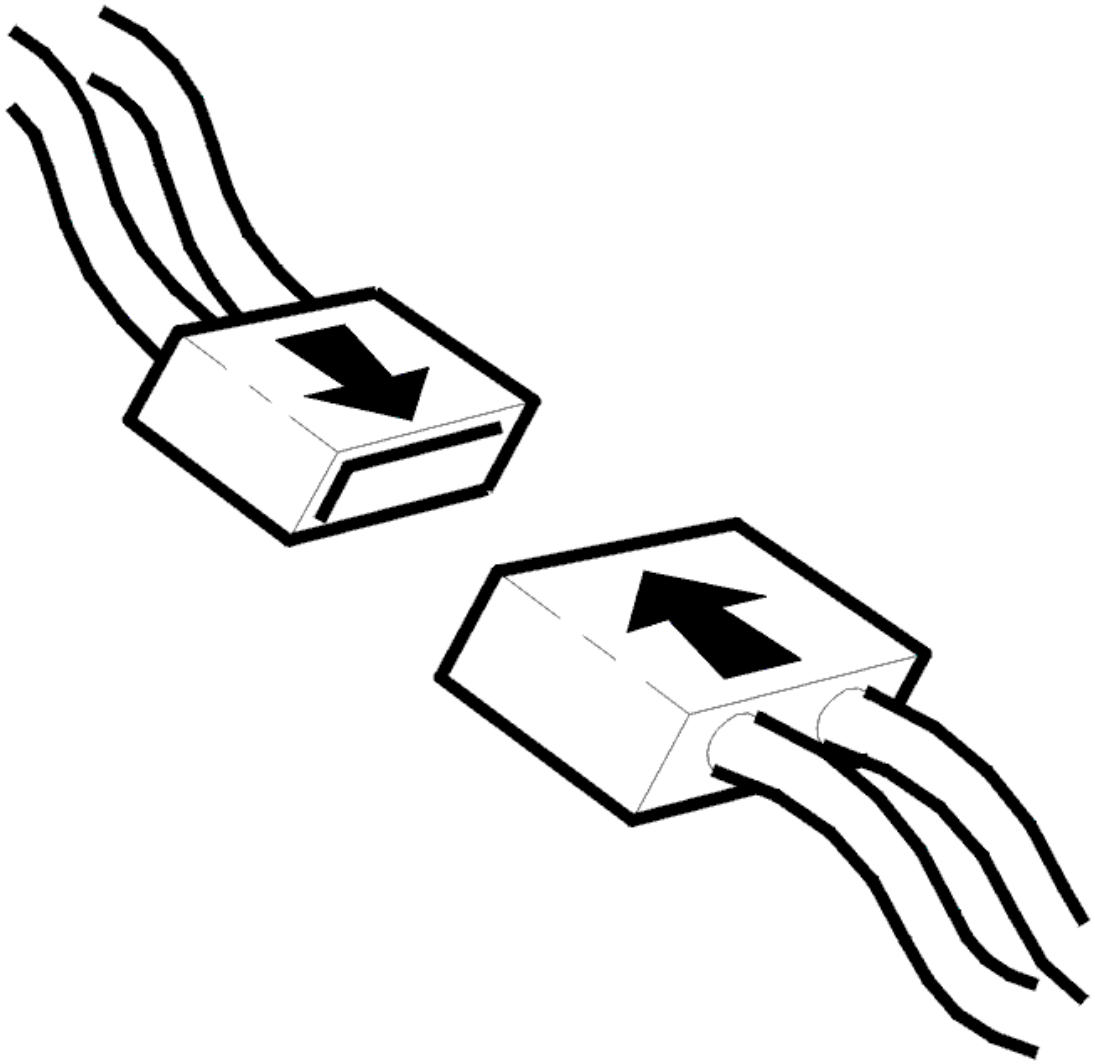

Fig. 254: Connecting Connector
Courtesy of VOLVO CARS CORPORATION

- Ignition off
- Check the connectors of the brake control module (BCM) and the brake light switch for contact resistance and oxidation.
- Reinstall the components, reconnect the connectors etc.
- Ignition on
- Read the status of the brake light switch.

  Depress the brake pedal and release it. The value should change between OFF and ON.

  If the value changes, the malfunction was caused by poor contact in the brake control module (BCM) or brake light switch connector.

Other information

- For information on brake control module (BCM) connector removal: **CONNECTING THE BREAKOUT BOX, BRAKE CONTROL MODULE (BCM)**
- see **CONTENTS**

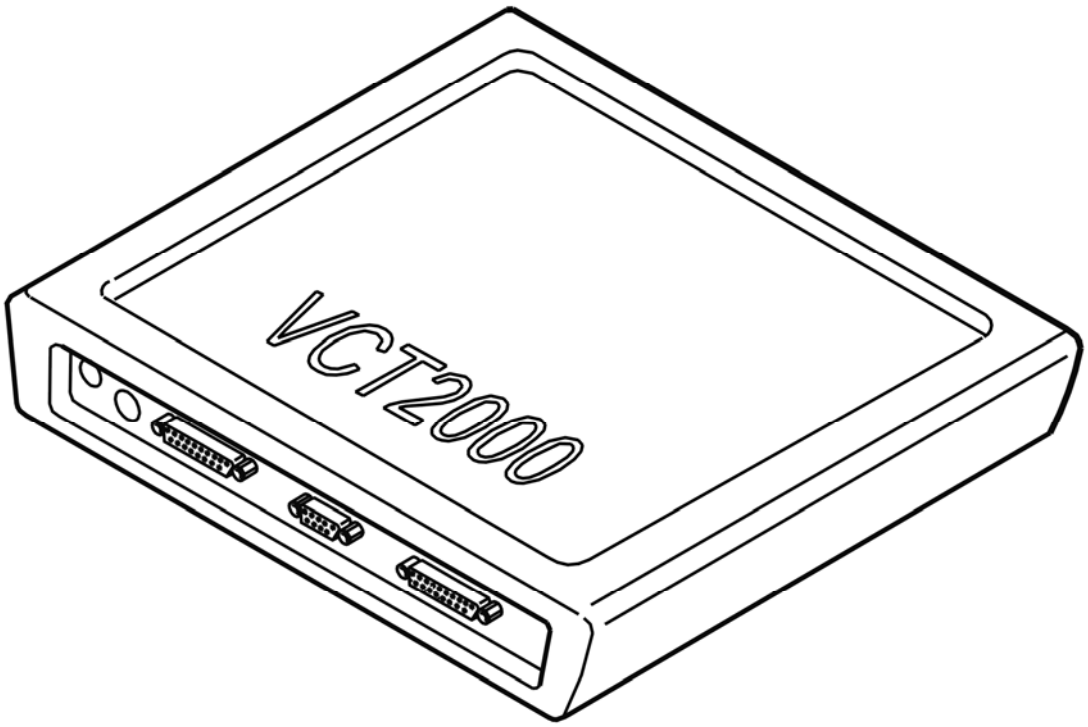

Fig. 255: Identifying VCT2000 Diagnostic Tool Symbol In VIDA
Courtesy of VOLVO CARS CORPORATION

Does the value change?

- **YES**

  OKAY: Troubleshooting has been completed.

- **NO**

  see **CHECKING FUSES, WIRING AND SENSORS**

CHECKING FUSES, WIRING AND SENSORS

Check that the brake light switch fuse in the engine compartment relay/fuse box is intact.

Check the cable between brake light switch terminal #1 and the fuse in the engine compartment relay/fuse box as well as between brake light switch terminal #5 and the connector for open circuit, short-circuit to ground and short-circuit to voltage.

Check the cable between the connector and central electronic module (CEM) terminal #B4 and between the connector and engine electronic module (ECM) terminal #B26 for open circuit, short-circuit to ground and short-circuit to voltage.

HINT: Check the brake light switch by measuring the resistance between terminals #1 and #5 on the brake light switch. Resistance should be infinite when the brake light switch is activated and 0 ohms when the brake light switch is not activated.

Remedy as necessary.

Other information

- see **CONNECTING THE BREAKOUT BOX, BRAKE CONTROL MODULE (BCM)**
- To connect the breakout box to the Engine control module (ECM), see: **CONNECTING THE BREAKOUT BOX**
- For connection of the breakout box to the central electronic module (CEM): **CONNECTING THE BREAKOUT BOX**
- see **STOP LAMP SWITCH, REPLACING**
- see **CONTENTS**

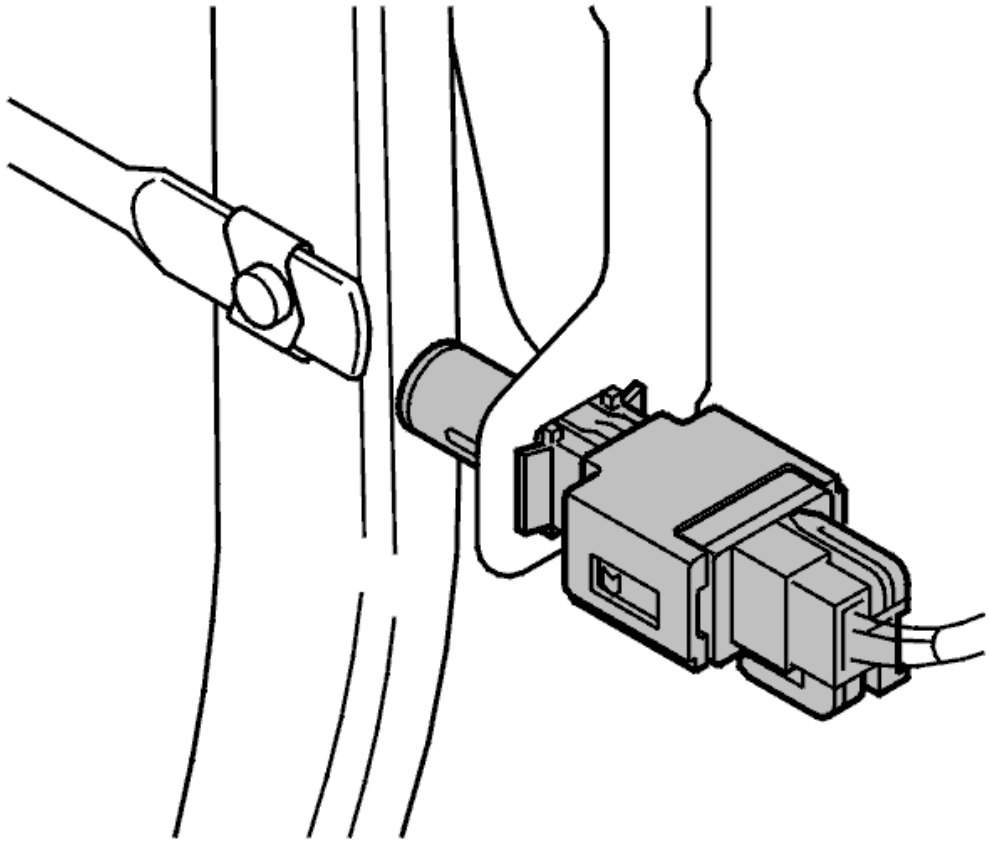

Fig. 256: Brake Light Switch
Courtesy of VOLVO CARS CORPORATION

Was a malfunction detected?

- **YES**

  see **VERIFICATION**

- **NO**

  FAULT NOT FOUND: Troubleshooting has been completed.

VERIFICATION

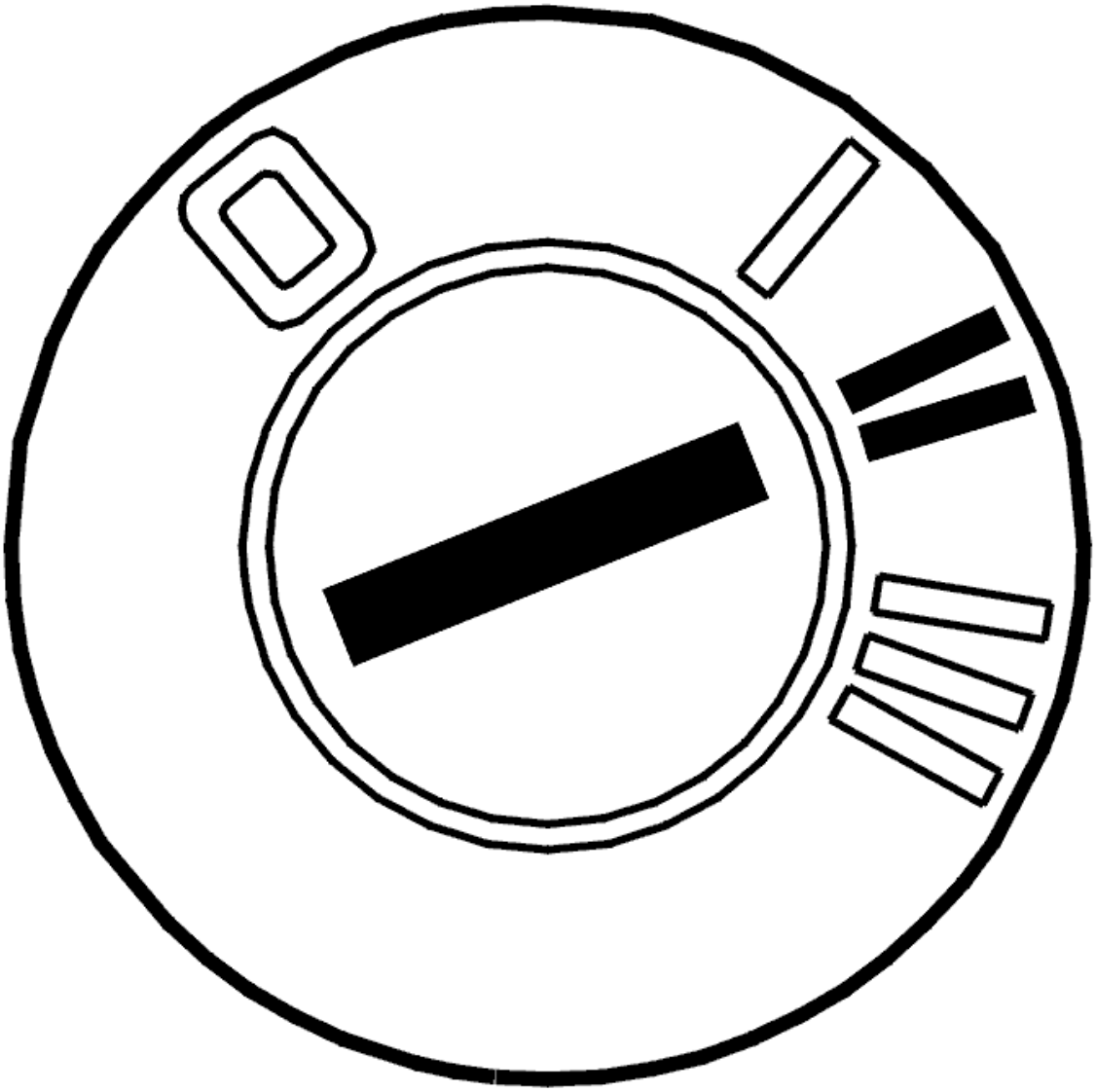

Fig. 257: Identifying Ignition ON
Courtesy of VOLVO CARS CORPORATION

- Ignition off
- Reinstall the components, reconnect the connectors etc.
- Ignition on
- Read the status of the brake light switch.

  Depress the brake pedal and release it. The value should change between OFF and ON.

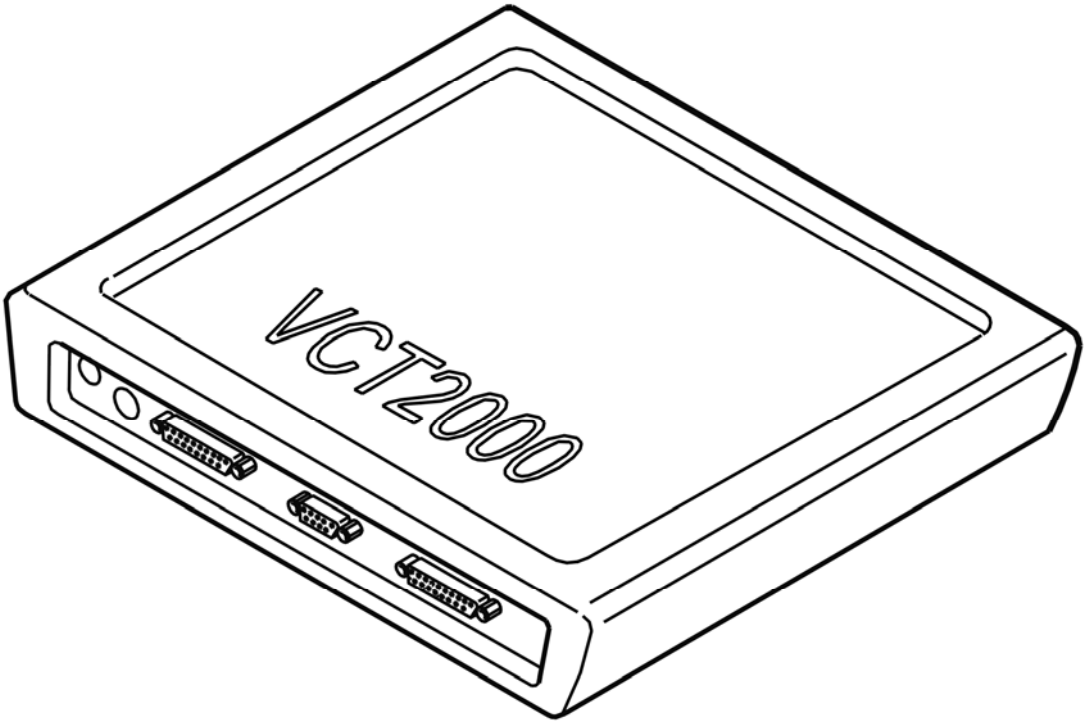

Fig. 258: Identifying VCT2000 Diagnostic Tool Symbol In VIDA
Courtesy of VOLVO CARS CORPORATION

Does the value change?

- **YES**

  OKAY: Troubleshooting has been completed.

- **NO**

  see **INFORMATION**

INFORMATION

FAULT-TRACING INFORMATION

The fault should have been detected and remedied. As this is not the case fault-tracing has failed.

Exit fault-tracing for this diagnostic trouble code (DTC) or make another attempt.

BCM-C004401: BRAKE PRESSURE SENSOR "A". GENERAL MALFUNCTION INFORMATION. GENERAL ELECTRICAL MALFUNCTION

(B6324S; 2007-2010)

DIAGNOSTIC TROUBLE CODE (DTC) INFORMATION

Condition

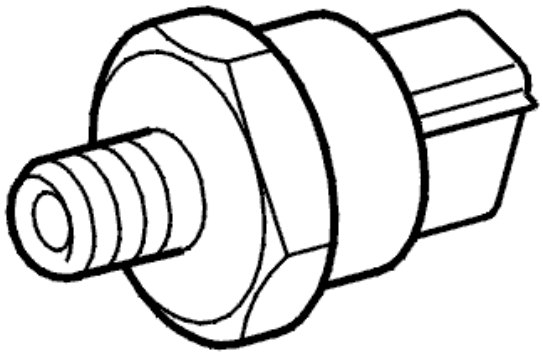

Fig. 259: Identifying Brake Pressure Sensor
Courtesy of VOLVO CARS CORPORATION

NOTE: The diagnostic trouble code only applies to vehicles equipped with DSTC.

Brake pressure sensors provide the brake control module (BCM) signals regarding the pressure in the brake system. If the brake control module (BCM) registers an incorrect signal from a brake pressure sensor, diagnostic code BCM-C004401 or BCM-C004501 is generated depending on which sensor is involved.

Substitute Value

- TC is blocked.
- SC is blocked.
- AYC is blocked.

HINT: For information on abbreviations: BRAKE SYSTEM, ABBREVIATIONS

Possible Source

- Open circuit in the cables.
- The cables are short-circuited to ground or voltage.
- Damaged pressure sensor.
- Internal malfunction in brake control module (BCM).

Fault symptom[s]

- General warning light on.
- Anti-spin is not operational.
- The stability function is not operational.
- The anti-skid function is not operational.

TROUBLESHOOTING

CHECKING THE CONNECTORS

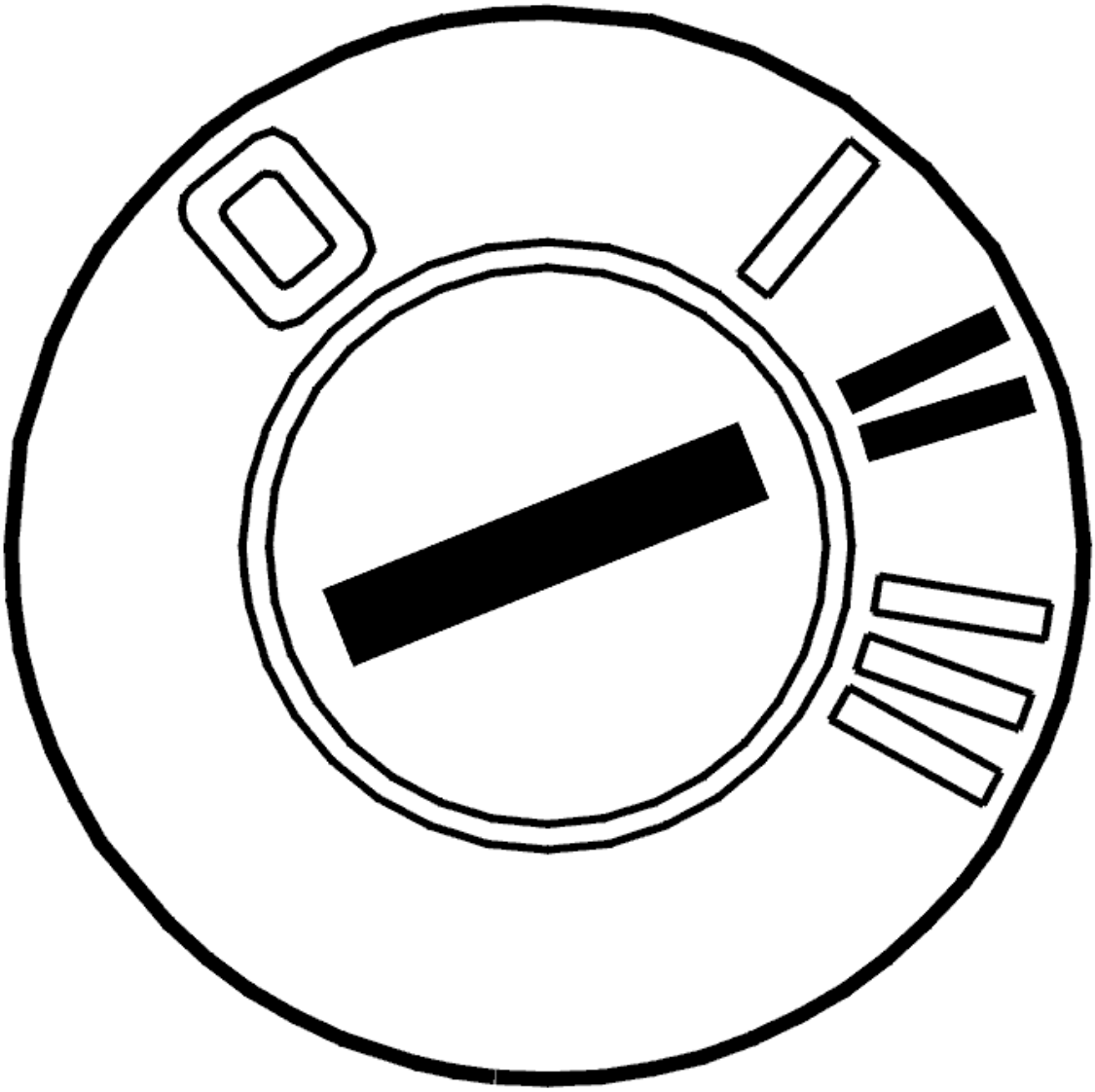

Fig. 260: Identifying Ignition ON
Courtesy of VOLVO CARS CORPORATION

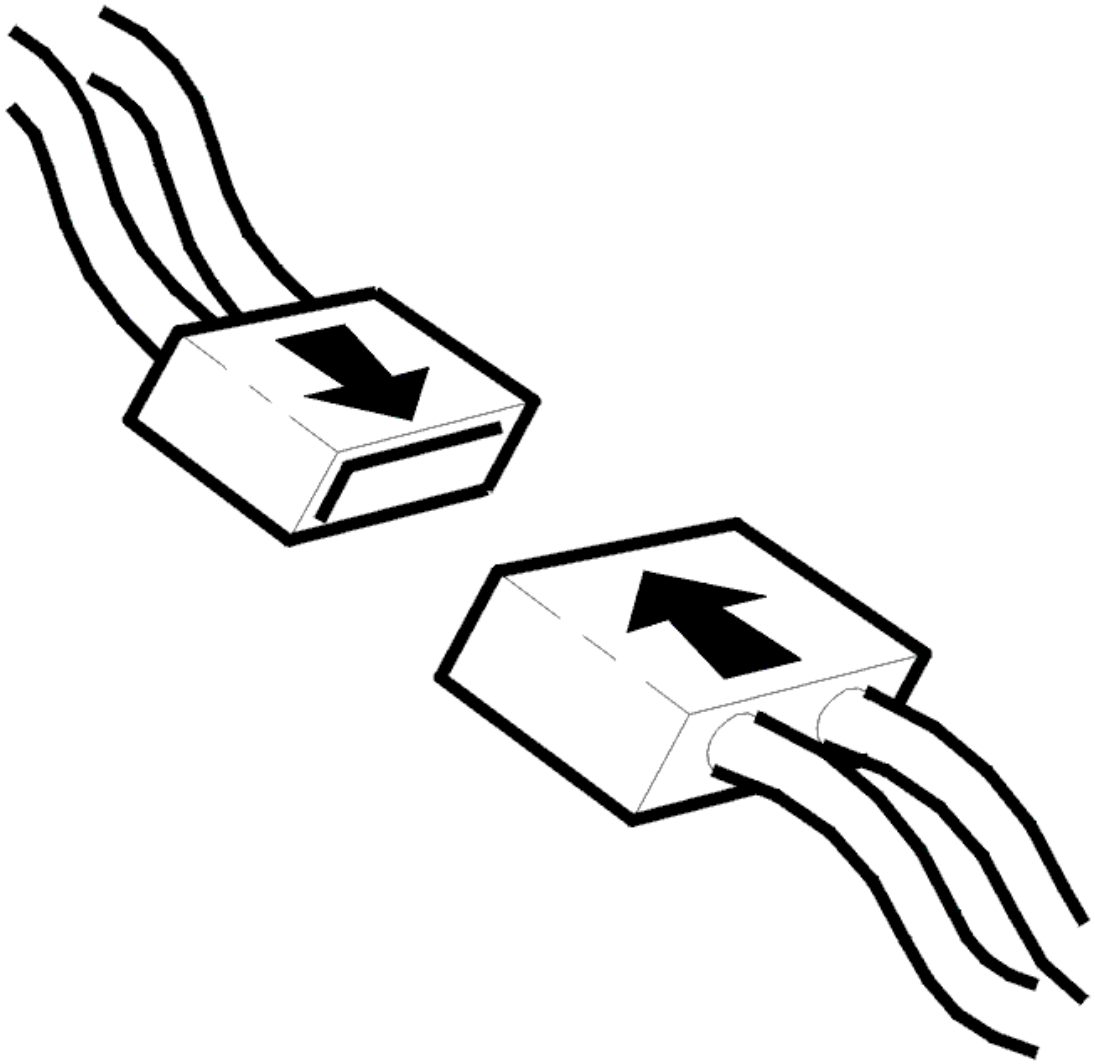

Fig. 261: Connecting Connector
Courtesy of VOLVO CARS CORPORATION

- Ignition off
- Check the connectors of the brake control module (BCM) and the brake pressure sensor for contact resistance and oxidation.
- Reinstall the components, reconnect the connectors etc.
- Ignition on
- Read off the brake system pressure for the relevant pressure sensor.
- Depress the brake pedal.

  Brake pressure should increase with increased pressure on the pedal. If brake pressure increases, the malfunction was caused by contact resistance in the connectors of the control module or the pressure sensor.

Other information

- For removal of the control module connectors: **CONNECTING THE BREAKOUT BOX, BRAKE CONTROL MODULE (BCM)**
- see **CONTENTS**

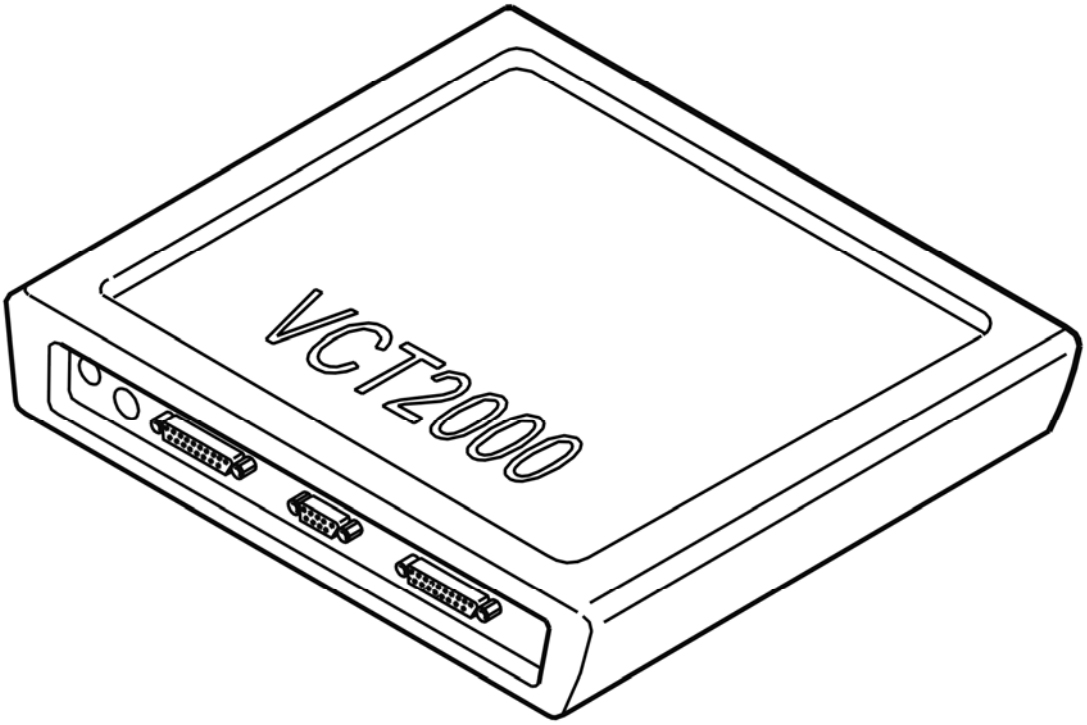

Fig. 262: Identifying VCT2000 Diagnostic Tool Symbol In VIDA
Courtesy of VOLVO CARS CORPORATION

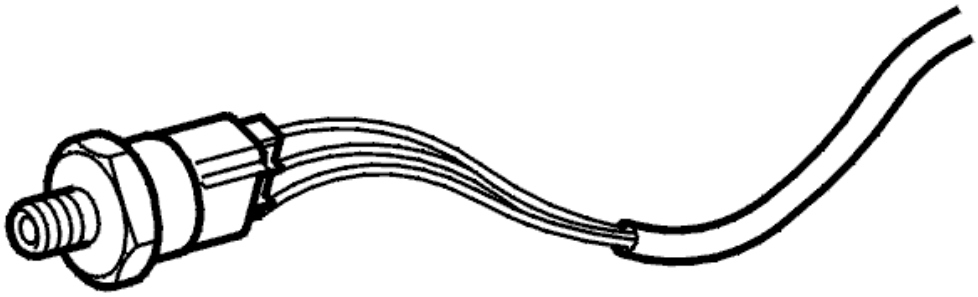

Fig. 263: Brake Pressure Sensor
Courtesy of VOLVO CARS CORPORATION

Does brake pressure increase?

- **YES**

  OKAY: Troubleshooting has been completed.

- **NO**

  see **CHECKING THE CONTROL MODULE**

CHECKING THE CONTROL MODULE

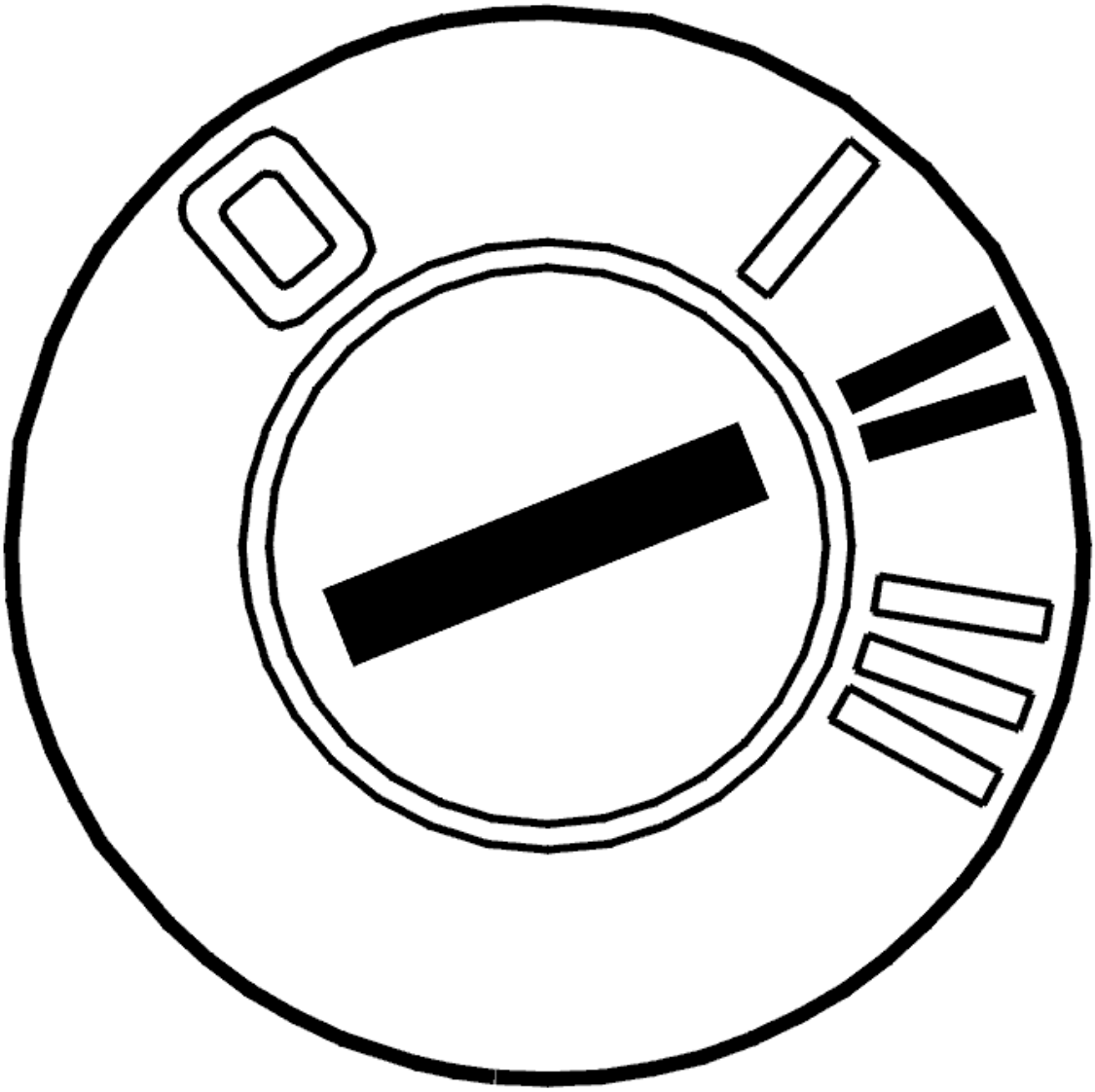

Fig. 264: Identifying Ignition ON
Courtesy of VOLVO CARS CORPORATION

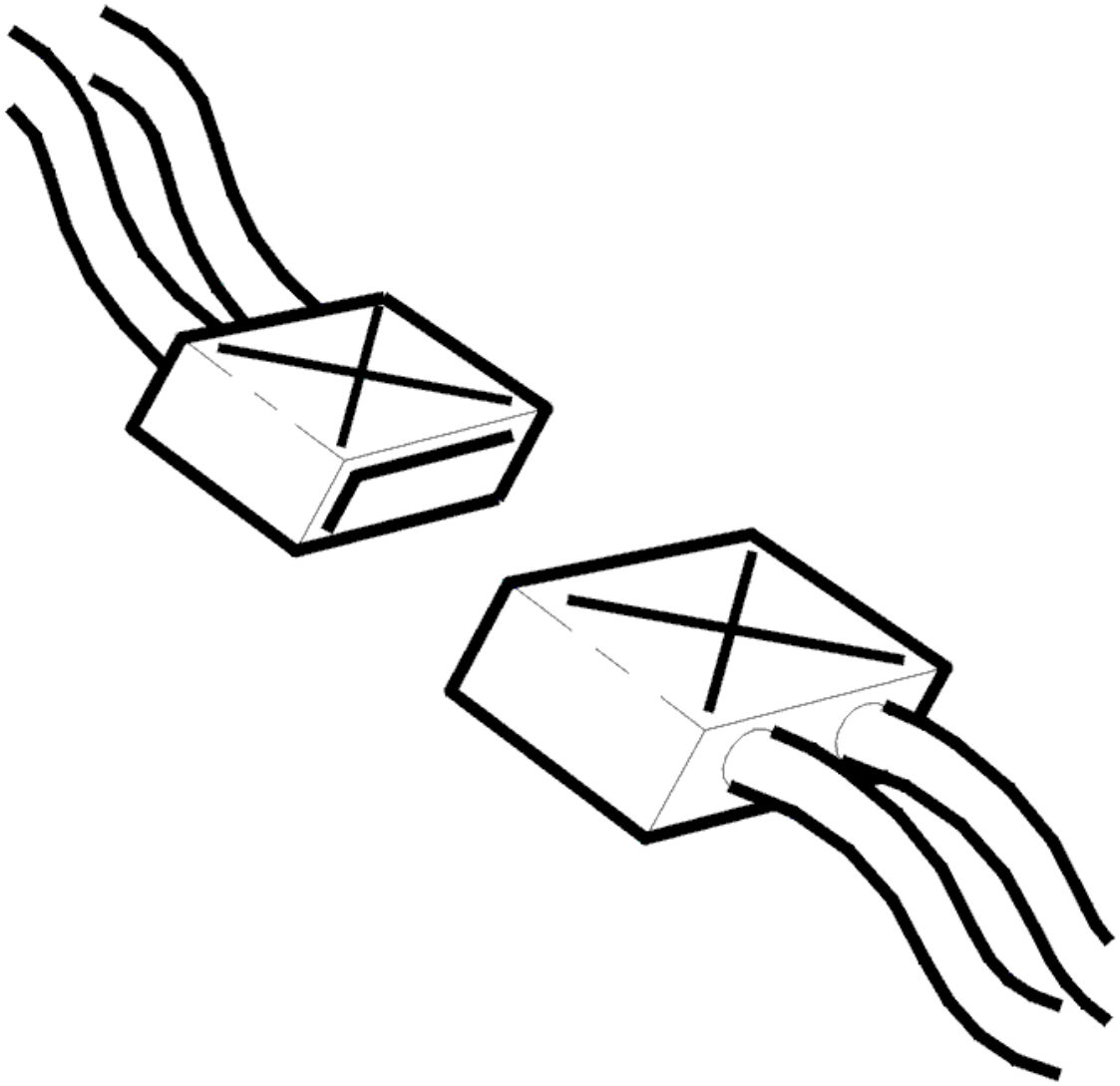

Fig. 265: Identifying Connector
Courtesy of VOLVO CARS CORPORATION

- Ignition on
- Pressure sensor connector unplugged.
- Breakout box connected.

Check the voltage feed with a voltmeter:

Check the voltage feed with a voltmeter.

For pressure sensor A, measure between #A21 and #A22 on the breakout box.

For pressure sensor B, measure between #A18 and #A19 on the breakout box.

The voltage should be approx. 5 V. If the voltage is incorrect, replace the brake control module (BCM).

Other information

- see **CONNECTING THE BREAKOUT BOX, BRAKE CONTROL MODULE (BCM)**
- see **SIGNAL SPECIFICATION, BRAKE CONTROL MODULE (BCM) WITH DSTC (DYNAMIC STABILITY AND TRACTION CONTROL)**
- see **BRAKE CONTROL MODULE (BCM), REPLACING**

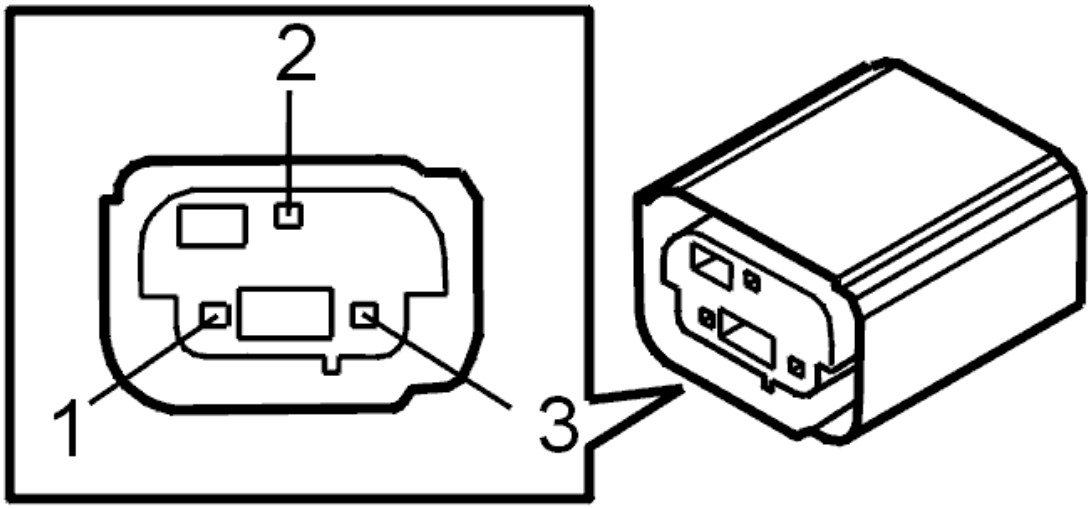

Fig. 266: Identifying Pedal Position Sensor Connector
Courtesy of VOLVO CARS CORPORATION

Was the voltage OK?

- **YES**

  see **CHECKING WIRING AND SENSORS**

- **NO**

  see **VERIFICATION**

CHECKING WIRING AND SENSORS

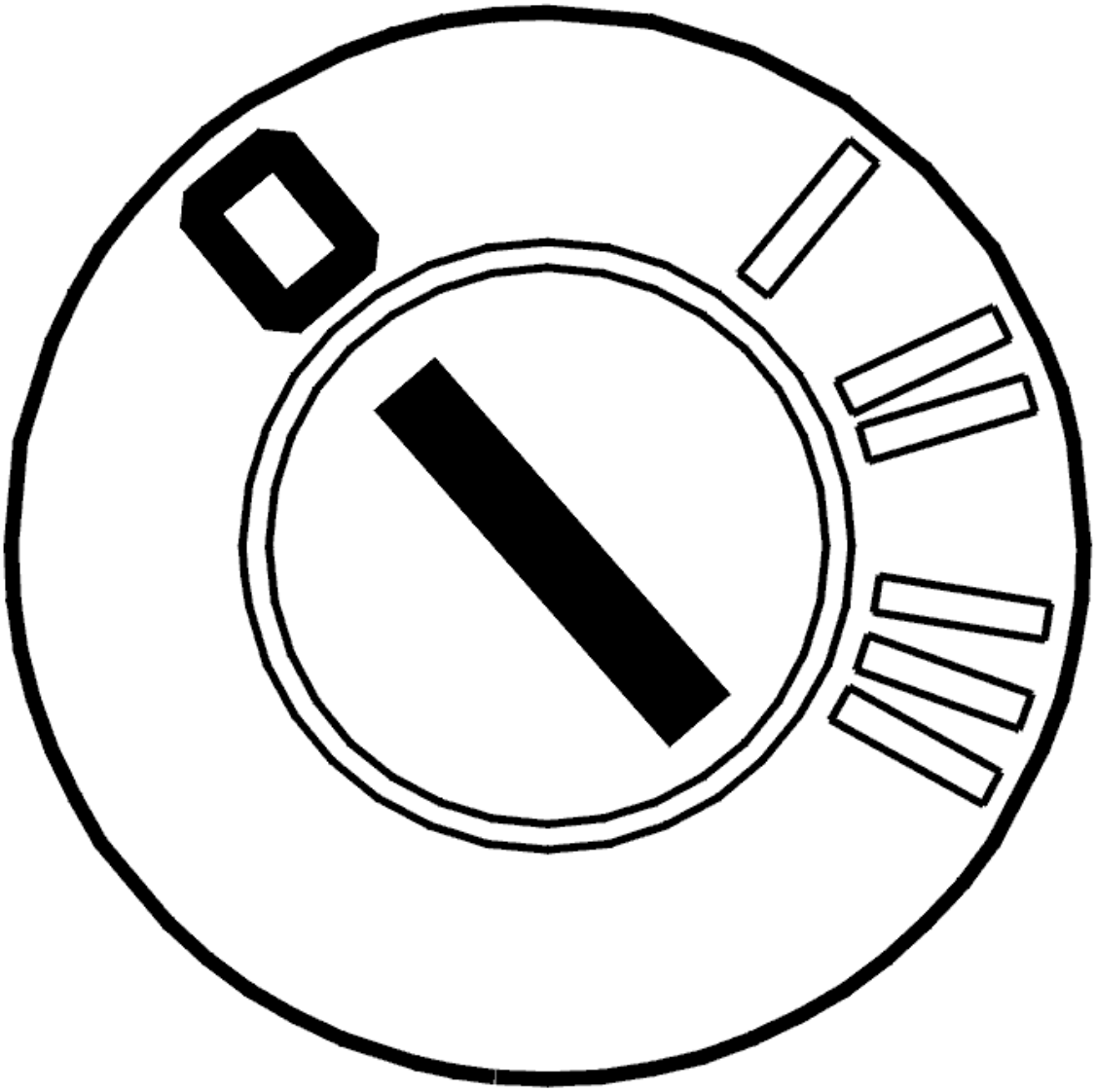

Fig. 267: Identifying Ignition OFF
Courtesy of VOLVO CARS CORPORATION

- Ignition off
- Connect a breakout box.

  Check the cables between the pressure sensor and the brake control module (BCM) for open circuit and short circuit to ground.

  For pressure sensor B, check the cables:

  - between pressure sensor terminal #1 and brake control module (BCM) terminal #19 (#A19)
  - between pressure sensor terminal #2 and brake control module (BCM) terminal #20 (#A20)
  - between pressure sensor terminal #3 and brake control module (BCM) terminal #18 (#A18)

For pressure sensor A, check the cables:

- between pressure sensor terminal #1 and brake control module (BCM) terminal #21 (#A21)
- between pressure sensor terminal #2 and brake control module (BCM) terminal #23 (#A23)
- between pressure sensor terminal #3 and brake control module (BCM) terminal #22 (#A22)

HINT: With the ignition on and the breakout box connected, check the relevant brake pressure sensor by measuring the sensor signal:

Pressure sensor B

- between terminals #A18 and #A19 on the breakout box. The voltage should be approx. 5 V.
- between terminals #A19 and #A20 on the breakout box. The voltage should be 0.25-4.75 V depending on brake pressure.

Pressure sensor A

- between terminals #A21 and #A22 on the breakout box. The voltage should be approx. 5 V.
- between terminals #A21 and #A23 on the breakout box. The voltage should be 0.25-4.75 V depending on brake pressure.

If the voltage does not change when the brake pedal is depressed, replace the pressure sensor.

Other information

- see **CONNECTING THE BREAKOUT BOX, BRAKE CONTROL MODULE (BCM)**
- see **SIGNAL SPECIFICATION, BRAKE CONTROL MODULE (BCM) WITH DSTC (DYNAMIC STABILITY AND TRACTION CONTROL)**
- see **PRESSURE SENSOR, MASTER CYLINDER, REPLACING**

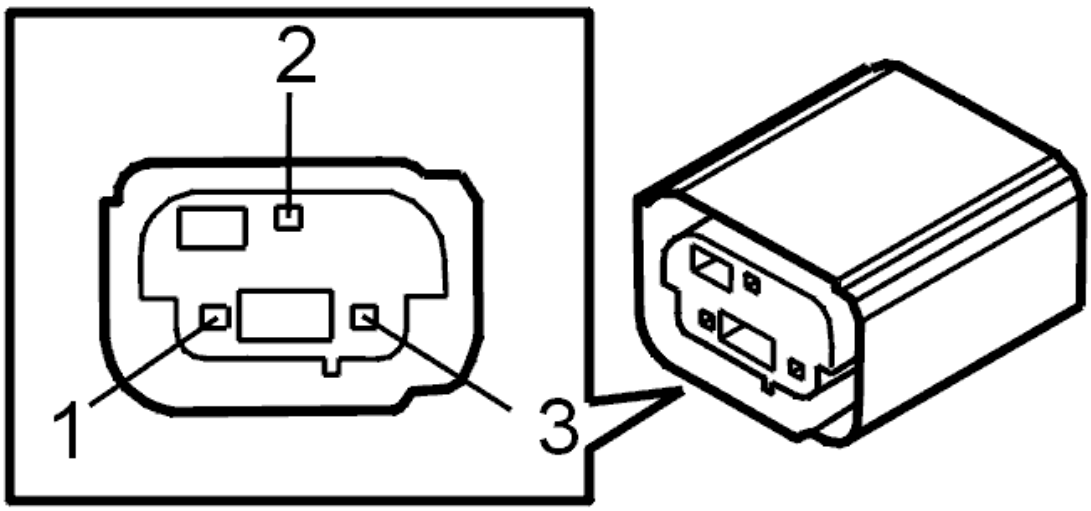

Fig. 268: Identifying Pedal Position Sensor Connector

Courtesy of VOLVO CARS CORPORATION

Was a malfunction detected?

- **YES**

  see **VERIFICATION**

- **NO**

  FAULT NOT FOUND: Troubleshooting has been completed.

VERIFICATION

VERIFICATION

HINT: After carrying out the repair, check that the malfunction has been remedied.

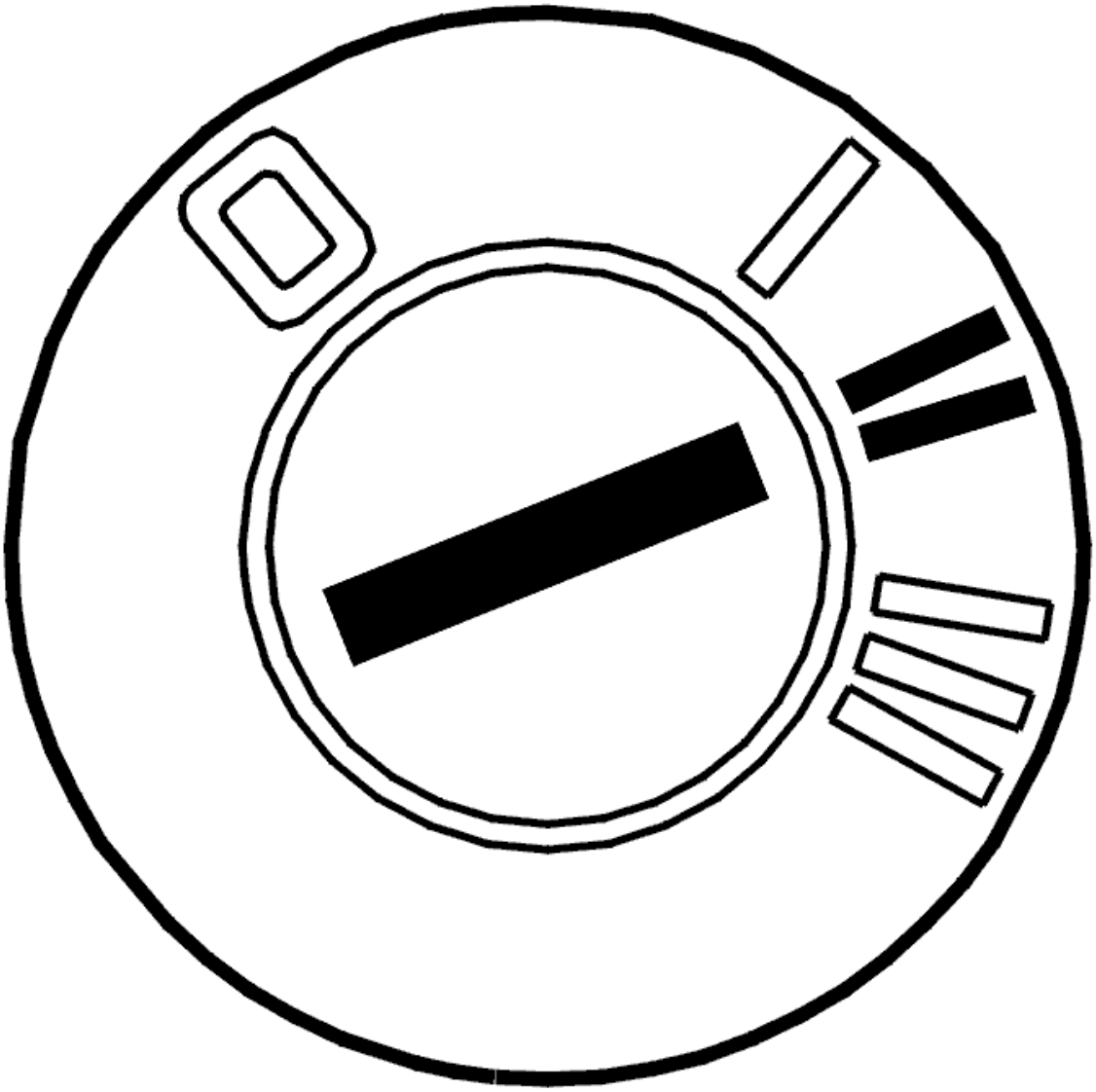

Fig. 269: Identifying Ignition ON
Courtesy of VOLVO CARS CORPORATION

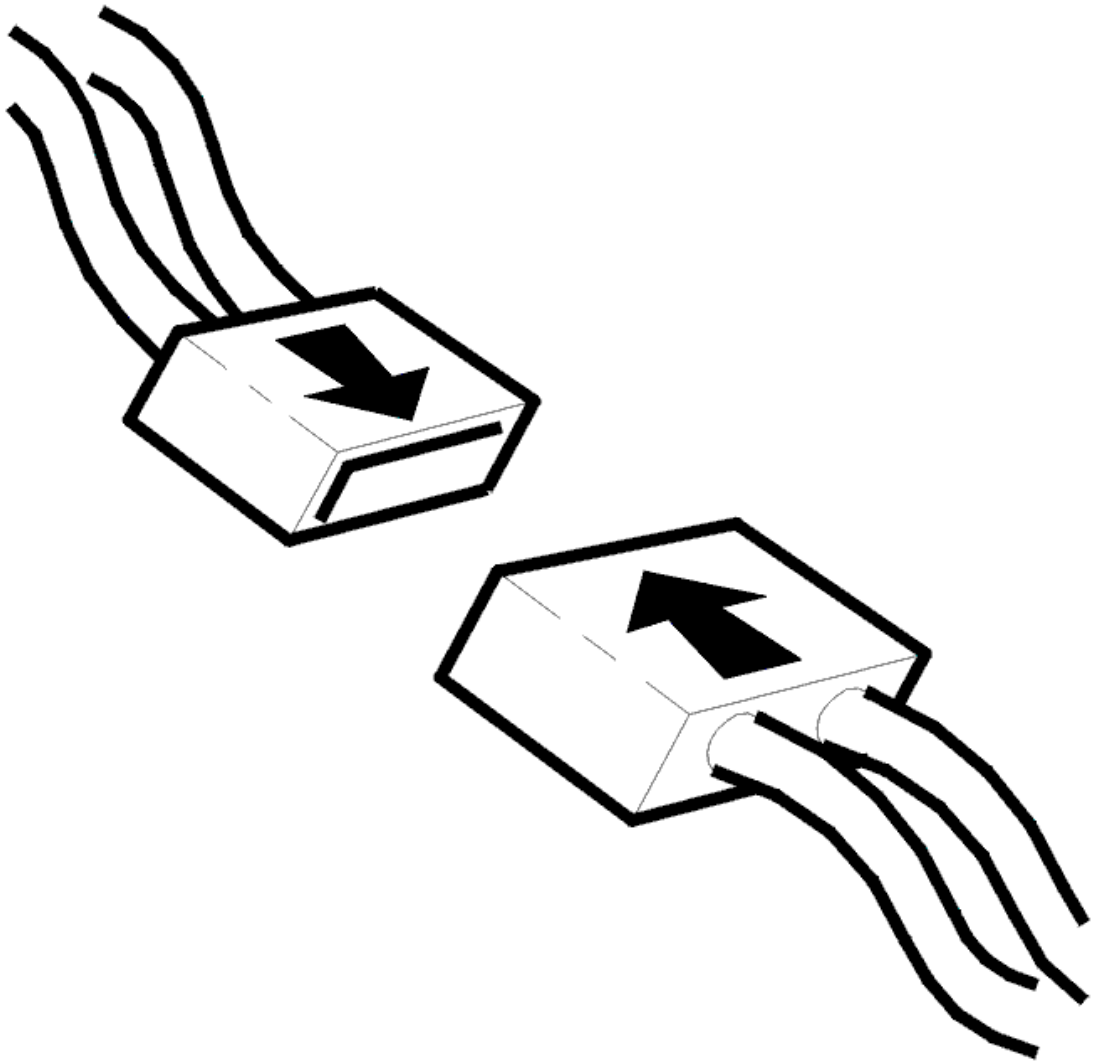

Fig. 270: Connecting Connector
Courtesy of VOLVO CARS CORPORATION

- Ignition off
- Reconnect the connectors, components, etc.
- Ignition on
- Read off the brake system pressure for the relevant pressure sensor.
- Push down the brake pedal.

  Brake pressure should increase with increased pressure on the pedal.

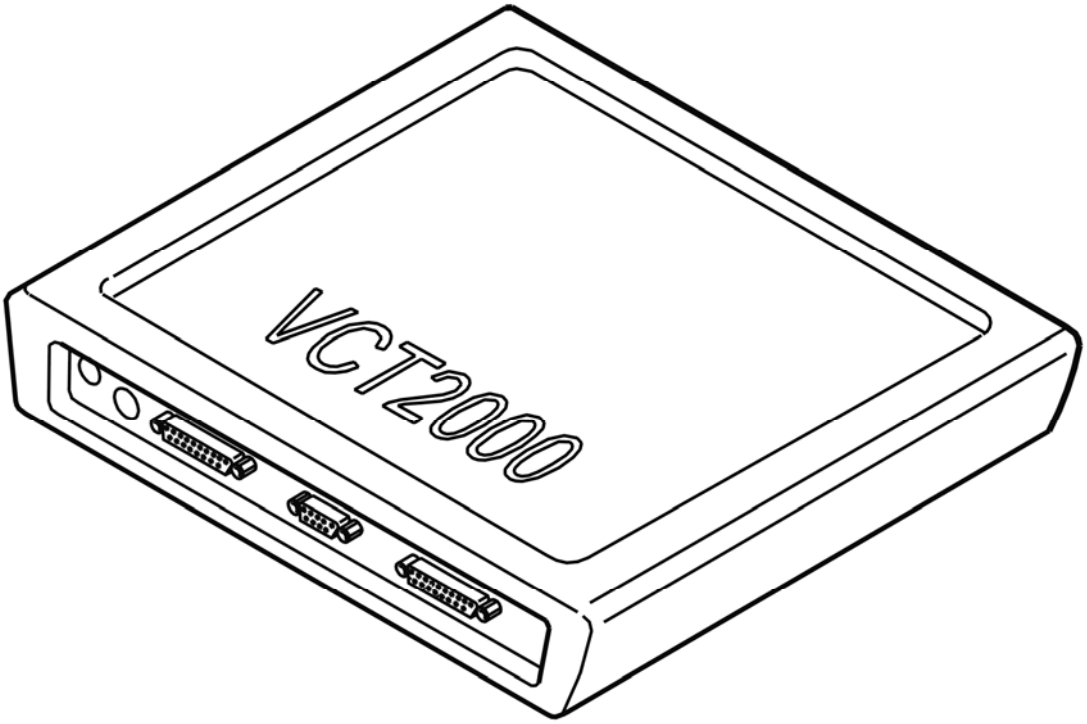

Fig. 271: Identifying VCT2000 Diagnostic Tool Symbol In VIDA
Courtesy of VOLVO CARS CORPORATION

Does brake pressure increase?

- **YES**

  VERIFIED: Troubleshooting has been completed.

- **NO**

  see **INFORMATION**

INFORMATION

FAULT-TRACING INFORMATION

The fault should have been detected and remedied. As this is not the case fault-tracing has failed.

Exit fault-tracing for this diagnostic trouble code (DTC) or make another attempt.

BCM-C004401: BRAKE PRESSURE SENSOR "A". GENERAL MALFUNCTION INFORMATION. GENERAL ELECTRICAL MALFUNCTION

(B6324S5; 2011-2012)

DIAGNOSTIC TROUBLE CODE (DTC) INFORMATION

see **DIAGNOSTIC TROUBLE CODE (DTC) INFORMATION**

TROUBLESHOOTING

see **TROUBLESHOOTING**

BCM-C004401: BRAKE PRESSURE SENSOR "A". GENERAL MALFUNCTION INFORMATION. GENERAL ELECTRICAL MALFUNCTION (B8444S; 2005-2011)

DIAGNOSTIC TROUBLE CODE (DTC) INFORMATION

see **DIAGNOSTIC TROUBLE CODE (DTC) INFORMATION**

TROUBLESHOOTING

see **TROUBLESHOOTING**

BCM-C004664: BRAKE PRESSURE SENSOR "A"/"B". ALGORITHM ERROR. SIGNAL OUTSIDE PERMITTED RANGE (B6324S; 2007-2010)

DIAGNOSTIC TROUBLE CODE INFORMATION BCM-C004664

Condition

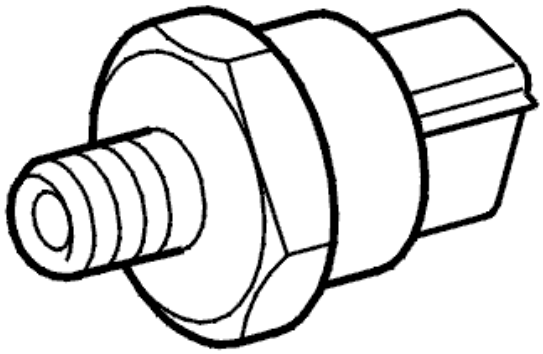

Fig. 272: Identifying Brake Pressure Sensor
Courtesy of VOLVO CARS CORPORATION

NOTE: The diagnostic trouble code only applies to ABS systems with DSTC.

Brake pressure sensors A and B give Brake control module (BCM) signal about the pressure in the brake system. Diagnostic trouble code BCM-C004664 is generated if Brake control module (BCM) registers that the signal from any of the pressure sensors is unreasonable.

Substitute Value

- TC is blocked.
- SC is blocked.
- AYC is blocked.

HINT: For information on abbreviations: BRAKE SYSTEM, ABBREVIATIONS

Possible Source

- Open circuit in the ground cable.
- Malfunction in the brake circuit.
- Damaged pressure sensor.

Fault symptom[s]

- General warning light on.
- Anti-spin is not operational.
- The stability function is not operational.
- The anti-skid function is not operational.

TROUBLESHOOTING BCM-C004664

CHECKING THE CONNECTORS

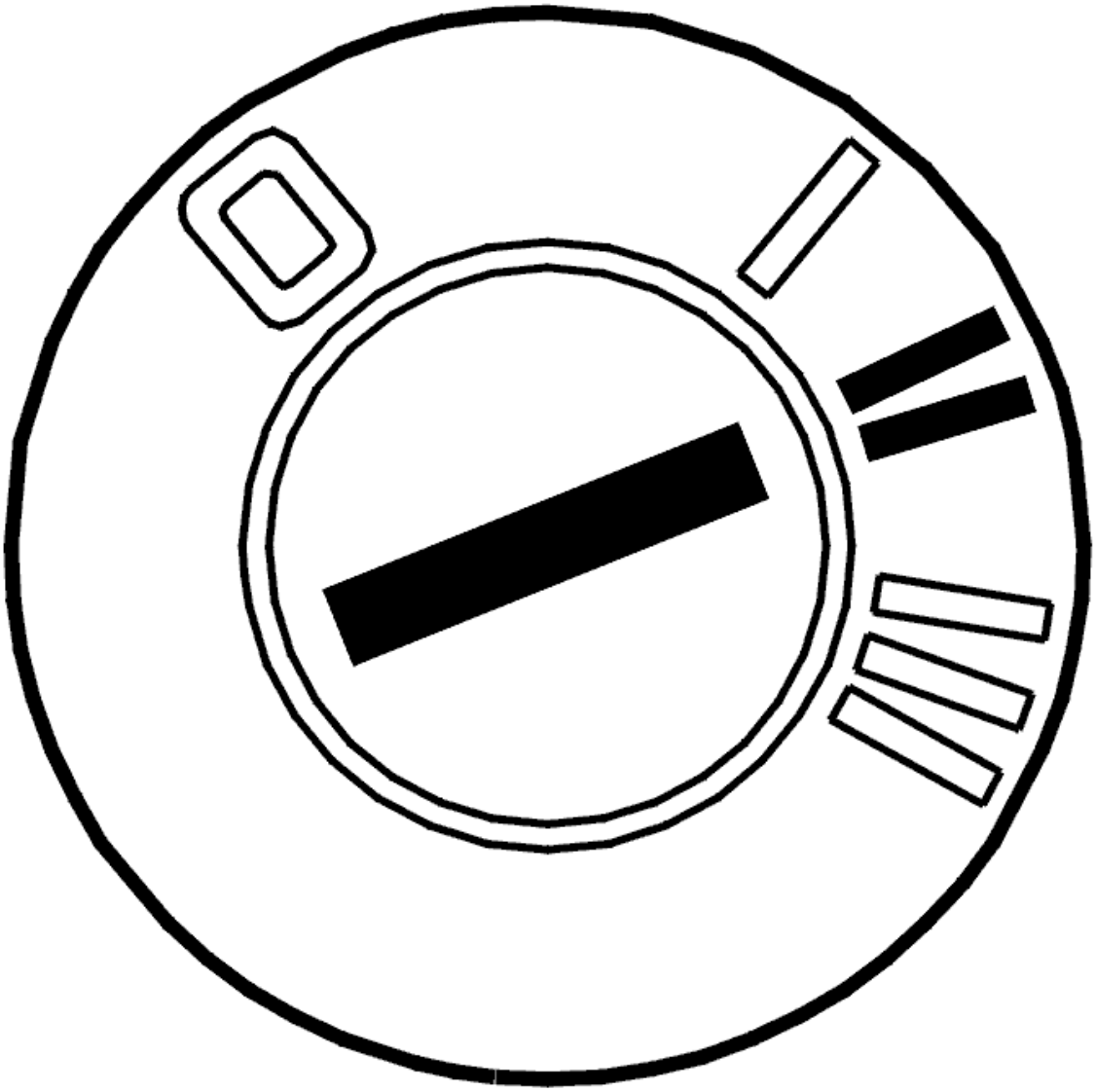

Fig. 273: Identifying Ignition ON
Courtesy of VOLVO CARS CORPORATION

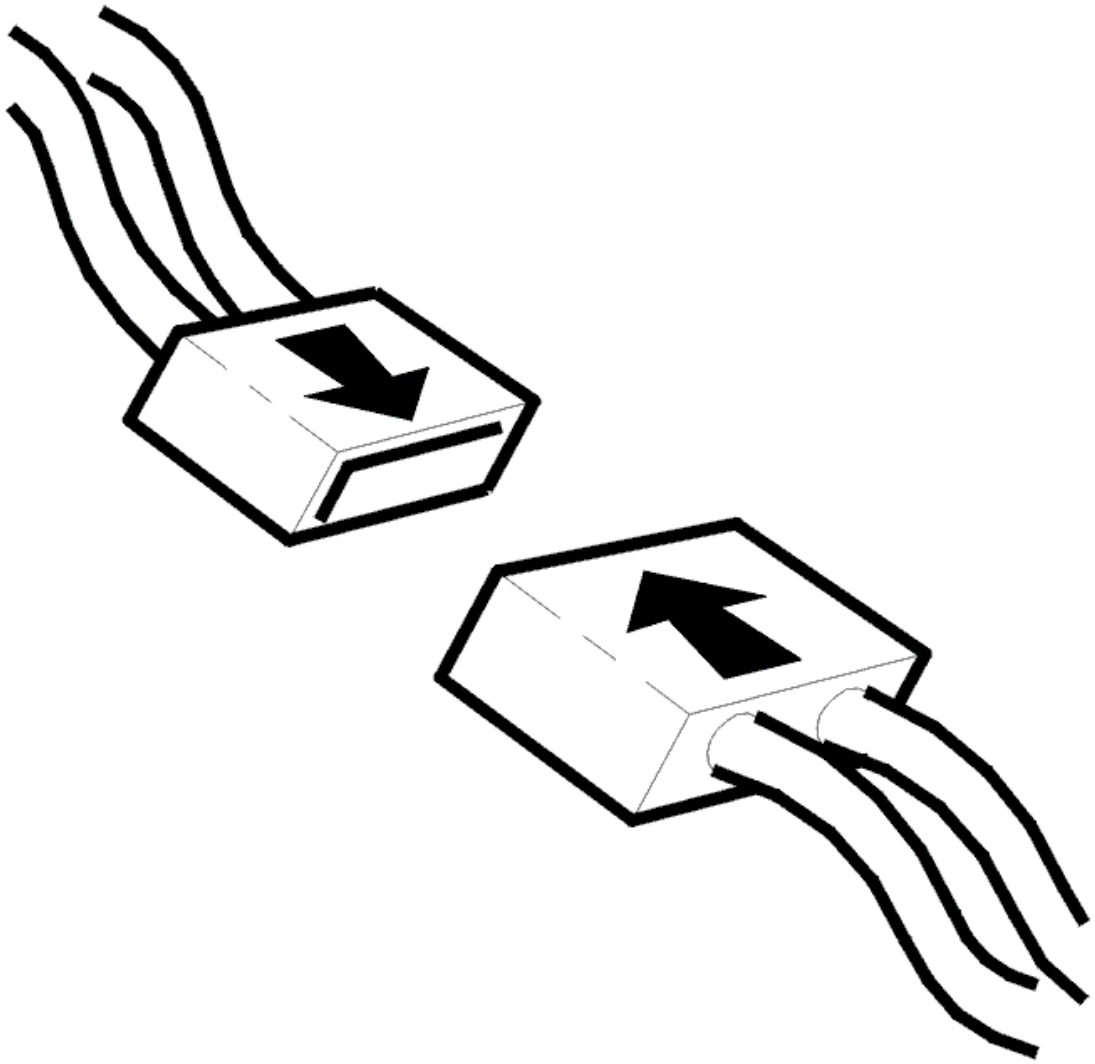

Fig. 274: Connecting Connector
Courtesy of VOLVO CARS CORPORATION

- Ignition off
- Check the connectors of the brake control module (BCM) and the brake pressure sensor for contact resistance and oxidation.
- Reinstall the components, reconnect the connectors etc.
- Ignition on
- Read off the brake system pressure.
- Depress the brake pedal.

  The brake pressure indicated by both pressure sensors should increase with increased pressure on the pedal. If the brake pressure indicated by both pressure sensors increases, the malfunction was caused by contact resistance in the connectors of the control module or the pressure sensor.

Other information

- To access brake control module (BCM) connectors: **CONNECTING THE BREAKOUT BOX, BRAKE CONTROL MODULE (BCM)** .
- see **CONTENTS**

Fig. 275: Identifying VCT2000 Diagnostic Tool Symbol In VIDA
Courtesy of VOLVO CARS CORPORATION

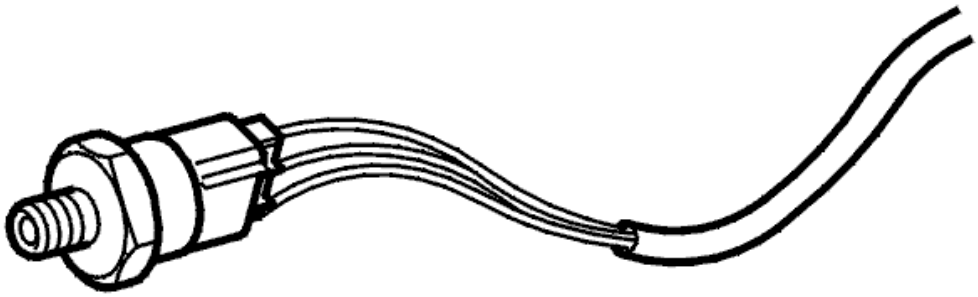

Fig. 276: Brake Pressure Sensor
Courtesy of VOLVO CARS CORPORATION

Does pressure increase?

- **YES**

  OKAY: Troubleshooting has been completed.

- **NO**

  see **CHECKING WIRING AND SENSORS**

CHECKING WIRING AND SENSORS

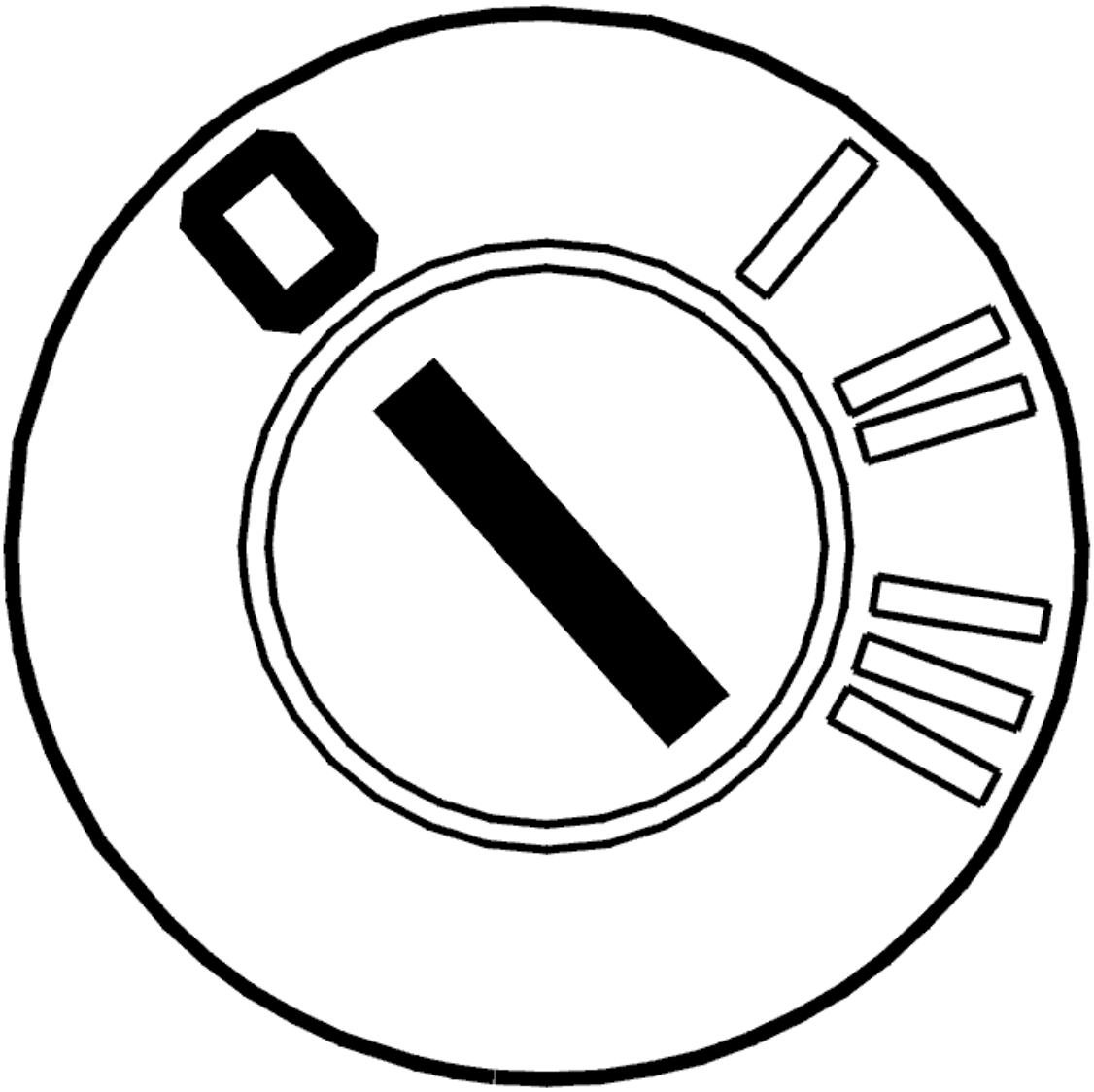

Fig. 277: Identifying Ignition OFF
Courtesy of VOLVO CARS CORPORATION

- Ignition off
- Connect a breakout box.

  Check the ground cable between the relevant brake pressure sensor and the brake control module (BCM) for an open circuit.

For pressure sensor A, check the cable between pressure sensor #1 and brake control module (BCM) #19 (#A19).

For pressure sensor B, check the cable between pressure sensor #1 and brake control module (BCM) #21 (#A21).

If the cable is OK, try a new pressure sensor.

Other information

- see **CONNECTING THE BREAKOUT BOX, BRAKE CONTROL MODULE (BCM)**
- see **SIGNAL SPECIFICATION, BRAKE CONTROL MODULE (BCM) WITH DSTC (DYNAMIC STABILITY AND TRACTION CONTROL)**
- For pressure sensor replacement: **PRESSURE SENSOR, MASTER CYLINDER, REPLACING**

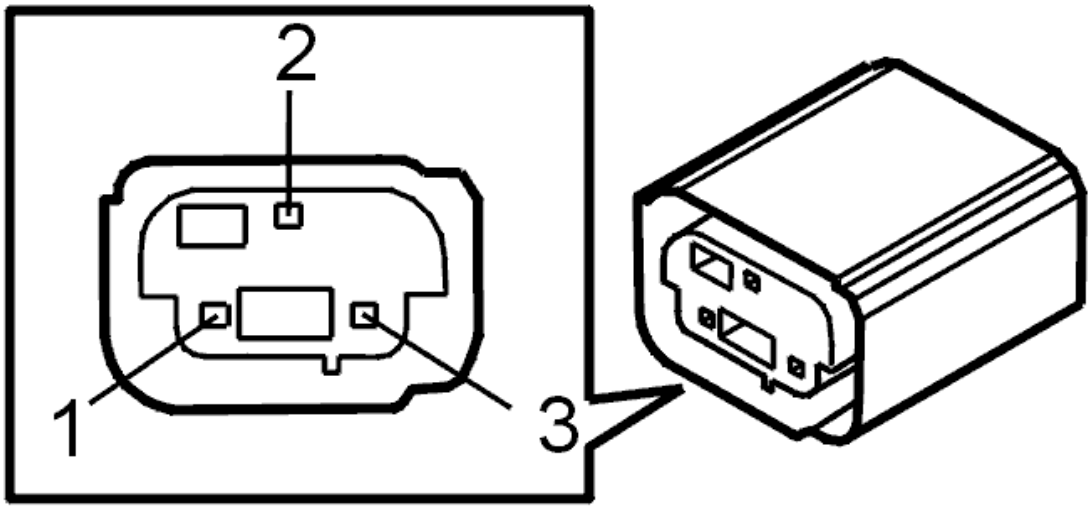

Fig. 278: Identifying Pedal Position Sensor Connector
Courtesy of VOLVO CARS CORPORATION

Was any defect found on the cable?

- **YES**

  see **VERIFICATION**

- **NO**

  see **CHECKING THE BRAKE CONTROL MODULE (BCM)**

CHECKING THE BRAKE CONTROL MODULE (BCM)

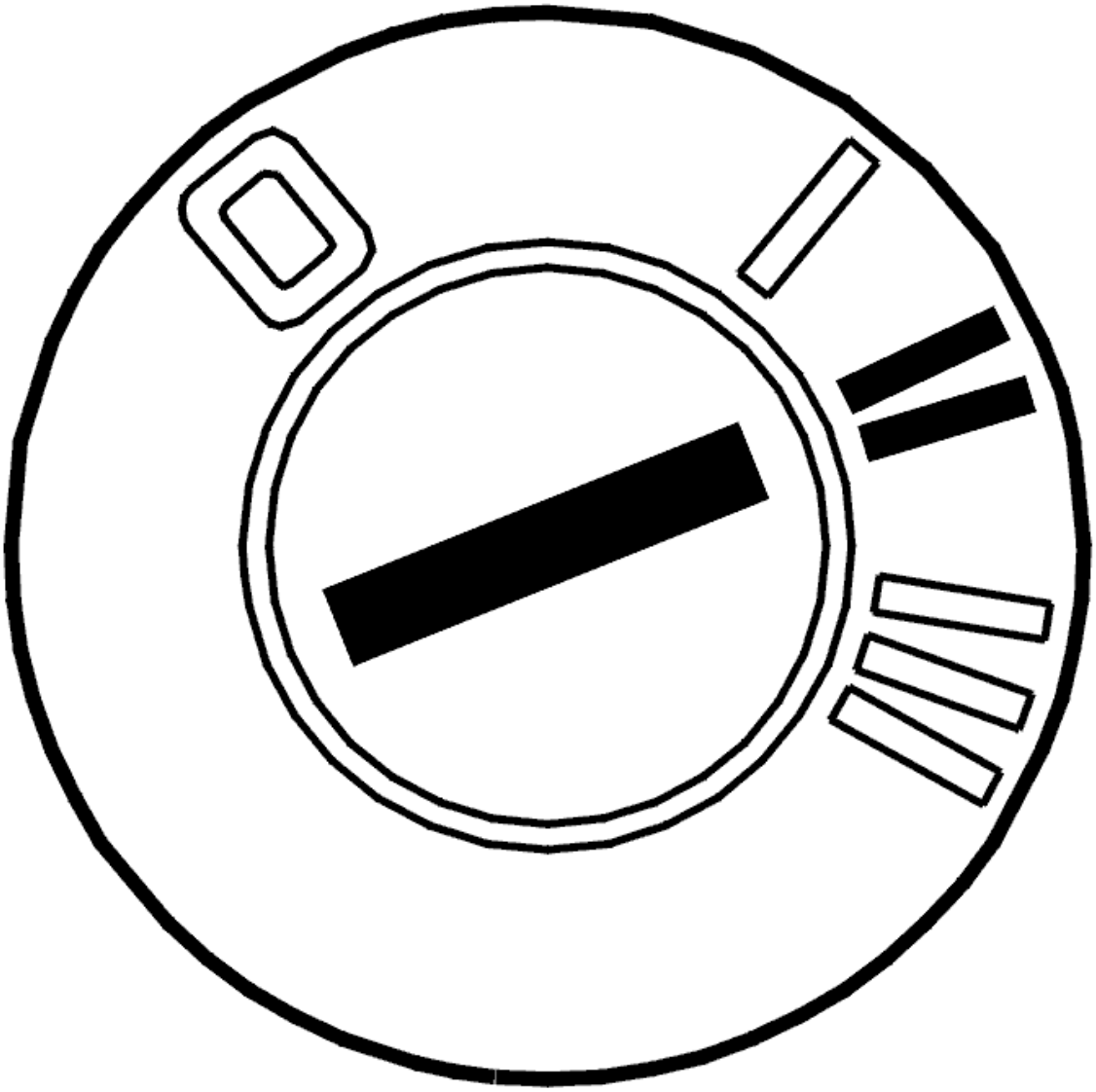

Fig. 279: Identifying Ignition ON
Courtesy of VOLVO CARS CORPORATION

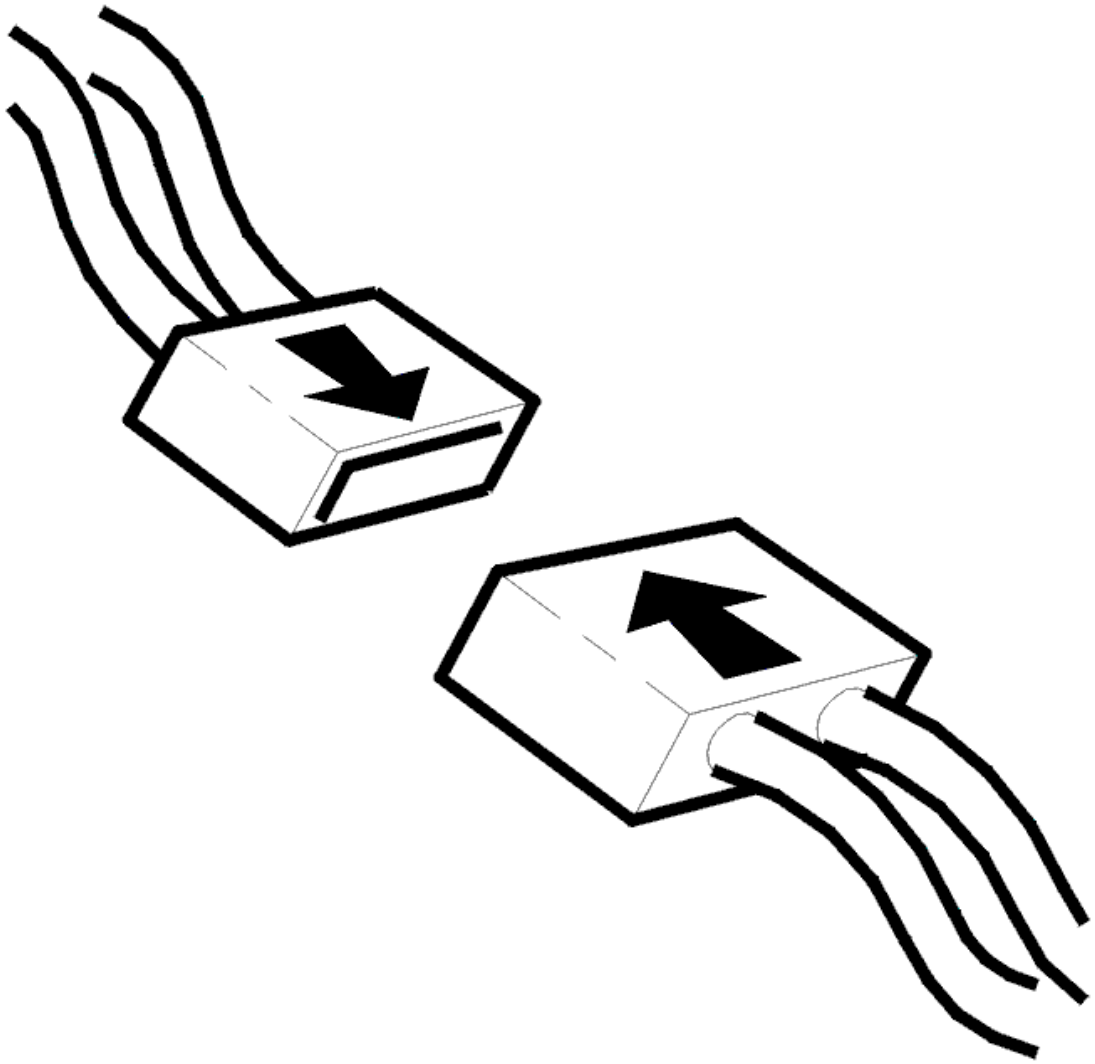

Fig. 280: Connecting Connector
Courtesy of VOLVO CARS CORPORATION

- Ignition off
- Reinstall the components, reconnect the connectors etc.
- Ignition on
- Read off the brake system pressure for the relevant pressure sensor.
- Depress the brake pedal.

  Brake pressure should increase with increased pressure on the pedal.

Fig. 281: Identifying VCT2000 Diagnostic Tool Symbol In VIDA
Courtesy of VOLVO CARS CORPORATION

Does brake pressure increase?

- **YES**

  see **VERIFICATION**

- **NO**

  see **INFORMATION**

VERIFICATION

VERIFICATION

HINT: After carrying out the repair, check that the malfunction has been remedied.

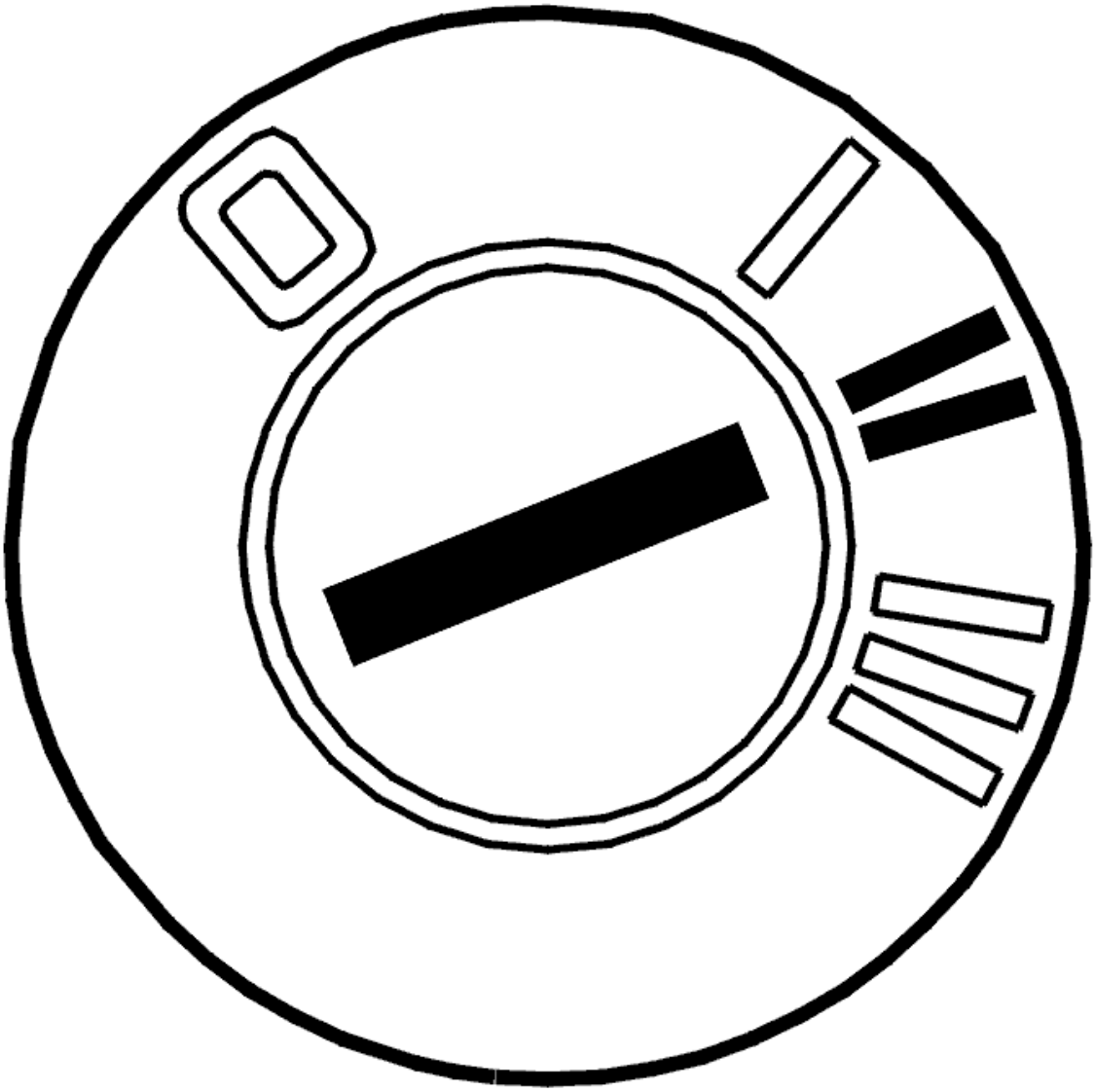

Fig. 282: Identifying Ignition ON
Courtesy of VOLVO CARS CORPORATION

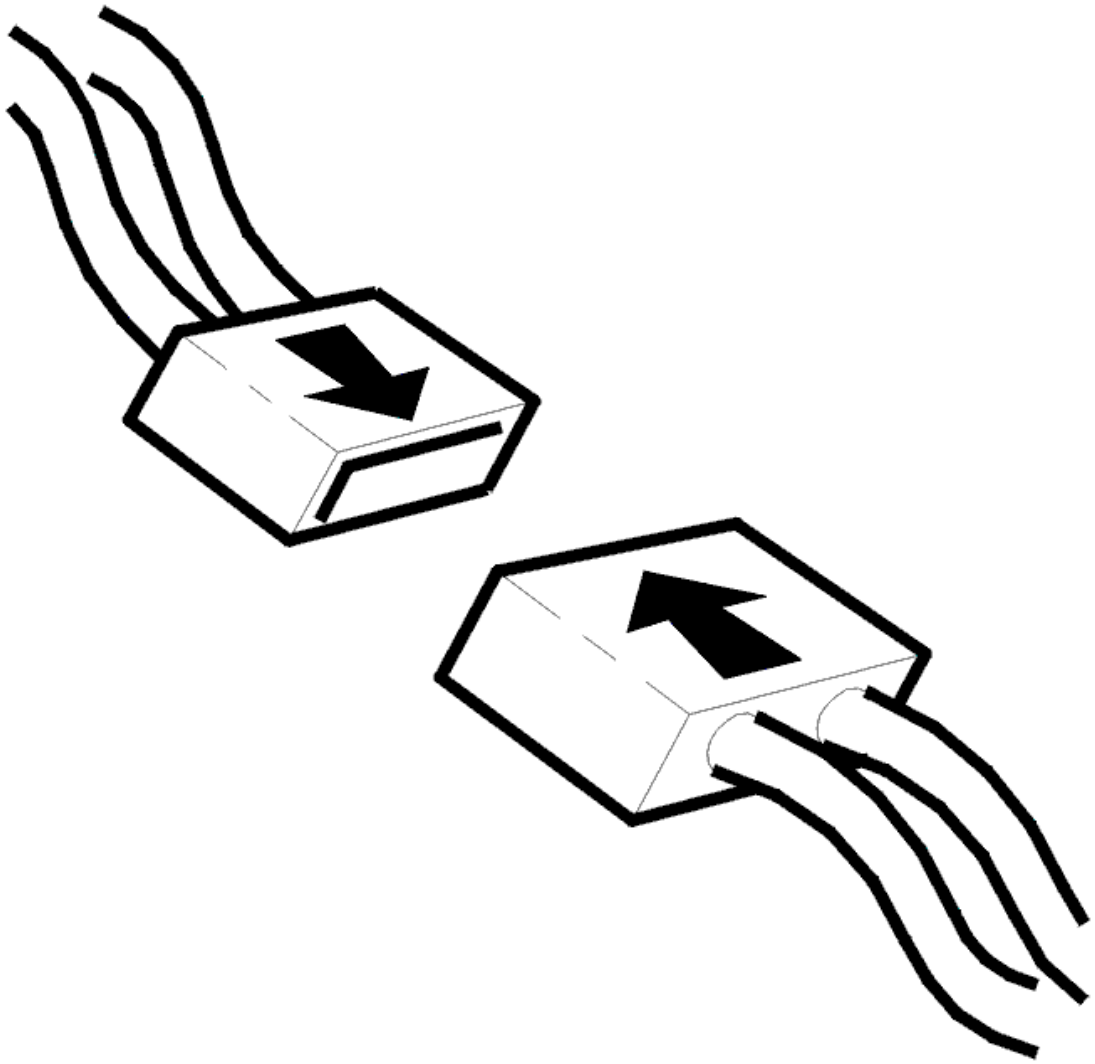

Fig. 283: Connecting Connector
Courtesy of VOLVO CARS CORPORATION

- Ignition off
- Reconnect the connectors, components, etc.
- Ignition on
- Read off the brake system pressure for the relevant pressure sensor.
- Push down the brake pedal.

  Brake pressure should increase with increased pressure on the pedal.

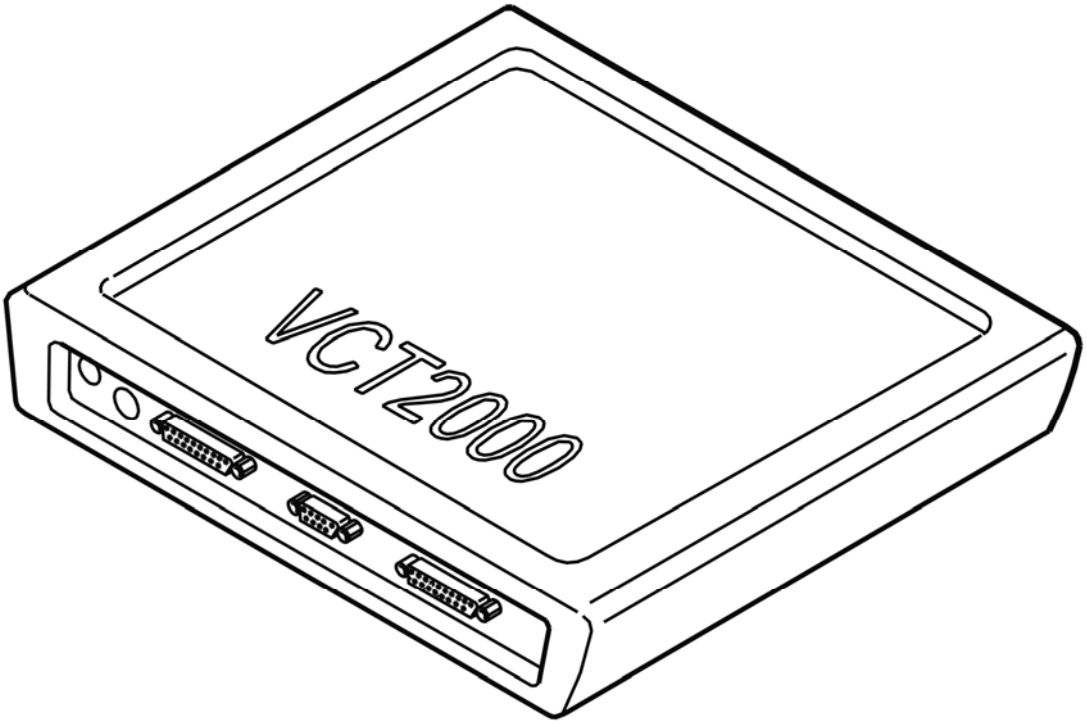

Fig. 284: Identifying VCT2000 Diagnostic Tool Symbol In VIDA
Courtesy of VOLVO CARS CORPORATION

Does brake pressure increase?

- **YES**

  VERIFIED: Troubleshooting has been completed.

- **NO**

  see **INFORMATION**

INFORMATION

FAULT-TRACING INFORMATION

The fault should have been detected and remedied. As this is not the case fault-tracing has failed.

Exit fault-tracing for this diagnostic trouble code (DTC) or make another attempt.

INFORMATION

FAULT-TRACING INFORMATION

The fault should be diagnosed and remedied. Since this is not the case the fault-tracing process has failed.

Complete the fault-tracing for those fault or try again.

BCM-C004664: BRAKE PRESSURE SENSOR "A"/"B". ALGORITHM ERROR. SIGNAL OUTSIDE PERMITTED RANGE (B6324S5; 2011-2012)

DIAGNOSTIC TROUBLE CODE INFORMATION BCM-C004664

see **DIAGNOSTIC TROUBLE CODE INFORMATION BCM-C004664**

TROUBLESHOOTING BCM-C004664

see **TROUBLESHOOTING BCM-C004664**

BCM-C004664: BRAKE PRESSURE SENSOR "A"/"B". ALGORITHM ERROR. SIGNAL OUTSIDE PERMITTED RANGE (B8444S; 2005-2011)

DIAGNOSTIC TROUBLE CODE INFORMATION BCM-C004664

see **DIAGNOSTIC TROUBLE CODE INFORMATION BCM-C004664**

TROUBLESHOOTING BCM-C004664

see **TROUBLESHOOTING BCM-C004664**

BCM-C004801: PEDAL POSITION SENSOR. GENERAL MALFUNCTION INFORMATION. GENERAL ELECTRICAL MALFUNCTION (B6324S; 2007-2010)

DIAGNOSTIC TROUBLE CODE INFORMATION BCM-C004801

Condition

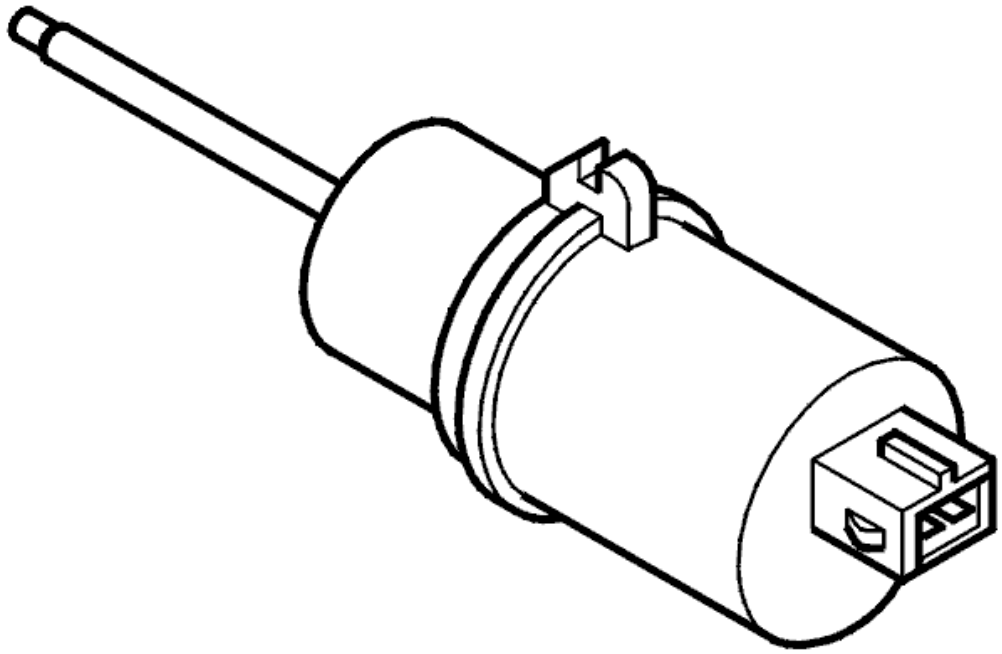

Fig. 285: Identifying Brake Pedal Position Sensor
Courtesy of VOLVO CARS CORPORATION

The pedal position sensor sends the brake control module (BCM) a signal indicate the position of the brake pedal and the speed with which it was depressed. The brake control module (BCM) uses the signal to activate the active brake assist (BA) function during sudden heavy braking.

Diagnostic trouble code BCM-C004801 is generated if the brake control module (BCM) registers a defective signal from the pedal position sensor.

The diagnostic trouble code can be diagnosed when the ignition is on and if the pedal position sensor signal is more than 4.85 V or less than 0.15 V for a long period of time.

Substitute Value

- BA is blocked.

HINT: For information on abbreviations: BRAKE SYSTEM, ABBREVIATIONS

Possible Source

- Open-circuit on the signal cable.
- The cables are short-circuited to ground or supply voltage.

- Improperly installed sensor.
- Damaged sensor.
- Internal malfunction in brake control module (BCM).

Fault symptom[s]

- General warning light on.

TROUBLESHOOTING BCM-C004801

CHECKING THE CONNECTORS

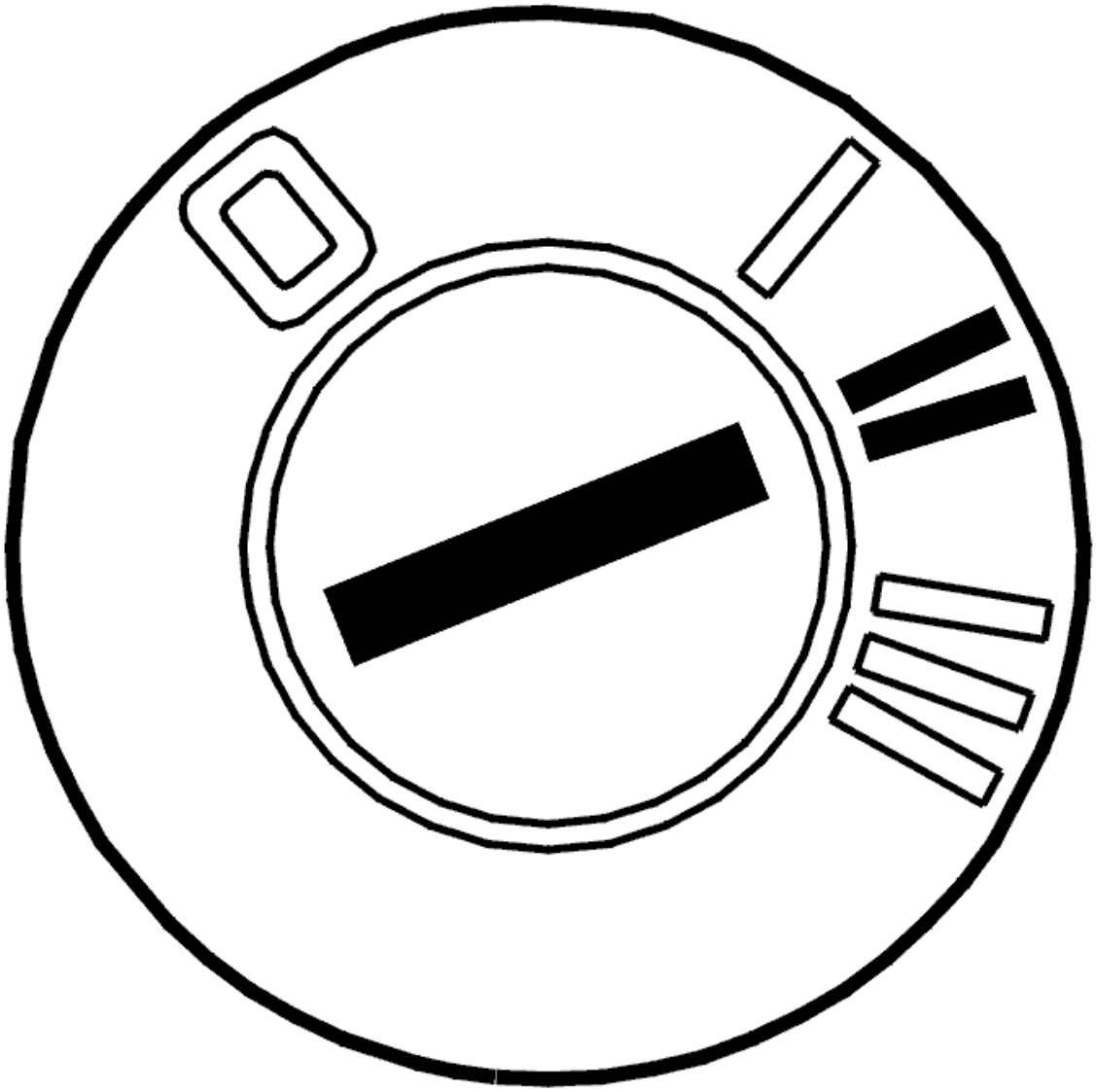

Fig. 286: Identifying Ignition ON
Courtesy of VOLVO CARS CORPORATION

- Ignition off
- Check the connectors of the brake control module (BCM) and the pedal position sensor for contact resistance and oxidation.
- Reinstall the components, reconnect the connectors etc.
- Connect a breakout box to the brake control module (BCM).
- Ignition on
- Read off the status and speed of the pedal position sensor.

Depress the brake pedal and check that the signals are updated.

The pedal position sensor signal should increase upon increased pressure on the brake pedal.

Depress the brake pedal at different speeds. Check that the speed signal is updated.

Other information

- see **CONNECTING THE BREAKOUT BOX, BRAKE CONTROL MODULE (BCM)**
- see **CONTENTS**

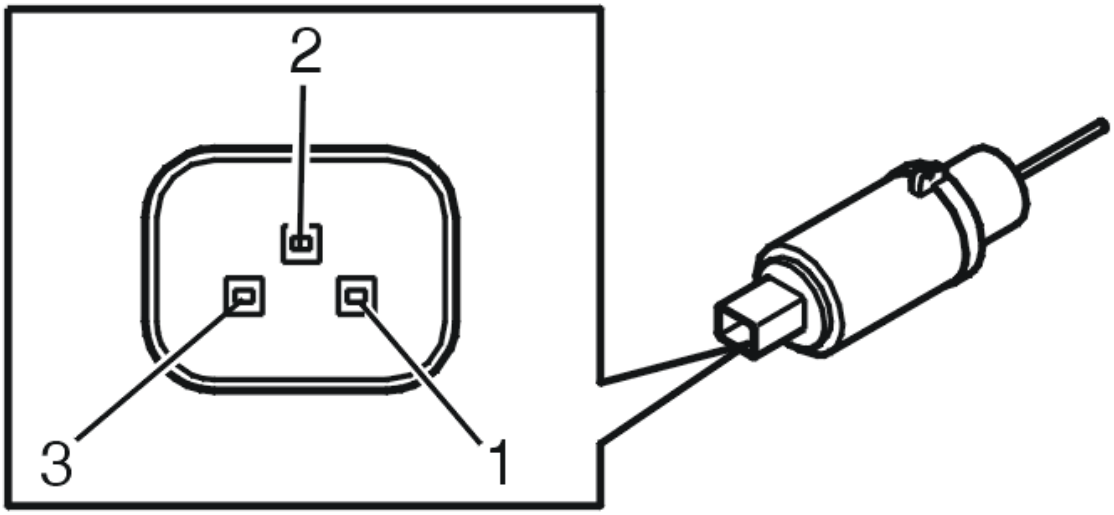

Fig. 287: Identifying Brake Pedal Position Sensor Connector Terminals
Courtesy of VOLVO CARS CORPORATION

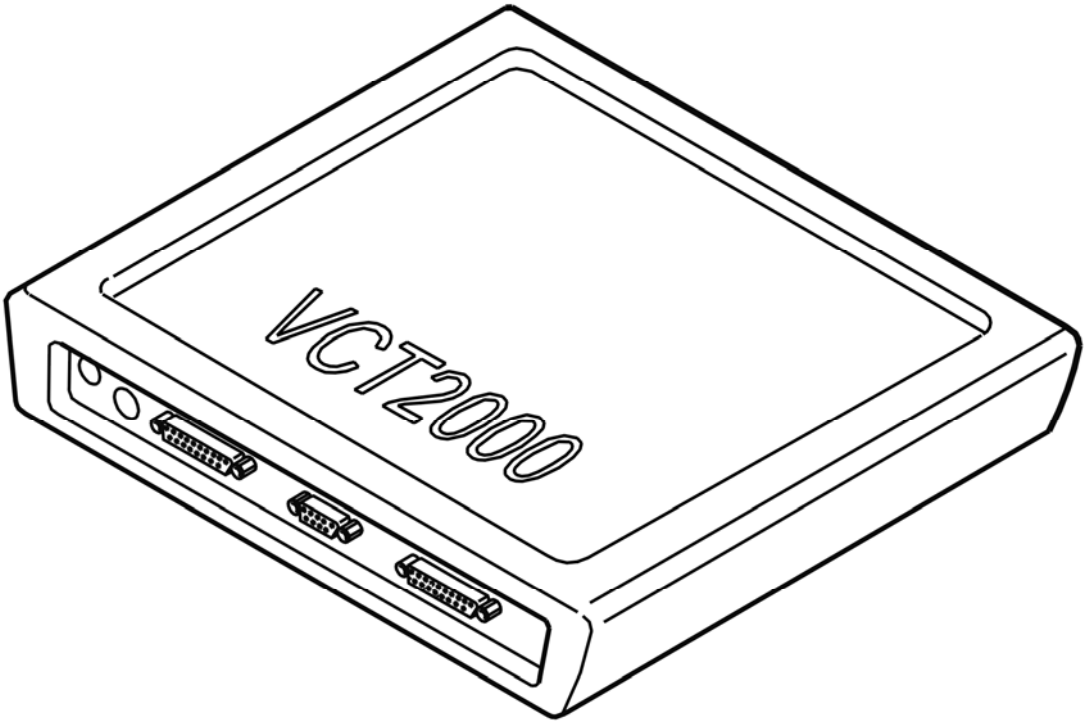

Fig. 288: Identifying VCT2000 Diagnostic Tool Symbol In VIDA
Courtesy of VOLVO CARS CORPORATION

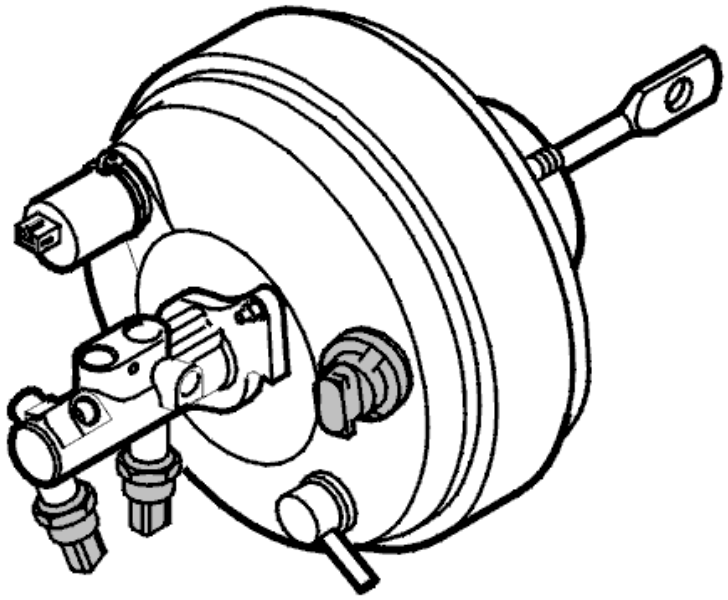

Fig. 289: Identifying Brake Booster
Courtesy of VOLVO CARS CORPORATION

Is the signal updated?

- **YES**

  OKAY: Troubleshooting has been completed.

- **NO**

  see **CHECKING WIRING AND SENSORS**

CHECKING WIRING AND SENSORS

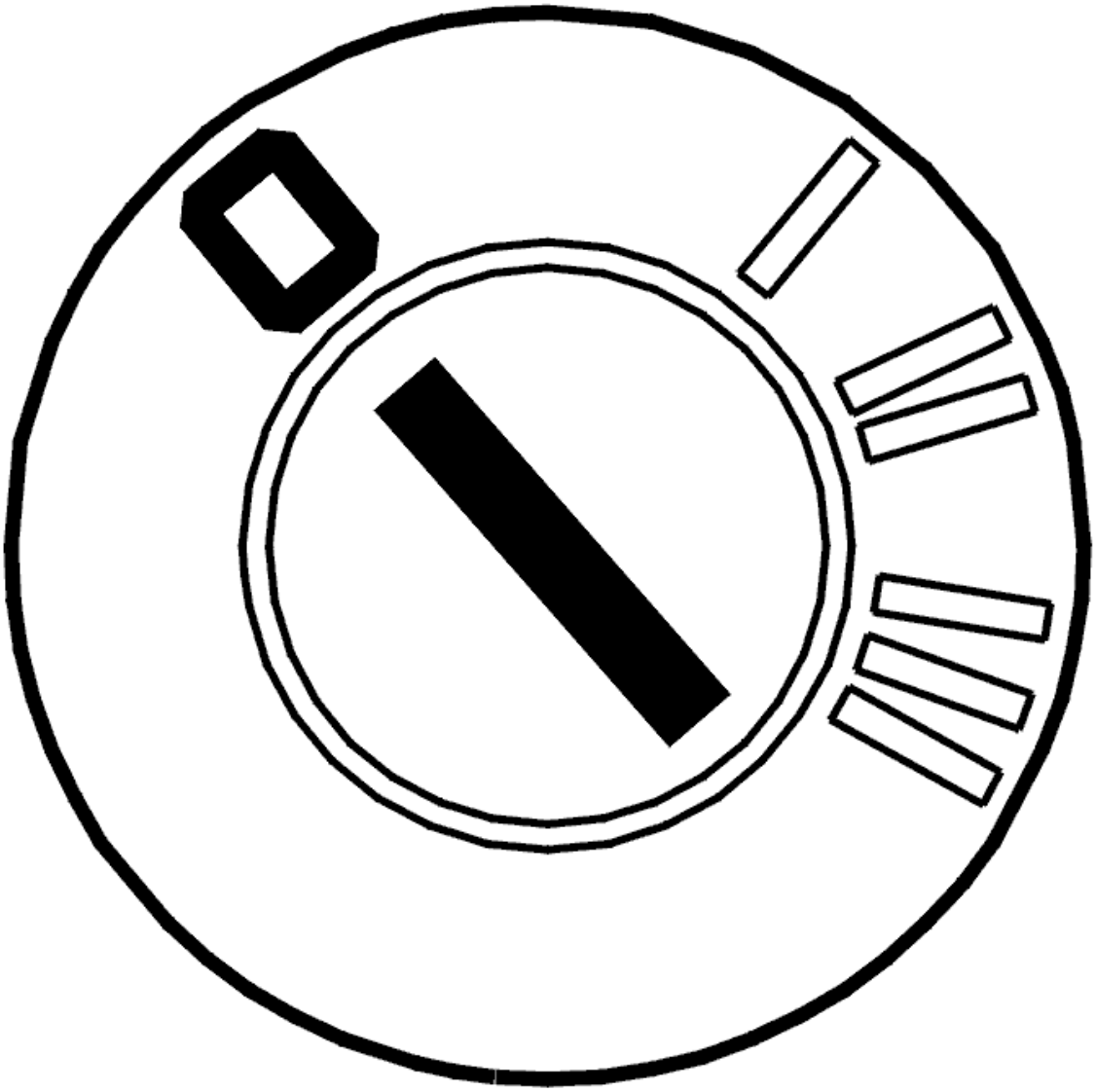

Fig. 290: Identifying Ignition OFF
Courtesy of VOLVO CARS CORPORATION

- Ignition off

  Check the cables for open circuit, short circuit to ground and short circuit to supply voltage.

  Measure between: the pedal position sensor

  - Pedal position sensor terminal #1 and brake control module (BCM) terminal #7 (#A7).
  - Pedal position sensor terminal #2 and brake control module (BCM) terminal #5 (#A5).
  - Pedal position sensor terminal #3 and brake control module (BCM) terminal #3 (#A3).

  Check the pedal position sensor

- with the ignition off
- a breakout box connected to the wiring harness
- the brake control module (BCM) disconnected

by measuring the resistance on the pedal position sensor.

When the brake pedal is not actuated, the resistance between terminals #3 (#A3) and #5 (#A5) on the breakout box should be approx. 0.5 kohms. The resistance should increase when the brake pedal is depressed.

When the brake pedal is not actuated, the resistance between terminals #3 (#A3) and #7 (#A7) on the breakout box should be approx. 2.5 kohms. The resistance should decrease when the brake pedal is depressed.

Remedy as necessary.

Other information

- see **CONNECTING THE BREAKOUT BOX, BRAKE CONTROL MODULE (BCM)**
- see **SIGNAL SPECIFICATION, BRAKE CONTROL MODULE (BCM) WITH STC/ TRACS**
- see **SIGNAL SPECIFICATION, BRAKE CONTROL MODULE (BCM) WITH DSTC (DYNAMIC STABILITY AND TRACTION CONTROL)** .
- see **PEDAL SENSOR POWER BRAKE BOOSTER, REPLACING**
- see **CONTENTS**

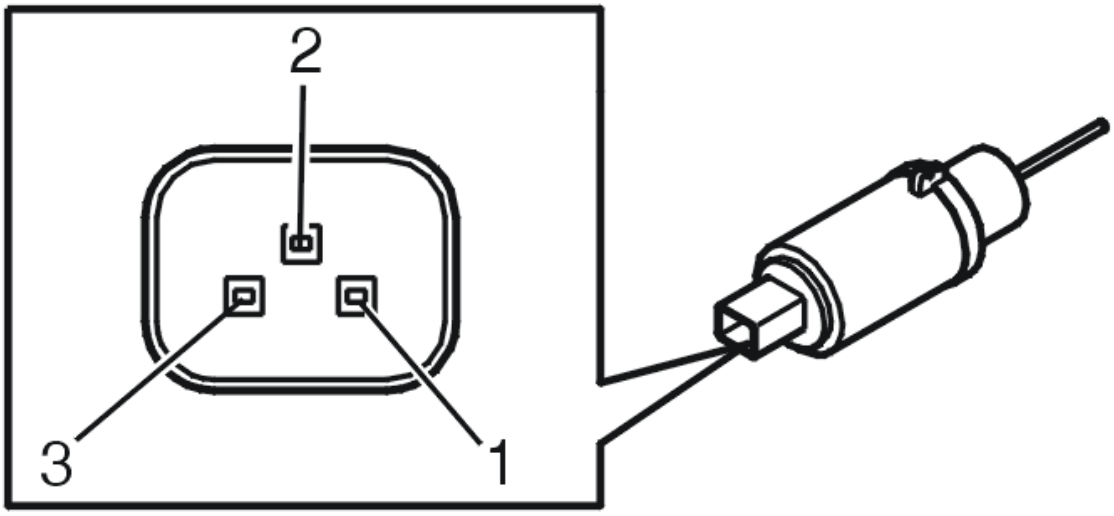

Fig. 291: Identifying Brake Pedal Position Sensor Connector Terminals
Courtesy of VOLVO CARS CORPORATION

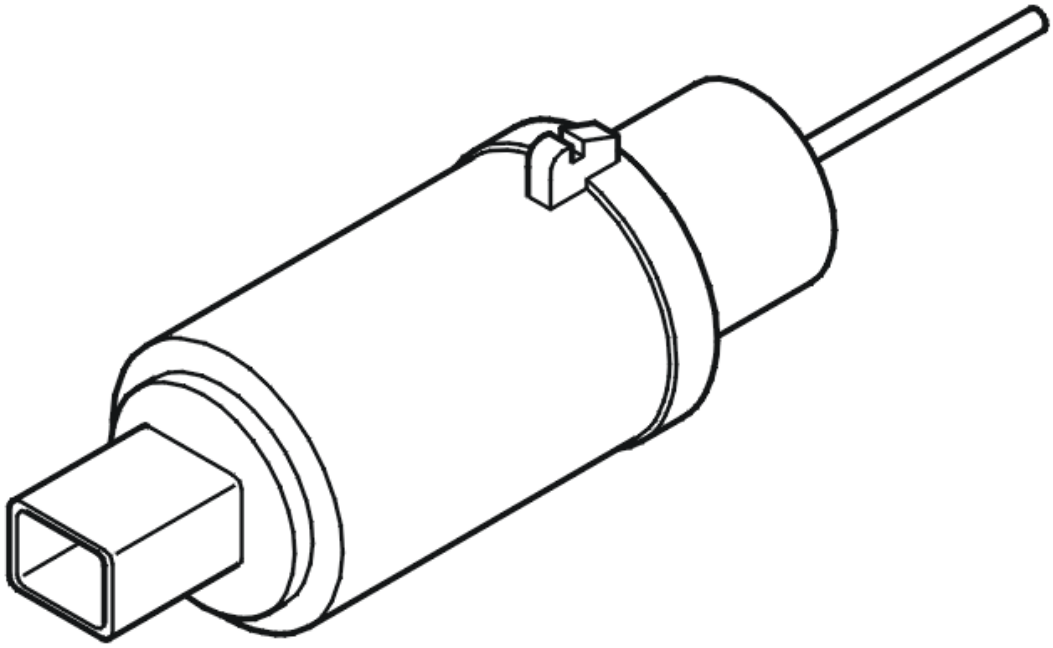

Fig. 292: Identifying Pedal Position Sensor
Courtesy of VOLVO CARS CORPORATION

Was a malfunction detected?

- **YES**

  see **VERIFICATION**

- **NO**

  see **INFORMATION**

VERIFICATION

HINT: After carrying out the repair, check that the malfunction has been remedied.

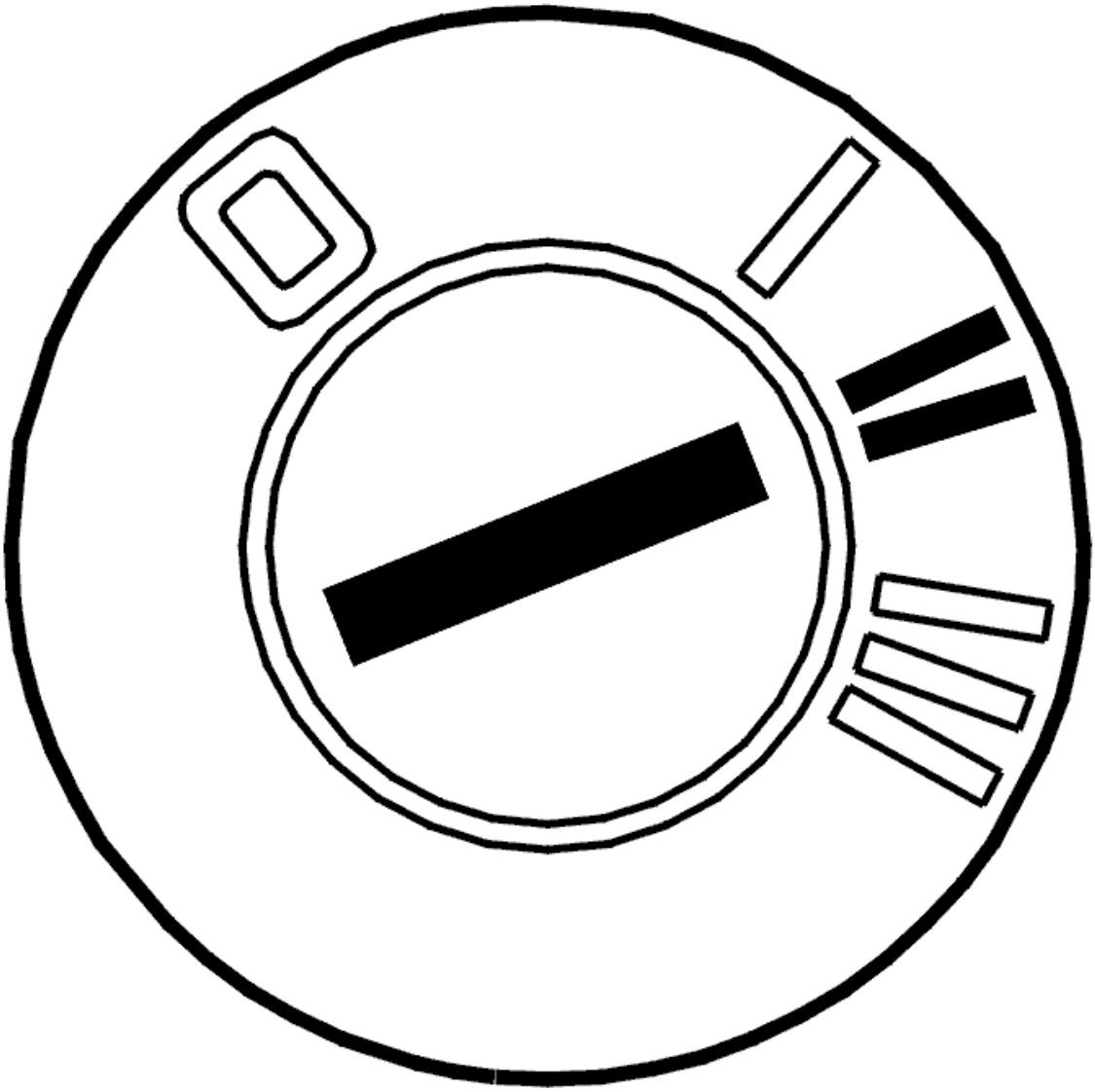

Fig. 293: Identifying Ignition ON
Courtesy of VOLVO CARS CORPORATION

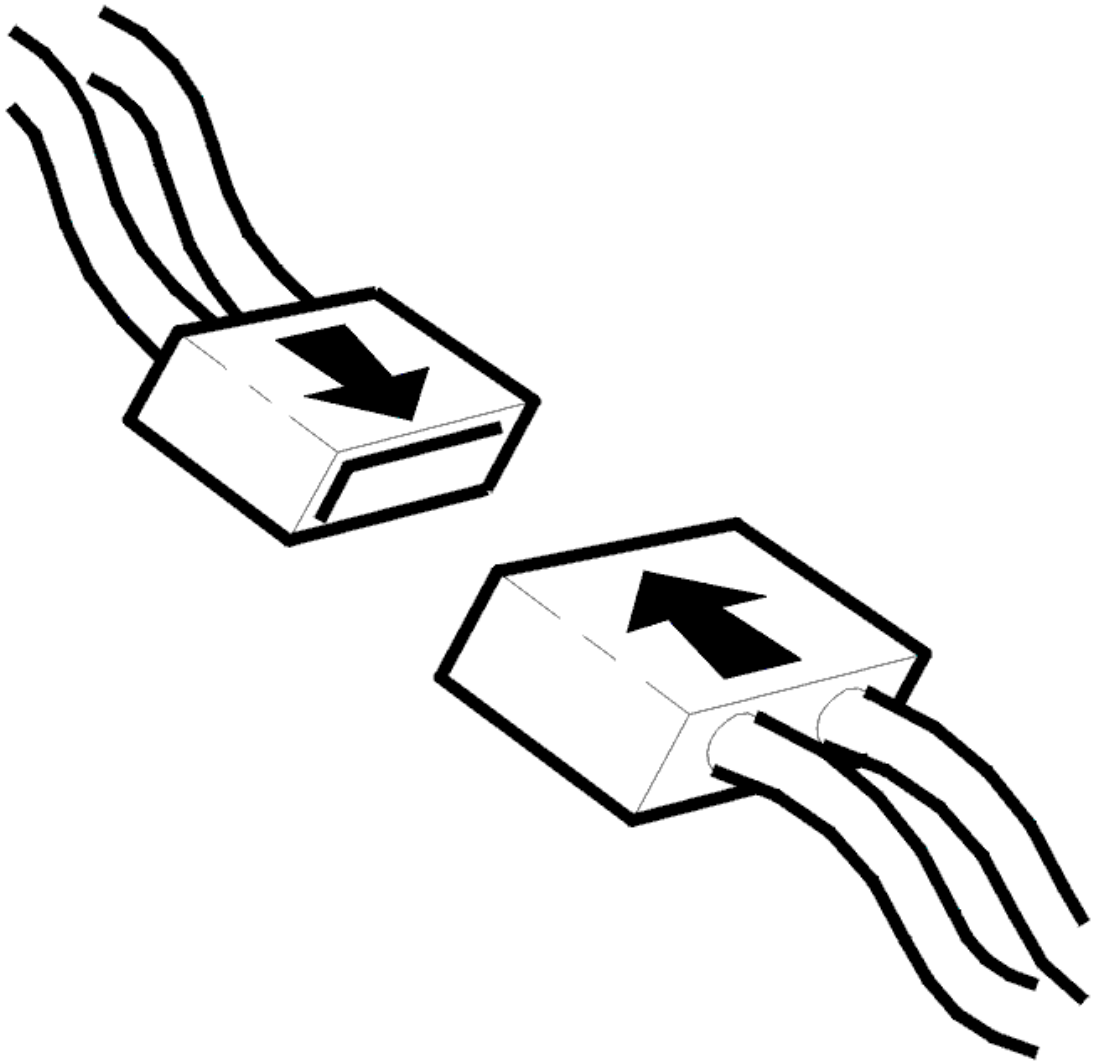

Fig. 294: Connecting Connector
Courtesy of VOLVO CARS CORPORATION

- Ignition off
- Reinstall the components, reconnect the connectors etc.
- Ignition on
- Read off the pedal position sensor signal.

  Depress the brake pedal and check that the signal is updated.

  The signals should increase upon increased pressure on the brake pedal. Depress the brake pedal at different speeds and check that the signal is updated.

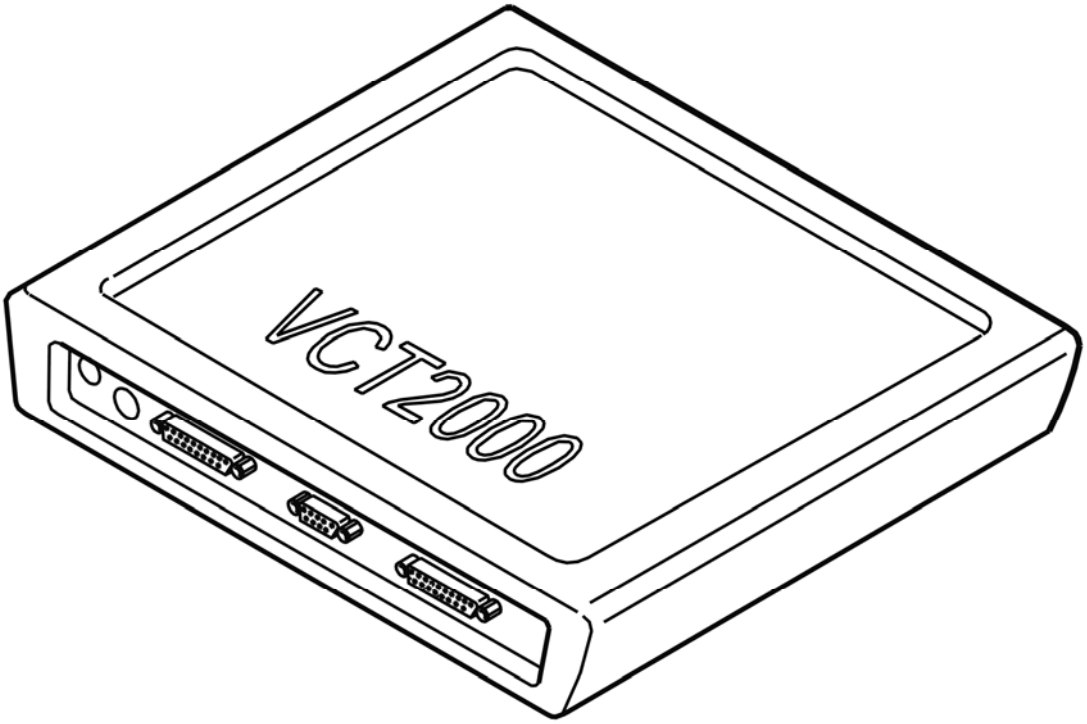

Fig. 295: Identifying VCT2000 Diagnostic Tool Symbol In VIDA
Courtesy of VOLVO CARS CORPORATION

Is the signal updated?

- **YES**

  OKAY: Troubleshooting has been completed.

- **NO**

  see **INFORMATION**

INFORMATION

FAULT-TRACING INFORMATION

The fault should have been detected and remedied. As this is not the case fault-tracing has failed.

Exit fault-tracing for this diagnostic trouble code (DTC) or make another attempt.

INFORMATION

FAULT-TRACING INFORMATION

The fault should be diagnosed and remedied. Since this is not the case the fault-tracing process has failed.

Complete the fault-tracing for those fault or try again.

BCM-C004801: PEDAL POSITION SENSOR. GENERAL MALFUNCTION INFORMATION. GENERAL ELECTRICAL MALFUNCTION (B6324S5; 2011-2012)

DIAGNOSTIC TROUBLE CODE INFORMATION BCM-C004801

see **DIAGNOSTIC TROUBLE CODE INFORMATION BCM-C004801**

TROUBLESHOOTING BCM-C004801

see **TROUBLESHOOTING BCM-C004801**

BCM-C004801: PEDAL POSITION SENSOR. GENERAL MALFUNCTION INFORMATION. GENERAL ELECTRICAL MALFUNCTION (B8444S; 2005-2011)

DIAGNOSTIC TROUBLE CODE INFORMATION BCM-C004801

see **DIAGNOSTIC TROUBLE CODE INFORMATION BCM-C004801**

TROUBLESHOOTING BCM-C004801

see **TROUBLESHOOTING BCM-C004801**

BCM-C004864: PEDAL POSITION SENSOR. ALGORITHM ERROR. SIGNAL OUTSIDE PERMITTED RANGE (B6324S; 2007-2010)

DIAGNOSTIC TROUBLE CODE INFORMATION BCM-C004864

Condition

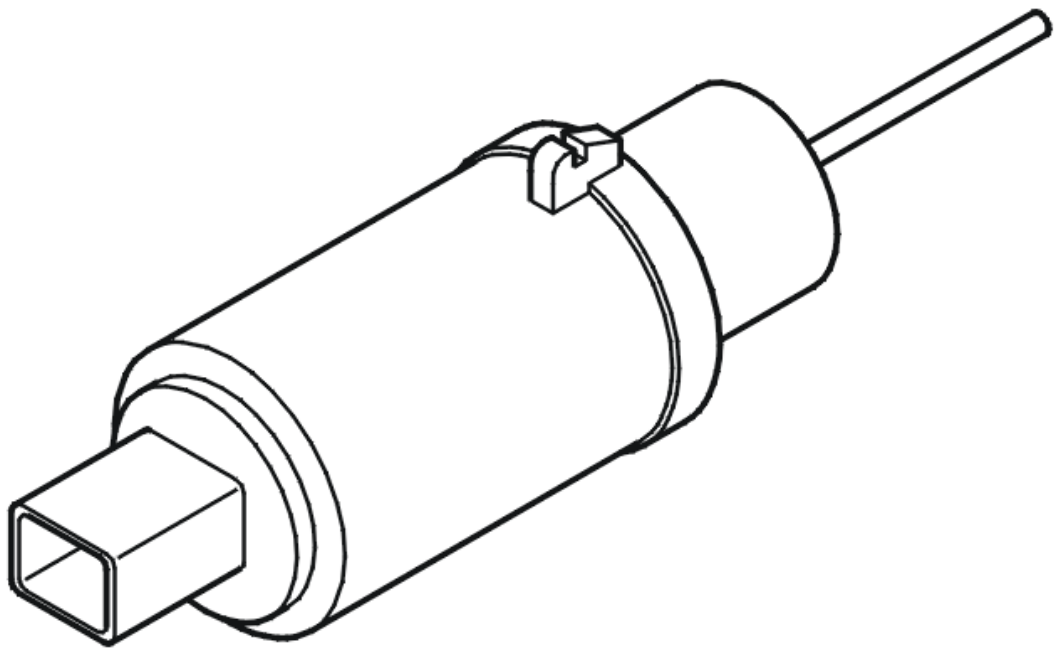

Fig. 296: Identifying Pedal Position Sensor
Courtesy of VOLVO CARS CORPORATION

The pedal position sensor is part of the "Active brake assist" (BA) function and sends a signal to the brake control module (BCM) regarding the position of the brake pedal and the speed with which it was depressed. These signals are used to determine how much brake force is needed in each braking situation.

The pedal position sensor is also found in vehicles without BA. It is then used by the brake control module (BCM) to check the function of the brake light switch.

Diagnostic trouble code BCM-C004864 is generated if the brake control module (BCM) registers an unreasonable signal from the pedal position sensor.

The diagnostic trouble code can be diagnosed after the following: The brake pedal is pressed all the way down, the engine is started and the brake pedal released. After remaining stationary for approx. 10 seconds, the vehicle is driven faster than 10 km/h (6.2 mph) for at least 10 seconds. The vehicle is then stopped by braking.

Substitute Value

- BA is blocked.

HINT: For information on abbreviations: BRAKE SYSTEM, ABBREVIATIONS

Possible Source

- Open circuit in the cables.
- The cables are short-circuited to ground or voltage.
- Improperly installed pedal position sensor.
- Damaged pedal position sensor.
- Damaged brake control module (BCM).

Fault symptom[s]

- General warning light on.

TROUBLESHOOTING BCM-C004864

CHECKING DIAGNOSTIC TROUBLE CODES IN CEM AND ECM

If there are any diagnostic trouble codes for the brake pedal position sensor or the brake light switch stored in the engine control module (ECM) or in the central electronic module (CEM), perform troubleshooting of these first.

Were any diagnostic trouble codes stored for the pedal position sensor or brake light switch?

- **YES**

  OKAY: Troubleshooting has been completed.

- **NO**

  see **CHECKING CONTROL MODULE AND THE SENSOR'S CONNECTOR**

CHECKING CONTROL MODULE AND THE SENSOR'S CONNECTOR

HINT: The cause of the diagnostic trouble code can be found in the circuit for the brake light switch or the pedal position sensor.

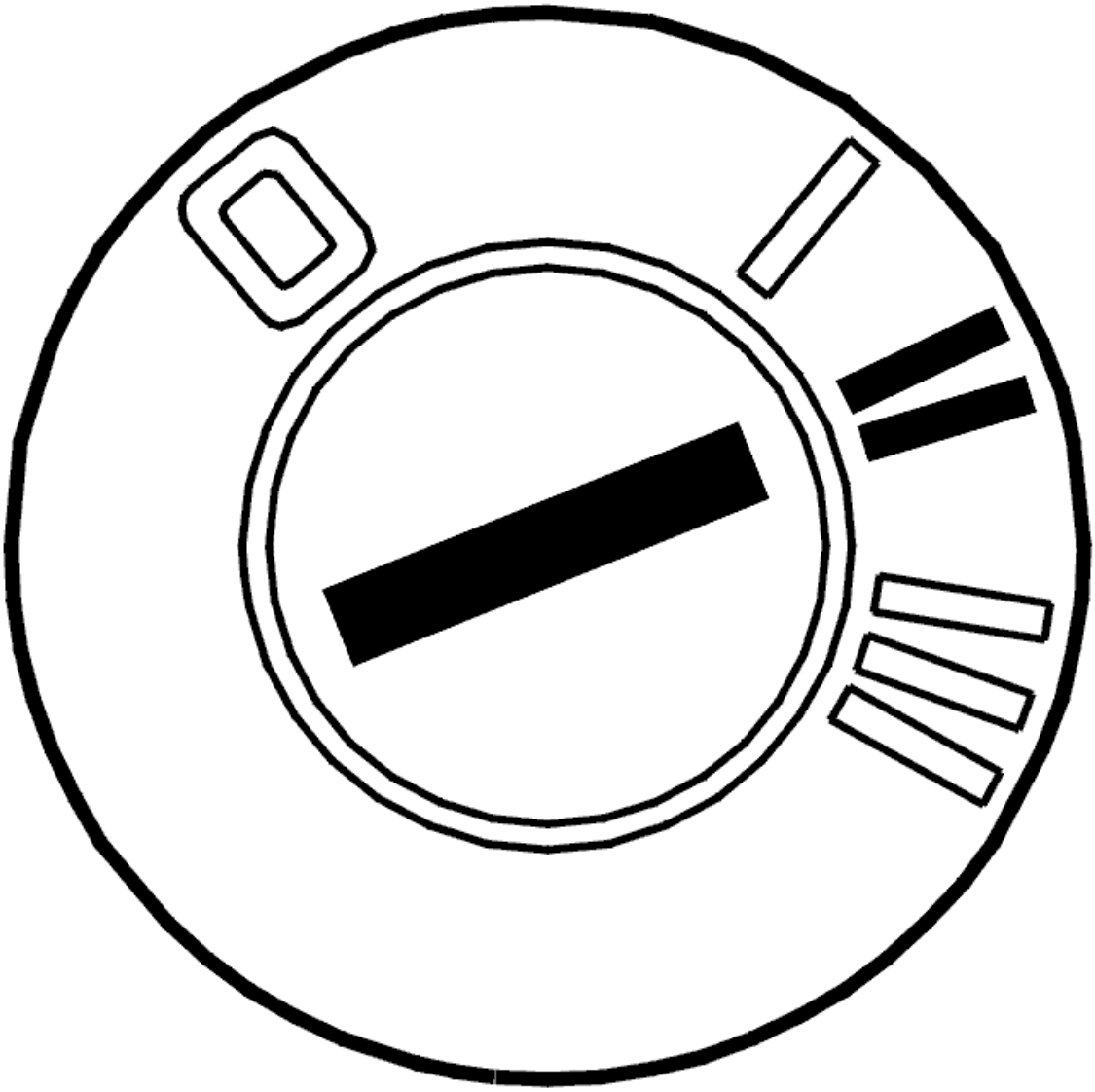

Fig. 297: Identifying Ignition ON
Courtesy of VOLVO CARS CORPORATION

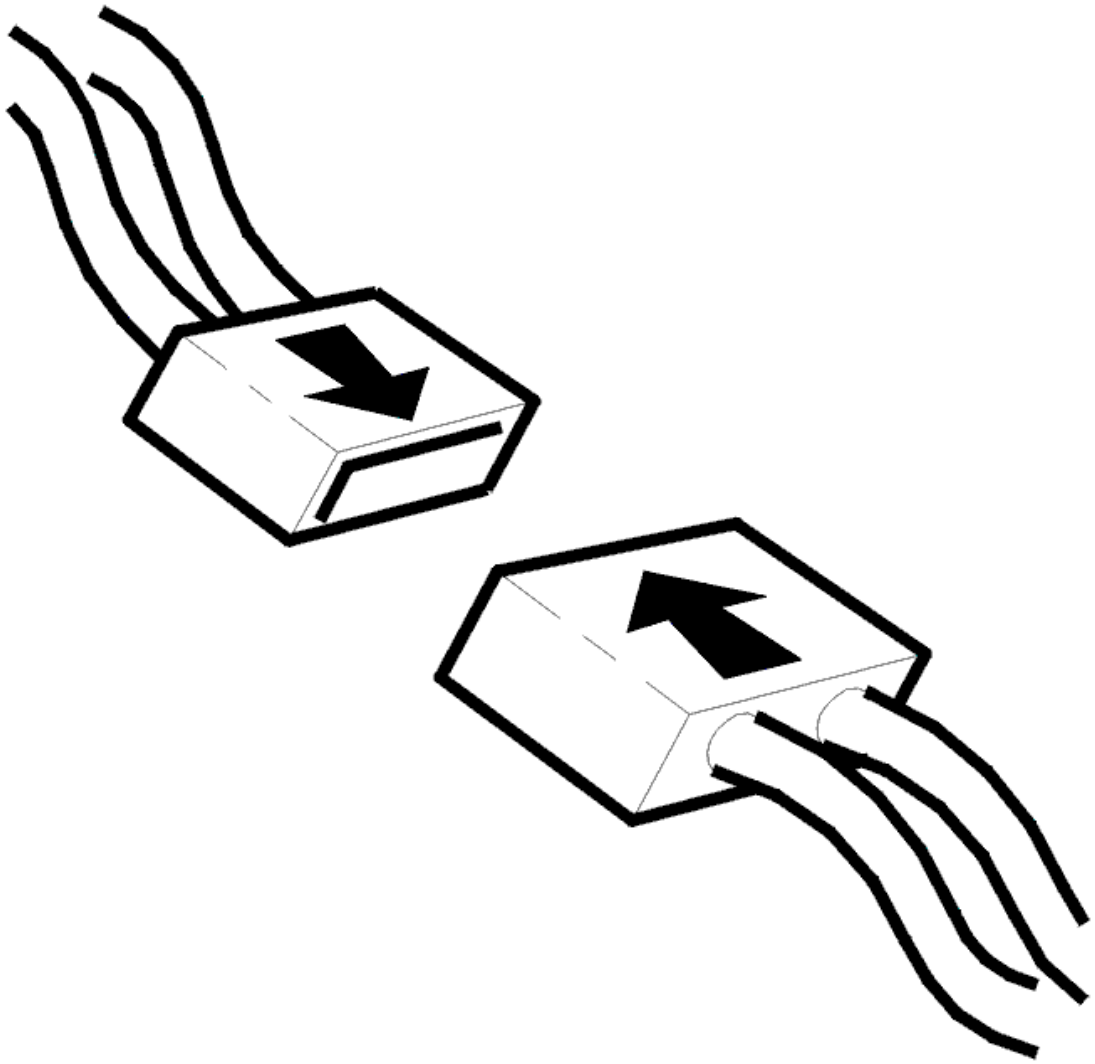

Fig. 298: Connecting Connector
Courtesy of VOLVO CARS CORPORATION

- Ignition off
- Check the connectors of the brake control module (BCM), brake light switch, and the pedal position sensor for contact resistance and oxidation.
- Reinstall the components, reconnect the connectors etc.
- Ignition on
- Read off the status of the brake light switch and the pedal position sensor's position.

  Depress the brake pedal and let it up again. The value shall change between OFF and ON, and the pedal position sensor's position shall be updated.

  Other information

- see **CONNECTING THE BREAKOUT BOX, BRAKE CONTROL MODULE (BCM)**
- see **STOP LAMP SWITCH, REPLACING**
- see **PEDAL SENSOR POWER BRAKE BOOSTER, REPLACING**
- see **CONTENTS**

Select an alternative:

1. The value for the brake light switch does not change.

   see **CHECKING FUSES, WIRING AND SENSORS**

2. The value for the pedal position sensor is not updated.

   see **SIGNAL OUTSIDE PERMITTED RANGE**

3. The values are OK.

   FAULT NOT FOUND: Troubleshooting has been completed.

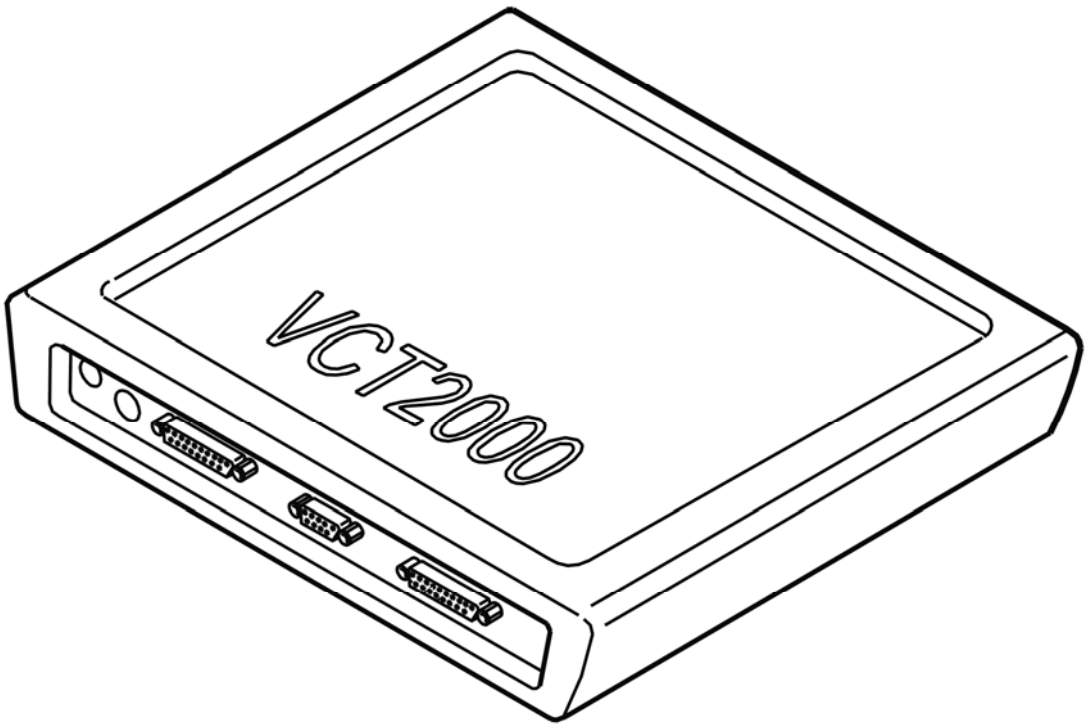

Fig. 299: Identifying VCT2000 Diagnostic Tool Symbol In VIDA
Courtesy of VOLVO CARS CORPORATION

Select an alternative.

CHECKING FUSES, WIRING AND SENSORS

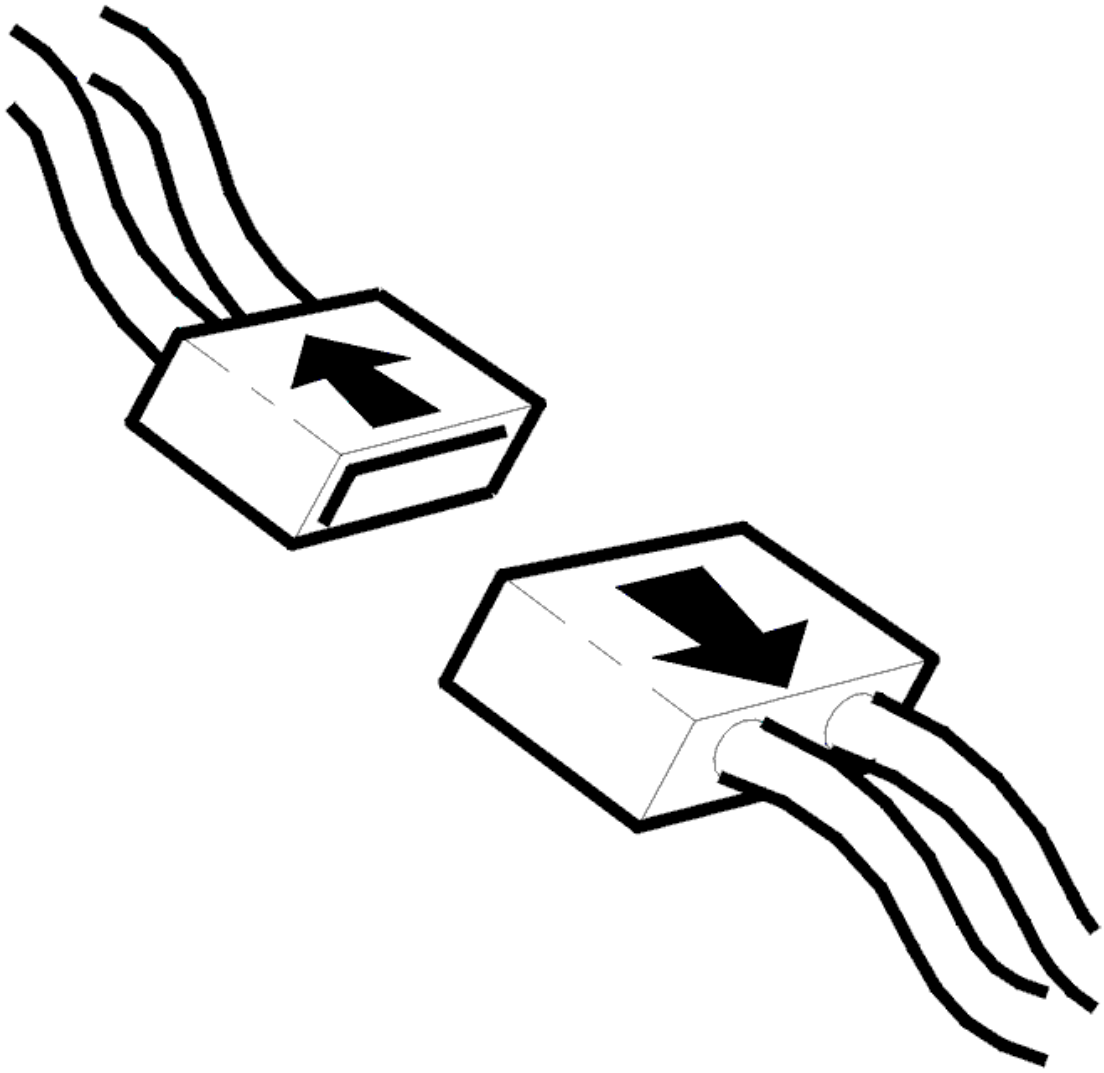

Fig. 300: Disconnecting Connector
Courtesy of VOLVO CARS CORPORATION

Check that the fuse for the brake light circuit is okay. If the fuse is damaged, first check the circuit to the brake light switch for short-circuiting to voltage before the replacing the fuse.

If the fuse is okay, check the circuit for the brake light switch for open circuit and short-circuit to ground.

Remedy as necessary.

Other information

- see **CONNECTING THE BREAKOUT BOX, BRAKE CONTROL MODULE (BCM)**
- To connect the breakout box to the Engine control module (ECM), see: **CONNECTING THE**

BREAKOUT BOX

- For connecting breakout box to Central Electronic Module (CEM):**CONNECTING THE BREAKOUT BOX**
- see **STOP LAMP SWITCH, REPLACING**
- see **CHECKING WIRING AND TERMINALS**

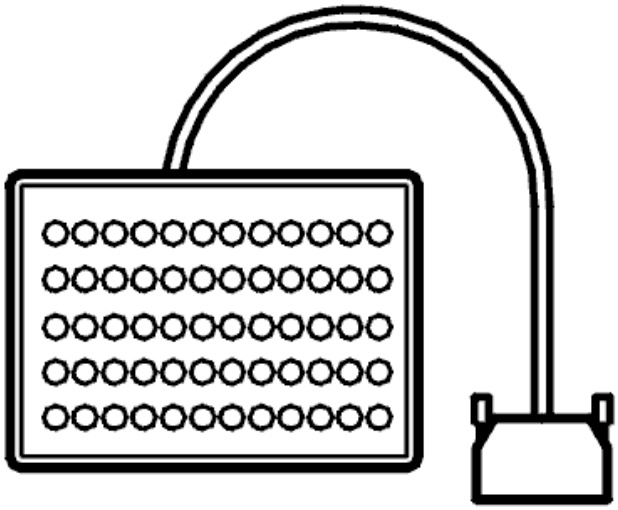

Fig. 301: Breakout Box
Courtesy of VOLVO CARS CORPORATION

Was a malfunction detected?

- **YES**

  see **VERIFICATION**

- **NO**

  FAULT NOT FOUND: Troubleshooting has been completed.

SIGNAL OUTSIDE PERMITTED RANGE

CHECKING THE CONNECTORS

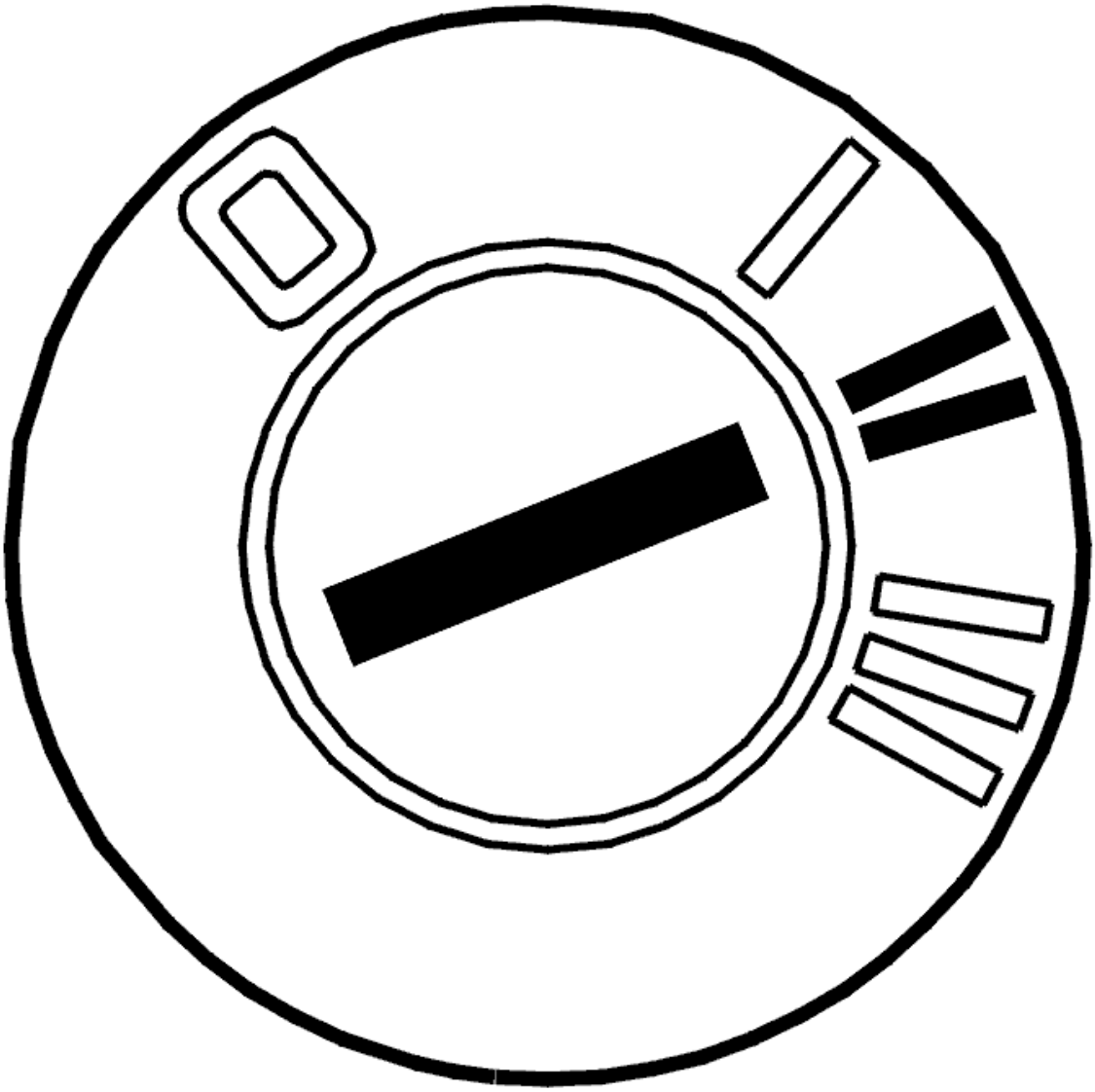

Fig. 302: Identifying Ignition ON
Courtesy of VOLVO CARS CORPORATION

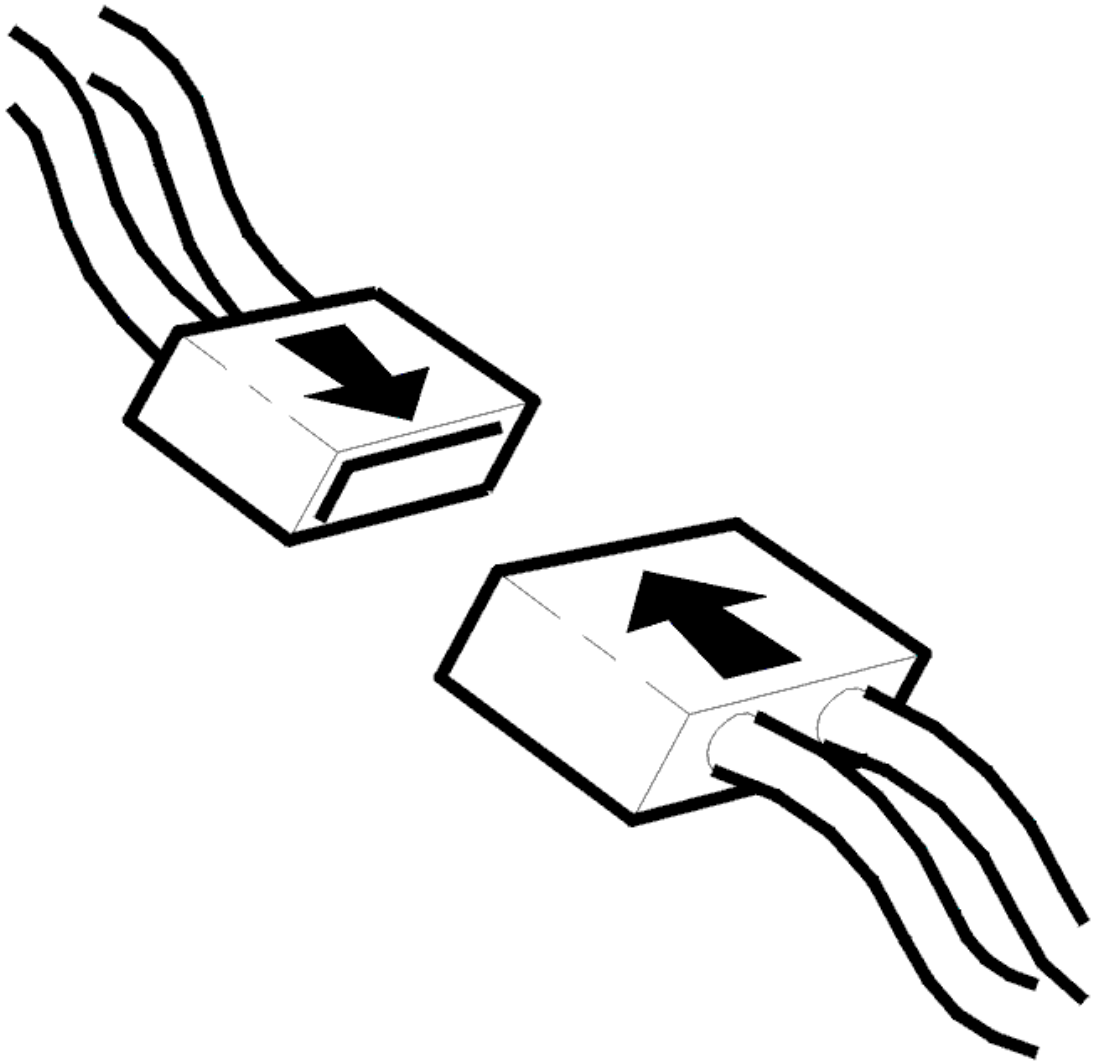

Fig. 303: Connecting Connector
Courtesy of VOLVO CARS CORPORATION

- Ignition off
- Check the connectors of the brake control module (BCM) and the pedal position sensor for contact resistance and oxidation.
- Reinstall the components, reconnect the connectors etc.
- Connect a breakout box.
- Ignition on
- Read off the pedal position sensor signal.

  Press down the brake pedal and check that the pedal's signals are updated.

  Other information

- see **CONNECTING THE BREAKOUT BOX, BRAKE CONTROL MODULE (BCM)**
- see **CONTENTS** .

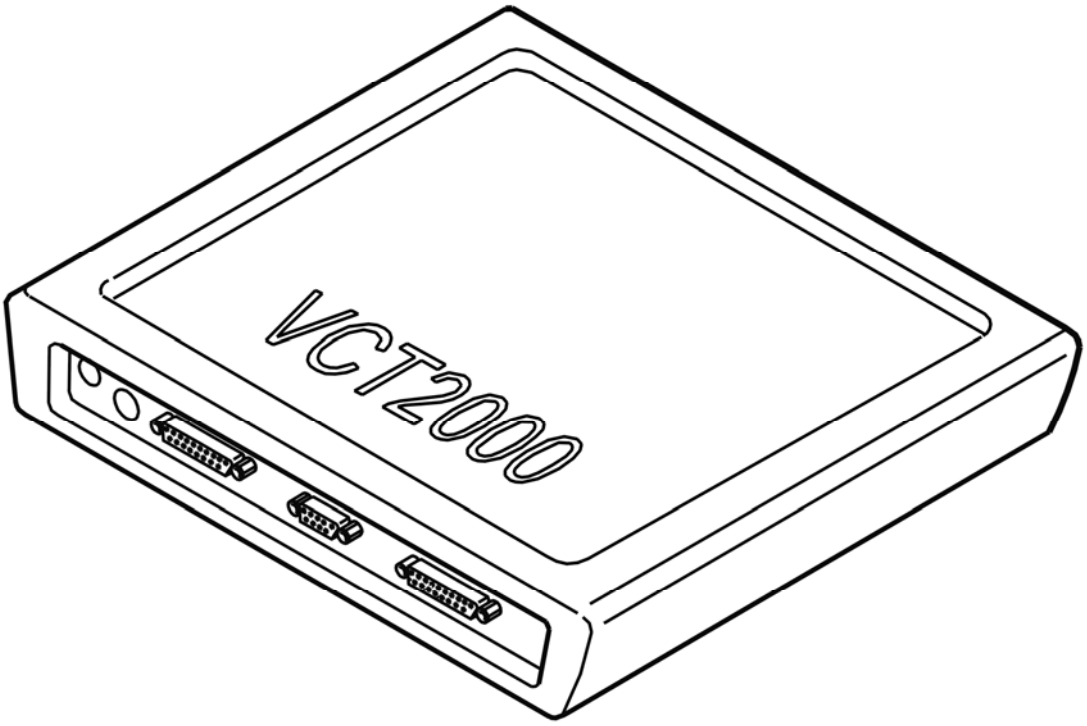

Fig. 304: Identifying VCT2000 Diagnostic Tool Symbol In VIDA
Courtesy of VOLVO CARS CORPORATION

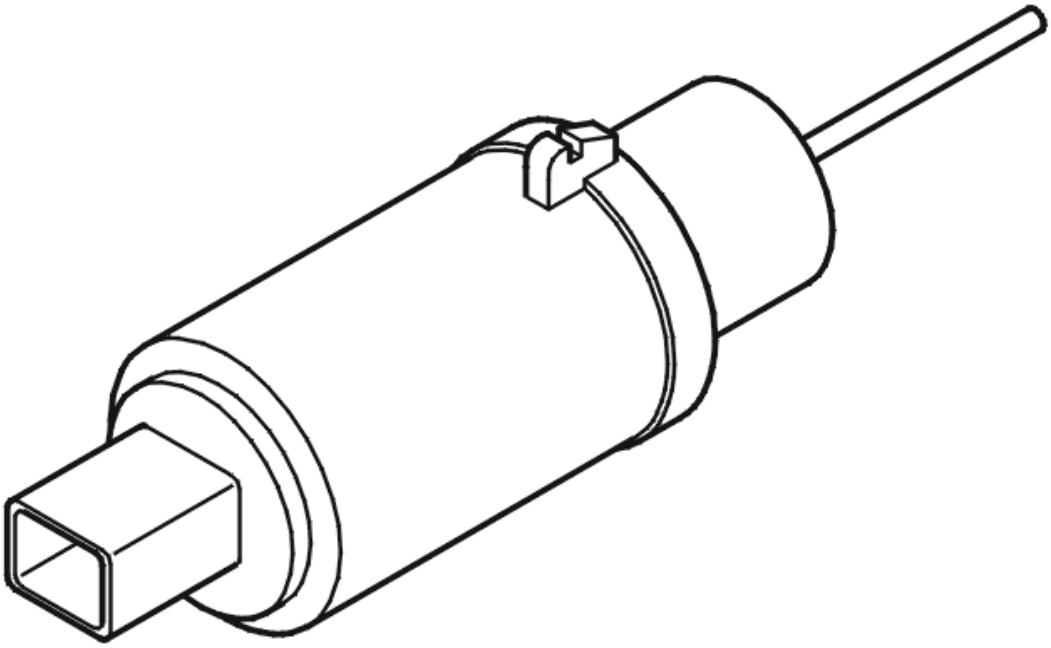

Fig. 305: Identifying Pedal Position Sensor
Courtesy of VOLVO CARS CORPORATION

Were the signals updated?

- **YES**

  OKAY: Troubleshooting has been completed.

- **NO**

  see **CHECKING WIRING AND SENSORS**

CHECKING WIRING AND SENSORS

Check the cables between:

- pedal position sensor terminal #1 and brake control module (BCM) terminal #7 (#A7)
- pedal position sensor terminal #2 and brake control module (BCM) terminal #5 (#A5)
- pedal position sensor terminal #3 and brake control module (BCM) terminal #3 (#A3)

check for open circuit, short-circuit to ground and short-circuit to voltage.

HINT: Connect an ohmmeter between #2 and #3 on the pedal position sensor's connector.

HINT: The resistance shall be approx. 0.5 kohms with the brake pedal inactivated and approx. 2.5-3 kohms with depressed brake pedal.

HINT:

HINT: Connect the ohmmeter between #1 and #3 on the pedal position sensor's connector.

HINT: The resistance shall be approx. 2.5-3 kohms with the brake pedal inactivated and approx. 0.5 kohms with depressed brake pedal.

HINT:

HINT: If resistance is incorrect, replace the pedal position sensor.

If no defect is found, replace the pedal position sensor.

Other information

- see **CONNECTING THE BREAKOUT BOX, BRAKE CONTROL MODULE (BCM)**
- see **PEDAL SENSOR POWER BRAKE BOOSTER, REPLACING**
- see **SIGNAL SPECIFICATION, BRAKE CONTROL MODULE (BCM) WITH DSTC (DYNAMIC STABILITY AND TRACTION CONTROL)** .
- see **CONTENTS**

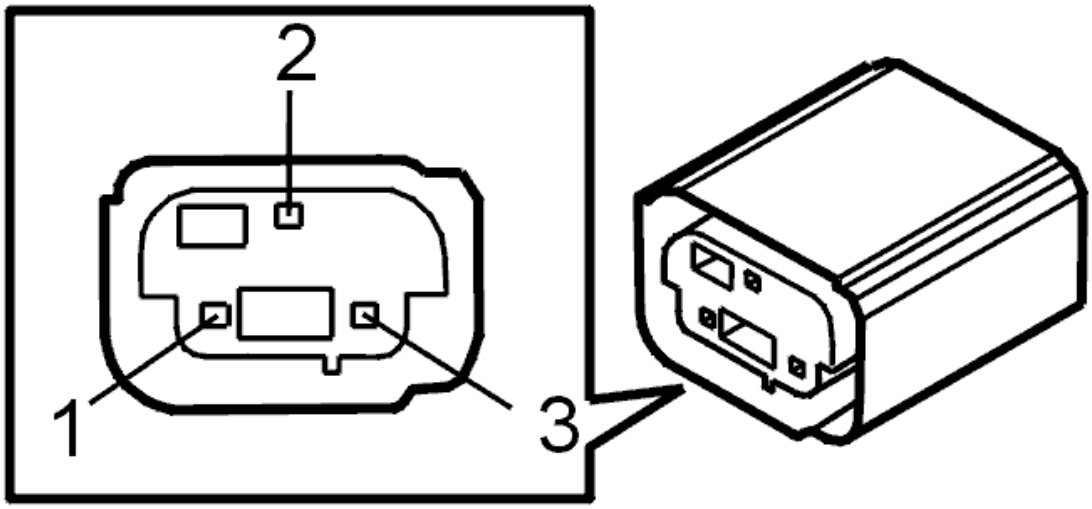

Fig. 306: Identifying Pedal Position Sensor Connector
Courtesy of VOLVO CARS CORPORATION

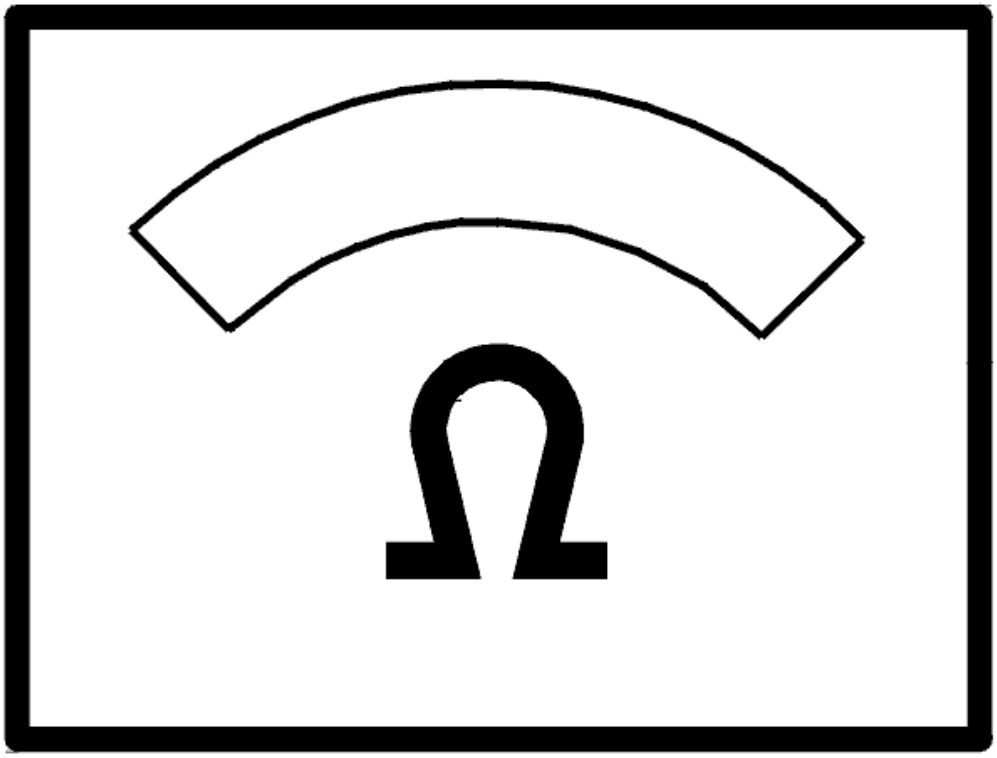

Fig. 307: Identifying Ohm Meter
Courtesy of VOLVO CARS CORPORATION

- **Continue**

  see **VERIFICATION**

VERIFICATION

HINT: After carrying out the repair, check that the malfunction has been remedied.

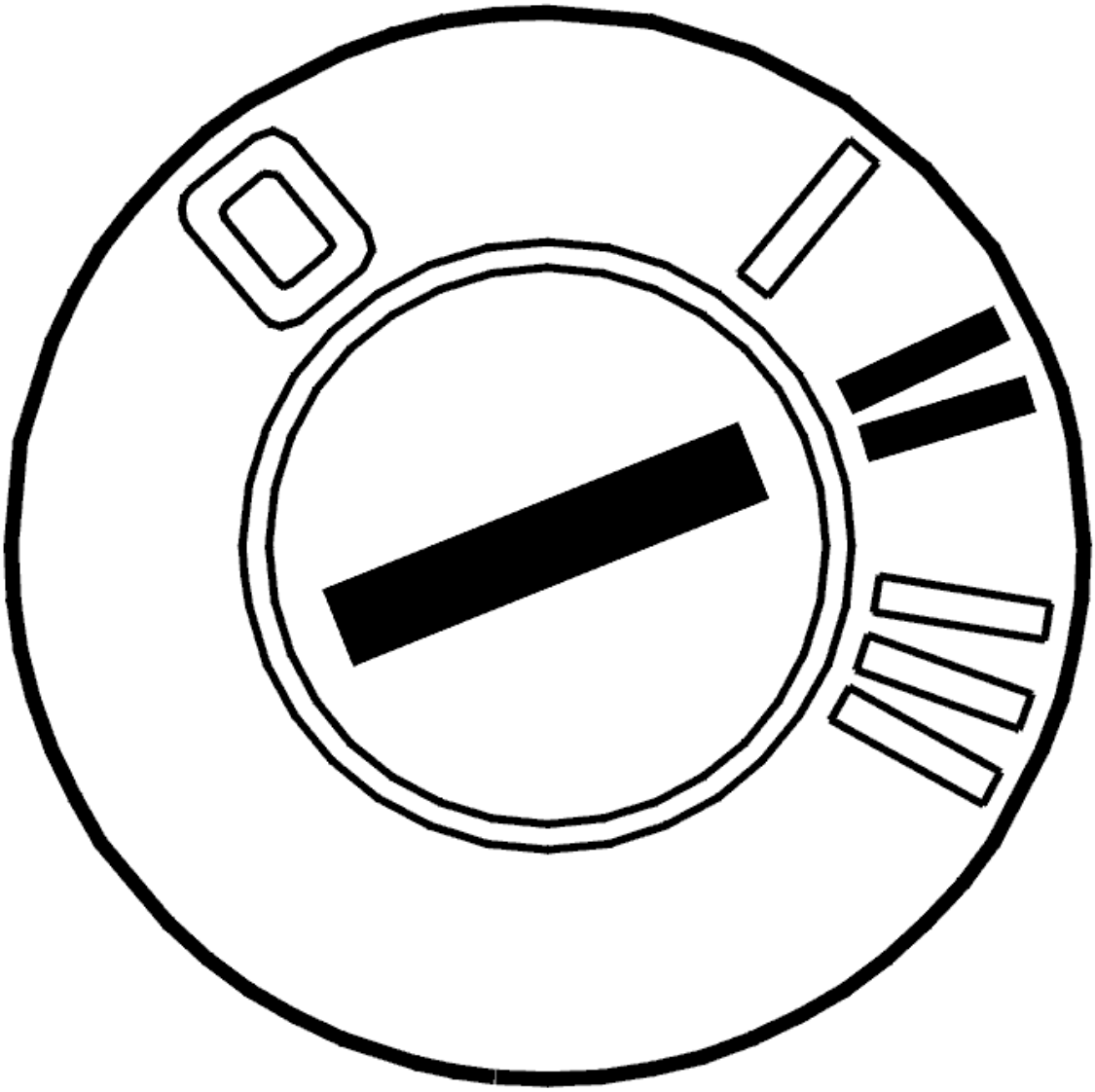

Fig. 308: Identifying Ignition ON
Courtesy of VOLVO CARS CORPORATION

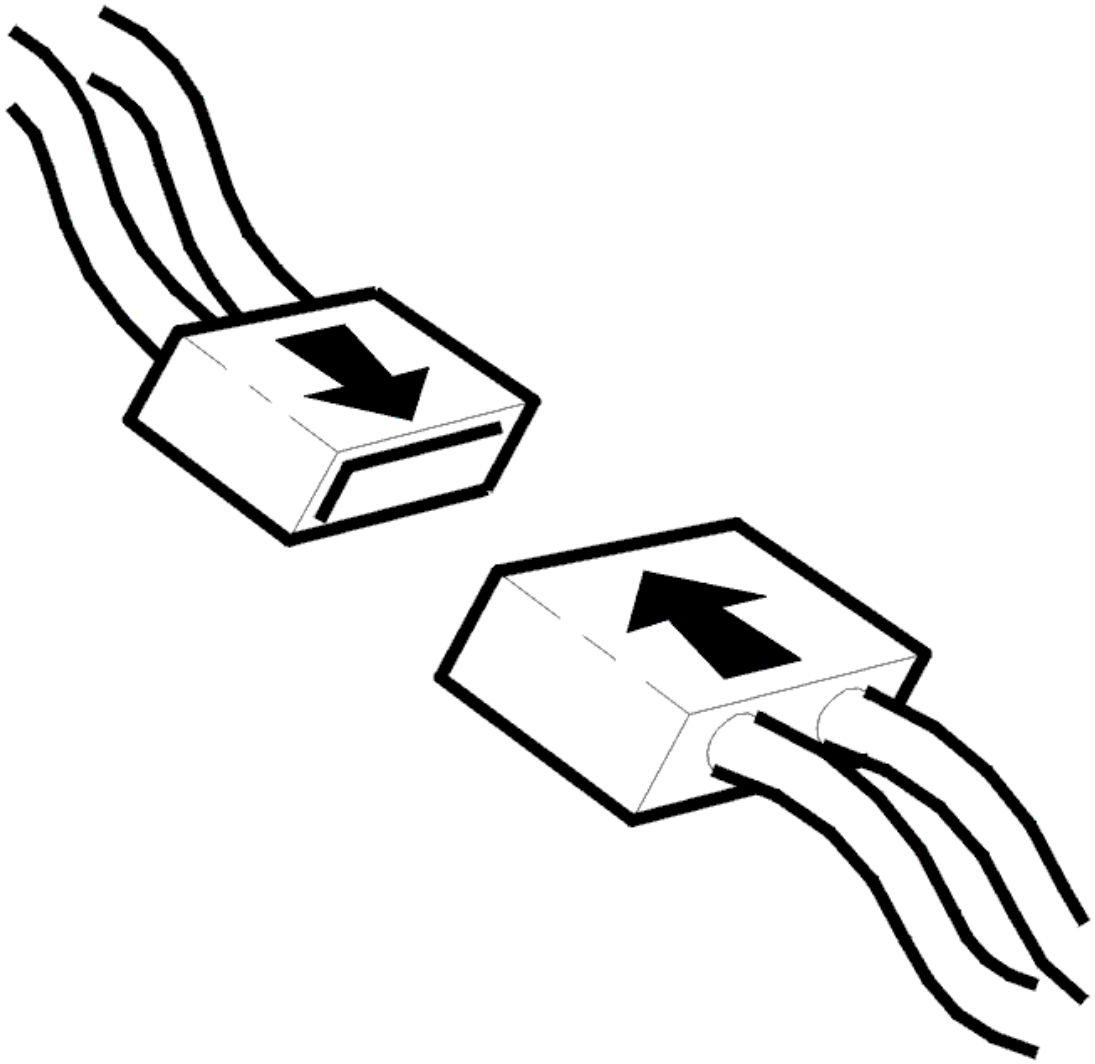

Fig. 309: Connecting Connector
Courtesy of VOLVO CARS CORPORATION

- Ignition off
- Reinstall the components, reconnect the connectors etc.
- Ignition on
- Read off the pedal position sensor signal.

  Press down the brake pedal and check that the pedal's signals are updated.

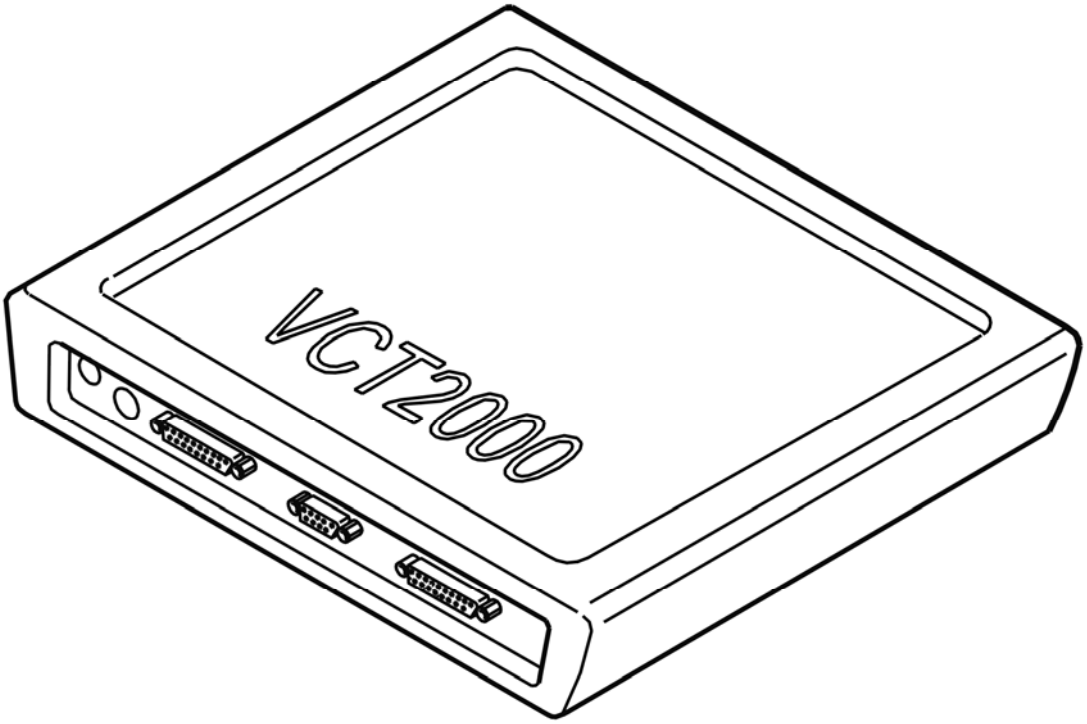

Fig. 310: Identifying VCT2000 Diagnostic Tool Symbol In VIDA
Courtesy of VOLVO CARS CORPORATION

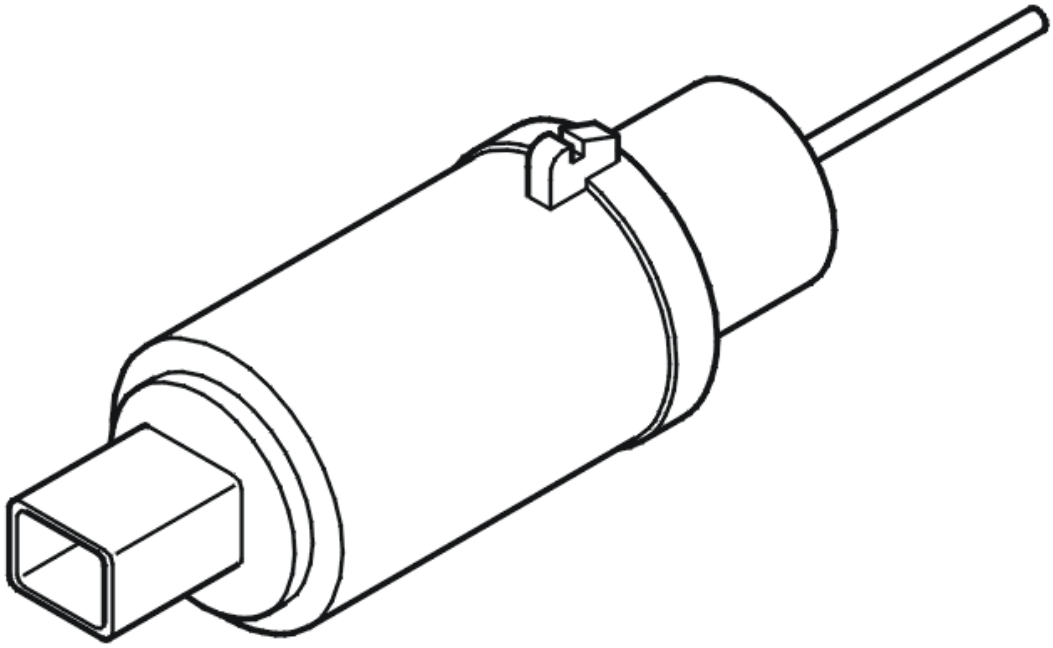

Fig. 311: Identifying Pedal Position Sensor
Courtesy of VOLVO CARS CORPORATION

Were the signals updated?

- **YES**

  OKAY: Troubleshooting has been completed.

- **NO**

  see **INFORMATION**

INFORMATION

FAULT-TRACING INFORMATION

The fault should have been detected and remedied. As this is not the case fault-tracing has failed.

Exit fault-tracing for this diagnostic trouble code (DTC) or make another attempt.

VERIFICATION

VERIFICATION

HINT: After carrying out the repair, check that the malfunction has been remedied.

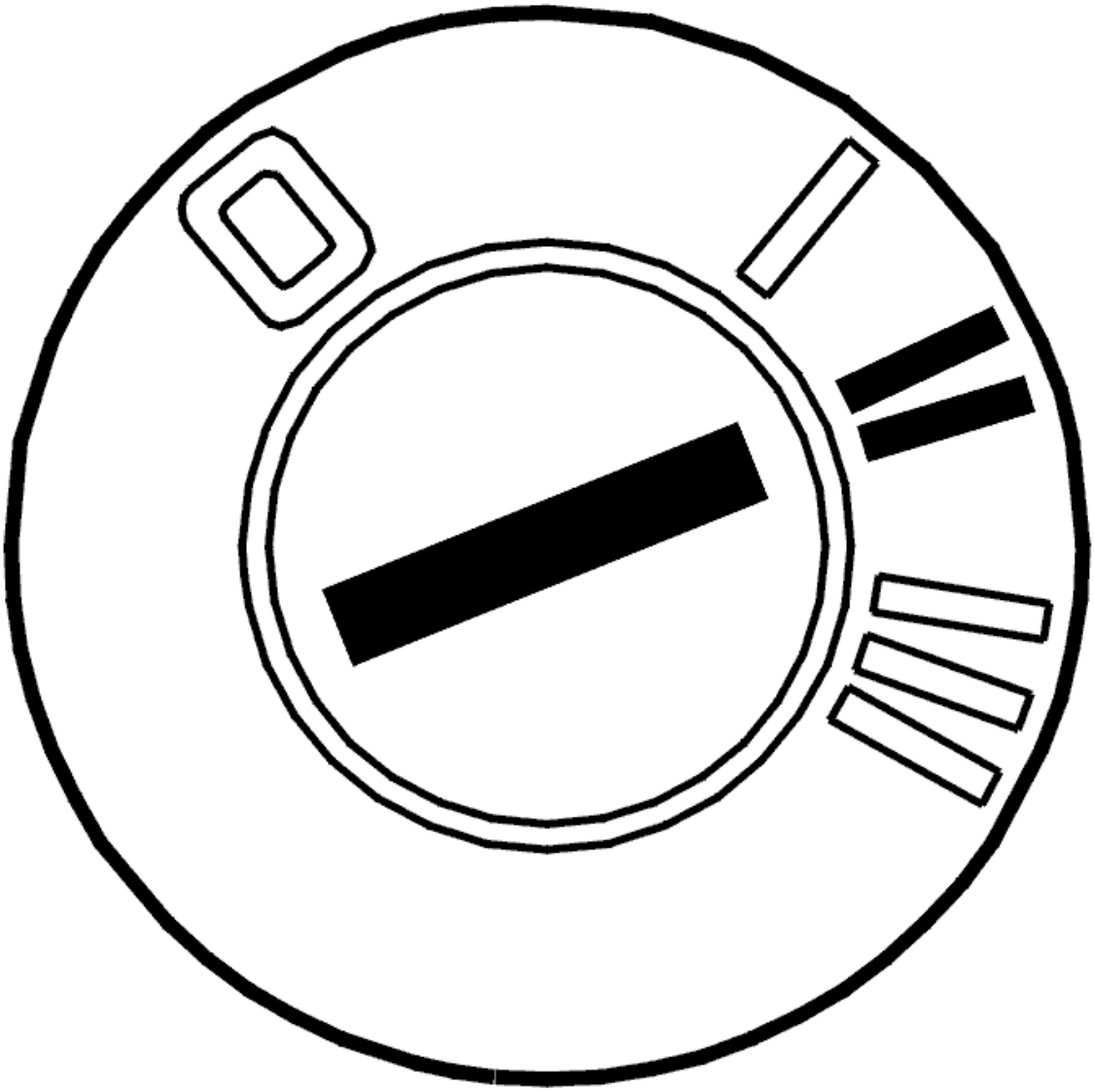

Fig. 312: Identifying Ignition ON
Courtesy of VOLVO CARS CORPORATION

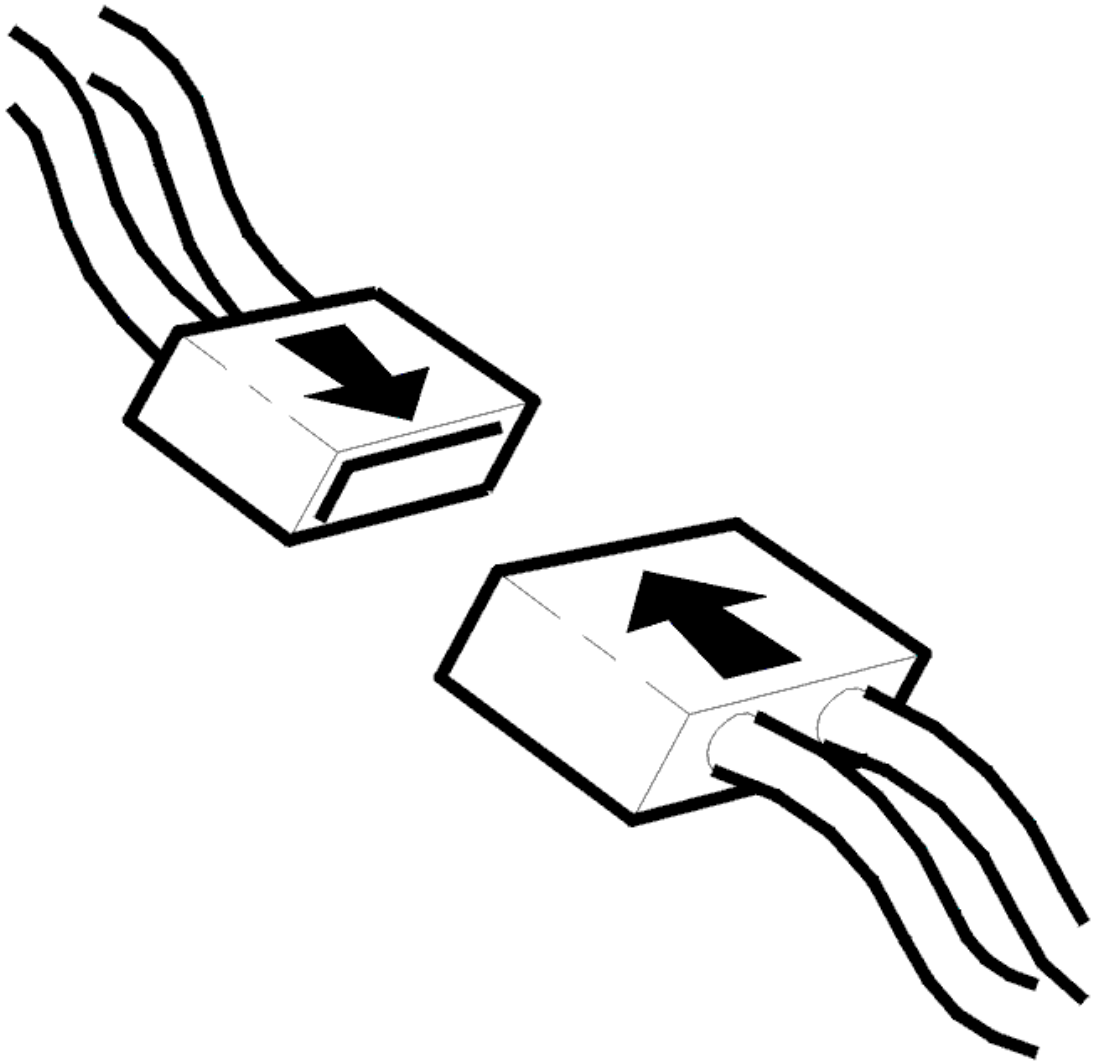

Fig. 313: Connecting Connector
Courtesy of VOLVO CARS CORPORATION

- Ignition off
- Reconnect the connectors, components, etc.
- Ignition on
- Read the status of the brake light switch.

  Depress the brake pedal and release it. The value should change between OFF and ON.

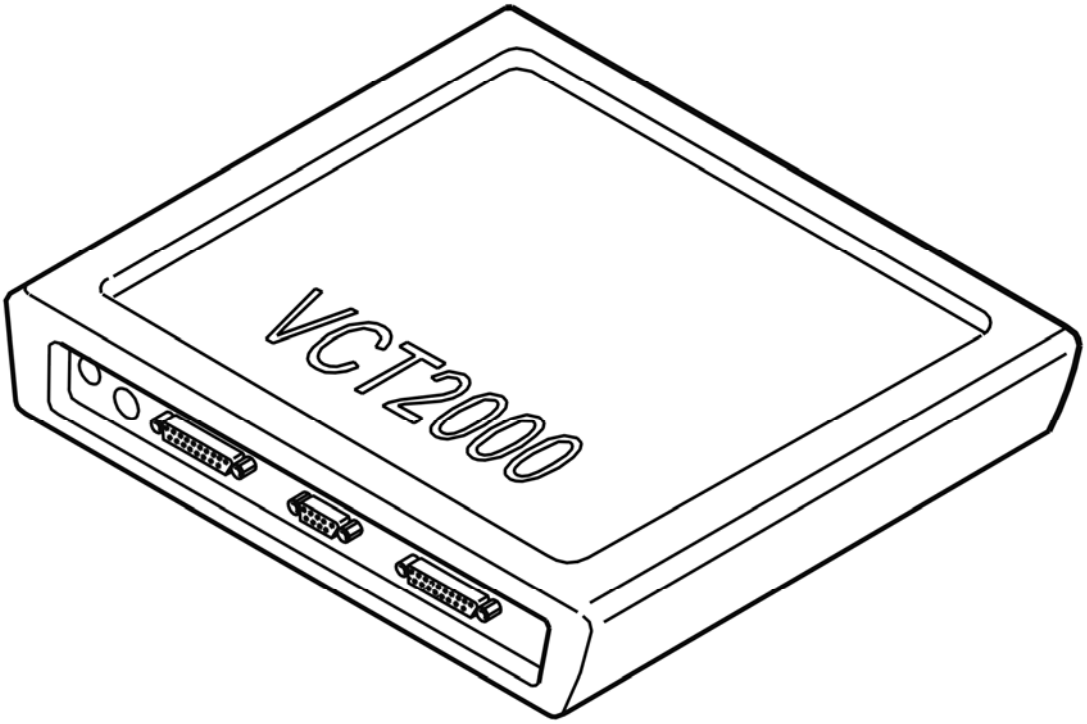

Fig. 314: Identifying VCT2000 Diagnostic Tool Symbol In VIDA
Courtesy of VOLVO CARS CORPORATION

Does the value change?

- **YES**

  VERIFIED: Troubleshooting has been completed.

- **NO**

  see **INFORMATION**

BCM-C004864: PEDAL POSITION SENSOR. ALGORITHM ERROR. SIGNAL OUTSIDE PERMITTED RANGE (B6324S5; 2011-2012)

DIAGNOSTIC TROUBLE CODE INFORMATION BCM-C004864

see **DIAGNOSTIC TROUBLE CODE INFORMATION BCM-C004864**

TROUBLESHOOTING BCM-C004864

see **TROUBLESHOOTING BCM-C004864**

BCM-C004864: PEDAL POSITION SENSOR. ALGORITHM ERROR. SIGNAL OUTSIDE PERMITTED RANGE (B8444S; 2005-2011)

DIAGNOSTIC TROUBLE CODE INFORMATION BCM-C004864

see **DIAGNOSTIC TROUBLE CODE INFORMATION BCM-C004864**

TROUBLESHOOTING BCM-C004864

CHECKING DIAGNOSTIC TROUBLE CODES IN CEM AND ECM

If there are any diagnostic trouble codes for the brake pedal position sensor or the brake light switch stored in the engine control module (ECM) or in the central electronic module (CEM), perform troubleshooting of these first.

Were any diagnostic trouble codes stored for the pedal position sensor or brake light switch?

- **YES**

  OKAY: Troubleshooting has been completed.

- **NO**

  see **CHECKING CONTROL MODULE AND THE SENSOR'S CONNECTOR**

CHECKING CONTROL MODULE AND THE SENSOR'S CONNECTOR

HINT: The cause of the diagnostic trouble code can be found in the circuit for the brake light switch or the pedal position sensor.

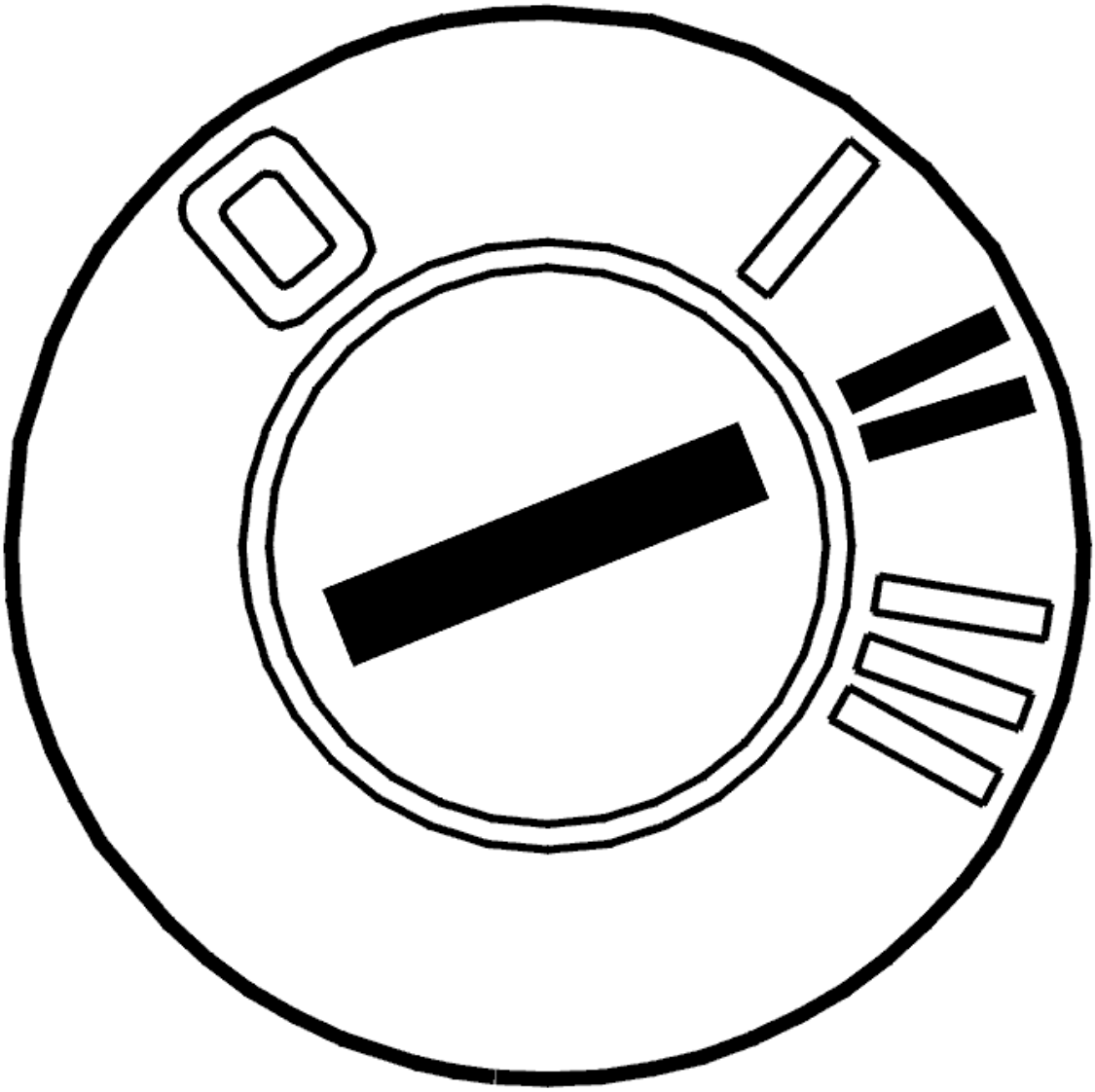

Fig. 315: Identifying Ignition ON
Courtesy of VOLVO CARS CORPORATION

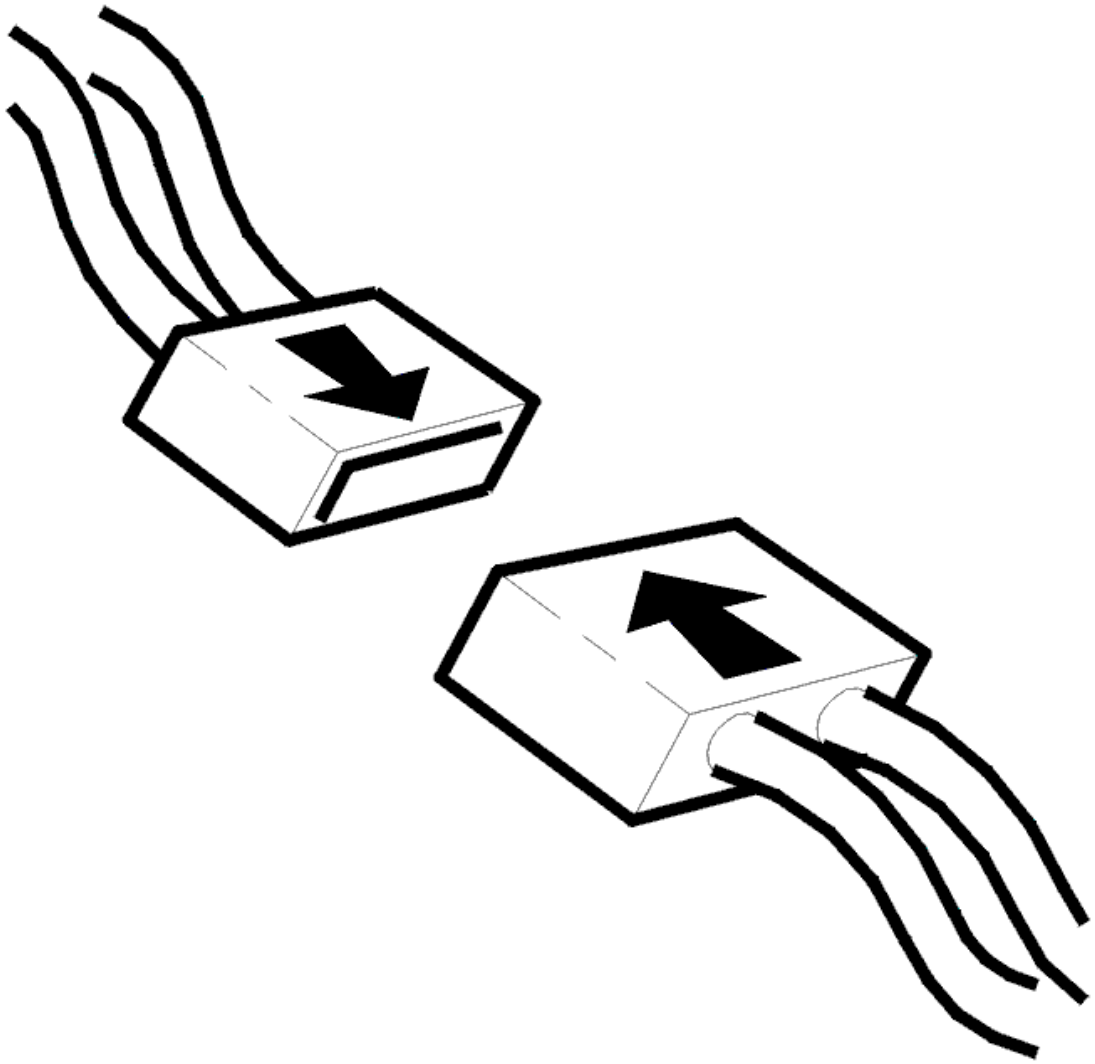

Fig. 316: Connecting Connector
Courtesy of VOLVO CARS CORPORATION

- Ignition off
- Check the connectors of the brake control module (BCM), brake light switch, and the pedal position sensor for contact resistance and oxidation.
- Reinstall the components, reconnect the connectors etc.
- Ignition on
- Read off the status of the brake light switch and the pedal position sensor's position.

  Depress the brake pedal and let it up again. The value shall change between OFF and ON, and the pedal position sensor's position shall be updated.

  Other information

- see **CONNECTING THE BREAKOUT BOX, BRAKE CONTROL MODULE (BCM)**
- see **STOP LAMP SWITCH, REPLACING**
- see **PEDAL SENSOR POWER BRAKE BOOSTER, REPLACING**
- see **CONTENTS**

Select an alternative:

1. The value for the brake light switch does not change.

   see **CHECKING FUSES, WIRING AND SENSORS**

2. The value for the pedal position sensor is not updated.

   see **SIGNAL OUTSIDE PERMITTED RANGE**

3. The values are OK.

   FAULT NOT FOUND: Troubleshooting has been completed.

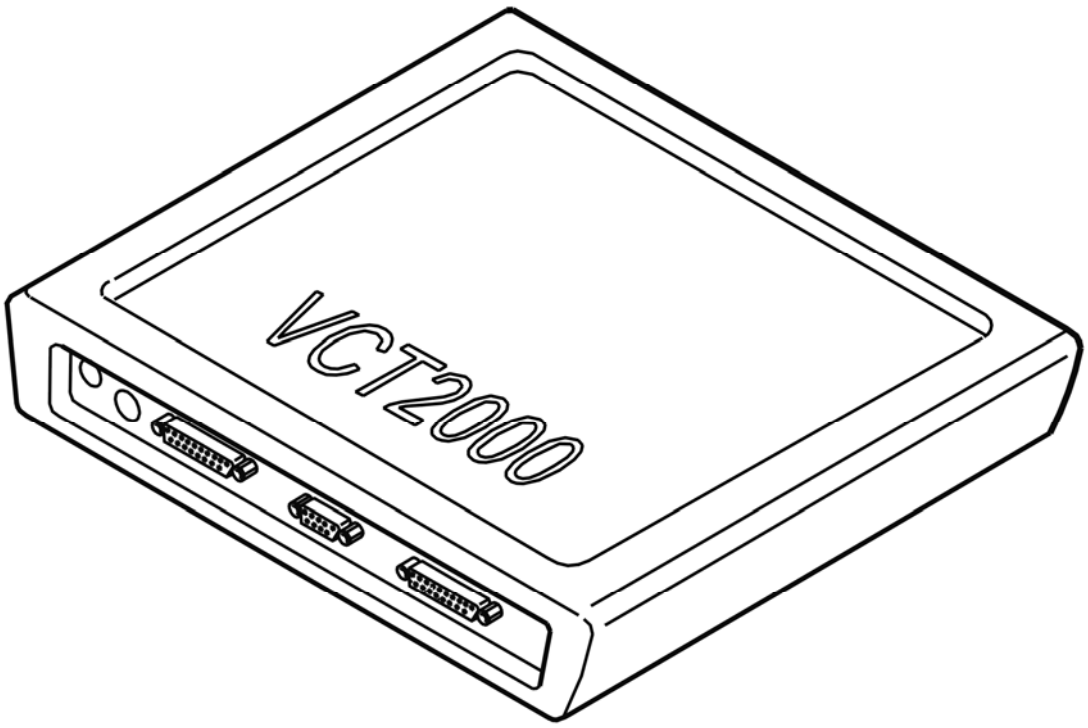

Fig. 317: Identifying VCT2000 Diagnostic Tool Symbol In VIDA
Courtesy of VOLVO CARS CORPORATION

Select an alternative.

CHECKING FUSES, WIRING AND SENSORS

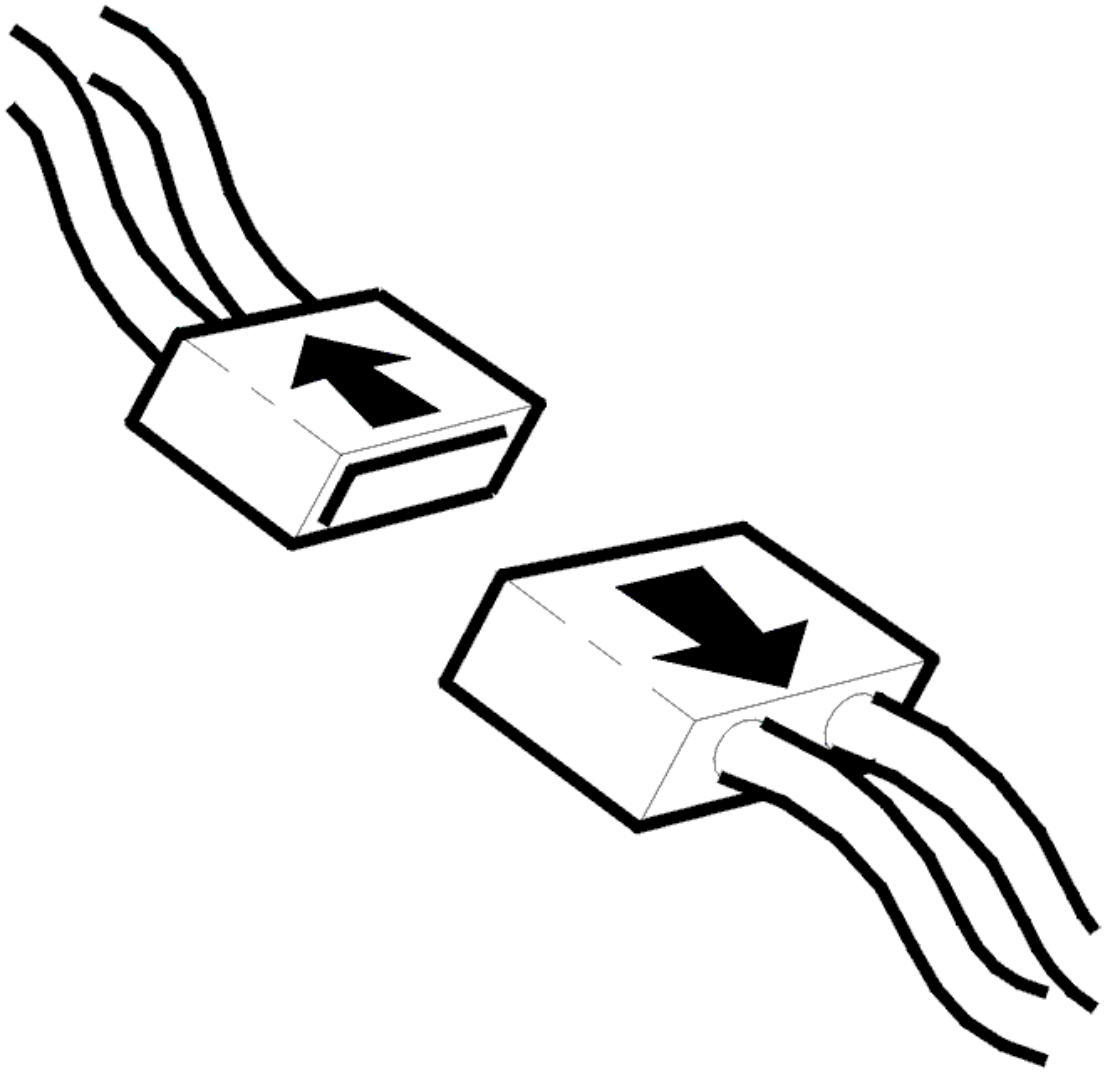

Fig. 318: Disconnecting Connector
Courtesy of VOLVO CARS CORPORATION

Check that the fuse for the brake light circuit is okay. If the fuse is damaged, first check the circuit to the brake light switch for short-circuiting to voltage before the replacing the fuse.

If the fuse is okay, check the circuit for the brake light switch for open circuit and short-circuit to ground.

Remedy as necessary.

Other information

- see **CONNECTING THE BREAKOUT BOX, BRAKE CONTROL MODULE (BCM)**
- To connect the breakout box to the Engine control module (ECM), see: **CONNECTING THE**

BREAKOUT BOX

- For connecting breakout box to Central Electronic Module (CEM):**CONNECTING THE BREAKOUT BOX**
- see **STOP LAMP SWITCH, REPLACING**
- see **CHECKING WIRING AND TERMINALS**

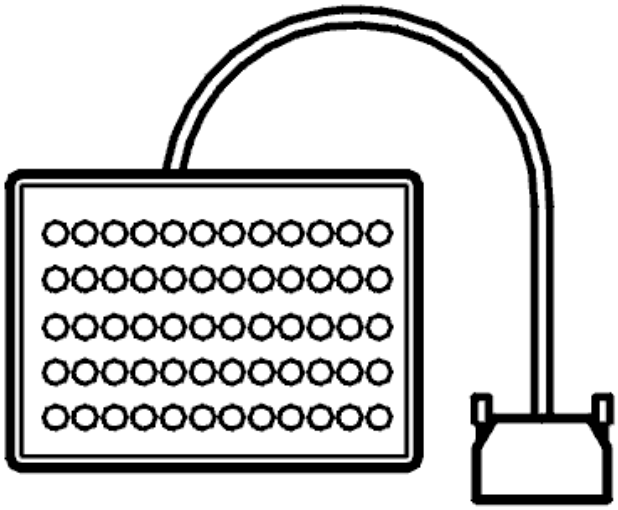

Fig. 319: Breakout Box
Courtesy of VOLVO CARS CORPORATION

Was a malfunction detected?

- **YES**

  see **VERIFICATION**

- **NO**

  FAULT NOT FOUND: Troubleshooting has been completed.

SIGNAL OUTSIDE PERMITTED RANGE

CHECKING THE CONNECTORS

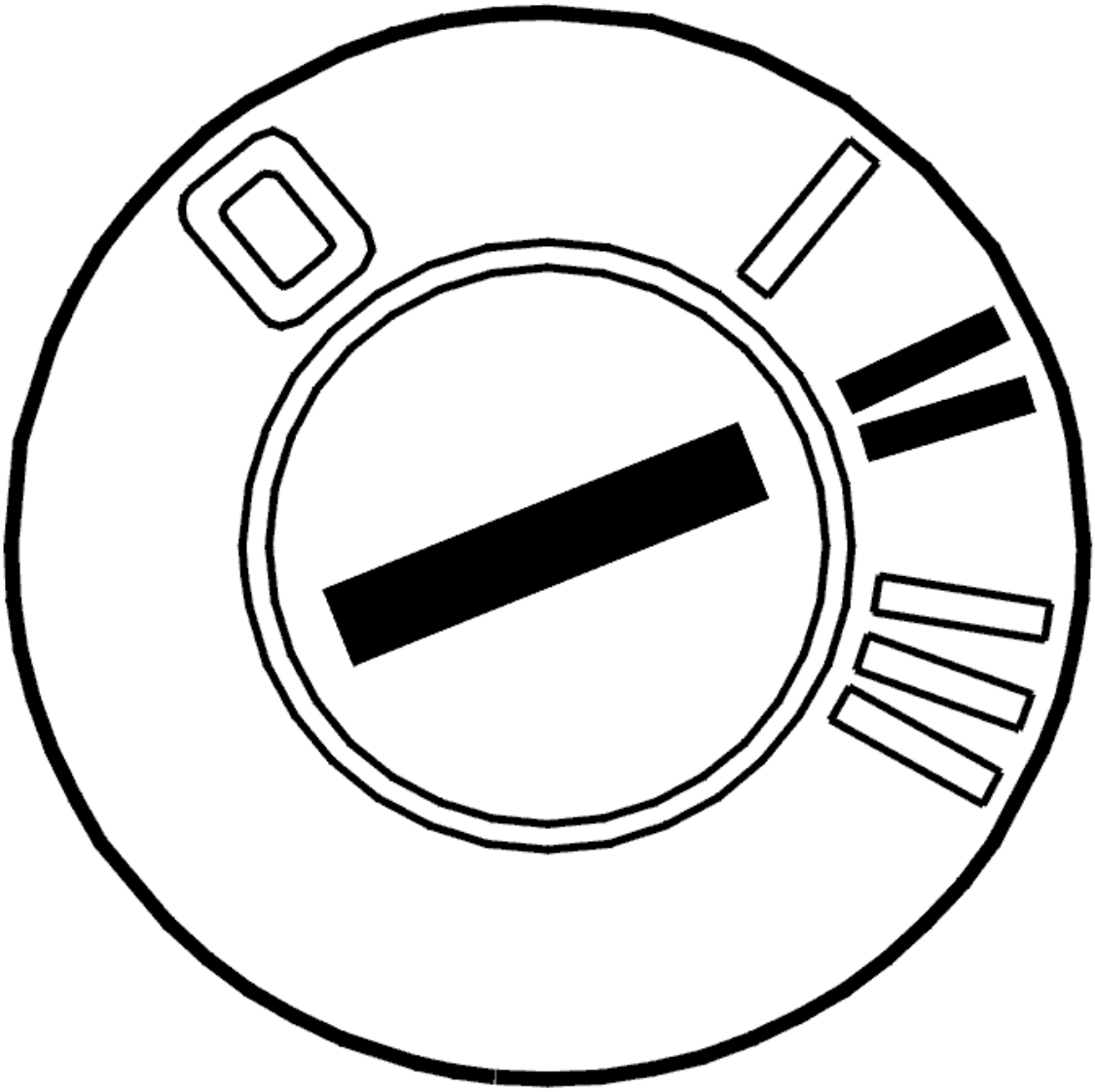

Fig. 320: Identifying Ignition ON
Courtesy of VOLVO CARS CORPORATION

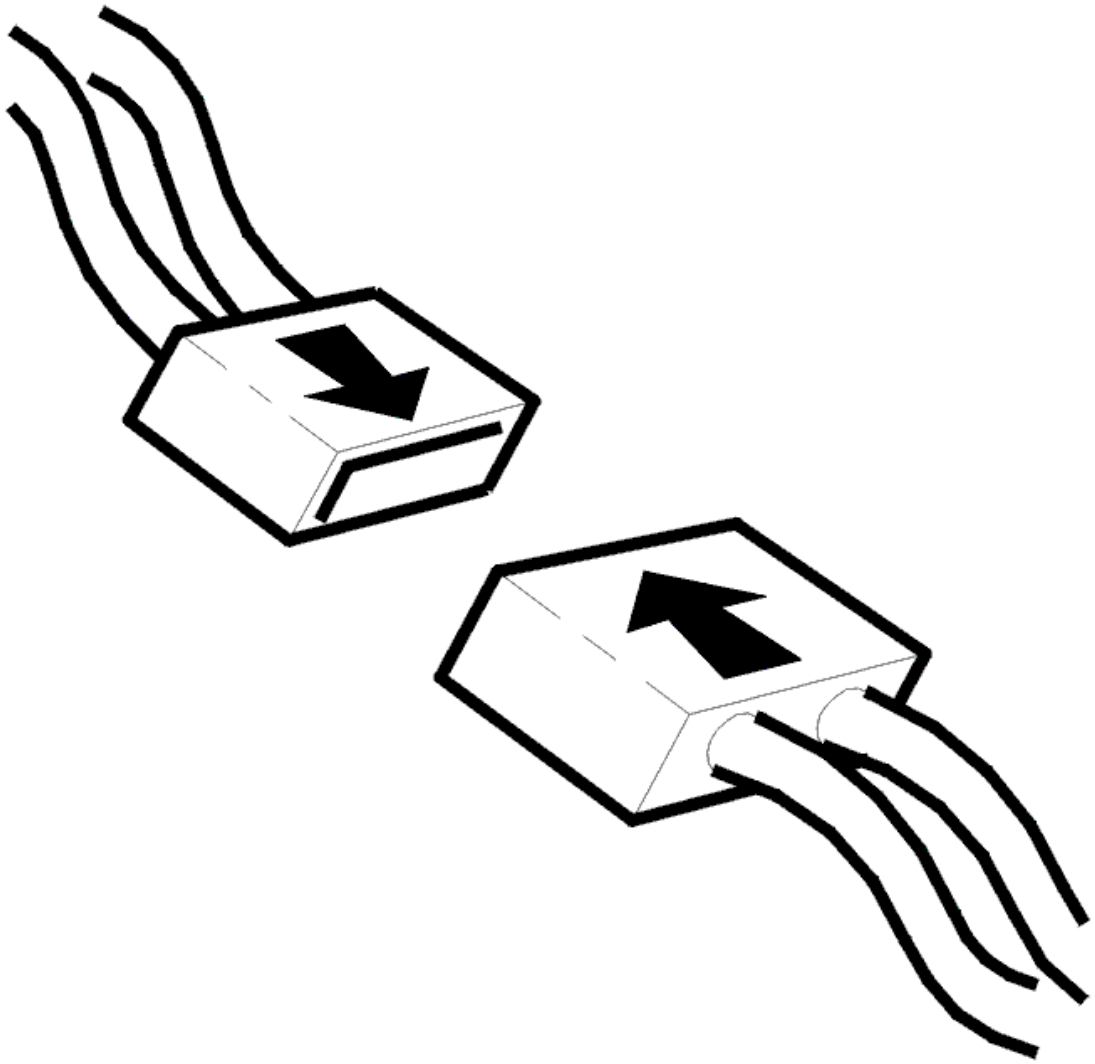

Fig. 321: Connecting Connector
Courtesy of VOLVO CARS CORPORATION

- Ignition off
- Check the connectors of the brake control module (BCM) and the pedal position sensor for contact resistance and oxidation.
- Reinstall the components, reconnect the connectors etc.
- Connect a breakout box.
- Ignition on
- Read off the pedal position sensor signal.

  Press down the brake pedal and check that the pedal's signals are updated.

  Other information

- see **CONNECTING THE BREAKOUT BOX, BRAKE CONTROL MODULE (BCM)**
- see **CONTENTS** .

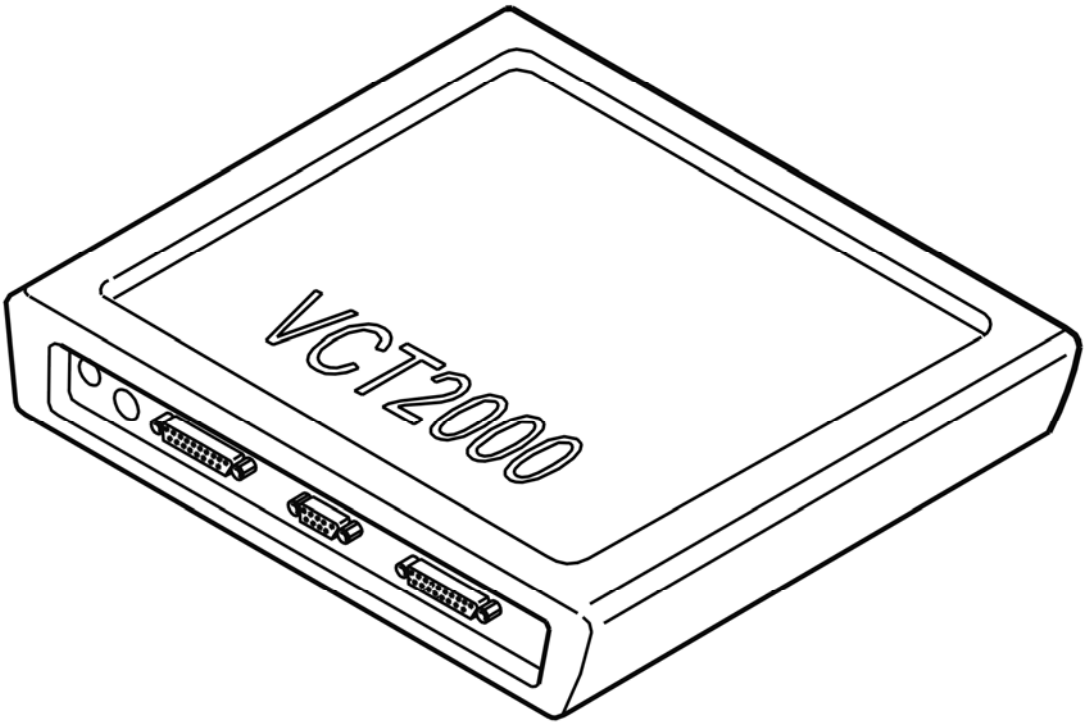

Fig. 322: Identifying VCT2000 Diagnostic Tool Symbol In VIDA
Courtesy of VOLVO CARS CORPORATION

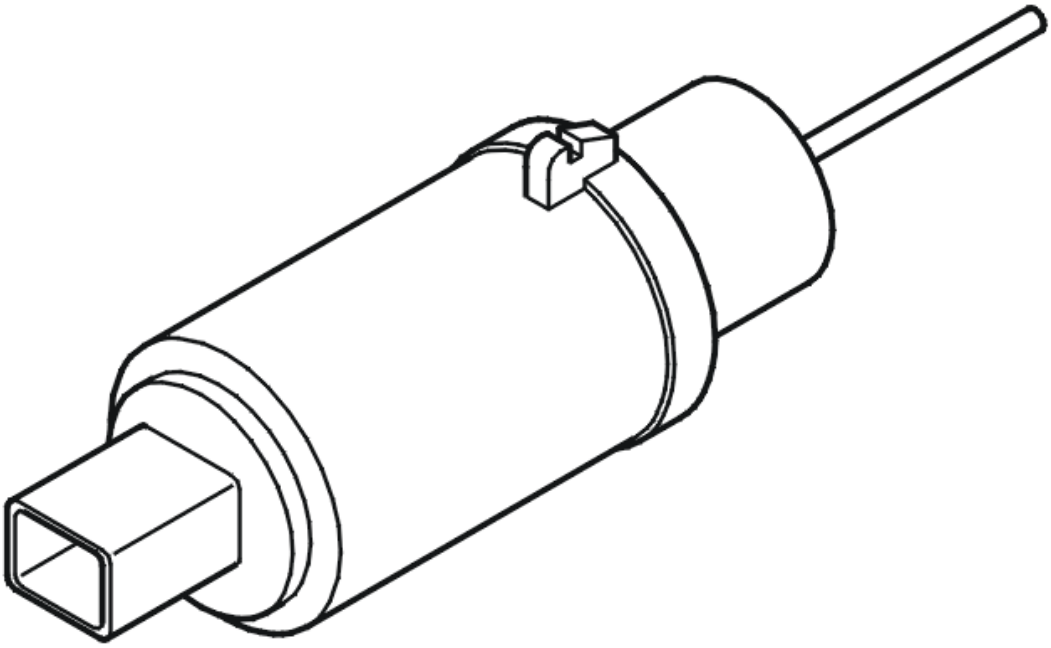

Fig. 323: Identifying Pedal Position Sensor
Courtesy of VOLVO CARS CORPORATION

Were the signals updated?

- **YES**

  OKAY: Troubleshooting has been completed.

- **NO**

  see **CHECKING WIRING AND SENSORS**

CHECKING WIRING AND SENSORS

Check the cables between:

- pedal position sensor terminal #1 and brake control module (BCM) terminal #7 (#A7)
- pedal position sensor terminal #2 and brake control module (BCM) terminal #5 (#A5)
- pedal position sensor terminal #3 and brake control module (BCM) terminal #3 (#A3)

check for open circuit, short-circuit to ground and short-circuit to voltage.

HINT: Connect an ohmmeter between #2 and #3 on the pedal position sensor's connector.

HINT: The resistance shall be approx. 0.5 kohms with the brake pedal inactivated and approx. 2.5-3 kohms with depressed brake pedal.

HINT:

HINT: Connect the ohmmeter between #1 and #3 on the pedal position sensor's connector.

HINT: The resistance shall be approx. 2.5-3 kohms with the brake pedal inactivated and approx. 0.5 kohms with depressed brake pedal.

HINT:

HINT: If resistance is incorrect, replace the pedal position sensor.

If no defect is found, replace the pedal position sensor.

Other information

- see **CONNECTING THE BREAKOUT BOX, BRAKE CONTROL MODULE (BCM)**
- see **PEDAL SENSOR POWER BRAKE BOOSTER, REPLACING**
- see **SIGNAL SPECIFICATION, BRAKE CONTROL MODULE (BCM) WITH DSTC (DYNAMIC STABILITY AND TRACTION CONTROL)** .
- see **CONTENTS**

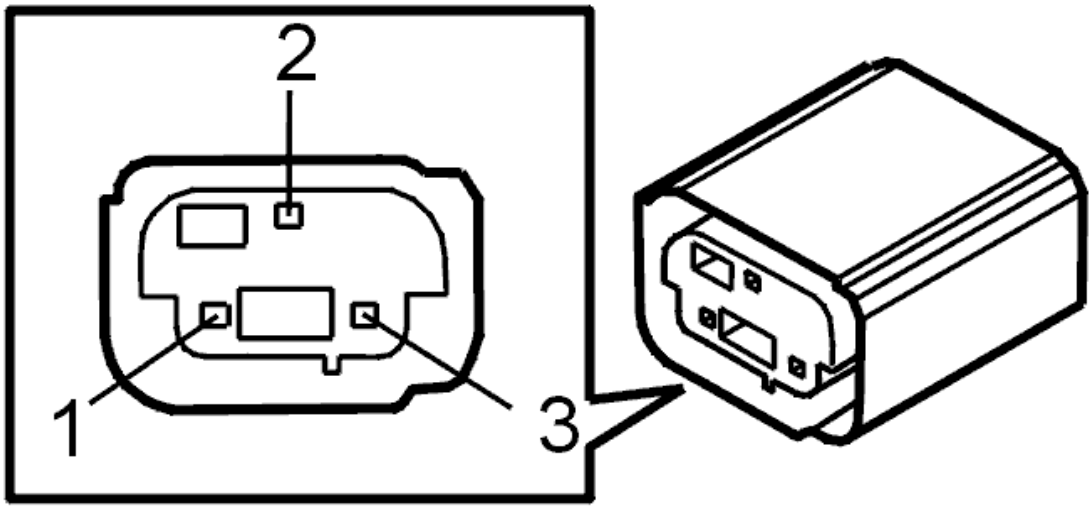

Fig. 324: Identifying Pedal Position Sensor Connector
Courtesy of VOLVO CARS CORPORATION

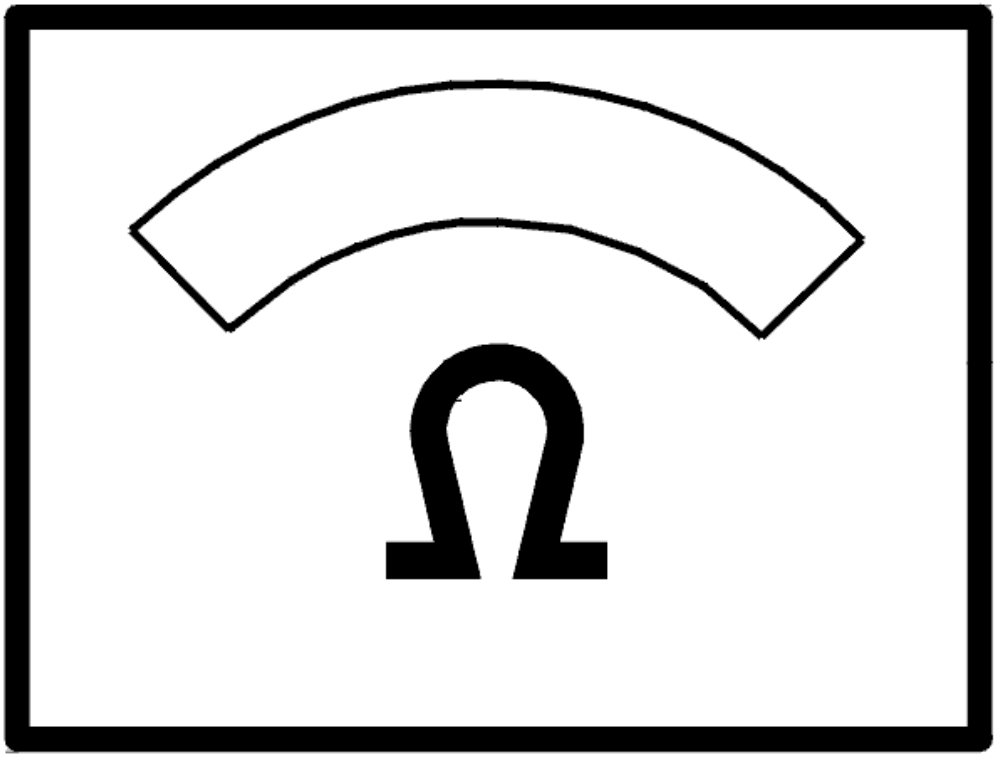

Fig. 325: Identifying Ohm Meter
Courtesy of VOLVO CARS CORPORATION

- **Continue**

  see **VERIFICATION**

VERIFICATION

HINT: After carrying out the repair, check that the malfunction has been remedied.

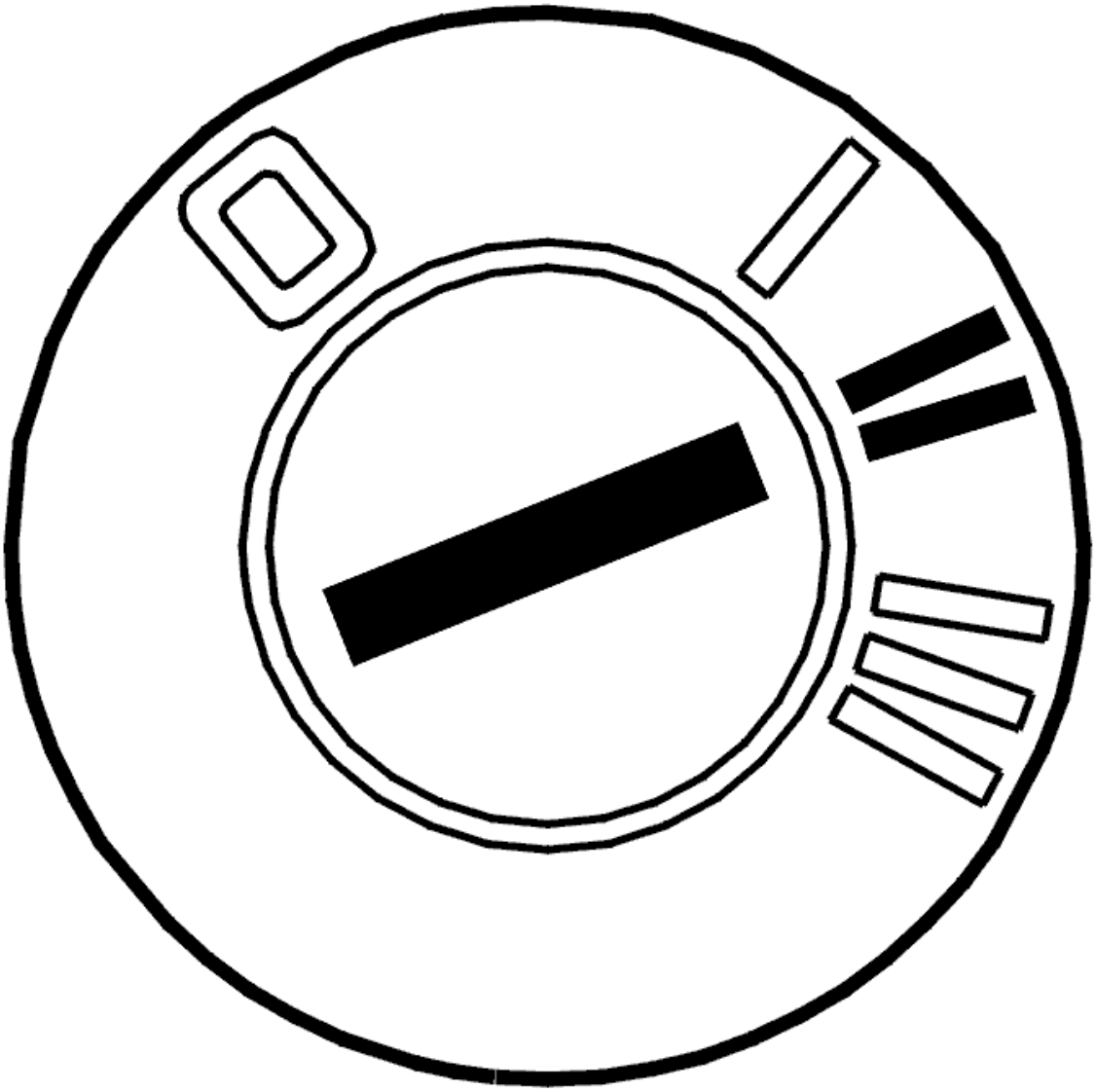

Fig. 326: Identifying Ignition ON
Courtesy of VOLVO CARS CORPORATION

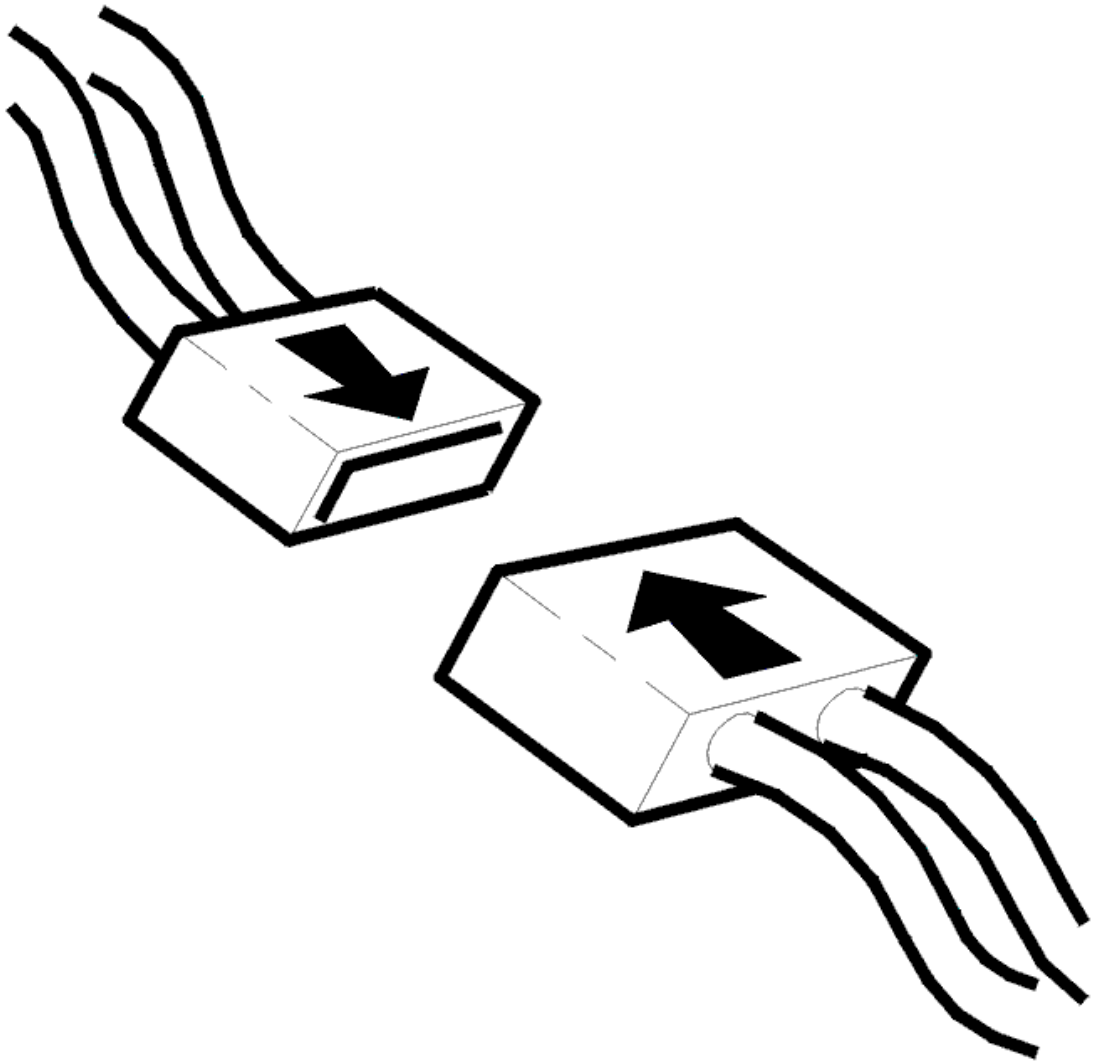

Fig. 327: Connecting Connector
Courtesy of VOLVO CARS CORPORATION

- Ignition off
- Reinstall the components, reconnect the connectors etc.
- Ignition on
- Read off the pedal position sensor signal.

  Press down the brake pedal and check that the pedal's signals are updated.

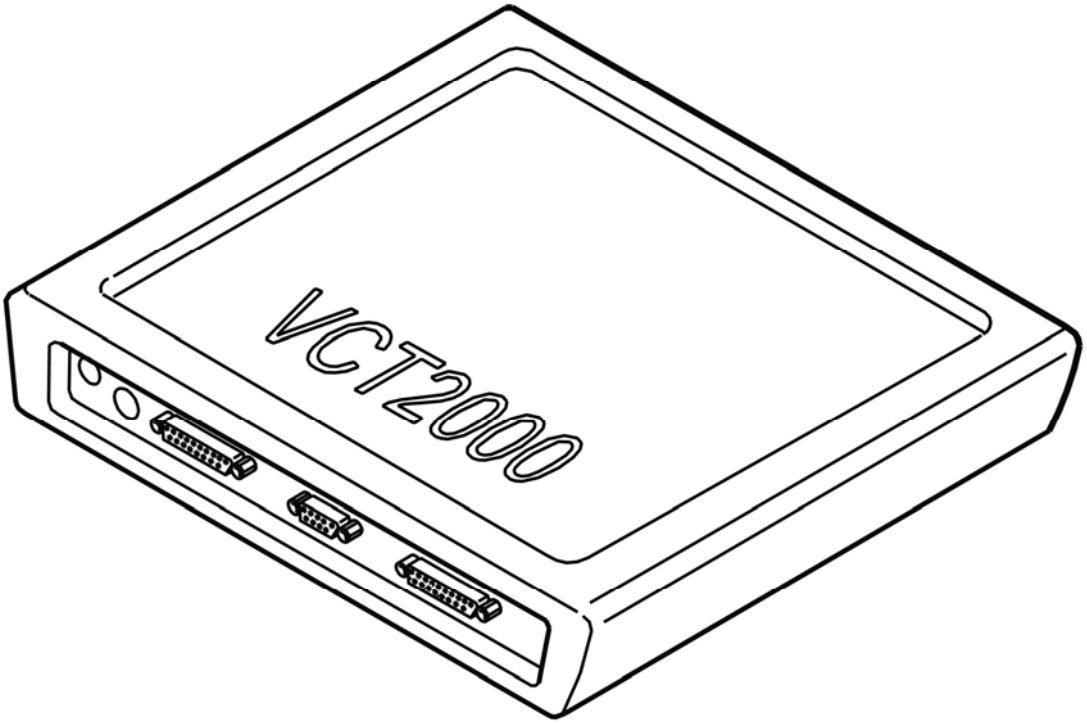

Fig. 328: Identifying VCT2000 Diagnostic Tool Symbol In VIDA
Courtesy of VOLVO CARS CORPORATION

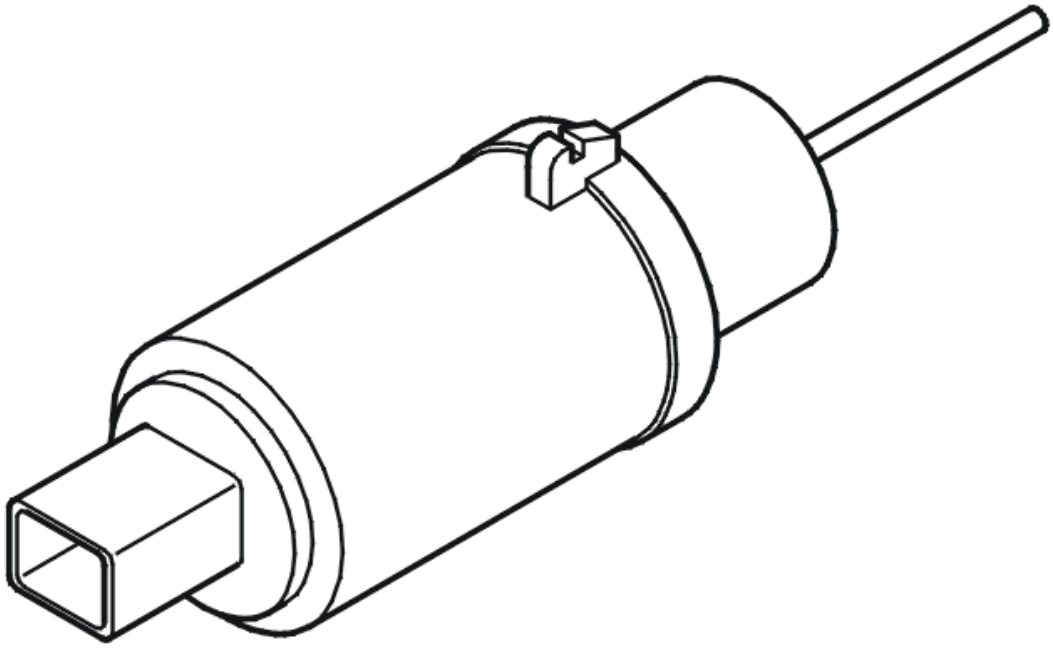

Fig. 329: Identifying Pedal Position Sensor
Courtesy of VOLVO CARS CORPORATION

Were the signals updated?

- **YES**

  OKAY: Troubleshooting has been completed.

- **NO**

  see **INFORMATION**

INFORMATION

FAULT-TRACING INFORMATION

The fault should have been detected and remedied. As this is not the case fault-tracing has failed.

Exit fault-tracing for this diagnostic trouble code (DTC) or make another attempt.

VERIFICATION

VERIFICATION

HINT: After carrying out the repair, check that the malfunction has been remedied.

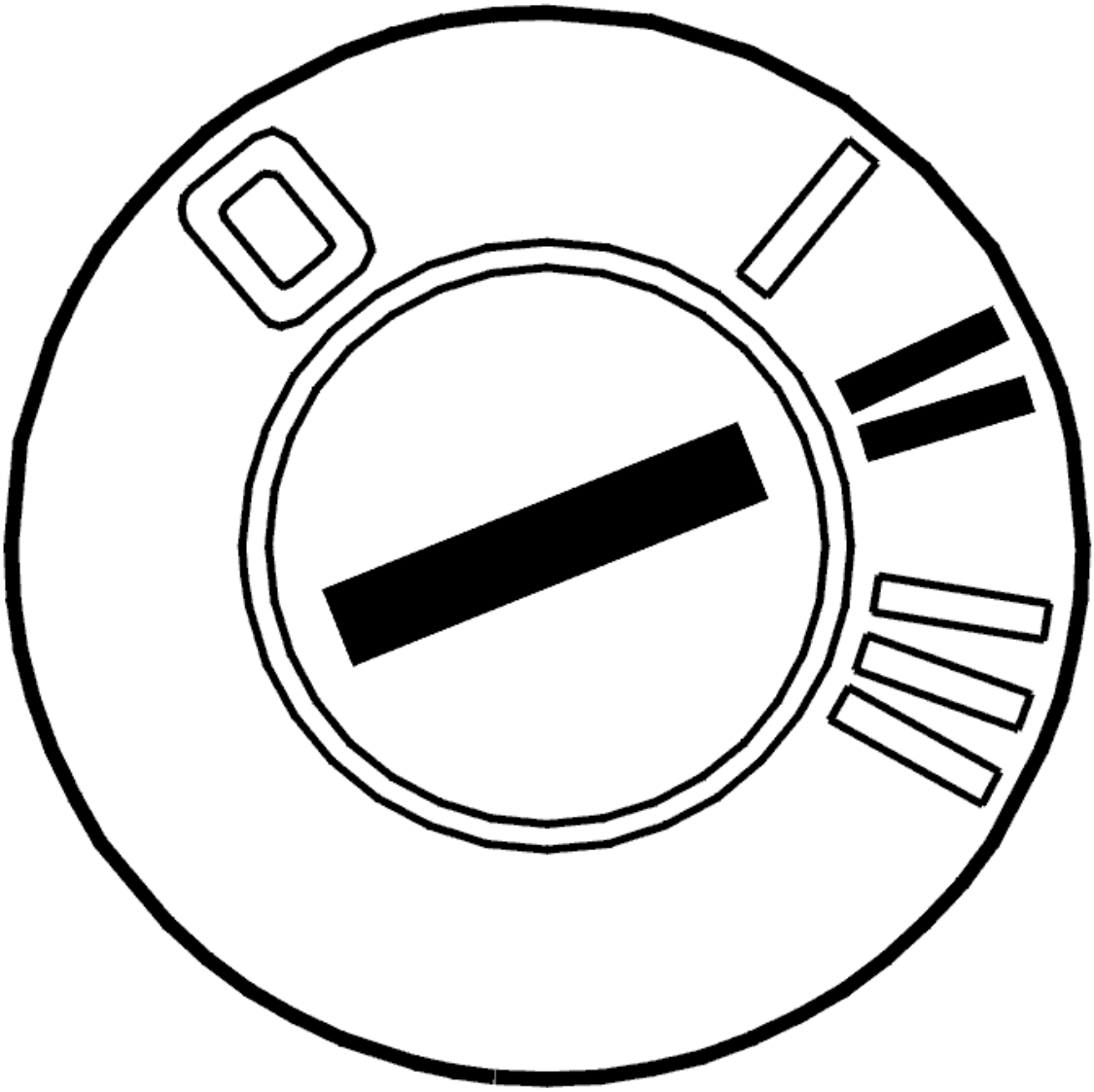

Fig. 330: Identifying Ignition ON
Courtesy of VOLVO CARS CORPORATION

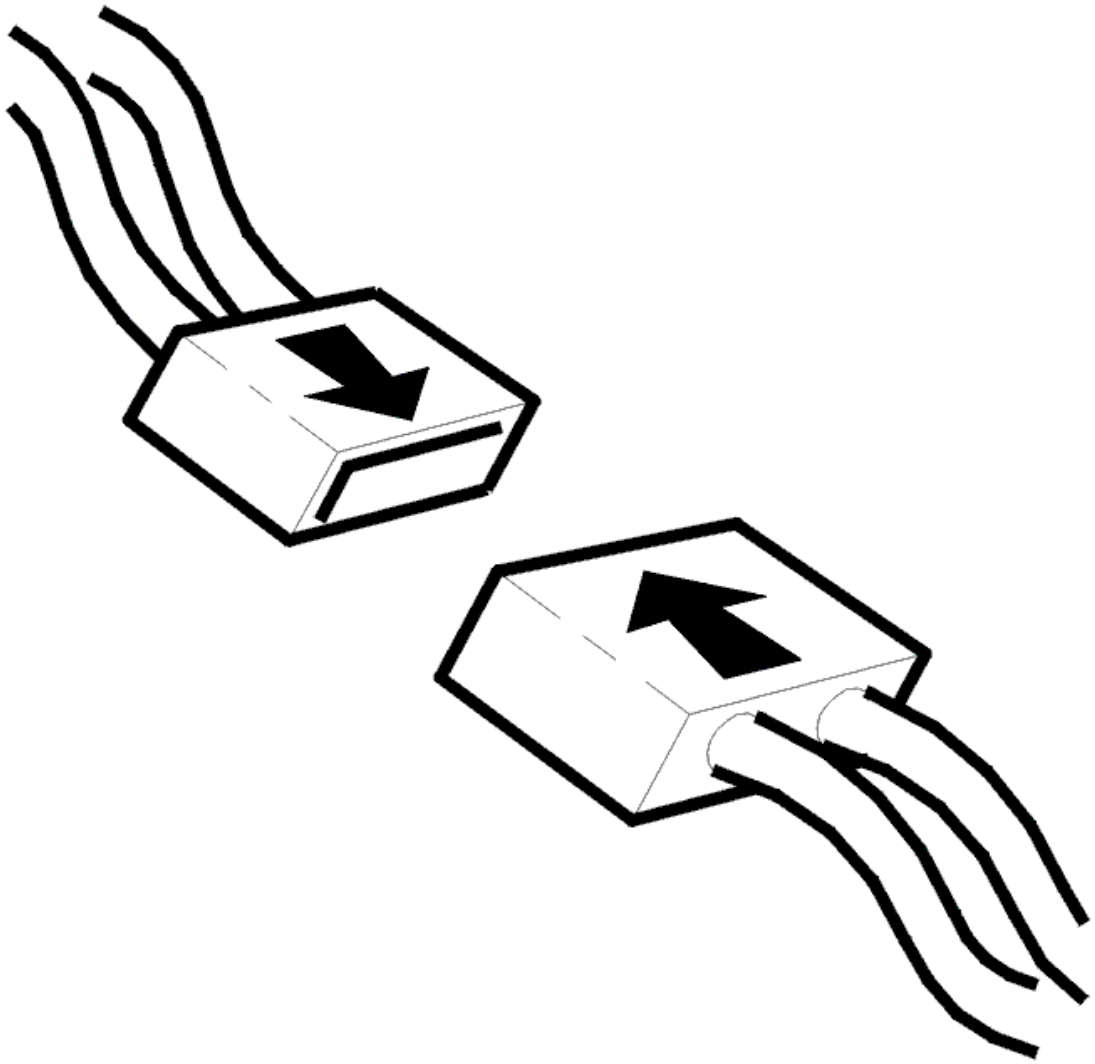

Fig. 331: Connecting Connector
Courtesy of VOLVO CARS CORPORATION

- Ignition off
- Reconnect the connectors, components, etc.
- Ignition on
- Read the status of the brake light switch.

  Depress the brake pedal and release it. The value should change between OFF and ON.

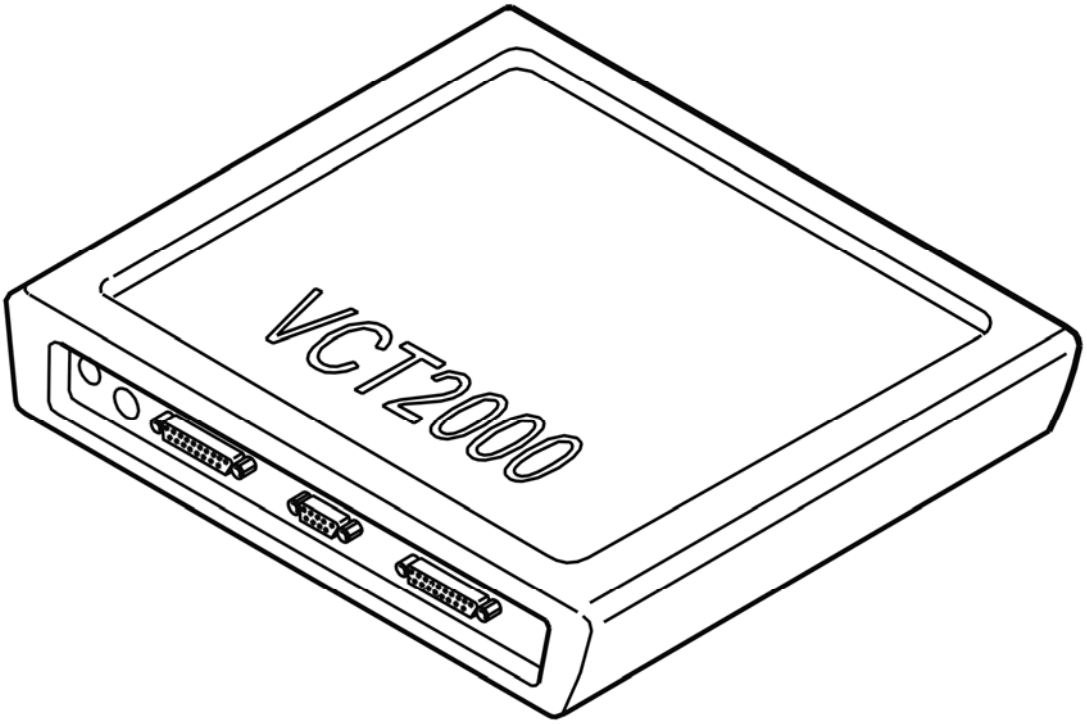

Fig. 332: Identifying VCT2000 Diagnostic Tool Symbol In VIDA
Courtesy of VOLVO CARS CORPORATION

Does the value change?

- **YES**

  VERIFIED: Troubleshooting has been completed.

- **NO**

  see **INFORMATION**

BRAKES

Brake Control System - Diagnostic Trouble Codes and Associated Procedures

ACCELERATION SENSOR LATERAL. GENERAL MALFUNCTION INFORMATION. GENERAL ELECTRICAL MALFUNCTION (B6324S; 2007-2010)

DIAGNOSTIC TROUBLE CODE (DTC) INFORMATION

Condition

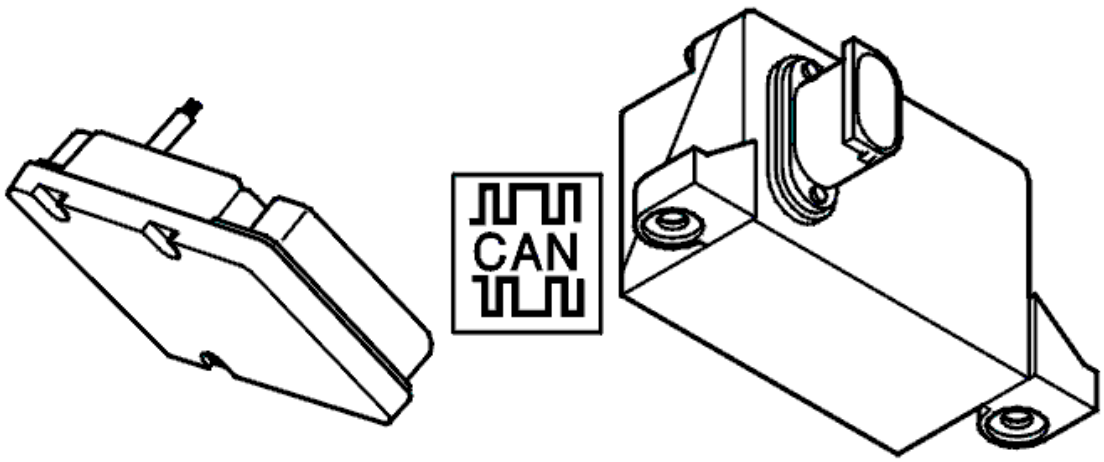

Fig. 1: Identifying Brake Control Module & Active Yaw Control Sensor
Courtesy of VOLVO CARS CORPORATION

NOTE: The diagnostic trouble code only applies to vehicles equipped with DSTC.

The AYC sensor for DSTC consists of a yaw speed sensor, lateral accelerometer, accelerometer (AWD only) and inclination sensor (RSC only). Via its own internal CAN network, the sensors transmit information to the brake control module (BCM) on the size of the yaw angle, vehicle acceleration both laterally and straight ahead as well as lateral inclination.

If the brake control module (BCM) registers a defective signal from one of the sensors, diagnostic trouble code BCM-C006101, BCM-C006201, BCM-C006301, or BCM-C111401 is generated depending on the sensor.

- BCM-C006101: Lateral accelerometer
- BCM-C006201: Accelerometer
- BCM-C006301: Yaw speed sensor
- BCM-C111401: Inclination sensor

The diagnostic trouble code can be diagnosed when the ignition is on.

Substitute Value

- TC is blocked.
- SC is blocked.
- AYC is blocked.
- RSC is blocked (only vehicles with RSC).

HINT: For information on brake system abbreviations: BRAKE SYSTEM, ABBREVIATIONS

Possible Source

- Open circuit or short circuit to ground on AYC sensor cables.
- Internal malfunction in AYC sensor.

NOTE: This diagnostic trouble code (DTC) is not due to an internal hardware fault in the Brake control module (BCM) and must not be remedied by replacing the control module.

Fault symptom[s]

- General warning light on.
- Anti-spin is not operational.
- The stability function is not operational.
- The anti-skid function is not operational.

TROUBLESHOOTING

CHECKING THE WIRING

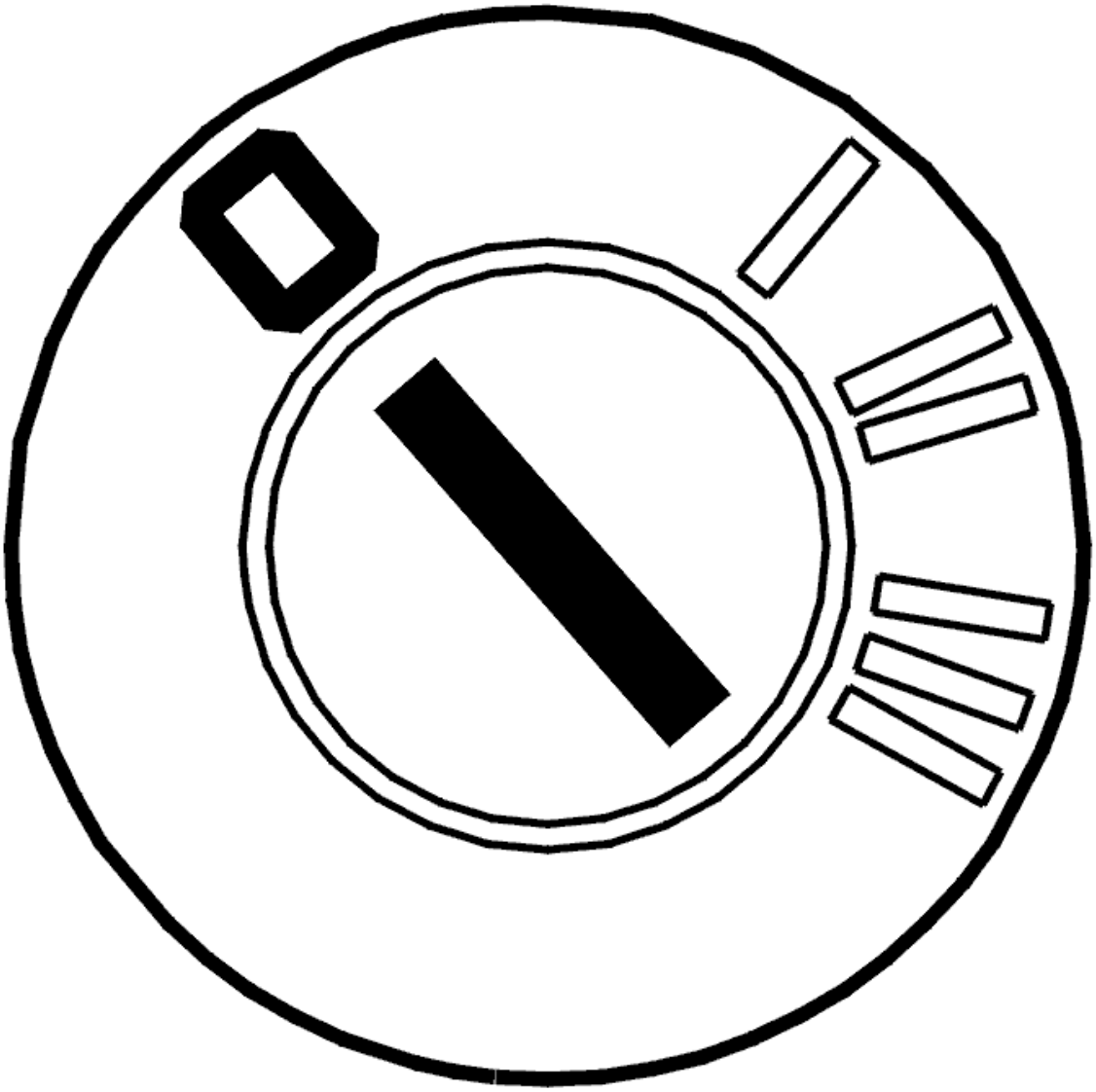

Fig. 2: Identifying Ignition OFF
Courtesy of VOLVO CARS CORPORATION

- Ignition off

  Check the cables for an open circuit.

  Measure between:

  - The connector for AYC sensor terminal #1 and brake control module (BCM) terminal #A25 (#A25).
  - The connector for AYC sensor terminal #2 and brake control module (BCM) terminal #A29 (#A29).
  - The connector for AYC sensor terminal #3 and brake control module (BCM) terminal #A6 (#A6).
  - The connector for AYC sensor terminal #5 and brake control module (BCM) terminal #A39

(#A39).

If no defect is found on the cables, replace the AYC sensor.

Remedy as necessary.

Other information

- see **CONNECTING THE BREAKOUT BOX, BRAKE CONTROL MODULE (BCM)**
- see **SIGNAL SPECIFICATION, BRAKE CONTROL MODULE (BCM) WITH DSTC (DYNAMIC STABILITY AND TRACTION CONTROL)**
- see **ACTIVE YAW CONTROL SENSOR, REPLACING**
- see **CONTENTS**

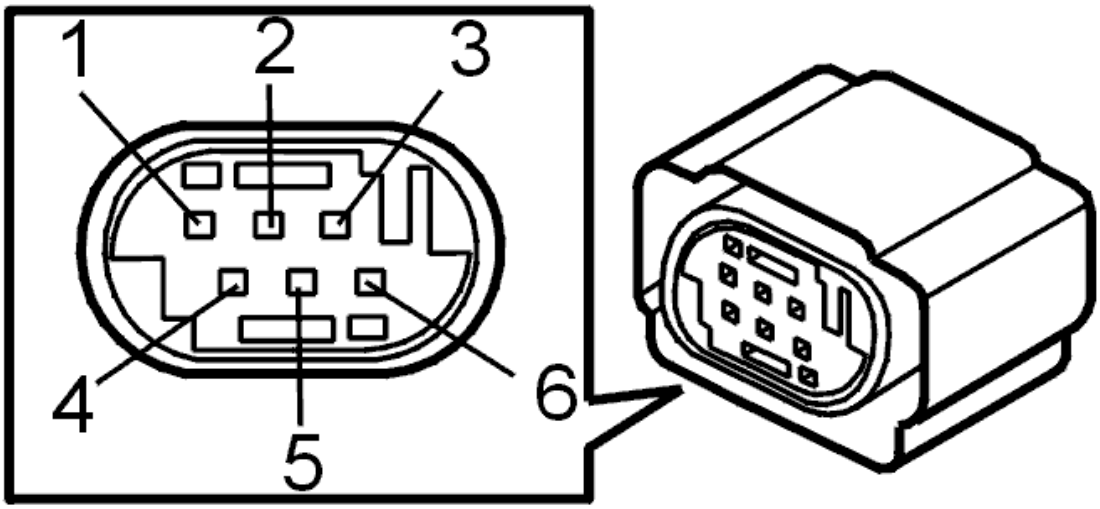

Fig. 3: Identifying Active Yaw Control Sensor Connector Terminals
Courtesy of VOLVO CARS CORPORATION

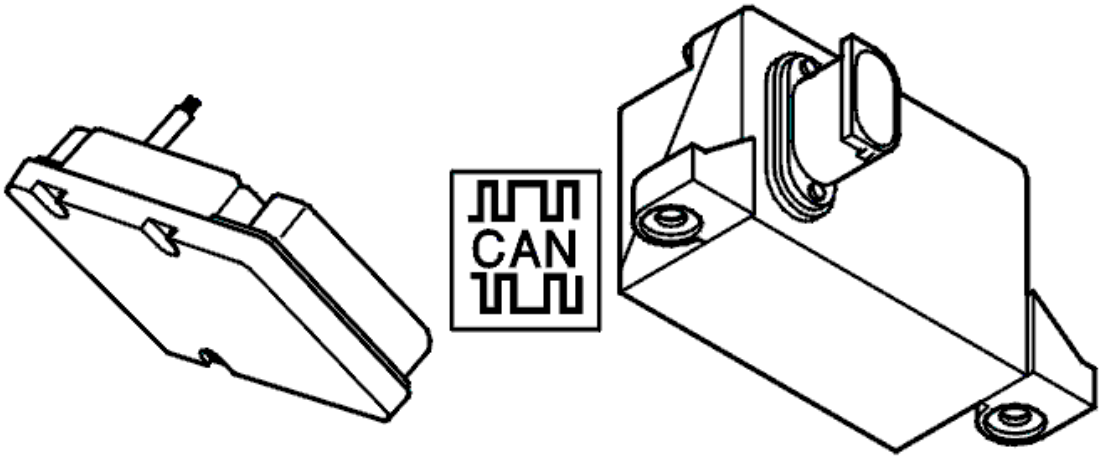

Fig. 4: Identifying Brake Control Module & Active Yaw Control Sensor
Courtesy of VOLVO CARS CORPORATION

- **Continue**

  see **VERIFICATION**

VERIFICATION

VERIFICATION

HINT: After carrying out the repair, check that the malfunction has been remedied.

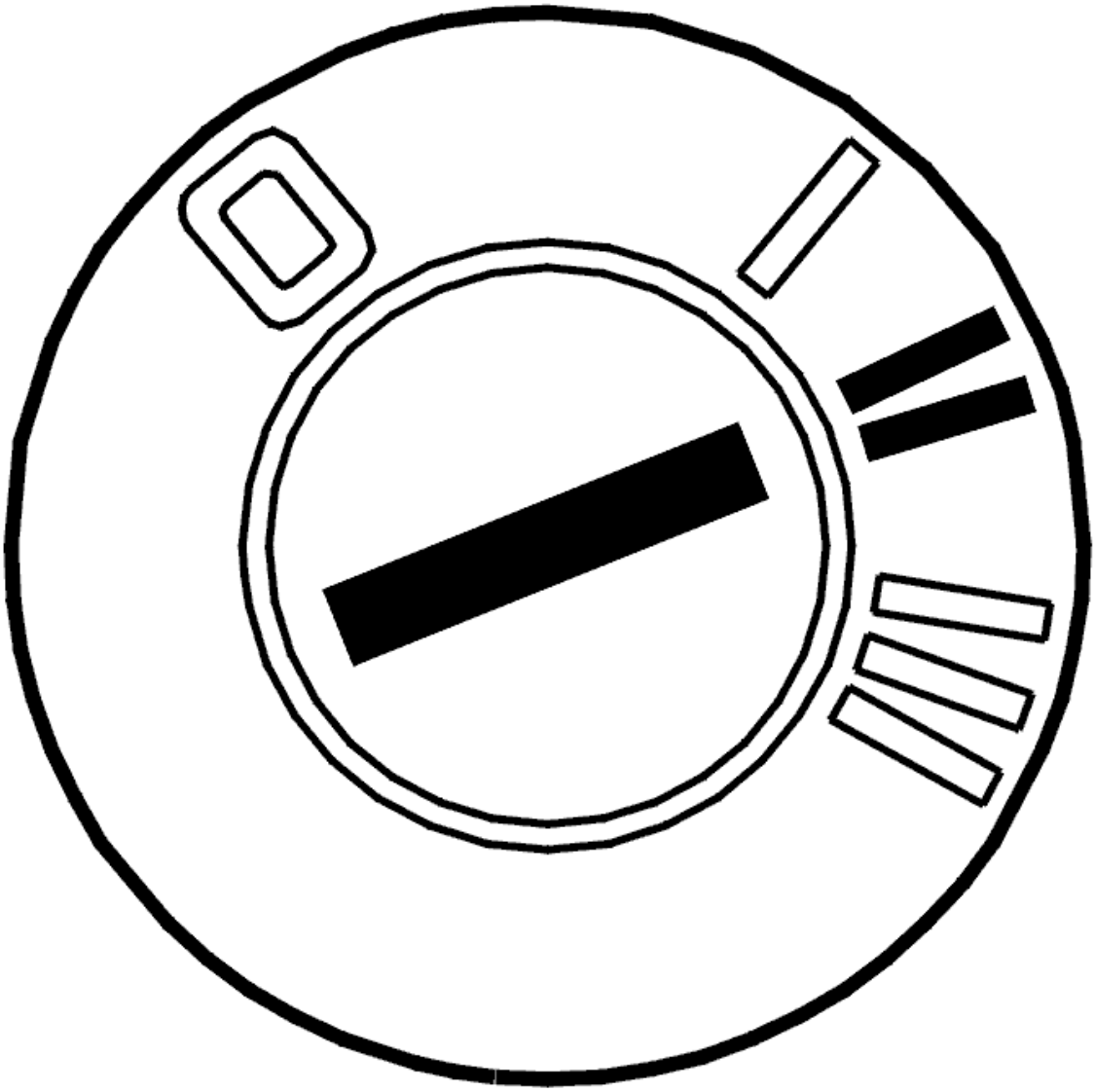

Fig. 5: Identifying Ignition ON
Courtesy of VOLVO CARS CORPORATION

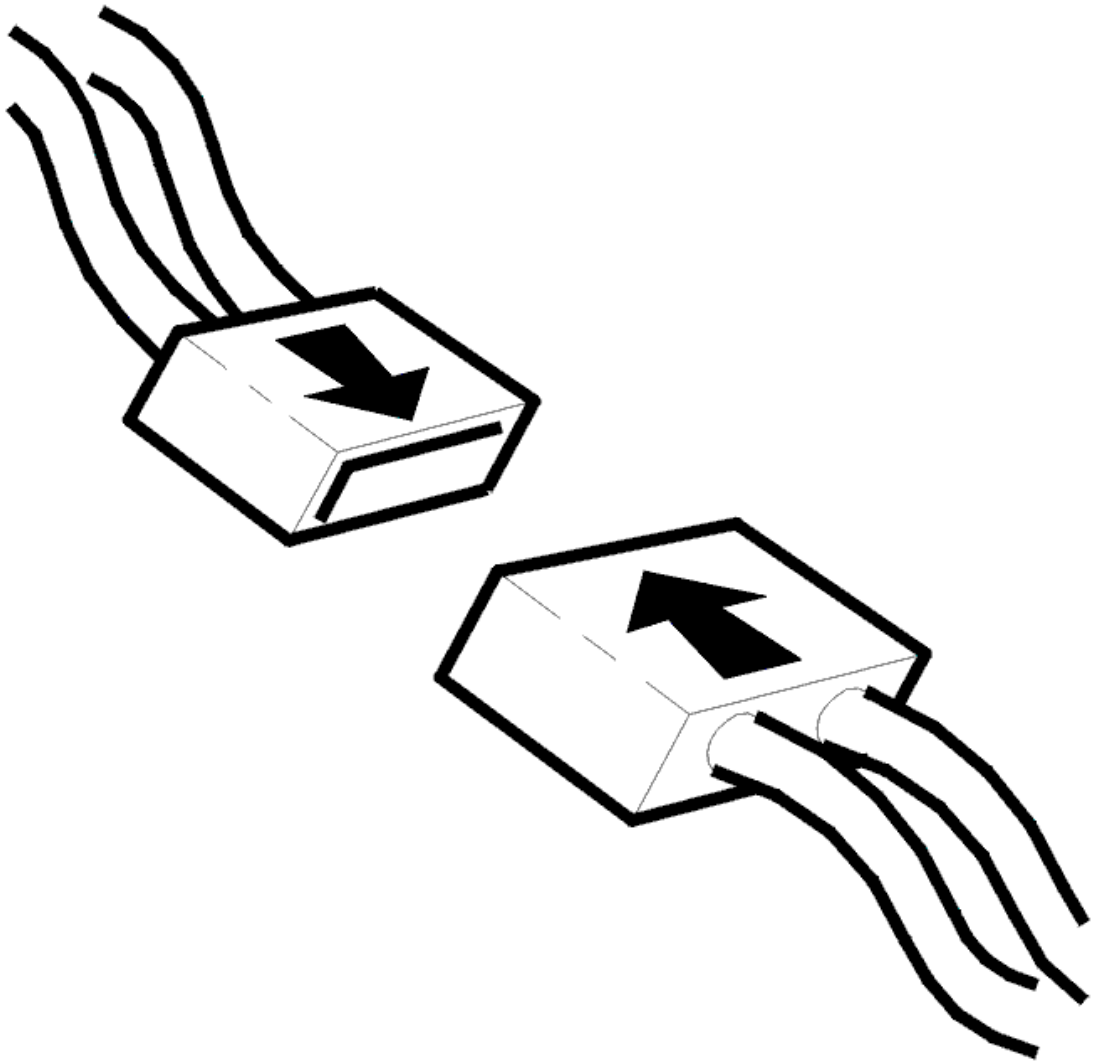

Fig. 6: Connecting Connector
Courtesy of VOLVO CARS CORPORATION

- Ignition off
- Reconnect the connectors, components, etc.
- Test-drive the vehicle according to **TEST DRIVE FORM (DSTC (DYNAMIC STABILITY AND TRACTION CONTROL) /BRAKE CONTROL MODULE), DESCRIPTION** .

NOTE: **Do not turn off the ignition between test-driving and reading out diagnostic trouble codes. This is to obtain the correct status of the diagnostic trouble codes.**

Then read out the diagnostic trouble code's status without turning off the ignition after the test-drive.

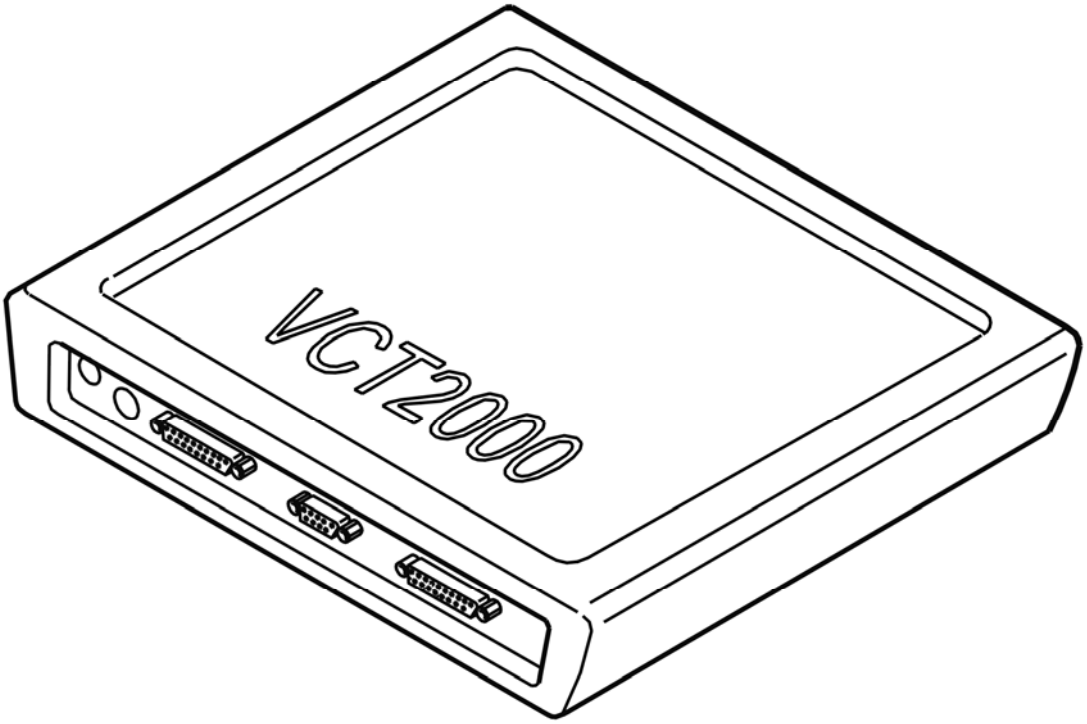

Fig. 7: Identifying VCT2000 Diagnostic Tool Symbol In VIDA
Courtesy of VOLVO CARS CORPORATION

Is the status of the diagnostic trouble code intermittent?

- **YES**

  VERIFIED: Troubleshooting has been completed.

- **NO**

  see **INFORMATION**

INFORMATION

FAULT-TRACING INFORMATION

The fault should have been detected and remedied. As this is not the case fault-tracing has failed.

Exit fault-tracing for this diagnostic trouble code (DTC) or make another attempt.

BCM-C006101: ACCELERATION SENSOR LATERAL. GENERAL MALFUNCTION INFORMATION. GENERAL ELECTRICAL MALFUNCTION

(B6324S5; 2011-2012)

DIAGNOSTIC TROUBLE CODE (DTC) INFORMATION

see **DIAGNOSTIC TROUBLE CODE (DTC) INFORMATION**

TROUBLESHOOTING

see **TROUBLESHOOTING**

BCM-C006101: ACCELERATION SENSOR LATERAL. GENERAL MALFUNCTION INFORMATION. GENERAL ELECTRICAL MALFUNCTION (B8444S; 2005-2011)

DIAGNOSTIC TROUBLE CODE (DTC) INFORMATION

see **DIAGNOSTIC TROUBLE CODE (DTC) INFORMATION**

TROUBLESHOOTING

see **TROUBLESHOOTING**

BCM-C006128: ACCELERATION SENSOR LATERAL. GENERAL SIGNAL ERROR. SIGNAL DISPLACEMENT ERROR/ZERO ADJUSTMENT ERROR (B6324S; 2007-2010)

DIAGNOSTIC TROUBLE CODE (DTC) INFORMATION

Condition

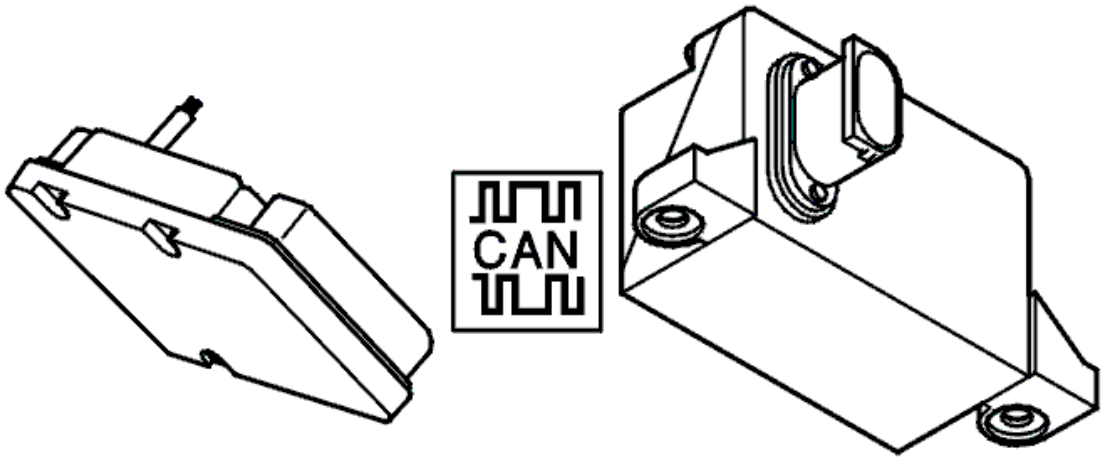

Fig. 8: Identifying Brake Control Module & Active Yaw Control Sensor
Courtesy of VOLVO CARS CORPORATION

NOTE: The diagnostic trouble code only applies to vehicles equipped with DSTC.

The AYC sensor for DSTC consists of a yaw speed sensor, lateral accelerometer, accelerometer (AWD only) and inclination sensor (RSC only). Via its own internal CAN network, the sensors transmit information to the brake control module (BCM) on the size of the yaw angle, vehicle acceleration both laterally and straight ahead as well as lateral inclination. Each sensor has an offset value, correction value, for individual sensor deviations.

If the brake control module (BCM) registers an incorrect offset value from one of the sensors, diagnostic trouble code BCM-C006128, BCM-C006228, BCM-C006328 or BCM-C111486 is generated depending on the sensor.

- BCM-C006128: Lateral accelerometer
- BCM-C006228: Accelerometer
- BCM-C006328: Yaw speed sensor
- BCM-C111486: Inclination sensor

The diagnostic trouble code can be diagnosed when the ignition is on.

Substitute Value

- TC is blocked.
- SC is blocked.
- AYC is blocked.
- RSC is blocked (only vehicles with RSC).

HINT: For information on brake system abbreviations: BRAKE SYSTEM, ABBREVIATIONS

Possible Source

- AYC sensor improperly mounted.
- Loose AYC sensor.
- Bent AYC sensor bracket.
- Internal malfunction in AYC sensor.

NOTE: This diagnostic trouble code (DTC) is not due to an internal hardware fault in the Brake control module (BCM) and must not be remedied by replacing the control module.

Fault symptom[s]

- General warning light on.
- Anti-spin is not operational.

- The stability function is not operational.
- The anti-skid function is not operational.

TROUBLESHOOTING

CHECKING THE COMPONENT

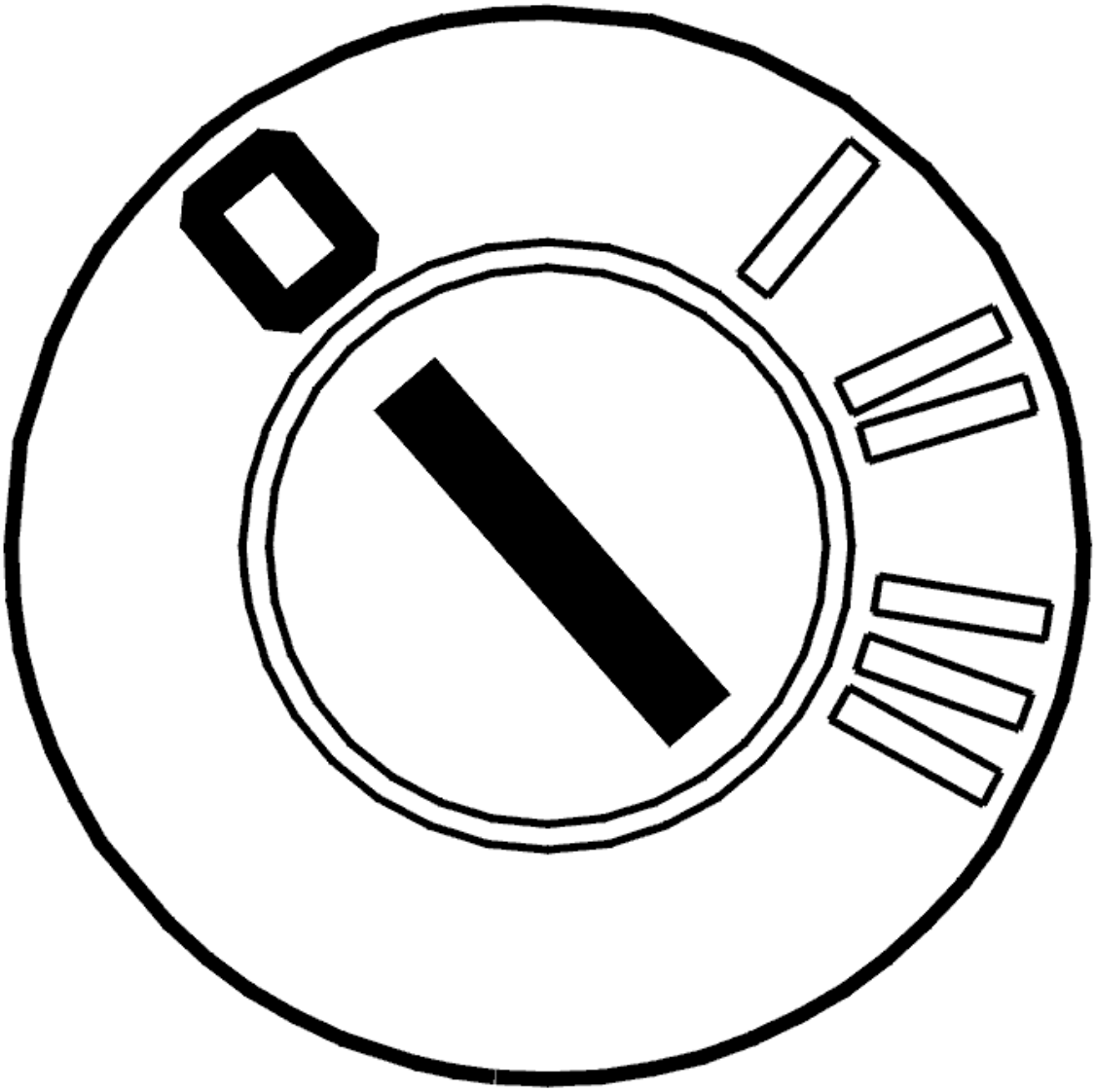

Fig. 9: Identifying Ignition OFF
Courtesy of VOLVO CARS CORPORATION

- Ignition off

  Check that the AYC sensor is properly secured and correctly mounted on the bracket under the passenger seat.

Also check that the bracket is not bent or damaged in any way.

Remedy as necessary.

Other information

- see **ACTIVE YAW CONTROL SENSOR, REPLACING**

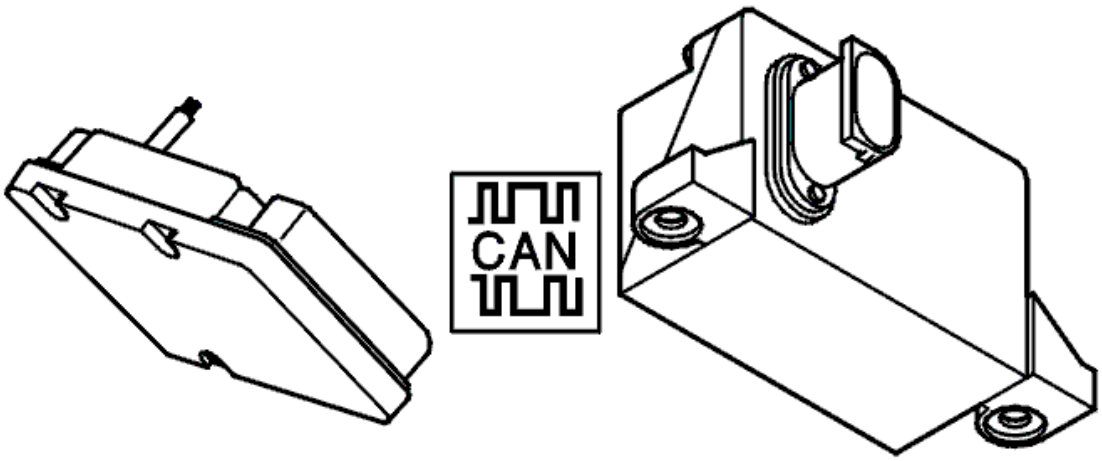

Fig. 10: Identifying Brake Control Module & Active Yaw Control Sensor
Courtesy of VOLVO CARS CORPORATION

- **Continue**

  see **VERIFICATION**

VERIFICATION

VERIFICATION

HINT: After carrying out the repair, check that the malfunction has been remedied.

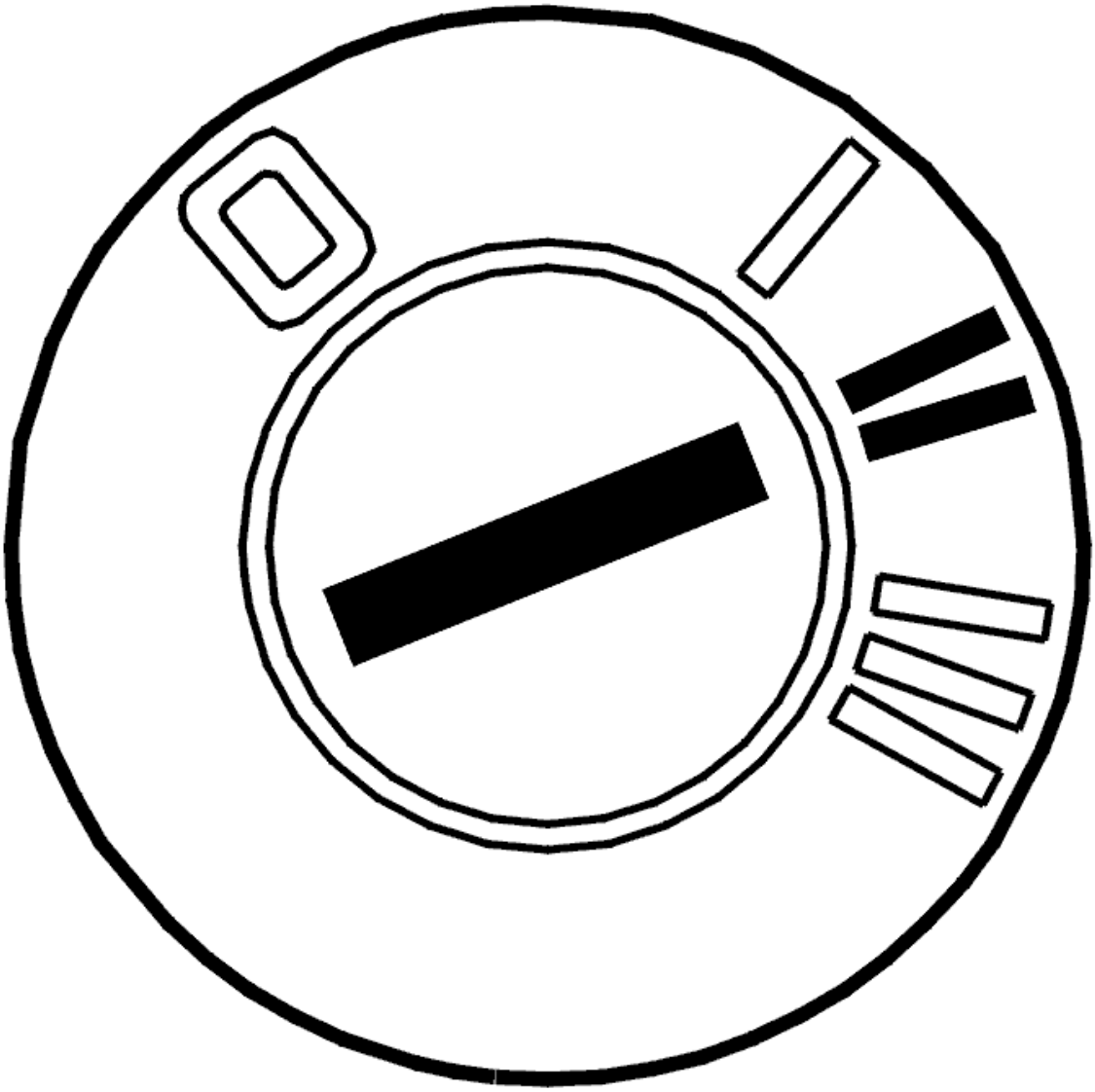

Fig. 11: Identifying Ignition ON
Courtesy of VOLVO CARS CORPORATION

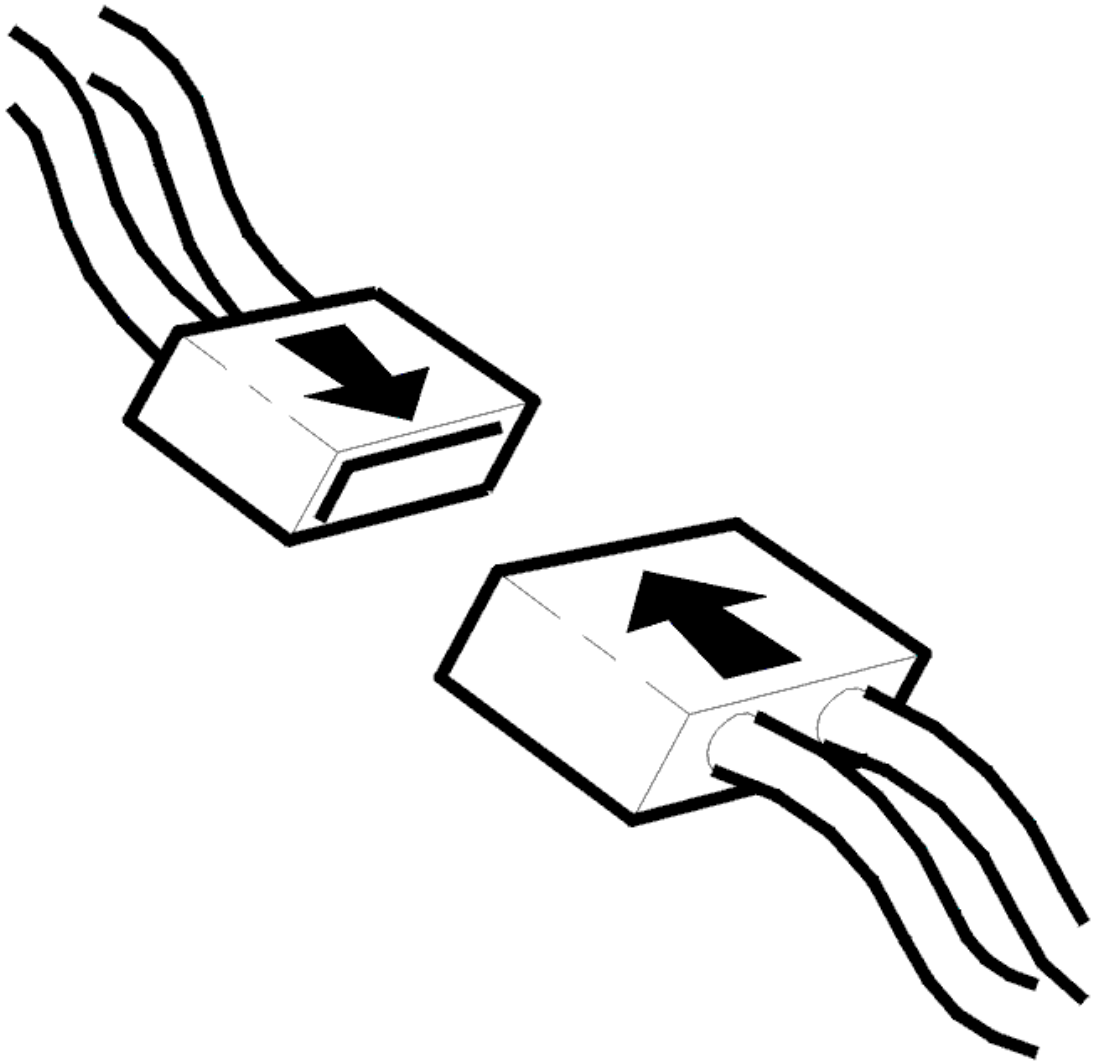

Fig. 12: Connecting Connector
Courtesy of VOLVO CARS CORPORATION

- Ignition off
- Reconnect the connectors, components, etc.
- Test-drive the vehicle according to **TEST DRIVE FORM (DSTC (DYNAMIC STABILITY AND TRACTION CONTROL) /BRAKE CONTROL MODULE), DESCRIPTION** .

NOTE: **Do not turn off the ignition between test-driving and reading out diagnostic trouble codes. This is to obtain the correct status of the diagnostic trouble codes.**

Then read out the diagnostic trouble code's status without turning off the ignition after the test-drive.

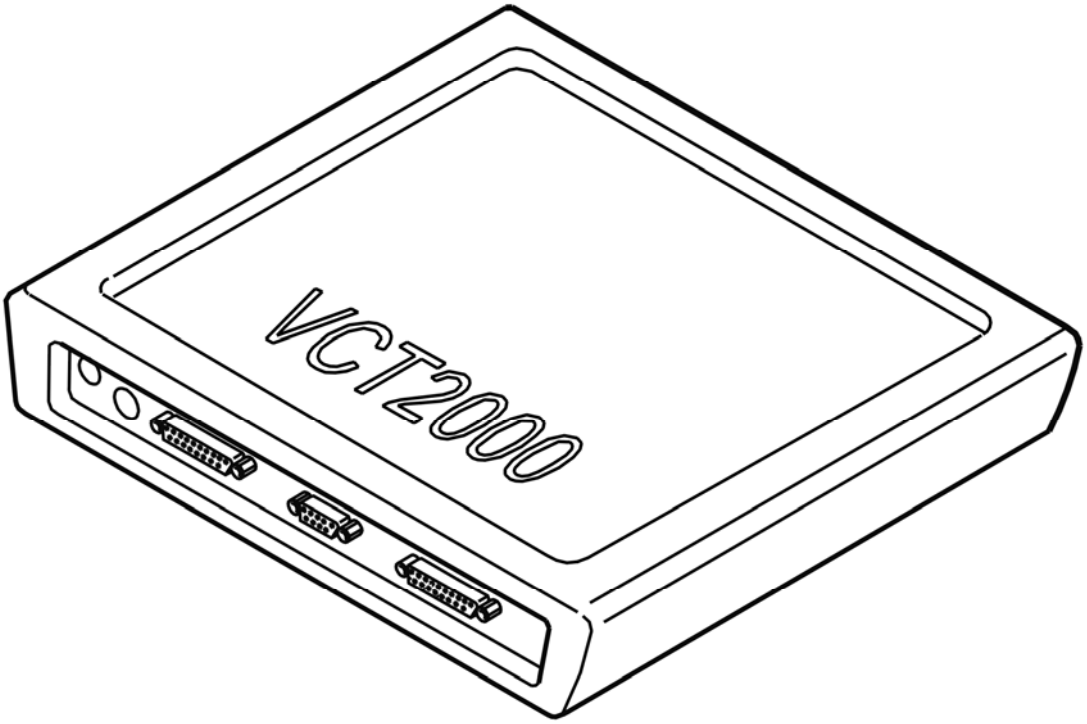

Fig. 13: Identifying VCT2000 Diagnostic Tool Symbol In VIDA
Courtesy of VOLVO CARS CORPORATION

Is the status of the diagnostic trouble code intermittent?

- **YES**

  VERIFIED: Troubleshooting has been completed.

- **NO**

  see **INFORMATION**

INFORMATION

FAULT-TRACING INFORMATION

The fault should have been detected and remedied. As this is not the case fault-tracing has failed.

Exit fault-tracing for this diagnostic trouble code (DTC) or make another attempt.

BCM-C006128: ACCELERATION SENSOR LATERAL. GENERAL SIGNAL ERROR. SIGNAL DISPLACEMENT ERROR/ZERO ADJUSTMENT ERROR

(B6324S5; 2011-2012)

DIAGNOSTIC TROUBLE CODE (DTC) INFORMATION

see **DIAGNOSTIC TROUBLE CODE (DTC) INFORMATION**

TROUBLESHOOTING

see **TROUBLESHOOTING**

BCM-C006128: ACCELERATION SENSOR LATERAL. GENERAL SIGNAL ERROR. SIGNAL DISPLACEMENT ERROR/ZERO ADJUSTMENT ERROR (B8444S; 2005-2011)

DIAGNOSTIC TROUBLE CODE (DTC) INFORMATION

see **DIAGNOSTIC TROUBLE CODE (DTC) INFORMATION**

TROUBLESHOOTING

see **TROUBLESHOOTING**

BCM-C006164: ACCELERATION SENSOR LATERAL. ALGORITHM ERROR. SIGNAL OUTSIDE PERMITTED RANGE (B6324S; 2007-2010)

DIAGNOSTIC TROUBLE CODE (DTC) INFORMATION

Condition

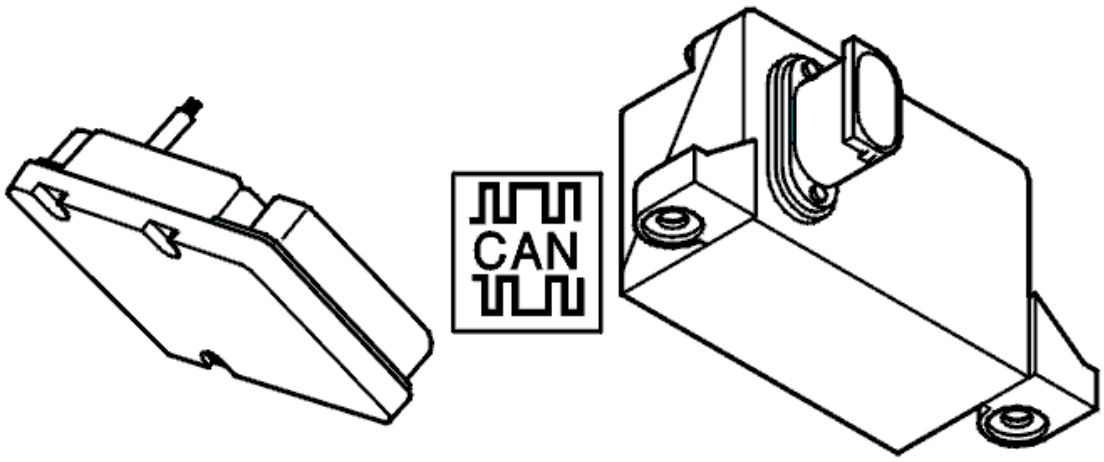

Fig. 14: Identifying Brake Control Module & Active Yaw Control Sensor

Courtesy of VOLVO CARS CORPORATION

NOTE: The diagnostic trouble code only applies to vehicles equipped with DSTC.

The AYC sensor for DSTC consists of a yaw speed sensor, lateral accelerometer, accelerometer (AWD only) and inclination sensor (RSC only). Via its own internal CAN network, the sensors transmit information to the brake control module (BCM) on the size of the yaw angle, vehicle acceleration both laterally and straight ahead as well as lateral inclination.

If the brake control module (BCM) registers an unreasonable signal from one of the sensors, diagnostic trouble code BCM-C006364, BCM-C006164, BCM-C111464 or BCM-C006264 is generated depending on which sensor is involved.

- BCM-C006364: Yaw speed sensor
- BCM-C006164: Lateral acceleration sensor
- BCM-C111464: Inclination sensor
- BCM-C006264: Accelerometer

Substitute Value

- TC is blocked.
- SC is blocked.
- AYC is blocked.
- RSC is blocked (only vehicles with RSC).

HINT: For information on abbreviations: BRAKE SYSTEM, ABBREVIATIONS

Possible Source

- Interference or noise on the cables that disrupted AYC sensor calculations.
- The voltage feed to the AYC sensor is too low.
- Defective wheel alignment.
- Internal malfunction in AYC sensor.

NOTE: This diagnostic trouble code (DTC) is not due to an internal hardware fault in the Brake control module (BCM) and must not be remedied by replacing the control module.

Fault symptom[s]

- General warning light on.
- Anti-spin is not operational.
- The stability function is not operational.
- The anti-skid function is not operational.

TROUBLESHOOTING

CHECKING THE CONNECTORS

NOTE: **If other diagnostic trouble codes are stored in the brake control module (BCM) in addition to BCM-C006364, BCM-C006164, BCM-C111464 or BCM-C006264, select Cancel and troubleshoot these diagnostic trouble codes first.**

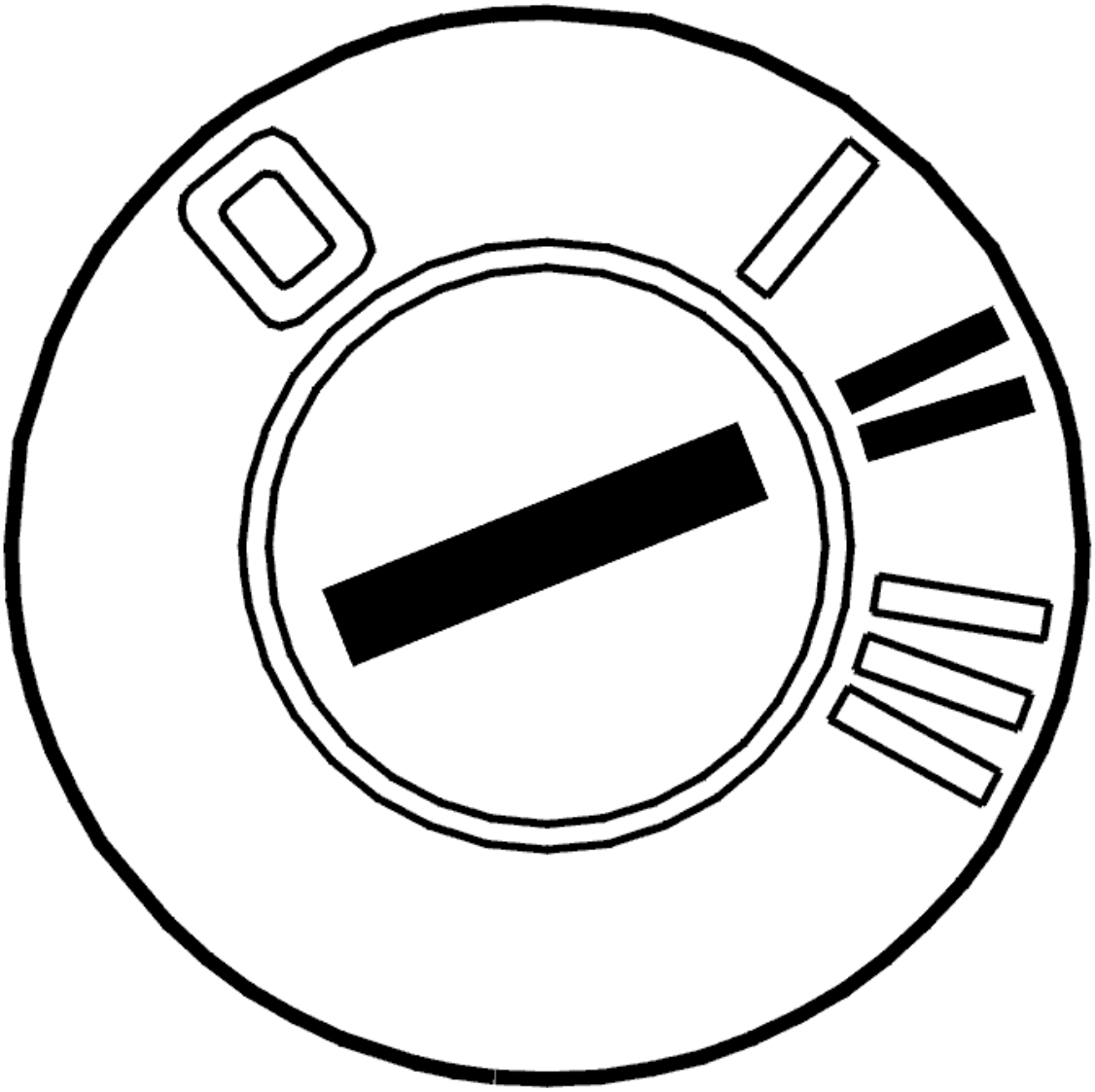

Fig. 15: Identifying Ignition ON
Courtesy of VOLVO CARS CORPORATION

- Ignition off
- Check the connectors of the brake control module (BCM) and the AYC sensor for contact resistance and oxidation.
- Check that a source of interference, such as a cellular phone or a radio receiver, is not positioned too close

to the AYC sensor.

- Test-drive following operating cycle: **TEST DRIVE FORM (DSTC (DYNAMIC STABILITY AND TRACTION CONTROL) /BRAKE CONTROL MODULE), DESCRIPTION**
- Ignition on
- Read off diagnostic trouble codes (DTCs).

If the status of the diagnostic trouble code is intermittent, the malfunction was probably caused by contact resistance or oxidation in the brake control module (BCM) or AYC sensor connector or a source of interference too close to the sensor.

Other information

- For removal of the AYC sensor connector: **ACTIVE YAW CONTROL SENSOR, REPLACING**
- For removal of the brake control module (BCM) connector: **CONNECTING THE BREAKOUT BOX, BRAKE CONTROL MODULE (BCM)**

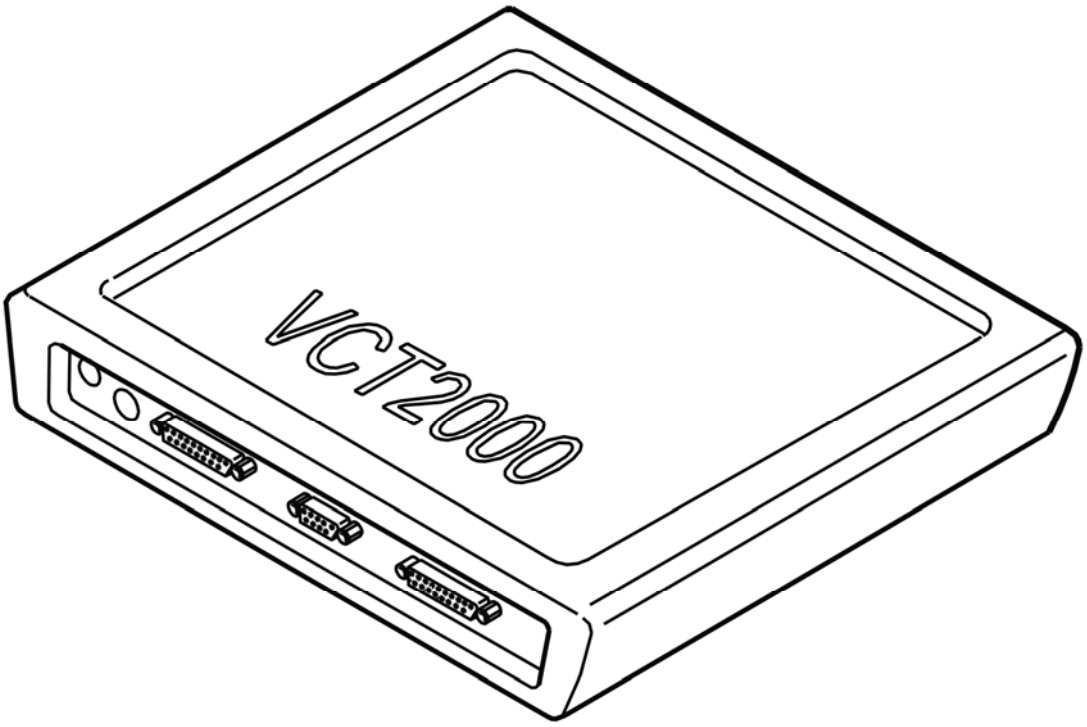

Fig. 16: Identifying VCT2000 Diagnostic Tool Symbol In VIDA
Courtesy of VOLVO CARS CORPORATION

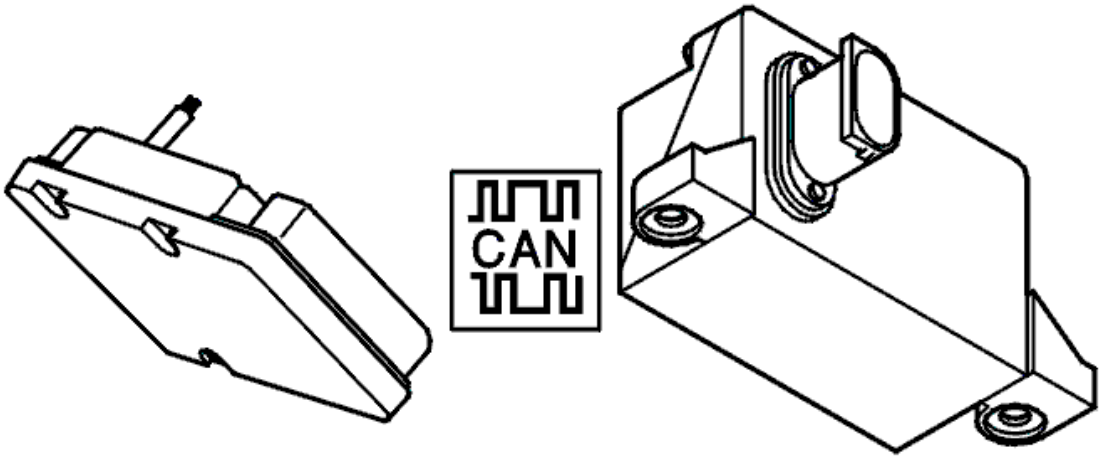

Fig. 17: Identifying Brake Control Module & Active Yaw Control Sensor
Courtesy of VOLVO CARS CORPORATION

Was the diagnostic trouble code status permanent?

- **YES**

  see **CHECKING THE WIRING**

- **NO**

  OKAY: Troubleshooting has been completed.

CHECKING THE WIRING

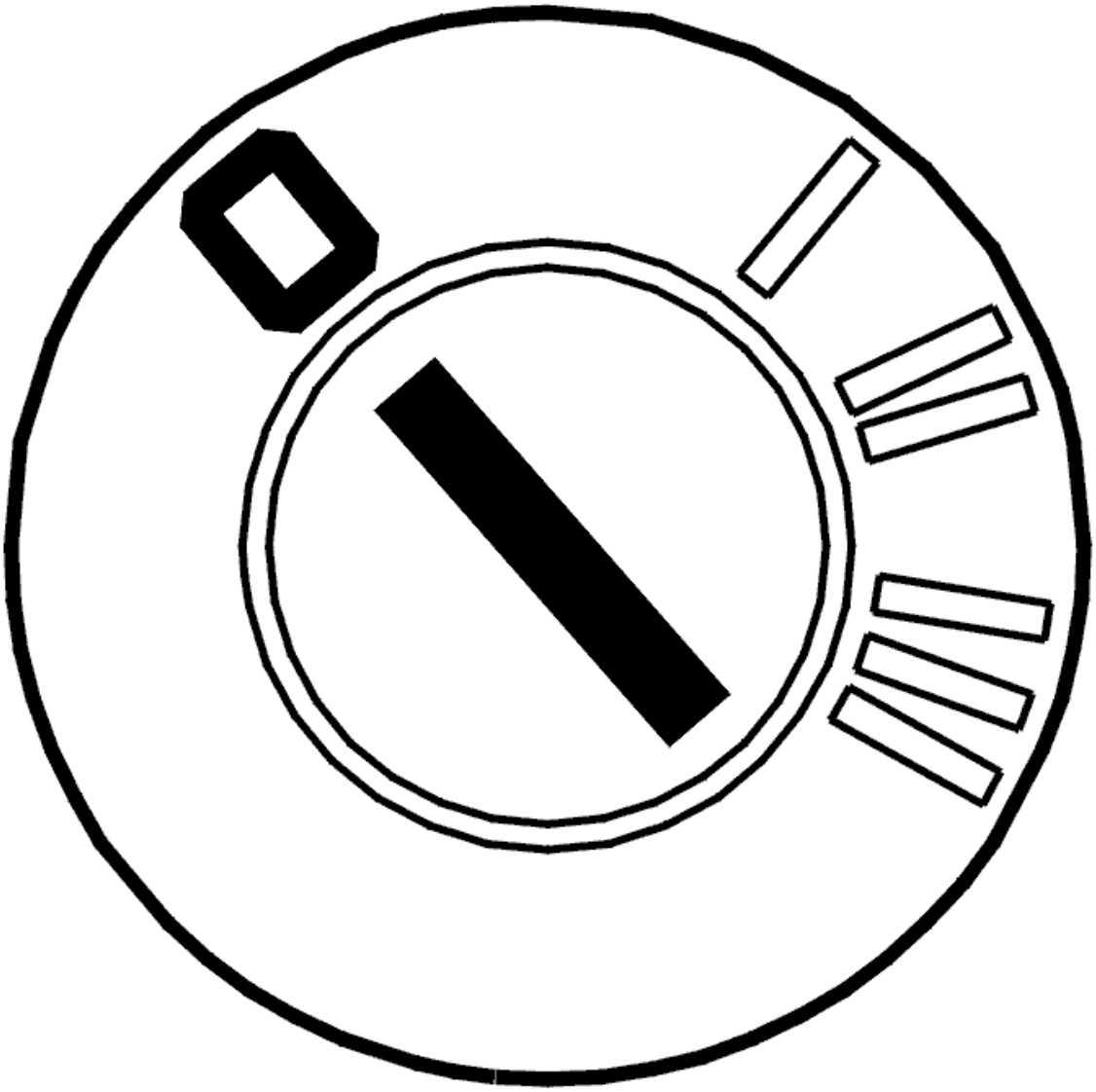

Fig. 18: Identifying Ignition OFF
Courtesy of VOLVO CARS CORPORATION

- Ignition off

  Check the connectors of the brake control module (BCM) and the AYC sensor for contact resistance and oxidation.

  Check the cables for an open circuit.

  Measure between:

  - The connector for AYC sensor terminal #1 and brake control module (BCM) terminal #A25 (#A25).
  - The connector for AYC sensor terminal #2 and brake control module (BCM) terminal #A29 (#A29).

- The connector for AYC sensor terminal #3 and brake control module (BCM) terminal #A6 (#A6).
- The connector for AYC sensor terminal #5 and brake control module (BCM) terminal #A39 (#A39).

Check wheel alignment.

Remedy as necessary.

Other information

- see **CONNECTING THE BREAKOUT BOX, BRAKE CONTROL MODULE (BCM)**
- see **SIGNAL SPECIFICATION, BRAKE CONTROL MODULE (BCM) WITH DSTC (DYNAMIC STABILITY AND TRACTION CONTROL)**
- see **WHEEL ALIGNMENT, CHECKING / ADJUSTING**
- see **ACTIVE YAW CONTROL SENSOR, REPLACING**
- see **CONTENTS**

- **Continue**

  see **VERIFICATION**

VERIFICATION

VERIFICATION

HINT: After carrying out the repair, check that the malfunction has been remedied.

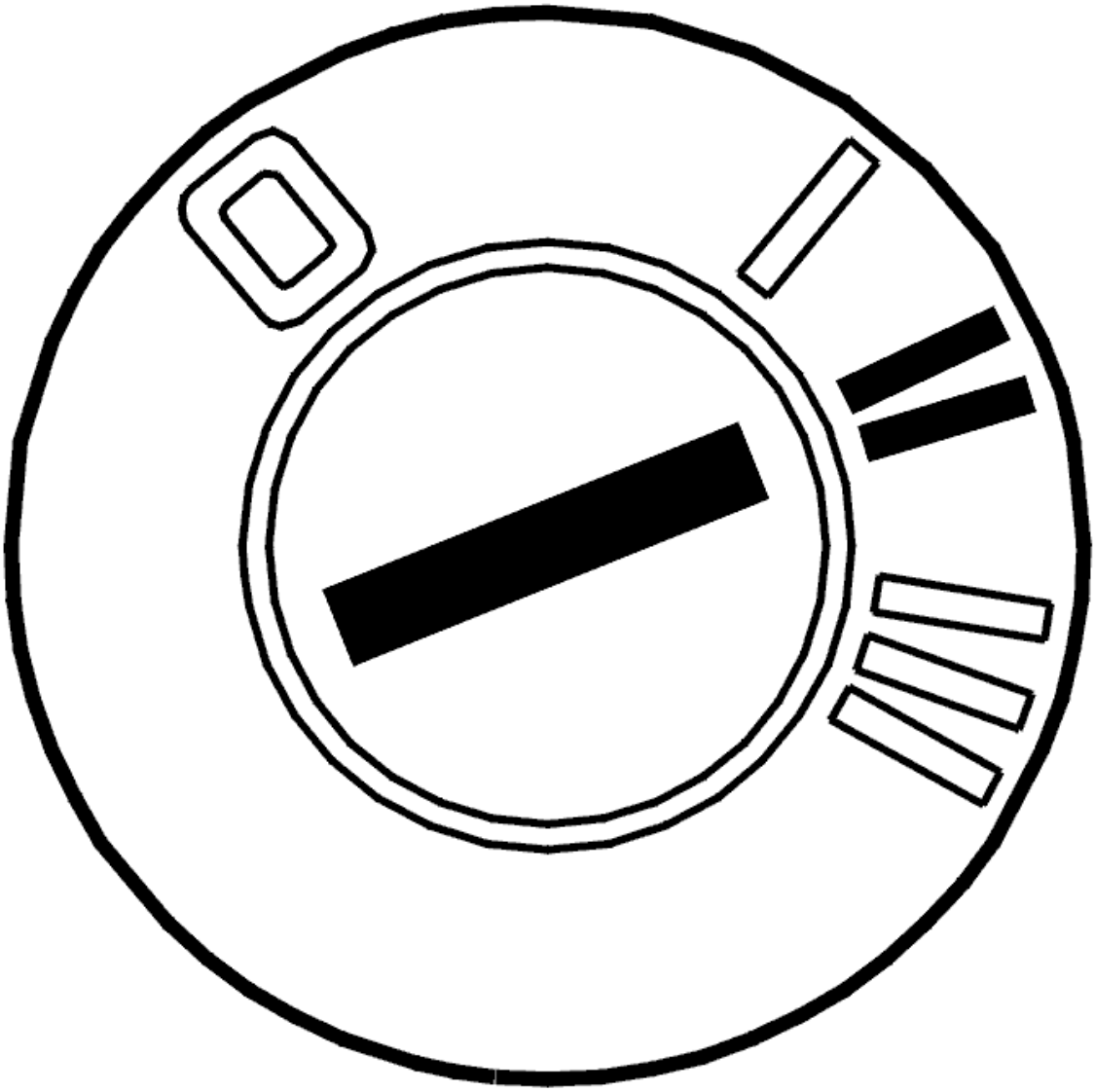

Fig. 19: Identifying Ignition ON
Courtesy of VOLVO CARS CORPORATION

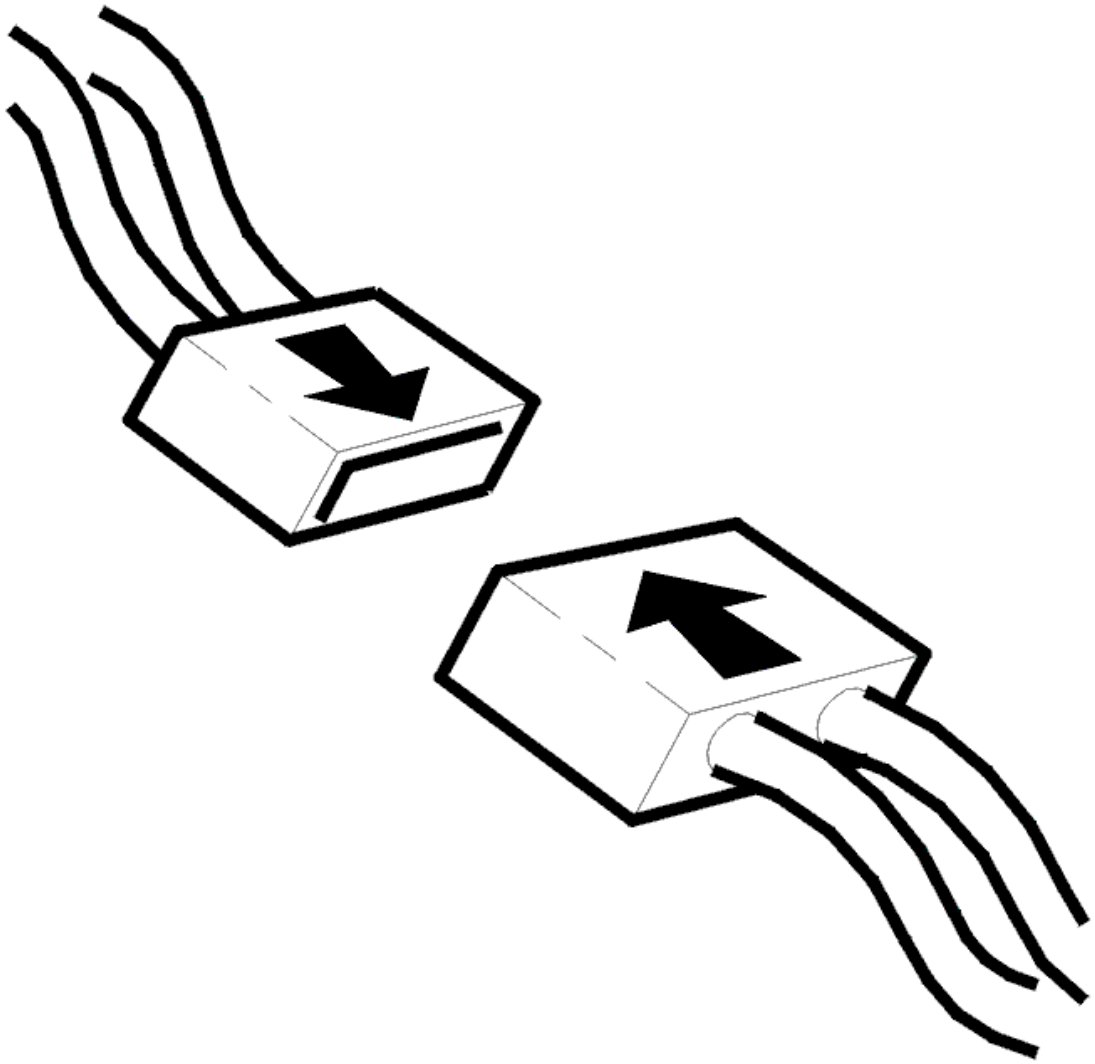

Fig. 20: Connecting Connector
Courtesy of VOLVO CARS CORPORATION

- Ignition off
- Reconnect the connectors, components, etc.
- Test-drive the vehicle according to **TEST DRIVE FORM (DSTC (DYNAMIC STABILITY AND TRACTION CONTROL) /BRAKE CONTROL MODULE), DESCRIPTION** .

NOTE: **Do not turn off the ignition between test-driving and reading out diagnostic trouble codes. This is to obtain the correct status of the diagnostic trouble codes.**

Then read out the diagnostic trouble code's status without turning off the ignition after the test-drive.

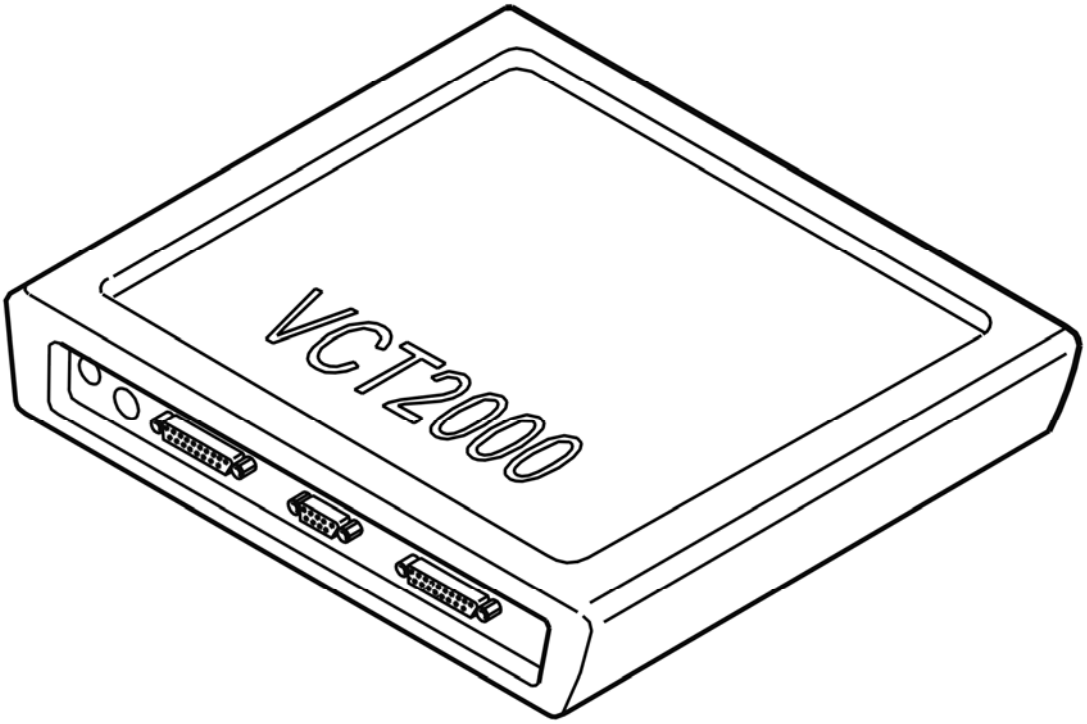

Fig. 21: Identifying VCT2000 Diagnostic Tool Symbol In VIDA
Courtesy of VOLVO CARS CORPORATION

Is the status of the diagnostic trouble code intermittent?

- **YES**

  VERIFIED: Troubleshooting has been completed.

- **NO**

  see **INFORMATION**

INFORMATION

FAULT-TRACING INFORMATION

The fault should have been detected and remedied. As this is not the case fault-tracing has failed.

Exit fault-tracing for this diagnostic trouble code (DTC) or make another attempt.

BCM-C006164: ACCELERATION SENSOR LATERAL. ALGORITHM ERROR. SIGNAL OUTSIDE PERMITTED RANGE (B6324S5; 2011-2012)

DIAGNOSTIC TROUBLE CODE (DTC) INFORMATION

see **DIAGNOSTIC TROUBLE CODE (DTC) INFORMATION**

TROUBLESHOOTING

see **TROUBLESHOOTING**

BCM-C006164: ACCELERATION SENSOR LATERAL. ALGORITHM ERROR. SIGNAL OUTSIDE PERMITTED RANGE (B8444S; 2005-2011)

DIAGNOSTIC TROUBLE CODE (DTC) INFORMATION

see **DIAGNOSTIC TROUBLE CODE (DTC) INFORMATION**

TROUBLESHOOTING

see **TROUBLESHOOTING**

BCM-C006A01 MULTI-AXIAL ACCELERATION SENSOR. GENERAL MALFUNCTION INFORMATION. GENERAL ELECTRICAL MALFUNCTION (B6324S; 2007-2010)

DIAGNOSTIC TROUBLE CODE INFORMATION BCM-C006A01

Condition

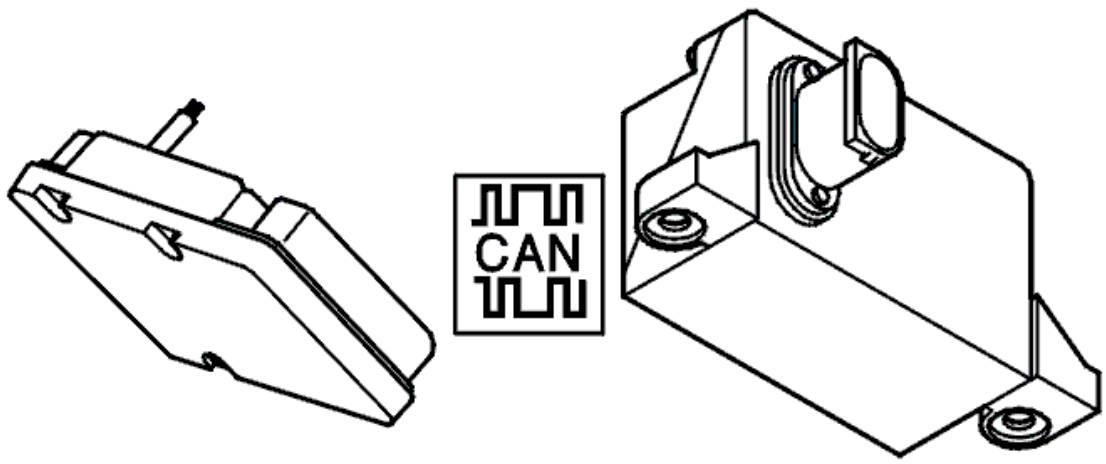

Fig. 22: Identifying Brake Control Module & Active Yaw Control Sensor
Courtesy of VOLVO CARS CORPORATION

NOTE: The diagnostic trouble code only applies to brake systems with DSTC.

The AYC sensor is supplied with voltage 12 V.

Diagnostic trouble code BCM-C006A01 is generated if the brake control module (BCM) registers that the voltage feed to the AYC sensor is too high or too low.

Substitute Value

- TC is blocked.
- SC is blocked.
- AYC is blocked.

HINT: For information on abbreviations: BRAKE SYSTEM, ABBREVIATIONS

Possible Source

- Contact resistance or oxidation in the connectors or connections.
- The voltage feed cables of the AYC sensor are short-circuited to ground or voltage.
- Open circuit on the voltage feed cable of the AYC sensor.
- Internal malfunction in AYC sensor.
- Internal malfunction in brake control module (BCM).

Fault symptom[s]

- General warning light on.
- Anti-spin is not operational.
- The stability function is not operational.
- The anti-skid function is not operational.

TROUBLESHOOTING BCM-C006A01

CHECKING THE CONNECTORS

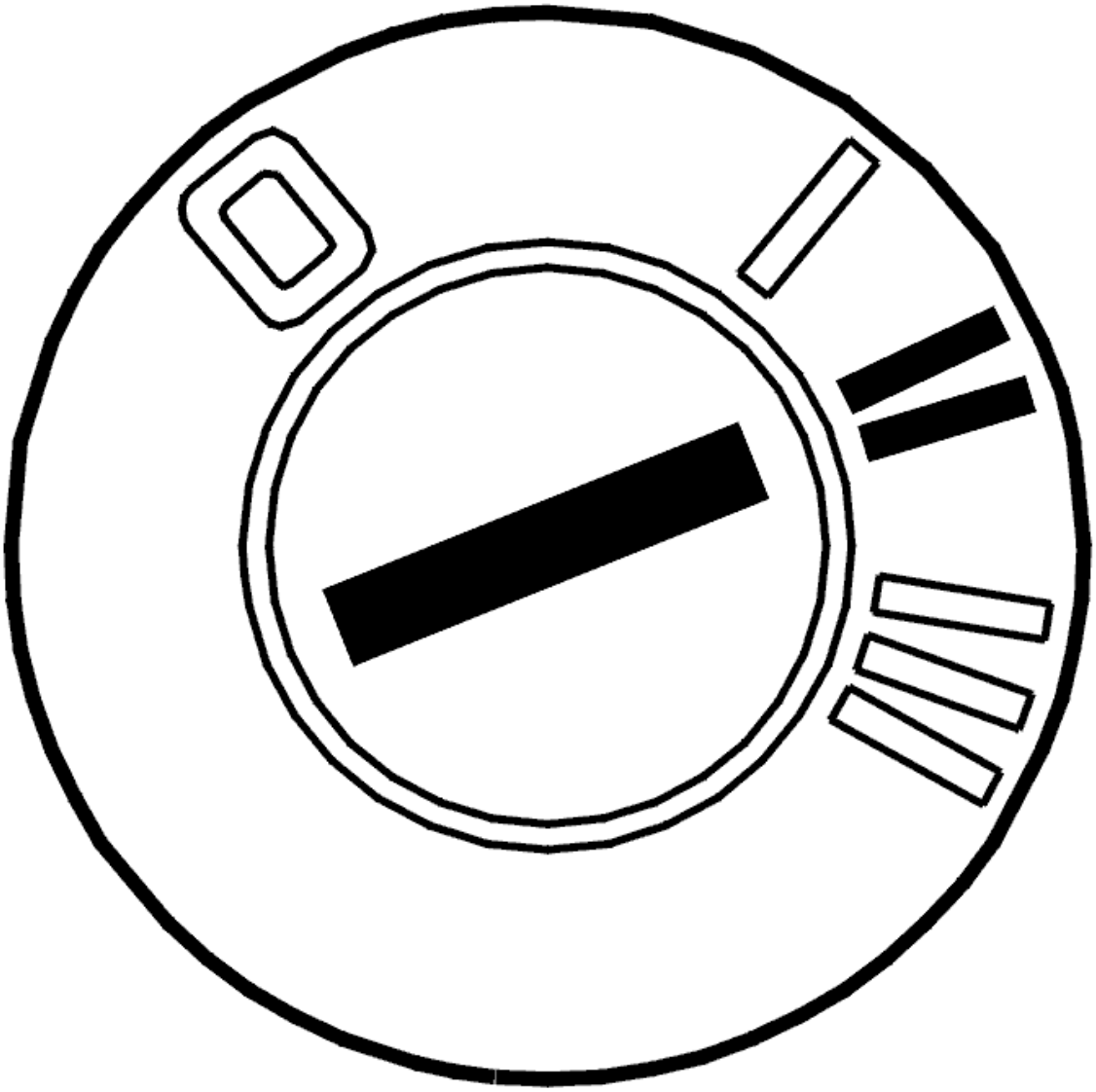

Fig. 23: Identifying Ignition ON
Courtesy of VOLVO CARS CORPORATION

- Ignition off
- Check the connectors of the brake control module (BCM) and AYC sensor for contact resistance and oxidation.
- Ignition on
- Wait approximately 60 seconds.
- Read off diagnostic trouble codes (DTCs).

  If the status of the diagnostic trouble code is intermittent, the malfunction was probably caused by contact resistance or oxidation in the connectors of the control module or AYC sensor.

  Other information

- To access control module connectors: **CONNECTING THE BREAKOUT BOX, BRAKE CONTROL MODULE (BCM)**
- see **ACTIVE YAW CONTROL SENSOR, REPLACING**
- see **CONTENTS**

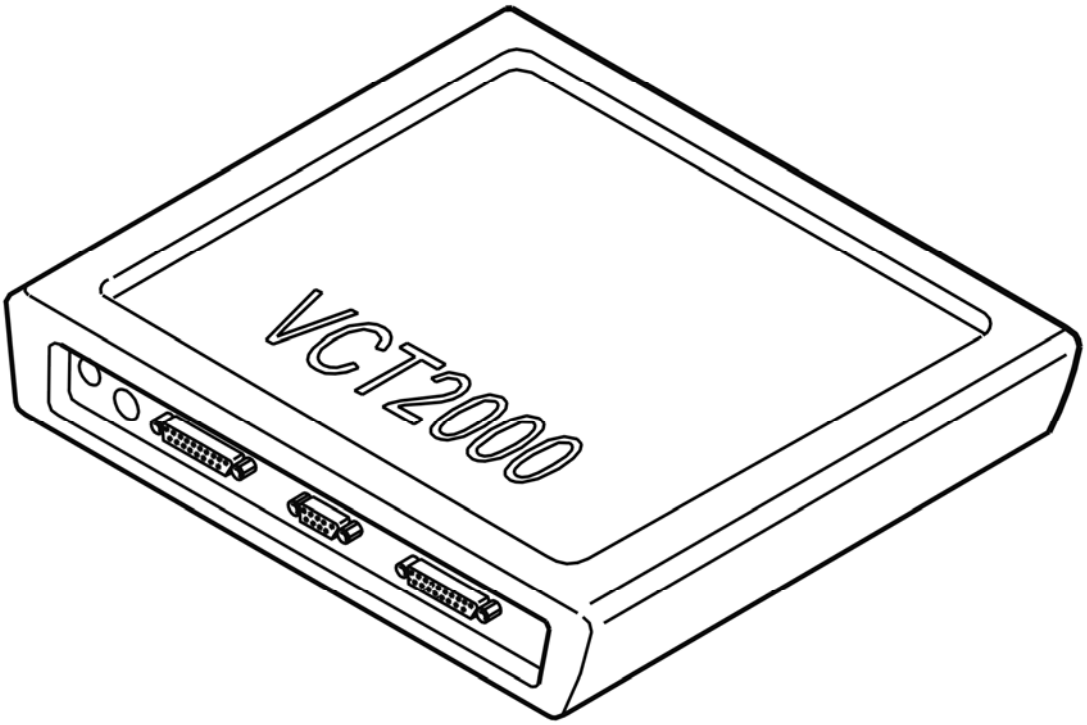

Fig. 24: Identifying VCT2000 Diagnostic Tool Symbol In VIDA
Courtesy of VOLVO CARS CORPORATION

Is the status of the diagnostic trouble code intermittent?

- **YES**

  OKAY: Troubleshooting has been completed.

- **NO**

  see **CHECKING THE AYC SENSOR**

CHECKING THE AYC SENSOR

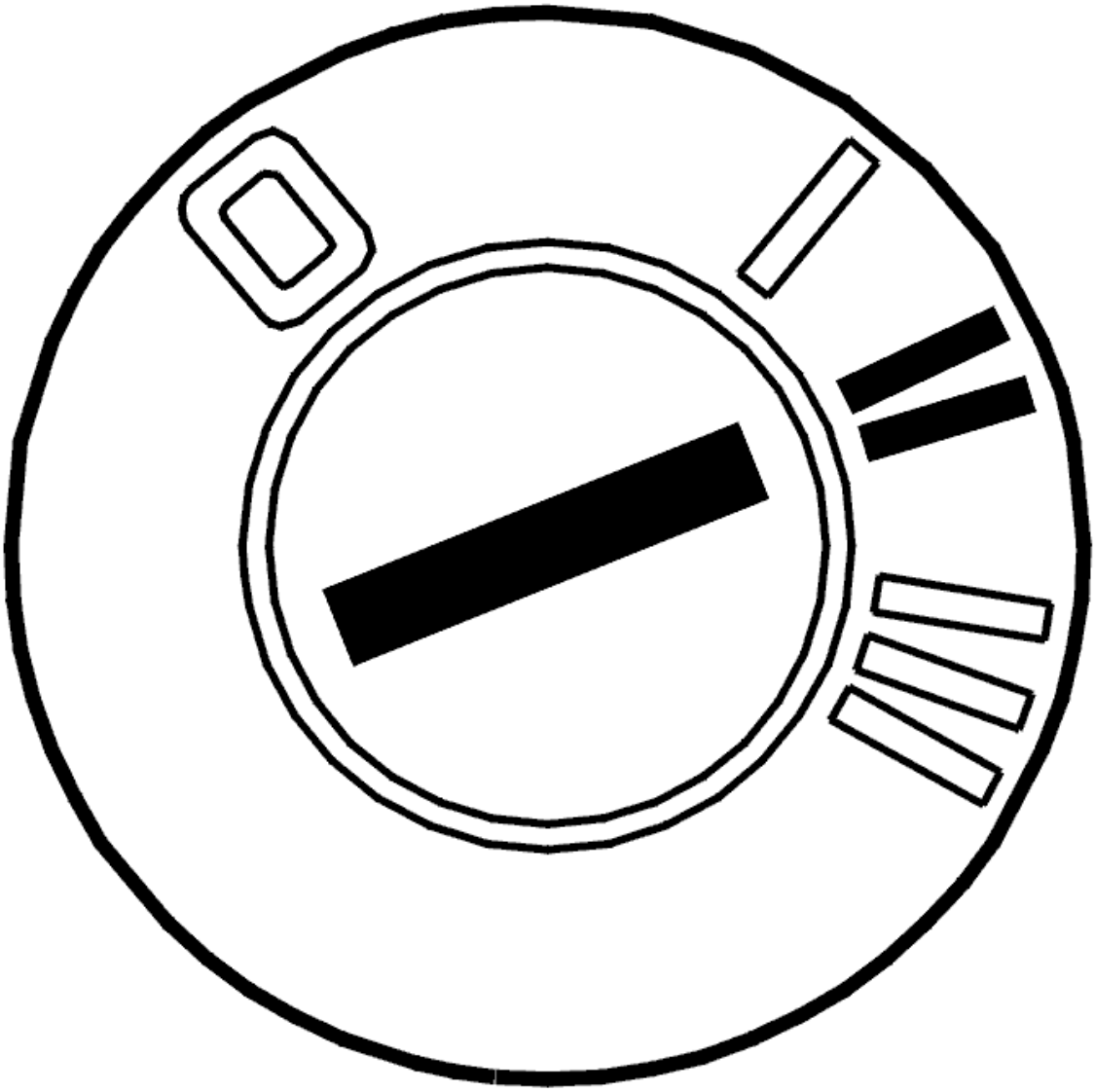

Fig. 25: Identifying Ignition ON
Courtesy of VOLVO CARS CORPORATION

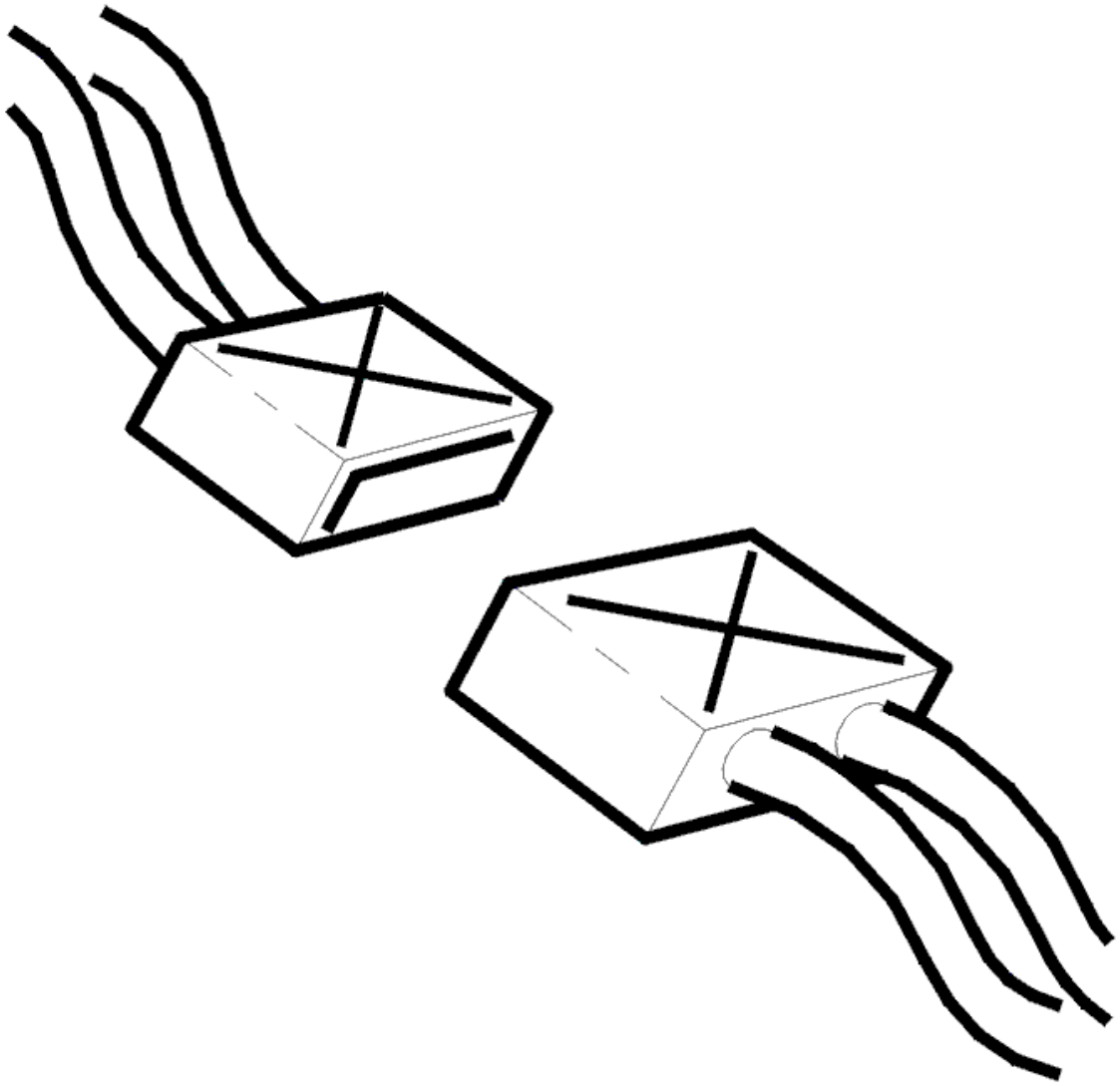

Fig. 26: Identifying Connector
Courtesy of VOLVO CARS CORPORATION

- Ignition off
- Breakout box connected to brake control module (BCM).
- Ignition on
- Read off the voltage feed to the brake control module (BCM).

  Check the voltage feed to the AYC sensor by connecting a voltmeter between brake control module (BCM) terminals #6 (#A6) and #39 (#A39). The voltage value should approximately equal the value read out for the brake control module (BCM).

  If the voltage feed to the AYC sensor is OK, replace the AYC sensor.

  Remedy as necessary.

Other information

- see **CONNECTING THE BREAKOUT BOX, BRAKE CONTROL MODULE (BCM)**
- see **SIGNAL SPECIFICATION, BRAKE CONTROL MODULE (BCM) WITH DSTC (DYNAMIC STABILITY AND TRACTION CONTROL)**
- see **ACTIVE YAW CONTROL SENSOR, REPLACING**

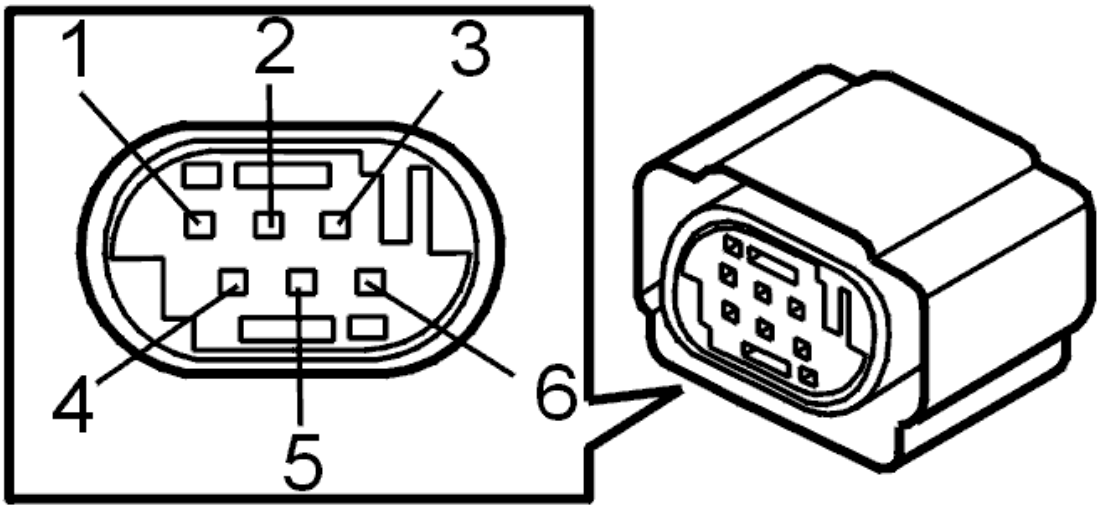

Fig. 27: Identifying Active Yaw Control Sensor Connector Terminals
Courtesy of VOLVO CARS CORPORATION

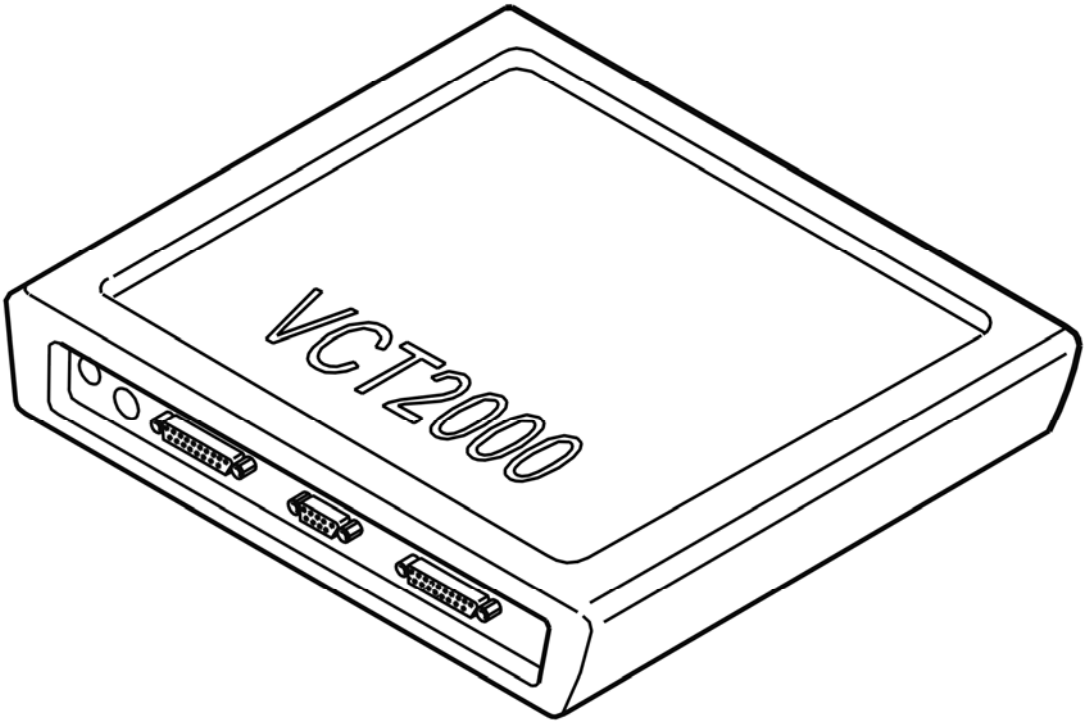

Fig. 28: Identifying VCT2000 Diagnostic Tool Symbol In VIDA
Courtesy of VOLVO CARS CORPORATION

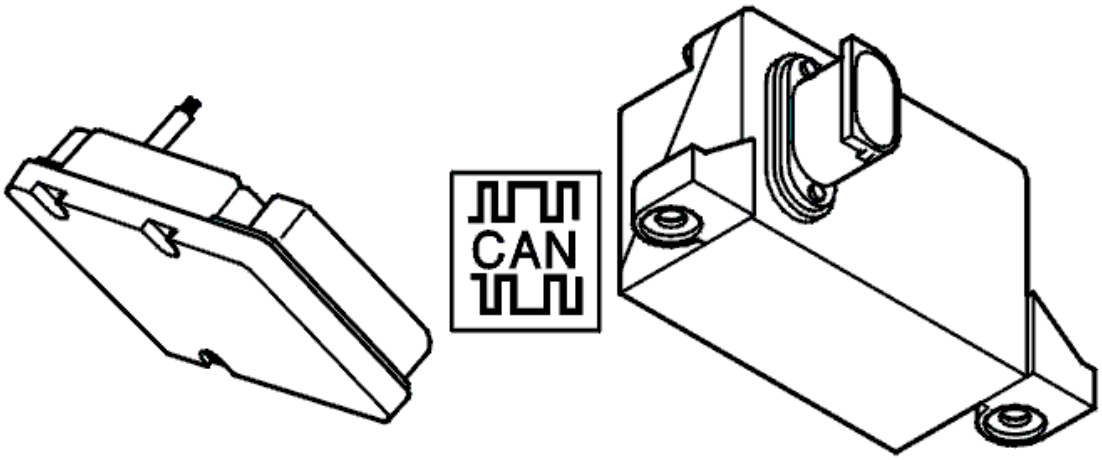

Fig. 29: Identifying Brake Control Module & Active Yaw Control Sensor
Courtesy of VOLVO CARS CORPORATION

Was the voltage OK?

- **YES**

  see **CHECKING THE WIRING**

- **NO**

  see **VERIFICATION**

CHECKING THE WIRING

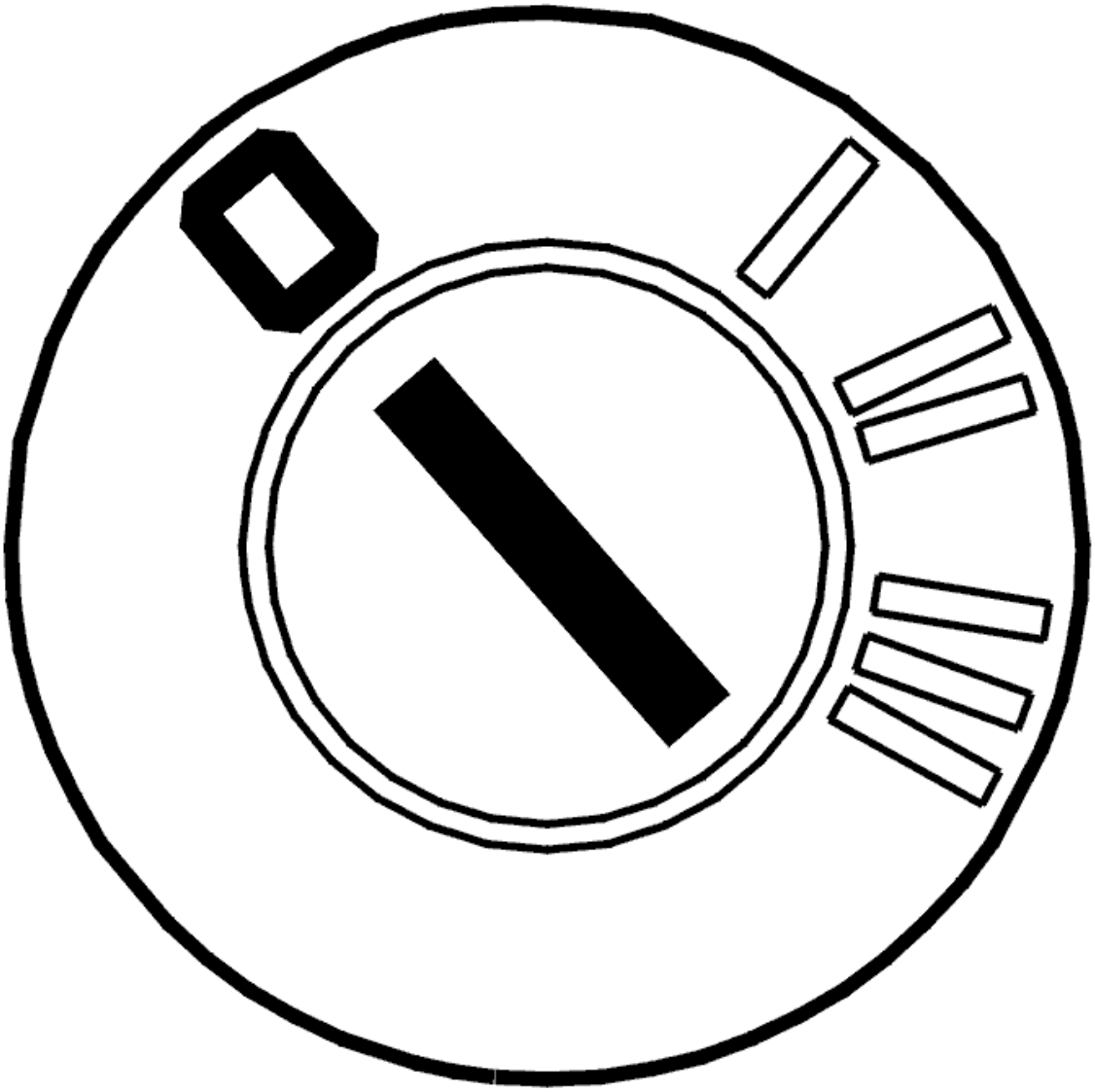

Fig. 30: Identifying Ignition OFF
Courtesy of VOLVO CARS CORPORATION

- Ignition off

  Check the cables for voltage feed between AYC sensor:

- terminal #3 and brake control module (BCM) terminal #6 (#A6)
- terminal #5 and brake control module (BCM) terminal #39 (#A39)

for short-circuit to ground and short circuit to voltage.

If the cables are OK, replace the brake control module (BCM).

Other information

- see **CONNECTING THE BREAKOUT BOX, BRAKE CONTROL MODULE (BCM)**
- see **SIGNAL SPECIFICATION, BRAKE CONTROL MODULE (BCM) WITH DSTC (DYNAMIC STABILITY AND TRACTION CONTROL)**
- see **BRAKE CONTROL MODULE (BCM), REPLACING**
- see **CONTENTS** .

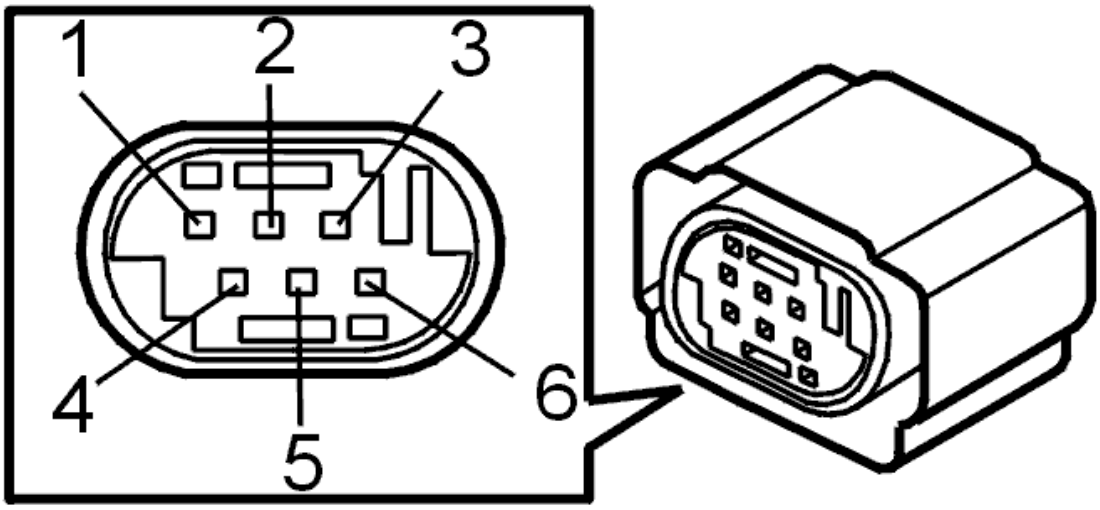

Fig. 31: Identifying Active Yaw Control Sensor Connector Terminals
Courtesy of VOLVO CARS CORPORATION

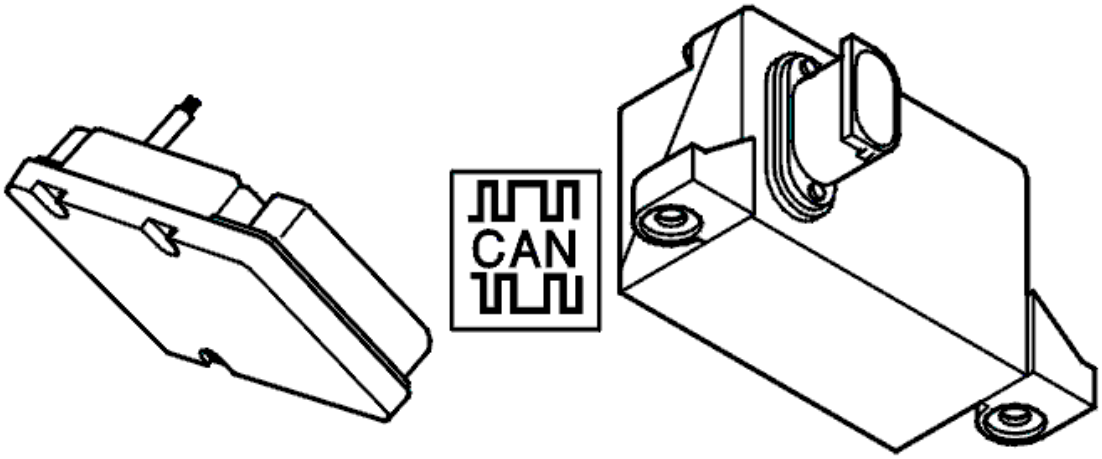

Fig. 32: Identifying Brake Control Module & Active Yaw Control Sensor
Courtesy of VOLVO CARS CORPORATION

- **Continue**

  see **VERIFICATION**

VERIFICATION

VERIFICATION

HINT: After carrying out the repair, check that the malfunction has been remedied.

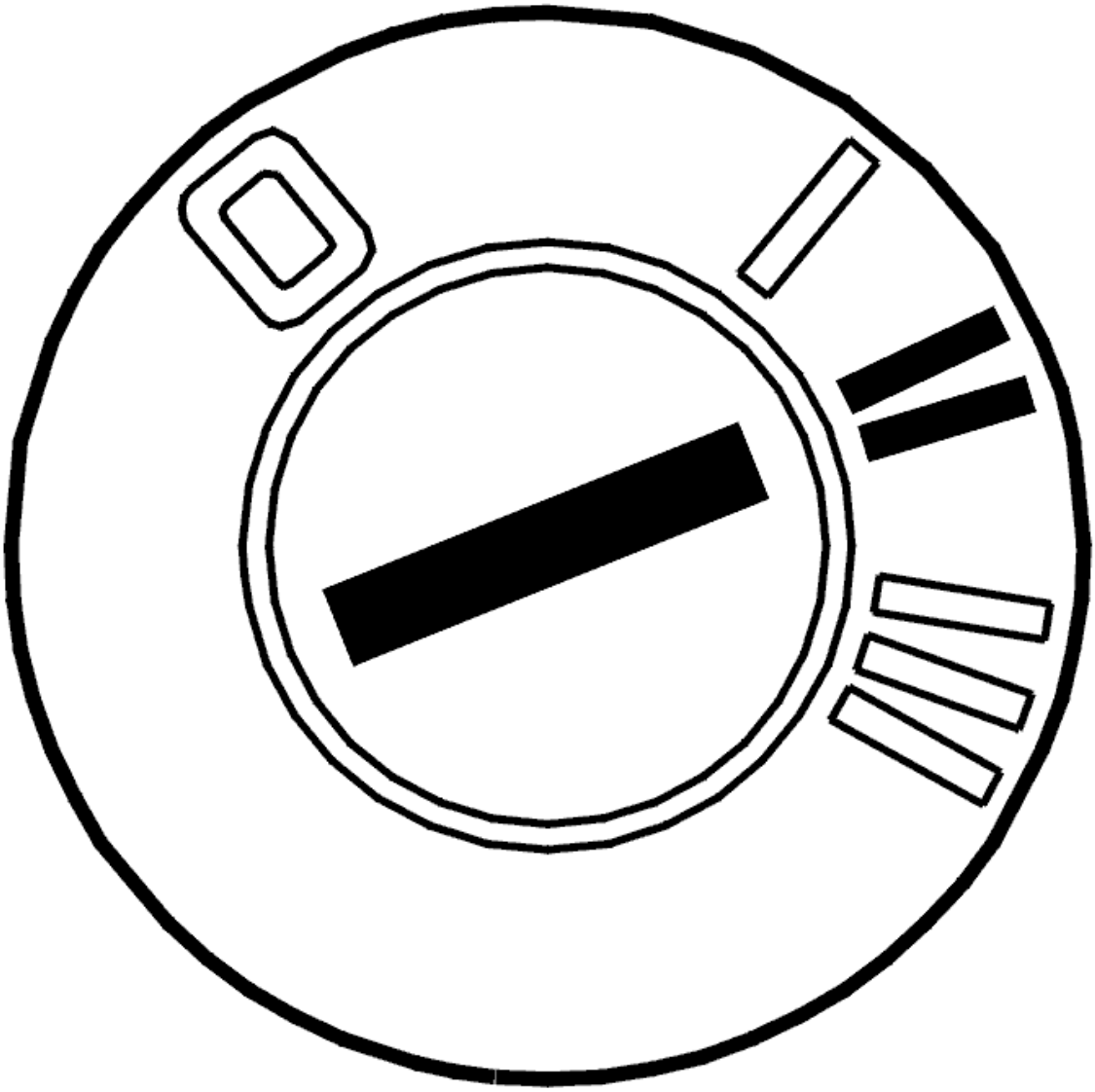

Fig. 33: Identifying Ignition ON
Courtesy of VOLVO CARS CORPORATION

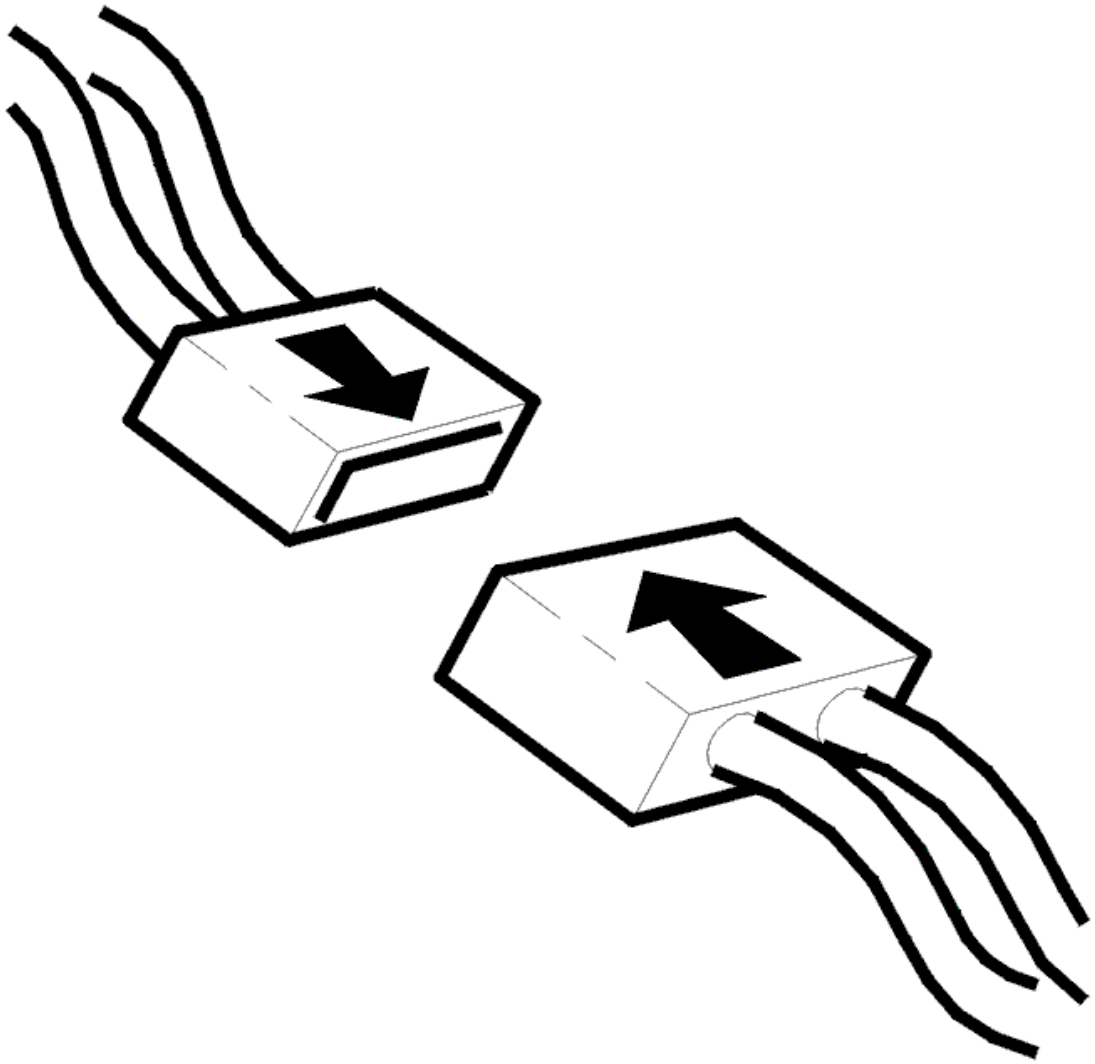

Fig. 34: Connecting Connector
Courtesy of VOLVO CARS CORPORATION

- Ignition off
- Reconnect the connectors, components, etc.
- Test-drive the vehicle according to **TEST DRIVE FORM (DSTC (DYNAMIC STABILITY AND TRACTION CONTROL) /BRAKE CONTROL MODULE), DESCRIPTION** .

NOTE: **Do not turn off the ignition between test-driving and reading out diagnostic trouble codes. This is to obtain the correct status of the diagnostic trouble codes.**

Then read out the diagnostic trouble code's status without turning off the ignition after the test-drive.

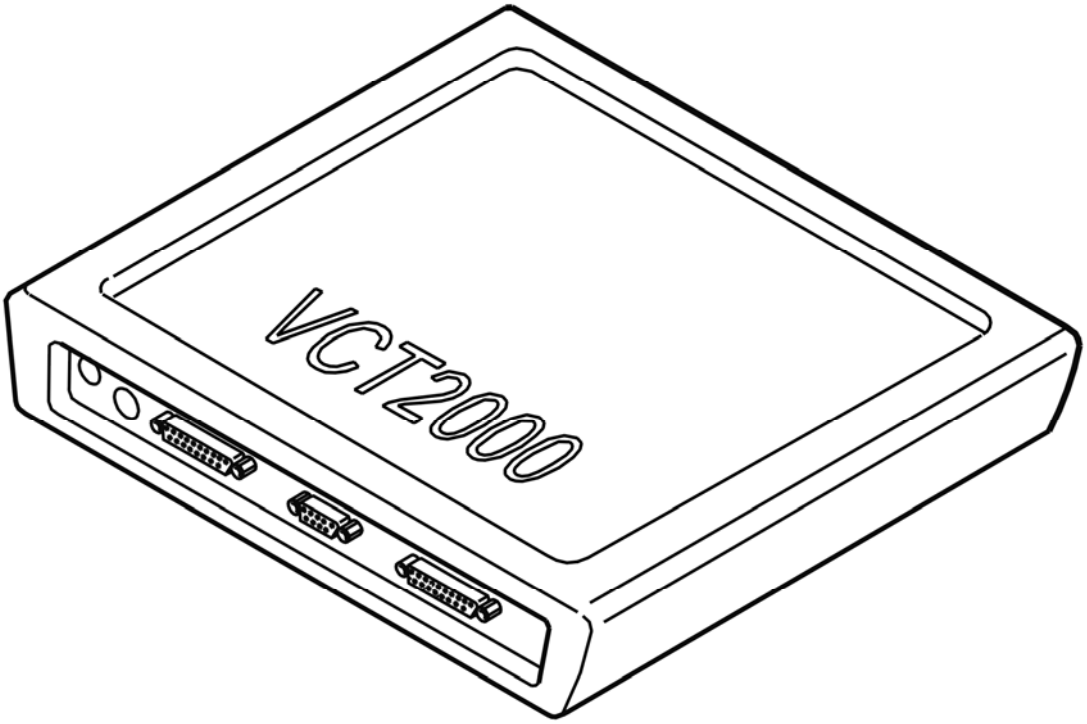

Fig. 35: Identifying VCT2000 Diagnostic Tool Symbol In VIDA
Courtesy of VOLVO CARS CORPORATION

Is the status of the diagnostic trouble code intermittent?

- **YES**

  VERIFIED: Troubleshooting has been completed.

- **NO**

  see **INFORMATION**

INFORMATION

FAULT-TRACING INFORMATION

The fault should have been detected and remedied. As this is not the case fault-tracing has failed.

Exit fault-tracing for this diagnostic trouble code (DTC) or make another attempt.

BCM-C006A01 MULTI-AXIAL ACCELERATION SENSOR. GENERAL MALFUNCTION INFORMATION. GENERAL ELECTRICAL MALFUNCTION

(B6324S5; 2011-2012)

DIAGNOSTIC TROUBLE CODE INFORMATION BCM-C006A01

see **DIAGNOSTIC TROUBLE CODE INFORMATION BCM-C006A01**

TROUBLESHOOTING BCM-C006A01

see **TROUBLESHOOTING BCM-C006A01**

BCM-C006A01 MULTI-AXIAL ACCELERATION SENSOR. GENERAL MALFUNCTION INFORMATION. GENERAL ELECTRICAL MALFUNCTION (B8444S; 2005-2011)

DIAGNOSTIC TROUBLE CODE INFORMATION BCM-C006A01

see **DIAGNOSTIC TROUBLE CODE INFORMATION BCM-C006A01**

TROUBLESHOOTING BCM-C006A01

see **TROUBLESHOOTING BCM-C006A01**

BCM-C006A04 MULTI-AXIAL ACCELERATION SENSOR. GENERAL MALFUNCTION INFORMATION. INTERNAL ERROR (B6324S; 2007-2010)

DIAGNOSTIC TROUBLE CODE INFORMATION BCM-C006A04

Condition

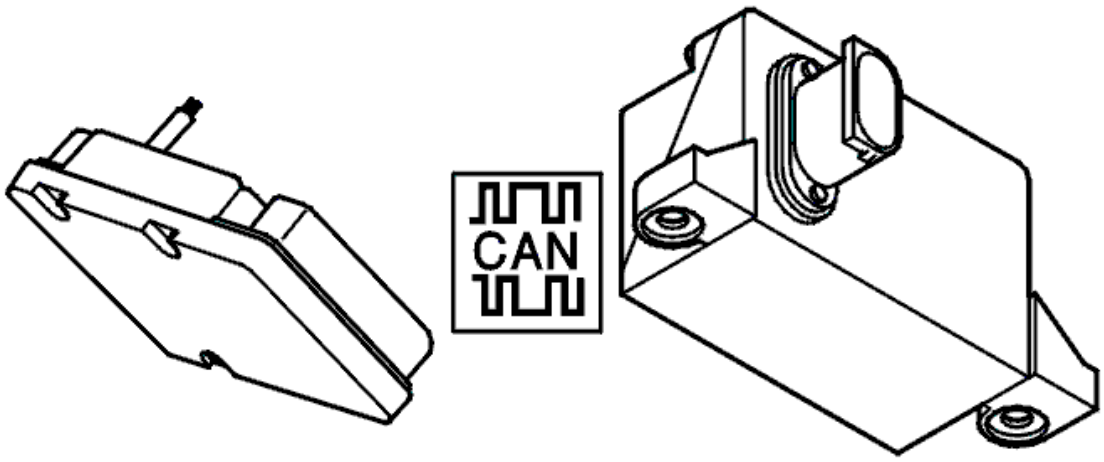

Fig. 36: Identifying Brake Control Module & Active Yaw Control Sensor

Courtesy of VOLVO CARS CORPORATION

NOTE: The diagnostic trouble code only applies to vehicles equipped with DSTC.

The AYC sensor is supplied 12 V. The sensor signal voltage to the brake control module (BCM) is approx. 2.5 V when the vehicle is stationary. The brake control module (BCM) compares the voltage to a reference value.

Diagnostic trouble code BCM-C006A04 is generated if the voltage does not match the reference value or if an internal malfunction is registered in the AYC sensor.

Substitute Value

- TC is blocked.
- SC is blocked.
- AYC is blocked.

HINT: For information on abbreviations: BRAKE SYSTEM, ABBREVIATIONS

Possible Source

- Signals that interfere with the AYC sensor.
- Too low voltage to the AYC sensor.
- Internal malfunction in AYC sensor.

NOTE: This diagnostic trouble code (DTC) is not due to an internal hardware fault in the Brake control module (BCM) and must not be remedied by replacing the control module.

Fault symptom[s]

- General warning light on.
- Anti-spin is not operational.
- The stability function is not operational.
- The anti-skid function is not operational.

TROUBLESHOOTING BCM-C006A04

CHECKING THE SENSOR'S PRESENT VALUE.

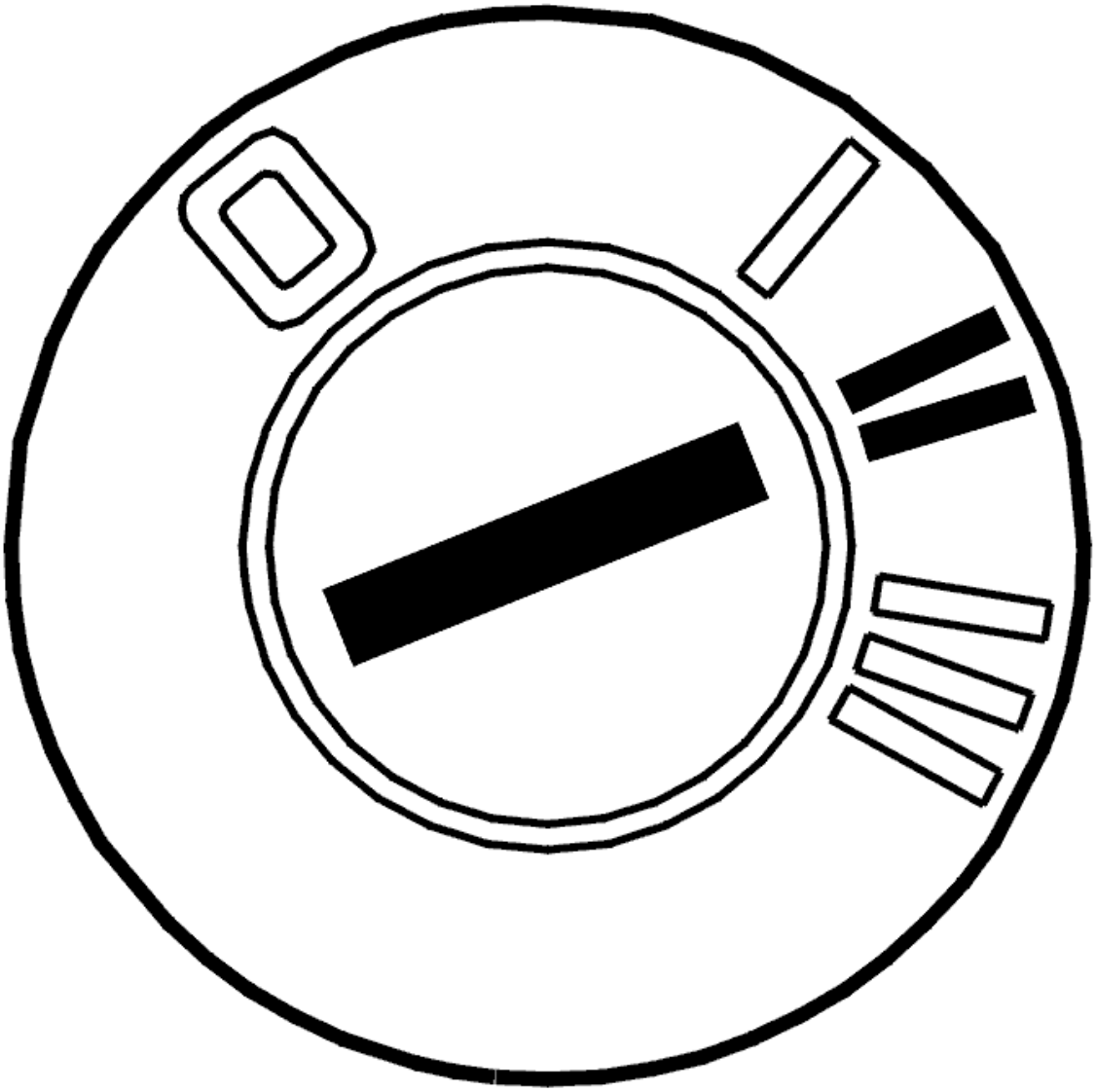

Fig. 37: Identifying Ignition ON
Courtesy of VOLVO CARS CORPORATION

- Ignition off
- Check the connectors of the brake control module (BCM) and AYC sensor for contact resistance and oxidation.
- Ignition on
- Read off the value in question.

Check the read value of the respective component to the value in the table.

Component	Value
Yaw sensor	-81.9 degrees/second - +81.9 degrees/second
Lateral accelerometer	

	-17.9 m/s^2 - +17.9 m/s^2
Accelerometer	-17.9 m/s^2 - +17.9 m/s^2

NOTE: **The value for the accelerometer can only be read out in four-wheel drive vehicles.**

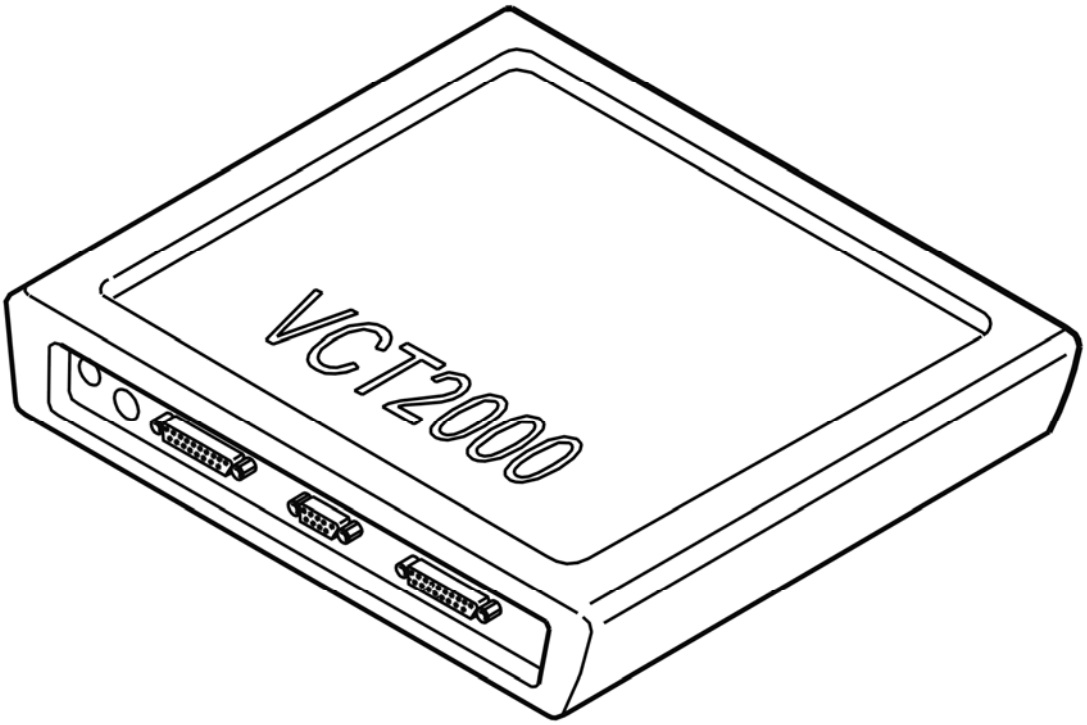

Fig. 38: Identifying VCT2000 Diagnostic Tool Symbol In VIDA
Courtesy of VOLVO CARS CORPORATION

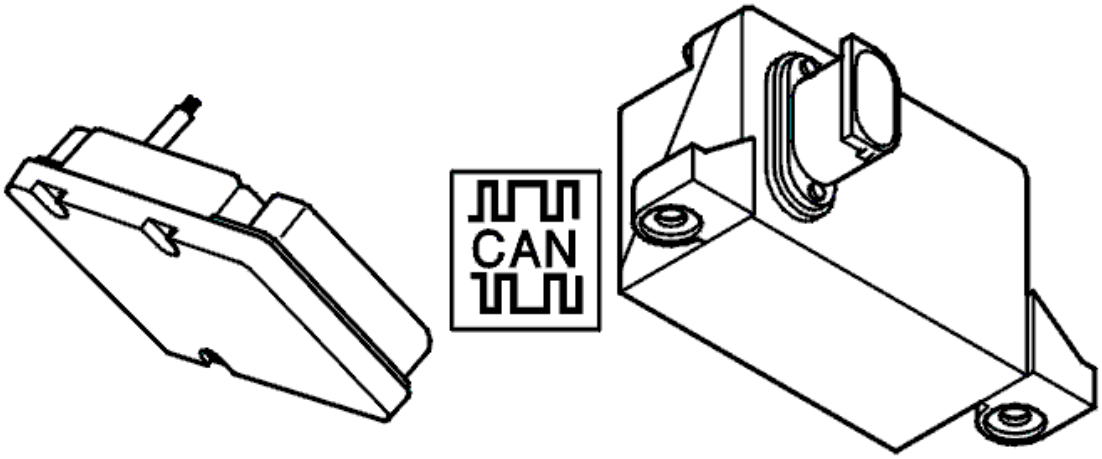

Fig. 39: Identifying Brake Control Module & Active Yaw Control Sensor
Courtesy of VOLVO CARS CORPORATION

Are the present values OK?

- **YES**

  OKAY: Troubleshooting has been completed.

- **NO**

  see **CHECKING THE VOLTAGE FEED**

CHECKING THE VOLTAGE FEED

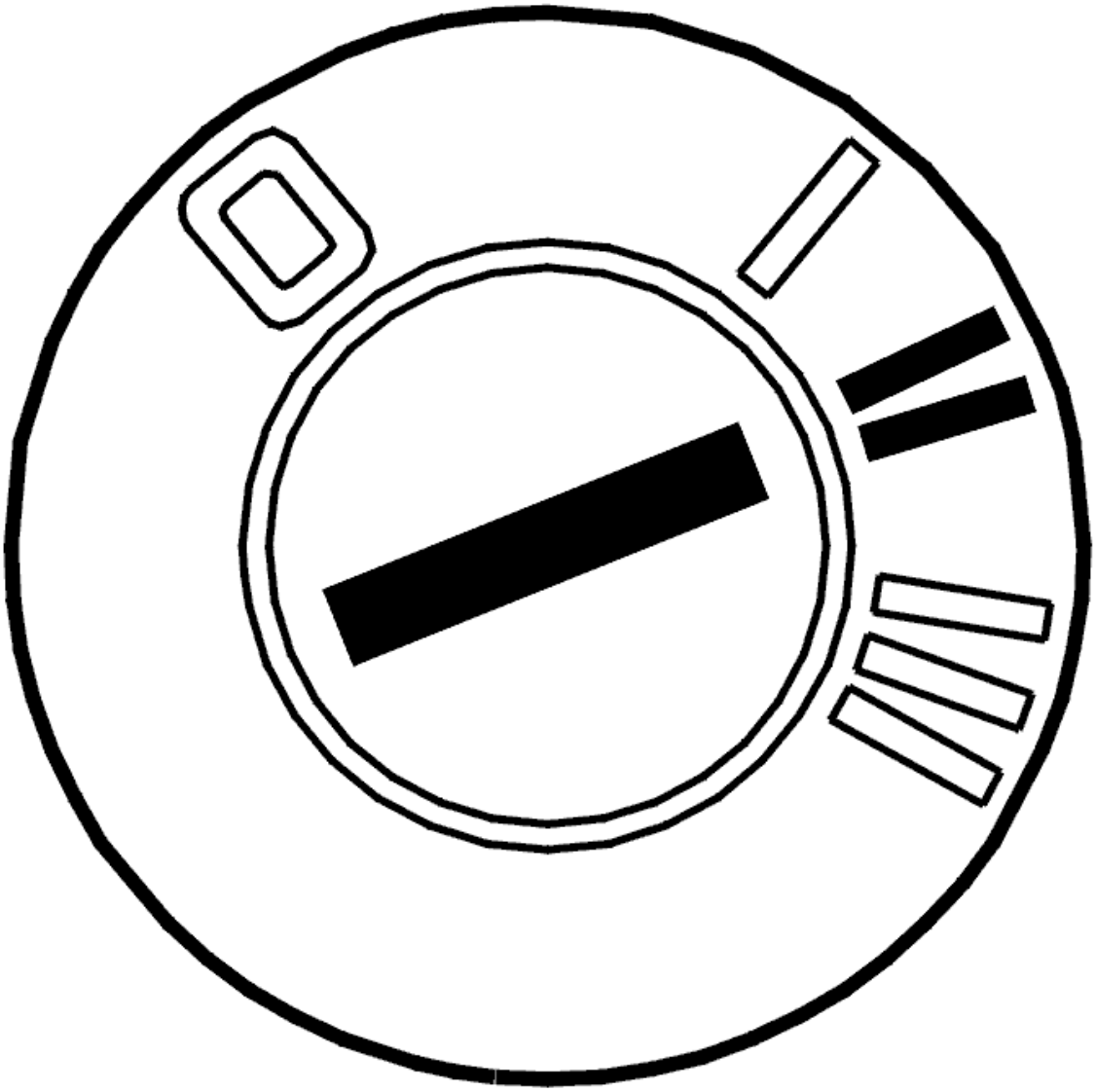

Fig. 40: Identifying Ignition ON
Courtesy of VOLVO CARS CORPORATION

- Ignition off
- Connect a breakout box to the brake control module (BCM).
- Ignition on

  Check the voltage feed to the AYC sensor by connecting a voltmeter between terminals #6 (#A6) and #39 (#A39) on the breakout box. The voltage should equal normal system voltage.

  If the voltage is incorrect, replace the brake control module (BCM).

  If the voltage is OK, check the cables for an open circuit.

  Measure between:

- AYC sensor terminal #3 and brake control module (BCM) terminal #6 (#A6).
- AYC sensor terminal #5 and brake control module (BCM) terminal #39 (#A39).

If the cables are OK, replace the AYC sensor.

Other information

- see **CONNECTING THE BREAKOUT BOX, BRAKE CONTROL MODULE (BCM)**
- see **SIGNAL SPECIFICATION, BRAKE CONTROL MODULE (BCM) WITH DSTC (DYNAMIC STABILITY AND TRACTION CONTROL)**
- see **BRAKE CONTROL MODULE (BCM), REPLACING**
- see **ACTIVE YAW CONTROL SENSOR, REPLACING**
- see **SIGNAL SPECIFICATION, BRAKE CONTROL MODULE (BCM) WITH DSTC (DYNAMIC STABILITY AND TRACTION CONTROL)**
- see **CONTENTS** .

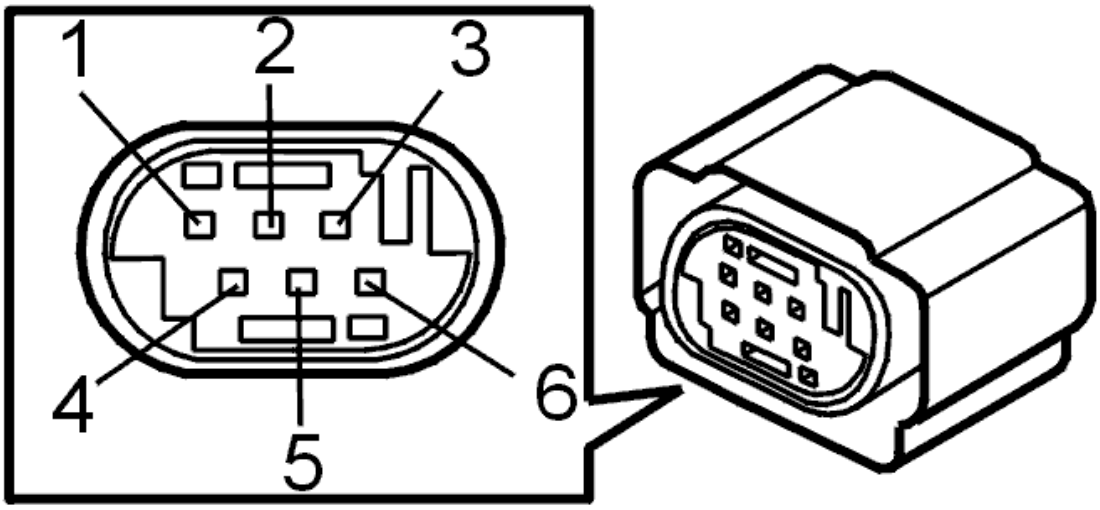

Fig. 41: Identifying Active Yaw Control Sensor Connector Terminals
Courtesy of VOLVO CARS CORPORATION

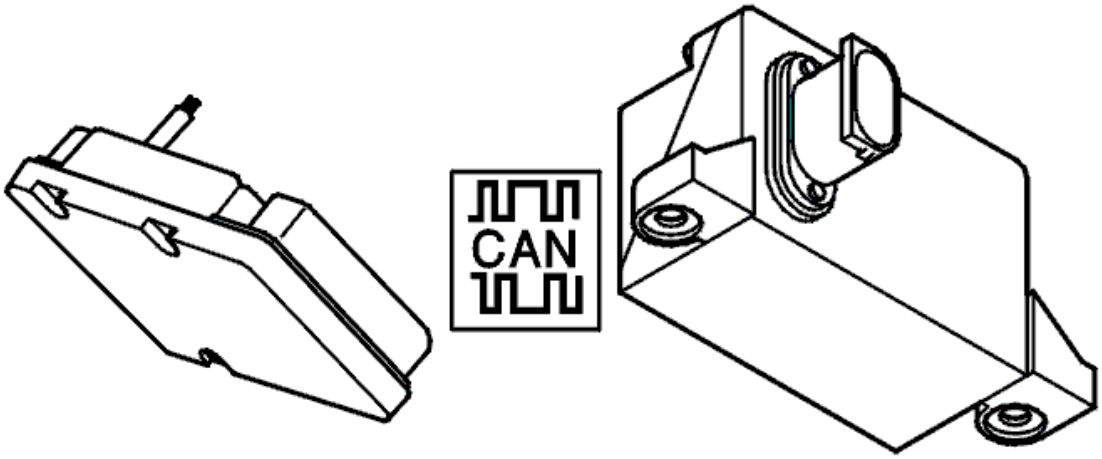

Fig. 42: Identifying Brake Control Module & Active Yaw Control Sensor
Courtesy of VOLVO CARS CORPORATION

- **Continue**

  see **VERIFICATION**

VERIFICATION

VERIFICATION

HINT: After carrying out the repair, check that the malfunction has been remedied.

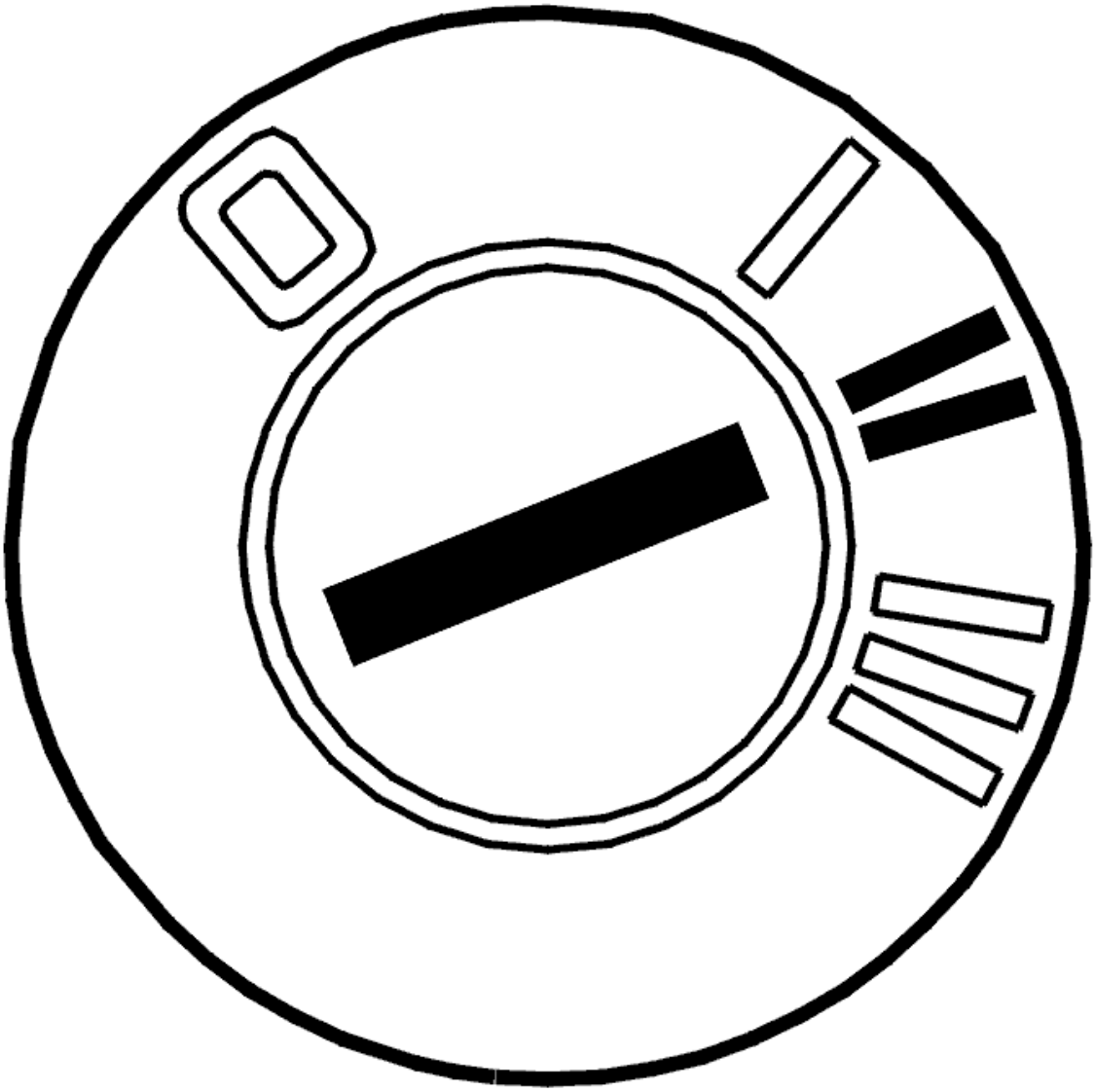

Fig. 43: Identifying Ignition ON
Courtesy of VOLVO CARS CORPORATION

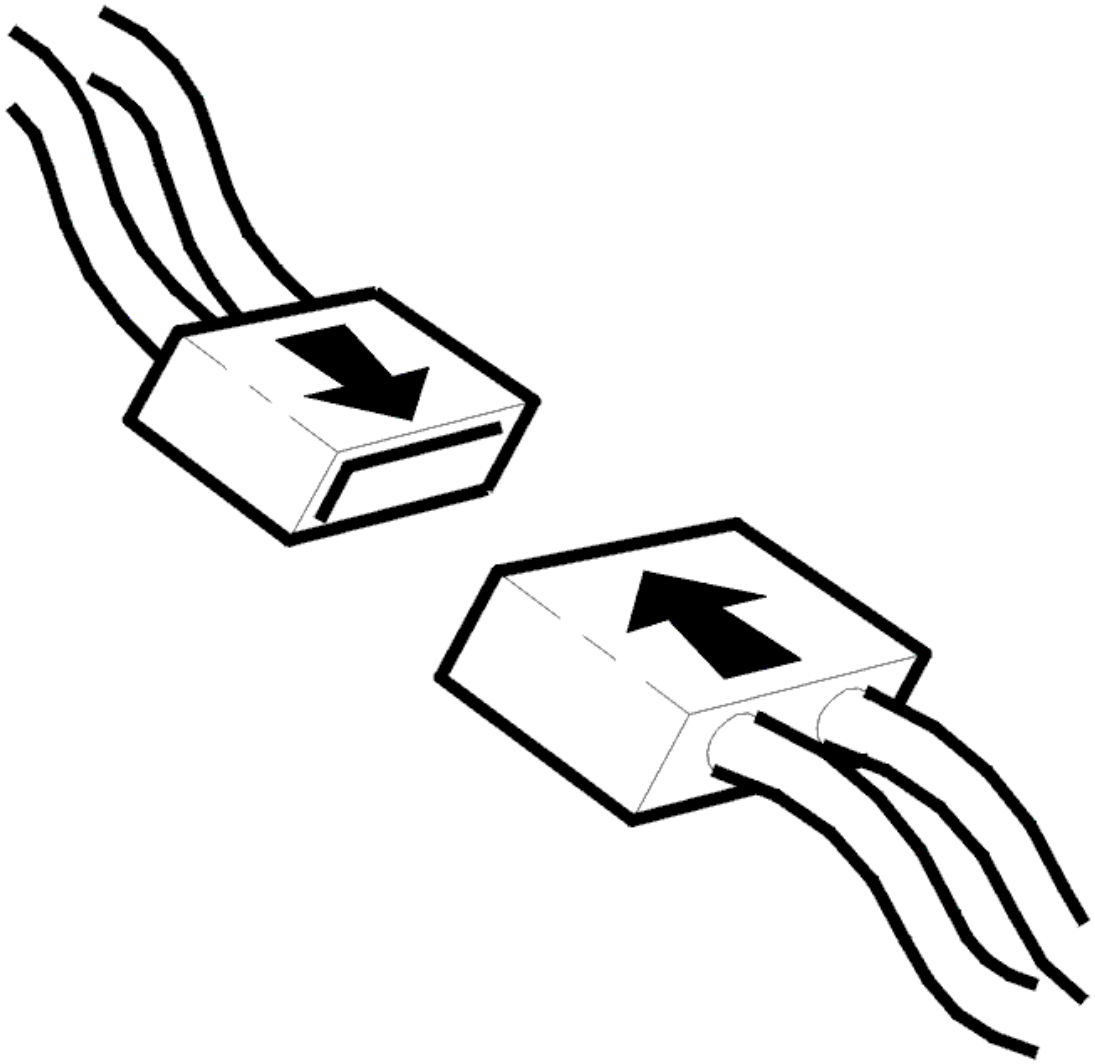

Fig. 44: Connecting Connector
Courtesy of VOLVO CARS CORPORATION

- Ignition off
- Reconnect the connectors, components, etc.
- Test-drive the vehicle according to **TEST DRIVE FORM (DSTC (DYNAMIC STABILITY AND TRACTION CONTROL) /BRAKE CONTROL MODULE), DESCRIPTION** .

NOTE: **Do not turn off the ignition between test-driving and reading out diagnostic trouble codes. This is to obtain the correct status of the diagnostic trouble codes.**

Then read out the diagnostic trouble code's status without turning off the ignition after the test-drive.

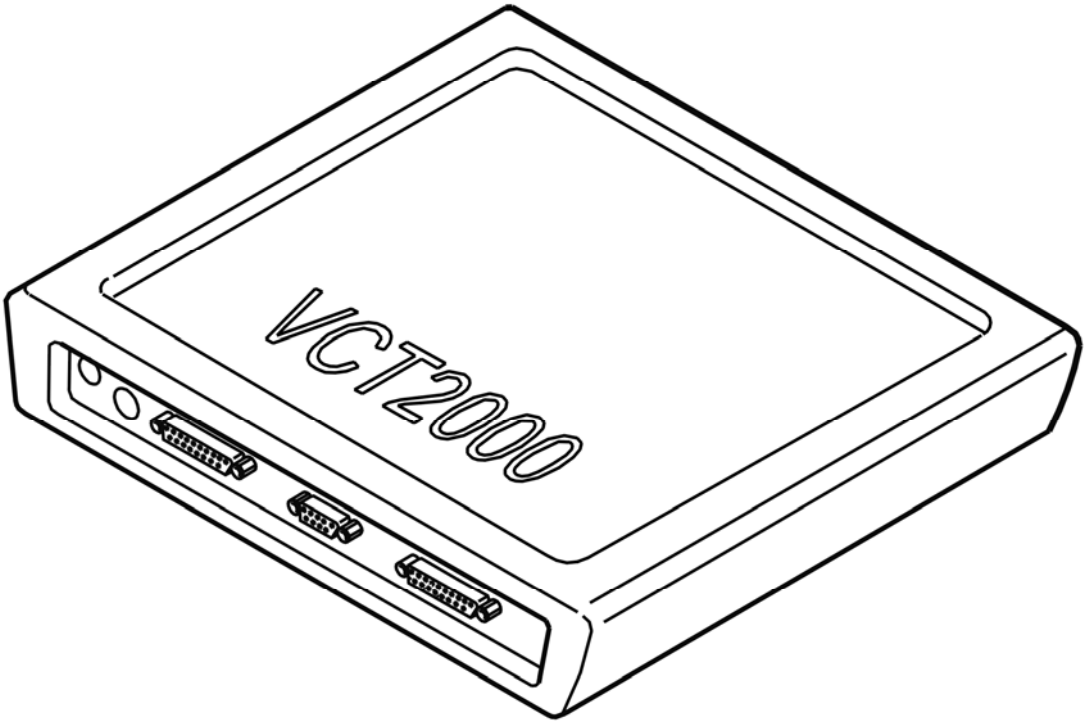

Fig. 45: Identifying VCT2000 Diagnostic Tool Symbol In VIDA
Courtesy of VOLVO CARS CORPORATION

Is the status of the diagnostic trouble code intermittent?

- **YES**

  VERIFIED: Troubleshooting has been completed.

- **NO**

  see **INFORMATION**

INFORMATION

FAULT-TRACING INFORMATION

The fault should have been detected and remedied. As this is not the case fault-tracing has failed.

Exit fault-tracing for this diagnostic trouble code (DTC) or make another attempt.

BCM-C006A04 MULTI-AXIAL ACCELERATION SENSOR. GENERAL MALFUNCTION INFORMATION. INTERNAL ERROR (B6324S5; 2011-2012)

DIAGNOSTIC TROUBLE CODE INFORMATION BCM-C006A04

see **DIAGNOSTIC TROUBLE CODE INFORMATION BCM-C006A04**

TROUBLESHOOTING BCM-C006A04

see **TROUBLESHOOTING BCM-C006A04**

BCM-C006A04 MULTI-AXIAL ACCELERATION SENSOR. GENERAL MALFUNCTION INFORMATION. INTERNAL ERROR (B8444S; 2005-2011)

DIAGNOSTIC TROUBLE CODE INFORMATION BCM-C006A04

see **DIAGNOSTIC TROUBLE CODE INFORMATION BCM-C006A04**

TROUBLESHOOTING BCM-C006A04

see **TROUBLESHOOTING BCM-C006A04**

BCM-C006A16 MULTI-AXIAL ACCELERATION SENSOR. GENERAL ELECTRICAL MALFUNCTION. VOLTAGE TOO LOW (B6324S; 2007-2010)

DIAGNOSTIC TROUBLE CODE INFORMATION BCM-C006A16

Condition

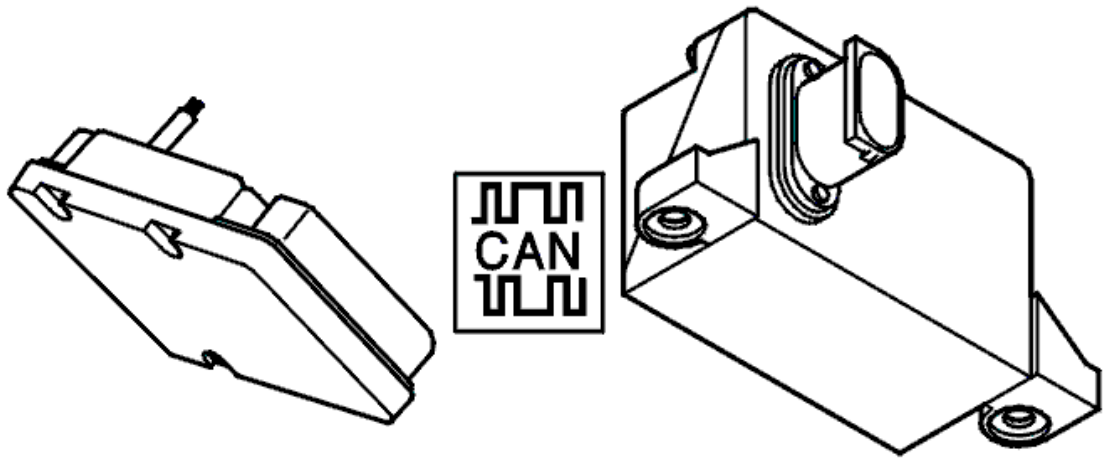

Fig. 46: Identifying Brake Control Module & Active Yaw Control Sensor
Courtesy of VOLVO CARS CORPORATION

NOTE: **The diagnostic trouble code only applies to vehicles equipped with DSTC.**

Diagnostic trouble code BCM-C006A16 is generated if the brake control module (BCM) registers that the voltage feed to the AYC sensor is below approx. 6 V ±0.5 V.

Substitute Value

- TC is blocked.
- SC is blocked.
- AYC is blocked.

HINT: For information on abbreviations: BRAKE SYSTEM, ABBREVIATIONS

Possible Source

- Contact resistance in AYC sensor connections.
- Cables short-circuited to ground.
- Open circuit in the cables.
- Internal malfunction in AYC sensor.
- Internal malfunction in brake control module (BCM).

NOTE: This diagnostic trouble code (DTC) is not due to an internal hardware fault in the Brake control module (BCM) and must not be remedied by replacing the control module.

Fault symptom[s]

- General warning light on.
- Anti-spin is not operational.
- The stability function is not operational.
- The anti-skid function is not operational.

TROUBLESHOOTING BCM-C006A16

CHECKING DIAGNOSTIC TROUBLE CODE STATUS

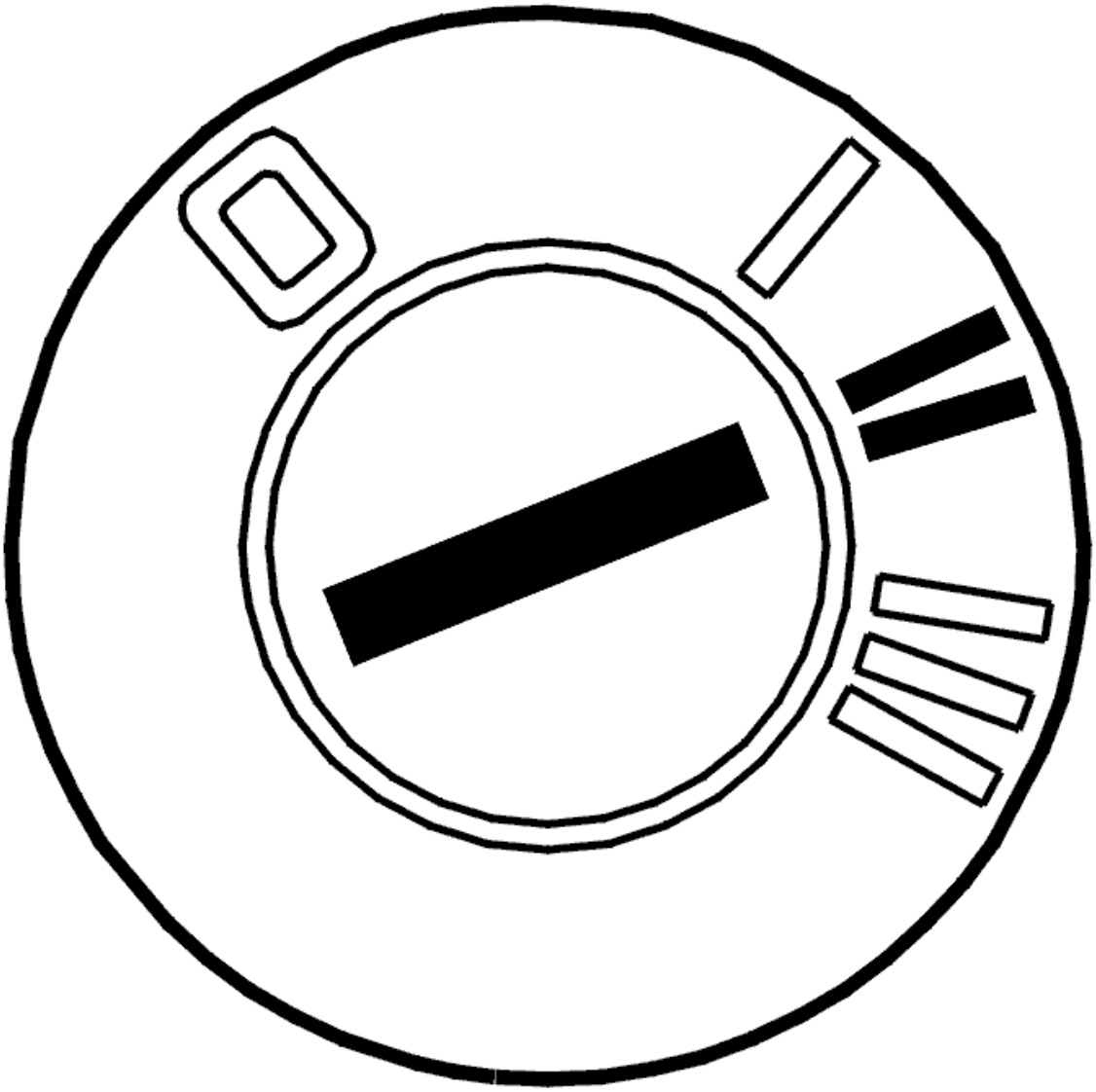

Fig. 47: Identifying Ignition ON
Courtesy of VOLVO CARS CORPORATION

- Ignition off
- Check the connectors of the brake control module (BCM) and AYC sensor for contact resistance and oxidation.
- Test-drive the vehicle, see **TEST DRIVE FORM (DSTC (DYNAMIC STABILITY AND TRACTION CONTROL) /BRAKE CONTROL MODULE), DESCRIPTION**
- Ignition on
- Wait approximately 60 seconds.
- Read off diagnostic trouble codes (DTCs).

  If the status of the diagnostic trouble code is intermittent, the malfunction was probably caused by contact resistance or oxidation in the brake control module (BCM) or AYC sensor connector.

Other information

- For removal of the brake control module (BCM) connector: **CONNECTING THE BREAKOUT BOX, BRAKE CONTROL MODULE (BCM)**
- see **ACTIVE YAW CONTROL SENSOR, REPLACING**
- see **CONTENTS**

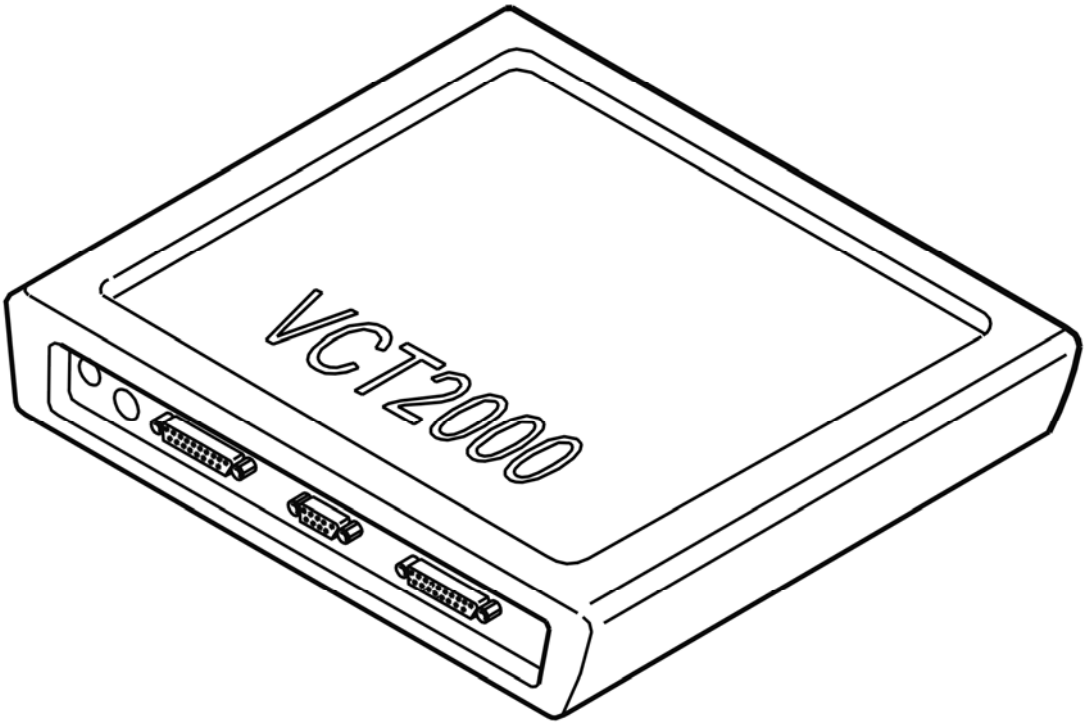

Fig. 48: Identifying VCT2000 Diagnostic Tool Symbol In VIDA
Courtesy of VOLVO CARS CORPORATION

Is the status of the diagnostic trouble code intermittent?

- **YES**

  OKAY: Troubleshooting has been completed.

- **NO**

  see **CHECKING THE WIRING**

CHECKING THE WIRING

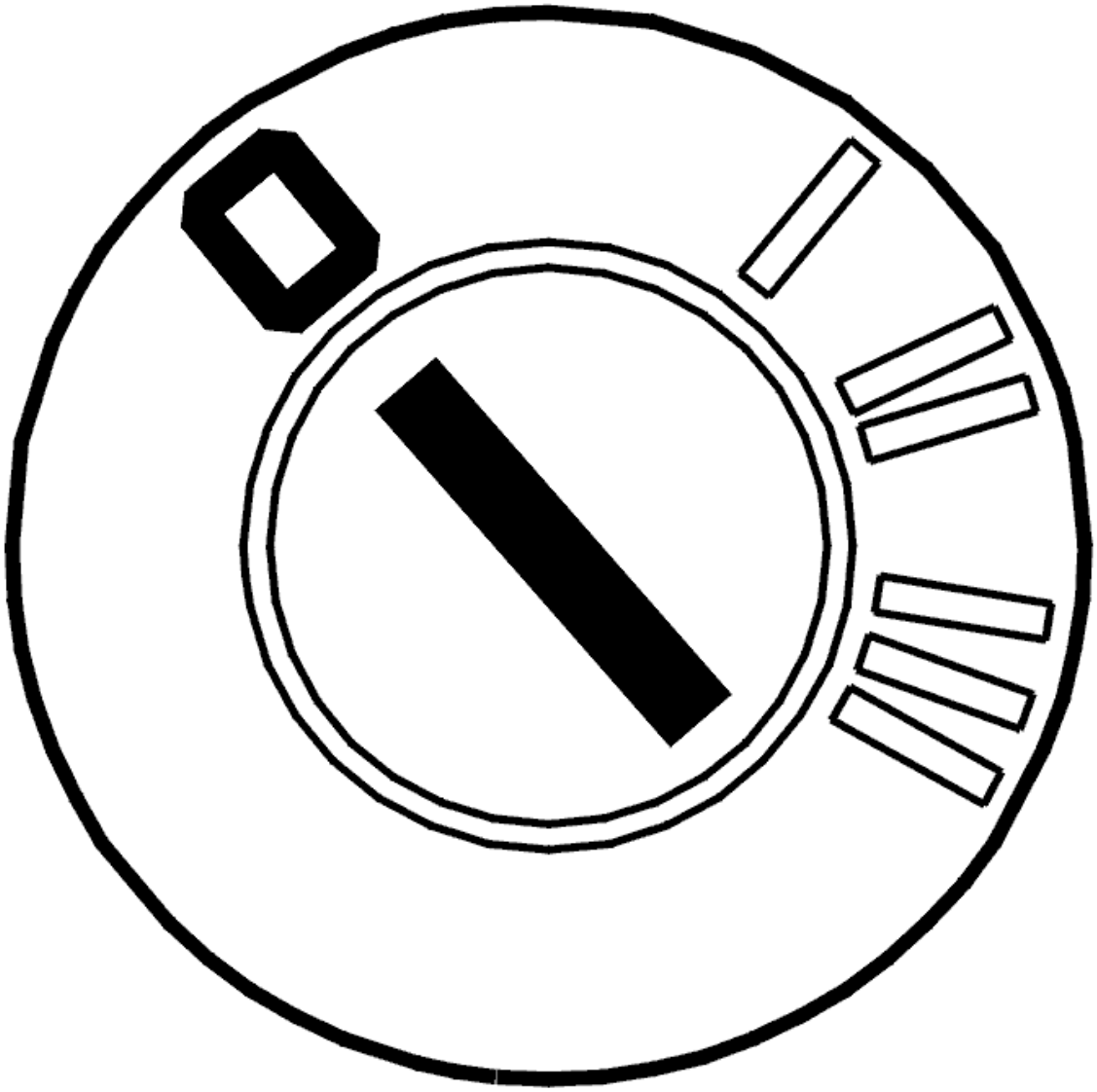

Fig. 49: Identifying Ignition OFF
Courtesy of VOLVO CARS CORPORATION

- Ignition off
- Connect a breakout box.

  Check the cables for open circuit or short circuit to ground.

  Measure between:

  - AYC sensor connector terminal #3 and brake control module (BCM) terminal #6 (#A6).
  - AYC sensor connector terminal #5 and brake control module (BCM) terminal #39 (#A39).

  Other information

- see **CONNECTING THE BREAKOUT BOX, BRAKE CONTROL MODULE (BCM)**
- see **SIGNAL SPECIFICATION, BRAKE CONTROL MODULE (BCM) WITH DSTC (DYNAMIC STABILITY AND TRACTION CONTROL)**
- see **ACTIVE YAW CONTROL SENSOR, REPLACING**
- see **CONTENTS** .

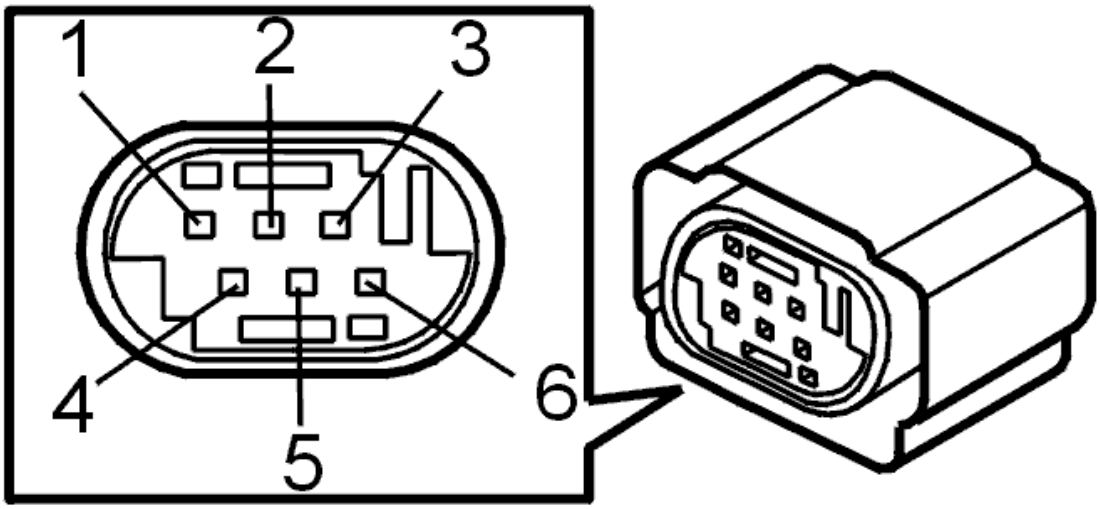

Fig. 50: Identifying Active Yaw Control Sensor Connector Terminals
Courtesy of VOLVO CARS CORPORATION

Was a malfunction detected?

- **YES**

  see **VERIFICATION**

- **NO**

  see **CHECKING THE VOLTAGE FEED**

CHECKING THE VOLTAGE FEED

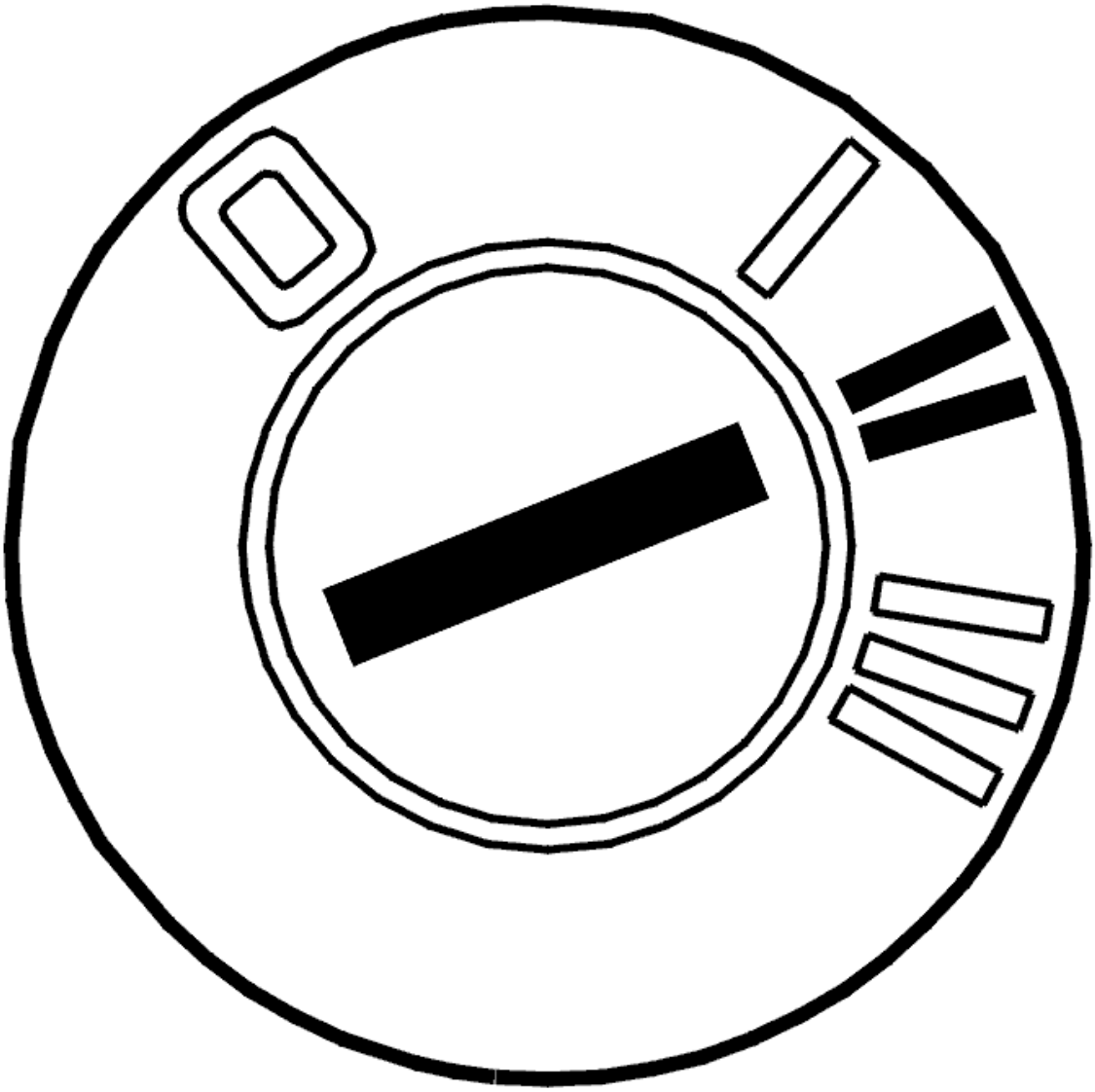

Fig. 51: Identifying Ignition ON
Courtesy of VOLVO CARS CORPORATION

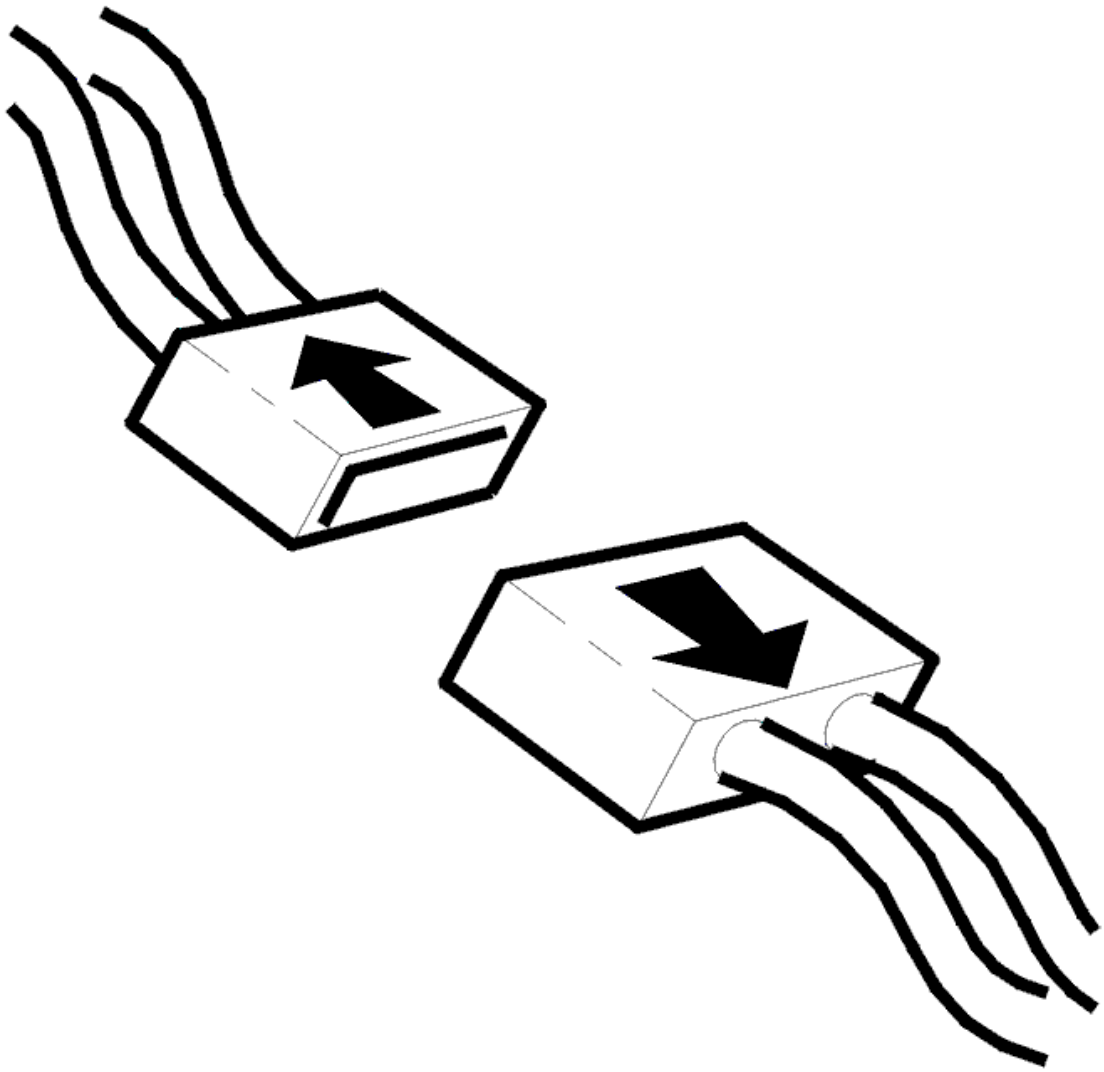

Fig. 52: Disconnecting Connector
Courtesy of VOLVO CARS CORPORATION

- Ignition off
- Breakout box connected.
- Unplug the AYC sensor connector.
- Ignition on

  Connect a voltmeter to terminals #6 (#A6) and #39 (#A39) on the breakout box.

  The voltage should be normal system voltage.

  If the voltage is OK, replace the AYC sensor.

  If the voltage is incorrect, replace the brake control module (BCM).

Other information

- see **ACTIVE YAW CONTROL SENSOR, REPLACING**
- see **BRAKE CONTROL MODULE (BCM), REPLACING**
- see **SIGNAL SPECIFICATION, BRAKE CONTROL MODULE (BCM) WITH DSTC (DYNAMIC STABILITY AND TRACTION CONTROL)**

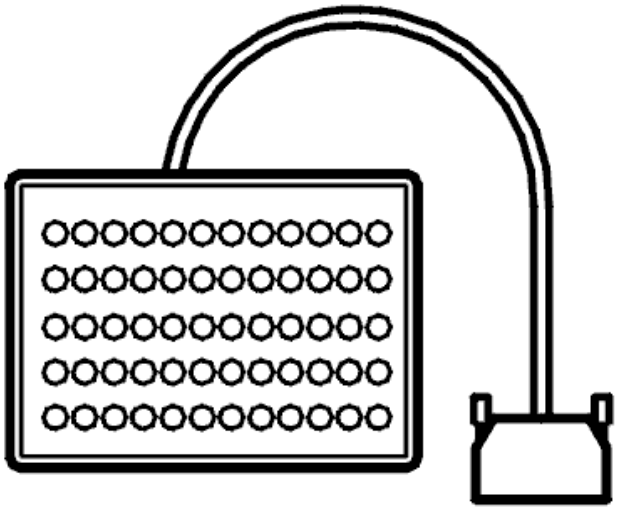

Fig. 53: Breakout Box
Courtesy of VOLVO CARS CORPORATION

- **Continue**

  see **VERIFICATION**

INTERMITTENT MALFUNCTION

HINT: The diagnostic trouble code status indicates that the brake control module (BCM) has previously registered a malfunction, but the malfunction is no longer active.

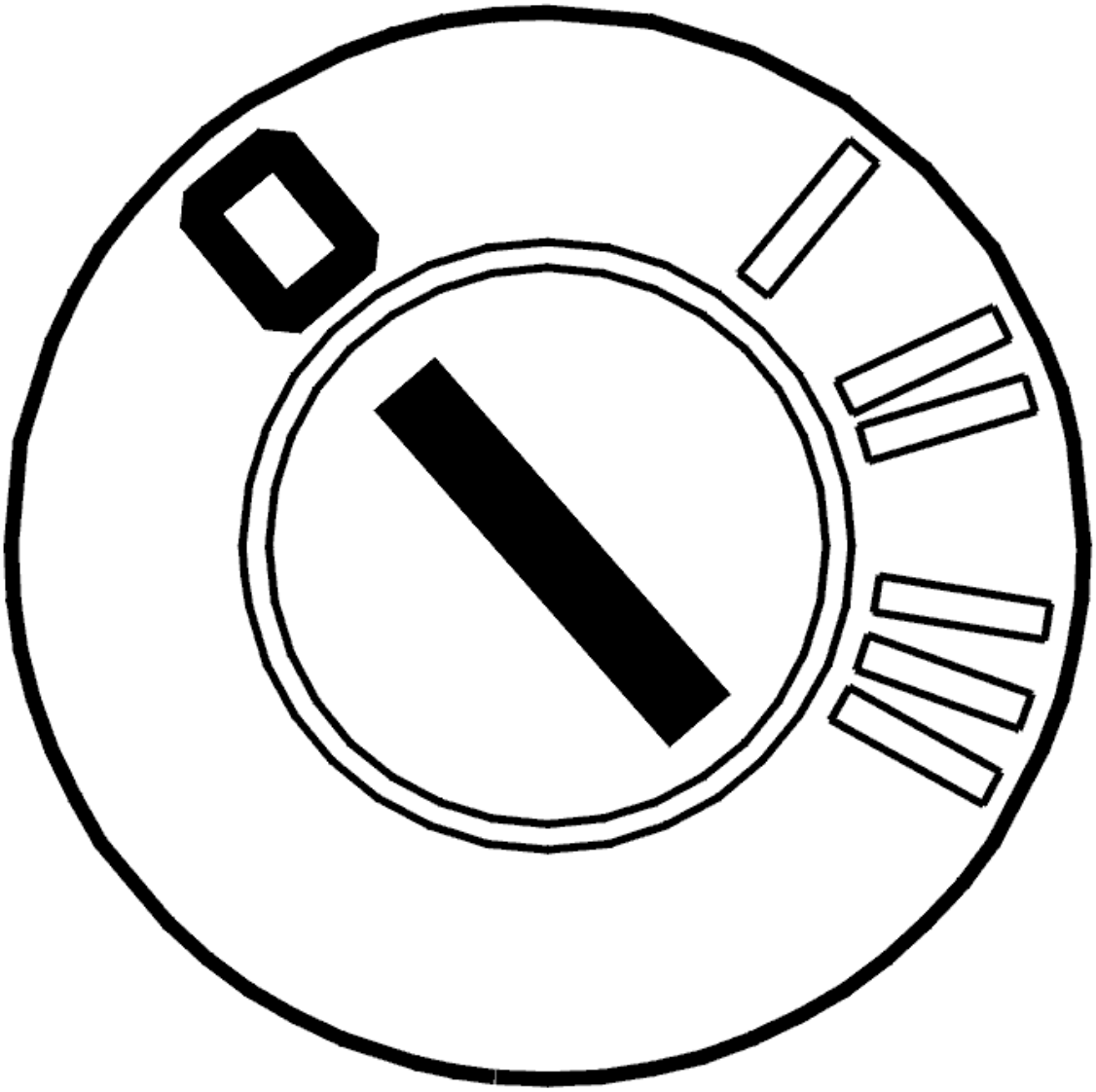

Fig. 54: Identifying Ignition OFF
Courtesy of VOLVO CARS CORPORATION

- Ignition off

  Check the connectors of the brake control module (BCM) and AYC sensor for contact resistance and oxidation.

  Check the cables for intermittent open circuit or short circuit to ground.

  Measure between:

  - AYC sensor connector terminal #3 and brake control module (BCM) terminal #6 (#A6).
  - AYC sensor connector terminal #5 and brake control module (BCM) terminal #39 (#A39).

  Other information

- see **CONNECTING THE BREAKOUT BOX, BRAKE CONTROL MODULE (BCM)**
- see **ACTIVE YAW CONTROL SENSOR, REPLACING**
- see **SIGNAL SPECIFICATION, BRAKE CONTROL MODULE (BCM) WITH DSTC (DYNAMIC STABILITY AND TRACTION CONTROL)**
- see **CONTENTS** .

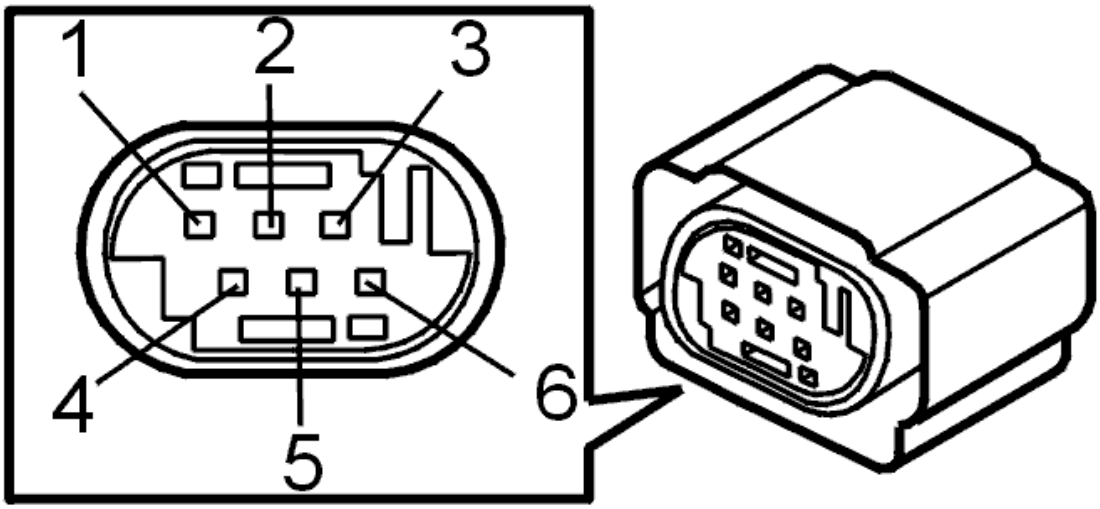

Fig. 55: Identifying Active Yaw Control Sensor Connector Terminals
Courtesy of VOLVO CARS CORPORATION

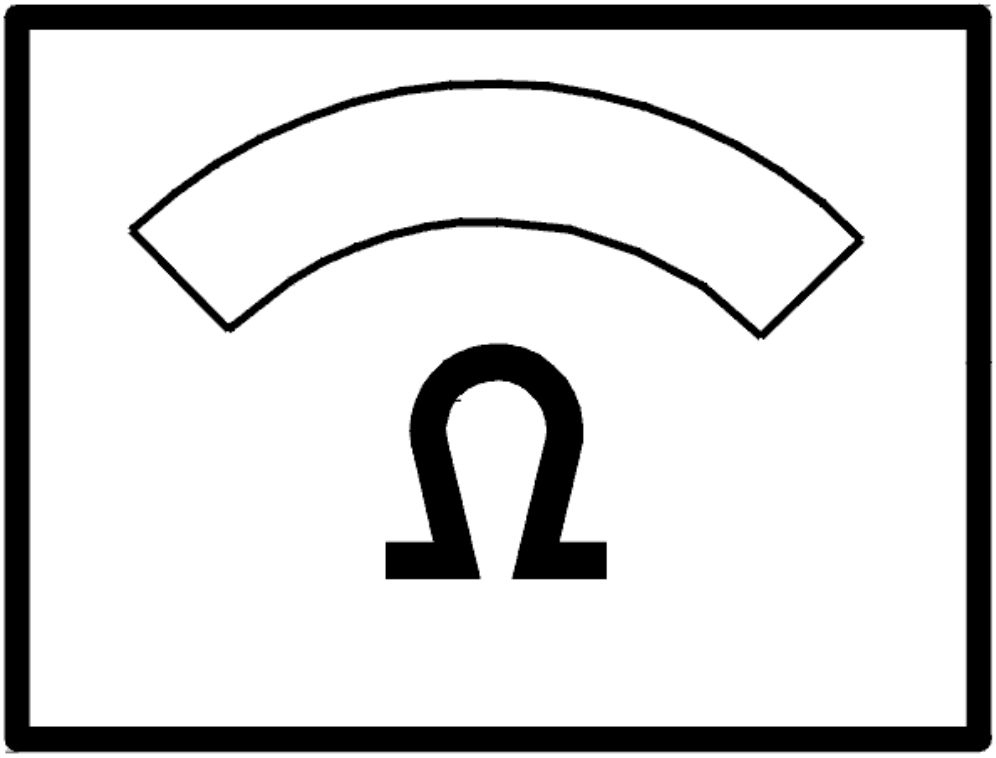

Fig. 56: Identifying Ohm Meter
Courtesy of VOLVO CARS CORPORATION

VERIFICATION

VERIFICATION

HINT: After carrying out the repair, check that the malfunction has been remedied.

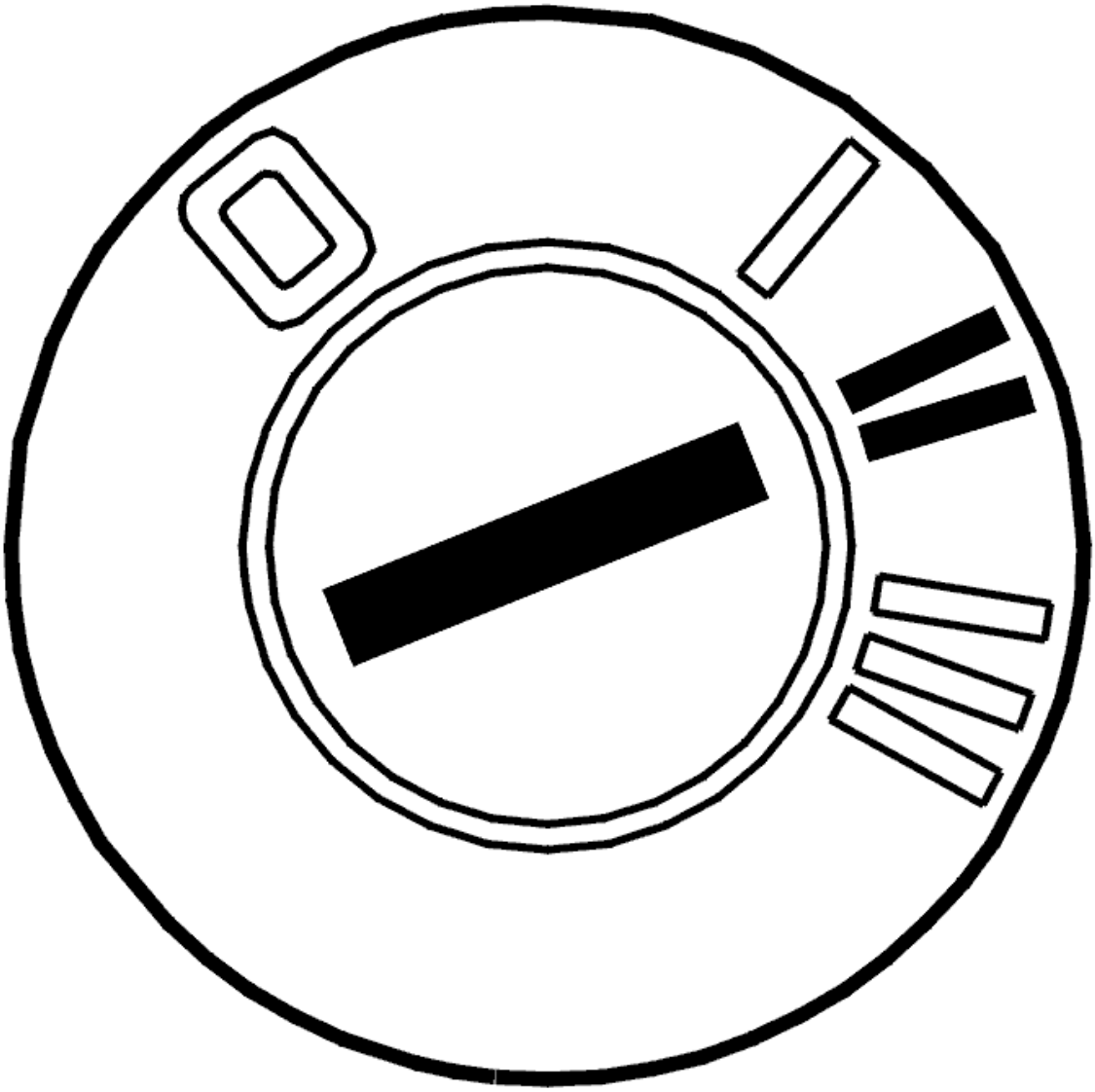

Fig. 57: Identifying Ignition ON
Courtesy of VOLVO CARS CORPORATION

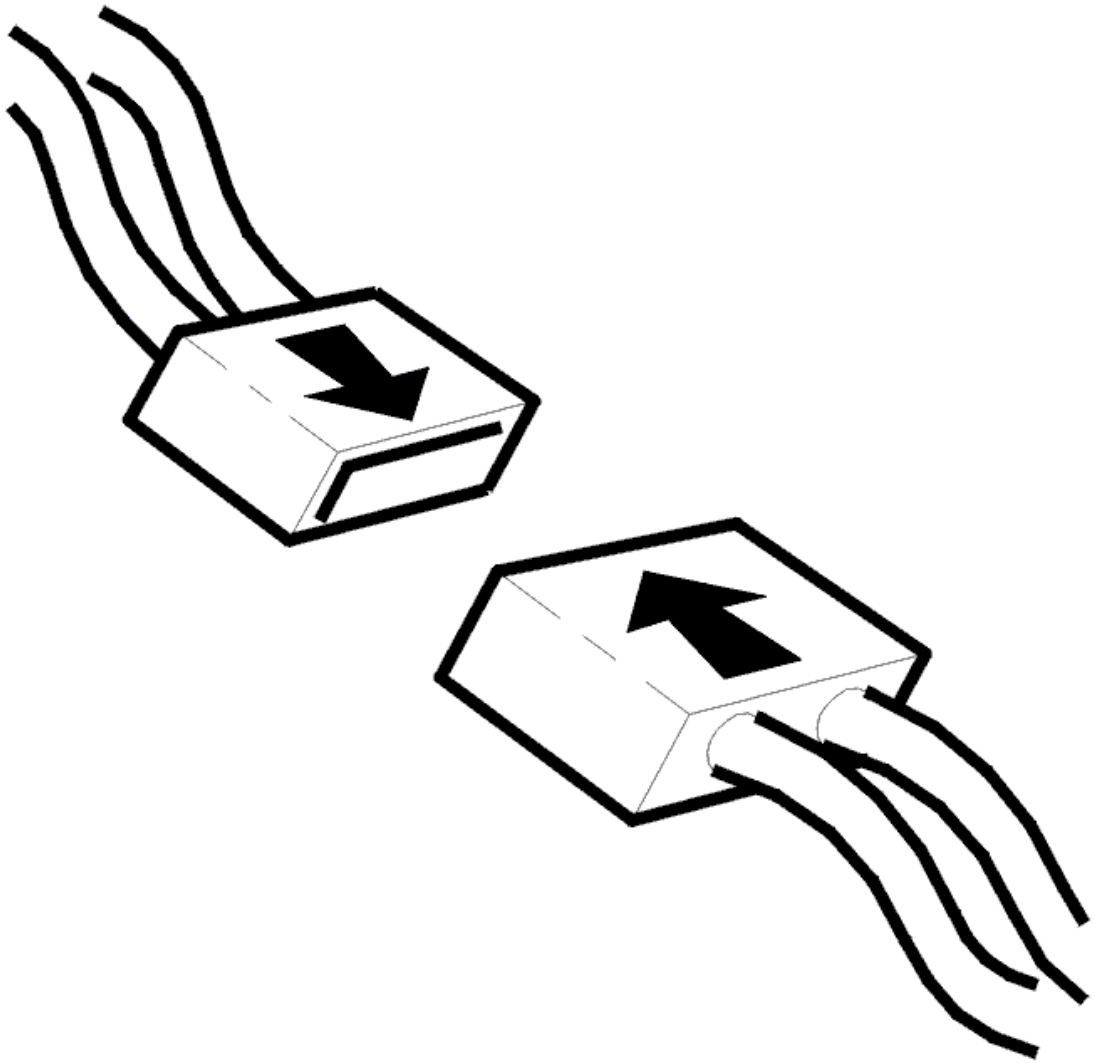

Fig. 58: Connecting Connector
Courtesy of VOLVO CARS CORPORATION

- Ignition off
- Reconnect the connectors, components, etc.
- Test-drive the vehicle according to **TEST DRIVE FORM (DSTC (DYNAMIC STABILITY AND TRACTION CONTROL) /BRAKE CONTROL MODULE), DESCRIPTION** .

NOTE: **Do not turn off the ignition between test-driving and reading out diagnostic trouble codes. This is to obtain the correct status of the diagnostic trouble codes.**

Then read out the diagnostic trouble code's status without turning off the ignition after the test-drive.

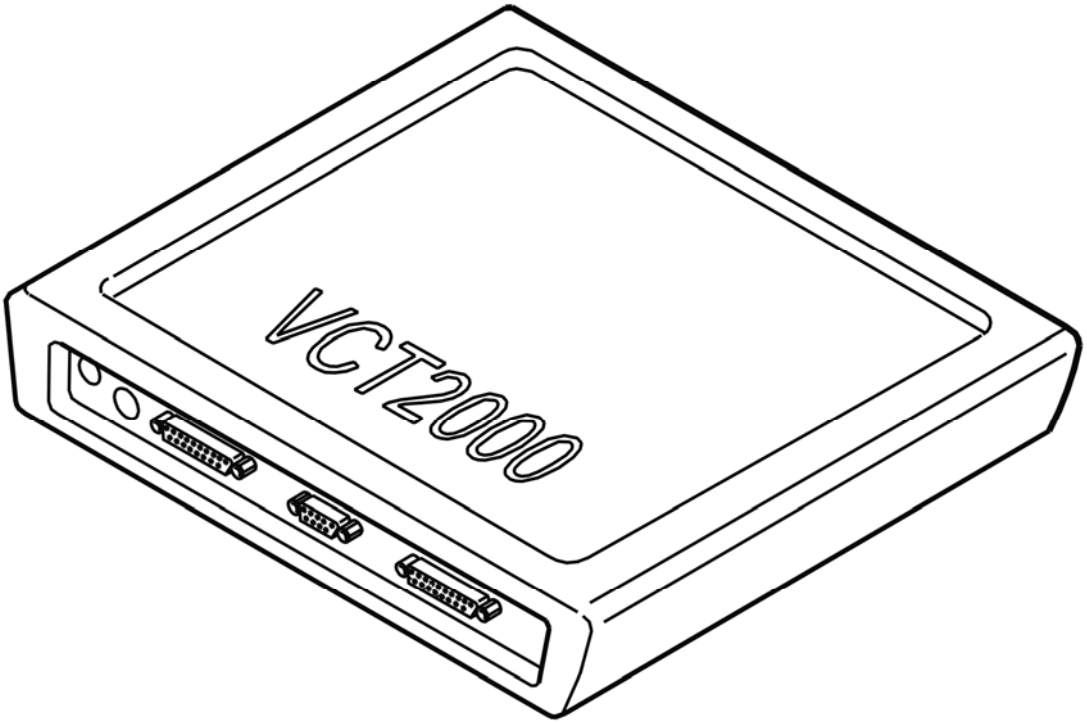

Fig. 59: Identifying VCT2000 Diagnostic Tool Symbol In VIDA
Courtesy of VOLVO CARS CORPORATION

Is the status of the diagnostic trouble code intermittent?

- **YES**

  VERIFIED: Troubleshooting has been completed.

- **NO**

  see **INFORMATION**

INFORMATION

FAULT-TRACING INFORMATION

The fault should have been detected and remedied. As this is not the case fault-tracing has failed.

Exit fault-tracing for this diagnostic trouble code (DTC) or make another attempt.

INFORMATION

FAULT-TRACING INFORMATION

If the fault is intermittent, do not verify fault-tracing if the fault does not recur.

It is possible to view the information again, or leave fault-tracing for this diagnostic trouble code (DTC).

BCM-C006A16 MULTI-AXIAL ACCELERATION SENSOR. GENERAL ELECTRICAL MALFUNCTION. VOLTAGE TOO LOW (B6324S5; 2011-2012)

DIAGNOSTIC TROUBLE CODE INFORMATION BCM-C006A16

see **DIAGNOSTIC TROUBLE CODE INFORMATION BCM-C006A16**

TROUBLESHOOTING BCM-C006A16

see **TROUBLESHOOTING BCM-C006A16**

BCM-C006A16 MULTI-AXIAL ACCELERATION SENSOR. GENERAL ELECTRICAL MALFUNCTION. VOLTAGE TOO LOW (B8444S; 2005-2011)

DIAGNOSTIC TROUBLE CODE INFORMATION BCM-C006A16

see **DIAGNOSTIC TROUBLE CODE INFORMATION BCM-C006A16**

TROUBLESHOOTING BCM-C006A16

see **TROUBLESHOOTING BCM-C006A16**

BCM-C006A17 MULTI-AXIAL ACCELERATION SENSOR. GENERAL ELECTRICAL MALFUNCTION. VOLTAGE TOO HIGH (B6324S; 2007-2010)

DIAGNOSTIC TROUBLE CODE INFORMATION BCM-C006A17

Condition

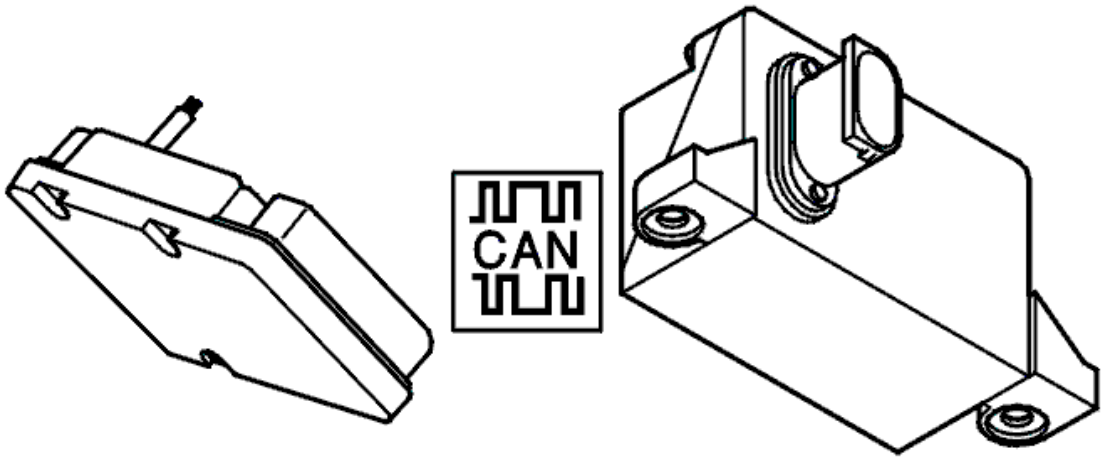

Fig. 60: Identifying Brake Control Module & Active Yaw Control Sensor
Courtesy of VOLVO CARS CORPORATION

NOTE: The diagnostic trouble code only applies to vehicles equipped with DSTC.

Diagnostic trouble code BCM-C006A17 is generated if the brake control module (BCM) registers that the voltage feed from the AYC sensor exceeds approx. 17 V.

Substitute Value

- TC is blocked.
- SC is blocked.
- AYC is blocked.

HINT: For information on abbreviations: BRAKE SYSTEM, ABBREVIATIONS

Possible Source

- The voltage feed cable is short-circuited to voltage.
- Internal malfunction in AYC sensor.

NOTE: This diagnostic trouble code (DTC) is not due to an internal hardware fault in the Brake control module (BCM) and must not be remedied by replacing the control module.

Fault symptom[s]

- General warning light on.
- Anti-spin is not operational.

- The stability function is not operational.
- The anti-skid function is not operational.

TROUBLESHOOTING BCM-C006A17

CHECKING THE WIRING

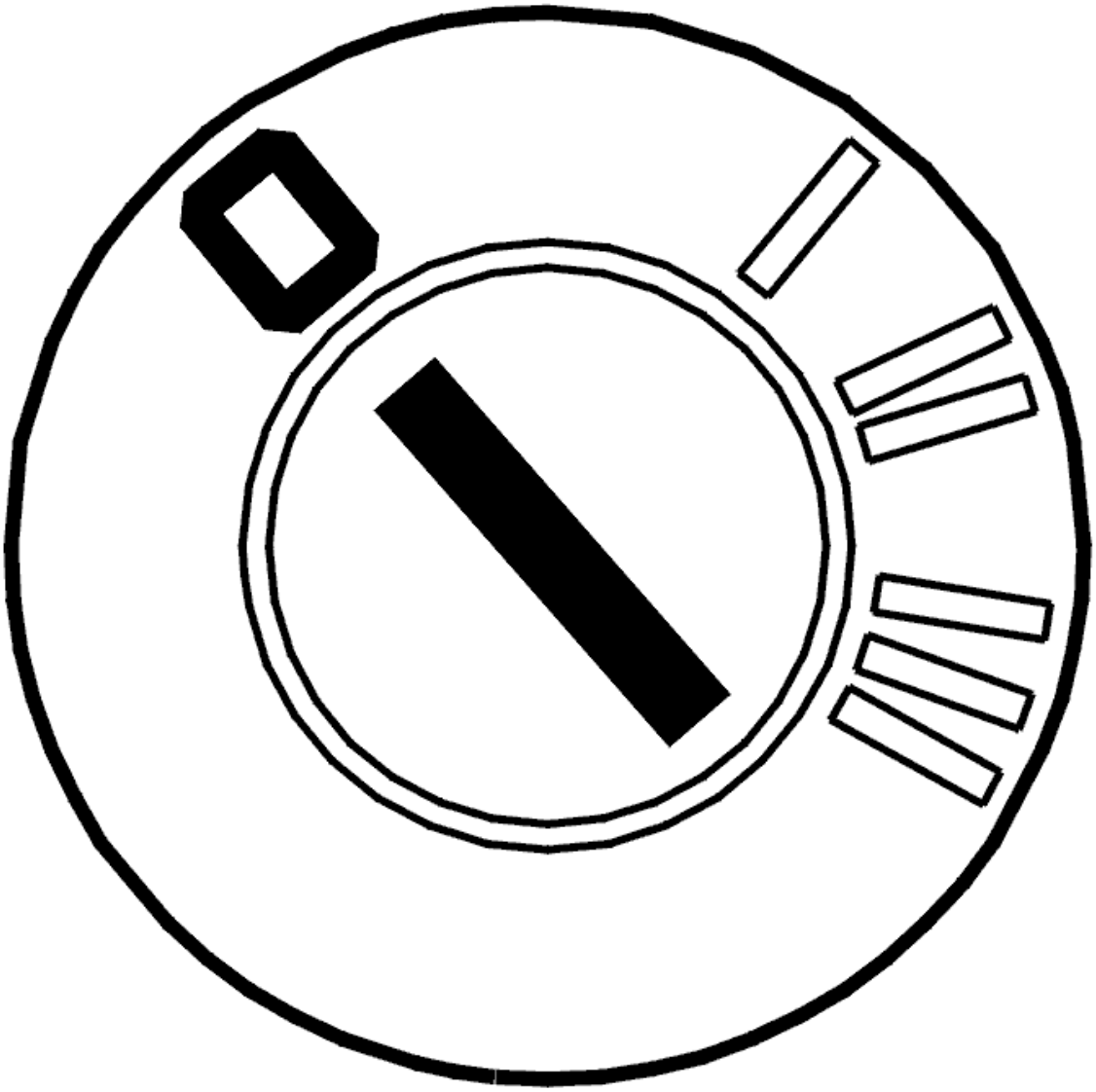

Fig. 61: Identifying Ignition OFF
Courtesy of VOLVO CARS CORPORATION

- Ignition off
- Connect a breakout box.

  Check the cables for short circuit to supply voltage.

Measure between:

- AYC sensor connector terminal #3 and brake control module (BCM) terminal #6 (#A6).
- AYC sensor connector terminal #5 and brake control module (BCM) terminal #39 (#A39).

Other information

- see **CONNECTING THE BREAKOUT BOX, BRAKE CONTROL MODULE (BCM)**
- see **SIGNAL SPECIFICATION, BRAKE CONTROL MODULE (BCM) WITH DSTC (DYNAMIC STABILITY AND TRACTION CONTROL)**
- see **ACTIVE YAW CONTROL SENSOR, REPLACING**
- see **CONTENTS**

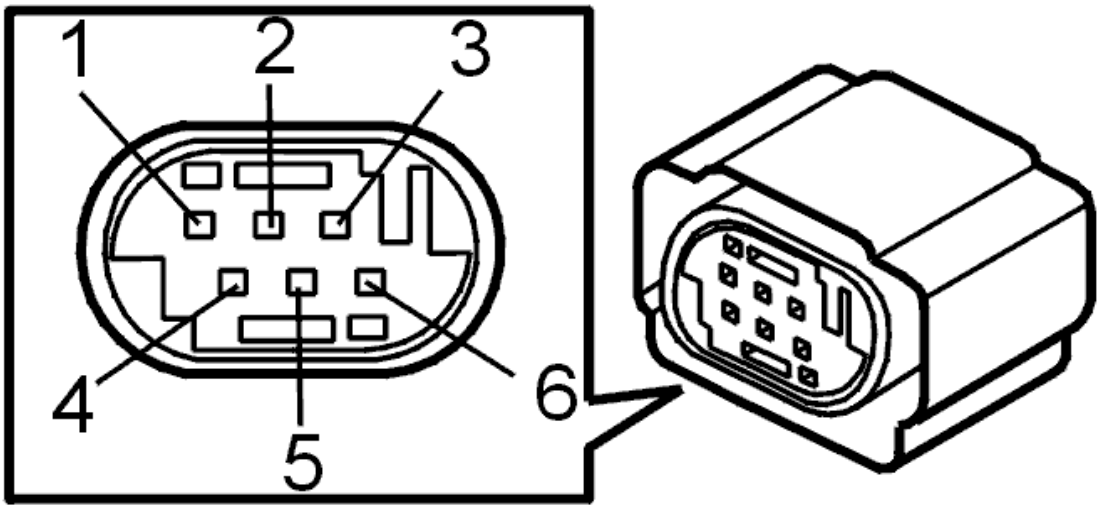

Fig. 62: Identifying Active Yaw Control Sensor Connector Terminals
Courtesy of VOLVO CARS CORPORATION

Was a malfunction detected?

- **YES**

  see **VERIFICATION**

- **NO**

  see **CHECKING THE CONTROL MODULE**

CHECKING THE CONTROL MODULE

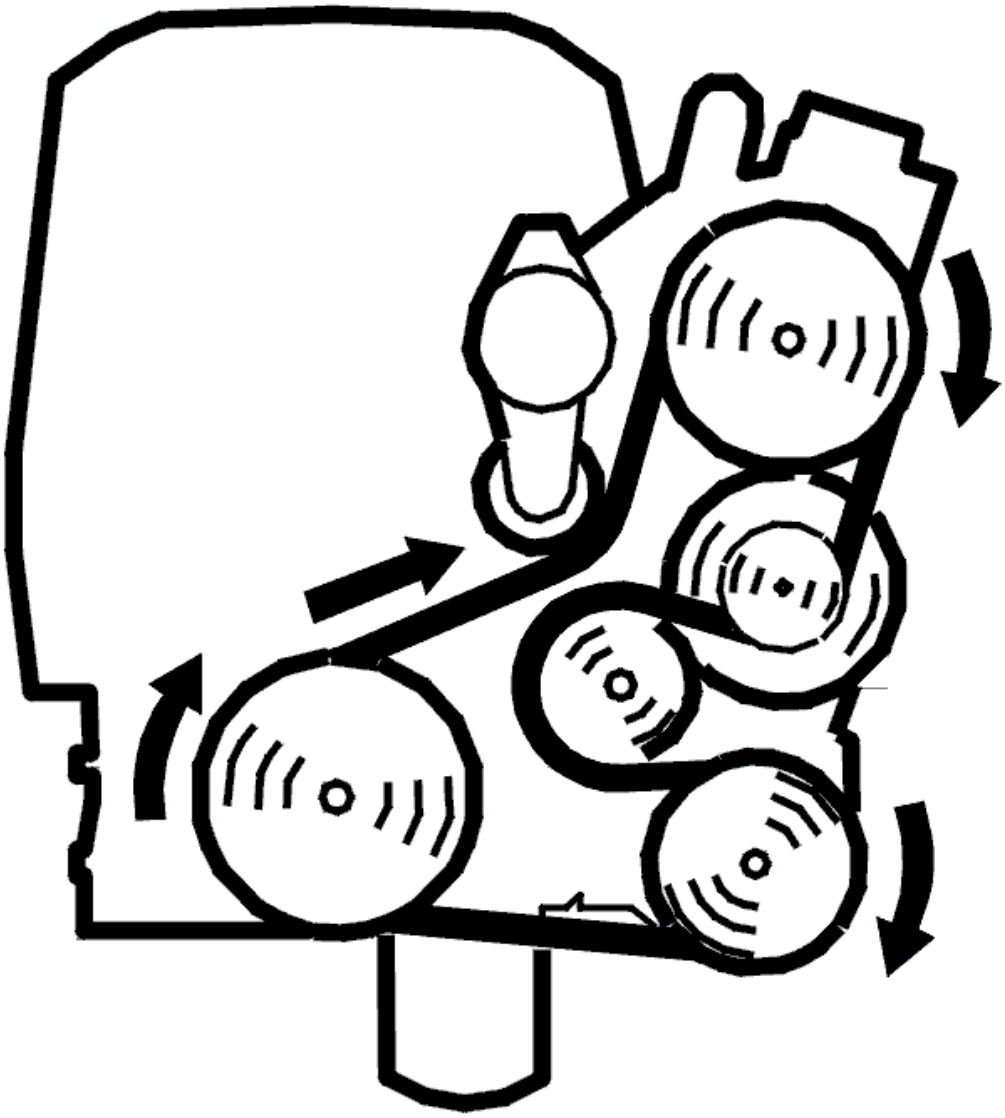

Fig. 63: Belt Routing / Engine Idling - Volvo
Courtesy of VOLVO CARS CORPORATION

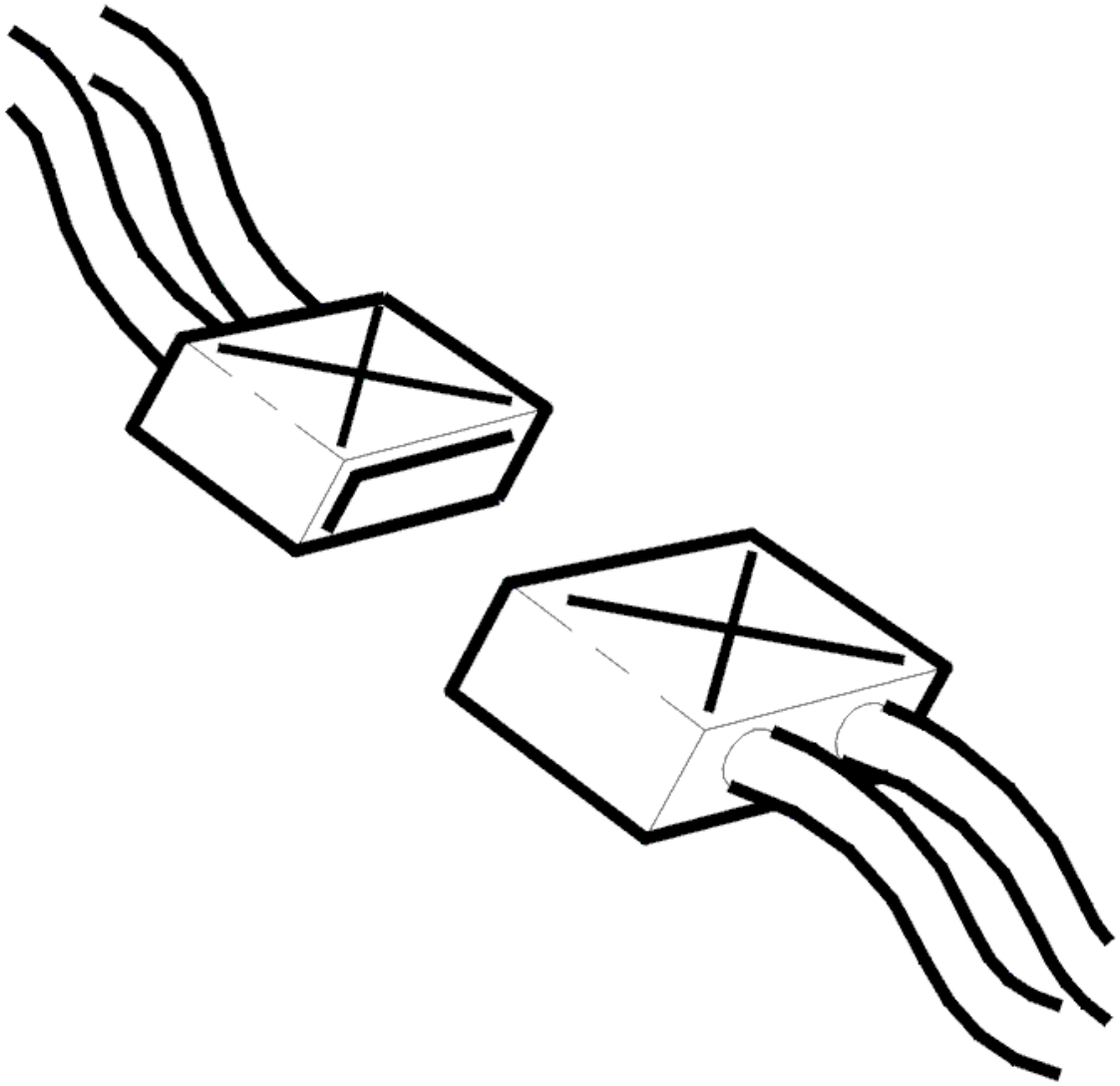

Fig. 64: Identifying Connector
Courtesy of VOLVO CARS CORPORATION

- Ignition off
- Breakout box connected to brake control module (BCM).
- AYC sensor connector unplugged.
- Start the engine.
- Read off the voltage feed to the brake control module (BCM).

  Check the voltage feed to the AYC sensor by connecting a voltmeter between brake control module (BCM) terminals #6 (#A6) and #39 (#A39).

  Check that voltage is about the same as the read value of the brake control module (BCM).

  If the voltage feed to the AYC sensor is OK, replace the AYC sensor.

If the voltage to the brake control module (BCM) is too high, check the charging system.

Remedy as necessary.

Other information

- see **CONNECTING THE BREAKOUT BOX, BRAKE CONTROL MODULE (BCM)**
- see **SIGNAL SPECIFICATION, BRAKE CONTROL MODULE (BCM) WITH DSTC (DYNAMIC STABILITY AND TRACTION CONTROL)**
- see **ACTIVE YAW CONTROL SENSOR, REPLACING**

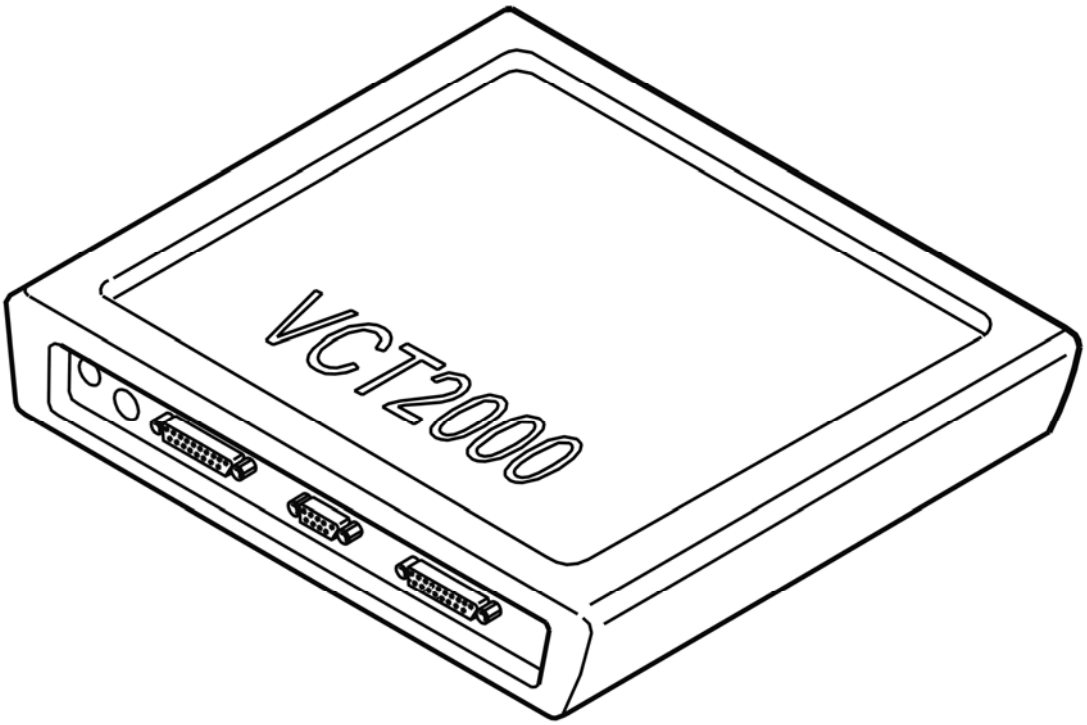

Fig. 65: Identifying VCT2000 Diagnostic Tool Symbol In VIDA
Courtesy of VOLVO CARS CORPORATION

- **Continue**

  see **VERIFICATION**

VERIFICATION

VERIFICATION

HINT: After carrying out the repair, check that the malfunction has been remedied.

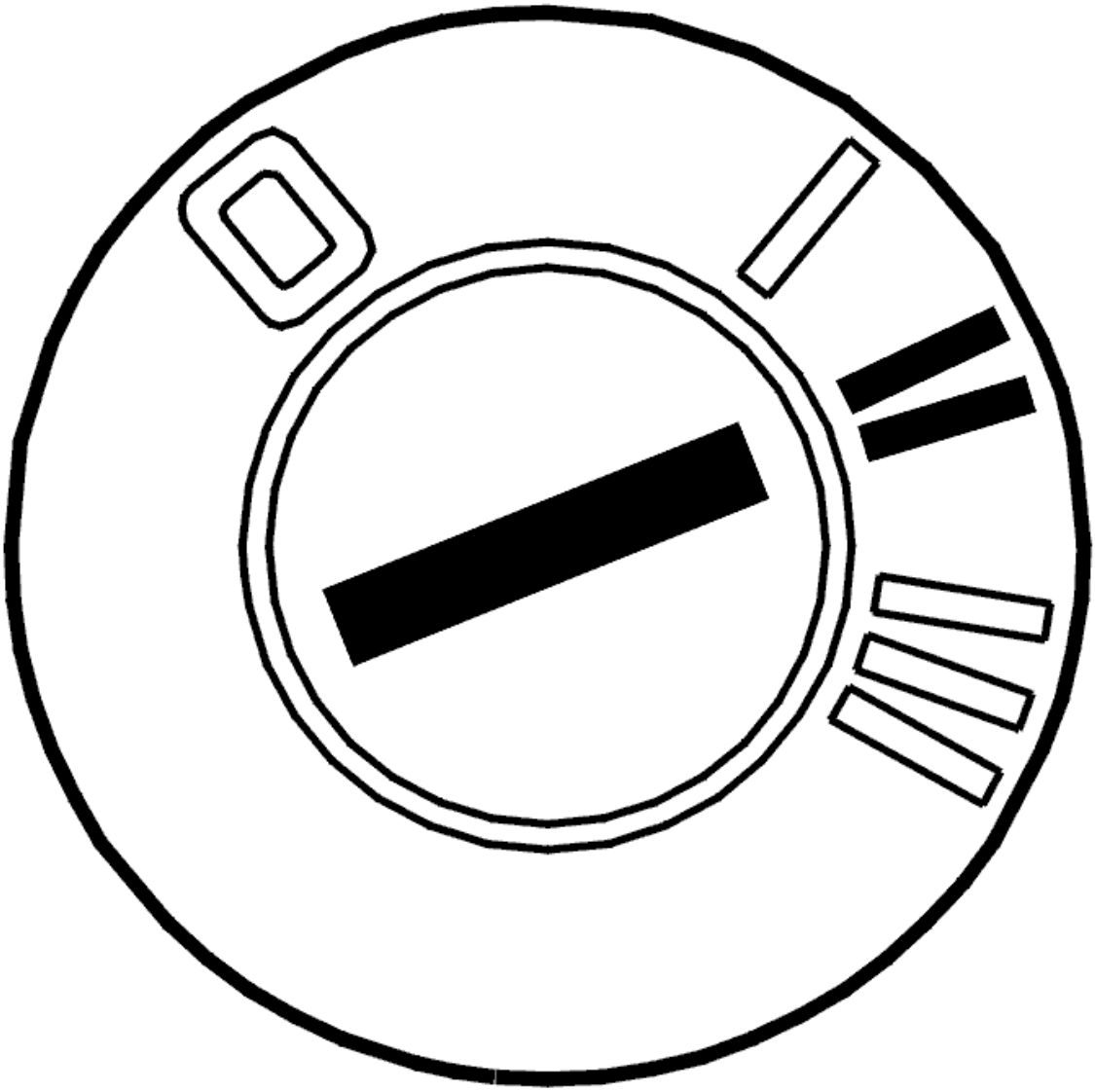

Fig. 66: Identifying Ignition ON
Courtesy of VOLVO CARS CORPORATION

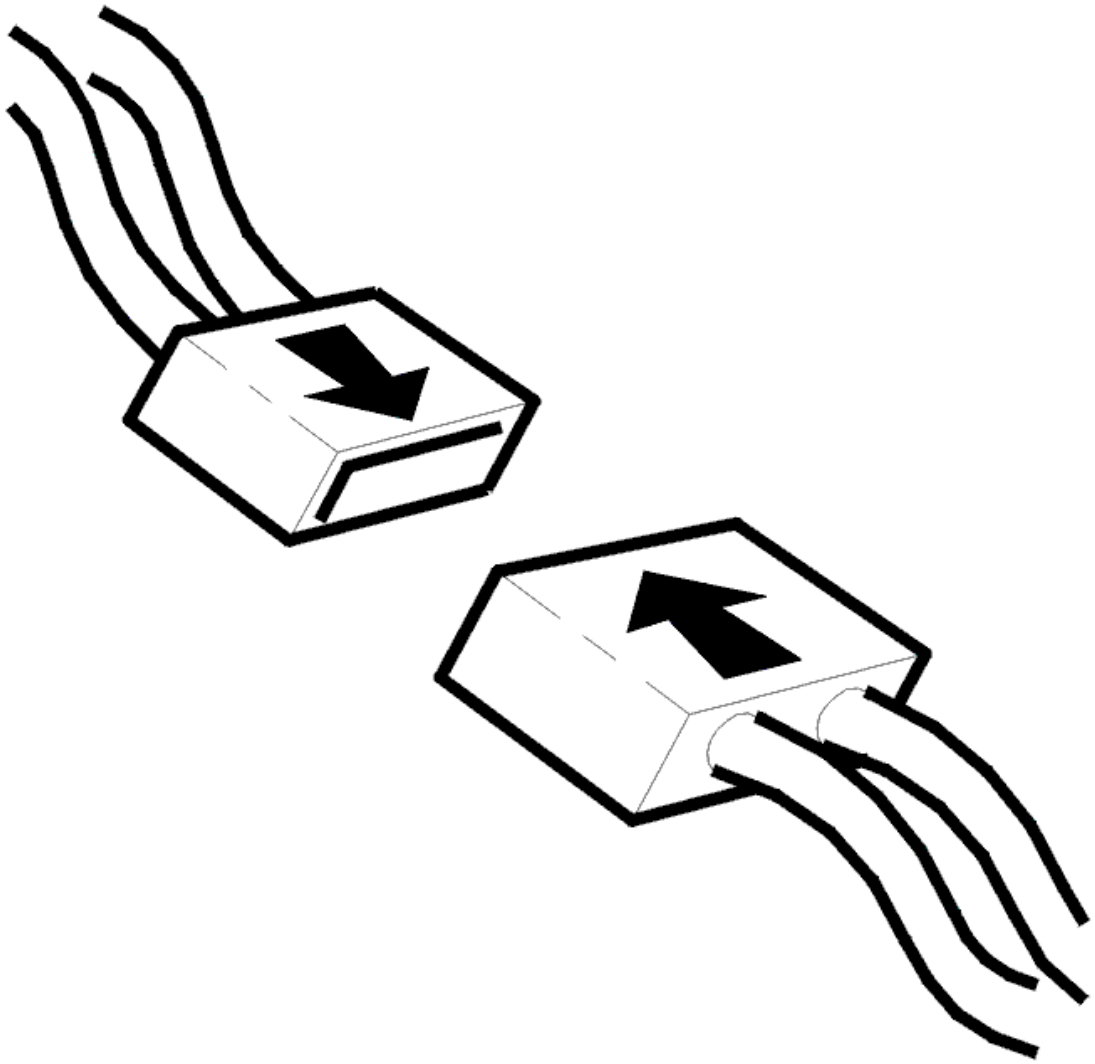

Fig. 67: Connecting Connector
Courtesy of VOLVO CARS CORPORATION

- Ignition off
- Reconnect the connectors, components, etc.
- Test-drive the vehicle according to **TEST DRIVE FORM (DSTC (DYNAMIC STABILITY AND TRACTION CONTROL) /BRAKE CONTROL MODULE), DESCRIPTION** .

NOTE: **Do not turn off the ignition between test-driving and reading out diagnostic trouble codes. This is to obtain the correct status of the diagnostic trouble codes.**

Then read out the diagnostic trouble code's status without turning off the ignition after the test-drive.

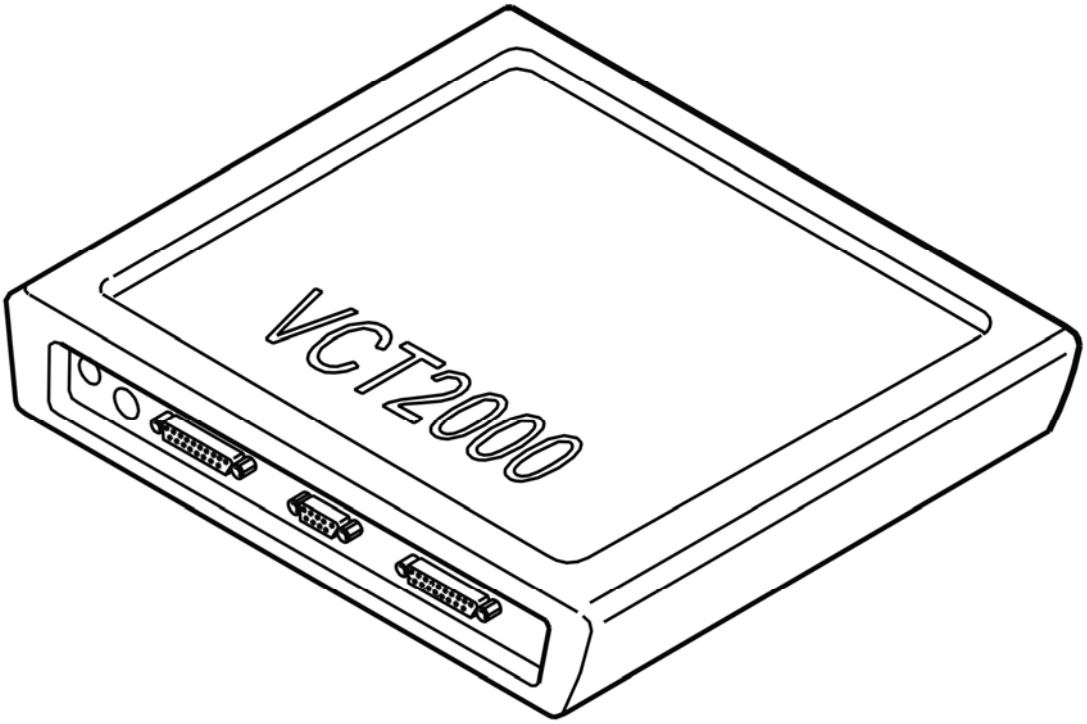

Fig. 68: Identifying VCT2000 Diagnostic Tool Symbol In VIDA
Courtesy of VOLVO CARS CORPORATION

Is the status of the diagnostic trouble code intermittent?

- **YES**

  VERIFIED: Troubleshooting has been completed.

- **NO**

  see **INFORMATION**

INFORMATION

FAULT-TRACING INFORMATION

The fault should have been detected and remedied. As this is not the case fault-tracing has failed.

Exit fault-tracing for this diagnostic trouble code (DTC) or make another attempt.

BCM-C006A17 MULTI-AXIAL ACCELERATION SENSOR. GENERAL ELECTRICAL MALFUNCTION. VOLTAGE TOO HIGH (B6324S5; 2011-2012)

DIAGNOSTIC TROUBLE CODE INFORMATION BCM-C006A17

see **DIAGNOSTIC TROUBLE CODE INFORMATION BCM-C006A17**

TROUBLESHOOTING BCM-C006A17

see **TROUBLESHOOTING BCM-C006A17**

BCM-C006A17 MULTI-AXIAL ACCELERATION SENSOR. GENERAL ELECTRICAL MALFUNCTION. VOLTAGE TOO HIGH (B8444S; 2005-2011)

DIAGNOSTIC TROUBLE CODE INFORMATION BCM-C006A17

see **DIAGNOSTIC TROUBLE CODE INFORMATION BCM-C006A17**

TROUBLESHOOTING BCM-C006A17

see **TROUBLESHOOTING BCM-C006A17**

BCM-C006B00 STABILITY SYSTEM ACTIVE TOO LONG. GENERAL MALFUNCTION INFORMATION. NO INFORMATION ON MALFUNCTION TYPE (B6324S; 2007-2010)

DIAGNOSTIC TROUBLE CODE INFORMATION BCM-C006B00

Condition

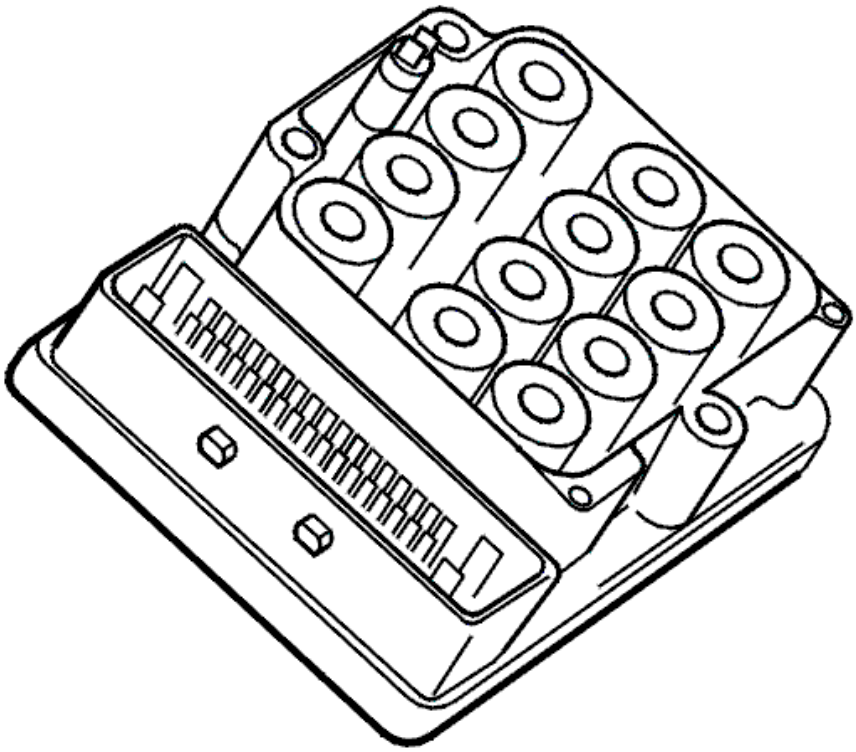

Fig. 69: ABS Control Module
Courtesy of VOLVO CARS CORPORATION

NOTE: The diagnostic trouble code only applies to vehicles equipped with DSTC.

Diagnostic trouble code BCM-C006B00 is generated if the brake control module (BCM) registers that the stability function regulates continuously for more than 15 seconds.

Substitute Value

- TC is blocked.
- SC is blocked.
- AYC is blocked.

HINT: For information on abbreviations: BRAKE SYSTEM, ABBREVIATIONS

Possible Source

- Improperly installed steering wheel.
- Defective wheel alignment.
- Loose or improperly installed AYC sensor.
- Damaged AYC sensor.

NOTE: **This diagnostic trouble code (DTC) is not due to an internal hardware fault in the Brake control module (BCM) and must not be remedied by replacing the control module.**

Fault symptom[s]

- General warning light on.
- Anti-spin is not operational.
- The stability function is not operational.
- The anti-skid function is not operational.

TROUBLESHOOTING BCM-C006B00

VISUAL BRAKE CHECK

HINT: The diagnostic trouble code indicates that the stability function has regulated too long.

Check the front and rear brakes for overheating damage on the brake caliper, brake pads and brake disc. Replace damaged components.

Inform the customer why the anti-spin function was temporarily blocked and the ABS warning light was on.

Other information

- see **BRAKE CALIPERS FRONT, REPLACING**
- see **BRAKE CALIPERS REAR, REPLACING**
- see **BRAKE PADS FRONT, REPLACING**
- see **BRAKE PADS REAR, REPLACING**
- see **BRAKE DISC FRONT, REPLACING**
- see **BRAKE DISC REAR, REPLACING**

BCM-C006B00 STABILITY SYSTEM ACTIVE TOO LONG. GENERAL MALFUNCTION INFORMATION. NO INFORMATION ON MALFUNCTION TYPE (B6324S5; 2011-2012)

DIAGNOSTIC TROUBLE CODE INFORMATION BCM-C006B00

see **DIAGNOSTIC TROUBLE CODE INFORMATION BCM-C006B00**

TROUBLESHOOTING BCM-C006B00

see **TROUBLESHOOTING BCM-C006B00**

BCM-C006B00 STABILITY SYSTEM ACTIVE TOO LONG. GENERAL

MALFUNCTION INFORMATION. NO INFORMATION ON MALFUNCTION TYPE (B8444S; 2005-2011)

DIAGNOSTIC TROUBLE CODE INFORMATION BCM-C006B00

see **DIAGNOSTIC TROUBLE CODE INFORMATION BCM-C006B00**

TROUBLESHOOTING BCM-C006B00

see **TROUBLESHOOTING BCM-C006B00**

BCM-C007200: BRAKE TEMPERATURE TOO HIGH. GENERAL MALFUNCTION INFORMATION. NO INFORMATION ON MALFUNCTION TYPE (B6324S; 2007-2010)

DIAGNOSTIC TROUBLE CODE INFORMATION BCM-C007200

Condition

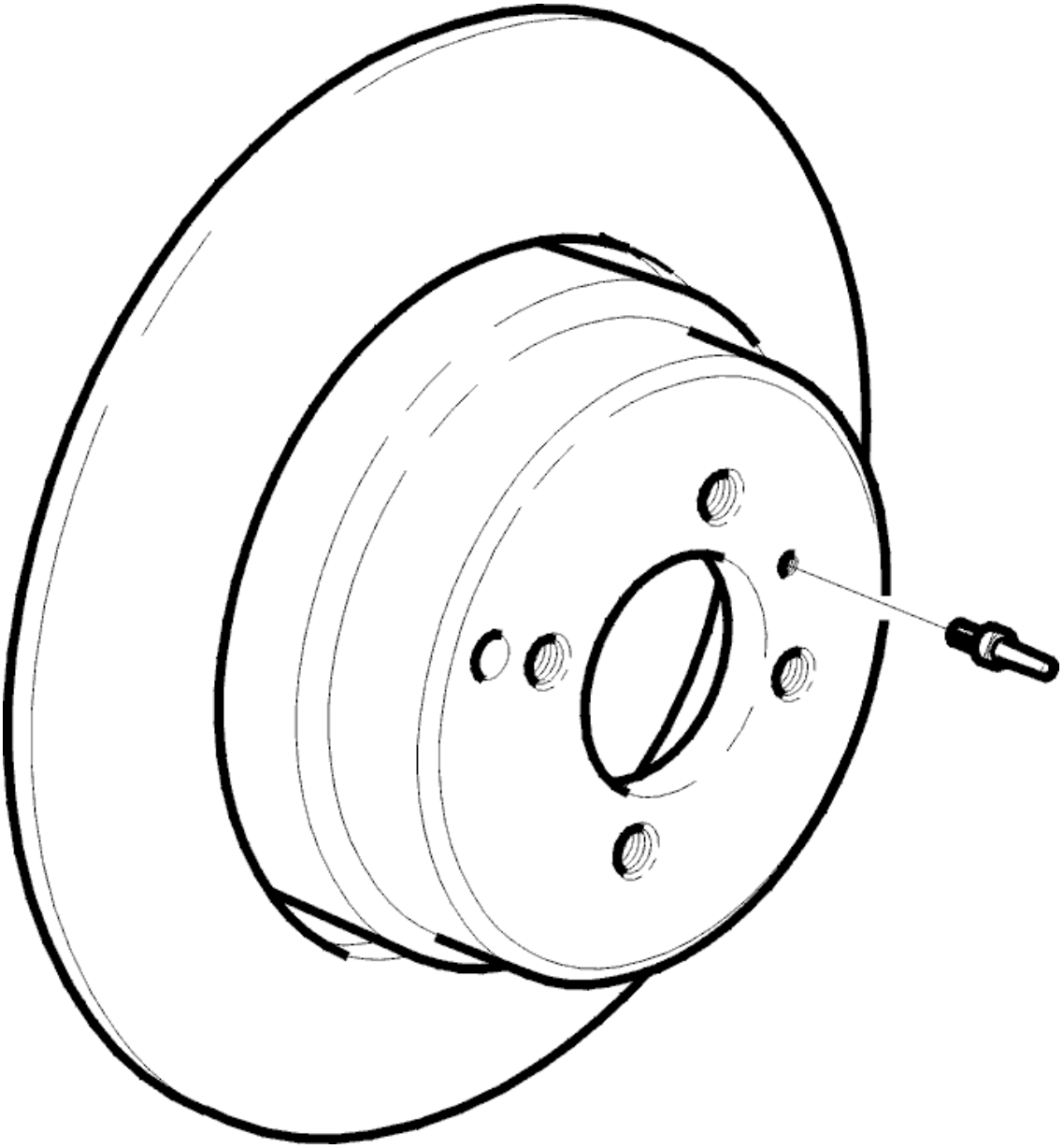

Fig. 70: Identifying Brake Caliper Mounting Bolt
Courtesy of VOLVO CARS CORPORATION

On vehicles with the STC/DSTC/TRACS anti-spin function, the brake control module (BCM) registers how much the brakes are used and then calculates the temperature of all brake discs. If the calculated temperature exceeds 450 °C (842 °F), diagnostic trouble code BCM-C007200 is generated.

The diagnostic trouble code can be diagnosed when the ignition is on.

Substitute Value

- TC is blocked.

HINT: For information on brake system abbreviations: BRAKE SYSTEM, ABBREVIATIONS

Possible Source

- Anti-spin control too long.
- Brake actuation too long (the brakes were used so much that brake disc temperature has become too high).

NOTE: This diagnostic trouble code (DTC) is not due to an internal hardware fault in the Brake control module (BCM) and must not be remedied by replacing the control module.

Fault symptom[s]

- Anti-spin is not operational.

  NOTE: The anti-spin function is blocked until brake disc temperature is below 300 °C (572 °F).

TROUBLESHOOTING BCM-C007200

VISUAL BRAKE CHECK

- Remove the front wheels.

  Visually check the front wheel brakes.

  Check for overheating damage on the brake caliper, brake pads and brake disc. Replace damaged components.

  Inform the customer why the anti-spin function was temporarily blocked and the ABS warning light was on.

  Remedy as necessary.

  Other information

  - see **BRAKE CALIPERS FRONT, REPLACING**
  - see **BRAKE PADS FRONT, REPLACING**
  - see **BRAKE DISC FRONT, REPLACING**

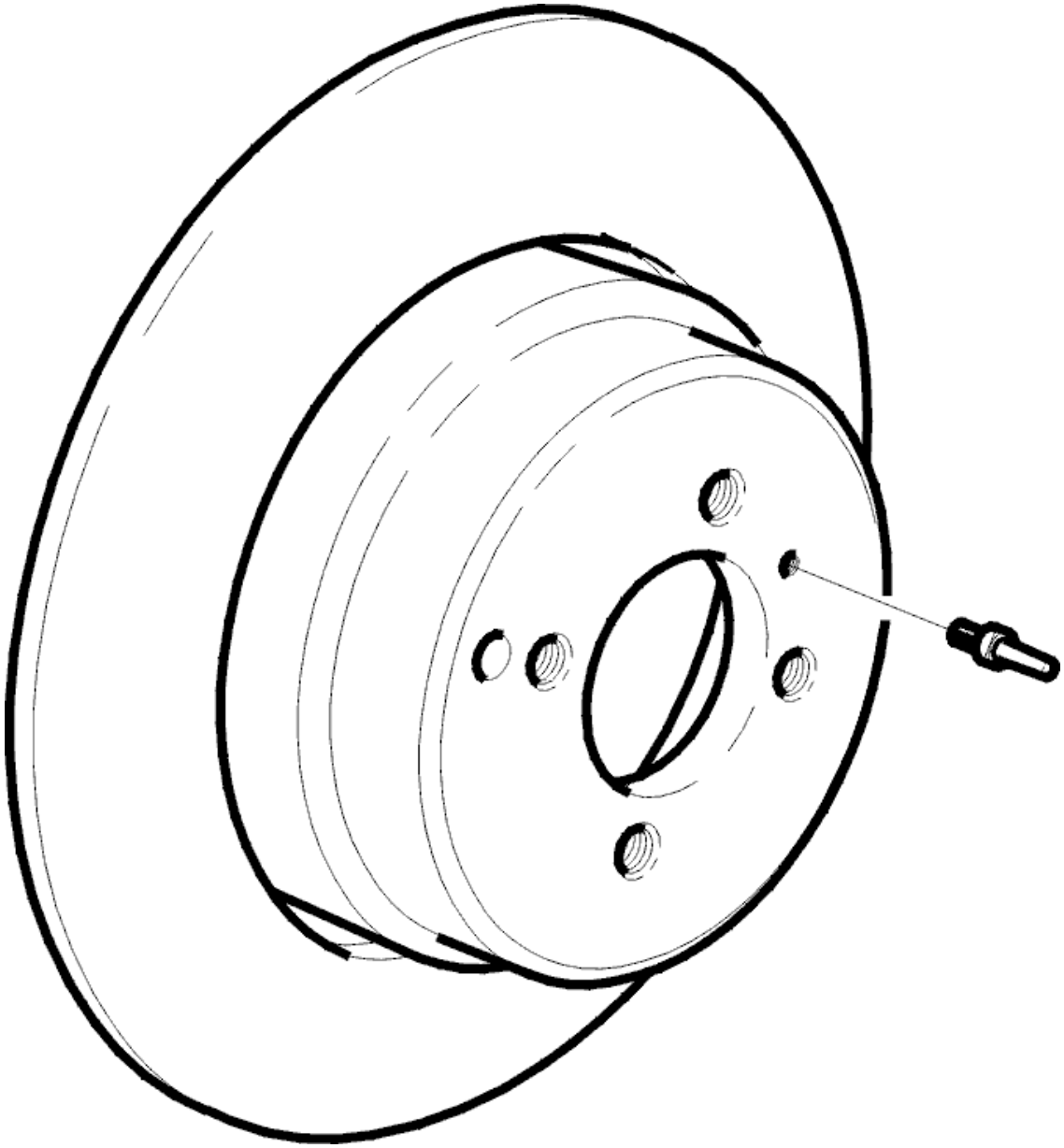

Fig. 71: Identifying Brake Caliper Mounting Bolt
Courtesy of VOLVO CARS CORPORATION

BCM-C007200: BRAKE TEMPERATURE TOO HIGH. GENERAL MALFUNCTION INFORMATION. NO INFORMATION ON MALFUNCTION TYPE (B6324S5; 2011-2012)

DIAGNOSTIC TROUBLE CODE INFORMATION BCM-C007200

see **DIAGNOSTIC TROUBLE CODE INFORMATION BCM-C007200**

TROUBLESHOOTING BCM-C007200

see **TROUBLESHOOTING BCM-C007200**

BCM-C007200: BRAKE TEMPERATURE TOO HIGH. GENERAL MALFUNCTION INFORMATION. NO INFORMATION ON MALFUNCTION TYPE (B8444S; 2005-2011)

DIAGNOSTIC TROUBLE CODE INFORMATION BCM-C007200

see **DIAGNOSTIC TROUBLE CODE INFORMATION BCM-C007200**

TROUBLESHOOTING BCM-C007200

see **TROUBLESHOOTING BCM-C007200**

BCM-C008204: BRAKE SYSTEM MALFUNCTION INDICATOR. GENERAL MALFUNCTION INFORMATION. INTERNAL ERROR (B6324S; 2007-2010)

DIAGNOSTIC TROUBLE CODE INFORMATION BCM-C008204

Condition

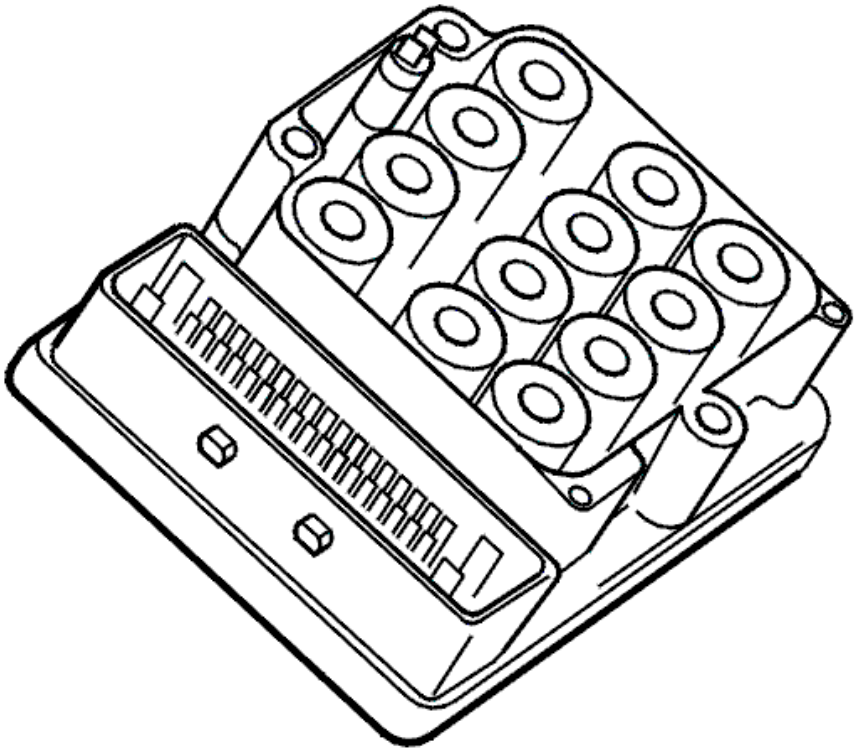

Fig. 72: ABS Control Module

Courtesy of VOLVO CARS CORPORATION

Diagnostic trouble code BCM-C008204 is generated if the brake control module (BCM) registers an internal error, such as interference or open hydraulic valve circuit.

Substitute Value

- ABS is blocked.
- EBD is blocked.
- SC is blocked.
- TC is blocked.
- AYC is blocked.
- BA is blocked.

HINT: For information on brake system abbreviations: BRAKE SYSTEM, ABBREVIATIONS

Possible Source

- Interference, noise, etc. that have disrupted control module calculations.
- Internal error in the control module.

Fault symptom[s]

- General warning light is on.
- ABS warning light is on.
- Brake circuit not working; warning light on.
- ABS is not operational.
- Anti-spin is not operational.
- The stability function is not operational.
- The anti-skid function is not operational.

TROUBLESHOOTING BCM-C008204

READING OFF DIAGNOSTIC TROUBLE CODES (DTCS)

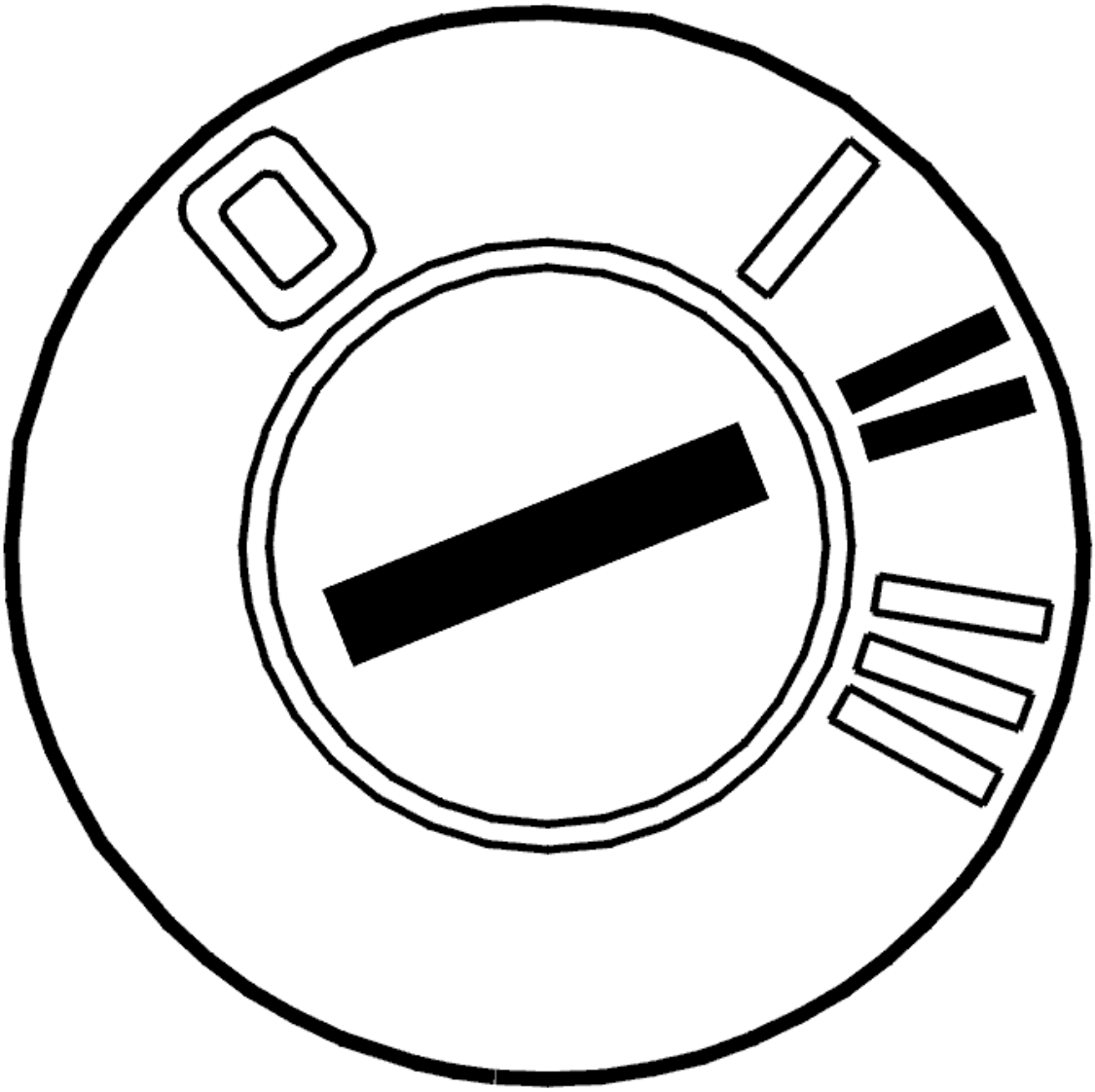

Fig. 73: Identifying Ignition ON
Courtesy of VOLVO CARS CORPORATION

- Ignition on
- Read off diagnostic trouble codes (DTCs).

  If other diagnostic trouble codes are stored in addition to BCM-C008204, perform troubleshooting of these first.

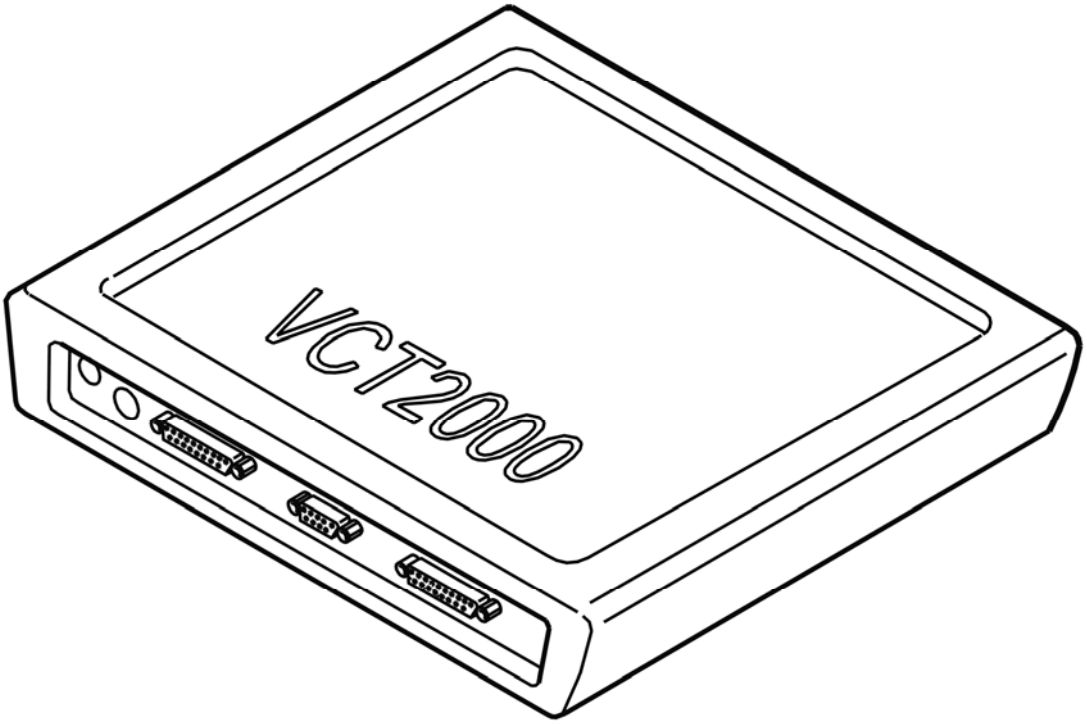

Fig. 74: Identifying VCT2000 Diagnostic Tool Symbol In VIDA
Courtesy of VOLVO CARS CORPORATION

Are other diagnostic trouble codes stored in addition to BCM-C008204?

- **YES**

  OKAY: Troubleshooting has been completed.

- **NO**

  see **ERASING DIAGNOSTIC TROUBLE CODE (DTC)**

ERASING DIAGNOSTIC TROUBLE CODE (DTC)

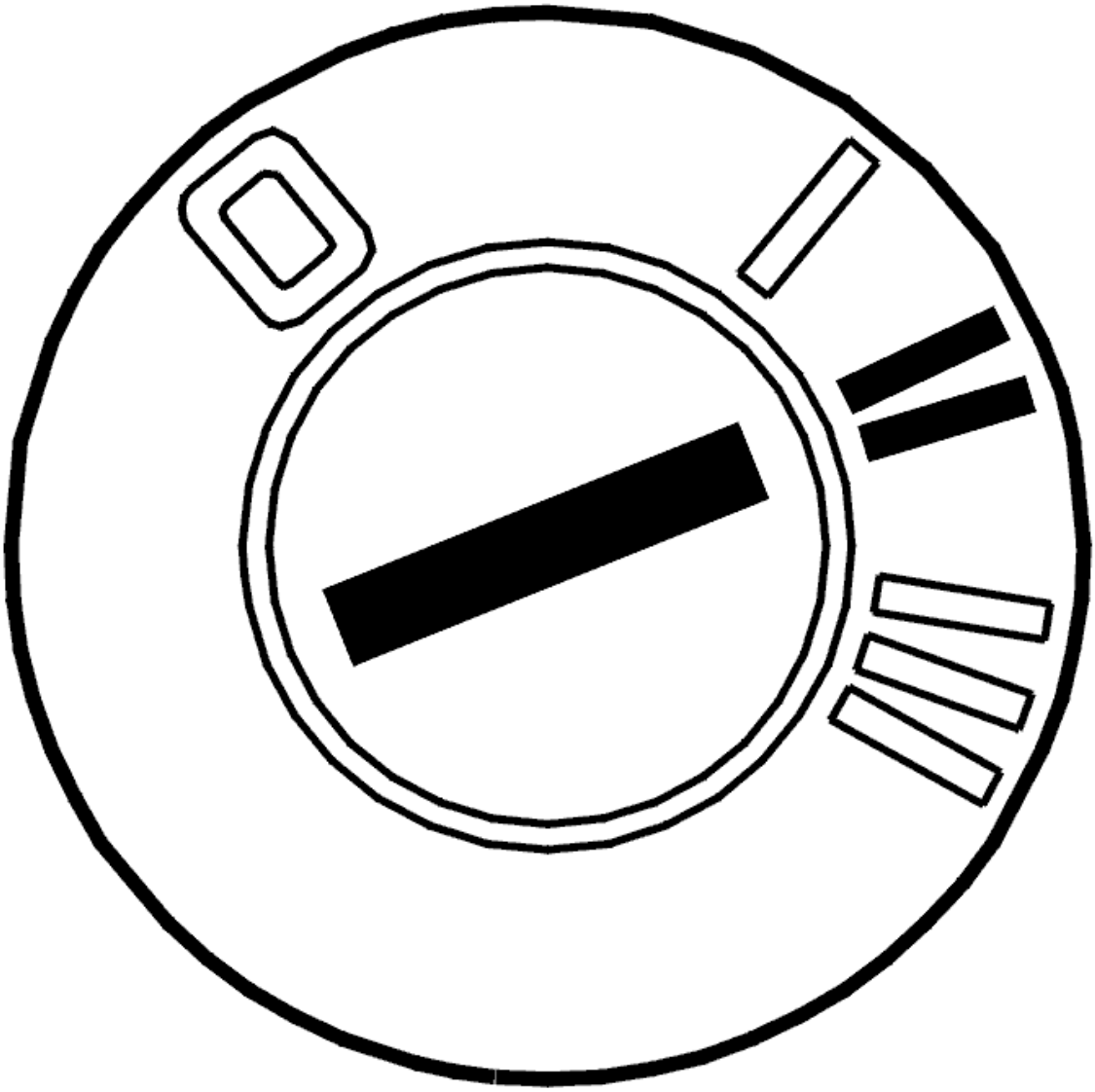

Fig. 75: Identifying Ignition ON
Courtesy of VOLVO CARS CORPORATION

- Ignition on

  Erase the diagnostic trouble code.

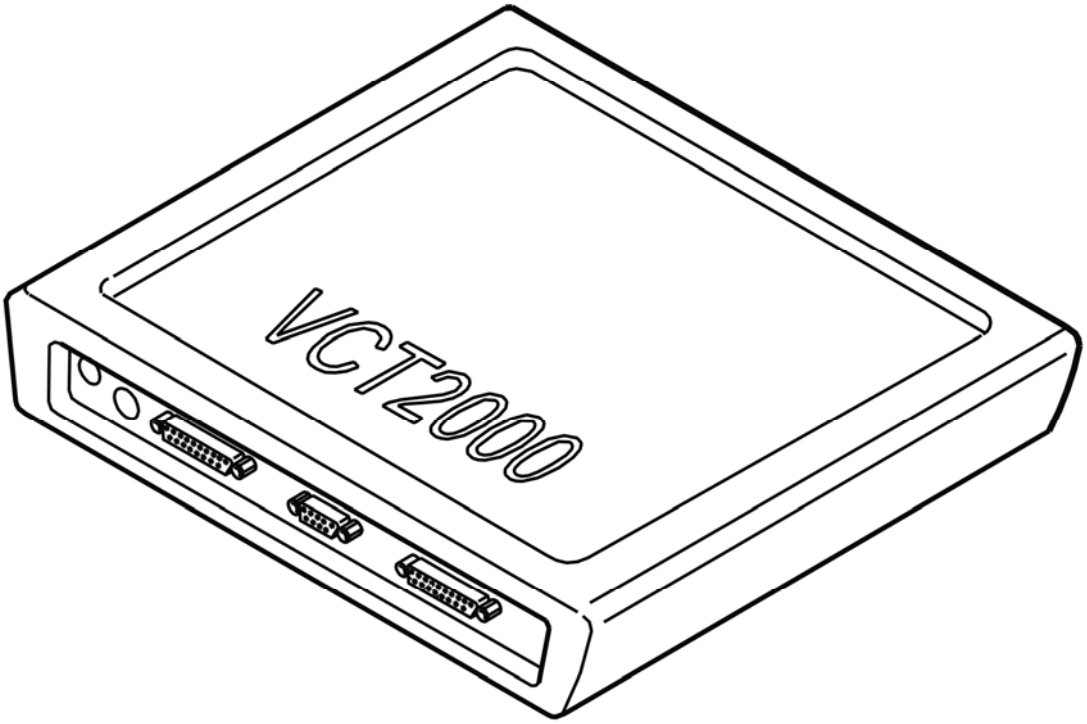

Fig. 76: Identifying VCT2000 Diagnostic Tool Symbol In VIDA
Courtesy of VOLVO CARS CORPORATION

- **Continue**

see **CHECKING THE DIAGNOSTIC TROUBLE CODE**

CHECKING THE DIAGNOSTIC TROUBLE CODE

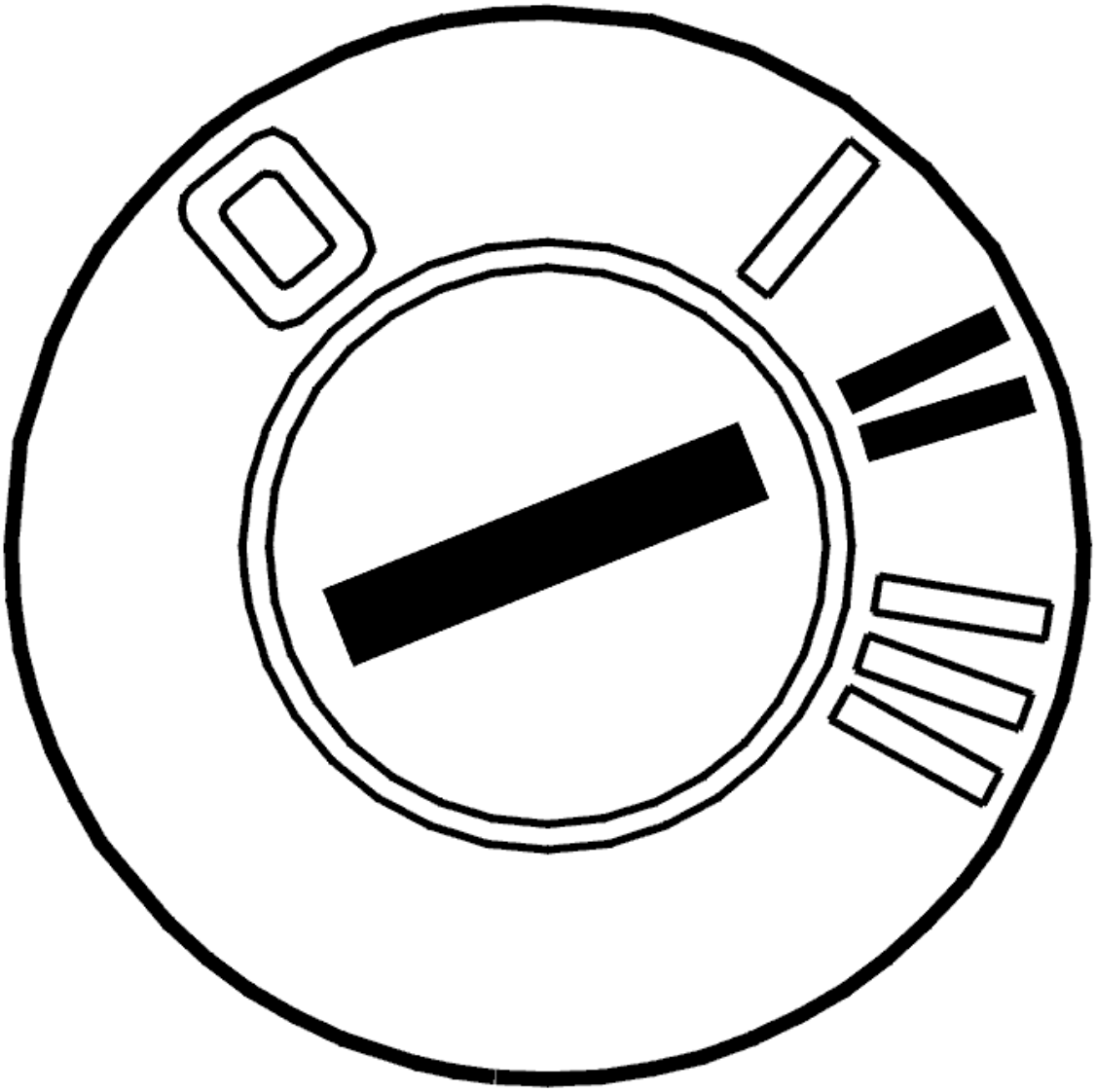

Fig. 77: Identifying Ignition ON
Courtesy of VOLVO CARS CORPORATION

- Ignition off
- Check the connector of the brake control module (BCM) for contact resistance and oxidation.
- Wait a few seconds.
- Switch on the ignition and wait for 60 seconds.
- Read off diagnostic trouble codes (DTCs).

  If diagnostic trouble code BCM-C008204 is stored once again, replace brake control module (BCM).

  Other information

  - see **BRAKE CONTROL MODULE (BCM), REPLACING** .
  - see **CONTENTS**

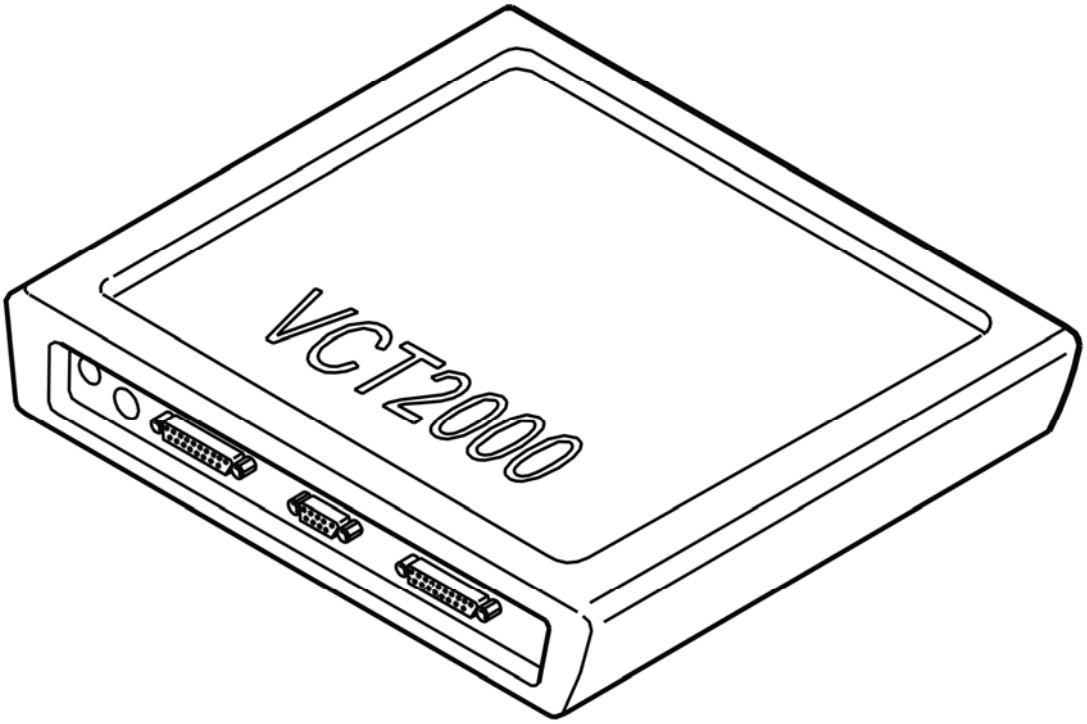

Fig. 78: Identifying VCT2000 Diagnostic Tool Symbol In VIDA
Courtesy of VOLVO CARS CORPORATION

Was diagnostic trouble code BCM-C008204 stored as a permanent error?

- **YES**

  OKAY: Troubleshooting has been completed.

- **NO**

  see **TROUBLESHOOTING INFORMATION**

TROUBLESHOOTING INFORMATION

The brake control module (BCM) has previously registered a malfunction, but the malfunction is no longer active. Check that the cables are not positioned too close to a source of interference, such as a cellular phone.

BCM-C008204: BRAKE SYSTEM MALFUNCTION INDICATOR. GENERAL MALFUNCTION INFORMATION. INTERNAL ERROR (B6324S5; 2011-2012)

DIAGNOSTIC TROUBLE CODE INFORMATION BCM-C008204

see **DIAGNOSTIC TROUBLE CODE INFORMATION BCM-C008204**

TROUBLESHOOTING BCM-C008204

see **TROUBLESHOOTING BCM-C008204**

BCM-C008204: BRAKE SYSTEM MALFUNCTION INDICATOR. GENERAL MALFUNCTION INFORMATION. INTERNAL ERROR (B8444S; 2005-2011)

DIAGNOSTIC TROUBLE CODE INFORMATION BCM-C008204

see **DIAGNOSTIC TROUBLE CODE INFORMATION BCM-C008204**

TROUBLESHOOTING BCM-C008204

see **TROUBLESHOOTING BCM-C008204**

BCM-C008216: BRAKE SYSTEM MALFUNCTION INDICATOR. GENERAL ELECTRICAL MALFUNCTION. VOLTAGE TOO LOW (B6324S; 2007-2010)

DIAGNOSTIC TROUBLE CODE INFORMATION BCM-C008216

Condition

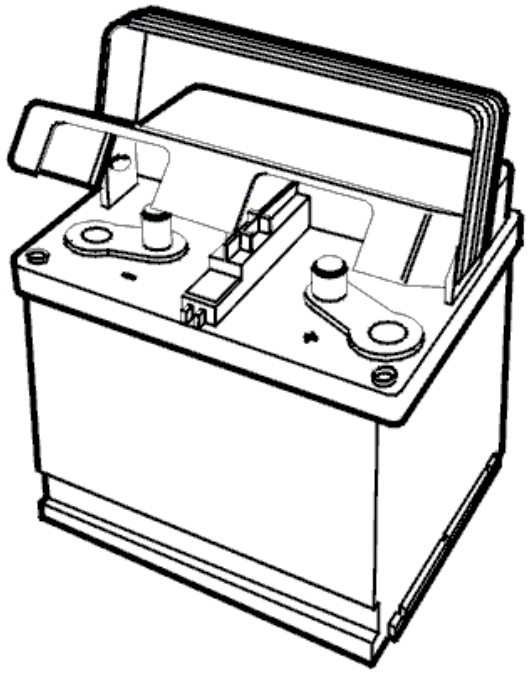

Fig. 79: Identifying Battery
Courtesy of VOLVO CARS CORPORATION

Diagnostic trouble code BCM-C008216 is generated if the brake control module (BCM) registers that battery voltage is less than 9.5 V and the speed of the fastest rotating wheel exceeds 20 km/h (12.4 mph).

The diagnostic trouble code can be diagnosed when speed exceeds 20 km/h (12.4 mph) and low voltage has been detected for more than 0.5 ms.

Substitute Value

- ABS is blocked.
- EBD is blocked if voltage is below 8 V.
- TC is blocked.
- SC is blocked.
- AYC is blocked.
- BA is blocked.

HINT: For information on brake system abbreviations: BRAKE SYSTEM, ABBREVIATIONS

Possible Source

- Contact resistance in the terminals
- Battery voltage too low.
- Malfunction in charging system.
- Open circuit or short circuit to ground on voltage feed cable.
- Damaged fuse in circuit.
- Interference on the cables.
- Damaged brake control module (BCM).

Fault symptom[s]

- General warning light on.
- ABS warning light on.
- Brake circuit not working; warning light on.
- ABS is not operational.
- Anti-spin is not operational.
- The stability function is not operational.
- The anti-skid function is not operational.

TROUBLESHOOTING BCM-C008216

CHECKING THE BATTERY VOLTAGE

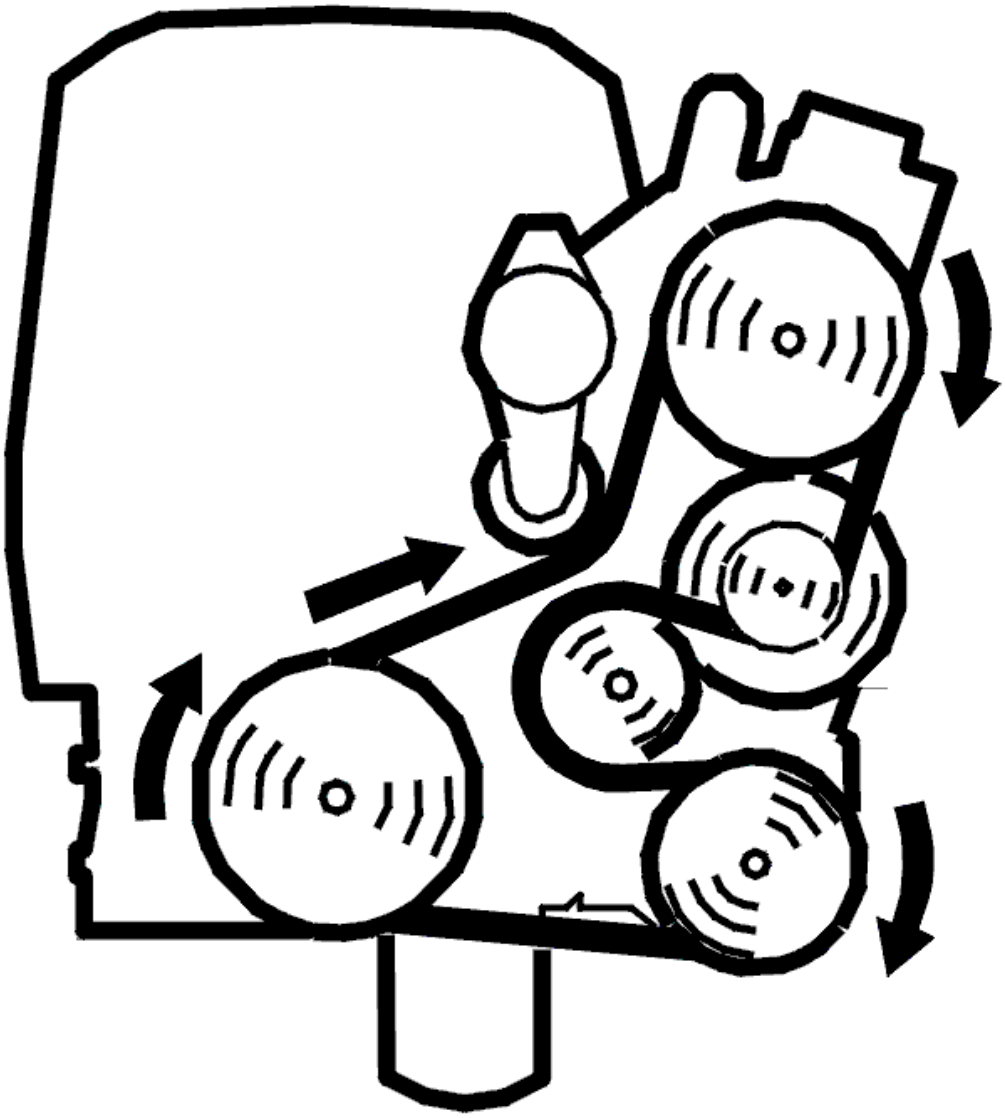

Fig. 80: Belt Routing / Engine Idling - Volvo
Courtesy of VOLVO CARS CORPORATION

- Start the engine and let it idle.
- Connect a voltmeter between the positive and negative battery terminals.

  The voltage should be normal system voltage.

  If voltage is low, check the charging system as described in relevant information.

Was the voltage too low?

- **YES**

  OKAY: Troubleshooting has been completed.

- **NO**

  see **CHECKING THE VOLTAGE FEED**

CHECKING THE VOLTAGE FEED

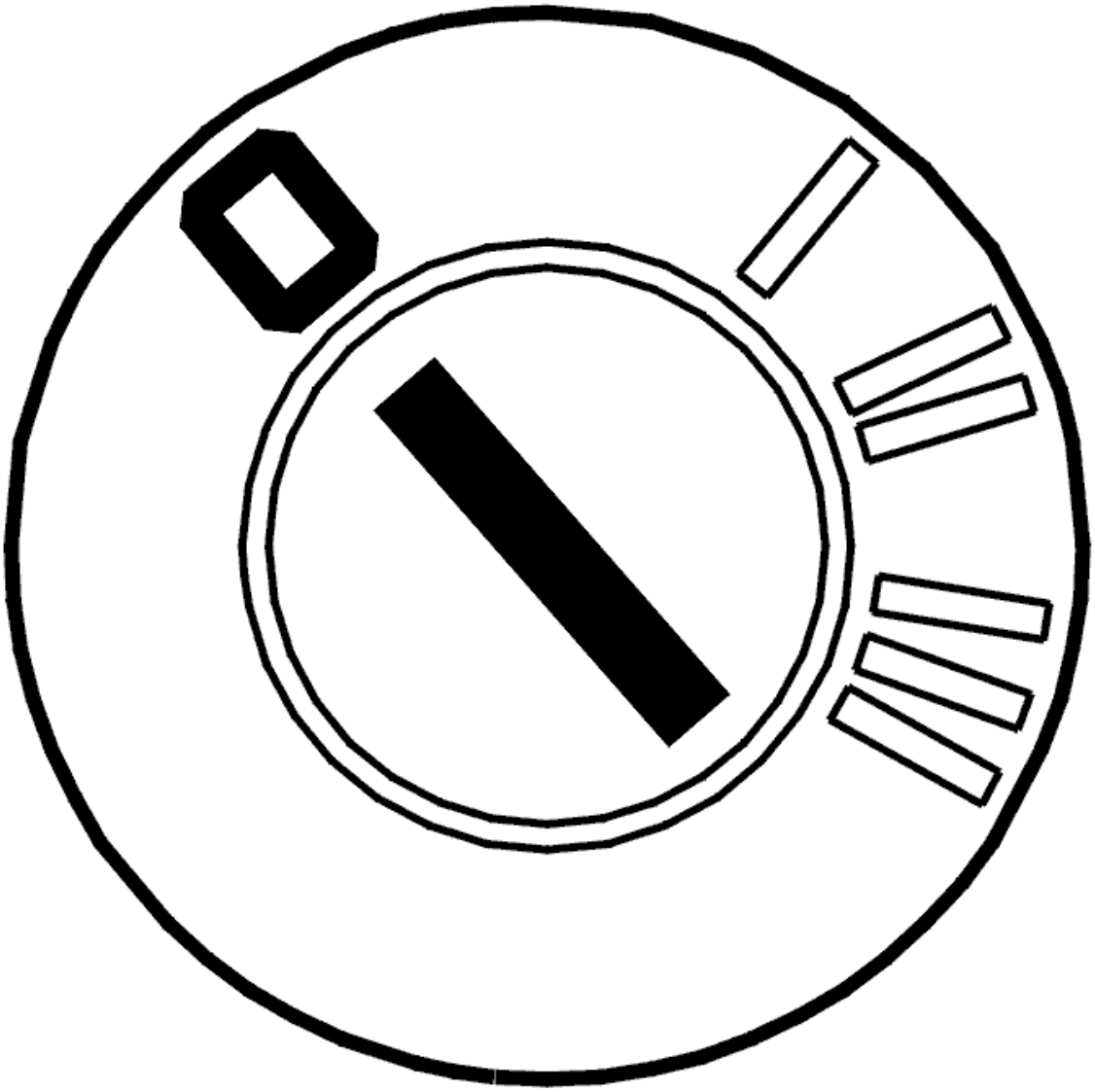

Fig. 81: Identifying Ignition OFF
Courtesy of VOLVO CARS CORPORATION

- Ignition off

  Check the connector of the brake control module (BCM) for contact resistance and oxidation.

  Check the voltage feed cable between the brake system fuse in the engine compartment relay/fuse box and control module connector terminal #A32 (#32) for short circuit to ground.

HINT: With the ignition on and the voltmeter connected between terminals #A32 (#32) and #A47 (#A47) on the breakout box, the voltmeter should show battery voltage.

Other information

- see **CONNECTING THE BREAKOUT BOX, BRAKE CONTROL MODULE (BCM)**
- see **SIGNAL SPECIFICATION, BRAKE CONTROL MODULE (BCM) WITH STC/ TRACS**
- see **SIGNAL SPECIFICATION, BRAKE CONTROL MODULE (BCM) WITH DSTC (DYNAMIC STABILITY AND TRACTION CONTROL)**
- see **CHECKING WIRING AND TERMINALS**

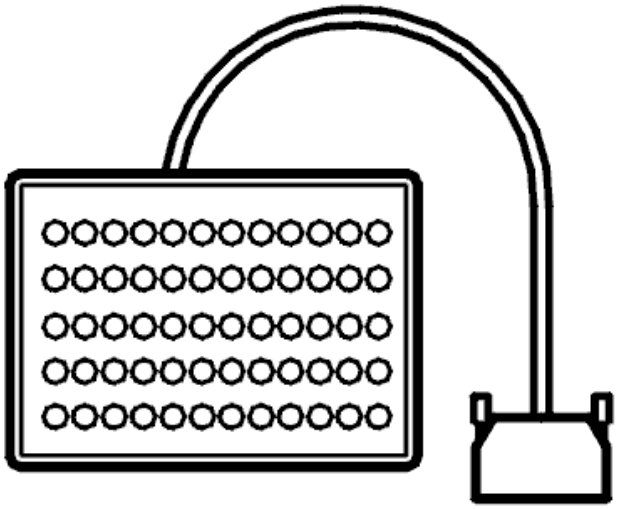

Fig. 82: Breakout Box
Courtesy of VOLVO CARS CORPORATION

Was a malfunction detected?

- **YES**

  see **VERIFICATION**

- **NO**

  see **CHECKING SYSTEM VOLTAGE**

CHECKING SYSTEM VOLTAGE

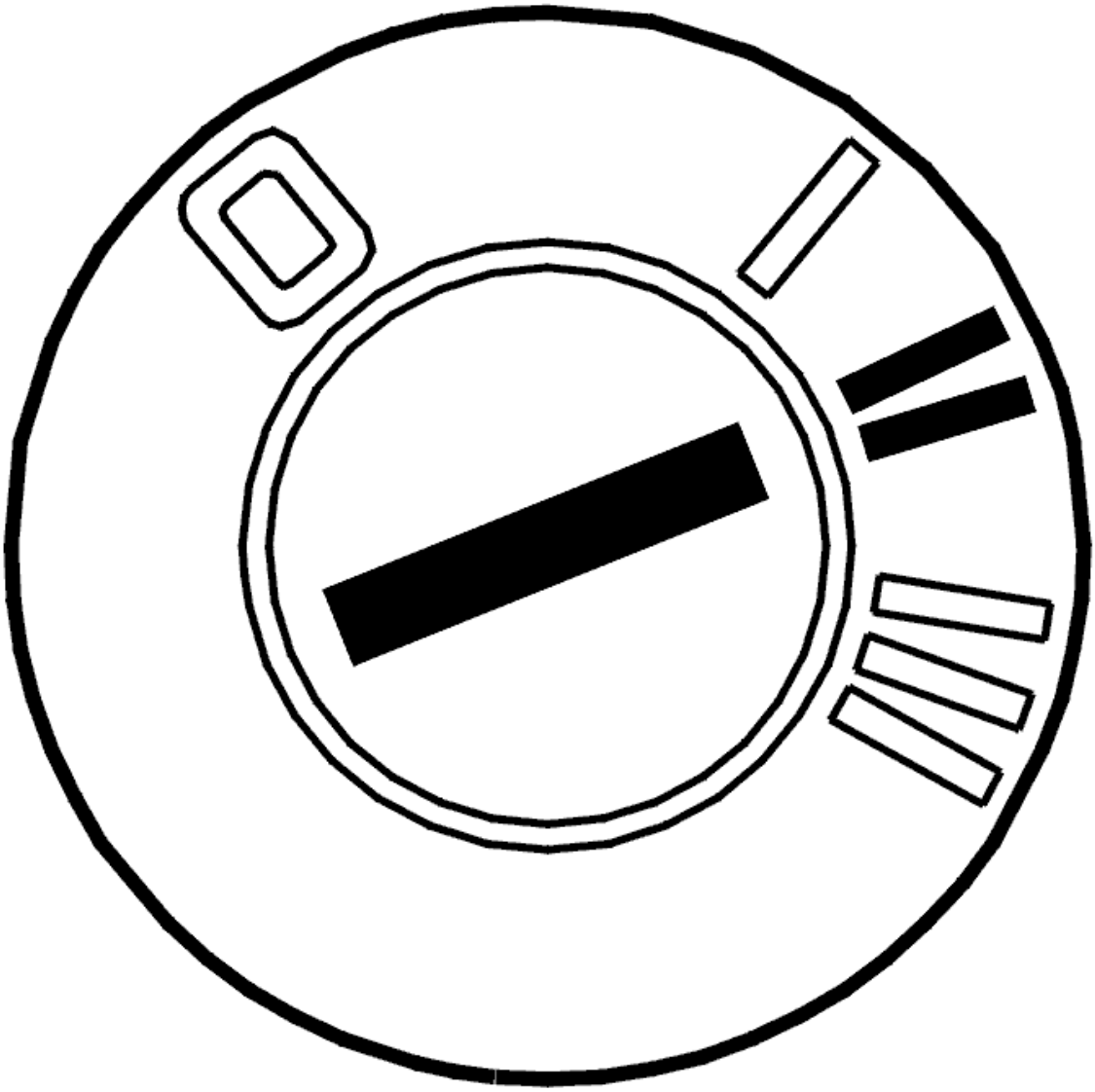

Fig. 83: Identifying Ignition ON
Courtesy of VOLVO CARS CORPORATION

- Ignition off
- Reinstall the connectors, components etc.
- Ignition on
- Read off the voltage feed to the brake control module (BCM).

  The voltage should be normal system voltage.

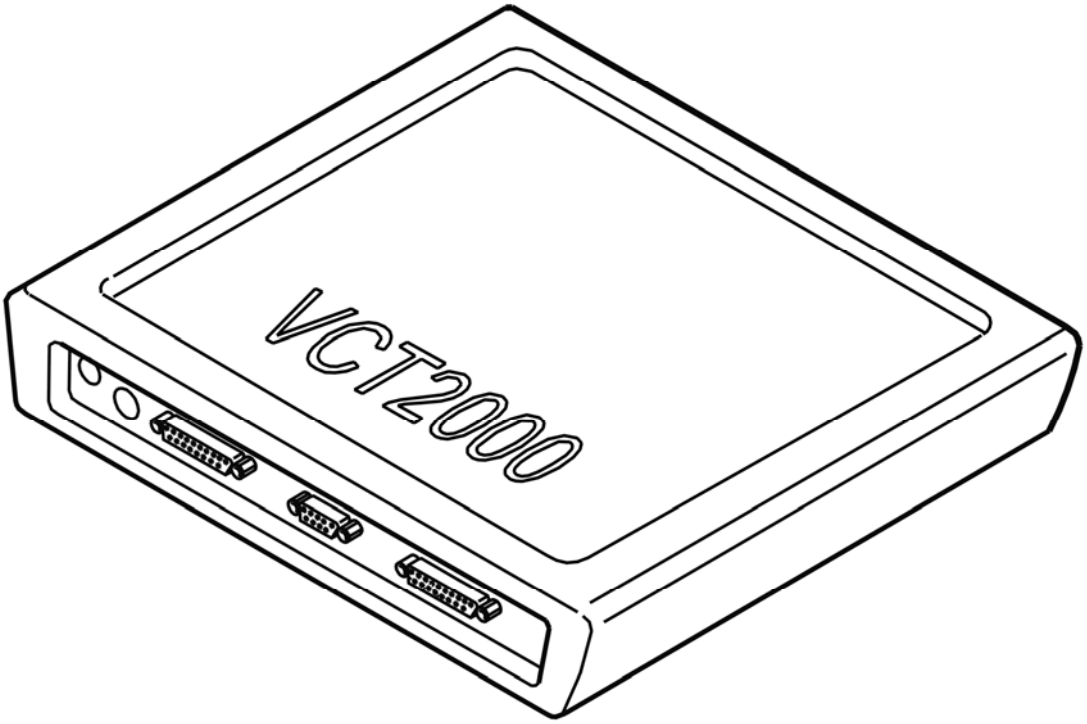

Fig. 84: Identifying VCT2000 Diagnostic Tool Symbol In VIDA
Courtesy of VOLVO CARS CORPORATION

Is the voltage OK?

- **OK**

  OKAY: Troubleshooting has been completed.

- **NOT OK**

  see **INFORMATION**

VERIFICATION

HINT: After carrying out the repair, check that the malfunction has been remedied.

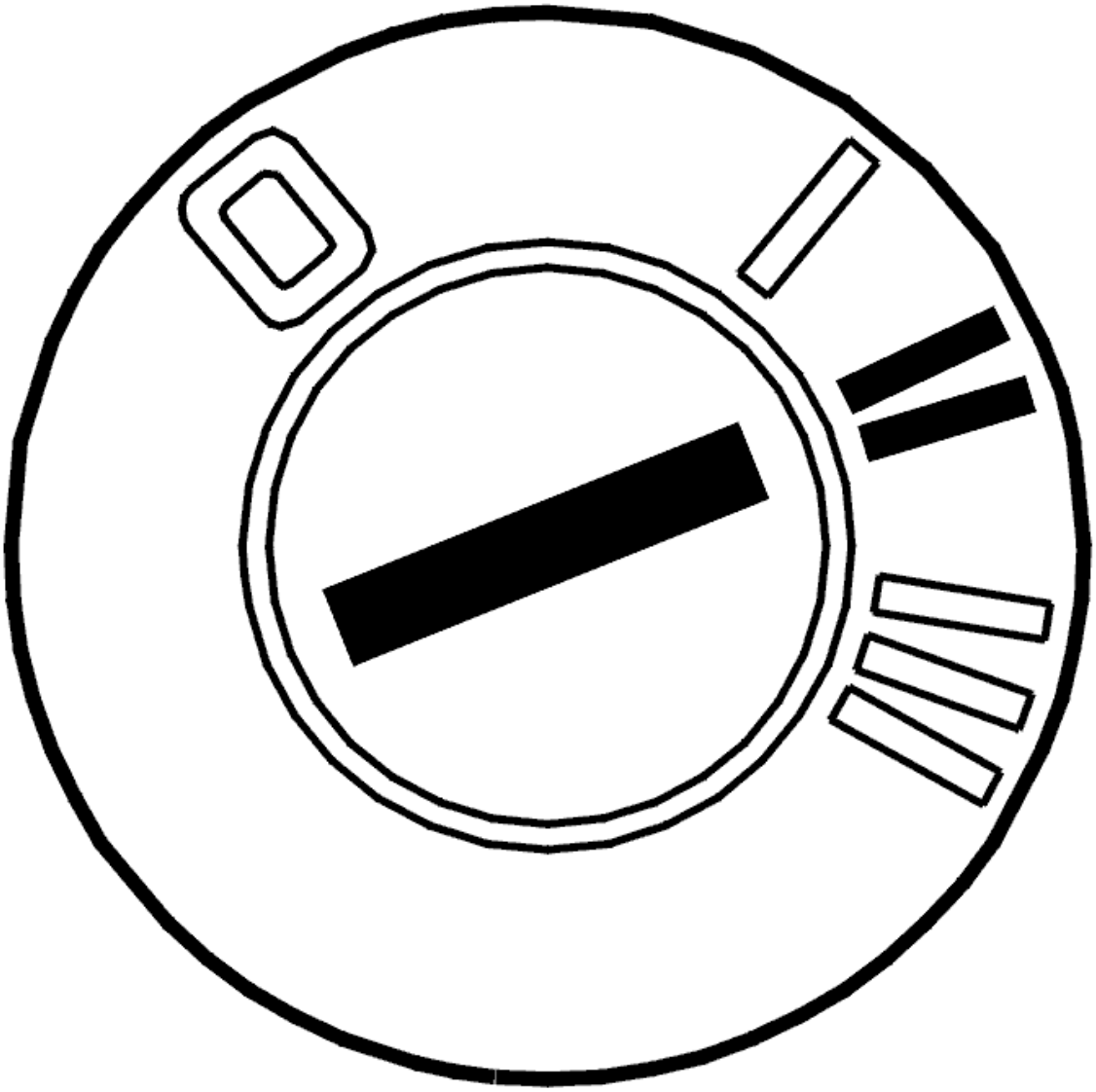

Fig. 85: Identifying Ignition ON
Courtesy of VOLVO CARS CORPORATION

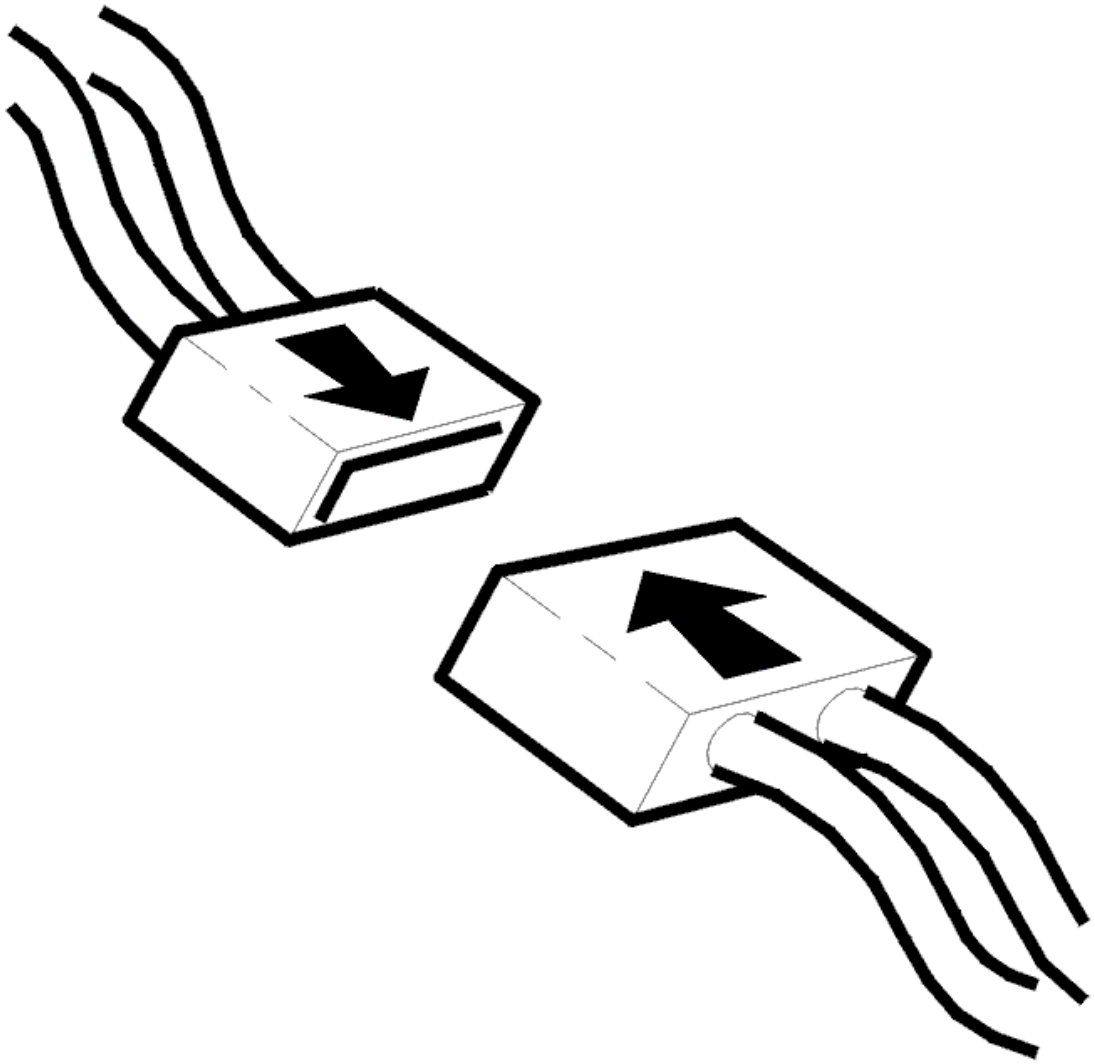

Fig. 86: Connecting Connector
Courtesy of VOLVO CARS CORPORATION

- Ignition off
- Reinstall the connectors, components etc.
- Ignition on

Read off the voltage to the brake control module (BCM).

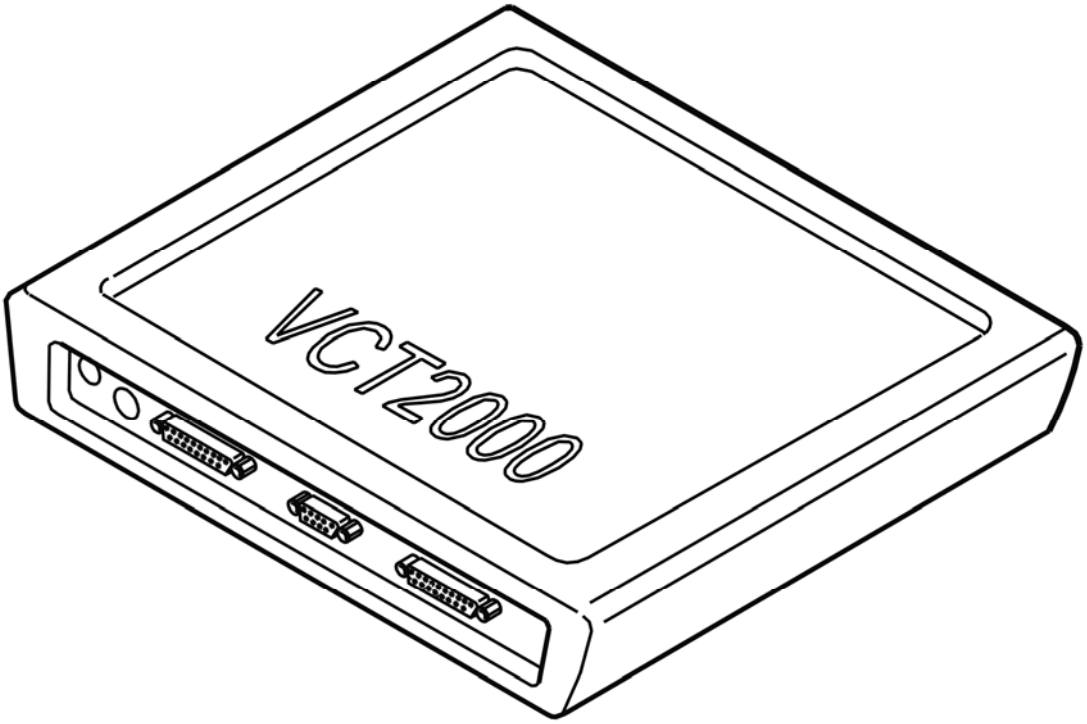

Fig. 87: Identifying VCT2000 Diagnostic Tool Symbol In VIDA
Courtesy of VOLVO CARS CORPORATION

The voltage should be battery voltage.

- **OK**

  OKAY: Troubleshooting has been completed.

- **NOT OK**

  see **INFORMATION**

INFORMATION

FAULT-TRACING INFORMATION

The fault should have been detected and remedied. As this is not the case fault-tracing has failed.

Exit fault-tracing for this diagnostic trouble code (DTC) or make another attempt.

BCM-C008216: BRAKE SYSTEM MALFUNCTION INDICATOR. GENERAL ELECTRICAL MALFUNCTION. VOLTAGE TOO LOW (B6324S5; 2011-2012)

DIAGNOSTIC TROUBLE CODE INFORMATION BCM-C008216

see **DIAGNOSTIC TROUBLE CODE INFORMATION BCM-C008216**

TROUBLESHOOTING BCM-C008216

see **TROUBLESHOOTING BCM-C008216**

BCM-C008216: BRAKE SYSTEM MALFUNCTION INDICATOR. GENERAL ELECTRICAL MALFUNCTION. VOLTAGE TOO LOW (B8444S; 2005-2011)

DIAGNOSTIC TROUBLE CODE INFORMATION BCM-C008216

see **DIAGNOSTIC TROUBLE CODE INFORMATION BCM-C008216**

TROUBLESHOOTING BCM-C008216

see **TROUBLESHOOTING BCM-C008216**

BCM-C008217: BRAKE SYSTEM MALFUNCTION INDICATOR. GENERAL ELECTRICAL MALFUNCTION. VOLTAGE TOO HIGH (B6324S; 2007-2010)

DIAGNOSTIC TROUBLE CODE INFORMATION BCM-C008217

Condition

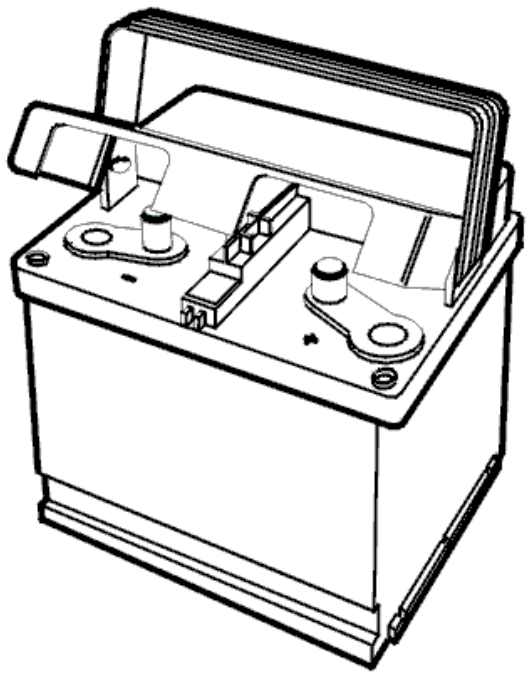

Fig. 88: Identifying Battery

Courtesy of VOLVO CARS CORPORATION

Diagnostic trouble code BCM-C008217 is generated if the brake control module (BCM) registers that battery voltage exceeds 18 V.

The diagnostic trouble code can be diagnosed when the ignition is on.

Substitute Value

- ABS is blocked.
- EBD is blocked.
- TC is blocked.
- SC is blocked.
- AYC is blocked.
- BA is blocked.

HINT: For information on brake system abbreviations: BRAKE SYSTEM, ABBREVIATIONS

Possible Source

- Malfunction in charging system.

Fault symptom[s]

- General warning light on.
- ABS warning light on.
- Brake circuit not working; warning light on.
- ABS is not operational.
- Anti-spin is not operational.
- The stability function is not operational.
- The anti-skid function is not operational.

TROUBLESHOOTING BCM-C008217

CHECKING THE BATTERY VOLTAGE

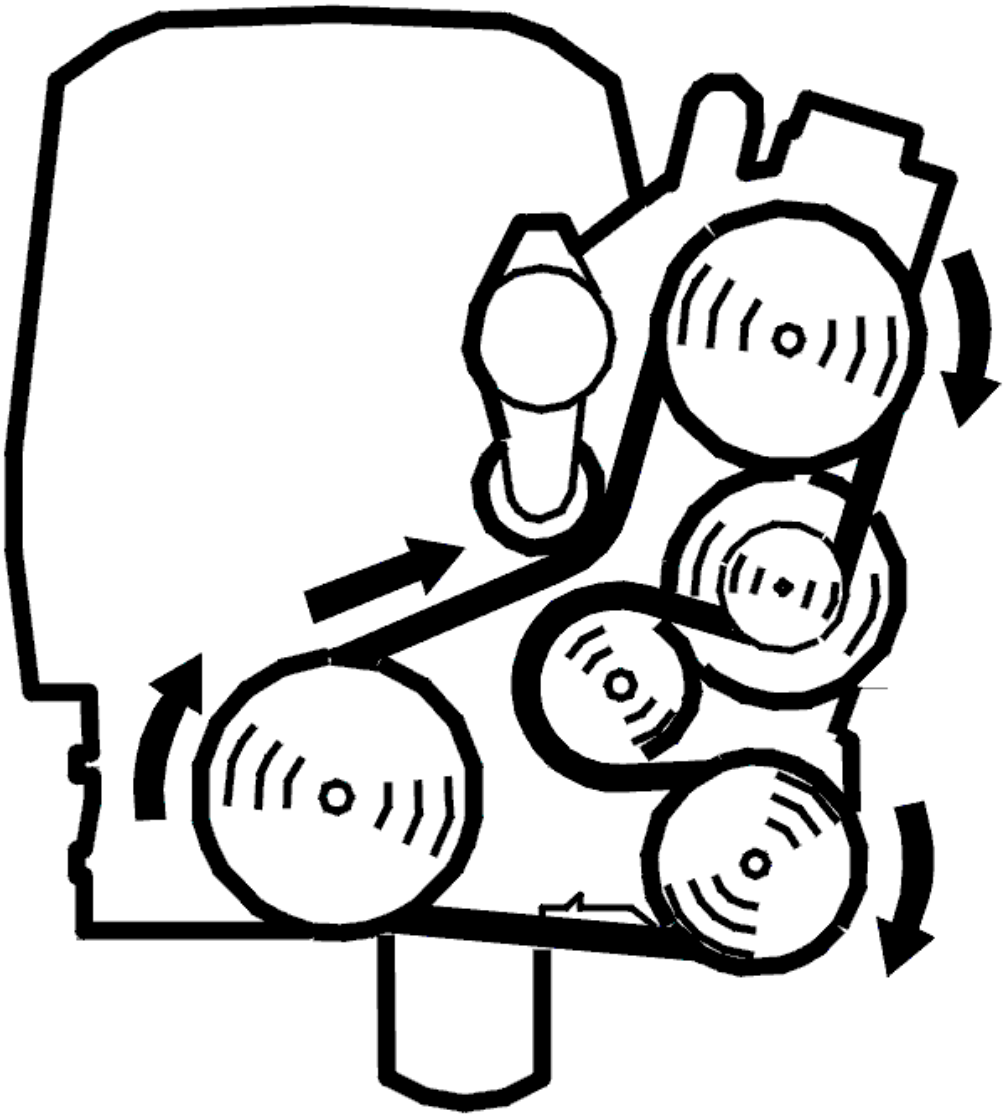

Fig. 89: Belt Routing / Engine Idling - Volvo
Courtesy of VOLVO CARS CORPORATION

- Start the engine and let it idle.
- Connect a voltmeter between the positive and negative battery terminals.

  The voltage should be normal system voltage.

  If voltage is high, check the charging system as described in relevant information.

Was the voltage too high?

- **YES**

  OKAY: Troubleshooting has been completed.

- **NO**

  see **TROUBLESHOOTING INFORMATION**

TROUBLESHOOTING INFORMATION

Troubleshooting indicates that the brake control module (BCM) has previously registered a malfunction, but the malfunction is no longer active.

BCM-C008217: BRAKE SYSTEM MALFUNCTION INDICATOR. GENERAL ELECTRICAL MALFUNCTION. VOLTAGE TOO HIGH (B6324S5; 2011-2012)

DIAGNOSTIC TROUBLE CODE INFORMATION BCM-C008217

see **DIAGNOSTIC TROUBLE CODE INFORMATION BCM-C008217**

TROUBLESHOOTING BCM-C008217

see **TROUBLESHOOTING BCM-C008217**

BCM-C008217: BRAKE SYSTEM MALFUNCTION INDICATOR. GENERAL ELECTRICAL MALFUNCTION. VOLTAGE TOO HIGH (B8444S; 2005-2011)

DIAGNOSTIC TROUBLE CODE INFORMATION BCM-C008217

see **DIAGNOSTIC TROUBLE CODE INFORMATION BCM-C008217**

TROUBLESHOOTING BCM-C008217

see **TROUBLESHOOTING BCM-C008217**

BCM-C008249: BRAKE SYSTEM MALFUNCTION INDICATOR. INTERNAL ERROR. ELECTRICAL MALFUNCTION (B6324S; 2007-2010)

DIAGNOSTIC TROUBLE CODE INFORMATION BCM-C008249

Condition

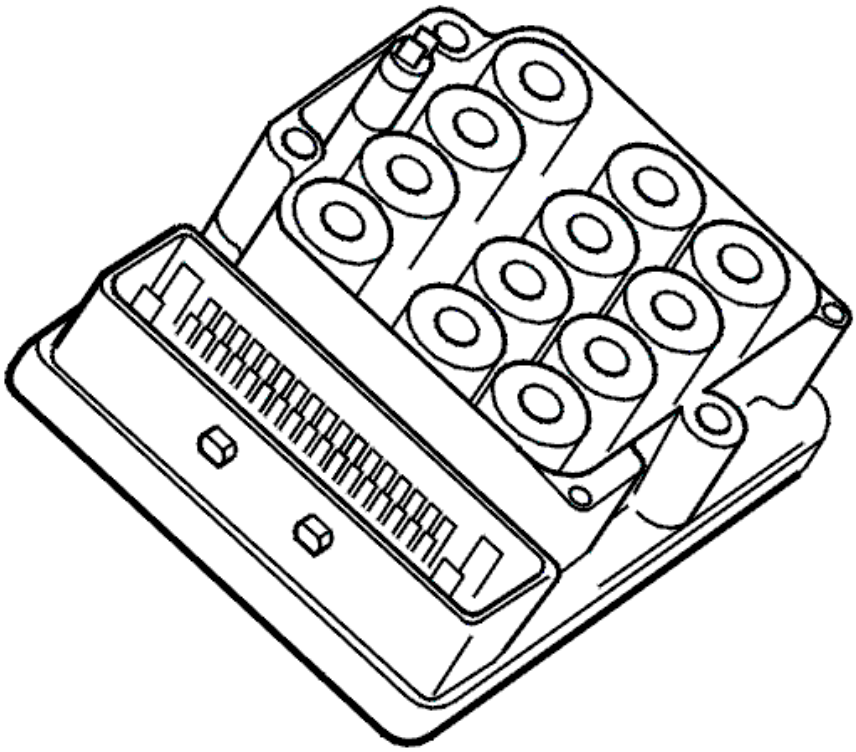

Fig. 90: ABS Control Module
Courtesy of VOLVO CARS CORPORATION

Diagnostic trouble code BCM-C008249 is generated if the brake control module (BCM) registers an internal error.

Substitute Value

- ABS is blocked.
- EBD is blocked.
- TC is blocked.
- SC is blocked.
- AYC is blocked.
- BA is blocked.

HINT: For information on brake system abbreviations: BRAKE SYSTEM, ABBREVIATIONS

Possible Source

- Interference, noise, etc. that have disrupted control module calculations.
- Internal error in the control module

Fault symptom[s]

- General warning light on.
- ABS warning light on.
- Brake circuit not working; warning light on.
- ABS is not operational.
- Anti-spin is not operational.
- The stability function is not operational.
- The anti-skid function is not operational.

TROUBLESHOOTING BCM-C008249

READING OFF DIAGNOSTIC TROUBLE CODES (DTCS)

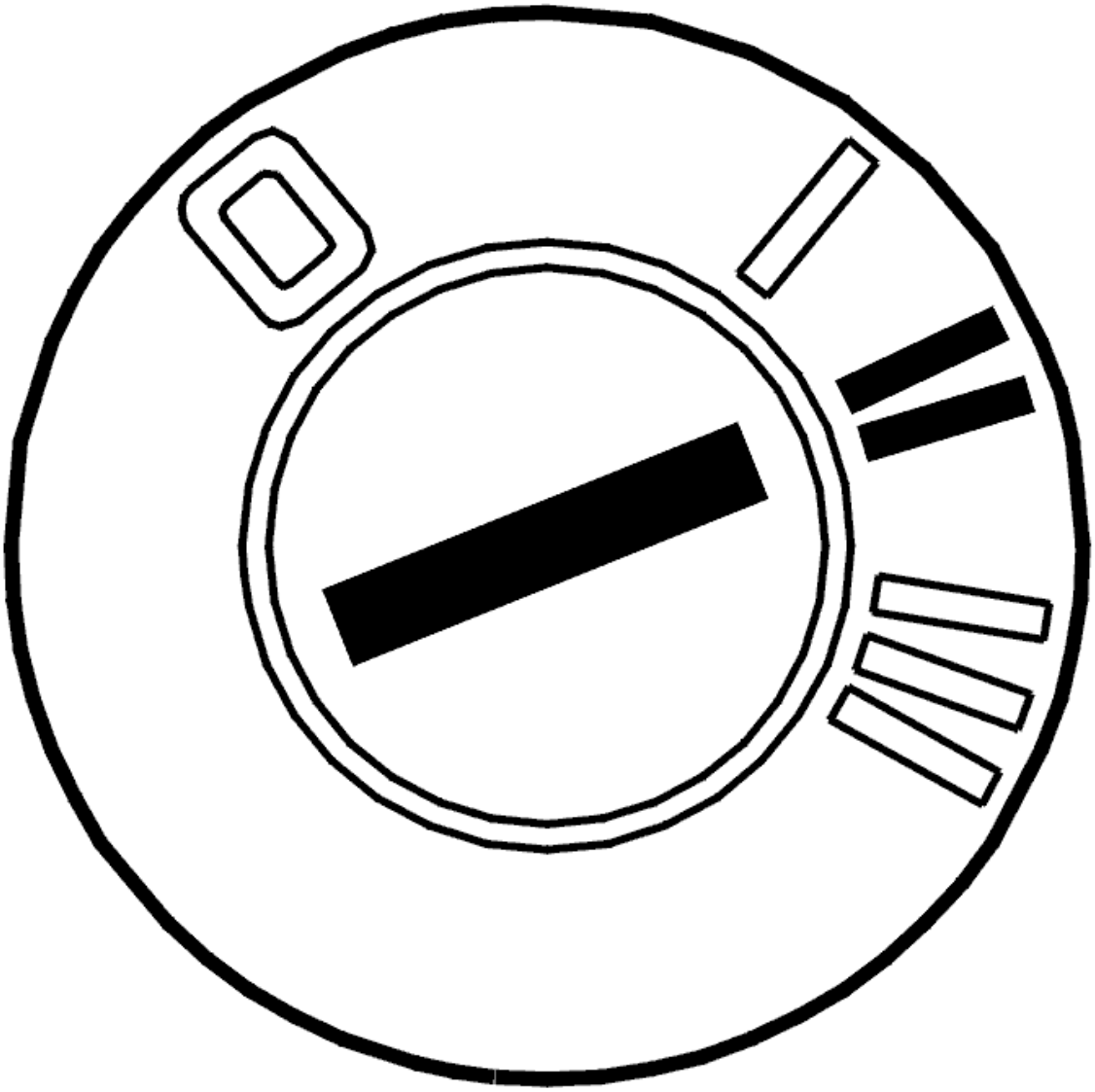

Fig. 91: Identifying Ignition ON
Courtesy of VOLVO CARS CORPORATION

- Ignition on
- Read off diagnostic trouble codes (DTCs).

  If other diagnostic trouble codes are stored in addition to BCM-C008249, perform troubleshooting of these first.

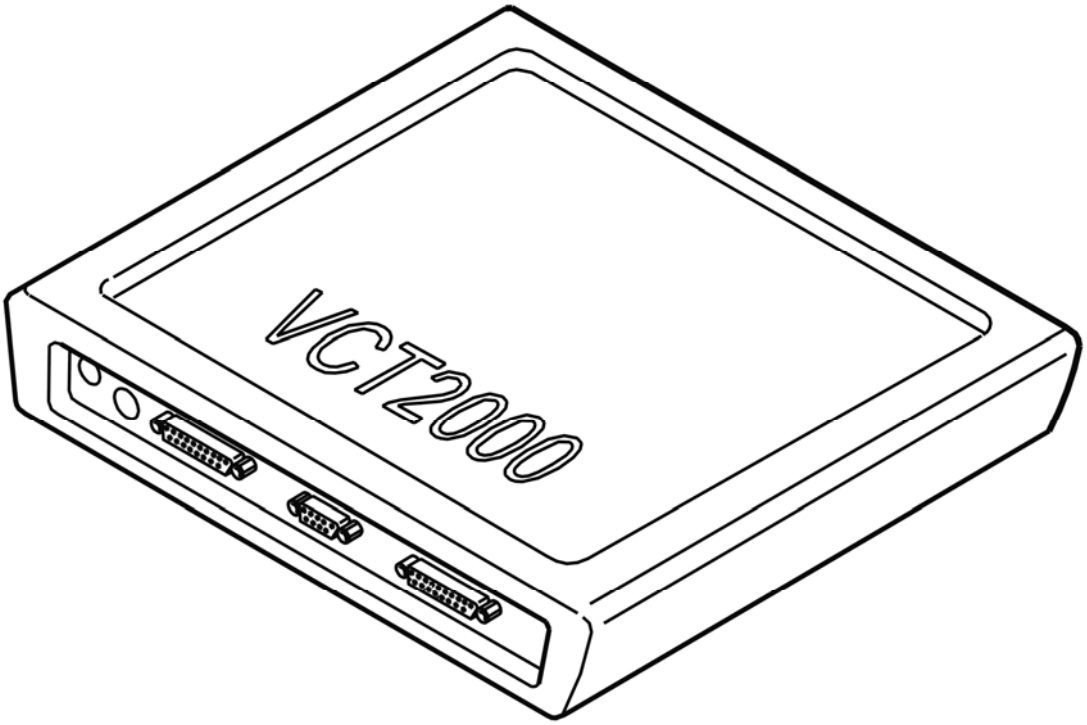

Fig. 92: Identifying VCT2000 Diagnostic Tool Symbol In VIDA
Courtesy of VOLVO CARS CORPORATION

Are other diagnostic trouble codes stored in addition to BCM-C008249?

- **YES**

  OKAY: Troubleshooting has been completed.

- **NO**

  see **CONTROL MODULE REPLACEMENT AND PROGRAMMING**

CONTROL MODULE REPLACEMENT AND PROGRAMMING

The brake control module (BCM) has registered an internal error.

CAUTION: A new control module is delivered without software. The control module must be programmed in order to function after replacement.

Other information

- see **BRAKE CONTROL MODULE (BCM), REPLACING**

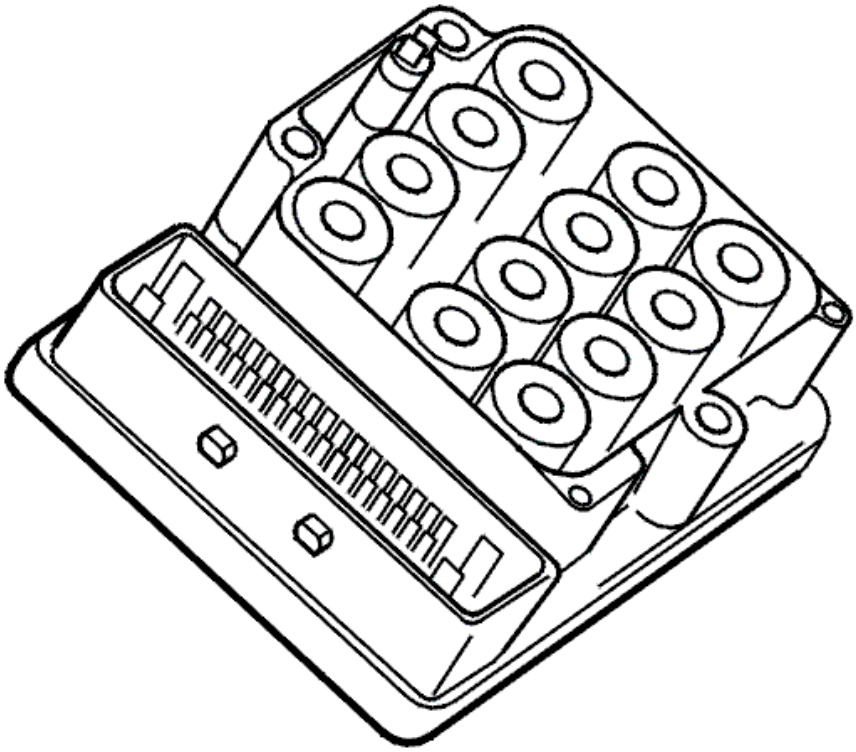

Fig. 93: ABS Control Module
Courtesy of VOLVO CARS CORPORATION

BCM-C008249: BRAKE SYSTEM MALFUNCTION INDICATOR. INTERNAL ERROR. ELECTRICAL MALFUNCTION (B6324S5; 2011-2012)

DIAGNOSTIC TROUBLE CODE INFORMATION BCM-C008249

see **DIAGNOSTIC TROUBLE CODE INFORMATION BCM-C008249**

TROUBLESHOOTING BCM-C008249

see **TROUBLESHOOTING BCM-C008249**

BCM-C008249: BRAKE SYSTEM MALFUNCTION INDICATOR. INTERNAL ERROR. ELECTRICAL MALFUNCTION (B8444S; 2005-2011)

DIAGNOSTIC TROUBLE CODE INFORMATION BCM-C008249

see **DIAGNOSTIC TROUBLE CODE INFORMATION BCM-C008249**

TROUBLESHOOTING BCM-C008249

see **TROUBLESHOOTING BCM-C008249**

BCM-C110668: COMMUNICATION BETWEEN CONTROL MODULES. ALGORITHM ERROR. EVENT-CONTROLLED INFORMATION (B6324S; 2007-2010)

DIAGNOSTIC TROUBLE CODE INFORMATION BCM-C110668

Condition

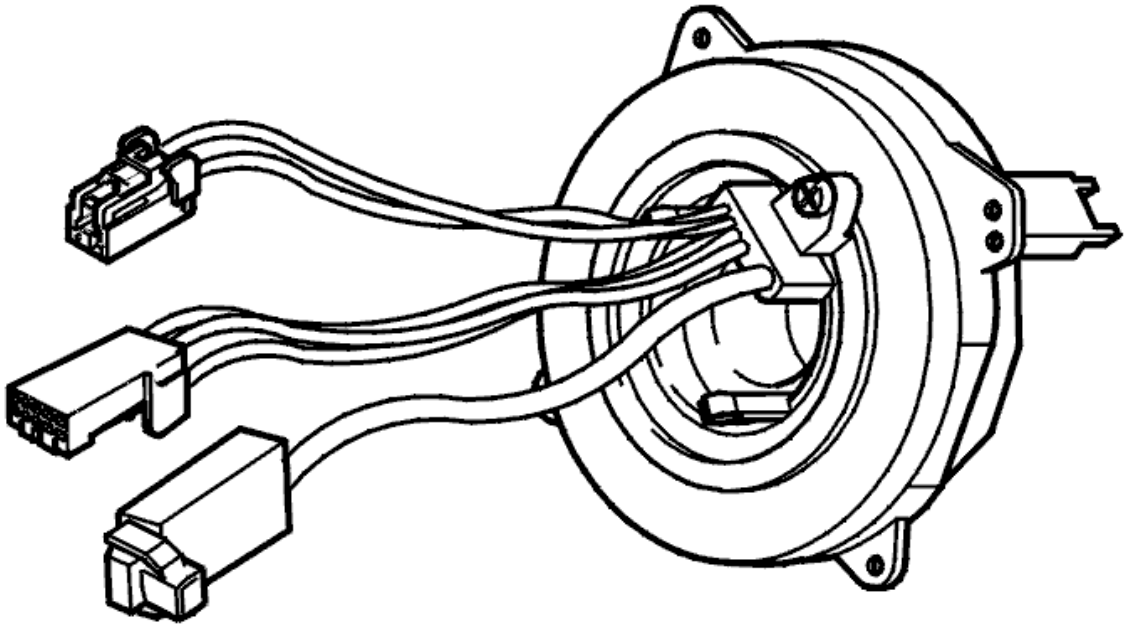

Fig. 94: Identifying Steering Wheel Angle Sensor
Courtesy of VOLVO CARS CORPORATION

After the steering angle sensor has been initialized, there is a plausibility check of the steering angle.

If the check is not passed and speed exceeds 50 km/h (31 mph), diagnostic trouble code BCM-C110668 is generated.

The plausibility check can be passed after BCM-C110687 is generated but before the ignition is turned off. If the check is not finished within one minute, BCM-C110687 is also generated.

Substitute Value

- AYC is blocked.

Possible Source

- The steering angle did not pass the plausibility check.

NOTE: **This diagnostic trouble code (DTC) is not due to an internal hardware fault in the Brake control module (BCM) and must not be remedied by replacing the control module.**

Fault symptom[s]

- General warning light on.
- The anti-skid function is not operational.

TROUBLESHOOTING BCM-C110668

CHECKING THE DIAGNOSTIC TROUBLE CODES (DTCS)

If diagnostic trouble code BCM-C110668 is stored by itself, it can be erased.

If diagnostic trouble code BCM-C110687 is stored together with BCM-C110668, read out the diagnostic trouble codes from the steering angle sensor (SAS) and troubleshoot the system.

Select an alternative:

1. Diagnostic trouble code BCM-C110668 is stored by itself.

   see **ERASING DIAGNOSTIC TROUBLE CODES (DTCS)**

2. Diagnostic trouble codes BCM-C110687 and BCM-C110668 are stored together.

   OKAY: Troubleshooting has been completed.

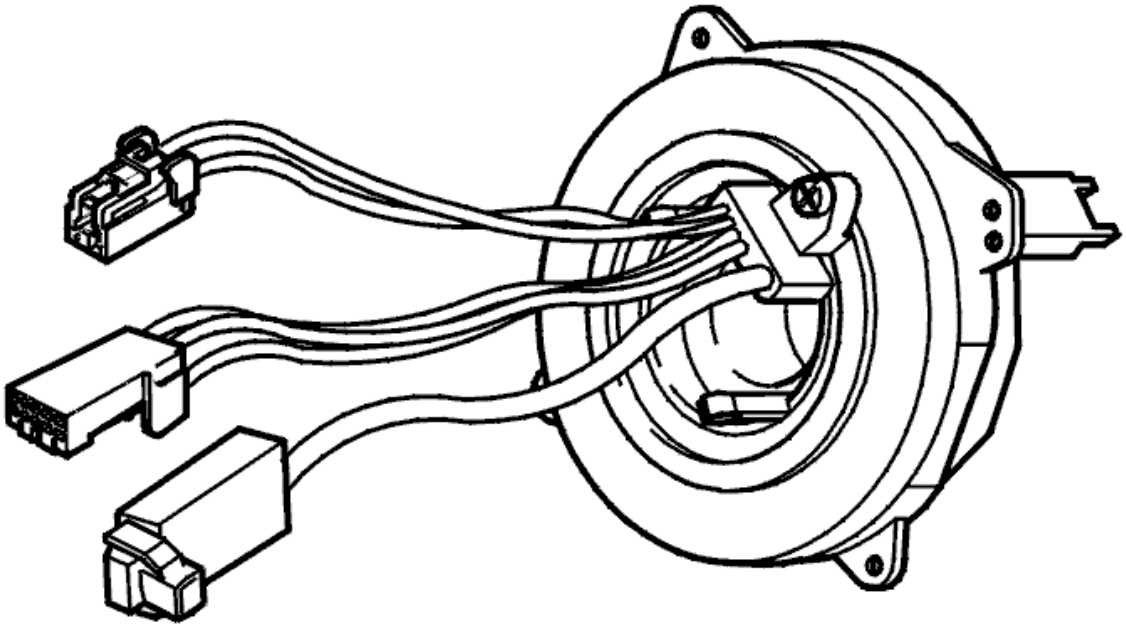

Fig. 95: Identifying Steering Wheel Angle Sensor
Courtesy of VOLVO CARS CORPORATION

ERASING DIAGNOSTIC TROUBLE CODES (DTCS)

ERASING DIAGNOSTIC TROUBLE CODES (DTCS)

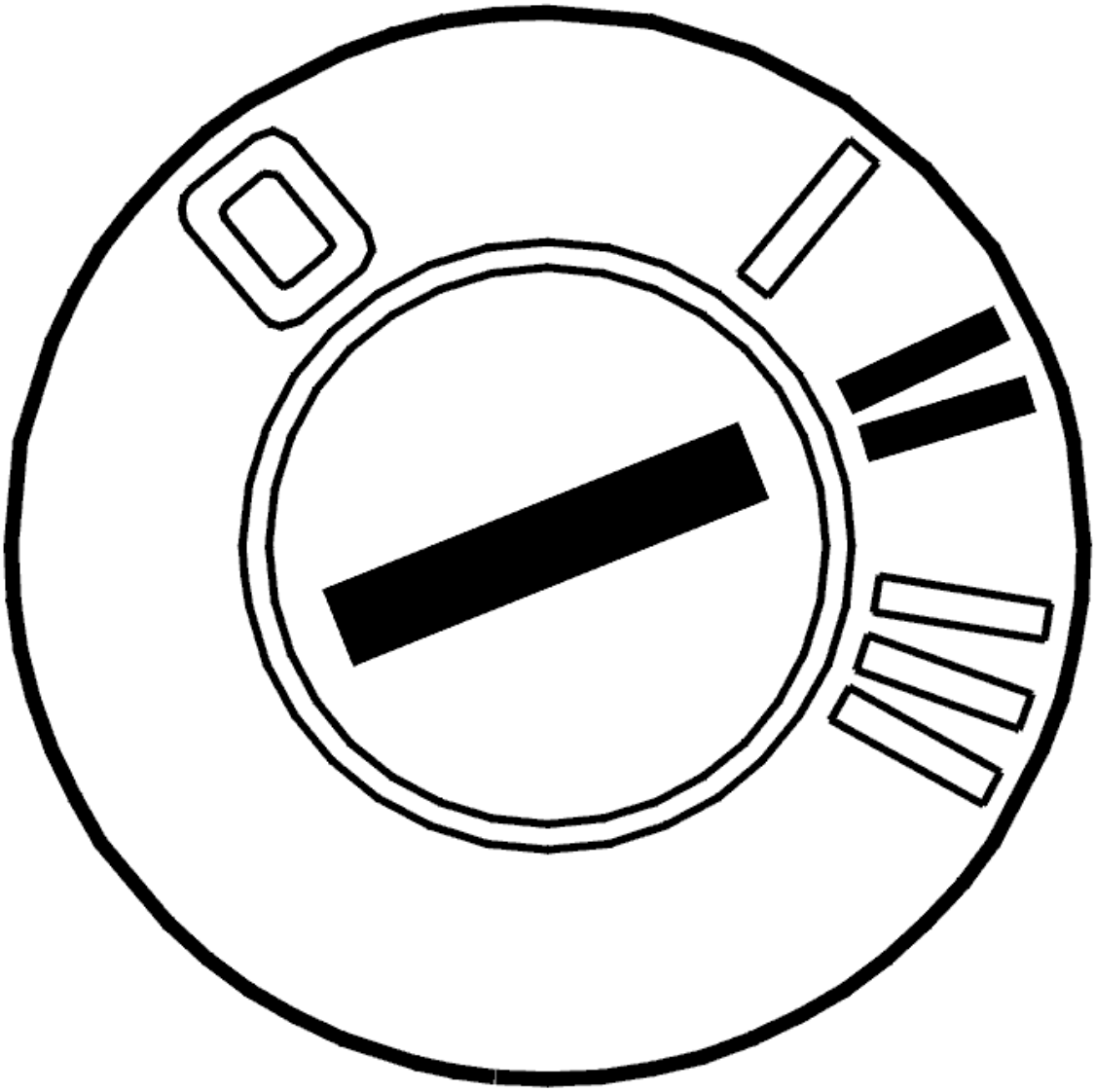

Fig. 96: Identifying Ignition ON
Courtesy of VOLVO CARS CORPORATION

- Ignition on

  Erase diagnostic trouble codes (DTCs).

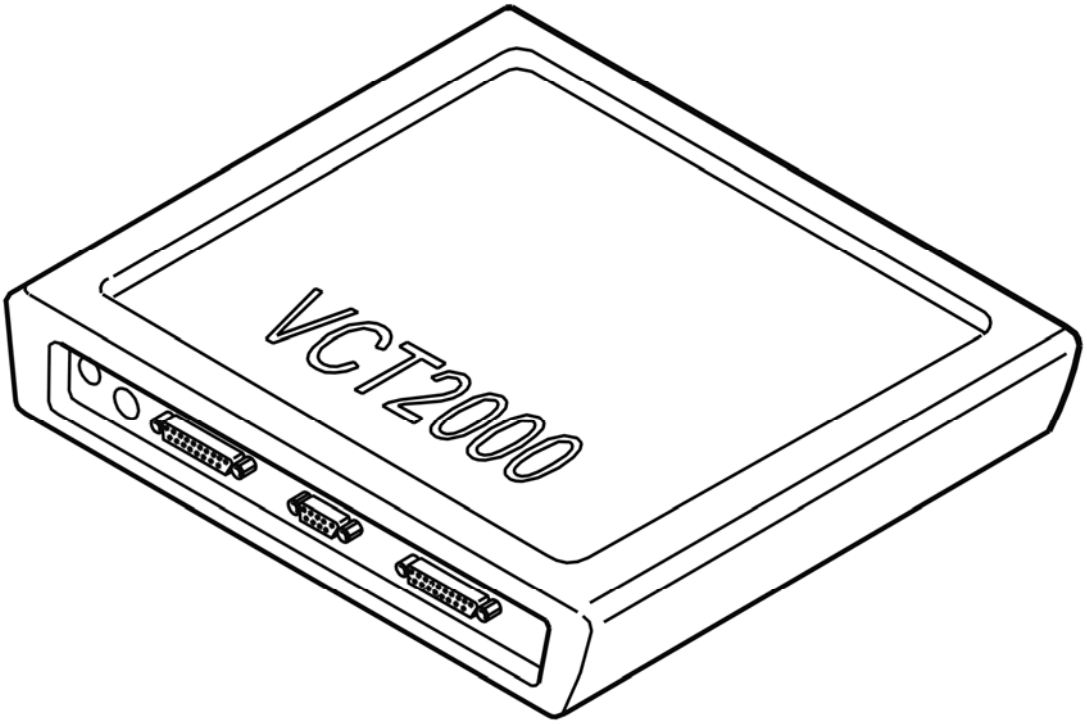

Fig. 97: Identifying VCT2000 Diagnostic Tool Symbol In VIDA
Courtesy of VOLVO CARS CORPORATION

BCM-C110668: COMMUNICATION BETWEEN CONTROL MODULES. ALGORITHM ERROR. EVENT-CONTROLLED INFORMATION (B6324S5; 2011-2012)

DIAGNOSTIC TROUBLE CODE INFORMATION BCM-C110668

see **DIAGNOSTIC TROUBLE CODE INFORMATION BCM-C110668**

TROUBLESHOOTING BCM-C110668

see **TROUBLESHOOTING BCM-C110668**

BCM-C110668: COMMUNICATION BETWEEN CONTROL MODULES. ALGORITHM ERROR. EVENT-CONTROLLED INFORMATION (B8444S; 2005-2011)

DIAGNOSTIC TROUBLE CODE INFORMATION BCM-C110668

see **DIAGNOSTIC TROUBLE CODE INFORMATION BCM-C110668**

TROUBLESHOOTING BCM-C110668

see **TROUBLESHOOTING BCM-C110668**

BCM-C110687: COMMUNICATION BETWEEN CONTROL MODULES. BUS/MESSAGE ERROR. MESSAGE MISSING (B6324S; 2007-2010)

DIAGNOSTIC TROUBLE CODE INFORMATION BCM-C110687

Condition

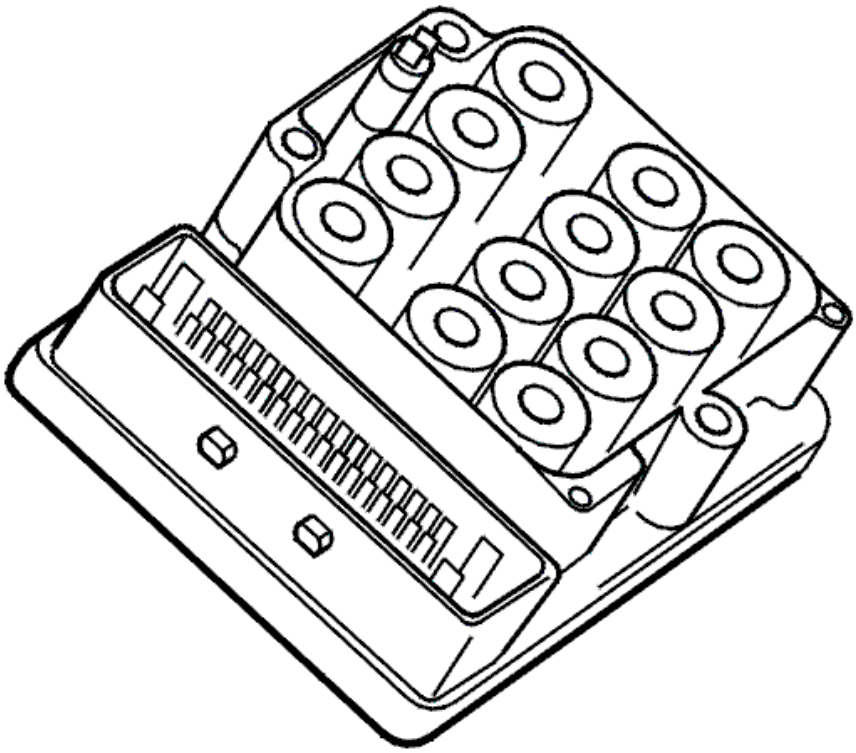

Fig. 98: ABS Control Module
Courtesy of VOLVO CARS CORPORATION

NOTE: The diagnostic trouble code only applies to vehicles equipped with DSTC.

Diagnostic trouble code BCM-C110687 is generated if the brake control module (BCM) registers that the wheel or steering wheel alignment is defective.

Substitute Value

- TC is blocked.
- SC is blocked.

- AYC is blocked.

HINT: For information on abbreviations: BRAKE SYSTEM, ABBREVIATIONS

Possible Source

- Defective wheel alignment.
- Defective steering wheel alignment.
- Damaged steering angle sensor.

NOTE: This diagnostic trouble code (DTC) is not due to an internal hardware fault in the Brake control module (BCM) and must not be remedied by replacing the control module.

Fault symptom[s]

- General warning light on.
- Anti-spin is not operational.
- The stability function is not operational.
- The anti-skid function is not operational.

TROUBLESHOOTING BCM-C110687

TROUBLESHOOTING INFORMATION

The diagnostic trouble code indicates a malfunction in the steering angle sensor module (SAS).

Read out the diagnostic trouble codes from the steering angle sensor module (SAS) and troubleshoot as described in corresponding information.

BCM-C110687: COMMUNICATION BETWEEN CONTROL MODULES. BUS/MESSAGE ERROR. MESSAGE MISSING (B6324S5; 2011-2012)

DIAGNOSTIC TROUBLE CODE INFORMATION BCM-C110687

see **DIAGNOSTIC TROUBLE CODE INFORMATION BCM-C110687**

TROUBLESHOOTING BCM-C110687

see **TROUBLESHOOTING BCM-C110687**

BCM-C110687: COMMUNICATION BETWEEN CONTROL MODULES. BUS/MESSAGE ERROR. MESSAGE MISSING (B8444S; 2005-2011)

DIAGNOSTIC TROUBLE CODE INFORMATION BCM-C110687

see **DIAGNOSTIC TROUBLE CODE INFORMATION BCM-C110687**

TROUBLESHOOTING BCM-C110687

see **TROUBLESHOOTING BCM-C110687**

BCM-C110768: COMMUNICATION BETWEEN CONTROL MODULES. ALGORITHM ERROR. EVENT-CONTROLLED INFORMATION (B6324S; 2007-2010)

DIAGNOSTIC TROUBLE CODE (DTC) INFORMATION BCM-C110768

Condition

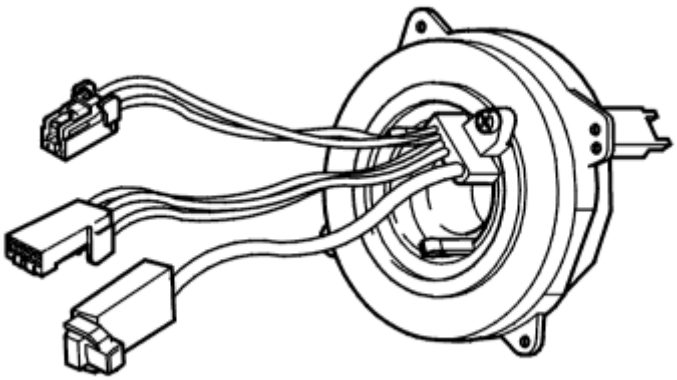

Fig. 99: Identifying Steering Wheel Angle Sensor, Cables & Connectors
Courtesy of VOLVO CARS CORPORATION

The steering angle sensor is initiated with a steering wheel movement of at least ±5° within a certain period after turning the ignition on.

Diagnostic trouble code BCM-110768 is generated if the steering angle is not initialized after 2 minutes of driving at a speed over 10 km/h (6.2 mph).

Initialization can also be performed after BCM-110768 has been stored before the ignition is turned off. The anti-spin warning light will then go off. BCM-110787 is also generated if initialization is not performed before the ignition is turned off.

Substitute Value

- AYC is blocked.

Possible Source

- The steering angle sensor has not been initialized after two minutes of driving over 10 km/h (6.2 mph).

NOTE: **This diagnostic trouble code (DTC) is not due to an internal hardware fault in the Brake control module (BCM) and must not be remedied by replacing the control module.**

Fault symptom[s]

- General warning light on.
- The anti-skid function is not operational.

TROUBLESHOOTING BCM-C110768

CHECKING THE DIAGNOSTIC TROUBLE CODES (DTCS)

If diagnostic trouble code BCM-C110768 is stored by itself, it can be erased.

If diagnostic trouble code BCM-C110787 is stored together with BCM-C110768, read out the diagnostic trouble codes from the steering angle sensor (SAS) and troubleshoot the system.

Select an alternative:

1. Diagnostic trouble code BCM-C110768 is stored by itself.

   see **ERASING DIAGNOSTIC TROUBLE CODES (DTCS)**

2. Diagnostic trouble codes BCM-C110787 and BCM-C110768 are stored together.

   OKAY: Troubleshooting has been completed.

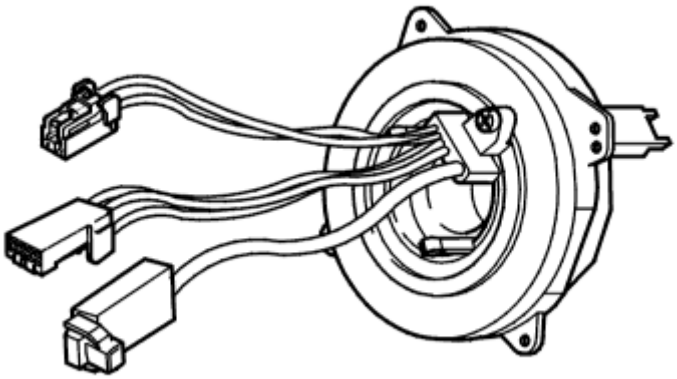

Fig. 100: Identifying Steering Wheel Angle Sensor, Cables & Connectors
Courtesy of VOLVO CARS CORPORATION

ERASING DIAGNOSTIC TROUBLE CODES (DTCS)

ERASING DIAGNOSTIC TROUBLE CODES (DTCS)

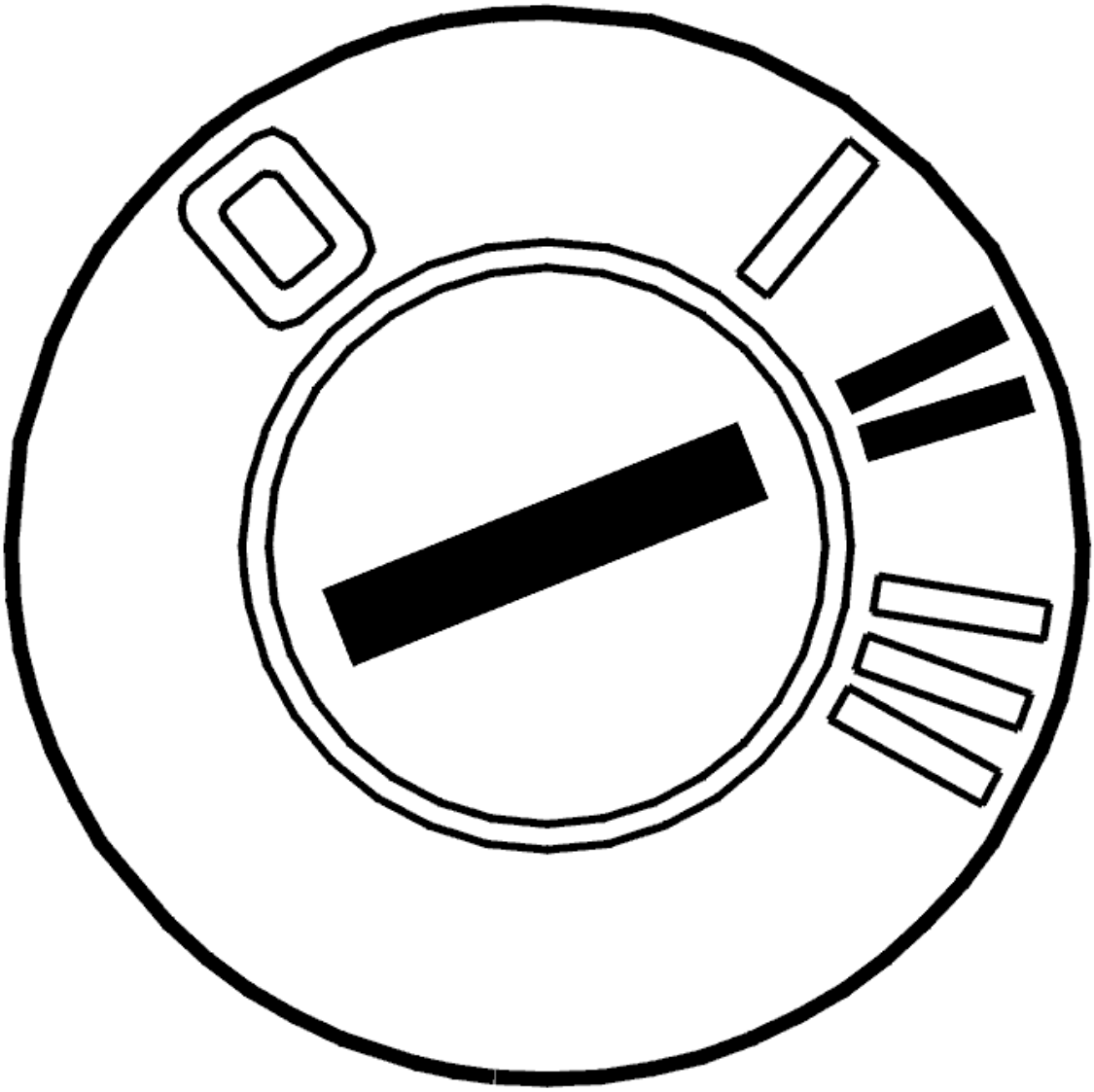

Fig. 101: Identifying Ignition ON
Courtesy of VOLVO CARS CORPORATION

- Ignition on

  Erase diagnostic trouble codes (DTCs).

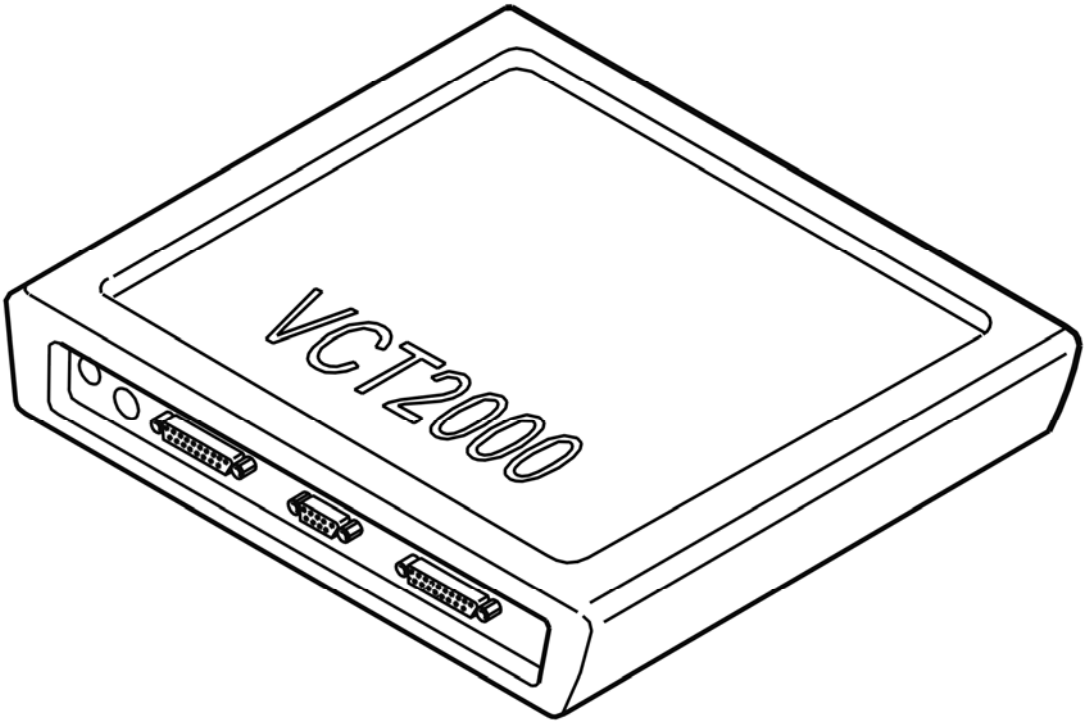

Fig. 102: Identifying VCT2000 Diagnostic Tool Symbol In VIDA
Courtesy of VOLVO CARS CORPORATION

BCM-C110768: COMMUNICATION BETWEEN CONTROL MODULES. ALGORITHM ERROR. EVENT-CONTROLLED INFORMATION (B6324S5; 2011-2012)

DIAGNOSTIC TROUBLE CODE (DTC) INFORMATION BCM-C110768

see **DIAGNOSTIC TROUBLE CODE (DTC) INFORMATION BCM-C110768**

TROUBLESHOOTING BCM-C110768

see **TROUBLESHOOTING BCM-C110768**

BCM-C110768: COMMUNICATION BETWEEN CONTROL MODULES. ALGORITHM ERROR. EVENT-CONTROLLED INFORMATION (B8444S; 2005-2011)

DIAGNOSTIC TROUBLE CODE (DTC) INFORMATION BCM-C110768

see **DIAGNOSTIC TROUBLE CODE (DTC) INFORMATION BCM-C110768**

TROUBLESHOOTING BCM-C110768

see **TROUBLESHOOTING BCM-C110768**

BCM-C110787: COMMUNICATION BETWEEN CONTROL MODULES. BUS/MESSAGE ERROR. MESSAGE MISSING (B6324S; 2007-2010)

DIAGNOSTIC TROUBLE CODE INFORMATION BCM-C110787

Condition

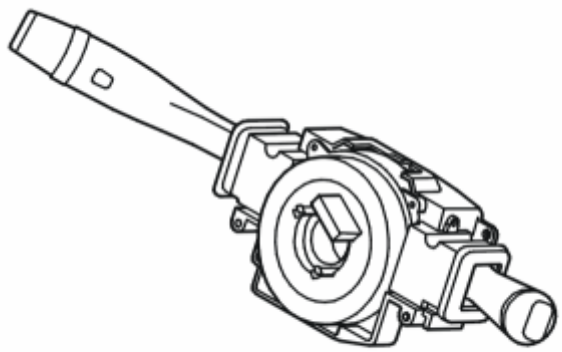

Fig. 103: Identifying Steering Angle Sensor
Courtesy of VOLVO CARS CORPORATION

NOTE: The diagnostic trouble code only applies to vehicles equipped with DSTC.

The steering angle sensor module (SAS) is initialized by turning the steering wheel in either direction within 120 seconds of the vehicle being started. The brake control module (BCM) retrieves the signals from the steering angle sensor on the CAN network. Diagnostic trouble code BCM-C110787 is generated if the brake control module (BCM) registers that the steering angle sensor module (SAS) was not initiated within 120 seconds of starting and speed has exceeded approx. 10 km/h (6.2 mph).

Substitute Value

- AYC is blocked.

HINT: For information on abbreviations: BRAKE SYSTEM, ABBREVIATIONS

Possible Source

- After start, the vehicle was given straight ahead for more than two minutes and then the ignition was turned off, thus there was no steering angle sensor module (SAS) initialization.

- Internal malfunction in steering angle sensor (SAS).

NOTE: **This diagnostic trouble code (DTC) is not due to an internal hardware fault in the Brake control module (BCM) and must not be remedied by replacing the control module.**

Fault symptom[s]

- General warning light on.
- The anti-skid function is not operational.

TROUBLESHOOTING BCM-C110787

TROUBLESHOOTING INFORMATION

The steering angle sensor module (SAS) is initiated when the steering wheel is turned more than 5° in either direction. If the vehicle is driven for 2 minutes without sufficient steering wheel movement, diagnostic trouble code BCM-C110787 can be generated. Consult with the customer if this may have happened.

If this is not the case, read out the diagnostic trouble codes from the steering angle sensor module (SAS) and troubleshoot as described in the information for this system.

BCM-C110787: COMMUNICATION BETWEEN CONTROL MODULES. BUS/MESSAGE ERROR. MESSAGE MISSING (B6324S5; 2011-2012)

DIAGNOSTIC TROUBLE CODE INFORMATION BCM-C110787

see **DIAGNOSTIC TROUBLE CODE INFORMATION BCM-C110787**

TROUBLESHOOTING BCM-C110787

see **TROUBLESHOOTING BCM-C110787**

BCM-C110787: COMMUNICATION BETWEEN CONTROL MODULES. BUS/MESSAGE ERROR. MESSAGE MISSING (B8444S; 2005-2011)

DIAGNOSTIC TROUBLE CODE INFORMATION BCM-C110787

see **DIAGNOSTIC TROUBLE CODE INFORMATION BCM-C110787**

TROUBLESHOOTING BCM-C110787

see **TROUBLESHOOTING BCM-C110787**

BCM-C110801: VOLTAGE FEED SENSOR. GENERAL MALFUNCTION

INFORMATION. GENERAL ELECTRICAL MALFUNCTION (B6324S; 2007-2010)

DIAGNOSTIC TROUBLE CODE INFORMATION BCM-C110801

Condition

NOTE: The diagnostic trouble code only applies to vehicles equipped with DSTC.

The brake pressure sensors and the pedal position sensor have a common voltage feed internally in the brake control module (BCM).

Diagnostic trouble code BCM-C110801 is generated if the brake control module (BCM) detects that voltage to the sensors is defective.

The diagnostic trouble code can be diagnosed when the ignition is on.

Substitute Value

- SC is blocked.
- TC is blocked.
- AYC is blocked.
- TRACS is blocked.
- BA is blocked.

HINT: For information on brake system abbreviations: BRAKE SYSTEM, ABBREVIATIONS

Possible Source

- The cables are short-circuited to ground or supply voltage.
- Damaged sensor.
- Damaged brake control module (BCM).

Fault symptom[s]

- General warning light on.
- Anti-spin is not operational.
- The stability function is not operational.
- The anti-skid function is not operational.

TROUBLESHOOTING BCM-C110801

CHECKING THE CONNECTORS

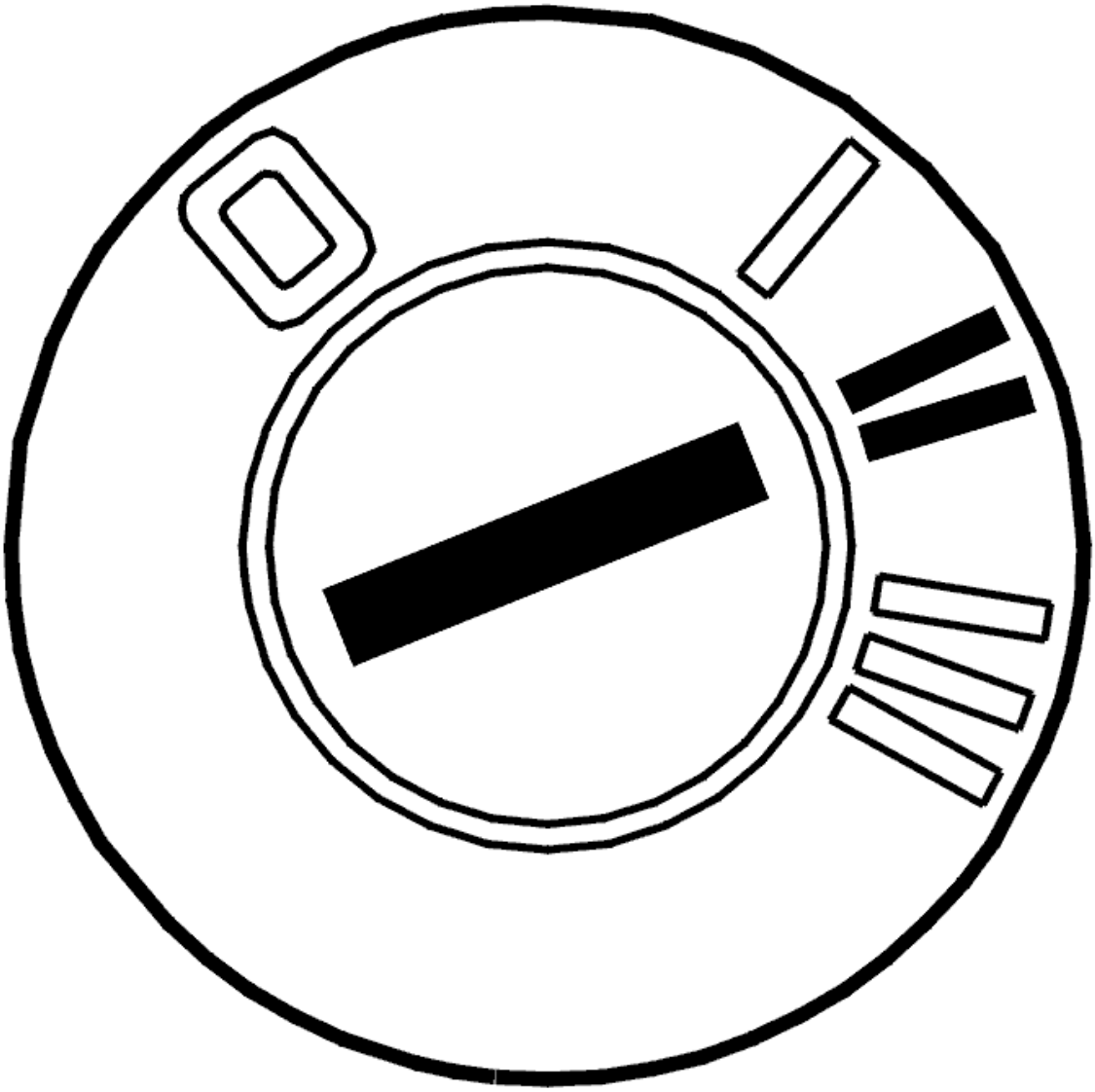

Fig. 104: Identifying Ignition ON
Courtesy of VOLVO CARS CORPORATION

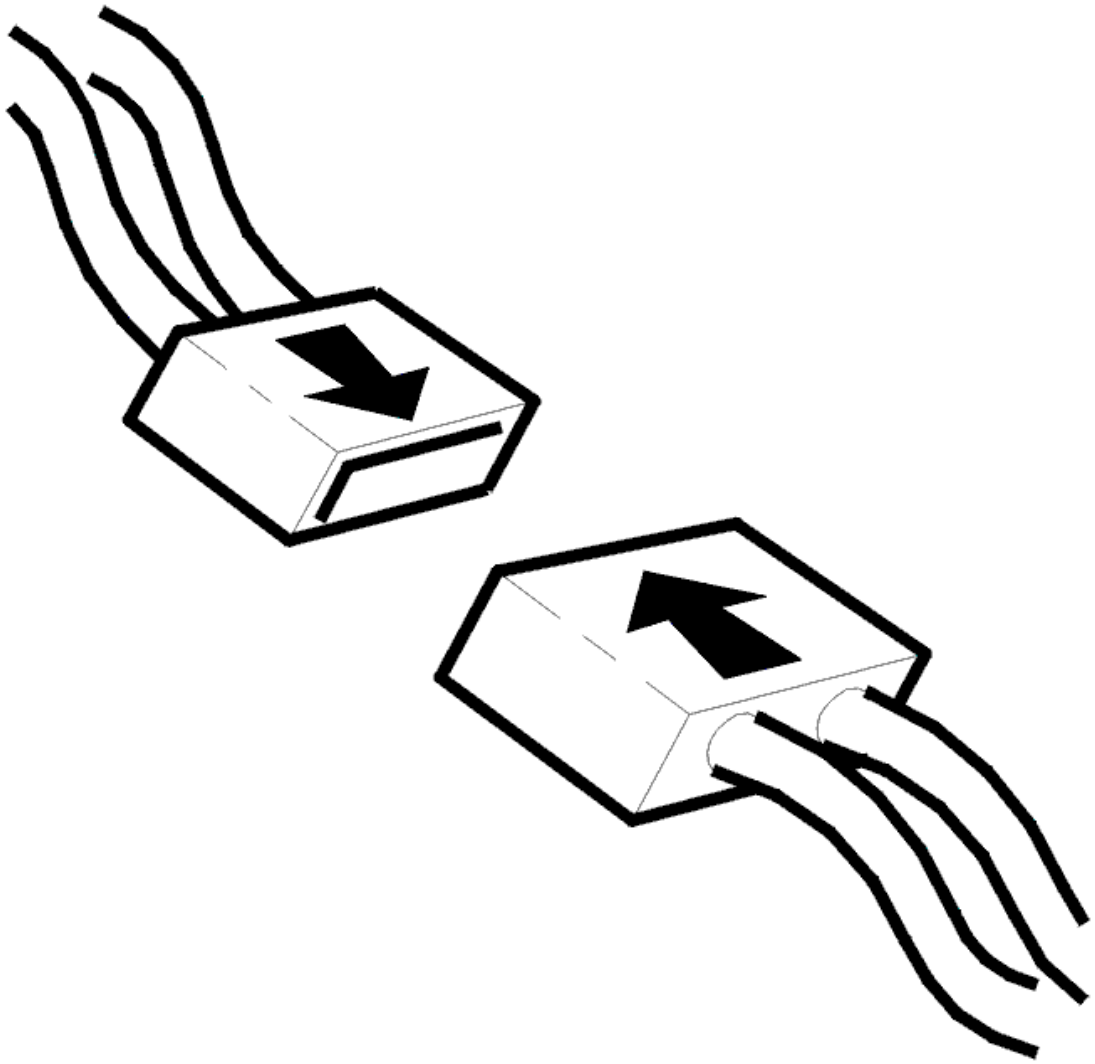

Fig. 105: Connecting Connector
Courtesy of VOLVO CARS CORPORATION

- Ignition off
- Check the connectors of the brake control module (BCM), pedal position sensor and brake pressure sensors for contact resistance and oxidation.
- Reinstall the components, reconnect the connectors etc.
- Ignition on

Test-drive the vehicle, see **TEST DRIVE FORM (DSTC (DYNAMIC STABILITY AND TRACTION CONTROL) /BRAKE CONTROL MODULE), DESCRIPTION**

NOTE: **Do not turn off the ignition between test-driving and reading out diagnostic trouble codes. This is to obtain the correct status of the diagnostic trouble codes.**

Read out the diagnostic trouble code's status without turning off the ignition after the test-drive.

Other information

- see **CONNECTING THE BREAKOUT BOX, BRAKE CONTROL MODULE (BCM)**
- see **PEDAL SENSOR POWER BRAKE BOOSTER, REPLACING**
- see **PRESSURE SENSOR, MASTER CYLINDER, REPLACING**
- see **CHECKING WIRING AND TERMINALS**

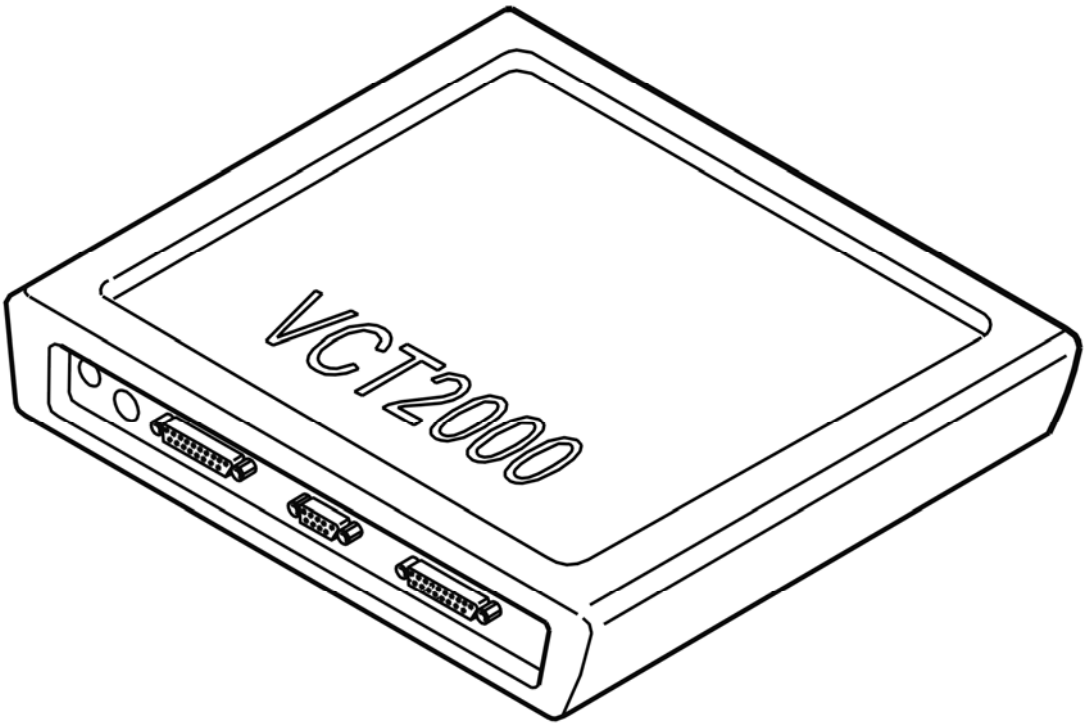

Fig. 106: Identifying VCT2000 Diagnostic Tool Symbol In VIDA
Courtesy of VOLVO CARS CORPORATION

Is the status of the diagnostic trouble code intermittent?

- **YES**

  OKAY: Troubleshooting has been completed.

- **NO**

  see **CHECKING THE WIRING AND COMPONENT**

CHECKING THE WIRING AND COMPONENT

Check the cables between pedal position sensor

terminal #1 and brake control module (BCM) terminal #7 (#A7)
terminal #2 and brake control module (BCM) terminal #5 (#A5)
terminal #3 and brake control module (BCM) terminal #3 (#A3)

check for open circuit, short circuit to ground and short circuit to supply voltage.

Check the pedal position sensor

- with the ignition off
- a breakout box connected to the wiring harness
- the brake control module (BCM) disconnected

by measuring the resistance on the pedal position sensor.

When the brake pedal is not actuated, the resistance between terminals #3 (#A3) and #5 (#A5) should be approx. 0.5 kohms. The resistance should increase when the brake pedal is depressed.

When the brake pedal is not actuated, the resistance between terminals #3 (#A3) and #7 (#A7) should be approx. 2.5 kohms. The resistance should decrease when the brake pedal is depressed.

If resistance is incorrect, replace the pedal position sensor.

Remedy as necessary.

Other information

- see **CONNECTING THE BREAKOUT BOX, BRAKE CONTROL MODULE (BCM)**
- see **PEDAL SENSOR POWER BRAKE BOOSTER, REPLACING**
- see **SIGNAL SPECIFICATION, BRAKE CONTROL MODULE (BCM) WITH DSTC (DYNAMIC STABILITY AND TRACTION CONTROL)**

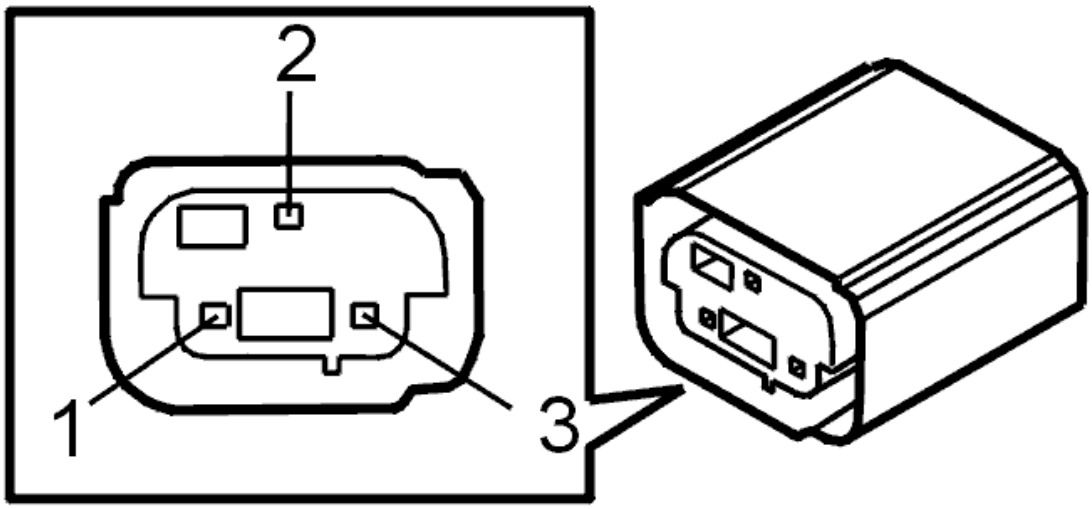

Fig. 107: Identifying Pedal Position Sensor Connector
Courtesy of VOLVO CARS CORPORATION

Was a malfunction detected?

- **YES**

  see **VERIFICATION**

- **NO**

  see **CHECKING WIRING AND SENSORS**

CHECKING WIRING AND SENSORS

Check the cables between the brake control module (BCM) and the brake pressure sensor connectors.

For brake pressure sensor 1:

- terminal #1 and brake control module (BCM) terminal #19 (#A19)
- terminal #2 and brake control module (BCM) terminal #20 (#A20)
- terminal #3 and brake control module (BCM) terminal #18 (#A18)

For brake pressure sensor 2:

- terminal #1 and brake control module (BCM) terminal #21 (#A21)
- terminal #2 and brake control module (BCM) terminal #23 (#A23)
- terminal #3 and brake control module (BCM) terminal #22 (#A22)

check for an open-circuit, a short-circuit to ground and a short-circuit to supply voltage.

HINT: With the breakout box and sensor connectors connected and the ignition on, check the brake

pressure sensors by measuring the signal from the sensor between:

Brake pressure sensor 1:

- terminals #A19 and #A20 on the breakout box. The voltage should be approx. 0.25-4.75 V depending on brake pressure.
- terminals #A18 and #A19 on the breakout box. The voltage should be approx. 5 V.

Brake pressure sensor 2:

- terminals #A21 and #A23 on the breakout box. The voltage should be approx. 0.25-4.75 V depending on brake pressure.
- terminals #A21 and #A22 on the breakout box. The voltage should be approx. 5 V.

Remedy as necessary.

Other information

- see **CONNECTING THE BREAKOUT BOX, BRAKE CONTROL MODULE (BCM)**
- see **SIGNAL SPECIFICATION, BRAKE CONTROL MODULE (BCM) WITH DSTC (DYNAMIC STABILITY AND TRACTION CONTROL)**
- see **PRESSURE SENSOR, MASTER CYLINDER, REPLACING**
- see **CONTENTS**

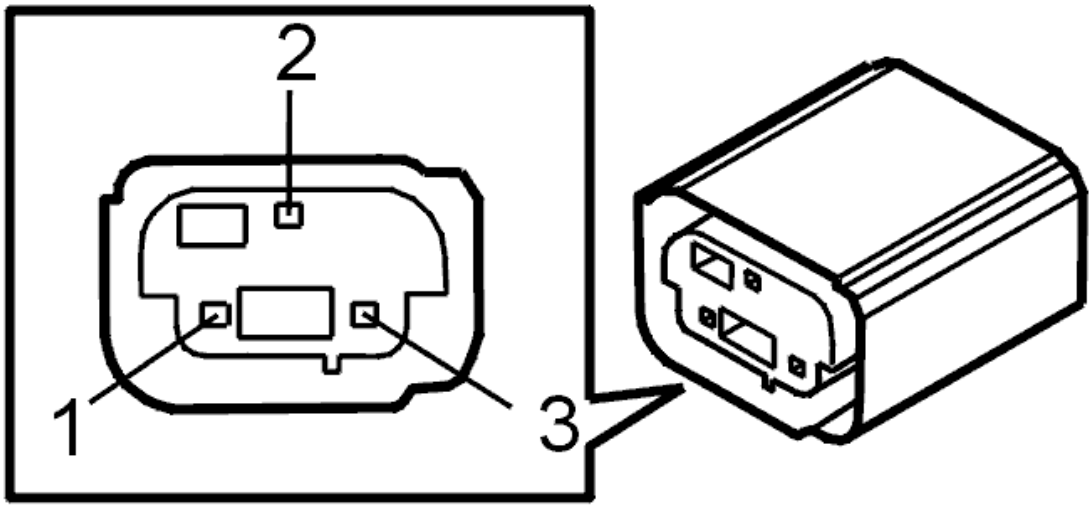

Fig. 108: Identifying Pedal Position Sensor Connector
Courtesy of VOLVO CARS CORPORATION

Was a malfunction detected?

- **YES**

see **VERIFICATION**

- **NO**

  see **INFORMATION**

VERIFICATION

VERIFICATION

HINT: After carrying out the repair, check that the malfunction has been remedied.

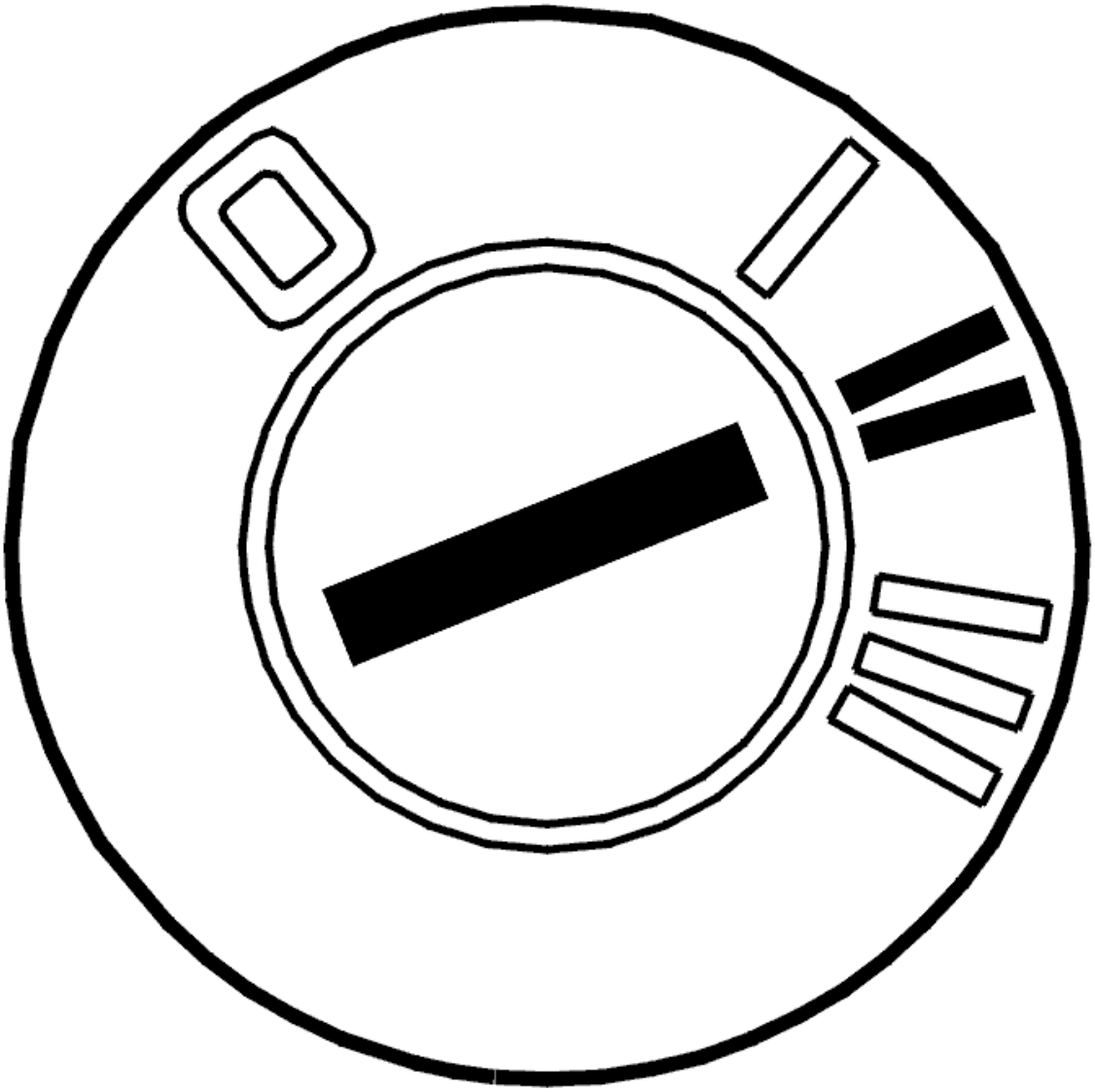

Fig. 109: Identifying Ignition ON
Courtesy of VOLVO CARS CORPORATION

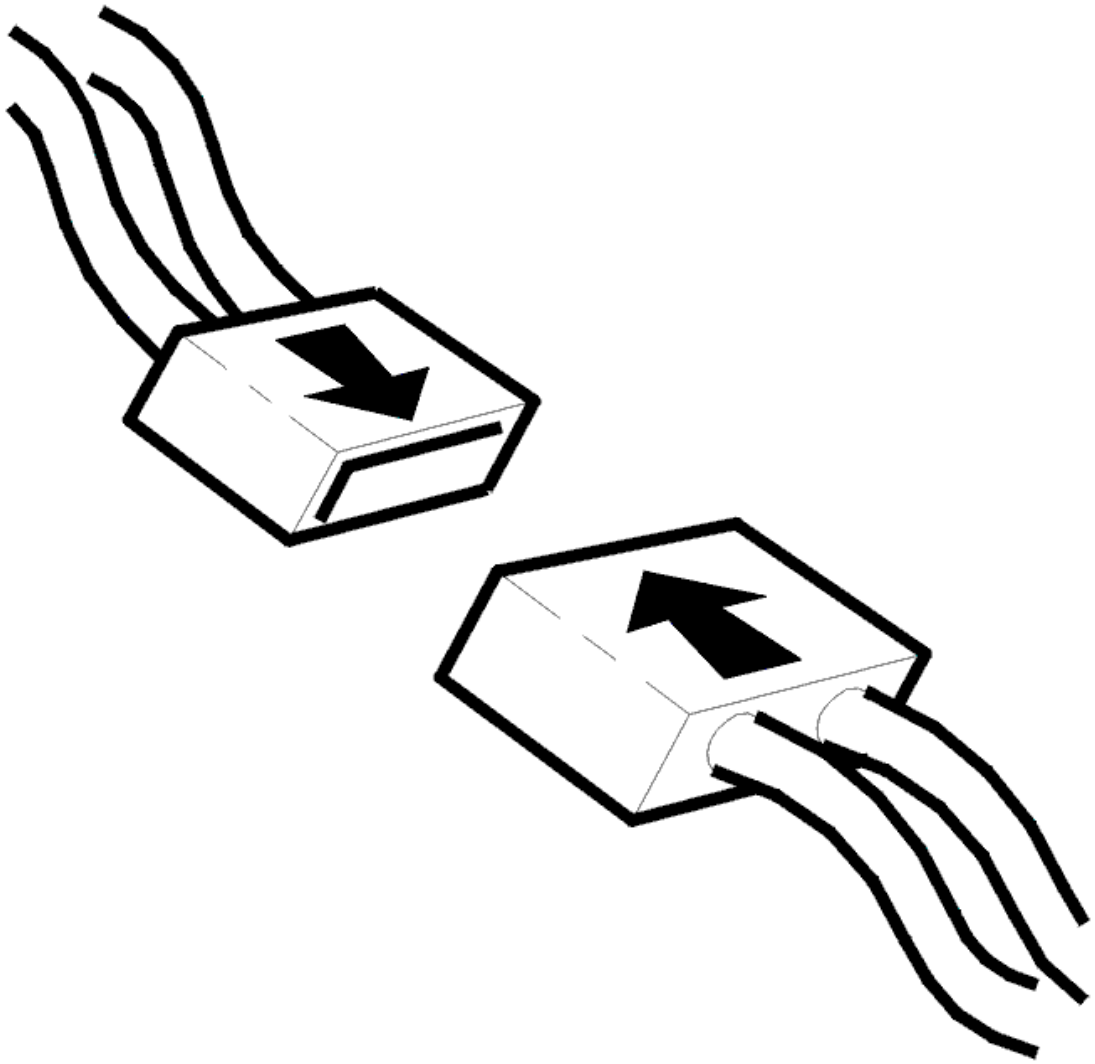

Fig. 110: Connecting Connector
Courtesy of VOLVO CARS CORPORATION

- Ignition off
- Reconnect the connectors, components, etc.
- Test-drive the vehicle according to **TEST DRIVE FORM (DSTC (DYNAMIC STABILITY AND TRACTION CONTROL) /BRAKE CONTROL MODULE), DESCRIPTION** .

NOTE: **Do not turn off the ignition between test-driving and reading out diagnostic trouble codes. This is to obtain the correct status of the diagnostic trouble codes.**

Then read out the diagnostic trouble code's status without turning off the ignition after the test-drive.

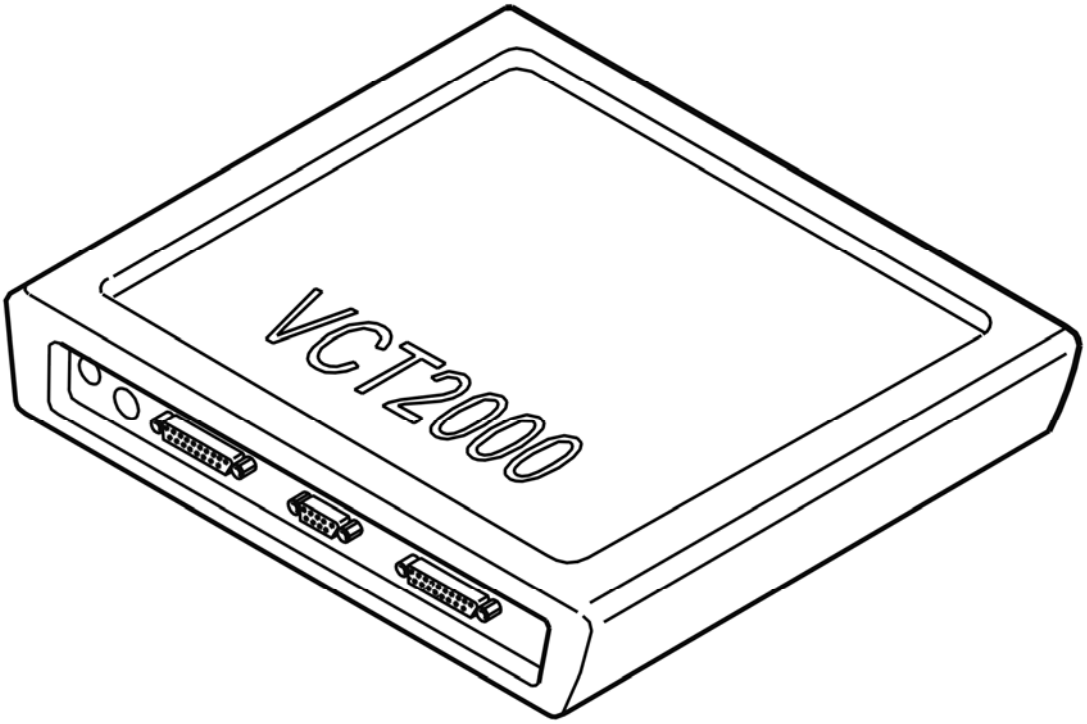

Fig. 111: Identifying VCT2000 Diagnostic Tool Symbol In VIDA
Courtesy of VOLVO CARS CORPORATION

Is the status of the diagnostic trouble code intermittent?

- **YES**

  VERIFIED: Troubleshooting has been completed.

- **NO**

  see **INFORMATION**

INFORMATION

FAULT-TRACING INFORMATION

The fault should have been detected and remedied. As this is not the case fault-tracing has failed.

Exit fault-tracing for this diagnostic trouble code (DTC) or make another attempt.

INFORMATION

FAULT-TRACING INFORMATION

The fault should be diagnosed and remedied. Since this is not the case the fault-tracing process has failed.

Complete the fault-tracing for those fault or try again.

BCM-C110801: VOLTAGE FEED SENSOR. GENERAL MALFUNCTION INFORMATION. GENERAL ELECTRICAL MALFUNCTION (B6324S5; 2011-2012)

DIAGNOSTIC TROUBLE CODE INFORMATION BCM-C110801

see **DIAGNOSTIC TROUBLE CODE INFORMATION BCM-C110801**

TROUBLESHOOTING BCM-C110801

see **TROUBLESHOOTING BCM-C110801**

BCM-C110801: VOLTAGE FEED SENSOR. GENERAL MALFUNCTION INFORMATION. GENERAL ELECTRICAL MALFUNCTION (B8444S; 2005-2011)

DIAGNOSTIC TROUBLE CODE INFORMATION BCM-C110801

see **DIAGNOSTIC TROUBLE CODE INFORMATION BCM-C110801**

TROUBLESHOOTING BCM-C110801

see **TROUBLESHOOTING BCM-C110801**

BCM-C111154: AYC SENSOR. PROGRAMMING ERROR. CALIBRATION MISSING (B6324S; 2007-2010)

DIAGNOSTIC TROUBLE CODE INFORMATION BCM-C111154

Condition

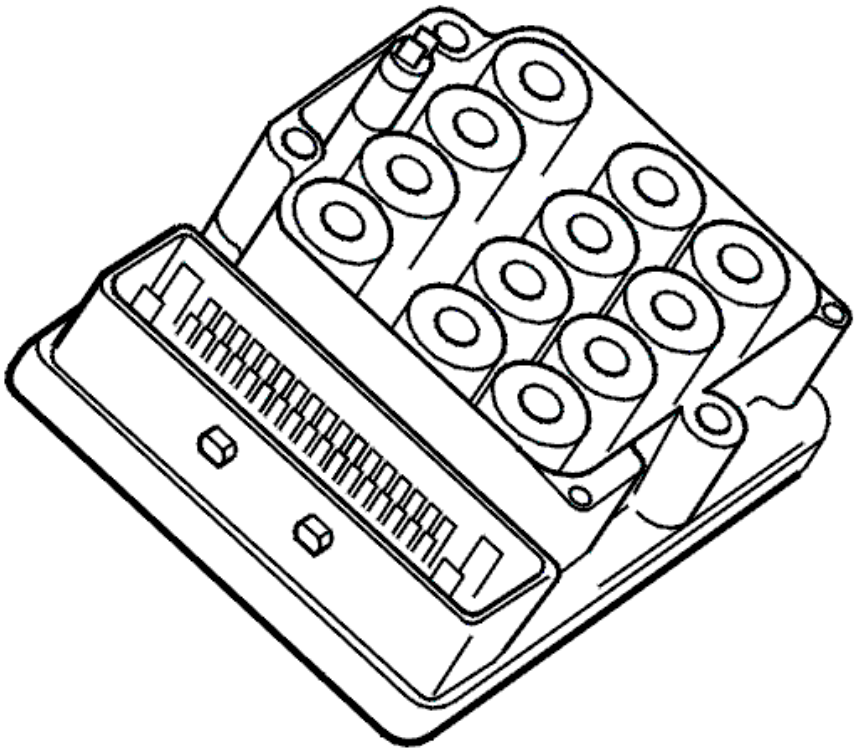

Fig. 112: ABS Control Module
Courtesy of VOLVO CARS CORPORATION

NOTE: The diagnostic trouble code only applies to vehicles equipped with DSTC.

When calibrating sensors that are part of active yaw control (AYC), a checksum is stored in the brake control module (BCM). At start-up, the control module checks the stored checksum against a calculated checksum.

Diagnostic trouble code BCM-C111154 is generated if the checksums do not match.

The diagnostic trouble code can be diagnosed when the ignition is on.

Substitute Value

- TC is blocked.
- SC is blocked.
- AYC is blocked.

HINT: For information on abbreviations: BRAKE SYSTEM, ABBREVIATIONS

Possible Source

- Damaged brake control module (BCM).

NOTE: **This diagnostic trouble code (DTC) is not due to an internal hardware fault in the Brake control module (BCM) and must not be remedied by replacing the control module.**

Fault symptom[s]

- General warning light on.
- Anti-spin is not operational.
- The stability function is not operational.
- The anti-skid function is not operational.

TROUBLESHOOTING BCM-C111154

TROUBLESHOOTING INFORMATION

HINT: The diagnostic trouble code can be stored during software download and just needs to be erased.

NOTE: **Only erase the diagnostic trouble code if it was stored during software download.**

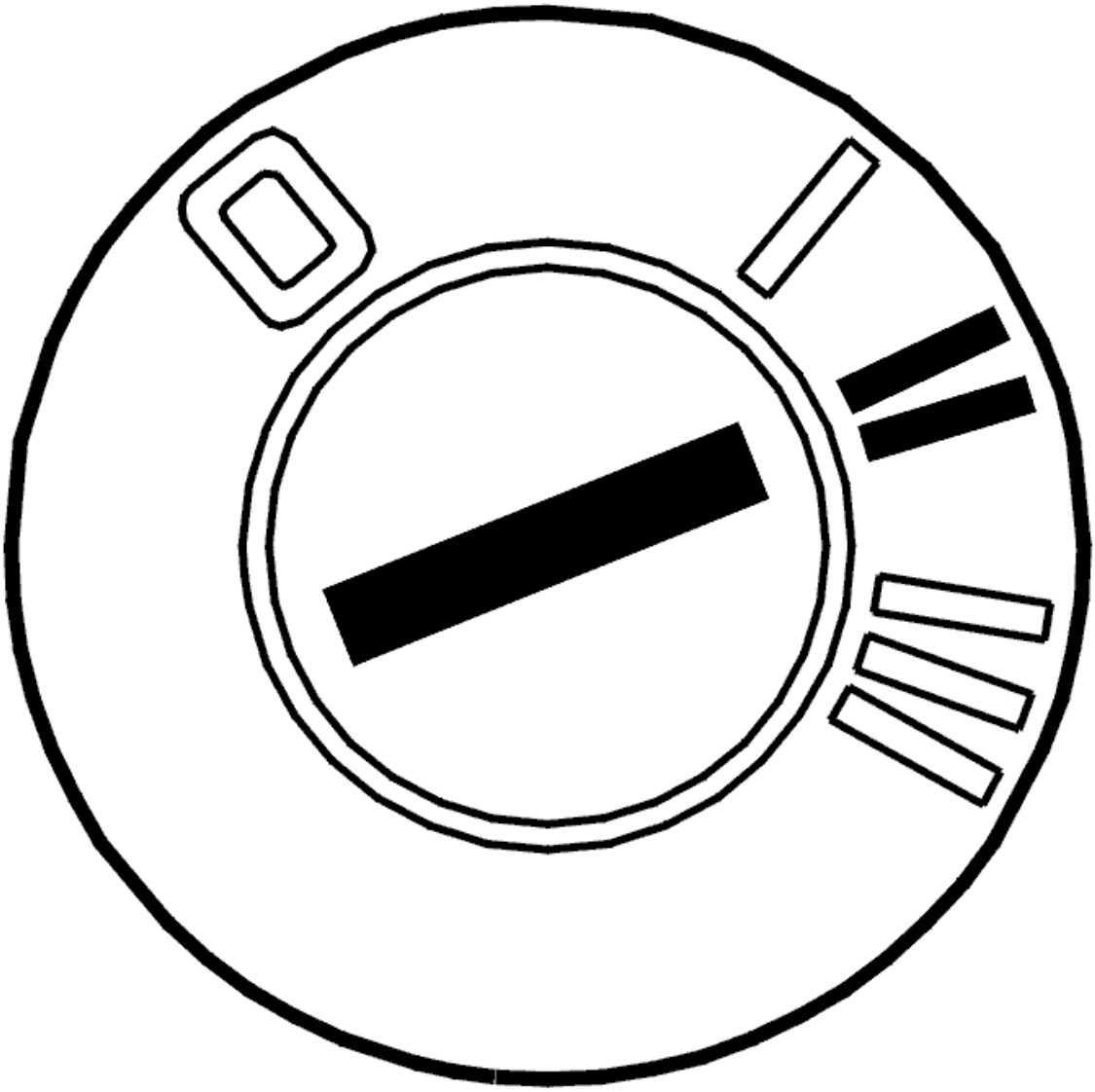

Fig. 113: Identifying Ignition ON
Courtesy of VOLVO CARS CORPORATION

- Ignition on

  Erase diagnostic trouble codes (DTCs).

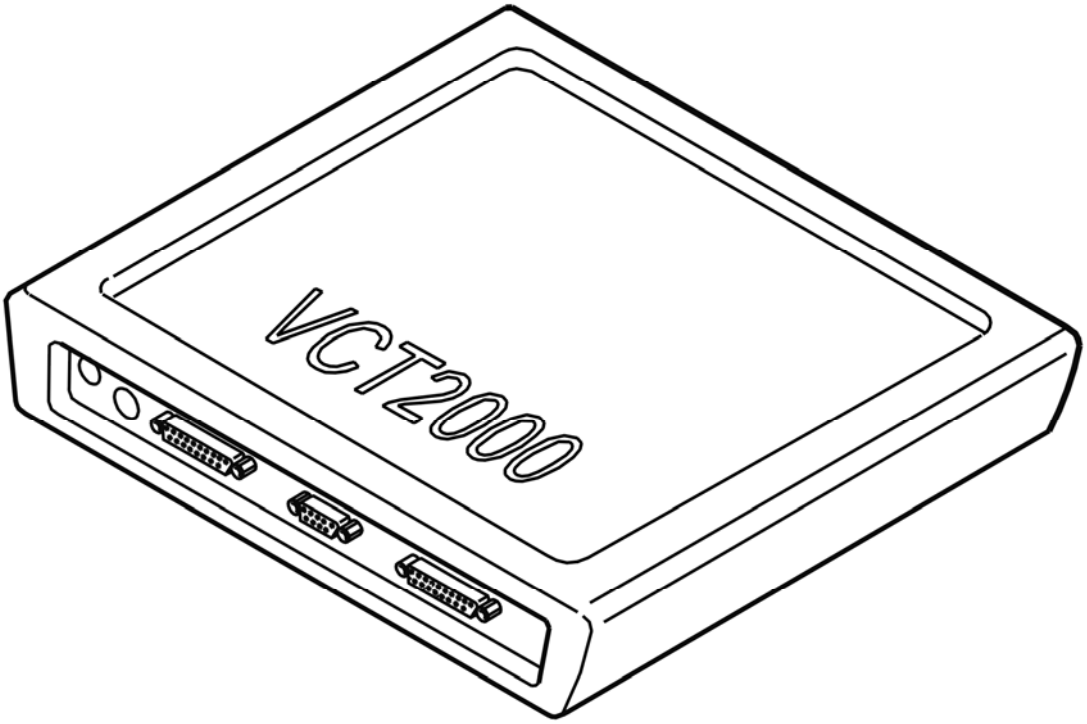

Fig. 114: Identifying VCT2000 Diagnostic Tool Symbol In VIDA
Courtesy of VOLVO CARS CORPORATION

- **Continue**

  see **SENSOR CALIBRATION**

SENSOR CALIBRATION

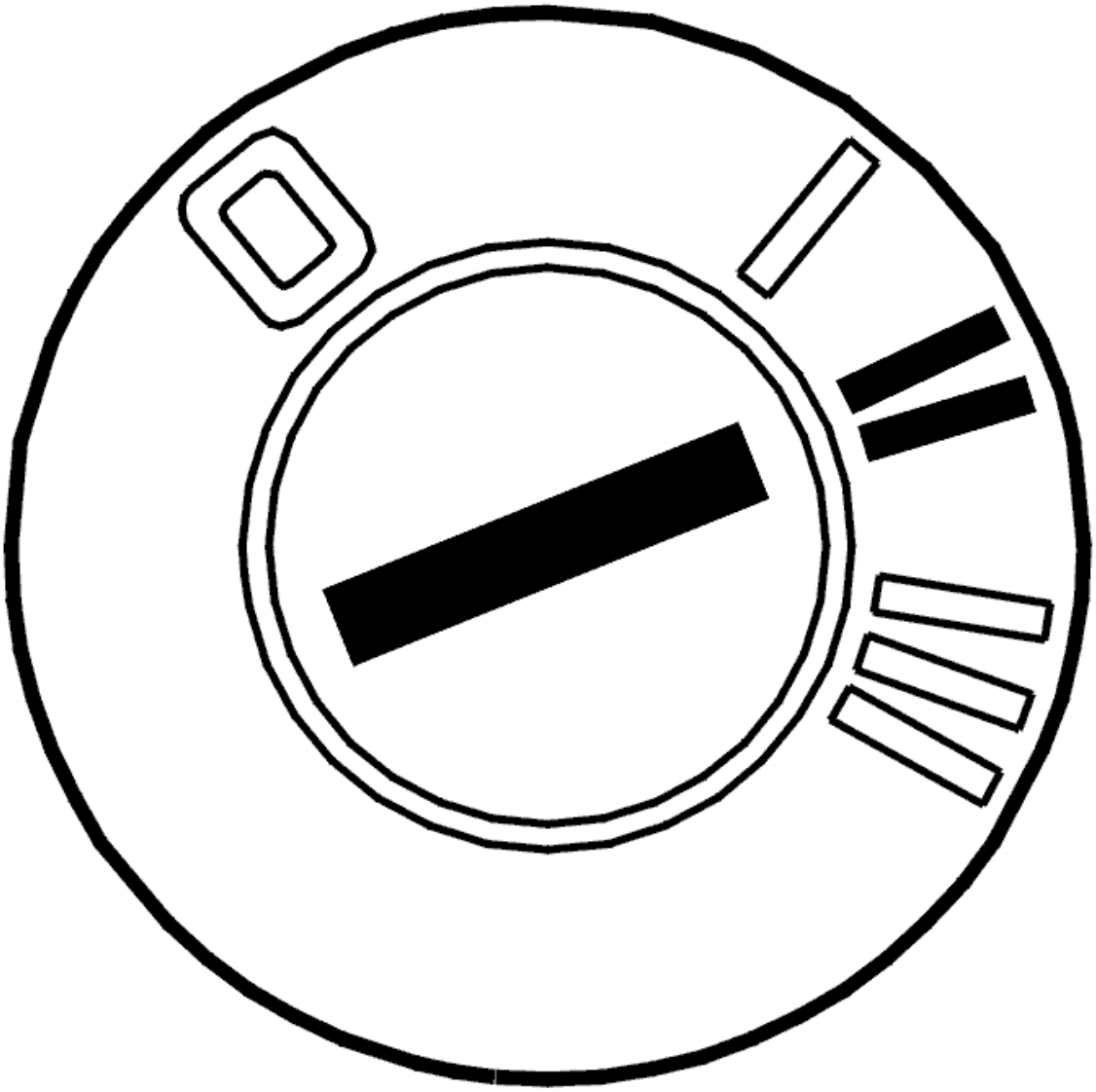

Fig. 115: Identifying Ignition ON
Courtesy of VOLVO CARS CORPORATION

- Ignition on
- Calibrate the brake control module (BCM).

NOTE: **When calibrating, the vehicle should be parked on a flat surface and the brake pedal must not be touched.**

The accelerometer can only be calibrated on vehicles with AWD.

CAUTION: For model XC90, the yaw sensor and inclination sensor should also be calibrated.

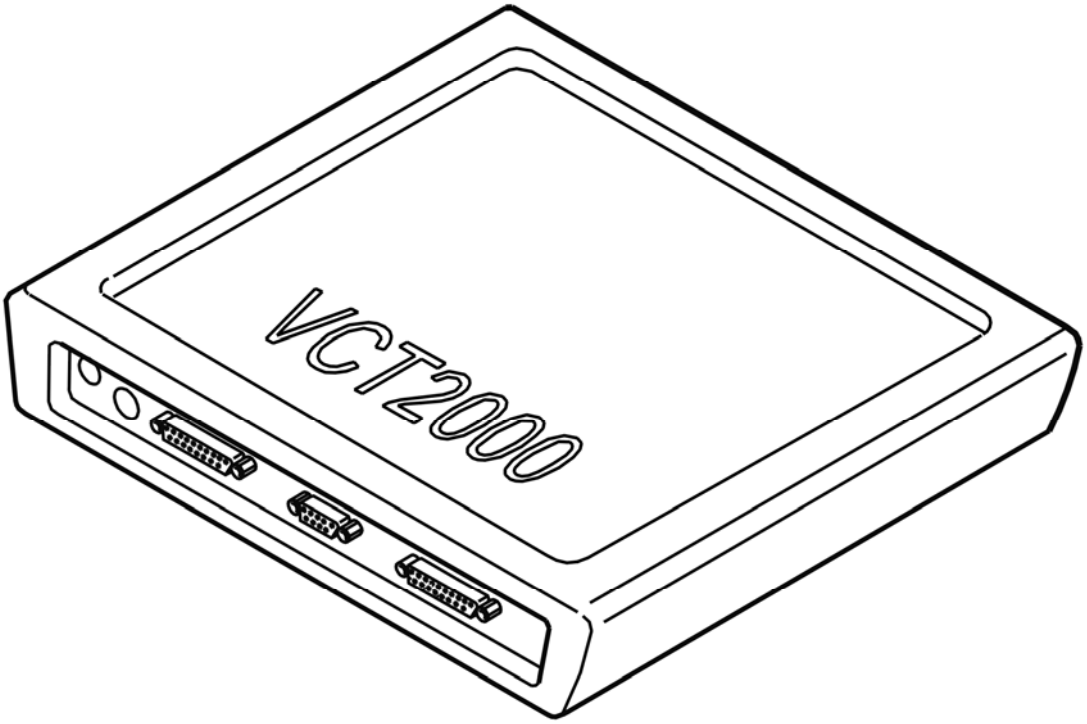

Fig. 116: Identifying VCT2000 Diagnostic Tool Symbol In VIDA
Courtesy of VOLVO CARS CORPORATION

- **Continue**

  see **READING OFF DIAGNOSTIC TROUBLE CODE STATUS**

READING OFF DIAGNOSTIC TROUBLE CODE STATUS

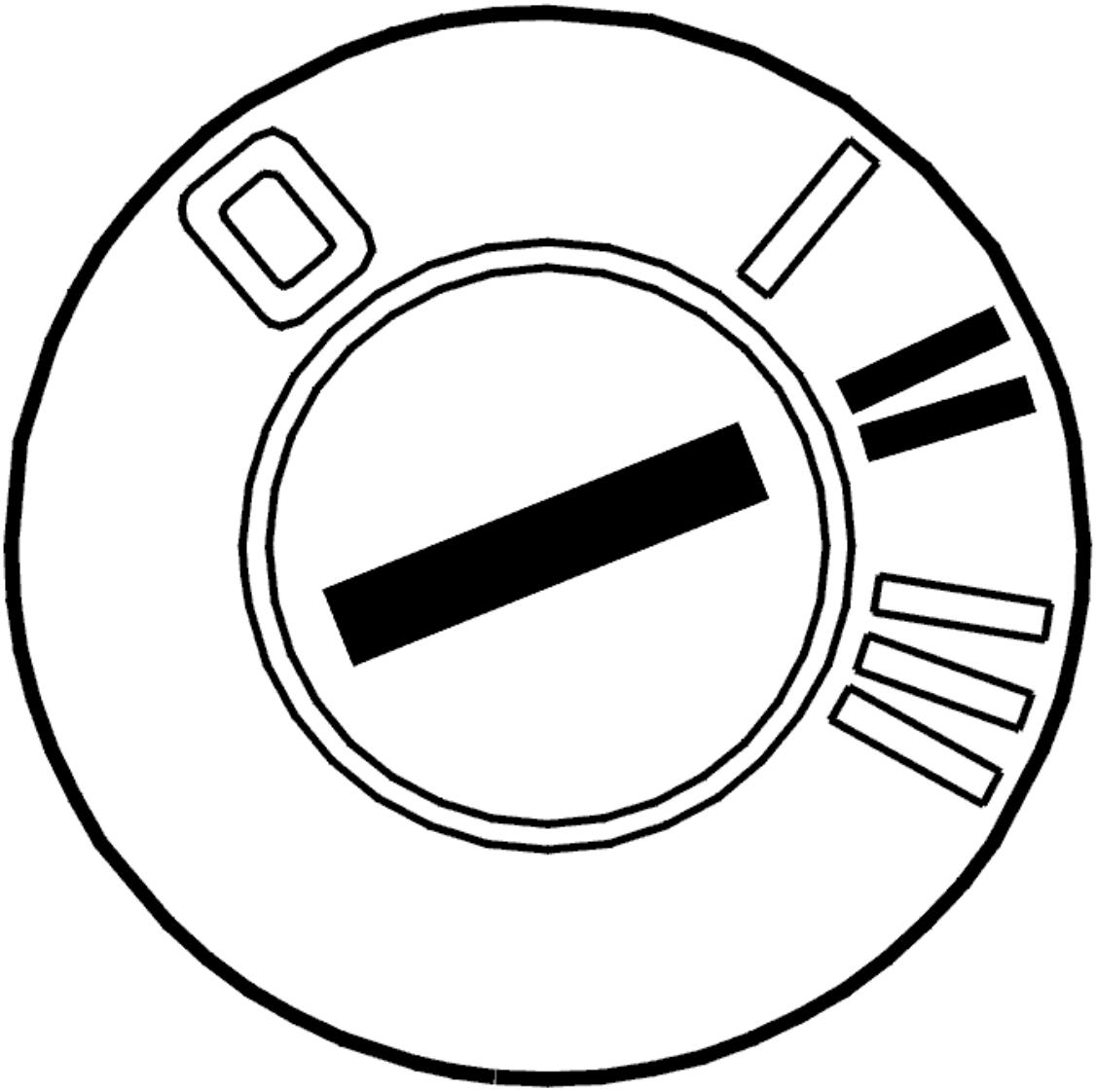

Fig. 117: Identifying Ignition ON
Courtesy of VOLVO CARS CORPORATION

- Ignition on
- Wait approximately 60 seconds.
- Read off diagnostic trouble codes (DTCs).

  If the status of the diagnostic trouble code has changed from permanent to intermittent, the malfunction is no longer active.

  If the diagnostic trouble code has a permanent status, try a new AYC sensor.

  Other information

  - see **ACTIVE YAW CONTROL SENSOR, REPLACING**

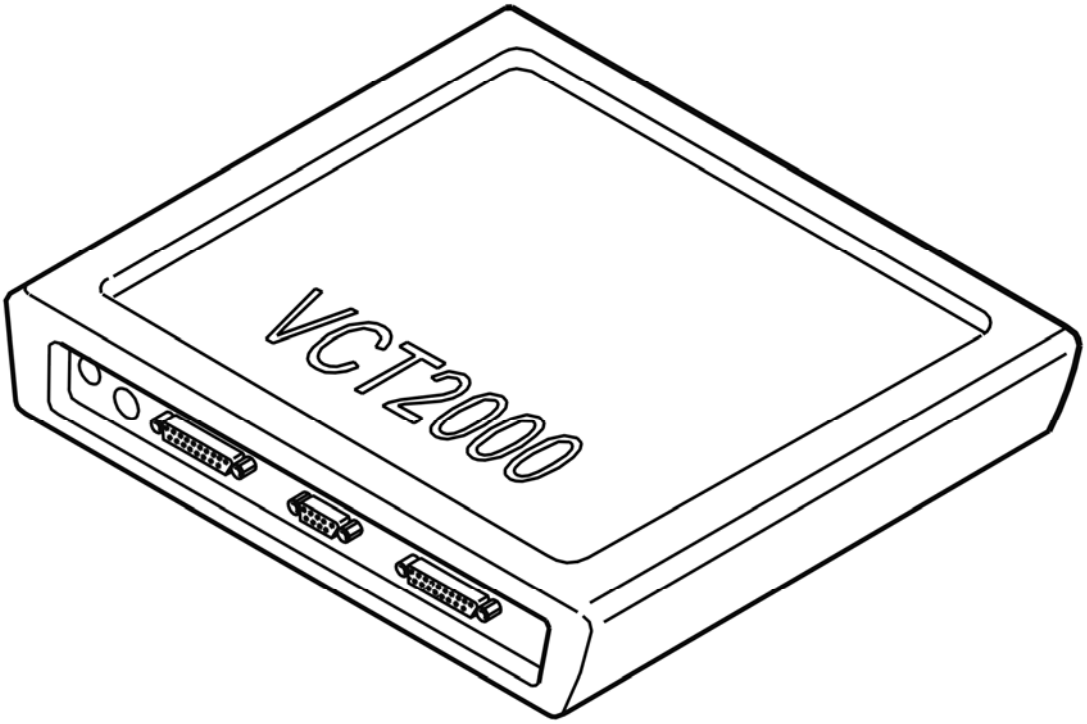

Fig. 118: Identifying VCT2000 Diagnostic Tool Symbol In VIDA
Courtesy of VOLVO CARS CORPORATION

Is the status of the diagnostic trouble code intermittent?

- **YES**

  OKAY: Troubleshooting has been completed.

- **NO**

  see **VERIFICATION**

VERIFICATION

VERIFICATION

HINT: After carrying out the repair, check that the malfunction has been remedied.

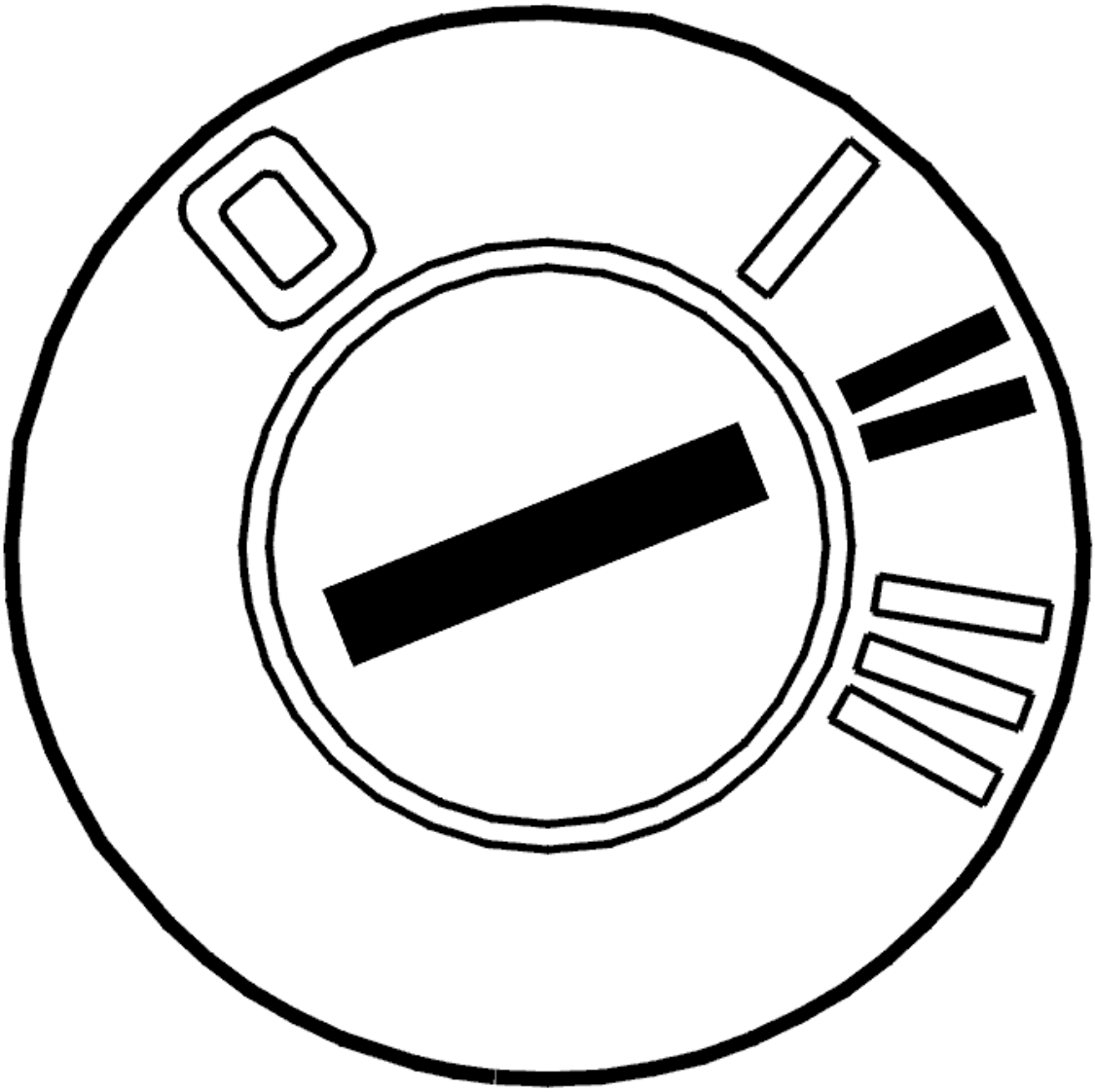

Fig. 119: Identifying Ignition ON
Courtesy of VOLVO CARS CORPORATION

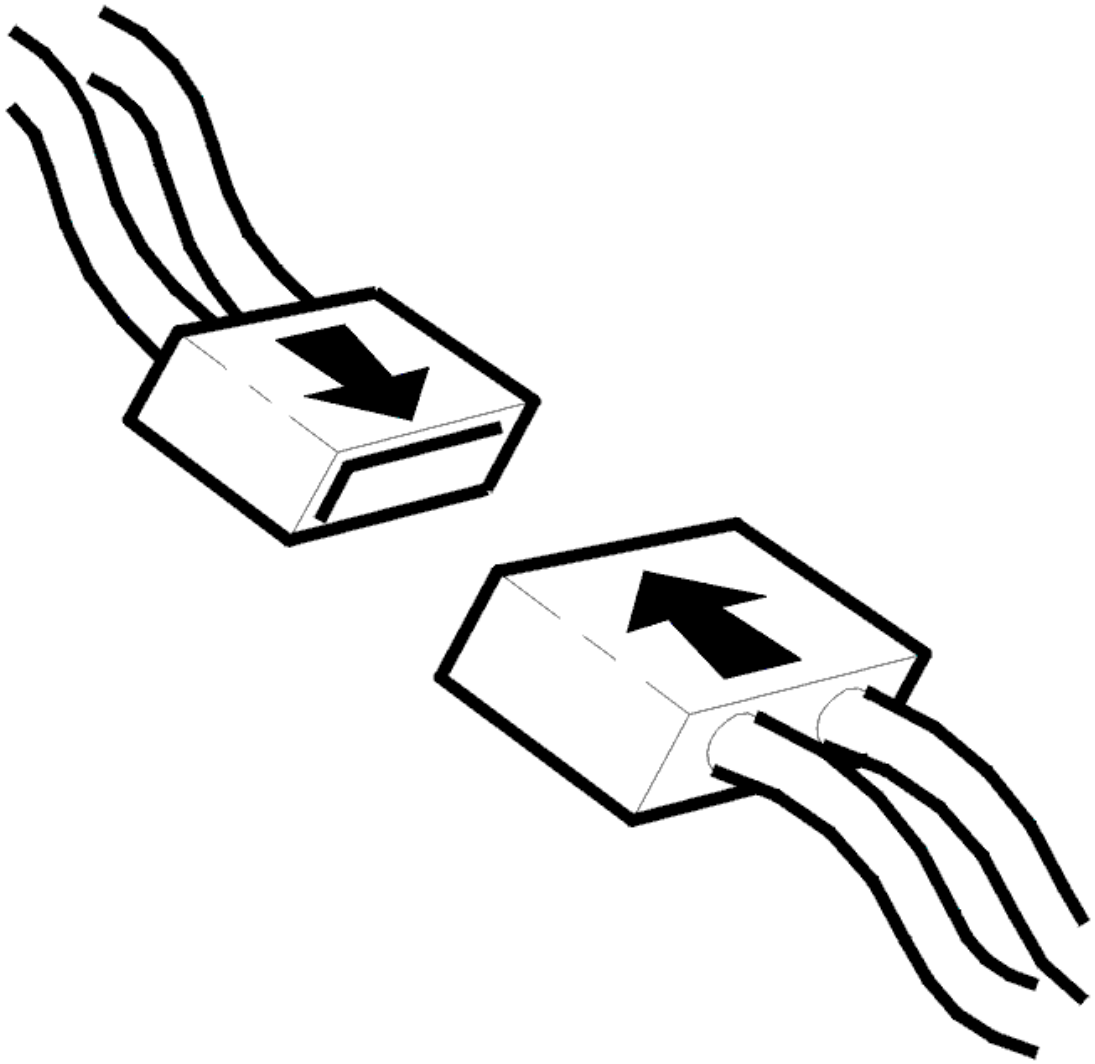

Fig. 120: Connecting Connector
Courtesy of VOLVO CARS CORPORATION

- Ignition off
- Reconnect the connectors, components, etc.
- Test-drive the vehicle according to **TEST DRIVE FORM (DSTC (DYNAMIC STABILITY AND TRACTION CONTROL) /BRAKE CONTROL MODULE), DESCRIPTION** .

NOTE: **Do not turn off the ignition between test-driving and reading out diagnostic trouble codes. This is to obtain the correct status of the diagnostic trouble codes.**

Then read out the diagnostic trouble code's status without turning off the ignition after the test-drive.

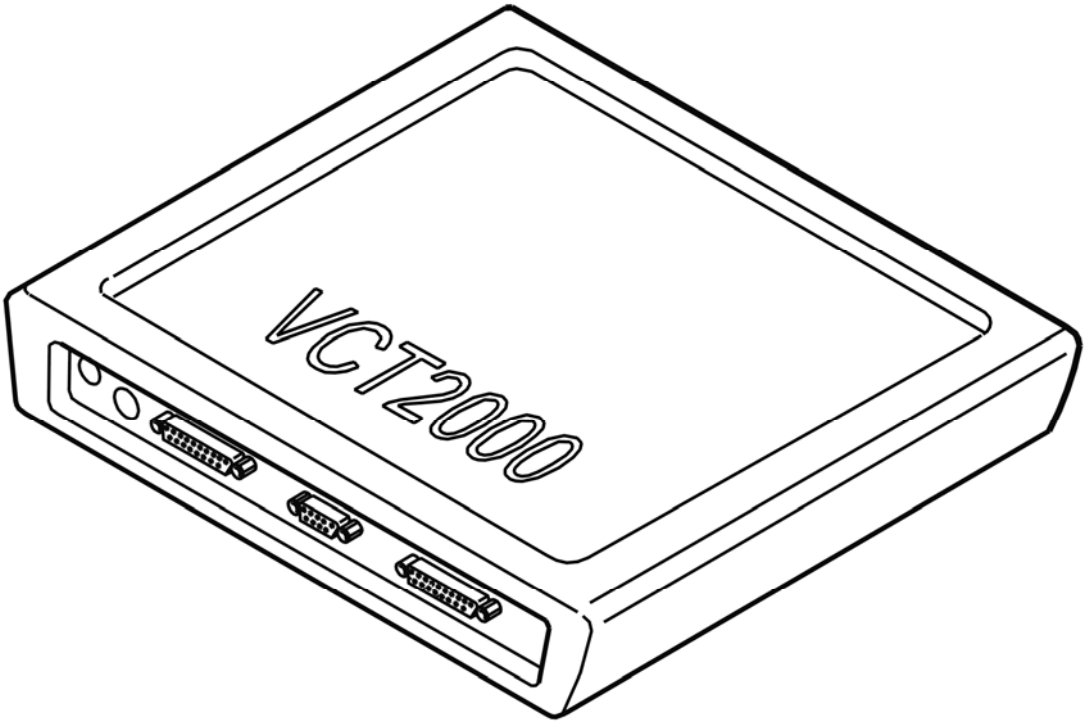

Fig. 121: Identifying VCT2000 Diagnostic Tool Symbol In VIDA
Courtesy of VOLVO CARS CORPORATION

Is the status of the diagnostic trouble code intermittent?

- **YES**

  VERIFIED: Troubleshooting has been completed.

- **NO**

  see **INFORMATION**

INFORMATION

FAULT-TRACING INFORMATION

The fault should have been detected and remedied. As this is not the case fault-tracing has failed.

Exit fault-tracing for this diagnostic trouble code (DTC) or make another attempt.

BCM-C111154: AYC SENSOR. PROGRAMMING ERROR. CALIBRATION MISSING (B6324S5; 2011-2012)

DIAGNOSTIC TROUBLE CODE INFORMATION BCM-C111154

see **DIAGNOSTIC TROUBLE CODE INFORMATION BCM-C111154**

TROUBLESHOOTING BCM-C111154

see **TROUBLESHOOTING BCM-C111154**

BCM-C111154: AYC SENSOR. PROGRAMMING ERROR. CALIBRATION MISSING (B8444S; 2005-2011)

DIAGNOSTIC TROUBLE CODE INFORMATION BCM-C111154

see **DIAGNOSTIC TROUBLE CODE INFORMATION BCM-C111154**

TROUBLESHOOTING BCM-C111154

see **TROUBLESHOOTING BCM-C111154**

BCM-C111301: HYDRAULIC VALVES. GENERAL MALFUNCTION INFORMATION. GENERAL ELECTRICAL MALFUNCTION (B6324S; 2007-2010)

DIAGNOSTIC TROUBLE CODE INFORMATION BCM-C111301

Condition

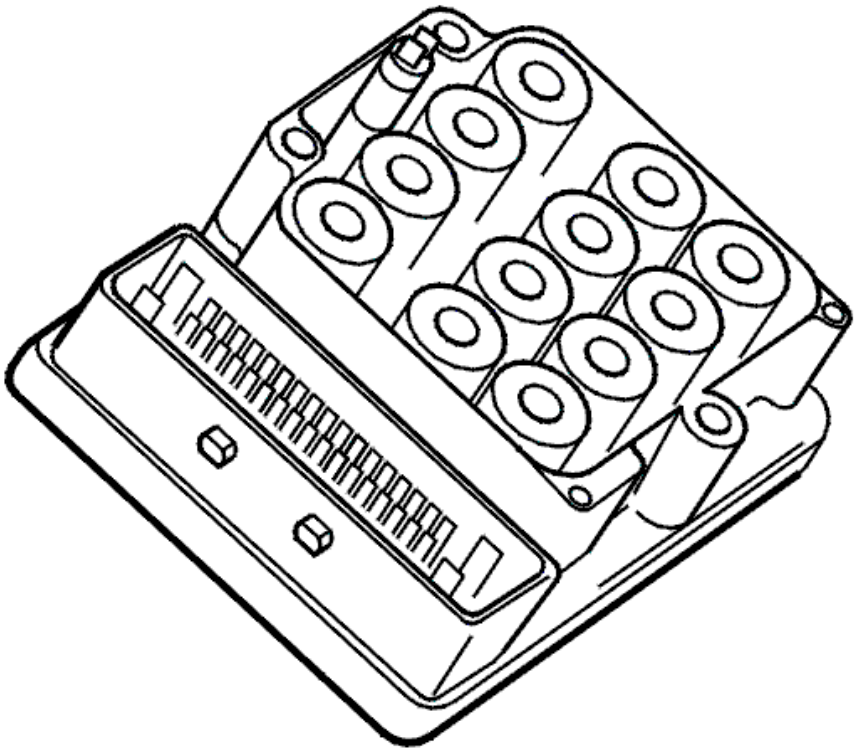

Fig. 122: ABS Control Module
Courtesy of VOLVO CARS CORPORATION

For diagnostic trouble code BCM-C111301, the brake control module can register a malfunction for different reasons. Diagnostic trouble code BCM-C111301 is generated:

- if the inlet or outlet valve circuits in the control module are short-circuited to ground or if there if the circuit is open.
- if the control module is subjected to interference so that its calculation is incorrect
- if the control module registers that there is a malfunction in internal control module circuits for the inlet and outlet valves
- if the inlet valve in the anti-spin circuit of the control module is short-circuited to ground or voltage or if the circuit is open
- if the control module registers an open circuit or short circuit in one of the internal control module circuits.

Substitute Value

- ABS is blocked.
- TC is blocked.
- SC is blocked.
- AYC is blocked.

- EBD is blocked.
- BA is blocked.

HINT: For information on abbreviations: BRAKE SYSTEM, ABBREVIATIONS

Possible Source

- Internal error in the control module

Fault symptom[s]

- ABS warning light on.
- Brake circuit not working; warning light on.
- ABS is not operational.
- Anti-spin is not operational.
- The stability function is not operational.
- The anti-skid function is not operational.

TROUBLESHOOTING BCM-C111301

CHECKING HYDRAULIC VALVE FUNCTION

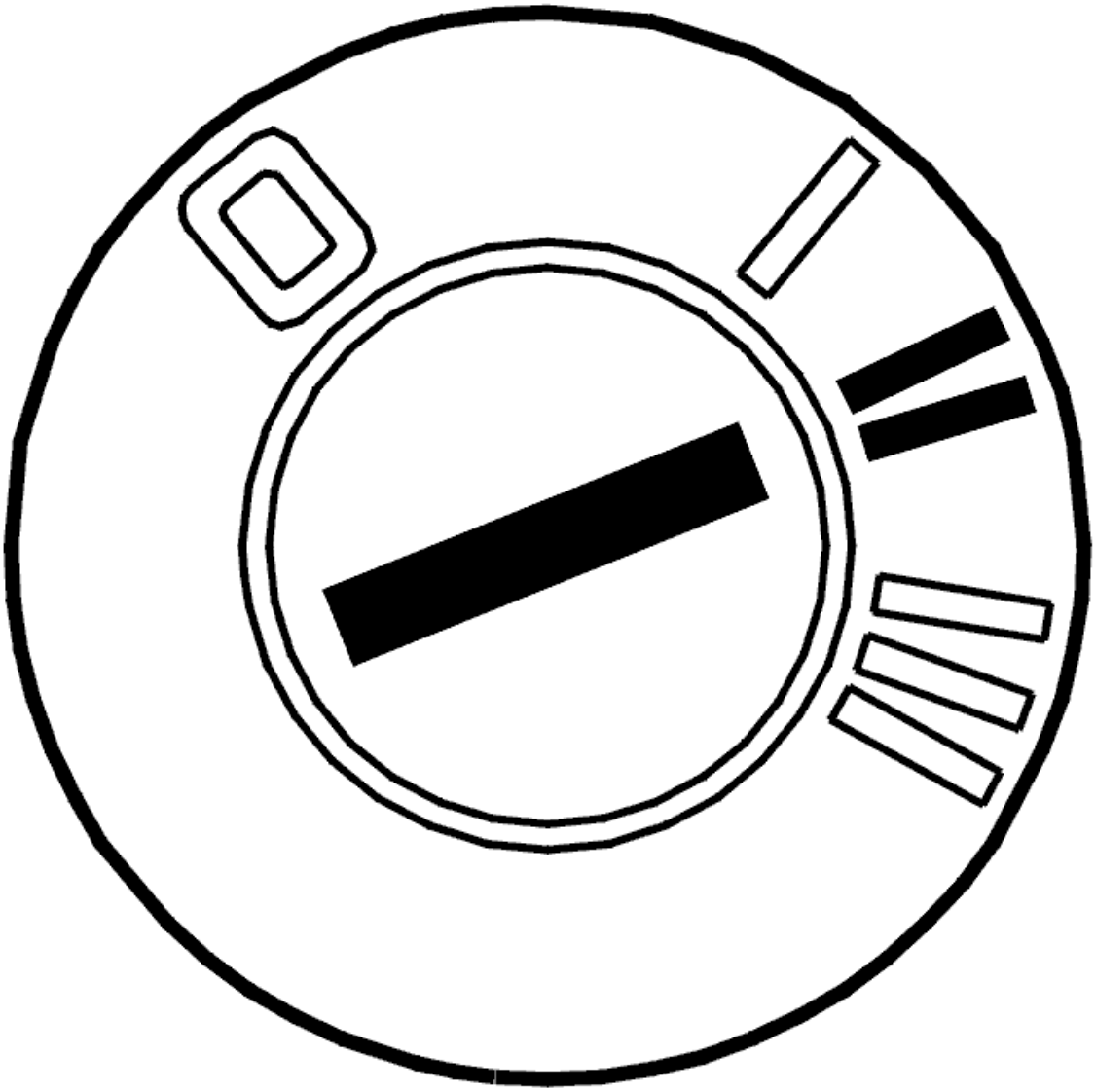

Fig. 123: Identifying Ignition ON
Courtesy of VOLVO CARS CORPORATION

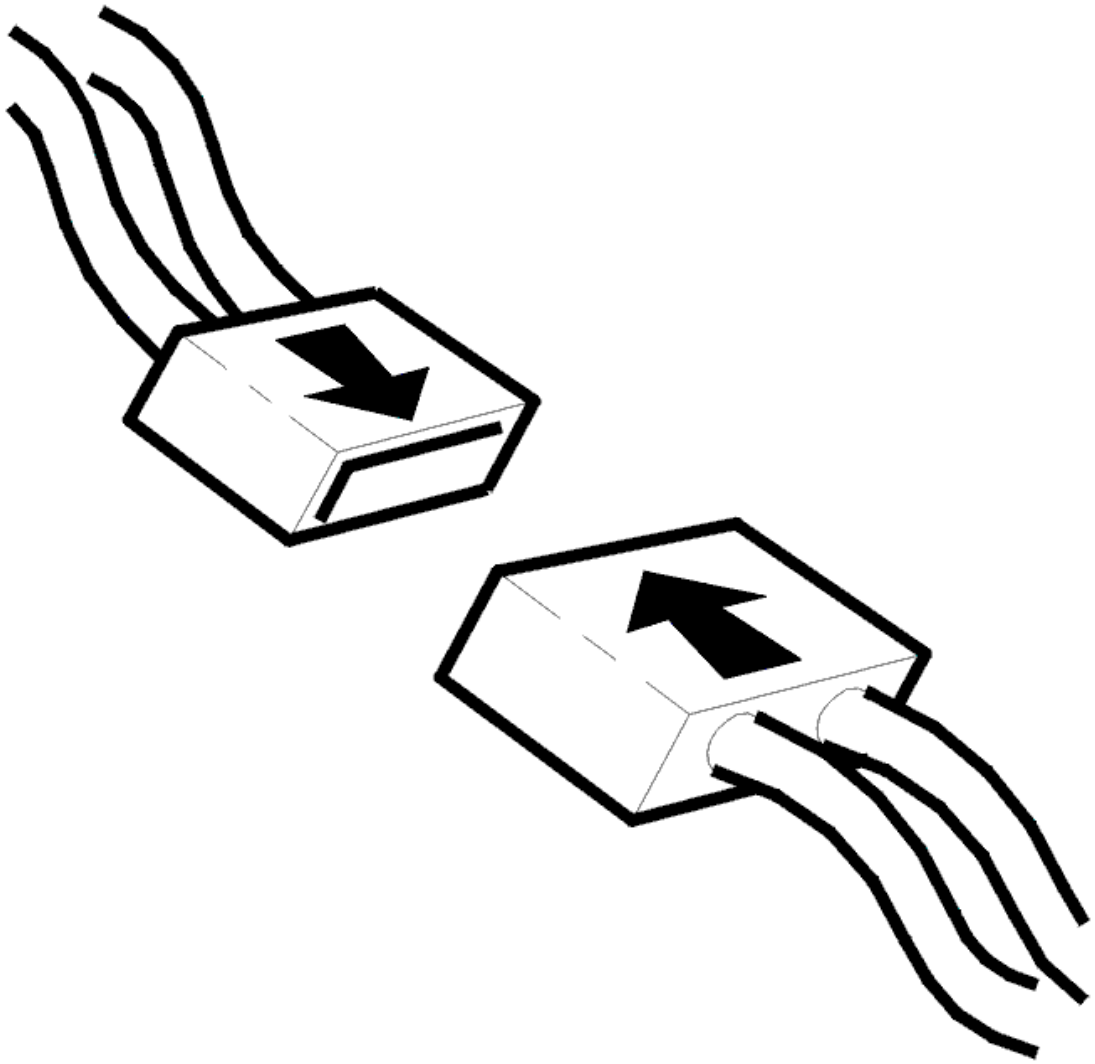

Fig. 124: Connecting Connector
Courtesy of VOLVO CARS CORPORATION

- Ignition off
- Check the connector of the brake control module (BCM) for contact resistance and oxidation.
- Reconnect the connectors, components, etc.
- Ignition on

  Try activating the hydraulic valves.

  A clear "ticking" sound should be heard.

  Other information

  - For control module disconnection: **CONNECTING THE BREAKOUT BOX, BRAKE**

CONTROL MODULE (BCM)

- see **CONTENTS**

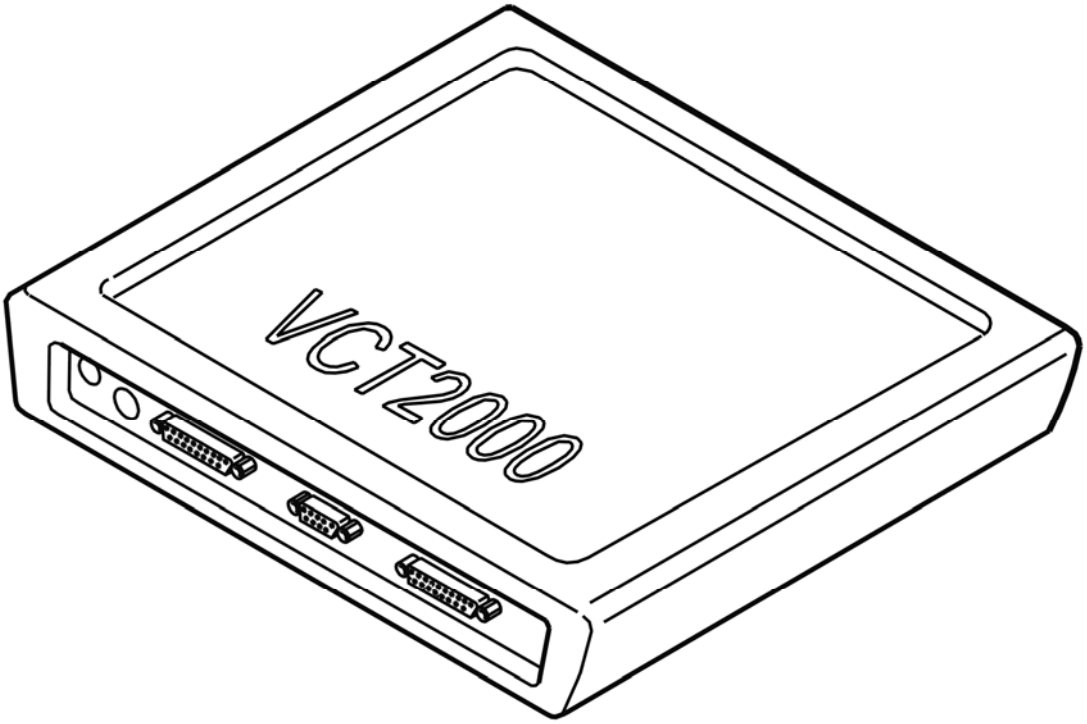

Fig. 125: Identifying VCT2000 Diagnostic Tool Symbol In VIDA
Courtesy of VOLVO CARS CORPORATION

Can the valves be activated?

- **YES**

  OKAY: Troubleshooting has been completed.

- **NO**

  see **CONTROL MODULE REPLACEMENT AND PROGRAMMING**

CONTROL MODULE REPLACEMENT AND PROGRAMMING

CAUTION: A new brake control module (BCM) is delivered without software. The control module must be programmed in order to function after replacement.

For information on control module replacement and programming: **BRAKE CONTROL MODULE (BCM),**

REPLACING

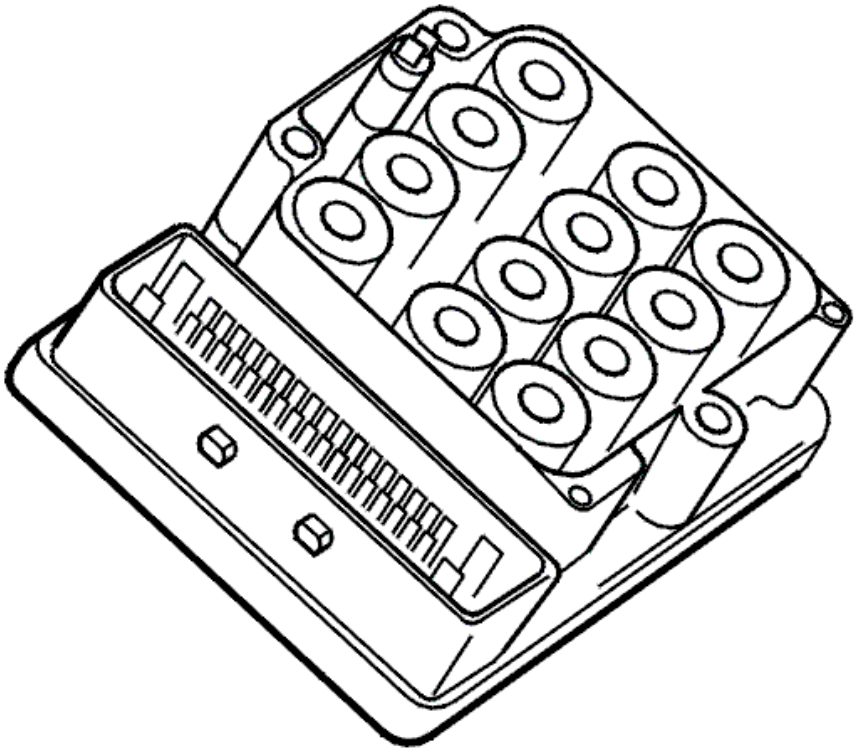

Fig. 126: ABS Control Module
Courtesy of VOLVO CARS CORPORATION

BCM-C111301: HYDRAULIC VALVES. GENERAL MALFUNCTION INFORMATION. GENERAL ELECTRICAL MALFUNCTION (B6324S5; 2011-2012)

DIAGNOSTIC TROUBLE CODE INFORMATION BCM-C111301

see **DIAGNOSTIC TROUBLE CODE INFORMATION BCM-C111301**

TROUBLESHOOTING BCM-C111301

see **TROUBLESHOOTING BCM-C111301**

BCM-C111301: HYDRAULIC VALVES. GENERAL MALFUNCTION INFORMATION. GENERAL ELECTRICAL MALFUNCTION (B8444S; 2005-2011)

DIAGNOSTIC TROUBLE CODE INFORMATION BCM-C111301

see **DIAGNOSTIC TROUBLE CODE INFORMATION BCM-C111301**

TROUBLESHOOTING BCM-C111301

see **TROUBLESHOOTING BCM-C111301**

BCM-C111495: INCLINATION SENSOR. COMPONENT MALFUNCTION. INCORRECT ASSEMBLY (B6324S; 2007-2010)

DIAGNOSTIC TROUBLE CODE INFORMATION BCM-C111495

Condition

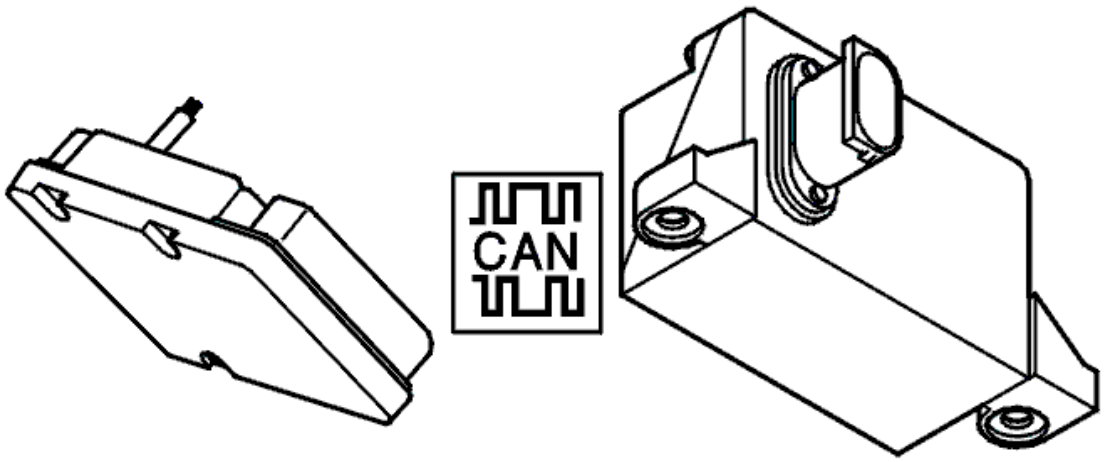

Fig. 127: Identifying Brake Control Module & Active Yaw Control Sensor
Courtesy of VOLVO CARS CORPORATION

The AYC sensor comes in two variants: one for a two-wheel drive vehicle and one for a four-wheel drive vehicle. Diagnostic trouble code BCM-C111495 is generated if the brake control module (BCM) registers that the installed AYC sensor is not appropriate for the vehicle.

Substitute Value

- TC is blocked.
- SC is blocked.
- AYC is blocked.

HINT: For information on abbreviations: BRAKE SYSTEM, ABBREVIATIONS

Possible Source

- Incorrect AYC sensor installed.

NOTE: **This diagnostic trouble code (DTC) is not due to an internal hardware fault in the Brake control module (BCM) and must not be remedied by replacing the control module.**

Fault symptom[s]

- General warning light on.
- Anti-spin is not operational.
- The stability function is not operational.
- The anti-skid function is not operational.

TROUBLESHOOTING BCM-C111495

CHECKING THE AYC SENSOR

The diagnostic trouble code indicates that an AYC sensor for a four-wheel drive vehicle is installed in a two-wheel drive vehicle or that an AYC sensor for a two-wheel drive vehicle is installed in a four-wheel drive vehicle.

Change to the right sensor type, see **ACTIVE YAW CONTROL SENSOR, REPLACING**

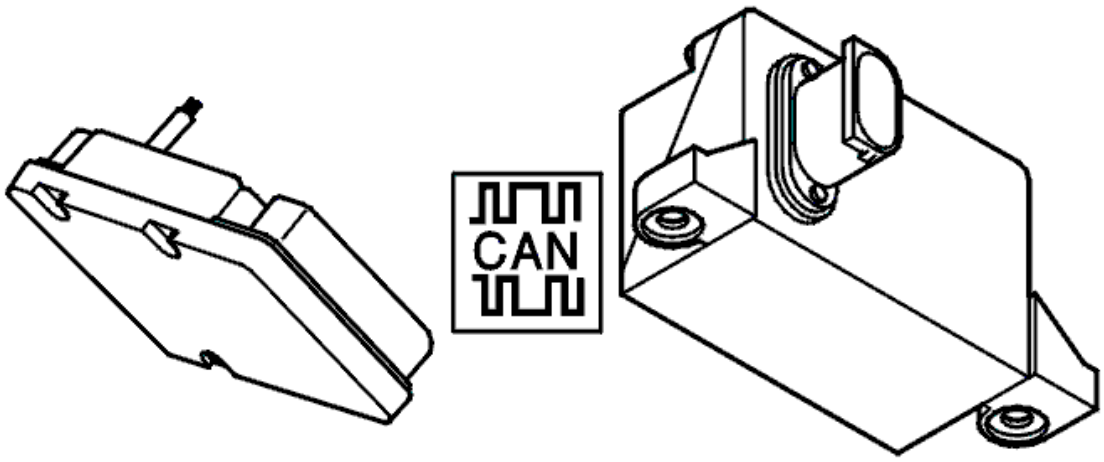

Fig. 128: Identifying Brake Control Module & Active Yaw Control Sensor
Courtesy of VOLVO CARS CORPORATION

- **Continue**

  see **VERIFICATION**

VERIFICATION

VERIFICATION

HINT: After carrying out the repair, check that the malfunction has been remedied.

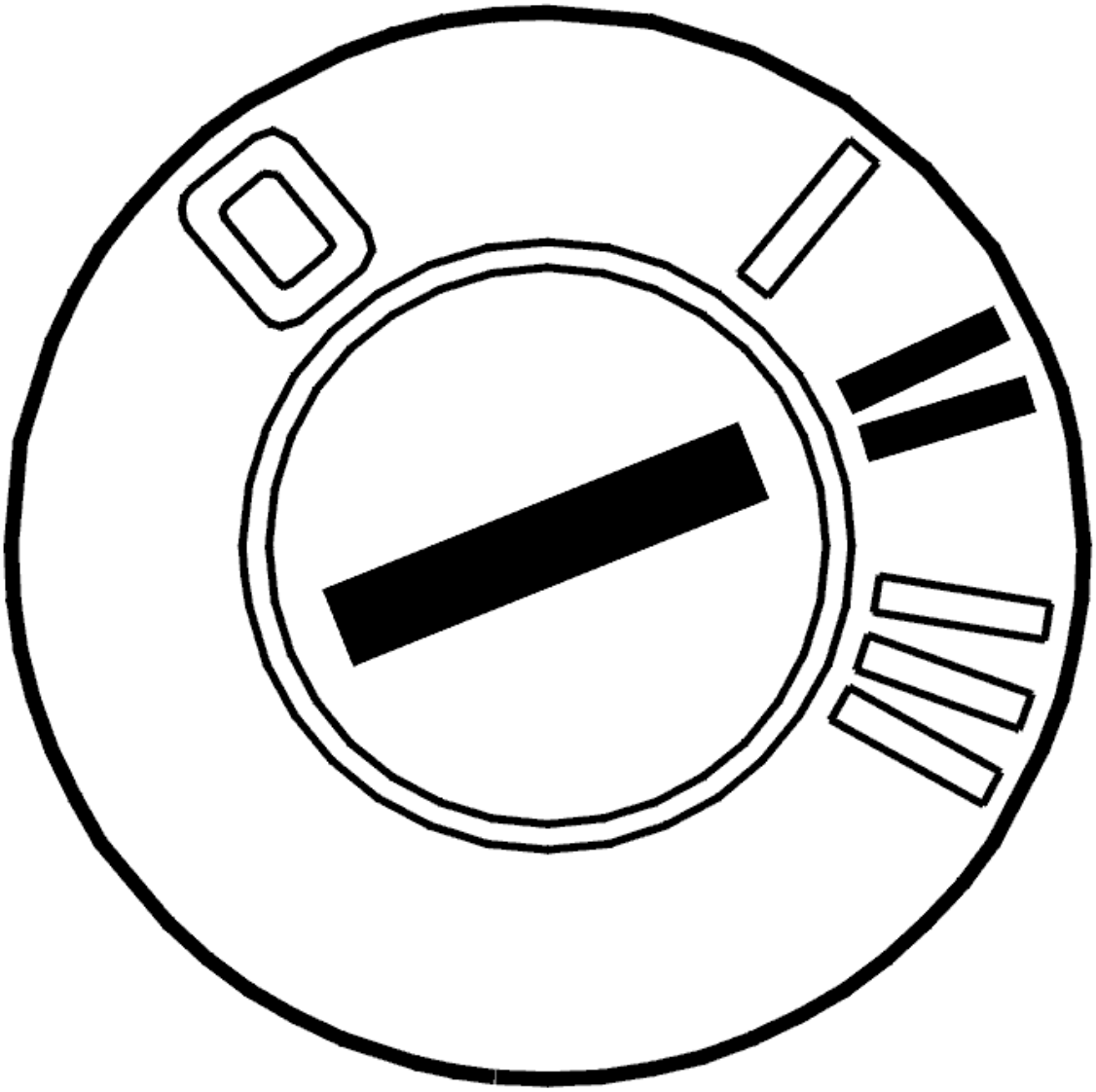

Fig. 129: Identifying Ignition ON
Courtesy of VOLVO CARS CORPORATION

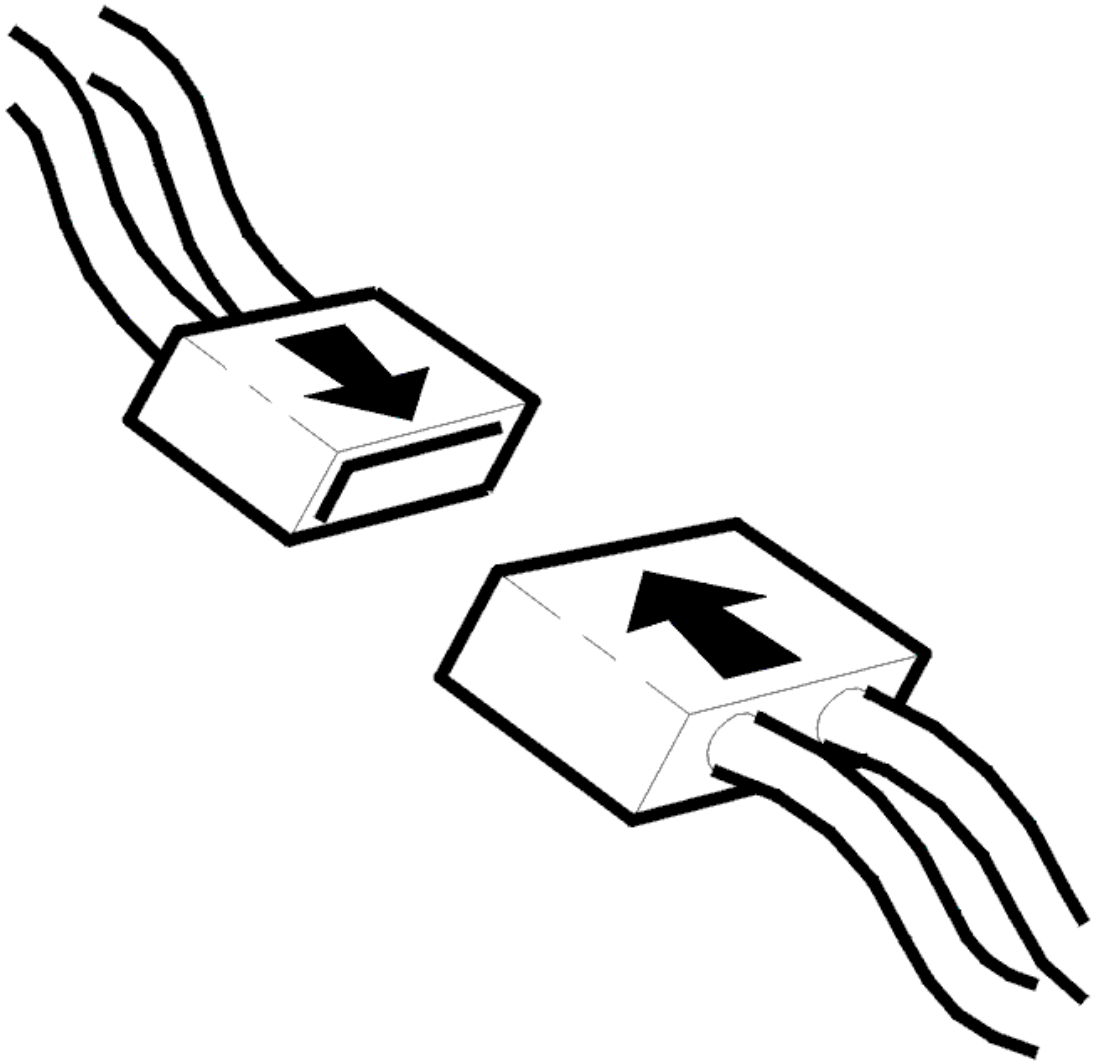

Fig. 130: Connecting Connector
Courtesy of VOLVO CARS CORPORATION

- Ignition off
- Reconnect the connectors, components, etc.
- Test-drive the vehicle according to **TEST DRIVE FORM (DSTC (DYNAMIC STABILITY AND TRACTION CONTROL) /BRAKE CONTROL MODULE), DESCRIPTION** .

NOTE: **Do not turn off the ignition between test-driving and reading out diagnostic trouble codes. This is to obtain the correct status of the diagnostic trouble codes.**

Then read out the diagnostic trouble code's status without turning off the ignition after the test-drive.

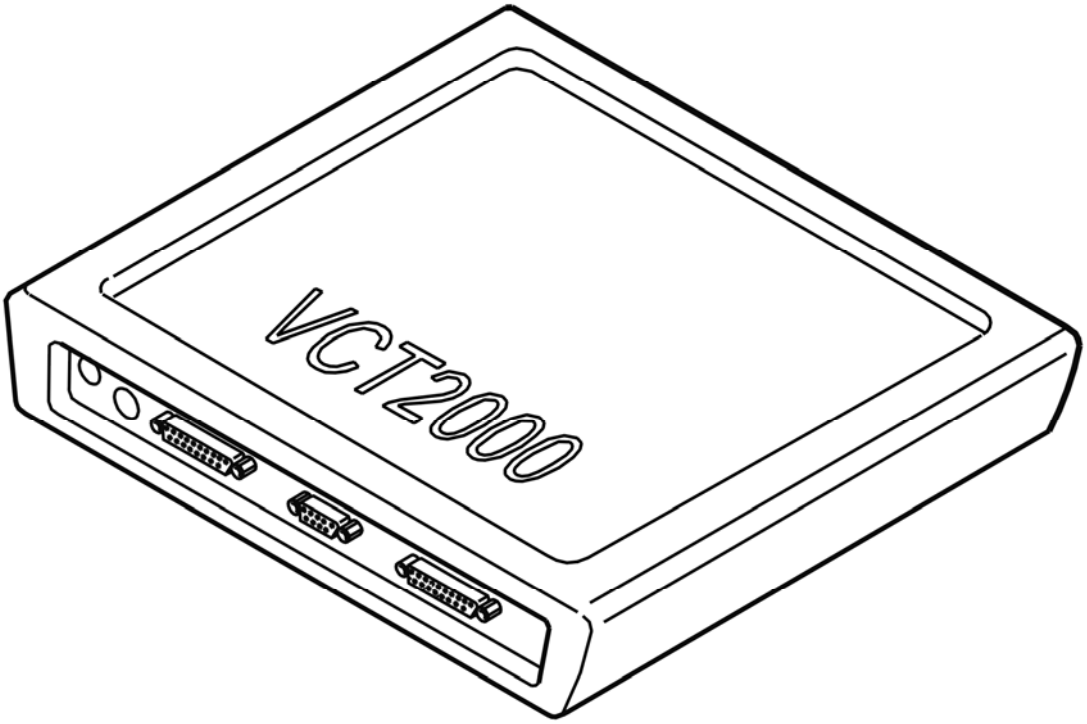

Fig. 131: Identifying VCT2000 Diagnostic Tool Symbol In VIDA
Courtesy of VOLVO CARS CORPORATION

Is the status of the diagnostic trouble code intermittent?

- **YES**

  VERIFIED: Troubleshooting has been completed.

- **NO**

  see **INFORMATION**

INFORMATION

FAULT-TRACING INFORMATION

The fault should have been detected and remedied. As this is not the case fault-tracing has failed.

Exit fault-tracing for this diagnostic trouble code (DTC) or make another attempt.

BCM-C111495: INCLINATION SENSOR. COMPONENT MALFUNCTION. INCORRECT ASSEMBLY (B6324S5; 2011-2012)

DIAGNOSTIC TROUBLE CODE INFORMATION BCM-C111495

see **DIAGNOSTIC TROUBLE CODE INFORMATION BCM-C111495**

TROUBLESHOOTING BCM-C111495

see **TROUBLESHOOTING BCM-C111495**

BCM-C111495: INCLINATION SENSOR. COMPONENT MALFUNCTION. INCORRECT ASSEMBLY (B8444S; 2005-2011)

DIAGNOSTIC TROUBLE CODE INFORMATION BCM-C111495

see **DIAGNOSTIC TROUBLE CODE INFORMATION BCM-C111495**

TROUBLESHOOTING BCM-C111495

see **TROUBLESHOOTING BCM-C111495**

BCM-C111542: CONTROL MODULE. INTERNAL MALFUNCTION. GENERAL MEMORY ERROR (B6324S; 2007-2010)

DIAGNOSTIC TROUBLE CODE INFORMATION BCM-C111542

Condition

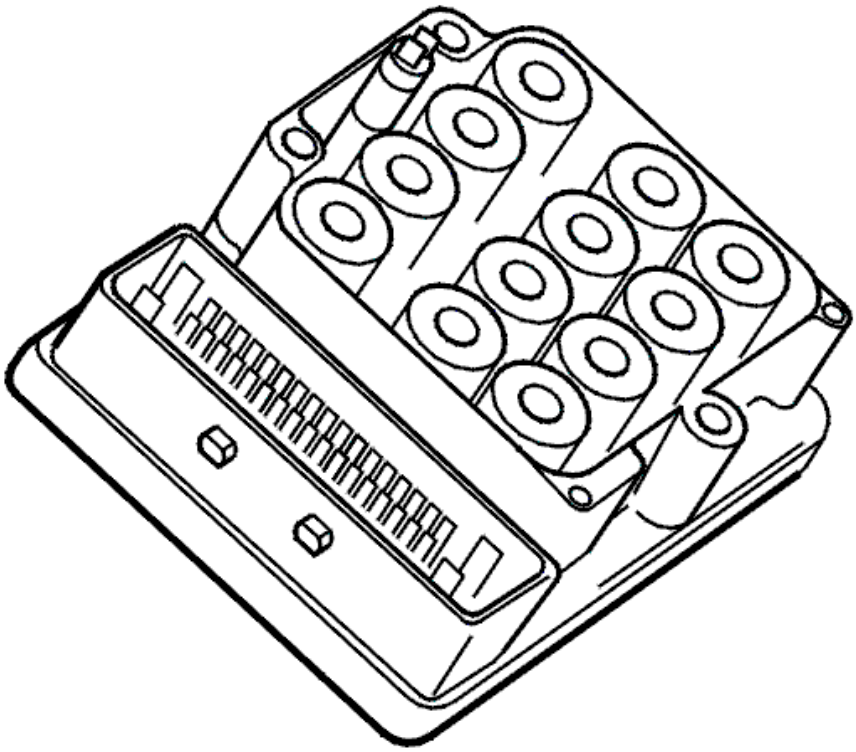

Fig. 132: ABS Control Module
Courtesy of VOLVO CARS CORPORATION

The control modules continually transmit and receive information via the vehicle's CAN data network (Controller Area Network). When voltage is supplied to the brake control module (BCM), the CAN controller that handles CAN communication is initialized.

Diagnostic trouble code BCM-C111542 is generated if CAN controller initialization fails.

The diagnostic trouble code can be diagnosed when the ignition is on.

Substitute Value

- TC is blocked.
- SC is blocked.
- AYC is blocked.
- All communication to and from the brake control module (BCM) is deactivated.

HINT: For information on abbreviations: BRAKE SYSTEM, ABBREVIATIONS

Possible Source

- Internal malfunction in brake control module (BCM).

Fault symptom[s]

- General warning light on.
- The stability function is not operational.
- The anti-skid function is not operational.

TROUBLESHOOTING BCM-C111542

CHECKING THE DIAGNOSTIC TROUBLE CODES (DTCS)

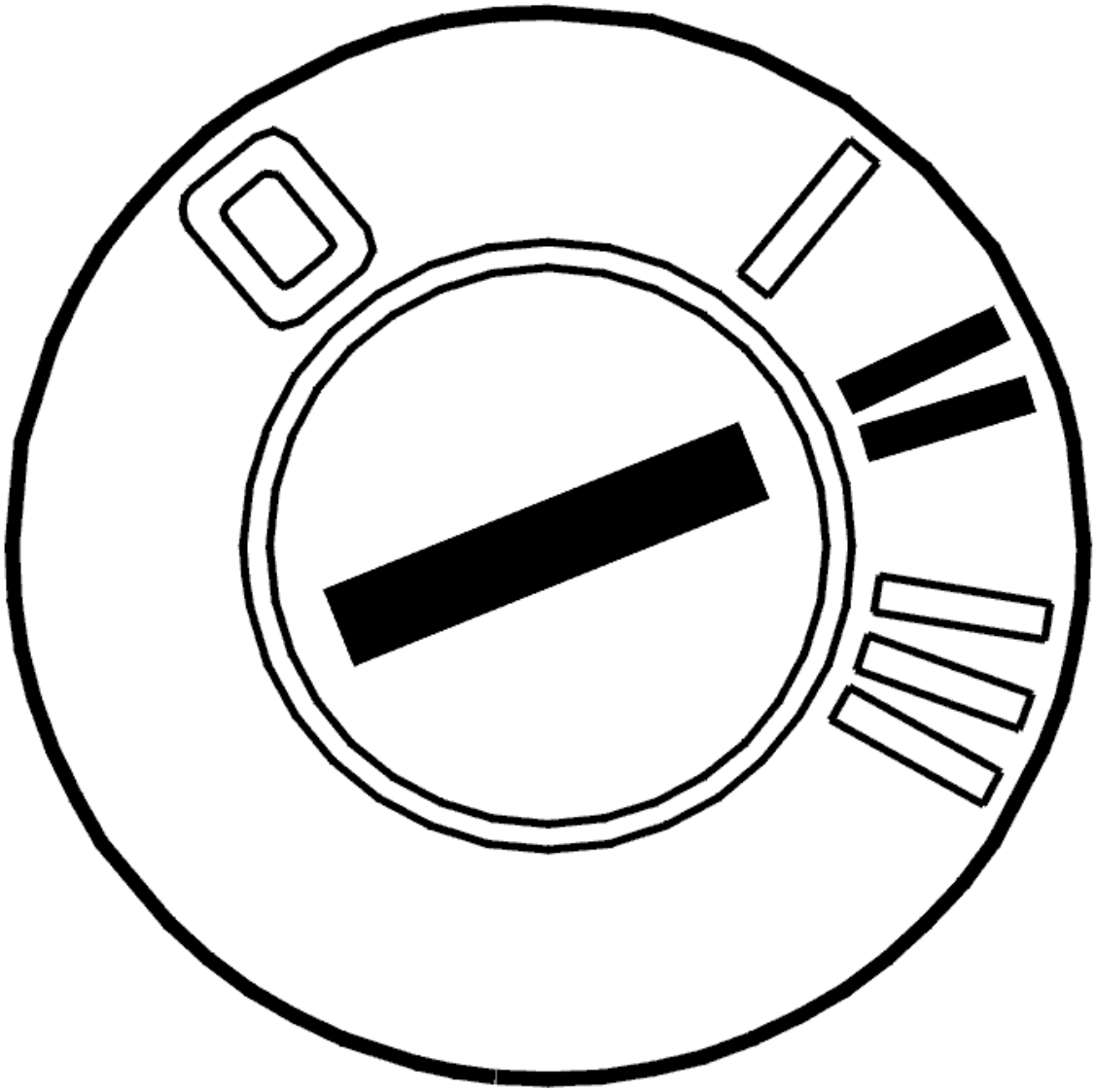

Fig. 133: Identifying Ignition ON
Courtesy of VOLVO CARS CORPORATION

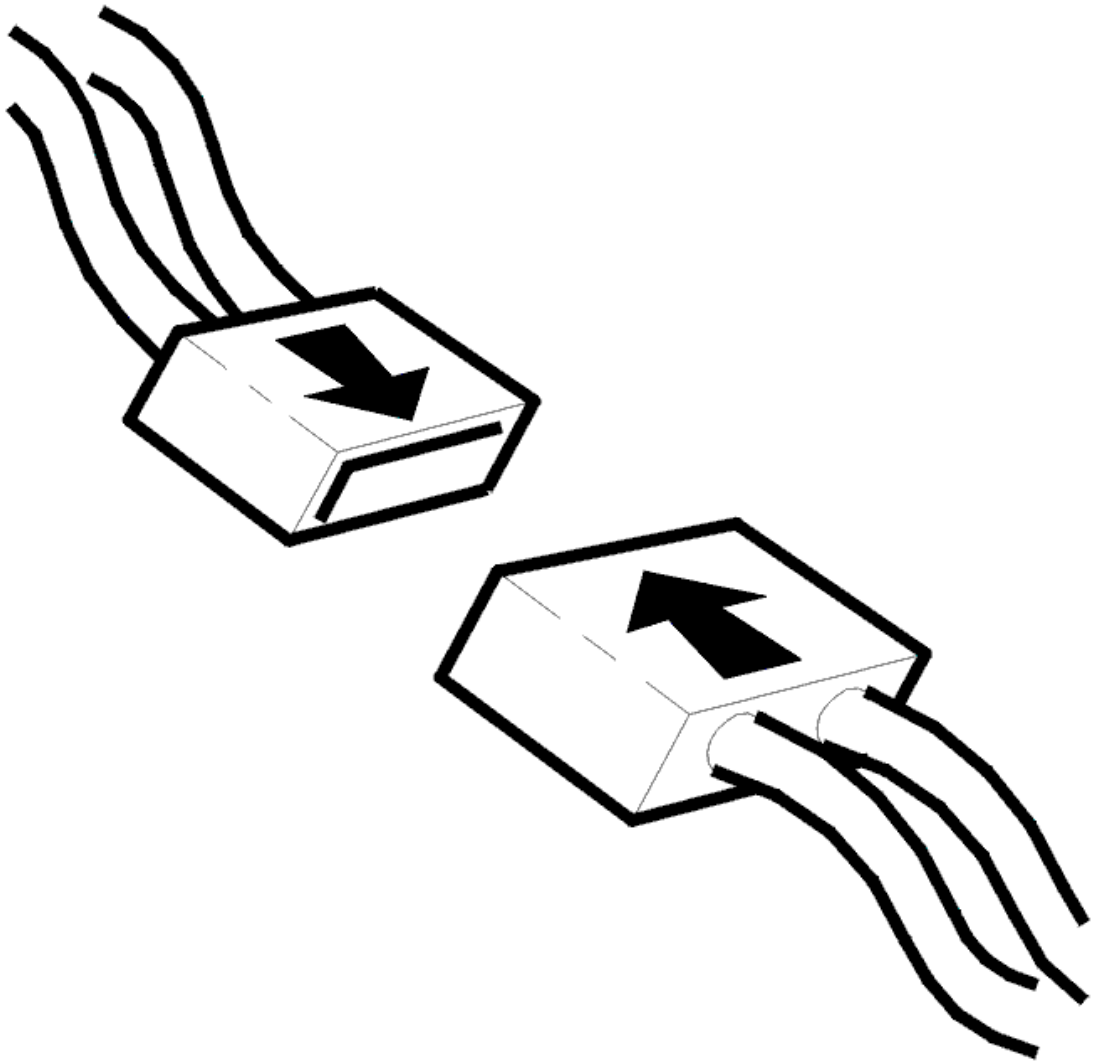

Fig. 134: Connecting Connector
Courtesy of VOLVO CARS CORPORATION

- Ignition off
- Check the connector of the brake control module (BCM) for contact resistance and oxidation.
- Reinstall the components, reconnect the connectors etc.
- Ignition on
- Wait approximately 60 seconds.
- Read the status of the diagnostic trouble code.

  If the diagnostic trouble code status is permanent, replace the brake control module (BCM).

  Other information

  - To access brake control module (BCM) connectors: **CONNECTING THE BREAKOUT BOX,**

BRAKE CONTROL MODULE (BCM)

- see **BRAKE CONTROL MODULE (BCM), REPLACING**
- see **CONTENTS**

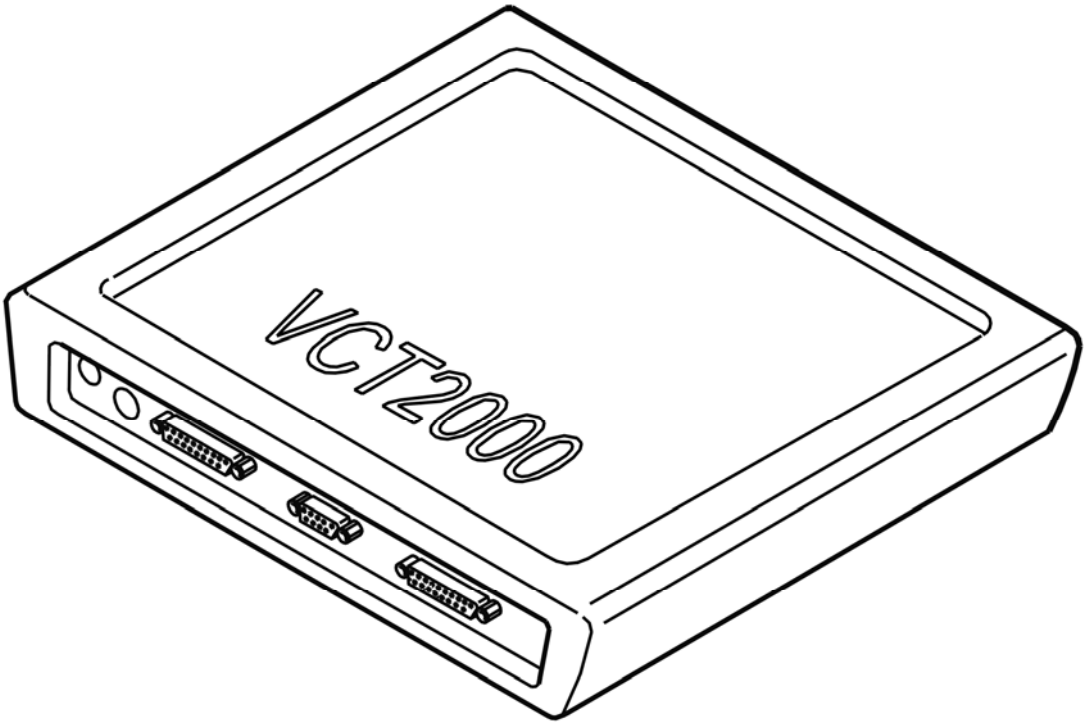

Fig. 135: Identifying VCT2000 Diagnostic Tool Symbol In VIDA
Courtesy of VOLVO CARS CORPORATION

Was the status of the diagnostic trouble code permanent?

- **YES**

  OKAY: Troubleshooting has been completed.

- **NO**

  see **INFORMATION**

INFORMATION

FAULT-TRACING INFORMATION

If the fault is intermittent, do not verify fault-tracing if the fault does not recur.

It is possible to view the information again, or leave fault-tracing for this diagnostic trouble code (DTC).

BCM-C111542: CONTROL MODULE. INTERNAL MALFUNCTION. GENERAL MEMORY ERROR (B6324S5; 2011-2012)

DIAGNOSTIC TROUBLE CODE INFORMATION BCM-C111542

see **DIAGNOSTIC TROUBLE CODE INFORMATION BCM-C111542**

TROUBLESHOOTING BCM-C111542

see **TROUBLESHOOTING BCM-C111542**

BCM-C111542: CONTROL MODULE. INTERNAL MALFUNCTION. GENERAL MEMORY ERROR (B8444S; 2005-2011)

DIAGNOSTIC TROUBLE CODE INFORMATION BCM-C111542

see **DIAGNOSTIC TROUBLE CODE INFORMATION BCM-C111542**

TROUBLESHOOTING BCM-C111542

see **TROUBLESHOOTING BCM-C111542**

BCM-C11164A: FACTORY TEST DSTC. INTERNAL MALFUNCTION. INCORRECT COMPONENT (B6324S; 2007-2010)

DIAGNOSTIC TROUBLE CODE INFORMATION BCM-C11164A

Condition

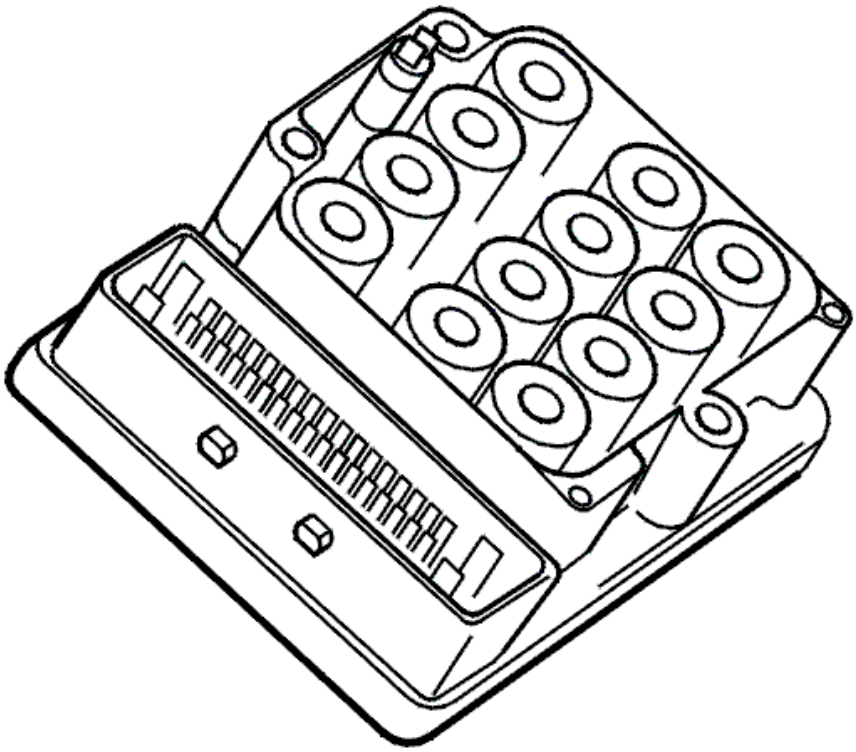

Fig. 136: ABS Control Module
Courtesy of VOLVO CARS CORPORATION

NOTE: The diagnostic trouble code only applies to vehicles equipped with DSTC.

Diagnostic trouble code BCM-C11164A is generated if the brake control module (BCM) registers that the factory test was not completed.

Substitute Value

- TC is blocked.
- SC is blocked.
- AYC is blocked.

HINT: For information on abbreviations: BRAKE SYSTEM, ABBREVIATIONS

Possible Source

- AYC regulation during the factory test.
- Factory test not completed.

NOTE: This diagnostic trouble code (DTC) is not due to an internal hardware fault in

the Brake control module (BCM) and must not be remedied by replacing the control module.

Fault symptom[s]

- General warning light on.
- Anti-spin is not operational.
- The stability function is not operational.
- The anti-skid function is not operational.

TROUBLESHOOTING BCM-C11164A

TROUBLESHOOTING INFORMATION

The diagnostic trouble code indicates that the brake system AYC function regulated, which means that the test cycle was not completed properly and must be redone.

BCM-C11164A: FACTORY TEST DSTC. INTERNAL MALFUNCTION. INCORRECT COMPONENT (B6324S5; 2011-2012)

DIAGNOSTIC TROUBLE CODE INFORMATION BCM-C11164A

see **DIAGNOSTIC TROUBLE CODE INFORMATION BCM-C11164A**

TROUBLESHOOTING BCM-C11164A

see **TROUBLESHOOTING BCM-C11164A**

BCM-C11164A: FACTORY TEST DSTC. INTERNAL MALFUNCTION. INCORRECT COMPONENT (B8444S; 2005-2011)

DIAGNOSTIC TROUBLE CODE INFORMATION BCM-C11164A

see **DIAGNOSTIC TROUBLE CODE INFORMATION BCM-C11164A**

TROUBLESHOOTING BCM-C11164A

see **TROUBLESHOOTING BCM-C11164A**

BCM-C111768: STABILITY FUNCTION. ALGORITHM ERROR. EVENT-CONTROLLED INFORMATION (B6324S; 2007-2010)

DIAGNOSTIC TROUBLE CODE INFORMATION BCM-C111768

Condition

If the brake control module (BCM) performs an extended start-up check of the DSTC system due to a number of malfunctions during the previous operating cycle, the diagnostic trouble code is generated in the subsequent operating cycle (ignition off and ignition on).

Substitute Value

- Nothing.

Possible Source

- The diagnostic trouble code was generated in the previous operating cycle.

Fault symptom[s]

- Information light on.

TROUBLESHOOTING BCM-C111768

CHECKING THE DIAGNOSTIC TROUBLE CODES (DTCS)

If diagnostic trouble code BCM-C111768 is stored by itself, it can be erased.

If diagnostic trouble code BCM-406B00 is stored together with BCM-C111768, troubleshoot according to information for diagnostic trouble code BCM-406B00.

Select an alternative:

1. Only BCM-C111768 is stored.

   OKAY: Troubleshooting has been completed.

2. Diagnostic trouble codes BCM-406B00 and BCM-C111768 are stored together.

ERASING DIAGNOSTIC TROUBLE CODES (DTCS)

ERASING DIAGNOSTIC TROUBLE CODES (DTCS)

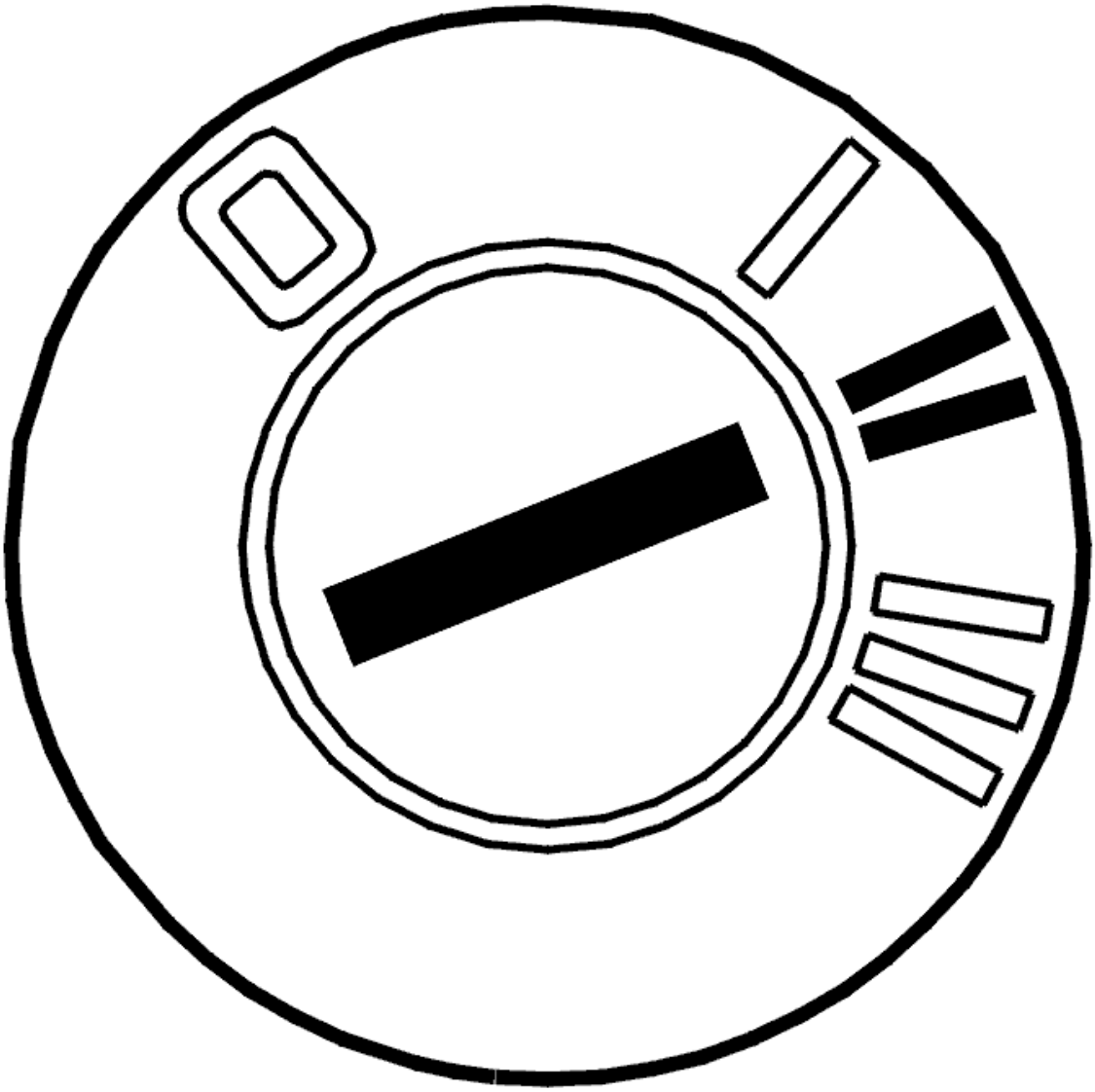

Fig. 137: Identifying Ignition ON
Courtesy of VOLVO CARS CORPORATION

- Ignition on

  Erase diagnostic trouble codes (DTCs).

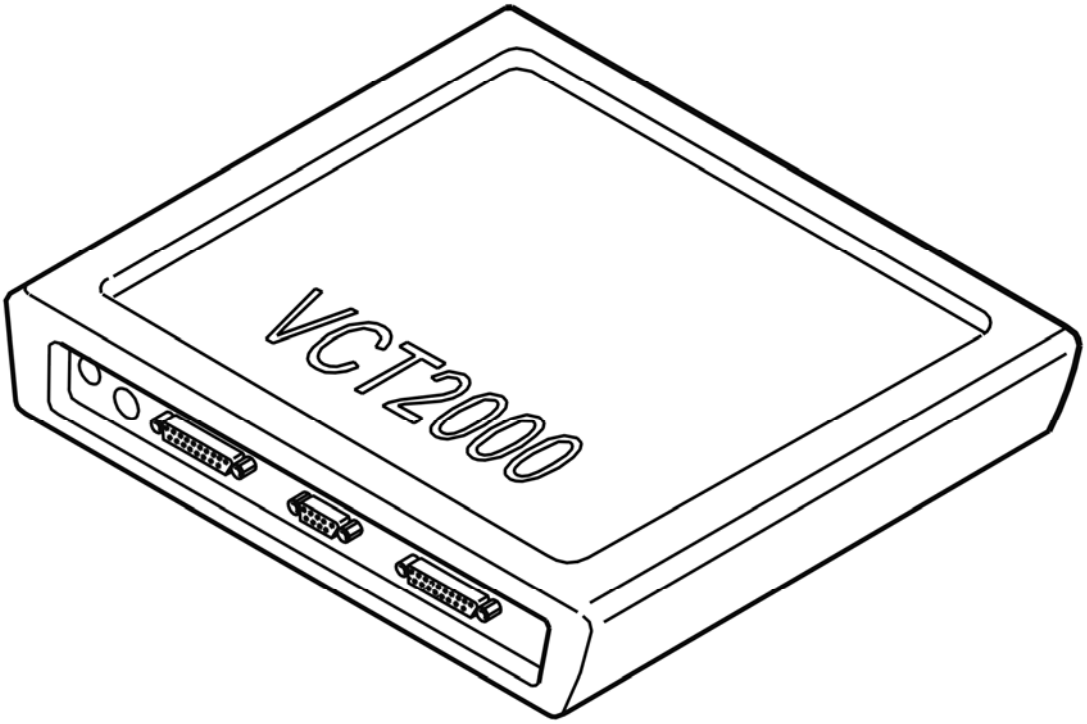

Fig. 138: Identifying VCT2000 Diagnostic Tool Symbol In VIDA
Courtesy of VOLVO CARS CORPORATION

BCM-C111768: STABILITY FUNCTION. ALGORITHM ERROR. EVENT-CONTROLLED INFORMATION (B6324S5; 2011-2012)

DIAGNOSTIC TROUBLE CODE INFORMATION BCM-C111768

see **DIAGNOSTIC TROUBLE CODE INFORMATION BCM-C111768**

TROUBLESHOOTING BCM-C111768

see **TROUBLESHOOTING BCM-C111768**

BCM-C111768: STABILITY FUNCTION. ALGORITHM ERROR. EVENT-CONTROLLED INFORMATION (B8444S; 2005-2011)

DIAGNOSTIC TROUBLE CODE INFORMATION BCM-C111768

see **DIAGNOSTIC TROUBLE CODE INFORMATION BCM-C111768**

TROUBLESHOOTING BCM-C111768

see **TROUBLESHOOTING BCM-C111768**

BCM-C111802: BRAKE SERVO DISENGAGE SWITCH. GENERAL MALFUNCTION INFORMATION. GENERAL SIGNAL ERROR (B6324S; 2007-2010)

DIAGNOSTIC TROUBLE CODE INFORMATION BCM-C111802

Condition

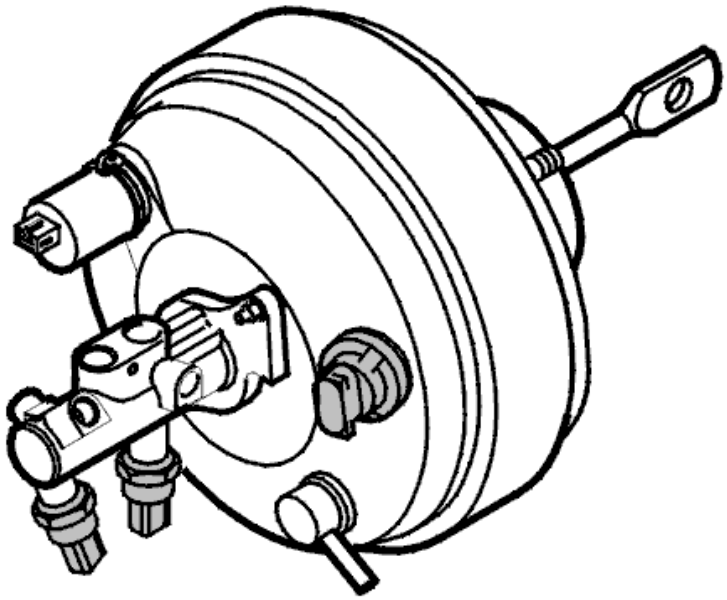

Fig. 139: Identifying Brake Booster
Courtesy of VOLVO CARS CORPORATION

NOTE: The diagnostic trouble code only applies to brake systems with DSTC.

The pedal pressure sensor, located in the brake booster, informs the brake control module (BCM) when the brake pedal is depressed. The brake control module (BCM) uses this information to disengage the active yaw control (AYC) stability function and engage active brake assist (BA) if the functions are active when the driver depresses the brake pedal.

Diagnostic trouble code BCM-C111802 is generated if the brake control module (BCM) registers an unreasonable signal from the pedal pressure sensor.

Substitute Value

- TC is blocked.
- SC is blocked.
- AYC is blocked.
- BA is blocked.

HINT: For information on abbreviations: BRAKE SYSTEM, ABBREVIATIONS

Possible Source

- Contact resistance or oxidation in the connectors or connections.
- Open circuit in the cables.
- The cables are short-circuited to ground or voltage.
- Damaged pedal pressure sensor.
- Damaged brake control module (BCM).

Fault symptom[s]

- General warning light on.
- Anti-spin is not operational.
- The stability function is not operational.
- The anti-skid function is not operational.

TROUBLESHOOTING BCM-C111802

CHECKING THE CONNECTORS

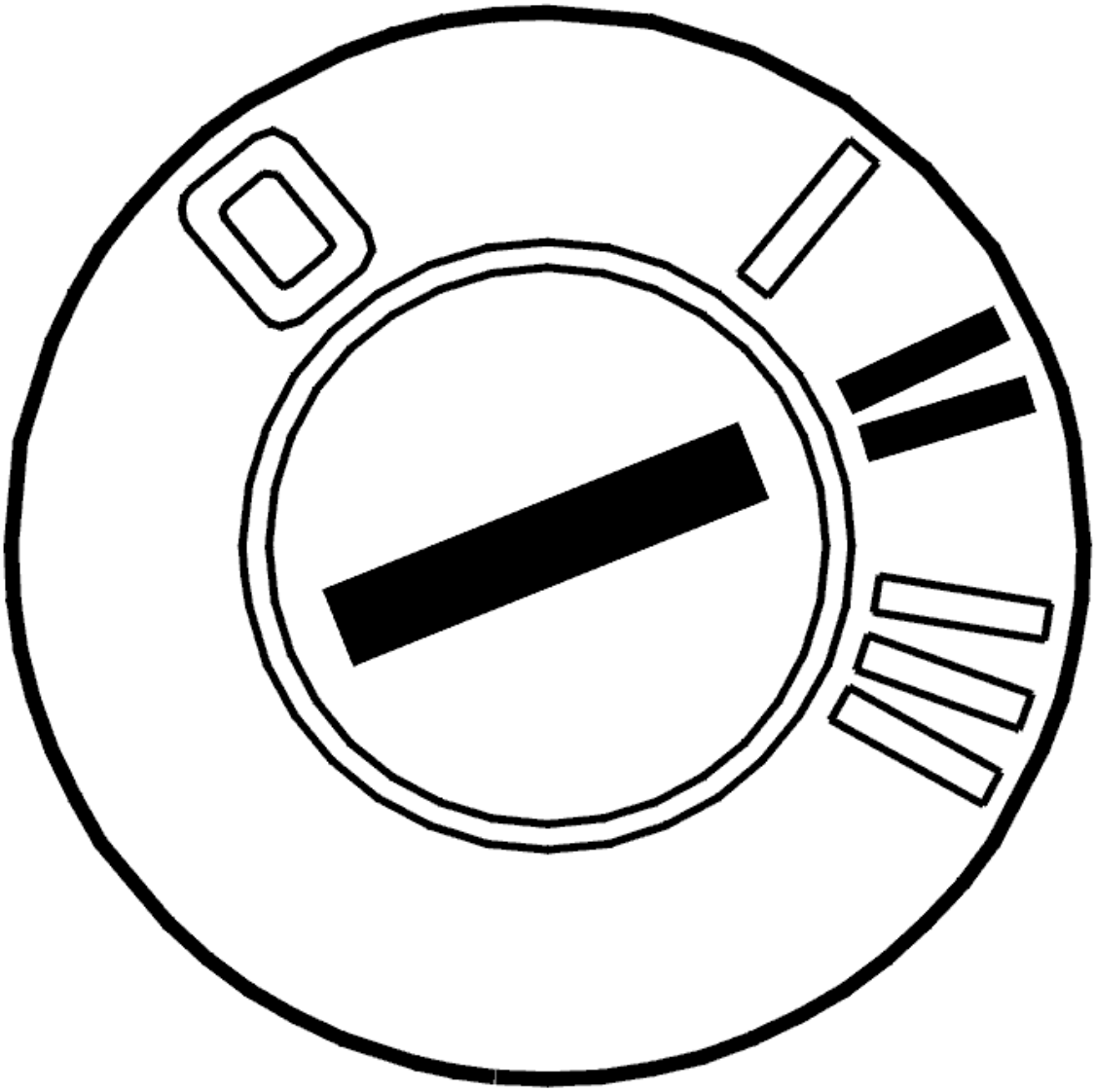

Fig. 140: Identifying Ignition ON
Courtesy of VOLVO CARS CORPORATION

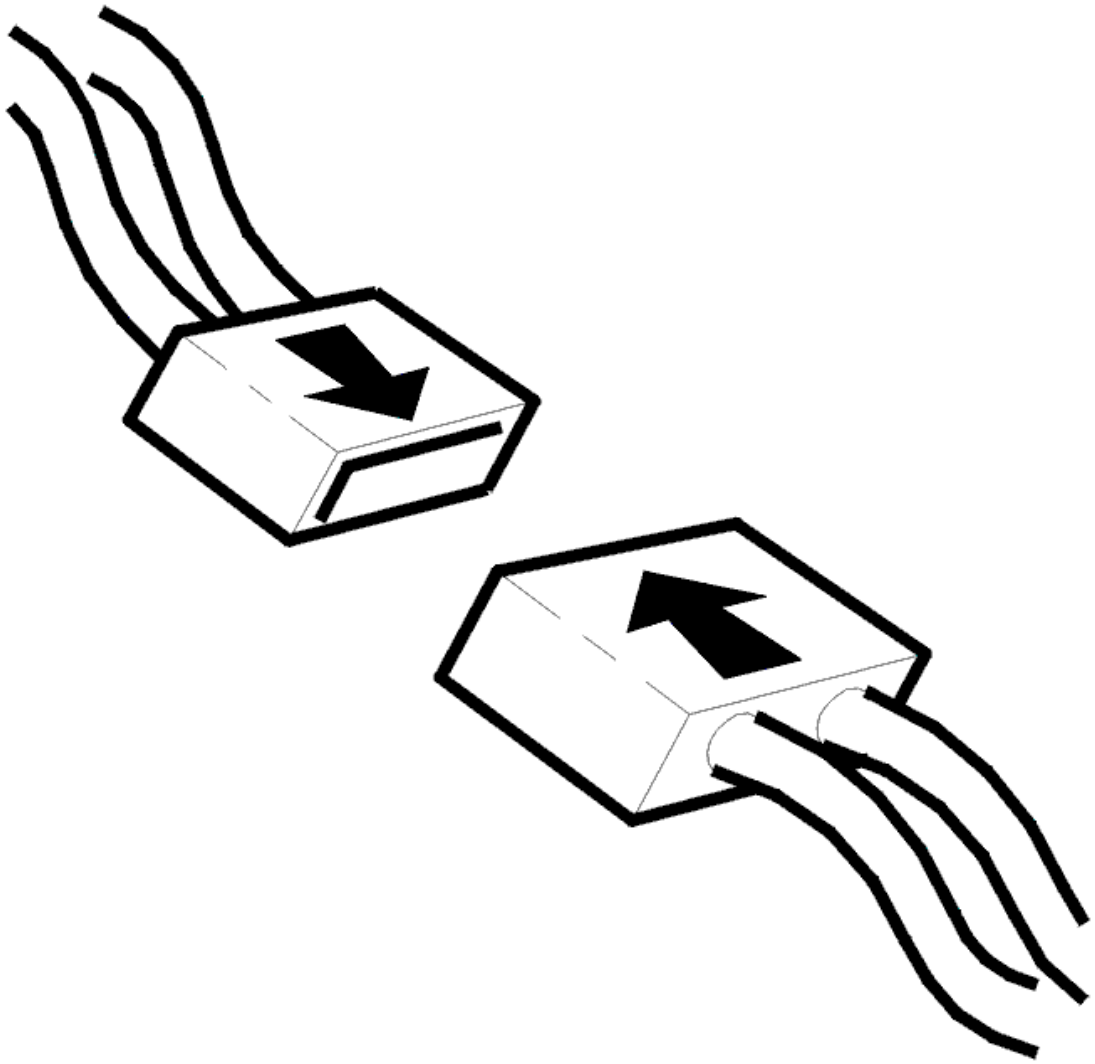

Fig. 141: Connecting Connector
Courtesy of VOLVO CARS CORPORATION

- Ignition off
- Check the connectors of the brake control module (BCM) and the pedal pressure sensor for contact resistance and oxidation.
- Reinstall the components, reconnect the connectors etc.
- Ignition on
- Read off the pedal pressure sensor status.

  The status should be OFF if the brake pedal is not actuated and should switch to ON when the brake pedal is actuated. If the status changes, the malfunction was probably caused by contact resistance or oxidation in the connectors of the brake control module (BCM) or the pedal pressure sensor.

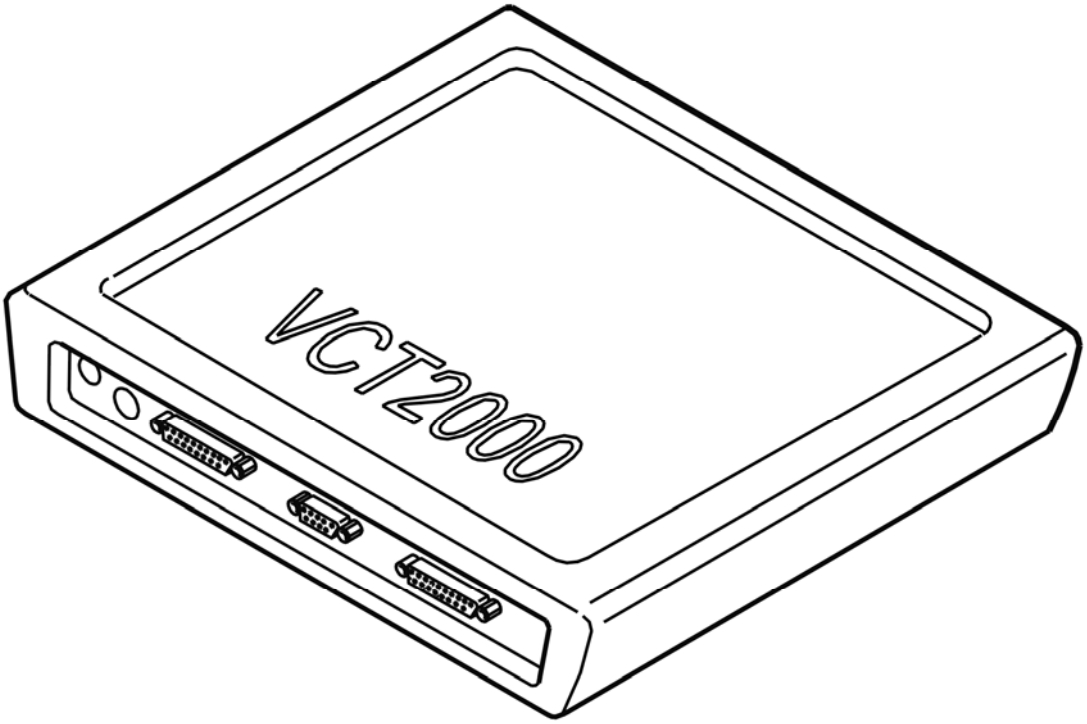

Fig. 142: Identifying VCT2000 Diagnostic Tool Symbol In VIDA
Courtesy of VOLVO CARS CORPORATION

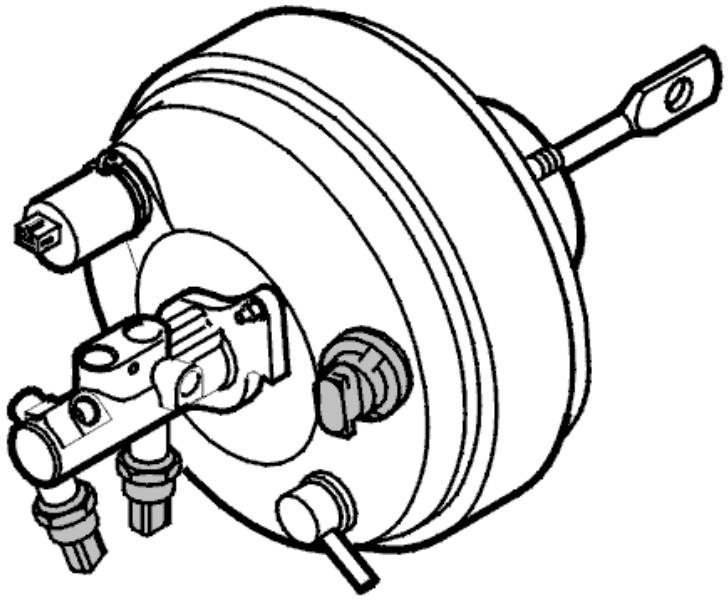

Fig. 143: Identifying Brake Booster
Courtesy of VOLVO CARS CORPORATION

Does the status change?

- **YES**

  OKAY: Troubleshooting has been completed.

- **NO**

  see **CHECKING THE WIRING**

CHECKING THE WIRING

Check the cables for open circuit, short-circuit to ground and short-circuit to voltage.

Measure between:

- Pedal pressure sensor terminal #1 and brake control module (BCM) terminal #27 (#A27).
- Pedal pressure sensor terminal #2 and brake control module (BCM) terminal #30 (#A30).
- Pedal pressure sensor terminal #5 and brake control module (BCM) terminal #28 (#A28).

Remedy as necessary.

Other information

- see **CONNECTING THE BREAKOUT BOX, BRAKE CONTROL MODULE (BCM)**
- see **SIGNAL SPECIFICATION, BRAKE CONTROL MODULE (BCM) WITH DSTC (DYNAMIC STABILITY AND TRACTION CONTROL)**
- For pedal pressure sensor (brake booster) replacement:
  - For B6xxxx, see **POWER BRAKE BOOSTER, REPLACING**
  - For B5xxxx, see **POWER BRAKE BOOSTER, REPLACING** .
- see **CONTENTS**

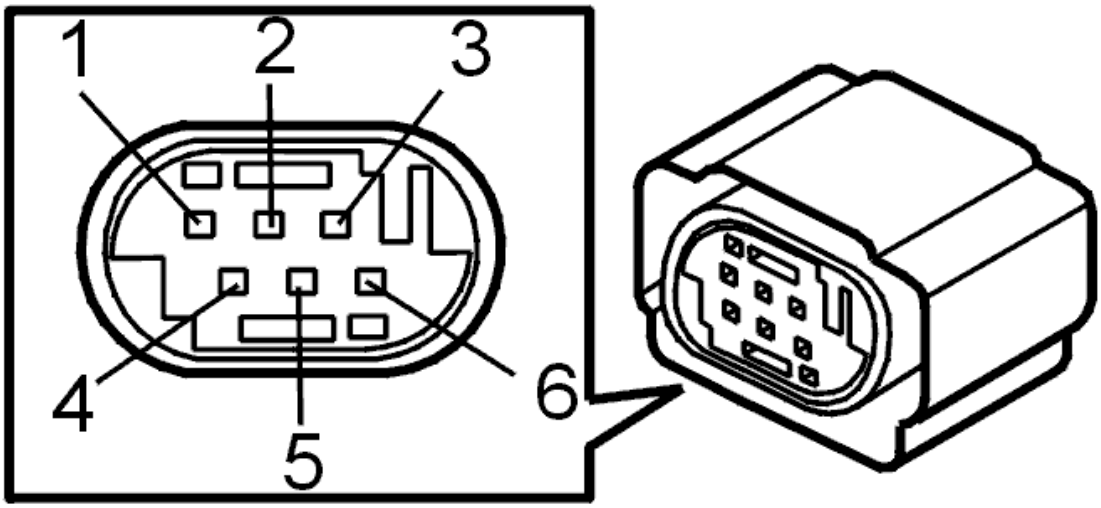

Fig. 144: Identifying Active Yaw Control Sensor Connector Terminals
Courtesy of VOLVO CARS CORPORATION

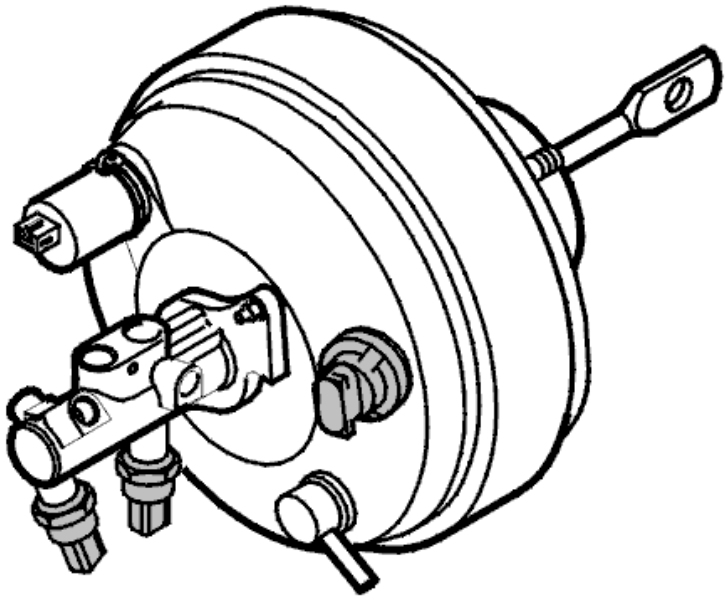

Fig. 145: Identifying Brake Booster
Courtesy of VOLVO CARS CORPORATION

Was a malfunction detected?

- **YES**

  see **VERIFICATION**

- **NO**

  see **CHECKING THE CONNECTORS**

CHECKING THE CONNECTORS

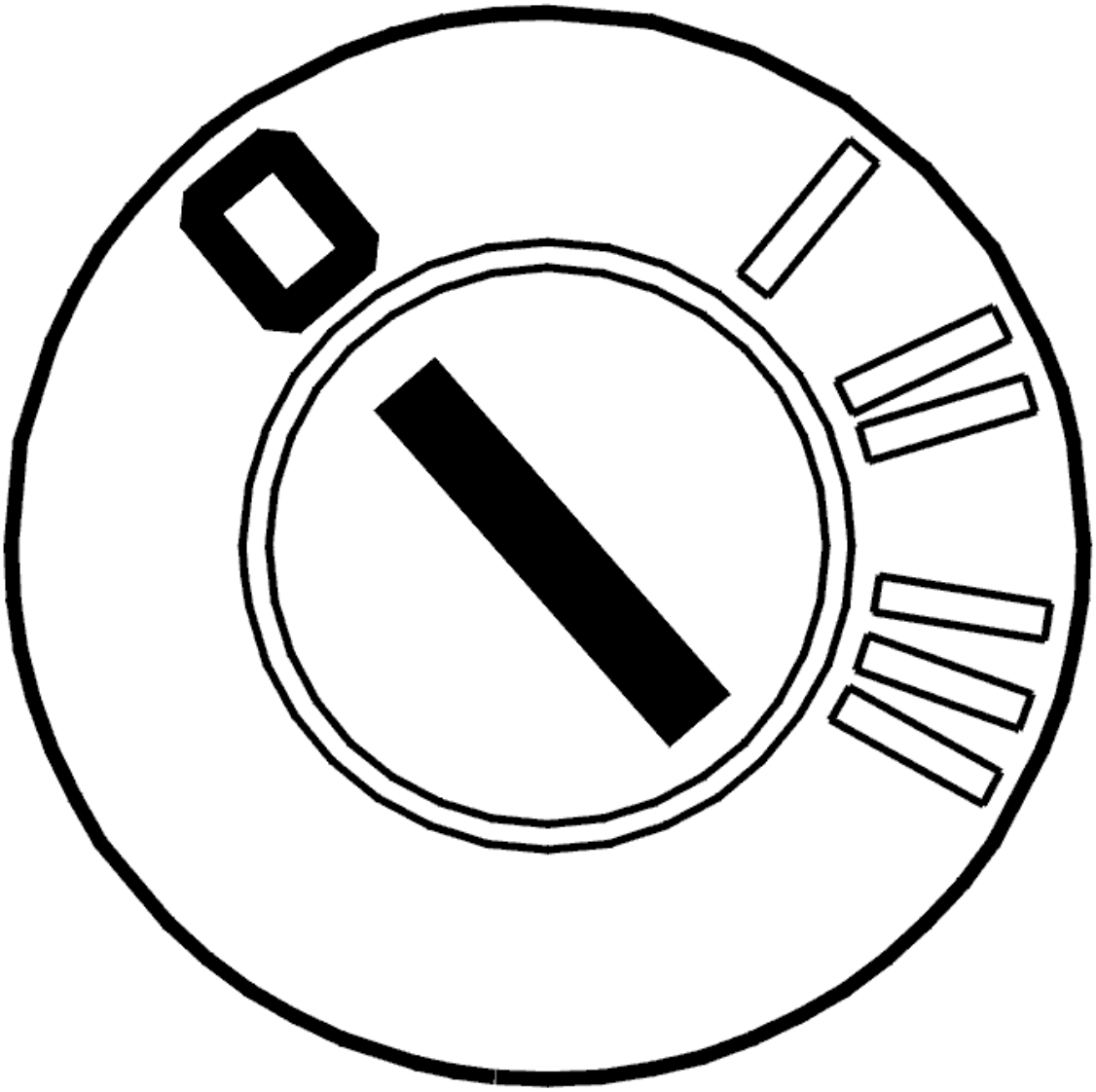

Fig. 146: Identifying Ignition OFF
Courtesy of VOLVO CARS CORPORATION

- Ignition off
- Connect a breakout box to the wiring harness (not to the brake control module (BCM)).

  Connect an ohmmeter between terminals #28 and #27 on the breakout box. Resistance should be infinite when the brake pedal is not activated and 0 ohms when the brake pedal is depressed.

  Then connect the ohmmeter between terminals #28 and #30 on the breakout box. Resistance should be 0 ohms when the brake pedal is not activated and infinite when the brake pedal is depressed.

  If resistance is incorrect, replace the brake booster.

  Other information

- see **CONNECTING THE BREAKOUT BOX, BRAKE CONTROL MODULE (BCM)**
- For XC90 B6xxxx, see **POWER BRAKE BOOSTER, REPLACING**
- For XC90 B5xxxx, see **POWER BRAKE BOOSTER, REPLACING** .

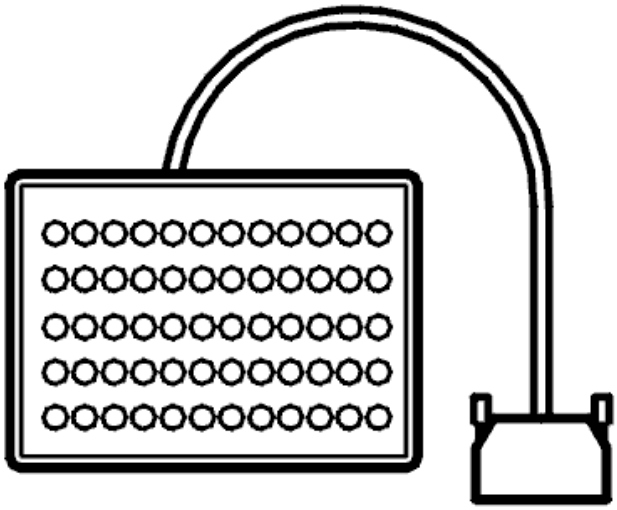

Fig. 147: Breakout Box
Courtesy of VOLVO CARS CORPORATION

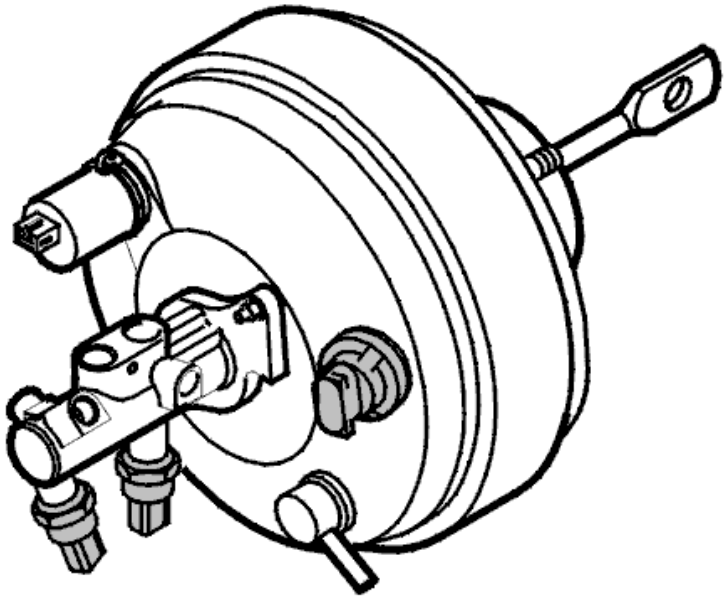

Fig. 148: Identifying Brake Booster

Courtesy of VOLVO CARS CORPORATION

Was the resistance OK?

- **YES**

  FAULT NOT FOUND: Troubleshooting has been completed.

- **NO**

  see **VERIFICATION**

VERIFICATION

VERIFICATION

HINT: After carrying out the repair, check that the malfunction has been remedied.

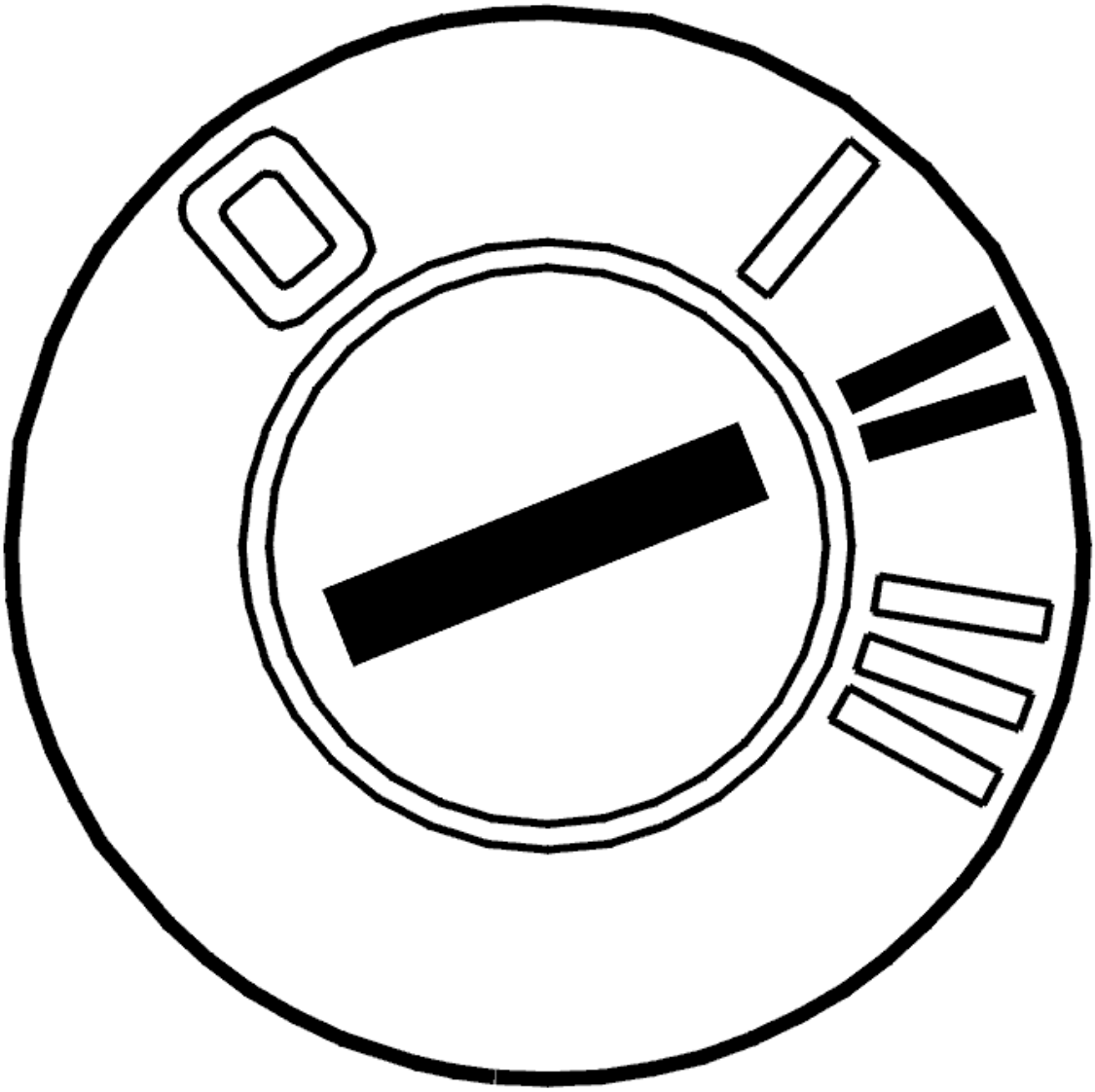

Fig. 149: Identifying Ignition ON
Courtesy of VOLVO CARS CORPORATION

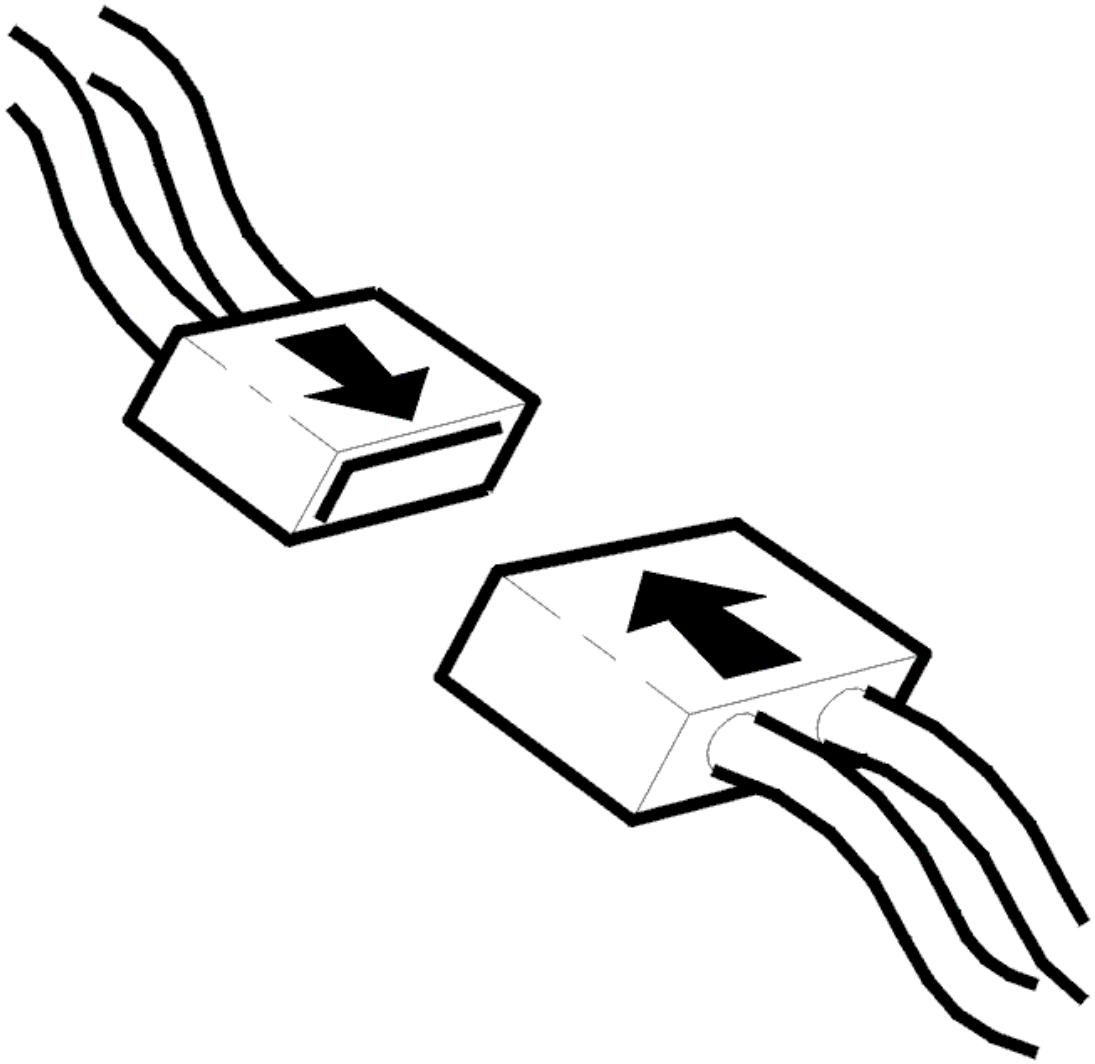

Fig. 150: Connecting Connector
Courtesy of VOLVO CARS CORPORATION

- Ignition off
- Reconnect the connectors, components, etc.
- Test-drive the vehicle according to **TEST DRIVE FORM (DSTC (DYNAMIC STABILITY AND TRACTION CONTROL) /BRAKE CONTROL MODULE), DESCRIPTION** .

NOTE: **Do not turn off the ignition between test-driving and reading out diagnostic trouble codes. This is to obtain the correct status of the diagnostic trouble codes.**

Then read out the diagnostic trouble code's status without turning off the ignition after the test-drive.

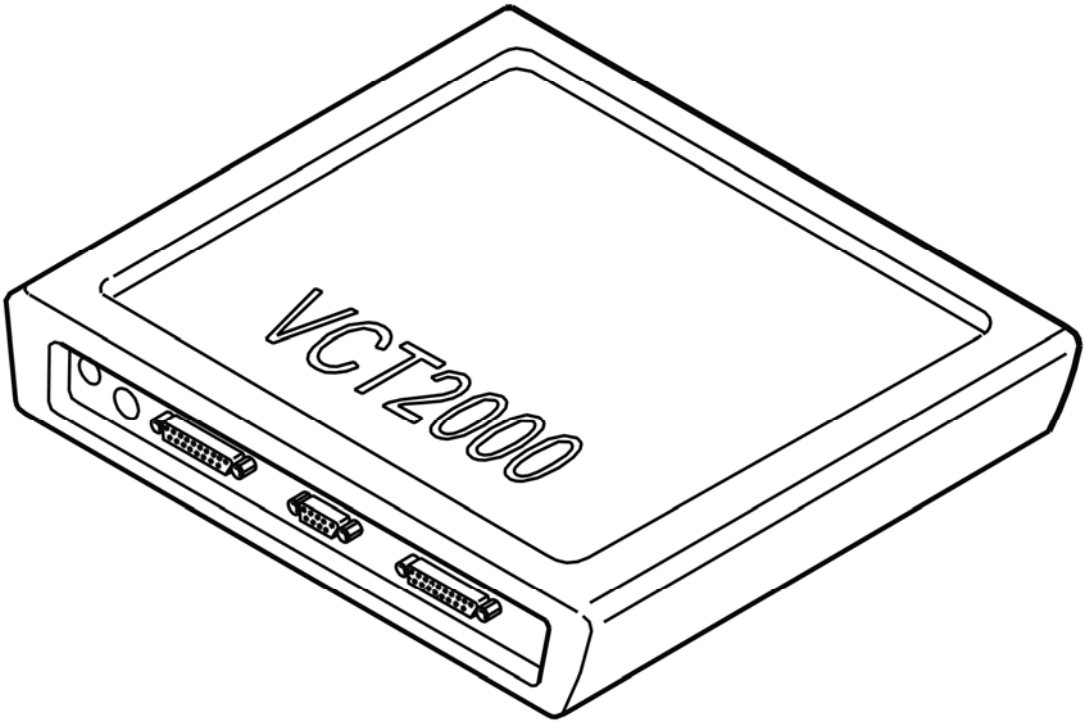

Fig. 151: Identifying VCT2000 Diagnostic Tool Symbol In VIDA
Courtesy of VOLVO CARS CORPORATION

Is the status of the diagnostic trouble code intermittent?

- **YES**

  VERIFIED: Troubleshooting has been completed.

- **NO**

  see **INFORMATION**

INFORMATION

FAULT-TRACING INFORMATION

The fault should have been detected and remedied. As this is not the case fault-tracing has failed.

Exit fault-tracing for this diagnostic trouble code (DTC) or make another attempt.

BCM-C111802: BRAKE SERVO DISENGAGE SWITCH. GENERAL MALFUNCTION INFORMATION. GENERAL SIGNAL ERROR (B6324S5;

2011-2012)

DIAGNOSTIC TROUBLE CODE INFORMATION BCM-C111802

see **DIAGNOSTIC TROUBLE CODE INFORMATION BCM-C111802**

TROUBLESHOOTING BCM-C111802

see **TROUBLESHOOTING BCM-C111802**

BCM-C111802: BRAKE SERVO DISENGAGE SWITCH. GENERAL MALFUNCTION INFORMATION. GENERAL SIGNAL ERROR (B8444S; 2005-2011)

DIAGNOSTIC TROUBLE CODE INFORMATION BCM-C111802

see **DIAGNOSTIC TROUBLE CODE INFORMATION BCM-C111802**

TROUBLESHOOTING BCM-C111802

see **TROUBLESHOOTING BCM-C111802**

BCM-E000: CONTROL MODULE COMMUNICATION. FAULTY COMMUNICATION (2003-2004)

DIAGNOSTIC TROUBLE CODE (DTC) INFORMATION BCM-E000

Condition

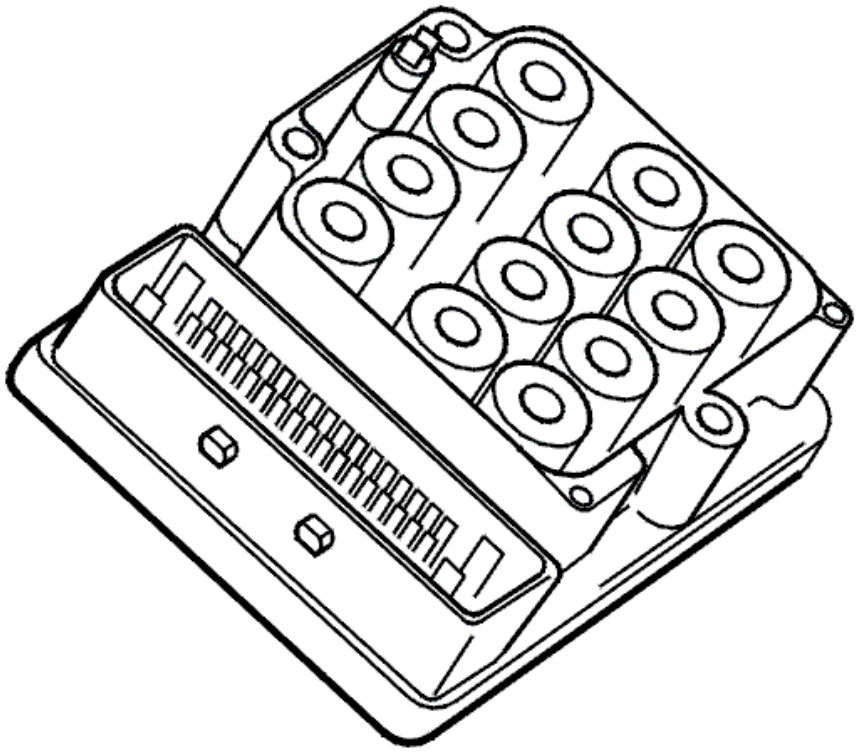

Fig. 152: ABS Control Module
Courtesy of VOLVO CARS CORPORATION

The control modules transmit and receive information via a standardized serial communication method - CAN (Control Area Network). The diagnostic trouble code (DTC) is stored if the control module registers serious interference (CAN communication blocked).

NOTE: **In the event of system communication problems, it is not possible to communicate with the control module. Therefore it will only be possible to read off the fault if it is intermittent.**

Substitute Value

- The control module shuts itself off ("bus-off")

  HINT: The control module will remain shut off until the power supply is broken (15, 30, X). When the power supply is connected the control module will make a new attempt to communicate.

Possible Source

- Short-circuit between the control area network (CAN) wiring
- Open-circuit in the control area network (CAN) wiring
- Internal fault in the control module

- Internal fault in another control module in the same part of the control area network (CAN).

Fault symptom[s]

- The ABS warning lamp is lit
- No ABS function
- Message in the display.

FAULTY COMMUNICATION

see **FAULTY COMMUNICATION**

BCM-E000: CONTROL MODULE COMMUNICATION. FAULTY COMMUNICATION (B5254T2; 2005-2007)

DIAGNOSTIC TROUBLE CODE (DTC) INFORMATION BCM-E000

see **DIAGNOSTIC TROUBLE CODE (DTC) INFORMATION BCM-E000**

BCM-E000: CONTROL MODULE COMMUNICATION. FAULTY COMMUNICATION (B6294T; 2005-2006)

DIAGNOSTIC TROUBLE CODE (DTC) INFORMATION BCM-E000

see **DIAGNOSTIC TROUBLE CODE (DTC) INFORMATION BCM-E000**

BCM-E003: CONFIGURATION FAULT. FAULTY CONFIGURATION (2003-2004)

DIAGNOSTIC TROUBLE CODE (DTC) INFORMATION BCM-E003

Condition

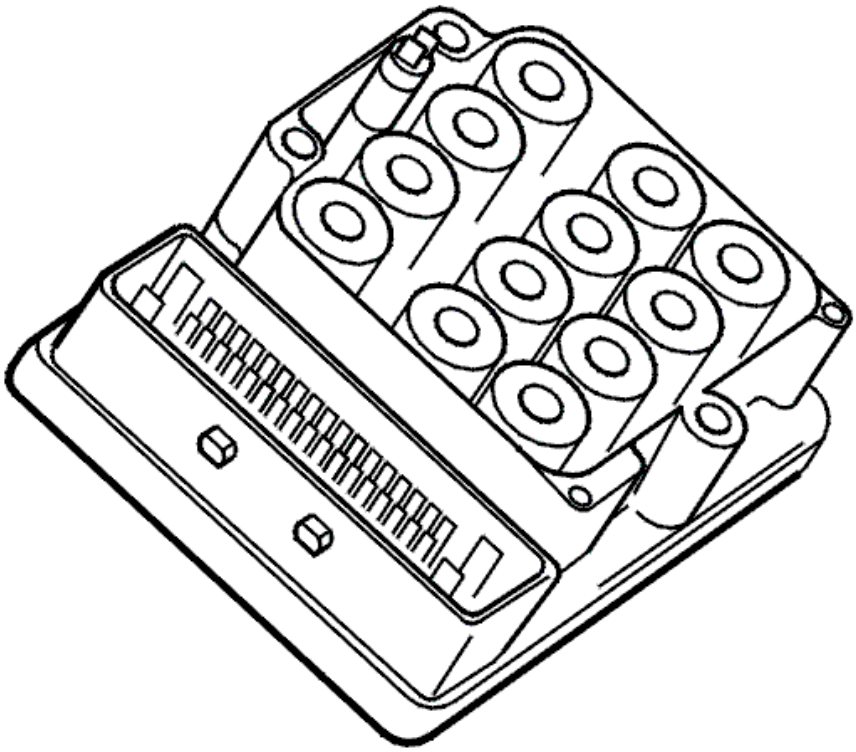

Fig. 153: ABS Control Module
Courtesy of VOLVO CARS CORPORATION

The control module compares its configuration ID with the signal configuration transmitted on the control area network (CAN) by the central electronic module (CEM). If the configuration IDs do not correspond the fault code is stored. The diagnostic trouble code (DTC) is also stored if the communication between the control module and the central electronic module (CEM) is interrupted.

NOTE: **In the event of an open-circuit in both the control area network (CAN) cables, it is not possible to communicate with the control module. Therefore it will only be possible to read off the diagnostic trouble code (DTC) if this type of fault is intermittent. When the diagnostic trouble code (DTC) is stored, the control module responds to the diagnostic command, however normal control area network (CAN) communication does not work. ("Expulsion mode")**

Substitute Value

- None.

Possible Source

- Faulty control area network (CAN) configuration ID. (The node is not intended for this car, for example a used control module with different software/hardware.)

- Open-circuit in the control area network (CAN) wiring between the control module and the central electrical module (CEM).

NOTE: **This diagnostic trouble code (DTC) is not due to an internal hardware fault in the Brake control module (BCM) and must not be remedied by replacing the control module.**

Fault symptom[s]

- The ABS warning lamp is lit
- No ABS function
- Message in the display.

FAULTY CONFIGURATION (2003)

see **FAULTY CONFIGURATION (2003)**

FAULTY CONFIGURATION (2004)

see **FAULTY CONFIGURATION (2004)**

BCM-E003: CONFIGURATION FAULT. FAULTY CONFIGURATION (B5254T2; 2005-2007)

DIAGNOSTIC TROUBLE CODE (DTC) INFORMATION BCM-E003

see **DIAGNOSTIC TROUBLE CODE (DTC) INFORMATION BCM-E003**

BCM-E003: CONFIGURATION FAULT. FAULTY CONFIGURATION (B6294T; 2005-2006)

DIAGNOSTIC TROUBLE CODE (DTC) INFORMATION BCM-E003

see **DIAGNOSTIC TROUBLE CODE (DTC) INFORMATION BCM-E003**

BCM-U000100: HS-CAN COMMUNICATION BUS. GENERAL MALFUNCTION INFORMATION. NO INFORMATION ON MALFUNCTION TYPE (B6324S; 2007-2010)

DIAGNOSTIC TROUBLE CODE INFORMATION BCM-U000100

Condition

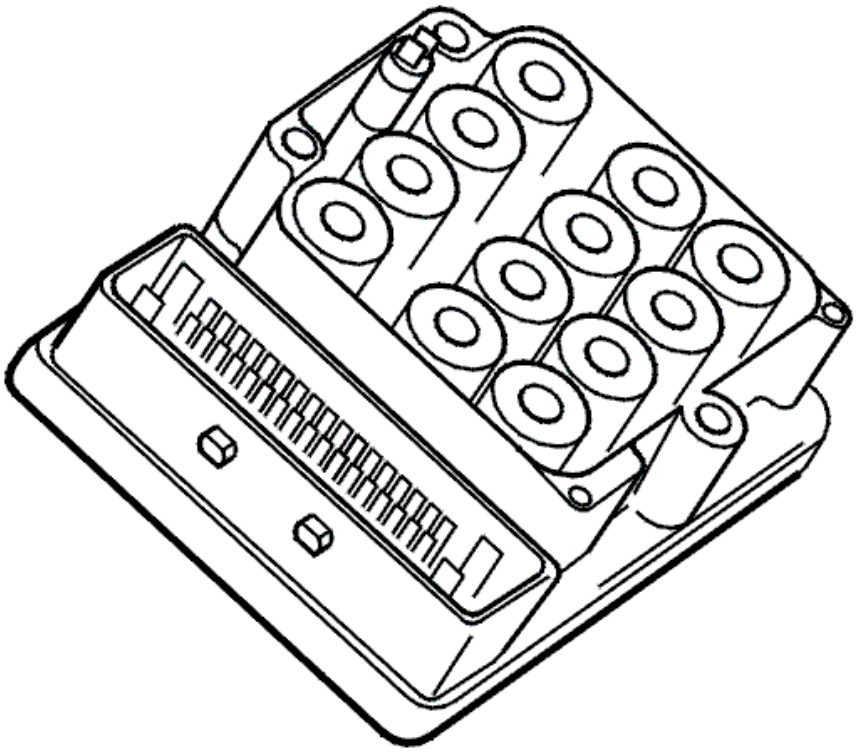

Fig. 154: ABS Control Module
Courtesy of VOLVO CARS CORPORATION

The control modules transmit and receive information via a standardized serial communication method - CAN (Controller Area Network). The diagnostic trouble code (DTC) is generated if the brake control module (BCM) registers serious interference (CAN communication blocked).

NOTE: **In the event of a system communication malfunction, it is not possible to communicate with the brake control module (BCM). Thus, the diagnostic trouble code can only be read out if the malfunction is intermittent.**

Substitute Value

- The brake control module (BCM) deactivates itself ("bus off")

  HINT: The control module will remain deactivated until the voltage feed is interrupted (15, 30, X). When the voltage feed is reconnected, the control module will make new attempts to communicate.

Possible Source

- Short-circuit between CAN cables.
- Open circuit in CAN cables.
- Internal malfunction in brake control module (BCM).

- Internal malfunction in another control module in the same part of the CAN network.

Fault symptom[s]

- ABS warning light on.
- No ABS function.
- Message in the text display.

TROUBLESHOOTING

see **TROUBLESHOOTING**

BCM-U000100: HS-CAN COMMUNICATION BUS. GENERAL MALFUNCTION INFORMATION. NO INFORMATION ON MALFUNCTION TYPE (B6324S5; 2011-2012)

DIAGNOSTIC TROUBLE CODE INFORMATION BCM-U000100

see **DIAGNOSTIC TROUBLE CODE INFORMATION BCM-U000100**

TROUBLESHOOTING

see **TROUBLESHOOTING**

BCM-U000100: HS-CAN COMMUNICATION BUS. GENERAL MALFUNCTION INFORMATION. NO INFORMATION ON MALFUNCTION TYPE (B8444S; 2005-2011)

DIAGNOSTIC TROUBLE CODE INFORMATION BCM-U000100

see **DIAGNOSTIC TROUBLE CODE INFORMATION BCM-U000100**

TROUBLESHOOTING

see **TROUBLESHOOTING**

BCM-U010000: FAILED COMMUNICATION WITH THE ENGINE CONTROL MODULE (ECM). GENERAL MALFUNCTION INFORMATION. NO INFORMATION ON MALFUNCTION TYPE (B6324S; 2007-2010)

DIAGNOSTIC TROUBLE CODE INFORMATION BCM-U010000

Condition

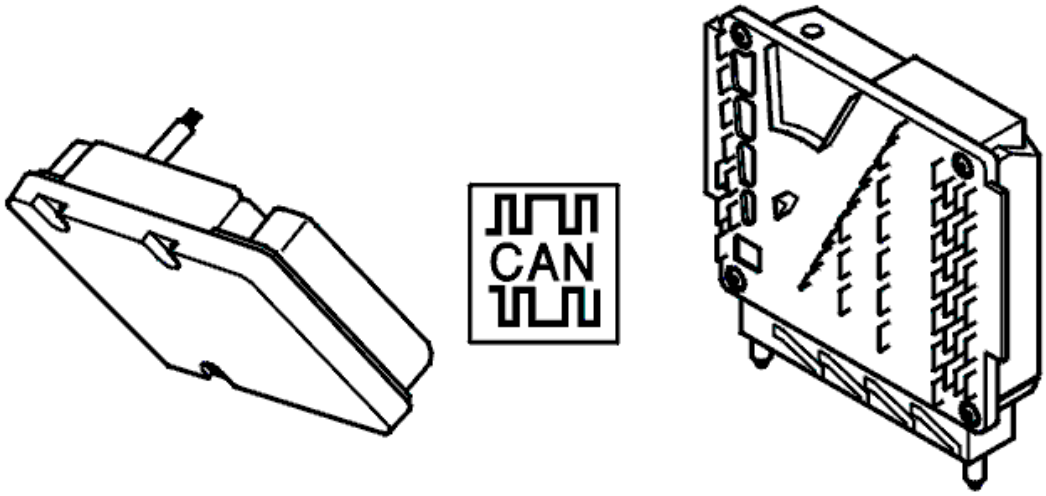

Fig. 155: Identifying Brake Control Module (BCM) & Engine Control Module (ECM)
Courtesy of VOLVO CARS CORPORATION

NOTE: The diagnostic trouble code only applies to vehicles equipped with STC/DSTC.

Diagnostic trouble code BCM-U010000 is generated if the brake control module registers that there is no speed or torque signal from the engine control module (ECM) from more than 500 ms.

Substitute Value

- TC is blocked.
- SC is blocked.
- AYC is blocked.

HINT: For information on abbreviations: BRAKE SYSTEM, ABBREVIATIONS

Possible Source

- Open circuit or short circuit on CAN cable.
- Malfunction in engine control module (ECM).

Fault symptom[s]

- General warning light on.
- Anti-spin is not operational.
- The stability function is not operational.
- The anti-skid function is not operational.

TROUBLESHOOTING BCM-U010000

CHECKING DIAGNOSTIC TROUBLE CODES (DTCS) IN THE CENTRAL ELECTRONIC MODULE

CHECKING OTHER DIAGNOSTIC TROUBLE CODES (DTCS)

In the event of communication problems, the fault may exist in other parts of the communications network.

The role of the central electronic module is to generally control the communications network and to store diagnostic trouble codes (DTCs) in the event of communication problems between control modules.

If there are diagnostic trouble codes (DTCs) stored for communication problems in the central electronic module, stop the fault tracing and fault trace the central electronic module.

Were diagnostic trouble codes (DTCs) for communication problems stored in the central electronic module?

- **YES**

  OKAY: Troubleshooting has been completed.

- **NO**

  see **CHECKING DIAGNOSTIC TROUBLE CODES IN THE ENGINE CONTROL MODULE (ECM)**

CHECKING DIAGNOSTIC TROUBLE CODES IN THE ENGINE CONTROL MODULE (ECM)

The diagnostic trouble code is due to no torque signal or rpm signal from the engine for more than 500 ms. The brake control module (BCM) uses the signals to control the stability function.

If there are any diagnostic trouble codes stored for the engine control module (ECM), perform troubleshooting of these first.

Were any diagnostic trouble codes stored for the engine control module (ECM)?

- **YES**

  OKAY: Troubleshooting has been completed.

- **NO**

  see **CHECKING THE DIAGNOSTIC TROUBLE CODES (DTCS)**

CHECKING THE DIAGNOSTIC TROUBLE CODES (DTCS)

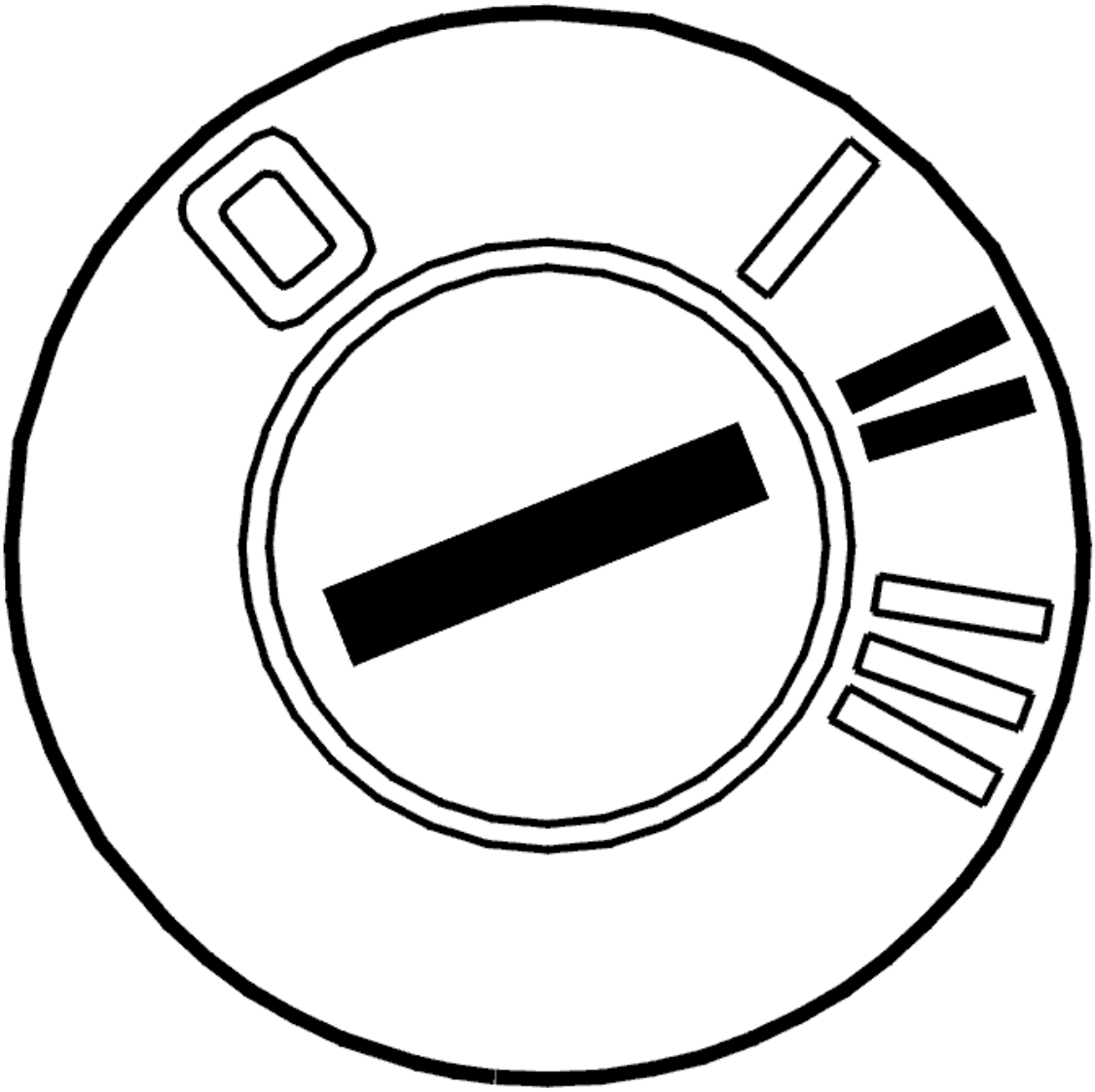

Fig. 156: Identifying Ignition ON
Courtesy of VOLVO CARS CORPORATION

- Ignition on
- Wait approximately 60 seconds.
- Read the status of the diagnostic trouble code.

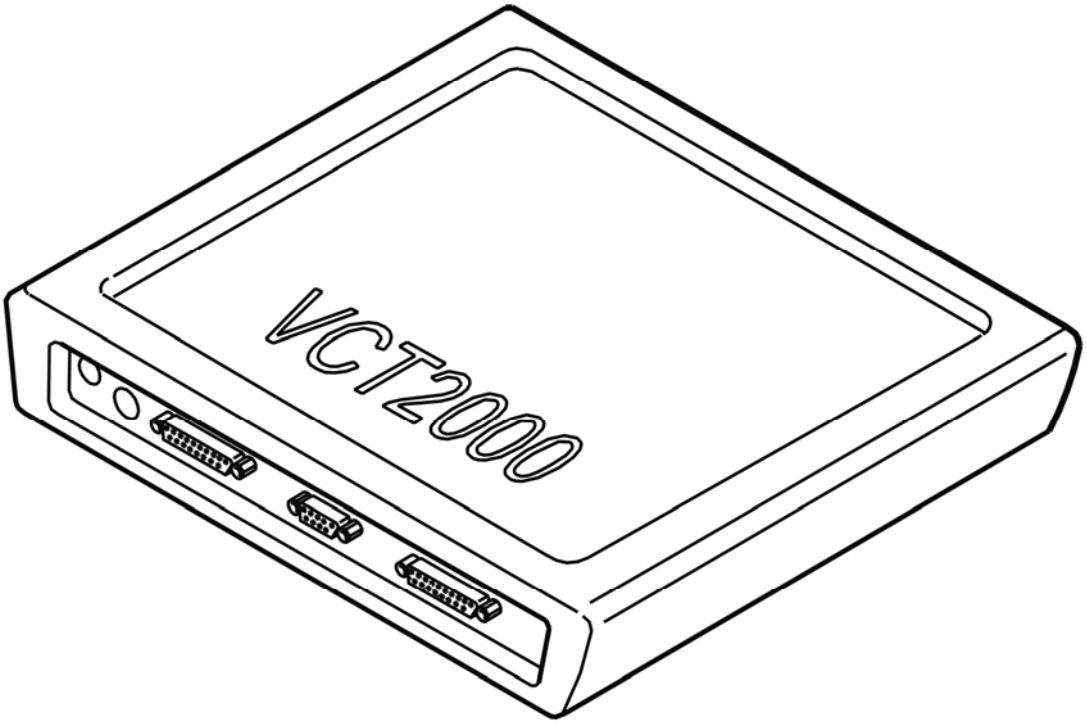

Fig. 157: Identifying VCT2000 Diagnostic Tool Symbol In VIDA
Courtesy of VOLVO CARS CORPORATION

Is the status of the diagnostic trouble code permanent?

- **YES**

  see **CHECKING WIRING AND TERMINALS**

- **NO**

  see **INTERMITTENT MALFUNCTION**

CHECKING WIRING AND TERMINALS

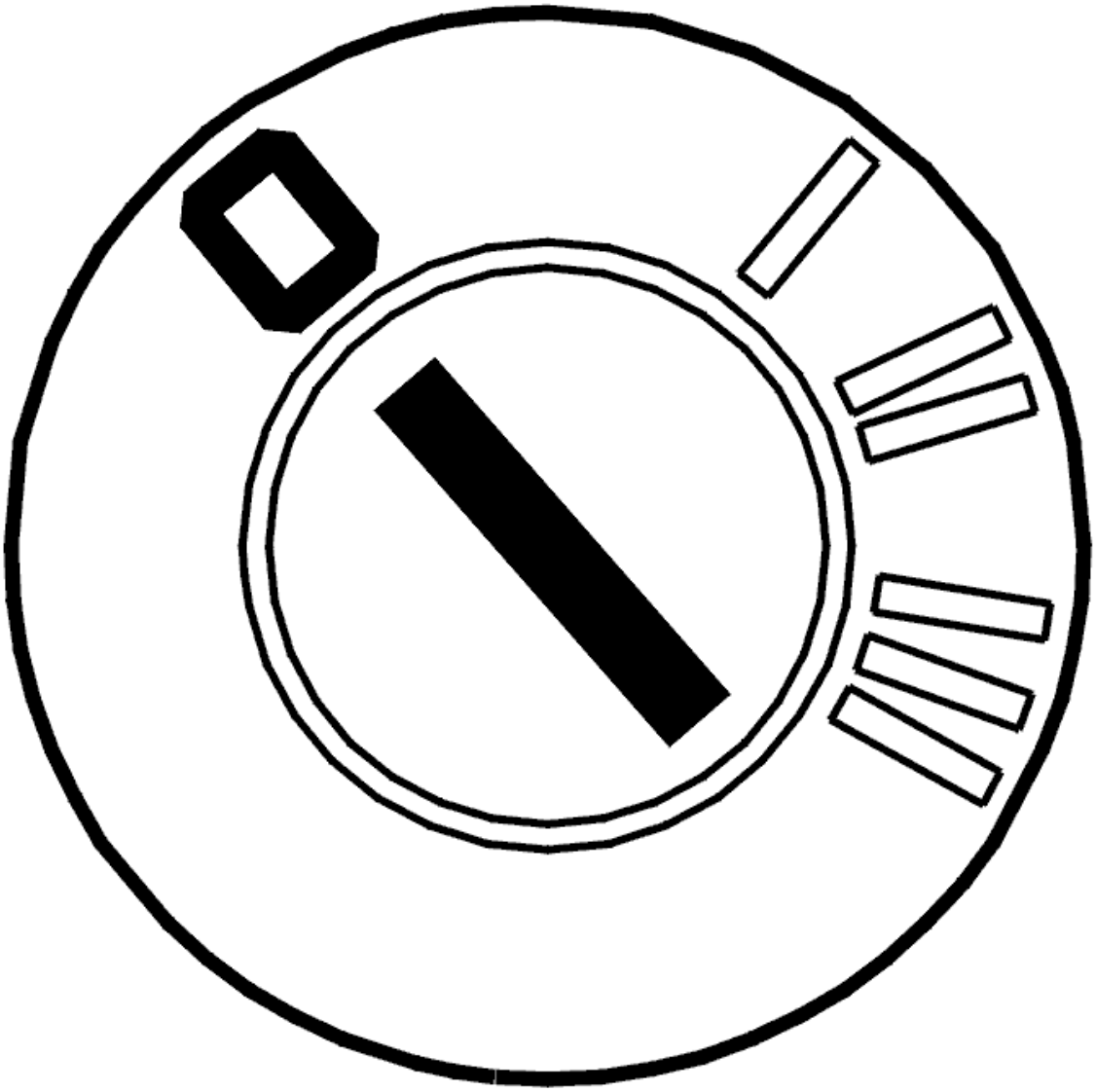

Fig. 158: Identifying Ignition OFF
Courtesy of VOLVO CARS CORPORATION

- Ignition off

  Check the brake control module (BCM) connector for damaged or bent pins as well as contact resistance and oxidation.

  Check the cables for CAN-communication between brake control module (BCM) and engine control module (ECM) for open circuit, short-circuit to ground as well as short-circuit to voltage.

  Also check that the cables are not positioned too close to a source of interference, such as a cellular phone.

  Remedy as necessary.

Other information

- see **CONTENTS**

- **Continue**

  see **VERIFICATION**

INTERMITTENT MALFUNCTION

HINT: The diagnostic trouble code status indicates that the brake control module (BCM) has previously registered a malfunction, but the malfunction is no longer active.

Check the connectors of the brake control module (BCM) and the engine control module (ECM) for contact resistance and oxidation.

Also check that the cables are not positioned too close to a source of interference, such as a cellular phone.

Remedy as necessary.

INFORMATION

FAULT-TRACING INFORMATION

The fault should have been detected and remedied. As this is not the case fault-tracing has failed.

Exit fault-tracing for this diagnostic trouble code (DTC) or make another attempt.

VERIFICATION

VERIFICATION

HINT: After carrying out the repair, check that the malfunction has been remedied.

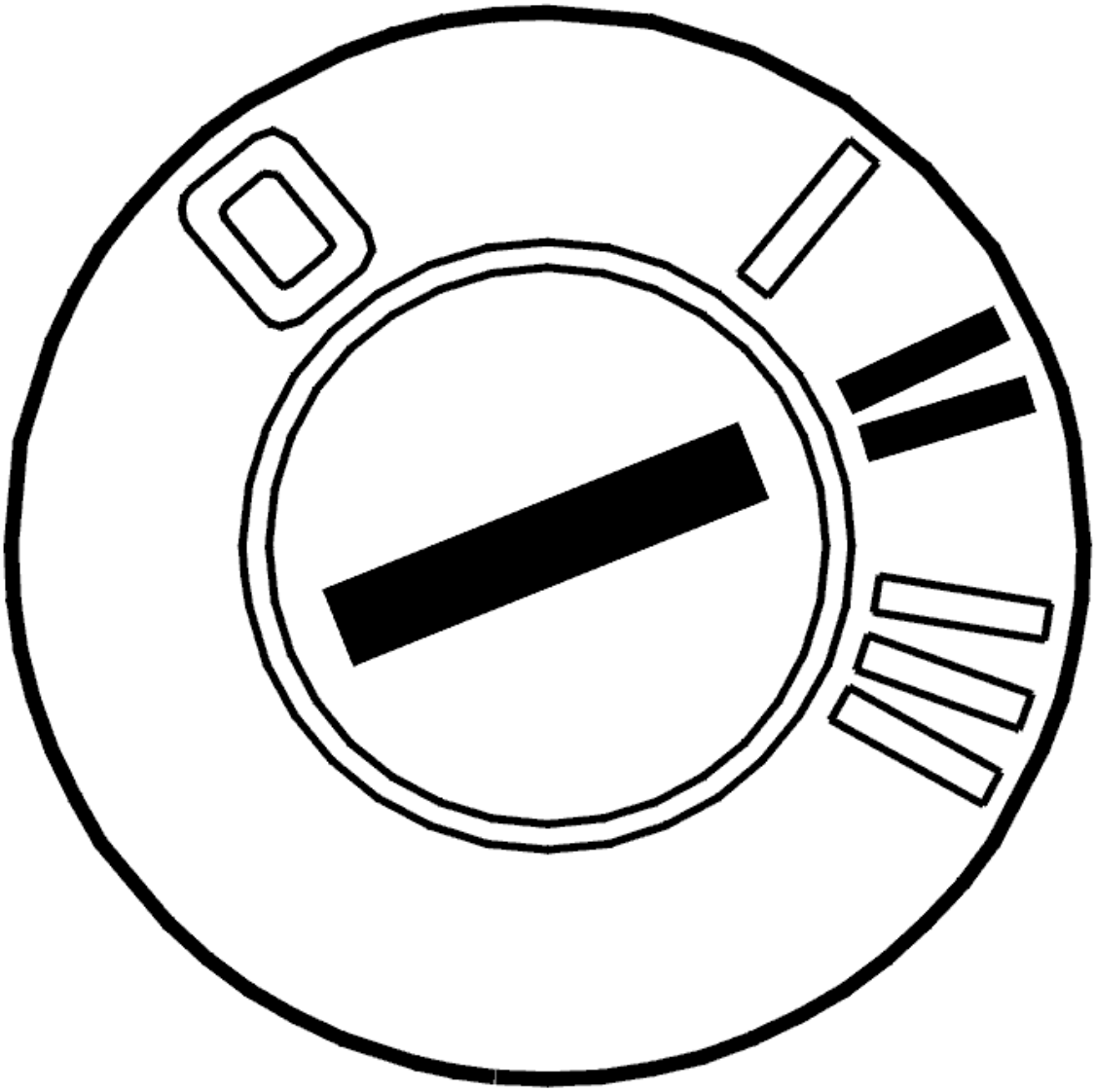

Fig. 159: Identifying Ignition ON
Courtesy of VOLVO CARS CORPORATION

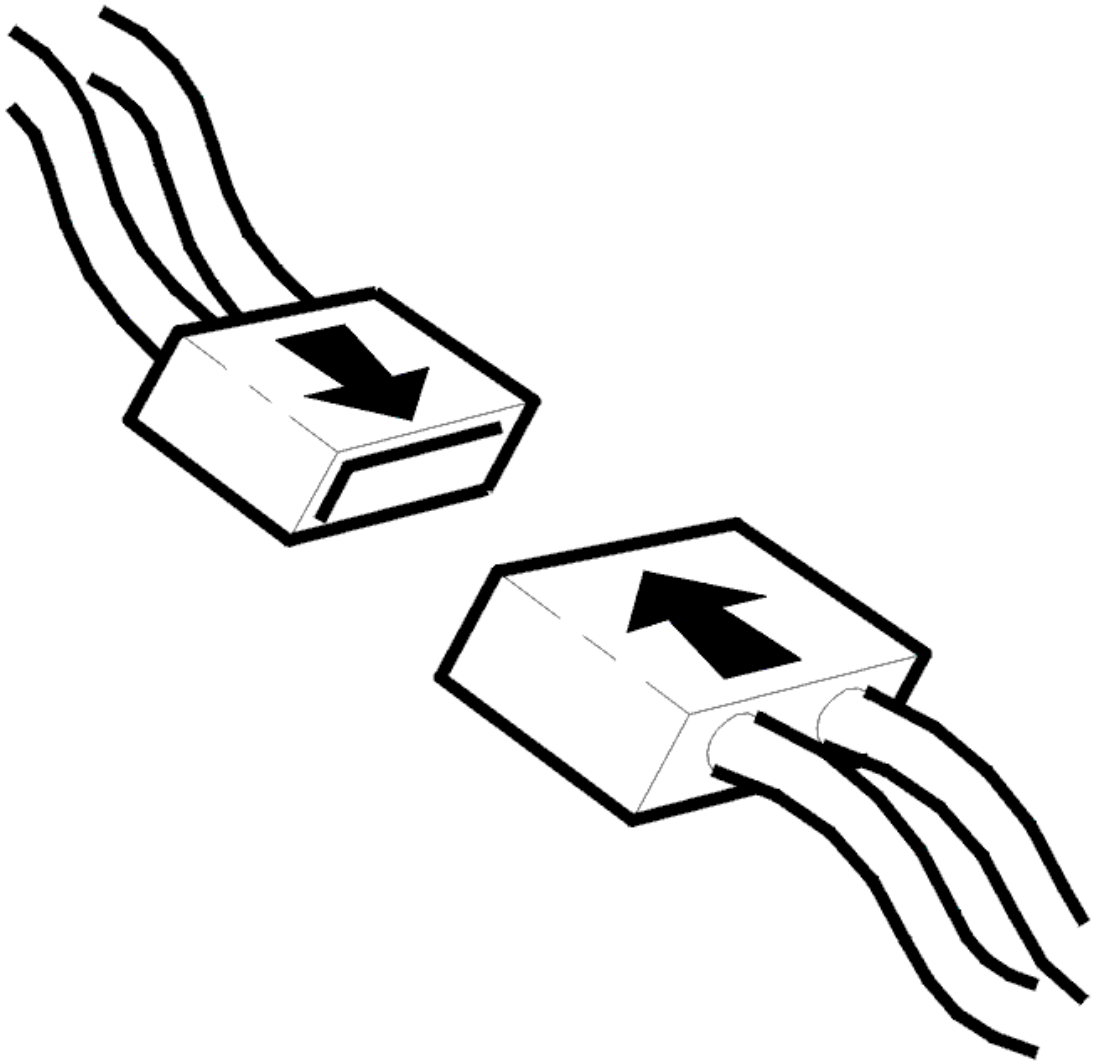

Fig. 160: Connecting Connector
Courtesy of VOLVO CARS CORPORATION

- Ignition off
- Reconnect the connectors, components, etc.
- Test-drive the vehicle according to **TEST DRIVE FORM (DSTC (DYNAMIC STABILITY AND TRACTION CONTROL) /BRAKE CONTROL MODULE), DESCRIPTION** .

NOTE: **Do not turn off the ignition between test-driving and reading out diagnostic trouble codes. This is to obtain the correct status of the diagnostic trouble codes.**

Then read out the diagnostic trouble code's status without turning off the ignition after the test-drive.

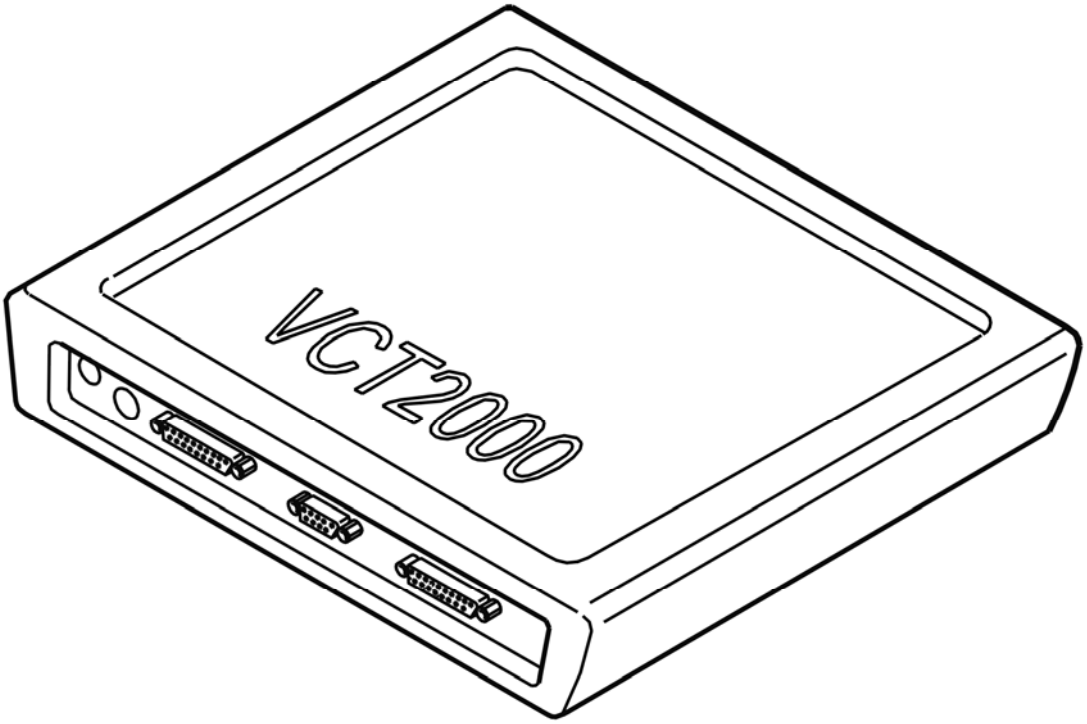

Fig. 161: Identifying VCT2000 Diagnostic Tool Symbol In VIDA
Courtesy of VOLVO CARS CORPORATION

Is the status of the diagnostic trouble code intermittent?

- **YES**

  VERIFIED: Troubleshooting has been completed.

- **NO**

  see **INFORMATION**

BCM-U010000: FAILED COMMUNICATION WITH THE ENGINE CONTROL MODULE (ECM). GENERAL MALFUNCTION INFORMATION. NO INFORMATION ON MALFUNCTION TYPE (B6324S5; 2011-2012)

DIAGNOSTIC TROUBLE CODE INFORMATION BCM-U010000

see **DIAGNOSTIC TROUBLE CODE INFORMATION BCM-U010000**

TROUBLESHOOTING BCM-U010000

see **TROUBLESHOOTING BCM-U010000**

BCM-U010000: FAILED COMMUNICATION WITH THE ENGINE CONTROL MODULE (ECM). GENERAL MALFUNCTION INFORMATION. NO INFORMATION ON MALFUNCTION TYPE (B8444S; 2005-2011)

DIAGNOSTIC TROUBLE CODE INFORMATION BCM-U010000

see **DIAGNOSTIC TROUBLE CODE INFORMATION BCM-U010000**

TROUBLESHOOTING BCM-U010000

see **TROUBLESHOOTING BCM-U010000**

BCM-U011400: FAILED COMMUNICATION WITH DIFFERENTIAL ELECTRONIC MODULE (DEM). GENERAL MALFUNCTION INFORMATION. NO INFORMATION ON MALFUNCTION TYPE (2004-2012)

FAULT-TRACING

GENERAL INFORMATION

The DTC is generated when communication between two control modules has been cancelled. There can be a number of causes for interruptions in the communication:

- The transmitting control module has stopped transmitting the signal that the transmitting module (the control module that has generated the DTC) expects.
- Intermittent open-circuit in one or both CAN cables in part of the network
- Intermittent short-circuits between the CAN cables
- Intermittent short-circuits between one of the CAN cables and ground or supply voltage
- Incorrect signal configuration in control module that set diagnostic trouble code. The fault can be due to a customer or workshop replacing a control module without downloading new software for the replacement.

NOTE: **If there is a diagnostic trouble code (DTC) for a communication fault in a control module, check whether diagnostic trouble codes (DTCs) have been stored in the central electronic module (CEM). Central electronic module (CEM) monitors the voltage level on the CAN-lines, and is the only control module that directly can set a diagnostic trouble code for short-circuiting to ground or to voltage for any of the leads. Central electronic module (CEM) shall not be replaced in case of CAN-fault, unless troubleshooting reveals that the module has an internal fault.**

Corrective actions

1. If there are diagnostic trouble codes stored in several control modules that indicate lost communication on the CAN-net, first try to troubleshoot diagnostic trouble codes in Central electronic module (CEM).
2. Fault trace the transmitting control module.
3. If the problem is intermittent, erase the diagnostic trouble code and check that it is not generated again.
4. If there are only diagnostic trouble codes that indicate lost communication on the CAN-net stored in the control module that generated this trouble code, try to solve the problem by downloading new software to the control unit.
5. Check the cables in the controller area network (CAN) according to the following fault-tracing.

Other information

- see **GENERAL INFORMATION ABOUT FAULT-TRACING IN THE CAN NETWORK (2005-2012)** **GENERAL INFORMATION ABOUT FAULT-TRACING IN THE CAN NETWORK (2004)**
- Go to the tab software and program the control module with the latest software.

- **Continue**

  see **VERIFICATION**

VERIFICATION

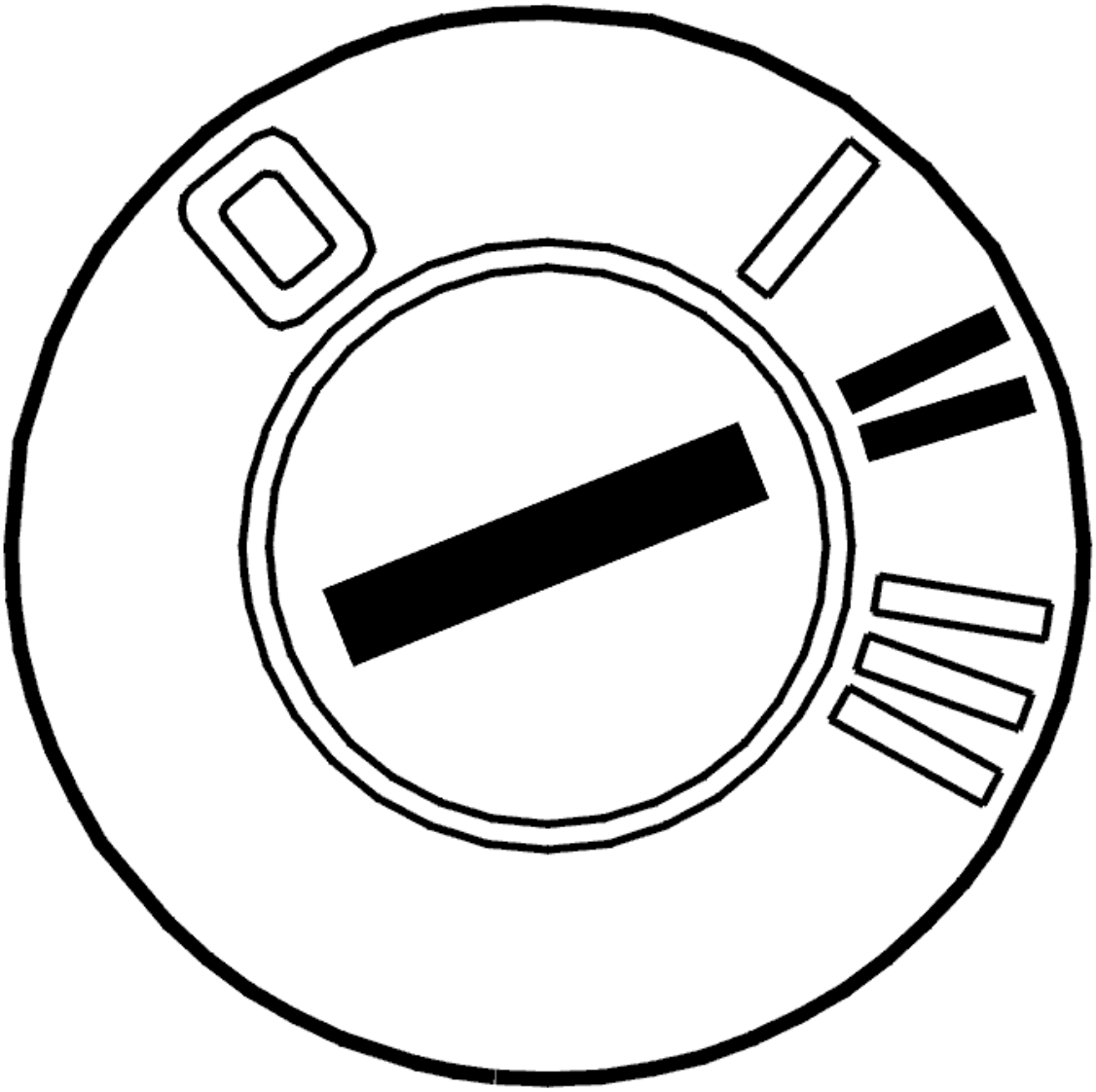

Fig. 162: Identifying Ignition ON
Courtesy of VOLVO CARS CORPORATION

- Ignition on
- Wait for 20 seconds.

NOTE: **This first verification assumes that download of new software was required in the control module that generated the diagnostic trouble code. If download of new software was not required: read out diagnostic trouble codes and check if the code status is permanent or intermittent to learn how difficult it will be to find the fault.**

Read out the diagnostic trouble codes in the vehicle via the DIAGNOSTICS tab.

Check that the diagnostic trouble code (DTC) for faulty communication is not stored again.

Has the fault been remedied?

- **YES**

  OKAY: Troubleshooting has been completed.

- **NO**

  see **TAKING READING ON CABLE IN THE CAN NETWORK (HS-CAN)**

TAKING READING ON CABLE IN THE CAN NETWORK (HS-CAN)

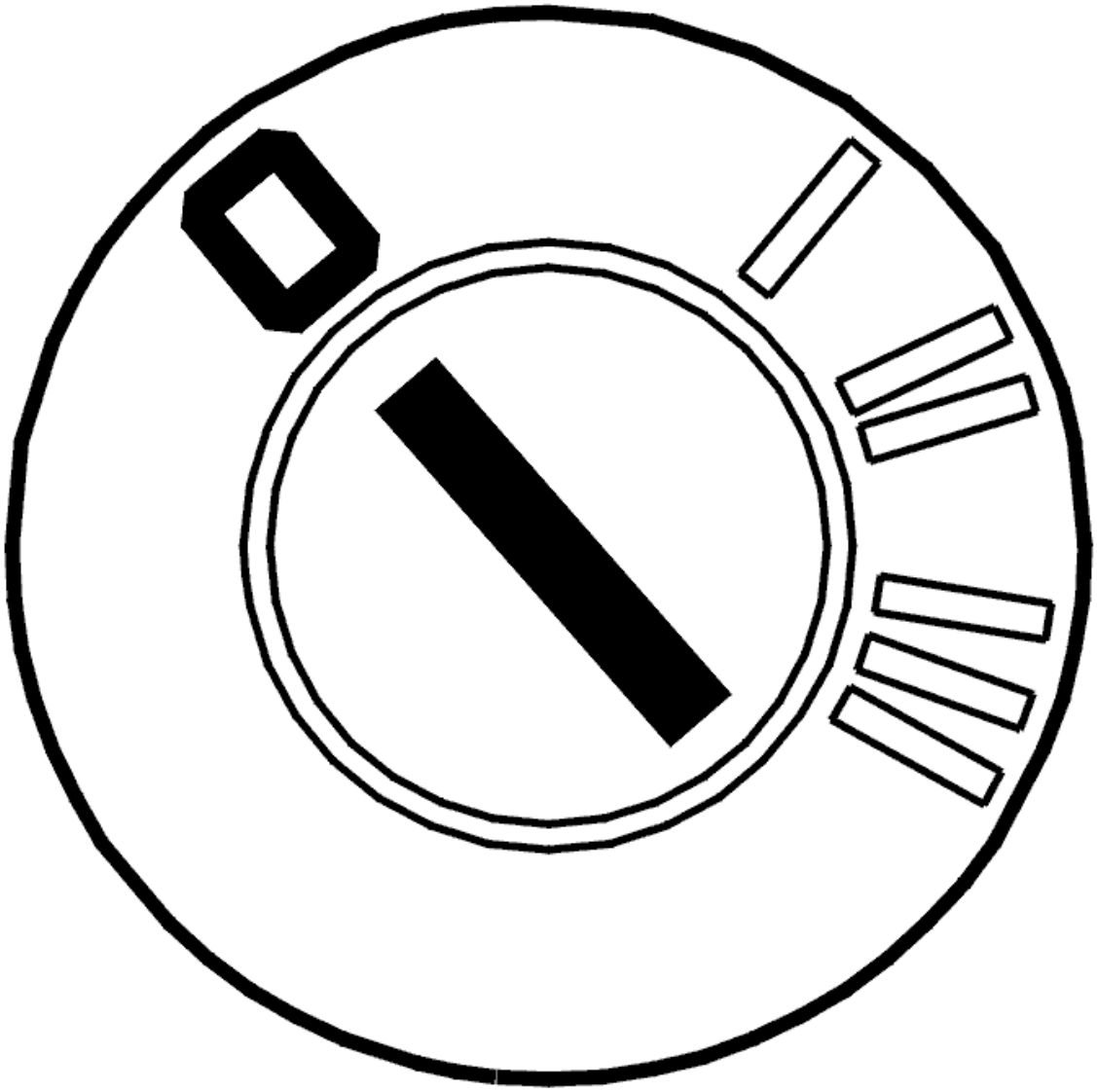

Fig. 163: Identifying Ignition OFF
Courtesy of VOLVO CARS CORPORATION

- Ignition off

- Disconnect the battery negative lead.
- Remove the central electronic module (CEM)
- Connect the breakout box to the cable harness for the central electronic module (CEM). Do not connect the central electronic module (CEM).

HINT: Where a breakout box cannot be used, take readings from the rear of the affected connectors if possible. This prevents terminal pins and socket housings being damaged.

Disconnect the CAN network to make it easier to locate a fault. A suitable point to disconnect the network is at the central electronic module (CEM). Fault-tracing therefore starts from the central electronic module (CEM).

Take resistance readings across the following terminals. Various readings will be obtained due to the structure of the network. Twist the cable harness and work the connectors at accessible points along the cable harness in order to check whether the resistance changes during each measurement. This method can be used to detect intermittent short-circuits or open-circuits.

NOTE: The following resistance readings only measure the main arteries in the high speed network, not the junctions that exist for some control modules. If an open-circuit is suspected in a cable, or a short-circuit is suspected in one of its junctions, the connector at the control module for this junction must be disconnected and the reading taken from there.

Take the following readings

- Resistance between CAN_H and CAN_L, high-speed network. Resistance should be 120 ohms.

  NOTE: Measuring will only give value 120 ohms if the main circuit in the CAN-net is intact. If there is a short-circuit somewhere in the CAN-net (either main circuit or other branching) the resistance will be 0 ohms.

- The resistance between CAN_L, high-speed network, and a connection to voltage, as well as between CAN_L, high-speed network and a connection to ground. The resistance shall be very high (more than 1 Mohms).
- The resistance between CAN, high-speed network, and a connection to voltage, as well as between CAN, high-speed network and a connection to ground. The resistance shall be very high (more than 1 Mohms).

HINT: Any short-circuit detected on the CAN-net may be on the main circuit or on any branching running out to some control modules. If a fault is found, try to disconnect the junction with the fault at a point further forward. Try to locate the fault in this way.

Remedy as necessary.

Other information

- see **BATTERY, DISCONNECTING**
- see **CHECKING WIRING AND TERMINALS**

Was a fault detected?

- **YES**

  see **VERIFICATION**

- **NO**

  see **CHECKING THE TRAFFIC LOAD ON THE CAN CABLES**

CHECKING THE TRAFFIC LOAD ON THE CAN CABLES

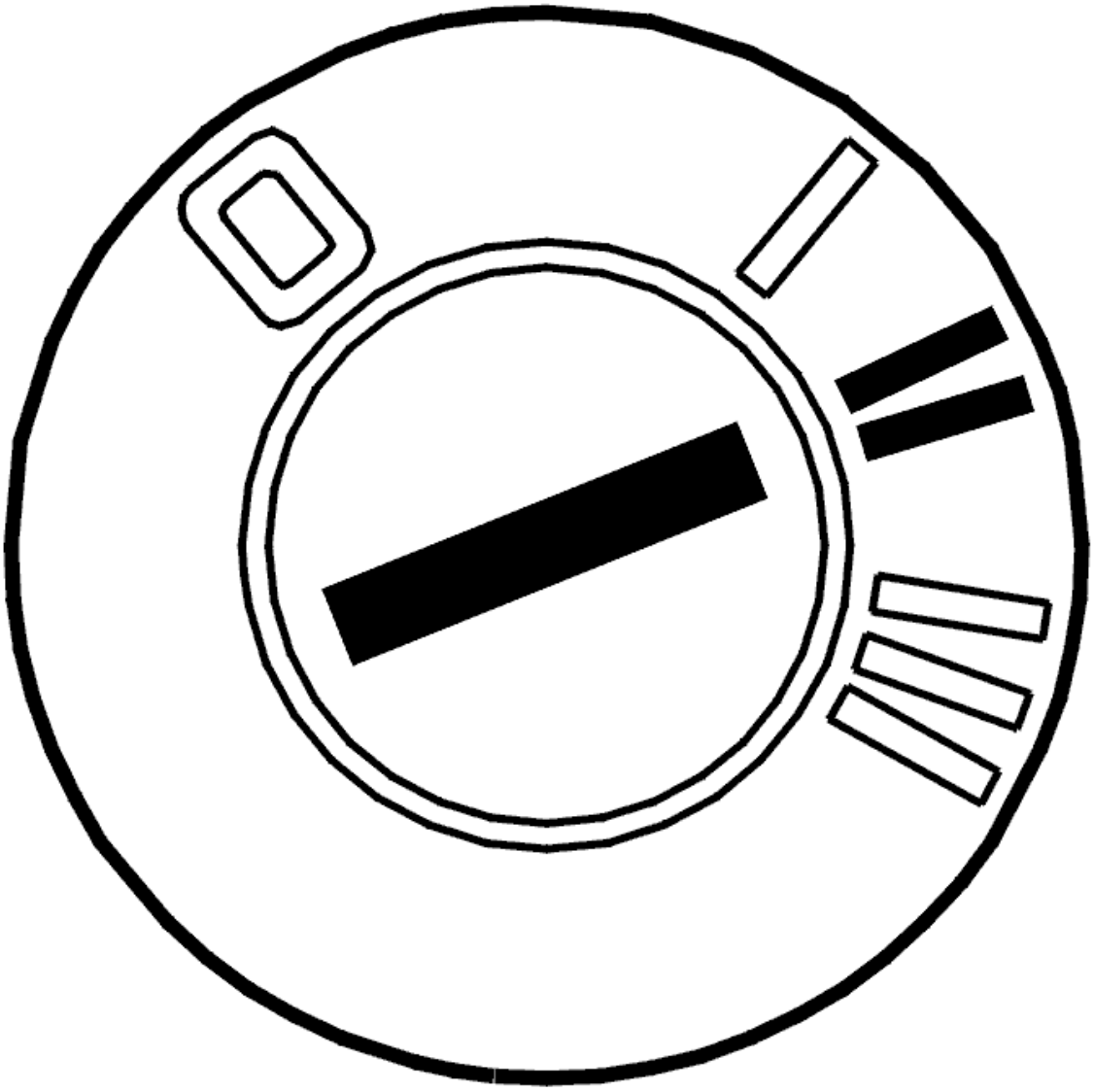

Fig. 164: Identifying Ignition ON
Courtesy of VOLVO CARS CORPORATION

- Connect the central electronic module (CEM) to the breakout box
- Connect the battery.
- Ignition on

NOTE: **When the adapter cable harness and the central electronic module (CEM) have been connected, there is access to both sides of the CAN network (both LS-CAN and HS-CAN). There will also be traffic on both networks. Be careful to check the terminals between which the readings are to be taken so that the intended reading is not taken on the wrong network.**

Faults in the CAN network may be due to a control module sending faulty messages that disrupt normal communication. When messages are sent incorrectly, this results in a considerable increase in the amount of traffic on the CAN network. Check the load by measuring the average voltage value on the CAN cables in relation to ground.

Check as follows:

- Measure the voltage between CAN_L, high-speed network, and ground. The voltage shall be approx. 2.3 V.
- Measure the voltage between CAN_H, high-speed network, and ground. The voltage shall be approx. 2.8 V.

Other information

- see **BATTERY, DISCONNECTING**

Is the value OK?

- **YES**

  see **INFORMATION**

- **NO**

  see **IDENTIFYING A CONTROL MODULE IN THE CAN NETWORK**

IDENTIFYING A CONTROL MODULE IN THE CAN NETWORK

If the load on the CAN network is too high, this may be due to a control module sending faulty messages on the CAN network (known as a disruptive control module). The fault may also be due to an intermittent short-circuit to supply voltage or ground in one of the CAN cables. This results in the control modules on the CAN network starting to send faulty messages. The faults can occur without a diagnostic trouble code (DTC) being stored by the control modules. The voltage can be measured between the CAN cables in order to check the load on the

CAN network.

NOTE: **It is not necessarily the control module that has set the diagnostic trouble code that communicates incorrectly. Faulty messages can come from any control module in the same section of the CAN network. However, faulty communication in one network cannot affect the communication on the other network. In other words, faulty communication on the LS-CAN cannot disrupt communication on the HS-CAN and vice versa.**

- Check communication/load on CAN-net by measuring voltage between CAN-L and CAN-H. The voltage's average value shall be approx. 0.5 V (permitted is 0.4 to 0.6 V). In case of communication error, the voltage is approx. 0.7 V and higher.

In order to identify which control module is communicating incorrectly, cut the power supply to one control module at a time. Check the voltage in the CAN cables again. The easiest way to cut the power supply is to remove the fuse(s) for the relevant control module. Continue until the voltage between the CAN cables drops to approximately 0.5 V.

HINT: When the suspected control module has been identified, connect and disconnect the supply voltage to the control module a number of times to verify that the fault appears and disappears. Ignition off between each check.

NOTE: **Do not cut the power to the central electronic module (CEM) unless it is the last control module left to check.**

The control module that is communicating incorrectly must be replaced.

NOTE: **A faulty control module that disrupts communication can place other control modules in Limp-Home mode (i. e. they work but with limited functionality) even after switching the ignition off and on a number of times. To remedy this, disconnect and reconnect the battery negative terminal to restore the control modules to normal function.**

Remedy as necessary.

Other information

- See Signal specification for Central Electronic Module (CEM).
- **Continue**

  see **VERIFICATION**

VERIFICATION

HINT: Once a fault has been repaired, conduct a verification to check that the fault has been remedied.

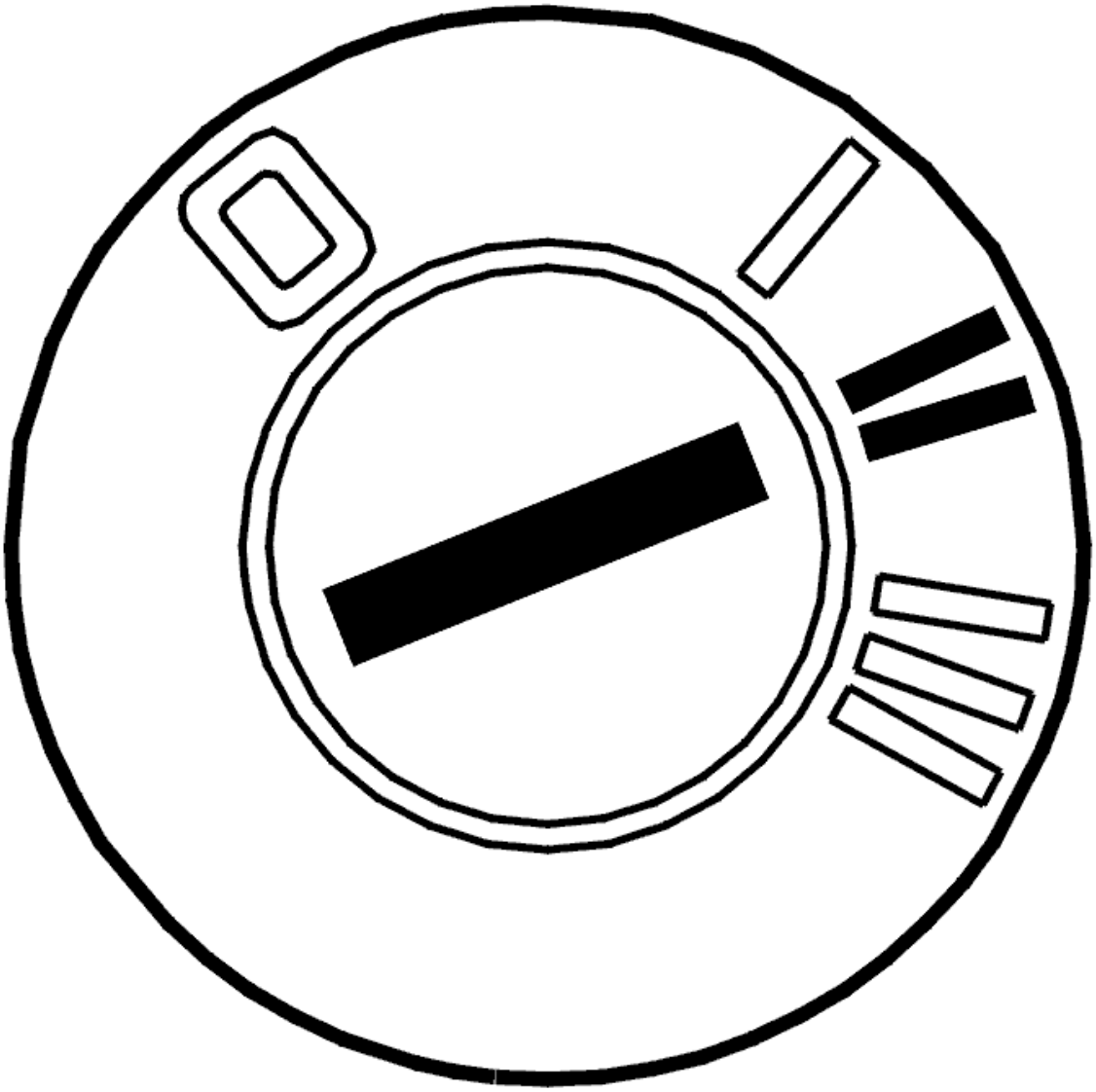

Fig. 165: Identifying Ignition ON
Courtesy of VOLVO CARS CORPORATION

- Reinstall the connectors, components etc.
- Ignition on
- Erase diagnostic trouble codes (DTCs) in all control modules
- Start the vehicle. Allow the vehicle to run for 10 minutes.

  Read out the diagnostic trouble codes in the vehicle via the DIAGNOSTICS tab.

Is the diagnostic trouble code for configuration fault regenerated?

- **NO**

  OKAY: Troubleshooting has been completed.

- **YES**

  see **INFORMATION**

INFORMATION

In exceptions the fault code can be generated as a result of a damaged control module. However, do not replace control module, unless complete troubleshooting has been performed according to all earlier steps in the troubleshooting, and no other faults have been confirmed. Also, do not replace control module if the fault is intermittent.

Has the fault been remedied?

- **YES**

  OKAY: Troubleshooting has been completed.

- **NO**

  see **INFORMATION**

INFORMATION

FAULT-TRACING INFORMATION

The fault should have been detected and remedied. As this is not the case fault-tracing has failed.

Exit fault-tracing for this diagnostic trouble code (DTC) or make another attempt.

INFORMATION

FAULT-TRACING INFORMATION

Verification shows that the fault is no longer present. The diagnostic trouble code (DTC) was probably caused by an intermittent fault.

Fault-tracing for this diagnostic trouble code (DTC) is not followed by a verification.

You can view the information again or exit fault-tracing for this diagnostic trouble code (DTC).

BCM-U011400: FAILED COMMUNICATION WITH DIFFERENTIAL ELECTRONIC MODULE (DEM). GENERAL MALFUNCTION INFORMATION. NO INFORMATION ON MALFUNCTION TYPE (B6324S; 2007-2010)

DIAGNOSTIC TROUBLE CODE INFORMATION BCM-U011400

Condition

NOTE: The diagnostic trouble code only applies to vehicles equipped with AWD and DSTC.

The differential electronic module (DEM) informs the brake control module (BCM) when all wheel drive is active. During all wheel drive operation, the brake control module (BCM) should not activate the stability function due to the risk of disrupting the differential electronic module (DEM). Diagnostic trouble code BCM-U011400 is generated if the brake control module (BCM) registers that there is no signal from the differential electronic module (DEM) or if the signal indicates that all wheel drive is not operational.

The diagnostic trouble code can be diagnosed when the ignition is on.

Substitute Value

- SC is blocked.
- TC is blocked (AWD TRACS is blocked even though no warning light is on).
- AYC is blocked.

HINT: For information on abbreviations: BRAKE SYSTEM, ABBREVIATIONS

Possible Source

- Fault-trace the Differential electronic module (DEM).

Fault symptom[s]

- General warning light on.
- Anti-spin is not operational.
- The stability function is not operational.
- The anti-skid function is not operational.

BCM-U011400: FAILED COMMUNICATION WITH DIFFERENTIAL ELECTRONIC MODULE (DEM). GENERAL MALFUNCTION INFORMATION. NO INFORMATION ON MALFUNCTION TYPE (B6324S5; 2011-2012)

DIAGNOSTIC TROUBLE CODE INFORMATION BCM-U011400

see **DIAGNOSTIC TROUBLE CODE INFORMATION BCM-U011400**

BCM-U011400: FAILED COMMUNICATION WITH DIFFERENTIAL ELECTRONIC MODULE (DEM). GENERAL MALFUNCTION INFORMATION. NO INFORMATION ON MALFUNCTION TYPE (B8444S; 2005-2011)

DIAGNOSTIC TROUBLE CODE INFORMATION BCM-U011400

see **DIAGNOSTIC TROUBLE CODE INFORMATION BCM-U011400**

BCM-U012587: FAILED COMMUNICATION WITH MULTI-AXIAL ACCELERATION SENSOR MODULE. BUS/MESSAGE ERROR. MESSAGE MISSING (B6324S; 2007-2010)

DIAGNOSTIC TROUBLE CODE INFORMATION BCM-U012587

Condition

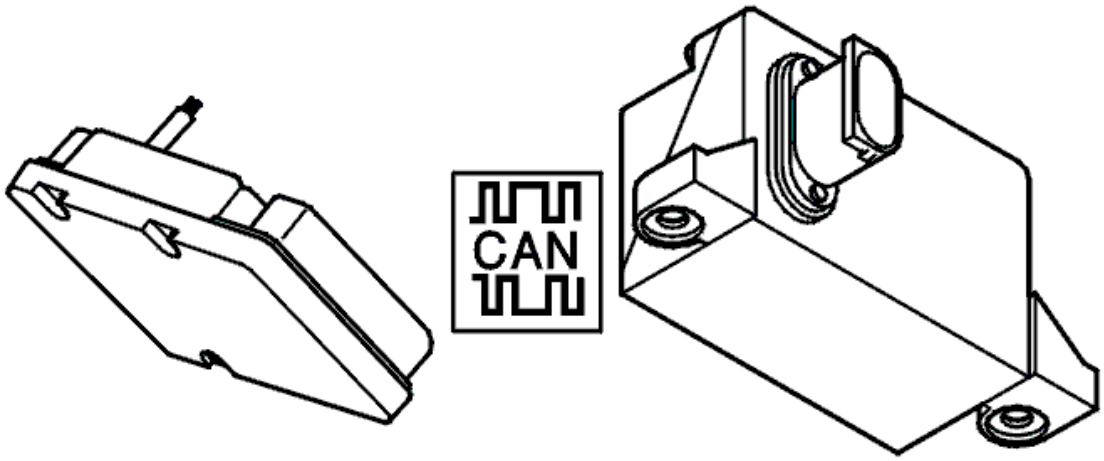

Fig. 166: Identifying Brake Control Module & Active Yaw Control Sensor
Courtesy of VOLVO CARS CORPORATION

NOTE: The diagnostic trouble code only applies to vehicles equipped with DSTC.

Diagnostic trouble code BCM-U012587 is generated if the brake control module (BCM) registers no signal or a defective signal from the AYC sensor.

Substitute Value

- TC is blocked.
- SC is blocked.
- AYC is blocked.

HINT: For information on abbreviations: BRAKE SYSTEM, ABBREVIATIONS

Possible Source

- Contact resistance in the terminals
- Open circuit on the cables between the brake control module (BCM) and the AYC sensor.

- No AYC sensor connected.
- Internal malfunction in AYC sensor.

NOTE: **This diagnostic trouble code (DTC) is not due to an internal hardware fault in the Brake control module (BCM) and must not be remedied by replacing the control module.**

Fault symptom[s]

- General warning light on.
- Anti-spin is not operational.
- The stability function is not operational.
- The anti-skid function is not operational.

TROUBLESHOOTING BCM-U012587

CHECKING FOR CONTACT RESISTANCE AND OXIDATION

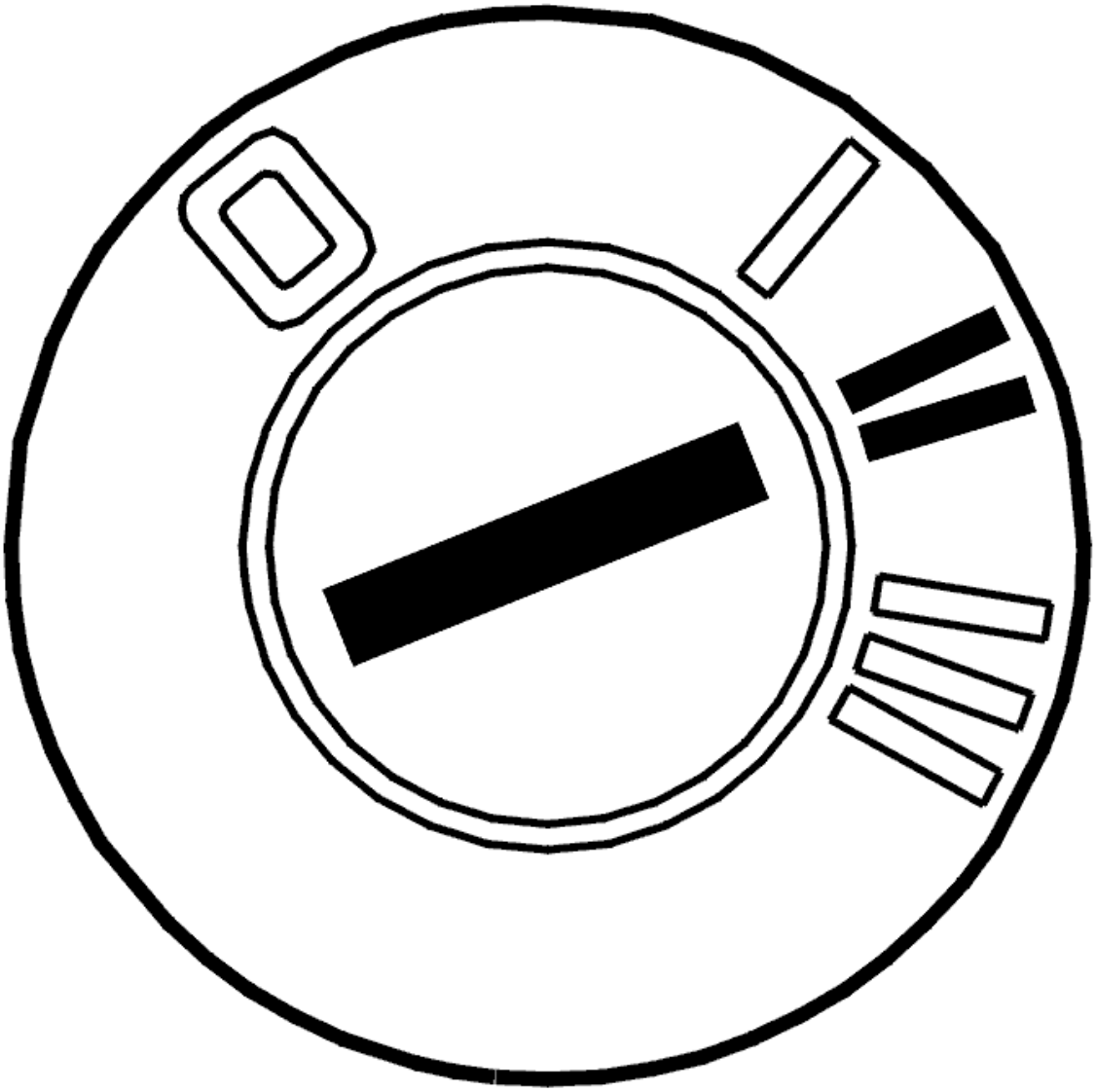

Fig. 167: Identifying Ignition ON
Courtesy of VOLVO CARS CORPORATION

- Ignition off
- Check the connectors of the brake control module (BCM) and AYC sensor for contact resistance and oxidation.
- Reinstall the components, reconnect the connectors etc.
- Test-drive the vehicle, see **TEST DRIVE FORM (DSTC (DYNAMIC STABILITY AND TRACTION CONTROL) /BRAKE CONTROL MODULE), DESCRIPTION**

NOTE: **Do not turn off the ignition between test-driving and reading out diagnostic trouble codes. This is to obtain the correct status of the diagnostic trouble codes.**

- Read out the diagnostic trouble code's status without turning off the ignition after the test-drive.

If the status of the diagnostic trouble code is intermittent, the malfunction was probably caused by contact resistance or oxidation in the connectors of the control module or AYC sensor.

Other information

- see **CONNECTING THE BREAKOUT BOX, BRAKE CONTROL MODULE (BCM)**
- see **ACTIVE YAW CONTROL SENSOR, REPLACING**
- see **CONTENTS** .

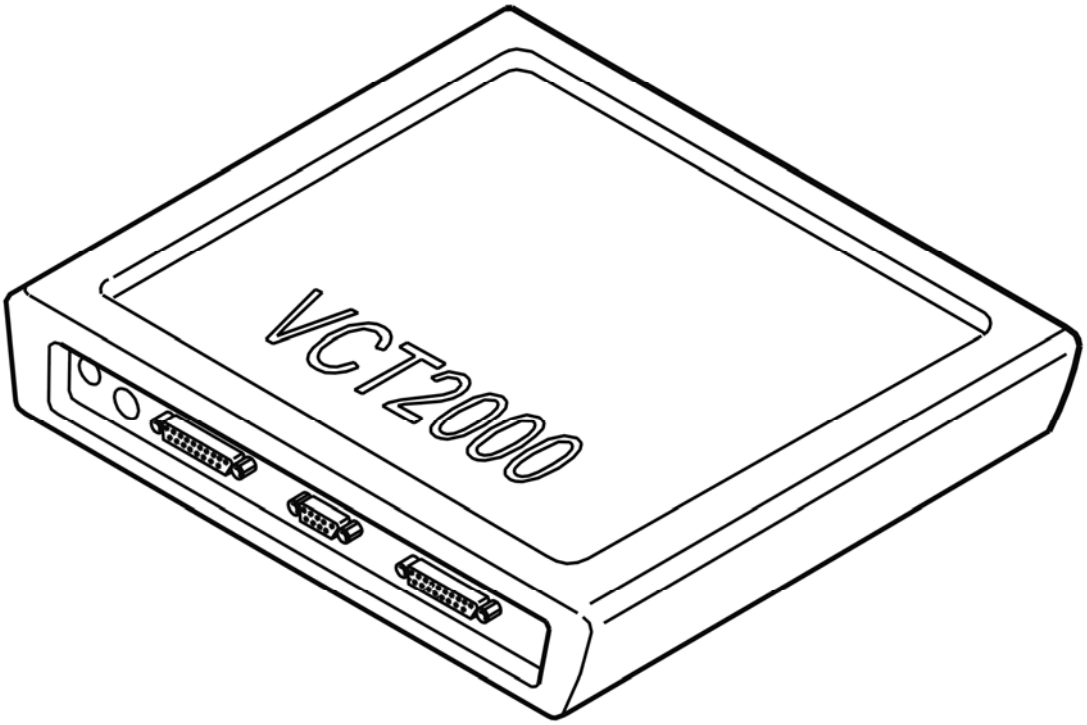

Fig. 168: Identifying VCT2000 Diagnostic Tool Symbol In VIDA
Courtesy of VOLVO CARS CORPORATION

Is the status of the diagnostic trouble code intermittent?

- **YES**

  OKAY: Troubleshooting has been completed.

- **NO**

  see **CHECKING THE WIRING**

CHECKING THE WIRING

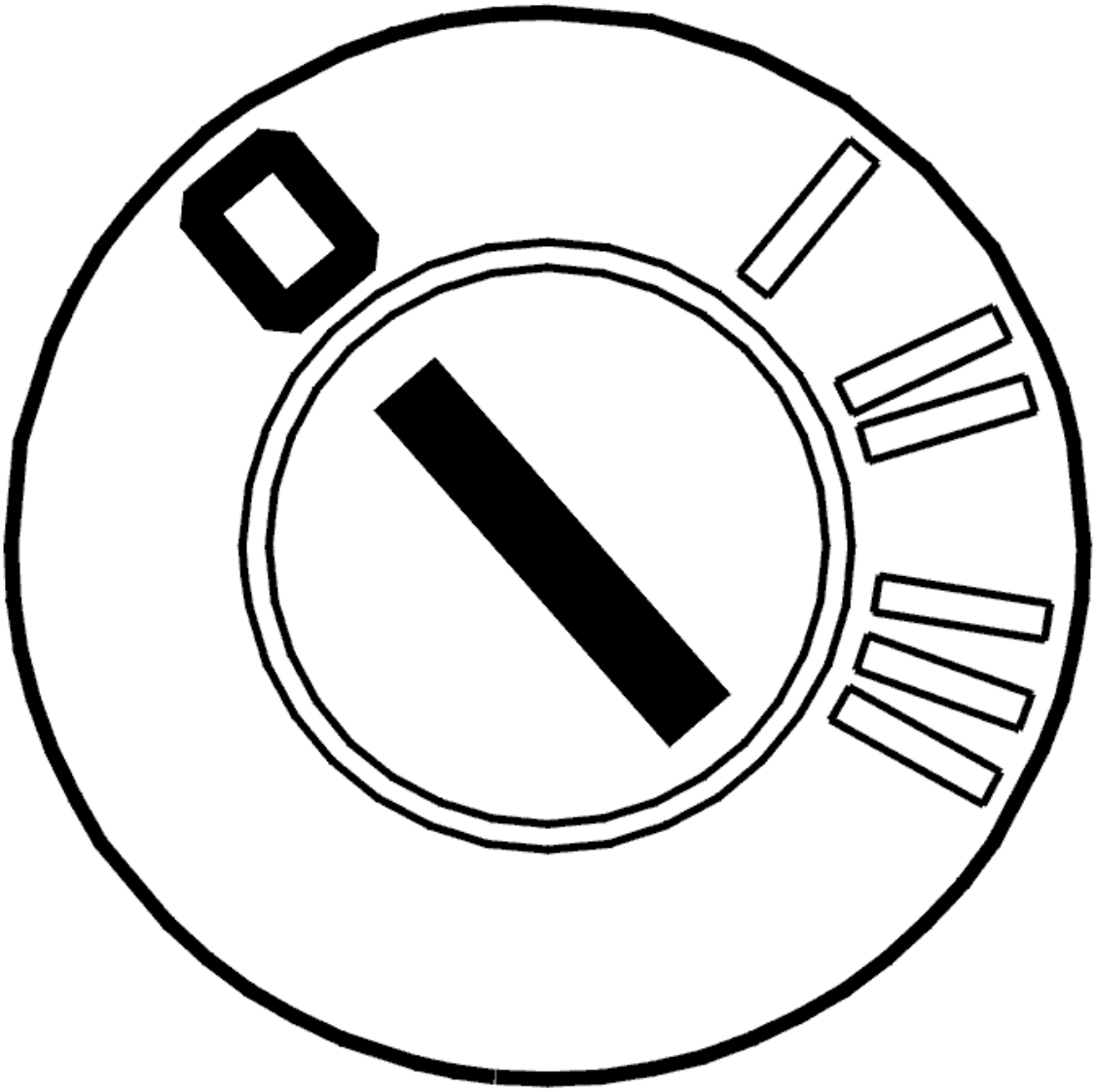

Fig. 169: Identifying Ignition OFF
Courtesy of VOLVO CARS CORPORATION

- Ignition off

  Check the cables for an open circuit.

  Measure between:

  - AYC sensor terminal #1 and brake control module (BCM) terminal #25 (#A25).
  - AYC sensor terminal #2 and brake control module (BCM) terminal #29 (#A29).
  - AYC sensor terminal #3 and brake control module (BCM) terminal #6 (#A6).
  - AYC sensor terminal #5 and brake control module (BCM) terminal #39 (#A39).

  Also check that the AYC sensor is properly installed and that the bracket is properly secured.

If the cables are OK and the AYC sensor is properly installed, replace the AYC sensor.

Other information

- see **CONNECTING THE BREAKOUT BOX, BRAKE CONTROL MODULE (BCM)**
- see **SIGNAL SPECIFICATION, BRAKE CONTROL MODULE (BCM) WITH DSTC (DYNAMIC STABILITY AND TRACTION CONTROL)**
- see **ACTIVE YAW CONTROL SENSOR, REPLACING**
- see **CONTENTS** .

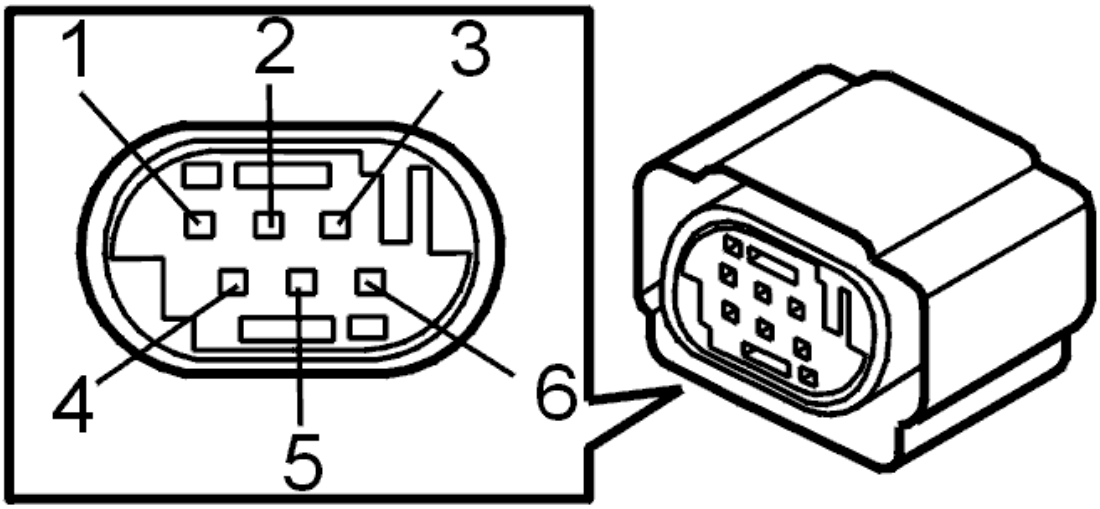

Fig. 170: Identifying Active Yaw Control Sensor Connector Terminals
Courtesy of VOLVO CARS CORPORATION

- **Continue**

  see **VERIFICATION**

VERIFICATION

VERIFICATION

HINT: After carrying out the repair, check that the malfunction has been remedied.

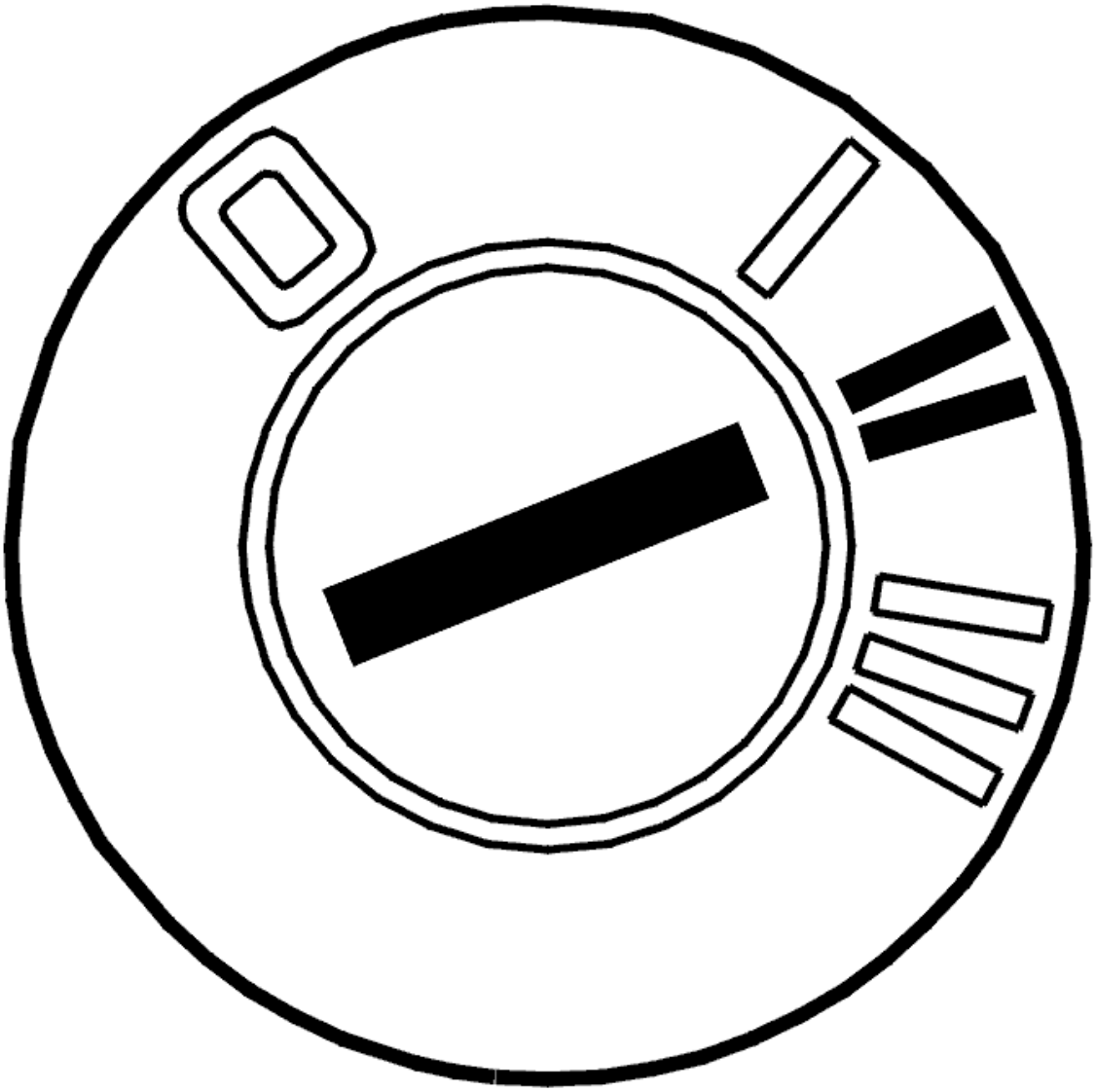

Fig. 171: Identifying Ignition ON
Courtesy of VOLVO CARS CORPORATION

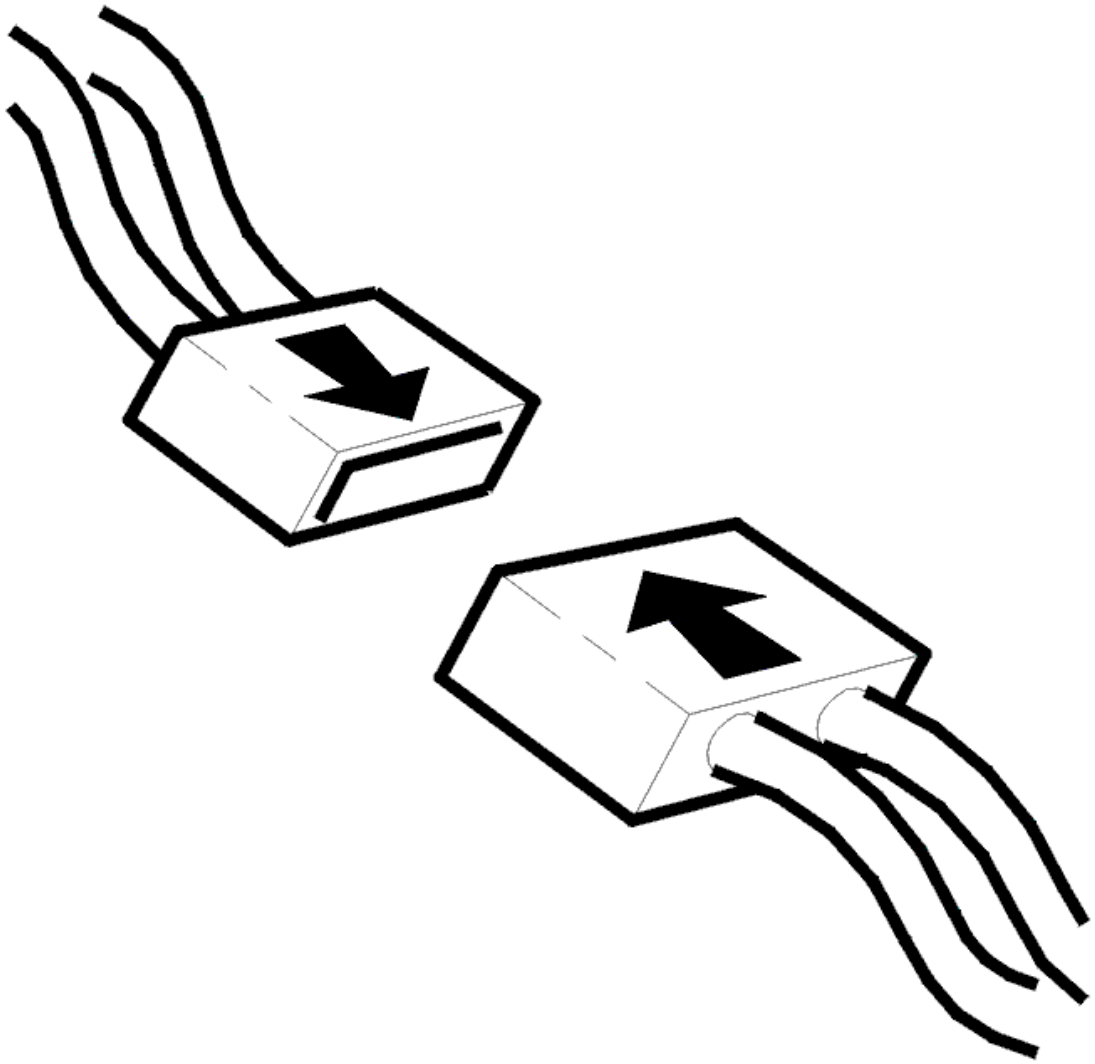

Fig. 172: Connecting Connector
Courtesy of VOLVO CARS CORPORATION

- Ignition off
- Reconnect the connectors, components, etc.
- Test-drive the vehicle according to **TEST DRIVE FORM (DSTC (DYNAMIC STABILITY AND TRACTION CONTROL) /BRAKE CONTROL MODULE), DESCRIPTION** .

NOTE: **Do not turn off the ignition between test-driving and reading out diagnostic trouble codes. This is to obtain the correct status of the diagnostic trouble codes.**

Then read out the diagnostic trouble code's status without turning off the ignition after the test-drive.

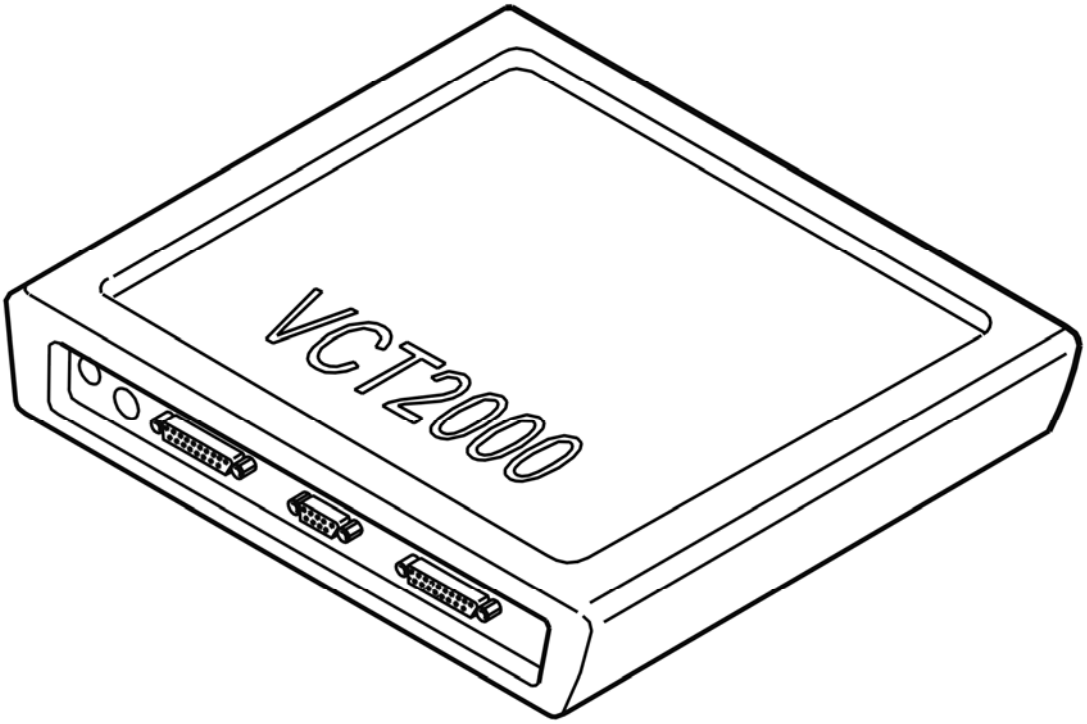

Fig. 173: Identifying VCT2000 Diagnostic Tool Symbol In VIDA
Courtesy of VOLVO CARS CORPORATION

Is the status of the diagnostic trouble code intermittent?

- **YES**

  VERIFIED: Troubleshooting has been completed.

- **NO**

  see **INFORMATION**

INFORMATION

FAULT-TRACING INFORMATION

The fault should have been detected and remedied. As this is not the case fault-tracing has failed.

Exit fault-tracing for this diagnostic trouble code (DTC) or make another attempt.

BCM-U012587: FAILED COMMUNICATION WITH MULTI-AXIAL ACCELERATION SENSOR MODULE. BUS/MESSAGE ERROR. MESSAGE

MISSING (B6324S5; 2011-2012)

DIAGNOSTIC TROUBLE CODE INFORMATION BCM-U012587

see **DIAGNOSTIC TROUBLE CODE INFORMATION BCM-U012587**

TROUBLESHOOTING BCM-U012587

see **TROUBLESHOOTING BCM-U012587**

BCM-U012587: FAILED COMMUNICATION WITH MULTI-AXIAL ACCELERATION SENSOR MODULE. BUS/MESSAGE ERROR. MESSAGE MISSING (B8444S; 2005-2011)

DIAGNOSTIC TROUBLE CODE INFORMATION BCM-U012587

see **DIAGNOSTIC TROUBLE CODE INFORMATION BCM-U012587**

TROUBLESHOOTING BCM-U012587

see **TROUBLESHOOTING BCM-U012587**

BCM-U012588: FAILED COMMUNICATION WITH MULTI-AXIAL ACCELERATION SENSOR MODULE. BUS/MESSAGE ERROR. OPEN CIRCUIT (B6324S; 2007-2010)

DIAGNOSTIC TROUBLE CODE INFORMATION BCM-U012588

Condition

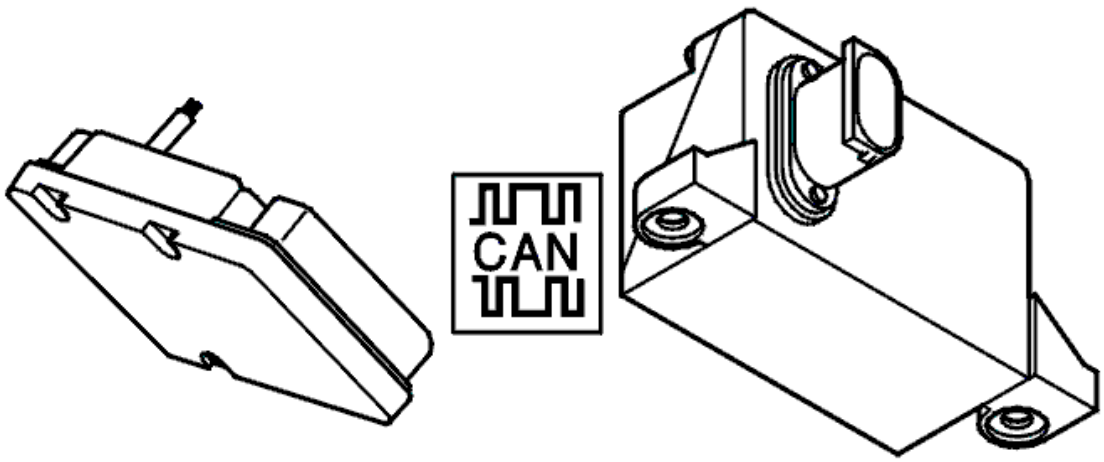

Fig. 174: Identifying Brake Control Module & Active Yaw Control Sensor
Courtesy of VOLVO CARS CORPORATION

Diagnostic trouble code BCM-U012588 is generated if the brake control module (BCM) registers a communication problem with the AYC sensor.

Substitute Value

- TC is blocked.
- SC is blocked.
- AYC is blocked.

HINT: For information on abbreviations: BRAKE SYSTEM, ABBREVIATIONS

Possible Source

- The CAN communication cables are short-circuited to each other.
- The CAN communication cables are short-circuited to ground or supply voltage.
- Internal malfunction in AYC sensor.
- Internal malfunction in brake control module (BCM).

Fault symptom[s]

- General warning light on.
- Anti-spin is not operational.
- The stability function is not operational.
- The anti-skid function is not operational.

TROUBLESHOOTING BCM-U012588

CHECKING THE DIAGNOSTIC TROUBLE CODES (DTCS)

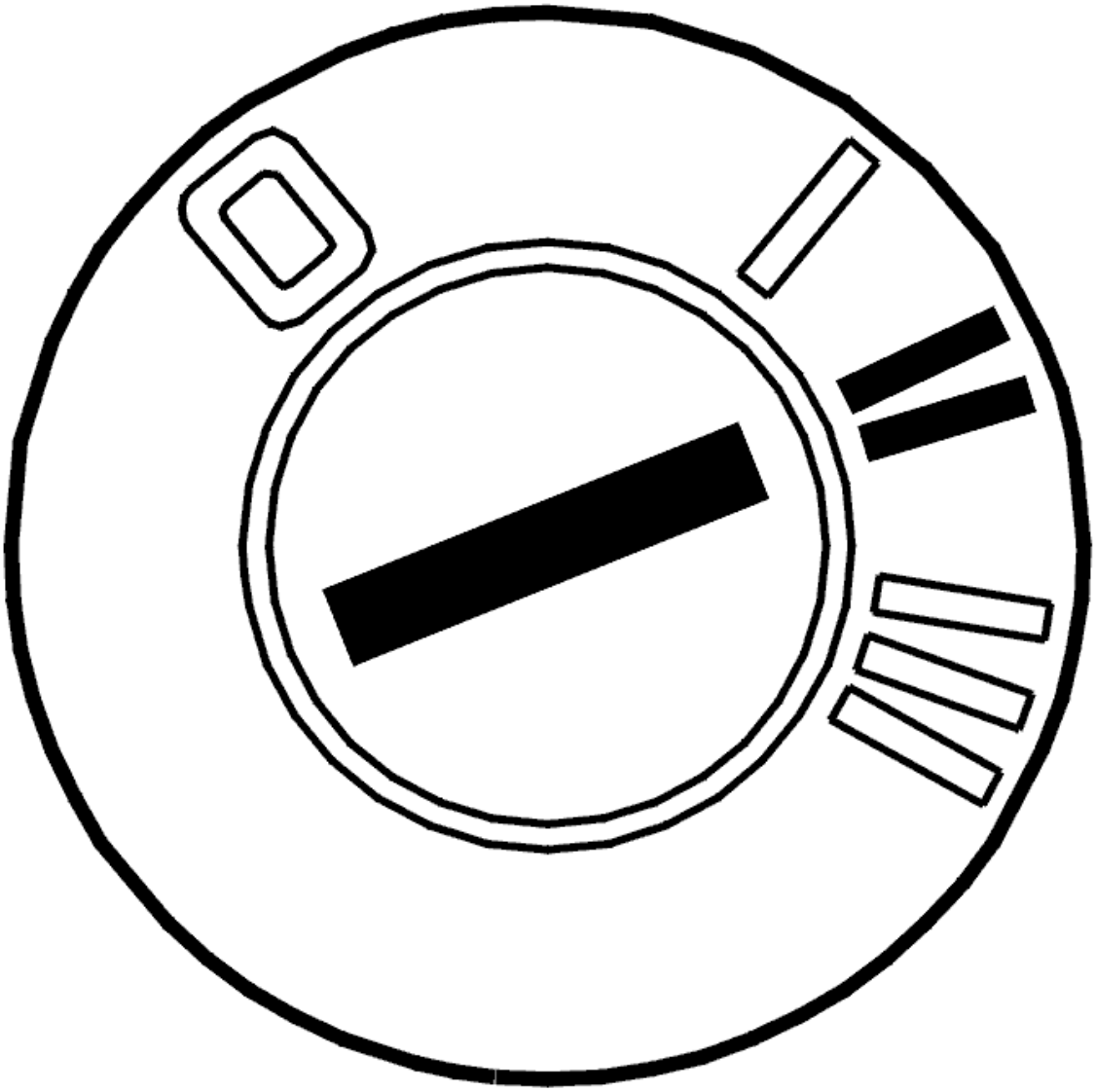

Fig. 175: Identifying Ignition ON
Courtesy of VOLVO CARS CORPORATION

- Ignition off
- Check the connectors of the brake control module (BCM) and AYC sensor for contact resistance and oxidation.
- Ignition on
- Wait approximately 60 seconds.
- Read the status of the diagnostic trouble code.

  If the status of the diagnostic trouble code is intermittent, the malfunction was probably caused by contact resistance or oxidation in the connectors of the control module or AYC sensor.

  Other information

- see **ACTIVE YAW CONTROL SENSOR, REPLACING**
- see **CONTENTS** .

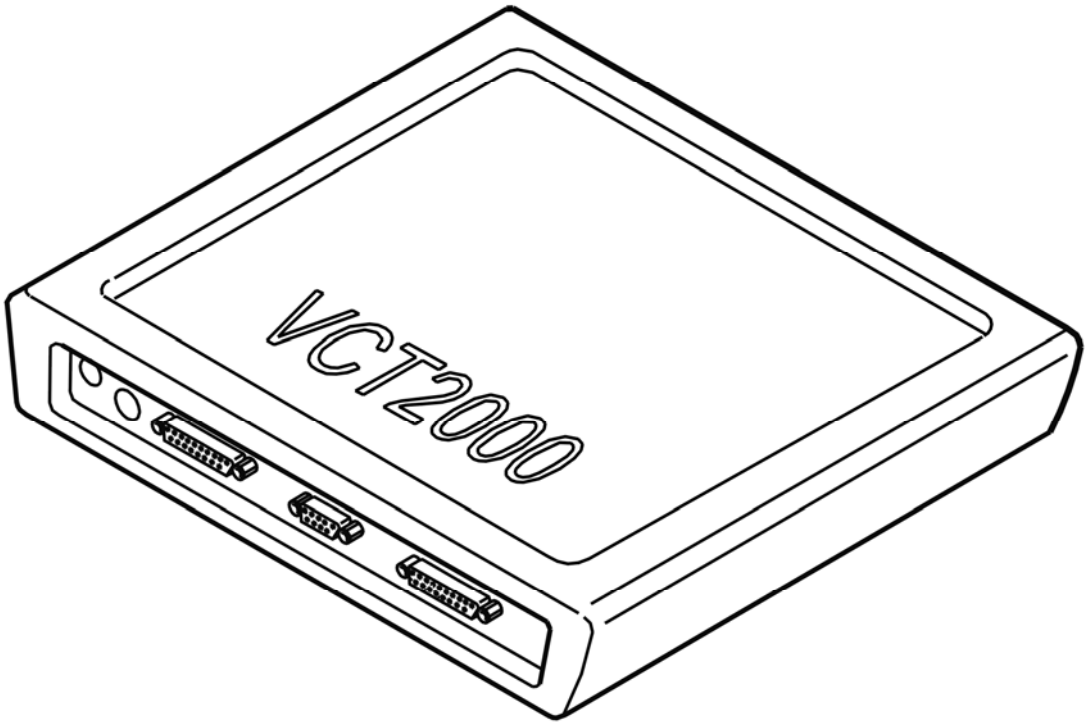

Fig. 176: Identifying VCT2000 Diagnostic Tool Symbol In VIDA
Courtesy of VOLVO CARS CORPORATION

Is the status of the diagnostic trouble code permanent?

- **YES**

  see **CHECKING THE WIRING**

- **NO**

  OKAY: Troubleshooting has been completed.

CHECKING THE WIRING

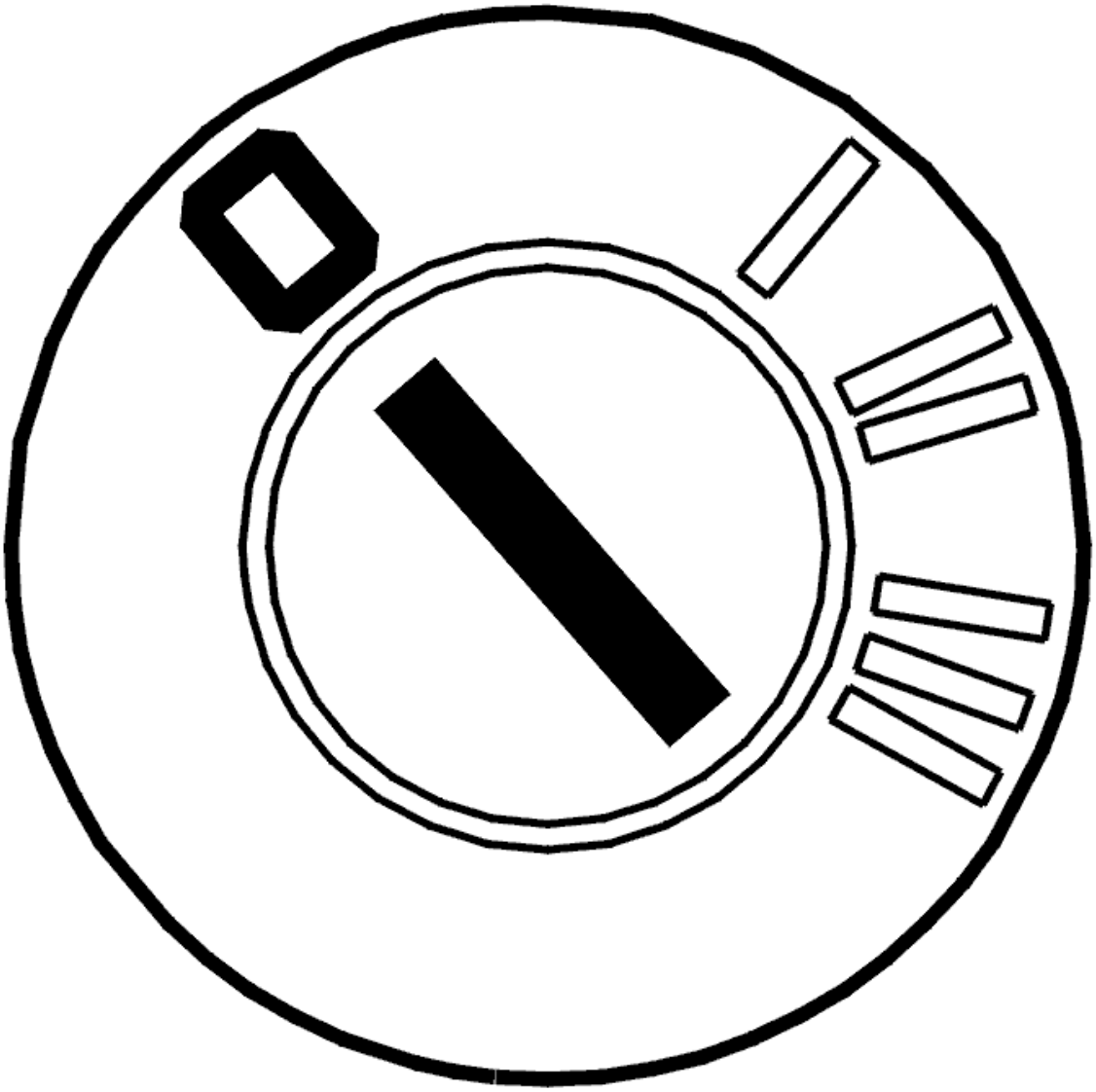

Fig. 177: Identifying Ignition OFF
Courtesy of VOLVO CARS CORPORATION

- Ignition off
- Connect a breakout box.

  Check the cables for open circuit, short circuit to ground and short circuit to supply voltage.

  Measure between:

  - AYC sensor connector terminal #1 and brake control module (BCM) terminal #25 (#A25).
  - AYC sensor connector terminal #2 and brake control module (BCM) terminal #29 (#A29).
  - AYC sensor connector terminal #3 and brake control module (BCM) terminal #6 (#A6).
  - AYC sensor connector terminal #5 and brake control module (BCM) terminal #39 (#A39).

Also check that the AYC sensor is properly installed and that the bracket is properly secured.

If the cables are OK, try a new AYC sensor.

Other information

- see **CONNECTING THE BREAKOUT BOX, BRAKE CONTROL MODULE (BCM)**
- see **SIGNAL SPECIFICATION, BRAKE CONTROL MODULE (BCM) WITH DSTC (DYNAMIC STABILITY AND TRACTION CONTROL)** .
- see **ACTIVE YAW CONTROL SENSOR, REPLACING**
- see **CONTENTS**

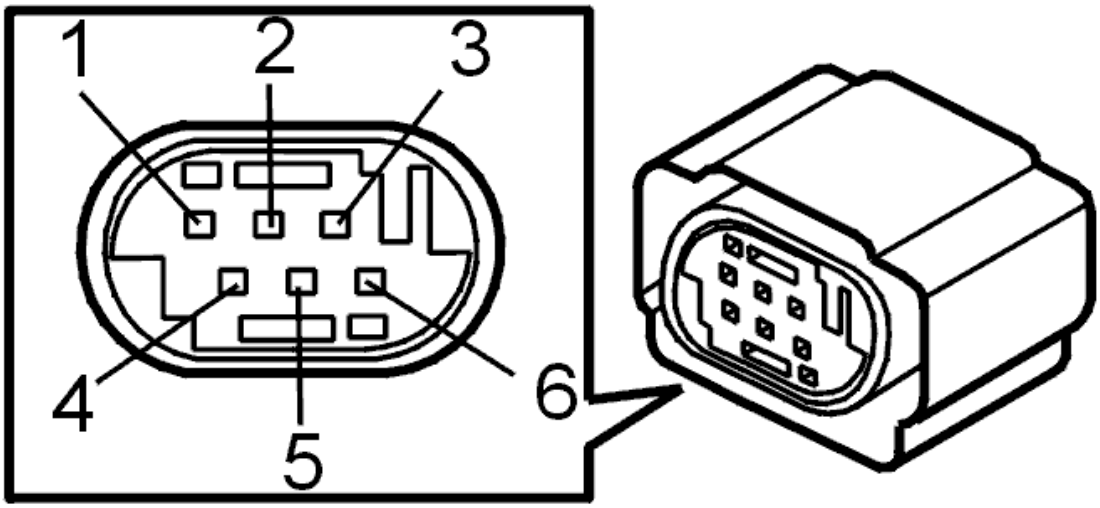

Fig. 178: Identifying Active Yaw Control Sensor Connector Terminals
Courtesy of VOLVO CARS CORPORATION

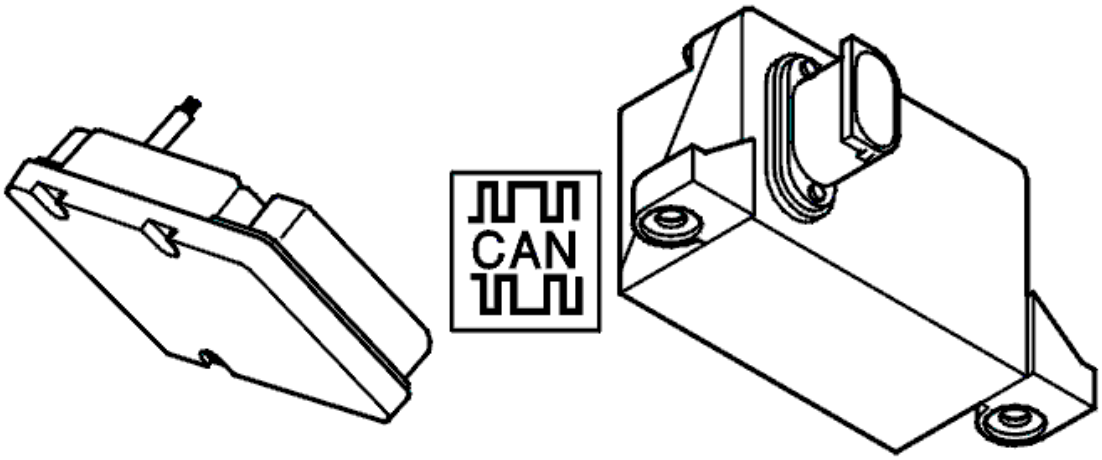

Fig. 179: Identifying Brake Control Module & Active Yaw Control Sensor

Courtesy of VOLVO CARS CORPORATION

Were there any defects in the cables or the AYC sensor installation?

- **YES**

  see **VERIFICATION**

- **NO**

  see **CHECKING THE DIAGNOSTIC TROUBLE CODE**

CHECKING THE DIAGNOSTIC TROUBLE CODE

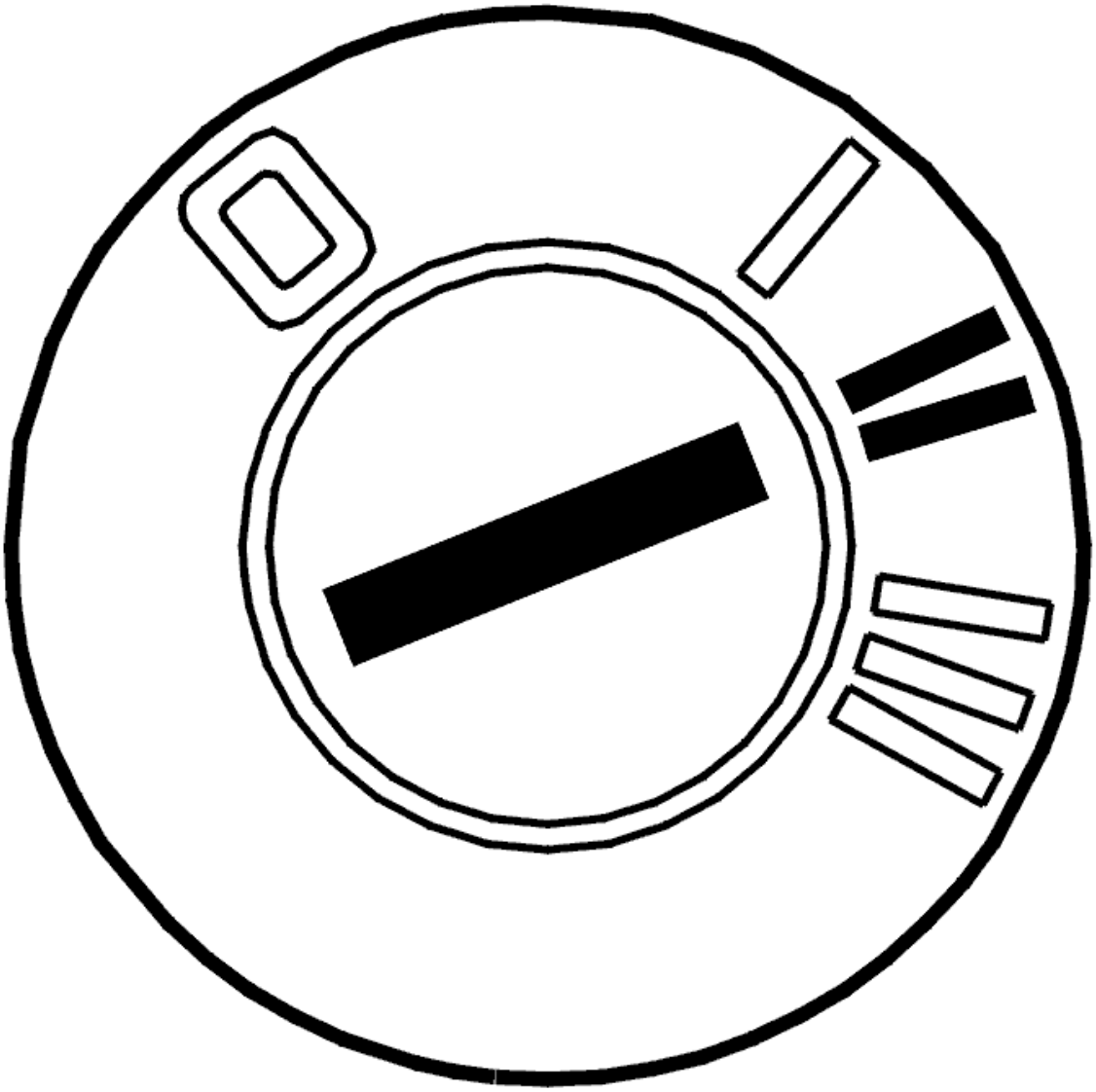

Fig. 180: Identifying Ignition ON
Courtesy of VOLVO CARS CORPORATION

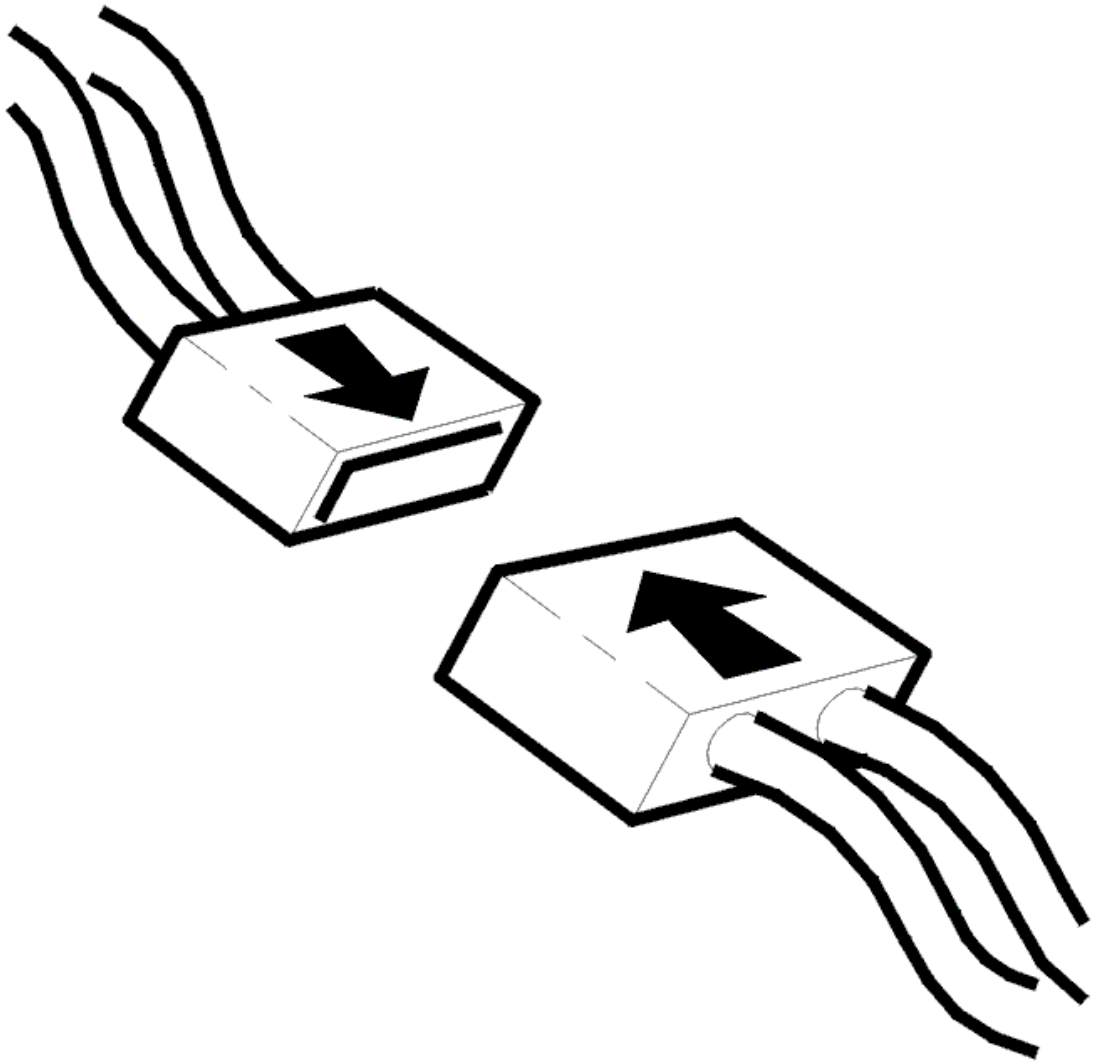

Fig. 181: Connecting Connector
Courtesy of VOLVO CARS CORPORATION

- Ignition off
- Reconnect the connectors, components, etc.
- Test-drive the vehicle according to **TEST DRIVE FORM (DSTC (DYNAMIC STABILITY AND TRACTION CONTROL) /BRAKE CONTROL MODULE), DESCRIPTION** .
- Ignition on
- Read off diagnostic trouble codes (DTCs).

  If the status of the diagnostic trouble code is still permanent, the brake control module (BCM) is defective.

  Reinstall the old AYC sensor and replace the brake control module (BCM)

Other information

- see **BRAKE CONTROL MODULE (BCM), REPLACING**

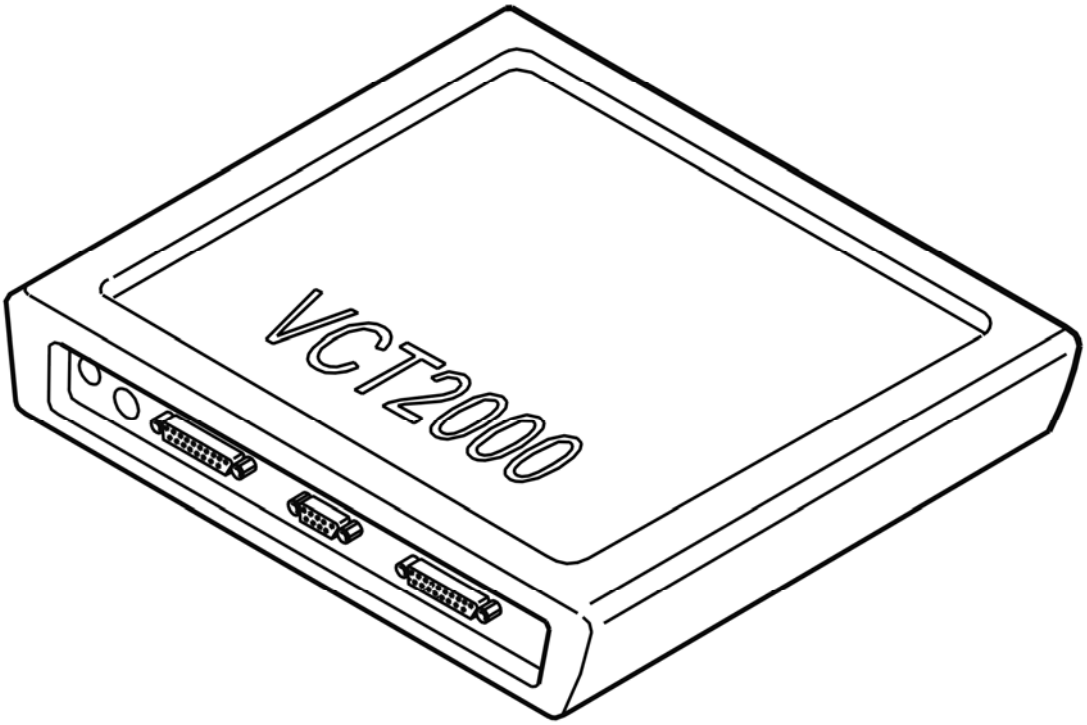

Fig. 182: Identifying VCT2000 Diagnostic Tool Symbol In VIDA
Courtesy of VOLVO CARS CORPORATION

Is the diagnostic trouble code status permanent?

- **YES**

  OKAY: Troubleshooting has been completed.

- **NO**

  see **INFORMATION**

VERIFICATION

VERIFICATION

HINT: After carrying out the repair, check that the malfunction has been remedied.

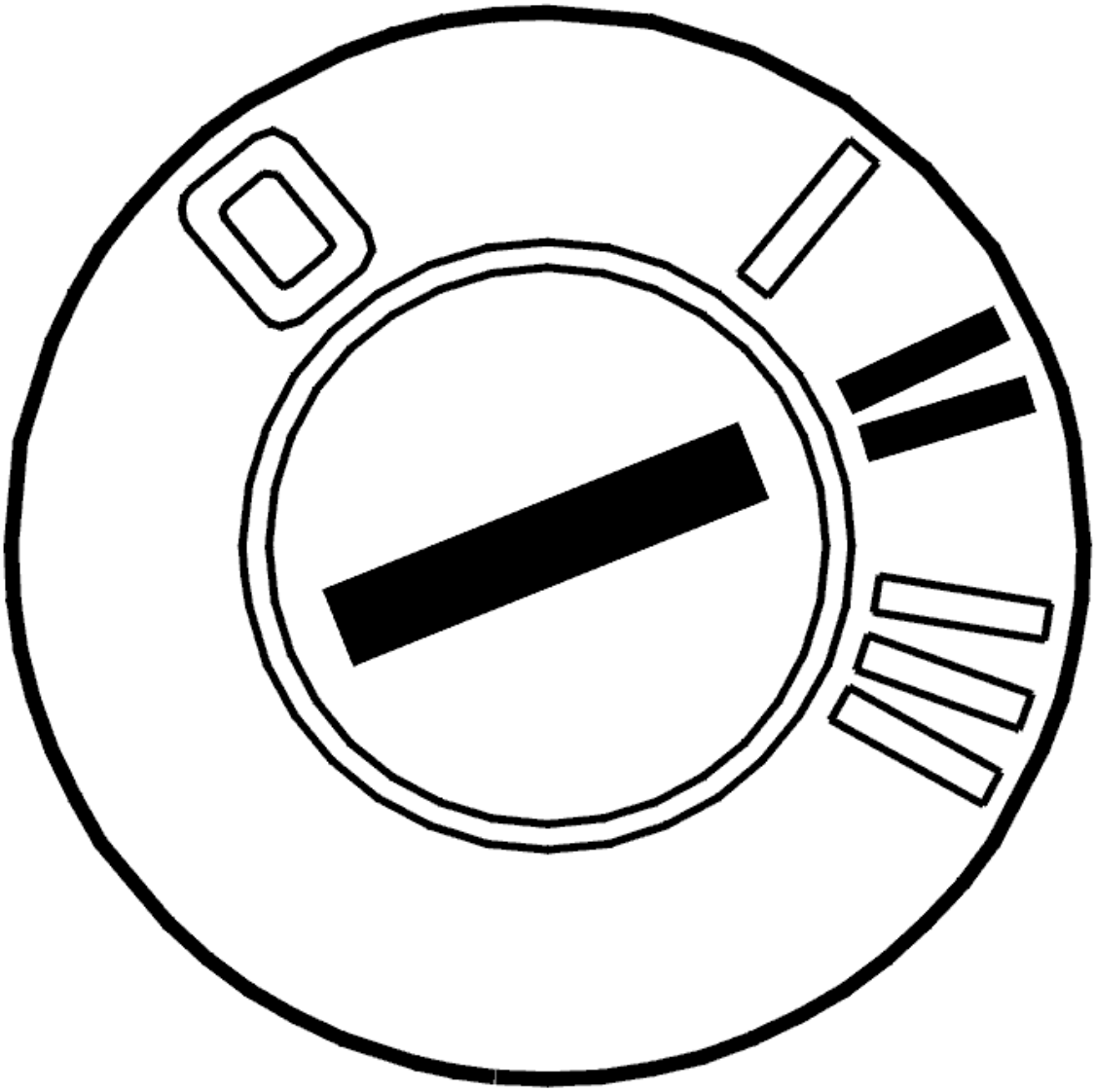

Fig. 183: Identifying Ignition ON
Courtesy of VOLVO CARS CORPORATION

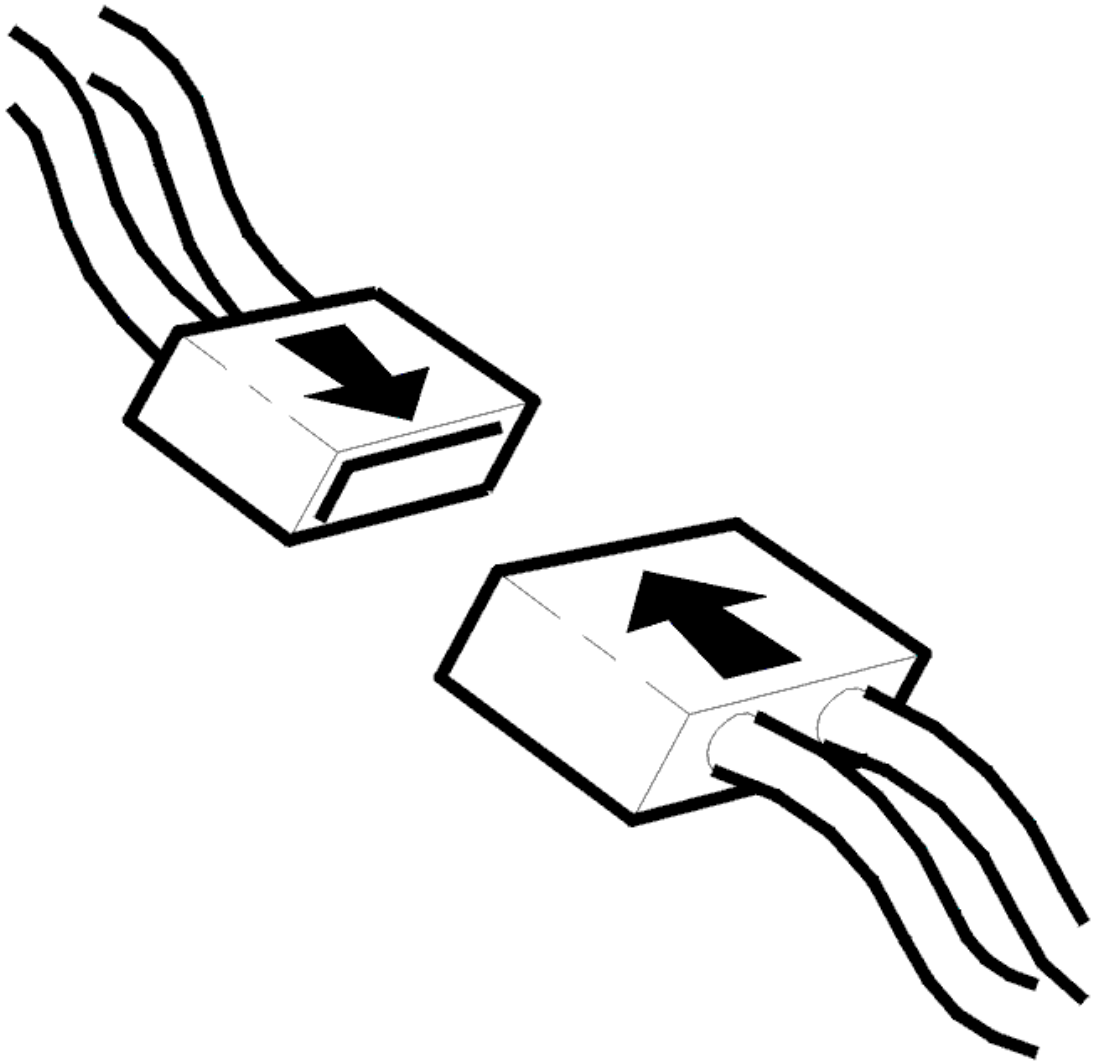

Fig. 184: Connecting Connector
Courtesy of VOLVO CARS CORPORATION

- Ignition off
- Reconnect the connectors, components, etc.
- Test-drive the vehicle according to **TEST DRIVE FORM (DSTC (DYNAMIC STABILITY AND TRACTION CONTROL) /BRAKE CONTROL MODULE), DESCRIPTION** .

NOTE: **Do not turn off the ignition between test-driving and reading out diagnostic trouble codes. This is to obtain the correct status of the diagnostic trouble codes.**

Then read out the diagnostic trouble code's status without turning off the ignition after the test-drive.

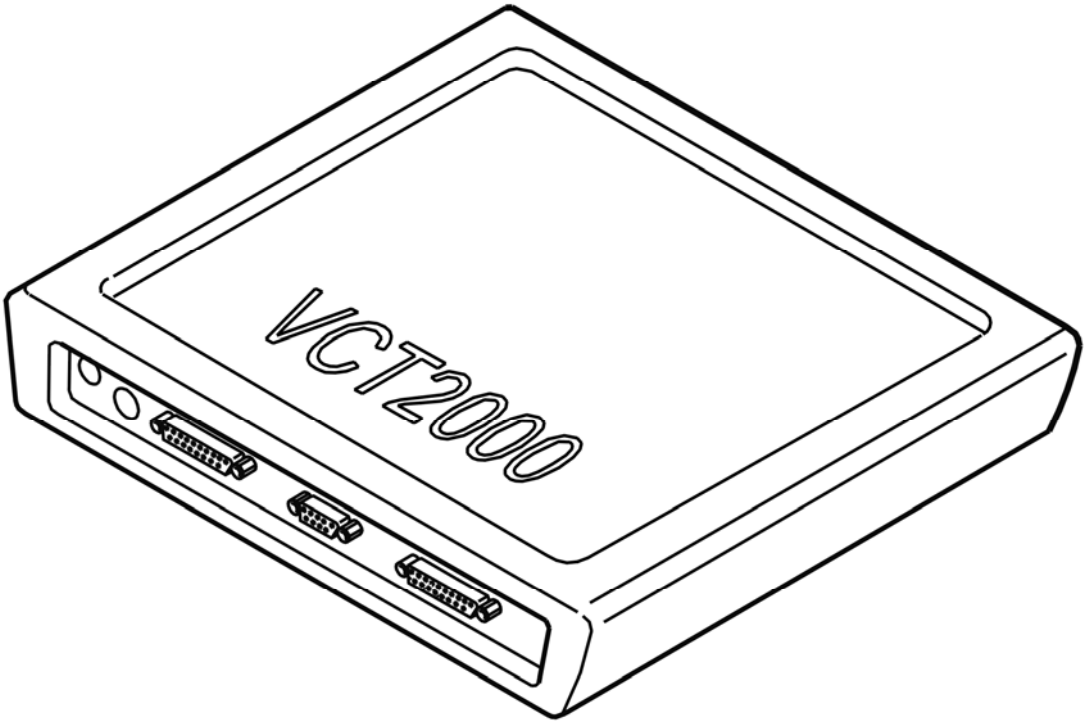

Fig. 185: Identifying VCT2000 Diagnostic Tool Symbol In VIDA
Courtesy of VOLVO CARS CORPORATION

Is the status of the diagnostic trouble code intermittent?

- **YES**

  VERIFIED: Troubleshooting has been completed.

- **NO**

  see **INFORMATION**

INFORMATION

FAULT-TRACING INFORMATION

The fault should have been detected and remedied. As this is not the case fault-tracing has failed.

Exit fault-tracing for this diagnostic trouble code (DTC) or make another attempt.

INFORMATION

FAULT-TRACING INFORMATION

The fault should be diagnosed and remedied. Since this is not the case the fault-tracing process has failed.

Complete the fault-tracing for those fault or try again.

BCM-U012588: FAILED COMMUNICATION WITH MULTI-AXIAL ACCELERATION SENSOR MODULE. BUS/MESSAGE ERROR. OPEN CIRCUIT (B6324S5; 2011-2012)

DIAGNOSTIC TROUBLE CODE INFORMATION BCM-U012588

see **DIAGNOSTIC TROUBLE CODE INFORMATION BCM-U012588**

TROUBLESHOOTING BCM-U012588

see **TROUBLESHOOTING BCM-U012588**

BCM-U012588: FAILED COMMUNICATION WITH MULTI-AXIAL ACCELERATION SENSOR MODULE. BUS/MESSAGE ERROR. OPEN CIRCUIT (B8444S; 2005-2011)

DIAGNOSTIC TROUBLE CODE INFORMATION BCM-U012588

see **DIAGNOSTIC TROUBLE CODE INFORMATION BCM-U012588**

TROUBLESHOOTING BCM-U012588

see **TROUBLESHOOTING BCM-U012588**

BCM-U012600: FAILED COMMUNICATION WITH STEERING ANGLE SENSOR MODULE (SAS). GENERAL MALFUNCTION INFORMATION. NO INFORMATION ON MALFUNCTION TYPE (B6324S; 2007-2010)

DIAGNOSTIC TROUBLE CODE INFORMATION BCM-U012600

Condition

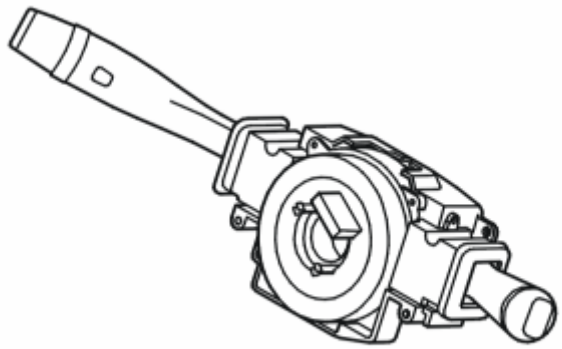

Fig. 186: Identifying Steering Angle Sensor
Courtesy of VOLVO CARS CORPORATION

NOTE: The diagnostic trouble code only applies to vehicles equipped with DSTC.

The steering angle sensor module (SAS) sends a signal to the brake control module (BCM) via CAN to indicate whether the steering angle sensor is functioning correctly or not.

Diagnostic trouble code BCM-U012600 is generated if the brake control module (BCM) registers that there is no signal from the steering angle sensor module (SAS).

The diagnostic trouble code can be diagnosed when the ignition is on.

Substitute Value

- TC is blocked.
- SC is blocked.
- AYC is blocked.

HINT: For information on abbreviations: BRAKE SYSTEM, ABBREVIATIONS

Possible Source

- Interference or open circuit on CAN.
- The steering angle sensor module (SAS) is not connected to CAN.
- Internal malfunction in steering angle sensor (SAS).

Fault symptom[s]

- General warning light on.
- Anti-spin is not operational.

- The stability function is not operational.
- The anti-skid function is not operational.

TROUBLESHOOTING BCM-U012600

CHECKING DIAGNOSTIC TROUBLE CODES (DTCS) IN THE CENTRAL ELECTRONIC MODULE

CHECKING OTHER DIAGNOSTIC TROUBLE CODES (DTCS)

In the event of communication problems, the fault may exist in other parts of the communications network.

The role of the central electronic module is to generally control the communications network and to store diagnostic trouble codes (DTCs) in the event of communication problems between control modules.

If there are diagnostic trouble codes (DTCs) stored for communication problems in the central electronic module, stop the fault tracing and fault trace the central electronic module.

Were diagnostic trouble codes (DTCs) for communication problems stored in the central electronic module?

- **YES**

  OKAY: Troubleshooting has been completed.

- **NO**

  see **CHECKING DIAGNOSTIC TROUBLE CODES IN THE STEERING ANGLE SENSOR MODULE (SAS)**

CHECKING DIAGNOSTIC TROUBLE CODES IN THE STEERING ANGLE SENSOR MODULE (SAS)

If there are any diagnostic trouble codes stored in the steering angle sensor module (SAS), perform troubleshooting of these first.

Were any diagnostic trouble codes stored in the steering angle sensor module (SAS)?

- **YES**

  OKAY: Troubleshooting has been completed.

- **NO**

  see **CHECKING WIRING AND TERMINALS**

CHECKING WIRING AND TERMINALS

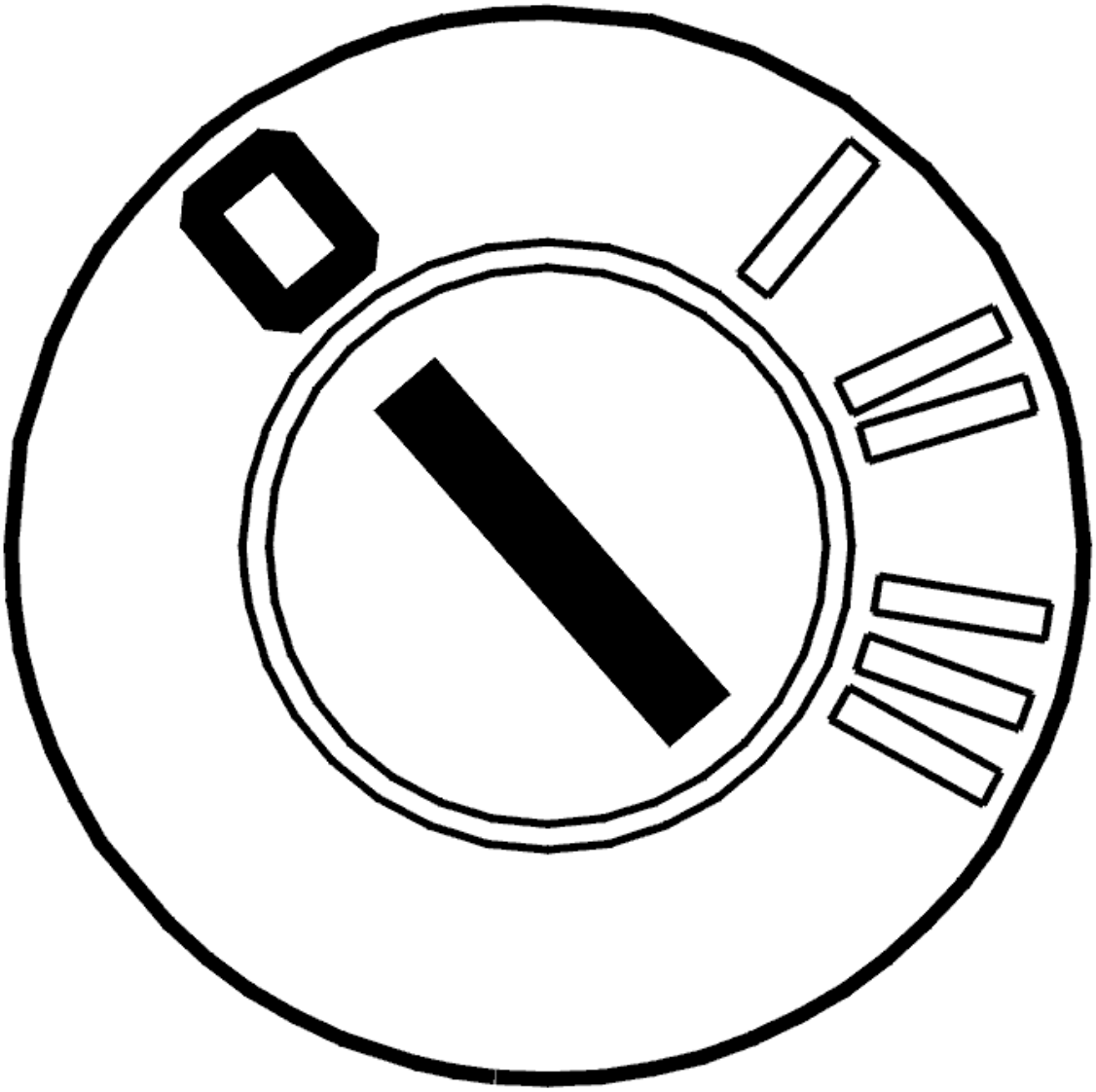

Fig. 187: Identifying Ignition OFF
Courtesy of VOLVO CARS CORPORATION

- Ignition off

  Check the brake control module (BCM) connector for damaged or bent pins as well as contact resistance and oxidation.

  Check the CAN communication cables for open circuit, short circuit to ground and short circuit to supply voltage.

  Measure between:

  - Brake control module (BCM) terminal #A11 (#A11) and steering angle sensor module (SAS) terminal #6 (#A36).
  - Brake control module (BCM) terminal #15 (#A15) and steering angle sensor module (SAS)

terminal #15 (#A45).

Also check that the cables are not positioned too close to a source of interference, such as a cellular phone.

Remedy as necessary.

Other information

- see **CONNECTING THE BREAKOUT BOX, BRAKE CONTROL MODULE (BCM)**
- see **CONNECTING THE BREAKOUT BOX**
- see **CONTENTS**

BCM-U012600: FAILED COMMUNICATION WITH STEERING ANGLE SENSOR MODULE (SAS). GENERAL MALFUNCTION INFORMATION. NO INFORMATION ON MALFUNCTION TYPE (B6324S5; 2011-2012)

DIAGNOSTIC TROUBLE CODE INFORMATION BCM-U012600

see **DIAGNOSTIC TROUBLE CODE INFORMATION BCM-U012600**

TROUBLESHOOTING BCM-U012600

see **TROUBLESHOOTING BCM-U012600**

BCM-U012600: FAILED COMMUNICATION WITH STEERING ANGLE SENSOR MODULE (SAS). GENERAL MALFUNCTION INFORMATION. NO INFORMATION ON MALFUNCTION TYPE (B8444S; 2005-2011)

DIAGNOSTIC TROUBLE CODE INFORMATION BCM-U012600

see **DIAGNOSTIC TROUBLE CODE INFORMATION BCM-U012600**

TROUBLESHOOTING BCM-U012600

see **TROUBLESHOOTING BCM-U012600**

BCM-U030000: INTERNAL SOFTWARE INCOMPATIBLE WITH THE CONTROL MODULE. GENERAL MALFUNCTION INFORMATION. NO INFORMATION ON MALFUNCTION TYPE (B6324S; 2007-2010)

DIAGNOSTIC TROUBLE CODE INFORMATION BCM-U030000

Condition

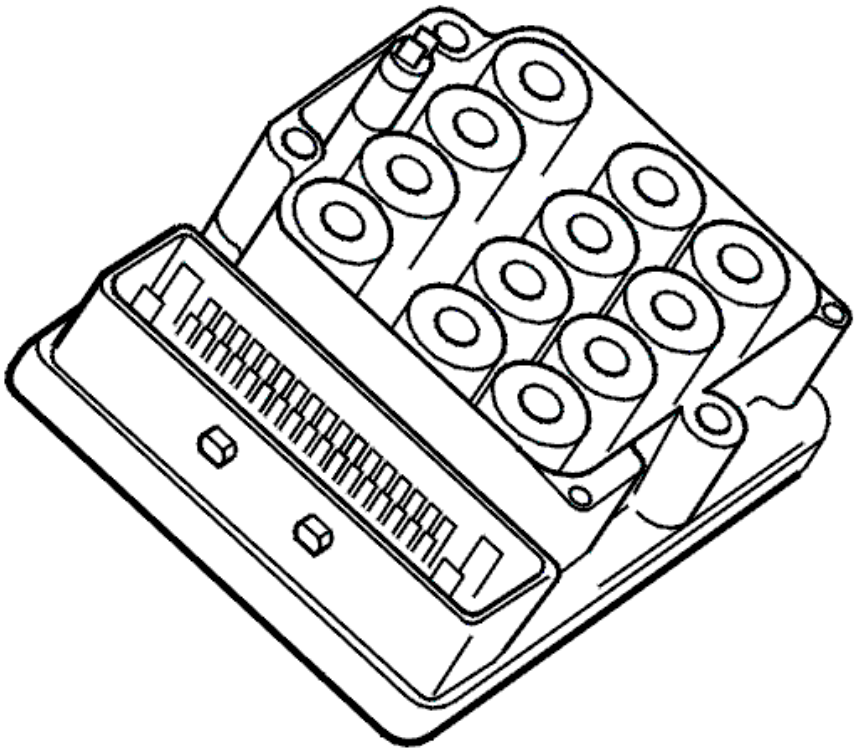

Fig. 188: ABS Control Module
Courtesy of VOLVO CARS CORPORATION

The brake control module (BCM) compares its configuration ID with the signal configuration sent by the central electronic module (CEM) on the CAN network. If the configuration IDs do not match, the diagnostic trouble code is generated. It is also generated if communication between the brake control module (BCM) and the central electronic module (CEM) is interrupted.

NOTE: **If there is an open circuit on both CAN cables, it is not possible to communicate with the brake control module (BCM). Thus, the diagnostic trouble code can only be read out if the malfunction is intermittent. When the diagnostic trouble code has been generated, the control module responds to diagnostic commands, but normal CAN communication is not possible ("Expulsion mode").**

Substitute Value

- Nothing.

Possible Source

- The brake control module (BCM) has an incorrect configuration ID (control module not intended for this vehicle, such as a used control module with different software/hardware).

- Open circuit in the CAN cables between the brake control module (BCM) and the central electronic module (CEM).

NOTE: **This diagnostic trouble code (DTC) is not due to an internal hardware fault in the Brake control module (BCM) and must not be remedied by replacing the control module.**

Fault symptom[s]

- ABS warning light on.
- No ABS function.
- Message in the text display.

TROUBLESHOOTING

see **TROUBLESHOOTING**

BCM-U030000: INTERNAL SOFTWARE INCOMPATIBLE WITH THE CONTROL MODULE. GENERAL MALFUNCTION INFORMATION. NO INFORMATION ON MALFUNCTION TYPE (B6324S5; 2011-2012)

DIAGNOSTIC TROUBLE CODE INFORMATION BCM-U030000

see **DIAGNOSTIC TROUBLE CODE INFORMATION BCM-U030000**

TROUBLESHOOTING

see **TROUBLESHOOTING**

BCM-U030000: INTERNAL SOFTWARE INCOMPATIBLE WITH THE CONTROL MODULE. GENERAL MALFUNCTION INFORMATION. NO INFORMATION ON MALFUNCTION TYPE (B8444S; 2005-2011)

DIAGNOSTIC TROUBLE CODE INFORMATION BCM-U030000

see **DIAGNOSTIC TROUBLE CODE INFORMATION BCM-U030000**

TROUBLESHOOTING

see **TROUBLESHOOTING**

BCM-U030046: CONTROL MODULE INCOMPATIBLE INTERNAL SOFTWARE. INTERNAL ERROR. DEFECTIVE CALIBRATION / PARAMETER MEMORY (B6324S; 2007-2010)

DIAGNOSTIC TROUBLE CODE INFORMATION BCM-U030046

Condition

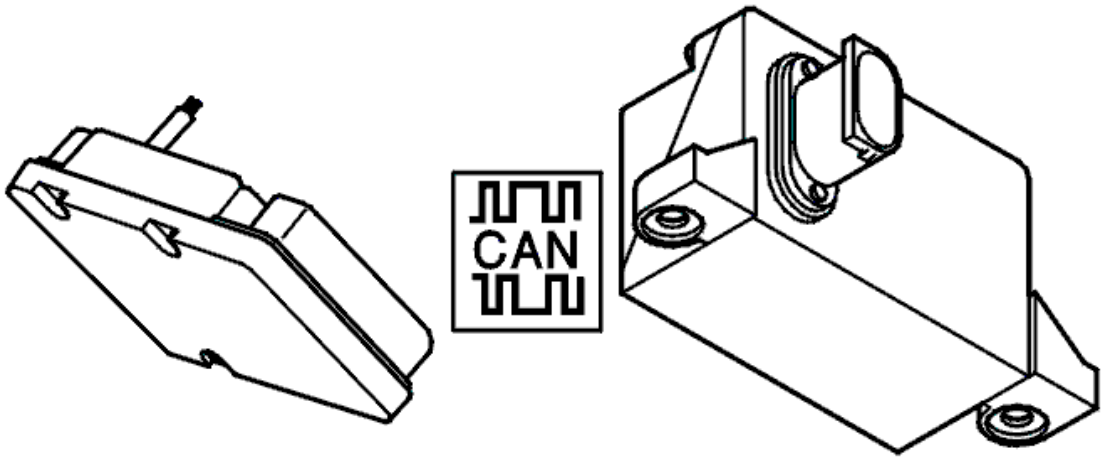

Fig. 189: Identifying Brake Control Module & Active Yaw Control Sensor
Courtesy of VOLVO CARS CORPORATION

NOTE: The diagnostic trouble code only applies to vehicles equipped with DSTC.

The control modules continually transmit and receive information via the vehicle's CAN data network (Controller Area Network).

The diagnostic trouble code is generated if the brake control module (BCM) registers that there has been no signal from the central electronic module (CEM), which provides information on vehicle model, for more than 27 seconds.

The diagnostic trouble code can be diagnosed when the ignition is on.

Substitute Value

- TC is blocked.
- SC is blocked.
- AYC is blocked.

HINT: For information on abbreviations: BRAKE SYSTEM, ABBREVIATIONS

Possible Source

- A brake control module (BCM) from a different vehicle model has been installed.
- A central electronic module (CEM) from a different vehicle model has been installed.

Fault symptom[s]

- General warning light on.
- Anti-spin is not operational.
- The stability function is not operational.
- The anti-skid function is not operational.

TROUBLESHOOTING BCM-U030046

CHECKING DIAGNOSTIC TROUBLE CODES (DTCS) IN THE CENTRAL ELECTRONIC MODULE

CHECKING OTHER DIAGNOSTIC TROUBLE CODES (DTCS)

In the event of communication problems, the fault may exist in other parts of the communications network.

The role of the central electronic module is to generally control the communications network and to store diagnostic trouble codes (DTCs) in the event of communication problems between control modules.

If there are diagnostic trouble codes (DTCs) stored for communication problems in the central electronic module, stop the fault tracing and fault trace the central electronic module.

Were diagnostic trouble codes (DTCs) for communication problems stored in the central electronic module?

- **YES**

  OKAY: Troubleshooting has been completed.

- **NO**

  see **CHECKING THE DIAGNOSTIC TROUBLE CODES (DTCS)**

CHECKING THE DIAGNOSTIC TROUBLE CODES (DTCS)

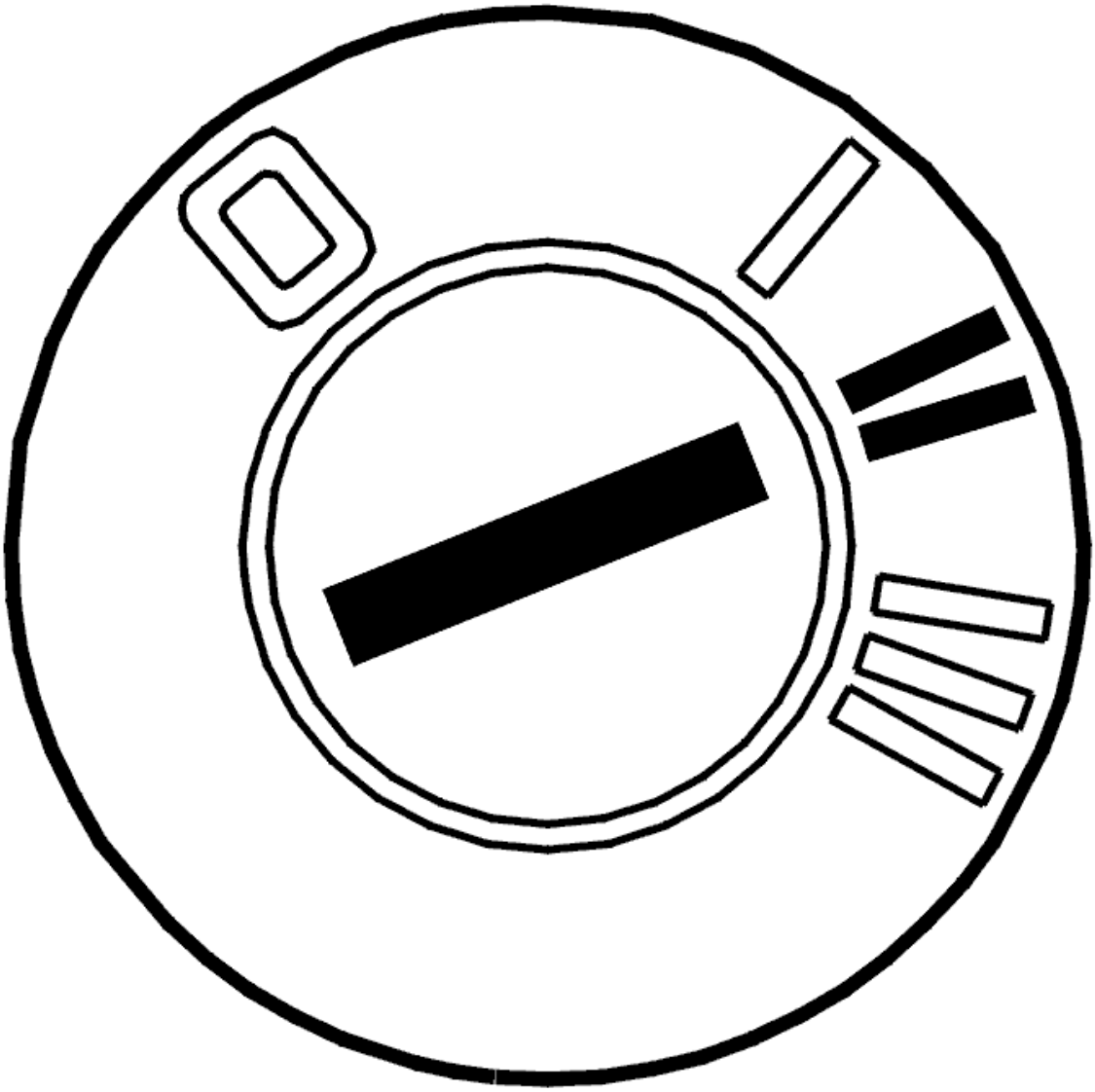

Fig. 190: Identifying Ignition ON
Courtesy of VOLVO CARS CORPORATION

- Ignition on
- Wait approximately 60 seconds.
- Read the status of the diagnostic trouble code.

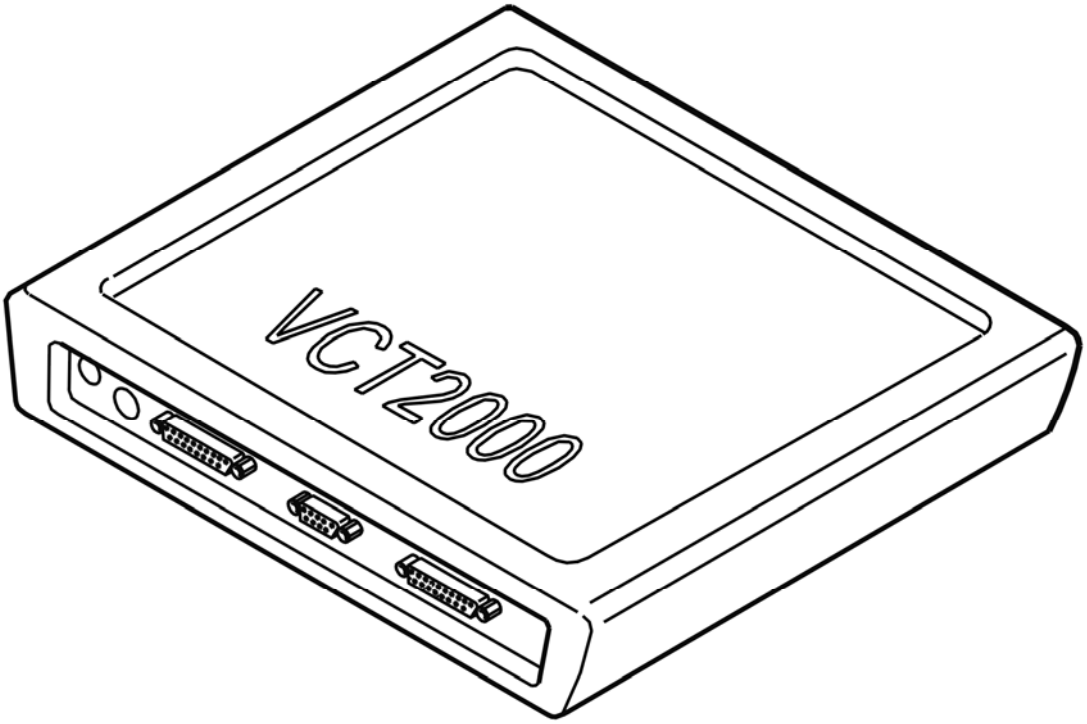

Fig. 191: Identifying VCT2000 Diagnostic Tool Symbol In VIDA
Courtesy of VOLVO CARS CORPORATION

Is the status of the diagnostic trouble code permanent?

- **YES**

  see **CHECKING CABLES AND CONNECTIONS**

- see **INTERMITTENT MALFUNCTION**

CHECKING CABLES AND CONNECTIONS

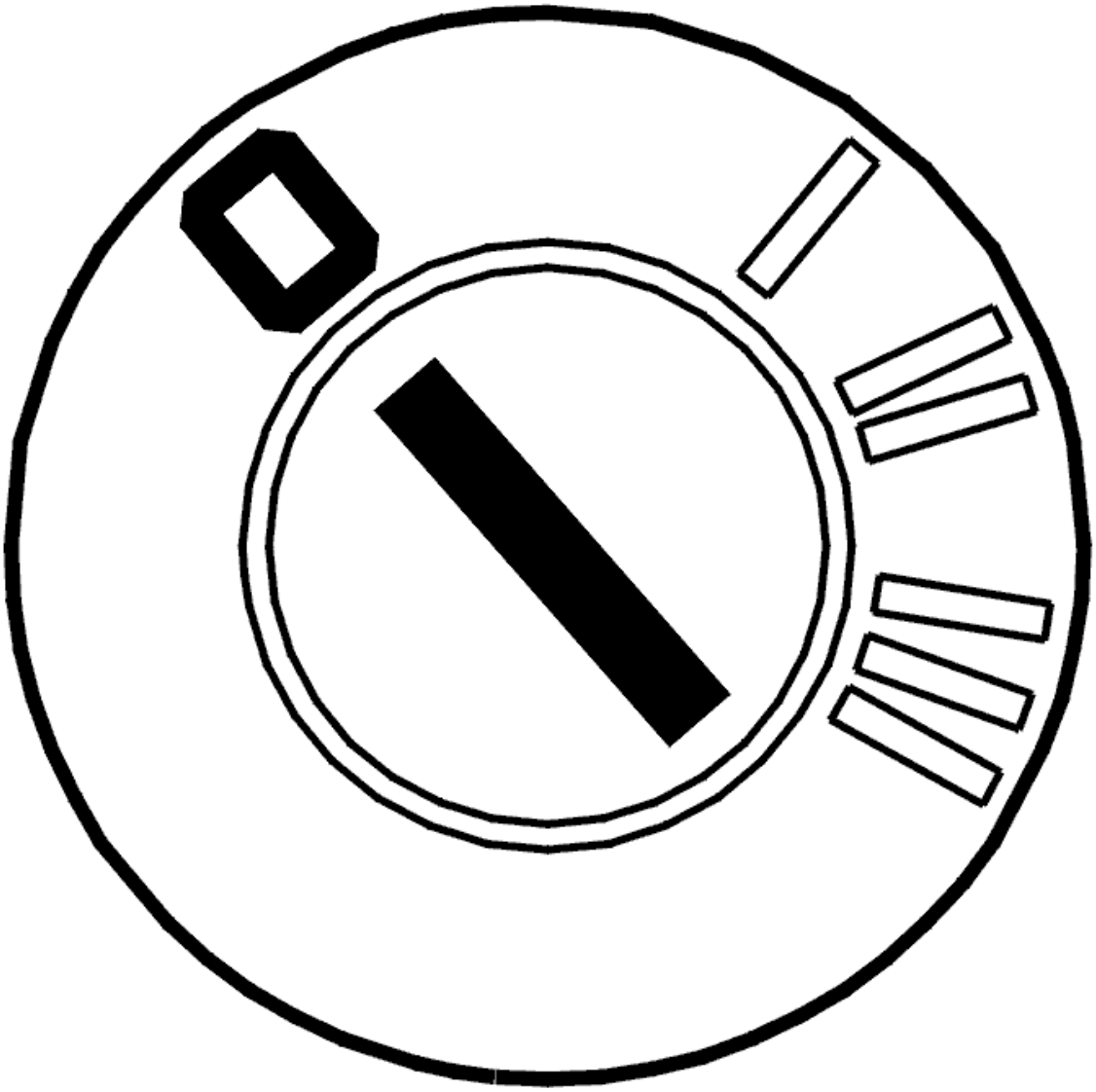

Fig. 192: Identifying Ignition OFF
Courtesy of VOLVO CARS CORPORATION

- Ignition off

  Check the brake control module (BCM) connector for damaged or bent pins as well as contact resistance and oxidation.

  Check the cables for CAN-communication between the bra control module (BCM) and central electronic module (CEM) for open circuit, short-circuit to ground and short-circuit to voltage.

  Also check that the cables are not positioned too close to a source of interference, such as a cellular phone.

  Remedy as necessary.

Other information

- see **CONTENTS**

- **Continue**

  see **VERIFICATION**

INTERMITTENT MALFUNCTION

HINT: The diagnostic trouble code status indicates that the brake control module (BCM) has previously registered a malfunction, but the malfunction is no longer active.

Check the connectors of the brake control module (BCM) and the central electronic module (CEM) for contact resistance and oxidation.

Also check that the CAN-communication cables are not positioned too close to a source of interference, such as a cellular phone.

Remedy as necessary.

INFORMATION

FAULT-TRACING INFORMATION

The fault should have been detected and remedied. As this is not the case fault-tracing has failed.

Exit fault-tracing for this diagnostic trouble code (DTC) or make another attempt.

VERIFICATION

VERIFICATION

HINT: After carrying out the repair, check that the malfunction has been remedied.

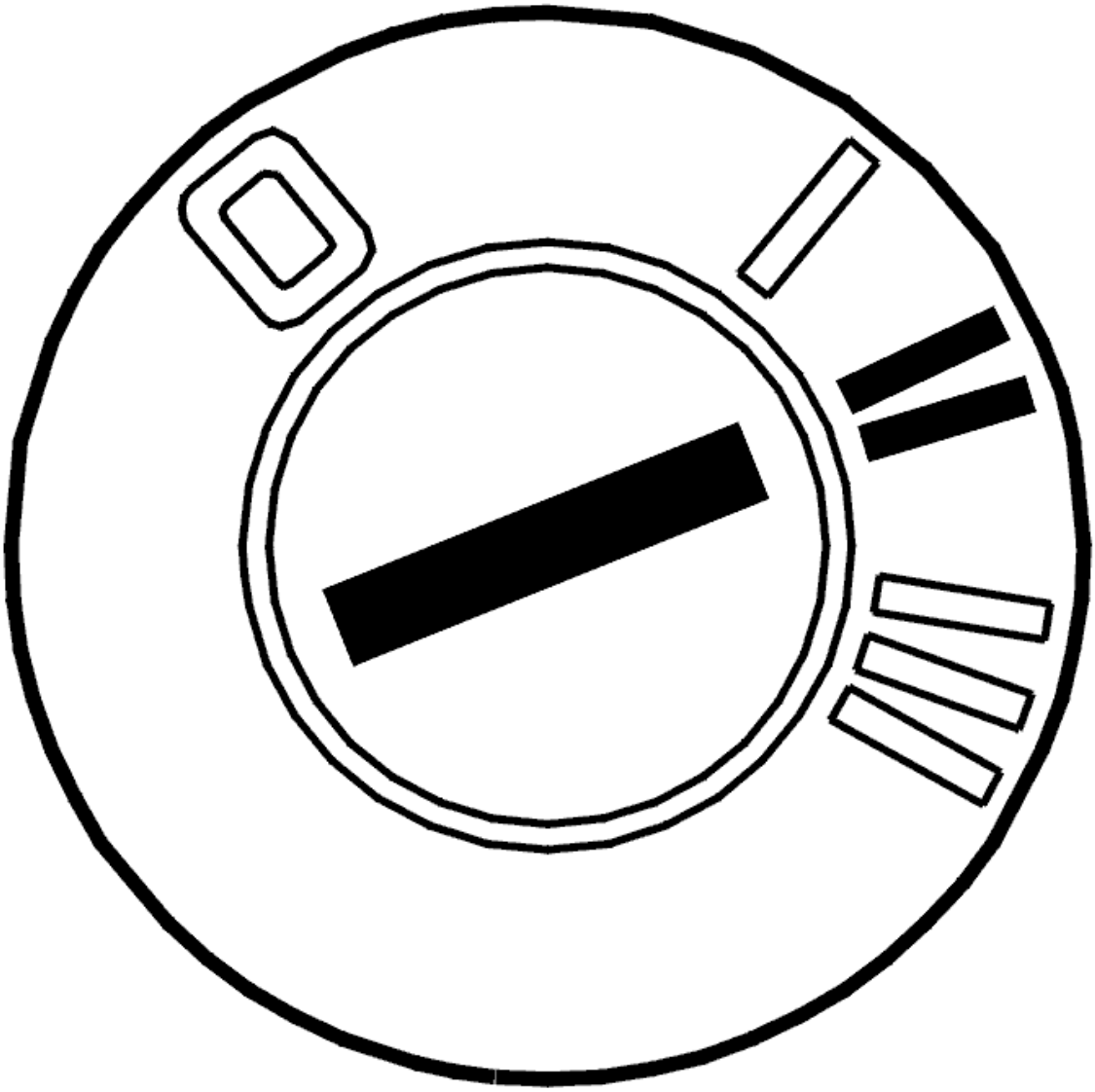

Fig. 193: Identifying Ignition ON
Courtesy of VOLVO CARS CORPORATION

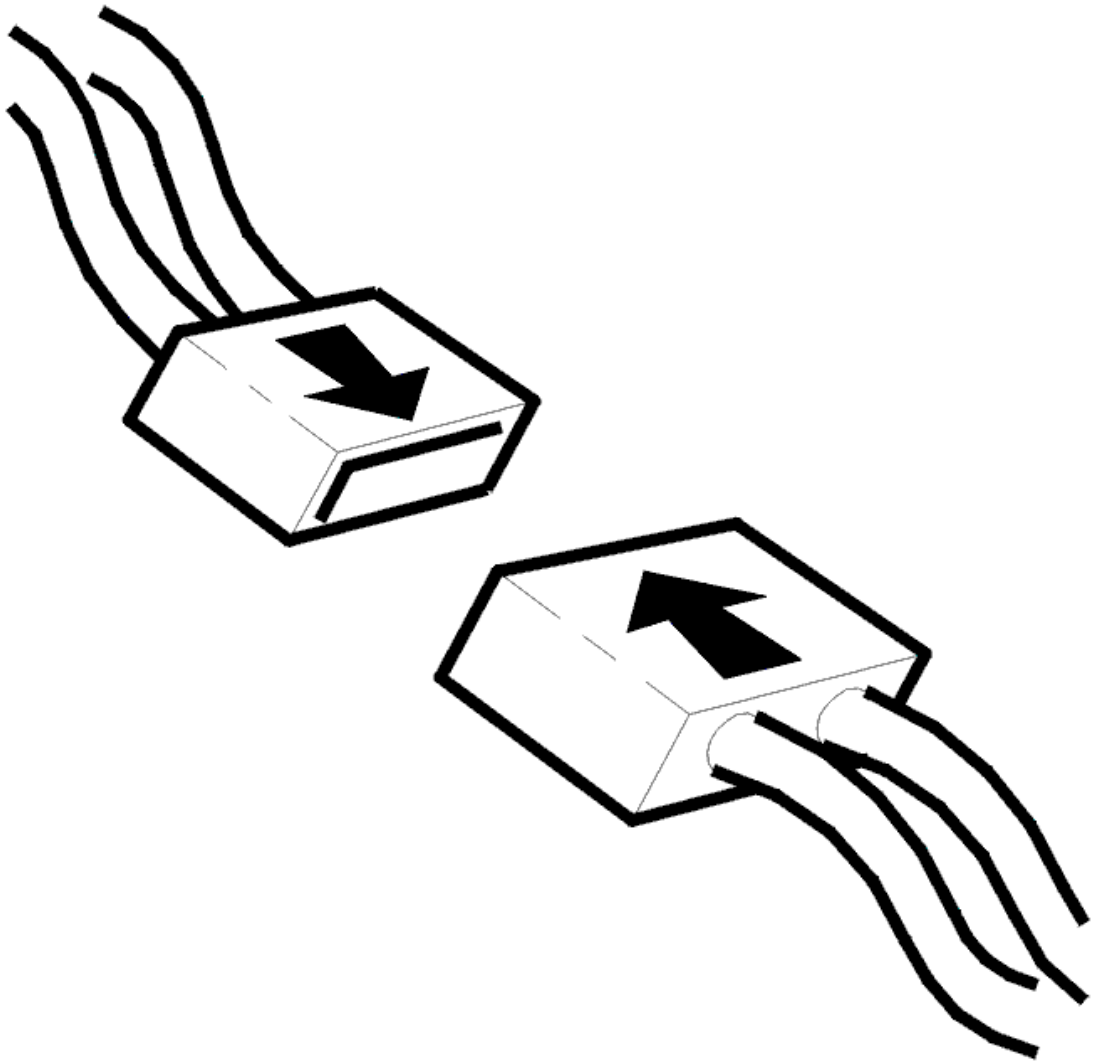

Fig. 194: Connecting Connector
Courtesy of VOLVO CARS CORPORATION

- Ignition off
- Reconnect the connectors, components, etc.
- Test-drive the vehicle according to **TEST DRIVE FORM (DSTC (DYNAMIC STABILITY AND TRACTION CONTROL) /BRAKE CONTROL MODULE), DESCRIPTION** .

NOTE: **Do not turn off the ignition between test-driving and reading out diagnostic trouble codes. This is to obtain the correct status of the diagnostic trouble codes.**

Then read out the diagnostic trouble code's status without turning off the ignition after the test-drive.

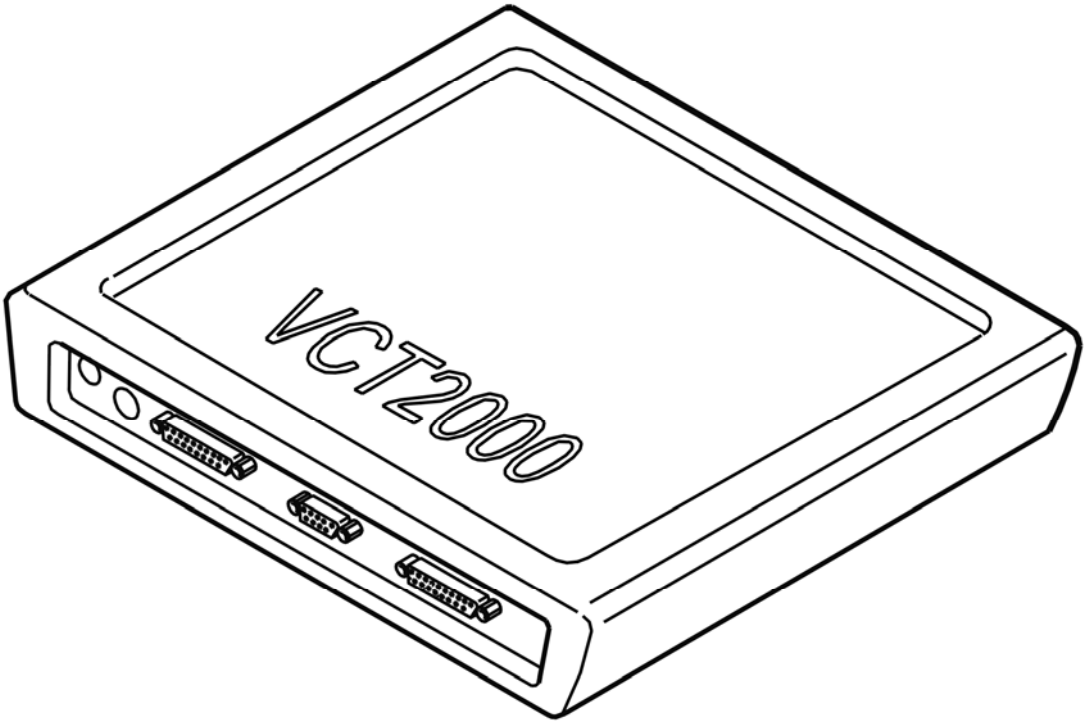

Fig. 195: Identifying VCT2000 Diagnostic Tool Symbol In VIDA
Courtesy of VOLVO CARS CORPORATION

Is the status of the diagnostic trouble code intermittent?

- **YES**

  VERIFIED: Troubleshooting has been completed.

- **NO**

  see **INFORMATION**

INFORMATION

FAULT-TRACING INFORMATION

If the fault is intermittent, do not verify fault-tracing if the fault does not recur.

It is possible to view the information again, or leave fault-tracing for this diagnostic trouble code (DTC).

BCM-U030046: CONTROL MODULE INCOMPATIBLE INTERNAL SOFTWARE. INTERNAL ERROR. DEFECTIVE CALIBRATION / PARAMETER

MEMORY (B6324S5; 2011-2012)

DIAGNOSTIC TROUBLE CODE INFORMATION BCM-U030046

see **DIAGNOSTIC TROUBLE CODE INFORMATION BCM-U030046**

TROUBLESHOOTING BCM-U030046

see **TROUBLESHOOTING BCM-U030046**

BCM-U030046: CONTROL MODULE INCOMPATIBLE INTERNAL SOFTWARE. INTERNAL ERROR. DEFECTIVE CALIBRATION / PARAMETER MEMORY (B8444S; 2005-2011)

DIAGNOSTIC TROUBLE CODE INFORMATION BCM-U030046

see **DIAGNOSTIC TROUBLE CODE INFORMATION BCM-U030046**

TROUBLESHOOTING BCM-U030046

see **TROUBLESHOOTING BCM-U030046**

BCM-U030087: CONTROL MODULE INCOMPATIBLE INTERNAL SOFTWARE. BUS/MESSAGE ERROR. MESSAGE MISSING (B6324S; 2007-2010)

DIAGNOSTIC TROUBLE CODE INFORMATION BCM-U030087

Condition

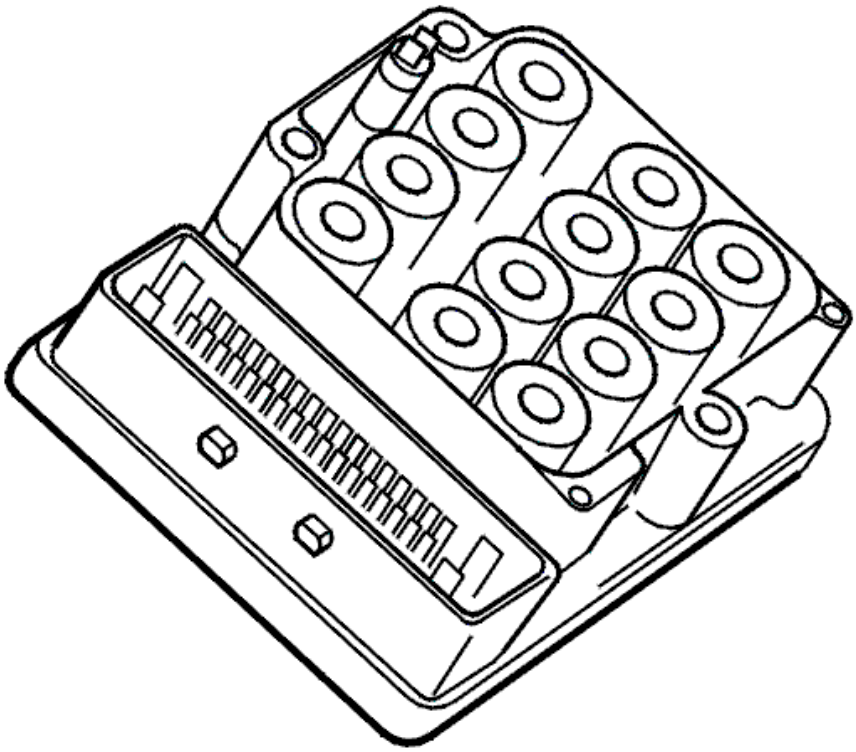

Fig. 196: ABS Control Module
Courtesy of VOLVO CARS CORPORATION

The brake control module (BCM) is factory-programmed with software for several vehicle models. During the first ignition cycle, the brake control module (BCM) reads vehicle configuration data from the central electronic module (CEM) and then configures itself to the vehicle model and equipment.

The diagnostic trouble code can be generated if

- a brake control module (BCM) that was previously in a different vehicle model is installed
- a central electronic module (CEM) that was previously in a different vehicle model is installed
- software for a different vehicle model has been downloaded to the brake control module (BCM).

Substitute Value

- TC is blocked.
- SC is blocked.
- AYC is blocked.

HINT: For information on abbreviations: BRAKE SYSTEM, ABBREVIATIONS

Possible Source

- A brake control module (BCM) from a different vehicle model is installed.
- A central electronic module (CEM) from a different vehicle model is installed.
- Software for a different vehicle model has been downloaded to the brake control module (BCM).

NOTE: This diagnostic trouble code (DTC) is not due to an internal hardware fault in the Brake control module (BCM) and must not be remedied by replacing the control module.

Fault symptom[s]

- General warning light on.
- Anti-spin is not operational.
- The stability function is not operational.
- The anti-skid function is not operational.

TROUBLESHOOTING BCM-U030087

CHECKING THE CENTRAL ELECTRONIC MODULE (CEM)

CAUTION: This diagnostic trouble code may be generated if the central electronic module (CEM) is replaced in the vehicle and either comes from another vehicle or is loaded with incompatible software.

Check that the correct central electronic module (CEM) is installed.

Check that the central electronic module (CEM) is loaded with the correct software for this vehicle. Read off the vehicle configuration via service for central electronic module (CEM).

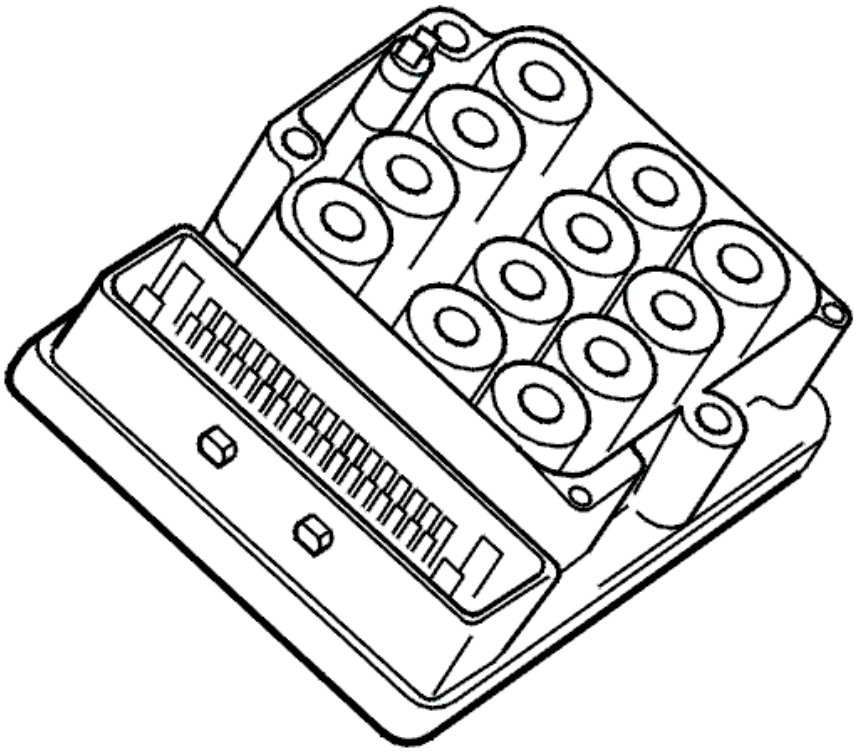

Fig. 197: ABS Control Module
Courtesy of VOLVO CARS CORPORATION

Is this the correct central electronic module (CEM) and software?

- **YES**

  see **REPROGRAMMING BCM**

- **NO**

  FAULT NOT FOUND: Troubleshooting has been completed.

REPROGRAMMING BCM

NOTE: The diagnostic trouble code may also be stored if the brake control module (BCM) has been tested in another vehicle that does not have engine B8444S.

The diagnostic trouble code may in certain cases have been stored after reprogramming of the brake system control module (BCM). If this is the case, then the brake control module (BCM) must be configured.

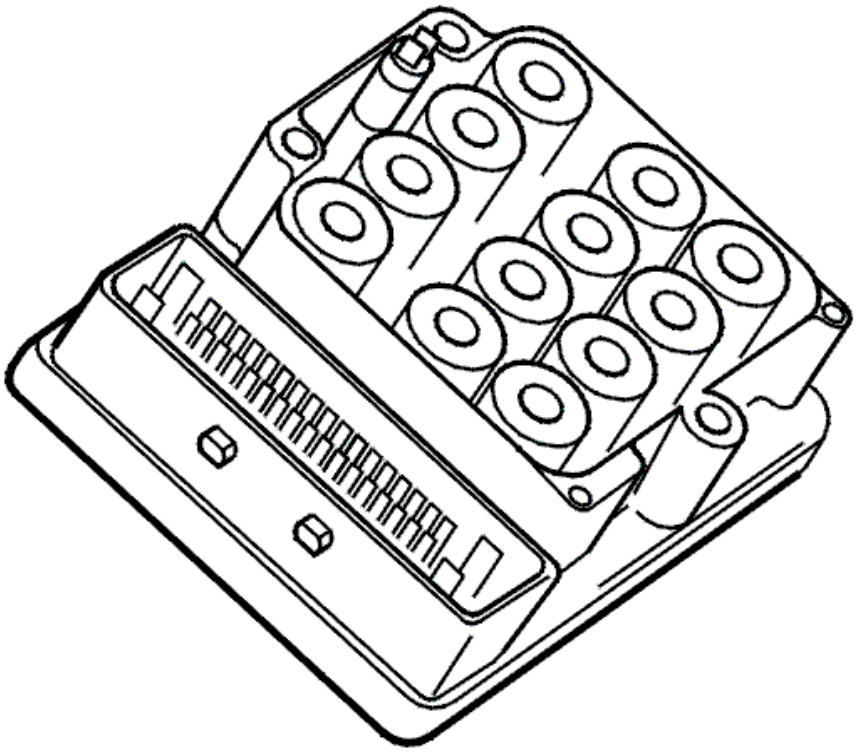

Fig. 198: ABS Control Module
Courtesy of VOLVO CARS CORPORATION

Is the diagnostic trouble code stored after reprogramming of the brake control module (BCM)?

- **YES**

  see **RESETTING AND CONFIGURING THE BRAKE CONTROL MODULE (BCM)**

- **NO**

  see **ERASING DIAGNOSTIC TROUBLE CODES (DTCS)**

ERASING DIAGNOSTIC TROUBLE CODES (DTCS)

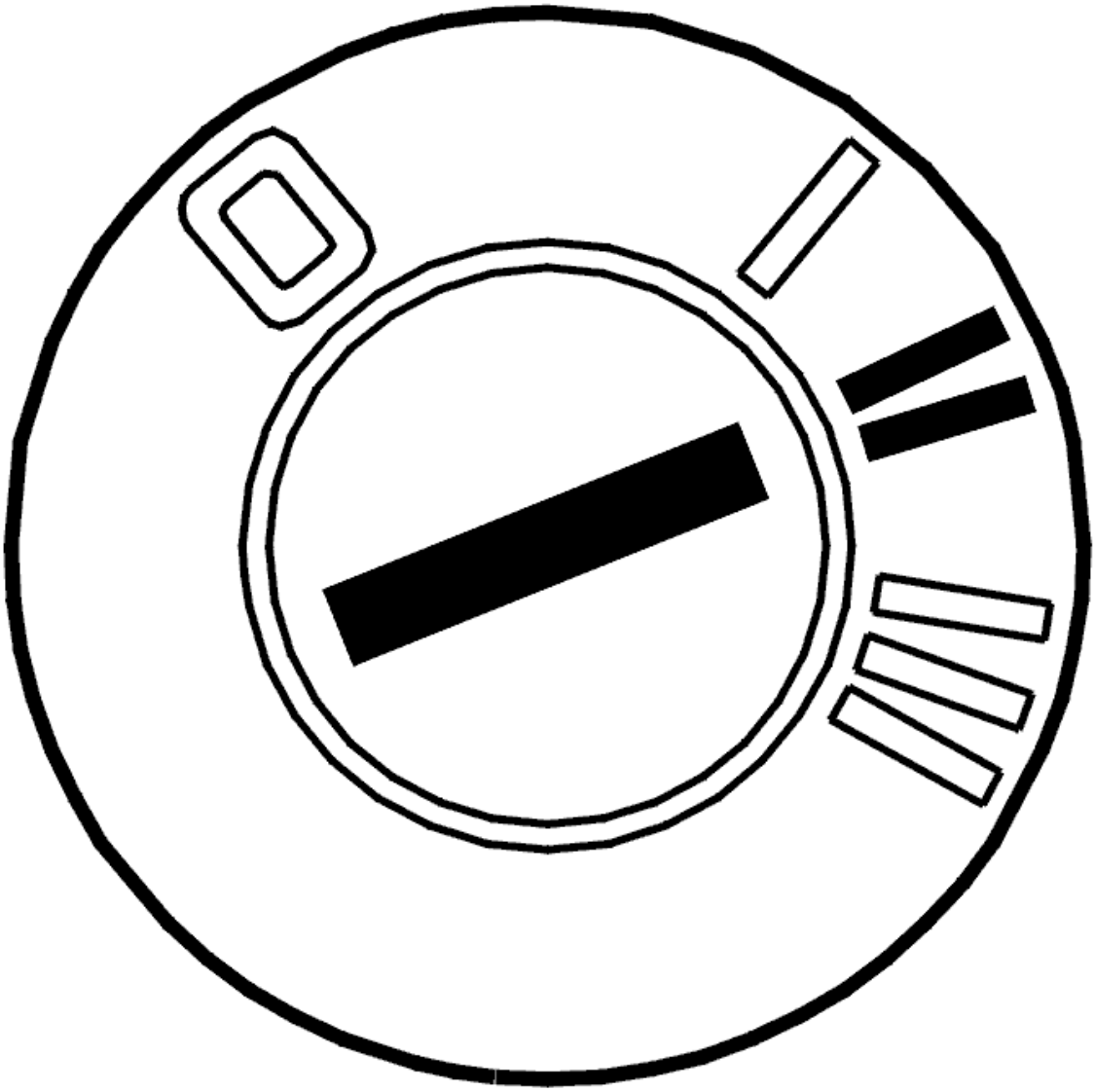

Fig. 199: Identifying Ignition ON
Courtesy of VOLVO CARS CORPORATION

- Ignition on
- Erase the diagnostic trouble codes from the brake control module (BCM).

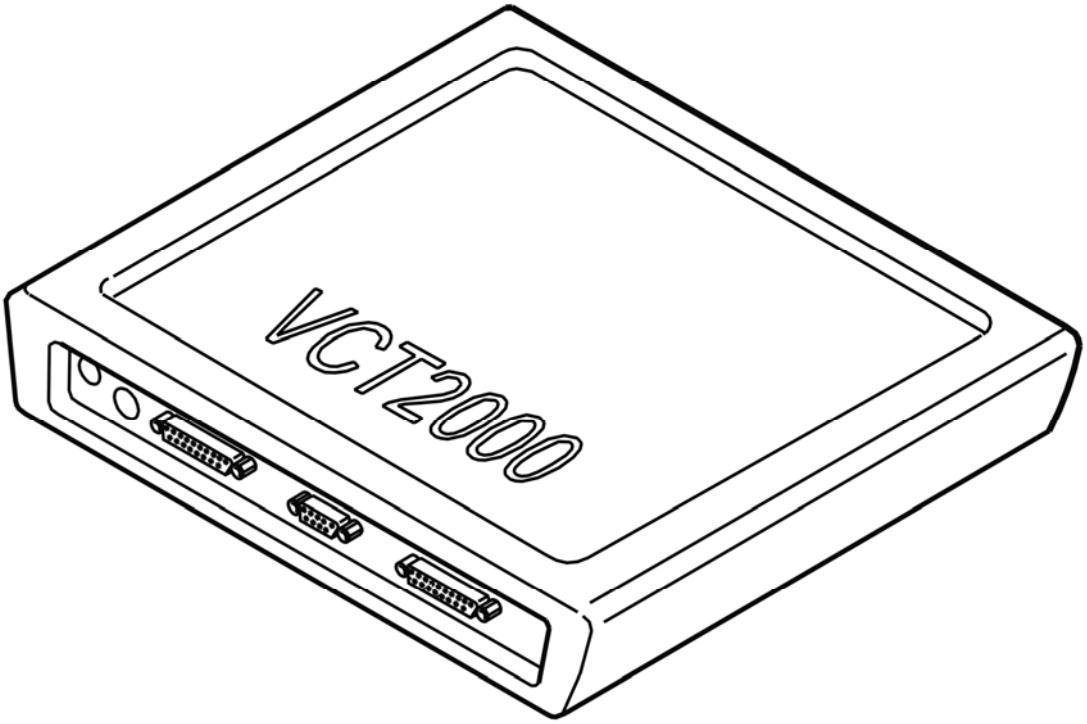

Fig. 200: Identifying VCT2000 Diagnostic Tool Symbol In VIDA
Courtesy of VOLVO CARS CORPORATION

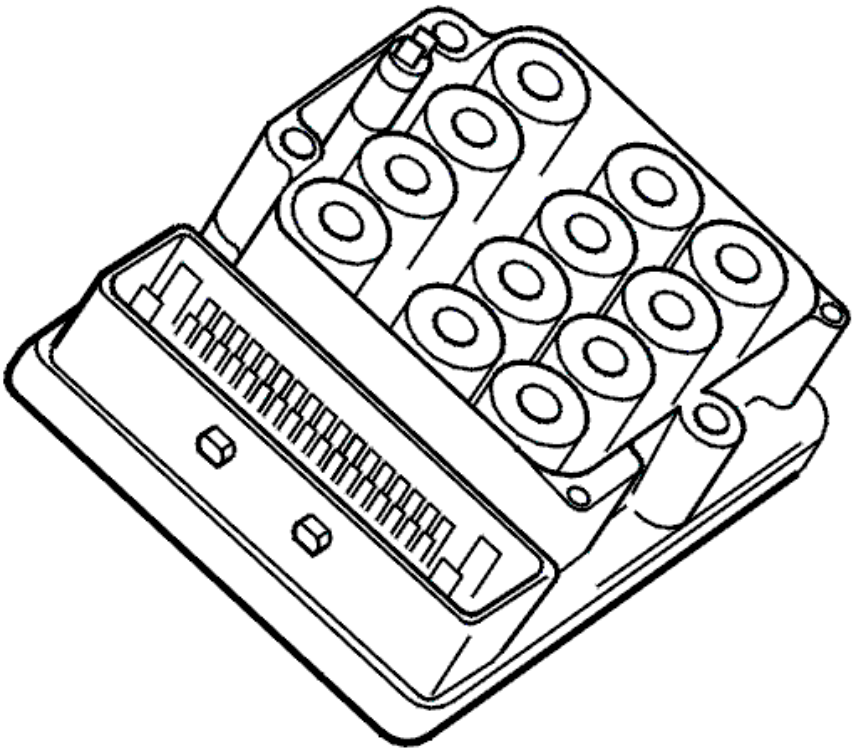

Fig. 201: ABS Control Module
Courtesy of VOLVO CARS CORPORATION

- **Continue**

see **READING OFF DIAGNOSTIC TROUBLE CODES (DTCS)**

READING OFF DIAGNOSTIC TROUBLE CODES (DTCS)

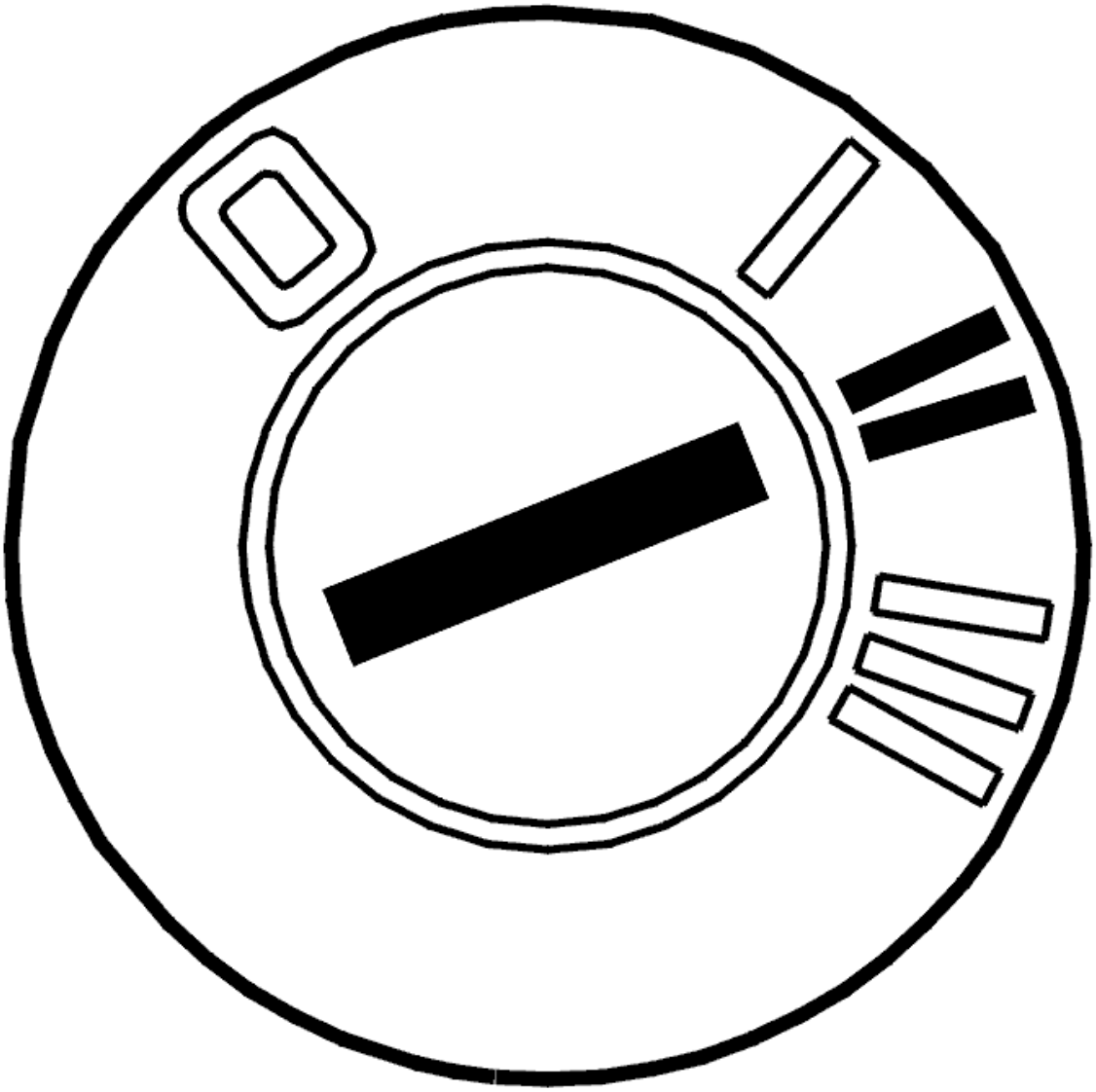

Fig. 202: Identifying Ignition ON
Courtesy of VOLVO CARS CORPORATION

- Ignition off
- Wait approx. 1 minute.
- Ignition on
- Read off diagnostic trouble codes (DTCs).

NOTE: **If the diagnostic trouble code no longer is stored, it may have been due to an intermittent malfunction or the brake control module (BCM) has been tested in another vehicle that does not have engine B8444S.**

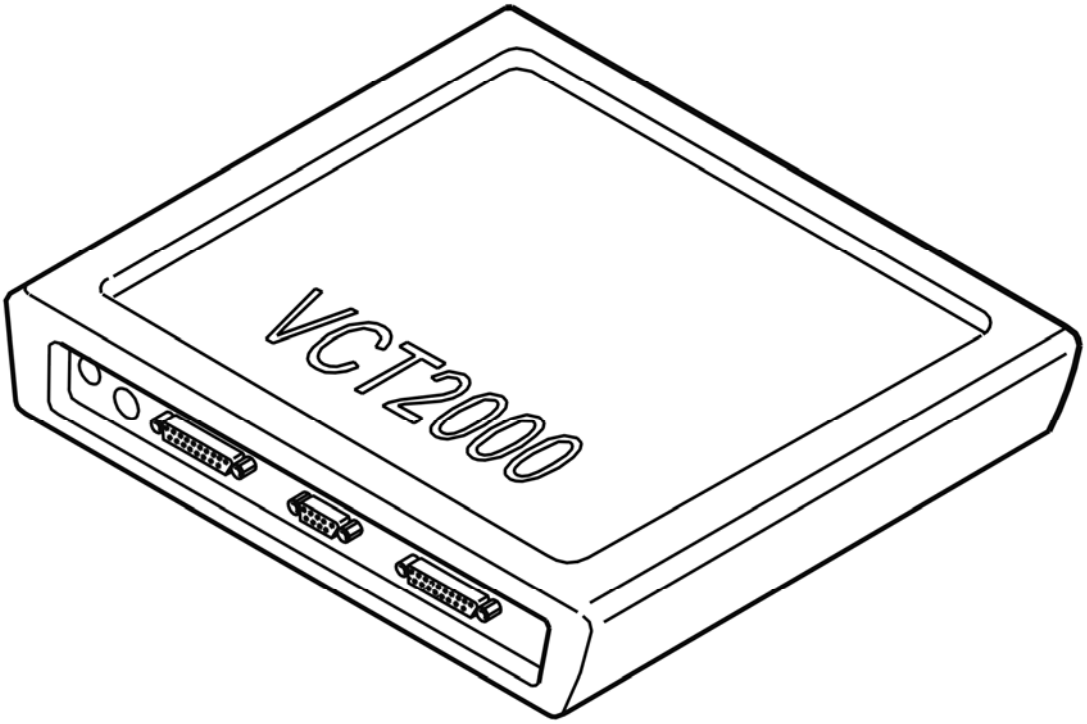

Fig. 203: Identifying VCT2000 Diagnostic Tool Symbol In VIDA
Courtesy of VOLVO CARS CORPORATION

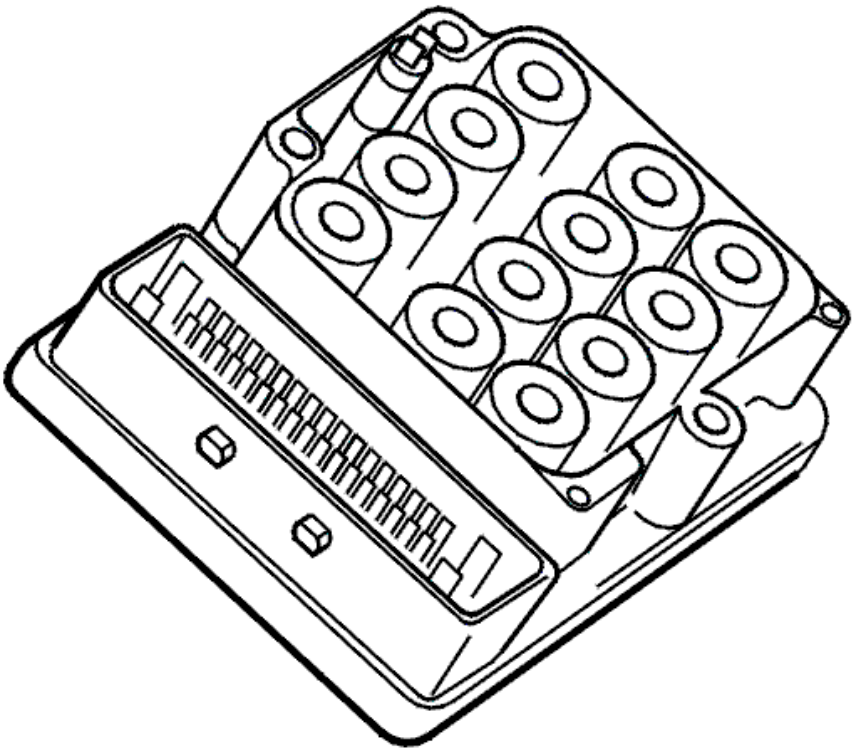

Fig. 204: ABS Control Module
Courtesy of VOLVO CARS CORPORATION

Is the diagnostic trouble code stored?

- **YES**

  see **RESETTING AND CONFIGURING THE BRAKE CONTROL MODULE (BCM)**

- **NO**

  OKAY: Troubleshooting has been completed.

RESETTING AND CONFIGURING THE BRAKE CONTROL MODULE (BCM)

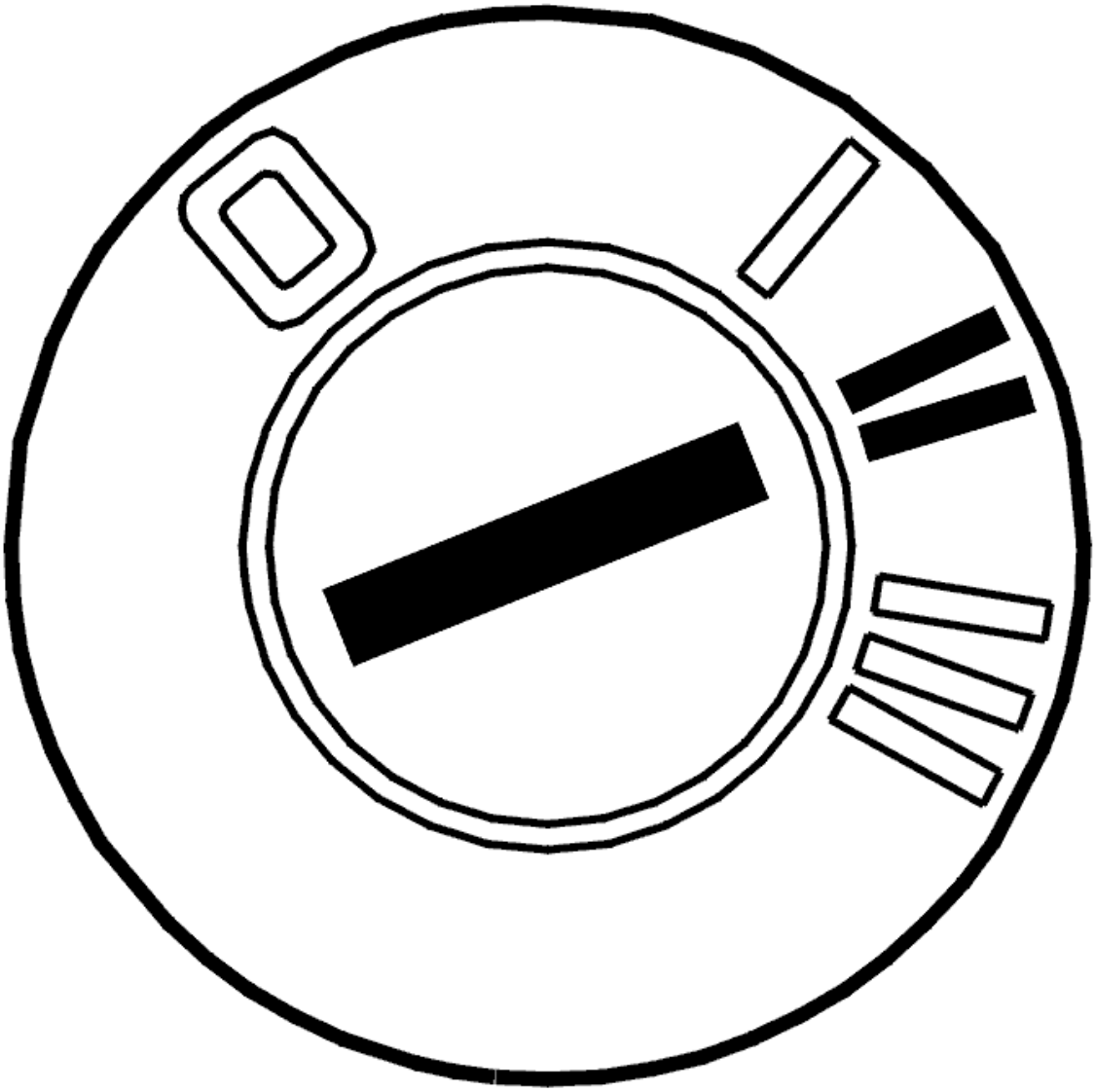

Fig. 205: Identifying Ignition ON
Courtesy of VOLVO CARS CORPORATION

- Ignition on
- Reset the configuration
- Wait 1 minute.

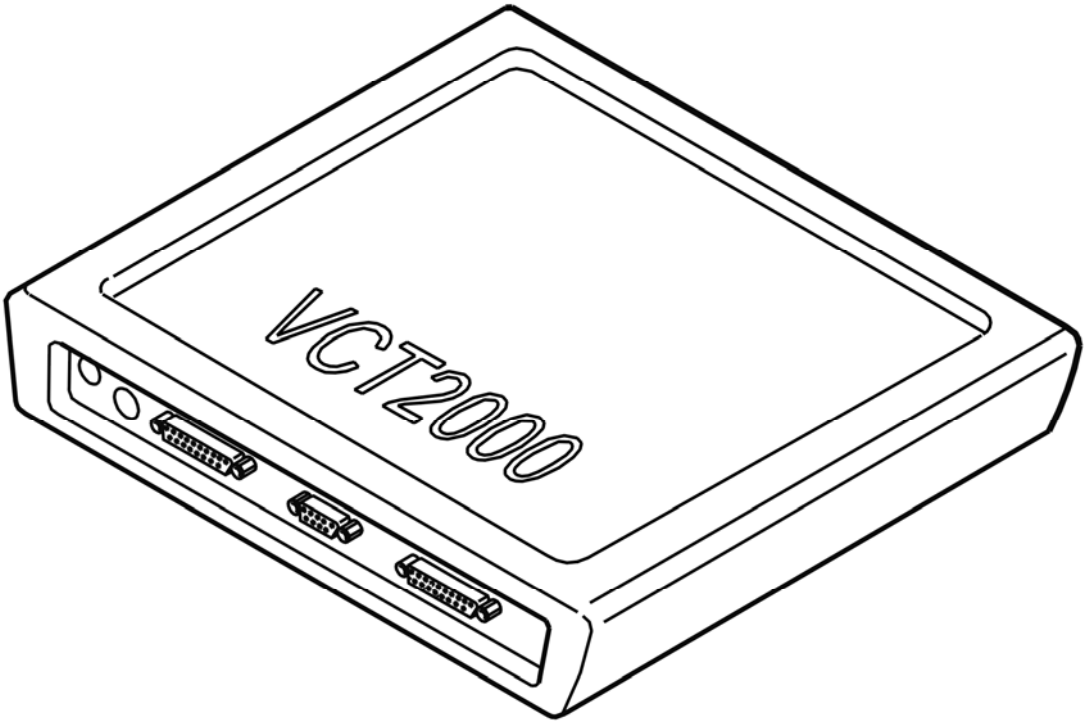

Fig. 206: Identifying VCT2000 Diagnostic Tool Symbol In VIDA
Courtesy of VOLVO CARS CORPORATION

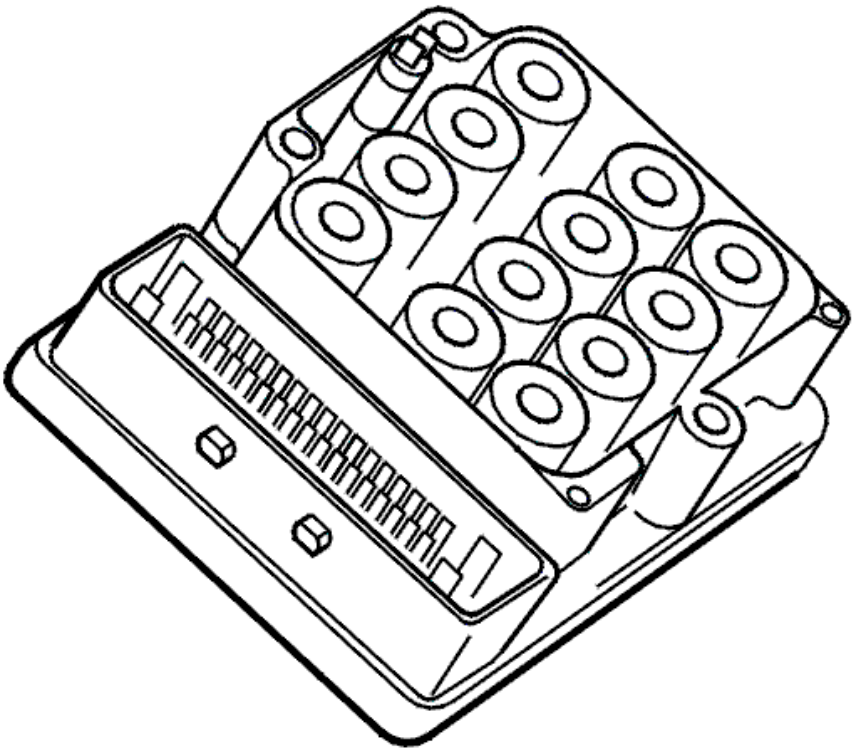

Fig. 207: ABS Control Module
Courtesy of VOLVO CARS CORPORATION

- **Continue**

  see **INFORMATION**

INFORMATION

FAULT-TRACING INFORMATION

In case of this defect, troubleshooting is not followed by verification.

The information can be displayed again or the fault-tracing for this fault can be interrupted.

BCM-U030087: CONTROL MODULE INCOMPATIBLE INTERNAL SOFTWARE. BUS/MESSAGE ERROR. MESSAGE MISSING (B6324S5; 2011-2012)

DIAGNOSTIC TROUBLE CODE INFORMATION BCM-U030087

see **DIAGNOSTIC TROUBLE CODE INFORMATION BCM-U030087**

TROUBLESHOOTING BCM-U030087

see **TROUBLESHOOTING BCM-U030087**

BCM-U030087: CONTROL MODULE INCOMPATIBLE INTERNAL SOFTWARE. BUS/MESSAGE ERROR. MESSAGE MISSING (B8444S; 2005-2011)

DIAGNOSTIC TROUBLE CODE INFORMATION BCM-U030087

see **DIAGNOSTIC TROUBLE CODE INFORMATION BCM-U030087**

TROUBLESHOOTING BCM-U030087

see **TROUBLESHOOTING BCM-U030087**

BCM-U040164: INVALID DATA RECEIVED FROM ENGINE CONTROL MODULE (ECM). ALGORITHM ERROR. SIGNAL OUTSIDE PERMITTED RANGE (B6324S; 2007-2010)

DIAGNOSTIC TROUBLE CODE INFORMATION BCM-U040164

Condition

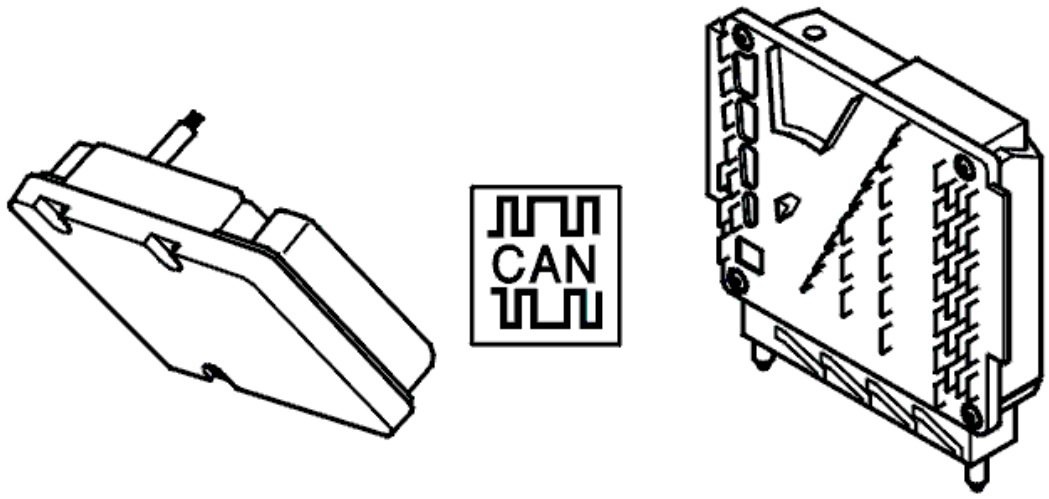

Fig. 208: Identifying Brake Control Module (BCM) & Engine Control Module (ECM)
Courtesy of VOLVO CARS CORPORATION

NOTE: The diagnostic trouble code only applies to vehicles equipped with STC/DSTC.

The engine control module (ECM) sends a signal to the brake control module (BCM) via CAN to indicate

whether the rpm signal is correct. The brake control module (BCM) uses the rpm signal to control the stability function.

Diagnostic trouble code BCM-U040164 is generated if the brake control module (BCM) registers that the engine control module (ECM) has sent a signal indicating that the rpm signal is unreasonable.

The diagnostic trouble code can be diagnosed after the engine has started.

Substitute Value

- TC is blocked.
- SC is blocked.
- AYC is blocked.

HINT: For information on abbreviations: BRAKE SYSTEM, ABBREVIATIONS

Possible Source

- Malfunction in engine control module (ECM).

NOTE: This diagnostic trouble code (DTC) is not due to an internal hardware fault in the Brake control module (BCM) and must not be remedied by replacing the control module.

Fault symptom[s]

- General warning light on.
- Anti-spin is not operational.
- The stability function is not operational.
- The anti-skid function is not operational.

TROUBLESHOOTING BCM-U040164

CHECKING DIAGNOSTIC TROUBLE CODES (DTCS) IN THE CENTRAL ELECTRONIC MODULE

CHECKING OTHER DIAGNOSTIC TROUBLE CODES (DTCS)

In the event of communication problems, the fault may exist in other parts of the communications network.

The role of the central electronic module is to generally control the communications network and to store diagnostic trouble codes (DTCs) in the event of communication problems between control modules.

If there are diagnostic trouble codes (DTCs) stored for communication problems in the central electronic module, stop the fault tracing and fault trace the central electronic module.

Were diagnostic trouble codes (DTCs) for communication problems stored in the central electronic

module?

- **YES**

  OKAY: Troubleshooting has been completed.

- **NO**

  see **TROUBLESHOOTING INFORMATION**

TROUBLESHOOTING INFORMATION

The diagnostic trouble code indicates that the malfunction is engine-related.

Read the diagnostic trouble codes from the engine control module (ECM) and troubleshoot as described in relevant information.

BCM-U040164: INVALID DATA RECEIVED FROM ENGINE CONTROL MODULE (ECM). ALGORITHM ERROR. SIGNAL OUTSIDE PERMITTED RANGE (B6324S5; 2011-2012)

DIAGNOSTIC TROUBLE CODE INFORMATION BCM-U040164

see **DIAGNOSTIC TROUBLE CODE INFORMATION BCM-U040164**

TROUBLESHOOTING BCM-U040164

see **TROUBLESHOOTING BCM-U040164**

BCM-U040164: INVALID DATA RECEIVED FROM ENGINE CONTROL MODULE (ECM). ALGORITHM ERROR. SIGNAL OUTSIDE PERMITTED RANGE (B8444S; 2005-2011)

DIAGNOSTIC TROUBLE CODE INFORMATION BCM-U040164

see **DIAGNOSTIC TROUBLE CODE INFORMATION BCM-U040164**

TROUBLESHOOTING BCM-U040164

see **TROUBLESHOOTING BCM-U040164**

BCM-U040482: INVALID DATA RECEIVED FROM TRANSMISSION CONTROL MODULE (TCM). BUS/MESSAGE ERROR. SEQUENCE COUNTER NOT CORRECT OR NOT UPDATED (B6324S; 2007-2010)

DIAGNOSTIC TROUBLE CODE INFORMATION BCM-U040482

Condition

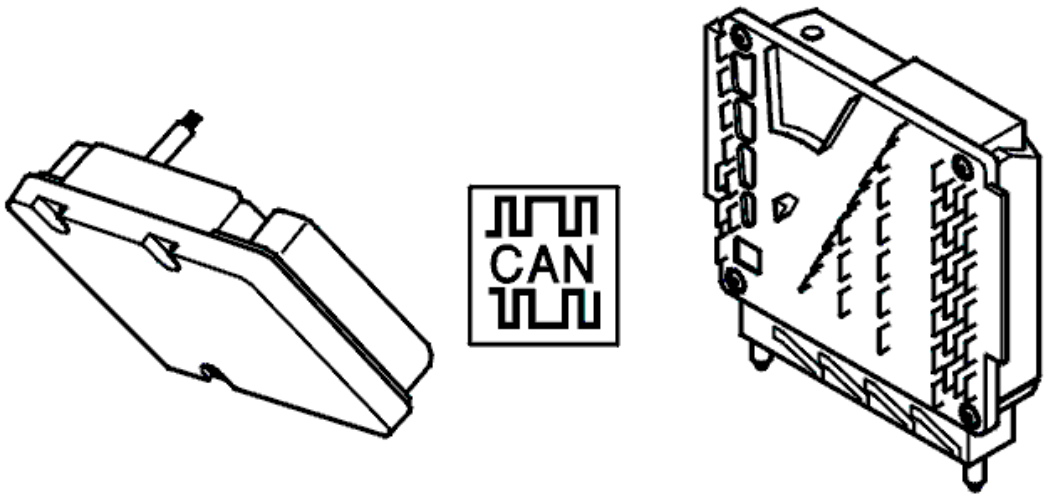

Fig. 209: Identifying Brake Control Module (BCM) & Engine Control Module (ECM)
Courtesy of VOLVO CARS CORPORATION

NOTE: The diagnostic trouble code only applies to vehicles equipped with DSTC.

The brake control module (BCM) receives a signal from the central electronic module (CEM) (manual transmission) or from the transmission control module (TCM) (automatic transmission) with information on the engaged gear. If reverse (R) is engaged, it should not be possible to activate the stability function.

Diagnostic trouble code BCM-U040482 is generated in the following cases:

- If the brake control module (BCM) registers no signal or a disrupted signal.
- If the brake control module (BCM) receives a signal indicating that reverse gear is engaged while the vehicle is being driven forward for more than one second.

The diagnostic trouble code can be diagnosed when speed exceeds 40 km/h (25 mph) and the direction of travel is straight ahead followed by a turn.

Substitute Value

- Nothing.

Possible Source

- Open circuit or short-circuit in the circuit for the back-up light switch (manual transmission).
- Interference on the CAN network.

- Short circuit or open circuit on CAN cable.

NOTE: **This diagnostic trouble code (DTC) is not due to an internal hardware fault in the Brake control module (BCM) and must not be remedied by replacing the control module.**

Fault symptom[s]

- None.

TROUBLESHOOTING BCM-U040482

CHECKING DIAGNOSTIC TROUBLE CODES IN THE CENTRAL ELECTRONIC MODULE (CEM)

If there are any diagnostic trouble codes stored in the central electronic module (CEM) for communication errors or the back-up lights, perform troubleshooting of these first.

Were any diagnostic trouble codes stored in the central electronic module (CEM) for communication errors or the back-up lights?

- **YES**

  OKAY: Troubleshooting has been completed.

- **NO**

  see **INFORMATION**

INFORMATION

NOTE: **If the back-up lights are on with reverse gear engaged and off in other positions, the function is okay. This indicates that the control module has previously registered a malfunction, but the malfunction no longer exists.**

Vehicle with manual transmission

In vehicles with manual transmission, there is a reverse gear switch on the transmission. The switch closes and gives a directly connected signal to the central electronic module (CEM) when reverse gear is engaged. This signal is then sent from the transmission control module (TCM) via the CAN-net to the brake control module (BCM). Check the function of the reverse gear switch.

Vehicle with automatic transmission

In vehicles with automatic transmission a signal is sent from the transmission control module (TCM) via the CAN-net to the central electronic module (CEM) that reverse gear is selected. This signal is also sent from the transmission control module (TCM) via the CAN-net to the brake control module (BCM). Check the function in the automatic transmission and lever carrier.

Remedy as necessary.

Other information

- see **CONTENTS**

BCM-U040482: INVALID DATA RECEIVED FROM TRANSMISSION CONTROL MODULE (TCM). BUS/MESSAGE ERROR. SEQUENCE COUNTER NOT CORRECT OR NOT UPDATED (B6324S5; 2011-2012)

DIAGNOSTIC TROUBLE CODE INFORMATION BCM-U040482

see **DIAGNOSTIC TROUBLE CODE INFORMATION BCM-U040482**

TROUBLESHOOTING BCM-U040482

see **TROUBLESHOOTING BCM-U040482**

BCM-U040482: INVALID DATA RECEIVED FROM TRANSMISSION CONTROL MODULE (TCM). BUS/MESSAGE ERROR. SEQUENCE COUNTER NOT CORRECT OR NOT UPDATED (B8444S; 2005-2011)

DIAGNOSTIC TROUBLE CODE INFORMATION BCM-U040482

see **DIAGNOSTIC TROUBLE CODE INFORMATION BCM-U040482**

TROUBLESHOOTING BCM-U040482

see **TROUBLESHOOTING BCM-U040482**

BCM-U041464: INVALID DATA RECEIVED FROM CONNECTION DIFFERENTIAL ELECTRONIC MODULE (DEM). ALGORITHM ERROR. SIGNAL OUTSIDE PERMITTED RANGE (B6324S; 2007-2010)

DIAGNOSTIC TROUBLE CODE INFORMATION BCM-U041464

Condition

NOTE: **The diagnostic trouble code only applies to vehicles equipped with AWD and DSTC.**

The differential electronic module (DEM) informs the brake control module (BCM) when all wheel drive is active. During all wheel drive operation, the brake control module (BCM) should not activate the stability function due to the risk of disrupting the differential electronic module (DEM). Diagnostic trouble code BCM-U041464 is generated if the brake control module (BCM) registers that the speed of the front and rear wheels

differs too much.

The diagnostic trouble code can be diagnosed when the ignition is on.

Substitute Value

- SC is blocked.
- AYC is blocked.

HINT: For information on abbreviations: BRAKE SYSTEM, ABBREVIATIONS

Possible Source

- Internal error in differential electronic module (DEM).

NOTE: This diagnostic trouble code (DTC) is not due to an internal hardware fault in the Brake control module (BCM) and must not be remedied by replacing the control module.

Fault symptom[s]

- General warning light on.
- Anti-spin is not operational.
- The stability function is not operational.

TROUBLESHOOTING BCM-U041464

CHECKING DIAGNOSTIC TROUBLE CODES (DTCS) IN THE CENTRAL ELECTRONIC MODULE

CHECKING OTHER DIAGNOSTIC TROUBLE CODES (DTCS)

In the event of communication problems, the fault may exist in other parts of the communications network.

The role of the central electronic module is to generally control the communications network and to store diagnostic trouble codes (DTCs) in the event of communication problems between control modules.

If there are diagnostic trouble codes (DTCs) stored for communication problems in the central electronic module, stop the fault tracing and fault trace the central electronic module.

Were diagnostic trouble codes (DTCs) for communication problems stored in the central electronic module?

- **YES**

  OKAY: Troubleshooting has been completed.

- **NO**

  see **TROUBLESHOOTING INFORMATION**

TROUBLESHOOTING INFORMATION

Fault-trace the Differential electronic module (DEM).

BCM-U041464: INVALID DATA RECEIVED FROM CONNECTION DIFFERENTIAL ELECTRONIC MODULE (DEM). ALGORITHM ERROR. SIGNAL OUTSIDE PERMITTED RANGE (B6324S5; 2011-2012)

DIAGNOSTIC TROUBLE CODE INFORMATION BCM-U041464

see **DIAGNOSTIC TROUBLE CODE INFORMATION BCM-U041464**

TROUBLESHOOTING BCM-U041464

see **TROUBLESHOOTING BCM-U041464**

BCM-U041464: INVALID DATA RECEIVED FROM CONNECTION DIFFERENTIAL ELECTRONIC MODULE (DEM). ALGORITHM ERROR. SIGNAL OUTSIDE PERMITTED RANGE (B8444S; 2005-2011)

DIAGNOSTIC TROUBLE CODE INFORMATION BCM-U041464

see **DIAGNOSTIC TROUBLE CODE INFORMATION BCM-U041464**

TROUBLESHOOTING BCM-U041464

see **TROUBLESHOOTING BCM-U041464**

BCM-U042829: INVALID DATA RECEIVED FROM STEERING ANGLE SENSOR MODULE (SAS). GENERAL SIGNAL ERROR. SIGNAL INVALID (B6324S; 2007-2010)

DIAGNOSTIC TROUBLE CODE INFORMATION BCM-U042829

Condition

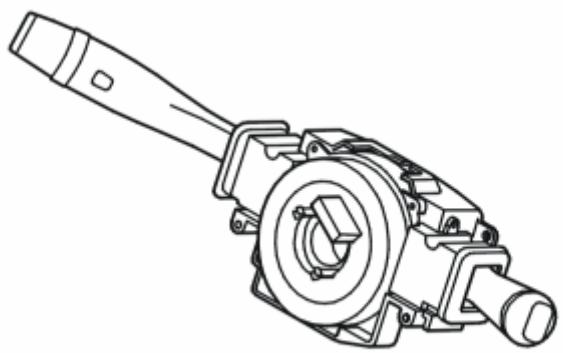

Fig. 210: Identifying Steering Angle Sensor
Courtesy of VOLVO CARS CORPORATION

The steering angle sensor module (SAS) communicates with the brake control module (BCM) with data sent in "small bundles". Each bundle has an ID number.

Diagnostic trouble code BCM-U042829 is generated if the brake control module (BCM) registers an unexpected ID number.

The diagnostic trouble code can be diagnosed when the ignition is on.

Substitute Value

- TC is blocked.
- SC is blocked.
- AYC is blocked.

HINT: For information on abbreviations: BRAKE SYSTEM, ABBREVIATIONS

Possible Source

- Interference or intermittent open circuit on CAN.
- Internal malfunction in steering angle sensor (SAS).

NOTE: This diagnostic trouble code (DTC) is not due to an internal hardware fault in the Brake control module (BCM) and must not be remedied by replacing the control module.

Fault symptom[s]

- General warning light on.
- Anti-spin is not operational.

- The stability function is not operational.
- The anti-skid function is not operational.

TROUBLESHOOTING BCM-U042829

INFORMATION

HINT: The diagnostic trouble code can be stored during brake control module (BCM) programming. If this is the case, erase the code.

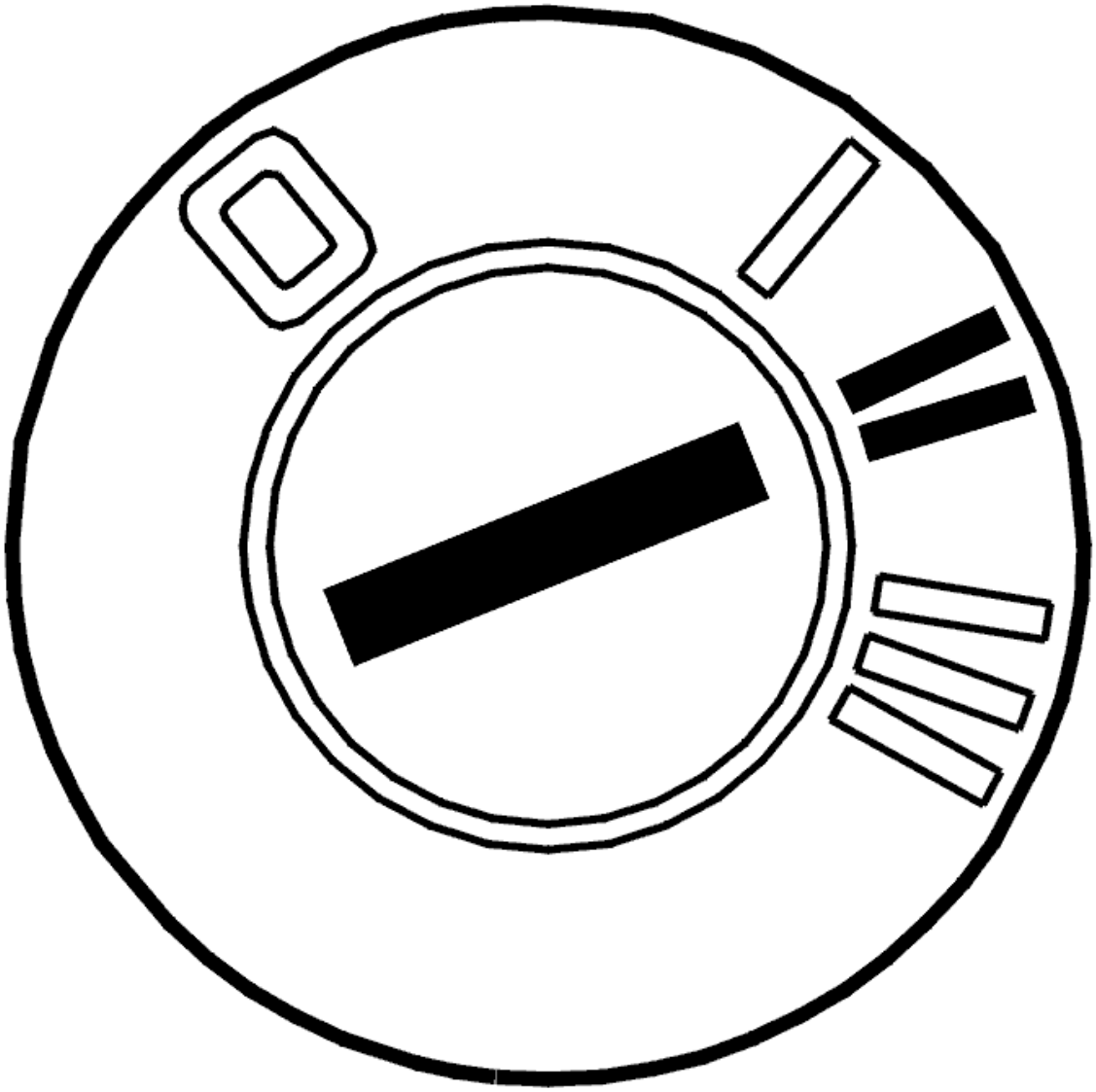

Fig. 211: Identifying Ignition ON
Courtesy of VOLVO CARS CORPORATION

- Ignition on
- Erase the diagnostic trouble code if it was generated during programming.

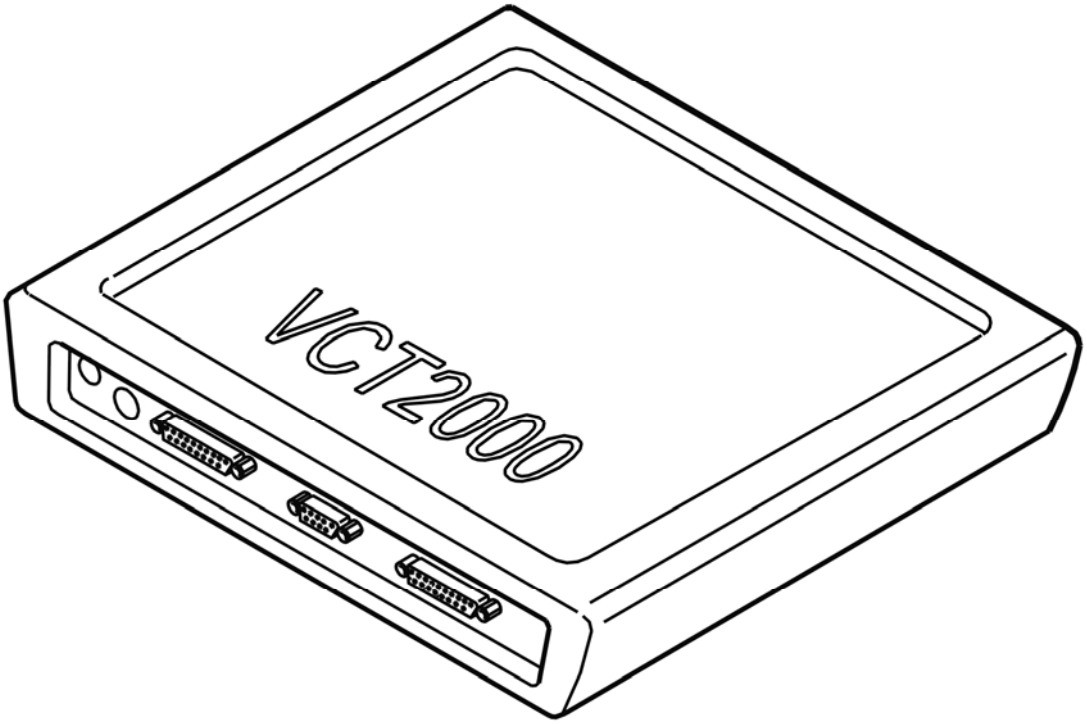

Fig. 212: Identifying VCT2000 Diagnostic Tool Symbol In VIDA
Courtesy of VOLVO CARS CORPORATION

Was the diagnostic trouble code stored during brake control module (BCM) programming?

- **YES**

  OKAY: Troubleshooting has been completed.

- **NO**

  see **CHECKING DIAGNOSTIC TROUBLE CODES (DTCS) IN THE CENTRAL ELECTRONIC MODULE**

CHECKING THE DIAGNOSTIC TROUBLE CODES (DTCS)

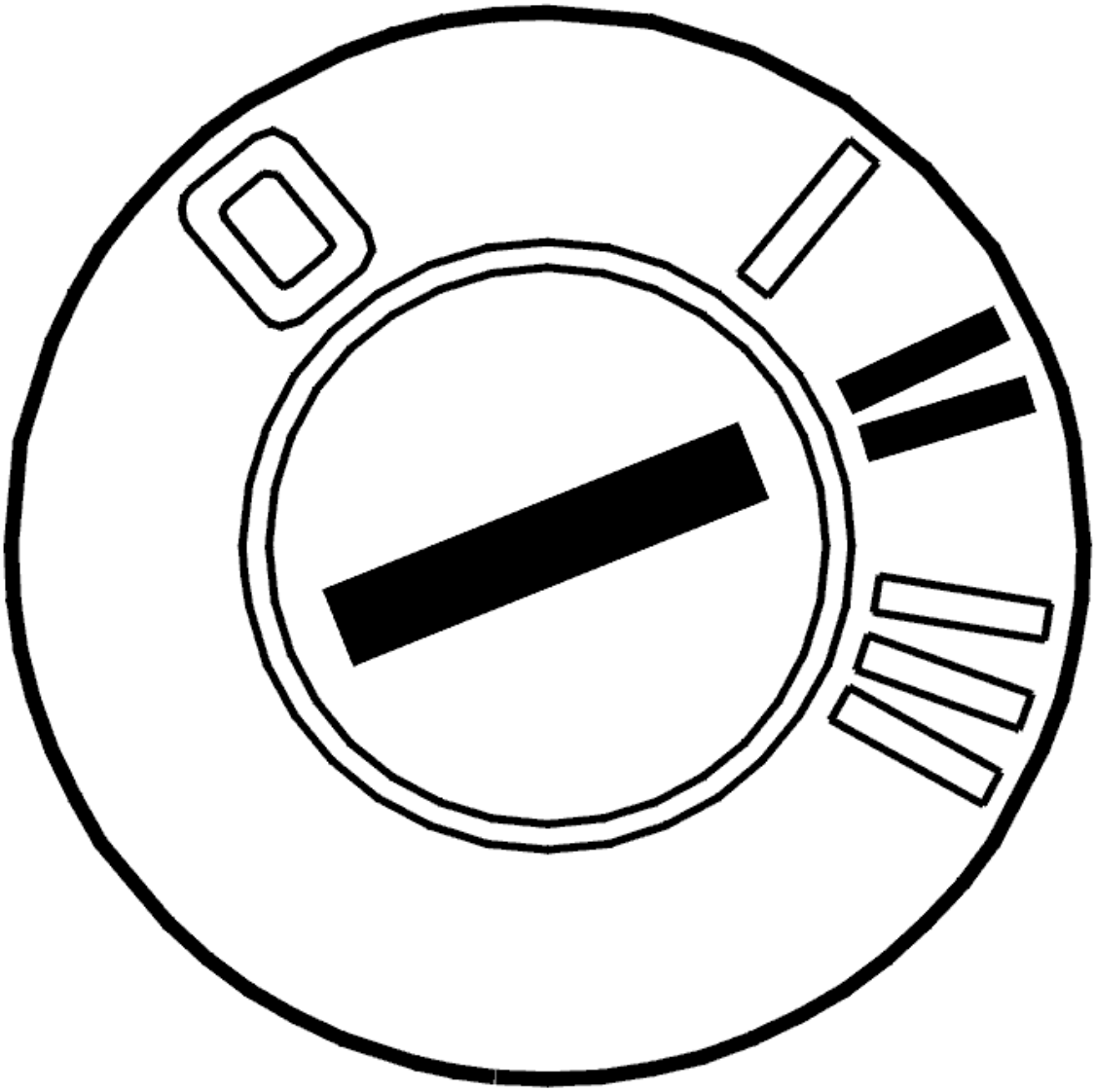

Fig. 213: Identifying Ignition ON
Courtesy of VOLVO CARS CORPORATION

- Ignition on
- Wait approx. 1 minute.
- Read the status of the diagnostic trouble code.

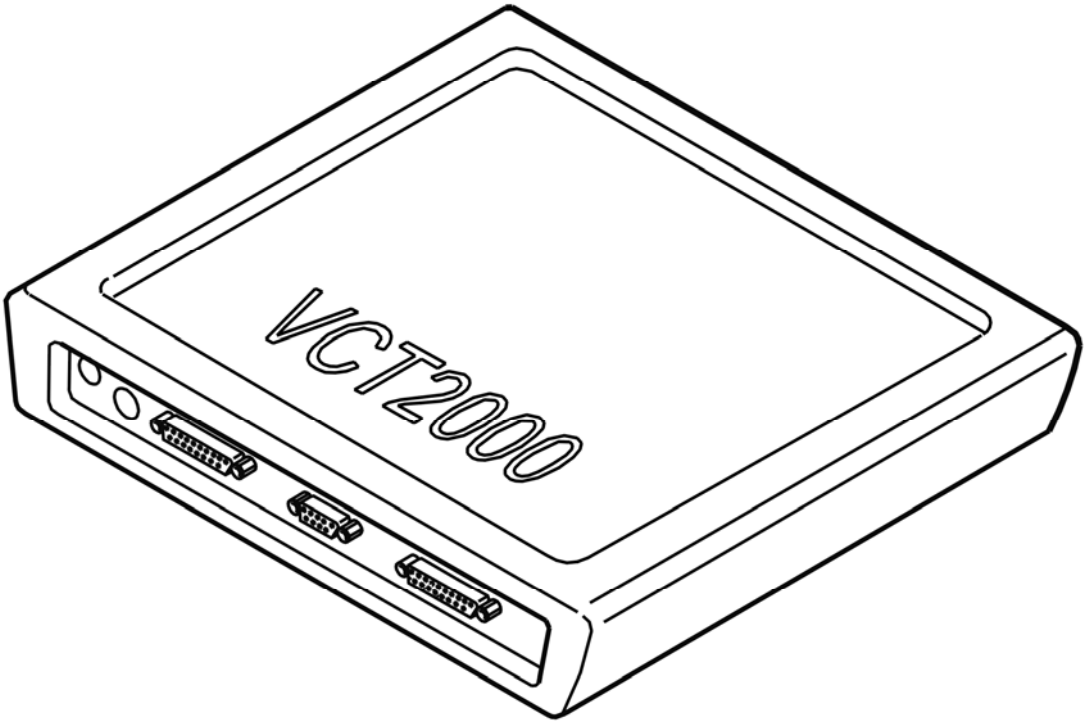

Fig. 214: Identifying VCT2000 Diagnostic Tool Symbol In VIDA
Courtesy of VOLVO CARS CORPORATION

Is the status of the diagnostic trouble code intermittent?

- **YES**

  see **INTERMITTENT MALFUNCTION**

- **NO**

  see **TROUBLESHOOTING INFORMATION**

TROUBLESHOOTING INFORMATION

The diagnostic trouble code indicates that the malfunction is in the steering angle sensor module (SAS).

Troubleshoot the system as described in relevant information. If no malfunction is found, replace the steering angle sensor module (SAS).

INTERMITTENT MALFUNCTION

HINT: The diagnostic trouble code status indicates that the brake control module (BCM) has previously registered a malfunction, but the malfunction is no longer active.

Check the connectors of the brake control module (BCM) and the steering angle sensor module (SAS) for contact resistance and oxidation.

Also check that the cables are not positioned too close to a source of interference, such as a cellular phone.

Remedy as necessary.

Other information

- For removal of the brake control module (BCM) connector: **CONNECTING THE BREAKOUT BOX, BRAKE CONTROL MODULE (BCM)**
- see **CONNECTING THE BREAKOUT BOX**
- see **CONTENTS** .
- **Continue**

  see **INFORMATION**

CHECKING DIAGNOSTIC TROUBLE CODES (DTCS) IN THE CENTRAL ELECTRONIC MODULE

CHECKING OTHER DIAGNOSTIC TROUBLE CODES (DTCS)

In the event of communication problems, the fault may exist in other parts of the communications network.

The role of the central electronic module is to generally control the communications network and to store diagnostic trouble codes (DTCs) in the event of communication problems between control modules.

If there are diagnostic trouble codes (DTCs) stored for communication problems in the central electronic module, stop the fault tracing and fault trace the central electronic module.

Were diagnostic trouble codes (DTCs) for communication problems stored in the central electronic module?

- **YES**

  OKAY: Troubleshooting has been completed.

- **NO**

  see **CHECKING THE DIAGNOSTIC TROUBLE CODES (DTCS)**

INFORMATION

FAULT-TRACING INFORMATION

The fault should have been detected and remedied. As this is not the case fault-tracing has failed.

Exit fault-tracing for this diagnostic trouble code (DTC) or make another attempt.

INFORMATION

FAULT-TRACING INFORMATION

If the fault is intermittent, do not verify fault-tracing if the fault does not recur.

It is possible to view the information again, or leave fault-tracing for this diagnostic trouble code (DTC).

BCM-U042829: INVALID DATA RECEIVED FROM STEERING ANGLE SENSOR MODULE (SAS). GENERAL SIGNAL ERROR. SIGNAL INVALID (B6324S5; 2011-2012)

DIAGNOSTIC TROUBLE CODE INFORMATION BCM-U042829

see **DIAGNOSTIC TROUBLE CODE INFORMATION BCM-U042829**

TROUBLESHOOTING BCM-U042829

see **TROUBLESHOOTING BCM-U042829**

BCM-U042829: INVALID DATA RECEIVED FROM STEERING ANGLE SENSOR MODULE (SAS). GENERAL SIGNAL ERROR. SIGNAL INVALID (B8444S; 2005-2011)

DIAGNOSTIC TROUBLE CODE INFORMATION BCM-U042829

see **DIAGNOSTIC TROUBLE CODE INFORMATION BCM-U042829**

TROUBLESHOOTING BCM-U042829

see **TROUBLESHOOTING BCM-U042829**

BCM-U042862: INVALID DATA RECEIVED FROM STEERING ANGLE SENSOR MODULE (SAS). ALGORITHM ERROR. COMPARISON ERROR (B6324S; 2007-2010)

DIAGNOSTIC TROUBLE CODE INFORMATION BCM-U042862

Condition

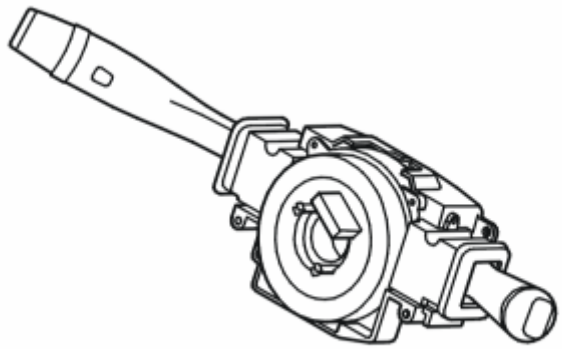

Fig. 215: Identifying Steering Angle Sensor
Courtesy of VOLVO CARS CORPORATION

NOTE: The diagnostic trouble code only applies to vehicles equipped with DSTC.

The steering angle sensor module (SAS) transmits steering angle sensor signals on the CAN network that the brake control module (BCM) retrieves. A reference signal is calculated using the signals from the wheels sensors, yaw speed sensor and the lateral accelerometer. Diagnostic trouble code BCM-U042862 is generated if the brake control module (BCM) registers that the reference signal is unreasonable.

Substitute Value

- SC is blocked.
- AYC is blocked.
- TC is blocked.

HINT: For information on abbreviations: BRAKE SYSTEM, ABBREVIATIONS

Possible Source

- Defective front end alignment.
- Improperly installed steering angle sensor.
- Damaged steering angle sensor.

NOTE: This diagnostic trouble code (DTC) is not due to an internal hardware fault in the Brake control module (BCM) and must not be remedied by replacing the control module.

Fault symptom[s]

- General warning light on.

- Anti-spin is not operational.
- The stability function is not operational.
- The anti-skid function is not operational.

TROUBLESHOOTING BCM-U042862

CHECKING THE DIAGNOSTIC TROUBLE CODES (DTCS)

NOTE: **If there are any diagnostic trouble codes stored for the steering angle sensor module (SAS), the wheel sensors or the AYC sensor (including yaw sensor and lateral accelerometer), perform troubleshooting of these first.**

Are any diagnostic trouble codes stored for the steering angle sensor module (SAS), the wheel sensors or the AYC sensor?

- **YES**

  OKAY: Troubleshooting has been completed.

- **NO**

  see **CHECKING THE DIAGNOSTIC TROUBLE CODES (DTCS)**

CHECKING THE DIAGNOSTIC TROUBLE CODES (DTCS)

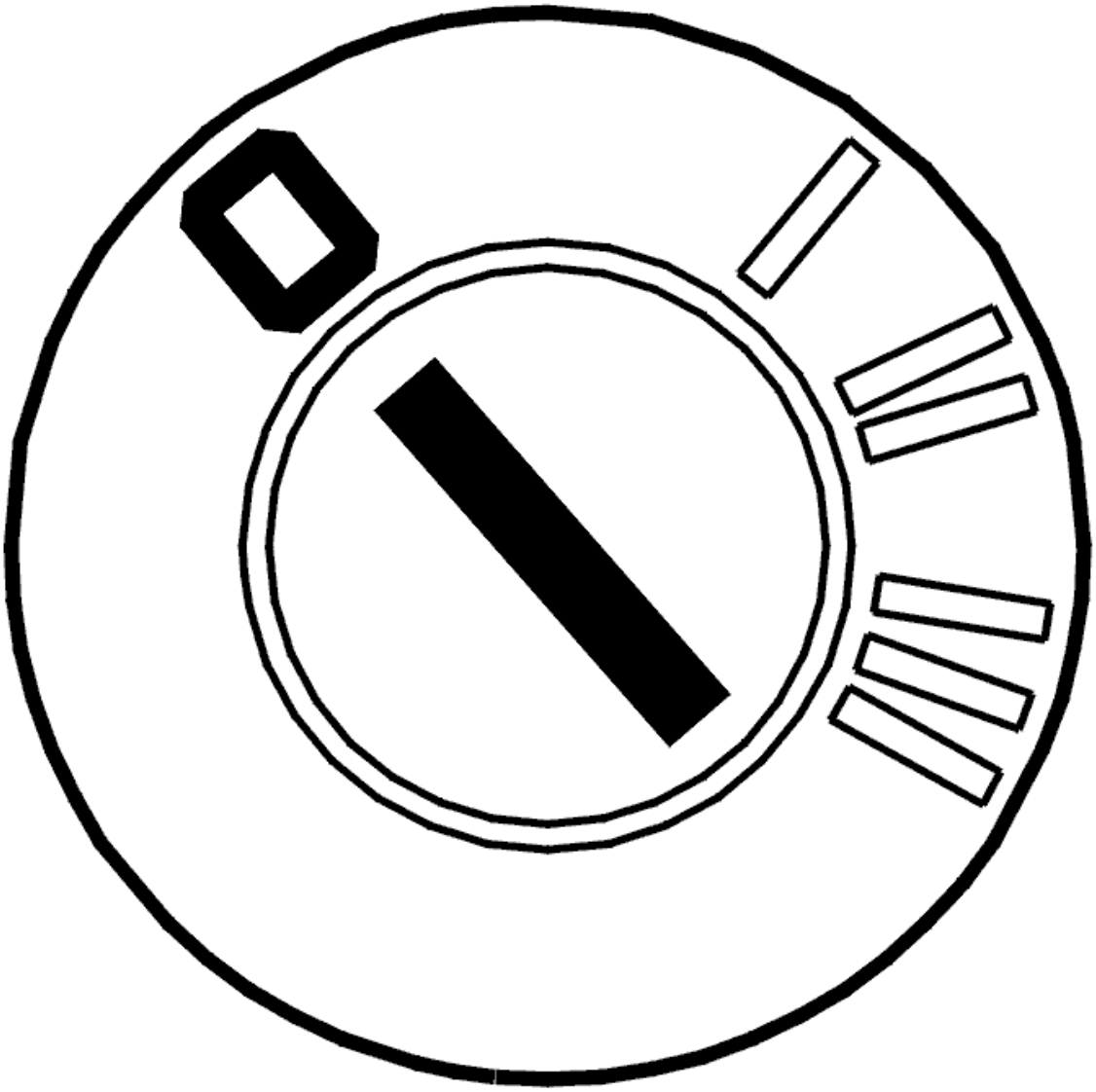

Fig. 216: Identifying Ignition OFF
Courtesy of VOLVO CARS CORPORATION

- Ignition off

  Check whether the AYC sensor is loose or improperly installed as described in: **ACTIVE YAW CONTROL SENSOR, REPLACING**

Is the AYC sensor properly secured?

- **YES**

  see **CHECKING THE CONNECTORS**

- **NO**

see **VERIFICATION**

CHECKING THE CONNECTORS

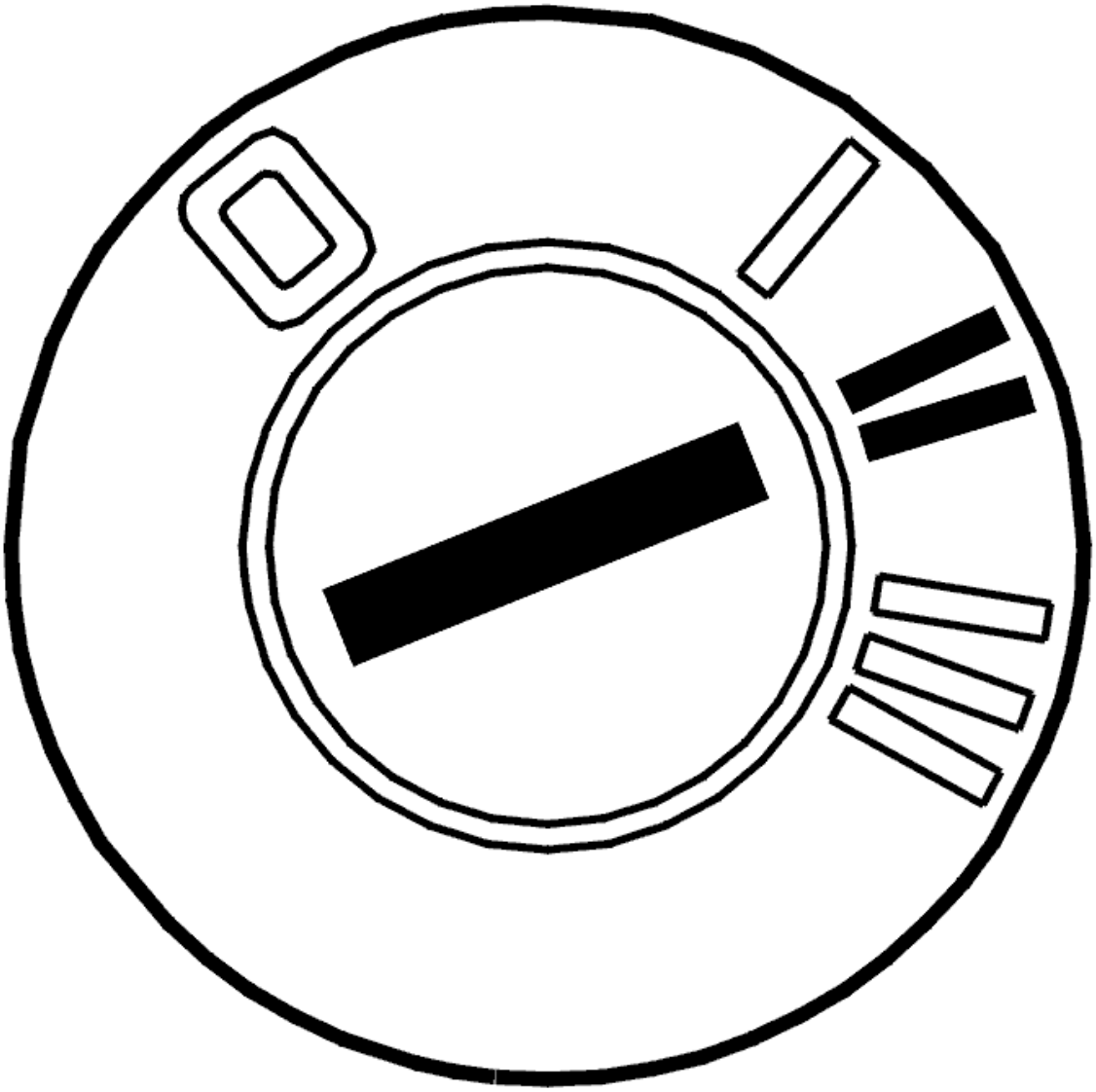

Fig. 217: Identifying Ignition ON
Courtesy of VOLVO CARS CORPORATION

- Ignition on
- Move the steering wheel to the straight-ahead position.
- Read off the steering angle.

  With the steering wheel and front wheels in the straight-ahead position, the steering angle value should be approx. 0°.

  If the steering angle does not match the position of the steering wheel, reset and steering angle and calibrate DSTC.

If the front end alignment does not match with the steering angle, adjust the front end and calibrate DSTC.

Other information

- For resetting the steering angle sensor: **CONTACT REEL, REPLACEMENT**
- For adjusting the front end: **WHEEL ALIGNMENT, CHECKING / ADJUSTING**

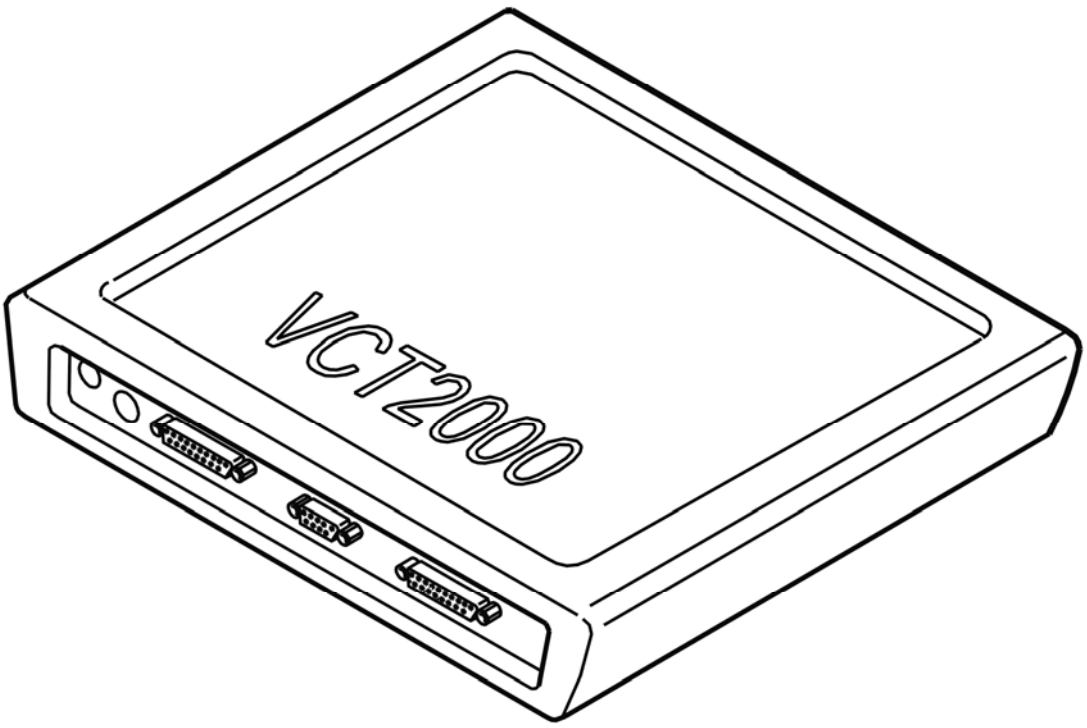

Fig. 218: Identifying VCT2000 Diagnostic Tool Symbol In VIDA
Courtesy of VOLVO CARS CORPORATION

Was steering wheel and front end alignment OK?

- **YES**

  see **INTERMITTENT MALFUNCTION**

- **NO**

  see **CALIBRATION**

CALIBRATION

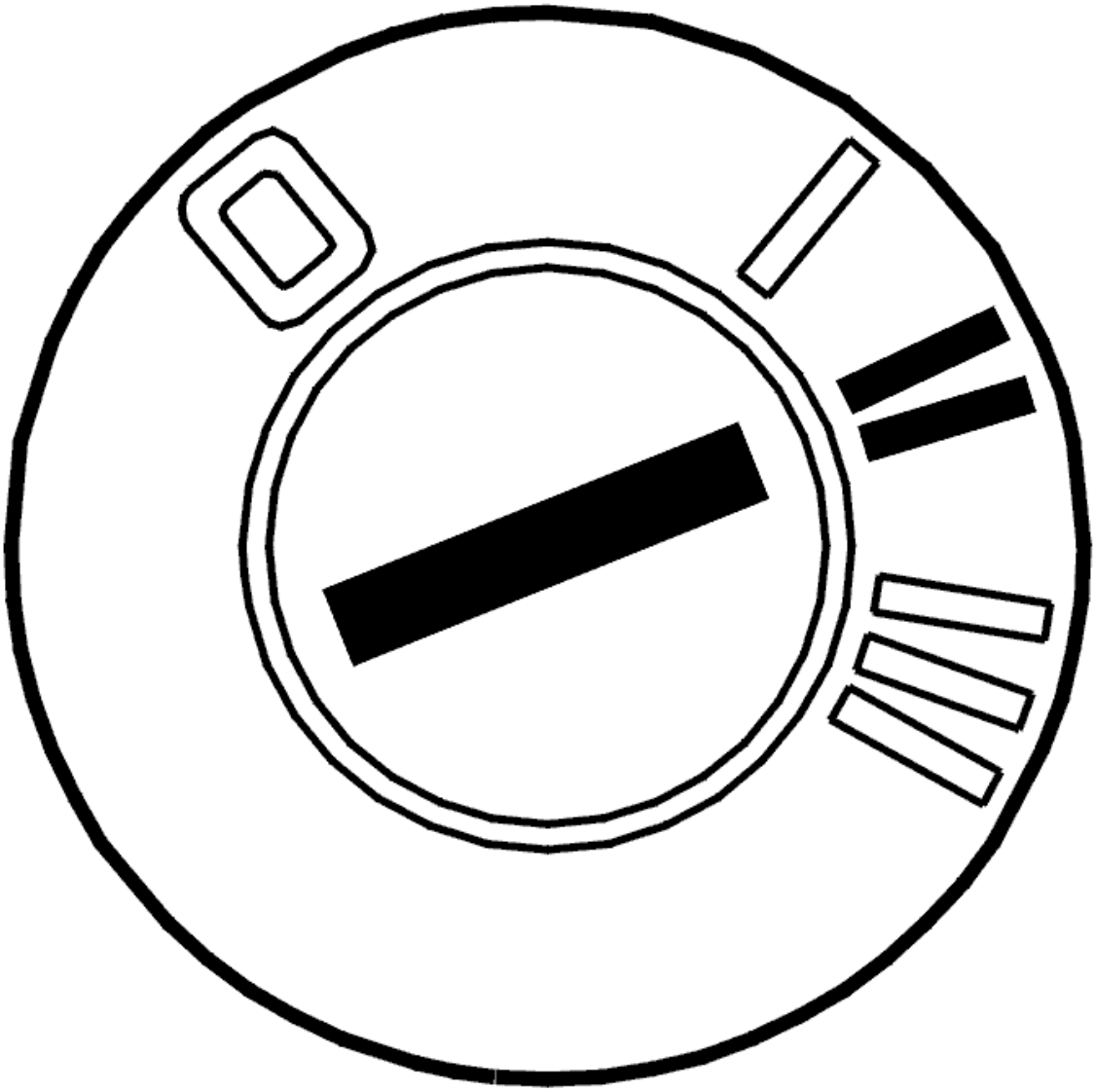

Fig. 219: Identifying Ignition ON
Courtesy of VOLVO CARS CORPORATION

- Ignition on

  Calibrate the brake control module (BCM).

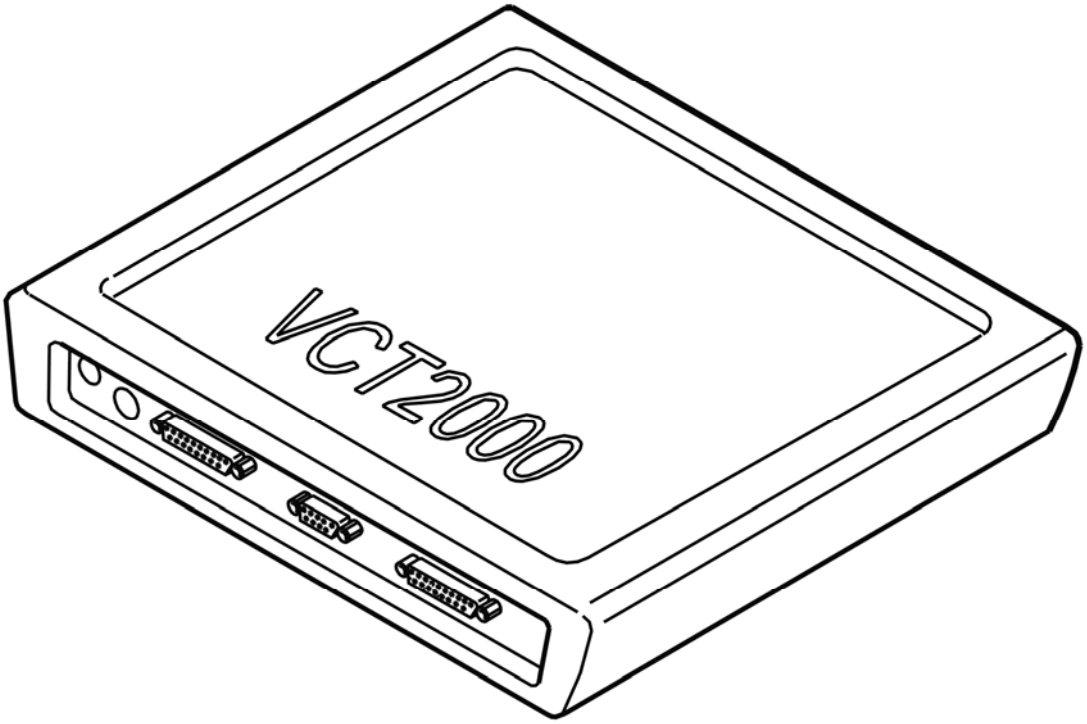

Fig. 220: Identifying VCT2000 Diagnostic Tool Symbol In VIDA
Courtesy of VOLVO CARS CORPORATION

- **Continue**

  see **VERIFICATION**

INTERMITTENT MALFUNCTION

HINT: The diagnostic trouble code status indicates that the brake control module (BCM) has previously registered a malfunction, but the malfunction is no longer active.

Check the connectors of the brake control module (BCM) and the steering angle sensor module (SAS) for contact resistance and oxidation.

Also check that the cables are not positioned too close to a source of interference, such as a cellular phone.

Remedy as necessary.

Other information

- see **CONTENTS**
- **Continue**

see **INFORMATION**

VERIFICATION

VERIFICATION

HINT: After carrying out the repair, check that the malfunction has been remedied.

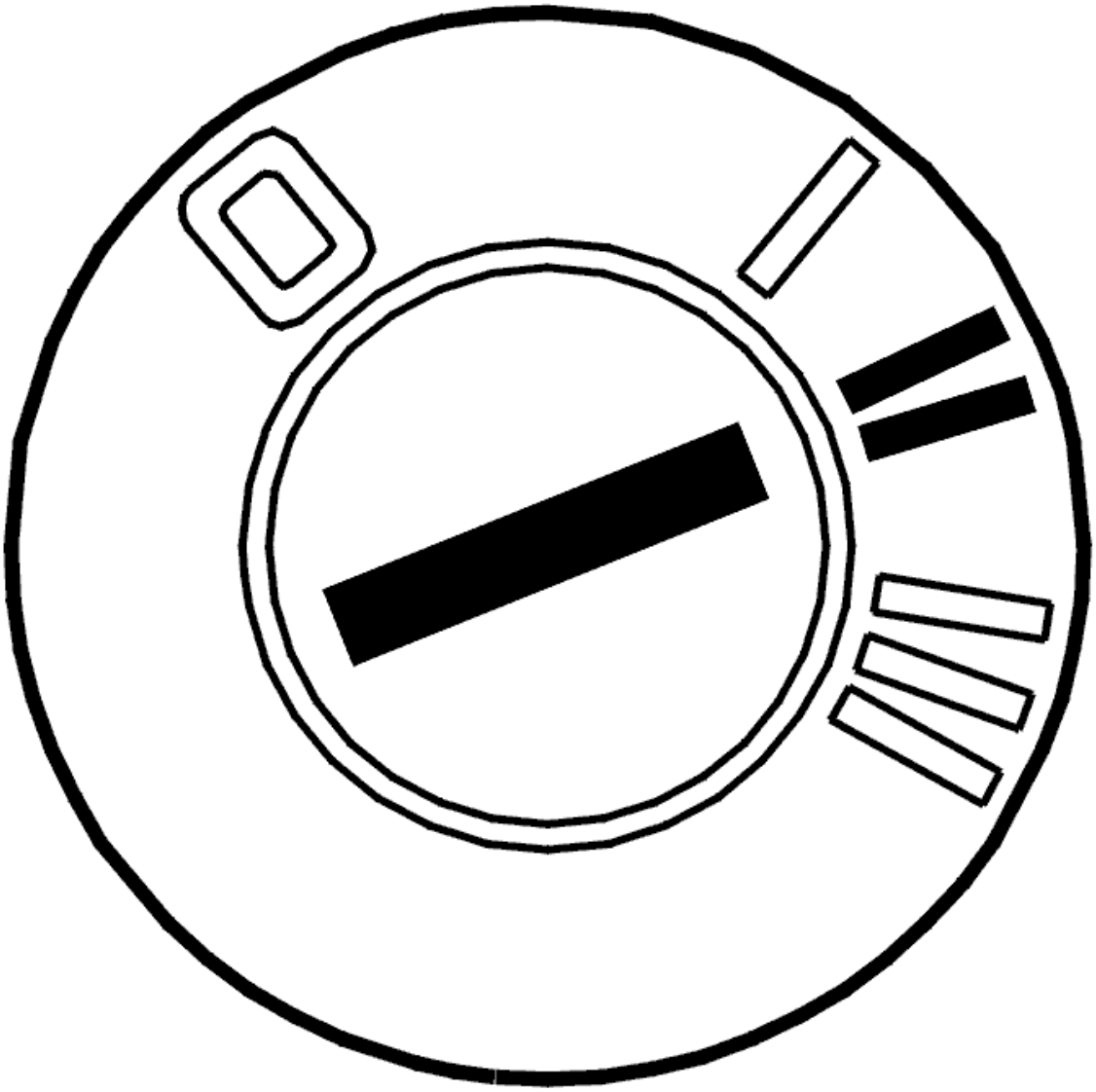

Fig. 221: Identifying Ignition ON
Courtesy of VOLVO CARS CORPORATION

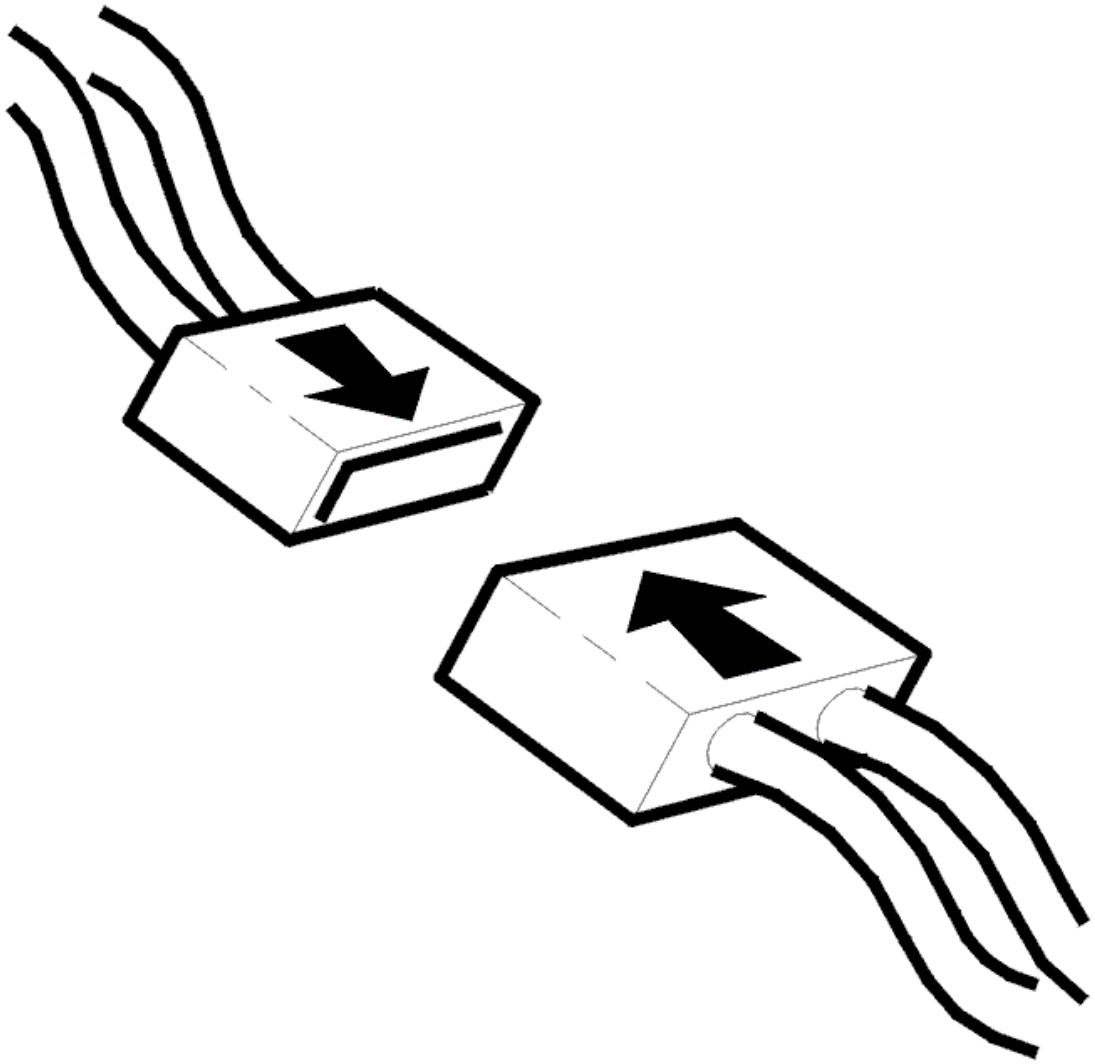

Fig. 222: Connecting Connector
Courtesy of VOLVO CARS CORPORATION

- Ignition off
- Reconnect the connectors, components, etc.
- Test-drive the vehicle according to **TEST DRIVE FORM (DSTC (DYNAMIC STABILITY AND TRACTION CONTROL) /BRAKE CONTROL MODULE), DESCRIPTION** .

NOTE: **Do not turn off the ignition between test-driving and reading out diagnostic trouble codes. This is to obtain the correct status of the diagnostic trouble codes.**

Then read out the diagnostic trouble code's status without turning off the ignition after the test-drive.

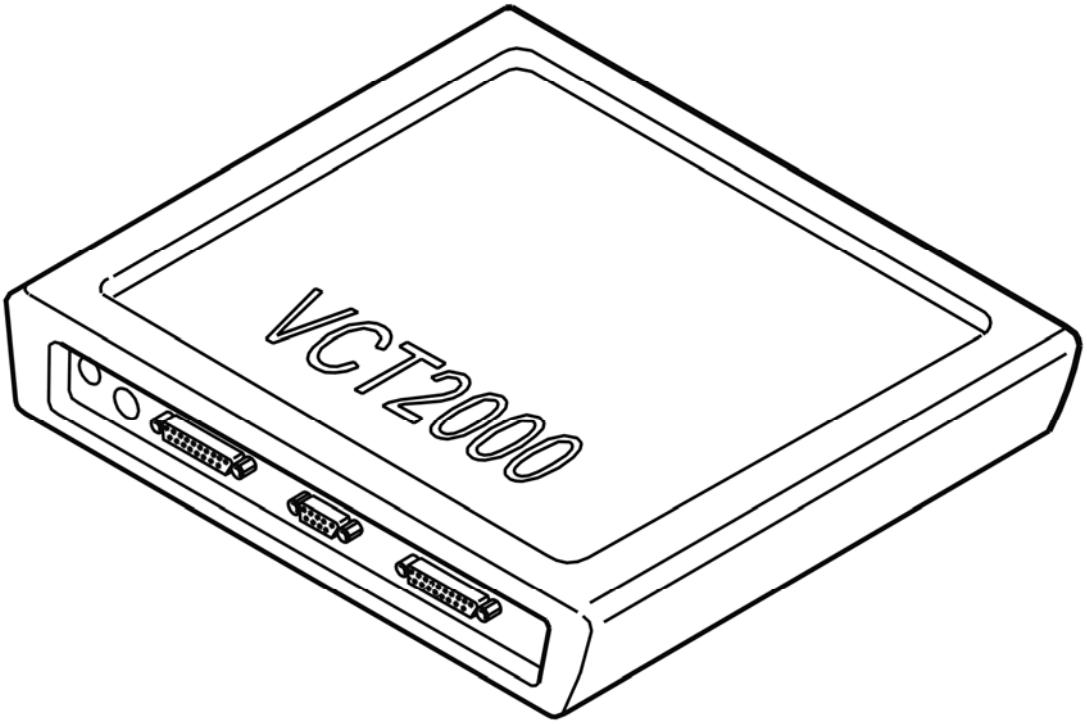

Fig. 223: Identifying VCT2000 Diagnostic Tool Symbol In VIDA
Courtesy of VOLVO CARS CORPORATION

Is the status of the diagnostic trouble code intermittent?

- **YES**

  VERIFIED: Troubleshooting has been completed.

- **NO**

  see **INFORMATION**

INFORMATION

FAULT-TRACING INFORMATION

The fault should have been detected and remedied. As this is not the case fault-tracing has failed.

Exit fault-tracing for this diagnostic trouble code (DTC) or make another attempt.

INFORMATION

FAULT-TRACING INFORMATION

If the fault is intermittent, do not verify fault-tracing if the fault does not recur.

It is possible to view the information again, or leave fault-tracing for this diagnostic trouble code (DTC).

BCM-U042862: INVALID DATA RECEIVED FROM STEERING ANGLE SENSOR MODULE (SAS). ALGORITHM ERROR. COMPARISON ERROR (B6324S5; 2011-2012)

DIAGNOSTIC TROUBLE CODE INFORMATION BCM-U042862

see **DIAGNOSTIC TROUBLE CODE INFORMATION BCM-U042862**

TROUBLESHOOTING BCM-U042862

see **TROUBLESHOOTING BCM-U042862**

BCM-U042862: INVALID DATA RECEIVED FROM STEERING ANGLE SENSOR MODULE (SAS). ALGORITHM ERROR. COMPARISON ERROR (B8444S; 2005-2011)

DIAGNOSTIC TROUBLE CODE INFORMATION BCM-U042862

see **DIAGNOSTIC TROUBLE CODE INFORMATION BCM-U042862**

TROUBLESHOOTING BCM-U042862

see **TROUBLESHOOTING BCM-U042862**

BCM-U042864: INVALID DATA RECEIVED FROM STEERING ANGLE SENSOR MODULE (SAS). ALGORITHM ERROR. SIGNAL OUTSIDE PERMITTED RANGE (B6324S; 2007-2010)

DIAGNOSTIC TROUBLE CODE INFORMATION BCM-U042864

Condition

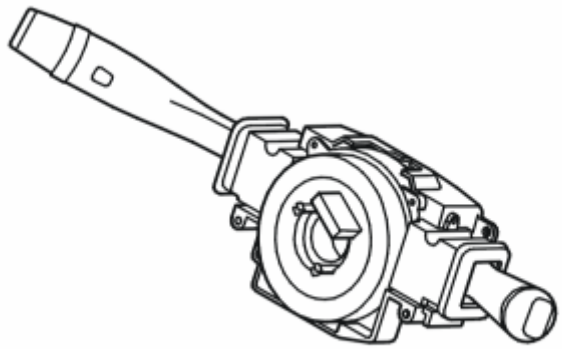

Fig. 224: Identifying Steering Angle Sensor
Courtesy of VOLVO CARS CORPORATION

NOTE: The diagnostic trouble code only applies to vehicles equipped with DSTC.

The steering angle sensor module (SAS) sends a status signal to the brake control module (BCM).

Diagnostic trouble code BCM-U042864 is generated if the message sent to the brake control module (BCM) by the steering angle sensor (SAS) indicates an internal malfunction.

Substitute Value

- TC is blocked.
- SC is blocked.
- AYC is blocked.

HINT: For information on abbreviations: BRAKE SYSTEM, ABBREVIATIONS

Possible Source

- Internal malfunction in steering angle sensor (SAS).

NOTE: This diagnostic trouble code (DTC) is not due to an internal hardware fault in the Brake control module (BCM) and must not be remedied by replacing the control module.

Fault symptom[s]

- General warning light on.
- Anti-spin is not operational.
- The stability function is not operational.

- The anti-skid function is not operational.

TROUBLESHOOTING BCM-U042864

INFORMATION

The diagnostic trouble code indicates an internal malfunction in the steering angle sensor (SAS). Read out the diagnostic trouble codes from the steering angle sensor (SAS) and troubleshoot as described in the information for the system.

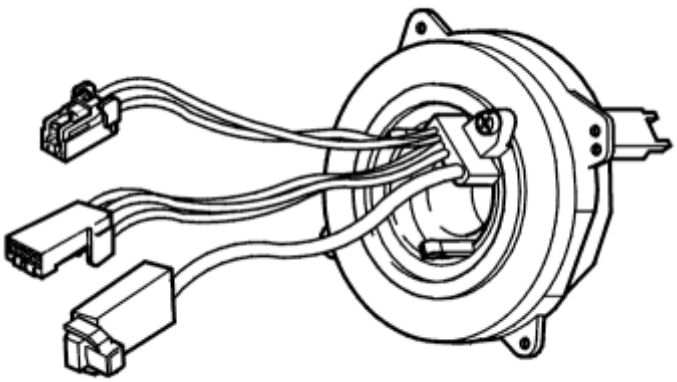

Fig. 225: Identifying Steering Wheel Angle Sensor, Cables & Connectors
Courtesy of VOLVO CARS CORPORATION

BCM-U042864: INVALID DATA RECEIVED FROM STEERING ANGLE SENSOR MODULE (SAS). ALGORITHM ERROR. SIGNAL OUTSIDE PERMITTED RANGE (B6324S5; 2011-2012)

DIAGNOSTIC TROUBLE CODE INFORMATION BCM-U042864

see **DIAGNOSTIC TROUBLE CODE INFORMATION BCM-U042864**

TROUBLESHOOTING BCM-U042864

see **TROUBLESHOOTING BCM-U042864**

BCM-U042864: INVALID DATA RECEIVED FROM STEERING ANGLE SENSOR MODULE (SAS). ALGORITHM ERROR. SIGNAL OUTSIDE PERMITTED RANGE (B8444S; 2005-2011)

DIAGNOSTIC TROUBLE CODE INFORMATION BCM-U042864

see **DIAGNOSTIC TROUBLE CODE INFORMATION BCM-U042864**

TROUBLESHOOTING BCM-U042864

see **TROUBLESHOOTING BCM-U042864**

BCM-XXXX: UNKNOWN DIAGNOSTIC TROUBLE CODE (DTC) FOR THE CURRENT CONTROL MODULE VERSION (2003-2004)

UNKNOWN DIAGNOSTIC TROUBLE CODE (DTC) FOR THE CURRENT CONTROL MODULE VERSION

READING OFF DIAGNOSTIC TROUBLE CODES (DTC)

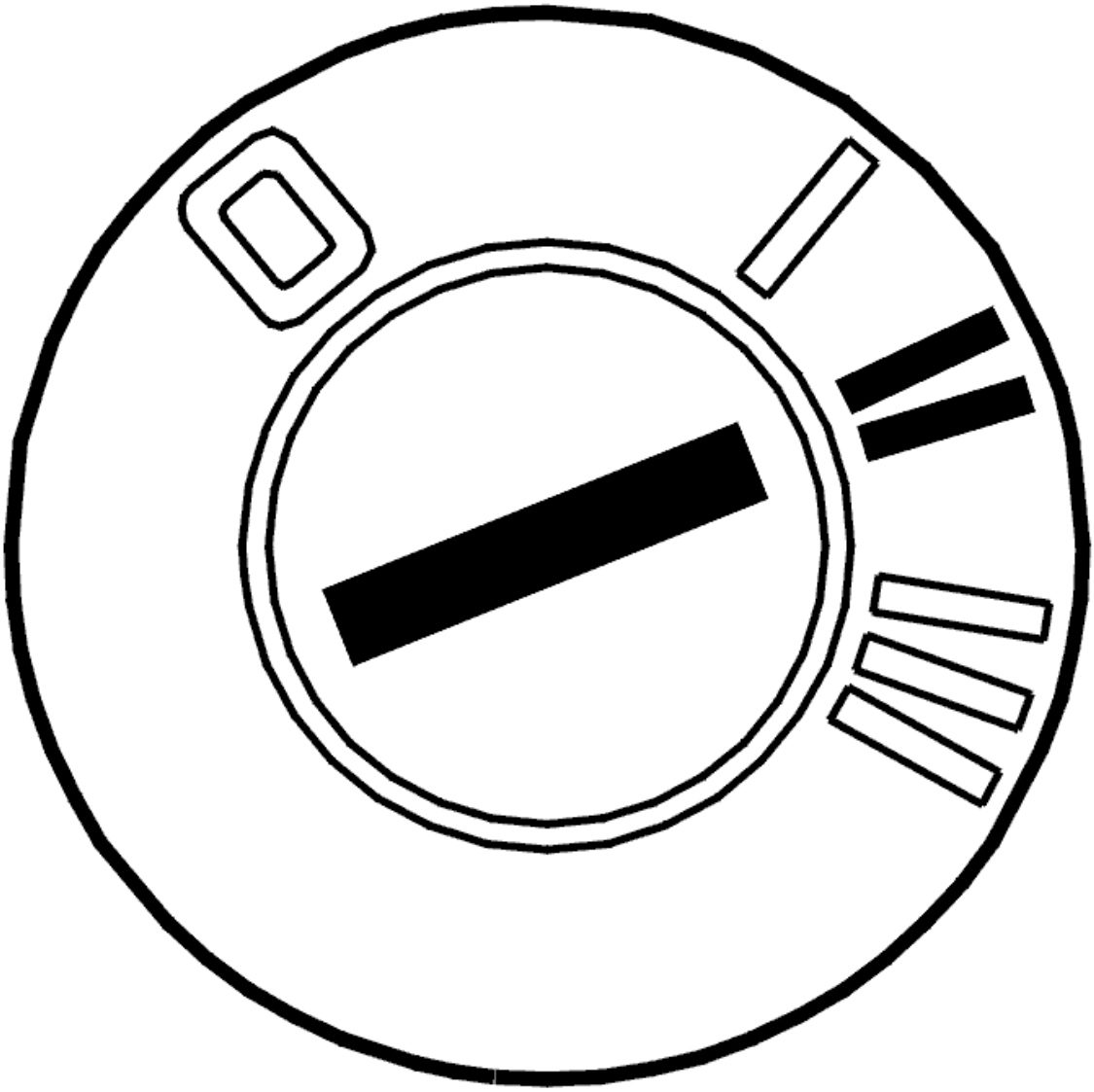

Fig. 226: Identifying Ignition ON

Courtesy of VOLVO CARS CORPORATION

- Ignition on.

  Read off the diagnostic trouble code (DTC) that is stored in the car.

  Make a note of the code. Report the code to VIDA customer support.

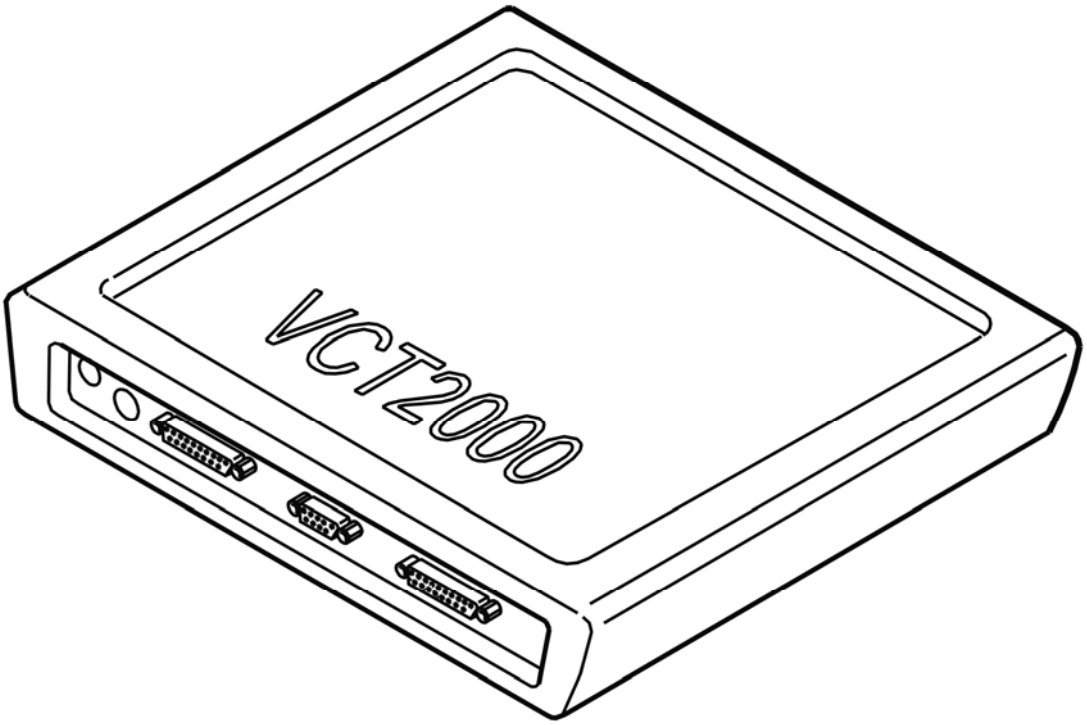

Fig. 227: Identifying VCT2000 Diagnostic Tool Symbol In VIDA
Courtesy of VOLVO CARS CORPORATION

BCM-XXXX: UNKNOWN DIAGNOSTIC TROUBLE CODE (DTC) FOR THE CURRENT CONTROL MODULE VERSION (B5254T2; 2005-2007)

UNKNOWN DIAGNOSTIC TROUBLE CODE (DTC) FOR THE CURRENT CONTROL MODULE VERSION

see **UNKNOWN DIAGNOSTIC TROUBLE CODE (DTC) FOR THE CURRENT CONTROL MODULE VERSION**

BCM-XXXX: UNKNOWN DIAGNOSTIC TROUBLE CODE (DTC) FOR THE CURRENT CONTROL MODULE VERSION (B6294T; 2005-2006)

UNKNOWN DIAGNOSTIC TROUBLE CODE (DTC) FOR THE CURRENT CONTROL MODULE VERSION

see **UNKNOWN DIAGNOSTIC TROUBLE CODE (DTC) FOR THE CURRENT CONTROL MODULE VERSION**

BCM-XXXXXX: UNKNOWN DIAGNOSTIC TROUBLE CODE FOR THIS CONTROL MODULE VERSION (B6324S; 2007-2010)

UNKNOWN DIAGNOSTIC TROUBLE CODE (DTC) FOR THE CURRENT CONTROL MODULE VERSION

READING OFF DIAGNOSTIC TROUBLE CODES

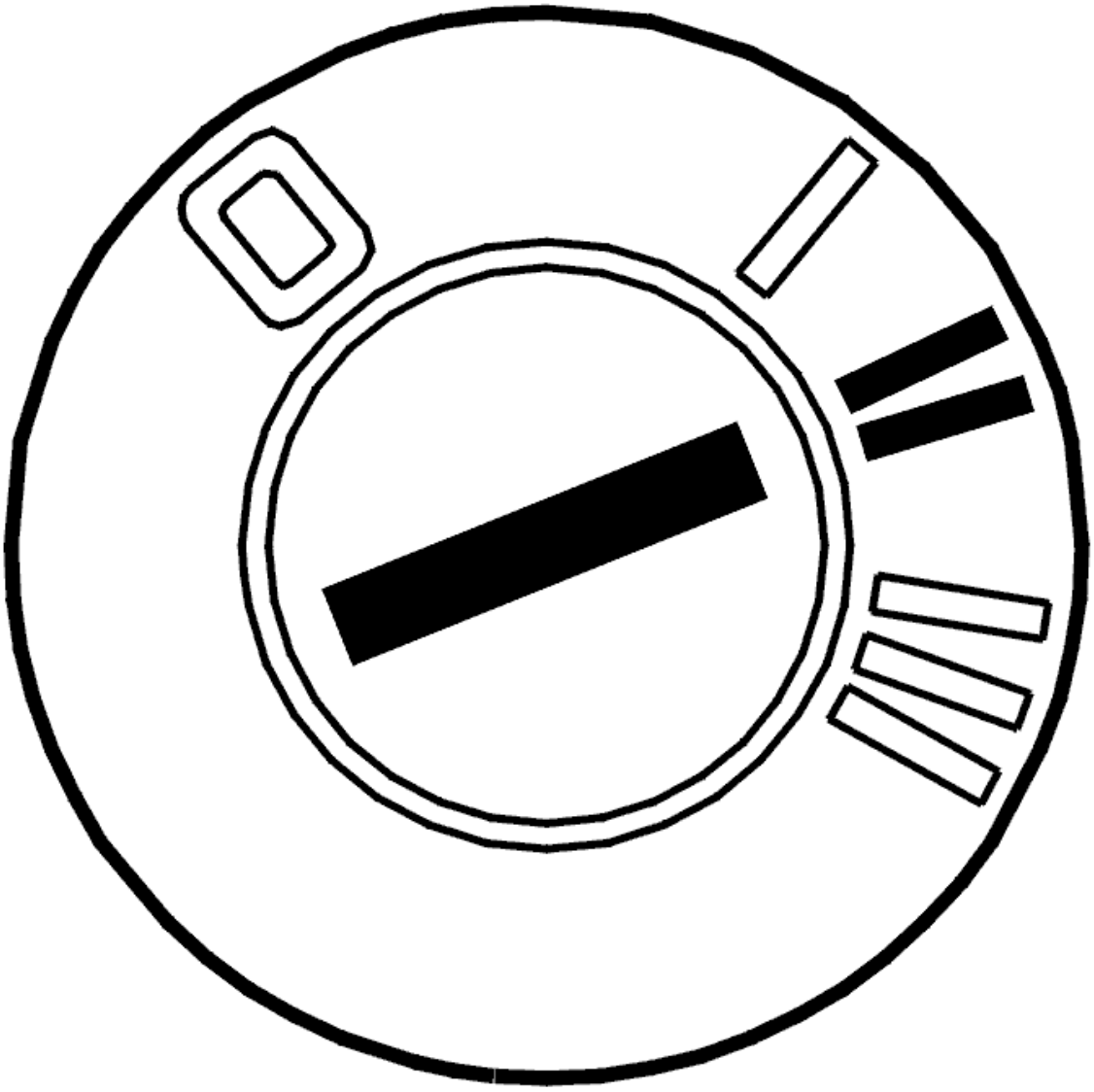

Fig. 228: Identifying Ignition ON
Courtesy of VOLVO CARS CORPORATION

- Ignition on

  Read the diagnostic trouble codes stored in the vehicle.

  Note and report number combination to customer support.

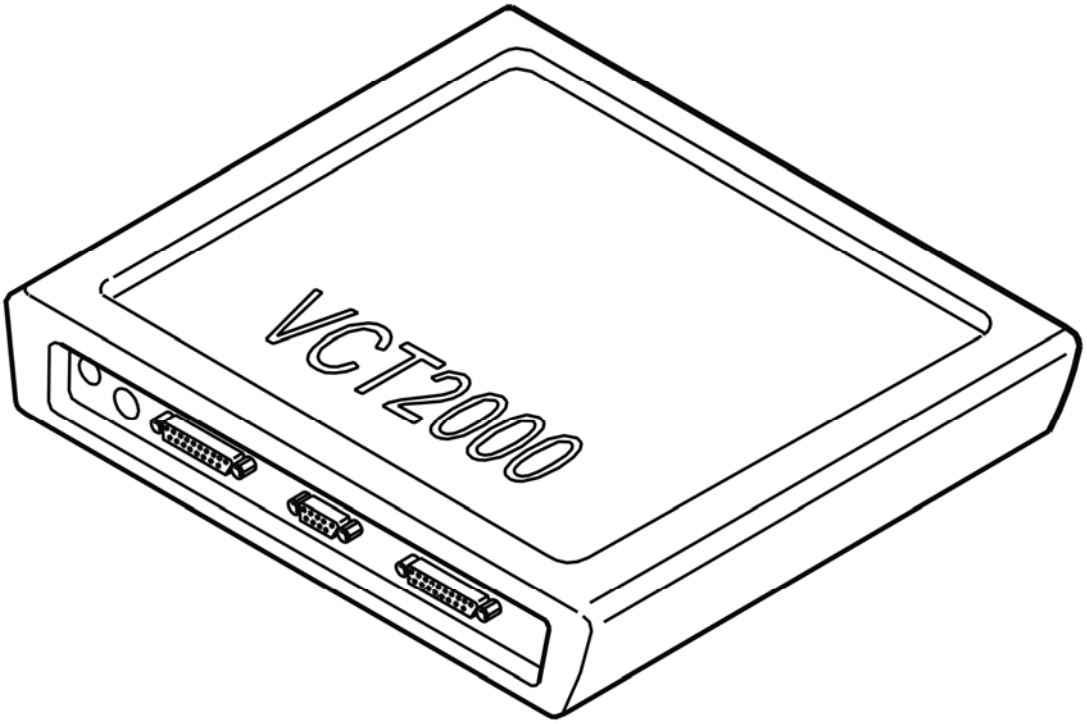

Fig. 229: Identifying VCT2000 Diagnostic Tool Symbol In VIDA
Courtesy of VOLVO CARS CORPORATION

BCM-XXXXXX: UNKNOWN DIAGNOSTIC TROUBLE CODE FOR THIS CONTROL MODULE VERSION (B6324S5; 2011-2012)

UNKNOWN DIAGNOSTIC TROUBLE CODE (DTC) FOR THE CURRENT CONTROL MODULE VERSION

see **UNKNOWN DIAGNOSTIC TROUBLE CODE (DTC) FOR THE CURRENT CONTROL MODULE VERSION**

BCM-XXXXXX: UNKNOWN DIAGNOSTIC TROUBLE CODE FOR THIS CONTROL MODULE VERSION (B8444S; 2005-2011)

UNKNOWN DIAGNOSTIC TROUBLE CODE (DTC) FOR THE CURRENT CONTROL MODULE

VERSION

see **UNKNOWN DIAGNOSTIC TROUBLE CODE (DTC) FOR THE CURRENT CONTROL MODULE VERSION**

BRAKES

Brake Control System - General Diagnostics and Tests

CHECKING THE GROUND TERMINALS, BRAKE CONTROL MODULE

CHECKING THE GROUND TERMINALS, BRAKE CONTROL MODULE

CHECKING THE GROUND TERMINALS

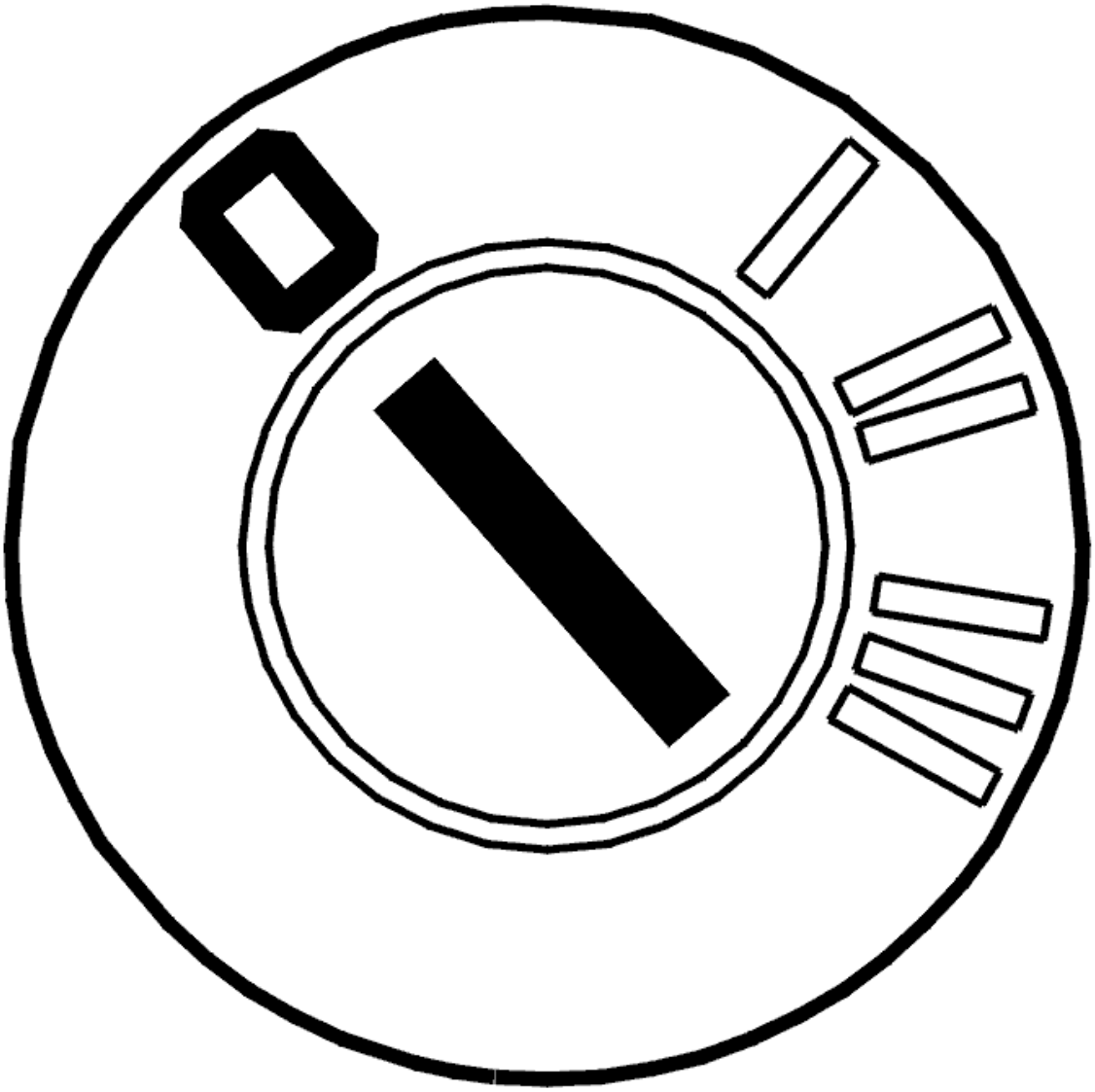

Fig. 1: Identifying Ignition OFF
Courtesy of VOLVO CARS CORPORATION

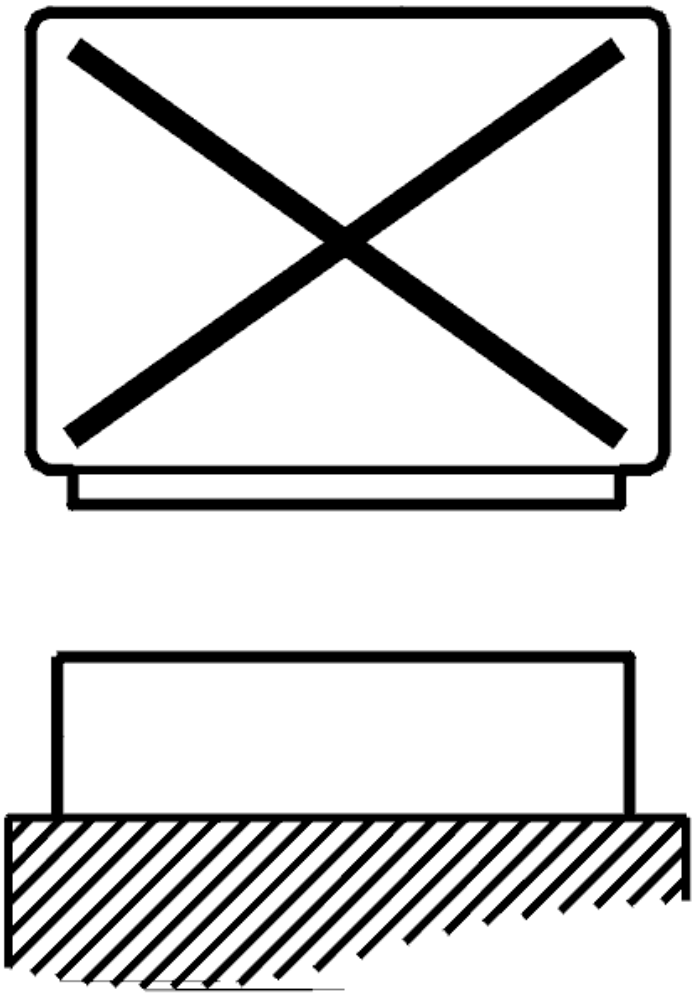

Fig. 2: Disconnecting Control Unit
Courtesy of VOLVO CARS CORPORATION

- Ignition off
- Connect the breakout box
- Control module disconnected.
- Switch off all equipment that takes power from the battery (for example, courtesy lighting, radio etc.).

  Check the resistance between the battery negative terminal and breakout box terminal #16 and between the battery negative terminal and breakout box terminal #46. The resistance must be 0 ohms.

  Check the ground terminal 1/1 (battery negative terminal) if the resistance is incorrect. Check for an open-circuit and contact resistance.

  Check the cable between ground terminal 31/95 (left-hand wheel arch) and brake control module

terminals #16 and #46. Check for an open-circuit. Check for contact resistance.

Other information

- To connect the breakout box, see **CONNECTING THE BREAKOUT BOX, BRAKE CONTROL MODULE (BCM)**

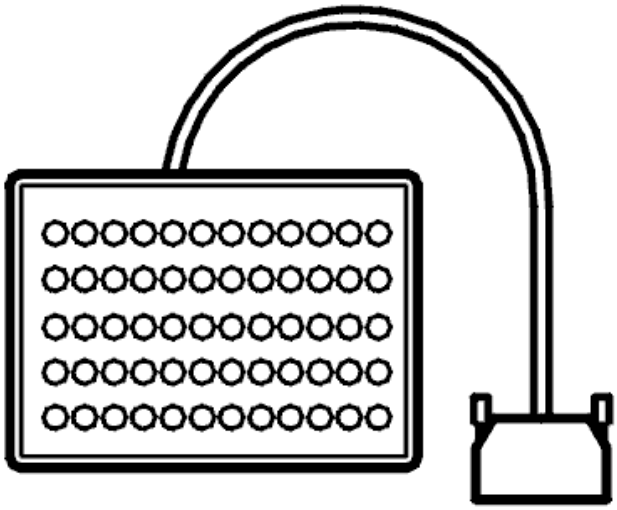

Fig. 3: Breakout Box
Courtesy of VOLVO CARS CORPORATION

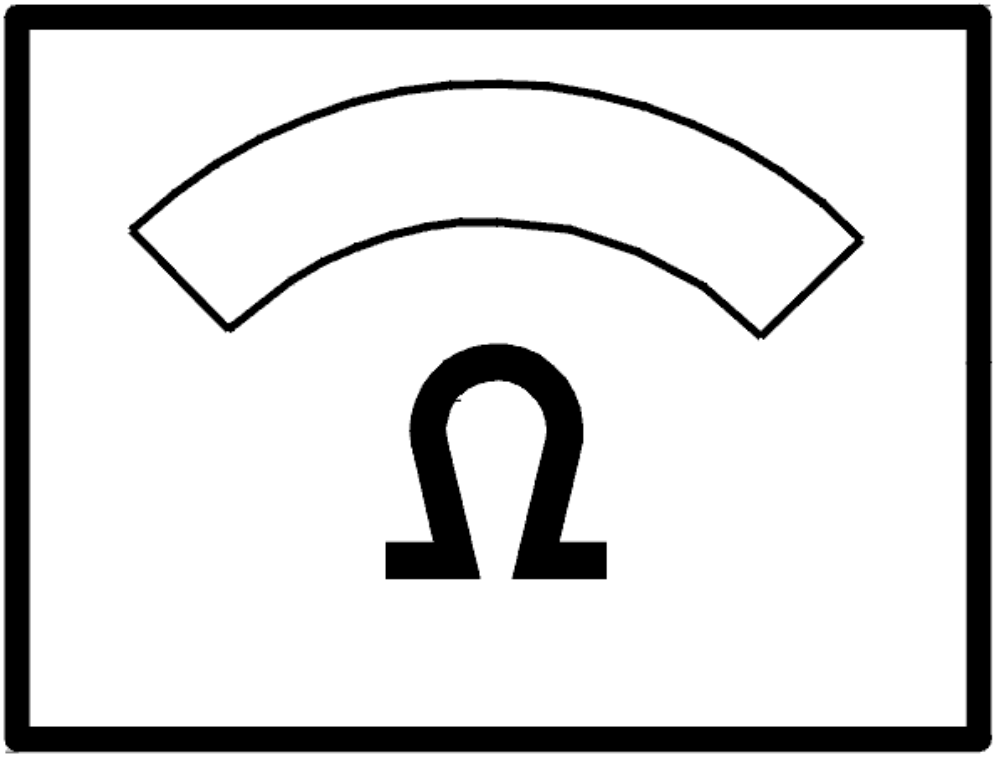

Fig. 4: Identifying Ohm Meter
Courtesy of VOLVO CARS CORPORATION

Was a fault detected?

- **YES**

  See **VERIFICATION**

- **NO**

  see **INFORMATION**

VERIFICATION

HINT: After carrying out the repair, check that the fault has been remedied.

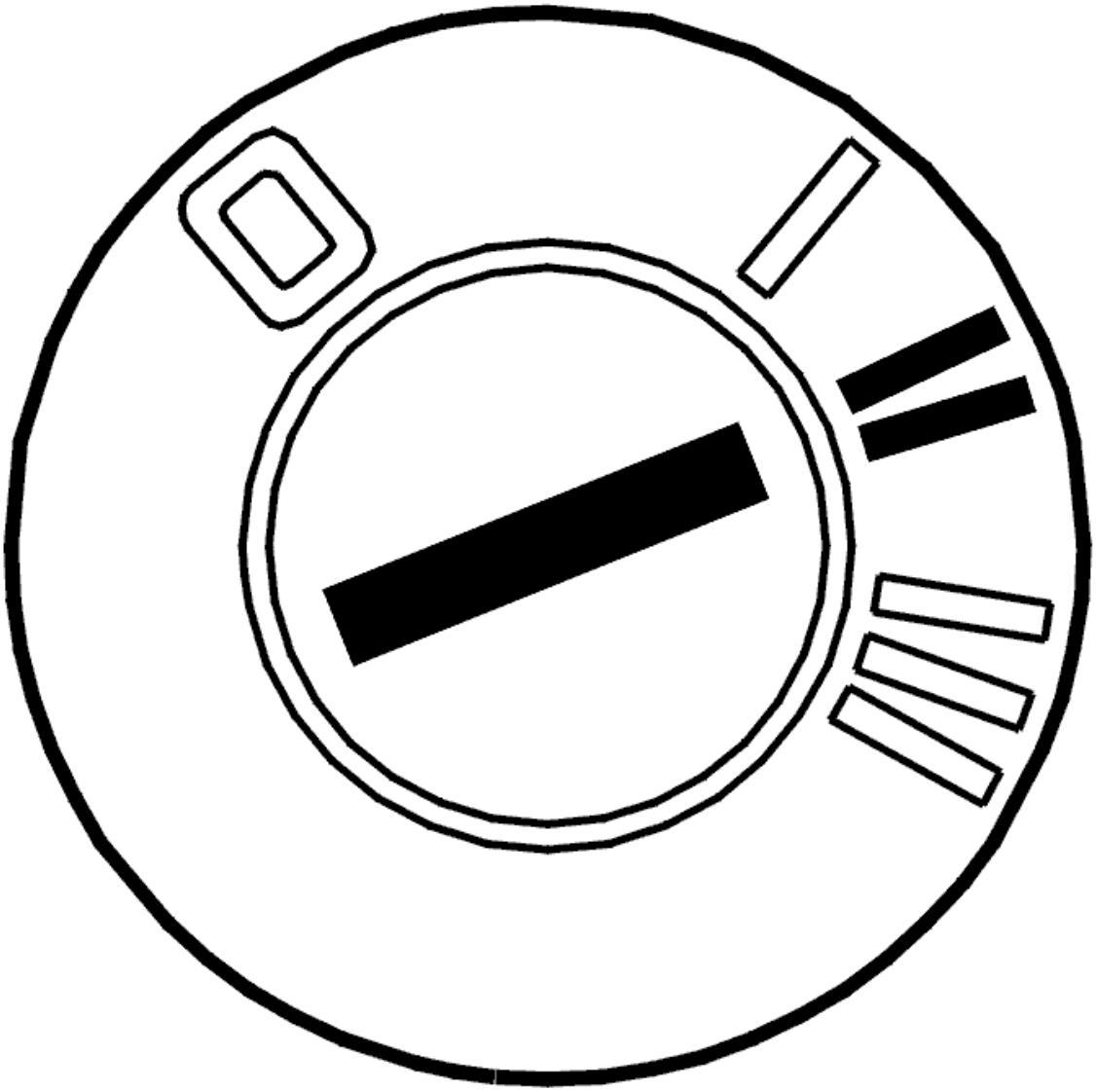

Fig. 5: Identifying Ignition ON
Courtesy of VOLVO CARS CORPORATION

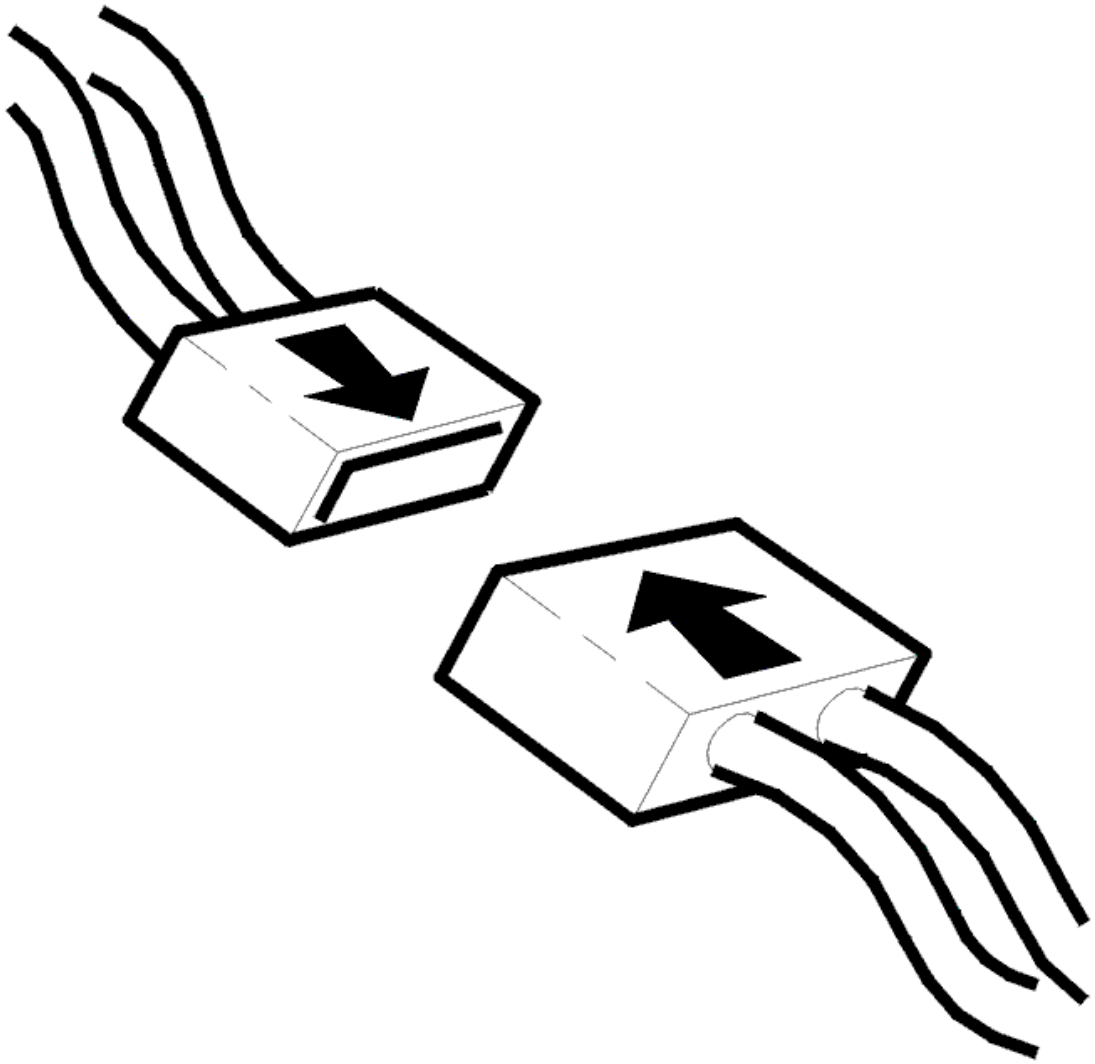

Fig. 6: Connecting Connector
Courtesy of VOLVO CARS CORPORATION

- Ignition off
- Reconnect the connectors, reinstall components etc.
- Ignition on.

The ABS warning lamp lights when the ignition is switched on.

Check that the warning lamp goes out after approximately 2 seconds.

NOTE: **The warning lamp will not go out if a fault has been stored in the control module.**

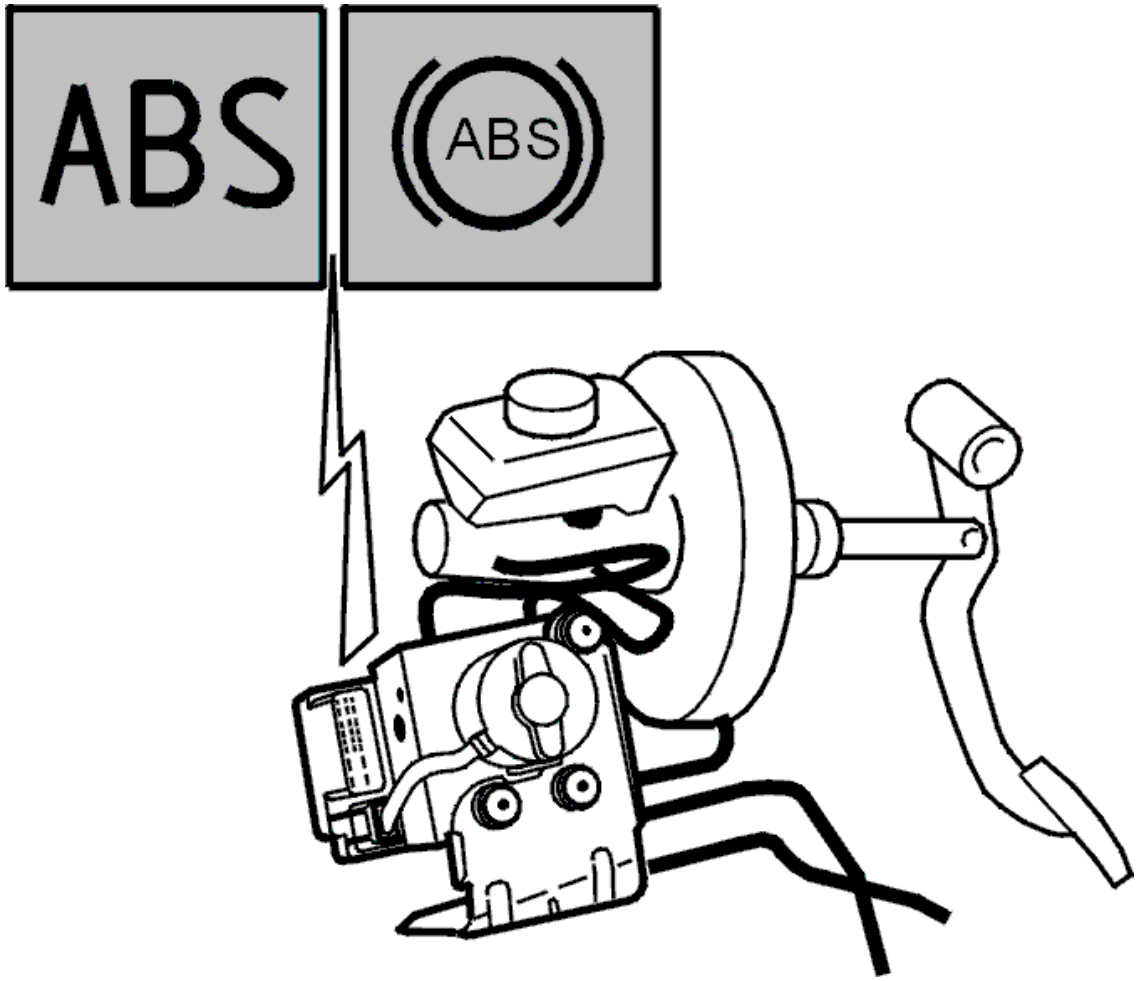

Fig. 7: Identifying ABS Control Module And ABS Warning Lamp
Courtesy of VOLVO CARS CORPORATION

Does the warning lamp go out after 2 seconds?

- **YES**

  OKAY: Troubleshooting has been completed.

- **NO**

  see **INFORMATION**

INFORMATION

FAULT-TRACING INFORMATION

The fault should be diagnosed and remedied. Since this is not the case the fault-tracing process has failed.

Complete the fault-tracing for those fault or try again.

CHECKING THE POWER SUPPLY, BRAKE CONTROL MODULE

CHECKING THE POWER SUPPLY, BRAKE CONTROL MODULE

CHECKING THE 15-SUPPLY TO THE CONTROL MODULE

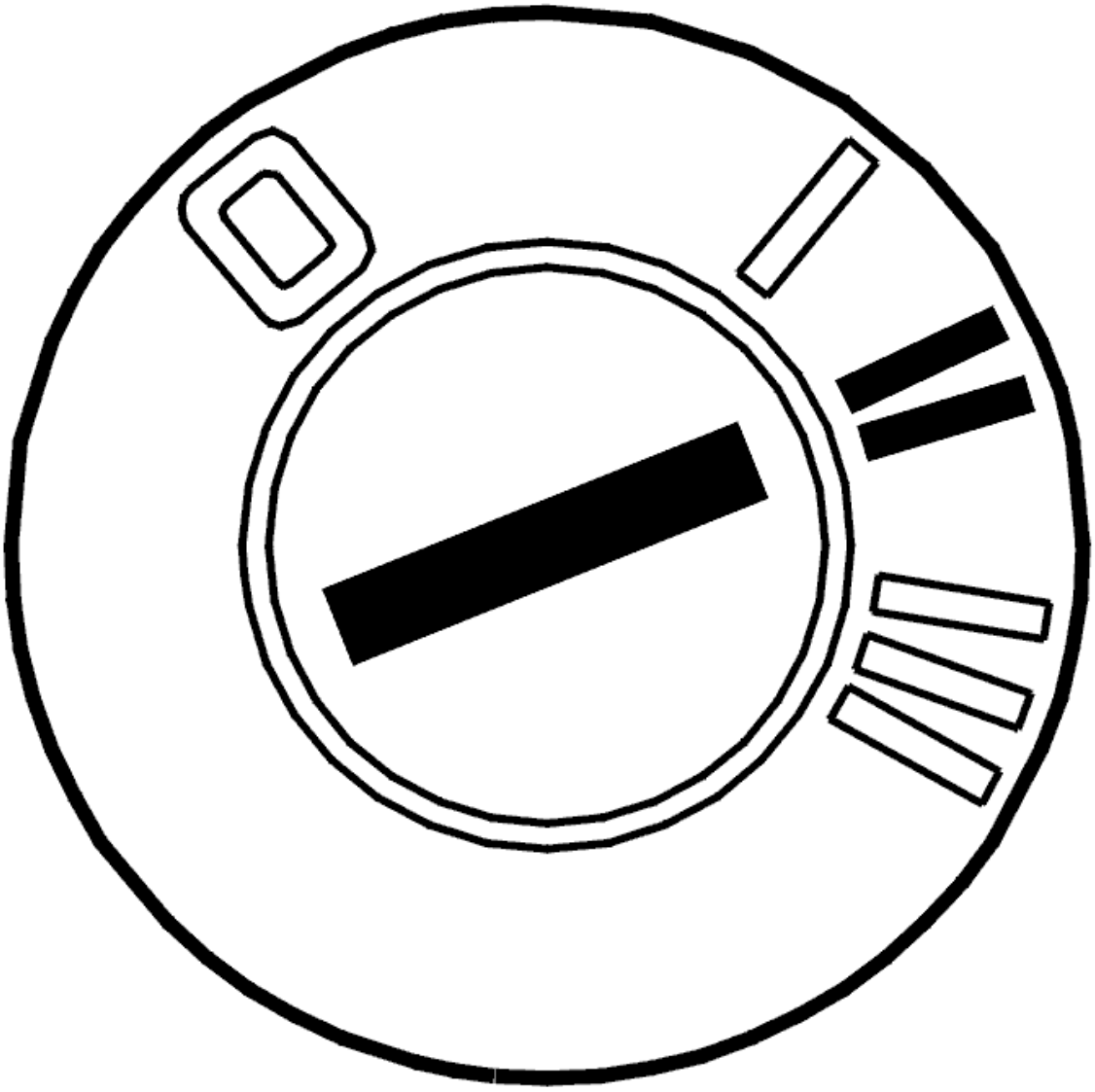

Fig. 8: Identifying Ignition ON
Courtesy of VOLVO CARS CORPORATION

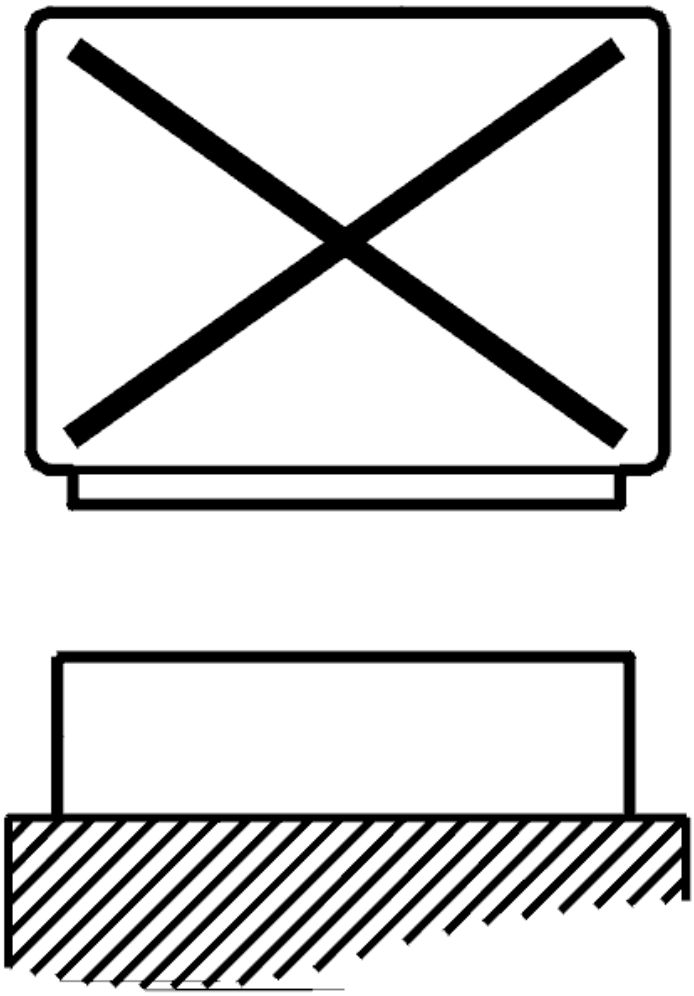

Fig. 9: Disconnecting Control Unit
Courtesy of VOLVO CARS CORPORATION

- The breakout box connected
- Control module disconnected.
- Ignition on.

  Check the 15-supply by measuring the voltage between terminal #4 (#A4) and ground terminals #16 (#A16) and #46 (#A46). The voltmeter should read battery voltage.

  Check that the fuse for the circuit is intact if the voltage is incorrect.

  If the fuse is blown, check the cable between brake control module terminal #4 (#A4) and the fuse. Check for a short-circuit to ground.

If the fuse is intact, check the cable between brake control module terminal #4 (#A4) and the fuse. Check for an open-circuit.

If no fault is found in the cable between brake control module terminal #4 (#A4) and the fuse, check the cable between the fuse and the ignition switch.

Other information

- To connect the breakout box, see **CONNECTING THE BREAKOUT BOX, BRAKE CONTROL MODULE (BCM)**

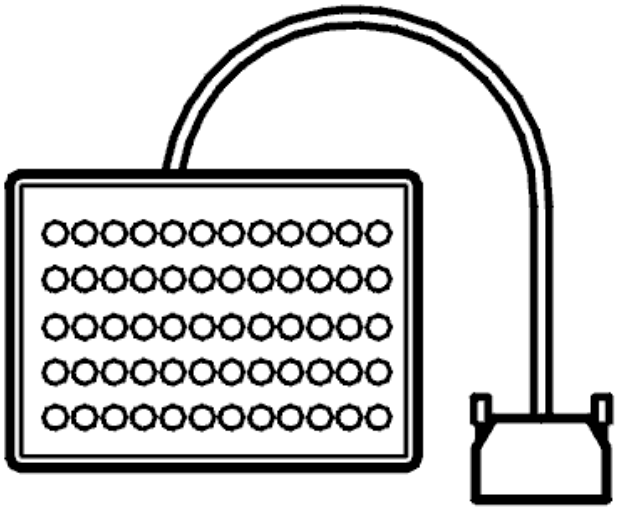

Fig. 10: Breakout Box
Courtesy of VOLVO CARS CORPORATION

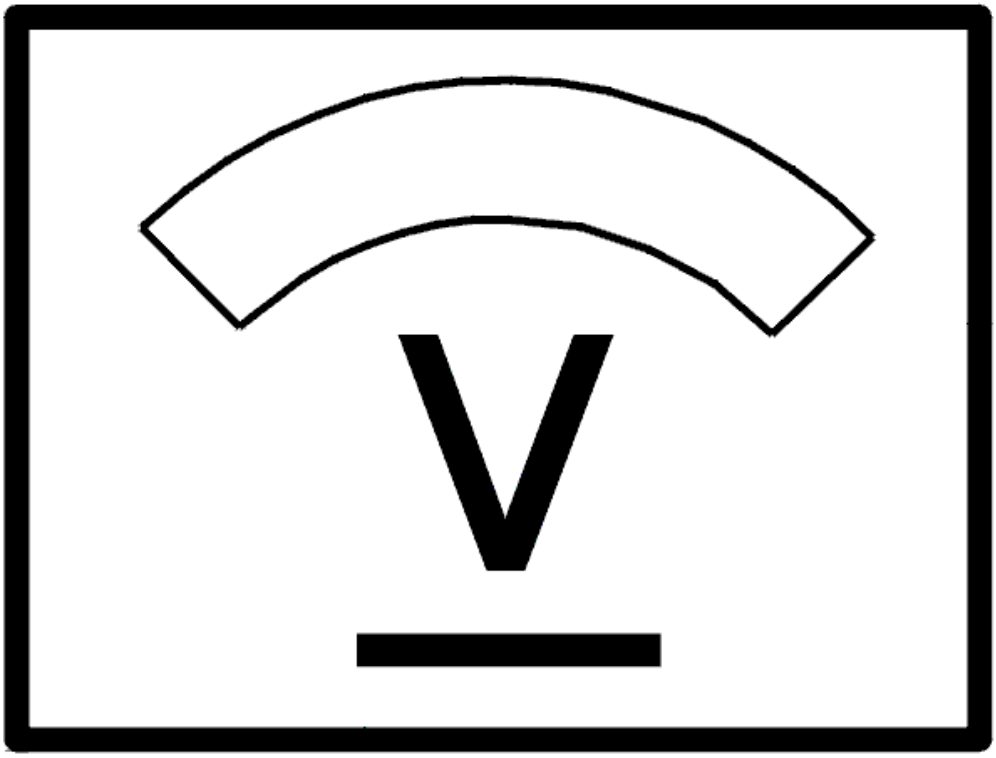

Fig. 11: Identifying Voltage Display
Courtesy of VOLVO CARS CORPORATION

Was a fault detected?

- **YES**

  OKAY: Troubleshooting has been completed.

- **NO**

  see **CHECKING THE 30-SUPPLY (VALVES) TO THE CONTROL MODULE**

CHECKING THE 30-SUPPLY (VALVES) TO THE CONTROL MODULE

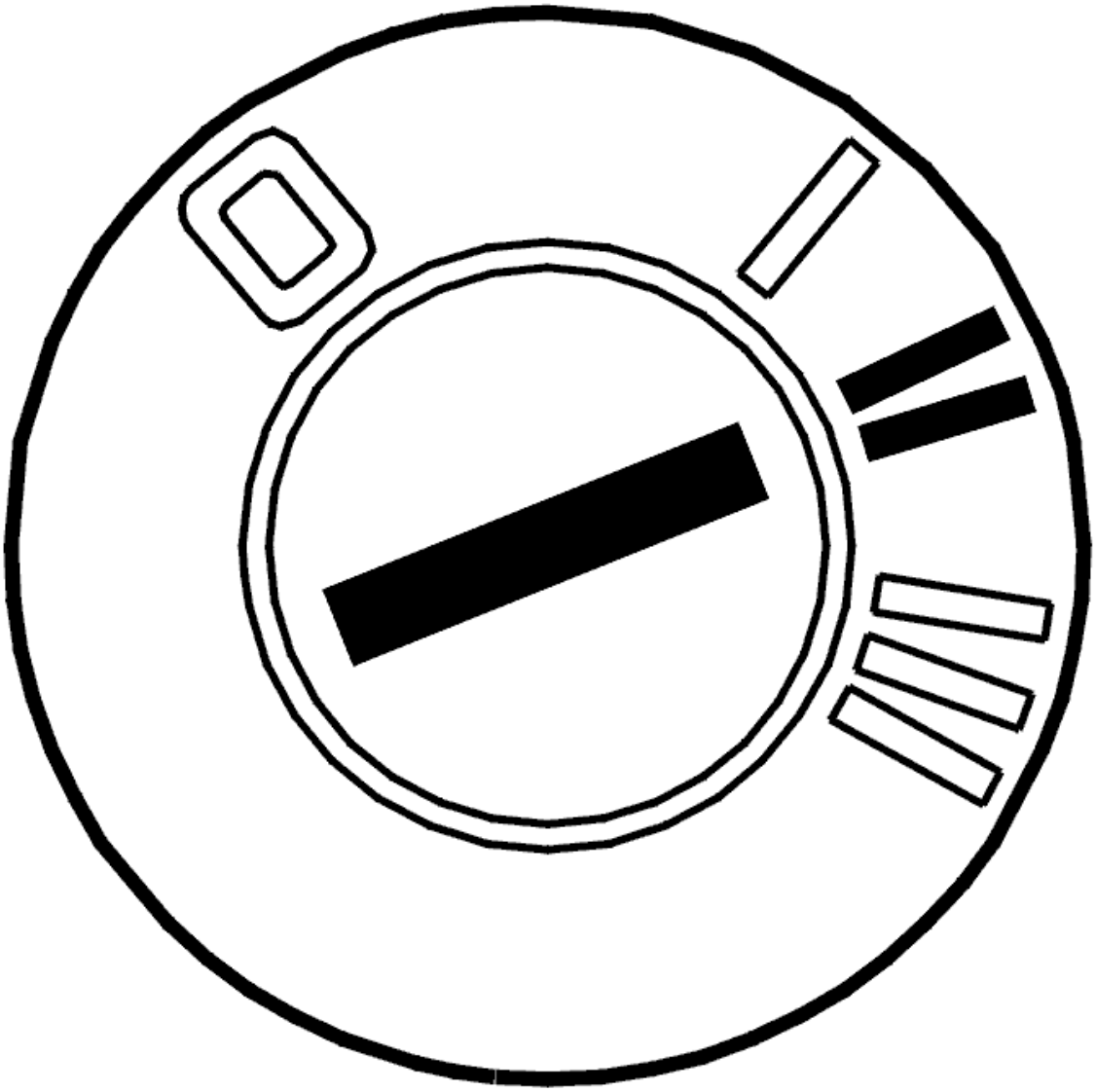

Fig. 12: Identifying Ignition ON
Courtesy of VOLVO CARS CORPORATION

- The breakout box connected
- Ignition on.

  Check the voltage between breakout box terminals #16 and #32 and between terminals #32 and #46. The voltmeter should read battery voltage.

  Check that the fuse for the circuit is intact if the voltage is incorrect.

  If the fuse is blown, check the cable between brake control module terminal #32 (#A32) and the fuse. Check for a short-circuit to ground.

  If the fuse is intact, check the cable between brake control module terminal #32 (#A32) and the fuse. Check for an open-circuit.

Remedy as necessary.

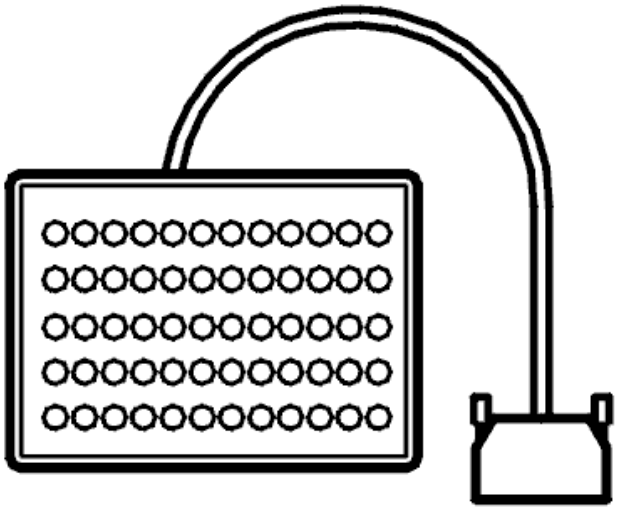

Fig. 13: Breakout Box
Courtesy of VOLVO CARS CORPORATION

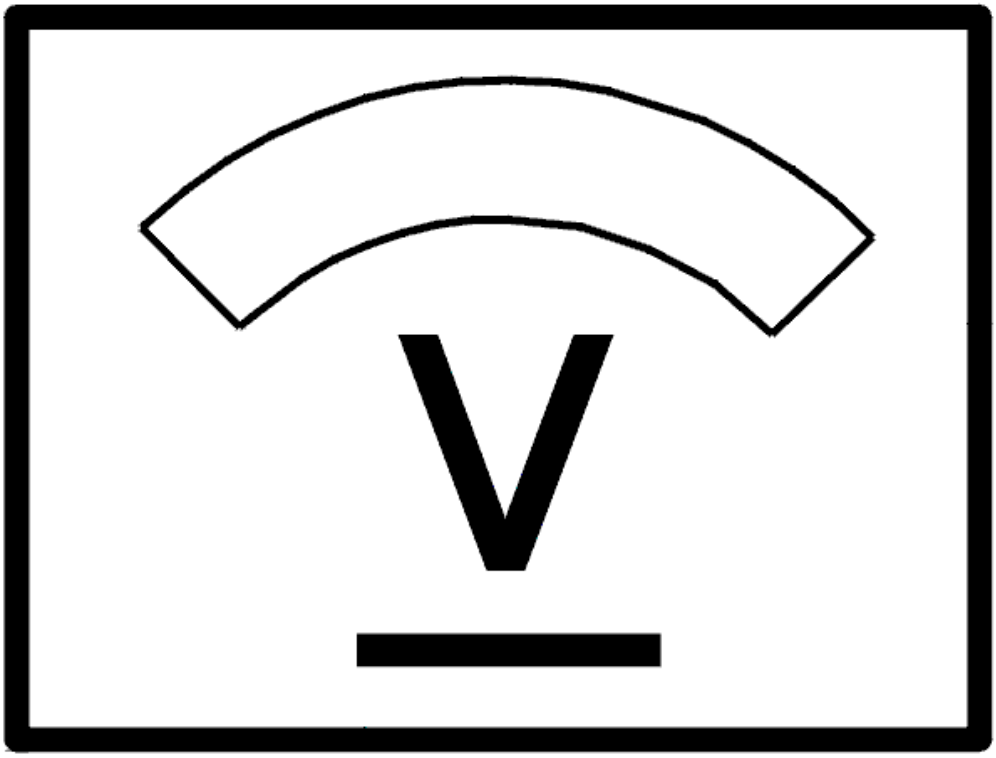

Fig. 14: Identifying Voltage Display
Courtesy of VOLVO CARS CORPORATION

CONNECTING THE BREAKOUT BOX

CONNECTING THE BREAKOUT BOX, BRAKE CONTROL MODULE (BCM)

see **CONNECTING THE BREAKOUT BOX**

CONNECTING THE BREAKOUT BOX

Special tools:

see **9511428**

see **9512958**

CONNECTING THE BREAKOUT BOX

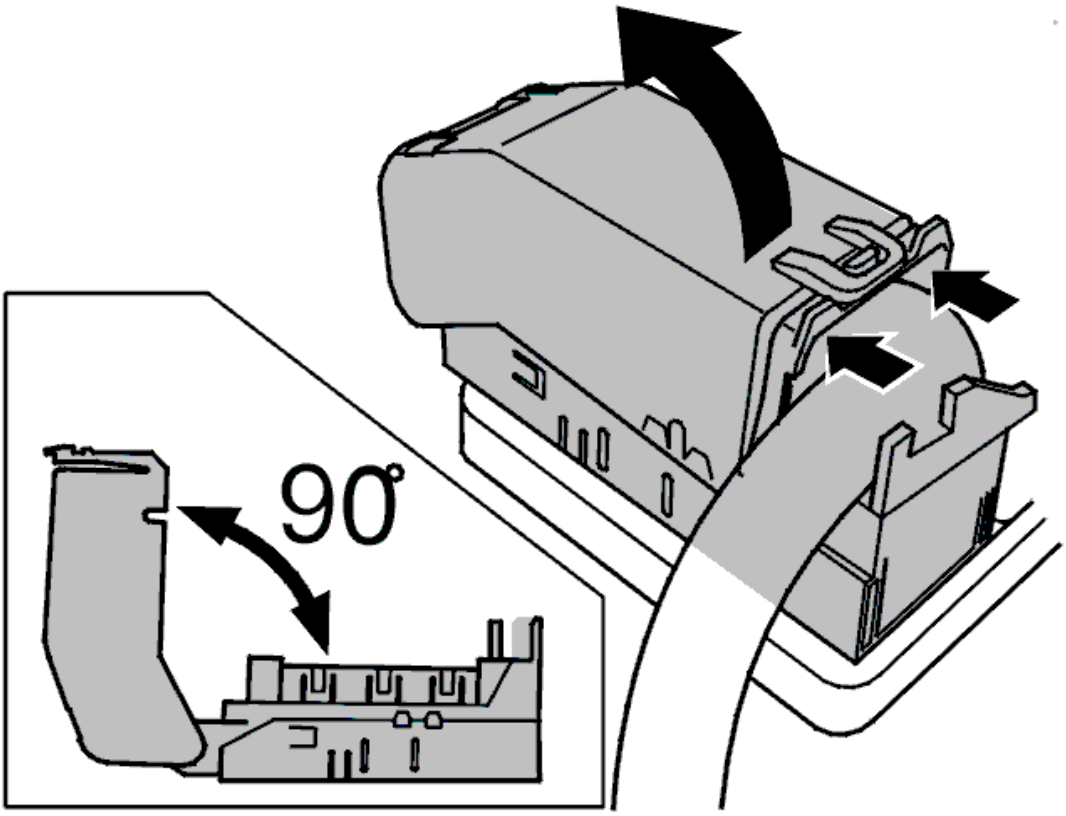

Fig. 15: Identifying Catch & Connector
Courtesy of VOLVO CARS CORPORATION

- Ignition off
- Expose the brake control module. See **BRAKE CONTROL MODULE (BCM), REPLACING**
- Disconnect the control module by pressing in the catch on top of the connector and **carefully** work the cover up so that the connector lifts.

CAUTION: Do not bend the cover up by more than 90°.

- Check in particular that the male and female terminals on the control module and the control module connector are intact, secure and cannot be pressed in. Check that the female terminal cables are securely connected
- In particular, check the terminal pins relevant to the diagnostic trouble code (DTC) / symptom. See **SIGNAL SPECIFICATION, BRAKE CONTROL MODULE (BCM) WITH STC/ TRACS** or **SIGNAL SPECIFICATION, BRAKE CONTROL MODULE (BCM) WITH DSTC (DYNAMIC STABILITY AND TRACTION CONTROL)** .
- Connect adapter see **9512958** to the control module's connector (wiring side) and connect breakout box see **9511428** to the adapter.

- The breakout box is designed to facilitate reading off the control module input and output signals when the control module is connected; and the resistance of the cable and component when the control module is disconnected. The use of a breakout box reduces the risk of accidental short-circuits and damage to the connector pins.

BRAKES

Brake Control System - Removal, replacement and installation

BRAKE CONTROL SYSTEM

BRAKE CONTROL MODULE (BCM), REPLACING

NOTE: **The illustrations in this service information are used for different model years and/or models. Some variation may occur. However, the essential information in the illustrations is always correct.**

BRAKE CONTROL MODULE (BCM), REPLACING

PREPARATION

Remove the battery lead. See **BATTERY, DISCONNECTING** .

REMOVING THE AIR CLEANER (ACL) HOUSING

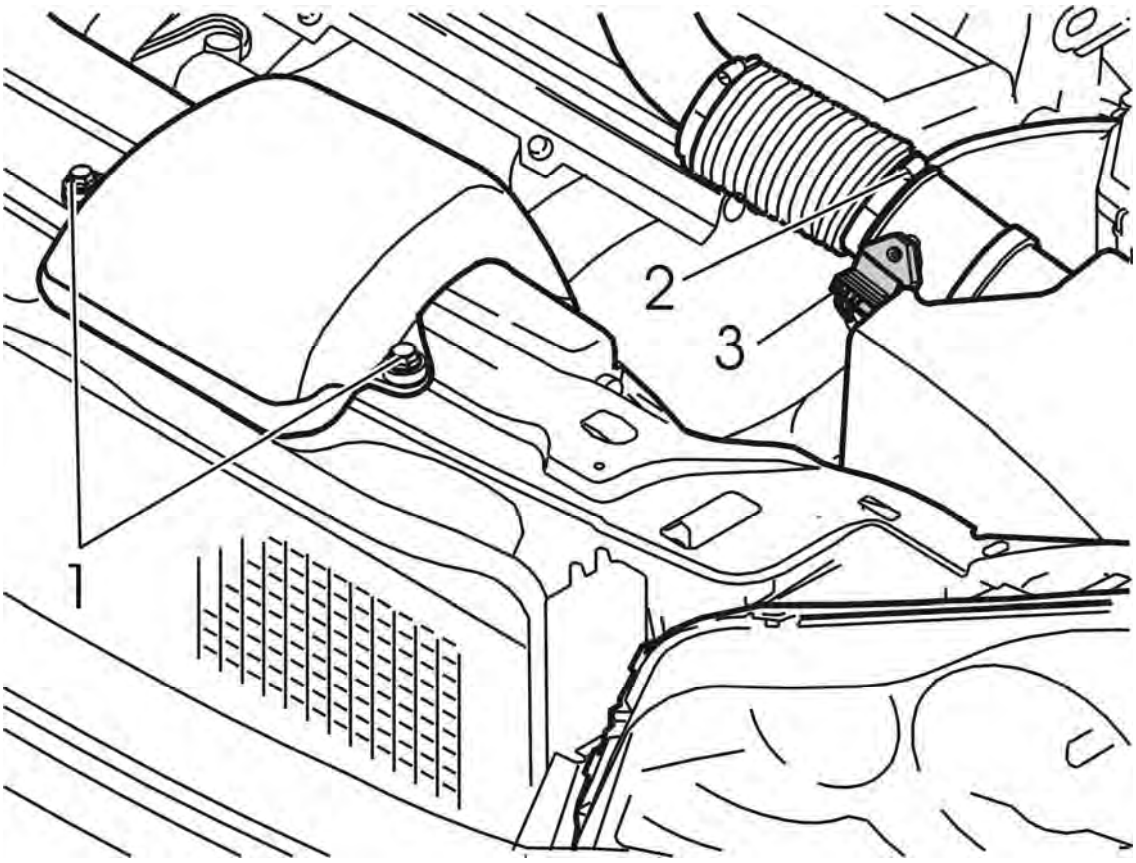

Fig. 1: Air Cleaner (ACL) Housing
Courtesy of VOLVO CARS CORPORATION

Remove the screws (1) for the intake manifold.

Disconnect the hose clamp (2) for the air hose.

Remove the connector (3) from the mass air flow (MAF) sensor.

Remove the air cleaner (ACL) housing from its mountings. Pull it straight up.

REMOVING THE INTEGRATED RELAY / FUSEBOX

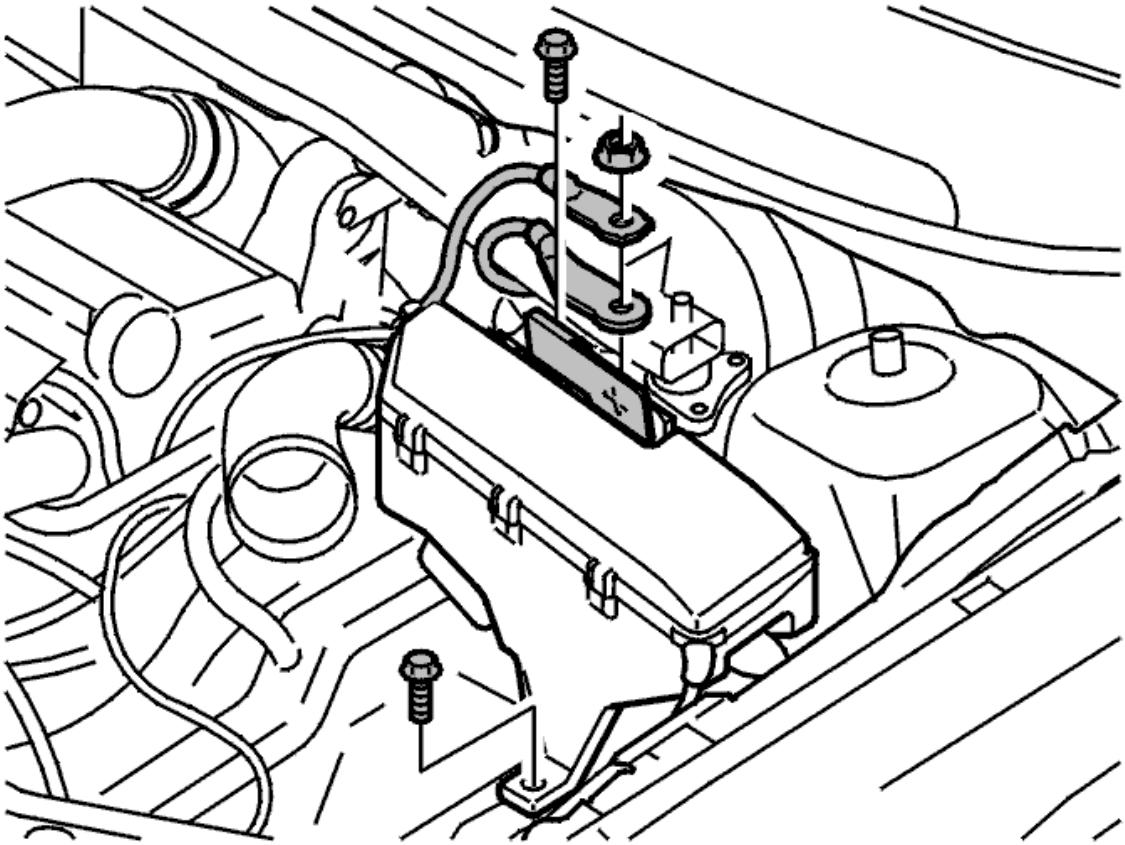

Fig. 2: Identifying Battery Leads, Screws And Nut
Courtesy of VOLVO CARS CORPORATION

Remove:

- the nut for the power supply cables
- the 2 power supply cables
- the 2 screws for the mounting.

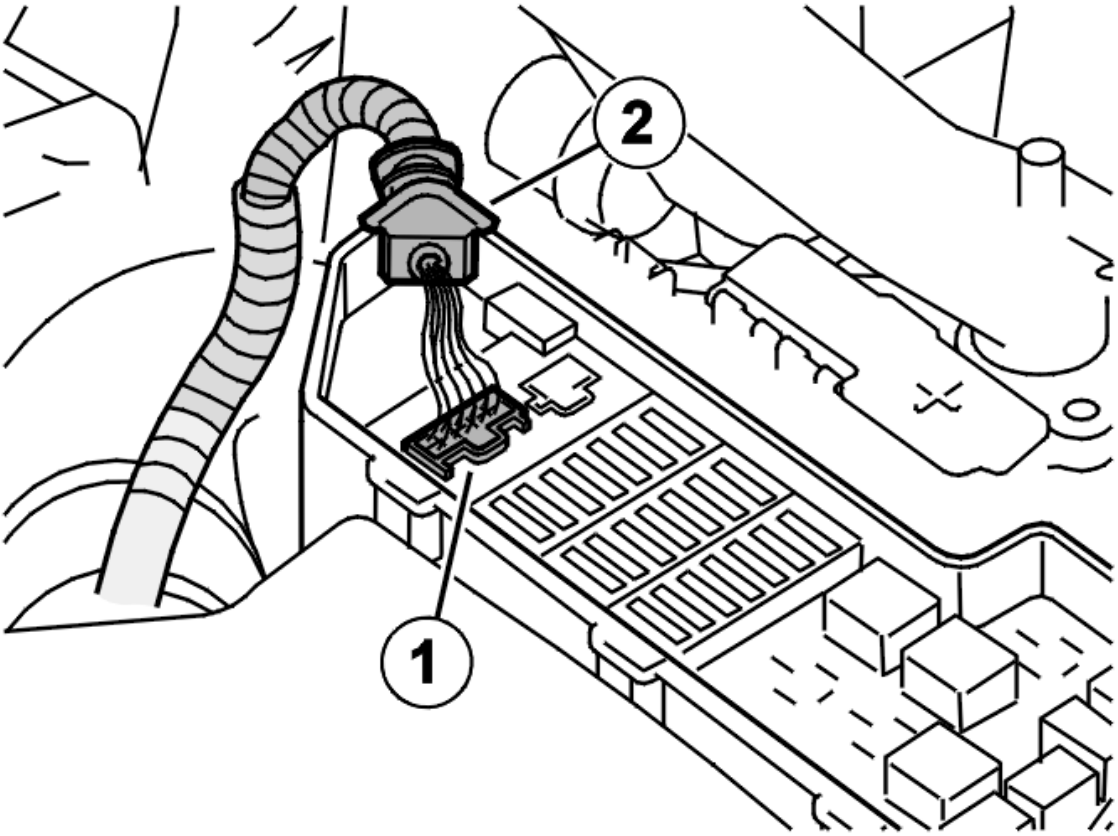

Fig. 3: Locating Connector And Cable Harness From Fusebox
Courtesy of VOLVO CARS CORPORATION

Open the integrated relay/fusebox. Remove the connector (1).

Disconnect the cable harness from the box (2).

Lift the box out of the mounting and move it to one side.

DISCONNECTING THE CONNECTOR

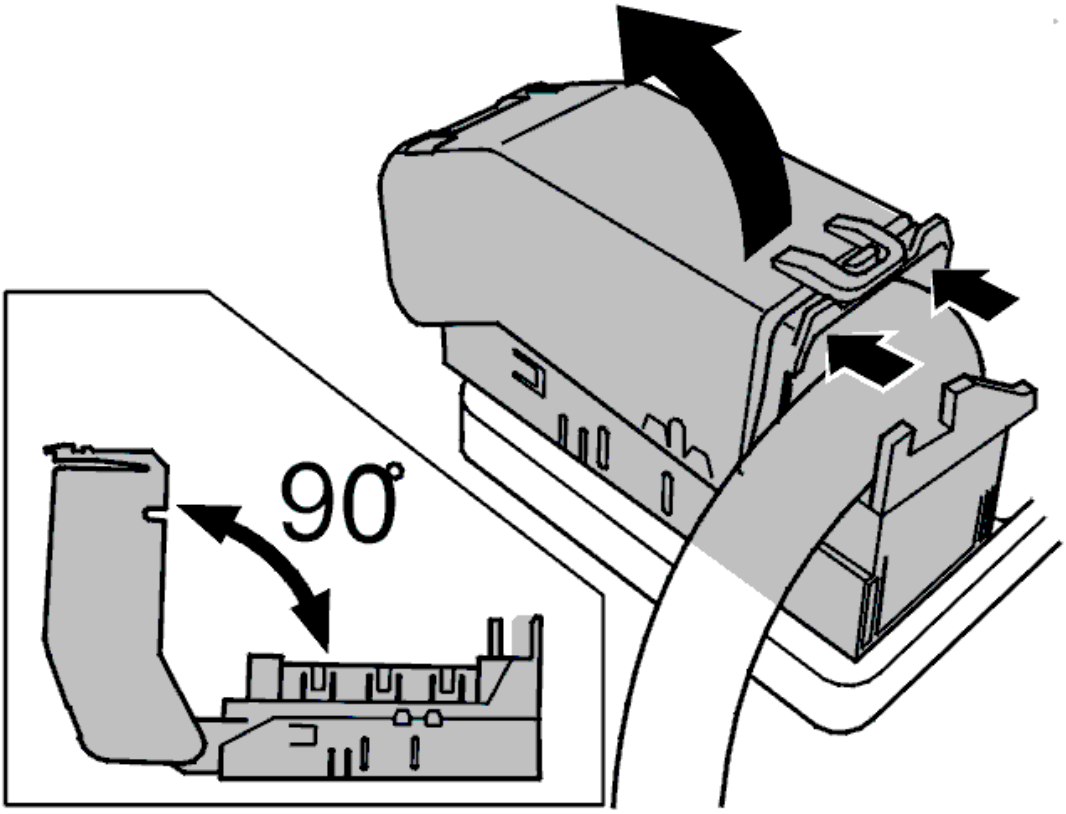

Fig. 4: Identifying Catch & Connector
Courtesy of VOLVO CARS CORPORATION

Disconnect the connector from the control module.

Press the catch and pull up the connector. Pull up the connector **a maximum of 90 °** .

Pull the connector up from the control module.

REMOVING THE CONTROL MODULE

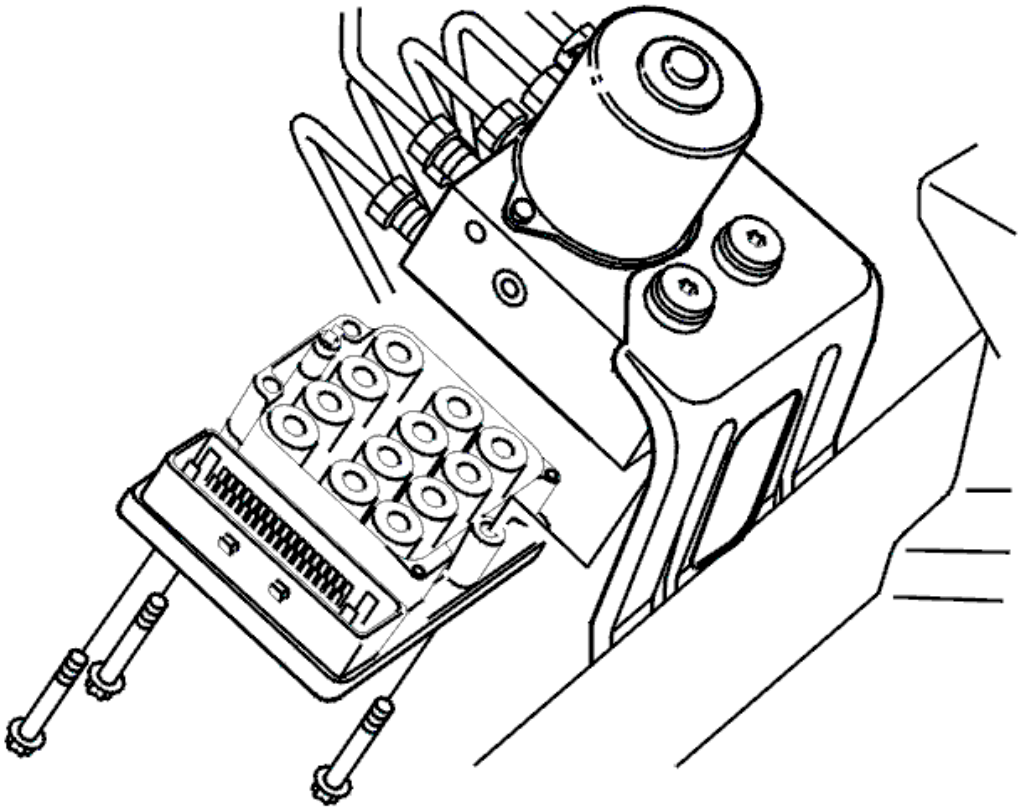

Fig. 5: Brake Control Module And Screws
Courtesy of VOLVO CARS CORPORATION

Remove the screws.

Use a 6 mm torx external socket.

Carefully pull the control module down so that the terminal pin on the control module comes loose inside the ABS modulator.

Continue pulling the control module down towards the brake lines and lift it out.

INSTALLING THE CONTROL MODULE

INSTALLING THE CONTROL MODULE

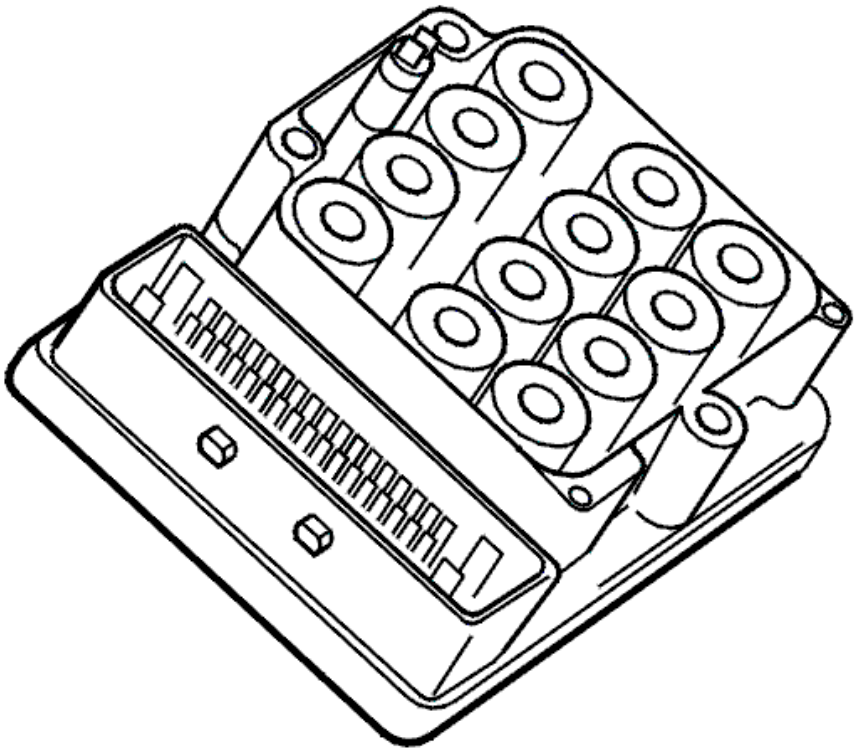

Fig. 6: ABS Control Module
Courtesy of VOLVO CARS CORPORATION

Check:

- the control module is correct (compare to the old one)
- that none of the pins on the connector are damaged
- that there are no contaminants on the mating surfaces between the control module and the ABS hydraulic modulator
- that no parts of the old control module seals remain on the old ABS hydraulic modulator valves.

Position the control module on the brake lines.

Center the control module with the ABS modulator valves so that the terminal pins are correctly positioned in the modulator.

Press the control module up so that the terminal pins connect.

Install:

- the screws. Tighten to **1.8 Nm**
- the connector on the control module. Lock the connector.

INSTALLING THE INTEGRATED RELAY / FUSEBOX

Install the box in its mounting.

Install:

- the cable harness
- the connector
- the 2 screws in the mounting. Tighten to **10 Nm**
- the 2 power supply cables
- the nut for the mounting for the power supply cables.

INSTALLING THE AIR CLEANER (ACL) HOUSING

Press the air cleaner (ACL) housing into place.

Install the air hoses and the connector.

FINISHING

WARNING: **No ABS, stability and traction control functions are available when there is communication with the Brake control module (BCM) (Volvo Diagnostics are activated). ABS warning lamp flashes for as long as the diagnostics are activated. To cancel the diagnostics before test driving the vehicle, the ignition must be switched off**

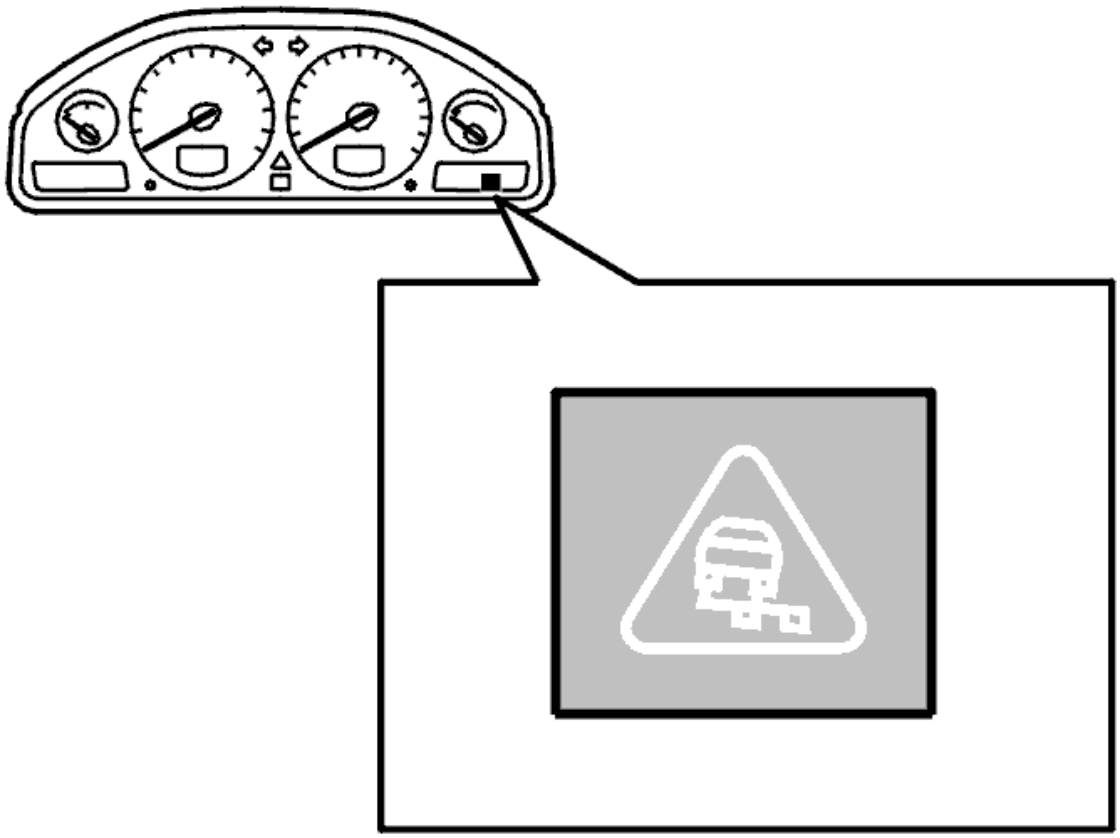

Fig. 7: Identifying Warning Light
Courtesy of VOLVO CARS CORPORATION

NOTE: Switch on the ignition.

Order the software. 8682705 .

Use VIDA vehicle communication to calibrate the control module.

Visual check.

Turn on the ignition.

Wait five seconds and until the symbol for the brakes on the dashboard has gone out.

In the event of a fault (the symbol is lit).

Check that the connector is connected.

Read off any diagnostic trouble codes (DTCs) stored in the control module. Erase.

Interrupt the diagnostic function by turning off the ignition.

Test drive the car, see **TEST DRIVE FORM (ABS), DESCRIPTION** .

Check that no diagnostic trouble codes (DTCs) are stored.

Interrupt the diagnostic function by turning off the ignition.

HYDRAULIC UNIT, REPLACING

NOTE: **As the illustrations in this service information are used for different model years and / or models, some variation may occur. However, the essential information in the illustrations is always correct.**

PREPARATION

Remove the battery lead. See **BATTERY, DISCONNECTING**

WARNING: **The hydraulic unit must not be opened under any circumstances. Reassembling it requires special equipment and facilities.**

NOTE: **An hydraulic unit for ABS has only eight valves while a unit for ABS and STC (stability and traction control) has ten valves.**

The method for replacing the unit is the same for both types. Check thoroughly when installing the new unit that the unit is the correct type.

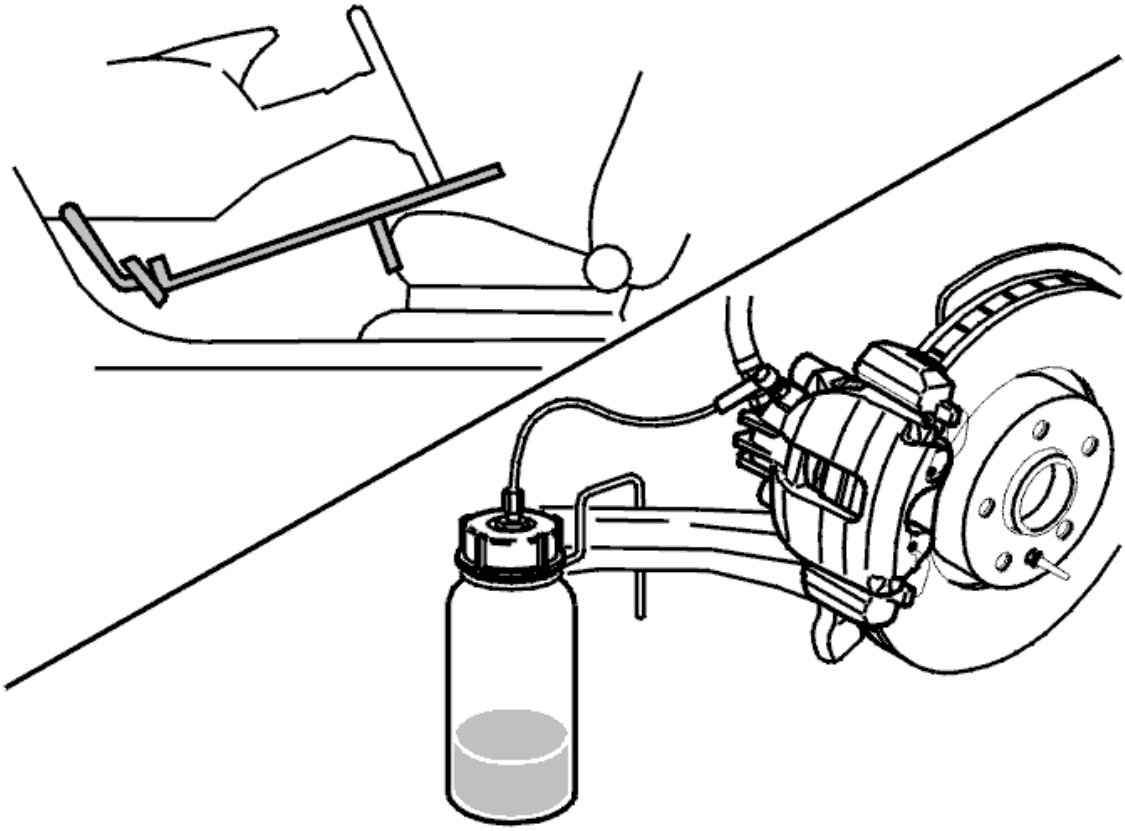

Fig. 8: Bleeding Brakes
Courtesy of VOLVO CARS CORPORATION

Secure the pedal in the depressed position.

Use a pedal jack.

Remove the protective cap from the bleed nipple at the left front wheel.

Install a plastic hose on the nipple. Open the bleed nipple.

Collect the brake fluid in a container (bottle).

Shut the bleed nipple.

REMOVING THE BRAKE PIPE FOR THE MASTER CYLINDER / ABS UNIT

Remove the brake pipe between the master cylinder and the ABS hydraulic modulator. See **BRAKE PIPE MASTER CYLINDER/ABS UNIT, REPLACING**

REMOVING THE ABS HYDRAULIC MODULATOR

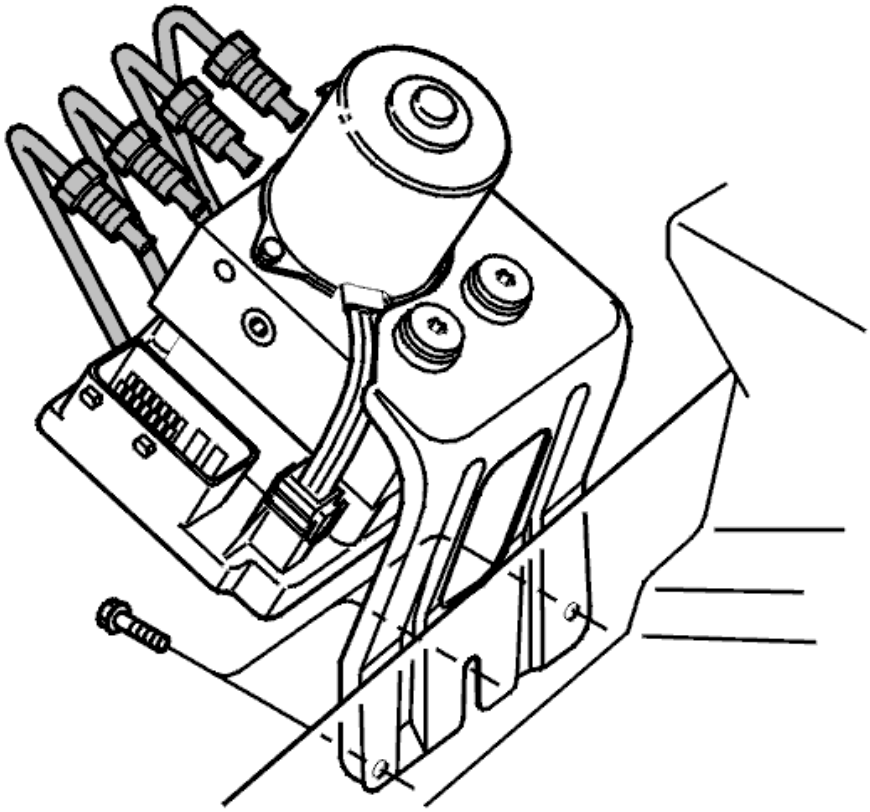

Fig. 9: Brake Pipes To Wheel Brakes From ABS Hydraulic Modulator
Courtesy of VOLVO CARS CORPORATION

Disconnect the brake pipes to the wheel brakes from the ABS hydraulic modulator.

NOTE: Note the position of the pipes in the hydraulic unit.

Hang the brake pipes on the cross member.

Plug the brake pipes and connections for the ABS hydraulic modulator and master cylinder.

Remove the connector from the control module.

Remove the 3 mounting screws for the bracket by the side member.

Raise the ABS hydraulic modulator and bracket.

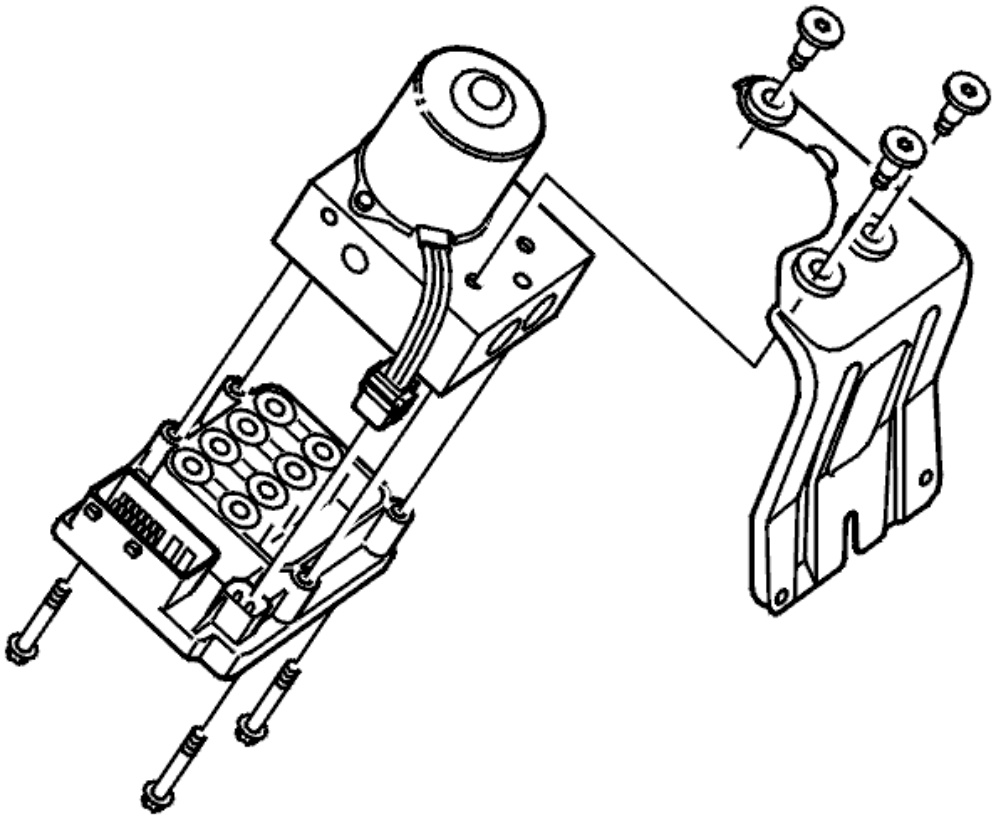

Fig. 10: ABS Hydraulic Modulator Bracket
Courtesy of VOLVO CARS CORPORATION

Remove:

- the connector for the pump motor from the control module
- the bracket from the ABS hydraulic modulator
- the control module.

INSTALLING THE ABS HYDRAULIC MODULATOR

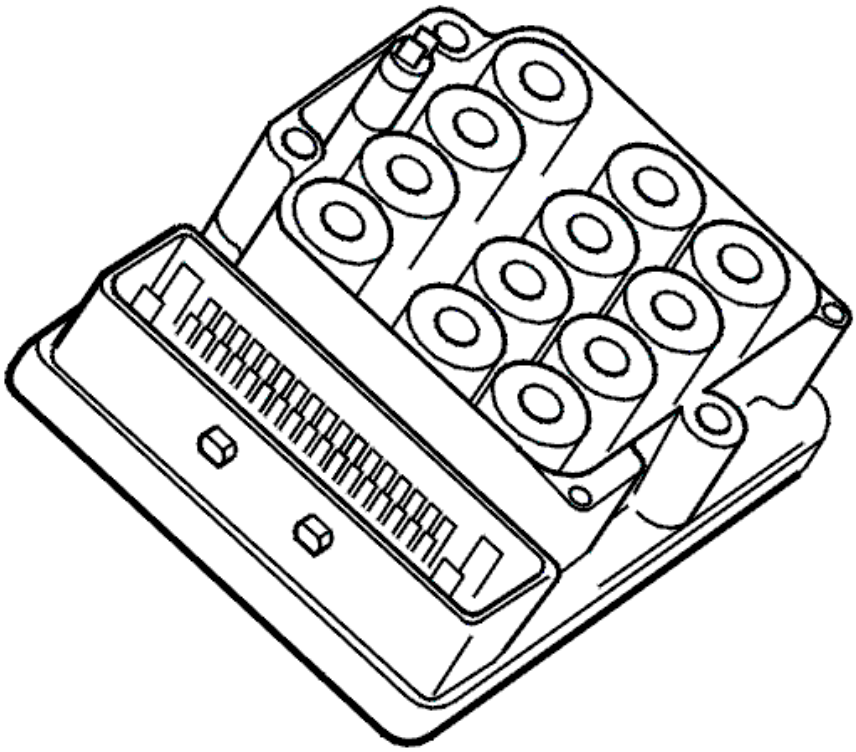

Fig. 11: ABS Control Module
Courtesy of VOLVO CARS CORPORATION

WARNING: **The ABS hydraulic modulator must not be opened under any circumstances. Reassembling it requires special equipment and facilities.**

On the control module check:

- that none of the pins on the connector are damaged
- that there are no contaminants on the mating surfaces between the control module and the ABS hydraulic modulator.

Install:

- the control module on the ABS hydraulic modulator
- the screws. Tighten to **1.8 Nm** .

NOTE: **The ABS hydraulic modulator is filled with brake fluid. It is important that the plugs are not removed until the brake pipes are to be connected.**

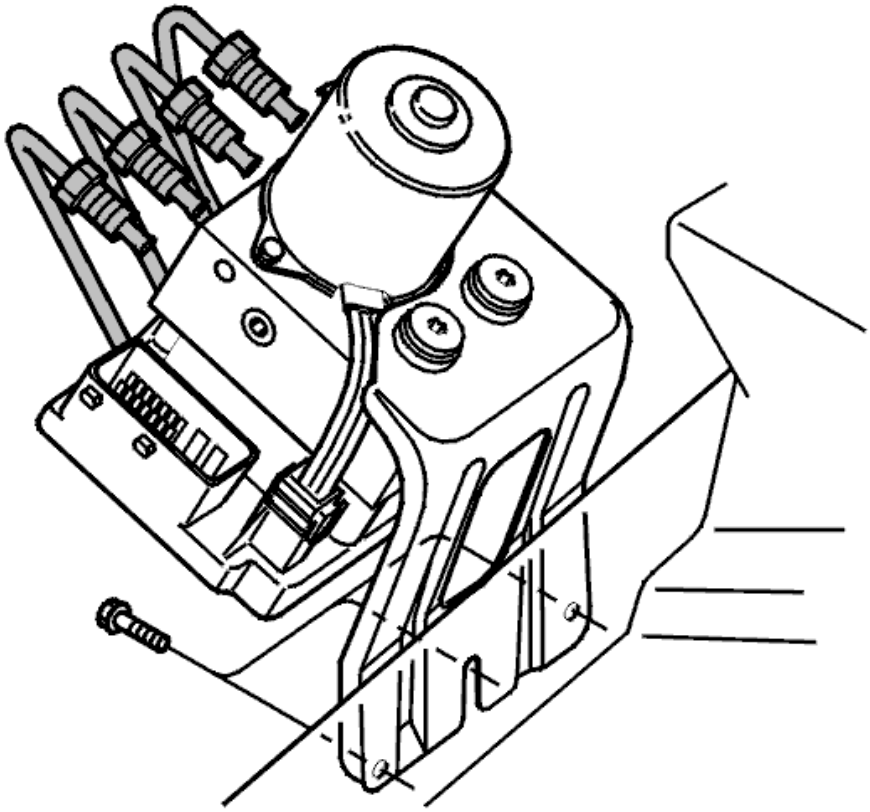

Fig. 12: Brake Pipes To Wheel Brakes From ABS Hydraulic Modulator
Courtesy of VOLVO CARS CORPORATION

Install:

- the new hydraulic unit on the bracket. Tighten the mounting screws. Tighten to **8 Nm**
- the connector for the pump motor to the control module
- the ABS hydraulic modulator and bracket
- the three screws. Tighten to **10 Nm** .

Remove the protective plugs. Connect the brake pipes to the wheel brakes. Tighten to **15 Nm** .

INSTALLING THE BRAKE PIPES ON THE MASTER CYLINDER / ABS UNIT

WARNING: **No ABS, stability and traction control functions are available when there is communication with the Brake control module (BCM) (Volvo Diagnostics are activated). ABS warning lamp flashes for as long as the diagnostics are activated. To cancel the diagnostics before test driving the vehicle, the ignition must be switched off**

Install the brake pipe between the master cylinder and the ABS hydraulic modulator. Then carry out the following. See **BRAKE PIPE MASTER CYLINDER/ABS UNIT, REPLACING**

NOTE: **Remember to remove the pedal jack after installing all brake pipes.**

RING GEAR (TOOTHED WHEEL) FRONT, CHANGE (2003-2005)

NOTE: **Some variation may occur. However, the essential information in the illustrations is always correct.**

Remove drive axle front, see **REAR AXLE, DRIVE SHAFTS - REMOVAL, REPLACEMENT AND INSTALLATION**

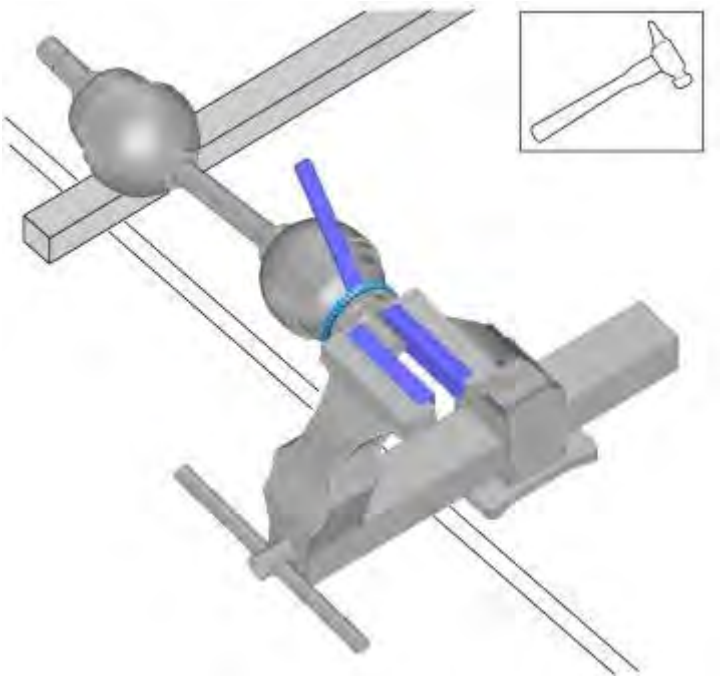

Fig. 13: Identifying Drive Axle Front Removal
Courtesy of VOLVO CARS CORPORATION

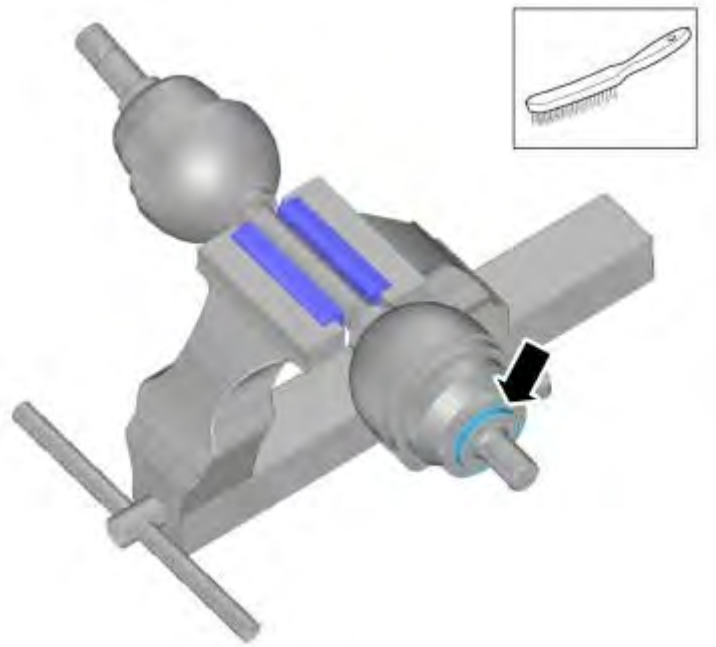

Fig. 14: Clean With Wire Brush
Courtesy of VOLVO CARS CORPORATION

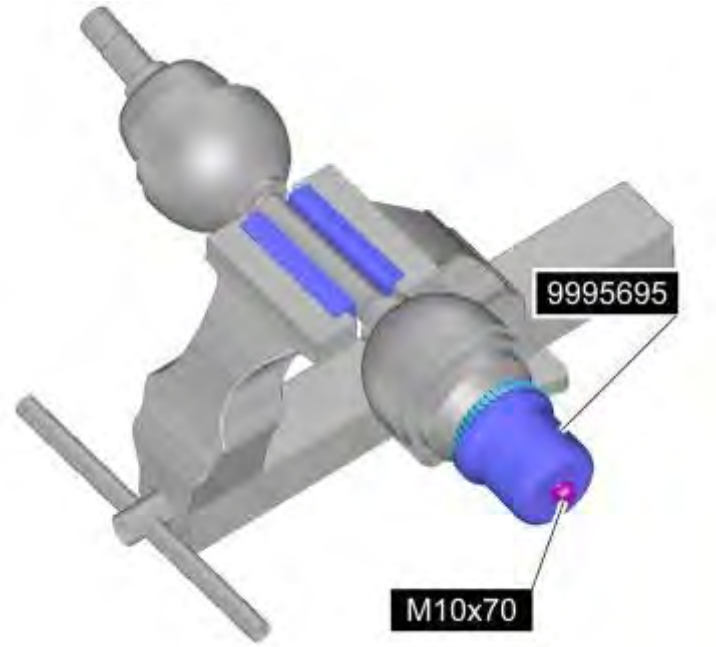

Fig. 15: Identifying Review Of Ring Gear
Courtesy of VOLVO CARS CORPORATION

BRAKES

Brake Control System - Specifications, electrical/electronic

COMPONENT SPECIFICATIONS (2003-2004)

COMPONENT SPECIFICATIONS

The component specification gives the value of the component when the connector is disconnected. Where no value is given, it is not possible to measure a relevant value at the component.

The figure within the brackets indicates the terminal pin on the component to which the value refers.

Designation	Type	Supply voltage	Value	Other
Active yaw control sensor	CAN node with integrated yaw rate sensor, lateral accelerometer and accelerometer (AWD only)	12 V (#3-#5)	Yaw rate sensor: °/s Lateral accelerometer: m/s^2 Accelerometer: m/s^2	The active yaw control sensor either contains two (2WD) or three (AWD) sensors and is connected to the brake control module with its own CAN lead.
Brake pressure sensor 1 & 2	Pressure switch (Pressostat)	5 V (#1-#3)	Operating range 0-170 bar 21 bar when brake pedal is not depressed	-
Pressure build-up valve	Electro magnetically controlled valve	12 V	Pulse width modulated (PWM) signal	-
Wheel sensor	Hall sensor	12 V	Tooth against sensor: Iapprox. 14mA Uapprox.9V Cover against sensor: Iapprox.7 mA Uapprox.1V below Ubat	-
Pedal pressure sensor	Two position switch	12 V (#2-#5) NO (#1-#5) NC	NO=Normally open NC=Normally closed	-
Pedal position sensor	Slide potentiometer	12 V	0 mm: approx. 0 V 38.5 mm: approx. 95 % of Ubat	-

COMPONENT SPECIFICATIONS (B5254T2; 2005-2007)

COMPONENT SPECIFICATIONS

see **COMPONENT SPECIFICATIONS**

COMPONENT SPECIFICATIONS (B6294T; 2005-2006)

COMPONENT SPECIFICATIONS

see **COMPONENT SPECIFICATIONS**

COMPONENT SPECIFICATIONS (B6324S; 2007-2010)

COMPONENT SPECIFICATIONS

see **COMPONENT SPECIFICATIONS**

COMPONENT SPECIFICATIONS (B6324S5; 2011-2012)

COMPONENT SPECIFICATIONS

see **COMPONENT SPECIFICATIONS**

COMPONENT SPECIFICATIONS (B8444S; 2005-2011)

COMPONENT SPECIFICATIONS

see **COMPONENT SPECIFICATIONS**

SIGNAL SPECIFICATION, BRAKE CONTROL MODULE (2003-2004)

SIGNAL SPECIFICATION, BRAKE CONTROL MODULE (BCM) WITH DSTC (DYNAMIC STABILITY AND TRACTION CONTROL)

All values given are between the relevant terminal in column 1 and terminal #A16 or #A47 (ground), unless otherwise indicated in brackets.

Connections 9, 13, 24, 26, 35, 38, 40-41 and 44 are not used.

NOTE: **It is important that the breakout box is connected and that the ground connections have been checked before starting to measure.**

	U=	DC voltage in volts (V)	U_{bat} =	battery voltage (V)
	I =	current in amperes (A)	U_{low} =	voltage approximately 0 V
	F =	Frequency in Hertz (Hz)		

Breakout box terminal	Terminal ECU	Signal type	Ignition on	Miscellaneous
#A1	#1	30-supply pump motor (power supply from battery)	U = U_{bat}	With a 30 A fuse.
#A2	#2	Diagnostic lead C-link	-	-
#A3	#3	Pedal position sensor, signal	0-5 V	Brake pedal position, analog signal. 0 mm: approx.0 V 38.5 mm: approx. 95% of 5 V
#A4	#4	15-supply (power supply from the ignition switch)	U = U_{bat}	-
#A5	#5	Pedal position sensor, signal ground	U=U_{low}	-
#A6	#6	Active yaw control sensor, power supply	U = U_{bat}	The active yaw control sensor receives 12 V from the control module.
#A7	#7	Pedal position sensor, power supply	U =5 V	The pedal position sensor receives 5 V from the control module.
#A8	#8	Wheel sensor right rear, signal output.	Tooth at sensor Uapprox.U_{low} Cover at sensor Uapprox.U_{bat}	Measure by creating a temporary voltage supply between #1 via a resistance of 1kohms and #8. Connect a voltmeter between #8 and ground connection #16. Turn the wheel slowly.
#A9	#9	-	-	-
#A10	#10	Wheel sensor left rear, signal output.	Tooth at sensor Uapprox.U_{low} Cover at sensor Uapprox.U_{bat}	Measure by creating a temporary voltage supply between #1 via a resistance of 1kohms and #10. Connect a voltmeter between #10 and ground connection #16. Turn the wheel slowly.
#A11	#11	Control modules communication cable (CAN H)	U=2-3 V	-
#A12	#12	Wheel sensor right front,	Tooth at sensor Uapprox.U_{low}	Measure by creating a temporary voltage supply between #1 via a resistance of 1kohms and

		signal output.	Cover at sensor Uapprox.U_{bat}	#12. Connect a voltmeter between #12 and ground connection #16. Turn the wheel slowly.
#A13	#13	-	-	-
#A14	#14	Wheel sensor left front, signal output.	Tooth at sensor Uapprox.U_{low} Cover at sensor Uapprox.U_{bat}	Measure by creating a temporary voltage supply between #1 via a resistance of 1kohms and #14. Connect a voltmeter between #14 and ground connection #16. Turn the wheel slowly.
#A15	#15	Control modules communication cable (CAN L)	U=2-3 V	-
#A16	#16	Power and signal ground	U=U_{low}	Ground terminal for the input and outlet valves and signal to the control module.
#A17	#17	Pressure build-up valve, power supply.	U=4.75-5.25 V	-
#A18	#18	Brake pressure sensor 2 (B), voltage-feed	U=4.75-5.25 V	Due to possibility of incorrect installation,#18-#20 may also be Brake pressure sensor 1 (A).
#A19	#19	Brake pressure sensor 2 (B), signal ground	U=U_{low}	-
#A20	#20	Brake pressure sensor 2 (B), signal	U=0.25-4.75 V	Analog signal 0-170 bar 23 mV/bar 0 bar = 0.5 V
#A21	#21	Brake pressure sensor 1 (A), signal ground.	U=U_{low}	Due to possibility of incorrect installation,#21-#23 may also be Brake pressure sensor 2 (B).
#A22	#22	Brake pressure sensor 1 (A), voltage-feed.	U=4.75-5.25 V	-
#A23	#23	Brake pressure sensor 1 (A), signal	U=0.25-4.75 V	Analog signal 0-170 bar 23 mV/bar 0 bar = 0.5 V
#A24	#24	-	-	-
#A25	#25	Active yaw control sensor, communication cable (CAN L)	U=2-3 V	-

#A26	#26	-	-	-
#A27	#27	Pedal pressure switch, signal	Open: Uapprox.U_{low} Closed: U approx.U_{bat}	The pedal pressure switch is open when the brake pedal is depressed.
#A28	#28	Test signal for the pedal pressure switch	-	-
#A29	#29	Active yaw control sensor, communication cable (CAN H)	U=2-3 V	-
#A30	#30	Pedal pressure switch, signal		The pedal pressure switch is closed when the brake pedal is not pressed.
#A31	#31	Pressure build-up valve, power supply	12 V	Pulse width modulated signal: maximum 4A 18kHz
#A32	#32	30-supply for the valves (power supply from battery)	U = U_{bat}	With a 30 A fuse.
#A33	#33	Front right wheel sensor. signal	Tooth against sensor: Iapprox.14 mA Cover against sensor: I approx. 7 mA	The sensor generates a pulsed signal (quadratic wave) with a fixed pulse ratio when the pulse wheel rotates. The frequency increases with speed. For test of sensor's function, see #12
#A34	#34	Front right wheel sensor, power supply.	U = U_{bat}	The wheel sensor receives 12 V from the control module.
#A35	#35	-	-	-
#A36	#36	Rear left wheel sensor, power supply.	U = U_{bat}	The wheel sensor receives 12 V from the control module.
#A37	#37	Rear left wheel sensor, signal	Tooth against sensor: Iapprox.14 mA Cover against sensor: I approx. 7 mA	The sensor generates a pulsed signal (quadratic wave) with a fixed pulse ratio when the pulse wheel rotates. The frequency increases with speed. For test of sensor's function, see #10 in the table
#A38	#38	-	-	-

#A39	#39	Active yaw control sensor, ground	$U=U_{low}$	-
#A40	#40	-	-	-
#A41	#41	-	-	-
#A42	#42	Rear right wheel sensor, signal	Tooth against sensor: Iapprox.14 mA Cover against sensor: I approx. 7 mA	The sensor generates a pulsed signal (quadratic wave) with a fixed pulse ratio when the pulse wheel rotates. The frequency increases with speed. For test of sensor's function, see #8 in the table
#A43	#43	Right rear wheel sensor, power supply	$U = U_{bat}$	The wheel sensor receives 12 V from the control module.
#A44	#44	-	-	-
#A45	#45	Front left wheel sensor, power supply	$U = U_{bat}$	The wheel sensor receives 12 V from the control module.
#A46	#46	Front left wheel sensor, signal	Tooth against sensor: Iapprox.14 mA Cover against sensor: I approx. 7 mA	The sensor generates a pulsed signal (quadratic wave) with a fixed pulse ratio when the pulse wheel rotates. The frequency increases with speed. For test of sensor's function, see #14 in the table
#A47	#47	Power and signal ground	$U=U_{low}$	Ground terminal for the pump motor.

SIGNAL SPECIFICATION, BRAKE CONTROL MODULE (BCM) WITH STC/ TRACS

All values given are between the relevant terminal in column 1 and terminal #A16 or #A47 (ground), unless otherwise indicated in brackets.

Pins 6, 9, 13, 17-31, 35, 38-41 and 44 are not used.

NOTE: **It is important that the breakout box is connected and that the ground connections have been checked before starting to measure.**

U=	DC voltage in volts (V)	Ubat =	battery voltage (V)
I =	current in amperes (A)	Ulow =	voltage approximately 0 V

	F =	Frequency in Hertz (Hz)		

Breakout box terminal	Terminal ECU	Signal type	Ignition on	Miscellaneous
#A1	#1	Pump motor, 30-supply (power supply from the battery)	U = Ubat	With a 30 A fuse.
#A2	#2	Diagnostic lead C-link	-	-
#A3	#3	Pedal position sensor, signal	0-5 V	Analogue signal which indicates the position of the brake pedal. 0 mm: approx.0V 38 mm: approx. 95% of 5 V
#A4	#4	15-supply (power supply from the ignition switch)	U = Ubat	-
#A5	#5	Pedal position sensor, signal ground	U = Ulow	-
#A6	#6	-	-	-
#A7	#7	Pedal position sensor, power supply	U =5 V	The pedal position sensor receives 5 V from the control module.
#A8	#8	Wheel sensor right rear, signal output	Tooth against sensor Uapprox.U_{low} Cover against sensor Uapprox.U_{bat}	Measure by creating a temporary voltage supply between #1 via a 1kohms and #8. Connect a voltmeter between #8 and ground connection #16. Turn the wheel slowly.
#A9	#9	-	-	-
#A10	#10	Wheel sensor left rear, signal output	Tooth against sensor Uapprox.U_{low} Cover against sensor Uapprox.U_{bat}	Measure by creating a temporary voltage supply between #1 via a 1kohms and #10. Connect a voltmeter between #10 and ground connection #16. Turn the wheel slowly.
#A11	#11	Control modules communication cable (CAN H)	U=2-3 V	-
#A12	#12		Tooth against sensor	Measure by creating a temporary voltage supply between #1 via a

		Wheel sensor right front, signal output	Uapprox.U_{low} Cover against sensor Uapprox.U_{bat}	1kohms and #12. Connect a voltmeter between #12 and ground connection #16. Turn the wheel slowly.
#A13	#13	-	-	-
#A14	#14	Wheel sensor left front, signal output	Tooth against sensor Uapprox.U_{low} Cover against sensor Uapprox.U_{bat}	Measure by creating a temporary voltage supply between #1 via a 1kohms and #14. Connect a voltmeter between #14 and ground connection #16. Turn the wheel slowly.
#A15	#15	Control modules communication cable (CAN L)	U=2-3 V	-
#A16	#16	Power and signal ground	U = Ulow	Ground terminal for the input and outlet valves and signal to the control module.
#A17	#17	-	-	-
#A18	#18	-	-	-
#A19	#19	-	-	-
#A20	#20	-	-	-
#A21	#21	-	-	-
#A22	#22	-	-	-
#A23	#23	-	-	-
#A24	#24	-	-	-
#A25	#25	-	-	-
#A26	#26	-	-	-
#A27	#27	-	-	-
#A28	#28	-	-	-
#A29	#29	-	-	-
#A30	#30	-	-	-
#A31	#31	-	-	-
#A32	#32	30-supply to the valves (power supply from the battery)	U = Ubat	With a 30 A fuse.
#A33	#33	Front right wheel sensor. signal	Tooth against sensor: Iapprox.14 mA Cover against sensor: I approx. 7 mA	The sensor generates a pulsed signal (quadratic wave) with a fixed pulse ratio when the pulse

				wheel rotates. The frequency increases with speed. For test of sensor's function, see #12 in table.
#A34	#34	Front right wheel sensor, power supply	U = Ubat	The wheel sensor receives 12 V from the control module.
#A35	#35	-	-	-
#A36	#36	Rear left wheel sensor, power supply	U = Ubat	The wheel sensor receives 12 V from the control module.
#A37	#37	Rear left wheel sensor, signal	Tooth against sensor: Iapprox.14 mA Cover against sensor: I approx. 7 mA	The sensor generates a pulsed signal (quadratic wave) with a fixed pulse ratio when the pulse wheel rotates. The frequency increases with speed. For test of sensor's function, see #10 in table.
#A38	#38	-	-	-
#A39	#39	-	-	-
#A40	#40	-	-	-
#A41	#41	-	-	-
#A42	#42	Rear right wheel sensor, signal	Tooth against sensor: Iapprox.14 mA Cover against sensor: I approx. 7 mA	The sensor generates a pulsed signal (quadratic wave) with a fixed pulse ratio when the pulse wheel rotates. The frequency increases with speed. For test of sensor's function, see #8 in table.
#A43	#43	Right rear wheel sensor, power supply.	U = Ubat	The wheel sensor receives 12 V from the control module.
#A44	#44	-	-	-
#A45	#45	Front left wheel sensor, power supply	U = Ubat	The wheel sensor receives 12 V from the control module.
#A46	#46	Front left wheel sensor, signal	Tooth against sensor: Iapprox.14 mA Cover against sensor:	The sensor generates a pulsed signal (quadratic wave) with a fixed pulse

			I approx. 7 mA	ratio when the pulse wheel rotates. The frequency increases with speed. For test of sensor's function, see #14 in table.
#A47	#47	Power and signal ground	U = Ulow	Ground terminal for the pump motor.

SIGNAL SPECIFICATION, BRAKE CONTROL MODULE (B5254T2; 2005-2007)

SIGNAL SPECIFICATION, BRAKE CONTROL MODULE (BCM) WITH DSTC (DYNAMIC STABILITY AND TRACTION CONTROL)

see **SIGNAL SPECIFICATION, BRAKE CONTROL MODULE (BCM) WITH DSTC (DYNAMIC STABILITY AND TRACTION CONTROL)**

SIGNAL SPECIFICATION, BRAKE CONTROL MODULE (BCM) WITH STC/ TRACS

see **SIGNAL SPECIFICATION, BRAKE CONTROL MODULE (BCM) WITH STC/ TRACS**

SIGNAL SPECIFICATION, BRAKE CONTROL MODULE (B6294T; 2005-2006)

SIGNAL SPECIFICATION, BRAKE CONTROL MODULE (BCM) WITH DSTC (DYNAMIC STABILITY AND TRACTION CONTROL)

see **SIGNAL SPECIFICATION, BRAKE CONTROL MODULE (BCM) WITH DSTC (DYNAMIC STABILITY AND TRACTION CONTROL)**

SIGNAL SPECIFICATION, BRAKE CONTROL MODULE (BCM) WITH STC/ TRACS

see **SIGNAL SPECIFICATION, BRAKE CONTROL MODULE (BCM) WITH STC/ TRACS**

SIGNAL SPECIFICATION, BRAKE CONTROL MODULE (B6324S; 2007-2010)

SIGNAL SPECIFICATION, BRAKE CONTROL MODULE (BCM) WITH DSTC (DYNAMIC STABILITY AND TRACTION CONTROL)

see **SIGNAL SPECIFICATION, BRAKE CONTROL MODULE (BCM) WITH DSTC (DYNAMIC STABILITY AND TRACTION CONTROL)**

SIGNAL SPECIFICATION, BRAKE CONTROL MODULE (BCM) WITH STC/ TRACS

see **SIGNAL SPECIFICATION, BRAKE CONTROL MODULE (BCM) WITH STC/ TRACS**

SIGNAL SPECIFICATION, BRAKE CONTROL MODULE (B6324S5; 2011-2012)

SIGNAL SPECIFICATION, BRAKE CONTROL MODULE (BCM) WITH DSTC (DYNAMIC STABILITY AND TRACTION CONTROL)

see **SIGNAL SPECIFICATION, BRAKE CONTROL MODULE (BCM) WITH DSTC (DYNAMIC STABILITY AND TRACTION CONTROL)**

SIGNAL SPECIFICATION, BRAKE CONTROL MODULE (BCM) WITH STC/ TRACS

see **SIGNAL SPECIFICATION, BRAKE CONTROL MODULE (BCM) WITH STC/ TRACS**

SIGNAL SPECIFICATION, BRAKE CONTROL MODULE (B8444S; 2005-2011)

SIGNAL SPECIFICATION, BRAKE CONTROL MODULE (BCM) WITH DSTC (DYNAMIC STABILITY AND TRACTION CONTROL)

see **SIGNAL SPECIFICATION, BRAKE CONTROL MODULE (BCM) WITH DSTC (DYNAMIC STABILITY AND TRACTION CONTROL)**

SIGNAL SPECIFICATION, BRAKE CONTROL MODULE (BCM) WITH STC/ TRACS

see **SIGNAL SPECIFICATION, BRAKE CONTROL MODULE (BCM) WITH STC/ TRACS**

BRAKES

Brake Control System - Specifications, other

VEHICLE COMMUNICATION INFORMATION (2003-2004)

DESCRIPTION OF ACTIVATIONS

DESCRIPTION OF ACTIVATIONS

A number of the components in the brake system can be activated using VIDA vehicle communication. Because the brake systems can be differently equipped with for example anti spin and stability functions, not all components can necessarily be activated.

ACTIVATING ALL VERSIONS

PUMP MOTOR

Activating the hydraulic modulator pump motor.

The pump motor should "hum".

LEFT FRONT INLET VALVE

Activating left front wheel inlet valve.

"Clicking sound" in the ABS hydraulic modulator.

RIGHT FRONT INLET VALVE

Activating right front wheel inlet valve.

"Clicking sound" in the ABS hydraulic modulator.

LEFT REAR INLET VALVE

Activating left rear wheel inlet valve.

"Clicking sound" in the ABS hydraulic modulator.

RIGHT REAR INLET VALVE

Activating right rear wheel inlet valve.

"Clicking sound" in the ABS hydraulic modulator.

LEFT FRONT OUTLET VALVE

Activating left front wheel outlet valve.

"Clicking sound" in the ABS hydraulic modulator.

RIGHT FRONT OUTLET VALVE

Activating right front wheel outlet valve.

"Clicking sound" in the ABS hydraulic modulator.

LEFT REAR OUTLET VALVE

Activating left rear wheel outlet valve.

"Clicking sound" in the ABS hydraulic modulator.

RIGHT REAR OUTLET VALVE

Activating right rear wheel outlet valve.

"Clicking sound" in the ABS hydraulic modulator.

ANTI SPIN FUNCTION STC (STABILITY AND TRACTION CONTROL) / TRACS (TRACTION CONTROL SYSTEM)

INLET VALVE STC (STABILITY AND TRACTION CONTROL) / TRACS (TRACTION CONTROL SYSTEM)

NOTE: Only STC (Stability and traction control) / TRACS (traction control system).

Activating the STC (Stability and Traction control) or TRACS (traction control system) inlet valve.

"Clicking sound" in the ABS hydraulic modulator.

DSTC (DYNAMIC STABILITY AND TRACTION CONTROL) FUNCTION

ACTIVE YAW CONTROL INLET VALVE

NOTE: Only DSTC (dynamic stability and traction control).

Activating the active yaw control inlet valve.

"Clicking sound" in the ABS hydraulic modulator.

ACTIVE YAW CONTROL OUTLET VALVE

NOTE: Only DSTC (dynamic stability and traction control).

Activating the active yaw control outlet valve.

"Clicking sound" in the hydraulic modulator

ACTIVE YAW CONTROL PRESSURE BUILD-UP VALVE

NOTE: Only DSTC (dynamic stability and traction control).

Activating the active yaw control pressure build-up valve.

A barely audible "clicking sound" from the power brake booster. If the pressure build-up valve is activated while the car is idling, the engine will splutter and the engine speed (RPM) will drop slightly.

DESCRIPTION OF PARAMETERS

PARAMETERS, STATUS

NOTE: The parameters that can be read off are determined by the systems with which the car is equipped.

STC (STABILITY AND TRACTION CONTROL) ENGAGEMENT INDICATION

The value indicates the status of the switch for STC (stability and traction control).

The function is always active with ignition switched on and is deactivated when the STC (stability and traction control) button is held in for approximately 2 seconds.

Active = STC (stability and traction control) activated.

Not activated = STC (stability and traction control) not activated.

DSTC (DYNAMIC STABILITY AND TRACTION CONTROL) ENGAGEMENT INDICATION

The value indicates the status of the switch for DSTC (dynamic stability and traction control).

The function is always active with ignition switched on and is deactivated when the DSTC (dynamic stability and traction control) button is held in for approximately 2 seconds.

Active = DSTC (dynamic stability and traction control) activated.

Not activated = DSTC (dynamic stability and traction control) not activated.

STOP LAMP SWITCH

The value indicates the status of the stop lamp switch.

Active (pressed in) = Stop (brake) lamp switch activated.

Not activated = Stop (brake) lamp switch not activated.

DIRECTION OF STEERING RIGHT / LEFT

The value indicates in which direction the steering wheel is turned.

Right = The steering wheel is turned to the right.

Left = The steering wheel is turned to the left.

PEDAL PRESSURE SENSOR STATUS

The value indicates the status of the pedal pressure sensor.

The pedal pressure sensor senses when the brake pedal is depressed. The brake control module (BCM) uses the signal to switch off the active yaw control (AYC) when the driver needs to brake.

OFF= Brake pedal unaffected.

ON = Brake pedal affected.

PARAMETERS, VALUE

WHEEL SPEED

The brake control module (BCM) calculates the wheel speed using the relevant wheel sensor.

Measurement range: 0.60 to 327 km/h

WHEEL ACCELERATION

The brake control module (BCM) derives the wheel acceleration / deceleration from the relevant wheel sensor signal. The value may vary dependent on the road surface. Uneven road surfaces give large variations.

Measurement range: -12.8 to +12.7 m/s^2

Positive value = acceleration.

Negative value = deceleration.

VEHICLE REFERENCE SPEED

The brake control module (BCM) derives the cars reference speed from the wheel sensor signal.

Measurement range: 0.60 to 327 km/h

ACCELERATION OF THE CAR, POSITIVE OR NEGATIVE

The vehicle's acceleration or deceleration.

The brake control module (BCM) derives the reference acceleration / deceleration from the relevant wheel sensor signal.

Measurement range: -12.8 to +12.7 m/s^2

Positive value = acceleration.

Negative value = deceleration.

BRAKE DISC, TEMPERATURE

The brake control module (BCM) derives the brake disc temperature depending on the length of time the anti-spin system has been operating or the ABS has been activated.

Measurement range: 0 to 918 °C

RATE OF YAW, SIGNAL (DSTC (DYNAMIC STABILITY AND TRACTION CONTROL))

The signal from the yaw rate sensor, which is integrated in the active yaw control (AYC) sensor, transmits information to the brake control module (BCM) about the rate of yaw (steering direction) of the car in °/s. A positive value indicates a steering direction to the right. A negative value indicates a steering direction to the left.

Measurement range: -75 to +75 °/s (model year -2004)

Measurement range: -82 to +82 °/s (model year 2004-)

LATERAL ACCELEROMETER, SIGNAL (DSTC (DYNAMIC STABILITY AND TRACTION CONTROL))

The signal from the lateral accelerometer, which is integrated in the active yaw control (AYC) sensor, transmits information to the brake control module (BCM) about the lateral acceleration of the car. A positive value indicates acceleration to the right. A negative value indicates acceleration to the left.

Measurement range: -16.7 to +16.7 m/s^2 (model year -2004)

Measurement range: -18 to +18 m/s^2 (model year 2004-)

ACCELEROMETER, SIGNAL (DSTC (DYNAMIC STABILITY AND TRACTION CONTROL))

The signal from the accelerometer, which is integrated in the active yaw control (AYC) sensor, transmits information to the brake control module (BCM) about the longitudinal acceleration of the car. Positive value indicates acceleration. Negative value indicates deceleration.

Measurement range: -16.7 to +16.7 m/s^2 (model year -2004)

Measurement range: -18 to +18 m/s^2 (model year 2004-)

BRAKE PRESSURE SENSOR 1 (DSTC (DYNAMIC STABILITY AND TRACTION CONTROL))

Brake pressure sensor 1 transmits a signal with the brake system pressure to the brake control module (BCM).

Measurement range: 0 to 170 bar

BRAKE PRESSURE SENSOR 2 (DSTC (DYNAMIC STABILITY AND TRACTION CONTROL))

Brake pressure sensor 2 transmits a signal with the brake system pressure to the brake control module (BCM).

Measurement range: 0 to 170 bar

PEDAL POSITION SENSOR, POSITION

The pedal position sensor transmits a signal to the brake control module (BCM) indicating the brake system pressure.

Measurement range: 0 to 42 mm

PEDAL POSITION SENSOR, SPEED

The pedal position sensor transmits a signal to the brake control module (BCM) indicating the pedal position sensor speed when depressed.

Measurement range: 0 to 11, 770 mm/s

STEERING WHEEL ANGLE (DSTC (DYNAMIC STABILITY AND TRACTION CONTROL))

The steering wheel angle sensor transmits a signal to the brake control module (BCM) indicating the steering wheel turn.

Measurement range: -81.92 to +81.88 °/s

STEERING ANGLE, VALUE (DSTC (DYNAMIC STABILITY AND TRACTION CONTROL))

The steering wheel angle sensor transmits a signal to the brake control module (BCM) indicating the steering wheel turn.

Measurement range: -700° to +700°

+700° = Left

-700° = Right

POWER SUPPLY

Power supply to the brake control module (BCM).

Measurement range: 0 to 18 V

OFFSET VALUES

HINT: The offset value is an adaptive correction value which gives the individual sensor offset for the sensor. The brake control module uses the value to determine the correct start value when the DSTC (dynamic stability and traction control) system is started up. If the normal value has changed during an operating cycle, the value is stored in the EEPROM memory of the brake control module (BCM) after the ignition is switched off. The value is then reloaded to the internal memory when the ignition is switched on.

HINT: The offset values can also change shortly after the ignition was switched off.

STEERING ANGLE SENSOR, OFFSET VALUE (DSTC (DYNAMIC STABILITY AND TRACTION CONTROL))

A diagnostic trouble code (DTC) is stored and DSTC (dynamic stability and traction control) is shut off at ±17 °/s.

Measurement range: -22 to +22 °/s

STEERING WHEEL ANGLE SENSOR, OFFSET VALUE (DSTC (DYNAMIC STABILITY AND TRACTION CONTROL))

A diagnostic trouble code (DTC) is stored and DSTC (dynamic stability and traction control) is shut off at ±17 °/s.

Measurement range: -22 to +22 °/s

YAW RATE SENSOR, OFFSET VALUE (DSTC (DYNAMIC STABILITY AND TRACTION CONTROL))

A diagnostic trouble code (DTC) is stored and DSTC (dynamic stability and traction control) is shut off at ±6.0 °/s.

Measurement range: -9.4 to +9.4 °/s

LATERAL ACCELEROMETER, OFFSET VALUE (DSTC (DYNAMIC STABILITY AND TRACTION CONTROL))

A diagnostic trouble code (DTC) is stored and DSTC (dynamic stability and traction control) is shut off at ± 1.7 m/s^2 .

Measurement range: -3.2 to +3.2 m/s^2

ACCELEROMETER, SIGNAL (DSTC (DYNAMIC STABILITY AND TRACTION CONTROL))

A diagnostic trouble code (DTC) is stored and DSTC (dynamic stability and traction control) is shut off at ± 1.7 m/s^2 .

Measurement range: -3.2 to +3.2 m/s^2

BRAKE PRESSURE SENSOR 1, OFFSET VALUE (DSTC (DYNAMIC STABILITY AND TRACTION CONTROL))

A diagnostic trouble code (DTC) is stored and DSTC (dynamic stability and traction control) is shut off at ±8 bar.

Measurement range: -20 to +20 bar

BRAKE PRESSURE SENSOR 2, OFFSET VALUE (DSTC (DYNAMIC STABILITY AND TRACTION CONTROL))

A diagnostic trouble code (DTC) is stored and DSTC (dynamic stability and traction control) is shut off at ±8 bar.

Measurement range: -20 to +20 bar

READING OFF EXTENDED DIAGNOSTIC TROUBLE CODE (DTC) INFORMATION, BRAKE CONTROL MODULE (BCM)

CONTENTS

Select type of description.

- see **FROZEN VALUES IN THE BRAKE CONTROL MODULE, DESCRIPTION**
- see **COUNTERS, DESCRIPTION**
- see **STATUS IDENTIFIER, DESCRIPTION**

FROZEN VALUES IN THE BRAKE CONTROL MODULE, DESCRIPTION

EXPLANATION

The values described below were stored in the control module memory when the diagnostic trouble code (DTC) was stored.

All parameters do not need to be implemented in one control module. This varies from system to system.

NOTE: **Parameters marked with STC (stability and traction control)/DSTC (dynamic stability and traction control) are only displayed on cars equipped with STC (stability and traction control) and DSTC (dynamic stability and traction control). Parameters marked with DSTC (dynamic stability and traction control) are only displayed on cars equipped with DSTC (dynamic stability and traction control).**

HINT: For information about abbreviations, see BRAKE SYSTEM, ABBREVIATIONS .

TIME SINCE THE DIAGNOSTIC TROUBLE CODE (DTC) WAS FIRST STORED

The time in hours since the diagnostic trouble code (DTC) was first stored. The brake control module obtains the value via the Control Area Network (CAN) from the central electronic module. The time is the total time that the central electronic module has been running.

OUTSIDE TEMPERATURE

The value indicates the outside temperature when the diagnostic trouble code (DTC) was stored. The brake control module obtains the value via the Control Area Network (CAN) from the central electronic module.

ACTUAL GEAR

The value indicates the selected gear when the diagnostic trouble code (DTC) was stored. The brake control module obtains the value via the CAN from the transmission control module (TCM) if the car is equipped with automatic transmission or from the central electronic module if the car is equipped with manual transmission.

ENGINE TORQUE

The value displays the engine torque. The value is given in Nm.

REQUESTED TORQUE

The value indicates the requested torque depending on the driving instance the brake control module has sent to the engine control module. The value is indicated in Nm.

CLUTCH PEDAL

The value displays if the clutch pedal has been affected or not.

Value:

Affected

Unaffected (or the car is equipped with automatic transmission)

STABILITY TRACTION CONTROL (STC)/DSTC (DYNAMIC STABILITY AND TRACTION CONTROL) FUNCTION

The value indicates the function status. The function is automatically switched on at ignition but can be switched off manually.

Value:

Manually disconnected

Engaged

ENGINE SPEED (RPM)

The engine control module (ECM) transmits the engine speed (RPM) on the Control area network (CAN) from where the brake control module retrieves the signal. The value of the engine speed is given in rpm.

CONTROL MODULE POWER SUPPLY

The value indicates the system voltage. The value is given in volts (V).

PUMP MOTOR

The value indicates the pump motor status

Value:

Active

Not active

VEHICLE SPEED

The value indicates the vehicle speed in km/h.

THE VEHICLE ACCELERATION

The value indicates the forward acceleration of the car in m/s^2 .

THE BRAKE DISC TEMPERATURE

The value indicates the highest temperature on any of the brake discs in °C.

STEERING WHEEL ANGLE (DSTC)

The value displays the steering wheel angle in degrees.

PEDAL POSITION SENSOR POSITION

The value indicates the position of the pedal position sensor.

Value:

0-1 cm

1-2 cm

>3 cm

DIRECTION OF TRAVEL (DSTC (DYNAMIC STABILITY AND TRACTION CONTROL))

The value indicates the direction of travel of the car at the moment the diagnostic trouble code (DTC) was stored.

Value:

Forward

Backward

PRESSURE SENSOR 1, BRAKE PRESSURE (DSTC (DYNAMIC STABILITY AND TRACTION CONTROL))

The value indicates the pressure in the primary circuit of the brake system.

The value is indicated in bar.

PRESSURE SENSOR 2, BRAKE PRESSURE (DSTC (DYNAMIC STABILITY AND TRACTION CONTROL))

The value indicates the pressure in the secondary circuit of the brake system.

The value is indicated in bar

ABS CONTROL

The value indicates if the ABS function was operating at the moment the diagnostic trouble code (DTC) was stored.

Value:

Active

Not active

STABILITY CONTROL CONTROL (STC (STABILITY AND TRACTION CONTROL) /DSTC (DYNAMIC STABILITY AND TRACTION CONTROL))

The value indicates if the traction control function was operating at the moment the diagnostic trouble code (DTC) was stored.

Value:

Active

Not active

TRACTION CONTROL CONTROL (STC (STABILITY AND TRACTION CONTROL) /DSTC (DYNAMIC STABILITY AND TRACTION CONTROL))

The value indicates if the TRACS (traction control system) was operating at the moment the diagnostic trouble code (DTC) was stored.

Value:

Active

Not active

ACTIVE YAW CONTROL CONTROL (STC (STABILITY AND TRACTION CONTROL) / DSTC (DYNAMIC STABILITY AND TRACTION CONTROL))

The value indicates if the stability function was operating at the moment the diagnostic trouble code (DTC) was stored.

Value:

Active

Not active

TRACTION CONTROL CONTROL ALL-WHEEL DRIVE (AWD) (STC (STABILITY AND TRACTION CONTROL) / DSTC (DYNAMIC STABILITY AND TRACTION CONTROL))

The value indicates if the TRACS (traction control system) was operating at the moment the diagnostic trouble code (DTC) was stored

Value:

Active

Not active

OVER OR UNDER STEER (DSTC (DYNAMIC STABILITY AND TRACTION CONTROL))

The value indicates if the car was in under steer or over steer when the fault code was stored.

Value:

No over- or under steer

Over steer

Under steer

PEDAL PRESSURE SENSOR (DSTC (DYNAMIC STABILITY AND TRACTION CONTROL))

The value indicates if the pedal pressure sensor was active or not.

Value:

Active

Not active

LATERAL ACCELEROMETER (DSTC (DYNAMIC STABILITY AND TRACTION CONTROL))

The value indicates the lateral acceleration in m/s^2 .

ACCELEROMETER (DSTC (DYNAMIC STABILITY AND TRACTION CONTROL))

The value indicates the acceleration in m/s^2 .

YAW RATE SENSOR, PRESENT VALUE (DSTC (DYNAMIC STABILITY AND TRACTION CONTROL))

The value indicates the yaw rate in °/s.

YAW RATE SENSOR, REQUESTED YAW RATE (DSTC (DYNAMIC STABILITY AND TRACTION CONTROL))

The value indicates the calculated yaw rate sensor based on the driver's behavior in °/s.

PRESSURE BUILD-UP VALVE (DSTC (DYNAMIC STABILITY AND TRACTION CONTROL))

The value displays the status of the pressure build-up valve.

Value:

Active

Not active

ELECTRONIC BRAKE ASSISTANCE CONTROL FUNCTION (DSTC (DYNAMIC STABILITY AND TRACTION CONTROL))

The value indicates if the electronic brake assistance was accessible or blocked at the moment the diagnostic trouble code (DTC) was stored.

Value:

Function accessible

The function is blocked

ELECTRONIC BRAKE FORCE DISTRIBUTION CONTROL FUNCTION

The value indicates if the electronic brake assistance was accessible or blocked at the moment the diagnostic trouble code (DTC) was stored.

Value:

Function accessible

The function is blocked

TRACTION CONTROL CONTROL FUNCTION (STC (STABILITY AND TRACTION CONTROL) /DSTC (DYNAMIC STABILITY AND TRACTION CONTROL))

The value indicates if the traction control was active or switched off at the moment the diagnostic trouble code (DTC) was stored.

Value:

Function accessible

The function is blocked

STABILITY CONTROL CONTROL FUNCTION (STC (STABILITY AND TRACTION CONTROL) /DSTC (DYNAMIC STABILITY AND TRACTION CONTROL))

The value indicates if the stability control was accessible or blocked at the moment the diagnostic trouble code (DTC) was stored

Value:

Function accessible

The function is blocked

ACTIVE YAW CONTROL CONTROL FUNCTION (DSTC (DYNAMIC STABILITY AND TRACTION CONTROL))

The value indicates if the active yaw control was accessible or blocked at the moment the diagnostic trouble code (DTC) was stored.

Value:

Function accessible

The function is blocked

TRACTION CONTROL CONTROL FUNCTION AWD

The value indicates if the traction control was accessible or blocked at the moment the diagnostic trouble code (DTC) was stored.

Value:

Function accessible

The function is blocked

CONTROL FUNCTION ABS

The value indicates if the ABS system was accessible or blocked at the moment the diagnostic trouble code (DTC) was stored.

Value:

Function accessible

The function is blocked

VEHICLE COMMUNICATION INFORMATION (B5254T2; 2005-2007)

DESCRIPTION OF ACTIVATIONS

see **DESCRIPTION OF ACTIVATIONS**

DESCRIPTION OF PARAMETERS

see **DESCRIPTION OF PARAMETERS**

READING OFF EXTENDED DIAGNOSTIC TROUBLE CODE (DTC) INFORMATION, BRAKE CONTROL MODULE (BCM)

see **READING OFF EXTENDED DIAGNOSTIC TROUBLE CODE (DTC) INFORMATION, BRAKE CONTROL MODULE (BCM)**

VEHICLE COMMUNICATION INFORMATION (B6294T; 2005-2006)

DESCRIPTION OF ACTIVATIONS

see **DESCRIPTION OF ACTIVATIONS**

DESCRIPTION OF PARAMETERS

see **DESCRIPTION OF PARAMETERS**

READING OFF EXTENDED DIAGNOSTIC TROUBLE CODE (DTC) INFORMATION, BRAKE CONTROL MODULE (BCM)

see **READING OFF EXTENDED DIAGNOSTIC TROUBLE CODE (DTC) INFORMATION, BRAKE CONTROL MODULE (BCM)**

VEHICLE COMMUNICATION INFORMATION, BRAKE CONTROL MODULE (BCM) (B6324S; 2007-2010)

BRAKE SYSTEM, ABBREVIATIONS

see **BRAKE SYSTEM, ABBREVIATIONS**

DESCRIPTION OF ACTIVATIONS

see **DESCRIPTION OF ACTIVATIONS**

DESCRIPTION OF PARAMETERS

PARAMETERS, STATUS

NOTE: Parameters that it is possible to read out is decided by the functions (STC/TRACS/DSTC) with which the vehicle is equipped.

BRAKE LIGHT SWITCH

The value shows status of the brake light switch. The brake control module (BCM) obtains the values via CAN from the engine control module (ECM).

Active (pressed in) = Brake light switch activated.

Not activated = Brake light switch not activated.

PEDAL PRESSURE SENSOR STATUS

The value shows status of the pedal pressure sensor. The brake control module (BCM) obtains the values via CAN from the engine control module (ECM).

Active (pressed in) = Pedal pressure sensor activated.

Not activated = Pedal pressure sensor not activated.

ENGINE RUNNING

The value shows the engine's status. The brake control module (BCM) obtains the value via CAN from the central electronic module (CEM).

Yes = Engine running.

No = Engine off.

SAFETY LEVEL

The value shows which safety level the brake control module (BCM) has at the time. The safety level changes depending on which safety functions that have been activated by VIDA in the control module. VIDA automatically selects the correct safety level depending on the diagnostic function. Activation of components/functions as well as calibration can only be performed at level 1 or 2.

Basic level = Normal position.

Level 1 = Safety level 1 activated.

Level 2 = Safety level 2 activated.

CONTROL FUNCTION ABS/EBD/TC/SC/AYC/EBA/RSC/TC-AWD

NOTE: Parameter SC/DSTC is only updated in vehicles with STC/DSTC.

The values show respective function's status.

Depending on the detected malfunction, driving, etc., status may vary.

AYC is shown as off until the steering wheel has been initiated and driven faster than 10 km/h.

Off = Function blocked.

Permitted = Function available.

STC/DSTC SWITCH INDICATION (STC)

NOTE: Only vehicles with SC/DSTC.

The value shows the status of the indicator diode in the STC/DSTC-switch. Requested status from the brake control module (BCM) that is sent on the CAN-network.

On = STC/DSTC indication activated.

Off = STC/DSTC indication not activated.

STEERING DIRECTION RIGHT/LEFT

NOTE: Only vehicles with DSTC.

The value shows which way the steering wheel is turned in relation to stored middle position. The brake control module (BCM) obtains the value via CAN from the steering wheel module (SWM).

Right = Steering wheel is turned to the right.

Left = Steering wheel is turned to the left.

PARAMETERS, VALUE

VOLTAGE FEED

The value shows brake control module (BCM) voltage feed.

Measurement range: 0-18 V

BATTERY VOLTAGE, CENTRAL ELECTRONIC MODULE (CEM)

The value shows battery voltage at the central electronic module (CEM). The brake control module (BCM) obtains the value via CAN from the central electronic module (CEM).

Measurement range: 0-32 V.

OUTDOOR TEMPERATURE

The value shows the outdoor temperature. The brake control module (BCM) obtains the value via CAN from the central electronic module (CEM).

Measurement range: -128 till +127 °C.

DRIVING DISTANCE

The value shows driven distance. The brake control module (BCM) obtains the value via CAN from the central electronic module (CEM).

Measurement range: 0 and up

PEDAL POSITION SENSOR'S POSITION

Value from pedal position sensor. The value shows the pedal position sensor's position.

Measurement range: 0-45 mm.

PEDAL POSITION SENSOR'S SPEED

Value from pedal position sensor. The value shows the pedal position sensor's speed, that is, how fast the brake pedal is pressed down or let up. Positive values are shown when the pedal is pressed down, negative values are shown when the pedal is let up.

Measurement range: -200 till +200 mm/s.

WHEEL SPEED

Value from wheel sensors. The brake control module (BCM) calculates wheel speed using respective wheel sensor.

Measurement range: 0.60-300 km/h.

VEHICLE'S REFERENCE SPEED

The value shows the vehicle's speed in km/h. Calculated value based on all wheel sensors' values.

Measurement range: 0.60-300 km/h.

WHEEL ACCELERATION

The value shows the wheels' acceleration or retardation. The brake control module (BCM) calculates the wheels' acceleration or retardation based on respective wheel sensor signal. The value may vary depending on the road surface. Uneven road surface may cause great variation.

Measurement range: 0-200 m/s^2

VEHICLE'S ACCELERATION, POSITIVE/NEGATIVE

The value shows the vehicle's acceleration/retardation. The brake control module (BCM) calculates the vehicle's acceleration/retardation based on respective wheel sensor signal.

Measurement range: 0-200 m/s^2 .

BRAKE DISC'S TEMPERATURE

The value shows temperature of the brake discs. The brake control module (BCM) calculates the temperature of the brake discs with regards to how long the traction function has controlled or ABS has been activated.

Measurement range: 0- 920 °C

STEERING ANGLE VALUE

NOTE: Only vehicles with DSTC.

The value shows the position of the steering angle. The brake control module (BCM) obtains the value via CAN from the steering wheel module (SWM).

Measurement range: -720 till +720°/s.

Positive values = Left

Negative values = Right

STEERING ANGLE SPEED

NOTE: Only vehicles with DSTC.

The value shows the speed of the steering angle. The brake control module (BCM) obtains the value via CAN from the steering wheel module (SWM).

Measurement range: -1500 till +1500°/s.

YAW ANGLE SIGNAL (DSTC)

NOTE: Only vehicles with DSTC.

The value shows yaw angle speed, that is, how fast the vehicle is turned on level ground. The signal from the

yaw speed sensor, which is built in to the stability sensor (BSC), give s the brake control module (BCM) information about the vehicle's yaw angle speed (steering direction) in °/s. Positive value indicate steering direction to the left, negative value indicates steering direction to the right.

Measurement range: -80 till +80°/s.

HINT: The value can be affected by sudden lateral movement of the vehicle's rear end or front end.

LATERAL ACCELEROMETER, SIGNAL

NOTE: Only vehicles with DSTC.

The value shows the lateral accelerometer's signal, that is, the vehicle's lateral inclination. The signal from the lateral accelerometer, which is built in to the stability sensor(BSC), give s the brake control module (BCM) information about the vehicle's lateral acceleration. Left turn gives a roll to the right, which gives a positive value. A right turn gives a roll to the left, which gives a negative value.

Measurement range: -20 to +20 m/s^2

HINT: The value can be affected by changing the vehicle's lateral inclination, e. g., by raising or lowering the vehicle's right or left side.

BRAKE PRESSURE SENSOR A AND B

NOTE: Only vehicles with DSTC.

The value shows the brake pressure in the hydraulic unit. The signal from the brake pressure sensors gives the brake control module (BCM) information about the pressure in the brake system.

Measurement range: 0-300 bar.

ACCELEROMETER, SIGNAL

NOTE: Only vehicles with DSTC and AWD.

The value shows the accelerometer's signal, that is, the vehicle's longitudinal inclination. The signal from the accelerometer, which is built in to the stability sensor (BSC), give s the brake control module (BCM) information about the vehicle's longitudinal acceleration. Positive value indicates acceleration, that is, the front of the vehicle is raised. Negative value indicates retardation, that is, the front of the vehicle is lowered.

Measurement range: -20 till +20 m/s^2

HINT: The value can be affected by changing the vehicle's longitudinal inclination, e. g., by raising or lowering the vehicle's front or rear end.

ROLL ANGLE, SIGNAL

NOTE: Only vehicles with DSTC and AWD.

The value shows the roll angle sensor's signal, that is, the vehicle's lateral inclination. The signal from the roll angle sensor, which is built in to the stability sensor (BSC), give s the brake control module (BCM) information about the vehicle's roll angle.

Measurement range: 0-90°/s.

HINT: The value can be affected by changing the vehicle's lateral inclination.

OFFSET VALUES (ONLY VEHICLES WITH DSTC)

HINT: The offset value is an adaptive correction value that indicates the individual deviation for the sensor. The brake control module (BCM) uses the value to always have the correct start value at start-up of the system for DSTC. If the normal value has been changed during an operating cycle, the value is stored after ignition off in the brake control module (BCM) EEPROM-memory and uploaded to the working memory at ignition on.

HINT: The offset values can also be changed shortly after the ignition has been turned off.

STEERING ANGLE SENSOR, STORED OFFSET VALUE

The value stored in the brake control module (BCM) EEPROM-memory.

Measurement range: -20 till +20°/s

YAW ANGLE SENSOR, STORED OFFSET VALUE

Current value for this operating cycle. Diagnostic trouble code is generated and DSTC is shut off at ±10°/s

Measurement range: -25 till +25°/s

LATERAL ACCELEROMETER, STORED OFFSET VALUE

The value stored in the brake control module (BCM) EEPROM-memory.

Measurement range: -10 to +10 m/s^2

BRAKE PRESSURE SENSOR A AND B, STORED OFFSET VALUE

The value stored in the brake control module (BCM) EEPROM-memory.

Measurement range: -20 till +20 bar

ACCELEROMETER, STORED OFFSET VALUE (DSTC AWD)

The value stored in the brake control module (BCM) EEPROM-memory.

Measurement range: -10 to +10 m/s^2

DESCRIPTION OF READING OFF OF EXTENDED DIAGNOSTIC TROUBLE CODE (DTC) INFORMATION

CONTENTS

Select type of description.

- see **FROZEN VALUES BRAKE CONTROL MODULE (BCM), DESCRIPTION**
- see **DESCRIPTION OF STATUS IDENTIFIER**
- see **DESCRIPTION OF COUNTER**

FROZEN VALUES BRAKE CONTROL MODULE (BCM), DESCRIPTION

EXPLANATION

When a diagnostic trouble code is generated, status or values are stored for certain parameters in the control module's memory. Then these can be read out using freeze frames.

Some parameters are not implemented in all models.

NOTE: Parameters marked with STC/DSTC are only shown for vehicles equipped with STC and DSTC. Parameters marked with DSTC are only shown for vehicles equipped with DSTC.

HINT: For information on abbreviations: BRAKE SYSTEM, ABBREVIATIONS

GLOBAL TIME

The value shows time in question when the diagnostic trouble code was stored. The brake control module (BCM) obtains the value via CAN from the central electronic module (CEM).

MILEAGE

The value shows total mileage in kilometers when the diagnostic trouble code was stored. The brake control module (BCM) obtains the value via CAN from the central electronic module (CEM).

BATTERY VOLTAGE CENTRAL ELECTRONIC MODULE (CEM)

The value shows battery voltage in volts when the diagnostic trouble code was stored. The brake control module (BCM) obtains the value via CAN from the central electronic module (CEM).

ENGINE RUNNING

The status indicates if the engine was running or not when the diagnostic trouble code was stored. The brake control module (BCM) obtains the value via CAN from the central electronic module (CEM).

Values:

Engine running

Not running

OUTSIDE TEMPERATURE

The value shows outdoor temperature in degrees Celsius at the time when the diagnostic trouble code was stored. The brake control module (BCM) obtains the value via CAN from the central electronic module (CEM).

CURRENT GEAR

The status indicates gear position at the time when the diagnostic trouble code was stored. The brake control module (BCM) obtains the value via CAN from the transmission control module (TCM) if the vehicle is equipped with automatic transmission or central electronic module (CEM) if the vehicle is equipped with manual transmission.

Values:

1st gear

2nd gear

3rd gear

4th gear

5th gear

6th gear

Reverse gear

Undefined

ENGINE TORQUE

The value shows the engine's torque in Nm at the time when the diagnostic trouble code was stored.

REQUESTED TORQUE

The value shows requested torque in Nm at the time when the diagnostic trouble code was stored. The brake control module (BCM) requests a certain torque from engine control module (ECM) depending on the situation.

CLUTCH PEDAL POSITION

The status indicates position of the clutch pedal at the time when the diagnostic trouble code was stored.

Values:

Activated

Not activated

DSTC-SWITCH (DSTC)

The status indicates position of the switch at the time when the diagnostic trouble code was stored. The function is engaged automatically when the ignition is on but can be disengaged manually.

Values:

Activated

Not activated

ENGINE SPEED (RPM)

The value shows the engine's rpm at the time when the diagnostic trouble code was stored. The brake control module (BCM) obtains the value via CAN from the central electronic module (CEM).

VOLTAGE FEED CONTROL MODULE

The value shows system voltage in volts at the time when the diagnostic trouble code was stored.

PUMP MOTOR

The status indicates if the pump motor for ABS was activated or not at the time when the diagnostic trouble code was stored.

Values:

Activated

Not activated

VEHICLE'S REFERENCE SPEED

The value indicates the vehicle speed in km/h.

VEHICLE'S ACCELERATION (DSTC)

The value shows the vehicle's acceleration straight ahead in m/s^2 .

STEERING WHEEL ANGLE CURRENT VALUE (DSTC)

The value shows the steering angle in degrees at the time when the diagnostic trouble code was stored.

OVERSTEERING/UNDERSTEERING (DSTC)

The status indicates if the vehicle understeered or oversteered at the time when the diagnostic trouble code was stored.

Values:

No understeering or oversteering

Understeer

Oversteer

PEDAL POSITION SENSOR

The status indicates the brake pedal's position at the time when the diagnostic trouble code was stored.

Values:

PTS inactive

0-1 cm

1-2 cm

>2 cm

TRAVEL DIRECTION (DSTC (DYNAMIC STABILITY AND TRACTION CONTROL))

The status indicates the vehicle's travel direction at the time when the diagnostic trouble code was stored.

Values:

Backward

Forward

BRAKE PRESSURE SENSOR A (DSTC)

The value shows the pressure in the brake system's primary circuit, given in bar.

BRAKE PRESSURE SENSOR B (DSTC)

The value shows the pressure in the brake system's secondary circuit, given in bar.

CONTROL FUNCTION RCS (DSTC)

The status indicates if the RCS-function controlled at the time when the diagnostic trouble code was stored.

Values:

Activated

Not activated

ACTIVE YAW CONTROL CONTROL FUNCTION (DSTC (DYNAMIC STABILITY AND TRACTION CONTROL))

The status indicates if the stability function controlled at the time when the diagnostic trouble code was stored.

Values:

Activated

Not activated

TRACTION CONTROL CONTROL FUNCTION (STC (STABILITY AND TRACTION CONTROL) /DSTC (DYNAMIC STABILITY AND TRACTION CONTROL))

The status indicates if the anti-spin function (TRACS) controlled at the time when the diagnostic trouble code was stored.

Values:

Activated

Not activated

STABILITY CONTROL CONTROL FUNCTION (STC (STABILITY AND TRACTION CONTROL) /DSTC (DYNAMIC STABILITY AND TRACTION CONTROL))

The status indicates if the anti-spin function (TRACS) controlled at the time when the diagnostic trouble code was stored.

Values:

Activated

Not activated

CONTROL FUNCTION ABS

The status indicates if the ABS-function controlled at the time when the diagnostic trouble code was stored.

Values:

Activated

Not activated

PRESSURE BUILD-UP VALVE BRAKE BOOSTER (DSTC)

The status indicates if the pressure build-up valve for active brake booster was activated at the time when the diagnostic trouble code was stored.

Values:

Activated

Not activated

PEDAL PRESSURE SENSOR (DSTC (DYNAMIC STABILITY AND TRACTION CONTROL))

The status indicates if the brake pedal was activated when the diagnostic trouble code was stored.

Values:

Activated

Not activated

VEHICLE COMMUNICATION INFORMATION, BRAKE CONTROL MODULE (BCM) (B6324S5; 2011-2012)

BRAKE SYSTEM, ABBREVIATIONS

see **BRAKE SYSTEM, ABBREVIATIONS**

DESCRIPTION OF ACTIVATIONS

see **DESCRIPTION OF ACTIVATIONS**

DESCRIPTION OF PARAMETERS

see **DESCRIPTION OF PARAMETERS**

DESCRIPTION OF READING OFF OF EXTENDED DIAGNOSTIC TROUBLE CODE (DTC) INFORMATION

see **DESCRIPTION OF READING OFF OF EXTENDED DIAGNOSTIC TROUBLE CODE (DTC) INFORMATION**

VEHICLE COMMUNICATION INFORMATION, BRAKE CONTROL MODULE (BCM) (B8444S; 2005-2011)

BRAKE SYSTEM, ABBREVIATIONS

see **BRAKE SYSTEM, ABBREVIATIONS**

DESCRIPTION OF ACTIVATIONS

see **DESCRIPTION OF ACTIVATIONS**

DESCRIPTION OF PARAMETERS

see **DESCRIPTION OF PARAMETERS**

DESCRIPTION OF READING OFF OF EXTENDED DIAGNOSTIC TROUBLE CODE (DTC) INFORMATION

see see **DESCRIPTION OF READING OFF OF EXTENDED DIAGNOSTIC TROUBLE CODE (DTC) INFORMATION**

BRAKES

Brake Control System - Symptom Related Diagnostic Procedures

CHECKING BRAKE CALIPER FUNCTION

CHECKING THE FUNCTION OF THE BRAKE CALIPER

CHECKING THE FUNCTION OF THE BRAKE CALIPER

- Check that the brake calipers operate correctly
- If a brake caliper does not operate properly, replace. See **BRAKE CALIPERS FRONT, REPLACING** or **BRAKE CALIPERS REAR, REPLACING** .

FAULT-TRACING INFORMATION

Condition

- No diagnostic trouble codes (DTCs) stored.
- The fault is permanent.

Possible Source

- Defective brake caliper.

CHECKING BRAKE CALIPER MOUNTING

CHECKING BRAKE CALIPER MOUNTING

CHECKING BRAKE CALIPER MOUNTING

- Check that all brake calipers are properly mounted. Tighten if necessary.

FAULT-TRACING INFORMATION

Condition

- No diagnostic trouble codes (DTCs) stored.
- The fault is permanent.

Possible Source

- Loose brake caliper.

CHECKING BRAKE DISC

CHECKING BRAKE DISCS

CHECKING BRAKE DISCS

- Check discs and turn or replace. See **BRAKE DISC FRONT, REPLACING** or **BRAKE DISC REAR, REPLACING** as necessary.

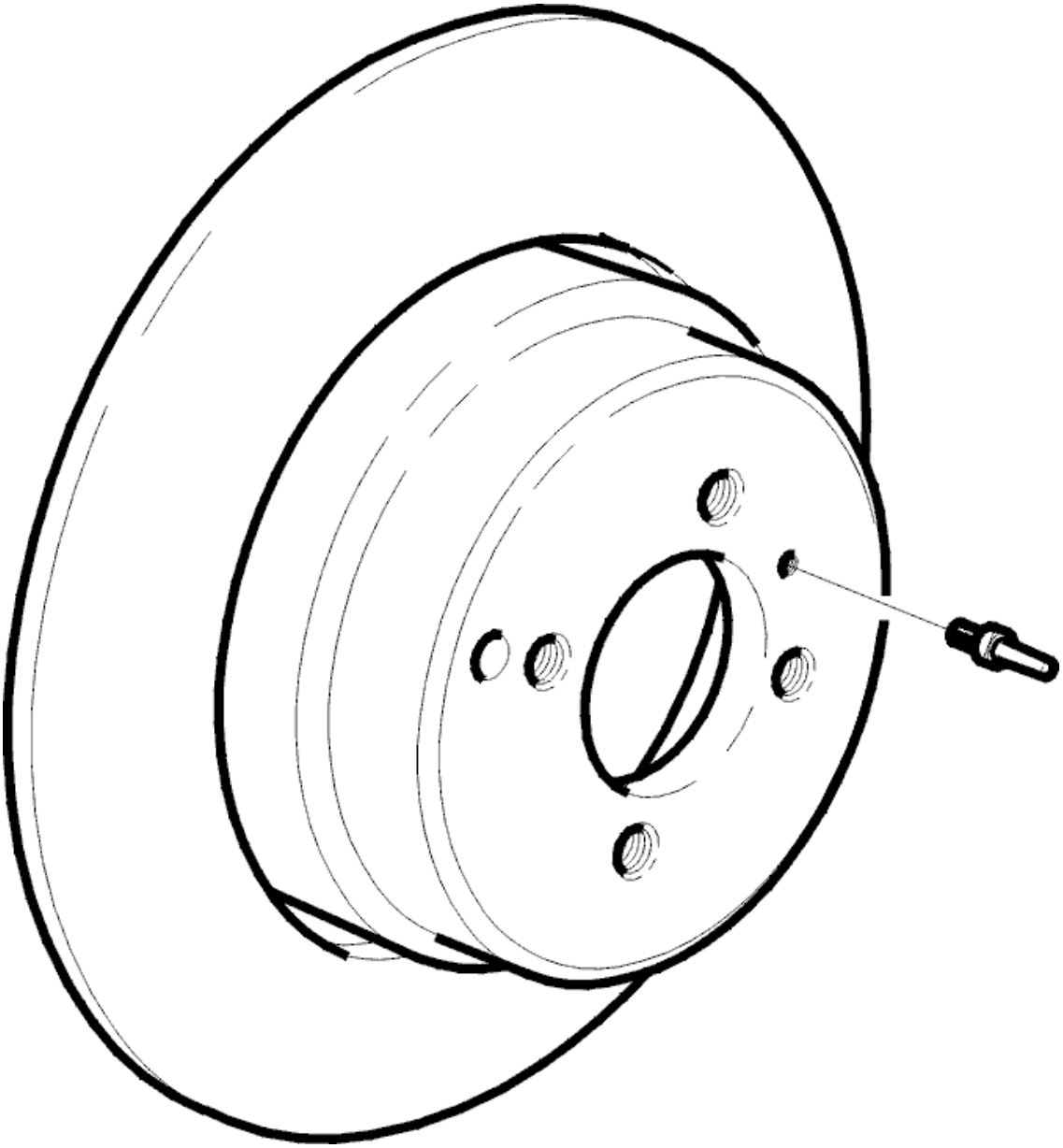

Fig. 1: Identifying Brake Caliper Mounting Bolt
Courtesy of VOLVO CARS CORPORATION

FAULT-TRACING INFORMATION

Condition

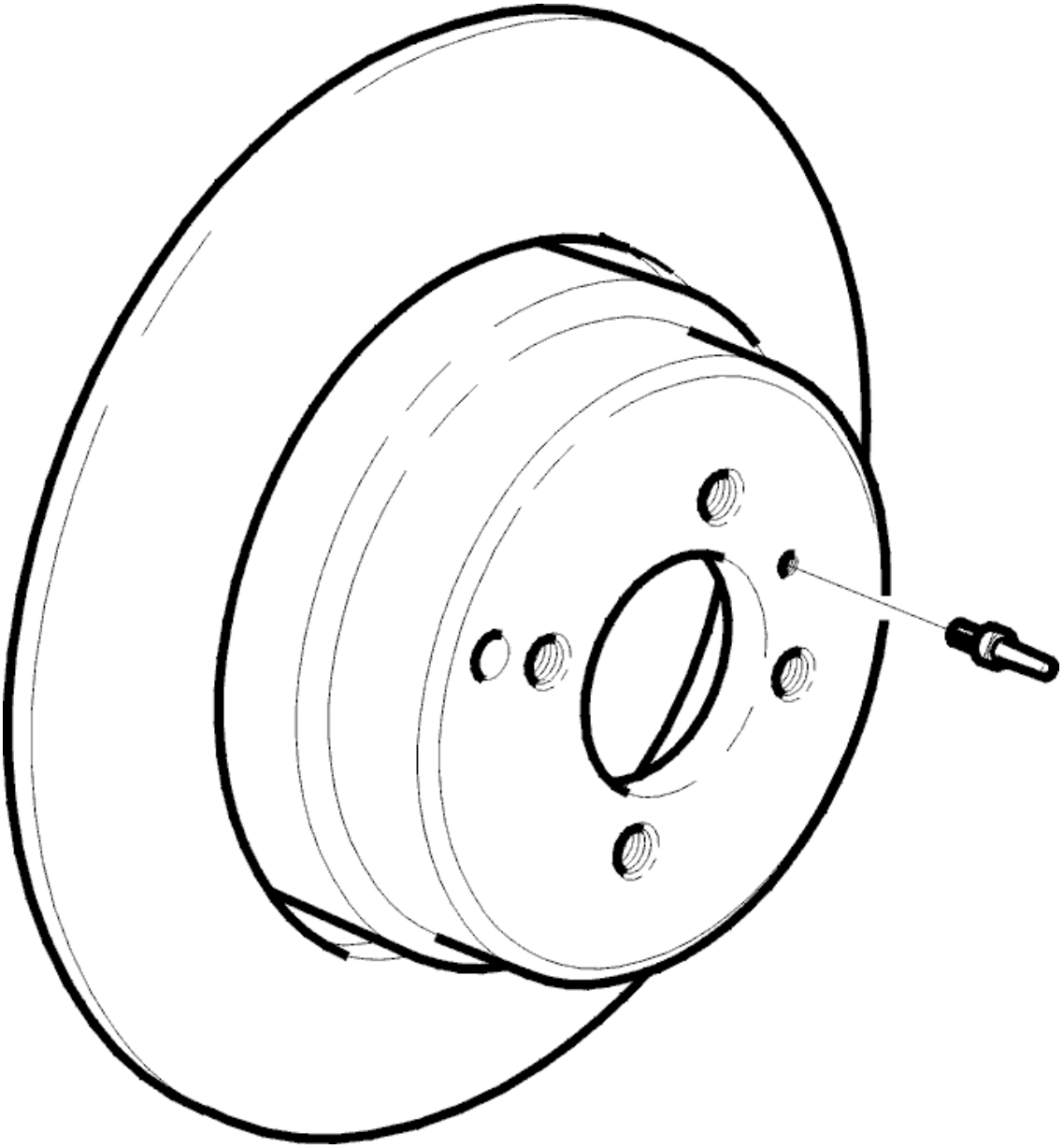

Fig. 2: Identifying Brake Caliper Mounting Bolt
Courtesy of VOLVO CARS CORPORATION

- No diagnostic trouble codes (DTCs) stored.
- The fault is permanent.

Possible Source

- Faulty brake disc.

CHECKING BRAKE DISC LATERAL RUNOUT

CHECKING THE BRAKE DISC LATERAL RUNOUT

CHECKING THE BRAKE DISC LATERAL RUNOUT

- Check the brake discs. See **BRAKE DISC FRONT, CALIBRATING** and, see **BRAKE DISC REAR, CALIBRATING**
- If necessary turn on a lathe or replace brake disc. See **BRAKE DISC FRONT, REPLACING** or **BRAKE DISC REAR, REPLACING** .

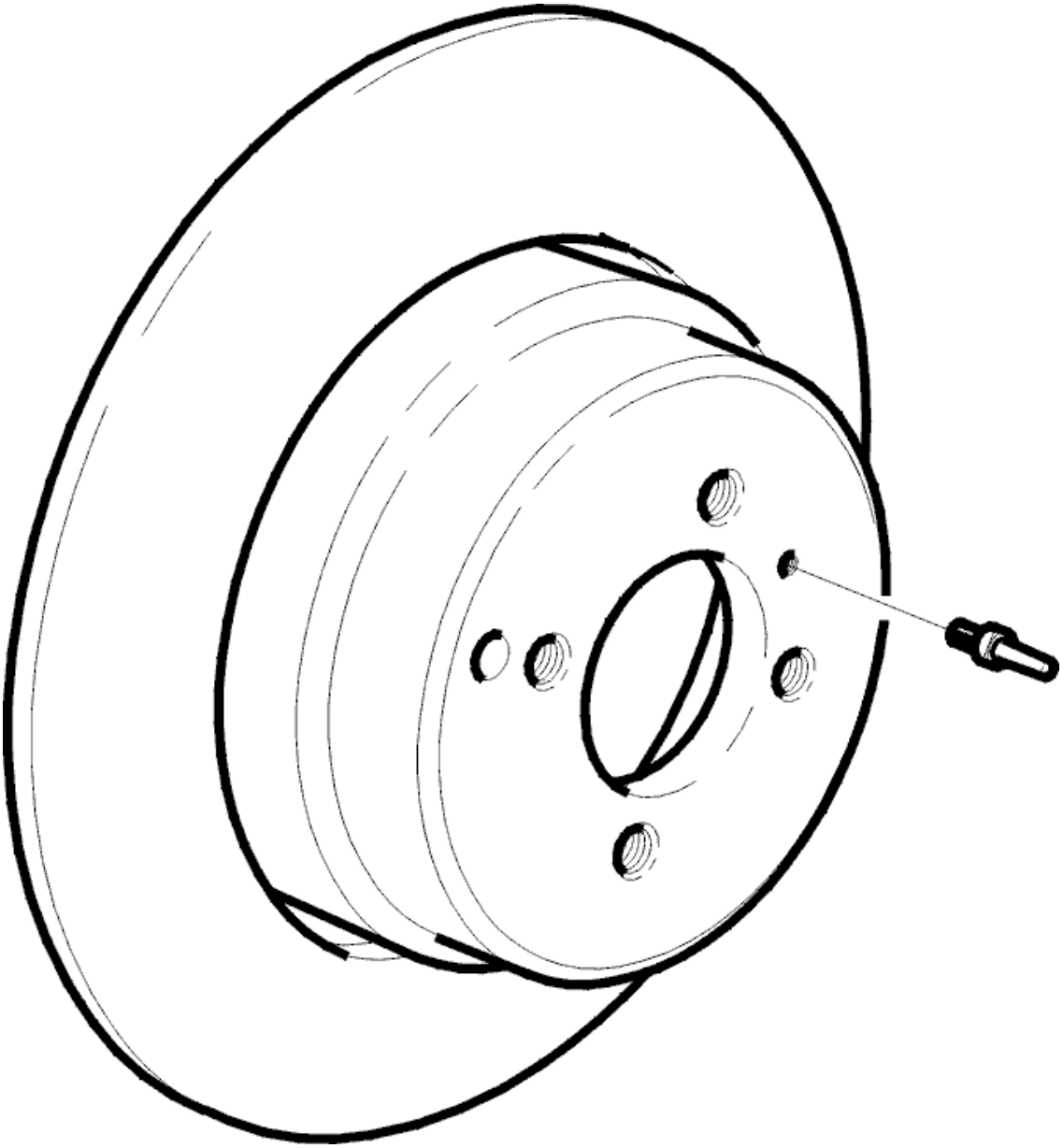

Fig. 3: Identifying Brake Caliper Mounting Bolt
Courtesy of VOLVO CARS CORPORATION

BRAKE DISC FRONT, CALIBRATING

- see **BRAKE DISC FRONT, CALIBRATING** .

FAULT-TRACING INFORMATION

Condition

- No diagnostic trouble codes (DTCs) stored.
- The fault is permanent.

Possible Source

- Vibrations from brake pedal (caused by variations in brake disc thickness).

CHECKING BRAKE FAILURE WARNING LAMP

CHECKING BRAKE FAILURE WARNING LAMP

CHECKING BRAKE FLUID LEVEL

Check brake fluid level is not too low. Brake fluid reservoir should be full.

If the brake fluid level is low, check that there are no brake fluid leaks in the hydraulic brake system.

Remedy as necessary.

- Top up brake fluid.
- Start engine and check that the brake failure warning lamp goes out.

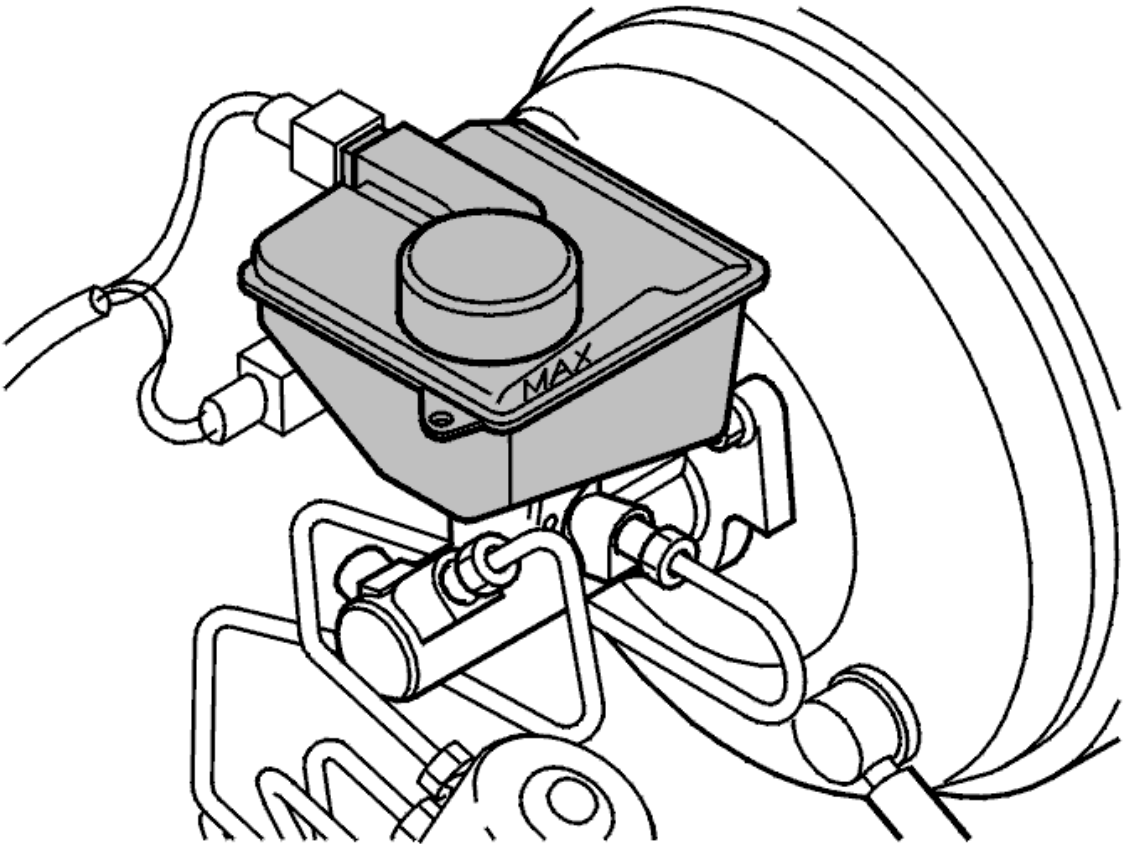

Fig. 4: Identifying Brake Fluid Reservoir
Courtesy of VOLVO CARS CORPORATION

FAULT-TRACING INFORMATION

Condition

- No diagnostic trouble codes (DTCs) stored.
- The fault is permanent.

Condition

- Low brake fluid level.
- Signal cable short-circuited to ground.
- Defective brake fluid level switch.
- Defective combined sensor.
- Faulty charging system.

WARNING: **If light comes on while driving or when braking, the brake fluid level is too low and the fault must be remedied before driving the car any further.**

CHECKING BRAKE FLUID LEVEL

CHECKING BRAKE FLUID LEVEL

CHECKING BRAKE FLUID LEVEL

- Check for leakage, top up and bleed the system, see **BRAKE SYSTEM, BLEEDING (USING BLEEDING UNIT)** .

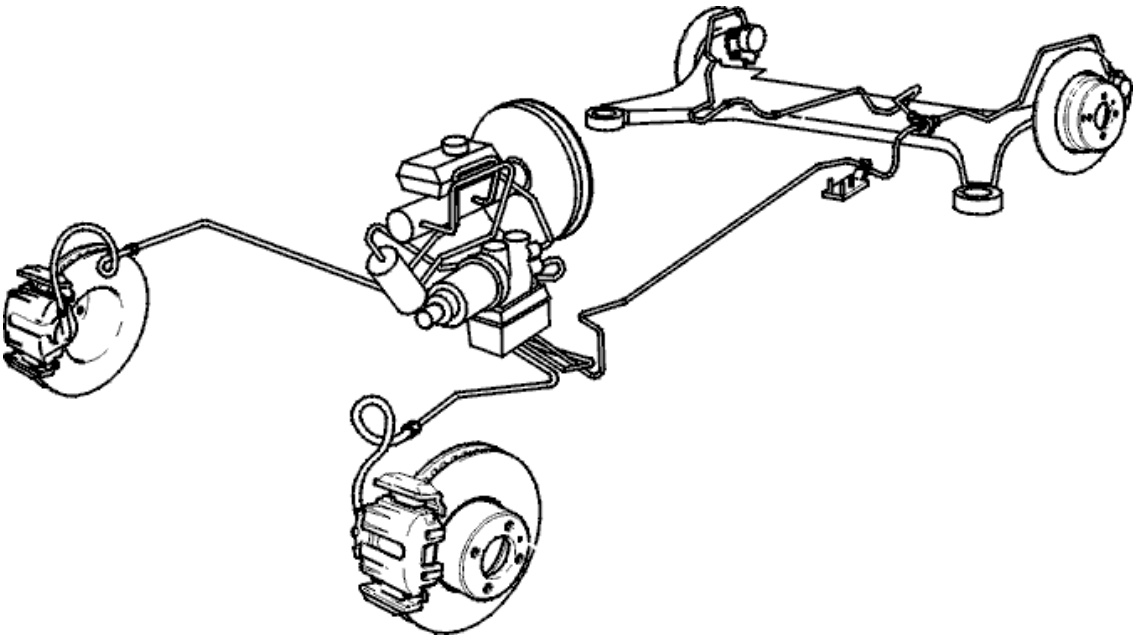

Fig. 5: Identifying Brake Hydraulic System
Courtesy of VOLVO CARS CORPORATION

FAULT-TRACING INFORMATION

Condition

- No diagnostic trouble codes (DTCs) stored.
- The fault is permanent.

Possible Source

- Low brake fluid level.

CHECKING BRAKE LIGHT SWITCH ADJUSTMENT (2003-2004)

CHECKING BRAKE LIGHT SWITCH ADJUSTMENT

CHECKING BRAKE LIGHT SWITCH ADJUSTMENT

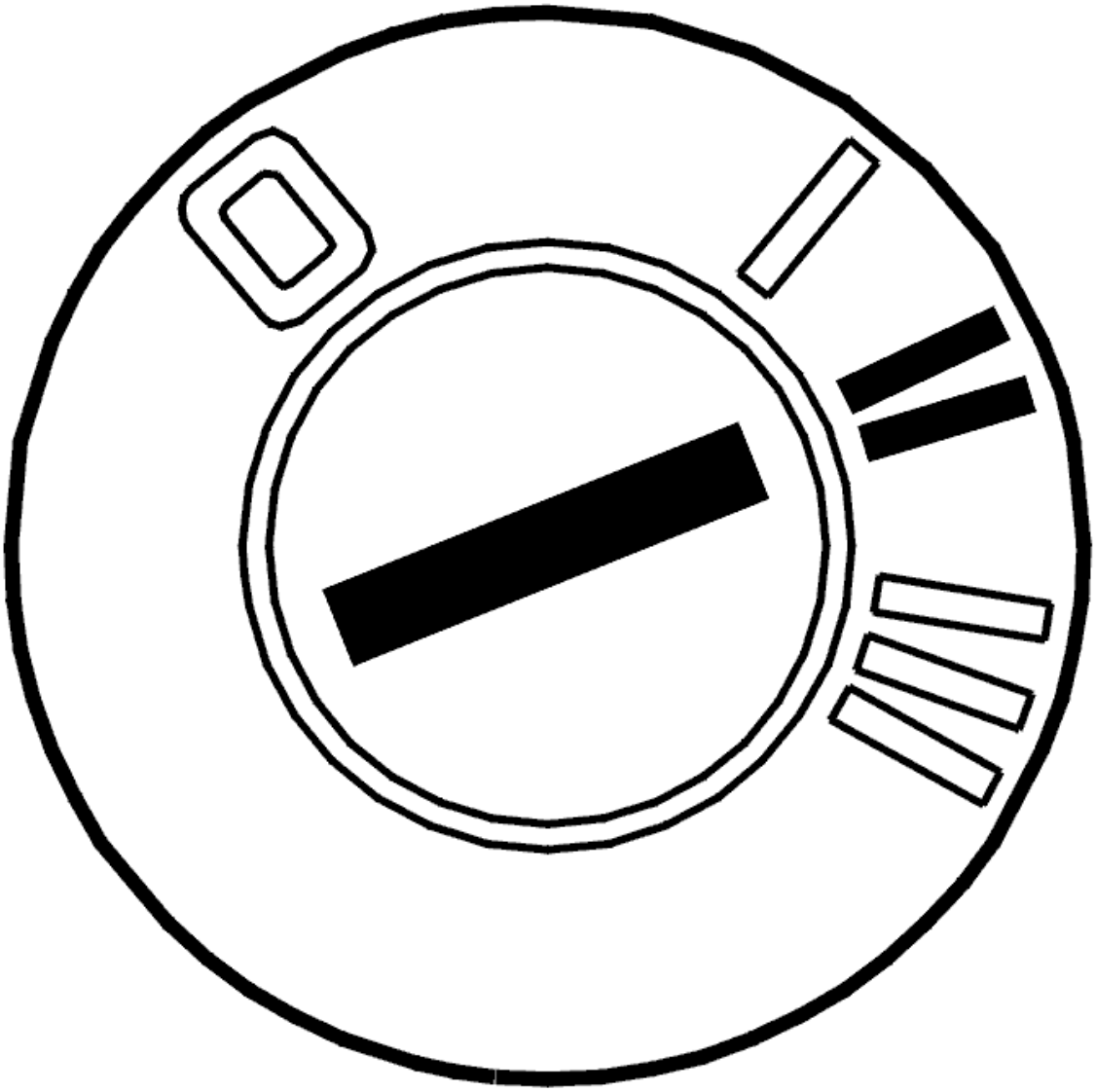

Fig. 6: Identifying Ignition ON
Courtesy of VOLVO CARS CORPORATION

- VIDA (scan tool) connected to the vehicle.
- Start the engine.

  Activate readout of components by clicking on the symbol for VCT2000.

  Slowly press down the brake pedal.

  Check the pedal position sensor's value when the brake light switch status changes from **Off** to **On** .

  The pedal position sensor shall have a value of at least 0.8 mm when the brake light switch status changes from **Off** to **On** .

  If the pedal position sensor's value is below the value given above, the brake light switch shall be

readjusted.

Other information

- To adjust the brake light switch: **STOP LAMP SWITCH, REPLACING** .

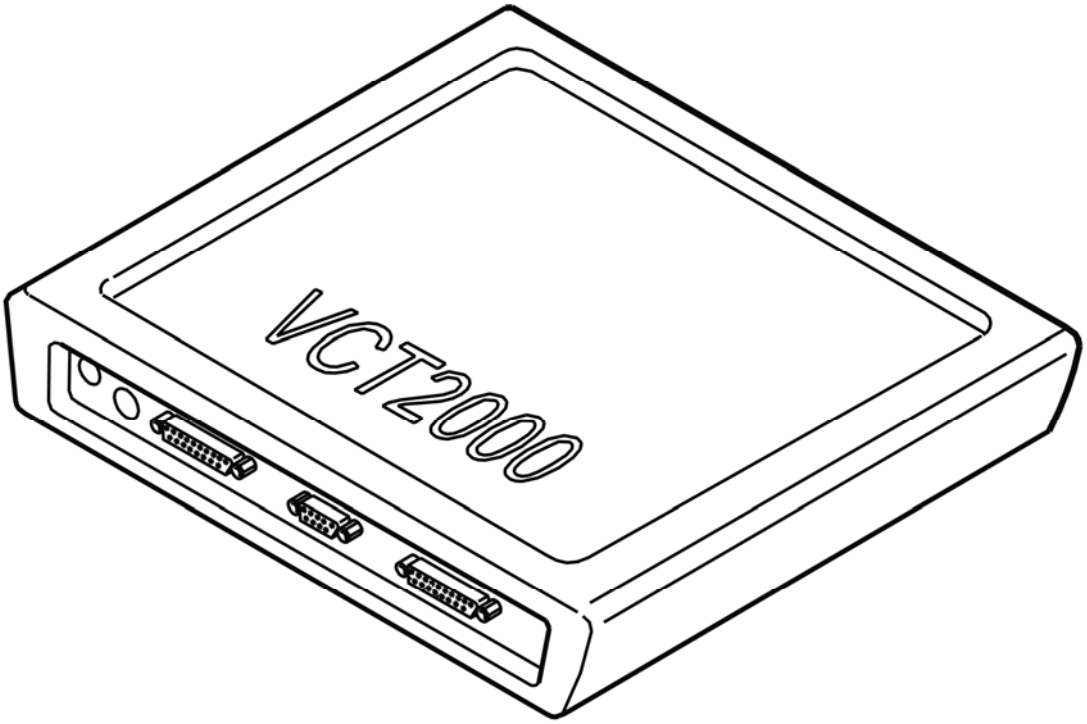

Fig. 7: Identifying VCT2000 Diagnostic Tool Symbol In VIDA
Courtesy of VOLVO CARS CORPORATION

CHECKING BRAKE LIGHT SWITCH ADJUSTMENT (B5254T2; 2005-2007)

CHECKING BRAKE LIGHT SWITCH ADJUSTMENT

see **CHECKING BRAKE LIGHT SWITCH ADJUSTMENT**

CHECKING BRAKE LIGHT SWITCH ADJUSTMENT (B6294T; 2005-2006)

CHECKING BRAKE LIGHT SWITCH ADJUSTMENT

see **CHECKING BRAKE LIGHT SWITCH ADJUSTMENT**

CHECKING BRAKE LIGHT SWITCH ADJUSTMENT (B6324S; 2007-2010)

CHECKING BRAKE LIGHT SWITCH ADJUSTMENT

CHECKING BRAKE LIGHT SWITCH ADJUSTMENT

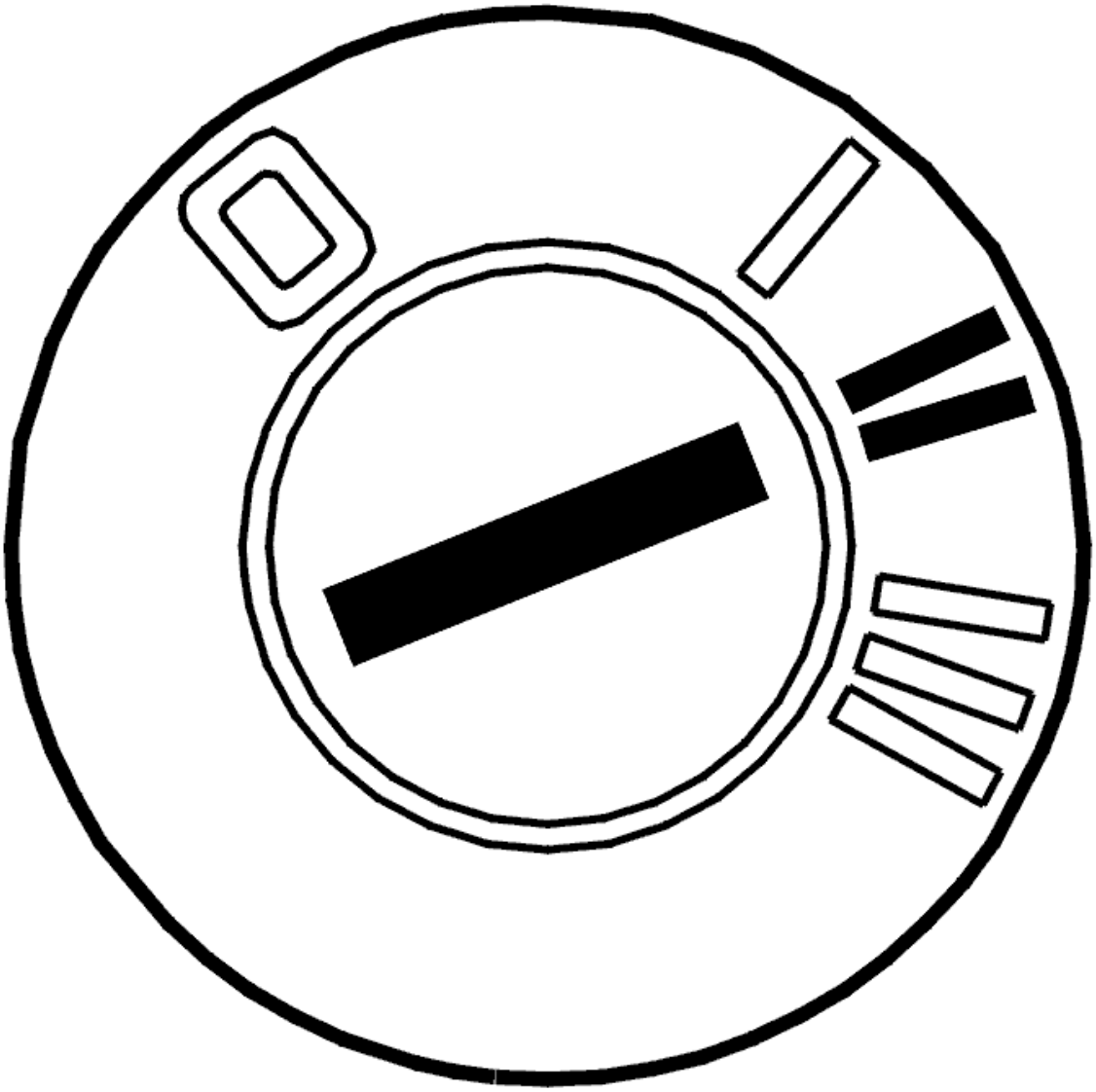

Fig. 8: Identifying Ignition ON
Courtesy of VOLVO CARS CORPORATION

- VIDA connected to the vehicle.
- Start the engine.

  Activate readout of components by clicking on the symbol for VCT2000.

  Slowly press down the brake pedal.

  Check the pedal position sensor's value when the brake light switch status switches from **Nor activated** to **Activated** .

The pedal position sensor must have a value of at least 0.8 mm when the stop lamp switch status shifts from **Not activated** to **Activated** .

If the pedal position sensor's value is below the value given above, the brake light switch shall be readjusted.

Other information

- see **STOP LAMP SWITCH, ADJUSTMENT**

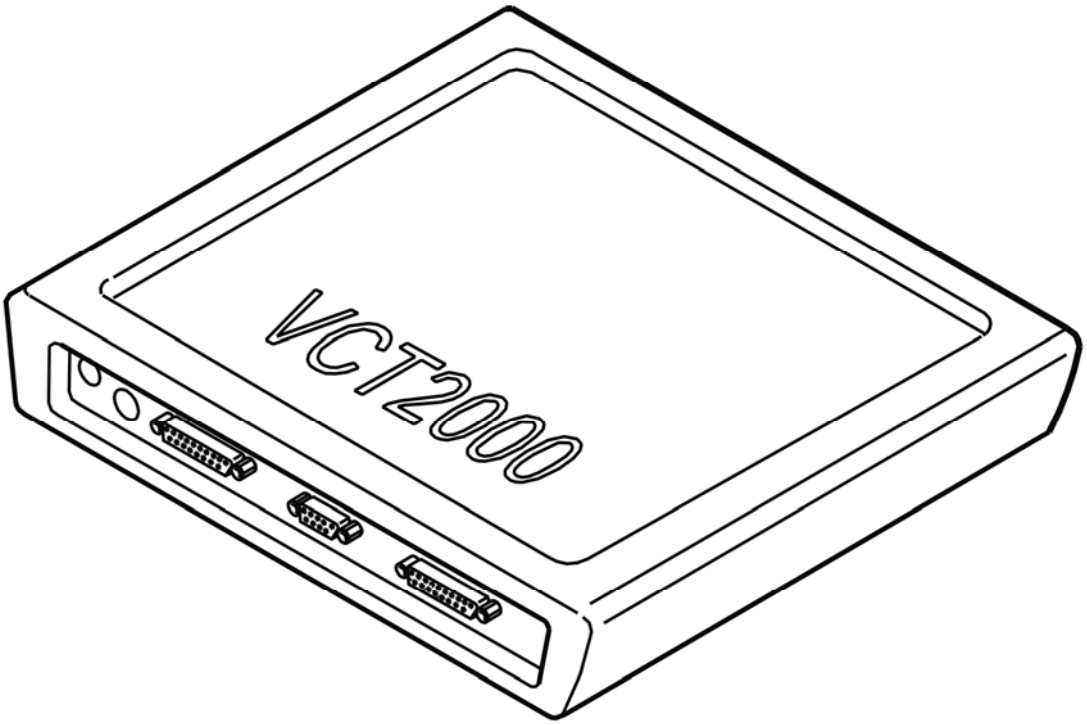

Fig. 9: Identifying VCT2000 Diagnostic Tool Symbol In VIDA
Courtesy of VOLVO CARS CORPORATION

STOP LAMP SWITCH, ADJUSTMENT

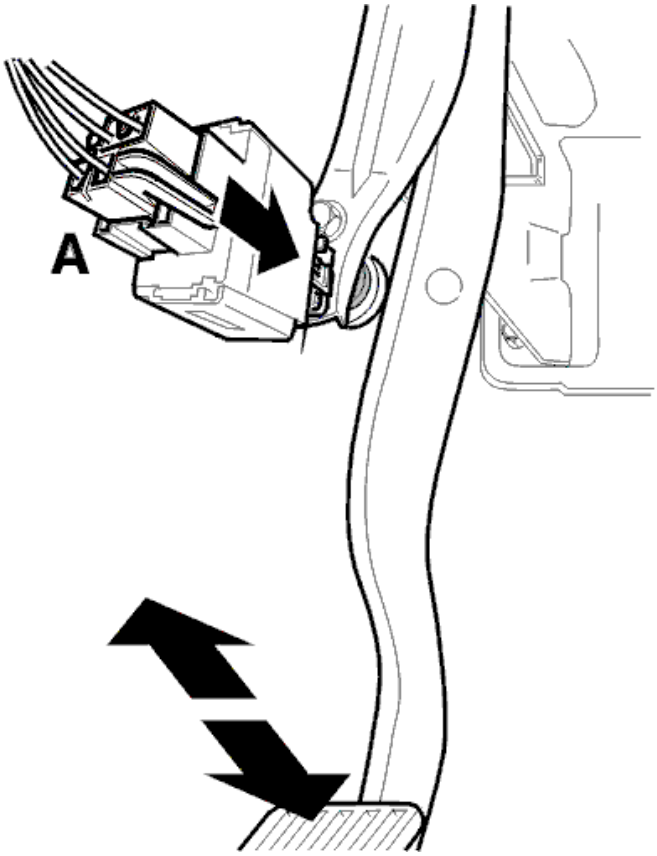

Fig. 10: Identifying Stop Lamp Switch, Adjustment
Courtesy of VOLVO CARS CORPORATION

Ignition off.

Remove the panel under the dashboard on the driver's side.

Depress the brake pedal.

Press the stop (brake) lamp switch, from the side of the connector A, completely forwards.

NOTE: A number of clicks should be heard and felt when pressing.

Carefully release the brake pedal.

The stop (brake) lamp switch is now adjusted.

Check the function.

NOTE: The stop lamp must light when the brake pedal is pressed down more than approximately 1 mm.

Reinstall the panel under the dashboard on the driver's side.

CHECKING BRAKE LIGHT SWITCH ADJUSTMENT (B6324S5; 2011-2012)

CHECKING BRAKE LIGHT SWITCH ADJUSTMENT

see **CHECKING BRAKE LIGHT SWITCH ADJUSTMENT**

CHECKING BRAKE LIGHT SWITCH ADJUSTMENT (B8444S; 2005-2011)

CHECKING BRAKE LIGHT SWITCH ADJUSTMENT

see **CHECKING BRAKE LIGHT SWITCH ADJUSTMENT**

CHECKING BRAKE PADS

CHECKING THE BRAKE PADS

CHECKING THE BRAKE PADS

- Measure the thickness of the brake pads. Minimum thickness 3.0 mm
- If necessary, replace the brake pads. See **BRAKE PADS FRONT, REPLACING** or **BRAKE PADS REAR, REPLACING**

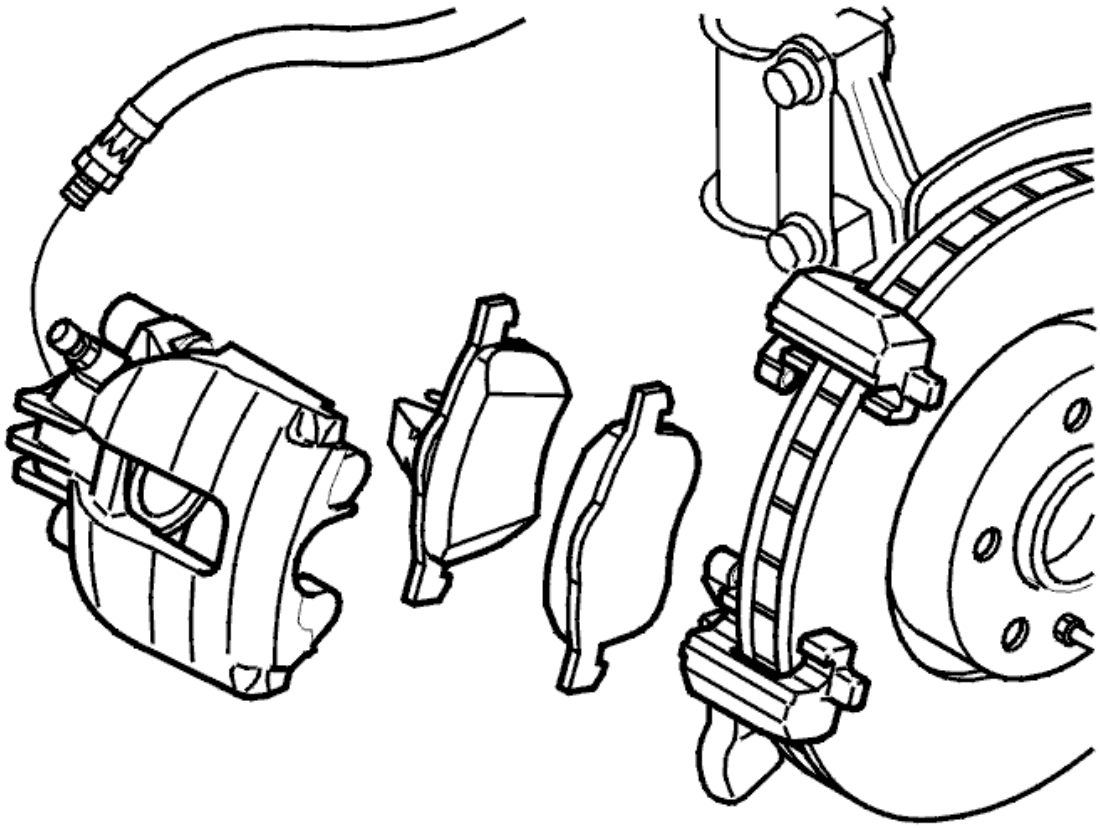

Fig. 11: Identifying Brake Caliper & Brake Pads

Courtesy of VOLVO CARS CORPORATION

FAULT-TRACING INFORMATION

Condition

- No diagnostic trouble codes (DTCs) stored.
- The fault is permanent.

Possible Source

- Play in wheel hub.

CHECKING BRAKE PIPES

CHECKING THE BRAKE PIPES

CHECKING THE BRAKE PIPES

- Check that the brake pipes are undamaged and not deformed. If necessary, replace. See **BRAKE PIPE REAR WHEEL, REPLACING** , see **BRAKE PIPE MASTER CYLINDER / ABS UNIT, REPLACING** and **BRAKE PIPE JUNCTION/ABS UNIT, REPLACING** .

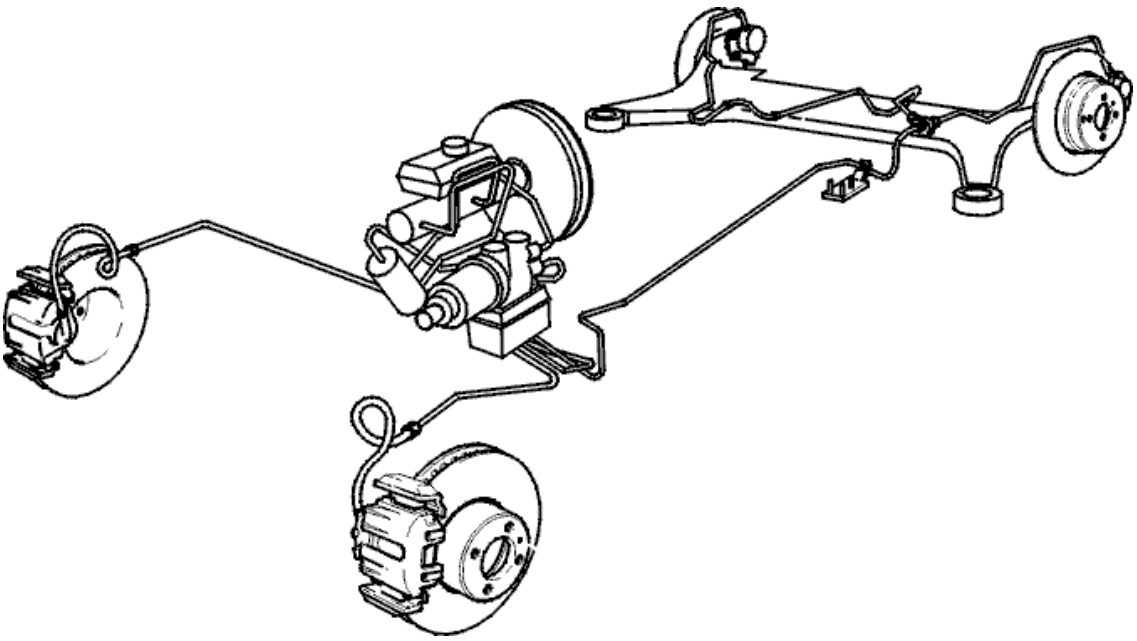

Fig. 12: Identifying Brake Hydraulic System
Courtesy of VOLVO CARS CORPORATION

BRAKE PIPE REAR WHEEL, REPLACING

- see **BRAKE PIPE REAR WHEEL, REPLACING** .

BRAKE PIPE HYDRAULIC UNIT / JUNCTION / FRONT WHEEL, REPLACING

- see **BRAKE PIPE MASTER CYLINDER / ABS UNIT, REPLACING** and **BRAKE PIPE JUNCTION/ABS UNIT, REPLACING** .

FAULT-TRACING INFORMATION

Condition

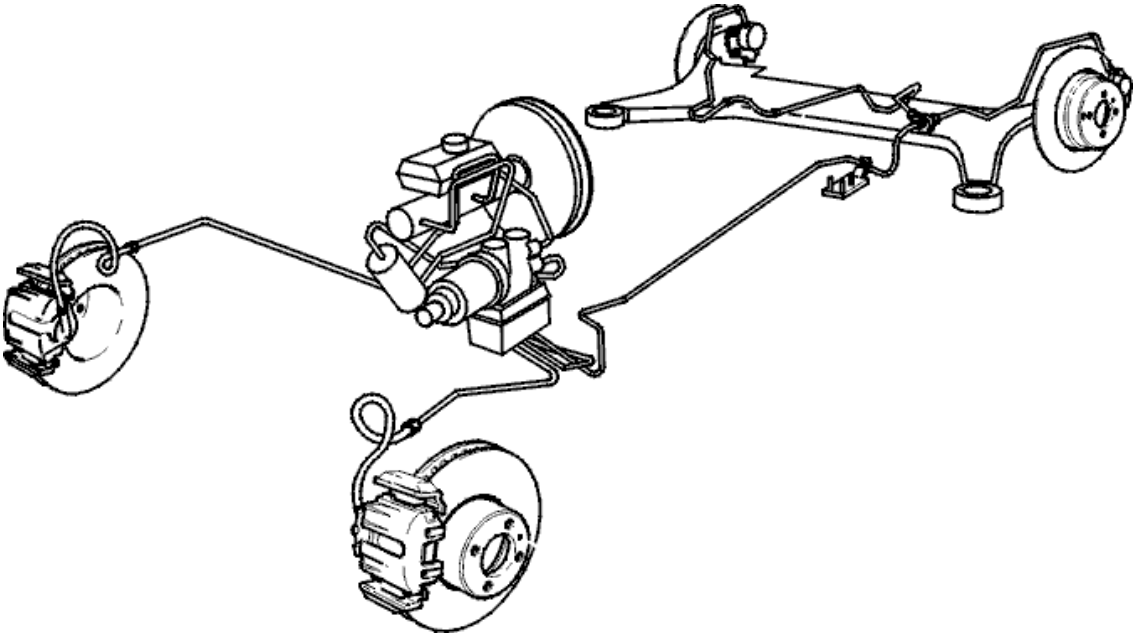

Fig. 13: Identifying Brake Hydraulic System
Courtesy of VOLVO CARS CORPORATION

- No diagnostic trouble codes (DTCs) stored.
- The fault is permanent.

Possible Source

- Deformed brake pipe.

CHECKING BRAKE SHOES AND BRAKE CABLES

CHECKING BRAKE SHOES AND BRAKE CABLES

CHECKING BRAKE SHOES AND BRAKE CABLES

- Check the adjustment of the brake shoes. If necessary, adjust. See **BRAKE SHOES PARKING BRAKE, REPLACING**
- Check the adjustment of the brake cable. If necessary, adjust. See **PARKING BRAKE CABLE REAR, REPLACING** .

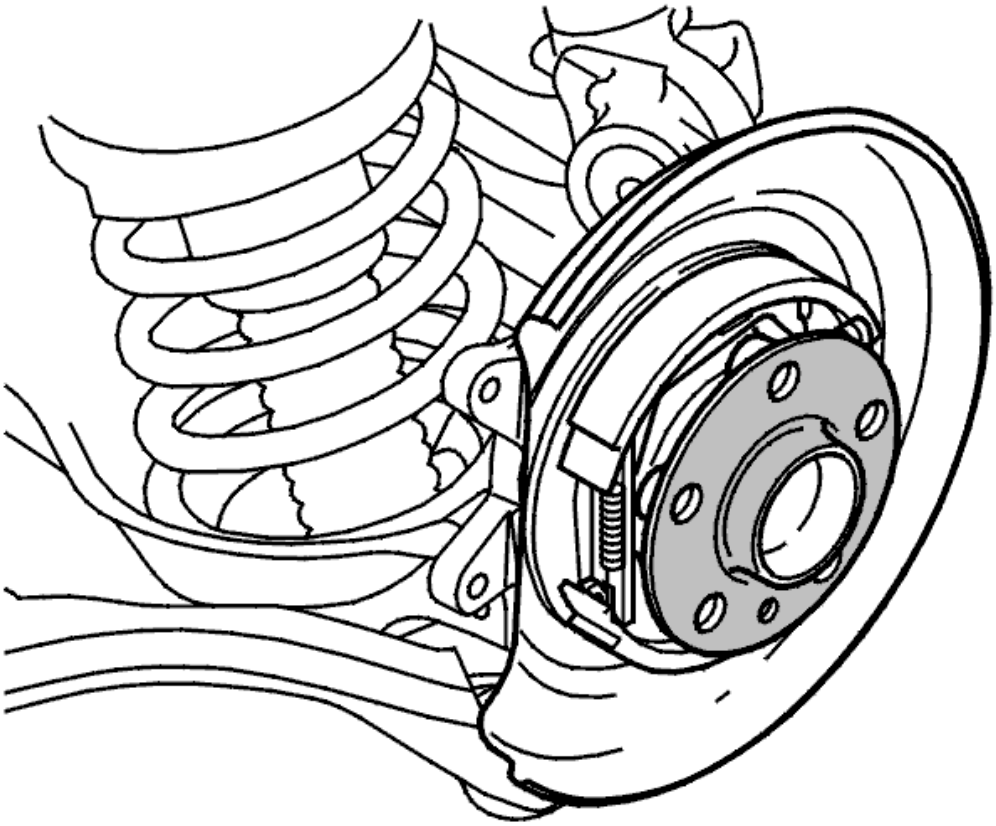

Fig. 14: Brake Pads
Courtesy of VOLVO CARS CORPORATION

BRAKE SHOES PARKING BRAKE, REPLACING

- see **BRAKE SHOES PARKING BRAKE, REPLACING** .

FAULT-TRACING INFORMATION

Condition

- No diagnostic trouble codes (DTCs) stored.
- The fault is permanent.

Possible Source

- Incorrectly adjusted brake shoes or cables.

CHECKING CONTROL MODULE CONNECTION

CHECKING CONTROL MODULE CONNECTION

CHECKING CONTROL MODULE CONNECTION

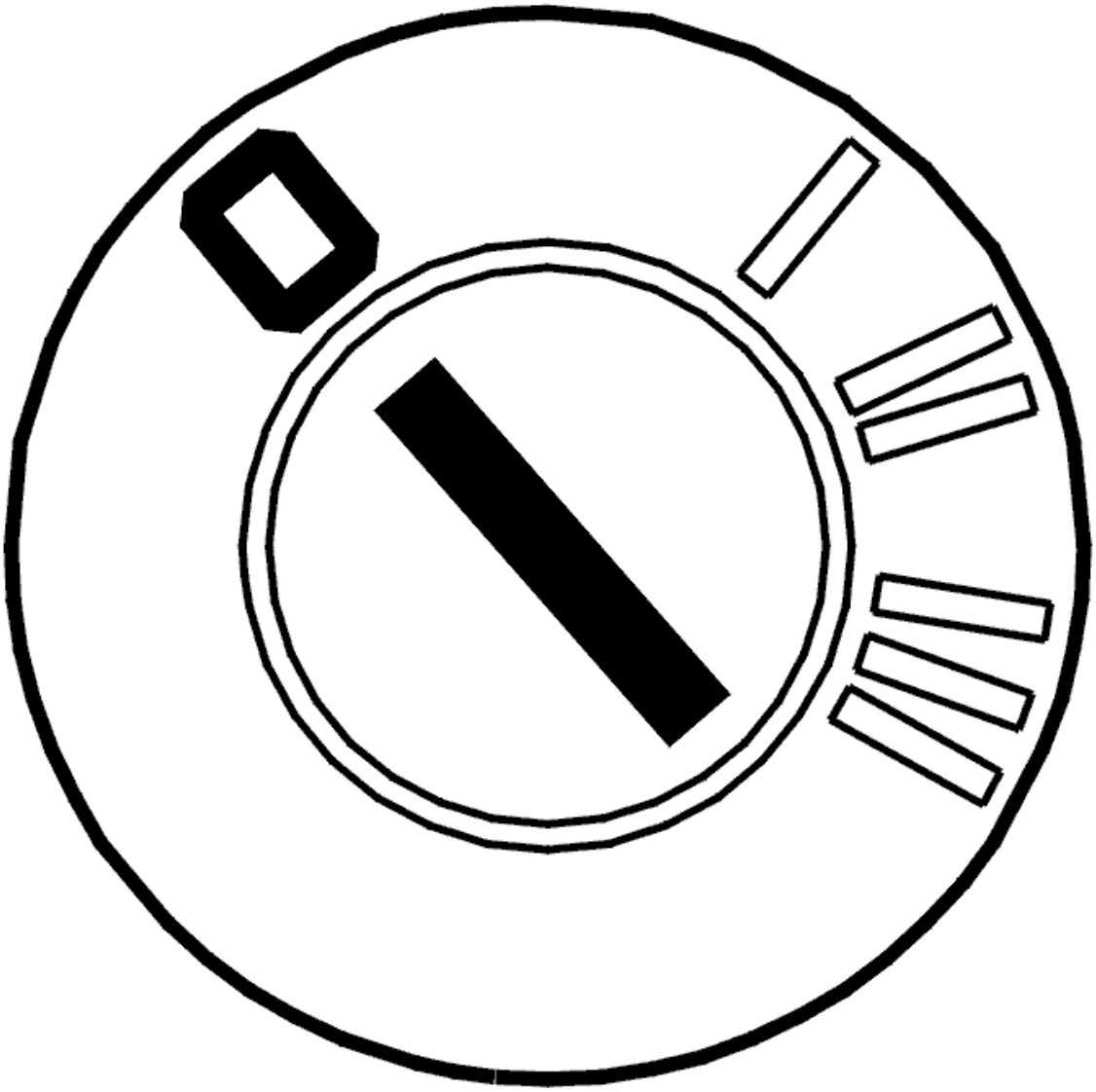

Fig. 15: Identifying Ignition OFF
Courtesy of VOLVO CARS CORPORATION

- Ignition off.

  Check that control module connector is correctly connected to control module and that connector lock is working.

  Check that control module connector, pins and socket housings are not damaged.

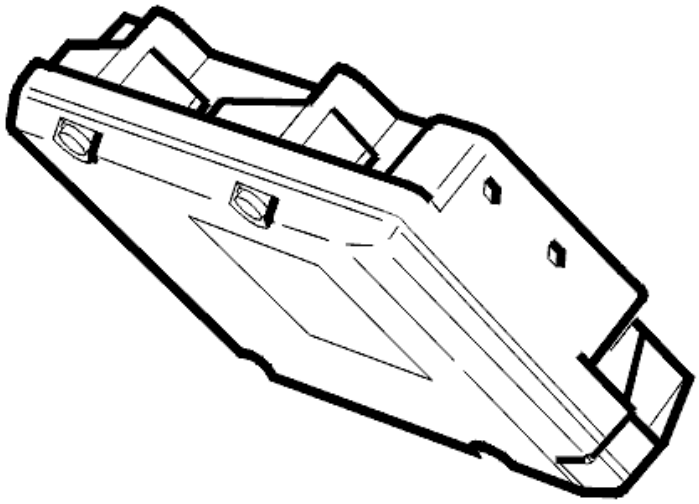

Fig. 16: Brake Control Module
Courtesy of VOLVO CARS CORPORATION

Is the control module correctly connected?

- **YES**

  fault not found

- **NO**

  see **CORRECTIVE ACTION, CONTROL MODULE CONNECTION**

CORRECTIVE ACTION, CONTROL MODULE CONNECTION

Connect control module.

- **Continue**

  see **VERIFICATION**

VERIFICATION

VERIFICATION

HINT: After carrying out the repair, check that the fault has been remedied.

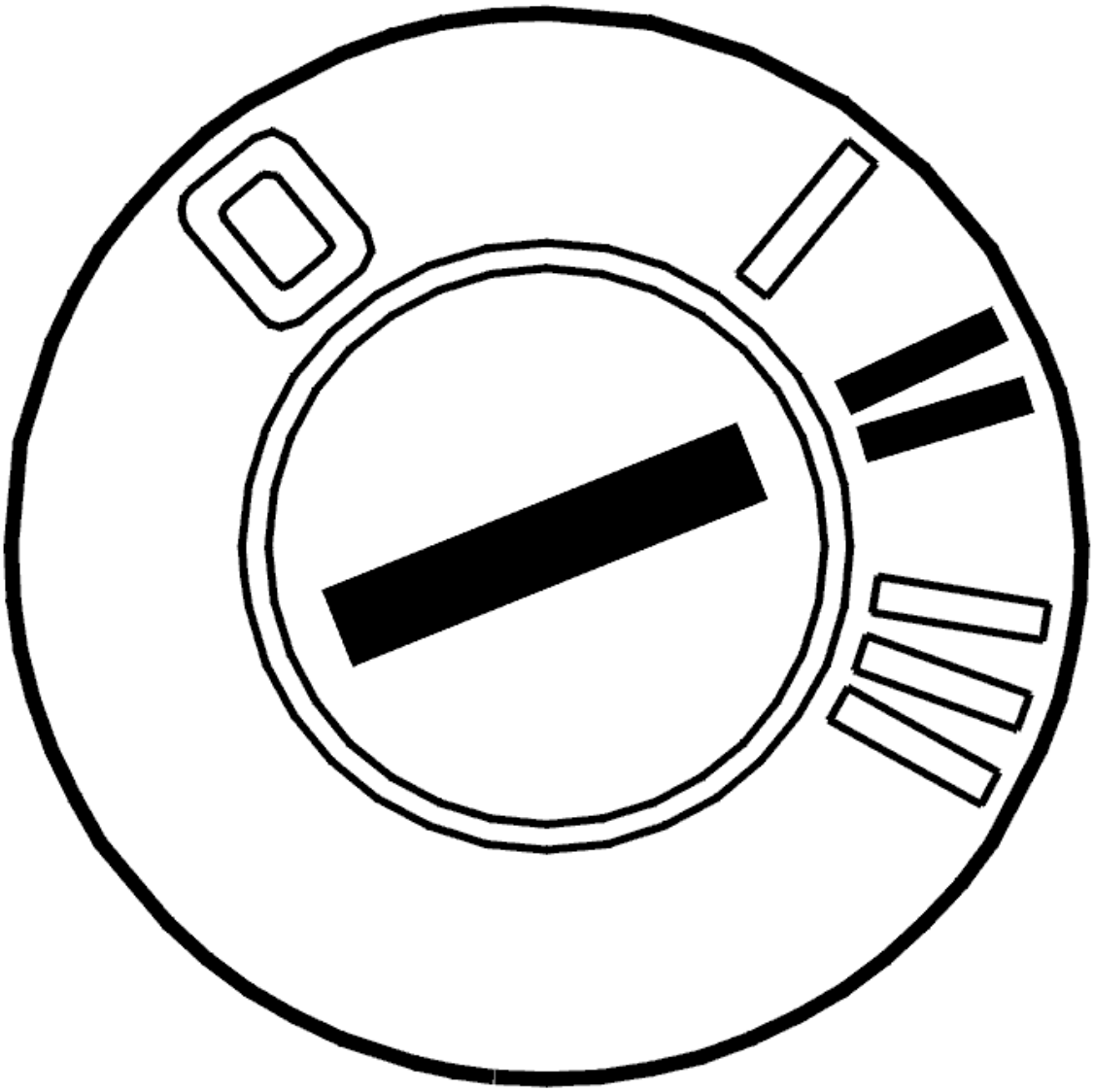

Fig. 17: Identifying Ignition ON
Courtesy of VOLVO CARS CORPORATION

- Ignition off.
- Reconnect connectors, reinstall components.
- Ignition on.

When the ignition is switched on the control module lights the ABS warning lamp. Check that the warning lamp goes out after approximately 2 seconds.

NOTE: The warning lamp will not go out if a fault has been stored in the control module.

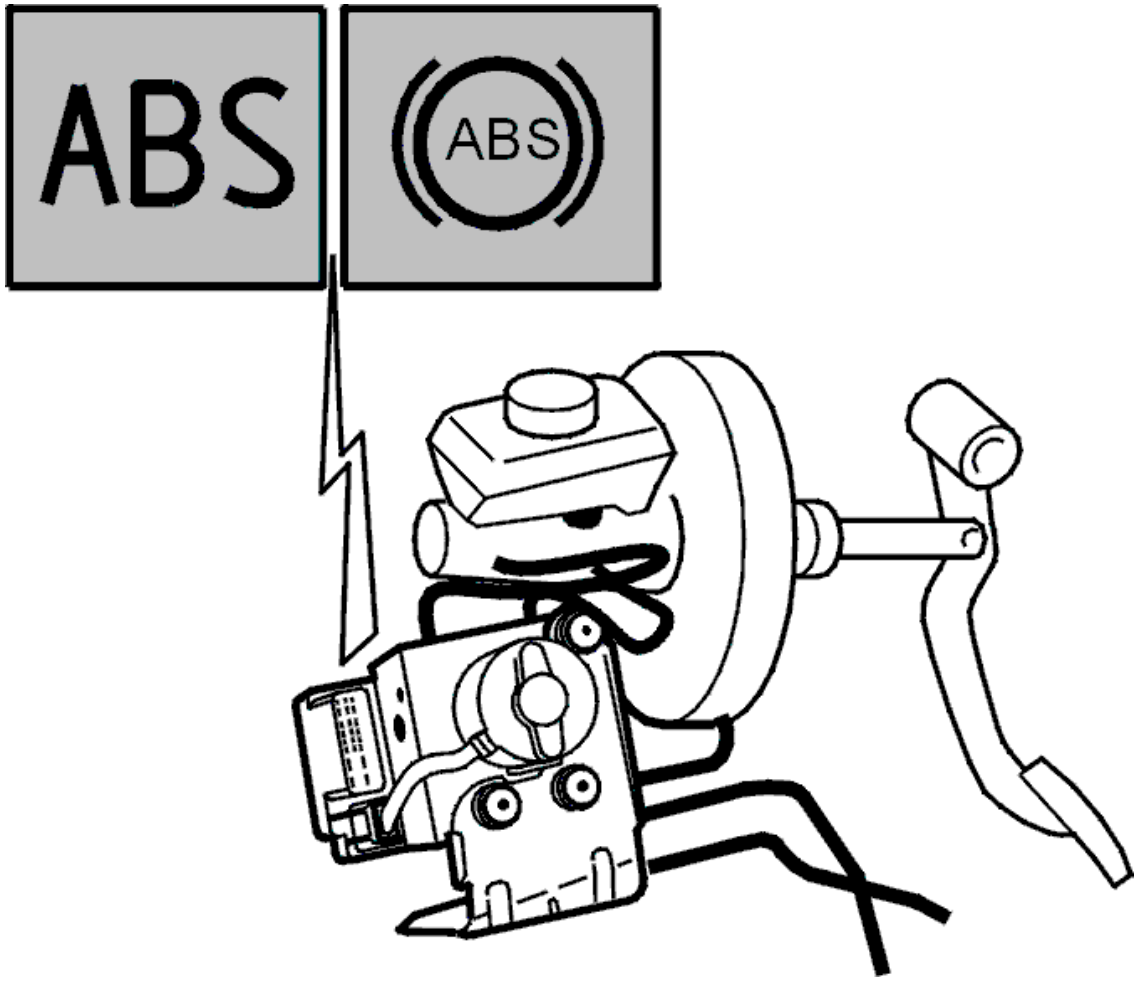

Fig. 18: Identifying ABS Control Module And ABS Warning Lamp
Courtesy of VOLVO CARS CORPORATION

Does the ABS warning lamp light and go out shortly afterwards?

- **YES**

  VERIFIED: Troubleshooting has been completed.

- **NO**

  see **INFORMATION**

INFORMATION

FAULT-TRACING INFORMATION

The fault should be diagnosed and remedied. Since this is not the case the fault-tracing process has failed.

Complete the fault-tracing for those fault or try again.

FAULT-TRACING INFORMATION

Condition

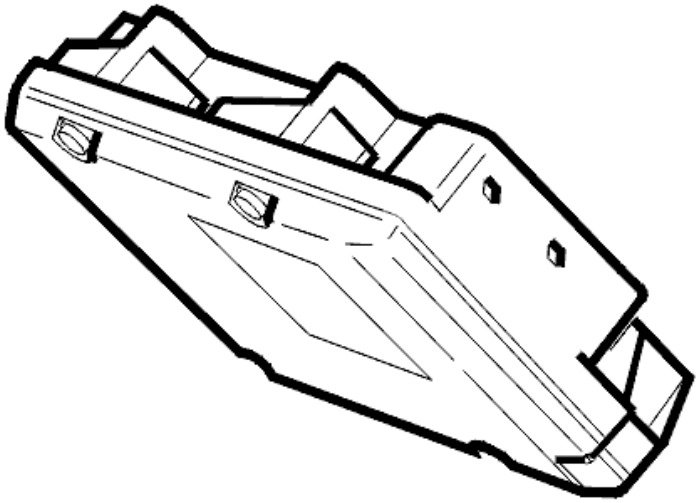

Fig. 19: Brake Control Module
Courtesy of VOLVO CARS CORPORATION

- No diagnostic trouble codes (DTCs) stored.
- Normal battery voltage.
- Charging system operating.
- The fault is permanent.

Possible Source

- Control module not/badly connected.

CHECKING DISC BRAKE CALIPER

CHECKING THE BRAKE CALIPERS

CHECKING THE BRAKE CALIPERS

- Check brake calipers for worn seals

- Replace the brake caliper if a seal is worn. See **BRAKE CALIPERS FRONT, REPLACING** or **BRAKE CALIPERS REAR, REPLACING** .

FAULT-TRACING INFORMATION

Condition

- No diagnostic trouble codes (DTCs) stored.
- The fault is permanent.

Possible Source

- Worn seal in brake caliper.

CHECKING FOR AIR IN BRAKE SYSTEM

CHECKING FOR AIR IN BRAKE SYSTEM

CHECKING FOR AIR IN BRAKE SYSTEM

- Bleed brake system according to **BRAKE SYSTEM, BLEEDING (USING BLEEDING UNIT)** .

FAULT-TRACING INFORMATION

Condition

- No diagnostic trouble codes (DTCs) stored.
- The fault is permanent.

Possible Source

- Air in brake system.

CHECKING FOR GREASE OR OIL ON PADS AND DISCS

CHECKING FOR GREASE OR OIL ON PADS AND DISCS

GREASE OR OIL ON PADS AND DISCS

- Replace brake pads. See **BRAKE PADS FRONT, REPLACING** or **BRAKE PADS REAR, REPLACING** and check nearby seals.

FAULT-TRACING INFORMATION

Condition

- No diagnostic trouble codes (DTCs) stored.
- The fault is permanent.

Possible Source

- Grease or oil on pads and discs.

CHECKING FOR MOISTURE ON PADS AND DISCS

CHECKING FOR MOISTURE ON PADS AND DISCS

CHECKING FOR MOISTURE ON PADS AND DISCS

- Brake several times to dry pads.

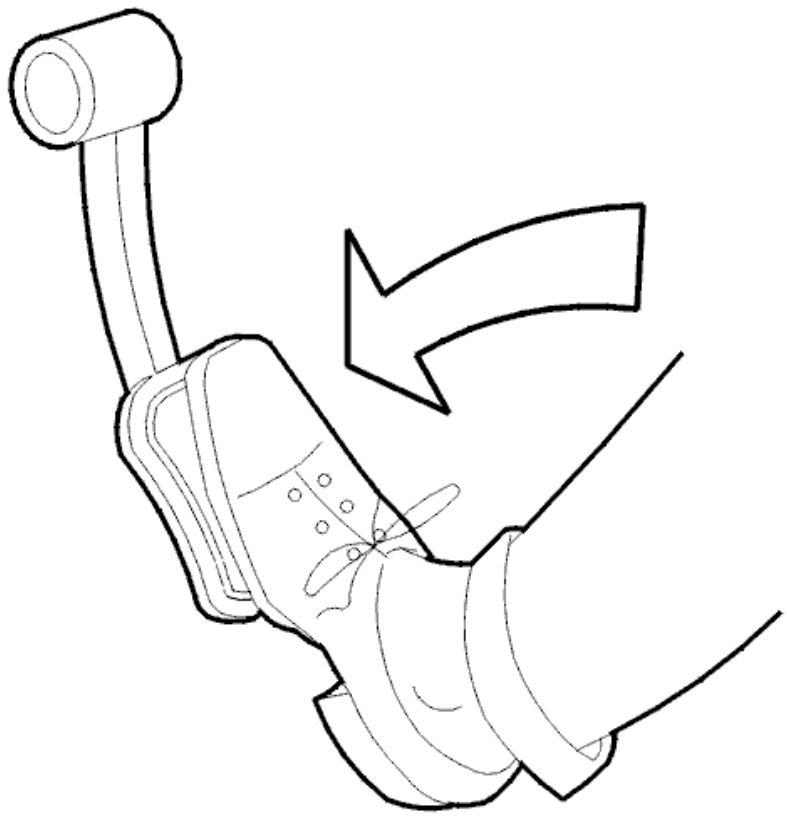

Fig. 20: Brake Pedal Pressed Several Times To Stop
Courtesy of VOLVO CARS CORPORATION

FAULT-TRACING INFORMATION

Condition

- No diagnostic trouble codes (DTCs) stored.

- The fault is permanent.

Possible Source

- Moisture on pads and discs.

CHECKING FOR UNEVEN TIRE WEAR

CHECKING FOR UNEVEN TIRE WEAR

CHECKING FOR UNEVEN TIRE WEAR

- Check tire wear on all tires.
- If a tire displays uneven tire wear that wheels alignment should be adjusted.

FAULT-TRACING INFORMATION

Condition

- No diagnostic trouble codes (DTCs) stored.
- The fault is permanent.

Possible Source

- Uneven tire wear.

CHECKING FRONT WHEEL ALIGNMENT

CHECKING FRONT WHEEL ALIGNMENT

CHECKING FRONT WHEEL ALIGNMENT

- Check front wheel alignment.
- Adjust if necessary.

FAULT-TRACING INFORMATION

Condition

- No diagnostic trouble codes (DTCs) stored.
- The fault is permanent.

Possible Source

- Front end incorrectly aligned.

CHECKING HOSES

CHECKING HOSES

CHECKING HOSES

- Check hydraulic hoses for leakage.
- If a hose is leaking, replace the hose according to **BRAKE HOSE FRONT, REPLACING** or **BRAKE HOSE REAR, REPLACING** .

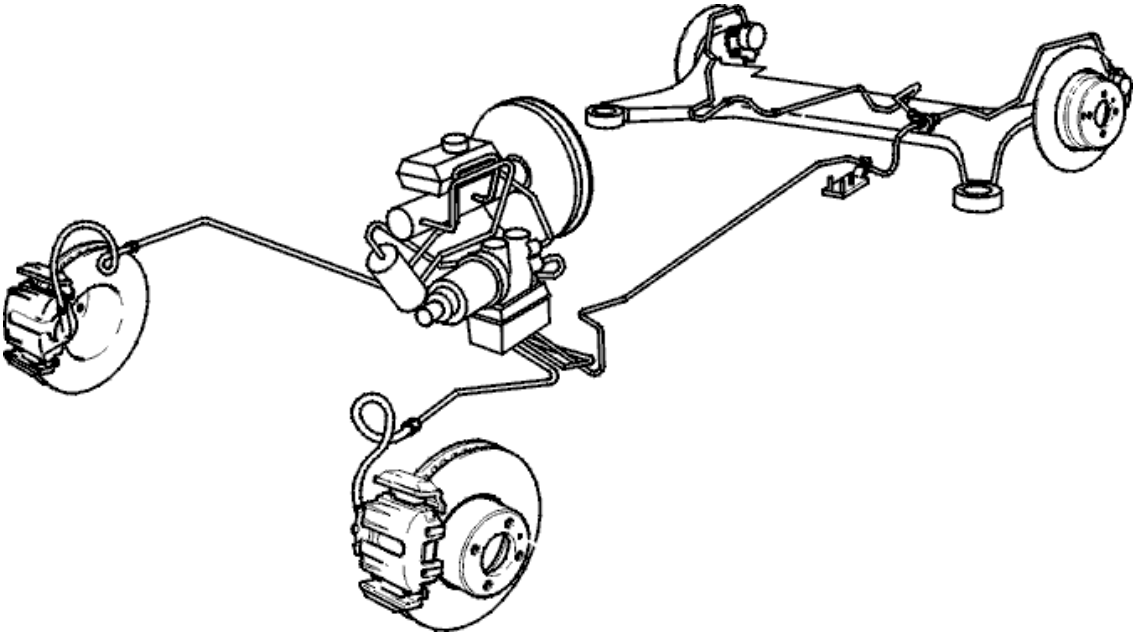

Fig. 21: Identifying Brake Hydraulic System
Courtesy of VOLVO CARS CORPORATION

FAULT-TRACING INFORMATION

Condition

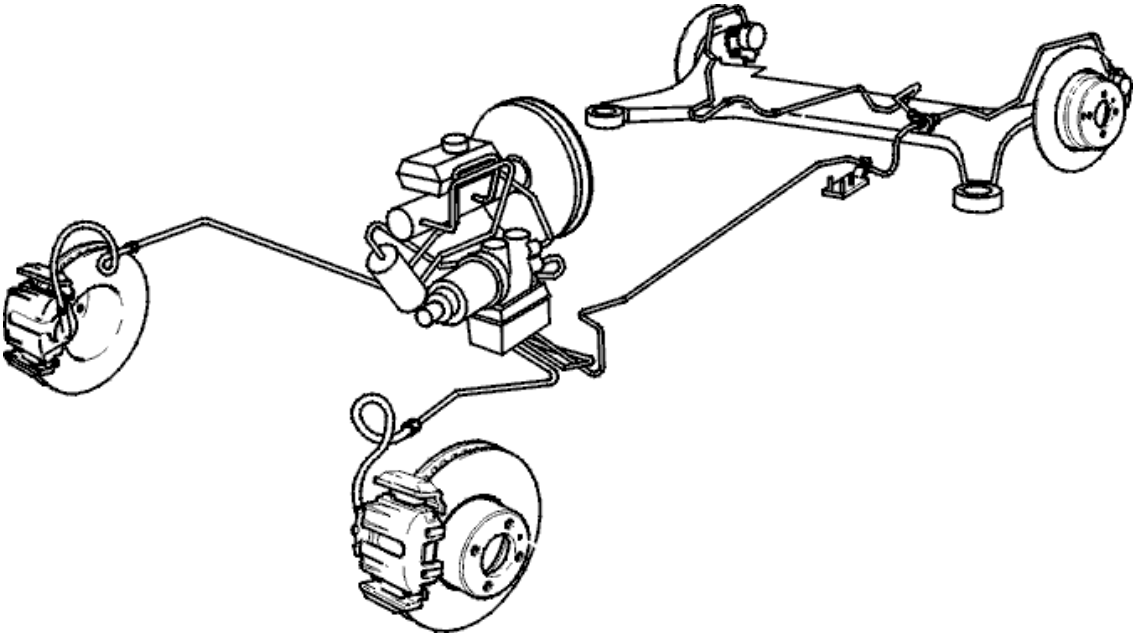

Fig. 22: Identifying Brake Hydraulic System
Courtesy of VOLVO CARS CORPORATION

- No diagnostic trouble codes (DTCs) stored.
- The fault is permanent.

Possible Source

- Leaking hose.

CHECKING LEAKAGE IN HYDRAULIC BRAKE SYSTEM

CHECKING LEAKAGE IN HYDRAULIC BRAKE SYSTEM

CHECKING LEAKAGE IN HYDRAULIC BRAKE SYSTEM

- Check hydraulic brake system. Repair and bleed system according to **BRAKE SYSTEM, BLEEDING (USING BLEEDING UNIT)** .

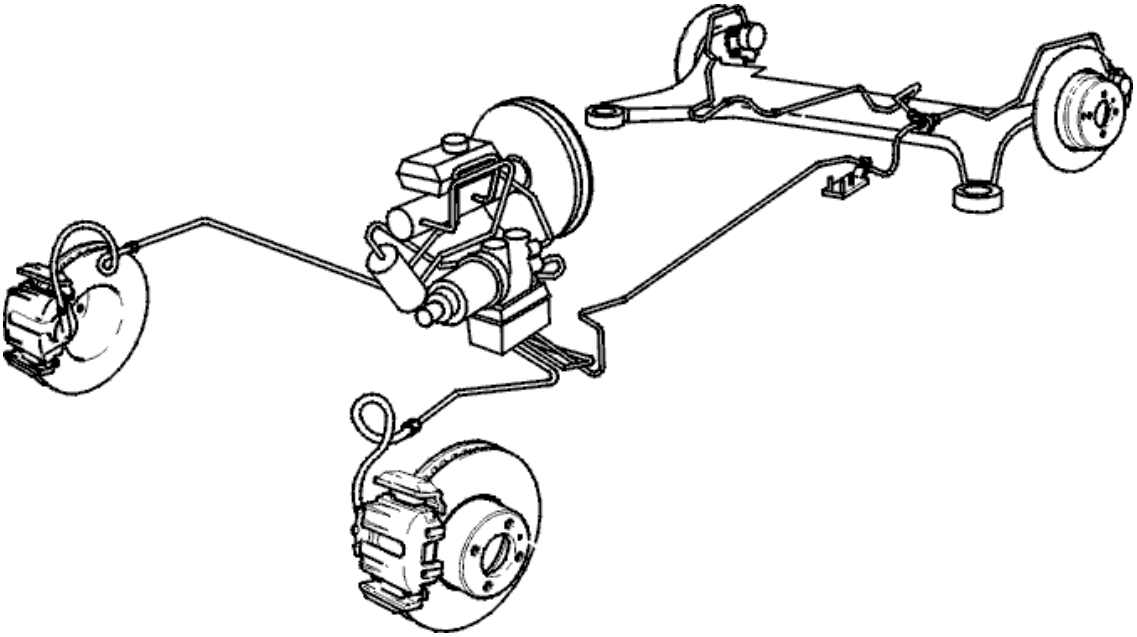

Fig. 23: Identifying Brake Hydraulic System
Courtesy of VOLVO CARS CORPORATION

FAULT-TRACING INFORMATION

Condition

- No diagnostic trouble codes (DTCs) stored.
- The fault is permanent.

Possible Source

- Leakage in hydraulic brake system.

CHECKING PARKING BRAKE CABLE

CHECKING PARKING BRAKE CABLE

CHECKING PARKING BRAKE CABLE

- Check that the mechanical cables are not damaged or sticking. If necessary replace the mechanical cable. See **PARKING BRAKE CABLE REAR, REPLACING** .

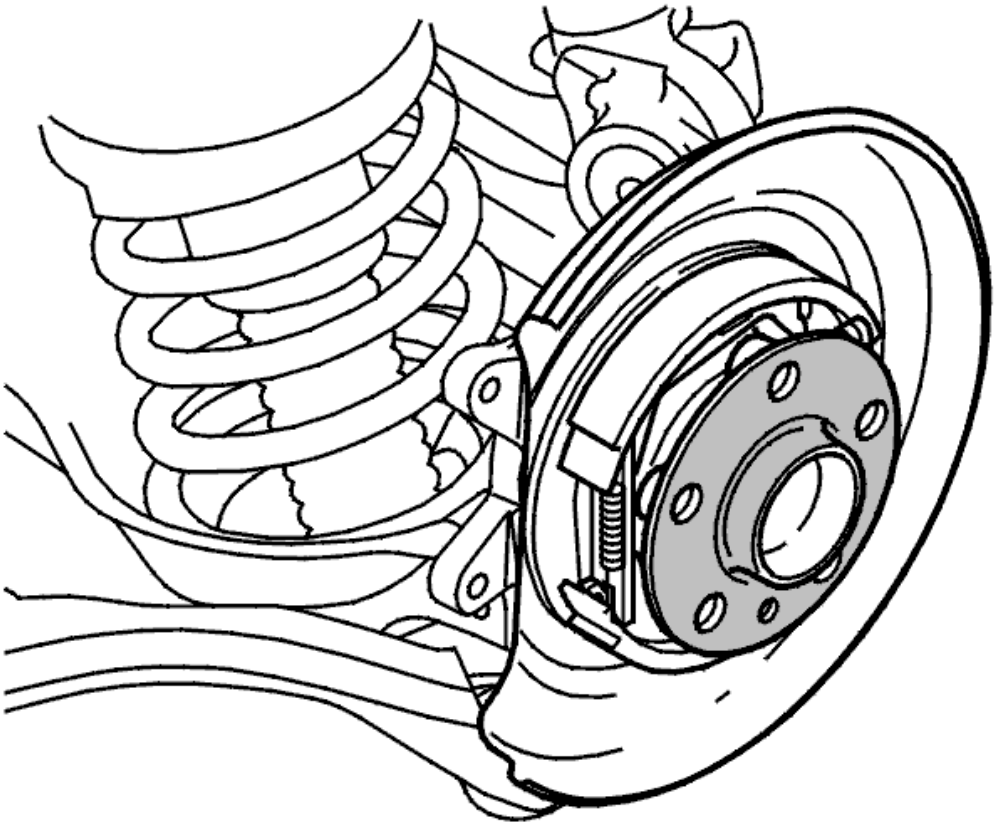

Fig. 24: Brake Pads
Courtesy of VOLVO CARS CORPORATION

FAULT-TRACING INFORMATION

Condition

- No diagnostic trouble codes (DTCs) stored.
- The fault is permanent.

Possible Source

- Sticking parking brake cable.

CHECKING PLAY IN WHEEL HUB

CHECKING PLAY IN WHEEL HUB

CHECKING PLAY IN WHEEL HUB

- Check play in wheel hub.
- If play is greater than tolerances, replace wheel hub.

FAULT-TRACING INFORMATION

Condition

- No diagnostic trouble codes (DTCs) stored.
- The fault is permanent.

Possible Source

- Play in wheel hub.

CHECKING POWER BRAKE BOOSTER

CHECKING THE POWER BRAKE BOOSTER

- Check the vacuum and the condition of the power brake booster. See **VACUUM SYSTEM, CHECKING**
- Replace hoses or power brake booster.
  - For XC90 B6xxxx, see **POWER BRAKE BOOSTER, REPLACING**
  - For XC90 B5xxxx, see **POWER BRAKE BOOSTER, REPLACING** .

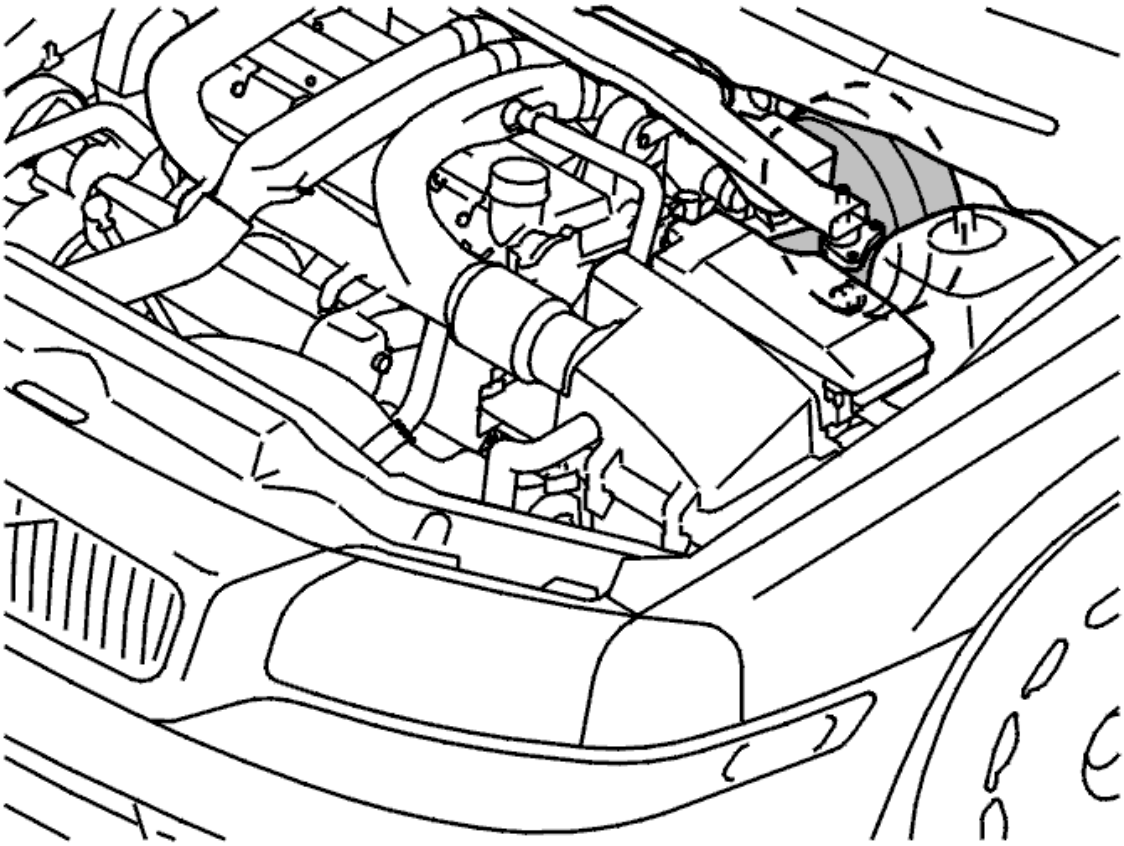

Fig. 25: Locating Power Brake Booster

Courtesy of VOLVO CARS CORPORATION

FAULT-TRACING INFORMATION

Condition

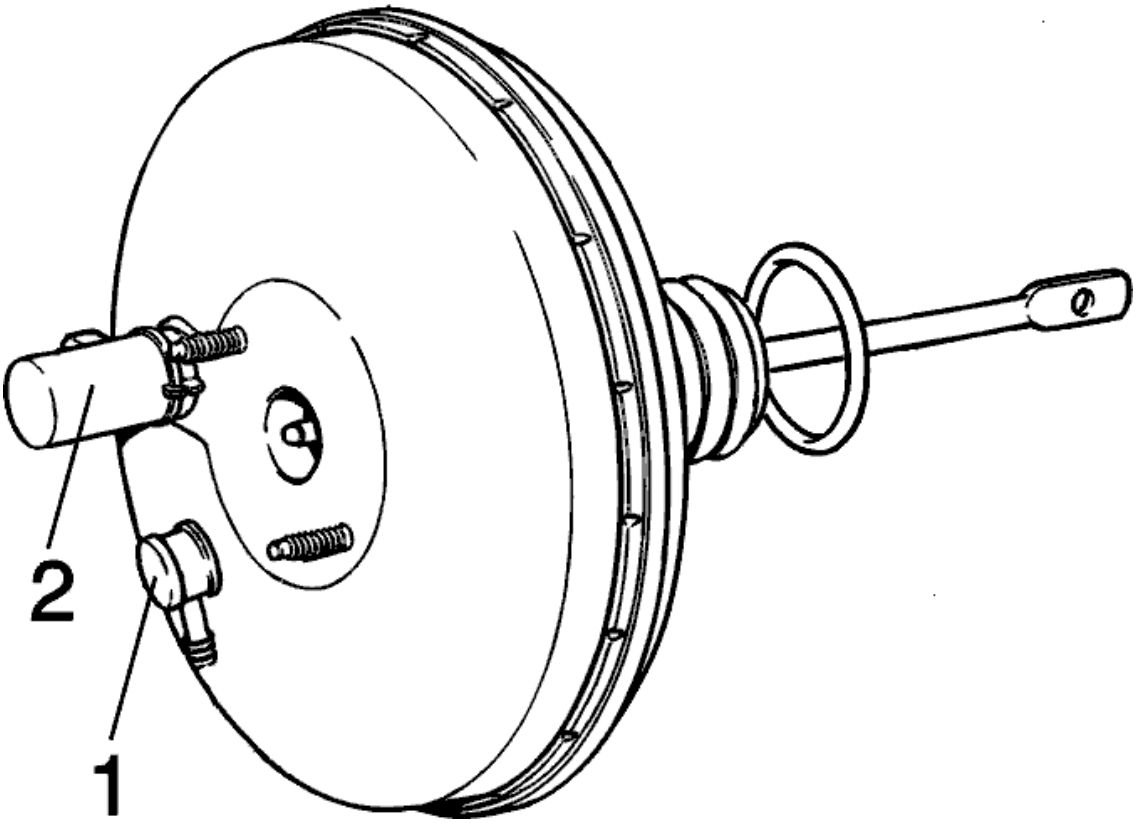

Fig. 26: Identifying Power Brake Booster
Courtesy of VOLVO CARS CORPORATION

- No diagnostic trouble codes (DTCs) stored.
- The fault is permanent.

Possible Source

- Defective power brake booster.

CHECKING POWER BRAKE BOOSTER CHECK VALVE

CHECKING THE CHECK VALVE FOR THE POWER BRAKE BOOSTER

- Check the function of the check valve. See **VACUUM SYSTEM, CHECKING** . Replace the check valve if the valve is faulty.

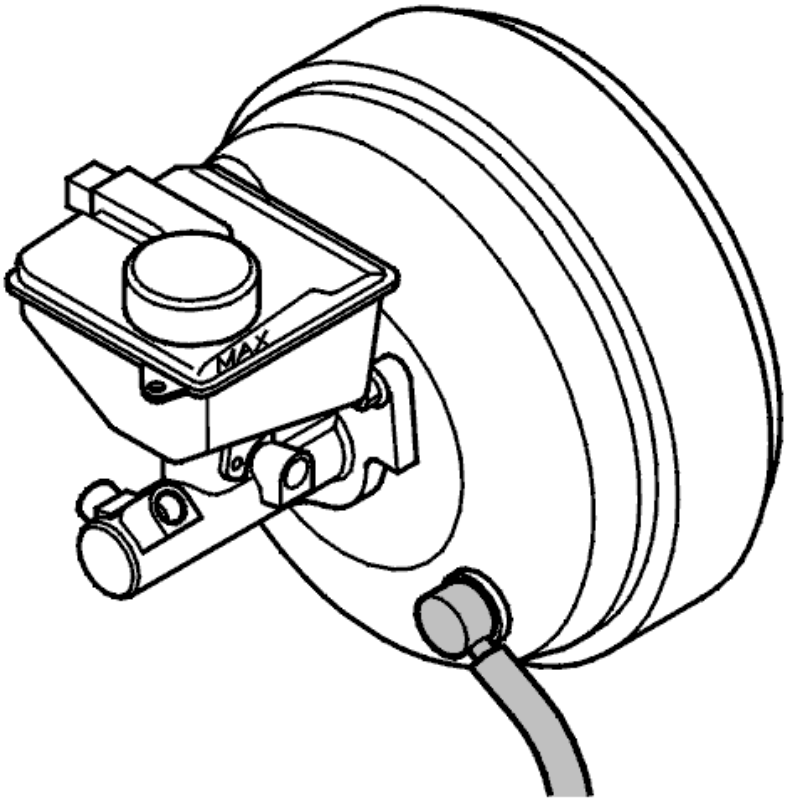

Fig. 27: Identifying Power Brake Booster Check Valve
Courtesy of VOLVO CARS CORPORATION

FAULT-TRACING INFORMATION

Condition

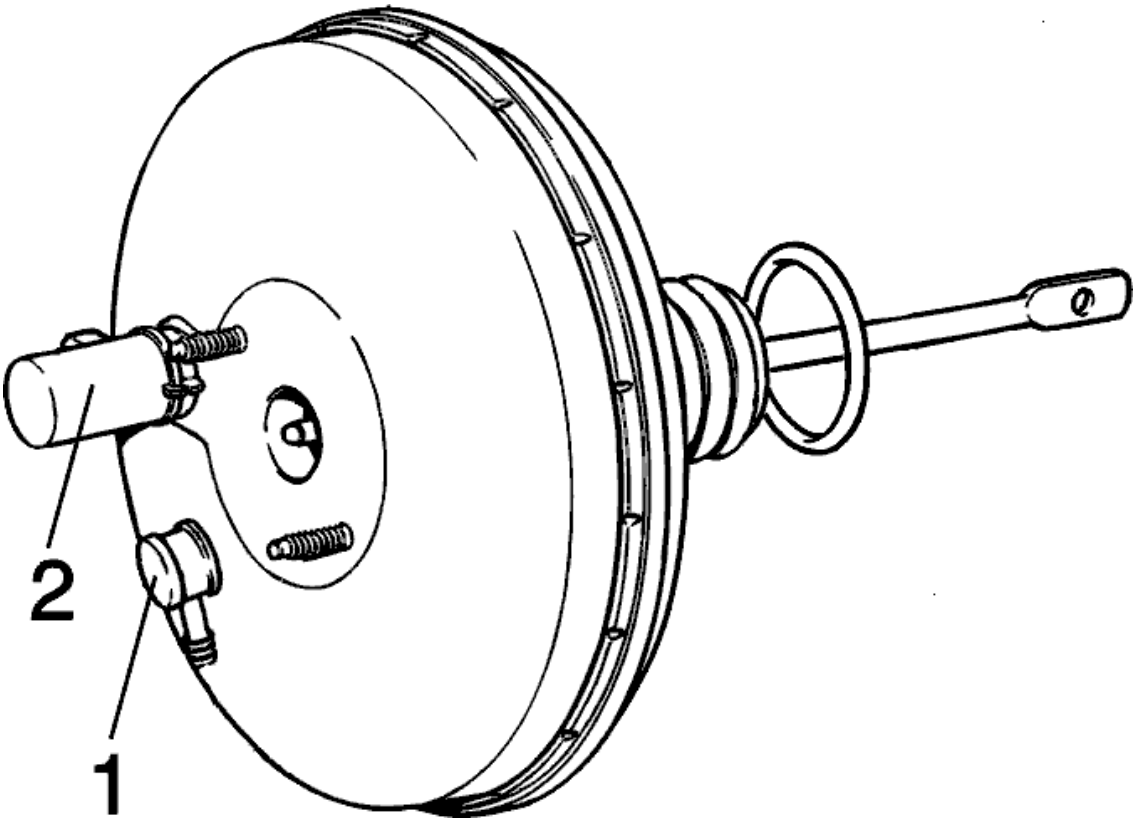

Fig. 28: Identifying Power Brake Booster
Courtesy of VOLVO CARS CORPORATION

- No diagnostic trouble codes (DTCs) stored.
- The fault is permanent.

Possible Source

- Defective power brake booster check valve (1).

CHECKING REAR BRAKE DISCS

CHECKING THE REAR BRAKE DISCS

- Check the brake discs. Replace. See **BRAKE DISC REAR, REPLACING**

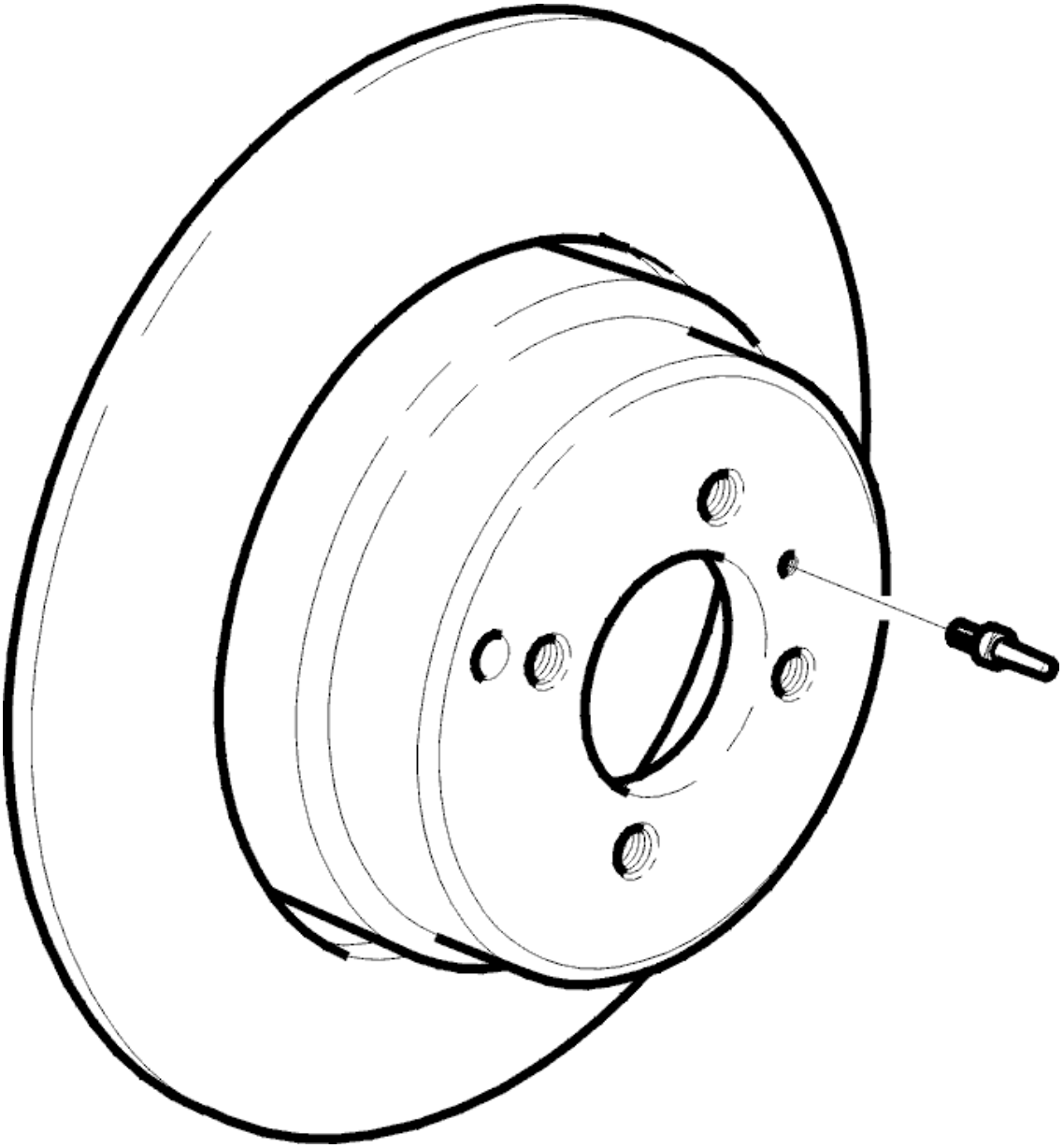

Fig. 29: Identifying Brake Caliper Mounting Bolt
Courtesy of VOLVO CARS CORPORATION

FAULT-TRACING INFORMATION

Condition

- No diagnostic trouble codes (DTCs) stored.
- The fault is permanent.

Possible Source

- Brake pads in rear brake caliper vibrating.

CHECKING THE GROUND TERMINAL, BRAKE CONTROL MODULE

CHECKING THE GROUND TERMINALS, BRAKE CONTROL MODULE

see **CHECKING THE GROUND TERMINALS, BRAKE CONTROL MODULE**

CHECKING THE POWER SUPPLY, BRAKE CONTROL MODULE

CHECKING THE POWER SUPPLY, BRAKE CONTROL MODULE

CHECKING THE 15-SUPPLY TO THE CONTROL MODULE

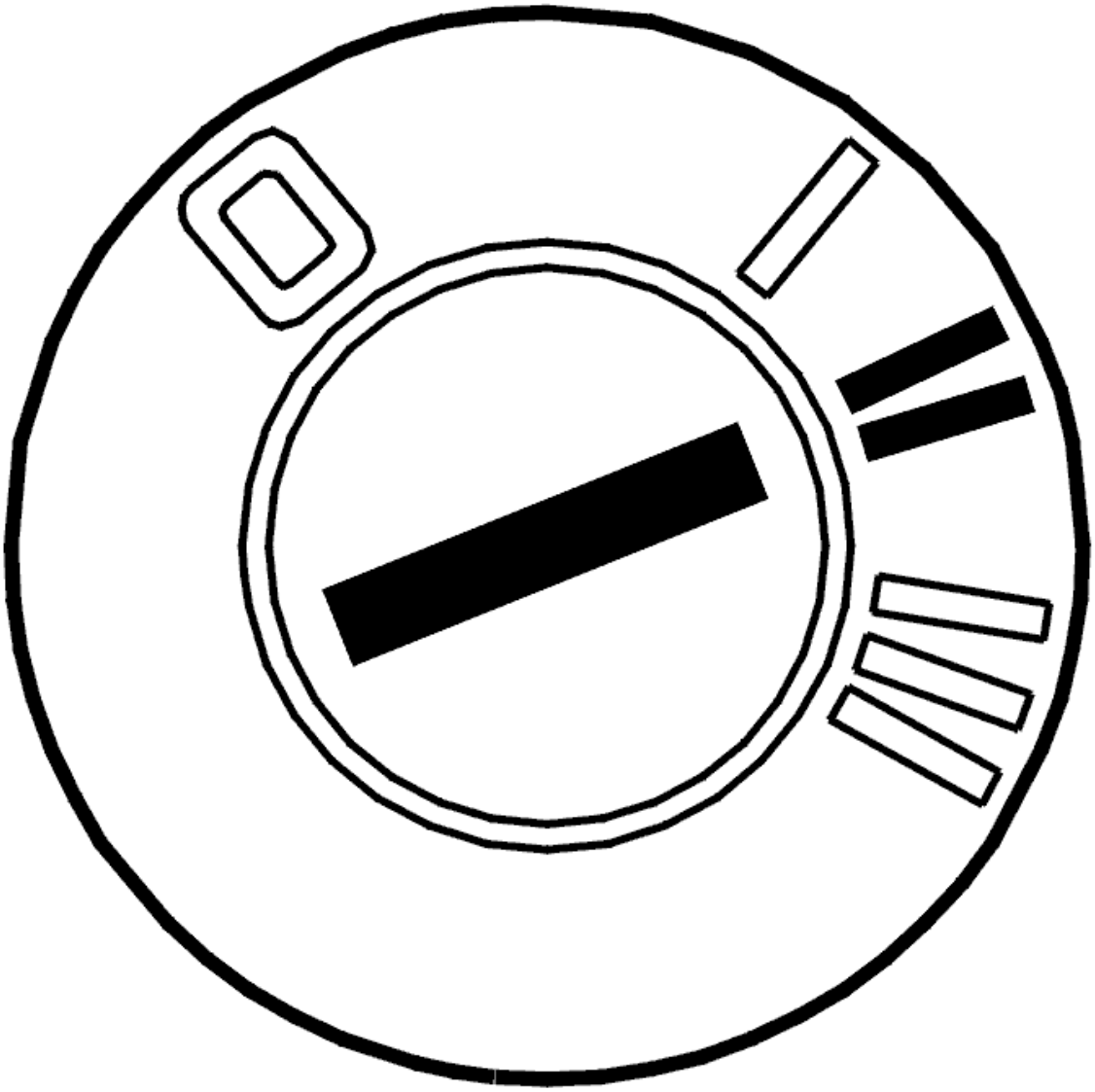

Fig. 30: Identifying Ignition ON
Courtesy of VOLVO CARS CORPORATION

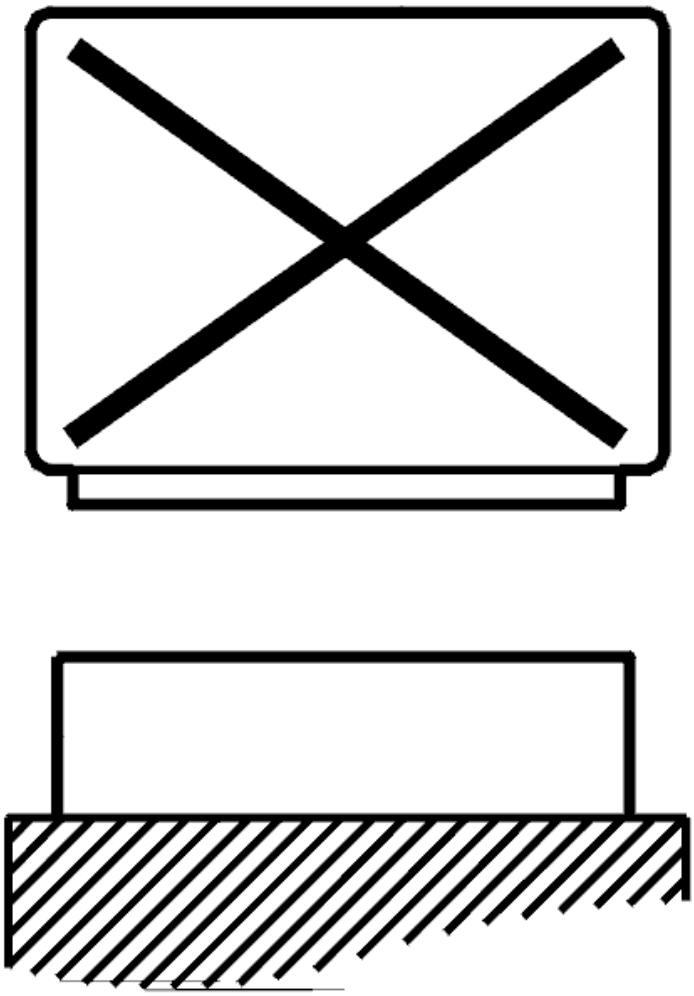

Fig. 31: Disconnecting Control Unit
Courtesy of VOLVO CARS CORPORATION

- The breakout box connected
- Control module disconnected.
- Ignition on.

  Check the 15-supply by measuring the voltage between terminal #4 (#A4) and ground terminals #16 (#A16) and #46 (#A46). The voltmeter should read battery voltage.

  Check that the fuse for the circuit is intact if the voltage is incorrect.

  If the fuse is blown, check the cable between brake control module terminal #4 (#A4) and the fuse. Check for a short-circuit to ground.

If the fuse is intact, check the cable between brake control module terminal #4 (#A4) and the fuse. Check for an open-circuit.

If no fault is found in the cable between brake control module terminal #4 (#A4) and the fuse, check the cable between the fuse and the ignition switch.

Other information

- To connect the breakout box, see **CONNECTING THE BREAKOUT BOX, BRAKE CONTROL MODULE (BCM)**

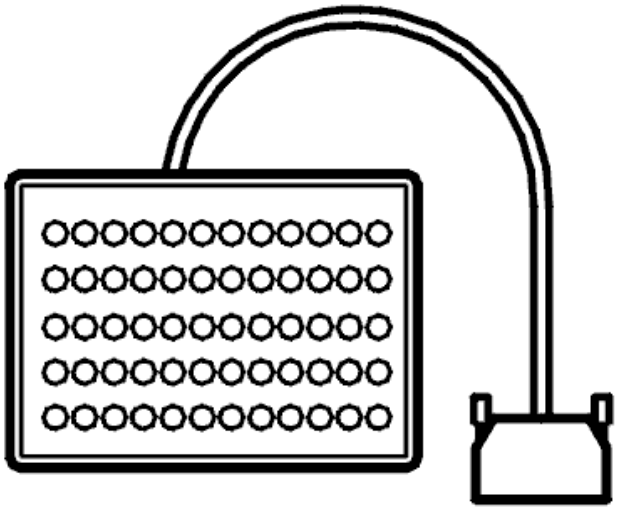

Fig. 32: Breakout Box
Courtesy of VOLVO CARS CORPORATION

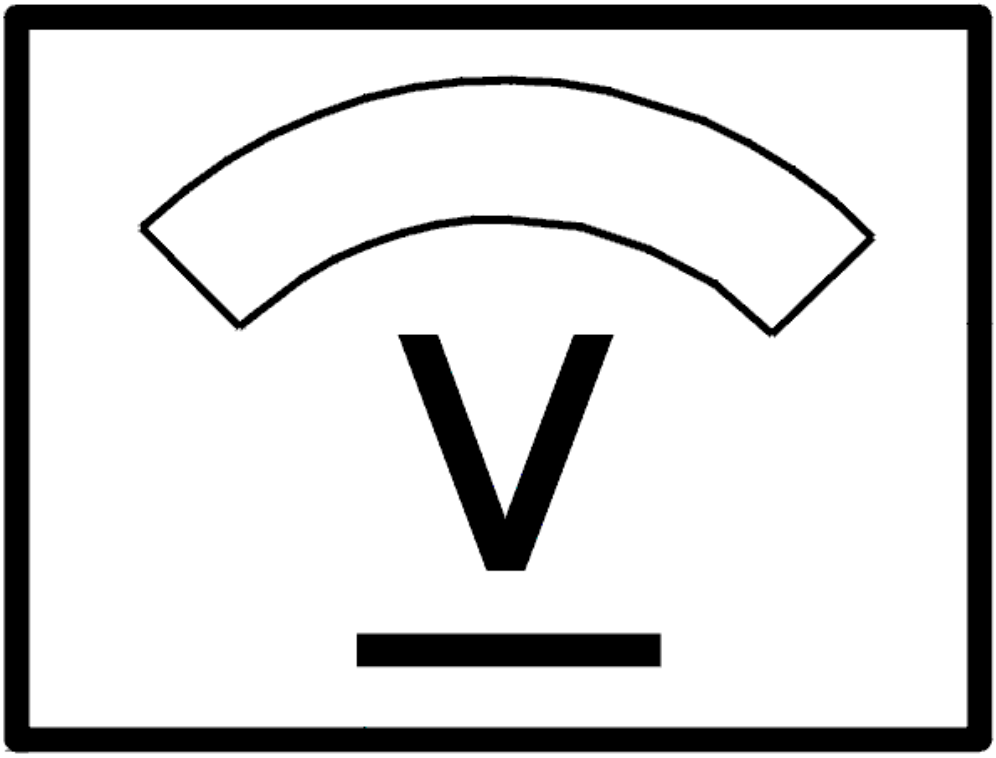

Fig. 33: Identifying Voltage Display
Courtesy of VOLVO CARS CORPORATION

Was a fault detected?

- **OK**

  see **VERIFICATION**

- **NOT OK**

  see **CHECKING THE 30-SUPPLY (VALVES) TO THE CONTROL MODULE**

CHECKING THE 30-SUPPLY (VALVES) TO THE CONTROL MODULE

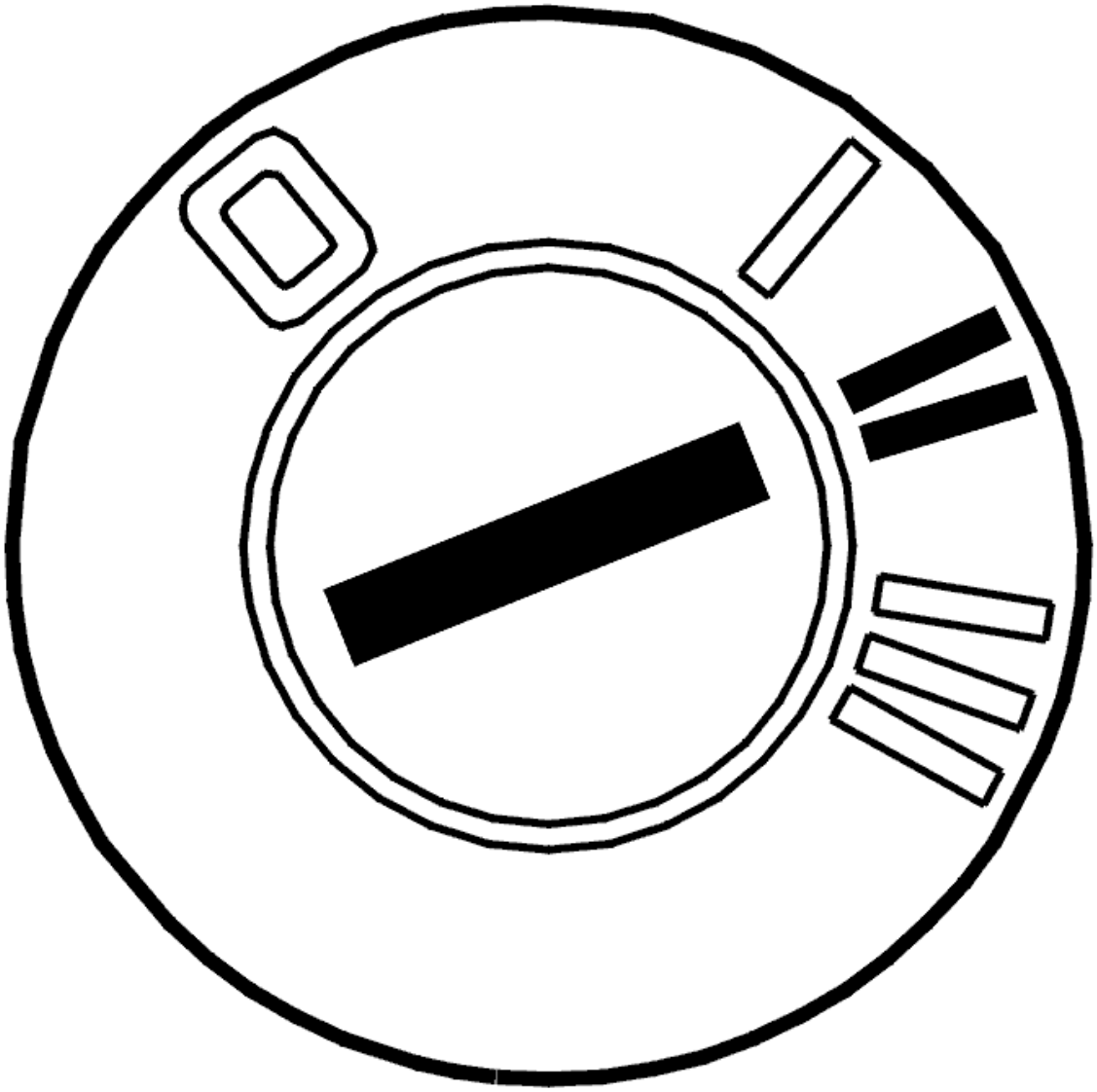

Fig. 34: Identifying Ignition ON
Courtesy of VOLVO CARS CORPORATION

- The breakout box connected
- Ignition on.

  Check the voltage between breakout box terminals #16 and #32 and between terminals #32 and #46. The voltmeter should read battery voltage.

  Check that the fuse for the circuit is intact if the voltage is incorrect.

  If the fuse is blown, check the cable between brake control module terminal #32 (#A32) and the fuse. Check for a short-circuit to ground.

  If the fuse is intact, check the cable between brake control module terminal #32 (#A32) and the fuse. Check for an open-circuit.

Remedy as necessary

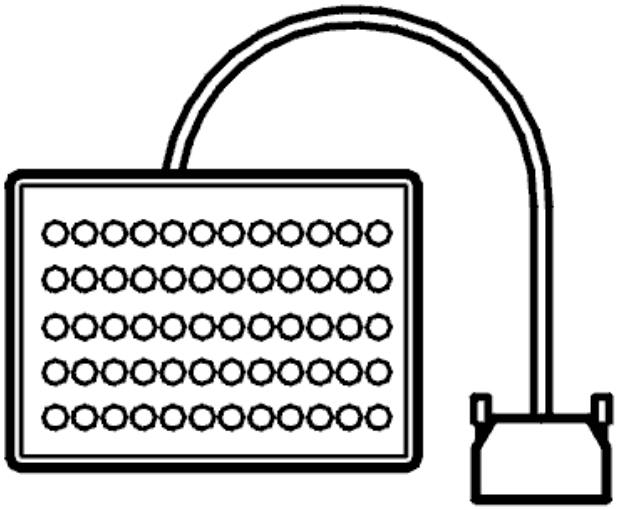

Fig. 35: Breakout Box
Courtesy of VOLVO CARS CORPORATION

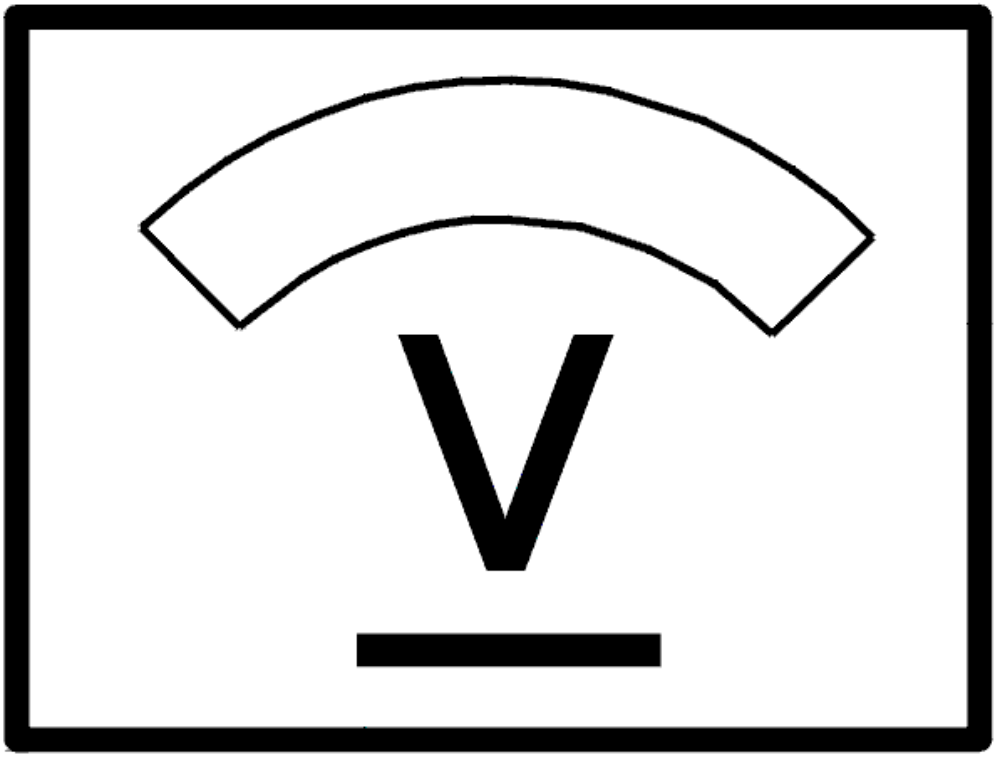

Fig. 36: Identifying Voltage Display
Courtesy of VOLVO CARS CORPORATION

Was a fault detected?

- **YES**

  see **VERIFICATION**

- **NO**

  see **INFORMATION**

VERIFICATION

HINT: After carrying out the repair, check that the fault has been remedied.

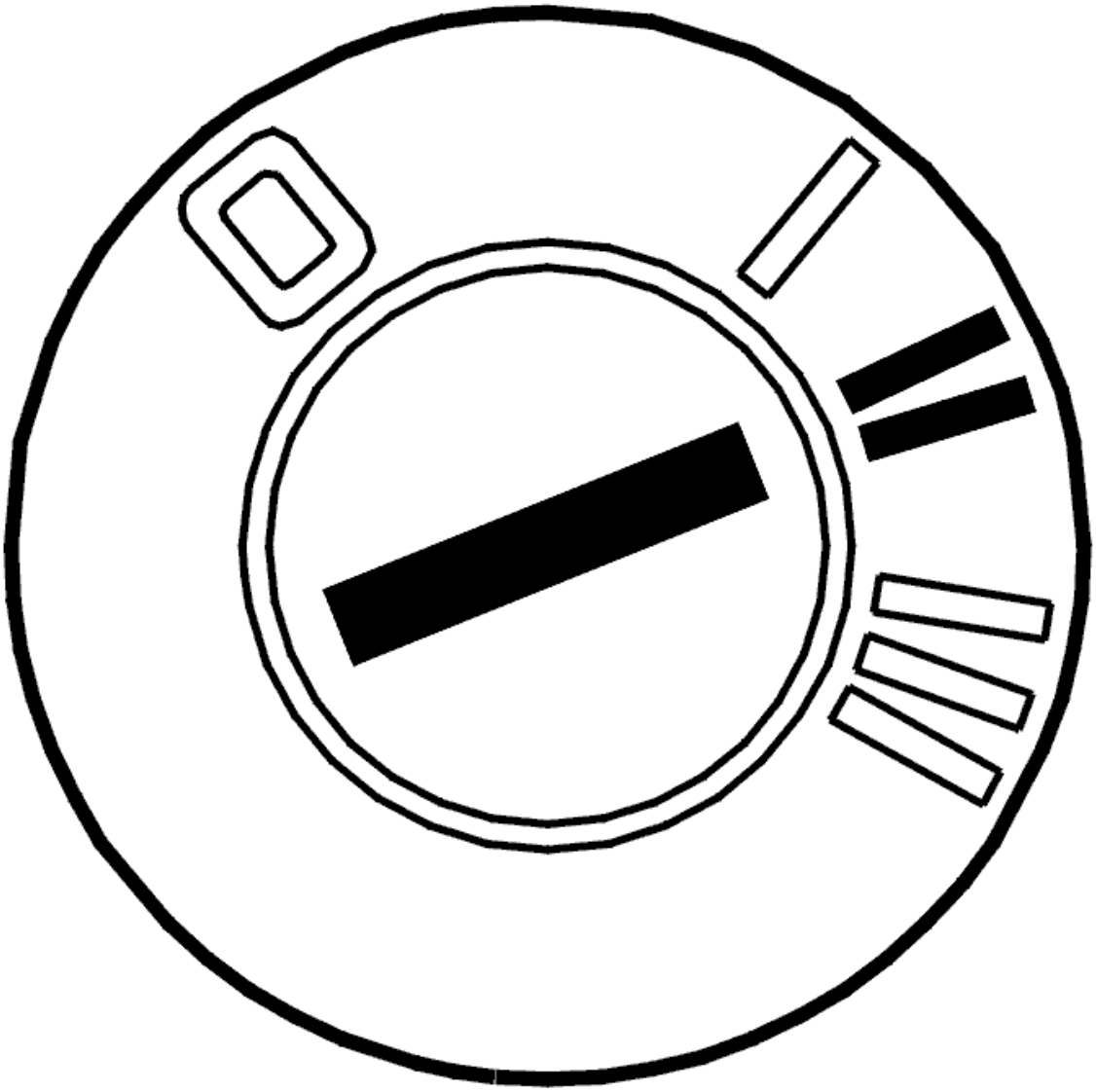

Fig. 37: Identifying Ignition ON
Courtesy of VOLVO CARS CORPORATION

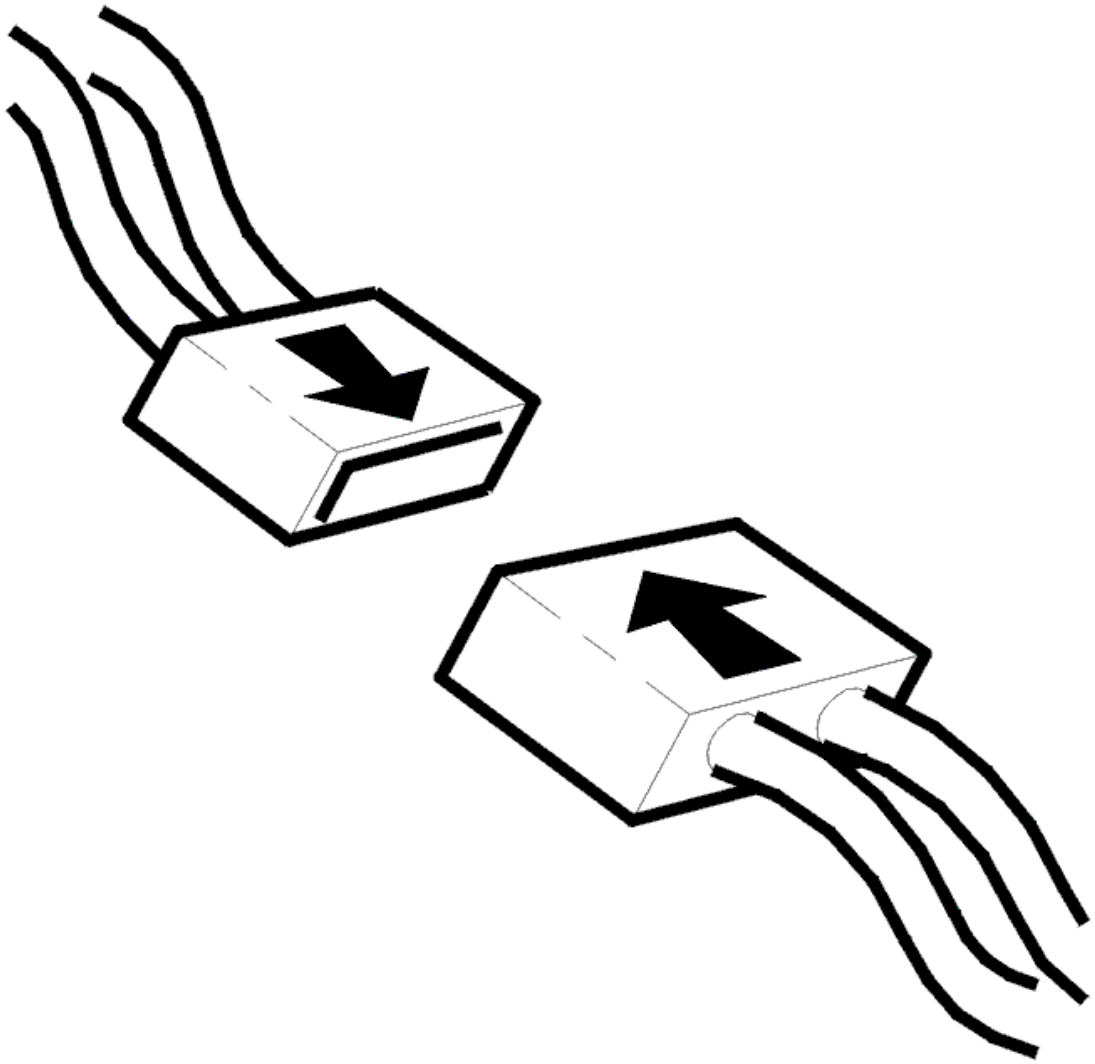

Fig. 38: Connecting Connector
Courtesy of VOLVO CARS CORPORATION

- Ignition off
- Reconnect the connectors, reinstall components etc.
- Ignition on.

The ABS warning lamp lights when the ignition is switched on.

Check that the warning lamp goes out after approximately 2 seconds.

NOTE: **The warning lamp will not go out if a fault has been stored in the control module.**

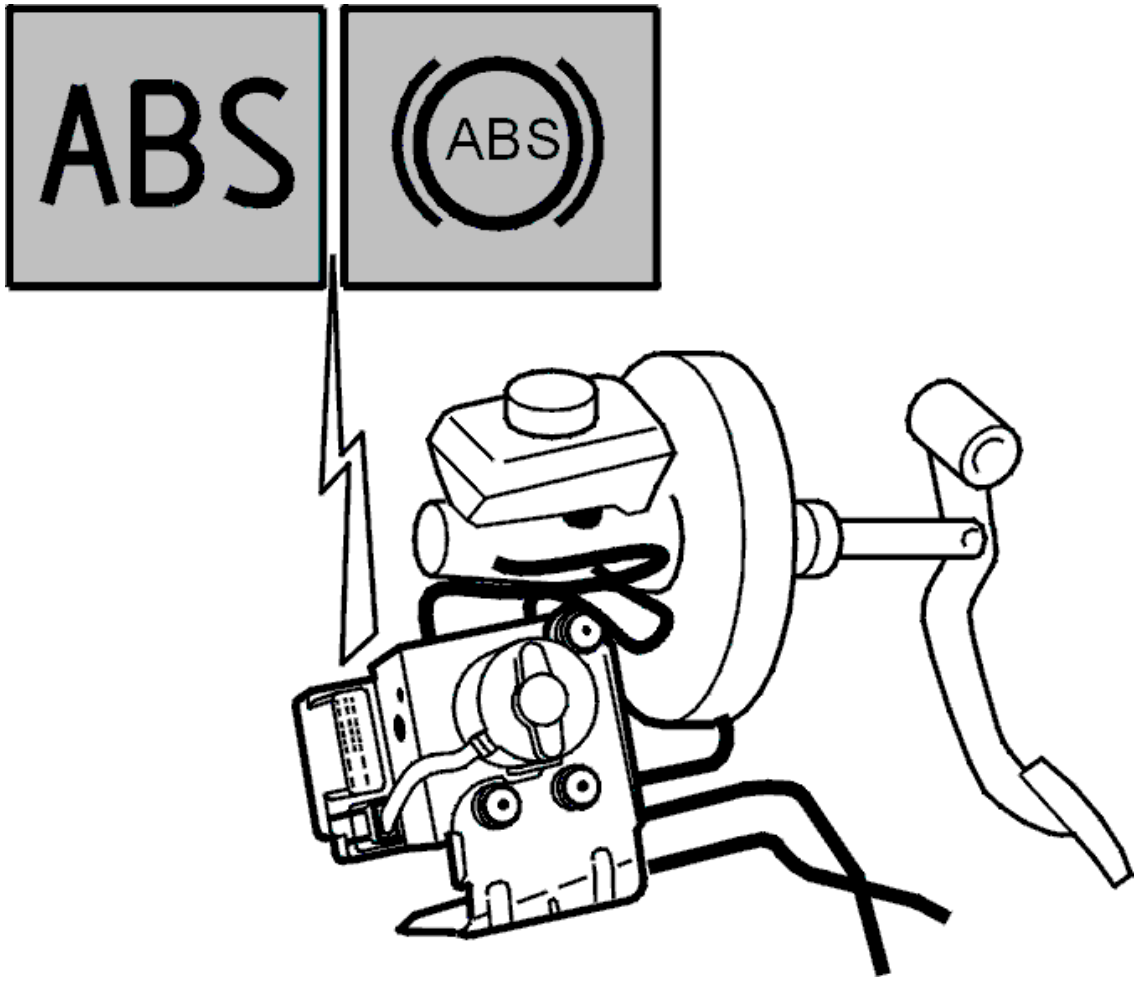

Fig. 39: Identifying ABS Control Module And ABS Warning Lamp
Courtesy of VOLVO CARS CORPORATION

Does the warning lamp go out after 2 seconds?

- **YES**

  OKAY: Troubleshooting has been completed.

- **NO**

  see **INFORMATION**

INFORMATION

FAULT-TRACING INFORMATION

The fault should be diagnosed and remedied. Since this is not the case the fault-tracing process has failed.

Complete the fault-tracing for those fault or try again.

CHECKING THE VACUUM PUMP

CHECKING THE VACUUM PUMP

FAULT-TRACING INFORMATION

The vacuum pump raises the power brake booster efficiency when the negative pressure of the engine is too low, e. g. when the engine is switched off (ignition on).

Operating difficulties may make the brake pedal stiff.

Reasons for the vacuum pump not working can include:

- Open-circuit, short-circuit in the wiring to the vacuum pump
- Defective vacuum pump switch
- Defective vacuum pump.

Reasons for the vacuum pump operating constantly can include:

- Short-circuit to supply voltage in the cable to the vacuum pump
- Defective vacuum pump switch
- Defective hoses to the vacuum pump.

- **Continue**

  see **CHECK THE FUNCTION OF THE VACUUM PUMP**

CHECK THE FUNCTION OF THE VACUUM PUMP

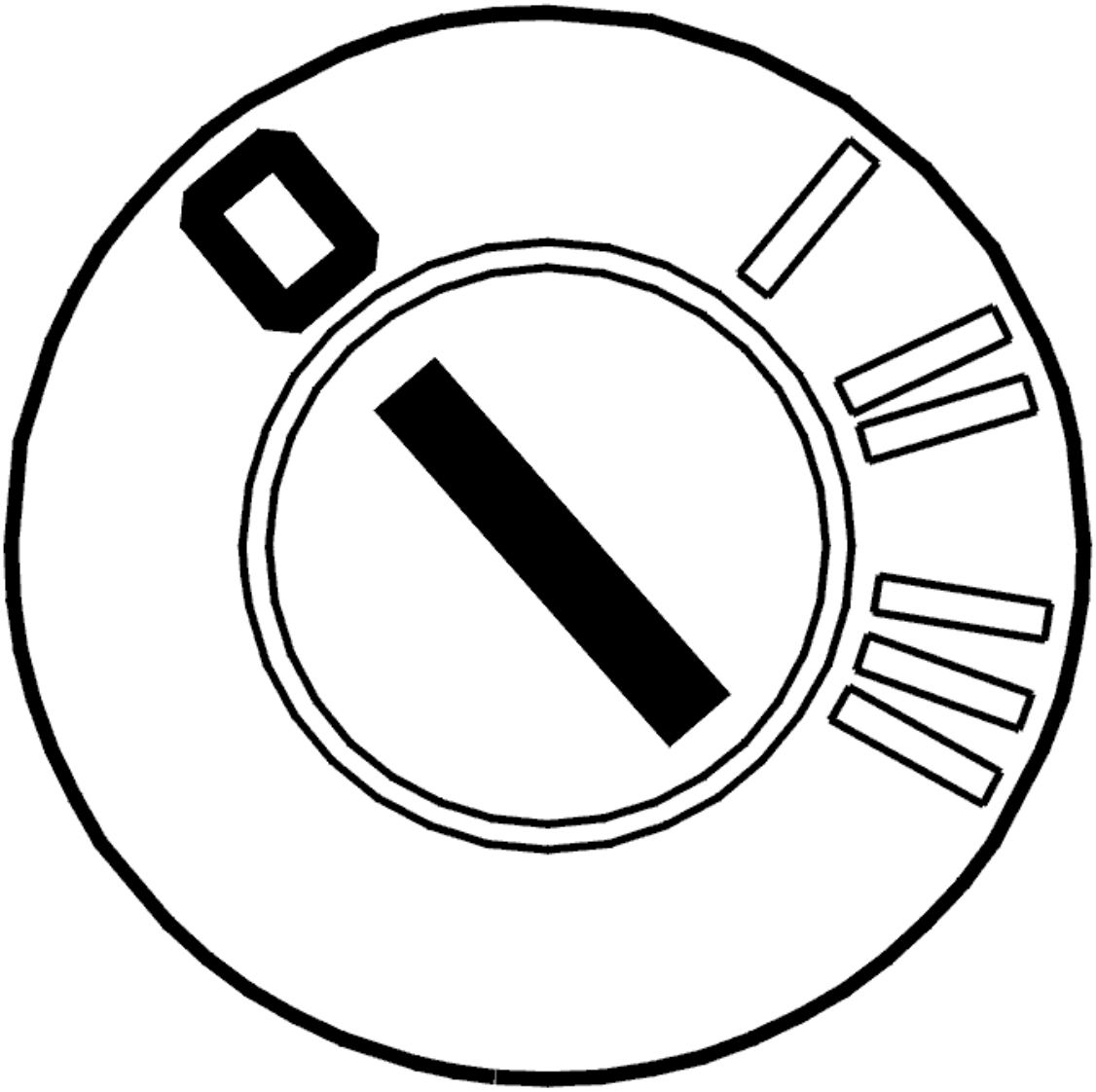

Fig. 40: Identifying Ignition OFF
Courtesy of VOLVO CARS CORPORATION

- Ignition off
- Check the hoses and connections. Check for leakage
- Before the next corrective action - wait approximately 3 minutes after switching the ignition off (system relay disconnected).

  Pump the brake pedal a few times to that all negative pressure in the power brake booster disappears.

  Check the function of the vacuum pump by pressing the brake pedal with the ignition on. The Vacuum pump should start and run for a few seconds to build up a new vacuum and then stop.

  Select an option:

1. The vacuum pump is functioning normally

   FAULT NOT FOUND: Troubleshooting has been completed.

2. The vacuum pump is operating constantly

   see **CHECKING THE WIRING**

3. The vacuum pump is not operating.

   see **CHECKING THE WIRING**

CHECKING THE WIRING

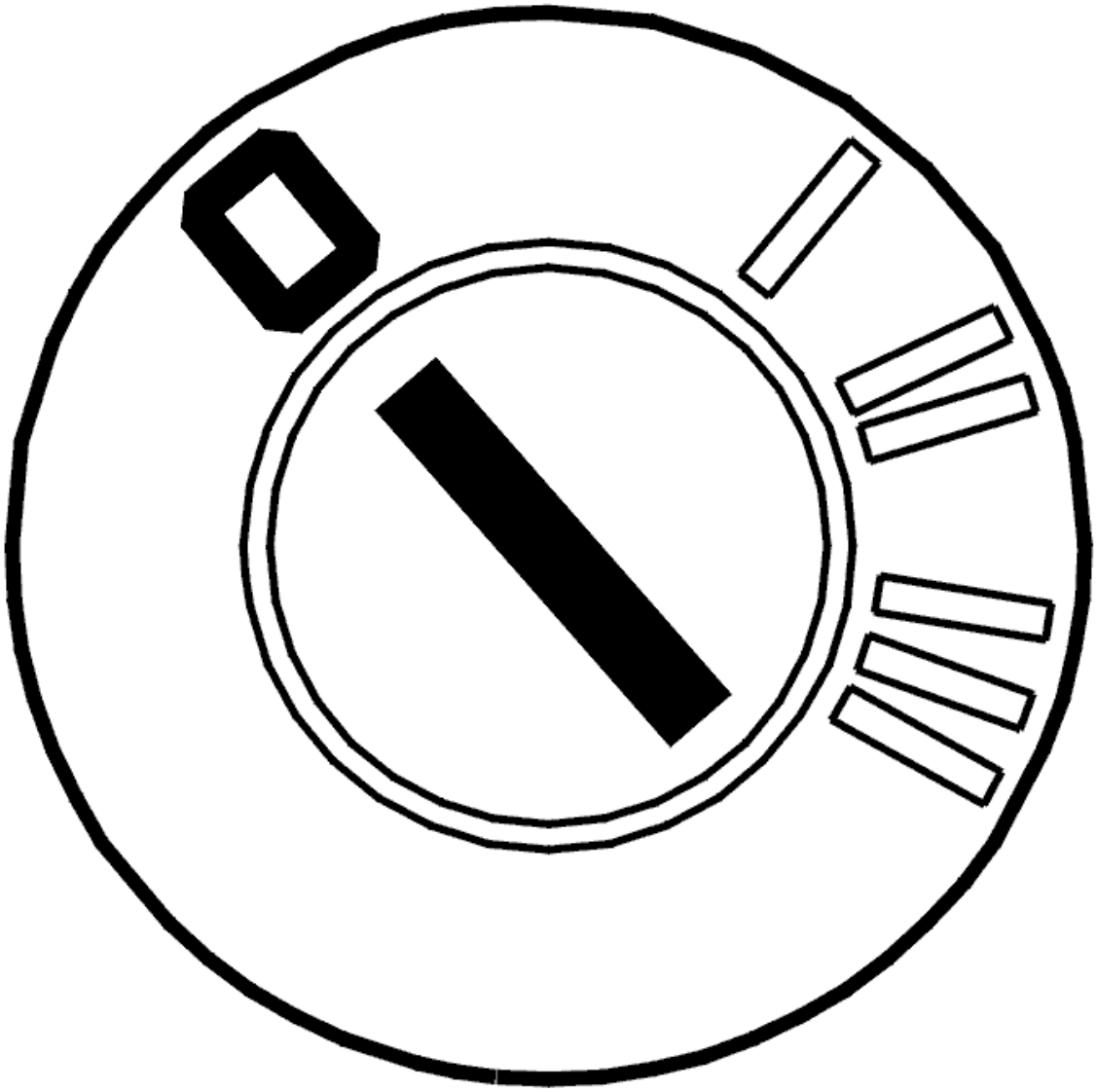

Fig. 41: Identifying Ignition OFF
Courtesy of VOLVO CARS CORPORATION

- Ignition off.

  Check the fuse for the vacuum pump in the integrated relay/fusebox in the engine compartment. If the fuse is blown, check the cable for power supply between vacuum pump switch terminal #1 and the fuse. Check the cable between vacuum pump switch terminal #2 and vacuum pump connector terminal #1. Check for an open-circuit or short-circuit to ground.

  Check the function of the vacuum pump switch. With the ignition on, connect a temporary cable looped between terminals #1 and #2 on the connector for the switch (vacuum pump side). If the vacuum pump starts, replace the switch.

  If the vacuum pump does not start, measure the resistance to vacuum pump terminals #1 and #2. If there is infinite resistance, there is an open-circuit in the vacuum pump or in the cable between the vacuum pump and the connector. If the resistance is 0 ohms there is a short-circuit in the vacuum pump or in the cable between the vacuum pump and connector.

  Remedy as necessary.

  Other information:

  - see **CHECKING WIRING AND TERMINALS** .

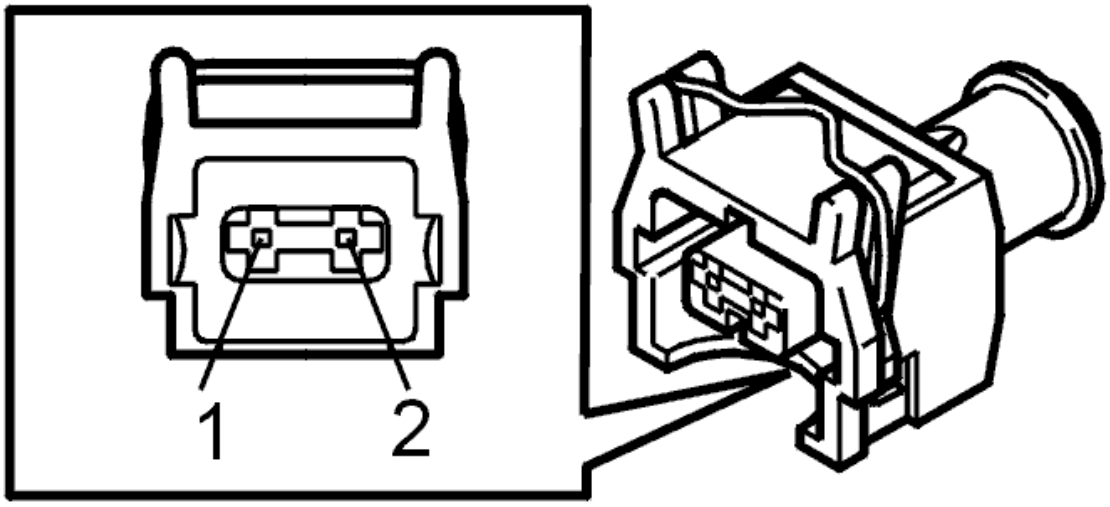

Fig. 42: Identifying 2 Pin Connector
Courtesy of VOLVO CARS CORPORATION

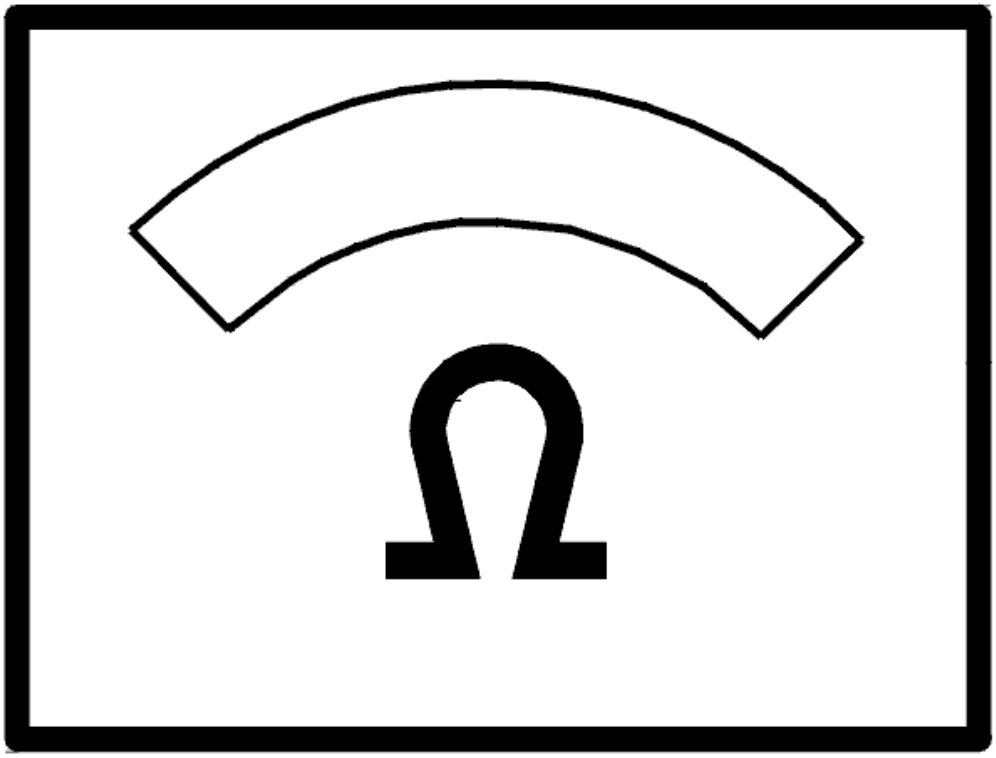

Fig. 43: Identifying Ohm Meter
Courtesy of VOLVO CARS CORPORATION

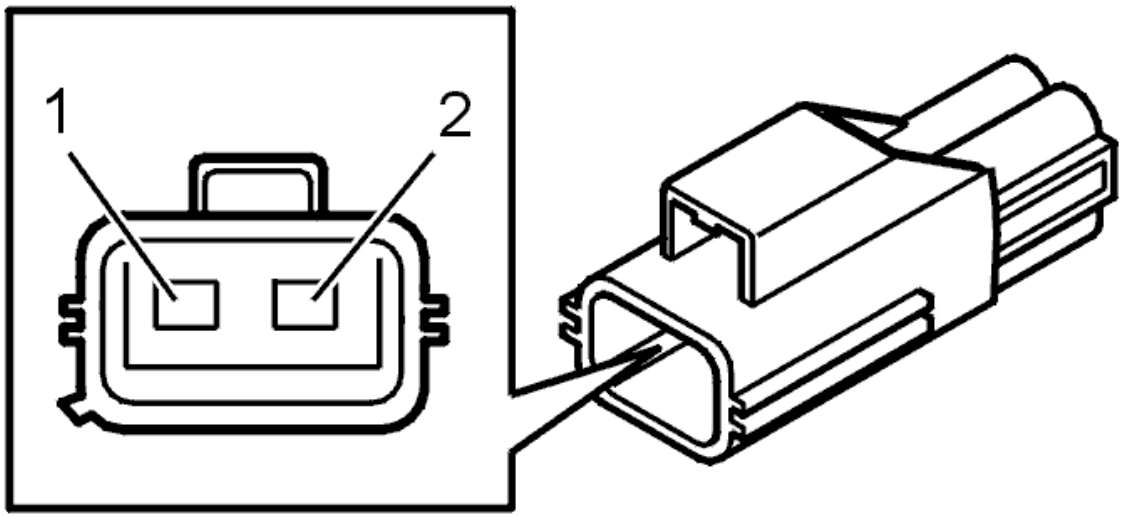

Fig. 44: Identifying Engine Coolant Temperature (ECT) Sensor And Connector Terminals
Courtesy of VOLVO CARS CORPORATION

- **Continue**

  see **VERIFICATION**

CHECKING THE WIRING

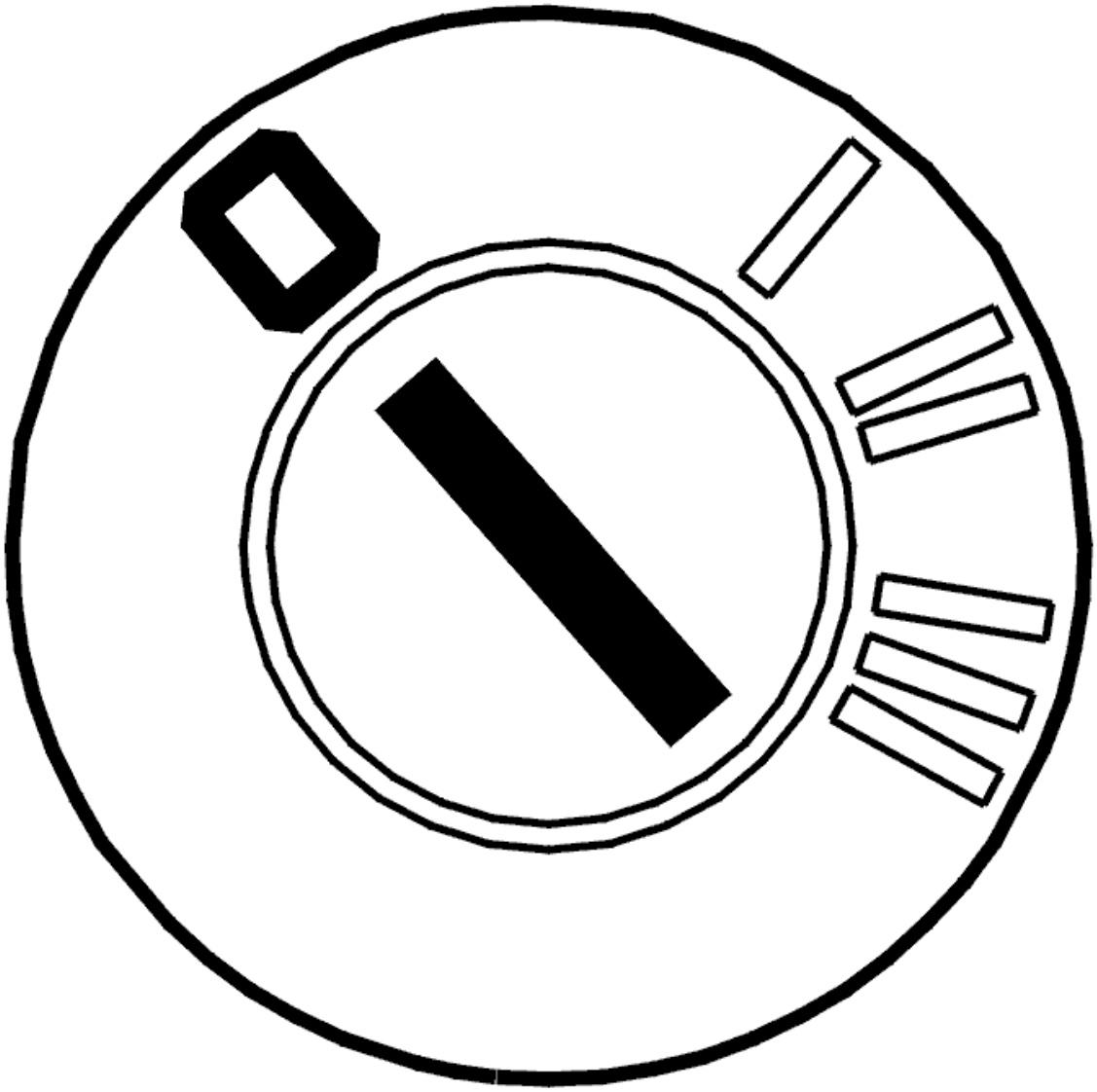

Fig. 45: Identifying Ignition OFF
Courtesy of VOLVO CARS CORPORATION

- Ignition off.

  Check the cable for power supply between the vacuum pump switch terminal #2 and vacuum pump connector terminal #1. Check for a short-circuit to supply voltage.

  HINT: Check the switch for the vacuum pump by measuring the resistance between terminals #1 and #2. The resistance must be infinite.

  Remedy as necessary.

  Other information:

  - see **CHECKING WIRING AND TERMINALS** .

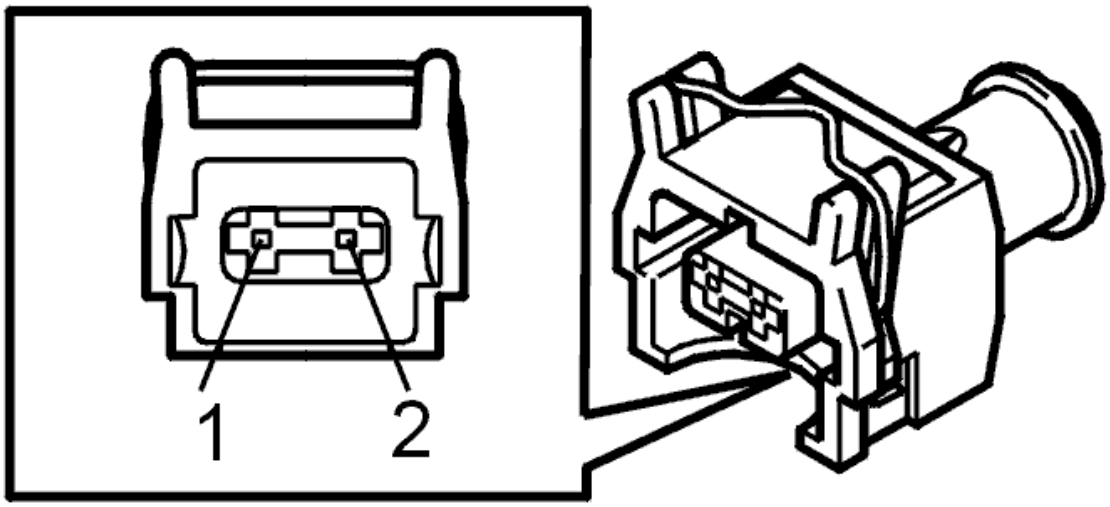

Fig. 46: Identifying 2 Pin Connector
Courtesy of VOLVO CARS CORPORATION

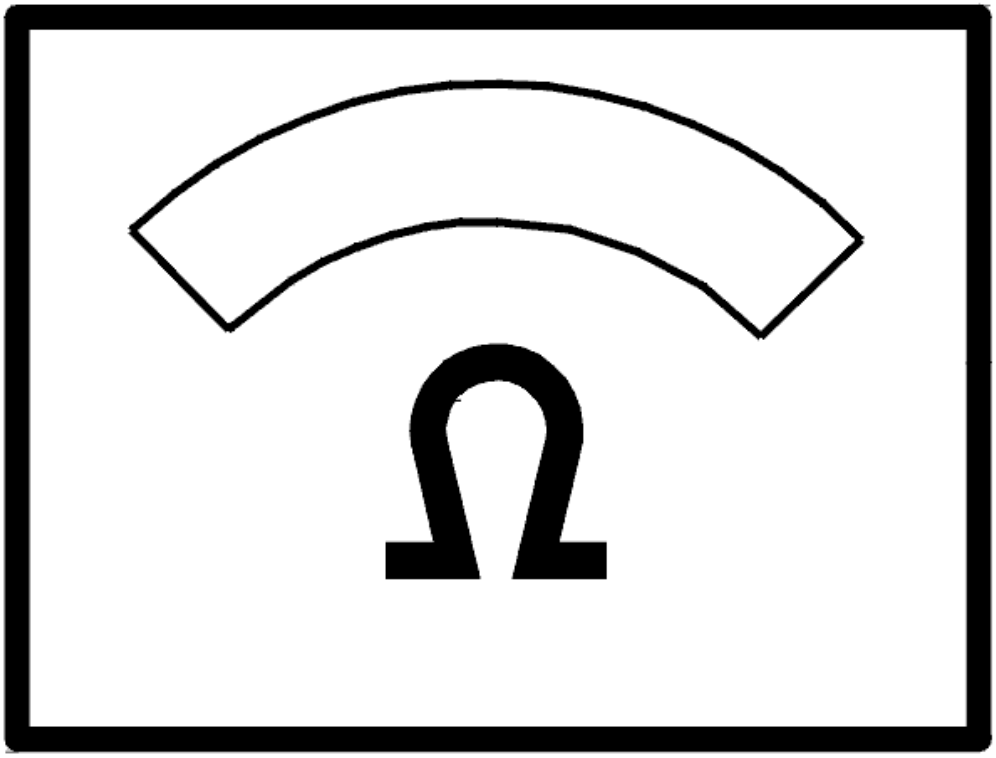

Fig. 47: Identifying Ohm Meter
Courtesy of VOLVO CARS CORPORATION

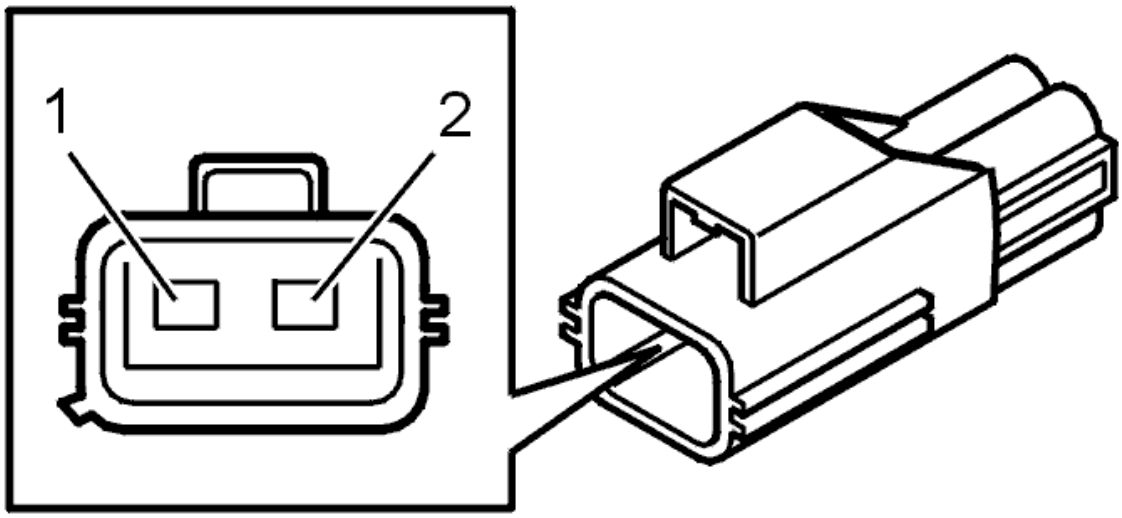

Fig. 48: Identifying Engine Coolant Temperature (ECT) Sensor And Connector Terminals
Courtesy of VOLVO CARS CORPORATION

- **Continue**

  see **VERIFICATION**

VERIFICATION

HINT: After carrying out the repair, check that the fault has been remedied.

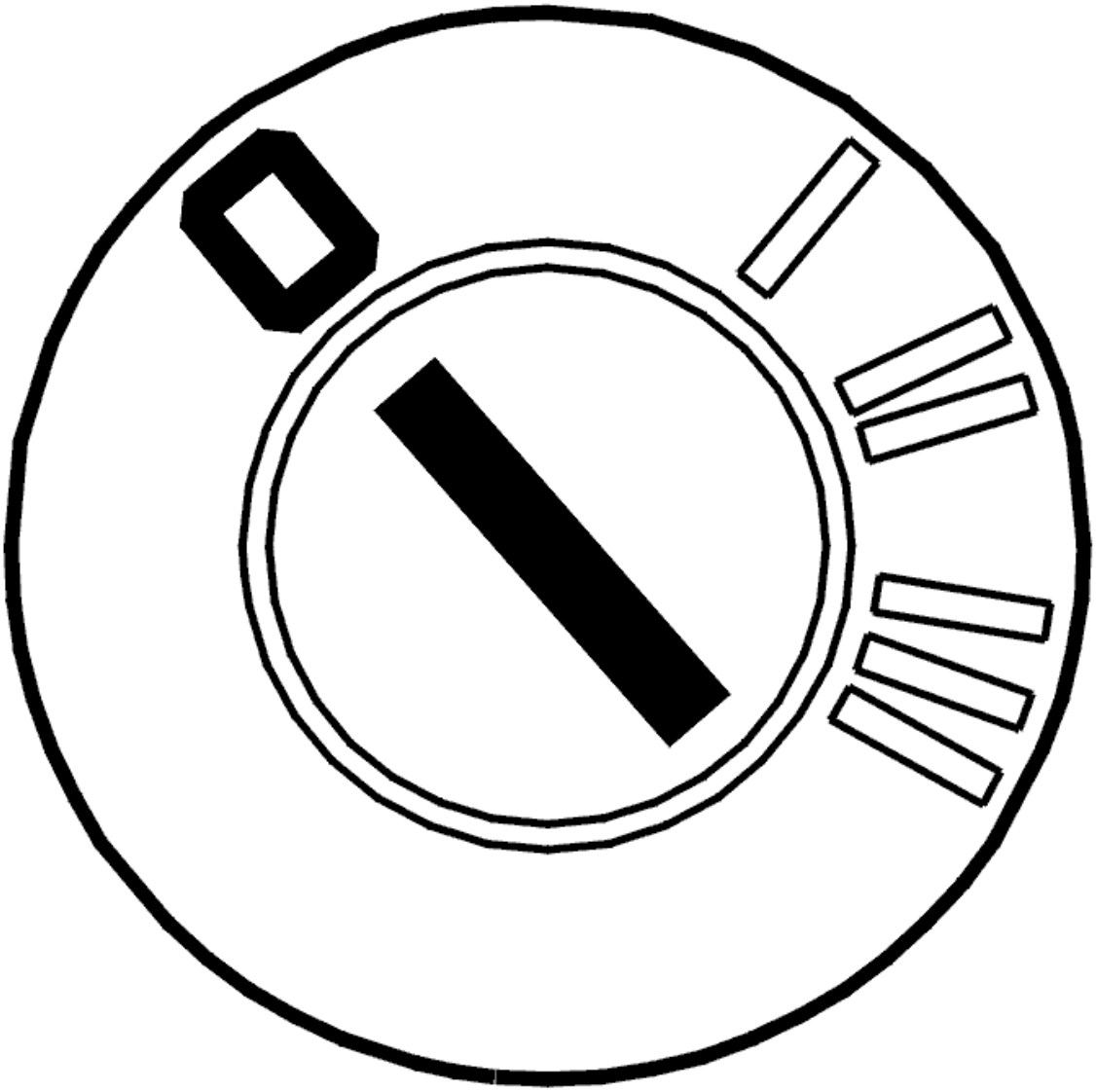

Fig. 49: Identifying Ignition OFF
Courtesy of VOLVO CARS CORPORATION

- Ignition off
- Before the next corrective action - wait approximately 3 minutes after switching the ignition off (system relay disconnected).

  Pump the brake pedal a few times to that all negative pressure in the power brake booster disappears.

  Check the function of the vacuum pump by pressing the brake pedal with the ignition on. The Vacuum pump should start and run for a few seconds to build up a new vacuum and then stop.

Is the function correct?

- **YES**

OKAY: Troubleshooting has been completed.

- **NO**

  see **INFORMATION**

INFORMATION

FAULT-TRACING INFORMATION

The fault should have been detected and remedied. As this is not the case fault-tracing has failed.

Exit fault-tracing for this diagnostic trouble code (DTC) or make another attempt.

CHECKING TIRES

CHECKING TIRES

CHECKING TIRES

- The tire should be mounted on the rim with the DOT marking outwards to counteract the taper.
- Reinstall the tire if necessary.

FAULT-TRACING INFORMATION

Condition

- No diagnostic trouble codes (DTCs) stored.
- The fault is permanent.

Possible Source

- Tire not fitted with DOT marking outwards.

REPLACING A DEFECTIVE BRAKE FLUID RESERVOIR

FAULT-TRACING INFORMATION

Condition

- No DTCs.
- Fault is permanent.

Possible Source

- Faulty charging system.

REPLACING A DEFECTIVE BRAKE FLUID RESERVOIR

FAULT TRACING INFORMATION

It is important to observe the following before proceeding:

- All tests for the symptom in question must have been carried out.
- No faults on components, connectors or leads have been found.

Have all tests been carried out without finding any faults?

- **YES**

  see **REPLACING A DEFECTIVE BRAKE FLUID RESERVOIR**

- **NO**

  NO. Perform additional fault tracing to locate fault.

REPLACING A DEFECTIVE BRAKE FLUID RESERVOIR

Try with a new brake fluid reservoir.

Other information

- see **BRAKE FLUID RESERVOIR, REPLACING**

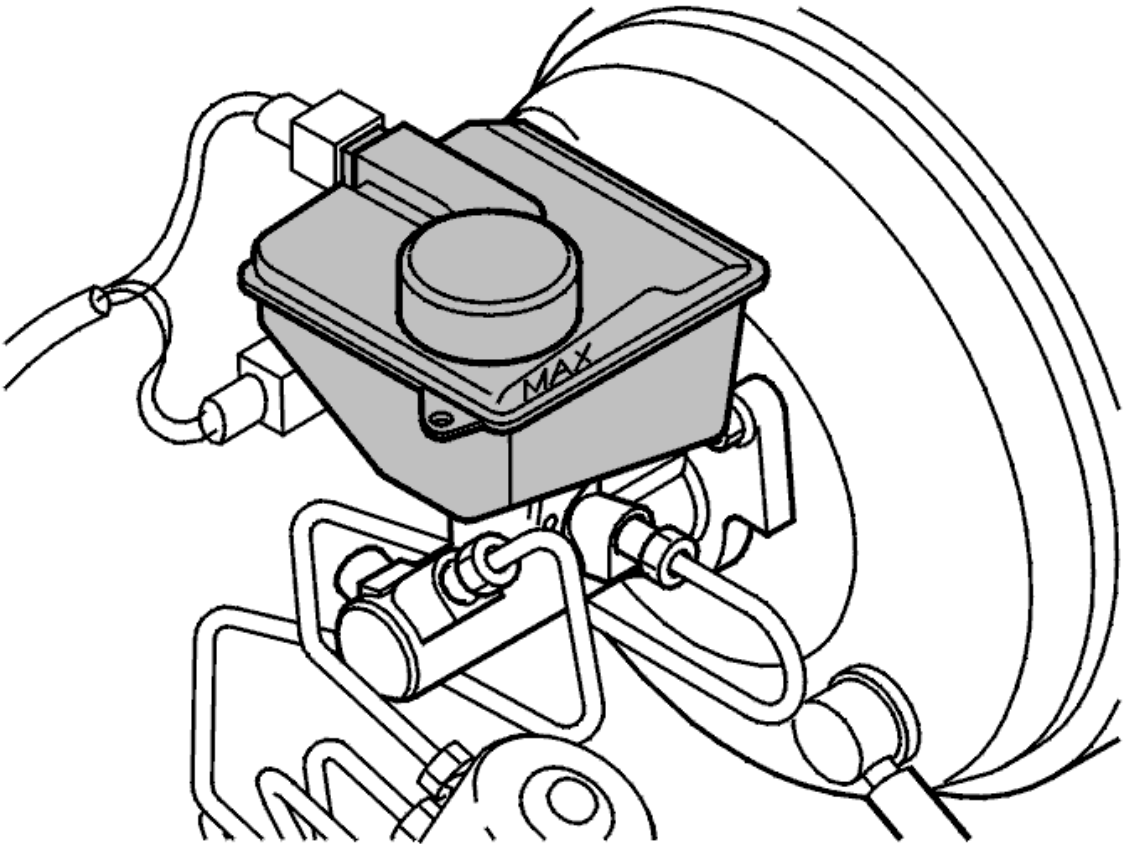

Fig. 50: Identifying Brake Fluid Reservoir
Courtesy of VOLVO CARS CORPORATION

REPLACING A DEFECTIVE MASTER CYLINDER

FAULT-TRACING INFORMATION

Condition

- No diagnostic trouble codes (DTCs) stored.
- The fault is permanent.

Possible Source

- Faulty master cylinder.

REPLACING A DEFECTIVE MASTER CYLINDER

QUESTION

Does the car have a DSTC system?

- **YES**

see **REPLACING A DEFECTIVE MASTER CYLINDER**

- **NO**

  see **REPLACING THE MASTER CYLINDER**

REPLACING THE MASTER CYLINDER

NOTE: All tests must be carried out before the master cylinder is replaced. Select cancel if this is not the case.

- Replace the master cylinder. See **MASTER CYLINDER, REPLACING** .

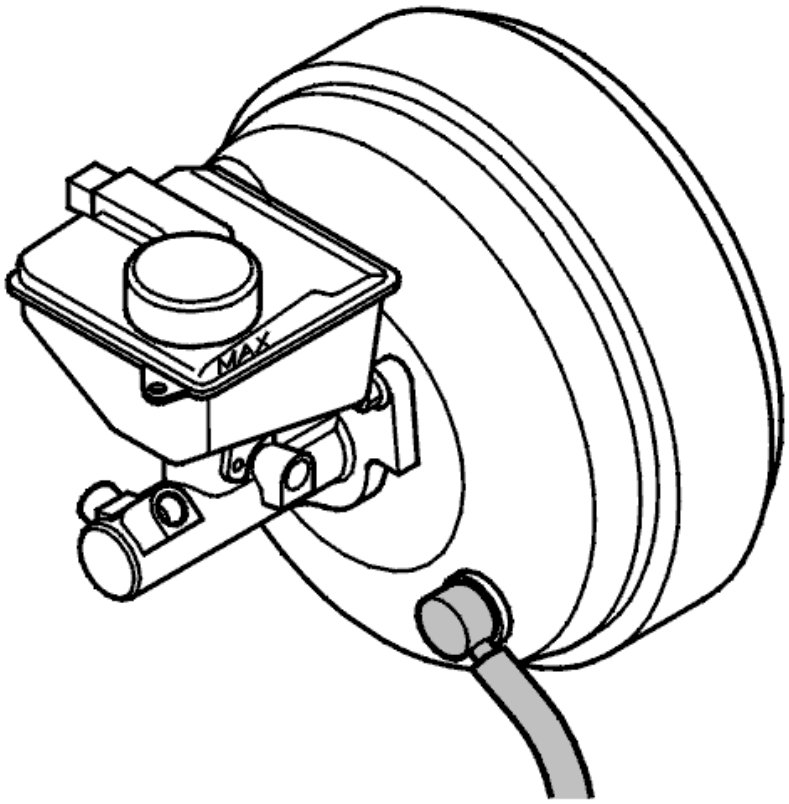

Fig. 51: Identifying Power Brake Booster Check Valve
Courtesy of VOLVO CARS CORPORATION

REPLACING A DEFECTIVE MASTER CYLINDER

REPLACING THE MASTER CYLINDER

NOTE: All tests must be carried out before the master cylinder is replaced. Select cancel if this is not the case.

- Replace the master cylinder. See **MASTER CYLINDER, REPLACING**

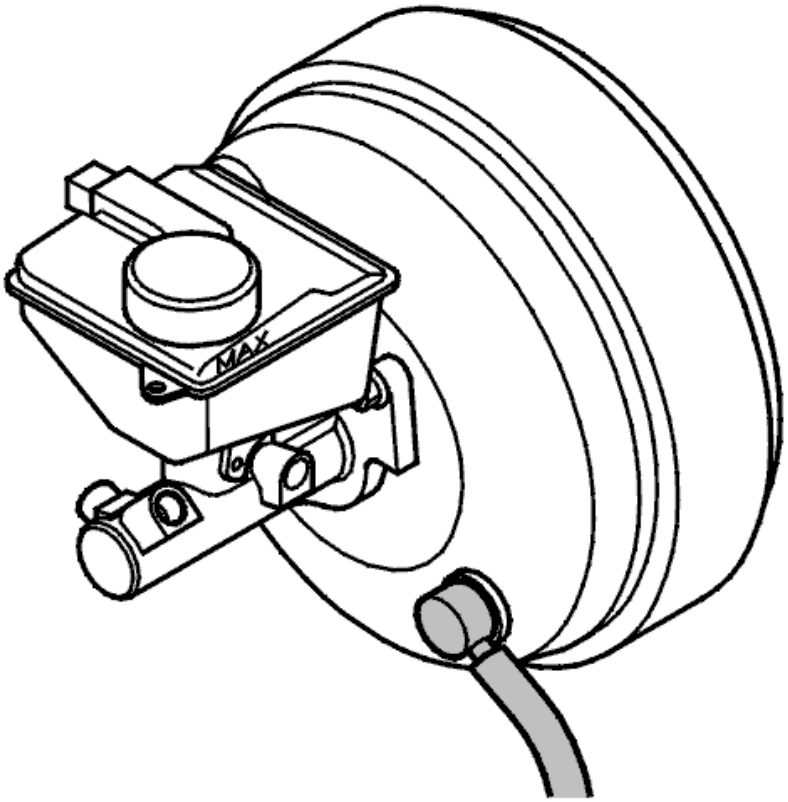

Fig. 52: Identifying Power Brake Booster Check Valve
Courtesy of VOLVO CARS CORPORATION

MASTER CYLINDER, REPLACING

- see **MASTER CYLINDER, REPLACING** .

REPLACING DEFECTIVE BRAKE FLUID RESERVOIR

FAULT-TRACING INFORMATION

see **FAULT-TRACING INFORMATION**

REPLACING DEFECTIVE BRAKE FLUID RESERVOIR

FAULT TRACING INFORMATION

It is important to observe the following before proceeding:

- All tests for the symptom in question must have been carried out.
- No faults on components, connectors or leads have been found.

Have all tests been carried out without finding any faults?

- **YES**

  see **REPLACING DEFECTIVE BRAKE FLUID RESERVOIR**

- **NO**

  NO. Continue with fault tracing to determine fault.

REPLACING DEFECTIVE BRAKE FLUID RESERVOIR

Try with a new brake fluid reservoir.

Other information

- see **BRAKE FLUID RESERVOIR, REPLACING**

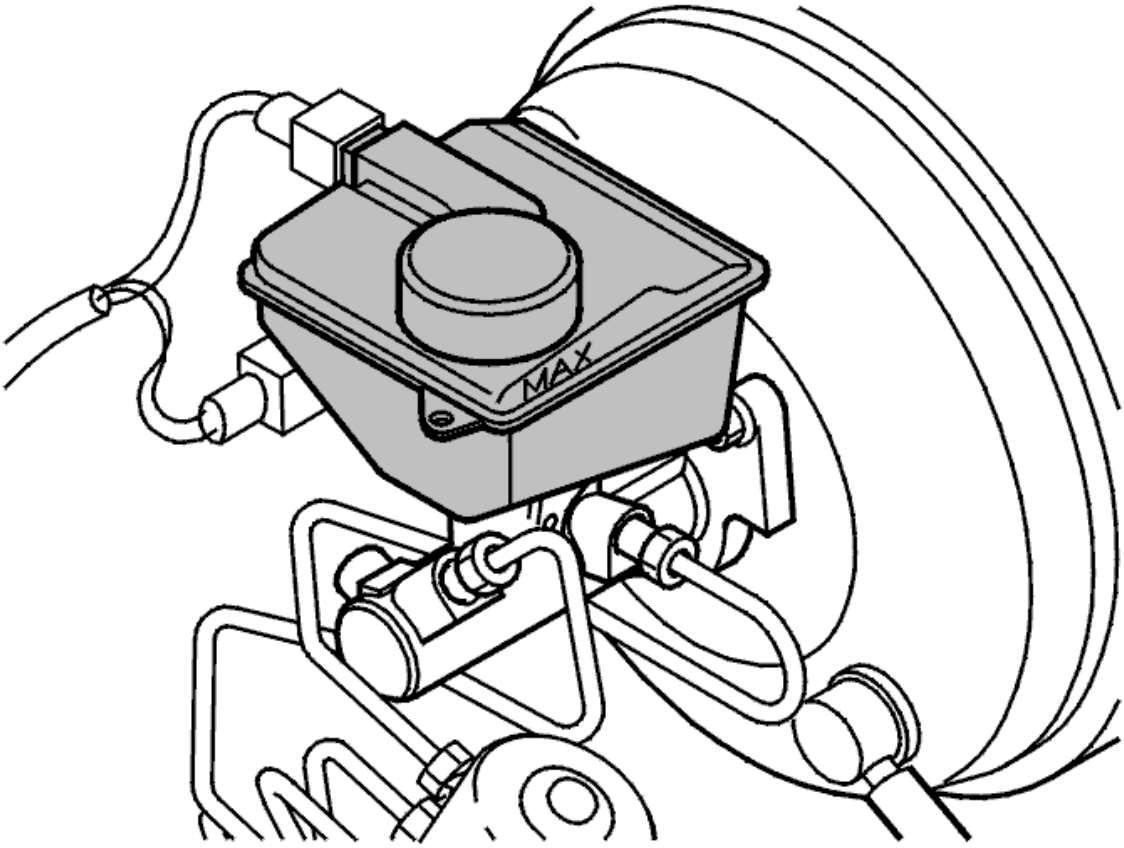

Fig. 53: Identifying Brake Fluid Reservoir
Courtesy of VOLVO CARS CORPORATION

ANTI-LOCK/TRACTION CONTROL

Brakes

ANTI-LOCK/TRACTION CONTROL

ACTIVE YAW CONTROL SENSOR, REPLACING

NOTE: **As the illustrations in this service information are used for different model years and / or models, some variation may occur. However, the essential information in the illustrations is always correct.**

LOCATION

The active yaw control sensor (AYC) is under the right-hand front seat.

PREPARATORY WORK

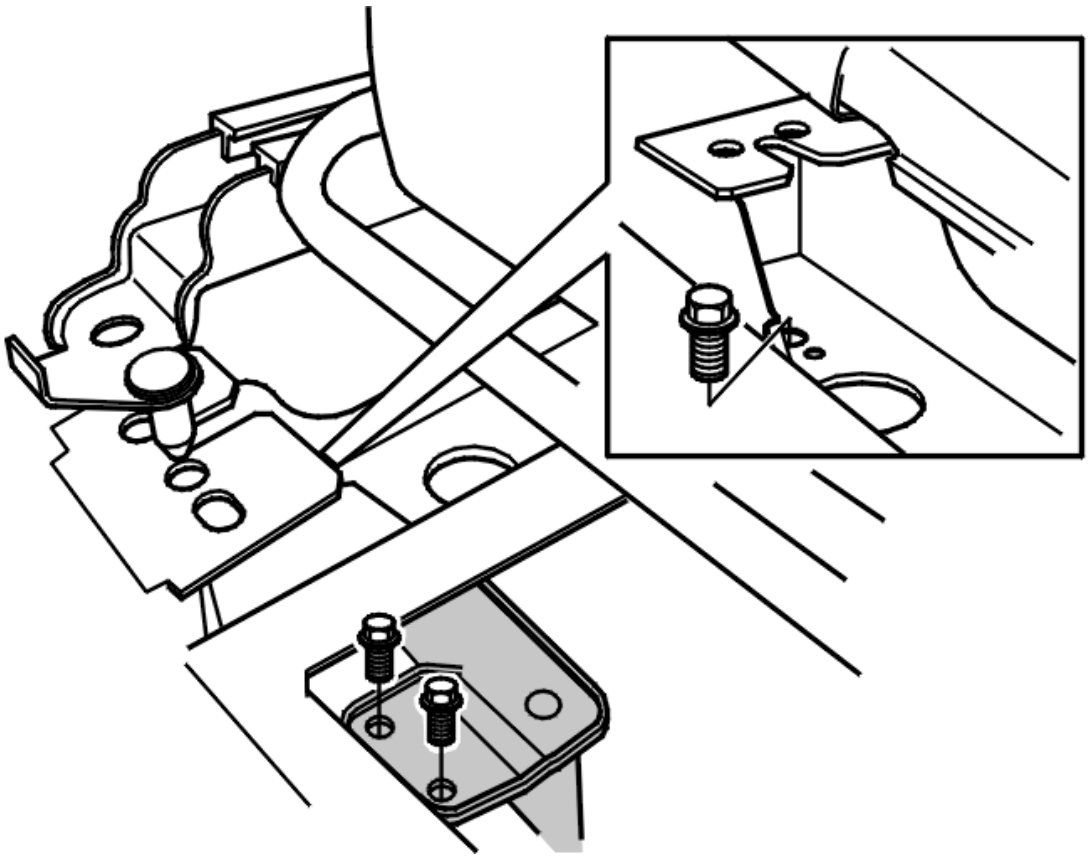

Fig. 1: Identifying Front Screws For Seat Rails And Bracket
Courtesy of VOLVO CARS CORPORATION

Remove the Audio module (AUD) see **AUDIO MODULE (AUD), REPLACING** .

Remove the panels over the front screws for the seat rails (pull straight up).

Remove the 2 front screws for the seat rails.

Fold the seat backwards.

Fold away the carpet.

Remove the right-hand screw for the seat bracket. See the illustration.

NOTE: Handle the active yaw control sensor with care as it is sensitive to mechanical damage.

REMOVING THE ACTIVE YAW CONTROL SENSOR

Remove the 2 screws for the bracket (see the illustration).

Disconnect the connector.

Lift the seat bracket. Remove the active yaw control (AYC) sensor.

Replace the sensor assembly together with the bracket.

TIGHTENING TORQUE

For tightening torques, see **TIGHTENING TORQUE** .

INSTALLING THE ACTIVE YAW CONTROL SENSOR

Lift the seat bracket. Install the active yaw control (AYC) sensor.

Install the 2 screws. M6

Connect the connector.

FINISHING WORK

Install:

- The right-hand screw for the seat bracket. M10
- The carpet
- The 2 front screws for the seat rails. M10
- The panels
- Audio module (AUD).

Calibrate using VIDA (Volvo scan tool)

CHECK

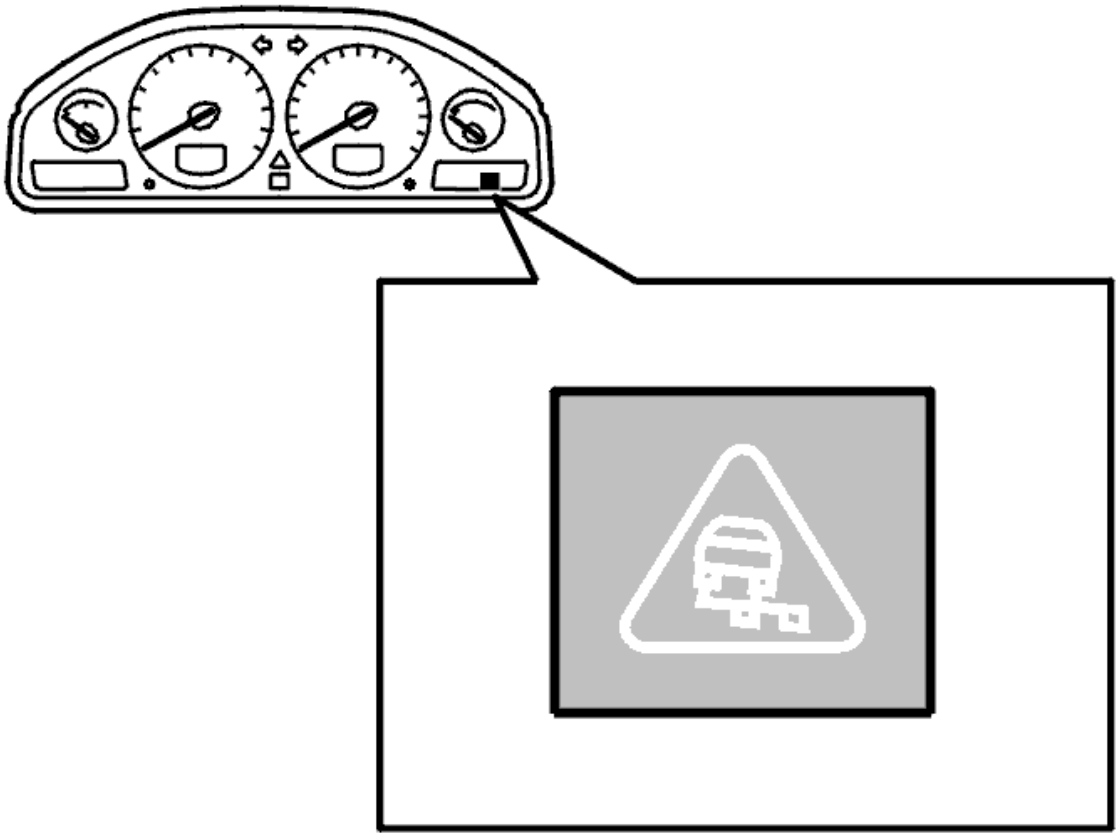

Fig. 2: Identifying Warning Light
Courtesy of VOLVO CARS CORPORATION

Turn on the ignition.

The symbol on the dashboard must go out within 5 seconds.

In the event of a fault the symbol is on continuously.

Test drive the car after repair. See **TEST DRIVE FORM (DSTC (DYNAMIC STABILITY AND TRACTION CONTROL) /BRAKE CONTROL MODULE), DESCRIPTION** .

BRAKE PIPE MASTER CYLINDER/ABS UNIT, REPLACING

NOTE: **As the illustrations in this service information are used for different model years and / or models, some variation may occur. However, the essential information in the illustrations is always correct.**

REPLACING THE BRAKE PIPE FOR THE LEFT-HAND FRONT WHEEL / ABS UNIT

PREPARATORY WORK

Disconnect the battery lead. See **BATTERY, DISCONNECTING** .

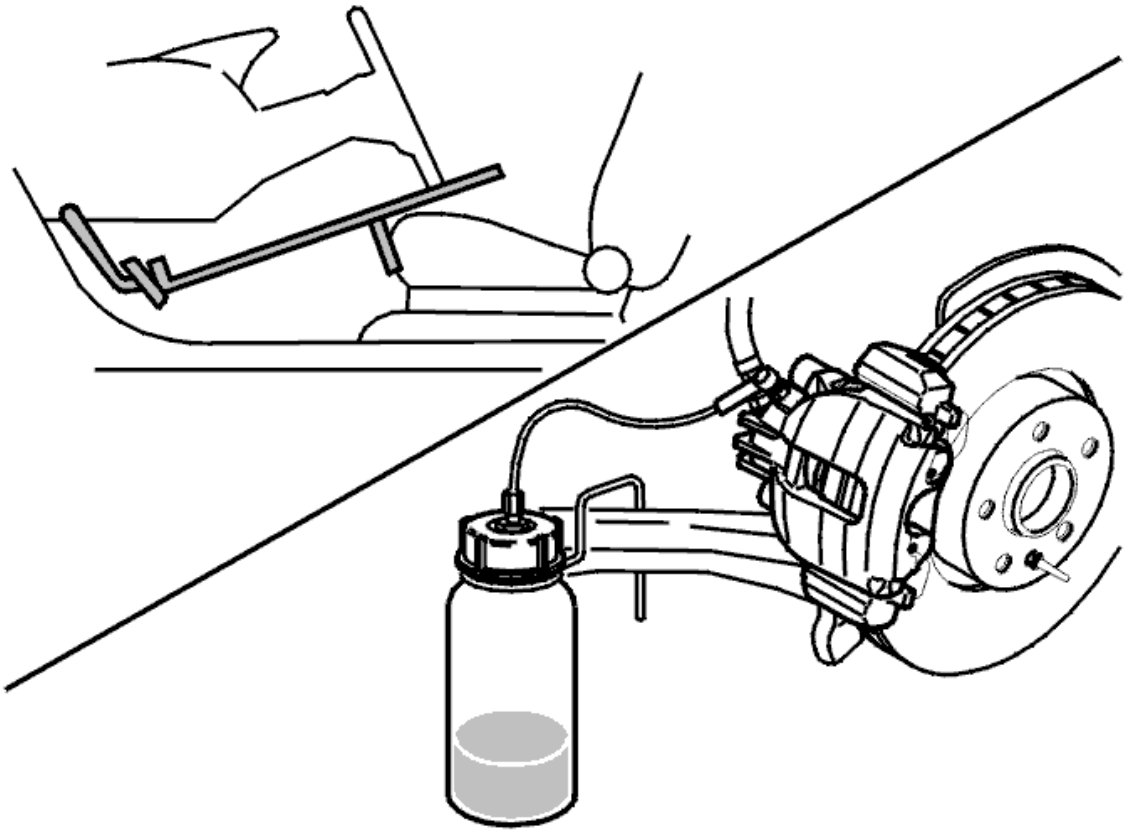

Fig. 3: Bleeding Brakes
Courtesy of VOLVO CARS CORPORATION

Secure the pedal in the depressed position. Use a pedal jack.

Remove the protective cap from the bleed nipple at the left front wheel.

Install a plastic hose on the nipple.

Open the bleed nipple.

Collect the brake fluid in a container.

Shut the bleed nipple.

REMOVING THE AIR CLEANER (ACL) HOUSING

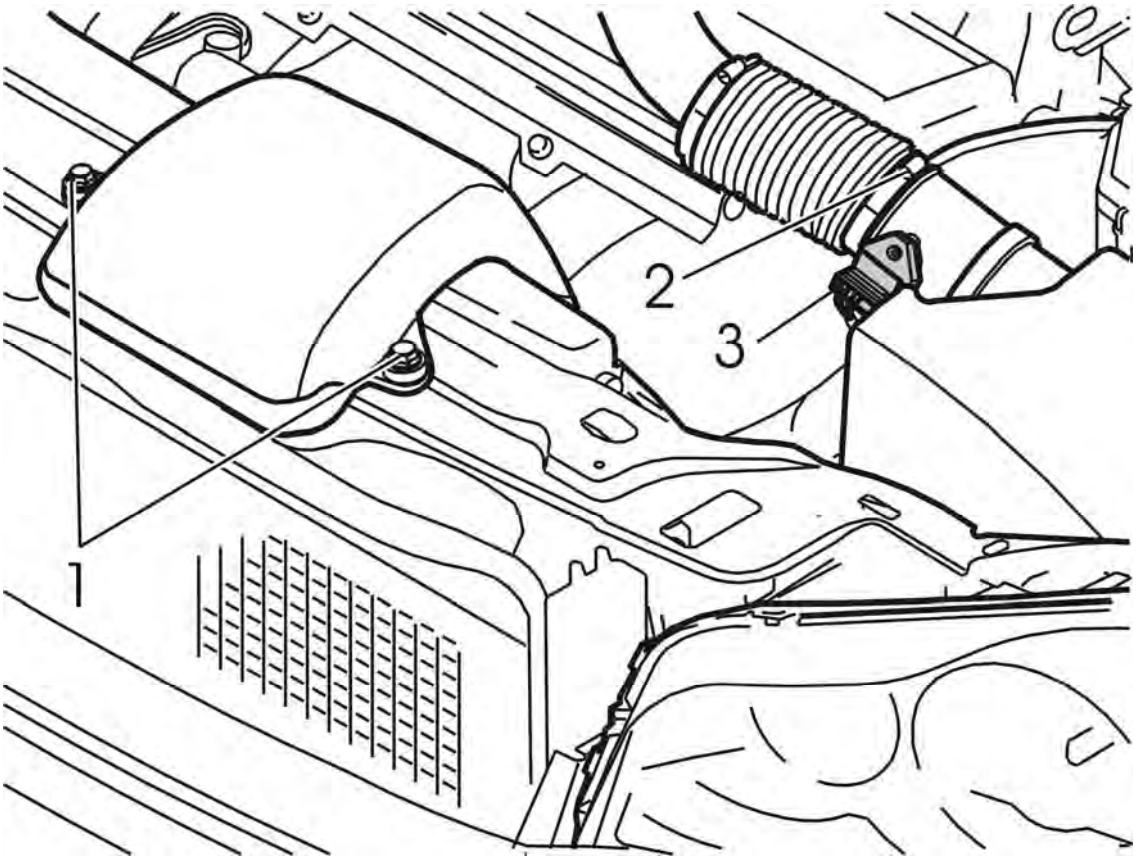

Fig. 4: Air Cleaner (ACL) Housing
Courtesy of VOLVO CARS CORPORATION

Remove the screws (1) for the intake manifold.

Disconnect the hose clamp (2) for the air hose.

Remove the connector (3) from the mass air flow (MAF) sensor.

Remove the air cleaner (ACL) housing from its mountings. Pull it straight up.

REMOVING THE INTEGRATED RELAY / FUSEBOX

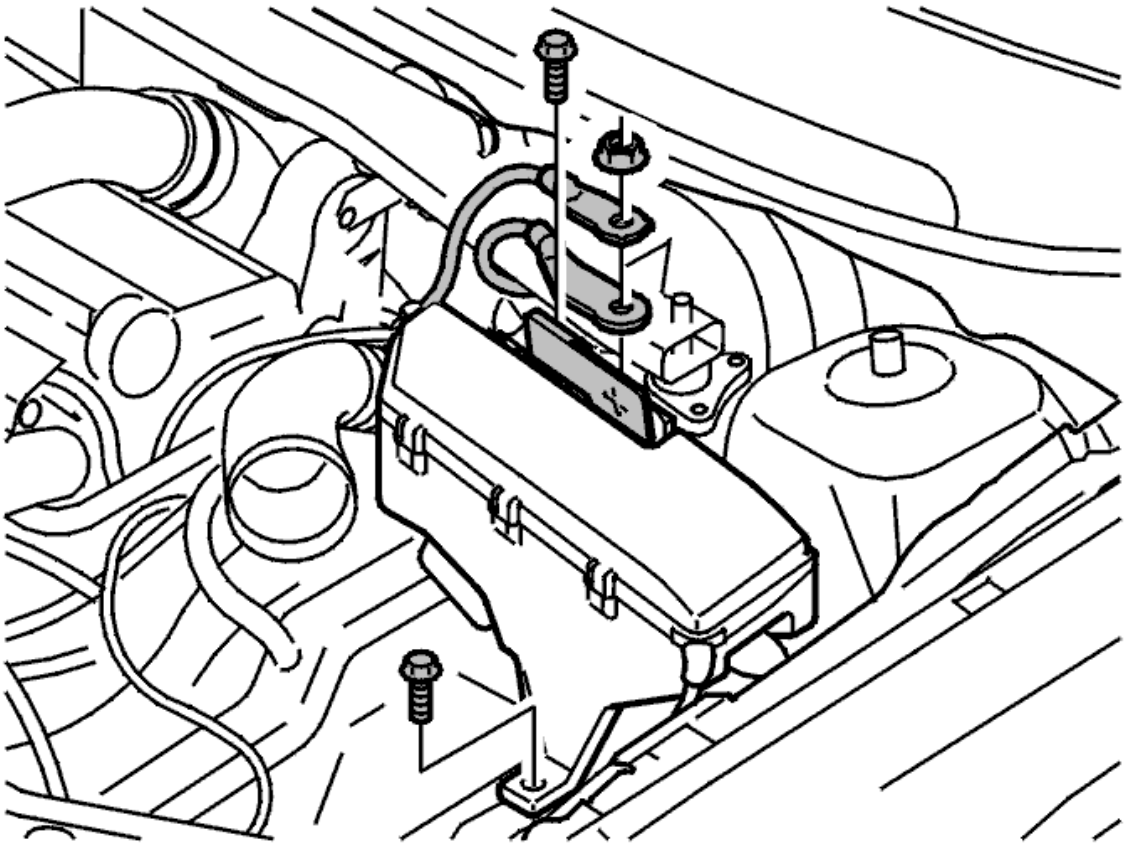

Fig. 5: Identifying Battery Leads, Screws And Nut
Courtesy of VOLVO CARS CORPORATION

Remove:

- the nut for the power cables
- the 2 power cables
- the 2 screws for the mounting.

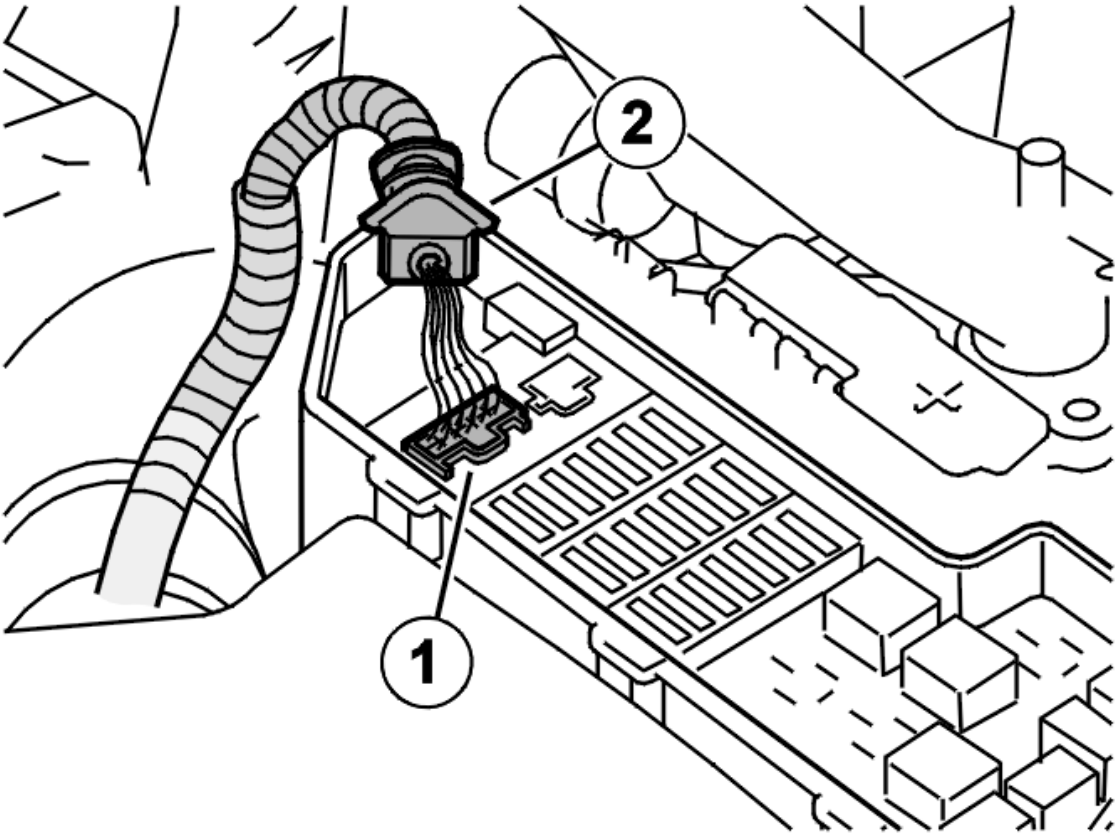

Fig. 6: Locating Connector And Cable Harness From Fusebox
Courtesy of VOLVO CARS CORPORATION

Open the integrated relay/fusebox. Remove the connector (1).

Disconnect the cable harness from the box (2).

Lift the box out of the mounting and move it to one side.

REMOVING THE LEFT-HAND BRAKE PIPE

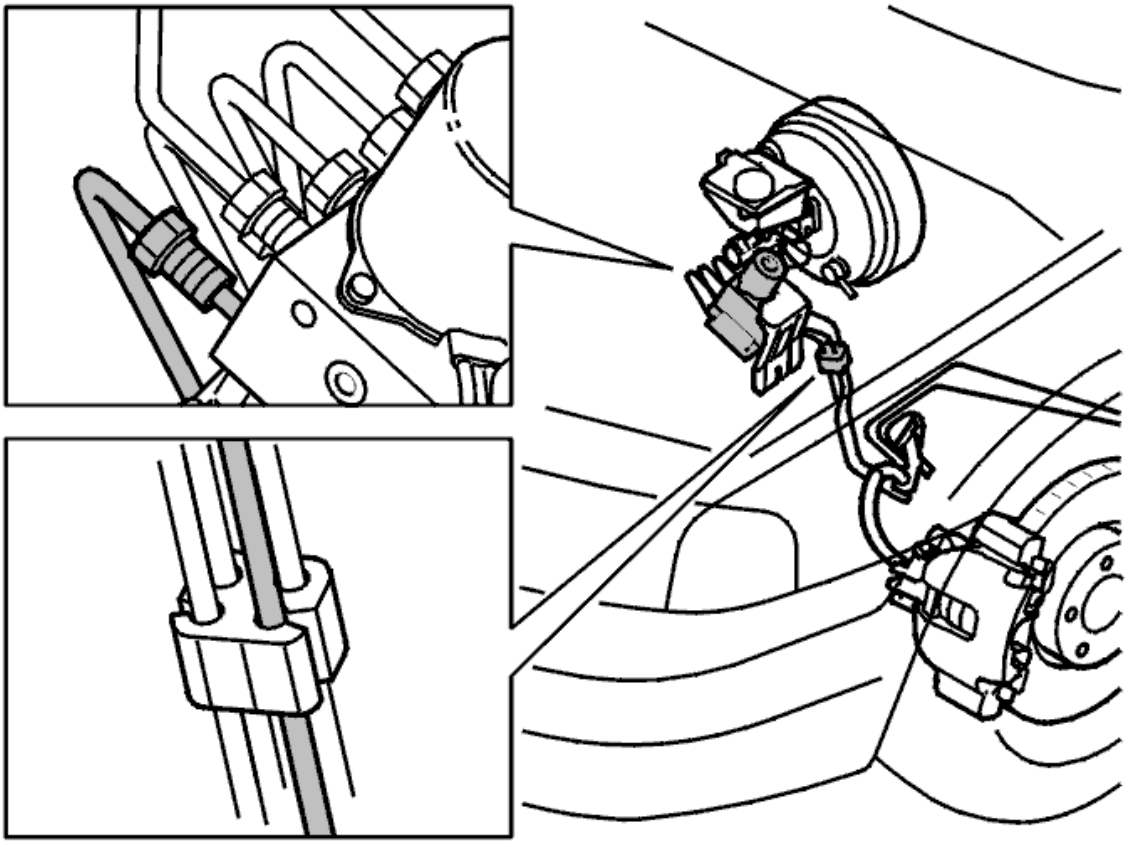

Fig. 7: Front Left Brake Pipe
Courtesy of VOLVO CARS CORPORATION

Clean around the brake pipe on the ABS hydraulic modulator. Remove the brake pipe from the ABS hydraulic modulator and the clips.

Blow clean around the brake pipe using compressed air.

Place paper under the ABS hydraulic modulator as protection against brake fluid spillage.

Remove:

- the brake pipe from the ABS hydraulic modulator
- the brake pipe from its clips and holder. Open the holder.

NOTE: Do not damage the ABS line.

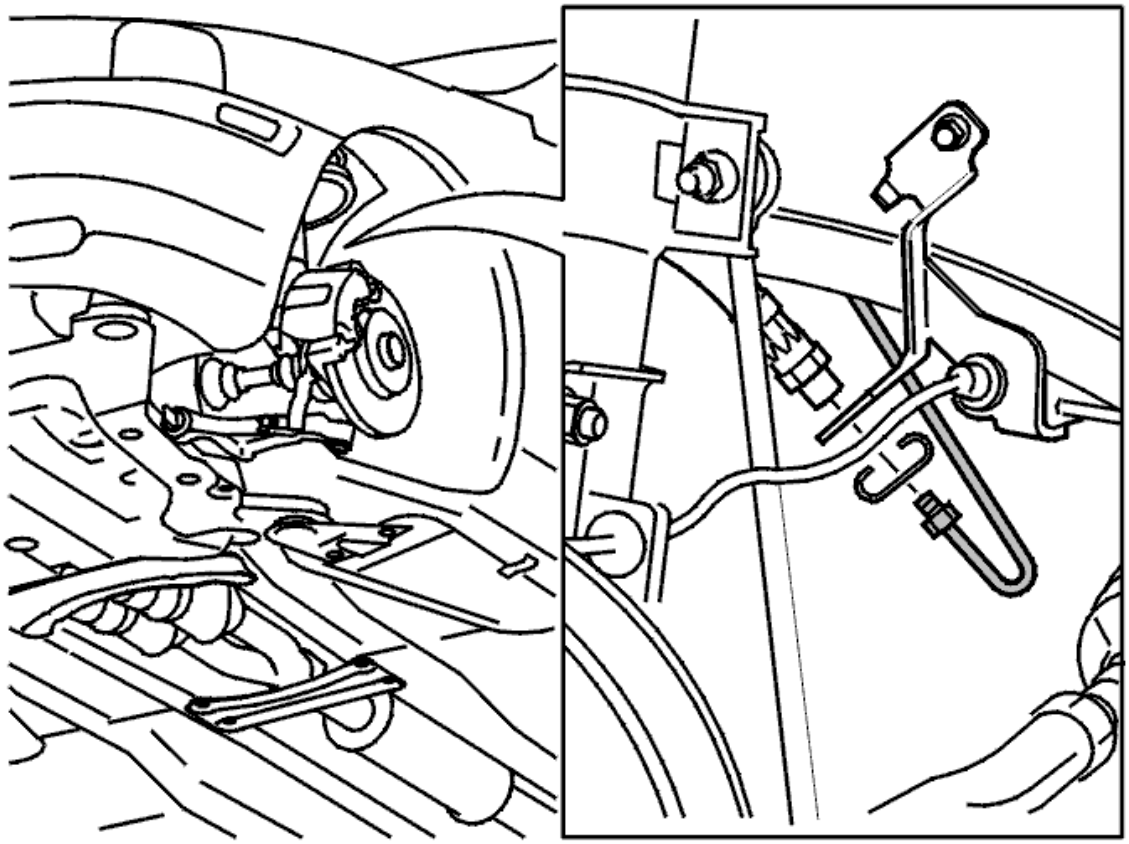

Fig. 8: Brake Pipe From Car
Courtesy of VOLVO CARS CORPORATION

Separate the brake pipe and the brake hose at the bracket.

Counterhold the brake hose so that it does not twist.

Remove the brake pipe from the car.

INSTALLING THE BRAKE PIPE FOR THE LEFT-HAND FRONT WHEEL / ABS UNIT

NOTE: **For tightening torques, see: TIGHTENING TORQUE .**

NOTE: **The new brake pipe must be bent into the correct shape when installing.**

This is important otherwise the pipe may be subject to stresses when it is in place.

Tighten the pipe to the brake hose. Tighten. See: **TIGHTENING TORQUE** .

Check that the hose is not twisted.

Install:

- the brake pipe in the ABS hydraulic modulator. Tighten. See: **TIGHTENING TORQUE**
- the pipe in its holder
- the ABS line in its clips on the brake pipe.

INSTALLING THE INTEGRATED RELAY / FUSEBOX

Install the box in its mounting.

Install:

- the cable harness
- the connector
- the 2 M6 screws for the mounting
- the 2 power cables
- the M8 nut to secure the power cables.

INSTALLING THE AIR CLEANER (ACL) HOUSING

Press the air cleaner (ACL) housing into place.

Install the air hoses and connector

FINISHING

Bleed the brake system. See **BRAKE SYSTEM, BLEEDING (USING BLEEDING UNIT)** .

Connect the battery lead.

TESTING THE PRESSURE OF THE BRAKE SYSTEM

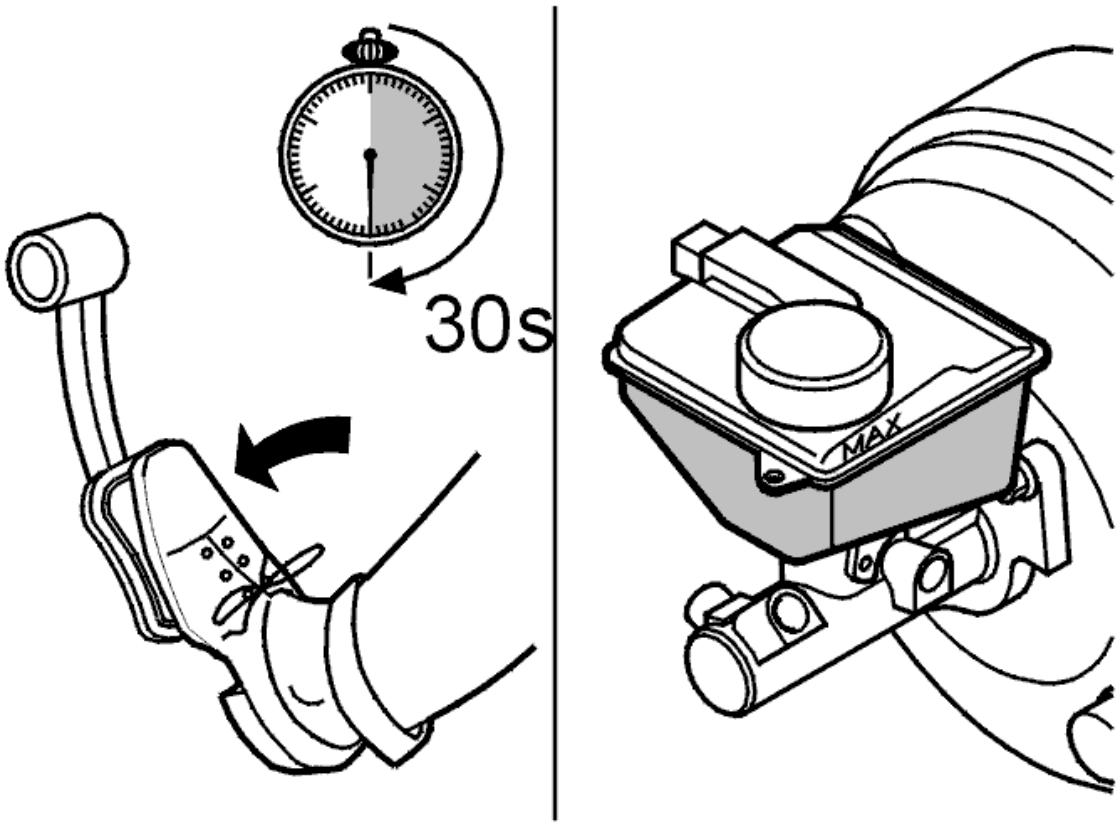

Fig. 9: Depressing Brake Pedal As If Braking Suddenly (So That Wheels Would Almost Lock) For 30 Seconds
Courtesy of VOLVO CARS CORPORATION

Depress the brake pedal hard for 30 seconds. Check that no leakage occurs from the brake nipples, hoses and joints.

Remedy any leakage.

Install the wheel. See **INSTALLING WHEELS** .

REPLACING THE BRAKE PIPE FOR THE RIGHT-HAND FRONT WHEEL / ABS UNIT

NOTE: **As the illustrations in this service information are used for different model years and / or models, some variation may occur. However, the essential information in the illustrations is always correct.**

PREPARATORY WORK

Disconnect the battery lead. See **BATTERY, DISCONNECTING** .

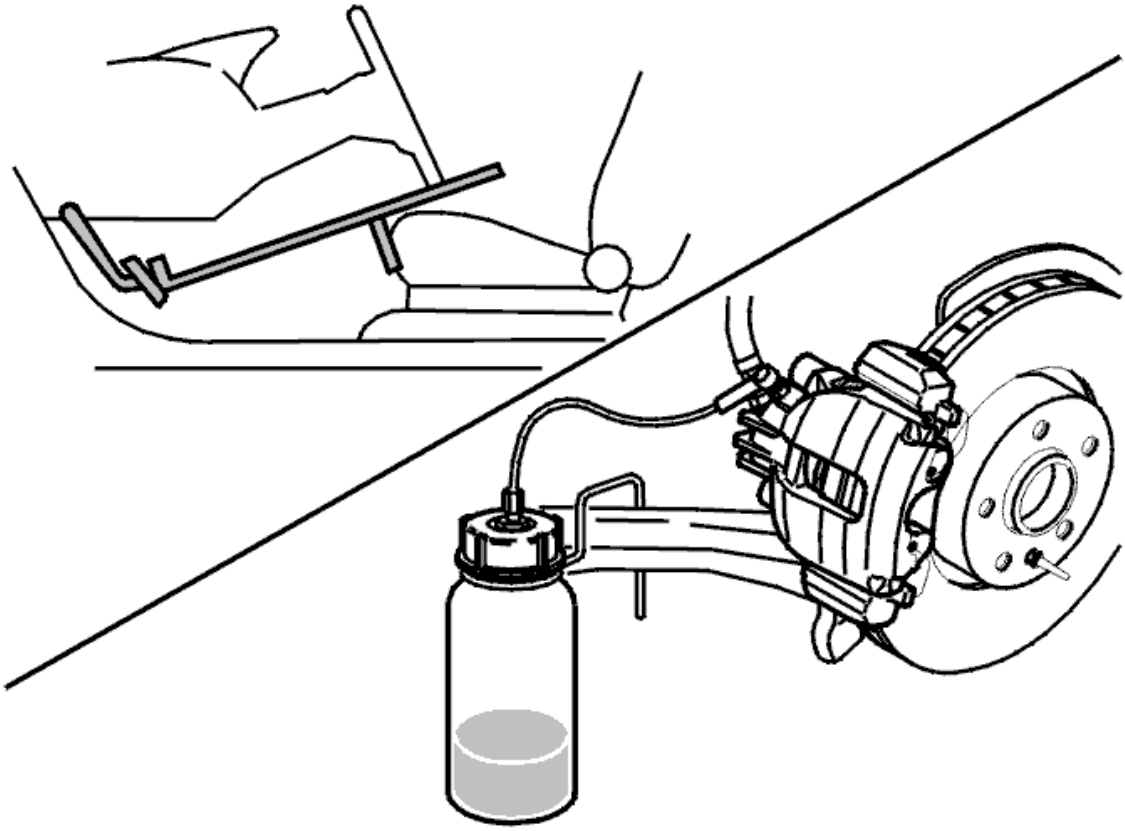

Fig. 10: Bleeding Brakes
Courtesy of VOLVO CARS CORPORATION

Secure the pedal in the depressed position. Use a pedal jack.

Remove the protective cap from the bleed nipple at the left front wheel.

Install a plastic hose on the nipple.

Open the bleed nipple.

Collect the brake fluid in a container.

Shut the bleed nipple.

REMOVING THE AIR CLEANER (ACL) HOUSING

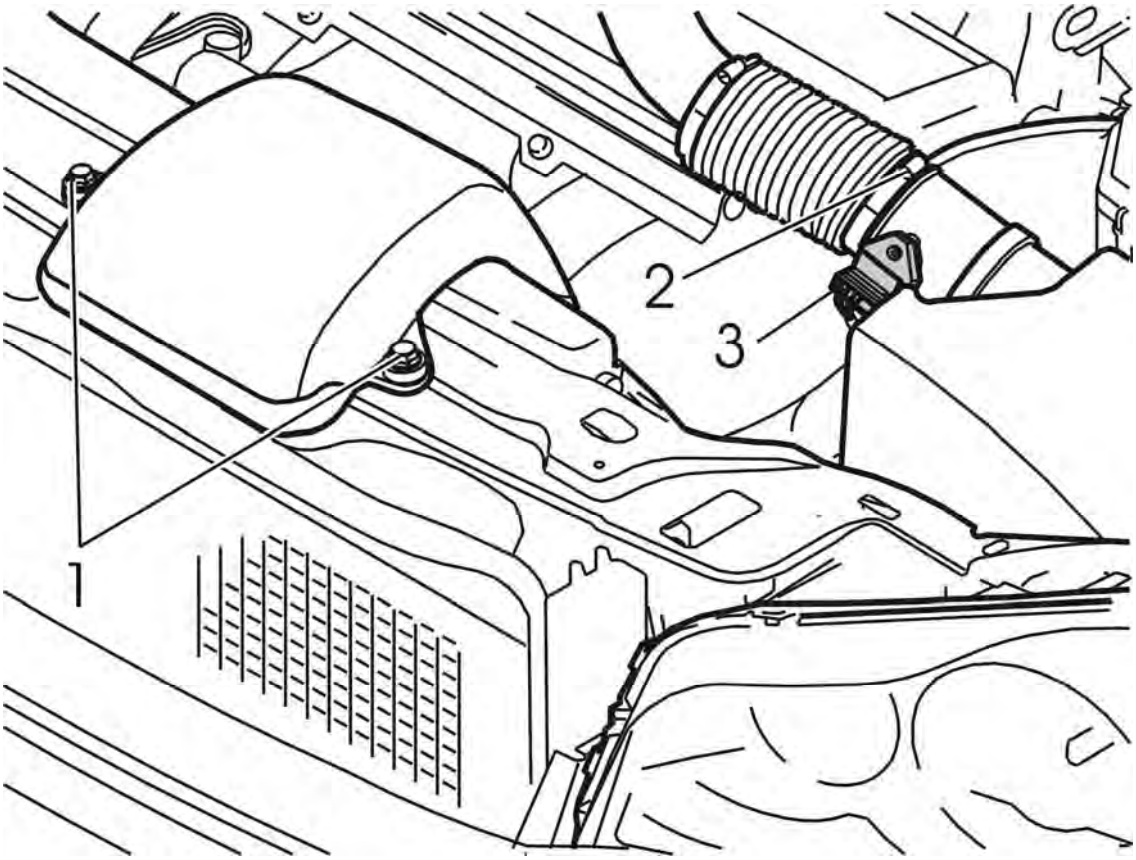

Fig. 11: Air Cleaner (ACL) Housing
Courtesy of VOLVO CARS CORPORATION

Remove the screws (1) for the intake manifold.

Disconnect the hose clamp (2) for the air hose.

Remove the connector (3) from the mass air flow (MAF) sensor.

Remove the air cleaner (ACL) housing from its mountings. Pull it straight up.

REMOVING THE INTEGRATED RELAY / FUSEBOX

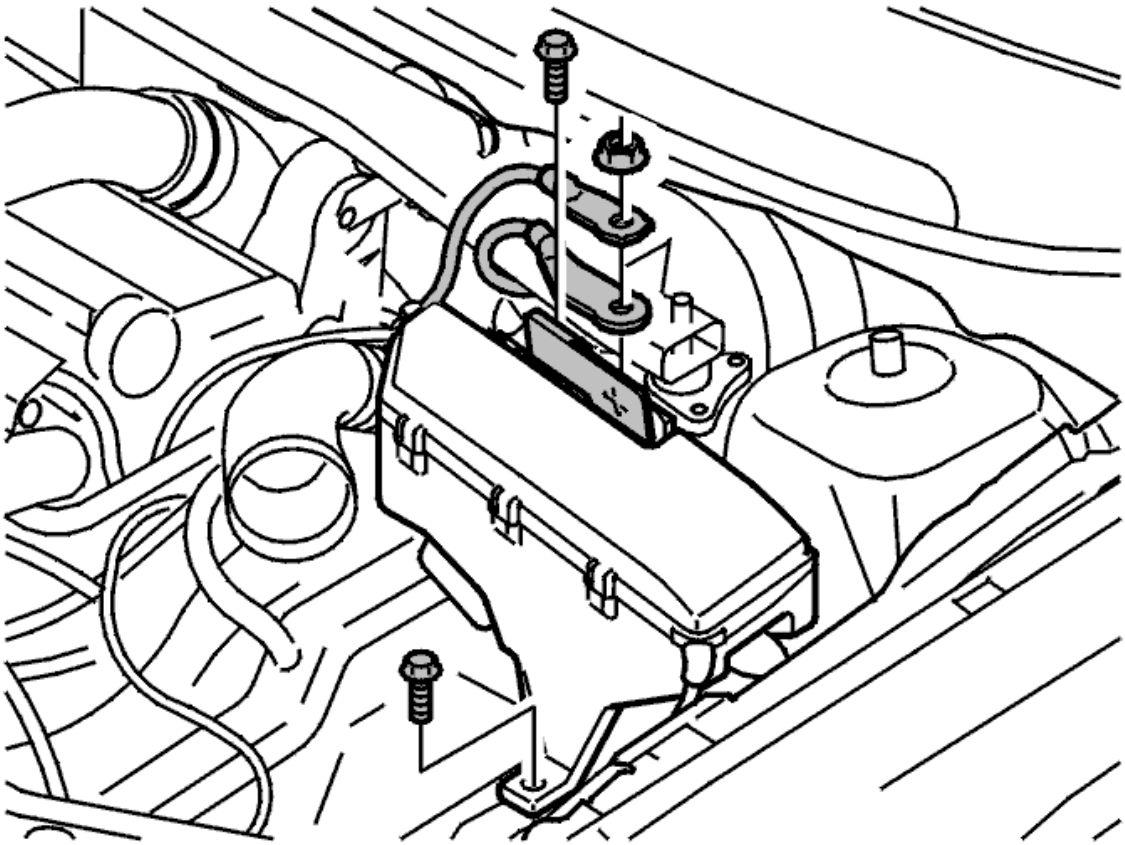

Fig. 12: Identifying Battery Leads, Screws And Nut
Courtesy of VOLVO CARS CORPORATION

Remove:

- the nut for the power cables
- the 2 power cables
- the 2 screws for the mounting.

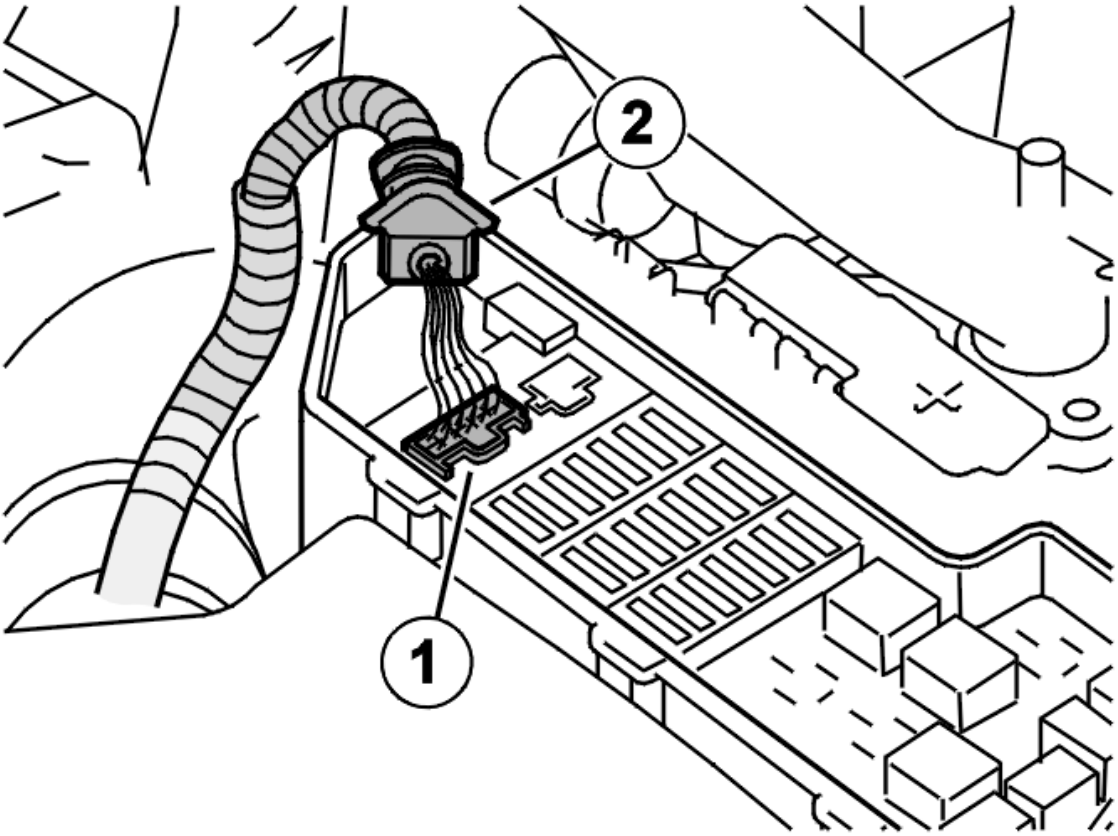

Fig. 13: Locating Connector And Cable Harness From Fusebox
Courtesy of VOLVO CARS CORPORATION

Open the integrated relay/fusebox. Remove the connector (1).

Disconnect the cable harness from the box (2).

Lift the box out of the mounting and move it to one side.

REMOVING THE BRAKE PIPE FOR THE RIGHT-HAND FRONT WHEEL / ABS UNIT

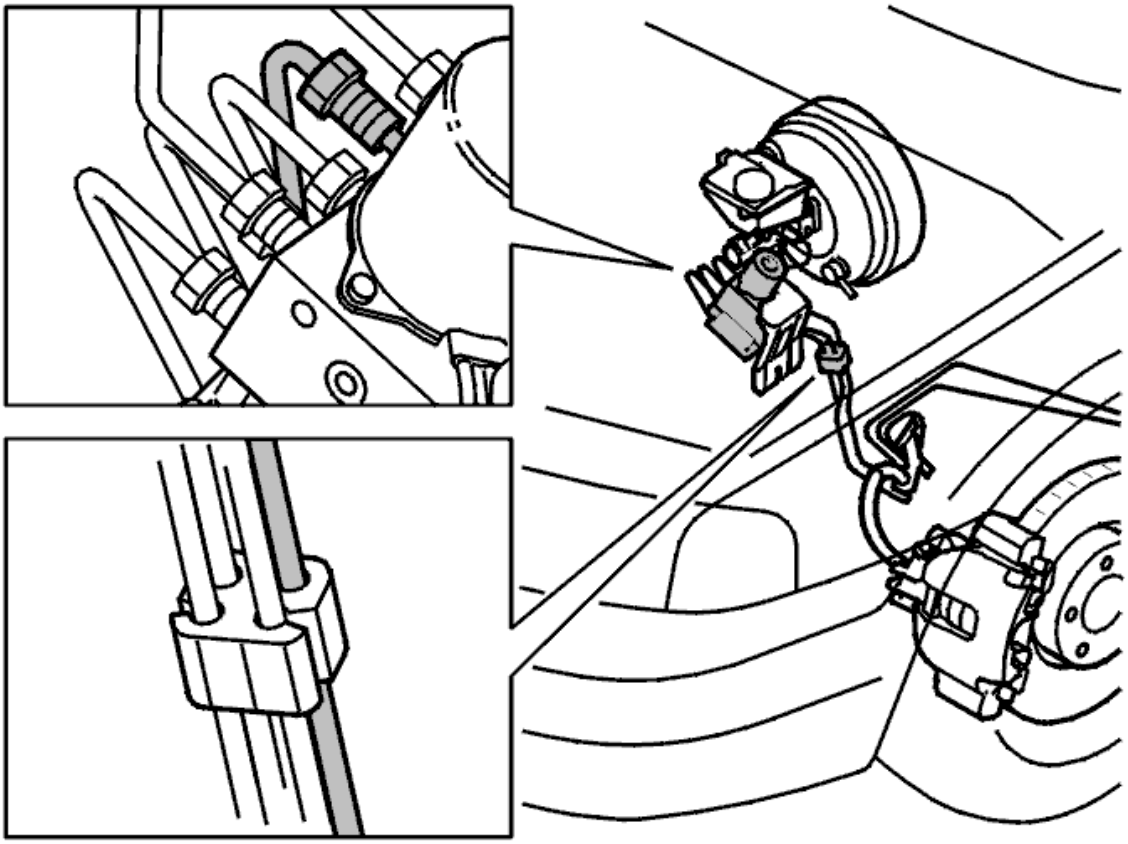

Fig. 14: Front Right Brake Pipe
Courtesy of VOLVO CARS CORPORATION

Clean around the brake pipe on the ABS hydraulic modulator. Remove the brake pipe from the ABS hydraulic modulator and holder.

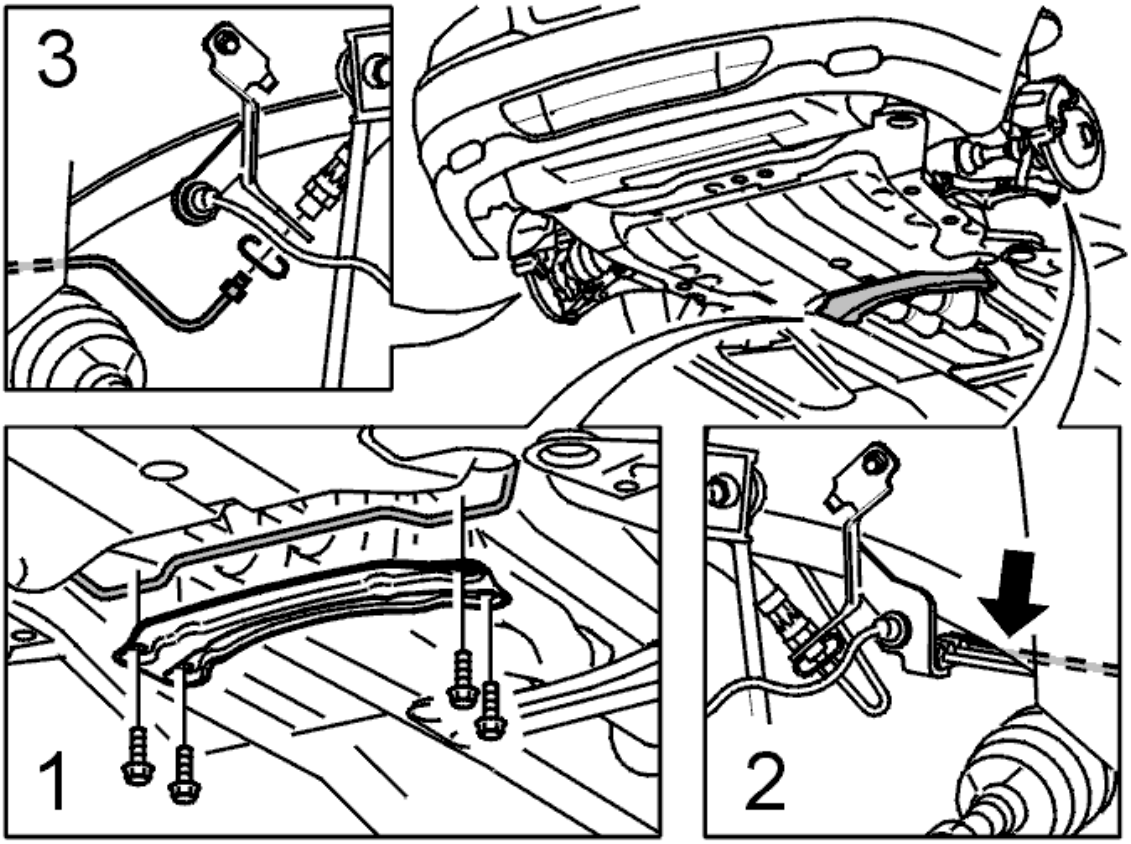

Fig. 15: Brake Pipe Removal Procedure
Courtesy of VOLVO CARS CORPORATION

Raise the car. Remove:

- the screws for the front cross member (1)
- the pipe from the bracket, left-hand side (2)
- the cross member.

Remove the brake pipe from its clips.

Separate the brake pipe and brake hose at the bracket (3).

Counterhold the brake hose so that it does not twist.

Remove the brake pipe from the car.

INSTALLING THE BRAKE PIPE FOR THE RIGHT-HAND FRONT WHEEL / ABS UNIT

NOTE: For tightening torques, see: TIGHTENING TORQUE .

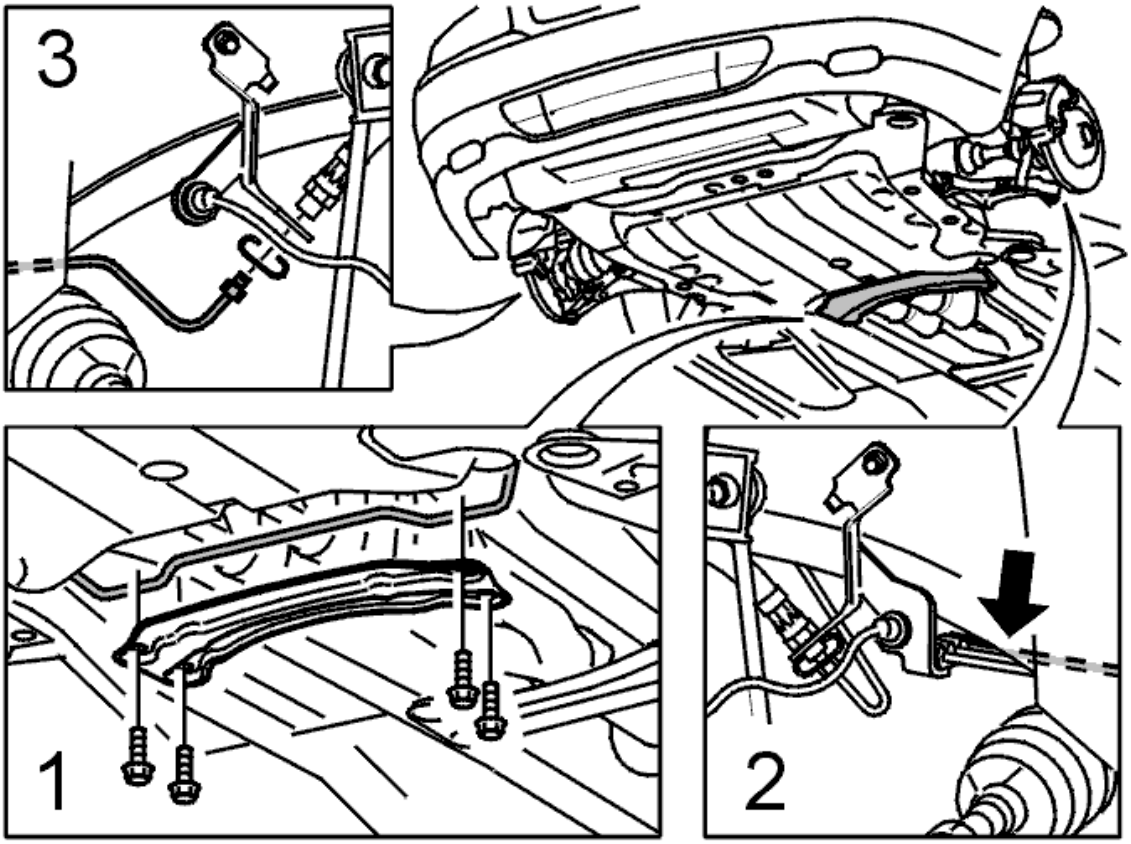

Fig. 16: Brake Pipe Removal Procedure
Courtesy of VOLVO CARS CORPORATION

NOTE: **The new brake pipe must be bent into the correct shape when installing.**

This is important otherwise the pipe may be subject to stresses when it is in place.

Install:

- the brake pipe between the ABS hydraulic modulator and the bracket, left-hand side (1)
- the brake pipe in its clips in the front cross member (2)
- the front cross member. Use the M6 screws.

Tighten the cross member. Tighten. See: **TIGHTENING TORQUE** .

Install the ABS line in its clips.

Lower the car.

Tighten the brake pipe. Tighten. See: **TIGHTENING TORQUE** .

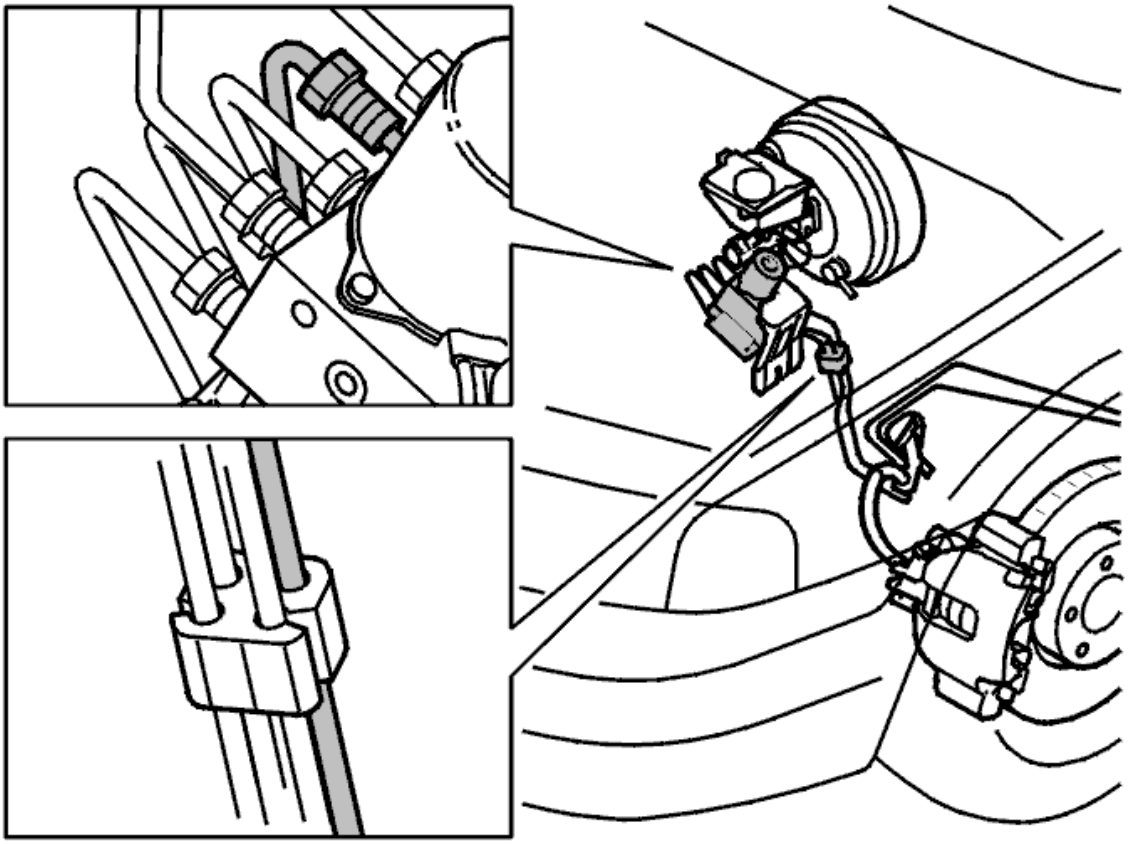

Fig. 17: Front Right Brake Pipe
Courtesy of VOLVO CARS CORPORATION

Install the brake pipe in the ABS hydraulic modulator.

Tighten. See: **TIGHTENING TORQUE** .

INSTALLING THE INTEGRATED RELAY / FUSEBOX

Install the box in its mounting.

Install:

- the cable harness
- the connector
- the 2 M6 screws for the mounting
- the 2 power cables
- the M8 nut to secure the power cables.

INSTALLING THE AIR CLEANER (ACL) HOUSING

Press the air cleaner (ACL) housing into place.

Install the air hoses and connector

FINISHING

Bleed the brake system. See **BRAKE SYSTEM, BLEEDING (USING BLEEDING UNIT)** .

Connect the battery lead.

TESTING THE PRESSURE OF THE BRAKE SYSTEM

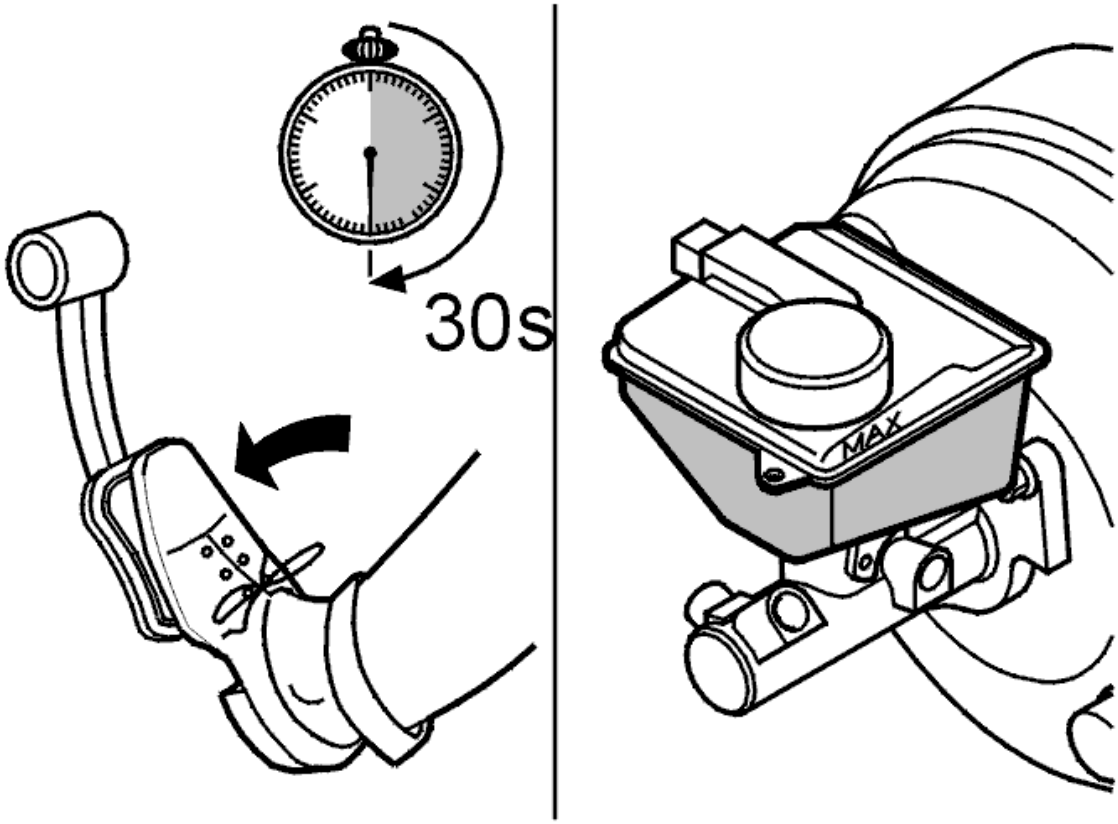

Fig. 18: Depressing Brake Pedal As If Braking Suddenly (So That Wheels Would Almost Lock) For 30 Seconds
Courtesy of VOLVO CARS CORPORATION

Depress the brake pedal hard for 30 seconds. Check that no leakage occurs from the brake nipples, hoses and joints.

Remedy any leakage.

Install the wheel. See **INSTALLING WHEELS** .

CONTROL MODULE, PREPARATIONS FOR REPLACEMENT

REMOVE THE AIR CLEANER (ACL) HOUSING

See **REMOVE THE AIR CLEANER (ACL) HOUSING** .

REMOVE THE INTEGRATED RELAY / FUSEBOX. REMOVE THE CONNECTOR FOR THE ABS UNIT

See **REMOVING THE INTEGRATED RELAY / FUSEBOX**.

WHEEL SENSOR FRONT, REPLACING

NOTE: The illustrations in this service information are used for different model years and/or models. Some variation may occur. However, the essential information in the illustrations is always correct.

PREPARATORY WORK

Raise the vehicle. Remove the front wheels.

REPLACEMENT

ABS SENSOR FRONT, REPLACING

NOTE: The work must be carried out on both sides unless otherwise indicated in the heading.

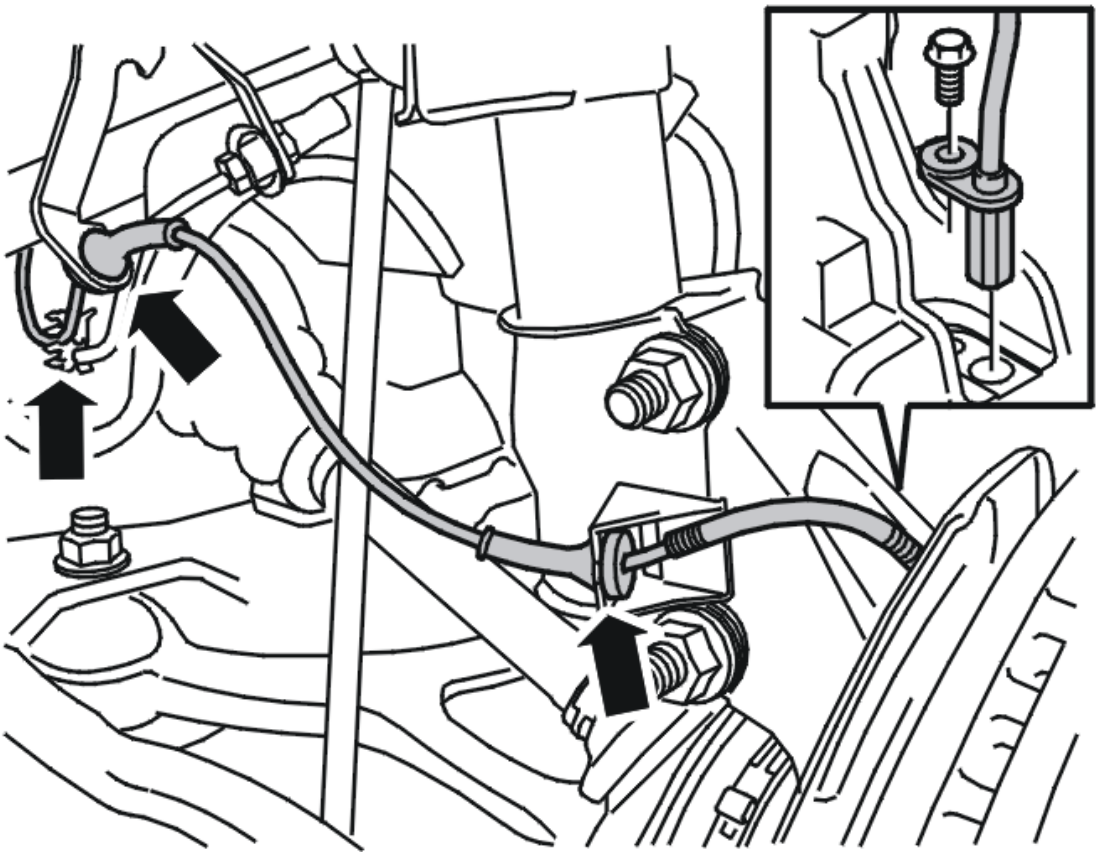

Fig. 19: Identifying Wheel Speed Sensor Cable
Courtesy of VOLVO CARS CORPORATION

Clean the sensor seat using a soft brush. Blow clean.

Remove:

- the screw for the sensor
- the cable from the brackets and the clip.

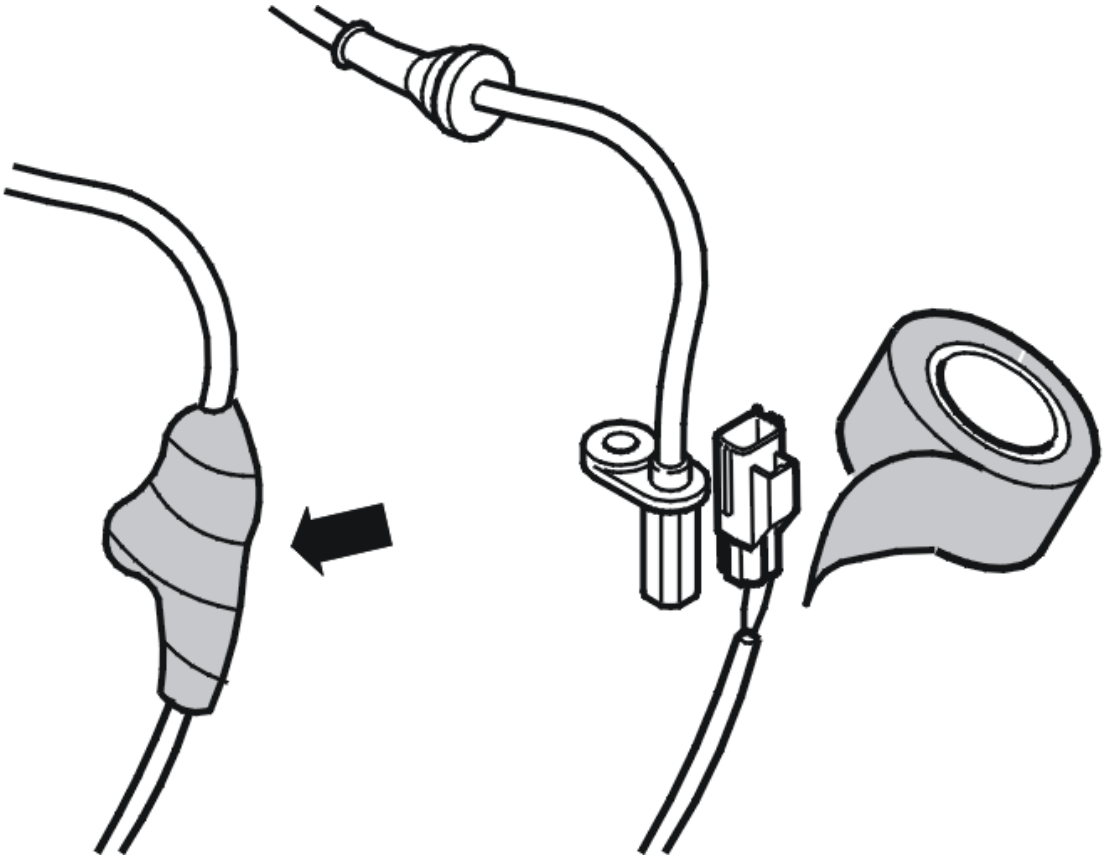

Fig. 20: Taping Connector For New Sensor To Old Sensor
Courtesy of VOLVO CARS CORPORATION

Tape the connector for the new sensor to the old sensor.

Lower the car.

REMOVING THE CABLE DUCT, RIGHT-HAND SIDE

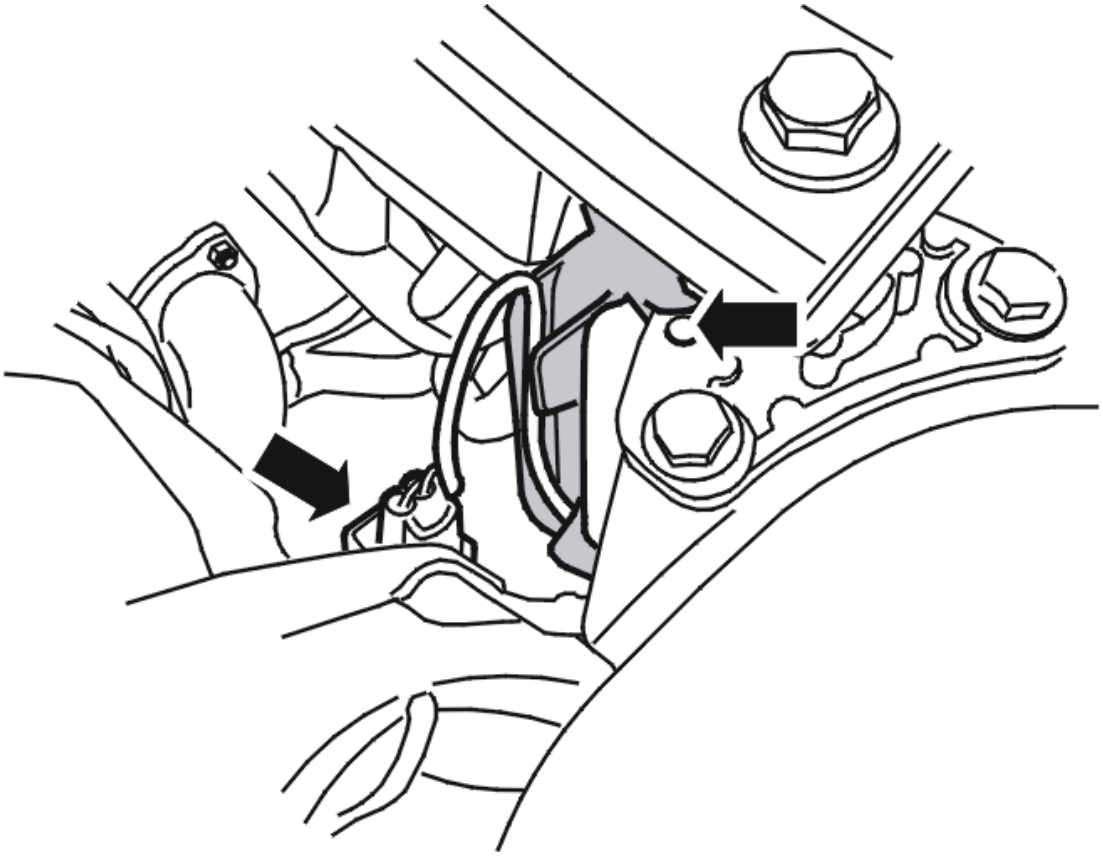

Fig. 21: Identifying Cable Duct At Torque Rod Bracket
Courtesy of VOLVO CARS CORPORATION

Disconnect the connector for the sensor.

Disconnect the cable duct from the torque rod bracket by carefully prying it off.

REPLACING SENSOR CABLE, RIGHT-HAND SIDE

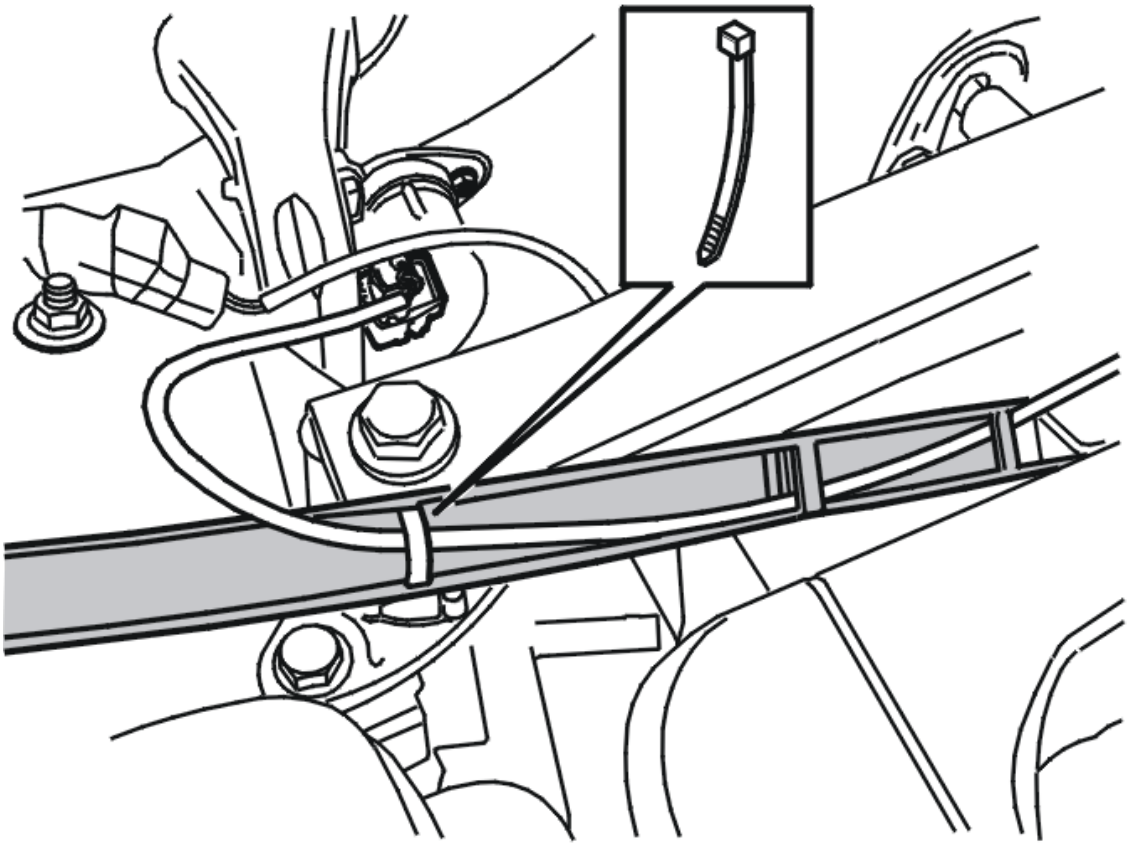

Fig. 22: Securing New Sensor Cable Inside Cable Duct Using New Tie Strap
Courtesy of VOLVO CARS CORPORATION

Pull up the sensor together with the cable duct so that the new sensor connector can be connected.

Remove:

- the tape. Connect the connector
- the old sensor cable from the cable duct.

Install:

- the new sensor cable in the cable duct. Use a new tie strap
- the cable duct on the torque rod bracket.

REMOVING THE AIR CLEANER (ACL) HOUSING, LEFT-HAND SIDE

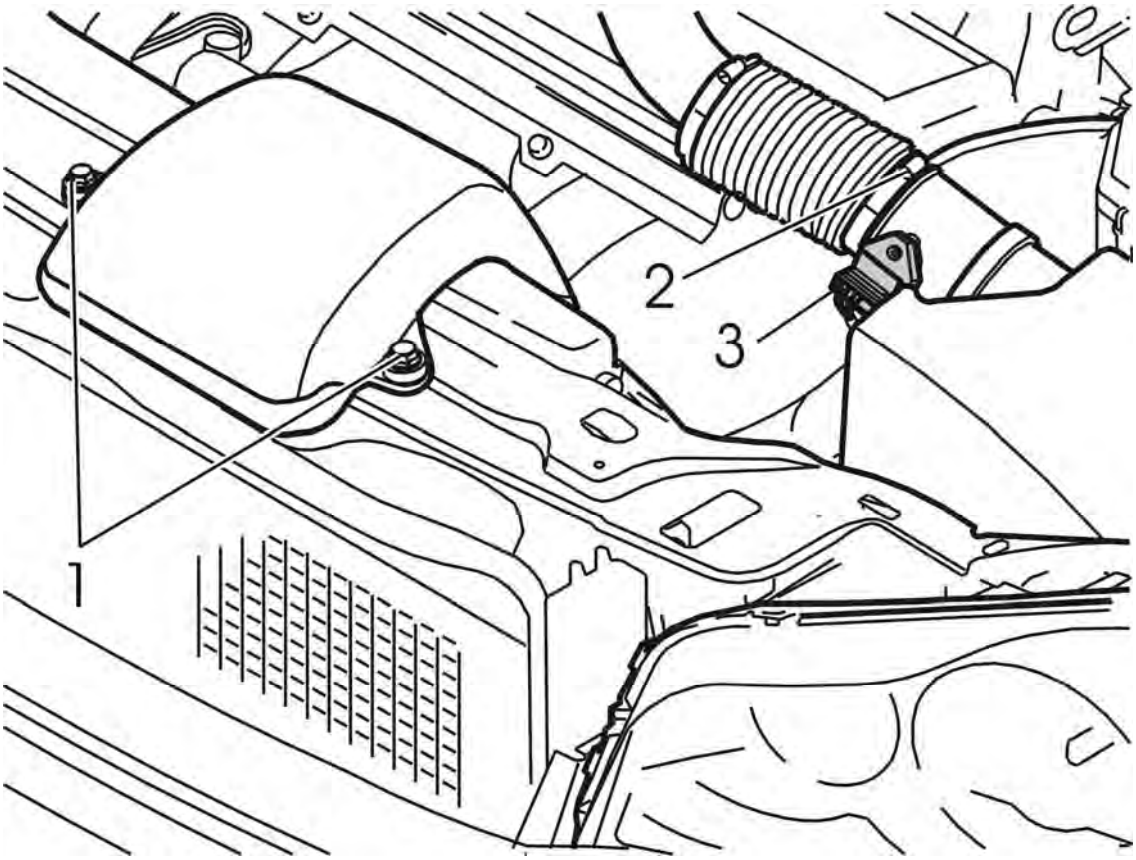

Fig. 23: Air Cleaner (ACL) Housing
Courtesy of VOLVO CARS CORPORATION

Remove the air cleaner (ACL) housing.

Remove:

- the 2 screws (1)
- the inlet hose
- the hose clamp (2)
- the connector (3)
- the tie strap for the cable.

Remove the turbocharger (TC) control valve from the air cleaner (ACL) housing

Remove:

- the plastic nut on the wheel arch side
- the air cleaner (ACL) housing.

REPLACING SENSOR CABLE, LEFT-HAND SIDE

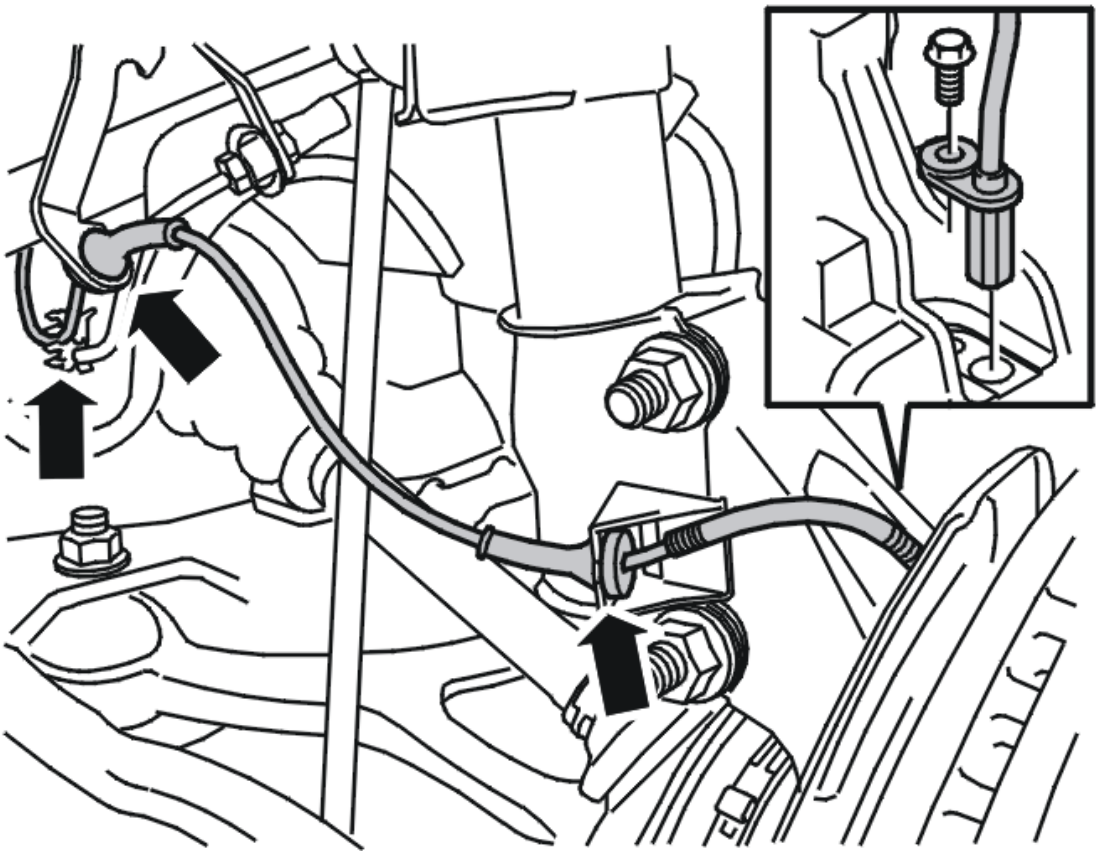

Fig. 24: Identifying Wheel Speed Sensor Cable
Courtesy of VOLVO CARS CORPORATION

Insert a hand under the fuse box. Disconnect the cable from the clips on the brake cable.

Pull up the sensor until the connector for the new cable is up.

Remove the tape and connect the connector.

Install the cable in the clips on the brake cable.

CAUTION: The yellow markings on the cables must be in the clip.

Raise the car.

INSTALLATION

NOTE: For tightening torques, see: TIGHTENING TORQUE .

INSTALLING THE SENSOR AND THE CABLE

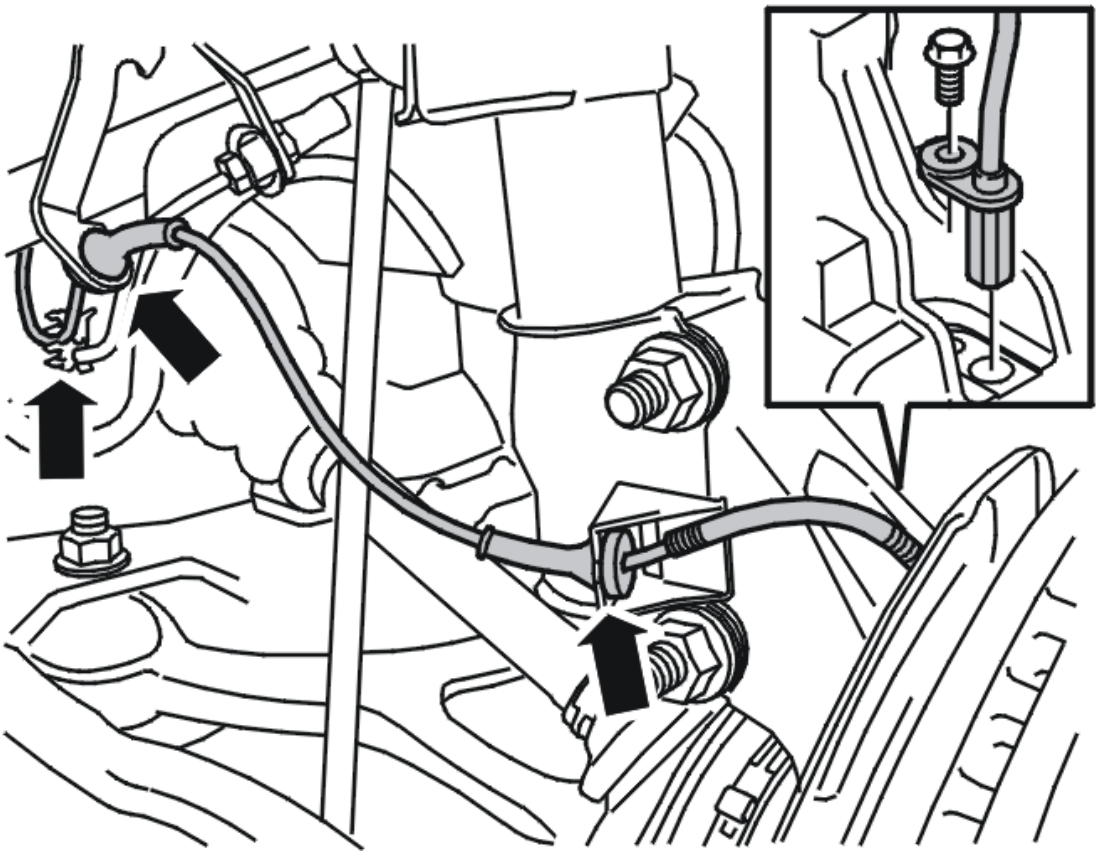

Fig. 25: Identifying Wheel Speed Sensor Cable
Courtesy of VOLVO CARS CORPORATION

Install:

- the cable in the clip and the brackets
- the sensor in the wheel spindle. Tighten. See: **TIGHTENING TORQUE** .

FITTING THE WHEEL

Install the wheels. See: **INSTALLING WHEELS** .

INSTALLING THE AIR CLEANER (ACL) HOUSING

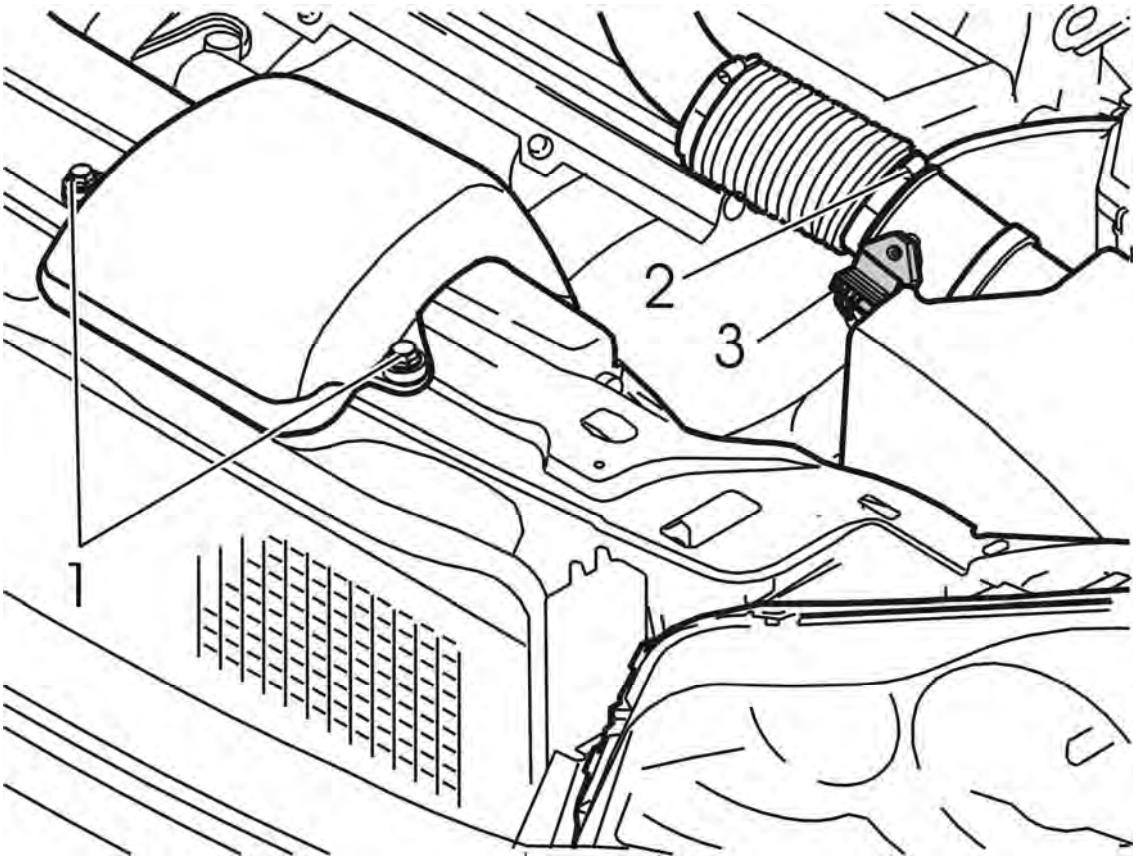

Fig. 26: Air Cleaner (ACL) Housing
Courtesy of VOLVO CARS CORPORATION

Install the air cleaner (ACL) housing. Check that the hoses are not trapped under the air cleaner (ACL) housing.

Install:

- the plastic nut on the wheel arch side
- the inlet hose using the hose clamp (2)
- the connector (3)
- the cable using the new cable tie to the air cleaner (ACL) housing
- the turbocharger (TC) control valve on the air cleaner (ACL) housing
- the inlet hose with the 2 screws (1).

FINISHING

FUNCTION TESTING AFTER REPLACEMENT

Read off any diagnostic trouble codes (DTCs).

Erase diagnostic trouble codes (DTCs).

Ignition off.

Start the engine. Check that the stop (brake) warning lamp does not light. If the stop (brake) warning lamp lights, the car must not be driven.

TEST DRIVING

Test drive the vehicle. See: **TEST DRIVE FORM (ABS), DESCRIPTION** .

WHEEL SENSOR REAR, REPLACING

NOTE: **As the illustrations in this service information are used for different model years and / or models, some variation may occur. However, the essential information in the illustrations is always correct.**

PREPARATION

Remove:

- the outer rear seats. See **UPHOLSTERY SEAT CUSHION OUTER (SECOND ROW), REPLACING**
- the center rear seats. See **UPHOLSTERY SEAT CUSHION CENTER (SECOND ROW), REPLACING** .

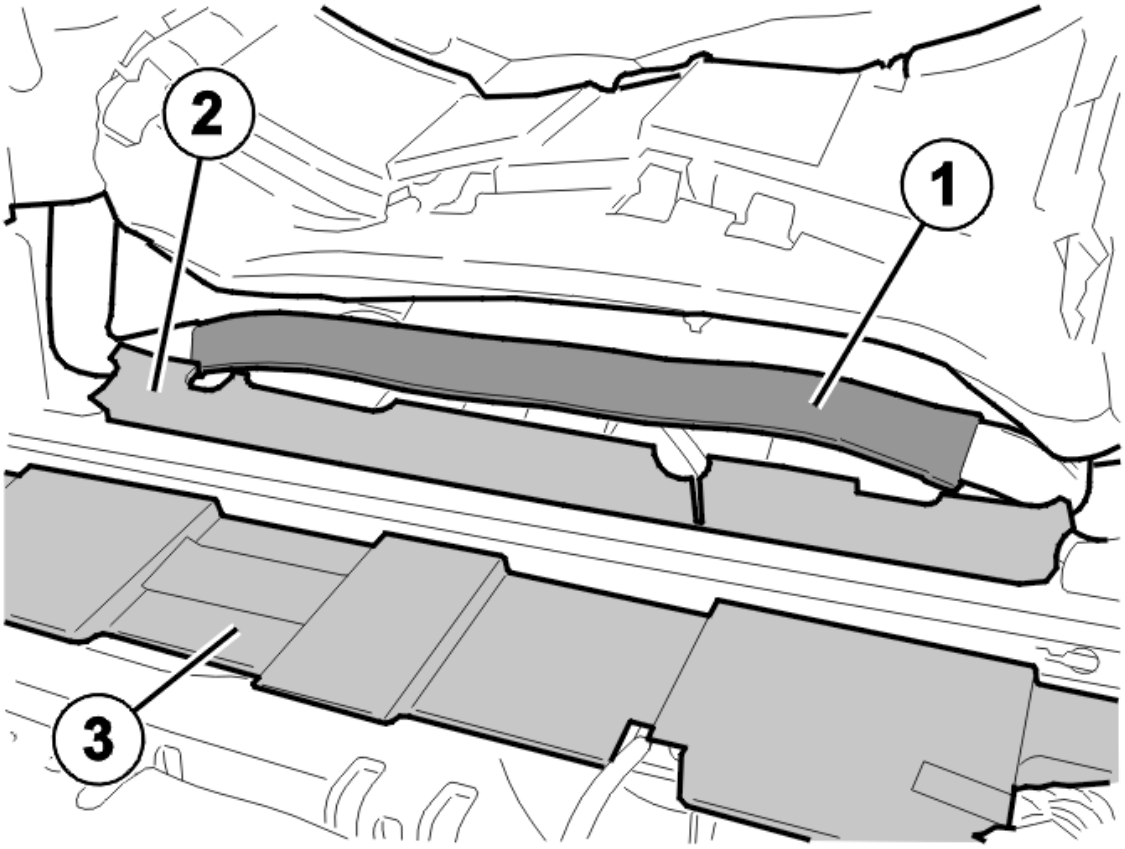

Fig. 27: Identifying Carpet And Insulation Blocks
Courtesy of VOLVO CARS CORPORATION

Fold the carpet back (1).

Remove:

- the insulation block (2)
- the insulation block (3).

APPLIES ONLY WHEN REPLACING THE SENSOR ON THE LEFT-HAND SIDE

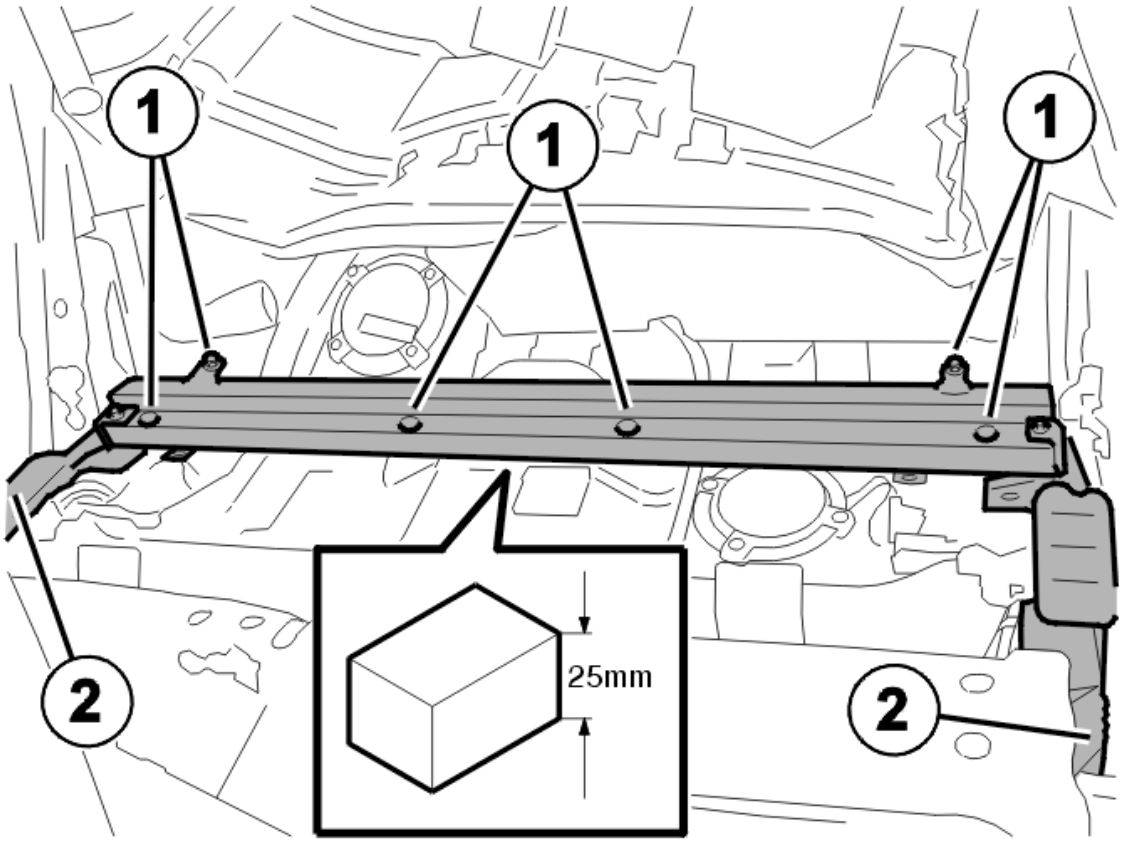

Fig. 28: Raising Rear Edge Of Seat Frame Approximately 25mm And Positioning Block Between Frame And Transmission Tunnel
Courtesy of VOLVO CARS CORPORATION

Remove:

- the 8 seat frame screws (1)
- the 8 seat frame screws (2).

Raise the rear edge of the seat frame approximately 25 mm. Position a block between the frame and the transmission tunnel.

REMOVING THE CAP OVER THE LEVEL SENSOR

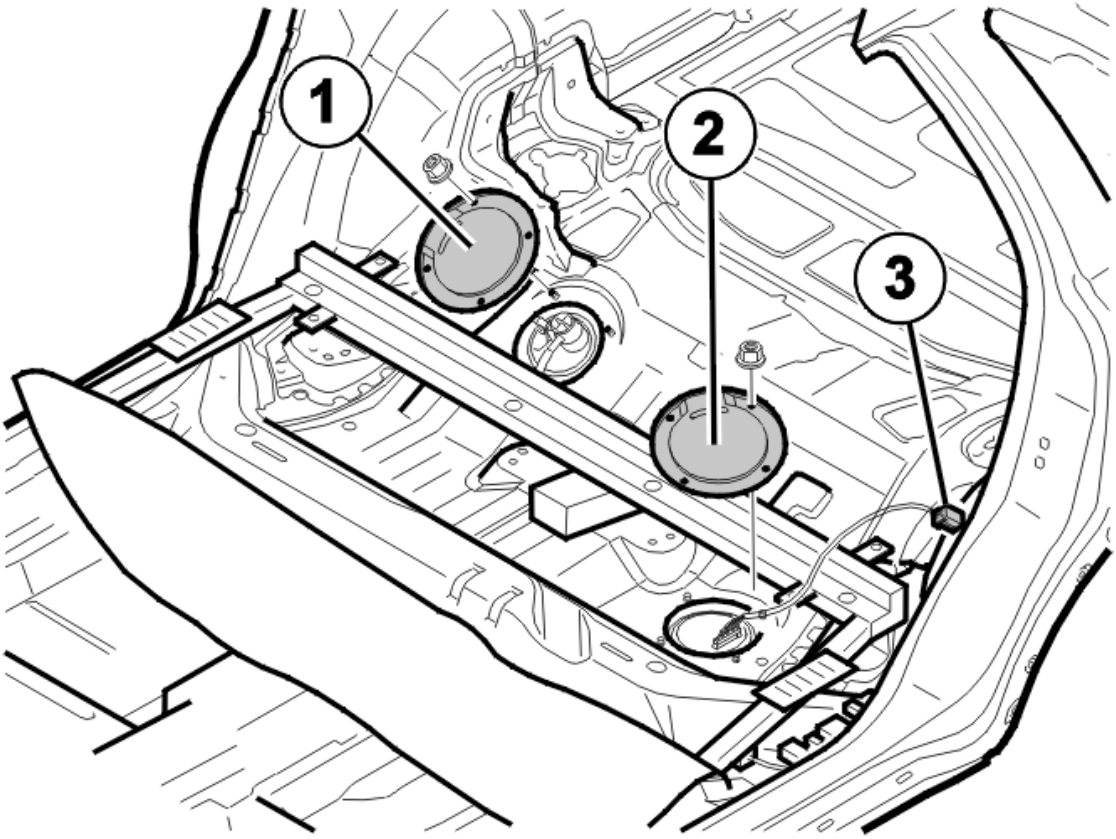

Fig. 29: Identifying Cover, Fuel Level Sensor, And Connector
Courtesy of VOLVO CARS CORPORATION

Remove the cover (1) to replace the right-hand sensor and (2) to replace the left-hand sensor.

REMOVING SENSOR

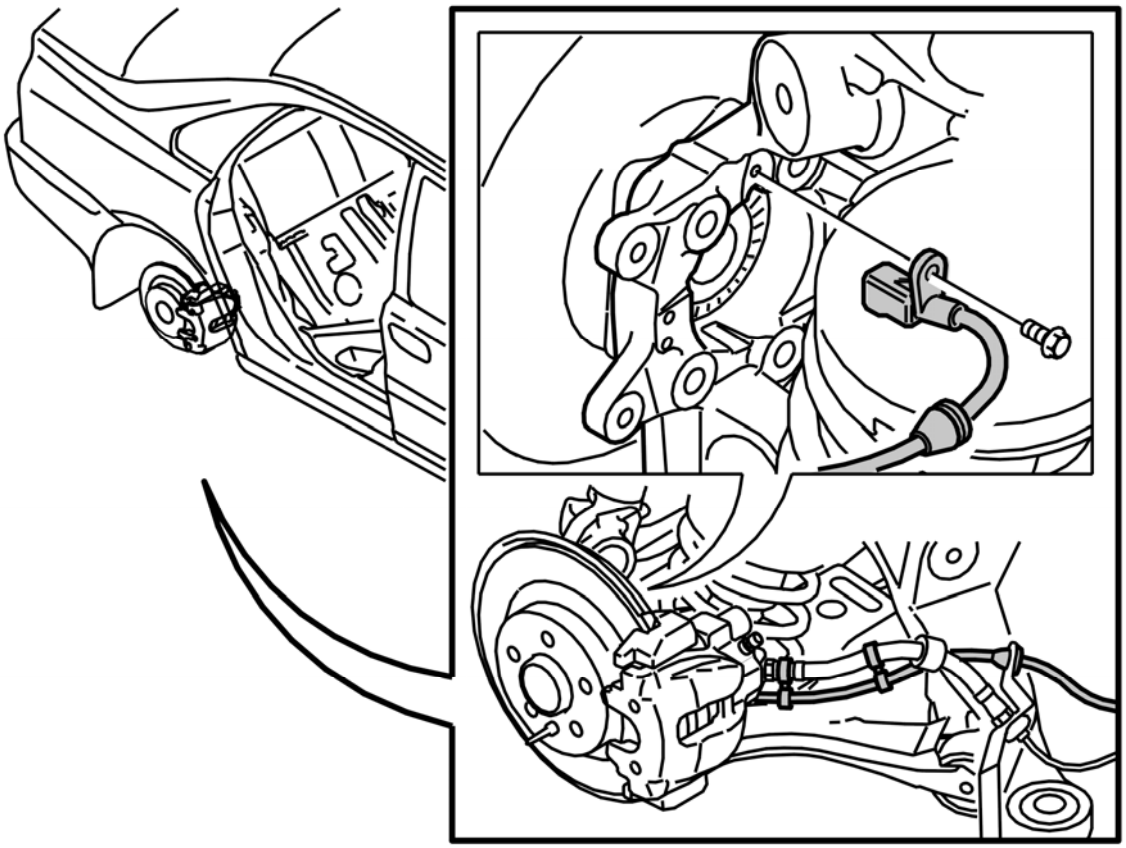

Fig. 30: Locating Wheel Sensor
Courtesy of VOLVO CARS CORPORATION

Disconnect the connector for the relevant sensor.

Tie a section of cable or wire onto the connector. Pull the cable harness from underneath between the tank and bodywork.

Detach the cable harness from the tank.

Remove the cable/wire from the connector.

NOTE: Blow clean around the sensor using compressed air before removing.

Remove the mounting screws for the sensor. Pull out the sensor.

Disconnect the cable harness from the clips on the brake hose.

Remove the cable harness and sensor.

INSTALLING SENSOR

Clean around the sensor seat so that when installed the sensor will be in the correct position against the pulse

wheel. Use a soft brush.

Install:

- the wheel sensor (**10 Nm**)
- the wheel sensor wiring in the clip on the brake hose and on the tank.

Secure the new connector to the loose cable/wire.

Pull up the sensor connector between the fuel tank and the body.

Disconnect the cable / wire from the connector.

Install the cover over the level sensor. Tighten the nuts.

Connect the wiring and the connectors.

APPLIES ONLY WHEN REPLACING THE LEFT-HAND SENSOR

Remove the block from under the seat frame.

Install:

- the 8 seat frame screws. Tighten to **50 Nm**
- the 2 seat frame screws. Tighten to **24 Nm** .

FINISHING

Fold the carpet down.

Install:

- the center rear seat. See **UPHOLSTERY BACKREST CUSHION CENTER (SECOND ROW), REPLACING**
- the outer rear seat. See **UPHOLSTERY BACKREST CUSHION OUTER (SECOND ROW)** .

Install the wheels. See **INSTALLING WHEELS** .

FUNCTION TEST

Check the function. See **WHEEL SENSOR FRONT, REPLACING**.

BRAKES

Brakes

BRAKES

CONNECT THE BLEEDING UNIT

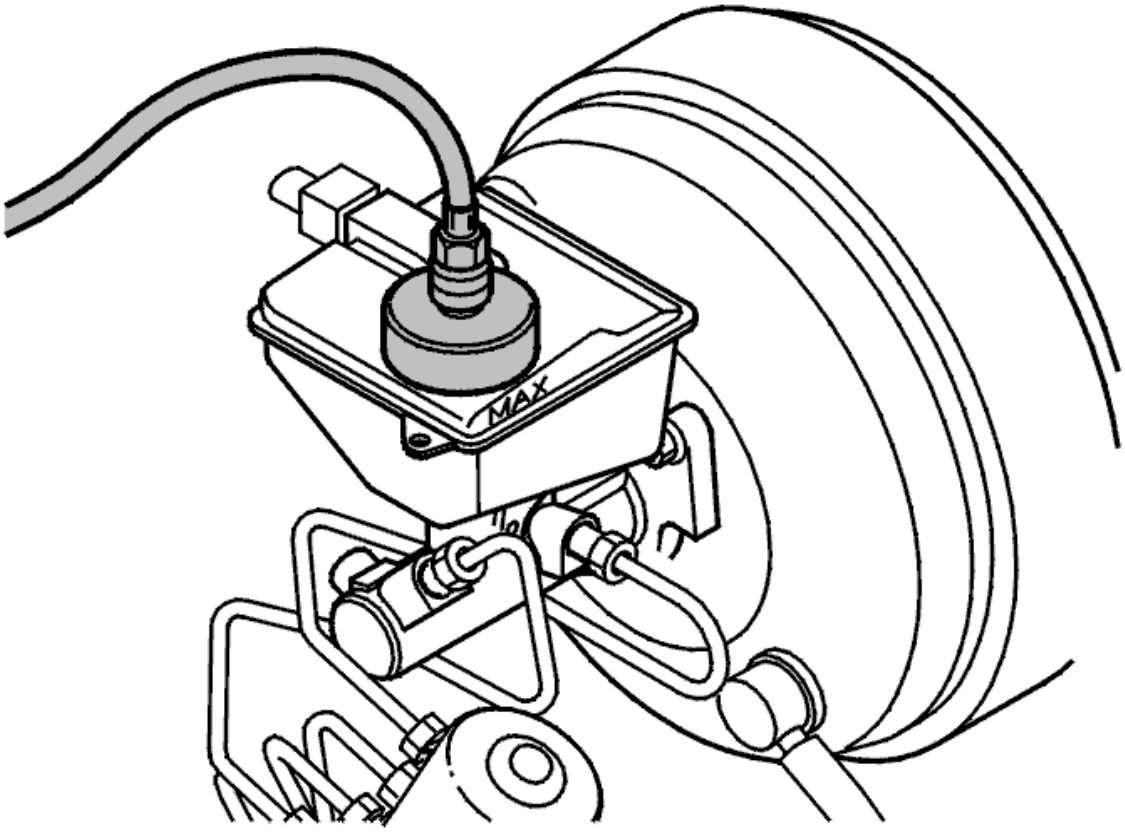

Fig. 1: Bleeding Unit Connected to Brake Fluid Reservoir
Courtesy of VOLVO CARS CORPORATION

Connect the bleeding unit to the brake fluid reservoir. Follow the manufacturer's instructions for connecting and using bleeding unit.

Pressurize the brake system. Check the connection to the brake fluid reservoir.

Depressurize the system after the check.

Raise the car and remove the wheels

PARKING BRAKE CABLE FRONT, REPLACING

NOTE: The illustrations in this service information are used for different model years

and/or models. Some variation may occur. However, the essential information in the illustrations is always correct.

REMOVAL

REMOVING THE CENTER CONSOLE

Remove the center console. See: **CENTER CONSOLE, REPLACING**

REMOVING THE FRONT BRAKE CABLE

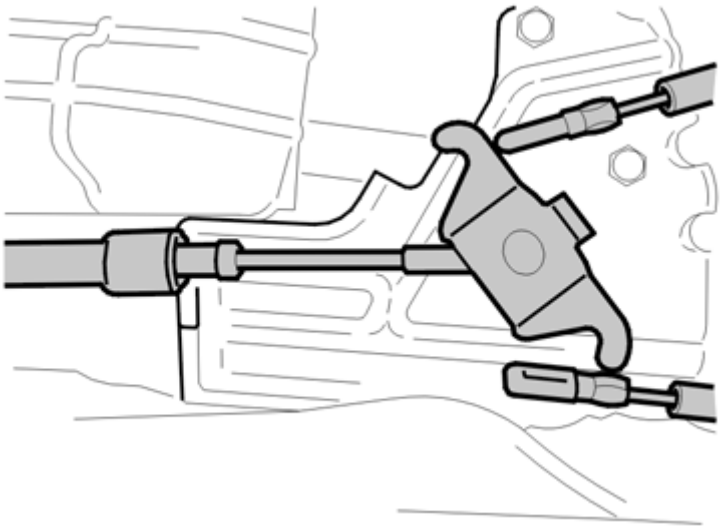

Fig. 2: Identifying Power Distributor And Brake Cables
Courtesy of VOLVO CARS CORPORATION

Unhook the power distributor for the front brake cable from the two rear brake cables. Remove the clips for the mechanical cable casing using long nose pliers. Lift the cable from the bracket.

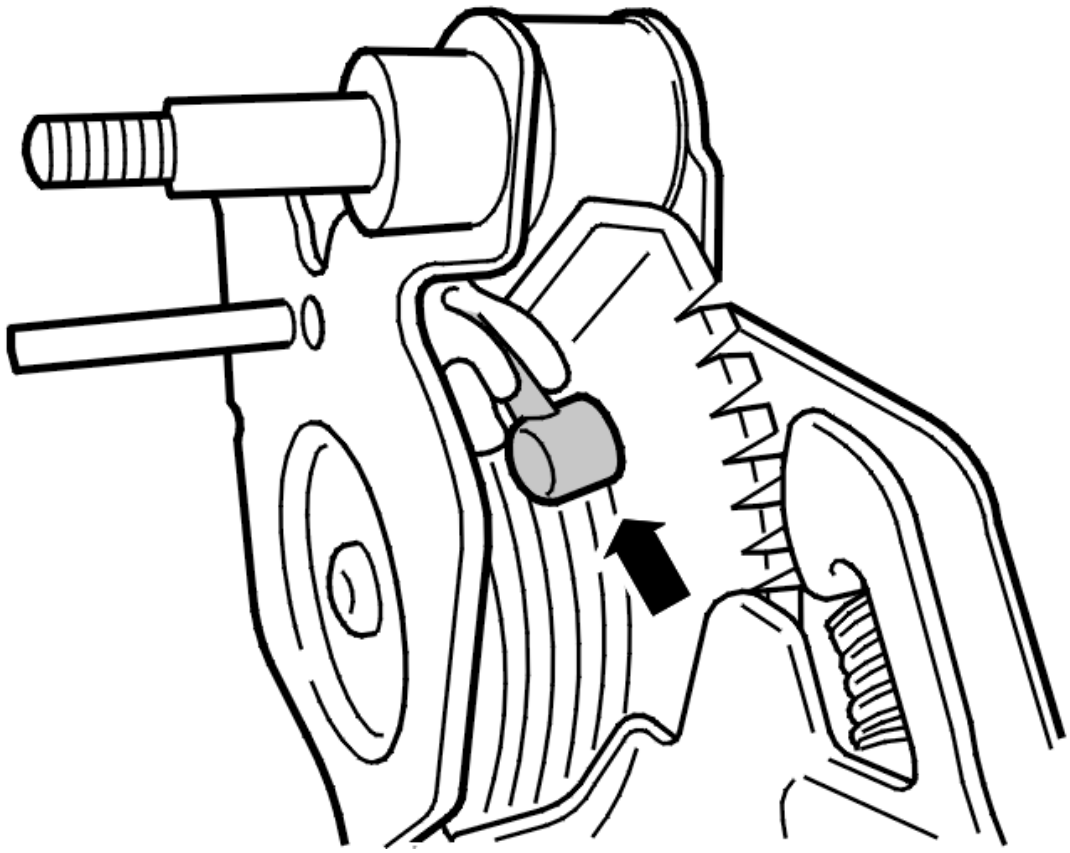

Fig. 3: View Of Cable In Pulley
Courtesy of VOLVO CARS CORPORATION

Remove:

- the cable from the cable pulley in the pedal
- the outer casing for the cable from the pedal using round-nose pliers.

REMOVING THE ACCELERATOR PEDAL (AP)

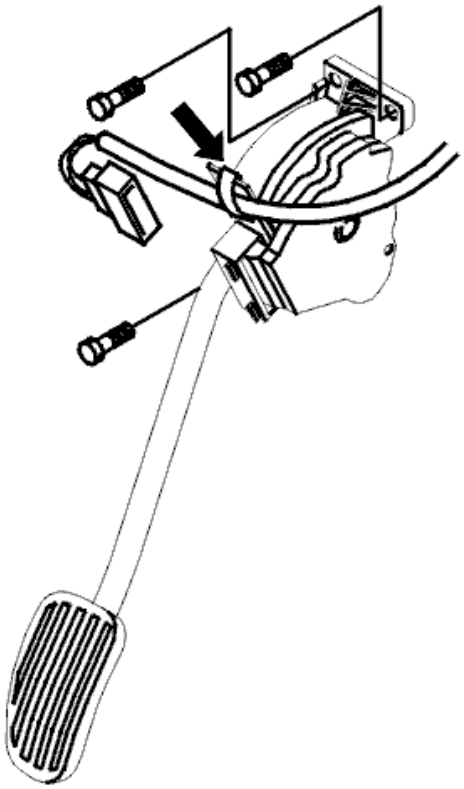

Fig. 4: Accelerator Pedal
Courtesy of VOLVO CARS CORPORATION

Slacken off and remove the lower screw for the accelerator pedal (AP). Slacken off the two upper screws.

Lift the accelerator pedal (AP). Pull the mechanical cable downwards so that it comes out from the underside of the mounting plate for the accelerator pedal (AP).

Pull the mechanical cable backwards at the tunnel. Ensure that the clip for the outer casing at the pedal end does not catch at the accelerator pedal/heater.

INSTALLATION

INSTALLING THE FRONT BRAKE CABLE

For tightening torques, see **TIGHTENING TORQUE** .

Pull the mechanical cable into the center of the tunnel above the insulation.

NOTE: The mechanical cable for the parking brake pedal must be installed before the power distributor at the tunnel.

INSTALLING THE ACCELERATOR PEDAL (AP)

Install:

- the lower screw for the accelerator pedal (AP)
- tighten the 3 M6 screws for the accelerator pedal (AP). The mechanical cable must be underneath the mounting plate for the accelerator pedal (AP) so that the 2 pieces of tape on the mechanical cable are hidden by the mounting.

INSTALLING THE CABLE FOR THE PARKING BRAKE PEDAL

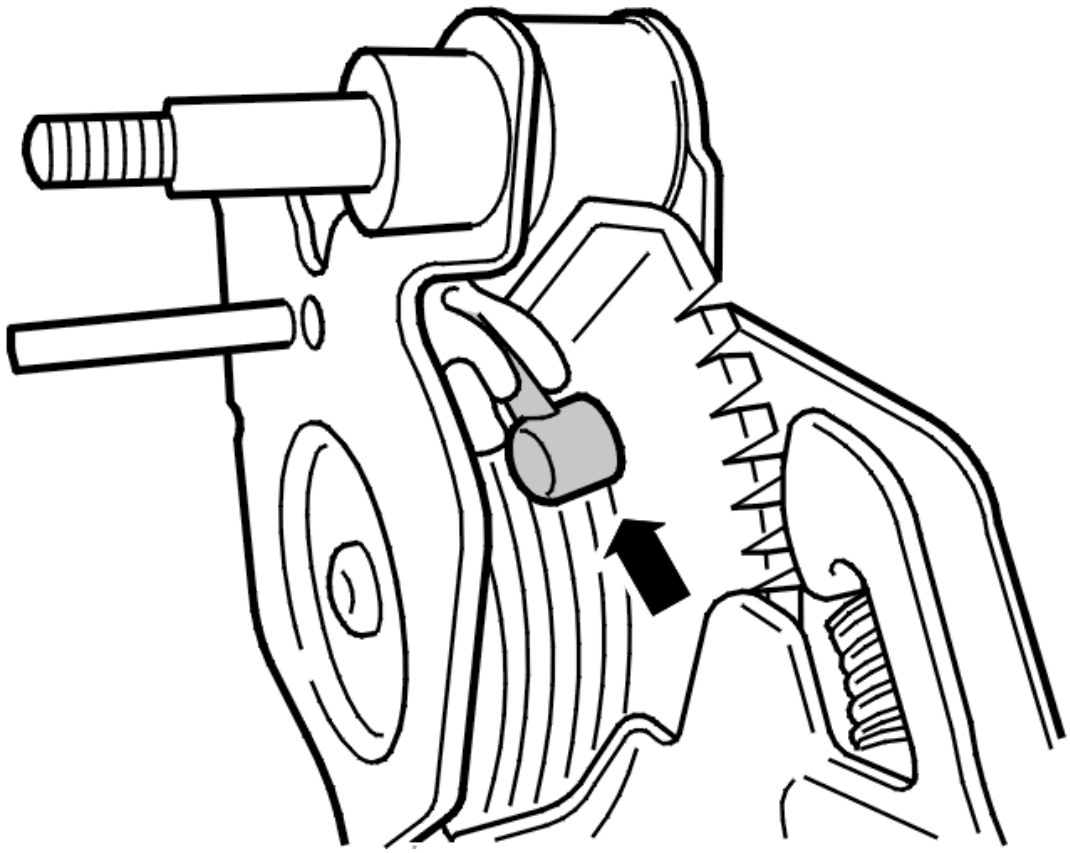

Fig. 5: View Of Cable In Pulley
Courtesy of VOLVO CARS CORPORATION

Press the cable into place in the pedal.

Install the cylindrical steel end piece for the cable in the cable pulley in the pedal.

INSTALLING THE BRAKE CABLE IN THE CENTER CONSOLE

Install the casing for the cable in the bracket.

Hook the power distributor for the front brake cable into place in the two rear brake cables.

INSTALLING THE PARKING BRAKE PEDAL

Install the parking brake pedal. See: **PARKING BRAKE SELF-ADJUSTMENT, RESETTING** .

NOTE: Activate the parking brake firmly for 10 minutes.

INSTALLING THE CENTER CONSOLE

Install the center console. See: **CENTER CONSOLE, REPLACING** .

PEDAL SENSOR, POWER BRAKE BOOSTER, REPLACING

NOTE: The illustrations in this service information are used for different model years and/or models. Some variation may occur. However, the essential information in the illustrations is always correct.

PREPARATORY WORK

Ignition off.

Press the brake pedal a few times until the pedal becomes stiff and rises slightly. This releases the vacuum in the brake servo and thus prevents the O-ring from being sucked in when the pedal position sensor is removed.

REMOVAL

REMOVING PEDAL POSITION SENSOR

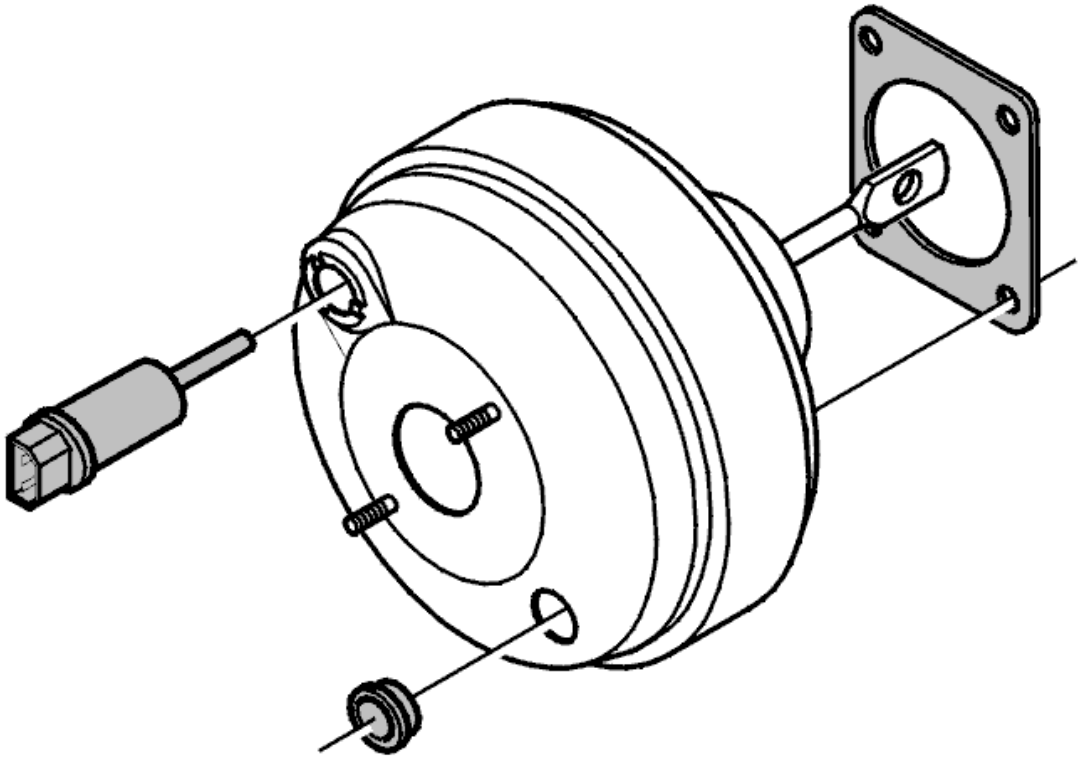

Fig. 6: Identifying Pedal Position Sensor Assembly
Courtesy of VOLVO CARS CORPORATION

Slacken off the snap ring around the mounting on the sensor slightly. Insert a narrow screwdriver or wedge. Press one end of the snap ring in approximately 10 mm. Press radially backwards in the groove in the snap ring.

Pull out the sensor slightly and disconnect the connector. Remove the sensor and the O-ring.

INSTALLATION

INSTALLING PEDAL POSITION SENSOR

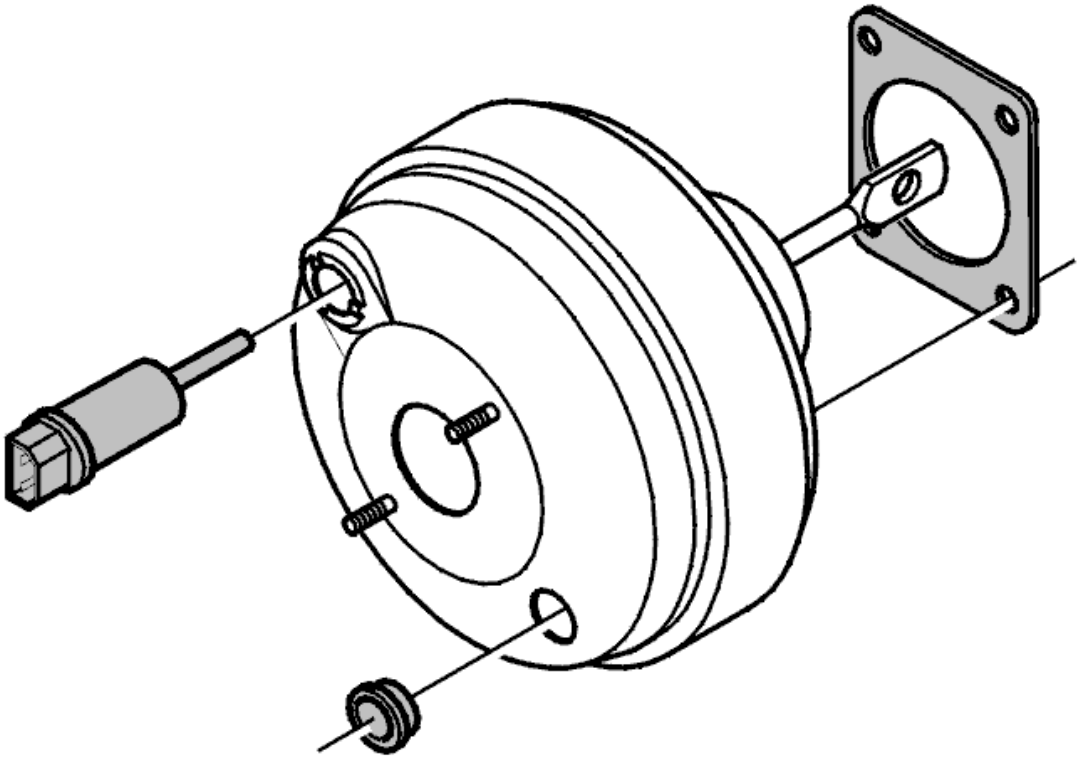

Fig. 7: Identifying Pedal Position Sensor Assembly
Courtesy of VOLVO CARS CORPORATION

Install:

- The O-ring on the sensor
- the sensor for the brake servo so that the locking lug goes into position. Press the snap ring into its original position if necessary.

Gently pull the sensor. Check that the sensor is secure.

Connect the connector.

PRESSURE SENSOR, MASTER CYLINDER, REPLACING

REMOVAL

PREPARATIONS FOR CHECKING THE PRESSURE SENSOR

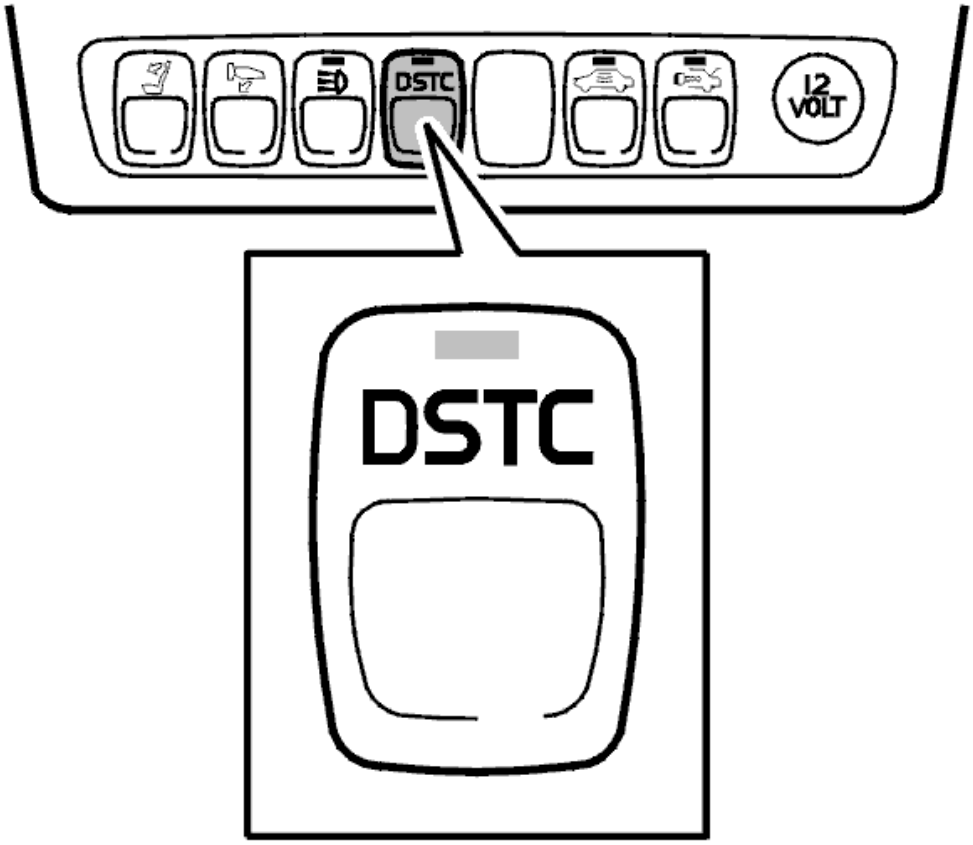

Fig. 8: DSTC Warning Lamp
Courtesy of VOLVO CARS CORPORATION

Turn on the ignition.

Press the dynamic stability and traction control (DSTC) button on the dashboard (the green lamp lights in the button) so that the DSTC system is engaged.

CHECKING PRESSURE SENSOR

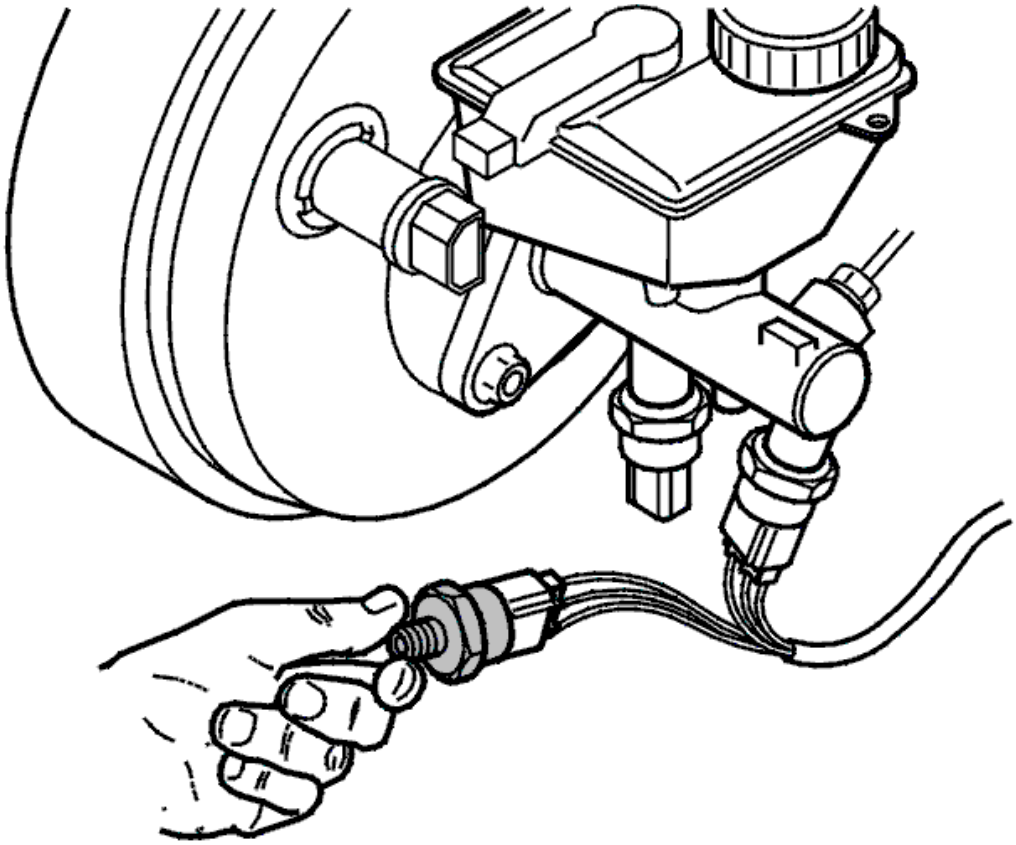

Fig. 9: Checking Pressure Sensor
Courtesy of VOLVO CARS CORPORATION

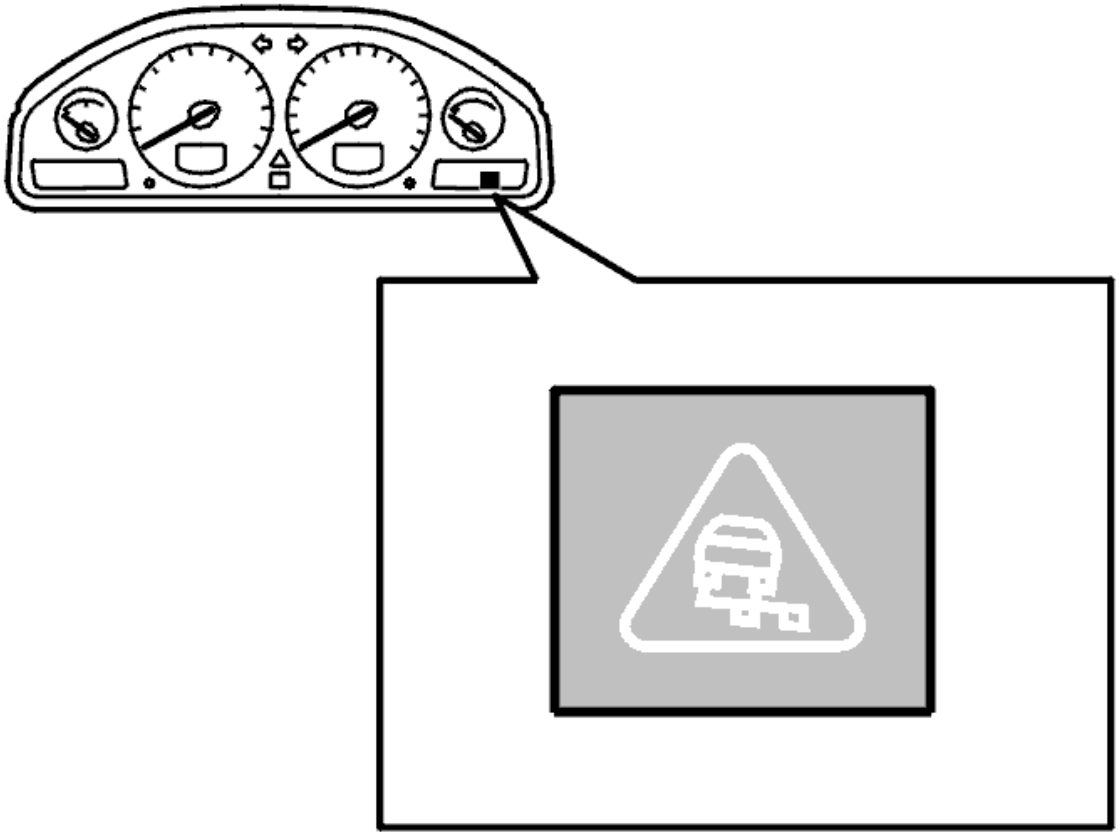

Fig. 10: Identifying Warning Light
Courtesy of VOLVO CARS CORPORATION

This check assumes that other faults that were diagnosed in the system have been rectified.

Switch off the ignition.

Disconnect one connector from one of the sensors.

Take out a new sensor.

Install the connector on the new sensor.

Switch on the ignition. Check whether the symbol on the dashboard lights or not.

If the symbol does not light the fault was in the old sensor. Test with the other sensor if the symbol lights.

NOTE: Reconnect the connector to the sensor after each test (the connectors should not be mixed up.)

Replacing the pressure sensor. See **PREPARATIONS BEFORE REPLACING THE PRESSURE SENSOR**

PREPARATIONS BEFORE REPLACING THE PRESSURE SENSOR

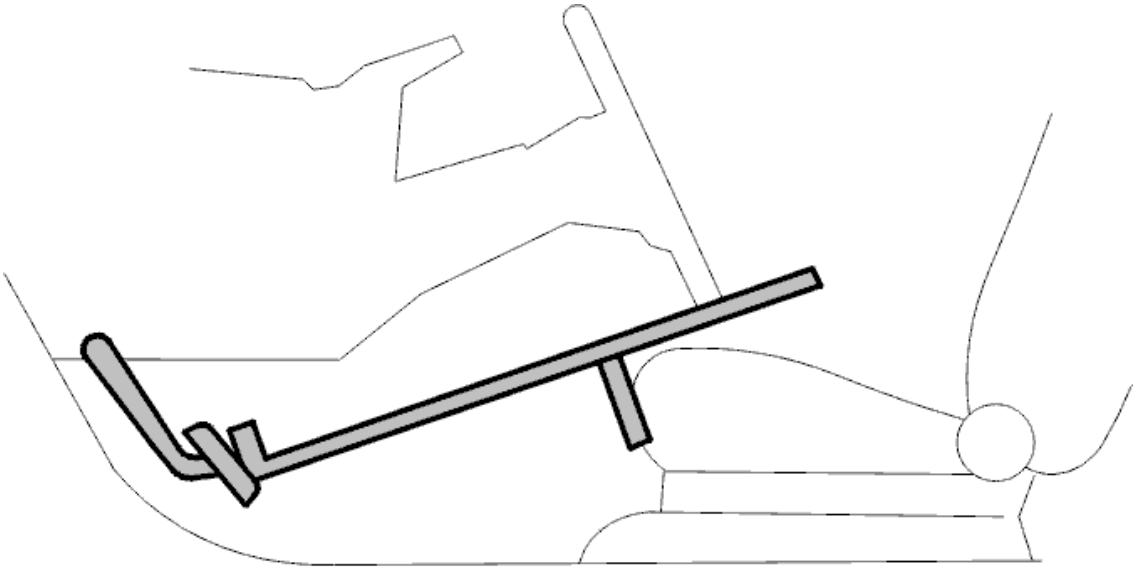

Fig. 11: Identifying Pedal Secured In Depressed Position Using Pedal Jack
Courtesy of VOLVO CARS CORPORATION

Apply the brake pedal lightly using a pedal jack.

Position paper under the master cylinder (to collect any brake fluid spillage).

Disconnect the connector from the pressure sensor.

REPLACING THE PRESSURE SENSOR

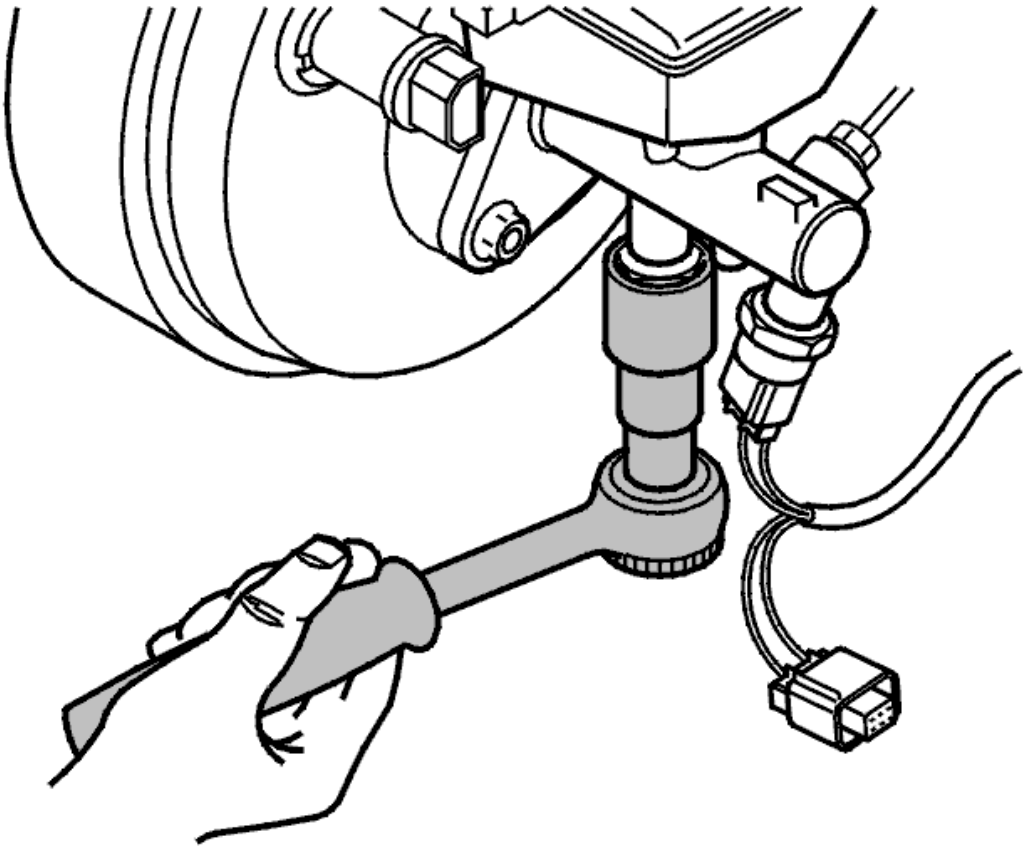

Fig. 12: Removing/Installing Pressure Sensor Using An Extended Socket
Courtesy of VOLVO CARS CORPORATION

Remove the pressure sensor using an extended socket.

INSTALLATION

INSTALLING THE PRESSURE SENSOR

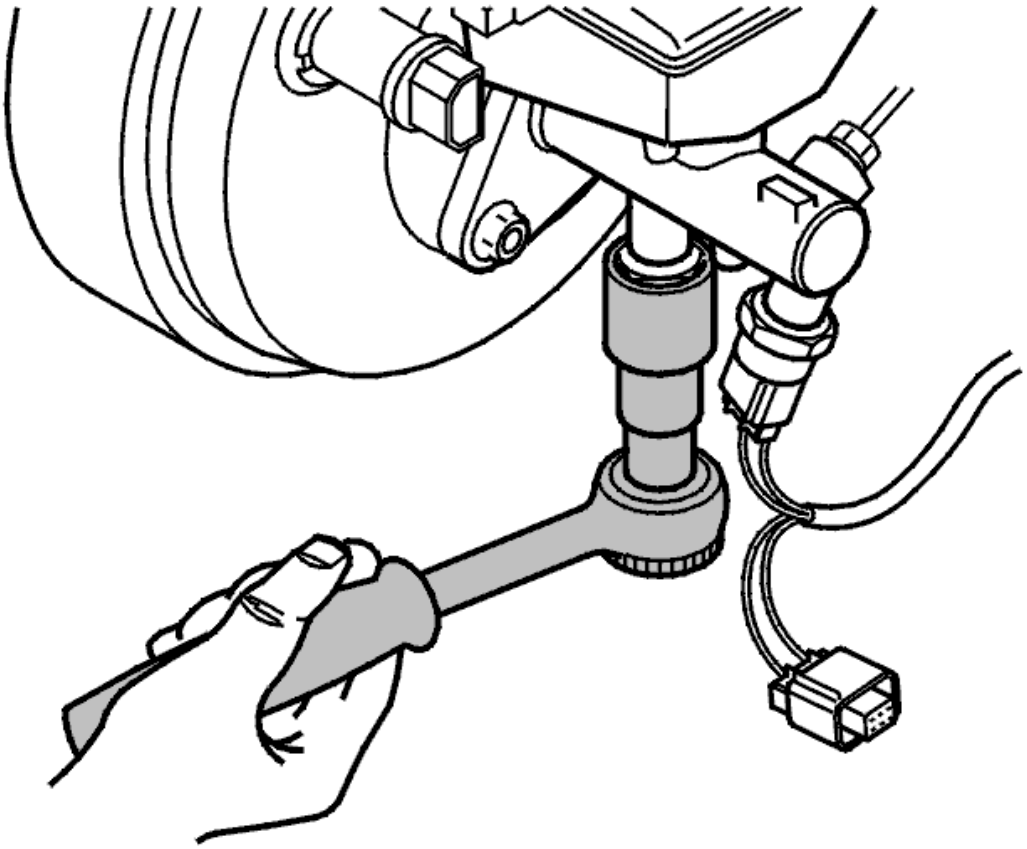

Fig. 13: Removing/Installing Pressure Sensor Using An Extended Socket
Courtesy of VOLVO CARS CORPORATION

Install the pressure sensor.

Tighten to 25 Nm.

Connect the connector.

Remove the pedal jack.

CHECKING THE PRESSURE SENSORS VISUALLY

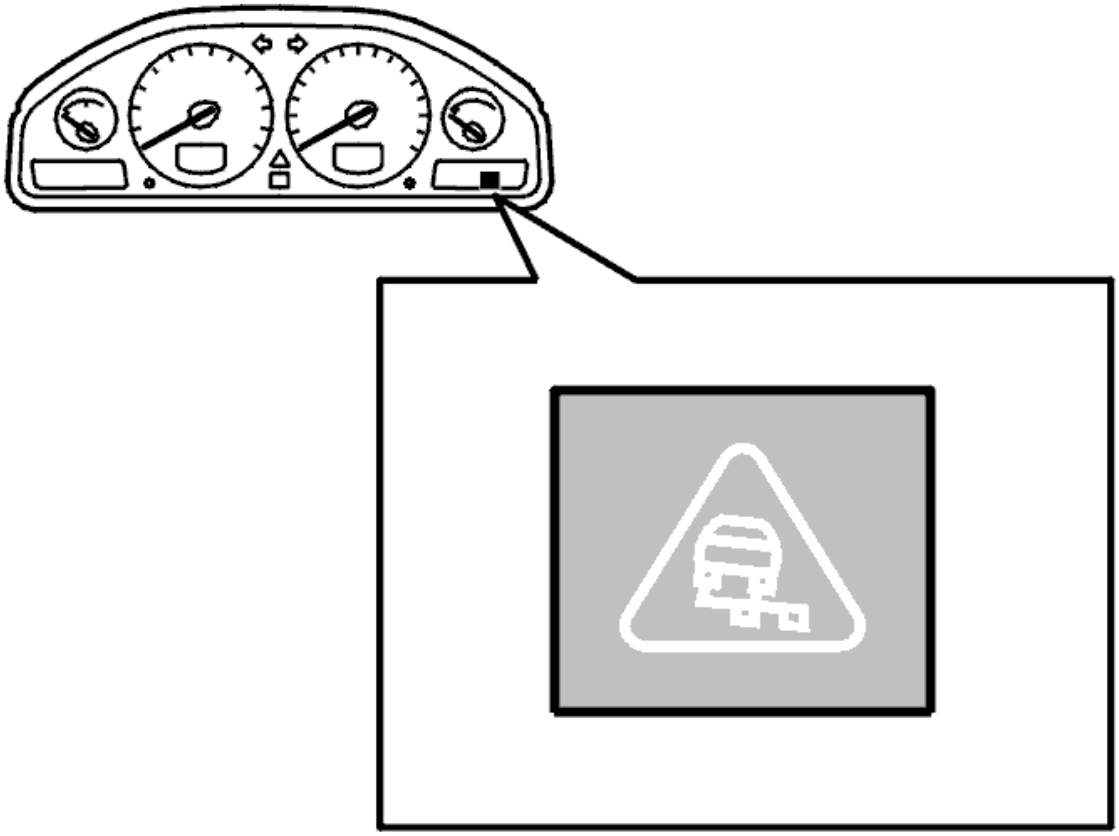

Fig. 14: Identifying Warning Light
Courtesy of VOLVO CARS CORPORATION

Switch on the ignition. Wait for 5 seconds. The symbol on the dashboard should go out.

BLEEDING THE BRAKE SYSTEM

With the bleeding unit. See **BRAKE SYSTEM, BLEEDING (USING BLEEDING UNIT)**

Without the bleeding unit. See **BRAKE SYSTEM BLEEDING**

AIRING

Bleed the circuit that the pressure sensor is on.

If both the pressure sensors have been replaced, bleed the whole system.

CHECKING THE BRAKES

see **BRAKE DISC FRONT, CALIBRATING** and **BRAKE DISC REAR, CALIBRATING**

RELAY BOX - AIR CLEANER (ACL) HOUSING

see **INSTALL THE INTEGRATED RELAY / FUSEBOX**

AIR CLEANER (ACL)

see **INSTALL THE AIR CLEANER (ACL) HOUSING**

VACUUM SYSTEM, CHECKING

PREPARATION

DISCONNECT THE BATTERY LEAD

See **BATTERY, DISCONNECTING** .

PREPARATIONS FOR CHECKING THE CHECK VALVE

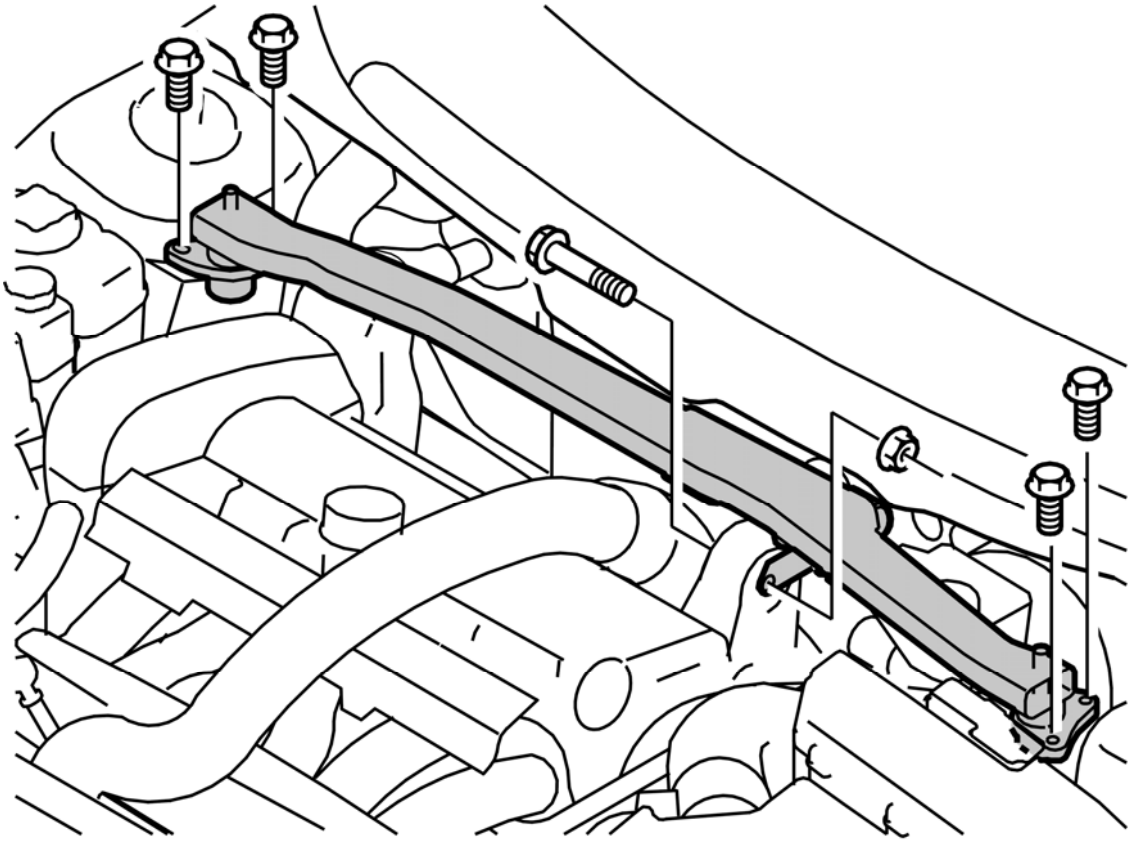

Fig. 15: Identifying Engine Stabilizer Brace And Mounting Screws
Courtesy of VOLVO CARS CORPORATION

Remove:

- the mounting screws for the torque rod
- the screw and nut for the engine mounting in the torque rod
- the torque rod.

CHECK THE VACUUM HOSE

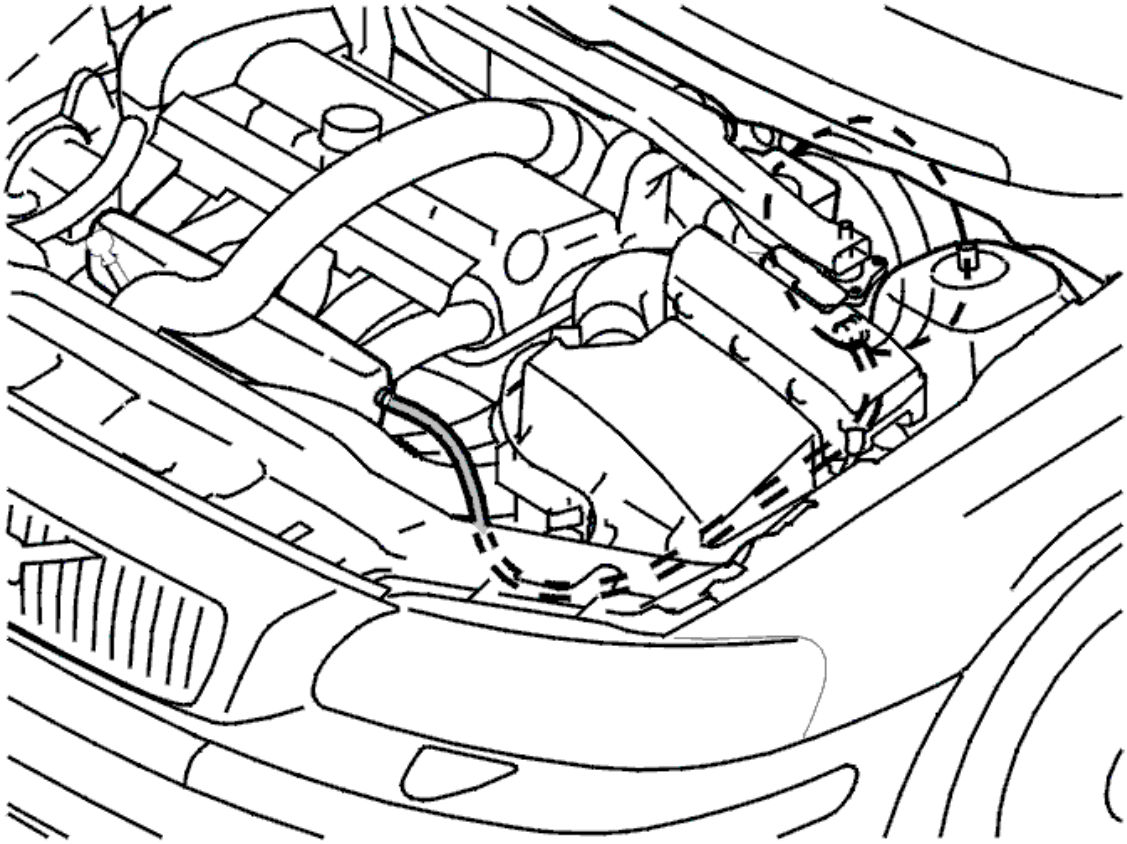

Fig. 16: Vacuum Hose Connections At Manifold And Check Valve
Courtesy of VOLVO CARS CORPORATION

Check:

- the vacuum hose connections at the manifold and the check valve
- that the vacuum hose is not crimped or rubbing anywhere
- that the vacuum hose inner weave has not broken and blocked the through flow.

Disconnect the hose. Start the engine. Check the vacuum.

CHECK THE CHECK VALVE

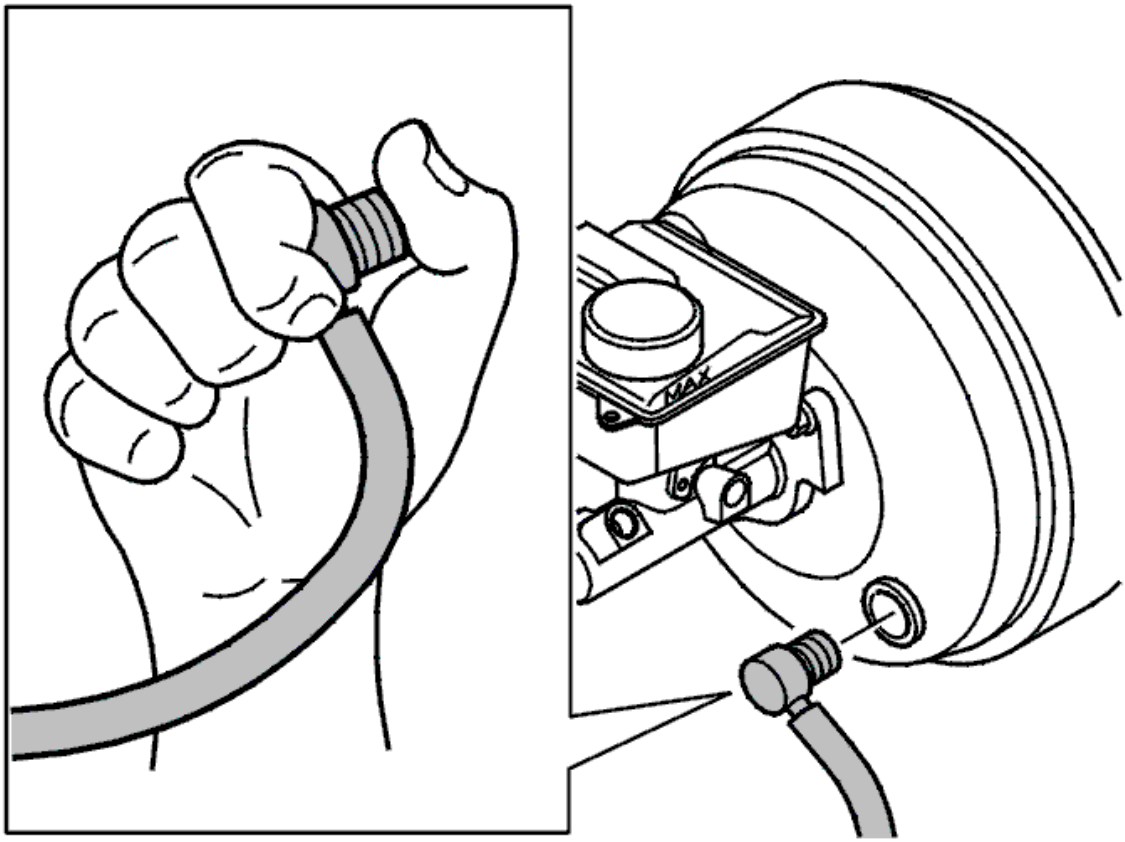

Fig. 17: Checking Function Of Check Valve
Courtesy of VOLVO CARS CORPORATION

Check the function of the check valve.

Start the engine.

Remove the check valve from the power brake booster.

Check that there is a vacuum. Feel the check valve.

Reinstall the check valve.

Press the vacuum hose. Listen for a leak. Replace the rubber bushing if there is a leak.

Switch off the engine.

NOTE: Replace a defective check valve .

Check the function after replacing the check valve

Depress the brake pedal several times to so that it has no travel.

Hold the pedal down. Start the engine. The pedal should travel and feel softer.

Release the brake. switch off the engine. Wait 1 minute. Then depress the pedal. The pedal should still feel soft but should become stiffer when it is depressed several times.

REPLACING THE VACUUM HOSE

REMOVE THE AIR CLEANER (ACL) HOUSING

See **BRAKE PIPE MASTER CYLINDER/ABS UNIT, REPLACING** .

REMOVE THE CHECK VALVE FROM THE POWER BRAKE BOOSTER. REMOVE THE VACUUM HOSE

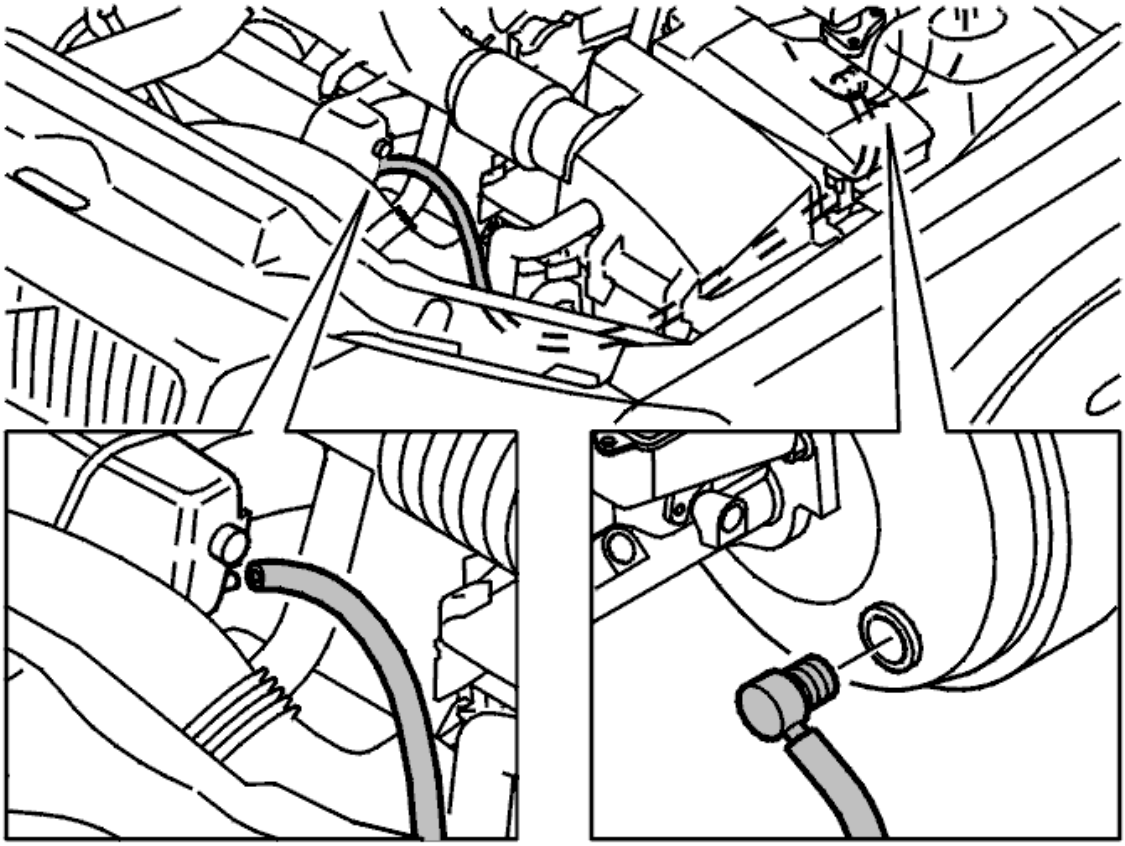

Fig. 18: Removing Check Valve From Power Brake Booster
Courtesy of VOLVO CARS CORPORATION

Pull out the check valve.

Remove the hose from the intake manifold.

Pull the hose forwards between the bracket for the ABS hydraulic modulator and the side member.

Replace the part of the hose which is damaged.

Transfer the check valve to the new hose section.

INSTALL THE VACUUM HOSE

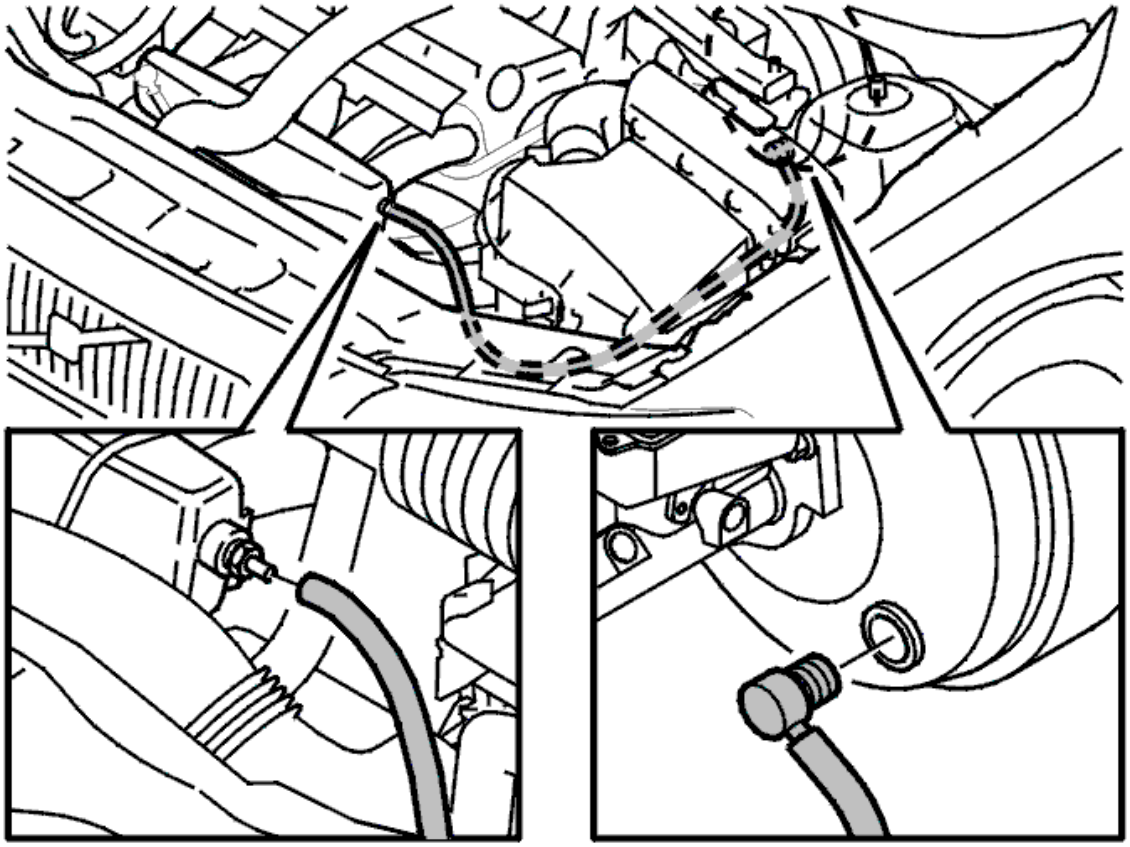

Fig. 19: Installing Vacuum Hose
Courtesy of VOLVO CARS CORPORATION

Install:

- the hose with the check valve behind the bracket for the ABS hydraulic modulator
- the check valve in the power brake booster
- the hose to the intake manifold.

INSTALL THE TORQUE ROD

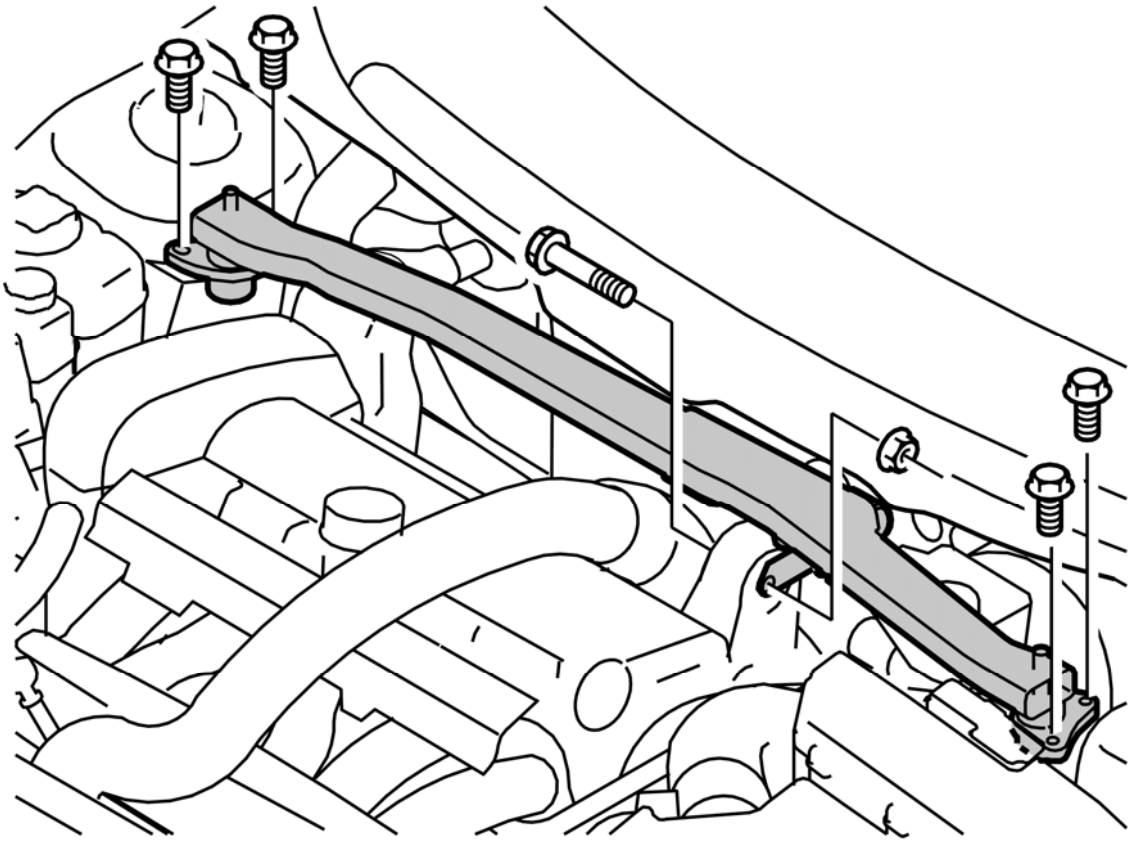

Fig. 20: Identifying Engine Stabilizer Brace And Mounting Screws
Courtesy of VOLVO CARS CORPORATION

Install:

- the torque rod. Tighten the mounting screws. Tighten to **50 Nm**
- the screw and a new nut for the engine mounting. Tighten to **80 Nm** .

CHECK THE POWER BRAKE BOOSTER

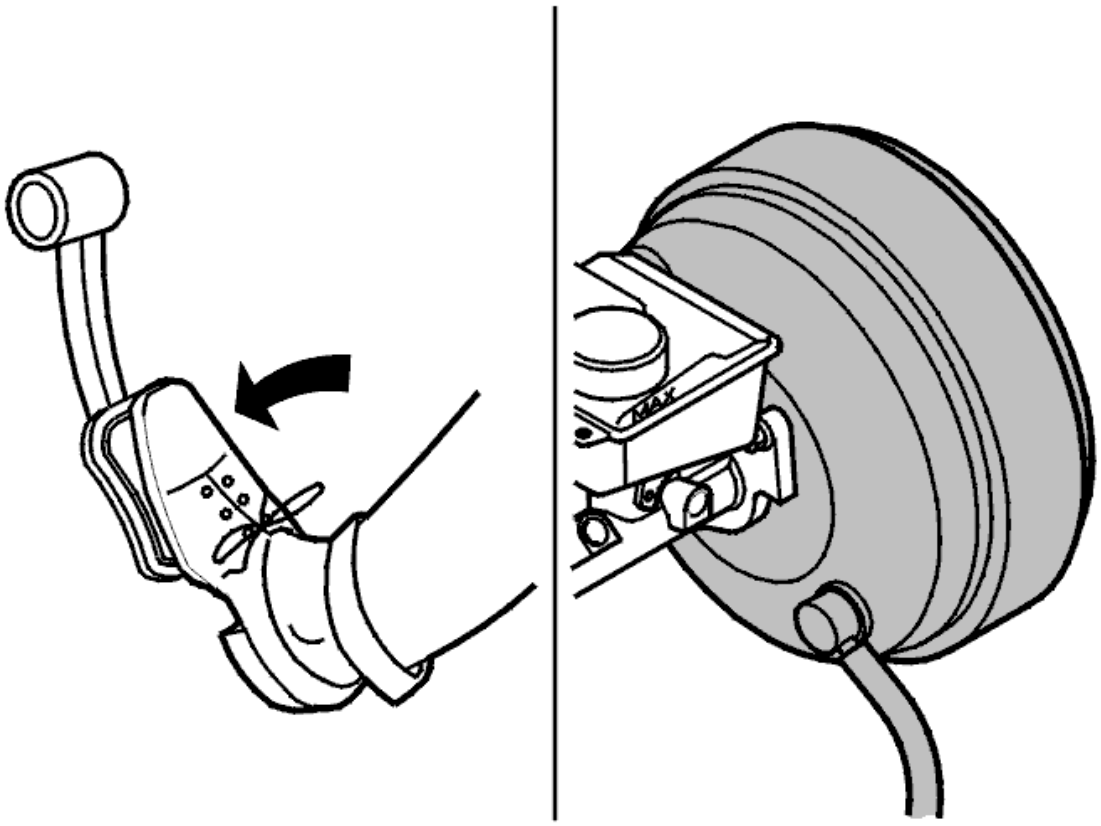

Fig. 21: Checking Power Brake Booster
Courtesy of VOLVO CARS CORPORATION

Check if there is a vacuum to the power brake booster. Do this by removing the hose from the check valve.

Depress the brake pedal several times to so that it has no travel.

Hold the pedal down. Start the engine. The pedal should travel and feel softer.

Release the brake. switch off the engine. Wait 1 minute. Then depress the pedal. The pedal should still feel soft but should become stiffer when it is depressed several times.

Replace the power brake booster if the pedal feels hard and unresponsive when the engine is idling.

To replace the power brake booster:

- For B6xxxx engine, see **POWER BRAKE BOOSTER, REPLACING**
- For B5xxxx engine, see **POWER BRAKE BOOSTER, REPLACING** .

BRAKES

General - General Safety Information

HEALTH AND SAFETY INSTRUCTIONS (2007-2012)

SAFETY INFORMATION BRAKE SYSTEM

WARNING: Brake fluid contains polyglycol ethers and polyglycols.

WARNING: Avoid contact with the eyes.

If the brake fluid comes into contact with the eyes, rinse the eyes with cold running water for 15 minutes. Seek medical attention if the irritation persists.

Wash your hands thoroughly after handling.

WARNING: If swallowed, drink water and induce vomiting.

Seek medical attention immediately.

CAUTION: If the brake fluid is spilt on a painted surface, the surface must be washed with cold water immediately.

BRAKES

General - Specifications, mechanical

TIGHTENING TORQUE

GENERAL TIGHTENING TORQUE

NOTE: Screws coated with a locking fluid or self locking nuts must be replaced with new when reinstalled.

See the table below to find the tightening torques for components not included in the summary.

Nuts and screws which are not self locking can be reused provided that they are in good condition.

Applies to screwed joint with strength class 8.8.	
Thread	Tightening torque (Nm)
M5	5
M6	10
M7	17
M8	24
M10	50
M12	80
M14	130

SUMMARY OF SPECIFIC COMPONENTS AND TIGHTENING TORQUES

NOTE: Screws coated with locking fluid or sealant must always be replaced with new when installing.

Always use **new screws and nuts** when angle tightening. Any exceptions to this rule will be indicated in the method.

Angle-tightening in tight spaces. See **SCREWED JOINT, TORQUE/ANGLE TIGHTENING** .

Brake caliper in wheel spindle not XC90	100 Nm
Brake caliper in steel wheel spindle only XC90 (M14)	1st step, 105 Nm 2nd stage, 60°
Bleed nipple in brake caliper (M10)	9 Nm
Slide pin in brake caliper, wrench size 7 mm	27.5 Nm
Slide pin in brake caliper, wrench size 9 mm, only applies to XC90 USA and CDN	60 Nm
Brake shield front in wheel spindle steel up to and including w918 and XC90 (M8)	20 Nm

Brake shield front in wheel spindle, aluminum not XC90 (M8)	15 Nm
Brake caliper Rear in wheel bearing housing not XC90 (M10)	60 Nm
Brake caliper rear in wheel bearing housing XC90 (M10)	1st step, 35 Nm 2nd stage, 60°
Brake shield rear in wheel bearing housing (M6)	12 Nm
Brake pipe in ABS modulator (M12)	14 Nm
Brake pipe in master cylinder (M12)	14 Nm
Brake pipe in brake hose (M10)	14 Nm
Brake hose in brake caliper (M10)	18 Nm
Brake pipe in joint fitting (M10)	14 Nm
Brake fluid reservoir in master cylinder (M5)	3.5 Nm
Bracket, ABS in hydraulic unit (M6)	8 Nm
Bracket ABS cable in shock absorber front (M5)	6 Nm
Bracket brake cable in sub-frame rear (M8)	20 Nm
Screw control module (BCM)	1.8 Nm
Mounting Brake pedal LHD automatic (M10)	30 Nm
Mounting Brake pedal RHD manual (M10)	35 Nm
Mounting Brake pedal LHD manual (M10)	40 Nm
Vacuum pump bracket in front cross member, only XC90 (M6)	8 Nm
Heat deflector plate in activation unit, RHD only (M8)	10 Nm

BRAKES

Hydraulic-Vacuum-Hydraulic Brakes - Removal, replacement and installation

BRAKE CONTROLS (2003-2012)

BUSHING, BRAKE PEDAL, REPLACING

NOTE: **The illustrations in this service information are used for different model years and/or models. Some variation may occur. However, the essential information in the illustrations is always correct.**

PREPARATORY WORK

Remove the brake lamp switch. See: **STOP LAMP SWITCH, REPLACING** .

REMOVAL

REMOVING THE STEERING COLUMN FROM THE LOWER STEERING SHAFT JOINT

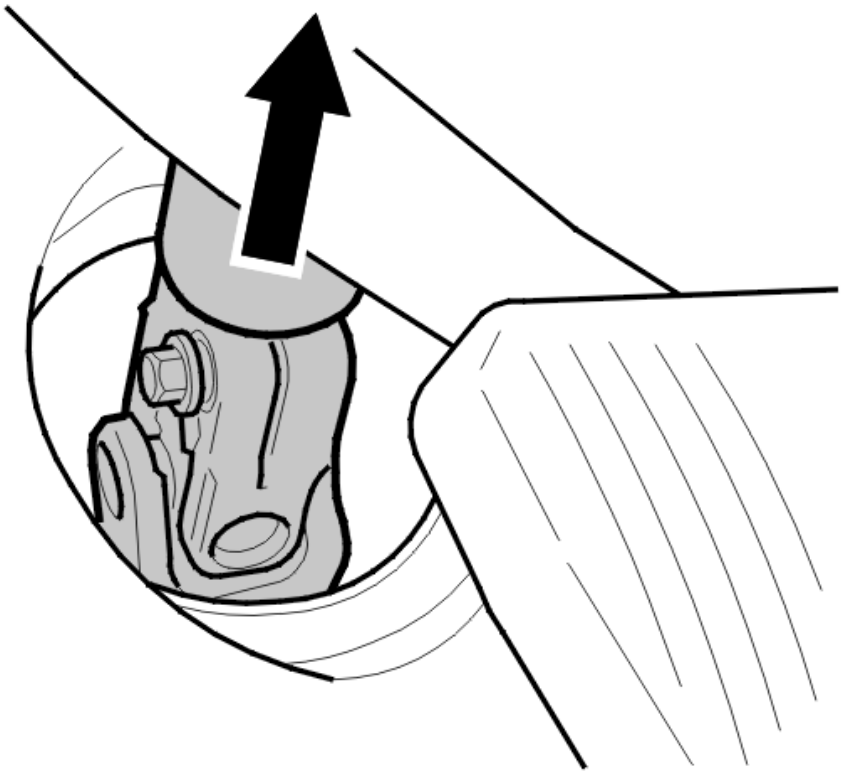

Fig. 1: Identifying Lower Steering Shaft Joint
Courtesy of VOLVO CARS CORPORATION

Fold the floor carpet out of the way.

Bend up the outer section of the steering shaft boot.

Remove the retaining clip around the boot.

Pull the boot up.

Remove:

- the screw for the steering wheel shaft's mounting in the joint, 1 pc.
- the joint from the steering shaft.

NOTE: Remove the ignition key so that the steering wheel lock is activated.

REMOVING THE BRAKE PEDAL

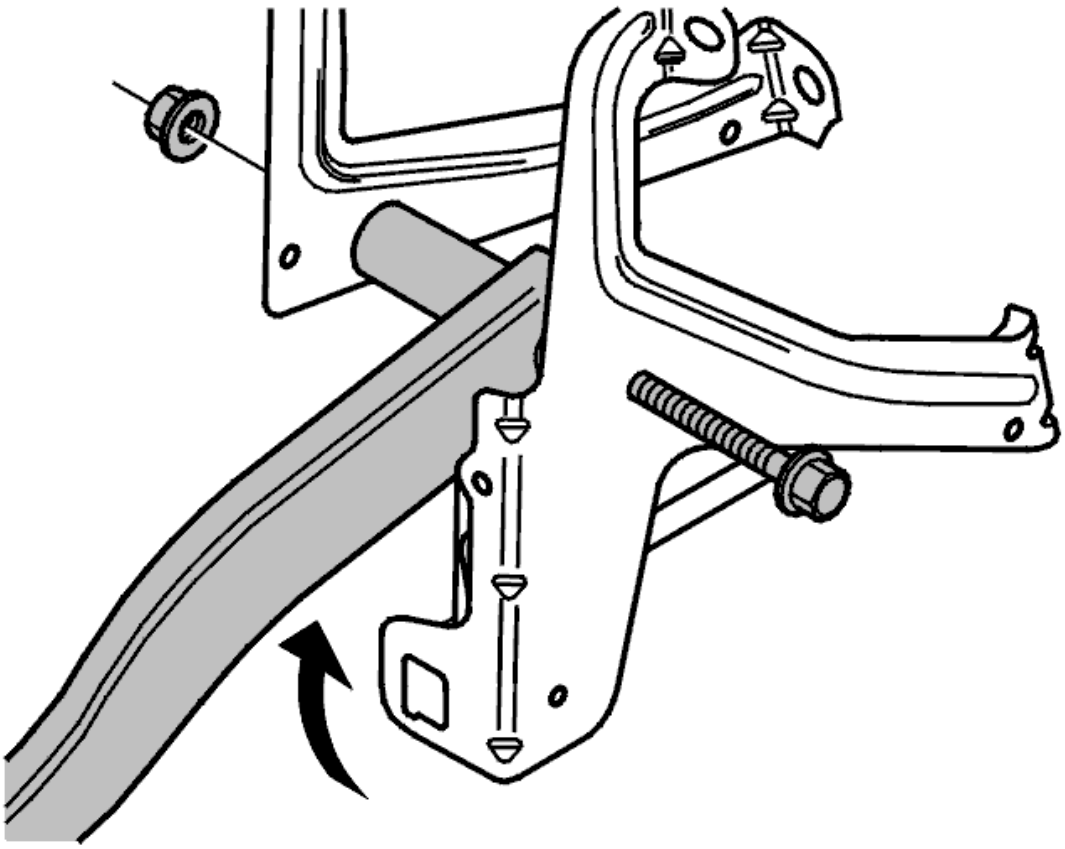

Fig. 2: Identifying Pedal Mounting Screw And Nut
Courtesy of VOLVO CARS CORPORATION

Remove:

- the screw and nut

- the pedal.

REMOVING BUSHINGS

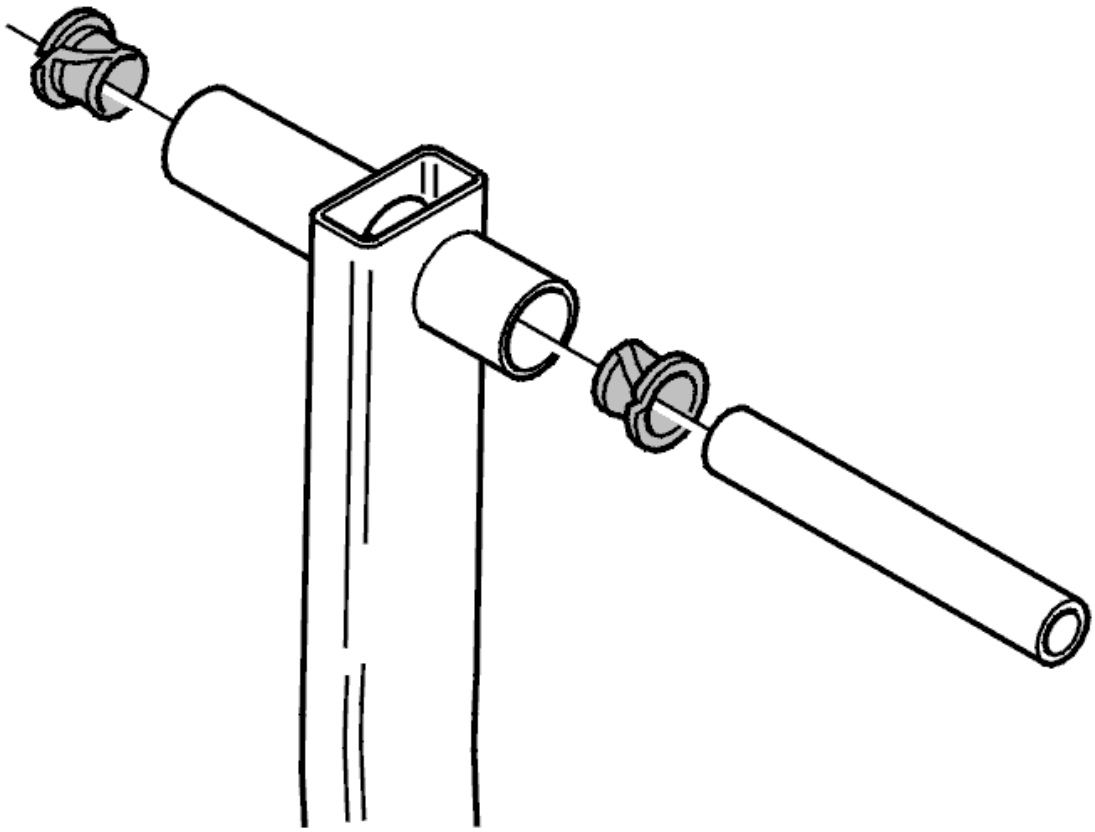

Fig. 3: Brake Pedal Bushings
Courtesy of VOLVO CARS CORPORATION

Press out the spacer sleeve. Pry the old bushings out of the way using a screwdriver.

INSTALLATION

TIGHTENING TORQUE

For tightening torques see: **TIGHTENING TORQUE** .

INSTALLING BUSHINGS

Press in:

- the bushings. Lubricate using grease, part number 1161241-3
- the spacer sleeve.

INSTALLING THE BRAKE PEDAL

Install:

- the pedal
- the nut and the screw, 1 pc. M10.

INSTALLING THE STEERING COLUMN ON THE LOWER STEERING SHAFT JOINT

Install the steering shaft on the lower steering shaft joint.

Install:

- a new screw, 1 pc. M8
- the steering shaft boot and snap ring.

Fold back the carpet.

FINISHING

Fit the brake lamp switch. See : **STOP LAMP SWITCH, REPLACING** .

BUSHING, PUSH ROD, REPLACING

NOTE: **The illustrations in this service information are used for different model years and/or models. Some variation may occur. However, the essential information in the illustrations is always correct.**

PREPARATORY WORK

Remove the brake lamp switch. See: **STOP LAMP SWITCH, REPLACING** .

REMOVAL

REMOVING THE BUSHING

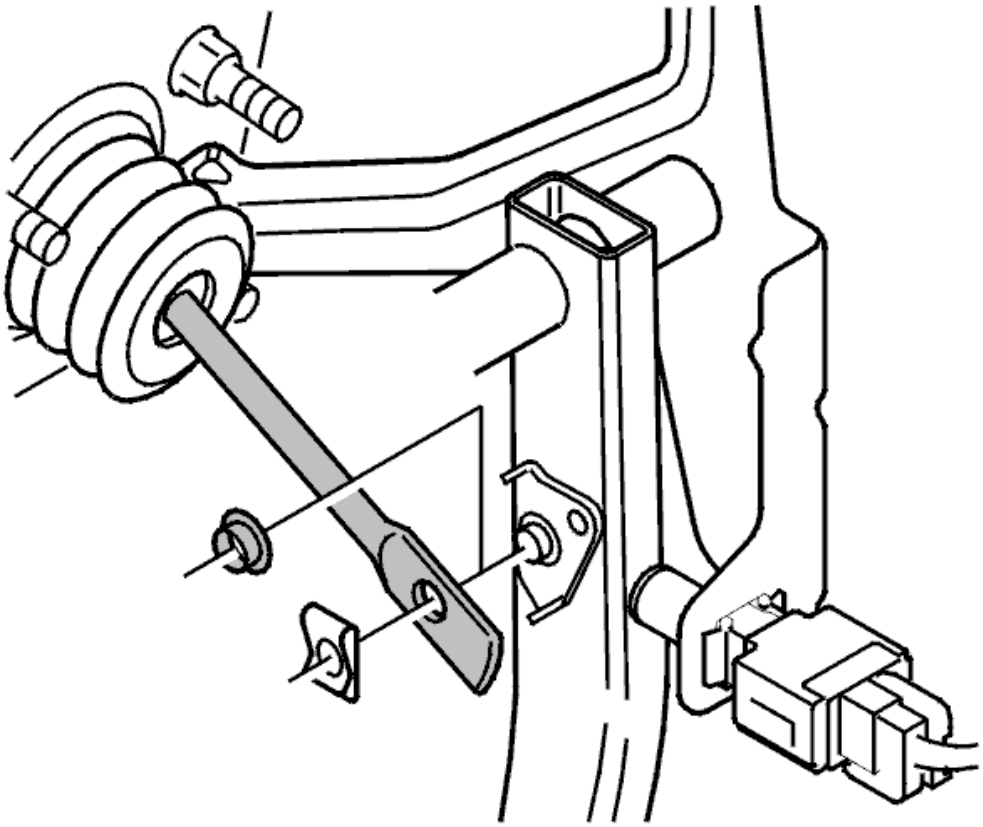

Fig. 4: Brake Pedal Push Rod
Courtesy of VOLVO CARS CORPORATION

Remove the small bushing located on the brake pedal.

INSTALLATION

INSTALLING THE BUSHING

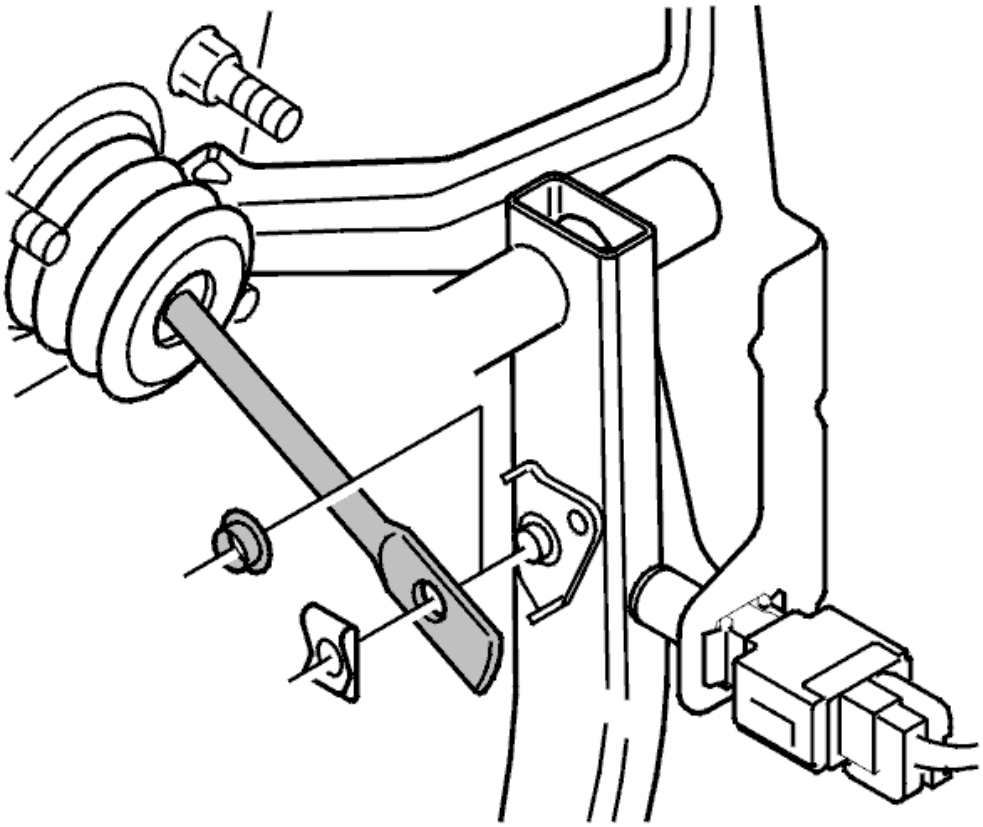

Fig. 5: Brake Pedal Push Rod
Courtesy of VOLVO CARS CORPORATION

Lubricate the new bushing with grease, P/N 1161241-3.

Fit the bushing on the brake pedal.

FINISHING

Fit the brake lamp switch. See: **STOP LAMP SWITCH, REPLACING** .

BRAKE PIPES AND CONNECTIONS (2003-2012)

BRAKE HOSE FRONT, REPLACING

NOTE: **The illustrations in this service information are used for different model years and/or models. Some variation may occur. However, the essential information in the illustrations is always correct.**

PREPARATORY WORK

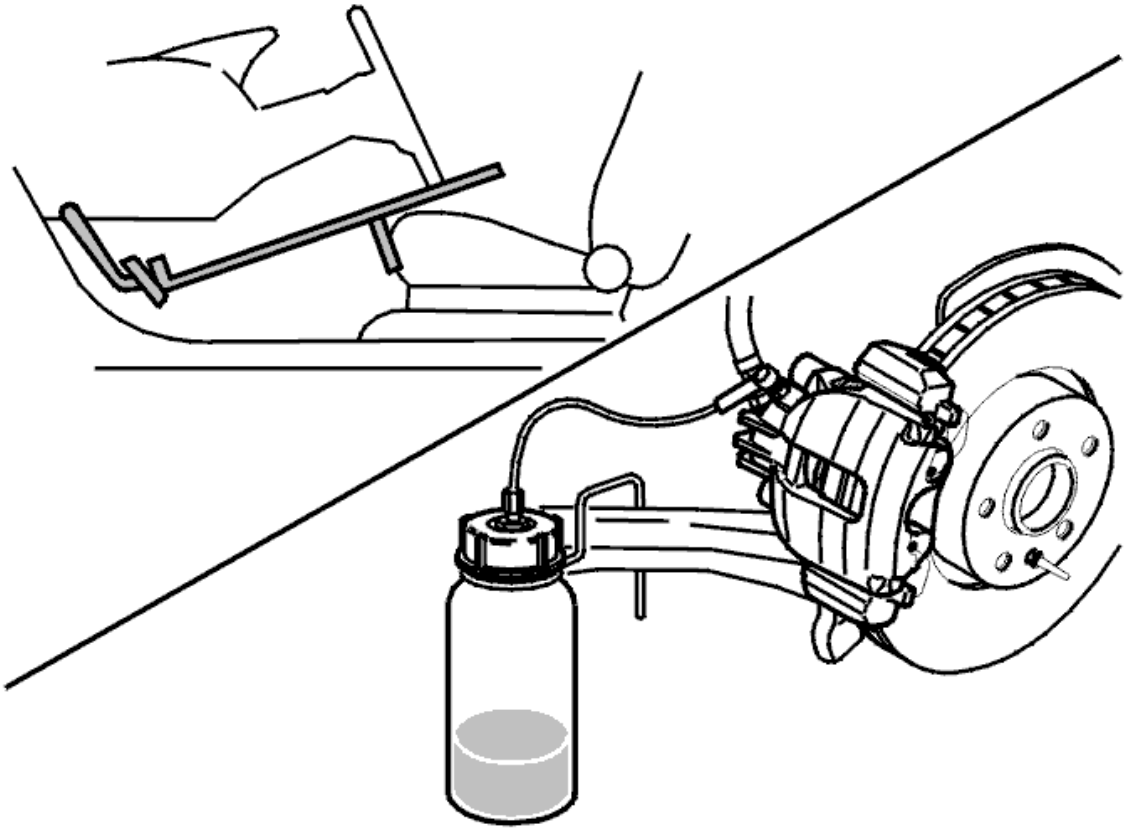

Fig. 6: Bleeding Brakes
Courtesy of VOLVO CARS CORPORATION

Secure the pedal in the depressed position. Use a pedal jack.

Remove the protective cap from the bleed nipple at the left front wheel. Install a plastic hose on the nipple.

Open the bleed nipple. Collect the brake fluid in a container.

Shut the bleed nipple.

REMOVAL

REMOVE THE BRAKE HOSE

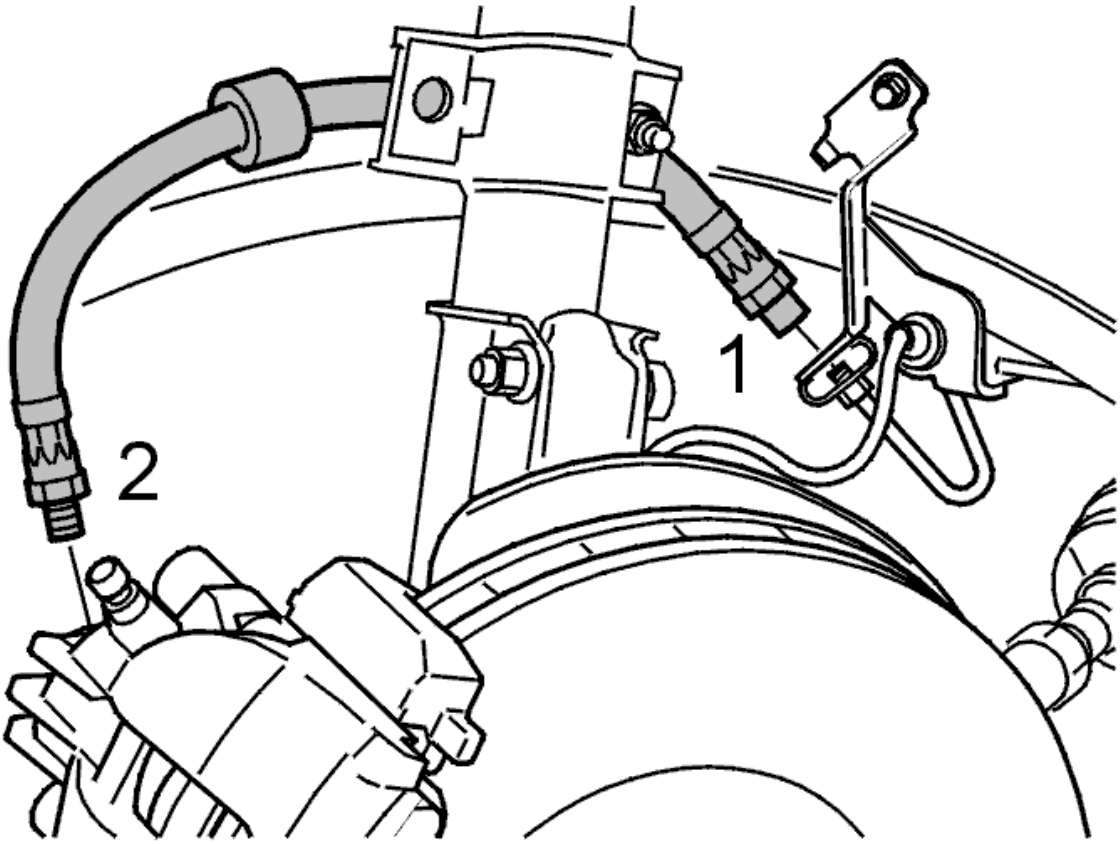

Fig. 7: Brake Pipe And Brake Caliper Hoses
Courtesy of VOLVO CARS CORPORATION

Remove:

- the brake hose from the brake pipe (1)
- the brake hose from the brake caliper (2).

INSTALLATION

INSTALL THE BRAKE HOSE

NOTE: For tightening torques, see: TIGHTENING TORQUE .

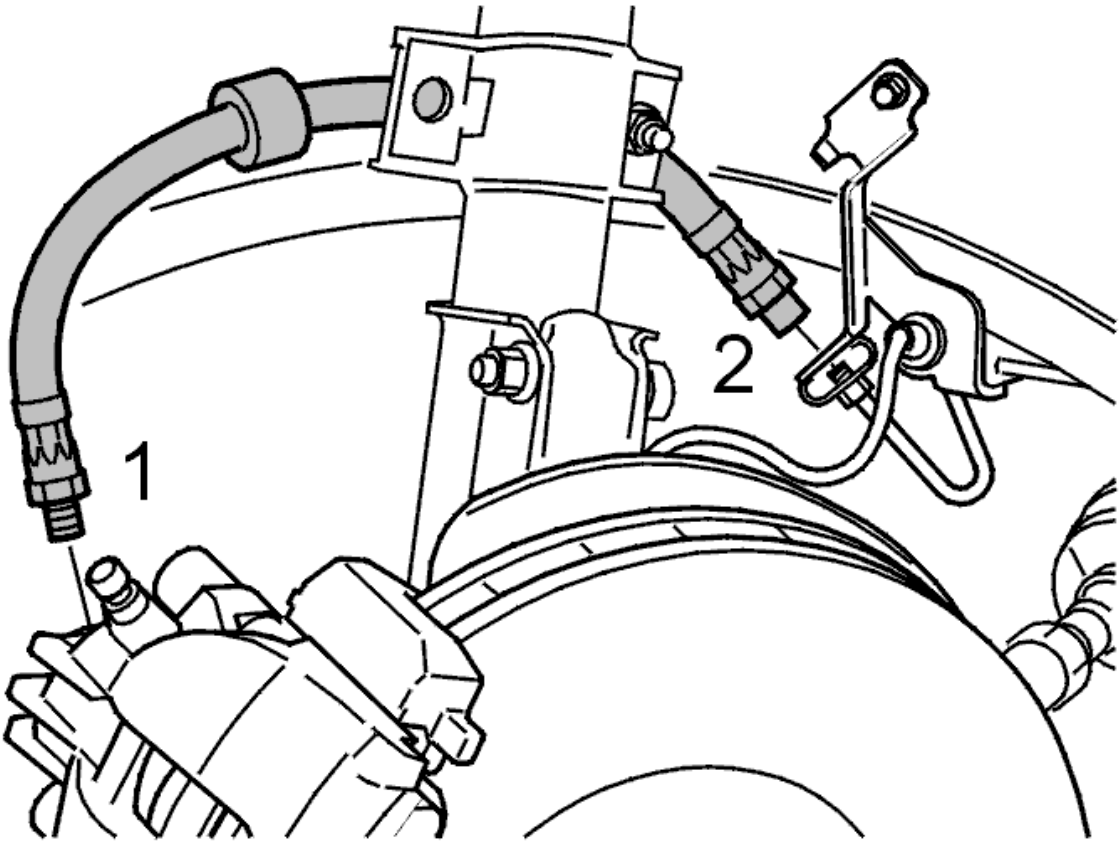

Fig. 8: Brake Pipe And Brake Caliper Hoses
Courtesy of VOLVO CARS CORPORATION

Install:

- the brake hose to the caliper (1). Tighten. See: **TIGHTENING TORQUE**
- brake pipe in the hose (2). Tighten. See: **TIGHTENING TORQUE** .

Check the brake hose

Ensure that the brake hose is not twisted. If necessary alter the hose at the other end (brake pipe end).

NOTE: **If the brake hose is twisted it may rub against the tire, rim or wheel arch. This could cause the circuit to fail.**

Top up with brake fluid and bleed the braking system. See: **BRAKE SYSTEM, BLEEDING (USING BLEEDING UNIT)** .

Install the wheel. See: **INSTALLING WHEELS** .

BRAKE HOSE REAR, REPLACING

PREPARATORY WORK

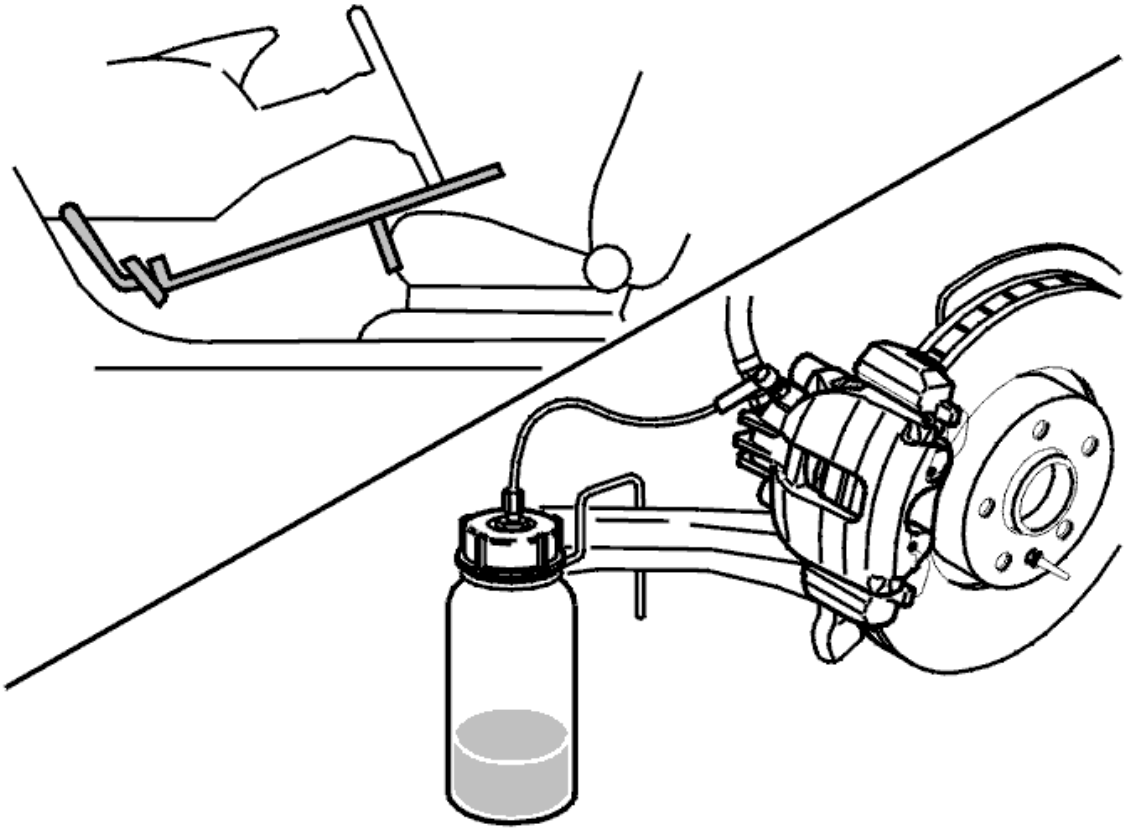

Fig. 9: Bleeding Brakes
Courtesy of VOLVO CARS CORPORATION

Secure the pedal in the depressed position. Use a pedal jack.

Remove the protective cap from the bleed nipple for the left rear wheel.

Install a plastic hose on the nipple. Open the bleed nipple.

Collect the brake fluid in a container.

Shut the bleed nipple.

REMOVAL

REMOVING THE BRAKE HOSE

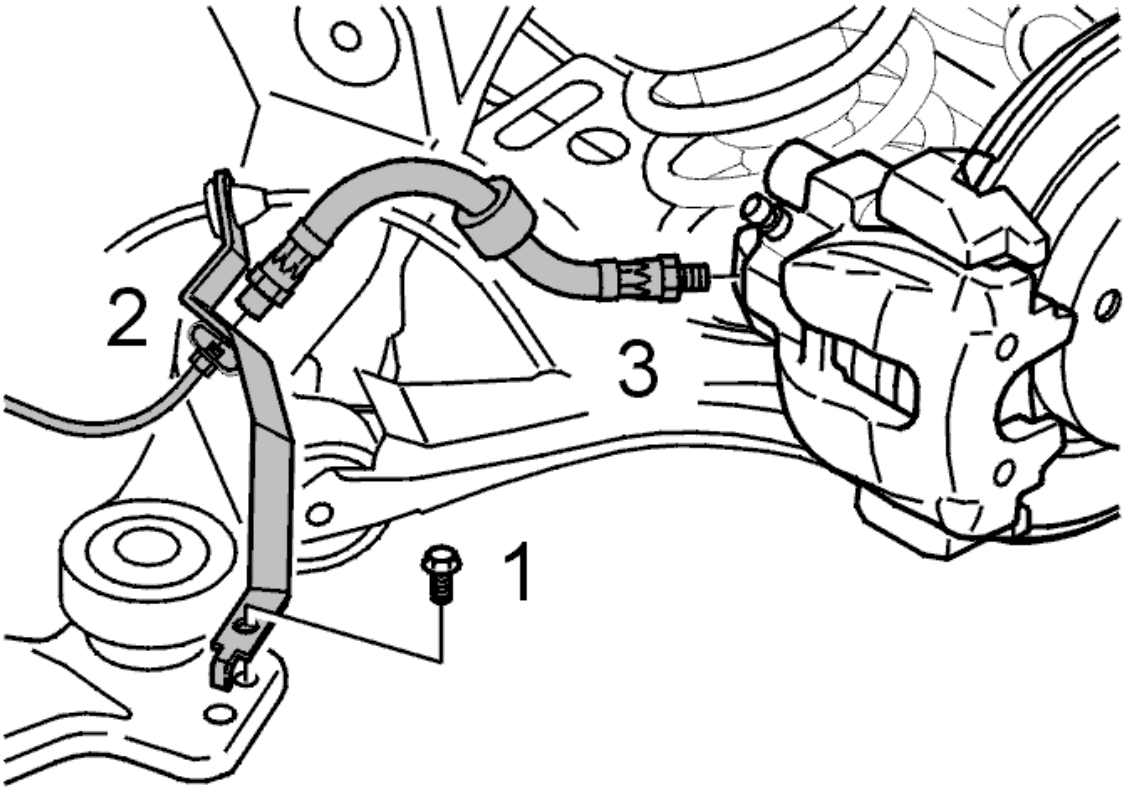

Fig. 10: Identifying Brake Hose, Bracket And Brake Pipe
Courtesy of VOLVO CARS CORPORATION

Remove:

- the bracket (1) for the brake pipe and brake hose. Pull the bracket backward a little
- the brake pipe (2) from the brake hose
- the brake hose (3) from the brake caliper.

INSTALLATION

INSTALL THE BRAKE HOSE

NOTE: For tightening torques, see: TIGHTENING TORQUE .

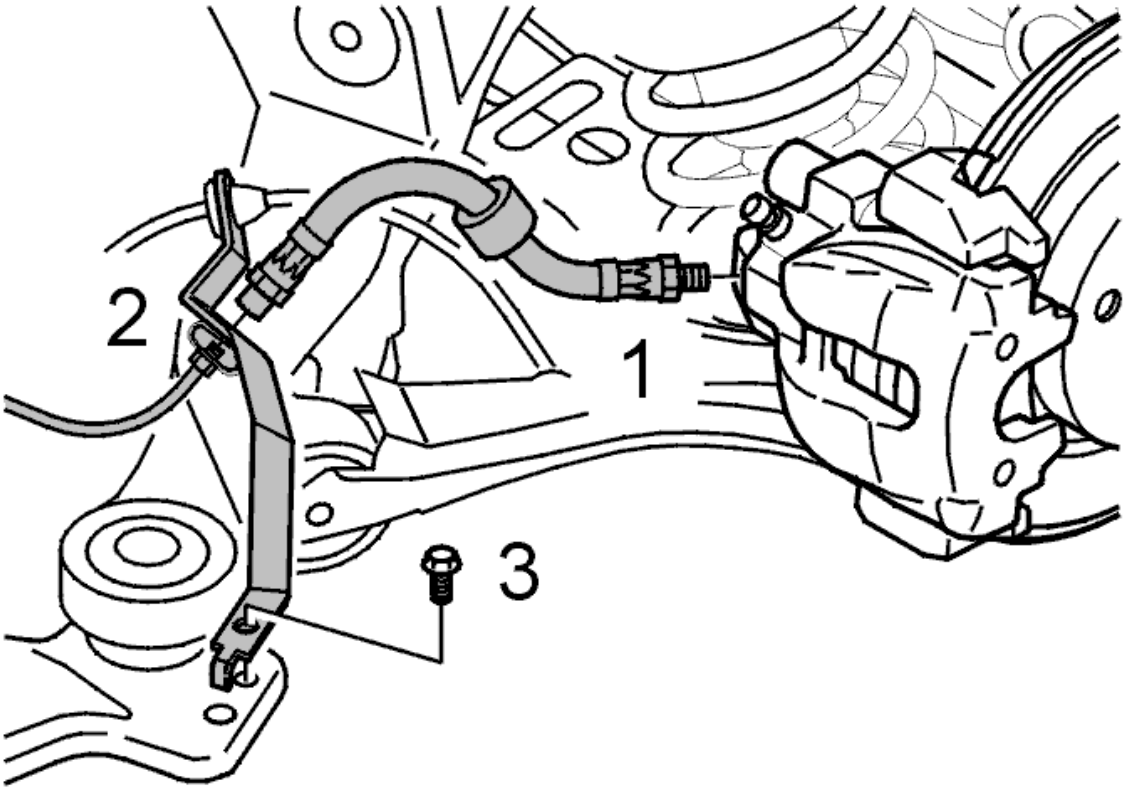

Fig. 11: Identifying Brake Hose, Bracket And Brake Pipe
Courtesy of VOLVO CARS CORPORATION

Install:

- the brake hose (1) to the caliper. Tighten. See: **TIGHTENING TORQUE**
- the brake pipe (2) in the hose. Tighten. See: **TIGHTENING TORQUE** . Check that the hose is not twisted
- the bracket (3).

Top up and bleed the braking system. See: **BRAKE SYSTEM, BLEEDING (USING BLEEDING UNIT)** .

Install the wheel. See: **INSTALLING WHEELS** .

BRAKE PIPE JUNCTION/ABS UNIT, REPLACING

NOTE: **As the illustrations in this service information are used for different model years and / or models, some variation may occur. However, the essential information in the illustrations is always correct.**

PREPARATORY WORK

Disconnect the battery lead. See **BATTERY, DISCONNECTING** .

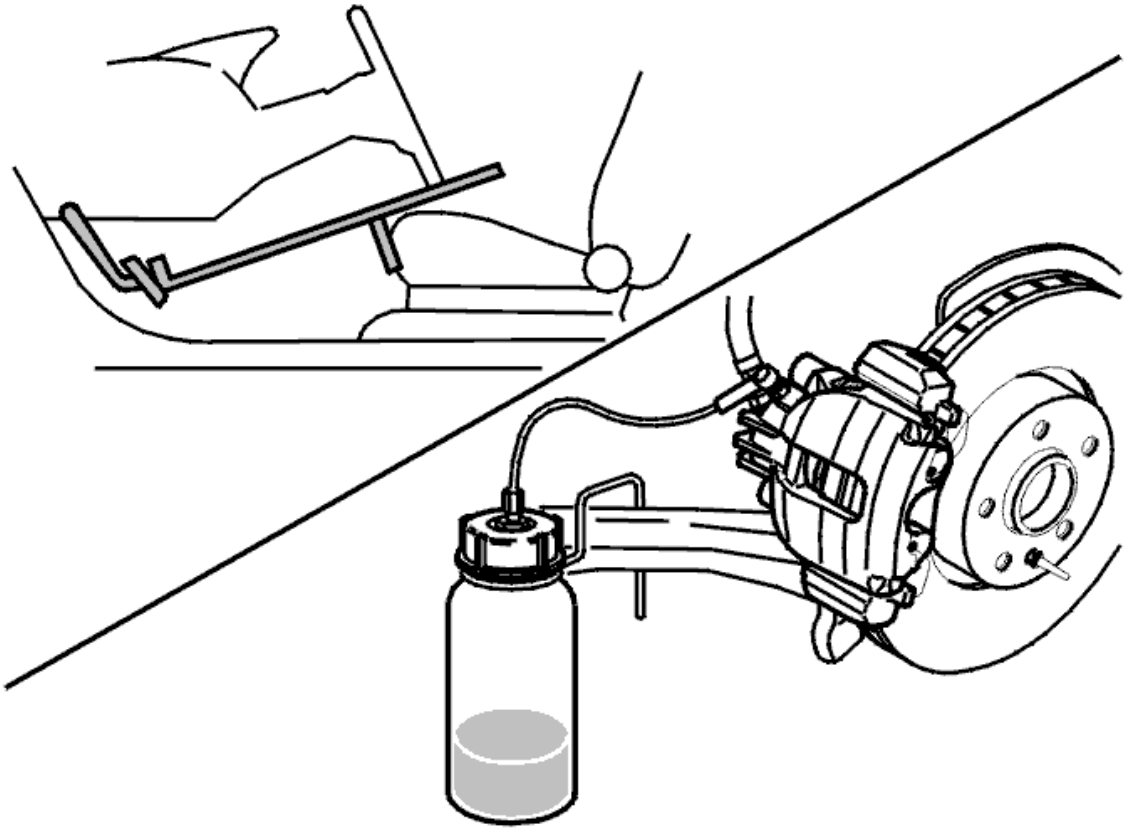

Fig. 12: Bleeding Brakes
Courtesy of VOLVO CARS CORPORATION

Secure the pedal in the depressed position. Use a pedal jack.

Remove the protective cap from the bleed nipple at the left front wheel.

Install a plastic hose on the nipple. Open the bleed nipple. Collect the brake fluid in a container.

Shut the bleed nipple.

REMOVAL

REMOVING THE AIR CLEANER (ACL) HOUSING

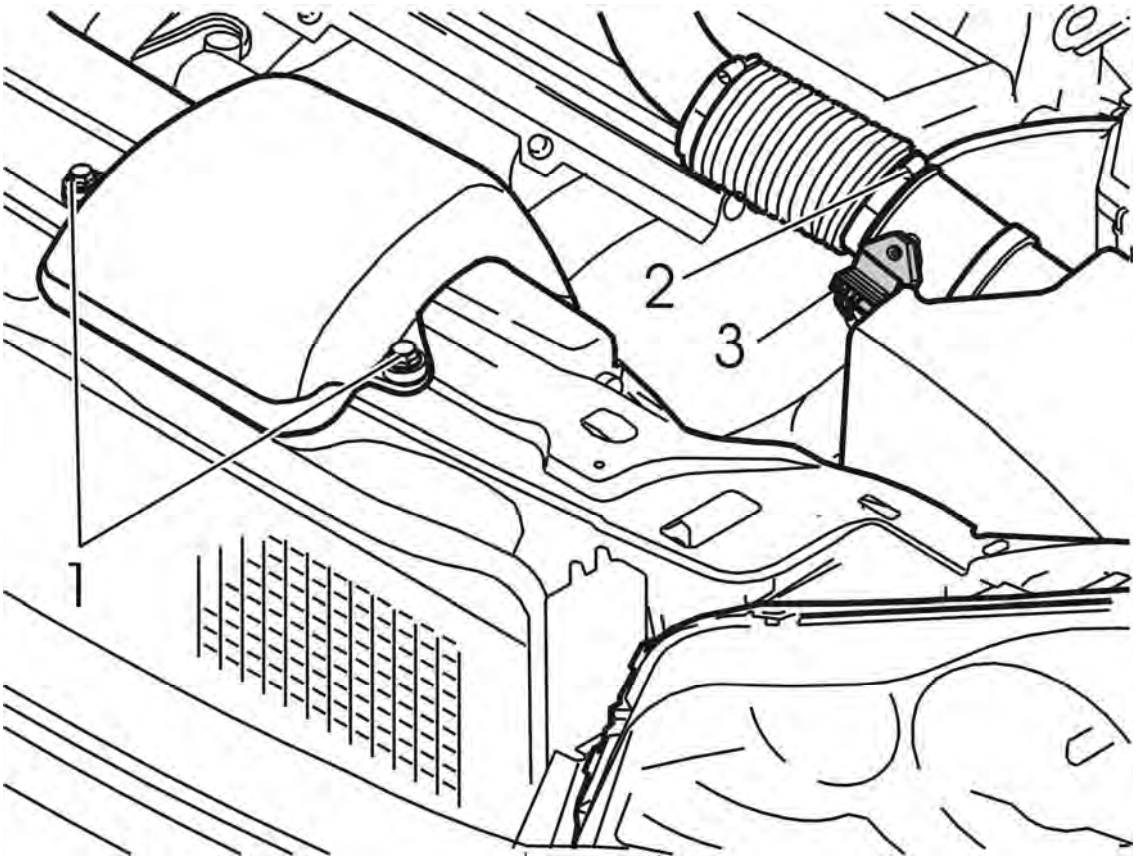

Fig. 13: Air Cleaner (ACL) Housing
Courtesy of VOLVO CARS CORPORATION

Disconnect the hose clamp for the air hose.

Remove all the air hoses and connectors from the air cleaner (ACL) housing.

Remove the air cleaner (ACL) housing from its mountings. Pull it straight up.

REMOVING THE INTEGRATED RELAY / FUSEBOX

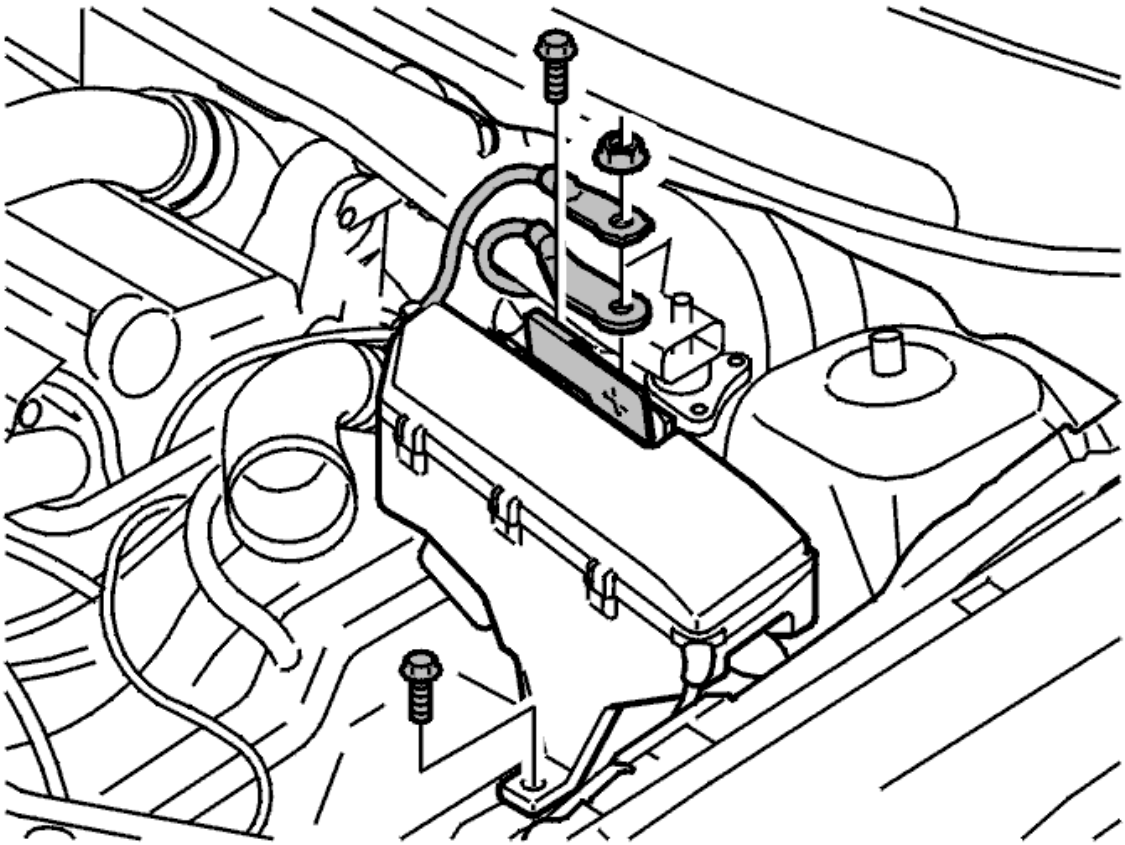

Fig. 14: Identifying Battery Leads, Screws And Nut
Courtesy of VOLVO CARS CORPORATION

Remove:

- the nut for the power cables
- the 2 power cables
- the 2 screws for the mounting.

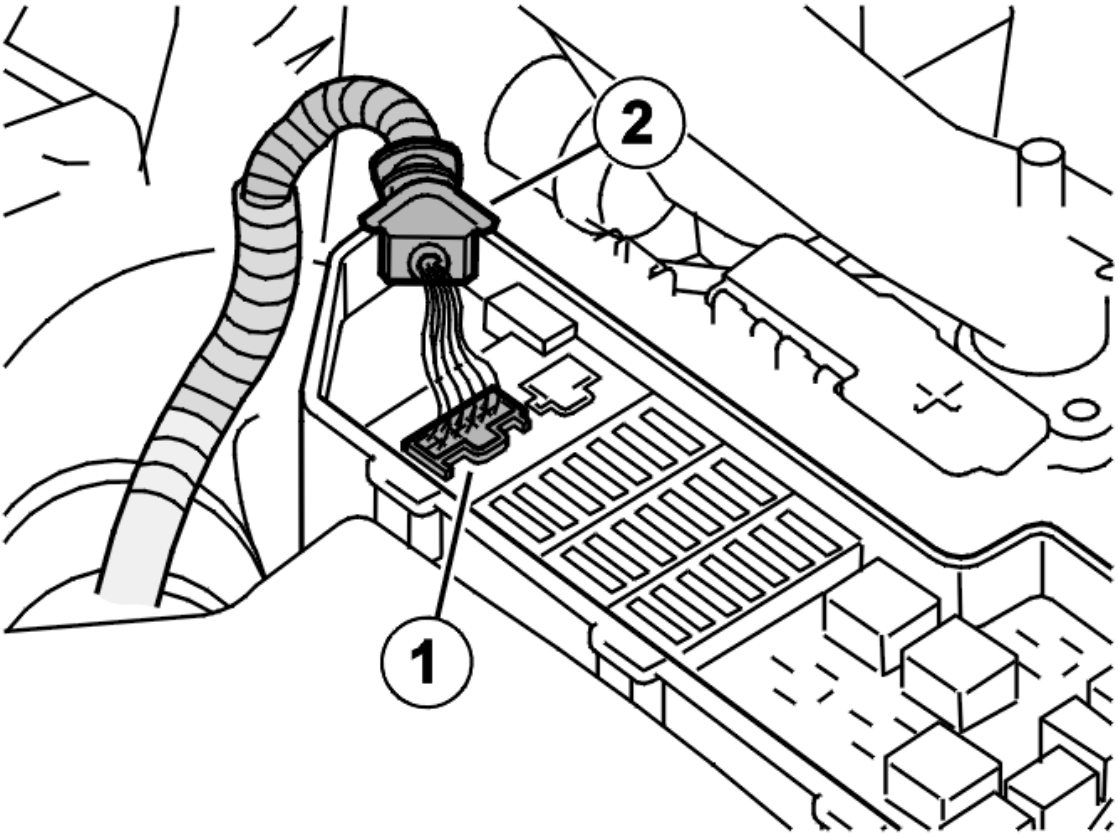

Fig. 15: Locating Connector And Cable Harness From Fusebox
Courtesy of VOLVO CARS CORPORATION

Open the integrated relay/fusebox. Remove the connector (1).

Disconnect the cable harness from the box (2).

Lift the box out of the mounting and move it to one side.

REMOVING THE BRAKE PIPE JUNCTION / ABS UNIT

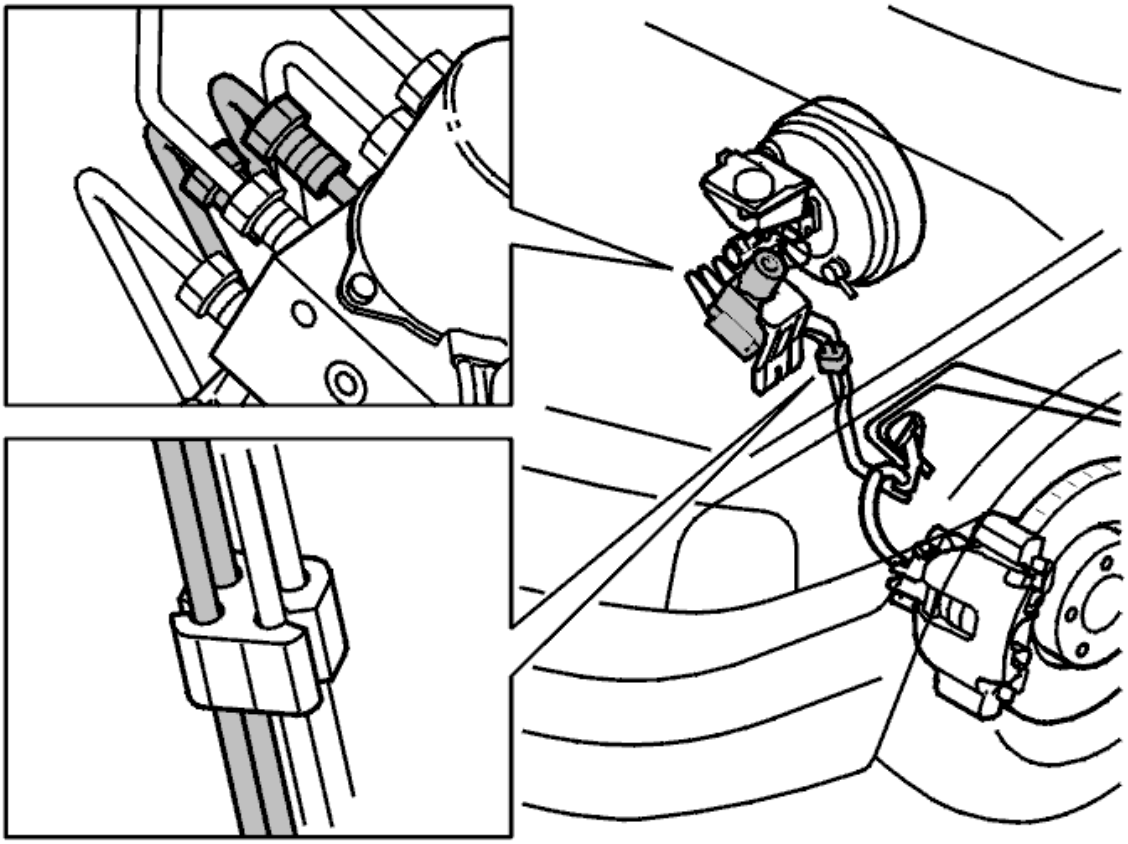

Fig. 16: Front-Rear Brake Pipe
Courtesy of VOLVO CARS CORPORATION

Clean around the brake pipe on the ABS hydraulic modulator. Remove the brake pipe from the ABS hydraulic modulator and holder.

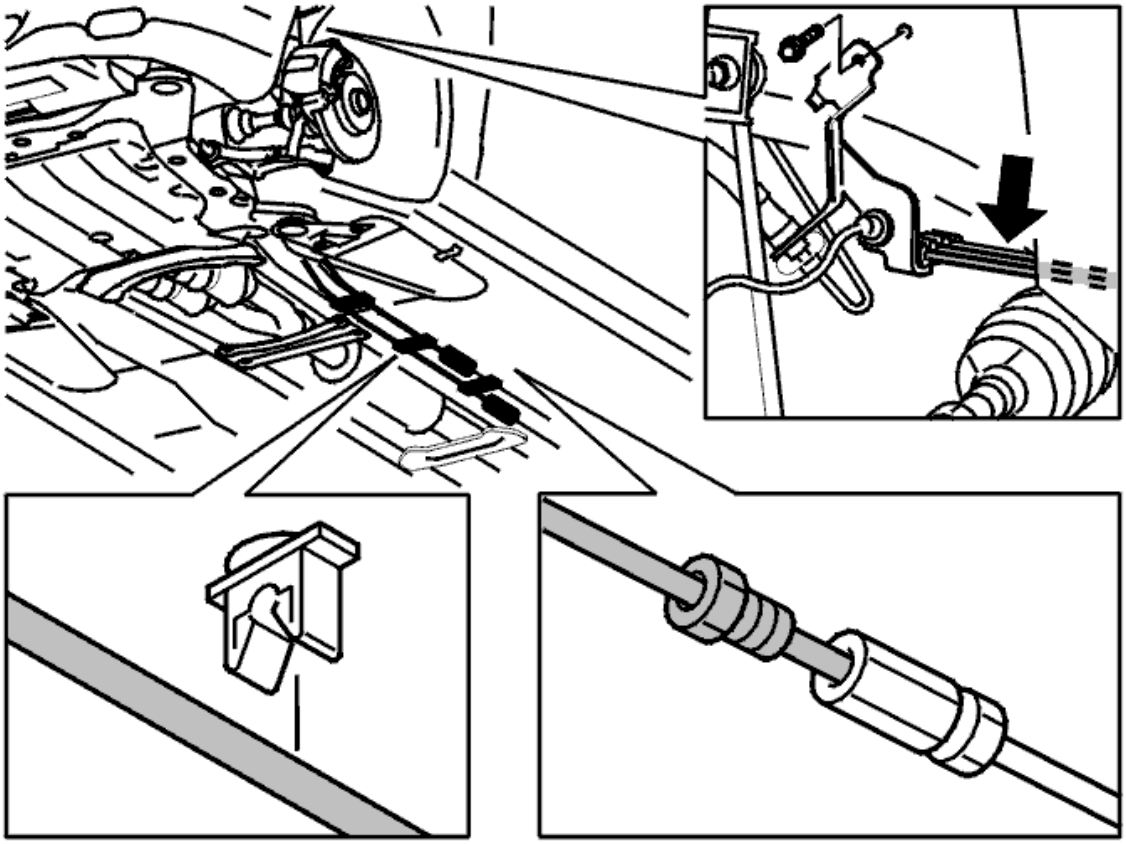

Fig. 17: Brake Pipe Removal Procedure
Courtesy of VOLVO CARS CORPORATION

Straighten the brake pipe by the ABS hydraulic modulator.

Raise the car.

Remove:

- the left front wheel
- the screw for the bracket for the brake pipe and brake hose
- the holder from the brake pipes.

Clean the brake pipe and joint nipple.

Separate the brake pipe at the joint nipple.

Remove the brake pipe from its clips.

NOTE: Cut the brake pipe at the bracket. Leave the pipe that has been cut in place as a guide for installation of the new brake pipe.

INSTALLATION

INSTALLING THE BRAKE PIPE JUNCTION / ABS UNIT

NOTE: For tightening torques, see: TIGHTENING TORQUE .

NOTE: The new brake pipe must be bent into the correct shape when installing. This is important otherwise the pipe may be subject to stresses when it is in place.

Remove the cut-off brake pipe. Install the new one.

Tighten the brake pipe in the joint nipple. Tighten. See: **TIGHTENING TORQUE** .

Secure the brake pipe in its clips in the body floor.

Bend and adjust the brake pipe so that it aligns with the hydraulic unit.

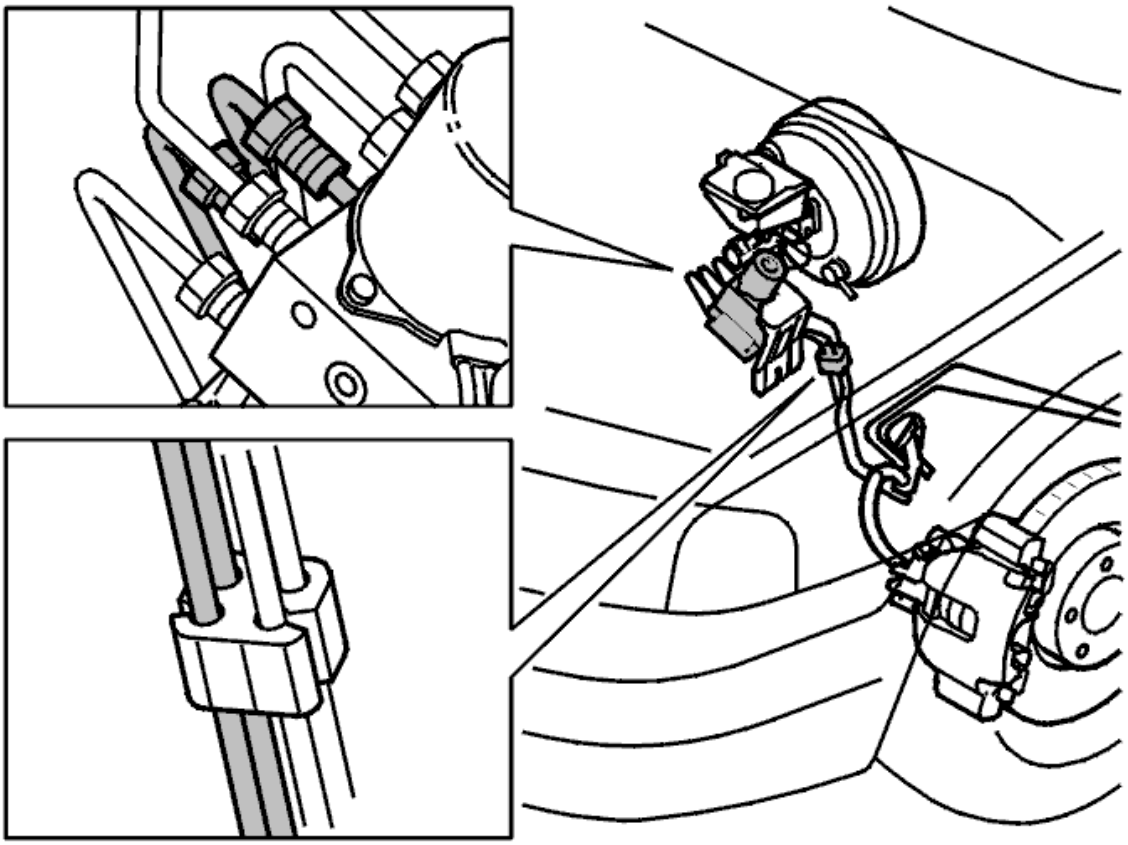

Fig. 18: Front-Rear Brake Pipe
Courtesy of VOLVO CARS CORPORATION

Install:

- the brake pipe in the ABS hydraulic modulator. Tighten. See: **TIGHTENING TORQUE**
- the brake pipe in its clips at the bracket. Adjust the pipe as necessary
- the clip holder on the brake pipes by the side member

- the bracket. Tighten. See: **TIGHTENING TORQUE** .

NOTE: The brake pipes must not be in contact with each other or the car body.

INSTALLING THE INTEGRATED RELAY / FUSEBOX

Install the box in its mounting.

Install:

- the cable harness
- the connector
- the 2 x M6 screws in the mounting
- the 2 x power cables
- the M8 nut to secure the power cables.

INSTALLING THE AIR CLEANER (ACL) HOUSING

Press the air cleaner (ACL) housing into place.

Install the air hoses and the connector.

FINISHING

Bleed the brake system. See **BRAKE SYSTEM, BLEEDING (USING BLEEDING UNIT)** .

Connect the battery lead.

TESTING THE PRESSURE OF THE BRAKE SYSTEM

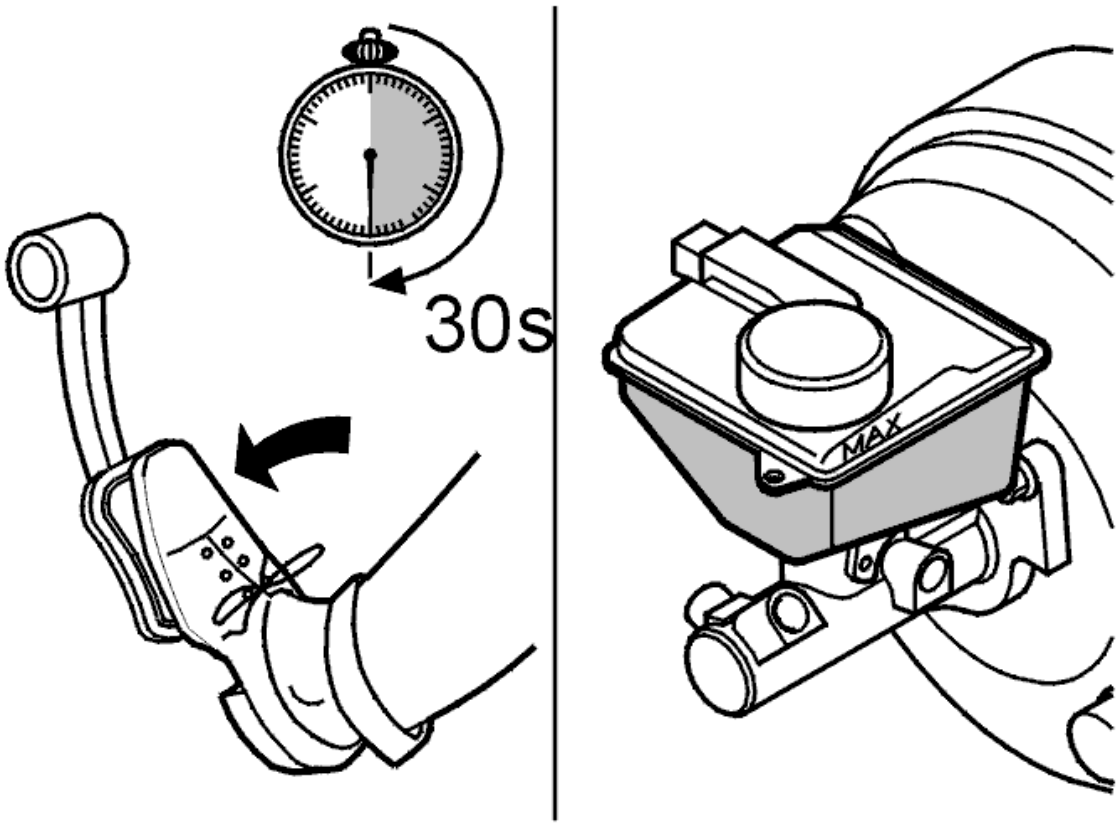

Fig. 19: Depressing Brake Pedal As If Braking Suddenly (So That Wheels Would Almost Lock) For 30 Seconds
Courtesy of VOLVO CARS CORPORATION

Depress the brake pedal hard for 30 seconds. Check that no leakage occurs from the brake nipples, hoses and joints.

Remedy any leakage.

Install the wheel. See **INSTALLING WHEELS** .

BRAKE PIPE MASTER CYLINDER / ABS UNIT, REPLACING

To replace the brake pipes for the left-hand front wheel / ABS unit, see **REPLACING THE BRAKE PIPE FOR THE LEFT-HAND FRONT WHEEL / ABS UNIT** .

To replace the brake pipes for the right-hand front wheel / ABS unit, see **REPLACING THE BRAKE PIPE FOR THE RIGHT-HAND FRONT WHEEL / ABS UNIT** .

BRAKE PIPE MASTER CYLINDER/ABS UNIT, REPLACING

NOTE: **As the illustrations in this service information are used for different model years and / or models, some variation may occur. However, the essential information**

in the illustrations is always correct.

PREPARATION

Disconnect the battery lead. See **BATTERY, DISCONNECTING**

REMOVING THE UPPER TORQUE ROD

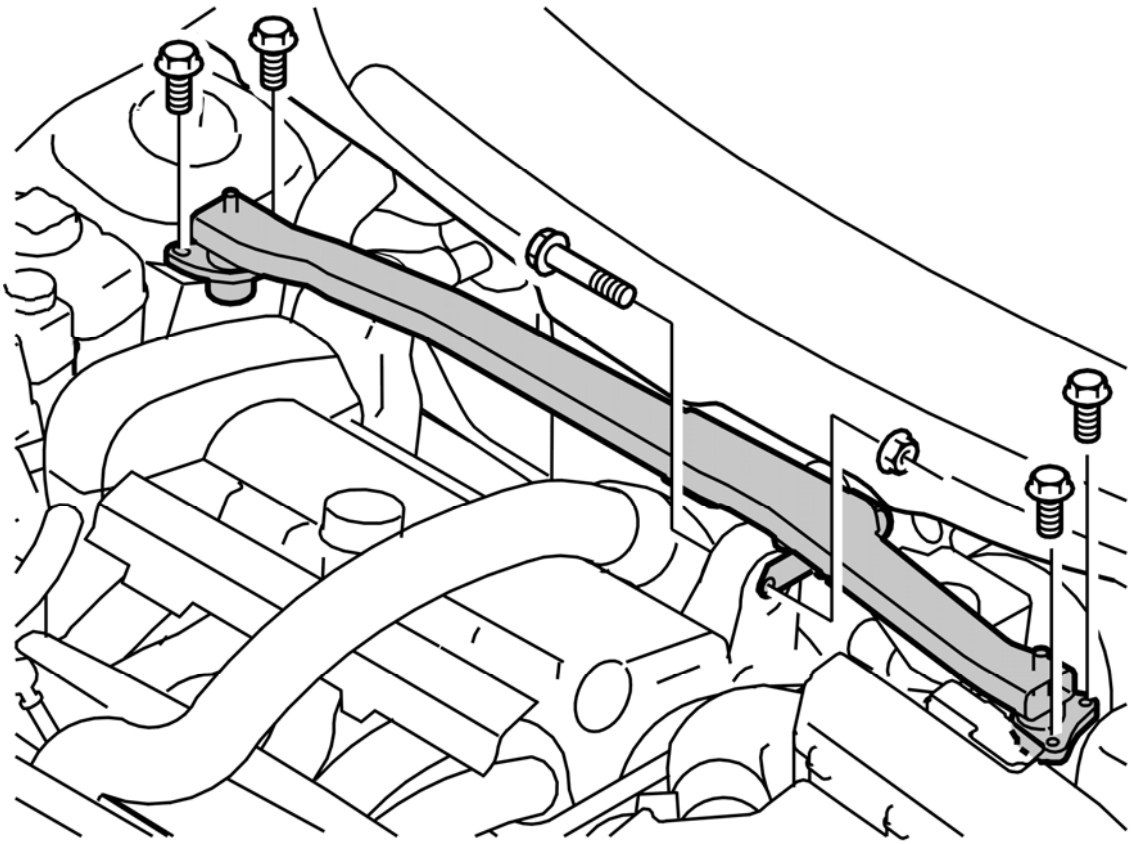

Fig. 20: Identifying Engine Stabilizer Brace And Mounting Screws
Courtesy of VOLVO CARS CORPORATION

Remove:

- the mounting screws for the torque rod
- the screw and nut for the engine mounting and torque rod
- the engine stabilizer brace.

REMOVING THE AIR CLEANER (ACL) HOUSING

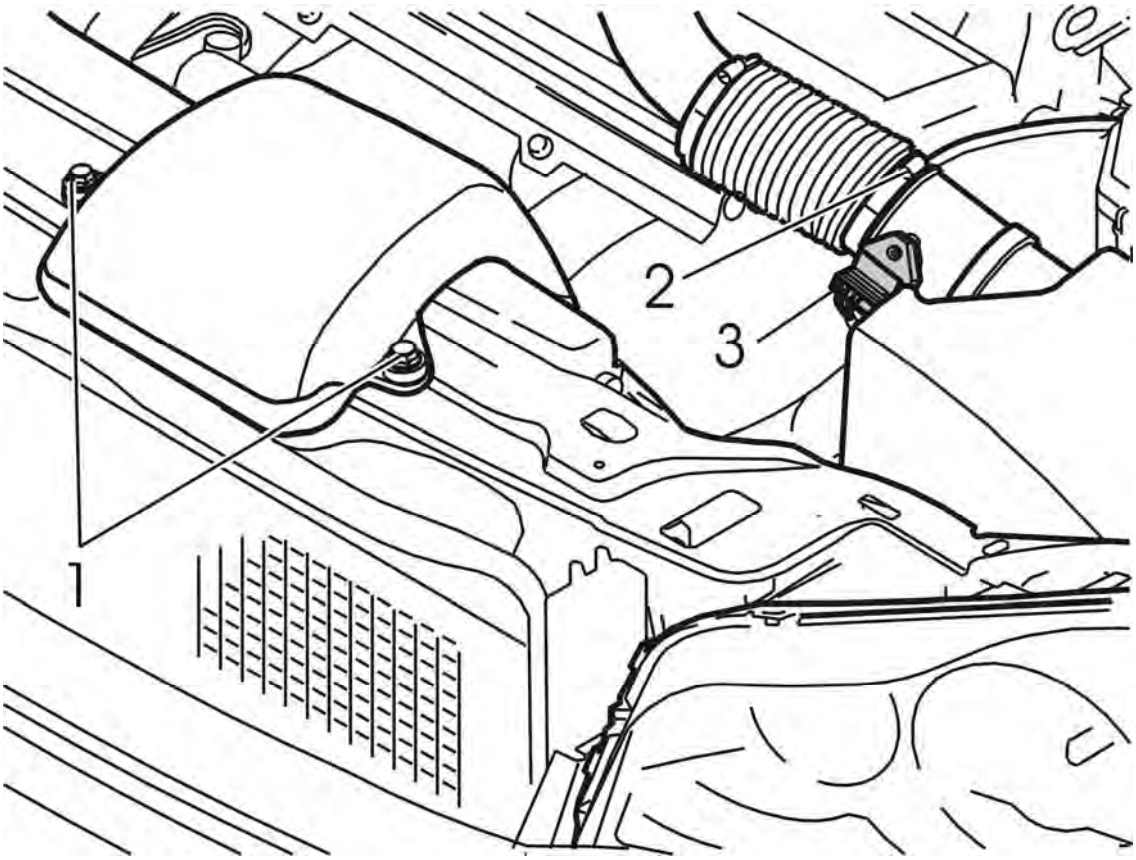

Fig. 21: Air Cleaner (ACL) Housing
Courtesy of VOLVO CARS CORPORATION

Remove the screws (1) for the intake manifold.

Disconnect the hose clamp (2) for the air hose.

Remove the connector (3) from the mass air flow (MAF) sensor.

Remove the air cleaner (ACL) housing from its mountings. Pull it straight up.

REMOVING THE INTEGRATED RELAY / FUSEBOX

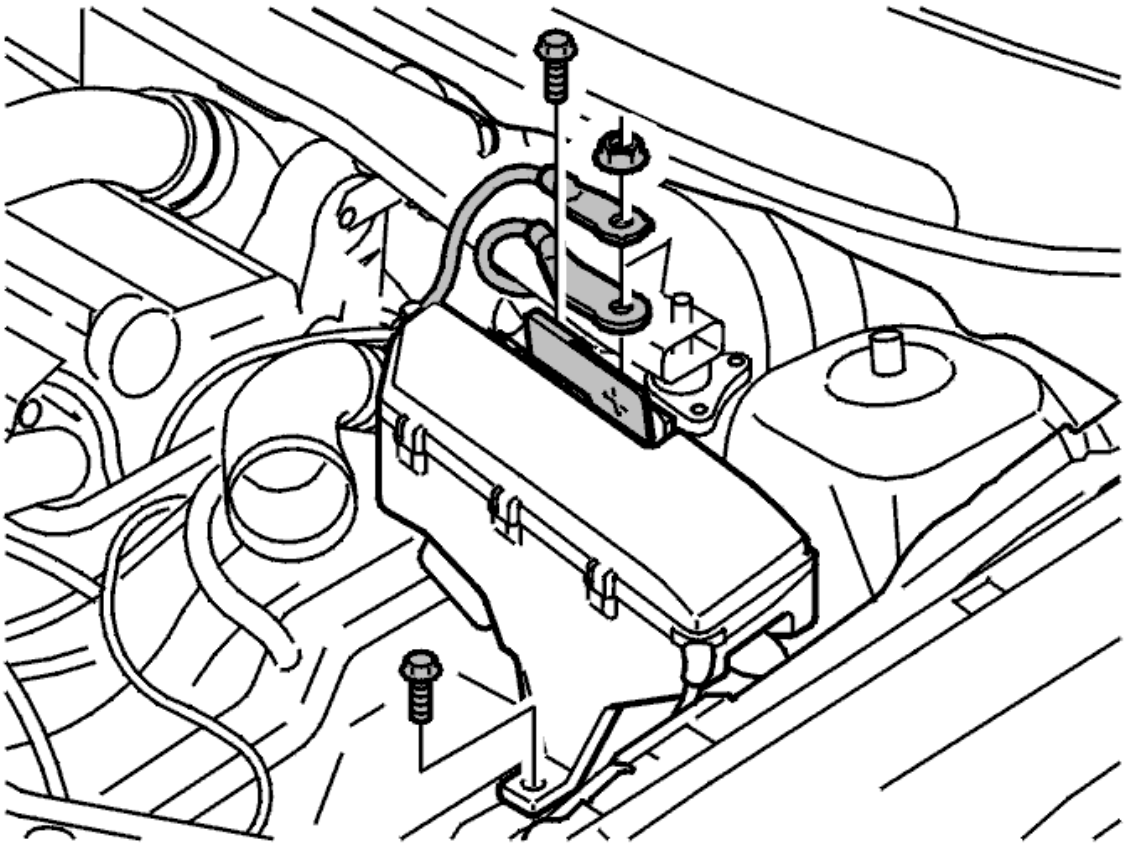

Fig. 22: Identifying Battery Leads, Screws And Nut
Courtesy of VOLVO CARS CORPORATION

Remove:

- the nut for the power cables
- the 2 power cables
- the 2 screws for the mounting.

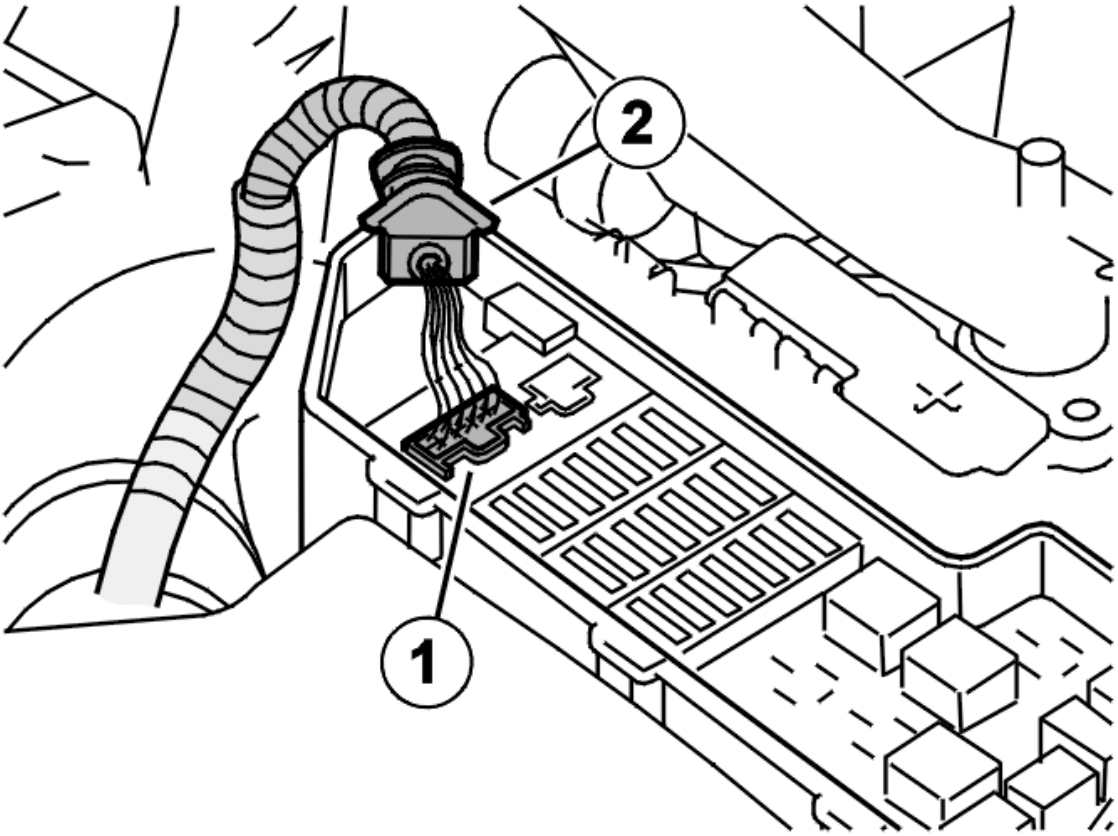

Fig. 23: Locating Connector And Cable Harness From Fusebox
Courtesy of VOLVO CARS CORPORATION

Open the integrated relay/fusebox. Remove the connector (1).

Disconnect the cable harness from the box (2).

Lift the box out of the mounting and move it to one side.

REMOVING THE BRAKE PIPES BETWEEN THE MASTER CYLINDER AND ABS UNIT

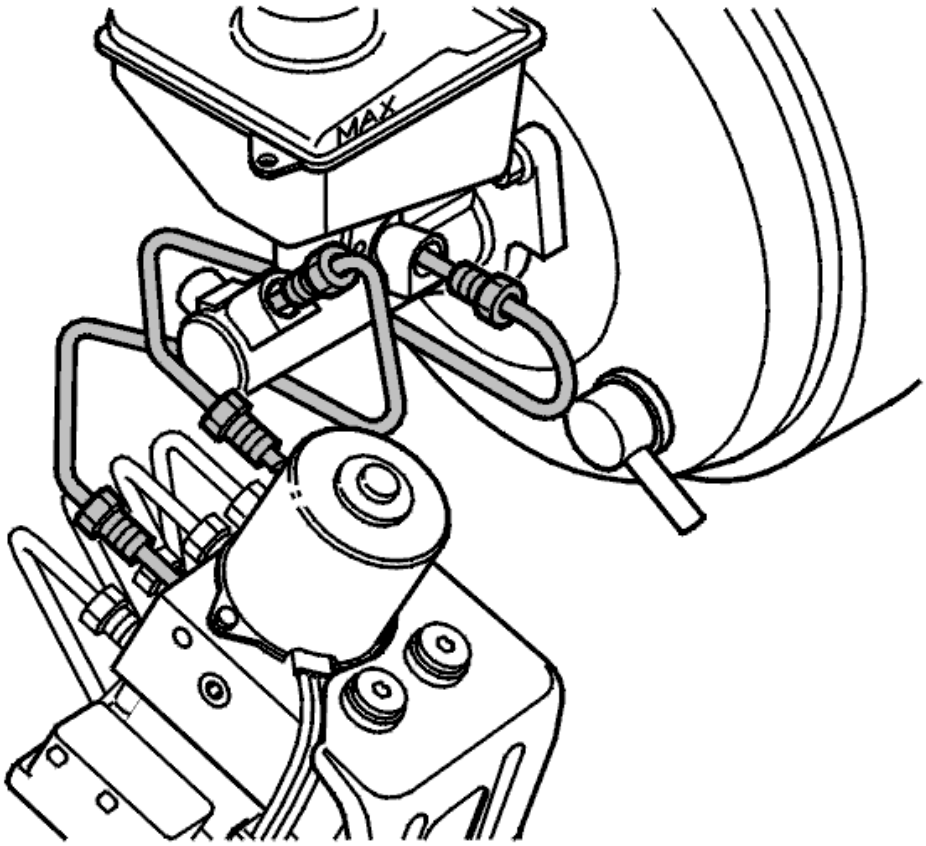

Fig. 24: Brake Pipe
Courtesy of VOLVO CARS CORPORATION

Clean the brake pipes terminals at the master cylinder and ABS unit.

Place paper under the master cylinder to avoid brake fluid spillage.

Remove the brake pipes from the master cylinder and ABS unit. Install sealing plugs.

INSTALLATION

INSTALLING THE BRAKE PIPES

NOTE: **For tightening torques, see: TIGHTENING TORQUE .**

NOTE: **The new brake pipe must be bent into the correct shape when installing.**

This is important otherwise the pipe may be subject to stresses when it is in place.

Install the brake pipes. Tighten. See: **TIGHTENING TORQUE** .

INSTALLING THE INTEGRATED RELAY / FUSEBOX

Install the box in its mounting.

Install:

- the cable harness
- the connector
- the 2 x M6 screws for the mounting
- the 2 x power cables
- the M8 nut to secure the power cables.

INSTALLING THE AIR CLEANER (ACL) HOUSING

Press the air cleaner (ACL) housing into place.

Install the air hoses and the connector.

INSTALLING THE UPPER TORQUE ROD

Install:

- the engine stabilizer brace
- the M12 screw and nut for the engine mounting
- the 4 x M10 mounting screws for the torque rod.

FINISHING

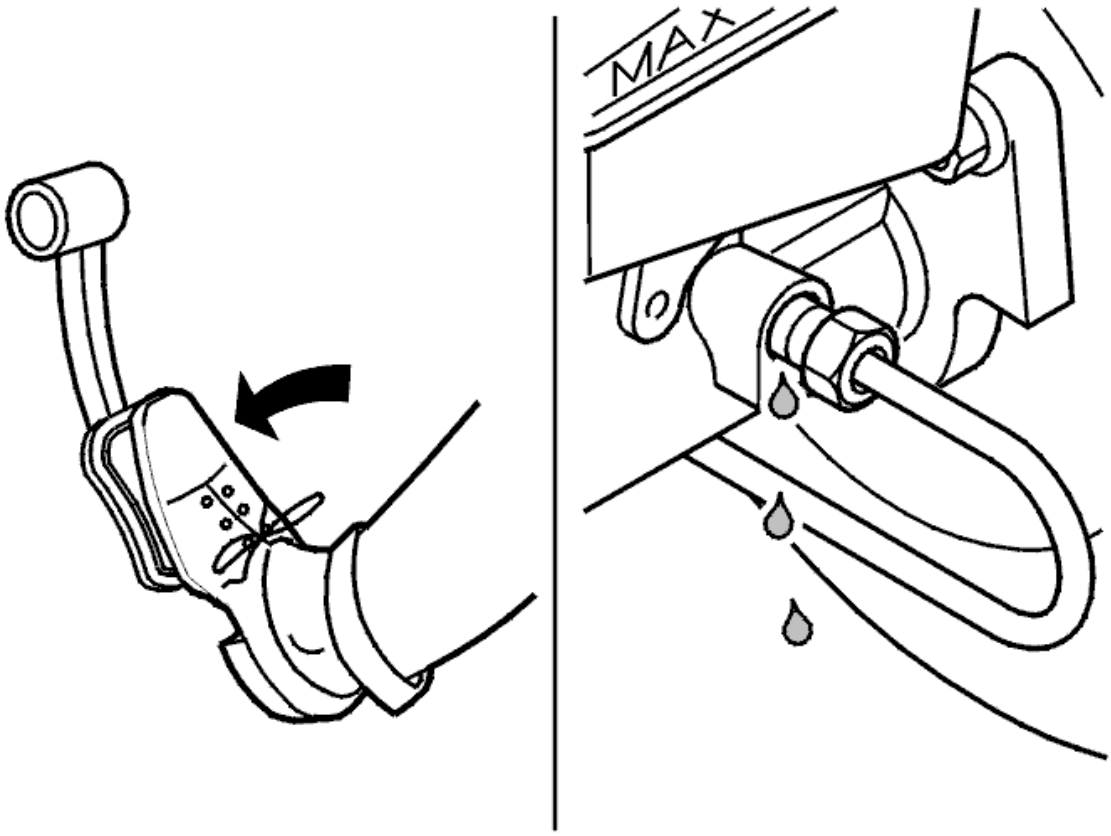

Fig. 25: Bleeding Brake System
Courtesy of VOLVO CARS CORPORATION

Bleed the brake system. See **BRAKE SYSTEM, BLEEDING (USING BLEEDING UNIT)** .

Check if there is still air in the system by pressing down the brake pedal with a jack at a pressure equivalent to heavy braking, 200 Nm. With the engine off and the brake pedal depressed 3-4 times, the pedal travel must not exceed 40 mm.

If the pedal travel exceeds this limit, bleed again and re-check the pedal travel.

That there is no brake fluid leakage.

Remove the bleed unit connector from the brake fluid reservoir.

Check that the brake fluid level is not above the maximum marking.

Connect the battery lead.

BRAKE PIPE REAR WHEEL, REPLACING

NOTE: **As the illustrations in this service information are used for different model years and / or models, some variation may occur. However, the essential information**

in the illustrations is always correct.

PREPARATORY WORK

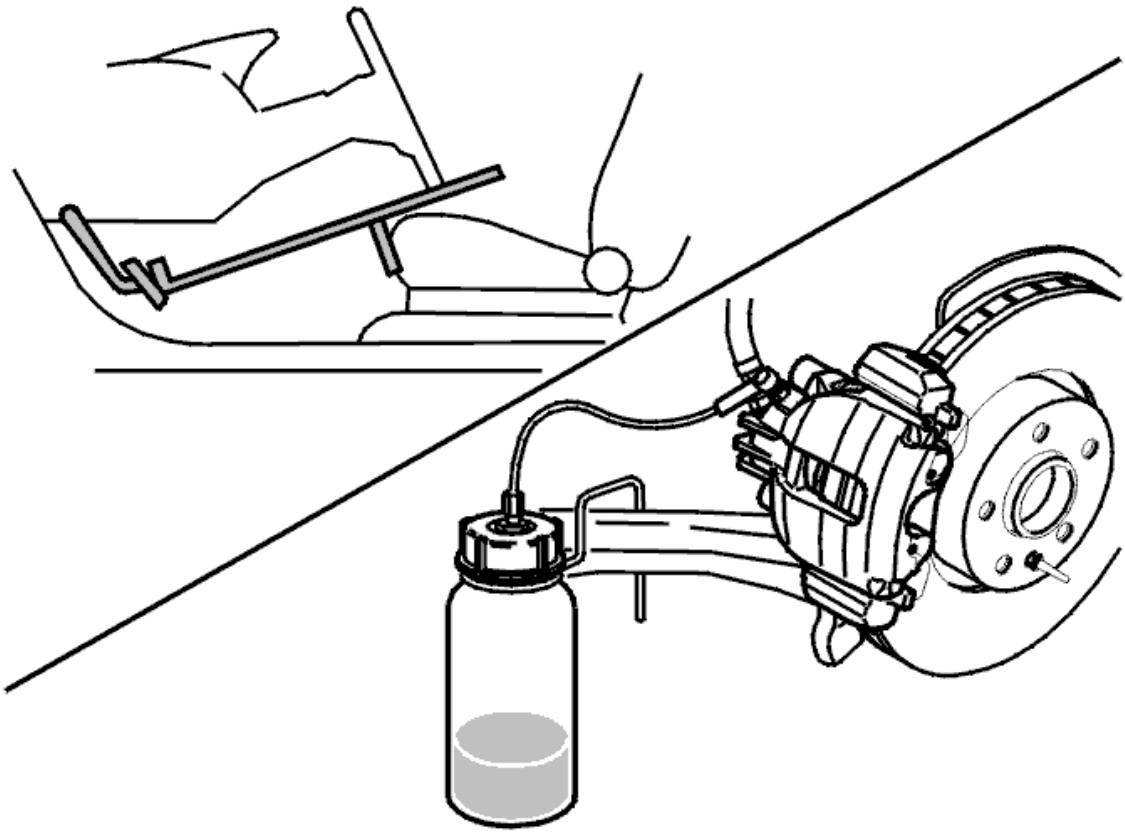

Fig. 26: Bleeding Brakes
Courtesy of VOLVO CARS CORPORATION

Secure the pedal in the depressed position. Use a pedal jack.

Remove the protective cap from the bleed nipple at the left front wheel.

Install a plastic hose on the nipple. Open the bleed nipple.

Collect the brake fluid in a container.

Shut the bleed nipple.

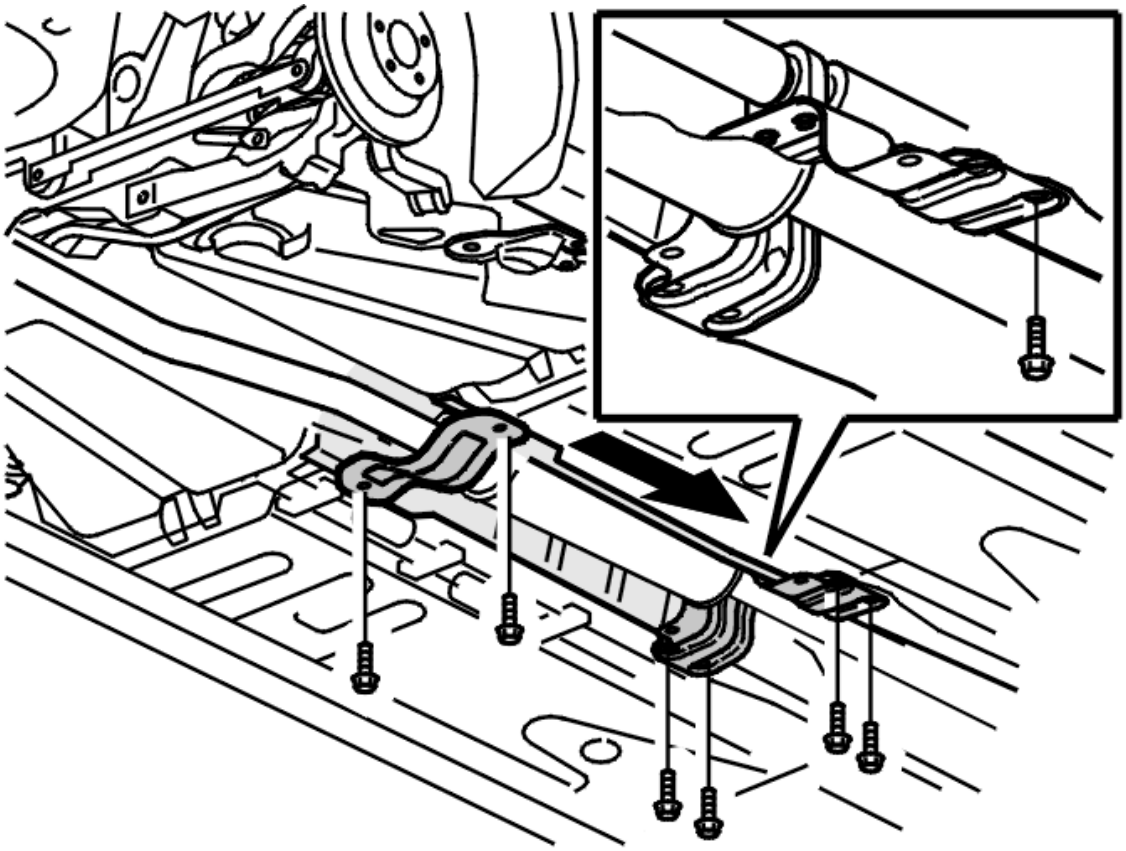

Fig. 27: Identifying Center Member Bearing, Crossmember And Screws
Courtesy of VOLVO CARS CORPORATION

Remove:

- the screws for the center bearing member
- the screws for the rear cross member.

Slide the rear heat deflector forward over the front heat deflector to expose the right brake pipe.

REMOVAL

REMOVING THE BRAKE PIPE

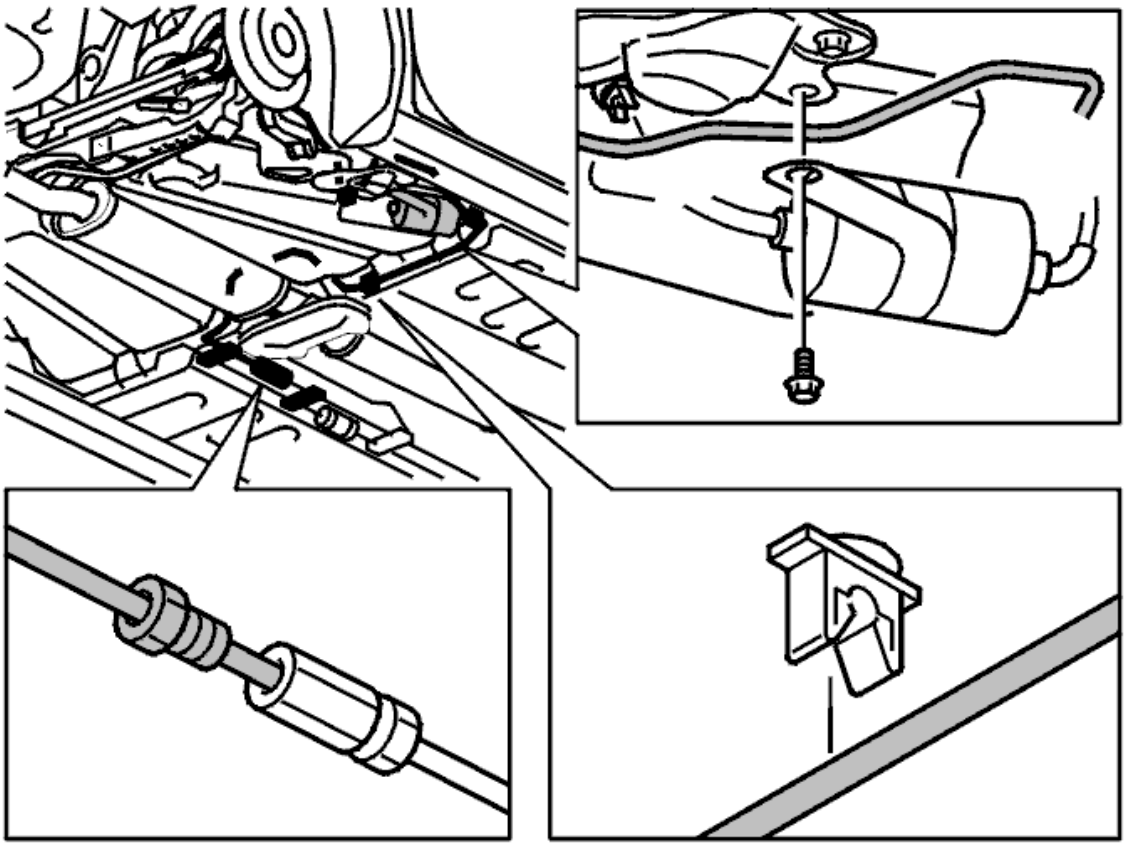

Fig. 28: Brake Pipe, Clips And Mountings
Courtesy of VOLVO CARS CORPORATION

Remove:

- the brake pipe from the clip
- the brake pipe at the joint.

Remove the screw at the mounting for the fuel filter.

Fold the mounting down.

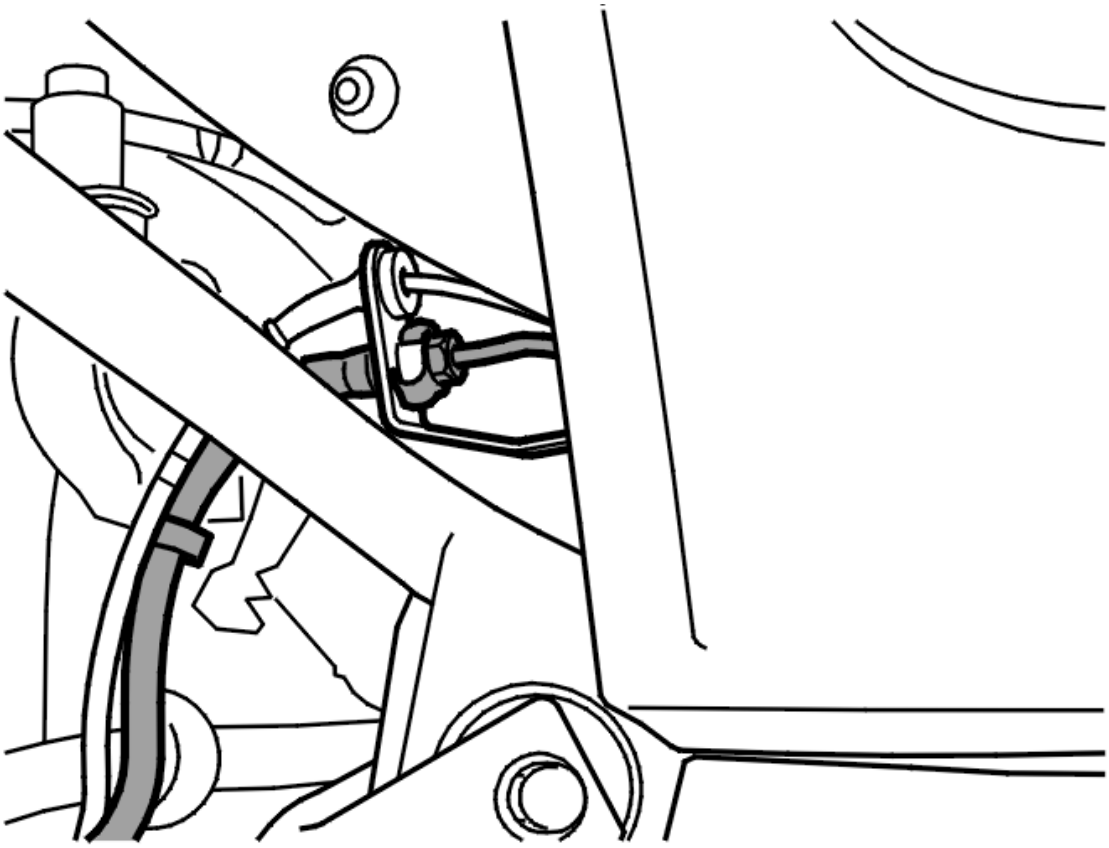

Fig. 29: Identifying Brake Pipe
Courtesy of VOLVO CARS CORPORATION

Disconnect the brake pipe at the bracket.

Remove the brake pipe.

INSTALLATION

INSTALLING THE BRAKE PIPES

NOTE: For tightening torques, see: TIGHTENING TORQUE .

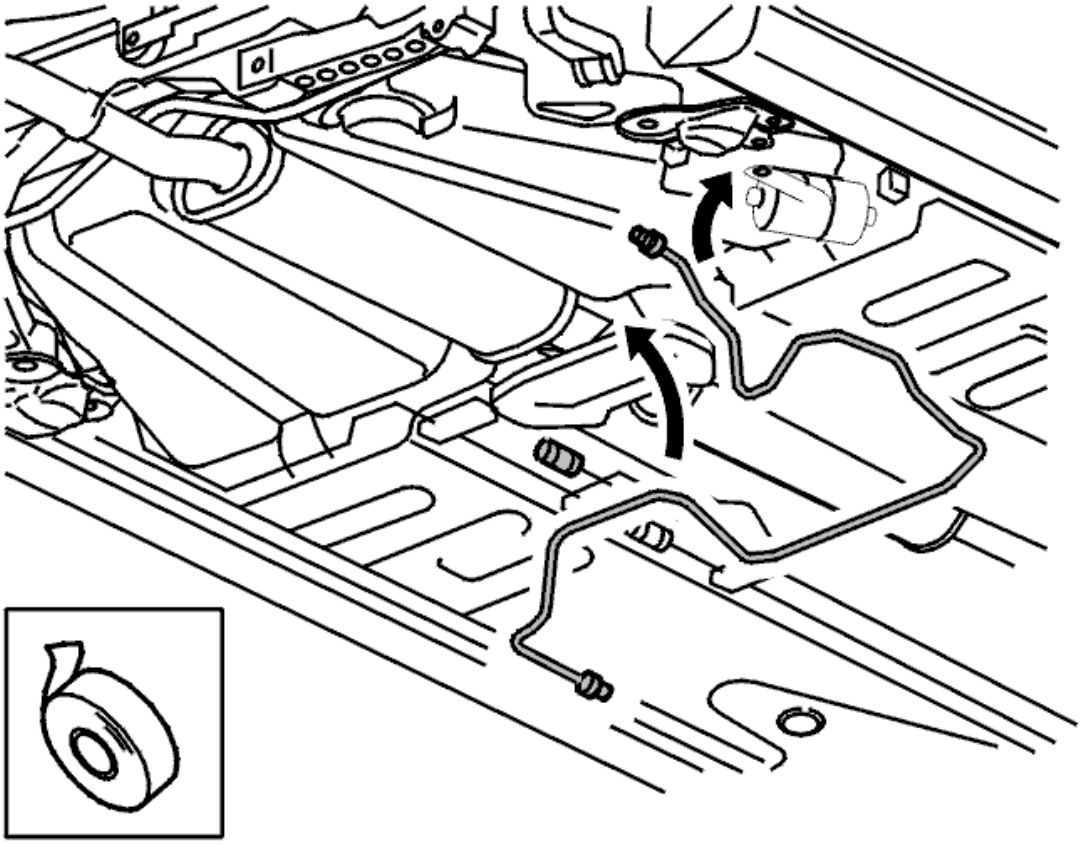

Fig. 30: Identifying Brake Pipe
Courtesy of VOLVO CARS CORPORATION

NOTE: Seal the ends of the pipe before installing the new brake pipe.

Thread the brake pipe between the bodywork and the fuel lines.

Continue under the parking brake cable and over the muffler down to the other brake pipe.

Remove the seal from the pipe end.

Install:

- the brake pipes. Tighten. See: **TIGHTENING TORQUE**
- the brake pipe and the brake hose in the bracket. Tighten. See: **TIGHTENING TORQUE** .

NOTE: The brake pipe must not be in contact with the car body. The brake hose must not be twisted.

Install:

- fuel filter

- the M8 screw for the fuel filter mounting.

FINISHING

Pull the heat deflector plate to the installation position.

Install:

- the cross member
- the 2 x M8 screws
- the 4 M8 screws for the support for the center bearing.

Remove the pedal jack.

Top up and bleed the braking system. See **BRAKE SYSTEM, BLEEDING (USING BLEEDING UNIT)** .

TESTING THE PRESSURE OF THE BRAKE SYSTEM

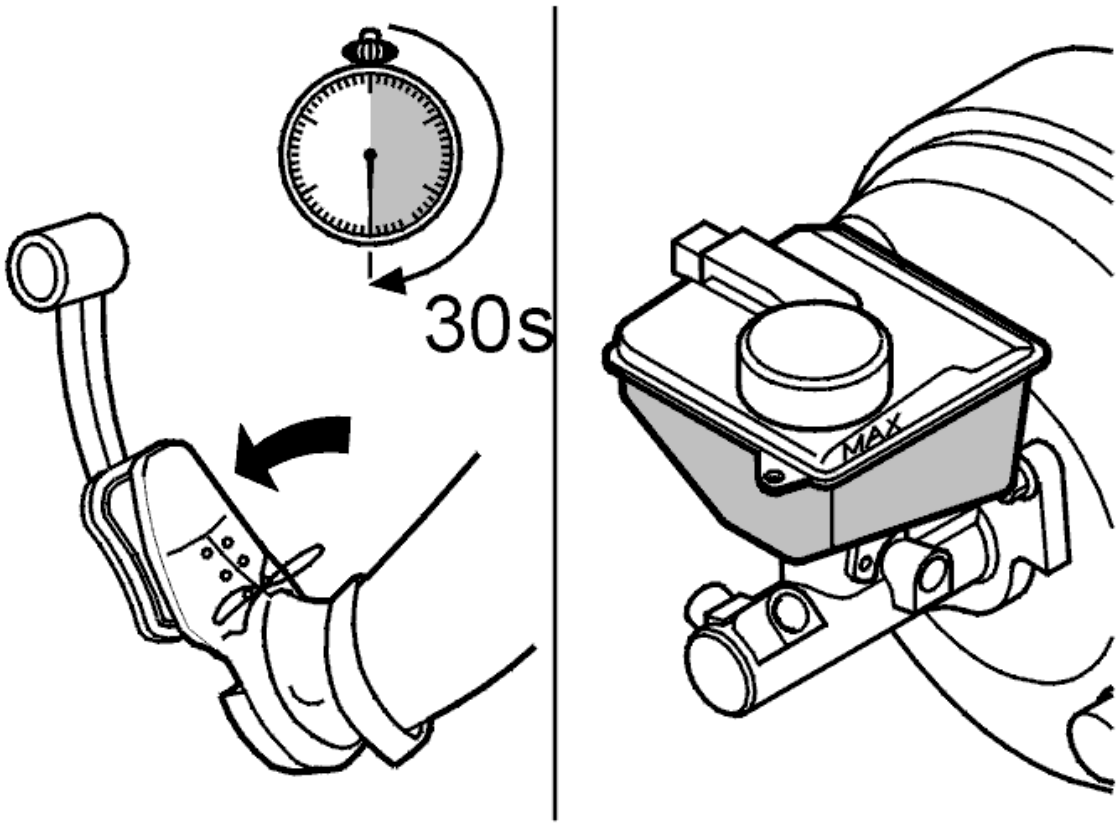

Fig. 31: Depressing Brake Pedal As If Braking Suddenly (So That Wheels Would Almost Lock) For 30 Seconds
Courtesy of VOLVO CARS CORPORATION

Depress the brake pedal hard for 30 seconds.

Check that no leakage occurs from the brake nipples, hoses and joints.

Remedy any leakage.

Install the wheel. See **INSTALLING WHEELS** .

REPLACING THE BRAKE PIPE FOR THE LEFT-HAND REAR WHEEL

PREPARATORY WORK

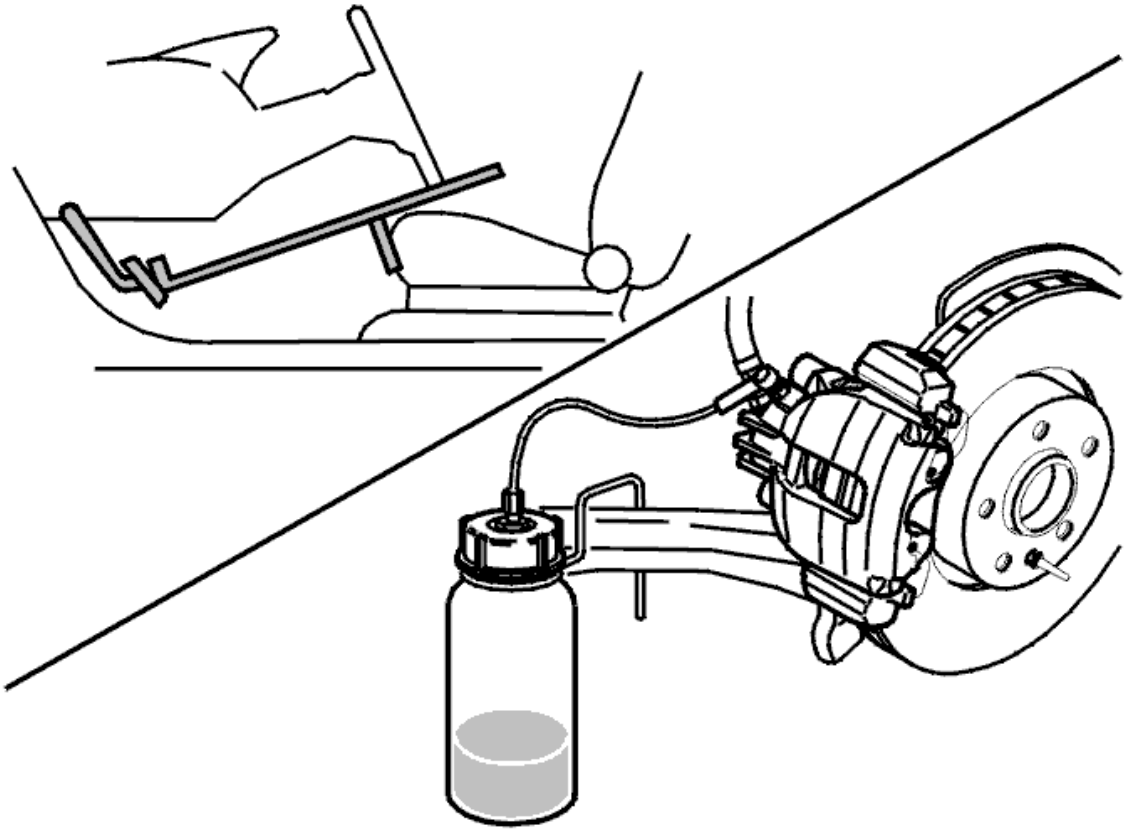

Fig. 32: Bleeding Brakes
Courtesy of VOLVO CARS CORPORATION

Secure the pedal in the depressed position. Use a pedal jack.

Remove the protective cap from the bleed nipple at the left front wheel.

Install a plastic hose on the nipple. Open the bleed nipple.

Collect the brake fluid in a container.

Shut the bleed nipple.

REMOVING THE BRAKE PIPE

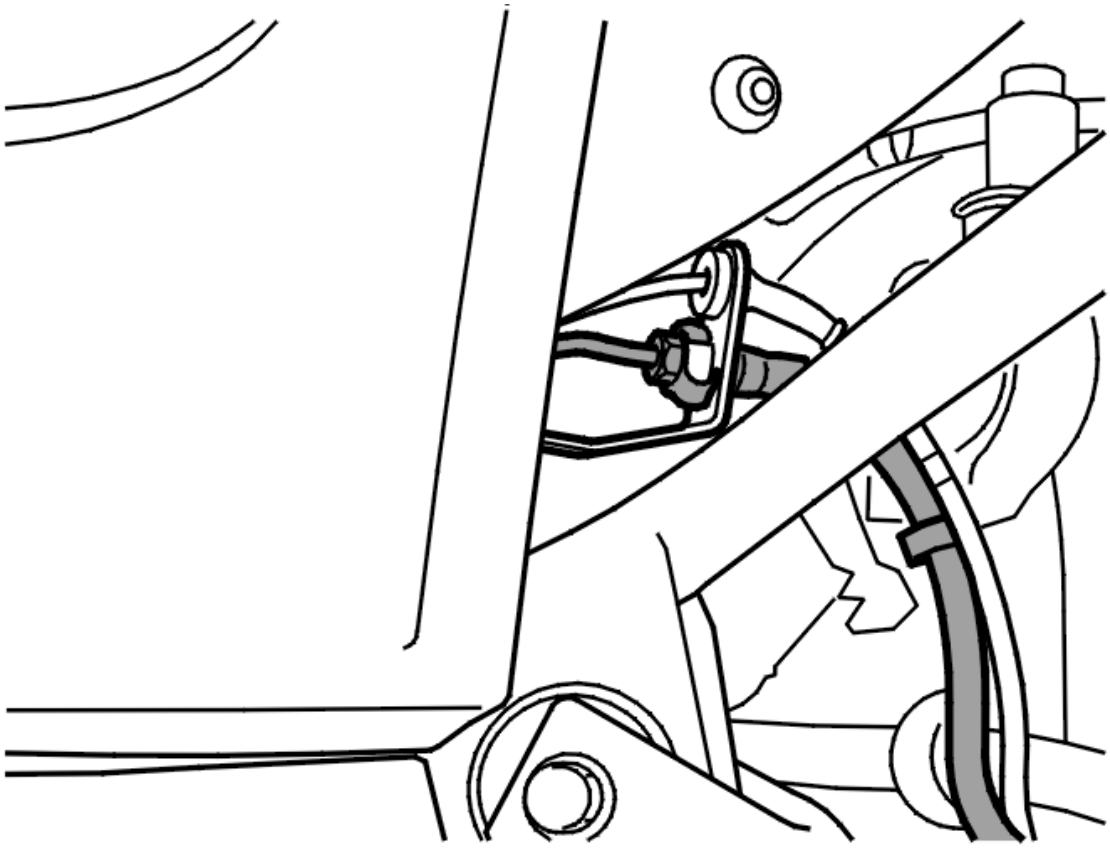

Fig. 33: Identifying Brake Pipe
Courtesy of VOLVO CARS CORPORATION

Separate the brake pipe and the brake hose at the bracket.

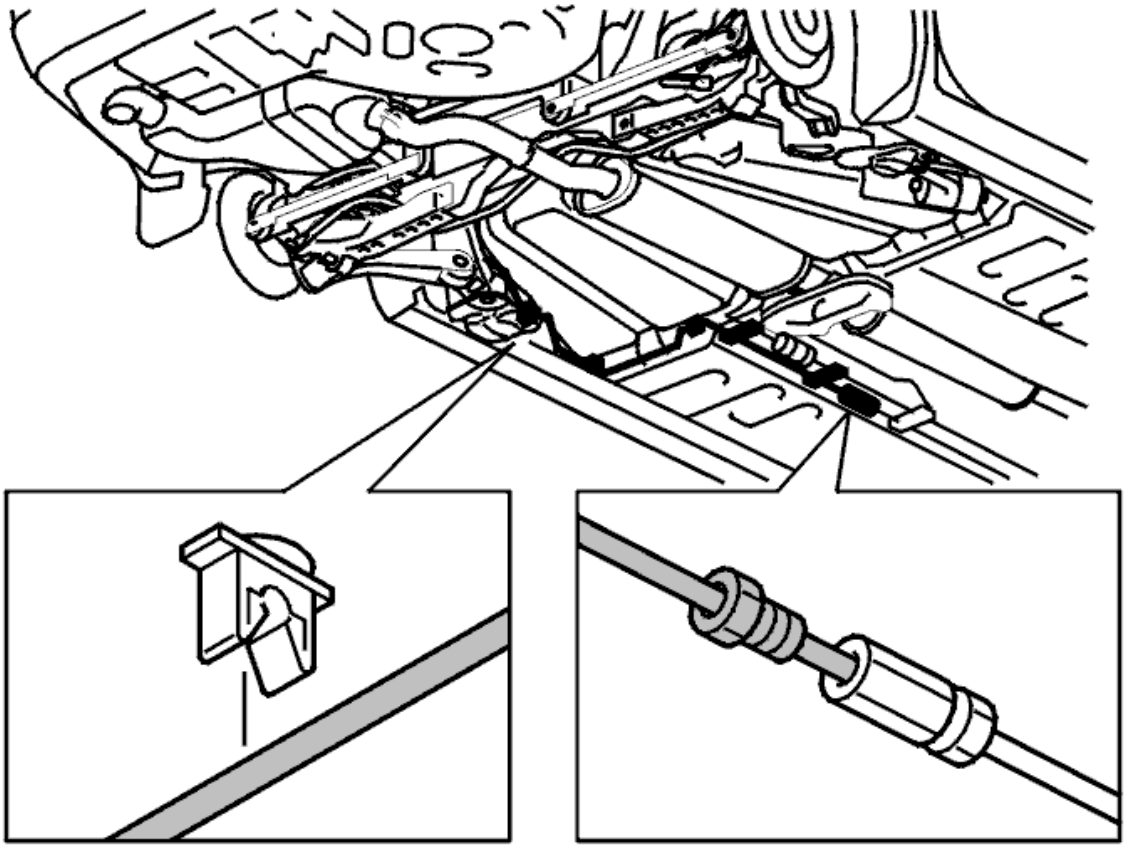

Fig. 34: Brake Pipe Joint And Clips
Courtesy of VOLVO CARS CORPORATION

Separate the brake pipe at the joint nipple under the car.

Remove the brake pipe from its clips.

Remove the brake pipe.

INSTALLING THE BRAKE PIPES

NOTE: **For tightening torques, see: TIGHTENING TORQUE .**

NOTE: **The new brake pipe must be bent into the correct shape when installing. This is important otherwise the pipe may be subject to stresses when it is in place.**

Install:

- the brake pipes. Tighten. See: **TIGHTENING TORQUE**
- the brake pipe and the brake hose in the bracket. Tighten. See: **TIGHTENING TORQUE** .

Remove the pedal jack.

NOTE: **The brake pipe must not be in contact with the car body. The brake hose must not be twisted.**

FINISHING

Top up and bleed the braking system. See **BRAKE SYSTEM, BLEEDING (USING BLEEDING UNIT)** .

TESTING THE PRESSURE OF THE BRAKE SYSTEM

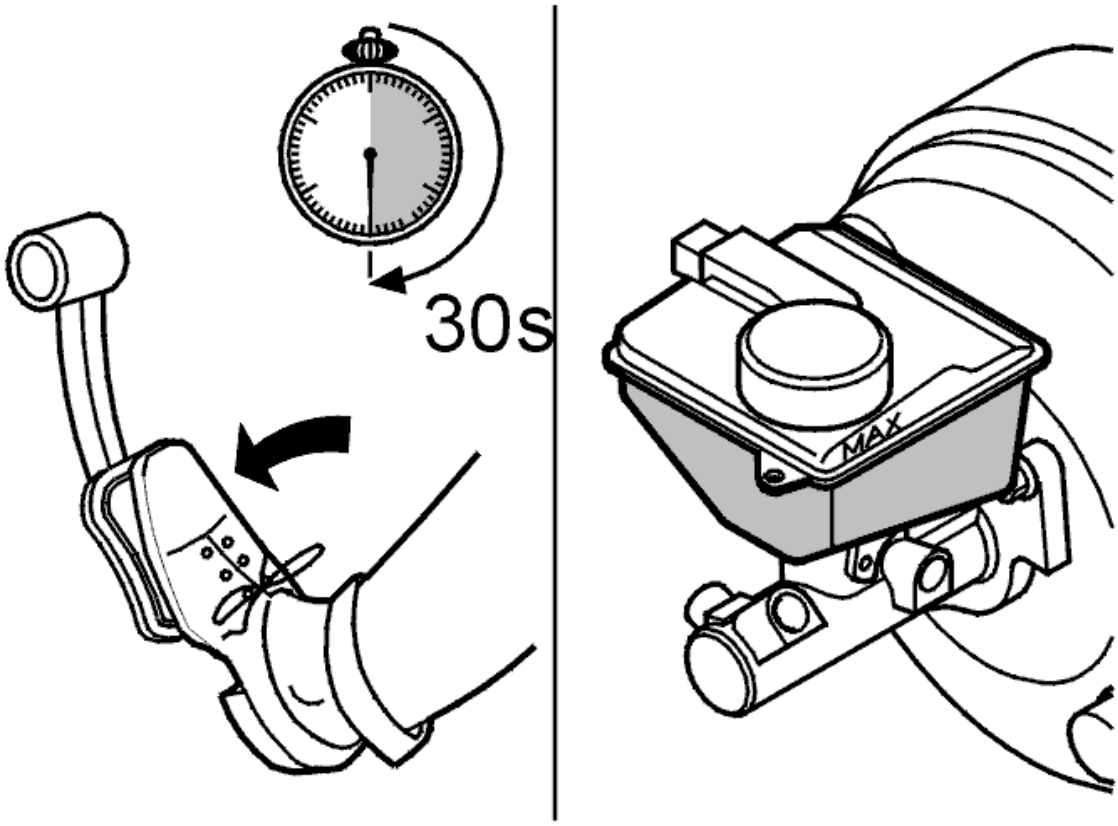

Fig. 35: Depressing Brake Pedal As If Braking Suddenly (So That Wheels Would Almost Lock) For 30 Seconds
Courtesy of VOLVO CARS CORPORATION

Depress the brake pedal hard for 30 seconds.

Check that no leakage occurs from the brake nipples, hoses and joints.

Remedy any leakage.

Install the wheel. See **INSTALLING WHEELS** .

MASTER CYLINDER, BRAKE BOOSTER (2003-2012)

MASTER CYLINDER, REPLACING

NOTE: The illustrations in this service information are used for different model years and/or models. Some variation may occur. However, the essential information in the illustrations is always correct.

PREPARATORY WORK

Disconnect the battery lead. See: **BATTERY, DISCONNECTING** .

CAUTION: It is important that no contaminants enter the brake system.

Before starting work, clean around the brake fluid reservoir cap and the pipe couplings.

If necessary, also clean the hose connections and the connections between the reservoir and the master cylinder.

CAUTION: Relieve the check valve in the power brake booster; alternatively pump the brake pedal until it has no travel.

This is so that no vacuum remains when the master cylinder is removed. Otherwise there is a risk that the O-ring will be sucked into the brake booster.

HINT: Position paper under the master cylinder to protect the paintwork.

CAUTION: Never, under any circumstances, open the master cylinder. Reassembling it requires special equipment and facilities.

REMOVAL

REMOVING THE TORQUE ROD

Remove the torque rod. See: **BRAKE FLUID RESERVOIR, REPLACING**.

DISCONNECTING THE CONNECTORS

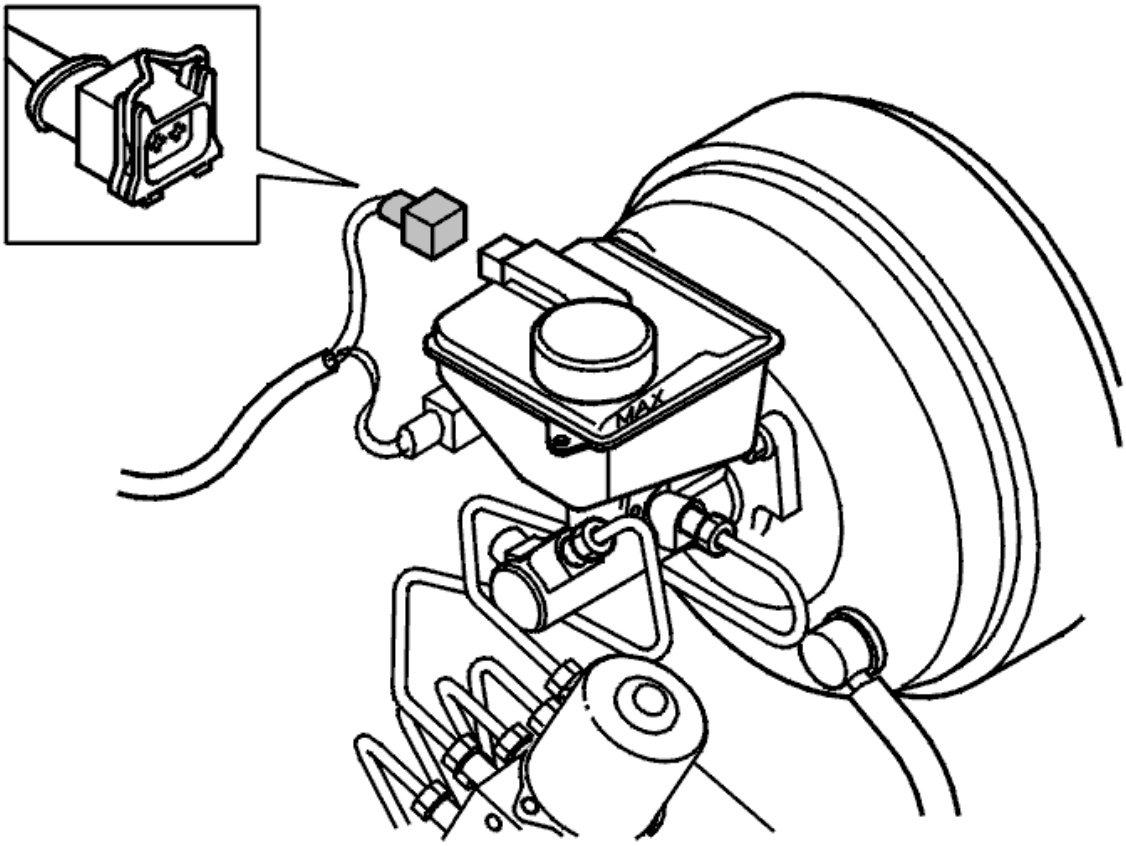

Fig. 36: Brake Fluid Reservoir And Power Brake Booster Connectors
Courtesy of VOLVO CARS CORPORATION

Disconnect the connectors at the brake fluid reservoir and at the power brake booster.

Block the hose to the clutch cylinder. (Applies only to cars with manual transmission).

Use hose pliers.

REMOVING THE BRAKE PIPE

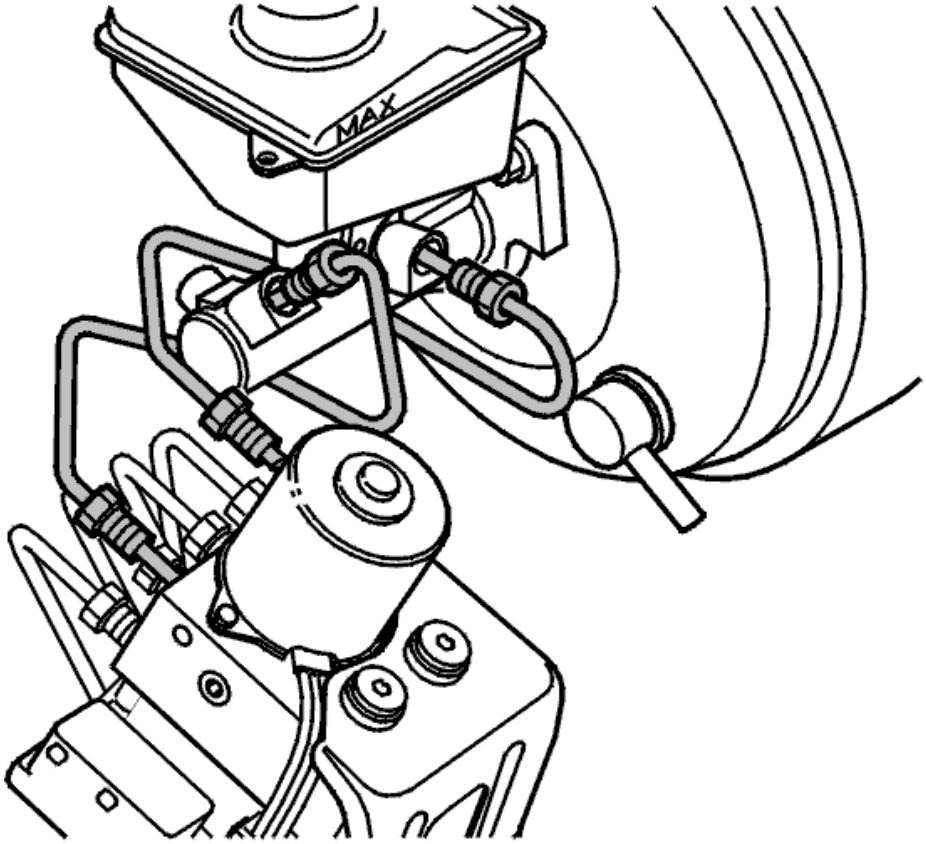

Fig. 37: Brake Pipe
Courtesy of VOLVO CARS CORPORATION

Remove:

- the brake pipes at the master cylinder
- the 2 upper brake pipes on the hydraulic modulator.

Plug the holes on the ABS hydraulic modulator so that that contaminants cannot get into it.

REMOVING THE MASTER CYLINDER

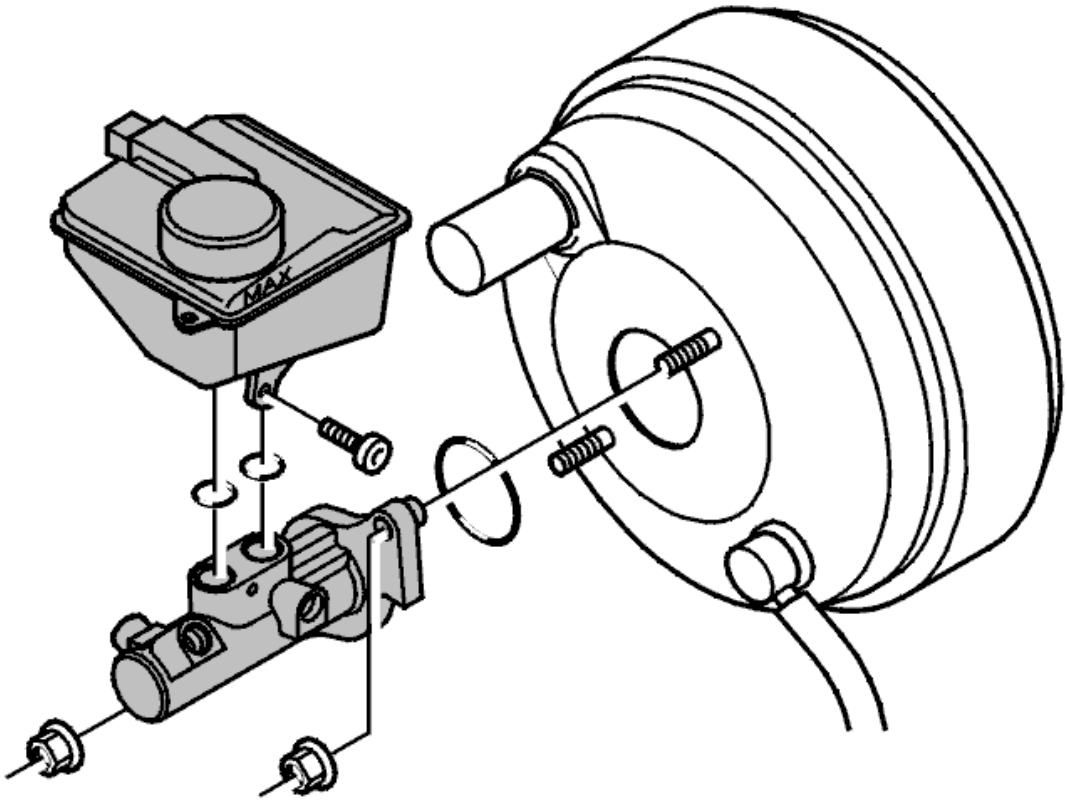

Fig. 38: Identifying Master Cylinder Removal
Courtesy of VOLVO CARS CORPORATION

Remove:

- the 2 nuts
- the master cylinder from the power brake booster
- the hose from the brake fluid reservoir (applies to cars with hydraulic clutch).

INSTALLATION

NOTE: For tightening torques, see: TIGHTENING TORQUE .

INSTALLING THE MASTER CYLINDER

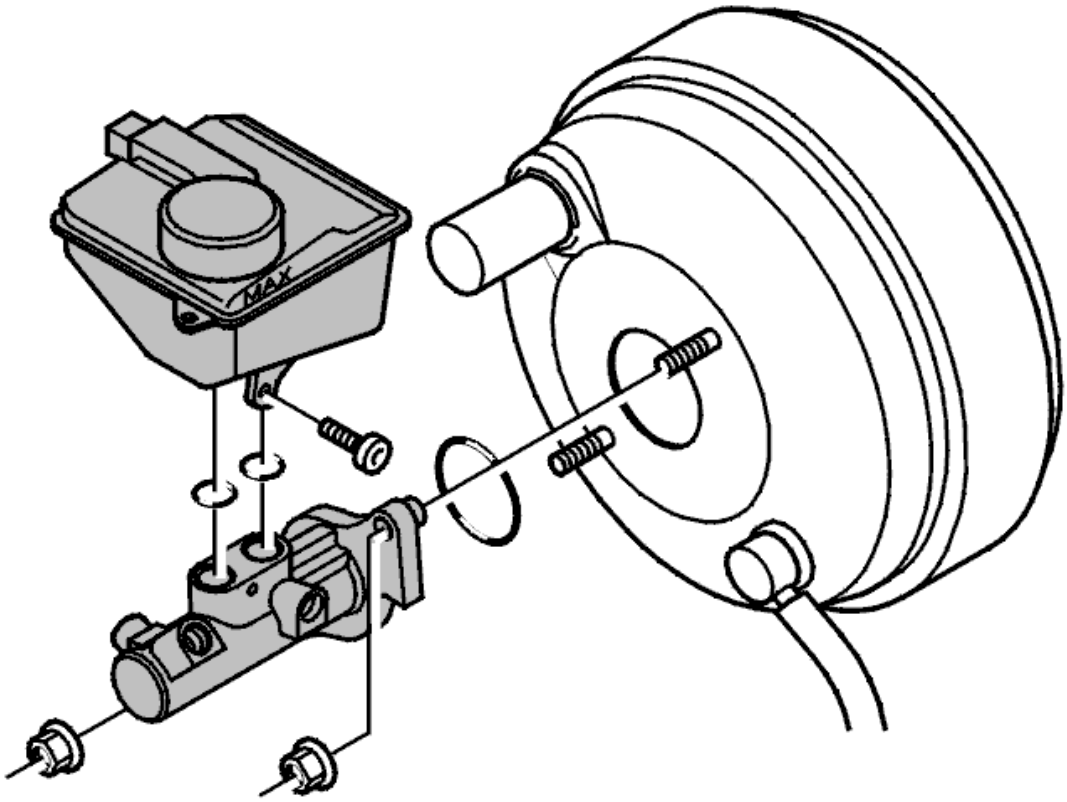

Fig. 39: Identifying Master Cylinder Removal
Courtesy of VOLVO CARS CORPORATION

Transfer the brake fluid reservoir to the new master cylinder.

Check that there is no dirt in the terminals.

Lubricate the O-rings and any hoses with brake fluid or glycerin.

NOTE: **Do not use a soap solution or mineral oil to lubricate the hoses. Use brake fluid or glycerin.**

Install:

- the brake fluid reservoir from directly above -
- the screw on the underneath of the brake fluid reservoir. Tighten. See: **TIGHTENING TORQUE** .

INSTALLING THE BRAKE PIPES

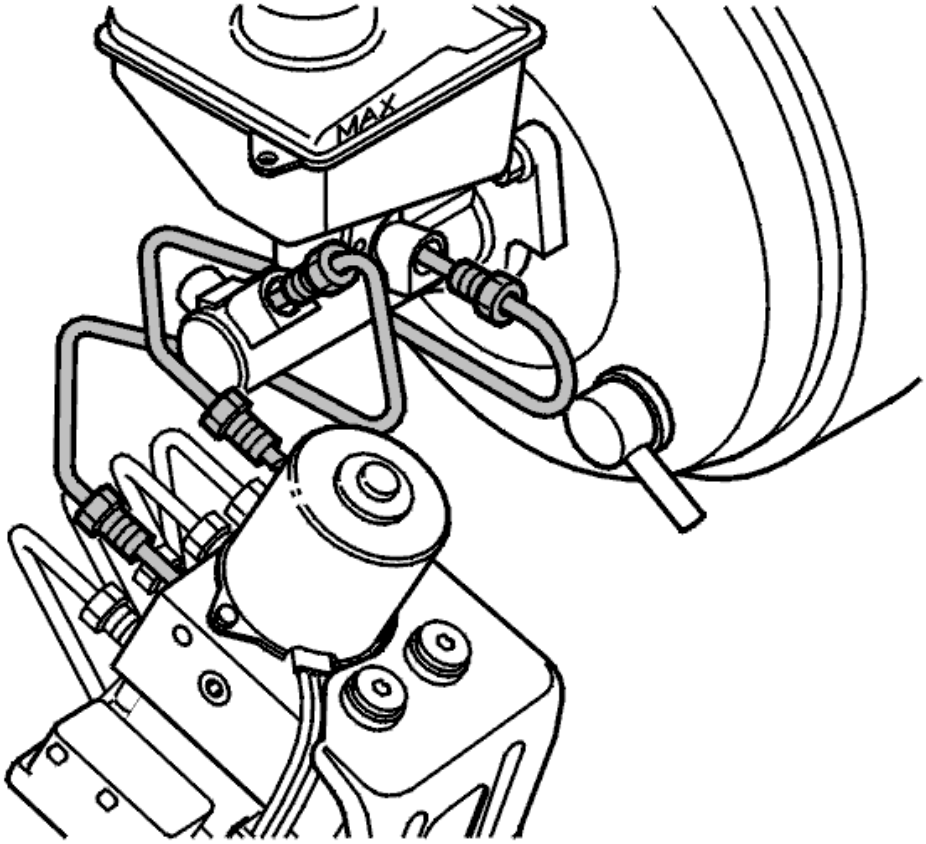

Fig. 40: Brake Pipe
Courtesy of VOLVO CARS CORPORATION

Install the brake pipes on the ABS hydraulic modulator and the master cylinder. Tighten. See: **TIGHTENING TORQUE** .

INSTALLING THE CONNECTORS

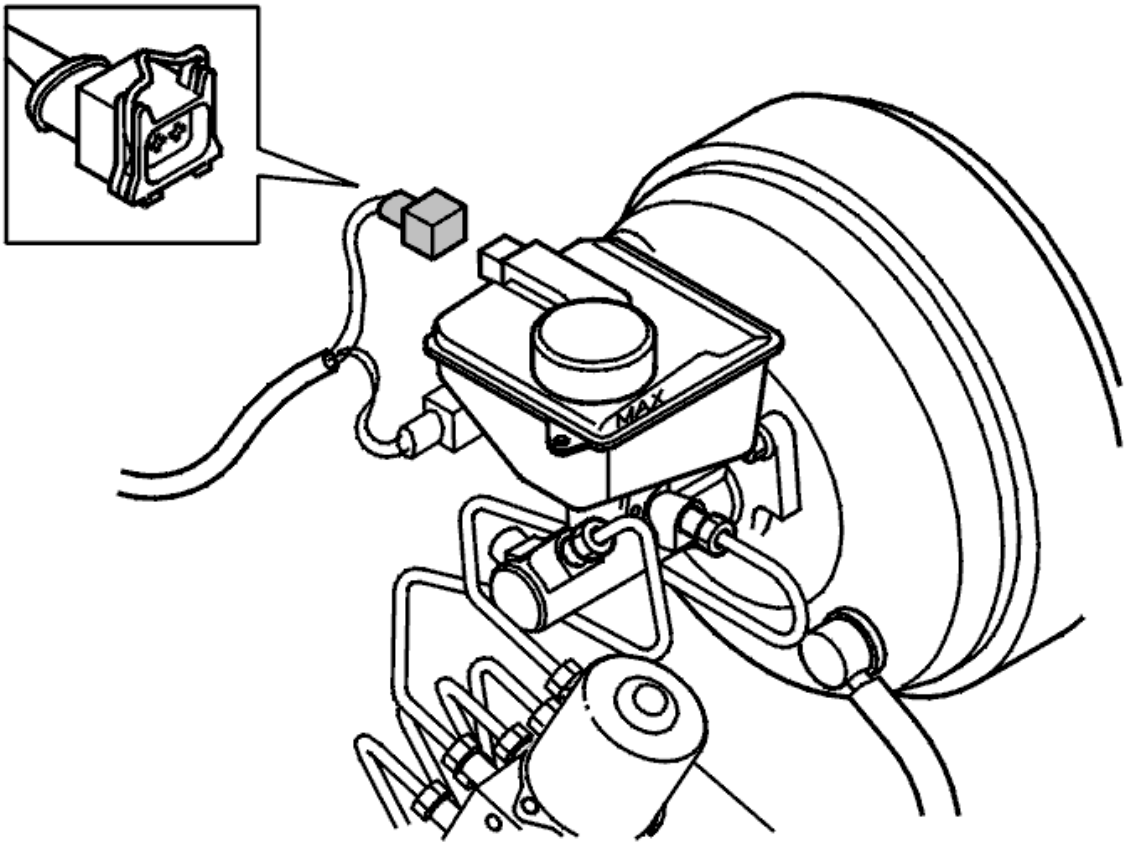

Fig. 41: Brake Fluid Reservoir And Power Brake Booster Connectors
Courtesy of VOLVO CARS CORPORATION

Install the connectors on the brake fluid reservoir and the power brake booster.

INSTALLING THE TORQUE ROD

Install the torque rod. See: **BRAKE FLUID RESERVOIR, REPLACING**.

FINISHING

Bleed the brake system. See: **BRAKE SYSTEM, BLEEDING (USING BLEEDING UNIT)** .

Check the air in the brake system. Check for brake fluid leakage. See: **BRAKE PIPE MASTER CYLINDER/ABS UNIT, REPLACING**.

Connect the battery lead. See: **BATTERY, DISCONNECTING** .

PEDAL POSITION SENSOR, REPLACING

NOTE: **The illustrations in this service information are used for different model years and/or models. Some variation may occur. However, the essential information in the illustrations is always correct.**

PREPARATORY WORK

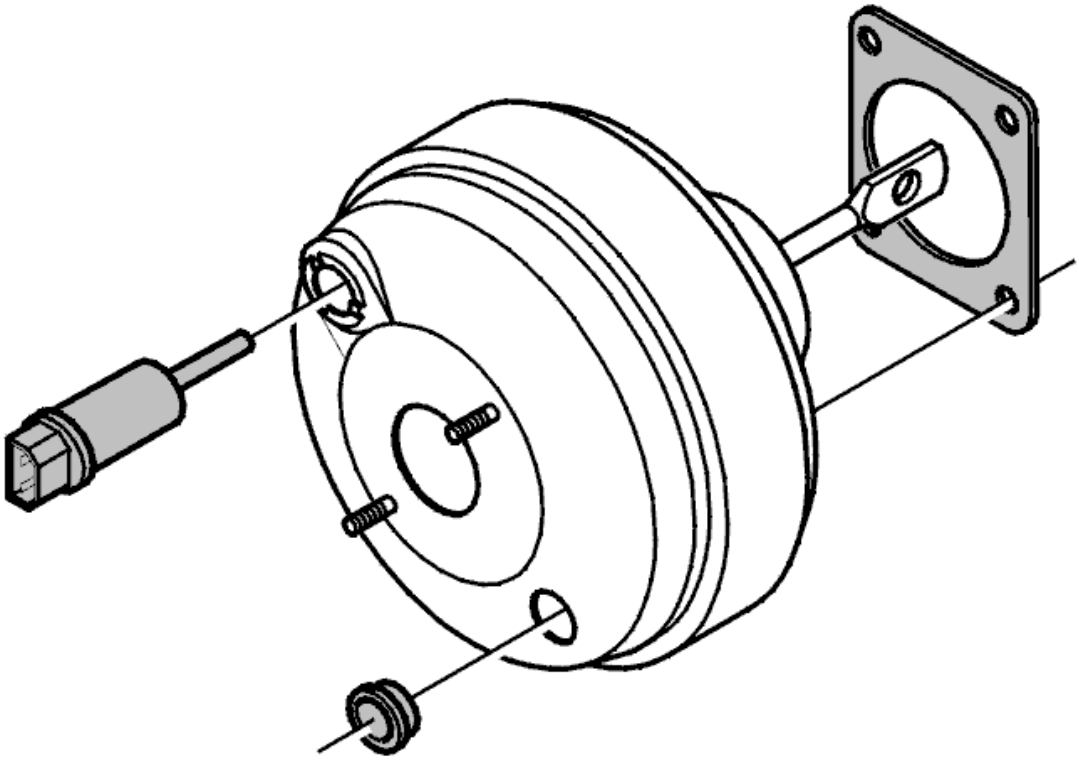

Fig. 42: Identifying Pedal Position Sensor Assembly
Courtesy of VOLVO CARS CORPORATION

Ignition off.

Press the brake pedal a few times until the pedal becomes stiff and rises slightly. This releases the vacuum in the power brake booster and thus prevents the O-ring from being sucked in when the pedal position sensor is removed.

REMOVAL

REMOVING PEDAL POSITION SENSOR

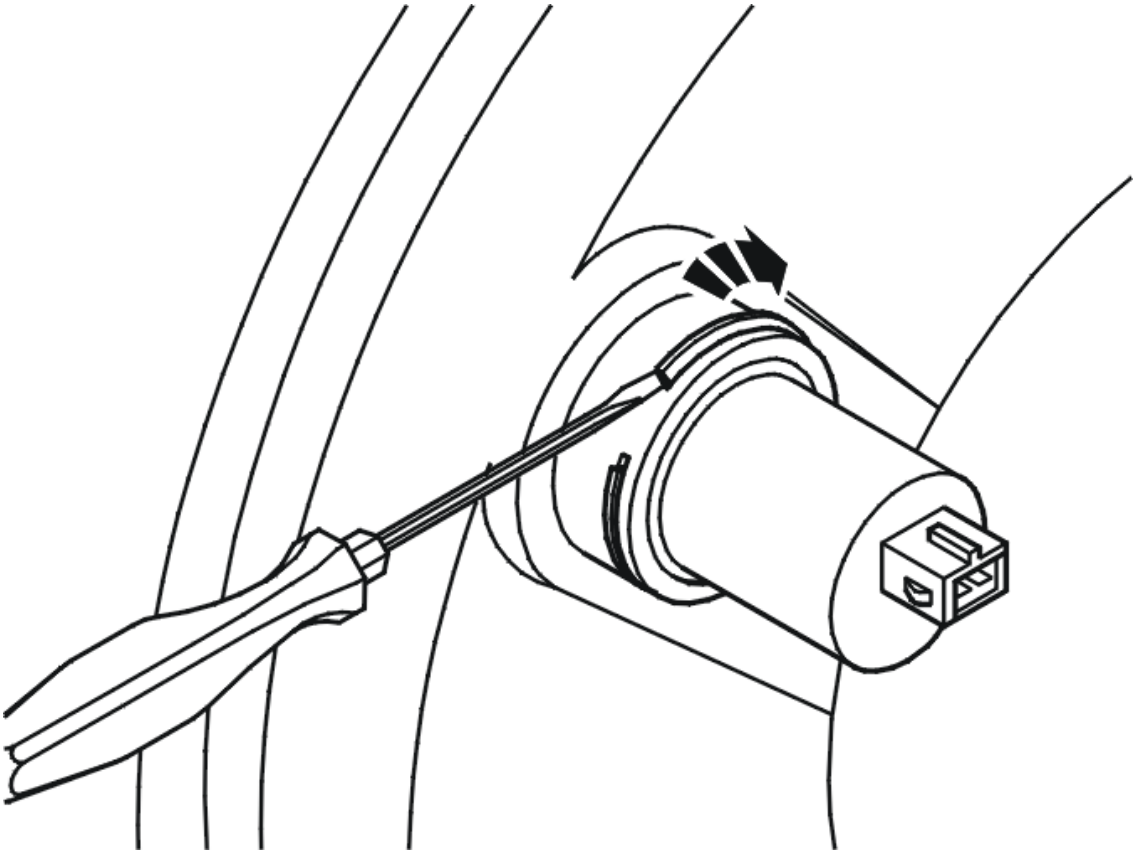

Fig. 43: Identifying Snap Ring, Sensor Mounting & Narrow Screwdriver
Courtesy of VOLVO CARS CORPORATION

Disconnect the connector from the sensor.

Slacken off the snap ring around the mounting for the sensor slightly. Insert a narrow screwdriver or wedge. Press one end of the snap ring in approximately 10 mm. Press radially backwards in the groove for the snap ring.

Remove the sensor and the O-ring.

INSTALLATION

INSTALLING PEDAL POSITION SENSOR

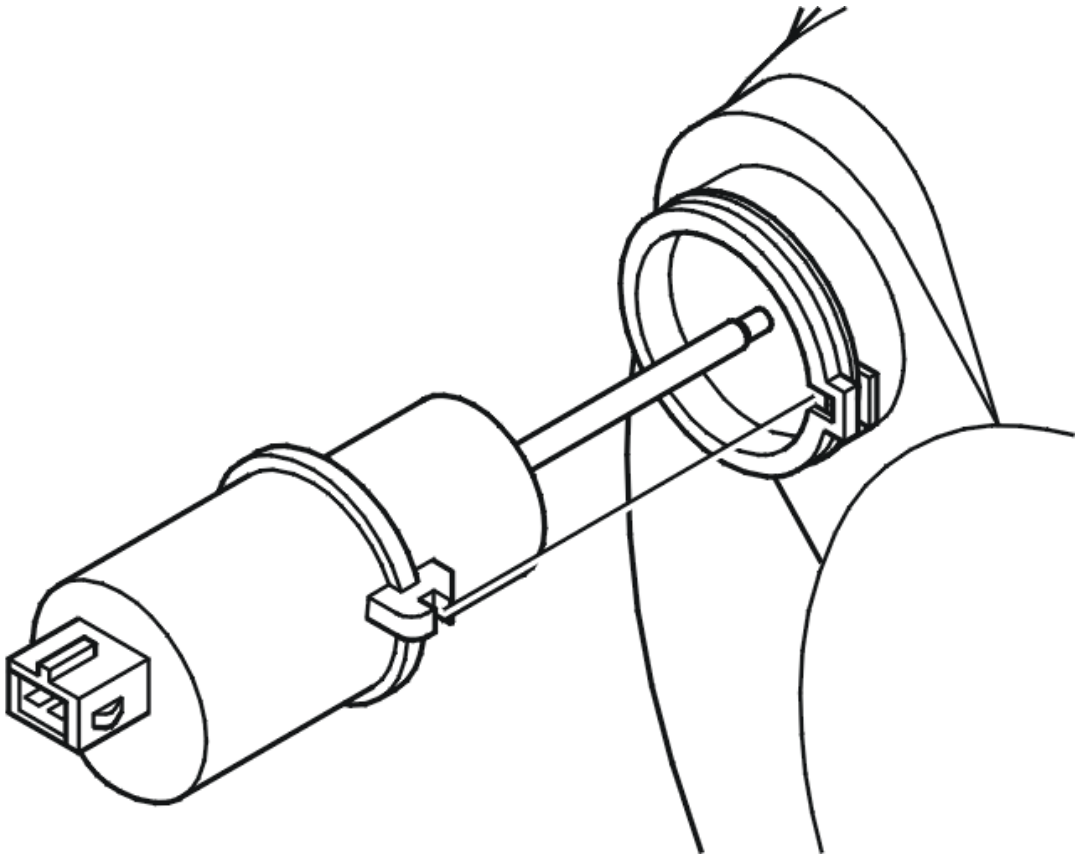

Fig. 44: Identifying Pedal Position Sensor
Courtesy of VOLVO CARS CORPORATION

NOTE: **Check that the snap ring is in position in the groove. Check that the ends of the snap ring lie against the stop lug.**

Install:

- The O-ring on the sensor
- lubricate the O-ring lightly using a soap solution
- the sensor for the power brake booster so that the locking lug goes into position.

Gently pull the sensor. Check that the sensor is secure.

Check that the snap ring is in position.

Connect the connector to the sensor.

MASTER CYLINDER, BRAKE BOOSTER (B5254T2; 2003-2007)

REPLACING THE VACUUM PUMP

NOTE: **The illustrations in this service information are used for different model years and/or models. Some variation may occur. However, the essential information in the illustrations is always correct.**

PREPARATORY WORK

Ignition off.

Disconnect the battery negative lead. See: **BATTERY, DISCONNECTING** .

REMOVING THE VACUUM PUMP

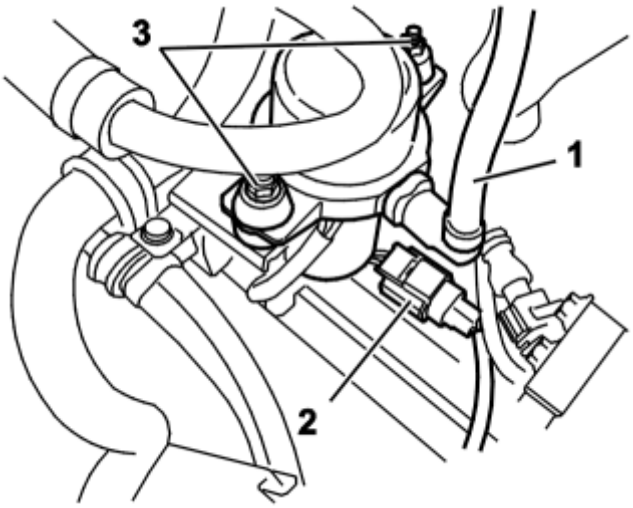

Fig. 45: Identifying Vacuum Pump Removal
Courtesy of VOLVO CARS CORPORATION

Remove:

- the hose (1)
- the connector (2).
- the 2 x screws (3)
- the pump.

NOTE: **For tightening torques, see: TIGHTENING TORQUE .**

FITTING OF VACUUM PUMP

Install:

- the pump.
- the 2 M6 screws.
- the hose

- the connector.

FINISHING

Install the battery negative lead. See **BATTERY, DISCONNECTING** .

BRAKE FLUID RESERVOIR, REPLACING

PREPARATORY WORK

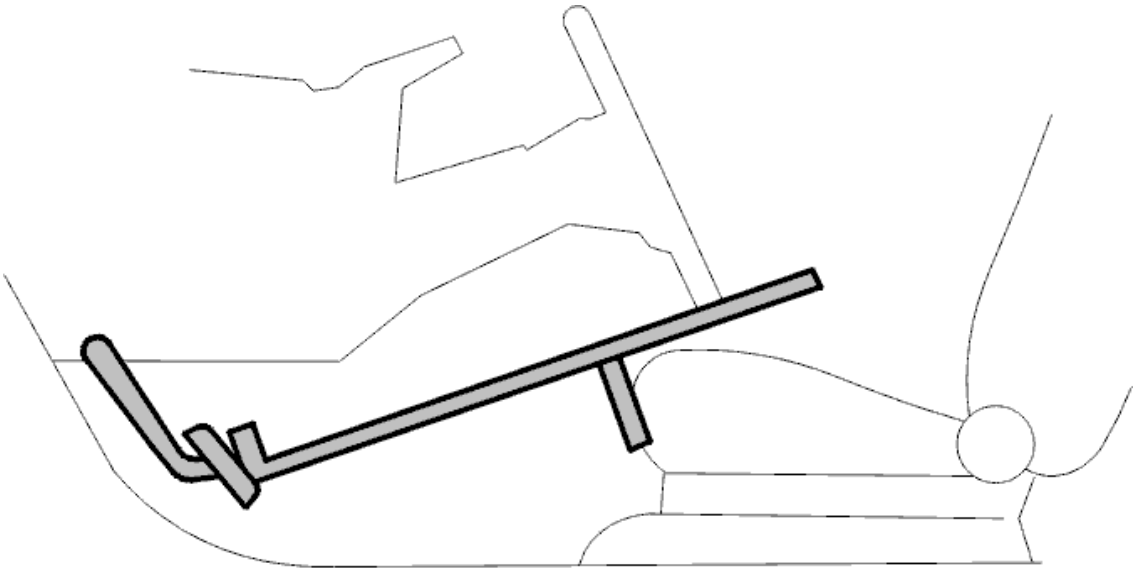

Fig. 46: Identifying Pedal Secured In Depressed Position Using Pedal Jack
Courtesy of VOLVO CARS CORPORATION

Switch off the ignition.

Clean around filler cap at the connector between the reservoir and master cylinder and at any hose connector. This is to ensure that no contaminants enter the brake system.

Place paper under the master cylinder. This is to protect the paintwork from damage if brake fluid is spilled.

Secure the pedal in the depressed position. Use a pedal jack.

REMOVAL

REMOVE THE UPPER ENGINE STABILIZER BRACE

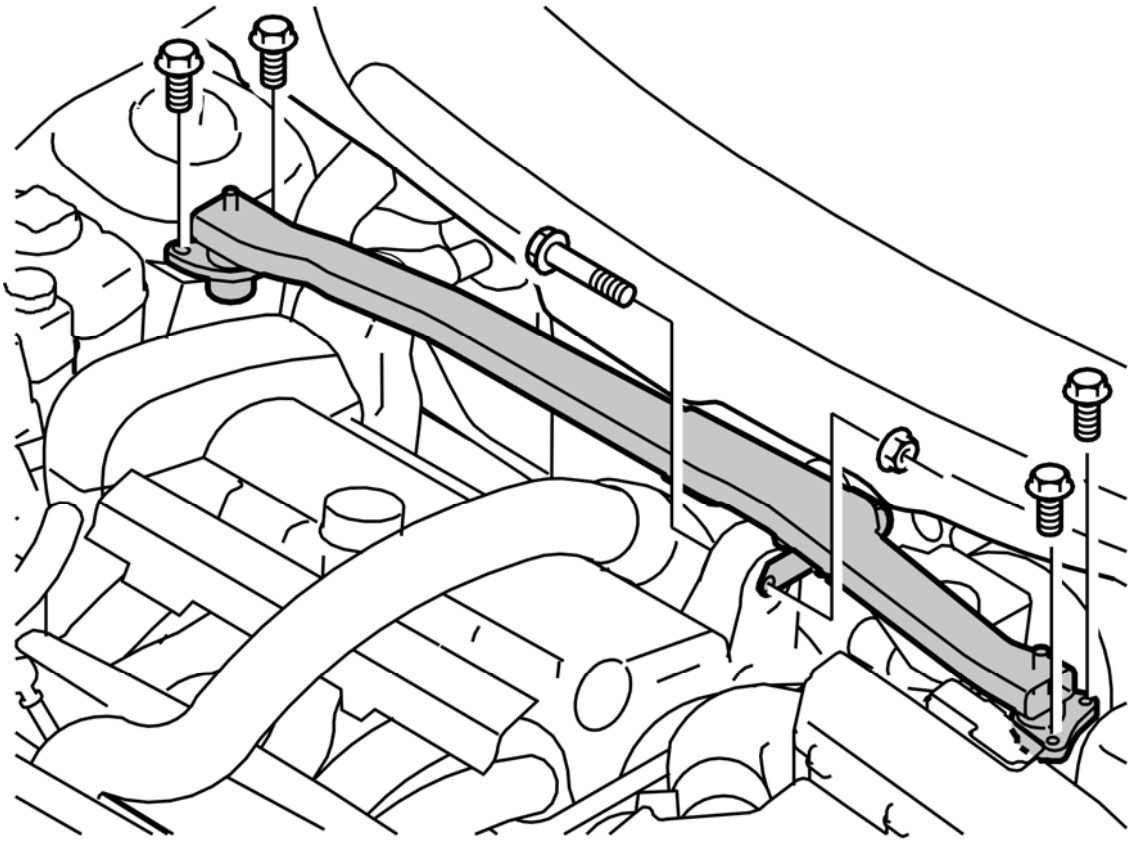

Fig. 47: Identifying Engine Stabilizer Brace And Mounting Screws
Courtesy of VOLVO CARS CORPORATION

Remove:

- the mounting screws for the torque rod
- the screw and nut for the engine mounting and torque rod
- the engine stabilizer brace.

PREPARATIONS FOR REMOVING THE BRAKE FLUID RESERVOIR

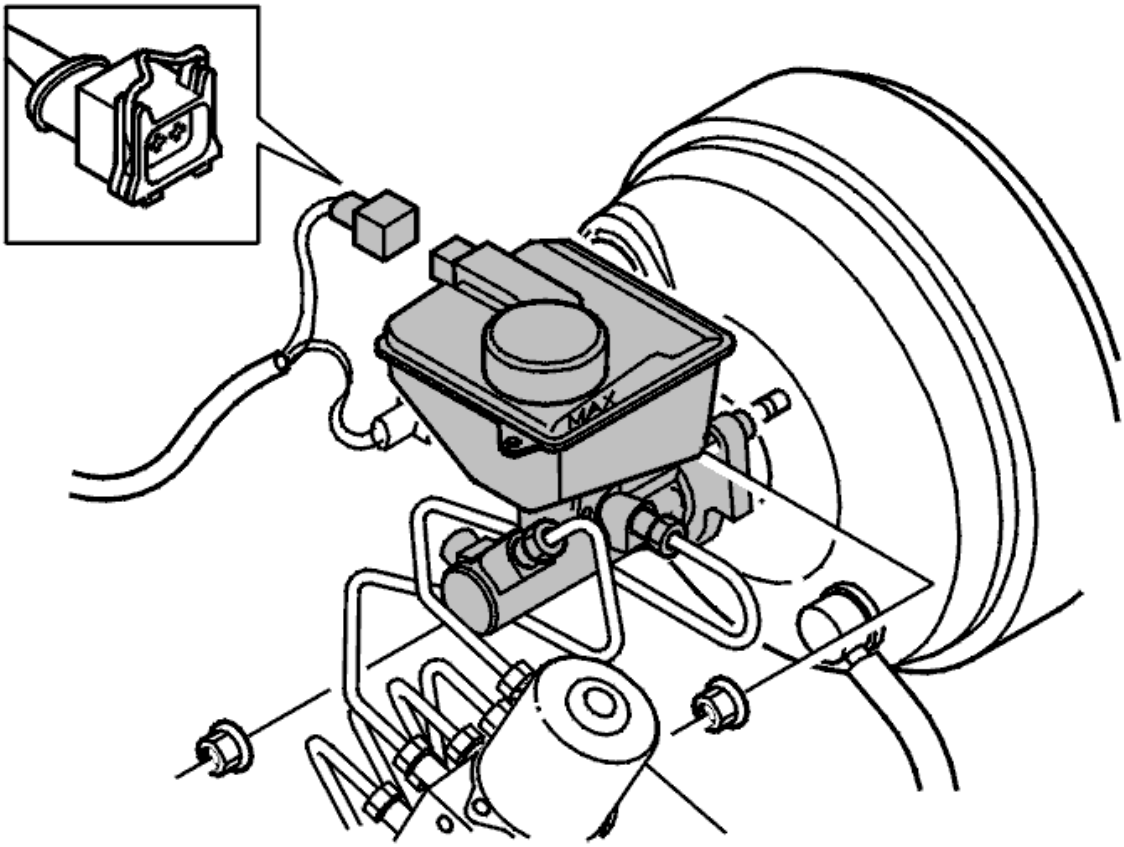

Fig. 48: Hose To Clutch Cylinder
Courtesy of VOLVO CARS CORPORATION

Block the hose to the clutch cylinder. **Applies to cars with manual transmissions** .

Pull out the master cylinder

Remove the connector from the brake fluid level sensor.

Remove the mounting nuts from the master cylinder.

Pull out the cylinder slightly.

REMOVE THE BRAKE FLUID RESERVOIR

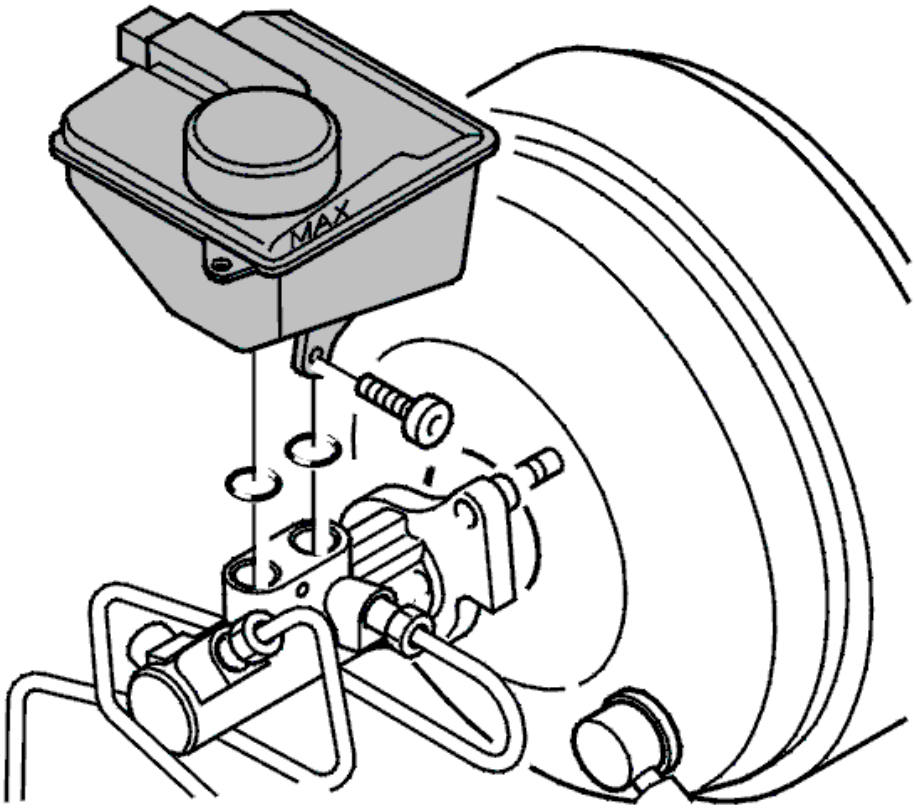

Fig. 49: Brake Fluid Reservoir From Master Cylinder
Courtesy of VOLVO CARS CORPORATION

Remove:

- the screw on the side of the brake fluid reservoir
- the brake fluid reservoir from the master cylinder. Pull the reservoir straight up
- the hose for the clutch cylinder. Applies to cars with manual transmissions.

CLEANING AND CHECKING

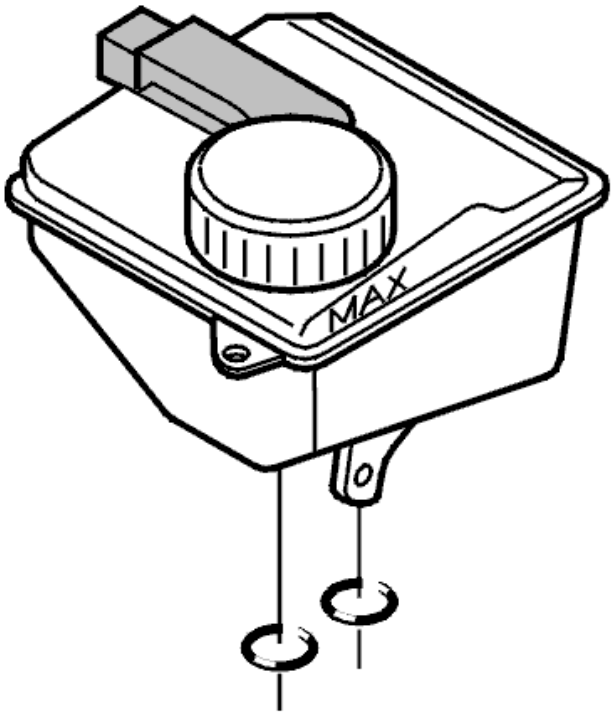

Fig. 50: Checking Brake Fluid Reservoir, Level Switch, Check Valves And Seals
Courtesy of VOLVO CARS CORPORATION

Check the brake fluid reservoir, the level switch, the check valves and seals.

Replace the seals if necessary.

Carefully clean the components that were not replaced. Clean off all contaminants and old brake fluid. Use new brake fluid.

INSTALLATION

INSTALL THE BRAKE FLUID RESERVOIR

NOTE: For tightening torques, see: TIGHTENING TORQUE .

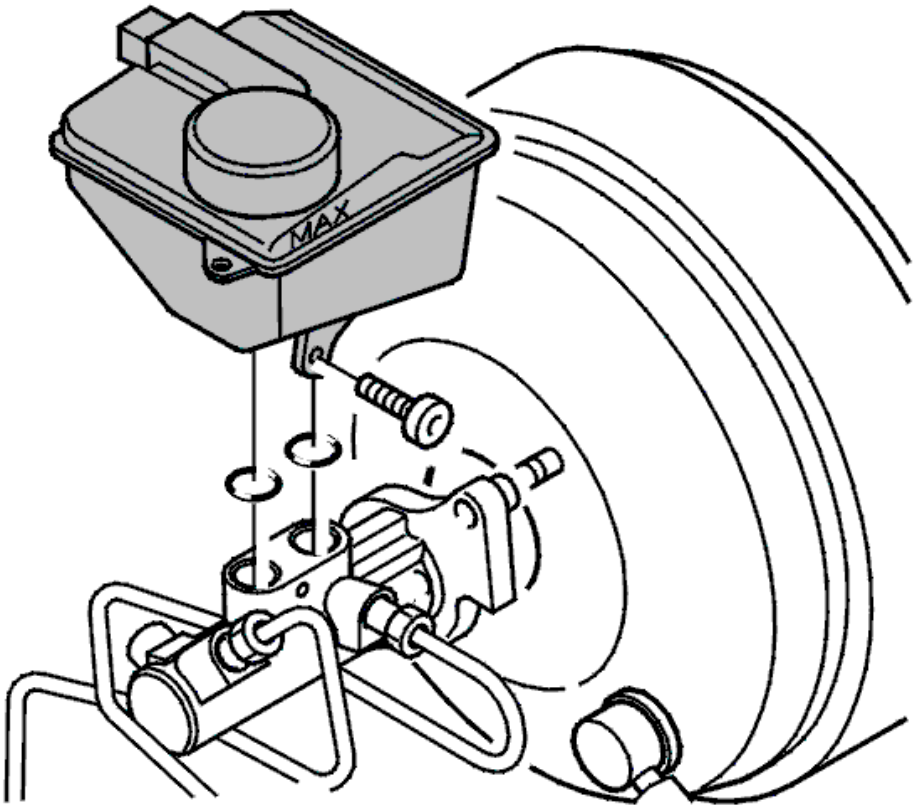

Fig. 51: Brake Fluid Reservoir From Master Cylinder
Courtesy of VOLVO CARS CORPORATION

Check that all connections are free of contaminants.

Lubricate the O-rings and any hoses with brake fluid or glycerin.

NOTE: **Do not use a soap solution or mineral oil to lubricate the hoses. Use brake fluid or glycerin.**

Install:

- the hose for the clutch cylinder. Remove the hose clip
- the brake fluid reservoir from directly above
- the screw on side of the brake fluid reservoir. Tighten. See: **TIGHTENING TORQUE** .

INSTALL THE MASTER CYLINDER

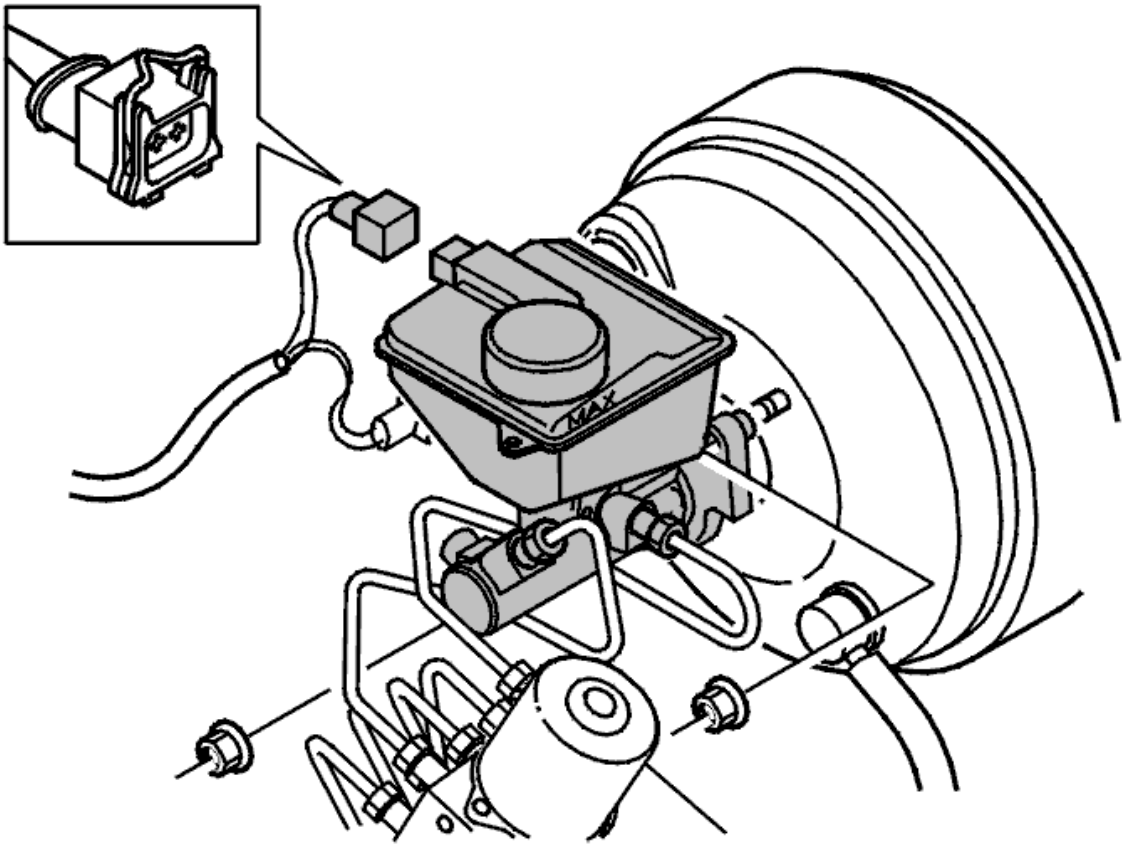

Fig. 52: Hose To Clutch Cylinder
Courtesy of VOLVO CARS CORPORATION

Install:

- the 2 M8 nuts for the master cylinder
- the connector on the brake fluid reservoir.

INSTALL THE UPPER TORQUE ROD

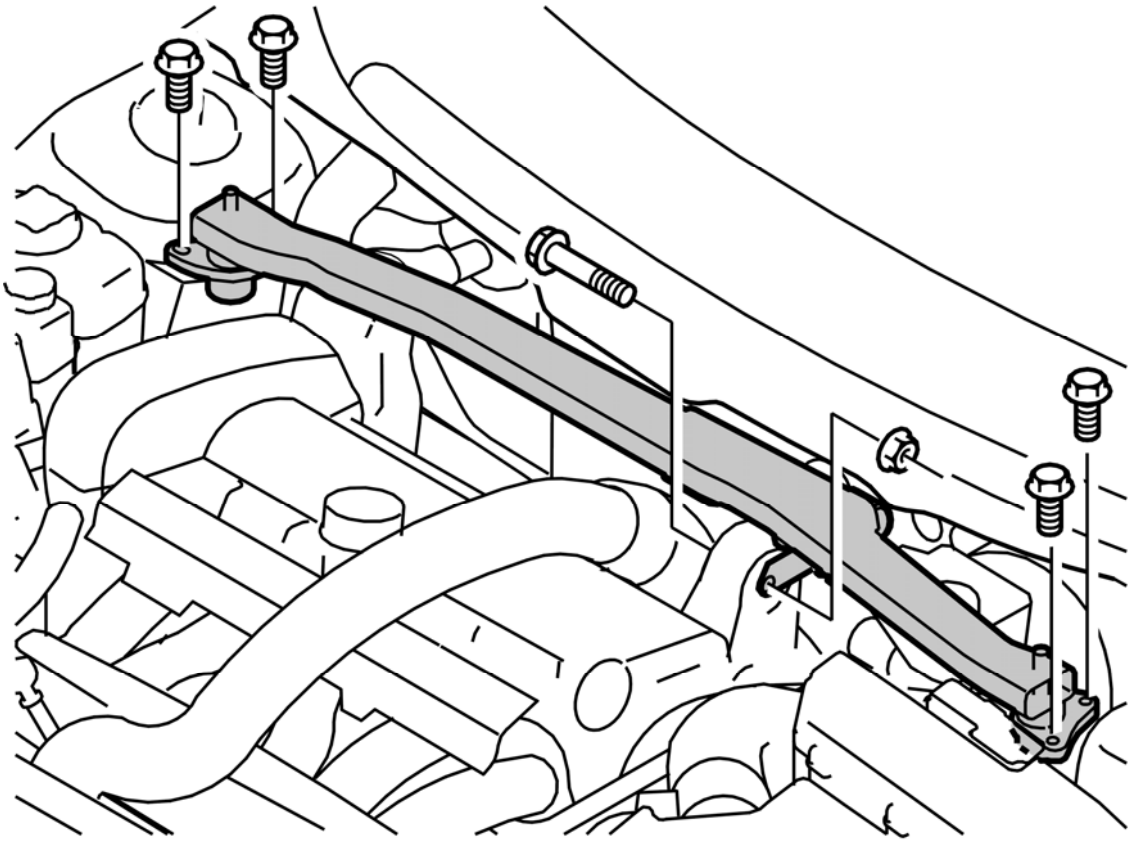

Fig. 53: Identifying Engine Stabilizer Brace And Mounting Screws
Courtesy of VOLVO CARS CORPORATION

Install:

- the torque rod, M10
- the screw and a new nut for the engine mounting, M12.

FINISHING

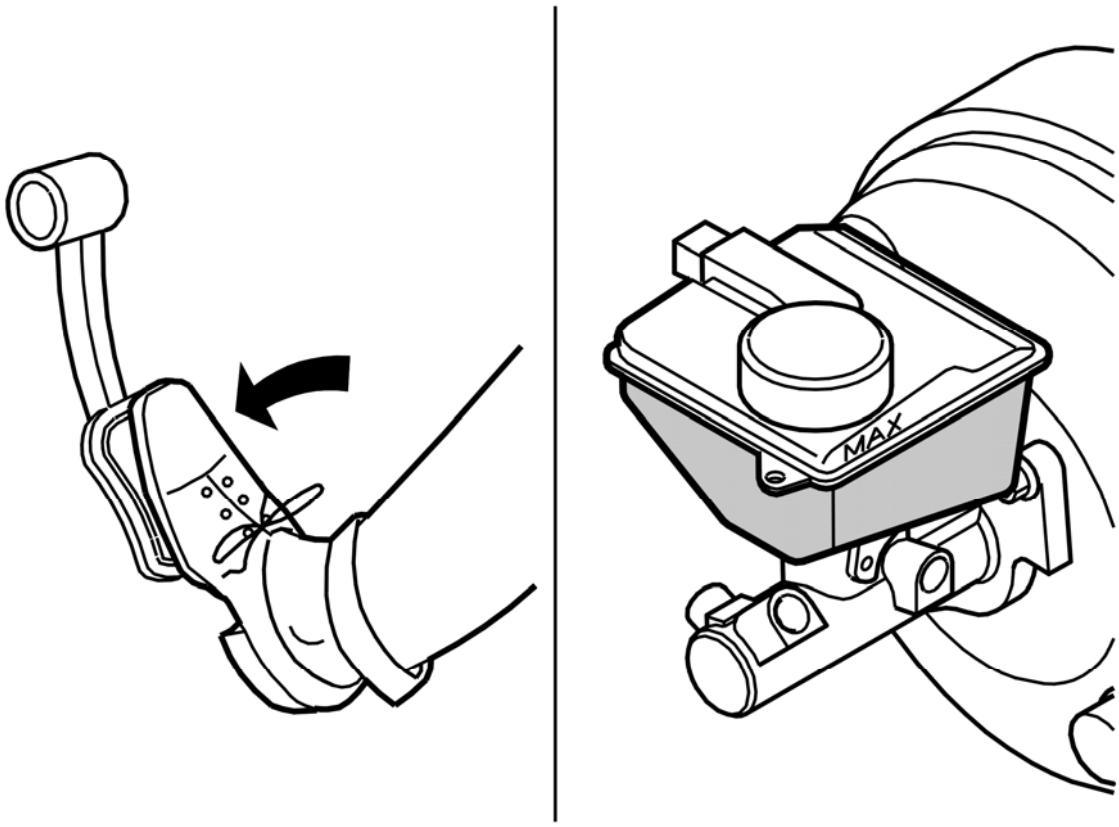

Fig. 54: Bleeding Brake System
Courtesy of VOLVO CARS CORPORATION

Fill the brake fluid reservoir with new brake fluid. Use Volvo Genuine parts, DOT 4+.

Remove the pedal jack.

Cars with manual transmissions: Bleed the clutch

If necessary:

Bleed the brake system. See **BRAKE SYSTEM, BLEEDING (USING BLEEDING UNIT)** .

see **BRAKE SYSTEM BLEEDING** .

Bleed the system again if the pedal travel is more than 40 mm.

Check for leakage.

The brake fluid level must not be above the maximum mark.

POWER BRAKE BOOSTER, REPLACING

NOTE: **As the illustrations in this service information are used for different model years and / or models, some variation may occur. However, the essential information in the illustrations is always correct.**

PREPARATION

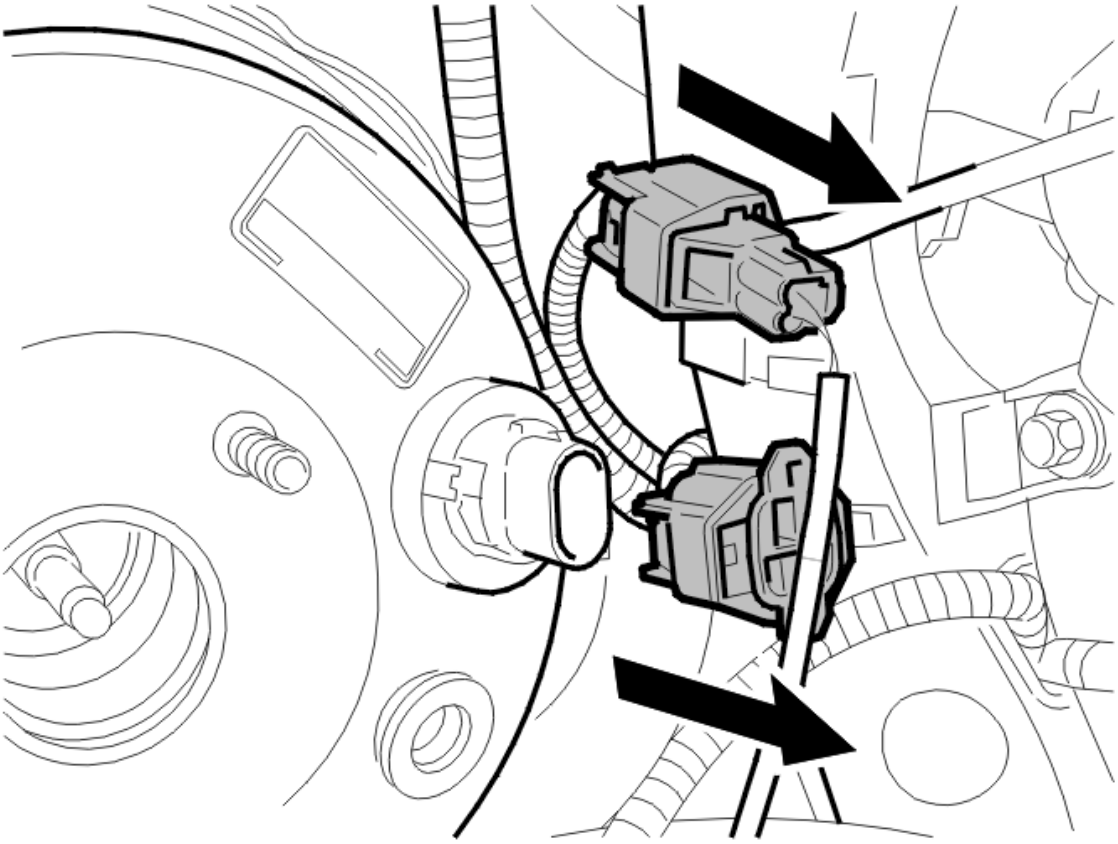

Fig. 55: Locating Connectors
Courtesy of VOLVO CARS CORPORATION

Remove the master cylinder. See **MASTER CYLINDER, REPLACING**.

Disconnect the connectors from the cable duct.

REMOVING THE ABS UNIT

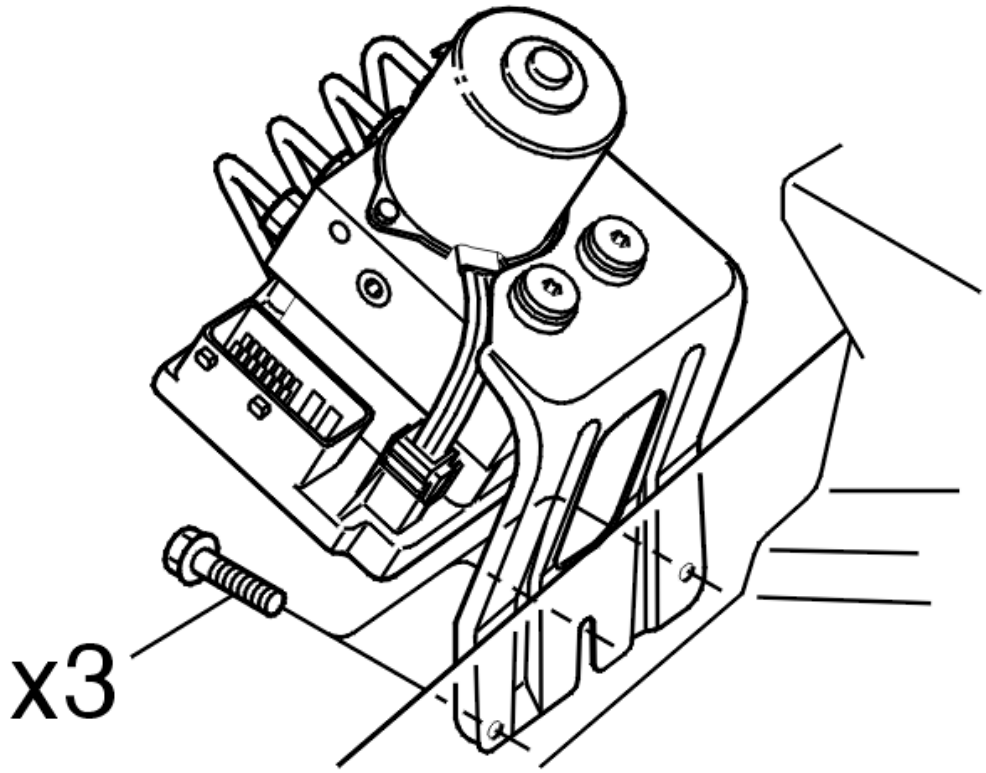

Fig. 56: Viewing 3 Screws For The Mounting Bracket
Courtesy of VOLVO CARS CORPORATION

Remove the 3 screws for the mounting bracket.

Carefully press the ABS unit to one side.

REMOVING SOUNDPROOFING PANELS

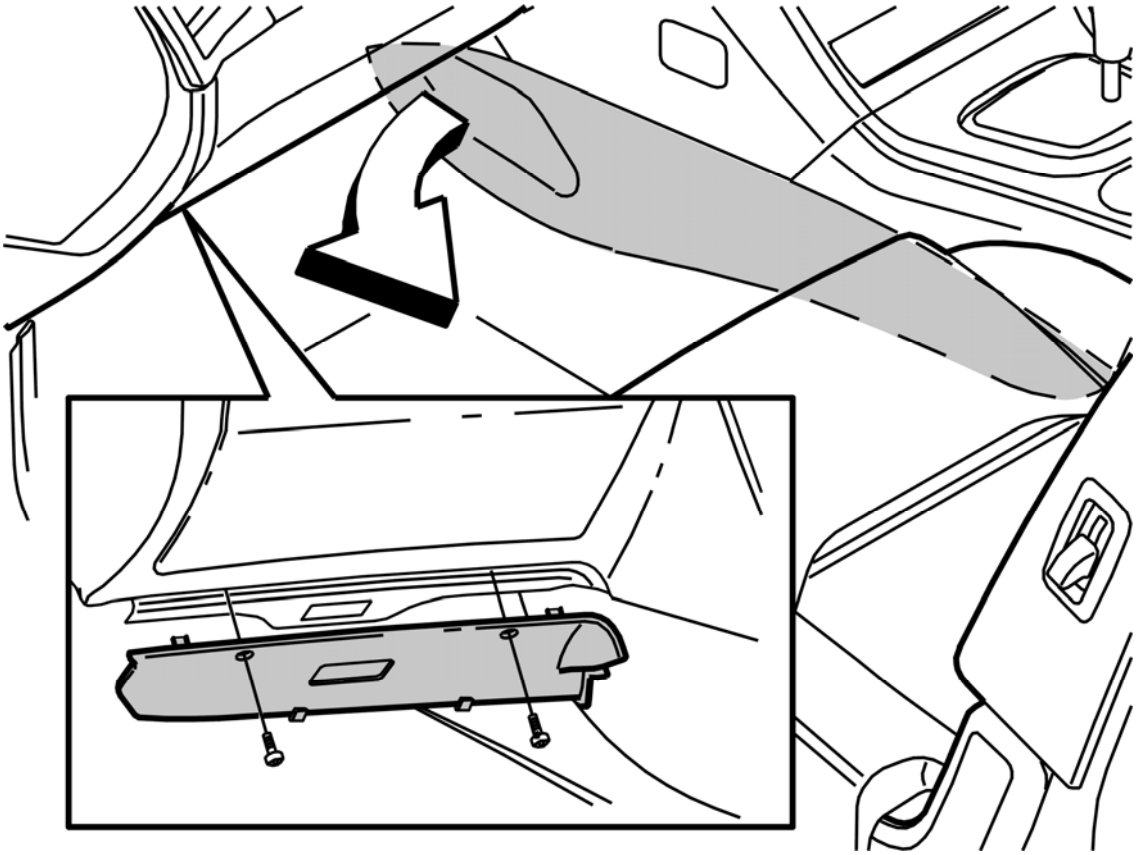

Fig. 57: Identifying Center Console Panel And Soundproofing Panel
Courtesy of VOLVO CARS CORPORATION

Remove:

- the screws (x 2)
- soundproofing panel.

REMOVING THE POWER BRAKE BOOSTER

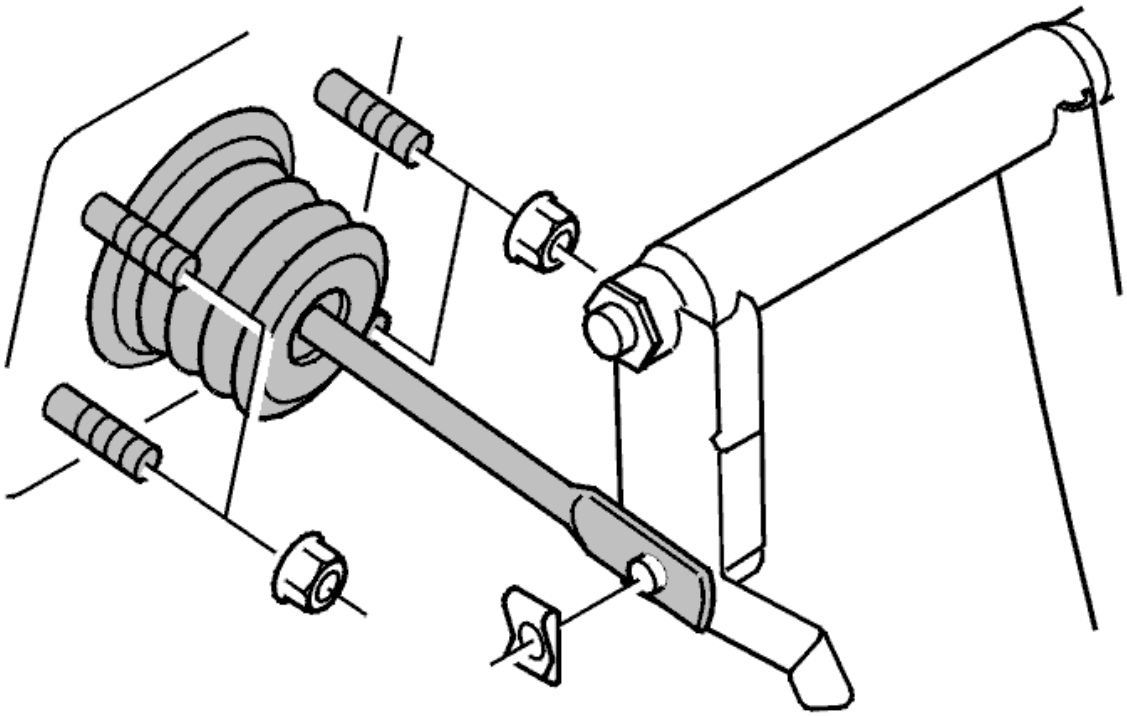

Fig. 58: Nuts Securing Power Brake Booster To Firewall
Courtesy of VOLVO CARS CORPORATION

Remove from under the dashboard:

- the retaining clip for the push rod for the power brake booster
- the four nuts securing the power brake booster to the firewall.

Remove from the engine compartment:

- the connectors
- the vacuum hose
- the power brake booster.

TRANSFERRING COMPONENTS

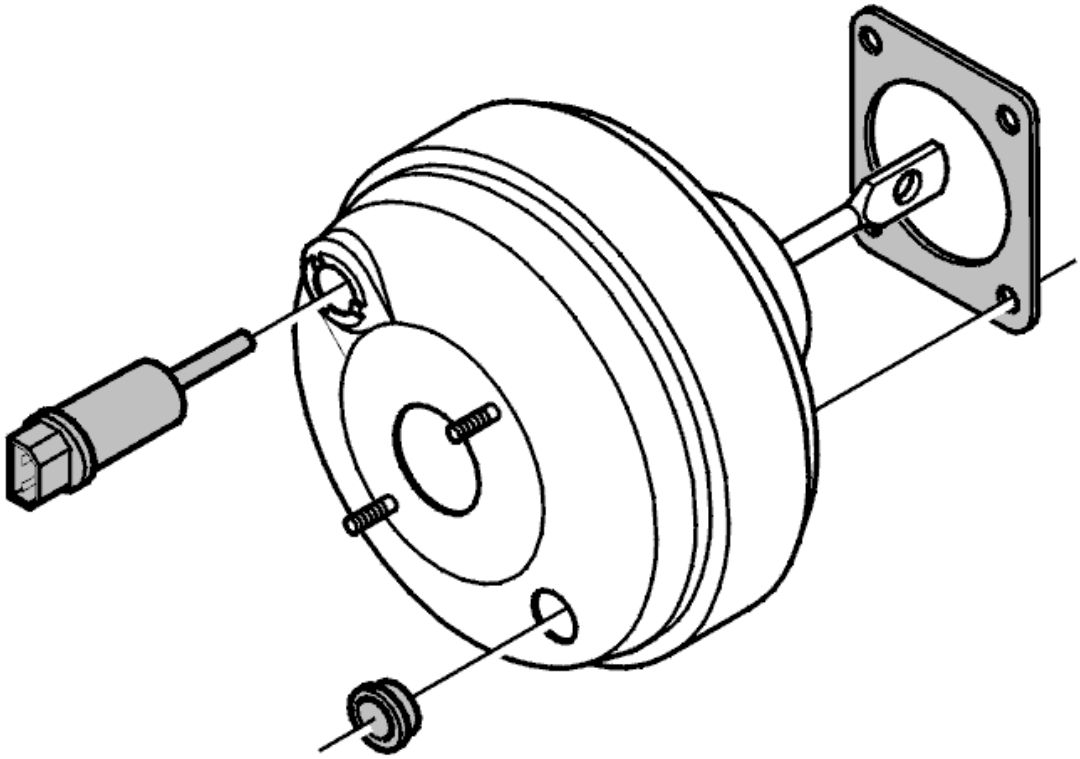

Fig. 59: Identifying Pedal Position Sensor Assembly
Courtesy of VOLVO CARS CORPORATION

Transfer:

- the pedal position sensor. See: **PEDAL POSITION SENSOR, REPLACING**
- the check valve
- the terminal for the check valve.

INSTALLATION

INSTALLING THE POWER BRAKE BOOSTER

NOTE: For tightening torques, see: TIGHTENING TORQUE .

Install in the engine compartment:

- the connectors
- the vacuum hose
- the power brake booster.

Install under the dashboard:

- the 4 x M8 nuts for mounting in the power brake booster
- the retaining clip for the push rod for the power brake booster.

INSTALLING THE SOUNDPROOFING PANEL

Install:

- the soundproofing panel
- the 2 x screws.

INSTALLING THE ABS UNIT

Carefully pull the ABS unit to the installation position.

Install the 3 x M6 screws for mounting in the bracket.

FINISHING

Connect the connector on the cable duct.

Install the master cylinder and bleed the brake system. See: **MASTER CYLINDER, REPLACING**.

MASTER CYLINDER, BRAKE BOOSTER (B6294T; 2003-2006)

POWER BRAKE BOOSTER, REPLACING

NOTE: **As the illustrations in this service information are used for different model years and / or models, some variation may occur. However, the essential information in the illustrations is always correct.**

PREPARATION

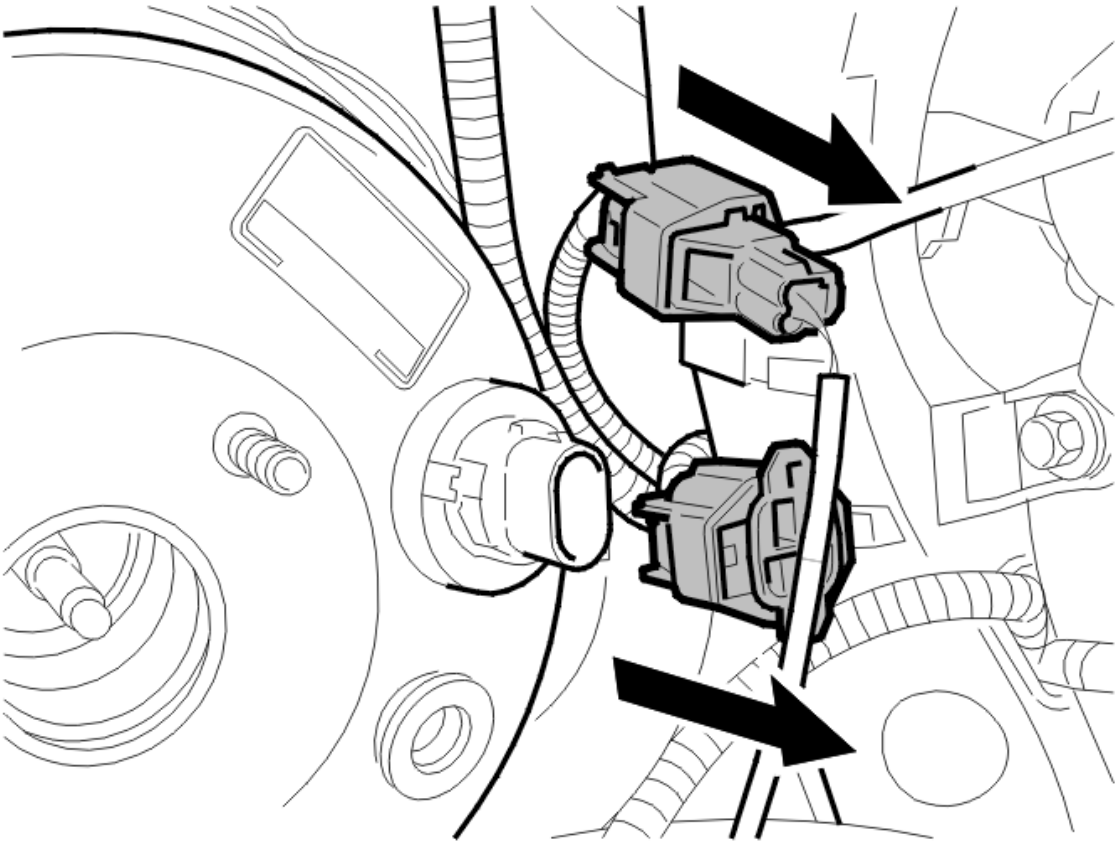

Fig. 60: Locating Connectors
Courtesy of VOLVO CARS CORPORATION

Remove the master cylinder. See **MASTER CYLINDER, REPLACING**.

Disconnect the connectors from the cable duct.

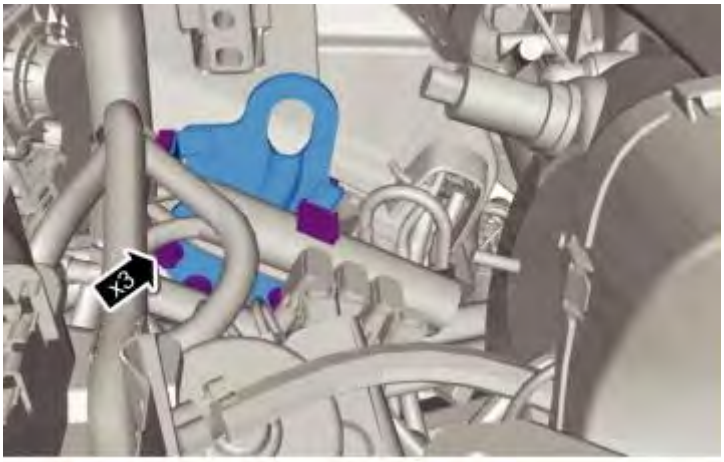

Fig. 61: Identifying Lifting Eye And Bolts
Courtesy of VOLVO CARS CORPORATION

Remove:

- lifting eye
- cable harness.

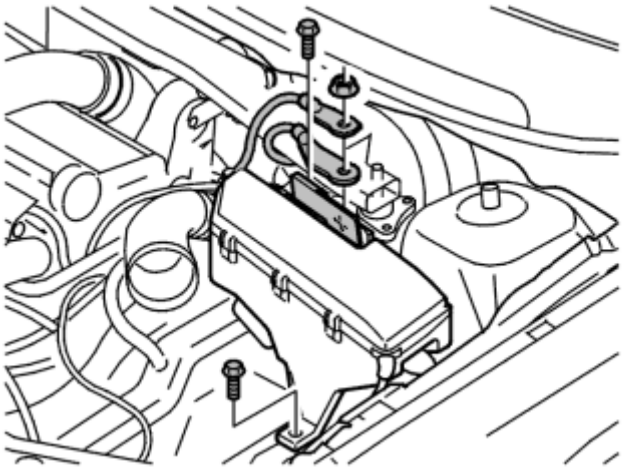

Fig. 62: Identifying Supply Lines And Bolts
Courtesy of VOLVO CARS CORPORATION

Remove:

- nut supply lines
- the two supply lines
- the 2 x screws in the mounting.

REMOVING THE ABS UNIT

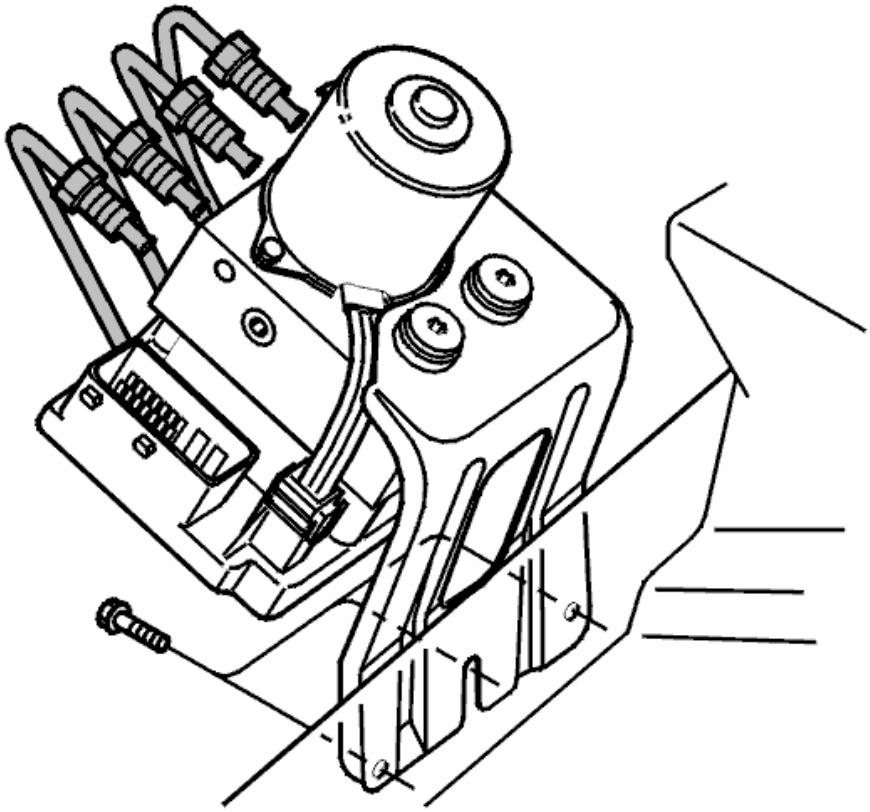

Fig. 63: Brake Pipes To Wheel Brakes From ABS Hydraulic Modulator
Courtesy of VOLVO CARS CORPORATION

Remove the 3 screws for the mounting bracket.

Carefully press the ABS unit to one side.

REMOVING SOUNDPROOFING PANELS

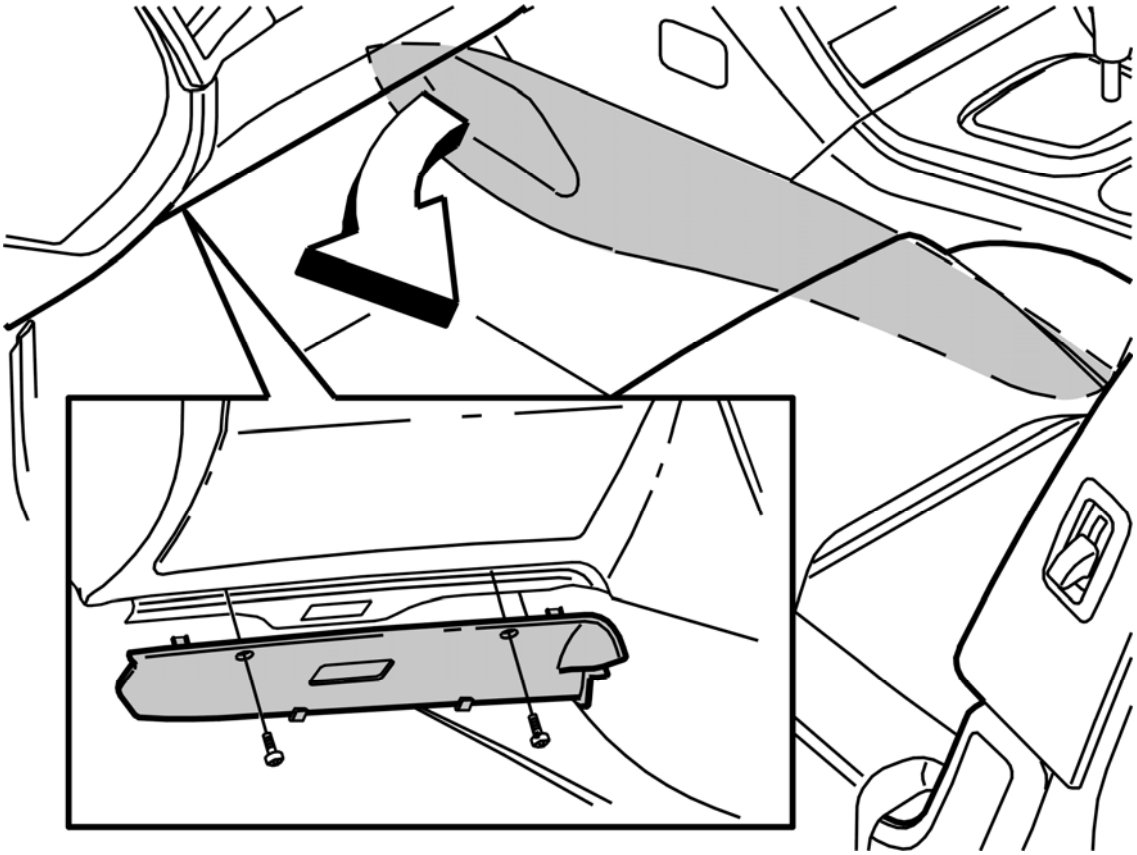

Fig. 64: Identifying Center Console Panel And Soundproofing Panel
Courtesy of VOLVO CARS CORPORATION

Remove:

- the screws (x 2)
- soundproofing panel.

REMOVING THE POWER BRAKE BOOSTER

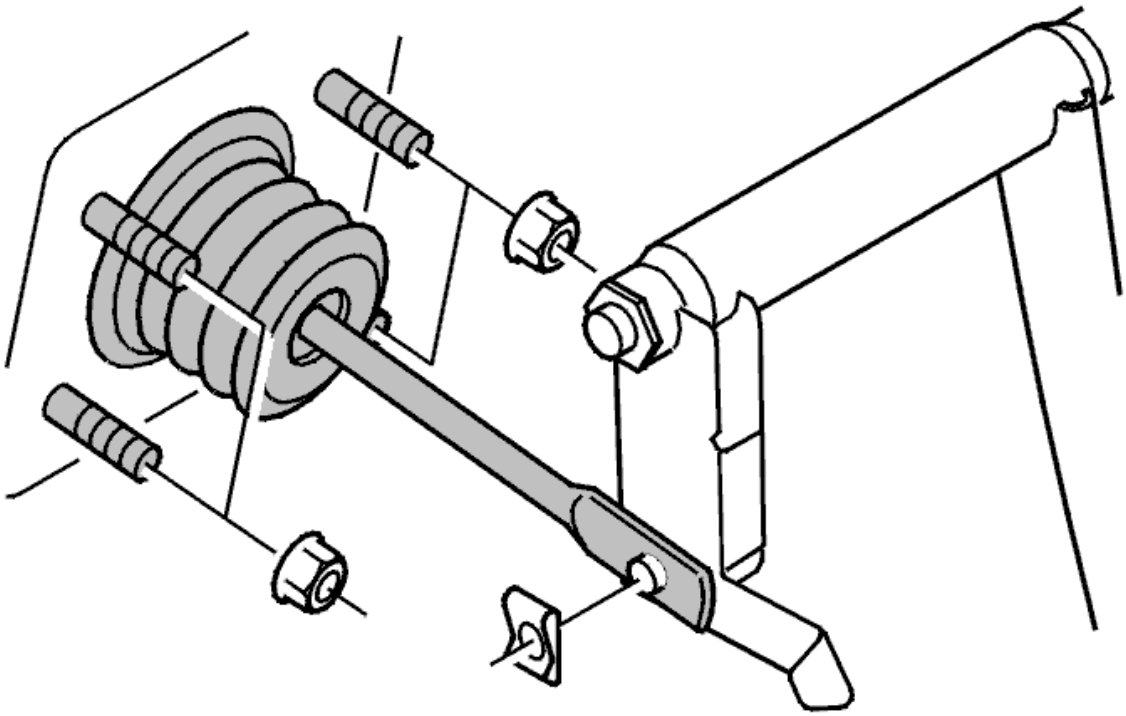

Fig. 65: Nuts Securing Power Brake Booster To Firewall
Courtesy of VOLVO CARS CORPORATION

Remove from under the dashboard:

- the retaining clip for the push rod for the power brake booster
- the four nuts securing the power brake booster to the firewall.

Remove from the engine compartment:

- the connectors
- the vacuum hose
- the power brake booster.

TRANSFERRING COMPONENTS

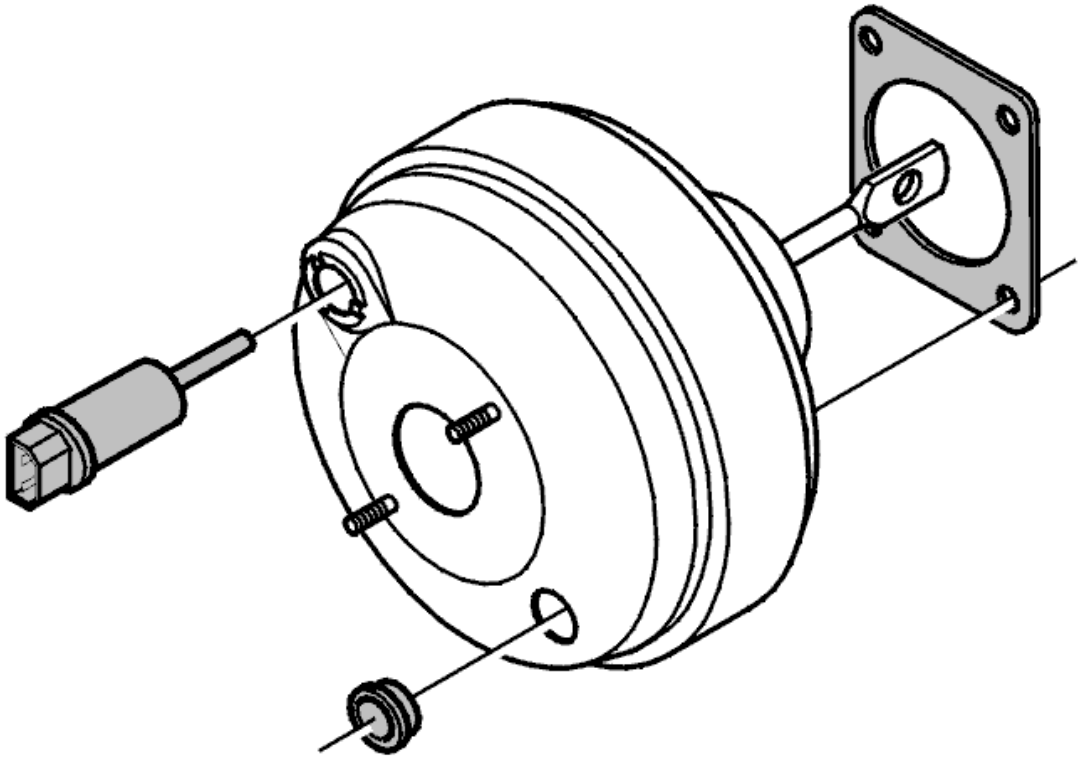

Fig. 66: Identifying Pedal Position Sensor Assembly
Courtesy of VOLVO CARS CORPORATION

Transfer:

- the pedal position sensor. See: **PEDAL POSITION SENSOR, REPLACING**
- the check valve
- the terminal for the check valve.

INSTALLATION

INSTALLING THE POWER BRAKE BOOSTER

NOTE: For tightening torques, see: TIGHTENING TORQUE .

Install in the engine compartment:

- the connectors
- the vacuum hose
- the power brake booster
- lifting eye
- central electrical unit.

Install under the dashboard:

- the 4 M8 nuts used to secure the power brake booster
- the retaining clip for the push rod for the power brake booster

INSTALLING THE SOUNDPROOFING PANEL

Install:

- the soundproofing panel
- the 2 screws.

INSTALLING THE ABS UNIT

Carefully pull the ABS unit to the installation position.

Install the 3 M6 screws for the mounting bracket.

FINISHING

Connect the connector on the cable duct.

Install the master cylinder and bleed the brake system. See: **MASTER CYLINDER, REPLACING**.

REPLACING THE VACUUM PUMP

see **REPLACING THE VACUUM PUMP**

REPLACING THE VACUUM PUMP

see **REPLACING THE VACUUM PUMP**

BRAKE FLUID RESERVOIR, REPLACING

see **BRAKE FLUID RESERVOIR, REPLACING**

MASTER CYLINDER, BRAKE BOOSTER (B6324S; 2007-2010)

POWER BRAKE BOOSTER, REPLACING

see **POWER BRAKE BOOSTER, REPLACING**

REPLACING THE VACUUM PUMP

see **REPLACING THE VACUUM PUMP**

MASTER CYLINDER, BRAKE BOOSTER (B6324S; 2007-2010)

REPLACING THE VACUUM PUMP

see **REPLACING THE VACUUM PUMP**

BRAKE FLUID RESERVOIR, REPLACING

see **BRAKE FLUID RESERVOIR, REPLACING**

MASTER CYLINDER, BRAKE BOOSTER (B6324S5; 2011-2012)

POWER BRAKE BOOSTER, REPLACING

see **POWER BRAKE BOOSTER, REPLACING**

REPLACING THE VACUUM PUMP

see **REPLACING THE VACUUM PUMP**

MASTER CYLINDER, BRAKE BOOSTER (B6324S5; 2011-2012)

REPLACING THE VACUUM PUMP

see **REPLACING THE VACUUM PUMP**

BRAKE FLUID RESERVOIR, REPLACING

see **BRAKE FLUID RESERVOIR, REPLACING**

MASTER CYLINDER, BRAKE BOOSTER (B8444S; 2005-2011)

POWER BRAKE BOOSTER, REPLACING

see **POWER BRAKE BOOSTER, REPLACING**

REPLACING THE VACUUM PUMP

see **REPLACING THE VACUUM PUMP**

MASTER CYLINDER, BRAKE BOOSTER (B8444S; 2005-2011)

REPLACING THE VACUUM PUMP

see **REPLACING THE VACUUM PUMP**

BRAKE FLUID RESERVOIR, REPLACING

see **BRAKE FLUID RESERVOIR, REPLACING**

VACUUM PUMP/TANK/LINE

VACUUM PUMP, BRAKE BOOSTER

NOTE: Removal steps in this procedure may contain installation details.

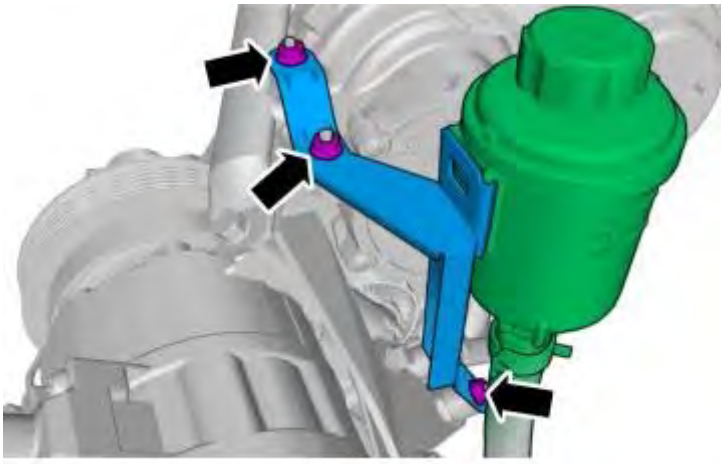

Fig. 67: Identifying Bracket and Fasteners
Courtesy of VOLVO CARS CORPORATION

M6. See **TIGHTENING TORQUE**

Fig. 68: View Of Quick Release Connector
Courtesy of VOLVO CARS CORPORATION

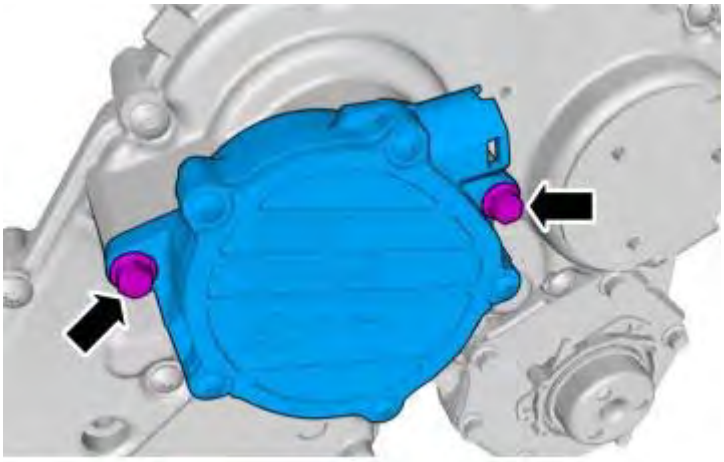

Fig. 69: Locating Vacuum Pump Bolts
Courtesy of VOLVO CARS CORPORATION

M7. See **TIGHTENING TORQUE**

To install, reverse the removal procedure

BRAKES

Hydraulic-Vacuum-Hydraulic Brakes - Symptom Verification

INFORMATION AND VERIFICATION, BRAKE PEDAL/PULSATIONS (2006-2012)

BRAKE PEDAL/PULSATIONS

SYMPTOM AND FUNCTION DESCRIPTION

NOTE: The symptom should always be verified together with the customer.

The following tips may be of help to decide if the symptom is due to a product feature or if continued troubleshooting is needed.

HINT: Brake pedal pulses when the vehicle's ABS works.

INFORMATION AND VERIFICATION, BRAKE PEDAL/SPONGY (2006-2012)

BRAKE PEDAL/SPONGY

SYMPTOM AND FUNCTION DESCRIPTION

NOTE: The symptom should always be verified together with the customer.

The following tips may be of help to decide if the symptom is due to a product feature or if continued troubleshooting is needed.

HINT: When the engine is off the brake pedal shall stop dead when pressed down.

HINT: At start the brake pedal can be pressed all the way down with some force.

INFORMATION AND VERIFICATION, BRAKES/BRAKES TOO SENSITIVE (2006-2012)

BRAKES/BRAKES TOO SENSITIVE

SYMPTOM AND FUNCTION DESCRIPTION

NOTE: The symptom should always be verified together with the customer.

The following tips may be of help to decide if the symptom is due to a product feature or if continued troubleshooting is needed.

HINT: Sensitivity of the brake pedal differs between different models.

BRAKES

Parking Brake - Cleaning, Inspection and Adjustment

BRAKE CONTROLS, MECHANICAL

PARKING BRAKE, ADJUSTING

NOTE: **The illustrations in this service information are used for different model years and/or models. Some variation may occur. However, the essential information in the illustrations is always correct.**

REMOVAL

REMOVING THE PANEL

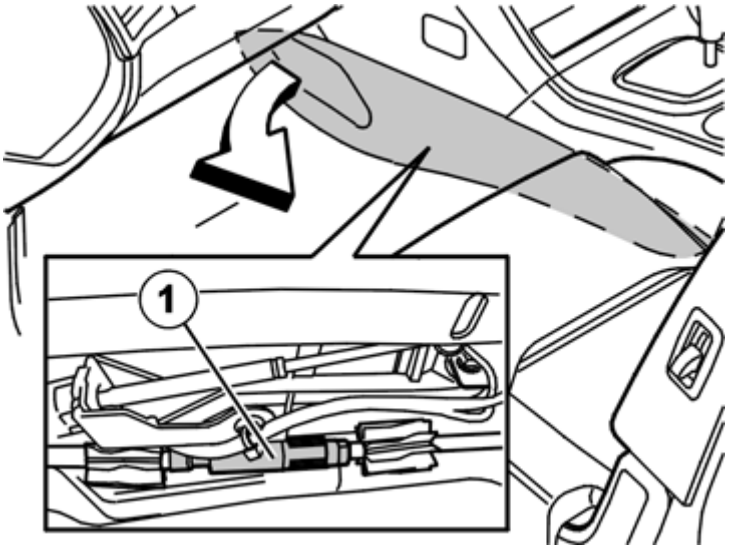

Fig. 1: Identifying Manual Adjustment For Parking Brake
Courtesy of VOLVO CARS CORPORATION

Remove the panel for the center console on the left-hand side.

Locate the adjustment for the parking brake (1).

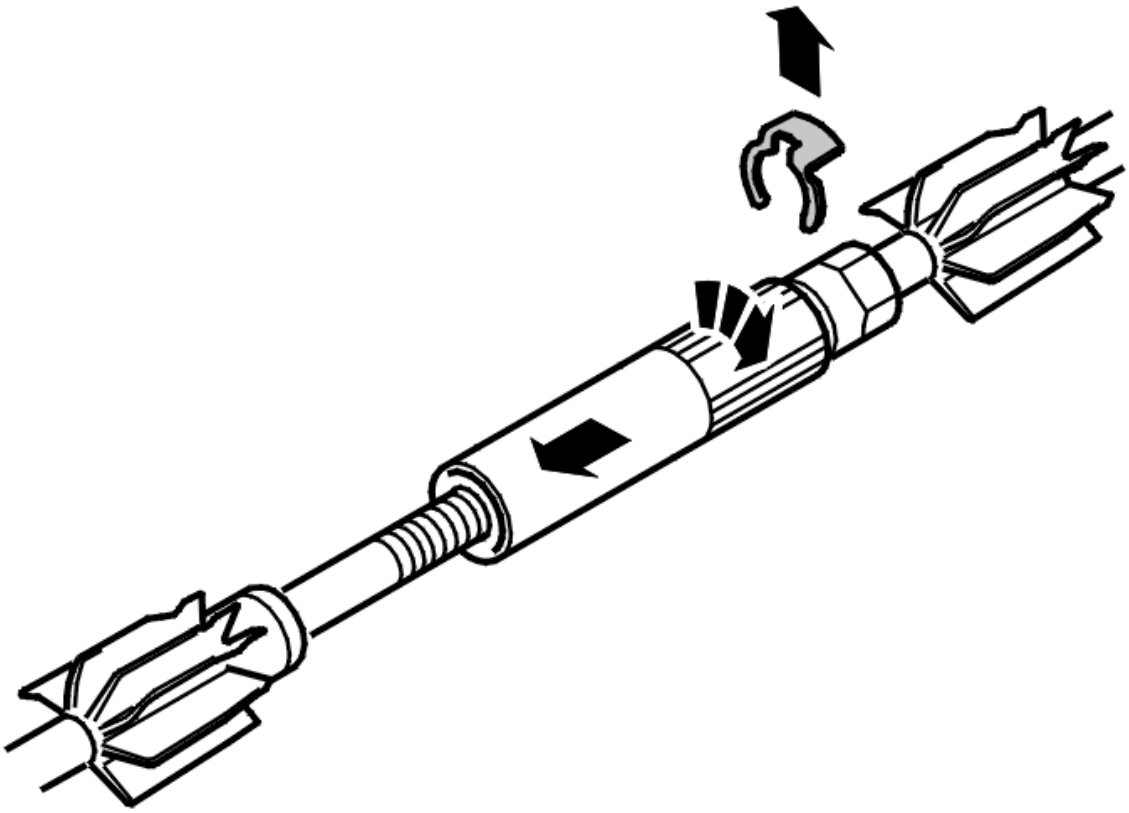

Fig. 2: Removing Retaining Clip
Courtesy of VOLVO CARS CORPORATION

Remove the retaining clip.

NOTE: Take care when removing the retaining clip.

Screw the socket clockwise over the groove for the retaining clip. Press the socket back over the adjustment rod.

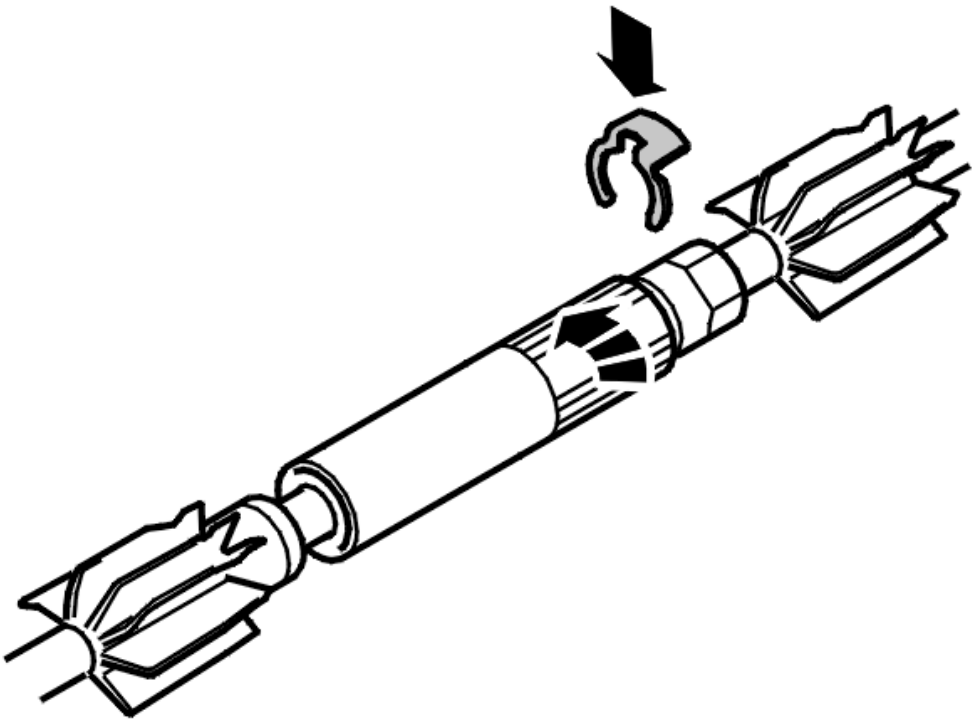

Fig. 3: Installing Retaining Clip
Courtesy of VOLVO CARS CORPORATION

Screw the socket anticlockwise so that the groove for the clip emerges.

Install the clip.

ADJUSTING THE PARKING BRAKE

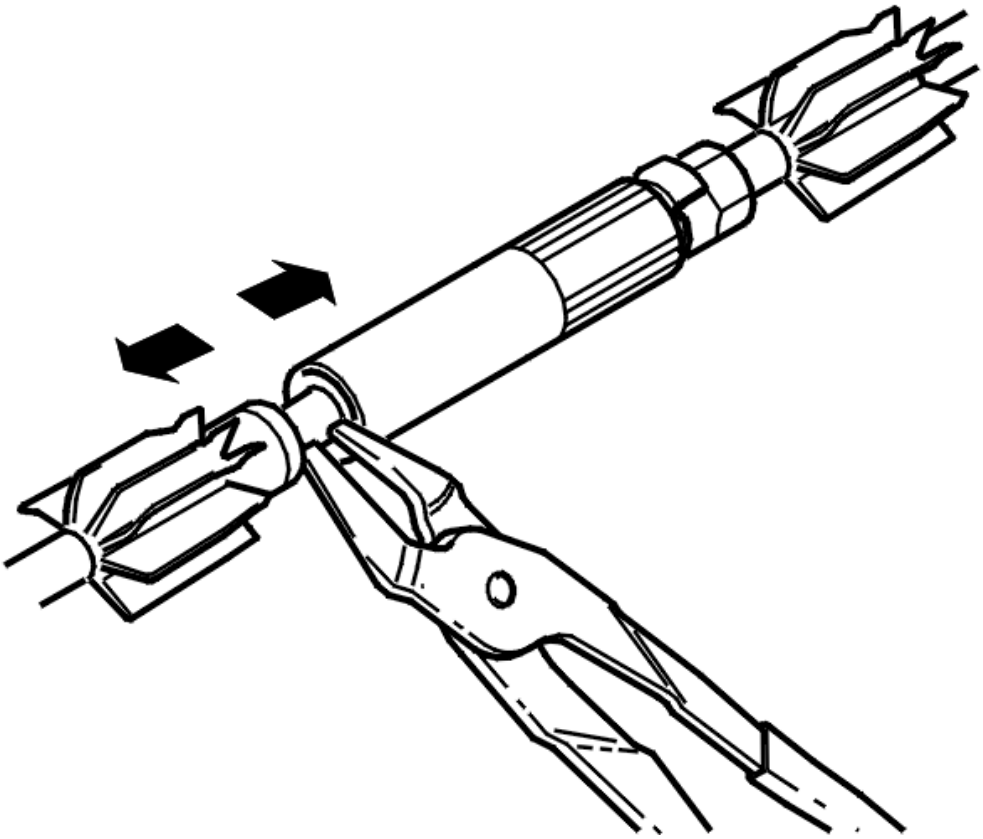

Fig. 4: Adjusting Parking Brake
Courtesy of VOLVO CARS CORPORATION

Depress the brake pedal to the first notch. Press out the adjustment using the adjustment rod: see **9512947** .

Test the parking brake.

Full effect can be obtained between the second and fifth ratchet teeth.

INSTALLATION

INSTALLING THE PANEL

Install the panel for the center console on the left-hand side.

PARKING BRAKE SELF-ADJUSTMENT, RESETTING

NOTE: **The illustrations in this service information are used for different model years and/or models. Some variation may occur. However, the essential information in the illustrations is always correct.**

REMOVAL

REMOVING SOUNDPROOFING PANELS

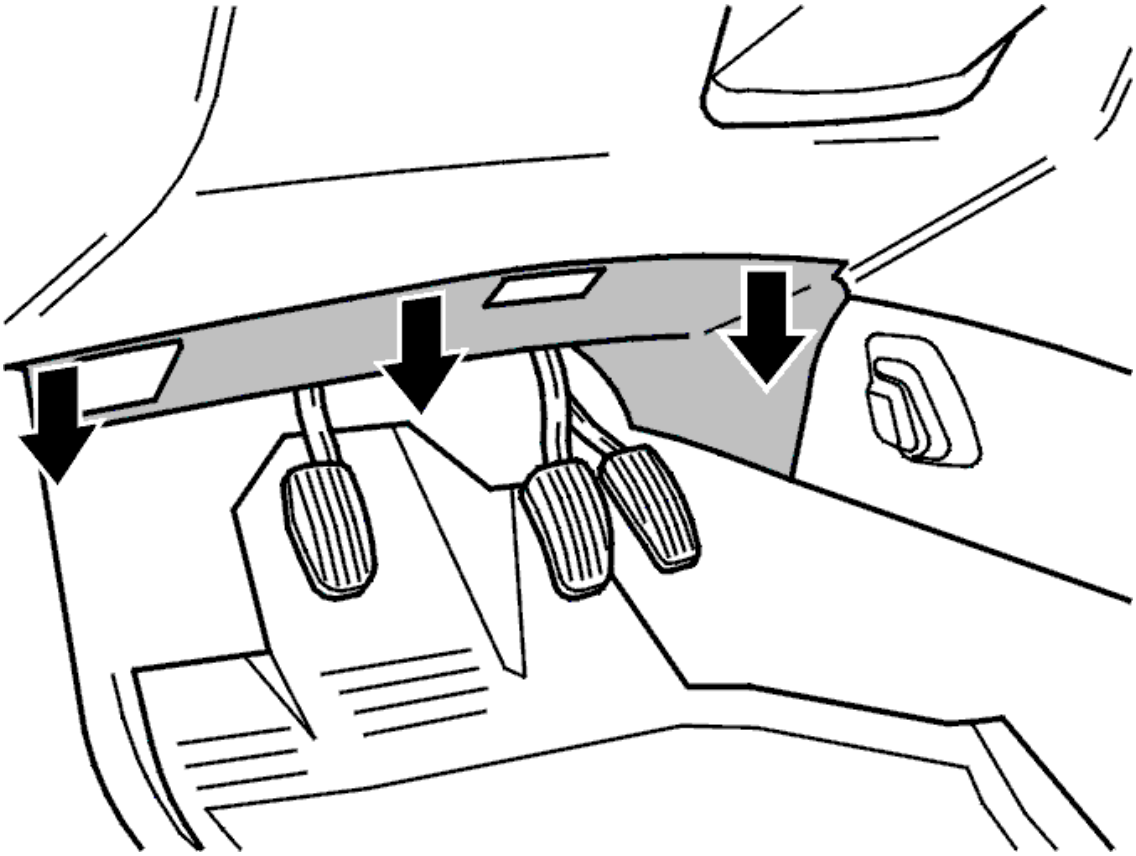

Fig. 5: Identifying Driver Side Soundproofing Panel
Courtesy of VOLVO CARS CORPORATION

HINT: The soundproofing panel sits in grooves at the pedal box.

Slacken off the 2 screws.

Pull the soundproofing panel straight down at the dashboard. Then pull the soundproofing panel backwards. Lift out the soundproofing panel.

REMOVING THE OBDII BRACKET

Remove the 2 screws.

Allow the bracket to hang from the wiring

REMOVING THE RELAY BOX

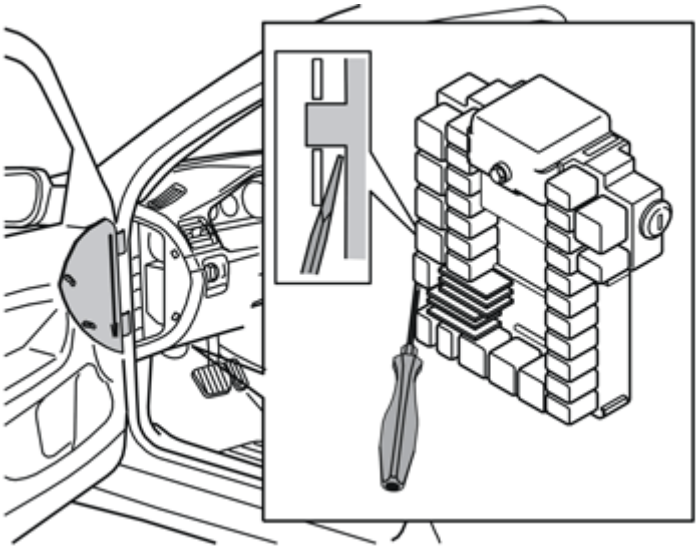

Fig. 6: Removing Relay Box
Courtesy of VOLVO CARS CORPORATION

Insert a screwdriver between the bracket and the relay box. Turn the screwdriver so that the bracket opens out. At the same time, pull the relay box out of the bracket towards the underside of the dashboard. Lift the relay box off the bracket. Pull the relay box downward under the dashboard.

REMOVING THE PARKING BRAKE PEDAL

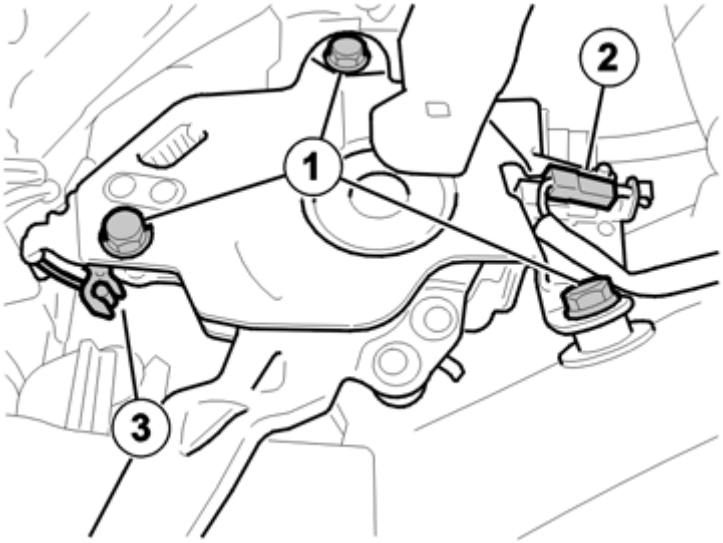

Fig. 7: Identifying Bolts, Connector And Cable
Courtesy of VOLVO CARS CORPORATION

Remove:

- the pedal (1) from the body, 3 screws, and pull/turn it diagonally backwards/inwards
- the wiring (2) for the pedal switch
- the disengagement cable (3) for the pedal.

RESET THE PARKING BRAKE TO THE ZERO POSITION

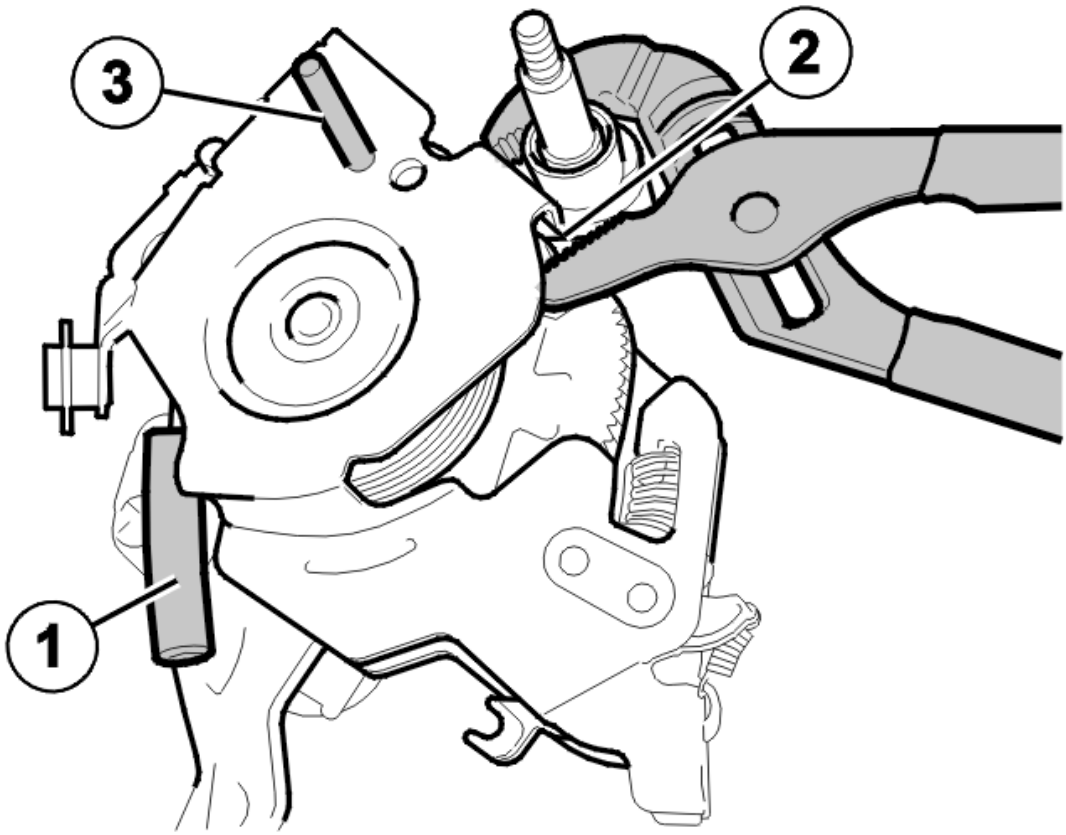

Fig. 8: Resetting Parking Brake
Courtesy of VOLVO CARS CORPORATION

Install a hose with an inner diameter of **5 mm** on the end of the friction spring (1).

Open the friction spring so that the primary cable runs freely. Use a pipe wrench to push back the primary cable mounting (2).

Insert a **6.5 mm** locking pin into the hole in the pedal (3) (it must pass through the bracket, cable pulley, pedal and the other bracket).

INSTALLATION

NOTE: For tightening torques, see: TIGHTENING TORQUE .

RESETTING THE PARKING BRAKE

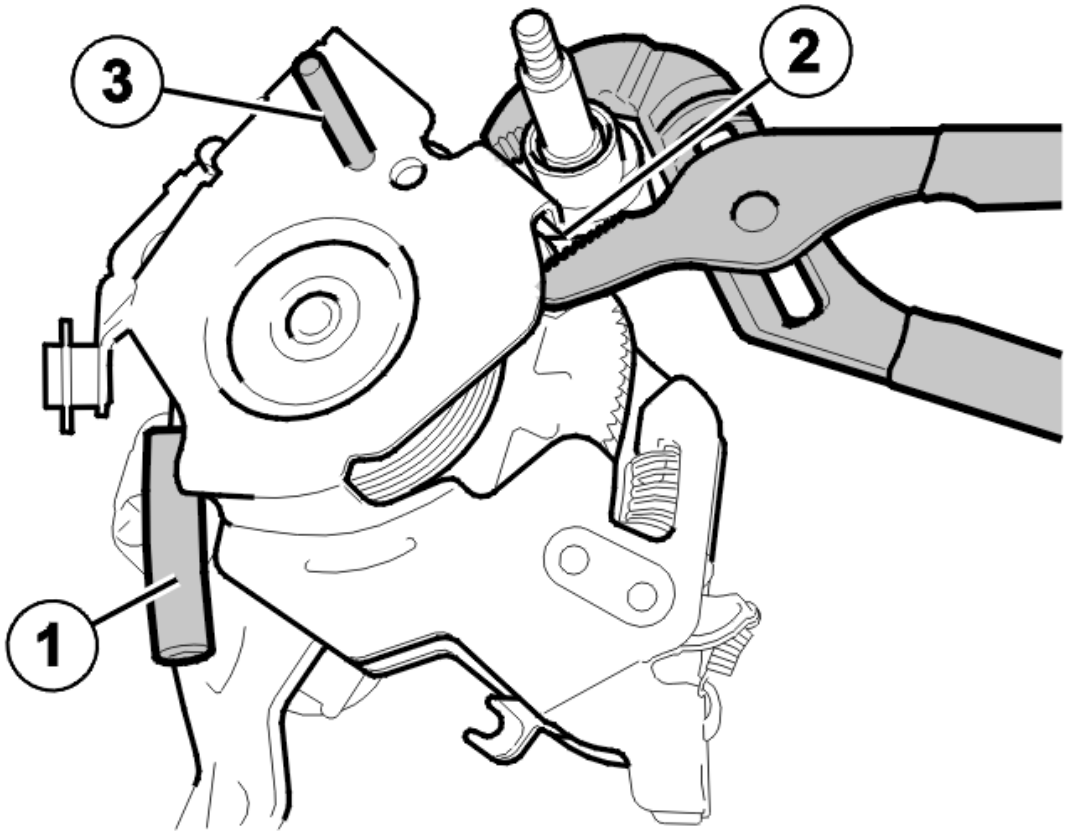

Fig. 9: Resetting Parking Brake
Courtesy of VOLVO CARS CORPORATION

Press the primary cable mounting (2) back into place.

Remove the locking pin (3). Reset the primary cable mounting to the operating position.

Remove the hose from the friction spring (1).

INSTALLING THE PARKING BRAKE PEDAL

Install:

- the disconnecting cable for the pedal
- the cables for the switch before the pedal has been turned in
- the parking brake pedal, 3 screws (M8).

FINISHING

Check the function of the parking brake.

Press down and release the pedal 5 times.

NOTE: Only when replacing.

Press the pedal down so that the clip cracks

INSTALLING THE RELAY BOX IN THE PASSENGER COMPARTMENT

Install the relay box on the bracket.

Press the relay box forward so that the catches engage in the bracket and "click". Install the soundproofing panel using 2 screws.

INSTALLING THE OBDII BRACKET AND SOUNDPROOFING PANEL

Install:

- the OBDII bracket using the 2 screws
- the soundproofing panel using the 2 screws.

BRAKES

Parking Brake - Removal, replacement and installation

PARKING BRAKE CONTROLS, MECHANICAL

BRAKE SHOES PARKING BRAKE, REPLACING (2003-2006)

Special tools:

see **9997225**

NOTE: **The illustrations in this service information are used for different model years and/or models. Some variation may occur. However, the essential information in the illustrations is always correct.**

PREPARATORY WORK

RESETTING THE PARKING BRAKE

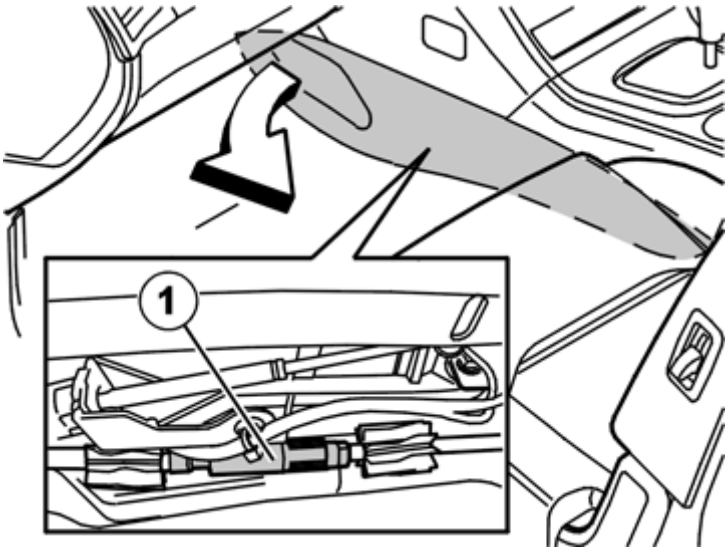

Fig. 1: Identifying Manual Adjustment For Parking Brake
Courtesy of VOLVO CARS CORPORATION

If the vehicle has a **manual** adjustment for the parking brake, see the illustration and no. 1. Reset the parking brake. See: **PARKING BRAKE, ADJUSTING** .

If the vehicle has a **self-adjusting** parking brake. Reassemble and lock the self-adjuster unit for the parking brake. See: **PARKING BRAKE SELF-ADJUSTMENT, RESETTING** .

REMOVAL

REMOVING THE BRAKE CALIPER WITH THE HOLDER AND THE BRAKE DISC

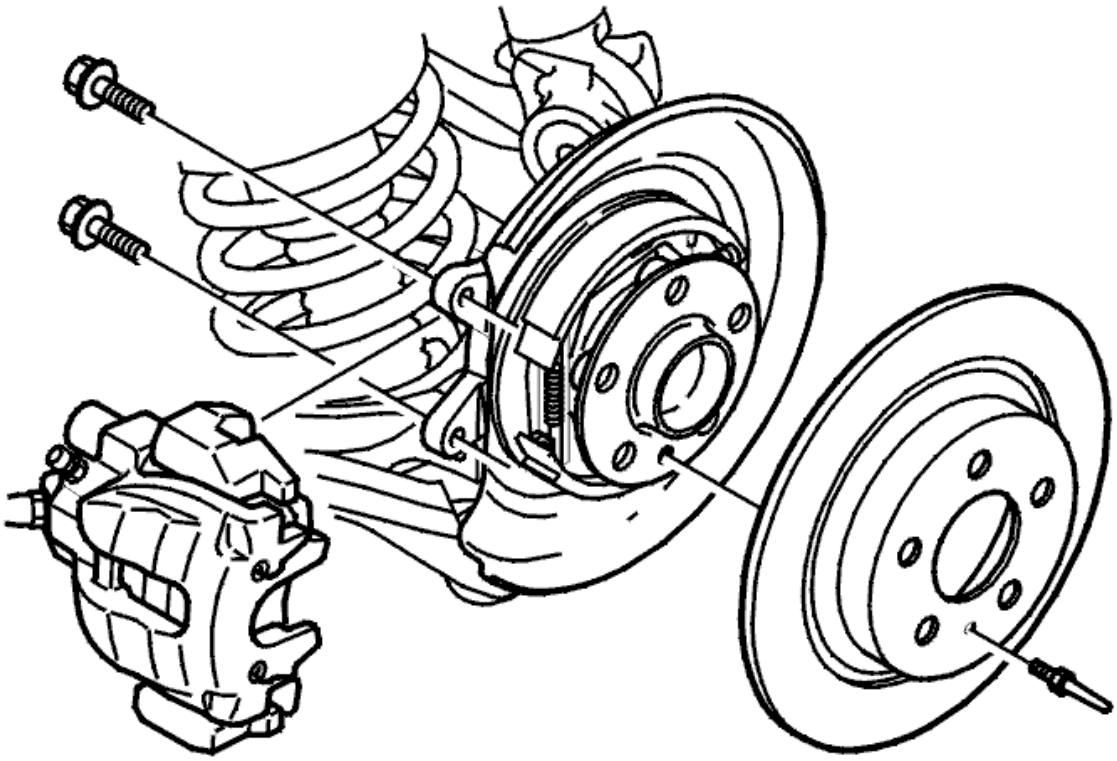

Fig. 2: Brake Disc And Caliper Holder
Courtesy of VOLVO CARS CORPORATION

Remove the mounting screws for the brake caliper. Hang the caliper from the spring. Use a wire so as not to damage the brake pipe.

Remove the screw and the brake disc.

NOTE: Do not damage the ABS line.

REMOVING THE PARKING BRAKE SHOES

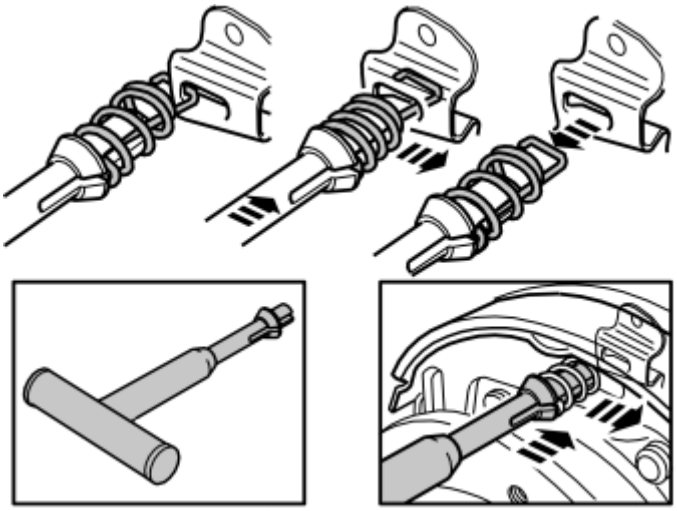

Fig. 3: Identifying Brake Shoe Fixing Springs & Tool (999 7225)
Courtesy of VOLVO CARS CORPORATION

Remove the two fixing springs on the brake shoes. Use **9997225** .

Compress the spring and move it backward, and let up so that the spring's end fits the slot in the bracket and can be removed.

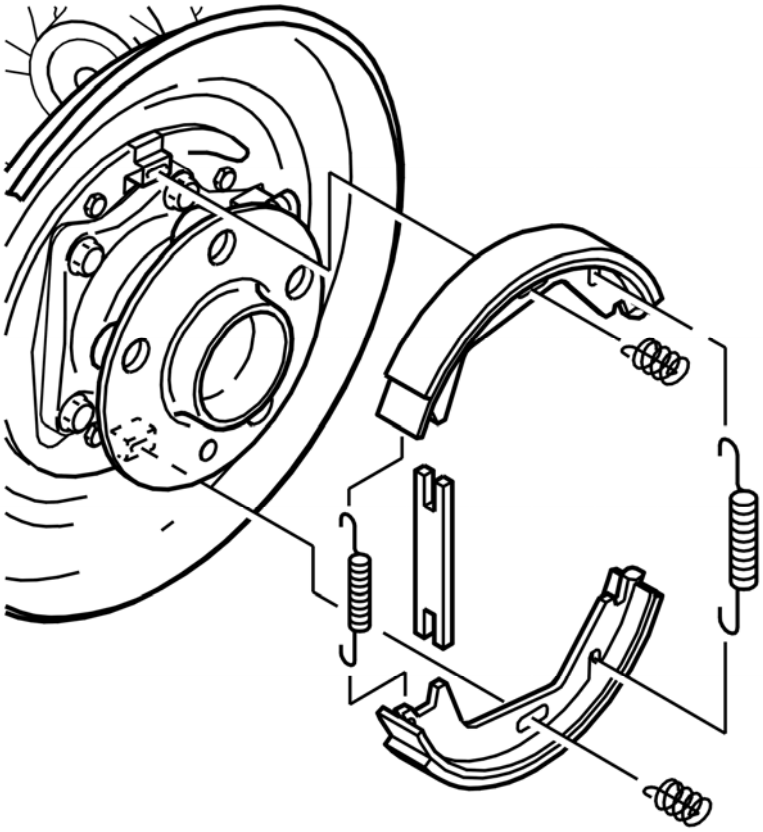

Fig. 4: Identifying Return Spring & Brake Shoes
Courtesy of VOLVO CARS CORPORATION

Detach the return spring at the expander.

Bend the brake shoes apart and remove them with the return spring and spacer.

CLEANING AND CHECKING

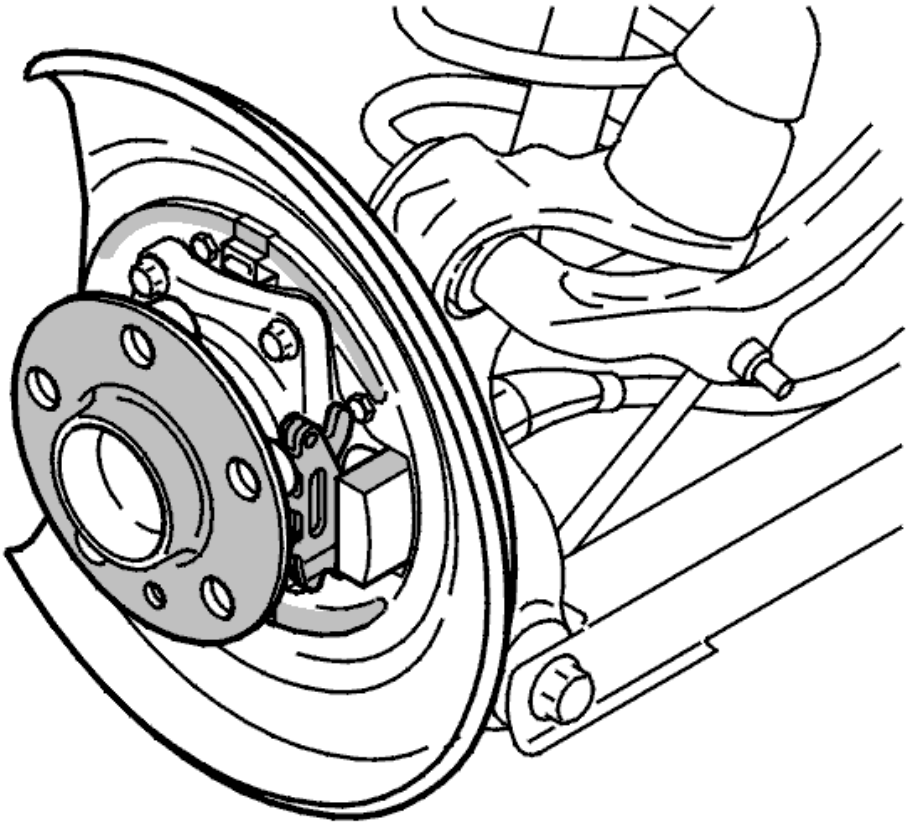

Fig. 5: Identifying Wheel Hub
Courtesy of VOLVO CARS CORPORATION

Check that no grease has leaked out of the wheel hub.

Check the parking brake expander for damage. Lubricate if necessary.

Clean the surfaces of the brake drum where the brake shoes make contact.

Check that hub flange is clean. Remove any rust.

Lubricate the contact surfaces on the brake shield. Use heat-resistant grease, P/N 116 1325-4.

INSTALLATION

NOTE: For tightening torques, see: TIGHTENING TORQUE .

INSTALLING BRAKE SHOES

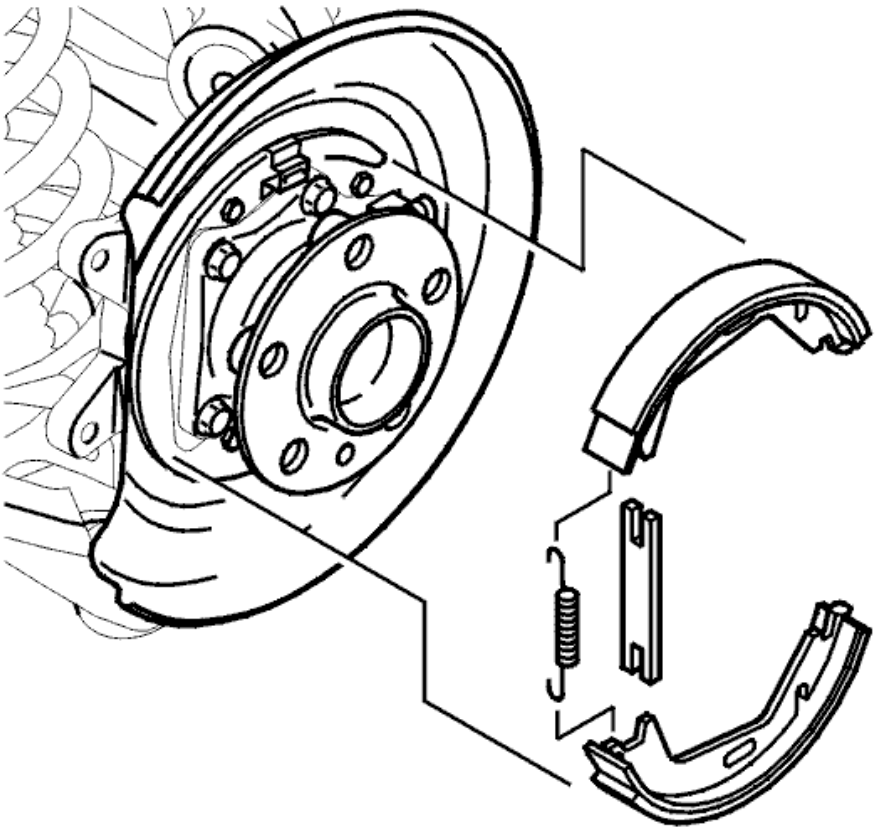

Fig. 6: Brake Shoes, Spacer And Small Return Spring
Courtesy of VOLVO CARS CORPORATION

Install:

- the brake shoes
- the spacer and the small return spring on the brake shoes.

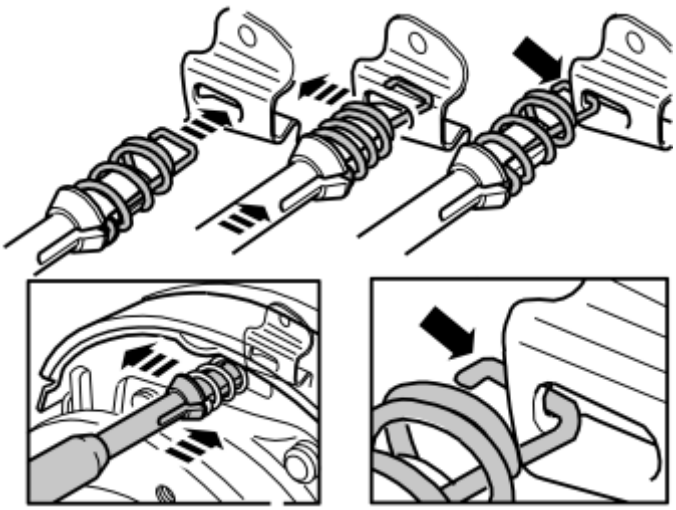

Fig. 7: Identifying Brake Shoe Fixing Springs & Tool (999 7225)

Courtesy of VOLVO CARS CORPORATION

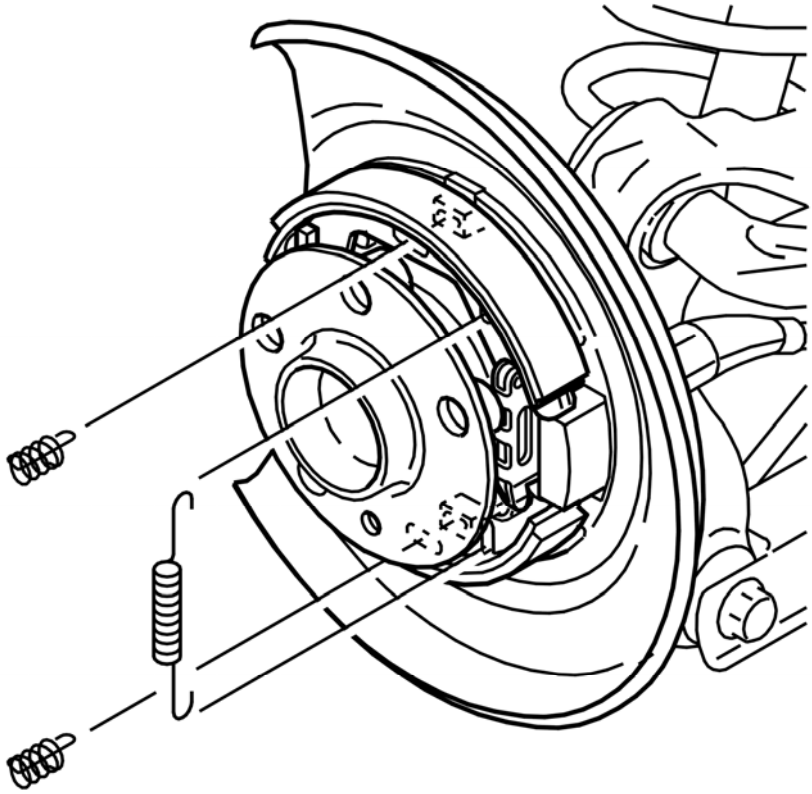

Fig. 8: Identifying Springs
Courtesy of VOLVO CARS CORPORATION

Install the fixing springs for the brake shoes and the return spring at the expander.

Install:

- the lower fixing spring, use **9997225** .

  Point the spring's catch forward, compress the spring and move it forward and let up so that the catch locks in the bracket.

- the upper fixing spring.
- the return spring by the expander.

Check that the brake shoes are positioned correctly in the expander.

Install the return spring at the expander.

INSTALLING THE BRAKE DISC AND THE BRAKE CALIPER WITH THE HOLDER

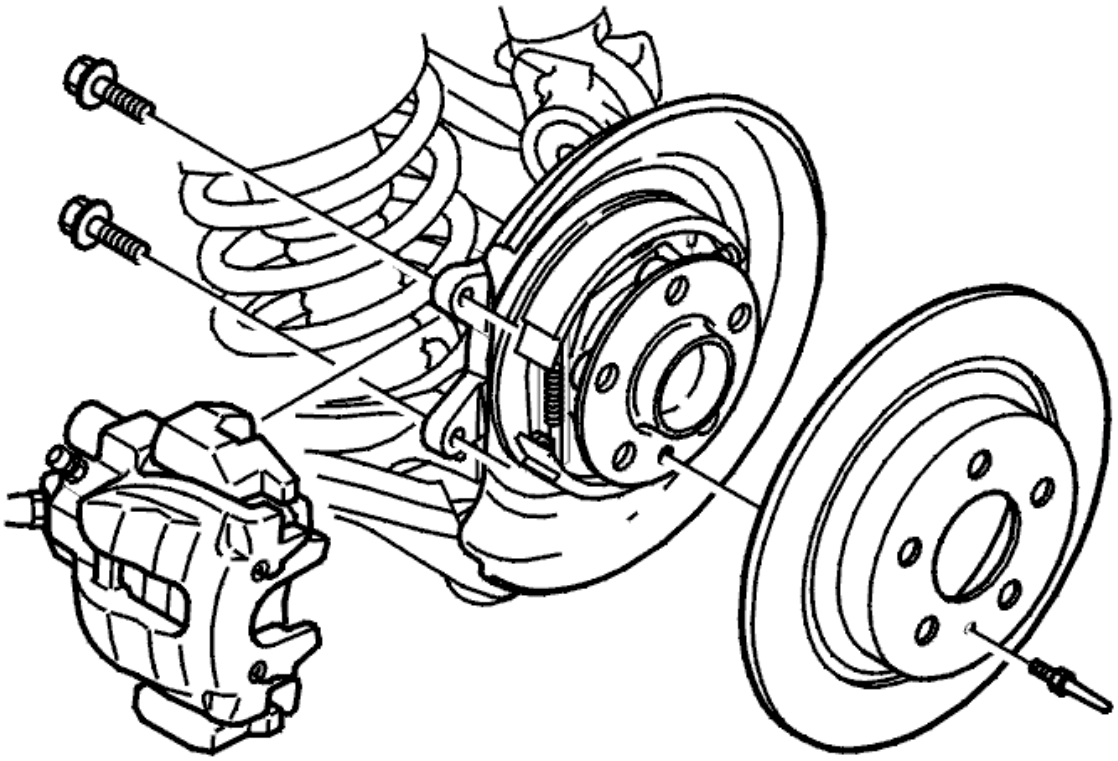

Fig. 9: Brake Disc And Caliper Holder
Courtesy of VOLVO CARS CORPORATION

Install:

- the 1 M6 screw for the disc
- the screws for the caliper holder. Tighten. See **SUMMARY OF SPECIFIC COMPONENTS AND TIGHTENING TORQUES** .

Use new mounting screws.

FINISHING

ADJUSTING THE PARKING BRAKE

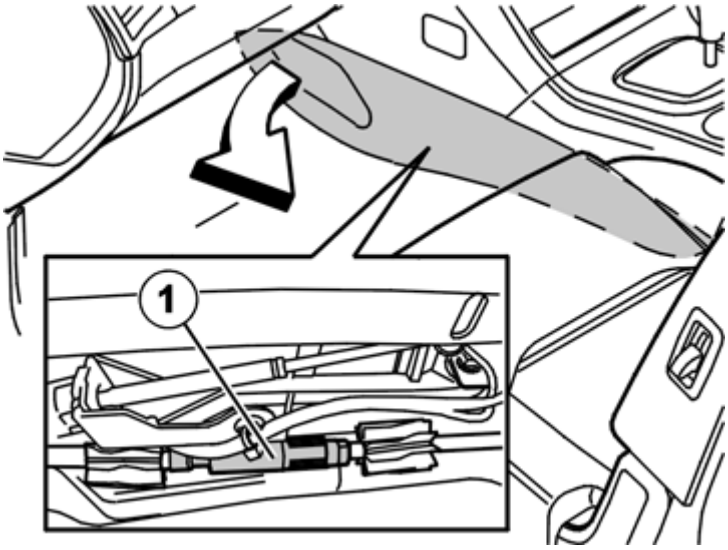

Fig. 10: Identifying Manual Adjustment For Parking Brake
Courtesy of VOLVO CARS CORPORATION

If the vehicle has a **manual** adjustment for the parking brake, see the illustration and no. 1. Adjust the parking brake. See: **PARKING BRAKE, ADJUSTING** .

If the vehicle has a **self-adjusting** parking brake. Reset the self adjuster for the parking brake. See: **PARKING BRAKE SELF-ADJUSTMENT, RESETTING** .

Install the wheel. See: **INSTALLING WHEELS** .

BREAKING IN THE NEW PARKING BRAKE PADS AFTER REPLACEMENT

NOTE: Activate the parking brake firmly for 10 minutes.

Break in the parking brake by depressing the parking brake pedal to the third notch. Then drive at 20 km/h for 40 seconds or 250 meters.

With the vehicle stationary, depress the parking brake pedal to the sixth notch. Release the brake pedal without keeping your foot on the pedal.

Post-adjust the parking brake if necessary.

PARKING BRAKE CABLE FRONT, REPLACING (2003, 2004)

NOTE: The illustrations in this service information are used for different model years and/or models. Some variation may occur. However, the essential information in the illustrations is always correct.

PREPARATORY WORK

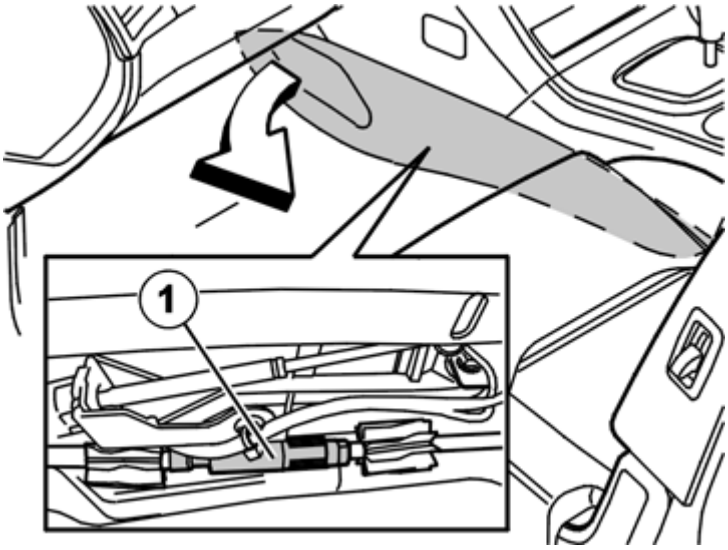

Fig. 11: Identifying Manual Adjustment For Parking Brake
Courtesy of VOLVO CARS CORPORATION

If the car has manual adjustment (1), restore the parking brake acc. to: **PARKING BRAKE, ADJUSTING** .

If the car has a self-adjusting parking brake.

Reassemble and lock the self-adjuster unit for the parking brake. See: **PARKING BRAKE SELF-ADJUSTMENT, RESETTING** .

> WARNING: **If the car is equipped with an earlier version of the self-adjusting parking brake, continue to the previous method acc. to: PARKING BRAKE CABLE FRONT, REPLACING .**

If the car is equipped with a later version manual adjustment of the parking brake, continue according to this method.

REMOVAL

REMOVING THE CENTER CONSOLE

Remove center console. See: **CENTER CONSOLE, REPLACING** .

REMOVING THE BRAKE CABLE IN THE CENTER CONSOLE

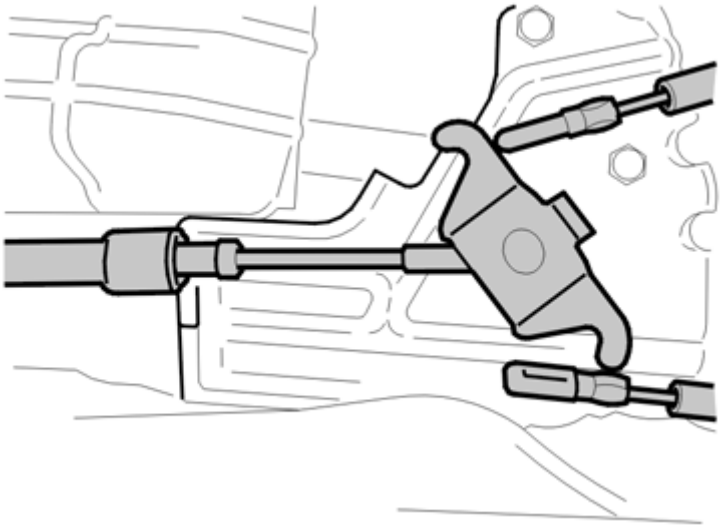

Fig. 12: Removing Rear Cables From Equalizer
Courtesy of VOLVO CARS CORPORATION

Remove:

- the rear mechanical cables from the power distributor
- the clips for the mechanical cable casing using long nose pliers. Lift the cable from the bracket.

REMOVING THE SOUNDPROOFING PANEL

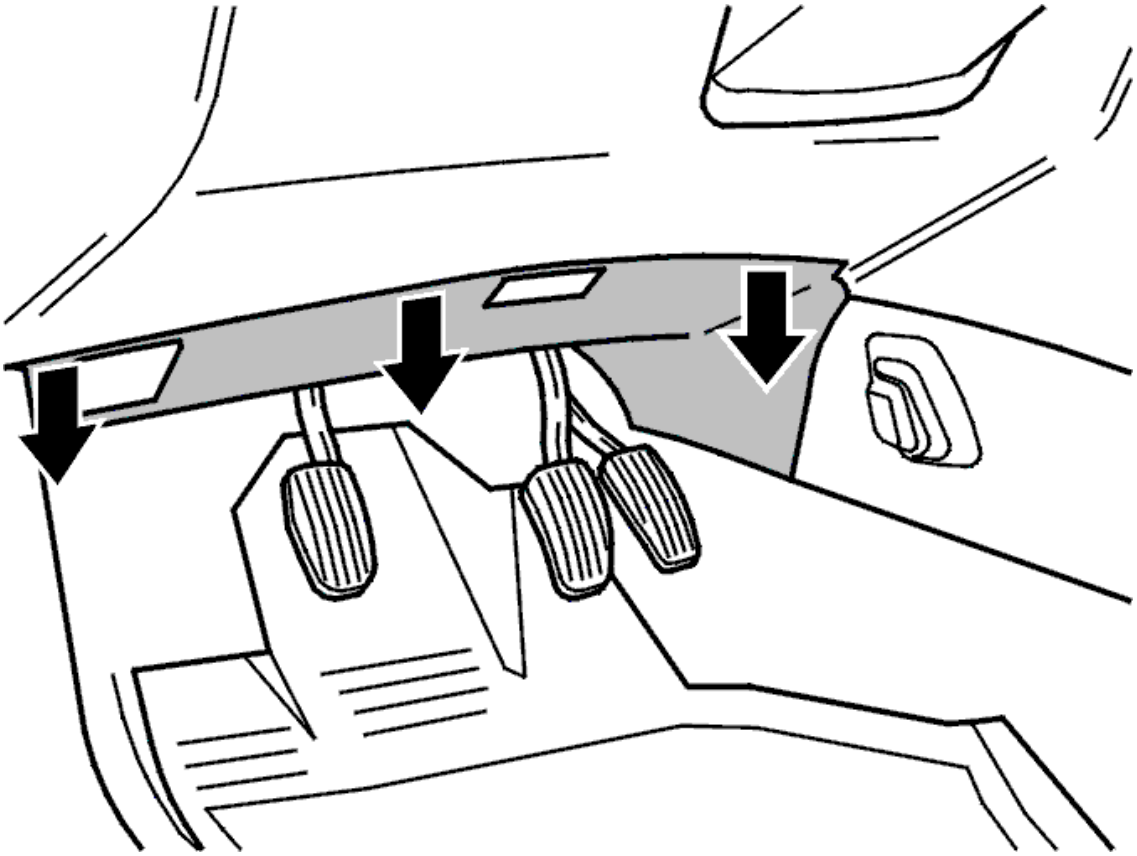

Fig. 13: Identifying Driver Side Soundproofing Panel
Courtesy of VOLVO CARS CORPORATION

Remove:

- the 2 x screws
- the soundproofing panel.

REMOVING THE OBDII BRACKET

Remove the 2 screws. Allow the bracket to hang from the wiring.

REMOVING CENTRAL ELECTRONIC MODULE (CEM)

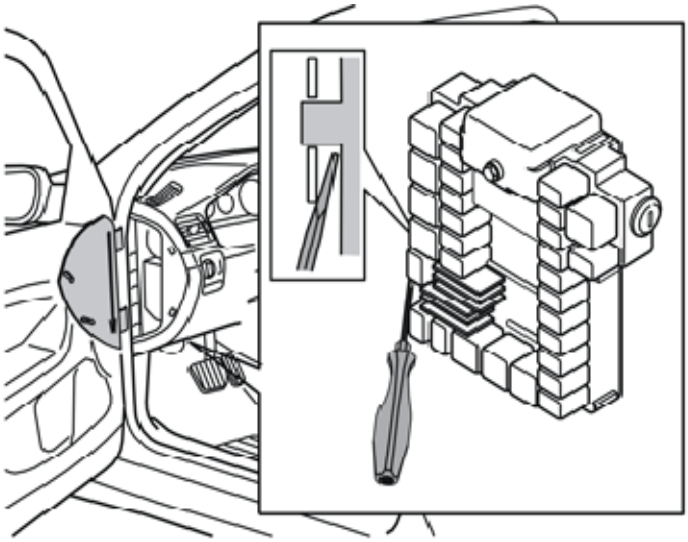

Fig. 14: Identifying Screwdriver, Bracket And Relay Box
Courtesy of VOLVO CARS CORPORATION

Insert a screwdriver between the bracket and the relay box. Turn the screwdriver so that the bracket opens out. At the same time, pull the relay box out of the bracket towards the underside of the dashboard. Lift the relay box off the bracket. Pull the relay box downward under the dashboard.

REMOVING THE PARKING BRAKE PEDAL

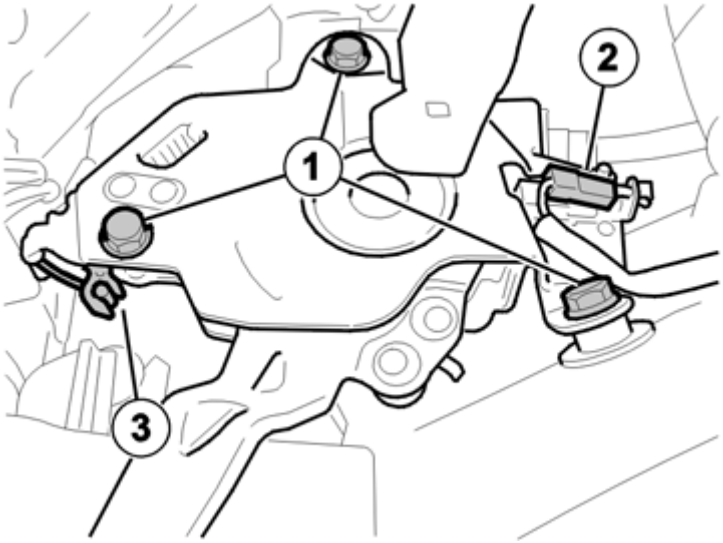

Fig. 15: Identifying Bolts, Connector And Cable
Courtesy of VOLVO CARS CORPORATION

Remove:

- the pedal (1) from the bodywork. Slacken off the 3 screws and pull / twist out the pedal diagonally backwards / inwards. Remove the pedal.
- the wiring (2) for the pedal switch

- the disengagement cable (3) for the pedal.

REMOVING THE MECHANICAL CABLE FOR THE PARKING BRAKE PEDAL

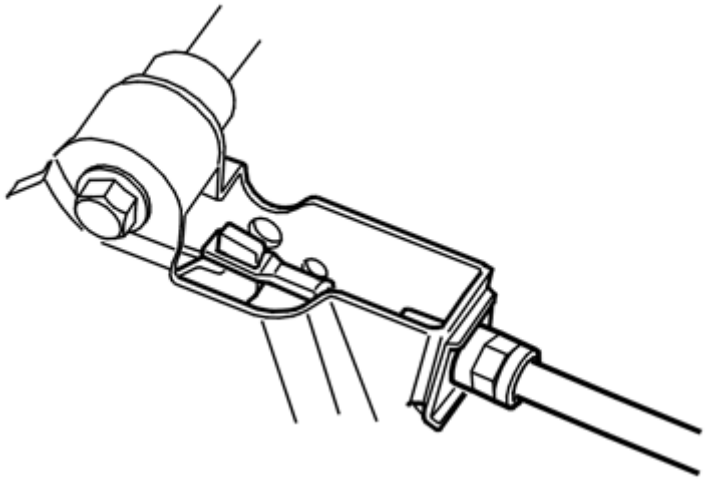

Fig. 16: Removing Mechanical Cable
Courtesy of VOLVO CARS CORPORATION

Remove:

- the mechanical cable from the cable pulley in the pedal
- the retaining clip
- the outer casing for the mechanical cable from the pedal using round-nose pliers.

INSTALLATION

NOTE: For tightening torques, see: TIGHTENING TORQUE .

INSTALLING THE FRONT BRAKE CABLE

Pull the mechanical cable into the center of the tunnel above the insulation.

NOTE: The cable for the parking brake pedal must be installed before the power distributor at the tunnel.

INSTALLING THE ACCELERATOR PEDAL (AP)

Install:

- the lower screw for the accelerator pedal (AP)
- tighten the 3 M6 screws for the accelerator pedal (AP). The cable must be underneath the mounting plate for the accelerator pedal (AP) so that the 2 pieces of tape on the cable are hidden by the mounting.

INSTALLING THE CABLE FOR THE PARKING BRAKE PEDAL

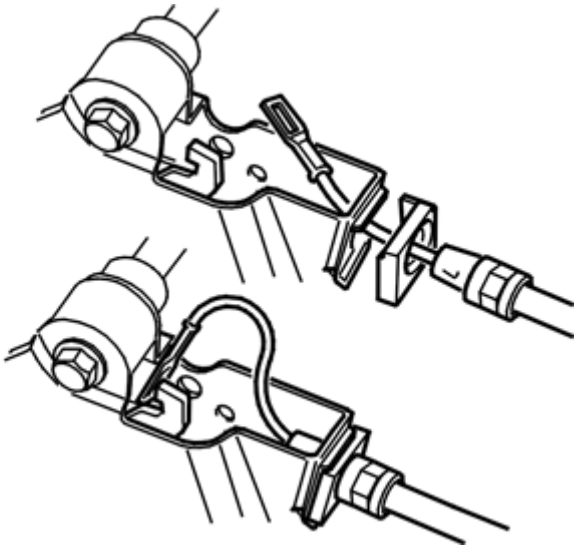

Fig. 17: Installing Cable Hook
Courtesy of VOLVO CARS CORPORATION

Applies to cars with pedals up to part number 30666703:

NOTE: The wide edge of the spacer washer must face the left side in the vehicle.

Press the mechanical cable into place in the pedal.

Secure the mechanical cable using the retaining clip.

Apply low-temperature grease, P/N 1161427-8, to the end piece of the mechanical cable.

Install the end piece of the mechanical cable in the cable pulley in the pedal.

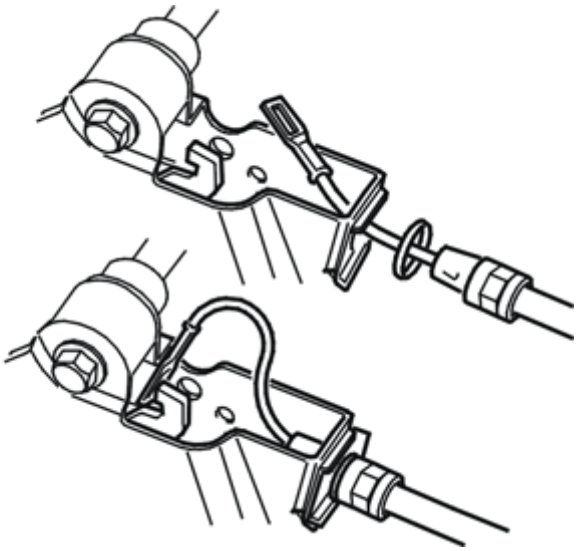

Fig. 18: Installing Cable Hook
Courtesy of VOLVO CARS CORPORATION

Applies to cars with pedals part number 30714010 or higher:

CAUTION: Remove the plastic spacer washer. Only a steel washer may be used as a spacer to prevent abnormal wear of the primary cable.

Press the mechanical cable into place in the pedal.

Secure the mechanical cable using the retaining clip.

Apply low-temperature grease, P/N 1161427-8, to the end piece of the mechanical cable.

Install the end piece of the mechanical cable in the cable pulley in the pedal.

INSTALLING THE BRAKE CABLE IN THE CENTER CONSOLE

Install:

- the outer casing for the cable in the console
- the power distributor for the front mechanical brake cable in the two rear mechanical brake cables.

INSTALLING THE PARKING BRAKE PEDAL

Install:

- the disengagement cable for the pedal
- the wiring for the switch before the pedal has been turned in
- the parking brake pedal using the 3 x M8 screws.

INSTALLING THE RELAY BOX IN THE PASSENGER COMPARTMENT

Install the relay box on the bracket.

Press the relay box forward so that the catches engage in the bracket and a "click" is heard.

INSTALLING THE OBDII BRACKET

Install:

- the OBDII bracket
- the 2 screws.

INSTALLING THE SOUNDPROOFING PANEL

Install:

- the soundproofing panel
- the 2 x screws

FINISHING

Adjust the parking brake. See: **PARKING BRAKE, ADJUSTING** .

NOTE: Activate the parking brake firmly for 10 minutes.

POST-ADJUSTING THE PARKING BRAKE

Post-adjust the parking brake if necessary.

PARKING BRAKE CABLE FRONT, REPLACING (2005-2012)

NOTE: The illustrations in this service information are used for different model years and/or models. Some variation may occur. However, the essential information in the illustrations is always correct.

PREPARATORY WORK

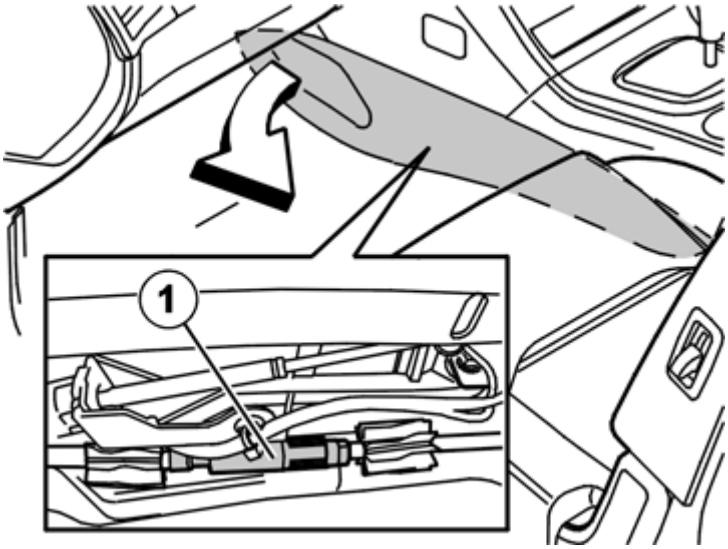

Fig. 19: Identifying Manual Adjustment For Parking Brake
Courtesy of VOLVO CARS CORPORATION

If the car has manual adjustment (1), restore the parking brake acc. to: **PARKING BRAKE, ADJUSTING** .

If the car has a self-adjusting parking brake.

Reassemble and lock the self-adjuster unit for the parking brake. See: **PARKING BRAKE SELF-ADJUSTMENT, RESETTING** .

WARNING: If the car is equipped with an earlier version of the self-adjusting parking brake, continue to the previous method acc. to: PARKING BRAKE CABLE FRONT, REPLACING .

If the car is equipped with a later version manual adjustment of the parking brake, continue according to this method.

REMOVAL

REMOVING THE CENTER CONSOLE

Remove center console. See: **CENTER CONSOLE, REPLACING** .

REMOVING THE BRAKE CABLE IN THE CENTER CONSOLE

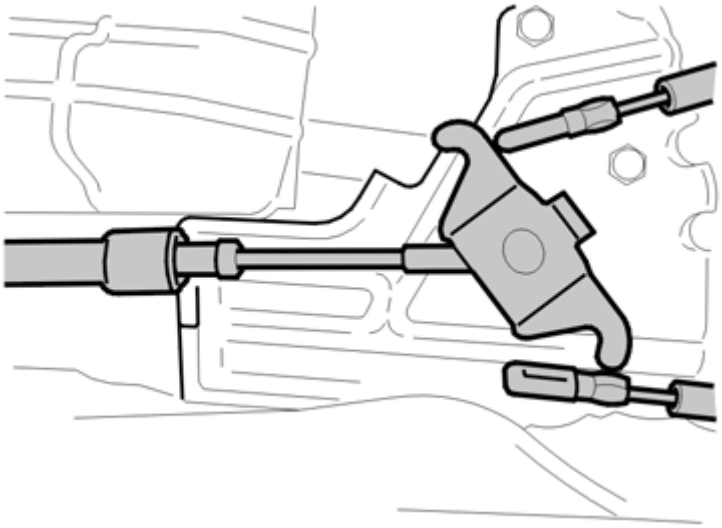

Fig. 20: Removing Rear Cables From Equalizer
Courtesy of VOLVO CARS CORPORATION

Remove:

- the rear mechanical cables from the power distributor
- the clips for the mechanical cable casing using long nose pliers. Lift the cable from the bracket.

REMOVING THE SOUNDPROOFING PANEL

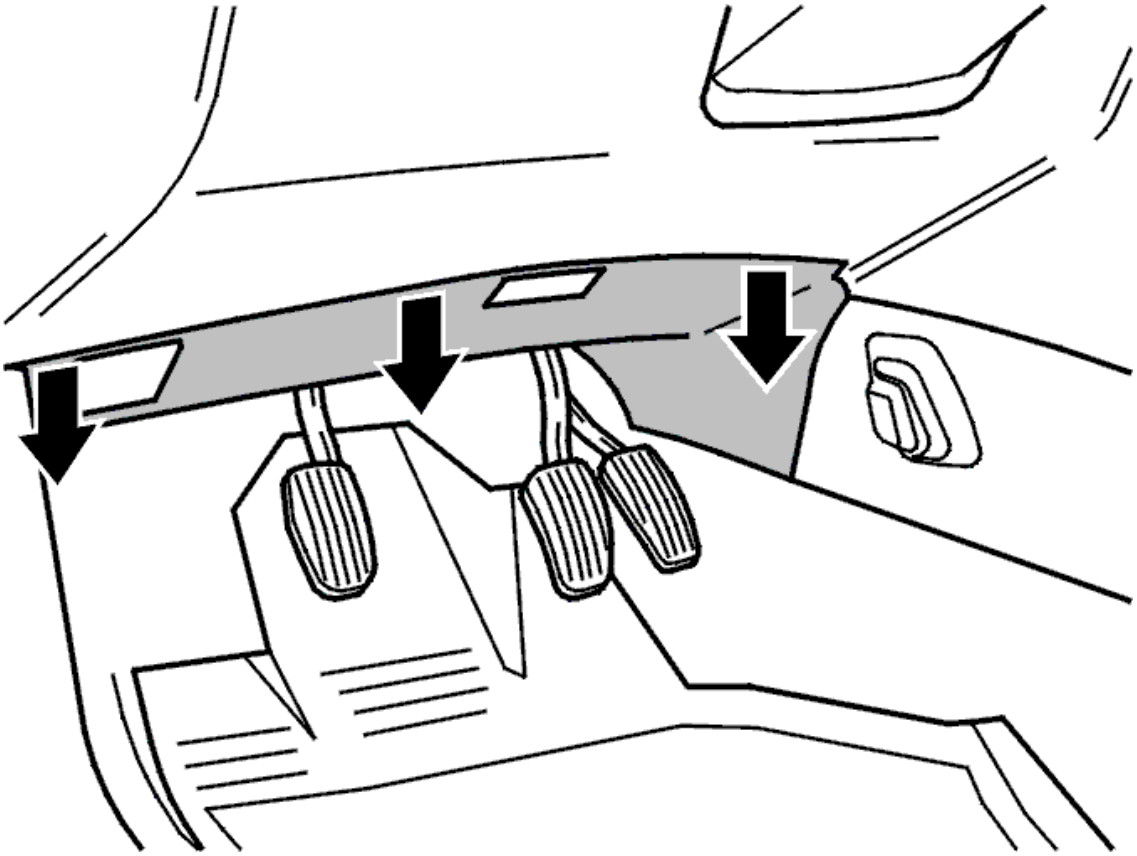

Fig. 21: Identifying Driver Side Soundproofing Panel
Courtesy of VOLVO CARS CORPORATION

Remove:

- the 2 x screws
- the soundproofing panel.

REMOVING THE OBDII BRACKET

Remove the 2 screws. Allow the bracket to hang from the wiring.

REMOVING CENTRAL ELECTRONIC MODULE (CEM)

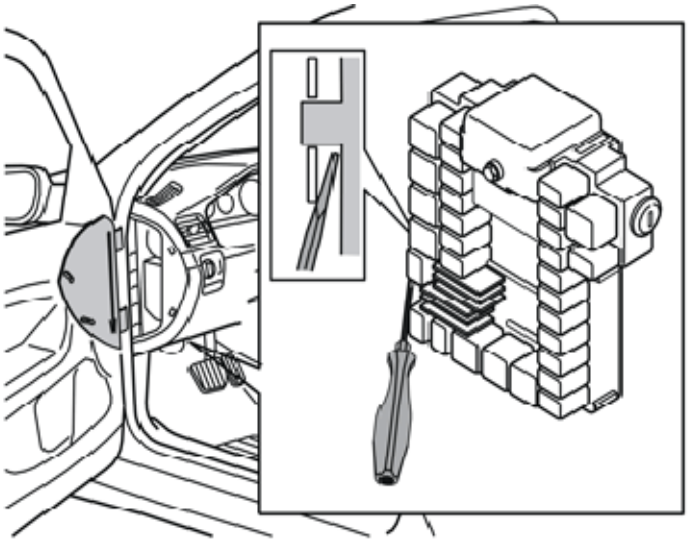

Fig. 22: Identifying Screwdriver, Bracket And Relay Box
Courtesy of VOLVO CARS CORPORATION

Insert a screwdriver between the bracket and the relay box. Turn the screwdriver so that the bracket opens out. At the same time, pull the relay box out of the bracket towards the underside of the dashboard. Lift the relay box off the bracket. Pull the relay box downward under the dashboard.

REMOVING THE PARKING BRAKE PEDAL

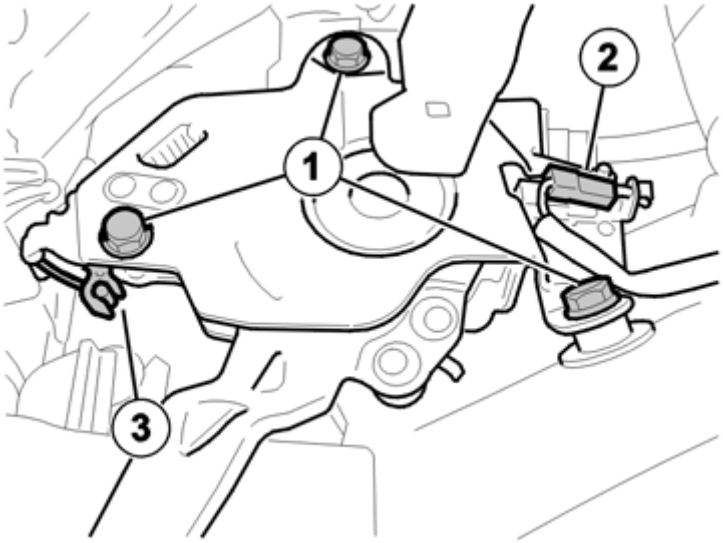

Fig. 23: Identifying Bolts, Connector And Cable
Courtesy of VOLVO CARS CORPORATION

Remove:

- the pedal (1) from the bodywork. Slacken off the 3 screws and pull / twist out the pedal diagonally backwards / inwards. Remove the pedal
- the wiring (2) for the pedal switch

- the disengagement cable (3) for the pedal.

REMOVING THE MECHANICAL CABLE FOR THE PARKING BRAKE PEDAL

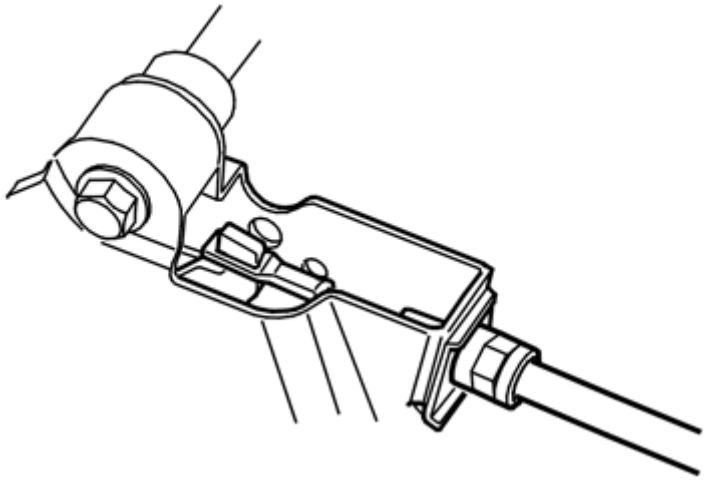

Fig. 24: Removing Mechanical Cable
Courtesy of VOLVO CARS CORPORATION

Remove:

- the mechanical cable from the cable pulley in the pedal
- the retaining clip
- the outer casing for the mechanical cable from the pedal using round-nose pliers.

INSTALLATION

NOTE: For tightening torques, see: TIGHTENING TORQUE .

INSTALLING THE FRONT BRAKE CABLE

Pull the mechanical cable into the center of the tunnel above the insulation.

NOTE: The cable for the parking brake pedal must be installed before the power distributor at the tunnel.

INSTALLING THE ACCELERATOR PEDAL (AP)

Install:

- the lower screw for the accelerator pedal (AP)
- tighten the 3 M6 screws for the accelerator pedal (AP). The cable must be underneath the mounting plate for the accelerator pedal (AP) so that the 2 pieces of tape on the cable are hidden by the mounting.

INSTALLING THE CABLE FOR THE PARKING BRAKE PEDAL

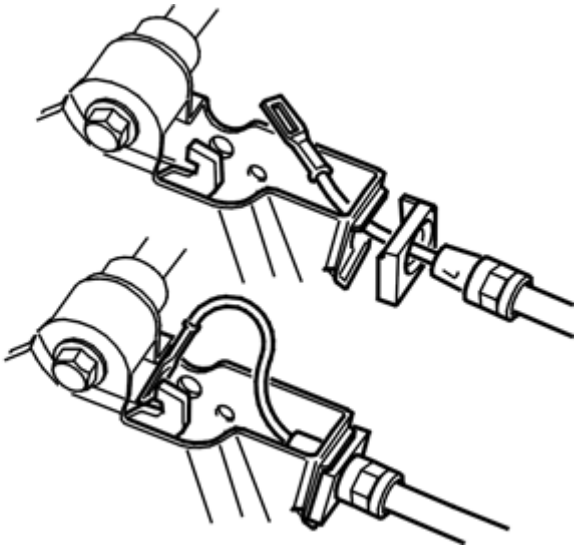

Fig. 25: Installing Cable Hook
Courtesy of VOLVO CARS CORPORATION

Applies to cars with pedals up to part number 30666703:

NOTE: The wide edge of the spacer washer must face the left side in the vehicle.

Press the mechanical cable into place in the pedal.

Secure the mechanical cable using the retaining clip.

Apply low-temperature grease, P/N 1161427-8, to the end piece of the mechanical cable.

Install the end piece of the mechanical cable in the cable pulley in the pedal.

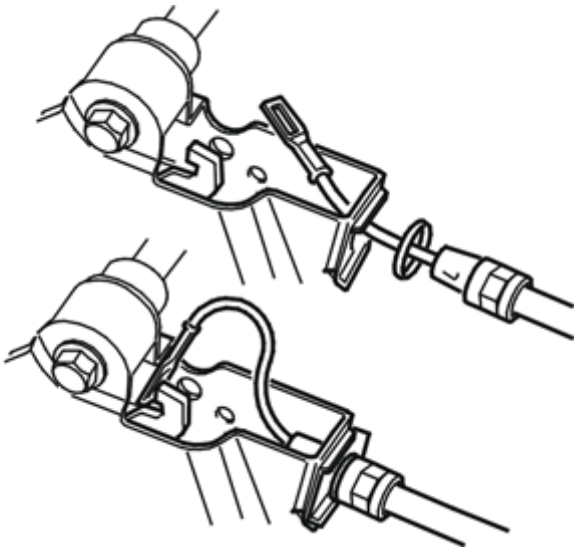

Fig. 26: Installing Cable Hook
Courtesy of VOLVO CARS CORPORATION

Applies to cars with pedals part number 30714010 or higher:

CAUTION: Remove the plastic spacer washer. Only a steel washer may be used as a spacer to prevent abnormal wear of the primary cable.

Press the mechanical cable into place in the pedal.

Secure the mechanical cable using the retaining clip.

Apply low-temperature grease, P/N 1161427-8, to the end piece of the mechanical cable.

Install the end piece of the mechanical cable in the cable pulley in the pedal.

INSTALLING THE BRAKE CABLE IN THE CENTER CONSOLE

Install:

- the outer casing for the cable in the console
- the power distributor for the front mechanical brake cable in the two rear mechanical brake cables.

INSTALLING THE PARKING BRAKE PEDAL

Install:

- the disengagement cable for the pedal
- the wiring for the switch before the pedal has been turned in
- the parking brake pedal using the 3 x M8 screws.

INSTALLING THE RELAY BOX IN THE PASSENGER COMPARTMENT

Install the relay box on the bracket.

Press the relay box forward so that the catches engage in the bracket and a "click" is heard.

INSTALLING THE OBDII BRACKET

Install:

- the OBDII bracket
- the 2 screws.

INSTALLING THE SOUNDPROOFING PANEL

Install:

- the soundproofing panel
- the 2 x screws

FINISHING

Adjust the parking brake. See: **PARKING BRAKE, ADJUSTING** .

NOTE: Activate the parking brake firmly for 10 minutes.

POST-ADJUSTING THE PARKING BRAKE

Post-adjust the parking brake if necessary.

PEDAL PARKING BRAKE, REPLACING

see **PEDAL PARKING BRAKE, REPLACING**

PARKING BRAKE CABLE REAR, REPLACING

NOTE: As the illustrations in this service information are used for different model years and / or models, some variation may occur. However, the essential information in the illustrations is always correct.

PREPARATORY WORK

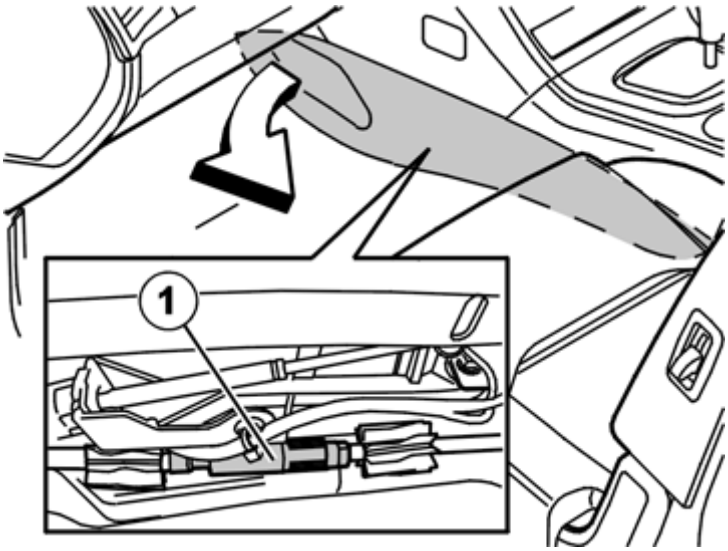

Fig. 27: Identifying Manual Adjustment For Parking Brake
Courtesy of VOLVO CARS CORPORATION

If the car has manual adjustment to the parking brake, see the illustration and (1). Reset the parking brake. See: **PARKING BRAKE, ADJUSTING** .

If the car has a self-adjusting parking brake.

Reassemble and lock the self-adjuster unit for the parking brake. See: **PARKING BRAKE SELF-ADJUSTMENT, RESETTING** .

REMOVAL

REMOVING THE CENTER CONSOLE

Remove the center console. See **CENTER CONSOLE, REPLACING** .

REMOVING THE BRAKE CABLE

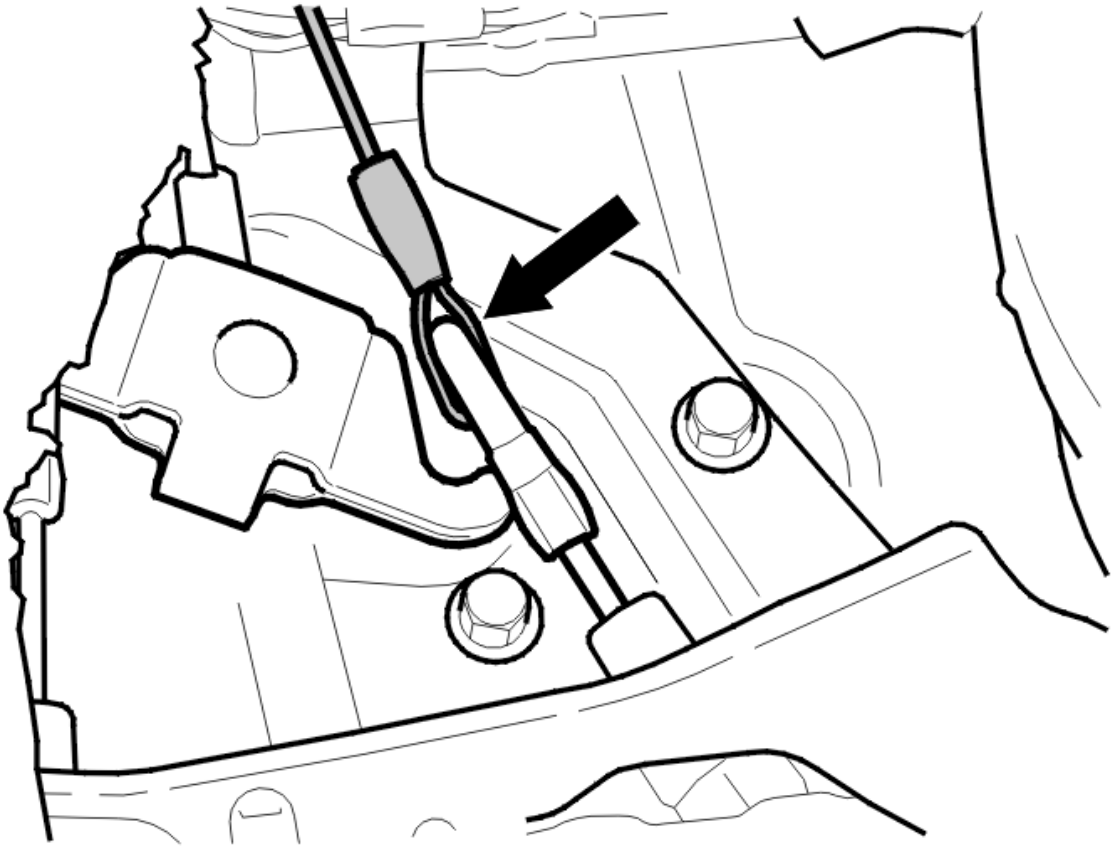

Fig. 28: Securing A Wire In The Cable Eyelet.
Courtesy of VOLVO CARS CORPORATION

Remove the mechanical cable from its segment.

Take hold of the mechanical cable and bend it to the side so that it can be removed.

Secure a heavy wire to the end of the mechanical cable.

Bend a thick metal wire (welding rod) as illustrated.

Secure the wire in the cable eyelet. Bend the wire over the eyelet.

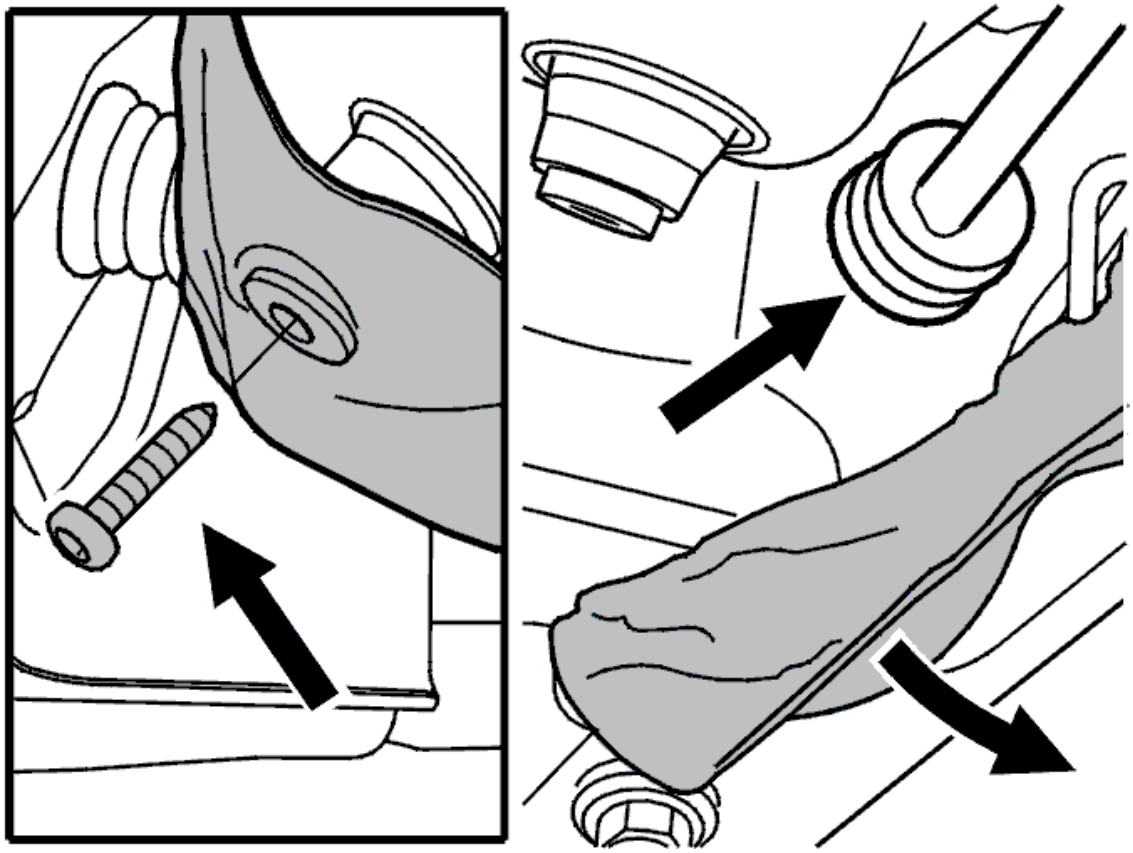

Fig. 29: Removing/Installing Heat Deflector Plate
Courtesy of VOLVO CARS CORPORATION

Raise the car.

Slacken off both screws for the heat shield on both sides.

Fold the heat deflector plate down.

Remove the rubber grommet for the mechanical cable.

REMOVING THE BRAKE CALIPER WITH THE HOLDER AND THE BRAKE DISC

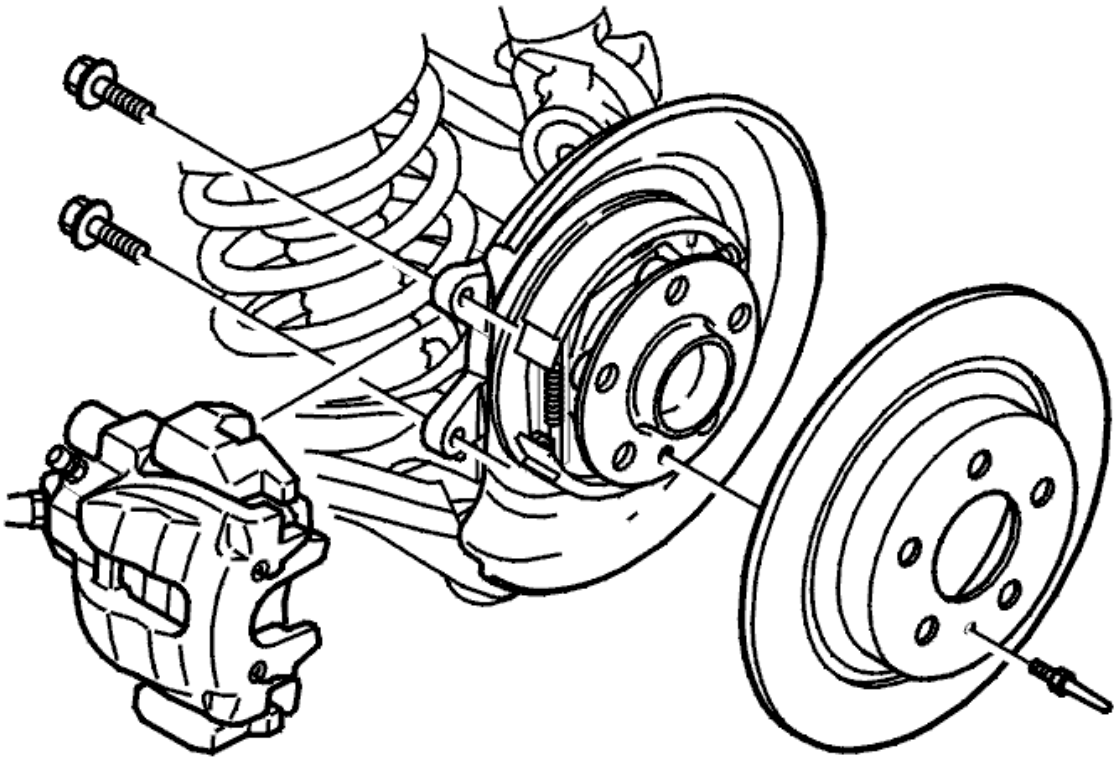

Fig. 30: Brake Disc And Caliper Holder
Courtesy of VOLVO CARS CORPORATION

Remove the mounting screws for the brake caliper. Hang the caliper from the spring. Use a wire so as not to damage the brake pipe.

Remove the screw and the brake disc.

NOTE: Do not damage the ABS line.

REMOVING THE EXPANDER

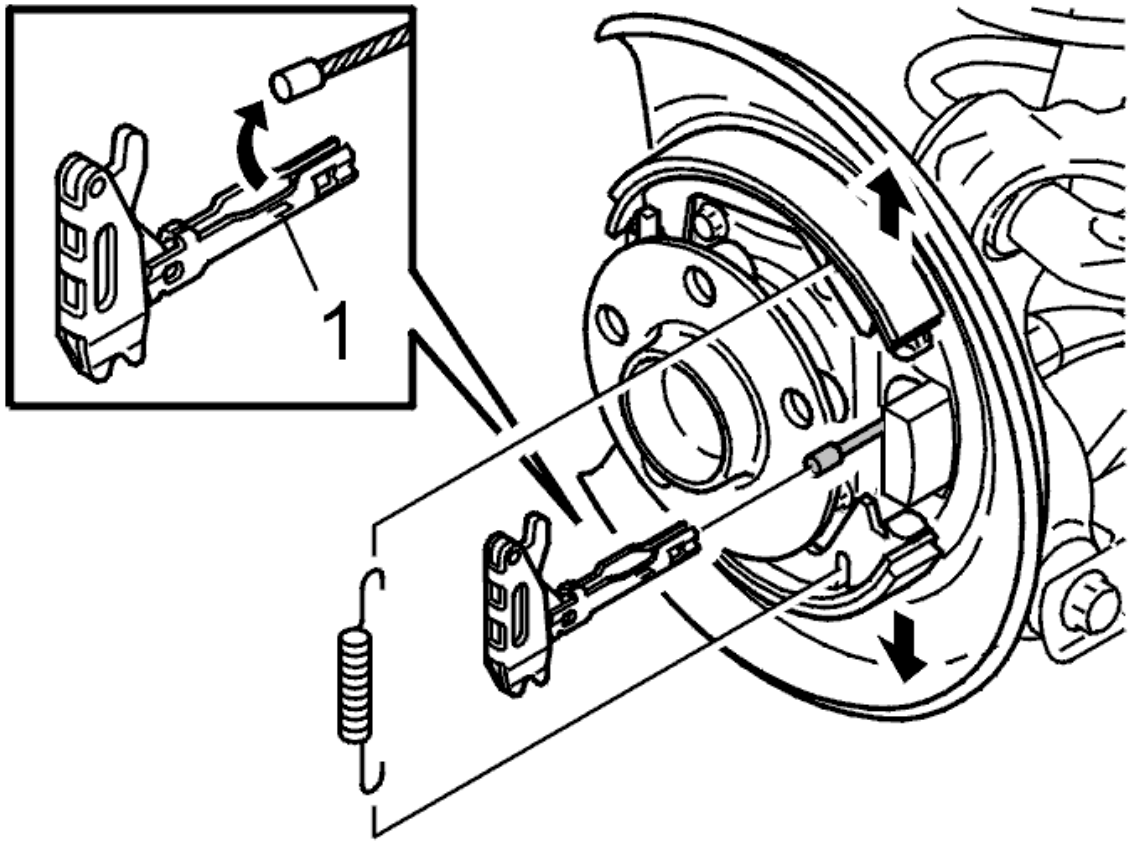

Fig. 31: Identifying Return Spring And Expander
Courtesy of VOLVO CARS CORPORATION

Remove:

- the return spring at the expander
- the expander. Lift the brake shoe slightly. Grip the expander and pull it outwards to access the cable.

Unhook or pry apart the expander (1) by the mechanical cable to remove it.

REMOVING THE BRAKE CABLE, CONTINUED

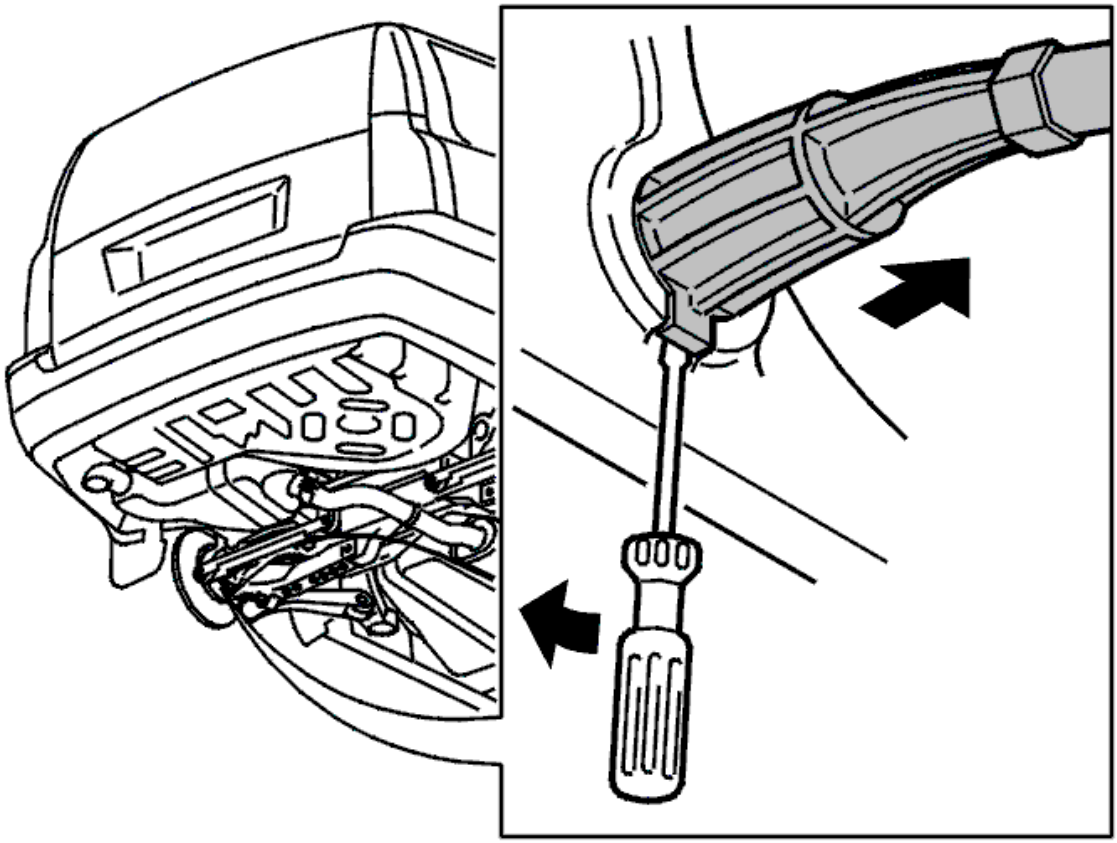

Fig. 32: Applying Screwdriver Between Guide Sleeve Lug And Wheel Arch
Courtesy of VOLVO CARS CORPORATION

Insert a screwdriver between the guide sleeve lug and the wheel unit. Pry apart slightly to remove the sleeve.

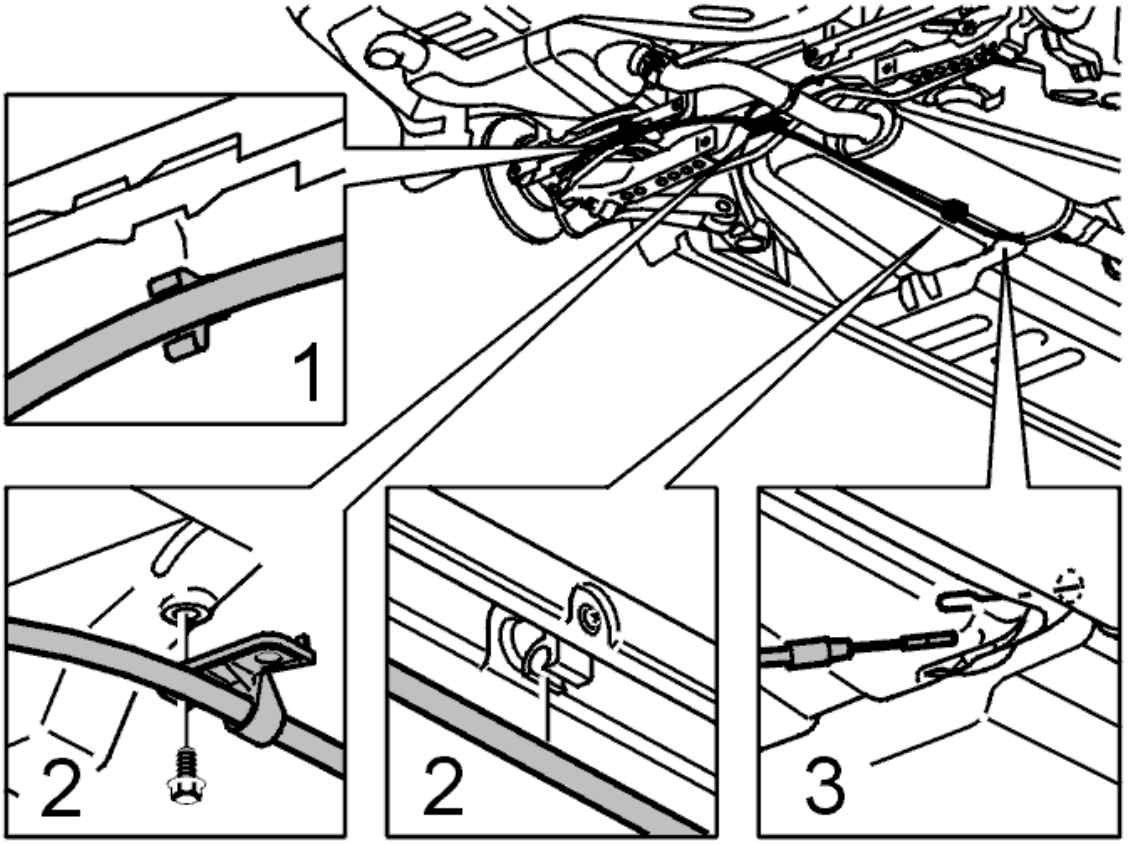

Fig. 33: Identifying Mechanical Brake Cable Removal
Courtesy of VOLVO CARS CORPORATION

Remove the clamp (1) by the tie rod.

Remove the mechanical cable from its mountings (2).

Pull the mechanical cable from the floor until the welding rod is visible (3).

Remove the mechanical cable from the welding rod.

INSTALLATION

NOTE: For tightening torques, see: TIGHTENING TORQUE .

INSTALLING THE MECHANICAL CABLE IN THE WHEEL UNIT

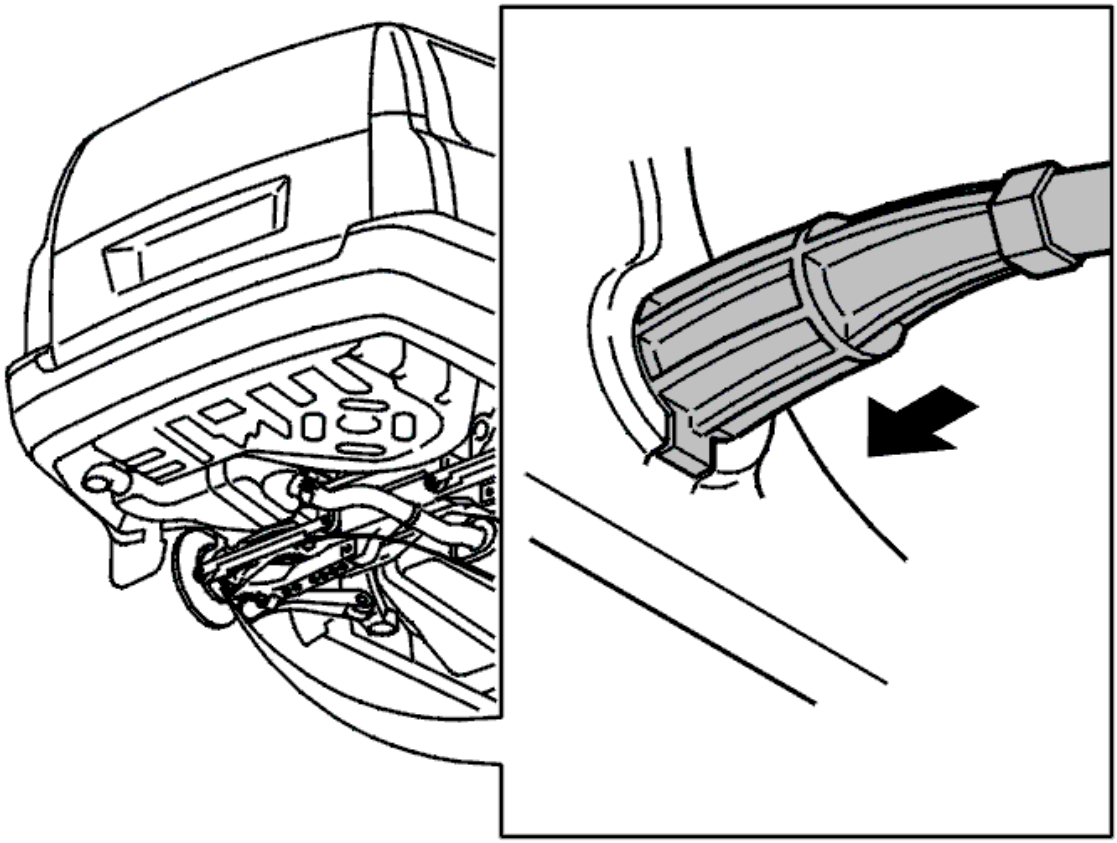

Fig. 34: Installing Brake Cable
Courtesy of VOLVO CARS CORPORATION

Lubricate the O-ring on the wheel unit lightly using petroleum jelly.

Install and press the guide lug for the cable sleeve into place in the wheel unit.

NOTE: This is important for the operation of the parking brake.

INSTALLING THE EXPANDER ON THE CABLE

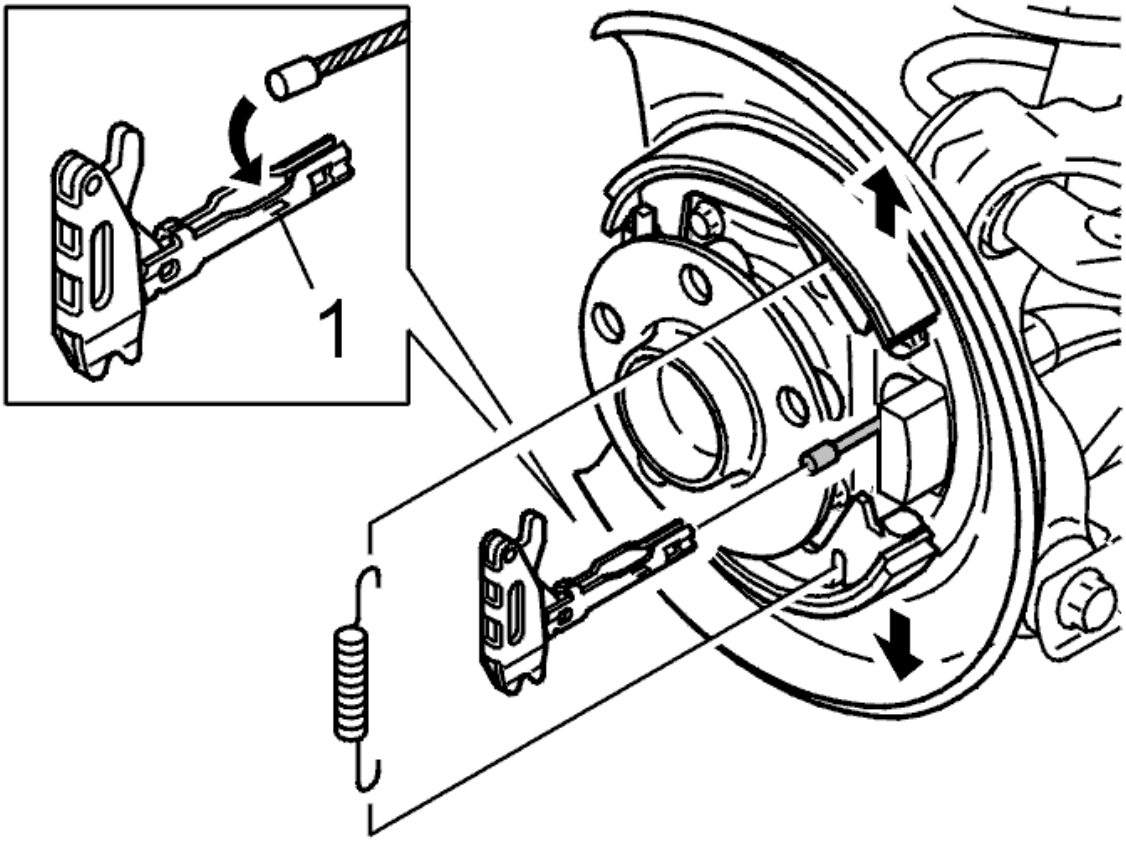

Fig. 35: Identifying Expander Installed On Mechanical Cable
Courtesy of VOLVO CARS CORPORATION

Install:

- the expander on the cable. Press the mounting together to lock the cable in the expander
- the expander between the brake shoes
- the return spring.

Check the function.

INSTALLING THE MECHANICAL CABLE

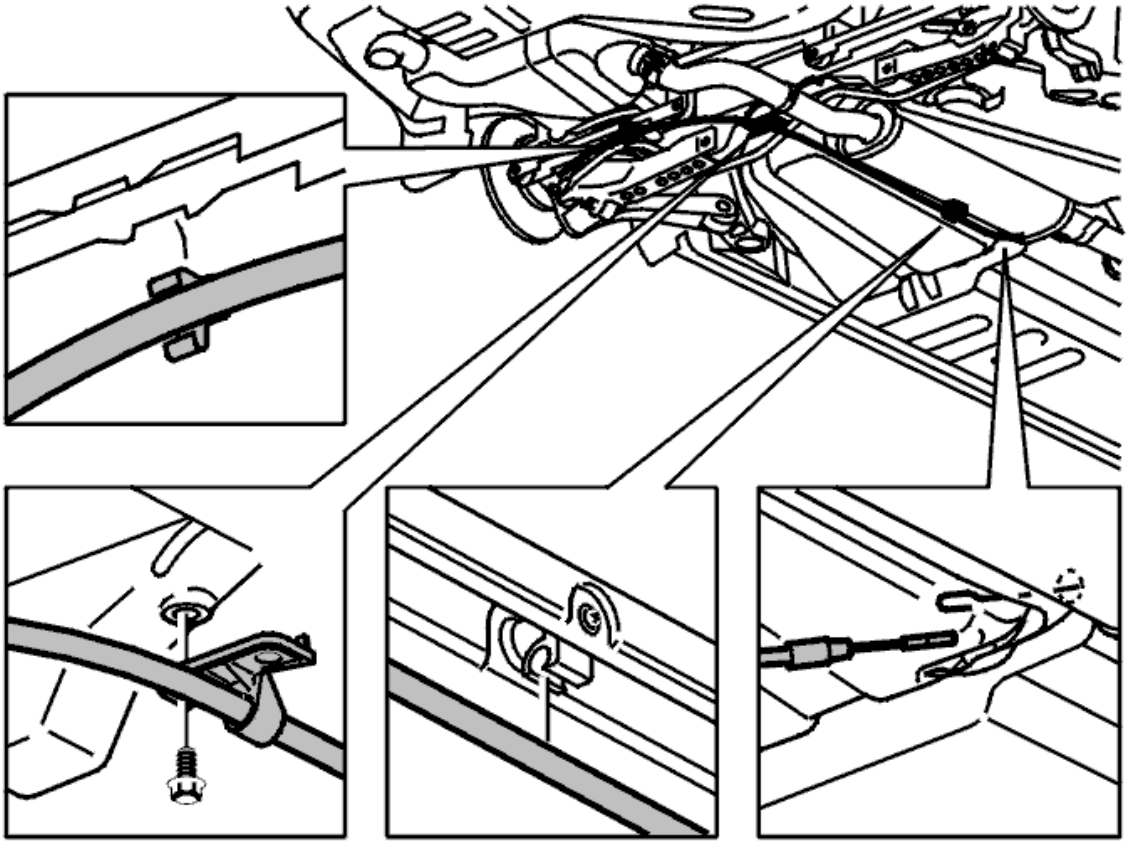

Fig. 36: Identifying Brake Cable & Clamps
Courtesy of VOLVO CARS CORPORATION

Secure the cable in its clamps and on the welding rod.

Bend the welding rod over the end of the cable.

Install the cable in the hole in the floor.

Press the rubber grommet into the hole in the floor.

Press the mechanical cable into place in its mounting between the heat shield and the fuel tank.

Also press the mechanical cable between the fuel tank and the edge of the heat deflector.

Lower the vehicle.

Take hold of the welding rod. Pull the mechanical cable with the sleeve through the bodywork and up to the parking brake lever.

Remove the welding rod.

Install the cable end in the segment.

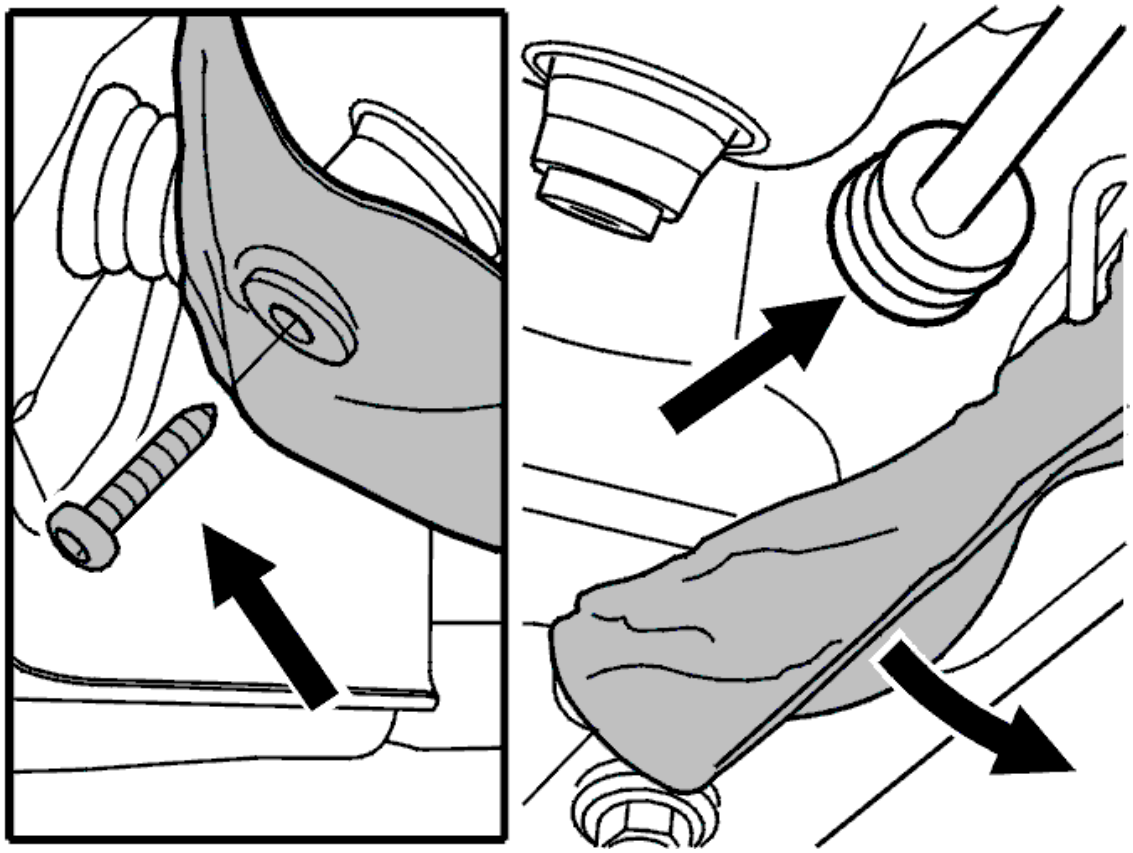

Fig. 37: Removing/Installing Heat Deflector Plate
Courtesy of VOLVO CARS CORPORATION

Raise the car.

Install the rubber seal against the bodywork.

Press the rubber grommet up until it seals.

Work up the heat shield. Install both the screws.

INSTALLING THE BRAKE DISC AND THE BRAKE CALIPER WITH THE HOLDER

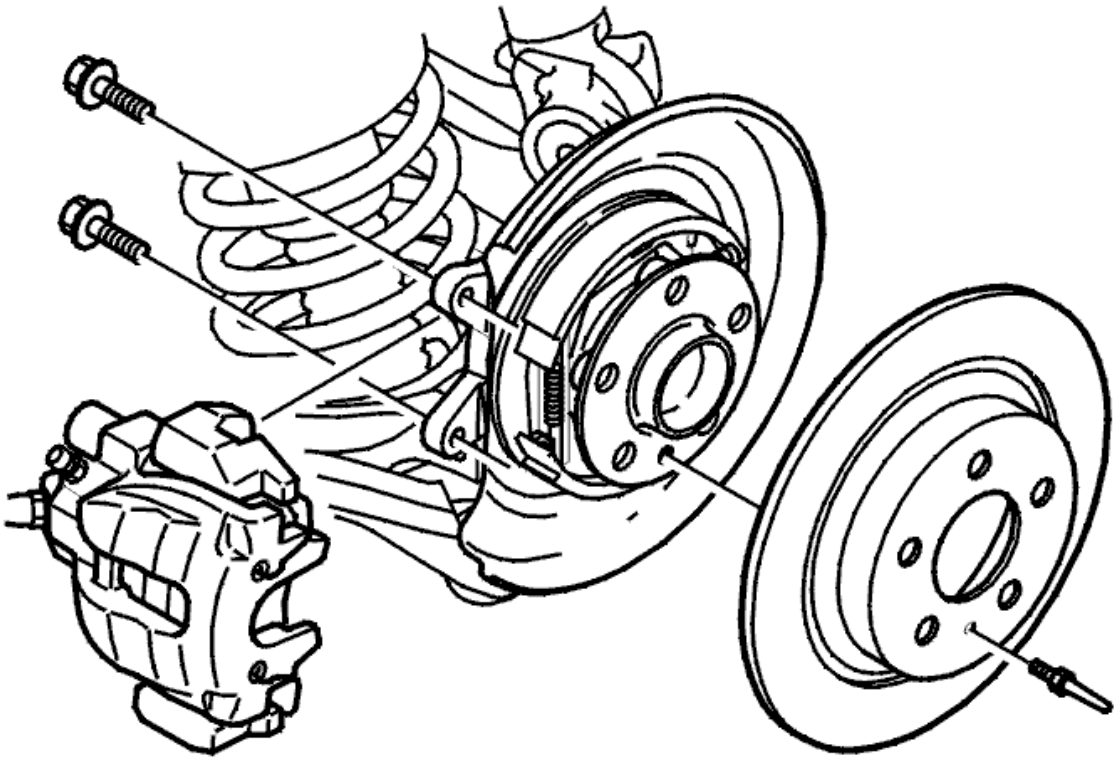

Fig. 38: Brake Disc And Caliper Holder
Courtesy of VOLVO CARS CORPORATION

Install:

- the 1 M6 screw for the disc
- the screws for the caliper holder. Tighten. See **TIGHTENING TORQUE** .

Use new mounting screws.

FINISHING

If the car has manual adjustment to the parking brake, see the illustration and (1). Adjust the parking brake. See: **PARKING BRAKE, ADJUSTING** .

If the car has a self-adjusting parking brake. Reset the self adjuster for the parking brake. See: **PARKING BRAKE SELF-ADJUSTMENT, RESETTING** .

NOTE: Activate the parking brake firmly for 10 minutes.

Install:

- the center console. See **CENTER CONSOLE, REPLACING**

- the wheel. See **INSTALLING WHEELS** .

ONLY WITH MANUAL ADJUSTMENT OF THE PARKING BRAKE

Post-adjust the parking brake if necessary.

PEDAL PARKING BRAKE, REPLACING (2005-2012)

NOTE: The illustrations in this service information are used for different model years and/or models. Some variation may occur. However, the essential information in the illustrations is always correct.

PREPARATORY WORK

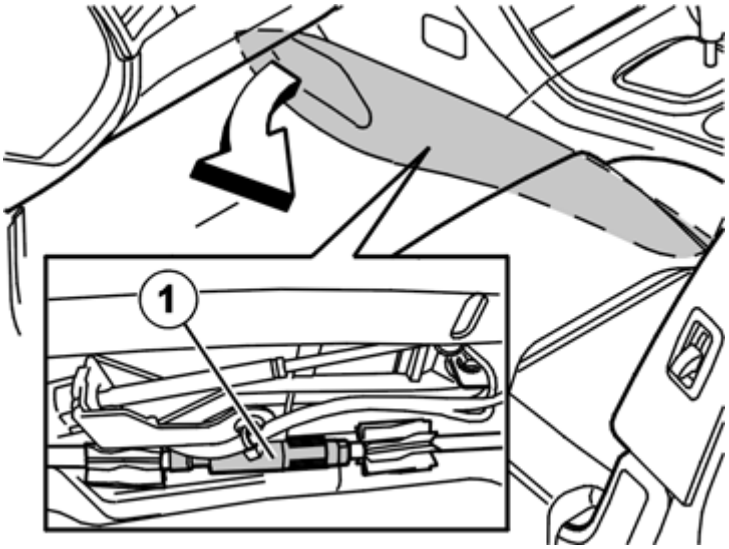

Fig. 39: Identifying Manual Adjustment For Parking Brake
Courtesy of VOLVO CARS CORPORATION

If the vehicle has manual adjustment (1), reset the parking brake. See **PARKING BRAKE, ADJUSTING** .

If the vehicle has a self-adjusting parking brake.

Reassemble and lock the self-adjuster unit for the parking brake. See: **PARKING BRAKE SELF-ADJUSTMENT, RESETTING** .

WARNING: **If the vehicle is equipped with an earlier version of the self-adjusting parking brake, continue to the previous method. See: PEDAL PARKING BRAKE, REPLACING.**

If the vehicle is equipped with a later version manual adjustment of the parking brake, continue according to this method.

REMOVAL

REMOVING THE CENTER CONSOLE

Remove center console. See: **CENTER CONSOLE, REPLACING** .

REMOVING THE BRAKE CABLE IN THE CENTER CONSOLE

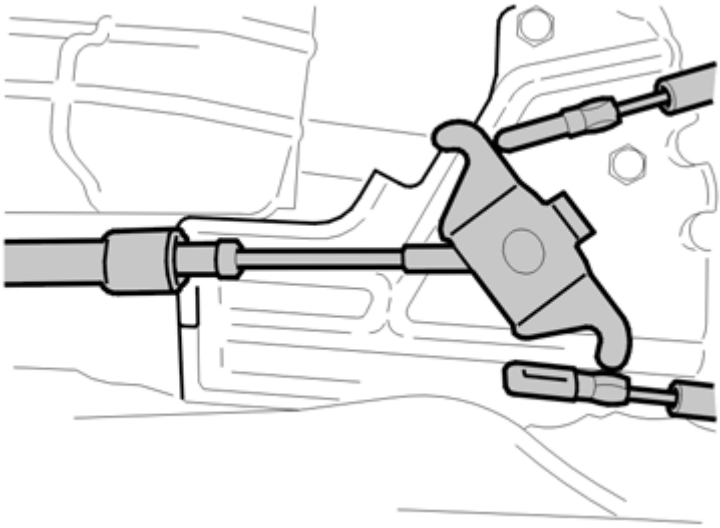

Fig. 40: Removing Rear Cables From Equalizer
Courtesy of VOLVO CARS CORPORATION

Remove the rear cables from the power distributor.

REMOVING THE SOUNDPROOFING PANEL

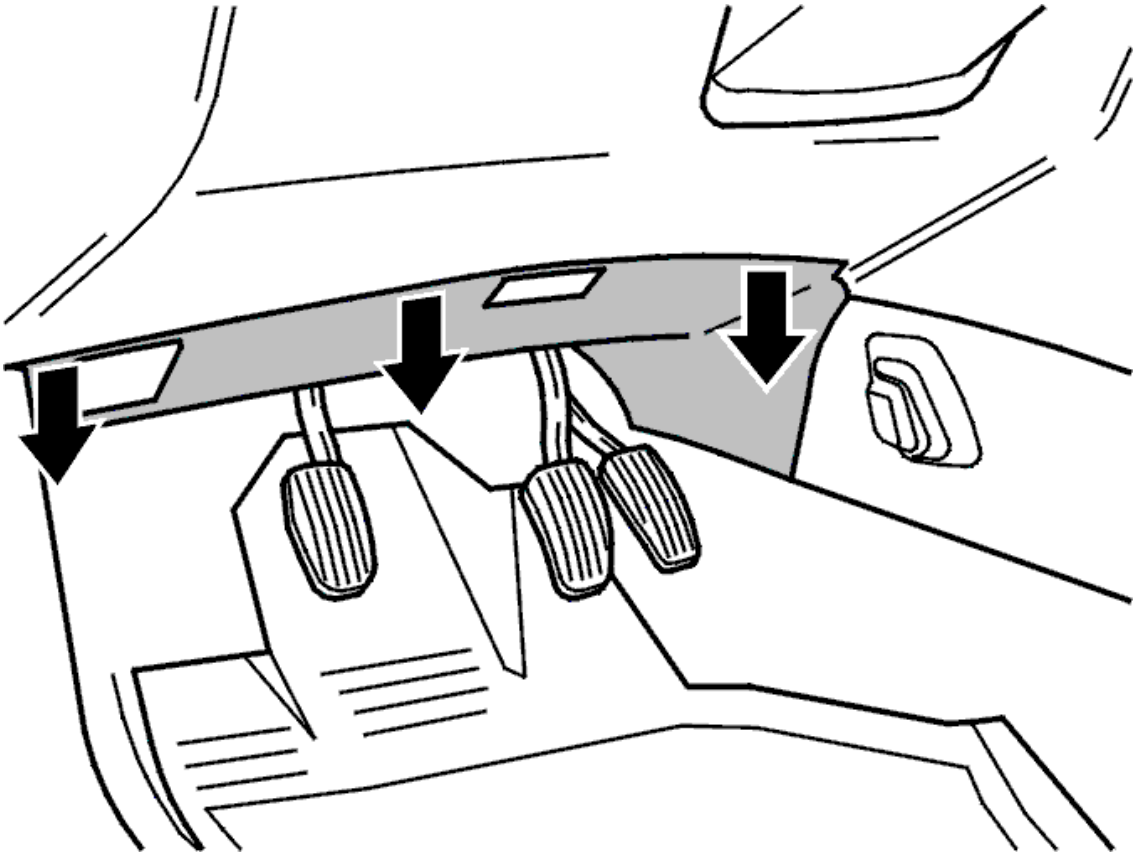

Fig. 41: Identifying Driver Side Soundproofing Panel
Courtesy of VOLVO CARS CORPORATION

Remove:

- the 2 x screws
- the soundproofing panel.

REMOVING THE OBDII BRACKET

Remove the 2 screws. Allow the bracket to hang in the cable harness.

REMOVING THE RELAY BOX

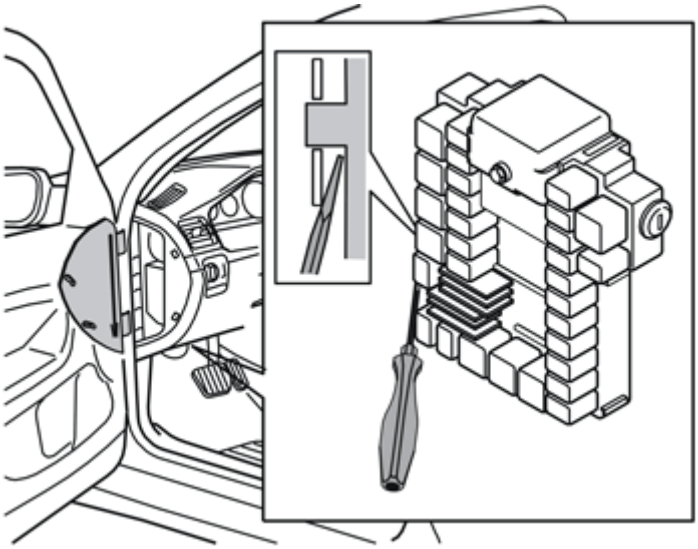

Fig. 42: Removing Relay Box
Courtesy of VOLVO CARS CORPORATION

Insert a screwdriver between the bracket and the relay box. Turn the screwdriver so that the bracket opens out. At the same time, pull the relay box out of the bracket towards the underside of the dashboard. Lift the relay box off the bracket. Pull the relay box downward under the dashboard.

REMOVING THE PARKING BRAKE PEDAL

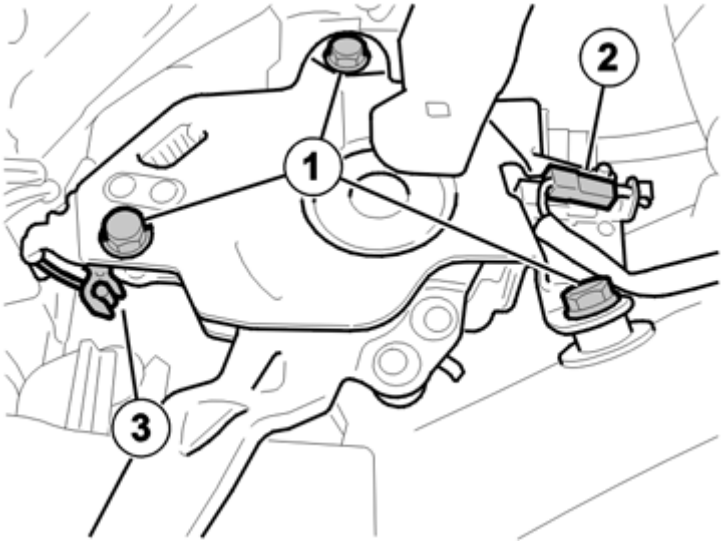

Fig. 43: Identifying Bolts, Connector And Cable
Courtesy of VOLVO CARS CORPORATION

Remove:

- the pedal (1) from the bodywork. Slacken off the 3 screws and pull / twist out the pedal diagonally backwards / inwards. Remove the pedal
- the cable harness (2) for the pedal switch

- the disengagement cable (3) for the pedal.

REMOVING THE MECHANICAL CABLE FOR THE PARKING BRAKE PEDAL

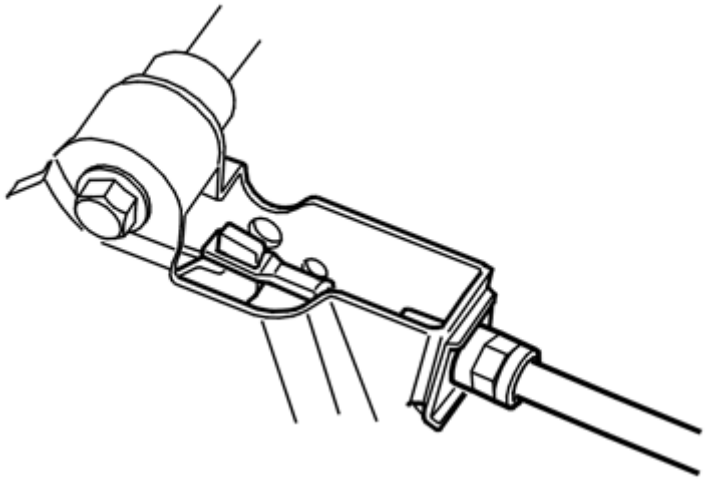

Fig. 44: Removing Mechanical Cable
Courtesy of VOLVO CARS CORPORATION

Remove:

- the mechanical cable from the cable pulley in the pedal
- the retaining clip
- the outer casing for the mechanical cable from the pedal using round-nose pliers.

INSTALLATION

NOTE: For tightening torques, see: TIGHTENING TORQUE .

INSTALLING THE CABLE FOR THE PARKING BRAKE PEDAL

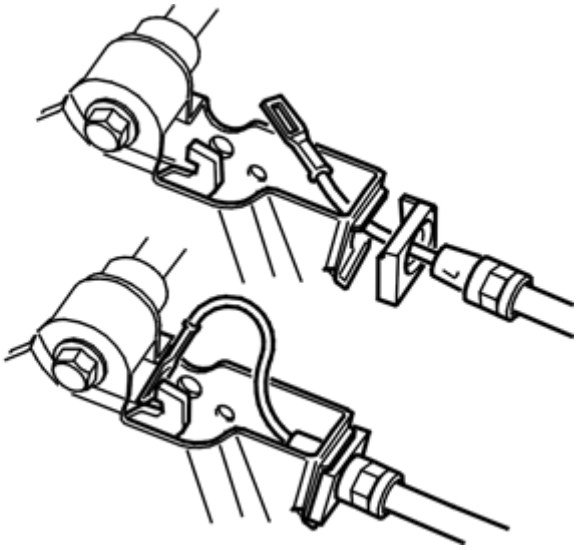

Fig. 45: Installing Cable Hook
Courtesy of VOLVO CARS CORPORATION

Applies to cars with pedals up to part number 30666703:

NOTE: The wide edge of the spacer washer must point to the left in the vehicle.

Press the mechanical cable into place in the pedal.

Secure the mechanical cable using the retaining clip.

Apply low-temperature grease, P/N 1161427-8, to the end piece of the mechanical cable.

Install the end piece of the mechanical cable in the cable pulley in the pedal.

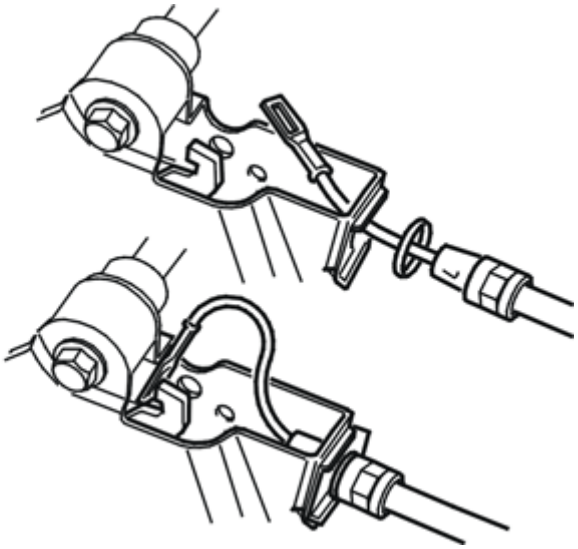

Fig. 46: Installing Cable Hook
Courtesy of VOLVO CARS CORPORATION

Applies to cars with pedals part number 30714010 or higher:

CAUTION: Remove the plastic spacer washer. Only a steel washer may be used as a spacer, this prevents abnormal wear of the primary cable.

Press the mechanical cable into place in the pedal.

Secure the cable using the retaining clip. Apply low-temperature grease, P/N 1161427-8, to the end piece of the mechanical cable.

Install the end piece of the mechanical cable in the cable pulley in the pedal.

INSTALLING THE BRAKE CABLE IN THE CENTER CONSOLE

Hook the power distributor for the front brake cable into place in the two rear brake cables.

INSTALLING THE PARKING BRAKE PEDAL

Install:

- the disengagement cable for the pedal
- the cable harness for the switch before the pedal has been turned in
- the parking brake pedal using the 3 x M8 screws.

INSTALLING THE RELAY BOX IN THE PASSENGER COMPARTMENT

Install the relay box on the bracket.

Press the relay box forward so that the catches engage in the bracket and "click".

INSTALLING THE OBDII BRACKET

Install:

- the OBDII bracket
- the 2 screws.

INSTALLING THE SOUNDPROOFING PANEL

Install:

- the soundproofing panel
- the 2 screws.

INSTALLING THE CENTER CONSOLE

Install the centre console. See: **CENTER CONSOLE, REPLACING** .

FINISHING

Adjust the parking brake. See **PARKING BRAKE, ADJUSTING** .

PEDAL PARKING BRAKE, REPLACING

NOTE: The illustrations in this service information are used for different model years and/or models. Some variation may occur. However, the essential information in the illustrations is always correct.

REMOVAL

REMOVING THE CENTER CONSOLE

Remove the center console. See: **CENTER CONSOLE, REPLACING** .

REMOVING THE BRAKE CABLE FROM THE CENTER CONSOLE

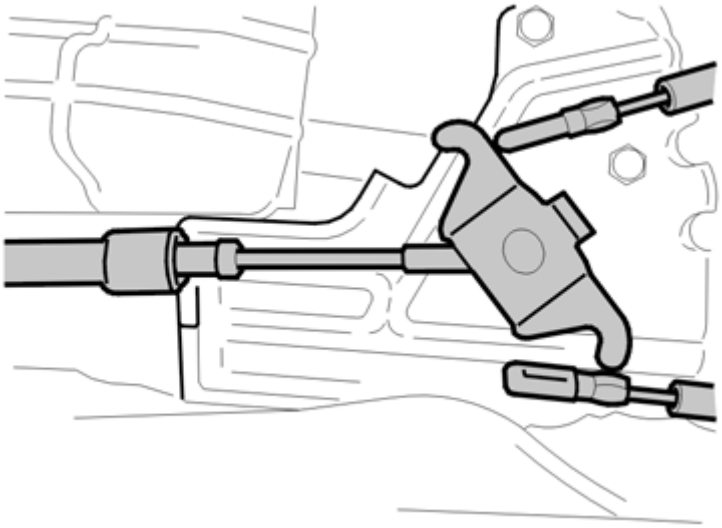

Fig. 47: Removing Rear Cables From Equalizer
Courtesy of VOLVO CARS CORPORATION

Unhook the power distributor for the front brake cable from the two rear brake cables.

REMOVING THE PARKING BRAKE CABLE

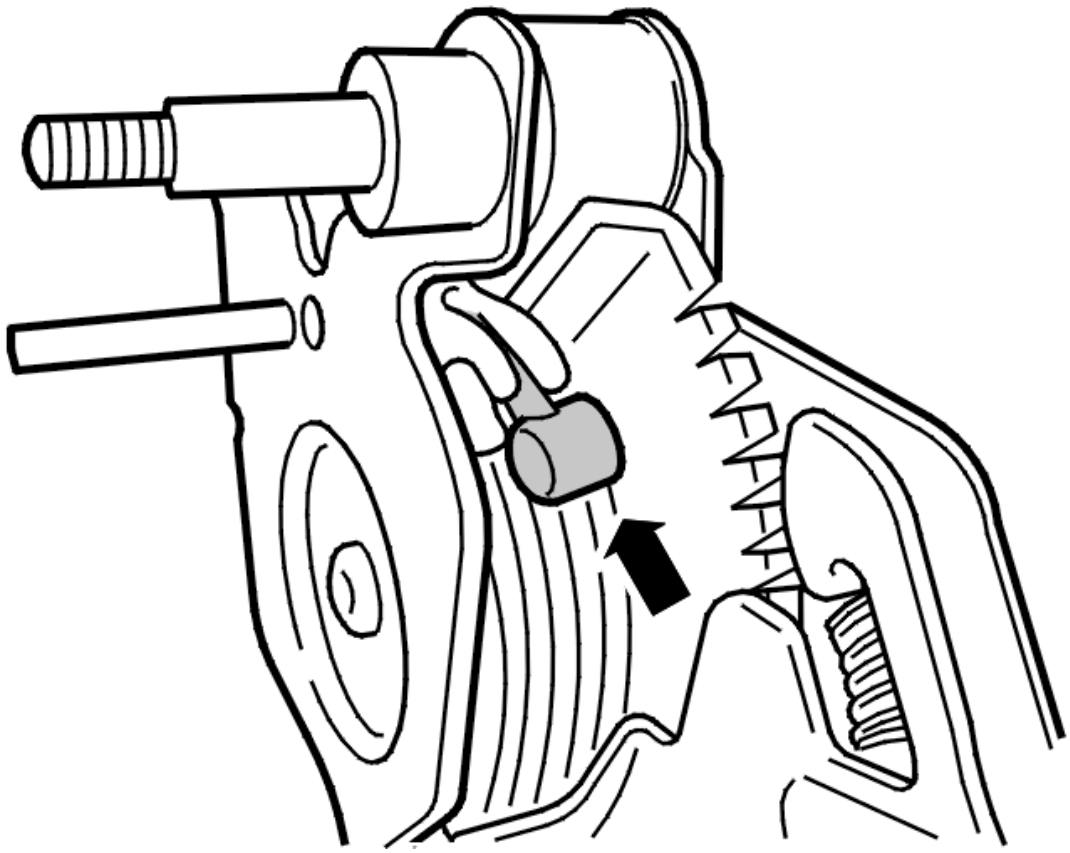

Fig. 48: View Of Cable In Pulley
Courtesy of VOLVO CARS CORPORATION

Remove:

- the cable from the cable pulley in the pedal
- the outer casing for the cable from the pedal using round-nose pliers.

INSTALLATION

NOTE: For tightening torques, see TIGHTENING TORQUE .

INSTALLING THE PARKING BRAKE CABLE

Press the cable into place in the pedal.

Install the cylindrical steel end piece for the cable in the cable pulley in the pedal.

Install the parking brake pedal. See **PARKING BRAKE SELF-ADJUSTMENT, RESETTING** .

NOTE: Press the pedal down so that the clip cracks.

INSTALLING THE BRAKE CABLE TO THE CENTER CONSOLE

Hook the power distributor for the front brake cable into place in the two rear brake cables.

INSTALLING THE CENTER CONSOLE

Install the center console. See: **CENTER CONSOLE, REPLACING** .

FINISHING

Install the parking brake pedal. See: **PARKING BRAKE SELF-ADJUSTMENT, RESETTING** .

NOTE: Press the pedal down so that the clip cracks.

EXTERIOR/INTERIOR TRIM

Power transmission

EXTERIOR/INTERIOR TRIM

REPLACING THE FLOOR CONSOLE SIDE PANEL

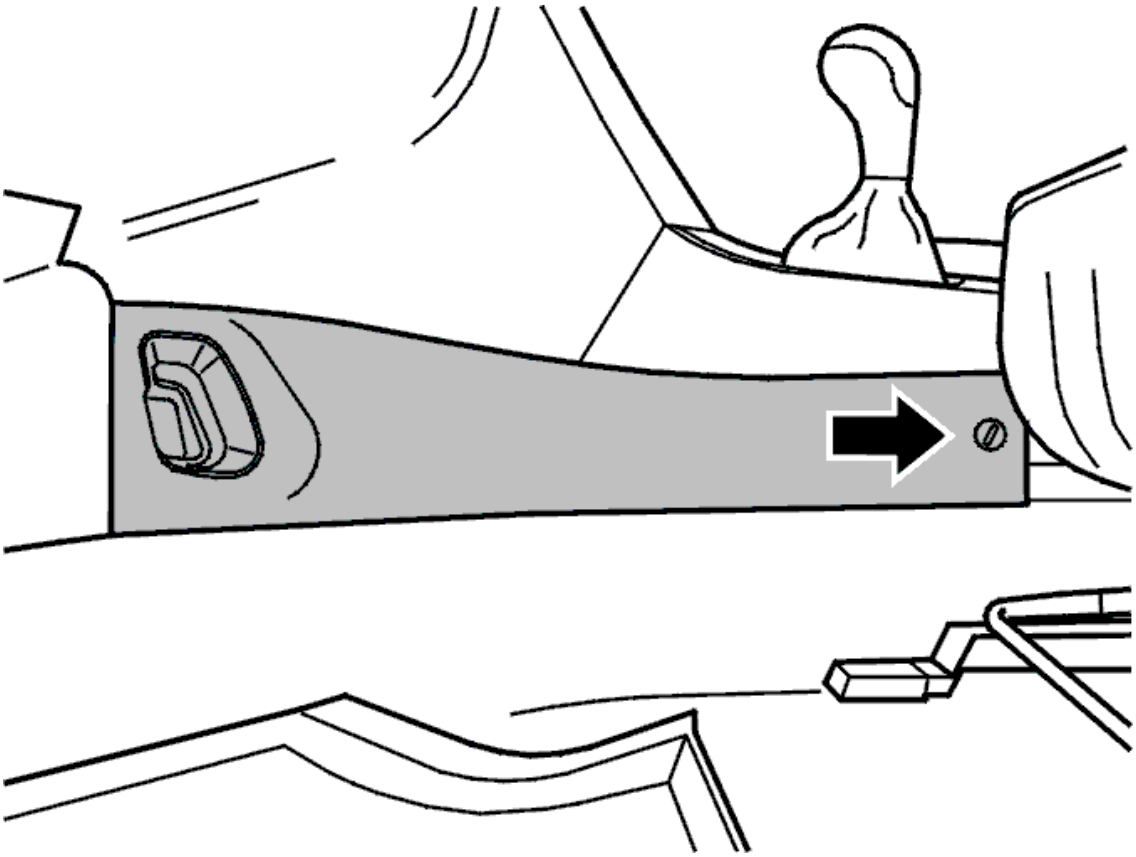

Fig. 1: Identifying Soundproofing Panel
Courtesy of VOLVO CARS CORPORATION

- Remove the soundproofing panel
- Move the front seat to the rearmost position
- Turn the clips a 1/4 turn.

  HINT: Use a washer or a coin.

- Slide the panel backwards
- Remove the panel.

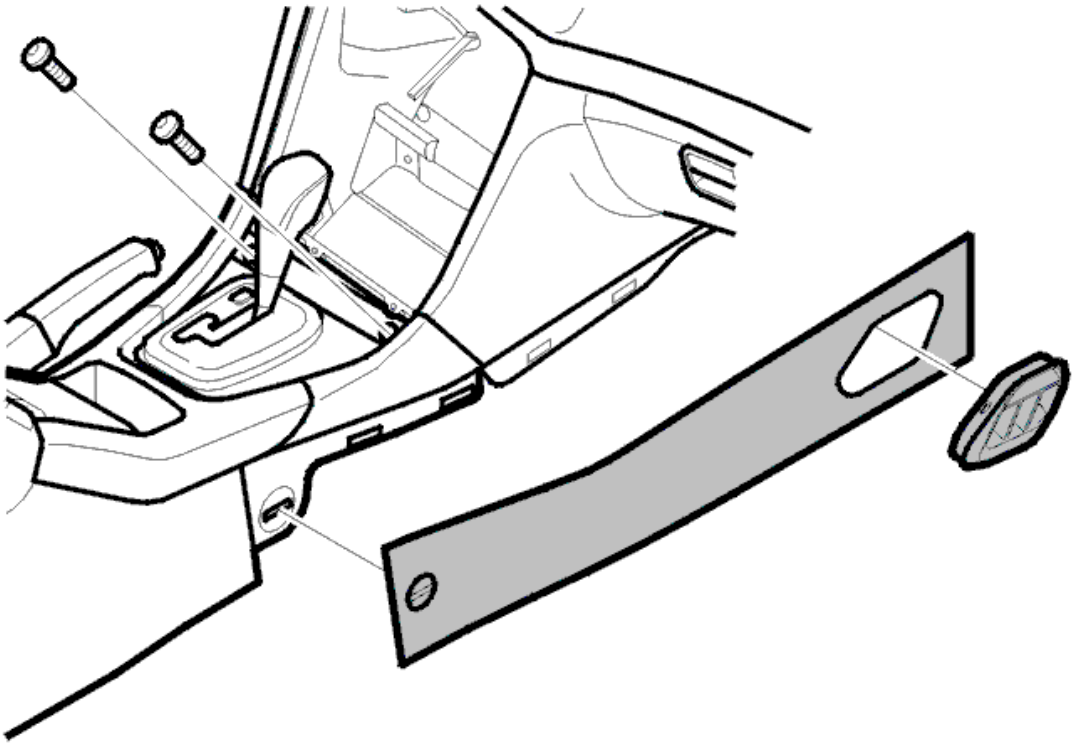

Fig. 2: Identifying Nozzle Removal
Courtesy of VOLVO CARS CORPORATION

- Unsnap the nozzle.

Install:

In reverse order.

BODY & FRAME

Power transmission

BODY & FRAME

SUB-FRAME, FRONT, REPLACING

Special tools:

see **9995716**

see **9995460**

see **9995045**

see **9512050**

PREPARATION

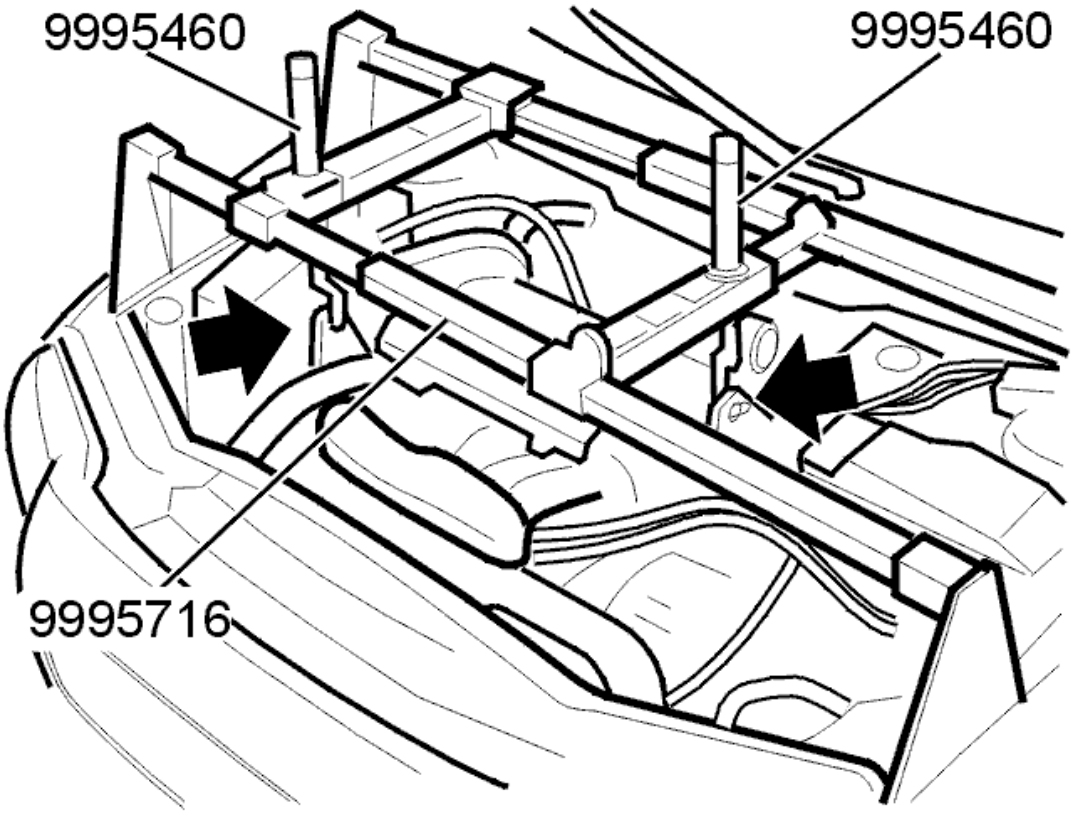

Fig. 1: 999 5716 And Lifting Hooks 999 5460 Installed
Courtesy of VOLVO CARS CORPORATION

- Install lifting beam see **9995716** . Install lifting hooks see **9995460**
- Lift the engine to relieve the load on the engine pads.

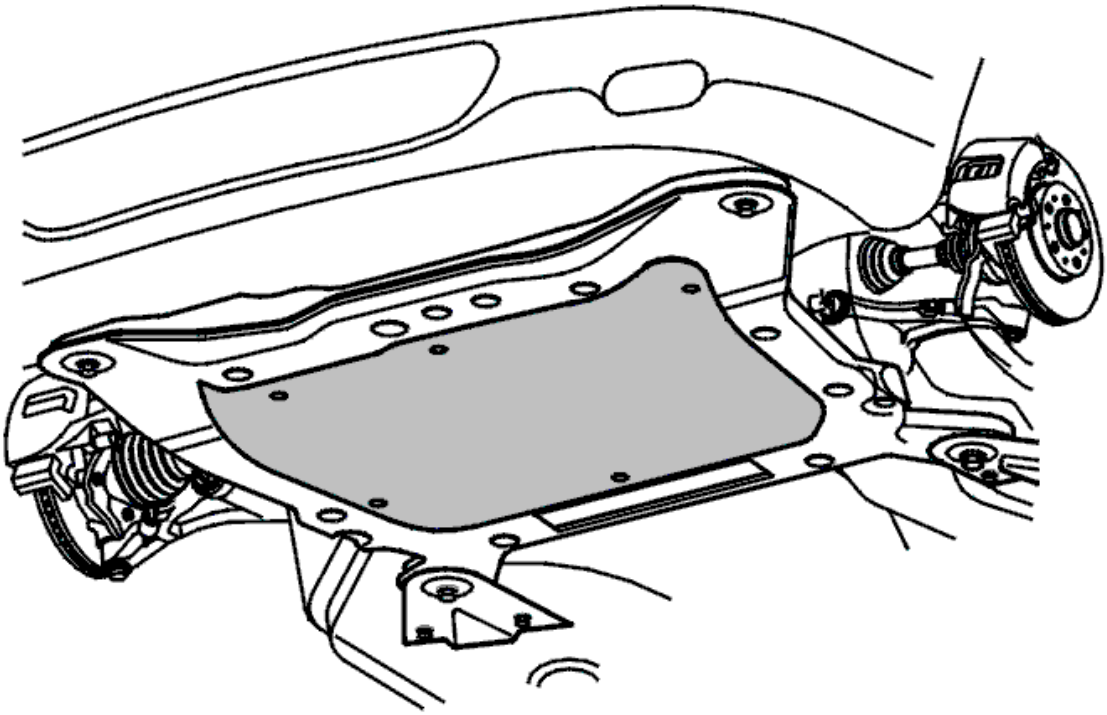

Fig. 2: Identifying Splash Guard Under Engine
Courtesy of VOLVO CARS CORPORATION

Remove

- the front wheels
- the splash guard under the engine.

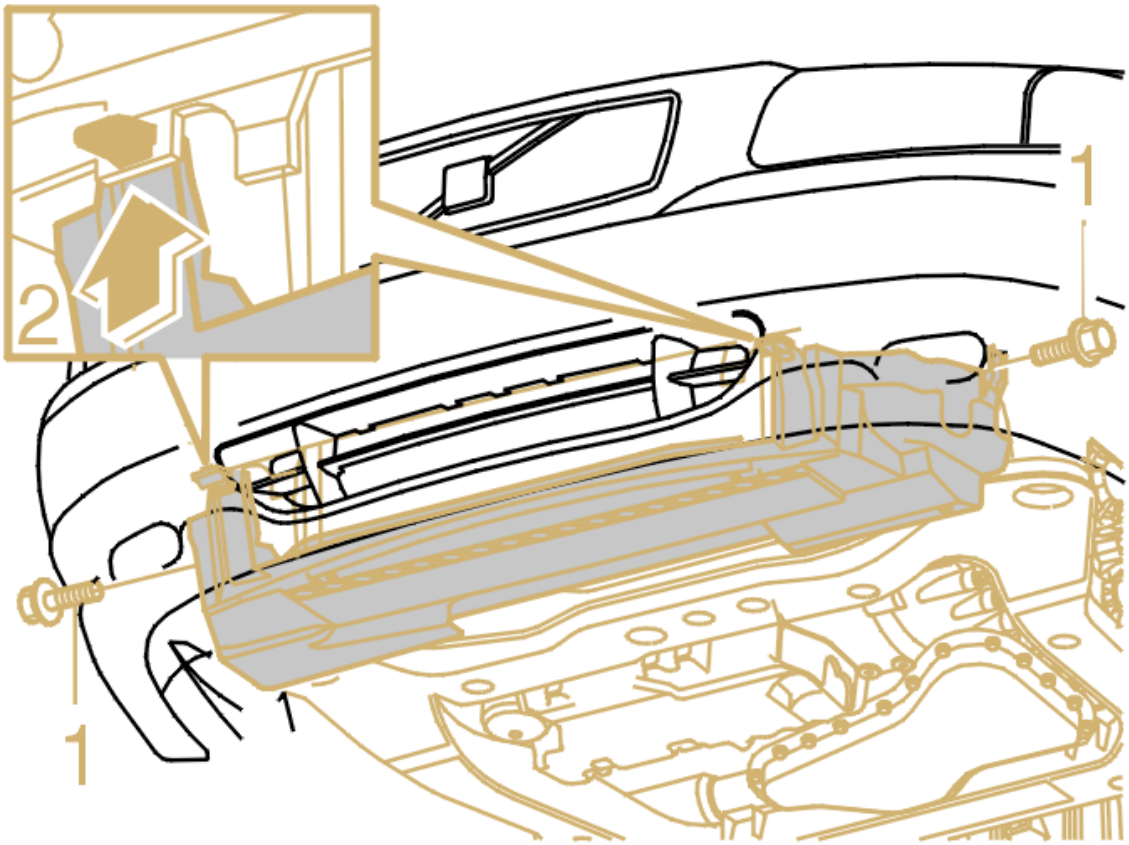

Fig. 3: Air Baffle
Courtesy of VOLVO CARS CORPORATION

- the air duct cover.

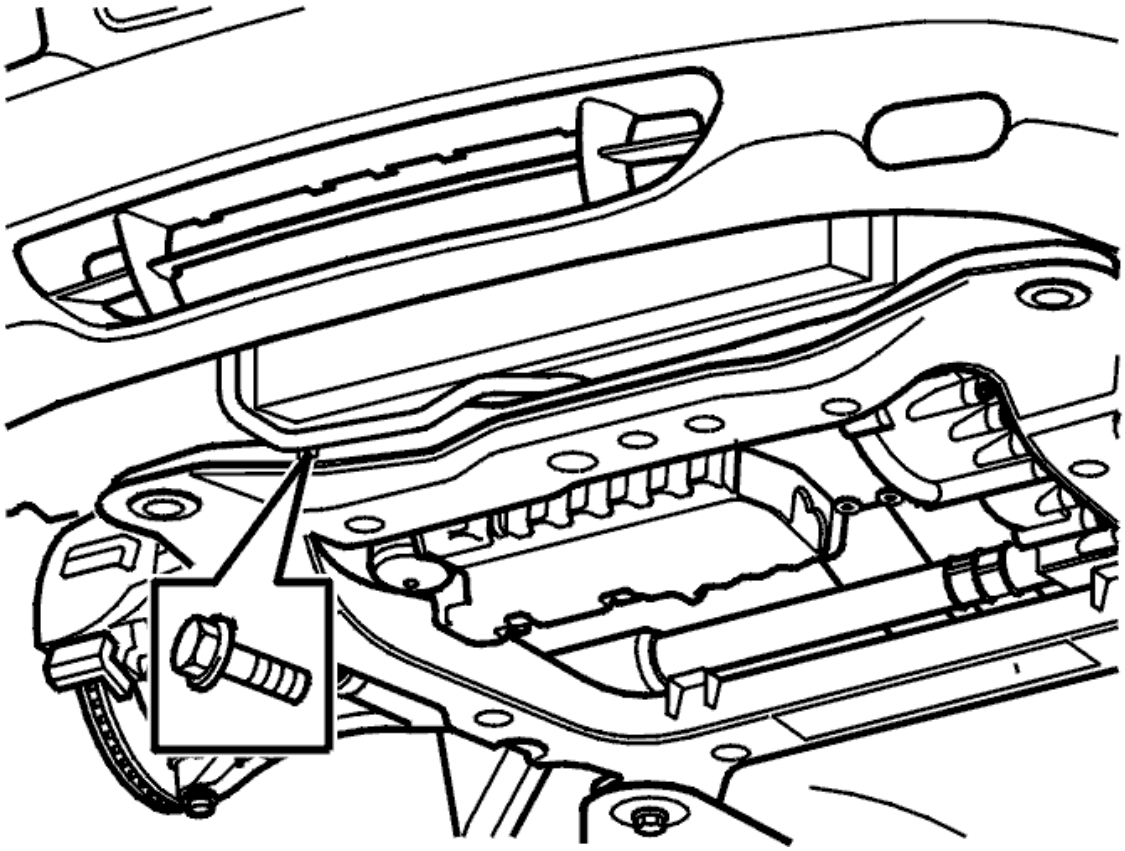

Fig. 4: Identifying Screw For Cable Duct
Courtesy of VOLVO CARS CORPORATION

- the cable duct screw.

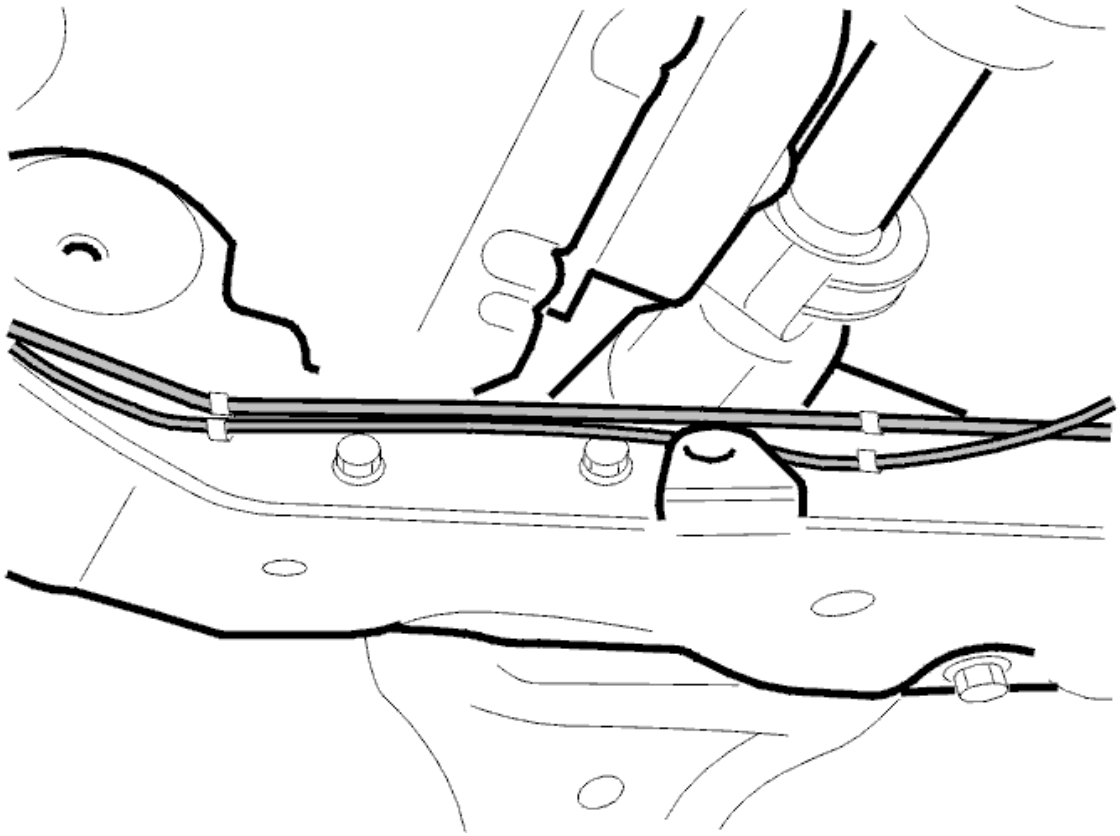

Fig. 5: Identifying Oil Pipe And Clamps For Steering Gear
Courtesy of VOLVO CARS CORPORATION

Remove

- the oil pipes from the steering gear from the snap fasteners on the sub-frame
- the hose for the EVAP canister along the sub-frame
- the fuel line for the engine block heater and the engine block heater (if applicable) on the left side of the sub-frame.

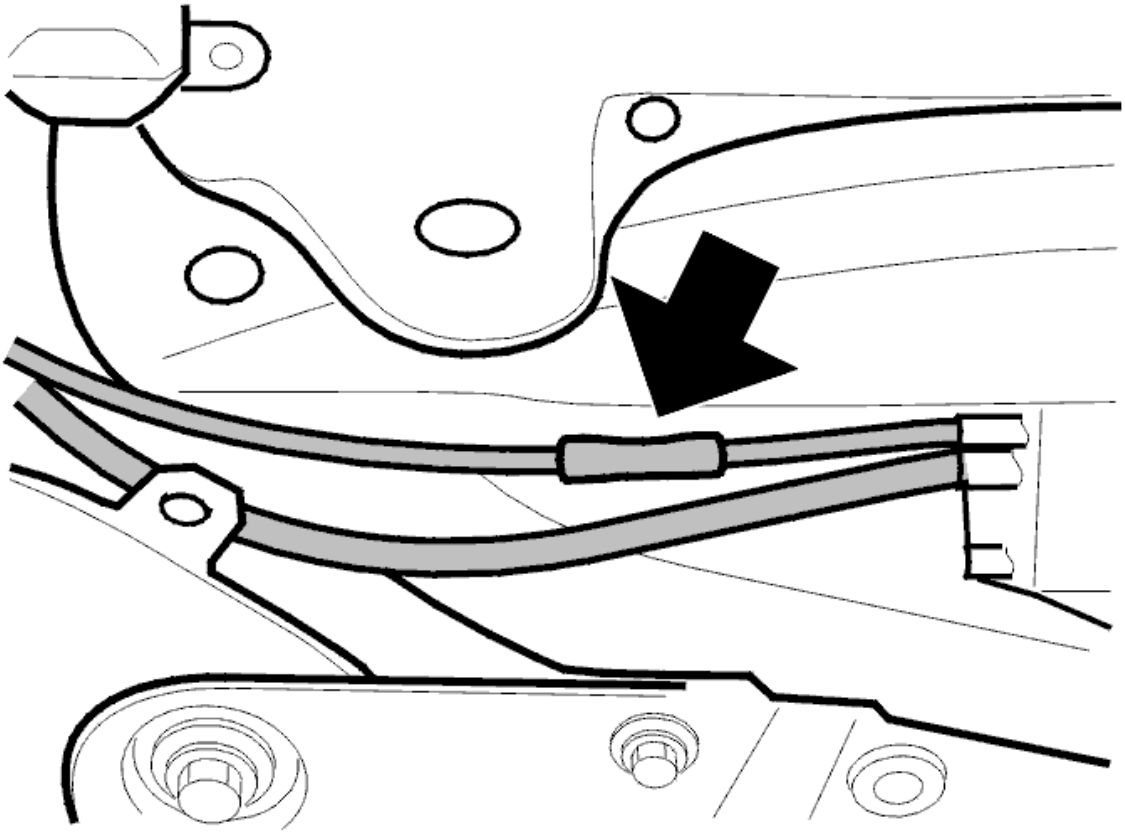

Fig. 6: EVAP Canister Hose
Courtesy of VOLVO CARS CORPORATION

Remove

- the hose for the EVAP canister in the joint by pulling apart the hose. Pull it forwards under the anti-roll bar and remove it from the snap fastener on the sub-frame.

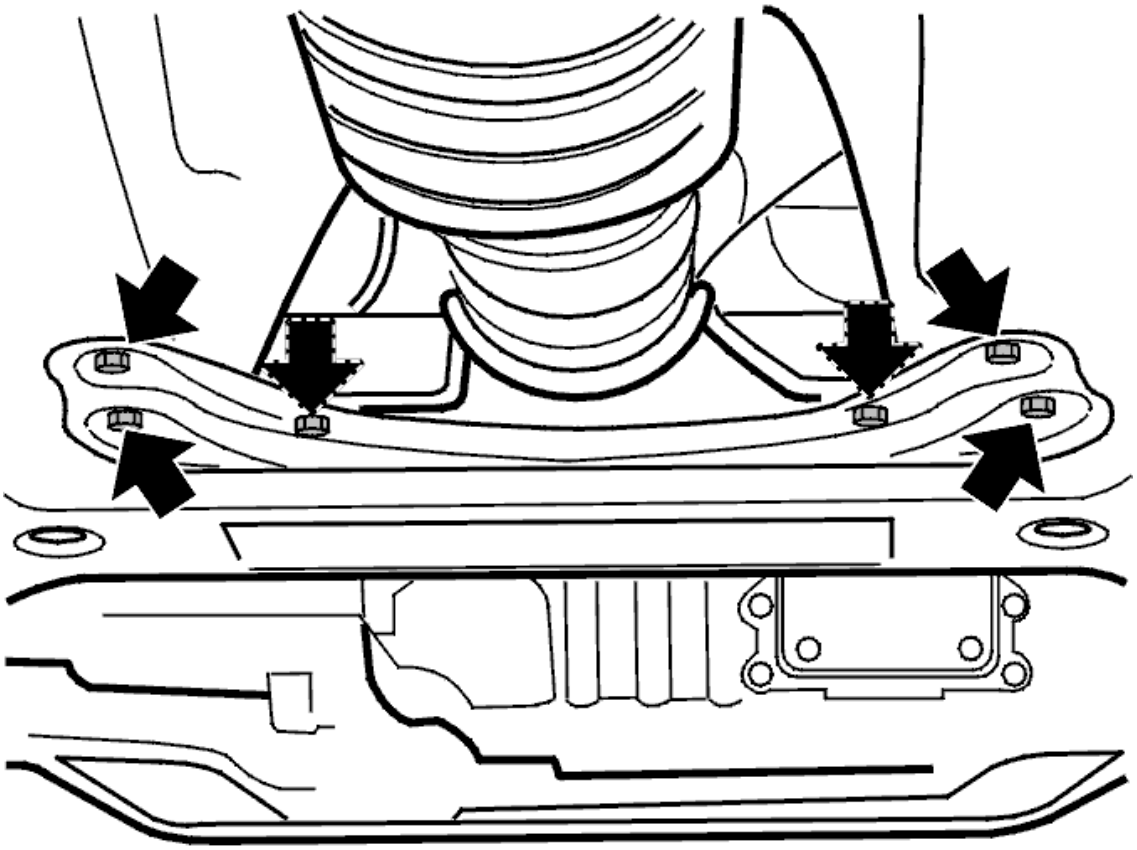

Fig. 7: Exhaust Pipe Bracket Screws
Courtesy of VOLVO CARS CORPORATION

Remove

- the mounting for the exhaust pipe on the bracket
- the screws holding the bracket for the exhaust pipe. Release the brake pipe from the snap fastener on the bracket
- the bracket.

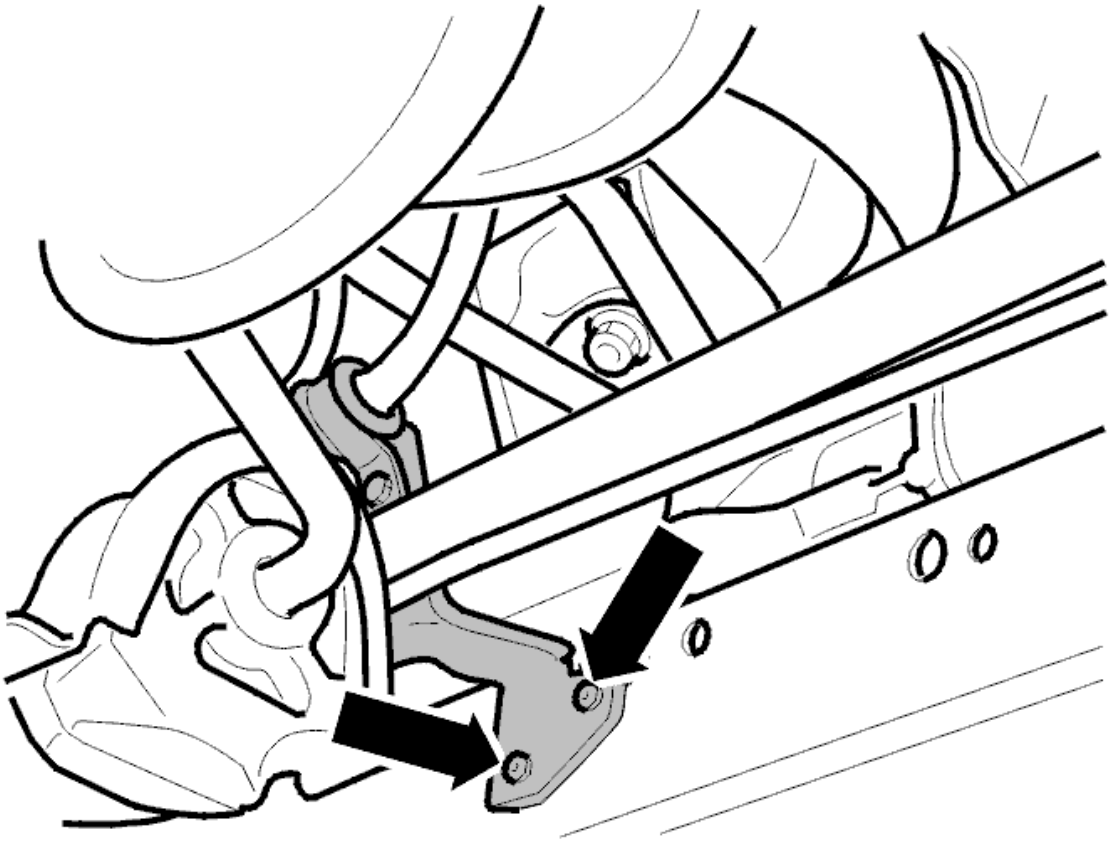

Fig. 8: Heated Oxygen Sensor (HO2S) From Mounting
Courtesy of VOLVO CARS CORPORATION

- Remove the heated oxygen sensor (HO2S) wiring from the mounting.

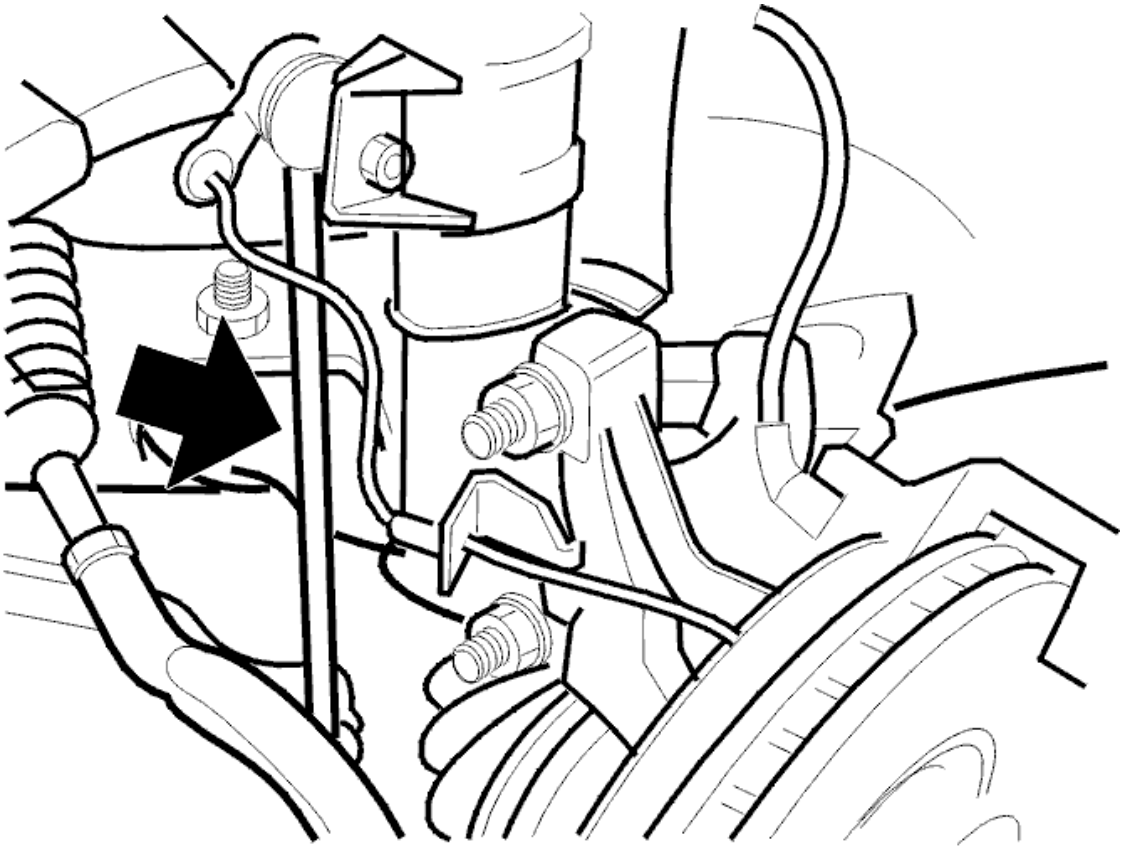

Fig. 9: Anti-Roll Bar
Courtesy of VOLVO CARS CORPORATION

- Remove the anti-roll bar links from the anti-roll bar. Counterhold using a Torx wrench so that the ball joint boot is not damaged.

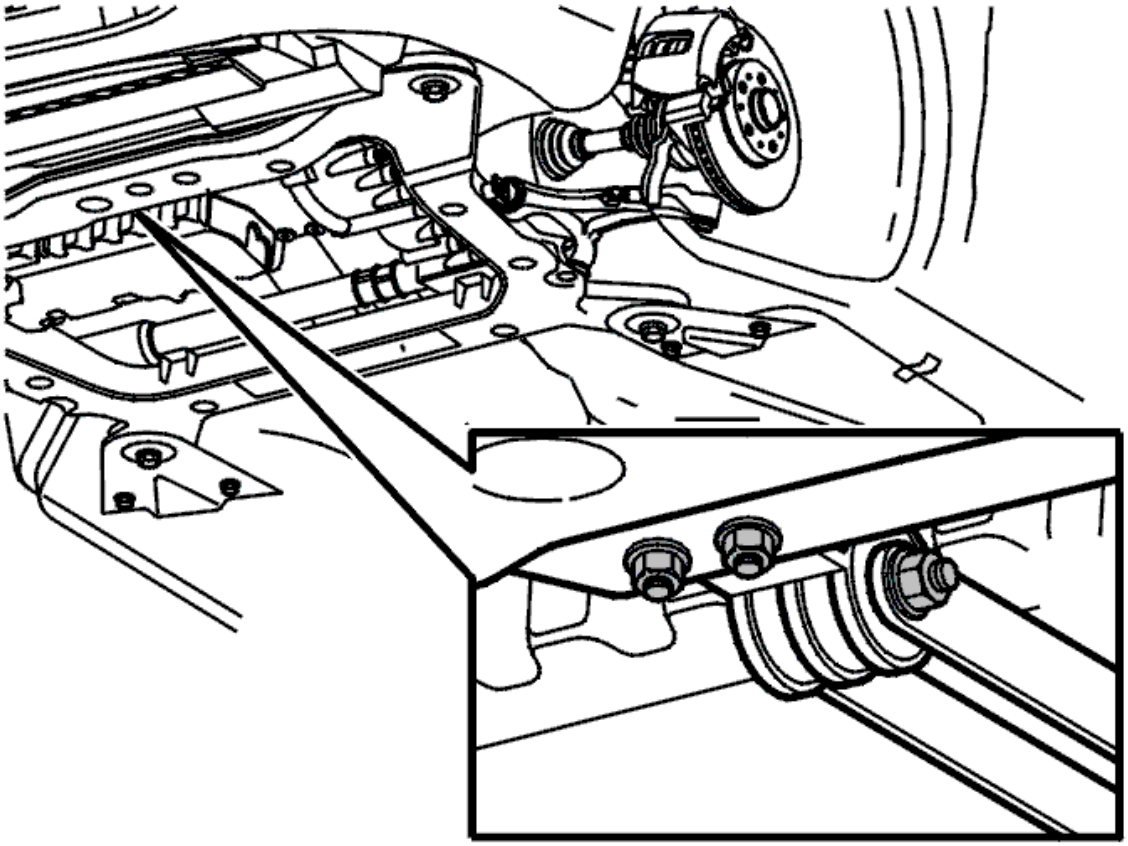

Fig. 10: Identifying Lower Torque Rod And Nuts
Courtesy of VOLVO CARS CORPORATION

- Remove both the nuts retaining the lower torque rod
- Remove the screw and bend up the bushing with the holder towards the torque rod.

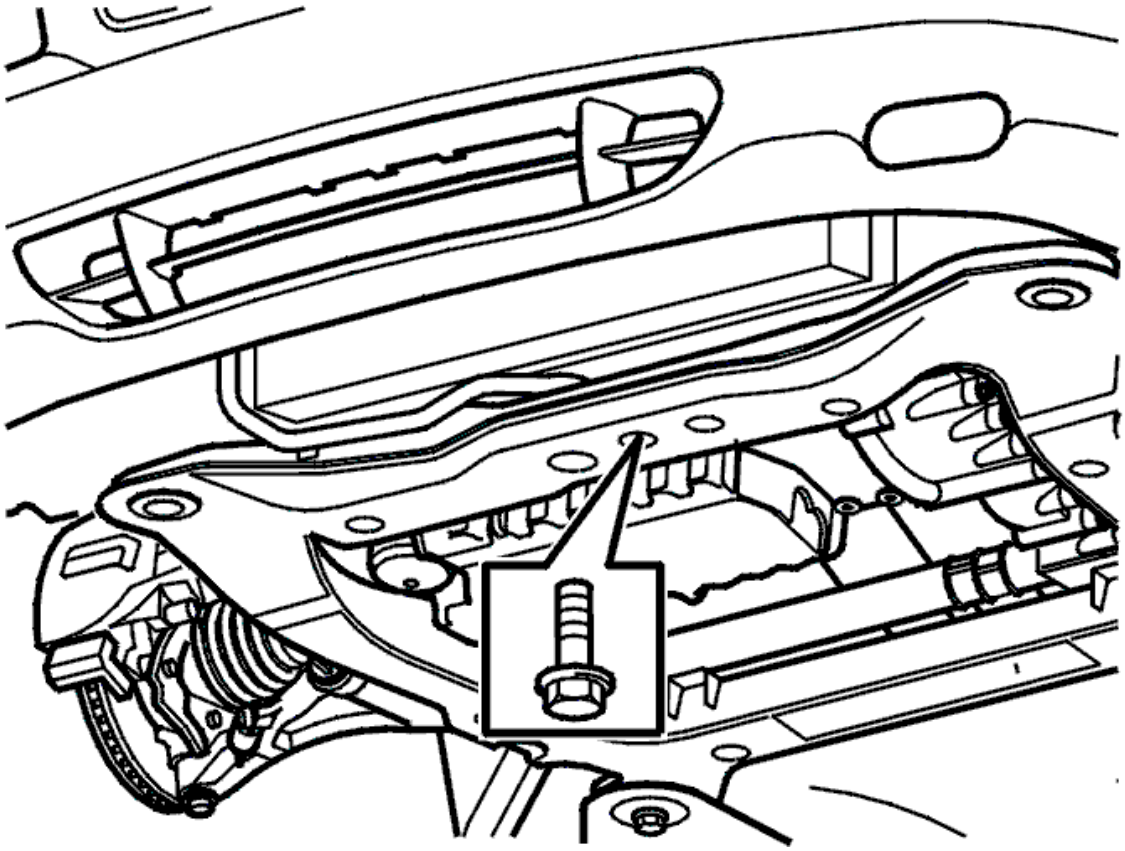

Fig. 11: Front Engine Pad Screw
Courtesy of VOLVO CARS CORPORATION

- Remove the front engine pad screw.

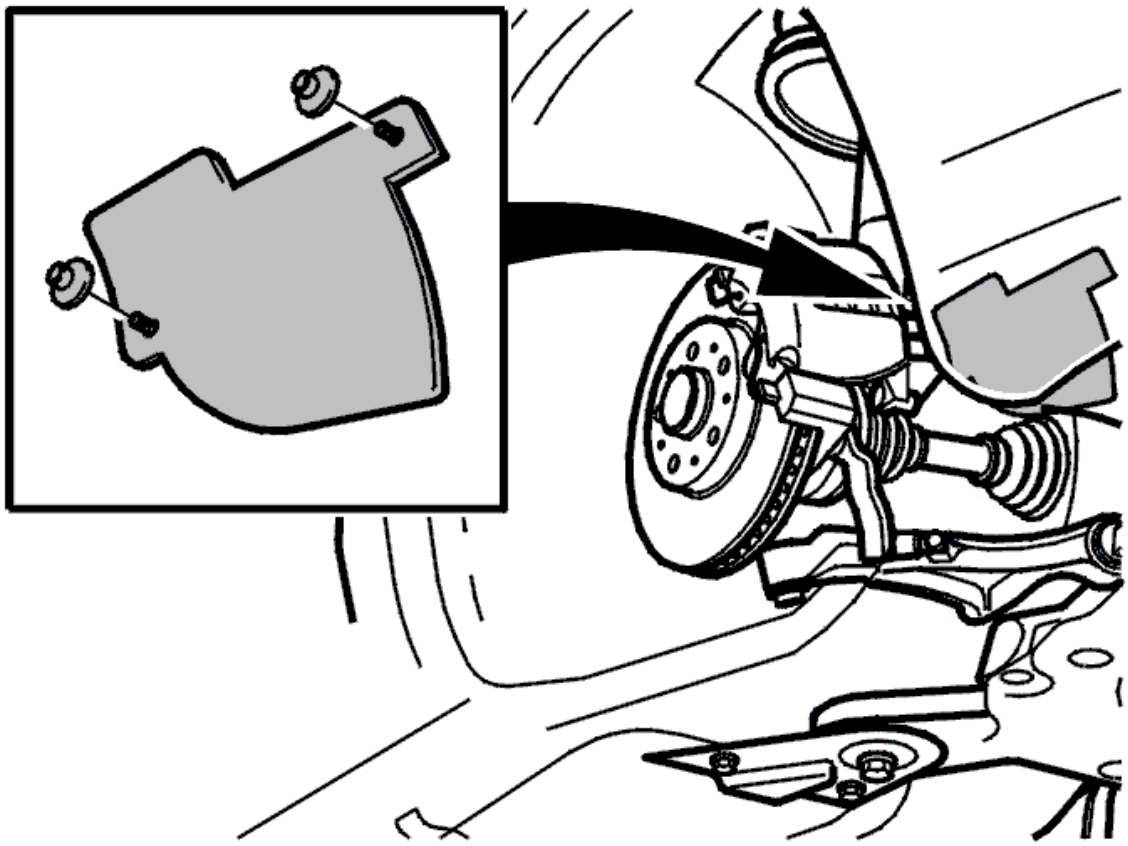

Fig. 12: Fender Liner
Courtesy of VOLVO CARS CORPORATION

- Slacken off the right lower front section of the fender liner
- Remove the plastic nuts on the fender liner
- Remove the splash guard
- Bend out the fender liner.

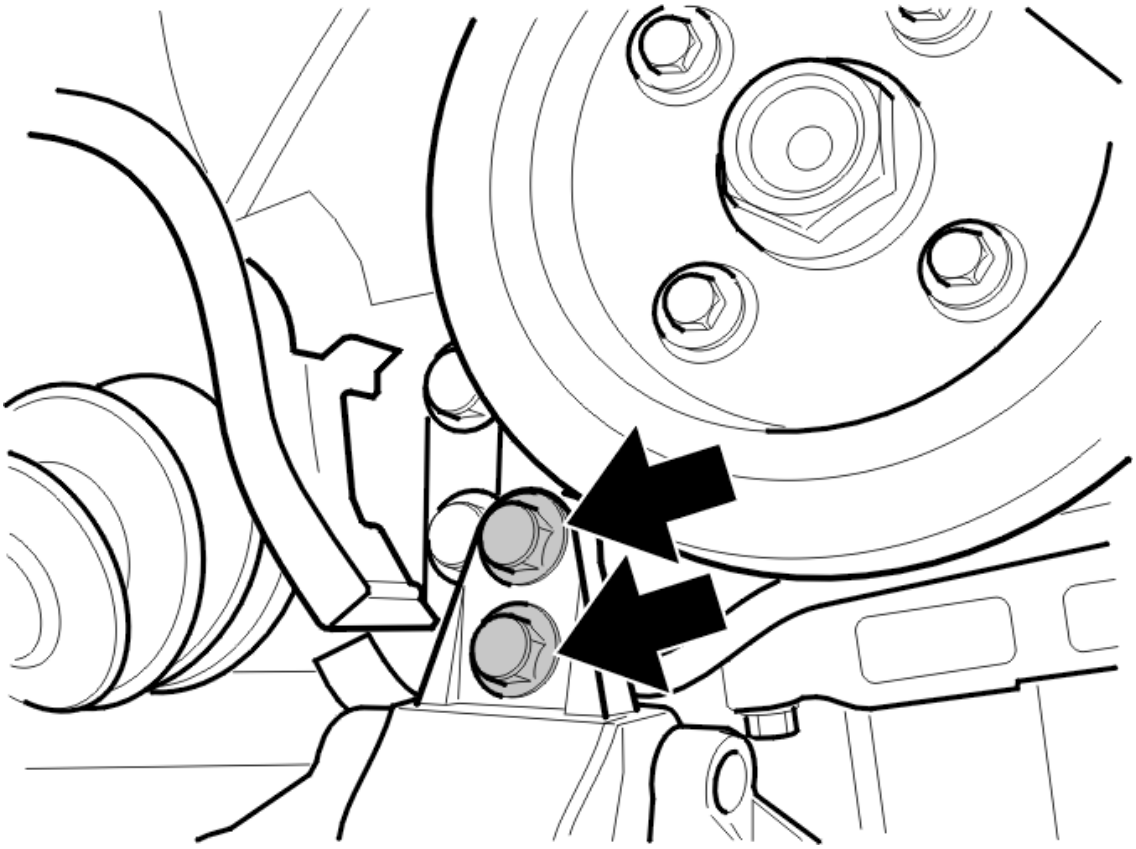

Fig. 13: Engine Mounting Screws
Courtesy of VOLVO CARS CORPORATION

- Remove both the right hand engine mounting screws.

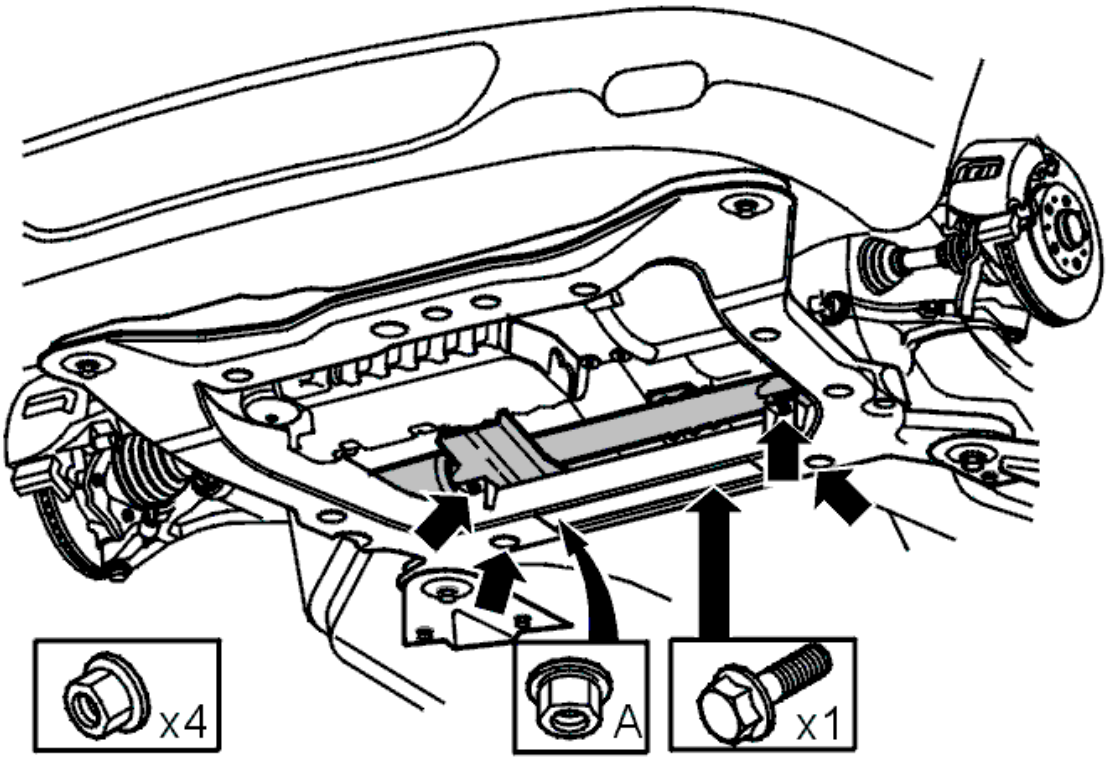

Fig. 14: Identifying Bolt And Nut Holding Steering Gear To Sub-Frame
Courtesy of VOLVO CARS CORPORATION

- Remove the four nuts and the screw holding the steering gear to the sub-frame
- Remove the delivery line from the clips on the sub-frame

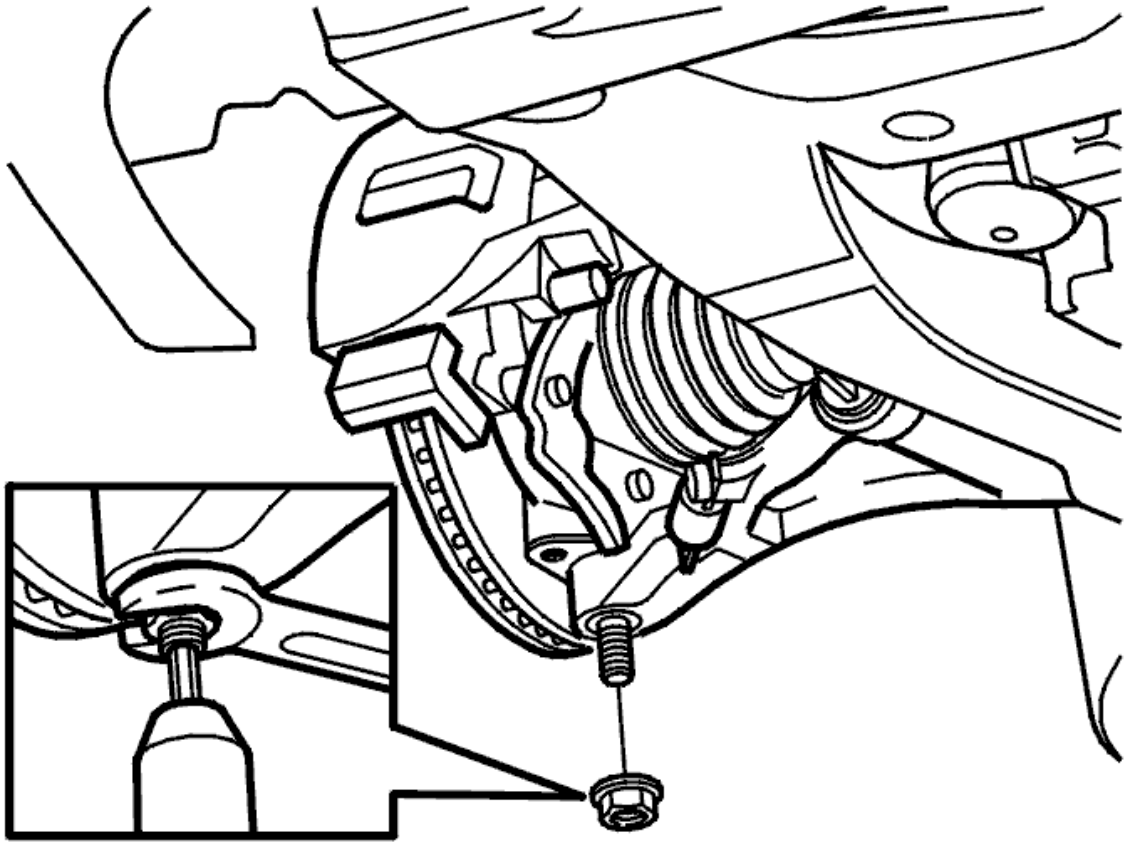

Fig. 15: Ball Joints Nuts
Courtesy of VOLVO CARS CORPORATION

- Remove the nuts from the ball joints. Counterhold with a Torx wrench so that the ball joint boot is not damaged.

REMOVING THE SUB-FRAME

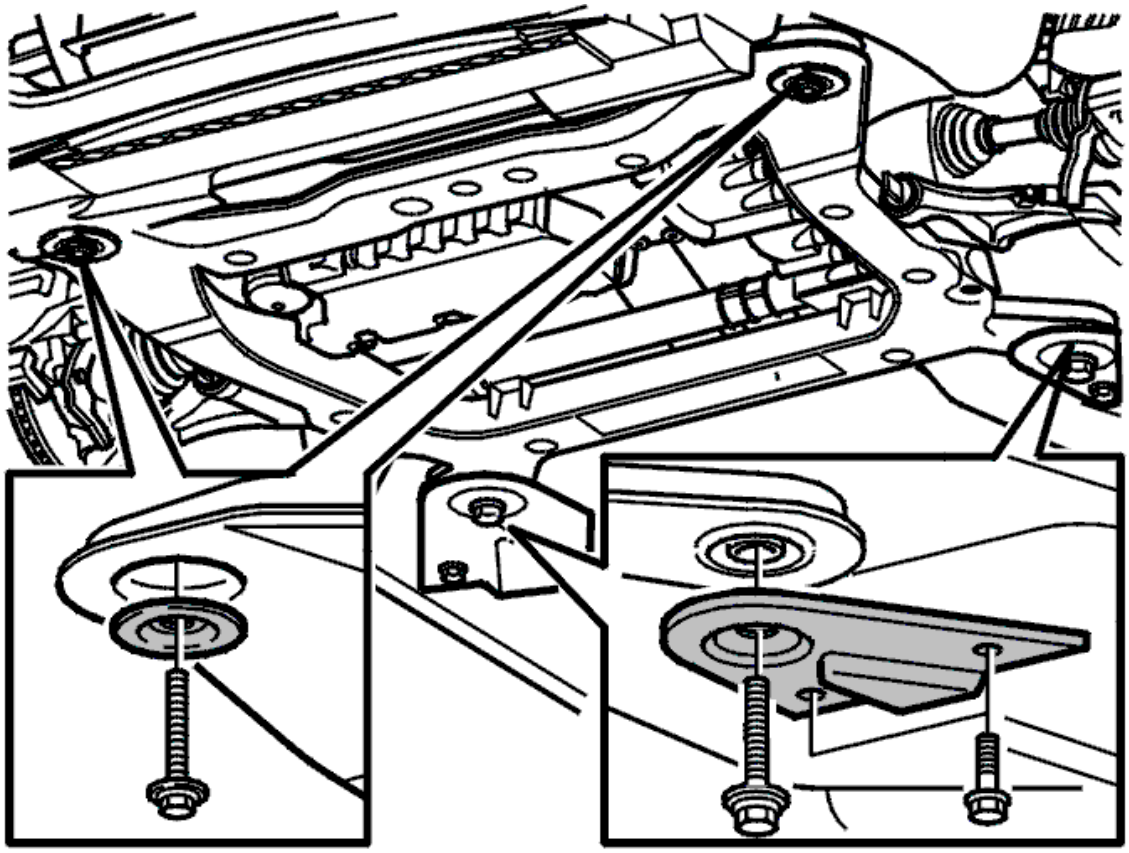

Fig. 16: Identifying Bolts, Washers And Brackets In Sub-Frame
Courtesy of VOLVO CARS CORPORATION

- Remove and hang up the engine block heater (if applicable) on the left front mounting for the sub-frame
- Position a lifting table under the sub-frame
- Remove the screws holding the sub-frame brackets to the bodywork on both sides
- Remove the four screws from the sub-frame
- Carefully lower the sub-frame.

NOTE: Ensure that the steering gear screws release from the sub-frame.

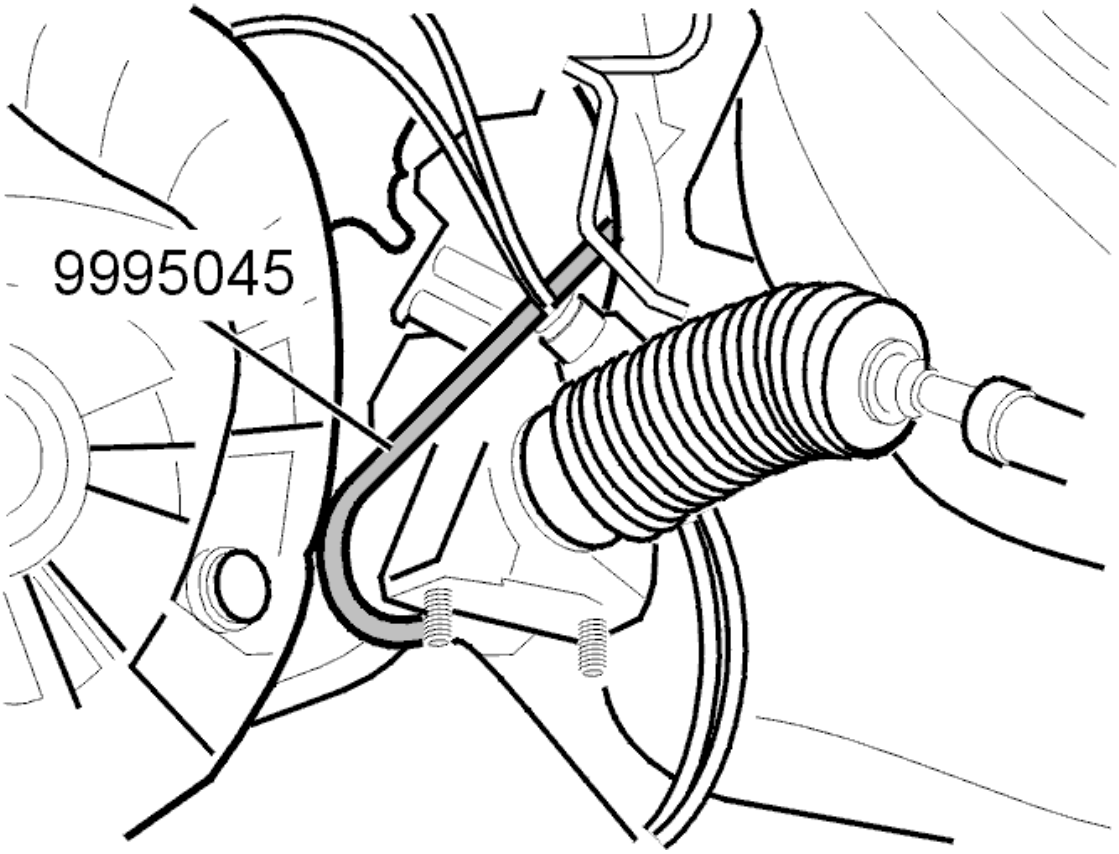

Fig. 17: Hanging Steering Gear From Hook So That Lower Steering Shaft Does Not Come Apart
Courtesy of VOLVO CARS CORPORATION

Hang the steering gear from a hook see **9995045** so that the lower steering shaft does not come apart.

TRANSFERRING COMPONENTS

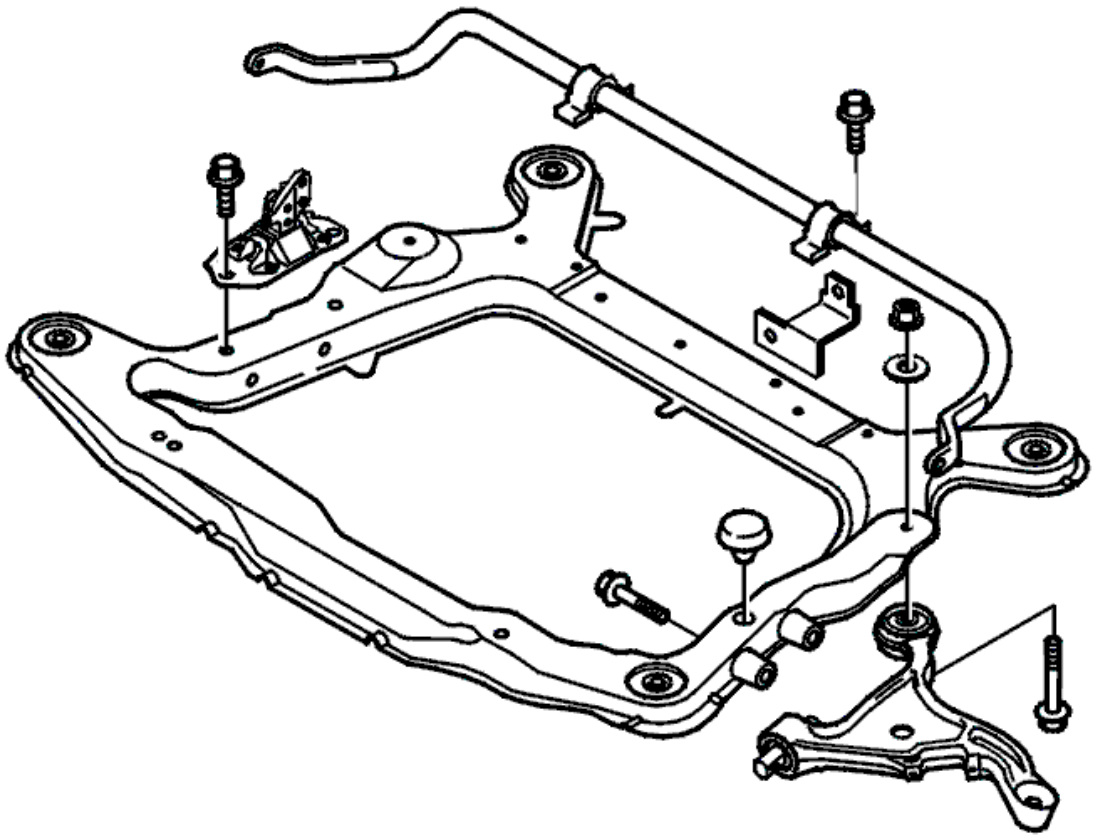

Fig. 18: Identifying Sub-Frame Components
Courtesy of VOLVO CARS CORPORATION

Transfer

- the control arms. Use new screws and new nut. Tighten the front screws. Tighten to **65 Nm** . Angle-tighten **90°** . Use bevel protractor see **9512050** . Tighten the rear screw. Tighten to **105 Nm** . Angle-tighten **90°**
- the anti-roll bar. Tighten to **60 Nm**
- the right-hand engine mounting. Tighten the screws. Tighten to **65 Nm** . Angle-tighten **60°**
- the mounting for the heated oxygen sensor (HO2S) wiring
- the engine pad.

Install new pipe / hose holders.

INSTALLING THE SUB-FRAME

- Position the sub-frame on a lifting table
- Carefully lift the sub-frame
- Locate the control arms on the ball joints and the steering gear on its mountings
- Remove the hook (999 5045) that is holding the steering gear
- Lift the sub-frame up completely

- Reinstall the engine block heater (if applicable).

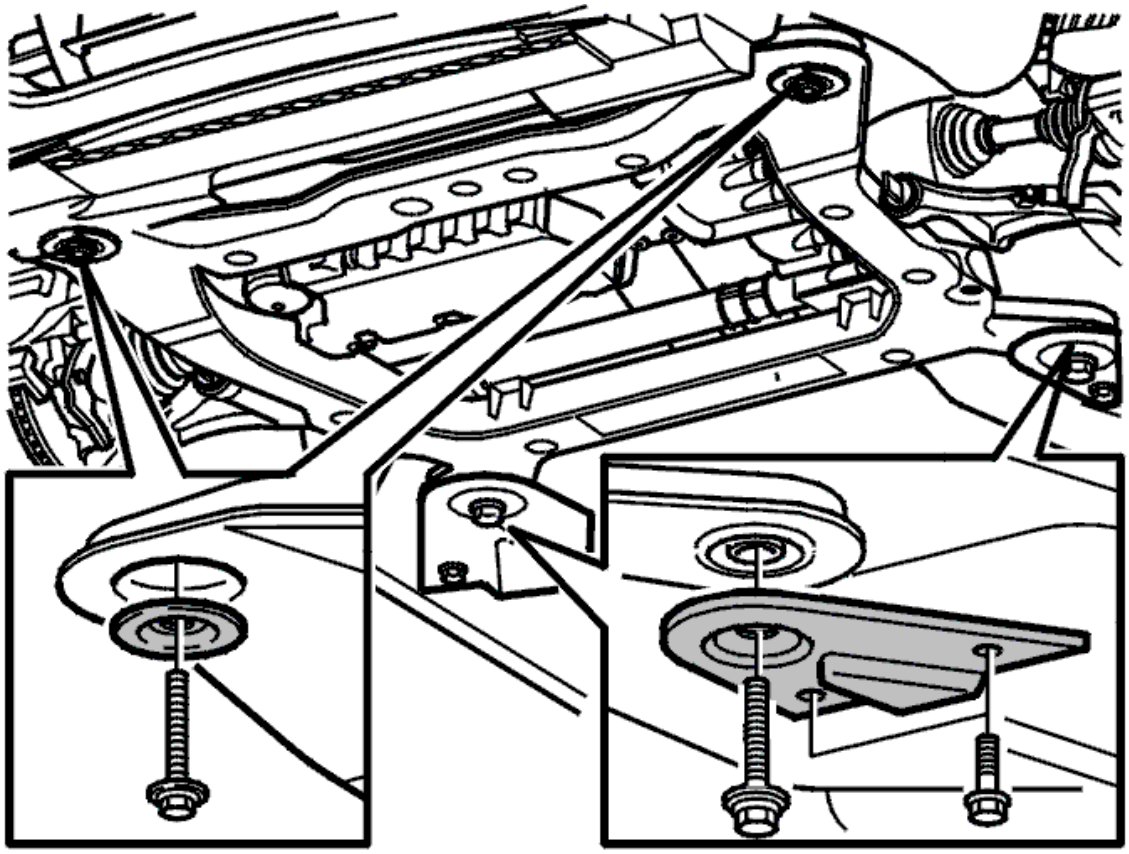

Fig. 19: Identifying Bolts, Washers And Brackets In Sub-Frame
Courtesy of VOLVO CARS CORPORATION

- Install the engine block heater (if applicable) on the left front mounting for the sub-frame
- Install the four screws in the sub-frame together with the sub-frame brackets. Use **new screws** . Lubricate the screws
- First tighten the screws on the left side of the sub-frame. Tighten to **105 Nm** . Angle tighten to **120°** . Then tighten the right-hand side to the same value
- Finally tighten the screws for the brackets on both sides to **50 Nm** .

FINISHING

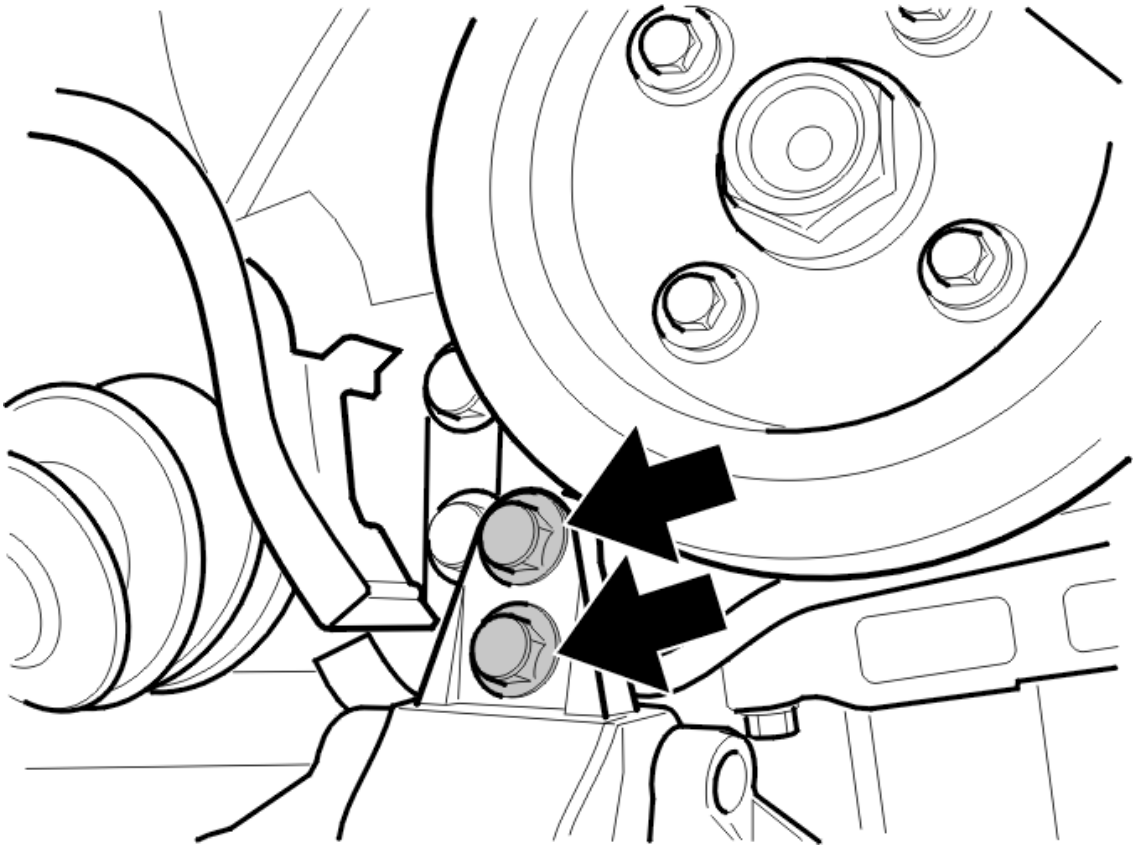

Fig. 20: Engine Mounting Screws
Courtesy of VOLVO CARS CORPORATION

Install

- the right-hand engine mounting. Use **new** screws. Tighten to **35 Nm** . Angle-tighten **90°** .

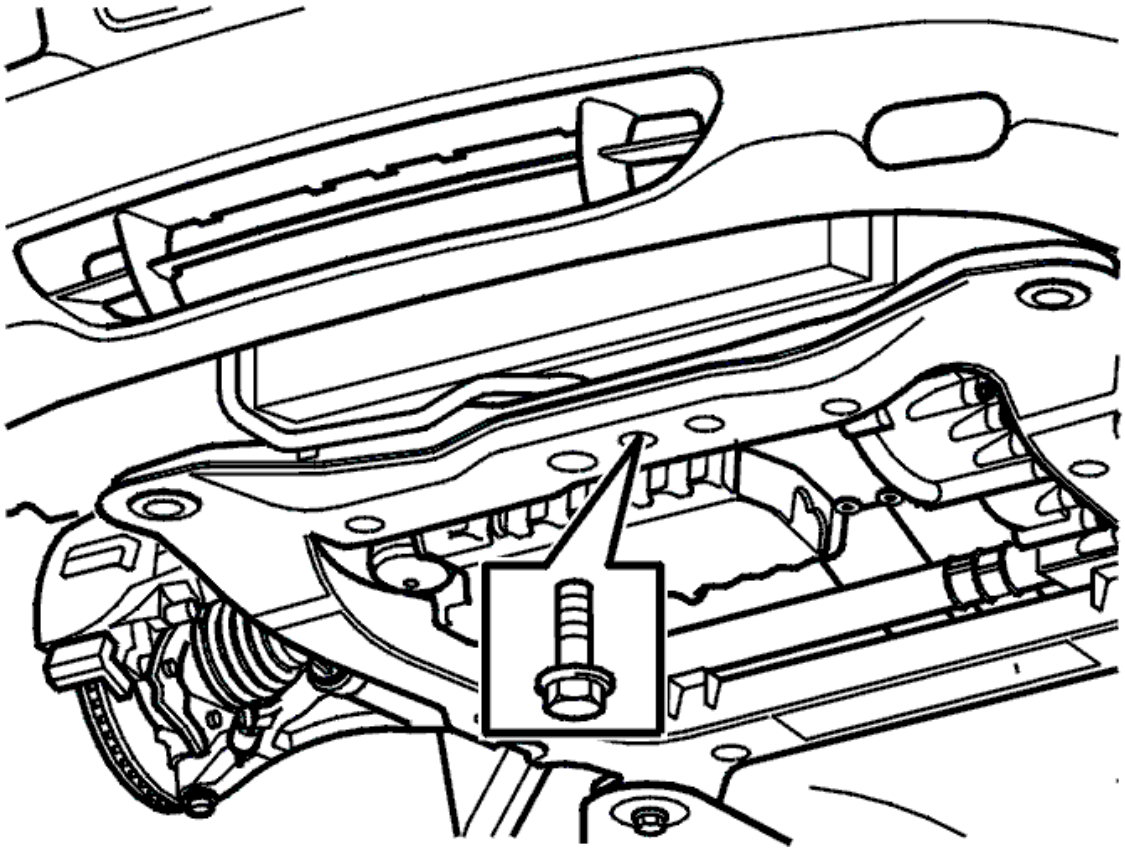

Fig. 21: Front Engine Pad Screw
Courtesy of VOLVO CARS CORPORATION

- the front engine pad. Tighten to **50 Nm** .

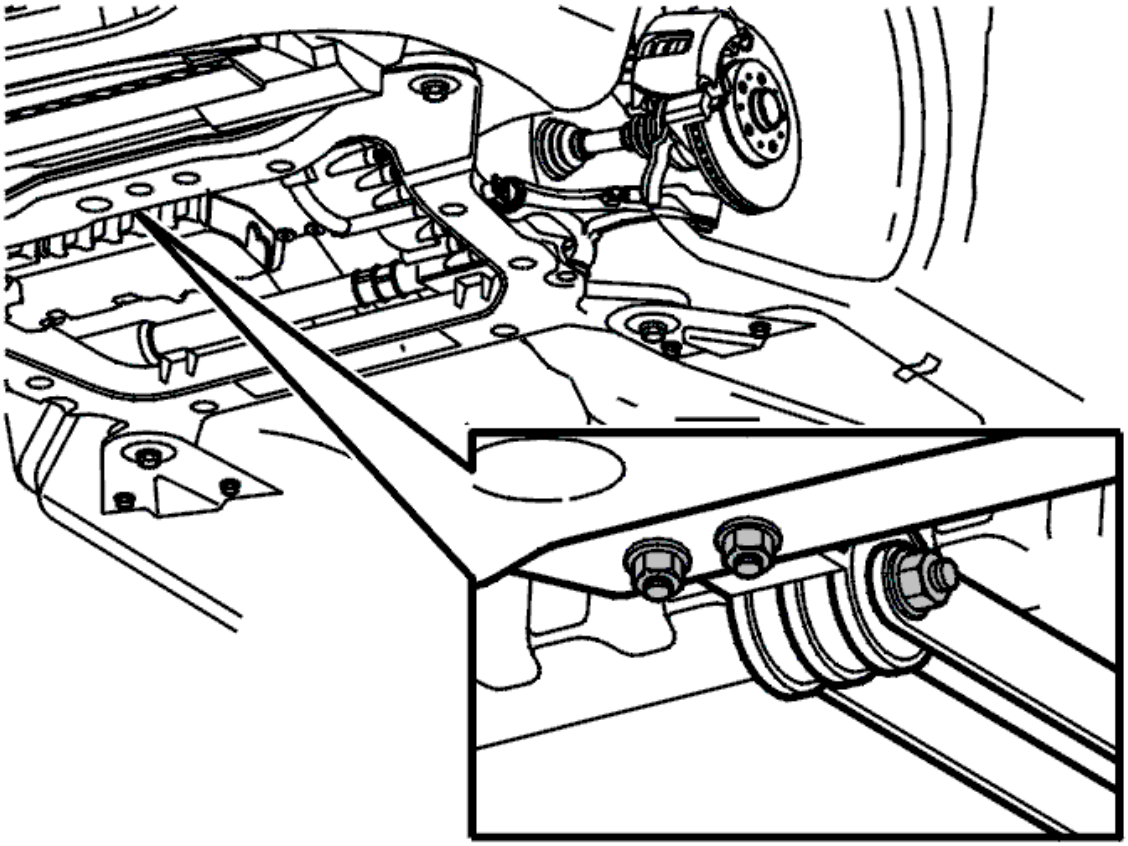

Fig. 22: Identifying Lower Torque Rod And Nuts
Courtesy of VOLVO CARS CORPORATION

- lower torque rod. Tighten the screw and nut. Tighten to **35 Nm** . Angle-tighten **90°** .

  The lower torque rod must be tightened last to avoid tension being introduced.

  Tighten the front nuts. Tighten to **65 Nm** . Angle-tighten **90°** . Use bevel protractor see **9512050** .

NOTE: Use new screws and nuts.

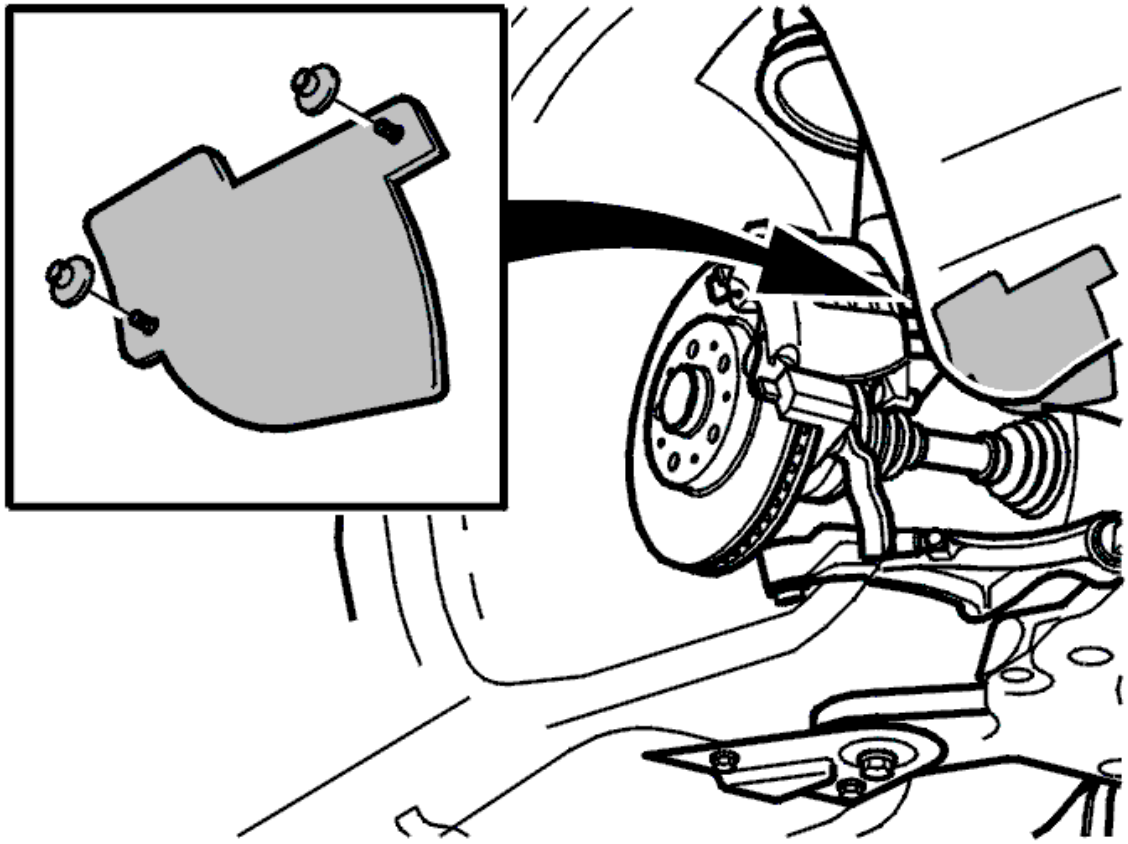

Fig. 23: Fender Liner
Courtesy of VOLVO CARS CORPORATION

- the fender liner and the splash guard with both the plastic nuts.

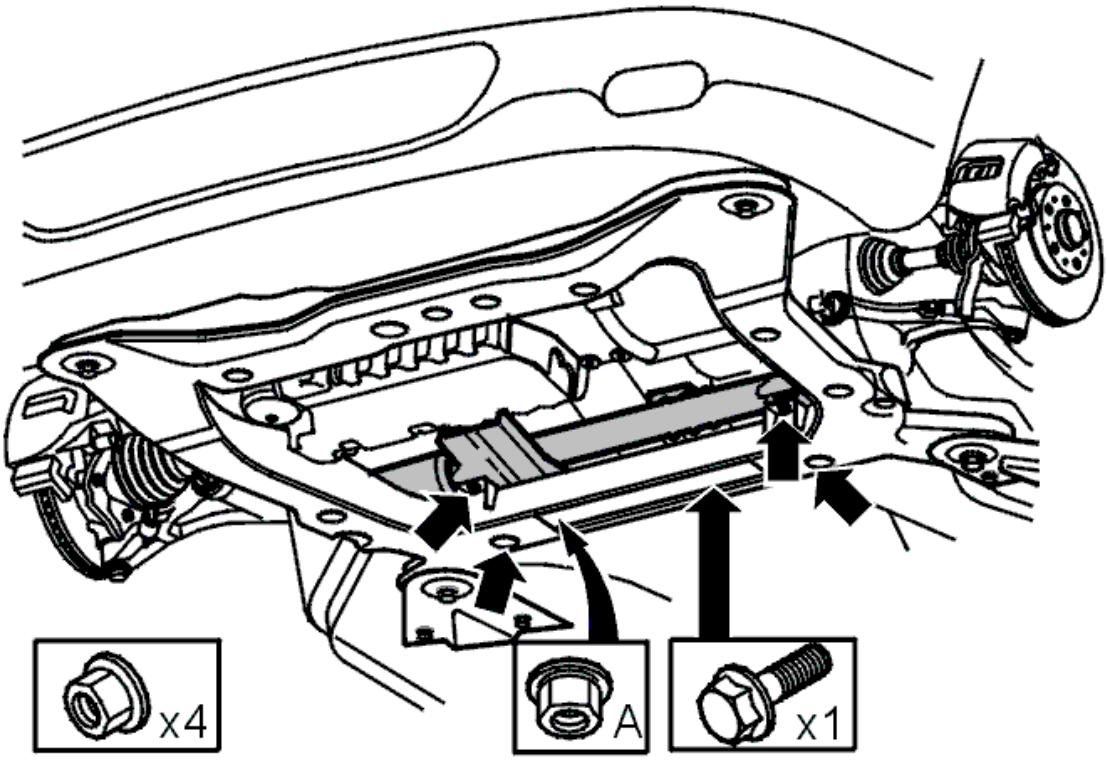

Fig. 24: Identifying Bolt And Nut Holding Steering Gear To Sub-Frame
Courtesy of VOLVO CARS CORPORATION

- the four nuts and the screw holding the steering gear. Use new nuts and a new screw. Tighten to **50 Nm**

  Clip the cable in position.

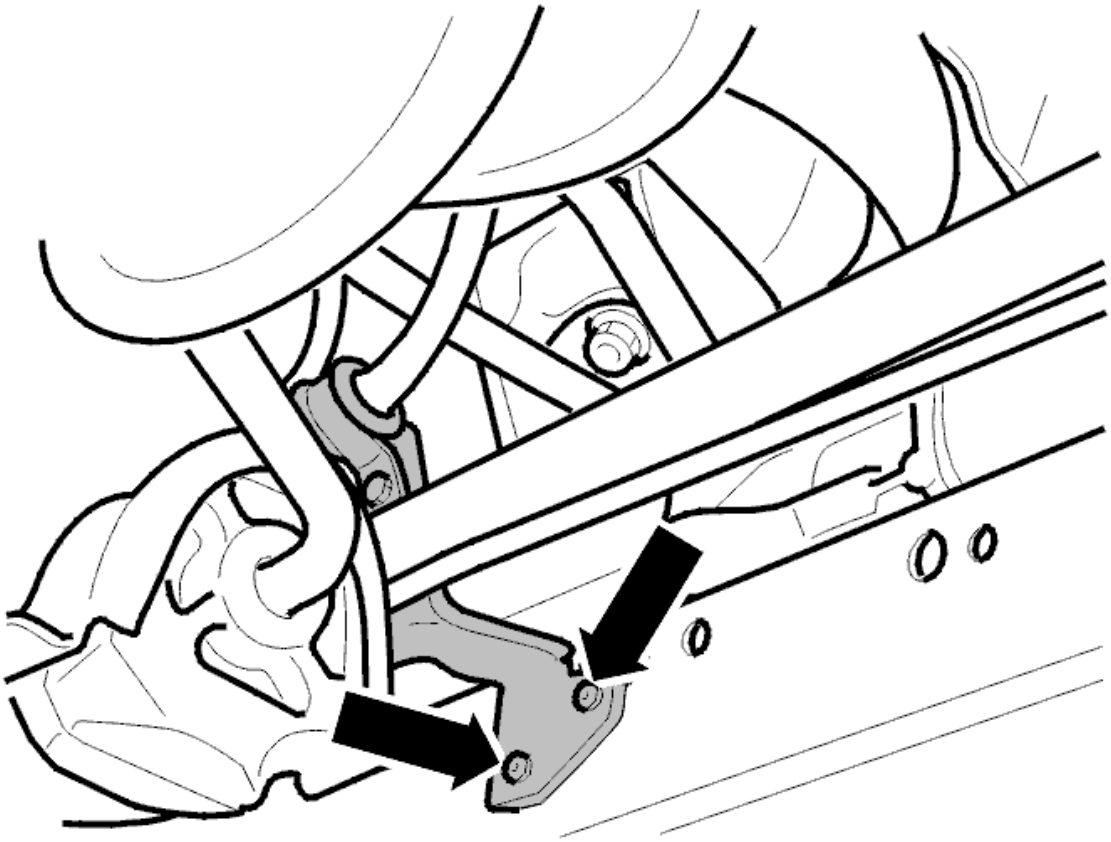

Fig. 25: Heated Oxygen Sensor (HO2S) From Mounting
Courtesy of VOLVO CARS CORPORATION

- the wiring for the heated oxygen sensor (HO2S) in its mounting.

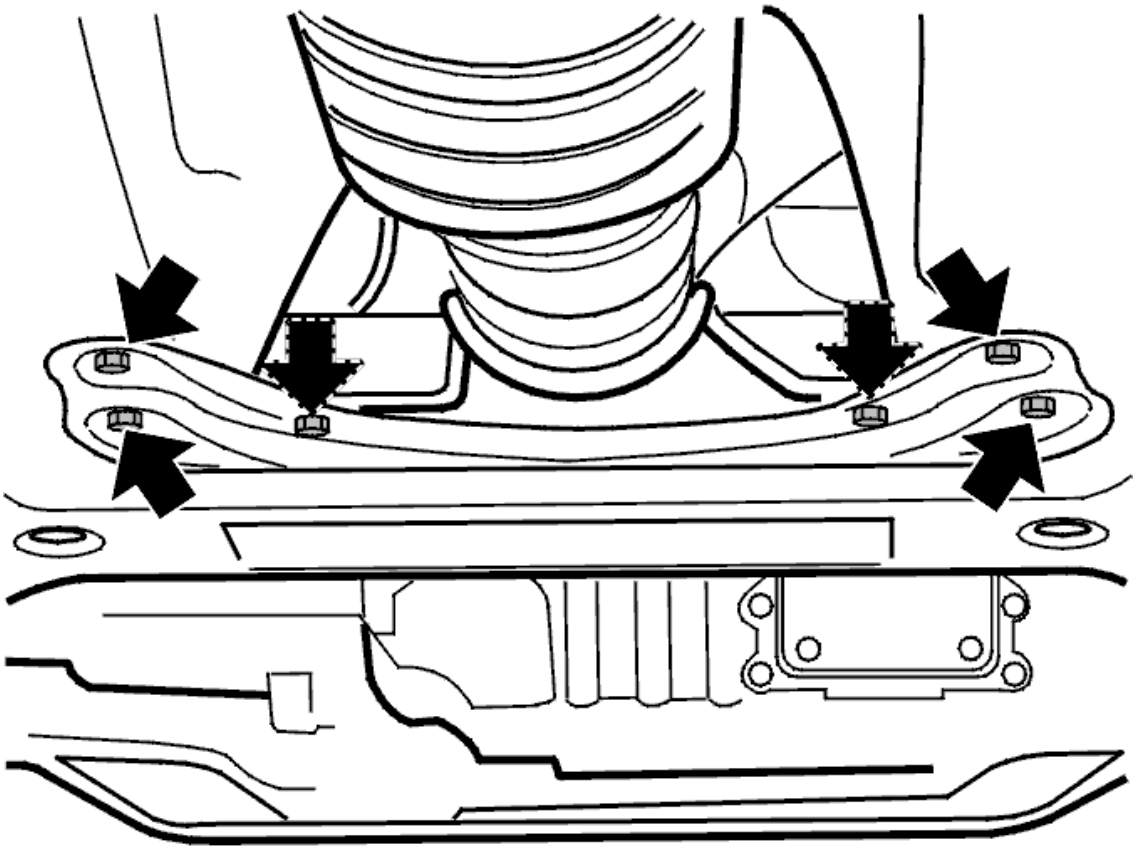

Fig. 26: Exhaust Pipe Bracket Screws
Courtesy of VOLVO CARS CORPORATION

- the mountings for the exhaust pipe on the bracket. Tighten to **10 Nm**
- the brake pipe on the bracket for the exhaust pipe
- the bracket for the exhaust pipe. Tighten the bracket screws. Tighten to **25 Nm** .

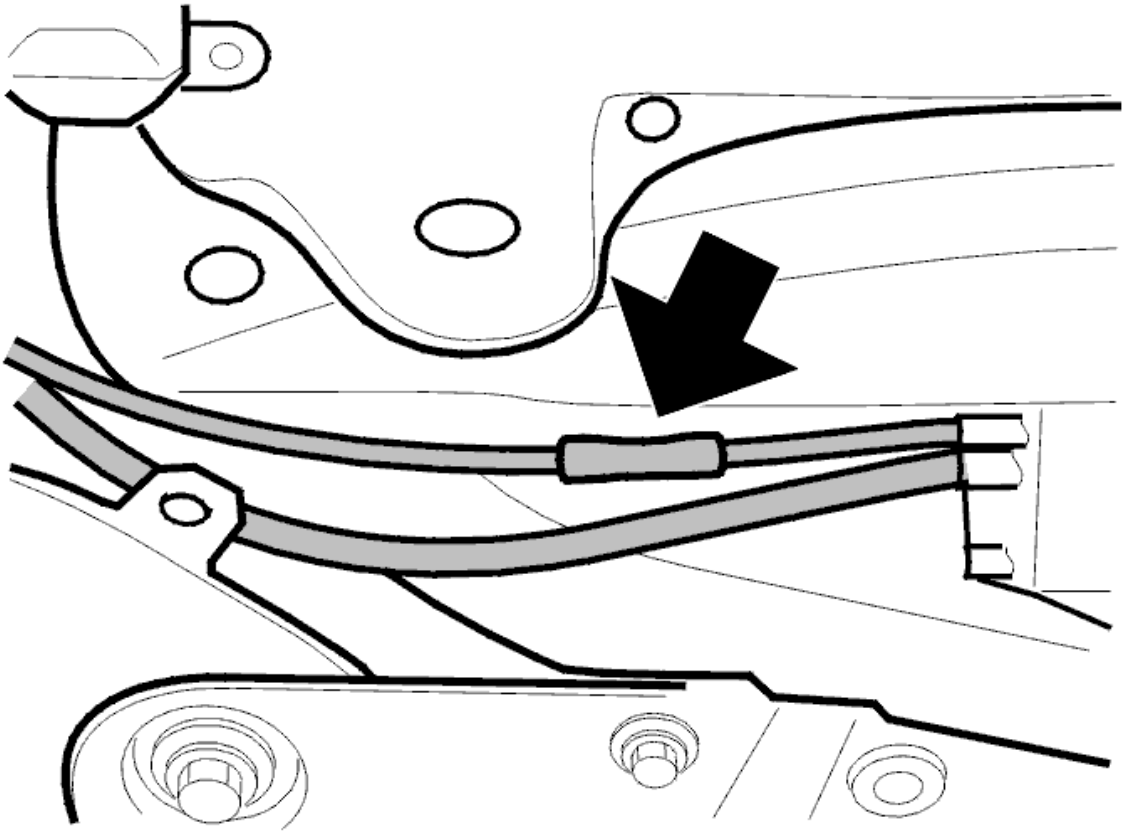

Fig. 27: EVAP Canister Hose
Courtesy of VOLVO CARS CORPORATION

- EVAP canister hose. Press the joint together.

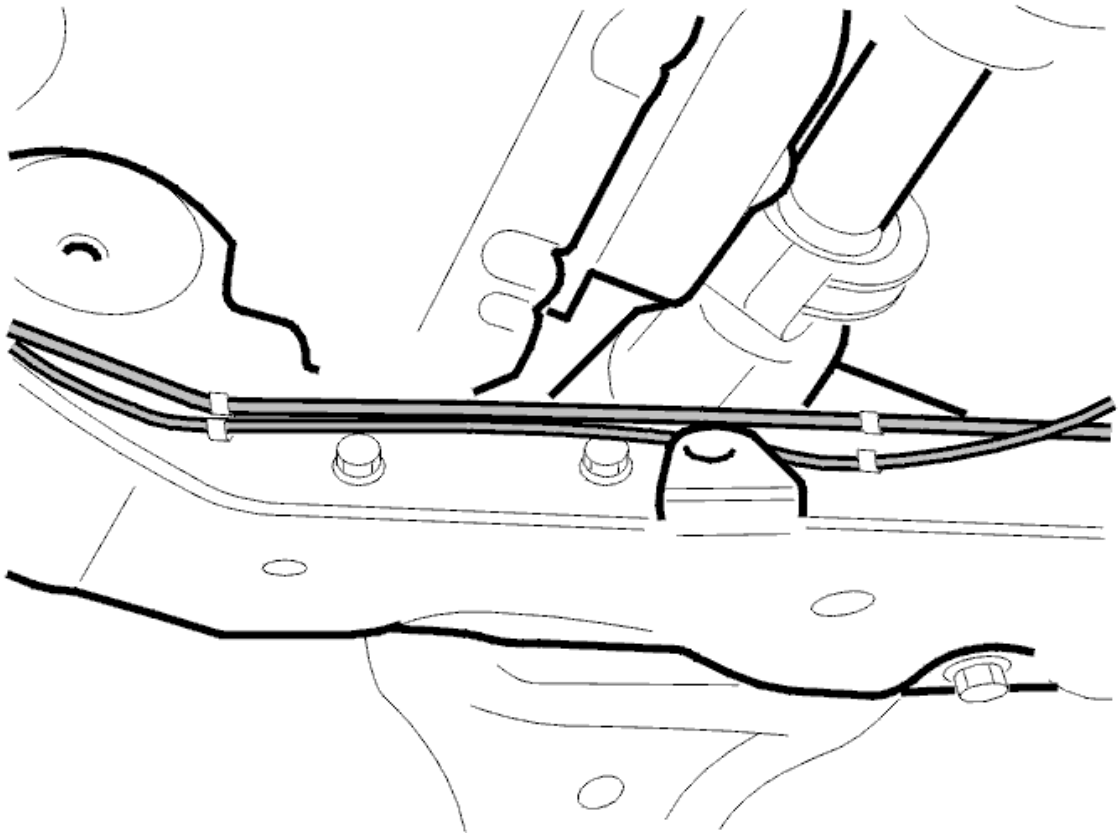

Fig. 28: Identifying Oil Pipe And Clamps For Steering Gear
Courtesy of VOLVO CARS CORPORATION

- oil pipes to steering gear
- any fuel line for engine block heater
- any engine block heater.

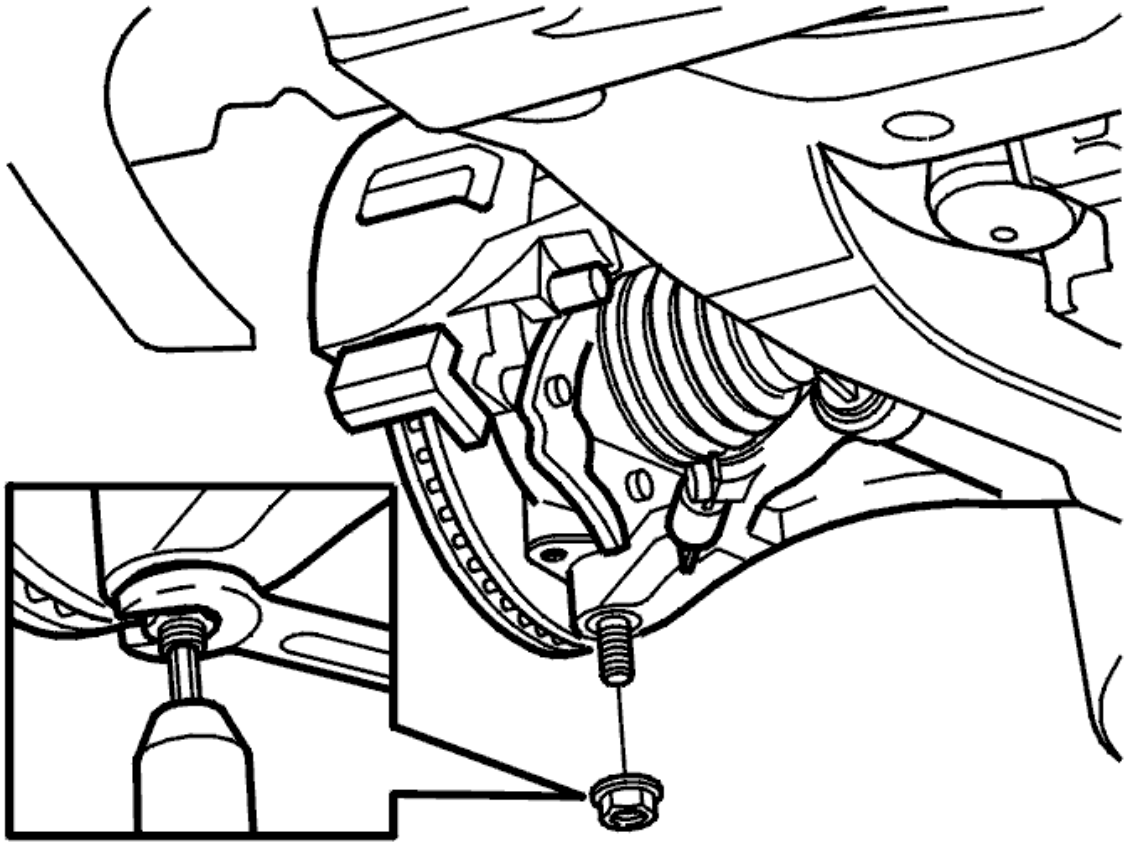

Fig. 29: Ball Joints Nuts
Courtesy of VOLVO CARS CORPORATION

- **new nuts** on the ball joints. Tighten. See: **TIGHTENING TORQUE** . Counterhold using a Torx wrench to prevent damaging the ball joint boot.

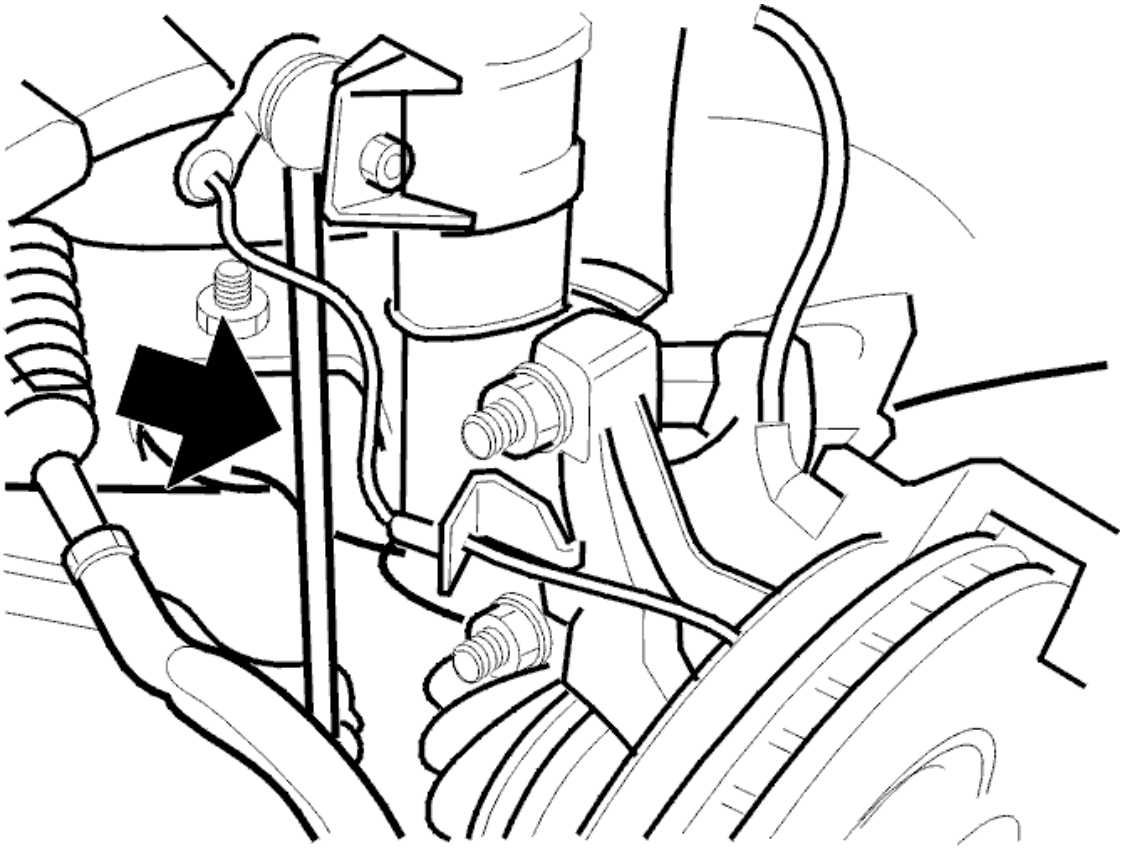

Fig. 30: Anti-Roll Bar
Courtesy of VOLVO CARS CORPORATION

- the anti-roll bar links. Use **new** nuts. Tighten to **50 Nm** . Counterhold with a Torx wrench so that the boot is not damaged.

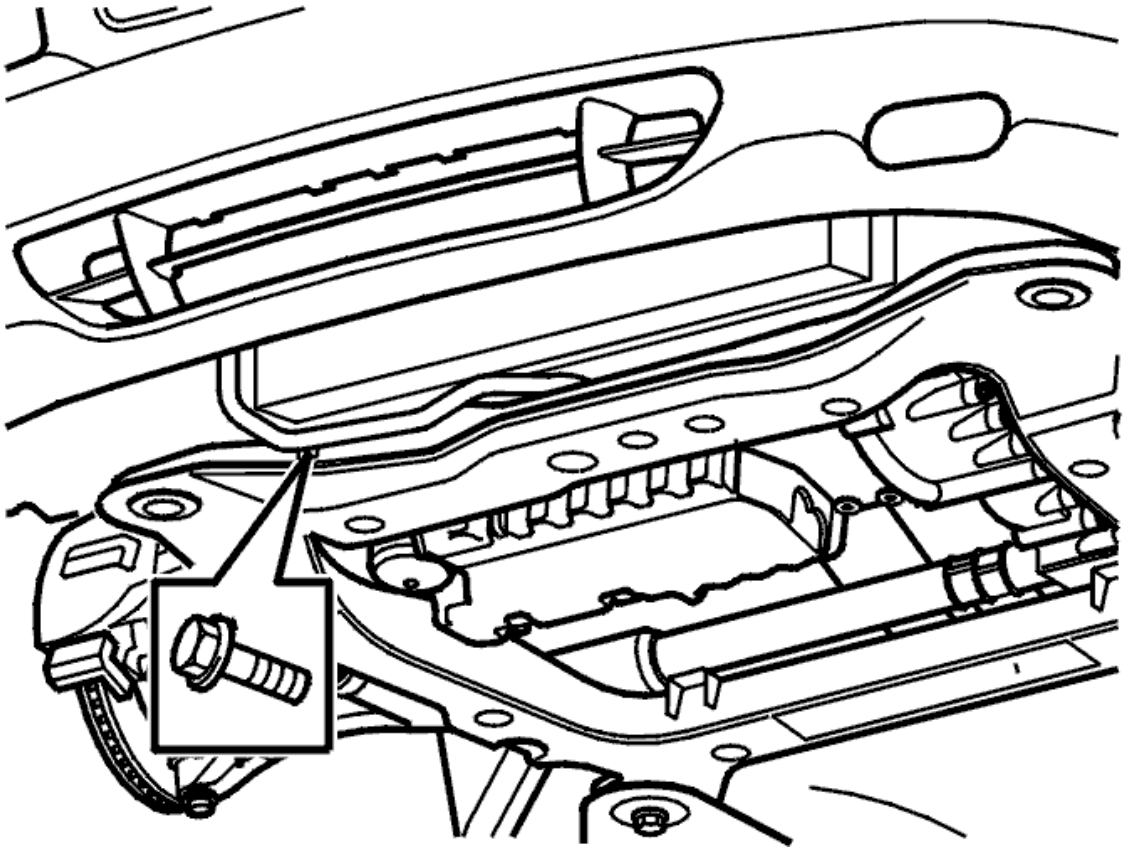

Fig. 31: Identifying Screw For Cable Duct
Courtesy of VOLVO CARS CORPORATION

- the cable duct screw.

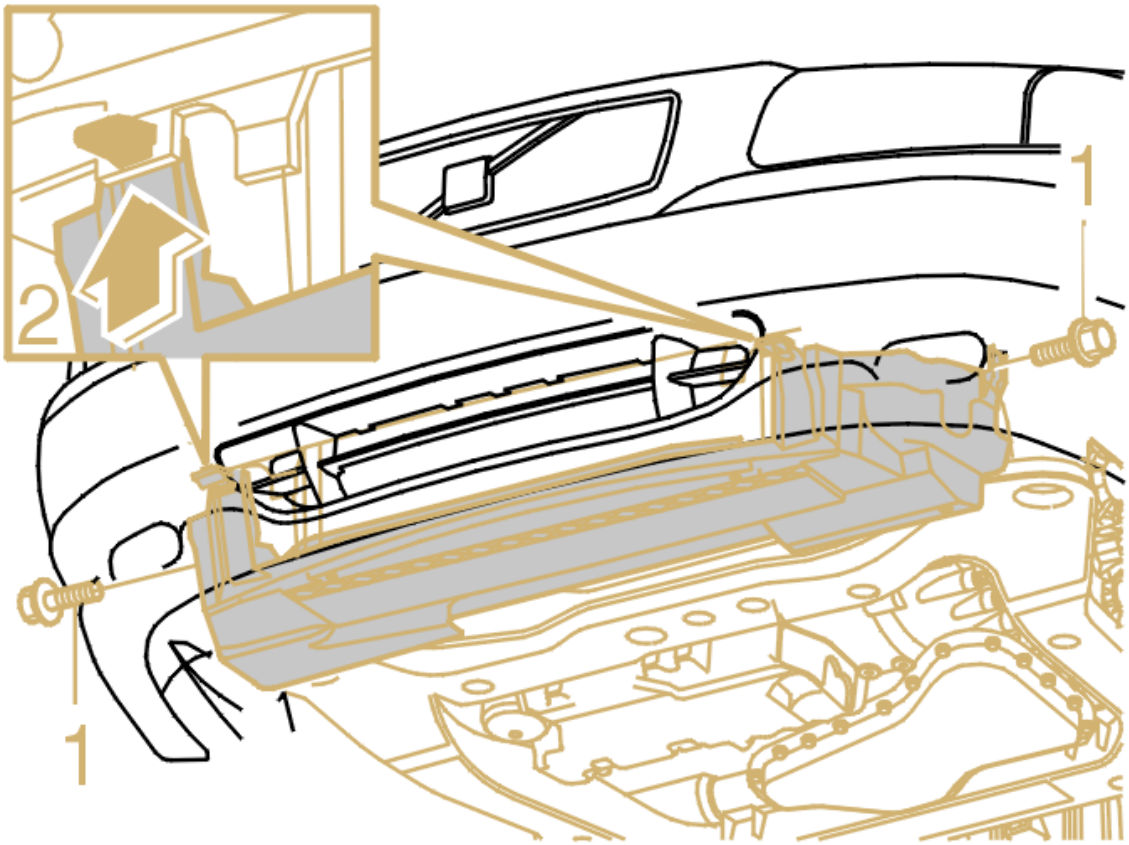

Fig. 32: Air Baffle
Courtesy of VOLVO CARS CORPORATION

- the air duct cover.

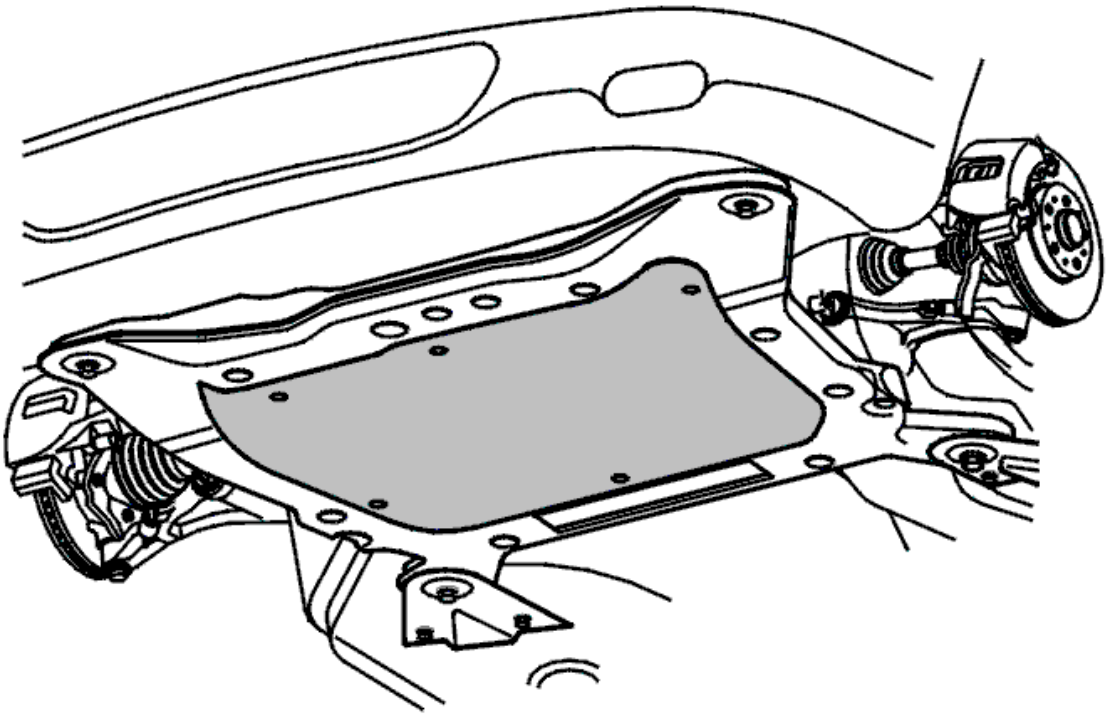

Fig. 33: Identifying Splash Guard Under Engine
Courtesy of VOLVO CARS CORPORATION

- the splash guard under the engine. Tighten to **20 Nm**
- Lower the car.

- Install the wheels. See **INSTALLING WHEELS**
- Remove the lifting tools for the engine

ANTI-LOCK/TRACTION CONTROL

Power transmission

ANTI-LOCK/TRACTION CONTROL

CONNECTING THE BREAKOUT BOX, BRAKE CONTROL MODULE (BCM)

Special tools:

see **9511428**

see **9512958**

CONNECTING THE BREAKOUT BOX

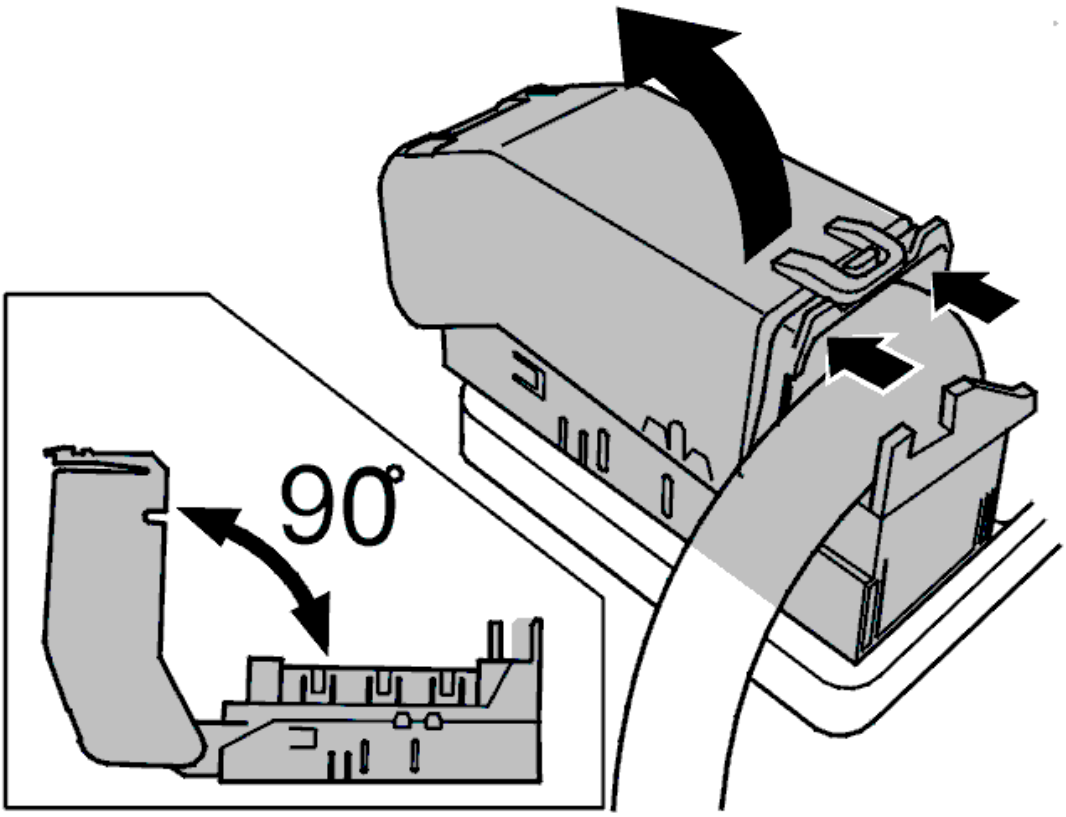

Fig. 1: Identifying Catch & Connector
Courtesy of VOLVO CARS CORPORATION

- Ignition off
- Expose the brake control module. See **BRAKE CONTROL MODULE (BCM), REPLACING**
- Disconnect the control module by pressing in the catch on top of the connector and **carefully** work the cover up so that the connector lifts.

CAUTION: Do not bend the cover up by more than 90°.

- Check in particular that the male and female terminals on the control module and the control module connector are intact, secure and cannot be pressed in. Check that the female terminal cables are securely connected
- In particular, check the terminal pins relevant to the diagnostic trouble code (DTC) / symptom. See **SIGNAL SPECIFICATION, BRAKE CONTROL MODULE (BCM) WITH STC/ TRACS** **or** see **SIGNAL SPECIFICATION, BRAKE CONTROL MODULE (BCM) WITH DSTC (DYNAMIC STABILITY AND TRACTION CONTROL)**
- Connect adapter see **9512958** to the control module's connector (wiring side) and connect breakout box see **9511428** to the adapter.
- The breakout box is designed to facilitate reading off the control module input and output signals when the control module is connected; and the resistance of the cable and component when the control module is disconnected. The use of a breakout box reduces the risk of accidental short-circuits and damage to the connector pins.

BRAKES

Power transmission

BRAKES

BRAKE CONTROL MODULE (BCM), REPLACING

REMOVAL

PREPARATION

NOTE: **In week 35 year 2001 a new brake control module (BCM) was introduced along with a new sensor in the brake electronics.**

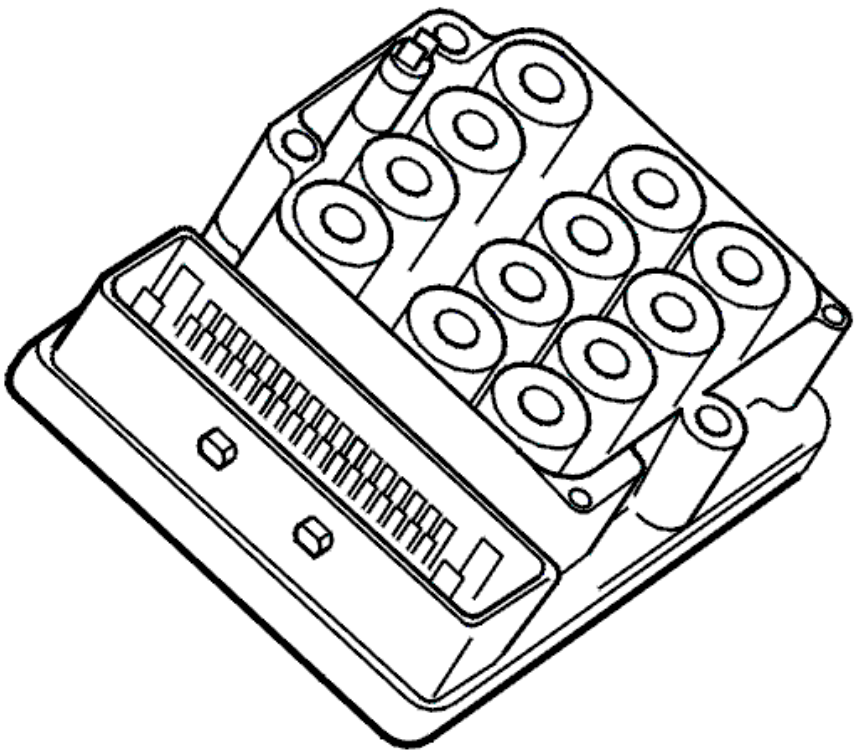

Fig. 1: ABS Control Module
Courtesy of VOLVO CARS CORPORATION

Remove the battery cable. See **BATTERY, DISCONNECTING** .

REMOVING THE AIR CLEANER (ACL) HOUSING

Remove the air cleaner (ACL) housing. See **BRAKE PIPE MASTER CYLINDER/ABS UNIT, REPLACING** .

REMOVING THE INTEGRATED RELAY / FUSEBOX

Remove the integrated relay / fusebox. Remove the connector for the ABS unit. See **REMOVING THE INTEGRATED RELAY / FUSEBOX** .

Remove the screw on the bracket.

Lift the box out of the bracket and put it to one side.

DISCONNECTING THE CONNECTOR

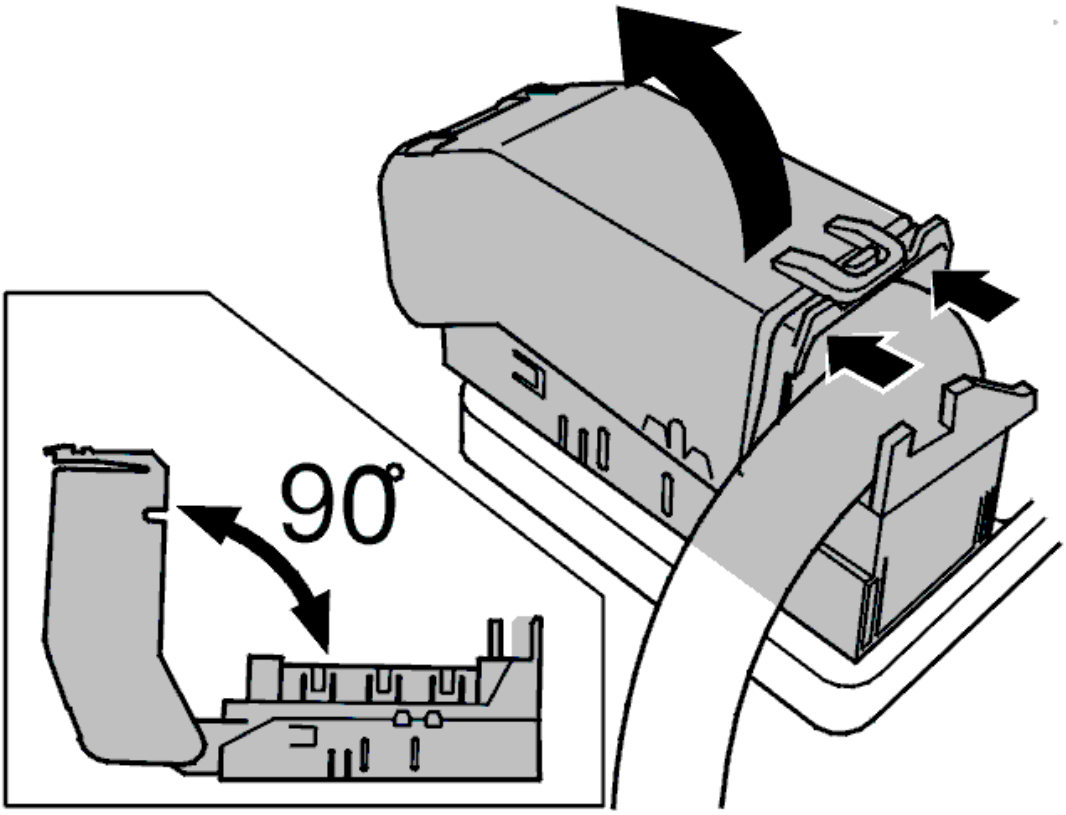

Fig. 2: Identifying Catch & Connector
Courtesy of VOLVO CARS CORPORATION

Disconnect the connector from the control module.

Press the catch and pull up the connector. Pull the connector up a maximum of **90** ° (any more and the connector will break).

Pull the connector up from the control module.

REMOVING THE CONTROL MODULE

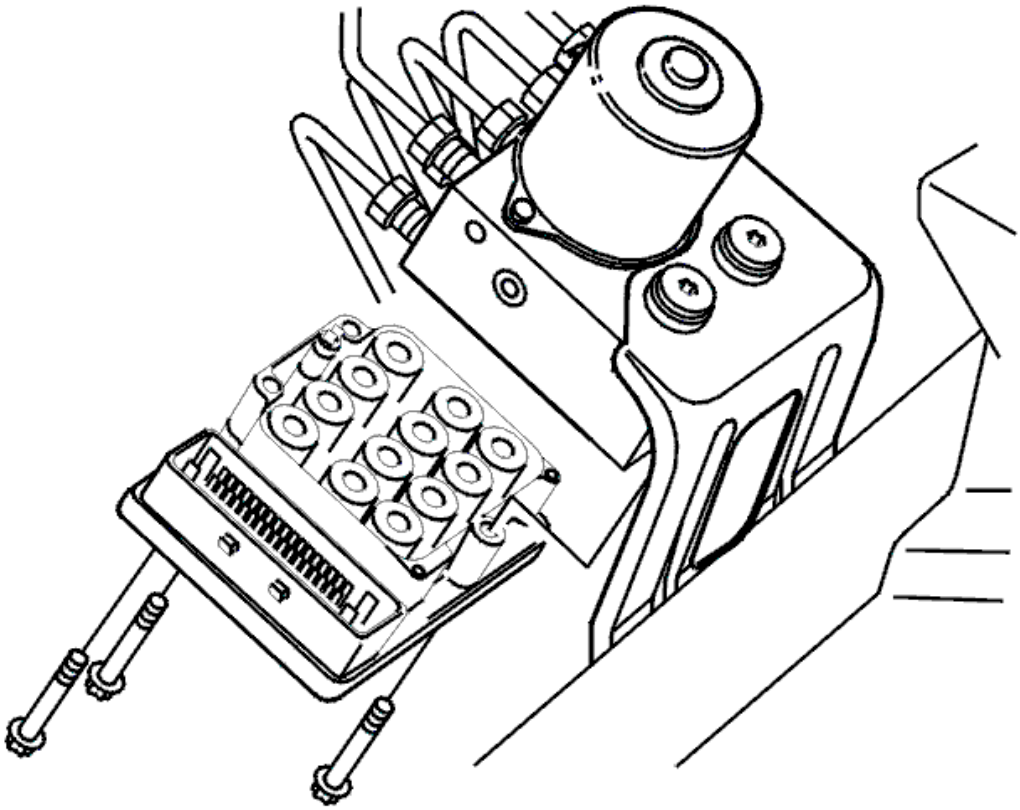

Fig. 3: Brake Control Module And Screws
Courtesy of VOLVO CARS CORPORATION

- Remove the screws.

  Use a 6 mm Torx external socket

- Carefully pull the control module down so that the terminal pin on the control module comes loose inside the ABS modulator
- Continue pulling the control module down towards the brake lines and lift it out.

CHECKING THE NEW CONTROL MODULE

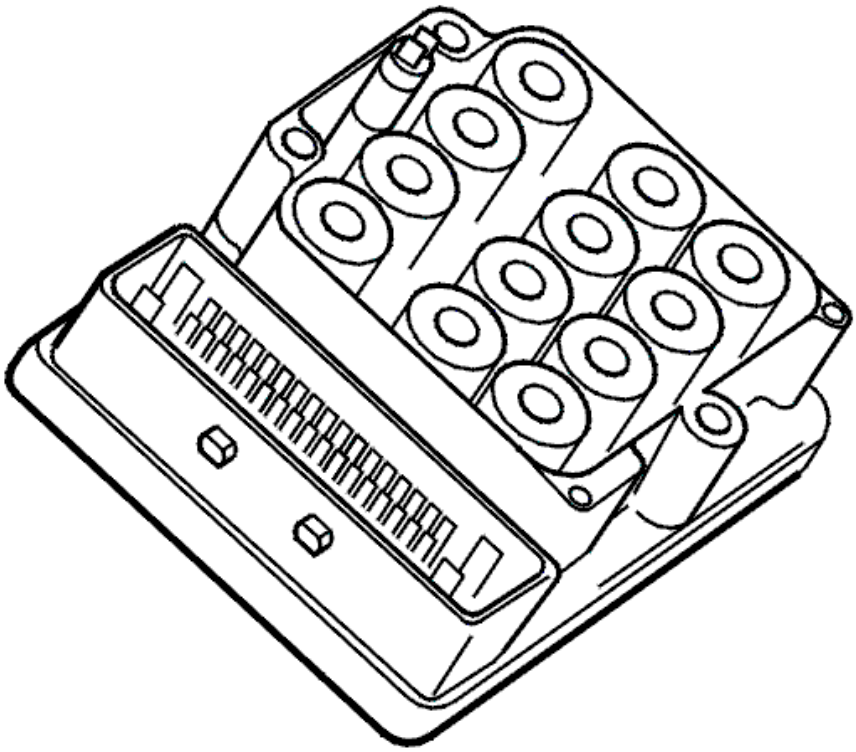

Fig. 4: ABS Control Module
Courtesy of VOLVO CARS CORPORATION

Check:

- the control module is correct (compare to the old one)
- that none of the pins on the connector are damaged
- that there are no contaminants on the mating surfaces between the control module and the ABS hydraulic modulator
- that no parts of the old control module seals remain on the old ABS hydraulic modulator valves.

INSTALLATION

INSTALLING THE CONTROL MODULE

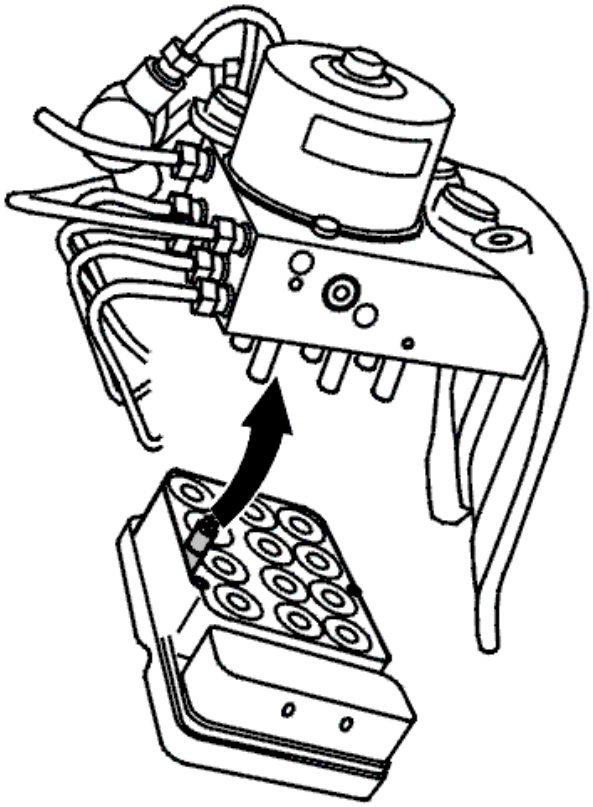

Fig. 5: Identifying Brake Control Module
Courtesy of VOLVO CARS CORPORATION

Position the control module on the brake lines.

Center the control module with the ABS modulator valves so that the terminal pins are correctly positioned in the modulator.

Press the control module up so that the terminal pins connect.

Install:

- the screws.

  Tighten to **1.8 Nm**

- the connector on the control module. Lock the connector
- the integrated relay/fusebox and the connector for the ABS unit. See **INTEGRATED RELAY / FUSEBOX, INSTALLING**
- the integrated relay / fusebox.

  Tighten the screw. Tighten to **10 Nm**

- the air cleaner (ACL) housing. See **AIR CLEANER (ACL) HOUSING, INSTALLING** .

INSTALLING THE BATTERY LEAD

Install the battery cable. See **BATTERY, DISCONNECTING** .

LOADING SOFTWARE

NOTE: Switch on the ignition. Order software.

VISUAL CHECK

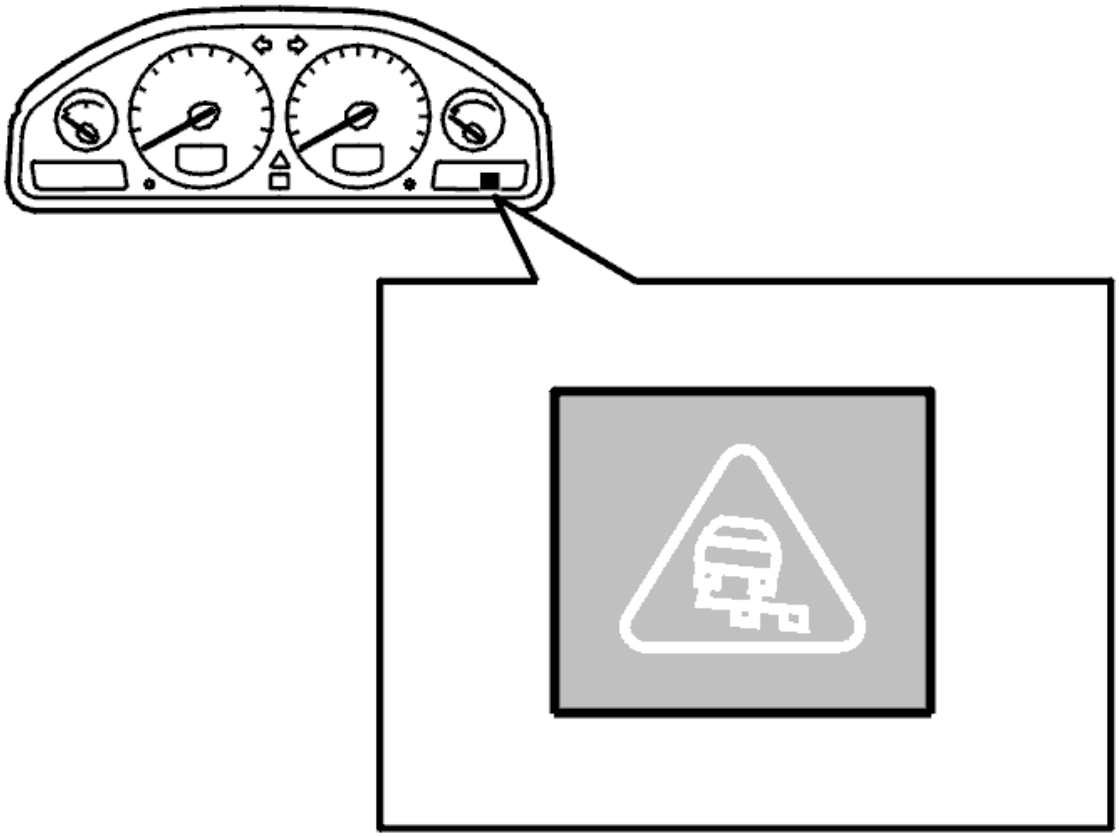

Fig. 6: Identifying Warning Light
Courtesy of VOLVO CARS CORPORATION

Turn on the ignition.

Wait five seconds and until the symbol for the brakes on the dashboard has gone out.

In the event of a fault (the symbol is lit).

Check that the connector is connected.

FUNCTION TEST

WARNING: No ABS, stability and traction control functions are available when there is communication with the Brake control module (BCM) (Volvo Diagnostics are activated). ABS warning lamp flashes for as long as the diagnostics are activated. To cancel the diagnostics before test driving the vehicle, the ignition must be switched off

See: **FUNCTION TEST** .

Use VIDA (Volvo scan tool) to calibrate the control module.

BRAKE FLUID RESERVOIR, REPLACING

REMOVAL

PREPARATIONS

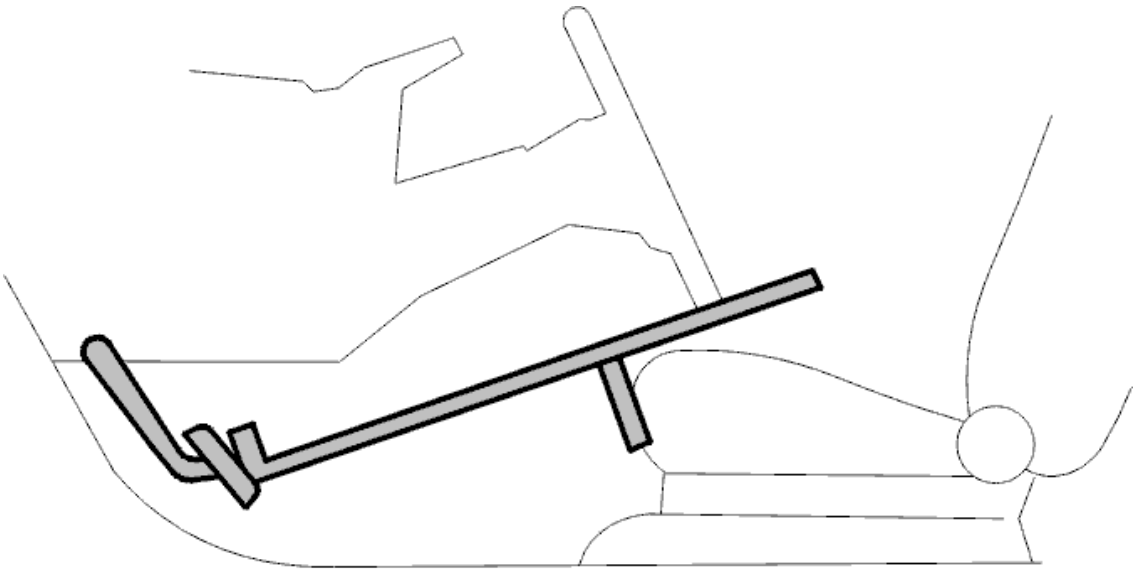

Fig. 7: Identifying Pedal Secured In Depressed Position Using Pedal Jack
Courtesy of VOLVO CARS CORPORATION

Switch off the ignition.

Clean around filler cap at the connector between the reservoir and master cylinder and at any hose connector. This is to ensure that no contaminants enter the brake system.

Place paper under the master cylinder. This is to protect the paintwork from damage if brake fluid is spilled.

Secure the pedal in the depressed position. Use a pedal jack.

REMOVE THE UPPER ENGINE STABILIZER BRACE

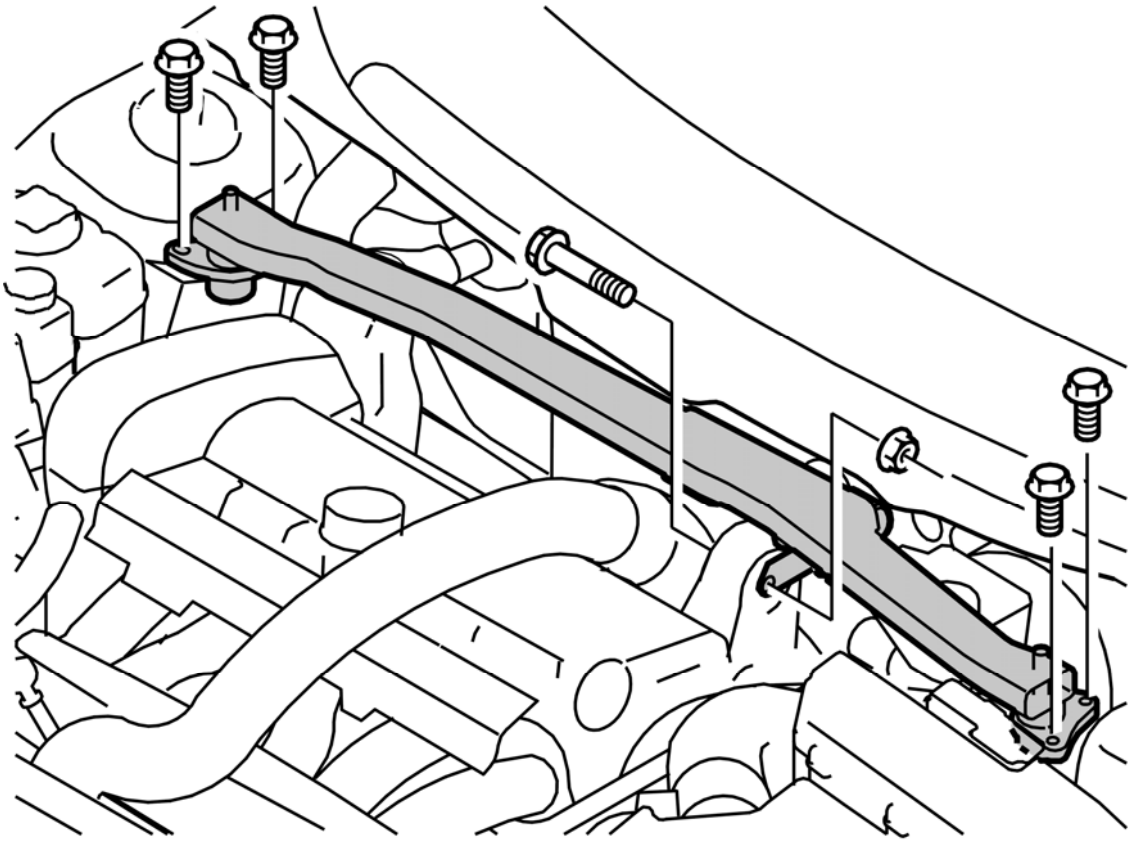

Fig. 8: Identifying Engine Stabilizer Brace And Mounting Screws
Courtesy of VOLVO CARS CORPORATION

Remove:

- the mounting screws for the torque rod
- the screw and nut for the engine mounting and torque rod
- the screw for the oil hose clamp
- the engine stabilizer brace.

PREPARATIONS FOR REMOVING THE BRAKE FLUID RESERVOIR

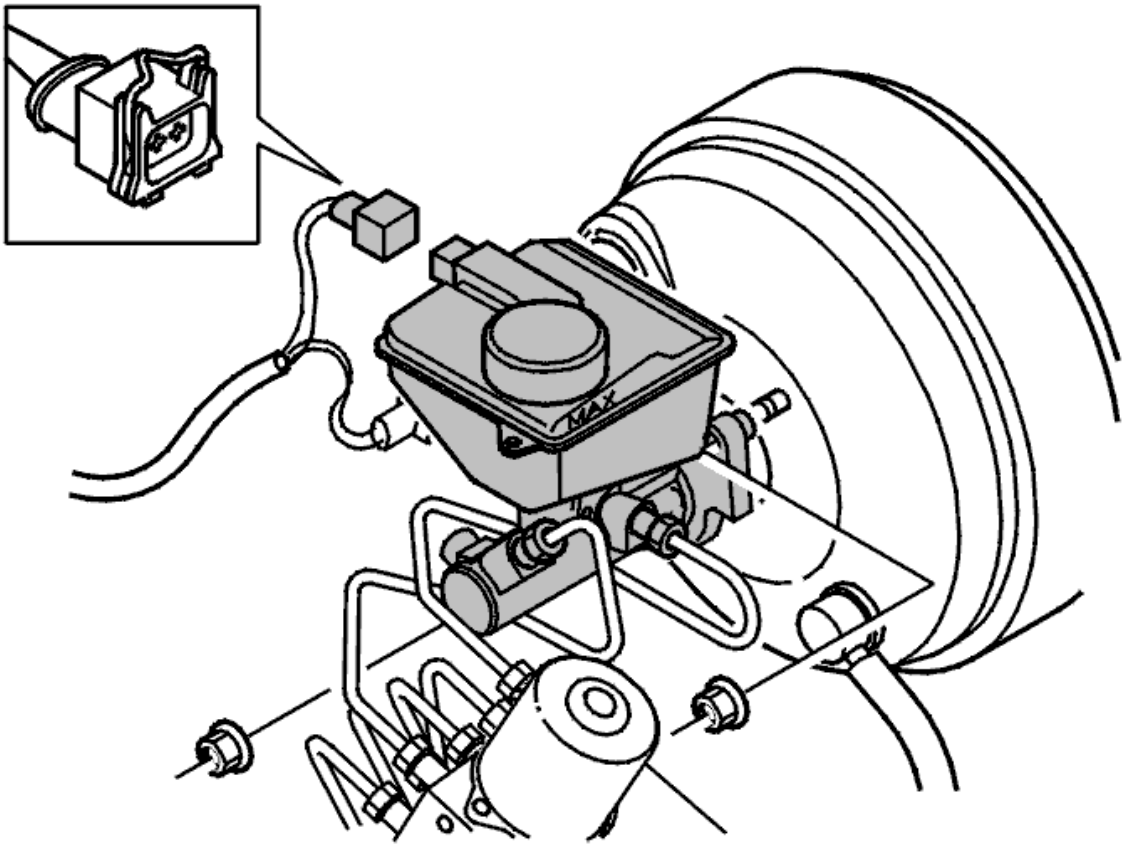

Fig. 9: Hose To Clutch Cylinder
Courtesy of VOLVO CARS CORPORATION

Block the hose to the clutch cylinder. **Applies to cars with manual transmissions** .

Remove the plastic cap and the cable holder

See **REMOVE THE PLASTIC CAP AND THE CABLE HOLDER**

Pull out the master cylinder

Remove the connector from the brake fluid level sensor.

Remove the mounting nuts from the master cylinder.

Pull out the cylinder slightly.

REMOVE THE BRAKE FLUID RESERVOIR

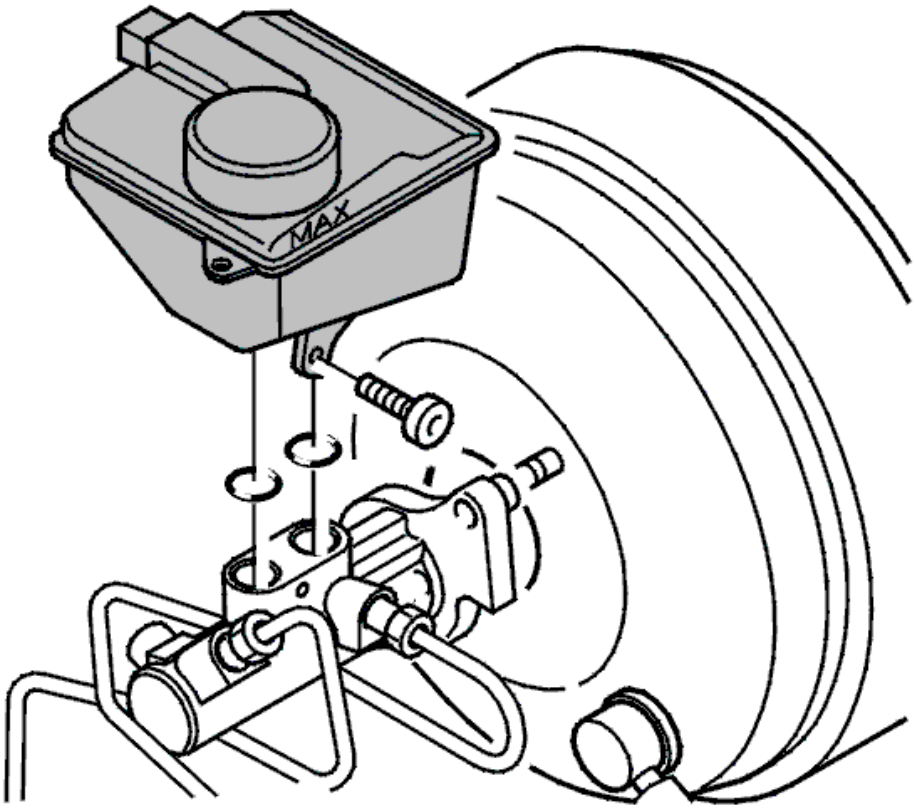

Fig. 10: Brake Fluid Reservoir From Master Cylinder
Courtesy of VOLVO CARS CORPORATION

Remove:

- the screw on the side of the brake fluid reservoir
- the brake fluid reservoir from the master cylinder. Pull the reservoir straight up
- the hose for the clutch cylinder. Applies to cars with manual transmissions.

CLEANING AND CHECKING

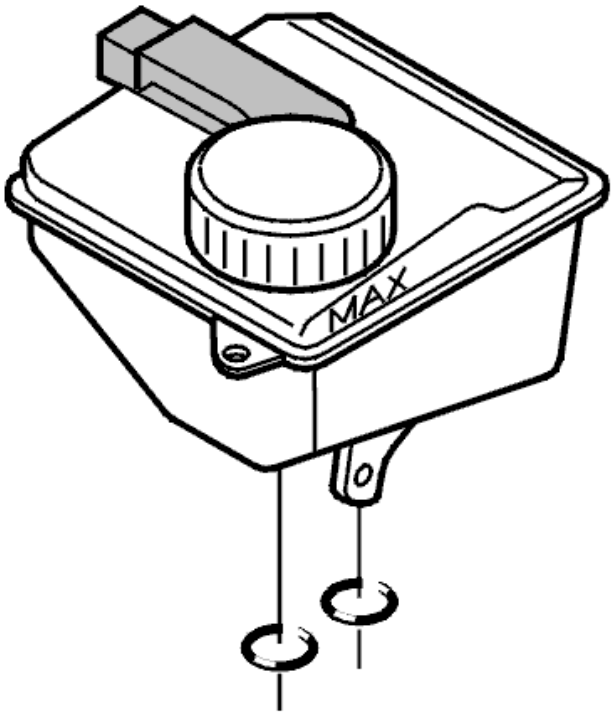

Fig. 11: Checking Brake Fluid Reservoir, Level Switch, Check Valves And Seals
Courtesy of VOLVO CARS CORPORATION

Check the brake fluid reservoir, the level switch, the check valves and seals.

Replace the seals if necessary.

Carefully clean the components that were not replaced. Clean off all contaminants and old brake fluid. Use new brake fluid.

INSTALLATION

INSTALL THE BRAKE FLUID RESERVOIR

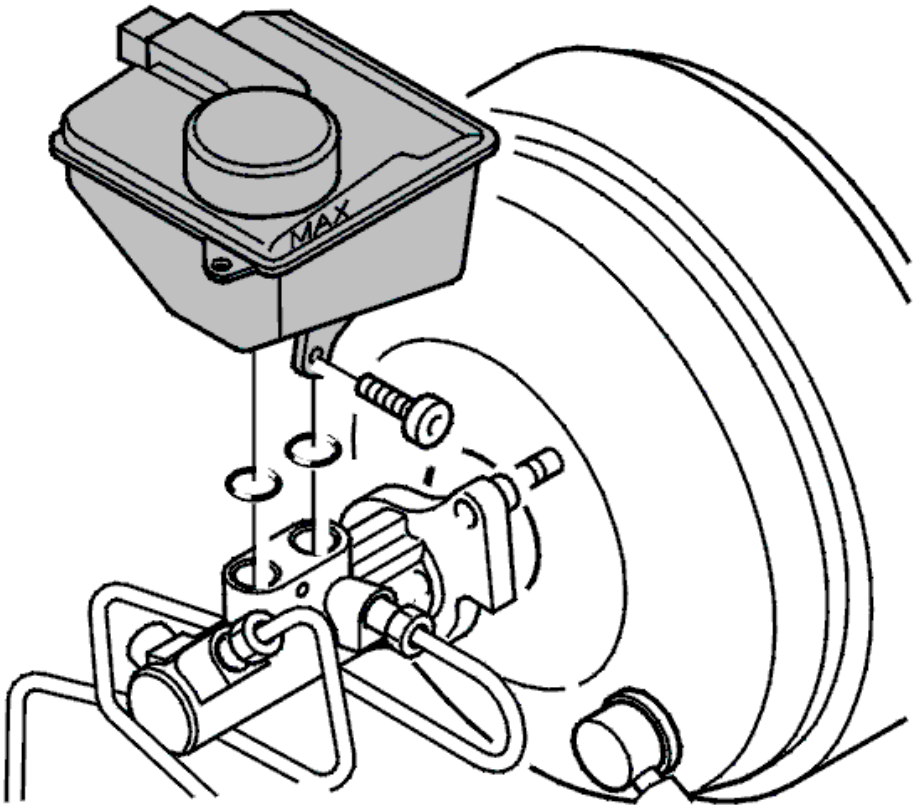

Fig. 12: Brake Fluid Reservoir From Master Cylinder
Courtesy of VOLVO CARS CORPORATION

Check that all connections are free of contaminants.

Lubricate the O-rings and any hoses with brake fluid or glycerin.

NOTE: **Do not use a soap solution or mineral oil to lubricate the hoses. Use brake fluid or glycerin.**

Install:

- the hose for the clutch cylinder. Remove the hose clip
- the brake fluid reservoir from directly above
- the screw on side of the brake fluid reservoir. Tighten to **3.5 Nm** .

INSTALL THE MASTER CYLINDER

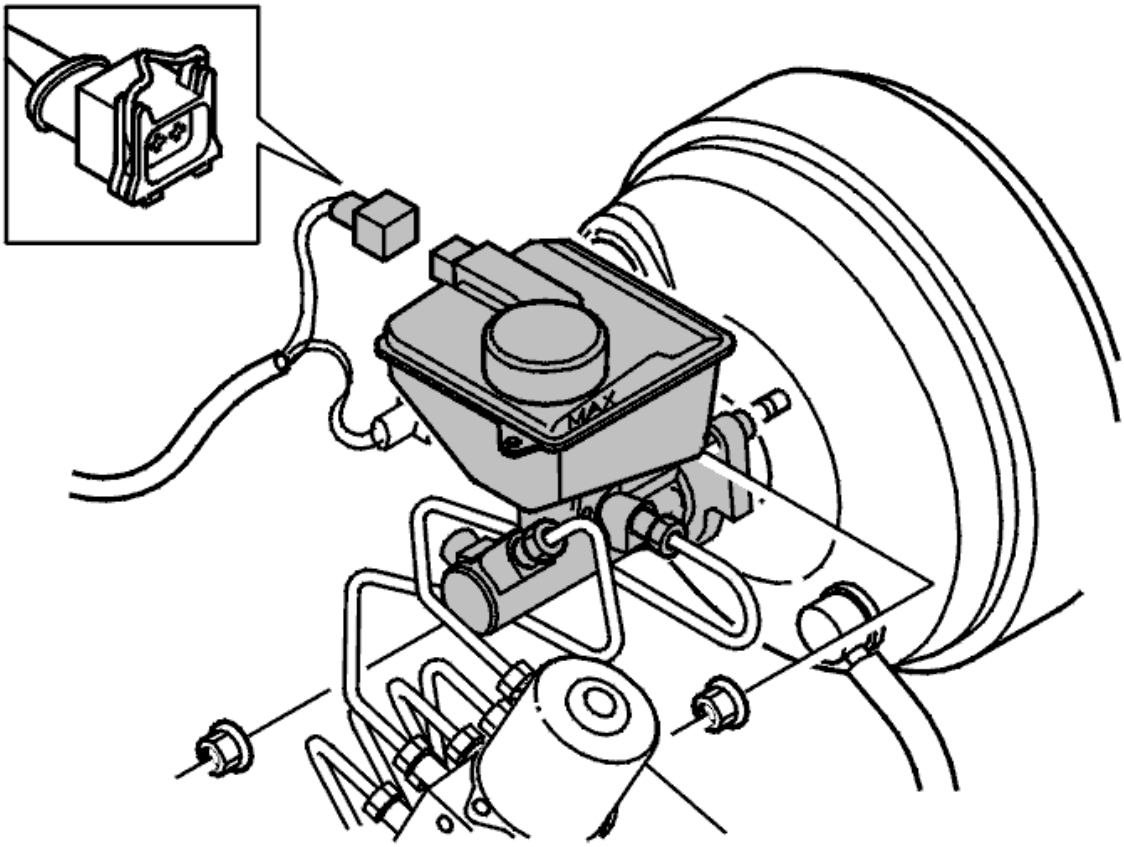

Fig. 13: Hose To Clutch Cylinder
Courtesy of VOLVO CARS CORPORATION

Tighten the mounting nuts. Tighten to **25 Nm** .

Connect the connector on the brake fluid reservoir.

Install the nut for the positive cable. Fold back the positive cable. Tighten the nut at the wheel arch. Tighten to **25 Nm** .

INSTALL THE UPPER TORQUE ROD

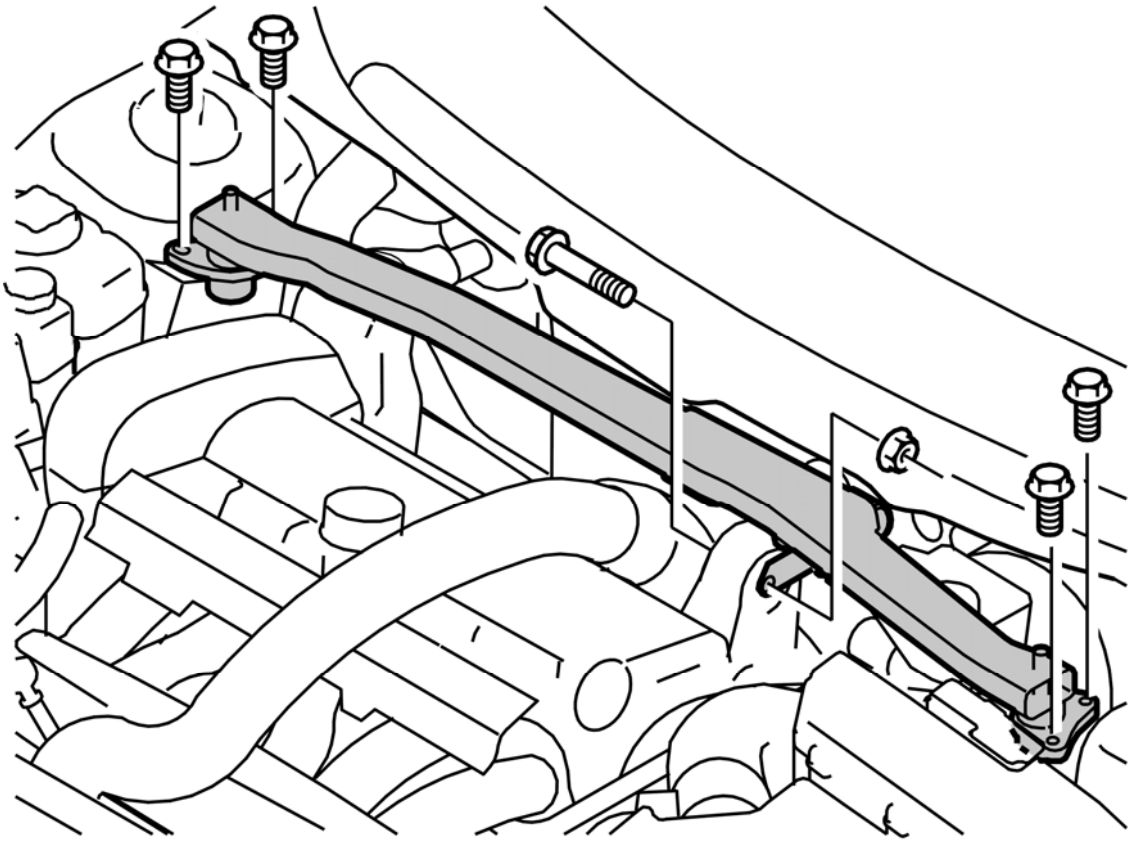

Fig. 14: Identifying Engine Stabilizer Brace And Mounting Screws
Courtesy of VOLVO CARS CORPORATION

Install:

- the engine stabilizer brace. Tighten the mounting screws. Tighten to **50 Nm**
- the screw and a new nut for the engine mounting. Tighten to **80 Nm**
- the screw for the oil hose clamp.

FINISHING WORK

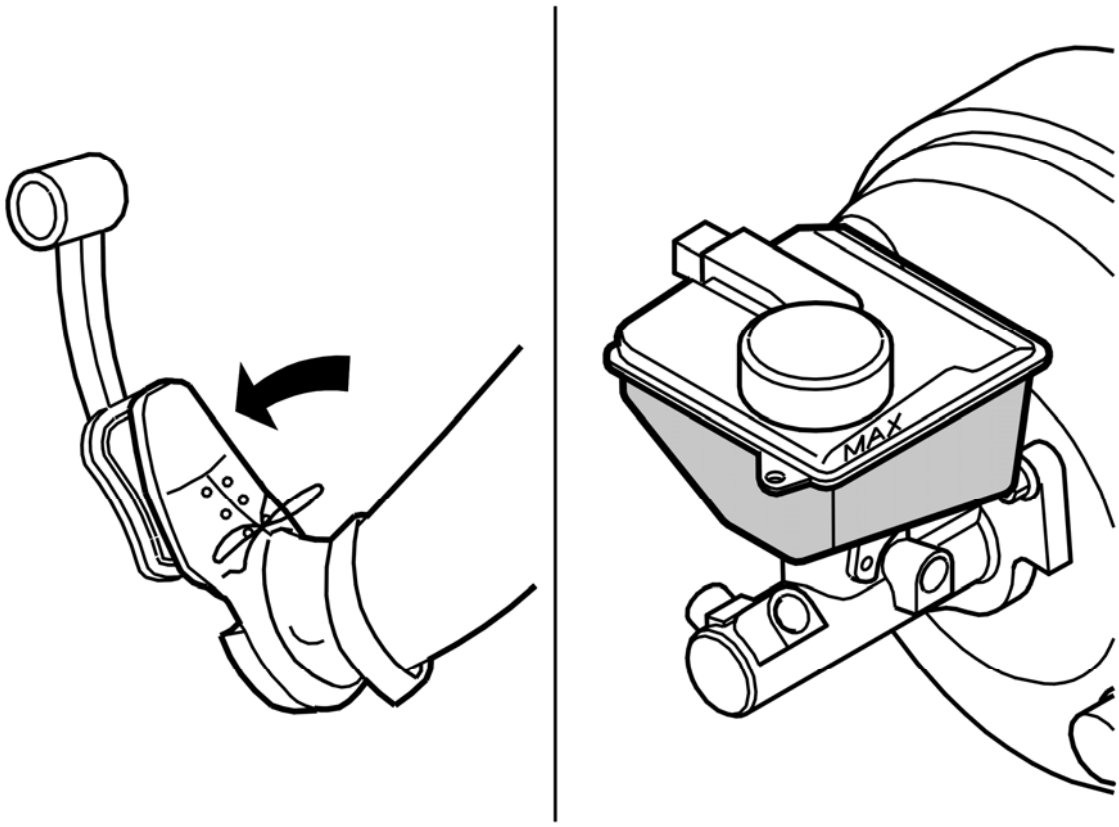

Fig. 15: Bleeding Brake System
Courtesy of VOLVO CARS CORPORATION

Fill the brake fluid reservoir with new brake fluid. Use Volvo Genuine parts, DOT 4+.

Remove the pedal jack.

Cars with manual transmissions: Bleed the clutch

If necessary:

Bleed the brake system. See **BRAKE SYSTEM, BLEEDING (USING BLEEDING UNIT)**

Bleed the system again if the pedal travel is more than 40 mm.

Check for leakage.

The brake fluid level must not be above the maximum mark.

BRAKES

Power transmission

BRAKES

REMOVE THE PANEL (1) OVER THE PARKING BRAKE LEVER

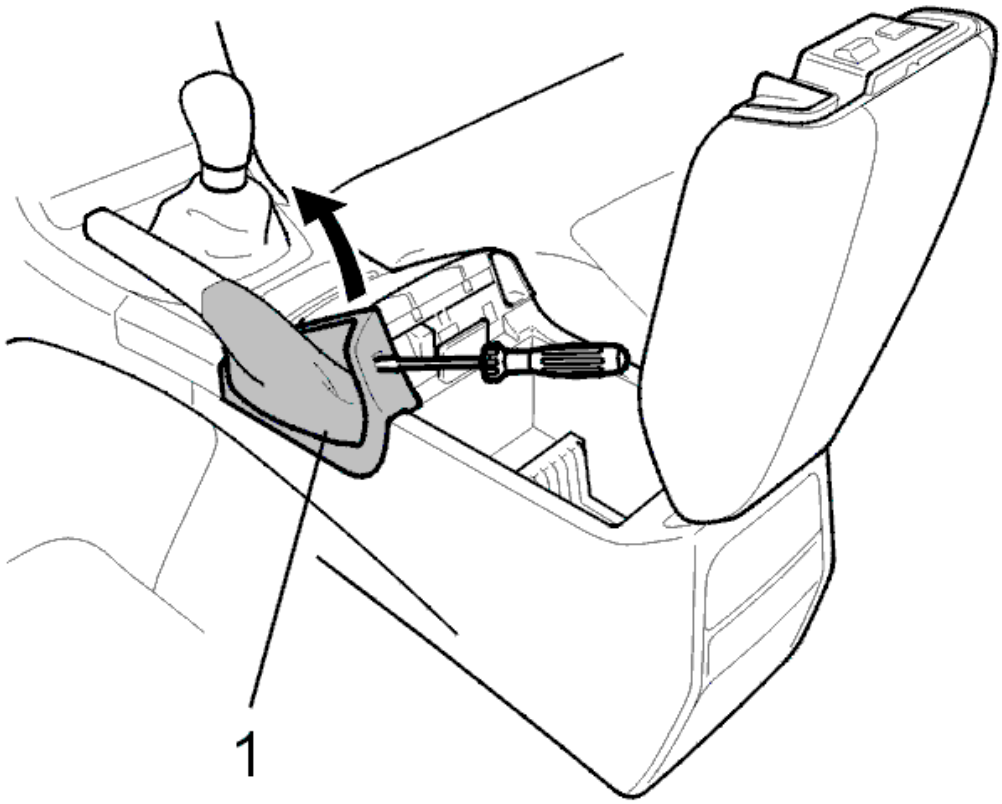

Fig. 1: Identifying Catch Pressed In With Screwdriver
Courtesy of VOLVO CARS CORPORATION

Open the cover for the center console locker.

Press in the catch with a screwdriver.

Lift the panel upwards / forwards.

INSTALL THE PANEL FOR THE PARKING BRAKE LEVER

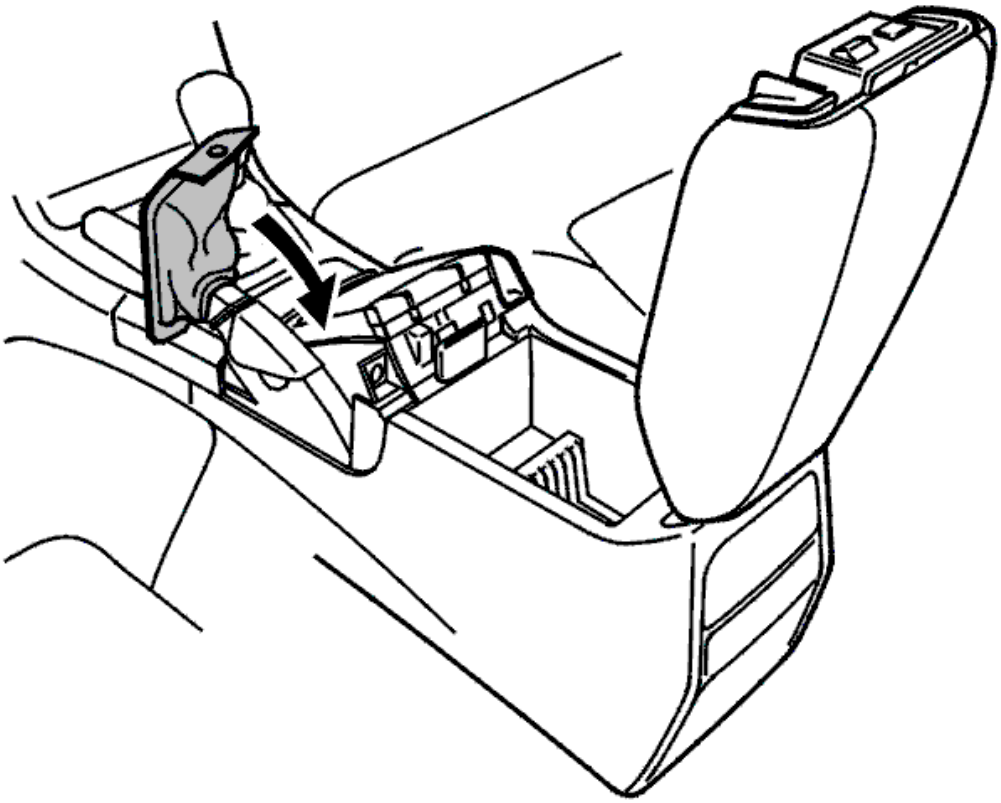

Fig. 2: Identifying Parking Brake Lever Panel Installation
Courtesy of VOLVO CARS CORPORATION

REMOVE THE SECURING SPRING AND LOCATING PINS

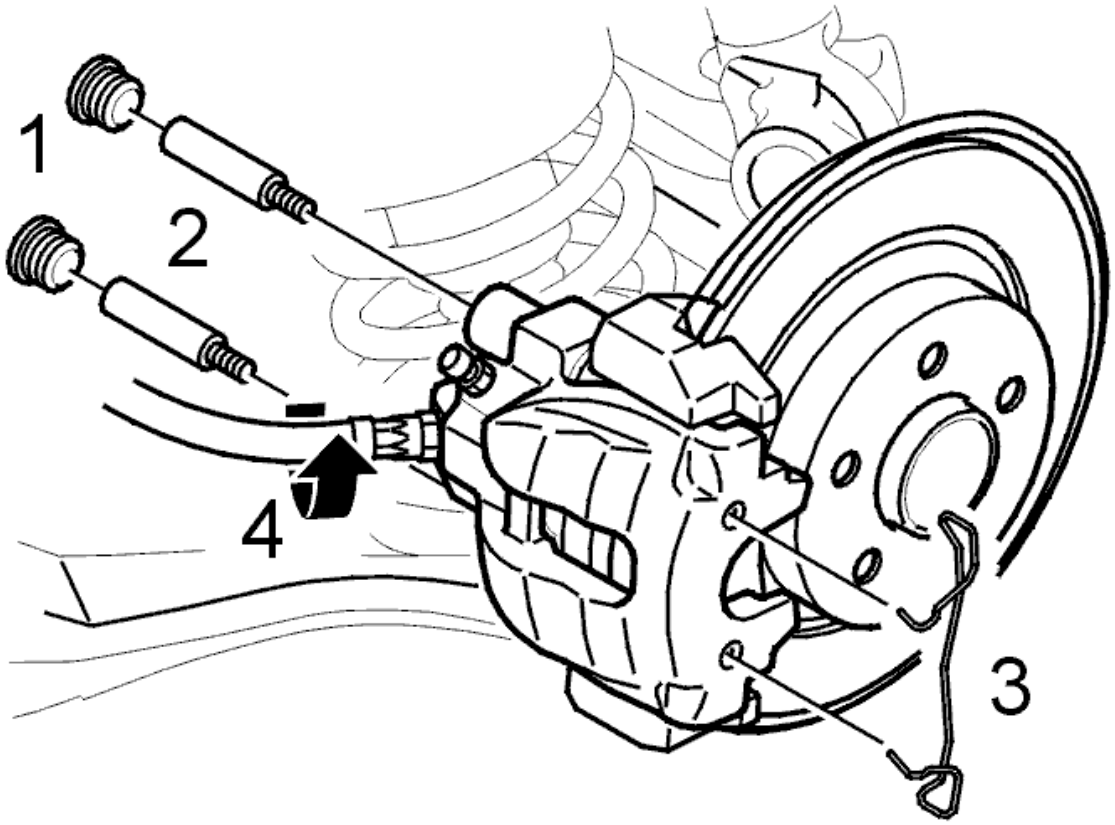

Fig. 3: Identifying Spring And Pins
Courtesy of VOLVO CARS CORPORATION

Slacken off the brake hose (4) half a turn.

Remove:

- the securing spring (3) carefully so that it does not deform
- the protective caps (1) from the two locating pins (2)
- the locating pins, use a hex socket 7 mm.

REMOVE THE BRAKE CALIPER AND BRAKE PADS

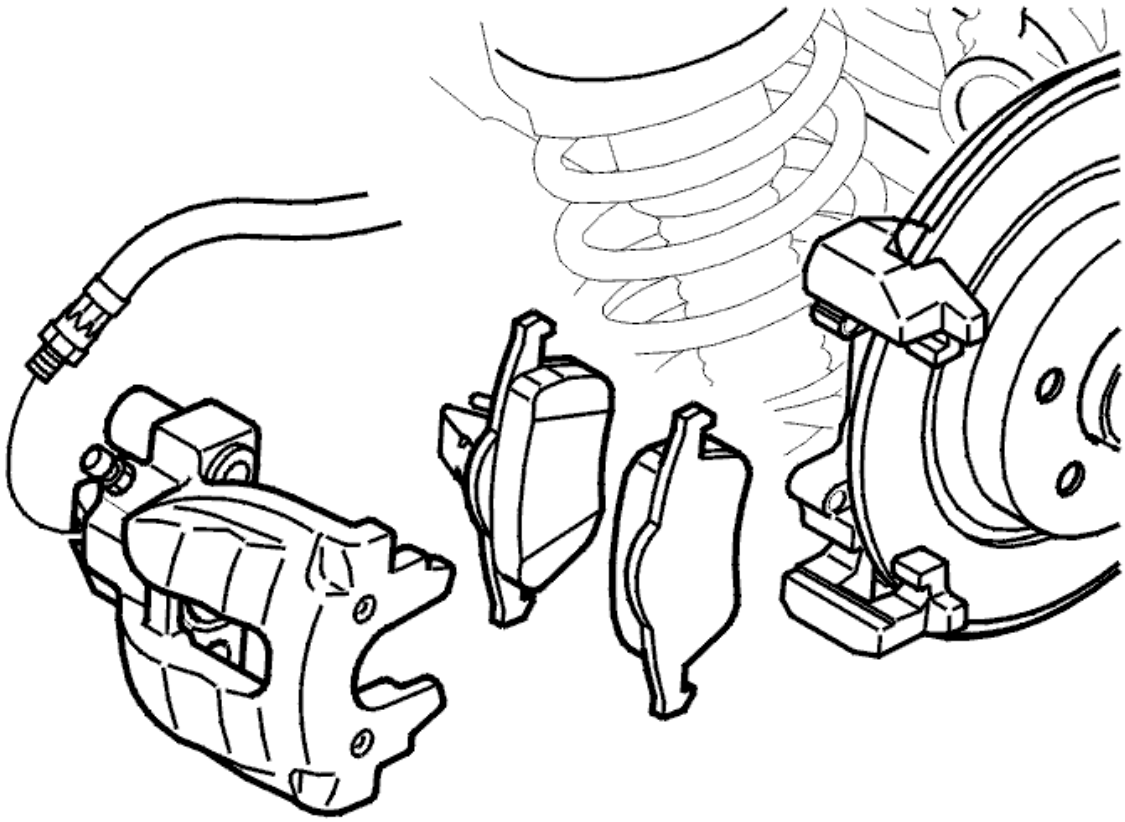

Fig. 4: Identifying Brake Caliper And Brake Pads
Courtesy of VOLVO CARS CORPORATION

Remove:

- the brake caliper from the holder
- the brake hose from the caliper
- the brake pads.

Drain any remaining brake fluid.

NOTE: Do not depress the brake pedal while the brake pads are removed.

SAFETY INFORMATION, BRAKE SYSTEM

WARNING: Brake fluid contains polyglycol ethers and polyglycols.

WARNING: Avoid contact with the eyes.

If the brake fluid comes into contact with the eyes, rinse the eyes with cold running water for 15 minutes. Seek medical attention if the irritation

persists.

Wash your hands thoroughly after handling.

WARNING: **If swallowed, drink water and induce vomiting.**

Seek medical attention immediately.

CAUTION: **If the brake fluid is spilled on a painted surface, the surface must be washed with cold water immediately.**

BRAKES

Power transmission

BRAKES

BRAKE CONTROL MODULE (BCM), REPLACING

REMOVAL

PREPARATION

NOTE: **In week 35 year 2001 a new brake control module (BCM) was introduced along with a new sensor in the brake electronics.**

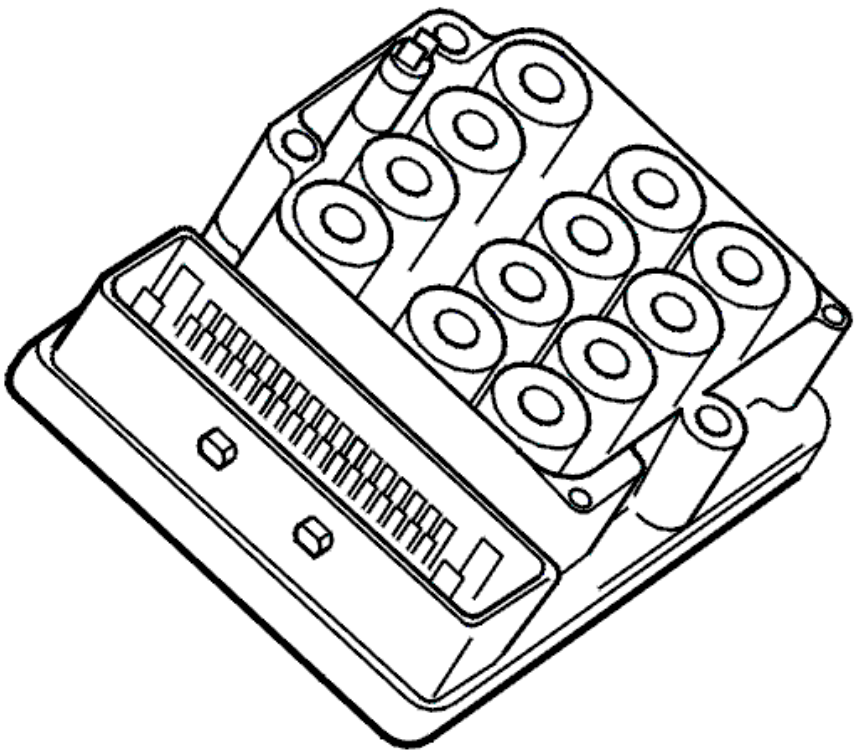

Fig. 1: ABS Control Module
Courtesy of VOLVO CARS CORPORATION

Remove the battery cable. See **BATTERY, DISCONNECTING** .

REMOVING THE AIR CLEANER (ACL) HOUSING

Remove the air cleaner (ACL) housing. See **BRAKE PIPE MASTER CYLINDER/ABS UNIT, REPLACING** .

REMOVING THE INTEGRATED RELAY / FUSEBOX

Remove the integrated relay / fusebox. Remove the connector for the ABS unit. See **REMOVING THE INTEGRATED RELAY / FUSEBOX** .

Remove the screw on the bracket.

Lift the box out of the bracket and put it to one side.

DISCONNECTING THE CONNECTOR

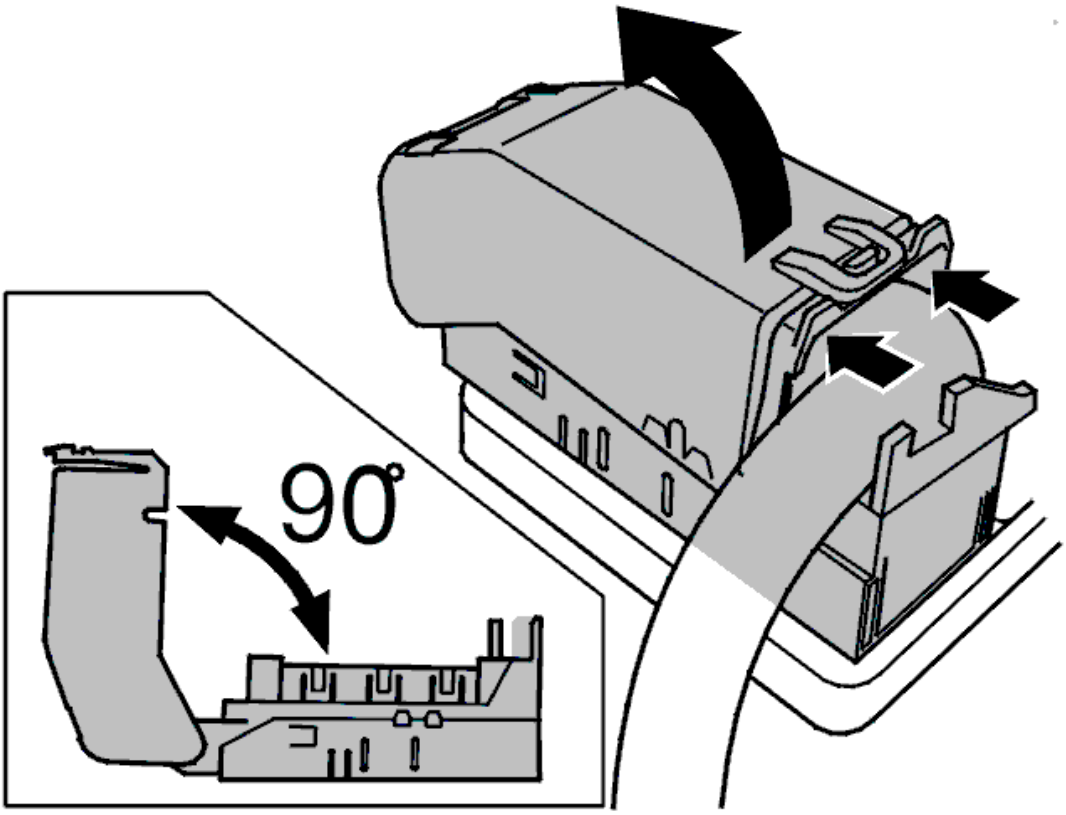

Fig. 2: Identifying Catch & Connector
Courtesy of VOLVO CARS CORPORATION

Disconnect the connector from the control module.

Press the catch and pull up the connector. Pull the connector up a maximum of **90** ° (any more and the connector will break).

Pull the connector up from the control module.

REMOVING THE CONTROL MODULE

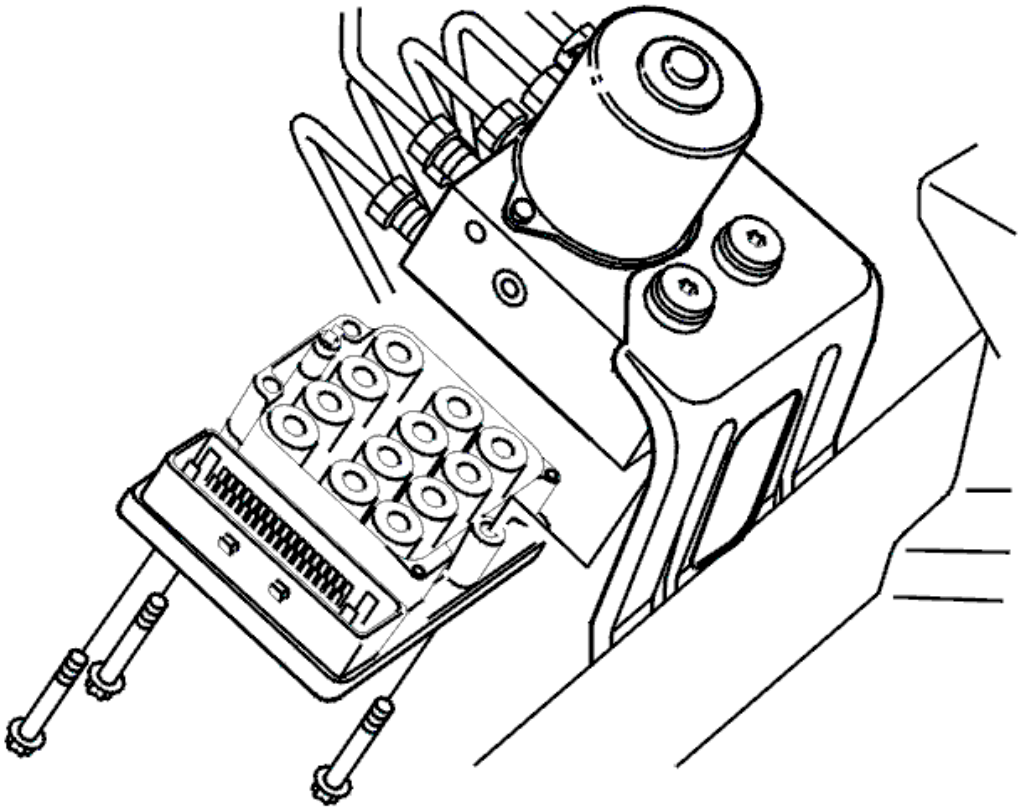

Fig. 3: Brake Control Module And Screws
Courtesy of VOLVO CARS CORPORATION

- Remove the screws.

  Use a 6 mm Torx external socket

- Carefully pull the control module down so that the terminal pin on the control module comes loose inside the ABS modulator
- Continue pulling the control module down towards the brake lines and lift it out.

CHECKING THE NEW CONTROL MODULE

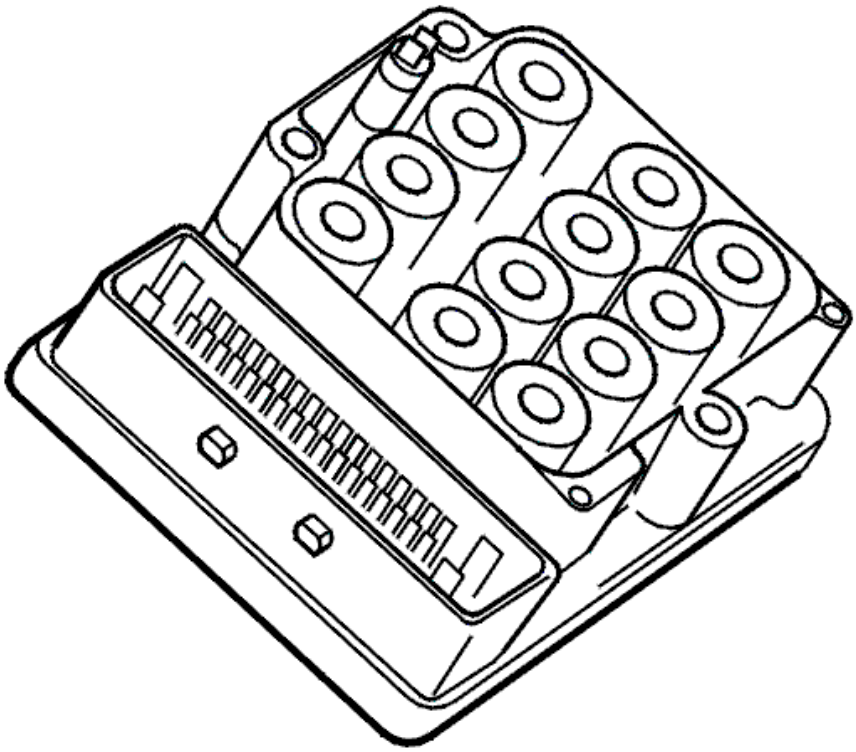

Fig. 4: ABS Control Module
Courtesy of VOLVO CARS CORPORATION

Check:

- the control module is correct (compare to the old one)
- that none of the pins on the connector are damaged
- that there are no contaminants on the mating surfaces between the control module and the ABS hydraulic modulator
- that no parts of the old control module seals remain on the old ABS hydraulic modulator valves.

INSTALLATION

INSTALLING THE CONTROL MODULE

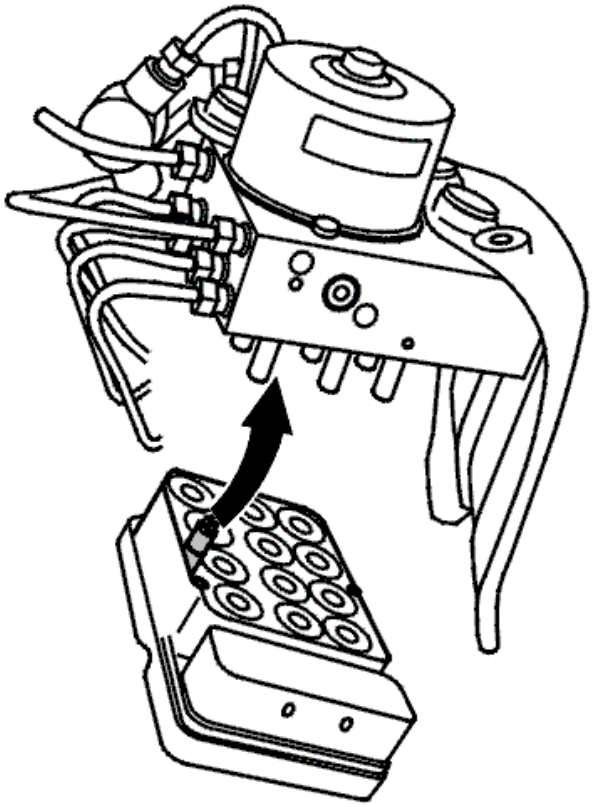

Fig. 5: Identifying Brake Control Module
Courtesy of VOLVO CARS CORPORATION

Position the control module on the brake lines.

Center the control module with the ABS modulator valves so that the terminal pins are correctly positioned in the modulator.

Press the control module up so that the terminal pins connect.

Install:

- the screws.

  Tighten to **1.8 Nm**

- the connector on the control module. Lock the connector
- the integrated relay/fusebox and the connector for the ABS unit. See **INTEGRATED RELAY / FUSEBOX, INSTALLING**
- the integrated relay / fusebox.

  Tighten the screw. Tighten to **10 Nm**

- the air cleaner (ACL) housing. See **AIR CLEANER (ACL) HOUSING, INSTALLING** .

INSTALLING THE BATTERY LEAD

Install the battery cable. See **BATTERY, DISCONNECTING** .

LOADING SOFTWARE

NOTE: Switch on the ignition. Order software.

VISUAL CHECK

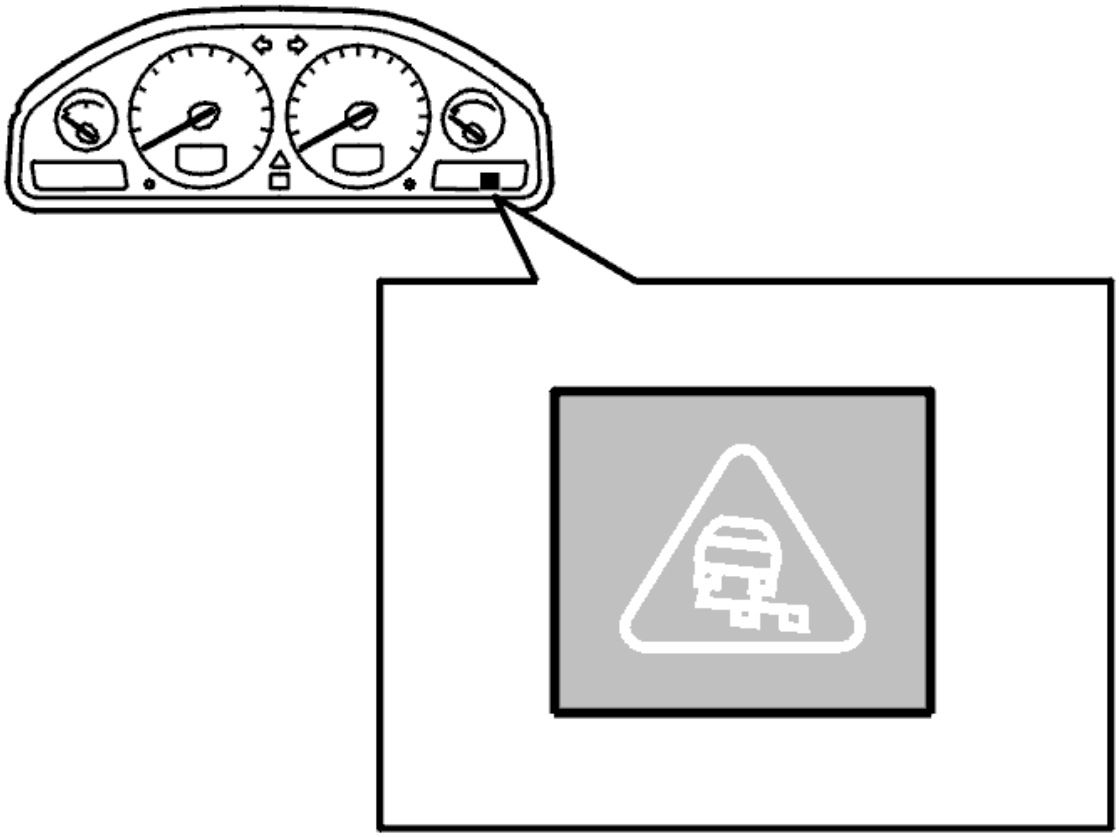

Fig. 6: Identifying Warning Light
Courtesy of VOLVO CARS CORPORATION

Turn on the ignition.

Wait five seconds and until the symbol for the brakes on the dashboard has gone out.

In the event of a fault (the symbol is lit).

Check that the connector is connected.

FUNCTION TEST

WARNING: No ABS, stability and traction control functions are available when there is communication with the Brake control module (BCM) (Volvo Diagnostics are activated). ABS warning lamp flashes for as long as the diagnostics are activated. To cancel the diagnostics before test driving the vehicle, the ignition must be switched off

See: **FUNCTION TEST** .

Use VIDA (Volvo scan tool) to calibrate the control module.

BRAKE FLUID RESERVOIR, REPLACING

REMOVAL

PREPARATIONS

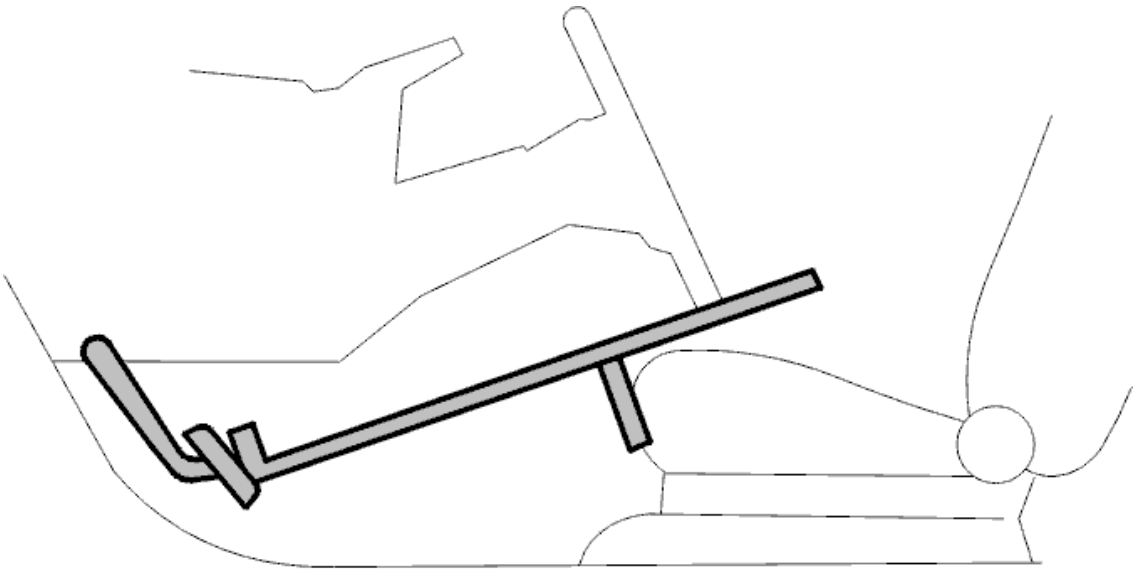

Fig. 7: Identifying Pedal Secured In Depressed Position Using Pedal Jack
Courtesy of VOLVO CARS CORPORATION

Switch off the ignition.

Clean around filler cap at the connector between the reservoir and master cylinder and at any hose connector. This is to ensure that no contaminants enter the brake system.

Place paper under the master cylinder. This is to protect the paintwork from damage if brake fluid is spilled.

Secure the pedal in the depressed position. Use a pedal jack.

REMOVE THE UPPER ENGINE STABILIZER BRACE

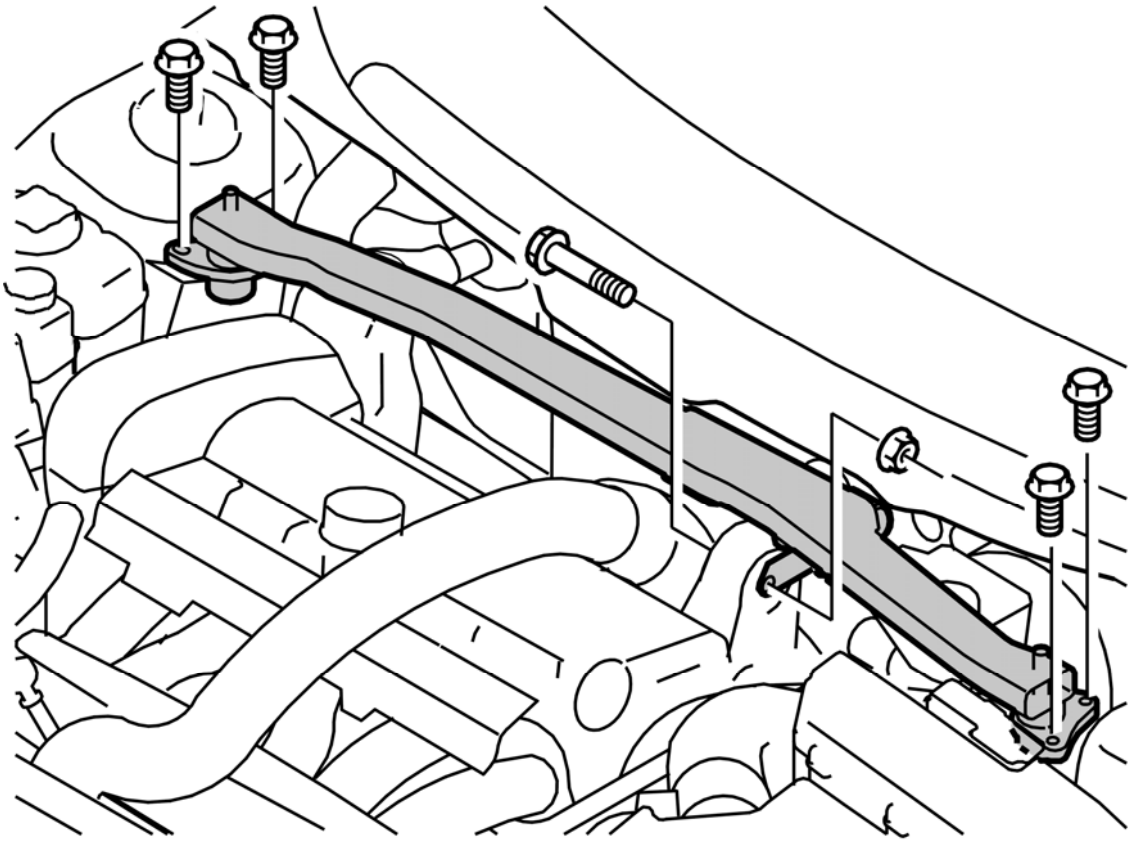

Fig. 8: Identifying Engine Stabilizer Brace And Mounting Screws
Courtesy of VOLVO CARS CORPORATION

Remove:

- the mounting screws for the torque rod
- the screw and nut for the engine mounting and torque rod
- the screw for the oil hose clamp
- the engine stabilizer brace.

PREPARATIONS FOR REMOVING THE BRAKE FLUID RESERVOIR

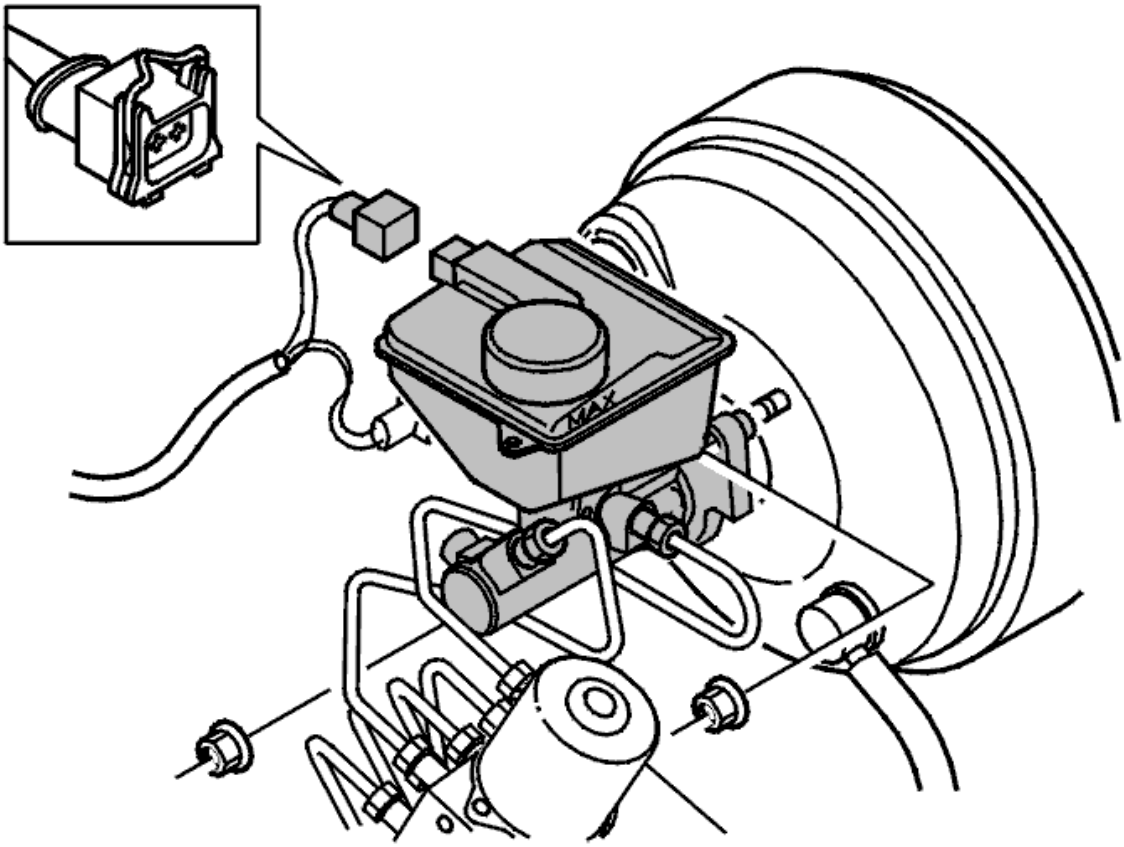

Fig. 9: Hose To Clutch Cylinder
Courtesy of VOLVO CARS CORPORATION

Block the hose to the clutch cylinder. **Applies to cars with manual transmissions** .

Remove the plastic cap and the cable holder

See **REMOVE THE PLASTIC CAP AND THE CABLE HOLDER**

Pull out the master cylinder

Remove the connector from the brake fluid level sensor.

Remove the mounting nuts from the master cylinder.

Pull out the cylinder slightly.

REMOVE THE BRAKE FLUID RESERVOIR

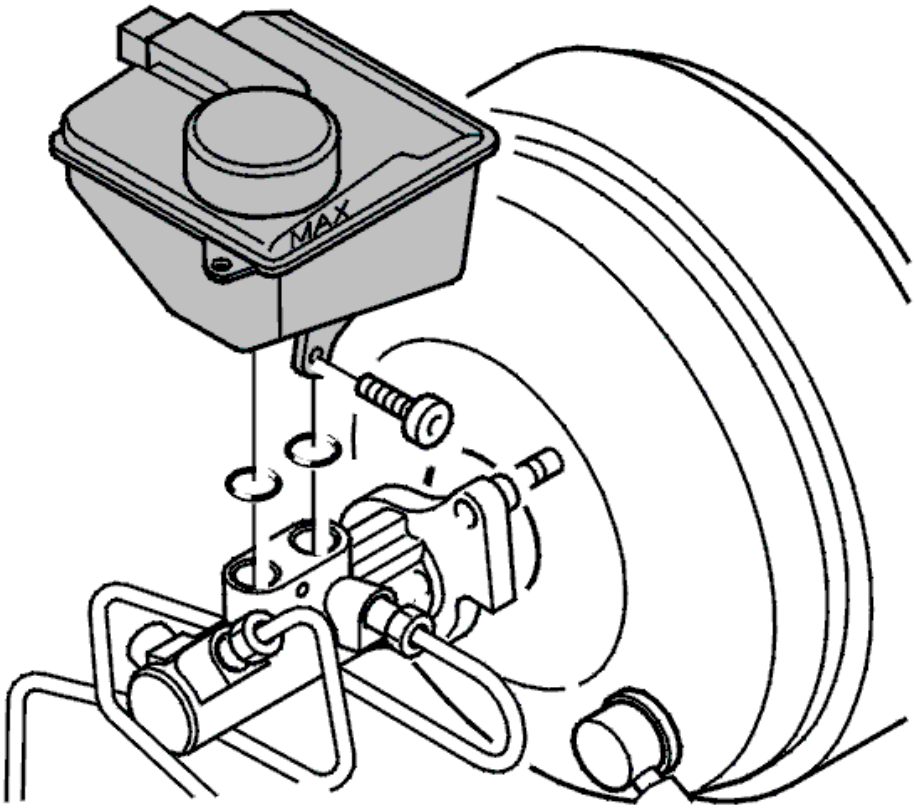

Fig. 10: Brake Fluid Reservoir From Master Cylinder
Courtesy of VOLVO CARS CORPORATION

Remove:

- the screw on the side of the brake fluid reservoir
- the brake fluid reservoir from the master cylinder. Pull the reservoir straight up
- the hose for the clutch cylinder. Applies to cars with manual transmissions.

CLEANING AND CHECKING

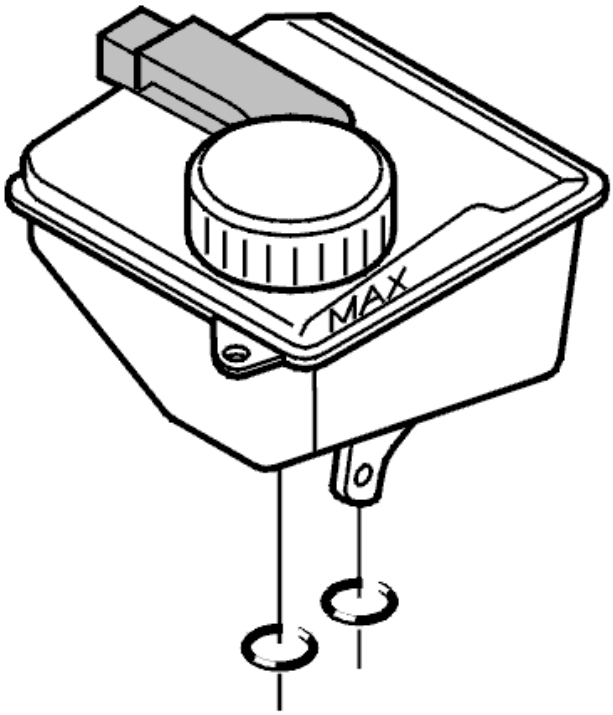

Fig. 11: Checking Brake Fluid Reservoir, Level Switch, Check Valves And Seals
Courtesy of VOLVO CARS CORPORATION

Check the brake fluid reservoir, the level switch, the check valves and seals.

Replace the seals if necessary.

Carefully clean the components that were not replaced. Clean off all contaminants and old brake fluid. Use new brake fluid.

INSTALLATION

INSTALL THE BRAKE FLUID RESERVOIR

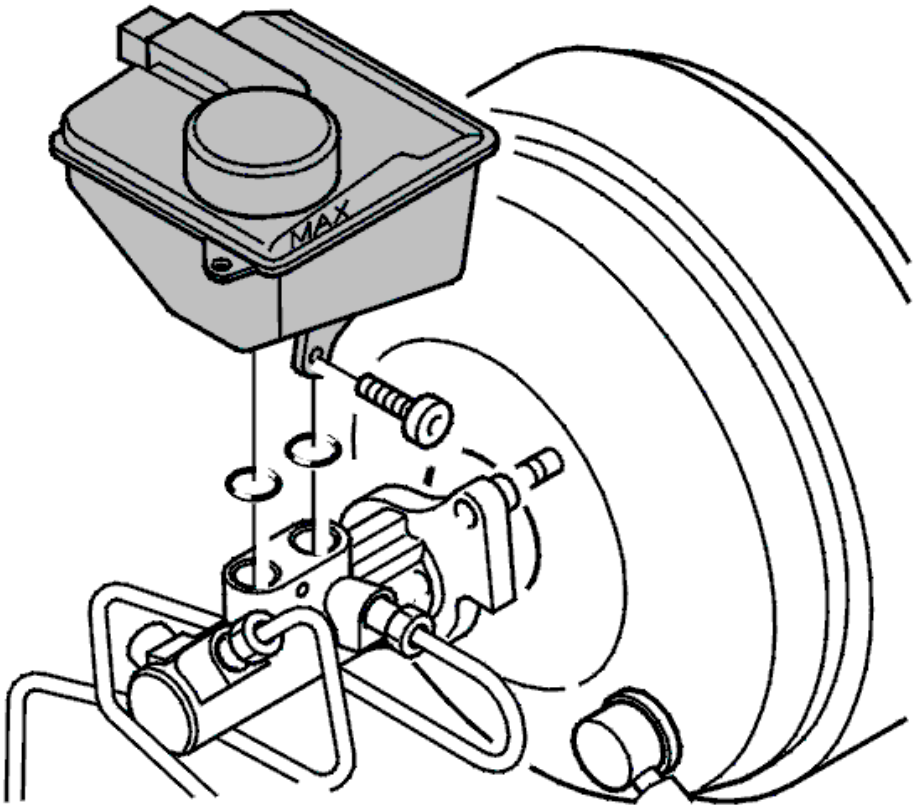

Fig. 12: Brake Fluid Reservoir From Master Cylinder
Courtesy of VOLVO CARS CORPORATION

Check that all connections are free of contaminants.

Lubricate the O-rings and any hoses with brake fluid or glycerin.

NOTE: **Do not use a soap solution or mineral oil to lubricate the hoses. Use brake fluid or glycerin.**

Install:

- the hose for the clutch cylinder. Remove the hose clip
- the brake fluid reservoir from directly above
- the screw on side of the brake fluid reservoir. Tighten to **3.5 Nm** .

INSTALL THE MASTER CYLINDER

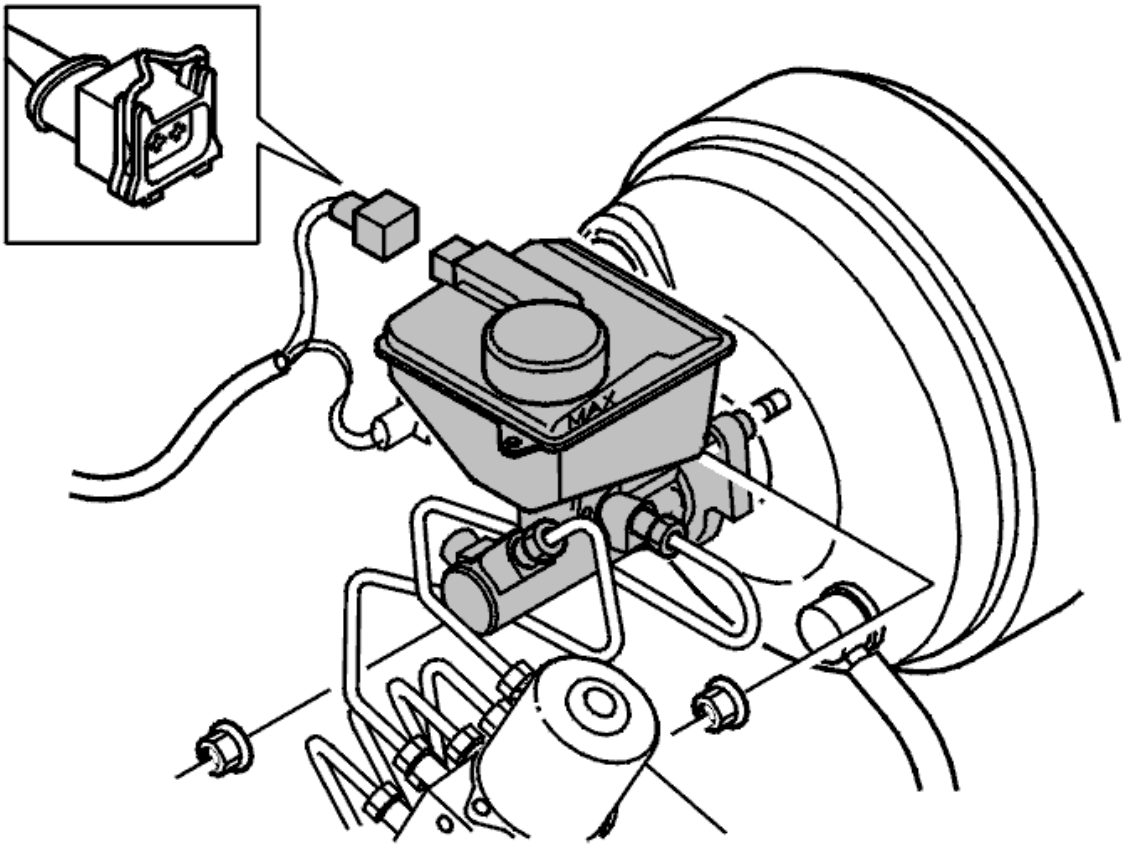

Fig. 13: Hose To Clutch Cylinder
Courtesy of VOLVO CARS CORPORATION

Tighten the mounting nuts. Tighten to **25 Nm** .

Connect the connector on the brake fluid reservoir.

Install the nut for the positive cable. Fold back the positive cable. Tighten the nut at the wheel arch. Tighten to **25 Nm** .

INSTALL THE UPPER TORQUE ROD

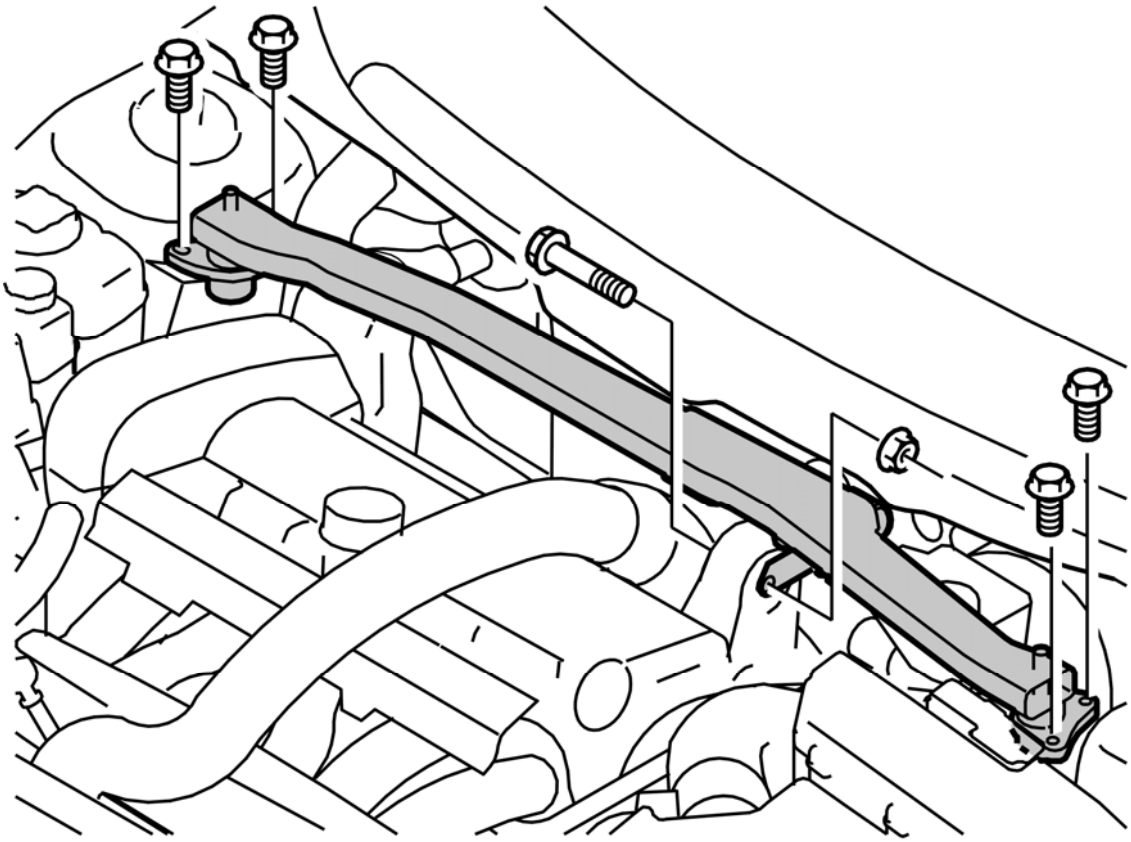

Fig. 14: Identifying Engine Stabilizer Brace And Mounting Screws
Courtesy of VOLVO CARS CORPORATION

Install:

- the engine stabilizer brace. Tighten the mounting screws. Tighten to **50 Nm**
- the screw and a new nut for the engine mounting. Tighten to **80 Nm**
- the screw for the oil hose clamp.

FINISHING WORK

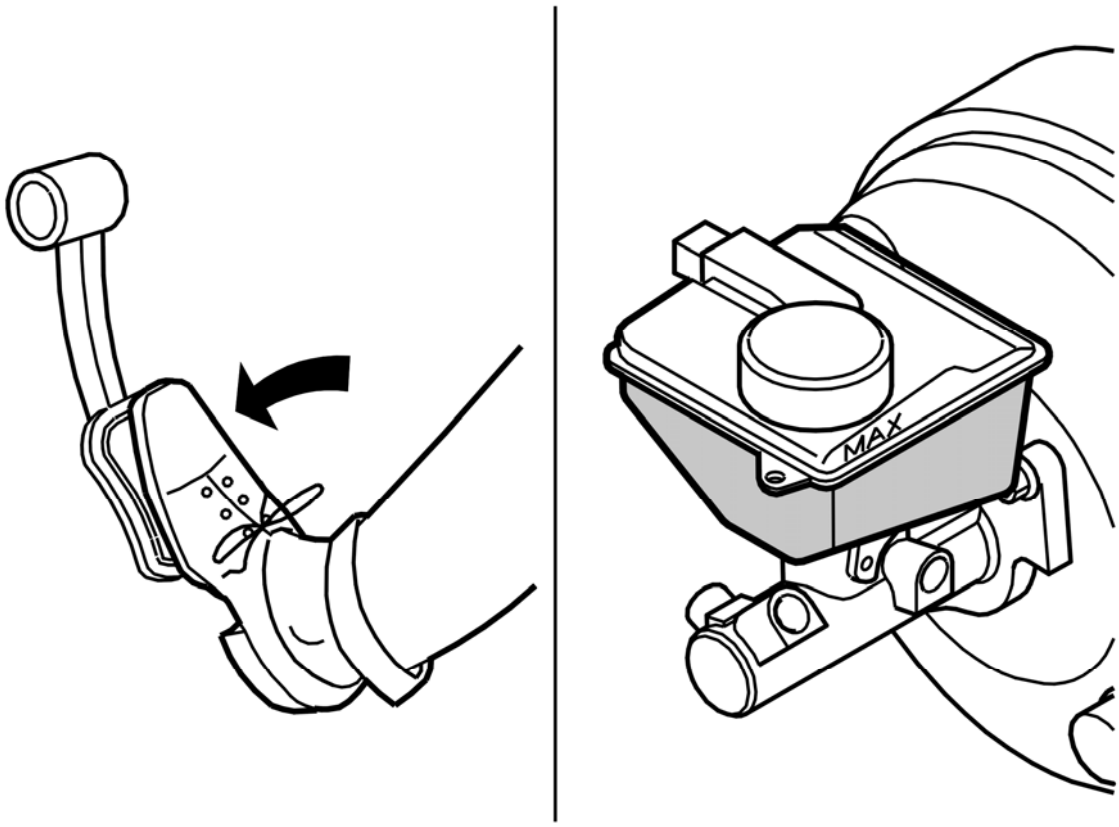

Fig. 15: Bleeding Brake System
Courtesy of VOLVO CARS CORPORATION

Fill the brake fluid reservoir with new brake fluid. Use Volvo Genuine parts, DOT 4+.

Remove the pedal jack.

Cars with manual transmissions: Bleed the clutch

If necessary:

Bleed the brake system. See **BRAKE SYSTEM, BLEEDING (USING BLEEDING UNIT)**

Bleed the system again if the pedal travel is more than 40 mm.

Check for leakage.

The brake fluid level must not be above the maximum mark.

BRAKES

Power transmission

BRAKES

RECONDITIONING REAR BRAKE CALIPERS

Special tools:

see **9814071**

COLLECT THE BRAKE FLUID

see **BRAKE CALIPERS FRONT, REPLACING** .

REMOVE THE SECURING SPRING AND LOCATING PINS

See **REMOVE THE SECURING SPRING AND LOCATING PINS** .

REMOVE THE BRAKE CALIPER AND BRAKE PADS

See **REMOVE THE BRAKE CALLIPER AND BRAKE PADS** .

REMOVE THE PISTON FROM THE BRAKE CALIPER

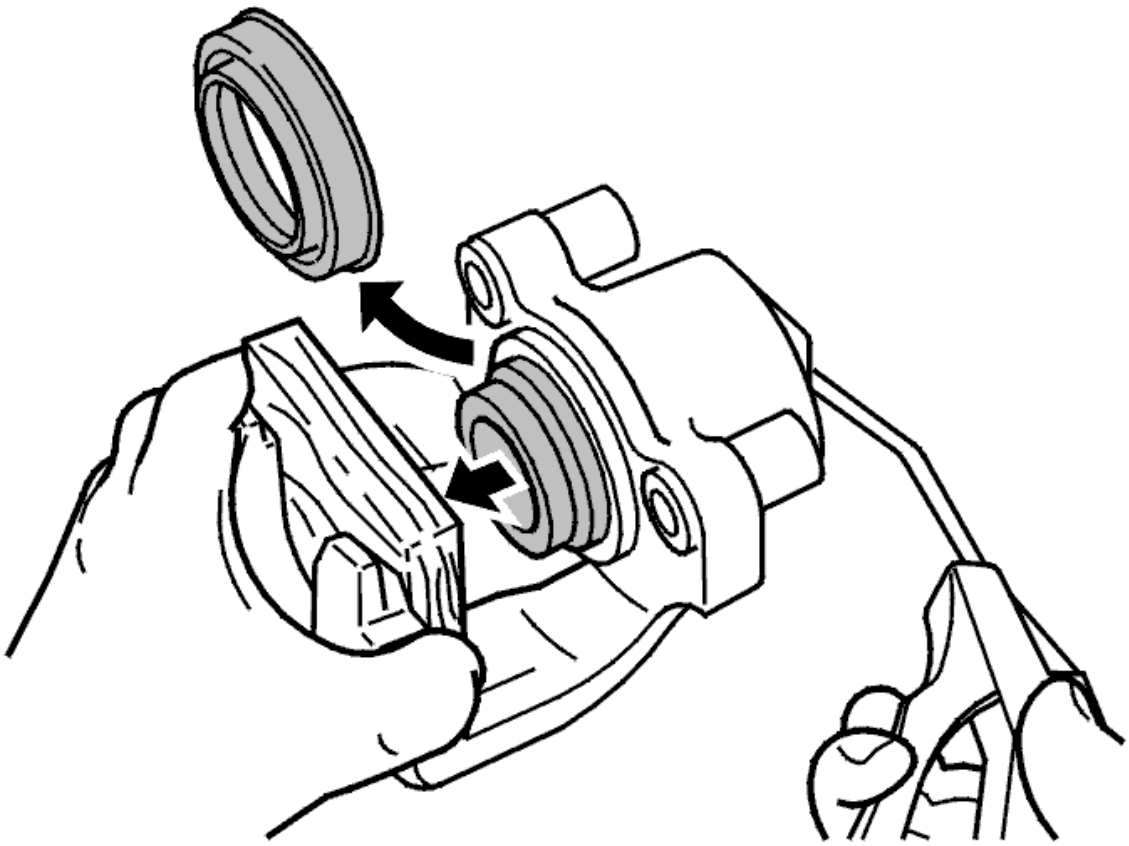

Fig. 1: Identifying Wood Block In Piston & Application Of Compressed Air For Removal
Courtesy of VOLVO CARS CORPORATION

WARNING: **Do not trap your fingers when the piston is pressed out.**

Remove the dust cap before the piston is pressed out.

Place a block of wood in front of the piston. Carefully press out the piston using compressed air.

CLEANING AND INSPECTION

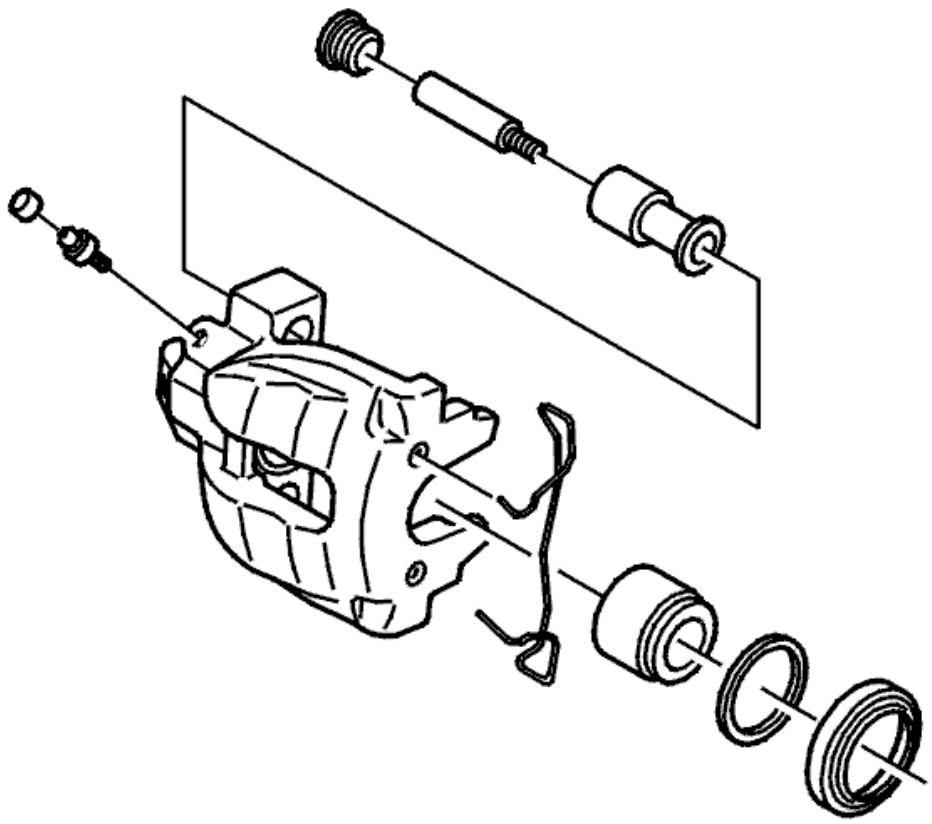

Fig. 2: Cleaning And Inspection Brake Caliper
Courtesy of VOLVO CARS CORPORATION

Clean the components in denatured alcohol.

Check the components for wear, damage, cracks and rust. Replace components if necessary.

Remove the sealing ring. Use weatherstrip tool see **9814071** or similar so as not to damage the edges of the groove.

Remove the rubber sleeves.

Check the rubber sleeves of the locating pins. Replace if necessary.

Always replace the sealing ring and dust boot when installing. Take particular care to clean the ducts and the grooves for the O-ring and dust boot.

If the cylinder is badly marked, scratched etc., replace the complete caliper.

Remove minor rust deposits using fine sandpaper.

Check the bleed nipple, replace as necessary.

INSTALL THE PISTON IN THE BRAKE CALIPER

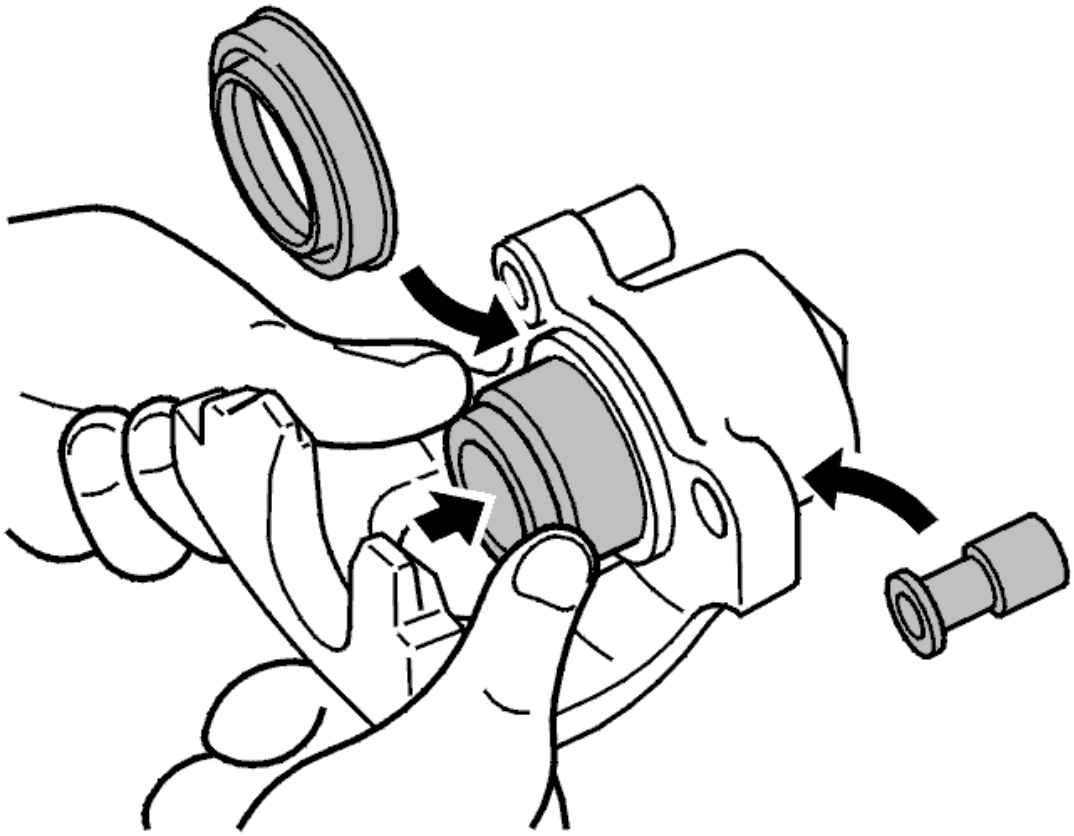

Fig. 3: Applying Thin Layer Of New Brake Fluid To Cylinders, Piston And New Sealing Ring
Courtesy of VOLVO CARS CORPORATION

Blow the ducts clean using compressed air.

Apply a thin layer of new brake fluid to the cylinders, the piston and the new sealing ring.

Install:

- the piston in the caliper. Carefully press the piston to the bottom
- the dust boot in the groove on the piston. Check that everything is positioned correctly
- the rubber sleeves in the caliper for the locating pins.

INSTALL THE BRAKE CALIPER

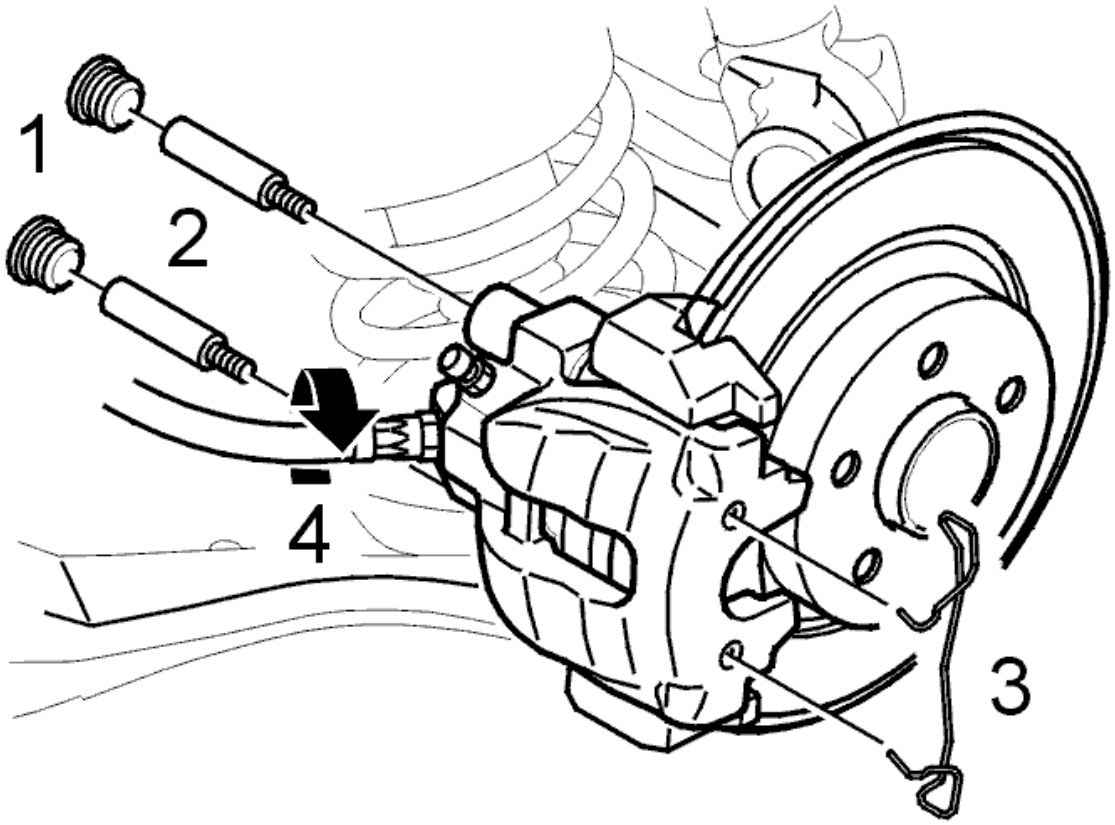

Fig. 4: Brake Caliper Assembly
Courtesy of VOLVO CARS CORPORATION

Lubricate the locating pins (2) using grease. P/N 1161325-4.

Insert the locating pins into the rubber sleeves. The pins should slide into the sleeves easily.

Secure the brake hose (4) loosely in the caliper.

Install:

- a brake pad in the piston
- the other pad in the caliper holder
- the brake caliper. Tighten the locating pins to **30 Nm**
- the securing springs (3)
- the protective caps (1).

Tighten the brake hose. Tighten to **16 Nm** .

Fill and bleed the brake system

see **BRAKE SYSTEM, BLEEDING (USING BLEEDING UNIT)** .

Pressure test the brake system

see **PRESSURE TEST THE BRAKE SYSTEM**.

Install the wheel

see **INSTALLING WHEELS**

PRESSURE TEST THE BRAKE SYSTEM

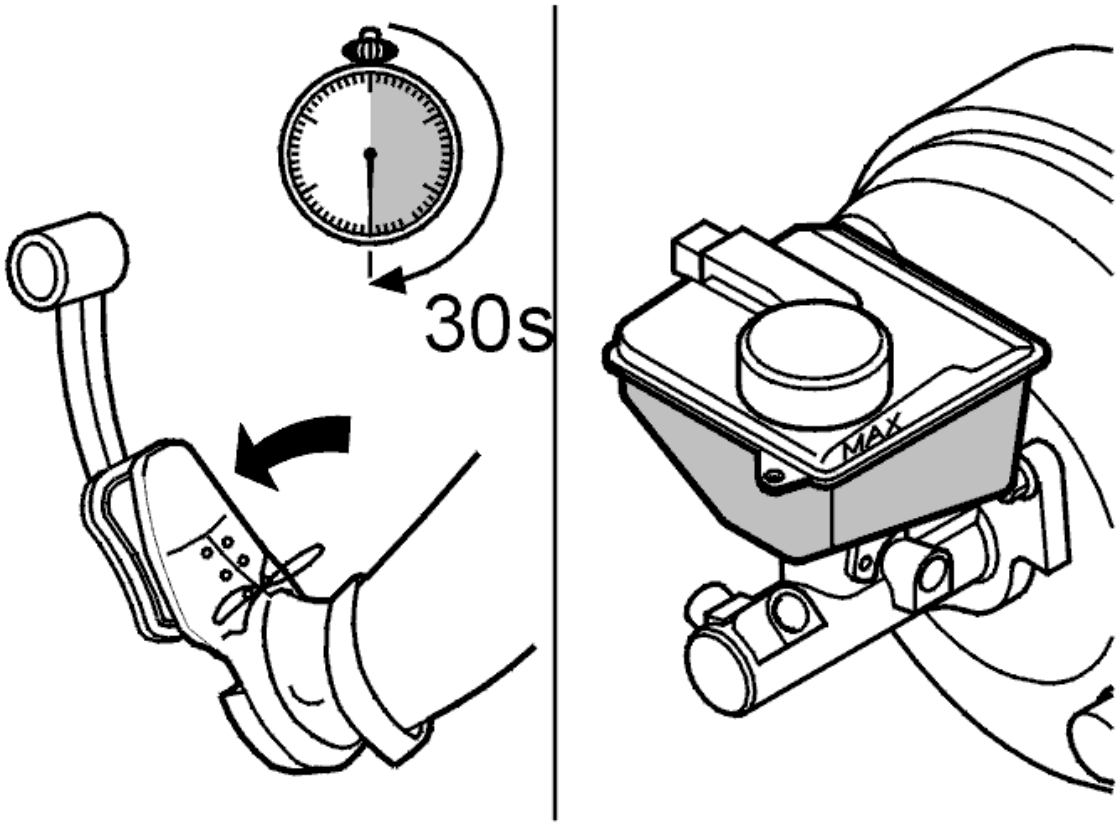

Fig. 5: Depressing Brake Pedal As If Braking Suddenly (So That Wheels Would Almost Lock) For 30 Seconds
Courtesy of VOLVO CARS CORPORATION

After the brake system has been bled it must be pressure tested.

Depress the brake pedal as if braking suddenly (so that the wheels would almost lock) for 30 seconds. Check that no leakage occurs from the brake nipples, hoses and joints.

Remedy any leakage.

Install the wheel

see **INSTALLING WHEELS**

BRAKES

Power transmission

BRAKES

HANDBRAKE, BRAKE SHOES, REPLACING

Special tools:

see **9997225**

NOTE: **The illustrations in this service information are used for different model years and/or models. Some variation may occur. However, the essential information in the illustrations is always correct.**

REMOVAL

REMOVE THE PANEL COVERING THE HANDBRAKE LEVER

See **REMOVE THE PANEL (1) OVER THE PARKING BRAKE LEVER** .

RELEASE THE HANDBRAKE ADJUSTER

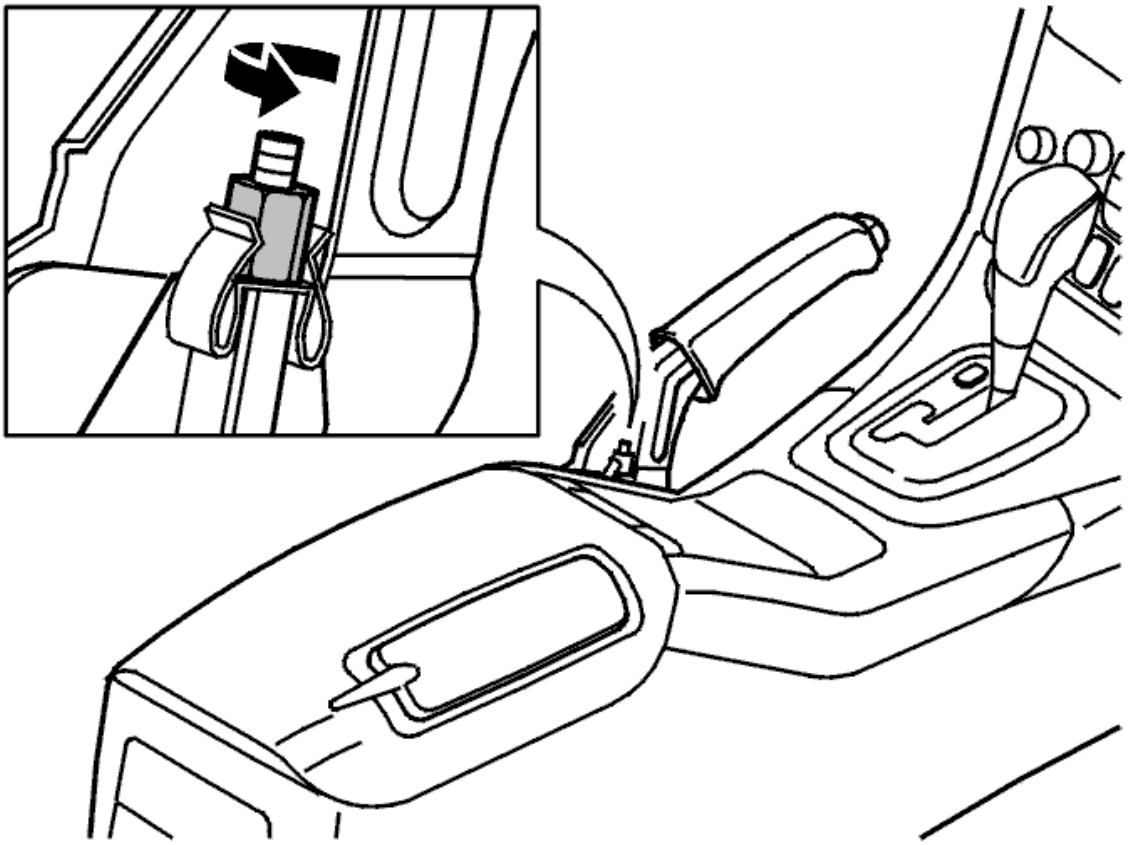

Fig. 1: Identifying Hand Brake Adjuster
Courtesy of VOLVO CARS CORPORATION

Slacken off the adjustment screw 5-10 turns so that the brake disc can be removed.

Remove the rear wheels

REMOVE THE BRAKE CALIPER AND HOLDER

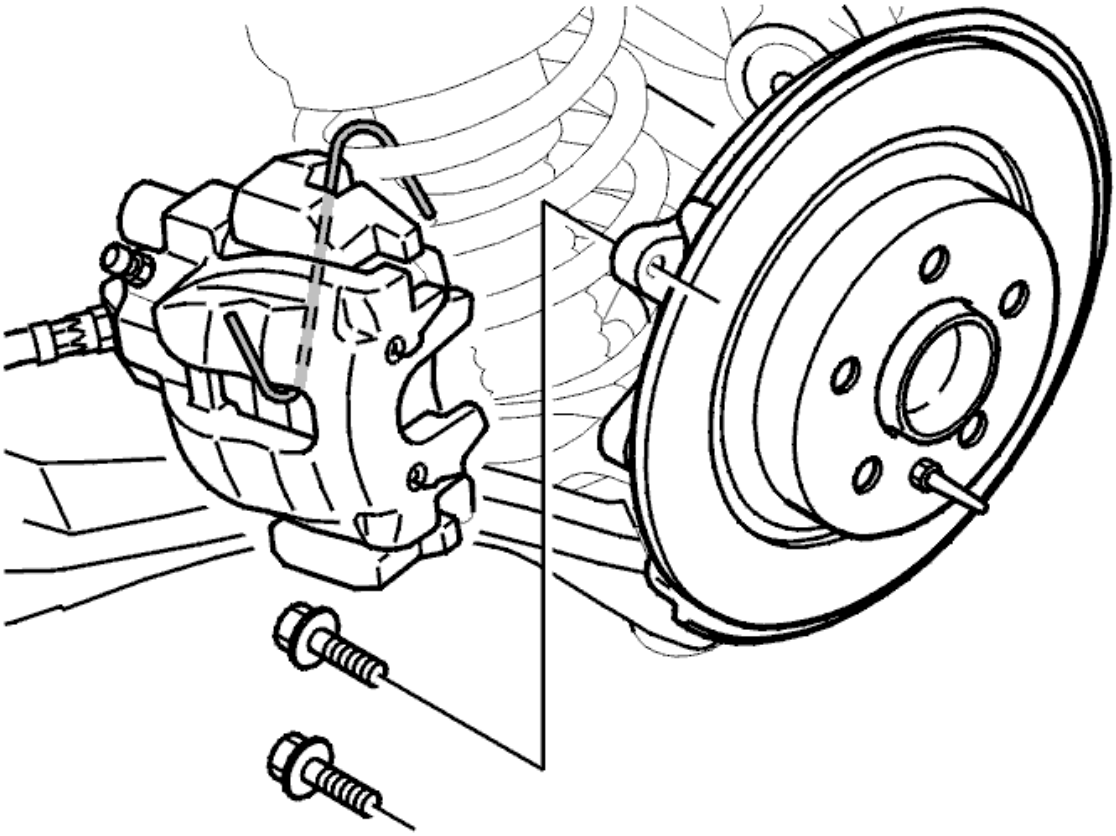

Fig. 2: Brake Caliper Components
Courtesy of VOLVO CARS CORPORATION

Hang the brake caliper from the spring using a wire.

NOTE: Do not damage the ABS line.

REMOVE THE BRAKE DISC

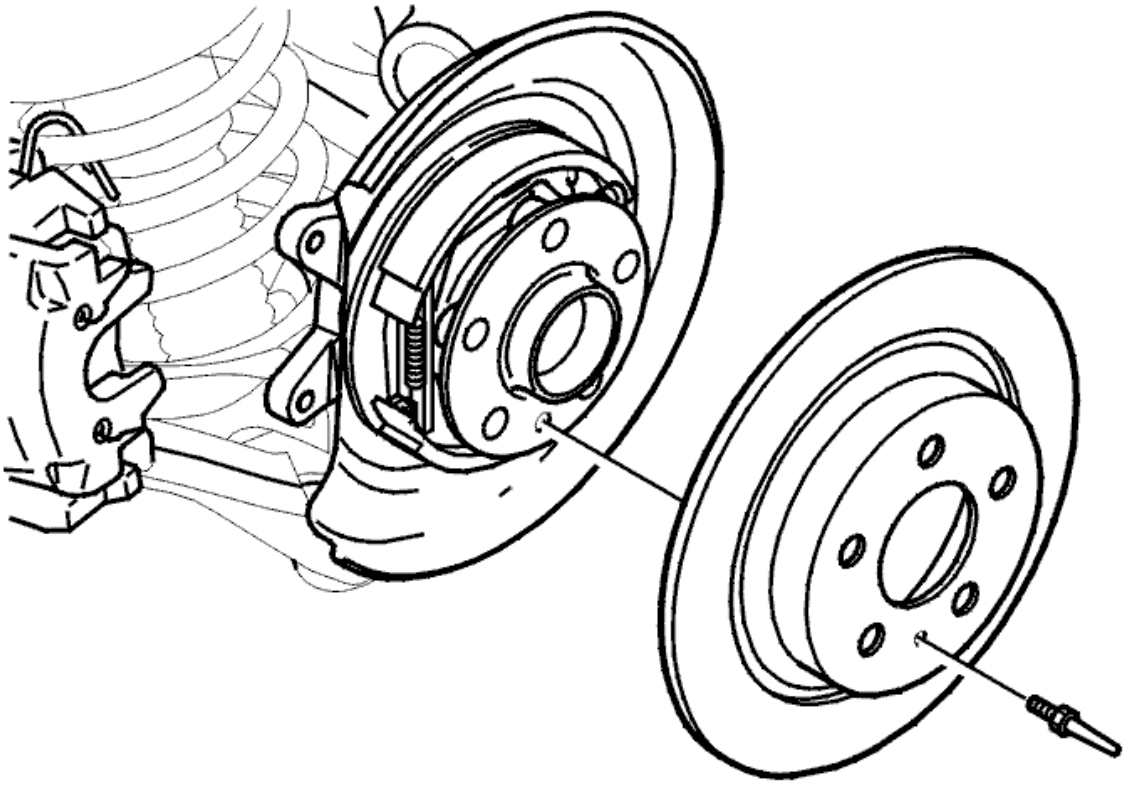

Fig. 3: Brake Disc
Courtesy of VOLVO CARS CORPORATION

REMOVE THE BRAKE SHOES

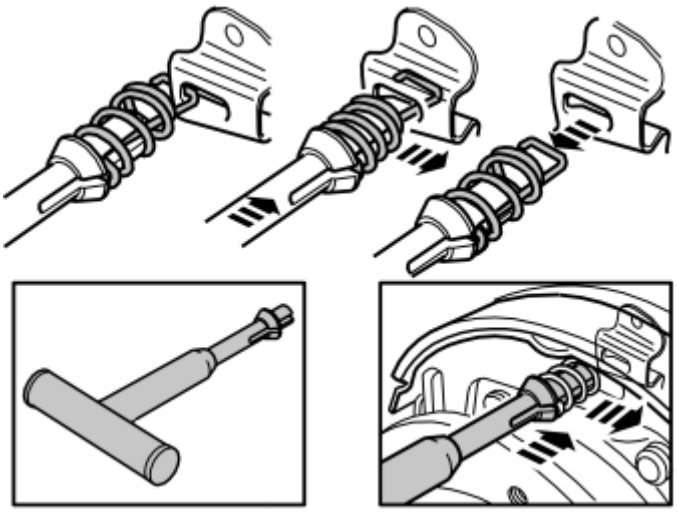

Fig. 4: Identifying Brake Shoe Fixing Springs & Tool (999 7225)
Courtesy of VOLVO CARS CORPORATION

Remove the two fixing springs on the brake shoes. Use see **9997225** .

Compress the spring and move it backward, and let up so that the spring's end fits the slot in the bracket and can be removed.

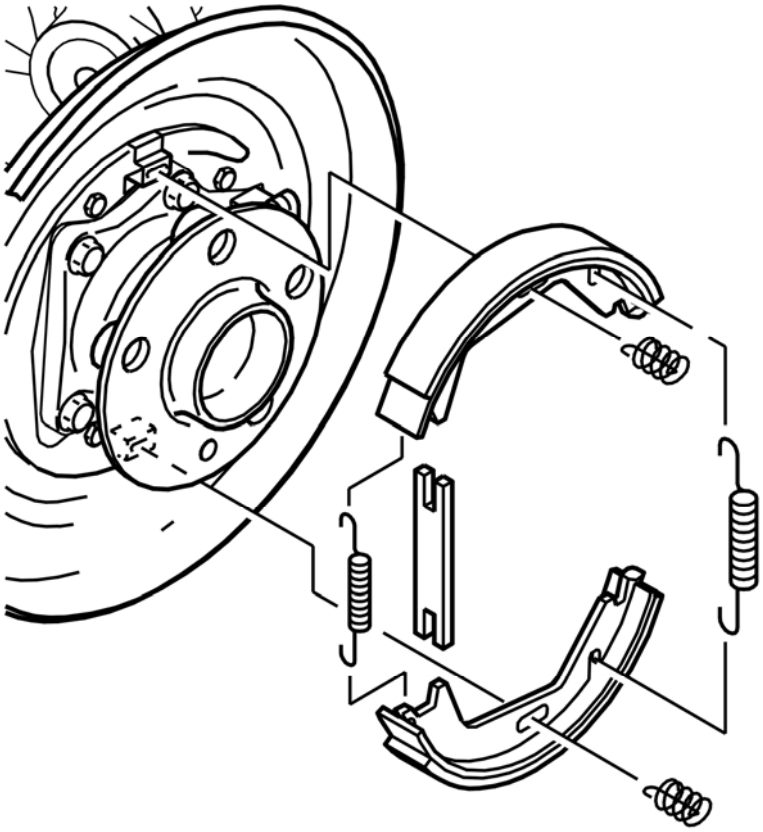

Fig. 5: Identifying Return Spring & Brake Shoes
Courtesy of VOLVO CARS CORPORATION

Detach the return spring at the expander.

Bend the brake shoes apart and remove them with the return spring and spacer.

CLEANING AND CHECKING

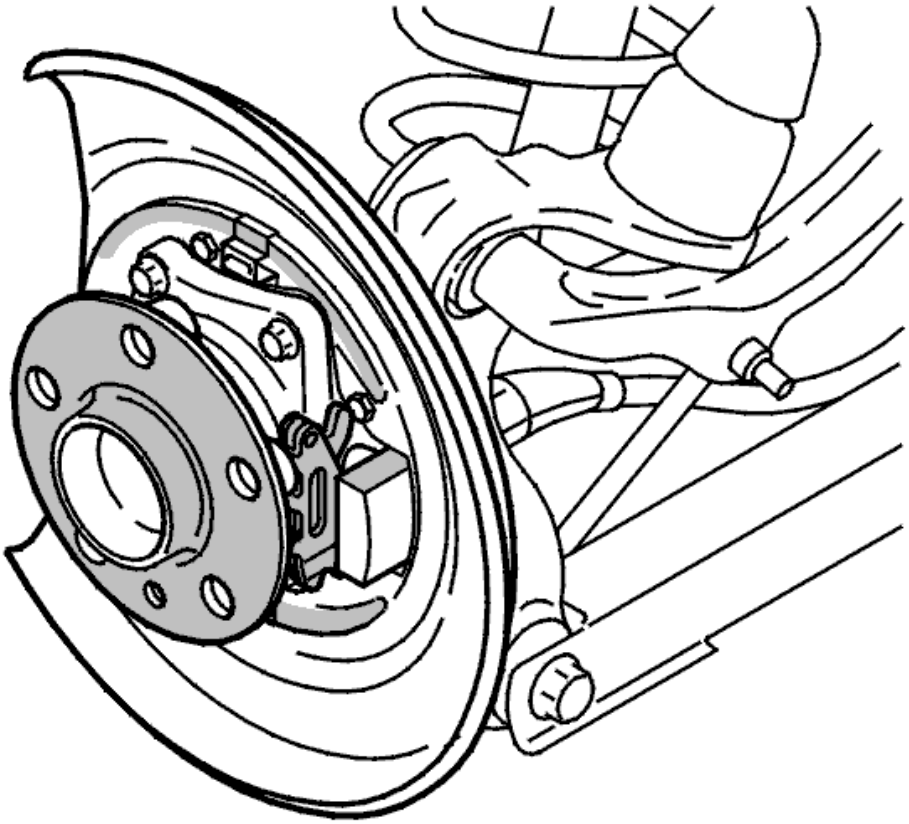

Fig. 6: Identifying Wheel Hub
Courtesy of VOLVO CARS CORPORATION

Check that no grease has leaked out of the wheel hub.

Check the handbrake expander for damage. Lubricate if necessary.

Clean the surfaces of the brake drum where the brake shoes make contact.

Check that hub flange is clean. Remove any rust.

Lubricate the contact surfaces on the brake shield. Use heat resistant grease, P/N 1161325-4.

INSTALLATION

INSTALL THE BRAKE COMPONENTS

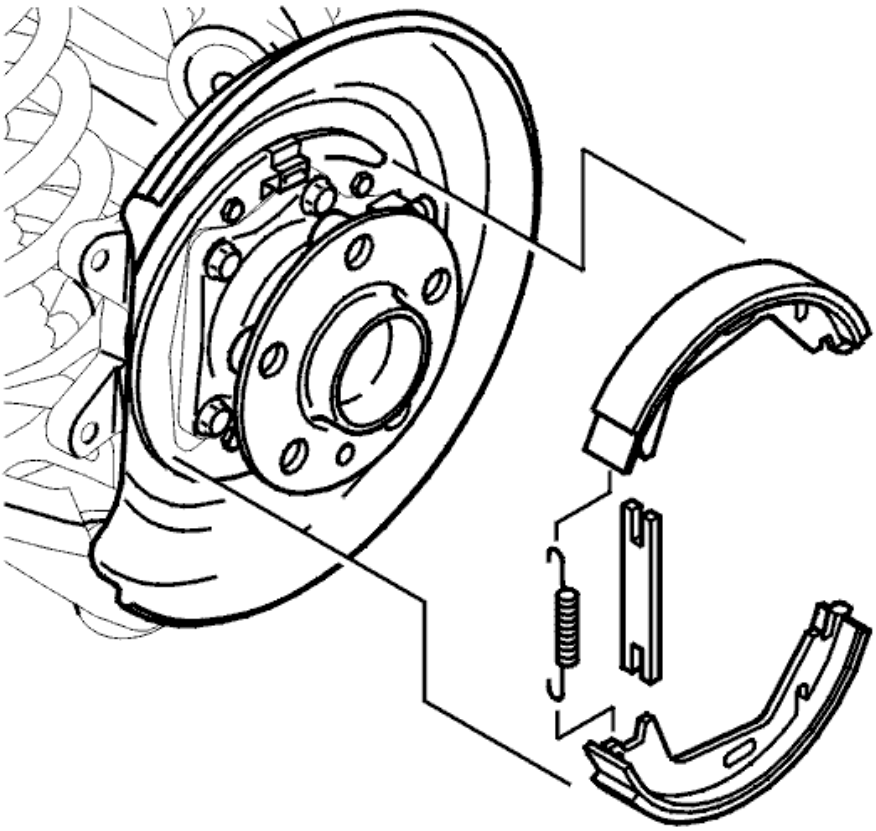

Fig. 7: Brake Shoes, Spacer And Small Return Spring
Courtesy of VOLVO CARS CORPORATION

Install:

- the brake shoes
- the spacer and the small return spring on the brake shoes.

INSTALLATION BRAKE COMPONENTS, CONTINUED

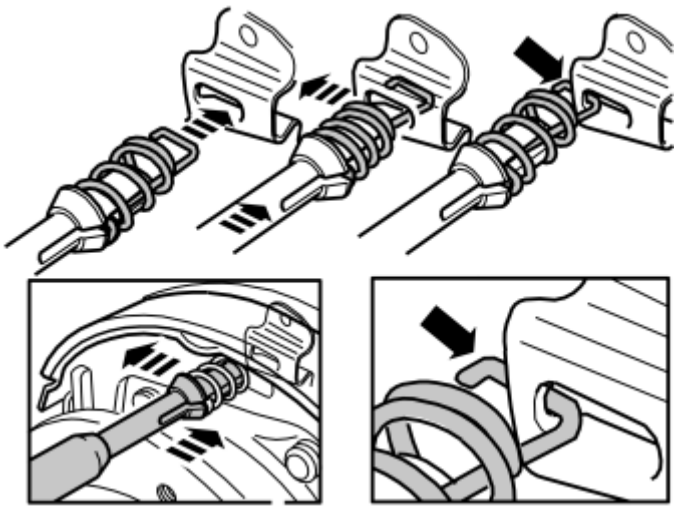

Fig. 8: Identifying Brake Shoe Fixing Springs & Tool (999 7225)
Courtesy of VOLVO CARS CORPORATION

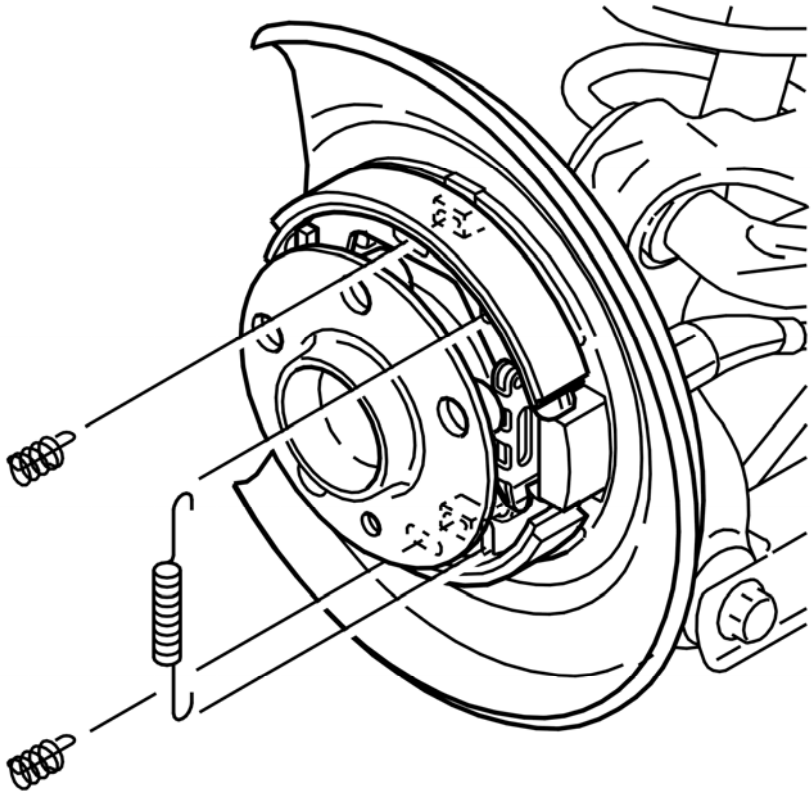

Fig. 9: Identifying Springs
Courtesy of VOLVO CARS CORPORATION

Install the fixing springs for the brake shoes and the return spring at the expander.

Install:

- the lower fixing spring, use see **9997225** .

  Point the spring's catch forward, compress the spring and move it forward and let up so that the catch locks in the bracket.

- the upper fixing spring.

Check that the brake shoes are positioned correctly in the expander.

Install the return spring at the expander.

INSTALL THE BRAKE DISC AND THE LOCATING PIN

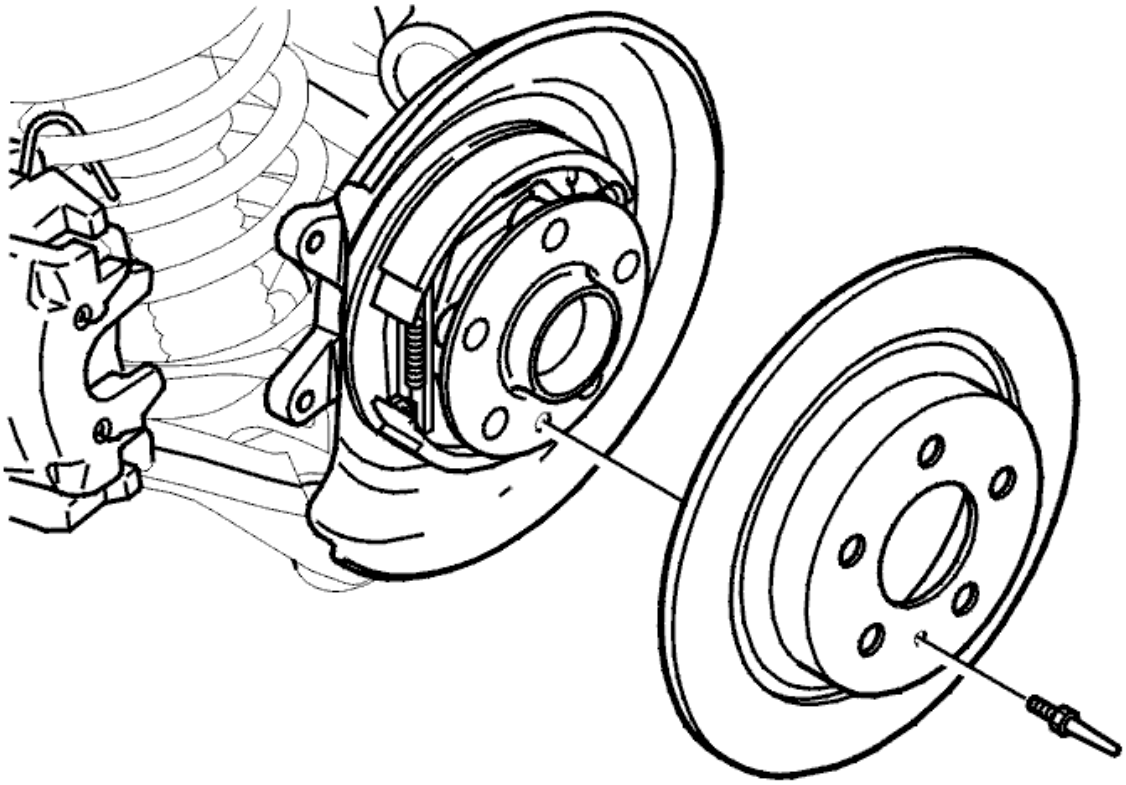

Fig. 10: Brake Disc
Courtesy of VOLVO CARS CORPORATION

Tighten locating pin. Tighten to **8 Nm** .

Check the brake pads. Replace if necessary

See **BRAKE PADS REAR, REPLACING** .

INSTALL THE BRAKE CALIPER AND THE CALIPER HOLDER

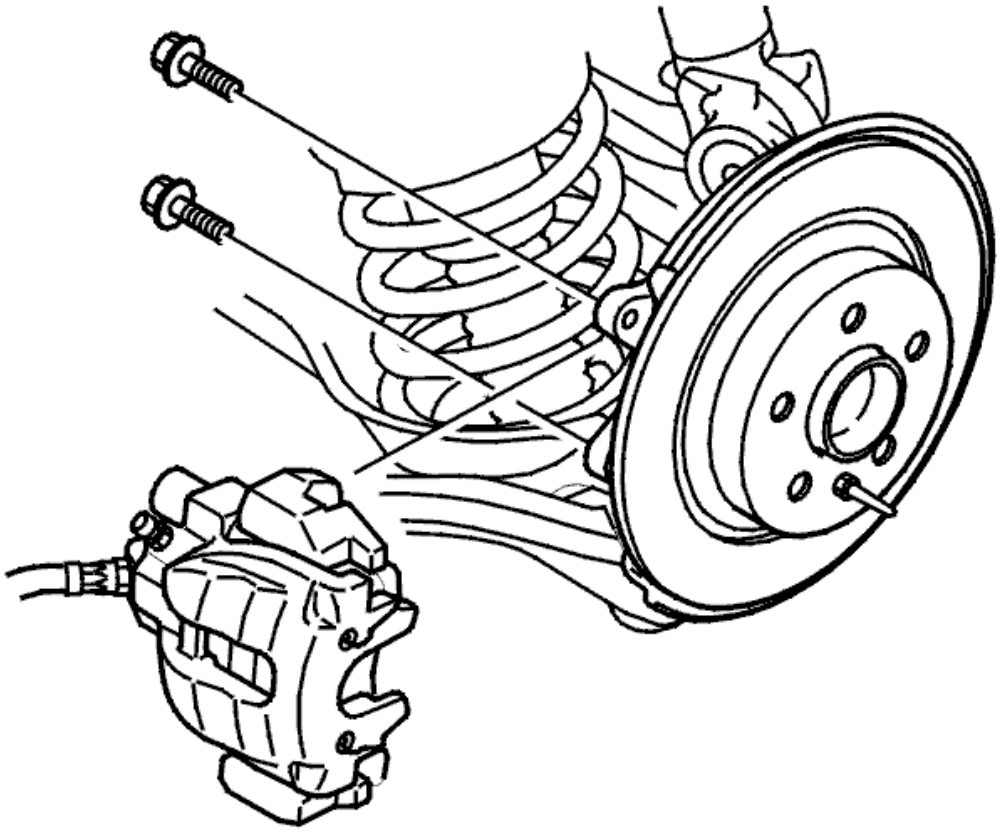

Fig. 11: Brake Caliper Mounting Screws
Courtesy of VOLVO CARS CORPORATION

Press apart the brake pads in the caliper. Install the brake caliper and the caliper holder.

Tighten the caliper holder mounting screws. Tighten to **60 Nm** .

NOTE: Use new screws.

Install the wheel

See **INSTALLING WHEELS** .

ADJUST THE HANDBRAKE

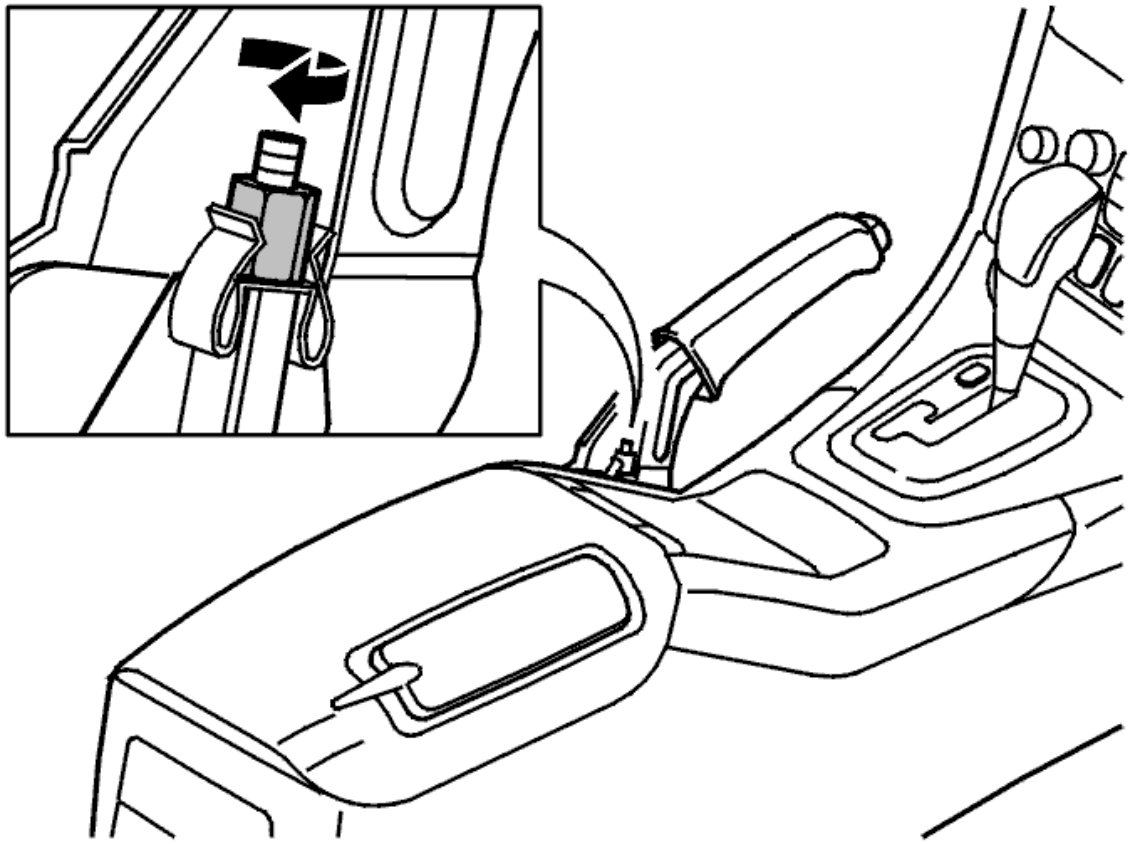

Fig. 12: Adjusting Parking Brake
Courtesy of VOLVO CARS CORPORATION

The handbrake lever must be in its lowest position.

Full effect can be obtained between the second and fifth ratchet teeth.

CAUTION: Follow the adjustment instructions to obtain full handbrake effect.

Turn the adjustment screw so that full braking effect is achieved between the second and the fifth notch.

Final check

Check that the wheels rotate freely after adjustment.

Test drive and readjust the handbrake

After replacing the brake shoes:

Drive the car at 30 km/h. Apply the handbrake lever until the car stops. This allows the brake shoes to bed into the brake drum.

Adjust the handbrake as required.

INSTALL THE PANEL OVER THE HANDBRAKE LEVER

See **INSTALL THE PANEL FOR THE PARKING BRAKE LEVER** .

BRAKES

Power transmission

BRAKES

PARKING BRAKE LEVER, REPLACING

REMOVING THE CENTER CONSOLE

REMOVING THE CENTER CONSOLE

See **CENTER CONSOLE, REPLACING** .

REPLACING THE PARKING BRAKE LEVER

REMOVE THE PARKING BRAKE LEVER

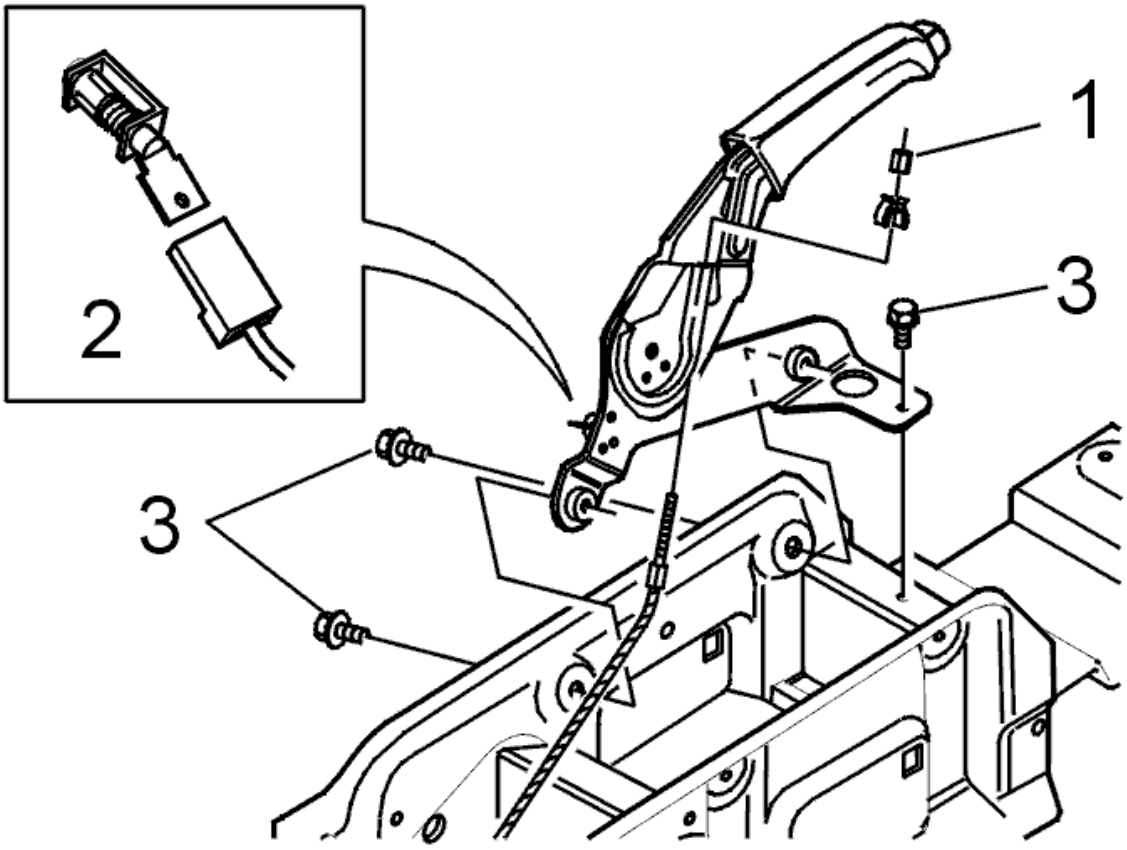

Fig. 1: Identifying Parking Brake Lever Assembly
Courtesy of VOLVO CARS CORPORATION

Remove the nut (1) for adjusting the parking brake. Pull out the cable.

Disconnect the connector (2) for the warning lamp.

Remove the three screws (3) holding the bracket for the parking brake lever. Remove the lever.

INSTALL THE PARKING BRAKE LEVER

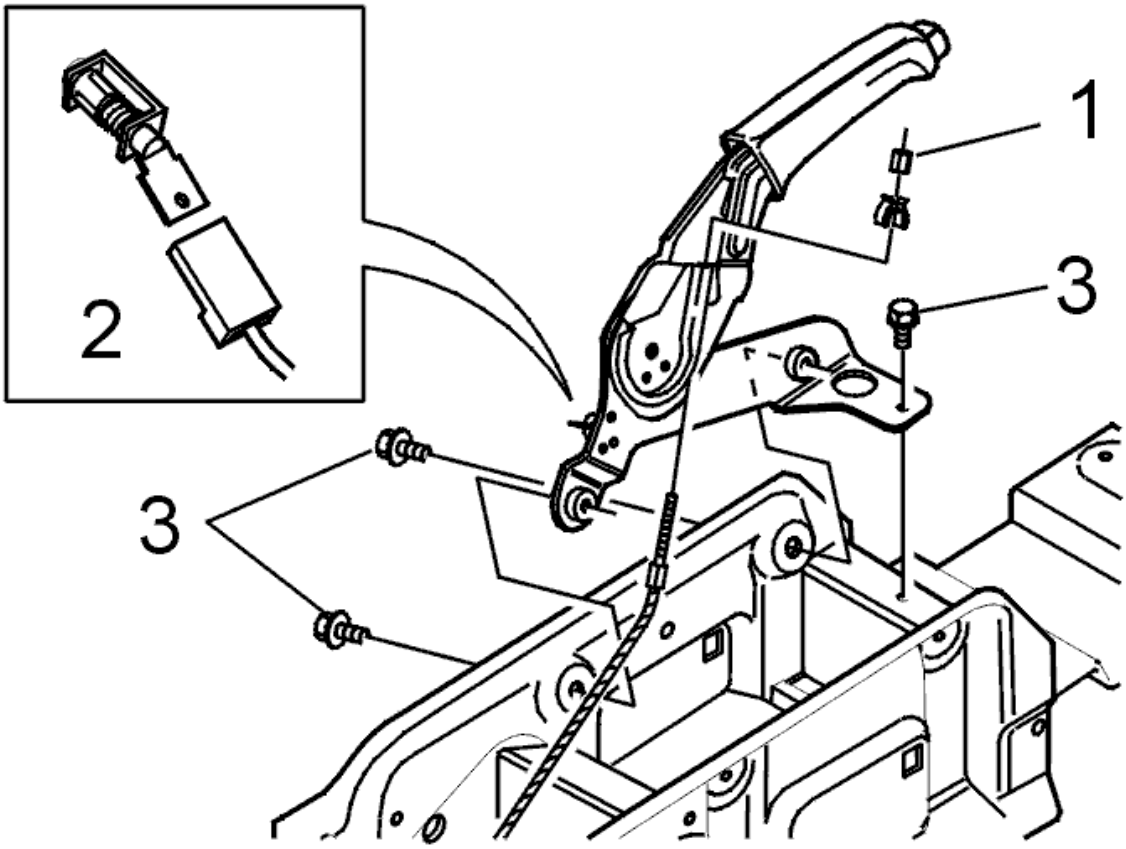

Fig. 2: Identifying Parking Brake Lever Assembly
Courtesy of VOLVO CARS CORPORATION

Install:

- the new bracket with parking brake lever in its mountings. Tighten to **25 Nm**
- the connector for the warning lamp
- the cable in the parking brake lever
- the adjuster nut.

INSTALLING THE CENTER CONSOLE

INSTALLING THE CENTER CONSOLE

See **CENTER CONSOLE, REPLACING** .

BRAKES

Wheel Brake - Cleaning, Inspection and Adjustment

BRAKE SYSTEM BLEEDING

BRAKE SYSTEM BLEEDING

NOTE: Bleeding an ABS brake system takes longer than bleeding a normal brake system.

GUIDELINES FOR BLEEDING

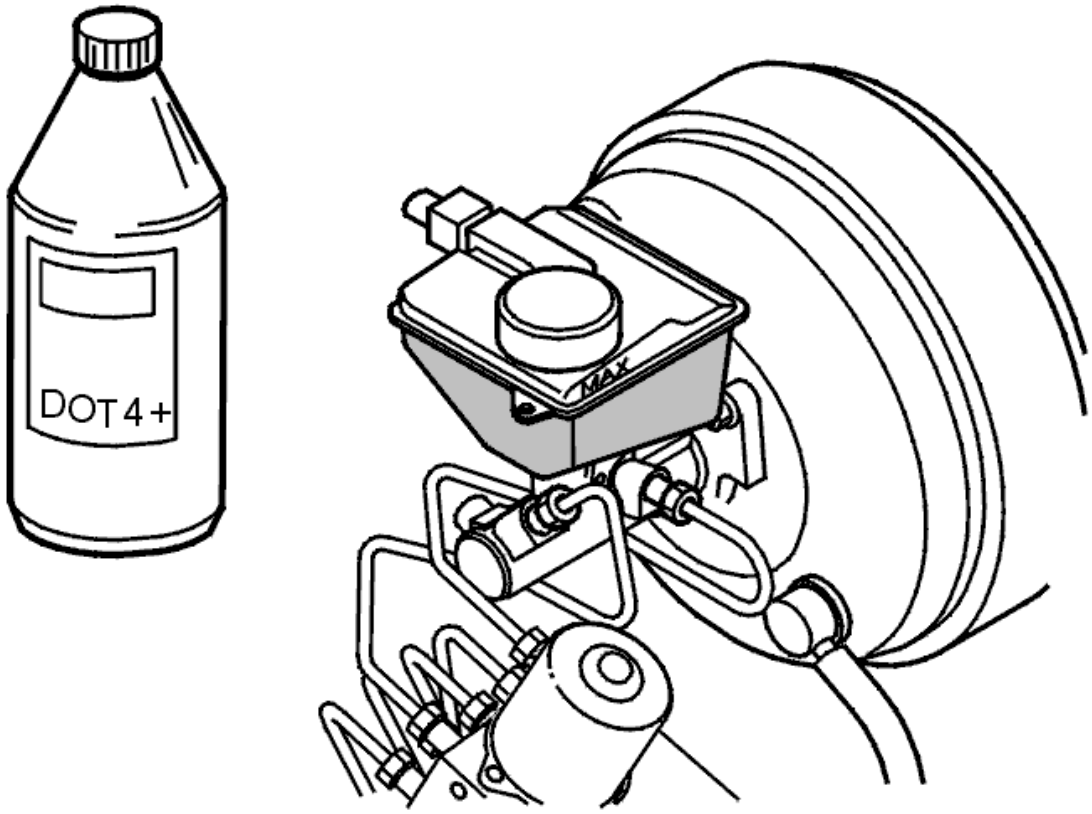

Fig. 1: Brake Fluid And Reservoir
Courtesy of VOLVO CARS CORPORATION

When reconditioning or replacing brake callipers bleed the relevant brake pipe as follows.

The brake pedal must be depressed throughout the operation. This is so that the brake system is not drained of brake fluid.

If the braking system has been completely or partly drained, bleed the whole system.

NOTE: **Use only genuine Volvo brake fluid with designation Volvo DOT 4+. Never reuse brake fluid. Always keep brake fluid in original packaging and well sealed.**

PREPARATIONS

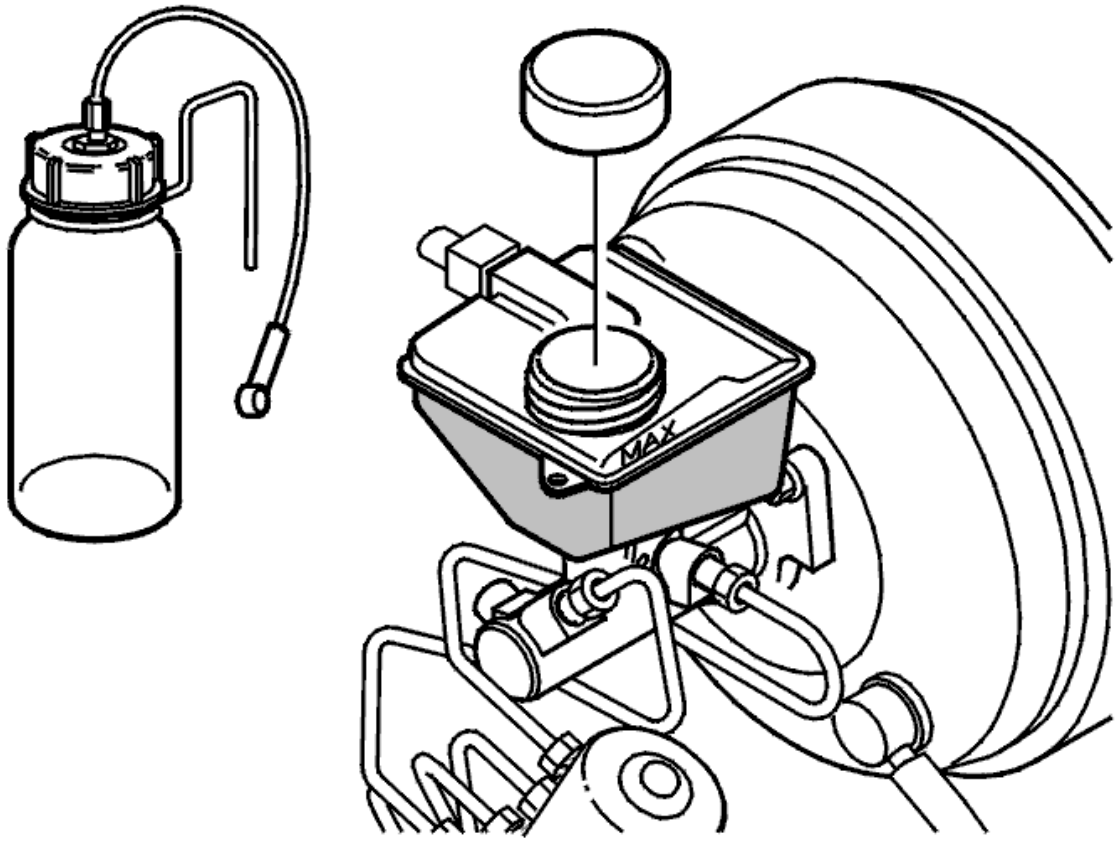

Fig. 2: Brake Fluid Reservoir And Brake Fluid Collection Bottle
Courtesy of VOLVO CARS CORPORATION

Switch off the ignition.

Clean around the brake fluid reservoir filler cap.

Take out the container.

Remove the filler cap.

Fill the brake fluid reservoir completely.

Raise the car

BLEED LEFT FRONT WHEEL

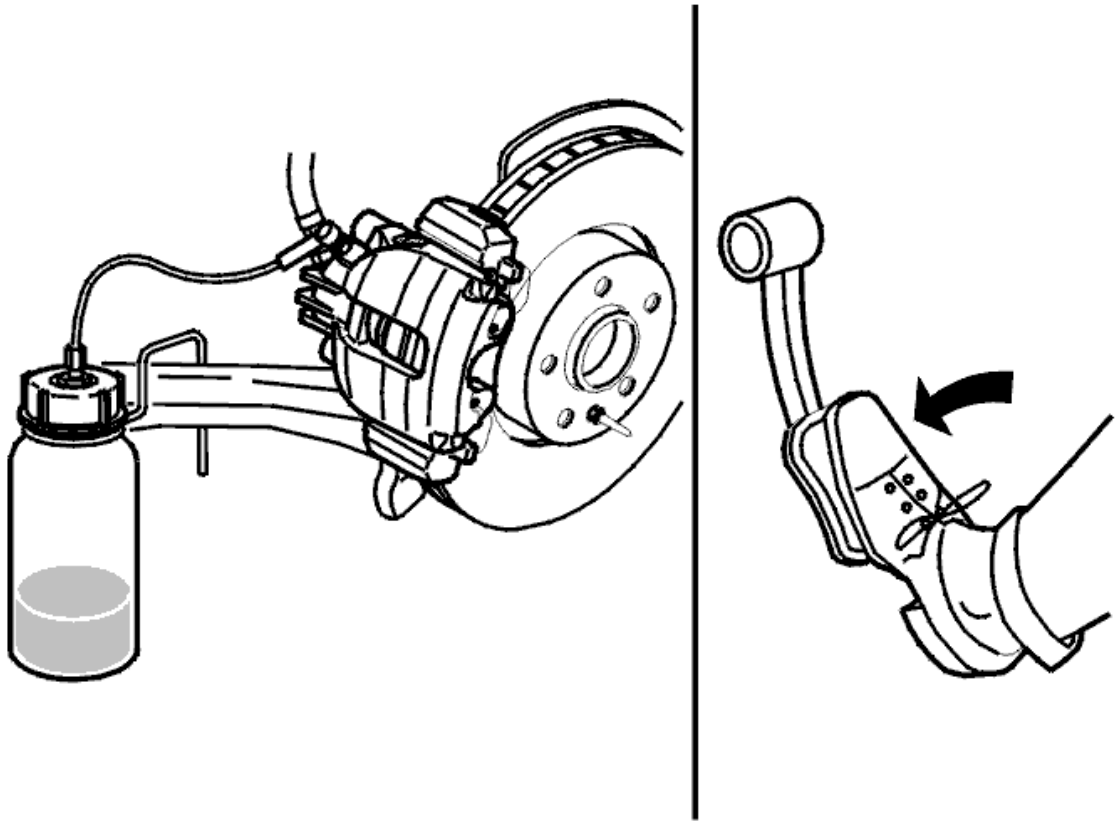

Fig. 3: Identifying Wheel Bleeding Procedure
Courtesy of VOLVO CARS CORPORATION

NOTE: While bleeding, check that there is sufficient brake fluid in the reservoir. Top up if necessary.

Remove the protective cap from the bleed nipple. Connect the hose from the collection bottle.

Depress the brake pedal a few times. Maintain pressure.

Open the bleed nipple.

Depress the pedal fully. Keep it fully depressed for approximately 5 seconds. Release it again. Repeat this 3-5 times until there are no air bubbles in the fluid coming out of the hose.

Tighten the bleed nipple.

Remove the hose from the bleed nipple. Install the protective cap.

Continue bleeding the other wheels in the same way in the following order:

Right front wheel, left rear wheel and right rear wheel.

Checking for air in the brake system and for brake fluid leakage

See **CHECKING FOR AIR IN THE BRAKE SYSTEM AND FOR BRAKE FLUID LEAKAGE** .

BRAKE SYSTEM, BLEEDING (USING BLEEDING UNIT)

NOTE: Bleeding an ABS brake system takes longer than bleeding a normal brake system.

GUIDELINES FOR BLEEDING

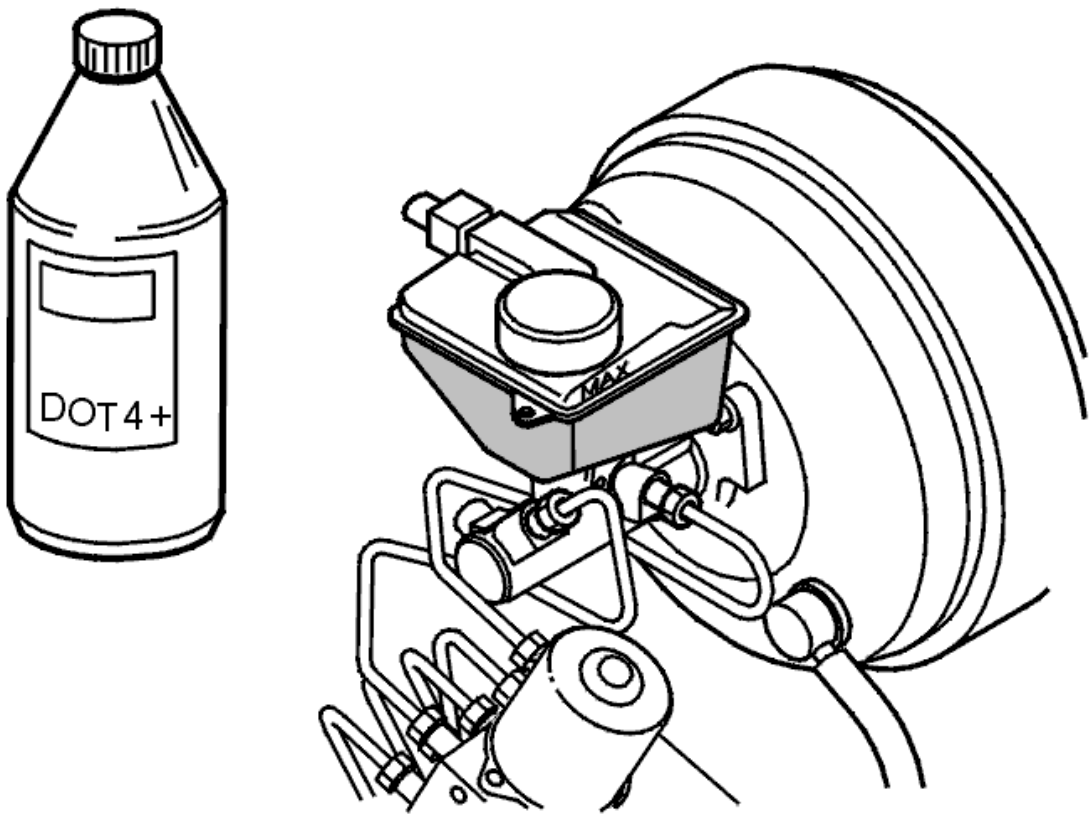

Fig. 4: Brake Fluid And Reservoir
Courtesy of VOLVO CARS CORPORATION

When reconditioning or replacing brake calipers bleed the relevant brake pipe as follows.

The brake pedal must be depressed throughout the operation. This is so that the brake system is not drained of brake fluid.

If the braking system has been completely or partly drained, bleed the whole system. A bleeding unit that can pressurize the brake system to 0.2-0.3 Mpa must be used.

NOTE: Use only Volvo Genuine Parts brake fluid (Volvo DOT 4+). Never reuse brake

fluid. Always keep brake fluid well sealed in its original packaging.

PREPARATIONS

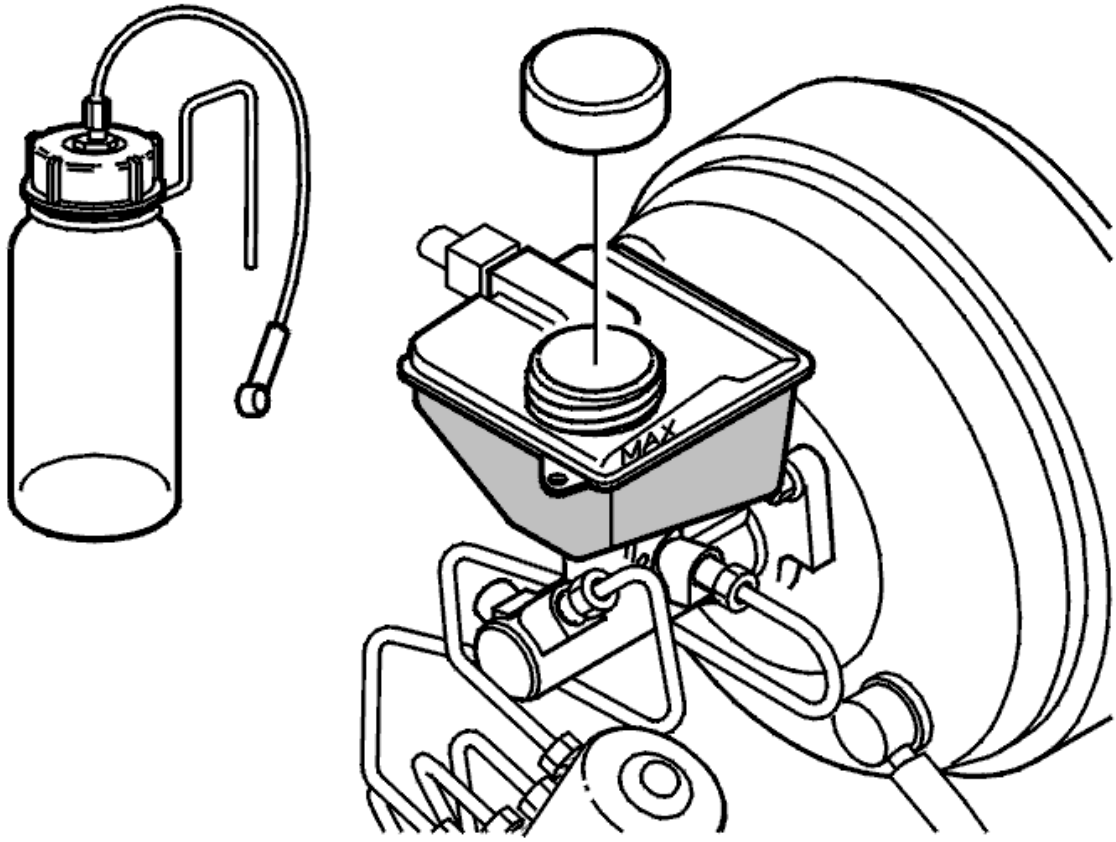

Fig. 5: Brake Fluid Reservoir And Brake Fluid Collection Bottle
Courtesy of VOLVO CARS CORPORATION

Switch off the ignition.

Clean around the brake fluid reservoir filler cap.

Take out the special brake fluid collection bottle.

CONNECT THE BLEEDING UNIT

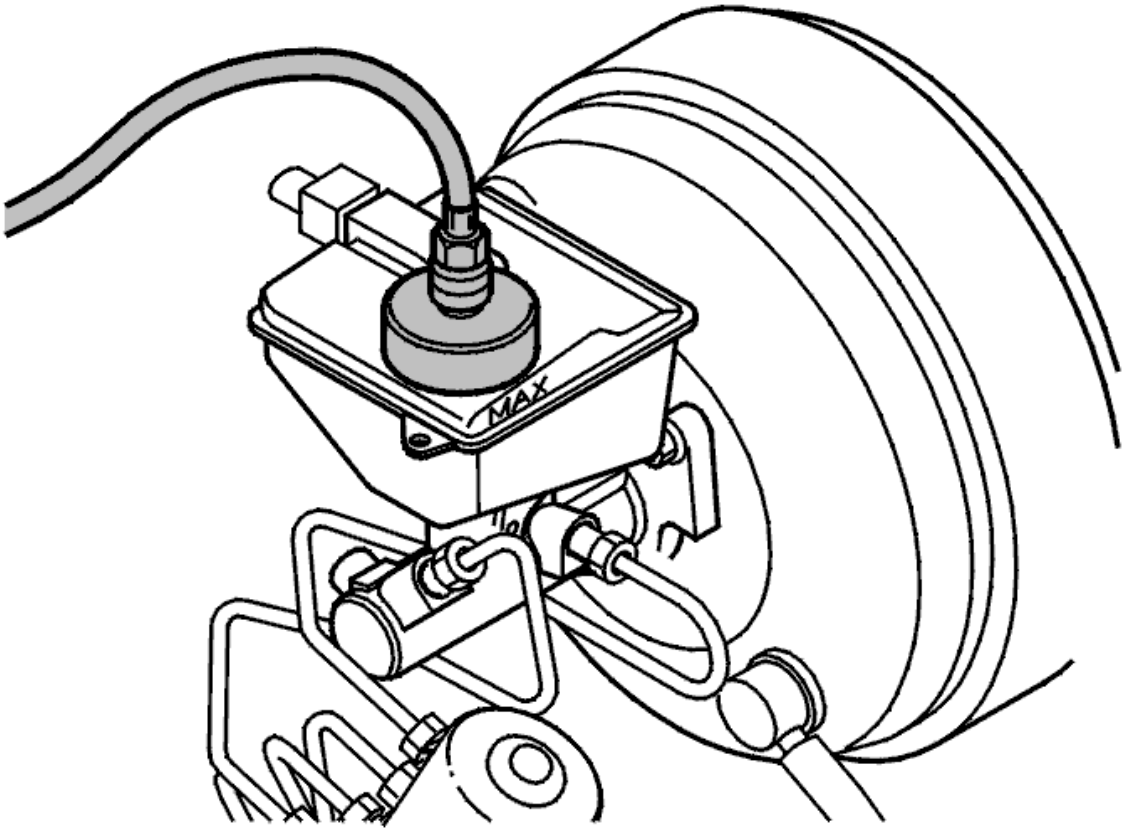

Fig. 6: Bleeding Unit Connected to Brake Fluid Reservoir
Courtesy of VOLVO CARS CORPORATION

Connect bleeding unit to brake fluid reservoir. Follow manufacturer's instructions for connecting and using bleeding unit.

Pressurize the brake system. Check the brake fluid reservoir connector.

Raise the car and remove the wheels

BLEEDING LEFT FRONT WHEEL (RIGHT WHEEL ON RIGHT-HAND DRIVE)

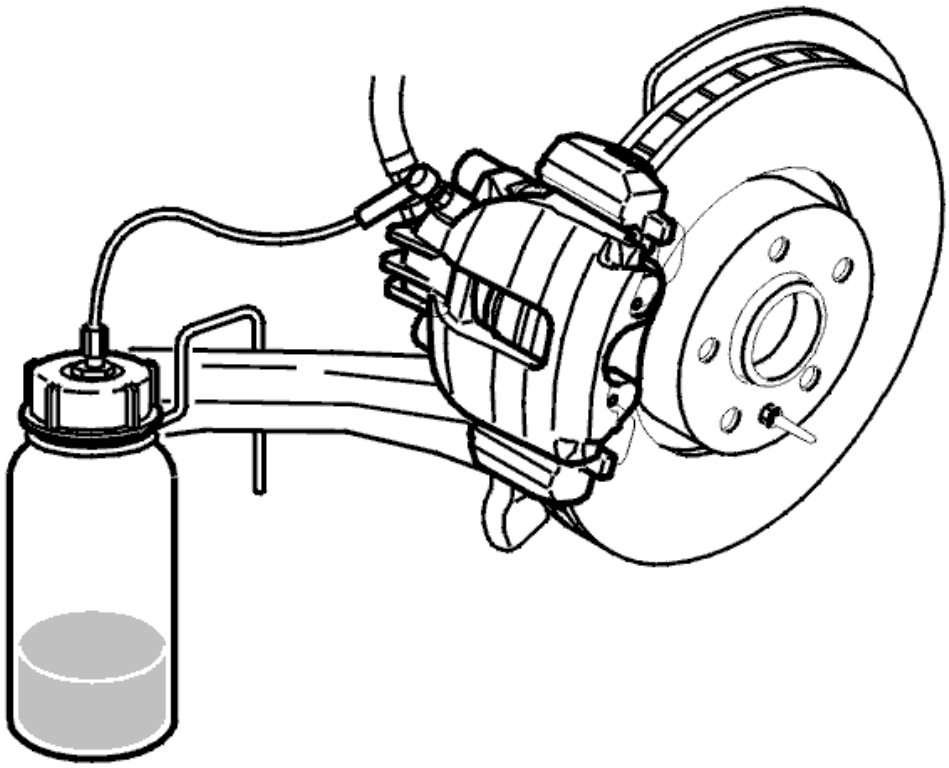

Fig. 7: Collection Bottle Hose Connected to Bleed Nipple
Courtesy of VOLVO CARS CORPORATION

Remove the protective cap from the bleed nipple. Connect the hose from the collection bottle.

Open the bleed nipple. Close it when there are no more air bubbles in the fluid coming out of the hose.

Tighten the bleed nipple.

Remove the hose from the bleed nipple. Reinstall the protective cap.

Bleeding other wheels

Continue to bleed the other wheels as for the left front wheel

Check for leakage from the bleed nipples.

DEPRESSURIZE THE BRAKE SYSTEM

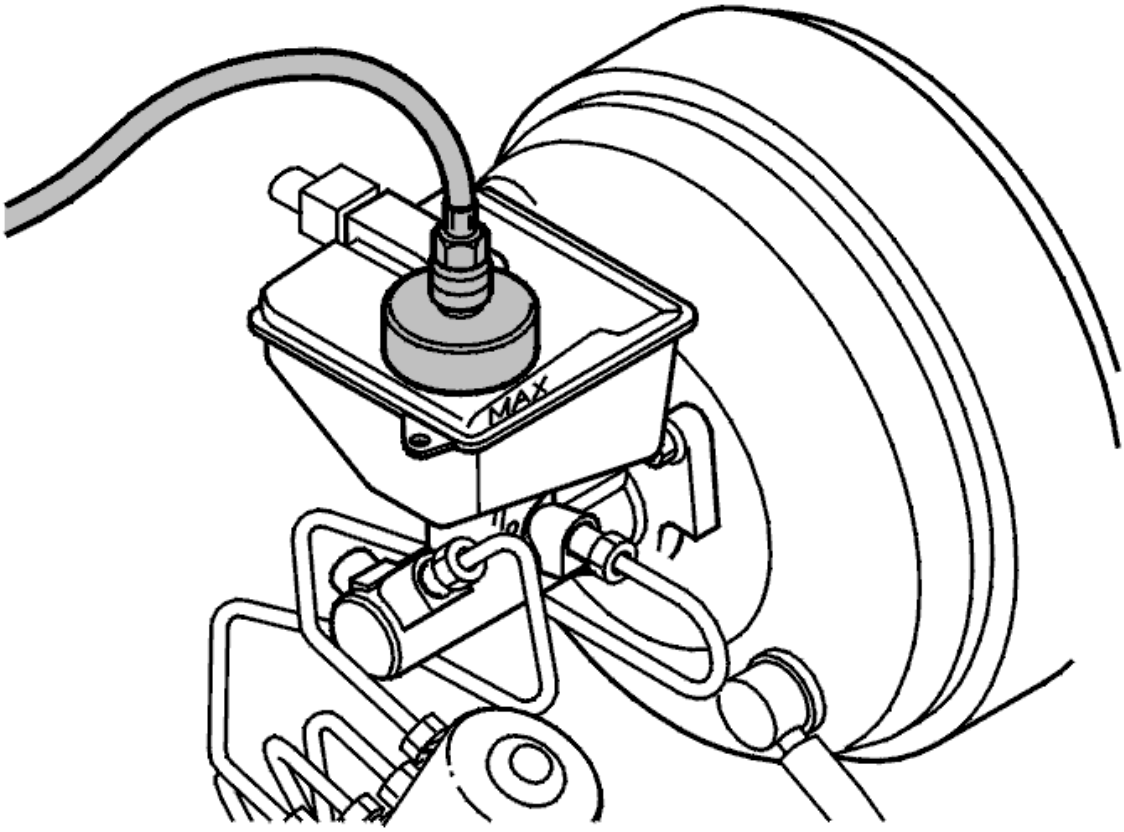

Fig. 8: Bleeding Unit Connected to Brake Fluid Reservoir
Courtesy of VOLVO CARS CORPORATION

Close the cock on the pressure line. Open a nipple and close it again.

Checking for air in the brake system and for brake fluid leakage

See **CHECKING FOR AIR IN THE BRAKE SYSTEM AND FOR BRAKE FLUID LEAKAGE**

FRONT WHEEL BRAKE

BRAKE DISC FRONT, CALIBRATING

Special tools:

see **9995419**

see **9995418**

see **1158147**

see **9995507**

NOTE: **As the illustrations in this service information are used for different model years and / or models, some variation may occur. However, the essential information in the illustrations is always correct.**

PREPARATION

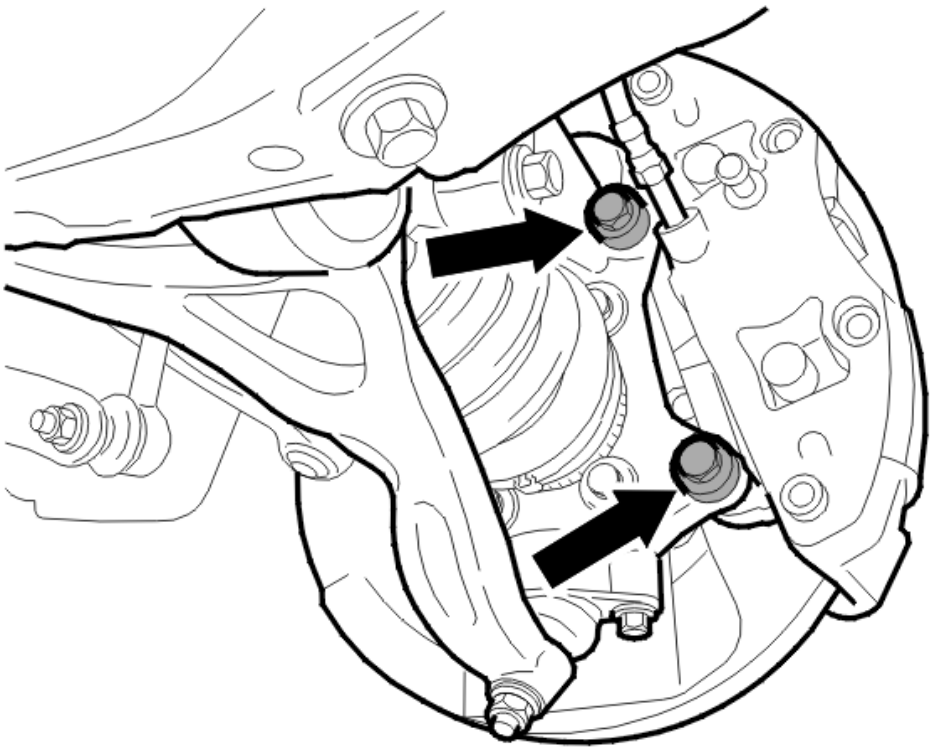

Fig. 9: Locating Brake Caliper Mounting Screws
Courtesy of VOLVO CARS CORPORATION

Remove:

- the wheel
- the mounting screws for the brake calliper holder.

Hang the brake calliper from the spring using a wire.

INSTALLING THE CLAMP RING

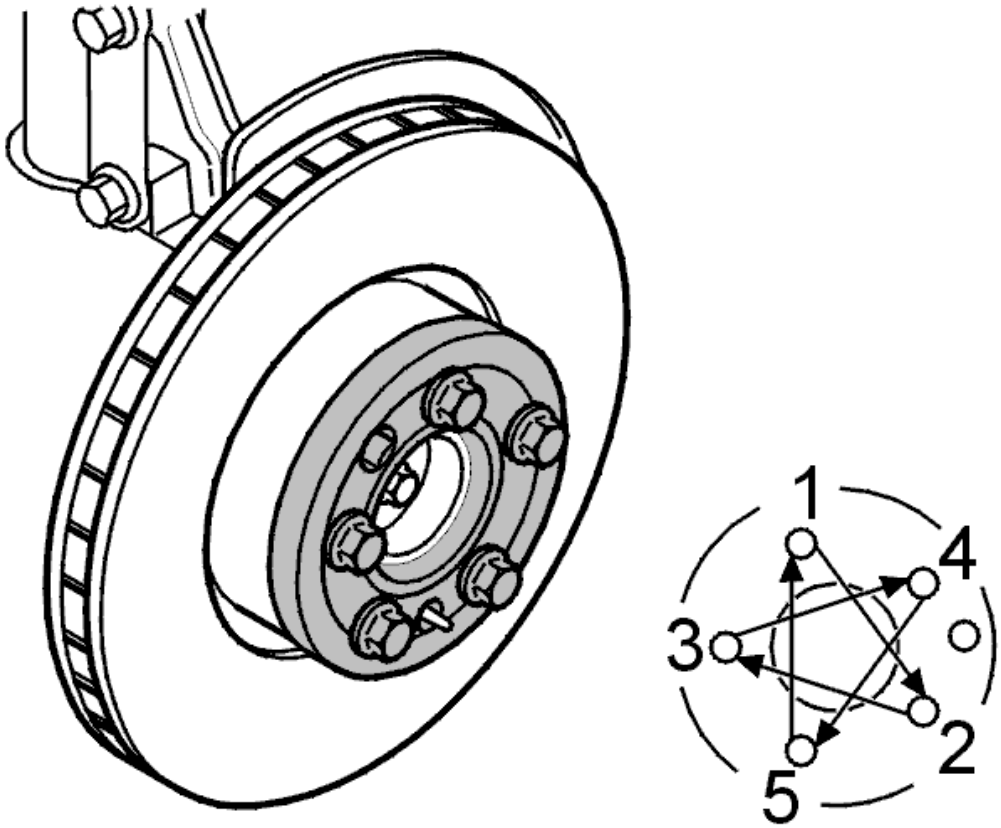

Fig. 10: Brake Disc Bolts Torque Sequence
Courtesy of VOLVO CARS CORPORATION

Install clamp ring see **9995419** , included in test tool kit: see **9995418** , on the hub with the wheel nuts.

Ensure that mating surfaces on the brake disc and clamp ring are clean.

Install the screws lightly. Then tighten them crosswise. Tighten to **110 Nm** . When tightening using an impact wrench, use torque socket see **1158147** .

INSTALLING THE BRACKET FOR THE TEST EQUIPMENT

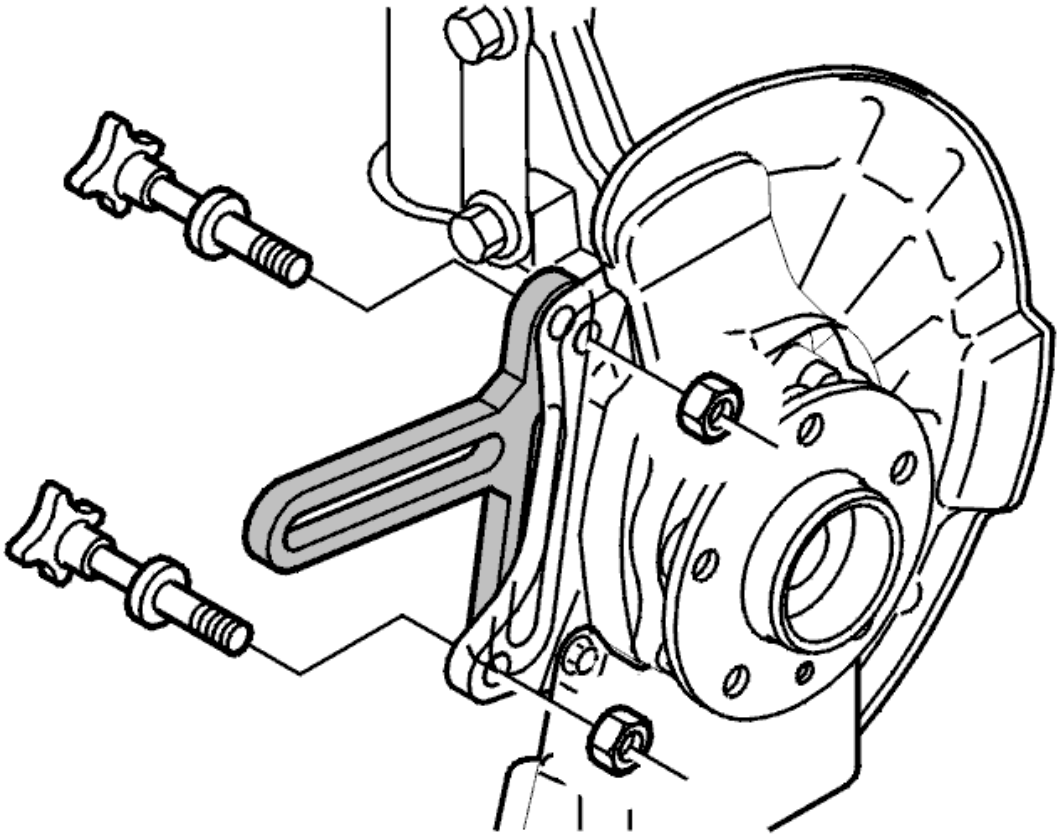

Fig. 11: Brake Caliper Bracket
Courtesy of VOLVO CARS CORPORATION

Install the bracket for the brake caliper's **upper** mounting hole first.

Press the bracket against the constant velocity joint housing.

Then install the lower mounting screw in the brake caliper's lower mounting hole. Clamp the bracket on one side using the flange on the screw.

Use the M12 screws and nuts included in kit see **9995507** .

INSTALLING THE DIAL GAUGE

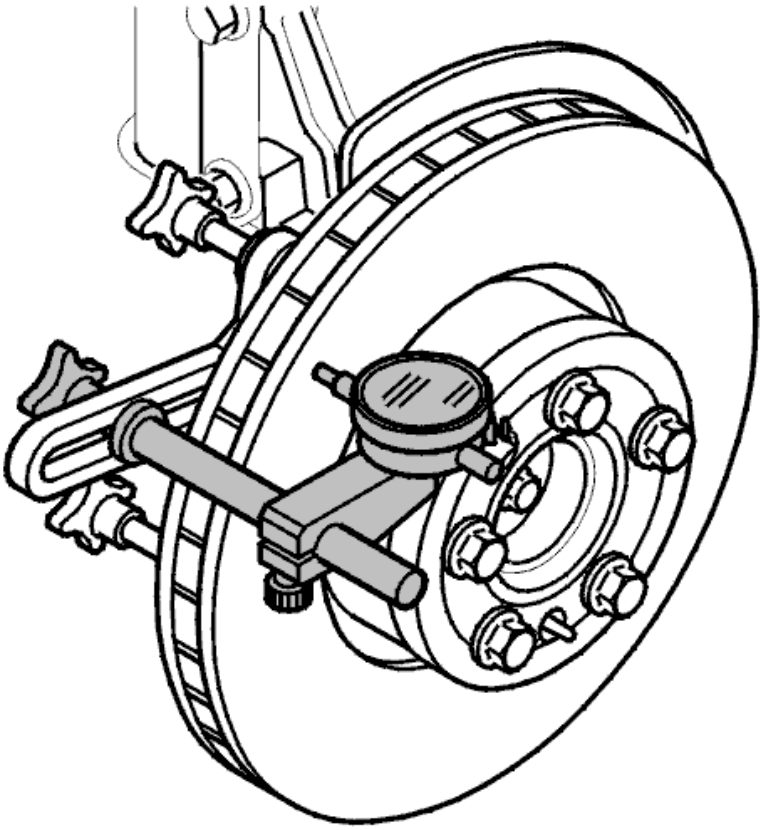

Fig. 12: Dial Gauge In Bracket
Courtesy of VOLVO CARS CORPORATION

Install the dial gauge in the bracket as illustrated.

MEASURING LATERAL RUN-OUT

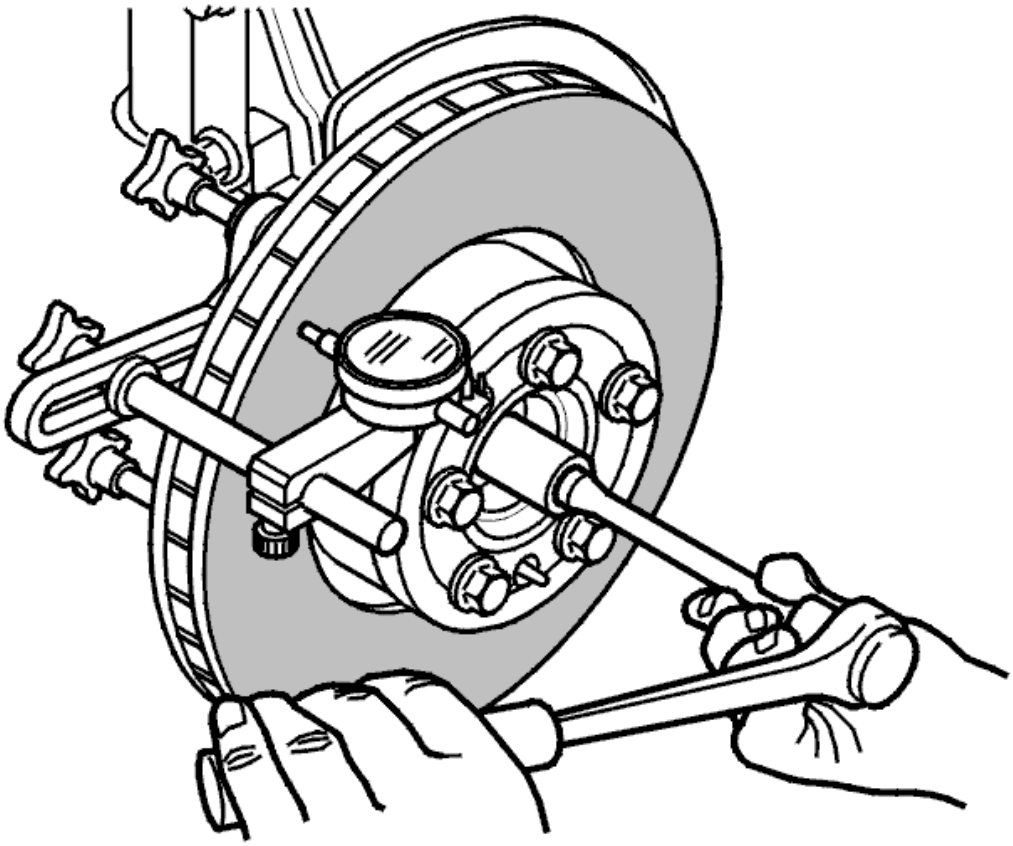

Fig. 13: Identifying Lateral Run Out Measurement
Courtesy of VOLVO CARS CORPORATION

Put the test gauge point against the brake disc as illustrated.

Rotate the brake disc. Use a socket to help.

Note the test gauge run-out. Brake disc lateral run-out must not exceed 0.040 mm.

If lateral run-out exceeds the value, replace the brake disc.

To replace the brake disc, see **BRAKE DISC FRONT, REPLACING** .

FINISHING

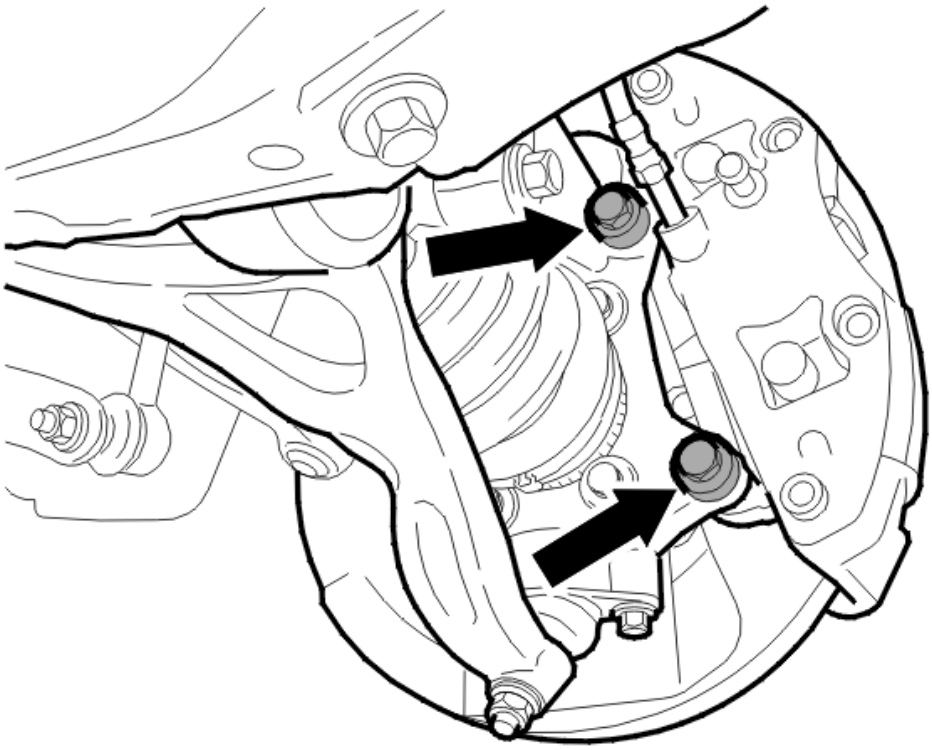

Fig. 14: Locating Brake Caliper Mounting Screws
Courtesy of VOLVO CARS CORPORATION

Remove the test equipment.

Install the calliper holder and the brake calliper. Use new screws on the calliper holder.

For tightening torques, see **TIGHTENING TORQUE** .

Install the wheel. See **INSTALLING WHEELS** .

BRAKE PADS, FRONT, PREPARATORY WORK AND FINISHING

NOTE: Some variation may occur. However, the essential information in the illustrations is always correct.

PREPARATORY WORK

Remove the wheel.

Always start by removing the left-hand wheel at the first service. At the following service remove the right-hand wheel.

Check the brake pads every other time on the left, respectively right-hand side.

For specifications of wear, see

NOTE: **Always add 2 mm to the given measurements so that the minimum/replacement limits are not exceeded up to the next service interval.**

FINISHING

Install the wheel. See: **INSTALLING WHEELS** .

BRAKE PADS, FRONT

Special tools	
	999 7437 Measuring tools **Tool number:** 999 7437 **Tool description:** Measuring tools **Tool boards:** 50

CHECK

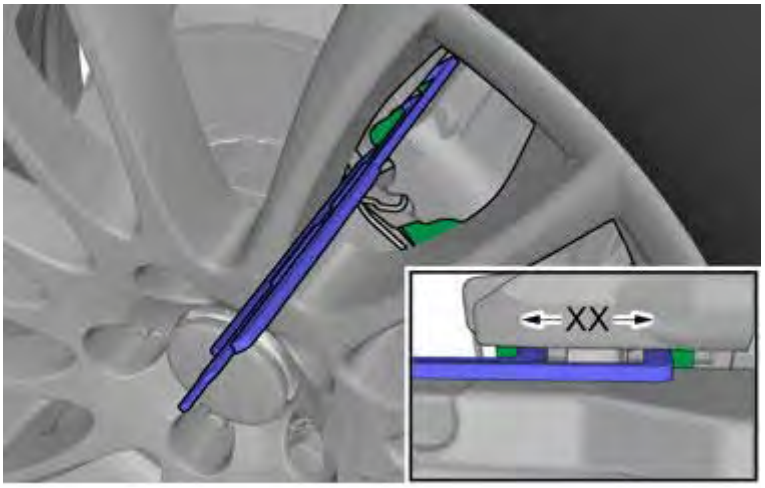

Fig. 15: Measuring Brake Pads Using Special Tool (9997437)
Courtesy of VOLVO CARS CORPORATION

see **9997437**

Note the value.

For information about front brake pads, see **BRAKE PADS, FRONT**

Replace brake pads front, see **BRAKE PADS, FRONT** see

MATERIALS

Materials	
Designation	**Part number**
Silicone grease	1161688

REMOVAL

NOTE: Removal steps in this procedure may contain installation details.

For information about safety information, brake system, see **SAFETY INFORMATION BRAKE SYSTEM**

Remove the wheel, see **WHEELS**

Fig. 16: Removing Anti-Rattle spring
Courtesy of VOLVO CARS CORPORATION

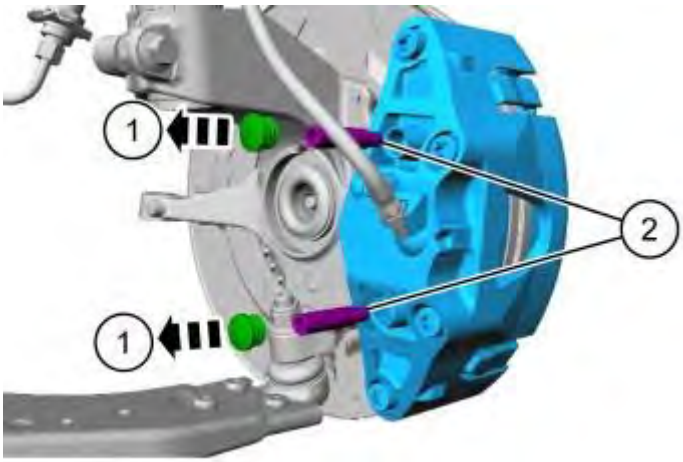

Fig. 17: Removing Caliper Slide Pins
Courtesy of VOLVO CARS CORPORATION

WARNING: The brake caliper housing Torx bolts must not be removed.

WARNING: Make sure that no load is placed on the brake hose.

Torque: Slide rail front brake caliper

28 Nm

Fig. 18: Fitting New Brake Pads
Courtesy of VOLVO CARS CORPORATION

INSTALLATION

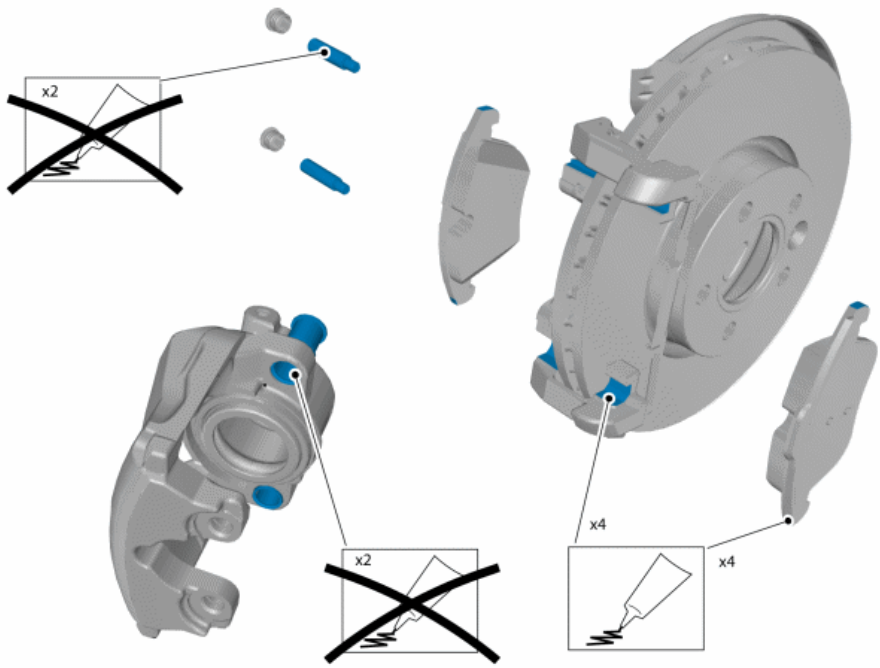

Fig. 19: Identifying Sliding Surfaces

Courtesy of VOLVO CARS CORPORATION

CAUTION: Make sure that the mating faces are clean and free of foreign material.

Use: Silicone grease, 1161688

Fig. 20: Identifying Contact Points
Courtesy of VOLVO CARS CORPORATION

CAUTION: Make sure that the mating faces are clean and free of foreign material.

To install, reverse the removal procedure.

REAR WHEEL BRAKE

BRAKE DISC REAR, CALIBRATING

Special tools:

see **9995418**

see **9995419**

see **9995507**

PREPARATORY WORK

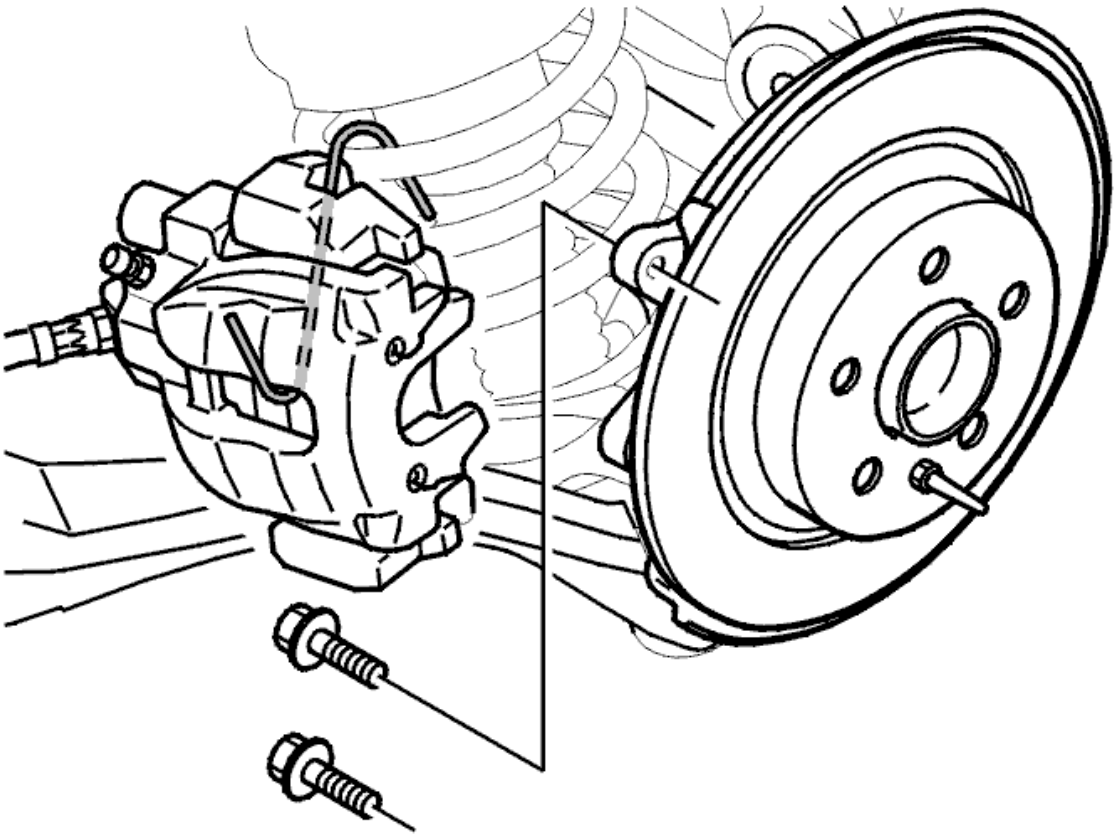

Fig. 21: Brake Caliper Components
Courtesy of VOLVO CARS CORPORATION

Remove:

- the wheel
- the mounting screws for the brake caliper holder.

Hang the brake caliper from the spring using a wire.

INSTALL THE CLAMP RING

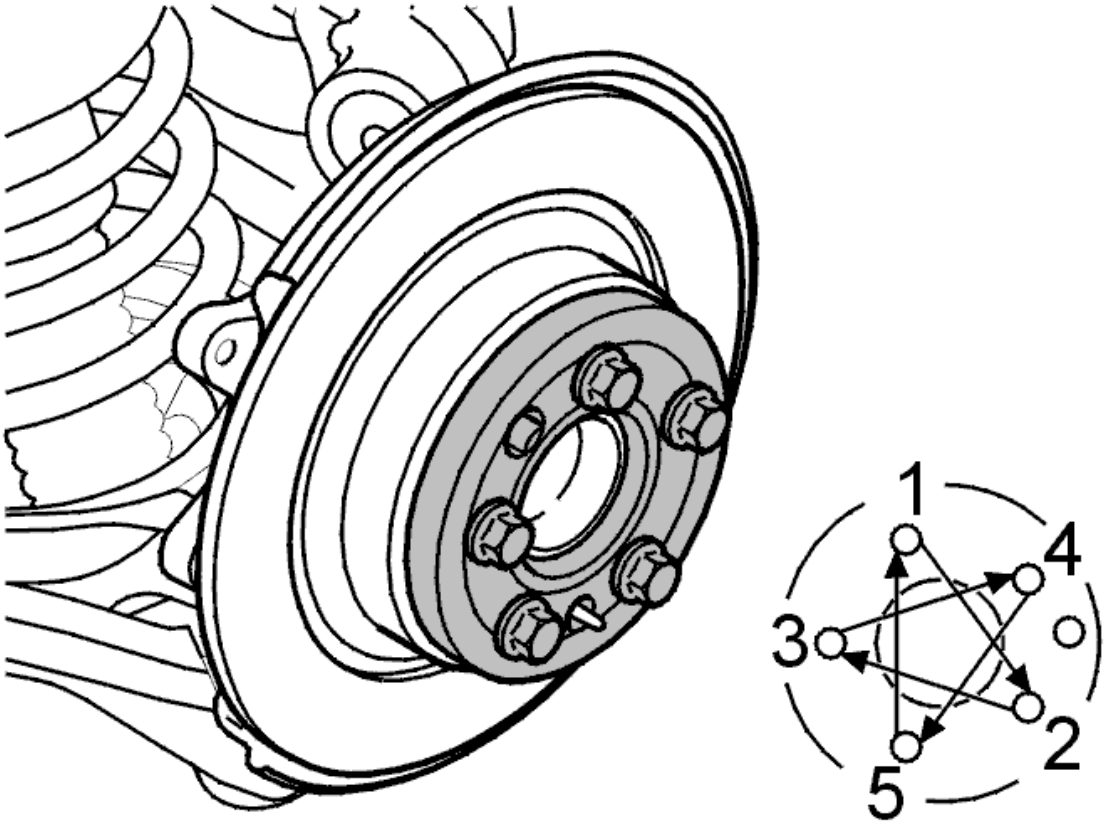

Fig. 22: Brake Disc Bolt Torque Sequence
Courtesy of VOLVO CARS CORPORATION

Install clamp ring: see **9995419** , included in measurement tool kit see **9995418** , on the hub using the wheel nuts.

Ensure that mating surfaces on the brake disc and clamp ring are clean.

Tighten the studs lightly. Then tighten the screws crosswise. Tighten to 110 Nm.

When tightening using an impact wrench, use torque socket: see **1158147** .

INSTALL THE BRACKET INCLUDED IN THE TEST EQUIPMENT

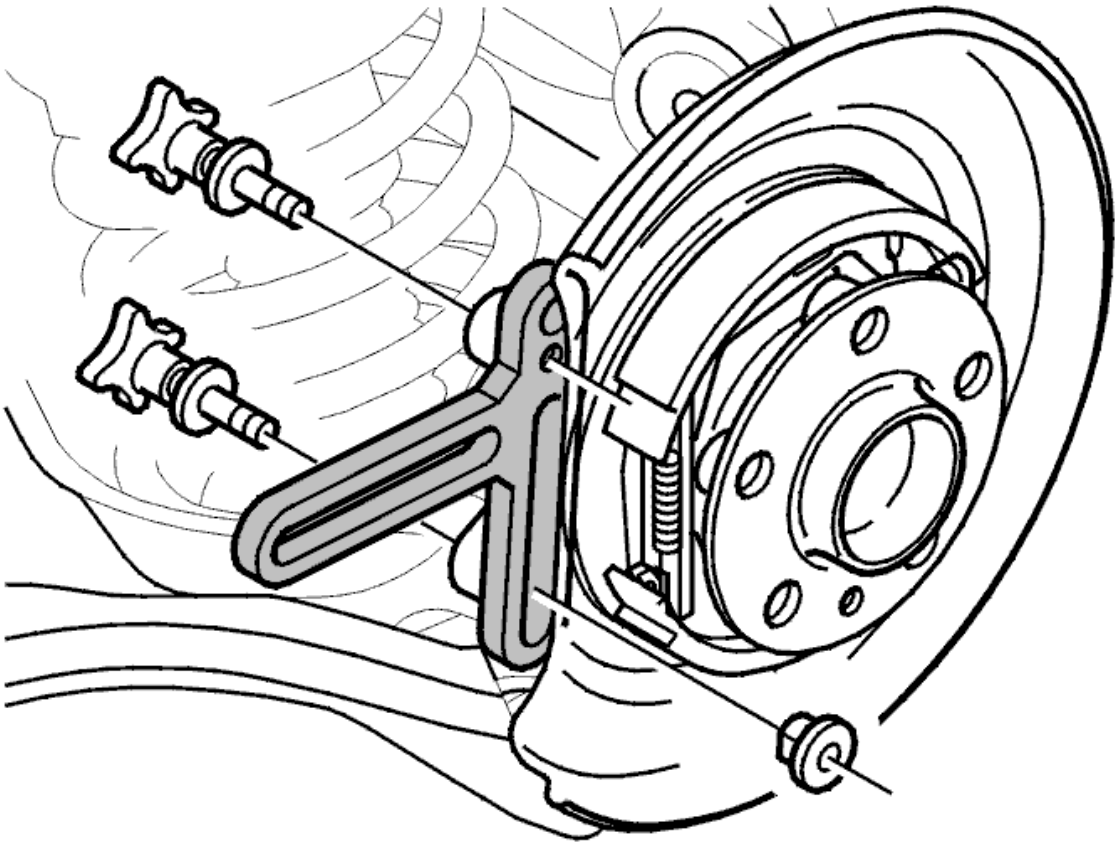

Fig. 23: Bracket On Mounting Hole For Brake Caliper
Courtesy of VOLVO CARS CORPORATION

Install the bracket on the mounting hole for the brake caliper.

Use the M8 screws and nuts included in kit see **9995507** .

NOTE: The lower nut is specially manufactured and should be located in the bracket.

INSTALL THE DIAL GAUGE

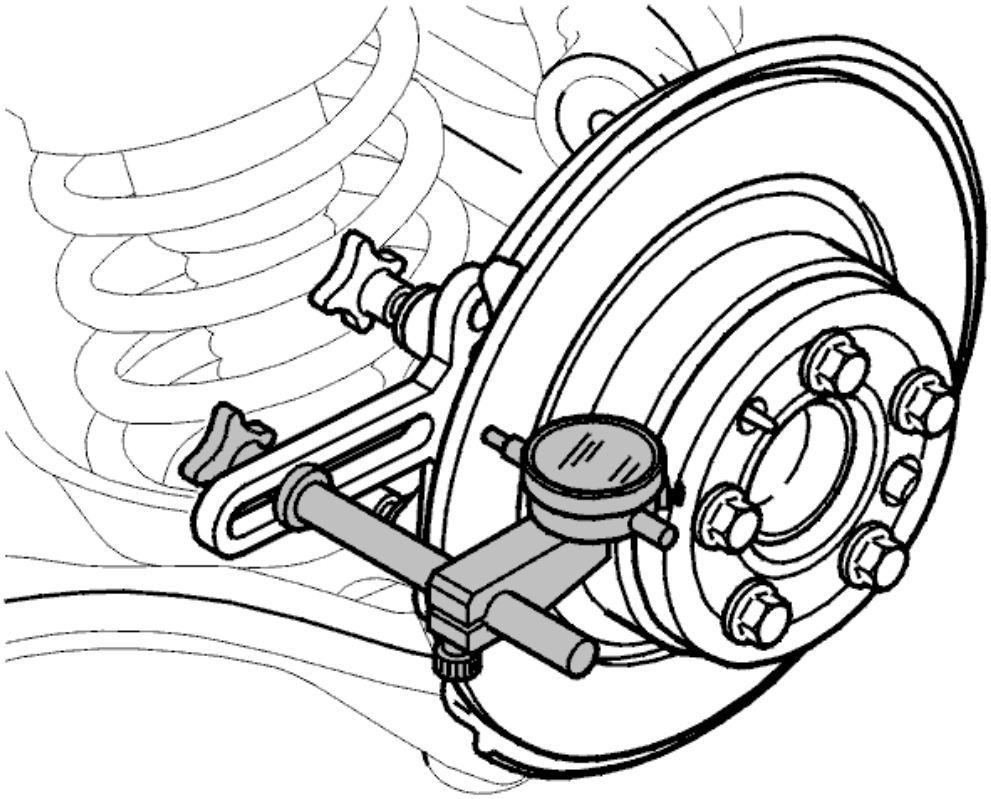

Fig. 24: Dial Gauge On Brake Disc
Courtesy of VOLVO CARS CORPORATION

Install the dial gauge in the bracket as illustrated.

MEASURE THE LATERAL RUN OUT

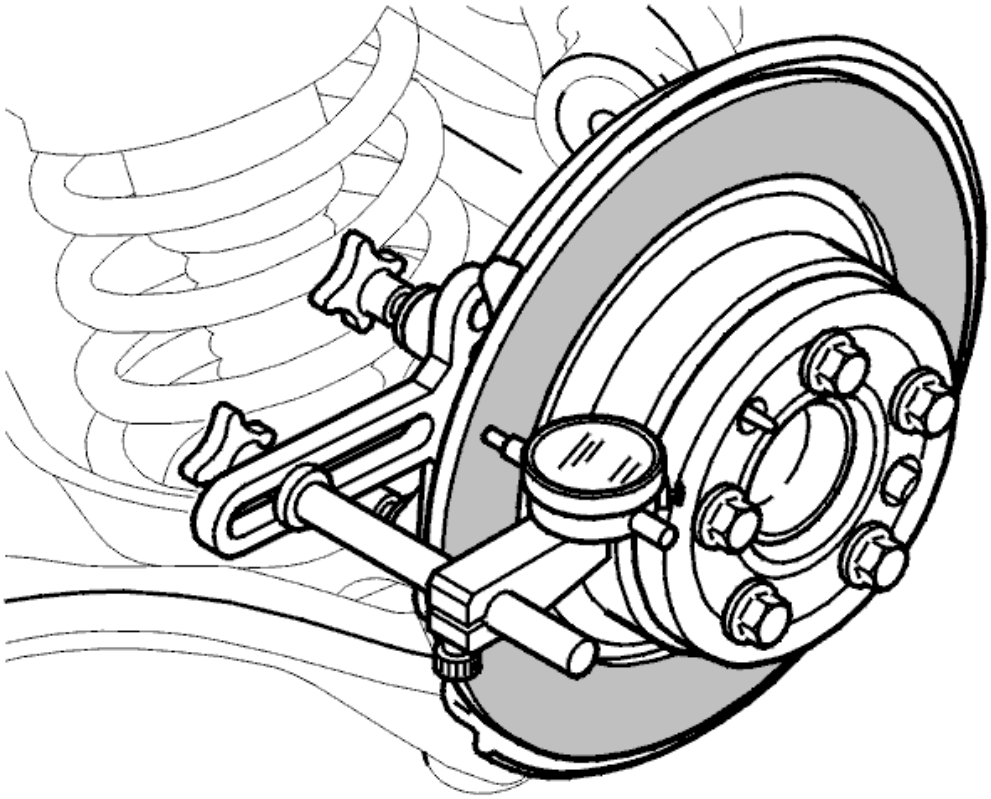

Fig. 25: Identifying Test Gauge Point Against Brake Disc
Courtesy of VOLVO CARS CORPORATION

Put the test gauge point against the brake disc as illustrated.

Rotate the brake disc.

Note the test gauge run-out. Brake disc lateral run-out must not exceed 0.050 mm.

If lateral run-out exceeds the value, replace the brake disc.

To replace brake discs on the XC90, see: **BRAKE DISC REAR, REPLACING** .

FINISHING

NOTE: For tightening torques, see: TIGHTENING TORQUE .

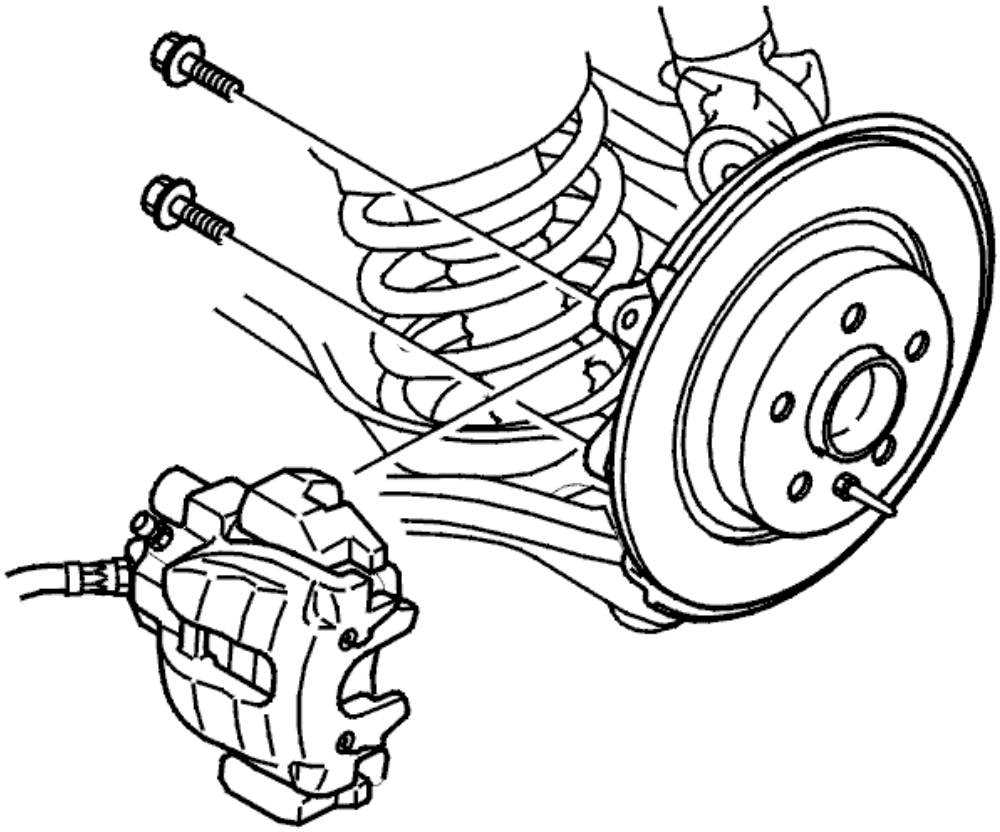

Fig. 26: Brake Caliper Mounting Screws
Courtesy of VOLVO CARS CORPORATION

Remove the test equipment

Install the caliper holder and the brake caliper. Use **new** screws on the caliper holder.

Tighten. See: **TIGHTENING TORQUE** .

Install the wheel

see **INSTALLING WHEELS** .

BRAKE DISC REAR, REPLACING

NOTE: The illustrations in this service information are used for different model years and/or models. Some variation may occur. However, the essential information in the illustrations is always correct.

REMOVAL

REMOVING THE BRAKE DISC

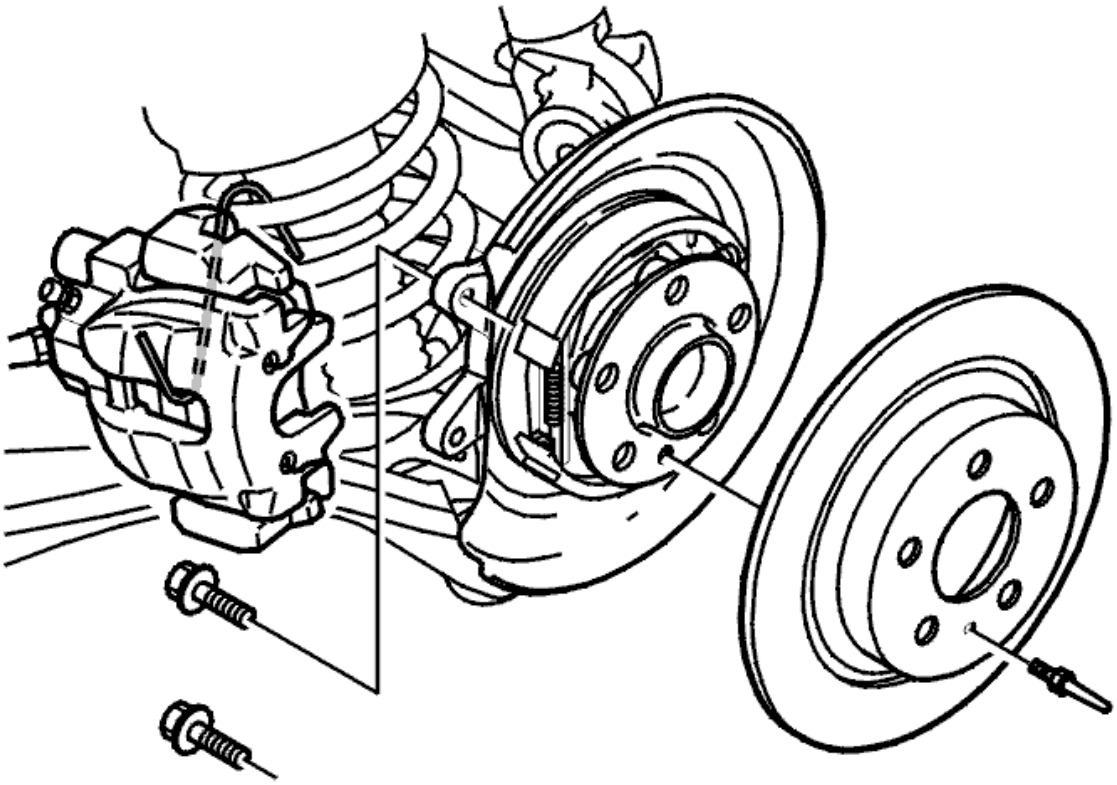

Fig. 27: Brake Caliper, Mounting Screws, Holder And Brake Disc
Courtesy of VOLVO CARS CORPORATION

Remove:

- the wheel
- the 2 mounting screws for the brake caliper holder. Hang the brake caliper from the spring using a wire
- the locating pin and the brake disc.

NOTE: In some cases the parking brake adjustment must be released in order to remove the brake disc.

Remove the panel covering the parking brake lever. See: **PARKING BRAKE LEVER, REPLACING** .

Release the parking brake adjuster. See: **HANDBRAKE, BRAKE SHOES, REPLACING** .

CLEANING AND CHECKING

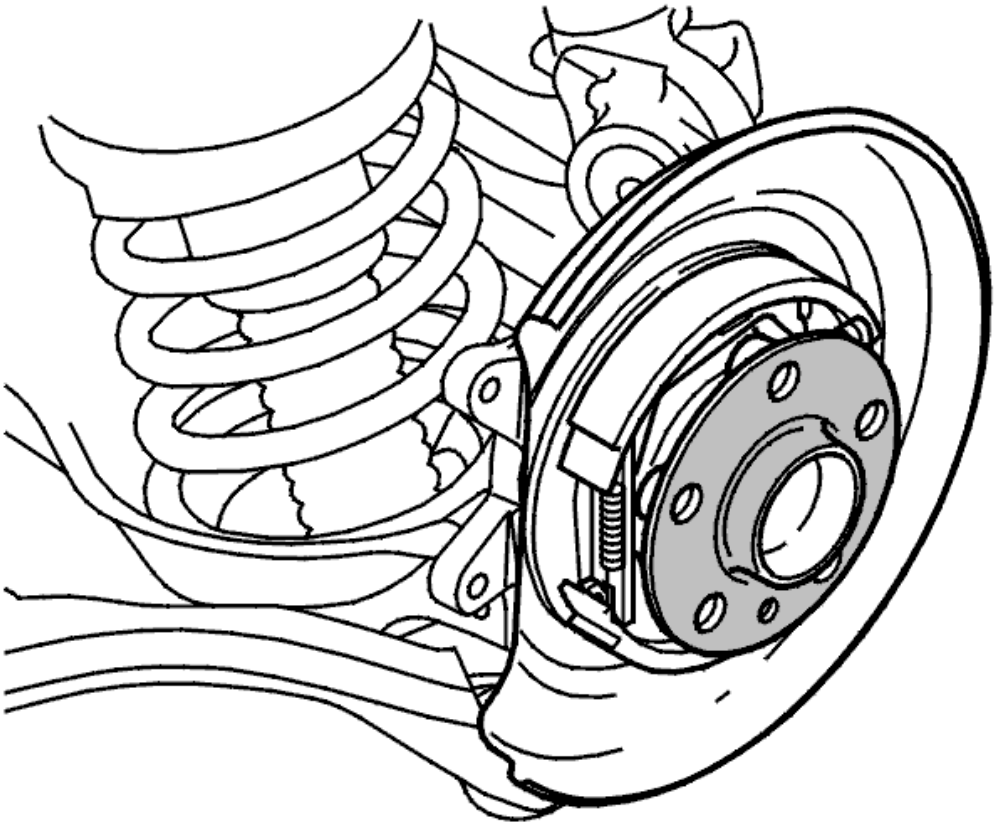

Fig. 28: Brake Pads
Courtesy of VOLVO CARS CORPORATION

NOTE: Cleaning is important to prevent lateral run out at the brake disc.

Clean the hub flange before installing the new brake disc.

Check the hub. If it is damaged, measure the lateral run out. See: **REAR WHEEL HUB, MEASURING LATERAL RUNOUT** .

Check the brake pads. See: **BRAKE PADS REAR, REPLACING** .

INSTALLATION

NOTE: For tightening torques, see: TIGHTENING TORQUE .

INSTALLING THE BRAKE DISC

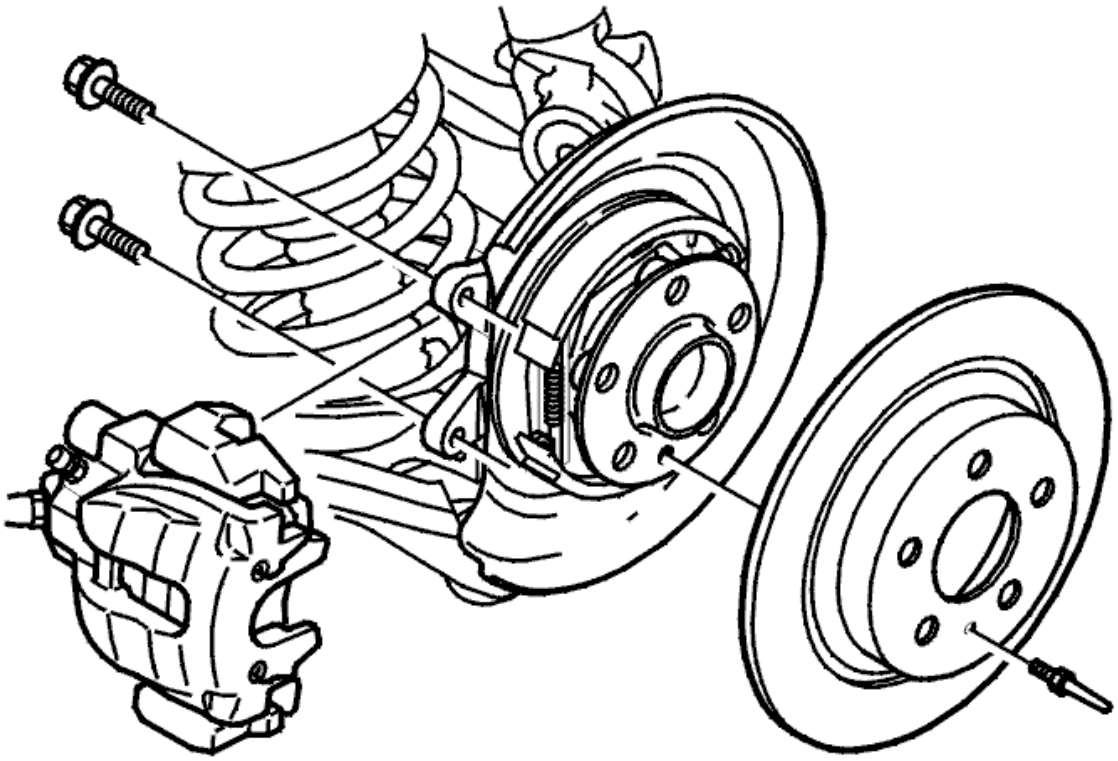

Fig. 29: Brake Disc And Caliper Holder
Courtesy of VOLVO CARS CORPORATION

NOTE: Be careful when handling the new brake disc. Careless handling can cause damage to the brake disc (out-of-true).

Install:

- the new brake disc. Tighten the locating pin. See: **TIGHTENING TORQUE**
- the caliper holder. Use 2 **new** mounting screws. Tighten. See: **TIGHTENING TORQUE** .

Depress the brake pedal a few times. Check the fluid level in the brake fluid reservoir. Top up if necessary.

NOTE: The parking brake must be adjusted if the parking brake adjustment was released.

See: **HANDBRAKE, BRAKE SHOES, REPLACING** .

Reinstall the panel covering the parking brake lever. See: **PARKING BRAKE LEVER, REPLACING** .

FINISHING

Install the wheel. See: **INSTALLING WHEELS** .

BRAKE PADS, REAR, CHECK

Special tools	
	999 7437 Measuring tools **Tool number:** 999 7437 **Tool description:** Measuring tools **Tool boards:** 50

CHECK

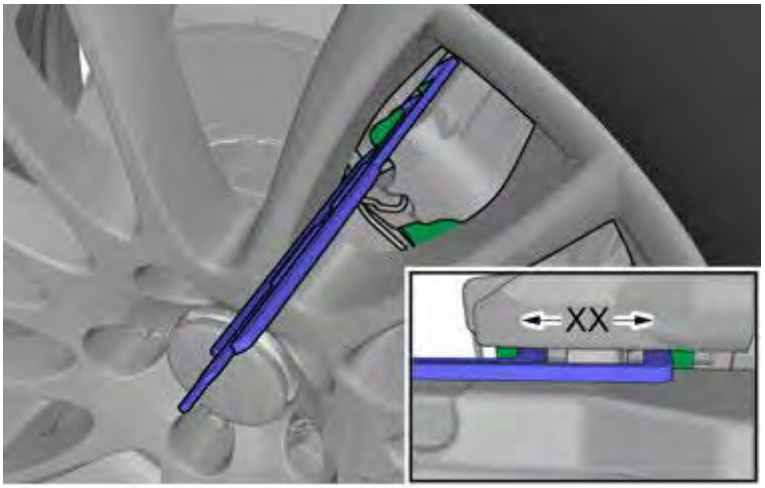

Fig. 30: Measuring Brake Pads Using Special Tool (9997437)
Courtesy of VOLVO CARS CORPORATION

see **9997437**

Note the value.

For information about brake pads, rear, see **BRAKE PADS REAR**

BRAKES

Wheel Brake - Removal, replacement and installation

FRONT WHEEL BRAKE (2003-2012)

BRAKE CALIPERS FRONT, REPLACING

NOTE: **As the illustrations in this service information are used for different model years and / or models, some variation may occur. However, the essential information in the illustrations is always correct.**

COLLECTING BRAKE FLUID

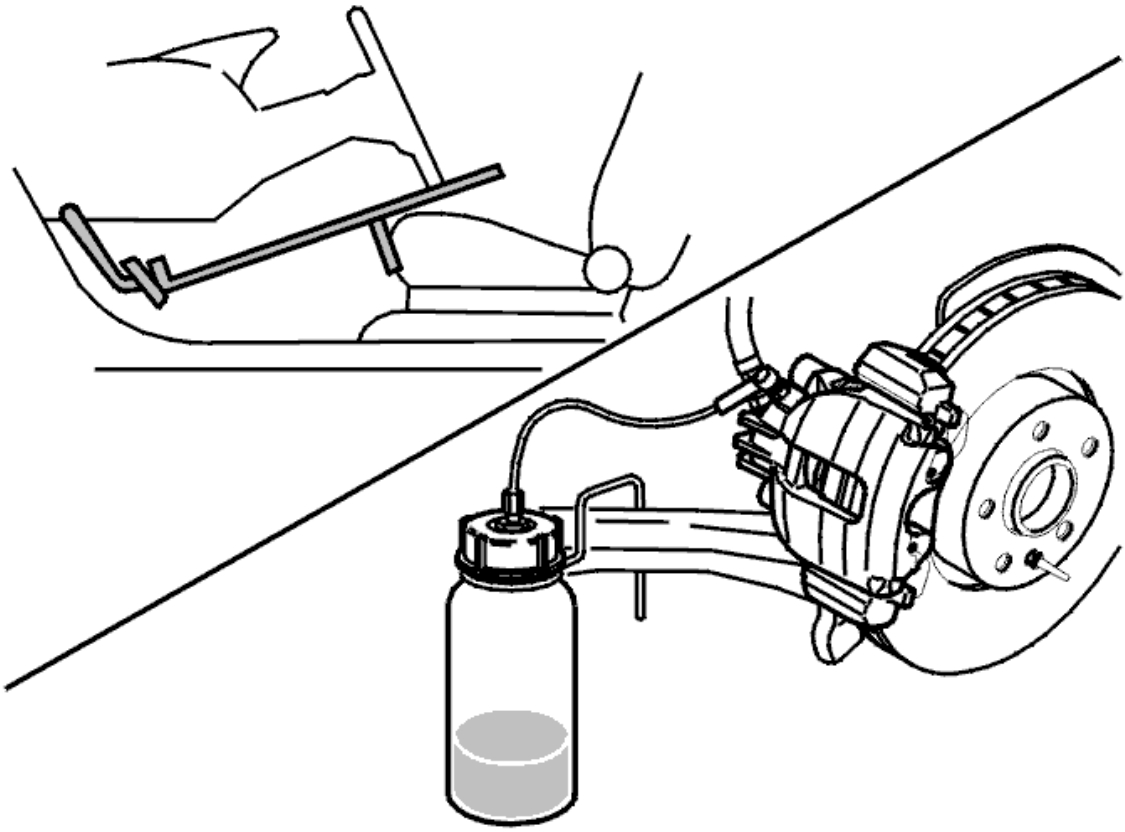

Fig. 1: Bleeding Brakes
Courtesy of VOLVO CARS CORPORATION

Remove the wheel.

Secure the pedal in the depressed position. Use a pedal jack.

Clean the brake caliper thoroughly.

Remove the protective cap from the bleed nipple.

Install a plastic hose on the nipple.

Open the bleed nipple. Collect the brake fluid in a container (bottle). Shut the bleed nipple.

REMOVING THE BRAKE CALIPER

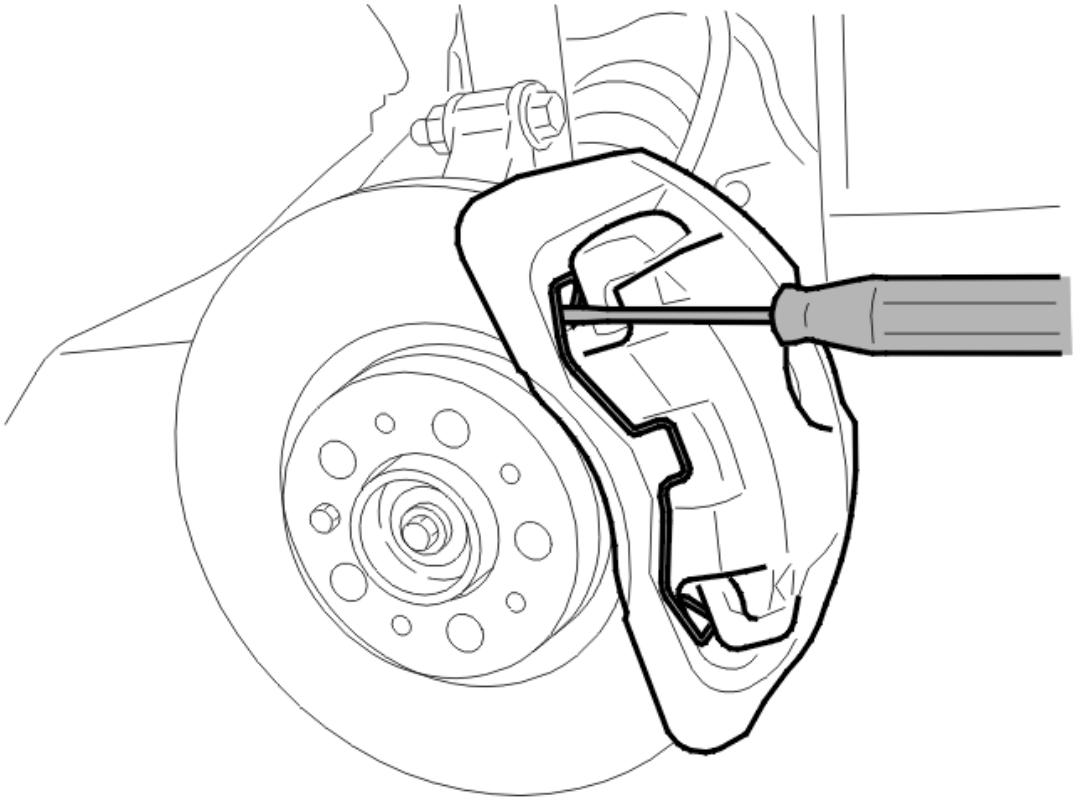

Fig. 2: Removing Brake Pad Retaining Spring
Courtesy of VOLVO CARS CORPORATION

Slacken the off brake hose approximately half a turn.

Remove the retaining spring carefully so as not to deform it.

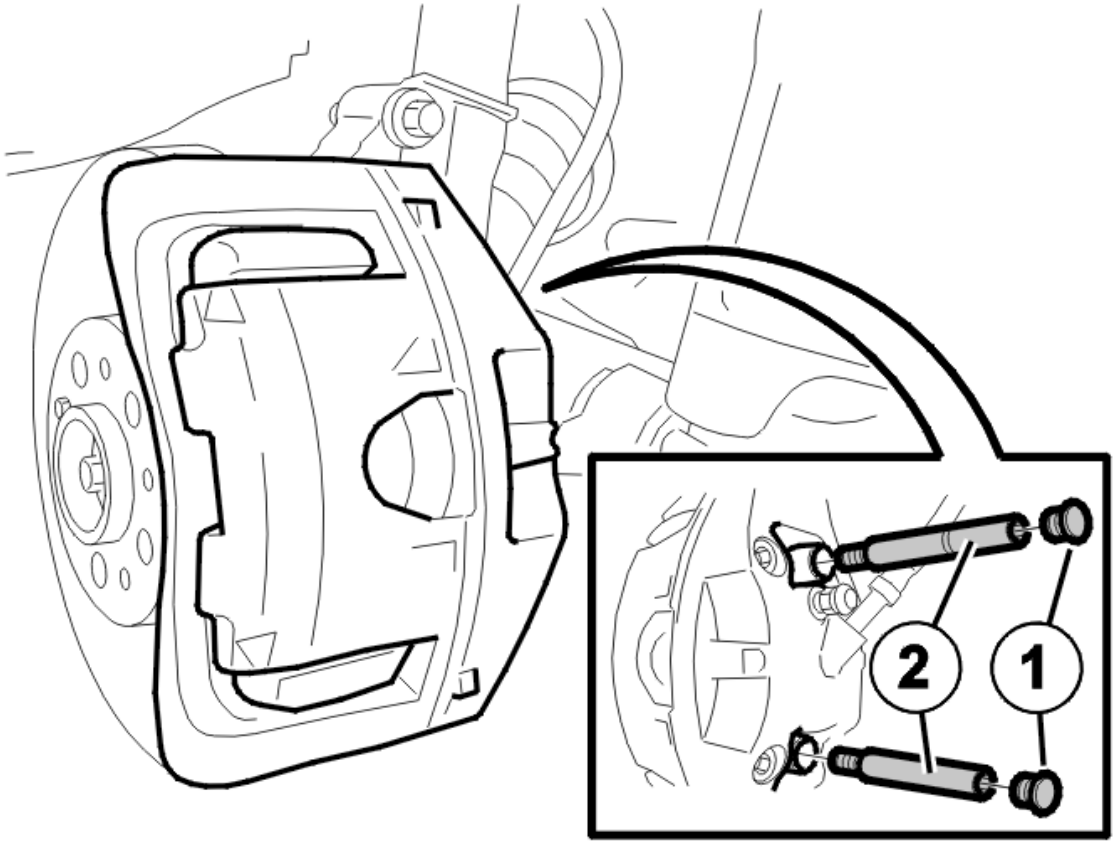

Fig. 3: Identifying Brake Caliper Locating Pins
Courtesy of VOLVO CARS CORPORATION

Remove:

- the protective caps (1) from the two locating pins (2)
- the locating pins, use hex socket 7 mm.

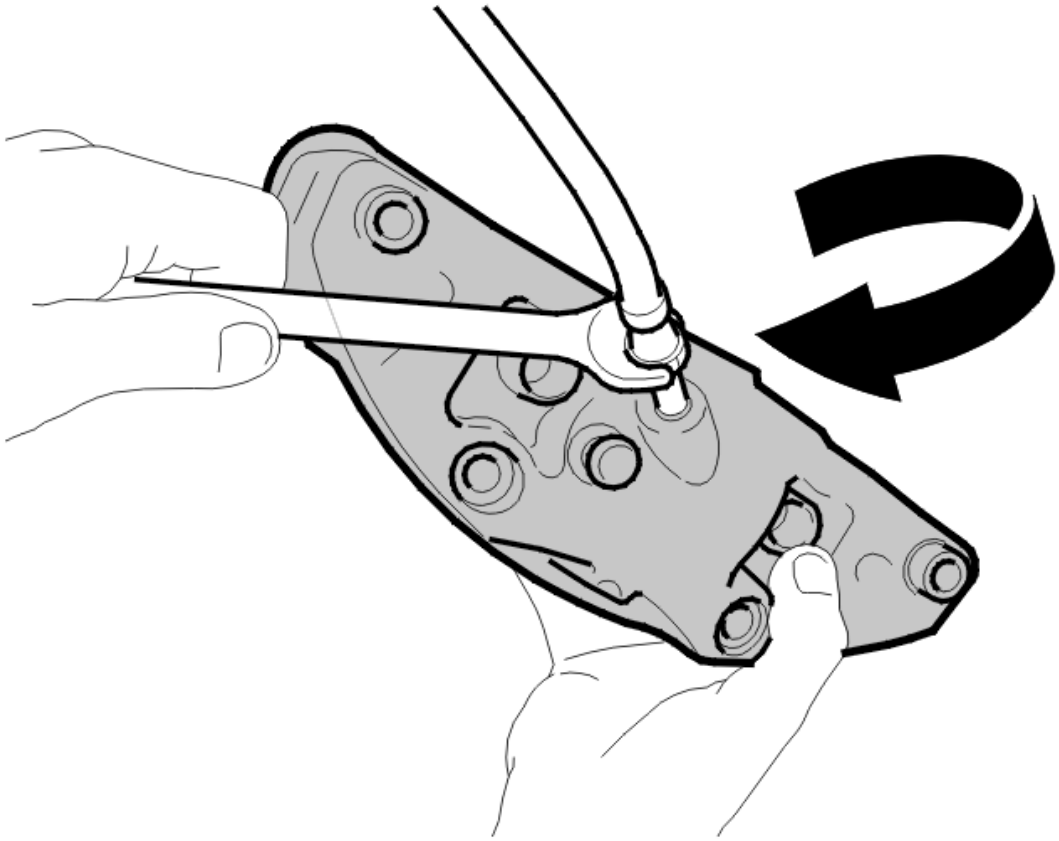

Fig. 4: Installing Brake Hose To Brake Caliper
Courtesy of VOLVO CARS CORPORATION

Remove:

- the brake caliper from the holder
- the brake pads.

Unscrew the brake caliper from the brake hose.

Drain the remaining brake fluid.

INSTALLING THE BRAKE CALIPER

Insert the brake caliper on brake hose (Do not tighten)

Install:

- brake pads
- brake caliper in the holder.

Lubricate the locating pins using grease, P/N 1161325-4.

Insert the locating pins into the rubber sleeves. The pins should slide into the sleeves easily.

Tighten the locating pins. For tightening torques, see **TIGHTENING TORQUE** .

Install the protective caps.

Install the securing spring.

Tighten the brake hose. For tightening torques, see **TIGHTENING TORQUE** .

NOTE: The brake hose must not be twisted. If necessary alter the hose at the other end (brake pipe end).

BLEEDING BRAKE SYSTEMS

Fill and bleed the brake system.

NOTE: Use only Volvo Genuine parts brake fluid (Volvo DOT 4+).

To bleed the brake system, see **BRAKE SYSTEM, BLEEDING (USING BLEEDING UNIT)**

FINISHING

Check:

- the function of the brakes after bleeding. Check that there is no leakage
- brake fluid level.

Depress the brake pedal a few times.

Check the level of the brake fluid reservoir.

Top up if necessary.

Install the wheel. See **INSTALLING WHEELS** .

BRAKE DISC FRONT, REPLACING

REMOVAL

PREPARATION

Remove the brake pads. See **BRAKE PADS FRONT, REPLACING**.

REMOVING THE BRAKE CALIPER HOLDERS AND BRAKE DISC

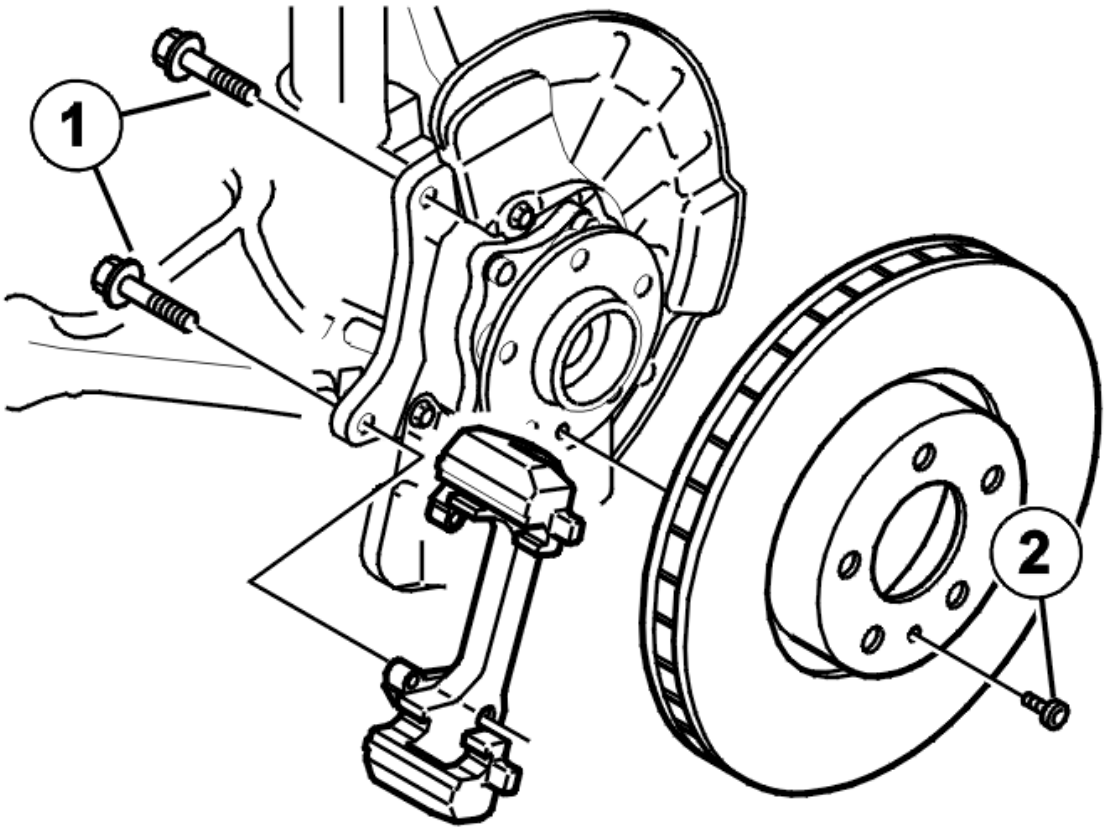

Fig. 5: Identifying Brake Disc Centering Screw And Caliper Bracket Mounting Screws
Courtesy of VOLVO CARS CORPORATION

Remove:

- both the mounting screws (1)
- the caliper holder
- the screw (2) and the brake disc.

CLEANING AND CHECKING

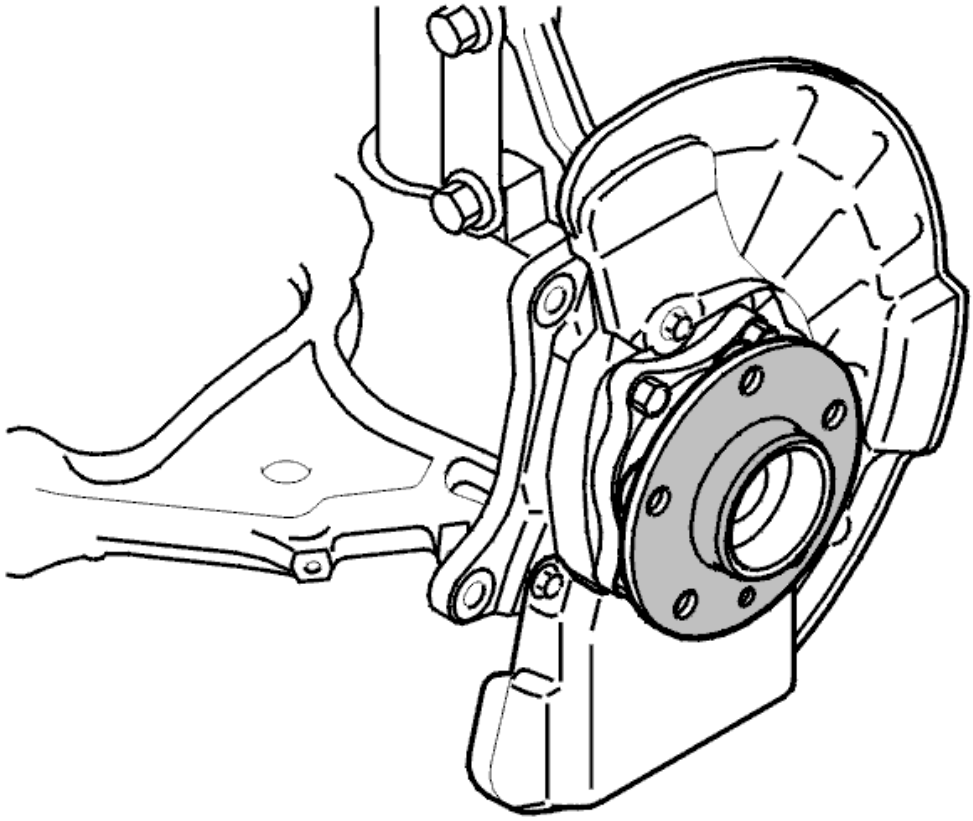

Fig. 6: Hub Flange
Courtesy of VOLVO CARS CORPORATION

NOTE: Cleaning is important to prevent lateral run out at the brake disc.

Clean the hub flange before installing the new brake disc.

Check the hub. If it is damaged, measure the lateral run out. See **FRONT WHEEL HUB, MEASURING LATERAL RUNOUT** .

INSTALLATION

NOTE: For tightening torques, see TIGHTENING TORQUE .

INSTALLING THE BRAKE DISC

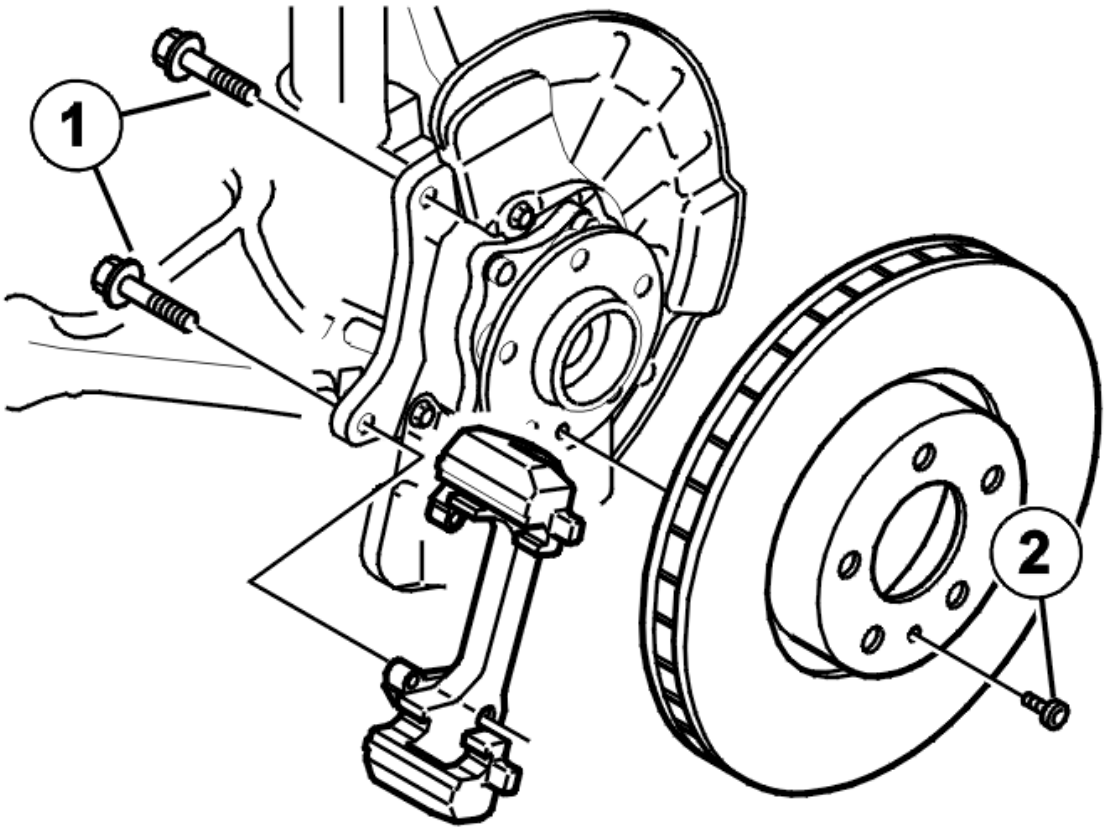

Fig. 7: Identifying Brake Disc Centering Screw And Caliper Bracket Mounting Screws
Courtesy of VOLVO CARS CORPORATION

NOTE: **Be careful when handling the new brake disc. Careless handling can cause damage to the brake disc (out-of-true).**

Install:

- the brake disc. Tighten the screw (2), M6
- the caliper holder. Tighten the two screws (1). See **SUMMARY OF SPECIFIC COMPONENTS AND TIGHTENING TORQUES** .

FINISHING

Install the brake pads. See **BRAKE PADS FRONT, REPLACING**.

Install the wheel. See **INSTALLING WHEELS** .

BRAKE PADS FRONT, REPLACING

NOTE: **The illustrations in this service information are used for different model years and/or models. Some variation may occur. However, the essential information in the illustrations is always correct.**

PREPARATORY WORK

Remove the wheels on both sides.

REMOVAL

REMOVING BRAKE PADS

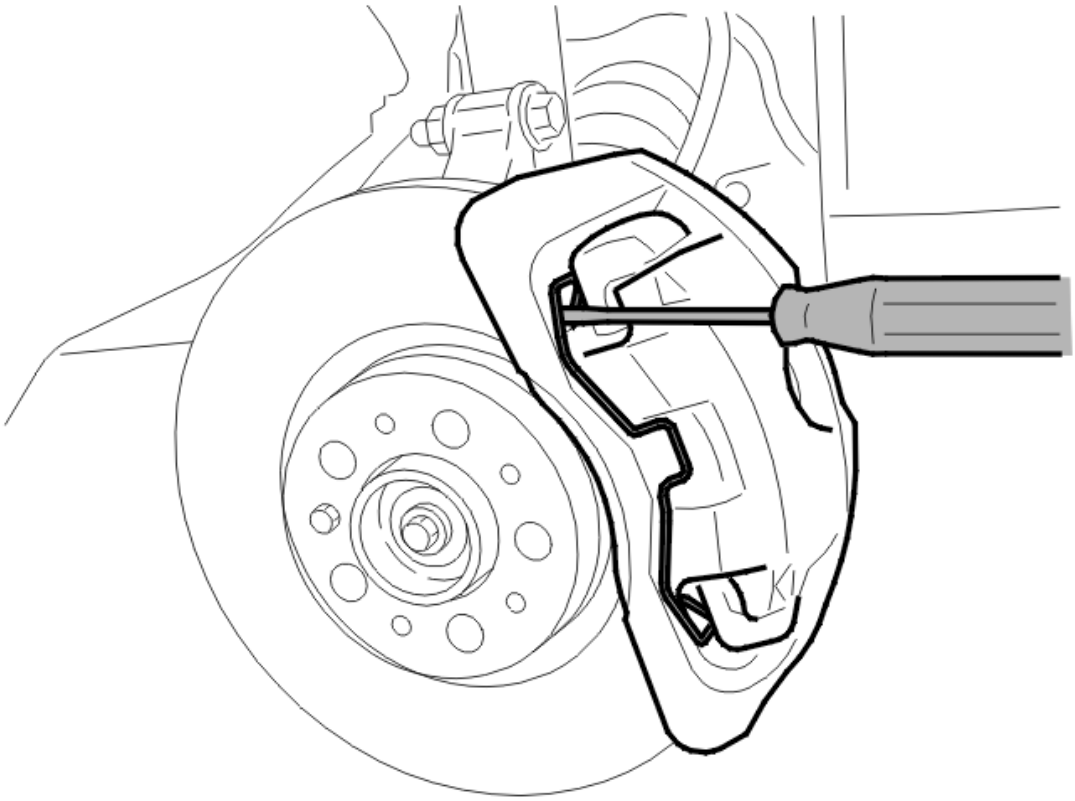

Fig. 8: Removing Brake Pad Retaining Spring
Courtesy of VOLVO CARS CORPORATION

NOTE: Minimum recommended pad thickness/replacement limit when installing new brake pads = 2 mm.

Remove the retaining spring carefully so as not to deform it.

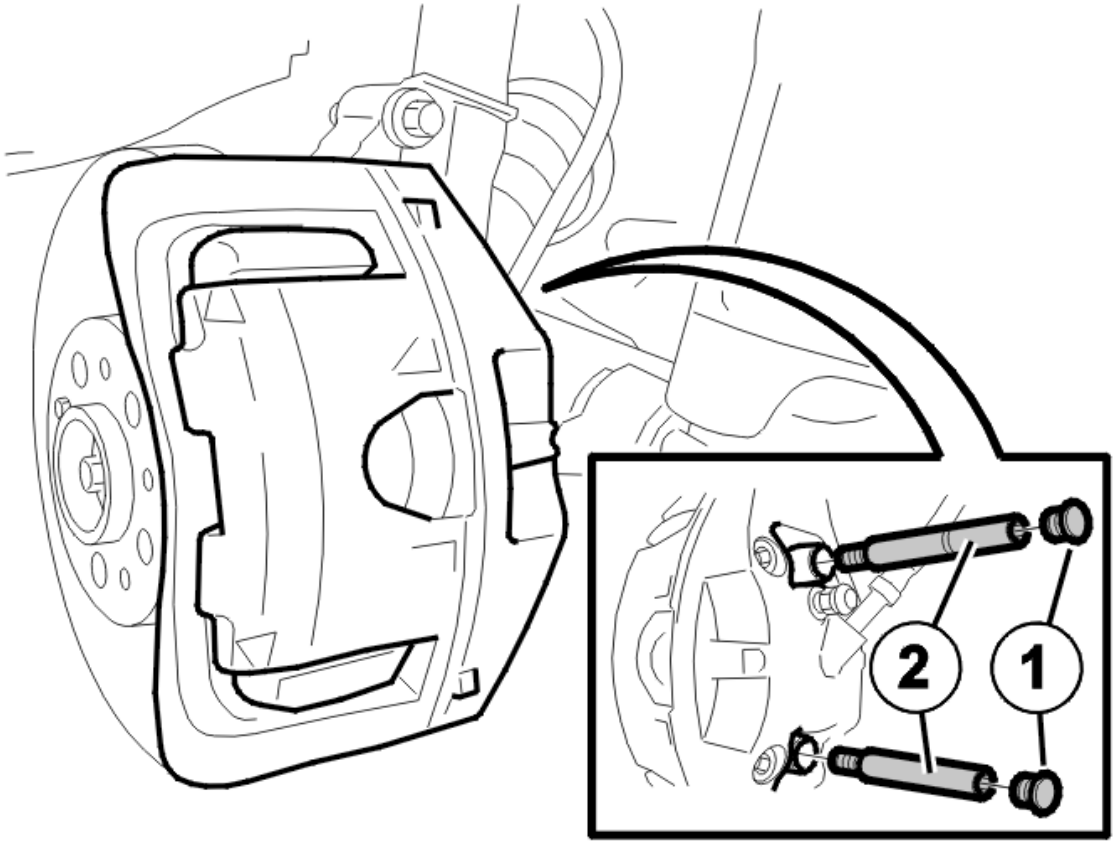

Fig. 9: Identifying Brake Caliper Locating Pins
Courtesy of VOLVO CARS CORPORATION

Remove:

- the protective caps (1) from the two locating pins (2)
- slide pins, use Allen head socket **7mm** (for certain versions, Allen head socket **9 mm**).

Remove:

- the brake caliper from the holder
- brake pads.

Hang brake caliper from a steel wire from the front spring so as not to damage brake hose.

NOTE: Do not press down the brake pedal when the brake pads are removed.

CLEANING THE BRAKE CALIPER

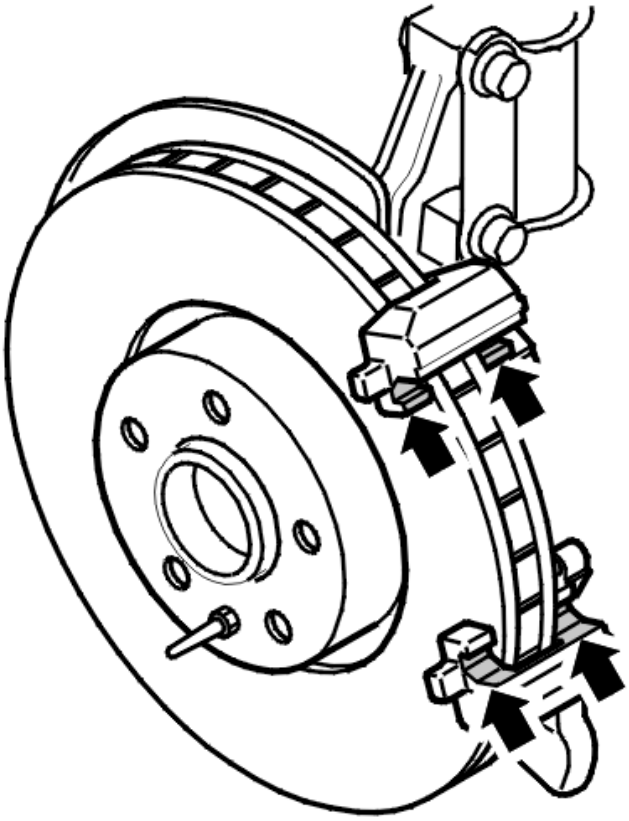

Fig. 10: Identifying Brake Disc And Caliper Holder
Courtesy of VOLVO CARS CORPORATION

Clean and check the brake caliper and dust cover.

Clean and check the brake pad mating surfaces in the brake caliper and caliper holder.

Clean the sliding pins using a steel brush.

Check piston dust boot.

NOTE: **If the dust boot is damaged, dirt may have penetrated into the cylinder. If this is the case, the caliper must be replaced.**

CHECKING THE BRAKE DISC

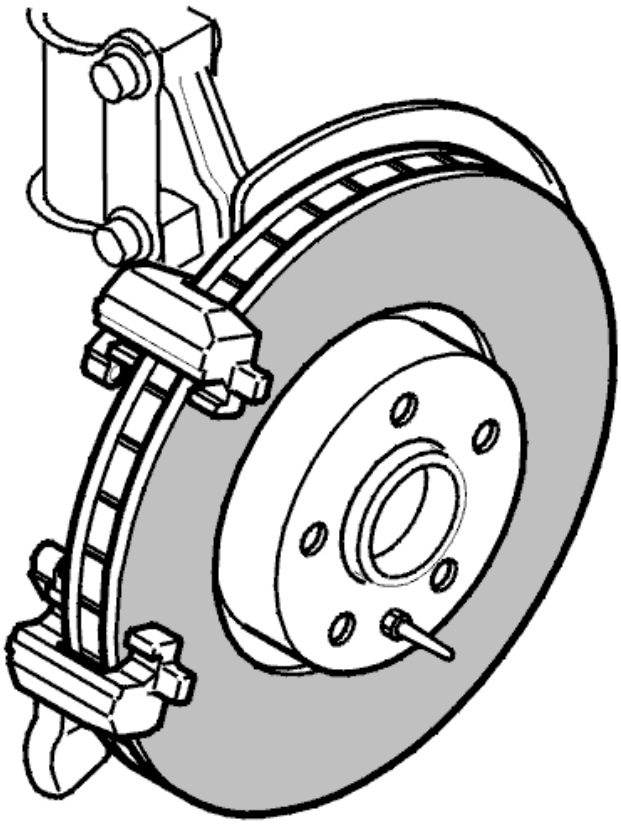

Fig. 11: Checking Brake Disc
Courtesy of VOLVO CARS CORPORATION

Check brake disc friction surfaces.

If the brake disc displays signs of out-of-true, check its lateral run out. See **BRAKE DISC FRONT, CALIBRATING** .

Replace the brake disc if it displays signs of heavy wear, variable thickness or similar. To replace, see **BRAKE DISC FRONT, REPLACING**.

NOTE: **Minimum disc thickness/replacement limit:**

Brake discs with an outer diameter of 316mm = 25.0 mm. Minimum recommended disc thickness when installing new brake pads = 25.8 mm.

Brake discs with an outer diameter of 336 mm = 27.0 mm. Minimum recommended disc thickness when installing new brake pads = 27.8 mm.

INSTALLATION

NOTE: **For tightening torques, see: TIGHTENING TORQUE .**

LUBRICATING THE SLIDING SURFACES

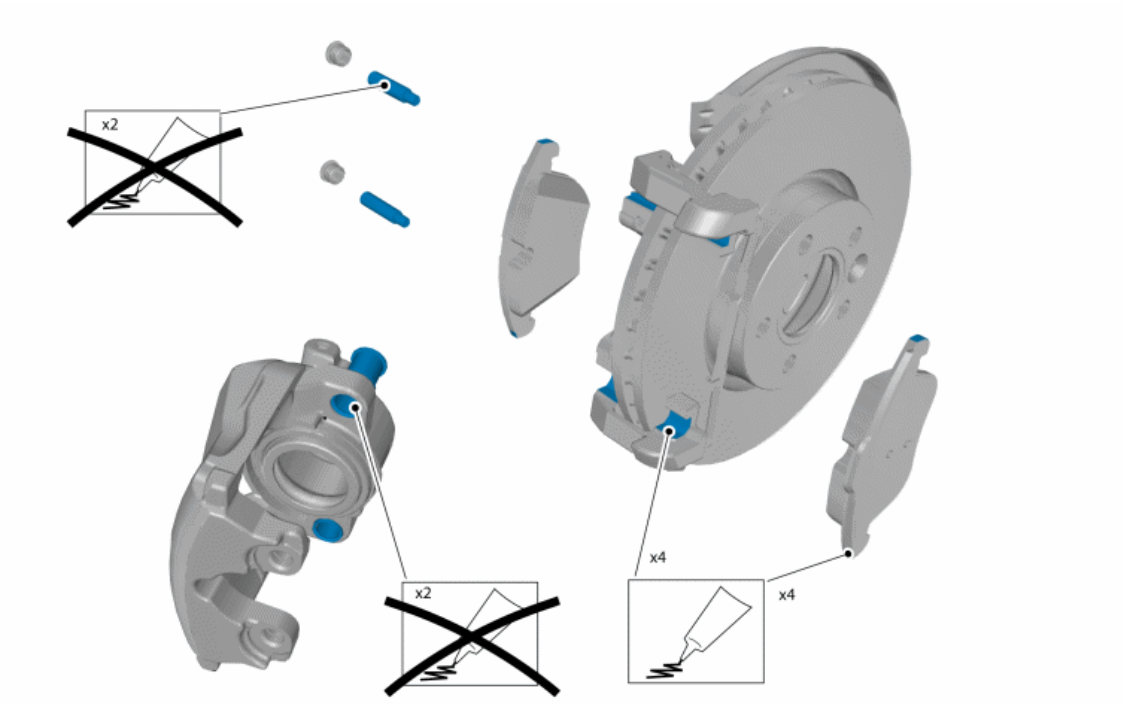

Fig. 12: Identifying Sliding Surfaces
Courtesy of VOLVO CARS CORPORATION

Lubricate the contact surfaces of the brake pads using silicone grease, part no. 1161687 (12 ml) or part no. 1161688 (50 ml)

(Do not lubricate the sliding pins)

INSTALLING THE BRAKE PADS

Press piston back into cylinder on brake caliper.

Check that the dust cover is correctly positioned.

Install:

- new brake pads
- the brake caliper.

INSTALLING SLIDE PINS IN THE BRAKE CALIPER

NOTE: Check the slide pins' rubber sleeves. Replace if necessary.

Insert the slide pins in the rubber sleeves.

Tighten the slide pins. Tighten acc. to: **TIGHTENING TORQUE** .

Install the protective caps.

Install the securing spring.

FINISHING

Check the brake fluid level in the reservoir.

Depress the brake pedal a few times. Check the level of the brake fluid reservoir.

Top up if necessary.

Install the wheels. See: **INSTALLING WHEELS** .

BRAKE FLUID (2003-2012)

BRAKE FLUID, REPLACING

GUIDELINES FOR BRAKE FLUID REPLACEMENT

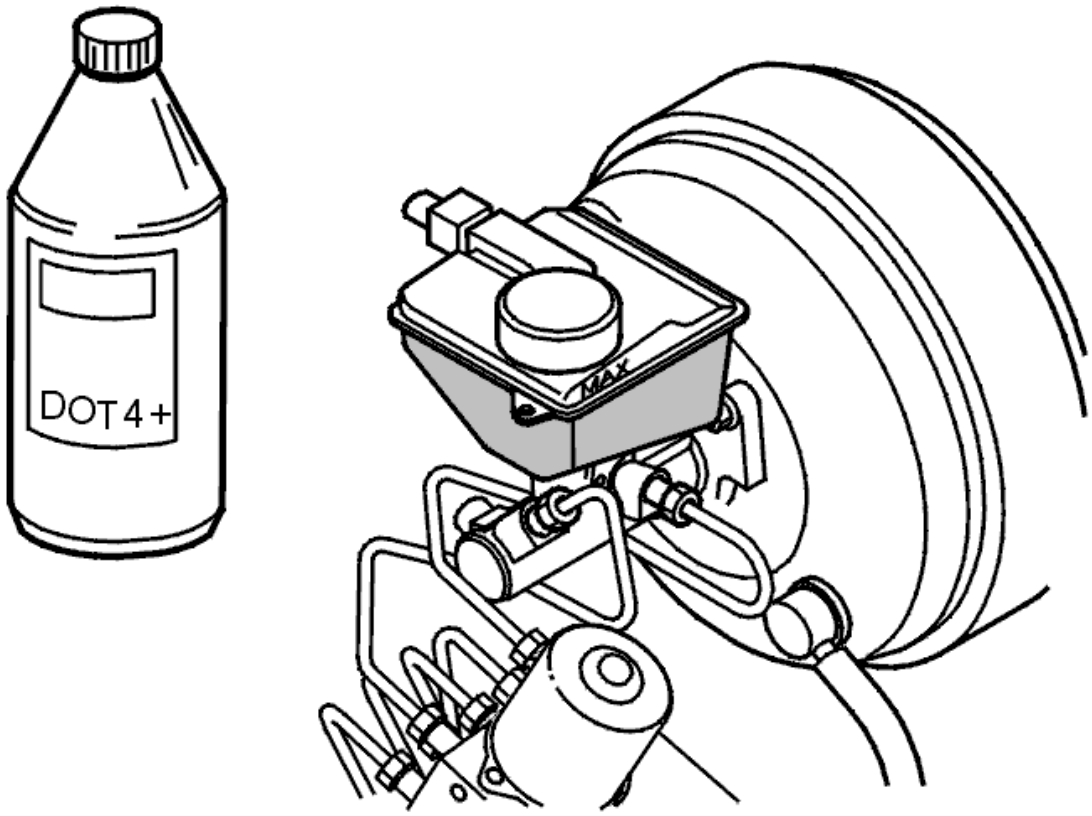

Fig. 13: Brake Fluid And Reservoir
Courtesy of VOLVO CARS CORPORATION

Brake fluid should be changed every two years. If the car is driven in a manner that requires frequent and heavy braking, such as driving in mountainous terrain or in a tropical climate with high humidity, the fluid should be changed every year.

Background

The oil must be replaced because it is hygroscopic (the fluid absorbs water molecules from the air). This absorption of water occurs through the brake hoses and brake fluid reservoir. These components are rubber and plastic respectively and are not completely sealed against water molecules. An increased water content in the brake fluid dramatically reduces its boiling point and causes corrosion in the brake system components. This results in damage to the brake system. Braking performance deteriorates markedly.

NOTE: Use only Volvo Genuine brake fluid (Volvo DOT 4+). Never reuse brake fluid. Always keep brake fluid well sealed in its original packaging.

NOTE: Continually check that there is sufficient brake fluid in the brake fluid reservoir when replacing brake fluid.

PREPARATIONS FOR CHANGING, FRONT

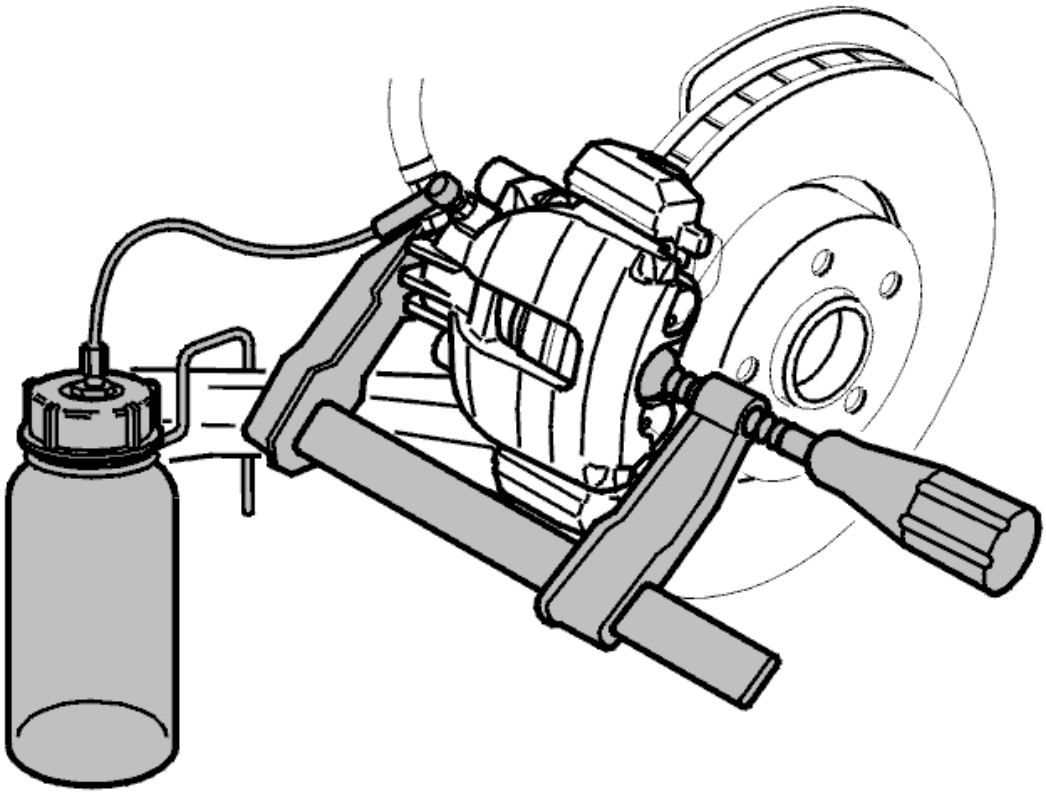

Fig. 14: Collecting Bottle, Hose And G-Clamp
Courtesy of VOLVO CARS CORPORATION

Switch off the ignition.

Clean around the brake fluid reservoir filler cap.

Raise the car.

Take out:

- a collecting bottle and hose to collect brake fluid in
- a G-clamp.

Remove the protective cap from the bleed nipple.

Connect the collecting bottle hose.

CHANGING THE BRAKE FLUID, FRONT

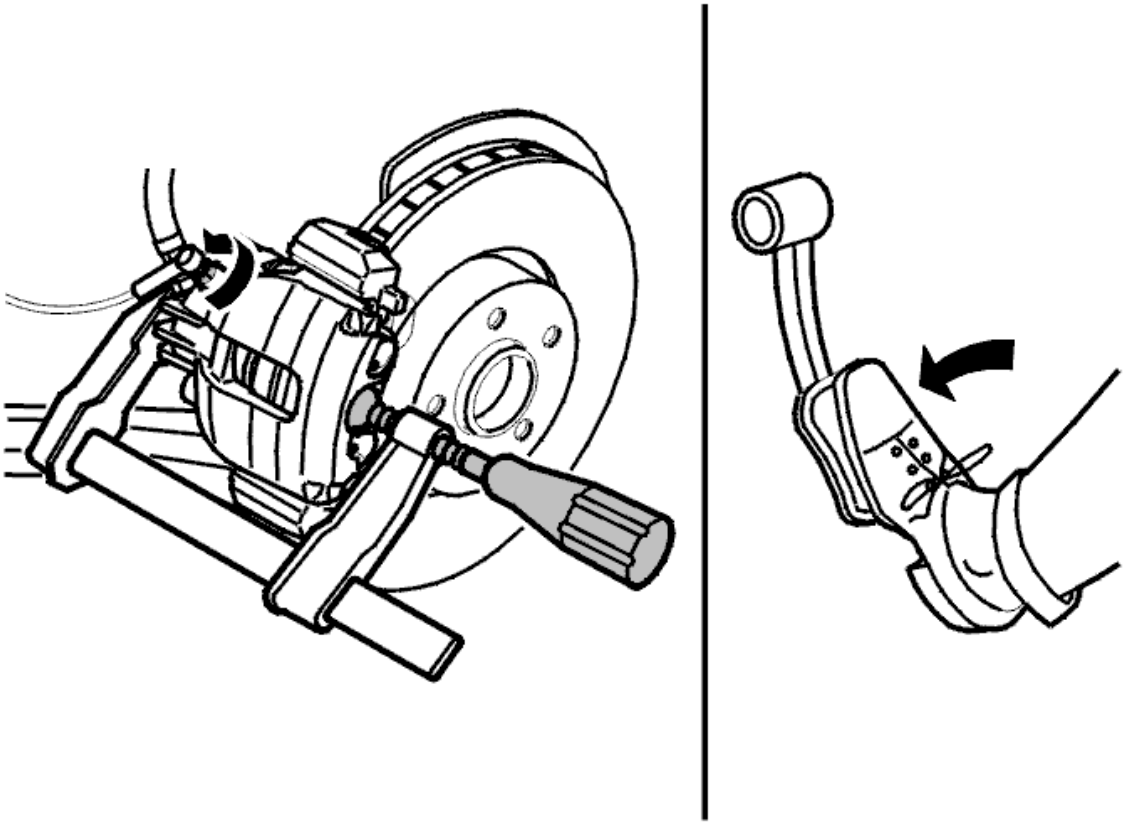

Fig. 15: Bleeding Brake System
Courtesy of VOLVO CARS CORPORATION

Open the bleed nipple, approximately one turn.

Press in the brake caliper piston to the bottom of the caliper. Use G-clamp as illustrated. Leave the G-clamp in

pushed in position.

Press down the brake pedal to the limit position. Keep it pressed down for approximately 2 seconds before releasing it. Repeat this until new brake fluid enters.

Close the bleed nipple when the brake pedal is fully depressed.

Remove:

- the hose. Install the protective cap
- the G-clamp from the brake caliper.

Finishing work, front

See **FINISHING WORK**.

PREPARATIONS FOR REPLACEMENT, REAR

Switch off the ignition.

Clean around the brake fluid reservoir filler cap.

Raise the car

Take out:

- a collecting bottle and hose to collect brake fluid in
- a jimmy
- a large pipe spanner.

REMOVE THE BRAKE CALIPER

See **REMOVE THE RETAINING SPRINGS AND LOCATING PINS FOR THE BRAKE PADS.** .

Press the piston into the brake caliper

See **PRESS THE PISTON INTO THE BRAKE CALIPER**.

INSTALL A JIMMY BAR

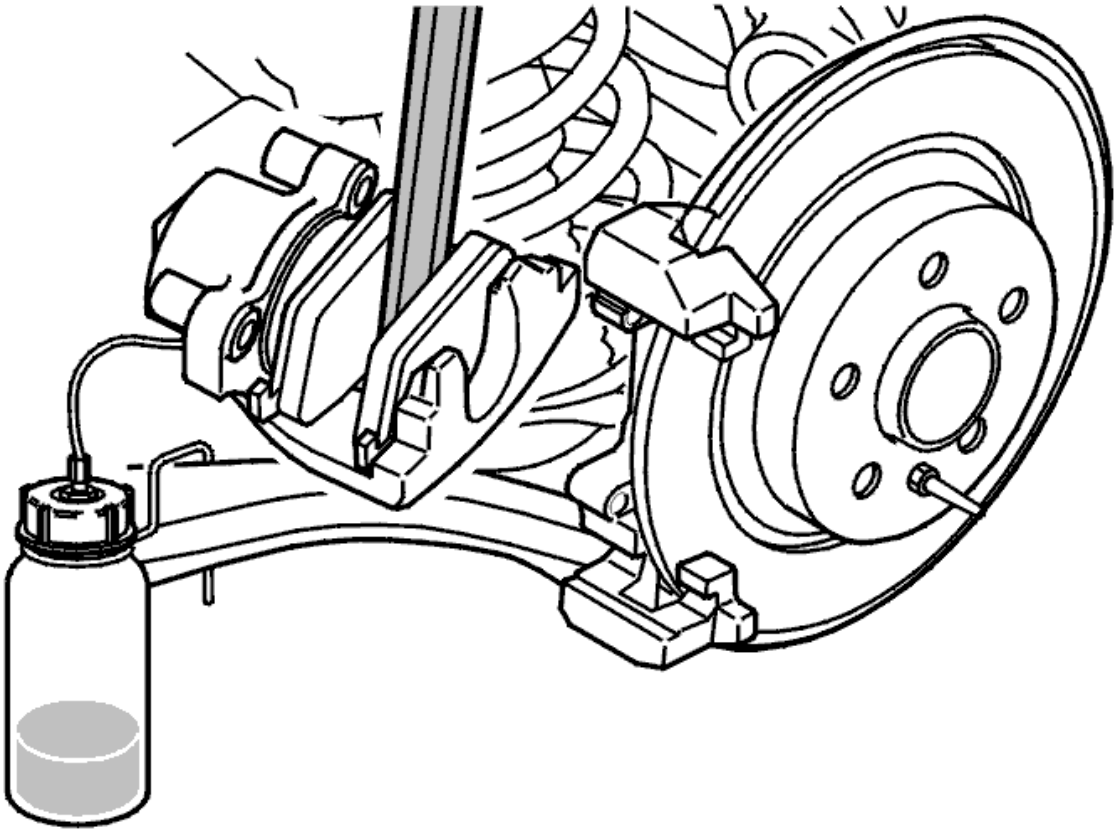

Fig. 16: Identifying Jimmy Inserted Between Brake Pads
Courtesy of VOLVO CARS CORPORATION

Insert the jimmy between the brake pads (as a counterhold) to keep the piston in.

REPLACING BRAKE FLUID, REAR

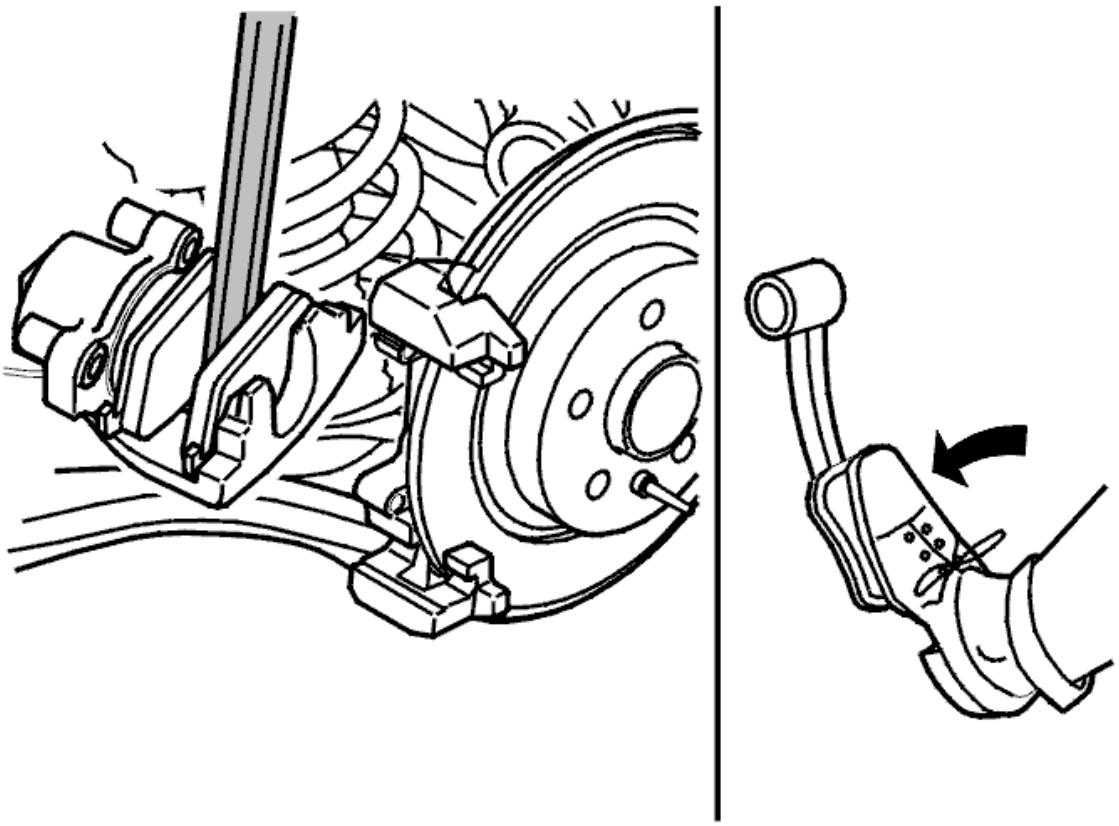

Fig. 17: Bleeding Rear Brakes
Courtesy of VOLVO CARS CORPORATION

Remove the protective cap from the bleed nipple.

Connect the collecting bottle hose.

Press down the brake pedal fully. Keep it pressed down for approximately 2 seconds before releasing it. Repeat this until new brake fluid enters.

Close bleed nipple when the brake pedal is fully depressed.

Remove:

- the hose and install the protective cap
- the collecting bottle.

INSTALL THE BRAKE CALIPER

See **INSTALL THE LOCATING PINS IN THE BRAKE CALIPER** .

Finishing work

See **FINISHING WORK**.

REPLACING THE BRAKE FLUID (USING A BLEEDING UNIT)

GUIDELINES FOR BRAKE FLUID REPLACEMENT

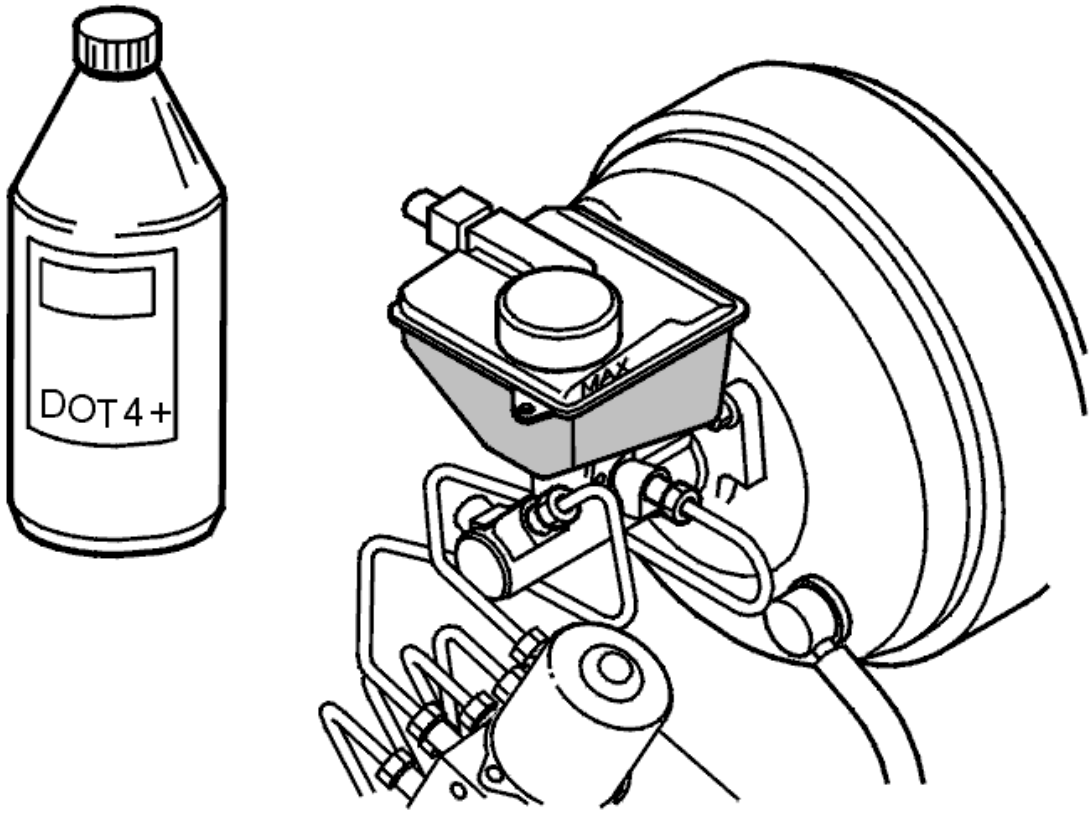

Fig. 18: Brake Fluid And Reservoir
Courtesy of VOLVO CARS CORPORATION

It is recommended that the brake fluid is replaced every 45, 000 km (30, 000 miles), or every other year. The fluid must be replaced annually on cars driven in conditions requiring hard and frequent braking, such as driving in mountains or tropical climates with high humidity.

Background

The oil must be replaced because it is hygroscopic (the fluid absorbs water molecules from the air). This absorption of water occurs through the brake hoses and brake fluid reservoir. These components are rubber and plastic respectively and are not completely sealed against water molecules. An increased water content in the brake fluid dramatically reduces its boiling point and causes corrosion in the brake system components. This results in damage to the brake system. Braking performance deteriorates markedly.

NOTE: **Use only Volvo Genuine Parts brake fluid (Volvo DOT 4+). Never reuse brake fluid. Always keep brake fluid well sealed in its original packaging.**

PREPARATIONS FOR CHANGING, FRONT

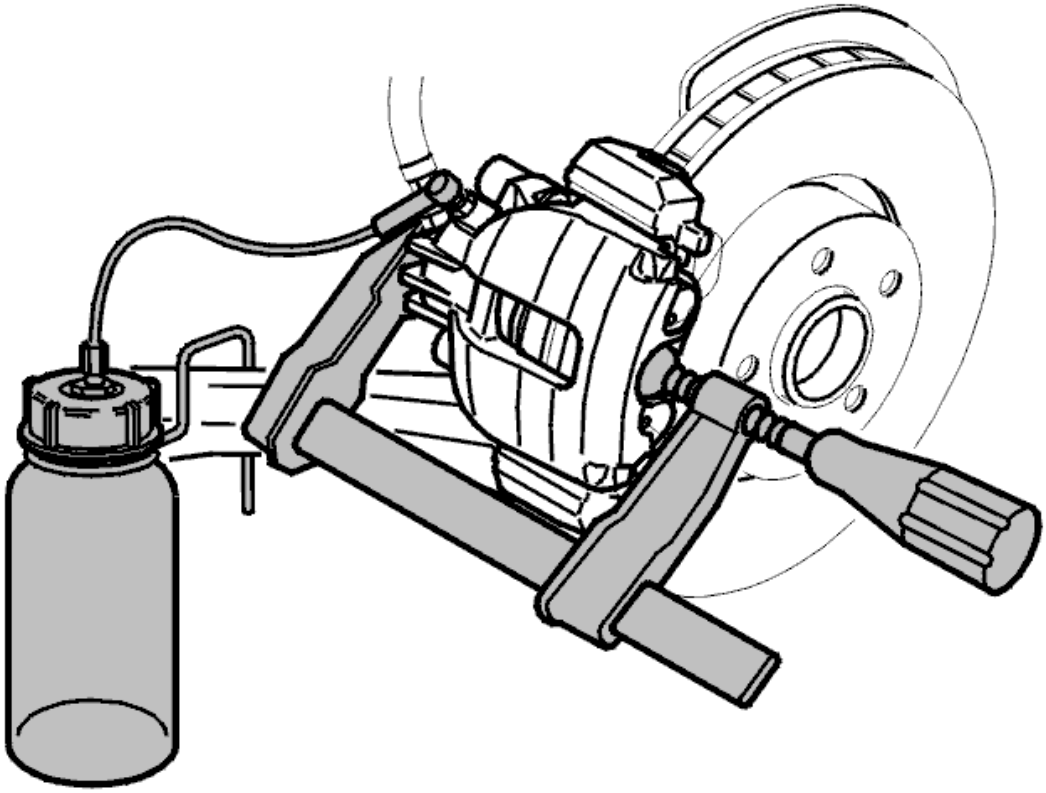

Fig. 19: Collecting Bottle, Hose And G-Clamp
Courtesy of VOLVO CARS CORPORATION

Switch off the ignition.

Clean around the brake fluid reservoir filler cap.

Connect the bleeding unit

See **CONNECT THE BLEEDING UNIT** .

Take out:

- a collecting bottle and hose to collect brake fluid in.
- a G-clamp.

Remove the protective cap from the bleed nipple on the brake calipers.

Connect the collecting bottle hose.

CHANGING THE BRAKE FLUID, FRONT

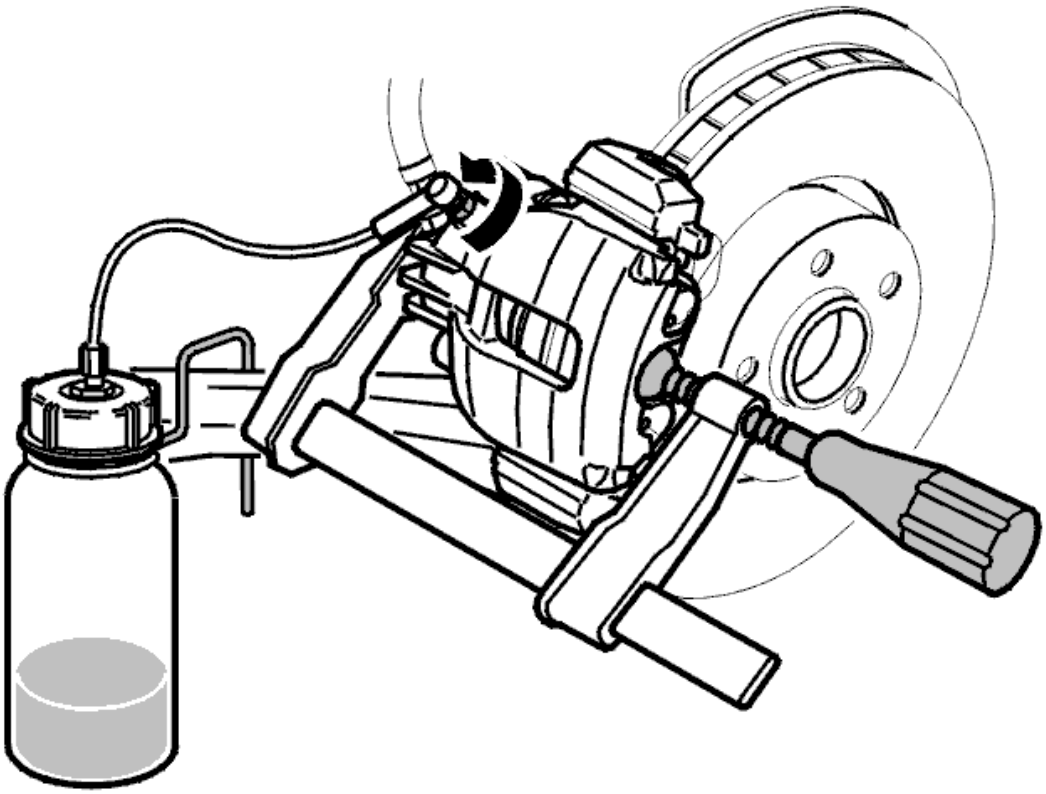

Fig. 20: Changing The Brake Fluid, Front
Courtesy of VOLVO CARS CORPORATION

Open the nipple, approximately one turn.

Push the brake caliper piston to bottom of the caliper using a G clamp. Leave the G-clamp in pushed in position.

Pressurize the braking system with the bleeding unit.

Leave the bleed nipple open until the new brake fluid enters.

Close the nipple. Remove the hose.

Install the protective cap.

Remove the G-clamp from the brake caliper.

REMOVE THE BLEEDING UNIT

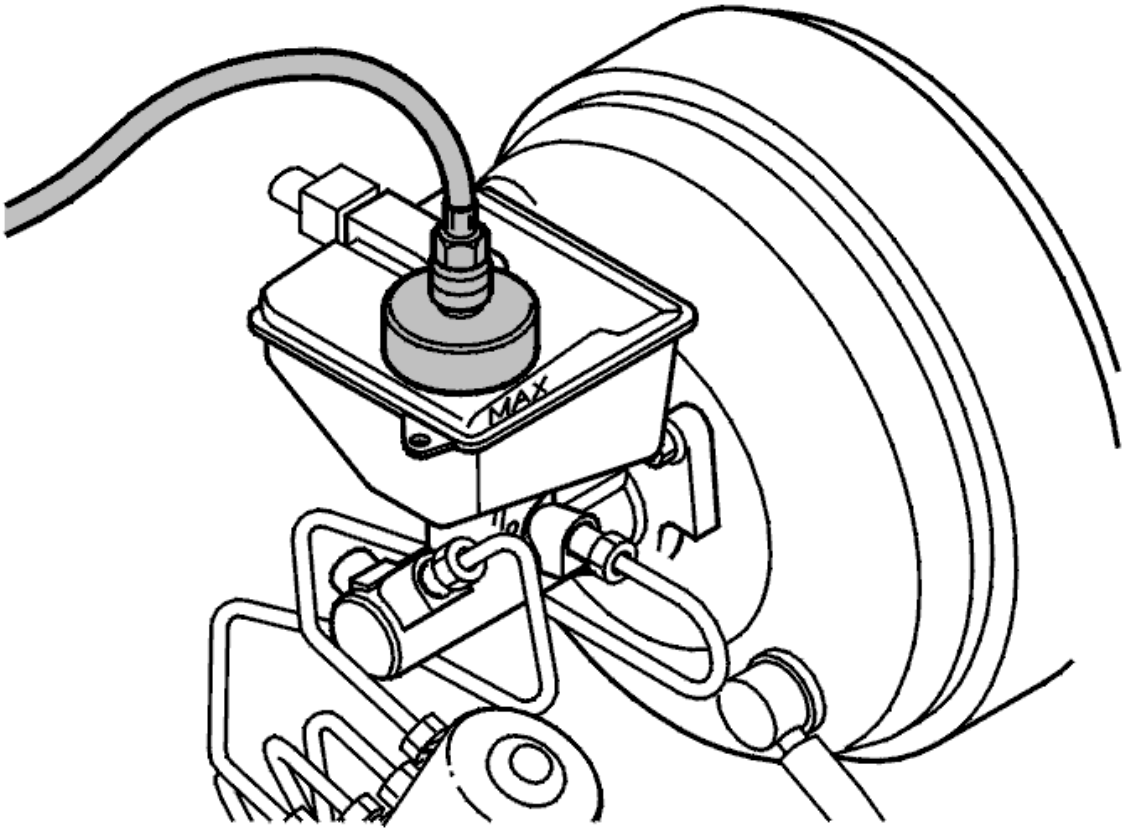

Fig. 21: Bleeding Unit Connected to Brake Fluid Reservoir
Courtesy of VOLVO CARS CORPORATION

Shut off the bleeding unit.

Depressurize the brake system by opening and closing a bleed nipple.

Remove the collecting bottle.

Remove the bleed unit connector from the brake fluid reservoir.

FINISHING WORK

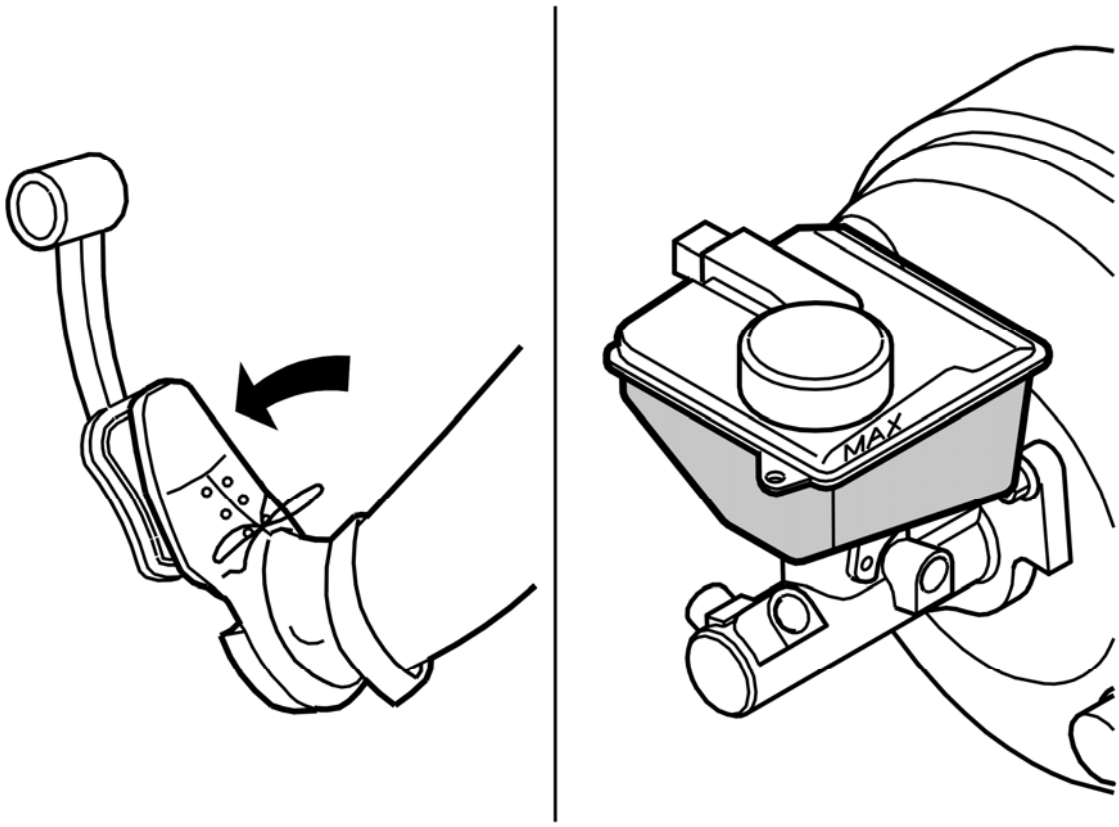

Fig. 22: Bleeding Brake System
Courtesy of VOLVO CARS CORPORATION

NOTE: Depress the brake pedal repeatedly until the brake pistons are in the normal position.

Check the brake fluid level. Install the cover.

Wash off any spilled brake fluid. Use warm water and car shampoo.

Install the wheel

See **INSTALLING WHEELS** .

PREPARATIONS FOR REPLACEMENT, REAR

Take out:

- a collecting bottle and hose to collect brake fluid in
- a large pipe wrench
- a jimmy
- the bleeding unit.

CONNECT THE BLEEDING UNIT

See **CONNECT THE BLEEDING UNIT** .

Raise the car

REMOVE THE REAR BRAKE CALIPER

See **REMOVE THE RETAINING SPRINGS AND LOCATING PINS FOR THE BRAKE PADS.** .

NOTE: **Do not remove the outer brake pad from the brake caliper. It is bonded to the caliper.**

PRESS THE PISTON INTO THE BRAKE CALIPER

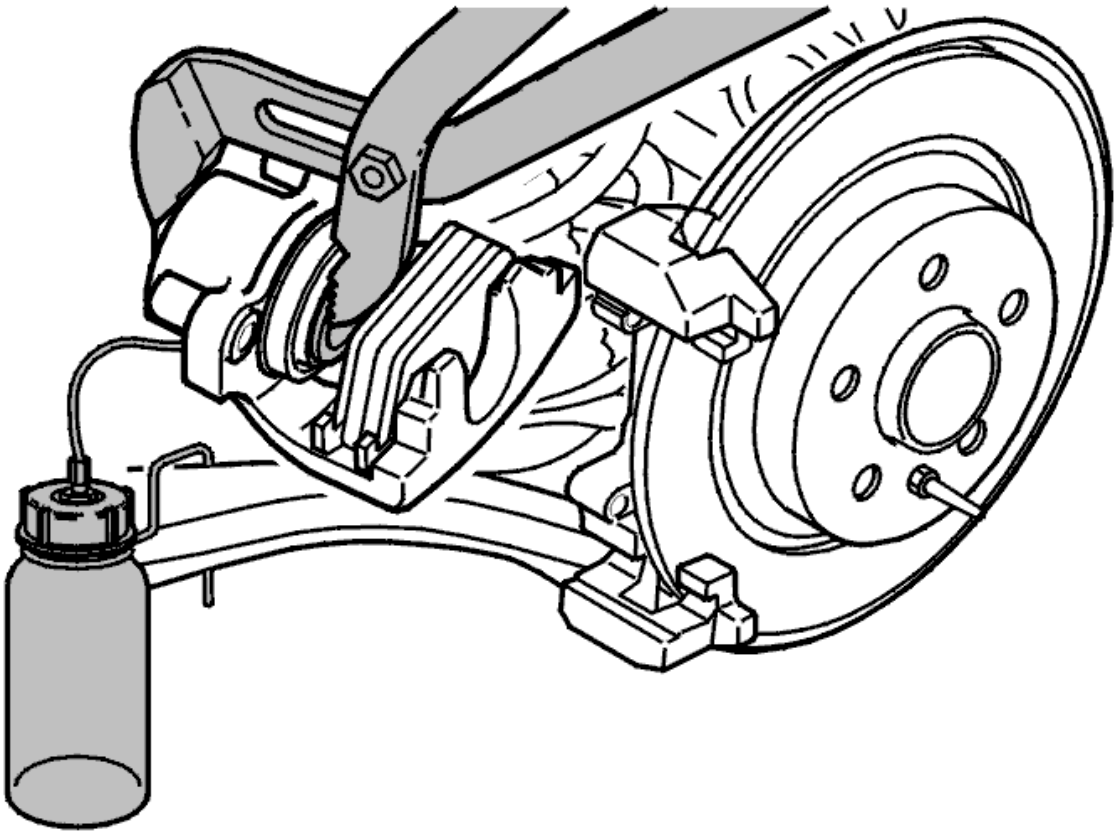

Fig. 23: Identifying Piston Pressed Into Caliper Using Pipe Wrench
Courtesy of VOLVO CARS CORPORATION

Remove the brake pad from the piston.

Press the piston into the caliper using the pipe wrench.

Reinstall the brake pad on the piston.

Remove the protective cap from the bleed nipple. Connect the collecting bottle hose.

REPLACING BRAKE FLUID, REAR

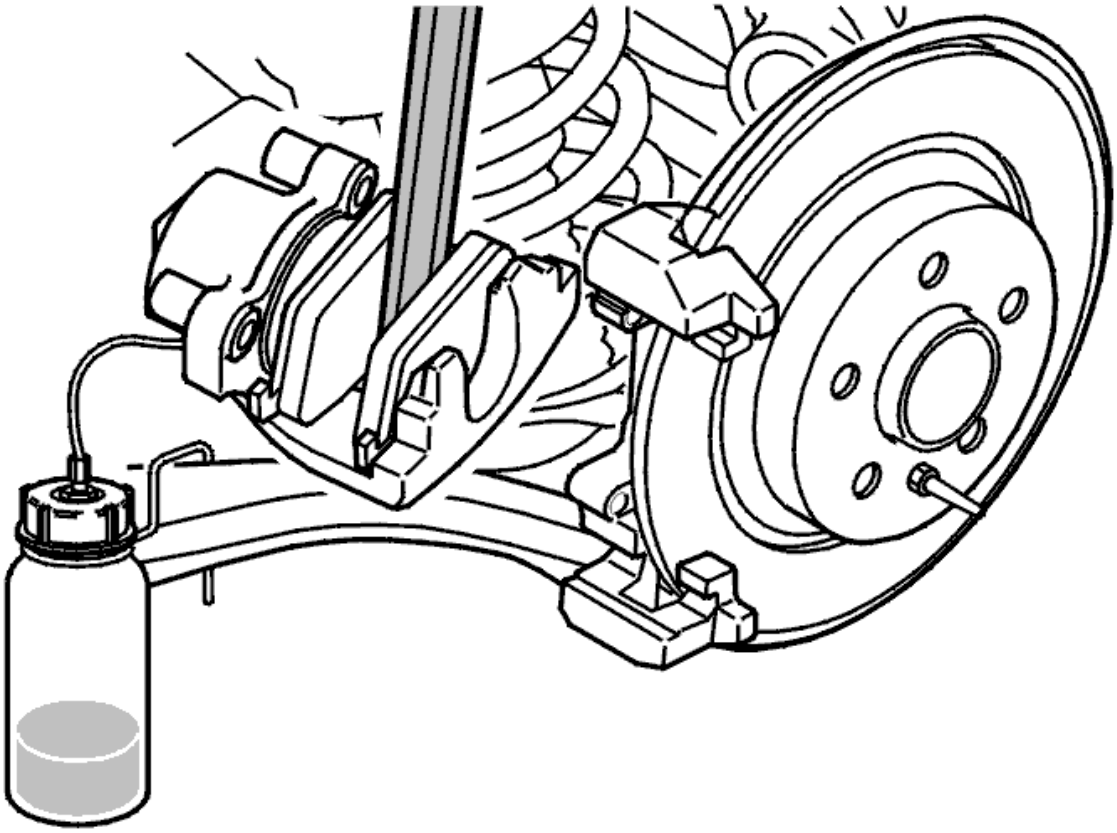

Fig. 24: Identifying Jimmy Inserted Between Brake Pads
Courtesy of VOLVO CARS CORPORATION

Insert the jimmy between the brake pads (as a counterhold) to keep the piston in.

Open the bleed nipple, approximately one turn.

Pressurize the braking system using the bleeding unit

Leave the bleed nipple open until the new brake fluid enters.

Close the nipple. Remove the hose.

Reinstall the protective cap on the bleed nipple.

Remove the jimmy between the brake pads.

Install the brake caliper

See **INSTALL THE LOCATING PINS IN THE BRAKE CALIPER** .

Remove the bleeding unit

See **REMOVE THE BLEEDING UNIT**.

Finishing work

See **FINISHING WORK**.

BLEEDING THE REAR BRAKE SYSTEM (WITH BLEEDING UNIT)

NOTE: Bleeding an ABS brake system takes longer than bleeding a normal brake system.

GUIDELINES FOR BLEEDING

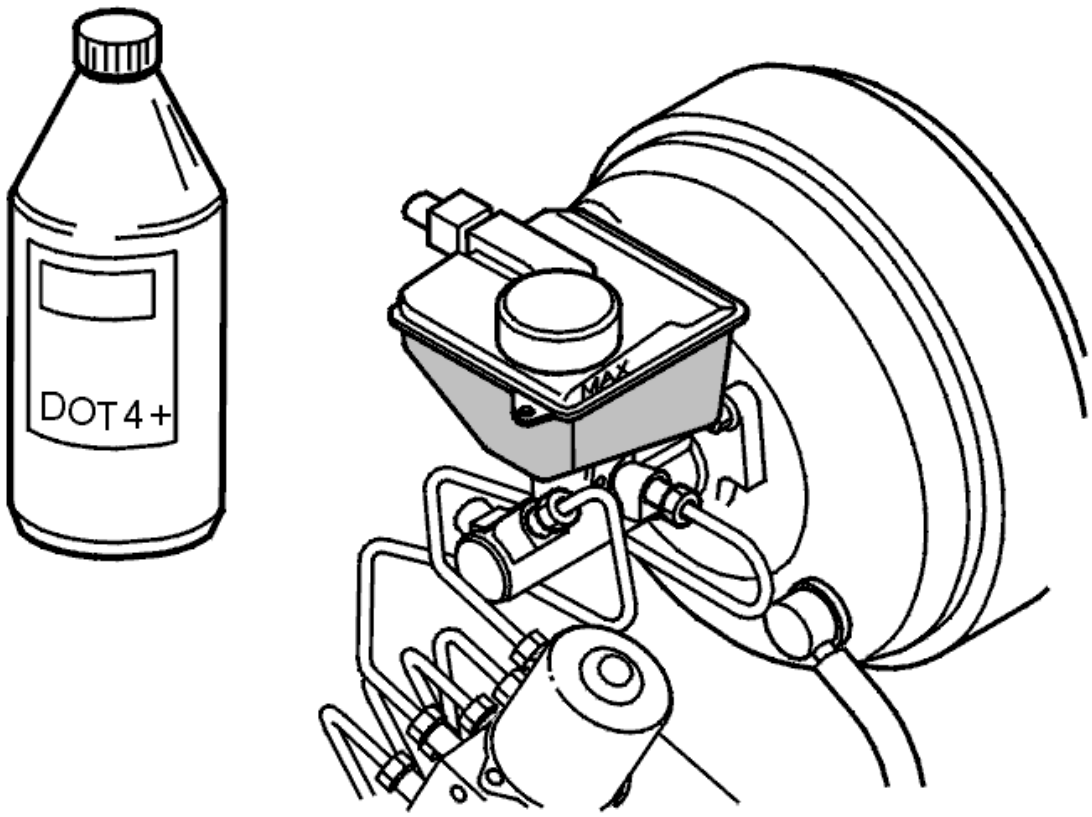

Fig. 25: Brake Fluid And Reservoir
Courtesy of VOLVO CARS CORPORATION

When reconditioning or replacing brake calipers, it is generally sufficient to bleed the relevant brake line as follows.

The brake pedal must be depressed throughout the operation. This is so that the brake system is not drained of brake fluid.

If the braking system has been completely or partly drained, bleed the whole system. A bleeding unit must be used that can pressurize the brake system to 0.2-0.3 MPa (29.0 - 43.5 psi).

NOTE: Use only Volvo Genuine Parts brake fluid specification DOT 4+.Never reuse brake fluid. Always keep brake fluid well sealed in its original packaging.

PREPARATIONS

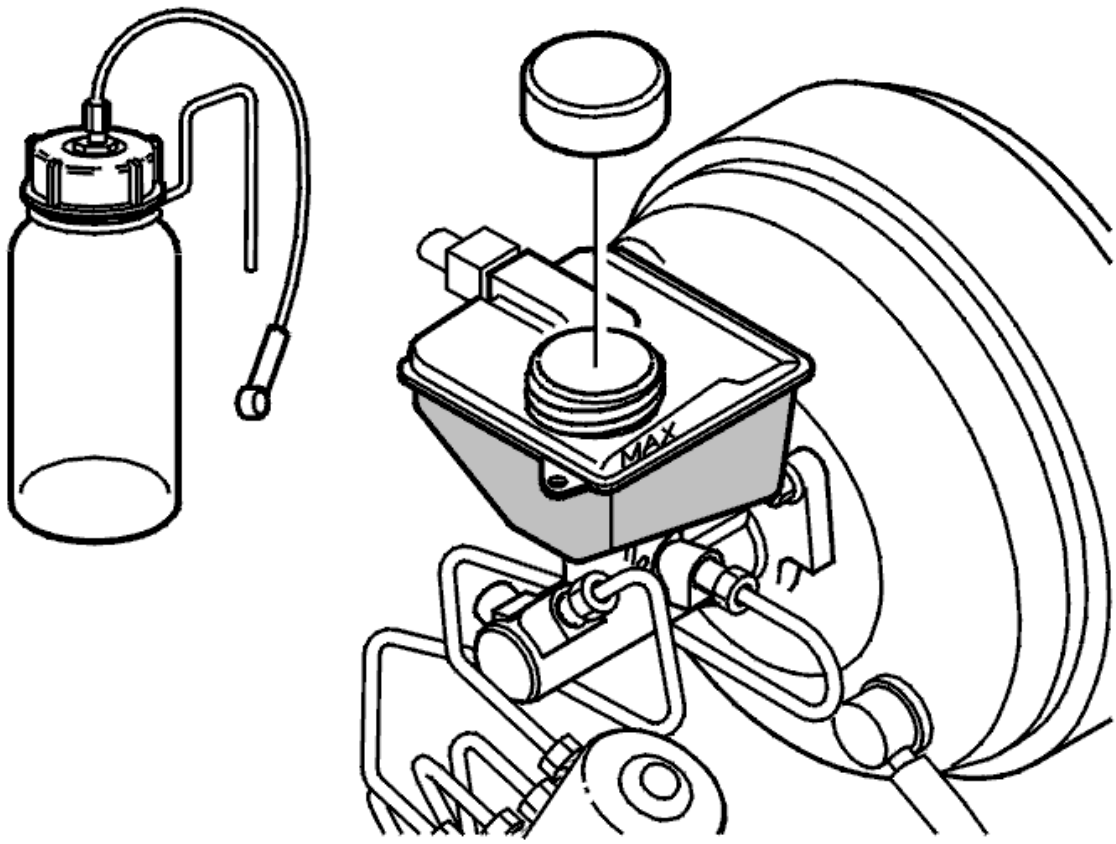

Fig. 26: Brake Fluid Reservoir And Brake Fluid Collection Bottle
Courtesy of VOLVO CARS CORPORATION

Switch off the ignition.

Clean around the brake fluid reservoir filler cap.

Take out the special brake fluid collection bottle.

CONNECT THE BLEEDING UNIT

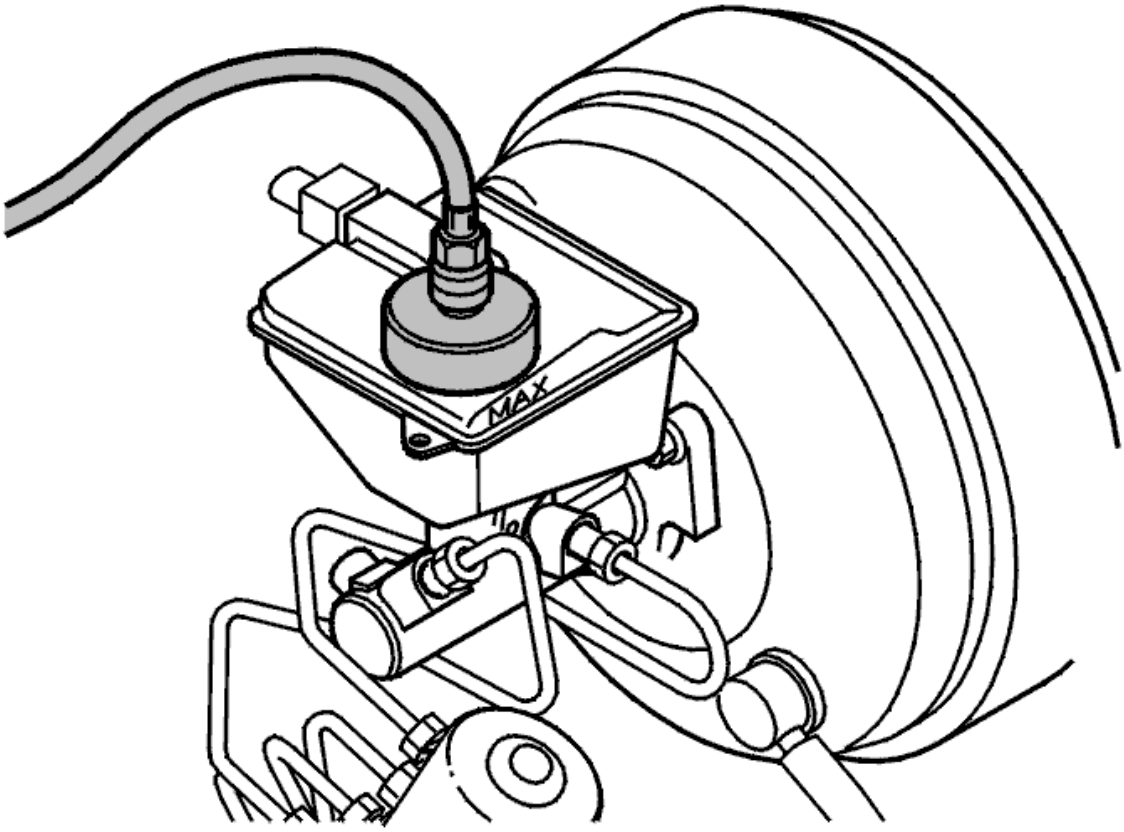

Fig. 27: Bleeding Unit Connected to Brake Fluid Reservoir
Courtesy of VOLVO CARS CORPORATION

Connect the bleeding unit to the brake fluid reservoir. Follow the manufacturer's instructions for connecting and using bleeding unit.

Pressurize the brake system. Check the connection to the brake fluid reservoir.

Depressurize the system after the check.

Raise the car and remove the wheels

BLEEDING THE LEFT FRONT WHEEL (RIGHT WHEEL ON RIGHT-HAND DRIVE CARS)

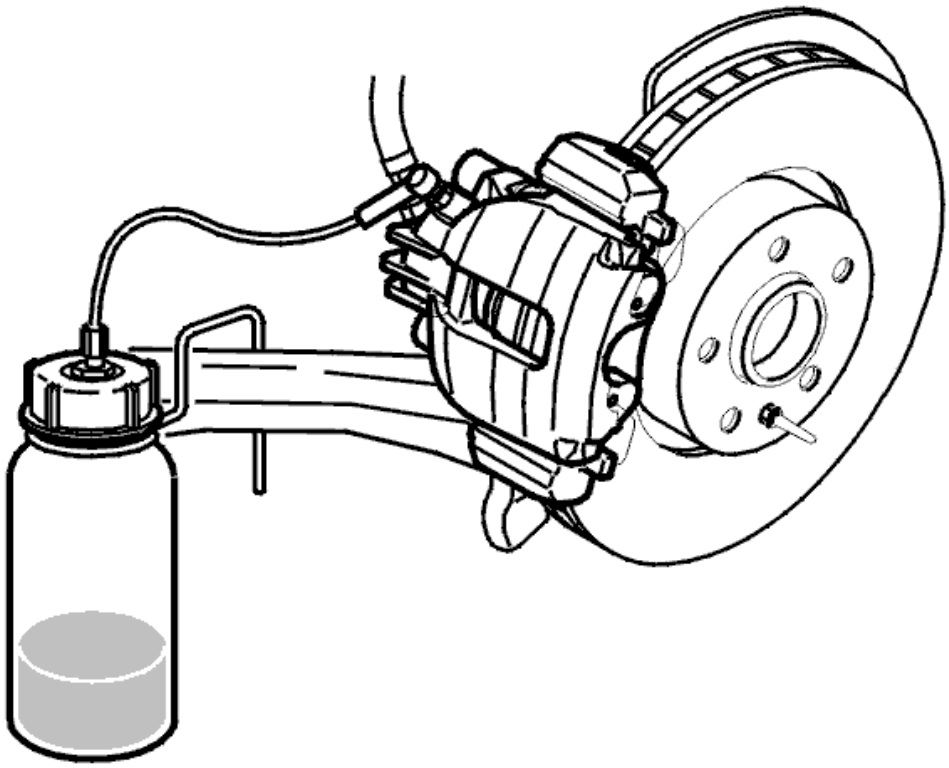

Fig. 28: Collection Bottle Hose Connected to Bleed Nipple
Courtesy of VOLVO CARS CORPORATION

Remove the protective cap from the bleed nipple. Connect the hose from the collection bottle.

Open the bleed nipple. Close it when there are no more air bubbles in the fluid coming out.

Tighten the bleed nipple.

Remove the hose from the bleed nipple. Reinstall the protective cap.

Bleeding the other wheels

Continue bleeding according to above in the following order:

- right front wheel

- left rear wheel

- right rear wheel.

Check for any leakage from the bleed nipples.

DEPRESSURIZE THE BRAKE SYSTEM

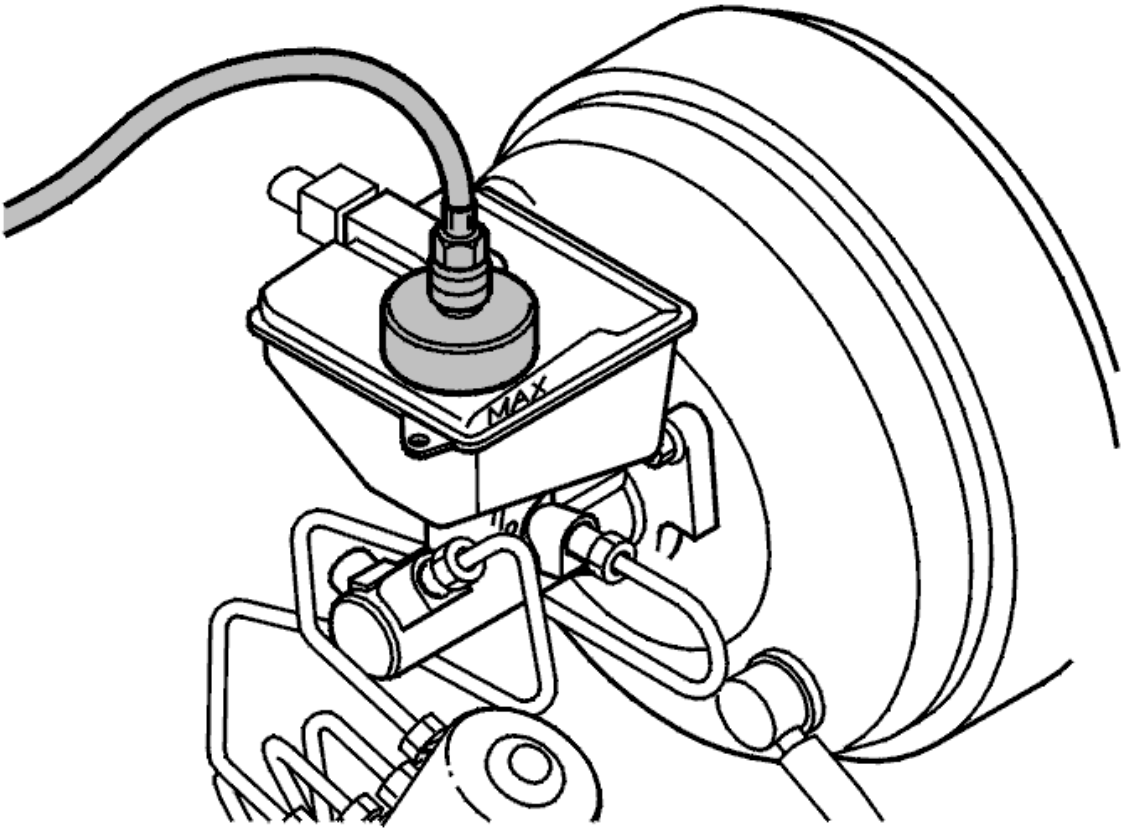

Fig. 29: Bleeding Unit Connected to Brake Fluid Reservoir
Courtesy of VOLVO CARS CORPORATION

Close the cock on the pressure line. Open a nipple and close it again.

Checking for air in the brake system and for brake fluid leakage

See **CHECKING FOR AIR IN THE BRAKE SYSTEM AND FOR BRAKE FLUID LEAKAGE** .

REAR WHEEL BRAKE (2003-2012)

BRAKE CALIPERS REAR, REPLACING

NOTE: **As the illustrations in this service information are used for different model years and / or models, some variation may occur. However, the essential information in the illustrations is always correct.**

PREPARATION

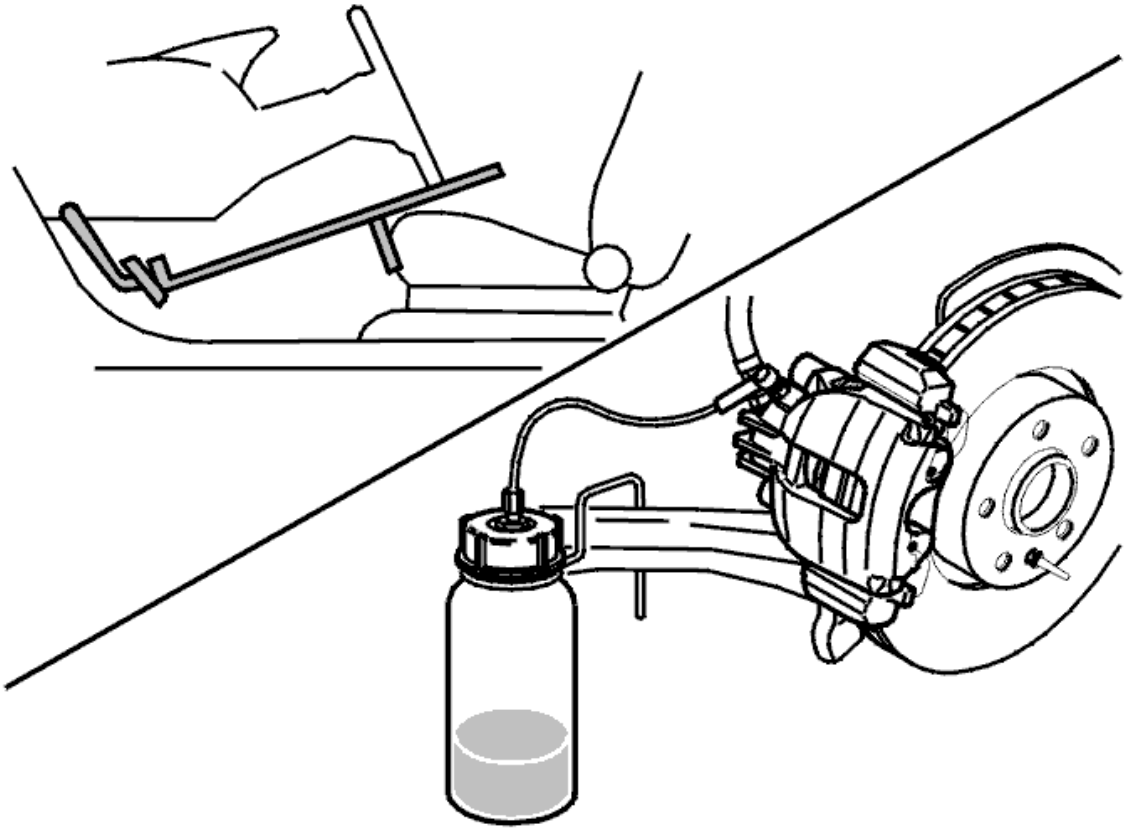

Fig. 30: Bleeding Brakes
Courtesy of VOLVO CARS CORPORATION

Remove the wheel.

Secure the pedal in the depressed position. Use a pedal jack.

Clean the brake caliper thoroughly.

Remove the protective cap from the bleed nipple.

Install a plastic hose on the nipple.

Open the bleed nipple. Collect the brake fluid in a container (bottle). Shut the bleed nipple.

Slacken the off brake hose approximately half a turn.

REMOVING THE BRAKE CALIPER

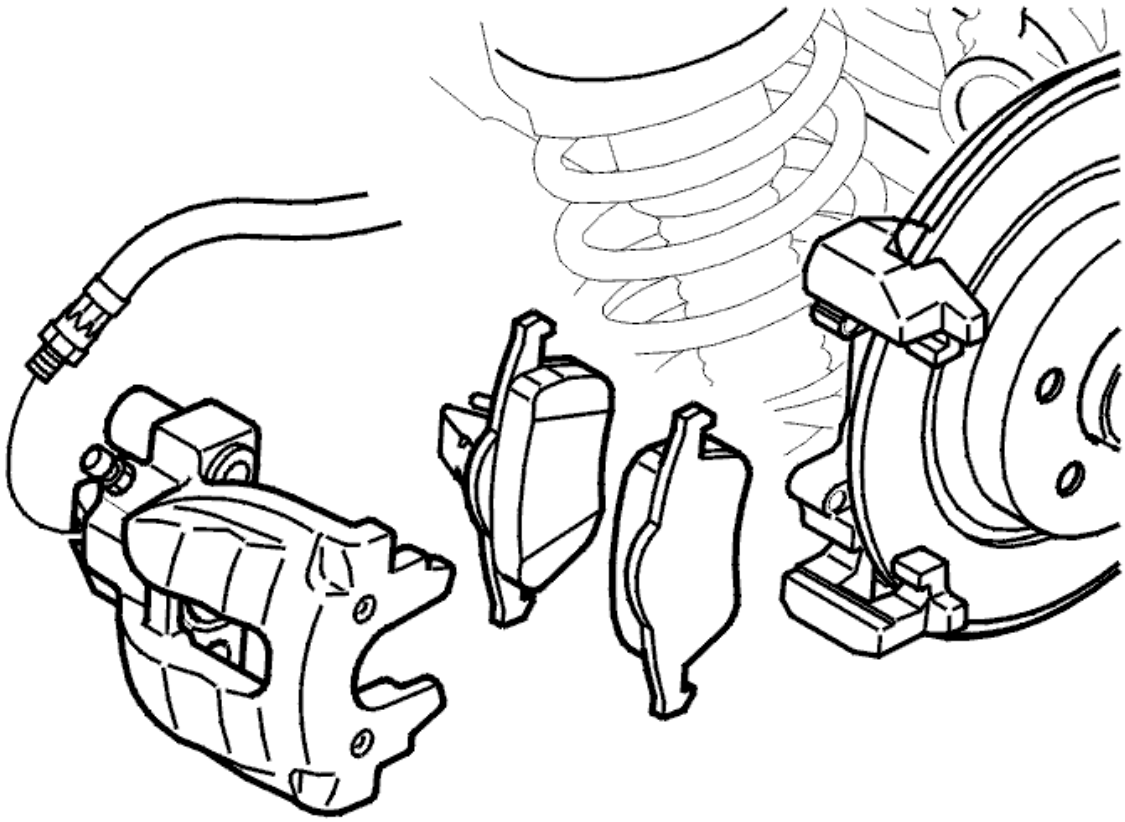

Fig. 31: Identifying Brake Caliper And Brake Pads
Courtesy of VOLVO CARS CORPORATION

Remove the brake caliper and brake pads. See: **BRAKE PADS REAR, REPLACING**.

Unscrew the brake caliper from the brake hose.

Drain the remaining brake fluid.

INSTALLING THE BRAKE CALIPER

NOTE: For tightening torques, see: TIGHTENING TORQUE .

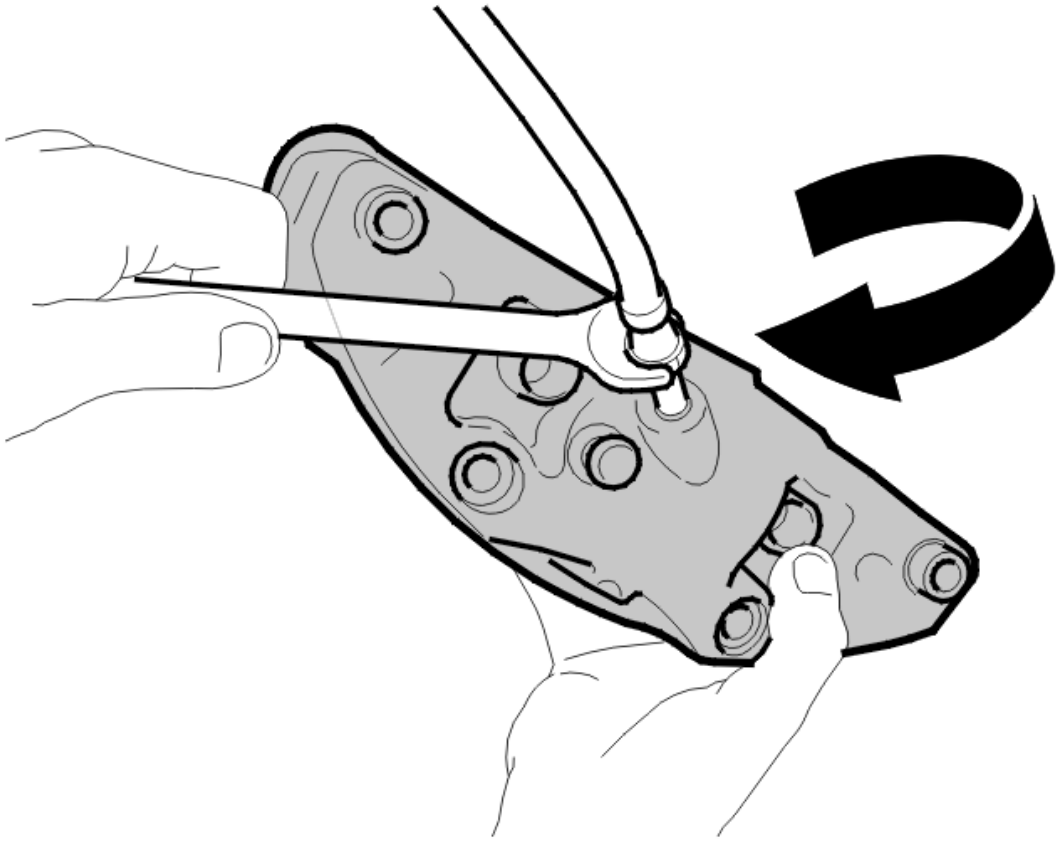

Fig. 32: Installing Brake Hose To Brake Caliper
Courtesy of VOLVO CARS CORPORATION

Insert the brake caliper on the hose and hand tighten.

Clean and install the brake pads and brake calipers. See **BRAKE PADS REAR, REPLACING**.

Tighten the brake hose. Tighten. See: **TIGHTENING TORQUE** .

NOTE: The brake hose must not be twisted. If necessary alter the hose at the other end (brake pipe end).

BLEEDING BRAKE SYSTEMS

Fill and bleed the brake system.

NOTE: Use only Volvo Genuine parts brake fluid (Volvo DOT 4+).

To bleed the brake system, see **BRAKE SYSTEM, BLEEDING (USING BLEEDING UNIT)** .

FINISHING

Check:

- the function of the brakes after bleeding. Check that there is no leakage
- brake fluid level.

Depress the brake pedal a few times. Check the level of the brake fluid reservoir. Top up if necessary.

Install the wheel. See: **INSTALLING WHEELS** .

BRAKE DISC REAR, REPLACING

NOTE: The illustrations in this service information are used for different model years and/or models. Some variation may occur. However, the essential information in the illustrations is always correct.

PREPARATORY WORK

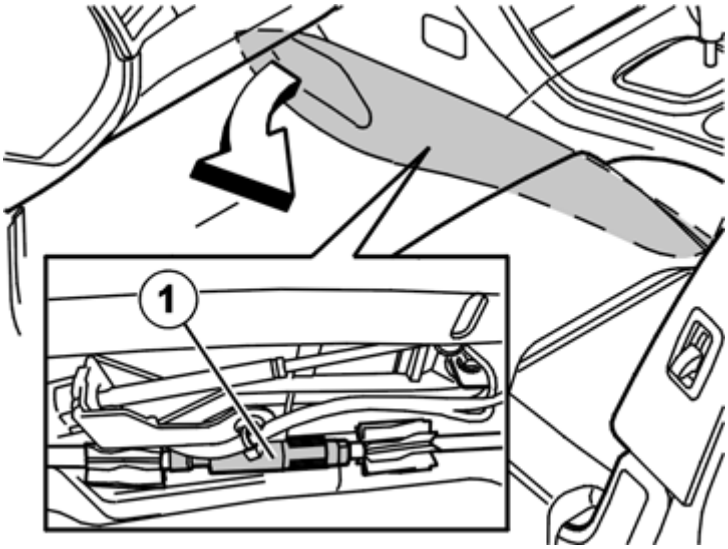

Fig. 33: Identifying Manual Adjustment For Parking Brake
Courtesy of VOLVO CARS CORPORATION

If the car has manual adjustment for the parking brake, see the illustration and (1). Reset the parking brake. See **PARKING BRAKE, ADJUSTING** .

If the car has a self-adjusting parking brake.

Reassemble and lock the self-adjuster unit for the parking brake. See: **PARKING BRAKE SELF-ADJUSTMENT, RESETTING** .

REMOVAL

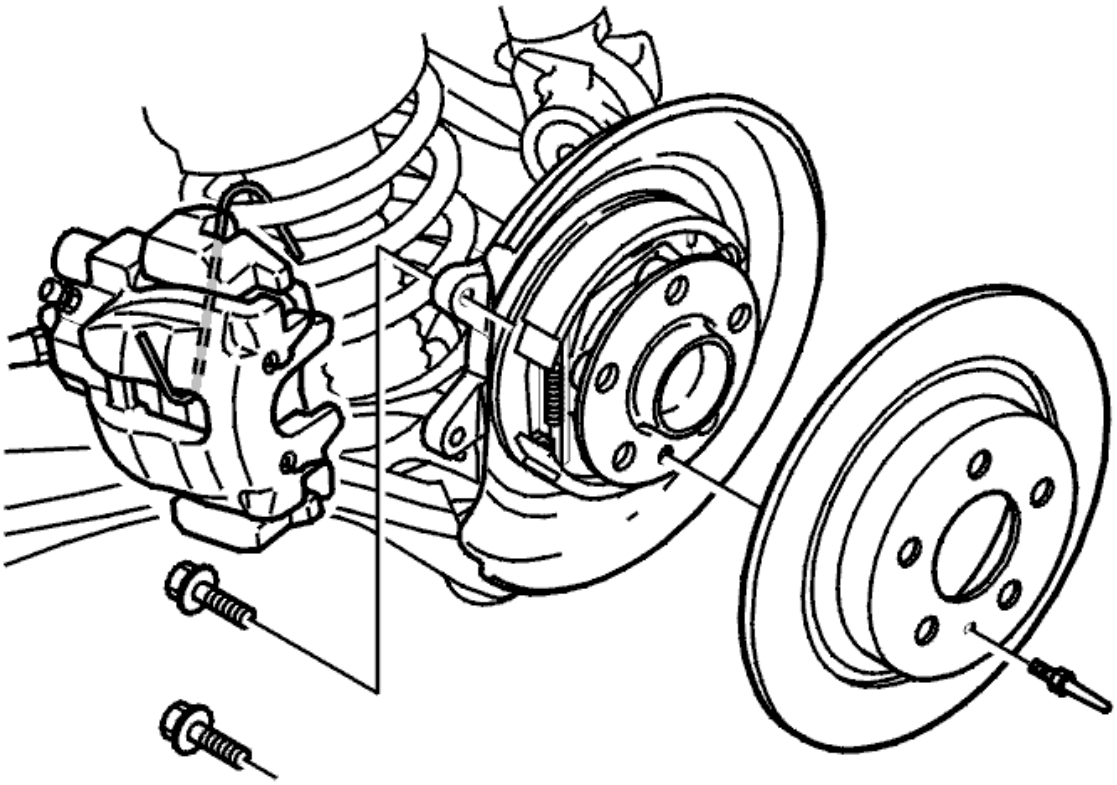

Fig. 34: Brake Caliper, Mounting Screws, Holder And Brake Disc
Courtesy of VOLVO CARS CORPORATION

Remove:

- the wheel
- the 2 mounting screws for the brake caliper holder. Hang the brake caliper from the spring using a wire
- the locating pin and the brake disc.

CLEANING AND CHECKING

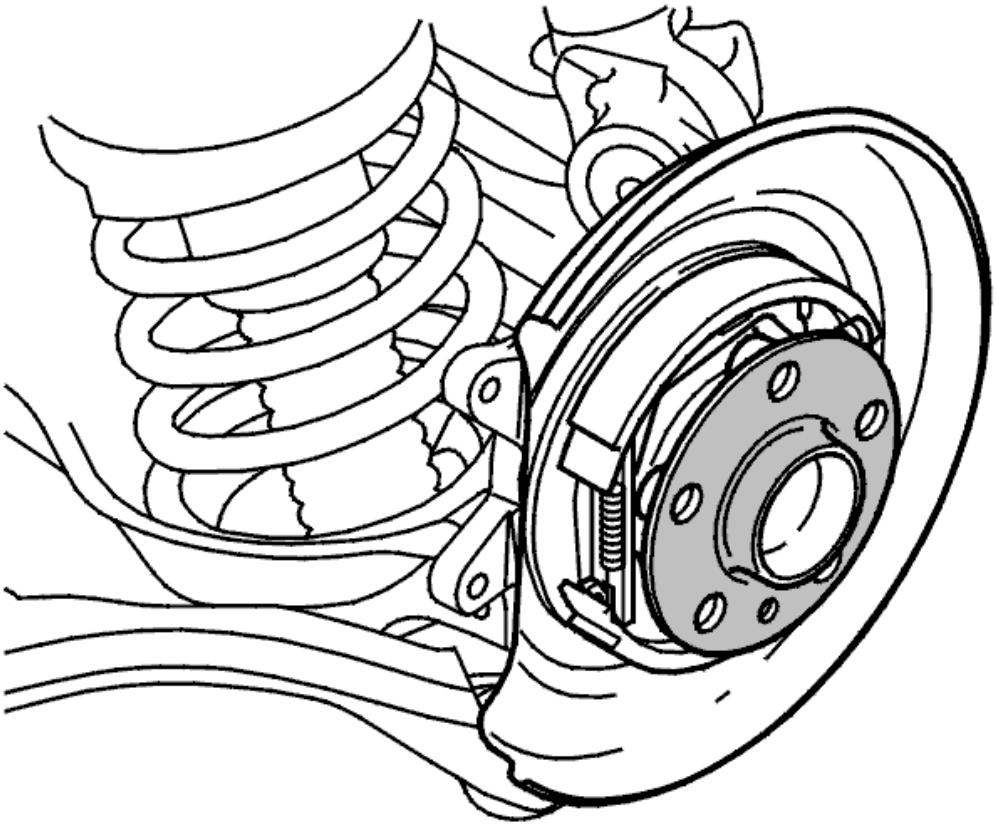

Fig. 35: Brake Pads
Courtesy of VOLVO CARS CORPORATION

NOTE: Cleaning is important to prevent lateral run out at the brake disc. Clean the hub flange before installing the new brake disc.

Check the hub. If it is damaged, measure the lateral run out. See: **REAR WHEEL HUB, MEASURING LATERAL RUNOUT** .

Check the brake pads. See: **BRAKE PADS REAR, REPLACING**.

INSTALLATION

NOTE: For tightening torques, see: TIGHTENING TORQUE .

INSTALLING THE BRAKE DISC AND CALIPER HOLDER

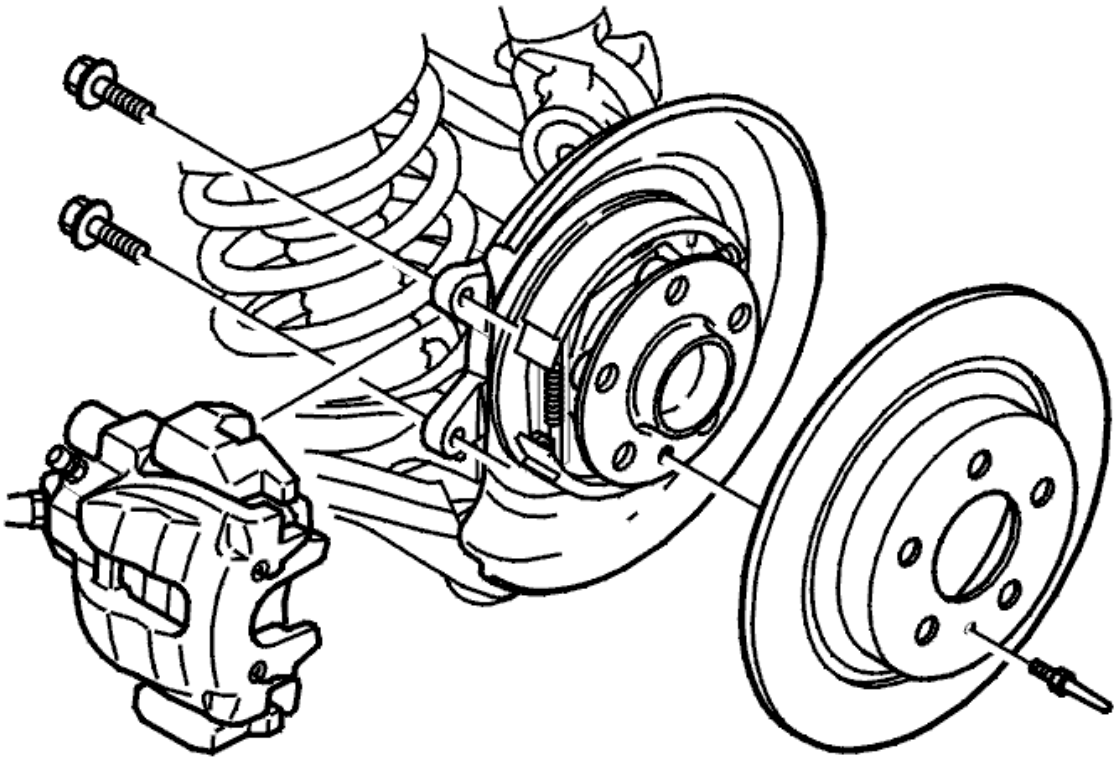

Fig. 36: Brake Disc And Caliper Holder
Courtesy of VOLVO CARS CORPORATION

Install the brake disc.

NOTE: **Be careful when handling the new brake disc. Careless handling can cause damage to the brake disc (out-of-true).**

Install:

- the new brake disc. Tighten the locating pin. Tighten. See: **TIGHTENING TORQUE**
- the brake caliper and the caliper holder. Use 2 **new** mounting screws. Tighten. See: **TIGHTENING TORQUE** .

FINISHING

Depress the brake pedal a few times.

Check the fluid level in the brake fluid reservoir.

Top up if necessary.

ADJUSTING THE PARKING BRAKE

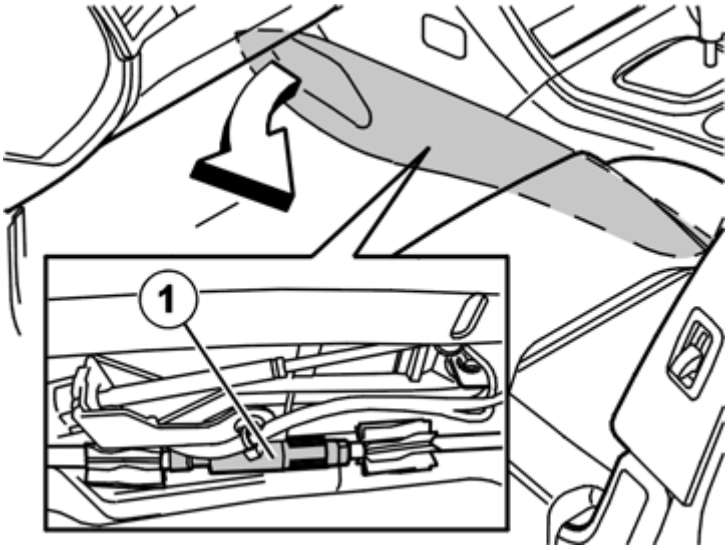

Fig. 37: Identifying Manual Adjustment For Parking Brake
Courtesy of VOLVO CARS CORPORATION

If the car has manual adjustment for the parking brake, see the illustration and (1). Adjust the parking brake. See: **PARKING BRAKE, ADJUSTING** .

If the car has a self-adjusting parking brake.

Activate the self-adjustment for the parking brake. See: **PARKING BRAKE SELF-ADJUSTMENT, RESETTING** .

Install the wheel. See: **INSTALLING WHEELS** .

BRAKE PADS REAR, REPLACING

NOTE: The illustrations in this service information are used for different model years and/or models. Some variation may occur. However, the essential information in the illustrations is always correct.

PREPARATIONS

Remove the wheels on both sides.

REMOVING BRAKE PADS

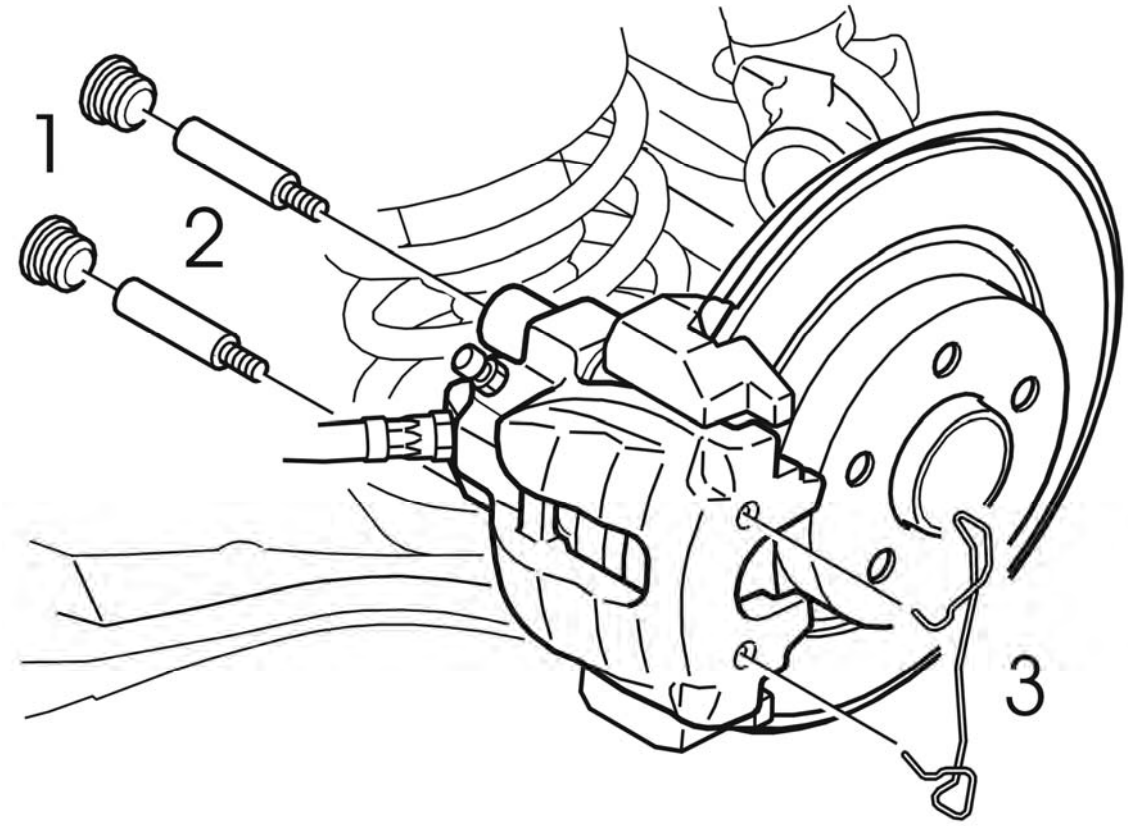

Fig. 38: Identifying Retaining Springs And Brake Pad Pins
Courtesy of VOLVO CARS CORPORATION

NOTE: **Minimum recommended pad thickness/replacement limit when installing new brake pads = 2 mm.**

Remove the retaining spring and locating pins for the brake calipers.

Remove:

- the securing spring (3) carefully so that it does not deform
- the protective caps (1) from the two locating pins (2)
- the locating pins, use hex socket 7 mm.

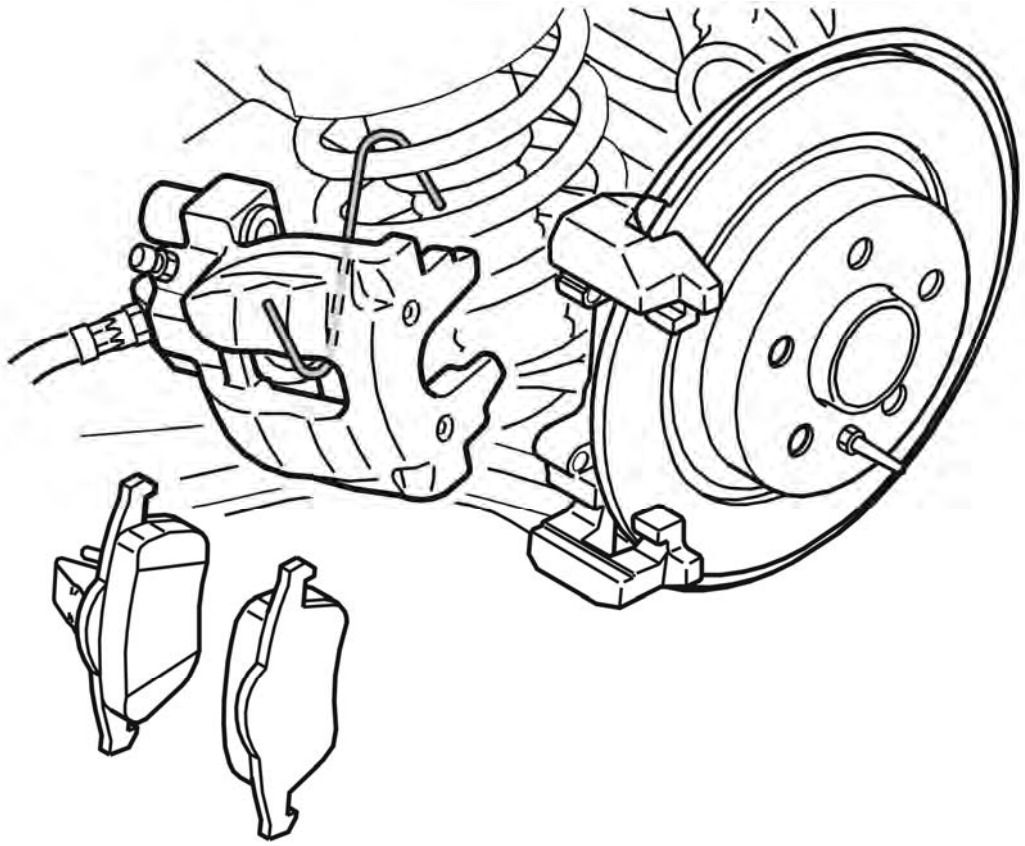

Fig. 39: Brake Caliper And Brake Pads
Courtesy of VOLVO CARS CORPORATION

Remove:

- the brake caliper from the holder
- the brake pads.

Hang the brake caliper in a steel wire from the rear spring so as not to damage the brake hose.

NOTE: Do not depress the brake pedal while the brake pads are removed.

CLEANING THE BRAKE CALIPER

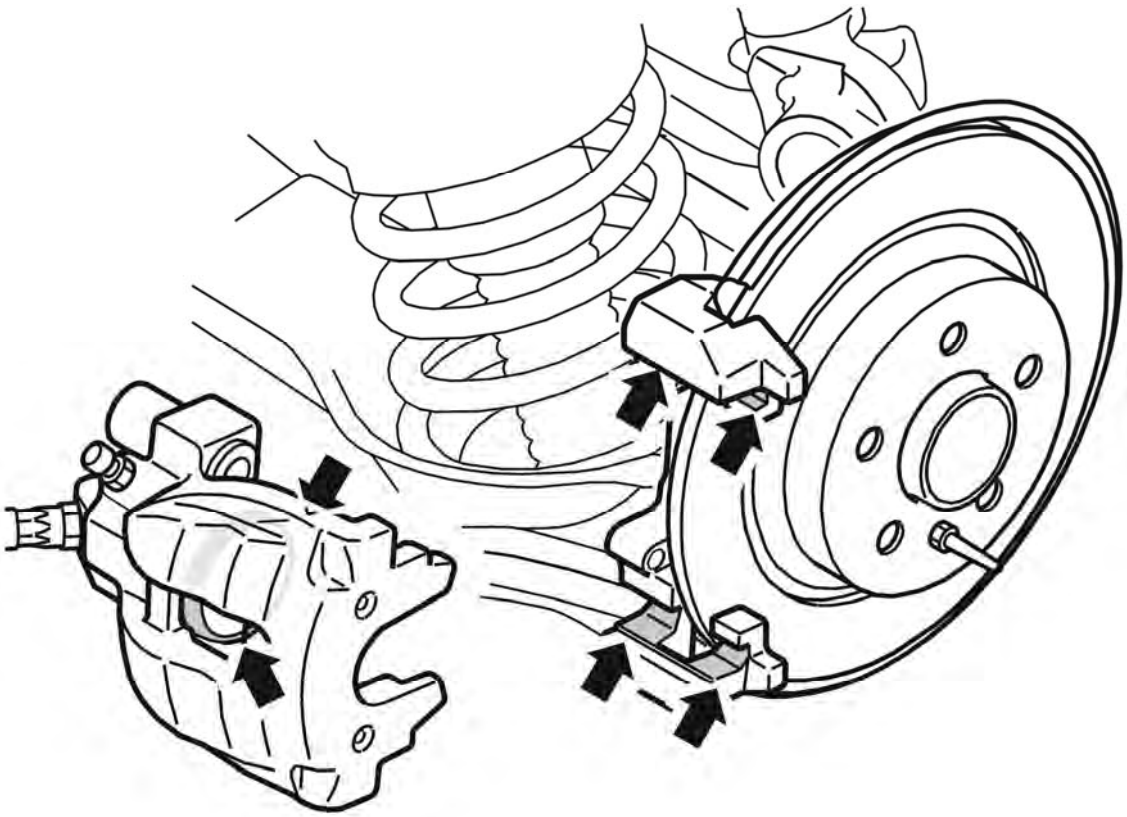

Fig. 40: Brake Caliper And Dust Cover
Courtesy of VOLVO CARS CORPORATION

Clean and check the brake caliper and dust cover.

Clean and check the brake pad mating surfaces in the brake caliper and caliper holder.

Clean the sliding pins using a steel brush.

Check piston dust boot.

NOTE: **If the dust boot is damaged dirt may have penetrated the cylinder. If this is the case the caliper must be replaced.**

CHECKING THE BRAKE DISC

Check brake disc friction surfaces.

If the brake disc displays signs of out-of-true, check its lateral run out. See **BRAKE DISC REAR, CALIBRATING** .

Replace the brake disc if it displays signs of heavy wear, variable thickness or similar. To replace, see **BRAKE DISC REAR, REPLACING**.

NOTE: **Minimum disc thickness/replacement limit = 18.0mm. Minimum recommended disc thickness when installing new brake pads = 18.7mm.**

INSTALLATION

NOTE: **For tightening torques, see: TIGHTENING TORQUE .**

LUBRICATING THE SLIDING SURFACES

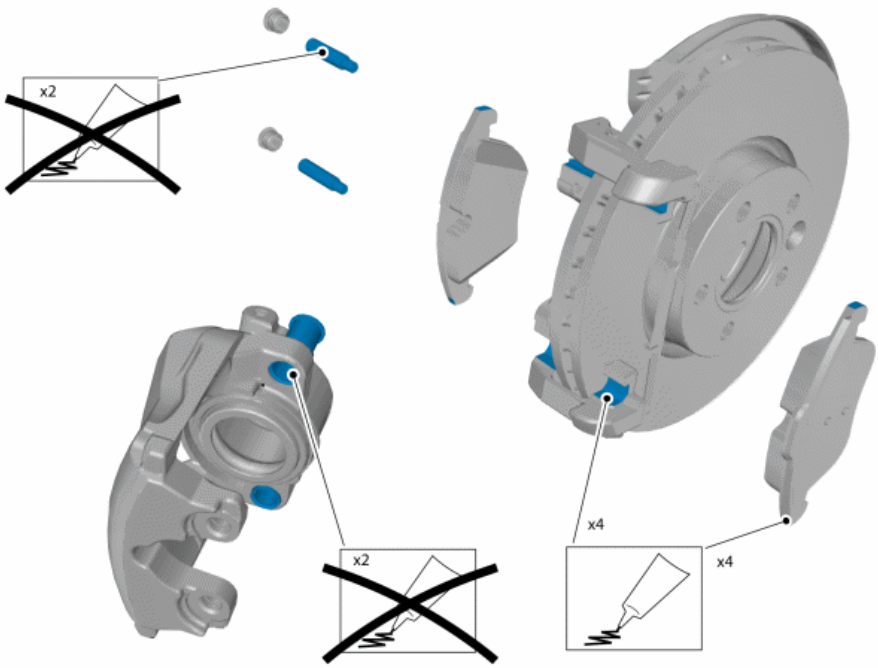

Fig. 41: Identifying Sliding Surfaces
Courtesy of VOLVO CARS CORPORATION

Lubricate the contact surfaces of the brake pads using silicone grease, part no. 1161687 (12 ml) or part no. 1161688 (50 ml).

(Do not lubricate the sliding pins)

INSTALLING THE BRAKE PADS

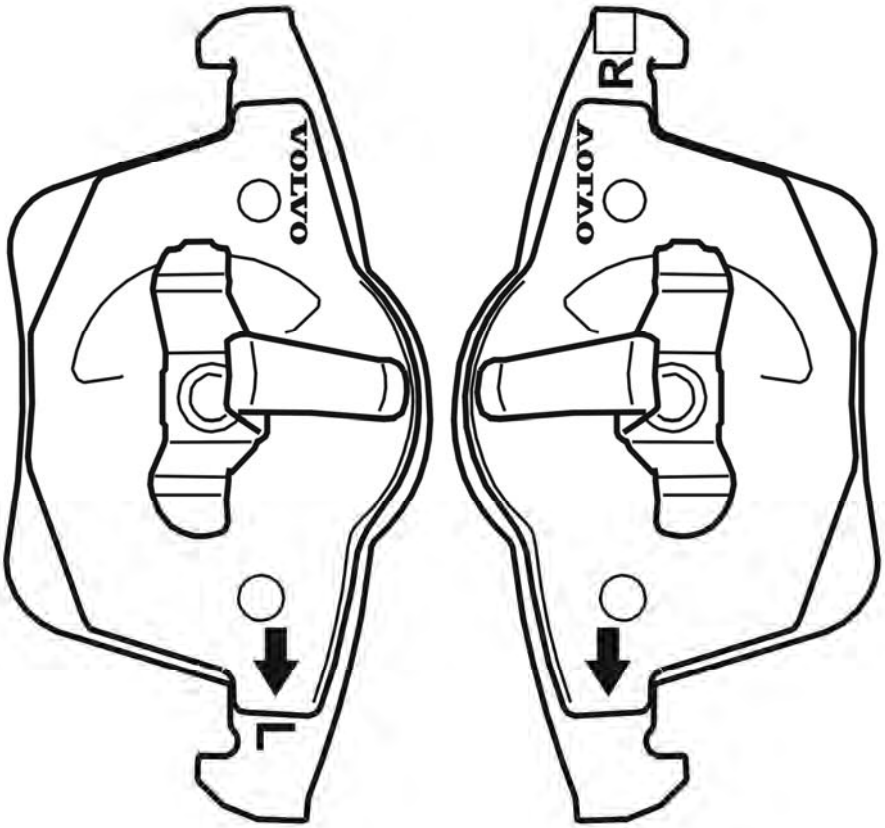

Fig. 42: Identifying Left And Right Brake Pads
Courtesy of VOLVO CARS CORPORATION

NOTE: **The rear brake pads on the piston side for the XC90 are different on the left and right-hand sides. The brake pads are marked with an arrow indicating the direction of the disc and with an L for the left-hand side and an R for the right-hand side.**

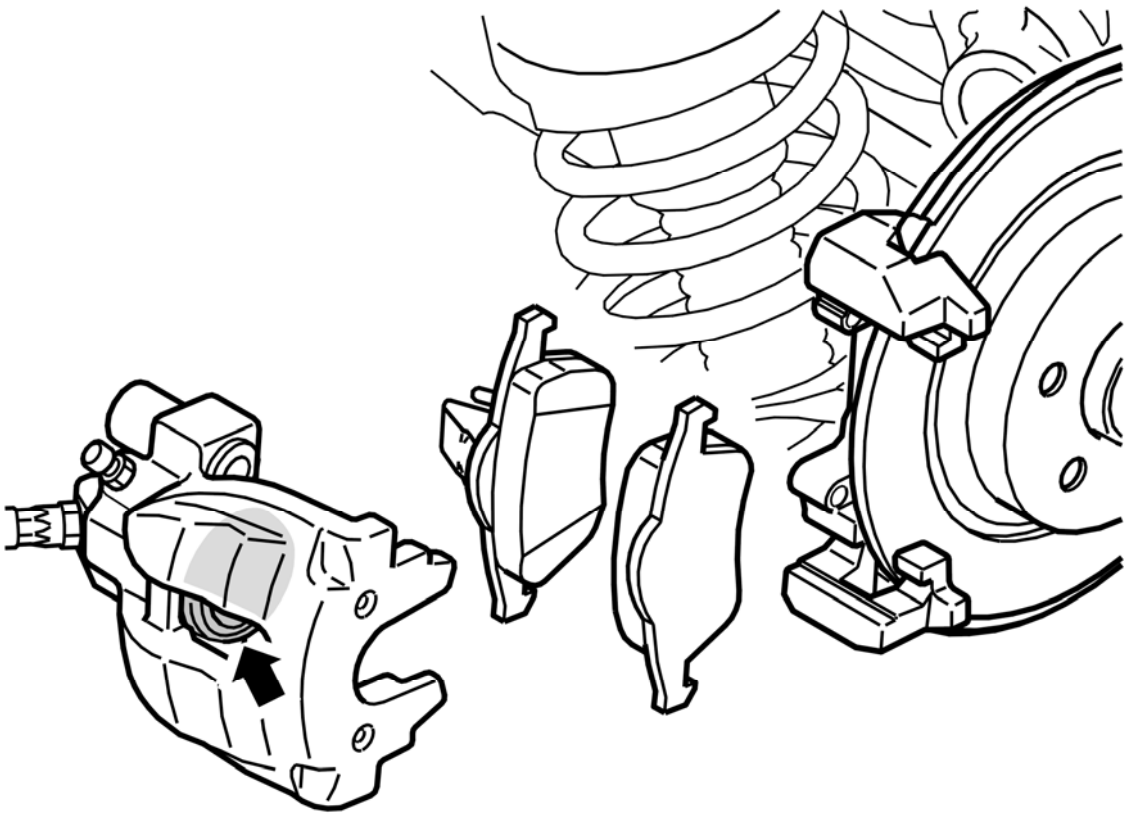

Fig. 43: Brake Caliper
Courtesy of VOLVO CARS CORPORATION

Press piston back into cylinder on brake caliper.

Check that the dust cover is correctly positioned.

Install:

- new brake pads
- the brake caliper.

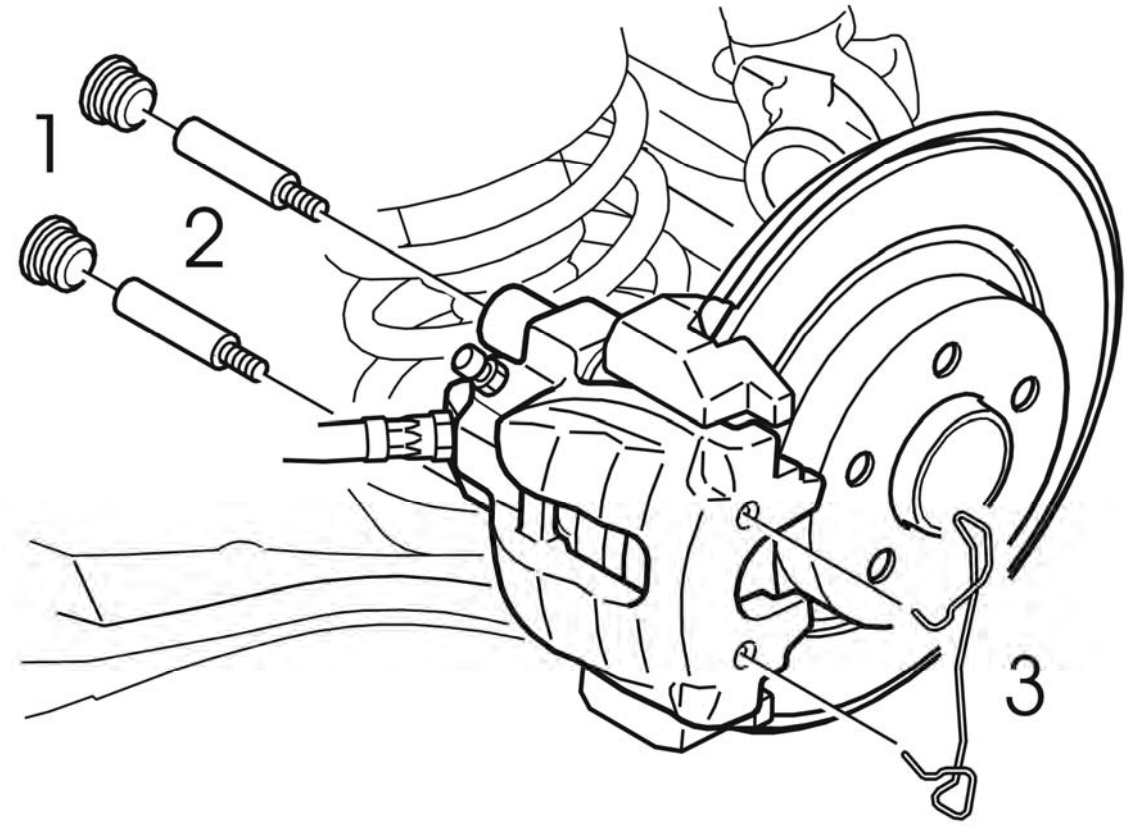

Fig. 44: Identifying Retaining Springs And Brake Pad Pins
Courtesy of VOLVO CARS CORPORATION

NOTE: Check the rubber sleeves of the locating pins. Replace if necessary.

Insert the locating pins in the rubber sleeves.

Tighten the locating pins. Tighten. See: **TIGHTENING TORQUE** .

Install protective caps (1).

Install the retaining spring (3).

FINISHING

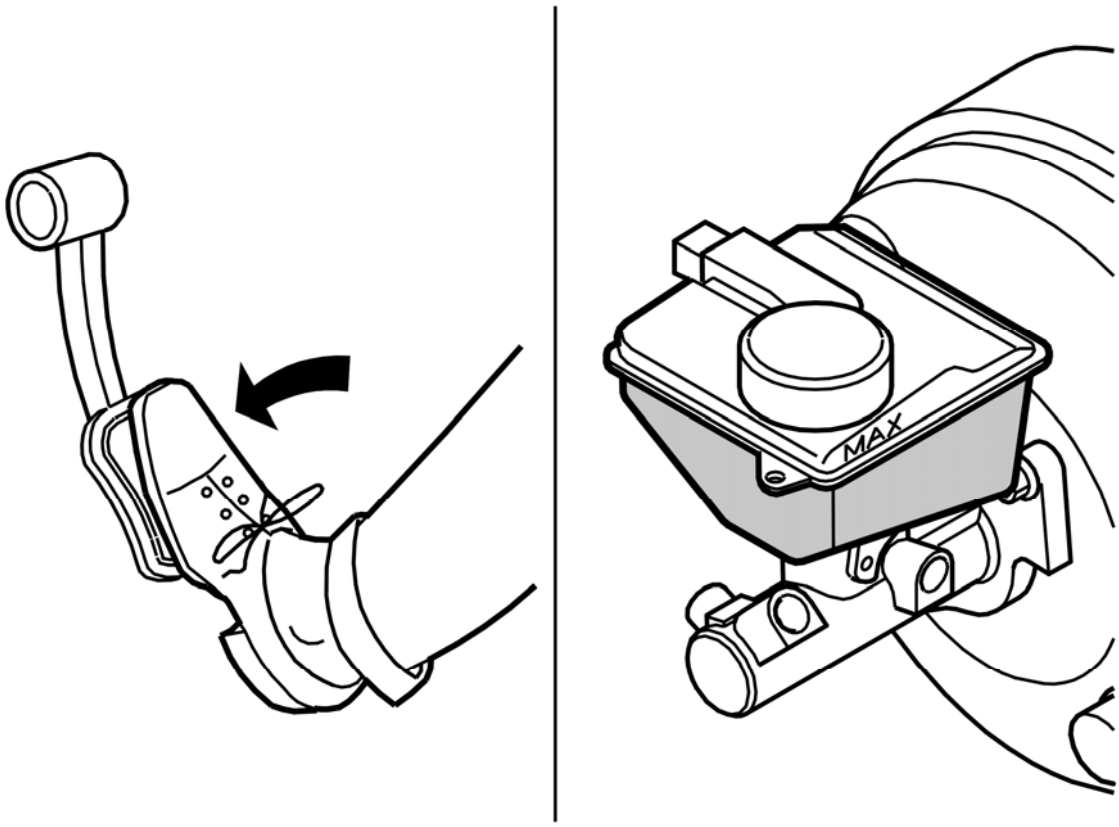

Fig. 45: Bleeding Brake System
Courtesy of VOLVO CARS CORPORATION

Check the brake fluid level in the reservoir.

Depress the brake pedal a few times. Check the level of the brake fluid reservoir.

Top up if necessary.

Install the wheels. See **INSTALLING WHEELS** .

BRAKES

Wheel Brake - Specifications, mechanical

FRONT WHEEL BRAKE

BRAKE DISCS FRONT

BRAKE DISCS FRONT SPECIFICATIONS

Front wheel brake - XC90:	16" and larger rims	17" and larger rims
Thickness, new	28 mm	30 mm
Replace at a minimum of	25 mm	27 mm
Minimum thickness for brake pad replacement	25.8 mm	27.8 mm

BRAKE PADS, FRONT

PAD THICKNESS (2X) + DISC THICKNESS

Model	**Type**	**Min dimensions mm**
XC90	16.5"	38
XC90	17.5"	32
XC90	17" 2 FN	34
R-line	17"	34

REAR WHEEL BRAKE

BRAKE DISCS REAR

BRAKE DISCS REAR SPECIFICATIONS

Rear wheel brake - XC90	16"	17"
Thickness, new	20 mm	20 mm
Must be replaced at a minimum of	17 mm	
Minimum thickness for brake pad replacement	17.7 mm	

BRAKE PADS REAR

PAD THICKNESS (2X) + DISC THICKNESS

Model	**Type**	**Min dimensions mm**
XC90	vent	29
R-line	vent	32

BRAKES

Wheel Brake - Symptom Verification

INFORMATION AND VERIFICATION, BRAKES/UNUSUAL ODOR (2006-2012)

BRAKES/UNUSUAL ODOR

SYMPTOM AND FUNCTION DESCRIPTION

NOTE: The symptom should always be verified together with the customer.

The following tips may be of help to decide if the symptom is due to a product feature or if continued troubleshooting is needed.

HINT: Smell from brakes may appear during hard driving or during "mountain driving".

INFORMATION AND VERIFICATION. BRAKES/VEHICLE PULLS TO LEFT (2006-2012)

BRAKES/VEHICLE PULLS TO LEFT

SYMPTOM AND FUNCTION DESCRIPTION

NOTE: The symptom should always be verified together with the customer.

The following tips may be of help to decide if the symptom is due to a product feature or if continued troubleshooting is needed.

HINT: The road's angle may cause the vehicle to veer in some direction.

HINT: When driving in rain, the vehicle may veer in some direction.

HINT: Incorrect tire pressure may cause the vehicle to veer to the right or left.

Check with the customer during what external conditions the symptoms appear.

INFORMATION AND VERIFICATION, BRAKES/VEHICLE PULLS TO RIGHT (2006-2012)

BRAKES/VEHICLE PULLS TO RIGHT

SYMPTOM AND FUNCTION DESCRIPTION

NOTE: The symptom should always be verified together with the customer.

The following tips may be of help to decide if the symptom is due to a product feature or if continued troubleshooting is needed.

HINT: The road's angle may cause the vehicle to veer in some direction.

HINT: When driving in rain, the vehicle may veer in some direction.

HINT: Incorrect tire pressure may cause the vehicle to veer to the right or left.

Check with the customer during what external conditions the symptoms appear.

DRIVELINE/AXLES

General - Specifications, Mechanical

TIGHTENING TORQUE (2003-2005)

GENERAL TIGHTENING TORQUE

CAUTION: Screws coated with a locking fluid or self locking nuts must be replaced with new when reinstalled.

See the table below to find the tightening torques for components not included in the summary.

Nuts and screws which are not self locking can be reused provided that they are in good condition.

Applies to screwed joint with strength class 8.8.	
Thread	Tightening torque (Nm)
M5	5
M6	10
M7	17
M8	24
M10	50
M12	80
M14	130

SUMMARY OF TIGHTENING TORQUES FOR SPECIFIC COMPONENTS

CAUTION: Screws coated with locking fluid or sealant must be replaced with new ones when reinstalled.

Always use **new screws and nuts** when angle tightening. Any exceptions to this rule will be indicated in the method.

Angle-tightening in tight spaces. See **SCREWED JOINT, TORQUE/ANGLE TIGHTENING** .

ALL DRIVE SHAFTS

Bolt drive shaft - wheel hub, front	Stage 1: 35 Nm Stage 2: 90°
Bolt drive shaft - wheel hub, version with rubber cone	50 Nm
Bolt drive shaft - wheel hub, rear	50 Nm

ALL GEARBOXES, ANGLE GEARS, CHAIN ANGLE GEARS AND REAR AXLE GEARS

Sensors	6 Nm
Filler plug, Level plug and Drain plug	35 Nm

AW, 4T65

Cover, control system (AW)	Diagonally 14 Nm
The nut for the lever and gear shift linkage rod	16 Nm
Side cover, gearbox (4T65)	Stage 1: Crosswise 10 Nm Stage 2: Crosswise 25 Nm
Bolt driver plate - torque converter 6 x bolts	35 Nm
Screws for the lower torque rod in the transmission **NOTE:** **Applies to 5-cylinder engines only**	Stage 1: 35 Nm Stage 2: 40°
Connection, oil cooler pipe to gearbox	30 Nm
Screw, oil pipe - transmission	6 Nm
Screw, oil pipe - dipstick pipe - transmission	15 Nm
Dipstick pipe for the transmission	24 Nm

TF-80SC

Integrated level plug/Torx	8 Nm
Cover, control system	Diagonally 14 Nm
Torque converter to carrier plate 6 screws	60 Nm
Gear selector mechanism (nut)	16 Nm

M56, M58, M66

Back-up (reversing) lamps switch	24 Nm
Flywheel	Stage 1:45 Nm Stage 2:65°

AWD

Bevel gear to transmission	75 Nm
Universal joint (spider) fastened with 4 bolts	Stage 1: Crosswise 16 Nm Stage 2: Crosswise 120°
Universal joint CV fastened with 6 bolts	Stage 1: Crosswise 10 Nm Crosswise 25 Nm
Pinion nut (Active on Demand Coupling)	150 Nm
Pinion nut, angle gear	180 Nm
Oil pump (AOC)	5 Nm
Control module (AOC)	5 Nm
Driveshaft (center bearing)	30 Nm
Oil plug, final drive	35 Nm

Oil plug, Active On-Demand Coupling	35 Nm
Bevel gear bracket	Stage 1: alternately to light contact Stage 2: 50 Nm
Manifold support bracket bevel gear	Stage 1: 35 Nm Stage 2: 90°

TRANSAXLE AND SYSTEM PRESSURE/STALL SPEED (2005-2012)

SYSTEM PRESSURE/STALL SPEED

Model	Engine	Stall speed (rpm)	System pressure stall speed	System pressure idle D (Mpa)	System pressure idle R (Mpa)
XC90	D5244T4	2800+/-150	N/A	0, 372 - 0, 422	0, 565 - 0, 680
XC90	B8444S	2413+/-150	N/A	0, 372 - 0, 422	0, 565 - 0, 680
XC90	B6324S	2330+/-150	N/A	0, 372 - 0, 422	0, 565 - 0, 680
S60 / V70 (00-08)	D5244T4/T5	2800+/-150	N/A	0, 372 - 0, 422	0, 565 - 0, 680
S60 / V70 (00-08)	B5254T4	2800+/-150	N/A	0, 372 - 0, 422	0, 575 - 0, 690
XC70 (-07)	D5244T4	2800+/-150	N/A	0, 372 - 0, 422	0, 565 - 0, 680

System pressure at stall speed not checked

TIGHTENING TORQUE

see **TIGHTENING TORQUE**

TRANSAXLE

SPECIFICATIONS

Type	AW50/51AWD	TF-80SCAWD
1st gear ratio	4, 769	4, 148
2nd gear ratio	2, 995	2, 370
3rd gear ratio	1, 957	1, 556
4th gear ratio	1, 324	1, 155
5th gear ratio	1, 018	0, 859
6th gear ratio	-	0, 686
R	3, 234	3, 394
Maximum torque	approx. 350 Nm	approx. 400 Nm (petrol engines)
		approx. 450 Nm (diesel engines)
Weight	87 kg	95 kg

Oil volume	7.1 liters	6.7 liters

LUBRICANT TRANSMISSION (2003-2012)

LUBRICANT TRANSMISSION

TRANSMISSION, MANUAL

Designation	Service volume (liter)	Part number	Quantity per pack (liter)
M56	2, 10	31280771	1
		31280772	4
M58	2, 10	31280771	1
		31280772	4
M59	2, 10	31280771	1
		31280772	4
M65	2, 0	31280771	1
		31280772	4
M66	1, 90	31280771	1
		31280772	4
MMT6	1, 65	31280771	1
		31280772	4
MTX75	1, 80	31280771	1
		31280772	4
B6	1, 58	31280771	1
		31280772	4
IB5	2, 10	1161723	1
		1161724	4

TRANSMISSION, AUTOMATIC

Designation		Part number	Package quantity
AW50-42, AW42 AWD, 4T65xxx		1161 521	1 liter
		1161 621	4 liters
AW50/55-50, AW50AWD		1161 540	1 liter
		1161 640	4 liters

MPS6		1161 838	1 liter
		1161 839	4 liters
TF-80SC Model year -10 Generation 1		1161 540	1 liter
		1161 640	4 liters
TF-80SC Model year 11- Generation 2		31256774	1 liter
		31256775	4 liters
XC90 TF-80SC		1161 540	1liter
		1161 640	4 liters

MISCELLANEOUS

Designation		Part number	Package quantity
Bevel gear		312 59380	1 liter
Chain housing		1161 745	1 liter
Clutch four-wheel drive		307 59648	0.3 liters
Final drive		1161 620	1 liter
Universal oil		1161 657	0, 2 liter
PFPE-grease aerosol		307 59651	0.15 liters
Grease, dog-clutch		312 59589	30 gram

CONSTANT VELOCITY JOINT BOOT, GREASE QUANTITY

Engine/transmission	Wheel side	Transmission side
B8444S/B6324S/TF-80SCAWD	150g / 2X80g = 160g	180g / 3x65g = 195g
D5244T4/TF-80SC	150g / 2X80g = 160g	180g / 3x65g = 195g
D5254T6/TF-80SC	203g / 2X80g + 1X60g = 220g	140g / 1X85g + 1X65g =

		150g
B5254T6/M66	150g / 2X80g = 160g	100g / 1X120g
D5244T4/M66	150g / 2X80g = 160g	100g / 1X120g
D4204T/MPS6	120g / 1X120g	174g / 3X65g = 195g

DRIVELINE/AXLES

Power transmission

DRIVELINE/AXLES

CHECKING THE VISCOUS COUPLING HOUSING AND VISCOUS COUPLING

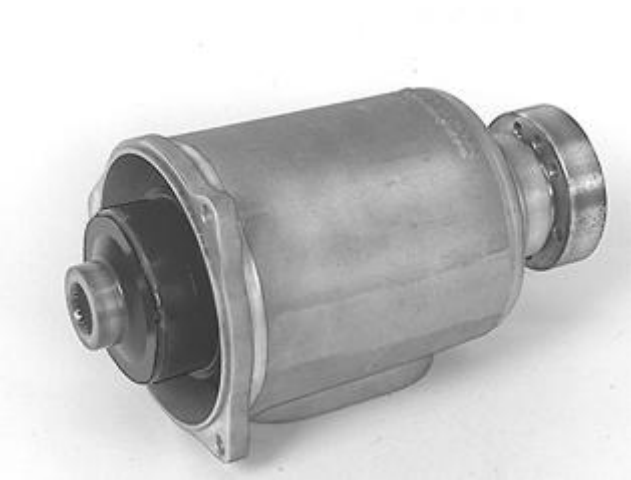

Fig. 1: Checking The Viscous Coupling Housing And Viscous Coupling
Courtesy of VOLVO CARS CORPORATION

Check the bearing for play and noise.

Check the viscous coupling mating surface with the pinion seal.

To replace the viscous coupling or bearing, see **BEARING VISCOUS COUPLING, REPLACING** .

DRIVELINE/AXLE

Power transmission

DRIVELINE/AXLE

BEARING, VISCOUS COUPLING, REPLACING

Special tools:

see **9991801**

see **9992412**

see **9992842**

see **9995652**

see **9995759**

see **9992861**

see **9995388**

NOTE: **Preparations for removal of the viscous coupling housing. See FINAL DRIVE, TRANSFERRING COMPONENTS .**

REMOVAL

REMOVING THE SCREW FOR HOLDING THE FLANGE TO THE VISCOUS COUPLING

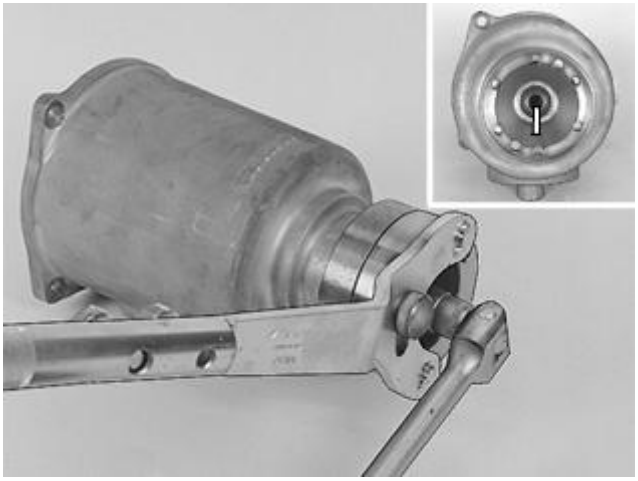

Fig. 1: Identifying Counterhold & Position Mark
Courtesy of VOLVO CARS CORPORATION

Use counterhold see **9995652** with adapter see **9995759** .

Mark up the position of the coupling and flange. Use a marker pen.

Press and tap out the viscous coupling from the flange. Take care not to damage the viscous coupling by letting it fall.

REMOVING THE FLANGE FROM THE BEARING

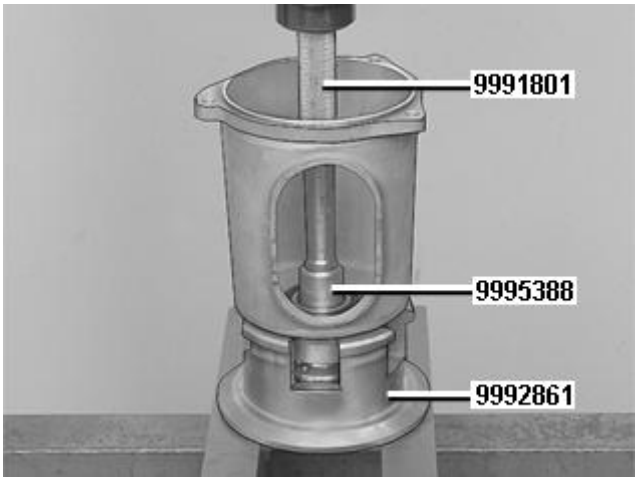

Fig. 2: Identifying Special Tools (Socket, Punch & Shaft / Drift)
Courtesy of VOLVO CARS CORPORATION

Support the viscous coupling housing on tool see **9992861** . Press out the flange. Use drift see **9995388** with shaft see **9991801** or a suitable drift.

REMOVING THE BEARING FROM THE VISCOUS COUPLING HOUSING

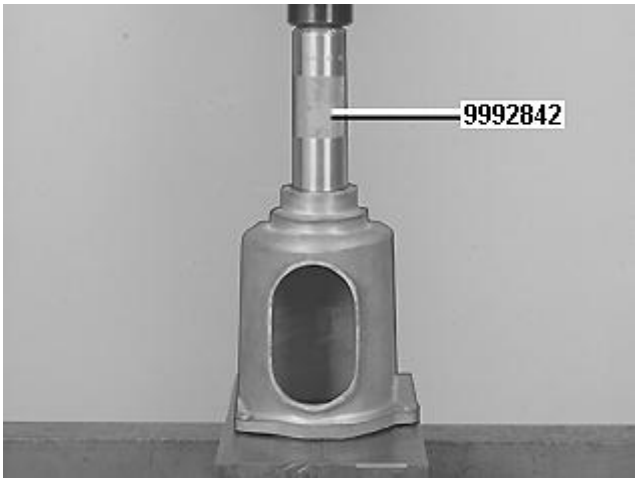

Fig. 3: Identifying Shaft / Drift Tool
Courtesy of VOLVO CARS CORPORATION

Use drift see **9992842** .

INSTALLATION

INSTALLING THE BEARING IN THE VISCOUS COUPLING HOUSING

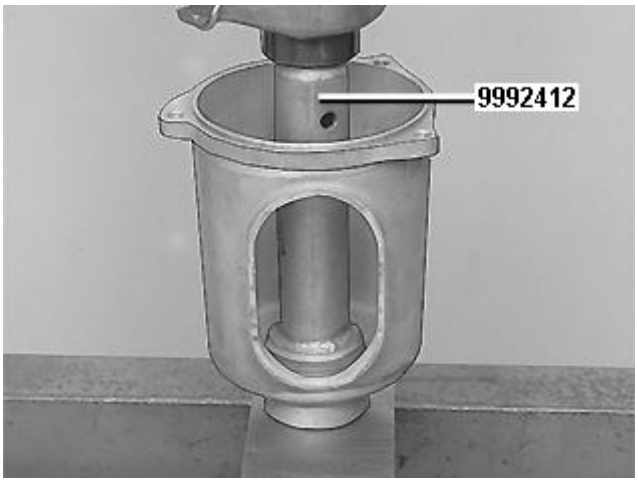

Fig. 4: Identifying Shaft / Drift Tool
Courtesy of VOLVO CARS CORPORATION

Use drift see **9992412** .

INSTALLING THE VISCOUS COUPLING HOUSING AND BEARING ONTO THE FLANGE

Fig. 5: Identifying Shaft / Drift Tool
Courtesy of VOLVO CARS CORPORATION

Use drift see **9992412** .

INSTALLING THE VISCOUS COUPLING INTO THE VISCOUS COUPLING HOUSING

Fig. 6: Identifying Viscous Coupling
Courtesy of VOLVO CARS CORPORATION

Install the viscous coupling as marked. See **REMOVING THE SCREW FOR HOLDING THE FLANGE TO THE VISCOUS COUPLING**.

NOTE: Check that the loose washer is in place.

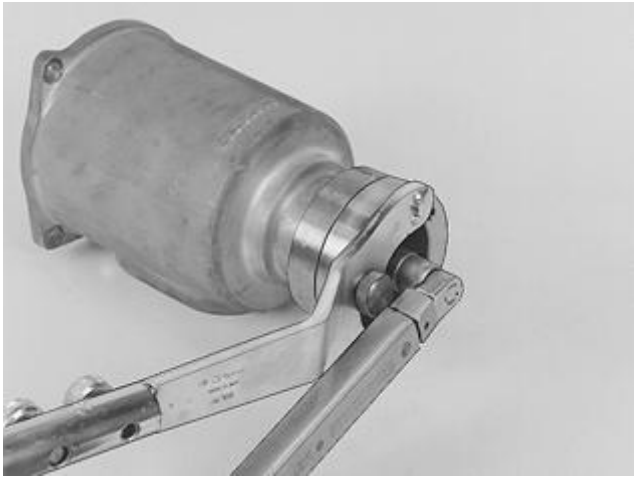

Fig. 7: Identifying Counterhold With Adaptor Flange
Courtesy of VOLVO CARS CORPORATION

Use a **new screw** . Tighten to **50 Nm** . Use counterhold see **9995759** with adapter see **9995759** .

NOTE: After installing the viscous coupling housing, see FINAL DRIVE, TRANSFERRING COMPONENTS .

DRIVELINE/AXLES

Power transmission

DRIVELINE/AXLES

SEAL, CV JOINT HOUSING, REPLACING

REMOVAL

PREPARATIONS

Remove the drive shaft on the right-hand side, see **REAR AXLE, DRIVE SHAFTS - REMOVAL, REPLACEMENT AND INSTALLATION** .

REMOVING THE SEALING RING FOR THE CV JOINT HOUSING FROM THE WHEEL SPINDLE

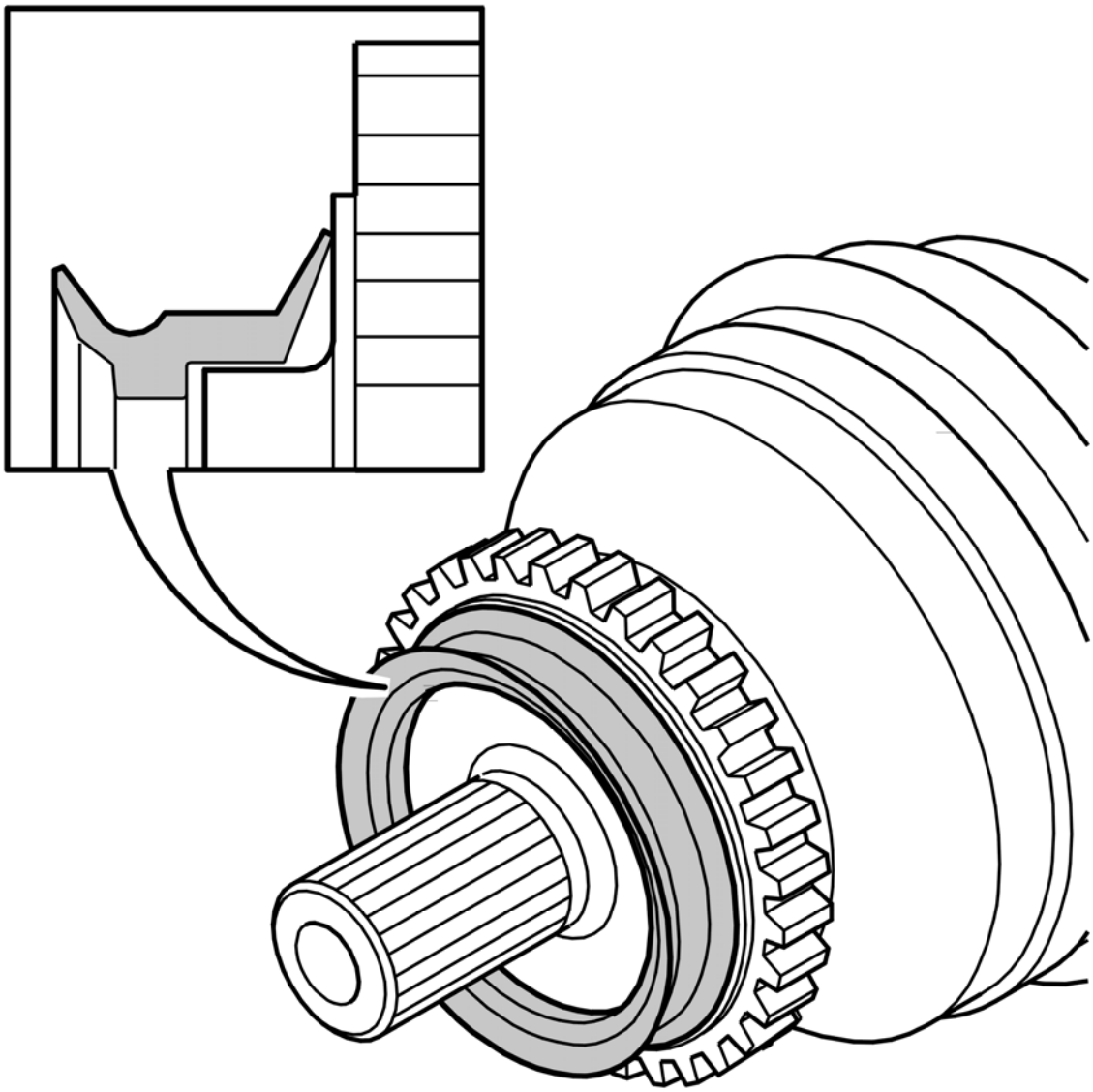

Fig. 1: Identifying Rubber Seal & Constant Velocity Joint
Courtesy of VOLVO CARS CORPORATION

Carefully remove the sealing ring.

NOTE: The sealing ring will be used again during installation.

INSTALLATION

INSTALLING THE SEALING RING FOR THE CV JOINT HOUSING ON THE WHEEL SPINDLE

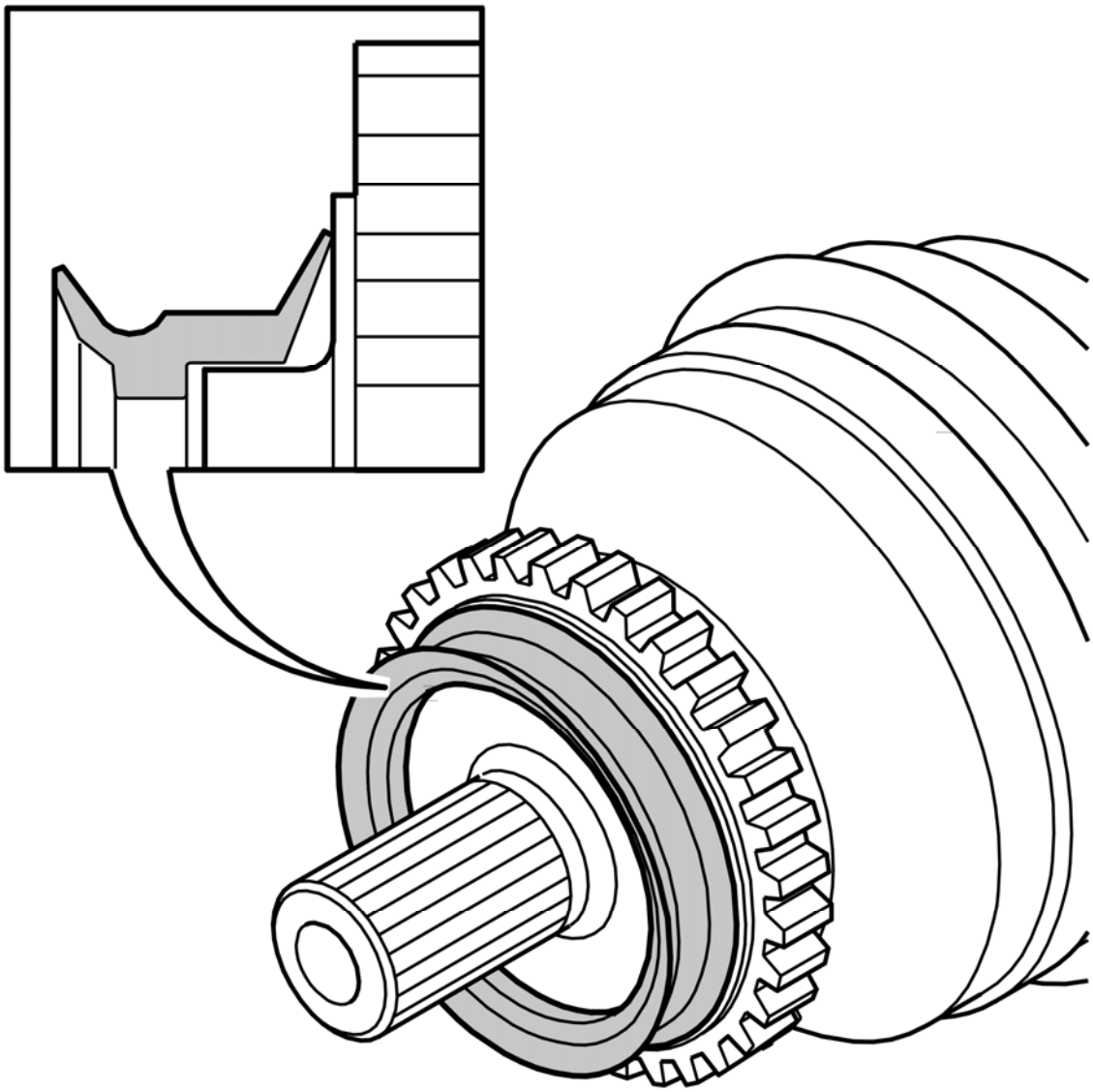

Fig. 2: Identifying Rubber Seal & Constant Velocity Joint
Courtesy of VOLVO CARS CORPORATION

NOTE: Replace the sealing ring if it is damaged or worn.

Clean around the constant velocity joint before installing the sealing ring.

Carefully install the sealing ring. Ensure that the sealing ring is correctly positioned on the drive shaft.

FINISHING

Install the drive shaft on the right-hand side, see **REAR AXLE, DRIVE SHAFTS - REMOVAL, REPLACEMENT AND INSTALLATION** .

DRIVELINE/AXLES

Power transmission

DRIVELINE/AXLES

PROPELLER SHAFT, SPECIAL INFORMATION

Operation Number(s):

NOTE: Removal steps in this procedure may contain installation details.

When disconnecting the propeller shaft from the bevel gear, final drive, or when changing propeller shaft, it is important to follow the method steps to avoid damage on the rubber gaiter on the middle universal joint.

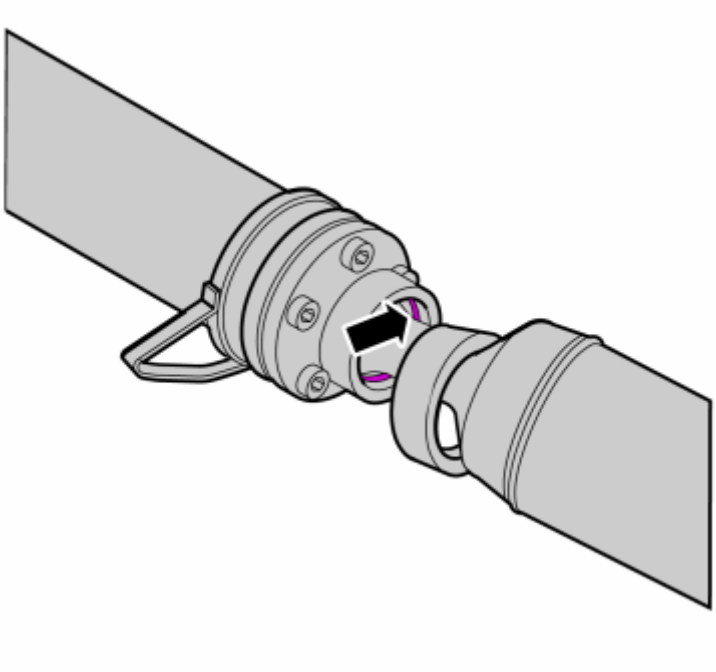

Fig. 1: Identifying Universal Joint Rubber Gaiter
Courtesy of VOLVO CARS CORPORATION

There is a raised part inside the universal joint that may damage the rubber gaiter if the propeller shaft is moved aside to max. when disconnecting at either end or removing the propeller shaft.

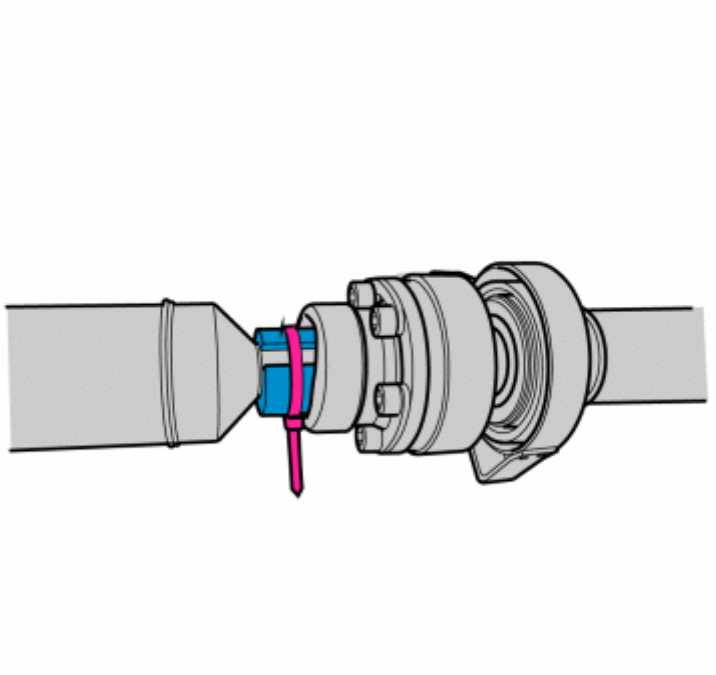

Fig. 2: Identifying Protected Rubber Gaiter
Courtesy of VOLVO CARS CORPORATION

If the whole propeller shaft is to be removed, the rubber gaiter must be protected.

Cut a 35 mm long piece of, e. g., radiator hose or similar that has been discarded.

Cut up the hose along its length.

Press in the hose into the universal joint and secure it with a cable tie.

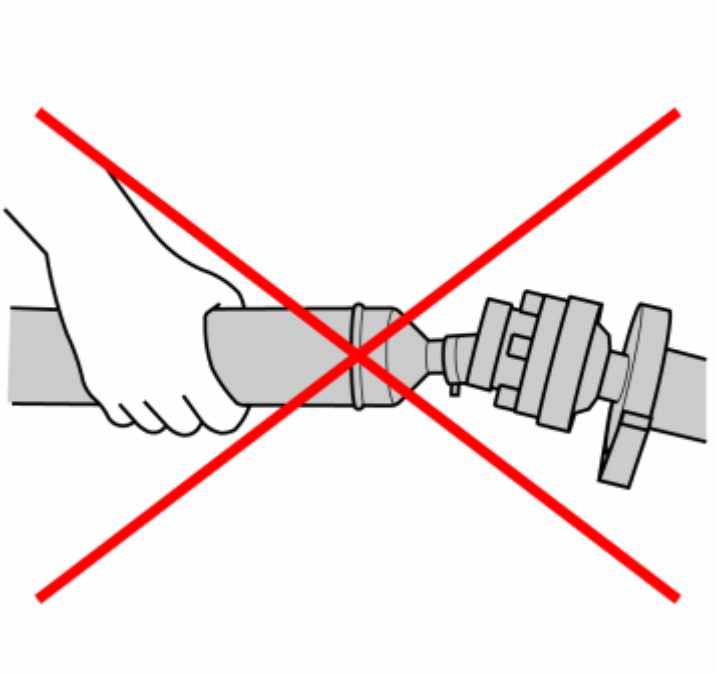

Fig. 3: Identifying Protection Of Propeller Shaft & Rubber Gaiter
Courtesy of VOLVO CARS CORPORATION

CAUTION: The propeller shaft may not be lifted without first protecting the rubber gaiter.

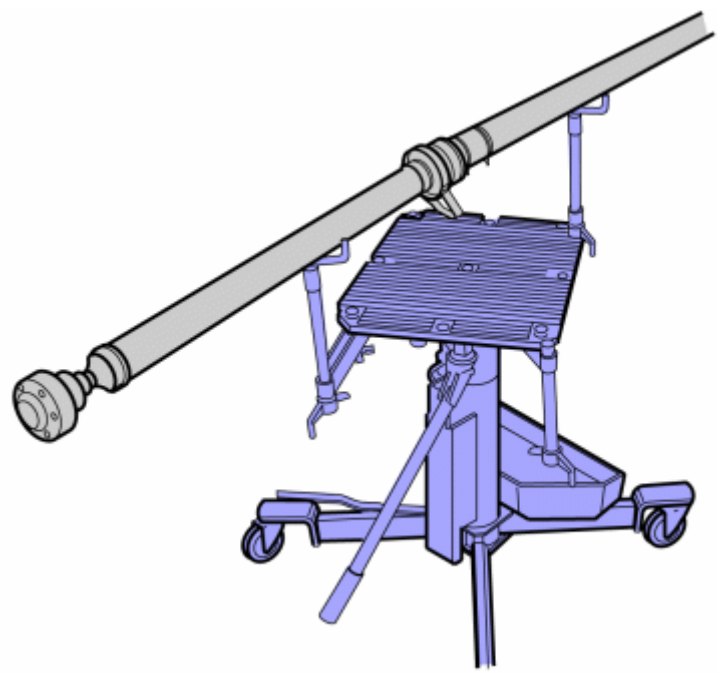

Fig. 4: Identifying Propeller Shaft & Jack
Courtesy of VOLVO CARS CORPORATION

If any part of the propeller shaft is to be disconnected, use a jack to support that part of the propeller shaft until it is suspended.

If the whole propeller shaft is to be removed, both parts must be supported.

DRIVELINE/AXLES

Power transmission

DRIVELINE/AXLES

TEMPERATURE / PRESSURE SENSOR, ACTIVE ON DEMAND COUPLING, REPLACING

NOTE: As the illustrations in this service information are used for different model years and / or models, some variation may occur. However, the essential information is always correct.

REMOVAL

PREPARATORY WORK

Ignition off.

Wait 3-4 minutes after the ignition has been switched off to reduce oil leaks on removal.

REMOVING THE CONTROL MODULE

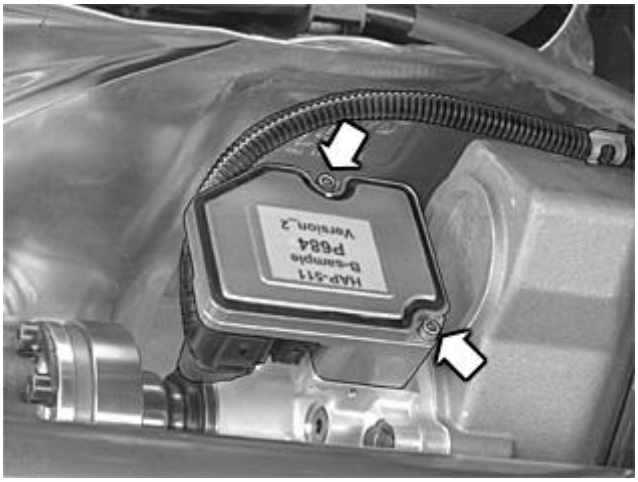

Fig. 1: Active On Demand Coupling Control Module Screws
Courtesy of VOLVO CARS CORPORATION

NOTE: Clean the area around the control module thoroughly before beginning removal.

Position a container underneath the Active on Demand Coupling. Disconnect the connectors for the control module and the oil pump.

Remove:

- the 2 screws for the control module

- the control module with the sealing plate and the cupped washer.

REMOVING COMPONENTS FROM THE ACTIVE ON DEMAND COUPLING

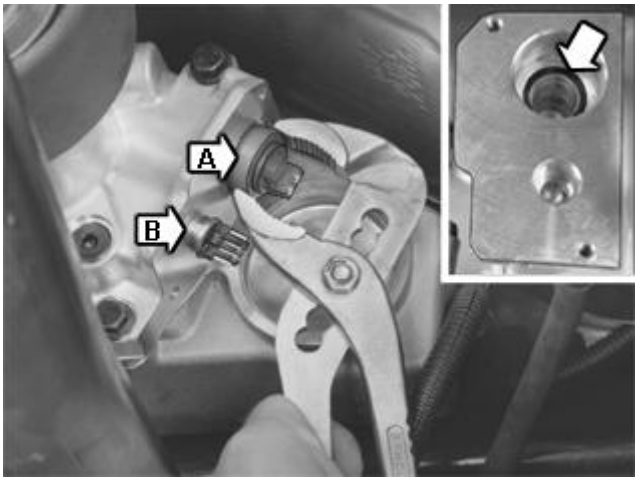

Fig. 2: Choke Valve And Temperature/Pressure Sensor
Courtesy of VOLVO CARS CORPORATION

Remove the throttle valve and the temperature/pressure sensor from the coupling.

A = Throttle valve.

B = Temperature/pressure sensor.

Use a large pair of pliers for removal. Grip the end of the throttle valve. Hold the pliers stable and pull the valve straight out.

NOTE: **Make sure that no damage is caused when removing the throttle valve. The valve cannot be replaced separately. The throttle valve is removed in order to be installed in the control module. This is done to minimize the risk of damage occurring to the contacts when installing.**

Remove:

- the temperature/pressure sensor as above
- the O-ring from the throttle valve seat in the coupling housing.

INSTALLATION

INSTALLING COMPONENTS

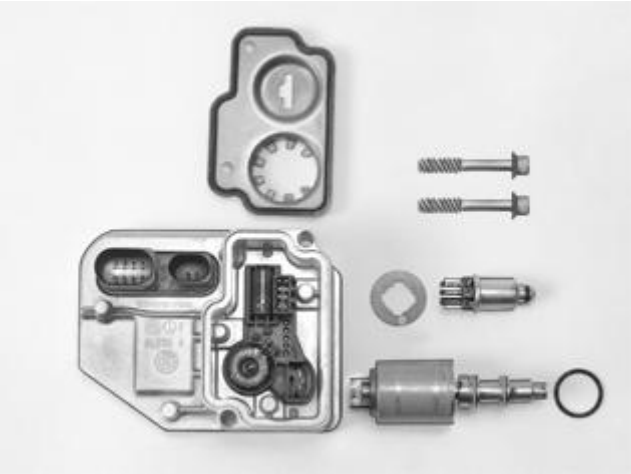

Fig. 3: Active On Demand Coupling Components
Courtesy of VOLVO CARS CORPORATION

Install:

- control module
- the sealing plate
- washer
- the throttle valve with O-rings
- the temperature/pressure sensor with O-ring
- the O-ring for the throttle valve seat
- the screws.

COMPONENTS THAT ARE INCLUDED IN THE KIT AND MUST BE REPLACED

Fig. 4: Active On Demand Coupling Control Module Kit
Courtesy of VOLVO CARS CORPORATION

- the temperature/pressure sensor with O-ring

- washer
- the O-ring for the throttle valve seat.

Position the sealing plate in the control module

Press the throttle valve and temperature/pressure sensor into place on the control module contacts. Place the cupped washer with the convex side against the temperature/pressure sensor.

Lubricate the sealing rings on the valves with oil, P/N 116 1641-4 (0.3 liters).

INSTALLING THE O-RING

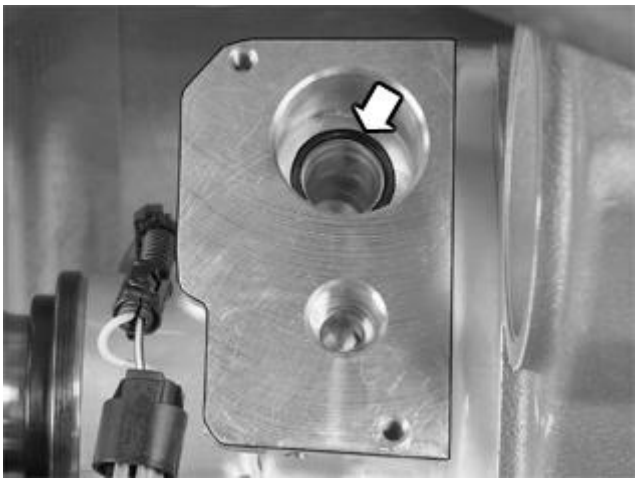

Fig. 5: Active On Demand Coupling Control Module O-Ring
Courtesy of VOLVO CARS CORPORATION

Carefully check that the sealing surface on the control module and valve seats in the Active on Demand Coupling is clean. Ensure that there is no trace of cloth or paper.

Lubricate the new O-ring with oil, P/N 116 1641-4 (0.3 liters). Press the O-ring into place in its seat.

INSTALLING THE CONTROL MODULE FOR THE ACTIVE ON DEMAND COUPLING

Fig. 6: Installing Control Module For Active On Demand Coupling
Courtesy of VOLVO CARS CORPORATION

Install the control module and the valves for the coupling. Press the control module against the coupling housing while loosely installing the screws alternately. Tighten. See **SUMMARY OF TIGHTENING TORQUES FOR SPECIFIC COMPONENTS** .

Connect the connectors to the control module and the oil pump.

Fill the Active on Demand Coupling with oil. Check the oil level. See **REAR AXLE, DRIVE SHAFTS - REMOVAL, REPLACEMENT AND INSTALLATION** .

Erase any diagnostic trouble codes (DTCs).

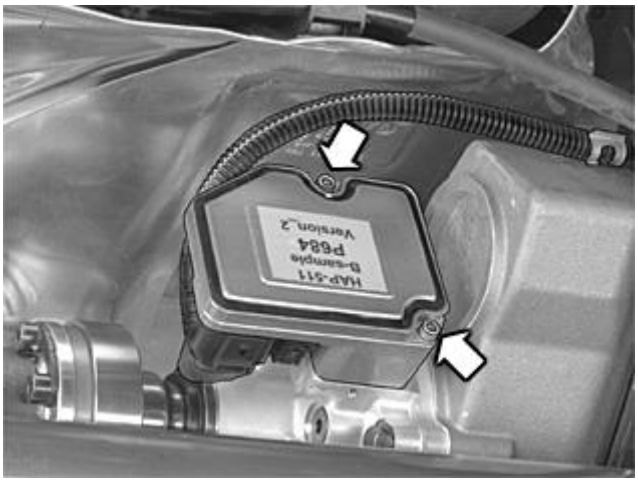

Fig. 7: Active On Demand Coupling Control Module Screws
Courtesy of VOLVO CARS CORPORATION

DRIVELINE/AXLES

Propeller Shaft - Removal, Replacement And Installation

PROPELLER SHAFT (B5254T2, AW50/51 AWD; 2003-07)

PROPELLER SHAFT JOINT (CV)

Special tools	
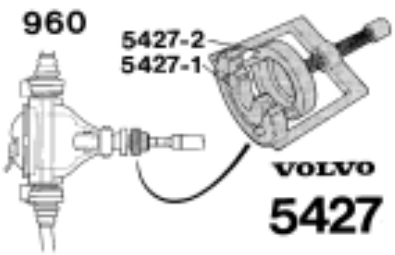	**T9995427 PULLER (CV-JOINT) P960** **Tool number:** T9995427 **Tool description:** PULLER (CV-JOINT) P960 **Tool boards:**

Materials:	
Designation	**Part number**
Grease	30787966

REMOVAL

NOTE: Removal steps in this procedure may contain installation details.

Remove the propeller shaft. See **PROPELLER SHAFT, REPLACING**

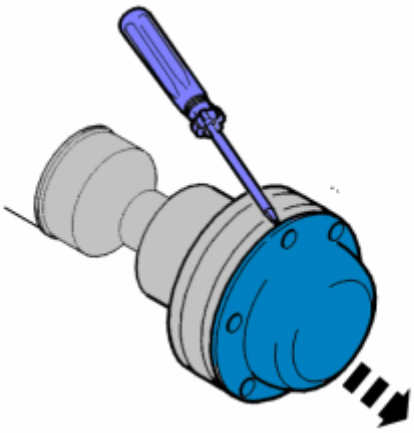

Fig. 1: Identifying Propeller Shaft Joint Removal (1 Of 4)
Courtesy of VOLVO CARS CORPORATION

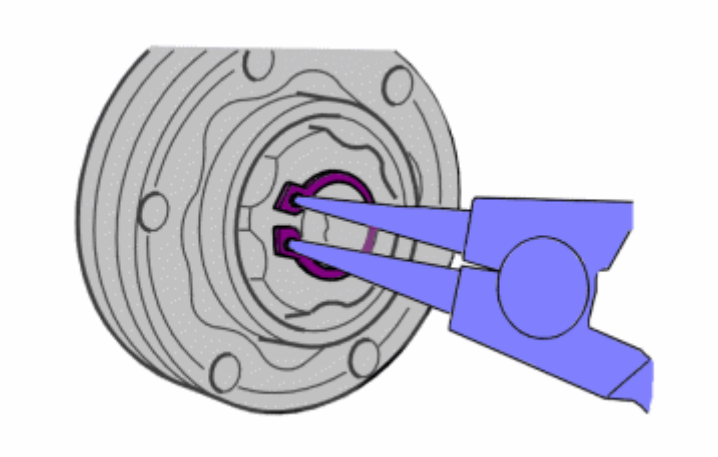

Fig. 2: Identifying Propeller Shaft Joint Removal (2 Of 4)
Courtesy of VOLVO CARS CORPORATION

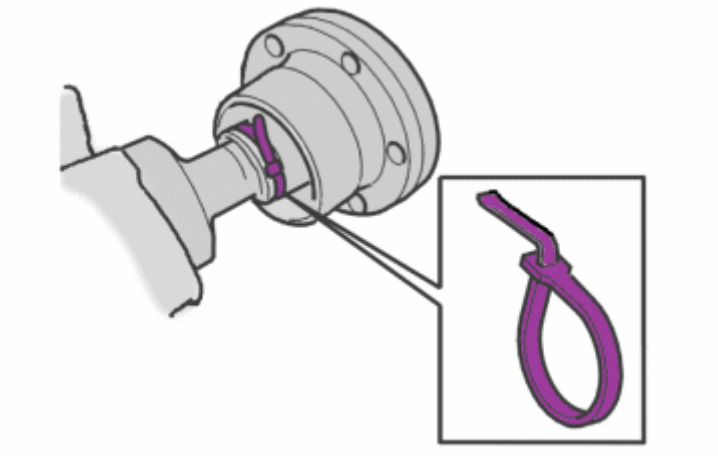

Fig. 3: Identifying Propeller Shaft Joint Removal (3 Of 4)
Courtesy of VOLVO CARS CORPORATION

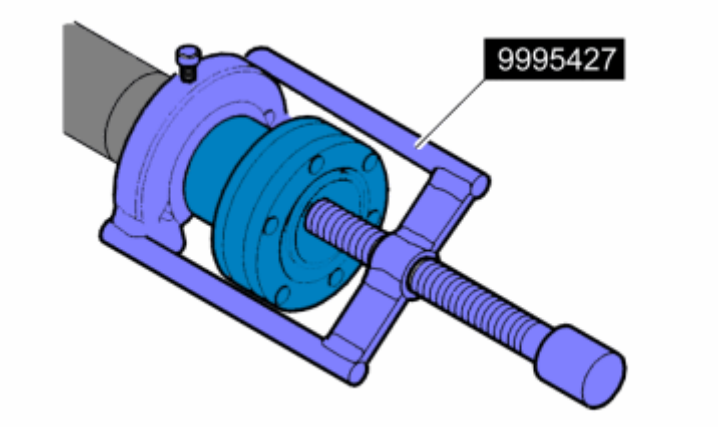

Fig. 4: Identifying Propeller Shaft Joint Removal (4 Of 4)
Courtesy of VOLVO CARS CORPORATION

see **9995427**

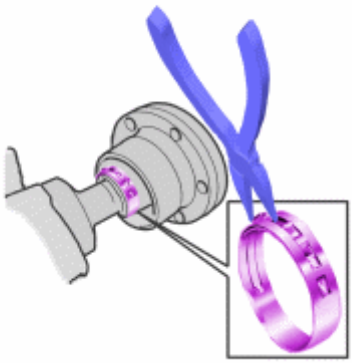

Fig. 5: Identifying Propeller Shaft Joint Installation (1 Of 4)
Courtesy of VOLVO CARS CORPORATION

CAUTION: Be extra careful when handling this component.

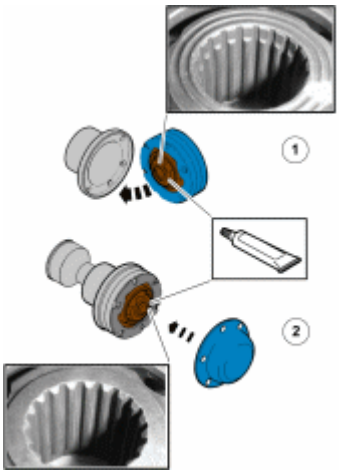

Fig. 6: Identifying Propeller Shaft Joint Installation (2 Of 4)
Courtesy of VOLVO CARS CORPORATION

CAUTION: Make sure that the gaskets are placed correctly.

Use: Grease, 30787966

CAUTION: Use all of the supplied lubricant, with equal amounts on each side.

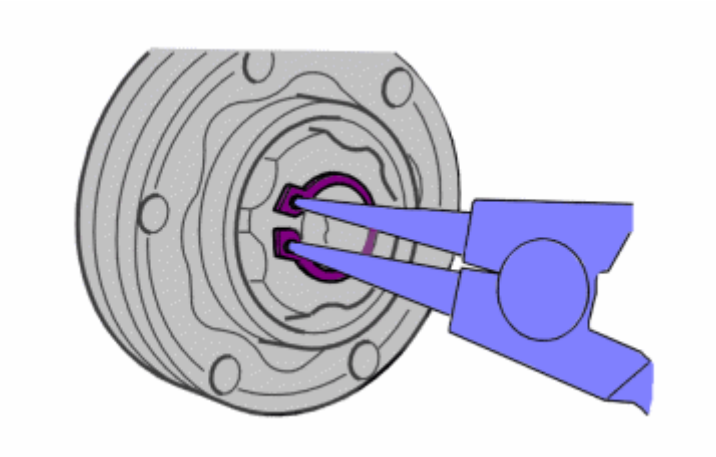

Fig. 7: Identifying Propeller Shaft Joint Installation (3 Of 4)
Courtesy of VOLVO CARS CORPORATION

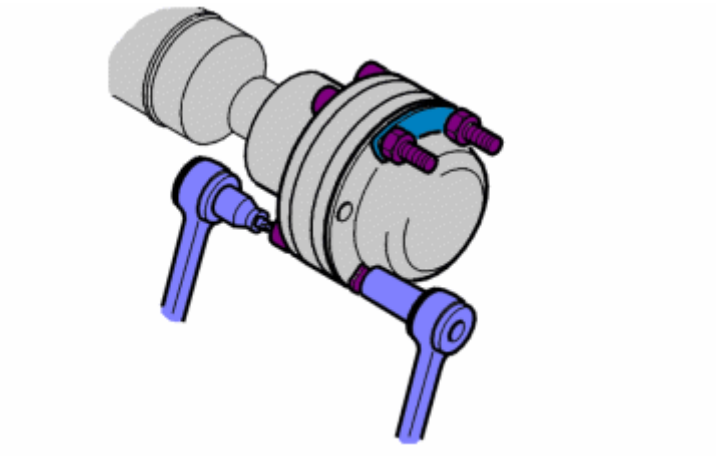

Fig. 8: Identifying Propeller Shaft Joint Installation (4 Of 4)
Courtesy of VOLVO CARS CORPORATION

Install the propeller shaft. See **PROPELLER SHAFT, REPLACING**

PROPELLER SHAFT, REPLACING

Special tools:

see **9512940**

see **9997057**

NOTE: **As the graphics in this service information are used for different model years and/or models, some variation may occur. However, the essential information is always correct.**

REMOVAL

REMOVING THE FRONT MEMBER

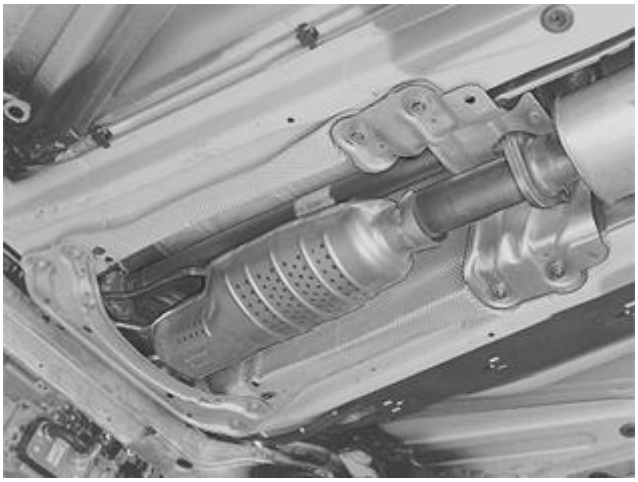

Fig. 9: Exhaust Pipe/Catalyst
Courtesy of VOLVO CARS CORPORATION

Remove the front member from the body, exhaust pipe and three-way catalytic converter (TWC). Remove the brake pipe from the mountings in the member.

REMOVING THE FRONT PROPELLER SHAFT

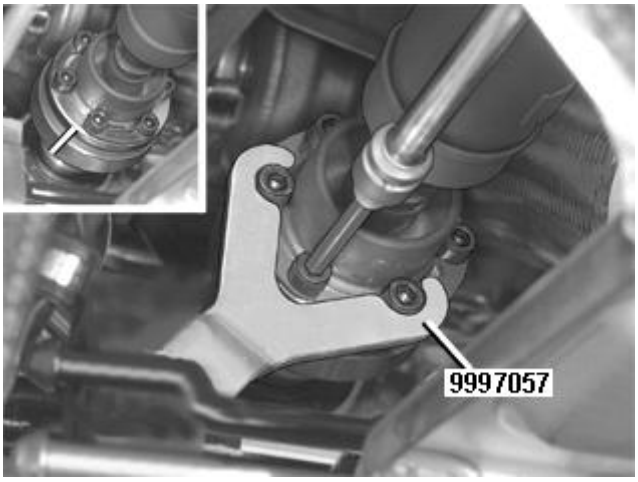

Fig. 10: Identifying Matchmark On Propeller Shaft CV Joint And Special Tool 999 7057
Courtesy of VOLVO CARS CORPORATION

NOTE: **If the same propeller shaft is to be reinstalled. Mark the propeller shaft CV joint in relation to the bevel gear flange.**

Remove the screws from the propeller shaft.

Use counterhold see **9997057** .

REMOVING THE REAR SECTION OF THE EXHAUST SYSTEM

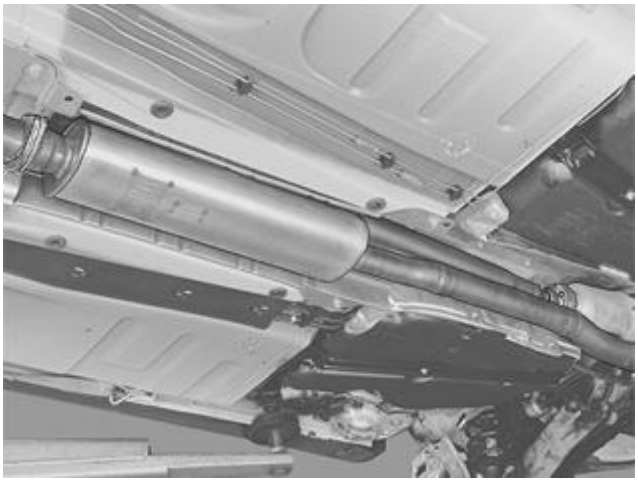

Fig. 11: Identifying Anti-Roll Bar Mounting Screws Of Rear Axle Member
Courtesy of VOLVO CARS CORPORATION

Support the front section of the exhaust pipe so as not to put strain on the exhaust manifold.

Remove the rear exhaust system assembly.

REMOVING THE REAR PROPELLER SHAFT

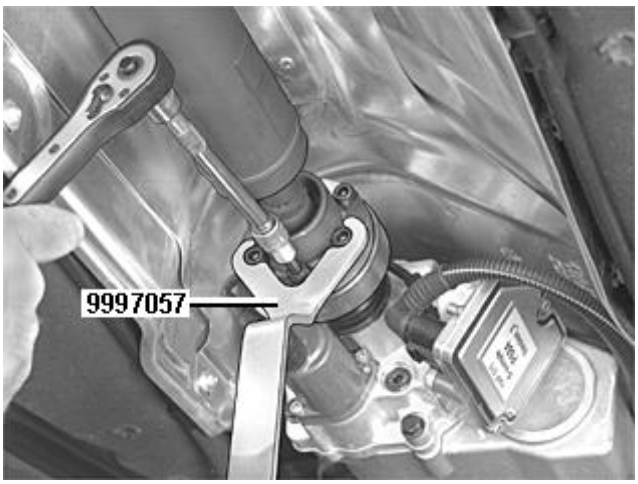

Fig. 12: Disconnecting The Propeller Shaft CV Joint Rear With Counterhold 999 7057
Courtesy of VOLVO CARS CORPORATION

NOTE: If the same propeller shaft is to be reused mark the propeller shaft CV joint in relation to the flange.

Remove the screws from the joint. Use counterhold see **9997057** .

Leave one screw in place by a few threads for safety.

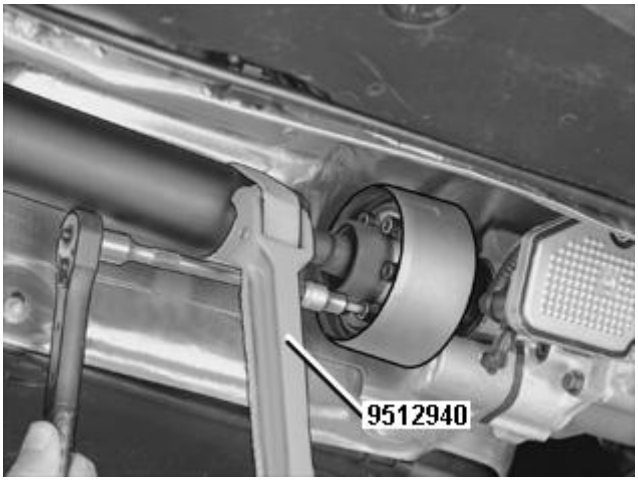

Fig. 13: Identifying Screw In Place For Safety
Courtesy of VOLVO CARS CORPORATION

For cars with a vibration damper on the Active on Demand Coupling flange

Use counterhold see **9512940** .

Leave one screw in place by a few threads for safety.

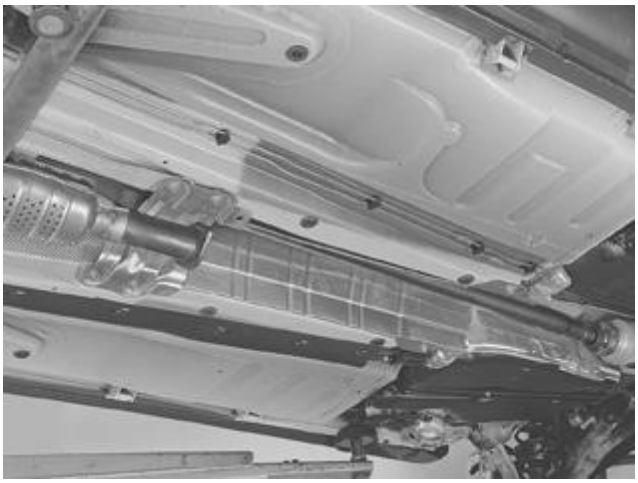

Fig. 14: Identifying Rear Propeller Shaft (Rear Exhaust System Section Removed)
Courtesy of VOLVO CARS CORPORATION

Remove the screws from the propeller shaft center bearing.

Slacken off the screws in the support for the center bearing on the right-hand side a few turns. Fully remove the screws on the left-hand side

Let the center support hang down so that the propeller shaft can be angled.

Remove the screw from the joint.

Press the shaft joints together, detach it from the flange.

Remove the shaft.

INSTALLATION

NOTE: For tightening torques, see TIGHTENING TORQUE .

NOTE: To ensure that there is no exhaust leakage, see FLANGED JOINT, ASSEMBLING .

INSTALLING THE PROPELLER SHAFT, FRONT

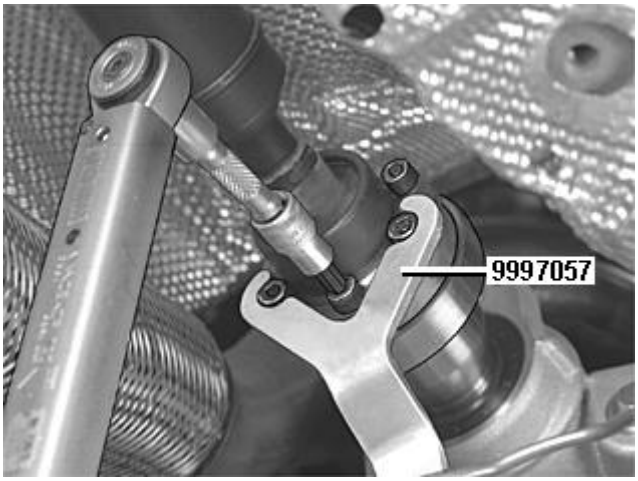

Fig. 15: Identifying Front Propeller Shaft And Special Tool 999 7057
Courtesy of VOLVO CARS CORPORATION

Check carefully that the mating surfaces on the propeller shaft and flange are clean.

NOTE: If the same propeller shaft is to be reinstalled, install the propeller shaft using the marking made earlier. See REMOVING THE FRONT PROPELLER SHAFT under REMOVAL.

Tightening the propeller shaft CV joint

Use new screws.

Tighten the screws. See **SUMMARY OF TIGHTENING TORQUES FOR SPECIFIC COMPONENTS** .

INSTALLING THE PROPELLER SHAFT, REAR

NOTE: If the same propeller shaft is to be reinstalled, install the propeller shaft using the marking made earlier. See REMOVING THE REAR PROPELLER SHAFT under REMOVAL.

Check carefully that the mating surfaces on the propeller shaft and flange are clean.

Align the propeller shaft CV joint against the flange.

Install the screws loosely in the support for the center bearing and the propeller shaft.

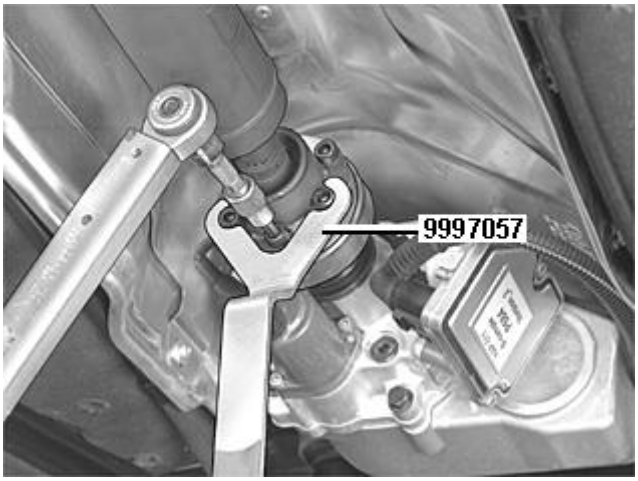

Fig. 16: Identifying Propeller Shaft
Courtesy of VOLVO CARS CORPORATION

Tightening the propeller shaft CV joint

Use new screws.

Tighten the screws. See **SUMMARY OF TIGHTENING TORQUES FOR SPECIFIC COMPONENTS** .

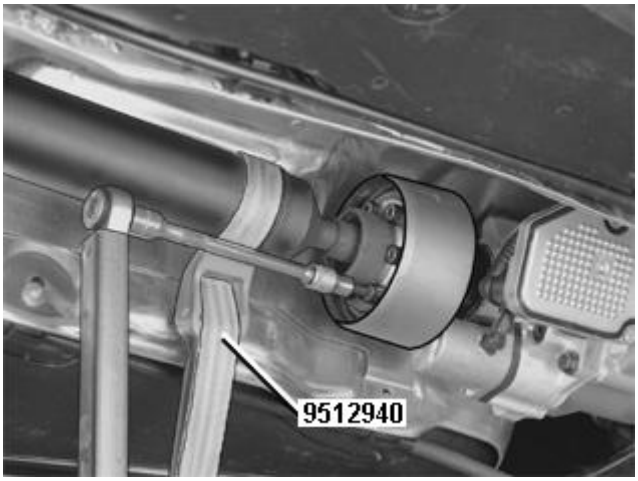

Fig. 17: Identifying Propeller Shaft Center Bearing
Courtesy of VOLVO CARS CORPORATION

For cars with a vibration damper on the Active on Demand Coupling flange

Use counterhold see **9512940** .

INSTALLING MEMBERS AND THE EXHAUST SYSTEM

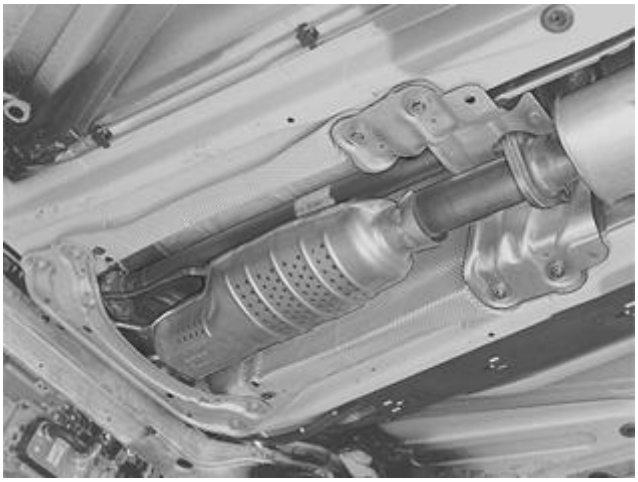

Fig. 18: Exhaust Pipe/Catalyst
Courtesy of VOLVO CARS CORPORATION

Tighten:

- the 4 M8 screws for the support for the center bearing
- the 2 M8 screws for the propeller shaft center bearing.

Install:

- the front member on the bodywork, the exhaust pipe and the three-way catalytic converter (TWC), 4 x M8. Tighten
- the brake pipe in the mountings in the member
- the rear exhaust pipe assembly. Use a new gasket between the three-way catalytic converter (TWC) and the rear exhaust system.

PROPELLER SHAFT, REPLACING

Special tools:

see **9512928**

see **9512940**

see **9997057**

NOTE: Since the graphics in this service information are used for different model years and/or models, some variation may occur. However, the essential information is always correct.

REMOVAL

REMOVING CROSS MEMBERS

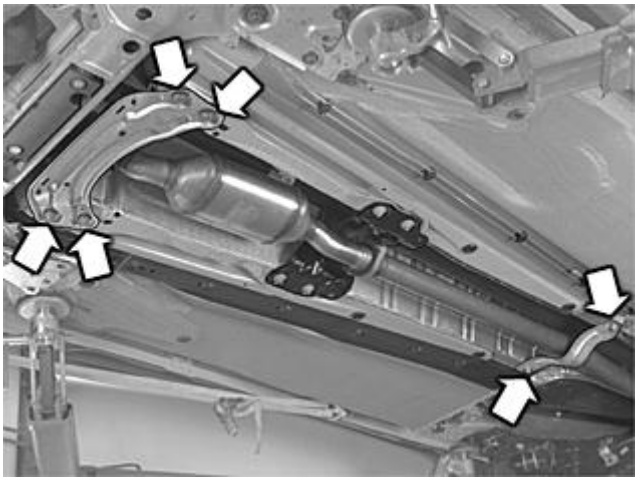

Fig. 19: Identifying Cross Members
Courtesy of VOLVO CARS CORPORATION

Remove:

- the front cross member from the body. Remove the brake pipe from the mountings in the member
- the rear cross member
- the rear exhaust pipe. Support the front section of the exhaust pipe/three-way catalytic converter (TWC) so as not to put strain on the exhaust manifold.

PAY ATTENTION TO THE FOLLOWING WHEN REMOVING PROPELLER SHAFT

NOTE: Applies to 6-cylinder engines only.

Follow instructions. See **PROPELLER SHAFT, SPECIAL INFORMATION**

REMOVING THE SCREWS FROM THE FRONT PROPELLER SHAFT

Fig. 20: Drive Flange Front Joint
Courtesy of VOLVO CARS CORPORATION

Remove the screws from the propeller shaft.

Use counterhold: see **9997057** .

REMOVING SCREWS FROM THE REAR PROPELLER SHAFT

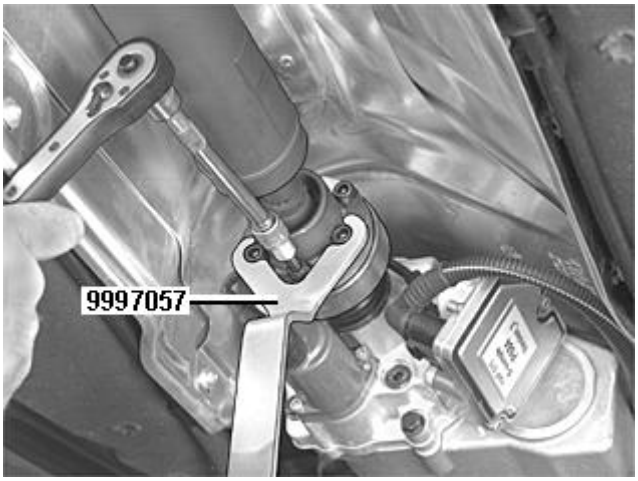

Fig. 21: Disconnecting The Propeller Shaft CV Joint Rear With Counterhold 999 7057
Courtesy of VOLVO CARS CORPORATION

NOTE: Only applies to vehicles with 5-cylinder engines.

Remove the screws from the propeller shaft.

Use counterhold: see **9997057** .

Leave one screw in place by a few threads for safety.

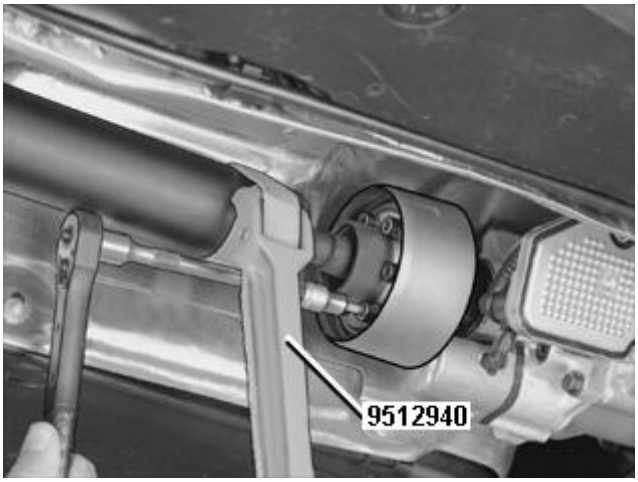

Fig. 22: Identifying Screw In Place For Safety

Courtesy of VOLVO CARS CORPORATION

NOTE: Only applies to cars with 5-cylinder engines and vibration damper on the AOC-coupling's flange.

Remove the screws from the propeller shaft.

Use counterhold: see **9512940** .

Leave one screw in place by a few threads for safety.

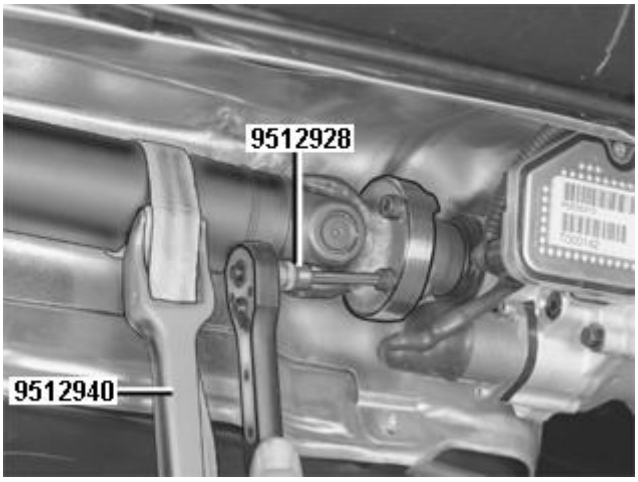

Fig. 23: Locating Propeller Shaft Bolts
Courtesy of VOLVO CARS CORPORATION

NOTE: Only applies to vehicles with 6-cylinder engines.

Pay attention to the following when removing propeller shaft

Follow instructions. See **PROPELLER SHAFT, SPECIAL INFORMATION**

Remove the screws from the propeller shaft.

Use counterhold see **9512940** and socket see **9512928** .

Leave one screw in place by a few threads for safety.

NOTE: Certain vehicles with 6 cylinder engines have a rear CV joint with 6 screws, in such cases use see 9997057 . See below for replacement parts.

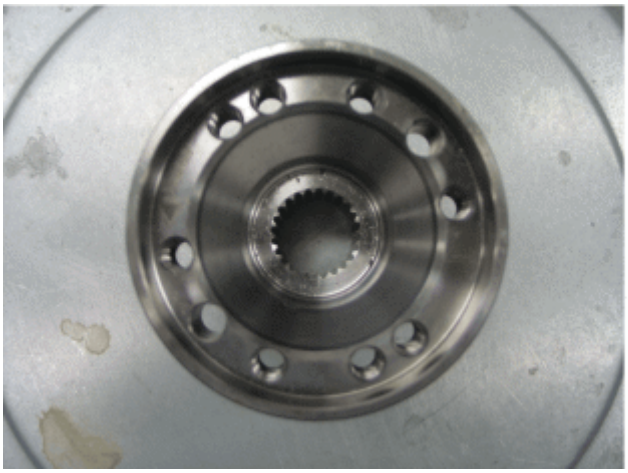

Fig. 24: Active On Demand Coupling
Courtesy of VOLVO CARS CORPORATION

Replacement part propeller shafts only have 4 screw holes on the rear CV joint. The flange on the Active on Demand Coupling has 8 threaded holes to fit propeller shafts with both 4 and 6 screws.

Fig. 25: Flange With Hole Pattern For Both 4 And 6 Bolts
Courtesy of VOLVO CARS CORPORATION

On flange with hole pattern for both 4 and 6 bolts, press loose the prop shaft from the AOC-coupling by threading in a bolt M8 20 mm long from the rear through one of the threaded holes that are not used.

REMOVING THE MOUNTING FOR THE CENTER BEARING FOR THE PROPELLER SHAFT

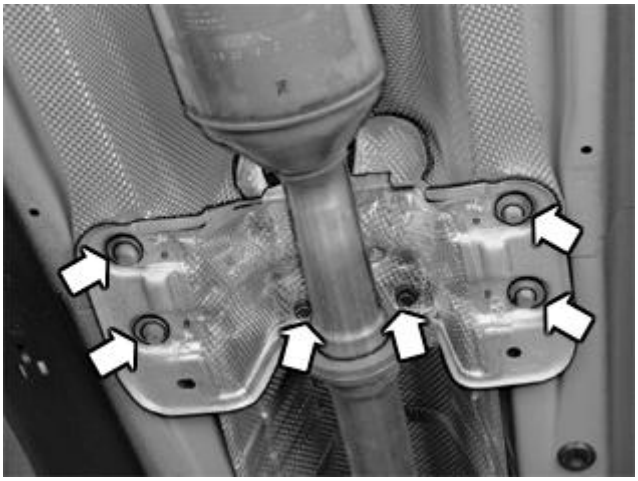

Fig. 26: Identifying Center Bearing Member
Courtesy of VOLVO CARS CORPORATION

Remove:

- the screws for the bearing for the propeller shaft in the center bearing member
- the screws for the center bearing member. Let the member rest on the exhaust system.

REMOVING THE PROPELLER SHAFT

Press the propeller shaft joints together. Detach the front joint from the flange for the bevel gear and move it to the side.

Remove:

- the screw from the rear joint and detach it from the flange
- the propeller shaft.

PROPELLER SHAFT, SPECIAL INFORMATION

Operation Number(s):

NOTE: Removal steps in this procedure may contain installation details.

When disconnecting the propeller shaft from the bevel gear, final drive, or when changing propeller shaft, it is important to follow the method steps to avoid damage on the rubber gaiter on the middle universal joint.

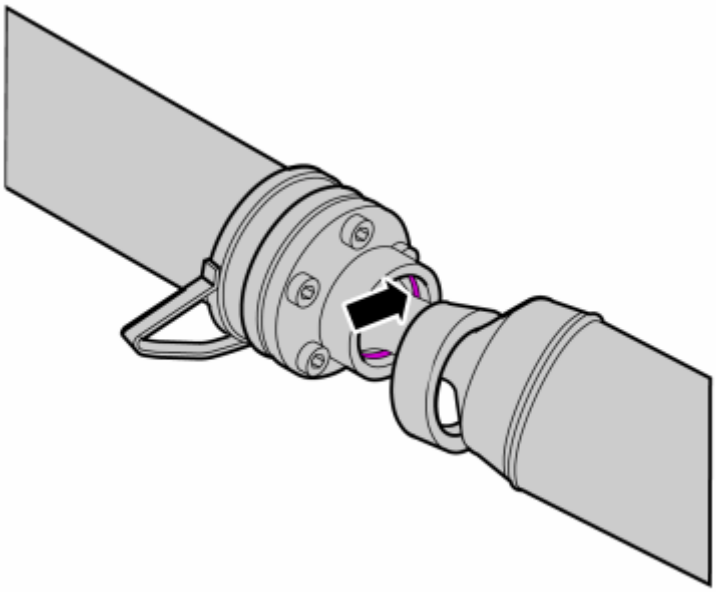

Fig. 27: Identifying Universal Joint Rubber Gaiter

There is a raised part inside the universal joint that may damage the rubber gaiter if the propeller shaft is moved aside to max. when disconnecting at either end or removing the propeller shaft.

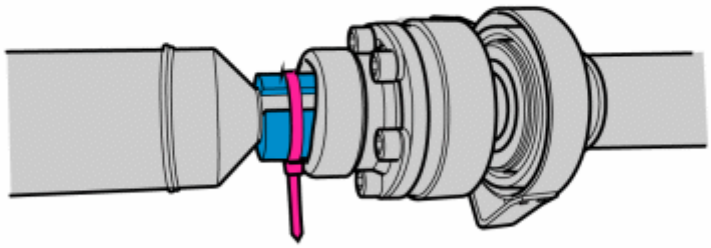

Fig. 28: Identifying Protected Rubber Gaiter

If the whole propeller shaft is to be removed, the rubber gaiter must be protected.

Cut a 35 mm long piece of, e.g., radiator hose or similar that has been discarded.

Cut up the hose along its length.

Press in the hose into the universal joint and secure it with a cable tie.

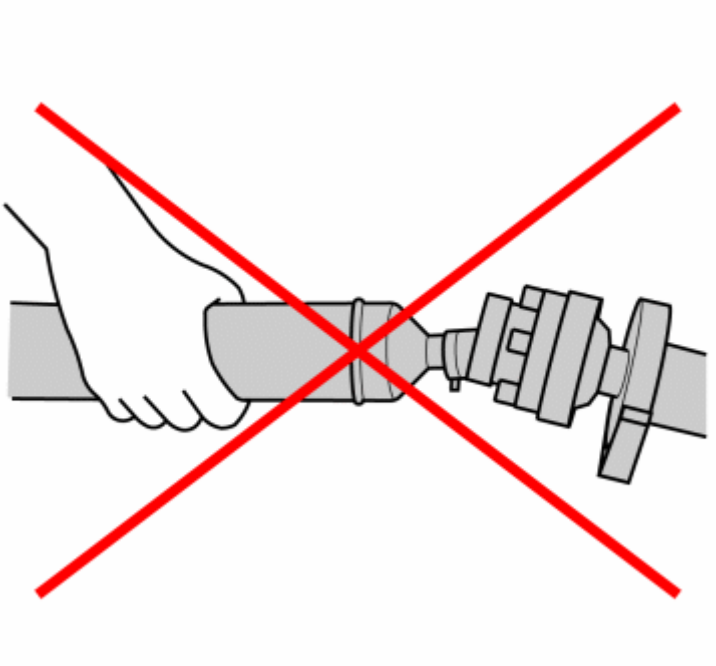

Fig. 29: Identifying Protection Of Propeller Shaft & Rubber Gaiter

CAUTION: The propeller shaft may not be lifted without first protecting the rubber gaiter.

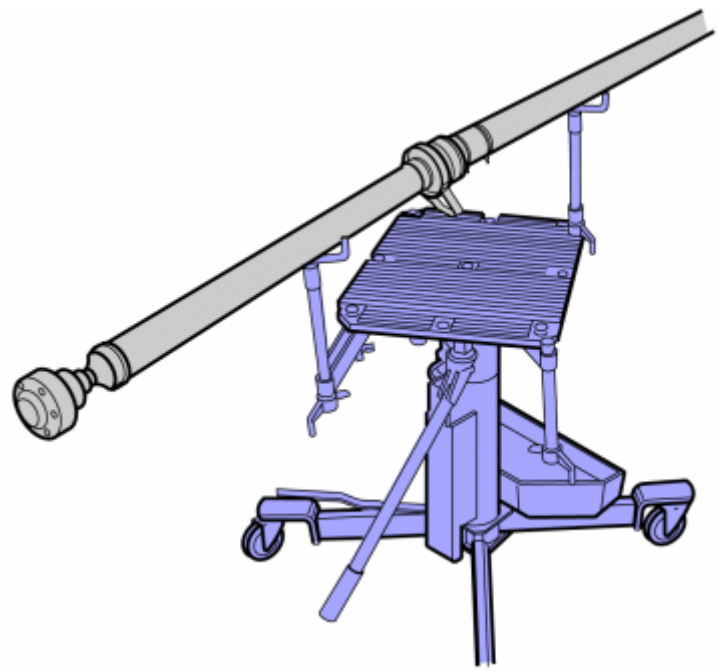

Fig. 30: Identifying Propeller Shaft & Jack

If any part of the propeller shaft is to be disconnected, use a jack to support that part of the propeller shaft until it is suspended.

If the whole propeller shaft is to be removed, both parts must be supported.

INSTALLATION

NOTE: For tightening torques, see TIGHTENING TORQUE .

NOTE: To ensure that there is no exhaust leakage, see FLANGED JOINT, ASSEMBLING .

INSTALLING THE PROPELLER SHAFT

Check carefully that the mating surfaces on the propeller shaft and flange are clean.

Align the propeller shaft joints with the flanges. Loosely install the screws in the center member and the center bearing.

INSTALLING THE FRONT JOINT ON THE DRIVE FLANGE

Fig. 31: Drive Flange Front Joint
Courtesy of VOLVO CARS CORPORATION

Use new screws. Tighten. See **SUMMARY OF TIGHTENING TORQUES FOR SPECIFIC COMPONENTS** .

Use counterhold: see **9997057** .

INSTALLING THE REAR JOINT ON THE DRIVE FLANGE

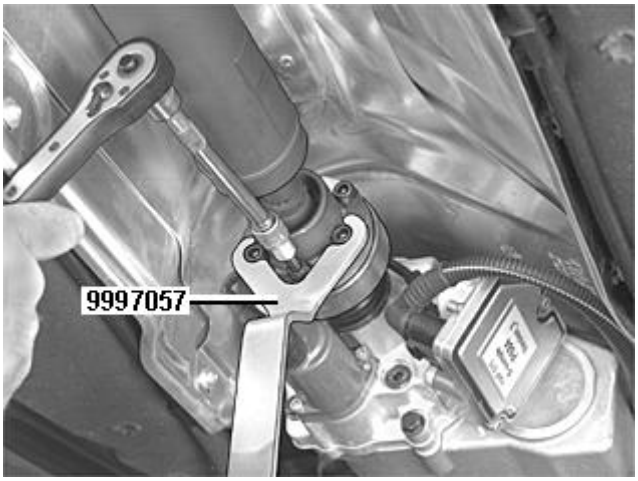

Fig. 32: Disconnecting The Propeller Shaft CV Joint Rear With Counterhold 999 7057
Courtesy of VOLVO CARS CORPORATION

NOTE: Only applies to vehicles with propeller shaft universal joints with 6 bolts.

Use new screws. Tighten. See **SUMMARY OF TIGHTENING TORQUES FOR SPECIFIC COMPONENTS** .

Use counterhold see **9997057** .

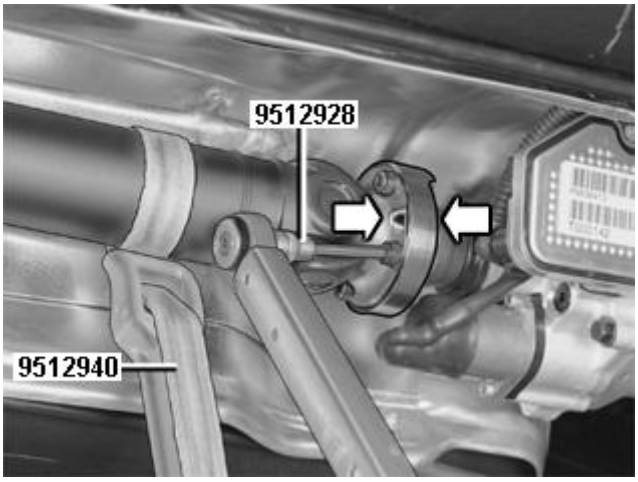

Fig. 33: Identifying Propeller Shaft Universal Joint
Courtesy of VOLVO CARS CORPORATION

NOTE: Only applies to vehicles with 6-cylinder engines and CV joint with 4 bolts.

Clean the joint using isopropanol P/N 1161 721 or similar.

Use 4 new screws.

Lubricate the threads and underneath the screw heads. Use normal lubricating oil. Wipe off any excess

lubricating oil to prevent it getting between the flange surfaces.

NOTE: When it is difficult to use a protractor to take the measurement, see SCREWED JOINT, TORQUE/ANGLE TIGHTENING .

Tighten according to **SUMMARY OF TIGHTENING TORQUES FOR SPECIFIC COMPONENTS**

NOTE: There are cast markings on the propeller shaft CV joint's flange and on the flange just beside the bolt holes. The markings should be opposite each other.

Use counterhold see **9512940** and socket see **9512928** .

HINT: To angle tighten, mark the material and then the screw 120° in front of the marking. Then tighten so that the markings are opposite each other.

INSTALLING MEMBERS AND THE EXHAUST SYSTEM

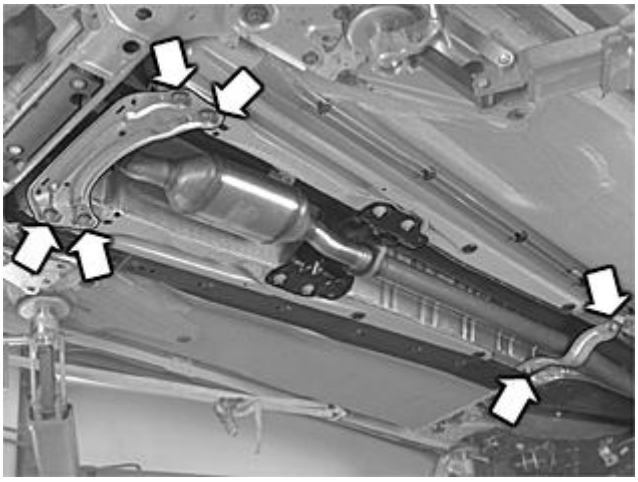

Fig. 34: Identifying Cross Members
Courtesy of VOLVO CARS CORPORATION

Tighten the 4 M8 screws for the support for the center bearing.

Tighten the 2 x M8 screws for the propeller shaft center bearing. See **SUMMARY OF TIGHTENING TORQUES FOR SPECIFIC COMPONENTS** .

Install:

- the front cross member to the body using 4 M8 screws. Tighten
- the brake pipe in the mountings in the member
- the rear exhaust pipe assembly using 2 M8 screws. Tighten

NOTE: Check that the gasket on the exhaust pipe's flange joint is free from defects.

- the rear cross member, 2 M8 nuts. Tighten.

PROPELLER SHAFT (B6294T, 4T65 AWD; 2003-06)

PROPELLER SHAFT JOINT (CV)

See **PROPELLER SHAFT JOINT (CV)**

PROPELLER SHAFT, REPLACING

See **PROPELLER SHAFT, REPLACING**

PROPELLER SHAFT (TF-80SC AWD; 2005-06)

PROPELLER SHAFT, REPLACING

Special tools:

see **9997057**

NOTE: **The graphics in this service information are used for different model years and/or models. Some variation may occur. However, the essential information in the graphics is always correct.**

REMOVAL

NOTE: **Move the gear selector to the P-position.**

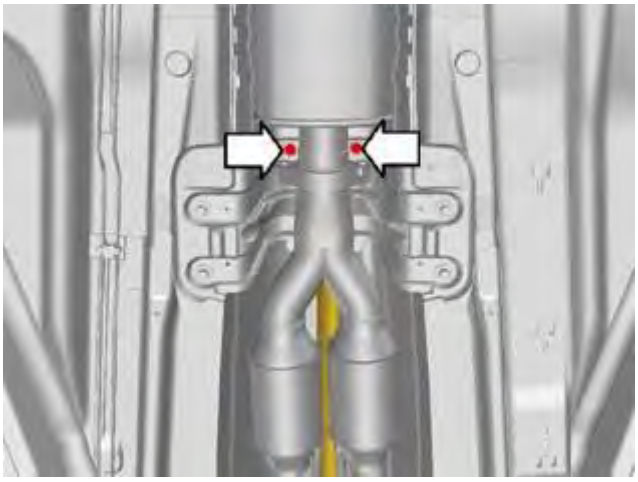

Fig. 35: Identifying Propeller Shaft Removal (1 Of 5)
Courtesy of VOLVO CARS CORPORATION

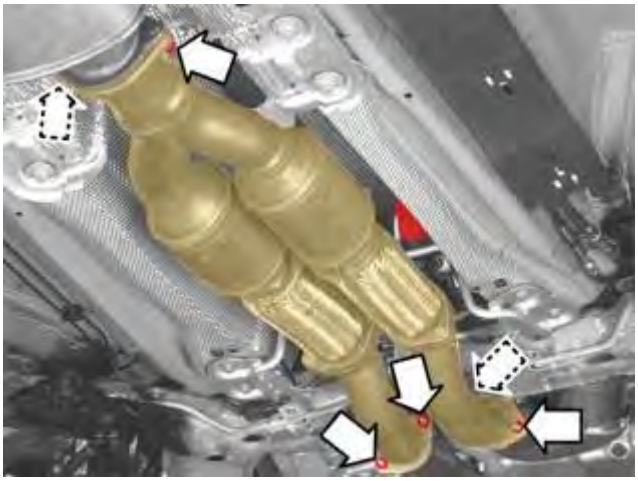

Fig. 36: Identifying Propeller Shaft Removal (2 Of 5)
Courtesy of VOLVO CARS CORPORATION

Fig. 37: Identifying Propeller Shaft Removal (3 Of 5)
Courtesy of VOLVO CARS CORPORATION

NOTE: **If the same propeller shaft is to be installed, mark the position of the flange against the propeller shaft.**

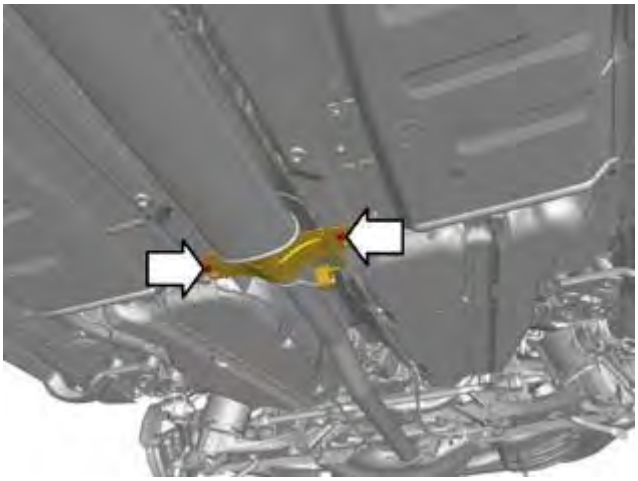

Fig. 38: Identifying Propeller Shaft Removal (4 Of 5)
Courtesy of VOLVO CARS CORPORATION

Fig. 39: Identifying Propeller Shaft Removal (5 Of 5)
Courtesy of VOLVO CARS CORPORATION

Hang the exhaust system.

NOTE: Do not angle down the exhaust system so that the rear end catches the bumper.

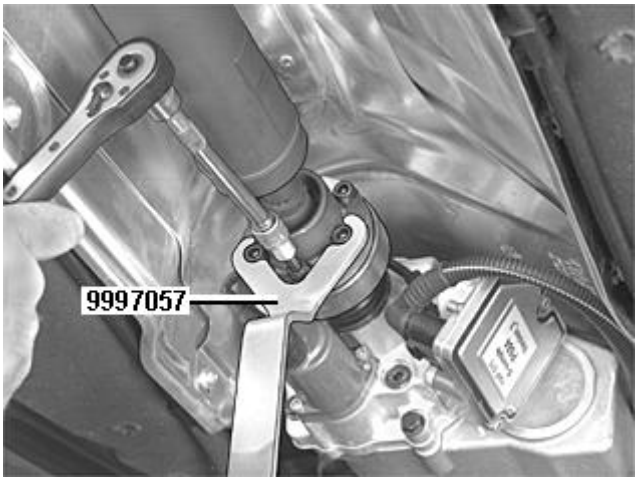

Fig. 40: Disconnecting The Propeller Shaft CV Joint Rear With Counterhold 999 7057
Courtesy of VOLVO CARS CORPORATION

Use see **9997057** .

NOTE: **If the same propeller shaft is to be installed, mark the position of the flange against the propeller shaft.**

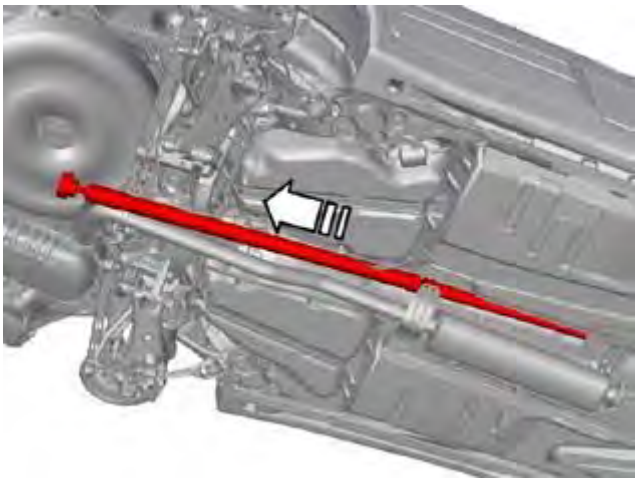

Fig. 41: Identifying Front Constant Velocity Joint
Courtesy of VOLVO CARS CORPORATION

NOTE: **Take care when the front constant velocity joint passes the heat shield on the center bearing.**

INSTALLATION

NOTE: **For tightening torques, see TIGHTENING TORQUE .**

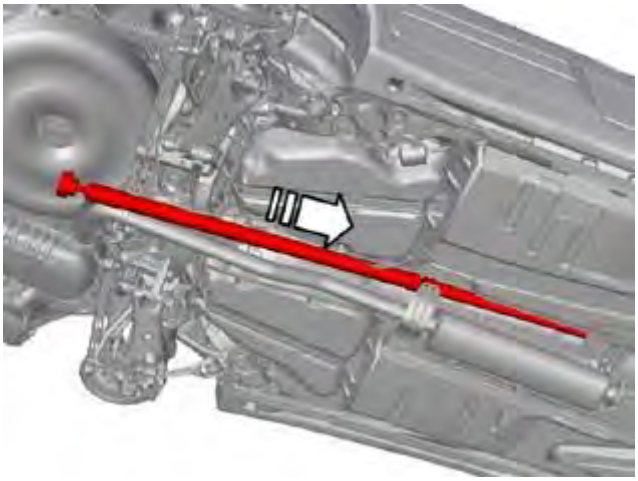

Fig. 42: Identifying Front Constant Velocity Joint
Courtesy of VOLVO CARS CORPORATION

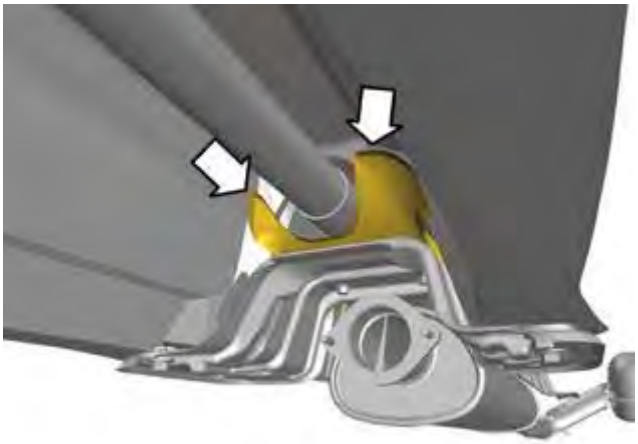

Fig. 43: Adjusting Heatshield
Courtesy of VOLVO CARS CORPORATION

NOTE: **Adjust the heatshield.**

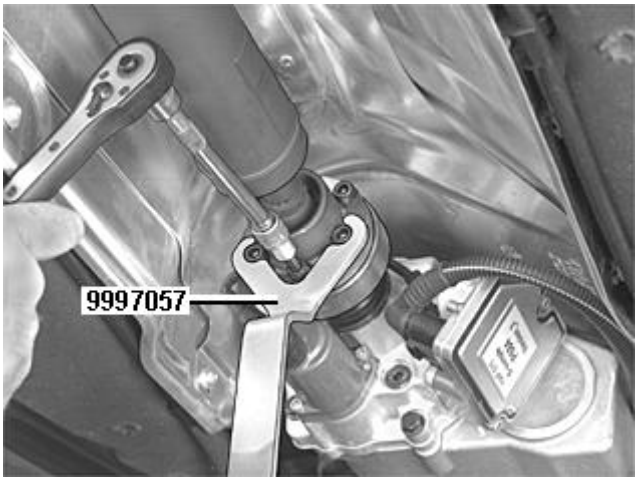

Fig. 44: Disconnecting The Propeller Shaft CV Joint Rear With Counterhold 999 7057
Courtesy of VOLVO CARS CORPORATION

Use **new** screws.

Tighten. See **SUMMARY OF TIGHTENING TORQUES FOR SPECIFIC COMPONENTS** .

Use see **9997057** .

NOTE: **If the same propeller shaft is installed, install according to the previous marking.**

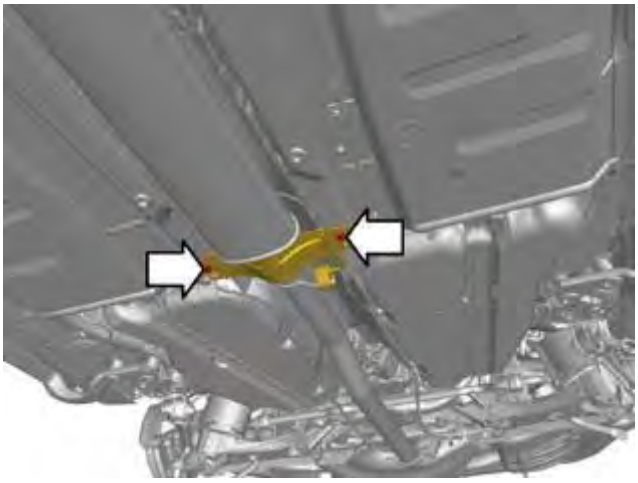

Fig. 45: Identifying Propeller Shaft Installation (1 Of 4)
Courtesy of VOLVO CARS CORPORATION

M8.

Fig. 46: Identifying Propeller Shaft Installation (2 Of 4)
Courtesy of VOLVO CARS CORPORATION

Use **new** screws.

Tighten. See **SUMMARY OF TIGHTENING TORQUES FOR SPECIFIC COMPONENTS** .

NOTE: **If the same propeller shaft is installed, install according to the previous marking.**

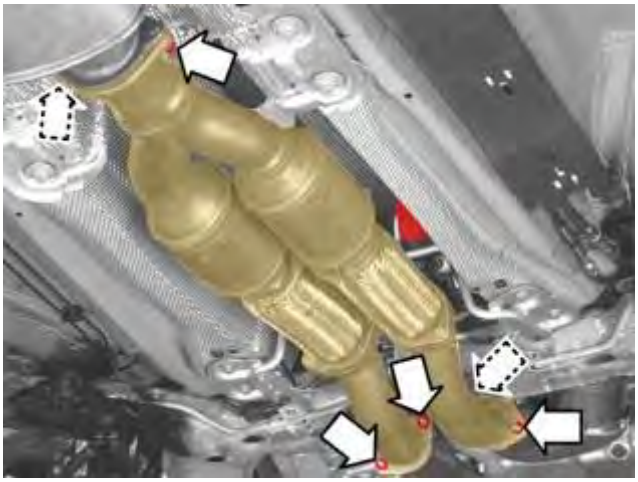

Fig. 47: Identifying Propeller Shaft Installation (3 Of 4)
Courtesy of VOLVO CARS CORPORATION

NOTE: **To ensure that there is no exhaust leakage, see FLANGED JOINT, ASSEMBLING .**

Tighten. See **TIGHTENING TORQUE** .

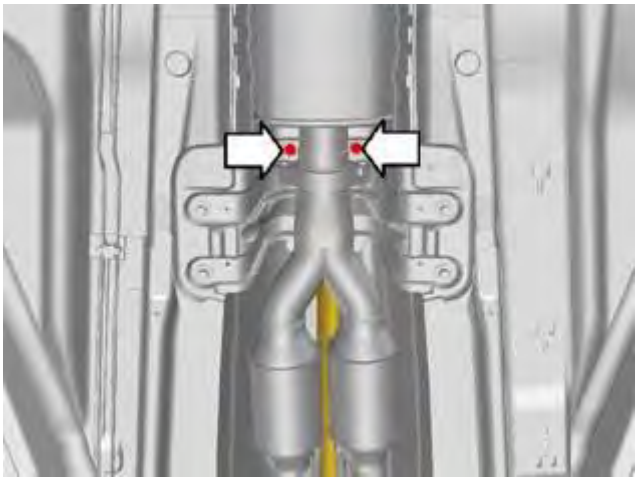

Fig. 48: Identifying Propeller Shaft Installation (4 Of 4)
Courtesy of VOLVO CARS CORPORATION

Tighten. See **SUMMARY OF TIGHTENING TORQUES FOR SPECIFIC COMPONENTS** .

PROPELLER SHAFT (B6324S, TF-80SC AWD; 2007-10)

PROPELLER SHAFT

REMOVAL

NOTE: Removal steps in this procedure may contain installation details.

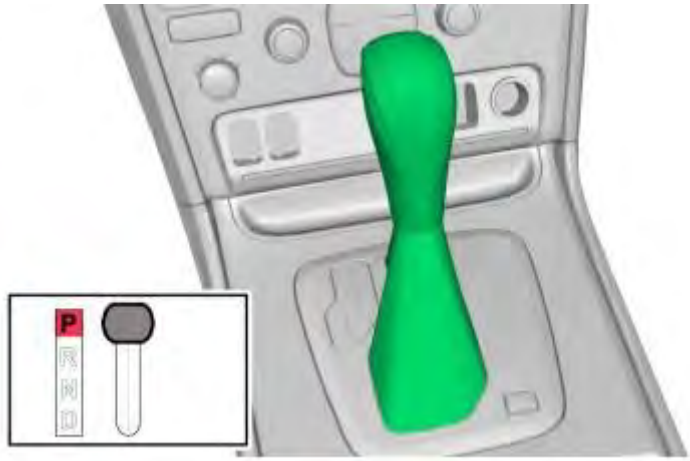

Fig. 49: Identifying Propeller Shaft Removal (1 Of 7)
Courtesy of VOLVO CARS CORPORATION

Remove the catalytic converter. See **CATALYTIC CONVERTER** .

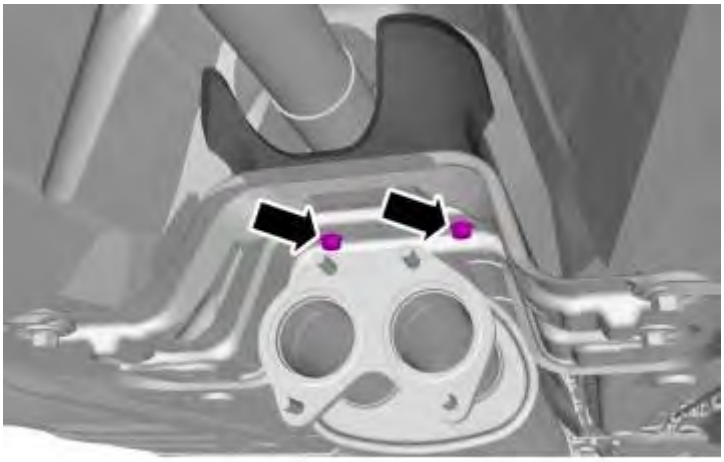

Fig. 50: Identifying Propeller Shaft Removal (2 Of 7)
Courtesy of VOLVO CARS CORPORATION

Tightening torque: Propeller shaft (center bearing). See **TIGHTENING TORQUE** .

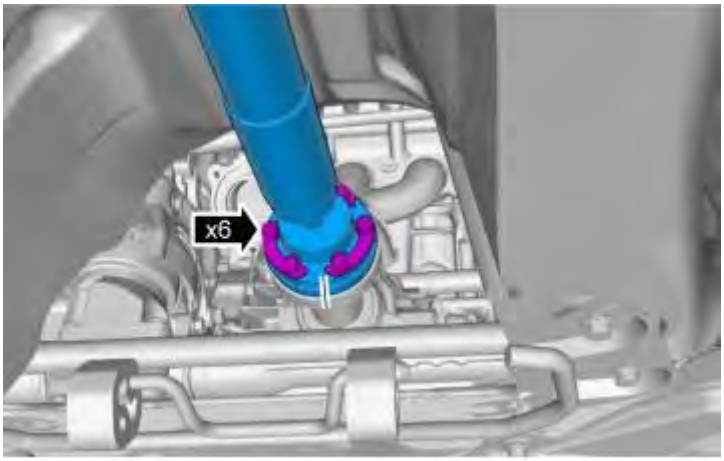

Fig. 51: Identifying Propeller Shaft Removal (3 Of 7)
Courtesy of VOLVO CARS CORPORATION

NOTE: Note the position of the component before removal.

Tightening torque: Propeller shaft (CV joint, 6 screws). See **TIGHTENING TORQUE** .

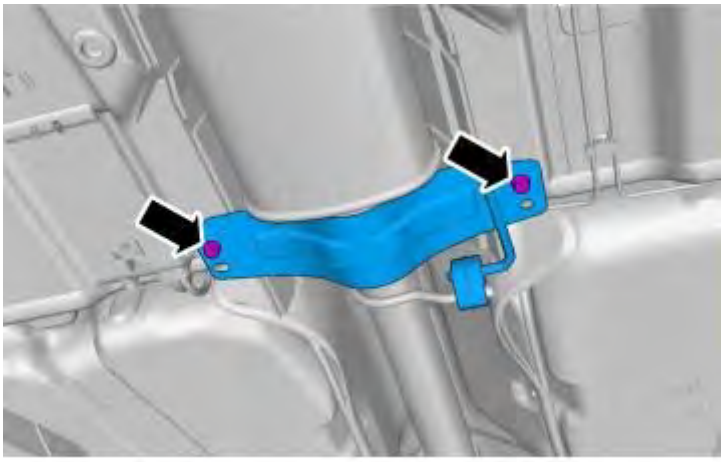

Fig. 52: Identifying Propeller Shaft Removal (4 Of 7)
Courtesy of VOLVO CARS CORPORATION

Tightening torque, M8. See **TIGHTENING TORQUE** .

Fig. 53: Identifying Propeller Shaft Removal (5 Of 7)
Courtesy of VOLVO CARS CORPORATION

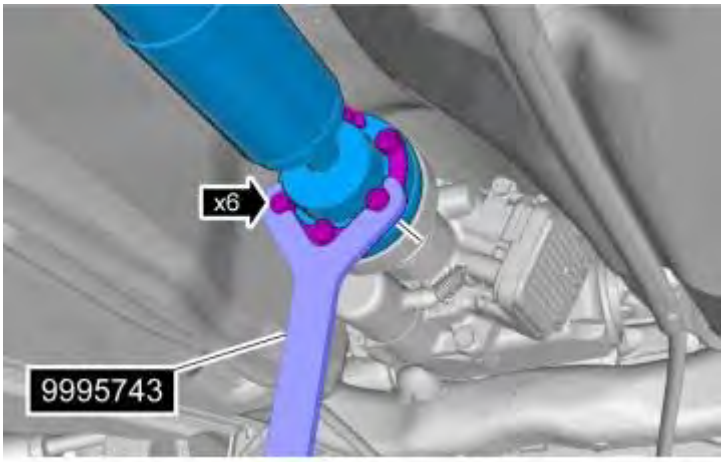

Fig. 54: Identifying Propeller Shaft Removal (6 Of 7)
Courtesy of VOLVO CARS CORPORATION

NOTE: Note the position of the component before removal.

see **9995743** .

Tightening torque: Propeller shaft (CV joint, 6 screws). See **TIGHTENING TORQUE** .

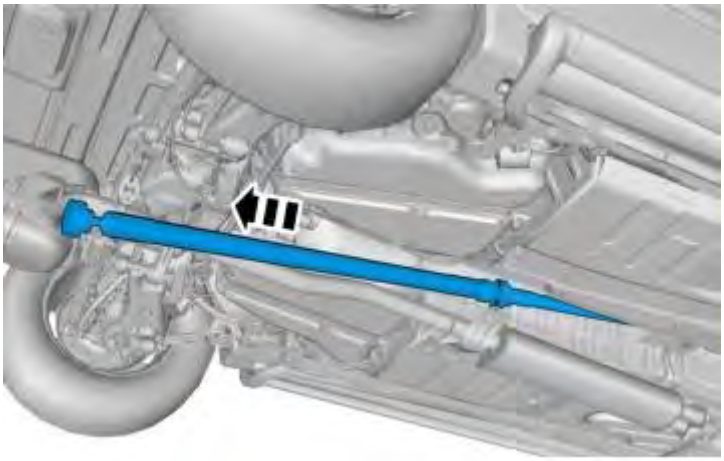

Fig. 55: Identifying Propeller Shaft Removal (7 Of 7)
Courtesy of VOLVO CARS CORPORATION

INSTALLATION

To install, reverse the removal procedure

PROPELLER SHAFT JOINT (CV)

See **PROPELLER SHAFT JOINT (CV)**

PROPELLER SHAFT (B6324S5, TF-80SC AWD; 2011-12)

PROPELLER SHAFT

See **PROPELLER SHAFT**

PROPELLER SHAFT JOINT (CV)

See **PROPELLER SHAFT JOINT (CV)**

DRIVELINE/AXLES

Rear Axle, Drive Shafts - Cleaning, Inspection and Adjustment

TEST DRIVING ACTIVE ON DEMAND COUPLING, AUTOMATIC TRANSMISSION (4T65 AWD; 2003-2006)

TEST DRIVING ACTIVE ON DEMAND COUPLING, AUTOMATIC TRANSMISSION

TEST DRIVING

WARNING: Ensure that the car is safely raised. Check that no objects are caught in the tire treads.

CAUTION: Carry out the test with the car raised so that all four wheels can rotate freely with the mounting at the ends of the control arms to prevent damage to the drive shafts.

NOTE: If the car has STC or DSTC, these functions must be disengaged. Press in the STC/DSTC button on the center console. Hold the button in for at least 2 seconds. The LED on the button must go out.

If the car is equipped with TRACS (traction control system) the function must be deactivated. This is carried out by removing the fuse for the ABS modulator in the engine compartment fusebox. Note that diagnostic trouble codes (DTCs) will be stored in the brake control module (BCM). These must be erased before returning the car to the customer. For further information about the integrated relay/fusebox, see the appropriate Wiring Diagram.

- Ignition off
- Raise the car so that all the wheels are clear of the ground
- Depress the brake pedal
- Move the gear selector to position P
- Start the engine and release the parking brake
- Move the gear selector to position D
- Release the brake pedal when the car is idling. At least one wheel on each axle must rotate
- Depress the accelerator pedal (AP) and maintain a speed of approximately 60-80 km/h. All wheels rotate at the same speed
- Release the accelerator pedal (AP)
- Select N immediately after releasing the accelerator pedal (AP)
- Apply the parking brake when the wheels are still rotating at 60-80 km/h. Check that the rear wheels stop abruptly and that the front wheels continue to rotate
- Release the parking brake and depress the brake pedal. All wheels must stop

- Move the gear selector to position D
- Release the brake pedal. Check that at least one wheel on each axle rotates
- Depress the brake pedal
- Move the gear selector to position P
- Start the engine with the parking brake applied. The indicator lamp in the driver information module (DIM) must light - signal to the differential electronic module (DEM)
- Move the gear selector to position D
- Release the brake pedal when the car is idling. Check that the front wheels rotate slowly and the rear wheels do not rotate.

TEST DRIVING ACTIVE ON DEMAND COUPLING, AUTOMATIC TRANSMISSION (AW50/51 AWD; 2003-2007)

TEST DRIVING ACTIVE ON DEMAND COUPLING, AUTOMATIC TRANSMISSION

see **TEST DRIVING ACTIVE ON DEMAND COUPLING, AUTOMATIC TRANSMISSION**

TEST DRIVING ACTIVE ON DEMAND COUPLING, AUTOMATIC TRANSMISSION (TF-80SC AWD; 2005-2012)

TEST DRIVING ACTIVE ON DEMAND COUPLING, AUTOMATIC TRANSMISSION

see **TEST DRIVING ACTIVE ON DEMAND COUPLING, AUTOMATIC TRANSMISSION**

TEST DRIVING ON LIFT, AUTOMATIC TRANSMISSION (4T65 AWD; 2003-2006)

TEST DRIVING ON LIFT, AUTOMATIC TRANSMISSION

TEST DRIVING

WARNING: Ensure that the vehicle is safely raised. Check that no objects are caught in the tire treads.

CAUTION: The test must be carried out on a raised vehicle so that all four wheels are free to turn, with attachment a long way out on the link arms, so as not to damage the drive shafts.

NOTE: If the vehicle has STC or DSTC, the function must be deactivated.

HINT: Read the oil pressure sensor signal using parameter readout, graphical display.

- Ignition off.

- Raise the vehicle so that all the wheels hang free.
- Depress the brake pedal.
- Move the gear selector lever to the P position.
- Start the engine.
- Move the gear selector lever to the D position.
- Release the brake pedal so that the vehicle idles. At least one wheel on each axle should rotate.

Read the oil pressure sensor signal to check functionality. Oil pressure must be between 0.5 and 1.0 MPa.

- Switch off the engine.
- Move the gear selector lever to the P position.
- Engage the parking brake.
- Start the engine.
- Move the gear selector lever to the D position.
- Release the brake pedal slowly when the car is idling ("simulating starting in reverse").
- The front wheels should now rotate slower than normal and the rear wheels should be stationary.

Read the oil pressure sensor signal to check functionality. Oil pressure should be between 1.0 and 1.5 MPa.

TEST DRIVING ON LIFT, AUTOMATIC TRANSMISSION (AW50/51 AWD; 2003-2007)

TEST DRIVING ON LIFT, AUTOMATIC TRANSMISSION

see **TEST DRIVING ON LIFT, AUTOMATIC TRANSMISSION**

DRIVELINE/AXLES

Rear Axle, Drive Shafts - Component Location

COMPONENT LOCATIONS, DIFFERENTIAL ELECTRONIC MODULE (DEM) (B6324S, TF-80SC AWD; 2007-2008)

COMPONENT LOCATIONS

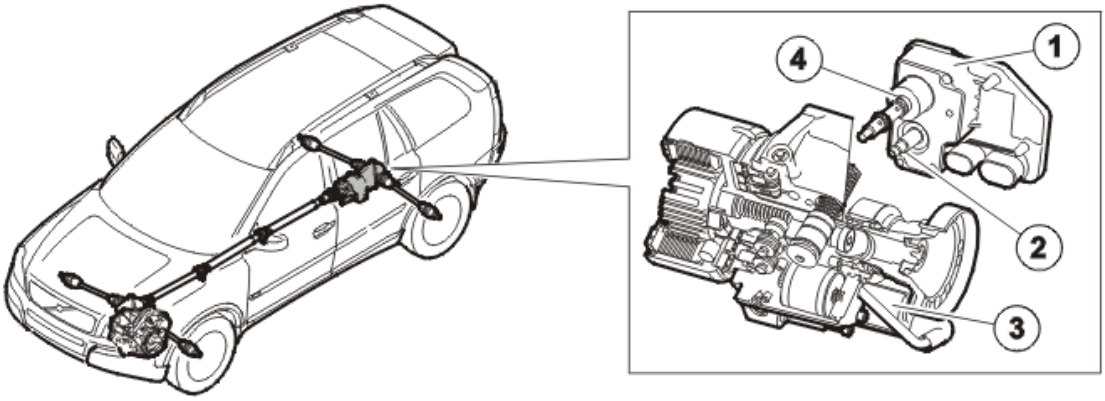

Fig. 1: Differential Electronic Module Component Overview
Courtesy of VOLVO CARS CORPORATION

Overview

1. Differential Electronic Module (DEM)
2. Oil pressure and temperature sensor
3. Electric feed pump
4. Control valve/axial solenoid

COMPONENT LOCATIONS, DIFFERENTIAL ELECTRONIC MODULE (DEM) (B6324S, TF-80SC AWD; 2009-2010)

LOCATION OF COMPONENTS

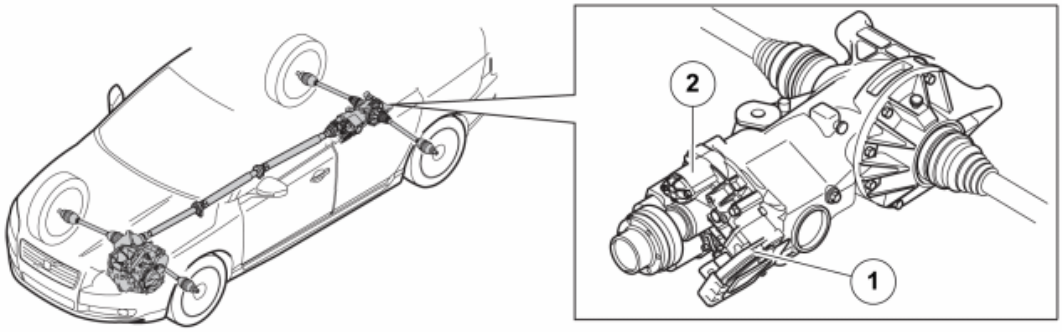

Fig. 2: Differential Electronic Module And Electric Feed Pump
Courtesy of VOLVO CARS CORPORATION

Overview

1. Differential electronic module (DEM)
2. Electric feed pump

COMPONENT LOCATIONS, DIFFERENTIAL ELECTRONIC MODULE (DEM) (B6324S5, TF-80SC AWD; 2011-2012)

LOCATION OF COMPONENTS

see **LOCATION OF COMPONENTS**

COMPONENT LOCATIONS, DIFFERENTIAL ELECTRONIC MODULE (DEM) (B8444S, TF-80SC AWD; 2006-2008)

COMPONENT LOCATIONS

see **COMPONENT LOCATIONS**

COMPONENT LOCATIONS, DIFFERENTIAL ELECTRONIC MODULE (DEM) (B8444S, TF-80SC AWD; 2009-2011)

LOCATION OF COMPONENTS

see **LOCATION OF COMPONENTS**

COMPONENT LOCATIONS, DIFFERENTIAL ELECTRONIC MODULE (DEM) (TF-80SC AWD; 2005)

COMPONENT LOCATIONS

see **COMPONENT LOCATIONS**

LOCATION OF COMPONENTS, DIFFERENTIAL ELECTRONIC MODULE (DEM) (4T65 AWD; 2005-2006)

LOCATION OF COMPONENTS

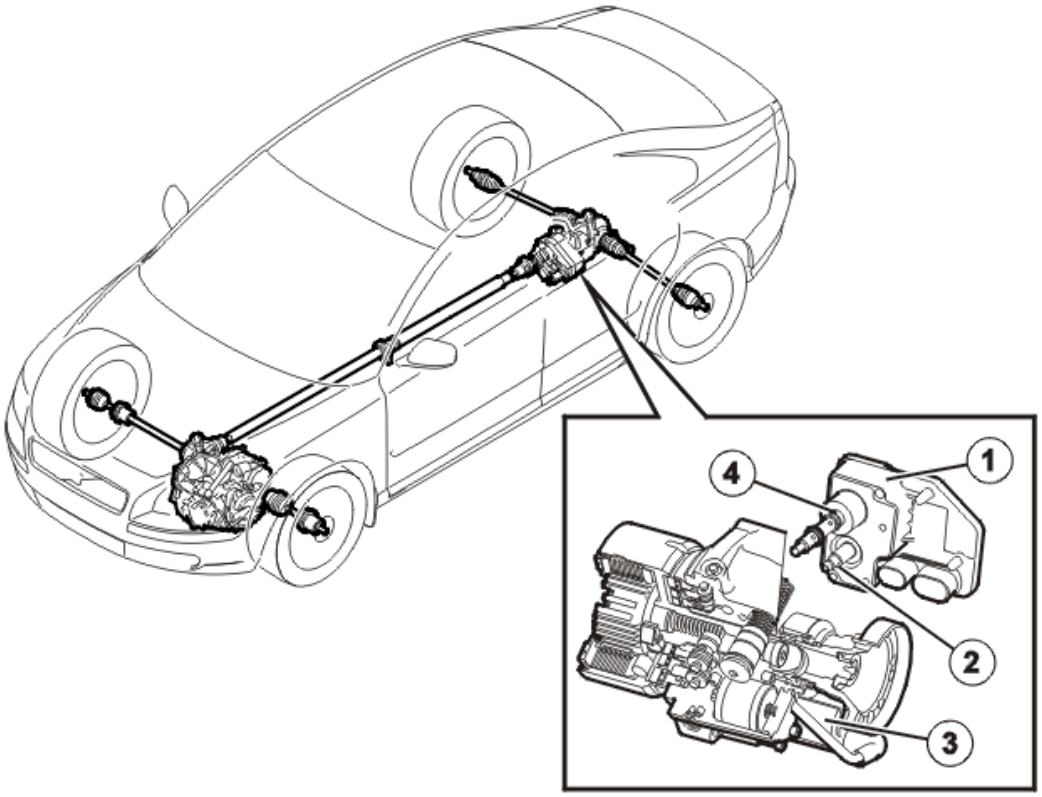

Fig. 3: Differential Electronic Module Component Overview
Courtesy of VOLVO CARS CORPORATION

Overview

1. Differential electronic module (DEM)
2. Oil pressure and temperature sensor
3. Electric feed pump
4. Control valve/axial solenoid.

LOCATION OF COMPONENTS, DIFFERENTIAL ELECTRONIC MODULE (DEM) (AW50/51 AWD; 2005-2007)

LOCATION OF COMPONENTS

see **LOCATION OF COMPONENTS**

DRIVELINE/AXLES

Rear Axle, Drive Shafts - Design and Function

ACTIVE ON DEMAND COUPLING (AOC) (2003-2004)

DESIGN

see **DESIGN**

DIAGNOSTIC FUNCTIONS

see **DIAGNOSTIC FUNCTIONS**

DOWNLOADING SOFTWARE AND REPLACING THE CONTROL MODULE

see **DOWNLOADING SOFTWARE AND REPLACING THE CONTROL MODULE**

FUNCTION

see **FUNCTION**

SYSTEM OVERVIEW

see **SYSTEM OVERVIEW**

DIFFERENTIAL ELECTRONIC MODULE (DEM) (4T65 AWD; 2005-2006)

DESIGN

see **DESIGN**

DIAGNOSTIC FUNCTIONS

see **DIAGNOSTIC FUNCTIONS**

DOWNLOADING SOFTWARE AND REPLACING THE CONTROL MODULE

see **DOWNLOADING SOFTWARE AND REPLACING THE CONTROL MODULE**

FUNCTION

see **FUNCTION**

SYSTEM OVERVIEW

see **SYSTEM OVERVIEW**

DIFFERENTIAL ELECTRONIC MODULE (DEM) (AW50/51 AWD; 2005-2007)

DESIGN

see **DESIGN**

DIAGNOSTIC FUNCTIONS

see **DIAGNOSTIC FUNCTIONS**

DOWNLOADING SOFTWARE AND REPLACING THE CONTROL MODULE

see **DOWNLOADING SOFTWARE AND REPLACING THE CONTROL MODULE**

FUNCTION

see **FUNCTION**

SYSTEM OVERVIEW

see **SYSTEM OVERVIEW**

DIFFERENTIAL ELECTRONIC MODULE (DEM) (TF-80SC AWD; 2009-2012)

DESIGN

see **DESIGN**

DIAGNOSTIC FUNCTIONS

see **DIAGNOSTIC FUNCTIONS**

DOWNLOADING SOFTWARE AND REPLACING THE CONTROL MODULE

see **DOWNLOADING SOFTWARE AND REPLACING THE CONTROL MODULE**

FUNCTION

see **FUNCTION**

SYSTEM OVERVIEW

see **SYSTEM OVERVIEW**

DIFFERENTIAL ELECTRONIC MODULE (DEM) (TF-80SC AWD; 2005-2008)

DESIGN

see **DESIGN**

DIAGNOSTIC FUNCTIONS

see **DIAGNOSTIC FUNCTIONS**

DOWNLOADING SOFTWARE AND REPLACING THE CONTROL MODULE

see **DOWNLOADING SOFTWARE AND REPLACING THE CONTROL MODULE**

FUNCTION

see **FUNCTION**

SYSTEM OVERVIEW

see **SYSTEM OVERVIEW**

DRIVELINE/AXLES

Rear Axle, Drive Shafts - Diagnostic Trouble Codes And Associated Procedures

DEM-0006: FEED PUMP. FAULTY SIGNAL (4T65 AWD; AW50/51 AWD; 2003-2004)

DIAGNOSTIC TROUBLE CODE (DTC) INFORMATION DEM-0006

Condition

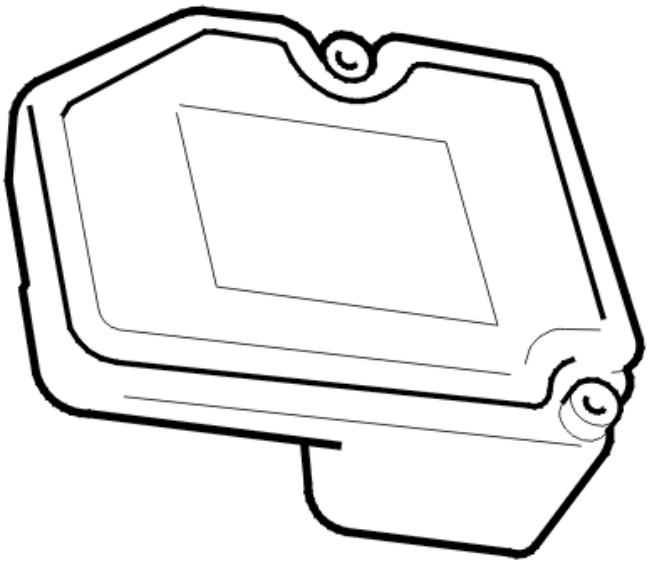

Fig. 1: Identifying Differential Electronic Module
Courtesy of VOLVO CARS CORPORATION

The differential electronic module (DEM) checks if the signal from the feed pump is within the permitted limits by comparing the signal with a calculated value.

Diagnostic trouble code (DTC) ECM-0006 is stored if the control module receives a signal from the feed pump corresponding to a current higher than 8191 mA. The control module interprets this as a fault.

Diagnostic trouble code (DTC) DEM 0006 can be diagnosed with the engine running and the engine speed (RPM) >500 rpm.

Substitute Value

- Four wheel drive is blocked.

Possible Source

- Defective feed pump.

Fault symptom[s]

- Four wheel drive is not functioning.

FAULTY SIGNAL

CHECKING THE PUMP MOTOR

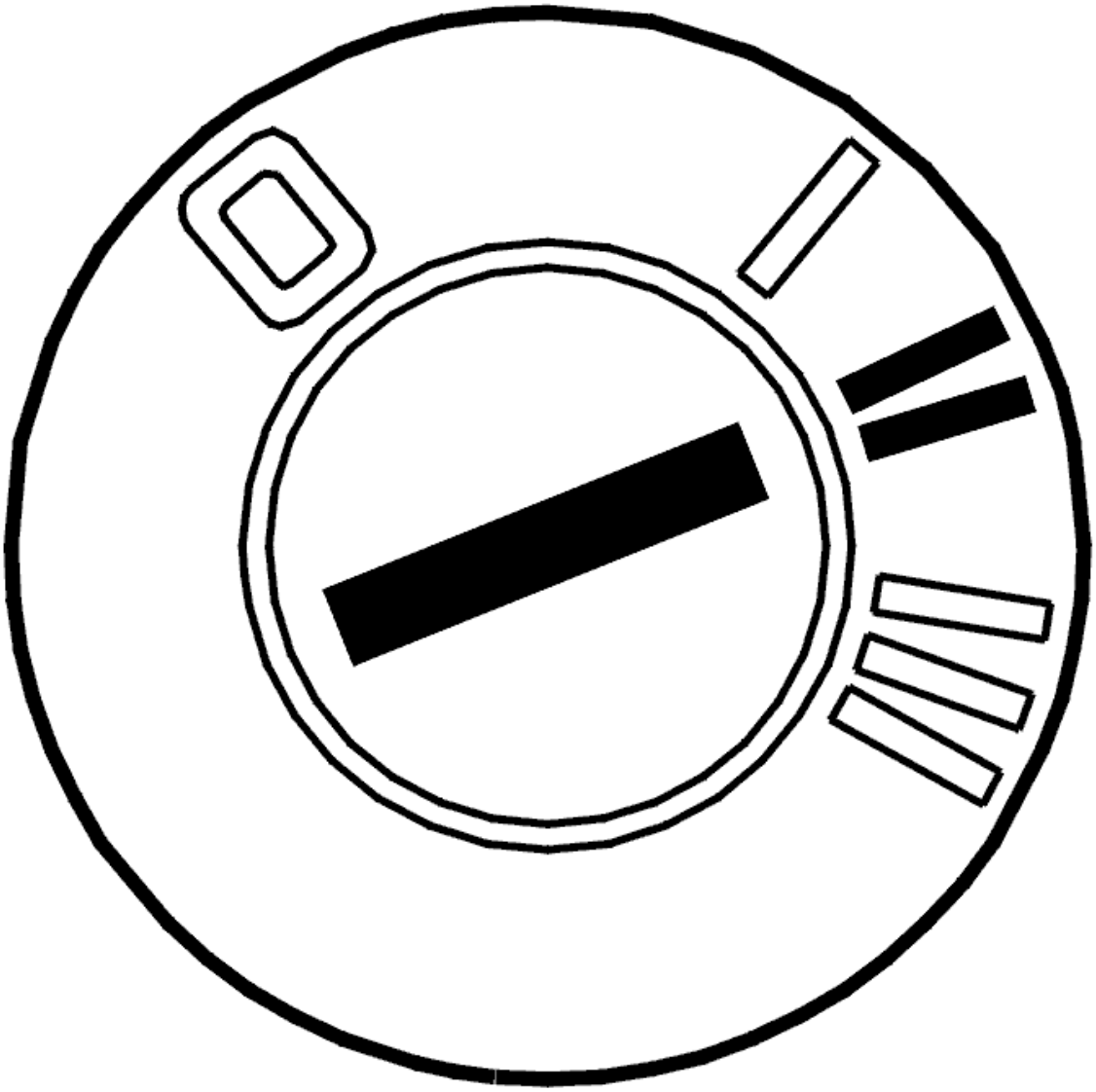

Fig. 2: Identifying Ignition ON
Courtesy of VOLVO CARS CORPORATION

- Ignition on.

  Check if the pump motor in the unit for four wheel drive (Active on Demand Coupling) starts and runs normally.

  HINT: The motor must hum and vibrate slightly. Listen using a stethoscope or a screwdriver pressed to your ear

  Fig. 3: Locating Active On Demand Coupling Pump Motor
  Courtesy of VOLVO CARS CORPORATION

Is the oil pump motor working?

- **YES**

  FAULT NOT FOUND: Troubleshooting has been completed.

- **NO**

  Refer to **CHECKING THE STATUS**

CHECKING THE STATUS

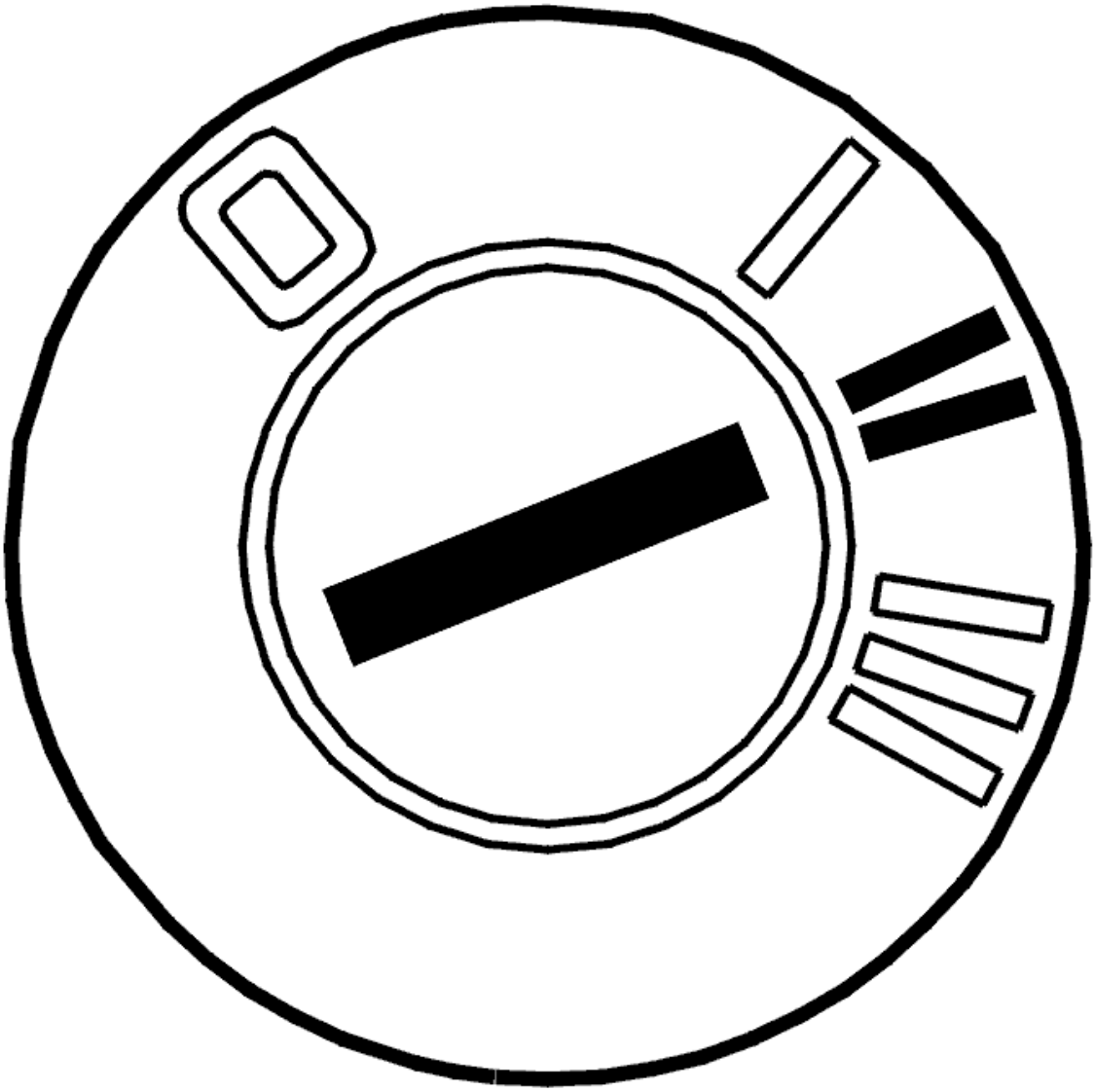

Fig. 4: Identifying Ignition ON
Courtesy of VOLVO CARS CORPORATION

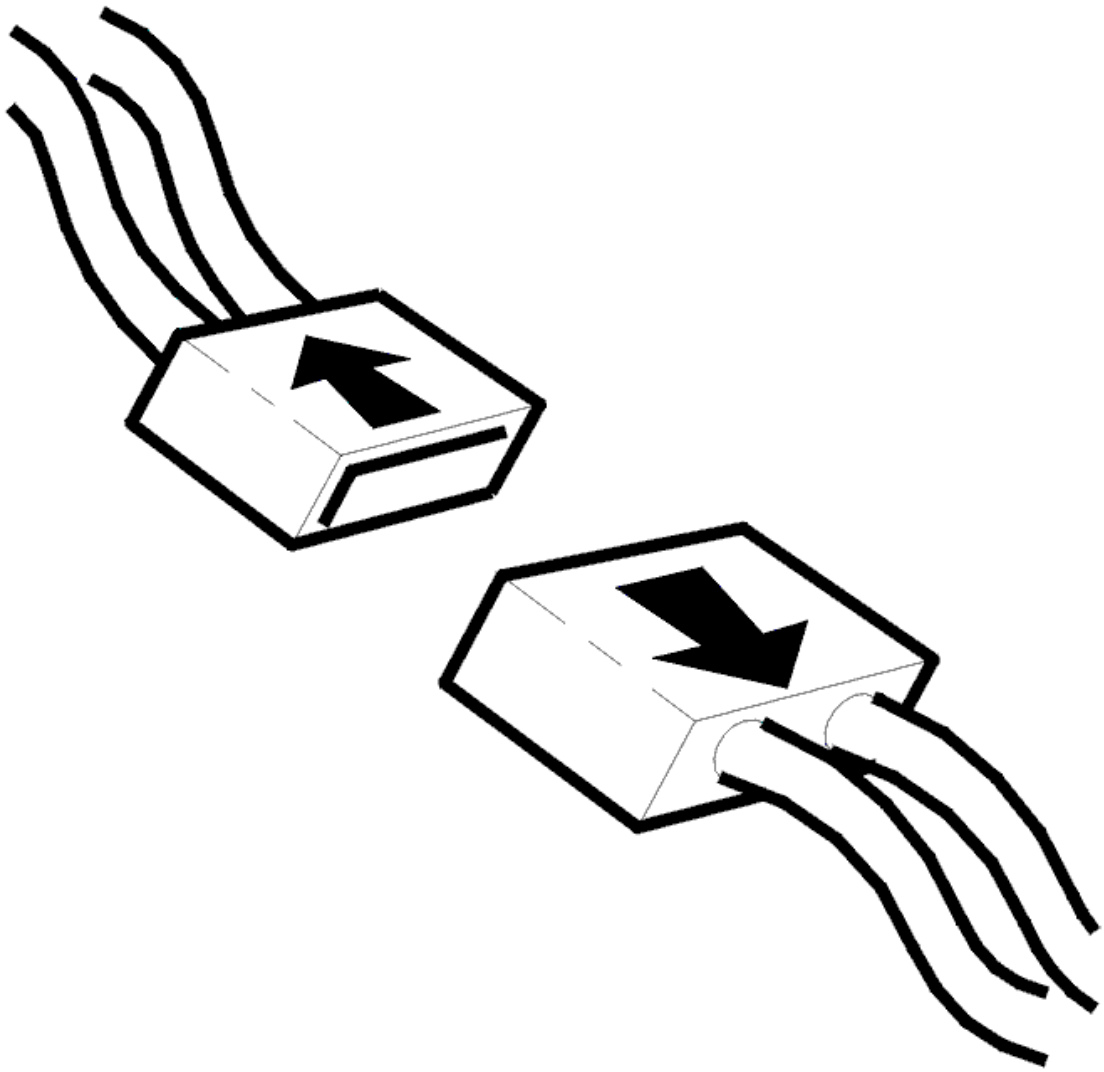

Fig. 5: Disconnecting Connector
Courtesy of VOLVO CARS CORPORATION

- Ignition on
- Disconnect the 2-pin connector for the feed pump.

  Disconnect the connector from the differential electronic module (DEM) to the feed pump. Take a reading using a voltmeter between terminals #1 and #2 on the connector for the pump motor. The voltmeter should read battery voltage.

  If the voltage was OK, check the connector. Check for bent or damaged pins.

  Remedy as necessary.

  Other information:

- For information about signals, see **SIGNAL SPECIFICATION, CONTROL MODULE FOR FOUR WHEEL DRIVE**
- see **CHECKING WIRING AND TERMINALS** .

Select an alternative below:

1. Faulty power supply. Refer to **REPLACING THE CONTROL MODULE**
2. Bent or damaged terminals **OKAY:** Troubleshooting has been completed.
3. No fault detected. Refer to **REPLACING THE COMPONENT**

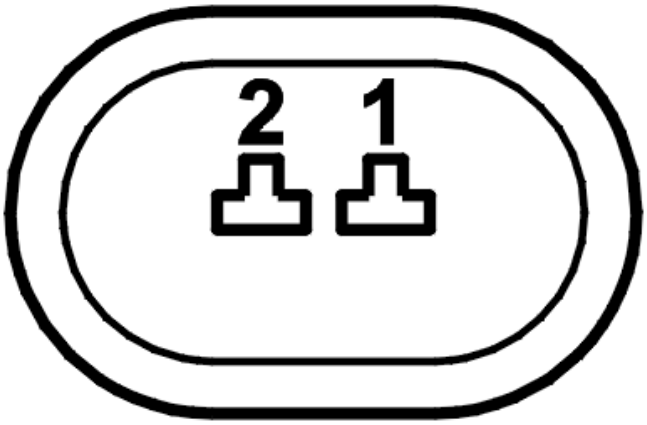

Fig. 6: Identifying Connector Terminals
Courtesy of VOLVO CARS CORPORATION

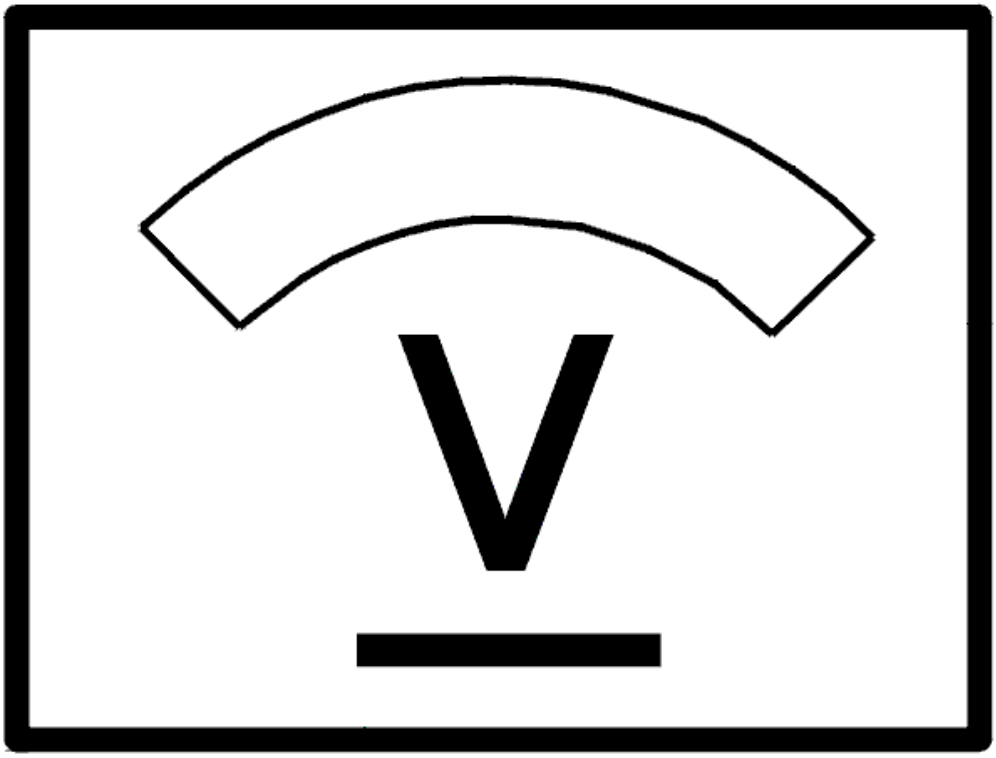

Fig. 7: Identifying Voltage Display
Courtesy of VOLVO CARS CORPORATION

REPLACING THE CONTROL MODULE

Replace the differential electronic module (DEM).

- For AW50AWD and 4T65AWD 2003-, see **DIFFERENTIAL ELECTRONIC MODULE (DEM), REPLACING**
- For TF-80SC 2005- see **DIFFERENTIAL ELECTRONIC MODULE (DEM), REPLACING (2005-2008)** .

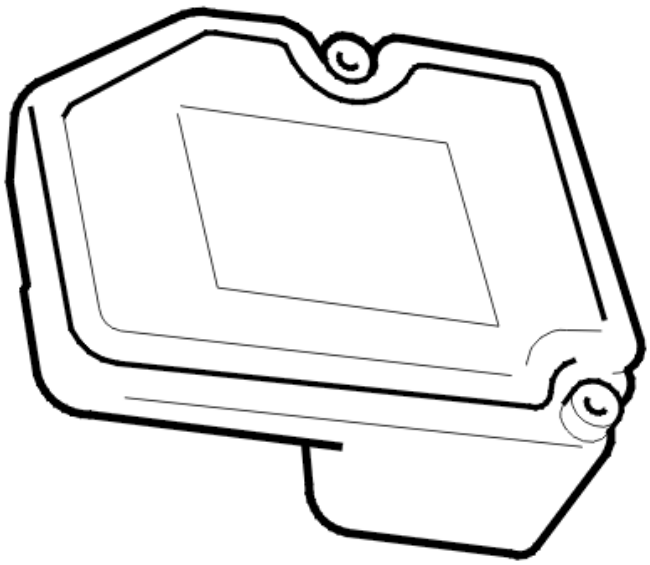

Fig. 8: Identifying Differential Electronic Module
Courtesy of VOLVO CARS CORPORATION

- **Continue**

  Refer to **VERIFICATION**

REPLACING THE COMPONENT

Replace the feed pump. See **OIL PUMP ACTIVE ON DEMAND COUPLING (AOC), REPLACING** .

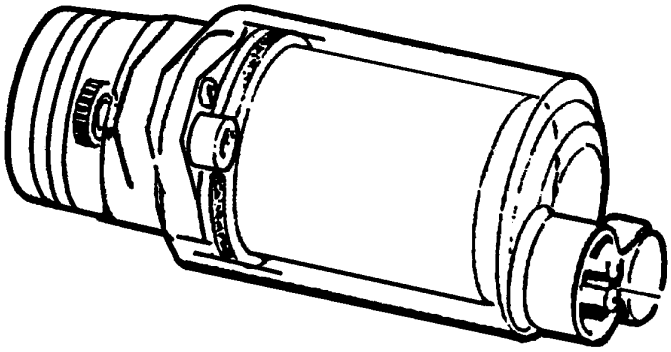

Fig. 9: Electrical Feed Pump

Courtesy of VOLVO CARS CORPORATION

- **Continue**

  Refer to **VERIFICATION**

VERIFICATION

HINT: After carrying out the repair, check that the fault has been remedied.

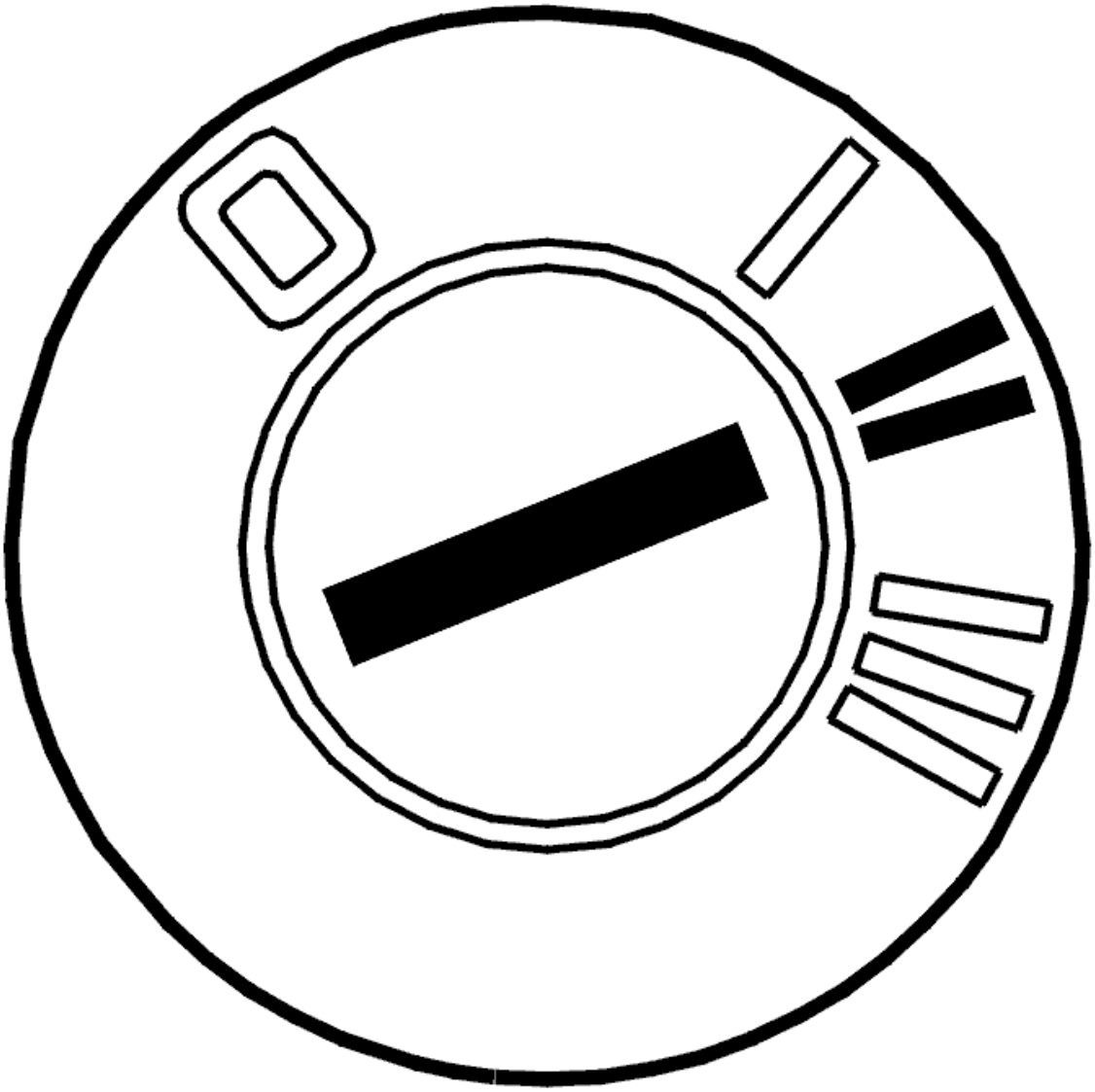

Fig. 10: Identifying Ignition ON
Courtesy of VOLVO CARS CORPORATION

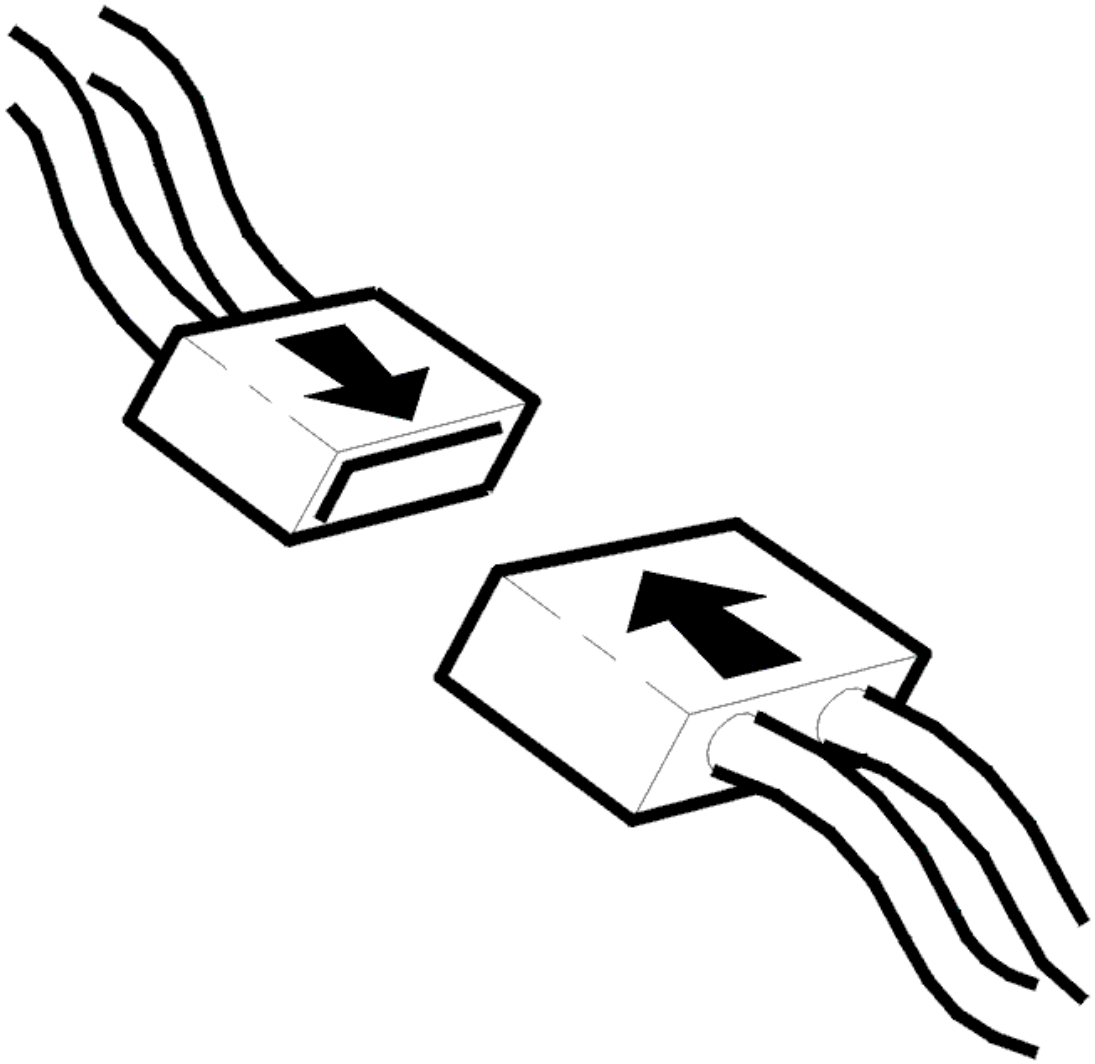

Fig. 11: Connecting Connector
Courtesy of VOLVO CARS CORPORATION

- Ignition off
- Reconnect the connectors, reinstall components etc.
- Ignition on.

  Check if the pump motor in the unit for four wheel drive (Active on Demand Coupling) starts and runs normally.

  HINT: The motor must hum and vibrate slightly. Listen using a stethoscope or a screwdriver pressed to your ear.

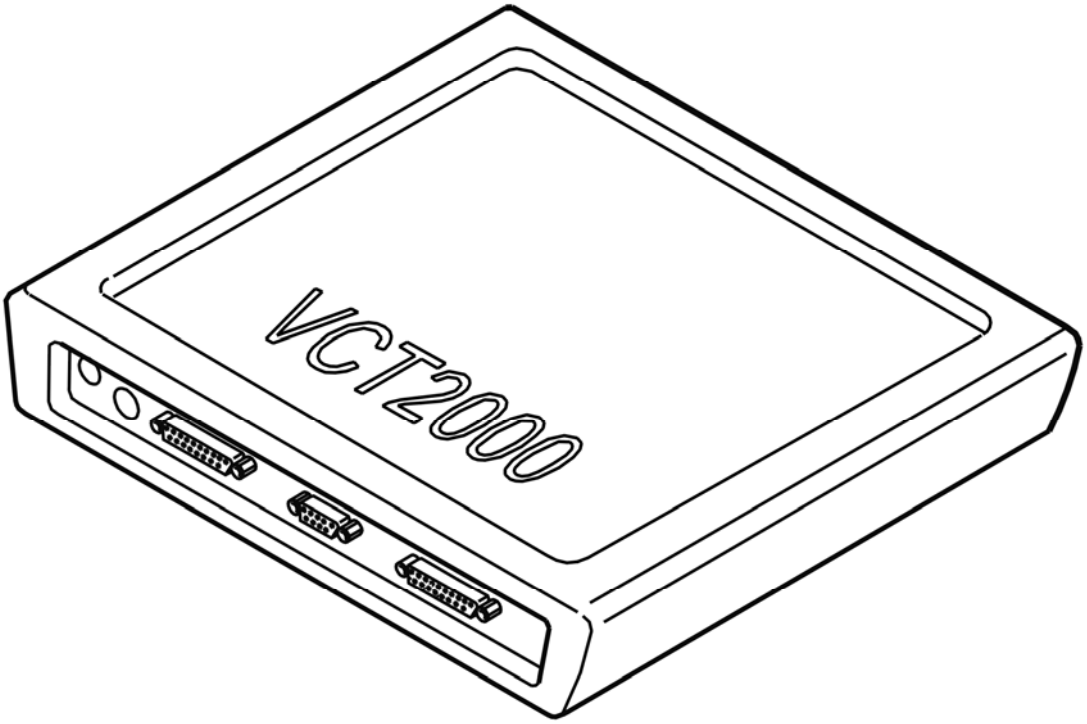

Fig. 12: Identifying VCT2000 Diagnostic Tool Symbol In VIDA
Courtesy of VOLVO CARS CORPORATION

Is the oil pump motor working?

- **YES**

  OKAY: Troubleshooting has been completed.

- **NO**

  Refer to **INFORMATION**

INFORMATION

FAULT-TRACING INFORMATION

The fault should have been detected and remedied. As this is not the case fault-tracing has failed.

Exit fault-tracing for this diagnostic trouble code (DTC) or make another attempt.

DEM-0006: FEED PUMP. FAULTY SIGNAL (4T65 AWD; 2005-2006)

DIAGNOSTIC TROUBLE CODE (DTC) INFORMATION DEM-0006

Condition

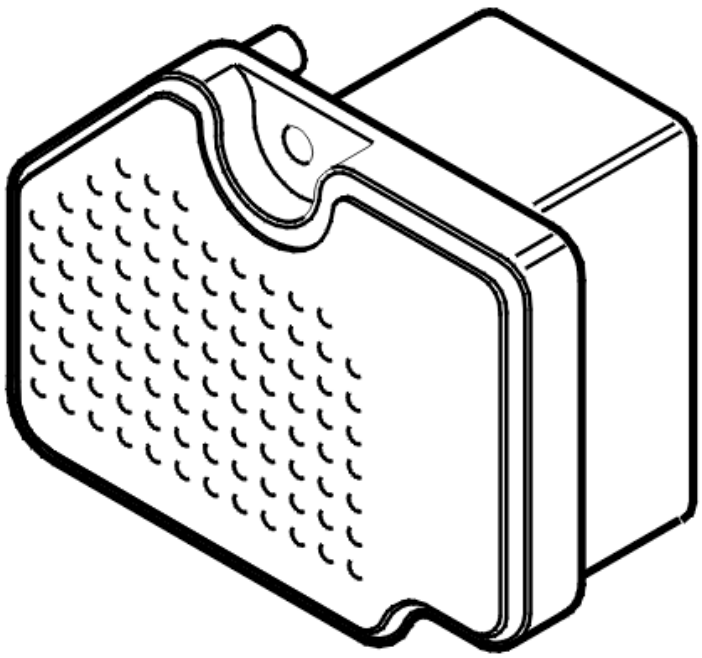

Fig. 13: Active On Demand Coupling Control Module
Courtesy of VOLVO CARS CORPORATION

The differential electronic module (DEM) checks if the signal from the feed pump is within the permitted range by comparing the signal with predefined parameters.

The diagnostic trouble code (DTC) is stored if the control module registers a incorrect signal, i. e. a current value outside the predefined parameters.

The diagnostic trouble code (DTC) can be diagnosed with the engine running and the engine speed (RPM) greater than 500 rpm.

Substitute Value

- Four wheel drive is disengaged.

Possible Source

- Damaged feed pump

  Signal too high

- Short-circuit to ground.
- Damaged cable harness to the feed pump

Signal too high

- Short-circuit to ground.

Fault symptom[s]

- Four wheel drive is not functioning.

FAULTY SIGNAL

CHECKING THE STATUS

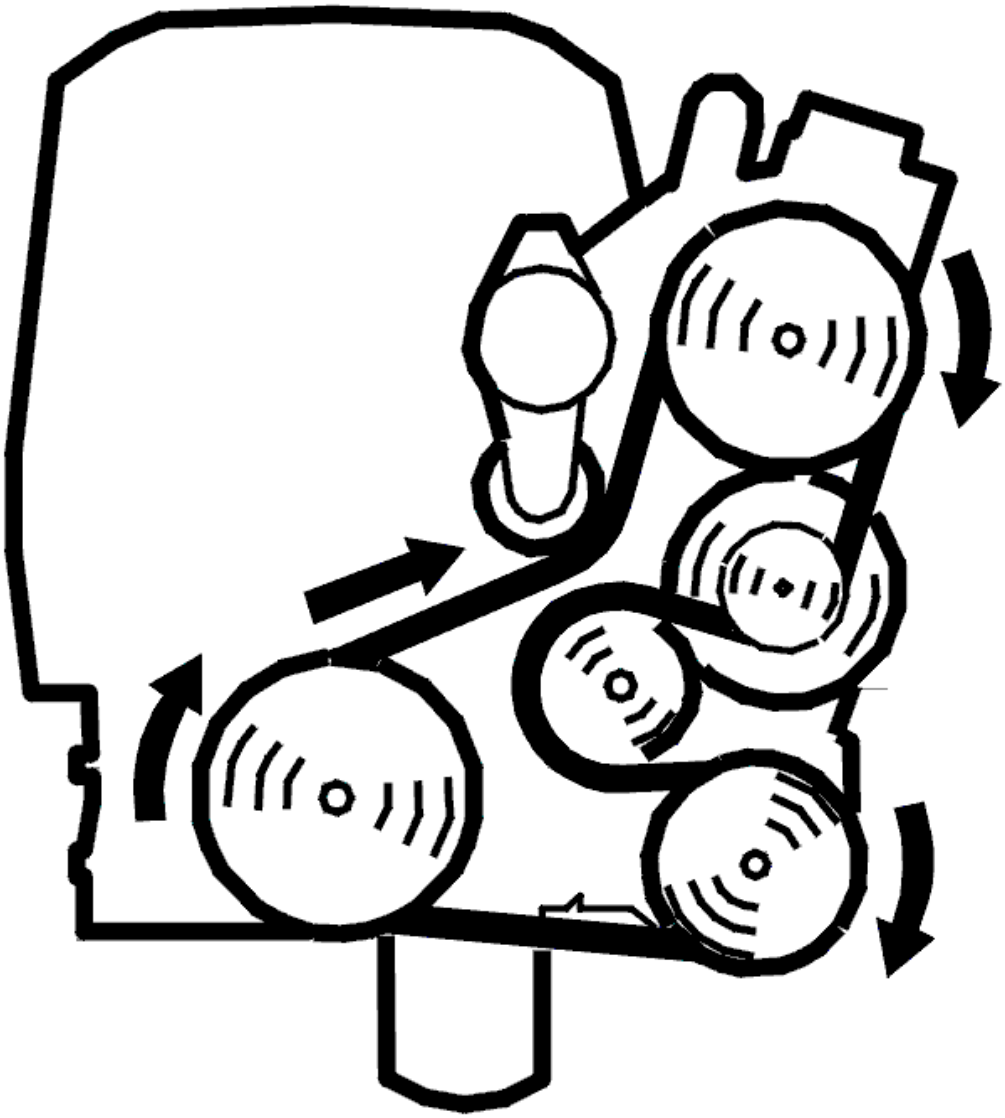

Fig. 14: Belt Routing / Engine Idling - Volvo
Courtesy of VOLVO CARS CORPORATION

- Engine idling.

  Check if the pump motor in the unit for four wheel drive (Active on Demand Coupling) starts and runs normally.

  HINT: The motor must hum and vibrate slightly. Listen using a stethoscope or a screwdriver pressed to your ear.

  If the pump motor starts, this is an indication that the fault was present previously but that it is not active at the moment, i. e. the fault is intermittent.

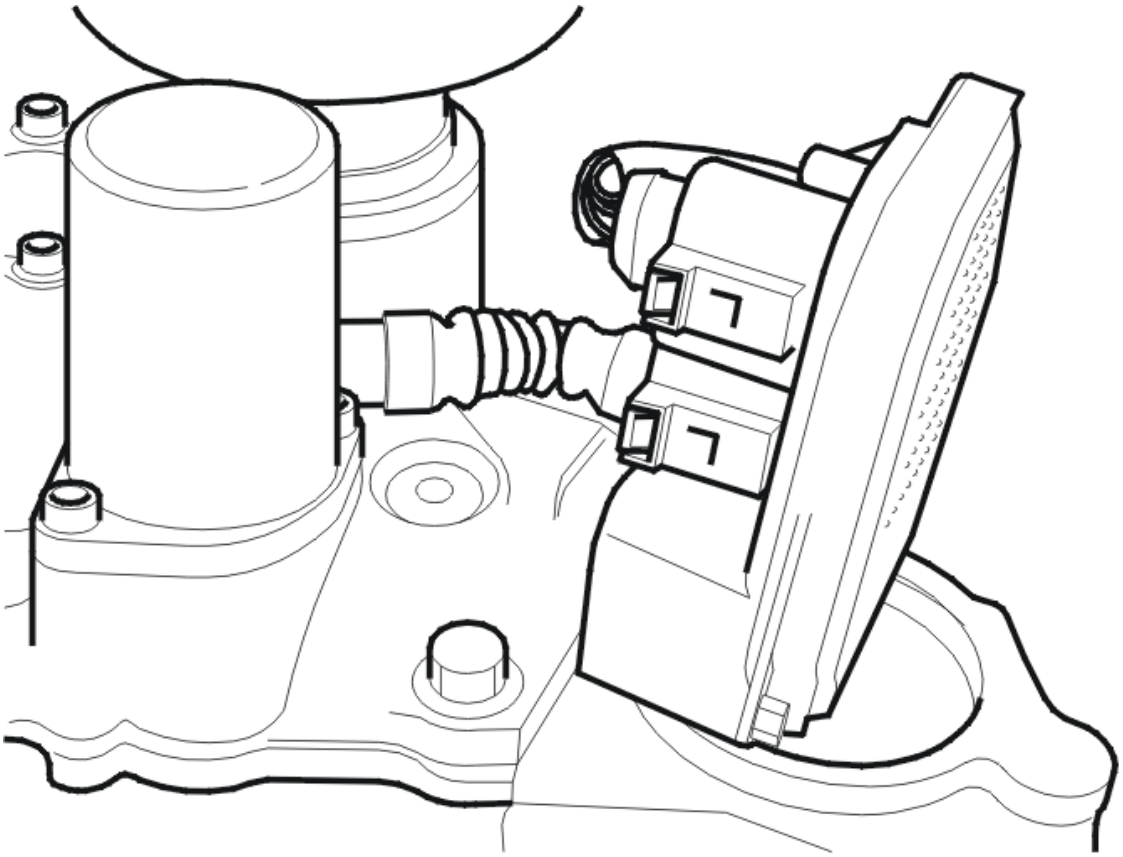

Fig. 15: Identifying Active On Demand Coupling Components
Courtesy of VOLVO CARS CORPORATION

- **Continue**

  Refer to **CHECKING THE CONNECTORS AND CABLES**

CHECKING THE CONNECTORS AND CABLES

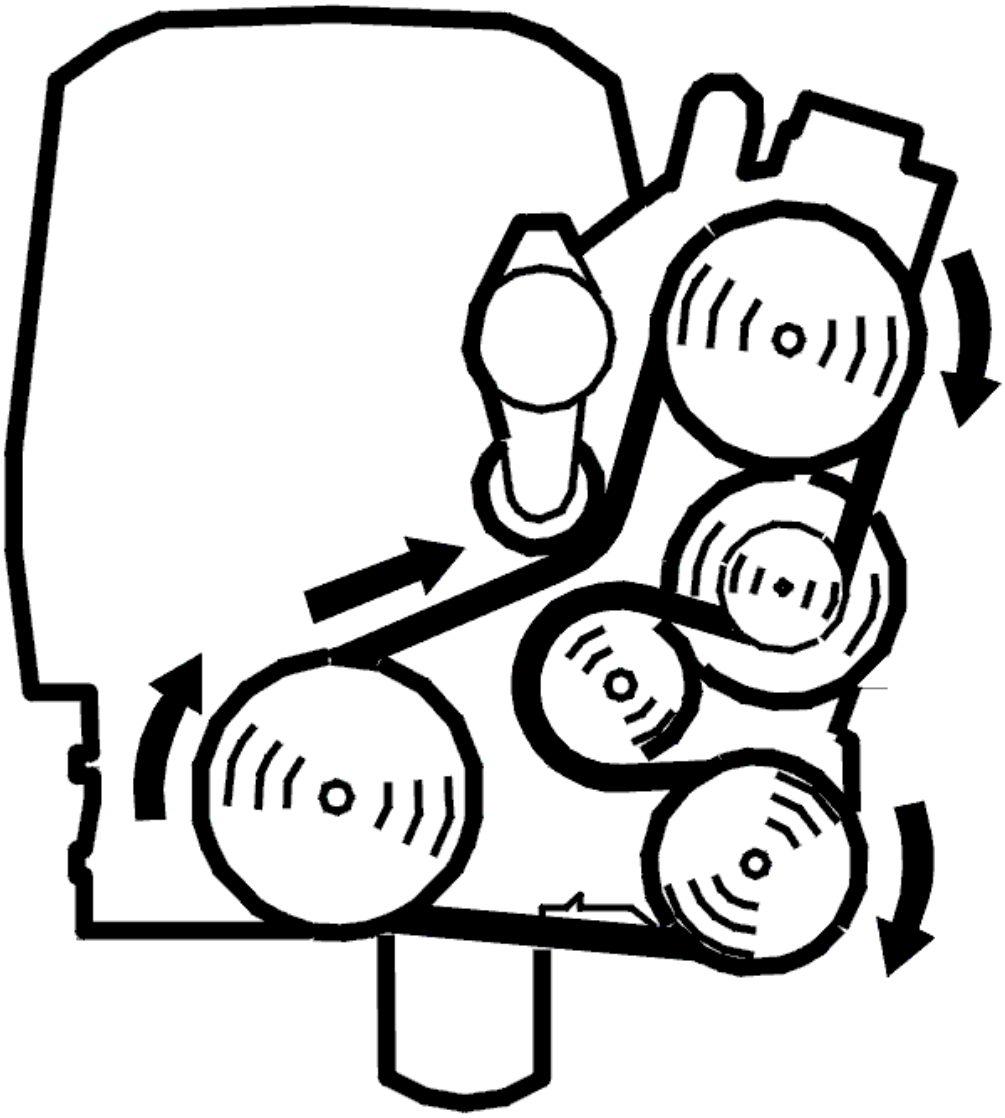

Fig. 16: Belt Routing / Engine Idling - Volvo
Courtesy of VOLVO CARS CORPORATION

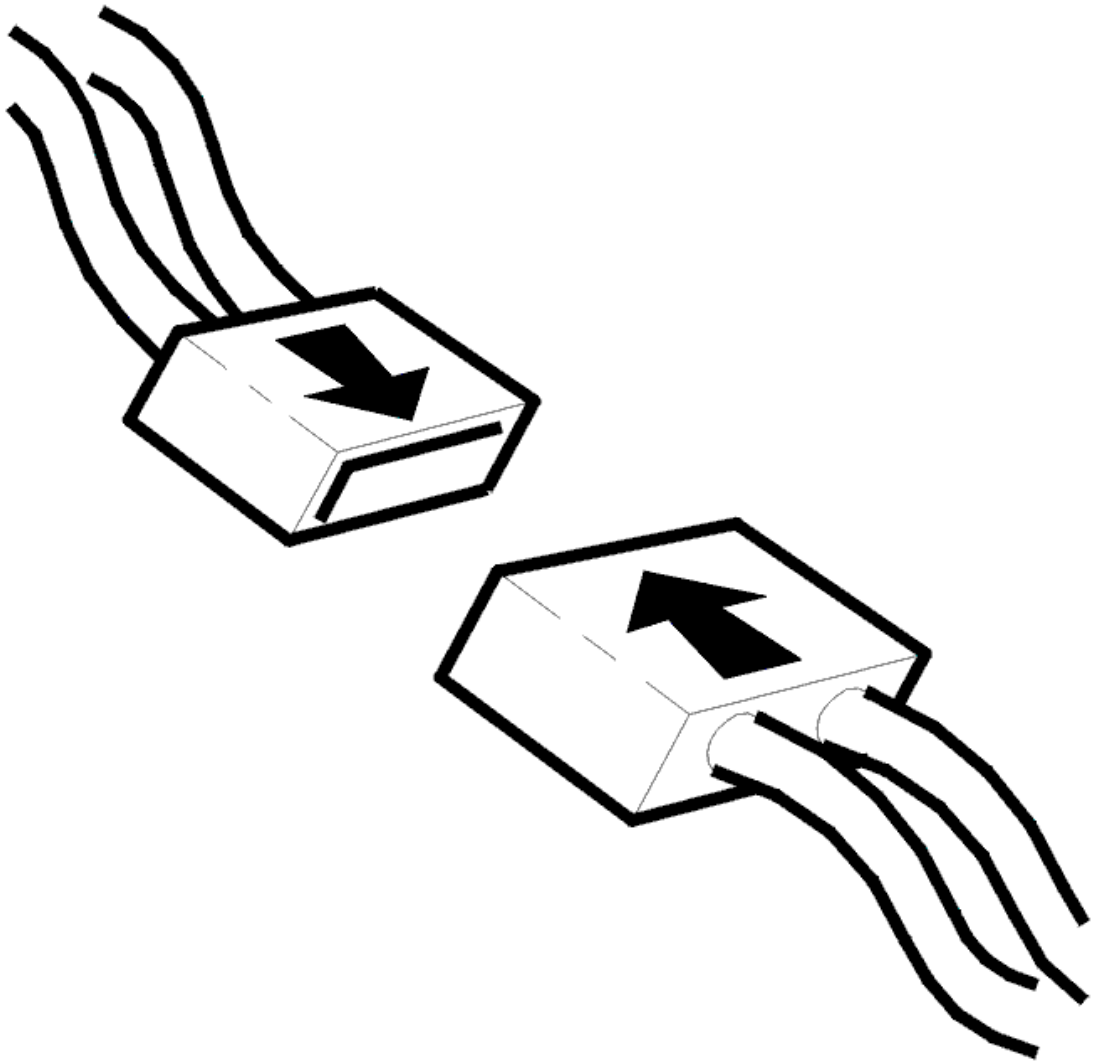

Fig. 17: Connecting Connector
Courtesy of VOLVO CARS CORPORATION

- Ignition off
- Check the connector between the differential electronic module (DEM) and the feed pump. Check for contact resistance and oxidation
- Check the cable between the differential electronic module (DEM) and the feed pump. Check for damage
- Engine idling.

  Check the voltage by taking readings using a voltmeter on the control module connector for the pump motor. Take readings between terminals #1 and #2.

NOTE: **The voltage is a pulse width modulated signal which varies greatly and can only be read off for a short time. The purpose of the reading is only to provide an indication of whether there is an open-circuit or not.**

Remedy as necessary.

Other information:

- see **SIGNAL SPECIFICATION, DIFFERENTIAL ELECTRONIC MODULE (DEM)**
- see **OIL PUMP ACTIVE ON DEMAND COUPLING (AOC), REPLACING**
- For AW50AWD and 4T65AWD 2003-, see **DIFFERENTIAL ELECTRONIC MODULE (DEM), REPLACING**
- For TF-80SC 2005- see **DIFFERENTIAL ELECTRONIC MODULE (DEM), REPLACING (2005-2008)** .
- For TF-80SC 2005- see **DIFFERENTIAL ELECTRONIC MODULE (DEM), REPLACING (2005-2008)** .
- see **CHECKING WIRING AND TERMINALS**

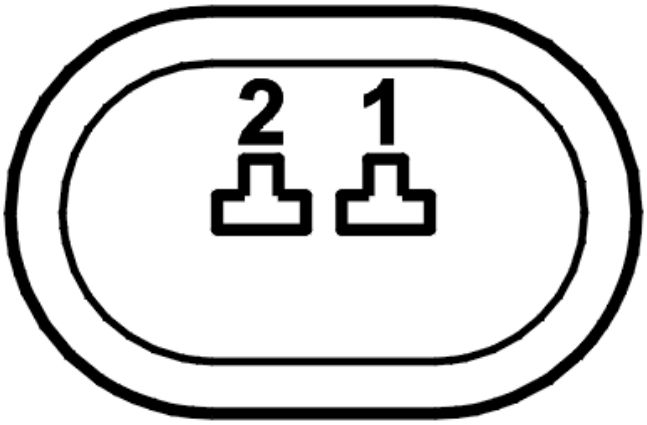

Fig. 18: Identifying Connector Terminals
Courtesy of VOLVO CARS CORPORATION

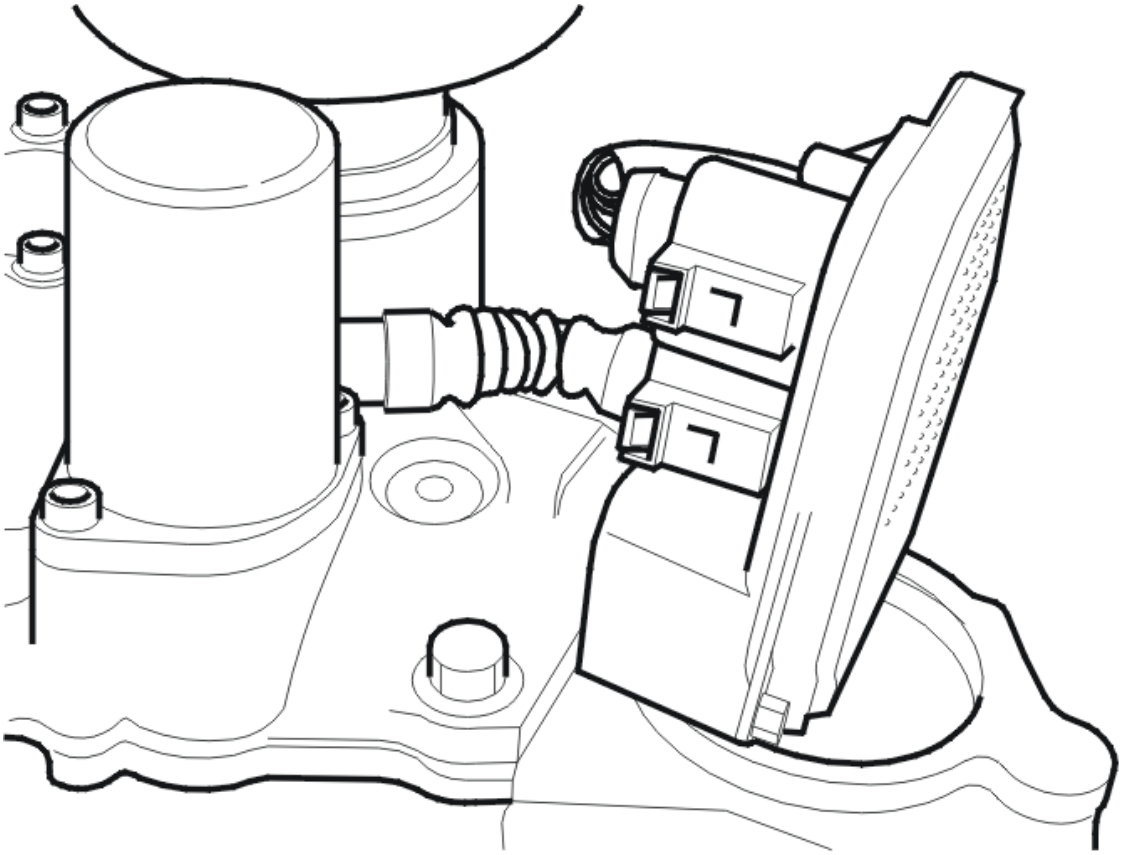

Fig. 19: Identifying Active On Demand Coupling Components
Courtesy of VOLVO CARS CORPORATION

- **Continue**

  Refer to **VERIFICATION**

VERIFICATION

HINT: After carrying out the repair, check that the fault has been remedied.

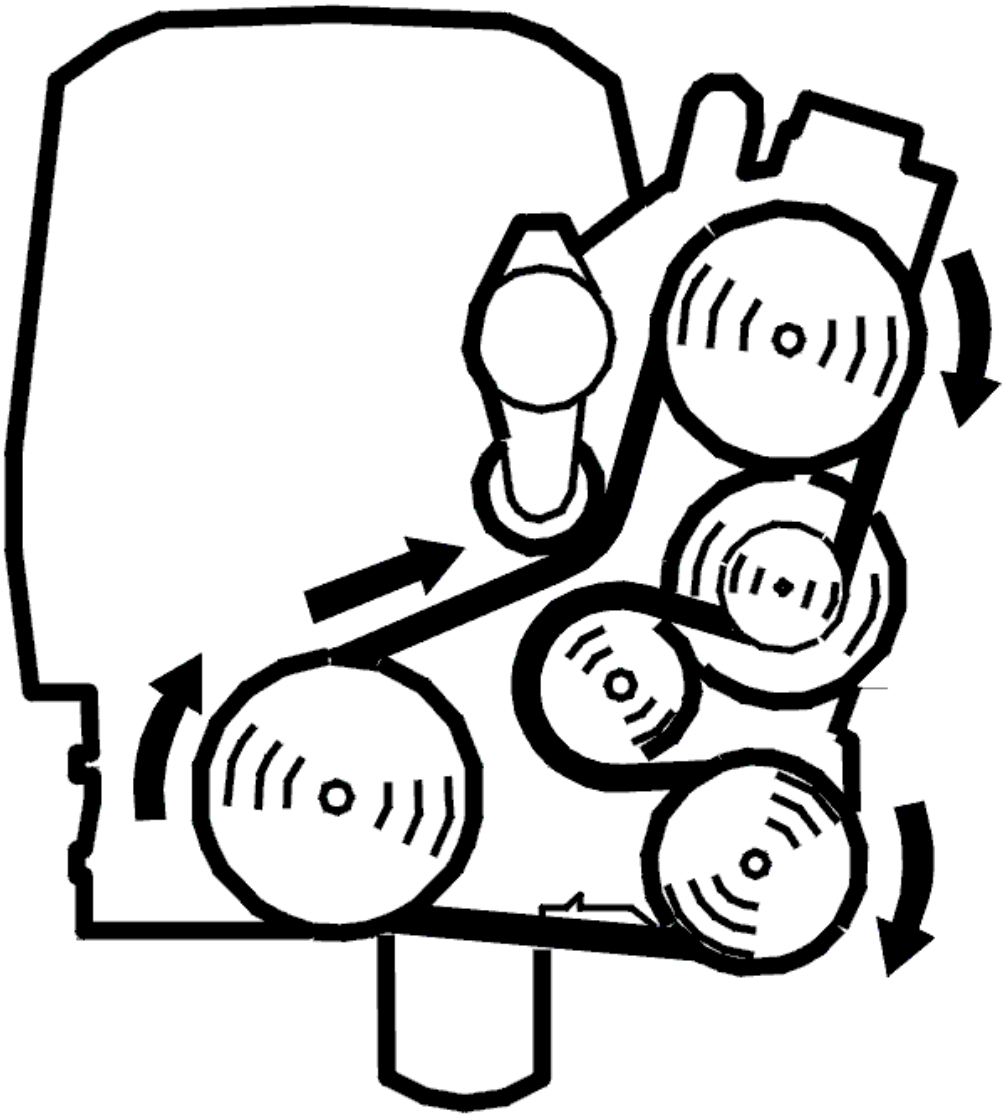

Fig. 20: Belt Routing / Engine Idling - Volvo
Courtesy of VOLVO CARS CORPORATION

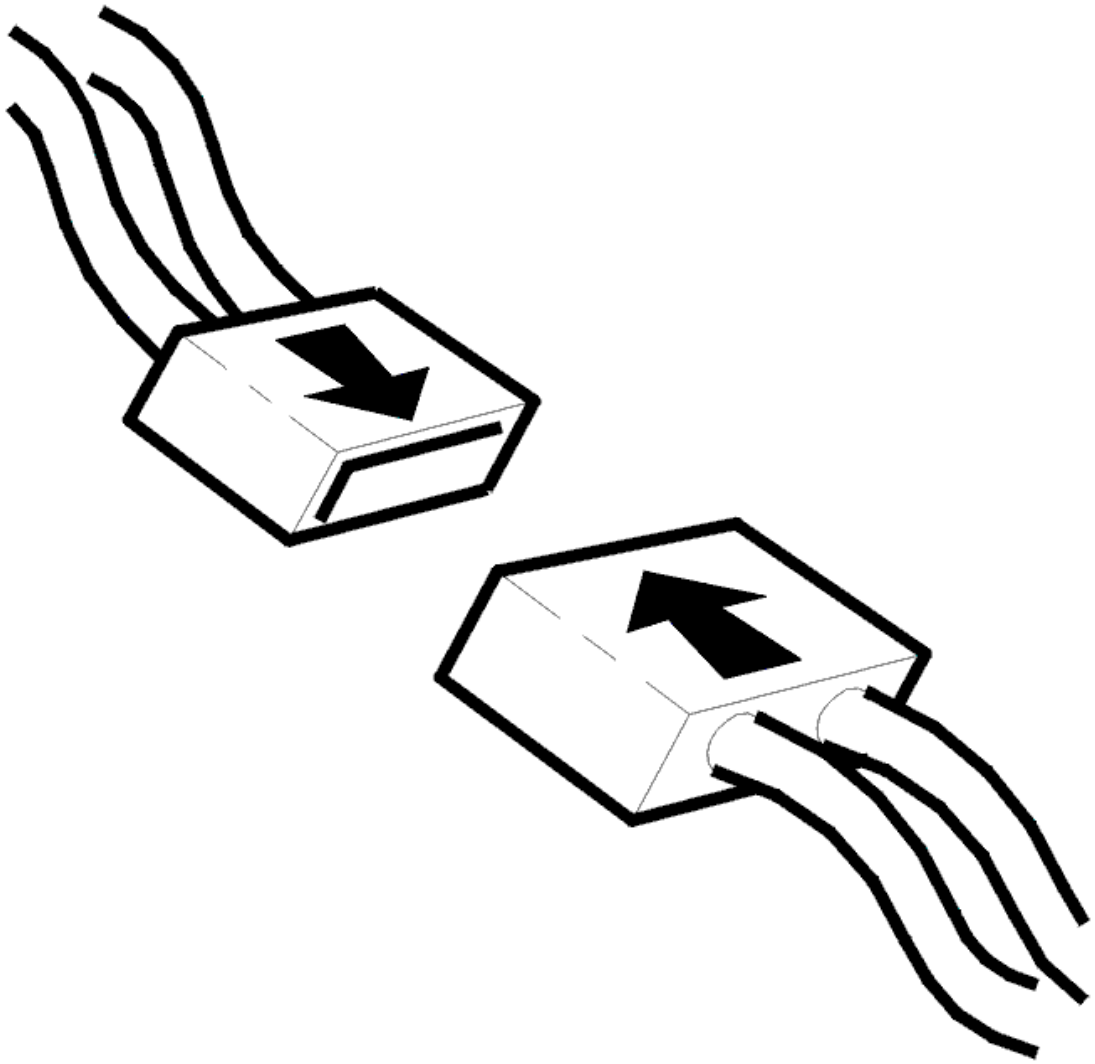

Fig. 21: Connecting Connector
Courtesy of VOLVO CARS CORPORATION

- Ignition off
- Reinstall the connectors, components etc.
- Engine idling.

  Check if the pump motor in the unit for four wheel drive (Active on Demand Coupling) starts and runs normally.

  HINT: The motor must hum and vibrate slightly. Listen using a stethoscope or a screwdriver pressed to your ear.

Does the feed pump work?

- **YES**

  VERIFIED: Troubleshooting has been completed.

- **NO**

  Refer to **INFORMATION**

INFORMATION

FAULT-TRACING INFORMATION

The fault should have been detected and remedied. As this is not the case fault-tracing has failed.

Exit fault-tracing for this diagnostic trouble code (DTC) or make another attempt.

DEM-0006: FEED PUMP. FAULTY SIGNAL (AW50/51 AWD; 2005-2007)

DIAGNOSTIC TROUBLE CODE (DTC) INFORMATION DEM-0006

see **DIAGNOSTIC TROUBLE CODE (DTC) INFORMATION DEM-0006**

FAULTY SIGNAL

see **FAULTY SIGNAL**

DEM-000B: OIL PRESSURE. INCORRECT VALUE (4T65 AWD; 2006)

DIAGNOSTIC TROUBLE CODE (DTC) INFORMATION DEM-000B

Condition

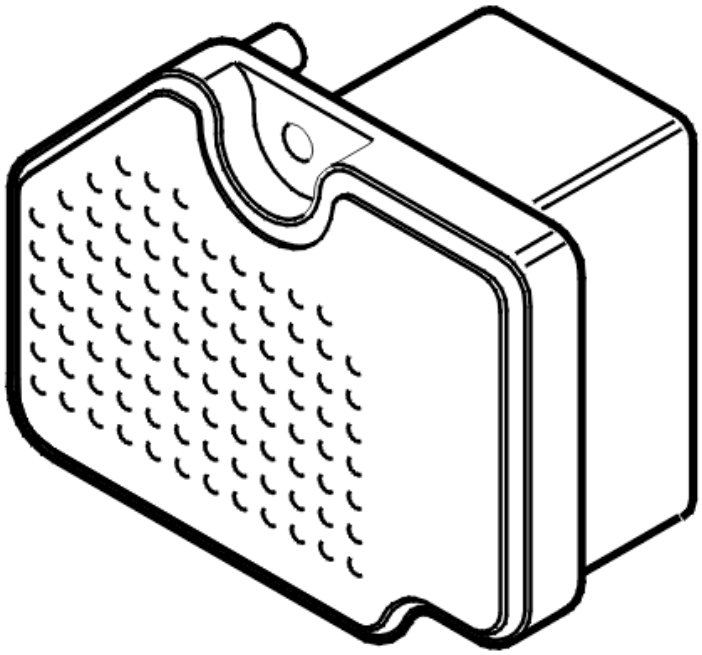

Fig. 22: Active On Demand Coupling Control Module
Courtesy of VOLVO CARS CORPORATION

Differential Electronic Module (DEM) calculates an expected oil pressure increase in the AOC-unit (the mechanical clutch) during driving. The control module checks how reasonable the oil pressure change is by comparing the calculated value with the signal from the oil pressure sensor.

If the signal deviates too much from the expected value the control module interprets this as a malfunction, and the diagnostic trouble code is generated.

The diagnostic trouble code (DTC) can be diagnosed when driving.

Substitute Value

- Four wheel drive is disengaged.

Possible Source

- Damaged temperature sensor.
- Damaged AOC unit (mechanic clutch).
- Oil leakage.
- Damaged Differential Electronic Module (DEM).

Fault symptom[s]

- Four wheel drive is not functioning.

INCORRECT VALUE

INFORMATION

NOTE: The diagnostic trouble code can also be generated due to damaged AOC-unit (clutch). Check the AOC-unit for visible damages. Listen for noise. Check the oil level in the coupling (Active on Demand Coupling).

- **Continue**

  Refer to **INFORMATION**

CHECKING COMPONENTS

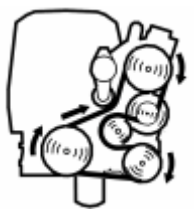

Fig. 23: Identifying Belt Routing
Courtesy of VOLVO CARS CORPORATION

- Engine idling.

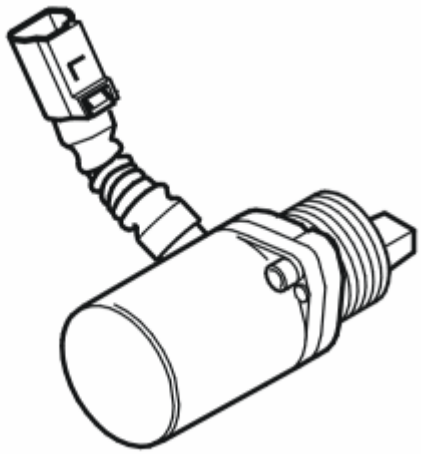

Fig. 24: Identifying Oil Pump Motor
Courtesy of VOLVO CARS CORPORATION

Check the function of the oil pump.

Listen using a stethoscope or a screwdriver pressed to your ear. The oil pump motor should hum and vibrate slightly.

NOTE: The pump motor may sound like it's running but in certain cases it only oscillates.

Is the feed pump working?

- **YES**

  Refer to **CHECKING THE FUNCTION**

- **NO**

  Refer to **CHECKING THE CONNECTORS AND CABLES**

INFORMATION

NOTE: The brake control module (BCM) can cause interference in the differential electronic module (DEM). For example, incorrect information from one of the wheel speed sensors causes the information from the Brake control module (BCM) to store a diagnostic trouble code (DTC). Therefore, troubleshoot the Brake Control Module (BCM) for incorrect signals from the wheel speed sensors.

- **Continue**

  Refer to **CHECKING PRESSURE AND TEMPERATURE SENSOR**

CHECKING THE CONNECTORS AND CABLES

Fig. 25: Identifying Ignition In Off Position
Courtesy of VOLVO CARS CORPORATION

- Ignition off.

  Check the connector between the Differential Electronic Module (DEM) and the feed pump with respect to contact resistance and oxidation.

  Check the lead between the Differential Electronic Module (DEM) and the feed pump for damage.

Reinstall the connectors, components etc.

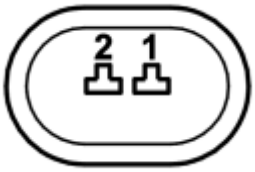

Fig. 26: Identifying Connector Terminals
Courtesy of VOLVO CARS CORPORATION

- Engine idling.

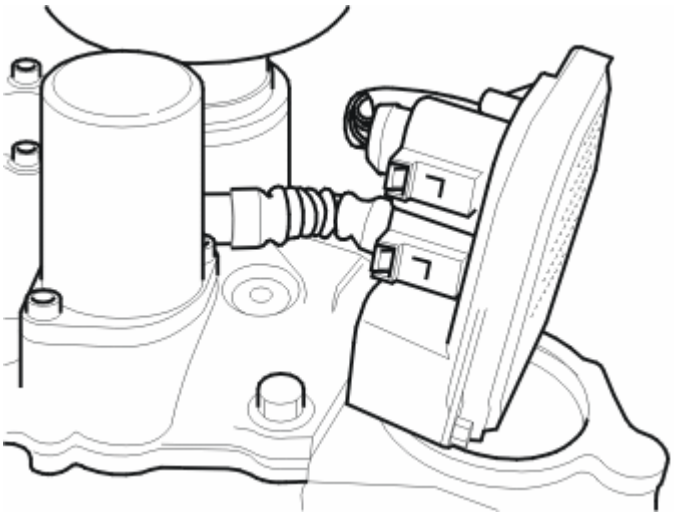

Fig. 27: Identifying Active On Demand Coupling Components
Courtesy of VOLVO CARS CORPORATION

Check the function of the oil pump.

Listen using a stethoscope or a screwdriver pressed to your ear. The oil pump motor should hum and vibrate slightly.

NOTE: The pump motor may sound like it's running but in certain cases it only oscillates.

Remedy as necessary.

Other information

- see **SIGNAL SPECIFICATION, DIFFERENTIAL ELECTRONIC MODULE (DEM)**
- For AW50AWD and 4T65AWD 2003-, see **ACTIVE ON DEMAND COUPLING (AOC), REPLACING**
- For AW50AWD and 4T65AWD 2003-, see **DIFFERENTIAL ELECTRONIC MODULE**

(DEM), REPLACING

- For TF-80SC 2005- see **DIFFERENTIAL ELECTRONIC MODULE (DEM), REPLACING (2005-2008)** .
- see **CHECKING WIRING AND TERMINALS**

Is the feed pump working?

- **YES**

  Refer to **VERIFICATION**

- **NO**

  Refer to **INFORMATION**

VERIFICATION

HINT: After carrying out the repair, check that the fault has been remedied.

Test-driving is required to ensure that the malfunction has been fixed.

Test drive the vehicle following:

see **TEST DRIVING ON LIFT, AUTOMATIC TRANSMISSION**

Check that the diagnostic trouble code (DTC) is not generated again after the test-drive.

Is the function OK?

- **YES**

  OKAY: Troubleshooting has been completed.

- **NO**

  Refer to **INFORMATION**

CHECKING THE FUNCTION

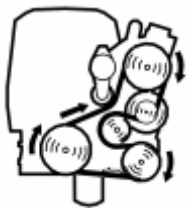

Fig. 28: Identifying Belt Routing
Courtesy of VOLVO CARS CORPORATION

Check that the AOC-unit works by test-driving the vehicle on the lift (to increase the clutch oil pressure). Read off the oil pressure during the test-drive.

Test drive the vehicle following:

see **TEST DRIVING ON LIFT, AUTOMATIC TRANSMISSION**

HINT: If the AOC-unit is not working, try with replacing control module.

HINT: Repeat the test-drive.

Other information

- see **SIGNAL SPECIFICATION, DIFFERENTIAL ELECTRONIC MODULE (DEM)**
- For AW50AWD and 4T65AWD 2003-, see **ACTIVE ON DEMAND COUPLING (AOC), REPLACING**
- For AW50AWD and 4T65AWD 2003-, see **DIFFERENTIAL ELECTRONIC MODULE (DEM), REPLACING**
- For TF-80SC 2005- see **DIFFERENTIAL ELECTRONIC MODULE (DEM), REPLACING (2005-2008)** .
- see **CHECKING WIRING AND TERMINALS**

Fig. 29: Identifying VCT2000 Diagnostic Tool Symbol In VIDA
Courtesy of VOLVO CARS CORPORATION

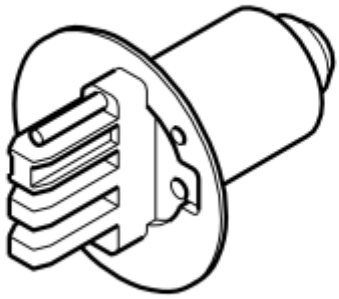

Fig. 30: Identifying Connector

Courtesy of VOLVO CARS CORPORATION

Is the function OK?

- **YES**

  Refer to **VERIFICATION**

- **NO**

  Refer to **INFORMATION**

INFORMATION

FAULT-TRACING INFORMATION

The fault should have been detected and remedied. As this is not the case fault-tracing has failed.

Exit fault-tracing for this diagnostic trouble code (DTC) or make another attempt.

CHECKING PRESSURE AND TEMPERATURE SENSOR

NOTE: Reading out of oil pressure can take place first after the diagnostic trouble code (DTC) has been deleted. Therefore frozen values should be printed and saved before deleting takes place.

1. Test of pressure sensor.
   - Ignition on.
   - Use VCT2000 (or appropriate scan tool).

     HINT: Correct pressure should be 0.00 +/- 0.08 MPa.

   - Engine idling
   - Use VCT2000 (or appropriate scan tool).

     HINT: Correct pressure should be 0.38 +/- 0.08 MPa.

2. Test of temperature sensor.
   - Ignition on.
   - Use VCT2000 (or appropriate scan tool).

     HINT: Normal value for ambient temperature when the vehicle is cold and (+20 to +50 °C) when the vehicle is driven.

If wrong value is read out, then diagnostic trouble code should be erased and the sensor changed. After changing sensor, repeat the test procedure again.

NOTE: **There are two types of sensors, an 80 bar and a 40 bar. Differential electronic module (DEM) has hardware number 30759701, 30785483, 30759682, 30783198, 30735844, or 30783018, an 80 bar pressure sensor should be installed. If Differential electronic module (DEM) has another hardware number than above, a 40 bar sensor should be installed.**

HINT: For reading out of hardware number, use VIDA (Volvo scan tool).

Other information

- see **TEMPERATURE / PRESSURE SENSOR ACTIVE ON DEMAND COUPLING, REPLACING**

Fig. 31: Identifying VCT2000 Diagnostic Tool Symbol In VIDA
Courtesy of VOLVO CARS CORPORATION

Has the fault been remedied?

- **YES**

  OKAY: Troubleshooting has been completed.

- **NO**

  Refer to **CHECKING COMPONENTS**

DEM-000B: OIL PRESSURE. INCORRECT VALUE (4T65 AWD; AW50/51 AWD; 2005)

DIAGNOSTIC TROUBLE CODE (DTC) INFORMATION DEM-000B

see **DIAGNOSTIC TROUBLE CODE (DTC) INFORMATION DEM-000B**

INCORRECT VALUE

INFORMATION

NOTE: **The diagnostic trouble code can also be generated due to damaged AOC-unit (clutch).**

Check the AOC-unit for visible damages. Listen for noise.

Check the oil level in the coupling (Active on Demand Coupling).

- **Continue**

  Refer to **CHECKING COMPONENTS**

CHECKING COMPONENTS

Fig. 32: Identifying Belt Routing
Courtesy of VOLVO CARS CORPORATION

- Engine idling.

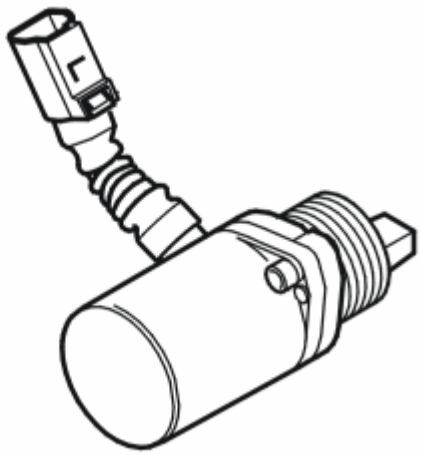

Fig. 33: Identifying Oil Pump Motor
Courtesy of VOLVO CARS CORPORATION

Check the function of the oil pump.

Listen using a stethoscope or a screwdriver pressed to your ear. The oil pump motor should hum and vibrate slightly.

NOTE: The pump motor may sound like it's running but in certain cases it only oscillates.

Is the feed pump working?

- **YES**

Refer to **INFORMATION**

- **NO**

  Refer to **CHECKING THE CONNECTORS AND CABLES**

INFORMATION

NOTE: The brake control module (BCM) can cause interference in the differential electronic module (DEM). For example, incorrect information from one of the wheel speed sensors causes the information from the Brake control module (BCM) to store a diagnostic trouble code (DTC). Therefore, troubleshoot the Brake Control Module (BCM) for incorrect signals from the wheel speed sensors.

- **Continue**

  Refer to **CHECKING THE FUNCTION**

CHECKING THE CONNECTORS AND CABLES

Fig. 34: Identifying Ignition In Off Position
Courtesy of VOLVO CARS CORPORATION

- Ignition off.

  Check the connector between the Differential Electronic Module (DEM) and the feed pump with respect to contact resistance and oxidation.

  Check the lead between the Differential Electronic Module (DEM) and the feed pump for damage.

  Reinstall the connectors, components etc.

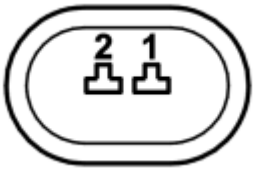

Fig. 35: Identifying Connector Terminals
Courtesy of VOLVO CARS CORPORATION

- Engine idling.

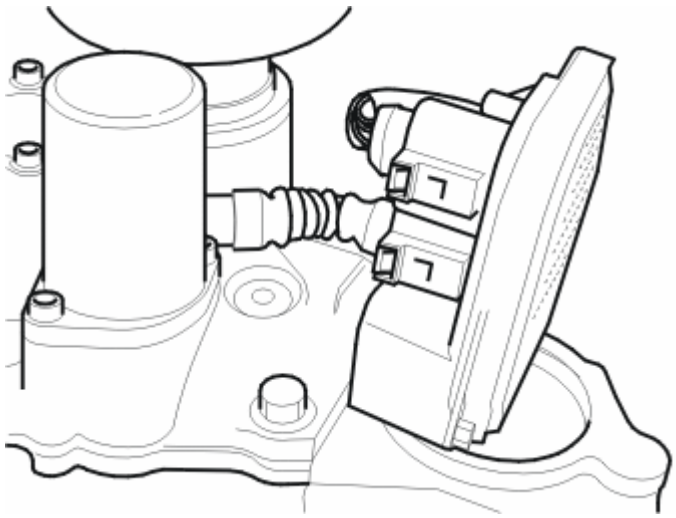

Fig. 36: Identifying Active On Demand Coupling Components
Courtesy of VOLVO CARS CORPORATION

Check the function of the oil pump.

Listen using a stethoscope or a screwdriver pressed to your ear. The oil pump motor should hum and vibrate slightly.

NOTE: **The pump motor may sound like it's running but in certain cases it only oscillates.**

Remedy as necessary.

Other information

- see **SIGNAL SPECIFICATION, DIFFERENTIAL ELECTRONIC MODULE (DEM)**
- For AW50AWD and 4T65AWD 2003-, see **ACTIVE ON DEMAND COUPLING (AOC), REPLACING**
- For AW50AWD and 4T65AWD 2003-, see **DIFFERENTIAL ELECTRONIC MODULE (DEM), REPLACING**
- For TF-80SC 2005- see **DIFFERENTIAL ELECTRONIC MODULE (DEM), REPLACING (2005-2008)** .
- see **CHECKING WIRING AND TERMINALS**

Is the feed pump working?

- **YES**

  Refer to **VERIFICATION**

- **NO**

  Refer to **INFORMATION**

CHECKING THE FUNCTION

NOTE: **Reading out of oil pressure can take place first after the diagnostic trouble code (DTC) has been deleted. Therefore frozen values should be printed and saved before deleting takes place.**

Fig. 37: Checking Traffic Load On CAN Cables
Courtesy of VOLVO CARS CORPORATION

- Ignition on.

  Read the oil pressure sensor signal to check the function.

  At ignition on the oil pressure should be 0.00 +/- 0.04 MPa.

Fig. 38: Identifying VCT2000 Diagnostic Tool Symbol In VIDA
Courtesy of VOLVO CARS CORPORATION

  - Engine idling.

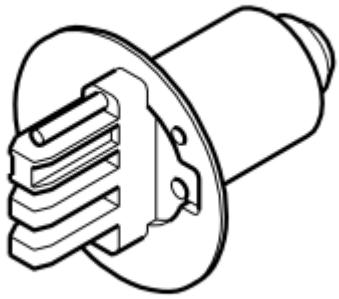

Fig. 39: Identifying Connector
Courtesy of VOLVO CARS CORPORATION

For engine at idle speed the oil pressure should be 0.38 +/- 0.04 MPa.

Is the function OK?

- **YES**

  Refer to **CHECKING THE FUNCTION**

- **NO**

  Refer to **REPLACEMENT OF TEMPERATURE/PRESSURE SENSOR**

VERIFICATION

HINT: After carrying out the repair, check that the fault has been remedied.

Test-driving is required to ensure that the malfunction has been fixed.

Test drive the vehicle following:

see **TEST DRIVING ON LIFT, AUTOMATIC TRANSMISSION**

Check that the diagnostic trouble code (DTC) is not generated again after the test-drive.

Is the function OK?

- **YES**

  OKAY: Troubleshooting has been completed.

- **NO**

  Refer to **INFORMATION**

CHECKING THE FUNCTION

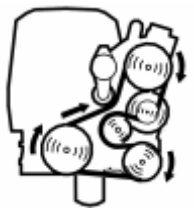

Fig. 40: Identifying Belt Routing
Courtesy of VOLVO CARS CORPORATION

Check that the AOC-unit works by test-driving the vehicle on the lift (to increase the clutch oil pressure). Read off the oil pressure during the test-drive.

Test drive the vehicle following:

see **TEST DRIVING ON LIFT, AUTOMATIC TRANSMISSION**

HINT: If the AOC-unit is not working, try with replacing control module.

HINT: Repeat the test-drive.

Other information

- see **SIGNAL SPECIFICATION, DIFFERENTIAL ELECTRONIC MODULE (DEM)**
- For AW50AWD and 4T65AWD 2003-, see **ACTIVE ON DEMAND COUPLING (AOC), REPLACING**
- For AW50AWD and 4T65AWD 2003-, see **DIFFERENTIAL ELECTRONIC MODULE (DEM), REPLACING**
- For TF-80SC 2005- see **DIFFERENTIAL ELECTRONIC MODULE (DEM), REPLACING (2005-2008)** .
- see **CHECKING WIRING AND TERMINALS**

Fig. 41: Identifying VCT2000 Diagnostic Tool Symbol In VIDA
Courtesy of VOLVO CARS CORPORATION

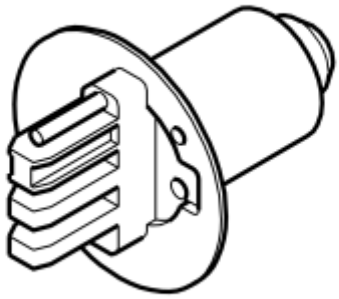

Fig. 42: Identifying Connector
Courtesy of VOLVO CARS CORPORATION

Is the function OK?

- **YES**

  Refer to **VERIFICATION**

- **NO**

  Refer to **INFORMATION**

REPLACEMENT OF TEMPERATURE/PRESSURE SENSOR

Fig. 43: Identifying Ignition In Off Position
Courtesy of VOLVO CARS CORPORATION

- Ignition off.

  Replace oil pressure sensor.

  HINT: The oil pressure sensor is integrated with the oil temperature sensor and these are located together with the Differential Electronic Module (DEM). Temperature/pressure sensor is replaceable.

  Check that the oil pressure sensor works after the replacement.

Fig. 44: Identifying VCT2000 Diagnostic Tool Symbol In VIDA
Courtesy of VOLVO CARS CORPORATION

- Ignition on.

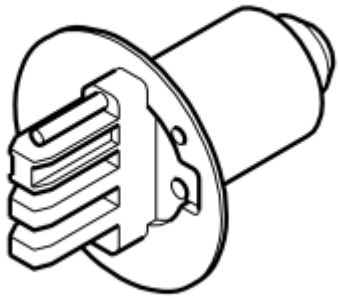

Fig. 45: Identifying Connector
Courtesy of VOLVO CARS CORPORATION

Read the oil pressure sensor signal to check the function.

At ignition on the oil pressure should be 0.00 +/- 0.04 MPa.

- Engine idling.

Read the oil pressure sensor signal to check the function.

For engine at idle speed the oil pressure should be 0.38 +/- 0.04 MPa.

Other information

- see **SIGNAL SPECIFICATION, DIFFERENTIAL ELECTRONIC MODULE (DEM)**
- see **TEMPERATURE / PRESSURE SENSOR ACTIVE ON DEMAND COUPLING, REPLACING**
- For AW50AWD and 4T65AWD 2003-, see **DIFFERENTIAL ELECTRONIC MODULE (DEM), REPLACING**
- For TF-80SC 2005- see **DIFFERENTIAL ELECTRONIC MODULE (DEM), REPLACING (2005-2008)** .

- see **CHECKING WIRING AND TERMINALS**

Is the function OK?

- **YES**

  Refer to **VERIFICATION**

- **NO**

  Refer to **CHECKING THE FUNCTION**

INFORMATION

FAULT-TRACING INFORMATION

The fault should have been detected and remedied. As this is not the case fault-tracing has failed.

Exit fault-tracing for this diagnostic trouble code (DTC) or make another attempt.

DEM-000B: OIL PRESSURE. INCORRECT VALUE (4T65 AWD; AW50/51 AWD; 2003-2004)

DIAGNOSTIC TROUBLE CODE (DTC) INFORMATION DEM-000B

Condition

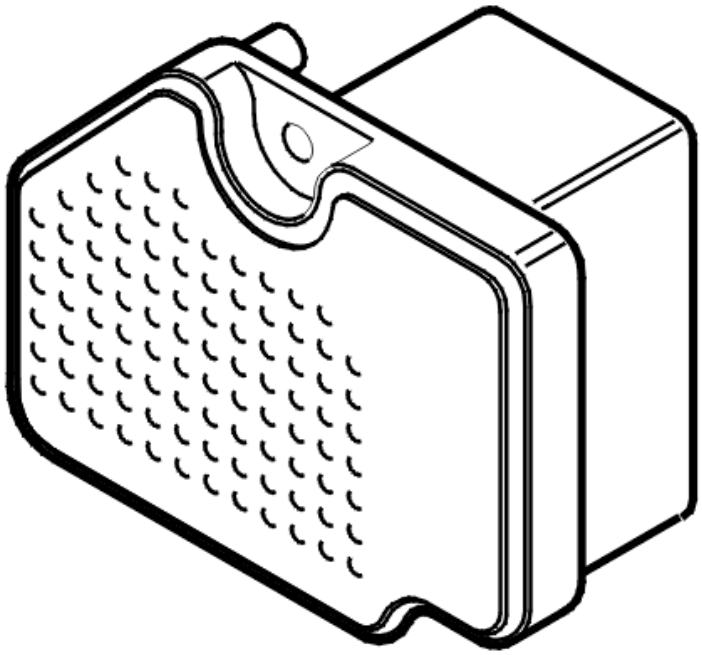

Fig. 46: Active On Demand Coupling Control Module
Courtesy of VOLVO CARS CORPORATION

Differential Electronic Module (DEM) calculates an expected oil pressure increase in the AOC-unit (the mechanical clutch) during driving. The control module checks how reasonable the oil pressure change is by comparing the calculated value with the signal from the oil pressure sensor.

If the signal deviates too much from the expected value the control module interprets this as a malfunction, and the diagnostic trouble code is generated.

The diagnostic trouble code (DTC) can be diagnosed when driving.

Substitute Value

- Four wheel drive is disengaged.

Possible Source

- Damaged temperature sensor.
- Damaged AOC unit (mechanic clutch).
- Oil leakage.
- Damaged Differential Electronic Module (DEM).

Fault symptom[s]

- Four wheel drive is not functioning.

INCORRECT VALUE

INFORMATION

NOTE: **The diagnostic trouble code can also be generated due to damaged AOC-unit (clutch).**

Check the AOC-unit for visible damages. Listen for noise.

Check the oil level in the coupling (Active on Demand Coupling).

- **Continue**

  Refer to **CHECKING COMPONENTS**

CHECKING COMPONENTS

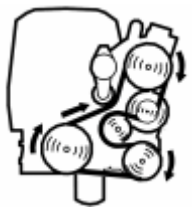

Fig. 47: Identifying Belt Routing
Courtesy of VOLVO CARS CORPORATION

- Engine idling.

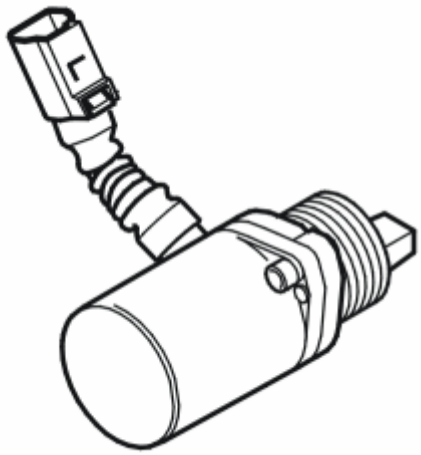

Fig. 48: Identifying Oil Pump Motor

Courtesy of VOLVO CARS CORPORATION

Check the function of the oil pump.

Listen using a stethoscope or a screwdriver pressed to your ear. The oil pump motor should hum and vibrate slightly.

NOTE: The pump motor may sound like it's running but in certain cases it only oscillates.

Is the feed pump working?

- **YES**

  Refer to **INFORMATION**

- **NO**

  Refer to **CHECKING THE CONNECTORS AND CABLES**

INFORMATION

NOTE: The brake control module (BCM) can cause interference in the differential electronic module (DEM). Incorrect signals from Brake Control Module (BCM) may result in the Differential Electronic Module (DEM) registering an incorrect oil pressure, thus generating the diagnostic trouble code (DTC). Therefore, troubleshoot the Brake Control Module (BCM) for incorrect signals from the wheel speed sensors.

- **Continue**

  Refer to **CHECKING THE FUNCTION**

CHECKING THE FUNCTION

NOTE: Reading out of oil pressure can take place first after the diagnostic trouble code (DTC) has been deleted. Therefore frozen values should be printed and saved before deleting takes place.

Fig. 49: Checking Traffic Load On CAN Cables
Courtesy of VOLVO CARS CORPORATION

- Ignition on.

  Read the oil pressure sensor signal to check the function.

  At ignition on the oil pressure should be 0.00 +/- 0.04 MPa.

Fig. 50: Identifying VCT2000 Diagnostic Tool Symbol In VIDA
Courtesy of VOLVO CARS CORPORATION

  - Engine idling.

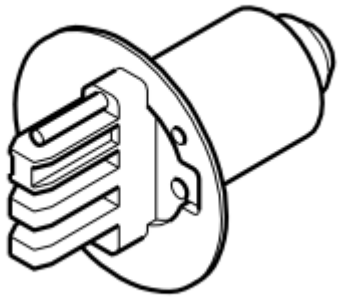

Fig. 51: Identifying Connector
Courtesy of VOLVO CARS CORPORATION

  For engine at idle speed the oil pressure should be 0.38 +/- 0.04 MPa.

Is the function OK?

- **YES**

  Refer to **CHECKING THE FUNCTION**

- **NO**

  Refer to **REPLACEMENT OF TEMPERATURE/PRESSURE SENSOR**

CHECKING THE CONNECTORS AND CABLES

Fig. 52: Identifying Ignition In Off Position
Courtesy of VOLVO CARS CORPORATION

- Ignition off.

  Check the connector between the Differential Electronic Module (DEM) and the feed pump with respect to contact resistance and oxidation.

  Check the lead between the Differential Electronic Module (DEM) and the feed pump for damage.

  Reinstall the connectors, components etc.

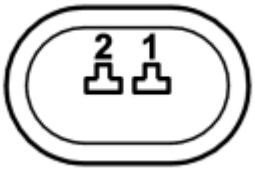

Fig. 53: Identifying Connector Terminals
Courtesy of VOLVO CARS CORPORATION

- Engine idling.

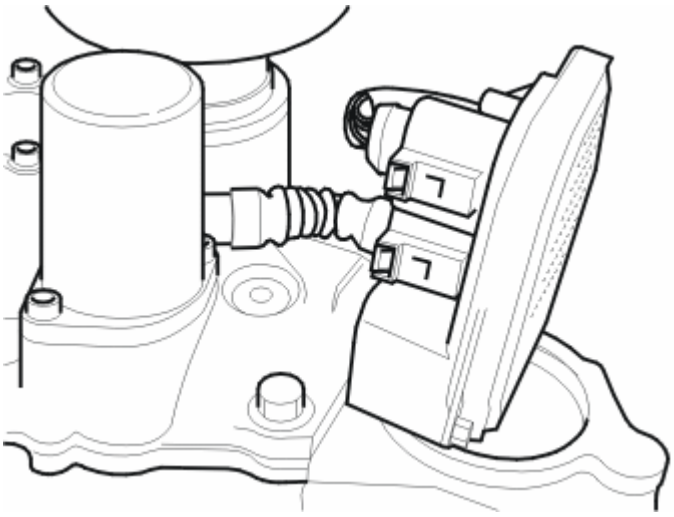

Fig. 54: Identifying Active On Demand Coupling Components
Courtesy of VOLVO CARS CORPORATION

Check the function of the oil pump.

Listen using a stethoscope or a screwdriver pressed to your ear. The oil pump motor should hum and vibrate slightly.

NOTE: The pump motor may sound like it's running but in certain cases it only oscillates.

Remedy as necessary.

Other information

- see **SIGNAL SPECIFICATION, CONTROL MODULE FOR FOUR WHEEL DRIVE**
- For AW50AWD and 4T65AWD 2003-, see **ACTIVE ON DEMAND COUPLING (AOC), REPLACING**
- For AW50AWD and 4T65AWD 2003-, see **DIFFERENTIAL ELECTRONIC MODULE (DEM), REPLACING**
- For TF-80SC 2005- see **DIFFERENTIAL ELECTRONIC MODULE (DEM), REPLACING (2005-2008)** .
- see **CHECKING WIRING AND TERMINALS**

Is the feed pump working?

- **YES**

  Refer to **VERIFICATION**

- **NO**

  Refer to **INFORMATION**

CHECKING THE FUNCTION

Fig. 55: Identifying Belt Routing
Courtesy of VOLVO CARS CORPORATION

Check that the AOC-unit works by test-driving the vehicle on the lift (to increase the clutch oil pressure). Read off the oil pressure during the test-drive.

Test drive the vehicle following:

see **TEST DRIVING ON LIFT, AUTOMATIC TRANSMISSION**

HINT: If the AOC-unit is not working, try with replacing control module.

HINT: Repeat the test-drive.

Other information

- see **SIGNAL SPECIFICATION, CONTROL MODULE FOR FOUR WHEEL DRIVE**
- For AW50AWD and 4T65AWD 2003-, see **ACTIVE ON DEMAND COUPLING (AOC), REPLACING**
- For AW50AWD and 4T65AWD 2003-, see **DIFFERENTIAL ELECTRONIC MODULE (DEM), REPLACING**
- For TF-80SC 2005- see **DIFFERENTIAL ELECTRONIC MODULE (DEM), REPLACING (2005-2008)** .
- see **CHECKING WIRING AND TERMINALS**

Fig. 56: Identifying VCT2000 Diagnostic Tool Symbol In VIDA
Courtesy of VOLVO CARS CORPORATION

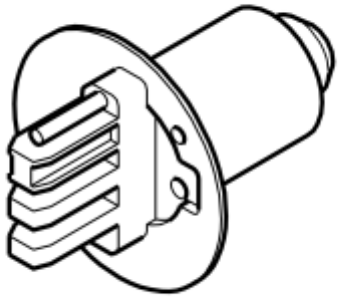

Fig. 57: Identifying Connector
Courtesy of VOLVO CARS CORPORATION

Is the function OK?

- **YES**

  Refer to **VERIFICATION**

- **NO**

  Refer to **INFORMATION**

REPLACEMENT OF TEMPERATURE/PRESSURE SENSOR

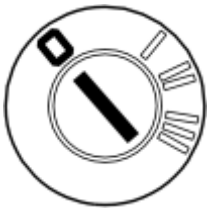

Fig. 58: Identifying Ignition In Off Position
Courtesy of VOLVO CARS CORPORATION

- Ignition off.

  Replace oil pressure sensor.

  HINT: The oil pressure sensor is integrated with the oil temperature sensor and these are located together with the Differential Electronic Module (DEM). Temperature/pressure sensor is replaceable.

  Check that the oil pressure sensor works after the replacement.

Fig. 59: Identifying VCT2000 Diagnostic Tool Symbol In VIDA
Courtesy of VOLVO CARS CORPORATION

  - Ignition on.

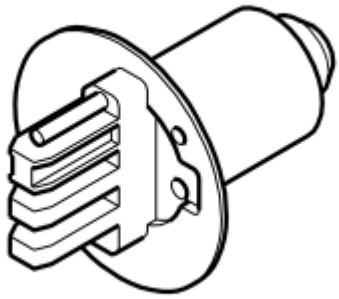

Fig. 60: Identifying Connector
Courtesy of VOLVO CARS CORPORATION

Read the oil pressure sensor signal to check the function.

At ignition on the oil pressure should be 0.00 +/- 0.04 MPa.

- Engine idling.

Read the oil pressure sensor signal to check the function.

For engine at idle speed the oil pressure should be 0.38 +/- 0.04 MPa.

Other information

- see **SIGNAL SPECIFICATION, CONTROL MODULE FOR FOUR WHEEL DRIVE**
- see **TEMPERATURE / PRESSURE SENSOR ACTIVE ON DEMAND COUPLING, REPLACING**
- For AW50AWD and 4T65AWD 2003-, see **DIFFERENTIAL ELECTRONIC MODULE (DEM), REPLACING**
- For TF-80SC 2005- see **DIFFERENTIAL ELECTRONIC MODULE (DEM), REPLACING (2005-2008)** .
- see **CHECKING WIRING AND TERMINALS**

Is the function OK?

- **YES**

  Refer to **VERIFICATION**

- **NO**

Refer to **CHECKING THE FUNCTION**

VERIFICATION

HINT: After carrying out the repair, check that the fault has been remedied.

Test-driving is required to ensure that the malfunction has been fixed.

Test drive the vehicle following:

see **TEST DRIVING ON LIFT, AUTOMATIC TRANSMISSION**

Check that the diagnostic trouble code (DTC) is not generated again after the test-drive.

Is the function OK?

- **YES**

  OKAY: Troubleshooting has been completed.

- **NO**

  Refer to **INFORMATION**

INFORMATION

FAULT-TRACING INFORMATION

The fault should have been detected and remedied. As this is not the case fault-tracing has failed.

Exit fault-tracing for this diagnostic trouble code (DTC) or make another attempt.

DEM-000B: OIL PRESSURE. INCORRECT VALUE (AW50/51 AWD; 2006-2007)

DIAGNOSTIC TROUBLE CODE (DTC) INFORMATION DEM-000B

see **DIAGNOSTIC TROUBLE CODE (DTC) INFORMATION DEM-000B**

INCORRECT VALUE

see **INCORRECT VALUE**

DEM-0001: TEMPERATURE SENSOR. FAULTY SIGNAL (4T65 AWD; AW50/51 AWD; 2005)

DIAGNOSTIC TROUBLE CODE (DTC) INFORMATION DEM-0001

Condition

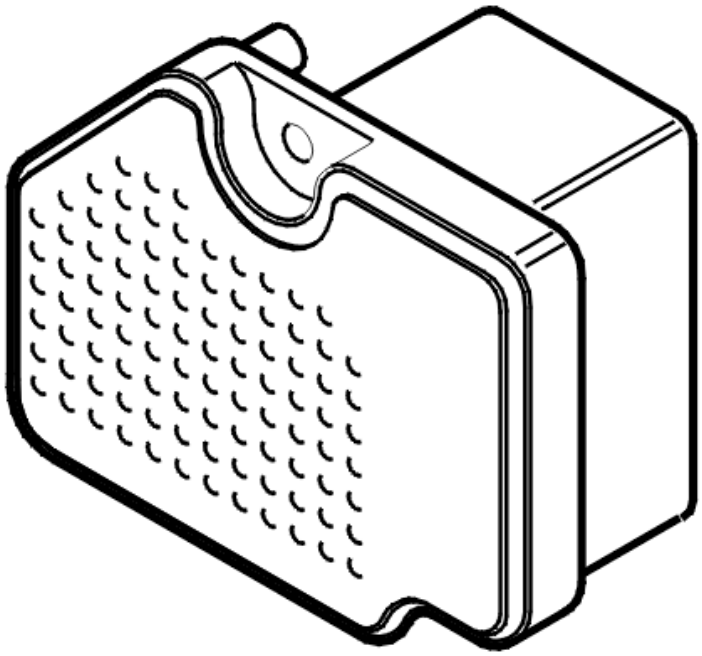

Fig. 61: Active On Demand Coupling Control Module
Courtesy of VOLVO CARS CORPORATION

The differential electronic module (DEM) checks if the signal from the oil temperature sensor is within the permitted range by comparing the signal with a predefined parameter.

The diagnostic trouble code (DTC) is stored if the signal from the oil temperature sensor corresponds to a temperature lower than -40 °C or higher than +110 °C.

The diagnostic trouble code (DTC) can be diagnosed when the ignition is switched on.

Substitute Value

- Four wheel drive is disengaged.

Possible Source

- Damaged temperature sensor
- Damaged control module.

Fault symptom[s]

- Four wheel drive is not functioning.

FAULTY SIGNAL

CHECKING THE CONNECTORS AND CABLES

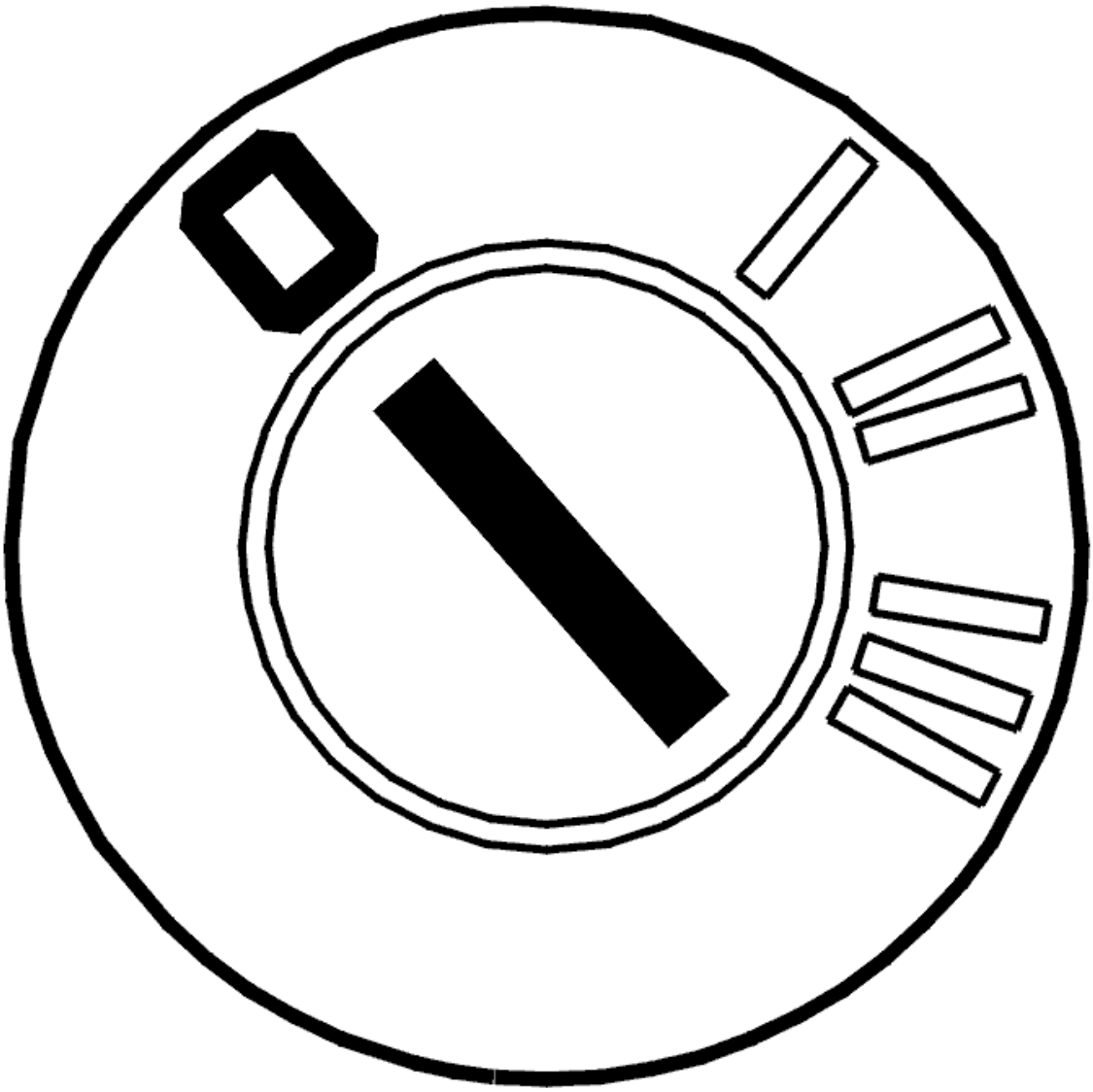

Fig. 62: Identifying Ignition OFF
Courtesy of VOLVO CARS CORPORATION

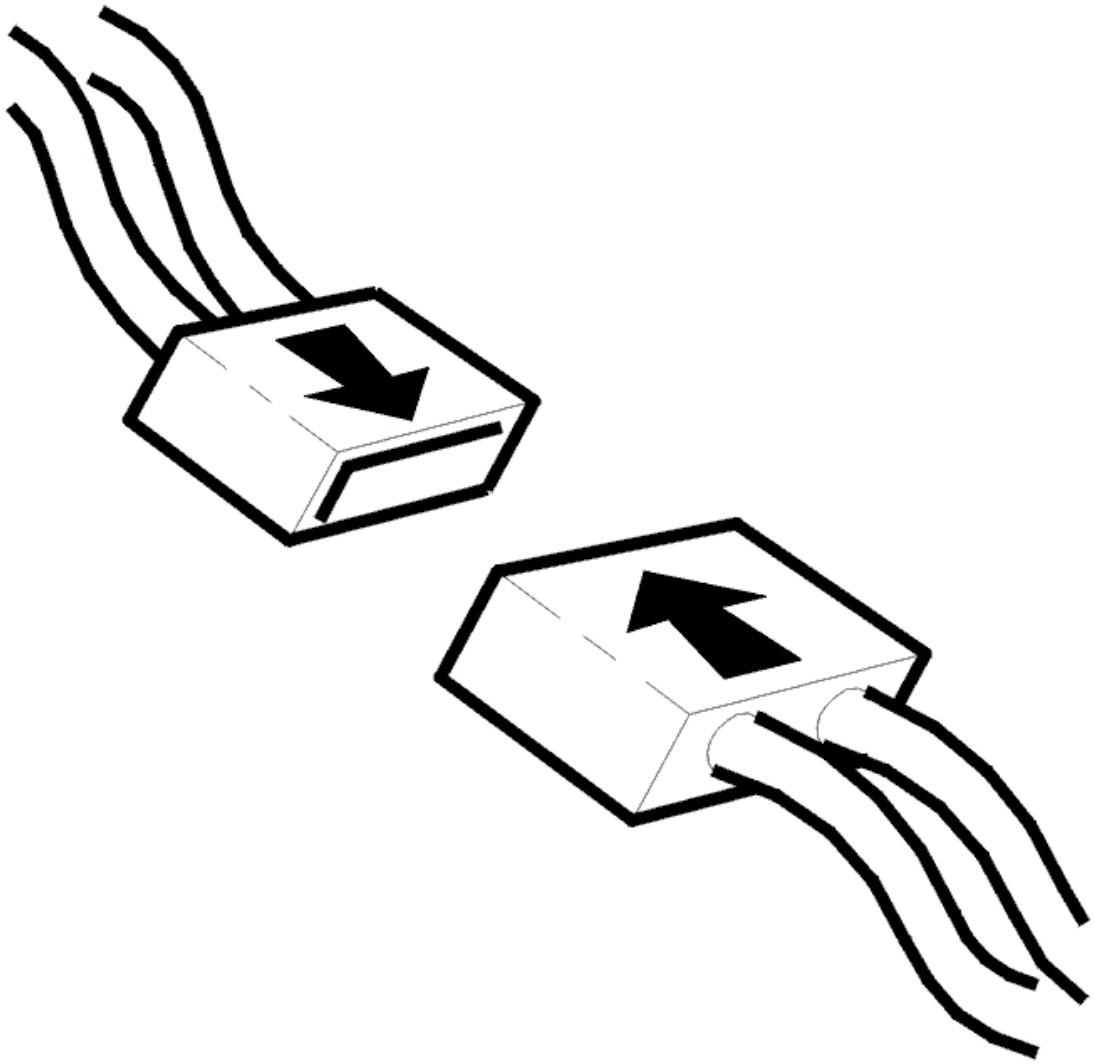

Fig. 63: Connecting Connector
Courtesy of VOLVO CARS CORPORATION

- Ignition off
- Check the connector between the differential electronic module (DEM) and the temperature sensor. Check for contact resistance and oxidation.

  HINT: Read off the temperature sensor signal to check the function.

  Remedy as necessary.

  Other information:

  - see **SIGNAL SPECIFICATION, DIFFERENTIAL ELECTRONIC MODULE (DEM)**
  - see **TEMPERATURE / PRESSURE SENSOR ACTIVE ON DEMAND COUPLING,**

REPLACING

- For AW50AWD and 4T65AWD 2003-, see **DIFFERENTIAL ELECTRONIC MODULE (DEM), REPLACING**
- For TF-80SC 2005- see **DIFFERENTIAL ELECTRONIC MODULE (DEM), REPLACING (2005-2008)** .
- see **CHECKING WIRING AND TERMINALS**

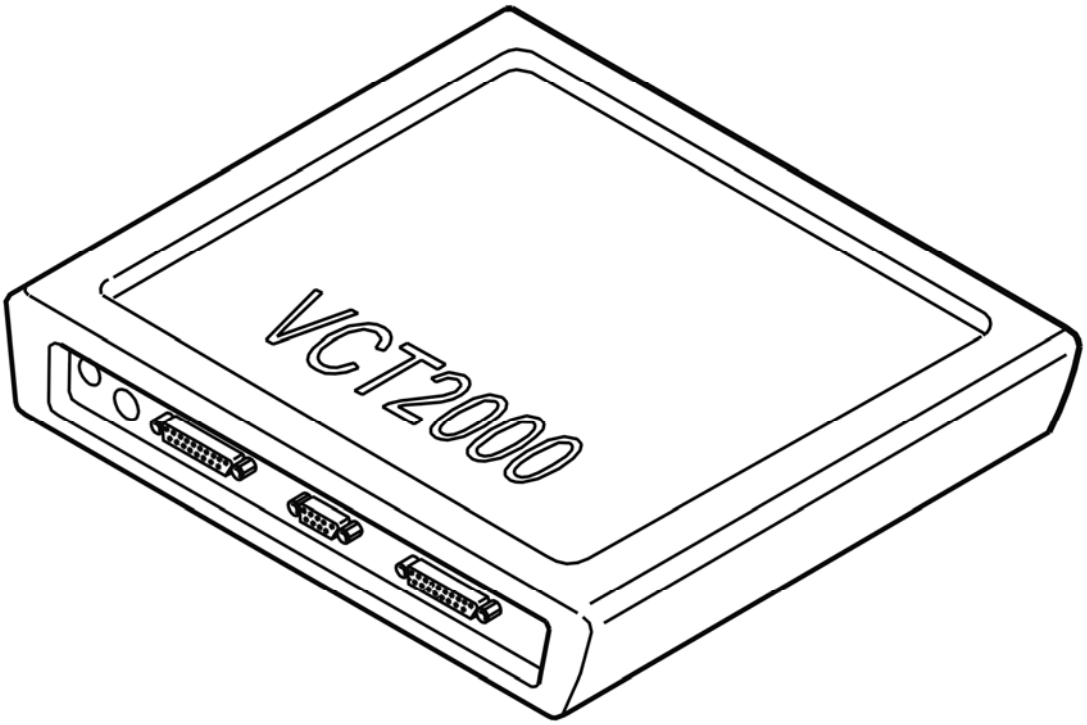

Fig. 64: Identifying VCT2000 Diagnostic Tool Symbol In VIDA
Courtesy of VOLVO CARS CORPORATION

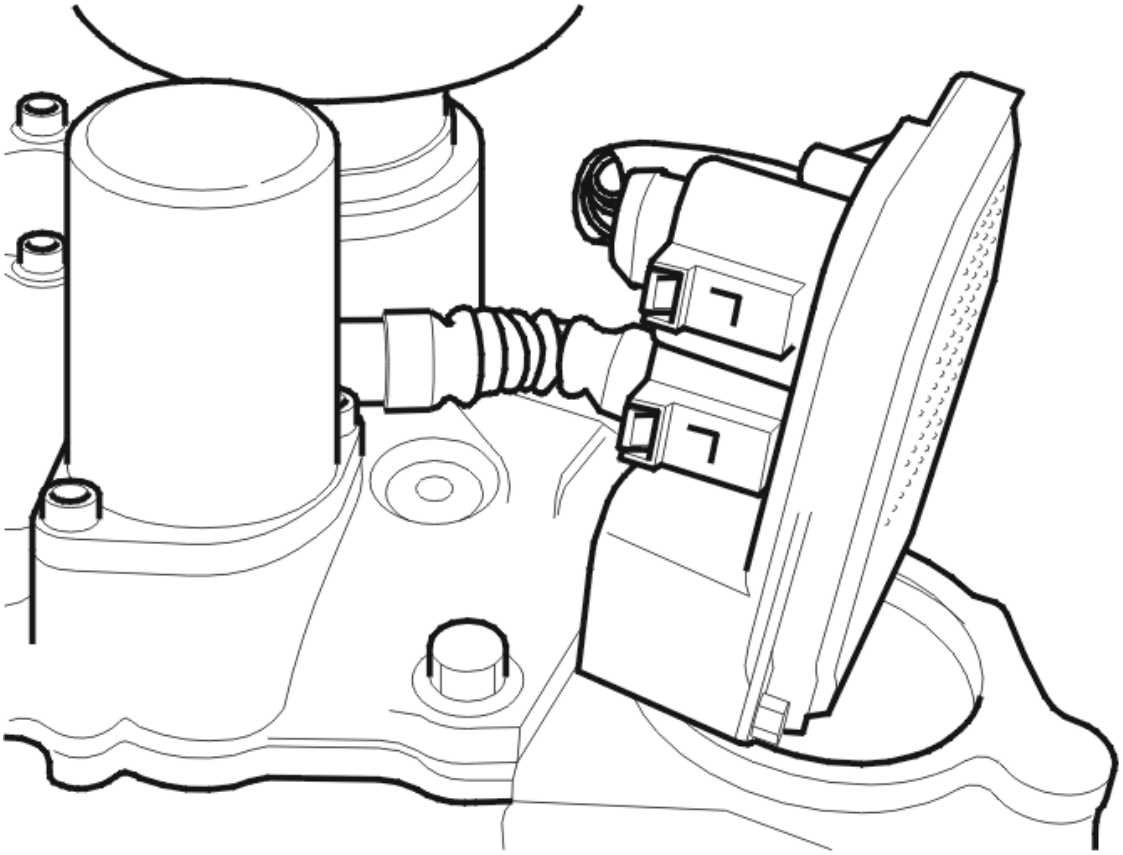

Fig. 65: Identifying Active On Demand Coupling Components
Courtesy of VOLVO CARS CORPORATION

- **Continue**

  Refer to **VERIFICATION**

VERIFICATION

VERIFICATION

HINT: After carrying out the repair, check that the fault has been remedied.

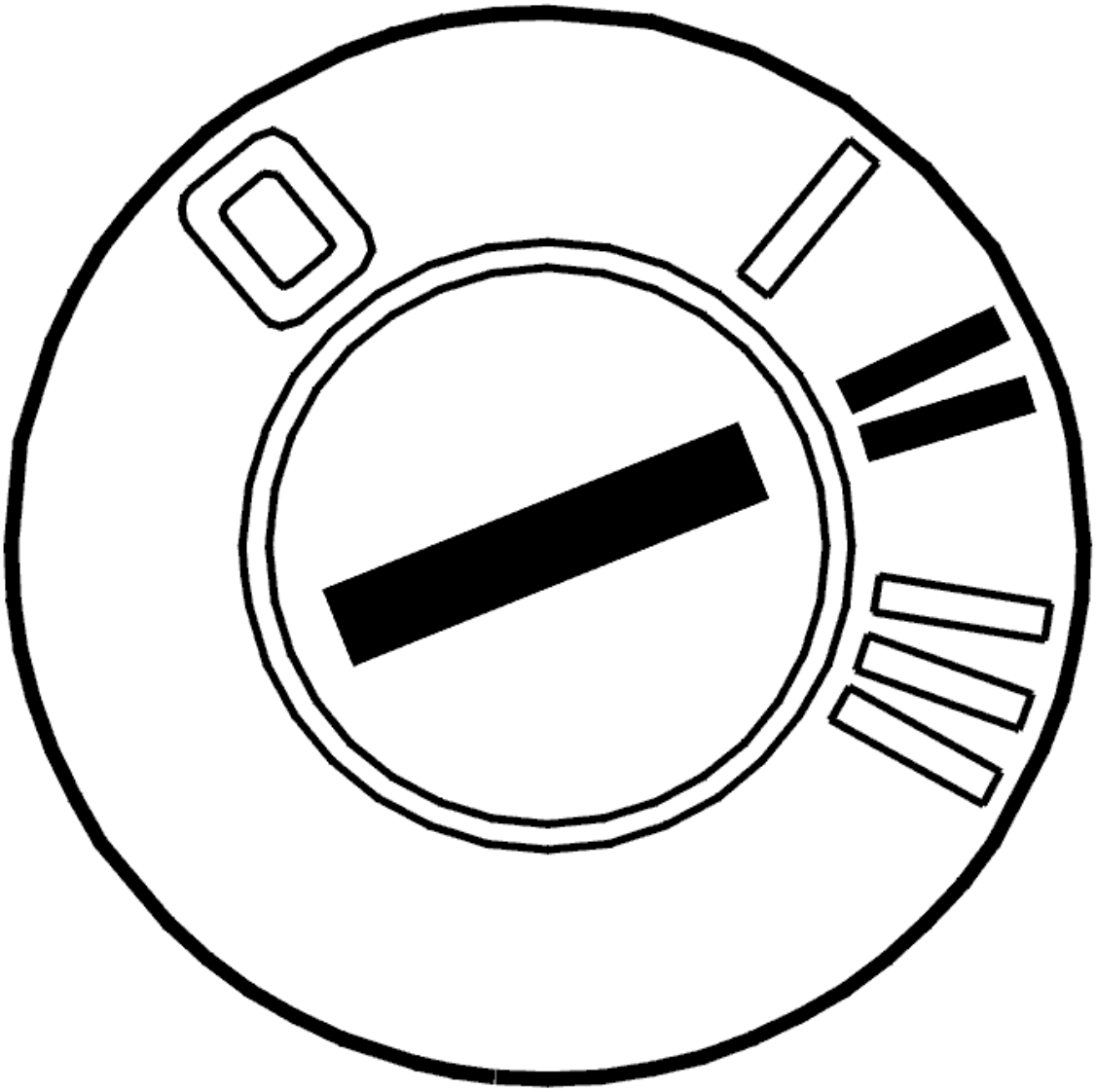

Fig. 66: Identifying Ignition ON
Courtesy of VOLVO CARS CORPORATION

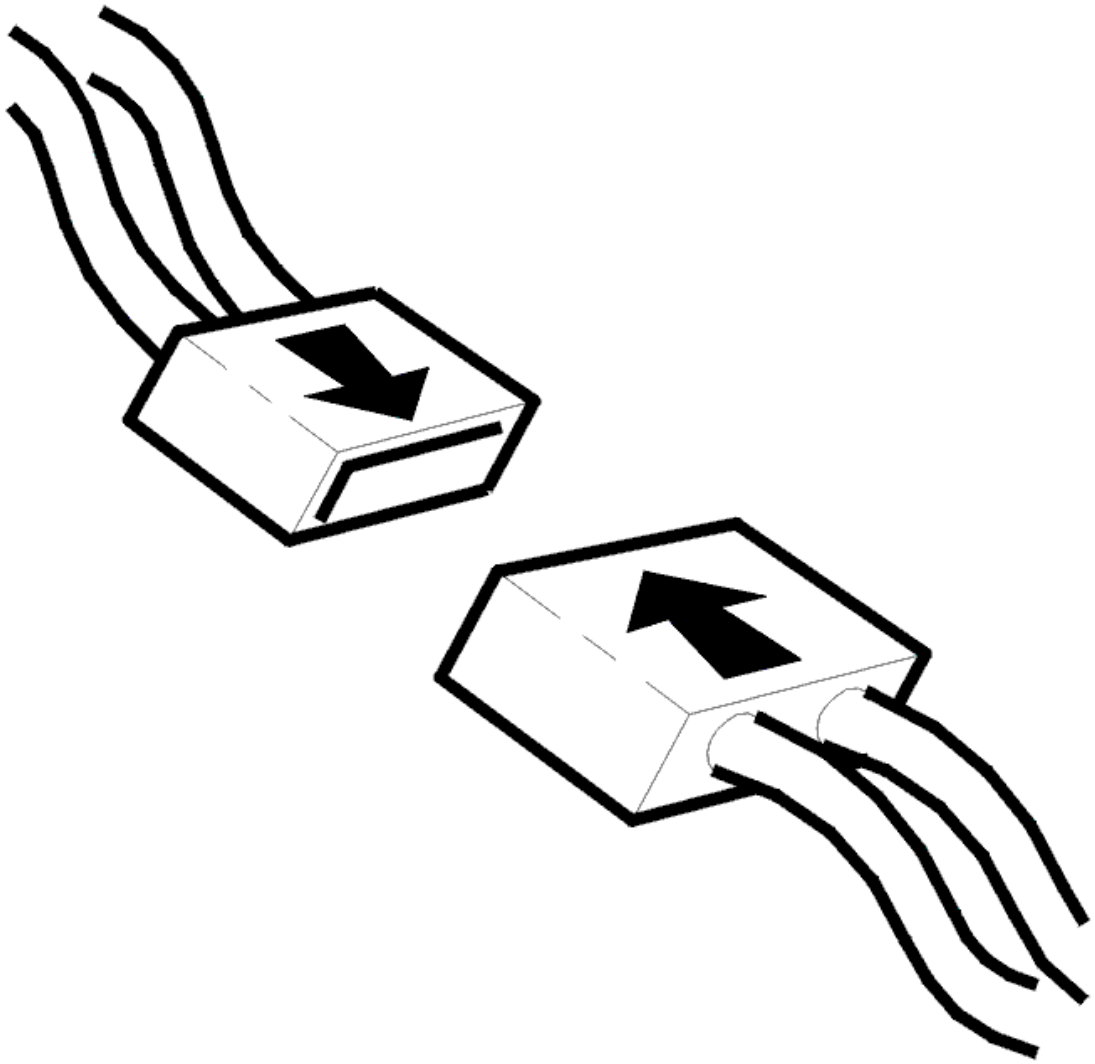

Fig. 67: Connecting Connector
Courtesy of VOLVO CARS CORPORATION

- Ignition off
- Reinstall the connectors, components etc.
- Ignition on.

  Read off the temperature.

  Check that the value is within its permitted range. Compare it to the ambient temperature.

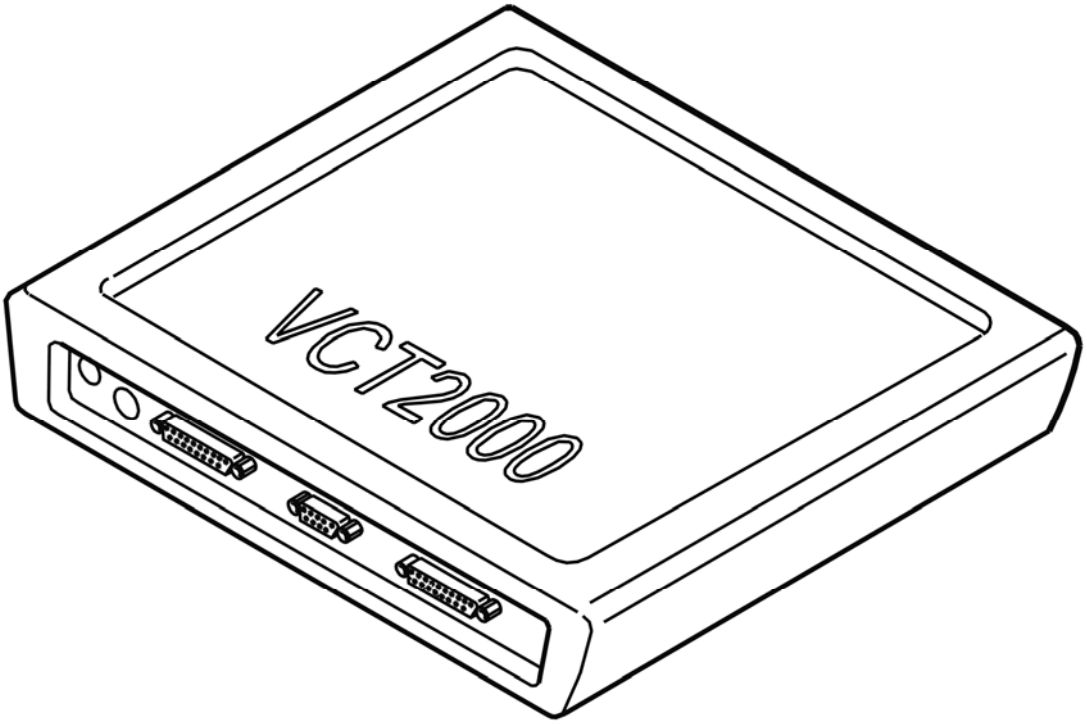

Fig. 68: Identifying VCT2000 Diagnostic Tool Symbol In VIDA
Courtesy of VOLVO CARS CORPORATION

Is the temperature reading OK?

- **YES**

  VERIFIED: Troubleshooting has been completed.

- **NO**

  Refer to **INFORMATION**

INFORMATION

FAULT-TRACING INFORMATION

The fault should have been detected and remedied. As this is not the case fault-tracing has failed.

Exit fault-tracing for this diagnostic trouble code (DTC) or make another attempt.

DEM-0001: TEMPERATURE SENSOR. FAULTY SIGNAL (4T65 AWD; 2006)

DIAGNOSTIC TROUBLE CODE (DTC) INFORMATION DEM-0001

see **DIAGNOSTIC TROUBLE CODE (DTC) INFORMATION DEM-0001**

FAULTY SIGNAL

CHECKING THE CONNECTORS AND CABLES

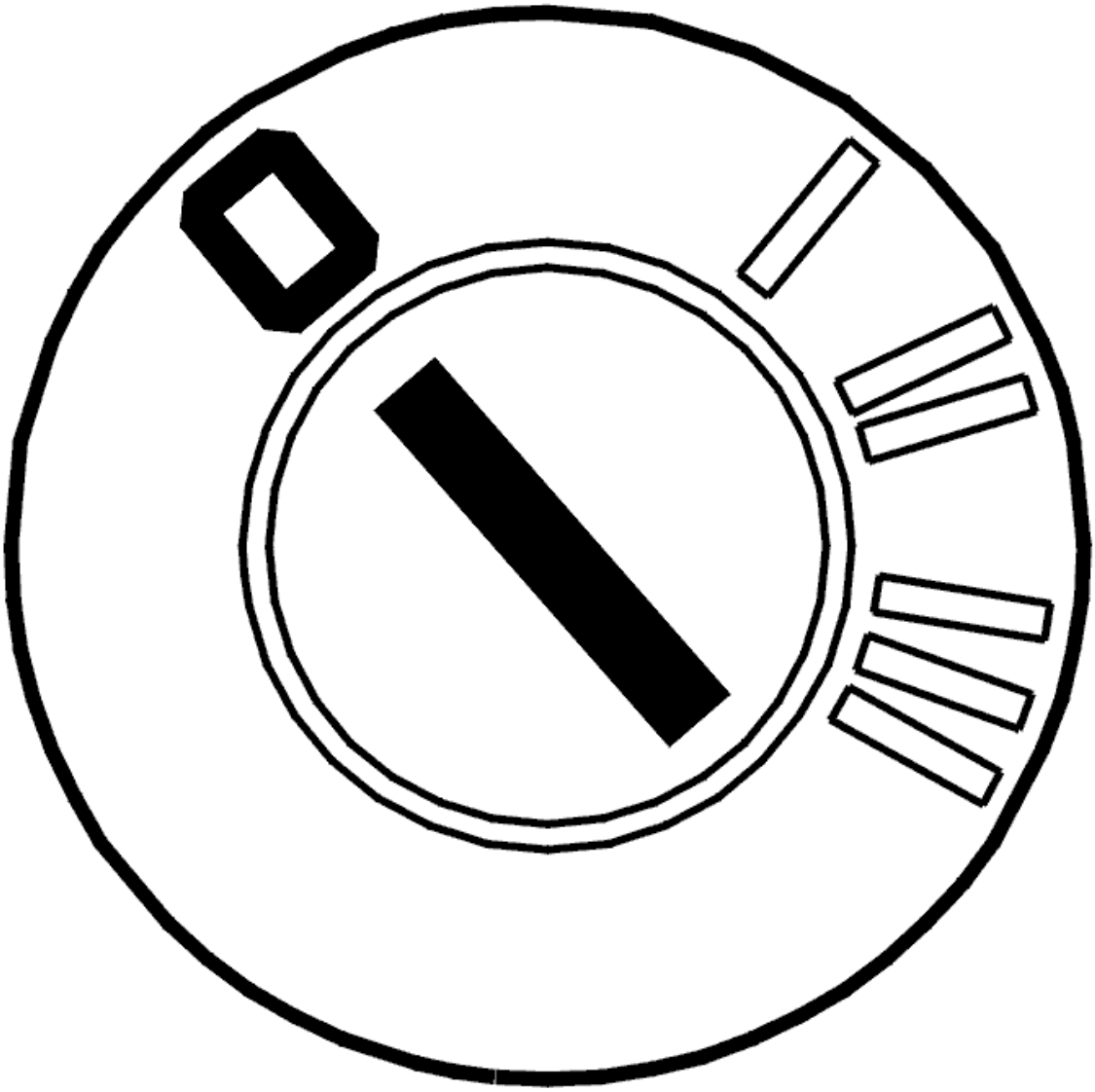

Fig. 69: Identifying Ignition OFF
Courtesy of VOLVO CARS CORPORATION

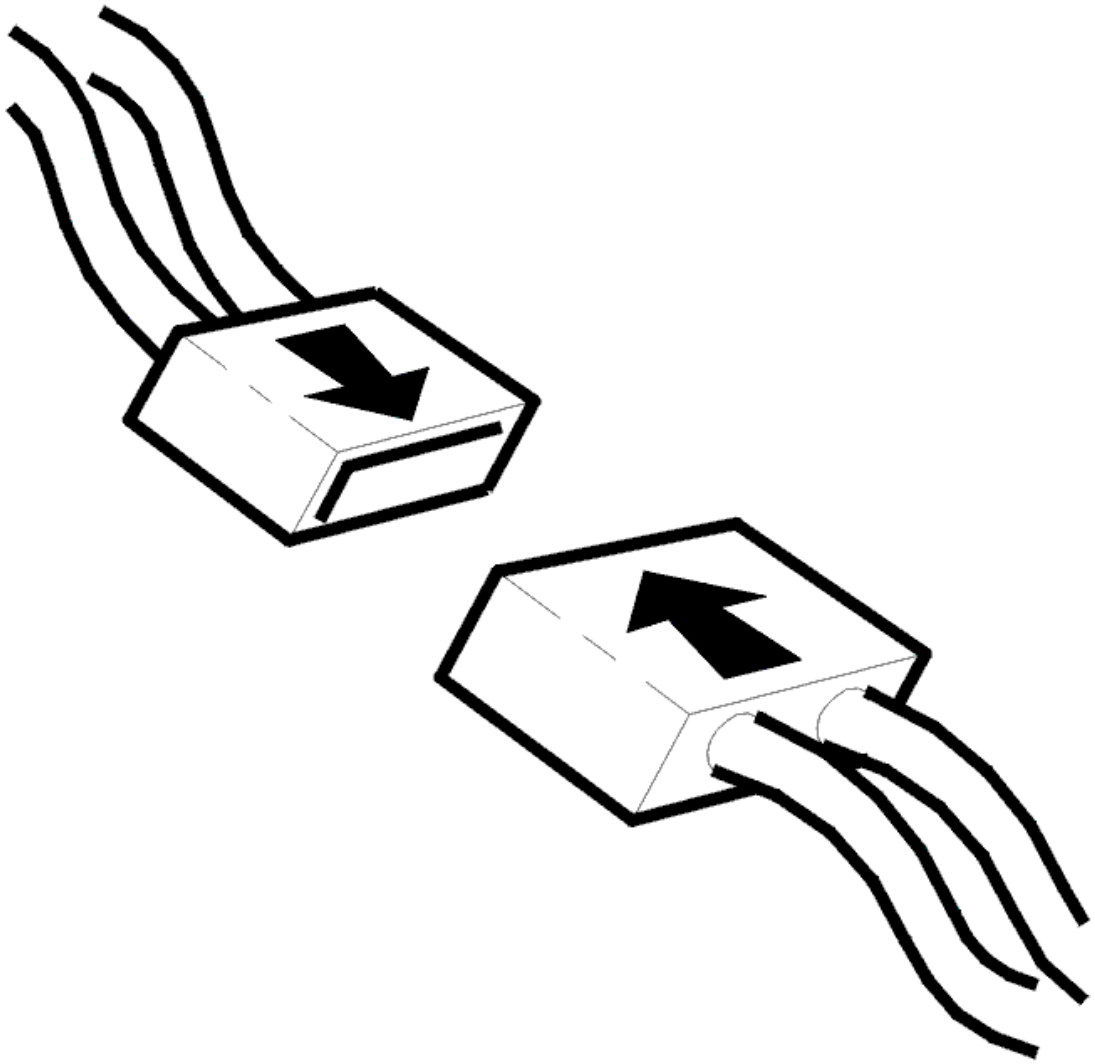

Fig. 70: Connecting Connector
Courtesy of VOLVO CARS CORPORATION

- Ignition off
- Check the connector between the differential electronic module (DEM) and the temperature sensor. Check for contact resistance and oxidation.

  HINT: Read off the temperature sensor signal to check the function.

  Remedy as necessary.

  Other information:

  - see **SIGNAL SPECIFICATION, DIFFERENTIAL ELECTRONIC MODULE (DEM)**
  - see **TEMPERATURE / PRESSURE SENSOR ACTIVE ON DEMAND COUPLING (AOC),**

REPLACING

- For AW50AWD and 4T65AWD 2003-, see **DIFFERENTIAL ELECTRONIC MODULE (DEM), REPLACING**
- For TF-80SC 2005- see **DIFFERENTIAL ELECTRONIC MODULE (DEM), REPLACING (2005-2008)** .
- see **CHECKING WIRING AND TERMINALS**

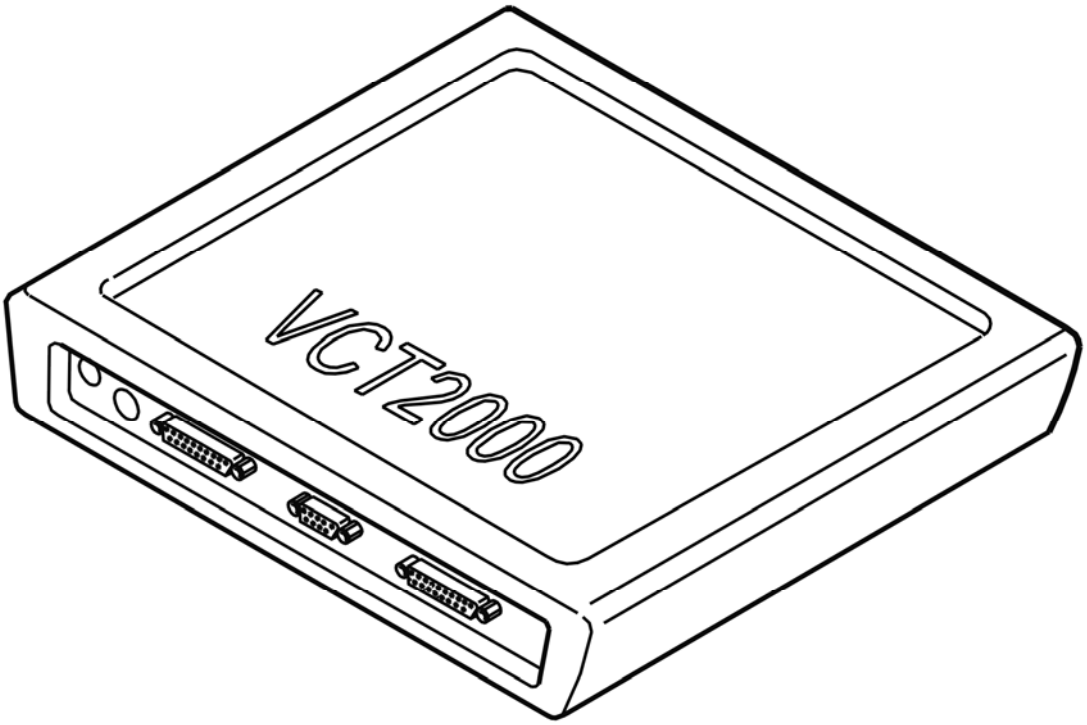

Fig. 71: Identifying VCT2000 Diagnostic Tool Symbol In VIDA
Courtesy of VOLVO CARS CORPORATION

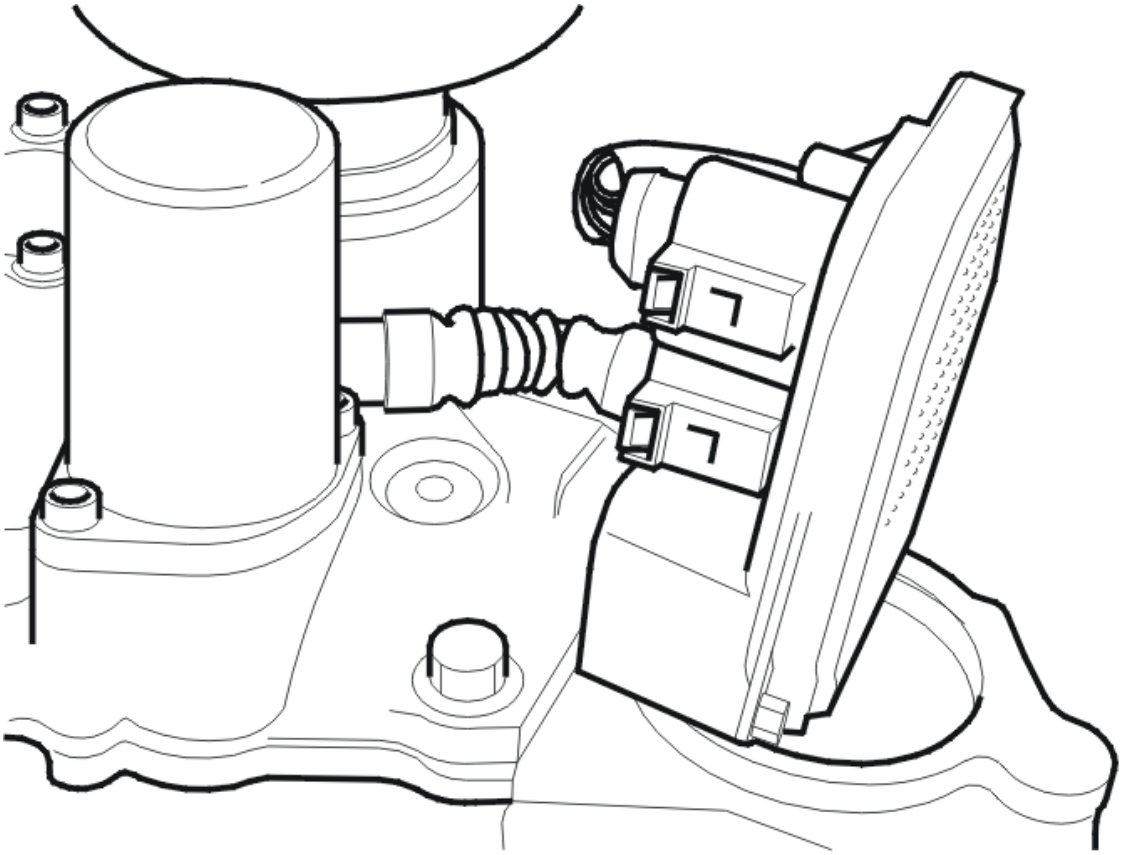

Fig. 72: Identifying Active On Demand Coupling Components
Courtesy of VOLVO CARS CORPORATION

- **Continue**

  Refer to **VERIFICATION**

VERIFICATION

HINT: After carrying out the repair, check that the fault has been remedied.

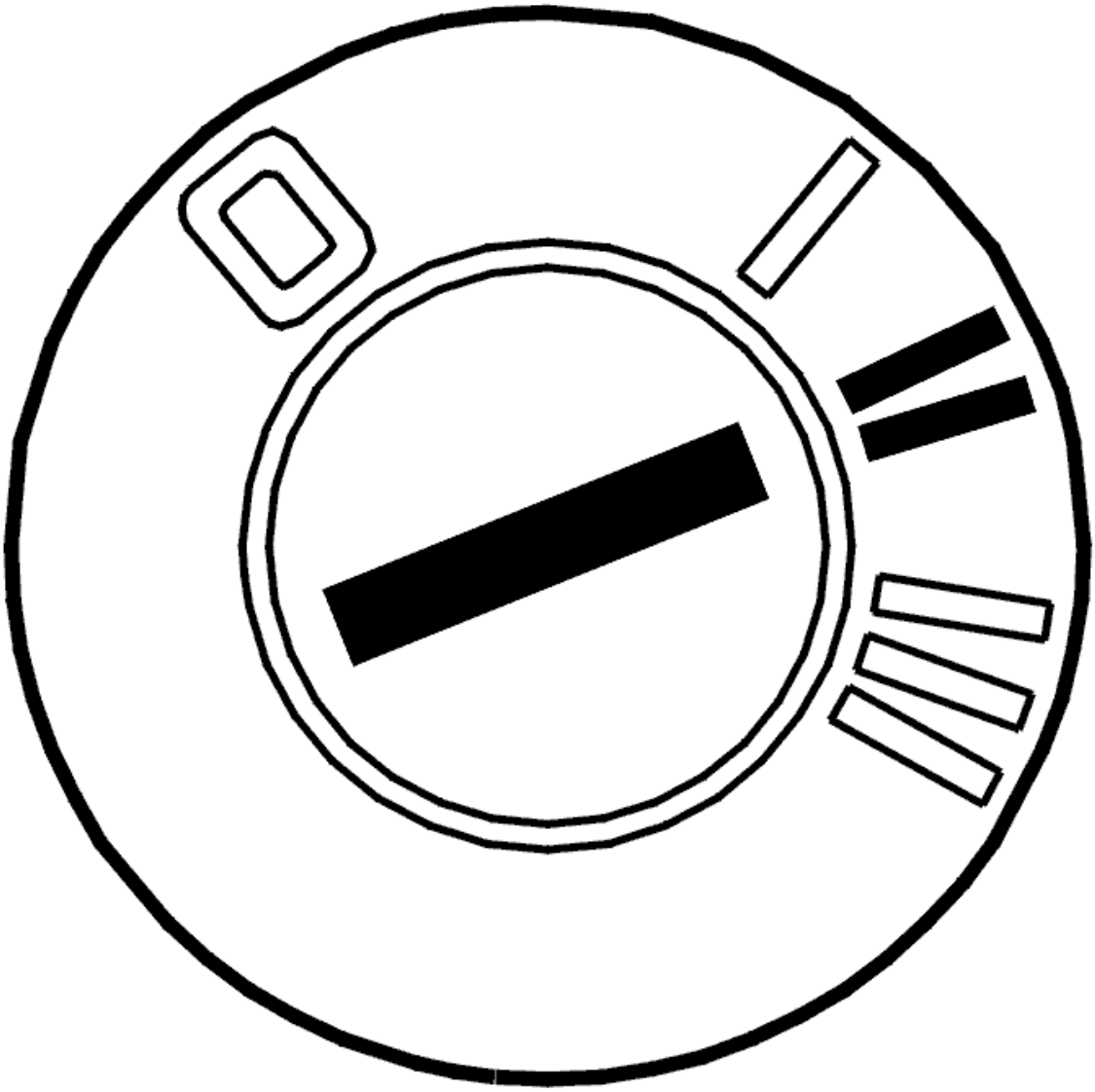

Fig. 73: Identifying Ignition ON
Courtesy of VOLVO CARS CORPORATION

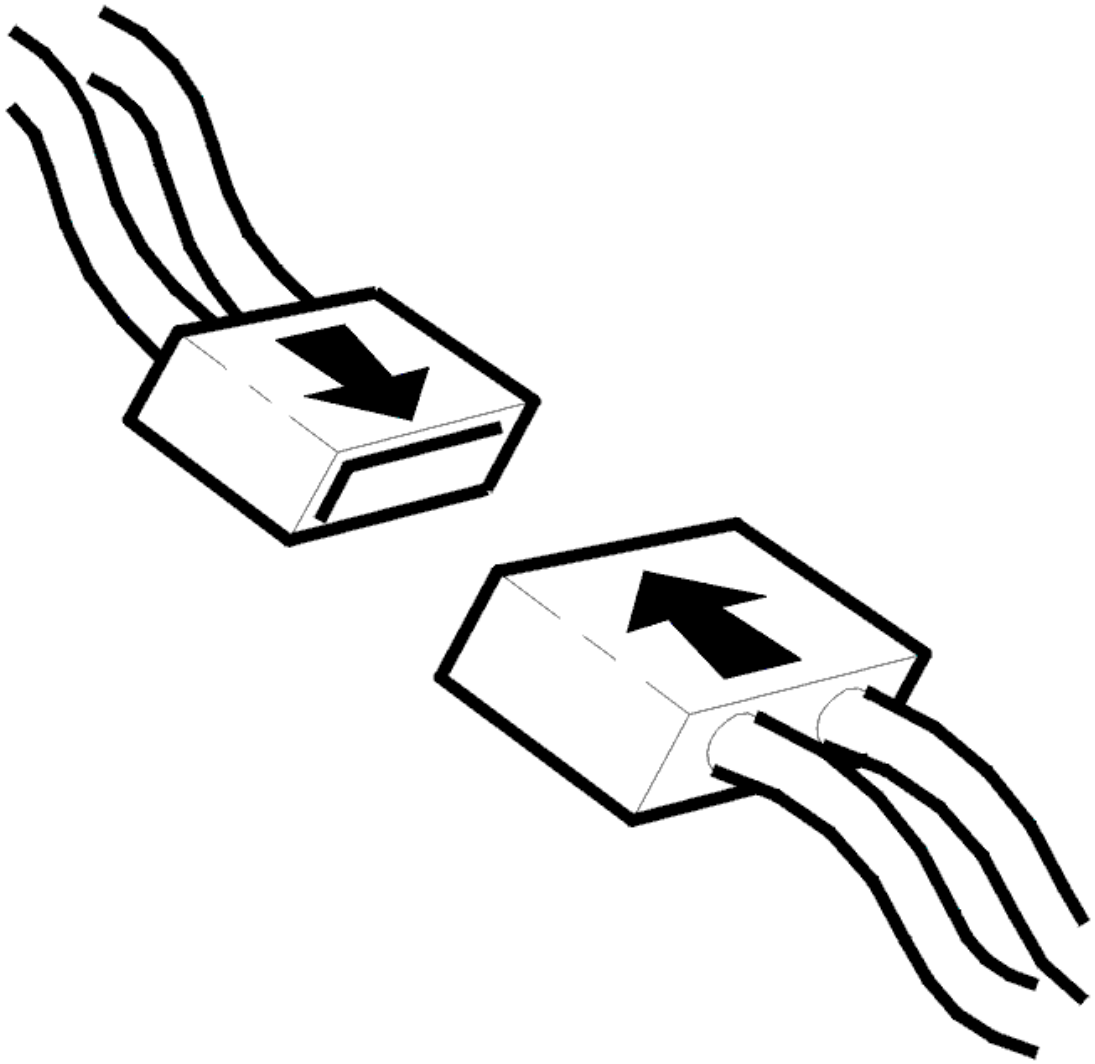

Fig. 74: Connecting Connector
Courtesy of VOLVO CARS CORPORATION

- Ignition off
- Reinstall the connectors, components etc.
- Ignition on.

  Read off the temperature.

  Check that the value is within its permitted range. Compare it to the ambient temperature.

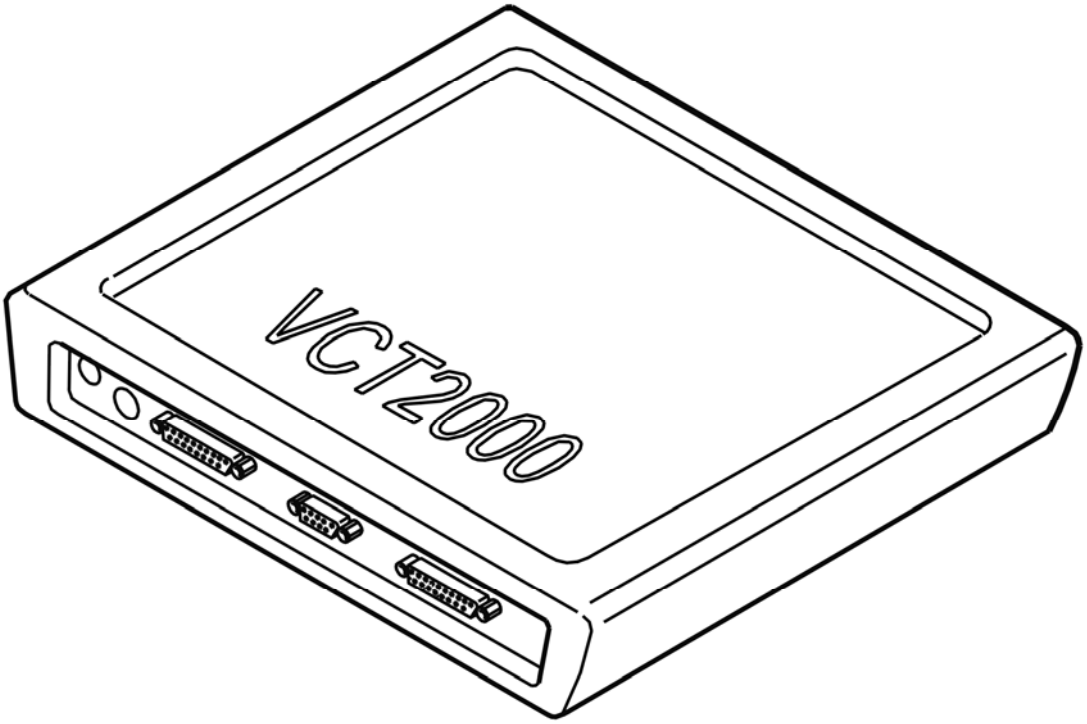

Fig. 75: Identifying VCT2000 Diagnostic Tool Symbol In VIDA
Courtesy of VOLVO CARS CORPORATION

Is the temperature reading OK?

- **YES**

  VERIFIED: Troubleshooting has been completed.

- **NO**

  Refer to **INFORMATION**

INFORMATION

FAULT-TRACING INFORMATION

The fault should have been detected and remedied. As this is not the case fault-tracing has failed.

Exit fault-tracing for this diagnostic trouble code (DTC) or make another attempt.

CHECKING PRESSURE AND TEMPERATURE SENSOR

NOTE: Reading out of oil pressure can take place first after the diagnostic trouble code

(DTC) has been deleted. Therefore frozen values should be printed and saved before deleting takes place.

1. Test of pressure sensor.
   - Ignition on.
   - Use VCT2000 (or appropriate scan tool).

     HINT: Correct pressure should be 0.00 +/- 0.08 MPa.

   - Engine idling
   - Use VCT2000 (or appropriate scan tool).

     HINT: Correct pressure should be 0.38 +/- 0.08 MPa.

2. Test of temperature sensor.
   - Ignition on.
   - Use VCT2000 (or appropriate scan tool).

     HINT: Normal value for ambient temperature when the vehicle is cold and (+20 to +50 °C) when the vehicle is driven.

If wrong value is read out, then diagnostic trouble code should be erased and the sensor changed. After changing sensor, repeat the test procedure again.

NOTE: **There are two types of sensors, an 80 bar and a 40 bar. Differential electronic module (DEM) has hardware number 30759701, 30785483, 30759682, 30783198, 30735844, or 30783018, an 80 bar pressure sensor should be installed. If Differential electronic module (DEM) has another hardware number than above, a 40 bar sensor should be installed.**

HINT: For reading out of hardware number, use VIDA (Volvo scan tool).

Other information

- see **TEMPERATURE / PRESSURE SENSOR ACTIVE ON DEMAND COUPLING (AOC), REPLACING**

Fig. 76: Identifying VCT2000 Diagnostic Tool Symbol In VIDA
Courtesy of VOLVO CARS CORPORATION

DEM-0001: TEMPERATURE SENSOR. FAULTY SIGNAL (4T65 AWD; AW50/51 AWD; 2003-2004)

DIAGNOSTIC TROUBLE CODE (DTC) INFORMATION DEM-0001

Condition

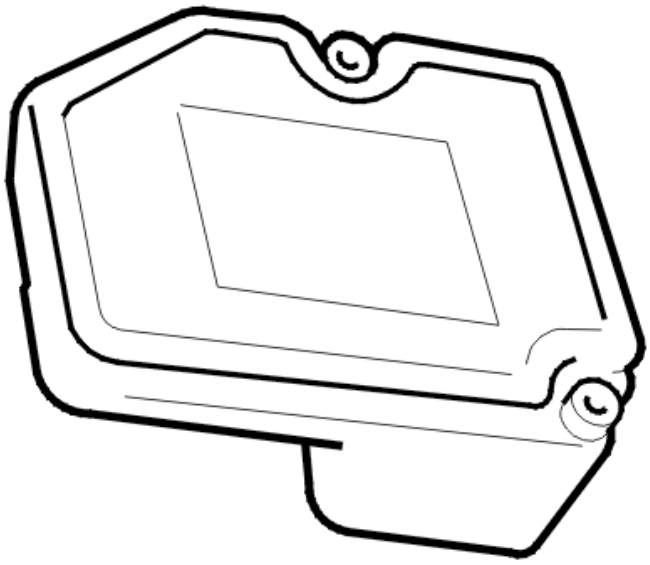

Fig. 77: Identifying Differential Electronic Module
Courtesy of VOLVO CARS CORPORATION

The differential electronic module (DEM) checks whether the signal from the oil temperature sensor is within its permitted range by comparing the signal with a calculated value.

When the engine speed exceeds 500 rpm, the control module calculates the temperature theoretically. The calculated temperature is compared to the oil temperature sensor signal. If the signal from the oil temperature sensor corresponds to a temperature below -128°C or higher than +127°C, the control module sees this as a fault. Diagnostic trouble code DEM-0001 is stored.

Diagnostic trouble code (DTC) DEM-0001 can be diagnosed with the engine running and the engine speed >500 rpm.

Substitute Value

- Four wheel drive is blocked.

Possible Source

- Defective temperature sensor
- Defective control module.

Fault symptom[s]

- Four wheel drive is not functioning.

FAULTY SIGNAL

CHECKING THE STATUS

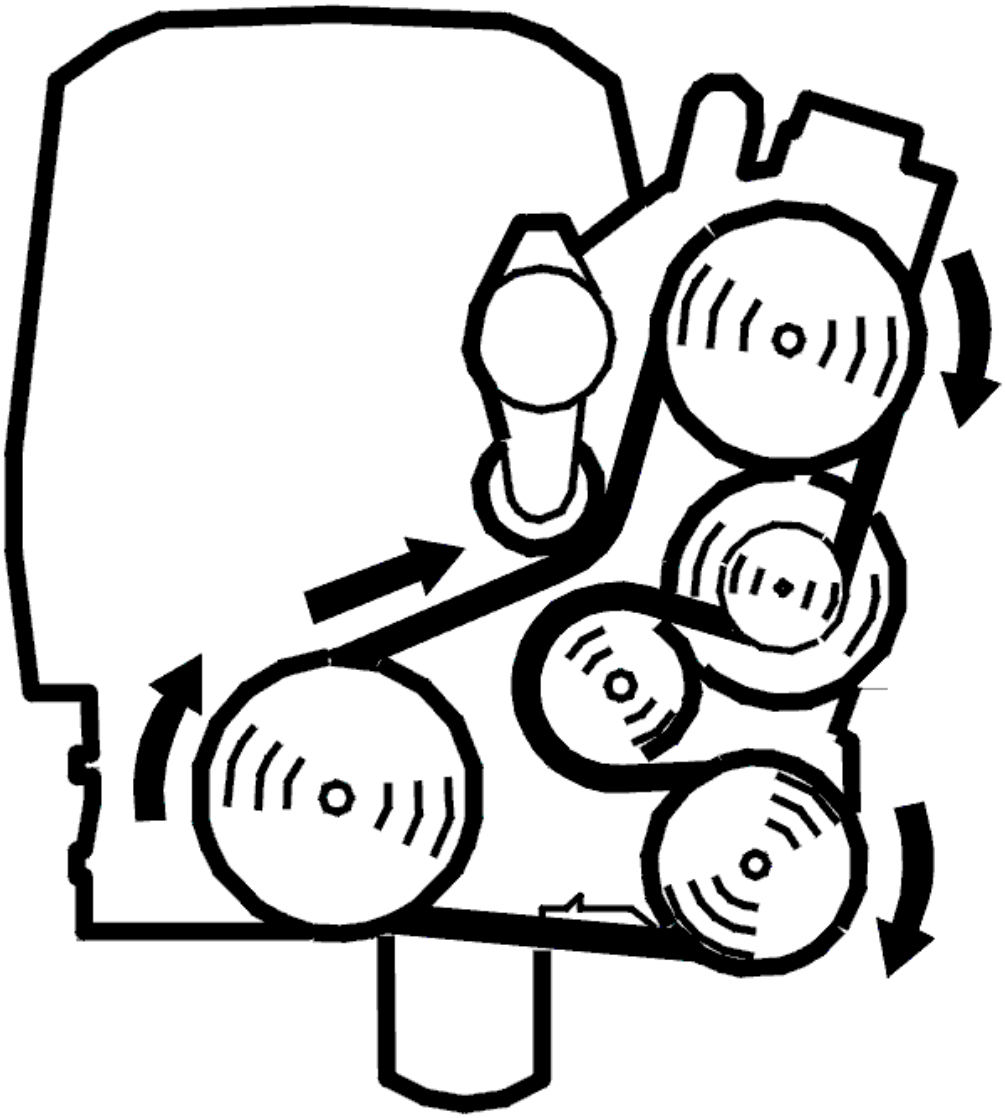

Fig. 78: Belt Routing / Engine Idling - Volvo
Courtesy of VOLVO CARS CORPORATION

- Engine idling
- Read off the oil temperature.

  Check that the oil temperature is within its permitted range. Compare it to the ambient temperature.

  HINT: To check that the temperature has been updated, test drive the car and read off the temperature again.

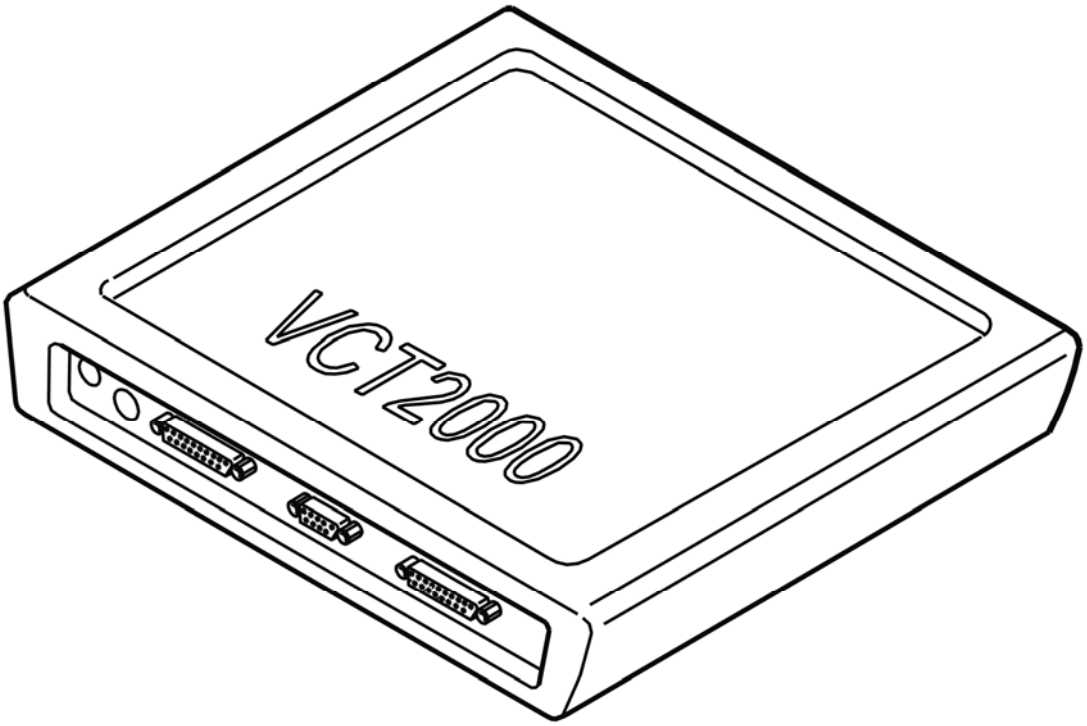

Fig. 79: Identifying VCT2000 Diagnostic Tool Symbol In VIDA
Courtesy of VOLVO CARS CORPORATION

Is the temperature reading OK?

- **YES**

  FAULT NOT FOUND: Troubleshooting has been completed.

- **NO**

  Refer to **REPLACING THE TEMPERATURE/PRESSURE SENSOR**

REPLACING THE TEMPERATURE/PRESSURE SENSOR

Replace the temperature/pressure sensor.

Other information:

- To replace the temperature/pressure sensor, see **TEMPERATURE / PRESSURE SENSOR ACTIVE ON DEMAND COUPLING, REPLACING** .

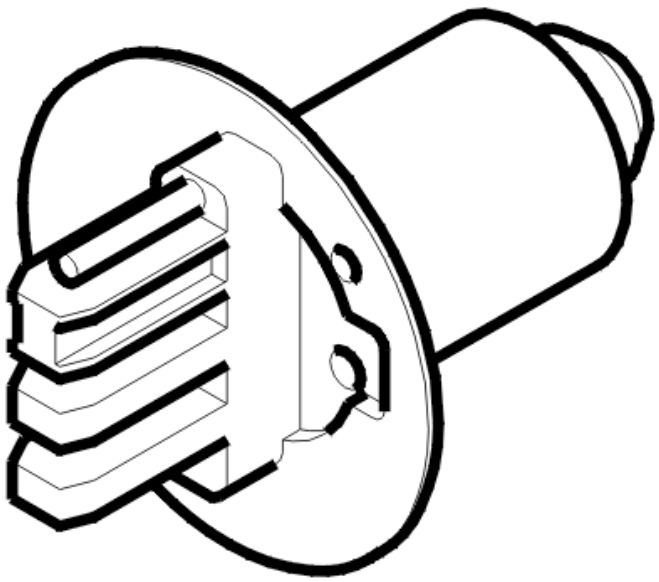

Fig. 80: Identifying Oil Pressure And Temperature Sensor
Courtesy of VOLVO CARS CORPORATION

- **Continue**

  Refer to **VERIFICATION**

VERIFICATION

HINT: After carrying out the repair, check that the fault has been remedied.

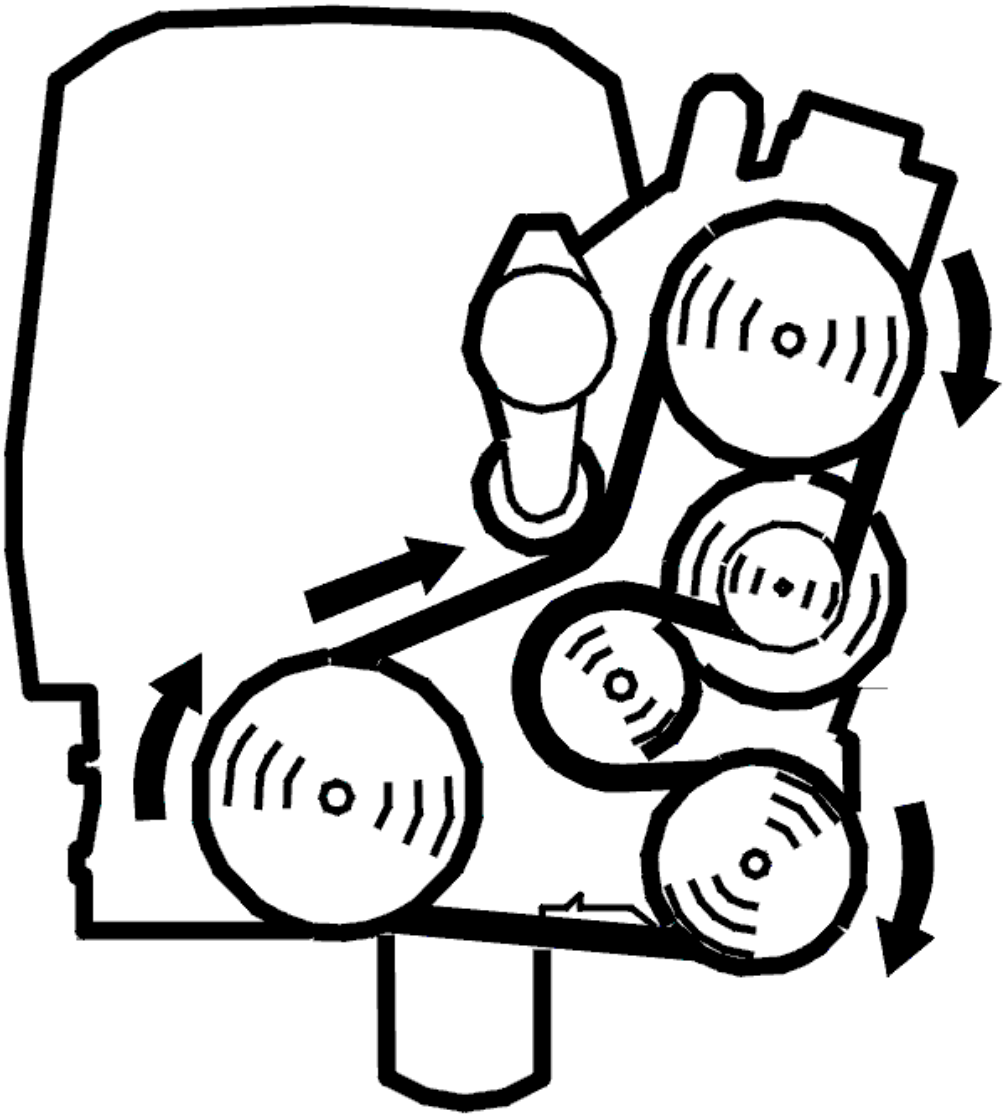

Fig. 81: Belt Routing / Engine Idling - Volvo
Courtesy of VOLVO CARS CORPORATION

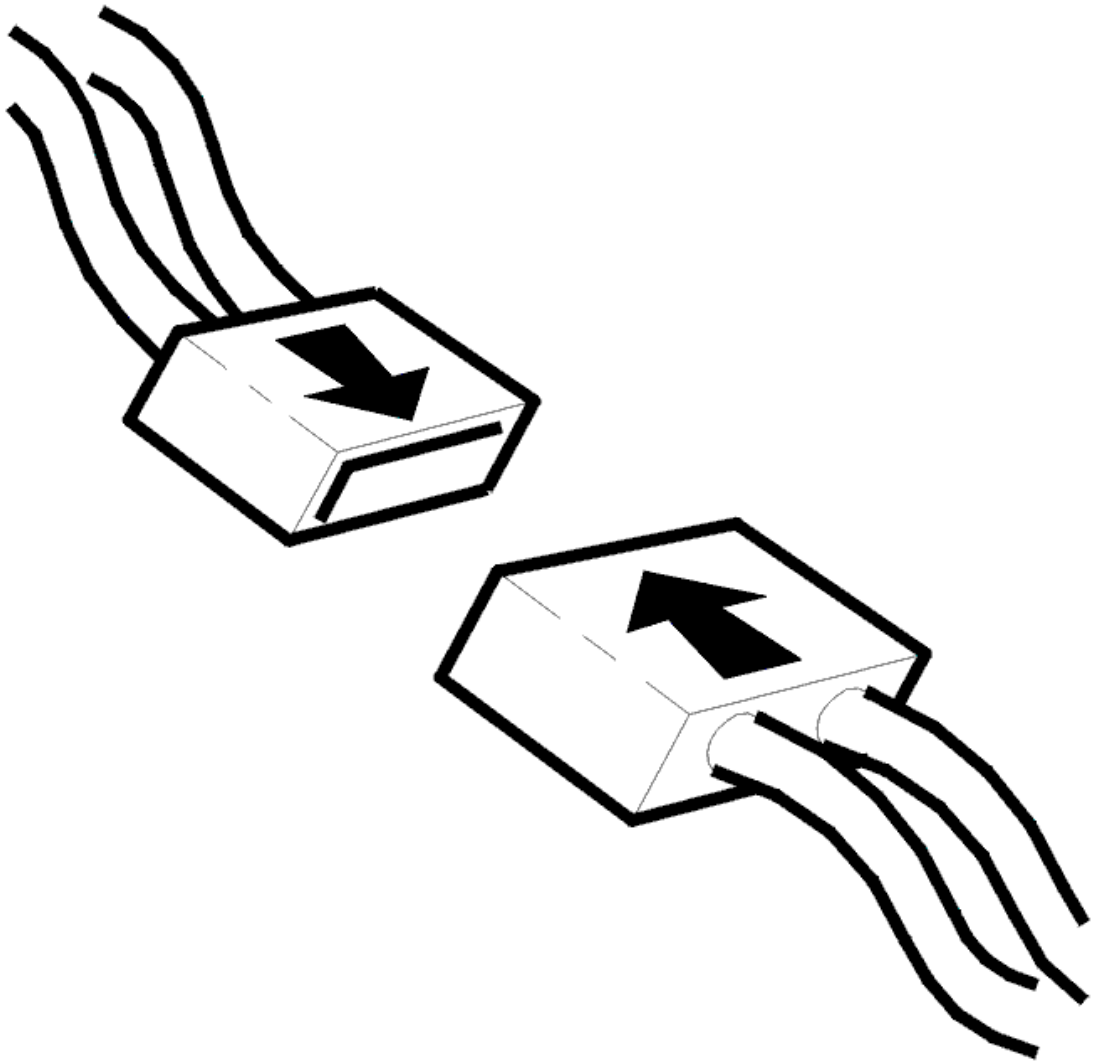

Fig. 82: Connecting Connector
Courtesy of VOLVO CARS CORPORATION

- Ignition off
- Reconnect the connectors, reinstall components etc.
- Engine idling
- Read off the oil temperature.

  Check that the oil temperature is within its permitted range. Compare it to the ambient temperature.

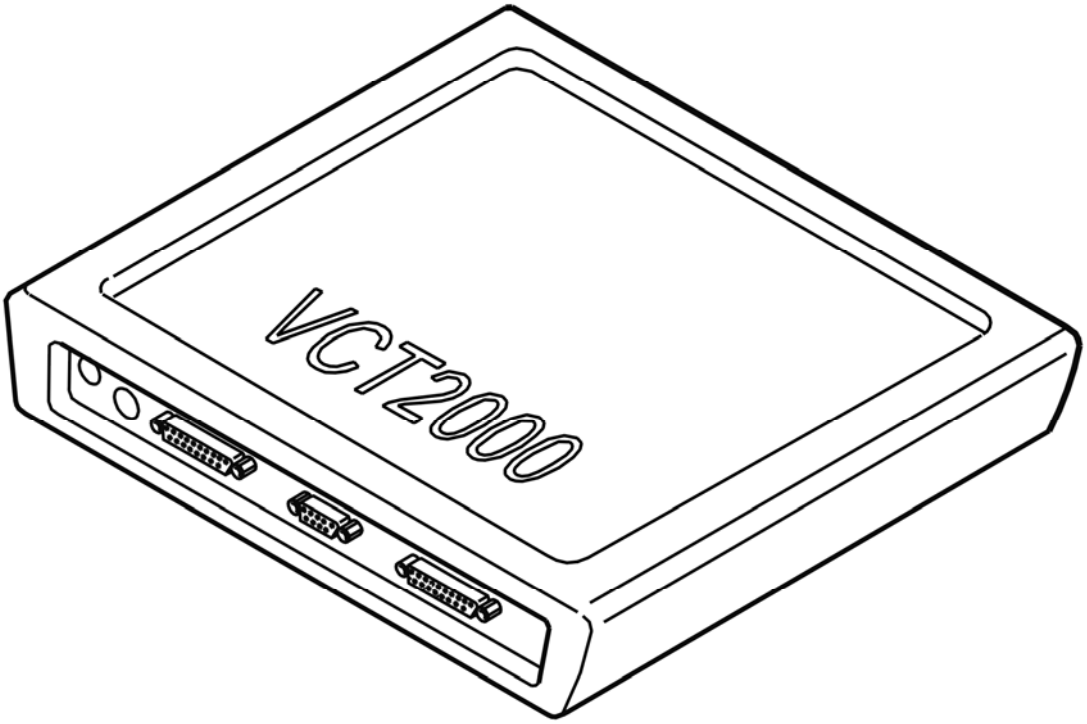

Fig. 83: Identifying VCT2000 Diagnostic Tool Symbol In VIDA
Courtesy of VOLVO CARS CORPORATION

Is the temperature reading OK?

- **YES**

  OKAY: Troubleshooting has been completed.

- **NO**

  Refer to **INFORMATION**

INFORMATION

FAULT-TRACING INFORMATION

The fault should have been detected and remedied. As this is not the case fault-tracing has failed.

Exit fault-tracing for this diagnostic trouble code (DTC) or make another attempt.

DEM-0001: TEMPERATURE SENSOR. FAULTY SIGNAL (AW50/51 AWD; 2006-2007)

DIAGNOSTIC TROUBLE CODE (DTC) INFORMATION DEM-0001

see **DIAGNOSTIC TROUBLE CODE (DTC) INFORMATION DEM-0001**

FAULTY SIGNAL

see **FAULTY SIGNAL**

DEM-0002: PRESSURE SENSOR. FAULTY SIGNAL (4T65 AWD; 2006)

DIAGNOSTIC TROUBLE CODE (DTC) INFORMATION DEM-0002

Condition

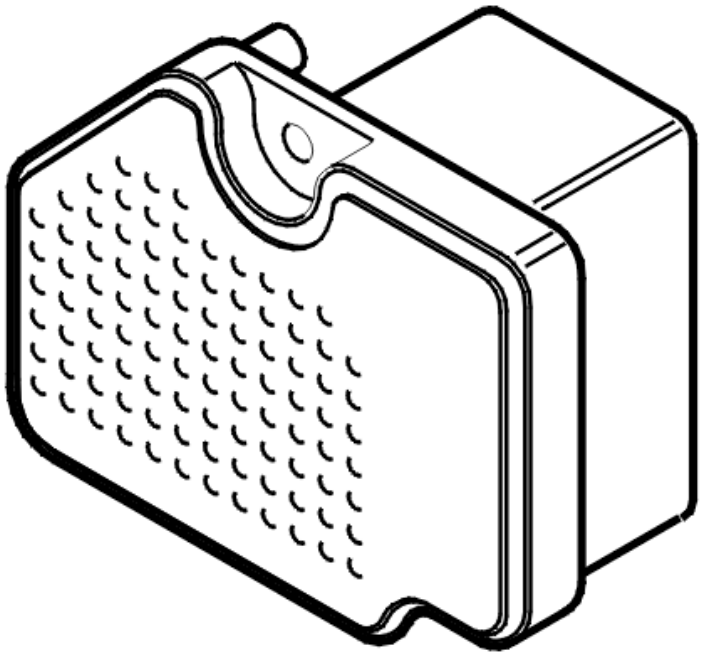

Fig. 84: Active On Demand Coupling Control Module
Courtesy of VOLVO CARS CORPORATION

The differential electronic module (DEM) checks if the signal from the oil pressure sensor is within the permitted range by comparing the signal with a predefined parameter.

The diagnostic trouble code (DTC) is stored if the signal from the oil pressure sensor corresponds to a pressure lower than 0 MPa or higher than 4 MPa.

The diagnostic trouble code (DTC) can be diagnosed when the ignition is switched on.

Substitute Value

- Four wheel drive is disengaged.

Possible Source

- Damaged oil pressure sensor
- Damaged control module.

Fault symptom[s]

- Four wheel drive is not functioning.

FAULTY SIGNAL

CHECKING THE FUNCTION

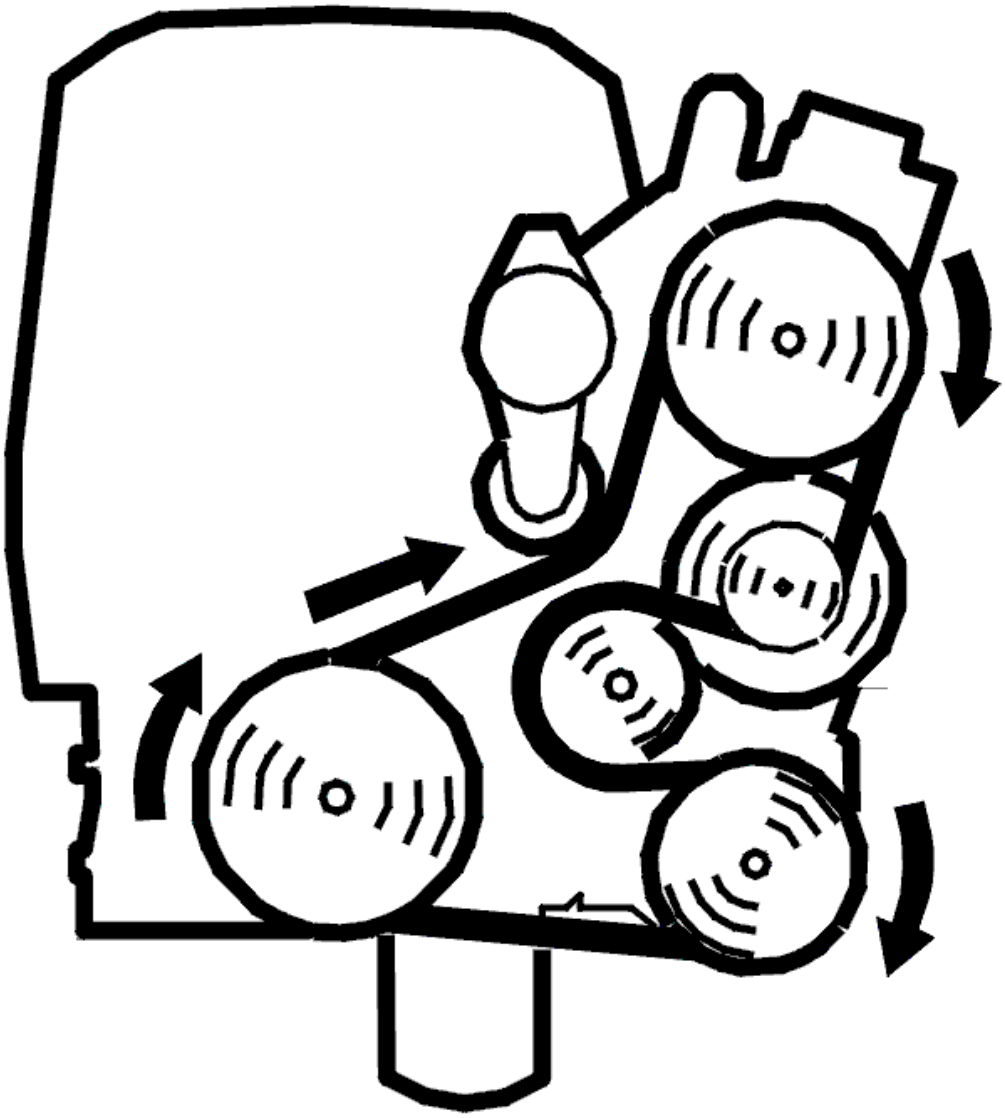

Fig. 85: Belt Routing / Engine Idling - Volvo
Courtesy of VOLVO CARS CORPORATION

CAUTION: Carry out the test with the vehicle raised so that all four wheels can rotate freely with the mounting at the ends of the control arms to prevent damage to the drive shafts.

WARNING: Ensure that the vehicle is safely raised. Check that no objects are caught in the tire treads.

NOTE: If the vehicle is equipped with TRACS (traction control system) or Traction Control (DSTC (Dynamic stability and traction control), STC (Stability and traction control)) the function must be deactivated. This is carried out by removing the fuse for the brake system pump motor in the engine compartment relay and fusebox. Note that diagnostic trouble codes

(DTCs) will be stored in the brake control module (BCM). These must be erased before returning the vehicle to the customer.

-
- Engine idling
- Read off the oil pressure.

  Check that the function of the oil pressure sensor is OK. Run the engine with the vehicle on the lift to increase the clutch oil pressure. Read off the pressure during the test drive. Check that the pressure has been updated.

  HINT: The oil pressure sensor has a measurement range of 0 to 4 Mpa.

  Check the connector between the differential electronic module (DEM) and the oil pressure sensor. Check for contact resistance and oxidation.

  Also check the clutch for leakage.

  Remedy as necessary.

  Other information:

  - see **SIGNAL SPECIFICATION, DIFFERENTIAL ELECTRONIC MODULE (DEM)**
  - see **TEMPERATURE / PRESSURE SENSOR ACTIVE ON DEMAND COUPLING (AOC), REPLACING**
  - For AW50AWD and 4T65AWD 2003-, see **ACTIVE ON DEMAND COUPLING (AOC), REPLACING**
  - For AW50AWD and 4T65AWD 2003-, see **DIFFERENTIAL ELECTRONIC MODULE (DEM), REPLACING**
  - For TF-80SC 2005- see **DIFFERENTIAL ELECTRONIC MODULE (DEM), REPLACING (2005-2008)** .
  - see **CHECKING WIRING AND TERMINALS**

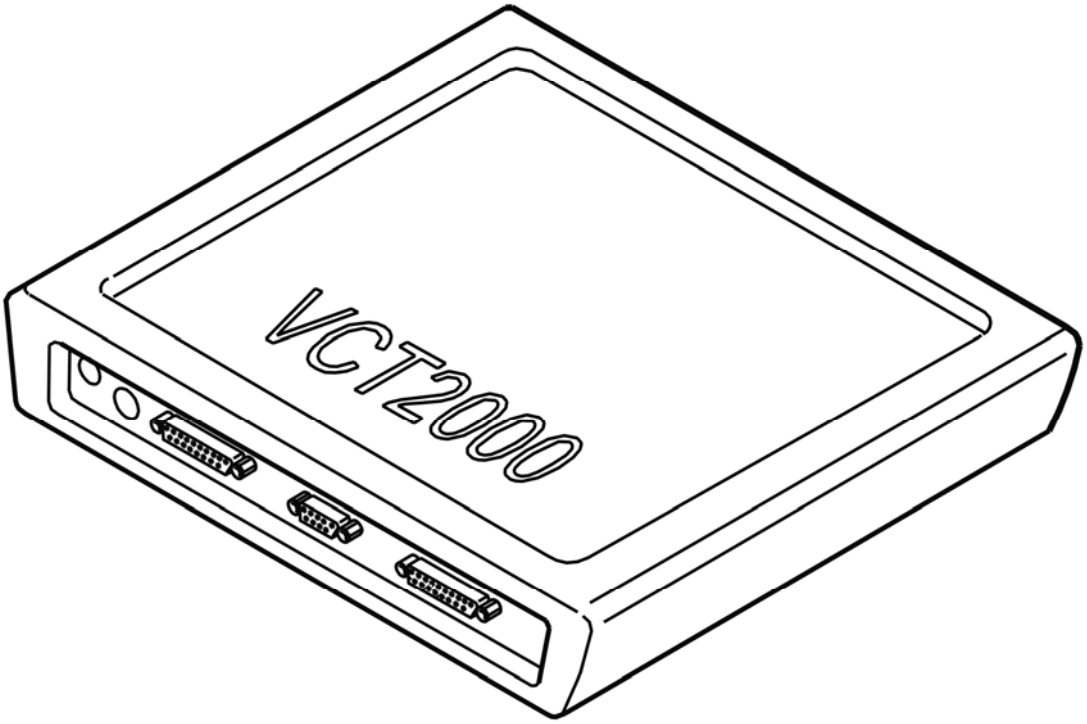

Fig. 86: Identifying VCT2000 Diagnostic Tool Symbol In VIDA
Courtesy of VOLVO CARS CORPORATION

- **Continue**

  Refer to **VERIFICATION**

VERIFICATION

HINT: After carrying out the repair, check that the fault has been remedied.

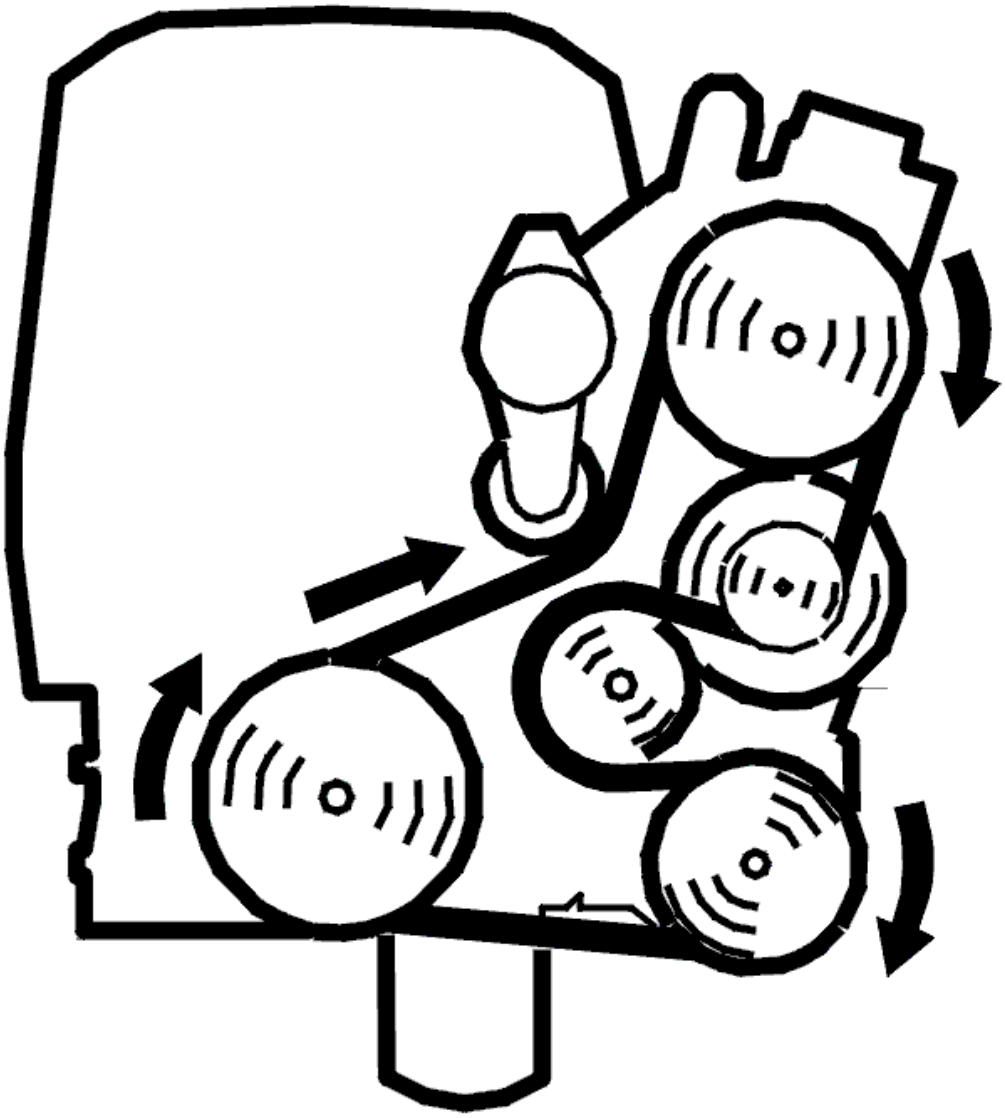

Fig. 87: Belt Routing / Engine Idling - Volvo
Courtesy of VOLVO CARS CORPORATION

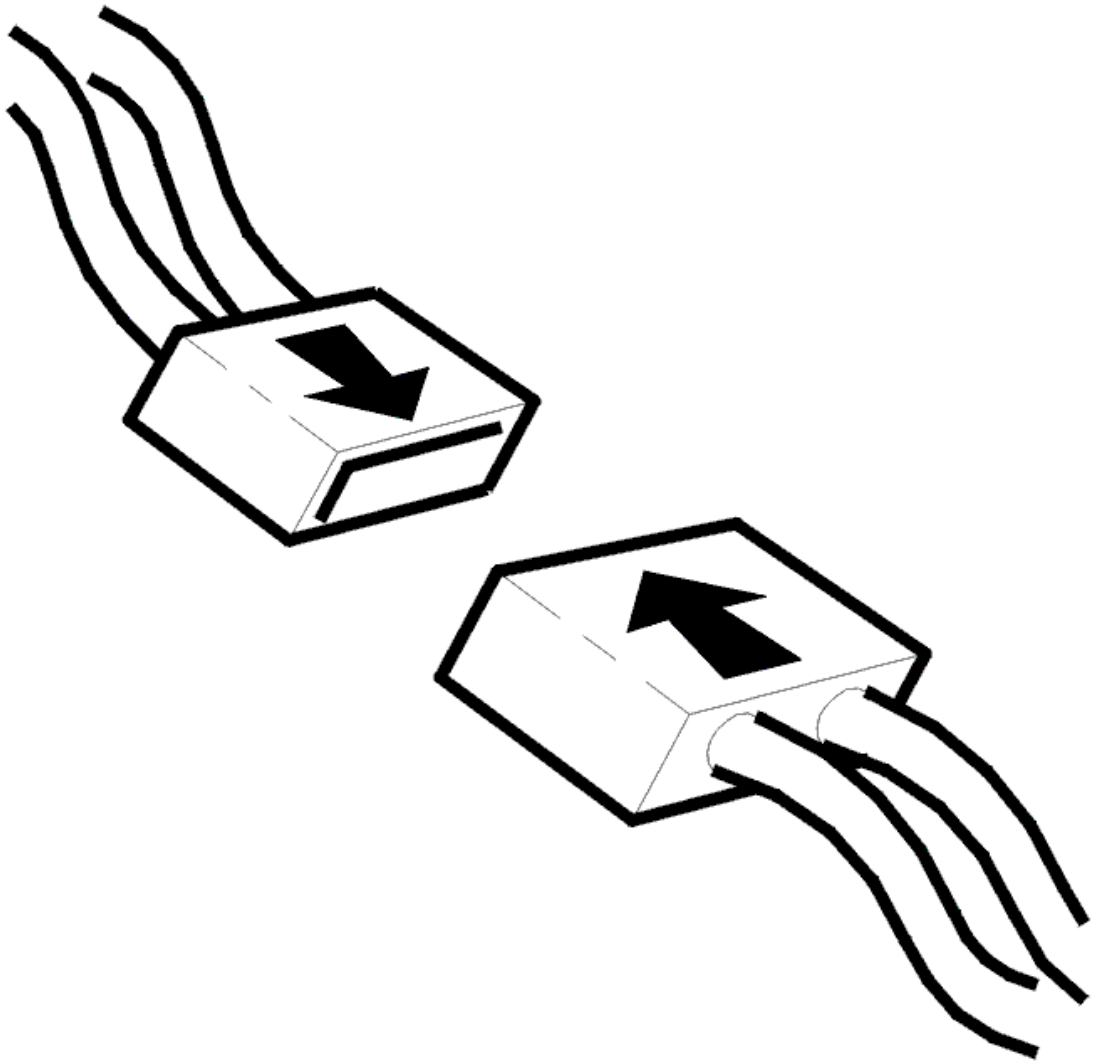

Fig. 88: Connecting Connector
Courtesy of VOLVO CARS CORPORATION

CAUTION: Carry out the test with the vehicle raised so that all four wheels can rotate freely with the mounting at the ends of the control arms to prevent damage to the drive shafts.

WARNING: Ensure that the vehicle is safely raised. Check that no objects are caught in the tire treads.

NOTE: If the vehicle is equipped with TRACS (traction control system) or Traction Control (DSTC (Dynamic stability and traction control), STC (Stability and traction control)) the function must be deactivated. This is carried out by removing the fuse for the brake system pump motor in the engine compartment relay and fusebox. Note that diagnostic trouble codes

(DTCs) will be stored in the brake control module (BCM). These must be erased before returning the vehicle to the customer.

-
- Ignition off
- Reinstall the connectors, components etc.
- Engine idling
- Read off the oil pressure.

  Check that the function of the oil pressure sensor is OK. Run the engine with the vehicle on the lift to increase the clutch oil pressure. Read off the pressure during the test drive. Check that the pressure has been updated.

  HINT: The oil pressure sensor has a measurement range of 0 to 4 Mpa.

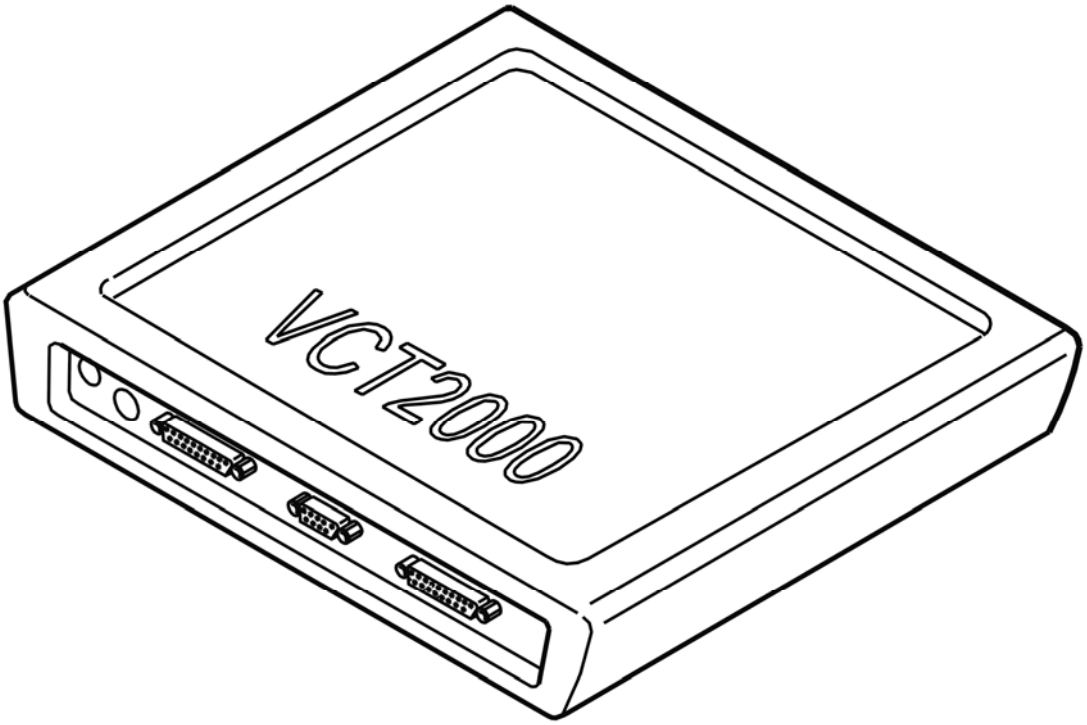

Fig. 89: Identifying VCT2000 Diagnostic Tool Symbol In VIDA
Courtesy of VOLVO CARS CORPORATION

Is the function OK?

- **YES**

VERIFIED: Troubleshooting has been completed.

- **NO**

  Refer to **INFORMATION**

INFORMATION

FAULT-TRACING INFORMATION

The fault should have been detected and remedied. As this is not the case fault-tracing has failed.

Exit fault-tracing for this diagnostic trouble code (DTC) or make another attempt.

CHECKING PRESSURE AND TEMPERATURE SENSOR

NOTE: **Reading out of oil pressure can take place first after the diagnostic trouble code (DTC) has been deleted. Therefore frozen values should be printed and saved before deleting takes place.**

1. Test of pressure sensor.
   - Ignition on.
   - Use VCT2000 (or appropriate scan tool).

     HINT: Correct pressure should be 0.00 +/- 0.08 MPa.

   - Engine idling
   - Use VCT2000 (or appropriate scan tool).

     HINT: Correct pressure should be 0.38 +/- 0.08 MPa.

2. Test of temperature sensor.
   - Ignition on.
   - Use VCT2000 (or appropriate scan tool).

     HINT: Normal value for ambient temperature when the vehicle is cold and (+20 to +50 °C) when the vehicle is driven.

If wrong value is read out, then diagnostic trouble code should be erased and the sensor changed. After changing sensor, repeat the test procedure again.

NOTE: **There are two types of sensors, an 80 bar and a 40 bar. Differential electronic module (DEM) has hardware number 30759701, 30785483, 30759682, 30783198, 30735844, or 30783018, an 80 bar pressure sensor should be installed. If Differential electronic module (DEM) has another hardware number than above, a 40 bar sensor should be installed.**

HINT: For reading out of hardware number, use VIDA (Volvo scan tool).

Other information

- see **TEMPERATURE / PRESSURE SENSOR ACTIVE ON DEMAND COUPLING (AOC), REPLACING**

Fig. 90: Identifying VCT2000 Diagnostic Tool Symbol In VIDA
Courtesy of VOLVO CARS CORPORATION

DEM-0002: PRESSURE SENSOR. FAULTY SIGNAL (4T65 AWD; AW50/51 AWD; 2005)

DIAGNOSTIC TROUBLE CODE (DTC) INFORMATION DEM-0002

see **DIAGNOSTIC TROUBLE CODE (DTC) INFORMATION DEM-0002**

FAULTY SIGNAL

CHECKING THE FUNCTION

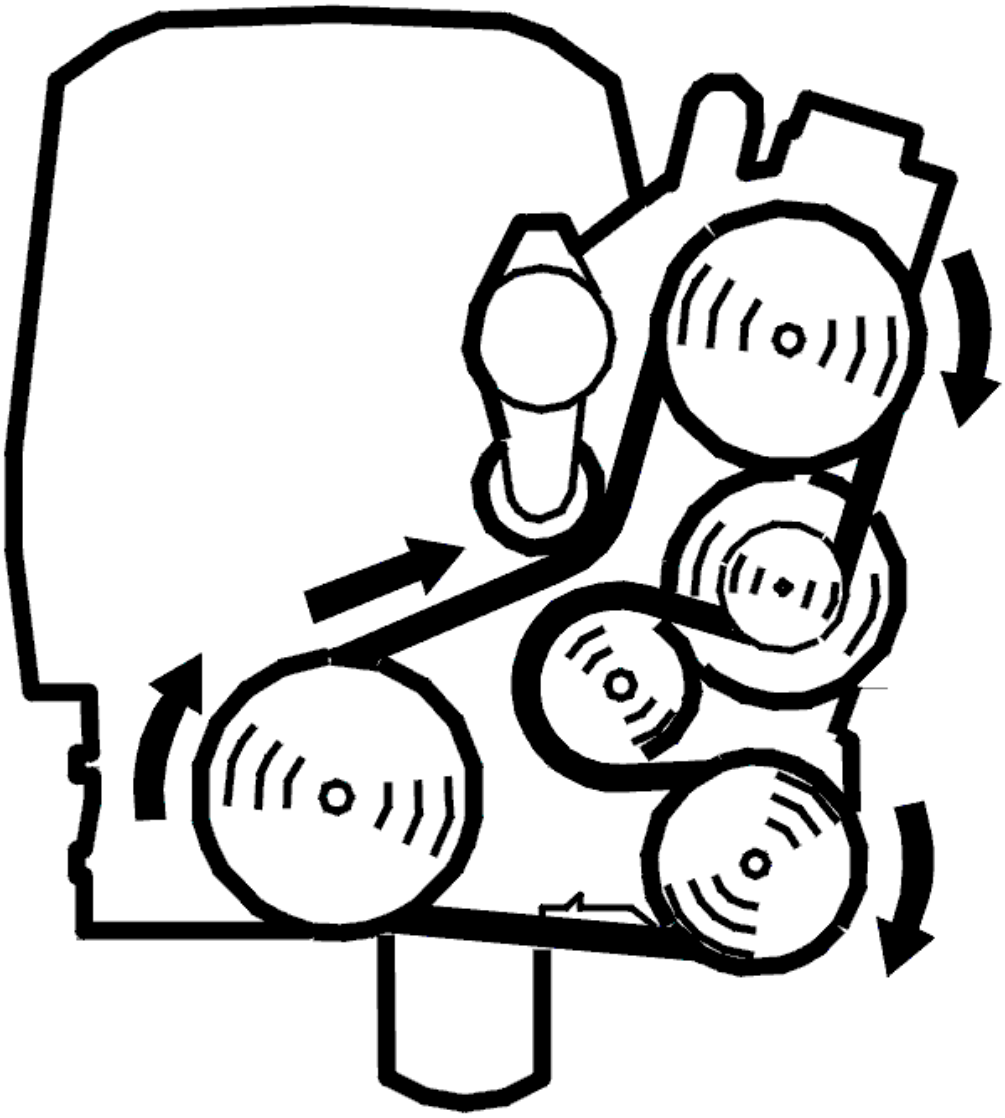

Fig. 91: Belt Routing / Engine Idling - Volvo
Courtesy of VOLVO CARS CORPORATION

CAUTION: Carry out the test with the vehicle raised so that all four wheels can rotate freely with the mounting at the ends of the control arms to prevent damage to the drive shafts.

WARNING: Ensure that the vehicle is safely raised. Check that no objects are caught in the tire treads.

NOTE: If the vehicle is equipped with TRACS (traction control system) or Traction Control (DSTC (Dynamic stability and traction control), STC (Stability and traction control)) the function must be deactivated. This is carried out by removing the fuse for the brake system pump motor in the engine compartment relay and fusebox. Note that diagnostic trouble codes

(DTCs) will be stored in the brake control module (BCM). These must be erased before returning the vehicle to the customer.

-
- Engine idling
- Read off the oil pressure.

Check that the function of the oil pressure sensor is OK. Run the engine with the vehicle on the lift to increase the clutch oil pressure. Read off the pressure during the test drive. Check that the pressure has been updated.

HINT: The oil pressure sensor has a measurement range of 0 to 4 Mpa.

Check the connector between the differential electronic module (DEM) and the oil pressure sensor. Check for contact resistance and oxidation.

Also check the clutch for leakage.

Remedy as necessary.

Other information:

- see **SIGNAL SPECIFICATION, DIFFERENTIAL ELECTRONIC MODULE (DEM)**
- see **TEMPERATURE / PRESSURE SENSOR ACTIVE ON DEMAND COUPLING, REPLACING**
- For AW50AWD and 4T65AWD 2003-, see **ACTIVE ON DEMAND COUPLING (AOC), REPLACING**
- For AW50AWD and 4T65AWD 2003-, see **DIFFERENTIAL ELECTRONIC MODULE (DEM), REPLACING**
- For TF-80SC 2005- see **DIFFERENTIAL ELECTRONIC MODULE (DEM), REPLACING (2005-2008)** .
- see **CHECKING WIRING AND TERMINALS**

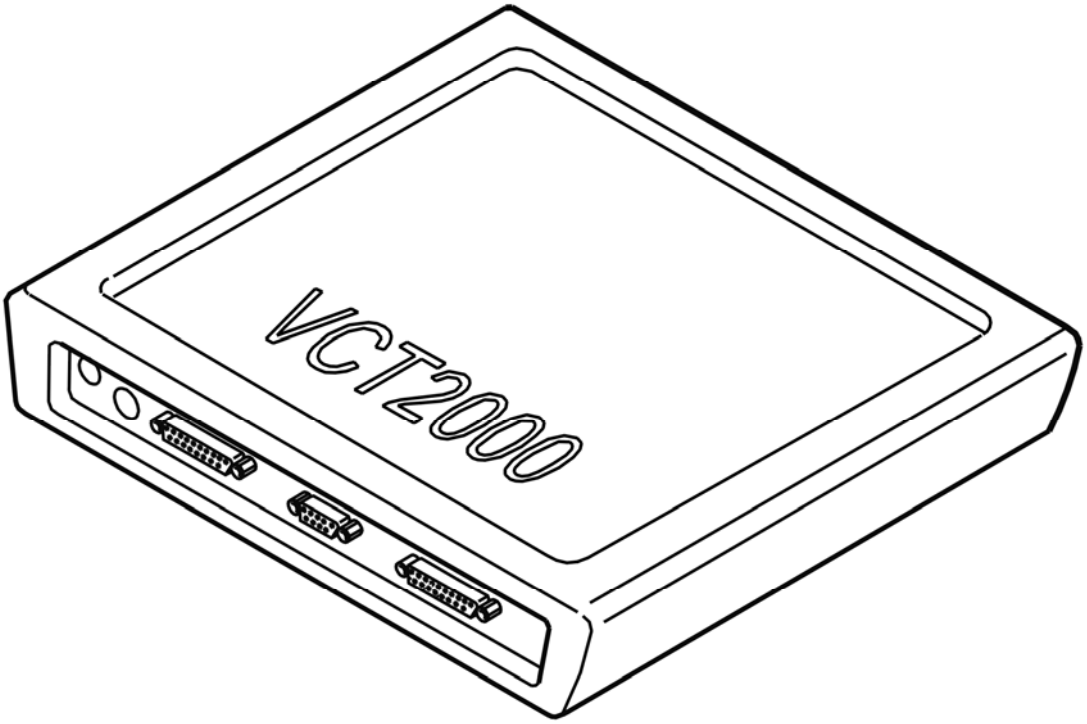

Fig. 92: Identifying VCT2000 Diagnostic Tool Symbol In VIDA
Courtesy of VOLVO CARS CORPORATION

- **Continue**

  Refer to **VERIFICATION**

VERIFICATION

HINT: After carrying out the repair, check that the fault has been remedied.

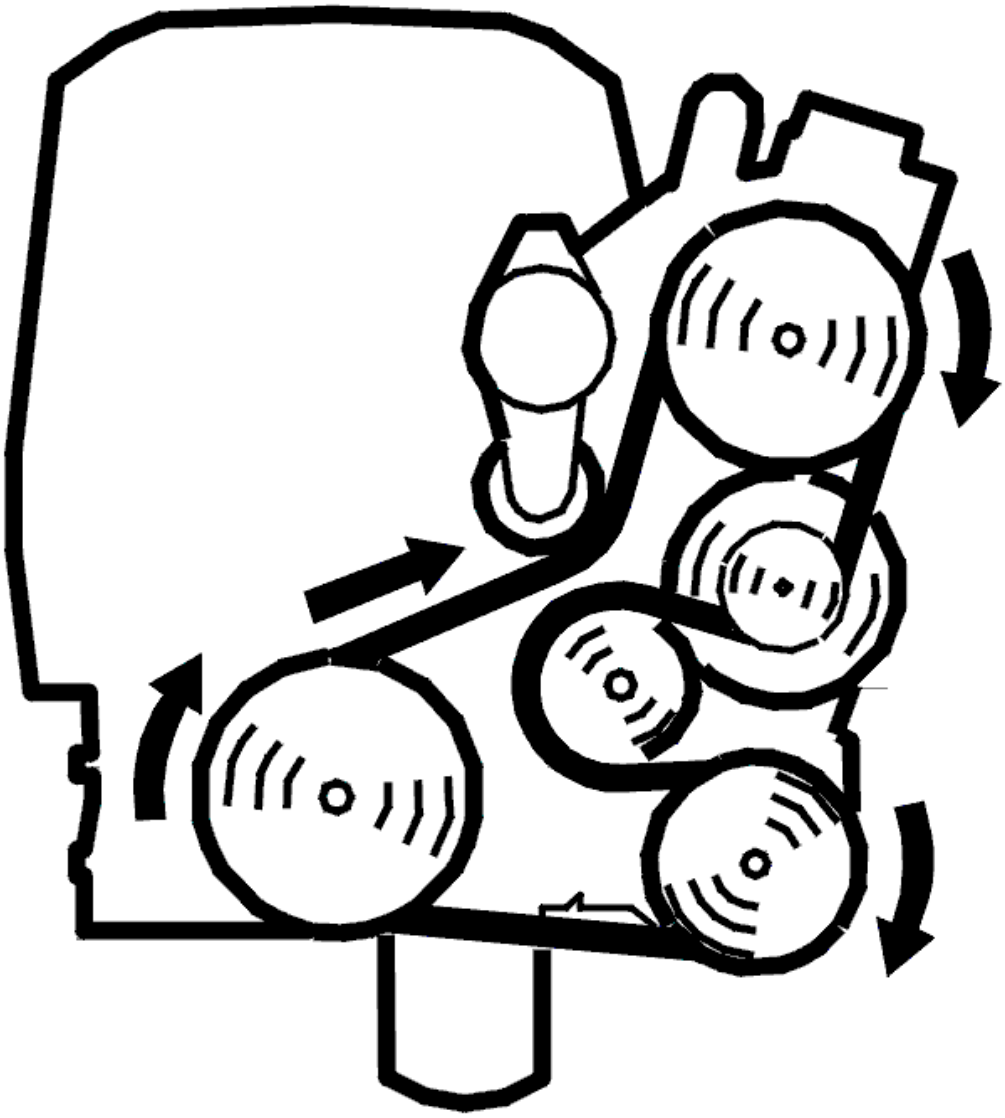

Fig. 93: Belt Routing / Engine Idling - Volvo
Courtesy of VOLVO CARS CORPORATION

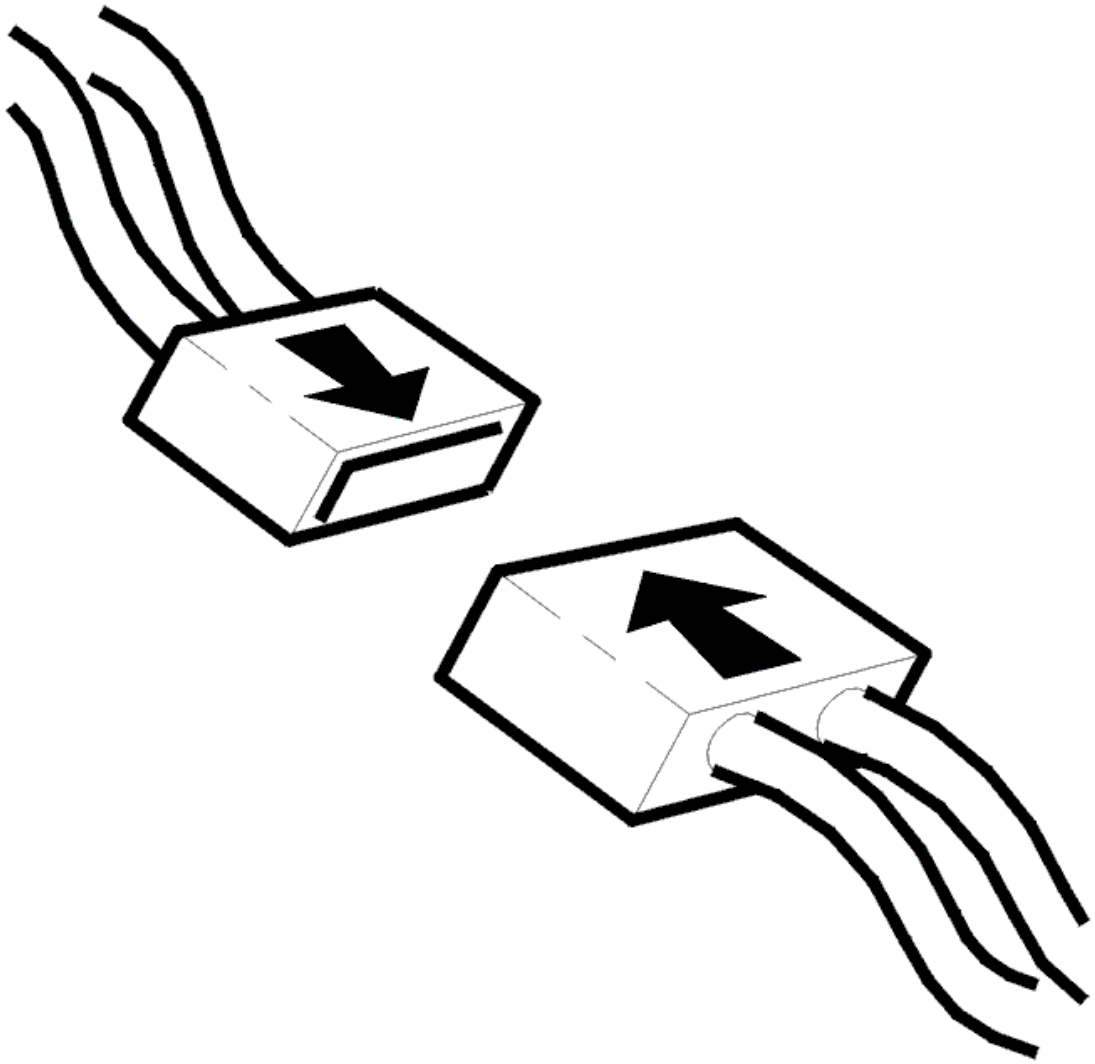

Fig. 94: Connecting Connector
Courtesy of VOLVO CARS CORPORATION

CAUTION: Carry out the test with the vehicle raised so that all four wheels can rotate freely with the mounting at the ends of the control arms to prevent damage to the drive shafts.

WARNING: Ensure that the vehicle is safely raised. Check that no objects are caught in the tire treads.

NOTE: If the vehicle is equipped with TRACS (traction control system) or Traction Control (DSTC (Dynamic stability and traction control), STC (Stability and traction control)) the function must be deactivated. This is carried out by removing the fuse for the brake system pump motor in the engine compartment relay and fusebox. Note that diagnostic trouble codes

(DTCs) will be stored in the brake control module (BCM). These must be erased before returning the vehicle to the customer.

-
- Ignition off
- Reinstall the connectors, components etc.
- Engine idling
- Read off the oil pressure.

  Check that the function of the oil pressure sensor is OK. Run the engine with the vehicle on the lift to increase the clutch oil pressure. Read off the pressure during the test drive. Check that the pressure has been updated.

  HINT: The oil pressure sensor has a measurement range of 0 to 4 Mpa.

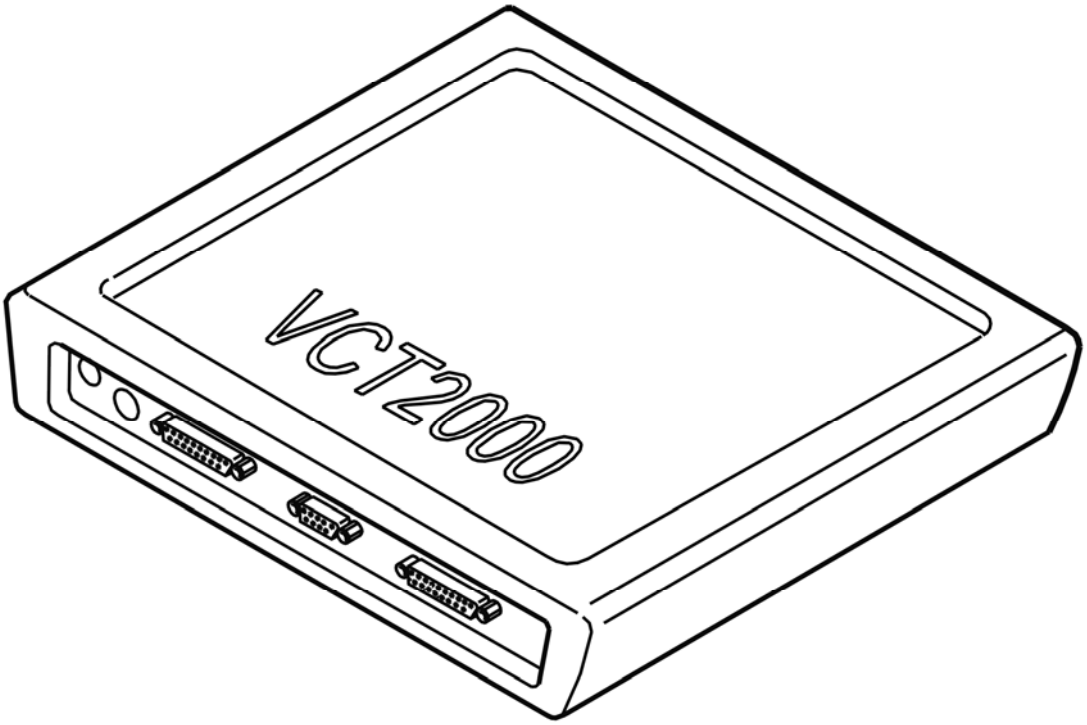

Fig. 95: Identifying VCT2000 Diagnostic Tool Symbol In VIDA
Courtesy of VOLVO CARS CORPORATION

Is the function OK?

- **YES**

VERIFIED: Troubleshooting has been completed.

- **NO**

  Refer to **INFORMATION**

INFORMATION

FAULT-TRACING INFORMATION

The fault should have been detected and remedied. As this is not the case fault-tracing has failed.

Exit fault-tracing for this diagnostic trouble code (DTC) or make another attempt.

DEM-0002: PRESSURE SENSOR. FAULTY SIGNAL (4T65 AWD; AW50/51 AWD; 2003-2004)

DIAGNOSTIC TROUBLE CODE (DTC) INFORMATION DEM-0002

Condition

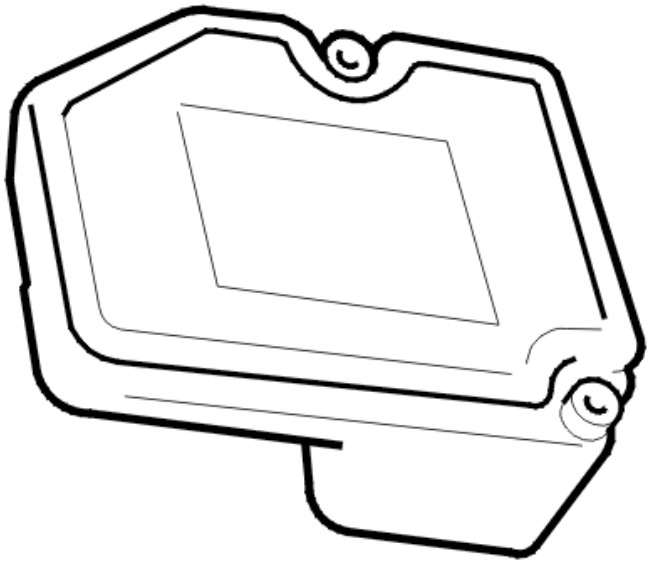

Fig. 96: Identifying Differential Electronic Module
Courtesy of VOLVO CARS CORPORATION

The differential electronic module (DEM) checks whether the signal from the oil temperature sensor is within the permitted limits by comparing the signal with a calculated value.

When the engine speed (RPM) exceeds 500 rpm, the control module calculates the pressure theoretically. The calculated pressure is compared to the oil temperature sensor signal. Diagnostic trouble code (DTC) DEM-0002 is stored if the signal from the oil temperature sensor corresponds to a temperature lower than 0 MPa or higher than 4 MPa. The control module interprets this as a fault.

Diagnostic trouble code (DTC) DEM-0002 can be diagnosed with the engine running and the engine speed (RPM) >500 rpm.

Substitute Value

- Four wheel drive is blocked.

Possible Source

- Defective control module.

Fault symptom[s]

- Four wheel drive is not functioning.

FAULTY SIGNAL

CHECKING THE PRESSURE SENSOR

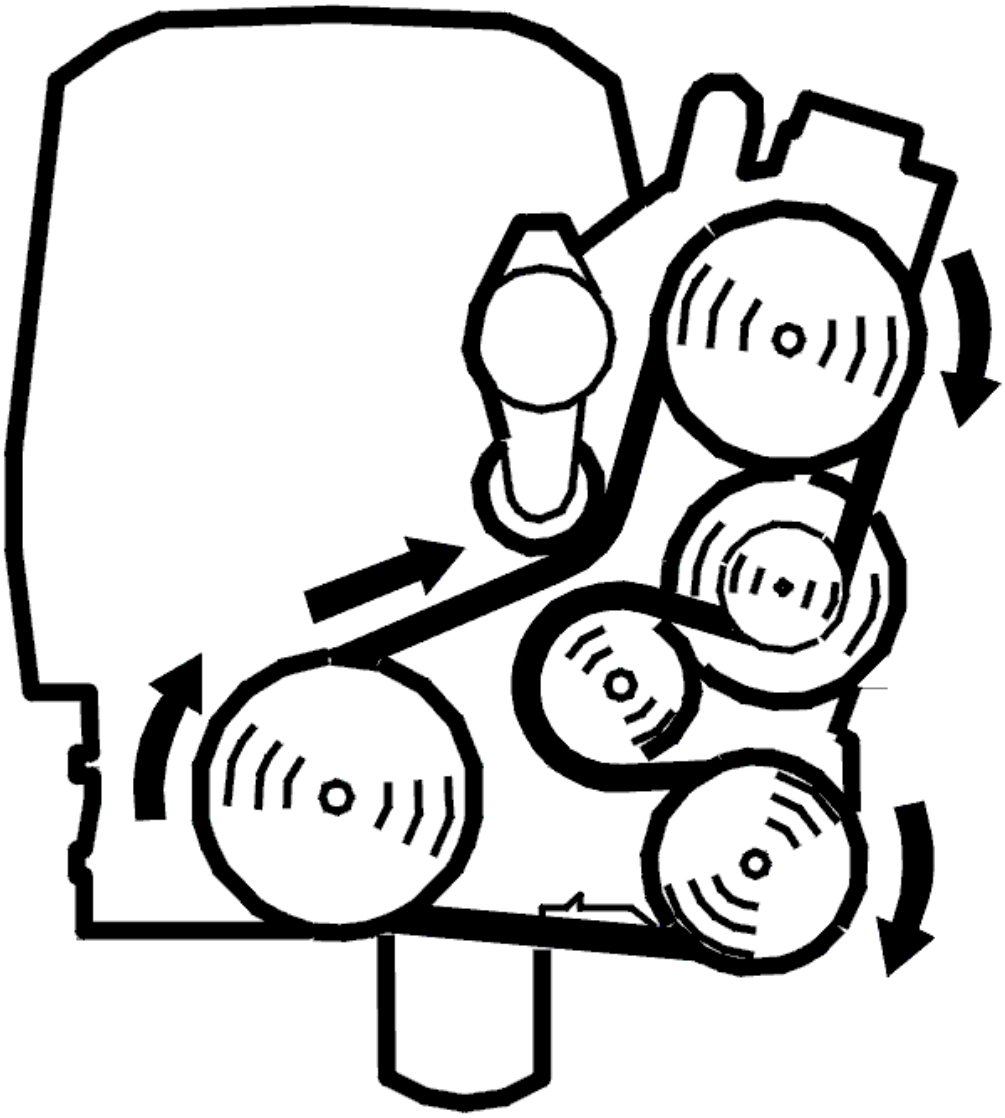

Fig. 97: Belt Routing / Engine Idling - Volvo
Courtesy of VOLVO CARS CORPORATION

CAUTION: Carry out the test with the car raised so that all four wheels can rotate freely with the mounting protruding on the control arms to prevent damage to the drive shafts.

WARNING: Ensure that the car is safely raised. Check that no objects are caught in the tire treads.

NOTE: If the car is equipped with TRACS (traction control system) or Traction Control (DSTC (Dynamic stability and traction control), STC (Stability and traction control)) the function must be deactivated. This is carried out by removing the fuse for the brake system pump motor in the engine compartment relay and fusebox. Note that diagnostic trouble codes

(DTCs) will be stored in the brake control module (BCM). These must be erased before returning the car to the customer.

-
- Engine idling
- Read off the oil pressure.

  Check that the function of the oil pressure sensor is OK. Run the engine with the car on the lift to increase the clutch oil pressure. Read off the pressure during the test drive. Check that the pressure has been updated.

  HINT: The oil pressure sensor has a measurement range of 0 to 4 MPa.

  Other information:

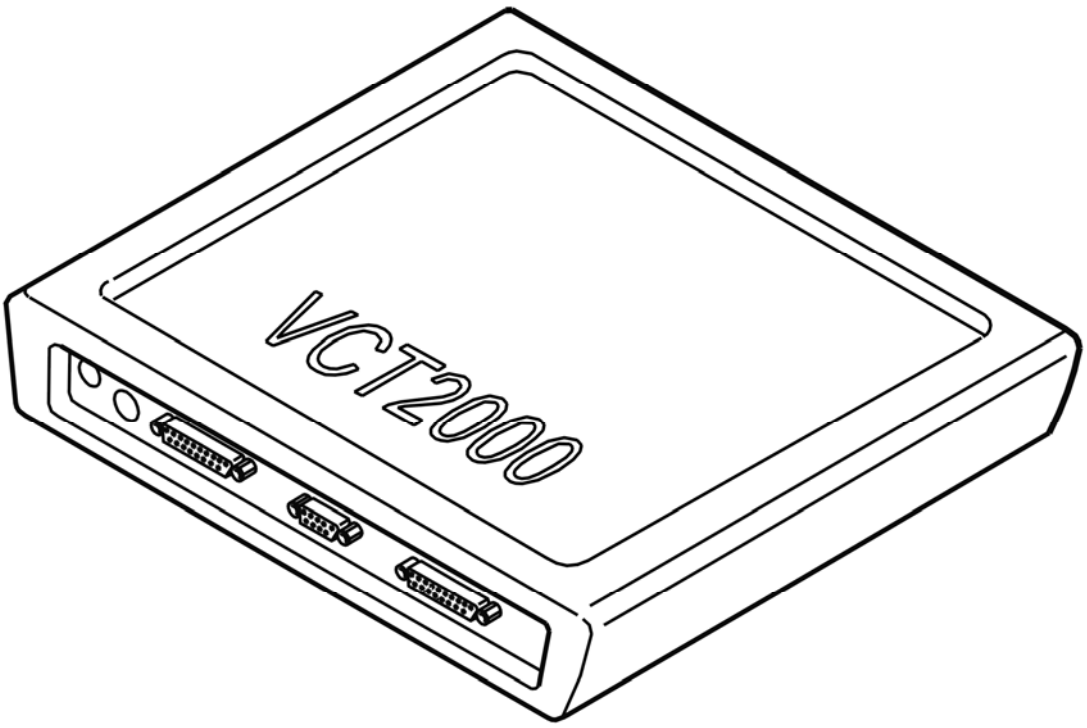

Fig. 98: Identifying VCT2000 Diagnostic Tool Symbol In VIDA
Courtesy of VOLVO CARS CORPORATION

Is the function OK?

- **YES**

  FAULT NOT FOUND: Troubleshooting has been completed.

- **NO**

  Refer to **REPLACING THE CONTROL MODULE**

REPLACING THE CONTROL MODULE

Replace the differential electronic module (DEM).

Other information:

- For AW50AWD and 4T65AWD 2003-, see **DIFFERENTIAL ELECTRONIC MODULE (DEM), REPLACING**
- For TF-80SC 2005- see **DIFFERENTIAL ELECTRONIC MODULE (DEM), REPLACING (2005-2008)** .

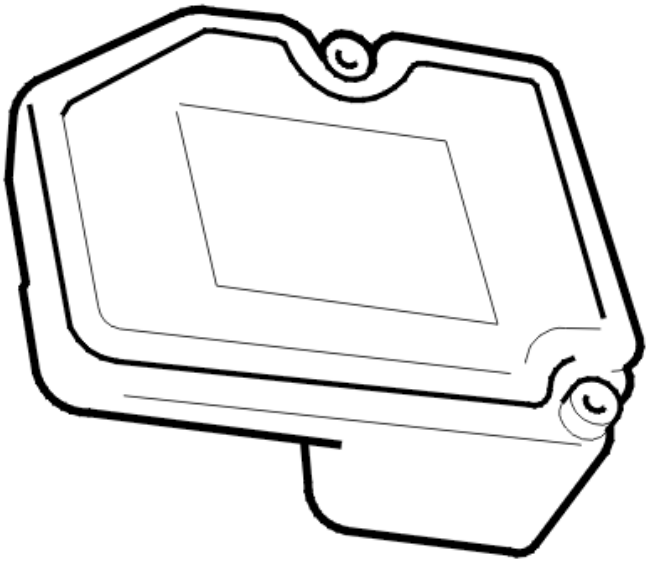

Fig. 99: Identifying Differential Electronic Module
Courtesy of VOLVO CARS CORPORATION

- **Continue**

  Refer to **VERIFICATION**

VERIFICATION

HINT: After carrying out the repair, check that the fault has been remedied.

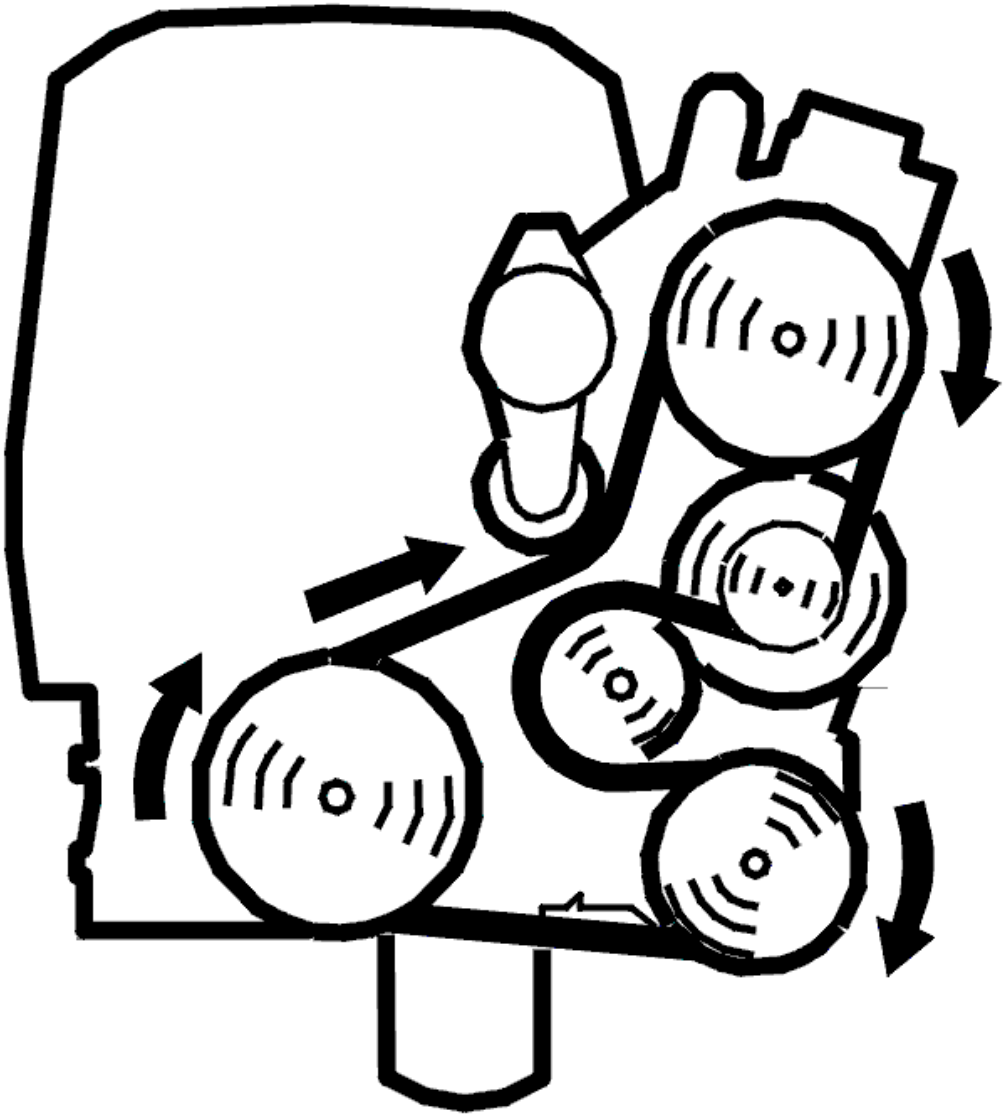

Fig. 100: Belt Routing / Engine Idling - Volvo
Courtesy of VOLVO CARS CORPORATION

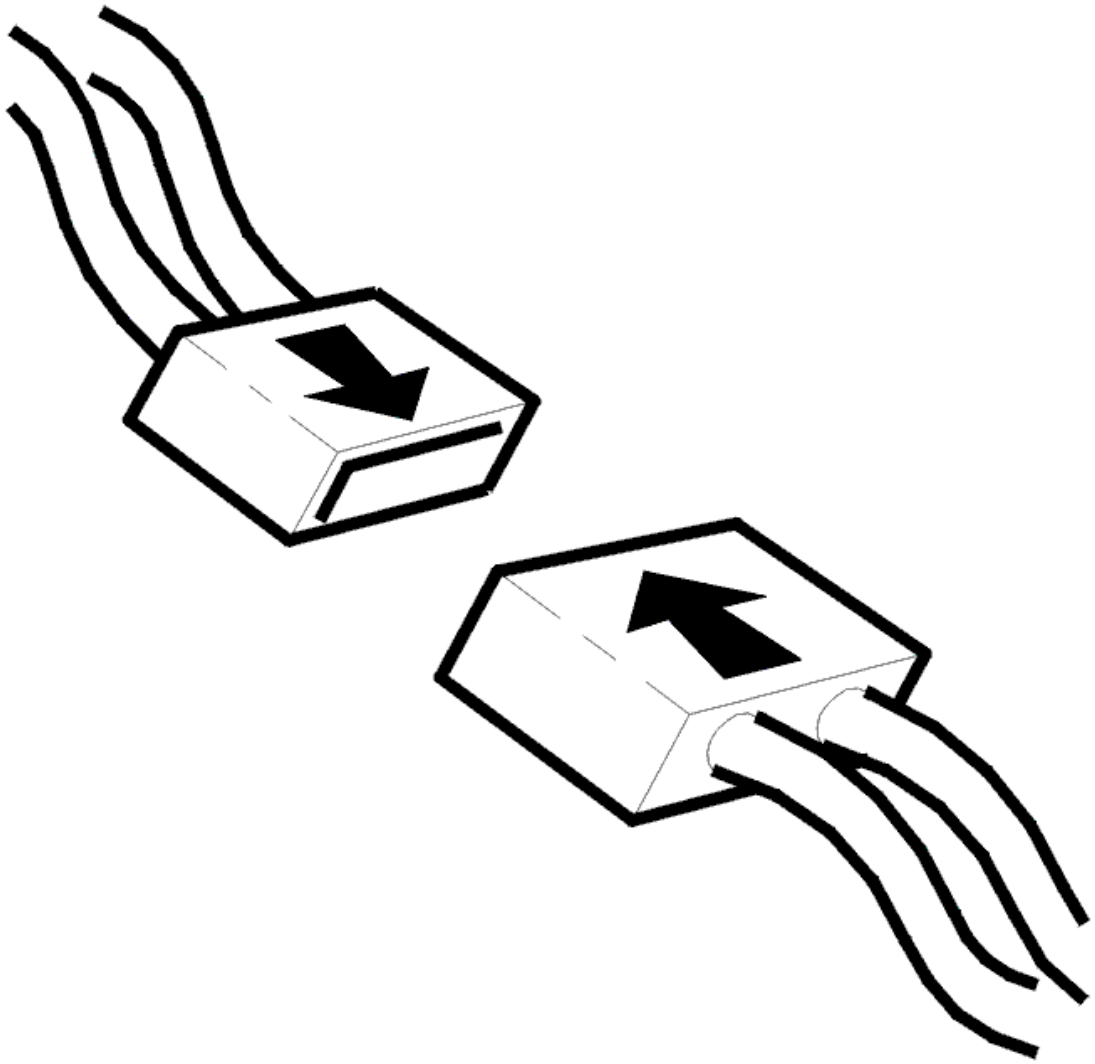

Fig. 101: Connecting Connector
Courtesy of VOLVO CARS CORPORATION

- Ignition off
- Reconnect the connectors, reinstall components etc.
- Engine idling
- Read off the oil pressure.

  Test drive the car on a lift to check that the oil pressure is updated.

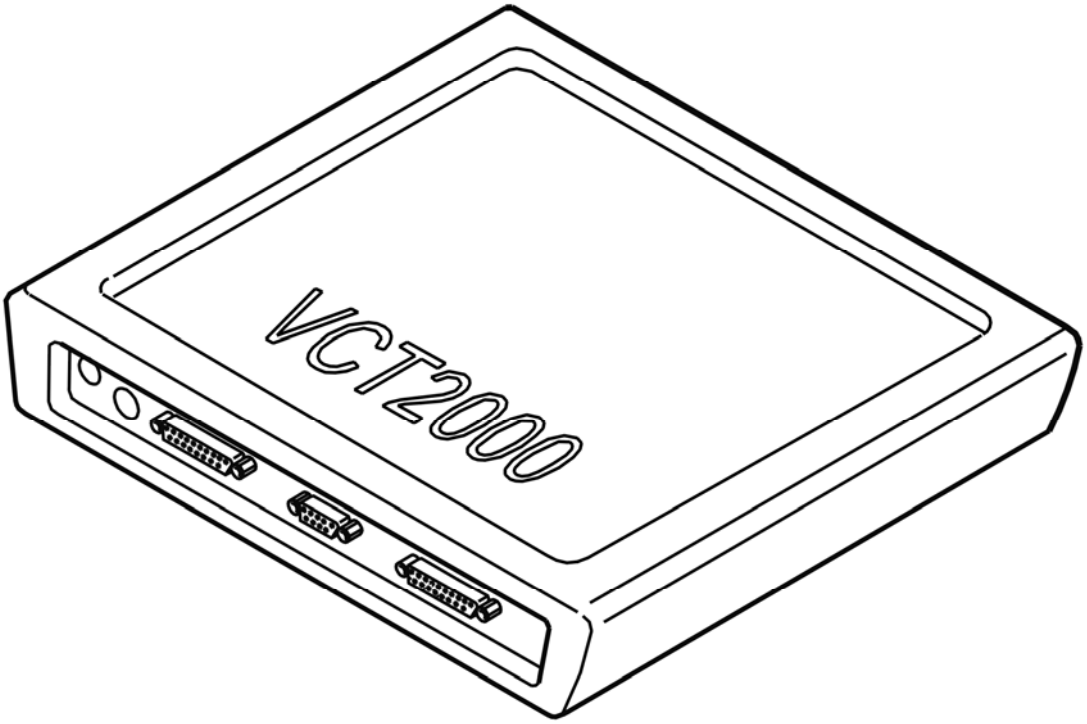

Fig. 102: Identifying VCT2000 Diagnostic Tool Symbol In VIDA
Courtesy of VOLVO CARS CORPORATION

Is the function OK?

- **YES**

  OKAY: Troubleshooting has been completed.

- **NO**

  Refer to **INFORMATION**

INFORMATION

FAULT-TRACING INFORMATION

The fault should have been detected and remedied. As this is not the case fault-tracing has failed.

Exit fault-tracing for this diagnostic trouble code (DTC) or make another attempt.

DEM-0002: PRESSURE SENSOR. FAULTY SIGNAL (AW50/51 AWD; 2006-2007)

DIAGNOSTIC TROUBLE CODE (DTC) INFORMATION DEM-0002

see **DIAGNOSTIC TROUBLE CODE (DTC) INFORMATION DEM-0002**

FAULTY SIGNAL

see **FAULTY SIGNAL**

DEM-0003: SYSTEM VOLTAGE. FAULTY VOLTAGE (4T65 AWD; 2005-2006)

DIAGNOSTIC TROUBLE CODE (DTC) INFORMATION DEM-0003

Condition

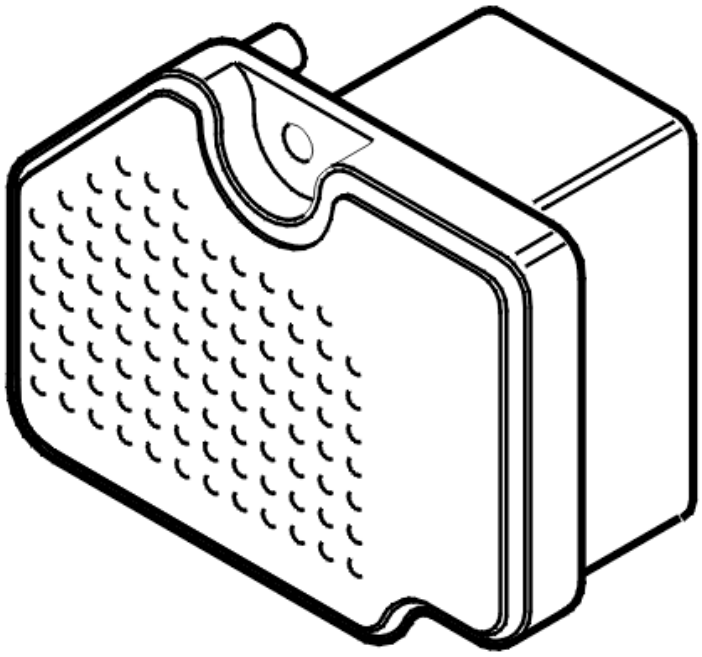

Fig. 103: Active On Demand Coupling Control Module
Courtesy of VOLVO CARS CORPORATION

The differential electronic module (DEM) checks its voltage supply by comparing the voltage between the differential electronic module (DEM) and the central electronic module (CEM).

Diagnostic trouble code (DTC) is stored if the control module registers a difference in the power supply between the central electronic module (CEM) and the differential electronic module (DEM) which is greater than 2.5 V.

The diagnostic trouble code (DTC) can be diagnosed when the ignition has been on for 10 seconds.

Substitute Value

- Four wheel drive is disengaged.

Possible Source

Signal too high:

- Short-circuit to supply voltage in signal cable.

Signal too low:

- Short-circuit to ground in the signal cable
- Open-circuit in the power supply.

Fault symptom[s]

- Four wheel drive is not functioning.

FAULTY VOLTAGE

CHECKING THE STATUS

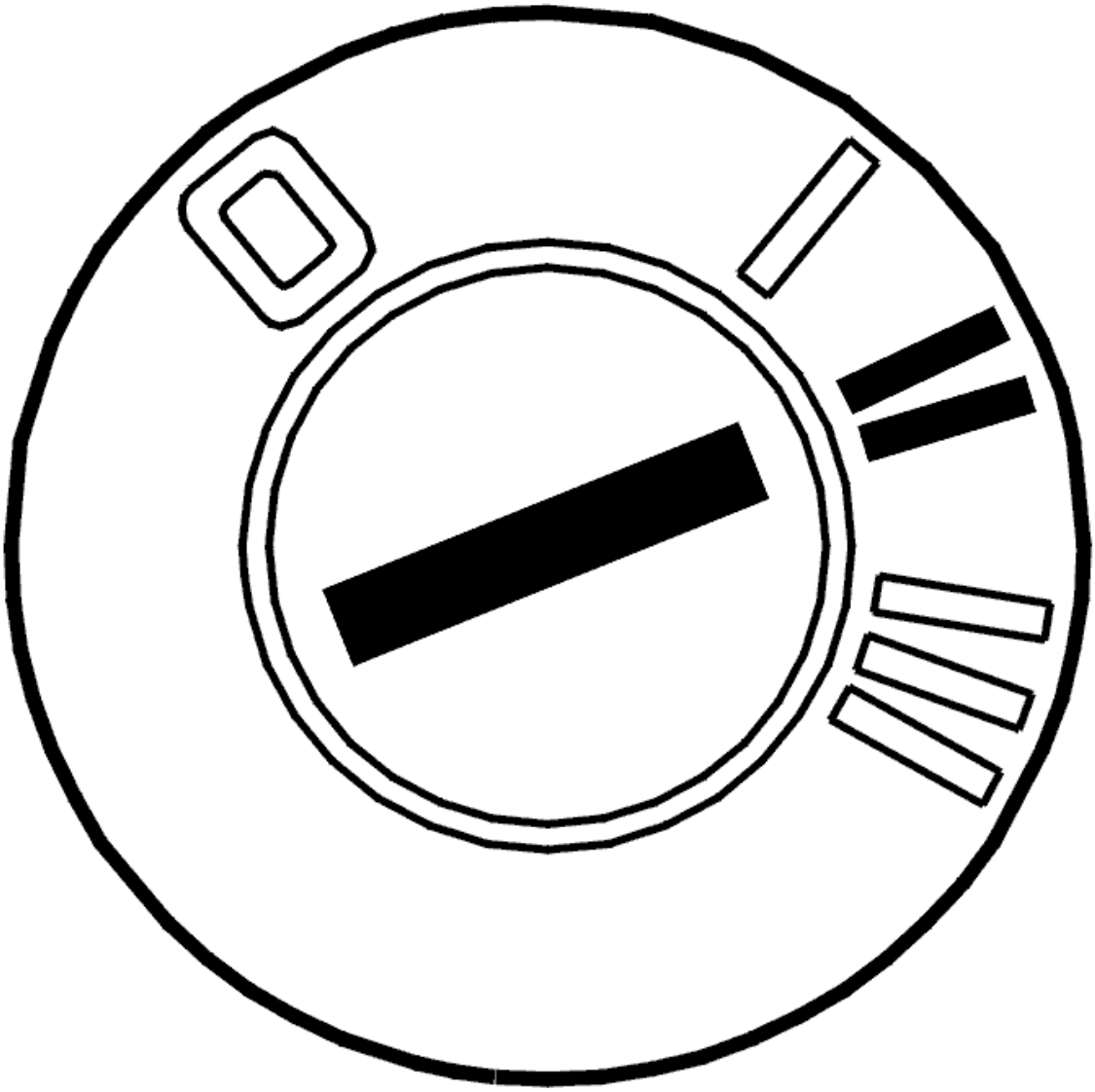

Fig. 104: Identifying Ignition ON
Courtesy of VOLVO CARS CORPORATION

- Ignition on.

  Read off the voltage for the differential electronic module (DEM) and the central electronic module (CEM).

  The voltage must be able to be compared with the power supply to the central electronic module (CEM) +/-2.5 V.

  HINT: Compare to the battery voltage.

  The fault is permanent if the power supply to the differential electronic module (DEM) deviates by more than 2.5 V from the central electronic module (CEM).

If the voltage is correct, this is an indication that the fault was present previously but is not active at the moment, i. e. an intermittent fault.

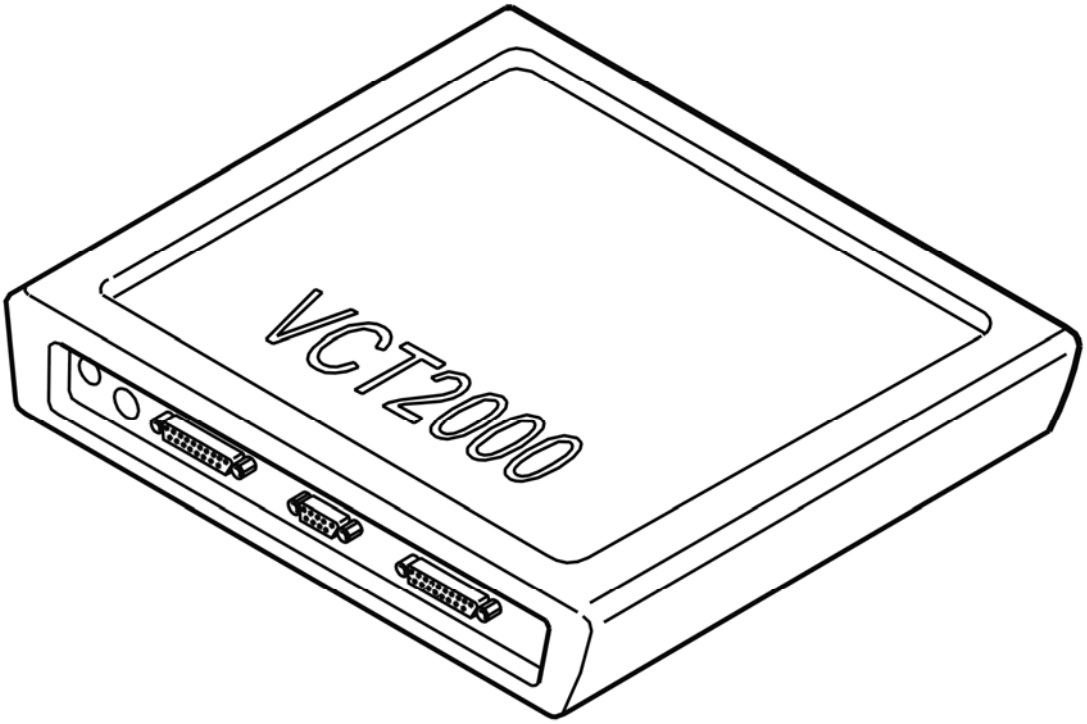

Fig. 105: Identifying VCT2000 Diagnostic Tool Symbol In VIDA
Courtesy of VOLVO CARS CORPORATION

- **Continue**

Refer to **CHECKING THE CONNECTORS AND CABLES**

CHECKING THE CONNECTORS AND CABLES

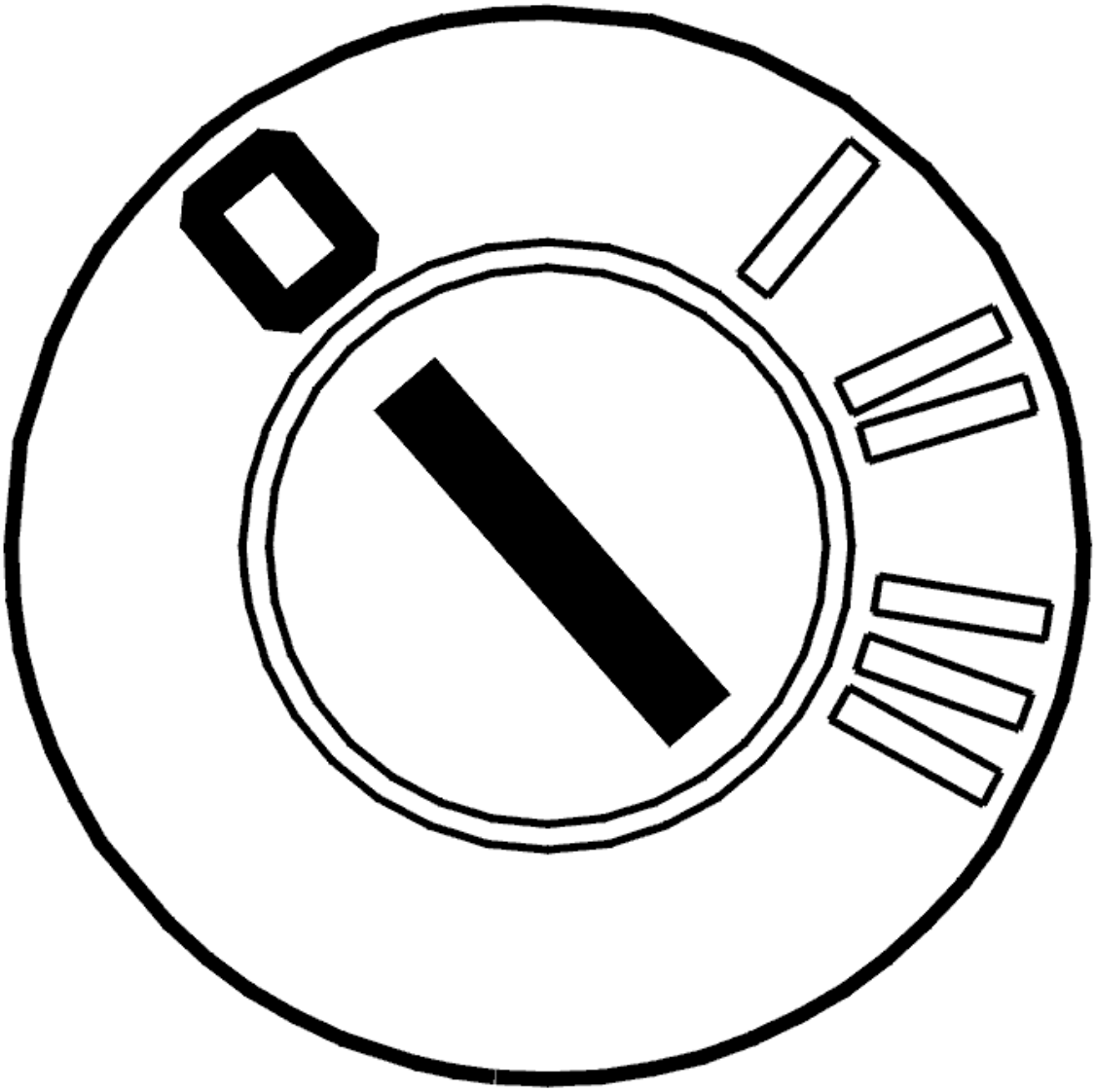

Fig. 106: Identifying Ignition OFF
Courtesy of VOLVO CARS CORPORATION

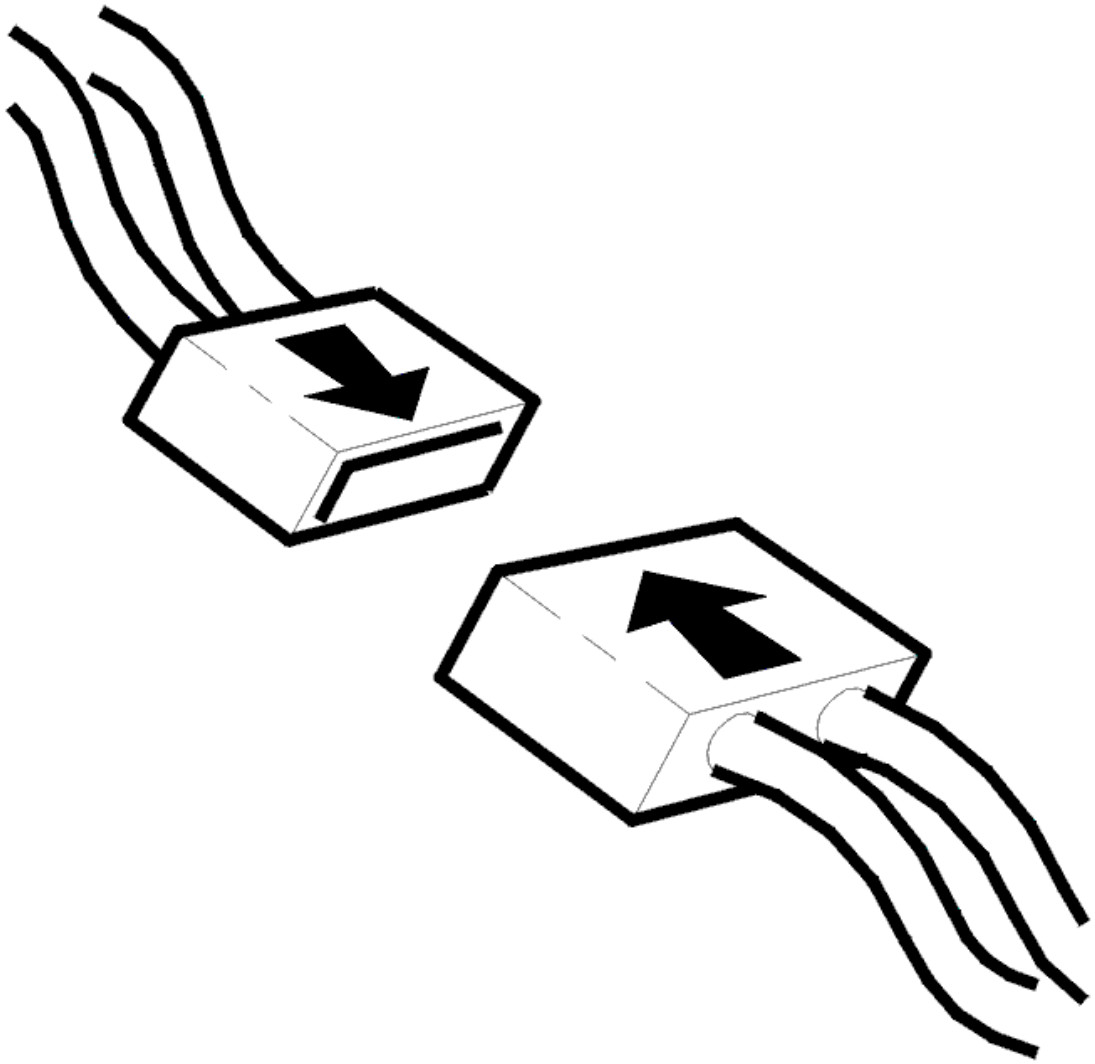

Fig. 107: Connecting Connector
Courtesy of VOLVO CARS CORPORATION

- Ignition off
- Check the connectors between the differential electronic module (DEM) and the Active on Demand Coupling- control module. Check for contact resistance and oxidation
- Check the cable between the differential electronic module (DEM) and the Active on Demand Coupling control module. Check for damage.

  HINT: Read off the voltage to check the function.

  HINT:

  Remedy as necessary.

Other information:

- see **SIGNAL SPECIFICATION, DIFFERENTIAL ELECTRONIC MODULE (DEM)**
- For AW50AWD and 4T65AWD 2003-, see **DIFFERENTIAL ELECTRONIC MODULE (DEM), REPLACING**
- For TF-80SC 2005- see **DIFFERENTIAL ELECTRONIC MODULE (DEM), REPLACING (2005-2008)** .
- see **CHECKING WIRING AND TERMINALS**

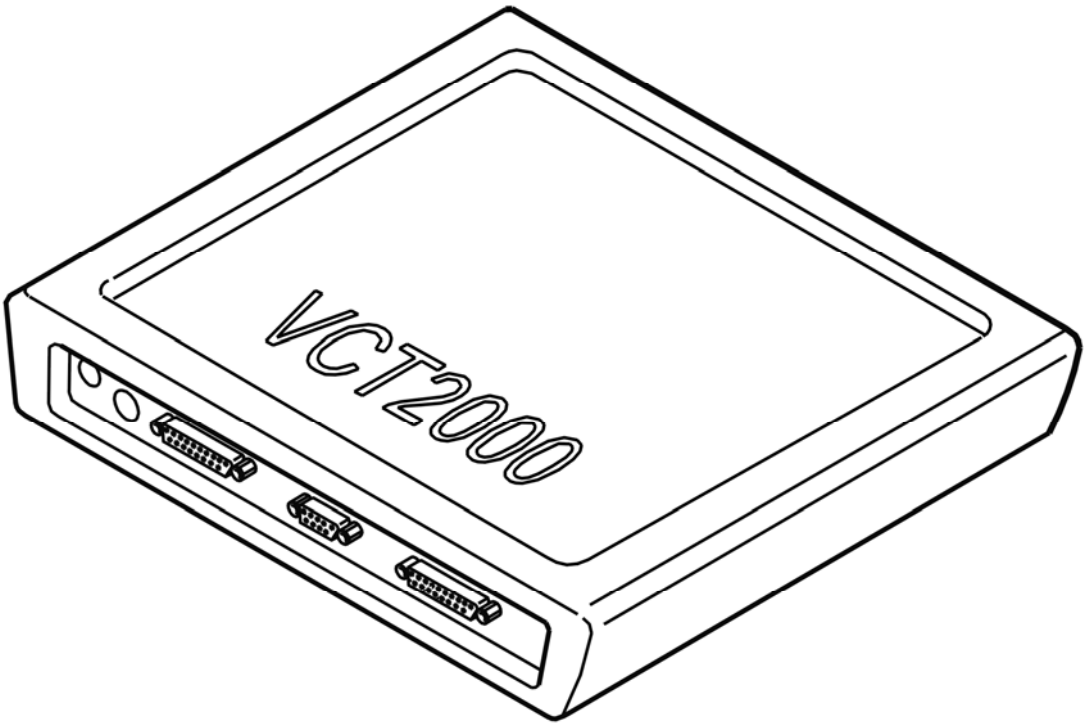

Fig. 108: Identifying VCT2000 Diagnostic Tool Symbol In VIDA
Courtesy of VOLVO CARS CORPORATION

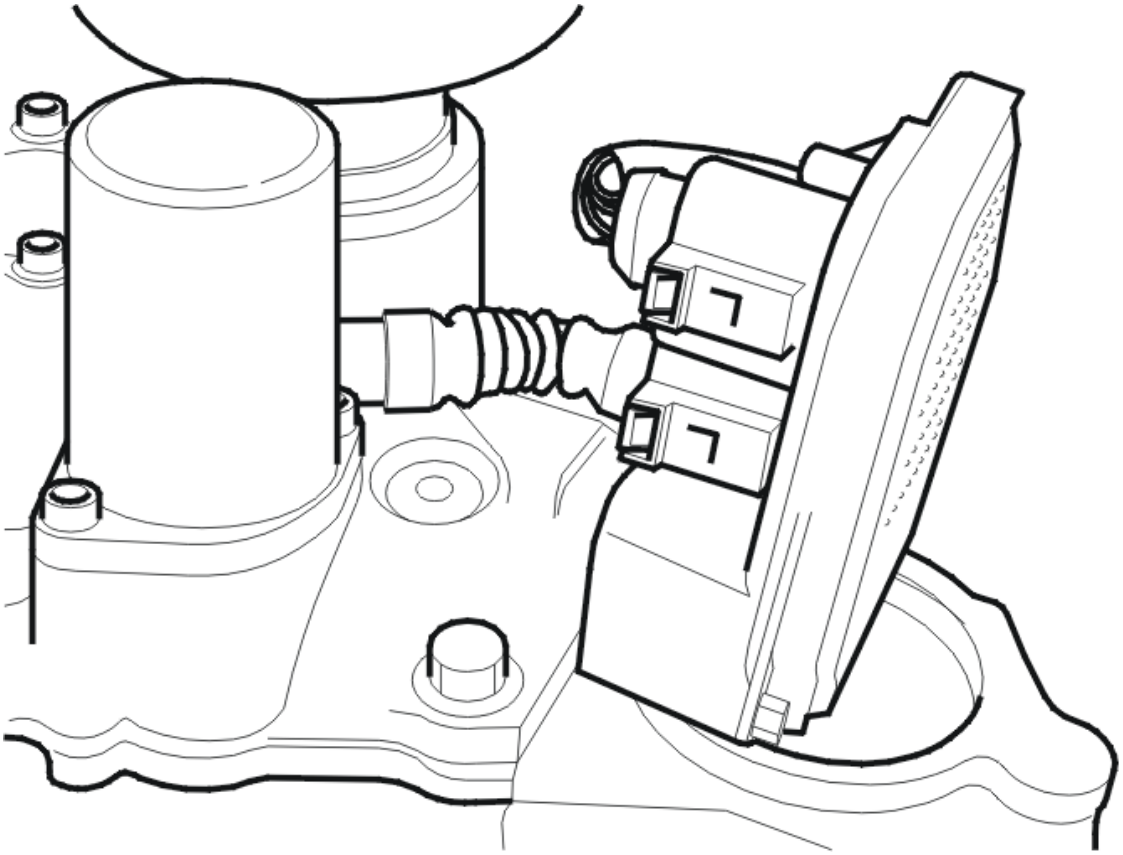

Fig. 109: Identifying Active On Demand Coupling Components
Courtesy of VOLVO CARS CORPORATION

- **Continue**

  Refer to **VERIFICATION**

VERIFICATION

HINT: After carrying out the repair, check that the fault has been remedied.

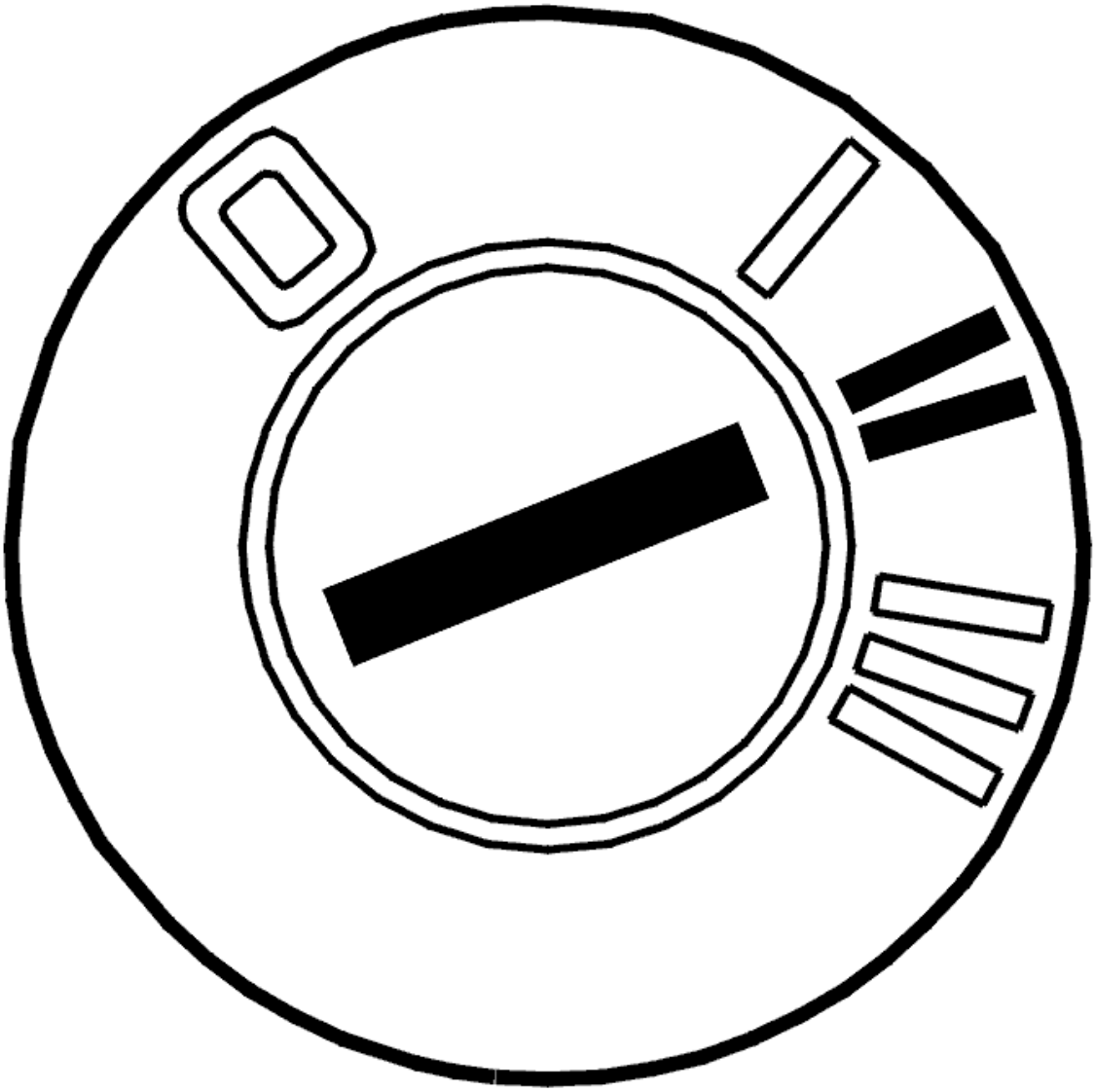

Fig. 110: Identifying Ignition ON
Courtesy of VOLVO CARS CORPORATION

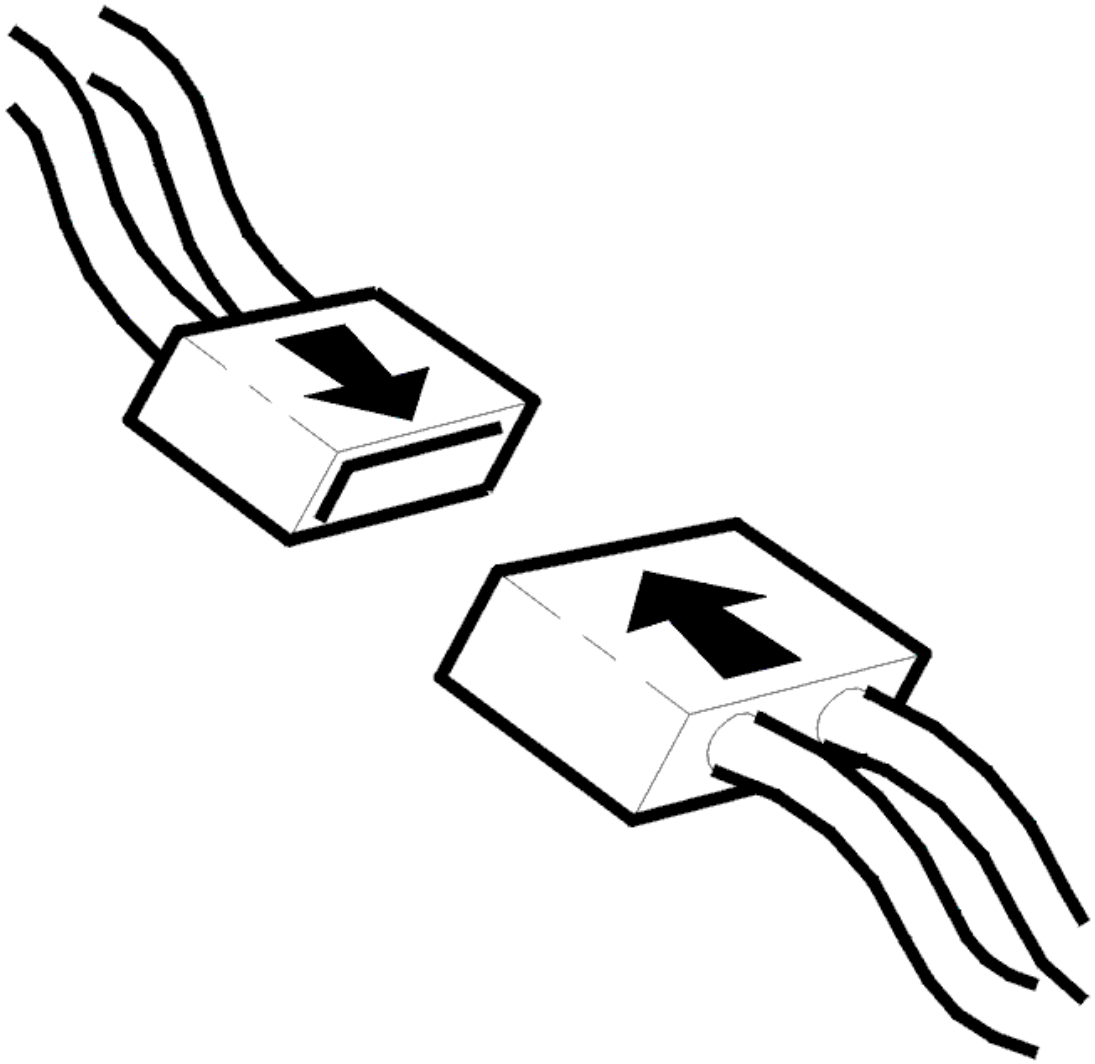

Fig. 111: Connecting Connector
Courtesy of VOLVO CARS CORPORATION

- Ignition off
- Reinstall the connectors, components etc.
- Ignition on.

  Read off the voltage to the differential electronic module (DEM).

  Check that the value is within its permitted range. The voltage must be able to be compared with the power supply to the central electronic module (CEM) +/-2.5 V.

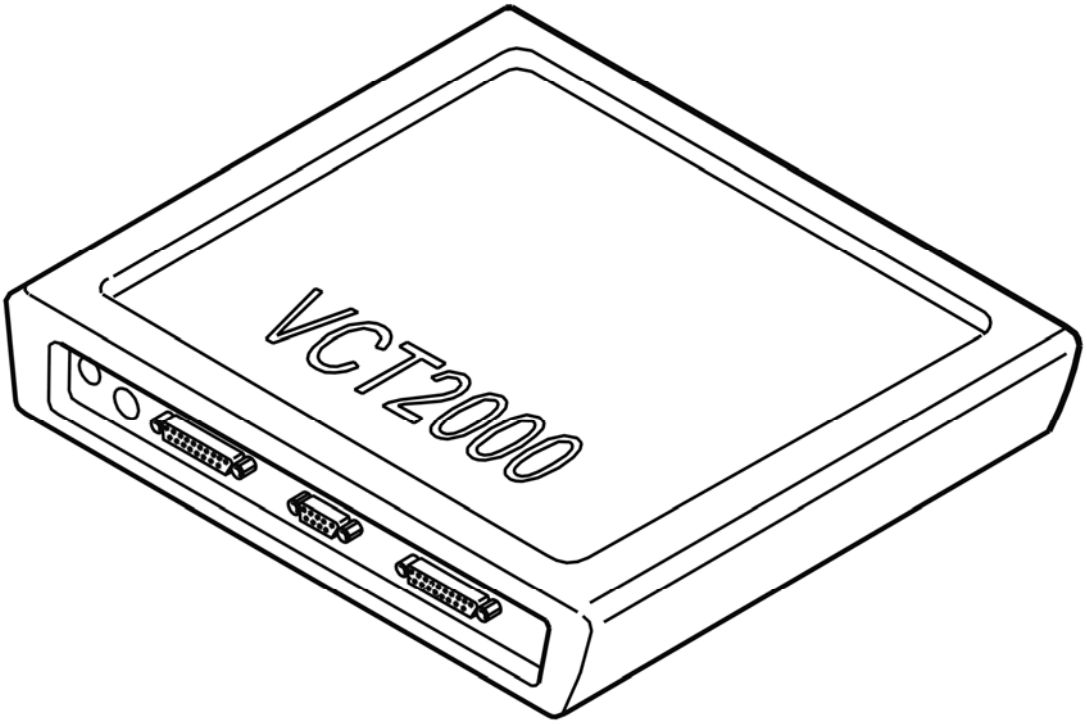

Fig. 112: Identifying VCT2000 Diagnostic Tool Symbol In VIDA
Courtesy of VOLVO CARS CORPORATION

Is the voltage OK?

- **YES**

  VERIFIED: Troubleshooting has been completed.

- **NO**

  Refer to **INFORMATION**

INFORMATION

FAULT-TRACING INFORMATION

The fault should have been detected and remedied. As this is not the case fault-tracing has failed.

Exit fault-tracing for this diagnostic trouble code (DTC) or make another attempt.

DEM-0003: SYSTEM VOLTAGE. FAULTY VOLTAGE (4T65 AWD; AW50/51 AWD; 2003-2004)

DIAGNOSTIC TROUBLE CODE (DTC) INFORMATION DEM-0003

Condition

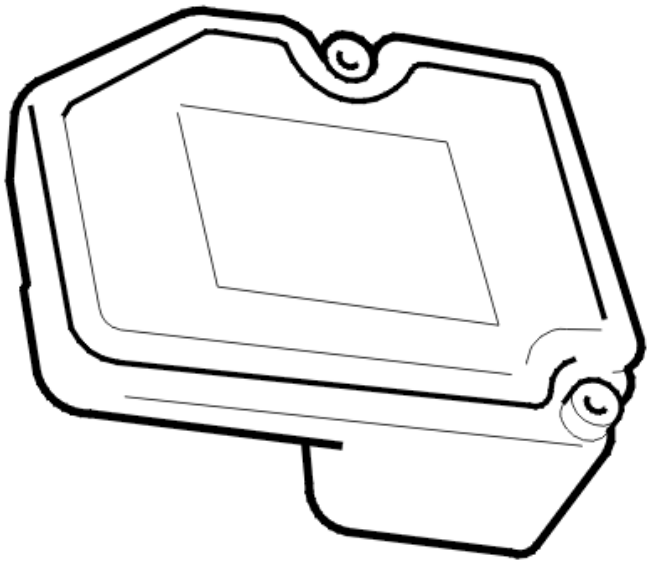

Fig. 113: Identifying Differential Electronic Module
Courtesy of VOLVO CARS CORPORATION

The differential electronic module (DEM) checks its voltage supply by comparing the voltage between the differential electronic module (DEM) and the central electronic module (CEM).

Diagnostic trouble code (DTC) DEM 003 is stored if the control module registers a difference in the power supply between the central electronic module (CEM) and the differential electronic module (DEM) which is greater than 2.5 V.

Diagnostic trouble code (DTC) DEM 0003 can be diagnosed with the engine running and the engine speed (RPM) >500 rpm.

Substitute Value

- Four wheel drive is blocked.

Possible Source

Signal too high:

- Short-circuit to supply voltage in the signal cable.

Signal too low:

- Short-circuit to ground in the signal cable
- Open-circuit in the power supply.

Fault symptom[s]

- Four wheel drive is not functioning.

FAULTY VOLTAGE

CHECKING THE POWER SUPPLY

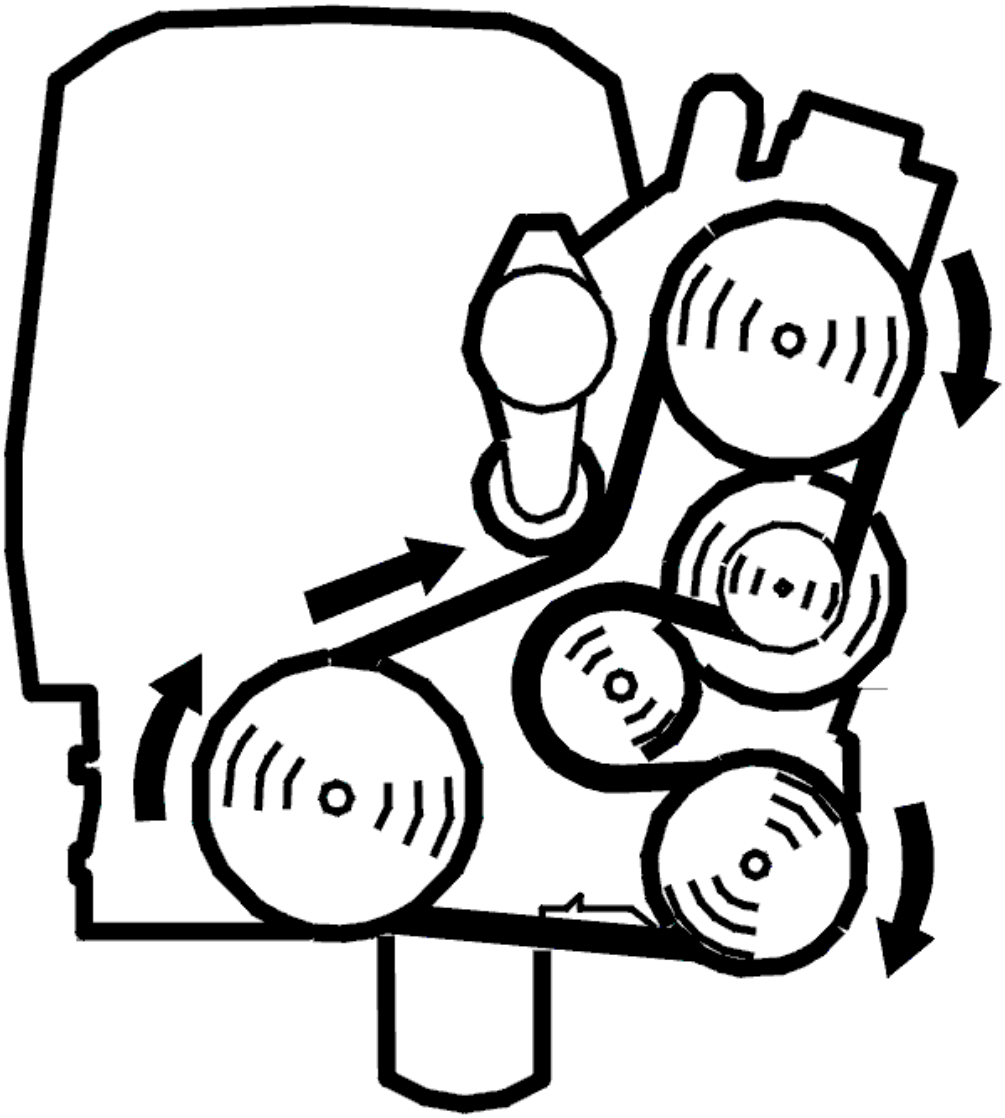

Fig. 114: Belt Routing / Engine Idling - Volvo
Courtesy of VOLVO CARS CORPORATION

- Engine idling.

  Read off to check that the power supply to the differential electronic module (DEM) is OK. The voltage must be able to be compared with the power supply to the central electronic module (CEM) 12 V +/-2.5 V.

  Other information:

  - For information about signals, see **SIGNAL SPECIFICATION, CONTROL MODULE FOR FOUR WHEEL DRIVE** .

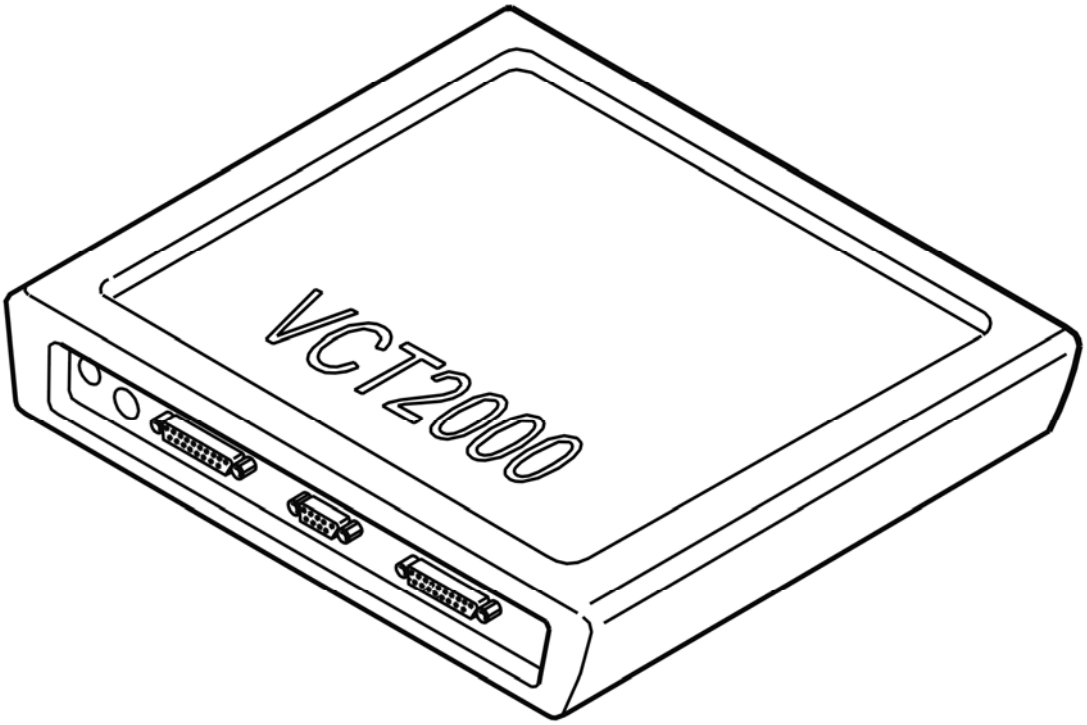

Fig. 115: Identifying VCT2000 Diagnostic Tool Symbol In VIDA
Courtesy of VOLVO CARS CORPORATION

Is the voltage OK?

- **YES**

  FAULT NOT FOUND: Troubleshooting has been completed.

- **NO**

Refer to **CHECKING THE WIRING**

CHECKING THE WIRING

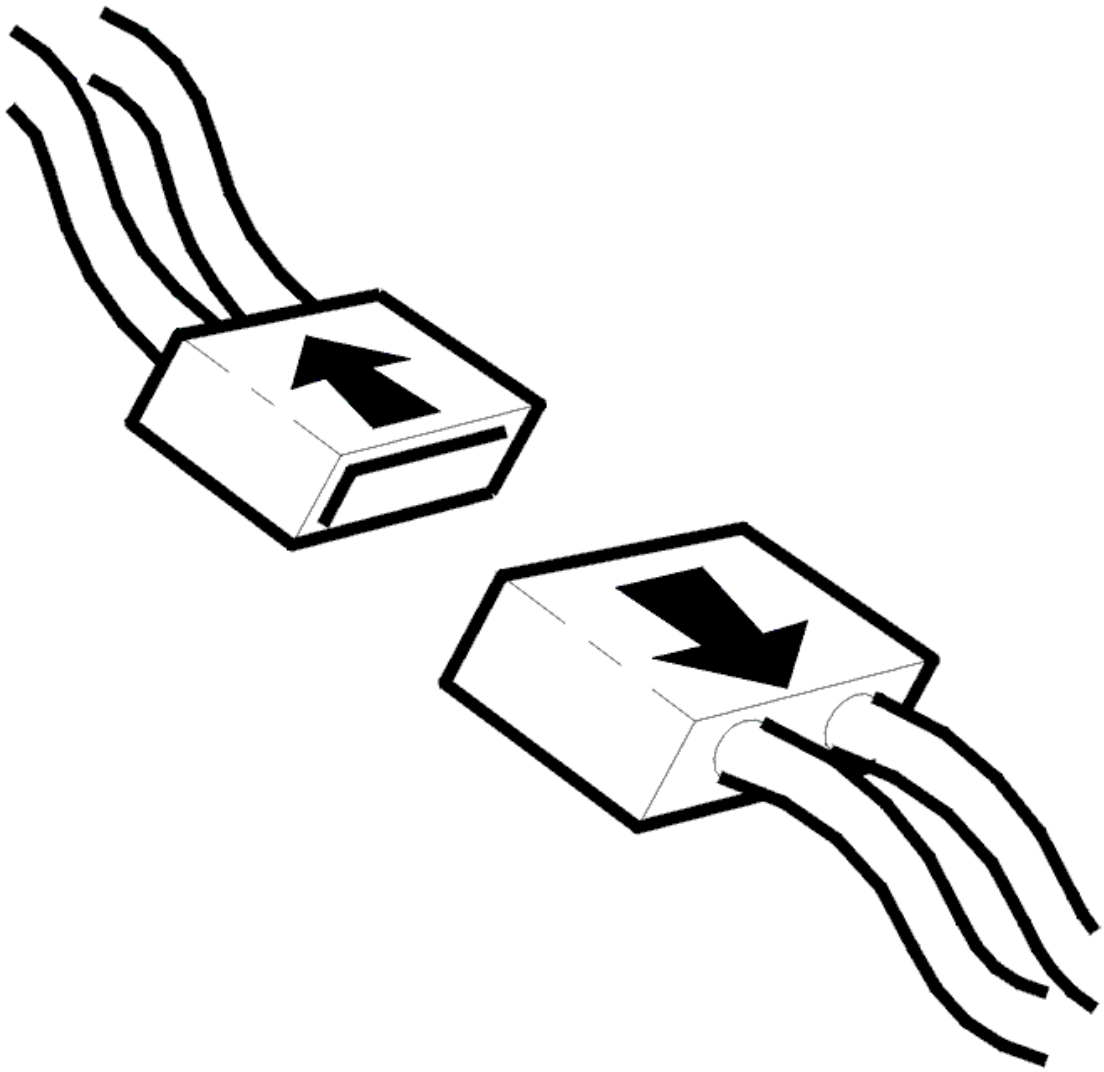

Fig. 116: Disconnecting Connector
Courtesy of VOLVO CARS CORPORATION

- Disconnect the connector from the differential electronic module (DEM).

  Check the cable between terminal #2 and ground. Check for an open-circuit.

  Check the connectors. Check for bent or damaged pins.

  Remedy as necessary.

  Other information:

- For information about signals, see **SIGNAL SPECIFICATION, CONTROL MODULE FOR FOUR WHEEL DRIVE**
- To check the wiring and connections, see **CHECKING WIRING AND TERMINALS** .

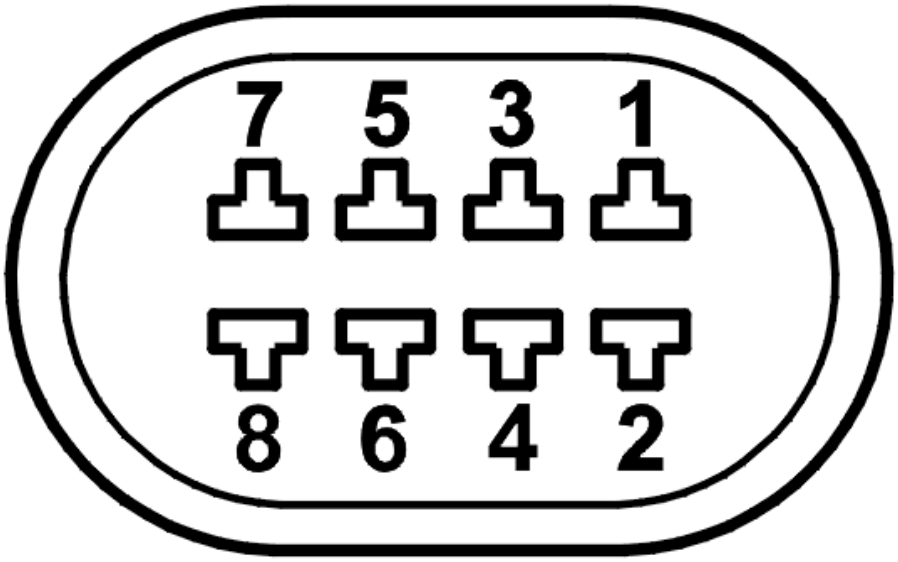

Fig. 117: Identifying Connector Terminals
Courtesy of VOLVO CARS CORPORATION

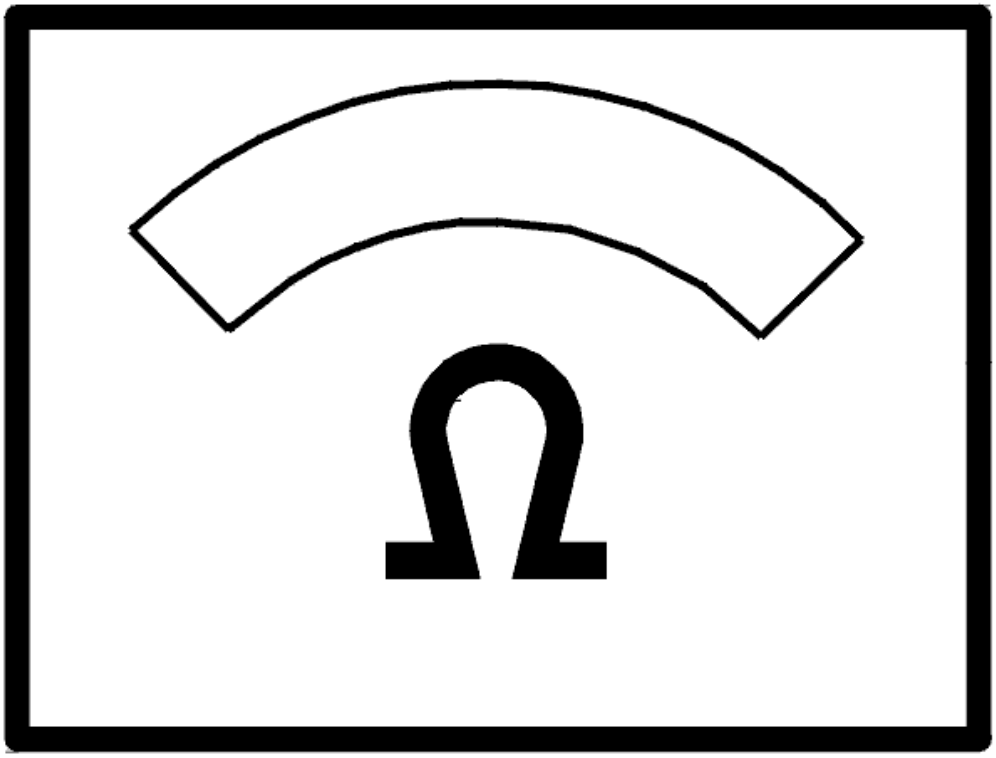

Fig. 118: Identifying Ohm Meter
Courtesy of VOLVO CARS CORPORATION

Fig. 119: Identifying Connector
Courtesy of VOLVO CARS CORPORATION

Were any faults found in the ground cable?

- **YES**

  Refer to **VERIFICATION**

- **NO**

  Refer to **CHECKING THE WIRING**

CHECKING THE WIRING

Check the power supply to terminal #1. Check for an open-circuit. Check for a short-circuit to ground.

HINT: Check the voltage between terminal #1 and ground with the ignition on and the voltmeter connected. The voltage should be battery voltage.

Remedy as necessary.

Other information:

- For information about signals, see **SIGNAL SPECIFICATION, CONTROL MODULE FOR FOUR WHEEL DRIVE**
- To check the wiring and connections, see **CHECKING WIRING AND TERMINALS** .

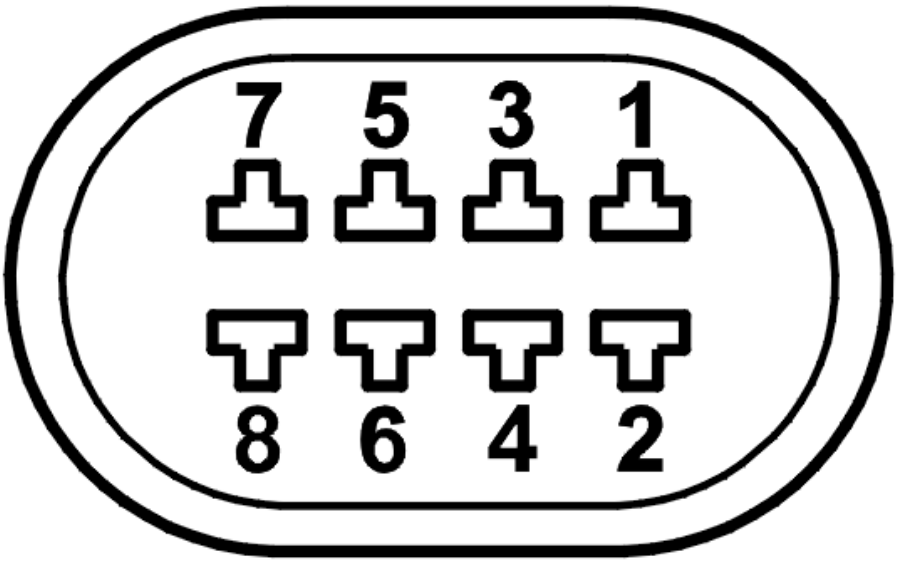

Fig. 120: Identifying Connector Terminals

Courtesy of VOLVO CARS CORPORATION

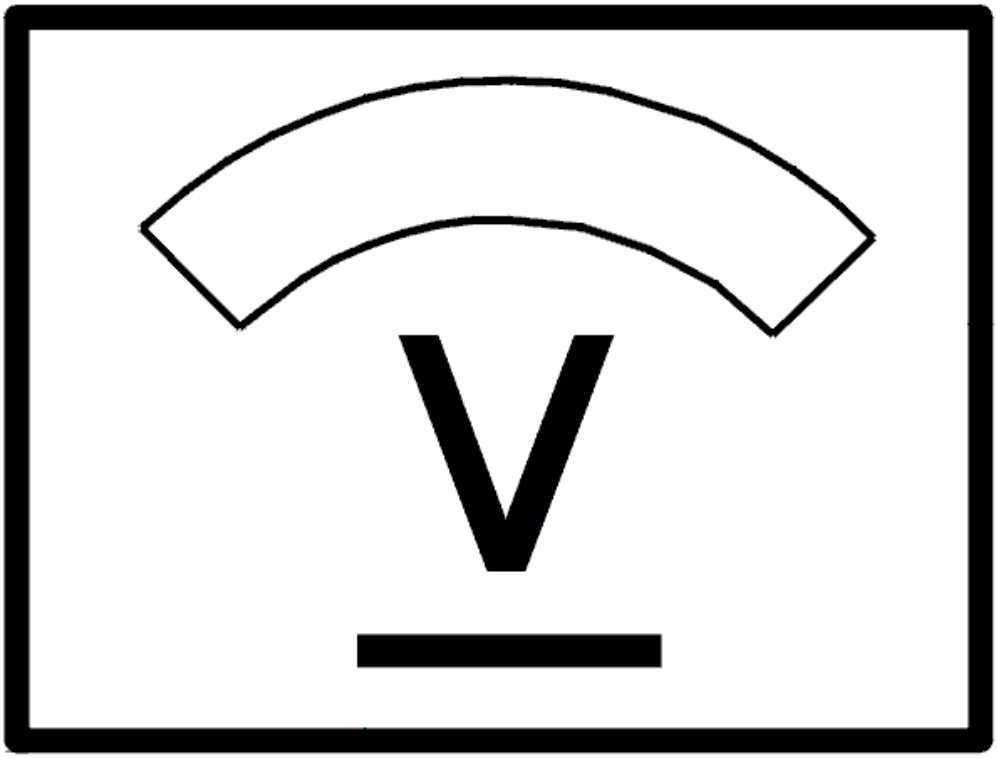

Fig. 121: Identifying Voltage Display
Courtesy of VOLVO CARS CORPORATION

Fig. 122: Identifying Connector
Courtesy of VOLVO CARS CORPORATION

Were any faults found in the cable?

- **YES**

  Refer to **VERIFICATION**

- **NO**

  Refer to **REPLACING THE CONTROL MODULE**

REPLACING THE CONTROL MODULE

Replace the differential electronic module (DEM).

- For AW50AWD and 4T65AWD 2003-, see **DIFFERENTIAL ELECTRONIC MODULE (DEM), REPLACING**
- For TF-80SC 2005- see **DIFFERENTIAL ELECTRONIC MODULE (DEM), REPLACING (2005-2008)** .

.

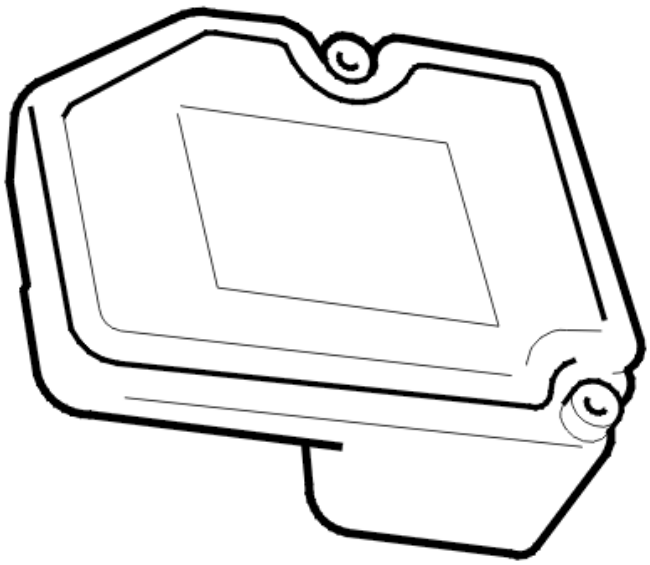

Fig. 123: Identifying Differential Electronic Module
Courtesy of VOLVO CARS CORPORATION

- **Continue**

  Refer to **VERIFICATION**

VERIFICATION

HINT: After carrying out the repair, check that the fault has been remedied.

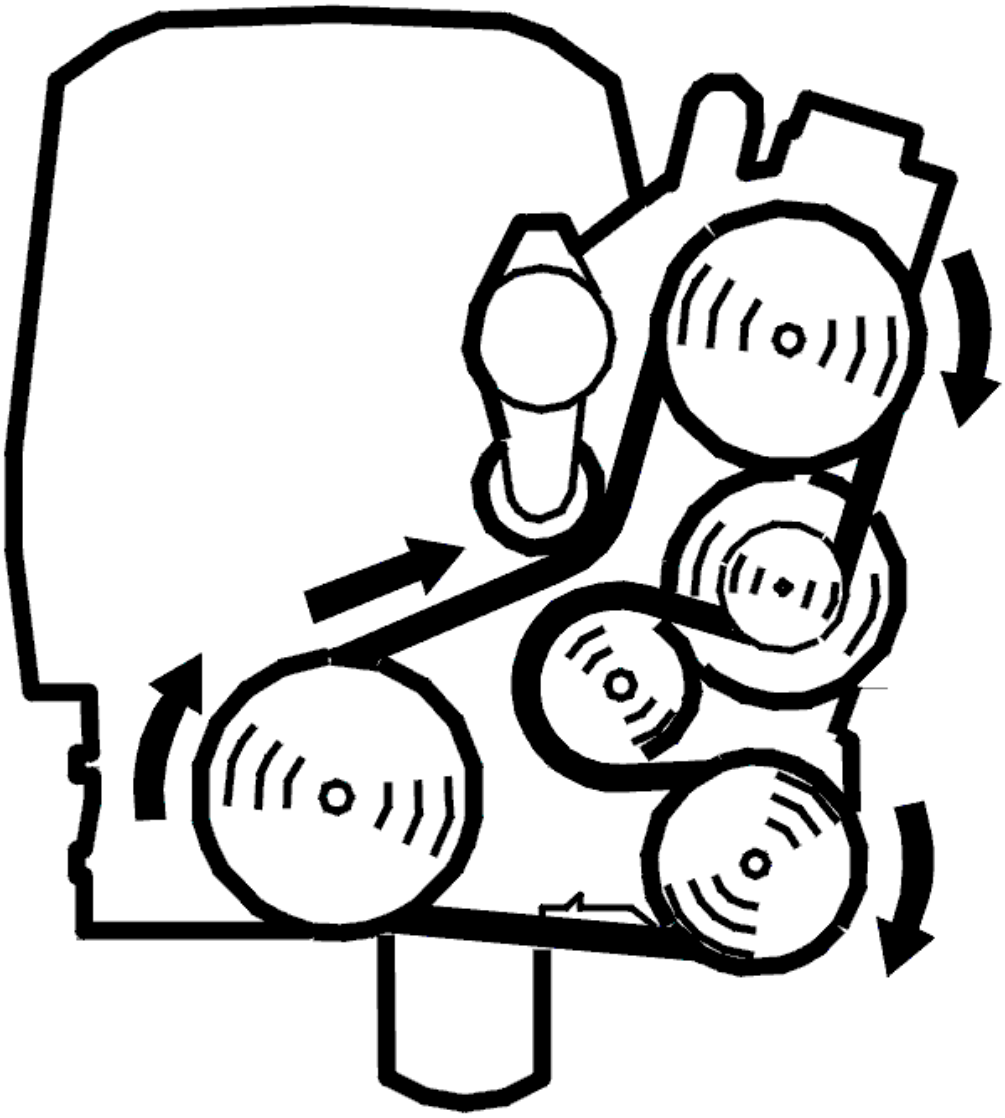

Fig. 124: Belt Routing / Engine Idling - Volvo
Courtesy of VOLVO CARS CORPORATION

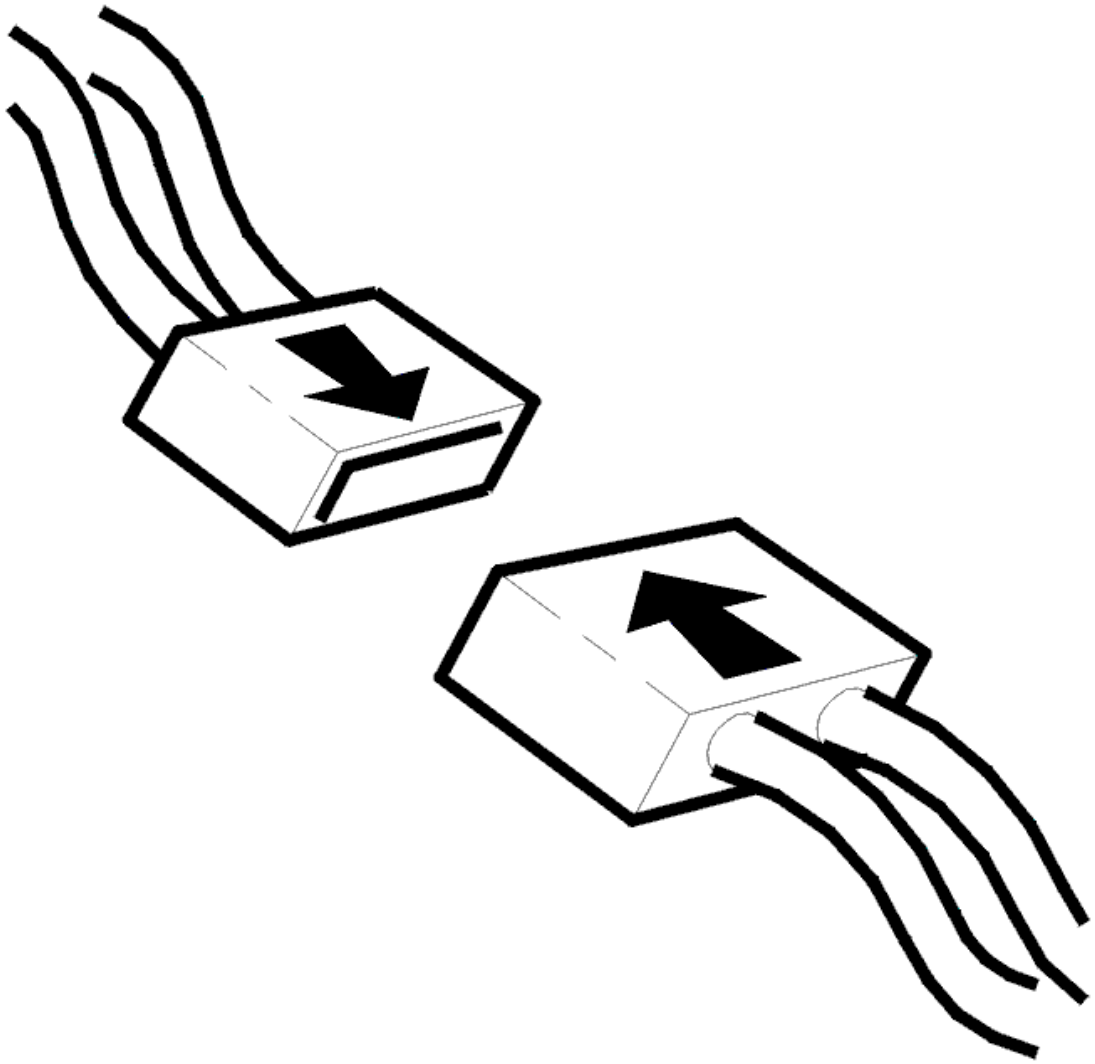

Fig. 125: Connecting Connector
Courtesy of VOLVO CARS CORPORATION

- Ignition off
- Reconnect the connectors, reinstall components etc.
- Engine idling
- Read off the power supply for the differential electronic module (DEM).

  Compare with the voltage at the central electronic module (CEM). The voltage must be 12 V +/- 2.5 V.

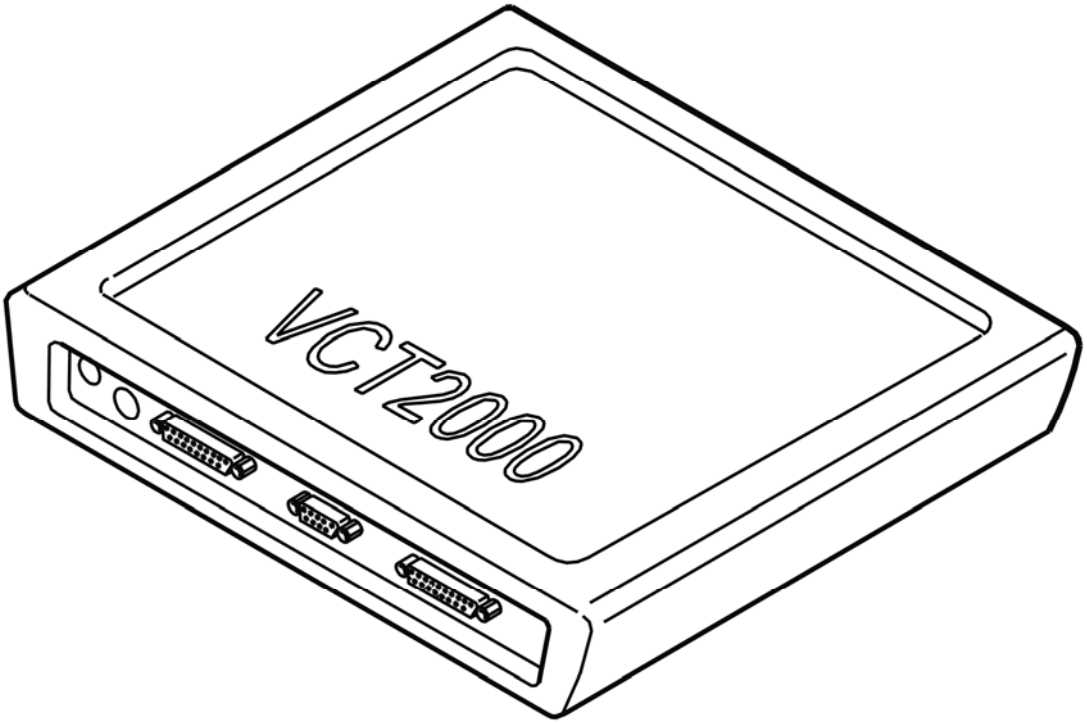

Fig. 126: Identifying VCT2000 Diagnostic Tool Symbol In VIDA
Courtesy of VOLVO CARS CORPORATION

Is the voltage OK?

- **YES**

  OKAY: Troubleshooting has been completed.

- **NO**

  Refer to **INFORMATION**

INFORMATION

FAULT-TRACING INFORMATION

The fault should have been detected and remedied. As this is not the case fault-tracing has failed.

Exit fault-tracing for this diagnostic trouble code (DTC) or make another attempt.

DEM-0003: SYSTEM VOLTAGE. FAULTY VOLTAGE (AW50/51 AWD; 2005-2007)

DIAGNOSTIC TROUBLE CODE (DTC) INFORMATION DEM-0003

see **DIAGNOSTIC TROUBLE CODE (DTC) INFORMATION DEM-0003**

FAULTY VOLTAGE

see **FAULTY VOLTAGE**

DEM-0005: CONTROL VALVE. FAULTY SIGNAL (4T65 AWD; AW50/51 AWD; 2003-2004)

DIAGNOSTIC TROUBLE CODE (DTC) INFORMATION DEM-0005

Condition

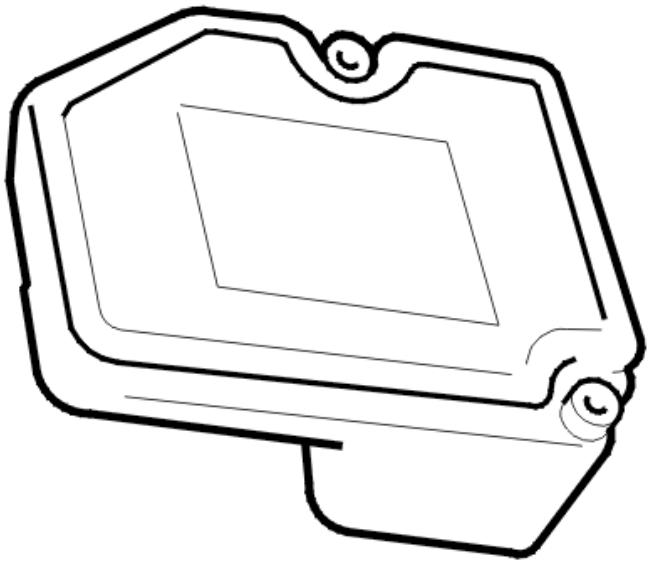

Fig. 127: Identifying Differential Electronic Module
Courtesy of VOLVO CARS CORPORATION

The differential electronic module (DEM) checks if the signal from the control valve is within the permitted limits by comparing the signal with a calculated value.

Diagnostic trouble code (DTC) ECM-0005 is stored if the control module receives a signal from the control valve corresponding to a current higher than 4095 mA. The control module interprets this as a fault.

Diagnostic trouble code (DTC) DEM 0005 can be diagnosed with the engine running and the engine speed (RPM) >500 rpm.

Substitute Value

- Four wheel drive is blocked.

Possible Source

- Defective control module.

Fault symptom[s]

- Four wheel drive is not functioning.

FAULTY SIGNAL

REPLACING THE CONTROL MODULE

Replace the differential electronic module (DEM).

- For AW50AWD and 4T65AWD 2003-, see **DIFFERENTIAL ELECTRONIC MODULE (DEM), REPLACING**
- For TF-80SC 2005- see **DIFFERENTIAL ELECTRONIC MODULE (DEM), REPLACING (2005-2008)** .

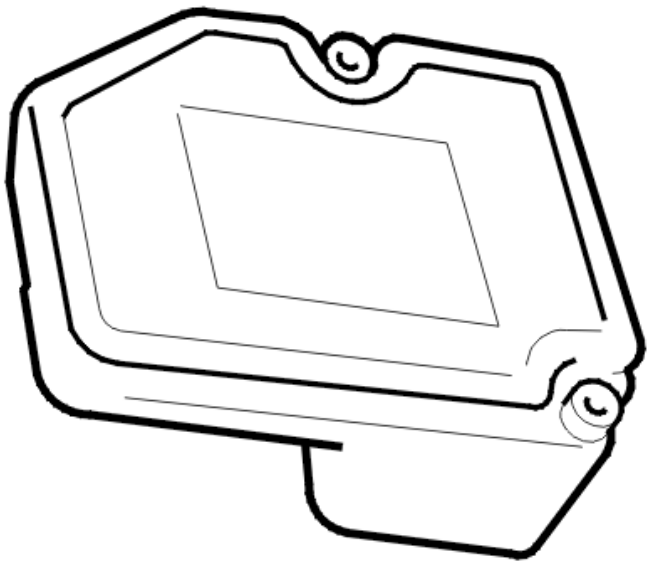

Fig. 128: Identifying Differential Electronic Module
Courtesy of VOLVO CARS CORPORATION

DEM-0005: CONTROL VALVE. INTERNAL FAULT (4T65 AWD; 2005-2006)

DIAGNOSTIC TROUBLE CODE (DTC) INFORMATION DEM-0005

Condition

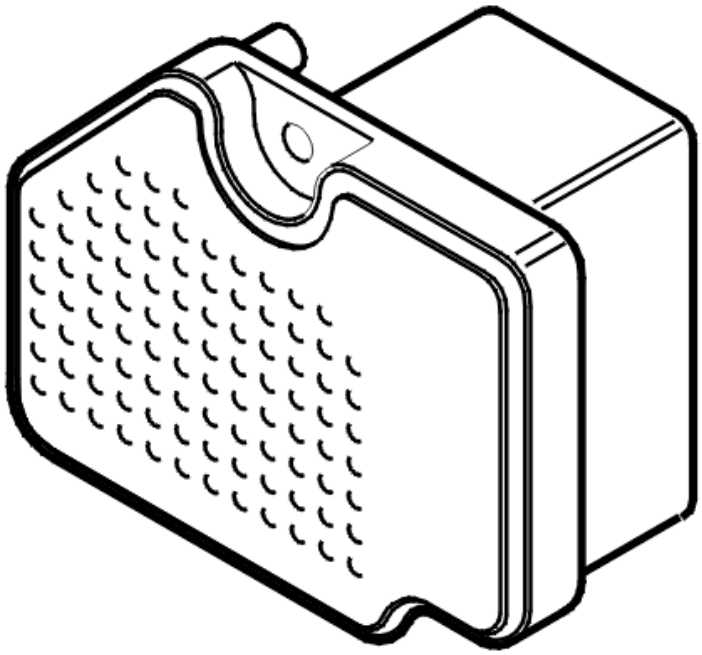

Fig. 129: Active On Demand Coupling Control Module
Courtesy of VOLVO CARS CORPORATION

The differential electronic module (DEM) checks if the signal from the control valve is within the permitted range by comparing the signal with a predefined parameter.

The diagnostic trouble code (DTC) is stored if the control module registers a incorrect signal, i. e. a current value outside the predefined parameters.

The diagnostic trouble code (DTC) can be diagnosed with the engine running and the engine speed (RPM) greater than 500 rpm.

Substitute Value

- Four wheel drive is disengaged.

Possible Source

- Damaged control module.

Fault symptom[s]

- Four wheel drive is not functioning.

INTERNAL FAULT

INFORMATION

The differential electronic module (DEM) has registered an internal fault.

If the fault is intermittent, it has been registered previously but is no longer present. Intermittent faults can be caused by interference at start up of the differential electronic module (DEM) or may be a different type of fault which occurs on different occasions. The fault is evaluated depending on how it occurs. Replace the differential electronic module (DEM) if the fault recurs.

Other information:

- For AW50AWD and 4T65AWD 2003-, see **DIFFERENTIAL ELECTRONIC MODULE (DEM), REPLACING**
- For TF-80SC 2005- see **DIFFERENTIAL ELECTRONIC MODULE (DEM), REPLACING (2005-2008)** .

Remedy as necessary.

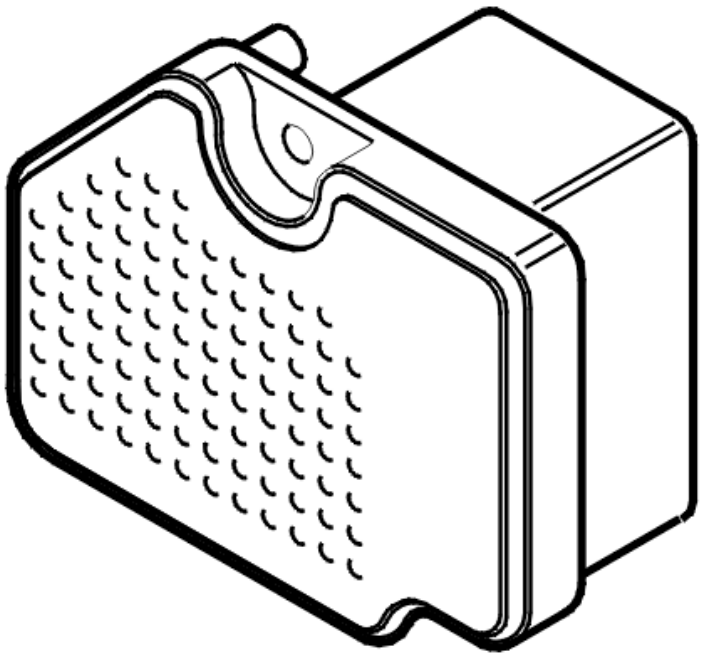

Fig. 130: Active On Demand Coupling Control Module
Courtesy of VOLVO CARS CORPORATION

- **Continue**

Refer to **INFORMATION**

INFORMATION

FAULT-TRACING INFORMATION

In case of this defect, troubleshooting is not followed by verification.

The information can be displayed again or the fault-tracing for this fault can be interrupted.

DEM-0005: CONTROL VALVE. INTERNAL FAULT (AW50/51 AWD; 2005-2007)

DIAGNOSTIC TROUBLE CODE (DTC) INFORMATION DEM-0005

see **DIAGNOSTIC TROUBLE CODE (DTC) INFORMATION DEM-0005**

INTERNAL FAULT

see **INTERNAL FAULT**

DEM-0007: HYDRAULIC PRESSURE. INCORRECT VALUE (4T65 AWD; AW50/51 AWD; 2005)

DIAGNOSTIC TROUBLE CODE (DTC) INFORMATION DEM-0007

Condition

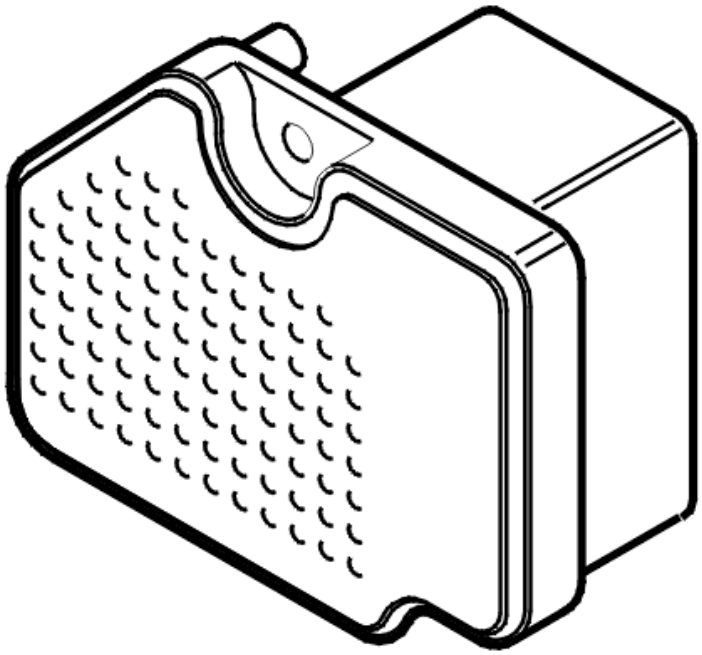

Fig. 131: Active On Demand Coupling Control Module
Courtesy of VOLVO CARS CORPORATION

The Differential electronic module (DEM) checks the oil pressure in the Haldex clutch using an oil pressure sensor.

When the engine speed exceeds 500 rpm, an initial pressure builds up in the clutch via an electric feed pump.

The diagnostic trouble code (DTC) is stored if the control module detects that:

- Initial pressure not reached within 2-4 minutes.

The control module's test for the diagnostic trouble code (DTC) starts in the event of:

- Engine speed (RPM) higher than 500 rpm.

Substitute Value

- Four wheel drive is disengaged.

Possible Source

- Damaged pressure sensor.

- Damaged feed pump.
- Too low oil volume in clutch.
- Internal leak in the clutch.

Fault symptom[s]

- Four wheel drive is not functioning.

INCORRECT VALUE

CHECKING THE OIL PRESSURE

Fig. 132: Checking Traffic Load On CAN Cables
Courtesy of VOLVO CARS CORPORATION

- Ignition on.

Read off the oil pressure in the Differential Electronic Module (DEM). The pressure must rise when the engine speed exceeds 500 rpm. Use **VIDA (Volvo scan tool)** .

First read off the oil pressure with the ignition on and then with the engine running. At read out, the oil pressure must rise when the engine rpm exceeds 500 rpm, the pressure must rise immediately after the engine's rpm increases.

If the pressure does not rise, this means that a fault has occurred.

Does the pressure increase?

- **YES**

  Refer to **INFORMATION**

- **NO**

  Refer to **CHECKING THE COMPONENT AND WIRING**

CHECKING THE FUNCTION

- Ignition off.
- Check the connector between the Differential Electronic Module (DEM) and the feed pump with respect to contact resistance and oxidation.

- Check the lead between the Differential Electronic Module (DEM) and the feed pump for damage.

Reinstall the connectors, components etc.

- Ignition on.

Activate the feed pump and check that it starts and runs normally. Listen using a stethoscope or a screwdriver pressed to your ear.

NOTE: The feed pump may sound like it's running but in certain cases it only oscillates.

Remedy as necessary.

Other information:

- see **SIGNAL SPECIFICATION, DIFFERENTIAL ELECTRONIC MODULE (DEM)**
- see **LOCATION OF COMPONENTS**

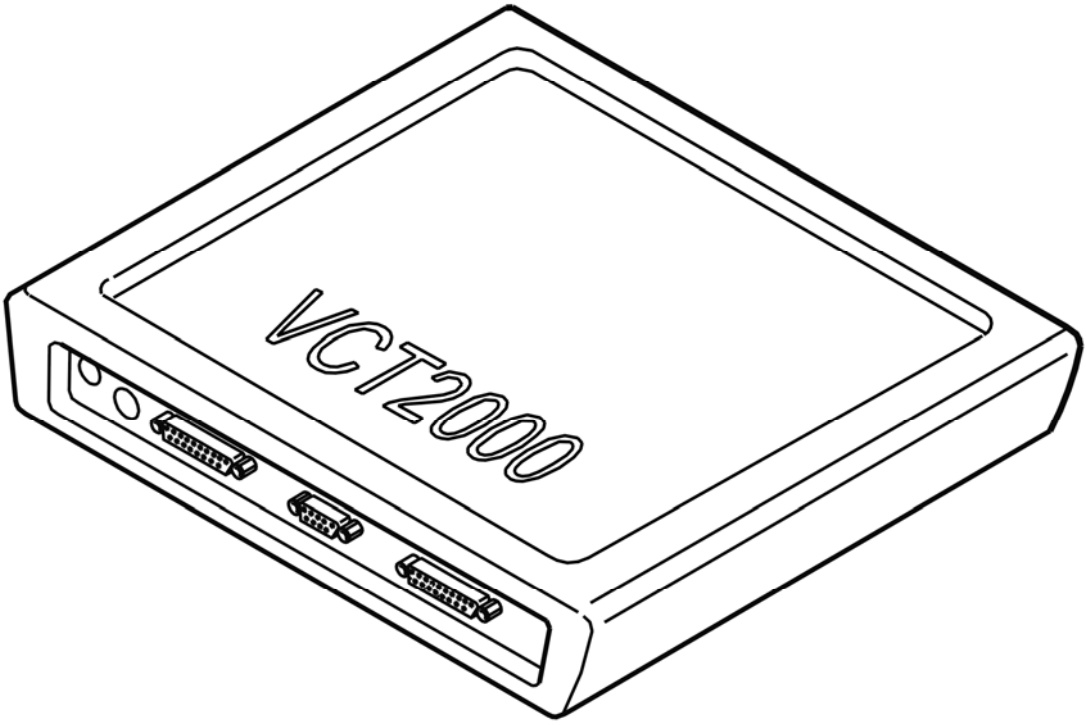

Fig. 133: Identifying VCT2000 Diagnostic Tool Symbol In VIDA
Courtesy of VOLVO CARS CORPORATION

Select continue when the defect has been remedied.

- **Continue**

  Refer to **INFORMATION**

CHECKING THE COMPONENT AND WIRING

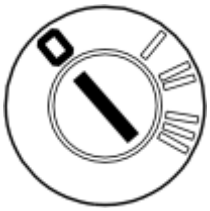

Fig. 134: Identifying Ignition In Off Position
Courtesy of VOLVO CARS CORPORATION

- Ignition off.

Check the connector for the Differential electronic module (DEM). Check for damage and loose connections.

Check that the cable harness is intact and not trapped or damaged.

Check that the oil pressure sensor (13) is correctly installed and that it does not have any external damage.
Check that the oil pressure sensor oil ducts are intact and free of dirt.

Remedy as necessary.

If no fault is found, try a new pressure sensor.

Other information

- see **CHECKING WIRING AND TERMINALS**
- see **TEMPERATURE / PRESSURE SENSOR ACTIVE ON DEMAND COUPLING (AOC), REPLACING**

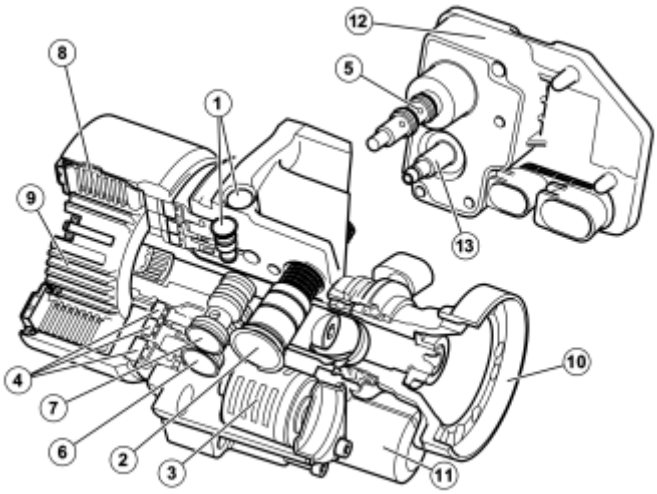

Fig. 135: Exploded View Of Rear Differential
Courtesy of VOLVO CARS CORPORATION

Is the function OK?

- **YES**

  OKAY: Troubleshooting has been completed.

- **NO**

  Refer to **CHECKING THE FUNCTION**

INFORMATION

Fig. 136: Checking Traffic Load On CAN Cables
Courtesy of VOLVO CARS CORPORATION

- Ignition on.

Check status for relevant diagnostic trouble code.

No further corrective action is required if the diagnostic trouble code (DTC) is intermittent and does not recur.

If the DTC status is permanent, continue with fault tracing.

Do you wish to continue with fault tracing?

- **YES**

  Refer to **CHECKING THE COMPONENT AND WIRING**

- **NO**

  OKAY: Troubleshooting has been completed.

INFORMATION

NOTE: **The diagnostic trouble code can also be generated due to damaged AOC-unit (clutch). Check the AOC-unit for visible damages. Listen for noise. Check the oil level in the coupling (Active on Demand Coupling).**

- **Continue**

  Refer to **CHECKING THE FUNCTION**

CHECKING THE FUNCTION

Check that the AOC-unit works by test-driving the vehicle on the lift (to increase the clutch oil pressure). Read off the oil pressure during the test-drive.

Test drive the vehicle:

see **CHECKING FOUR WHEEL DRIVE** (4T65 AWD), **or** see **CHECKING FOUR WHEEL DRIVE** (AW50/51 AWD)

- **Continue**

  Refer to **VERIFICATION**

VERIFICATION

HINT: After carrying out the repair, check that the fault has been remedied.

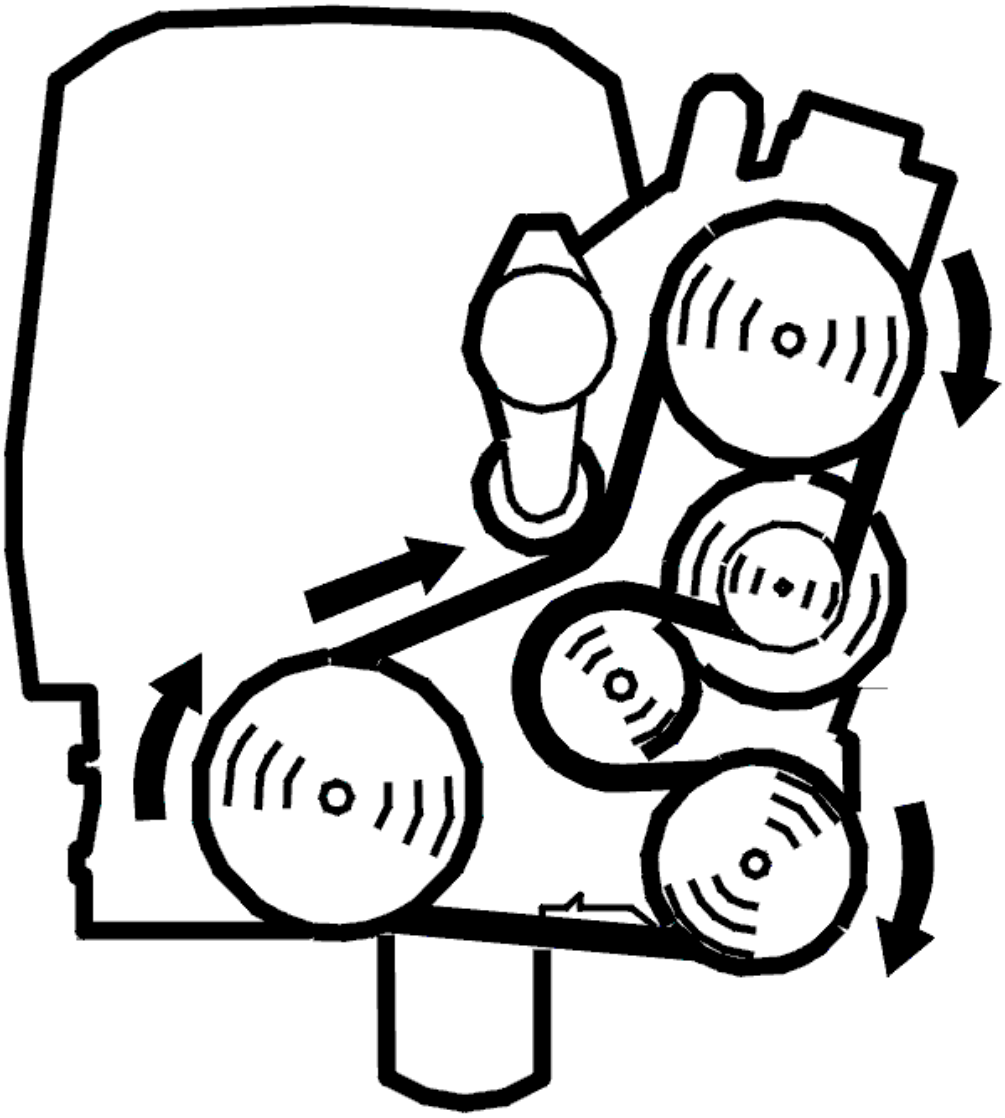

Fig. 137: Belt Routing / Engine Idling - Volvo
Courtesy of VOLVO CARS CORPORATION

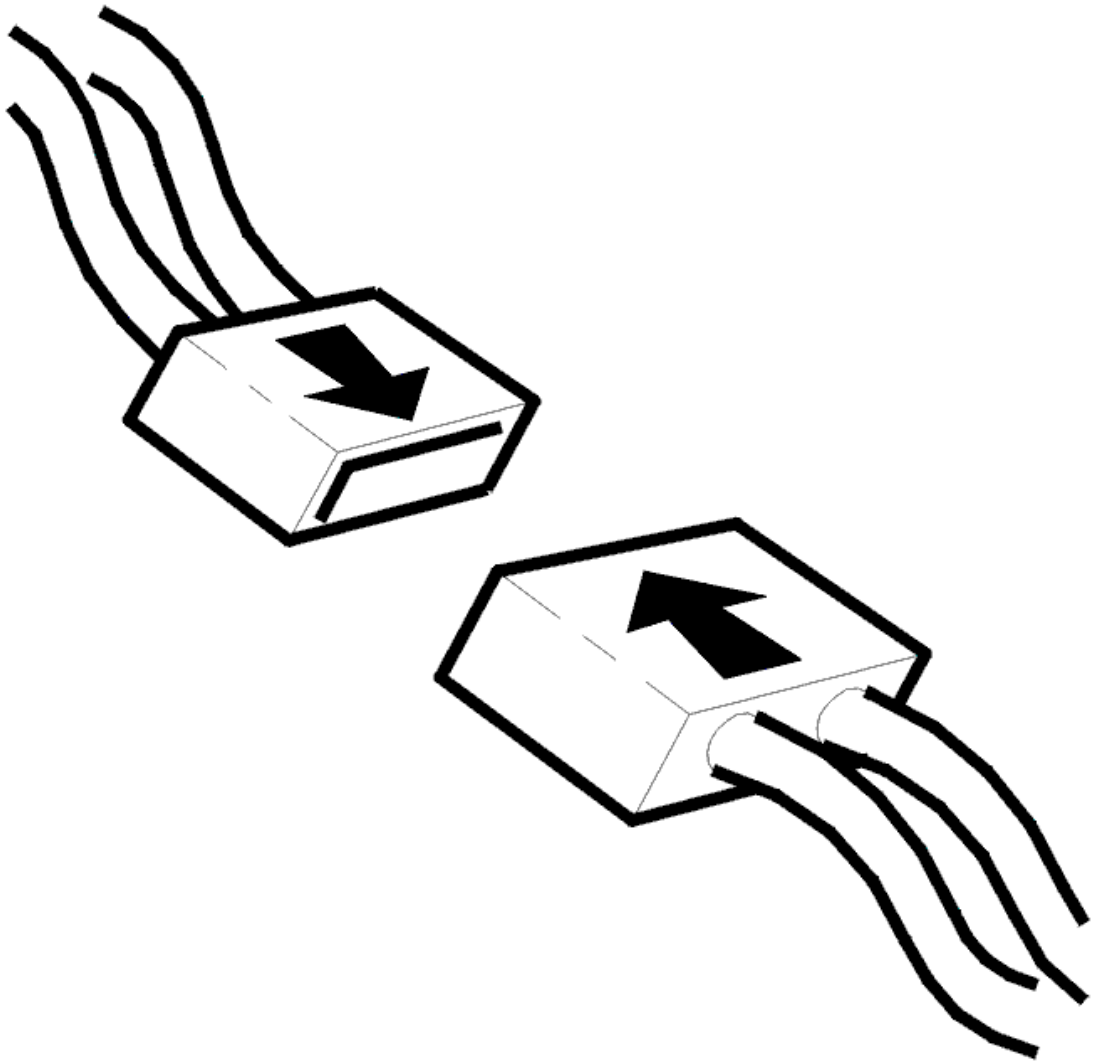

Fig. 138: Connecting Connector
Courtesy of VOLVO CARS CORPORATION

CAUTION: Carry out the test with the vehicle raised so that all four wheels can rotate freely with the mounting at the ends of the control arms to prevent damage to the drive shafts.

WARNING: Ensure that the vehicle is safely raised. Check that no objects are caught in the tire treads.

NOTE: If the vehicle is equipped with TRACS (traction control system) or Traction Control (DSTC (Dynamic stability and traction control), STC (Stability and traction control)) the function must be deactivated. This is carried out by removing the fuse for the brake system pump motor in the engine compartment relay and fusebox. Note that diagnostic trouble codes

(DTCs) will be stored in the brake control module (BCM). These must be erased before returning the vehicle to the customer.

-
- Ignition off
- Reinstall the connectors, components etc.
- Engine idling
- Read off the oil pressure.

  Check that the function of the oil pressure sensor is OK. Run the engine with the vehicle on the lift to increase the clutch oil pressure. Read off the pressure during the test drive. Check that the pressure has been updated.

  HINT: The oil pressure sensor has a measurement range of 0 to 4 Mpa.

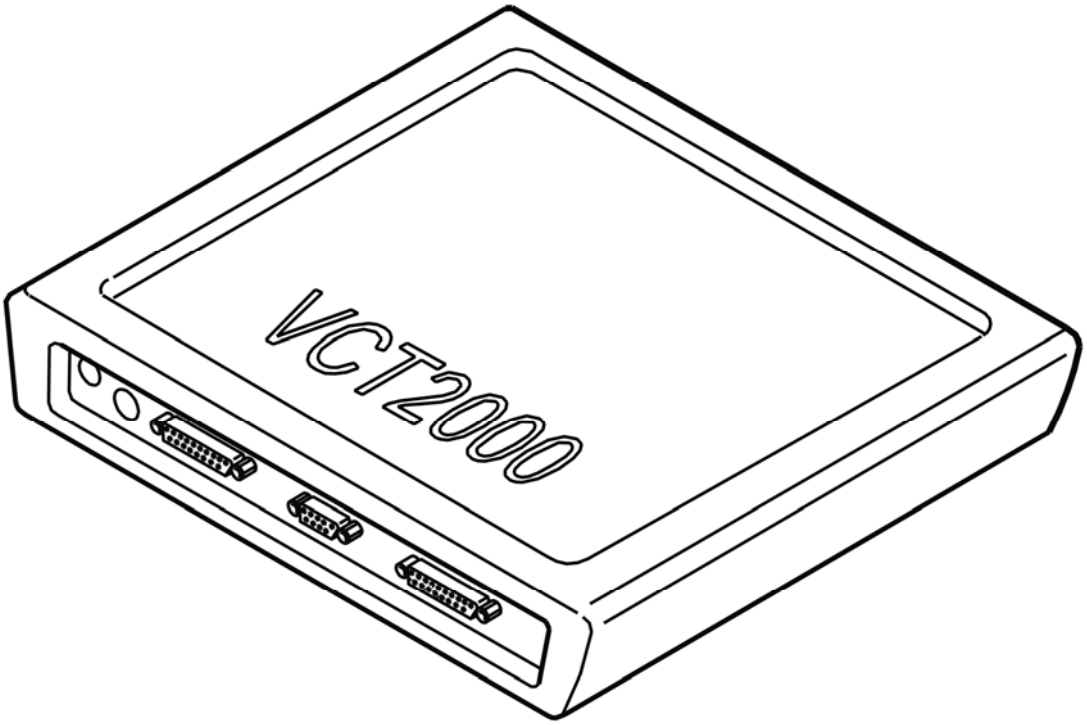

Fig. 139: Identifying VCT2000 Diagnostic Tool Symbol In VIDA
Courtesy of VOLVO CARS CORPORATION

Is the function OK?

- **YES**

VERIFIED: Troubleshooting has been completed.

- **NO**

  Refer to **INFORMATION**

INFORMATION

FAULT-TRACING INFORMATION

The fault should have been detected and remedied. As this is not the case fault-tracing has failed.

Exit fault-tracing for this diagnostic trouble code (DTC) or make another attempt.

DEM-0007: HYDRAULIC PRESSURE. INCORRECT VALUE (4T65 AWD; AW50/51 AWD; 2003-2004)

DIAGNOSTIC TROUBLE CODE (DTC) INFORMATION DEM-0007

Condition

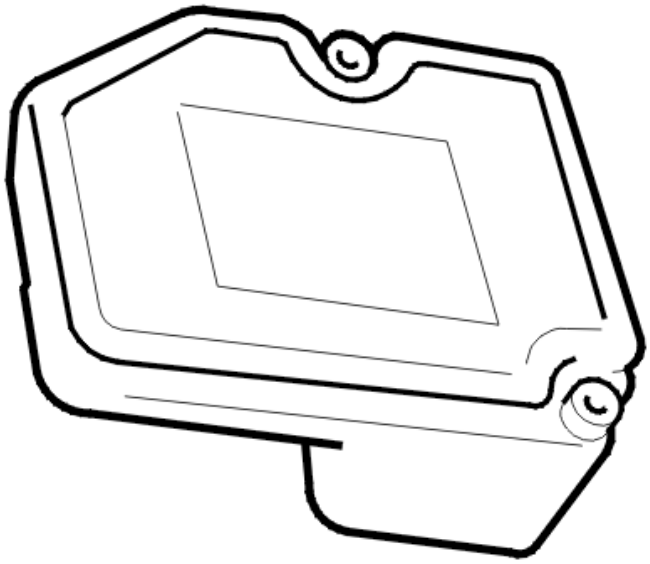

Fig. 140: Identifying Differential Electronic Module
Courtesy of VOLVO CARS CORPORATION

The differential electronic module (DEM) checks the signal from the oil pressure sensor by comparing the signal with a calculated value.

When the engine speed (RPM) exceeds 500 rpm, the control module calculates the pressure theoretically. The calculated pressure is compared to the oil temperature sensor signal. Diagnostic trouble code (DTC) DEM-007 is stored if the calculated temperature deviates from the calculated value. The control module interprets this as a fault.

Diagnostic trouble code (DTC) DEM-0007 can be diagnosed with the engine running and the engine speed (RPM) >500 rpm.

Substitute Value

- Four wheel drive is blocked.

Possible Source

- Defective control module.

Fault symptom[s]

- Four wheel drive is not functioning.

INCORRECT VALUE

CHECKING THE STATUS

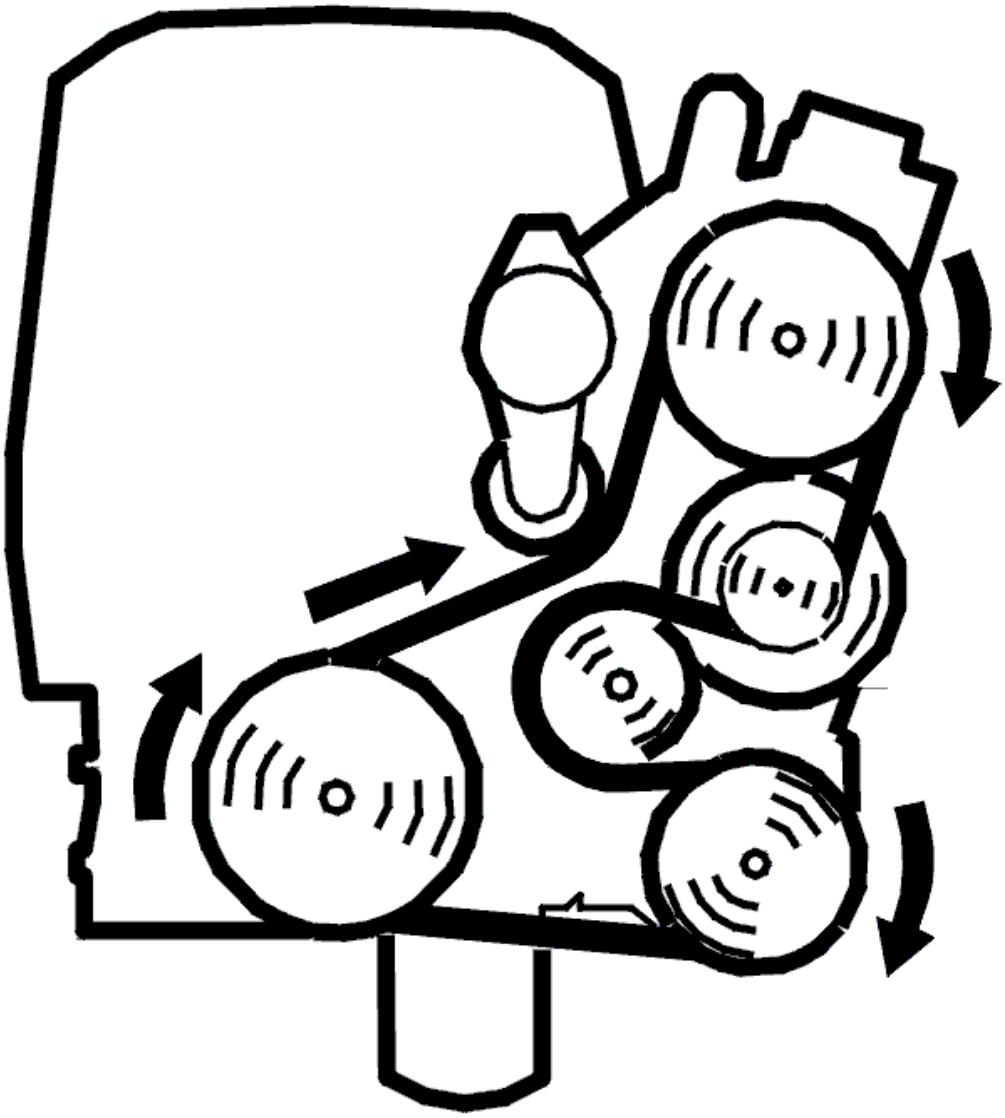

Fig. 141: Belt Routing / Engine Idling - Volvo
Courtesy of VOLVO CARS CORPORATION

CAUTION: Carry out the test with the car raised so that all four wheels can rotate freely with the mounting protruding on the control arms to prevent damage to the drive shafts.

WARNING: Ensure that the car is safely raised. Check that no objects are caught in the tire treads.

NOTE: If the car is equipped with TRACS (traction control system) or Traction Control (DSTC (Dynamic stability and traction control), STC (Stability and traction control)) the function must be deactivated. This is carried out by removing the fuse for the brake system pump motor in the engine compartment relay and fusebox. Note that diagnostic trouble codes

(DTCs) will be stored in the brake control module (BCM). These must be erased before returning the car to the customer.

-
- Engine idling
- Read off the oil pressure.

Check that the function of the oil pressure sensor is OK. Run the engine with the car on the lift to increase the clutch oil pressure. Read off the pressure during the test drive. Check that the pressure has been updated. Listen for noise to check that nothing mechanical has occurred in the clutch.

Other information:

Select an alternative below:

1. Oil pressure OK

   OKAY: Troubleshooting has been completed.

2. Mechanical noise

   Refer to **REPLACING THE COMPONENT**

3. The oil pressure is not updated.

   Refer to **REPLACING THE CONTROL MODULE**

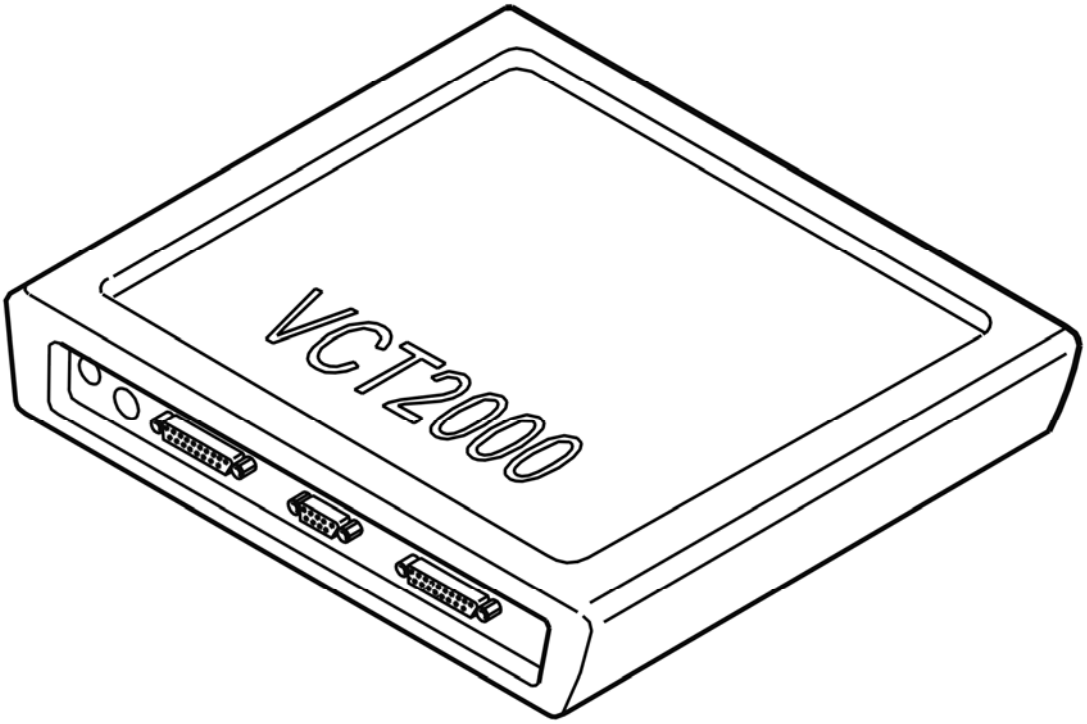

Fig. 142: Identifying VCT2000 Diagnostic Tool Symbol In VIDA
Courtesy of VOLVO CARS CORPORATION

REPLACING THE CONTROL MODULE

Replace the differential electronic module (DEM).

- For AW50AWD and 4T65AWD 2003-, see **DIFFERENTIAL ELECTRONIC MODULE (DEM), REPLACING**
- For TF-80SC 2005- see **DIFFERENTIAL ELECTRONIC MODULE (DEM), REPLACING (2005-2008)** .

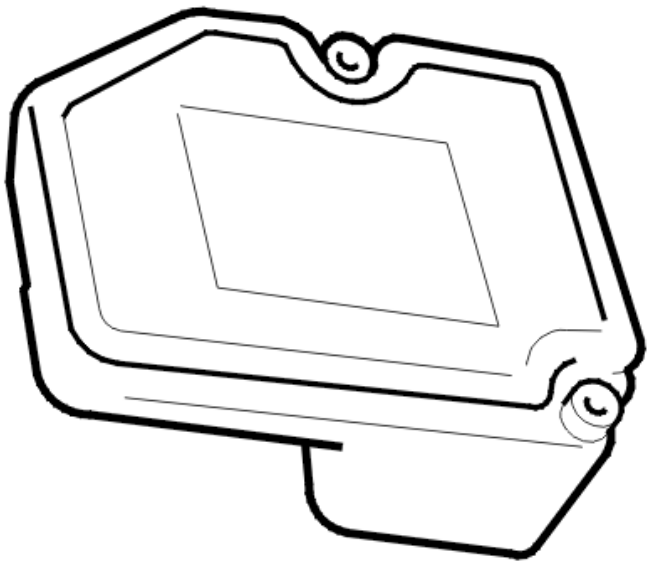

Fig. 143: Identifying Differential Electronic Module
Courtesy of VOLVO CARS CORPORATION

- **Continue**

  Refer to **VERIFICATION**

REPLACING THE COMPONENT

Replace the Active on Demand Coupling.

- For AW50AWD and 4T65AWD 2003-, see **ACTIVE ON DEMAND COUPLING (AOC), REPLACING**

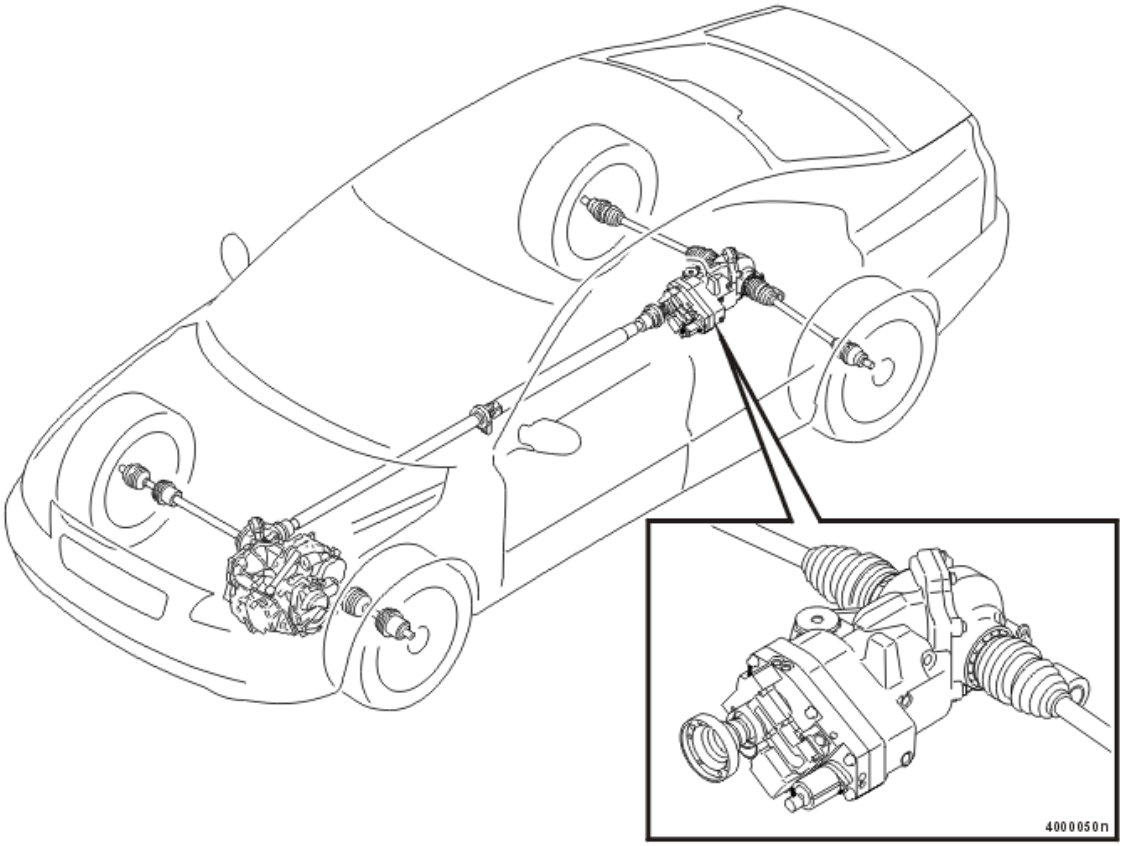

Fig. 144: Active On Demand Coupling
Courtesy of VOLVO CARS CORPORATION

- **Continue**

  Refer to **VERIFICATION**

VERIFICATION

HINT: After carrying out the repair, check that the fault has been remedied.

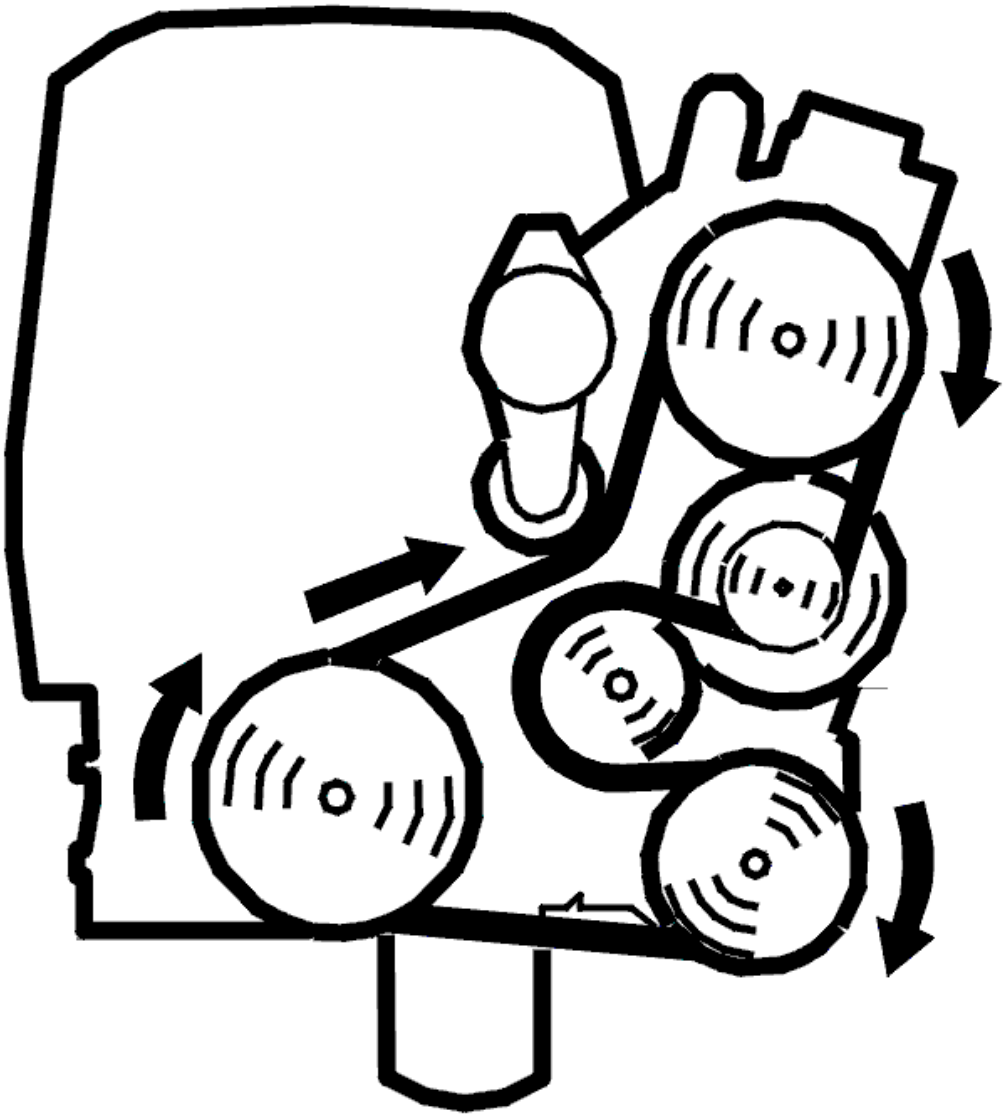

Fig. 145: Belt Routing / Engine Idling - Volvo
Courtesy of VOLVO CARS CORPORATION

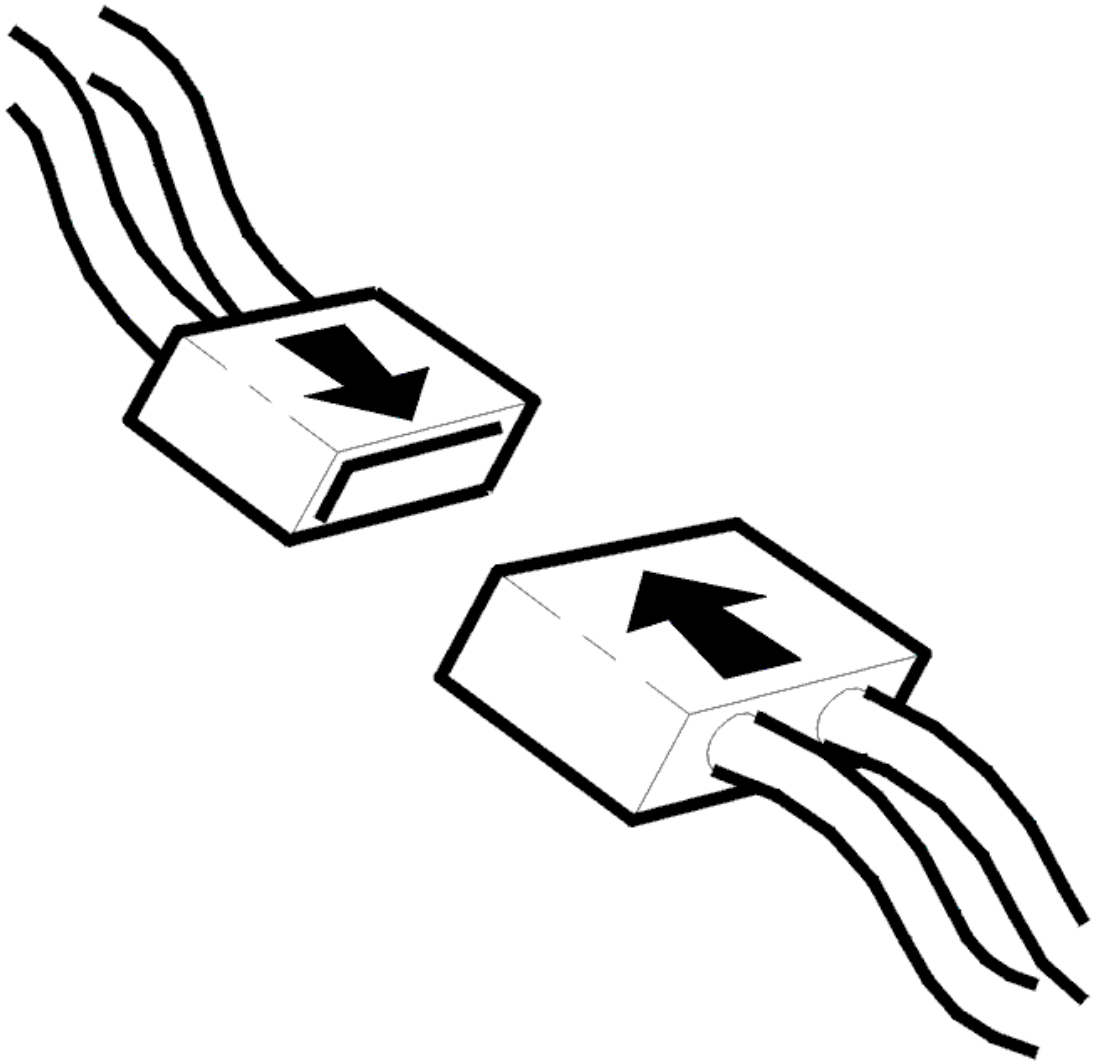

Fig. 146: Connecting Connector
Courtesy of VOLVO CARS CORPORATION

- Ignition off
- Reconnect the connectors, reinstall components etc.
- Engine idling.

  Check that the function of the oil pressure sensor is OK. Run the engine with the car on the lift to increase the clutch oil pressure. Read off the pressure during the test drive. Check that the pressure has been updated.

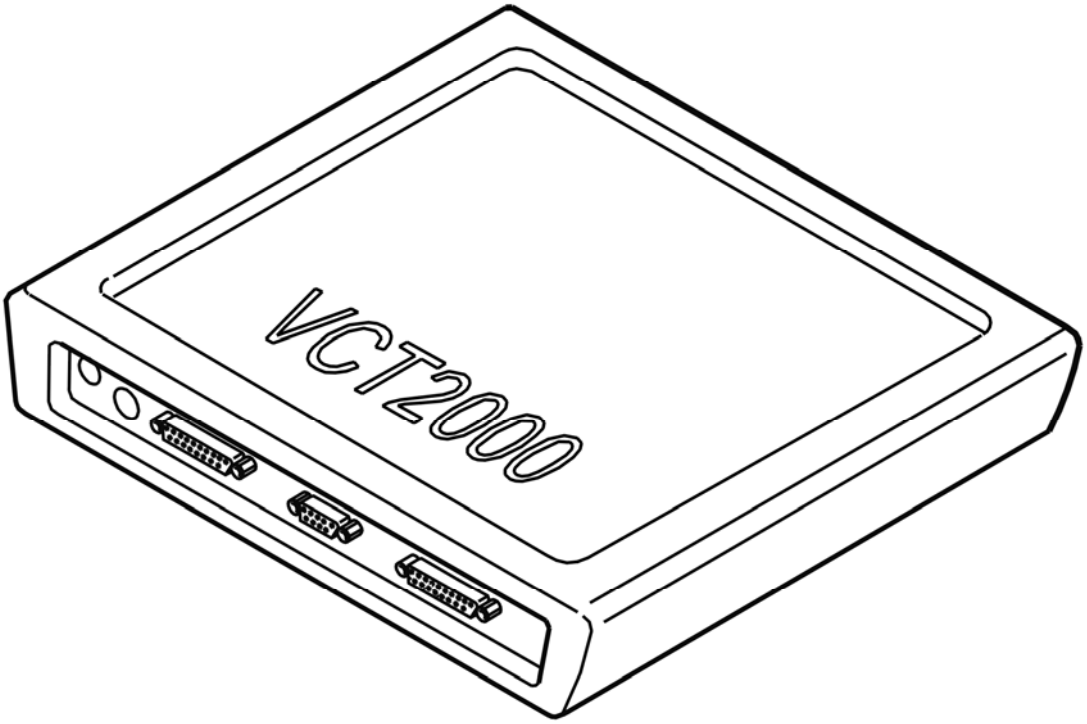

Fig. 147: Identifying VCT2000 Diagnostic Tool Symbol In VIDA
Courtesy of VOLVO CARS CORPORATION

Was the oil pressure updated?

- **YES**

  OKAY: Troubleshooting has been completed.

- **NO**

  Refer to **INFORMATION**

INFORMATION

FAULT-TRACING INFORMATION

The fault should have been detected and remedied. As this is not the case fault-tracing has failed.

Exit fault-tracing for this diagnostic trouble code (DTC) or make another attempt.

DEM-0007: HYDRAULIC PRESSURE. INCORRECT VALUE (4T65 AWD; 2006)

DIAGNOSTIC TROUBLE CODE (DTC) INFORMATION DEM-0007

see **DIAGNOSTIC TROUBLE CODE (DTC) INFORMATION DEM-0007**

INCORRECT VALUE

CHECKING THE FUNCTION

- Ignition off.
- Check the connector between the Differential Electronic Module (DEM) and the feed pump with respect to contact resistance and oxidation.
- Check the lead between the Differential Electronic Module (DEM) and the feed pump for damage.

Reinstall the connectors, components etc.

- Ignition on.

Activate the feed pump and check that it starts and runs normally. Listen using a stethoscope or a screwdriver pressed to your ear.

NOTE: The feed pump may sound like it's running but in certain cases it only oscillates.

Remedy as necessary.

Other information:

- see **SIGNAL SPECIFICATION, DIFFERENTIAL ELECTRONIC MODULE (DEM)**
- see **LOCATION OF COMPONENTS**

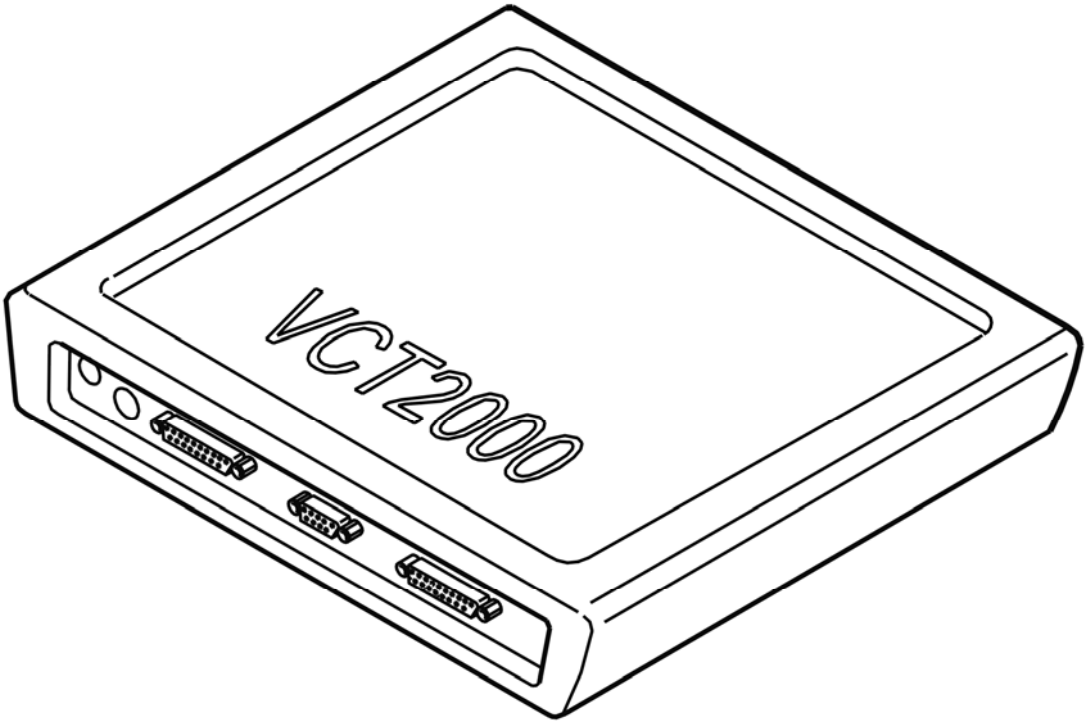

Fig. 148: Identifying VCT2000 Diagnostic Tool Symbol In VIDA
Courtesy of VOLVO CARS CORPORATION

Select continue when the defect has been remedied.

- **Continue**

  Refer to **INFORMATION**

CHECKING THE COMPONENT AND WIRING

Fig. 149: Identifying Ignition In Off Position
Courtesy of VOLVO CARS CORPORATION

- Ignition off.

Check the connector for the Differential electronic module (DEM). Check for damage and loose connections.

Check that the cable harness is intact and not trapped or damaged.

Check that the oil pressure sensor (13) is correctly installed and that it does not have any external damage. Check that the oil pressure sensor oil ducts are intact and free of dirt.

Remedy as necessary.

If no fault is found, try a new pressure sensor.

Other information

- see **CHECKING WIRING AND TERMINALS**
- see **TEMPERATURE / PRESSURE SENSOR ACTIVE ON DEMAND COUPLING (AOC), REPLACING**

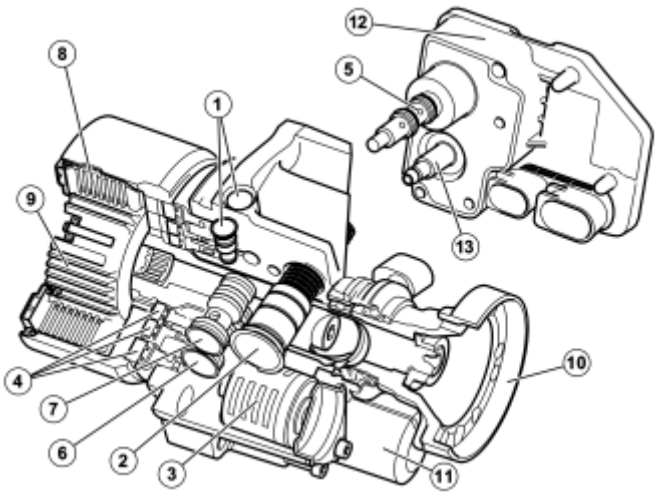

Fig. 150: Exploded View Of Rear Differential
Courtesy of VOLVO CARS CORPORATION

Is the function OK?

- **YES**

  OKAY: Troubleshooting has been completed.

- **NO**

  Refer to **CHECKING THE FUNCTION**

INFORMATION

NOTE: **The diagnostic trouble code can also be generated due to damaged AOC-unit (clutch). Check the AOC-unit for visible damages. Listen for noise. Check the oil level in the coupling (Active on Demand Coupling).**

- **Continue**

  Refer to **CHECKING THE FUNCTION**

CHECKING THE FUNCTION

Check that the AOC-unit works by test-driving the vehicle on the lift (to increase the clutch oil pressure). Read off the oil pressure during the test-drive.

Test drive the vehicle following:

see **CHECKING FOUR WHEEL DRIVE** (4T65 AWD), **or** see **CHECKING FOUR WHEEL DRIVE** (AW50/51 AWD)

- **Continue**

  Refer to **VERIFICATION**

VERIFICATION

HINT: After carrying out the repair, check that the fault has been remedied.

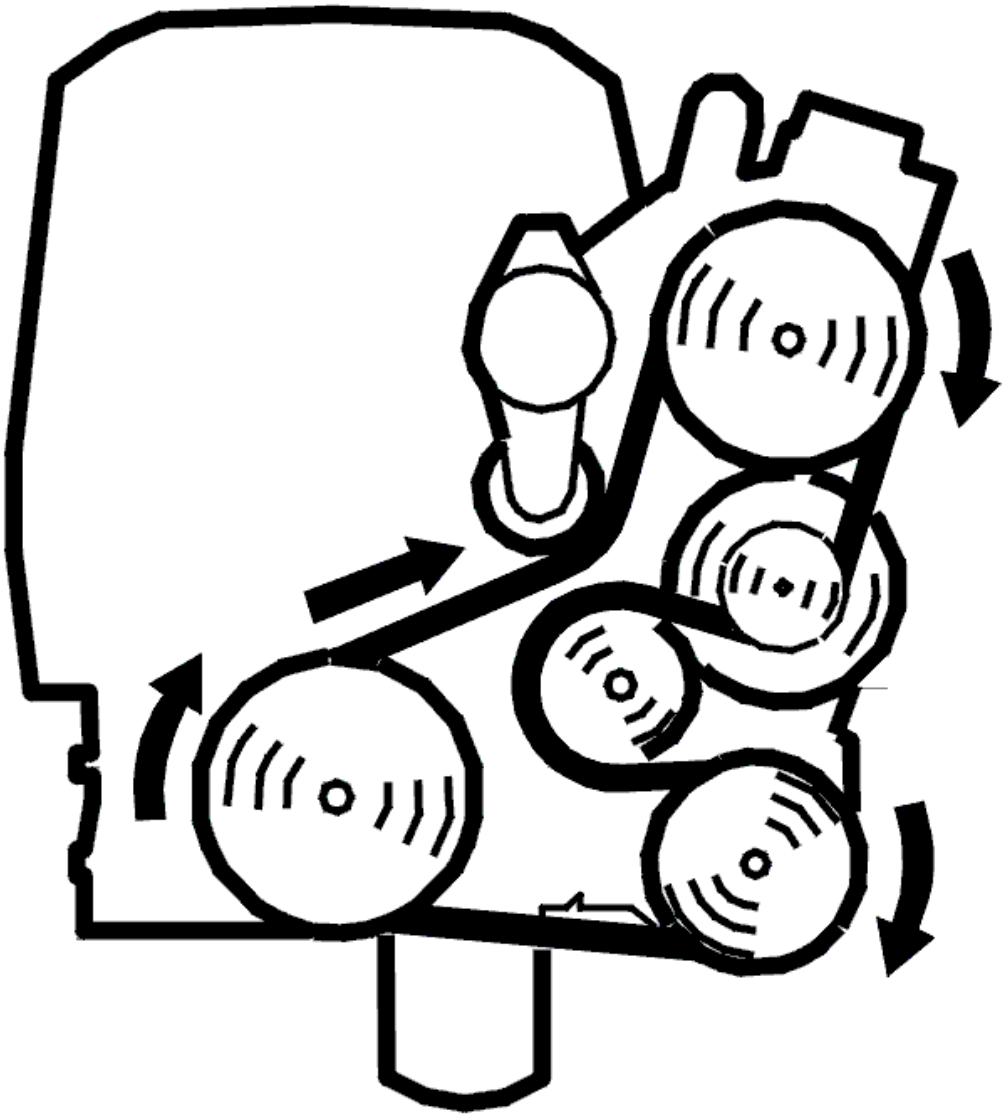

Fig. 151: Belt Routing / Engine Idling - Volvo
Courtesy of VOLVO CARS CORPORATION

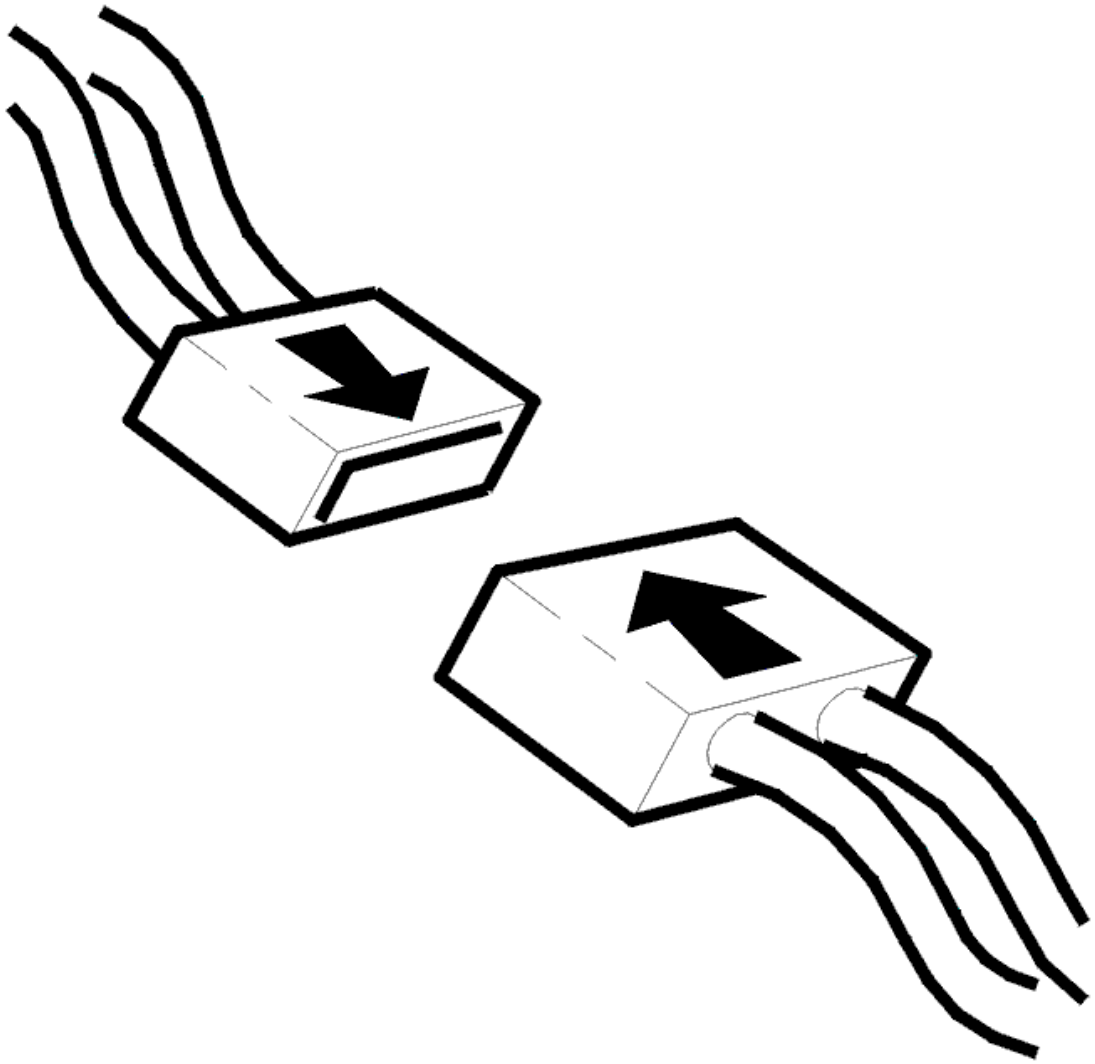

Fig. 152: Connecting Connector
Courtesy of VOLVO CARS CORPORATION

CAUTION: Carry out the test with the vehicle raised so that all four wheels can rotate freely with the mounting at the ends of the control arms to prevent damage to the drive shafts.

WARNING: Ensure that the vehicle is safely raised. Check that no objects are caught in the tire treads.

NOTE: If the vehicle is equipped with TRACS (traction control system) or Traction Control (DSTC (Dynamic stability and traction control), STC (Stability and traction control)) the function must be deactivated. This is carried out by removing the fuse for the brake system pump motor in the engine compartment relay and fusebox. Note that diagnostic trouble codes

(DTCs) will be stored in the brake control module (BCM). These must be erased before returning the vehicle to the customer.

-
- Ignition off
- Reinstall the connectors, components etc.
- Engine idling
- Read off the oil pressure.

  Check that the function of the oil pressure sensor is OK. Run the engine with the vehicle on the lift to increase the clutch oil pressure. Read off the pressure during the test drive. Check that the pressure has been updated.

  HINT: The oil pressure sensor has a measurement range of 0 to 4 Mpa.

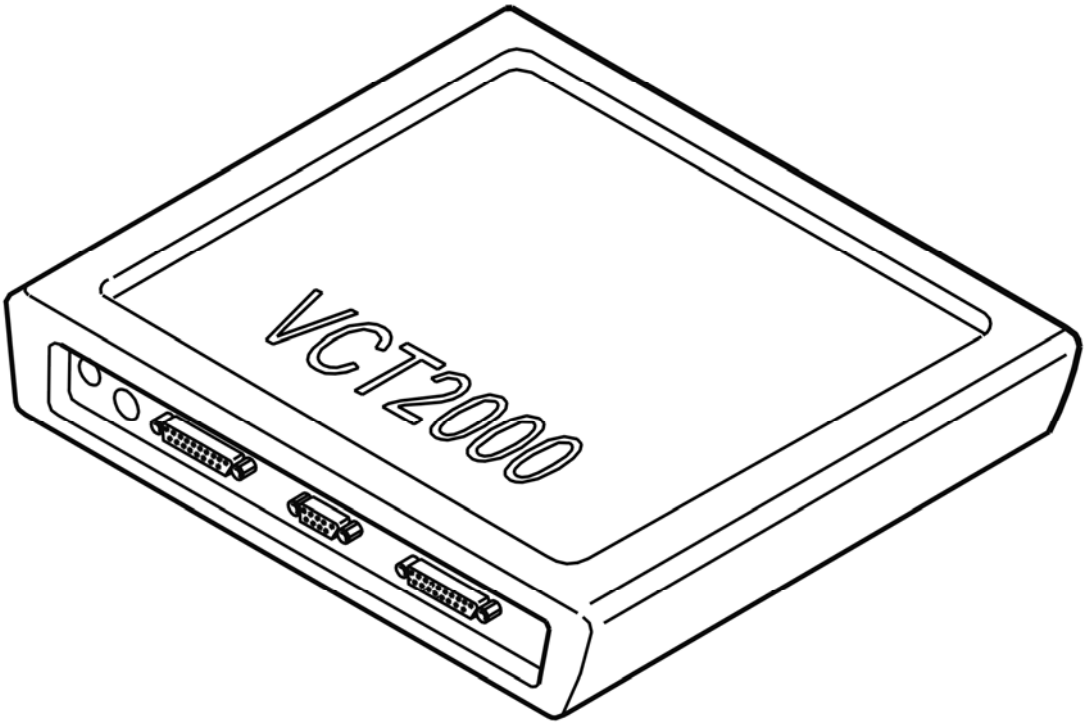

Fig. 153: Identifying VCT2000 Diagnostic Tool Symbol In VIDA
Courtesy of VOLVO CARS CORPORATION

Is the function OK?

- **YES**

VERIFIED: Troubleshooting has been completed.

- **NO**

  Refer to **INFORMATION**

INFORMATION

FAULT-TRACING INFORMATION

The fault should have been detected and remedied. As this is not the case fault-tracing has failed.

Exit fault-tracing for this diagnostic trouble code (DTC) or make another attempt.

CHECKING PRESSURE AND TEMPERATURE SENSOR

NOTE: **Reading out of oil pressure can take place first after the diagnostic trouble code (DTC) has been deleted. Therefore frozen values should be printed and saved before deleting takes place.**

1. Test of pressure sensor.
   - Ignition on.
   - Use VCT2000 (or appropriate scan tool).

     HINT: Correct pressure should be 0.00 +/- 0.08 MPa.

   - Engine idling
   - Use VCT2000 (or appropriate scan tool).

     HINT: Correct pressure should be 0.38 +/- 0.08 MPa.

2. Test of temperature sensor.
   - Ignition on.
   - Use VCT2000 (or appropriate scan tool).

     HINT: Normal value for ambient temperature when the vehicle is cold and (+20 to +50 °C) when the vehicle is driven.

If wrong value is read out, then diagnostic trouble code should be erased and the sensor changed. After changing sensor, repeat the test procedure again.

NOTE: **There are two types of sensors, an 80 bar and a 40 bar. Differential electronic module (DEM) has hardware number 30759701, 30785483, 30759682, 30783198, 30735844, or 30783018, an 80 bar pressure sensor should be installed. If Differential electronic module (DEM) has another hardware number than above, a 40 bar sensor should be installed.**

HINT: For reading out of hardware number, use VIDA (Volvo scan tool).

Other information

- see **TEMPERATURE / PRESSURE SENSOR ACTIVE ON DEMAND COUPLING (AOC), REPLACING**

Fig. 154: Identifying VCT2000 Diagnostic Tool Symbol In VIDA
Courtesy of VOLVO CARS CORPORATION

Has the fault been remedied?

- **YES**

  OKAY: Troubleshooting has been completed.

- **NO**

  Refer to **CHECKING THE COMPONENT AND WIRING**

DEM-0007: HYDRAULIC PRESSURE. INCORRECT VALUE (AW50/51 AWD; 2006-2007)

DIAGNOSTIC TROUBLE CODE (DTC) INFORMATION DEM-0007

see **DIAGNOSTIC TROUBLE CODE (DTC) INFORMATION DEM-0007**

INCORRECT VALUE

see **INCORRECT VALUE**

DEM-0008: CONTROL MODULE, CALIBRATION FAULT. INTERNAL FAULT (4T65 AWD; 2005-2006)

DIAGNOSTIC TROUBLE CODE (DTC) INFORMATION DEM-0008

Condition

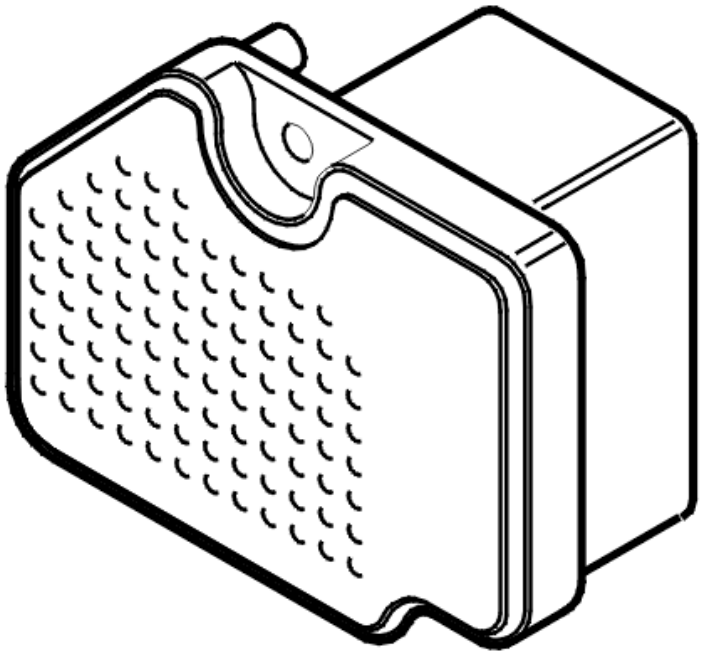

Fig. 155: Active On Demand Coupling Control Module
Courtesy of VOLVO CARS CORPORATION

The differential electronic module (DEM) checks the software calibration.

The diagnostic trouble code (DTC) is stored if the control module registers a fault in the calibration software.

The diagnostic trouble code (DTC) can be diagnosed when the ignition is switched on.

NOTE: The control module cannot be calibrated on the after market.

Substitute Value

- Four wheel drive is disengaged.

Possible Source

- The differential electronic module (DEM) is not calibrated.

Fault symptom[s]

- Four wheel drive is not functioning.

INTERNAL FAULT

INFORMATION

The differential electronic module (DEM) has registered an internal fault.

If the fault is intermittent, it has been registered previously but is no longer present. Intermittent faults can be caused by interference at start up of the differential electronic module (DEM) or may be a different type of fault which occurs on different occasions. The fault is evaluated depending on how it occurs. Replace the differential electronic module (DEM) if the fault recurs.

Other information:

- For AW50AWD and 4T65AWD 2003-, see **DIFFERENTIAL ELECTRONIC MODULE (DEM), REPLACING**
- For TF-80SC 2005- see **DIFFERENTIAL ELECTRONIC MODULE (DEM), REPLACING (2005-2008)** .

Remedy as necessary.

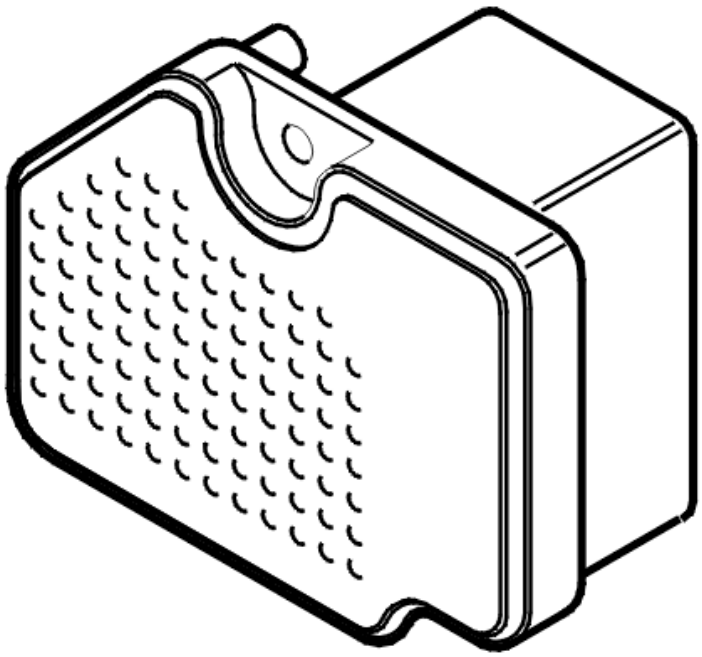

Fig. 156: Active On Demand Coupling Control Module
Courtesy of VOLVO CARS CORPORATION

- **Continue**

Refer to **INFORMATION**

INFORMATION

FAULT-TRACING INFORMATION

In case of this defect, troubleshooting is not followed by verification.

The information can be displayed again or the fault-tracing for this fault can be interrupted.

DEM-0008: CONTROL MODULE, CALIBRATION FAULT. INTERNAL FAULT (AW50/51 AWD; 2005-2007)

DIAGNOSTIC TROUBLE CODE (DTC) INFORMATION DEM-0008

see **DIAGNOSTIC TROUBLE CODE (DTC) INFORMATION DEM-0008**

INTERNAL FAULT

see **INTERNAL FAULT**

DEM-0008: CONTROL MODULE. INTERNAL FAULT (4T65 AWD; AW50/51 AWD; 2003-2004)

DIAGNOSTIC TROUBLE CODE (DTC) INFORMATION

Condition

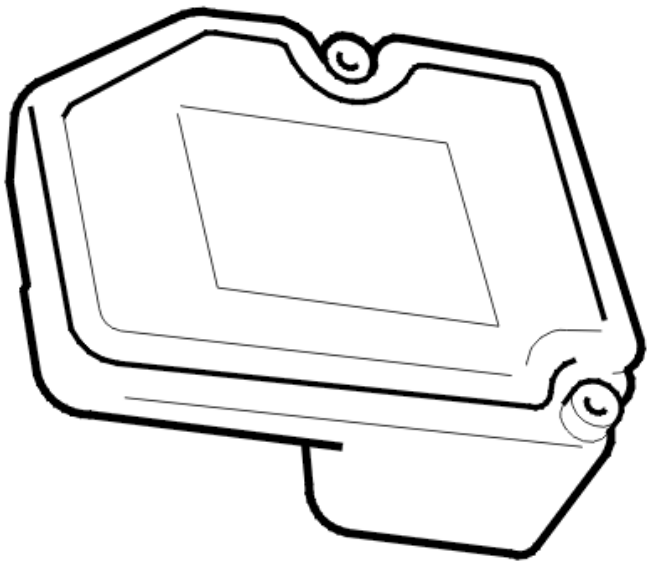

Fig. 157: Identifying Differential Electronic Module
Courtesy of VOLVO CARS CORPORATION

The differential electronic module (DEM) checks the software calibration.

Diagnostic trouble code (DTC) DEM-0008 is stored if the control module registers a fault in the internal calibration software.

Diagnostic trouble code (DTC) DEM-0008 can be diagnosed with the engine running and the engine speed (RPM) >500 rpm.

Substitute Value

- Four wheel drive is blocked.

Possible Source

- Defective control module.

Fault symptom[s]

- Four wheel drive is not functioning.

INTERNAL FAULT

REPLACING THE CONTROL MODULE

Replace the differential electronic module (DEM).

Other information:

- For AW50AWD and 4T65AWD 2003-, see **DIFFERENTIAL ELECTRONIC MODULE (DEM), REPLACING**
- For TF-80SC 2005- see **DIFFERENTIAL ELECTRONIC MODULE (DEM), REPLACING (2005-2008)** .

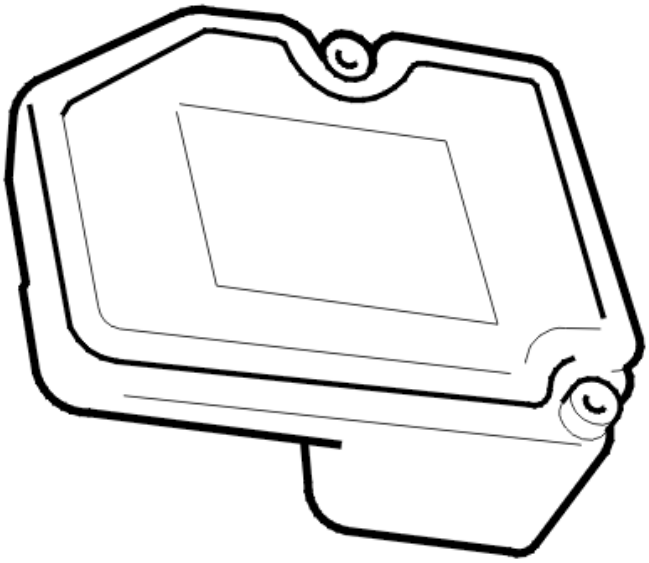

Fig. 158: Identifying Differential Electronic Module
Courtesy of VOLVO CARS CORPORATION

DEM-0009: CONTROL MODULE ANALOG/DIGITAL CONVERTER. INTERNAL FAULT (4T65 AWD; 2005-2006)

DIAGNOSTIC TROUBLE CODE (DTC) INFORMATION DEM-0009

Condition

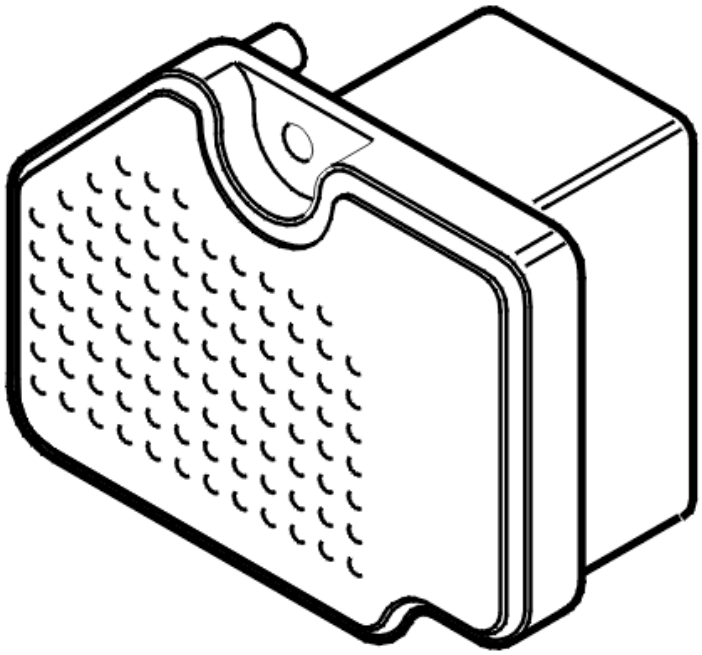

Fig. 159: Active On Demand Coupling Control Module
Courtesy of VOLVO CARS CORPORATION

The differential electronic module (DEM) checks the function at the Analog/Digital converter by comparing the analog power supply with the corresponding digital power supply (after Analog/Digital conversion).

The diagnostic trouble code (DTC) is stored if the signal from the Analog/Digital converter deviates from the power supply.

The diagnostic trouble code (DTC) can be diagnosed when the ignition is switched on.

Substitute Value

- Four wheel drive is disengaged.

Possible Source

- Internal fault (Analog/Digital converter not working).

Fault symptom[s]

- Four wheel drive is not functioning.

INTERNAL FAULT

INFORMATION

The differential electronic module (DEM) has registered an internal fault.

If the fault is intermittent, it has been registered previously but is no longer present. Intermittent faults can be caused by interference at start up of the differential electronic module (DEM) or may be a different type of fault which occurs on different occasions. The fault is evaluated depending on how it occurs. Replace the differential electronic module (DEM) if the fault recurs.

Other information:

- For AW50AWD and 4T65AWD 2003-, see **DIFFERENTIAL ELECTRONIC MODULE (DEM), REPLACING**
- For TF-80SC 2005- see **DIFFERENTIAL ELECTRONIC MODULE (DEM), REPLACING (2005-2008)** .

Remedy as necessary.

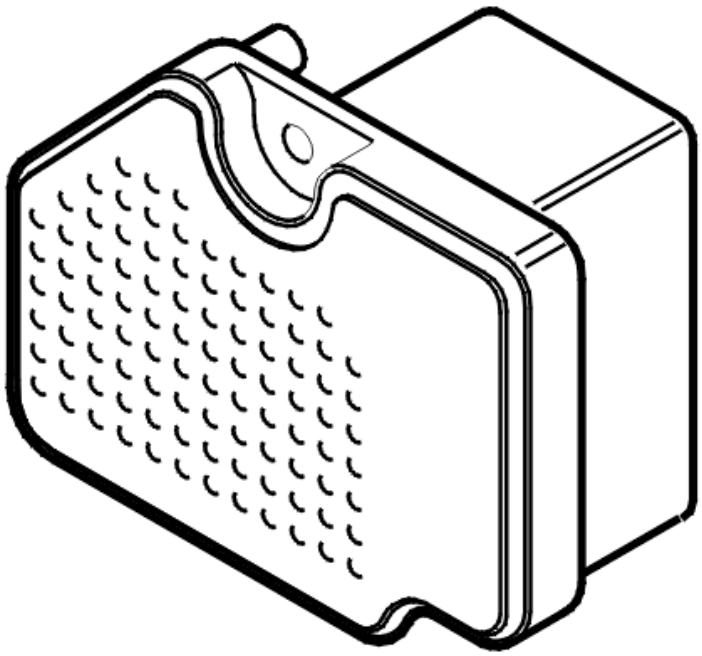

Fig. 160: Active On Demand Coupling Control Module
Courtesy of VOLVO CARS CORPORATION

- **Continue**

  Refer to **INFORMATION**

INFORMATION

FAULT-TRACING INFORMATION

In case of this defect, troubleshooting is not followed by verification.

The information can be displayed again or the fault-tracing for this fault can be interrupted.

DEM-0009: CONTROL MODULE ANALOG/DIGITAL CONVERTER. INTERNAL FAULT (AW50/51 AWD; 2005-2007)

DIAGNOSTIC TROUBLE CODE (DTC) INFORMATION DEM-0009

see **DIAGNOSTIC TROUBLE CODE (DTC) INFORMATION DEM-0009**

INTERNAL FAULT

see **INTERNAL FAULT**

DEM-0009: CONTROL MODULE. INTERNAL FAULT (4T65 AWD; AW50/51 AWD; 2003-2004)

DIAGNOSTIC TROUBLE CODE (DTC) INFORMATION

Condition

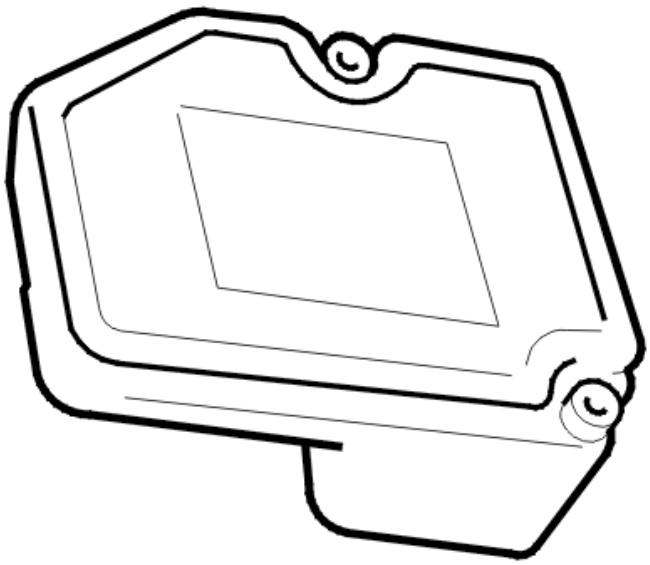

Fig. 161: Identifying Differential Electronic Module
Courtesy of VOLVO CARS CORPORATION

The differential electronic module (DEM) checks if the power supply is within permitted limits by comparing the signal with a calculated value.

Diagnostic trouble code (DTC) DEM-0009 is stored if the control module registers that the power supply is faulty.

Diagnostic trouble code (DTC) DEM-0009 can be diagnosed with the engine running and the engine speed (RPM) >500 rpm.

Substitute Value

- Four wheel drive is blocked.

Possible Source

- Internal fault
- Defective control module.

Fault symptom[s]

- Four wheel drive is not functioning.

INTERNAL FAULT

REPLACING THE CONTROL MODULE

Replace the differential electronic module (DEM).

- For AW50AWD and 4T65AWD 2003-, see **DIFFERENTIAL ELECTRONIC MODULE (DEM), REPLACING**
- For TF-80SC 2005- see **DIFFERENTIAL ELECTRONIC MODULE (DEM), REPLACING (2005-2008)** .

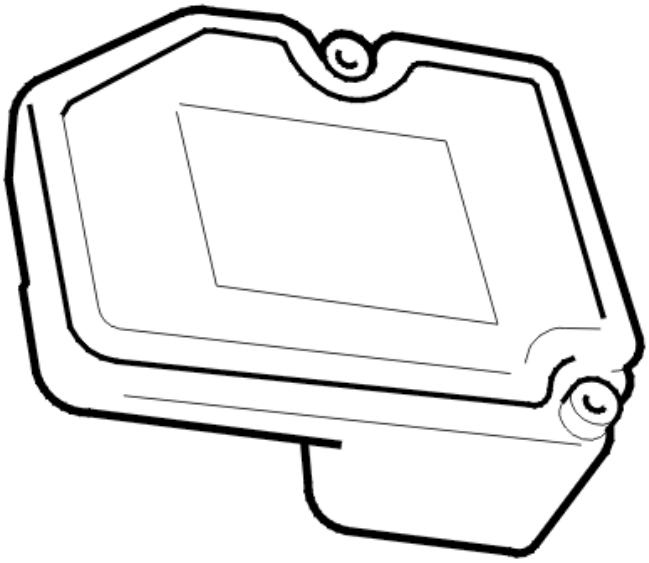

Fig. 162: Identifying Differential Electronic Module
Courtesy of VOLVO CARS CORPORATION

DEM-000A: POWER SUPPLY. FAULTY VOLTAGE (4T65 AWD; 2005-2006)

DIAGNOSTIC TROUBLE CODE (DTC) INFORMATION DEM-000A

Condition

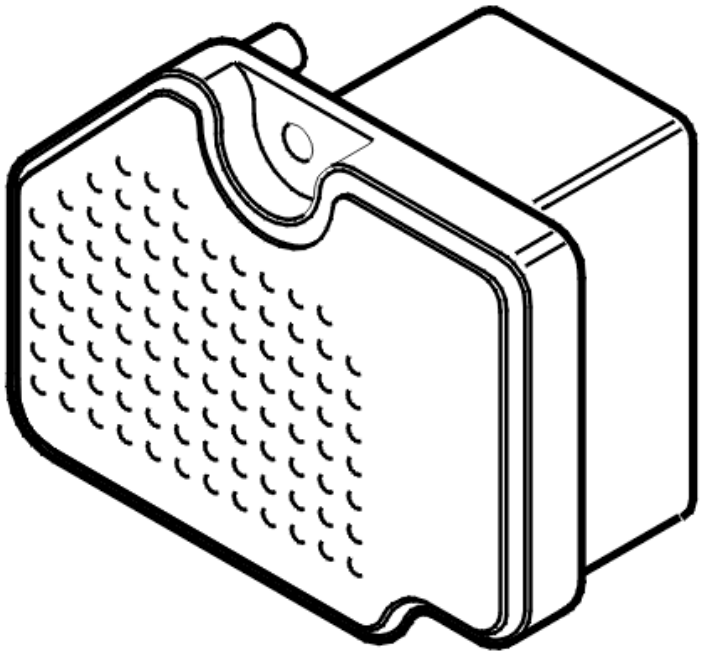

Fig. 163: Active On Demand Coupling Control Module
Courtesy of VOLVO CARS CORPORATION

The differential electronic module (DEM) continuously checks if the power supply to the control module is within its permitted range. The differential electronic module (DEM) compares the signal with the predefined parameter.

Diagnostic trouble code (DTC) DEM is stored if the control module registers a power supply lower than 8.5 V for 25 seconds or greater than 18.5 V for 3 seconds.

The diagnostic trouble code (DTC) can be diagnosed when the ignition is switched on.

Substitute Value

- Four wheel drive is disengaged.

Possible Source

Signal too high:

- Short-circuit to ground.

Signal too low:

- Open-circuit in the power supply.

Fault symptom[s]

- Four wheel drive is not functioning.

FAULTY VOLTAGE

CHECKING THE CONNECTORS AND CABLES

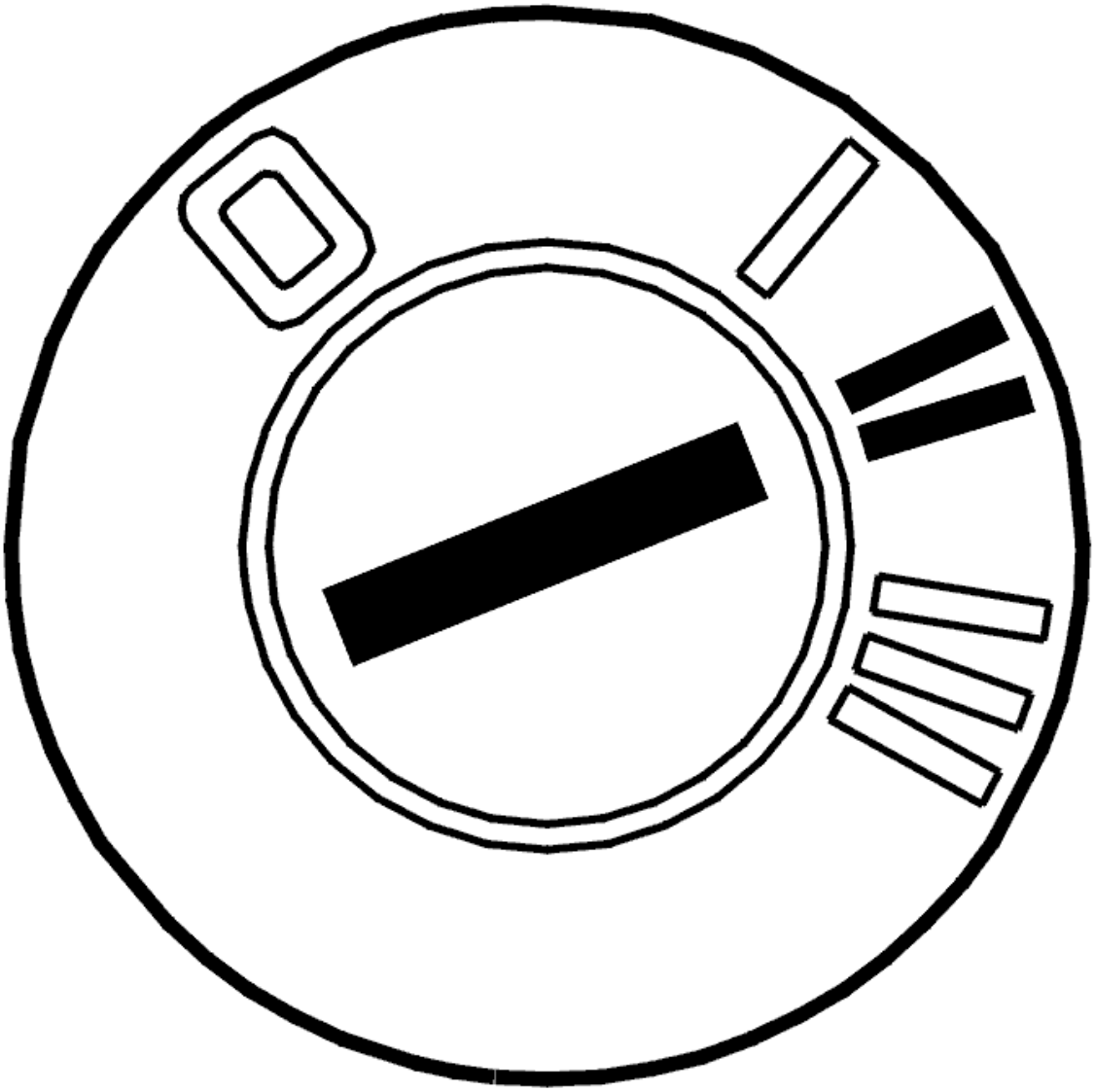

Fig. 164: Identifying Ignition ON
Courtesy of VOLVO CARS CORPORATION

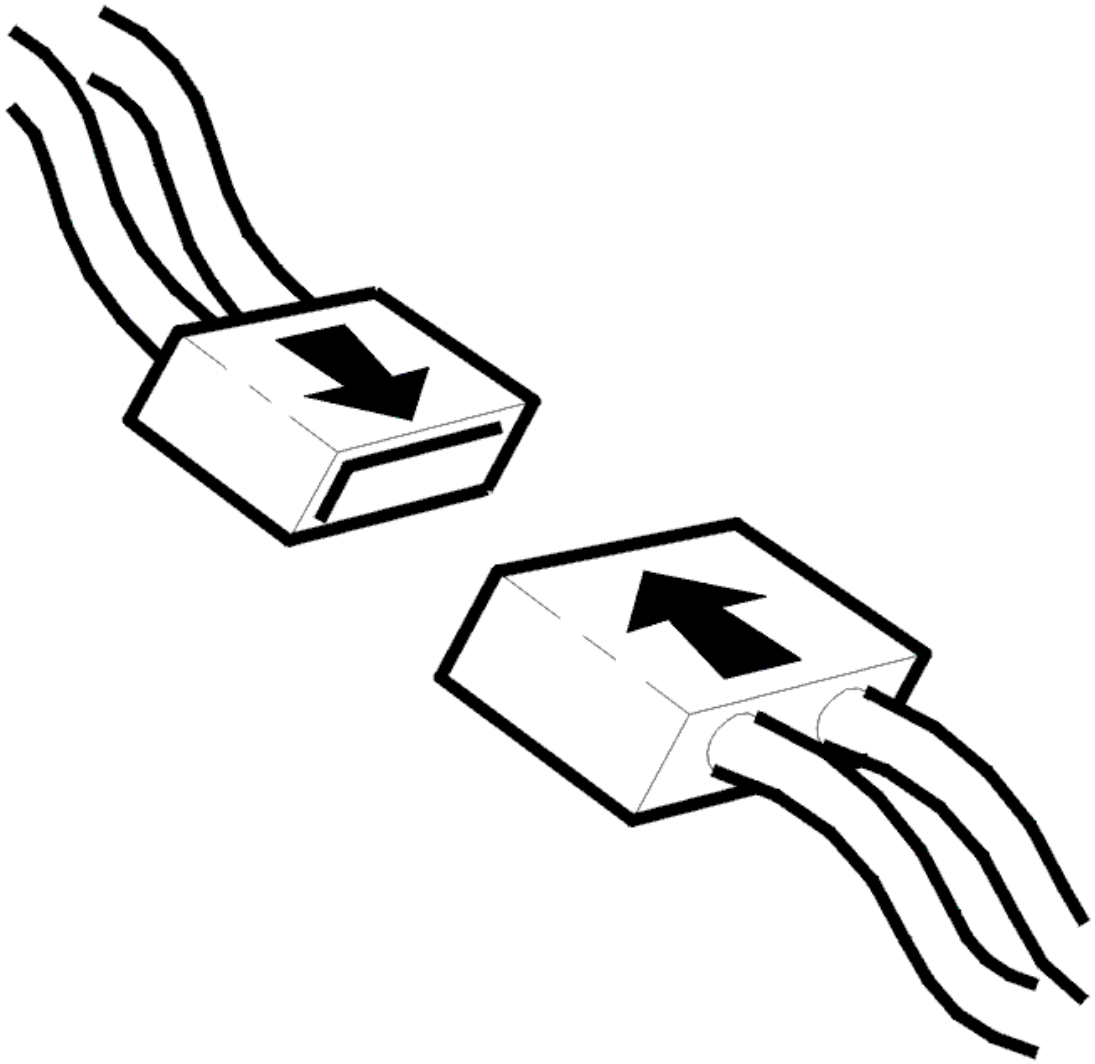

Fig. 165: Connecting Connector
Courtesy of VOLVO CARS CORPORATION

- Ignition off
- Check the connector between the differential electronic module (DEM) and the Active on Demand Coupling control module. Check for contact resistance and oxidation
- Check the cable between the differential electronic module (DEM) and the Active on Demand Coupling control module. Check for damage
- Ignition on.

  HINT: Read off the voltage to check the function. Voltage should be approximately battery voltage.

  Remedy as necessary.

  Other information:

- see **SIGNAL SPECIFICATION, DIFFERENTIAL ELECTRONIC MODULE (DEM)**
- For AW50AWD and 4T65AWD 2003-, see **DIFFERENTIAL ELECTRONIC MODULE (DEM), REPLACING**
- For TF-80SC 2005- see **DIFFERENTIAL ELECTRONIC MODULE (DEM), REPLACING (2005-2008)** .
- see **CHECKING WIRING AND TERMINALS**

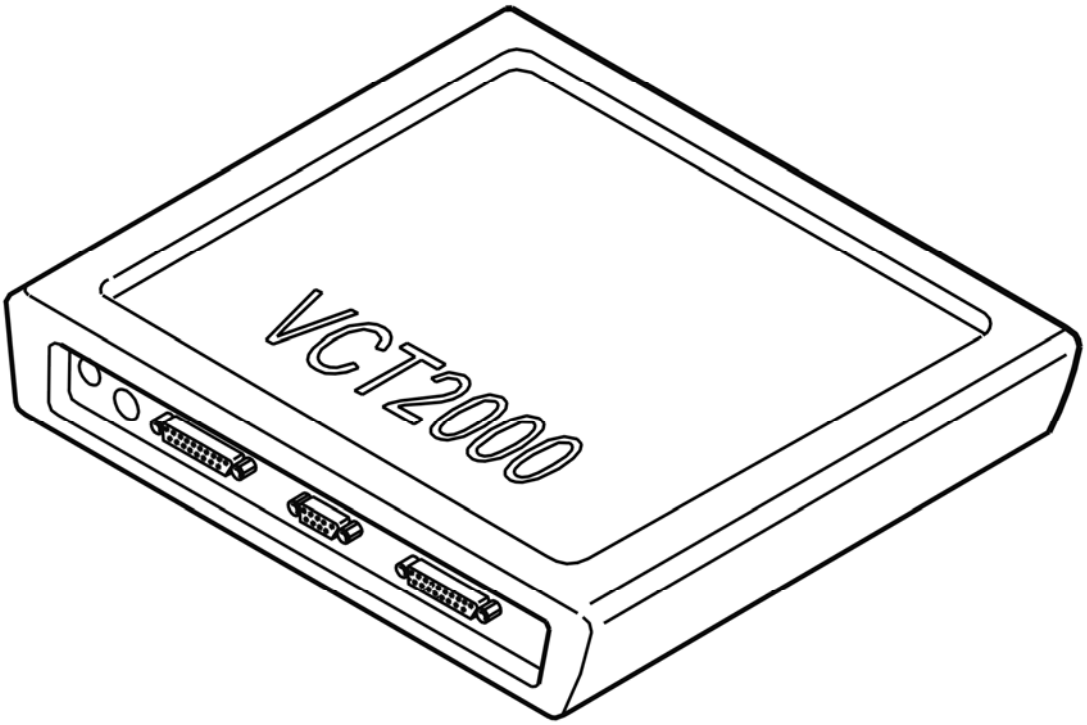

Fig. 166: Identifying VCT2000 Diagnostic Tool Symbol In VIDA
Courtesy of VOLVO CARS CORPORATION

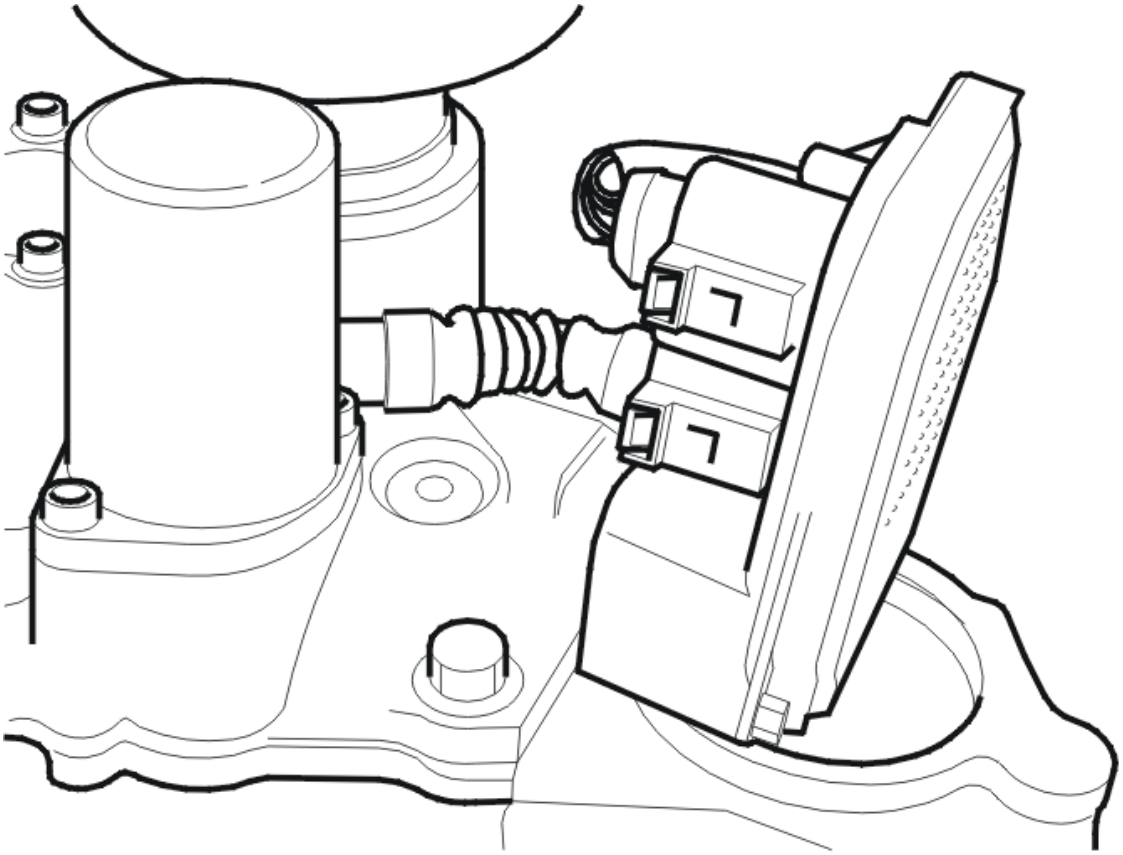

Fig. 167: Identifying Active On Demand Coupling Components
Courtesy of VOLVO CARS CORPORATION

- **Continue**

  Refer to **VERIFICATION**

VERIFICATION

HINT: After carrying out the repair, check that the fault has been remedied.

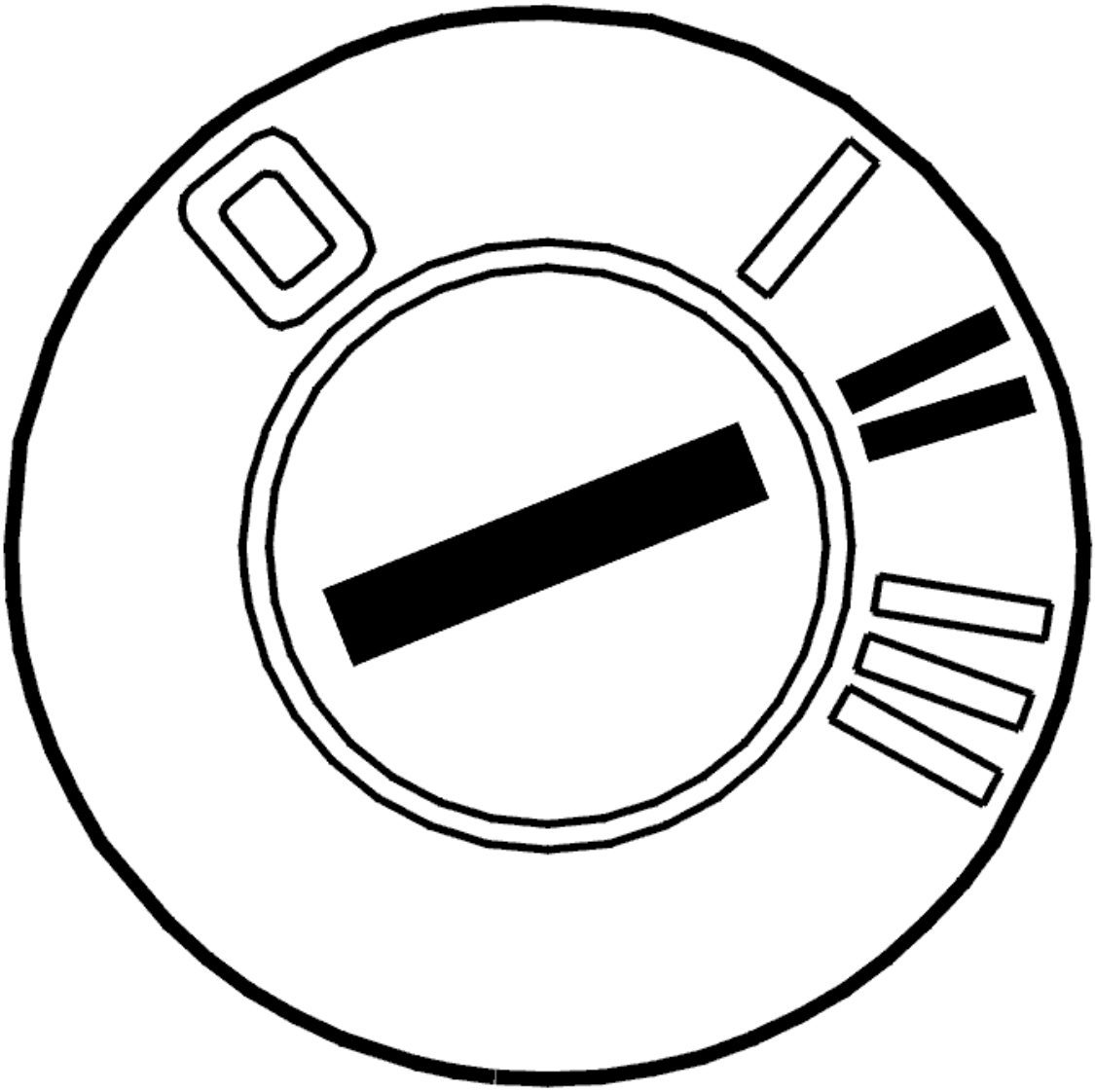

Fig. 168: Identifying Ignition ON
Courtesy of VOLVO CARS CORPORATION

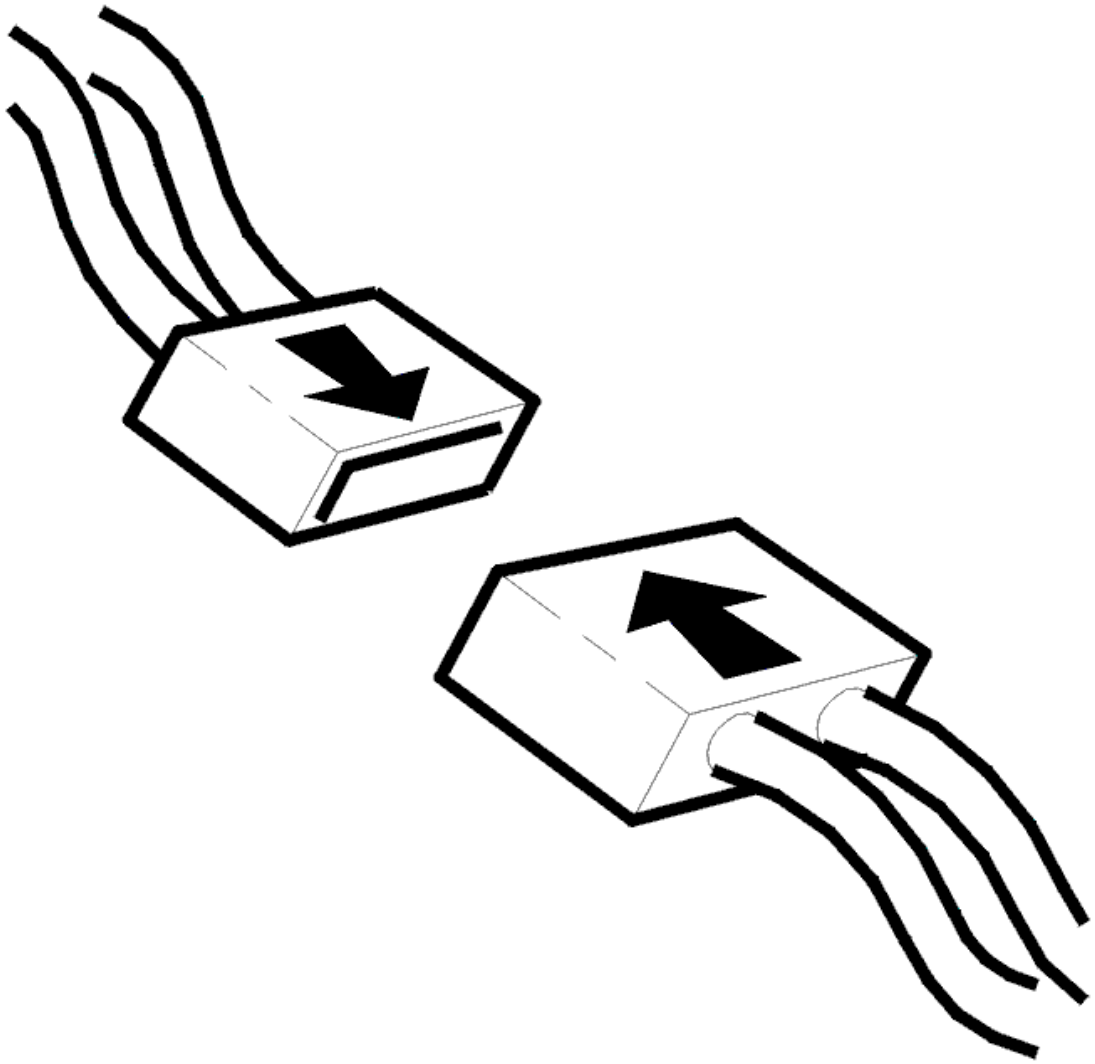

Fig. 169: Connecting Connector
Courtesy of VOLVO CARS CORPORATION

- Ignition off
- Reinstall the connectors, components etc.
- Ignition on.

  Read off the voltage to the differential electronic module (DEM).

  Voltage should be approximately battery voltage.

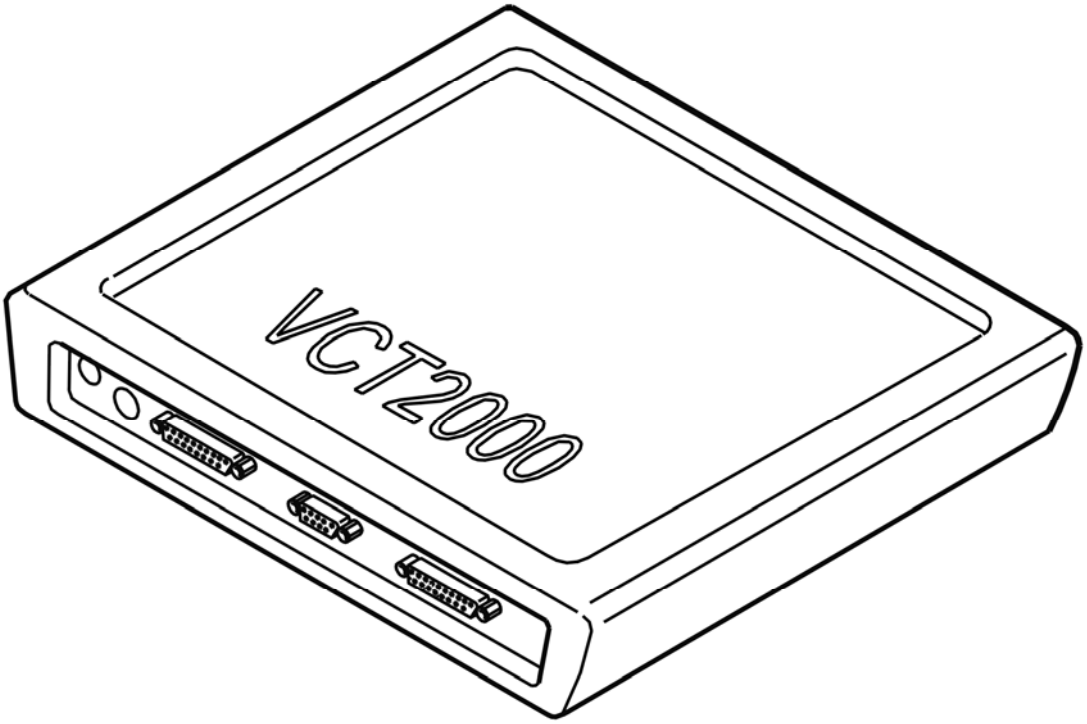

Fig. 170: Identifying VCT2000 Diagnostic Tool Symbol In VIDA
Courtesy of VOLVO CARS CORPORATION

Is the voltage OK?

- **YES**

  VERIFIED: Troubleshooting has been completed.

- **NO**

  Refer to **INFORMATION**

INFORMATION

FAULT-TRACING INFORMATION

The fault should have been detected and remedied. As this is not the case fault-tracing has failed.

Exit fault-tracing for this diagnostic trouble code (DTC) or make another attempt.

DEM-000A: POWER SUPPLY. FAULTY VOLTAGE (AW50/51 AWD; 2005-2007)

DIAGNOSTIC TROUBLE CODE (DTC) INFORMATION DEM-000A

see **DIAGNOSTIC TROUBLE CODE (DTC) INFORMATION DEM-000A**

FAULTY VOLTAGE

see **FAULTY VOLTAGE**

DEM-000A: POWER SUPPLY. INCORRECT VALUE (4T65 AWD; AW50/51 AWD; 2003-2004)

DIAGNOSTIC TROUBLE CODE (DTC) INFORMATION

Condition

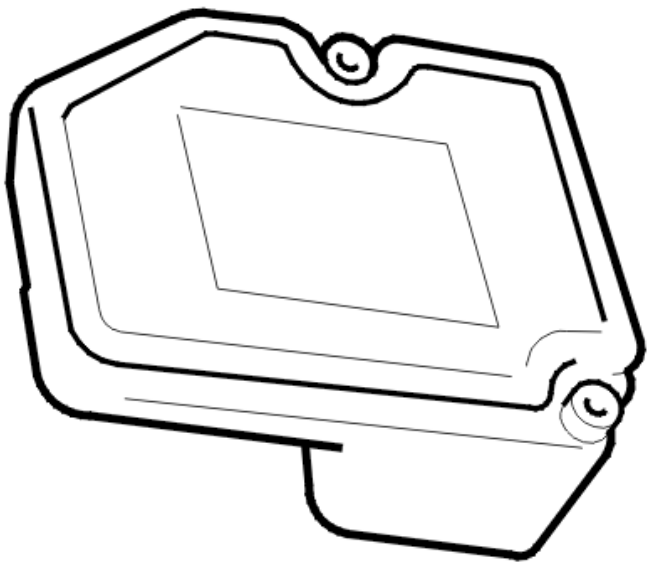

Fig. 171: Identifying Differential Electronic Module
Courtesy of VOLVO CARS CORPORATION

The differential electronic module (DEM) checks if the power supply for the control module is within the permitted limits by comparing the signal with a calculated value.

Diagnostic trouble code (DTC) DEM-000A is stored if the control module registers a power supply lower than 8.5 V for 25 seconds or greater than 18.5 V for 3 seconds.

Diagnostic trouble code (DTC) DEM-000A can be diagnosed with the engine running and the engine speed (RPM) >500 rpm.

Substitute Value

- Four wheel drive is blocked.

Possible Source

Signal too high:

- Short-circuit to ground.

Signal too low:

- Open-circuit in the power supply.

Fault symptom[s]

- Four wheel drive is not functioning.

INCORRECT VALUE

CHECKING THE STATUS

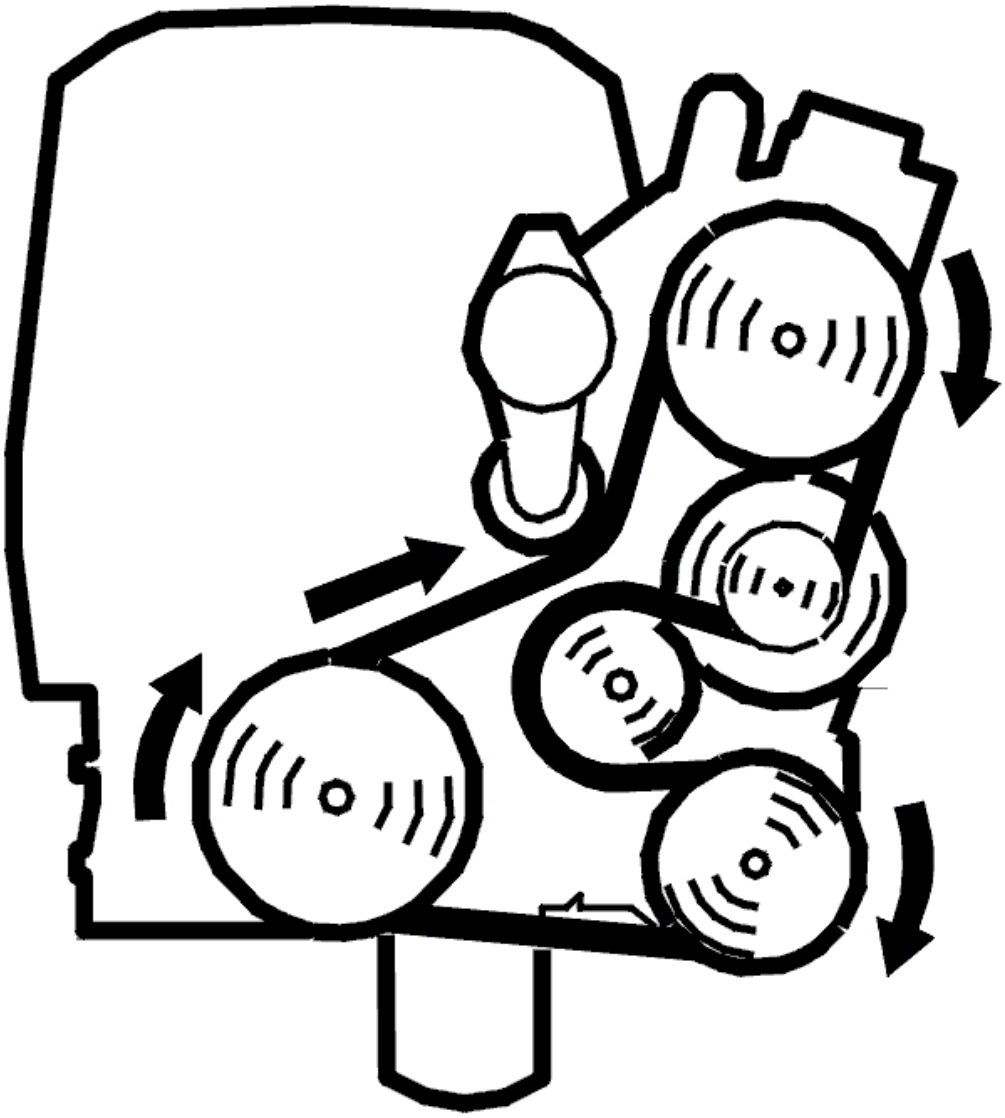

Fig. 172: Belt Routing / Engine Idling - Volvo
Courtesy of VOLVO CARS CORPORATION

- Engine idling.

  Read off the power supply for the differential electronic module (DEM).

  Other information:

  - For information about signals, see **SIGNAL SPECIFICATION, CONTROL MODULE FOR FOUR WHEEL DRIVE** .

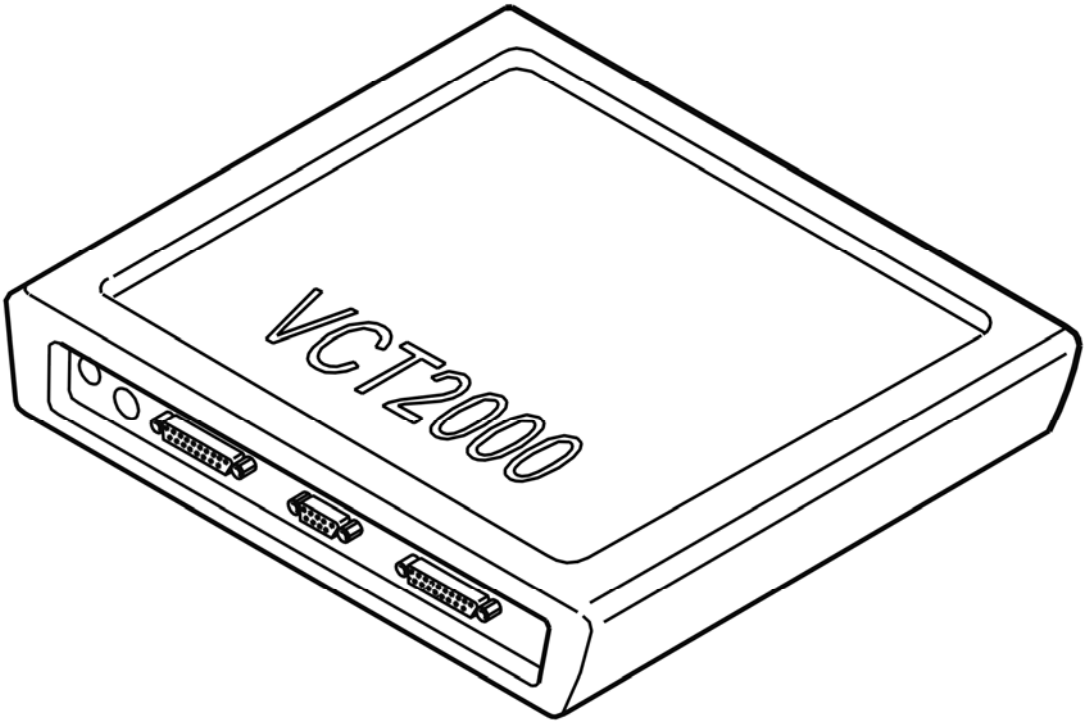

Fig. 173: Identifying VCT2000 Diagnostic Tool Symbol In VIDA
Courtesy of VOLVO CARS CORPORATION

Is the voltage OK?

- **YES**

  FAULT NOT FOUND: Troubleshooting has been completed.

- **NO**

  Refer to **CHECKING THE WIRING**

CHECKING THE WIRING

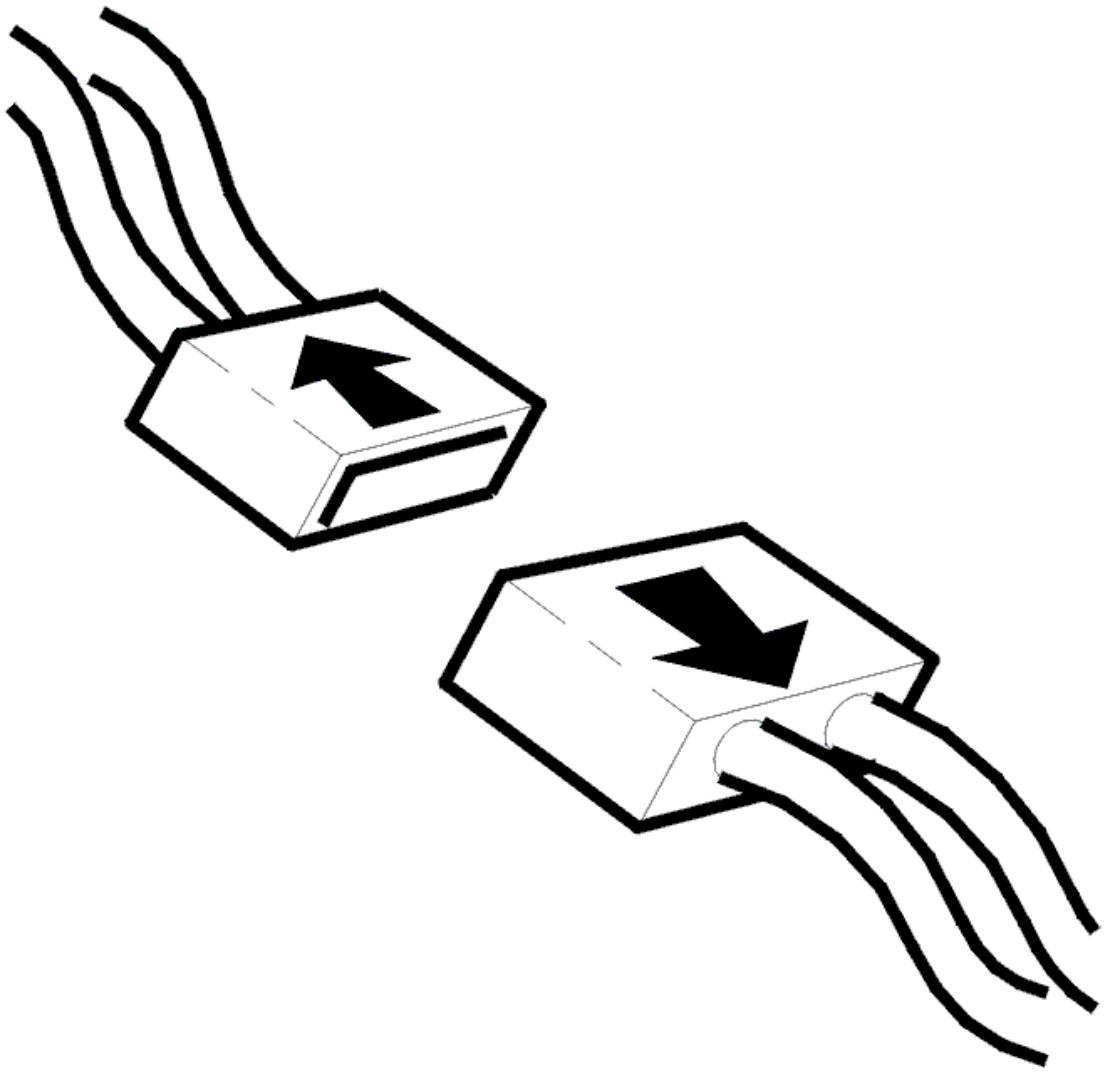

Fig. 174: Disconnecting Connector
Courtesy of VOLVO CARS CORPORATION

- Disconnect the connector from the differential electronic module (DEM).

  Check the cable between terminal #2 and ground. Check for an open-circuit.

  Check the connectors. Check for bent or damaged pins.

  Remedy as necessary.

  Other information:

  - For information about signals, see **SIGNAL SPECIFICATION, CONTROL MODULE FOR FOUR WHEEL DRIVE**
  - To check the wiring and connections, see **CHECKING WIRING AND TERMINALS** .

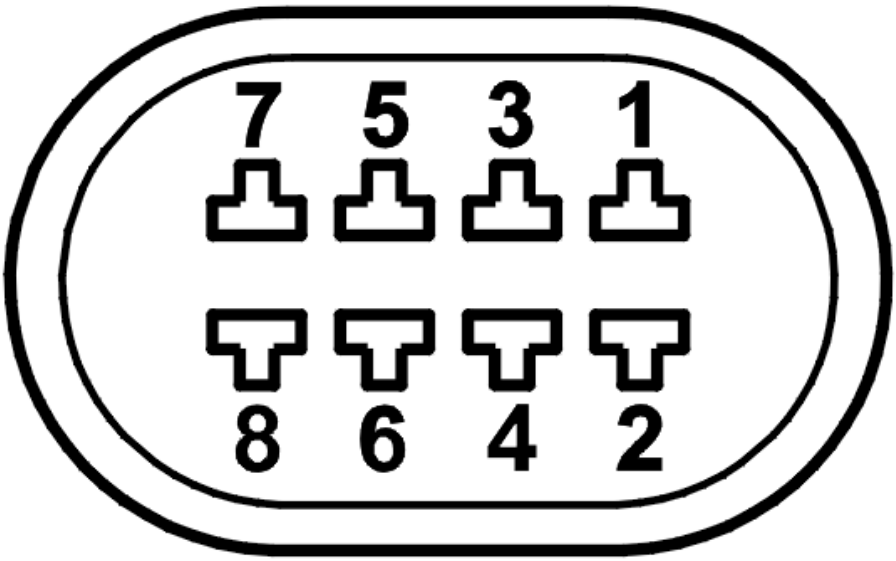

Fig. 175: Identifying Connector Terminals
Courtesy of VOLVO CARS CORPORATION

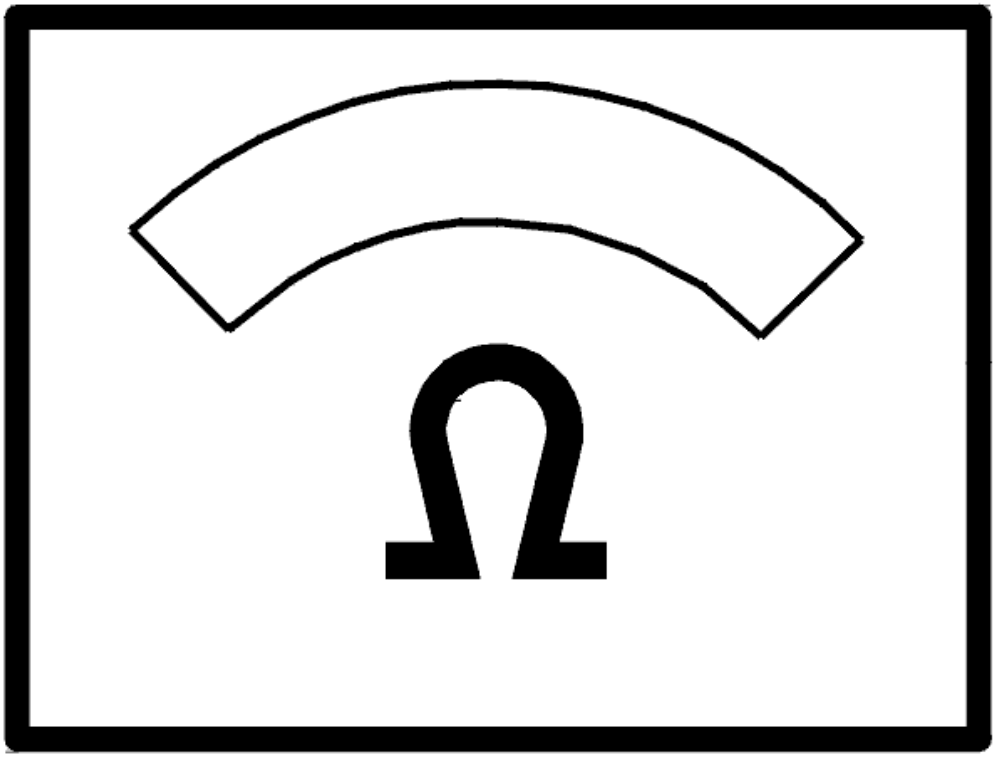

Fig. 176: Identifying Ohm Meter
Courtesy of VOLVO CARS CORPORATION

Fig. 177: Identifying Connector
Courtesy of VOLVO CARS CORPORATION

Were any faults found in the ground cable?

- **YES**

  Refer to **INFORMATION**

- **NO**

  Refer to **CHECKING THE WIRING**

CHECKING THE WIRING

Check the power supply to terminal #1. Check for an open-circuit. Check for a short-circuit to ground.

HINT: Check the voltage between terminal #1 and ground with the ignition on and the voltmeter connected. The voltage should be battery voltage.

Remedy as necessary.

Other information:

- For information about signals, see **SIGNAL SPECIFICATION, CONTROL MODULE FOR FOUR WHEEL DRIVE**
- To check the wiring and connections, see **CHECKING WIRING AND TERMINALS** .

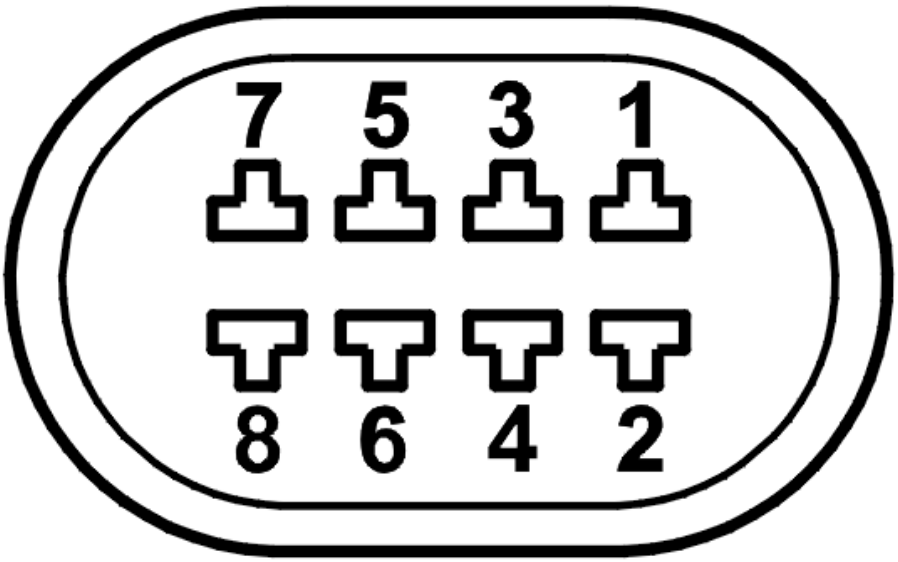

Fig. 178: Identifying Connector Terminals

Courtesy of VOLVO CARS CORPORATION

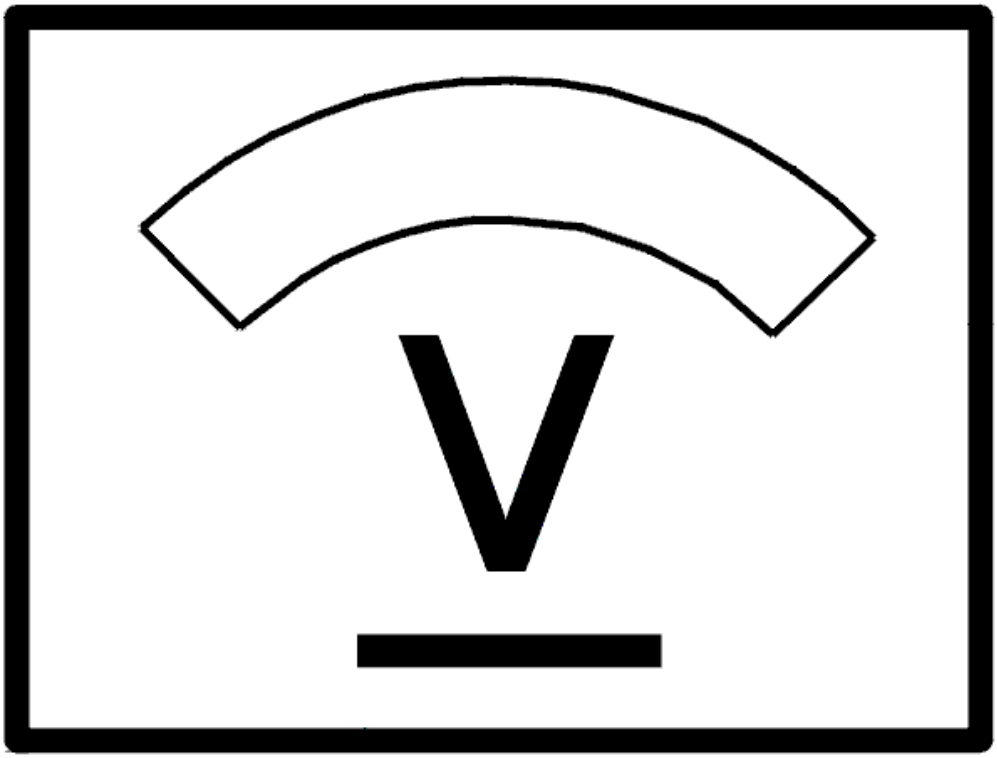

Fig. 179: Identifying Voltage Display
Courtesy of VOLVO CARS CORPORATION

Fig. 180: Identifying Connector
Courtesy of VOLVO CARS CORPORATION

Were any faults found in the cable?

- **YES**

  Refer to **INFORMATION**

- **NO**

  Refer to **REPLACING THE CONTROL MODULE**

REPLACING THE CONTROL MODULE

Replace the differential electronic module (DEM).

- For AW50AWD and 4T65AWD 2003-, see **DIFFERENTIAL ELECTRONIC MODULE (DEM), REPLACING**
- For TF-80SC 2005- see **DIFFERENTIAL ELECTRONIC MODULE (DEM), REPLACING (2005-2008)** .

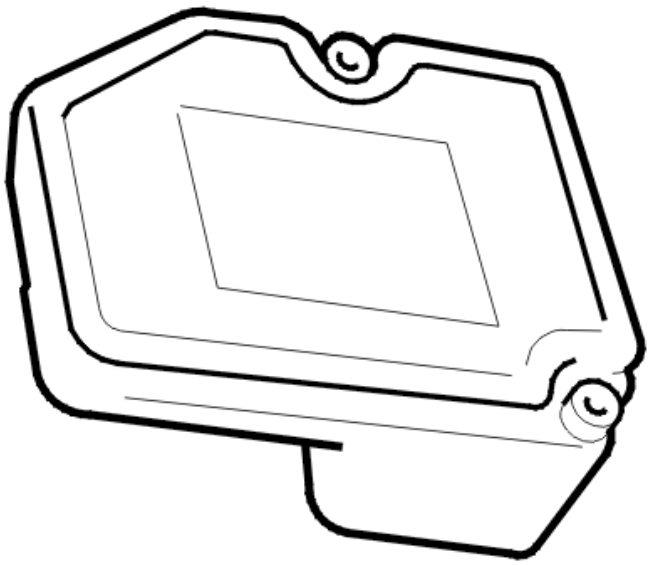

Fig. 181: Identifying Differential Electronic Module
Courtesy of VOLVO CARS CORPORATION

- **Continue**

  Refer to **INFORMATION**

INFORMATION

FAULT-TRACING INFORMATION

In case of this defect, troubleshooting is not followed by verification.

The information can be displayed again or the fault-tracing for this fault can be interrupted.

DEM-000C: CONTROL MODULE. FAULTY HARDWARE (4T65 AWD; 2005-2006)

DIAGNOSTIC TROUBLE CODE (DTC) INFORMATION DEM-000C

Condition

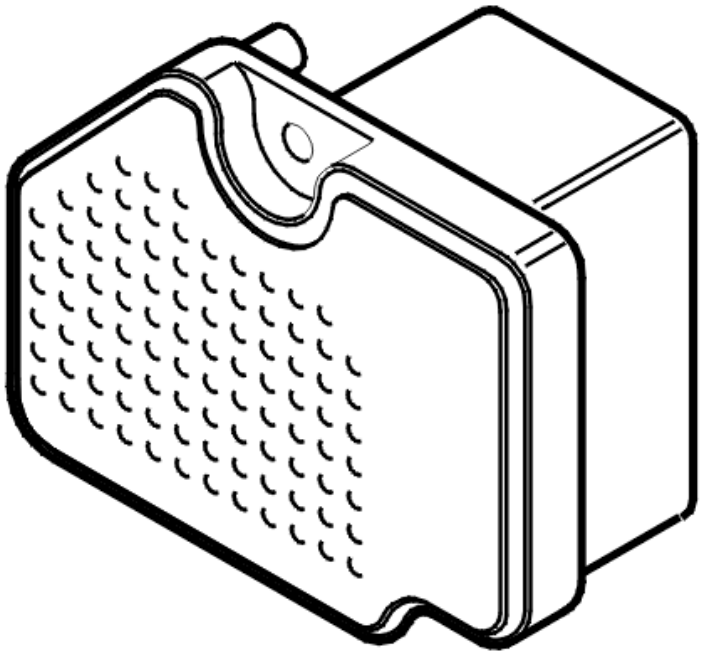

Fig. 182: Active On Demand Coupling Control Module
Courtesy of VOLVO CARS CORPORATION

The differential electronic module (DEM) checks the configuration in the connector to the control module for the Active on Demand Coupling. This is to prevent a control module from another make of car being installed by accident.

NOTE: A control module from another make of car with the same four wheel drive system can be incorrectly installed in a Volvo.

The diagnostic trouble code (DTC) is stored if the control module does not recognize the configuration.

The diagnostic trouble code (DTC) can be diagnosed when the ignition is switched on.

Substitute Value

- Four wheel drive is disengaged.

Possible Source

- Incorrect control module.

Fault symptom[s]

- Four wheel drive is not functioning.

FAULTY HARDWARE

INFORMATION

The software does not correspond to the hardware. Check that the correct hardware is installed.

Other information:

- For AW50AWD and 4T65AWD 2003-, see **DIFFERENTIAL ELECTRONIC MODULE (DEM), REPLACING**
- For TF-80SC 2005- see **DIFFERENTIAL ELECTRONIC MODULE (DEM), REPLACING (2005-2008)** .

Remedy as necessary.

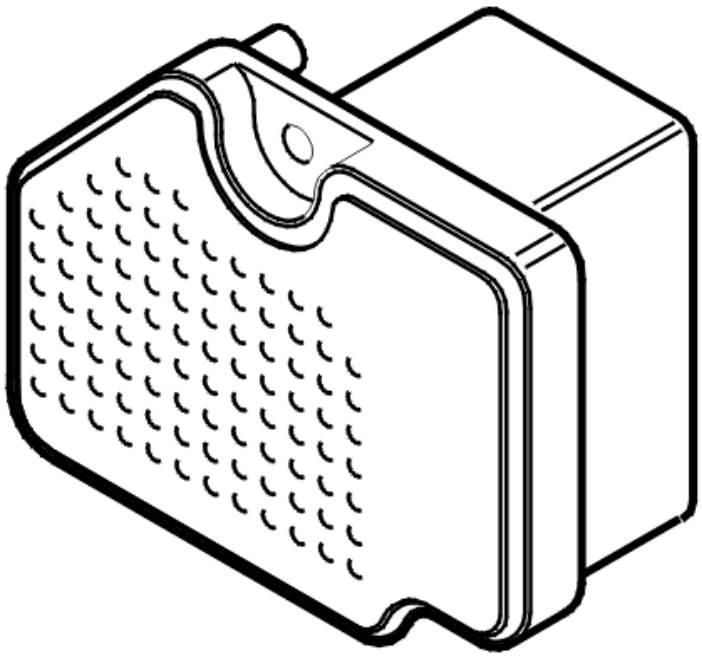

Fig. 183: Active On Demand Coupling Control Module
Courtesy of VOLVO CARS CORPORATION

- **Continue**

  Refer to **INFORMATION**

INFORMATION

FAULT-TRACING INFORMATION

In case of this defect, troubleshooting is not followed by verification.

The information can be displayed again or the fault-tracing for this fault can be interrupted.

DEM-000C: CONTROL MODULE. FAULTY HARDWARE (AW50/51 AWD; 2005-2007)

DIAGNOSTIC TROUBLE CODE (DTC) INFORMATION DEM-000C

see **DIAGNOSTIC TROUBLE CODE (DTC) INFORMATION DEM-000C**

FAULTY HARDWARE

see **FAULTY HARDWARE**

DEM-E000: CONTROL MODULE COMMUNICATION. FAULTY COMMUNICATION (4T65 AWD; AW50/51 AWD; 2003-2004)

DIAGNOSTIC TROUBLE CODE (DTC) INFORMATION DEM-E000

Condition

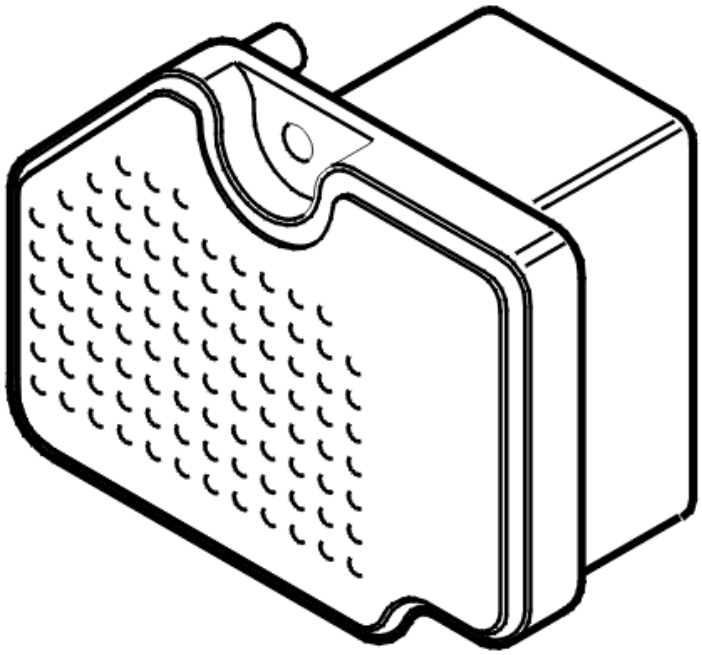

Fig. 184: Active On Demand Coupling Control Module
Courtesy of VOLVO CARS CORPORATION

The control modules transmit and receive information via a standardized serial communication method - CAN (Control Area Network). The diagnostic trouble code (DTC) is stored if the control module registers serious interference (CAN communication blocked).

NOTE: **In the event of system communication problems, it is not possible to communicate with the control module. Therefore it will only be possible to read off the fault if it is intermittent.**

Substitute Value

- The control module shuts itself off ("bus-off")

  HINT: The control module will remain shut off until the power supply is broken (15, 30, X). When the power supply is connected the control module will make a new attempt to communicate.

Possible Source

- Short-circuit between the control area network (CAN) wiring
- Open-circuit in the control area network (CAN) wiring
- Internal fault in the control module

- Internal fault in another control module in the same part of the control area network (CAN).

Fault symptom[s]

- Four wheel drive is not functioning
- Message in the display (not S60 model year 2002)
- The anti-spin warning lamp is lit (up to and including 2002 model year)
- General warning lamp lit.

FAULTY COMMUNICATION

see **FAULTY COMMUNICATION**

DEM-E000: CONTROL MODULE COMMUNICATION. FAULTY COMMUNICATION (4T65 AWD; 2005-2006)

DIAGNOSTIC TROUBLE CODE (DTC) INFORMATION DEM-E000

Condition

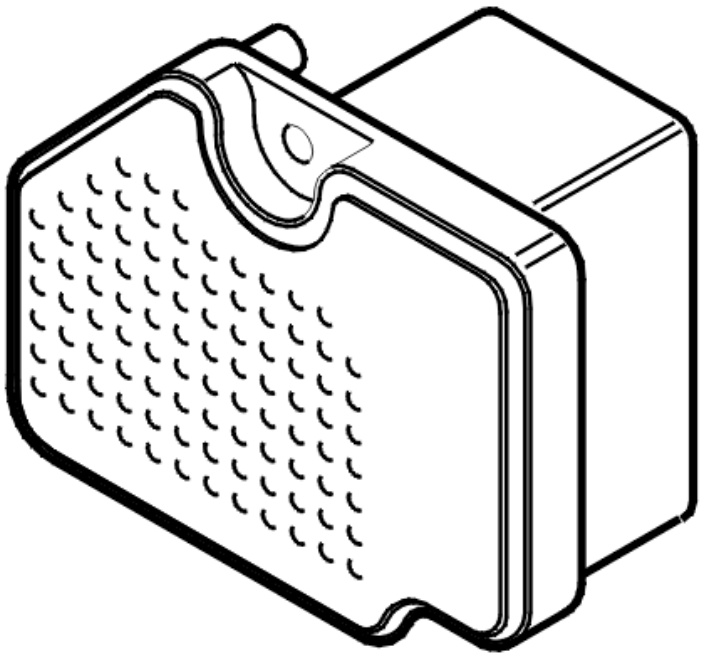

Fig. 185: Active On Demand Coupling Control Module
Courtesy of VOLVO CARS CORPORATION

The control modules transmit and receive information via a standardized serial communication method - CAN (Control Area Network). The diagnostic trouble code (DTC) is stored if the control module registers serious interference (CAN communication blocked).

NOTE: **In the event of system communication problems, it is not possible to communicate with the control module. Therefore it will only be possible to read off the diagnostic trouble code (DTC) if the fault is intermittent.**

Substitute Value

- The control module shuts itself off ("bus-off").

HINT: Control module will remain shut off until the power supply is broken (15, 30, X). When the power supply is connected the control module will make a new attempt to communicate.

Possible Source

- Short-circuit between the control area network (CAN) wiring
- Open-circuit in the control area network (CAN) wiring
- Internal fault in the control module
- Internal fault in another control module in the same part of the control area network (CAN).

Fault symptom[s]

- Four wheel drive is not functioning
- Message in the display
- The anti-spin warning lamp is lit
- General warning lamp lit.

DEM-E000: CONTROL MODULE COMMUNICATION. FAULTY COMMUNICATION (AW50/51 AWD; 2005-2007)

DIAGNOSTIC TROUBLE CODE (DTC) INFORMATION DEM-E000

see **DIAGNOSTIC TROUBLE CODE (DTC) INFORMATION DEM-E000**

DEM-E003: CONFIGURATION FAULT. FAULTY CONFIGURATION (4T65 AWD; AW50/51 AWD; 2003-2004)

DIAGNOSTIC TROUBLE CODE (DTC) INFORMATION DEM-E003

Condition View Of

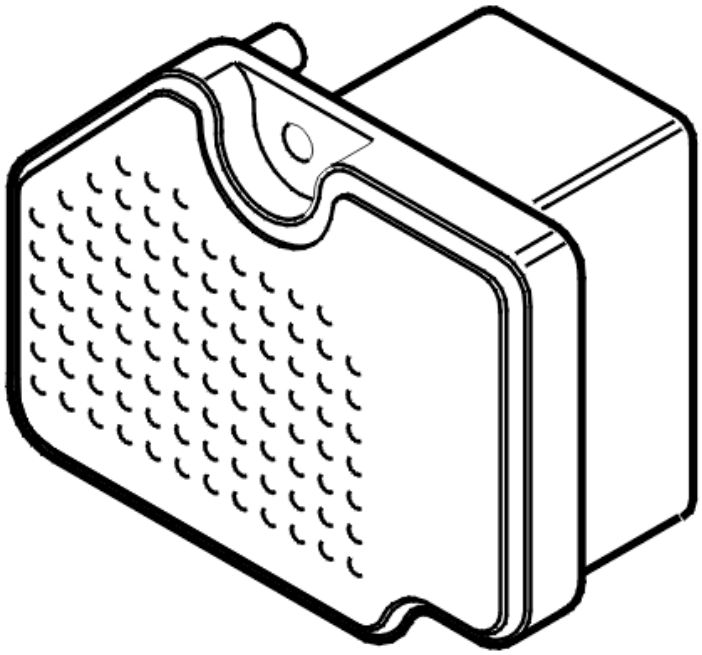

Fig. 186: Active On Demand Coupling Control Module
Courtesy of VOLVO CARS CORPORATION

The control module compares its configuration ID with the signal configuration transmitted on the control area network (CAN) by the central electronic module (CEM). If the configuration IDs do not correspond the fault code is stored. The diagnostic trouble code (DTC) is also stored if the communication between the control module and the central electronic module (CEM) is interrupted.

NOTE: **In the event of an open-circuit in both the control area network (CAN) cables, it is not possible to communicate with the control module. Therefore it will only be possible to read off the diagnostic trouble code (DTC) if this type of fault is intermittent. When the diagnostic trouble code (DTC) is stored, the control module responds to the diagnostic command, however normal control area network (CAN) communication does not work. ("Expulsion mode")**

Substitute Value

- None.

Possible Source

- Faulty control area network (CAN) configuration ID. (The node is not intended for this car (for example a used control module with different software/hardware))

- Open-circuit in the control area network (CAN) wiring between the control module and the central electrical module (CEM).

Fault symptom[s]

- Four wheel drive is not functioning
- Message in the display (not S60 model year 2002)
- The anti-spin warning lamp is lit (up to and including 2002 model year)
- General warning lamp lit (from model year 2003 inclusive).

DEM-E003: CONFIGURATION FAULT. FAULTY CONFIGURATION (4T65 AWD; 2005-2006)

DIAGNOSTIC TROUBLE CODE (DTC) INFORMATION DEM-E003

Condition

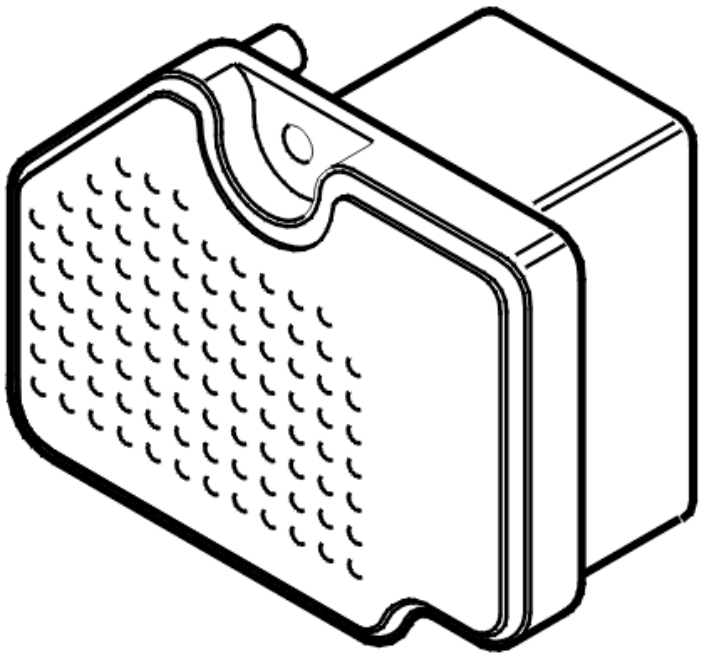

Fig. 187: Active On Demand Coupling Control Module
Courtesy of VOLVO CARS CORPORATION

The control module compares its configuration ID with the signal configuration transmitted on the control area network (CAN) by the central electronic module (CEM). If the configuration IDs do not correspond the fault

code is stored. The diagnostic trouble code (DTC) is also stored if the communication between the control module and the central electronic module (CEM) is interrupted.

NOTE: **In the event of an open-circuit in both the control area network (CAN) cables, it is not possible to communicate with the control module. Therefore it will only be possible to read off the diagnostic trouble code (DTC) if this type of fault is intermittent. When the diagnostic trouble code (DTC) is stored, the control module responds to the diagnostic command, however normal control area network (CAN) communication does not work. ("Expulsion-mode").**

Substitute Value

- None.

Possible Source

- Incorrect CAN configuration ID. (The node is not intended for this vehicle, for example, a used control module with different software/hardware)
- Open-circuit in the control area network (CAN) wiring between the control module and the central electrical module (CEM).

Fault symptom[s]

- Four wheel drive is not functioning
- Message in the display
- The anti-spin warning lamp is lit
- General warning lamp lit.

DEM-E003: CONFIGURATION FAULT. FAULTY CONFIGURATION (AW50/51 AWD; 2005-2007)

DIAGNOSTIC TROUBLE CODE (DTC) INFORMATION DEM-E003

see **DIAGNOSTIC TROUBLE CODE (DTC) INFORMATION DEM-E003**

DEM-P056017: SYSTEM VOLTAGE. GENERAL ELECTRICAL FAILURES. CIRCUIT VOLTAGE ABOVE THRESHOLD (B6324S, TF-80SC AWD; 2009-2010)

DIAGNOSTIC TROUBLE CODE (DTC) INFORMATION DEM-P056017

Condition

The Differential electronic module (DEM) continuously checks that the power supply to the control module is within its permitted range. The Differential electronic module (DEM) compares the power supply (signal) to the

predefined parameters.

The diagnostic trouble code (DTC) is stored if the control module detects that:

- The power supply is higher than 18.5 V.
- Incorrect value lasts longer than 3 seconds.

The control module's test for the diagnostic trouble code (DTC) starts in the event of:

- Ignition switch position II.

NOTE: The control module can only detect the fault once the test has been started and the diagnostic trouble code (DTC) is stored when the conditions are met.

Substitute Value

- Four-wheel drive is disengaged during the time the fault exists, and is disengaged a further 30 seconds after the fault has disappeared.

Possible Source

- Damaged generator (GEN).

Fault symptom[s]

- 4-wheel/all wheel drive/Does not work
- Text window and warning symbol/Text message

FAULT-TRACING

FAULT-TRACING INFORMATION

Use the following information and general checks during fault-tracing.

NOTE: Check that the fuses are intact. For locations, see the owner's manual, cover for fuse box, fuse ratings or similar.

1. Check, if possible, relevant functions in the vehicle using buttons/controls/test drives to determine the status of the fault.

   NOTE: If the vehicle does not show any of the given symptoms in the diagnostic trouble code information (DTC), this may mean that the fault is intermittent or that the control module is not detecting the fault at this moment.

2. Use the diagnostic trouble code's **frozen values** , **status identifiers** and **counter** to determine the operating conditions when the fault was detected, the fault's current status and any degree of intermittence

of the fault.

3. Check and fault-trace according to **the fault causes** that are specified in the **diagnostic trouble code (DTC) information** .
4. Use **VIDA (Volvo scan tool)** . Read off the parameters, activate components and functions, carry out quick tests and checking routines for the diagnostic trouble codes to identify the fault.
5. Check relevant components according to **Component specifications** .
6. Check relevant signals according to appropriate **signal specification** and **breakout box** service information.

NOTE: More information is available in Design and function .

Remedy as necessary.

Other information

- see **DESCRIPTION OF FROZEN VALUES**
- see **DESCRIPTION OF STATUS IDENTIFIER**
- see **DESCRIPTION OF COUNTER**
- see **DESCRIPTION OF PARAMETERS**
- see **DESCRIPTION OF COMPONENT/FUNCTION ACTIVATION**
- see **LOCATION OF COMPONENTS**
- see **COMPONENT SPECIFICATION**
- see **SIGNAL SPECIFICATION**
- see **CHECKING WIRING AND TERMINALS**

Repair

- see **OIL FILTER CLUTCH FOUR WHEEL DRIVE**
- see **OIL PUMP ACTIVE ON DEMAND COUPLING (AOC), REPLACING**
- see **ACTIVE ON-DEMAND COUPLING MODULE**

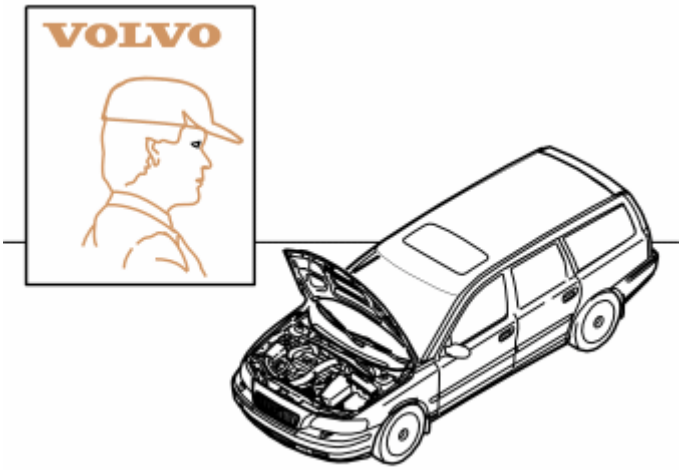

Fig. 188: Identifying VOLVO Certified Service Personnel
Courtesy of VOLVO CARS CORPORATION

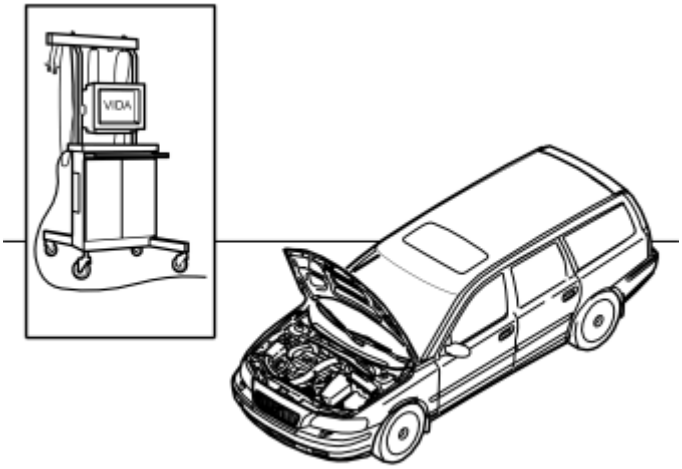

Fig. 189: Identifying VIDA
Courtesy of VOLVO CARS CORPORATION

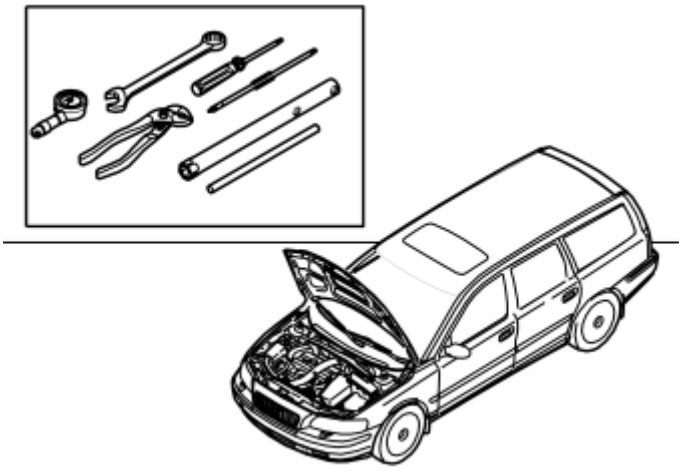

Fig. 190: Identifying Relevant Tools
Courtesy of VOLVO CARS CORPORATION

- **Continue**

  Refer to **INFORMATION**

INFORMATION

FAULT-TRACING INFORMATION

In case of this defect, troubleshooting is not followed by verification.

The information can be displayed again or the fault-tracing for this fault can be interrupted.

DEM-P056017: SYSTEM VOLTAGE. GENERAL ELECTRICAL FAILURES. CIRCUIT VOLTAGE ABOVE THRESHOLD (B6324S5, TF-80SC AWD; 2011-2012)

DIAGNOSTIC TROUBLE CODE (DTC) INFORMATION DEM-P056017

see **DIAGNOSTIC TROUBLE CODE (DTC) INFORMATION DEM-P056017**

FAULT-TRACING

see **FAULT-TRACING**

DEM-P056017: SYSTEM VOLTAGE. GENERAL ELECTRICAL FAILURES. CIRCUIT VOLTAGE ABOVE THRESHOLD (B8444S, TF-80SC AWD; 2009-2011)

DIAGNOSTIC TROUBLE CODE (DTC) INFORMATION DEM-P056017

see **DIAGNOSTIC TROUBLE CODE (DTC) INFORMATION DEM-P056017**

FAULT-TRACING

see **FAULT-TRACING**

DEM-P056017: SYSTEM VOLTAGE. GENERAL ELECTRICAL FAULT. TOO HIGH VOLTAGE (B6324S, TF-80SC AWD; 2007-2008)

DIAGNOSTIC TROUBLE CODE (DTC) INFORMATION DEM-P056017

Condition

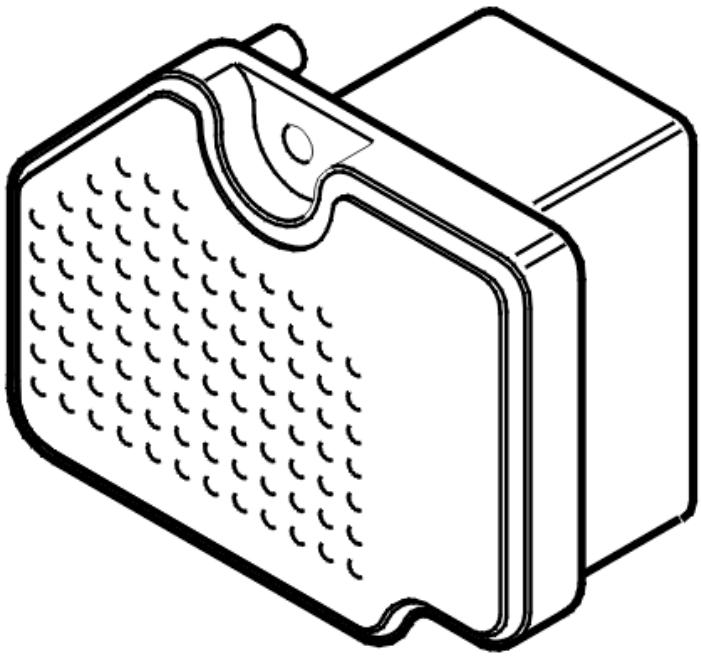

Fig. 191: Active On Demand Coupling Control Module
Courtesy of VOLVO CARS CORPORATION

The Differential Electronic Module (DEM) continuously checks that the power supply to the module is appropriate. The Differential Electronic Module (DEM) compares the power supply (the signal) with the predefined limits. If the module registers a value which exceeds 18.5 V, the trouble code is set.

The diagnostic trouble code can be diagnosed when the ignition is on.

Substitute Value

- Four wheel drive is disengaged.

Possible Source

- Damaged alternator.

Fault symptom[s]

- Four wheel drive is not functioning.

FAULT TRACING DEM-P056017

CHECKING THE POWER SUPPLY

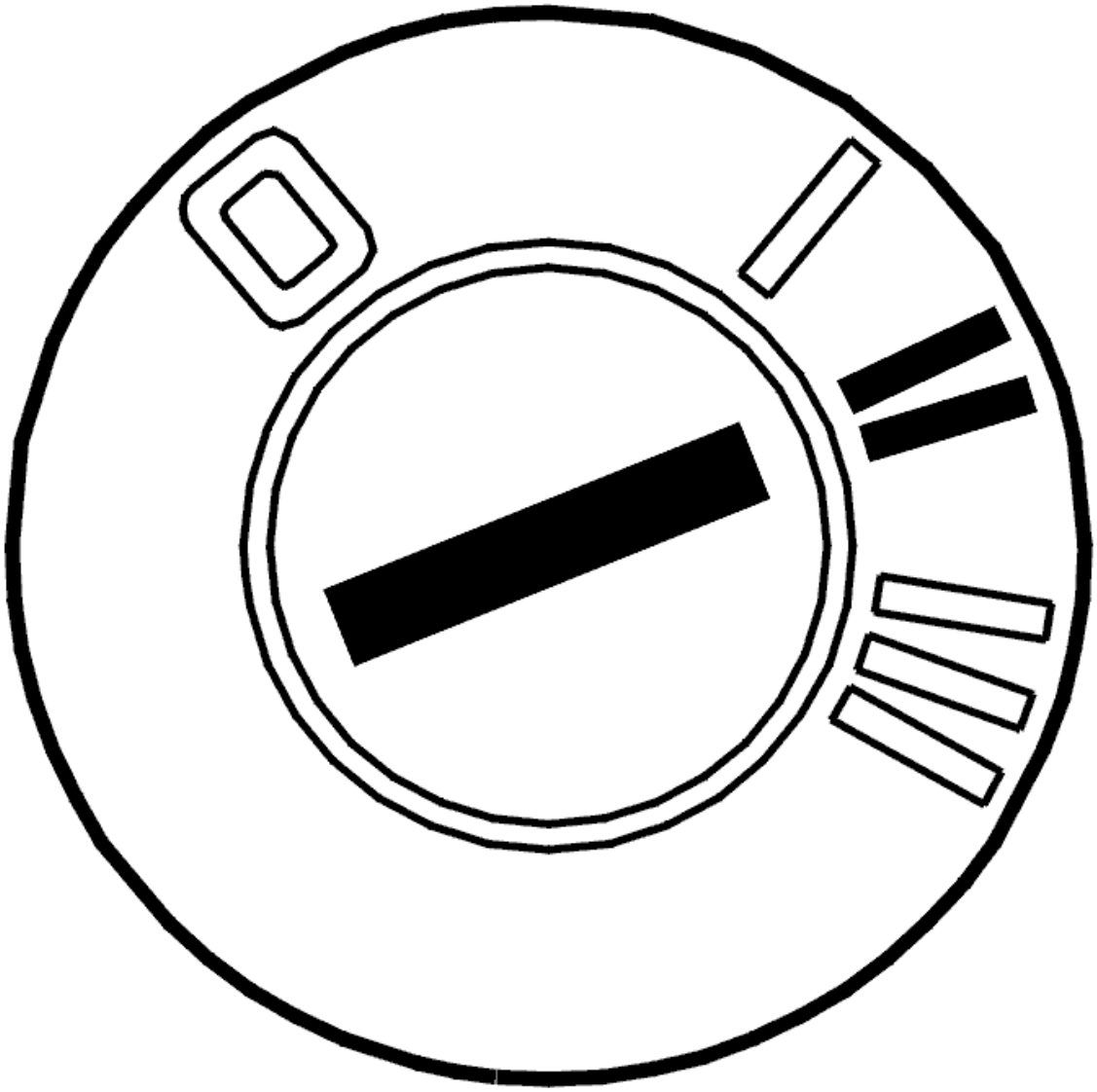

Fig. 192: Identifying Ignition ON
Courtesy of VOLVO CARS CORPORATION

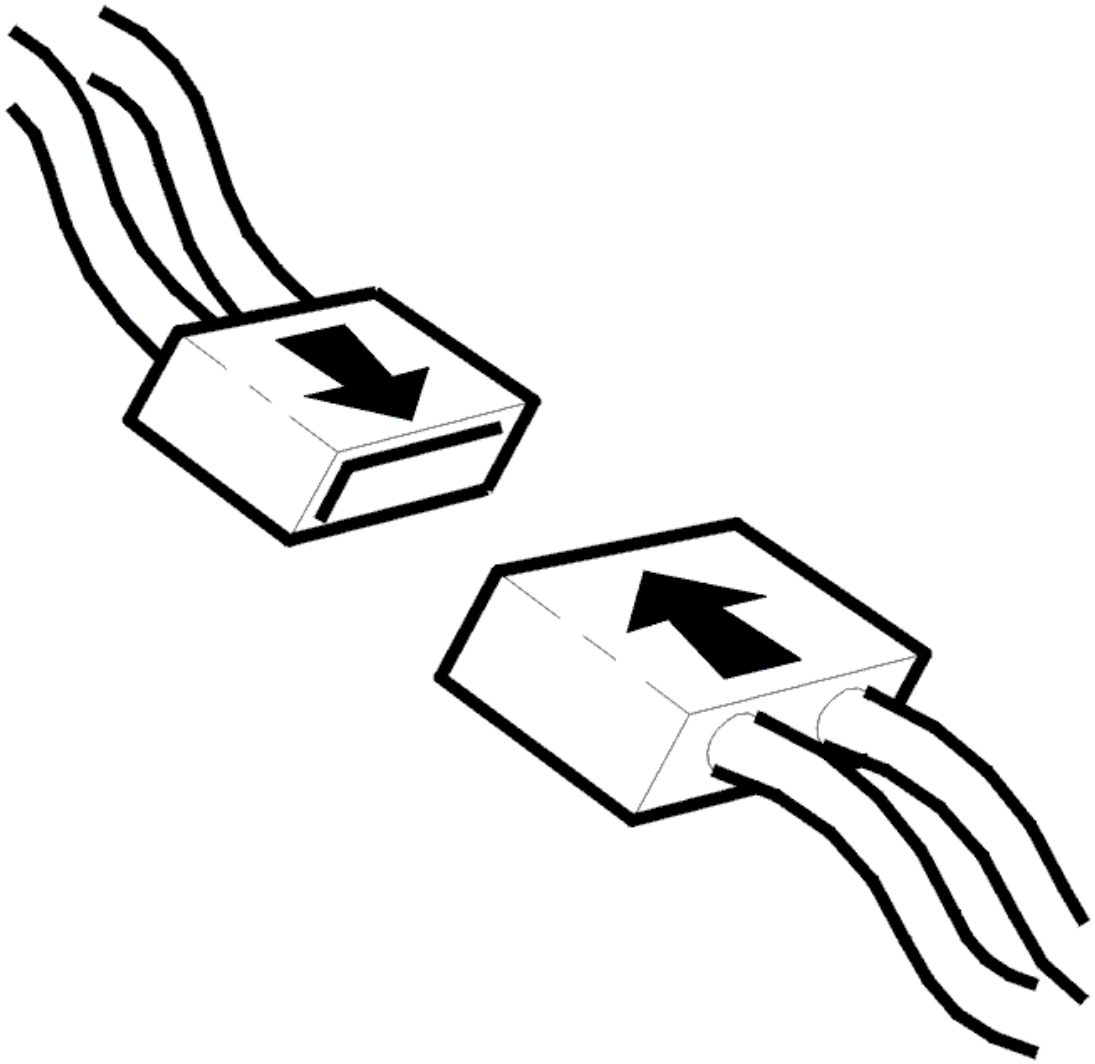

Fig. 193: Connecting Connector
Courtesy of VOLVO CARS CORPORATION

- Ignition on
- Read the value of the supply voltage to the Differential Electronic Module (DEM).

  The voltage should be about the same as the battery voltage.

  HINT: Compare with the voltage supply to the Central Electronic Module (CEM).

  - Start the engine and allow it to idle.
  - Read once again the value of the supply voltage to the Differential Electronic Module (DEM).

  The voltage should rise to 13-15 V, depending on the alternator charging voltage.

HINT: As the fault can be caused by a too high charging voltage from the alternator, this should also be checked

Remedy as necessary.

Other information:

- see **SIGNAL SPECIFICATION**
- For AW50AWD and 4T65AWD 2003-, see **DIFFERENTIAL ELECTRONIC MODULE (DEM), REPLACING**
- For TF-80SC 2005- see **DIFFERENTIAL ELECTRONIC MODULE (DEM), REPLACING (2005-2008)** .
- see **CHECKING WIRING AND TERMINALS**

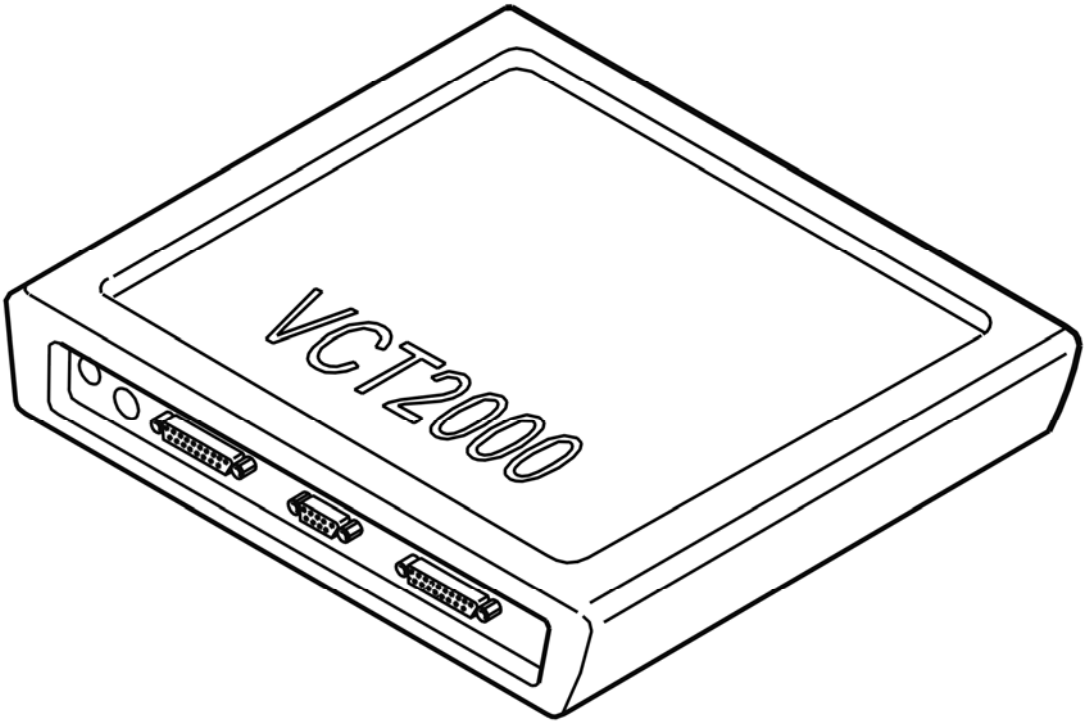

Fig. 194: Identifying VCT2000 Diagnostic Tool Symbol In VIDA
Courtesy of VOLVO CARS CORPORATION

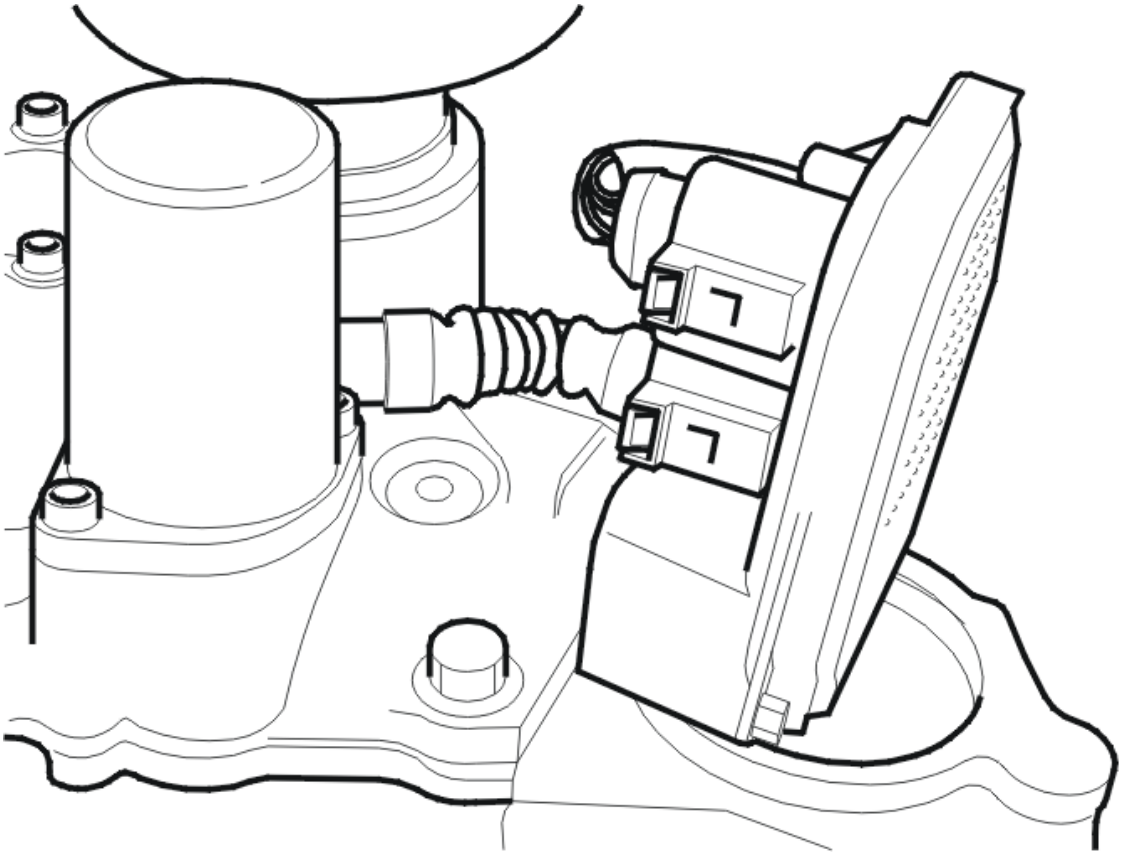

Fig. 195: Identifying Active On Demand Coupling Components
Courtesy of VOLVO CARS CORPORATION

- **Continue**

  Refer to **VERIFICATION**

VERIFICATION

HINT: After carrying out the repair, check that the fault has been remedied.

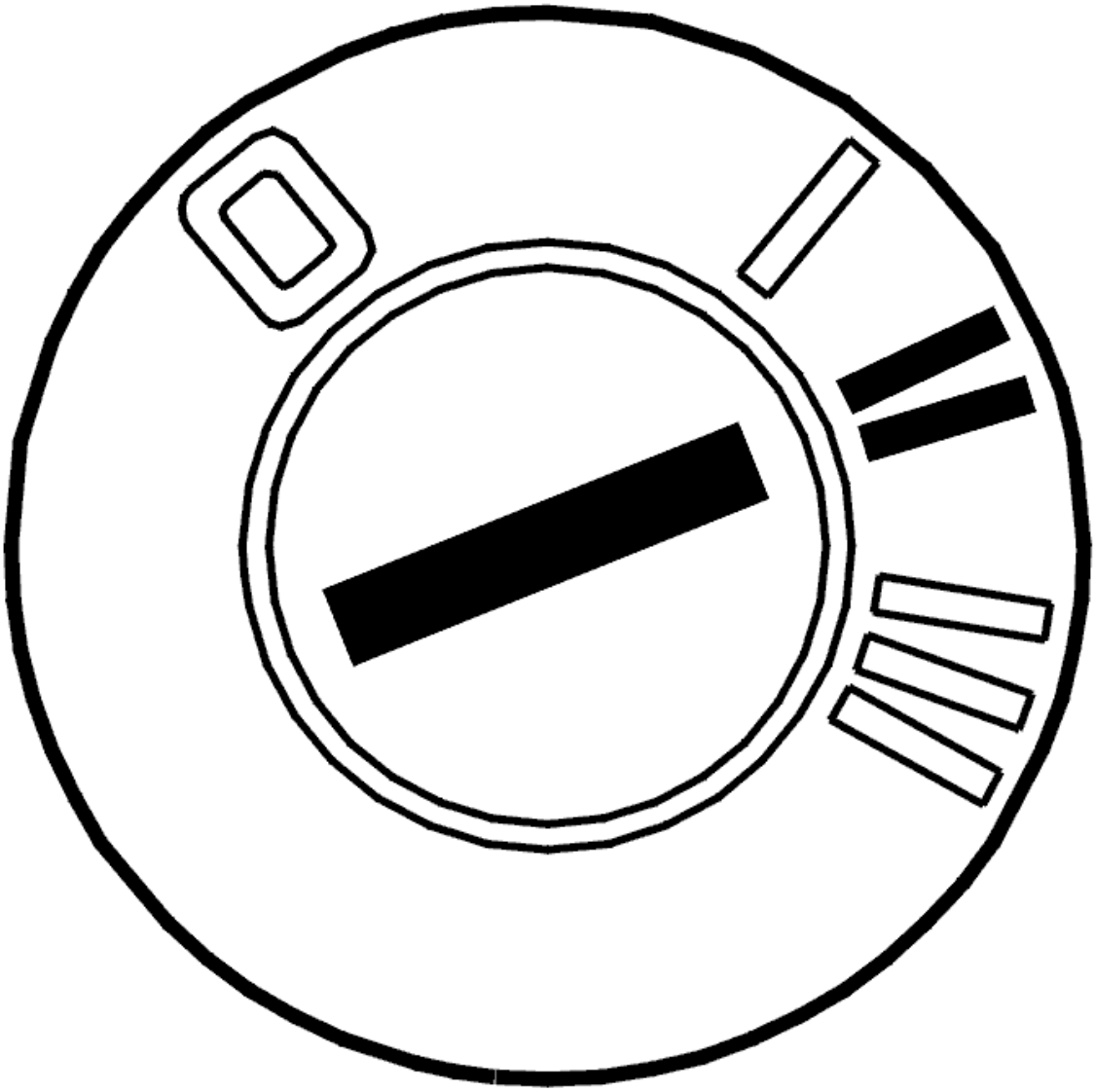

Fig. 196: Identifying Ignition ON
Courtesy of VOLVO CARS CORPORATION

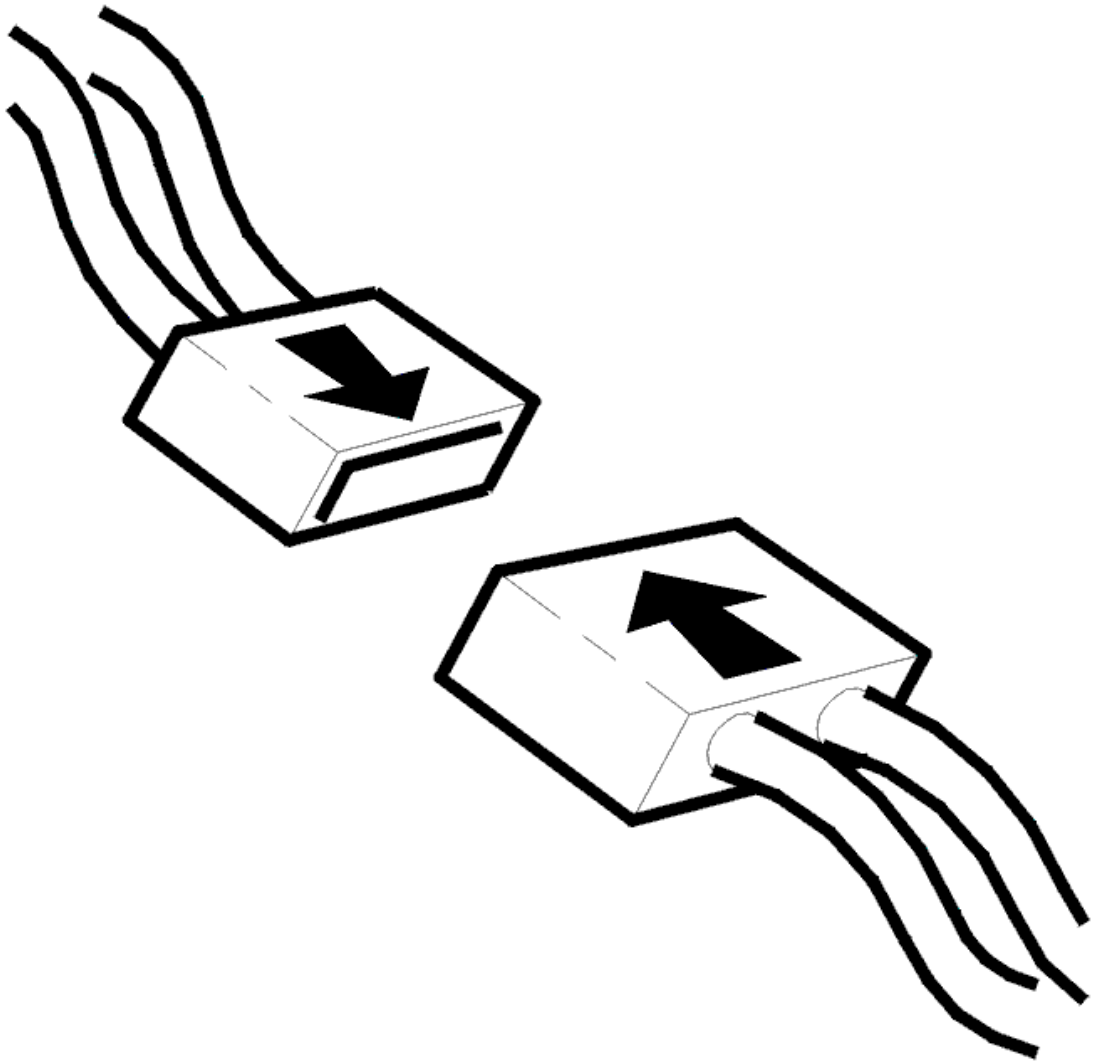

Fig. 197: Connecting Connector
Courtesy of VOLVO CARS CORPORATION

- Ignition off
- Reinstall the connectors, components etc.
- Ignition on

Read the value of the supply voltage to the Differential Electronic Module (DEM).

The voltage should be approx. the same as the battery voltage.

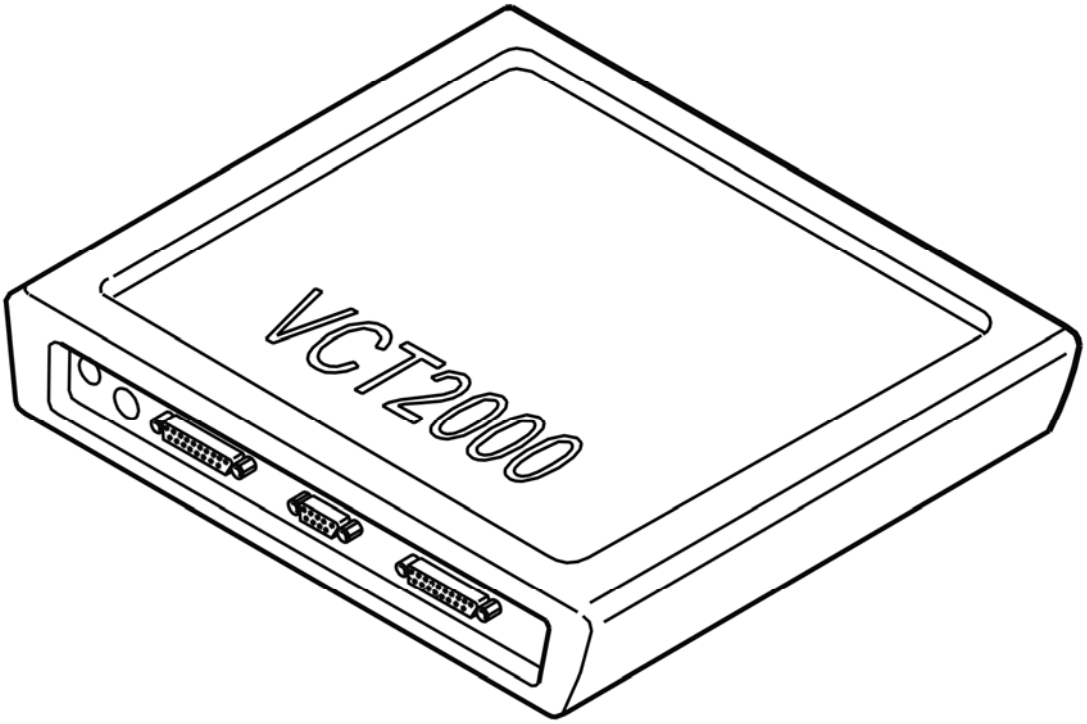

Fig. 198: Identifying VCT2000 Diagnostic Tool Symbol In VIDA
Courtesy of VOLVO CARS CORPORATION

Is the voltage OK?

- **YES**

  VERIFIED: Troubleshooting has been completed.

- **NO**

  Refer to **INFORMATION**

INFORMATION

FAULT-TRACING INFORMATION

The fault should have been detected and remedied. As this is not the case fault-tracing has failed.

Exit fault-tracing for this diagnostic trouble code (DTC) or make another attempt.

DEM-P056017: SYSTEM VOLTAGE. GENERAL ELECTRICAL FAULT. TOO HIGH VOLTAGE (B8444S, TF-80SC AWD; 2006-2008)

DIAGNOSTIC TROUBLE CODE (DTC) INFORMATION DEM-P056017

see **DIAGNOSTIC TROUBLE CODE (DTC) INFORMATION DEM-P056017**

FAULT TRACING DEM-P056017

see **FAULT TRACING DEM-P056017**

DEM-P056017: SYSTEM VOLTAGE. GENERAL ELECTRICAL FAULT. TOO HIGH VOLTAGE (TF-80SC AWD; 2005)

DIAGNOSTIC TROUBLE CODE (DTC) INFORMATION DEM-P056017

see **DIAGNOSTIC TROUBLE CODE (DTC) INFORMATION DEM-P056017**

FAULT TRACING DEM-P056017

see **FAULT TRACING DEM-P056017**

DEM-P060749: CONTROL MODULE PERFORMANCE. SYSTEM INTERNAL FAILURES. INTERNAL ELECTRONIC FAILURE (B6324S, TF-80SC AWD; 2009-2010)

DIAGNOSTIC TROUBLE CODE (DTC) INFORMATION DEM-P060749

Condition

The Differential electronic module (DEM) checks the internal components in the control module. The control module checks the function of the AC/DC converter, among other things. The control module compares the signal from the AC/DC converter to the predefined parameters.

The diagnostic trouble code (DTC) is stored if the control module detects that:

- The signal from the AC/DC converter is outside the parameters.
- Incorrect value lasts longer than 3 seconds.

The control module's test for the diagnostic trouble code (DTC) starts in the event of:

- Ignition switch position II.

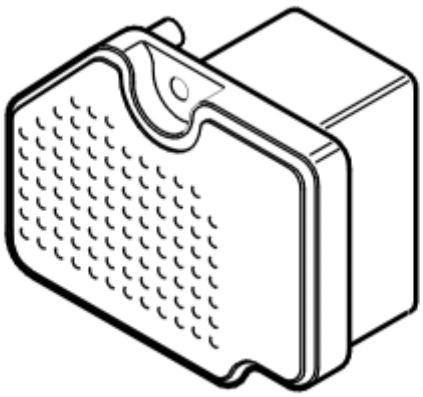

Fig. 199: Control Module
Courtesy of VOLVO CARS CORPORATION

Substitute Value

- Four wheel drive is disengaged.

Possible Source

- Damaged Differential Electronic Module (DEM).

Fault symptom[s]

- 4-wheel/all wheel drive/Does not work
- Text window and warning symbol/Text message

FAULT-TRACING

INFORMATION

The control module has registered an internal fault.

If the fault is intermittent it means that it has been registered previously but is no longer present. Intermittent faults may be due to interference at start up of the control module or may be a different type of fault which occurs on different occasions. The fault is evaluated depending on how it occurs. If the fault recurs, replace the control module.

Other information

- see **ACTIVE ON-DEMAND COUPLING MODULE**

Remedy as necessary.

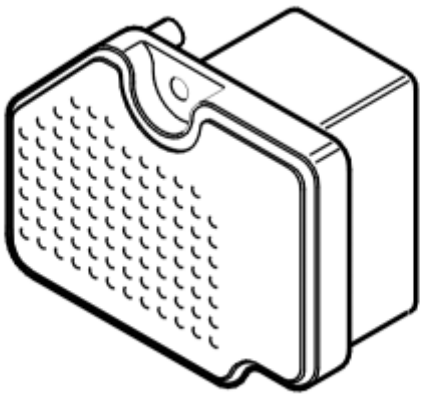

Fig. 200: Control Module
Courtesy of VOLVO CARS CORPORATION

- **Continue**

  Refer to **INFORMATION**

INFORMATION

FAULT-TRACING INFORMATION

The fault should have been detected and remedied. As this is not the case fault-tracing has failed.

Exit fault-tracing for this diagnostic trouble code (DTC) or make another attempt.

DEM-P060749: CONTROL MODULE PERFORMANCE. SYSTEM INTERNAL FAILURES. INTERNAL ELECTRONIC FAILURE (B6324S5, TF-80SC AWD; 2011-2012)

DIAGNOSTIC TROUBLE CODE (DTC) INFORMATION DEM-P060749

see **DIAGNOSTIC TROUBLE CODE (DTC) INFORMATION DEM-P060749**

FAULT-TRACING

see **FAULT-TRACING**

DEM-P060749: CONTROL MODULE PERFORMANCE. SYSTEM INTERNAL FAILURES. INTERNAL ELECTRONIC FAILURE (B8444S, TF-80SC AWD; 2009-2011)

DIAGNOSTIC TROUBLE CODE (DTC) INFORMATION DEM-P060749

see **DIAGNOSTIC TROUBLE CODE (DTC) INFORMATION DEM-P060749**

FAULT-TRACING

see **FAULT-TRACING**

DEM-P060749: CONTROL MODULE PERFORMANCE. INTERNAL FAULT. ELECTRICAL FAULT (B6324S, TF-80SC AWD; 2007-2008)

DIAGNOSTIC TROUBLE CODE (DTC) INFORMATION DEM-060749

Condition

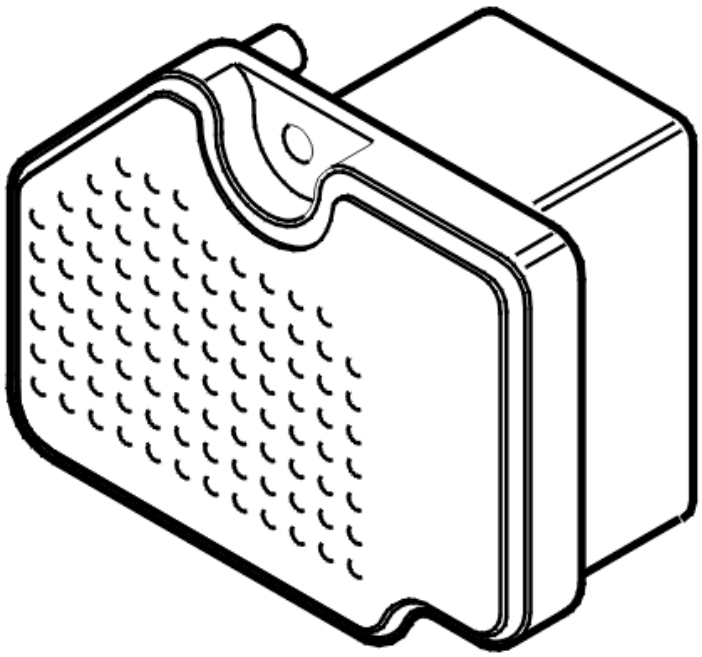

Fig. 201: Active On Demand Coupling Control Module
Courtesy of VOLVO CARS CORPORATION

The Differential Electronic Module (DEM) checks the function of the A/D converter by comparing the power supply with the predefined limits.

If the signal from the A/D converter is extreme and outside the limits, the control module interprets this as a fault and the trouble code is set.

The diagnostic trouble code can be diagnosed when the ignition is on.

Substitute Value

- Four wheel drive is disengaged.

Possible Source

- Damaged control module.

Fault symptom[s]

- Four wheel drive is not functioning.

FAULT TRACING DEM-P060749

INFORMATION

The Differential Electronic Module (DEM) has registered an internal fault.

If the fault is intermittent this means that it has been registered on an earlier occasion but that the fault is no longer present. Intermittent faults can depend upon disturbances during the start up of the Differential Electronic Module (DEM) or they can be other types of fault which can return on different occasions. An appraisal of the fault is made in each particular case. If the fault is persistent, replace the Differential Electronic Module (DEM).

Other information:

- For AW50AWD and 4T65AWD 2003-, see **DIFFERENTIAL ELECTRONIC MODULE (DEM), REPLACING**
- For TF-80SC 2005- see **DIFFERENTIAL ELECTRONIC MODULE (DEM), REPLACING (2005-2008)** .

Remedy as necessary.

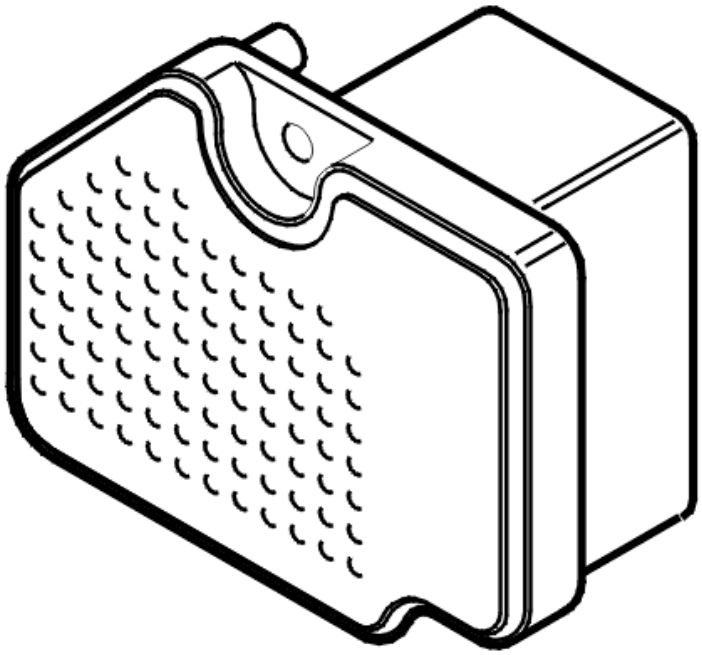

Fig. 202: Active On Demand Coupling Control Module
Courtesy of VOLVO CARS CORPORATION

- **Continue**

  Refer to **INFORMATION**

INFORMATION

FAULT-TRACING INFORMATION

In case of this defect, troubleshooting is not followed by verification.

The information can be displayed again or the fault-tracing for this fault can be interrupted.

DEM-P060749: CONTROL MODULE PERFORMANCE. INTERNAL FAULT. ELECTRICAL FAULT (B8444S, TF-80SC AWD; 2006-2008)

DIAGNOSTIC TROUBLE CODE (DTC) INFORMATION DEM-060749

see **DIAGNOSTIC TROUBLE CODE (DTC) INFORMATION DEM-060749**

FAULT TRACING DEM-P060749

see **FAULT TRACING DEM-P060749**

DEM-P060749: CONTROL MODULE PERFORMANCE. INTERNAL FAULT. ELECTRICAL FAULT (TF-80SC AWD; 2005)

DIAGNOSTIC TROUBLE CODE (DTC) INFORMATION DEM-060749

see **DIAGNOSTIC TROUBLE CODE (DTC) INFORMATION DEM-060749**

FAULT TRACING DEM-P060749

see **FAULT TRACING DEM-P060749**

DEM-P064F05 UNAUTHORIZED SOFTWARE/CALIBRATION DETECTED. GENERAL FAILURE INFORMATION. SYSTEM PROGRAMMING FAILURES (B6324S, TF-80SC AWD; 2009-2010)

DIAGNOSTIC TROUBLE CODE (DTC) INFORMATION DEM-P064F05

Condition

Information about the vehicle configuration is sent on the CAN network. Depending on the model and equipment, the vehicle can be configured in different ways. The central electronic module (CEM) sends the applicable signal ID for the vehicle. The differential electronic module (DEM) compares its configuration ID with the signal configuration transmitted on the network by the central electronic module (CEM).

The diagnostic trouble code (DTC) is stored if the control module detects that:

- These do not correspond, which means that the wrong software is programmed in Differential electronic module (DEM).

The control module's test for the diagnostic trouble code (DTC) starts in the event of:

- Ignition switch position II.

NOTE: **The control module can only detect the fault once the test has been started and the diagnostic trouble code (DTC) is stored when the conditions are met.**

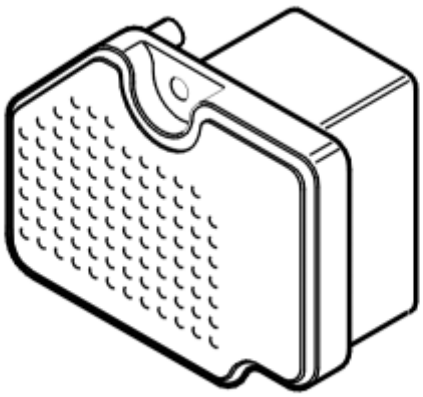

Fig. 203: Control Module
Courtesy of VOLVO CARS CORPORATION

Substitute Value

- Four wheel drive is disengaged.

Possible Source

- Incorrect software in Differential electronic module (DEM).

Fault symptom[s]

- 4-wheel/all wheel drive/Does not work
- Text window and warning symbol/Text message

FAULT-TRACING

GENERAL INFORMATION

The diagnostic trouble code (DTC) is stored when the communication between the central electronic module (CEM) and the relevant control module has been interrupted. There can be a number of causes for interruptions in the communication:

- Faulty signal configuration in the control module that stored the diagnostic trouble code (DTC). The fault can be due to a customer or workshop replacing a control module without downloading new software for the replacement
- Intermittent open-circuit in one or both CAN cables in part of the network
- Intermittent short-circuits between the CAN cables
- Intermittent short-circuits between one of the CAN cables and ground or supply voltage
- Internal fault in the control module that stored the diagnostic trouble code (DTC).

The fault can also be due to faulty software in a control module, a hardware problem in the CAN network (faulty cables) or a fault in a control module.

NOTE: **If there is a diagnostic trouble code (DTC) for a communication fault in a control module, check whether diagnostic trouble codes (DTCs) have been stored in the central electronic module (CEM). The central electronic module (CEM) monitors the voltage level in the CAN cables and is the only control module that can directly store a diagnostic trouble code (DTC) for a short-circuit in one of the cables for ground or supply voltage. Do not replace the central electronic module (CEM) in the event of a CAN fault unless fault-tracing has indicated that the central electronic module (CEM) has an internal fault.**

Corrective actions

1. If this diagnostic trouble code (DTC) is the only communication diagnostic trouble code (DTC) stored in one of the control modules in the high speed network, try to remedy the fault by downloading new software for the control module that stored the diagnostic trouble code (DTC)
2. Check the cables in the CAN network according to the following fault-tracing
3. The control module should be replaced as a last resort.

Other information

- see **GENERAL INFORMATION ABOUT FAULT-TRACING IN THE CAN NETWORK (2005-2012)**
- Go to the tab software and program the control module with the latest software.
- **Continue**

  Refer to **VERIFICATION**

VERIFICATION

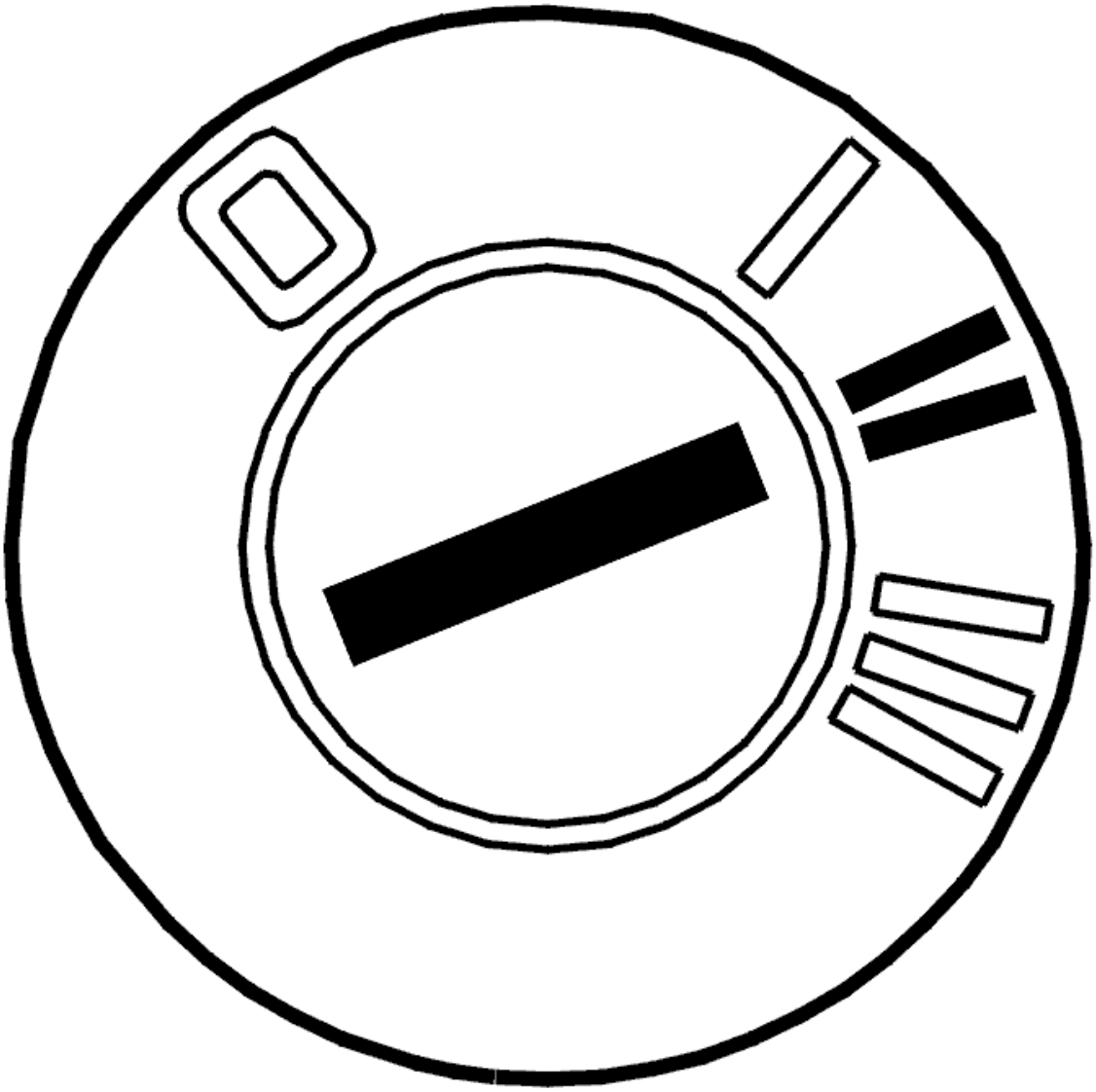

Fig. 204: Identifying Ignition ON
Courtesy of VOLVO CARS CORPORATION

- Ignition on
- Wait for 20 seconds.

NOTE: **This first verification assumes that download of new software was required in the control module that generated the diagnostic trouble code. If download of new software was not required: read out diagnostic trouble codes and check if the code status is permanent or intermittent to learn how difficult it will be to find the fault.**

Read out the diagnostic trouble codes in the vehicle via the DIAGNOSTICS tab.

Check that the diagnostic trouble code (DTC) for faulty communication is not stored again.

Has the fault been remedied?

- **YES**

  OKAY: Troubleshooting has been completed.

- **NO**

  Refer to **TAKING READING ON CABLE IN THE CAN NETWORK (HS-CAN)**

TAKING READING ON CABLE IN THE CAN NETWORK (HS-CAN)

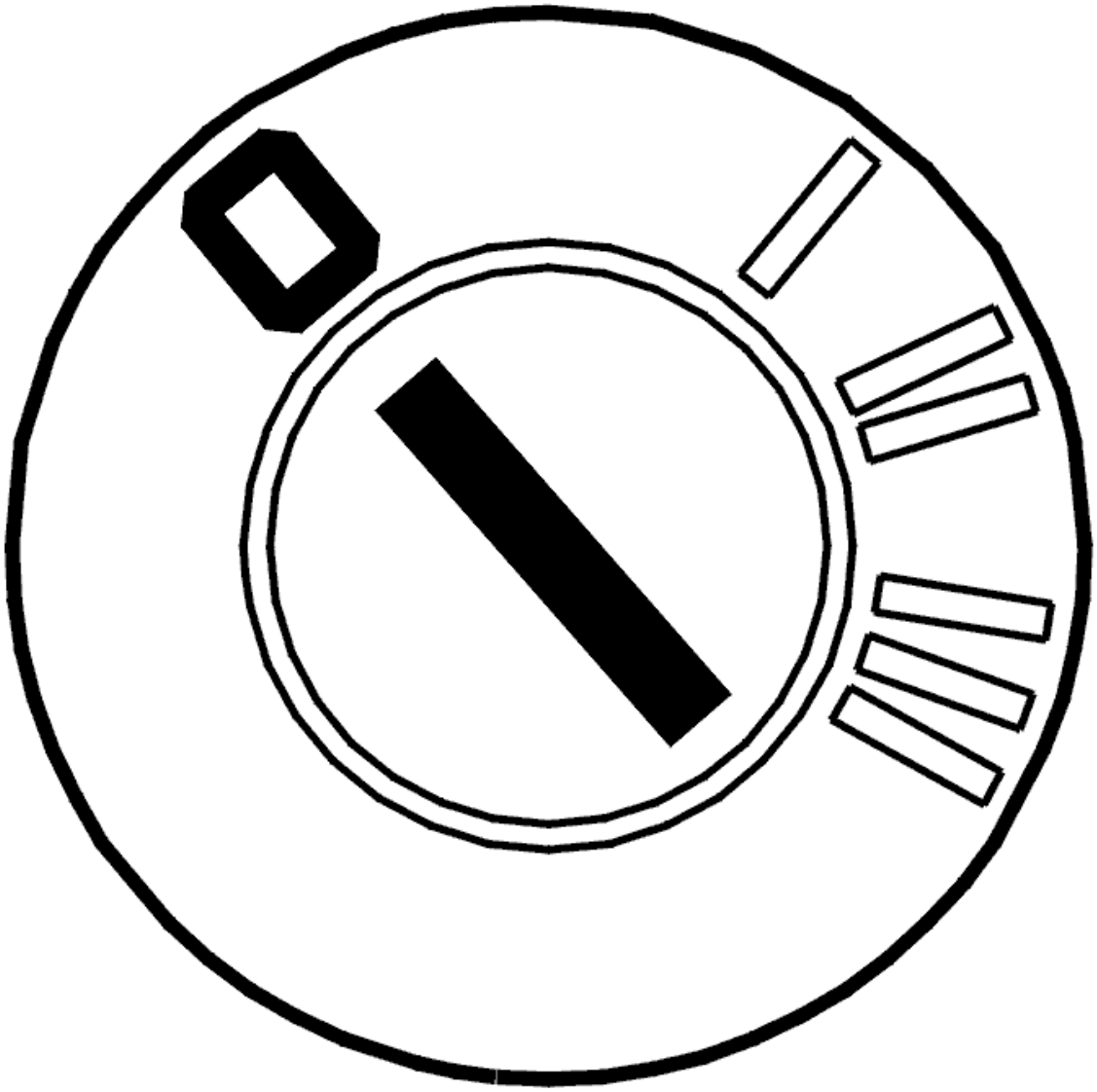

Fig. 205: Identifying Ignition OFF
Courtesy of VOLVO CARS CORPORATION

- Ignition off

- Disconnect the battery negative lead.
- Remove the central electronic module (CEM)
- Connect the breakout box to the cable harness for the central electronic module (CEM). Do not connect the central electronic module (CEM).

HINT: Where a breakout box cannot be used, take readings from the rear of the affected connectors if possible. This prevents terminal pins and socket housings being damaged.

Disconnect the CAN network to make it easier to locate a fault. A suitable point to disconnect the network is at the central electronic module (CEM). Fault-tracing therefore starts from the central electronic module (CEM).

Take resistance readings across the following terminals. Various readings will be obtained due to the structure of the network. Twist the cable harness and work the connectors at accessible points along the cable harness in order to check whether the resistance changes during each measurement. This method can be used to detect intermittent short-circuits or open-circuits.

NOTE: The following resistance readings only measure the main arteries in the high speed network, not the junctions that exist for some control modules. If an open-circuit is suspected in a cable, or a short-circuit is suspected in one of its junctions, the connector at the control module for this junction must be disconnected and the reading taken from there.

Take the following readings

- Resistance between C3:47 and C3:48. Resistance should be 120 ohms.

  NOTE: Measuring will only give value 120 ohms if the main circuit in the CAN-net is intact. If there is a short-circuit somewhere in the CAN-net (either main circuit or other branching) the resistance will be 0 ohms.

- The resistance between C3:48 and a connection to voltage as well as between C3:48 and a short-circuit to ground. The resistance should be very high (more than 1 Mohms).
- The resistance between C3:47 and a connection to voltage as well as between C3:47 and a short-circuit to ground. The resistance should be very high (more than 1 Mohms).

HINT: Any short-circuit detected on the CAN-net may be on the main circuit or on any branching running out to some control modules. If a fault is found, try to disconnect the junction with the fault at a point further forward. Try to locate the fault in this way.

Remedy as necessary.

Other information

- see **BATTERY, DISCONNECTING**

- see **CONNECTING THE BREAKOUT BOX**
- see **SIGNAL SPECIFICATION**
- see **CHECKING WIRING AND TERMINALS**

Was a fault detected?

- **YES**

  Refer to **VERIFICATION**

- **NO**

  Refer to **CHECKING THE TRAFFIC LOAD ON THE CAN CABLES**

CHECKING THE TRAFFIC LOAD ON THE CAN CABLES

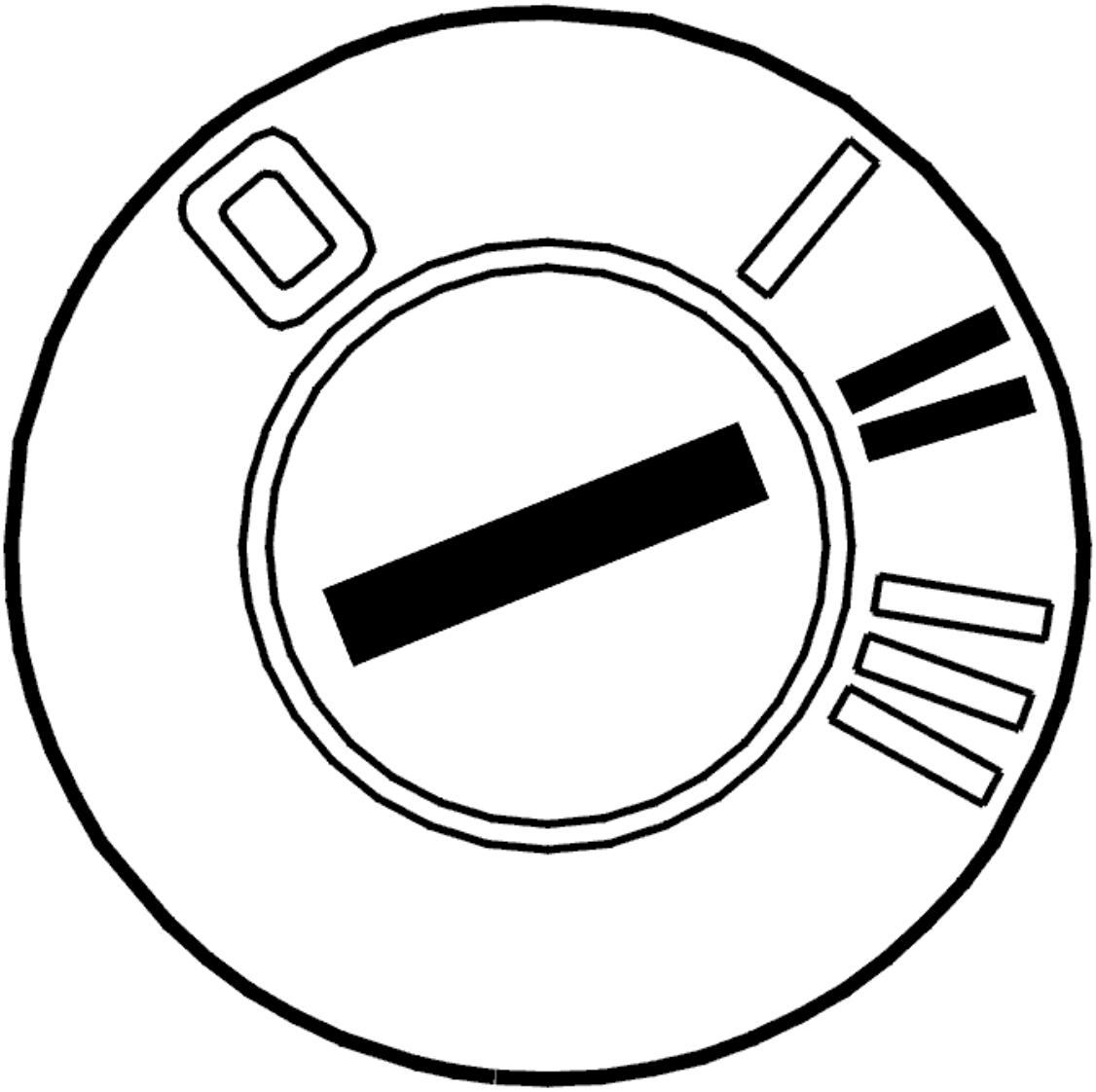

Fig. 206: Identifying Ignition ON
Courtesy of VOLVO CARS CORPORATION

- Connect the central electronic module (CEM) to the breakout box
- Connect the battery.
- Ignition on

NOTE: **When the adapter cable harness and the central electronic module (CEM) have been connected, there is access to both sides of the CAN network (both LS-CAN and HS-CAN). There will also be traffic on both networks. Be careful to check the terminals between which the readings are to be taken so that the intended reading is not taken on the wrong network.**

Faults in the CAN network may be due to a control module sending faulty messages that disrupt normal communication. When messages are sent incorrectly, this results in a considerable increase in the amount

of traffic on the CAN network. Check the load by measuring the average voltage value on the CAN cables in relation to ground.

Check as follows:

- Measure the voltage between C3:48 and ground. The voltage should be approx. 2.3 V.
- Measure the voltage between C3:47 and ground. The voltage should be approx. 2.8 V.

Other information

- see **CONNECTING THE BREAKOUT BOX**
- see **BATTERY, DISCONNECTING**

Is the value OK?

- **YES**

  Refer to **INFORMATION**

- **NO**

  Refer to **IDENTIFYING A CONTROL MODULE IN THE CAN NETWORK**

IDENTIFYING A CONTROL MODULE IN THE CAN NETWORK

If the load on the CAN network is too high, this may be due to a control module sending faulty messages on the CAN network (known as a disruptive control module). The fault may also be due to an intermittent short-circuit to supply voltage or ground in one of the CAN cables. This results in the control modules on the CAN network starting to send faulty messages. The faults can occur without a diagnostic trouble code (DTC) being stored by the control modules. The voltage can be measured between the CAN cables in order to check the load on the CAN network.

NOTE: **It is not necessarily the control module(s) that stored the diagnostic trouble code (DTC) that is communicating faultily. Faulty messages can come from any control module in the same section of the CAN network. However, faulty communication in one network cannot affect the communication on the other network. In other words, faulty communication on the LS-CAN cannot disrupt communication on the HS-CAN and vice versa.**

- Check communication/load on HS-CAN by measuring voltage between C3:48 and C3:47. The voltage's average value should be approx. 0.5 V (permitted is 0.4 to 0.6 V). In case of communication error, the voltage is approx. 0.7 V and higher.

In order to identify which control module is communicating incorrectly, cut the power supply to one control module at a time. Check the voltage in the CAN cables again. The easiest way to cut the power supply is to remove the fuse(s) for the relevant control module. Continue until the voltage between the CAN cables drops to approximately 0.5 V.

HINT: When the suspected control module has been identified, connect and disconnect the supply voltage to the control module a number of times to verify that the fault appears and disappears. Ignition off between each check.

NOTE: Do not cut the power to the central electronic module (CEM) unless it is the last control module left to check.

The control module that is communicating incorrectly must be replaced.

NOTE: A faulty control module that disrupts communication can place other control modules in Limp-Home mode (i. e. they work but with limited functionality) even after switching the ignition off and on a number of times. To remedy this, disconnect and reconnect the battery negative terminal to restore the control modules to normal function.

Remedy as necessary.

- **Continue**

  Refer to **VERIFICATION**

VERIFICATION

HINT: Once a fault has been repaired, conduct a verification to check that the fault has been remedied.

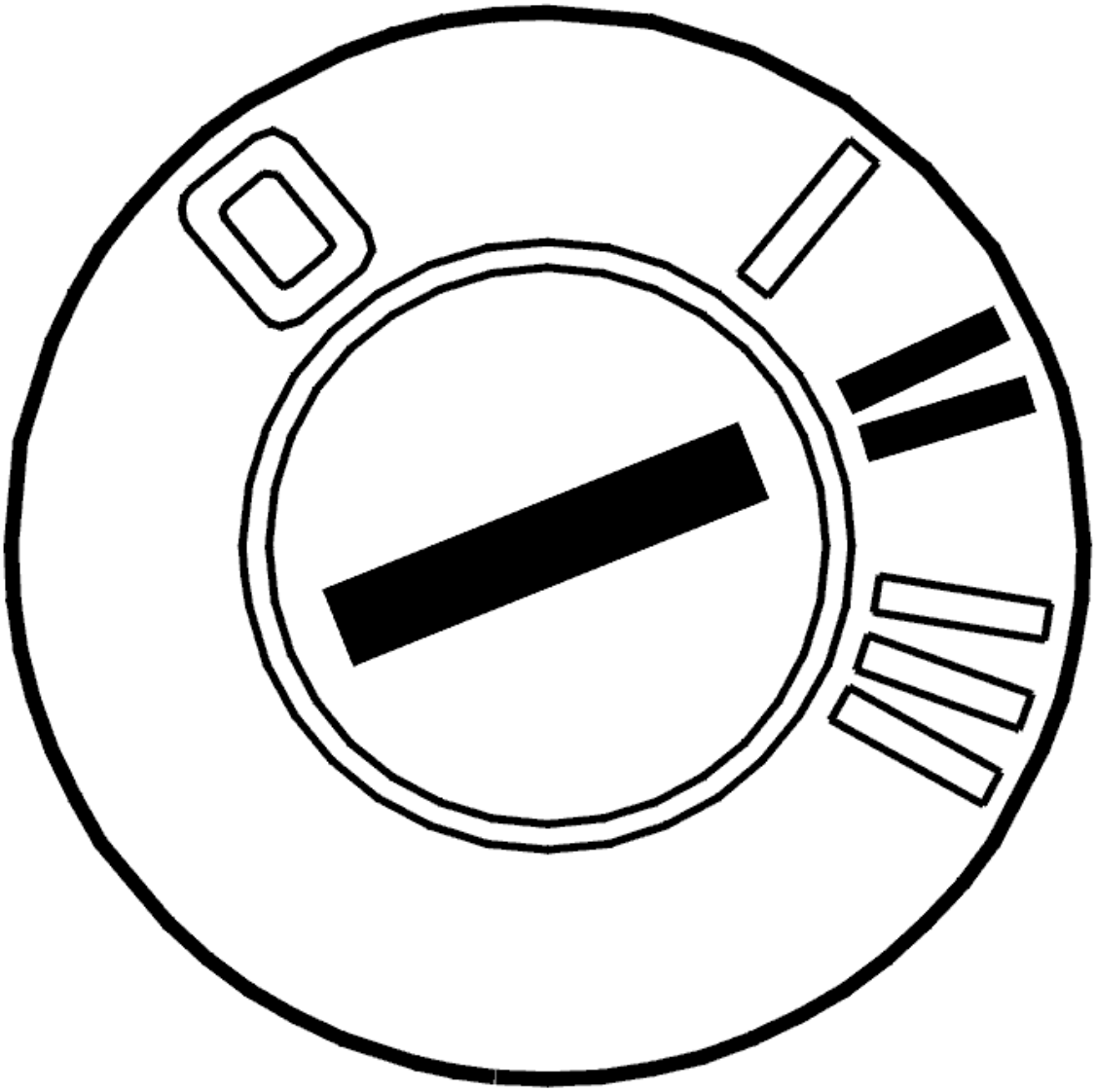

Fig. 207: Identifying Ignition ON
Courtesy of VOLVO CARS CORPORATION

- Reinstall the connectors, components etc.
- Ignition on
- Erase diagnostic trouble codes (DTCs) in all control modules
- Start the vehicle. Allow the vehicle to run for 10 minutes.

  Read out the diagnostic trouble codes in the vehicle via the DIAGNOSTICS tab.

Is the diagnostic trouble code for configuration fault regenerated?

- **YES**

  Refer to **INFORMATION**

- **NO**

  OKAY: Troubleshooting has been completed.

INFORMATION

FAULT-TRACING INFORMATION

The fault should have been detected and remedied. As this is not the case fault-tracing has failed.

Exit fault-tracing for this diagnostic trouble code (DTC) or make another attempt.

INFORMATION

FAULT-TRACING INFORMATION

Verification shows that the fault is no longer present. The diagnostic trouble code (DTC) was probably caused by an intermittent fault.

Fault-tracing for this diagnostic trouble code (DTC) is not followed by a verification.

You can view the information again or exit fault-tracing for this diagnostic trouble code (DTC).

DEM-P064F05 UNAUTHORIZED SOFTWARE/CALIBRATION DETECTED. GENERAL FAILURE INFORMATION. SYSTEM PROGRAMMING FAILURES (B6324S5, TF-80SC AWD; 2011-2012)

DIAGNOSTIC TROUBLE CODE (DTC) INFORMATION DEM-P064F05

see **DIAGNOSTIC TROUBLE CODE (DTC) INFORMATION DEM-P064F05**

FAULT-TRACING

see **FAULT-TRACING**

DEM-P064F05 UNAUTHORIZED SOFTWARE/CALIBRATION DETECTED. GENERAL FAILURE INFORMATION. SYSTEM PROGRAMMING FAILURES (B8444S, TF-80SC AWD; 2009-2011)

DIAGNOSTIC TROUBLE CODE (DTC) INFORMATION DEM-P064F05

see **DIAGNOSTIC TROUBLE CODE (DTC) INFORMATION DEM-P064F05**

FAULT-TRACING

see **FAULT-TRACING**

DEM-P066611: PCM / ECM / TCM INTERNAL TEMPERATURE SENSOR CIRCUIT. GENERAL ELECTRICAL FAILURES. CIRCUIT SHORT TO GROUND (B6324S, TF-80SC AWD; 2009-2010)

DIAGNOSTIC TROUBLE CODE (DTC) INFORMATION DEM-P066611

Condition

The Differential Electronic Module (DEM) has a temperature sensor fitted on the control module's circuit board. If the temperature exceeds a preset value all wheel drive is disabled. This is to protect the control module.

The diagnostic trouble code (DTC) is stored if the control module detects that:

- The temperature exceeds 193.2 °C.
- Incorrect value lasts longer than 3 seconds.

The control module's test for the diagnostic trouble code (DTC) starts in the event of:

- Ignition on.

NOTE: The control module can only detect the fault once the test has been started and the diagnostic trouble code (DTC) is stored when the conditions are met.

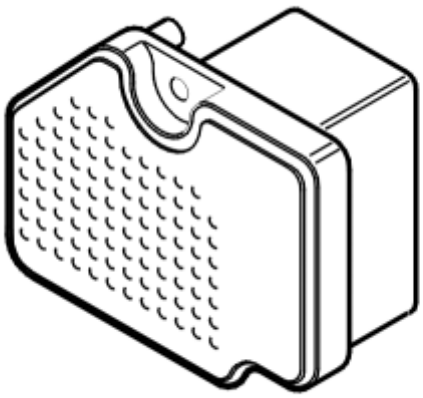

Fig. 208: Control Module
Courtesy of VOLVO CARS CORPORATION

Substitute Value

- Four wheel drive is disengaged.

Possible Source

- Damaged temperature sensor in the control module.
- Damaged Differential Electronic Module (DEM).

Fault symptom[s]

- 4-wheel/all wheel drive/Does not work
- Text window and warning symbol/Text message

FAULT-TRACING

INFORMATION

The control module has registered an internal fault.

The problem is solved by changing Differential electronic module (DEM).

Other information

- see **ACTIVE ON-DEMAND COUPLING MODULE**

Remedy as necessary.

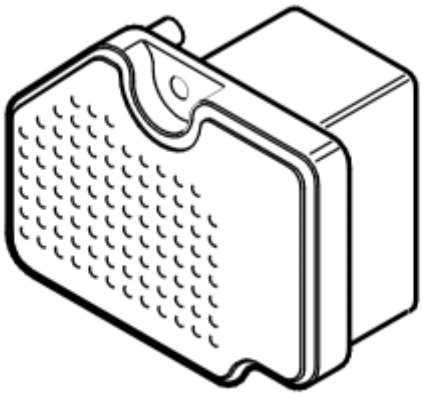

Fig. 209: Control Module
Courtesy of VOLVO CARS CORPORATION

- **Continue**

  Refer to **INFORMATION**

INFORMATION

FAULT-TRACING INFORMATION

The fault should have been detected and remedied. As this is not the case fault-tracing has failed.

Exit fault-tracing for this diagnostic trouble code (DTC) or make another attempt.

DEM-P066611: PCM / ECM / TCM INTERNAL TEMPERATURE SENSOR CIRCUIT. GENERAL ELECTRICAL FAILURES. CIRCUIT SHORT TO GROUND (B6324S5, TF-80SC AWD; 2011-2012)

DIAGNOSTIC TROUBLE CODE (DTC) INFORMATION DEM-P066611

see **DIAGNOSTIC TROUBLE CODE (DTC) INFORMATION DEM-P066611**

FAULT-TRACING

see **FAULT-TRACING**

DEM-P066611: PCM / ECM / TCM INTERNAL TEMPERATURE SENSOR CIRCUIT. GENERAL ELECTRICAL FAILURES. CIRCUIT SHORT TO GROUND (B8444S, TF-80SC AWD; 2009-2011)

DIAGNOSTIC TROUBLE CODE (DTC) INFORMATION DEM-P066611

see **DIAGNOSTIC TROUBLE CODE (DTC) INFORMATION DEM-P066611**

FAULT-TRACING

see **FAULT-TRACING**

DEM-P066615: PCM / ECM / TCM INTERNAL TEMPERATURE SENSOR CIRCUIT. GENERAL ELECTRICAL FAILURES. CIRCUIT SHORT TO BATTERY OR OPEN (B6324S, TF-80SC AWD; 2009-2010)

DIAGNOSTIC TROUBLE CODE (DTC) INFORMATION DEM-P066615

Condition

The Differential Electronic Module (DEM) has a temperature sensor fitted on the control module's circuit board. If the temperature is lower than a preset value, then the four-wheel drive is turned off.

The diagnostic trouble code (DTC) is stored if the control module detects that:

- The temperature is lower than -53.7 °C.
- Incorrect value lasts longer than 3 seconds.

The control module's test for the diagnostic trouble code (DTC) starts in the event of:

- Ignition on.

NOTE: **The control module can only detect the fault once the test has been started and the diagnostic trouble code (DTC) is stored when the conditions are met.**

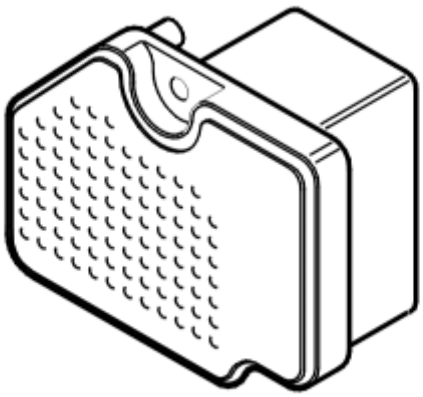

Fig. 210: Control Module
Courtesy of VOLVO CARS CORPORATION

Substitute Value

- Four wheel drive is disengaged.

Possible Source

- Damaged temperature sensor in the control module.
- Damaged Differential Electronic Module (DEM).

Fault symptom[s]

- 4-wheel/all wheel drive/Does not work
- Text window and warning symbol/Text message

FAULT-TRACING

see **FAULT-TRACING**

DEM-P066615: PCM / ECM / TCM INTERNAL TEMPERATURE SENSOR CIRCUIT. GENERAL ELECTRICAL FAILURES. CIRCUIT SHORT TO BATTERY OR OPEN (B6324S5, TF-80SC AWD; 2011-2012)

DIAGNOSTIC TROUBLE CODE (DTC) INFORMATION DEM-P066615

see **DIAGNOSTIC TROUBLE CODE (DTC) INFORMATION DEM-P066615**

FAULT-TRACING

see **FAULT-TRACING**

DRIVELINE/AXLES

Rear Axle, Drive Shafts - Diagnostic Trouble Codes And Associated Procedures

DEM-P066615: PCM / ECM / TCM INTERNAL TEMPERATURE SENSOR CIRCUIT. GENERAL ELECTRICAL FAILURES. CIRCUIT SHORT TO BATTERY OR OPEN (B8444S, TF-80SC AWD; 2009-2011)

DIAGNOSTIC TROUBLE CODE (DTC) INFORMATION DEM-P066615

see **DIAGNOSTIC TROUBLE CODE (DTC) INFORMATION DEM-P066615**

FAULT-TRACING

see **FAULT-TRACING**

DEM-P066727: PCM / ECM / TCM INTERNAL TEMPERATURE SENSOR RANGE/PERFORMANCE. GENERAL SIGNAL FAILURES. SIGNAL RATE OF CHANGE ABOVE THRESHOLD (B6324S, TF-80SC AWD; 2009-2010)

DIAGNOSTIC TROUBLE CODE (DTC) INFORMATION DEM-P066727

Condition

The Differential Electronic Module (DEM) has a temperature sensor fitted on the control module's circuit board. If the temperature rises too quickly, four-wheel drive disengages. This is to protect the control module.

The diagnostic trouble code (DTC) is stored if the control module detects that:

- The temperature increases at a speed greater than 10 °C/s.
- Incorrect value lasts longer than 50 ms.

The control module's test for the diagnostic trouble code (DTC) starts in the event of:

- Engine running.

NOTE: **The control module can only detect the fault once the test has been started and the diagnostic trouble code (DTC) is stored when the conditions are met.**

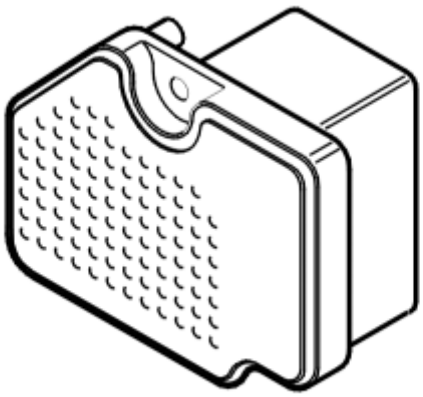

Fig. 1: Control Module
Courtesy of VOLVO CARS CORPORATION

Substitute Value

- Four-wheel drive is disengaged during the time the fault exists, and is disengaged a further 30 seconds after the fault has disappeared.

Possible Source

- Damaged temperature sensor in the control module.
- Damaged Differential Electronic Module (DEM).

Fault symptom[s]

- 4-wheel/all wheel drive/Does not work
- Text window and warning symbol/Text message

FAULT-TRACING

see **FAULT-TRACING**

DEM-P066727: PCM / ECM / TCM INTERNAL TEMPERATURE SENSOR RANGE/PERFORMANCE. GENERAL SIGNAL FAILURES. SIGNAL RATE OF CHANGE ABOVE THRESHOLD (B6324S5, TF-80SC AWD; 2011-2012)

DIAGNOSTIC TROUBLE CODE (DTC) INFORMATION DEM-P066727

see **DIAGNOSTIC TROUBLE CODE (DTC) INFORMATION DEM-P066727**

FAULT-TRACING

see **FAULT-TRACING**

DEM-P066727: PCM / ECM / TCM INTERNAL TEMPERATURE SENSOR RANGE/PERFORMANCE. GENERAL SIGNAL FAILURES. SIGNAL RATE OF CHANGE ABOVE THRESHOLD (B8444S, TF-80SC AWD; 2009-2011)

DIAGNOSTIC TROUBLE CODE (DTC) INFORMATION DEM-P066727

see **DIAGNOSTIC TROUBLE CODE (DTC) INFORMATION DEM-P066727**

FAULT-TRACING

see **FAULT-TRACING**

DEM-P093211: HYDRAULIC PRESSURE SENSOR CIRCUIT. GENERAL ELECTRICAL FAULT. SHORT CIRCUIT TO GROUND. (B6324S, TF-80SC AWD; 2007)

DIAGNOSTIC TROUBLE CODE (DTC) INFORMATION DEM-P093211

Condition

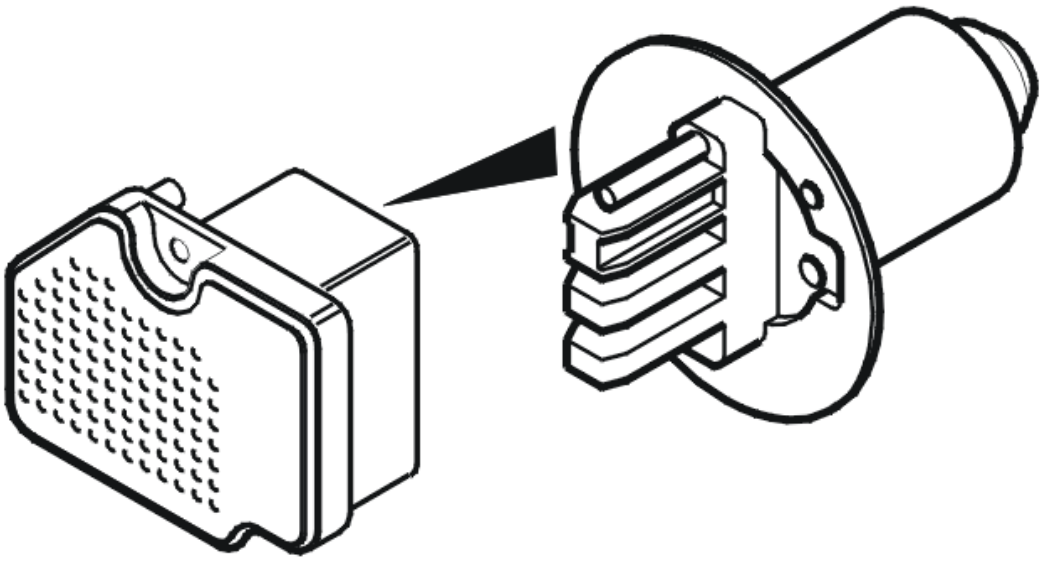

Fig. 2: Control Module And Oil Temperature Sensor
Courtesy of VOLVO CARS CORPORATION

The Differential Electronic Module (DEM) checks that the signal from the oil pressure sensor is appropriate. If the signal from the oil pressure sensor is less than the predefined lower limit, the control module interprets this as a fault and the trouble code is set.

The diagnostic trouble code can be diagnosed when the ignition is on.

Substitute Value

- Four wheel drive is disengaged.

Possible Source

- Connector resistance and oxidation in the connectors.
- Damaged oil pressure sensor.
- Damaged Differential Electronic Module (DEM).

Fault symptom[s]

- Four wheel drive functions badly.

FAULT TRACING DEM-P093211

CHECKING PRESSURE AND TEMPERATURE SENSOR

NOTE: Reading out of oil pressure can take place first after the diagnostic trouble code (DTC) has been deleted. Therefore frozen values should be printed and saved before deleting takes place.

1. Test of pressure sensor.
   - Ignition on.
   - Using Volvo Scan Tool hit the VCT2000 symbol.

     HINT: Correct pressure shall be 0.00 +/- 0.08 MPa.

   - Engine idling
   - Using Volvo Scan Tool hit the VCT2000 symbol.

     HINT: Correct pressure shall be 0.38 +/- 0.08 MPa.

2. Test of temperature sensor.
   - Ignition on.
   - Using Volvo Scan Tool hit the VCT2000 symbol.

HINT: Normal value for ambient temperature when the vehicle is cold and (+20 to +50 °C) when the vehicle is driven.

If wrong value is read out, then diagnostic trouble code shall be erased and the sensor changed. After changing sensor, repeat the test procedure again.

NOTE: There are two types of sensors, an 80 bar and a 40 bar. Differential electronic module (DEM) has hardware number 30759701, 30785483, 30759682, 30783198, 30735844, or 30783018, an 80 bar pressure sensor shall be installed. If Differential electronic module (DEM) has another hardware number than above, a 40 bar sensor shall be installed.

HINT: For reading out of hardware number, see VIDA/DIAGNOSTICS/NETWORK/DEM.

Other information

- see **TEMPERATURE / PRESSURE SENSOR ACTIVE ON DEMAND COUPLING (AOC), REPLACING**

Fig. 3: Identifying VCT2000 Diagnostic Tool Symbol In VIDA
Courtesy of VOLVO CARS CORPORATION

Has the fault been remedied?

- **YES**

  OKAY: Troubleshooting has been completed.

- **NO**

  Refer to **CHECKING THE CONNECTORS AND LEADS**

CHECKING THE CONNECTORS AND LEADS

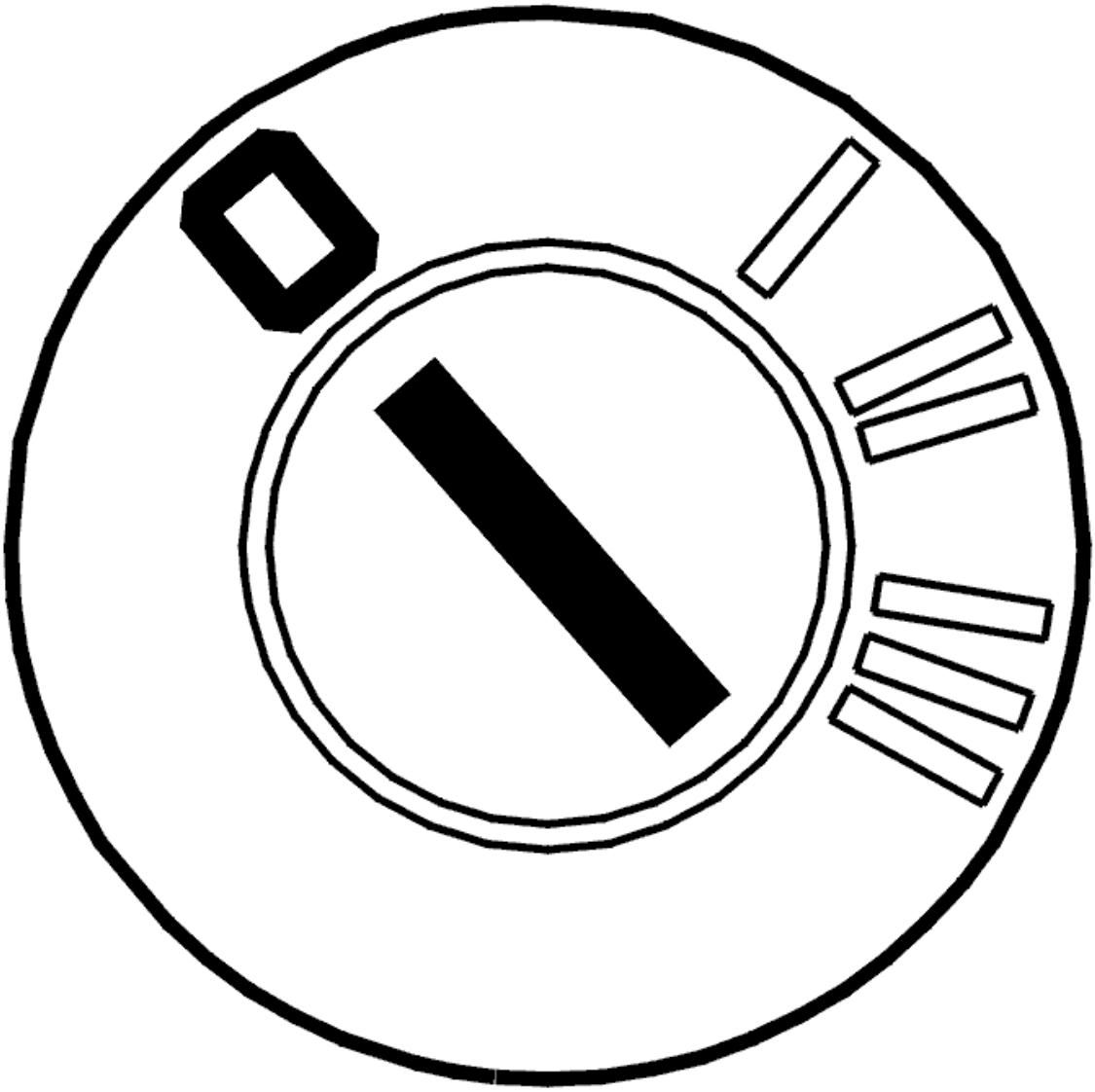

Fig. 4: Identifying Ignition OFF
Courtesy of VOLVO CARS CORPORATION

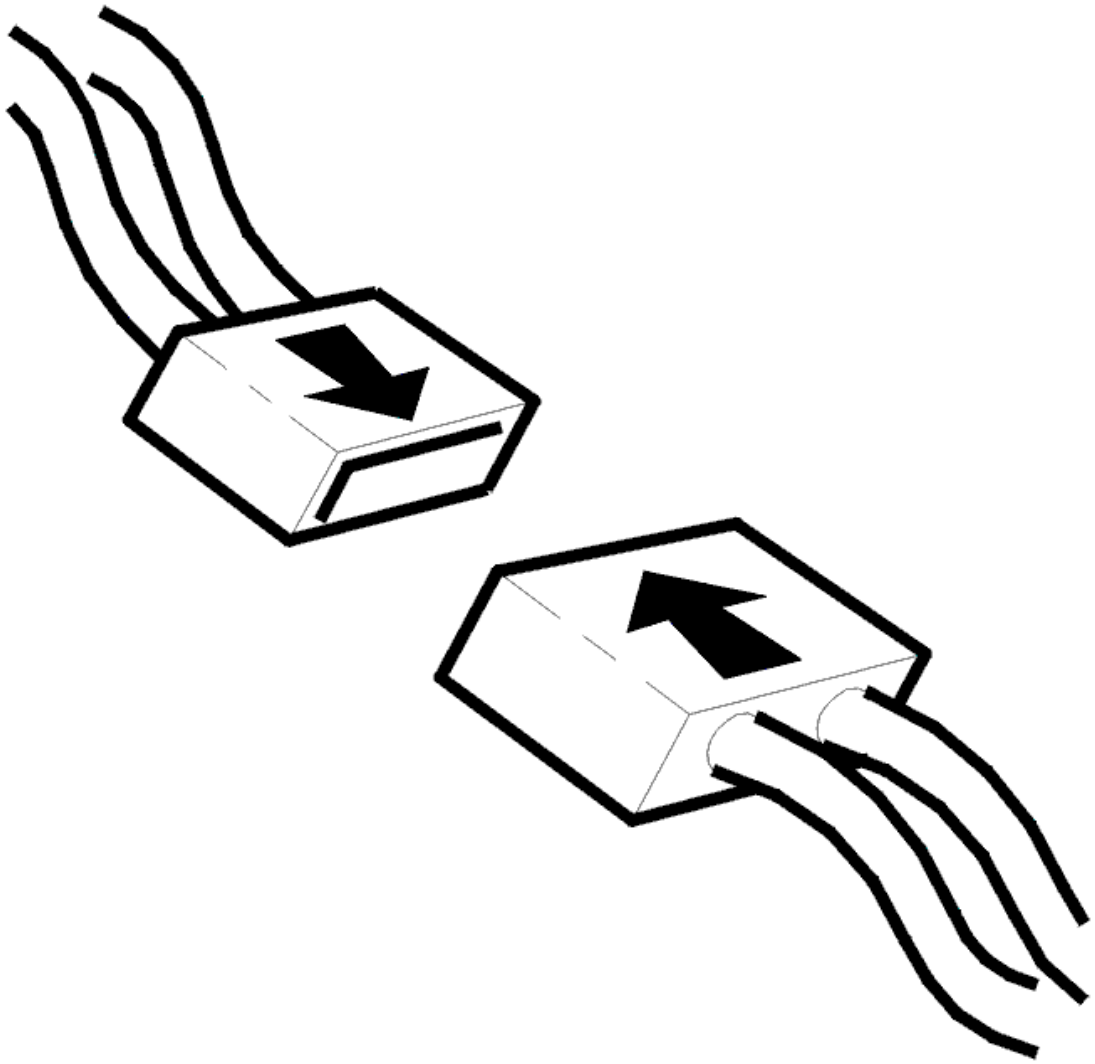

Fig. 5: Connecting Connector
Courtesy of VOLVO CARS CORPORATION

- Ignition off
- Check the connector between the Differential Electronic Module (DEM) and the oil pressure sensor with respect to contact resistance and oxidation.
- Check connector A with respect to depressed or damaged pins, contact resistance and oxidation.
- Start the engine and read the value of the oil pressure sensor signal in order to check the function.

  HINT: The oil pressure shall be 0.38 MPa +/- 0.08 MPa with the engine idling.

  Remedy as necessary.

  Other information:

- see **SIGNAL SPECIFICATION**
- see **TEMPERATURE / PRESSURE SENSOR ACTIVE ON DEMAND COUPLING (AOC), REPLACING**
- see **DIFFERENTIAL ELECTRONIC MODULE (DEM), REPLACING**
- see **CONTENTS**

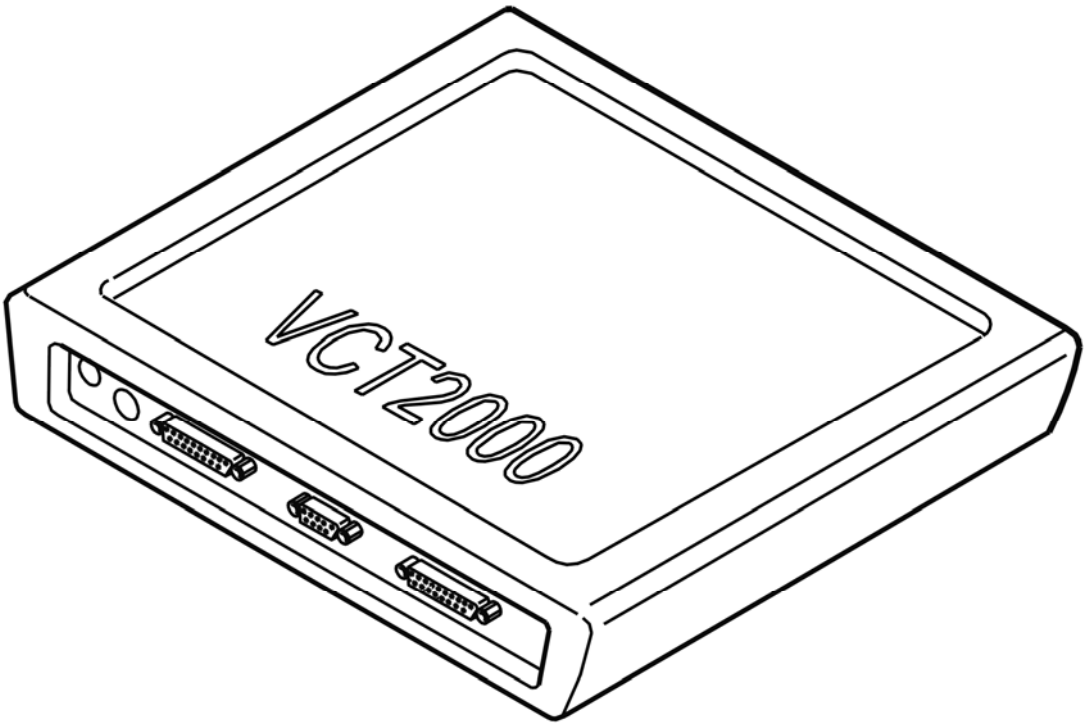

Fig. 6: Identifying VCT2000 Diagnostic Tool Symbol In VIDA
Courtesy of VOLVO CARS CORPORATION

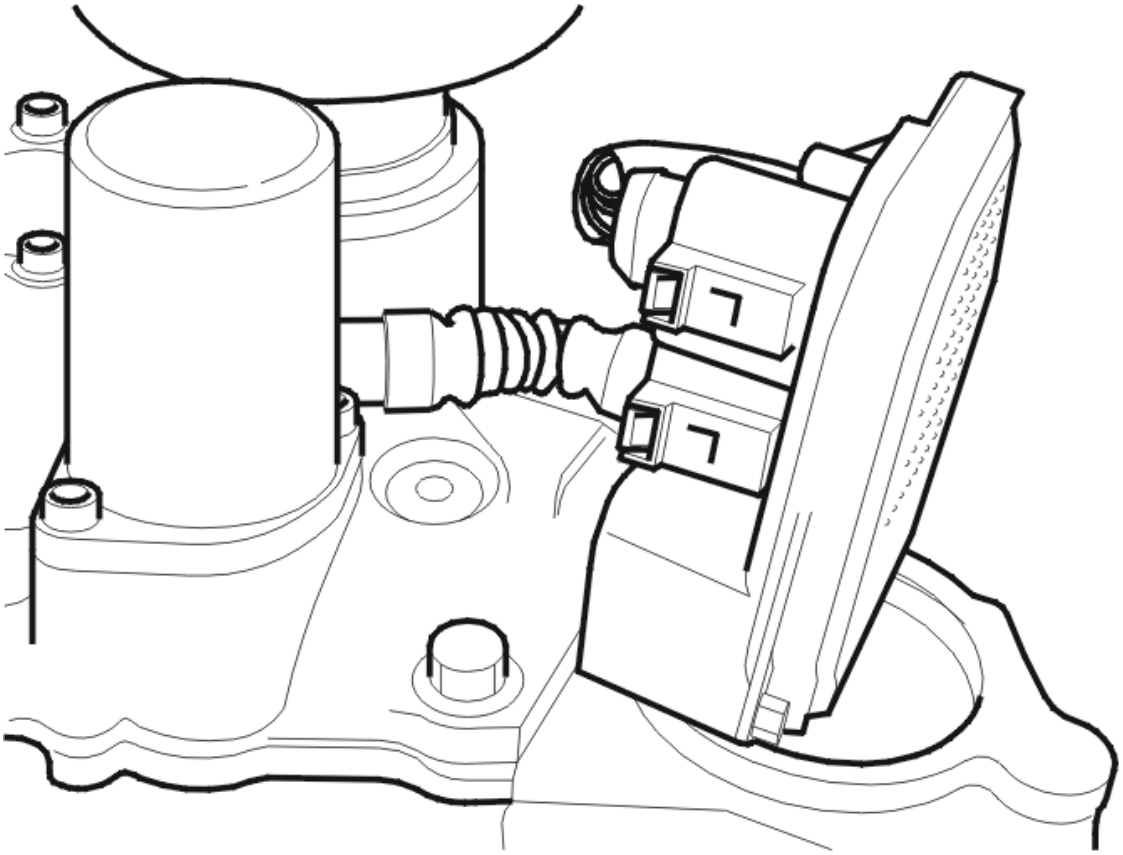

Fig. 7: Identifying Active On Demand Coupling Components
Courtesy of VOLVO CARS CORPORATION

- **Continue**

  Refer to **VERIFICATION**

VERIFICATION

HINT: After carrying out the repair, check that the fault has been remedied.

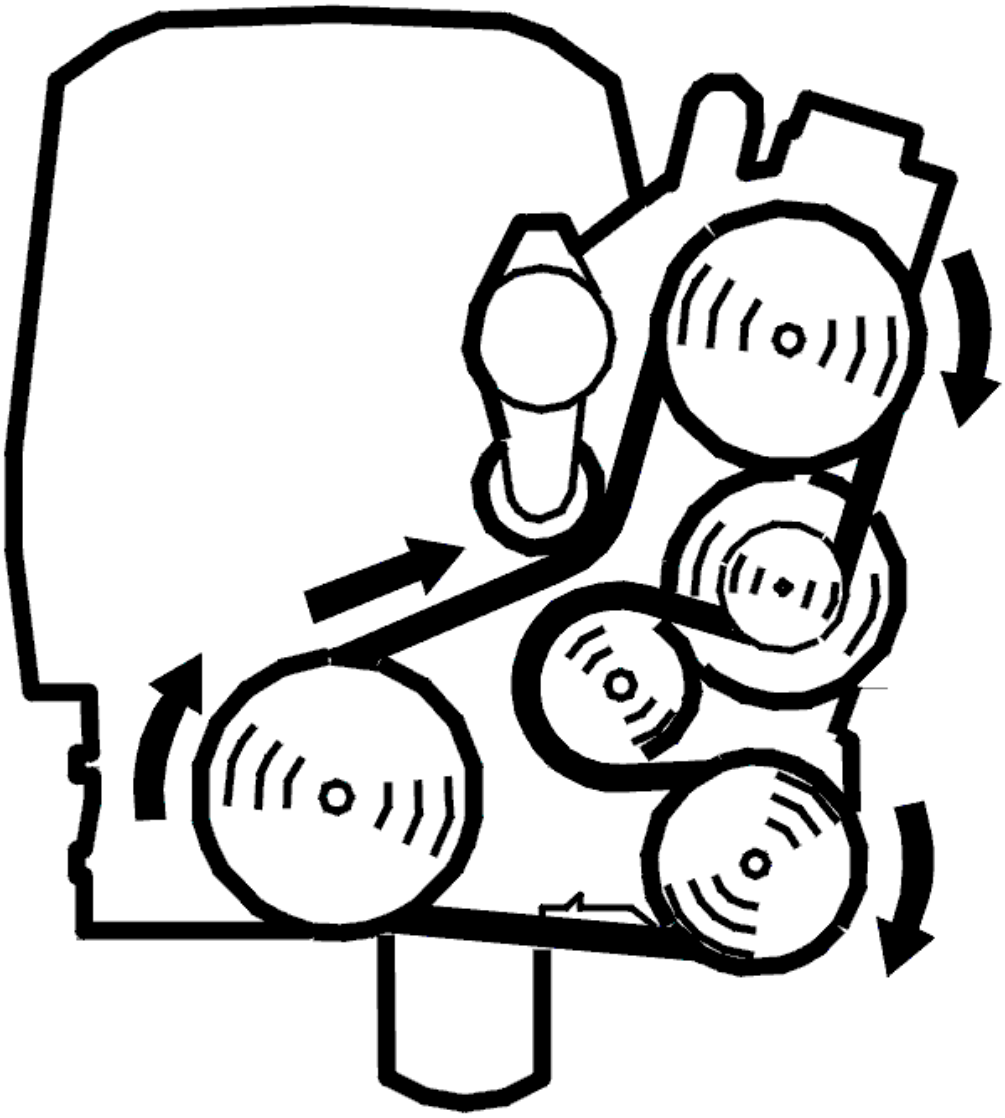

Fig. 8: Belt Routing / Engine Idling - Volvo
Courtesy of VOLVO CARS CORPORATION

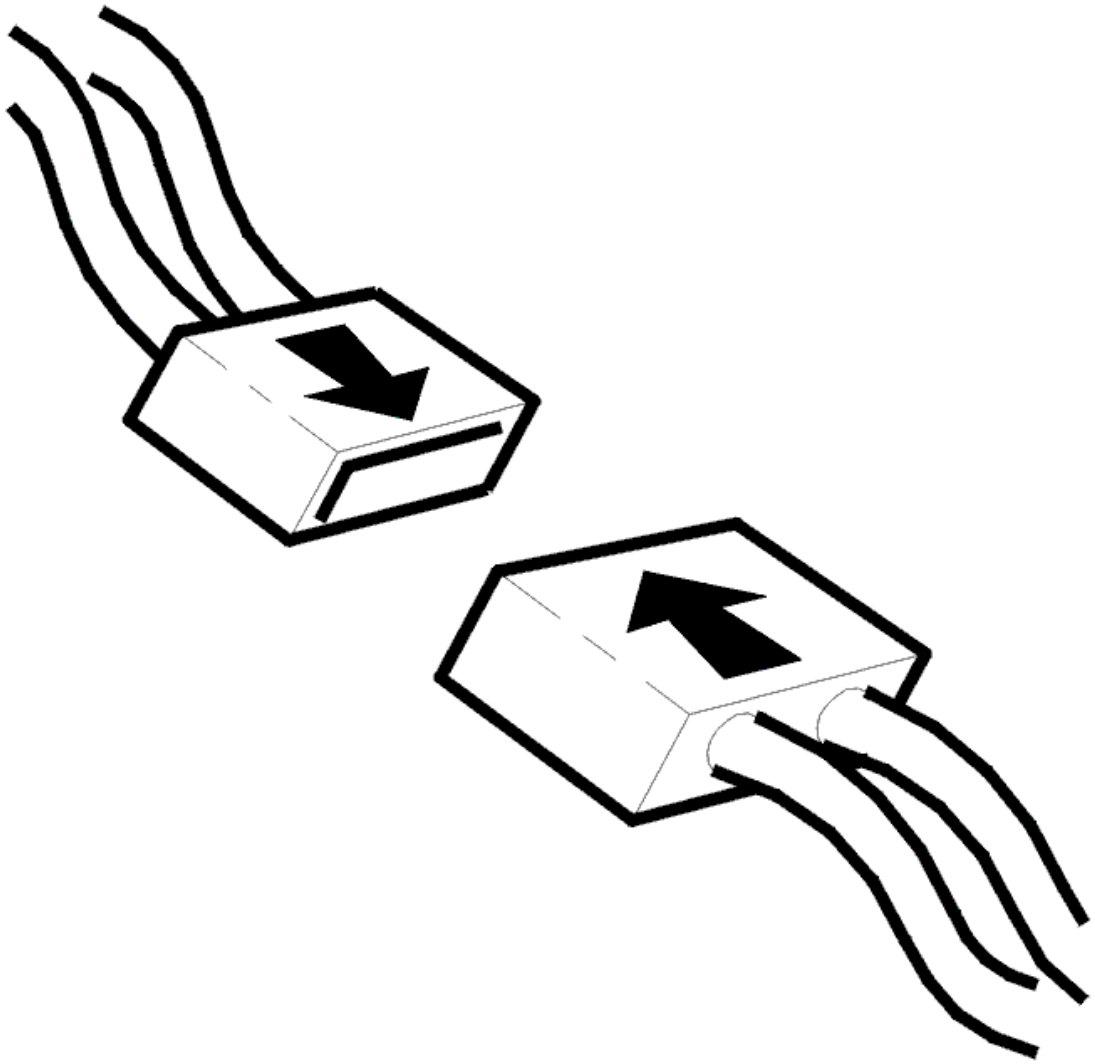

Fig. 9: Connecting Connector
Courtesy of VOLVO CARS CORPORATION

- Ignition off
- Reinstall the connectors, components etc.
- Engine running.

  Read off the oil pressure.

  HINT: The oil pressure should be 0.8 MPa when the engine is idling. The oil pressure sensor has a measurement range from 0 to 4 MPa.

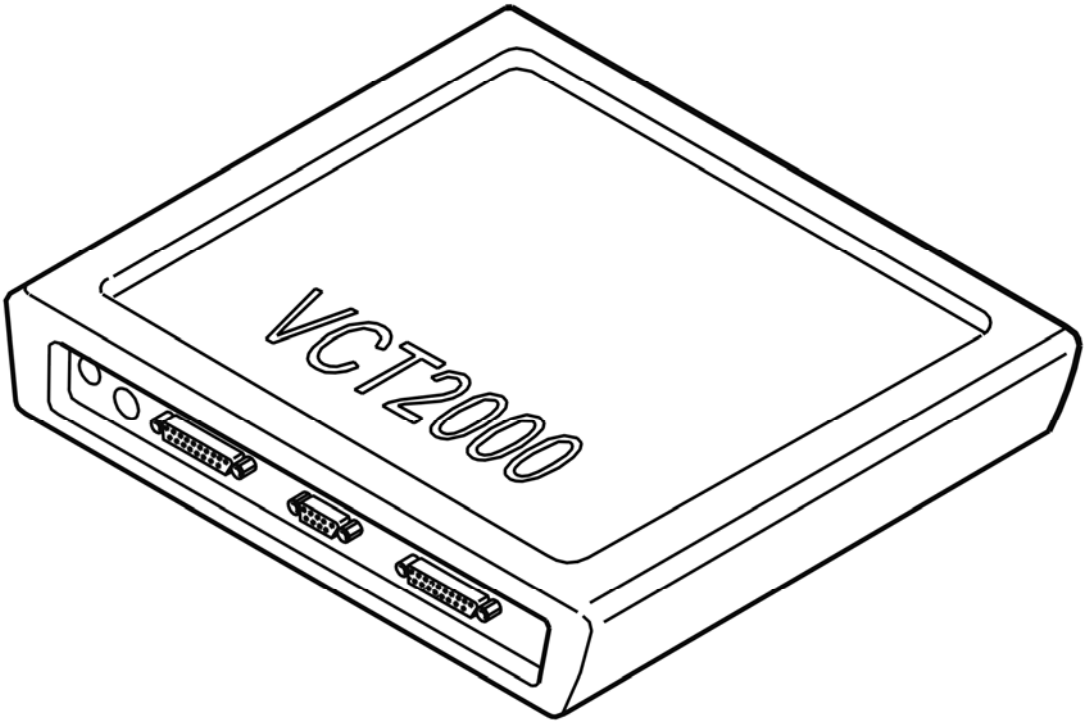

Fig. 10: Identifying VCT2000 Diagnostic Tool Symbol In VIDA
Courtesy of VOLVO CARS CORPORATION

Is the oil pressure OK?

- **YES**

  VERIFIED: Troubleshooting has been completed.

- **NO**

  Refer to **INFORMATION**

INFORMATION

FAULT-TRACING INFORMATION

The fault should have been detected and remedied. As this is not the case fault-tracing has failed.

Exit fault-tracing for this diagnostic trouble code (DTC) or make another attempt.

DEM-P093211: HYDRAULIC PRESSURE SENSOR CIRCUIT. GENERAL ELECTRICAL FAULT. SHORT CIRCUIT TO GROUND. (B6324S, TF-80SC

AWD; B8444S, TF-80SC AWD; 2008)

DIAGNOSTIC TROUBLE CODE (DTC) INFORMATION DEM-P093211

see **DIAGNOSTIC TROUBLE CODE (DTC) INFORMATION DEM-P093211**

FAULT TRACING DEM-P093211

CHECKING THE CONNECTORS AND LEADS

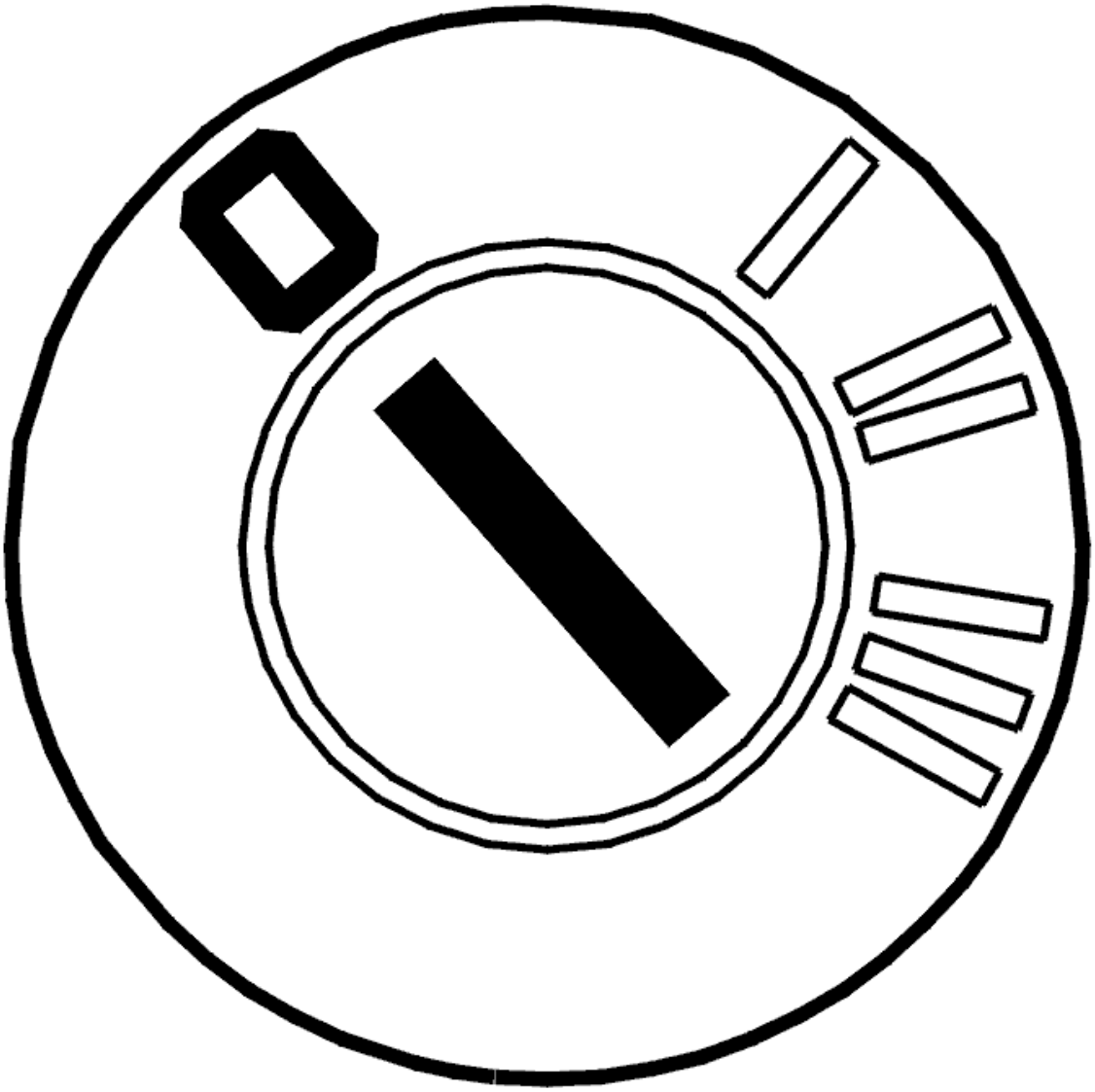

Fig. 11: Identifying Ignition OFF
Courtesy of VOLVO CARS CORPORATION

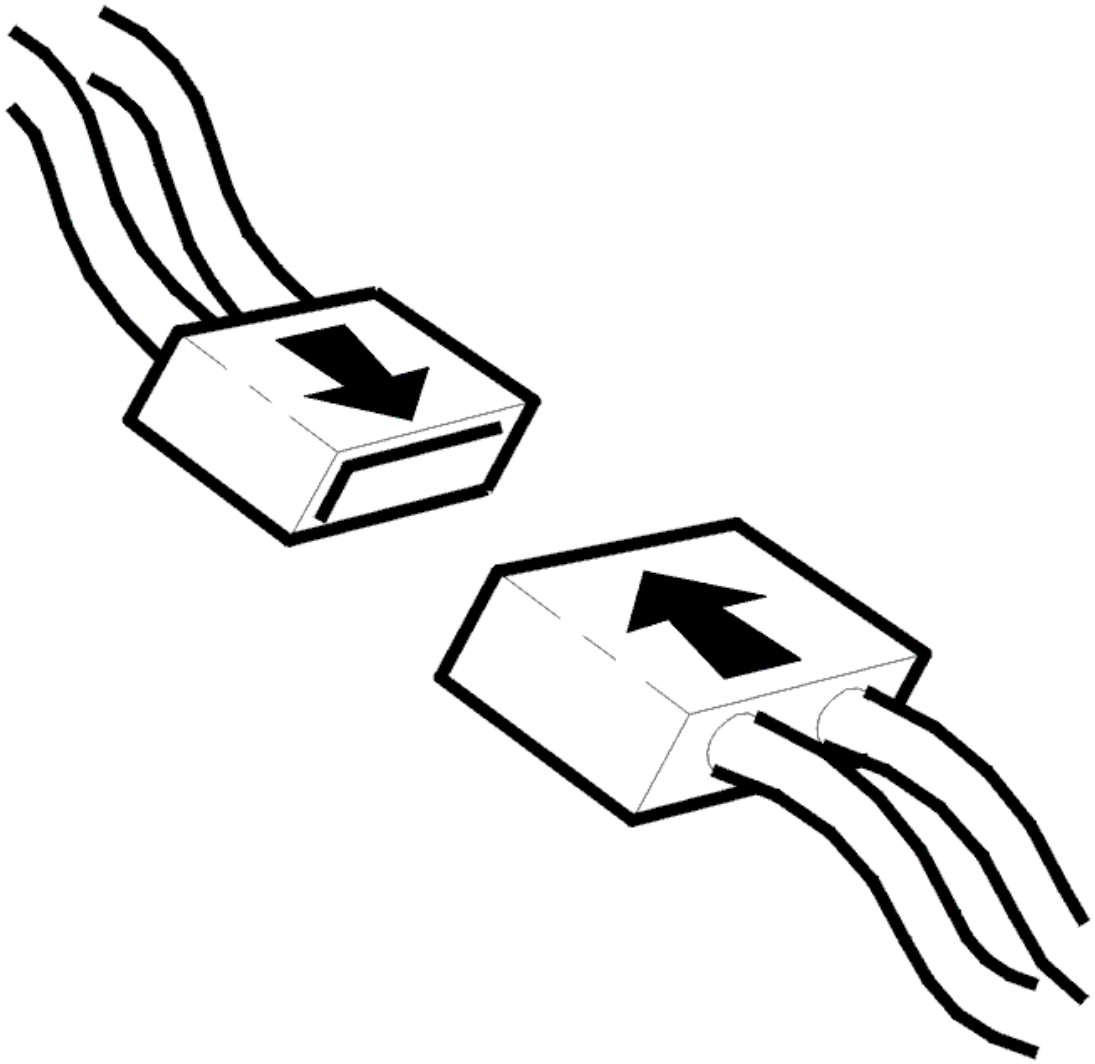

Fig. 12: Connecting Connector
Courtesy of VOLVO CARS CORPORATION

- Ignition off
- Check the connector between the Differential Electronic Module (DEM) and the oil pressure sensor with respect to contact resistance and oxidation.
- Check connector A with respect to depressed or damaged pins, contact resistance and oxidation.
- Start the engine and read the value of the oil pressure sensor signal in order to check the function.

  HINT: The oil pressure should be 0.8 MPa when the engine is idling. The oil pressure sensor has a measurement range from 0 to 4 MPa.

  Remedy as necessary.

  Other information:

- see **SIGNAL SPECIFICATION**
- see **TEMPERATURE / PRESSURE SENSOR ACTIVE ON DEMAND COUPLING (AOC), REPLACING**
- see **DIFFERENTIAL ELECTRONIC MODULE (DEM), REPLACING**
- see **CONTENTS**

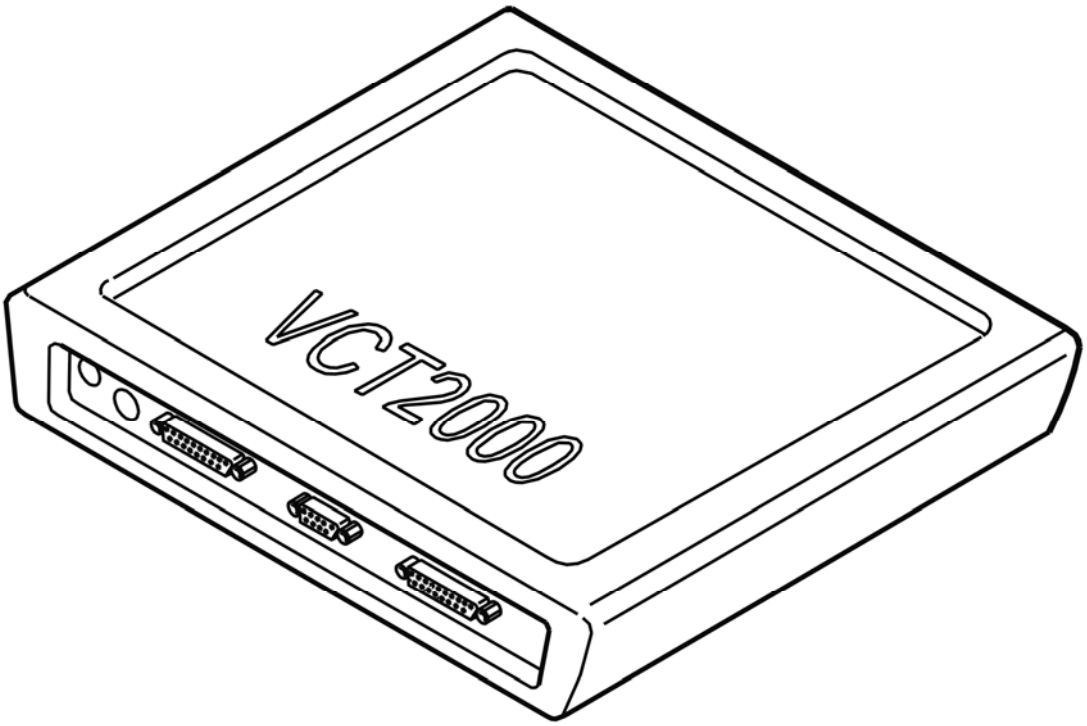

Fig. 13: Identifying VCT2000 Diagnostic Tool Symbol In VIDA
Courtesy of VOLVO CARS CORPORATION

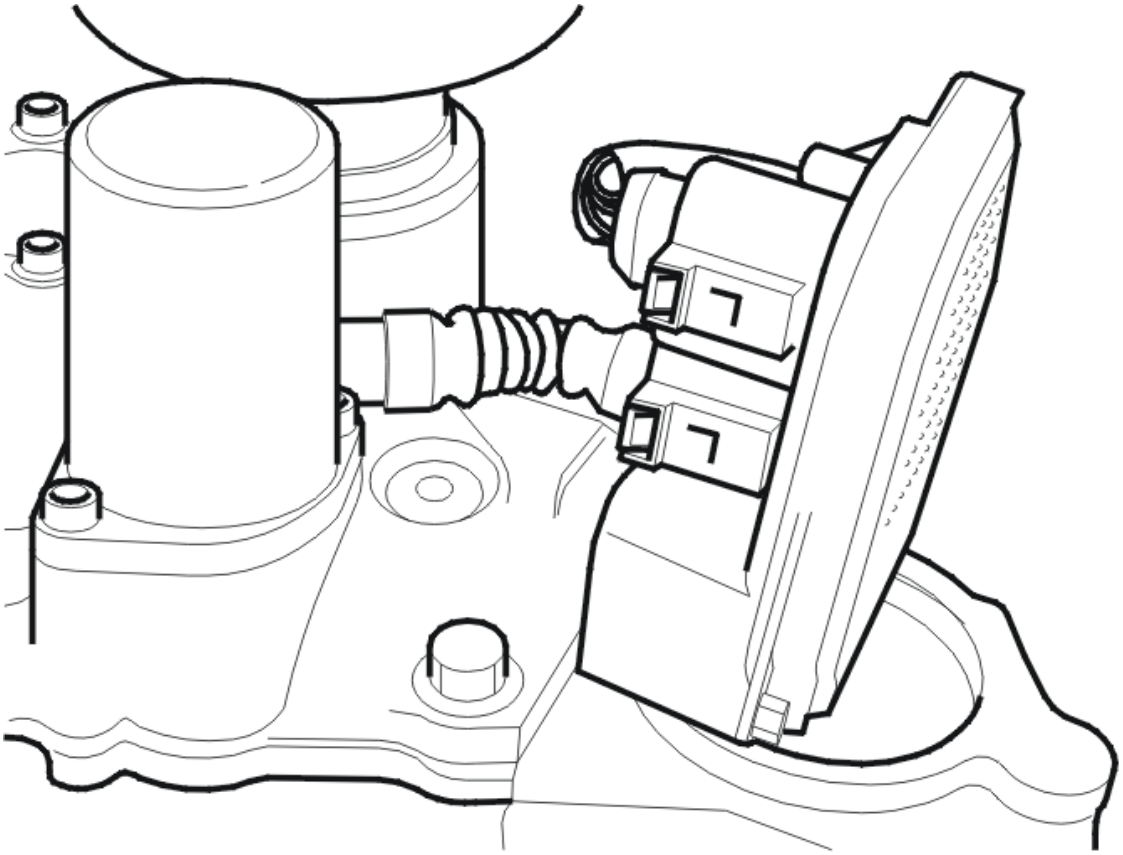

Fig. 14: Identifying Active On Demand Coupling Components
Courtesy of VOLVO CARS CORPORATION

- **Continue**

  Refer to **VERIFICATION**

VERIFICATION

HINT: After carrying out the repair, check that the fault has been remedied.

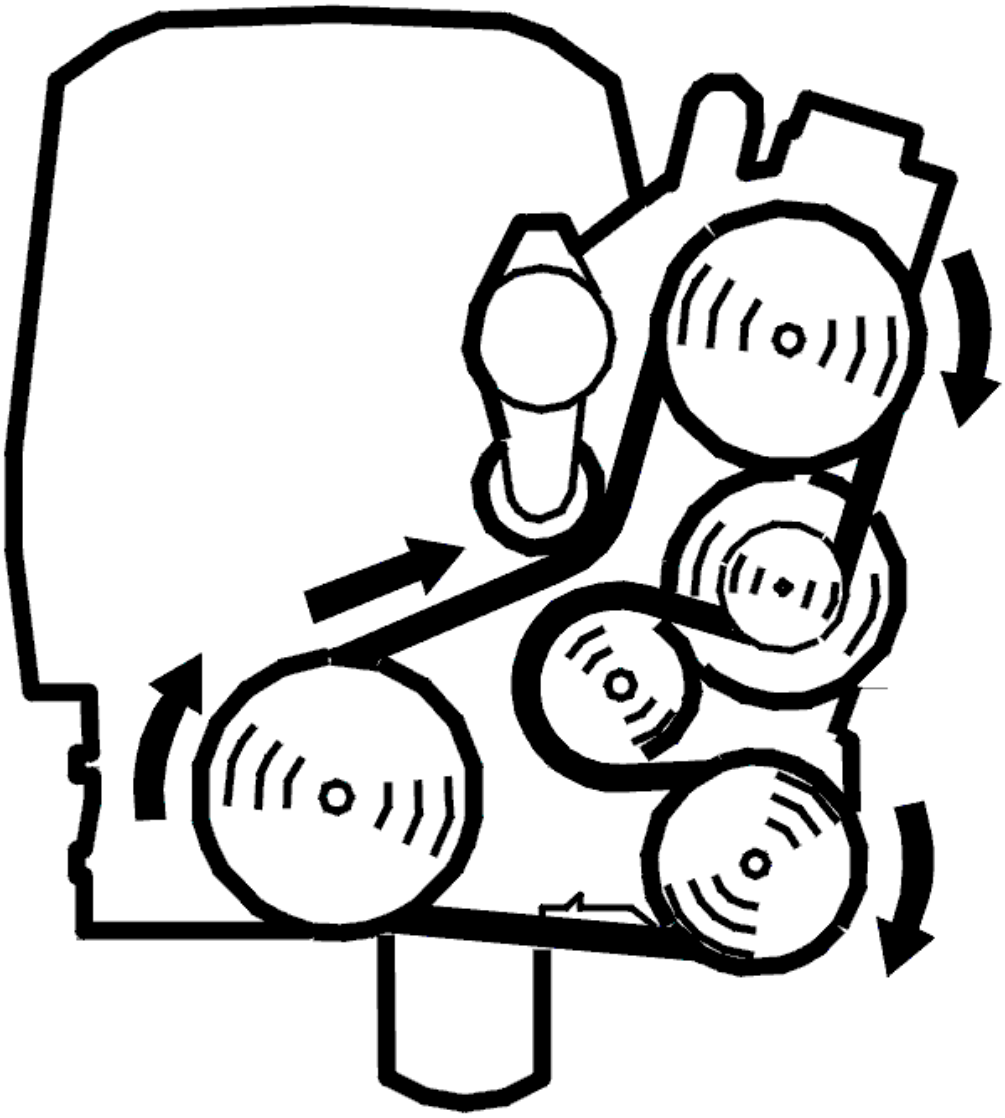

Fig. 15: Belt Routing / Engine Idling - Volvo
Courtesy of VOLVO CARS CORPORATION

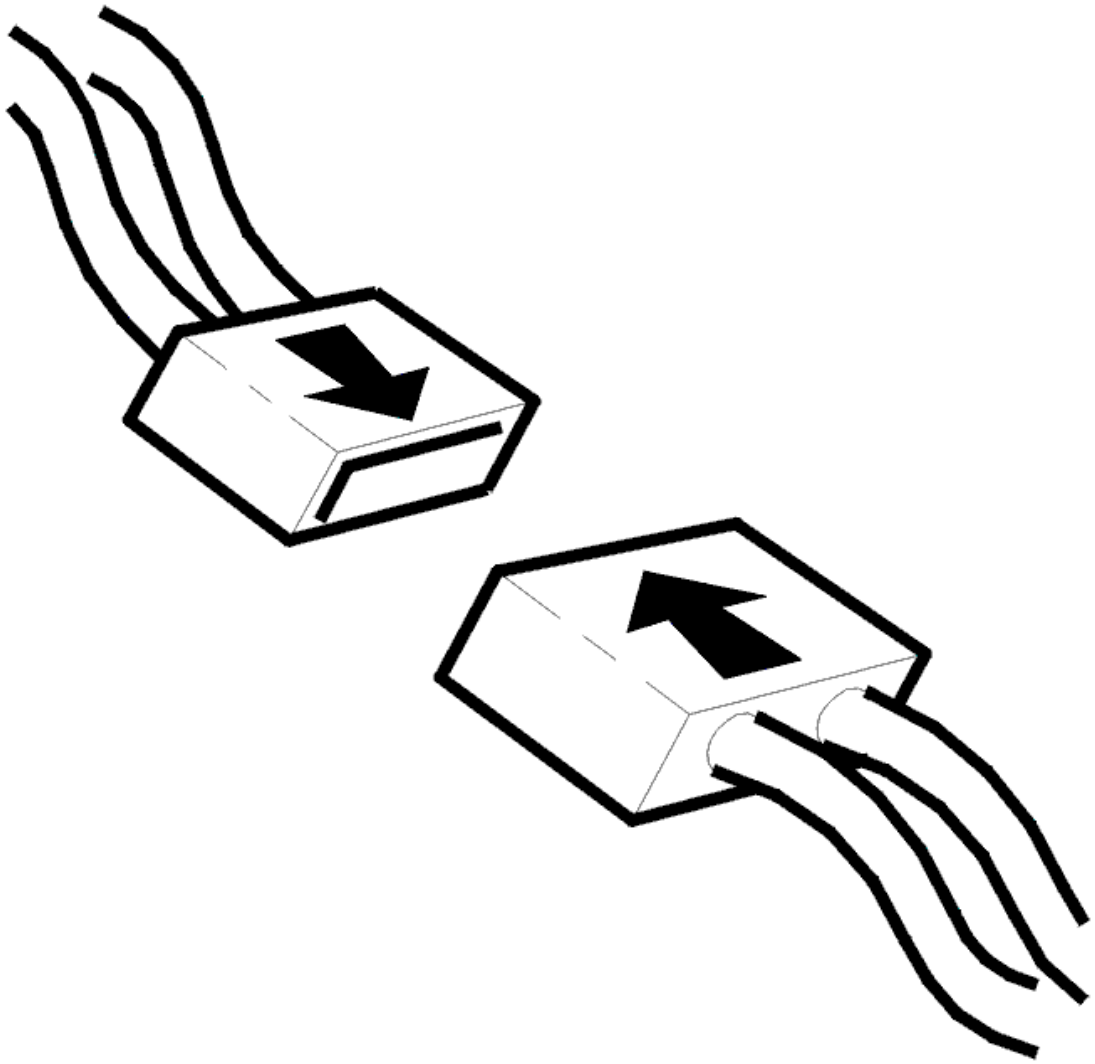

Fig. 16: Connecting Connector
Courtesy of VOLVO CARS CORPORATION

- Ignition off
- Reinstall the connectors, components etc.
- Engine running.

  Read off the oil pressure.

  HINT: The oil pressure should be 0.8 MPa when the engine is idling. The oil pressure sensor has a measurement range from 0 to 4 MPa.

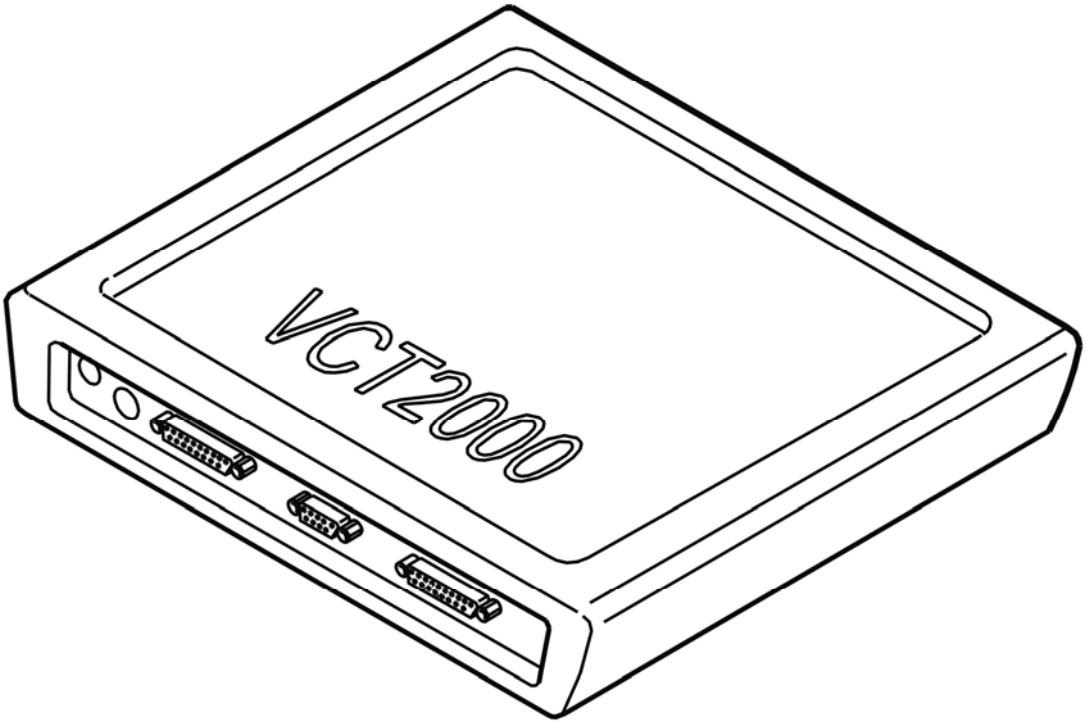

Fig. 17: Identifying VCT2000 Diagnostic Tool Symbol In VIDA
Courtesy of VOLVO CARS CORPORATION

Is the oil pressure OK?

- **YES**

  VERIFIED: Troubleshooting has been completed.

- **NO**

  Refer to **INFORMATION**

INFORMATION

FAULT-TRACING INFORMATION

The fault should have been detected and remedied. As this is not the case fault-tracing has failed.

Exit fault-tracing for this diagnostic trouble code (DTC) or make another attempt.

DEM-P093211: HYDRAULIC PRESSURE SENSOR CIRCUIT. GENERAL ELECTRICAL FAULT. SHORT CIRCUIT TO GROUND. (B8444S, TF-80SC

AWD; 2006-2007)

DIAGNOSTIC TROUBLE CODE (DTC) INFORMATION DEM-P093211

see **DIAGNOSTIC TROUBLE CODE (DTC) INFORMATION DEM-P093211**

FAULT TRACING DEM-P093211

see **FAULT TRACING DEM-P093211**

DEM-P093211: HYDRAULIC PRESSURE SENSOR CIRCUIT. GENERAL ELECTRICAL FAULT. SHORT CIRCUIT TO GROUND. (TF-80SC AWD; 2005)

DIAGNOSTIC TROUBLE CODE (DTC) INFORMATION DEM-P093211

see **DIAGNOSTIC TROUBLE CODE (DTC) INFORMATION DEM-P093211**

FAULT TRACING DEM-P093211

see **FAULT TRACING DEM-P093211**

DEM-P093215: HYDRAULIC PRESSURE SENSOR CIRCUIT. GENERAL ELECTRICAL FAULT. SHORT CIRCUIT TO A VOLTAGE SOURCE OR OPEN CIRCUIT. (B6324S, TF-80SC AWD; B8444S, TF-80SC AWD; 2008)

DIAGNOSTIC TROUBLE CODE (DTC) INFORMATION DEM-P093215

Condition

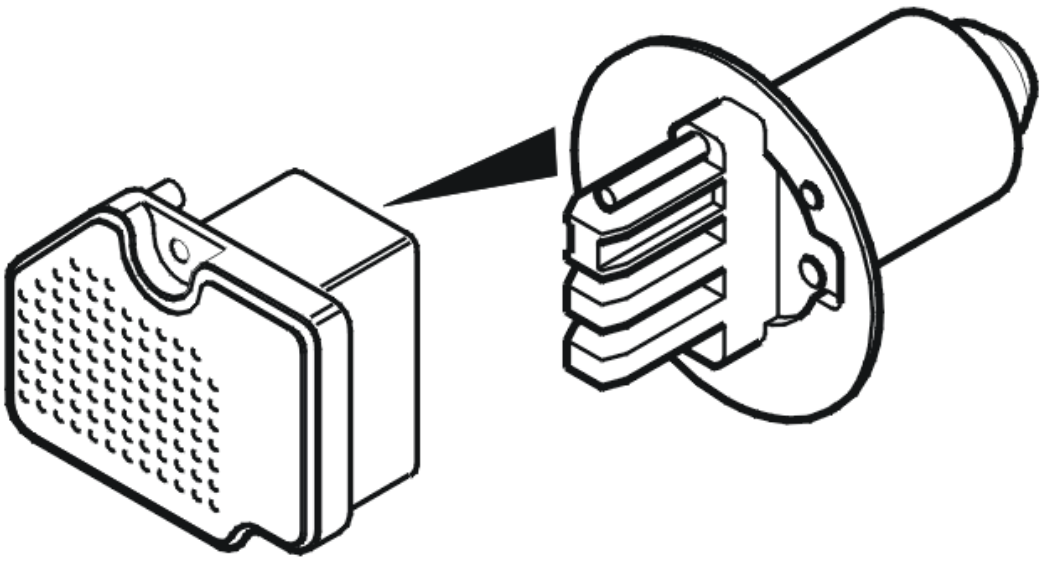

Fig. 18: Control Module And Oil Temperature Sensor
Courtesy of VOLVO CARS CORPORATION

The Differential Electronic Module (DEM) checks that the signal from the oil pressure sensor is appropriate. If the signal from the oil pressure sensor is higher than the predefined upper limit, the control module interprets this as a fault and the trouble code is set.

The diagnostic trouble code can be diagnosed when the ignition is on.

Substitute Value

- Four wheel drive is disengaged.

Possible Source

- Connector resistance and oxidation in the connectors.
- Damaged oil pressure sensor.
- Damaged control module.

Fault symptom[s]

- Four wheel drive functions badly.

FAULT TRACING DEM-P093215

CHECKING THE CONNECTORS AND LEADS

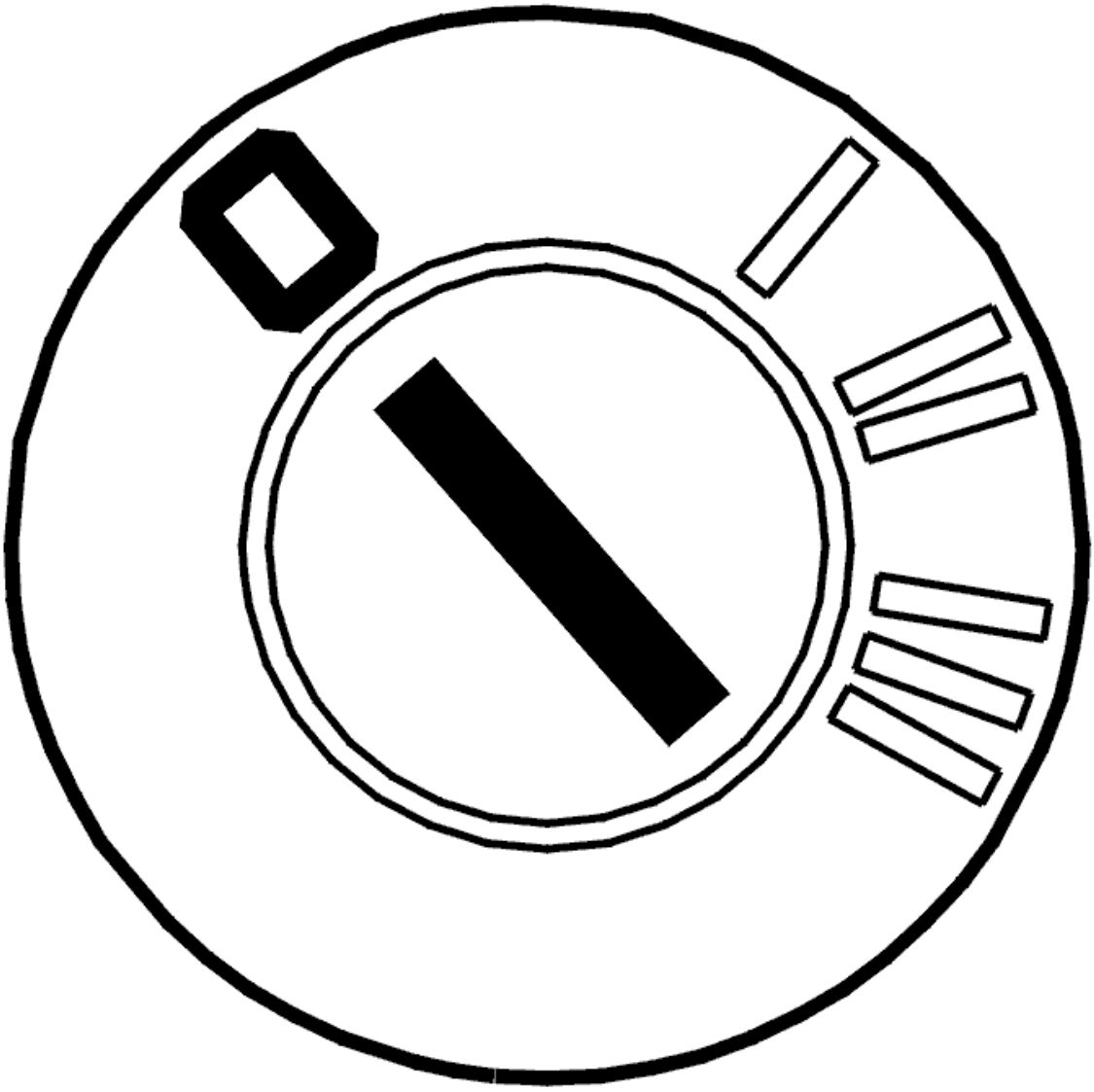

Fig. 19: Identifying Ignition OFF
Courtesy of VOLVO CARS CORPORATION

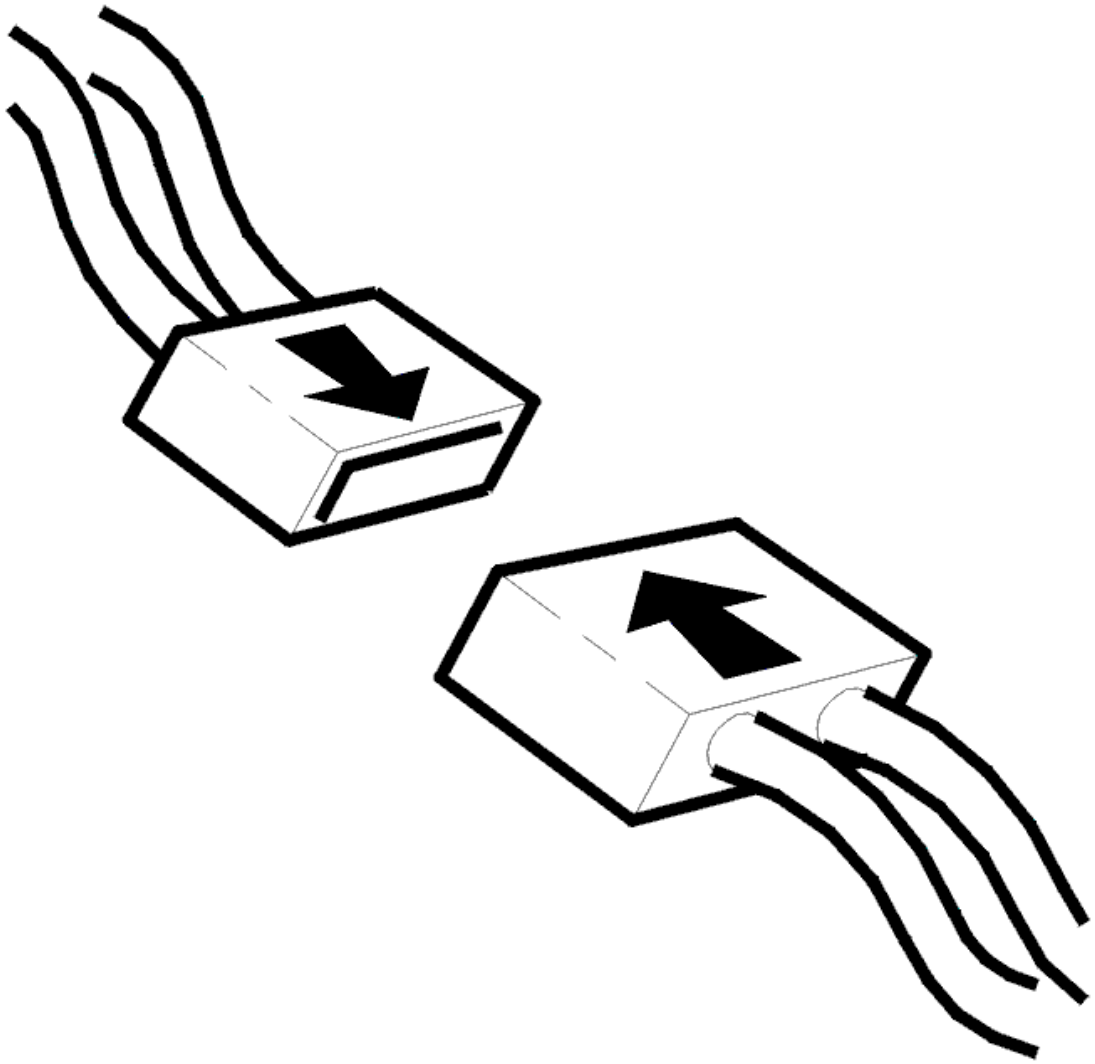

Fig. 20: Connecting Connector
Courtesy of VOLVO CARS CORPORATION

- Ignition off
- Check the connector between the Differential Electronic Module (DEM) and the oil pressure sensor with respect to contact resistance and oxidation.
- Check connector A with respect to depressed or damaged pins, contact resistance and oxidation.
- Start the engine and read the value of the oil pressure sensor signal in order to check the function.

  HINT: The oil pressure should be 0.8 MPa when the engine is idling. The oil pressure sensor has a measurement range from 0 to 4 MPa.

  Remedy as necessary.

  Other information:

- see **SIGNAL SPECIFICATION**
- see **TEMPERATURE / PRESSURE SENSOR ACTIVE ON DEMAND COUPLING (AOC), REPLACING**
- see **DIFFERENTIAL ELECTRONIC MODULE (DEM), REPLACING**
- see **CONTENTS**

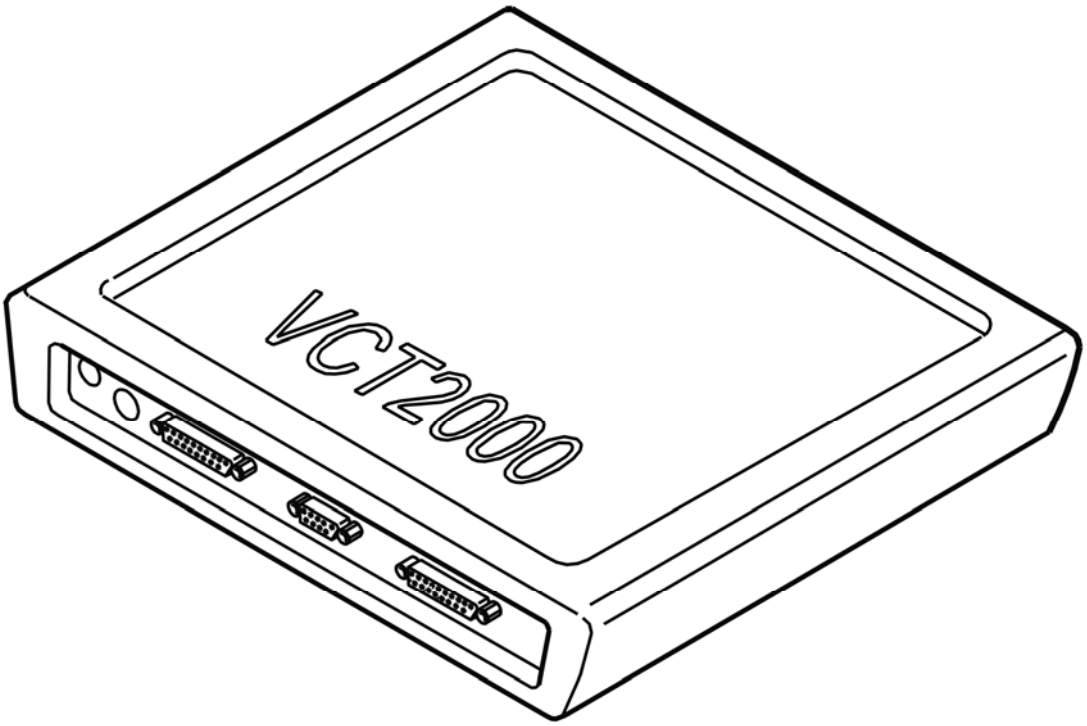

Fig. 21: Identifying VCT2000 Diagnostic Tool Symbol In VIDA
Courtesy of VOLVO CARS CORPORATION

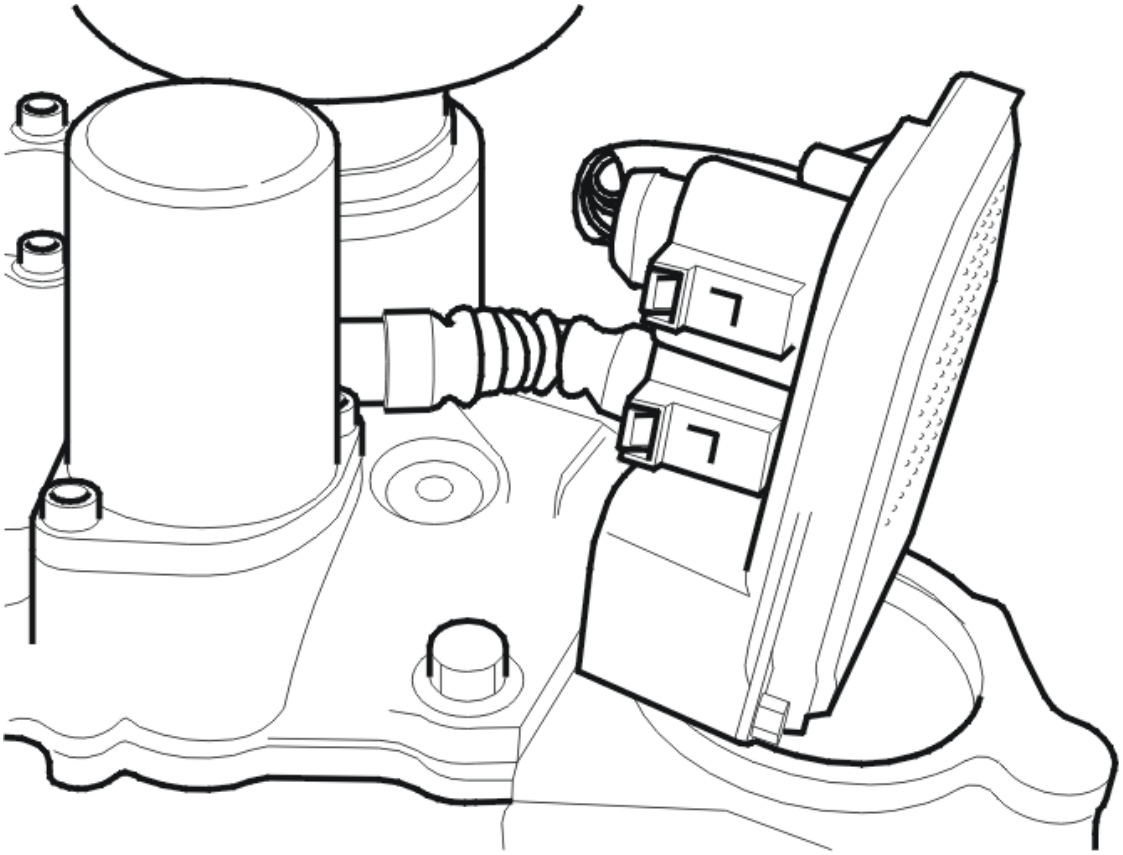

Fig. 22: Identifying Active On Demand Coupling Components
Courtesy of VOLVO CARS CORPORATION

- **Continue**

  Refer to **VERIFICATION**

VERIFICATION

HINT: After carrying out the repair, check that the fault has been remedied.

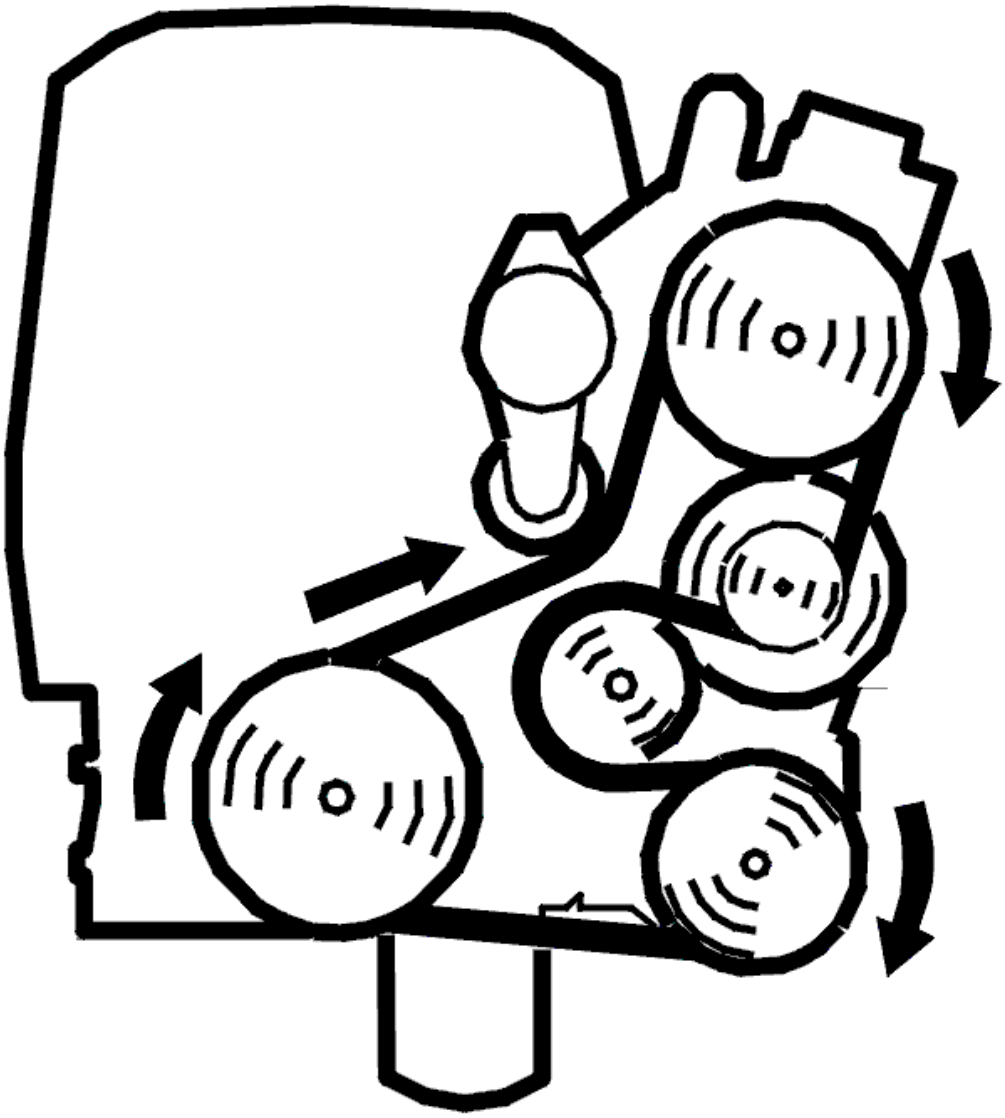

Fig. 23: Belt Routing / Engine Idling - Volvo
Courtesy of VOLVO CARS CORPORATION

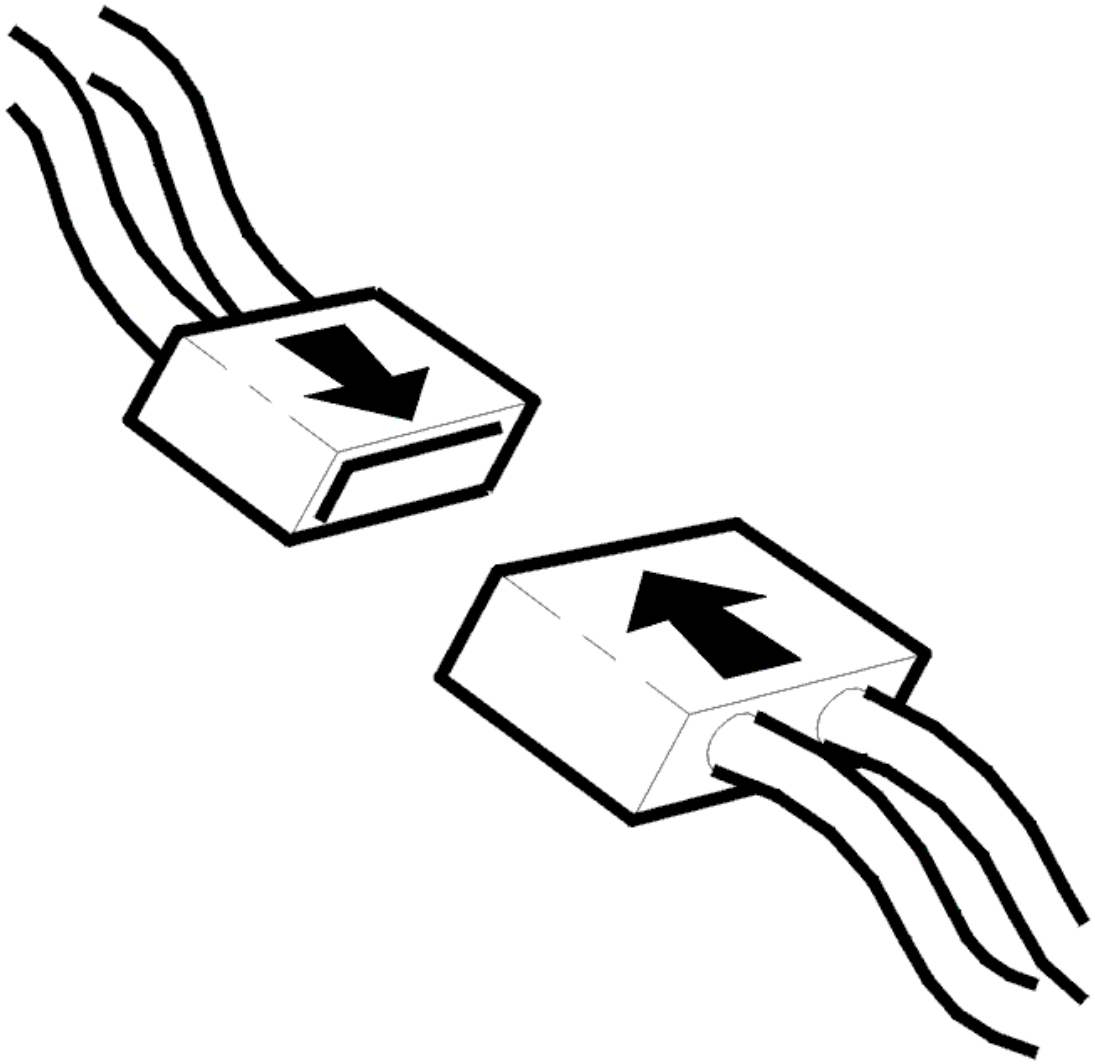

Fig. 24: Connecting Connector
Courtesy of VOLVO CARS CORPORATION

- Ignition off
- Reinstall the connectors, components etc.
- Engine running.

  Read off the oil pressure.

  HINT: The oil pressure should be 0.8 MPa when the engine is idling. The oil pressure sensor has a measurement range from 0 to 4 MPa.

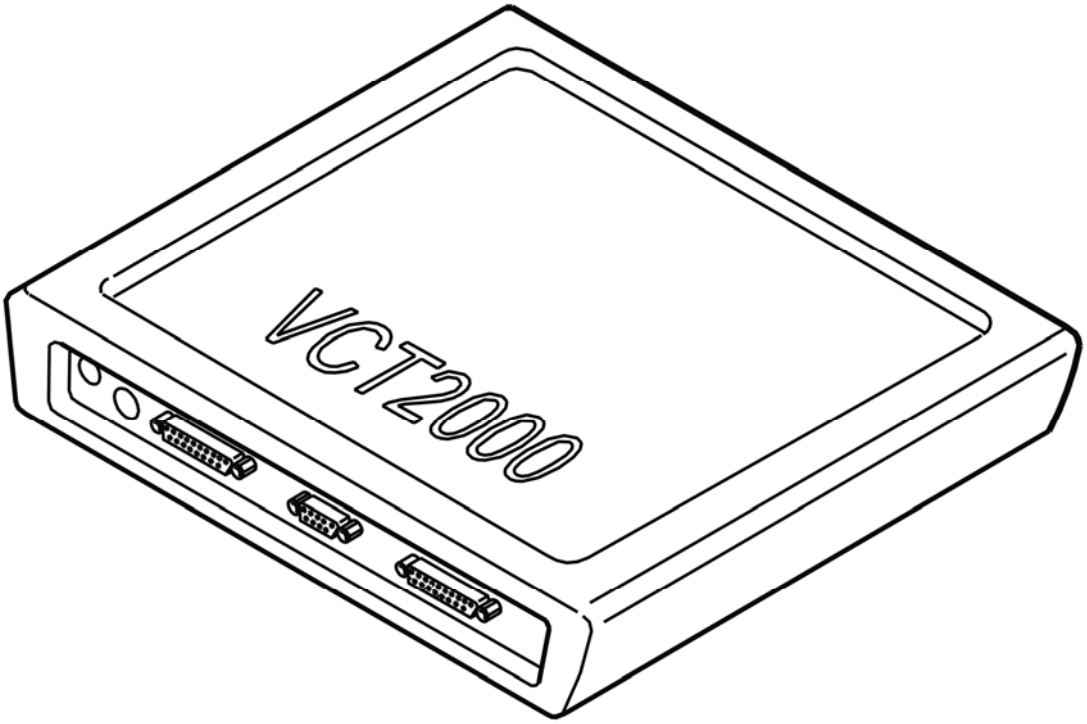

Fig. 25: Identifying VCT2000 Diagnostic Tool Symbol In VIDA
Courtesy of VOLVO CARS CORPORATION

Is the oil pressure OK?

- **YES**

  VERIFIED: Troubleshooting has been completed.

- **NO**

  Refer to **INFORMATION**

INFORMATION

FAULT-TRACING INFORMATION

The fault should have been detected and remedied. As this is not the case fault-tracing has failed.

Exit fault-tracing for this diagnostic trouble code (DTC) or make another attempt.

DEM-P093215: HYDRAULIC PRESSURE SENSOR CIRCUIT. GENERAL ELECTRICAL FAULT. SHORT CIRCUIT TO A VOLTAGE SOURCE OR OPEN

CIRCUIT. (B6324S, TF-80SC AWD; 2007)

DIAGNOSTIC TROUBLE CODE (DTC) INFORMATION DEM-P093215

see **DIAGNOSTIC TROUBLE CODE (DTC) INFORMATION DEM-P093215**

FAULT TRACING DEM-P093215

CHECKING PRESSURE AND TEMPERATURE SENSOR

NOTE: **Reading out of oil pressure can take place first after the diagnostic trouble code (DTC) has been deleted. Therefore frozen values should be printed and saved before deleting takes place.**

1. Test of pressure sensor.
   - Ignition on.
   - Using Volvo Scan Tool hit the VCT2000 symbol.

     HINT: Correct pressure shall be 0.00 +/- 0.08 MPa.

   - Engine idling
   - Using Volvo Scan Tool hit the VCT2000 symbol.

     HINT: Correct pressure shall be 0.38 +/- 0.08 MPa.

2. Test of temperature sensor.
   - Ignition on.
   - Using Volvo Scan Tool hit the VCT2000 symbol.

     HINT: Normal value for ambient temperature when the vehicle is cold and (+20 to +50 °C) when the vehicle is driven.

If wrong value is read out, then diagnostic trouble code shall be erased and the sensor changed. After changing sensor, repeat the test procedure again.

NOTE: **There are two types of sensors, an 80 bar and a 40 bar. Differential electronic module (DEM) has hardware number 30759701, 30785483, 30759682, 30783198, 30735844, or 30783018, an 80 bar pressure sensor shall be installed. If Differential electronic module (DEM) has another hardware number than above, a 40 bar sensor shall be installed.**

HINT: For reading out of hardware number, see VIDA/DIAGNOSTICS/NETWORK/DEM.

Other information

- see **TEMPERATURE / PRESSURE SENSOR ACTIVE ON DEMAND COUPLING (AOC), REPLACING**

Fig. 26: Identifying VCT2000 Diagnostic Tool Symbol In VIDA
Courtesy of VOLVO CARS CORPORATION

Has the fault been remedied?

- **YES**

  OKAY: Troubleshooting has been completed.

- **NO**

  Refer to **CHECKING THE CONNECTORS AND LEADS**

CHECKING THE CONNECTORS AND LEADS

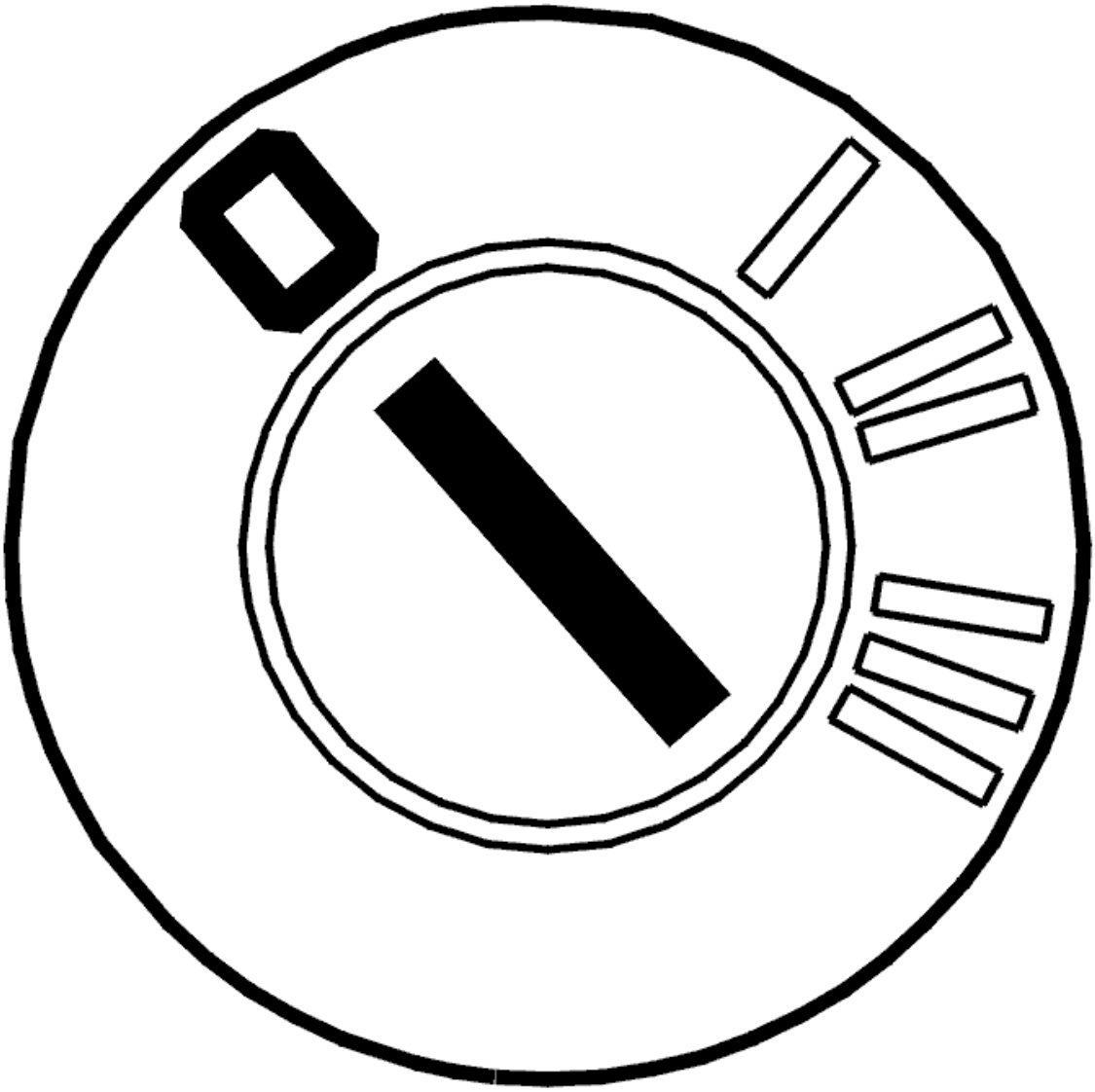

Fig. 27: Identifying Ignition OFF
Courtesy of VOLVO CARS CORPORATION

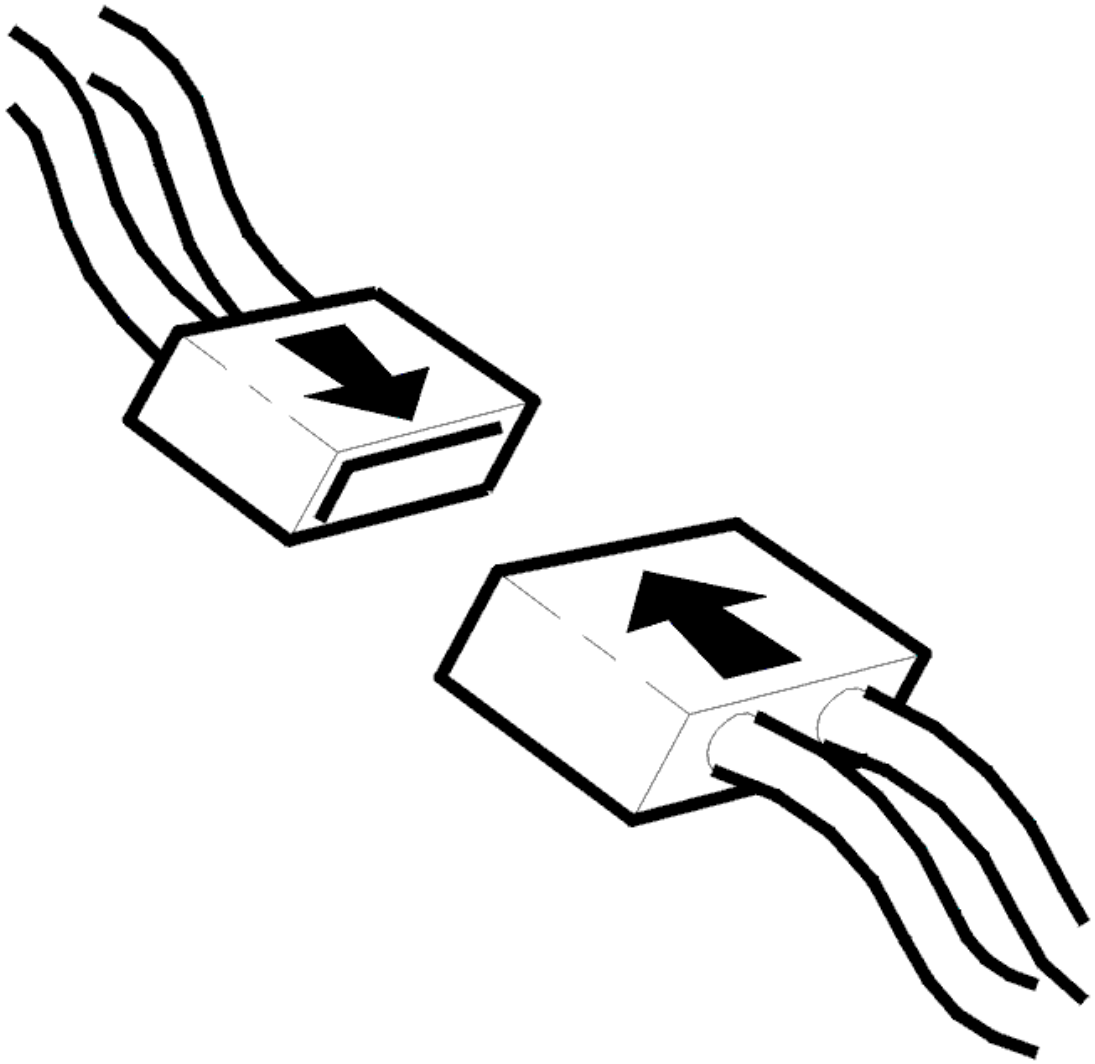

Fig. 28: Connecting Connector
Courtesy of VOLVO CARS CORPORATION

- Ignition off
- Check the connector between the Differential Electronic Module (DEM) and the oil pressure sensor with respect to contact resistance and oxidation.
- Check connector A with respect to depressed or damaged pins, contact resistance and oxidation.
- Start the engine and read the value of the oil pressure sensor signal in order to check the function.

  HINT: The oil pressure shall be 0.38 MPa +/- 0.08 MPa with the engine idling.

  Remedy as necessary.

  Other information:

- see **SIGNAL SPECIFICATION**
- see **TEMPERATURE / PRESSURE SENSOR ACTIVE ON DEMAND COUPLING (AOC), REPLACING**
- see **DIFFERENTIAL ELECTRONIC MODULE (DEM), REPLACING**
- see **CONTENTS**

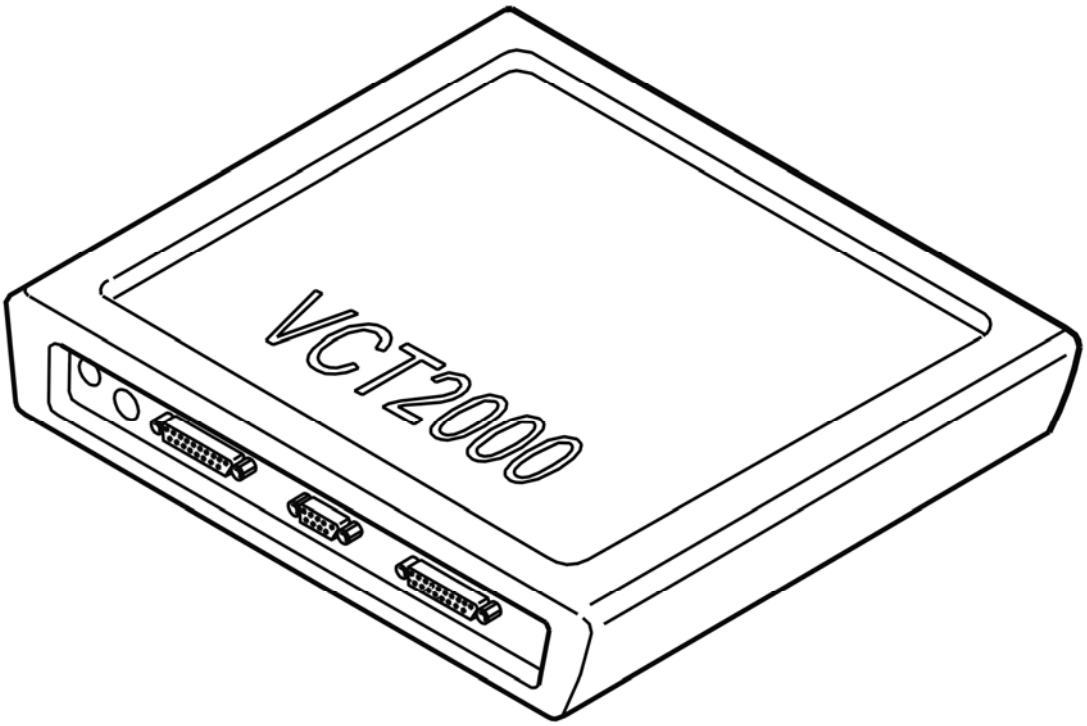

Fig. 29: Identifying VCT2000 Diagnostic Tool Symbol In VIDA
Courtesy of VOLVO CARS CORPORATION

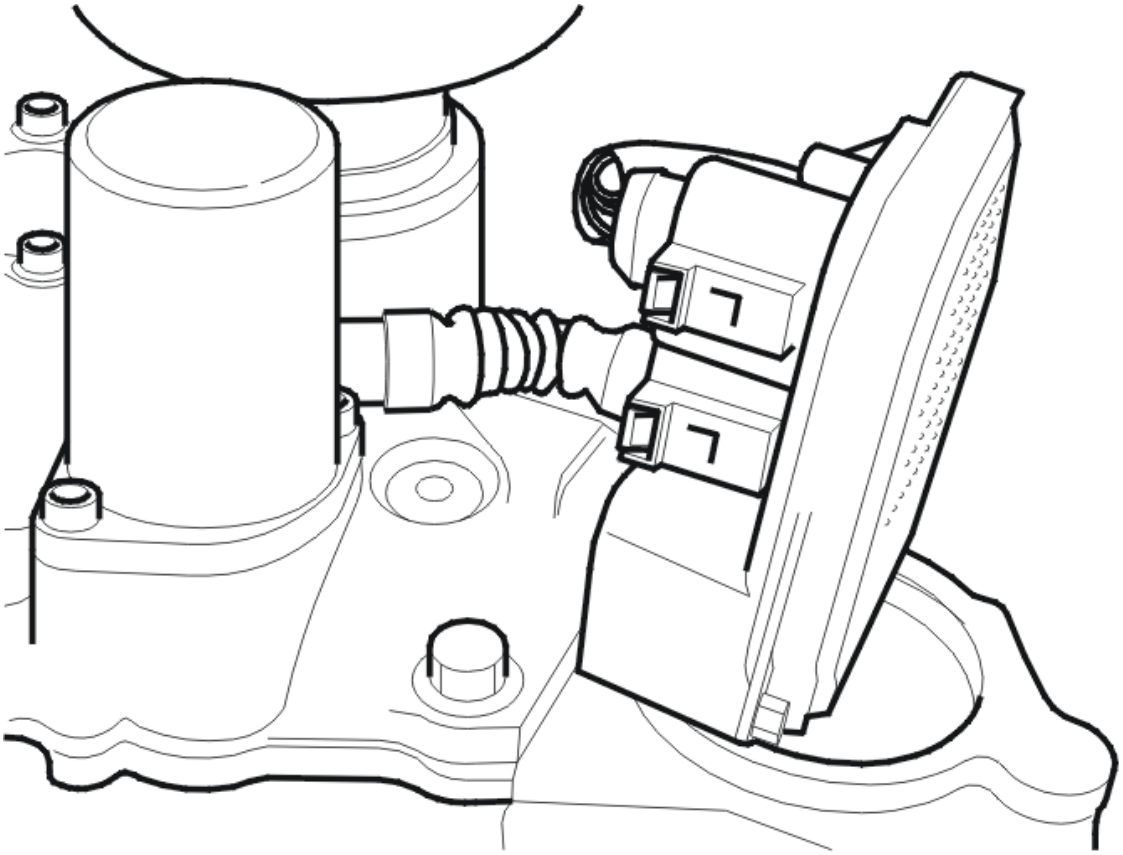

Fig. 30: Identifying Active On Demand Coupling Components
Courtesy of VOLVO CARS CORPORATION

- **Continue**

  Refer to **VERIFICATION**

VERIFICATION

HINT: After carrying out the repair, check that the fault has been remedied.

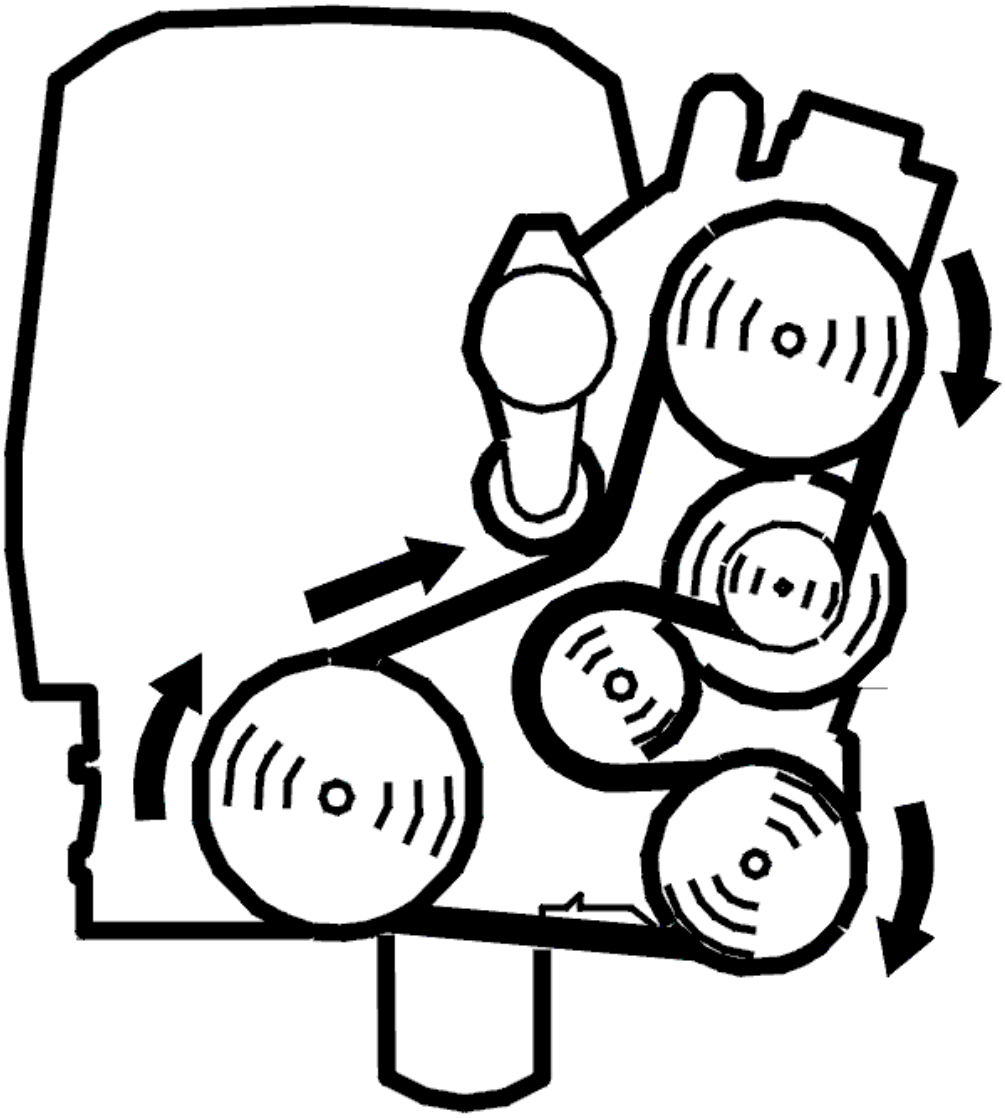

Fig. 31: Belt Routing / Engine Idling - Volvo
Courtesy of VOLVO CARS CORPORATION

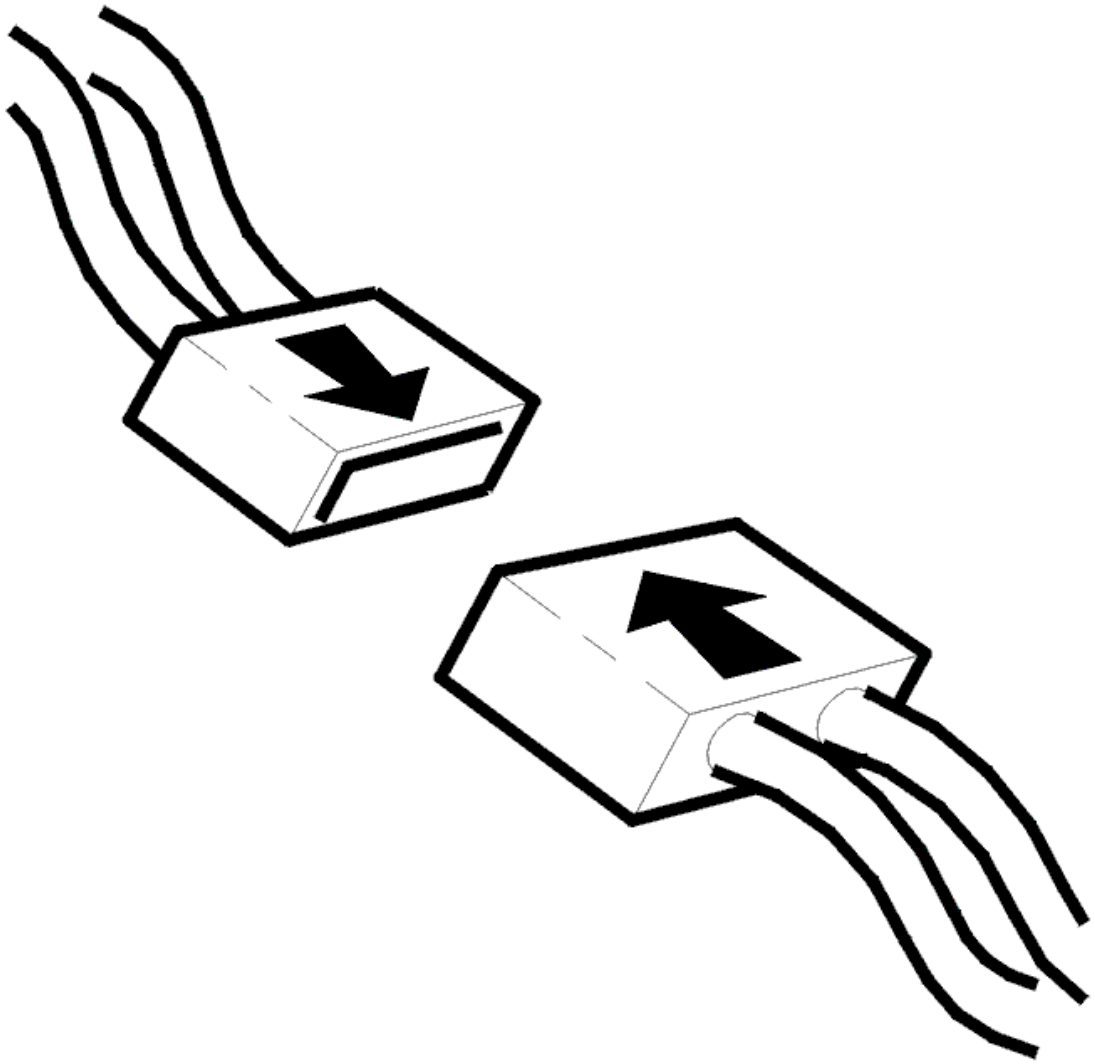

Fig. 32: Connecting Connector
Courtesy of VOLVO CARS CORPORATION

- Ignition off
- Reinstall the connectors, components etc.
- Engine running.

  Read off the oil pressure.

  HINT: The oil pressure should be 0.8 MPa when the engine is idling. The oil pressure sensor has a measurement range from 0 to 4 MPa.

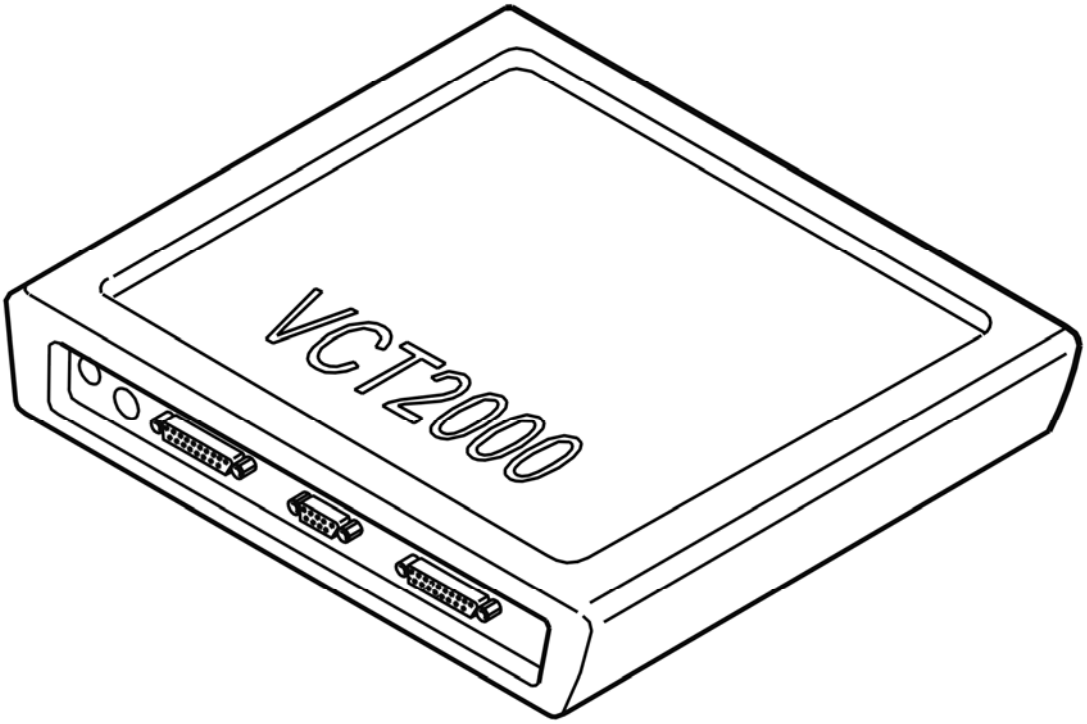

Fig. 33: Identifying VCT2000 Diagnostic Tool Symbol In VIDA
Courtesy of VOLVO CARS CORPORATION

Is the oil pressure OK?

- **YES**

  VERIFIED: Troubleshooting has been completed.

- **NO**

  Refer to **INFORMATION**

INFORMATION

FAULT-TRACING INFORMATION

The fault should have been detected and remedied. As this is not the case fault-tracing has failed.

Exit fault-tracing for this diagnostic trouble code (DTC) or make another attempt.

DEM-P093215: HYDRAULIC PRESSURE SENSOR CIRCUIT. GENERAL ELECTRICAL FAULT. SHORT CIRCUIT TO A VOLTAGE SOURCE OR OPEN

CIRCUIT. (B8444S, TF-80SC AWD; 2006-2007)

DIAGNOSTIC TROUBLE CODE (DTC) INFORMATION DEM-P093215

see **DIAGNOSTIC TROUBLE CODE (DTC) INFORMATION DEM-P093215**

FAULT TRACING DEM-P093215

see **FAULT TRACING DEM-P093215**

DEM-P093215: HYDRAULIC PRESSURE SENSOR CIRCUIT. GENERAL ELECTRICAL FAULT. SHORT CIRCUIT TO A VOLTAGE SOURCE OR OPEN CIRCUIT. (TF-80SC AWD; 2005)

DIAGNOSTIC TROUBLE CODE (DTC) INFORMATION DEM-P093215

see **DIAGNOSTIC TROUBLE CODE (DTC) INFORMATION DEM-P093215**

FAULT TRACING DEM-P093215

see **FAULT TRACING DEM-P093215**

DEM-P093711: OIL TEMPERATURE SENSOR CIRCUIT. GENERAL ELECTRICAL FAULT. SHORT CIRCUIT TO GROUND (B6324S, TF-80SC AWD; 2007)

DIAGNOSTIC TROUBLE CODE (DTC) INFORMATION DEM-P093711

Condition

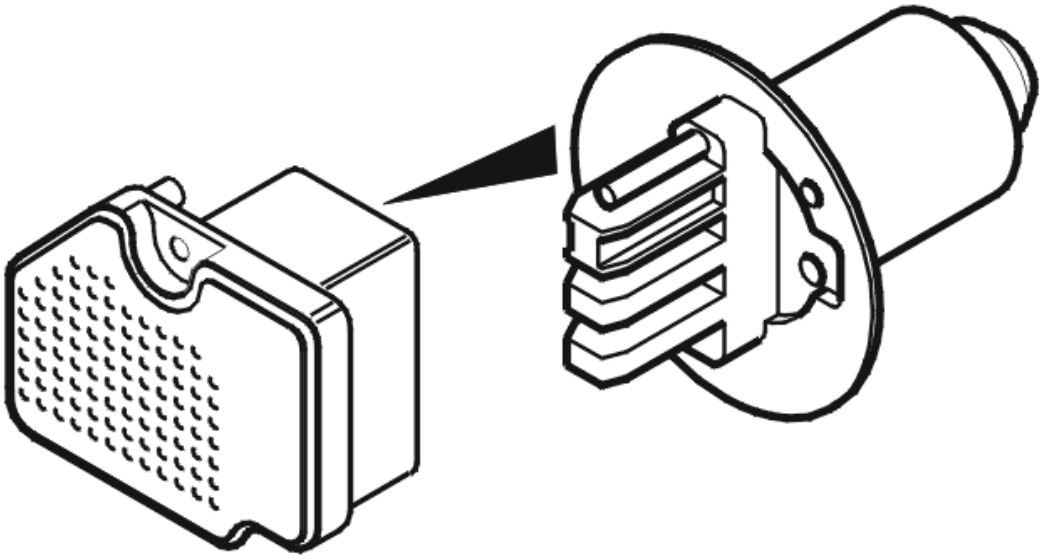

Fig. 34: Control Module And Oil Temperature Sensor
Courtesy of VOLVO CARS CORPORATION

The Differential Electronic Module (DEM) checks that the signal from the oil temperature sensor is appropriate. If the signal from the oil temperature sensor is less than the predefined lower limit, the control module interprets this as a fault and the trouble code is set.

The diagnostic trouble code can be diagnosed when the ignition is on.

Substitute Value

- Four wheel drive is disengaged.

Possible Source

- Connector resistance and oxidation in the connectors.
- Damaged temperature sensor.
- Damaged control module.

Fault symptom[s]

- Four wheel drive is not functioning.

FAULT TRACING DEM-P093711

CHECKING PRESSURE AND TEMPERATURE SENSOR

NOTE: Reading out of oil pressure can take place first after the diagnostic trouble code (DTC) has been deleted. Therefore frozen values should be printed and saved before deleting takes place.

1. Test of pressure sensor.
   - Ignition on.
   - Using Volvo Scan Tool hit the VCT2000 symbol.

     HINT: Correct pressure shall be 0.00 +/- 0.08 MPa.

   - Engine idling
   - Using Volvo Scan Tool hit the VCT2000 symbol.

     HINT: Correct pressure shall be 0.38 +/- 0.08 MPa.

2. Test of temperature sensor.
   - Ignition on.
   - Using Volvo Scan Tool hit the VCT2000 symbol.

     HINT: Normal value for ambient temperature when the vehicle is cold and (+20 to +50 °C) when the vehicle is driven.

If wrong value is read out, then diagnostic trouble code shall be erased and the sensor changed. After changing sensor, repeat the test procedure again.

NOTE: There are two types of sensors, an 80 bar and a 40 bar. Differential electronic module (DEM) has hardware number 30759701, 30785483, 30759682, 30783198, 30735844, or 30783018, an 80 bar pressure sensor shall be installed. If Differential electronic module (DEM) has another hardware number than above, a 40 bar sensor shall be installed.

HINT: For reading out of hardware number, see VIDA/DIAGNOSTICS/NETWORK/DEM.

Other information

- see **TEMPERATURE / PRESSURE SENSOR ACTIVE ON DEMAND COUPLING (AOC), REPLACING**

Fig. 35: Identifying VCT2000 Diagnostic Tool Symbol In VIDA
Courtesy of VOLVO CARS CORPORATION

Has the fault been remedied?

- **YES**

  OKAY: Troubleshooting has been completed.

- **NO**

  Refer to **CHECKING THE CONNECTORS AND LEADS**

CHECKING THE CONNECTORS AND LEADS

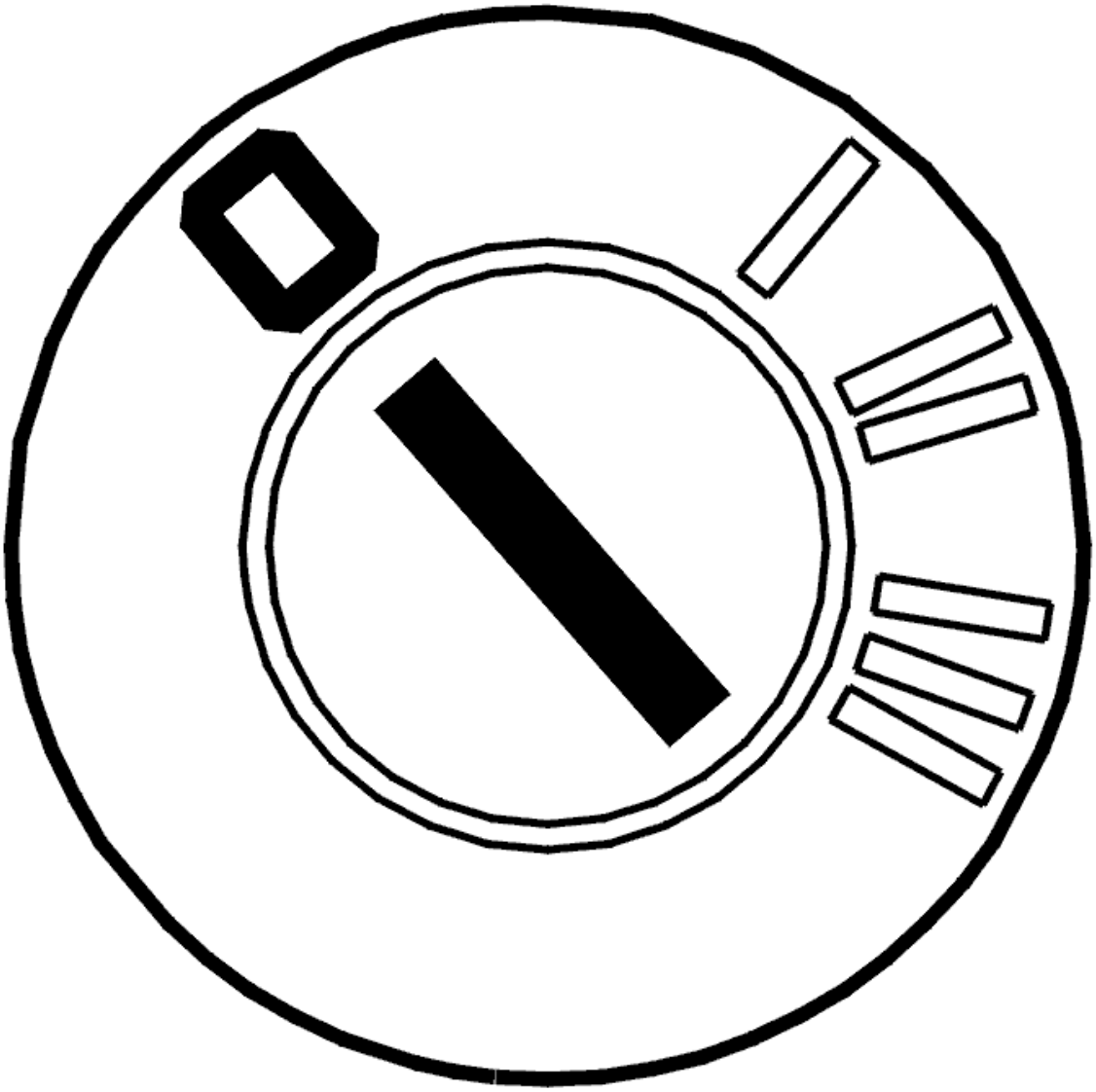

Fig. 36: Identifying Ignition OFF
Courtesy of VOLVO CARS CORPORATION

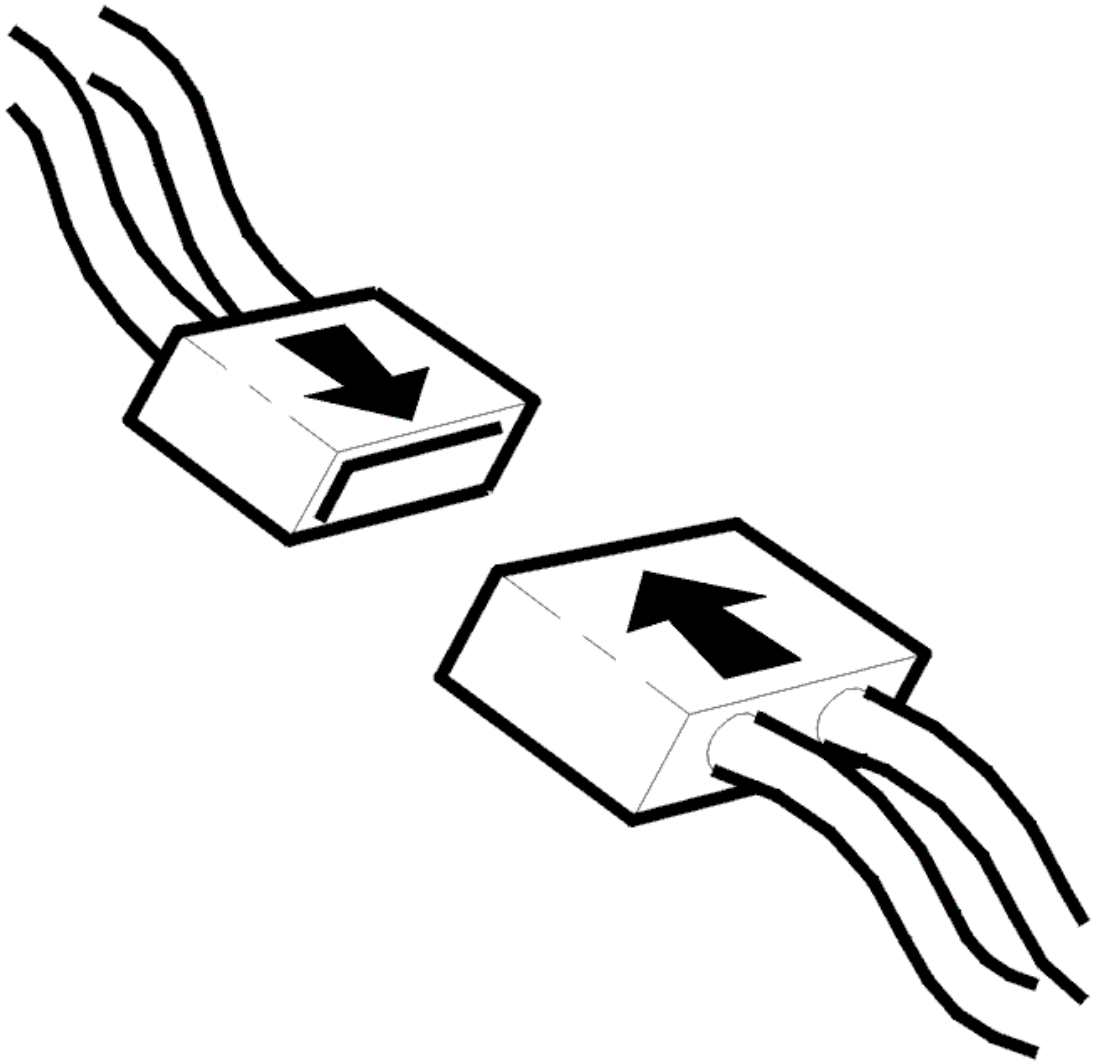

Fig. 37: Connecting Connector
Courtesy of VOLVO CARS CORPORATION

- Ignition off
- Check the connector between the Differential Electronic Module (DEM) and the temperature sensor with respect to contact resistance and oxidation.
- Check connector A with respect to depressed or damaged pins, contact resistance and oxidation.

  HINT: Read the temperature sensor signal to check the function.

  Remedy as necessary.

  Other information:

  - see **SIGNAL SPECIFICATION**

- see **TEMPERATURE / PRESSURE SENSOR ACTIVE ON DEMAND COUPLING (AOC), REPLACING**
- see **DIFFERENTIAL ELECTRONIC MODULE (DEM), REPLACING**
- see **CONTENTS**

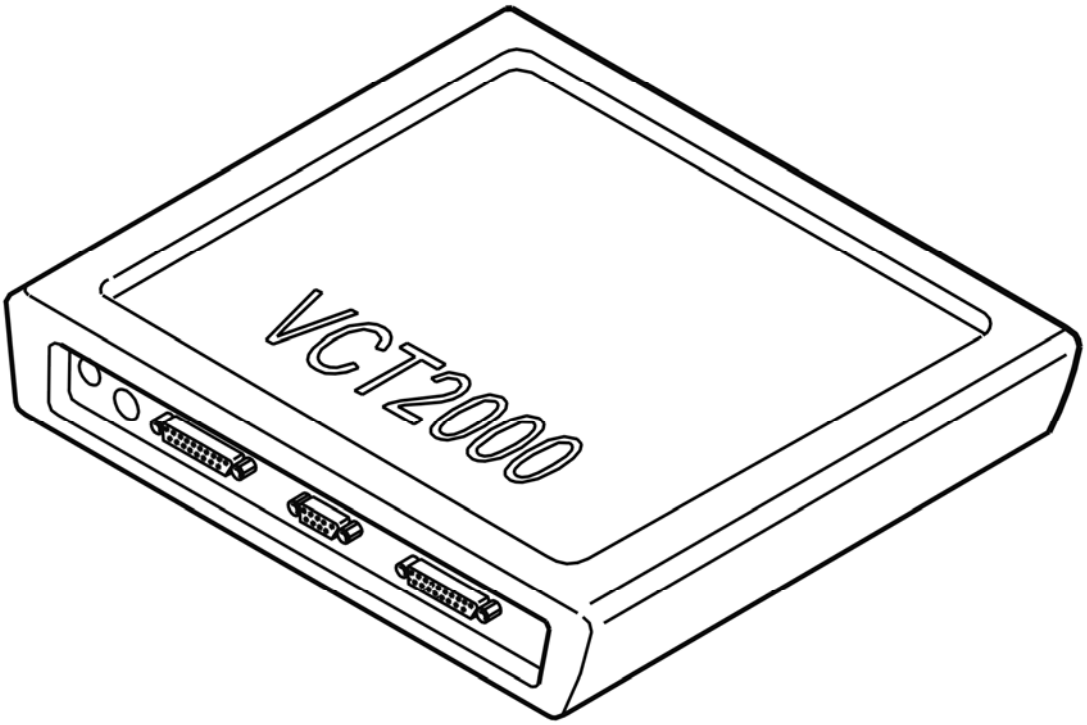

Fig. 38: Identifying VCT2000 Diagnostic Tool Symbol In VIDA
Courtesy of VOLVO CARS CORPORATION

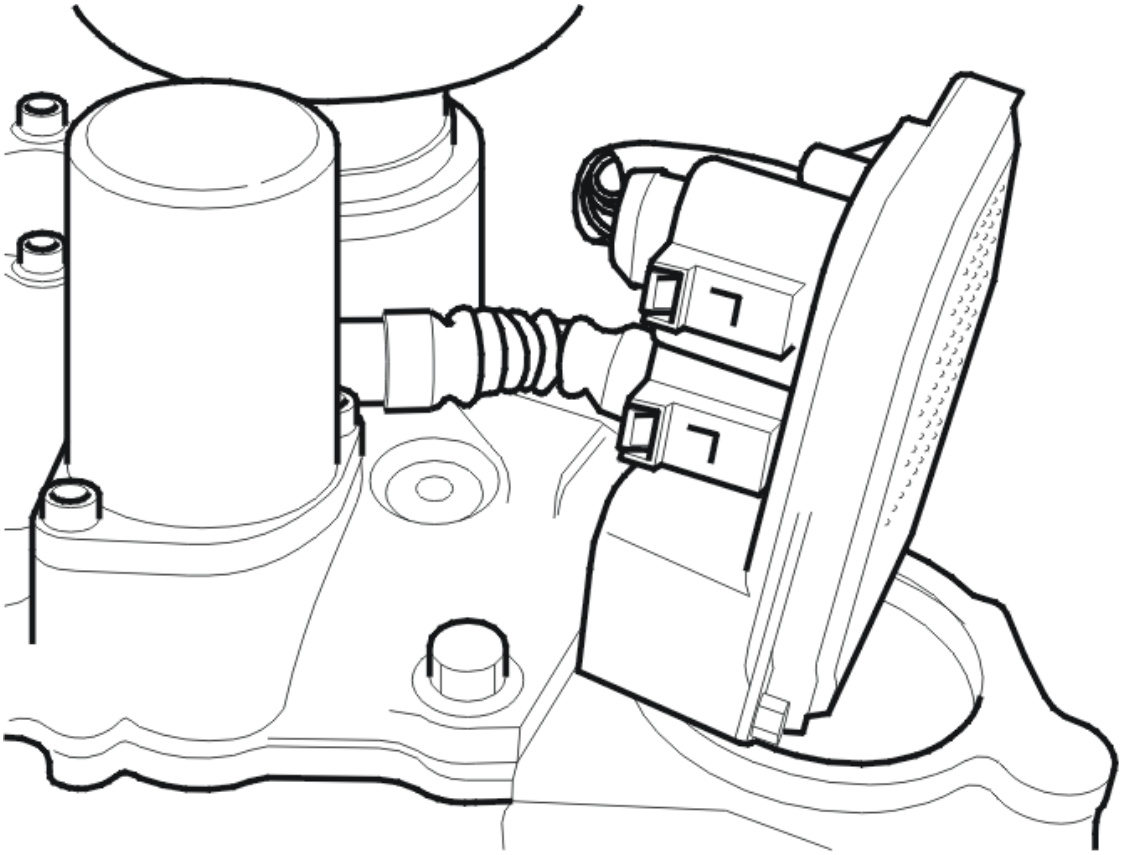

Fig. 39: Identifying Active On Demand Coupling Components
Courtesy of VOLVO CARS CORPORATION

- **Continue**

  Refer to **VERIFICATION**

VERIFICATION

HINT: After carrying out the repair, check that the fault has been remedied.

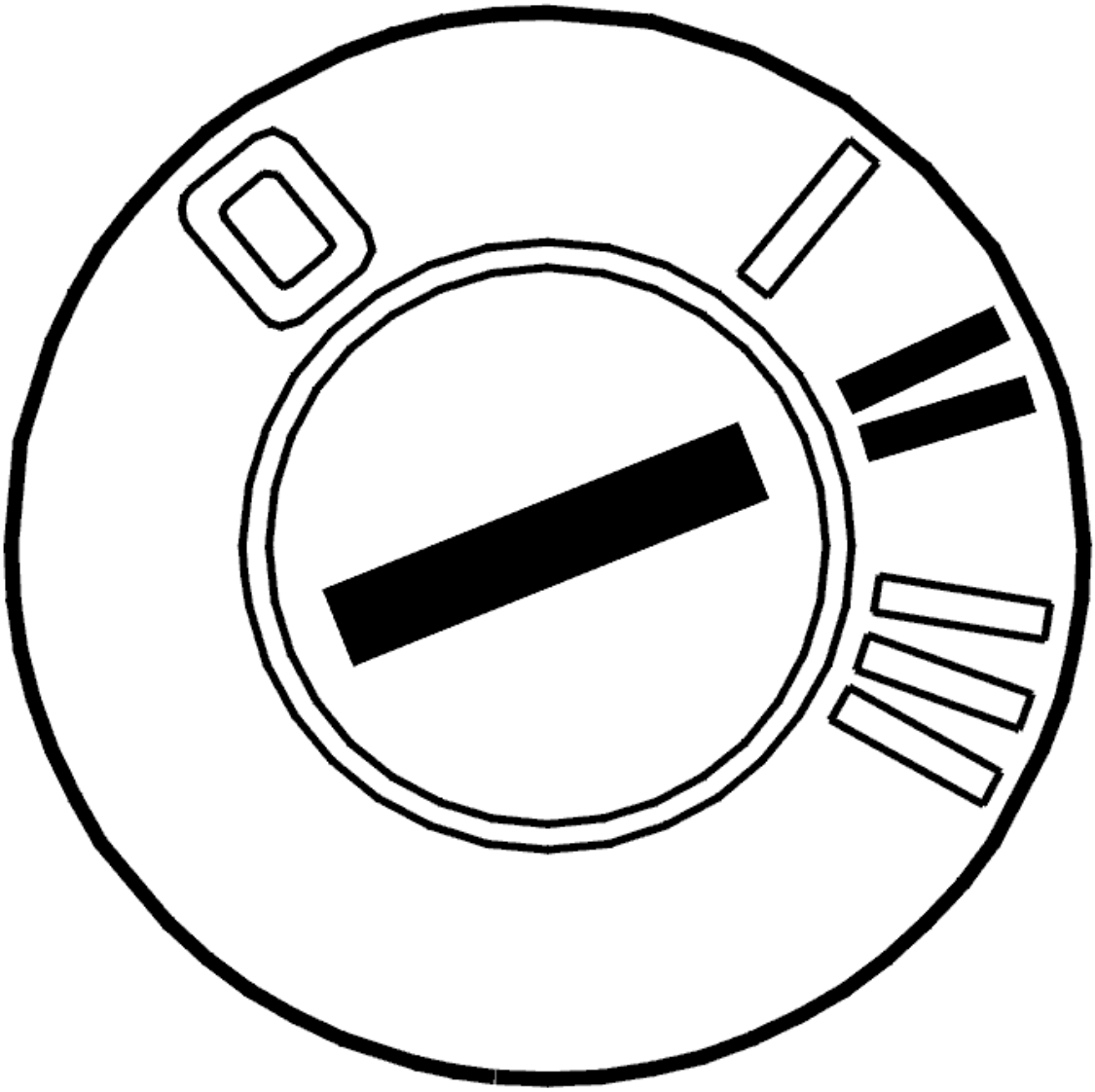

Fig. 40: Identifying Ignition ON
Courtesy of VOLVO CARS CORPORATION

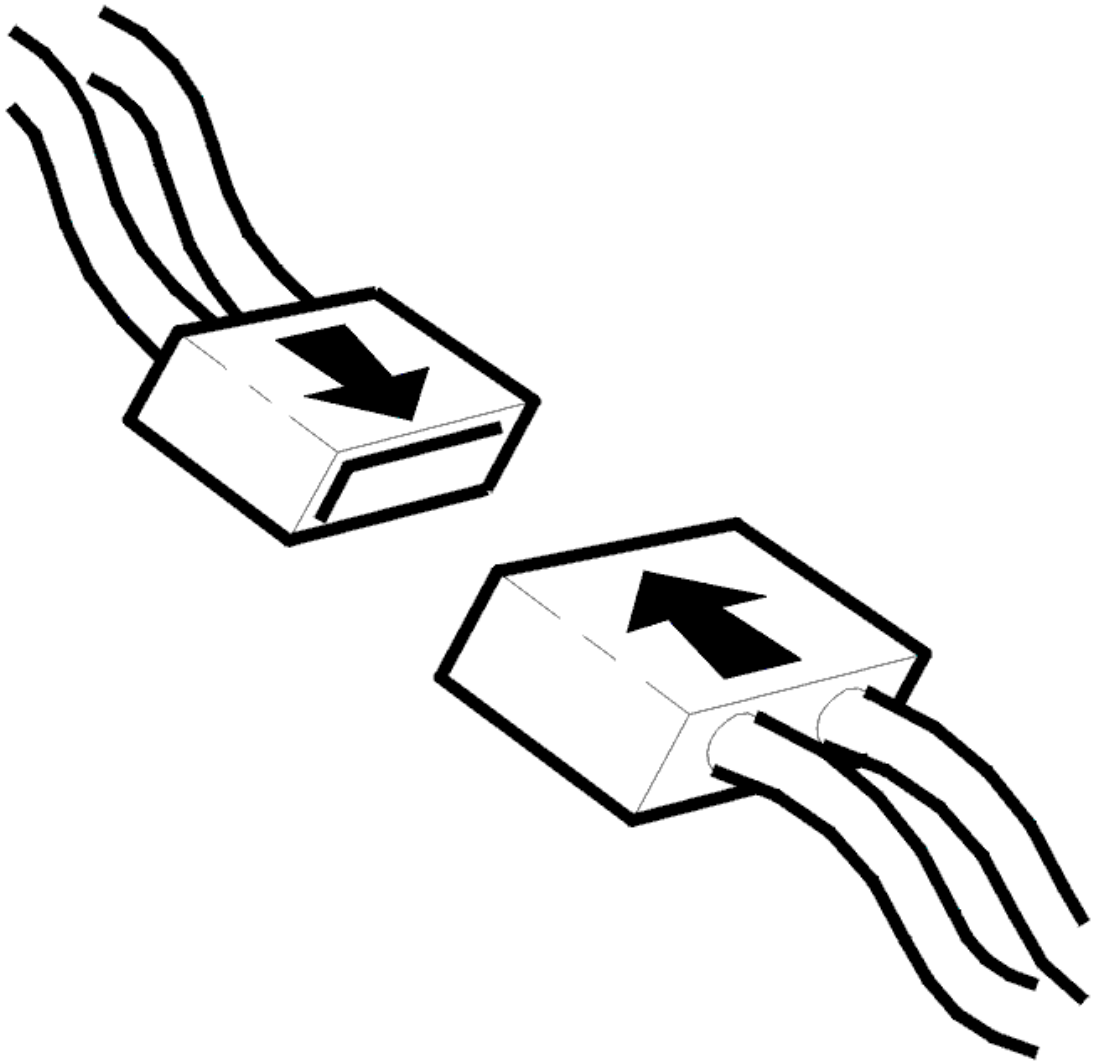

Fig. 41: Connecting Connector
Courtesy of VOLVO CARS CORPORATION

- Ignition off
- Reinstall the connectors, components etc.
- Ignition on

  Read the temperature.

  Check that the value is appropriate by comparing it with the ambient temperature.

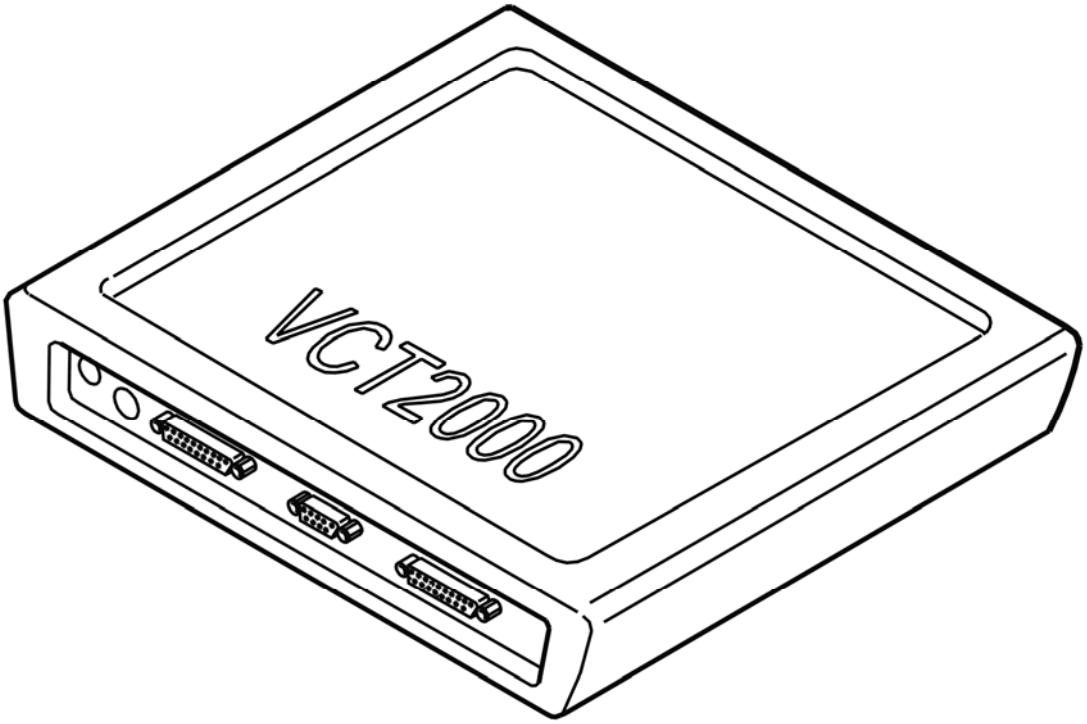

Fig. 42: Identifying VCT2000 Diagnostic Tool Symbol In VIDA
Courtesy of VOLVO CARS CORPORATION

Is the temperature OK?

- **YES**

  VERIFIED: Troubleshooting has been completed.

- **NO**

  Refer to **INFORMATION**

INFORMATION

FAULT-TRACING INFORMATION

The fault should have been detected and remedied. As this is not the case fault-tracing has failed.

Exit fault-tracing for this diagnostic trouble code (DTC) or make another attempt.

DEM-P093711: OIL TEMPERATURE SENSOR CIRCUIT. GENERAL ELECTRICAL FAULT. SHORT CIRCUIT TO GROUND (B6324S, TF-80SC

AWD; B8444S, TF-80SC AWD; 2008)

DIAGNOSTIC TROUBLE CODE (DTC) INFORMATION DEM-P093711

see **DIAGNOSTIC TROUBLE CODE (DTC) INFORMATION DEM-P093711**

FAULT TRACING DEM-P093711

CHECKING THE CONNECTORS AND LEADS

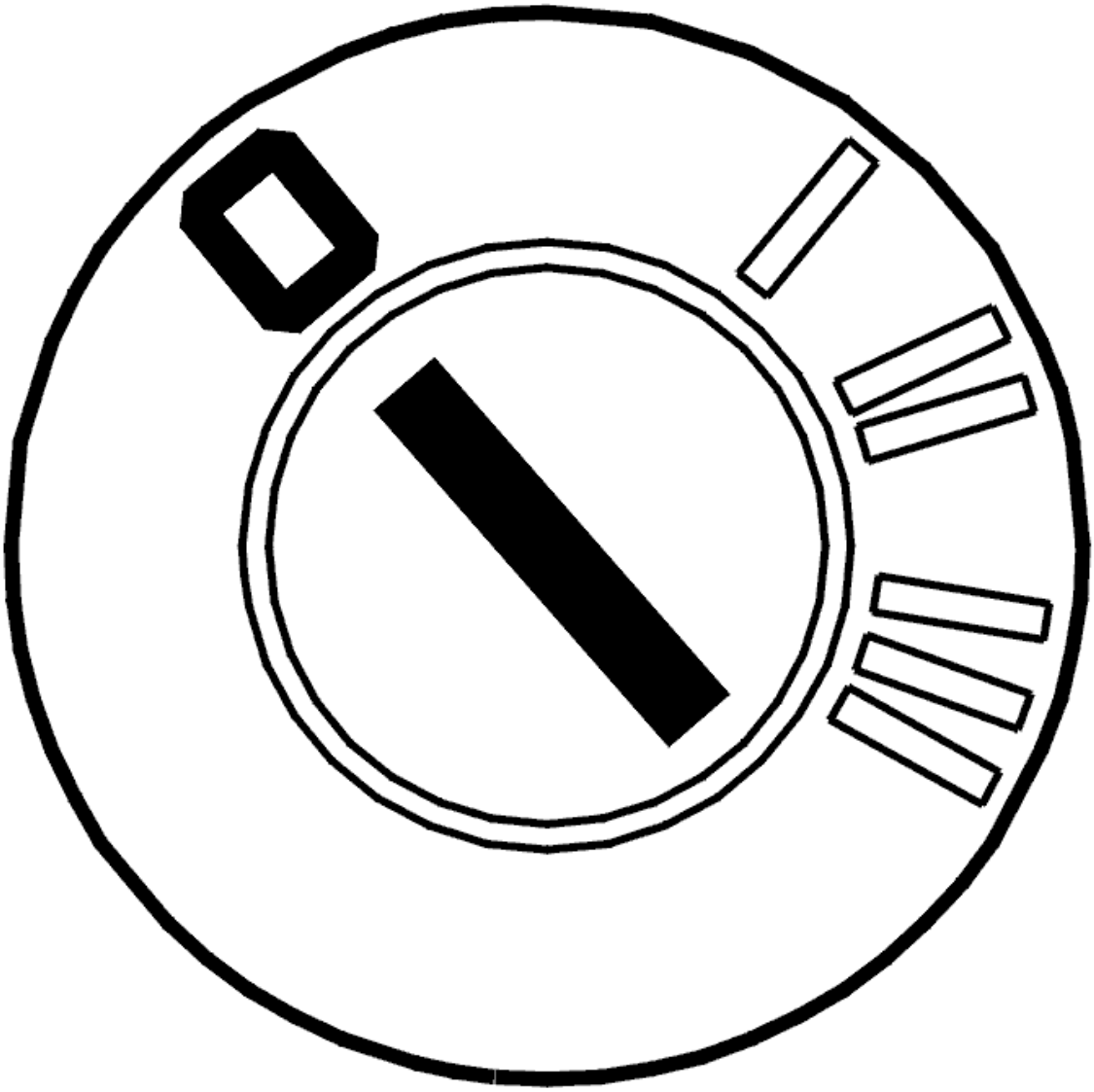

Fig. 43: Identifying Ignition OFF
Courtesy of VOLVO CARS CORPORATION

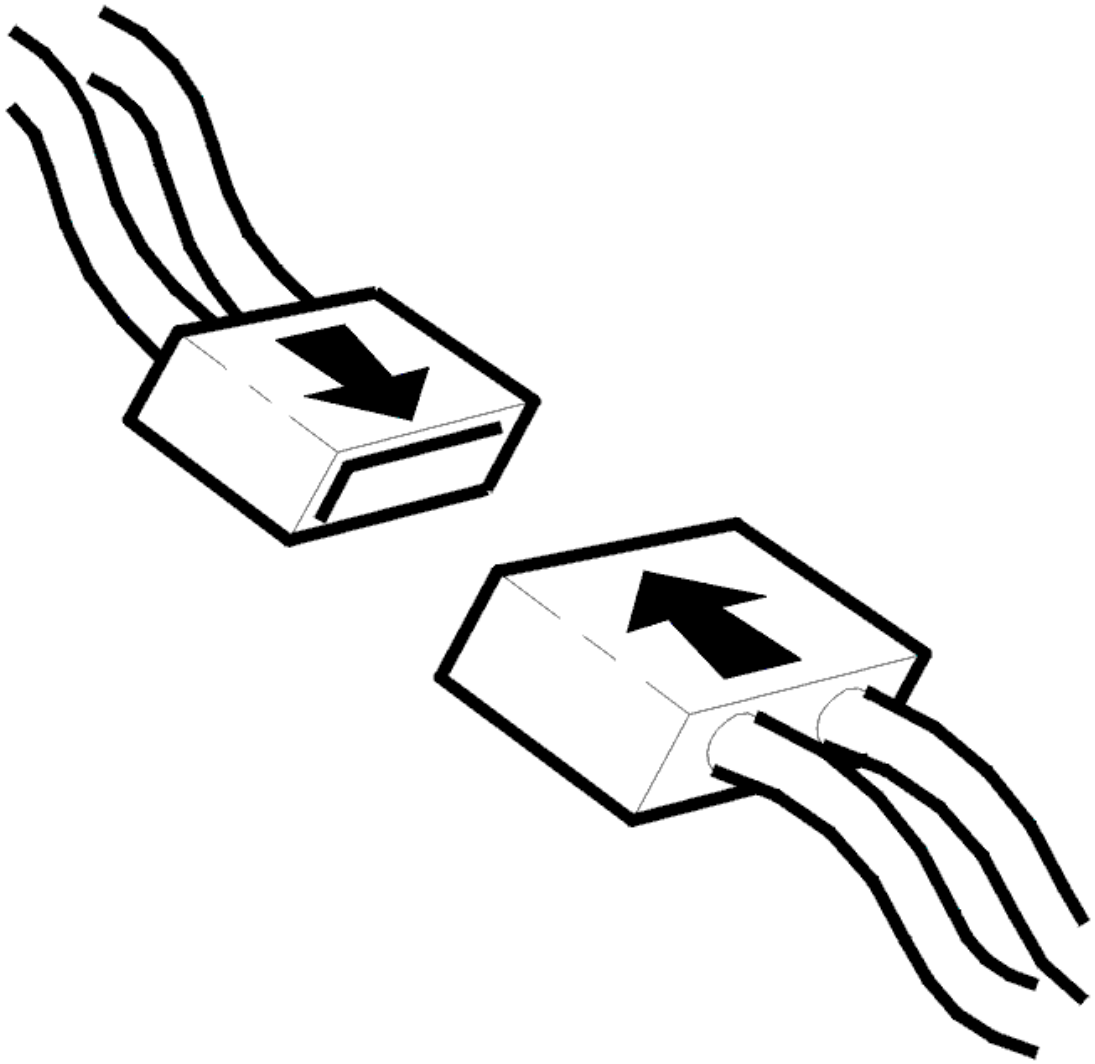

Fig. 44: Connecting Connector
Courtesy of VOLVO CARS CORPORATION

- Ignition off
- Check the connector between the Differential Electronic Module (DEM) and the temperature sensor with respect to contact resistance and oxidation.
- Check connector A with respect to depressed or damaged pins, contact resistance and oxidation.

  HINT: Read the temperature sensor signal to check the function.

  Remedy as necessary.

  Other information:

  - see **SIGNAL SPECIFICATION**

- see **TEMPERATURE / PRESSURE SENSOR ACTIVE ON DEMAND COUPLING (AOC), REPLACING**
- see **DIFFERENTIAL ELECTRONIC MODULE (DEM), REPLACING**
- see **CONTENTS**

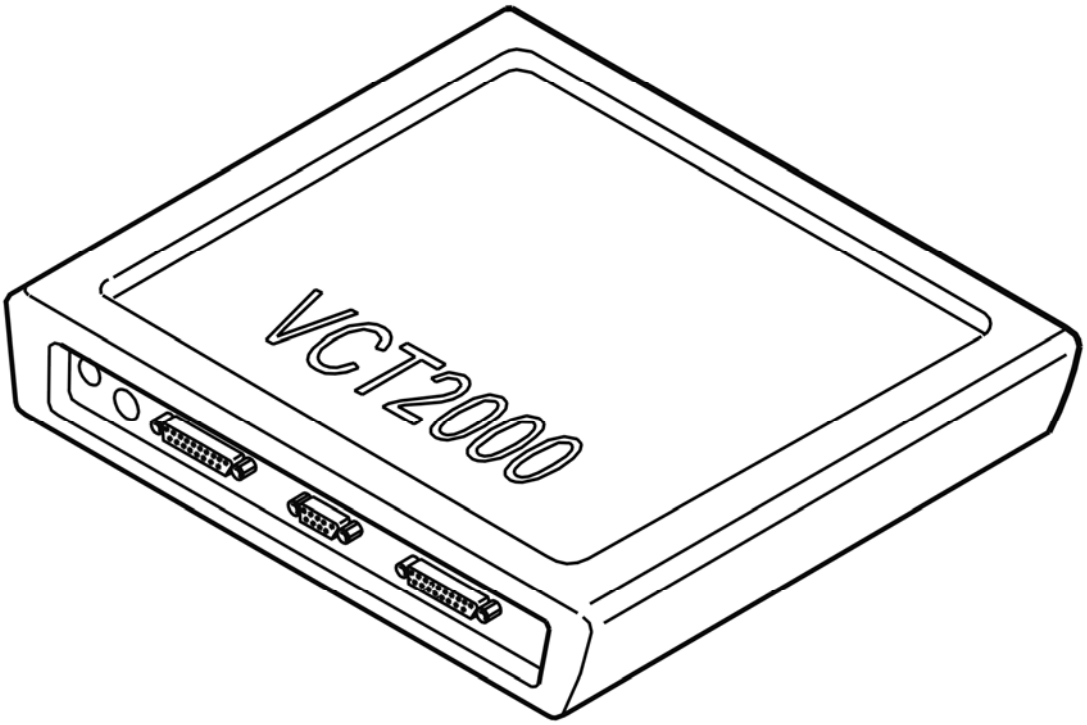

Fig. 45: Identifying VCT2000 Diagnostic Tool Symbol In VIDA
Courtesy of VOLVO CARS CORPORATION

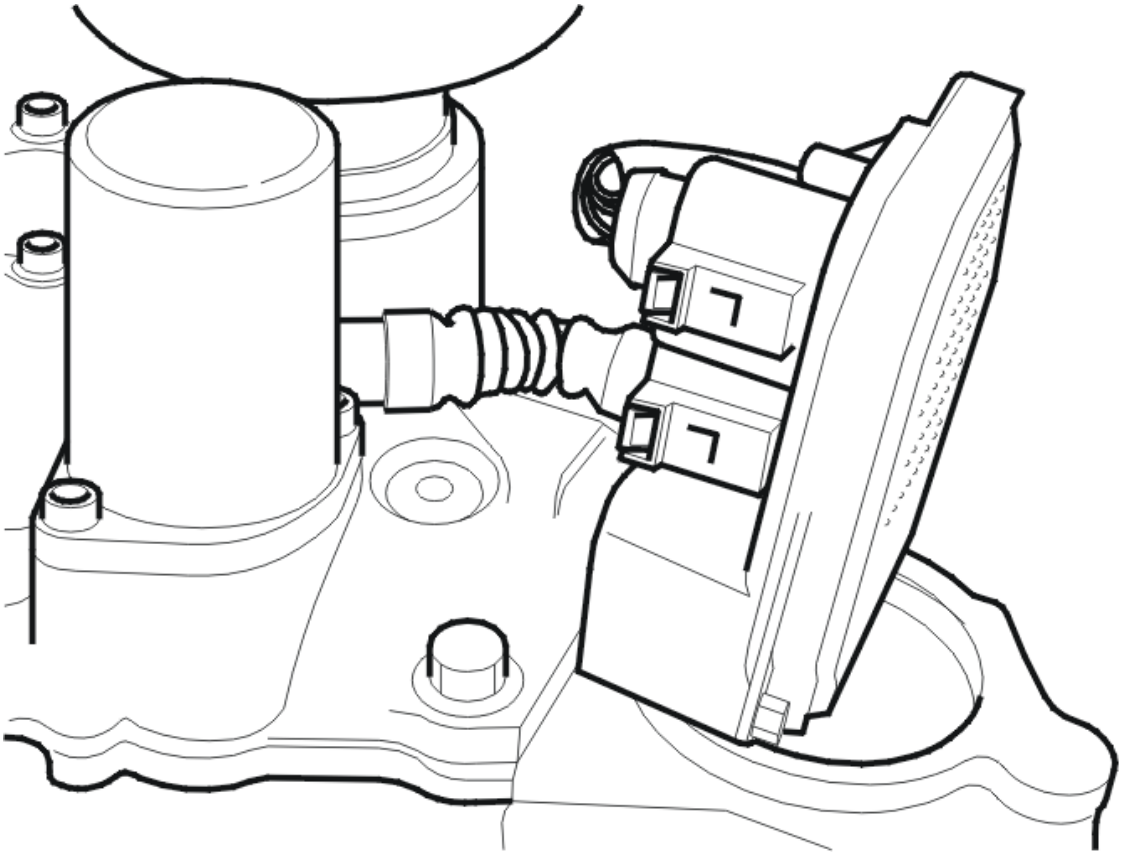

Fig. 46: Identifying Active On Demand Coupling Components
Courtesy of VOLVO CARS CORPORATION

- **Continue**

  Refer to **VERIFICATION**

VERIFICATION

HINT: After carrying out the repair, check that the fault has been remedied.

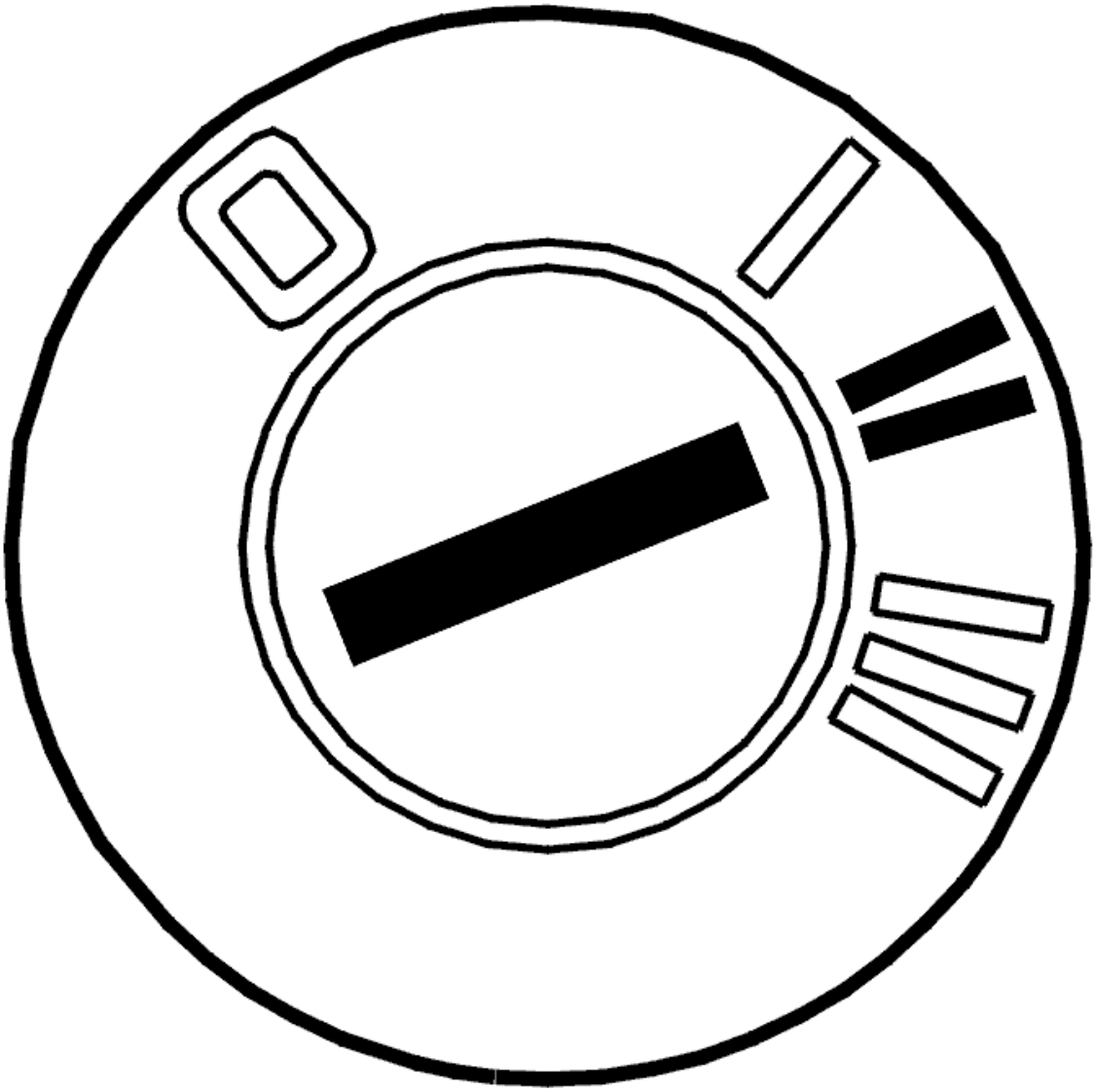

Fig. 47: Identifying Ignition ON
Courtesy of VOLVO CARS CORPORATION

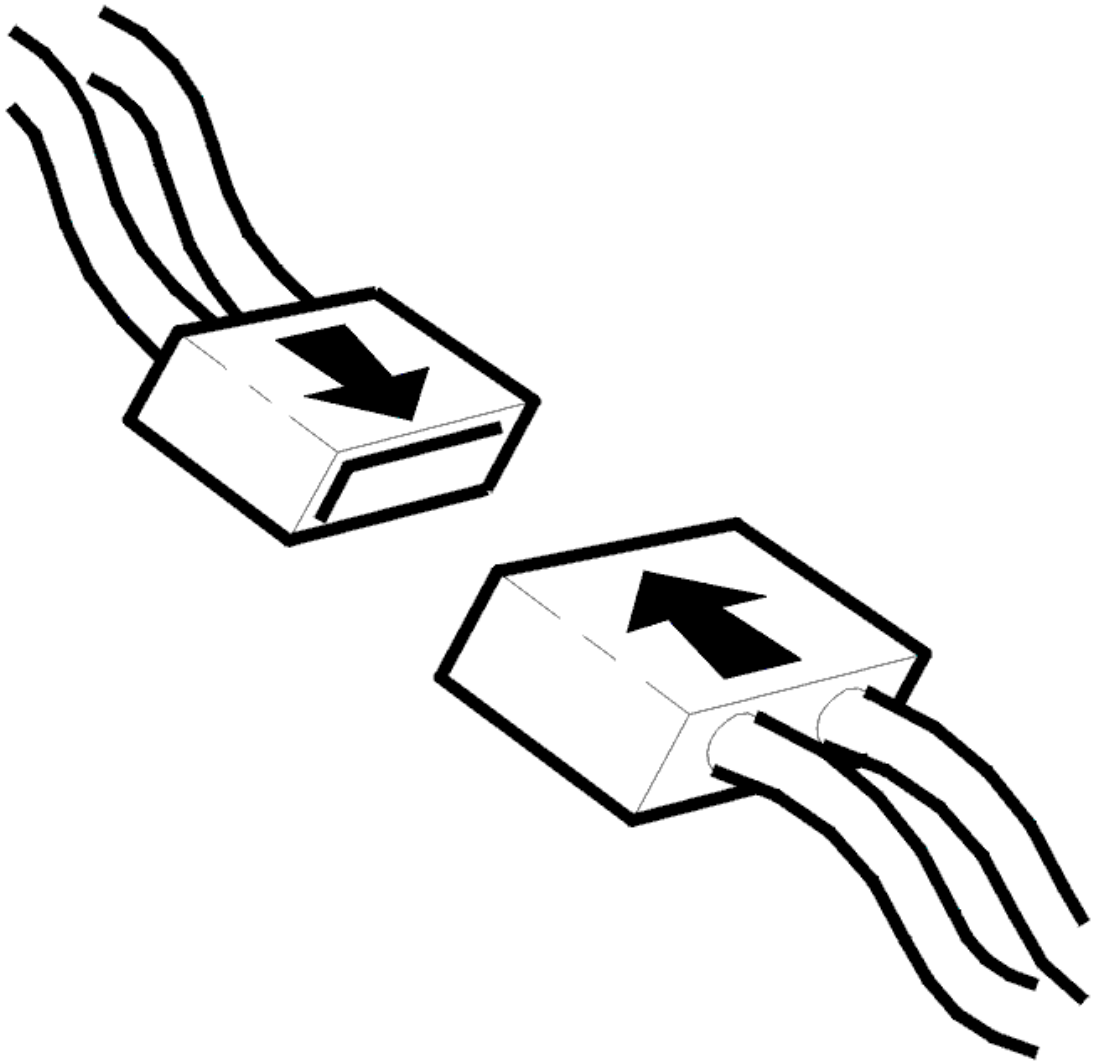

Fig. 48: Connecting Connector
Courtesy of VOLVO CARS CORPORATION

- Ignition off
- Reinstall the connectors, components etc.
- Ignition on

  Read the temperature.

  Check that the value is appropriate by comparing it with the ambient temperature.

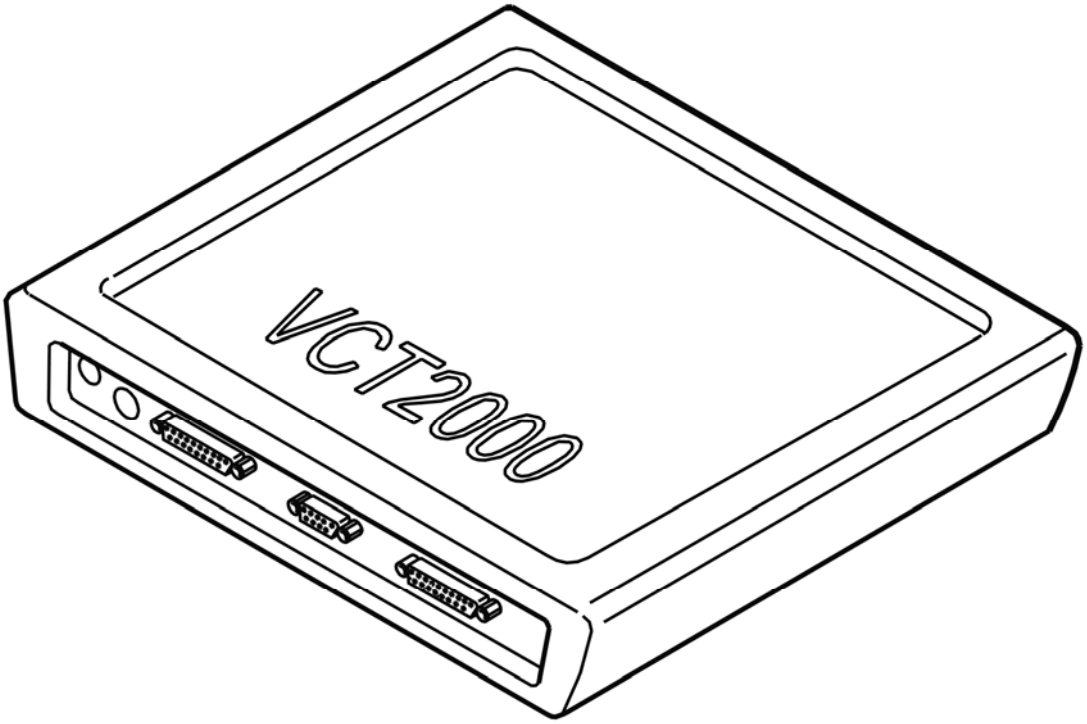

Fig. 49: Identifying VCT2000 Diagnostic Tool Symbol In VIDA
Courtesy of VOLVO CARS CORPORATION

Is the temperature OK?

- **YES**

  VERIFIED: Troubleshooting has been completed.

- **NO**

  Refer to **INFORMATION**

INFORMATION

FAULT-TRACING INFORMATION

The fault should have been detected and remedied. As this is not the case fault-tracing has failed.

Exit fault-tracing for this diagnostic trouble code (DTC) or make another attempt.

DEM-P093711: OIL TEMPERATURE SENSOR CIRCUIT. GENERAL ELECTRICAL FAULT. SHORT CIRCUIT TO GROUND (B8444S, TF-80SC

AWD; 2006-2007)

DIAGNOSTIC TROUBLE CODE (DTC) INFORMATION DEM-P093711

see **DIAGNOSTIC TROUBLE CODE (DTC) INFORMATION DEM-P093711**

FAULT TRACING DEM-P093711

see **FAULT TRACING DEM-P093711**

DEM-P093711: OIL TEMPERATURE SENSOR CIRCUIT. GENERAL ELECTRICAL FAULT. SHORT CIRCUIT TO GROUND (TF-80SC AWD; 2005)

DIAGNOSTIC TROUBLE CODE (DTC) INFORMATION DEM-P093711

see **DIAGNOSTIC TROUBLE CODE (DTC) INFORMATION DEM-P093711**

FAULT TRACING DEM-P093711

see **FAULT TRACING DEM-P093711**

DEM-P093715: OIL TEMPERATURE SENSOR CIRCUIT. GENERAL ELECTRICAL FAULT. SHORT CIRCUIT TO A VOLTAGE SOURCE OR OPEN CIRCUIT. (B6324S, TF-80SC AWD; B8444S, TF-80SC AWD; 2008)

DIAGNOSTIC TROUBLE CODE (DTC) INFORMATION DEM-P093715

Condition

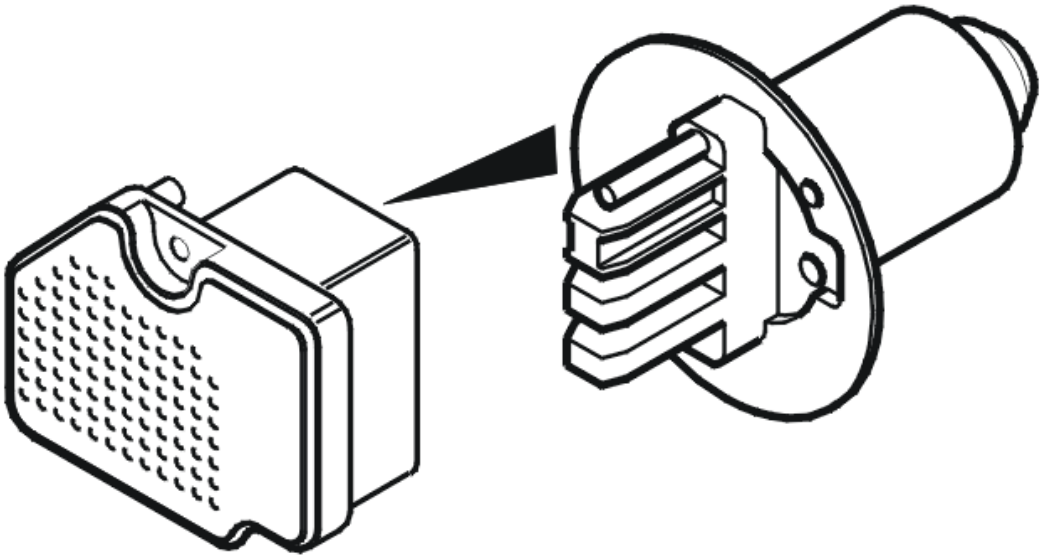

Fig. 50: Control Module And Oil Temperature Sensor
Courtesy of VOLVO CARS CORPORATION

The Differential Electronic Module (DEM) checks that the signal from the oil temperature sensor is appropriate. If the signal from the oil temperature sensor is higher than the predefined upper limit, the control module interprets this as a fault and the trouble code is set.

The diagnostic trouble code can be diagnosed when the ignition is on.

Substitute Value

- Four wheel drive is disengaged.

Possible Source

- Connector resistance and oxidation in the connectors.
- Damaged temperature sensor.
- Damaged control module.

Fault symptom[s]

- Four wheel drive is not functioning.

FAULT TRACING DEM-P093715

CHECKING THE CONNECTORS AND LEADS

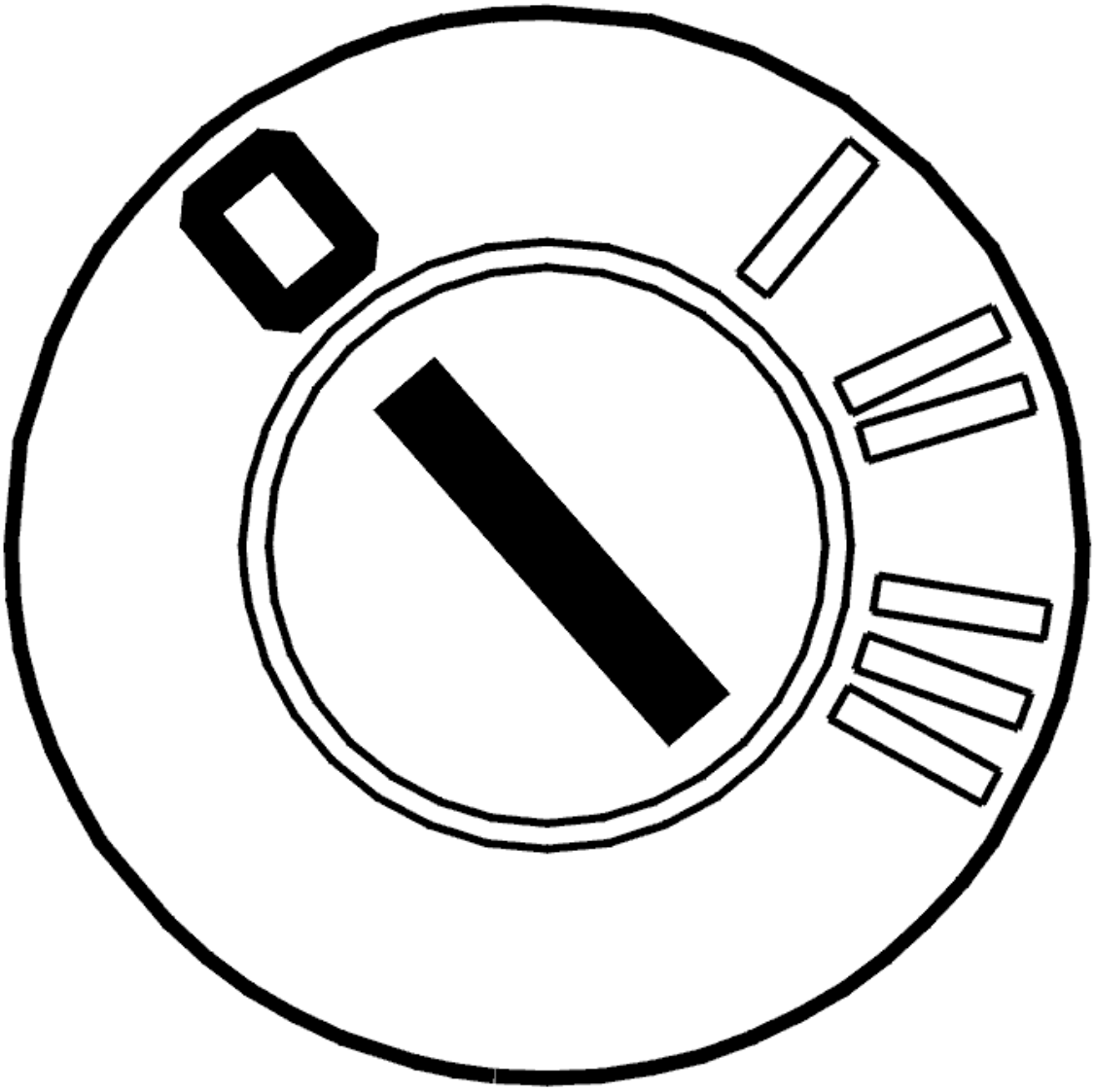

Fig. 51: Identifying Ignition OFF
Courtesy of VOLVO CARS CORPORATION

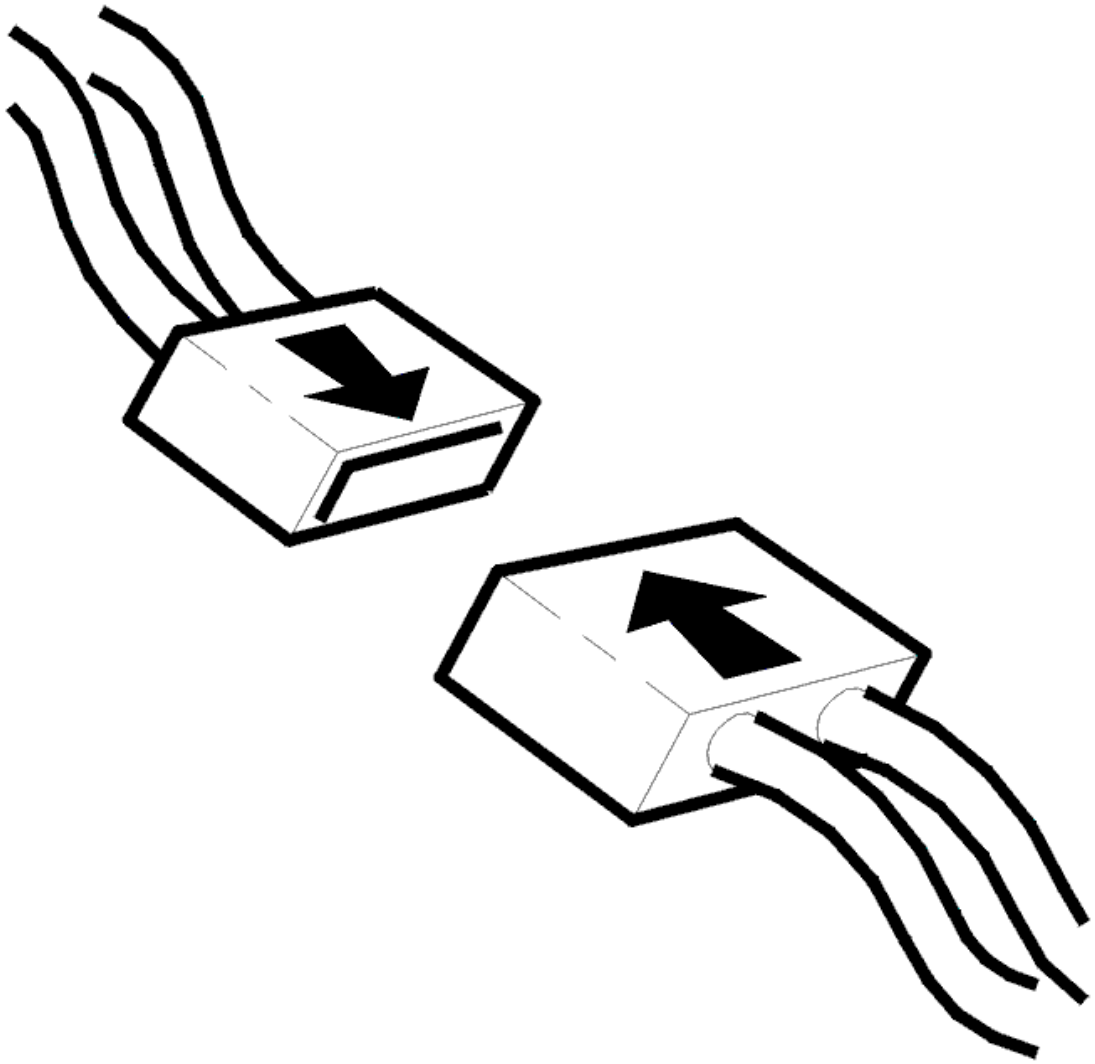

Fig. 52: Connecting Connector
Courtesy of VOLVO CARS CORPORATION

- Ignition off
- Check the connector between the Differential Electronic Module (DEM) and the temperature sensor with respect to contact resistance and oxidation.
- Check connector A with respect to depressed or damaged pins, contact resistance and oxidation.

  HINT: Read the temperature sensor signal to check the function.

  Remedy as necessary.

  Other information:

  - see **SIGNAL SPECIFICATION**

- see **TEMPERATURE / PRESSURE SENSOR ACTIVE ON DEMAND COUPLING (AOC), REPLACING**
- see **DIFFERENTIAL ELECTRONIC MODULE (DEM), REPLACING**
- see **CONTENTS**

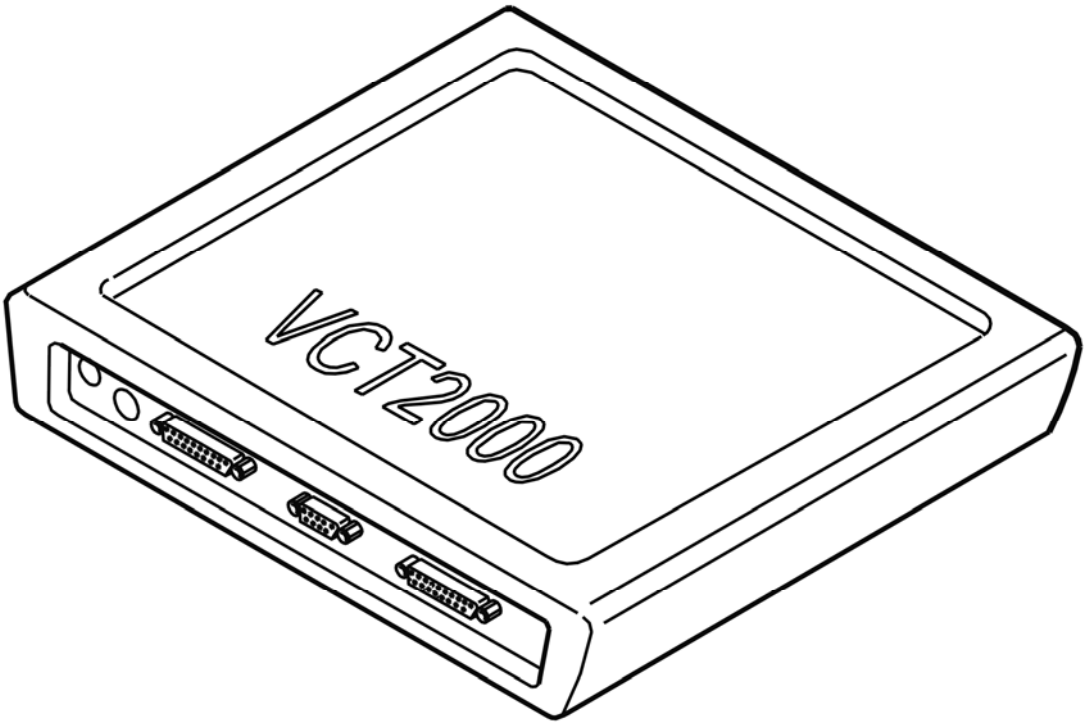

Fig. 53: Identifying VCT2000 Diagnostic Tool Symbol In VIDA
Courtesy of VOLVO CARS CORPORATION

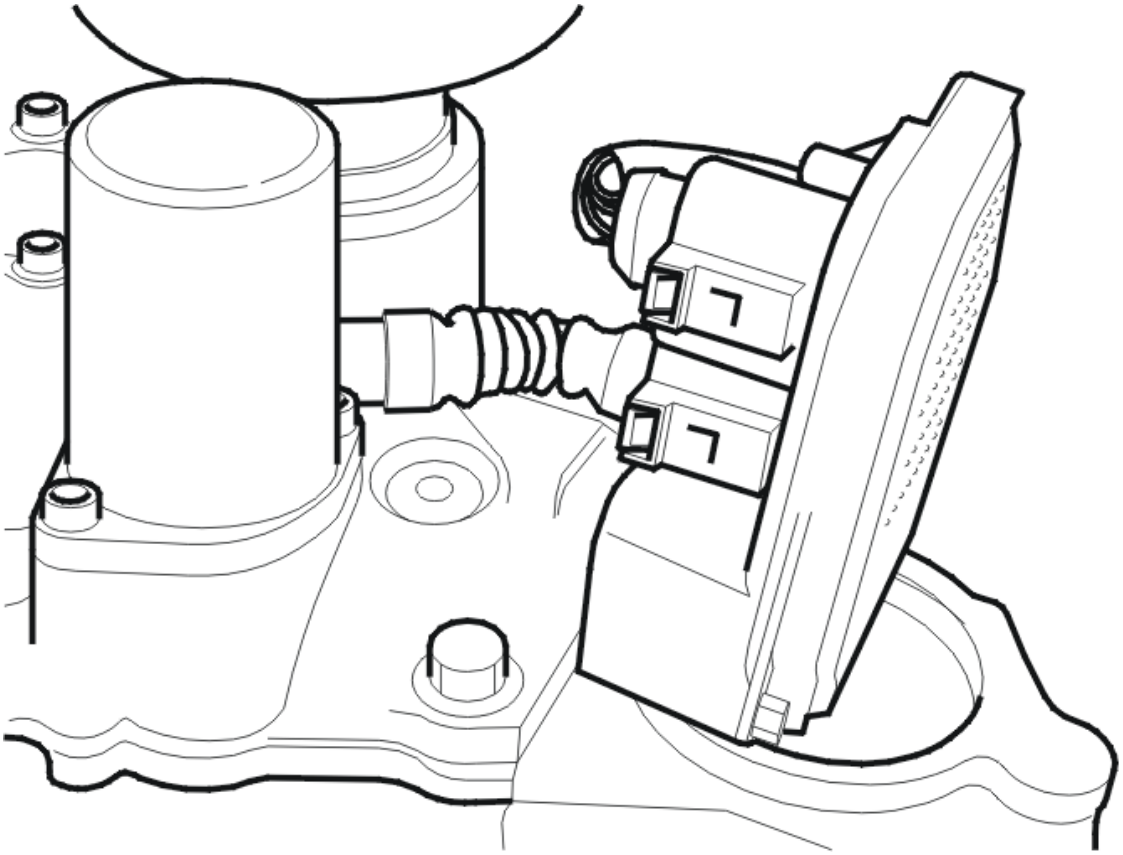

Fig. 54: Identifying Active On Demand Coupling Components
Courtesy of VOLVO CARS CORPORATION

- **Continue**

  Refer to **VERIFICATION**

VERIFICATION

HINT: After carrying out the repair, check that the fault has been remedied.

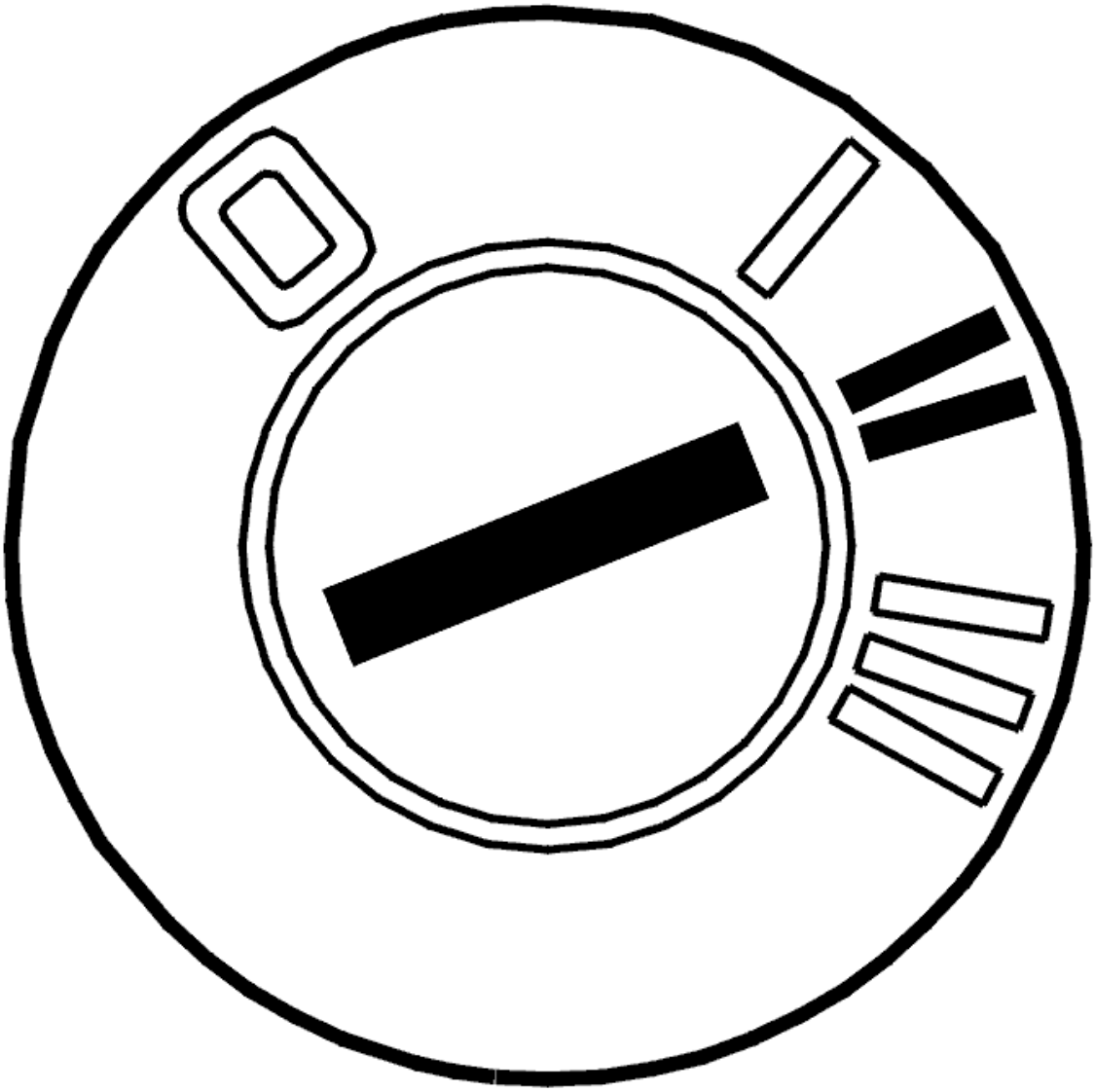

Fig. 55: Identifying Ignition ON
Courtesy of VOLVO CARS CORPORATION

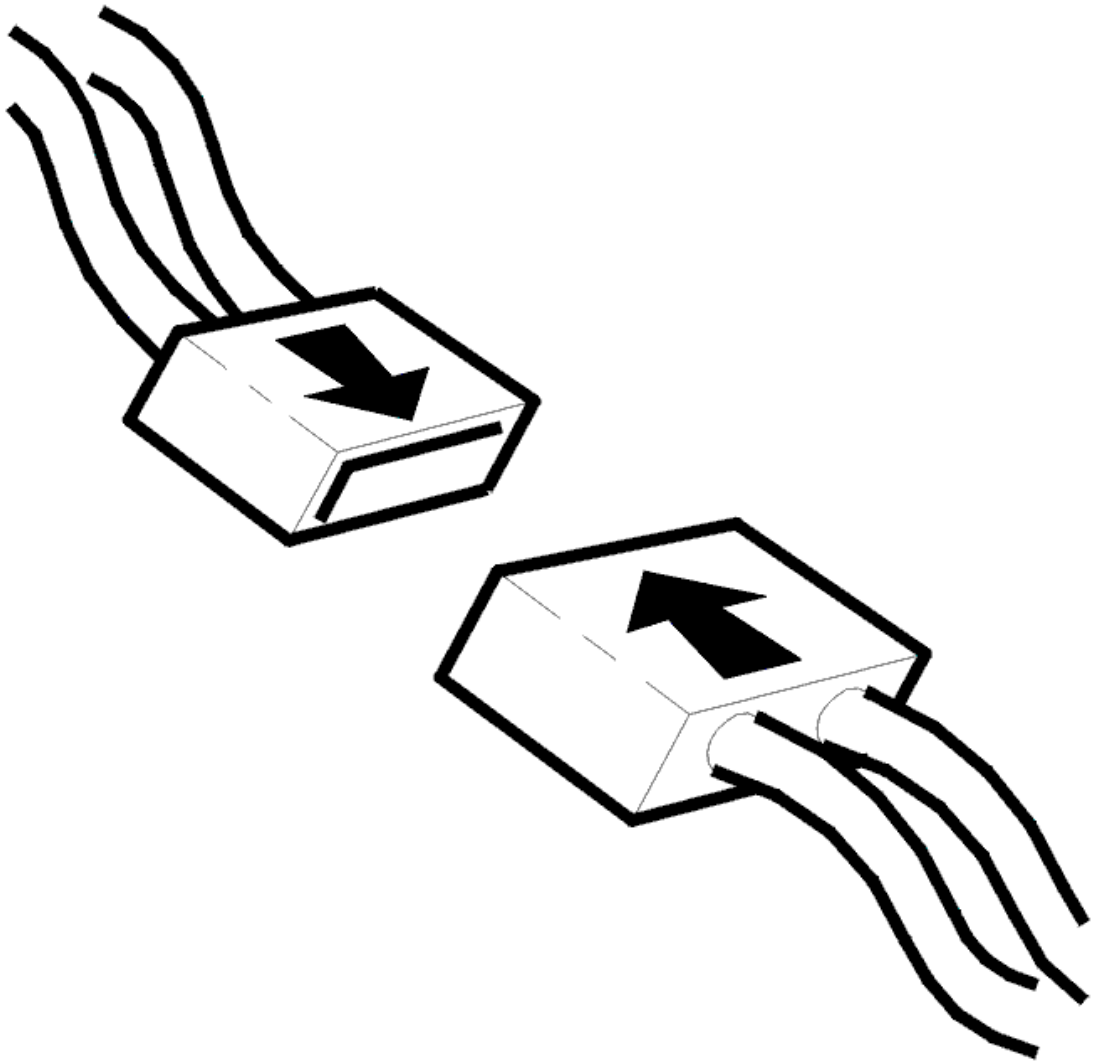

Fig. 56: Connecting Connector
Courtesy of VOLVO CARS CORPORATION

- Ignition off
- Reinstall the connectors, components etc.
- Ignition on

  Read the temperature.

  Check that the value is appropriate by comparing it with the ambient temperature.

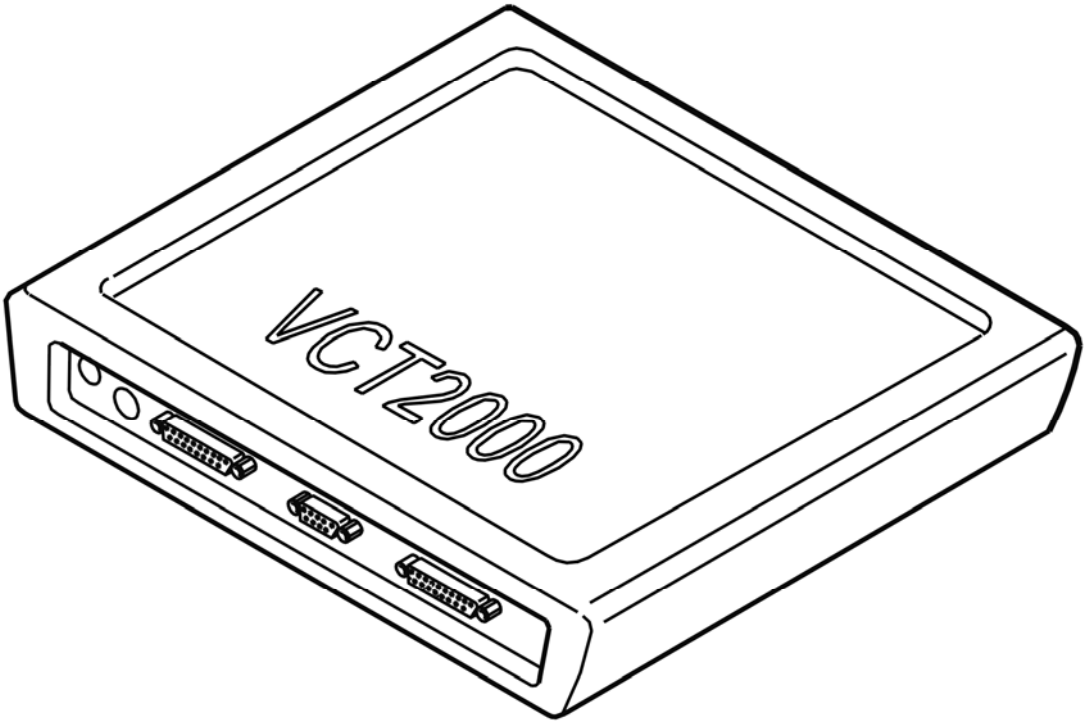

Fig. 57: Identifying VCT2000 Diagnostic Tool Symbol In VIDA
Courtesy of VOLVO CARS CORPORATION

Is the temperature OK?

- **YES**

  VERIFIED: Troubleshooting has been completed.

- **NO**

  Refer to **INFORMATION**

INFORMATION

FAULT-TRACING INFORMATION

The fault should have been detected and remedied. As this is not the case fault-tracing has failed.

Exit fault-tracing for this diagnostic trouble code (DTC) or make another attempt.

DEM-P093715: OIL TEMPERATURE SENSOR CIRCUIT. GENERAL ELECTRICAL FAULT. SHORT CIRCUIT TO A VOLTAGE SOURCE OR OPEN

CIRCUIT. (B6324S, TF-80SC AWD; 2007)

DIAGNOSTIC TROUBLE CODE (DTC) INFORMATION DEM-P093715

see **DIAGNOSTIC TROUBLE CODE (DTC) INFORMATION DEM-P093715**

FAULT TRACING DEM-P093715

CHECKING PRESSURE AND TEMPERATURE SENSOR

NOTE: **Reading out of oil pressure can take place first after the diagnostic trouble code (DTC) has been deleted. Therefore frozen values should be printed and saved before deleting takes place.**

1. Test of pressure sensor.
   - Ignition on.
   - Using Volvo Scan Tool hit the VCT2000 symbol.

     HINT: Correct pressure shall be 0.00 +/- 0.08 MPa.

   - Engine idling
   - Using Volvo Scan Tool hit the VCT2000 symbol.

     HINT: Correct pressure shall be 0.38 +/- 0.08 MPa.

2. Test of temperature sensor.
   - Ignition on.
   - Using Volvo Scan Tool hit the VCT2000 symbol.

     HINT: Normal value for ambient temperature when the vehicle is cold and (+20 to +50 °C) when the vehicle is driven.

If wrong value is read out, then diagnostic trouble code shall be erased and the sensor changed. After changing sensor, repeat the test procedure again.

NOTE: **There are two types of sensors, an 80 bar and a 40 bar. Differential electronic module (DEM) has hardware number 30759701, 30785483, 30759682, 30783198, 30735844, or 30783018, an 80 bar pressure sensor shall be installed. If Differential electronic module (DEM) has another hardware number than above, a 40 bar sensor shall be installed.**

HINT: For reading out of hardware number, see VIDA/DIAGNOSTICS/NETWORK/DEM.

Other information

- see **TEMPERATURE / PRESSURE SENSOR ACTIVE ON DEMAND COUPLING (AOC), REPLACING**

Fig. 58: Identifying VCT2000 Diagnostic Tool Symbol In VIDA
Courtesy of VOLVO CARS CORPORATION

Has the fault been remedied?

- **YES**

  OKAY: Troubleshooting has been completed.

- **NO**

  Refer to **CHECKING THE CONNECTORS AND LEADS**

CHECKING THE CONNECTORS AND LEADS

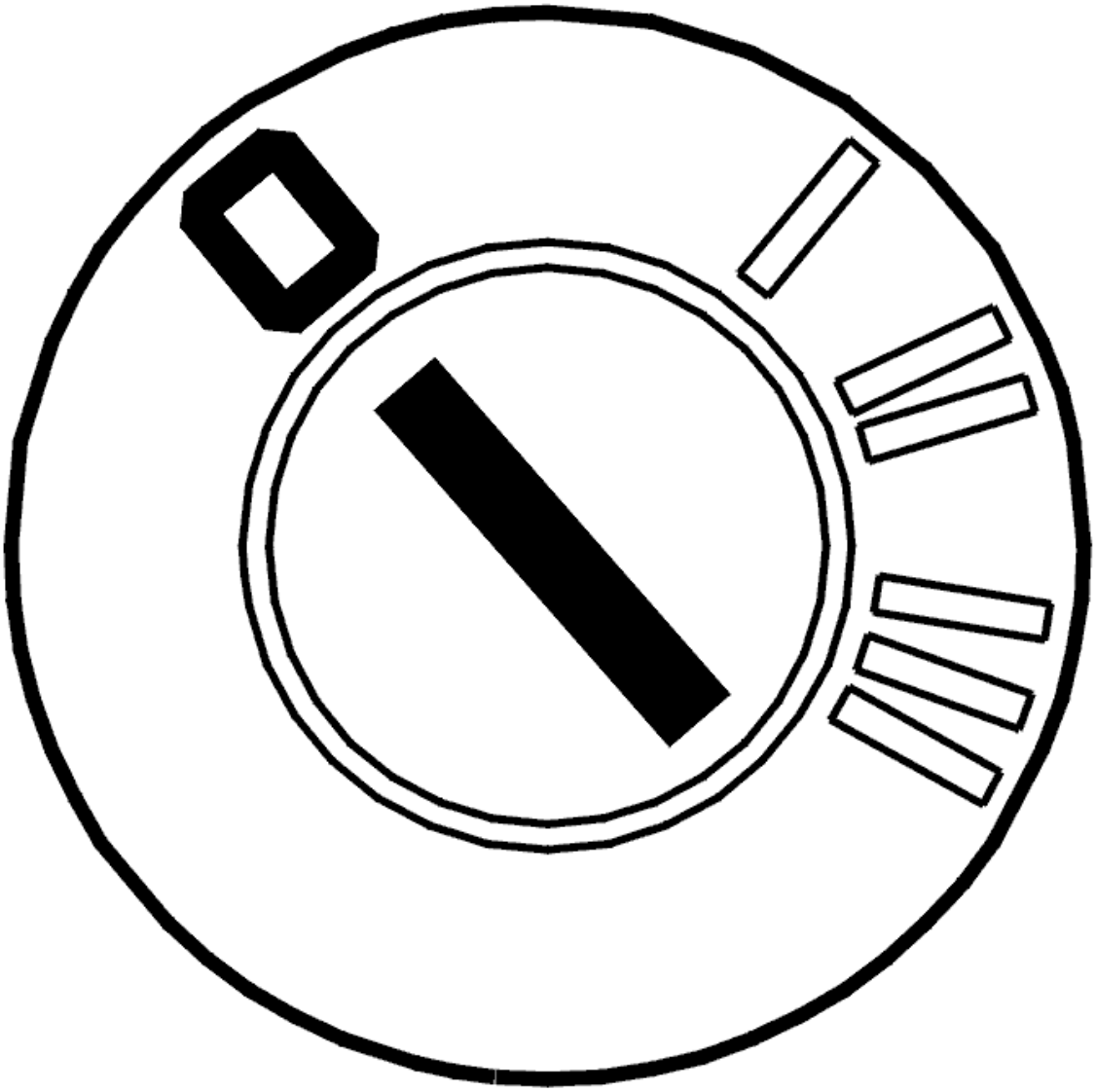

Fig. 59: Identifying Ignition OFF
Courtesy of VOLVO CARS CORPORATION

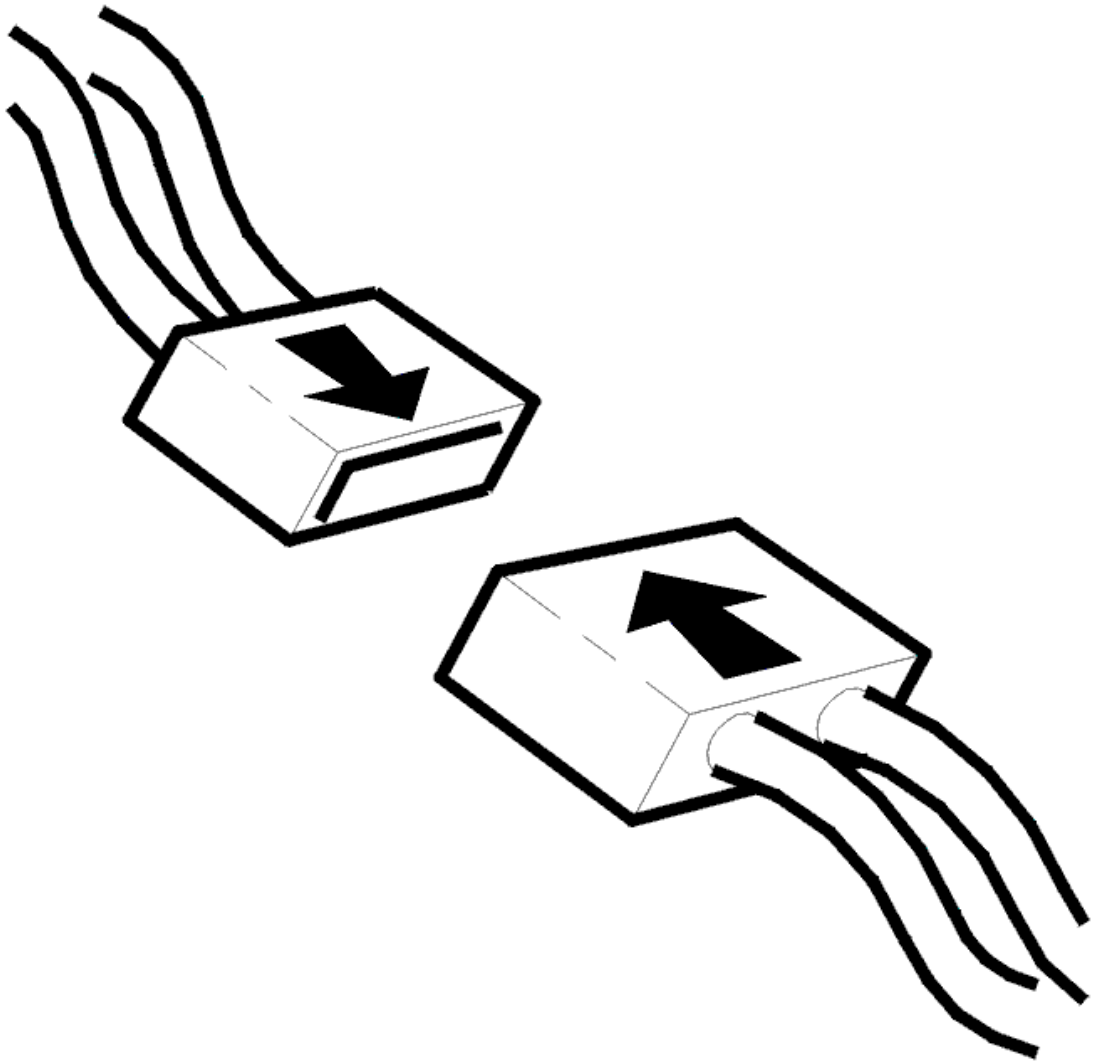

Fig. 60: Connecting Connector
Courtesy of VOLVO CARS CORPORATION

- Ignition off
- Check the connector between the Differential Electronic Module (DEM) and the temperature sensor with respect to contact resistance and oxidation.
- Check connector A with respect to depressed or damaged pins, contact resistance and oxidation.

  HINT: Read the temperature sensor signal to check the function.

  Remedy as necessary.

  Other information:

  - see **SIGNAL SPECIFICATION**

- see **TEMPERATURE / PRESSURE SENSOR ACTIVE ON DEMAND COUPLING (AOC), REPLACING**
- see **DIFFERENTIAL ELECTRONIC MODULE (DEM), REPLACING**
- see **CONTENTS**

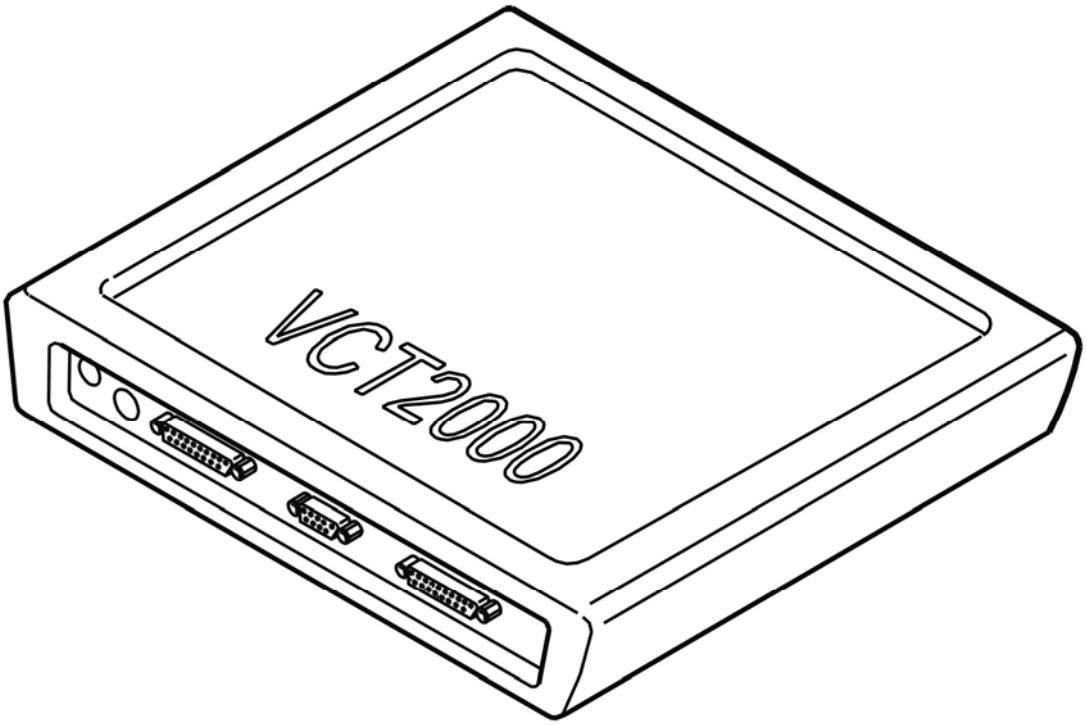

Fig. 61: Identifying VCT2000 Diagnostic Tool Symbol In VIDA
Courtesy of VOLVO CARS CORPORATION

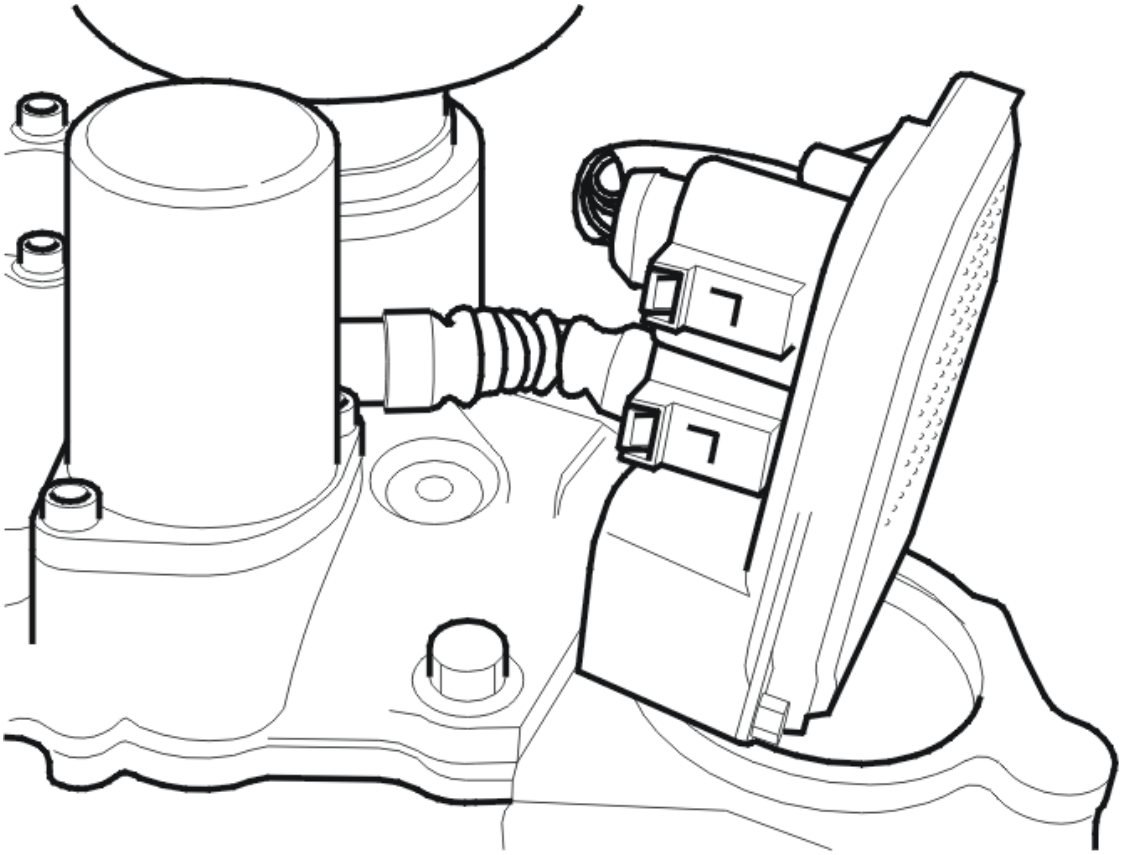

Fig. 62: Identifying Active On Demand Coupling Components
Courtesy of VOLVO CARS CORPORATION

- **Continue**

  Refer to **VERIFICATION**

VERIFICATION

HINT: After carrying out the repair, check that the fault has been remedied.

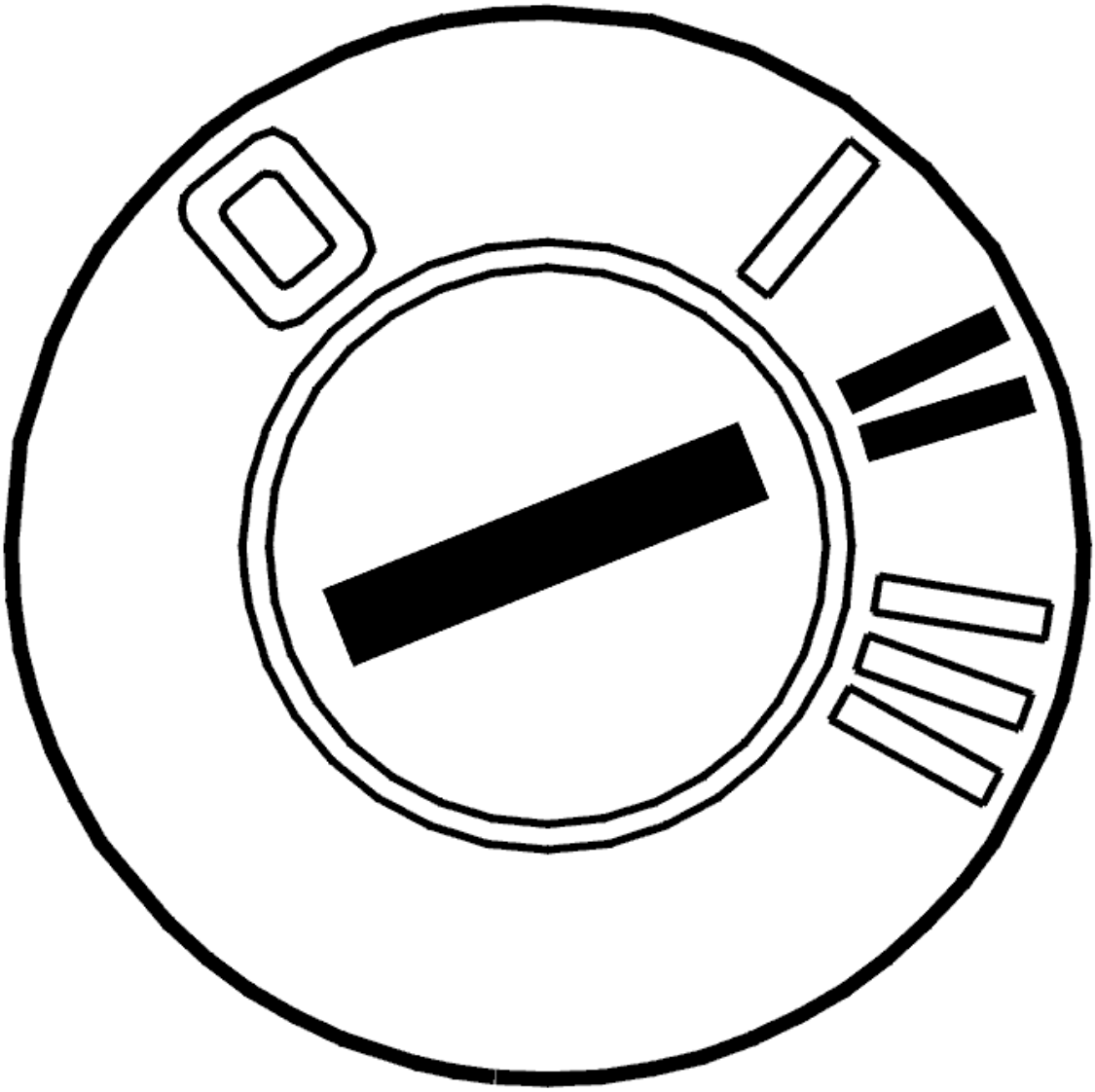

Fig. 63: Identifying Ignition ON
Courtesy of VOLVO CARS CORPORATION

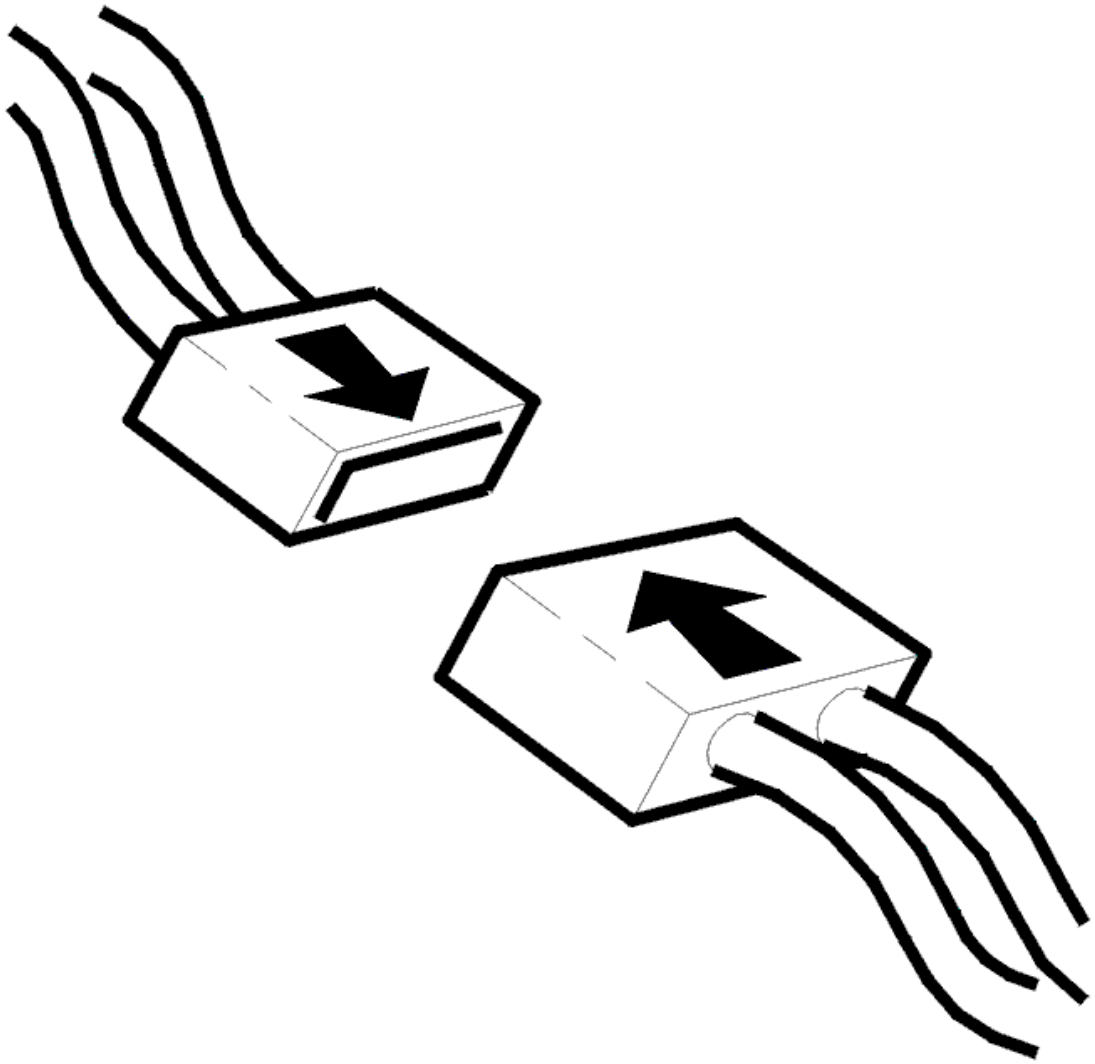

Fig. 64: Connecting Connector
Courtesy of VOLVO CARS CORPORATION

- Ignition off
- Reinstall the connectors, components etc.
- Ignition on

  Read the temperature.

  Check that the value is appropriate by comparing it with the ambient temperature.

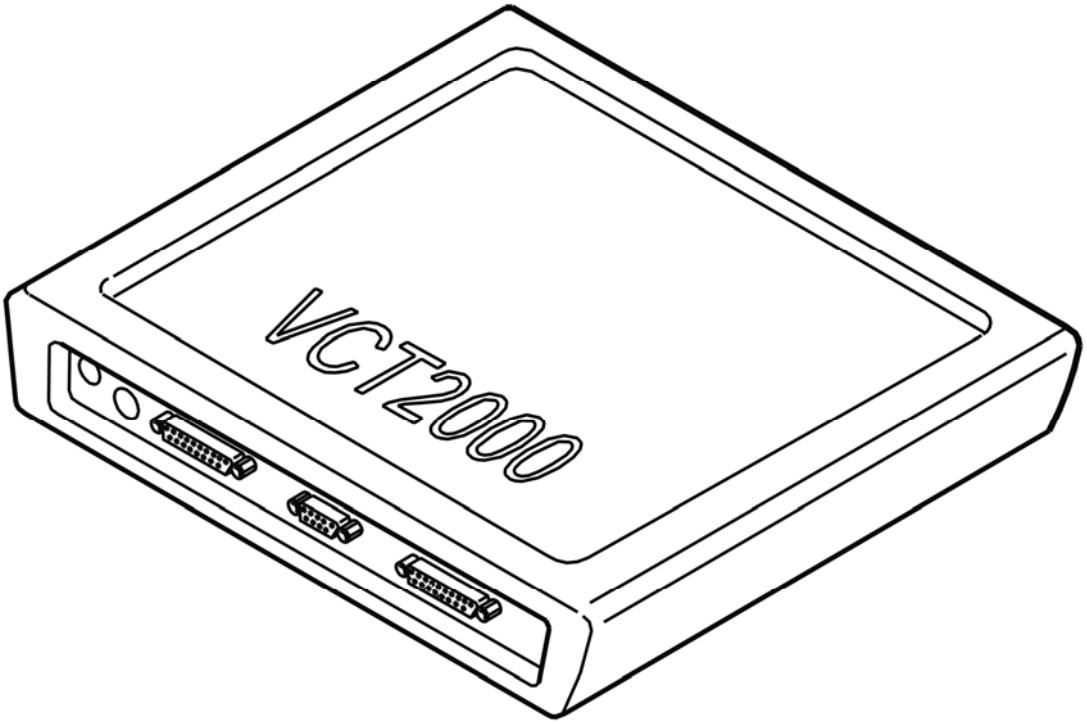

Fig. 65: Identifying VCT2000 Diagnostic Tool Symbol In VIDA
Courtesy of VOLVO CARS CORPORATION

Is the temperature OK?

- **YES**

  VERIFIED: Troubleshooting has been completed.

- **NO**

  Refer to **INFORMATION**

INFORMATION

FAULT-TRACING INFORMATION

The fault should have been detected and remedied. As this is not the case fault-tracing has failed.

Exit fault-tracing for this diagnostic trouble code (DTC) or make another attempt.

DEM-P093715: OIL TEMPERATURE SENSOR CIRCUIT. GENERAL ELECTRICAL FAULT. SHORT CIRCUIT TO A VOLTAGE SOURCE OR OPEN

CIRCUIT. (B8444S, TF-80SC AWD; 2006-2007)

DIAGNOSTIC TROUBLE CODE (DTC) INFORMATION DEM-P093715

see **DIAGNOSTIC TROUBLE CODE (DTC) INFORMATION DEM-P093715**

FAULT TRACING DEM-P093715

see **FAULT TRACING DEM-P093715**

DEM-P093715: OIL TEMPERATURE SENSOR CIRCUIT. GENERAL ELECTRICAL FAULT. SHORT CIRCUIT TO A VOLTAGE SOURCE OR OPEN CIRCUIT. (TF-80SC AWD; 2005)

DIAGNOSTIC TROUBLE CODE (DTC) INFORMATION DEM-P093715

see **DIAGNOSTIC TROUBLE CODE (DTC) INFORMATION DEM-P093715**

FAULT TRACING DEM-P093715

see **FAULT TRACING DEM-P093715**

DEM-P093827: OIL TEMPERATURE SENSOR CIRCUIT WITHIN/OUTSIDE THE LIMITS. GENERAL SIGNAL FAULT. RATE OF SIGNAL CHANGE EXCEEDS THE LIMIT. (B6324S, TF-80SC AWD; B8444S, TF-80SC AWD; 2008)

DIAGNOSTIC TROUBLE CODE (DTC) INFORMATION DEM-P093827

Condition

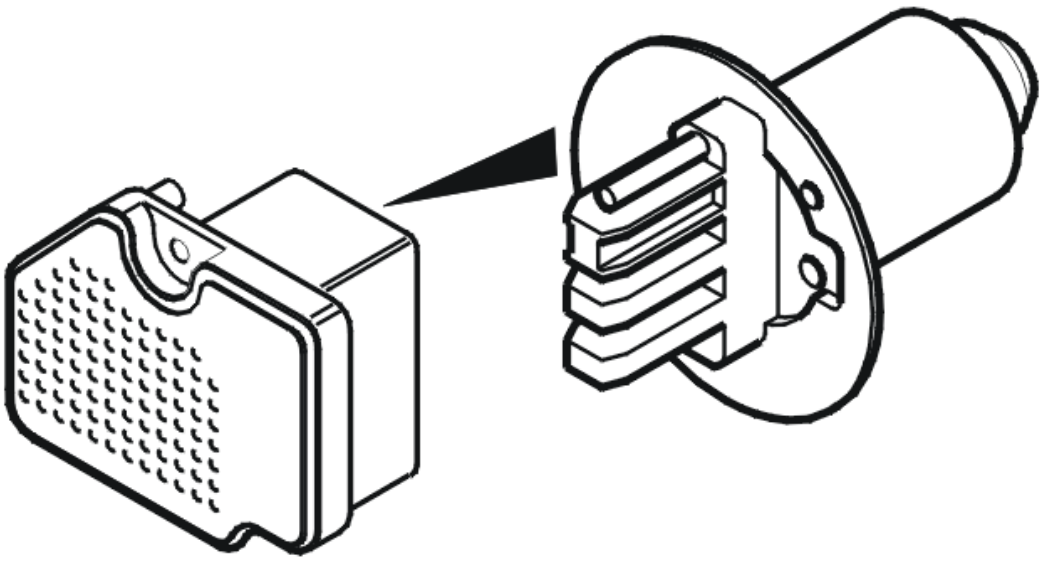

Fig. 66: Control Module And Oil Temperature Sensor
Courtesy of VOLVO CARS CORPORATION

The Differential Electronic Module (DEM) checks the rate of change of the signal from the oil temperature sensor. If the signal from the sensor changes more rapidly than calculated, the control module interprets this as a fault and the trouble code is set.

The diagnostic trouble code can be diagnosed when the ignition is on.

Substitute Value

- Four wheel drive is disengaged.

Possible Source

- Damaged temperature sensor.
- Damaged control module.

Fault symptom[s]

- Four wheel drive is not functioning.

FAULT TRACING DEM-P093827

CHECKING THE CONNECTORS AND LEADS

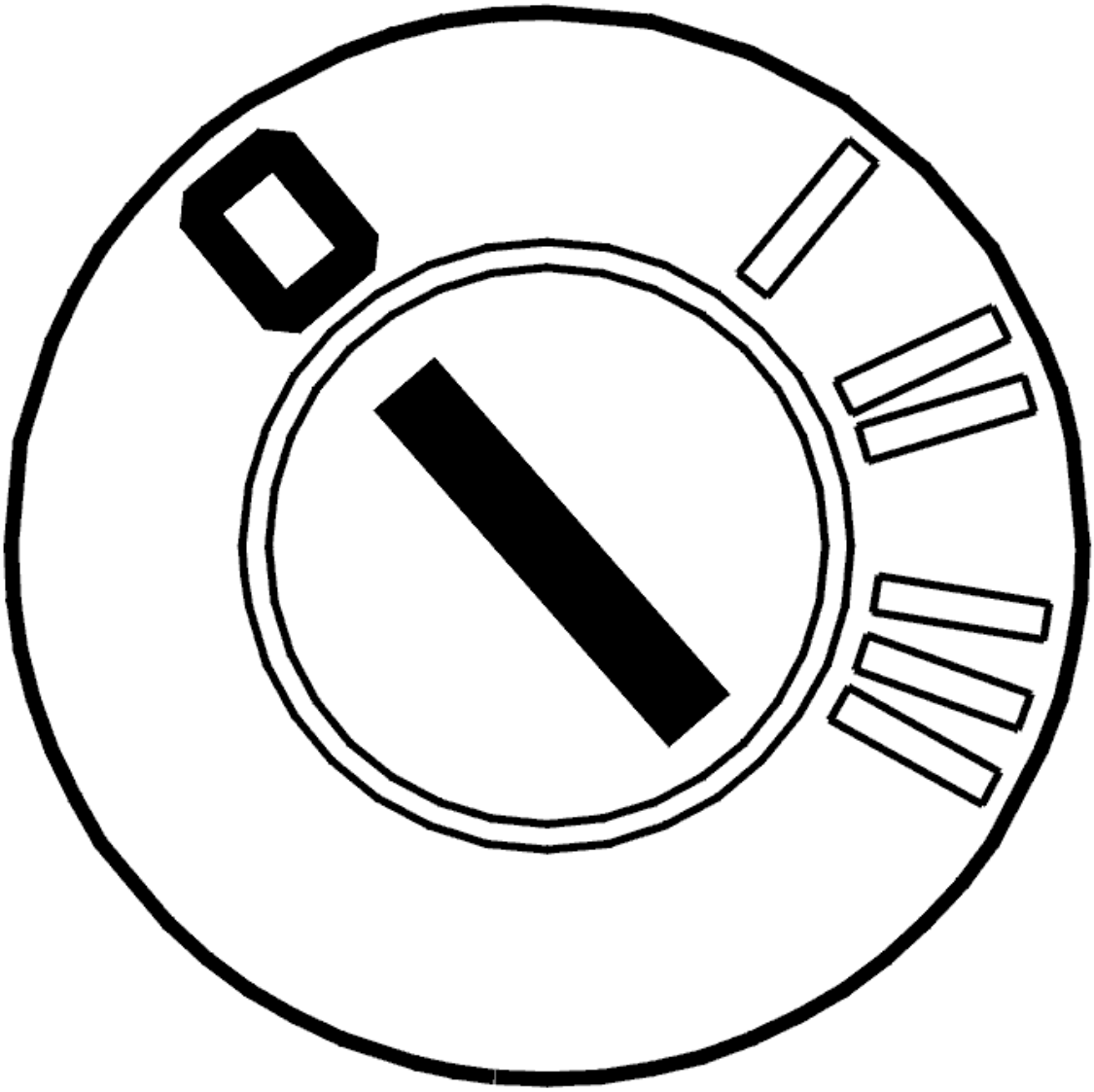

Fig. 67: Identifying Ignition OFF
Courtesy of VOLVO CARS CORPORATION

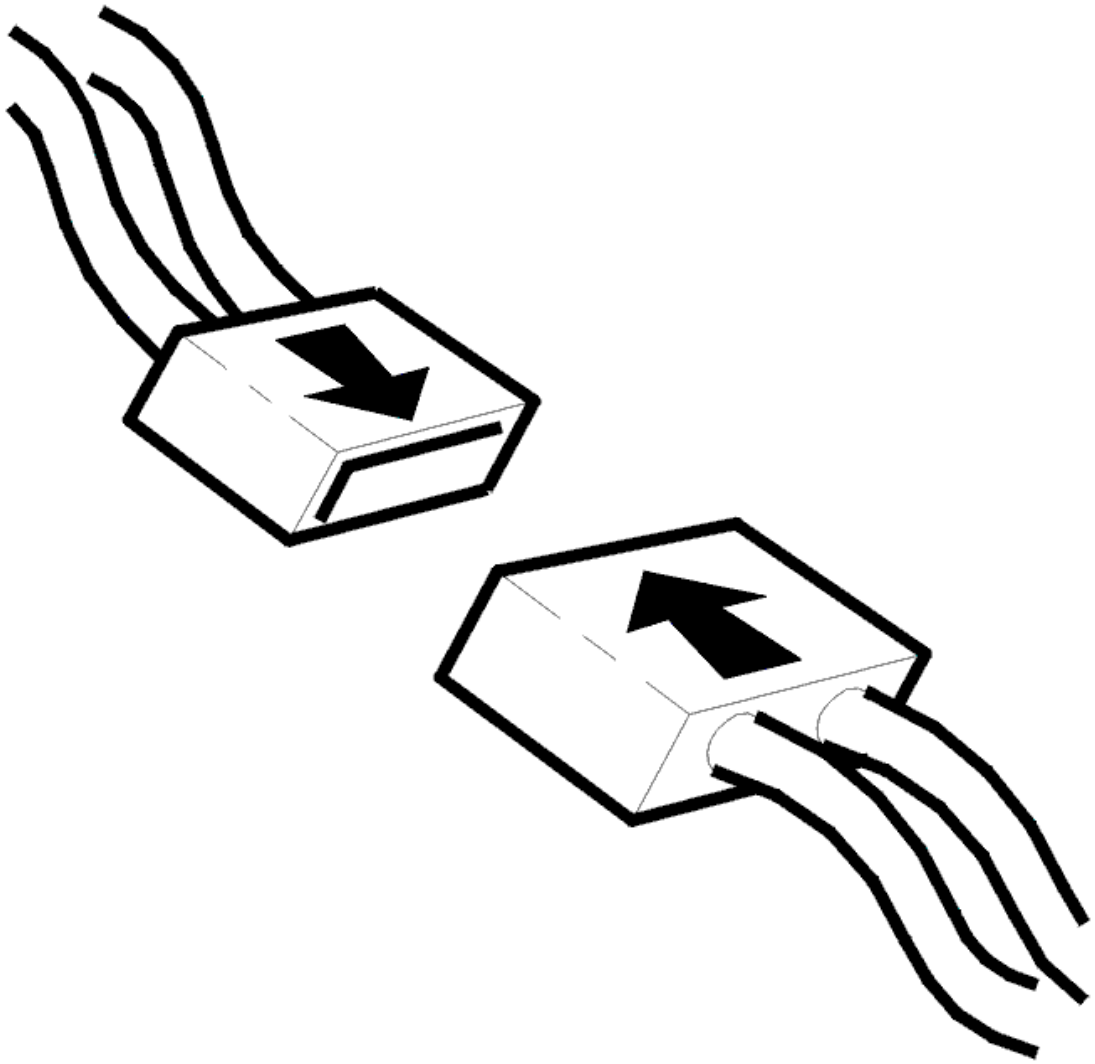

Fig. 68: Connecting Connector
Courtesy of VOLVO CARS CORPORATION

- Ignition off
- Check the connector between the Differential Electronic Module (DEM) and the temperature sensor with respect to contact resistance and oxidation.
- Check connector A with respect to depressed or damaged pins, contact resistance and oxidation.

  HINT: Read the temperature sensor signal to check the function.

  Remedy as necessary.

  Other information:

  - see **SIGNAL SPECIFICATION**

- see **TEMPERATURE / PRESSURE SENSOR ACTIVE ON DEMAND COUPLING (AOC), REPLACING**
- see **DIFFERENTIAL ELECTRONIC MODULE (DEM), REPLACING**
- see **CONTENTS**

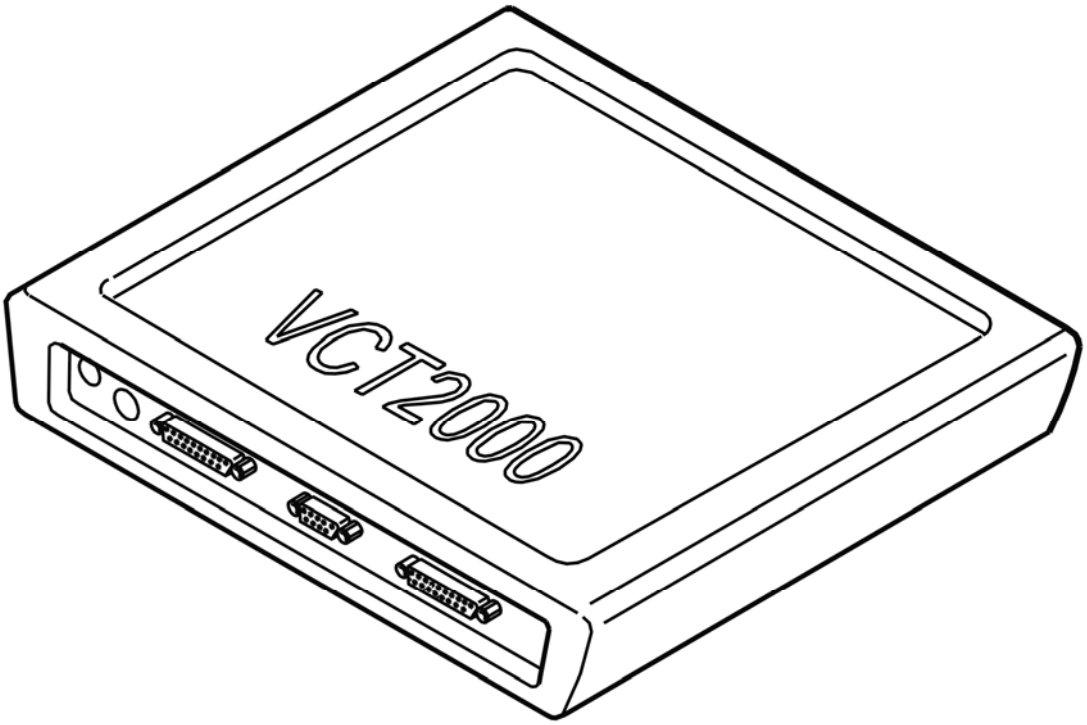

Fig. 69: Identifying VCT2000 Diagnostic Tool Symbol In VIDA
Courtesy of VOLVO CARS CORPORATION

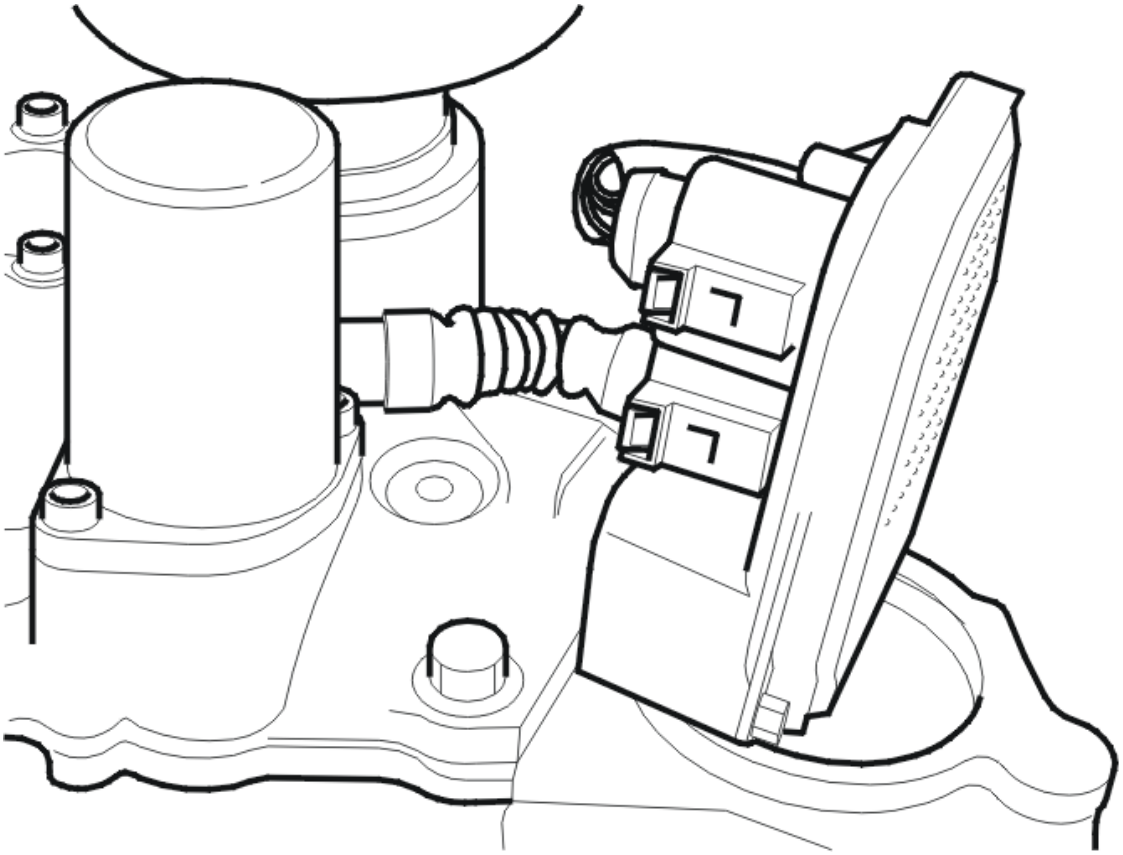

Fig. 70: Identifying Active On Demand Coupling Components
Courtesy of VOLVO CARS CORPORATION

- **Continue**

  Refer to **VERIFICATION**

VERIFICATION

HINT: After carrying out the repair, check that the fault has been remedied.

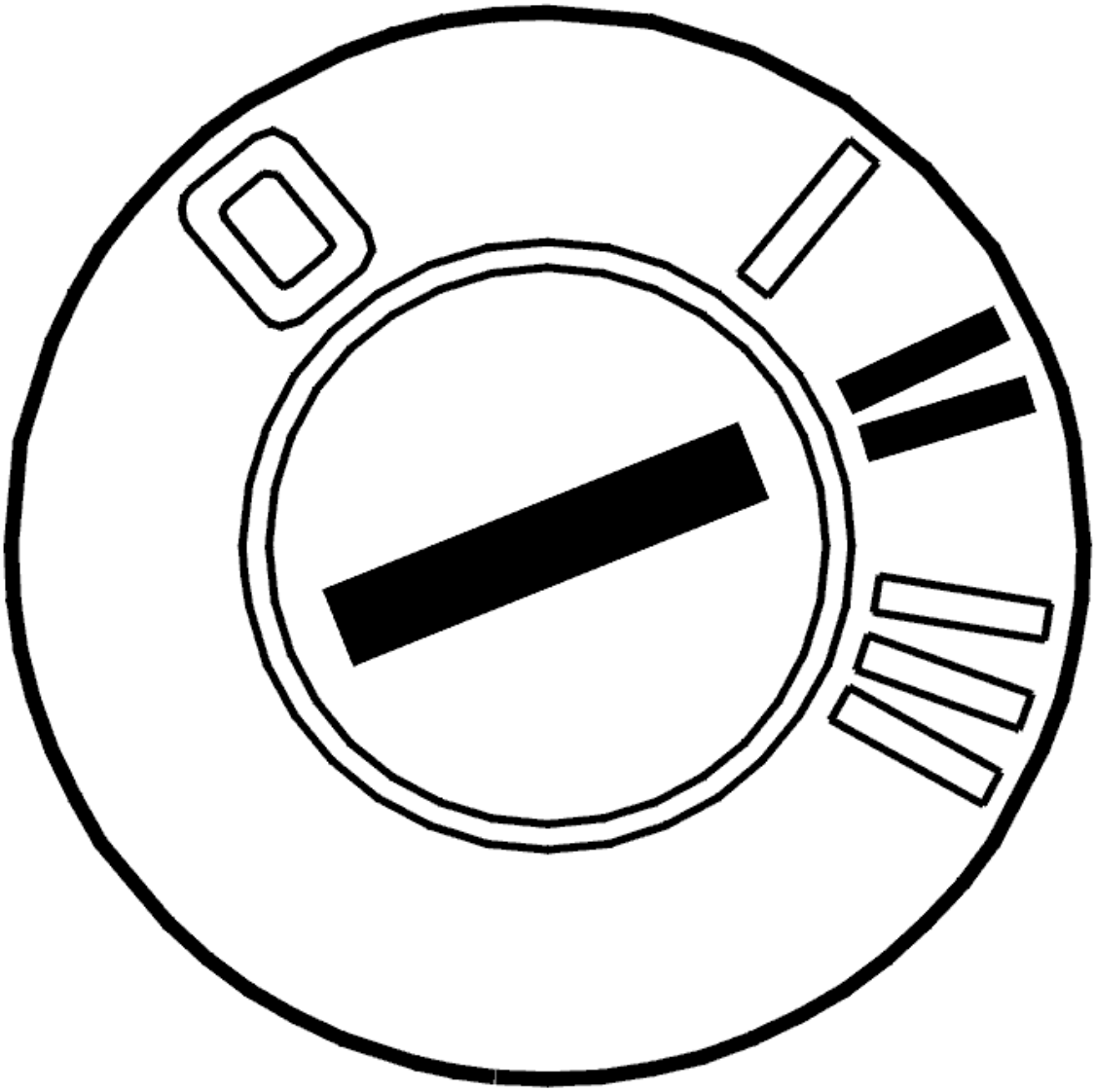

Fig. 71: Identifying Ignition ON
Courtesy of VOLVO CARS CORPORATION

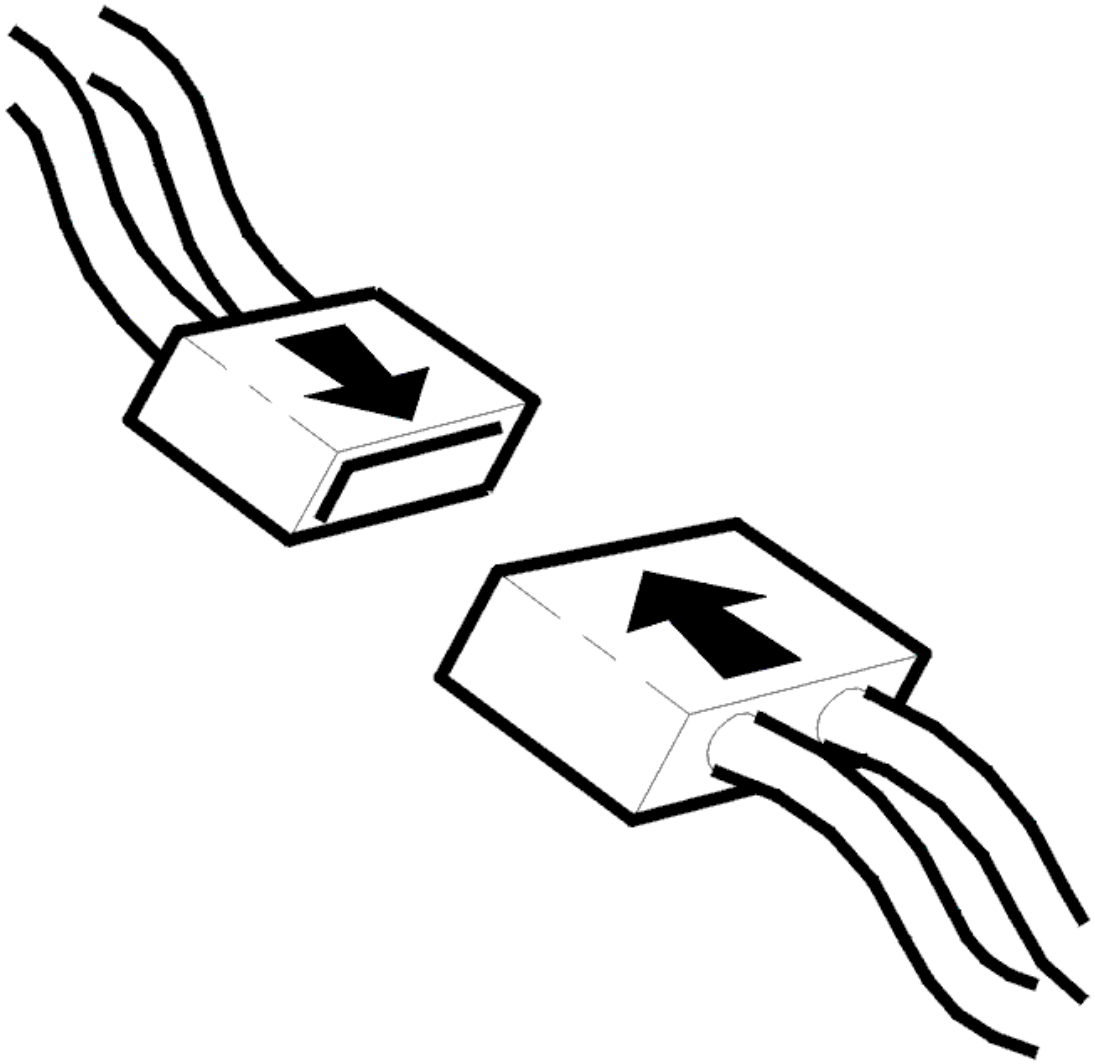

Fig. 72: Connecting Connector
Courtesy of VOLVO CARS CORPORATION

- Ignition off
- Reinstall the connectors, components etc.
- Ignition on

  Read the temperature.

  Check that the value is appropriate by comparing it with the ambient temperature.

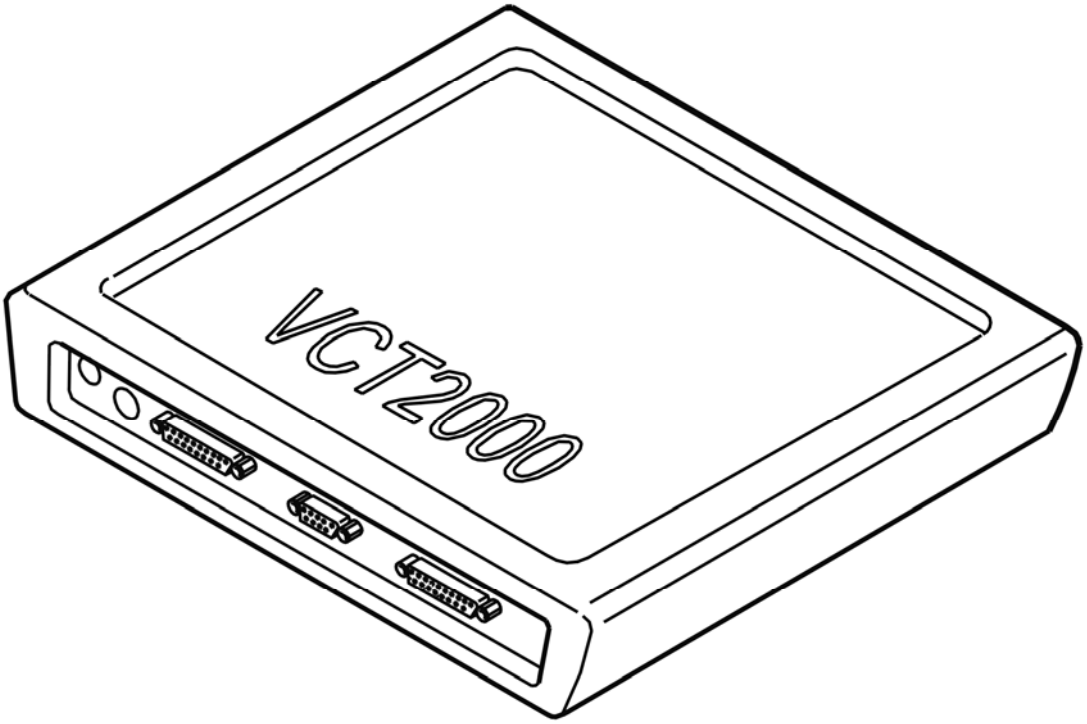

Fig. 73: Identifying VCT2000 Diagnostic Tool Symbol In VIDA
Courtesy of VOLVO CARS CORPORATION

Is the temperature OK?

- **YES**

  VERIFIED: Troubleshooting has been completed.

- **NO**

  Refer to **INFORMATION**

INFORMATION

FAULT-TRACING INFORMATION

The fault should have been detected and remedied. As this is not the case fault-tracing has failed.

Exit fault-tracing for this diagnostic trouble code (DTC) or make another attempt.

DEM-P093827: OIL TEMPERATURE SENSOR CIRCUIT WITHIN/OUTSIDE THE LIMITS. GENERAL SIGNAL FAULT. RATE OF SIGNAL CHANGE

EXCEEDS THE LIMIT. (B6324S, TF-80SC AWD; 2007)

DIAGNOSTIC TROUBLE CODE (DTC) INFORMATION DEM-P093827

see **DIAGNOSTIC TROUBLE CODE (DTC) INFORMATION DEM-P093827**

FAULT TRACING DEM-P093827

CHECKING PRESSURE AND TEMPERATURE SENSOR

NOTE: **Reading out of oil pressure can take place first after the diagnostic trouble code (DTC) has been deleted. Therefore frozen values should be printed and saved before deleting takes place.**

1. Test of pressure sensor.
   - Ignition on.
   - Using Volvo Scan Tool hit the VCT2000 symbol.

     HINT: Correct pressure shall be 0.00 +/- 0.08 MPa.

   - Engine idling
   - Using Volvo Scan Tool hit the VCT2000 symbol.

     HINT: Correct pressure shall be 0.38 +/- 0.08 MPa.

2. Test of temperature sensor.
   - Ignition on.
   - Using Volvo Scan Tool hit the VCT2000 symbol.

     HINT: Normal value for ambient temperature when the vehicle is cold and (+20 to +50 °C) when the vehicle is driven.

If wrong value is read out, then diagnostic trouble code shall be erased and the sensor changed. After changing sensor, repeat the test procedure again.

NOTE: **There are two types of sensors, an 80 bar and a 40 bar. Differential electronic module (DEM) has hardware number 30759701, 30785483, 30759682, 30783198, 30735844, or 30783018, an 80 bar pressure sensor shall be installed. If Differential electronic module (DEM) has another hardware number than above, a 40 bar sensor shall be installed.**

HINT: For reading out of hardware number, see VIDA/DIAGNOSTICS/NETWORK/DEM.

Other information

- see **TEMPERATURE / PRESSURE SENSOR ACTIVE ON DEMAND COUPLING (AOC), REPLACING**

Fig. 74: Identifying VCT2000 Diagnostic Tool Symbol In VIDA
Courtesy of VOLVO CARS CORPORATION

Has the fault been remedied?

- **YES**

  OKAY: Troubleshooting has been completed.

- **NO**

  Refer to **CHECKING THE CONNECTORS AND LEADS**

CHECKING THE CONNECTORS AND LEADS

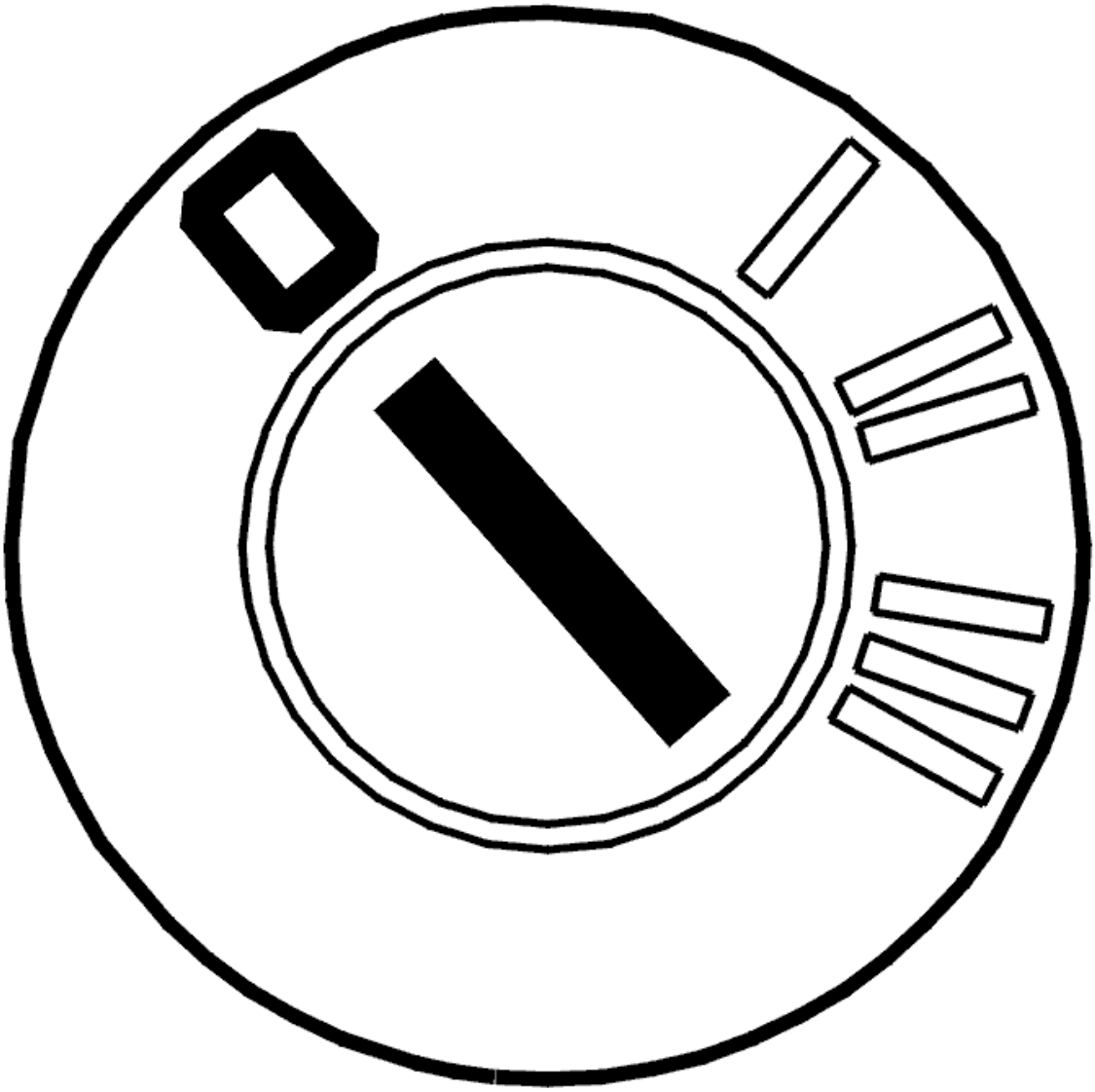

Fig. 75: Identifying Ignition OFF
Courtesy of VOLVO CARS CORPORATION

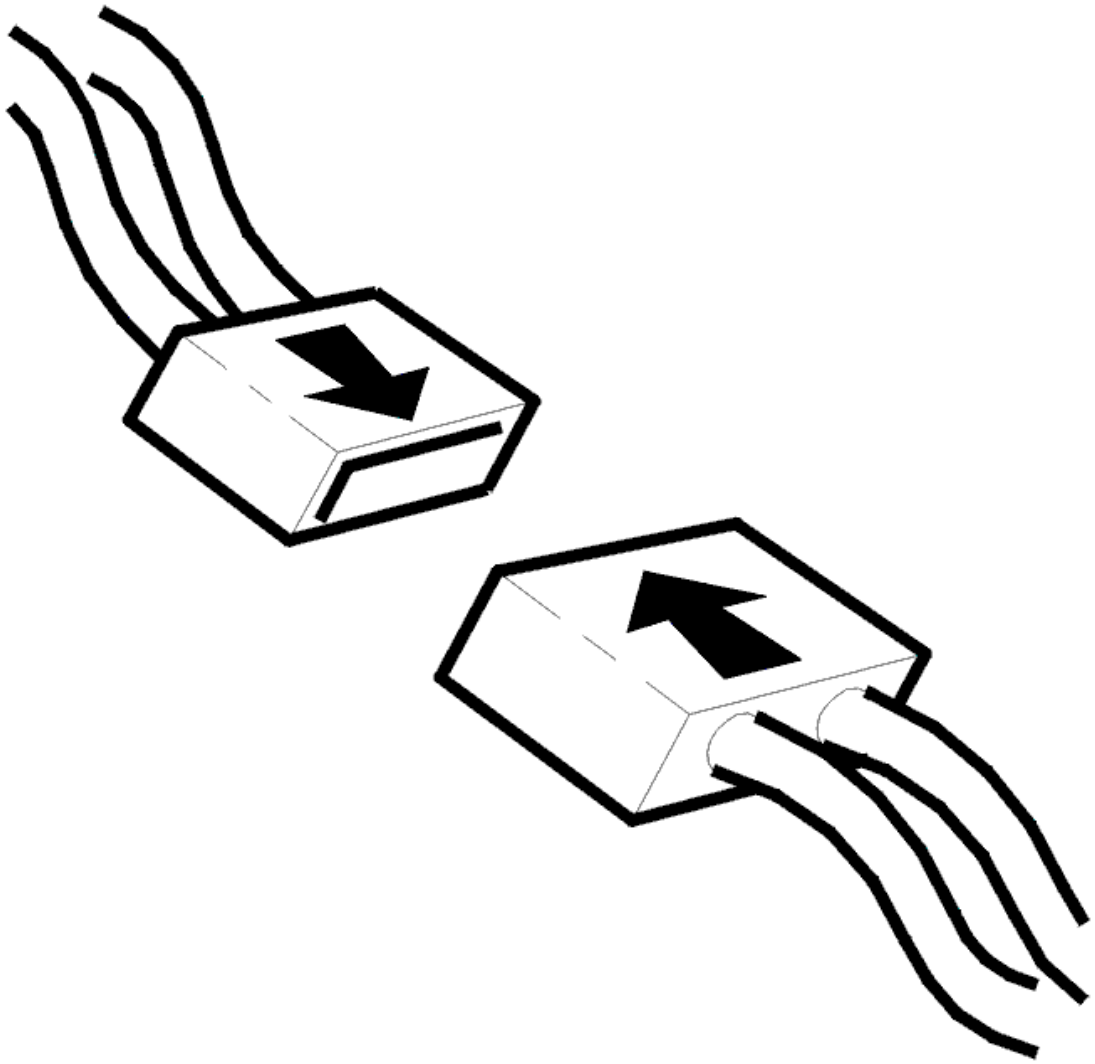

Fig. 76: Connecting Connector
Courtesy of VOLVO CARS CORPORATION

- Ignition off
- Check the connector between the Differential Electronic Module (DEM) and the temperature sensor with respect to contact resistance and oxidation.
- Check connector A with respect to depressed or damaged pins, contact resistance and oxidation.

  HINT: Read the temperature sensor signal to check the function.

  Remedy as necessary.

  Other information:

  - see **SIGNAL SPECIFICATION**

- see **TEMPERATURE / PRESSURE SENSOR ACTIVE ON DEMAND COUPLING (AOC), REPLACING**
- see **DIFFERENTIAL ELECTRONIC MODULE (DEM), REPLACING**
- see **CONTENTS**

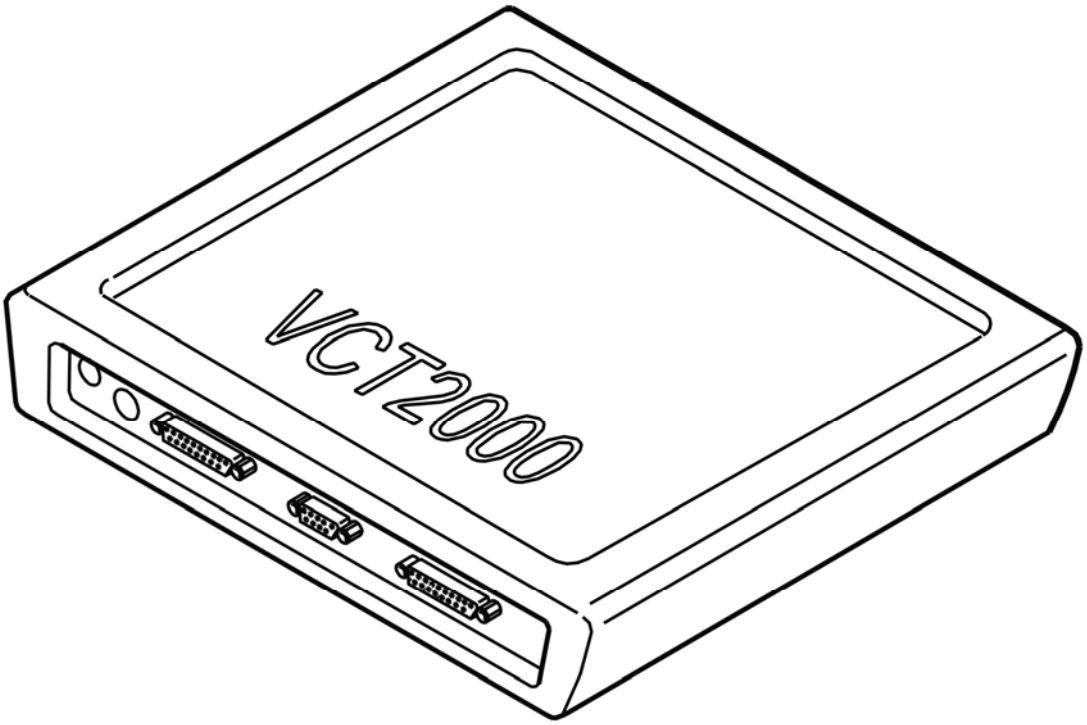

Fig. 77: Identifying VCT2000 Diagnostic Tool Symbol In VIDA
Courtesy of VOLVO CARS CORPORATION

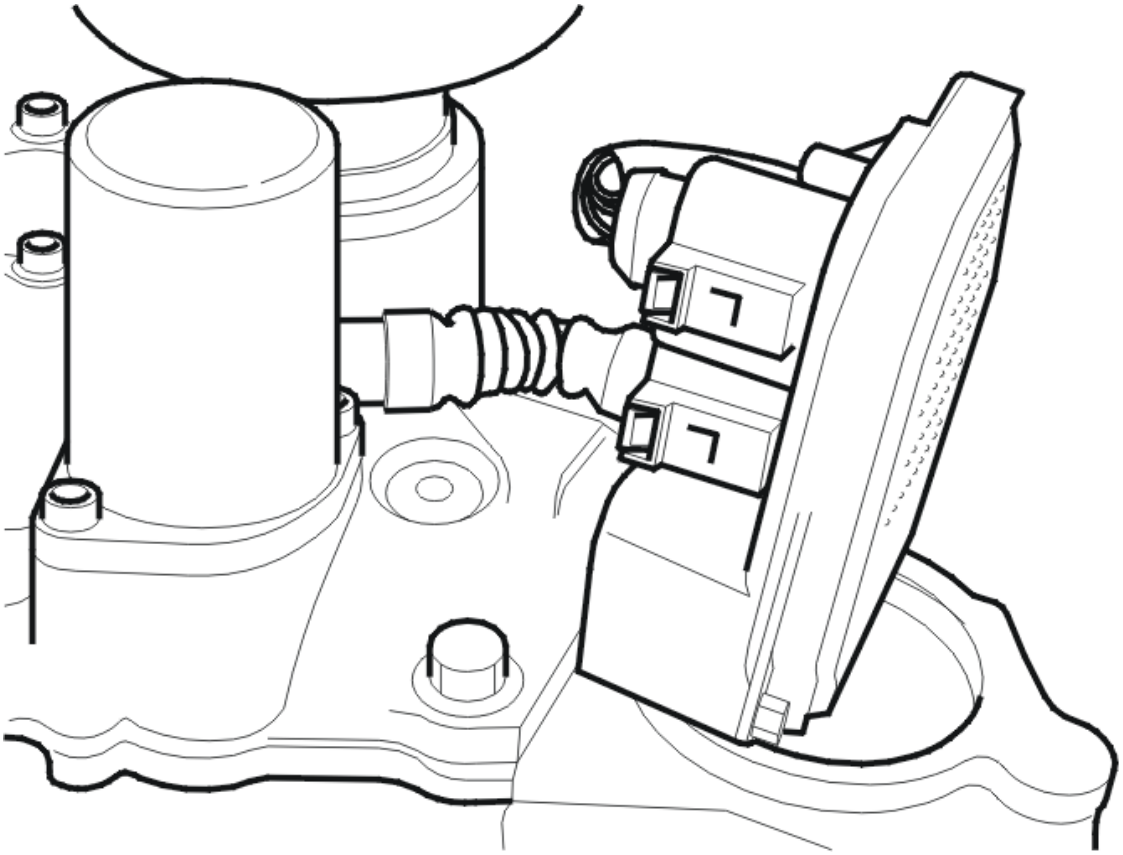

Fig. 78: Identifying Active On Demand Coupling Components
Courtesy of VOLVO CARS CORPORATION

- **Continue**

  Refer to **VERIFICATION**

VERIFICATION

HINT: After carrying out the repair, check that the fault has been remedied.

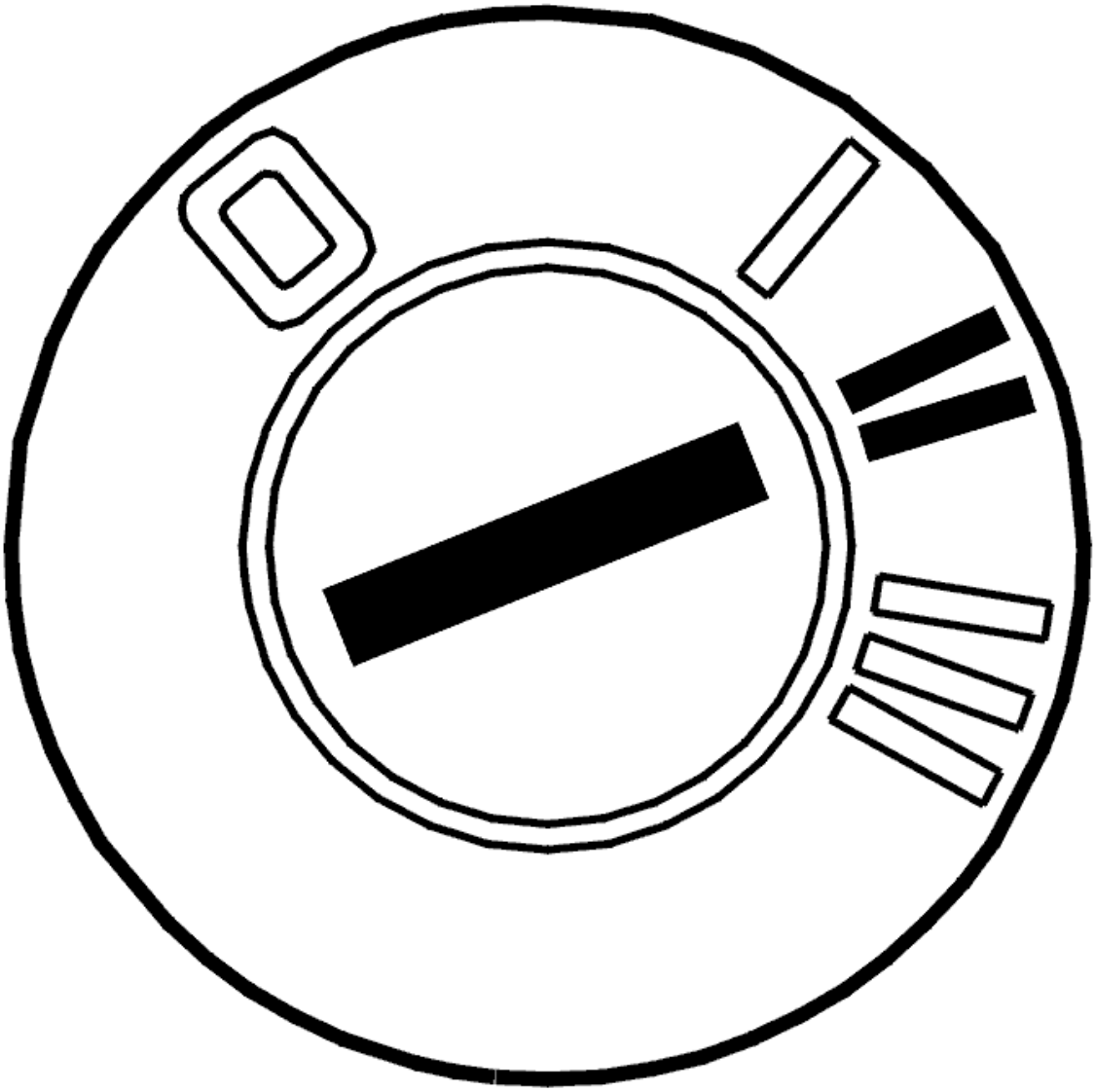

Fig. 79: Identifying Ignition ON
Courtesy of VOLVO CARS CORPORATION

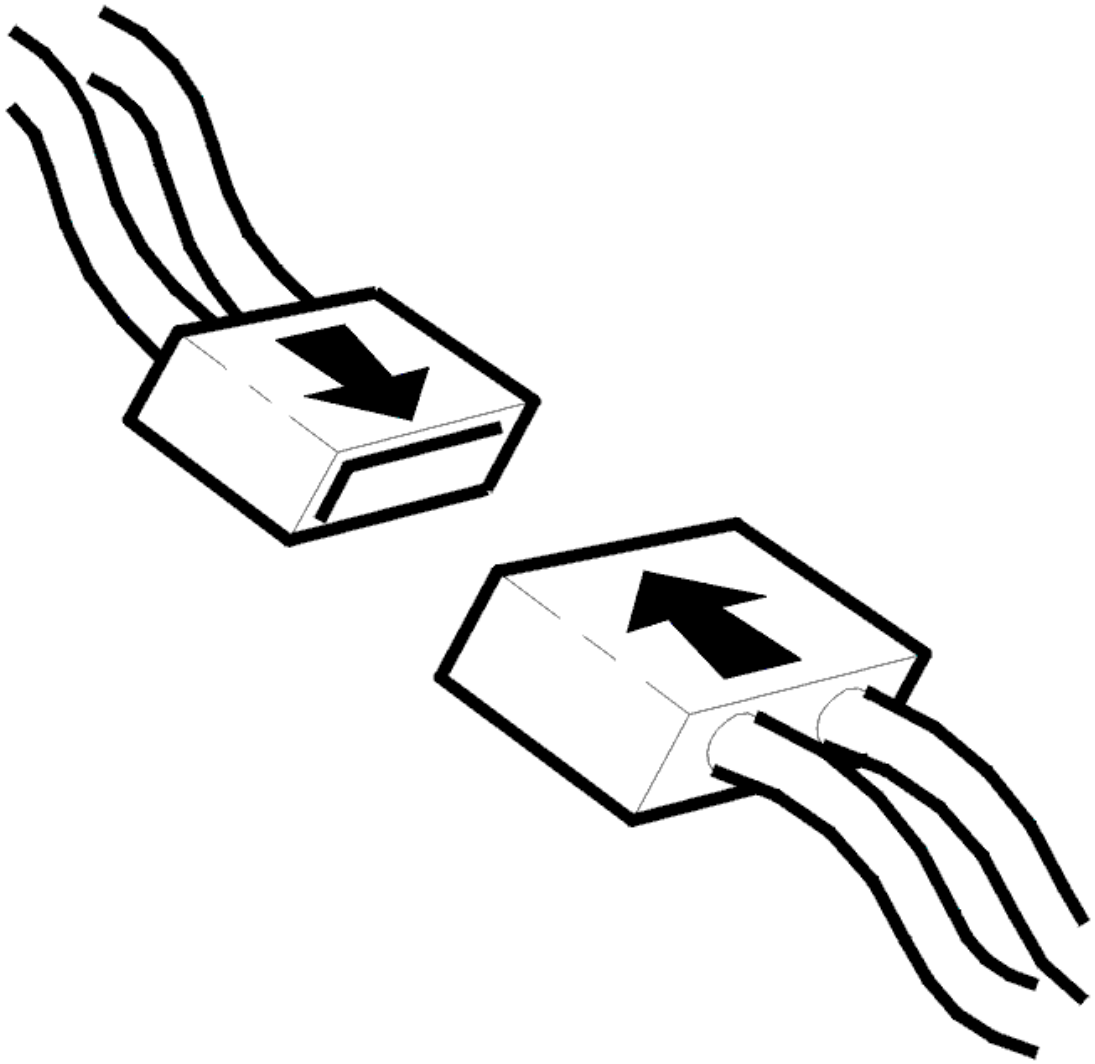

Fig. 80: Connecting Connector
Courtesy of VOLVO CARS CORPORATION

- Ignition off
- Reinstall the connectors, components etc.
- Ignition on

  Read the temperature.

  Check that the value is appropriate by comparing it with the ambient temperature.

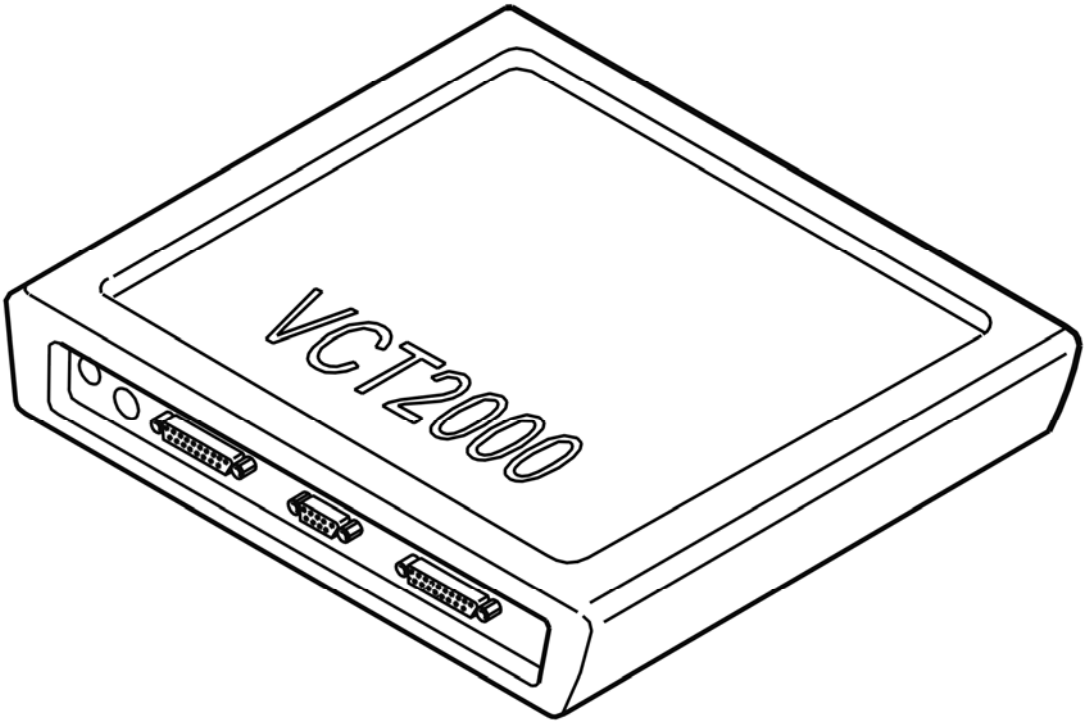

Fig. 81: Identifying VCT2000 Diagnostic Tool Symbol In VIDA
Courtesy of VOLVO CARS CORPORATION

Is the temperature OK?

- **YES**

  VERIFIED: Troubleshooting has been completed.

- **NO**

  Refer to **INFORMATION**

INFORMATION

FAULT-TRACING INFORMATION

The fault should have been detected and remedied. As this is not the case fault-tracing has failed.

Exit fault-tracing for this diagnostic trouble code (DTC) or make another attempt.

DEM-P093827: OIL TEMPERATURE SENSOR CIRCUIT WITHIN/OUTSIDE THE LIMITS. GENERAL SIGNAL FAULT. RATE OF SIGNAL CHANGE

EXCEEDS THE LIMIT. (B8444S, TF-80SC AWD; 2006-2007)

DIAGNOSTIC TROUBLE CODE (DTC) INFORMATION DEM-P093827

see **DIAGNOSTIC TROUBLE CODE (DTC) INFORMATION DEM-P093827**

FAULT TRACING DEM-P093827

see **FAULT TRACING DEM-P093827**

DEM-P093827: OIL TEMPERATURE SENSOR CIRCUIT WITHIN/OUTSIDE THE LIMITS. GENERAL SIGNAL FAULT. RATE OF SIGNAL CHANGE EXCEEDS THE LIMIT. (TF-80SC AWD; 2005)

DIAGNOSTIC TROUBLE CODE (DTC) INFORMATION DEM-P093827

see **DIAGNOSTIC TROUBLE CODE (DTC) INFORMATION DEM-P093827**

FAULT TRACING DEM-P093827

see **FAULT TRACING DEM-P093827**

DEM-P096162: PRESSURE CONTROL SOLENOID A CONTROL CIRCUIT RANGE/PERFORMANCE. ALGORITHM BASED FAILURES. SIGNAL COMPARE FAILURE (B6324S, TF-80SC AWD; 2009-2010)

DIAGNOSTIC TROUBLE CODE (DTC) INFORMATION DEM-P096162

Condition

Differential Electronic Module (DEM) calculates an expected oil pressure increase in the AOC-unit (the mechanical clutch) during driving. The control module checks reasonableness of the oil pressure change.

The diagnostic trouble code (DTC) is stored if the control module detects that:

- The signal from the oil pressure sensor deviates too much from the predefined value.
- Incorrect value lasts longer than 5 minutes.

The control module's test for the diagnostic trouble code (DTC) starts when:

- The oil temperature is between -40 °C and 120 °C.
- 30 seconds since the test was run the last time.
- The torque transfer is below a certain level that can be calibrated.
- The lateral acceleration is below a certain level that can be calibrated.

- No ABS engagement.
- No antispin engagement.

NOTE: The control module can only detect the fault once the test has been started and the diagnostic trouble code (DTC) is stored when the conditions are met.

Substitute Value

- Four wheel drive is disengaged.

Possible Source

- Damaged control valve/axial solenoid.
- Damaged AOC unit (mechanic clutch).
- Oil leakage.
- Damaged Differential Electronic Module (DEM).

Fault symptom[s]

- 4-wheel/all wheel drive/Does not work
- Text window and warning symbol/Text message

FAULT-TRACING

FAULT-TRACING INFORMATION

- Check the oil level in the coupling (Active on Demand Coupling).
- Check Differential electronic module (DEM) for damage to connector, oxidation, and pins.

  If the oil level is correct and no visual damage was found on Differential electronic module (DEM), change the oil and the oil filter.

  Other information

  - Checking the oil level
  - see **CHECKING WIRING AND TERMINALS**
  - see **OIL FILTER CLUTCH FOUR WHEEL DRIVE**

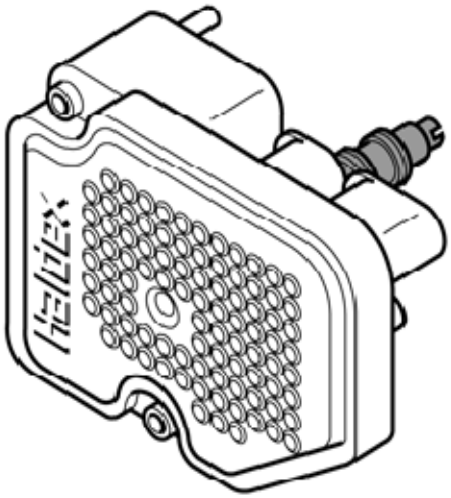

Fig. 82: Control Module
Courtesy of VOLVO CARS CORPORATION

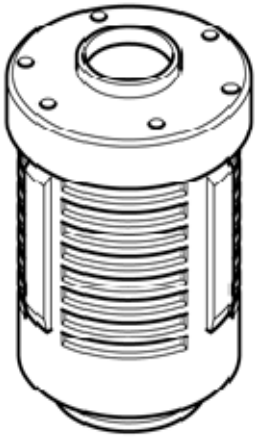

Fig. 83: Oil Filter
Courtesy of VOLVO CARS CORPORATION

Has the fault been remedied?

- **YES**

  OKAY: Troubleshooting has been completed.

- **NO**

  Refer to **INFORMATION**

INFORMATION

The control module has registered an internal fault.

The problem is solved by changing Differential electronic module (DEM).

Other information

- see **ACTIVE ON-DEMAND COUPLING MODULE**

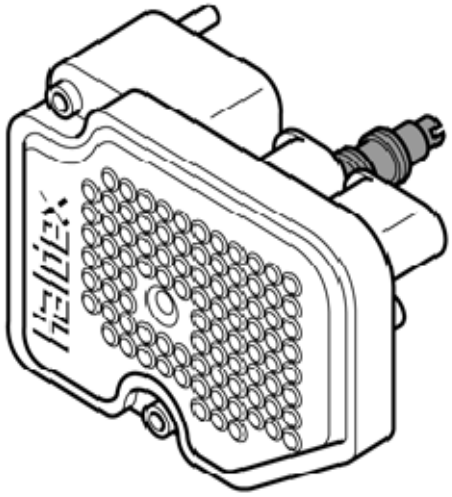

Fig. 84: Control Module
Courtesy of VOLVO CARS CORPORATION

- **Continue**

  Refer to **INFORMATION**

INFORMATION

FAULT-TRACING INFORMATION

The fault should have been detected and remedied. As this is not the case fault-tracing has failed.

Exit fault-tracing for this diagnostic trouble code (DTC) or make another attempt.

DEM-P096162: PRESSURE CONTROL SOLENOID A CONTROL CIRCUIT RANGE/PERFORMANCE. ALGORITHM BASED FAILURES. SIGNAL COMPARE FAILURE (B6324S5, TF-80SC AWD; 2011-2012)

DIAGNOSTIC TROUBLE CODE (DTC) INFORMATION DEM-P096162

see **DIAGNOSTIC TROUBLE CODE (DTC) INFORMATION DEM-P096162**

FAULT-TRACING

see **FAULT-TRACING**

DEM-P096162: PRESSURE CONTROL SOLENOID A CONTROL CIRCUIT RANGE/PERFORMANCE. ALGORITHM BASED FAILURES. SIGNAL COMPARE FAILURE (B8444S, TF-80SC AWD; 2009-2011)

DIAGNOSTIC TROUBLE CODE (DTC) INFORMATION DEM-P096162

see **DIAGNOSTIC TROUBLE CODE (DTC) INFORMATION DEM-P096162**

FAULT-TRACING

see **FAULT-TRACING**

DEM-P096162: PRESSURE REGULATION SOLENOID A CONTROL CIRCUIT WITHIN/OUTSIDE THE LIMITS. ALGORITHM FAULT. COMPARISON FAULT (B6324S, TF-80SC AWD; B8444S, TF-80SC AWD; 2008)

DIAGNOSTIC TROUBLE CODE (DTC) INFORMATION DEM-P096162

Condition

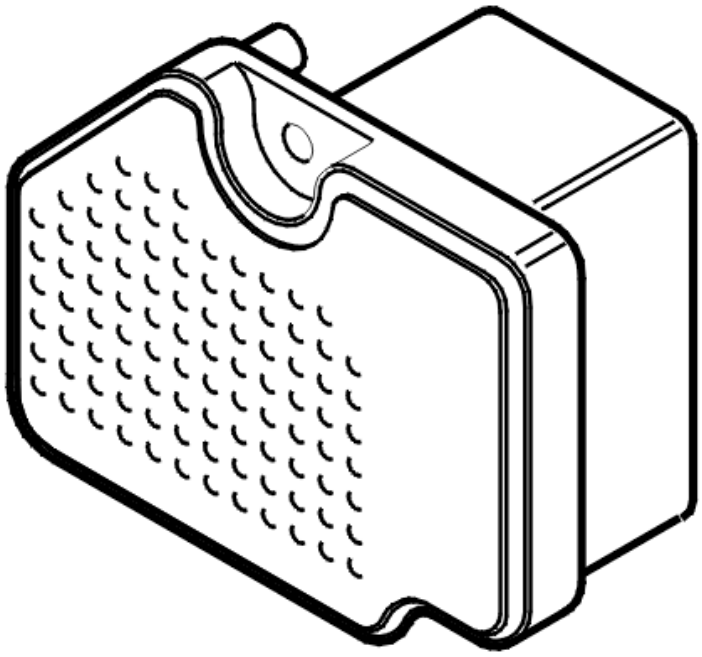

Fig. 85: Active On Demand Coupling Control Module
Courtesy of VOLVO CARS CORPORATION

The Differential Electronic Module (DEM) calculates an expected oil pressure change in the AOC unit (mechanical clutch) during driving. The control module checks whether the oil pressure change is appropriate by comparing the calculated value with the signal from the oil pressure sensor.

If the signal has too great a divergence from the expected value, the control module interprets this as a fault and the trouble code is set.

The diagnostic trouble code (DTC) can be diagnosed when driving.

Substitute Value

- Four wheel drive is disengaged.

Possible Source

- Damaged Differential Electronic Module (DEM).
- Damaged AOC unit (mechanic clutch).
- Oil leak.

Fault symptom[s]

- Four wheel drive is not functioning.

FAULT TRACING DEM-P096162

CHECKING THE FUNCTION

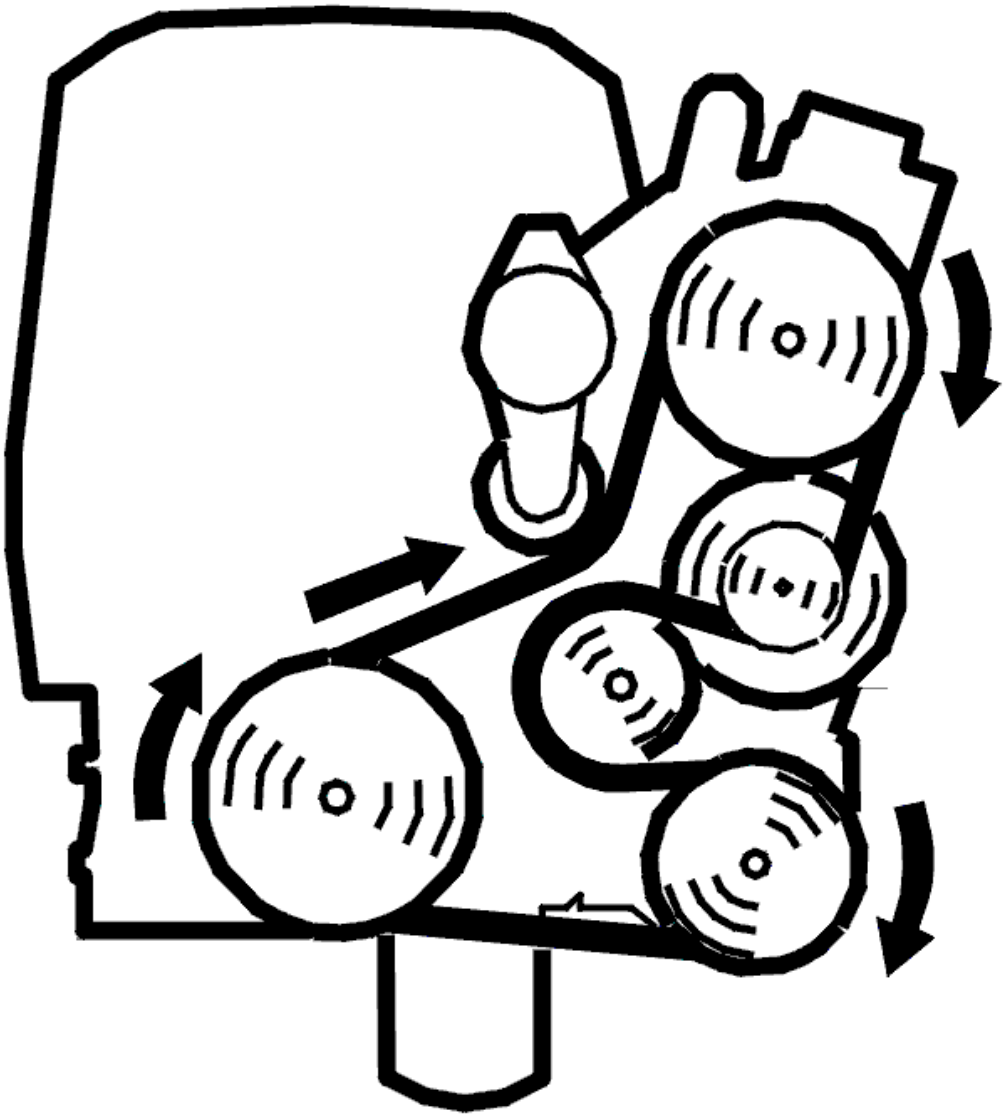

Fig. 86: Belt Routing / Engine Idling - Volvo
Courtesy of VOLVO CARS CORPORATION

CAUTION: Carry out the test with the vehicle raised so that all four wheels can rotate freely with the mounting at the ends of the control arms to prevent damage to the drive shafts.

WARNING: Ensure that the vehicle is safely raised. Check that no objects are caught in the tire treads.

NOTE: If the vehicle has TRACS or TC (STC, DSTC) this function must be deactivated. This is done by removing the fuse for the brake system pump motor from the engine compartment electrical center. Note that this will cause trouble codes to be set in the Brake Control Module (BCM). These codes must be erased before the vehicle is returned to the customer.

- Engine idling.
- Read off the oil pressure.

  Check that the function is OK by test running the vehicle on a lift (to increase the clutch oil pressure). Run the car in a low gear or in "Drive" with an automatic transmission. Apply the handbrake slightly and read the pressure value during the test. Check that the pressure is updated. Listen as well for abnormal noises from the clutch.

  HINT: The oil pressure sensor has a measurement range of 0 to 4 MPa.

  Also check the clutch for leakage.

  Remedy as necessary.

  Other information:

  - For further information about the fuses and relays, see the appropriate service information.
  - see **SIGNAL SPECIFICATION**
  - see **ACTIVE ON DEMAND COUPLING (AOC), REPLACING**
  - see **DIFFERENTIAL ELECTRONIC MODULE (DEM), REPLACING**
  - see **CONTENTS**

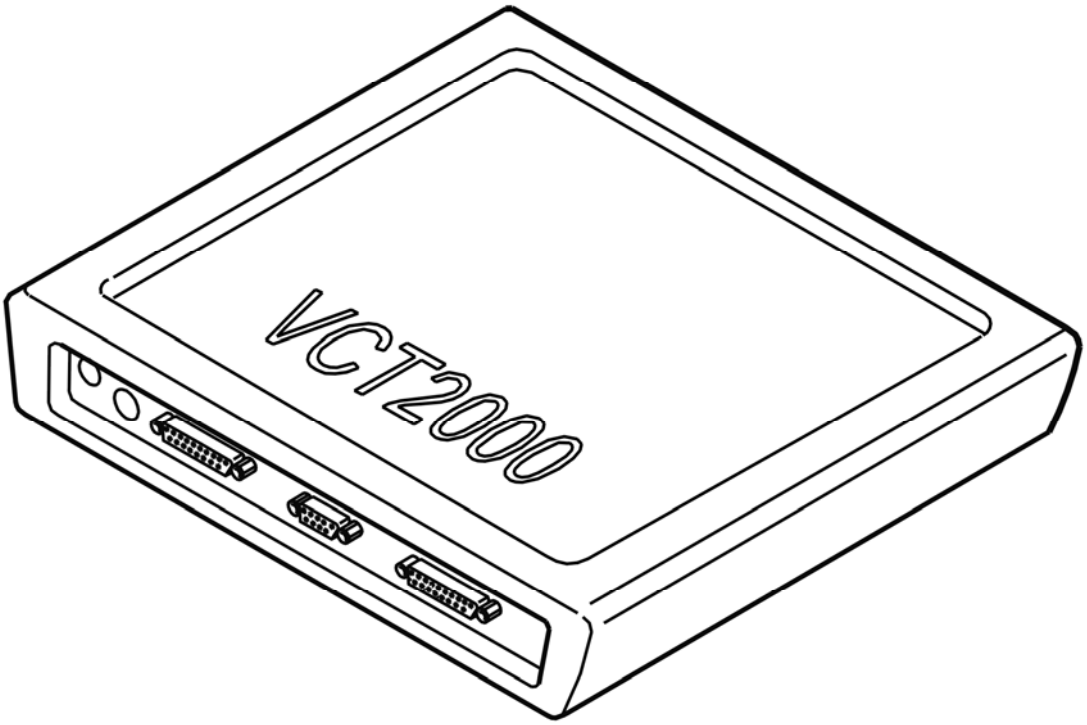

Fig. 87: Identifying VCT2000 Diagnostic Tool Symbol In VIDA
Courtesy of VOLVO CARS CORPORATION

- **Continue**

  Refer to **VERIFICATION**

VERIFICATION

HINT: After carrying out the repair, check that the fault has been remedied.

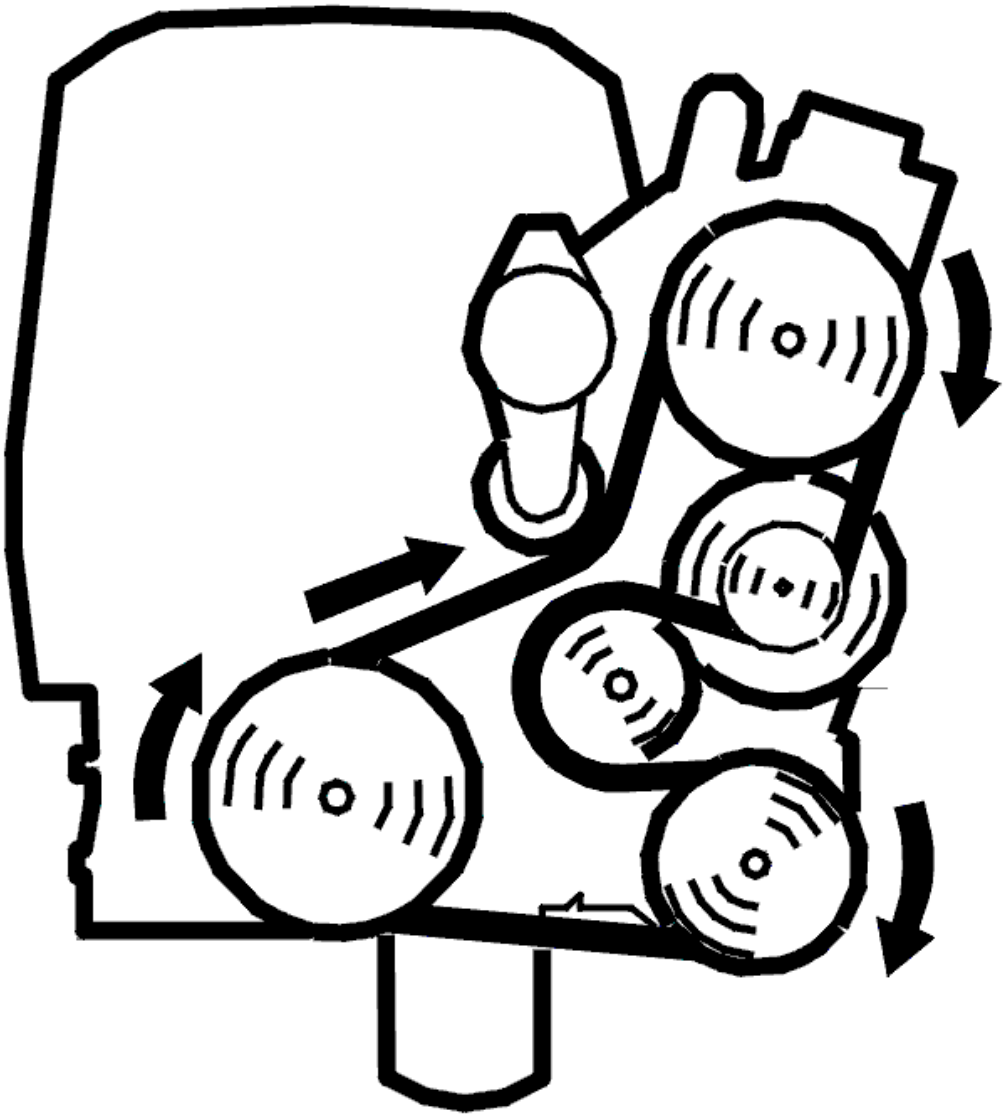

Fig. 88: Belt Routing / Engine Idling - Volvo
Courtesy of VOLVO CARS CORPORATION

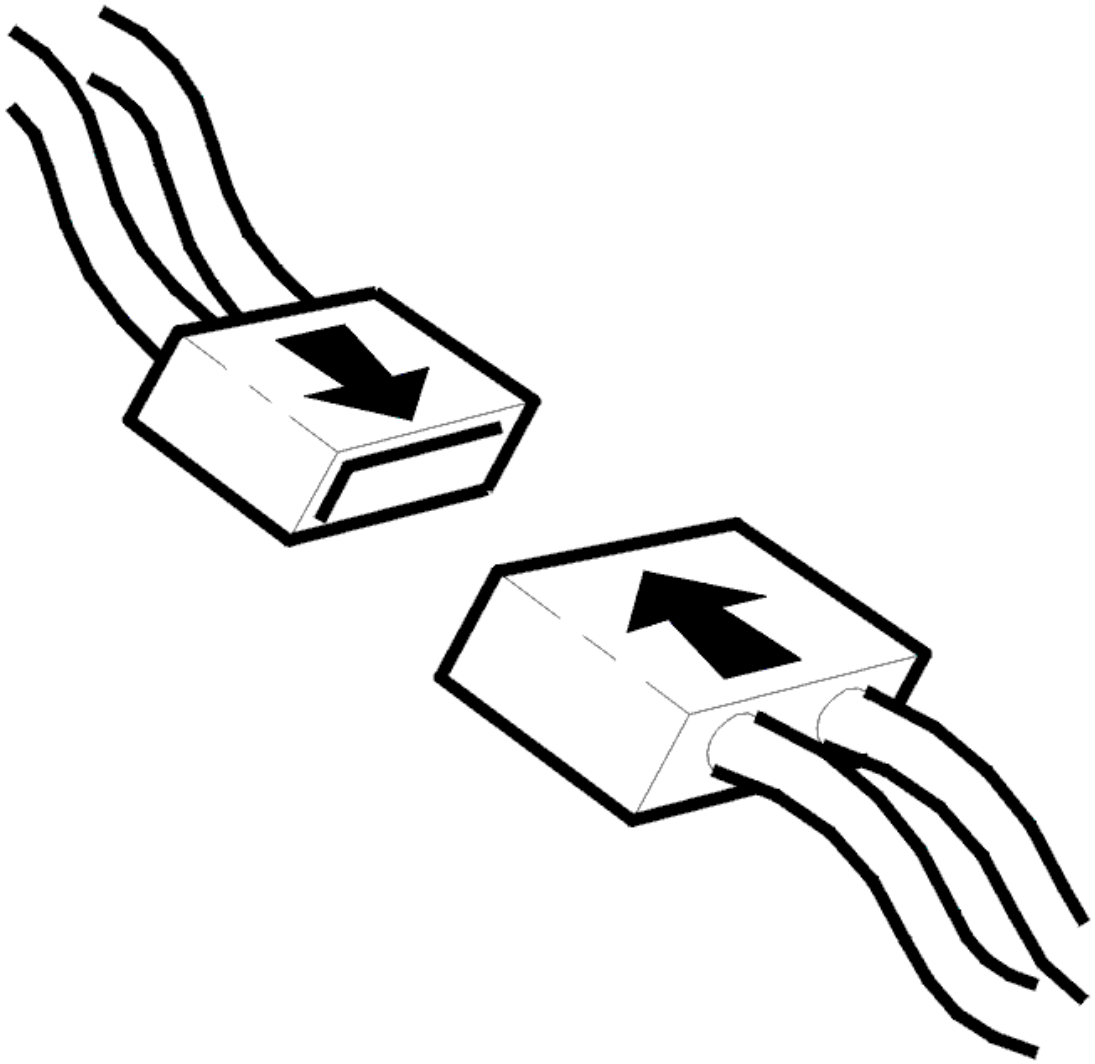

Fig. 89: Connecting Connector
Courtesy of VOLVO CARS CORPORATION

CAUTION: Carry out the test with the vehicle raised so that all four wheels can rotate freely with the mounting at the ends of the control arms to prevent damage to the drive shafts.

WARNING: Ensure that the vehicle is safely raised. Check that no objects are caught in the tire treads.

NOTE: If the vehicle has TRACS or TC (STC, DSTC) this function must be deactivated. This is done by removing the fuse for the brake system pump motor from the engine compartment electrical center. Note that this will cause trouble codes to be set in the Brake Control Module (BCM). These codes must be erased before the vehicle is returned to the customer.

- Ignition off
- Reinstall the connectors, components etc.
- Engine running, engine speed up to 2000 r. p. m.
- Read off the oil pressure.

  Check that the function is OK by test running the vehicle on a lift (to increase the clutch oil pressure). Run the car in a low gear or in "Drive" with an automatic transmission. Apply the handbrake slightly and read the pressure value during the test. Check that the pressure is updated. Listen as well for abnormal noises from the clutch.

  HINT: The oil pressure sensor has a measurement range of 0 to 4 MPa.

  Also check the clutch for leakage or noise.

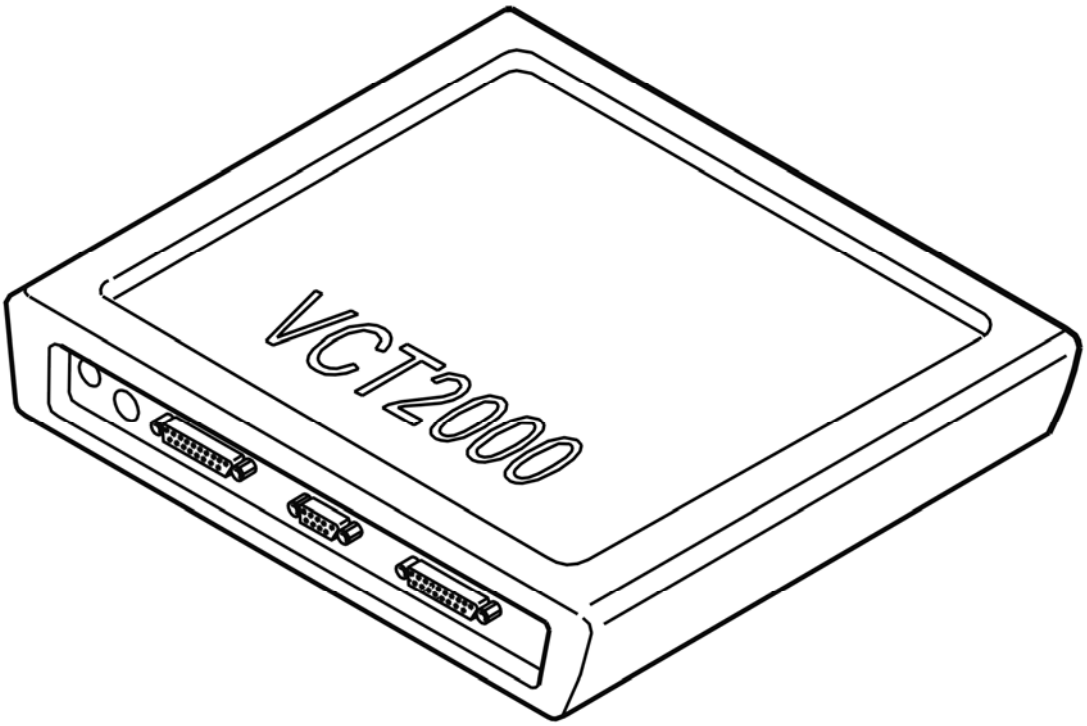

Fig. 90: Identifying VCT2000 Diagnostic Tool Symbol In VIDA
Courtesy of VOLVO CARS CORPORATION

Is the function OK?

- **YES**

  VERIFIED: Troubleshooting has been completed.

- **NO**

  Refer to **INFORMATION**

INFORMATION

FAULT-TRACING INFORMATION

The fault should have been detected and remedied. As this is not the case fault-tracing has failed.

Exit fault-tracing for this diagnostic trouble code (DTC) or make another attempt.

DEM-P096162: PRESSURE REGULATION SOLENOID A CONTROL CIRCUIT WITHIN/OUTSIDE THE LIMITS. ALGORITHM FAULT. COMPARISON FAULT (B6324S, TF-80SC AWD; 2007)

DIAGNOSTIC TROUBLE CODE (DTC) INFORMATION DEM-P096162

see **DIAGNOSTIC TROUBLE CODE (DTC) INFORMATION DEM-P096162**

FAULT TRACING DEM-P096162

CHECKING PRESSURE AND TEMPERATURE SENSOR

NOTE: Reading out of oil pressure can take place first after the diagnostic trouble code (DTC) has been deleted. Therefore frozen values should be printed and saved before deleting takes place.

1. Test of pressure sensor.
   - Ignition on.
   - Using Volvo Scan Tool hit the VCT2000 symbol.

     HINT: Correct pressure shall be 0.00 +/- 0.08 MPa.

   - Engine idling
   - Using Volvo Scan Tool hit the VCT2000 symbol.

     HINT: Correct pressure shall be 0.38 +/- 0.08 MPa.

2. Test of temperature sensor.
   - Ignition on.
   - Using Volvo Scan Tool hit the VCT2000 symbol.

     HINT: Normal value for ambient temperature when the vehicle is cold and (+20 to +50 °C) when the vehicle is driven.

If wrong value is read out, then diagnostic trouble code shall be erased and the sensor changed. After changing sensor, repeat the test procedure again.

NOTE: **There are two types of sensors, an 80 bar and a 40 bar. Differential electronic module (DEM) has hardware number 30759701, 30785483, 30759682, 30783198, 30735844, or 30783018, an 80 bar pressure sensor shall be installed. If Differential electronic module (DEM) has another hardware number than above, a 40 bar sensor shall be installed.**

HINT: For reading out of hardware number, see VIDA/DIAGNOSTICS/NETWORK/DEM.

Other information

- see **TEMPERATURE / PRESSURE SENSOR ACTIVE ON DEMAND COUPLING (AOC), REPLACING**

Fig. 91: Identifying VCT2000 Diagnostic Tool Symbol In VIDA
Courtesy of VOLVO CARS CORPORATION

Has the fault been remedied?

- **YES**

  OKAY: Troubleshooting has been completed.

- **NO**

  Refer to **CHECKING THE FUNCTION**

CHECKING THE FUNCTION

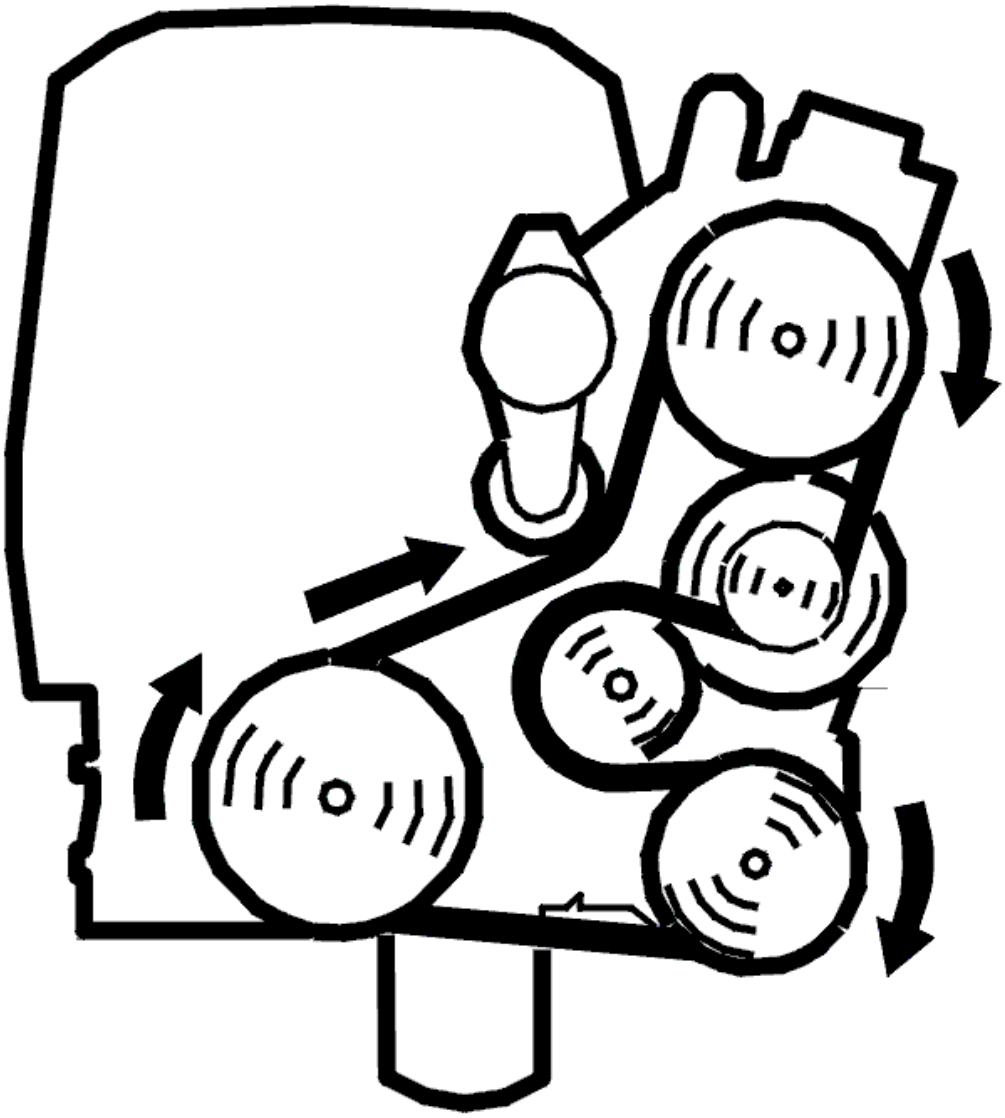

Fig. 92: Belt Routing / Engine Idling - Volvo
Courtesy of VOLVO CARS CORPORATION

CAUTION: Carry out the test with the vehicle raised so that all four wheels can rotate freely with the mounting at the ends of the control arms to prevent damage to the drive shafts.

WARNING: Ensure that the vehicle is safely raised. Check that no objects are caught in the tire treads.

NOTE: If the vehicle has TRACS or TC (STC, DSTC) this function must be deactivated. This is done by removing the fuse for the brake system pump motor from the engine compartment electrical center. Note that this will cause trouble codes to be set in the Brake Control Module (BCM). These codes must be erased before the vehicle is returned to the customer.

- Engine idling.
- Read off the oil pressure.

  Check that the function is OK by test running the vehicle on a lift (to increase the clutch oil pressure). Run the car in a low gear or in "Drive" with an automatic transmission. Apply the handbrake slightly and read the pressure value during the test. Check that the pressure is updated. Listen as well for abnormal noises from the clutch.

  HINT: The oil pressure sensor has a measurement range of 0 to 4 MPa.

  Also check the clutch for leakage.

  Remedy as necessary.

  Other information:

  - For further information about the fuses and relays, see the appropriate service information.
  - see **SIGNAL SPECIFICATION**
  - see **ACTIVE ON DEMAND COUPLING (AOC), REPLACING**
  - see **DIFFERENTIAL ELECTRONIC MODULE (DEM), REPLACING**
  - see **CONTENTS**

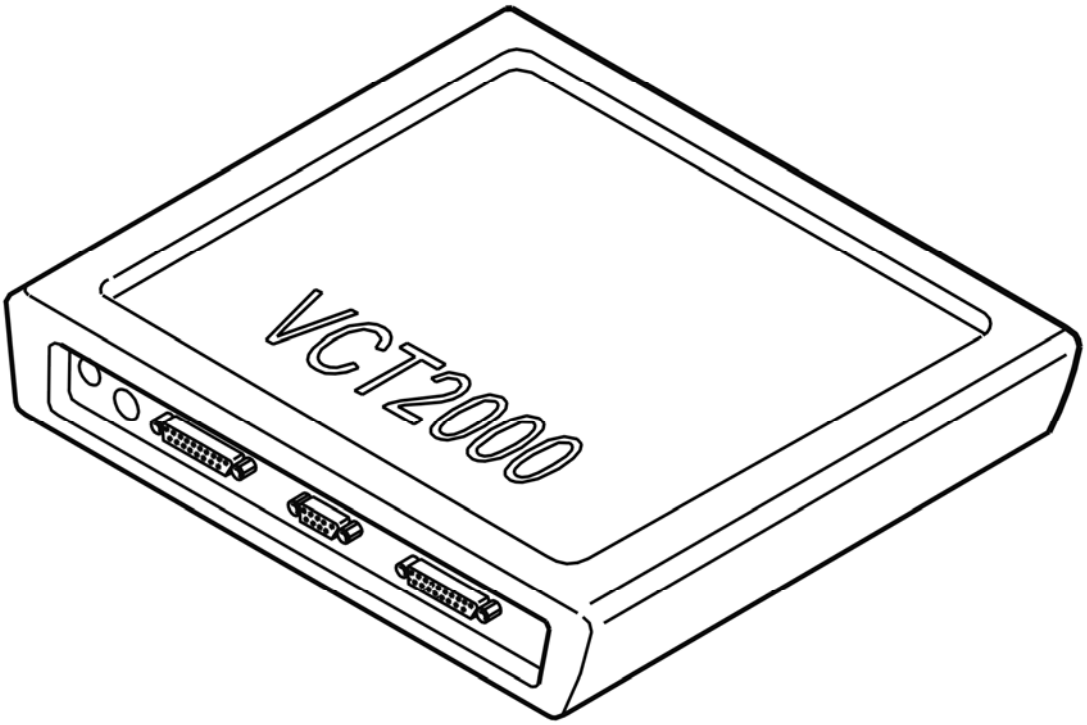

Fig. 93: Identifying VCT2000 Diagnostic Tool Symbol In VIDA
Courtesy of VOLVO CARS CORPORATION

- **Continue**

  Refer to **VERIFICATION**

VERIFICATION

HINT: After carrying out the repair, check that the fault has been remedied.

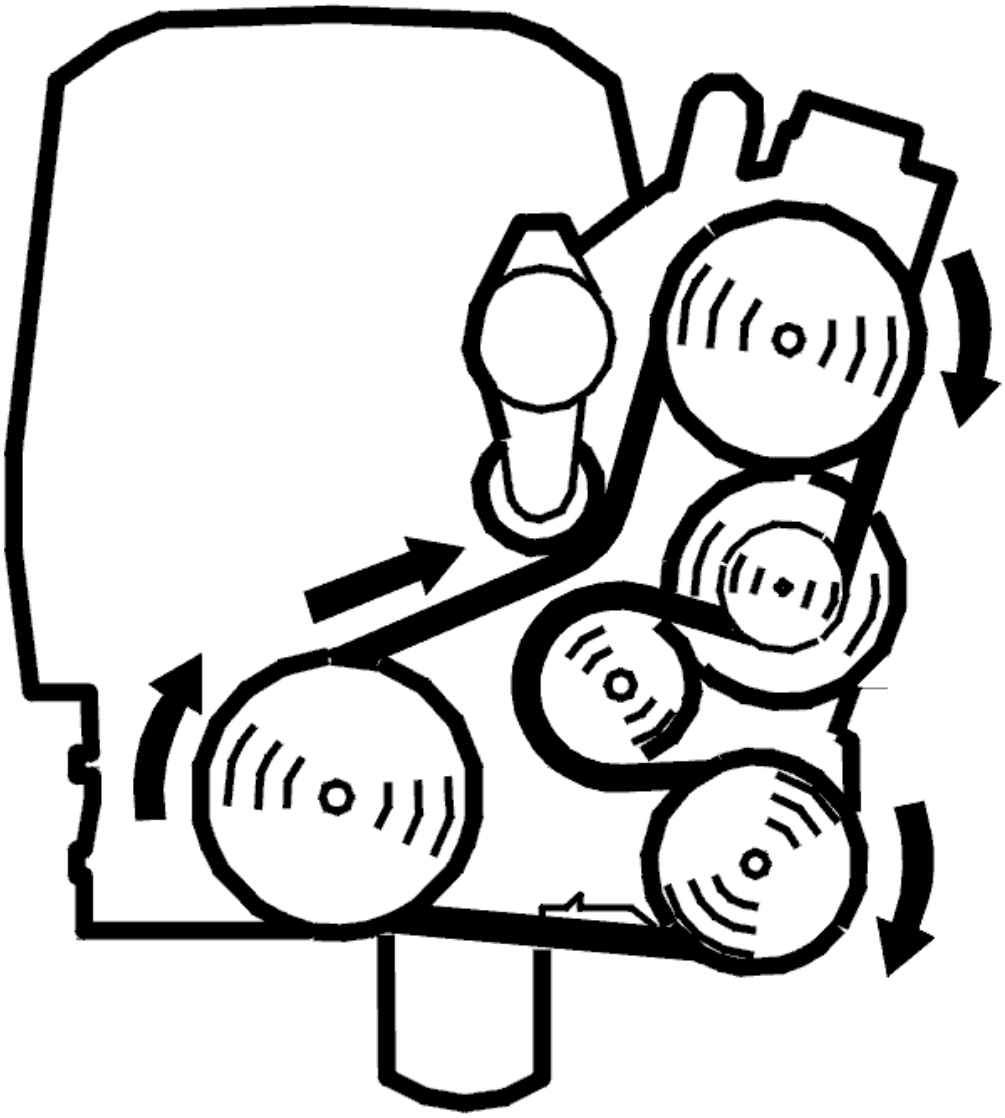

Fig. 94: Belt Routing / Engine Idling - Volvo
Courtesy of VOLVO CARS CORPORATION

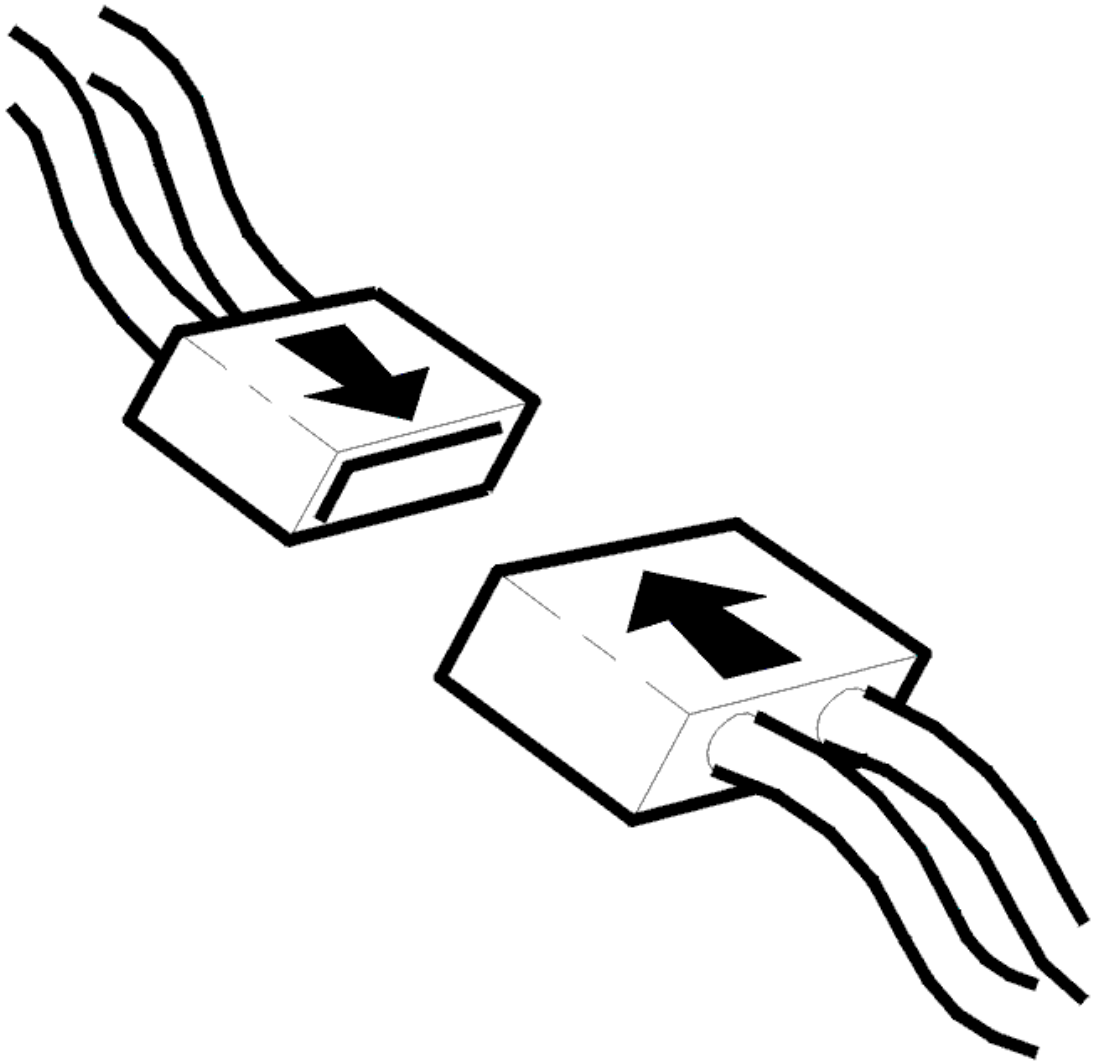

Fig. 95: Connecting Connector
Courtesy of VOLVO CARS CORPORATION

CAUTION: Carry out the test with the vehicle raised so that all four wheels can rotate freely with the mounting at the ends of the control arms to prevent damage to the drive shafts.

WARNING: Ensure that the vehicle is safely raised. Check that no objects are caught in the tire treads.

NOTE: If the vehicle has TRACS or TC (STC, DSTC) this function must be deactivated. This is done by removing the fuse for the brake system pump motor from the engine compartment electrical center. Note that this will cause trouble codes to be set in the Brake Control Module (BCM). These codes must be erased before the vehicle is returned to the customer.

- Ignition off
- Reinstall the connectors, components etc.
- Engine running, engine speed up to 2000 r. p. m.
- Read off the oil pressure.

  Check that the function is OK by test running the vehicle on a lift (to increase the clutch oil pressure). Run the car in a low gear or in "Drive" with an automatic transmission. Apply the handbrake slightly and read the pressure value during the test. Check that the pressure is updated. Listen as well for abnormal noises from the clutch.

  HINT: The oil pressure sensor has a measurement range of 0 to 4 MPa.

  Also check the clutch for leakage or noise.

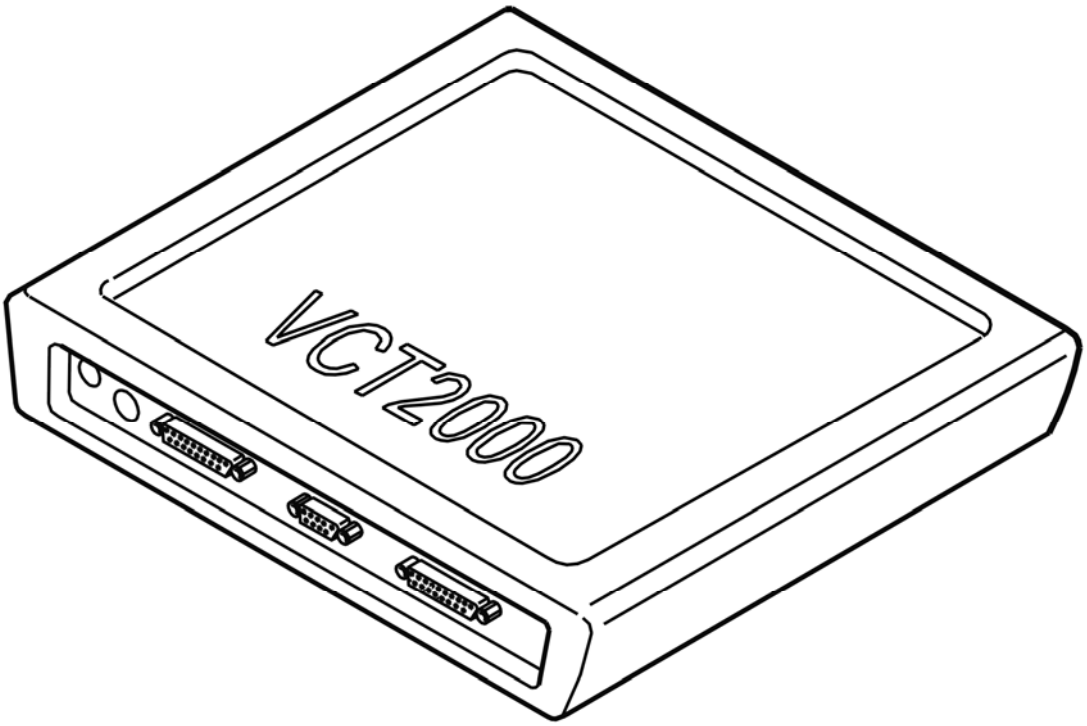

Fig. 96: Identifying VCT2000 Diagnostic Tool Symbol In VIDA
Courtesy of VOLVO CARS CORPORATION

Is the function OK?

- **YES**

  VERIFIED: Troubleshooting has been completed.

- **NO**

  Refer to **INFORMATION**

INFORMATION

FAULT-TRACING INFORMATION

The fault should have been detected and remedied. As this is not the case fault-tracing has failed.

Exit fault-tracing for this diagnostic trouble code (DTC) or make another attempt.

DEM-P096162: PRESSURE REGULATION SOLENOID A CONTROL CIRCUIT WITHIN/OUTSIDE THE LIMITS. ALGORITHM FAULT. COMPARISON FAULT (B8444S, TF-80SC AWD; 2006-2007)

DIAGNOSTIC TROUBLE CODE (DTC) INFORMATION DEM-P096162

see **DIAGNOSTIC TROUBLE CODE (DTC) INFORMATION DEM-P096162**

FAULT TRACING DEM-P096162

see **FAULT TRACING DEM-P096162**

DEM-P096162: PRESSURE REGULATION SOLENOID A CONTROL CIRCUIT WITHIN/OUTSIDE THE LIMITS. ALGORITHM FAULT. COMPARISON FAULT (TF-80SC AWD; 2005)

DIAGNOSTIC TROUBLE CODE (DTC) INFORMATION DEM-P096162

see **DIAGNOSTIC TROUBLE CODE (DTC) INFORMATION DEM-P096162**

FAULT TRACING DEM-P096162

see **FAULT TRACING DEM-P096162**

DEM-P118854: CALIBRATION MEMORY. SYSTEM PROGRAMMING FAILURES. MISSING CALIBRATION (B6324S, TF-80SC AWD; 2009-2010)

DIAGNOSTIC TROUBLE CODE (DTC) INFORMATION DEM-P118854

Condition

The differential electronic module (DEM) checks the software calibration. The control module has a number of parameters that can be calibrated. The parameters must have a default value. The parameters value is checked

internally in the control module.

The diagnostic trouble code (DTC) is stored if the control module detects that:

- The default values are missing or incorrect.

The control module's test for the diagnostic trouble code (DTC) starts in the event of:

- Ignition switch position II.

NOTE: The control module is calibrated together with the control valve/the axial solenoid during production. This cannot be carried out on the after market.

NOTE: The control module can only detect the fault once the test has been started and the diagnostic trouble code (DTC) is stored when the conditions are met.

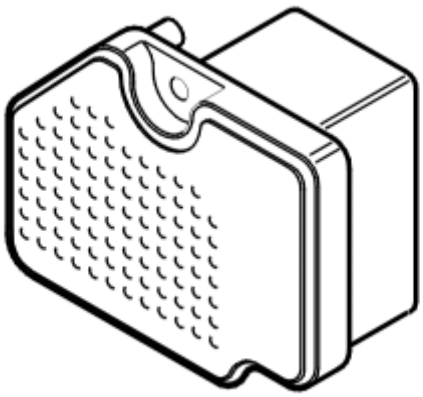

Fig. 97: Control Module
Courtesy of VOLVO CARS CORPORATION

Substitute Value

- Four wheel drive is disengaged.

Possible Source

- Damaged Differential Electronic Module (DEM).

Fault symptom[s]

- 4-wheel/all wheel drive/Does not work
- Text window and warning symbol/Text message

FAULT-TRACING

see **FAULT-TRACING**

DEM-P118854: CALIBRATION MEMORY. SYSTEM PROGRAMMING FAILURES. MISSING CALIBRATION (B6324S5, TF-80SC AWD; 2011-2012)

DIAGNOSTIC TROUBLE CODE (DTC) INFORMATION DEM-P118854

see **DIAGNOSTIC TROUBLE CODE (DTC) INFORMATION DEM-P118854**

FAULT-TRACING

see **FAULT-TRACING**

DEM-P118854: CALIBRATION MEMORY. SYSTEM PROGRAMMING FAILURES. MISSING CALIBRATION (B8444S, TF-80SC AWD; 2009-2011)

DIAGNOSTIC TROUBLE CODE (DTC) INFORMATION DEM-P118854

see **DIAGNOSTIC TROUBLE CODE (DTC) INFORMATION DEM-P118854**

FAULT-TRACING

see **FAULT-TRACING**

DEM-P118854: CALIBRATION MEMORY. PROGRAMMING FAULT. NO CALIBRATION STORED. (B6324S, TF-80SC AWD; 2007-2008)

DIAGNOSTIC TROUBLE CODE (DTC) INFORMATION DEM-P118854

Condition

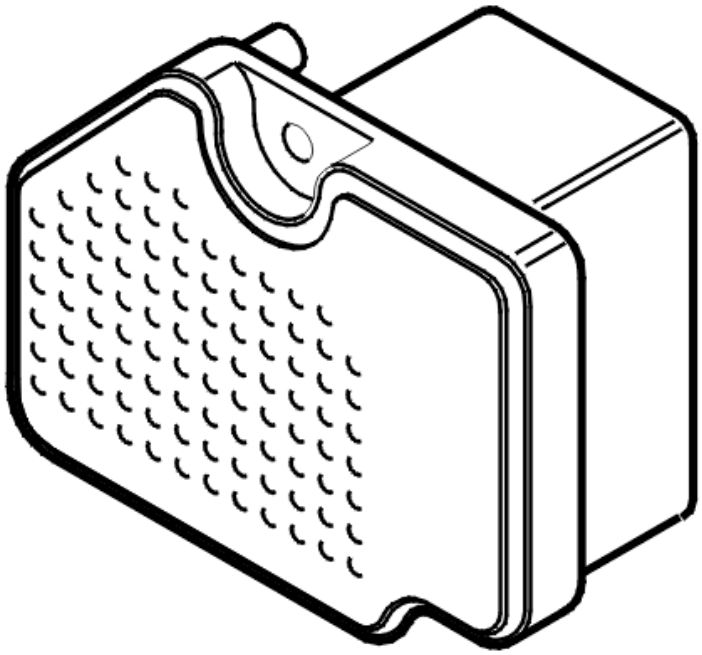

Fig. 98: Active On Demand Coupling Control Module
Courtesy of VOLVO CARS CORPORATION

The Differential Electronic Module (DEM) checks the calibration of the software. If the control module registers a fault in the calibration software the trouble code is set.

The diagnostic trouble code can be diagnosed when the ignition is on.

NOTE: The control module cannot be calibrated after production.

Substitute Value

- Four wheel drive is disengaged.

Possible Source

- The Differential Electronic Module (DEM) is not calibrated.

Fault symptom[s]

- Four wheel drive is not functioning.

FAULT TRACING DEM-118854

INFORMATION

The Differential Electronic Module (DEM) has registered an internal fault.

If the fault is intermittent this means that it has been registered on an earlier occasion but that the fault is no longer present. Intermittent faults can depend upon disturbances during the start up of the Differential Electronic Module (DEM) or they can be other types of fault which can return on different occasions. An appraisal of the fault is made in each particular case. If the fault is persistent, replace the Differential Electronic Module (DEM).

Other information:

- see **DIFFERENTIAL ELECTRONIC MODULE (DEM), REPLACING**

Remedy as necessary.

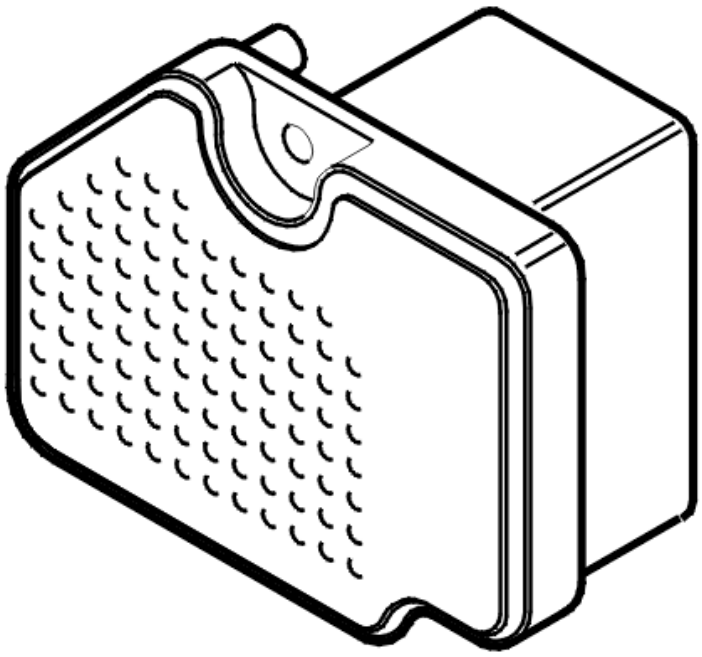

Fig. 99: Active On Demand Coupling Control Module
Courtesy of VOLVO CARS CORPORATION

- **Continue**

  Refer to **INFORMATION**

INFORMATION

FAULT-TRACING INFORMATION

In case of this defect, troubleshooting is not followed by verification.

The information can be displayed again or the fault-tracing for this fault can be interrupted.

DEM-P118854: CALIBRATION MEMORY. PROGRAMMING FAULT. NO CALIBRATION STORED. (B8444S, TF-80SC AWD; 2006-2008)

DIAGNOSTIC TROUBLE CODE (DTC) INFORMATION DEM-P118854

see **DIAGNOSTIC TROUBLE CODE (DTC) INFORMATION DEM-P118854**

FAULT TRACING DEM-118854

see **FAULT TRACING DEM-118854**

DEM-P118854: CALIBRATION MEMORY. PROGRAMMING FAULT. NO CALIBRATION STORED. (TF-80SC AWD; 2005)

DIAGNOSTIC TROUBLE CODE (DTC) INFORMATION DEM-P118854

see **DIAGNOSTIC TROUBLE CODE (DTC) INFORMATION DEM-P118854**

FAULT TRACING DEM-118854

see **FAULT TRACING DEM-118854**

DEM-P163568: TIRE/AXLE OUT OF ACCEPTABLE RANGE. ALGORITHM BASED FAILURES. EVENT INFORMATION (B6324S, TF-80SC AWD; 2009-2010)

DIAGNOSTIC TROUBLE CODE (DTC) INFORMATION DEM-P163568

Condition

NOTE: **This diagnostic trouble code (DTC) status is an event controlled diagnostic trouble code (DTC). An event controlled diagnostic trouble code (DTC) does not mean that there is a fault in the control module when it is active, but is designed as information.**

Differential electronic module (DEM) checks engagement and disengagement of four-wheel drive. The control module controls engagement and disengagement using a number of parameters, among others, by comparing speed of the wheels. If the vehicle's tires are worn unevenly (compared front and rear, or if a tire with incorrect dimension is installed (compared with the vehicle's other tires) on the vehicle's front or rear axle, this may result

in incorrect engagement of four-wheel drive.

The diagnostic trouble code (DTC) is stored if the control module detects that:

- Any of the wheels on the front or rear axle rotate faster than other wheels when driving on straight road with constant throttle application.

The control module's test for the diagnostic trouble code (DTC) starts in the event of:

- Constant vehicle speed (above 20 km/h).
- Constant engine RPM.
- Only small steering adjustments.
- Brake pedal released (no braking).
- The parking brake is not applied.
- Engine brake not active (accelerator pedal pressed down).

Substitute Value

- None.

Possible Source

- Unevenly worn tires (compared front and rear).
- Tire with incorrect dimension has been installed on front or rear axle (compare with other tires on the vehicle).

Fault symptom[s]

- 4-wheel/all wheel drive/Does not work

FAULT-TRACING INFORMATION

see **FAULT-TRACING INFORMATION**

DEM-P163568: TIRE/AXLE OUT OF ACCEPTABLE RANGE. ALGORITHM BASED FAILURES. EVENT INFORMATION (B6324S, TF-80SC AWD; 2007-2008)

DIAGNOSTIC TROUBLE CODE (DTC) INFORMATION DEM-P163568

Condition

NOTE: **This diagnostic trouble code (DTC) status is an event controlled diagnostic trouble code (DTC). An event controlled diagnostic trouble code (DTC) does not mean that there is a fault in the control module when it is active, but is designed**

as information.

Differential electronic module (DEM) checks engagement and disengagement of four-wheel drive. The control module controls engagement and disengagement using a number of parameters, among others, by comparing speed of the wheels. If the vehicle's tires are worn unevenly (compared front and rear, or if a tire with incorrect dimension is installed (compared with the vehicle's other tires) on the vehicle's front or rear axle, this may result in incorrect engagement of four-wheel drive.

The diagnostic trouble code (DTC) is stored if the control module detects that:

- Any of the wheels on the front or rear axle rotate faster than other wheels when driving on straight road with constant throttle application.

The control module's test for the diagnostic trouble code (DTC) starts in the event of:

- Constant vehicle speed (above 20 km/h).
- Constant engine RPM.
- Brake pedal released (no braking).
- The parking brake is not applied.
- Engine brake not active (accelerator pedal pressed down).

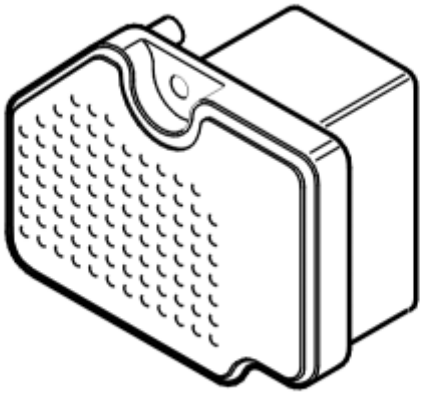

Fig. 100: Control Module
Courtesy of VOLVO CARS CORPORATION

Substitute Value

- Reduced function of four-wheel drive.

NOTE: **In case of heavy wheel spin, the four-wheel drive is engaged even if a diagnostic trouble code is generated.**

Possible Source

- Unevenly worn tires (compared front and rear).
- Tire with incorrect dimension has been installed on front or rear axle (compare with other tires on the vehicle).

Fault symptom[s]

- Jerks and hacks may be felt in the vehicle when driving on straight road with constant throttle application, especially on roads with slight downhill grade.

FAULT-TRACING INFORMATION

see **FAULT-TRACING INFORMATION**

DEM-P163568: TIRE/AXLE OUT OF ACCEPTABLE RANGE. ALGORITHM BASED FAILURES. EVENT INFORMATION (B6324S5, TF-80SC AWD; 2011-2012)

DIAGNOSTIC TROUBLE CODE (DTC) INFORMATION DEM-P163568

see **DIAGNOSTIC TROUBLE CODE (DTC) INFORMATION DEM-P163568**

FAULT-TRACING INFORMATION

see **FAULT-TRACING INFORMATION**

DEM-P163568: TIRE/AXLE OUT OF ACCEPTABLE RANGE. ALGORITHM BASED FAILURES. EVENT INFORMATION (B8444S, TF-80SC AWD; 2009-2011)

DIAGNOSTIC TROUBLE CODE (DTC) INFORMATION DEM-P163568

see **DIAGNOSTIC TROUBLE CODE (DTC) INFORMATION DEM-P163568**

FAULT-TRACING INFORMATION

see **FAULT-TRACING INFORMATION**

DEM-P163568: TIRE/AXLE OUT OF ACCEPTABLE RANGE. ALGORITHM BASED FAILURES. EVENT INFORMATION (B8444S, TF-80SC AWD; 2006-2008)

DIAGNOSTIC TROUBLE CODE (DTC) INFORMATION DEM-P163568

see **DIAGNOSTIC TROUBLE CODE (DTC) INFORMATION DEM-P163568**

FAULT-TRACING INFORMATION

see **FAULT-TRACING INFORMATION**

DEM-P163568: TIRE/AXLE OUT OF ACCEPTABLE RANGE. ALGORITHM BASED FAILURES. EVENT INFORMATION (TF-80SC AWD; 2005)

DIAGNOSTIC TROUBLE CODE (DTC) INFORMATION DEM-P163568

see **DIAGNOSTIC TROUBLE CODE (DTC) INFORMATION DEM-P163568**

FAULT-TRACING INFORMATION

see **FAULT-TRACING INFORMATION**

DEM-P168912: OIL PRESSURE CONTROL SOLENOID CIRCUIT. GENERAL ELECTRICAL FAILURES. CIRCUIT SHORT TO BATTERY (B6324S, TF-80SC AWD; 2009-2010)

DIAGNOSTIC TROUBLE CODE (DTC) INFORMATION DEM-P168912

Condition

The Differential electronic module (DEM) checks the performance of the control valve/the axial solenoid. The control module controls the solenoid by controlling the current via an internal control circuit. The control module checks the solenoid by comparing the current to the predefined parameters.

The diagnostic trouble code (DTC) is stored if the control module detects that:

- The current to the control valve/the axial solenoid is outside the predefined parameters.
- Incorrect value runs longer than 1 second.

The control module's test for the diagnostic trouble code (DTC) starts in the event of:

- Ignition switch position II.

NOTE: **The control module can only detect the fault once the test has been started and the diagnostic trouble code (DTC) is stored when the conditions are met.**

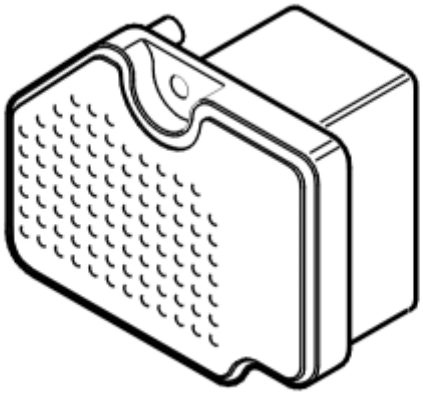

Fig. 101: Control Module
Courtesy of VOLVO CARS CORPORATION

Substitute Value

- Four wheel drive is disengaged.

Possible Source

- Damaged control valve/axial solenoid.
- Connector resistance and oxidation in the connectors.
- Damaged Differential Electronic Module (DEM).

Fault symptom[s]

- 4-wheel/all wheel drive/Does not work
- Text window and warning symbol/Text message

FAULT-TRACING

CHECKING THE CONNECTORS AND WIRING

Fig. 102: Identifying Ignition In Off Position
Courtesy of VOLVO CARS CORPORATION

- Ignition off.

Check connector and pins on pressure reducing valve for damage, short-circuiting to voltage feed, or oxidation. In case of damage, change pressure reducing valve and Differential electronic module (DEM) as a unit.

Remedy as necessary.

Other information

- see **CHECKING WIRING AND TERMINALS**
- see **ACTIVE ON-DEMAND COUPLING MODULE**

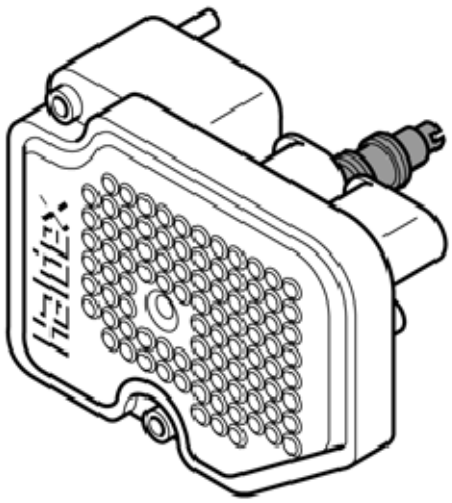

Fig. 103: Control Module
Courtesy of VOLVO CARS CORPORATION

- **Continue**

  Refer to **INFORMATION**

INFORMATION

FAULT-TRACING INFORMATION

The fault should have been detected and remedied. As this is not the case fault-tracing has failed.

Exit fault-tracing for this diagnostic trouble code (DTC) or make another attempt.

DEM-P168912: OIL PRESSURE CONTROL SOLENOID CIRCUIT. GENERAL ELECTRICAL FAILURES. CIRCUIT SHORT TO BATTERY (B6324S5, TF-80SC AWD; 2011-2012)

DIAGNOSTIC TROUBLE CODE (DTC) INFORMATION DEM-P168912

see **DIAGNOSTIC TROUBLE CODE (DTC) INFORMATION DEM-P168912**

FAULT-TRACING

see **FAULT-TRACING**

DEM-P168912: OIL PRESSURE CONTROL SOLENOID CIRCUIT. GENERAL ELECTRICAL FAILURES. CIRCUIT SHORT TO BATTERY (B8444S, TF-80SC AWD; 2009-2011)

DIAGNOSTIC TROUBLE CODE (DTC) INFORMATION DEM-P168912

see **DIAGNOSTIC TROUBLE CODE (DTC) INFORMATION DEM-P168912**

FAULT-TRACING

see **FAULT-TRACING**

DEM-P168912: SOLENOID CIRCUIT OIL PRESSURE REGULATION. GENERAL ELECTRICAL FAULT. SHORT CIRCUIT TO A VOLTAGE SOURCE (B6324S, TF-80SC AWD; 2007-2008)

DIAGNOSTIC TROUBLE CODE (DTC) INFORMATION DEM-168912

Condition

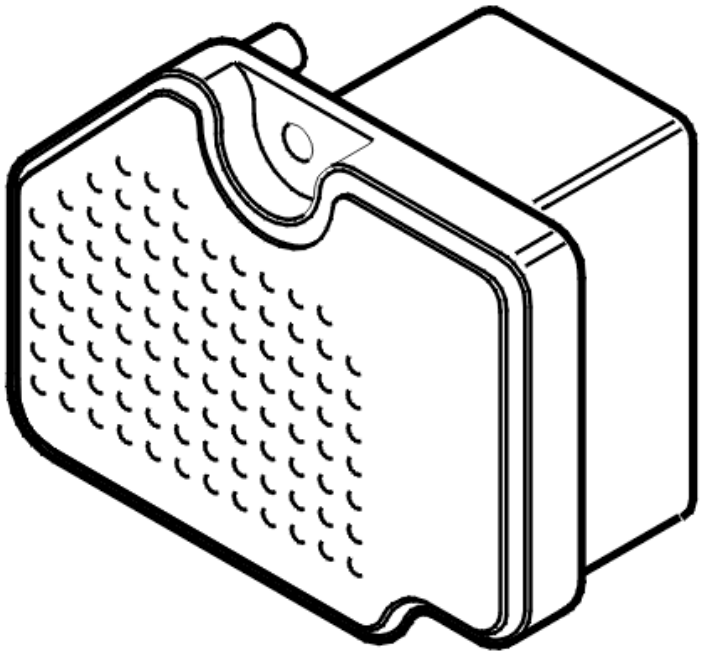

Fig. 104: Active On Demand Coupling Control Module
Courtesy of VOLVO CARS CORPORATION

The Differential Electronic Module (DEM) checks that the signal from the control valve is appropriate by comparing the signal with predefined limit values.

If the control unit registers a faulty signal, i. e. a current value (amperes) that is outside the predefined limits, the trouble code is set.

The diagnostic trouble code can be diagnosed when the engine is running.

Substitute Value

- Four wheel drive is disengaged.

Possible Source

- The signal cable is short-circuited to voltage.

Fault symptom[s]

- Four wheel drive is not functioning.

FAULT TRACING DEM-168912

CHECKING THE CONNECTORS AND LEADS

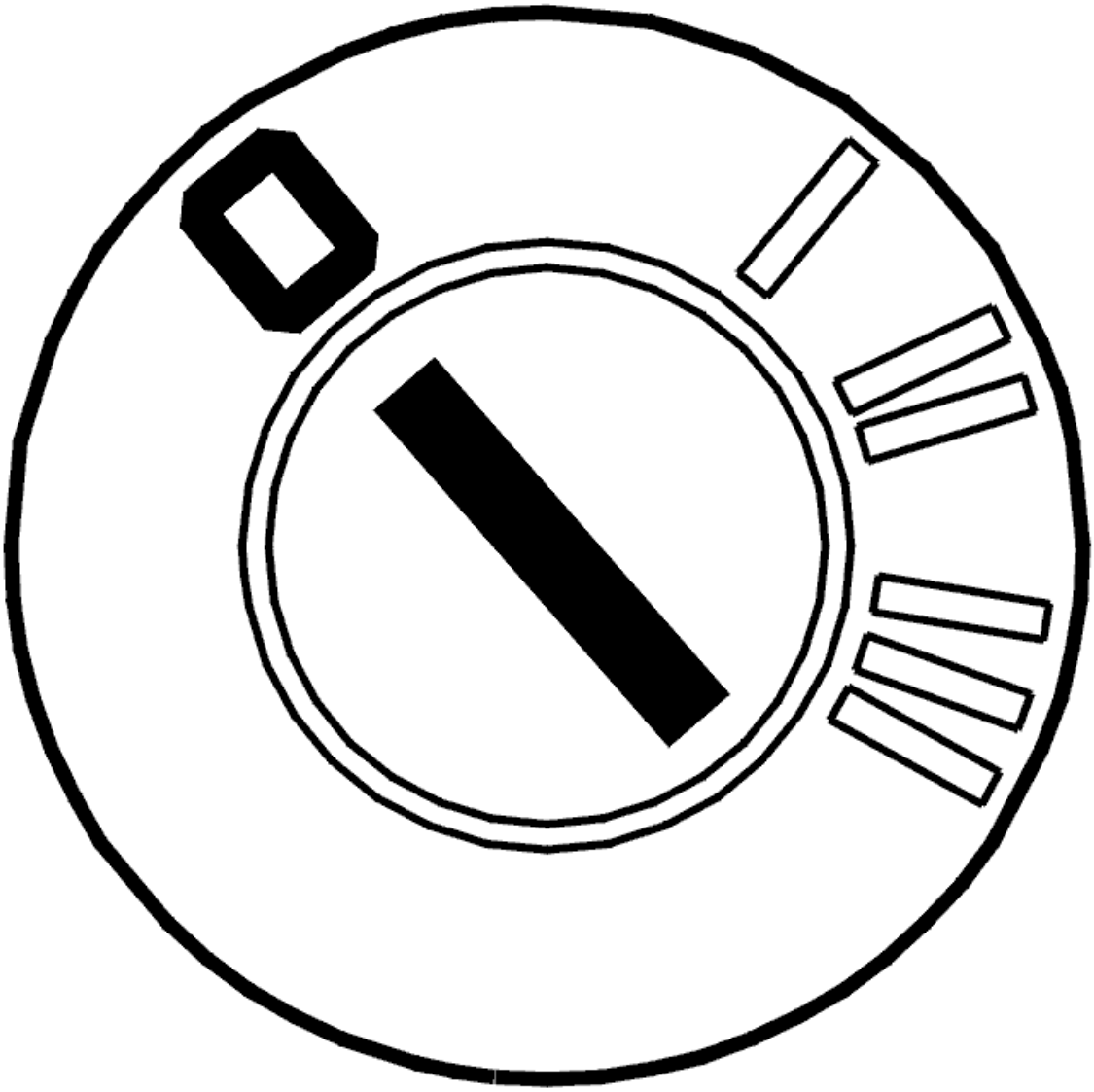

Fig. 105: Identifying Ignition OFF
Courtesy of VOLVO CARS CORPORATION

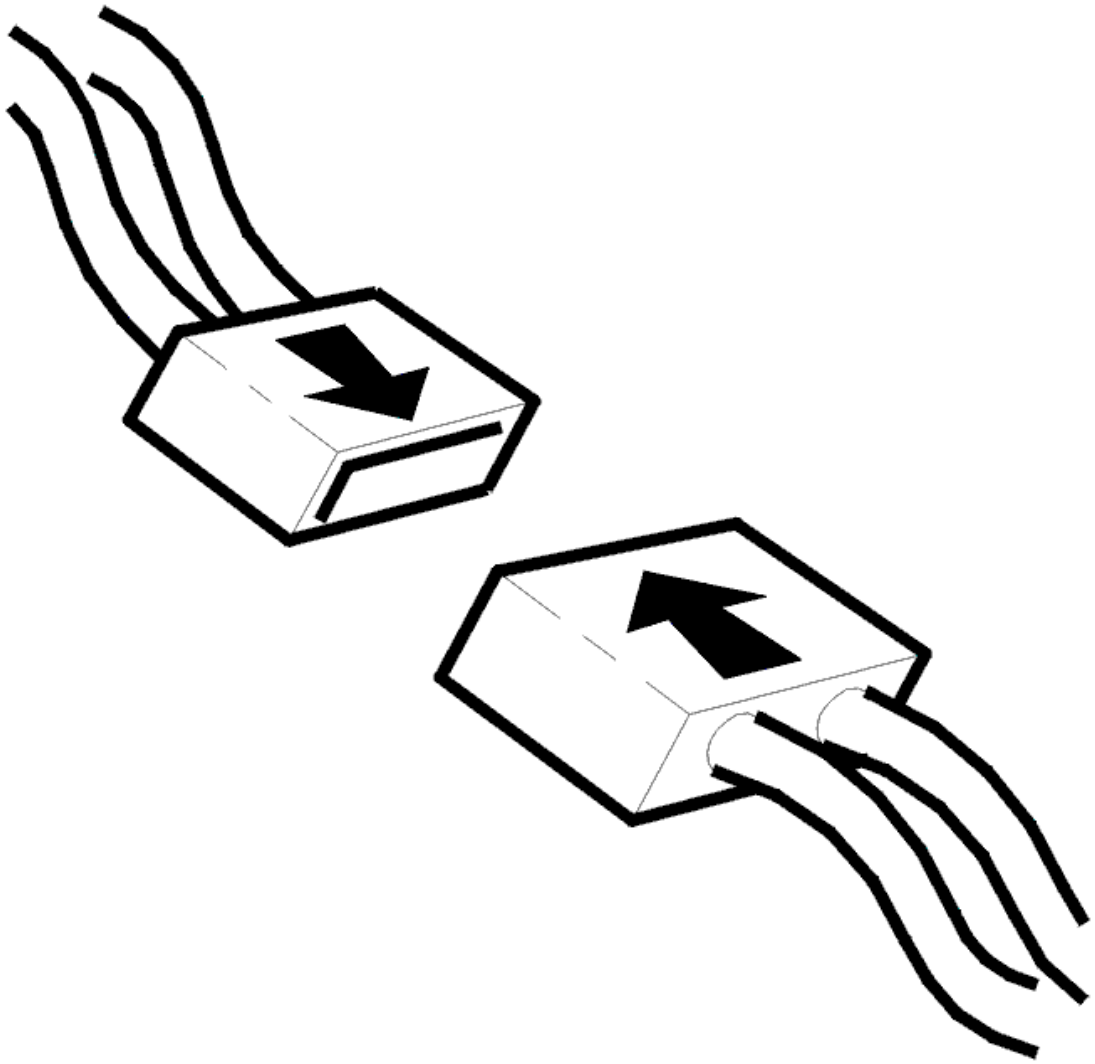

Fig. 106: Connecting Connector
Courtesy of VOLVO CARS CORPORATION

- Ignition off
- Check connector A with respect to contact resistance and oxidation.
- Check for damage to the leads to connector A.
- Reinstall the connectors, components etc.

HINT: Test drive the car according to the instructions given in the link below.

Remedy as necessary.

Other information:

- see **SIGNAL SPECIFICATION**

- see **TEST DRIVING ACTIVE ON DEMAND COUPLING, AUTOMATIC TRANSMISSION**
- see **DIFFERENTIAL ELECTRONIC MODULE (DEM), REPLACING**
- see **CONTENTS**

- **Continue**

  Refer to **VERIFICATION**

VERIFICATION

HINT: After carrying out the repair, check that the fault has been remedied.

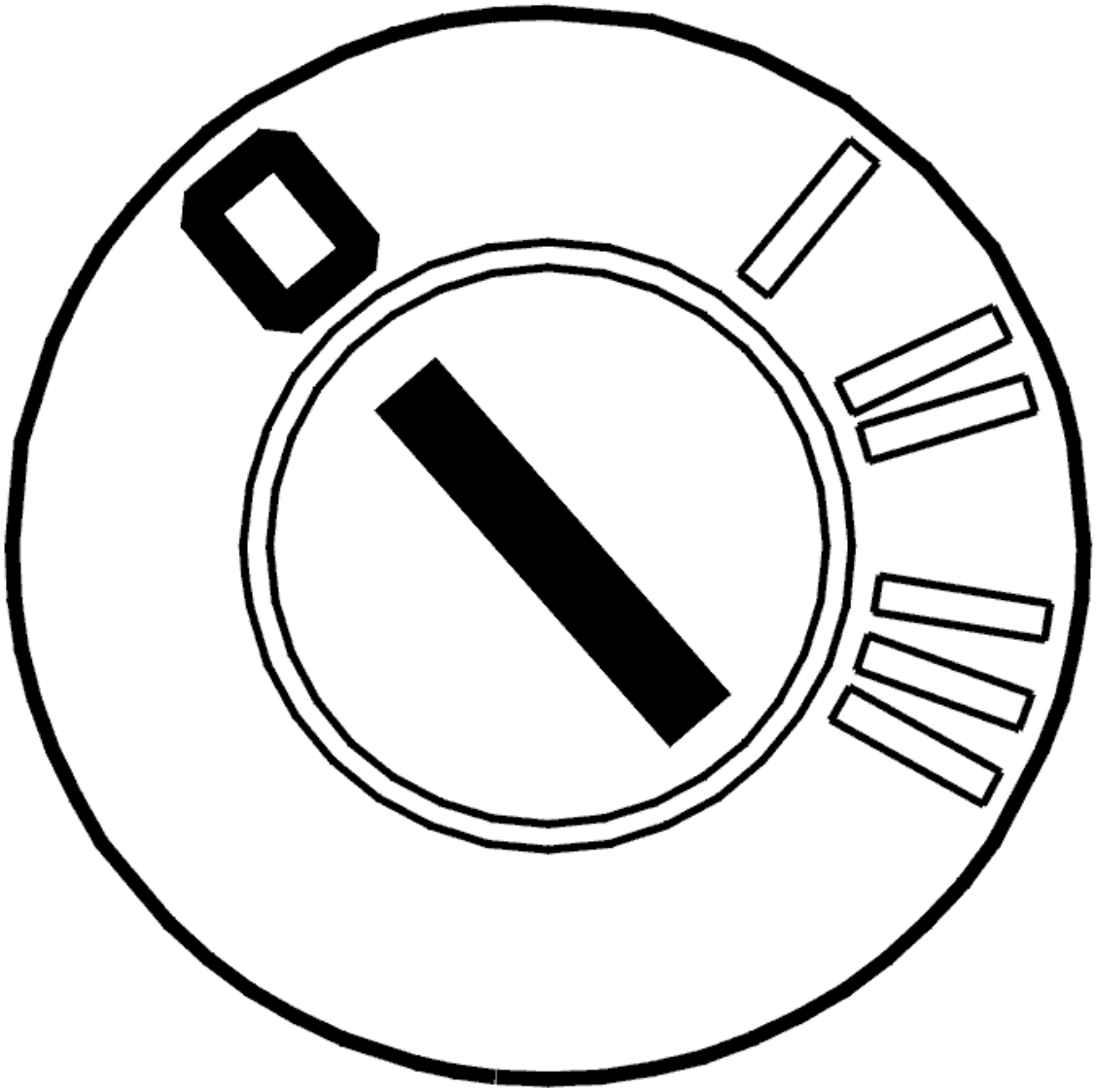

Fig. 107: Identifying Ignition OFF
Courtesy of VOLVO CARS CORPORATION

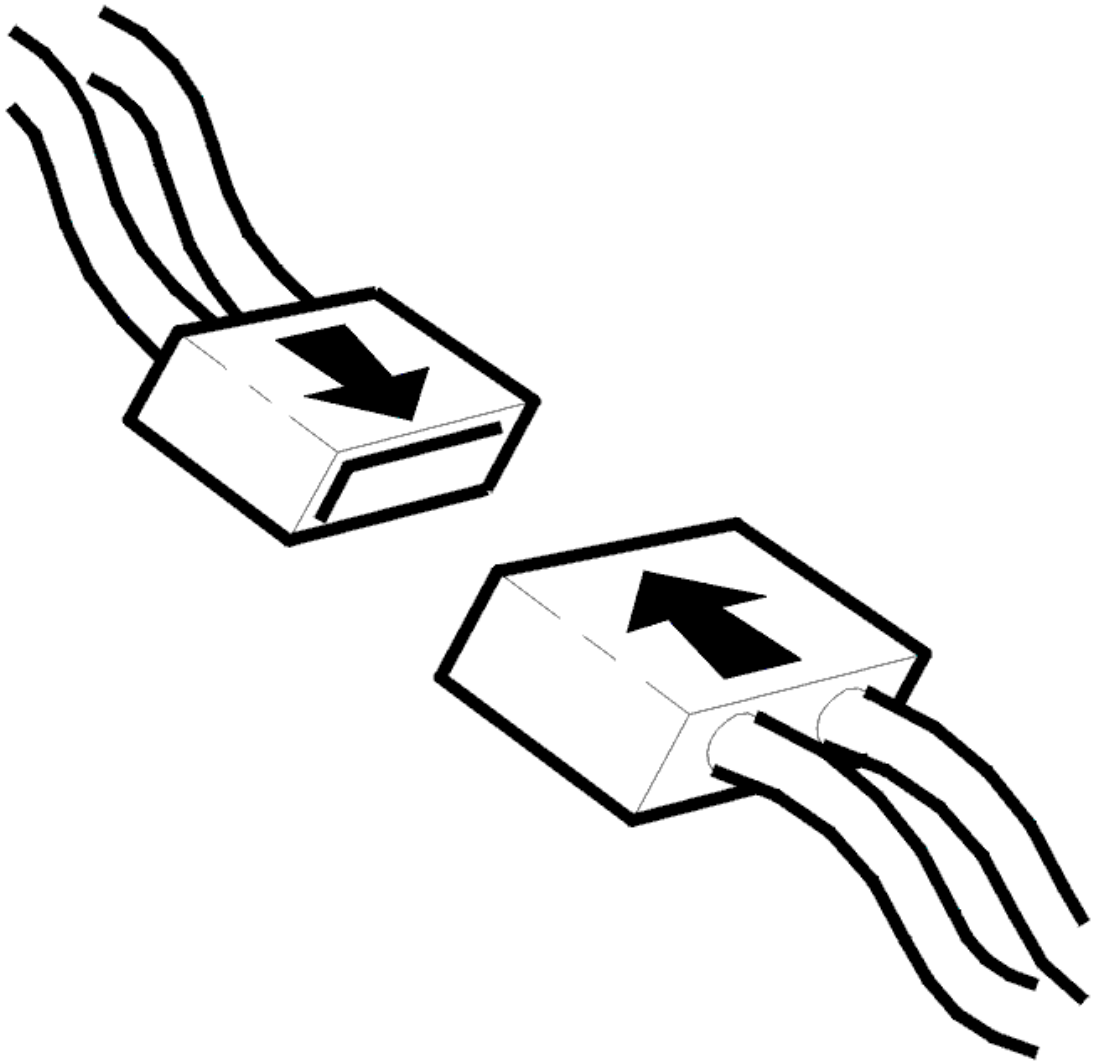

Fig. 108: Connecting Connector
Courtesy of VOLVO CARS CORPORATION

- Ignition off
- Reinstall the connectors, components etc.

  As appropriate test drive the car to verify that the function is OK.

Is the function OK?

- **YES**

  VERIFIED: Troubleshooting has been completed.

- **NO**

Refer to **INFORMATION**

INFORMATION

FAULT-TRACING INFORMATION

The fault should have been detected and remedied. As this is not the case fault-tracing has failed.

Exit fault-tracing for this diagnostic trouble code (DTC) or make another attempt.

DEM-P168912: SOLENOID CIRCUIT OIL PRESSURE REGULATION. GENERAL ELECTRICAL FAULT. SHORT CIRCUIT TO A VOLTAGE SOURCE (B8444S, TF-80SC AWD; 2006-2008)

DIAGNOSTIC TROUBLE CODE (DTC) INFORMATION DEM-168912

see **DIAGNOSTIC TROUBLE CODE (DTC) INFORMATION DEM-168912**

FAULT TRACING DEM-168912

see **FAULT TRACING DEM-168912**

DEM-P168912: SOLENOID CIRCUIT OIL PRESSURE REGULATION. GENERAL ELECTRICAL FAULT. SHORT CIRCUIT TO A VOLTAGE SOURCE (TF-80SC AWD; 2005)

DIAGNOSTIC TROUBLE CODE (DTC) INFORMATION DEM-168912

see **DIAGNOSTIC TROUBLE CODE (DTC) INFORMATION DEM-168912**

FAULT TRACING DEM-168912

see **FAULT TRACING DEM-168912**

DEM-P168914: SOLENOID CIRCUIT OIL PRESSURE REGULATION. GENERAL ELECTRICAL FAULT. SHORT CIRCUIT TO GROUND OR OPEN CIRCUIT (B6324S, TF-80SC AWD; 2007-2008)

DIAGNOSTIC TROUBLE CODE (DTC) INFORMATION DEM-168914

Condition

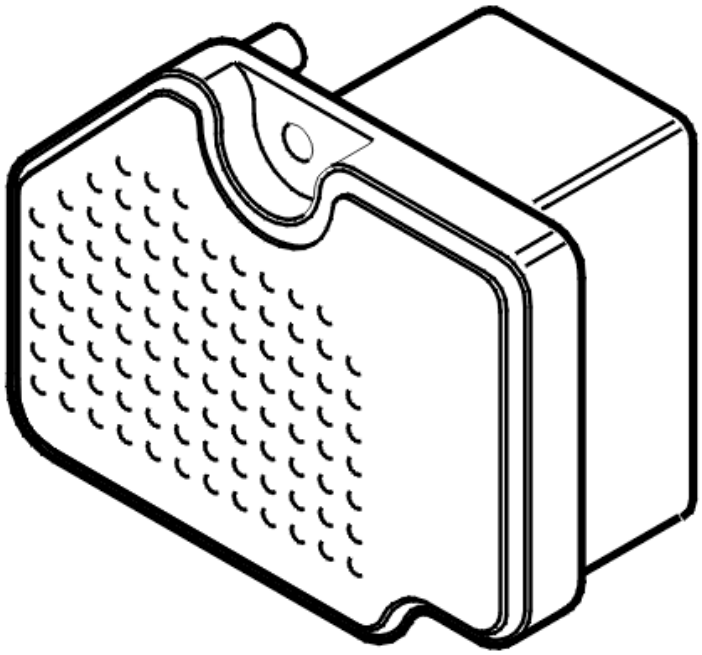

Fig. 109: Active On Demand Coupling Control Module
Courtesy of VOLVO CARS CORPORATION

The Differential Electronic Module (DEM) checks if the signal from the control valve is appropriate by comparing the signal with predefined limit values.

If the control unit registers a faulty signal, i. e. a current value (amperes) that is outside the predefined limits, the trouble code is set.

The diagnostic trouble code can be diagnosed when the engine is running.

Substitute Value

- Four wheel drive is disengaged.

Possible Source

- The signal cable is short-circuited to ground.
- Interruption of power supply.

Fault symptom[s]

- Four wheel drive is not functioning.

FAULT TRACING DEM-168914

CHECKING THE CONNECTORS AND LEADS

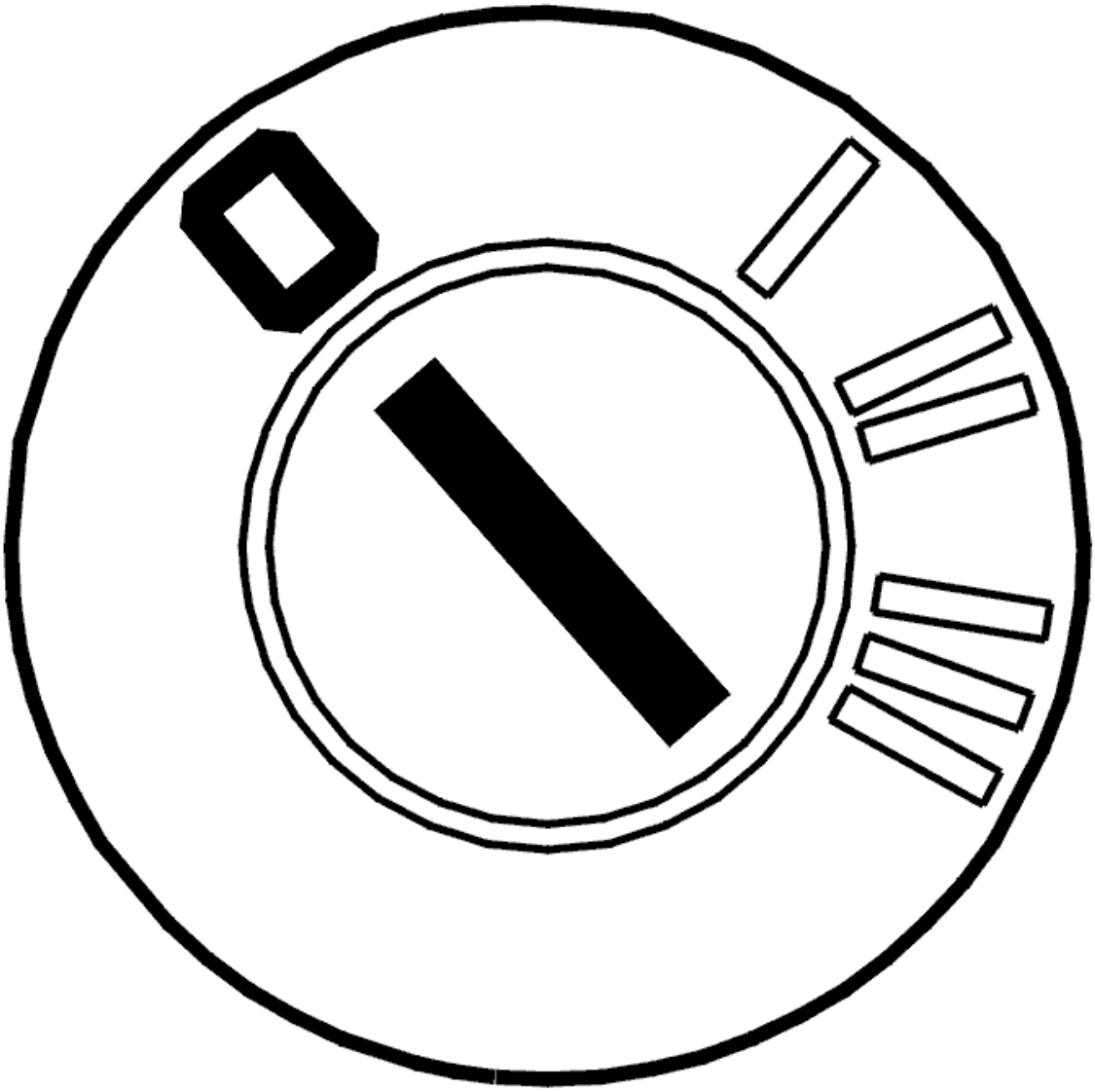

Fig. 110: Identifying Ignition OFF
Courtesy of VOLVO CARS CORPORATION

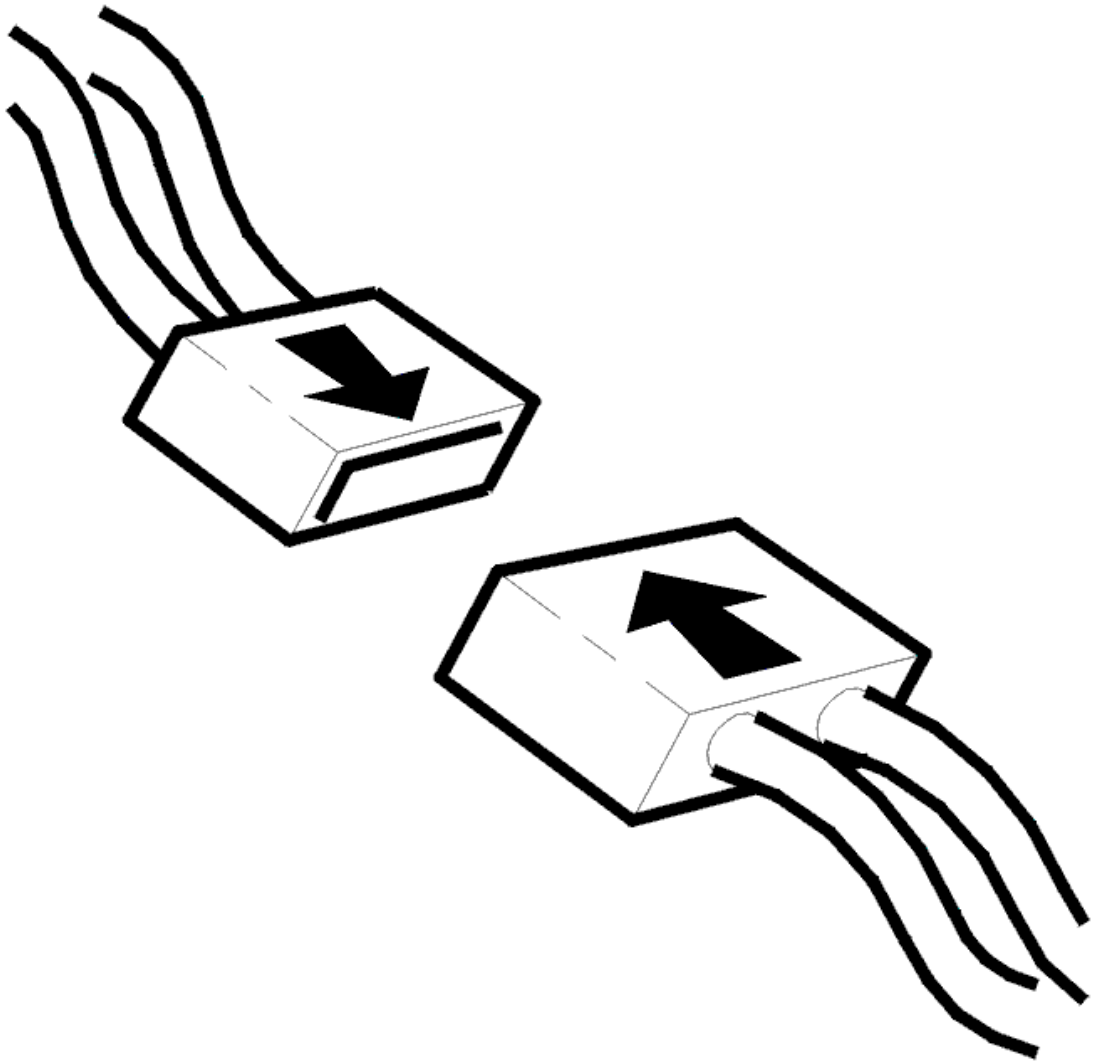

Fig. 111: Connecting Connector
Courtesy of VOLVO CARS CORPORATION

- Ignition off
- Check connector A with respect to contact resistance and oxidation.
- Check for damage to the leads to connector A.
- Reinstall the connectors, components etc.

HINT: Test drive the car according to the instructions given in the link below.

Remedy as necessary.

Other information:

- see **SIGNAL SPECIFICATION**

- see **TEST DRIVING ACTIVE ON DEMAND COUPLING, AUTOMATIC TRANSMISSION**
- see **DIFFERENTIAL ELECTRONIC MODULE (DEM), REPLACING**
- see **CONTENTS**

- **Continue**

  Refer to **VERIFICATION**

VERIFICATION

HINT: After carrying out the repair, check that the fault has been remedied.

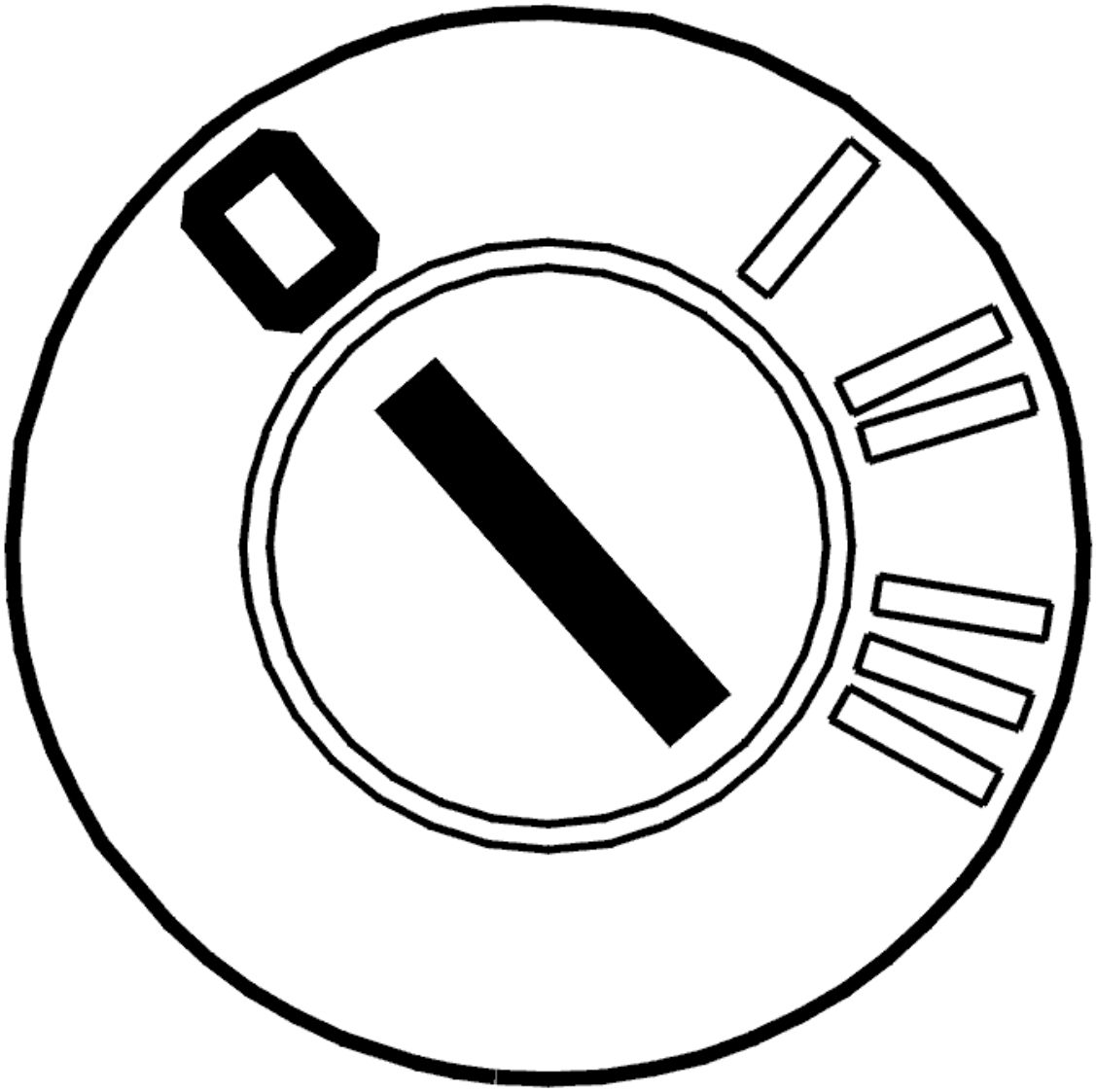

Fig. 112: Identifying Ignition OFF
Courtesy of VOLVO CARS CORPORATION

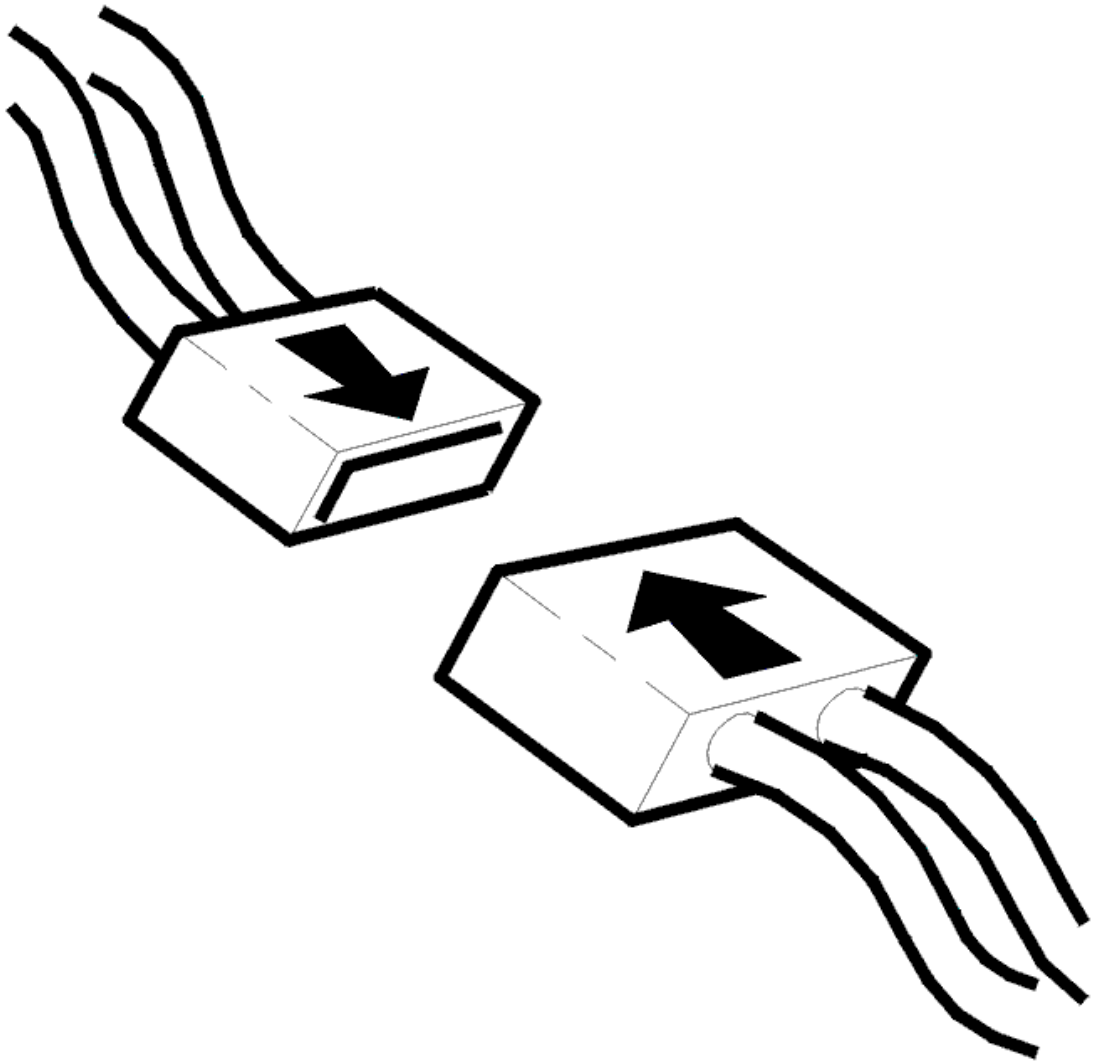

Fig. 113: Connecting Connector
Courtesy of VOLVO CARS CORPORATION

- Ignition off
- Reinstall the connectors, components etc.

  As appropriate test drive the car to verify that the function is OK.

Is the function OK?

- **YES**

  VERIFIED: Troubleshooting has been completed.

- **NO**

Refer to **INFORMATION**

INFORMATION

FAULT-TRACING INFORMATION

The fault should have been detected and remedied. As this is not the case fault-tracing has failed.

Exit fault-tracing for this diagnostic trouble code (DTC) or make another attempt.

DEM-P168914: SOLENOID CIRCUIT OIL PRESSURE REGULATION. GENERAL ELECTRICAL FAULT. SHORT CIRCUIT TO GROUND OR OPEN CIRCUIT (B8444S, TF-80SC AWD; 2006-2008)

DIAGNOSTIC TROUBLE CODE (DTC) INFORMATION DEM-168914

see **DIAGNOSTIC TROUBLE CODE (DTC) INFORMATION DEM-168914**

FAULT TRACING DEM-168914

see **FAULT TRACING DEM-168914**

DEM-P168914: SOLENOID CIRCUIT OIL PRESSURE REGULATION. GENERAL ELECTRICAL FAULT. SHORT CIRCUIT TO GROUND OR OPEN CIRCUIT (TF-80SC AWD; 2005)

DIAGNOSTIC TROUBLE CODE (DTC) INFORMATION DEM-168914

see **DIAGNOSTIC TROUBLE CODE (DTC) INFORMATION DEM-168914**

FAULT TRACING DEM-168914

see **FAULT TRACING DEM-168914**

DEM-P16891D: OIL PRESSURE CONTROL SOLENOID CIRCUIT. GENERAL ELECTRICAL FAILURES. CIRCUIT CURRENT OUT OF RANGE (B6324S, TF-80SC AWD; 2009-2010)

DIAGNOSTIC TROUBLE CODE (DTC) INFORMATION DEM-P16891D

Condition

The Differential electronic module (DEM) checks the performance of the control valve/the axial solenoid. The control module controls the solenoid by controlling the current via an internal control circuit. The control module checks the solenoid by comparing the current to the predefined parameters.

The diagnostic trouble code (DTC) is stored if the control module detects that:

- The amperage to the control valve/the axial solenoid deviates more than 0.2 A from the desired value.
- Incorrect value runs longer than 1 second.

The control module's test for the diagnostic trouble code (DTC) starts in the event of:

- Normal driving.

NOTE: The control module can only detect the fault once the test has been started and the diagnostic trouble code (DTC) is stored when the conditions are met.

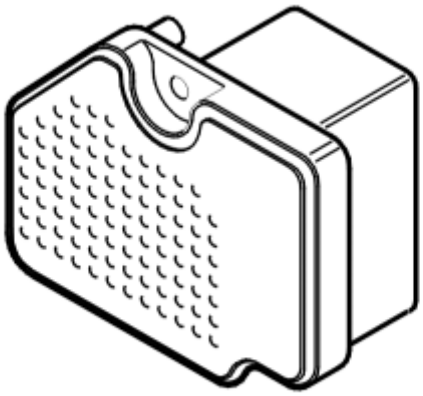

Fig. 114: Control Module
Courtesy of VOLVO CARS CORPORATION

Substitute Value

- Four wheel drive is disengaged.

Possible Source

- Damaged control valve/axial solenoid.
- Connector resistance and oxidation in the connectors.
- Damaged Differential Electronic Module (DEM).

Fault symptom[s]

- 4-wheel/all wheel drive/Does not work
- Text window and warning symbol/Text message

FAULT-TRACING

CHECKING THE CONNECTORS AND WIRING

Fig. 115: Identifying Ignition In Off Position
Courtesy of VOLVO CARS CORPORATION

- Ignition off.

Check connector and pins on pressure reducing valve for damage, short-circuiting, or oxidation. In case of damage, change pressure reducing valve and Differential electronic module (DEM) as a unit.

Remedy as necessary.

Other information

- see **CHECKING WIRING AND TERMINALS**
- see **ACTIVE ON-DEMAND COUPLING MODULE**

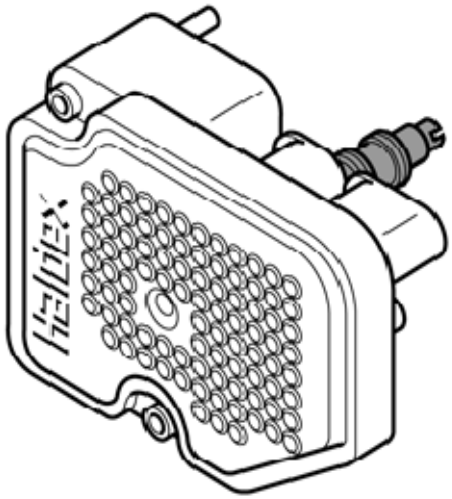

Fig. 116: Control Module
Courtesy of VOLVO CARS CORPORATION

- **Continue**

  Refer to **INFORMATION**

INFORMATION

FAULT-TRACING INFORMATION

The fault should have been detected and remedied. As this is not the case fault-tracing has failed.

Exit fault-tracing for this diagnostic trouble code (DTC) or make another attempt.

DEM-P16891D: OIL PRESSURE CONTROL SOLENOID CIRCUIT. GENERAL ELECTRICAL FAILURES. CIRCUIT CURRENT OUT OF RANGE (B6324S5, TF-80SC AWD; 2011-2012)

DIAGNOSTIC TROUBLE CODE (DTC) INFORMATION DEM-P16891D

see **DIAGNOSTIC TROUBLE CODE (DTC) INFORMATION DEM-P16891D**

FAULT-TRACING

see **FAULT-TRACING**

DEM-P16891D: OIL PRESSURE CONTROL SOLENOID CIRCUIT. GENERAL ELECTRICAL FAILURES. CIRCUIT CURRENT OUT OF RANGE (B8444S, TF-80SC AWD; 2009-2011)

DIAGNOSTIC TROUBLE CODE (DTC) INFORMATION DEM-P16891D

see **DIAGNOSTIC TROUBLE CODE (DTC) INFORMATION DEM-P16891D**

FAULT-TRACING

see **FAULT-TRACING**

DEM-P188912: OIL PRESSURE PUMP PERFORMANCE. GENERAL ELECTRICAL FAILURES. CIRCUIT SHORT TO BATTERY (B6324S, TF-80SC AWD; 2009-2010)

DIAGNOSTIC TROUBLE CODE (DTC) INFORMATION DEM-P188912

Condition

The Differential electronic module (DEM) checks the performance of the oil pressure pump. The control module compares the current strength from the oil pressure pump to the predefined parameters.

The diagnostic trouble code (DTC) is stored if the control module detects that:

- The amperage from the oil pressure pump is greater than 9 A.
- Incorrect value lasts longer than 10 minutes.

The control module's test for the diagnostic trouble code (DTC) starts in the event of:

- Ignition switch position II.

NOTE: **The control module can only detect the fault once the test has been started and the diagnostic trouble code (DTC) is stored when the conditions are met.**

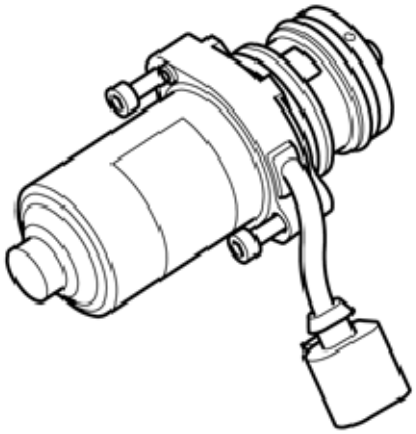

Fig. 117: Oil Pressure Pump
Courtesy of VOLVO CARS CORPORATION

Substitute Value

- Four wheel drive is disengaged.

Possible Source

- Damaged connector between oil pressure pump and Differential electronic module (DEM).
- Voltage supply cable short-circuited to voltage.
- Internal leak in the oil pressure pump.
- Damaged oil pressure pump.

Fault symptom[s]

- 4-wheel/all wheel drive/Does not work
- Text window and warning symbol/Text message

FAULT-TRACING

CHECKING THE CONNECTORS AND WIRING

Fig. 118: Identifying Ignition In Off Position
Courtesy of VOLVO CARS CORPORATION

- Ignition off.

Check the connector between oil pressure pump and Differential electronic module (DEM) for damaged pins, loose connection, or other defects that may affect functionality. Check the cable for a short-circuit to supply voltage.

Remedy as necessary.

Other information

- see **CHECKING WIRING AND TERMINALS**
- see **SIGNAL SPECIFICATION**
- see **ACTIVE ON-DEMAND COUPLING MODULE**

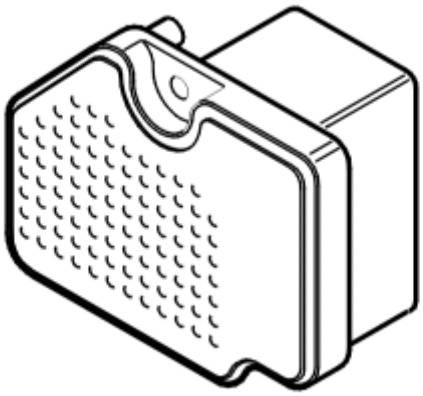

Fig. 119: Control Module
Courtesy of VOLVO CARS CORPORATION

Was the fault found?

- **YES**

  OKAY: Troubleshooting has been completed.

- **NO**

Refer to **CHECKING THE OIL PUMP**

CHECKING THE OIL PUMP

Since no malfunction was found, the symptom indicates that the malfunction is located in the oil pressure pump. Solve by changing the oil pressure pump.

Other information

- see **OIL PUMP ACTIVE ON DEMAND COUPLING (AOC), REPLACING**

DEM-P188912: OIL PRESSURE PUMP PERFORMANCE. GENERAL ELECTRICAL FAILURES. CIRCUIT SHORT TO BATTERY (B6324S5, TF-80SC AWD; 2011-2012)

DIAGNOSTIC TROUBLE CODE (DTC) INFORMATION DEM-P188912

see **DIAGNOSTIC TROUBLE CODE (DTC) INFORMATION DEM-P188912**

FAULT-TRACING

see **FAULT-TRACING**

DEM-P188912: OIL PRESSURE PUMP PERFORMANCE. GENERAL ELECTRICAL FAILURES. CIRCUIT SHORT TO BATTERY (B8444S, TF-80SC AWD; 2009-2011)

DIAGNOSTIC TROUBLE CODE (DTC) INFORMATION DEM-P188912

see **DIAGNOSTIC TROUBLE CODE (DTC) INFORMATION DEM-P188912**

FAULT-TRACING

see **FAULT-TRACING**

DEM-P188912: OIL PRESSURE PUMP PERFORMANCE. GENERAL ELECTRICAL FAULT. SHORT CIRCUIT TO A VOLTAGE SOURCE (B6324S, TF-80SC AWD; 2007-2008)

DIAGNOSTIC TROUBLE CODE (DTC) INFORMATION DEM-P188912

Condition

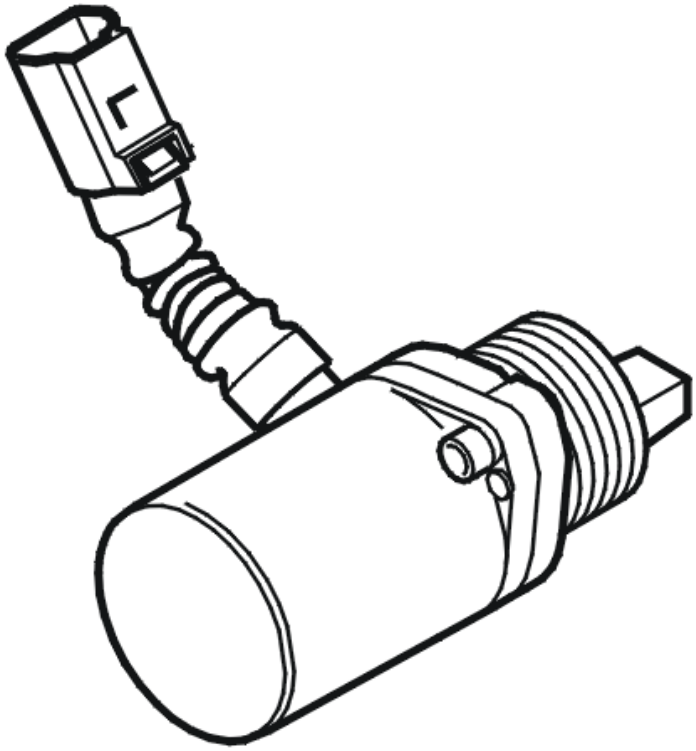

Fig. 120: Oil Pressure Pump
Courtesy of VOLVO CARS CORPORATION

The Differential Electronic Module (DEM) checks the performance of the oil pump by comparing the signal from the oil pump with the predefined limits.

If the signal from the oil pump is higher or lower than the predefined limits, the control module interprets this as a fault and the trouble code is set.

The diagnostic trouble code can be diagnosed when the engine is running.

Substitute Value

- Four wheel drive is disengaged.

Possible Source

- The signal cable is short-circuited to voltage.

Fault symptom[s]

- Four wheel drive is not functioning.

FAULT TRACING DEM-P188912

CHECKING THE STATUS

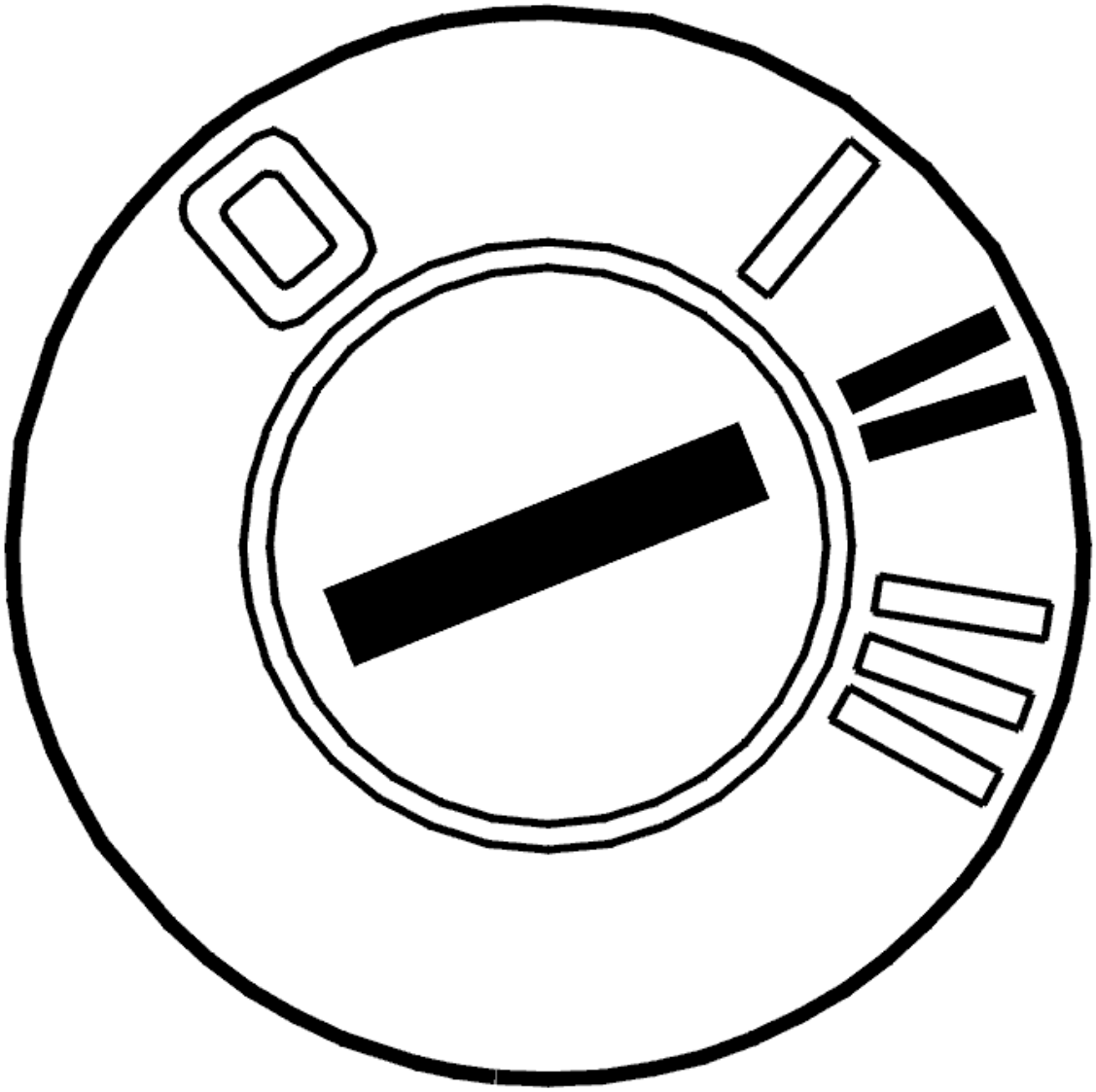

Fig. 121: Identifying Ignition ON
Courtesy of VOLVO CARS CORPORATION

- Ignition on

  Switch on the pump motor and check that it starts and runs normally.

  HINT: The motor should hum and vibrate slightly. Listen with a screwdriver or stethoscope against the ear.

  If the pump motor starts and stops, this indicates that the fault has existed previously but is not active just now (an intermittent fault).

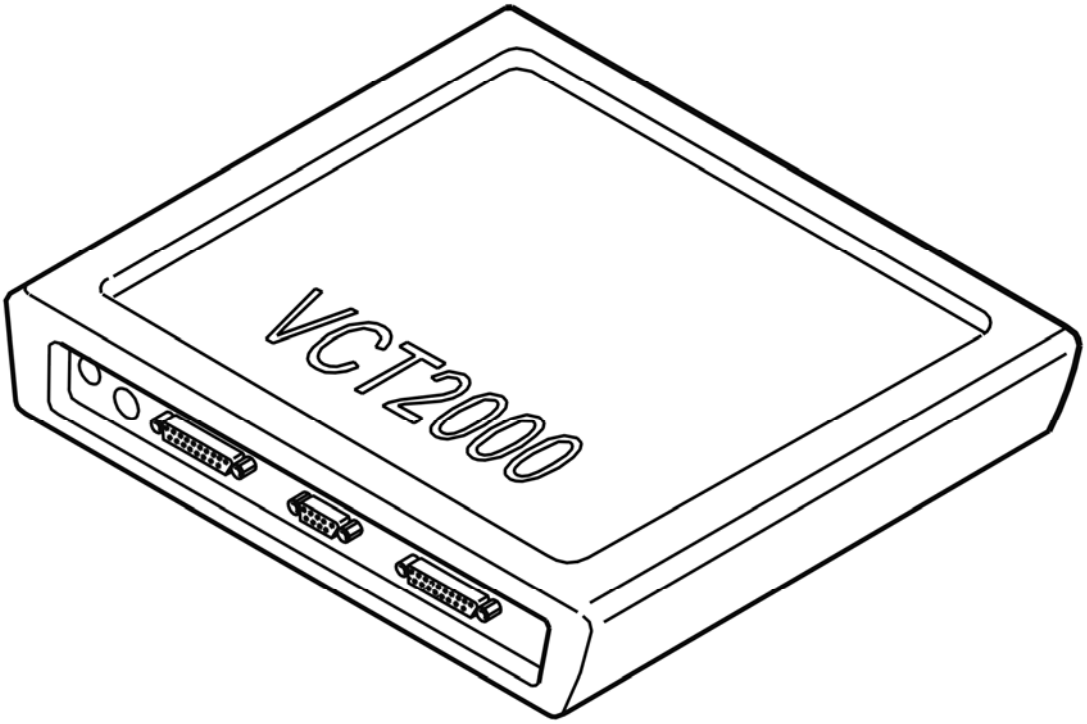

Fig. 122: Identifying VCT2000 Diagnostic Tool Symbol In VIDA
Courtesy of VOLVO CARS CORPORATION

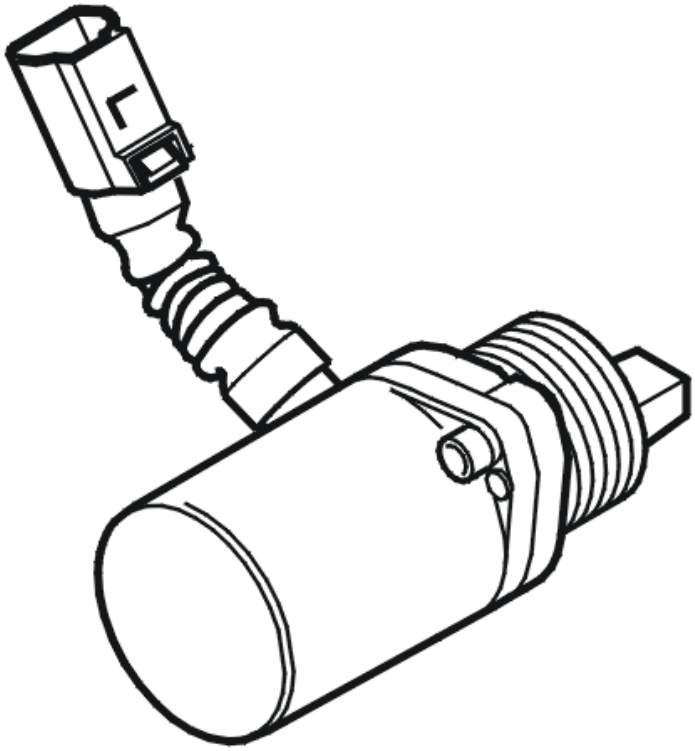

Fig. 123: Oil Pressure Pump
Courtesy of VOLVO CARS CORPORATION

- **Continue**

  Refer to **CHECKING THE CONNECTORS AND LEADS**

CHECKING THE CONNECTORS AND LEADS

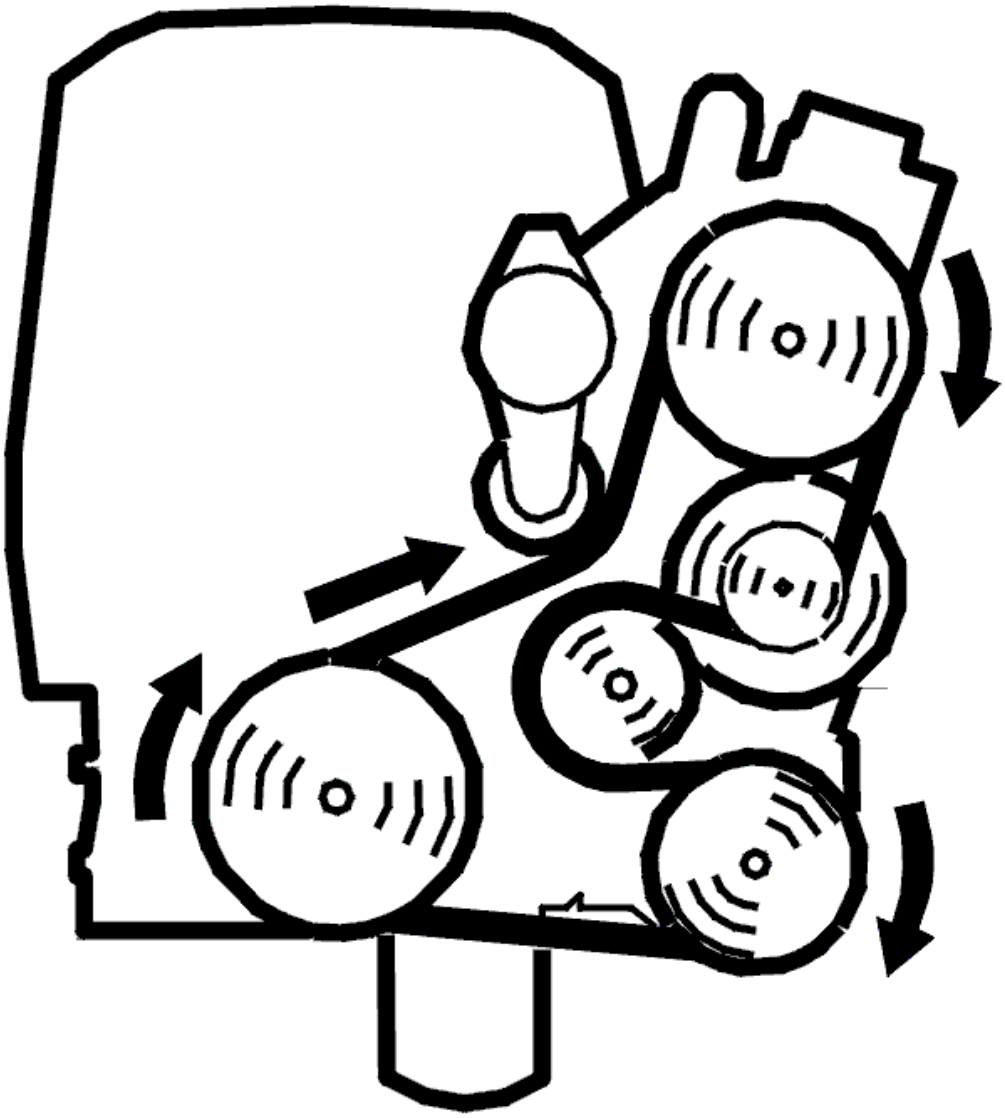

Fig. 124: Belt Routing / Engine Idling - Volvo
Courtesy of VOLVO CARS CORPORATION

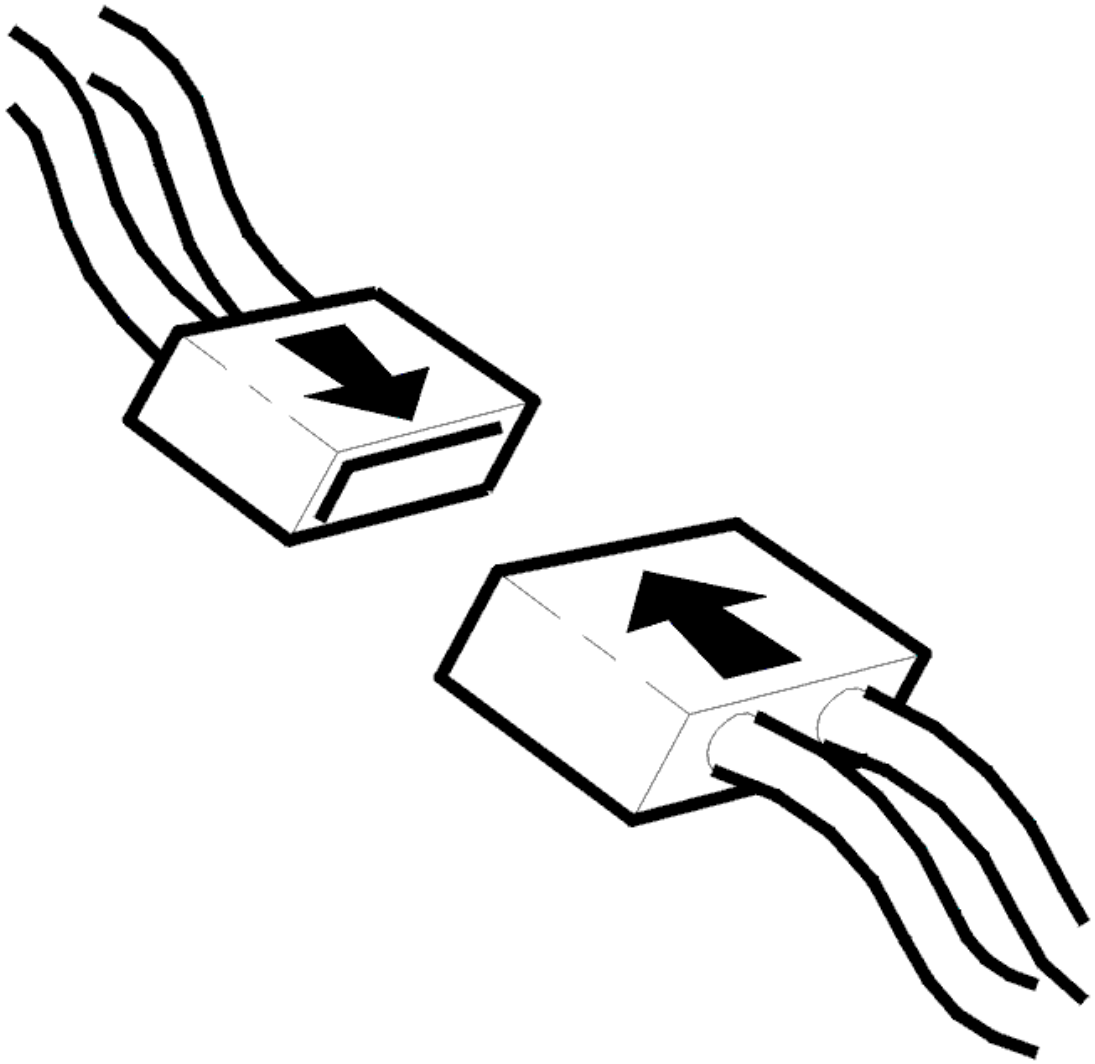

Fig. 125: Connecting Connector
Courtesy of VOLVO CARS CORPORATION

- Ignition off
- Check the connector between the Differential Electronic Module (DEM) and the feed pump with respect to contact resistance and oxidation.
- Check the lead between the Differential Electronic Module (DEM) and the feed pump for damage.
- Engine idling.

  Check the voltage by measuring with a voltmeter on the control module connector to the pump motor. Measure between #1 and #2.

NOTE: **The voltage is a pulse width modulated signal which can vary considerably and is only measurable a short while.**

Remedy as necessary.

Other information:

- see **SIGNAL SPECIFICATION**
- see **OIL PUMP ACTIVE ON DEMAND COUPLING (AOC), REPLACING**
- see **DIFFERENTIAL ELECTRONIC MODULE (DEM), REPLACING**
- see **CONTENTS**

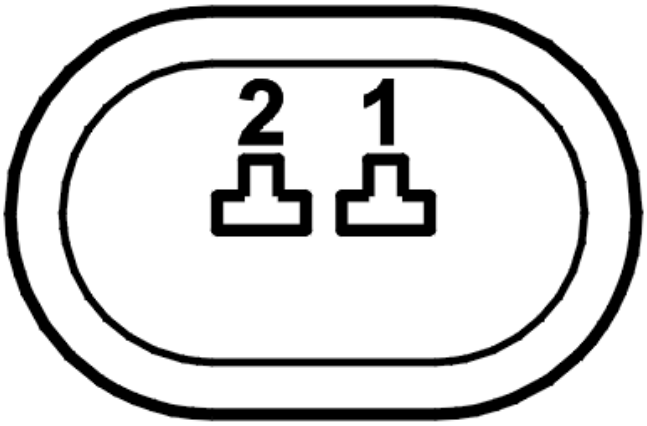

Fig. 126: Identifying Connector Terminals
Courtesy of VOLVO CARS CORPORATION

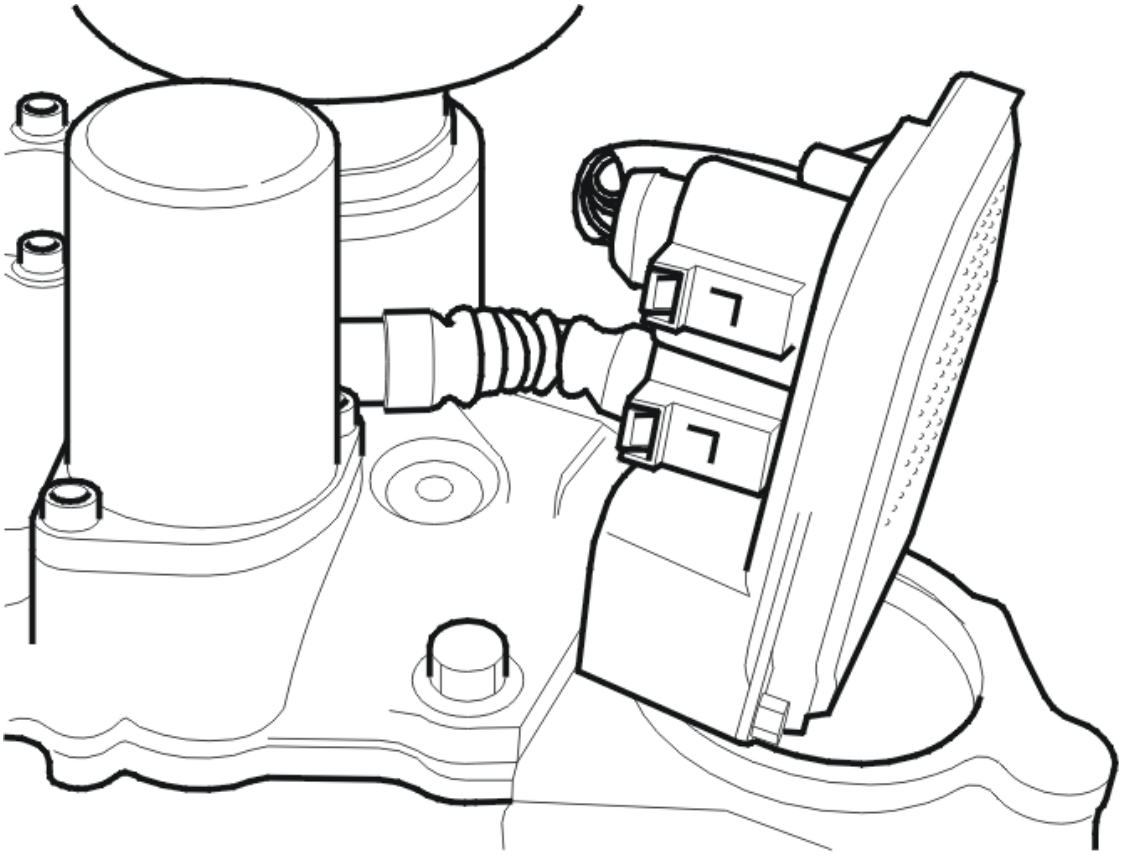

Fig. 127: Identifying Active On Demand Coupling Components
Courtesy of VOLVO CARS CORPORATION

- **Continue**

  Refer to **VERIFICATION**

VERIFICATION

HINT: After carrying out the repair, check that the fault has been remedied.

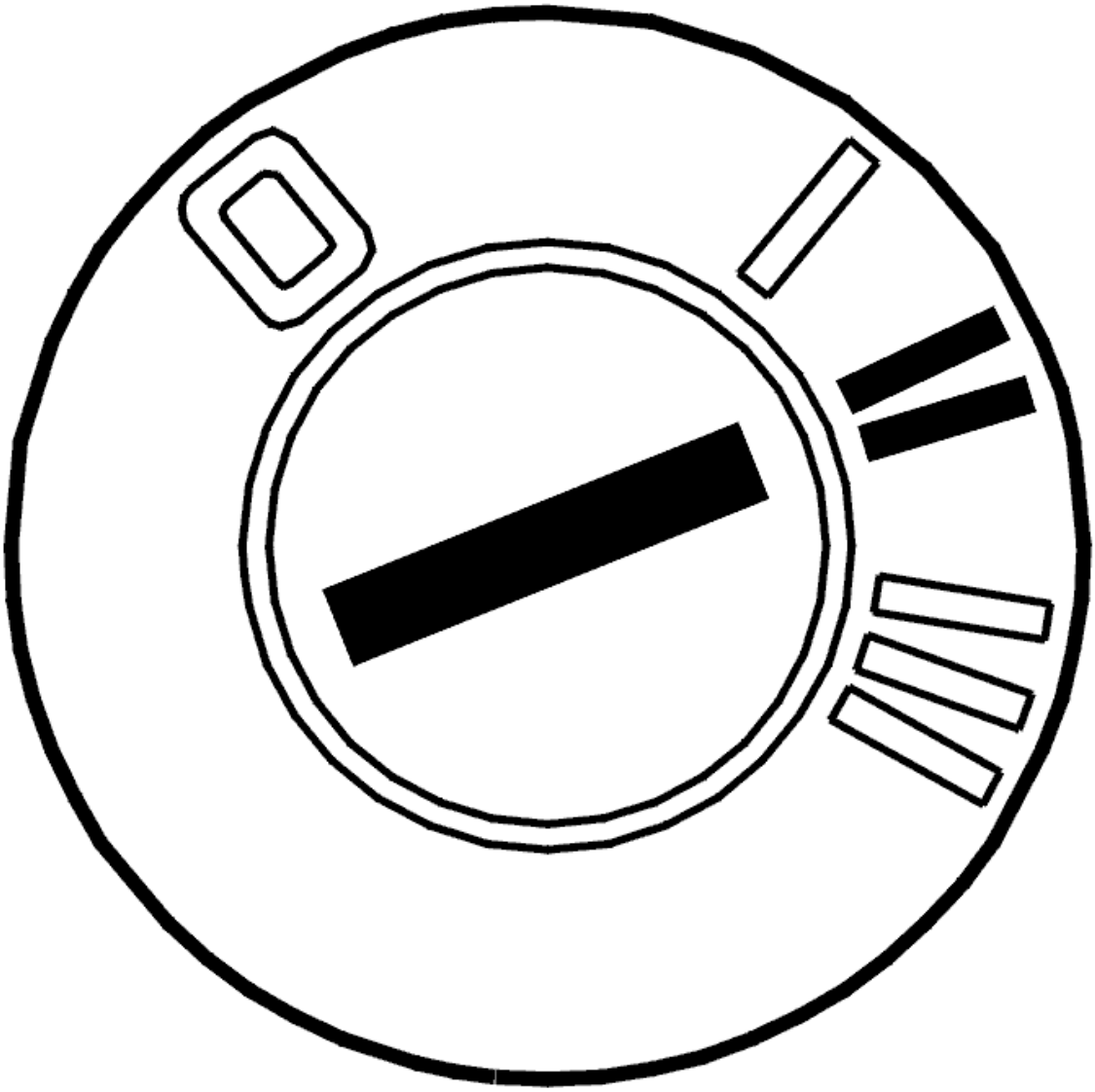

Fig. 128: Identifying Ignition ON
Courtesy of VOLVO CARS CORPORATION

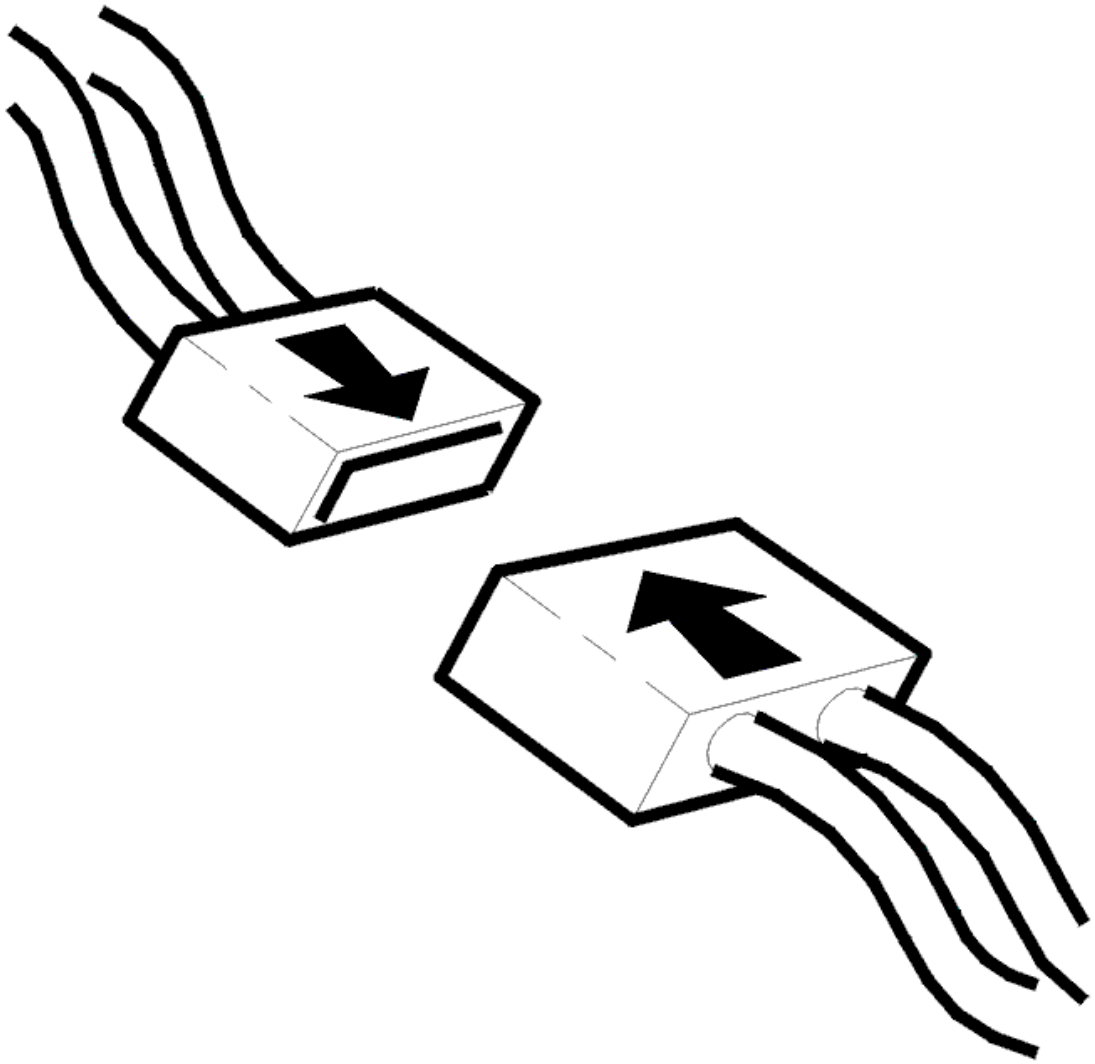

Fig. 129: Connecting Connector
Courtesy of VOLVO CARS CORPORATION

- Ignition off
- Reinstall the connectors, components etc.
- Ignition on

  Switch on the pump motor and check that it starts and runs normally.

  HINT: The motor should hum and vibrate slightly. Listen with a screwdriver or stethoscope against the ear.

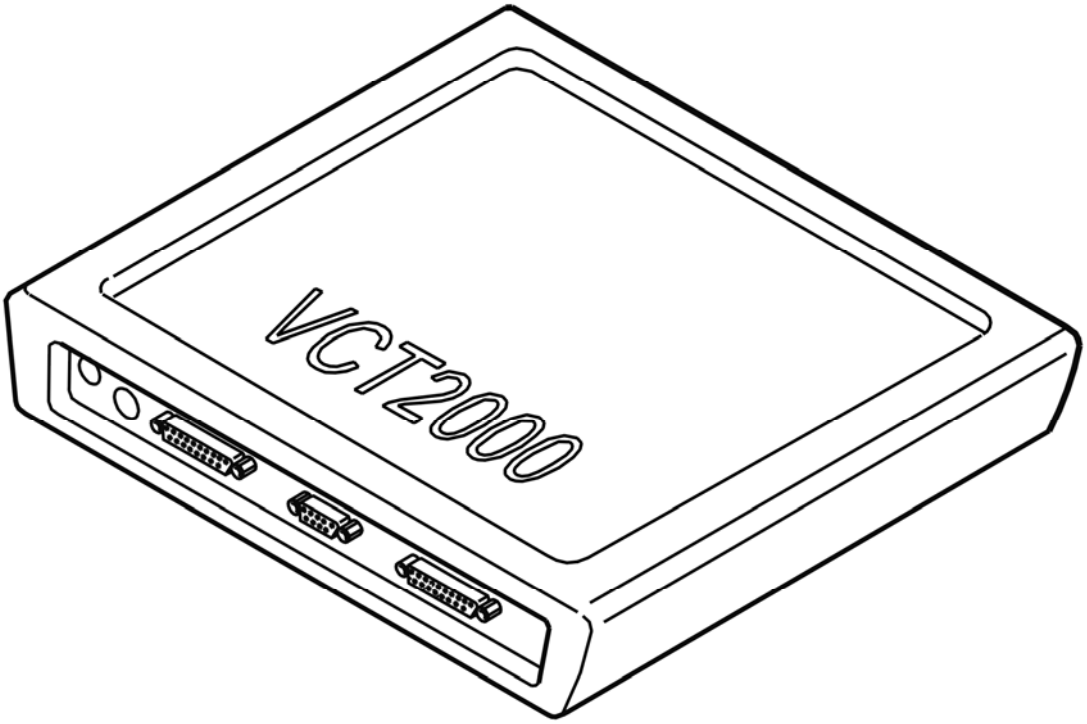

Fig. 130: Identifying VCT2000 Diagnostic Tool Symbol In VIDA
Courtesy of VOLVO CARS CORPORATION

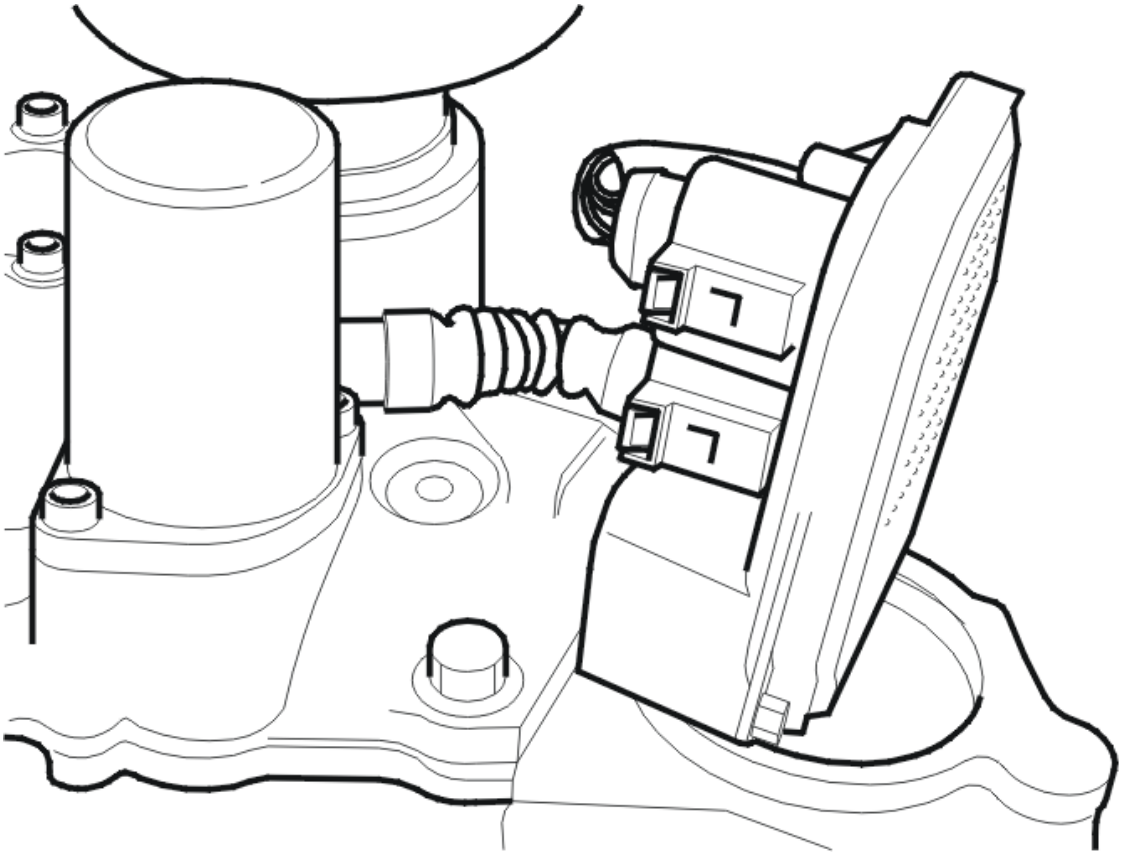

Fig. 131: Identifying Active On Demand Coupling Components
Courtesy of VOLVO CARS CORPORATION

Is the feed pump working?

- **YES**

  VERIFIED: Troubleshooting has been completed.

- **NO**

  Refer to **INFORMATION**

INFORMATION

FAULT-TRACING INFORMATION

The fault should have been detected and remedied. As this is not the case fault-tracing has failed.

Exit fault-tracing for this diagnostic trouble code (DTC) or make another attempt.

DEM-P188912: OIL PRESSURE PUMP PERFORMANCE. GENERAL ELECTRICAL FAULT. SHORT CIRCUIT TO A VOLTAGE SOURCE (B8444S,

TF-80SC AWD; 2006-2008)

DIAGNOSTIC TROUBLE CODE (DTC) INFORMATION DEM-P188912

see **DIAGNOSTIC TROUBLE CODE (DTC) INFORMATION DEM-P188912**

FAULT TRACING DEM-P188912

see **FAULT TRACING DEM-P188912**

DEM-P188912: OIL PRESSURE PUMP PERFORMANCE. GENERAL ELECTRICAL FAULT. SHORT CIRCUIT TO A VOLTAGE SOURCE (TF-80SC AWD; 2005)

DIAGNOSTIC TROUBLE CODE (DTC) INFORMATION DEM-P188912

see **DIAGNOSTIC TROUBLE CODE (DTC) INFORMATION DEM-P188912**

FAULT TRACING DEM-P188912

see **FAULT TRACING DEM-P188912**

DEM-P188914: OIL PRESSURE PUMP PERFORMANCE. GENERAL ELECTRICAL FAILURES. CIRCUIT SHORT TO GROUND OR OPEN (B6324S, TF-80SC AWD; 2009-2010)

DIAGNOSTIC TROUBLE CODE (DTC) INFORMATION DEM-P188914

Condition

The Differential electronic module (DEM) checks the performance of the oil pressure pump. The control module compares the signal from the oil pump to the predefined parameters.

The diagnostic trouble code (DTC) is stored if the control module detects that:

- The amperage from the oil pressure pump is less than 0.3 A.
- Incorrect value lasts longer than 30 seconds.

The control module's test for the diagnostic trouble code (DTC) starts when:

- The oil pressure pump voltage is 4.8 V or greater.

NOTE: **The control module can only detect the fault once the test has been started and the diagnostic trouble code (DTC) is stored when the conditions are met.**

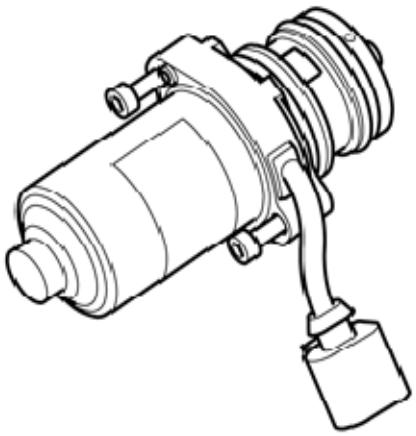

Fig. 132: Oil Pressure Pump
Courtesy of VOLVO CARS CORPORATION

Substitute Value

- Four wheel drive is disengaged.

Possible Source

- Damaged connector between oil pressure pump and Differential electronic module (DEM).
- Short-circuit to ground in the voltage supply cable.
- Open-circuit in the voltage supply cable.
- Damaged oil pressure pump.

Fault symptom[s]

- 4-wheel/all wheel drive/Does not work
- Text window and warning symbol/Text message

FAULT-TRACING

CHECKING THE CONNECTORS AND WIRING

Fig. 133: Identifying Ignition In Off Position
Courtesy of VOLVO CARS CORPORATION

- Ignition off.

Check the connector between oil pressure pump and Differential electronic module (DEM) for damaged pins, loose connection, or other defects that may affect functionality. Check the cable for the supply voltage for breakage and a short-circuit to ground.

Remedy as necessary.

Other information

- see **CHECKING WIRING AND TERMINALS**
- see **SIGNAL SPECIFICATION**
- see **ACTIVE ON-DEMAND COUPLING MODULE**

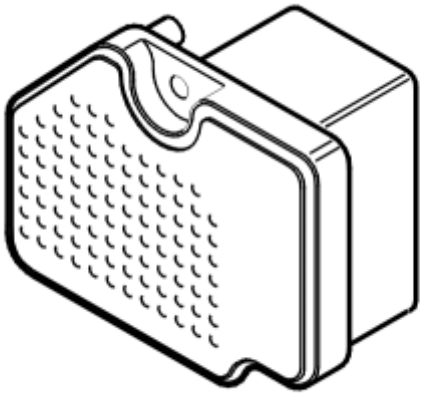

Fig. 134: Control Module
Courtesy of VOLVO CARS CORPORATION

Was the fault found?

- **YES**

  OKAY: Troubleshooting has been completed.

- **NO**

  Refer to **CHECKING THE OIL PUMP**

CHECKING THE OIL PUMP

Since no malfunction was found, the symptom indicates that the malfunction is located in the oil pressure pump. Solve by changing the oil pressure pump.

Other information

- see **OIL PUMP ACTIVE ON DEMAND COUPLING (AOC), REPLACING**

DEM-P188914: OIL PRESSURE PUMP PERFORMANCE. GENERAL ELECTRICAL FAILURES. CIRCUIT SHORT TO GROUND OR OPEN (B6324S5, TF-80SC AWD; 2011-2012)

DIAGNOSTIC TROUBLE CODE (DTC) INFORMATION DEM-P188914

see **DIAGNOSTIC TROUBLE CODE (DTC) INFORMATION DEM-P188914**

FAULT-TRACING

see **FAULT-TRACING**

DEM-P188914: OIL PRESSURE PUMP PERFORMANCE. GENERAL ELECTRICAL FAILURES. CIRCUIT SHORT TO GROUND OR OPEN (B8444S, TF-80SC AWD; 2009-2011)

DIAGNOSTIC TROUBLE CODE (DTC) INFORMATION DEM-P188914

see **DIAGNOSTIC TROUBLE CODE (DTC) INFORMATION DEM-P188914**

FAULT-TRACING

see **FAULT-TRACING**

DEM-P188914: OIL PRESSURE PUMP PERFORMANCE. GENERAL ELECTRICAL FAULT. SHORT CIRCUIT TO GROUND OR OPEN CIRCUIT (B6324S, TF-80SC AWD; 2007-2008)

DIAGNOSTIC TROUBLE CODE (DTC) INFORMATION DEM-P188914

Condition

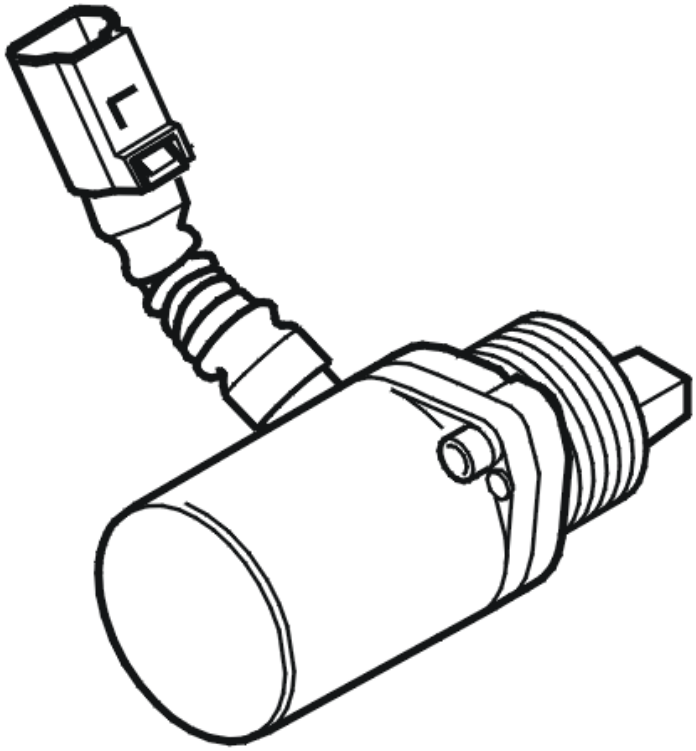

Fig. 135: Oil Pressure Pump
Courtesy of VOLVO CARS CORPORATION

The Differential Electronic Module (DEM) checks the performance of the oil pump by comparing the signal from the oil pump with the predefined limits.

If the signal from the oil pump is higher or lower than the predefined limits, the control module interprets this as a fault and the trouble code is set.

The diagnostic trouble code can be diagnosed when the engine is running.

Substitute Value

- Four wheel drive is disengaged.

Possible Source

- The signal cable is short-circuited to ground.
- Interruption of power supply.

Fault symptom[s]

- Four wheel drive is not functioning.

FAULT TRACING DEM-P188914

CHECKING THE STATUS

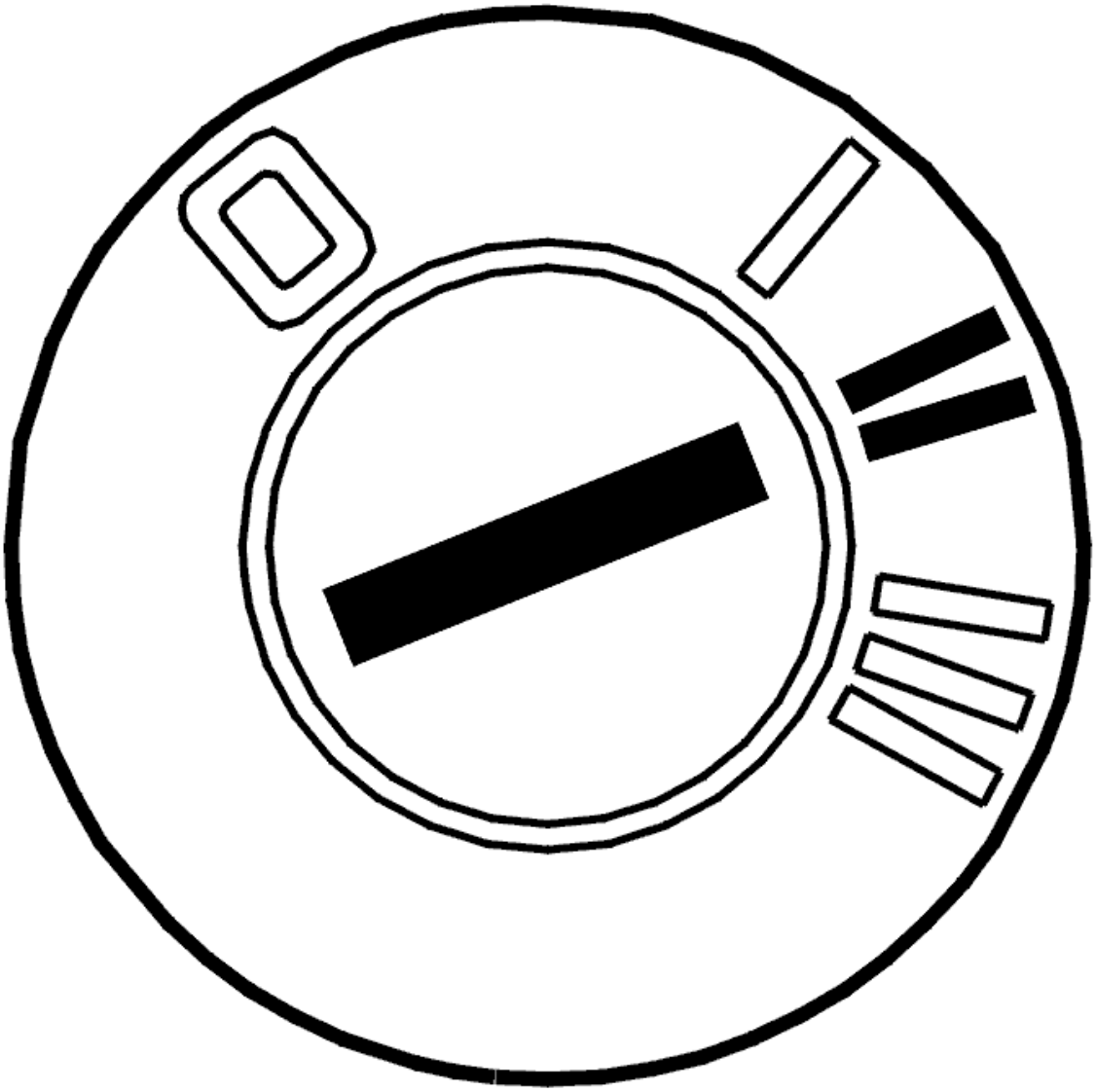

Fig. 136: Identifying Ignition ON
Courtesy of VOLVO CARS CORPORATION

- Ignition on

  Switch on the pump motor and check that it starts and runs normally.

  HINT: The motor should hum and vibrate slightly. Listen with a screwdriver or stethoscope against the ear.

  If the pump motor starts and stops, this indicates that the fault has existed previously but is not active just now (an intermittent fault).

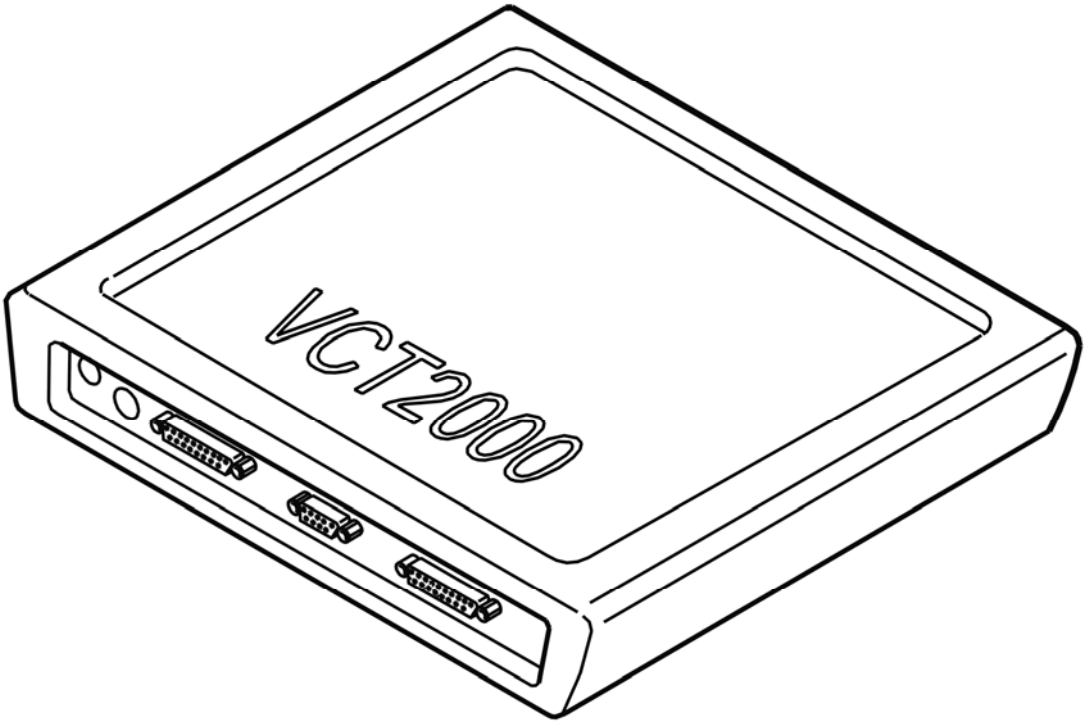

Fig. 137: Identifying VCT2000 Diagnostic Tool Symbol In VIDA
Courtesy of VOLVO CARS CORPORATION

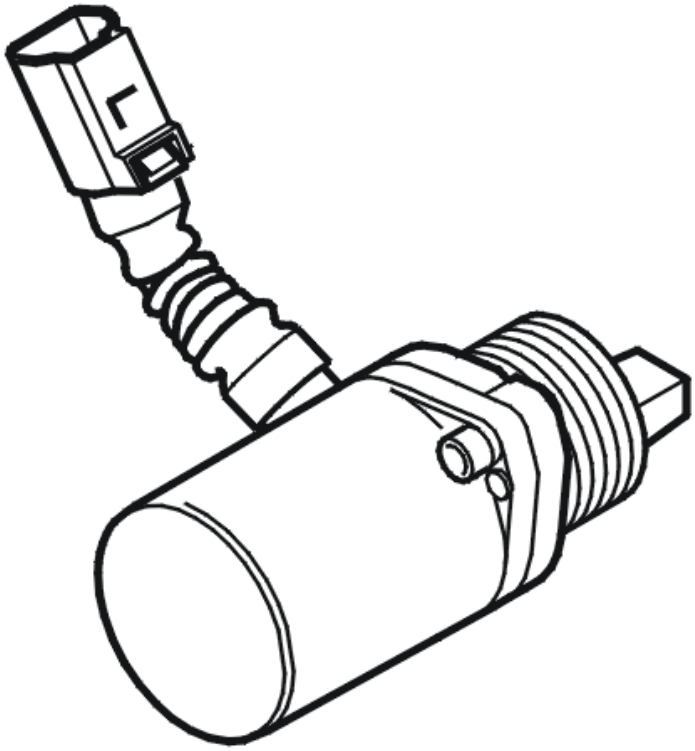

Fig. 138: Oil Pressure Pump
Courtesy of VOLVO CARS CORPORATION

- **Continue**

  Refer to **CHECKING THE CONNECTORS AND LEADS**

CHECKING THE CONNECTORS AND LEADS

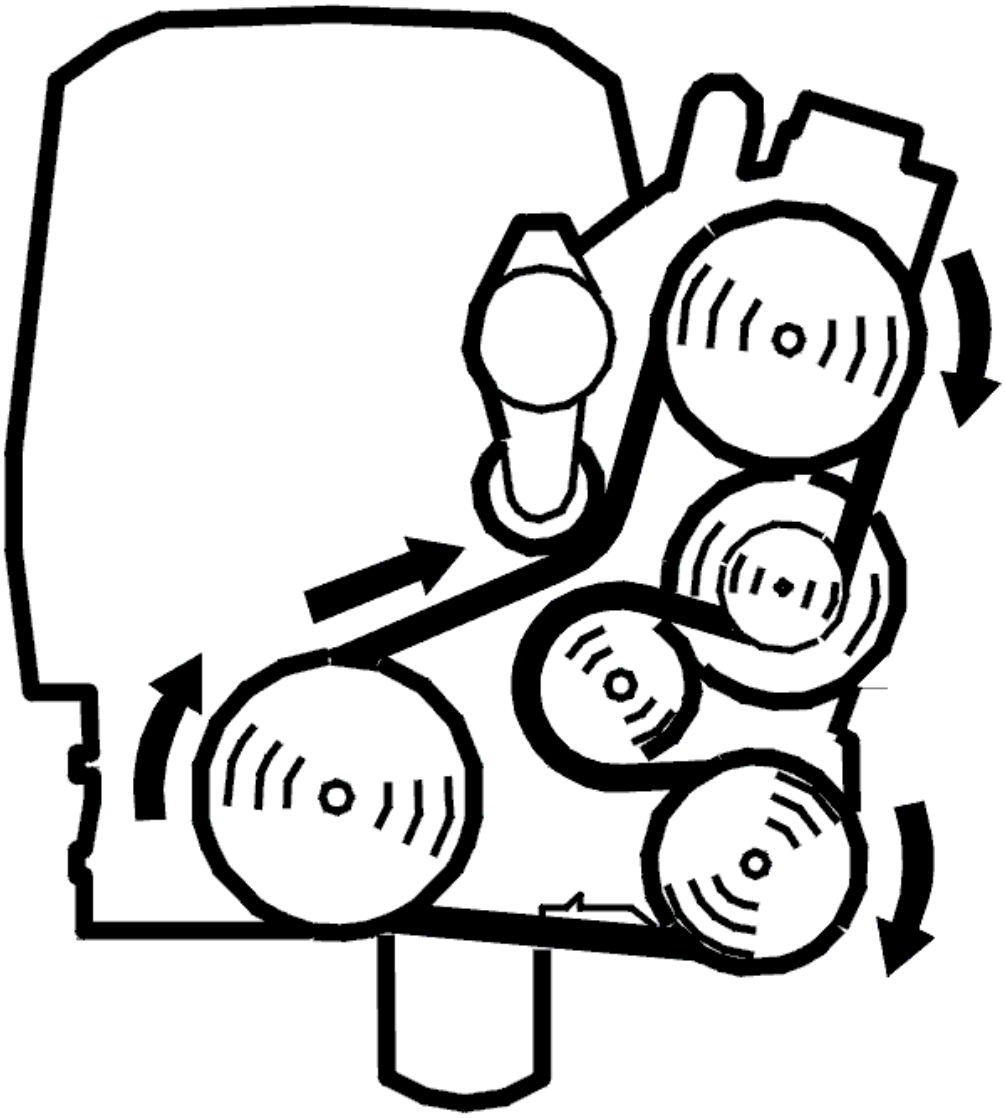

Fig. 139: Belt Routing / Engine Idling - Volvo
Courtesy of VOLVO CARS CORPORATION

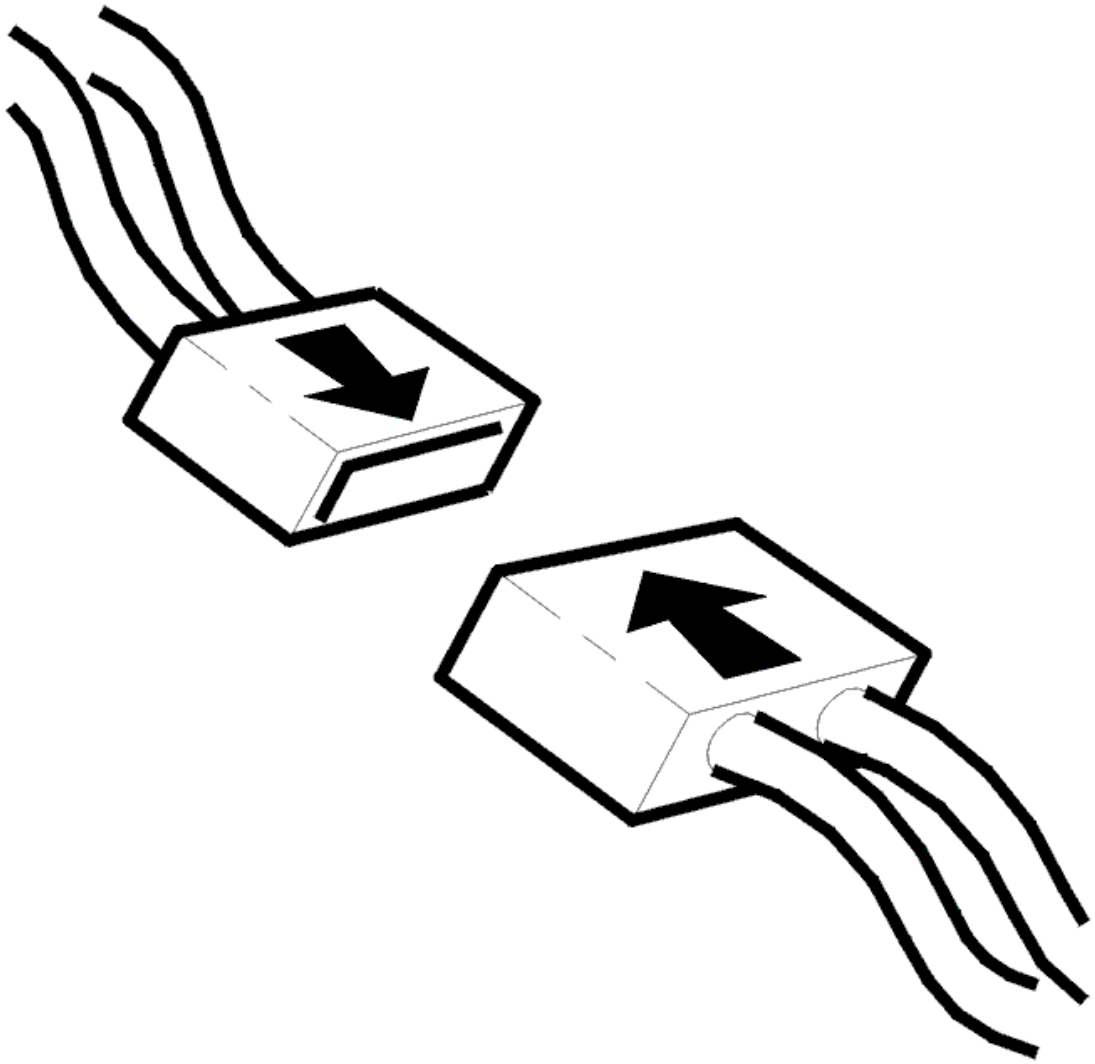

Fig. 140: Connecting Connector
Courtesy of VOLVO CARS CORPORATION

- Ignition off
- Check the connector between the Differential Electronic Module (DEM) and the feed pump with respect to contact resistance and oxidation.
- Check the lead between the Differential Electronic Module (DEM) and the feed pump for damage.
- Engine idling.

  Check the voltage by measuring with a voltmeter on the control module connector to the pump motor. Measure between #1 and #2.

NOTE: **The voltage is a pulse width modulated signal which can vary considerably and is only measurable a short while.**

Remedy as necessary.

Other information:

- see **SIGNAL SPECIFICATION**
- see **OIL PUMP ACTIVE ON DEMAND COUPLING (AOC), REPLACING**
- see **DIFFERENTIAL ELECTRONIC MODULE (DEM), REPLACING**
- see **CONTENTS**

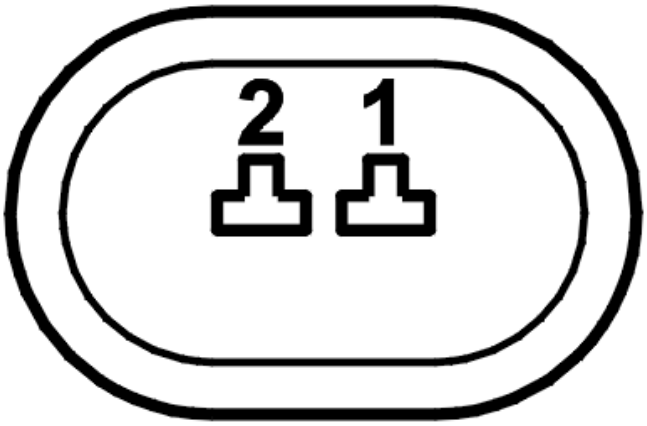

Fig. 141: Identifying Connector Terminals
Courtesy of VOLVO CARS CORPORATION

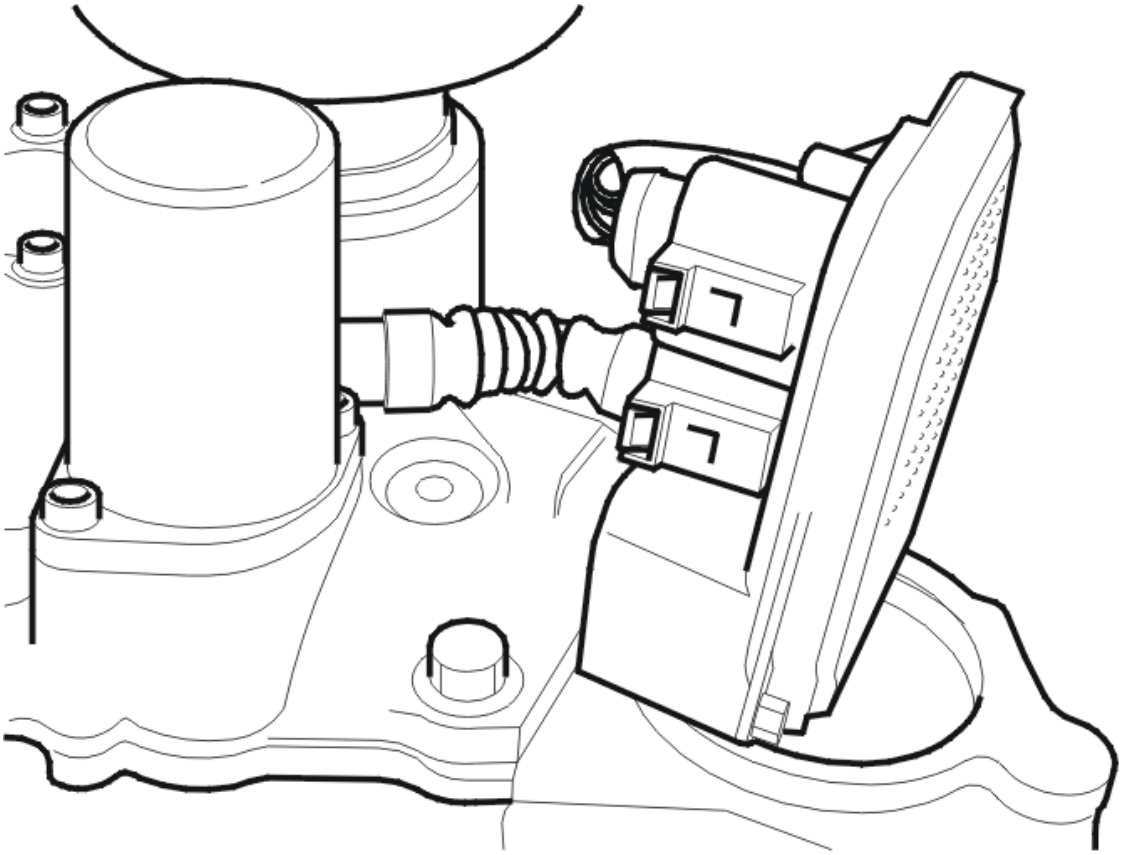

Fig. 142: Identifying Active On Demand Coupling Components
Courtesy of VOLVO CARS CORPORATION

- **Continue**

  Refer to **VERIFICATION**

VERIFICATION

HINT: After carrying out the repair, check that the fault has been remedied.

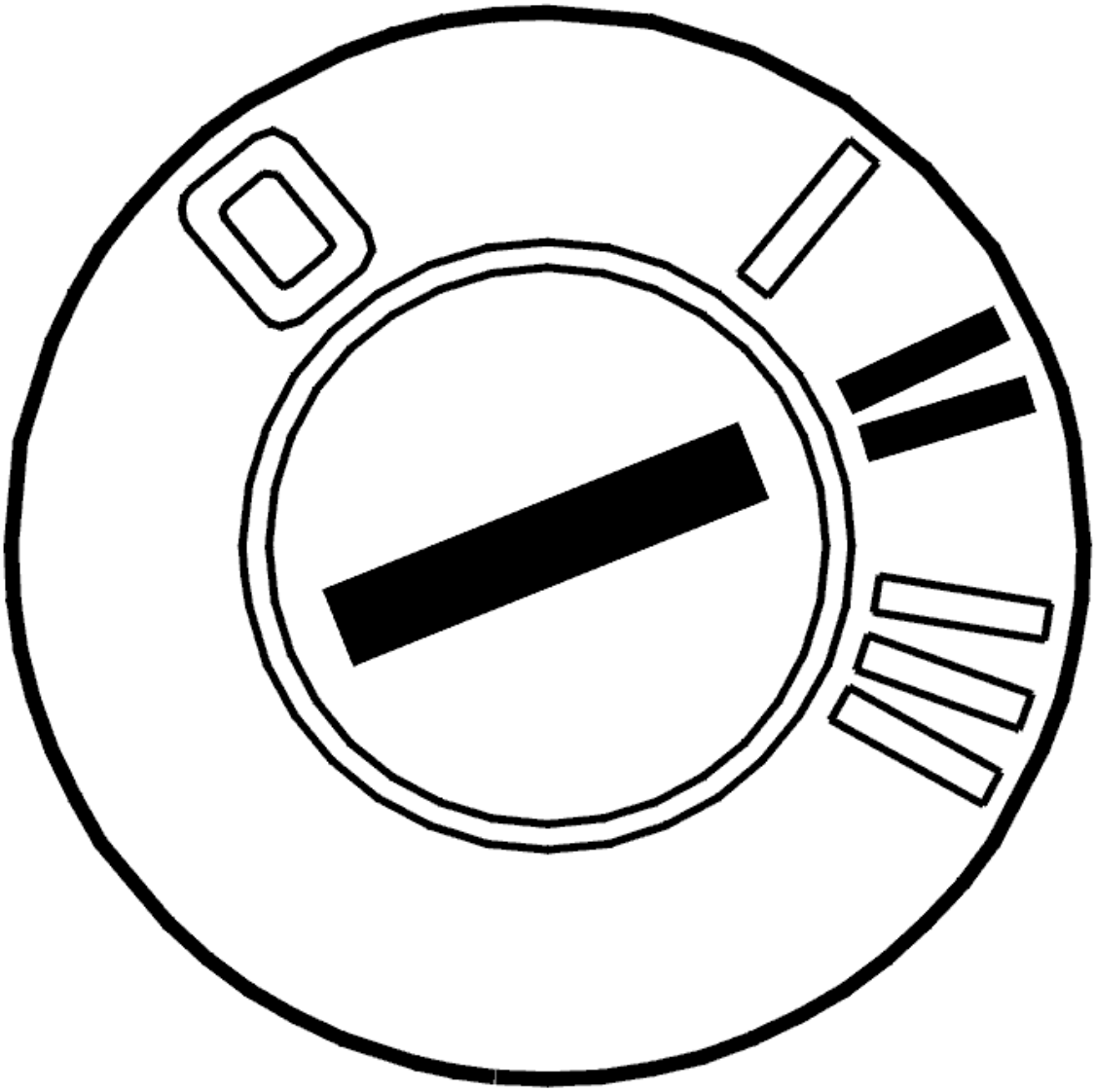

Fig. 143: Identifying Ignition ON
Courtesy of VOLVO CARS CORPORATION

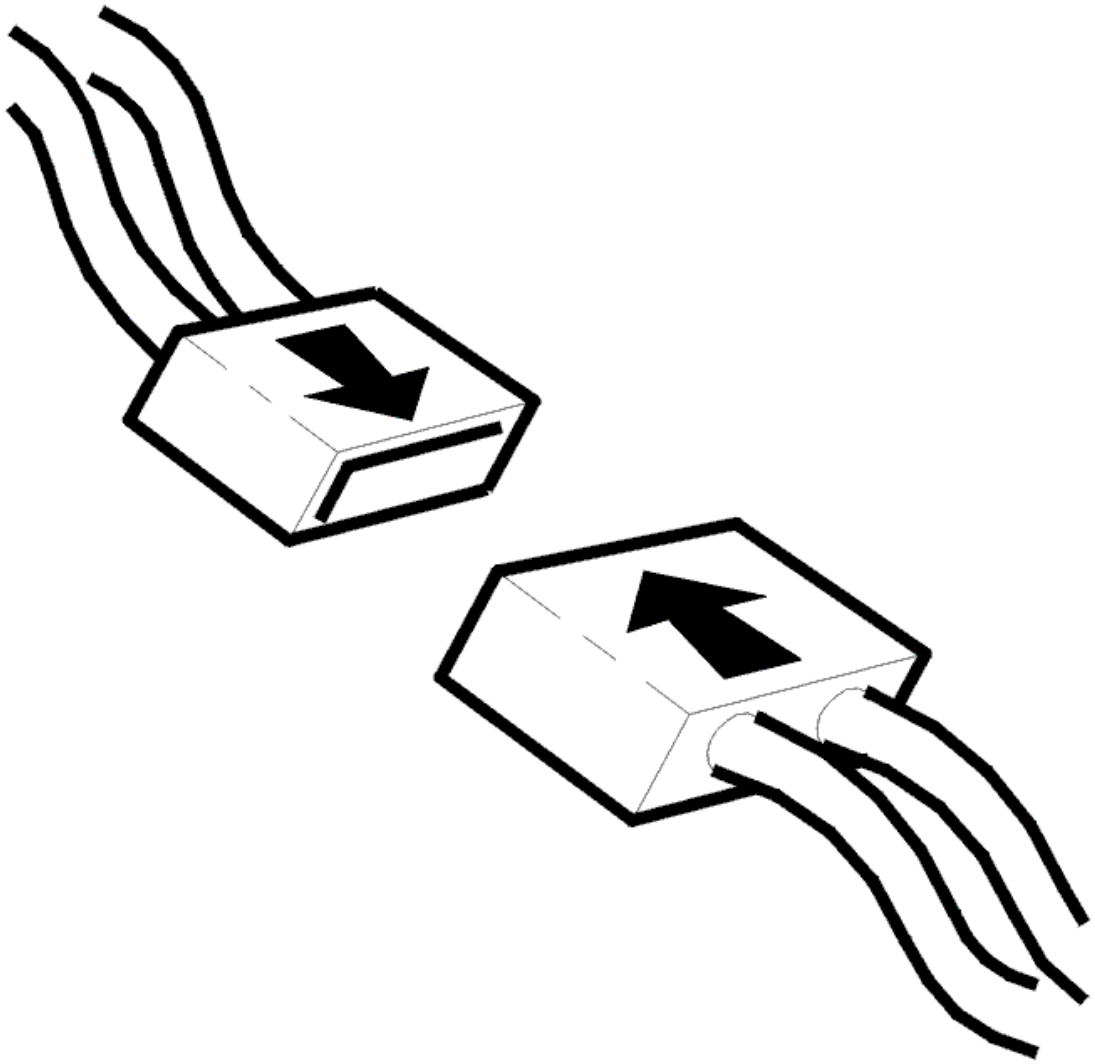

Fig. 144: Connecting Connector
Courtesy of VOLVO CARS CORPORATION

- Ignition off
- Reinstall the connectors, components etc.
- Ignition on

  Switch on the pump motor and check that it starts and runs normally.

  HINT: The motor should hum and vibrate slightly. Listen with a screwdriver or stethoscope against the ear.

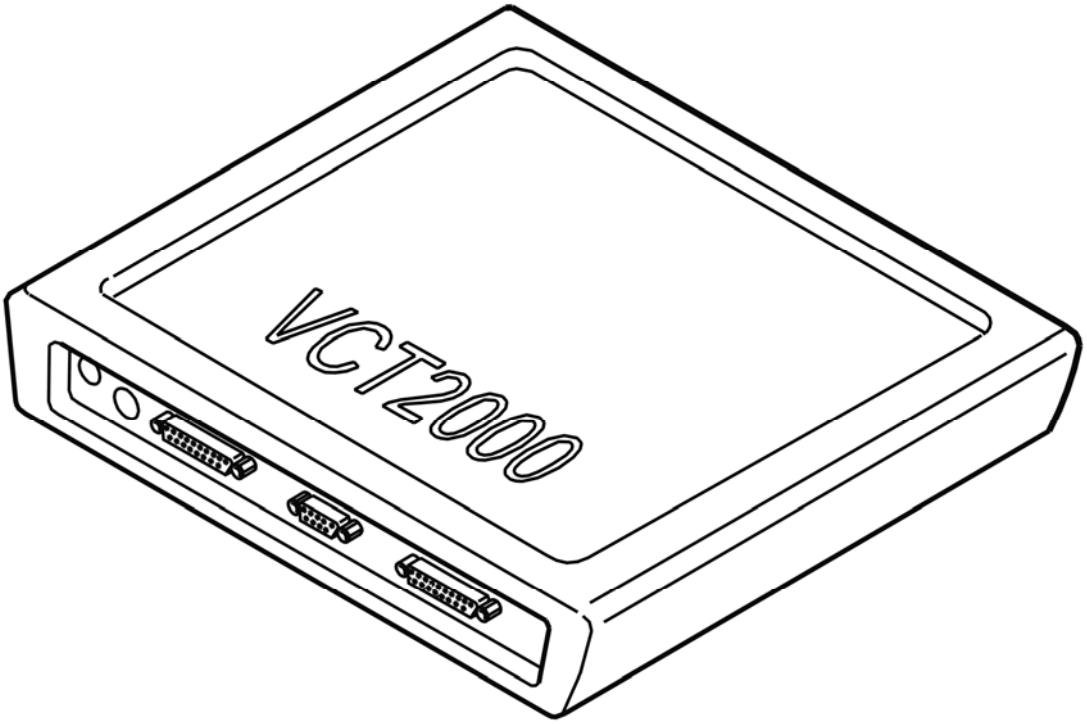

Fig. 145: Identifying VCT2000 Diagnostic Tool Symbol In VIDA
Courtesy of VOLVO CARS CORPORATION

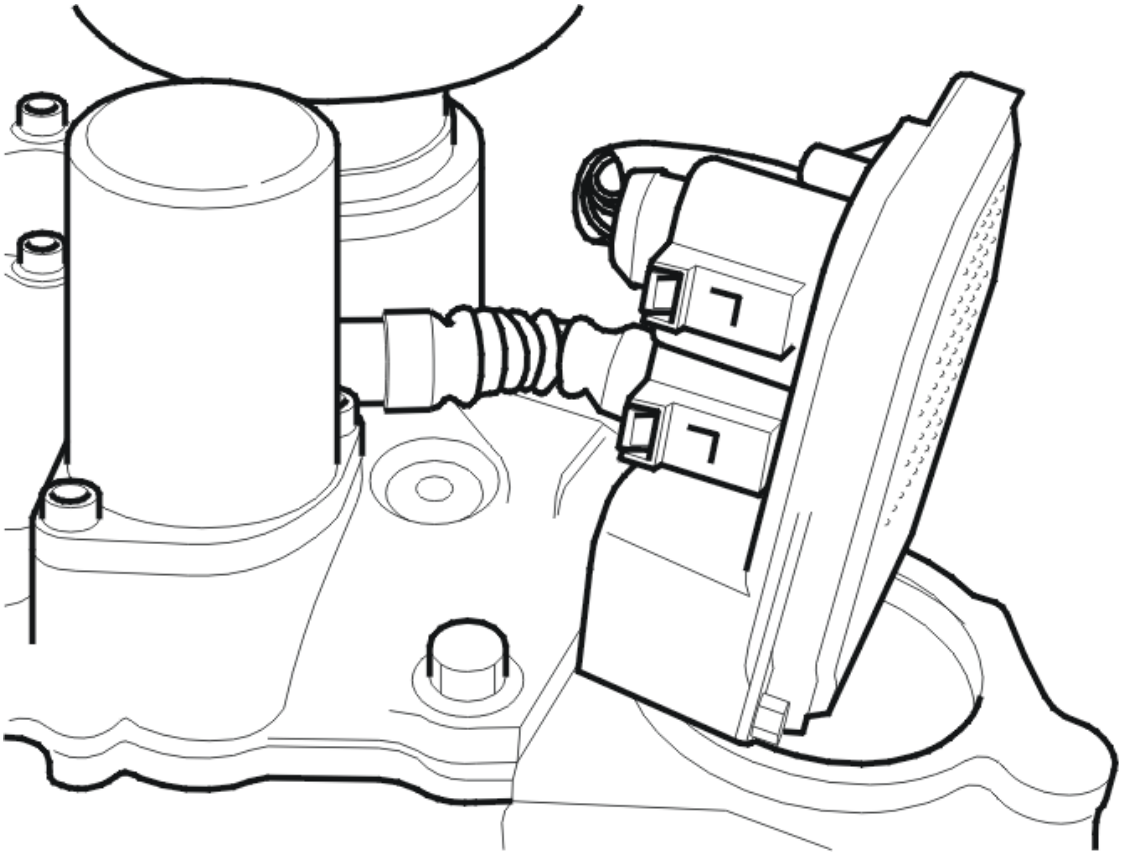

Fig. 146: Identifying Active On Demand Coupling Components
Courtesy of VOLVO CARS CORPORATION

Is the feed pump working?

- **YES**

  VERIFIED: Troubleshooting has been completed.

- **NO**

  Refer to **INFORMATION**

INFORMATION

FAULT-TRACING INFORMATION

The fault should have been detected and remedied. As this is not the case fault-tracing has failed.

Exit fault-tracing for this diagnostic trouble code (DTC) or make another attempt.

DEM-P188914: OIL PRESSURE PUMP PERFORMANCE. GENERAL ELECTRICAL FAULT. SHORT CIRCUIT TO GROUND OR OPEN CIRCUIT

(B8444S, TF-80SC AWD; 2006-2008)

DIAGNOSTIC TROUBLE CODE (DTC) INFORMATION DEM-P188914

see **DIAGNOSTIC TROUBLE CODE (DTC) INFORMATION DEM-P188914**

FAULT TRACING

see **FAULT TRACING DEM-P188914**

DEM-P188914: OIL PRESSURE PUMP PERFORMANCE. GENERAL ELECTRICAL FAULT. SHORT CIRCUIT TO GROUND OR OPEN CIRCUIT (TF-80SC AWD; 2005)

DIAGNOSTIC TROUBLE CODE (DTC) INFORMATION DEM-P188914

see **DIAGNOSTIC TROUBLE CODE (DTC) INFORMATION DEM-P188914**

FAULT TRACING

see **FAULT TRACING DEM-P188914**

DEM-P188918: OIL PRESSURE PUMP PERFORMANCE. GENERAL ELECTRICAL FAILURES. CIRCUIT CURRENT BELOW THRESHOLD (B6324S, TF-80SC AWD; 2009-2010)

DIAGNOSTIC TROUBLE CODE (DTC) INFORMATION DEM-P188918

Condition

The Differential electronic module (DEM) checks the performance of the oil pressure pump. The control module compares the signal from the oil pump to the predefined parameters. The current that goes through the oil pressure pump is dependent on the temperature of the oil.

The diagnostic trouble code (DTC) is stored if the control module detects that:

- The amperage through the oil pressure pump is too low.
- Incorrect value has been registered at 30 on each following operating cycle.

The control module's test for the diagnostic trouble code (DTC) starts when:

- The oil temperature is above 0 °C.
- The voltage across the oil pressure pump is greater than 11.5 V.

NOTE: The control module can only detect the fault once the test has been started and

the diagnostic trouble code (DTC) is stored when the conditions are met.

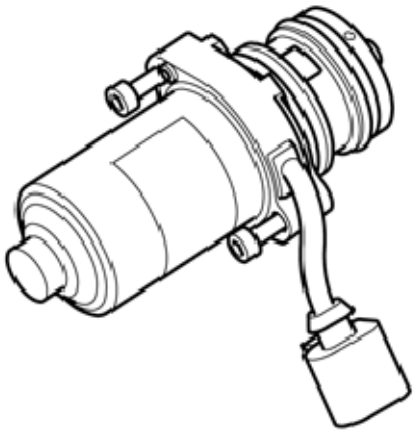

Fig. 147: Oil Pressure Pump
Courtesy of VOLVO CARS CORPORATION

Substitute Value

- None.

Possible Source

- Damaged connector between oil pressure pump and Differential electronic module (DEM).
- Oil level too low.
- Short-circuit to ground in the power supply cable.
- Damaged oil pressure pump.

Fault symptom[s]

- None.

FAULT-TRACING

CHECKING THE OIL LEVEL

Check the oil level in the coupling (Active on Demand Coupling).

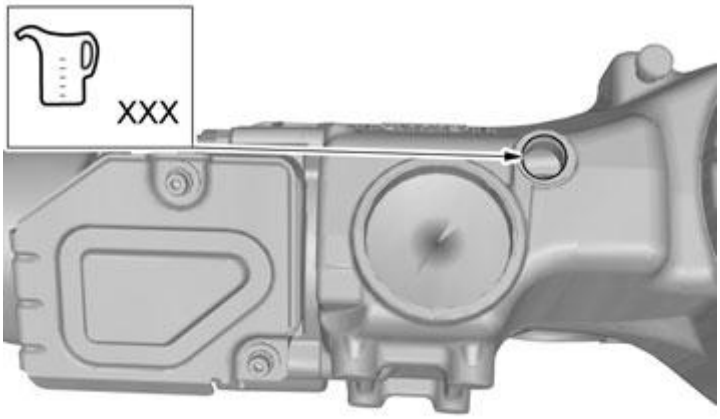

Fig. 148: Checking Coupling Oil level
Courtesy of VOLVO CARS CORPORATION

Was the fault found?

- **YES**

  OKAY: Troubleshooting has been completed.

- **NO**

  Refer to **CHECKING THE CONNECTORS AND WIRING**

CHECKING THE CONNECTORS AND WIRING

Fig. 149: Identifying Ignition In Off Position
Courtesy of VOLVO CARS CORPORATION

- Ignition off.

Check the connector between oil pressure pump and Differential electronic module (DEM) for damaged pins, loose connection, or other defects that may affect functionality. Check the cable for voltage feed for short-circuiting to ground.

Remedy as necessary.

Other information

- see **CHECKING WIRING AND TERMINALS**
- see **SIGNAL SPECIFICATION**
- see **ACTIVE ON-DEMAND COUPLING MODULE**

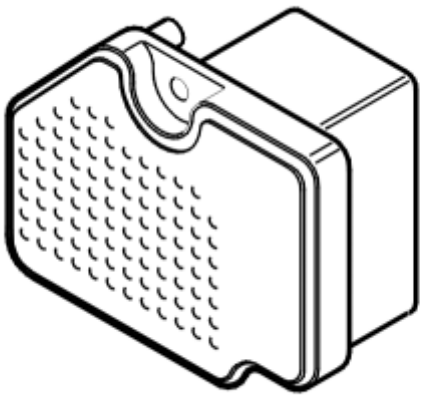

Fig. 150: Control Module
Courtesy of VOLVO CARS CORPORATION

Was the fault found?

- **YES**

  OKAY: Troubleshooting has been completed.

- **NO**

  Refer to **CHECKING THE OIL PUMP**

CHECKING THE OIL PUMP

Since no malfunction was found, the symptom indicates that the malfunction is located in the oil pressure pump. Solve by changing the oil pressure pump.

Other information

- see **OIL PUMP ACTIVE ON DEMAND COUPLING (AOC), REPLACING**

DEM-P188918: OIL PRESSURE PUMP PERFORMANCE. GENERAL ELECTRICAL FAILURES. CIRCUIT CURRENT BELOW THRESHOLD (B6324S5, TF-80SC AWD; 2011-2012)

DIAGNOSTIC TROUBLE CODE (DTC) INFORMATION DEM-P188918

see **DIAGNOSTIC TROUBLE CODE (DTC) INFORMATION DEM-P188918**

FAULT-TRACING

see **FAULT-TRACING**

DEM-P188918: OIL PRESSURE PUMP PERFORMANCE. GENERAL ELECTRICAL FAILURES. CIRCUIT CURRENT BELOW THRESHOLD (B8444S, TF-80SC AWD; 2009-2011)

DIAGNOSTIC TROUBLE CODE (DTC) INFORMATION DEM-P188918

see **DIAGNOSTIC TROUBLE CODE (DTC) INFORMATION DEM-P188918**

FAULT-TRACING

see **FAULT-TRACING**

DEM-P188949: OIL PRESSURE PUMP PERFORMANCE. SYSTEM INTERNAL FAILURES. INTERNAL ELECTRONIC FAILURE (B6324S, TF-80SC AWD; 2009-2010)

DIAGNOSTIC TROUBLE CODE (DTC) INFORMATION DEM-P188949

Condition

The Differential electronic module (DEM) checks the performance of the oil pressure pump. The control module compares the current strength from the oil pressure pump to the predefined parameters.

The diagnostic trouble code (DTC) is stored if the control module detects that:

- The amperage through the oil pressure pump is greater than 0.5 A when the pump is off.
- Incorrect value lasts longer than 30 seconds.

The control module's test for the diagnostic trouble code (DTC) starts in the event of:

- Ignition switch position II.
- The oil pressure pump is switched off.

NOTE: **The control module can only detect the fault once the test has been started and the diagnostic trouble code (DTC) is stored when the conditions are met.**

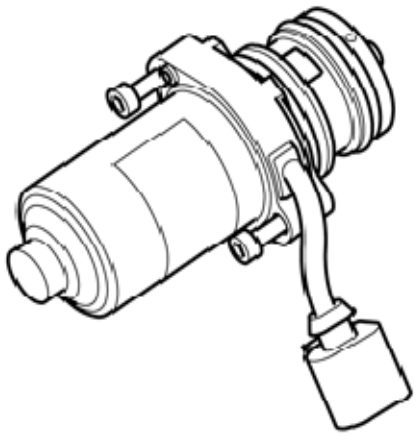

Fig. 151: Oil Pressure Pump
Courtesy of VOLVO CARS CORPORATION

Substitute Value

- Four wheel drive is disengaged.

Possible Source

- Damaged Differential Electronic Module (DEM).

Fault symptom[s]

- 4-wheel/all wheel drive/Does not work
- Text window and warning symbol/Text message

FAULT-TRACING

see **FAULT-TRACING**

DEM-P188949: OIL PRESSURE PUMP PERFORMANCE. SYSTEM INTERNAL FAILURES. INTERNAL ELECTRONIC FAILURE (B6324S5, TF-80SC AWD; 2011-2012)

DIAGNOSTIC TROUBLE CODE (DTC) INFORMATION DEM-P188949

see **DIAGNOSTIC TROUBLE CODE (DTC) INFORMATION DEM-P188949**

FAULT-TRACING

see **FAULT-TRACING**

DEM-P188949: OIL PRESSURE PUMP PERFORMANCE. SYSTEM INTERNAL FAILURES. INTERNAL ELECTRONIC FAILURE (B8444S, TF-80SC AWD; 2009-2011)

DIAGNOSTIC TROUBLE CODE (DTC) INFORMATION DEM-P188949

see **DIAGNOSTIC TROUBLE CODE (DTC) INFORMATION DEM-P188949**

FAULT-TRACING

see **FAULT-TRACING**

DEM-P188974: OIL PRESSURE PUMP PERFORMANCE. MECHANICAL FAILURES. ACTUATOR SLIPPING (B6324S, TF-80SC AWD; 2007)

DIAGNOSTIC TROUBLE CODE (DTC) INFORMATION DEM-P188974

Condition

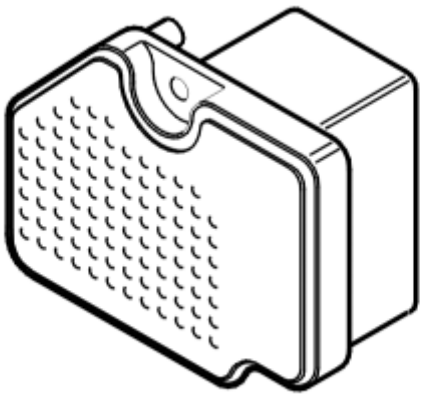

Fig. 152: Control Module
Courtesy of VOLVO CARS CORPORATION

The Differential electronic module (DEM) checks the oil pressure in the Haldex clutch using an oil pressure sensor.

When the engine speed exceeds 500 RPM, an initial pressure builds up in the clutch via an electric feed pump.

The diagnostic trouble code (DTC) is stored if the control module detects that:

- Initial pressure not reached within 2-4 minutes.

The control module's test for the diagnostic trouble code (DTC) starts in the event of:

- Engine speed (RPM) higher than 500 RPM.

Substitute Value

- Four wheel drive is disengaged.

Possible Source

- Pressure sensor is not functioning.
- Damaged feed pump.
- Too low oil volume in clutch.
- Internal leak in the clutch.

Fault symptom[s]

- Four wheel drive is not functioning.

FAULT-TRACING

INFORMATION

NOTE: **A mechanical fault in the AOC unit can be one possible cause of the trouble code being set. Therefore a first step should be to check the AOC unit for any damage or oil leaks. Listen also for noise from the clutch/back axle.**

Remedy as necessary.

Other information:

- see **TEST DRIVING ACTIVE ON DEMAND COUPLING, AUTOMATIC TRANSMISSION**
- For replacement of the AOC unit see:**DIFFERENTIAL ELECTRONIC MODULE (DEM), REPLACING**

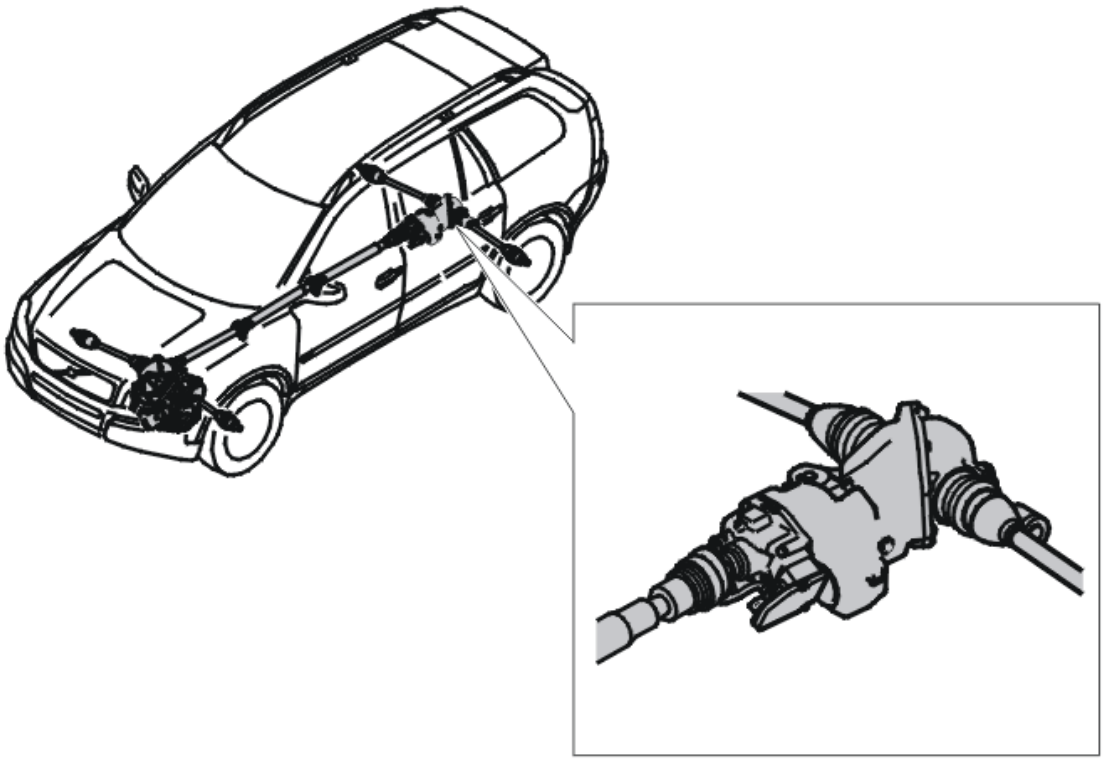

Fig. 153: Final Drive Assembly
Courtesy of VOLVO CARS CORPORATION

- **Continue**

  Refer to **CHECKING PRESSURE AND TEMPERATURE SENSOR**

CHECKING THE CONNECTORS AND LEADS

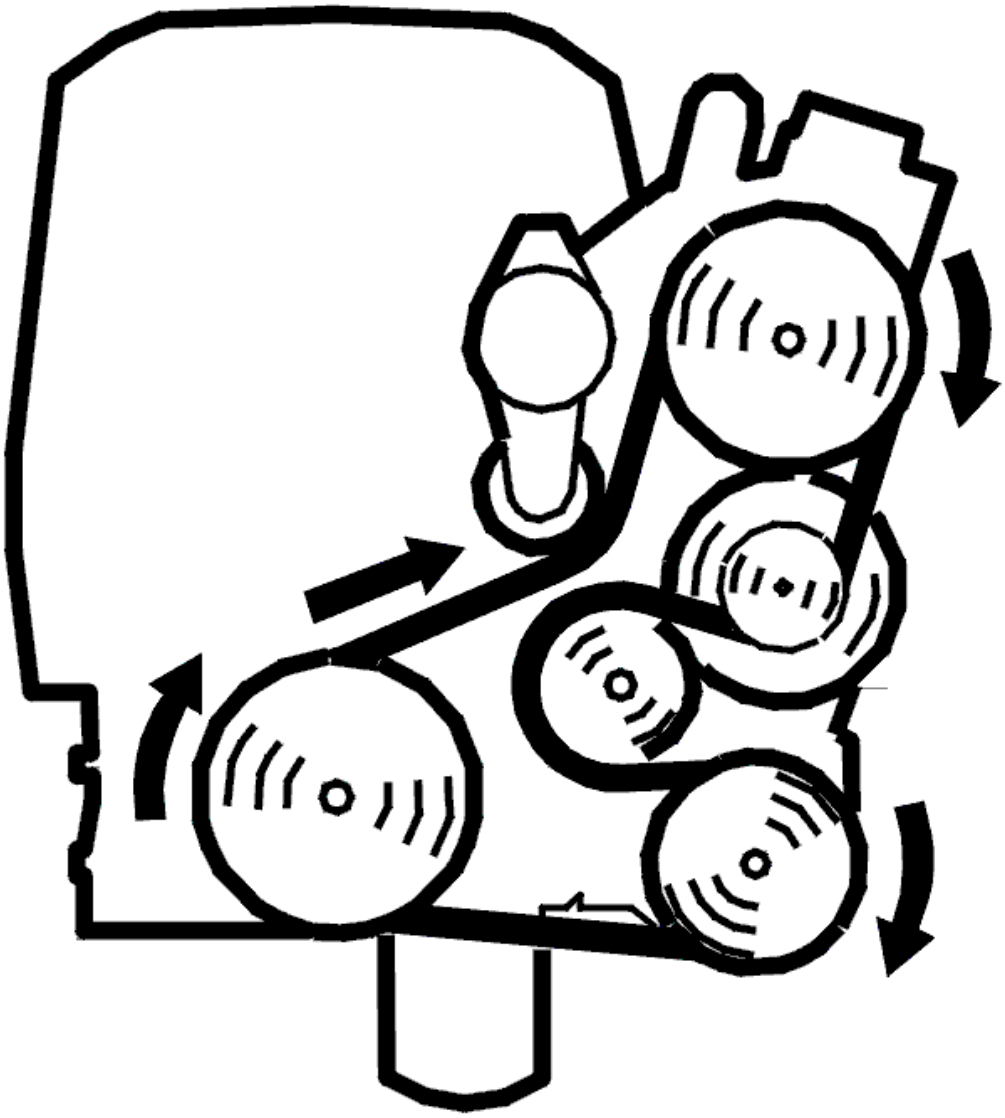

Fig. 154: Belt Routing / Engine Idling - Volvo
Courtesy of VOLVO CARS CORPORATION

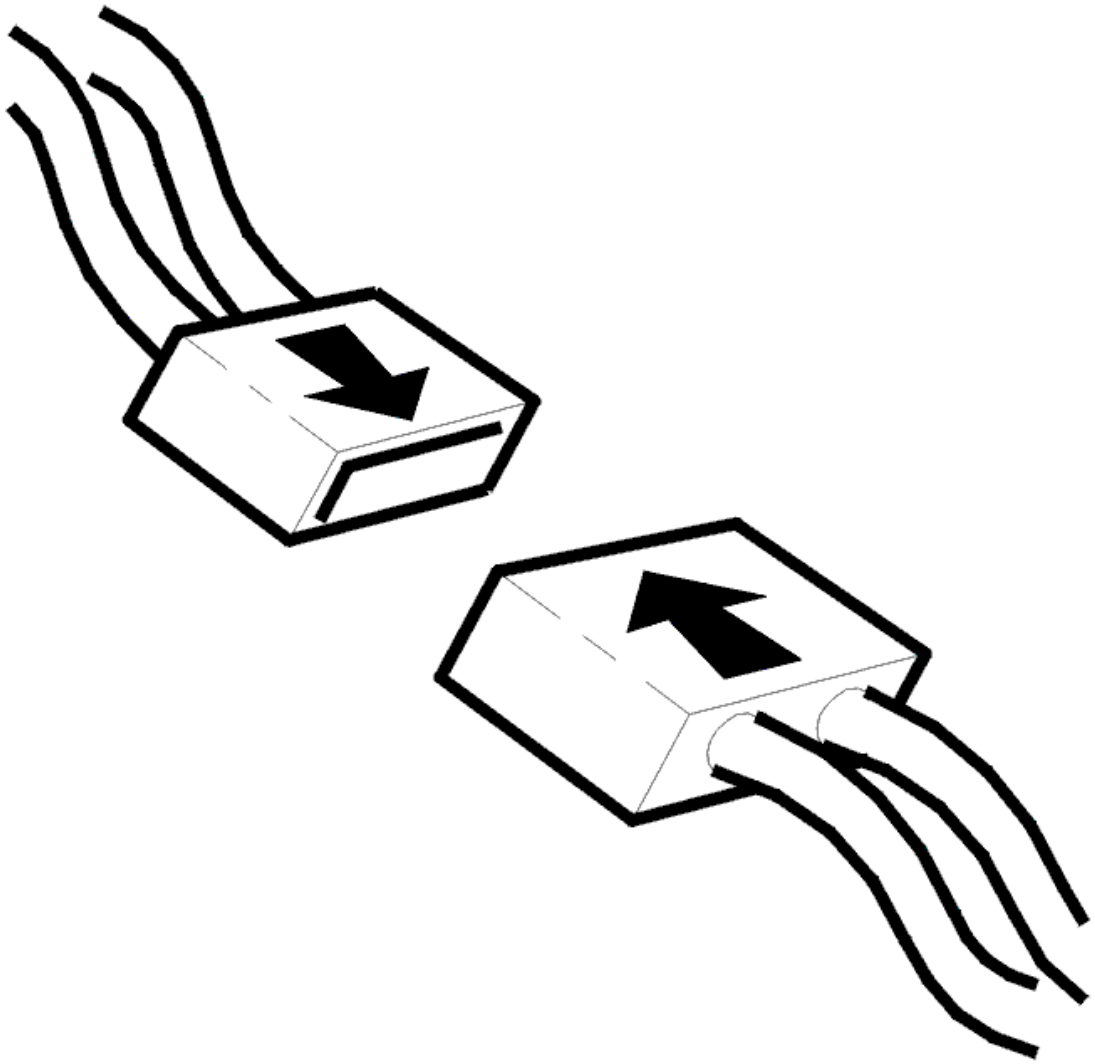

Fig. 155: Connecting Connector
Courtesy of VOLVO CARS CORPORATION

- Ignition off
- Check the connector between the Differential Electronic Module (DEM) and the feed pump with respect to contact resistance and oxidation.
- Check the lead between the Differential Electronic Module (DEM) and the feed pump for damage.
- Engine idling.

  Check the voltage by measuring with a voltmeter on the control module connector to the pump motor. Measure between #1 and #2.

NOTE: **The voltage is a pulse width modulated signal which can vary considerably and is only measurable a short while.**

Remedy as necessary.

Other information:

- see **SIGNAL SPECIFICATION**
- see **OIL PUMP ACTIVE ON DEMAND COUPLING (AOC), REPLACING**
- see **DIFFERENTIAL ELECTRONIC MODULE (DEM), REPLACING**
- see **CONTENTS**

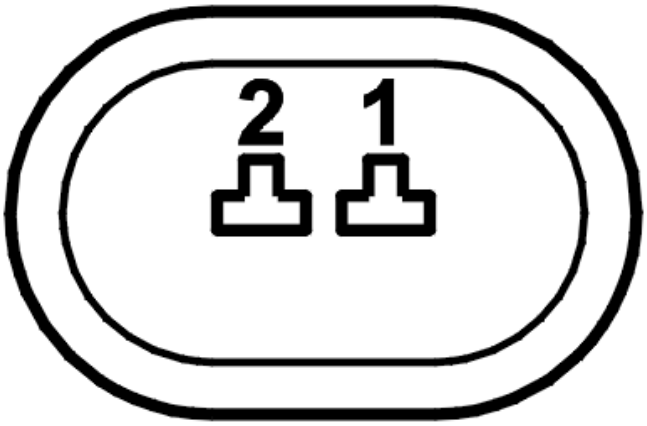

Fig. 156: Identifying Connector Terminals
Courtesy of VOLVO CARS CORPORATION

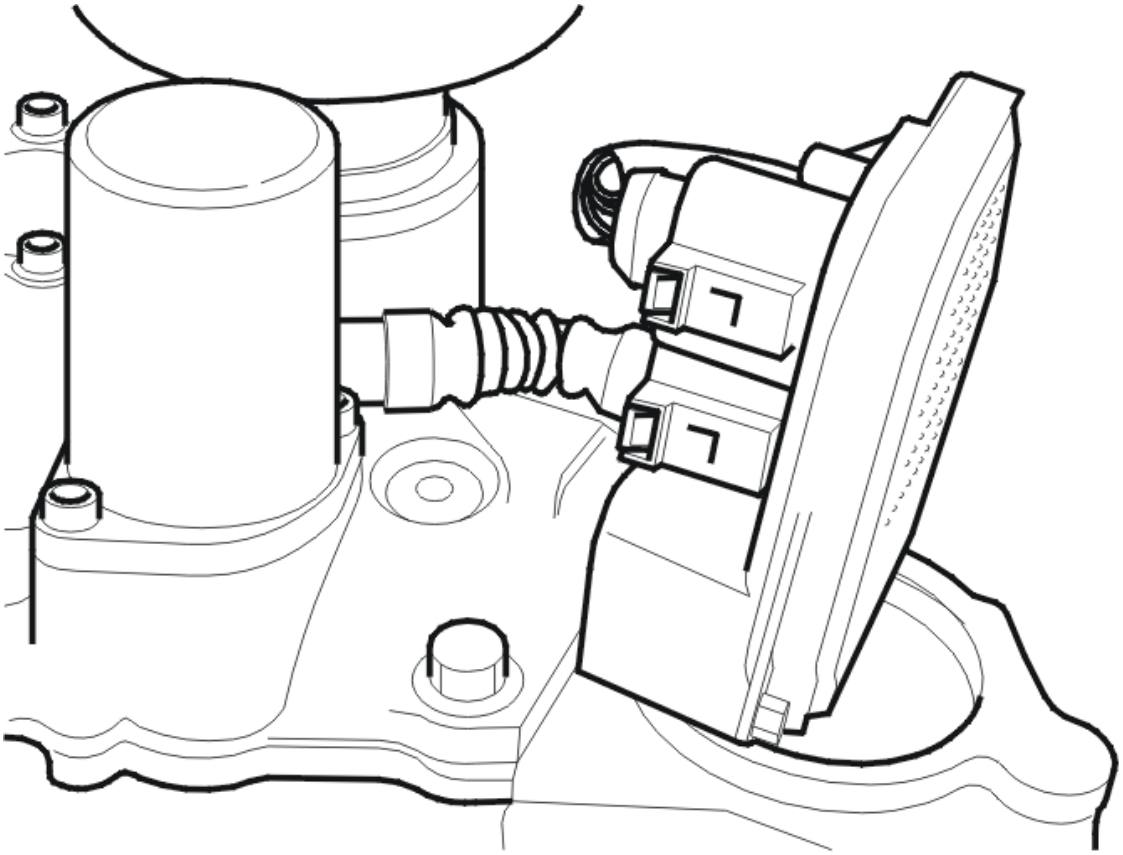

Fig. 157: Identifying Active On Demand Coupling Components
Courtesy of VOLVO CARS CORPORATION

- **Continue**

  Refer to **VERIFICATION**

CHECKING THE COMPONENT AND WIRING

Fig. 158: Identifying Ignition In Off Position
Courtesy of VOLVO CARS CORPORATION

- Ignition off.

Check the connector for the Differential electronic module (DEM). Check for damage and loose connections.

Check that the cable harness is intact and not trapped or damaged.

Check that the oil pressure sensor (13) is correctly installed and that it does not have any external damage. Check that the oil pressure sensor oil ducts are intact and free of dirt.

Remedy as necessary.

Other information

- see **CHECKING WIRING AND TERMINALS**
- see **TEMPERATURE / PRESSURE SENSOR ACTIVE ON DEMAND COUPLING (AOC), REPLACING**

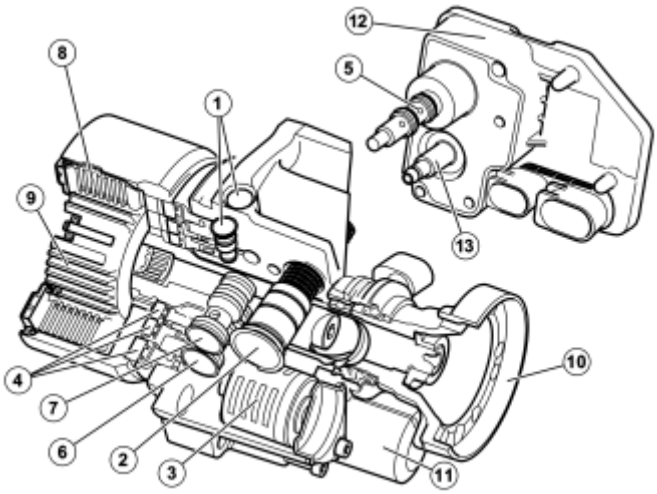

Fig. 159: Exploded View Of Rear Differential
Courtesy of VOLVO CARS CORPORATION

Is the function OK?

- **YES**

  OKAY: Troubleshooting has been completed.

- **NO**

  Refer to **CHECKING THE CONNECTORS AND LEADS**

CHECKING PRESSURE AND TEMPERATURE SENSOR

NOTE: **Reading out of oil pressure can take place first after the diagnostic trouble code (DTC) has been deleted. Therefore frozen values should be printed and saved before deleting takes place.**

1. Test of pressure sensor.
   - Ignition on.

- Using Volvo Scan Tool hit the VCT2000 symbol.

  HINT: Correct pressure shall be 0.00 +/- 0.08 MPa.

- Engine idling
- Using Volvo Scan Tool hit the VCT2000 symbol.

  HINT: Correct pressure shall be 0.38 +/- 0.08 MPa.

2. Test of temperature sensor.
   - Ignition on.
   - Using Volvo Scan Tool hit the VCT2000 symbol.

     HINT: Normal value for ambient temperature when the vehicle is cold and (+20 to +50 °C) when the vehicle is driven.

If wrong value is read out, then diagnostic trouble code shall be erased and the sensor changed. After changing sensor, repeat the test procedure again.

NOTE: **There are two types of sensors, an 80 bar and a 40 bar. Differential electronic module (DEM) has hardware number 30759701, 30785483, 30759682, 30783198, 30735844, or 30783018, an 80 bar pressure sensor shall be installed. If Differential electronic module (DEM) has another hardware number than above, a 40 bar sensor shall be installed.**

HINT: For reading out of hardware number, see VIDA/DIAGNOSTICS/NETWORK/DEM.

Other information

- see **TEMPERATURE / PRESSURE SENSOR ACTIVE ON DEMAND COUPLING (AOC), REPLACING**

Fig. 160: Identifying VCT2000 Diagnostic Tool Symbol In VIDA
Courtesy of VOLVO CARS CORPORATION

Has the fault been remedied?

- **YES**

  OKAY: Troubleshooting has been completed.

- **NO**

  Refer to **CHECKING THE COMPONENT AND WIRING**

INFORMATION

FAULT-TRACING INFORMATION

The fault should have been detected and remedied. As this is not the case fault-tracing has failed.

Exit fault-tracing for this diagnostic trouble code (DTC) or make another attempt.

VERIFICATION

HINT: After carrying out the repair, check that the fault has been remedied.

NOTE: After the AOC unit has been repaired or replaced, a test drive is required to check that the fault has been remedied.

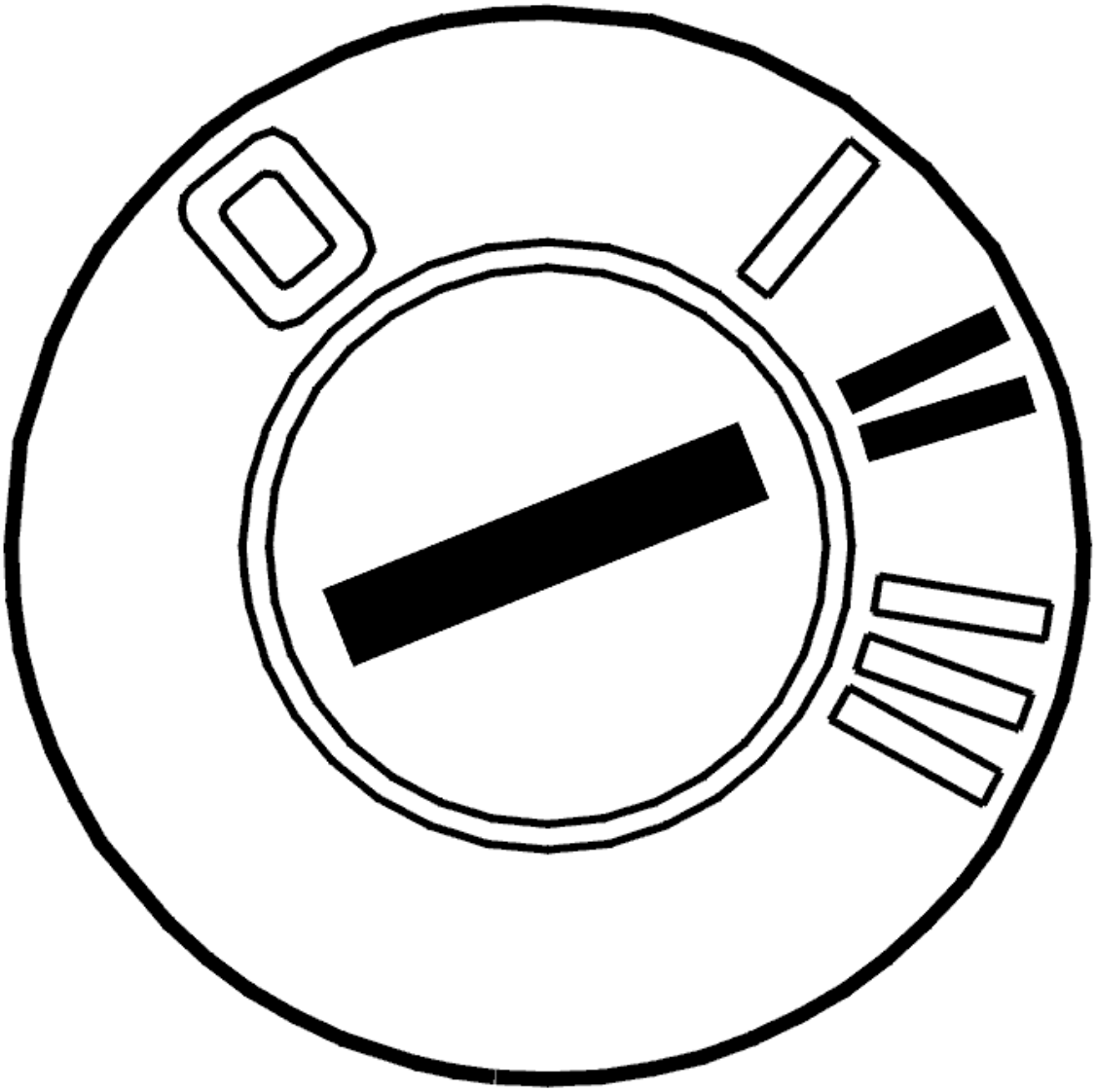

Fig. 161: Identifying Ignition ON
Courtesy of VOLVO CARS CORPORATION

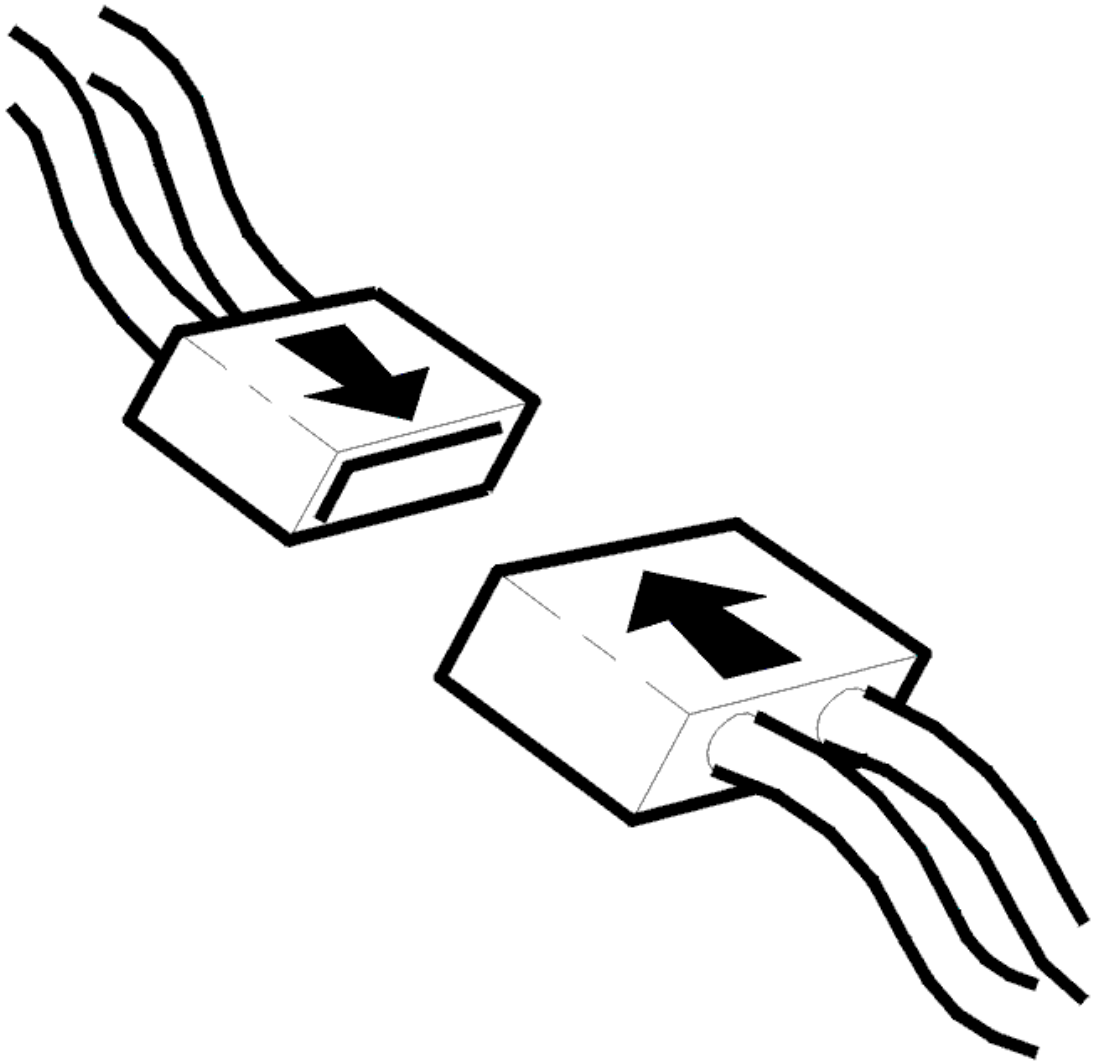

Fig. 162: Connecting Connector
Courtesy of VOLVO CARS CORPORATION

- Ignition off
- Reinstall the connectors, components etc.
- Ignition on

  Switch on the pump motor and check that it starts and runs normally.

  HINT: The motor should hum and vibrate slightly. Listen with a screwdriver or stethoscope against the ear.

  Other information:

  - see **TEST DRIVING ACTIVE ON DEMAND COUPLING, AUTOMATIC TRANSMISSION**

- see **TEST DRIVING ACTIVE ON DEMAND COUPLING, MANUAL TRANSMISSION**

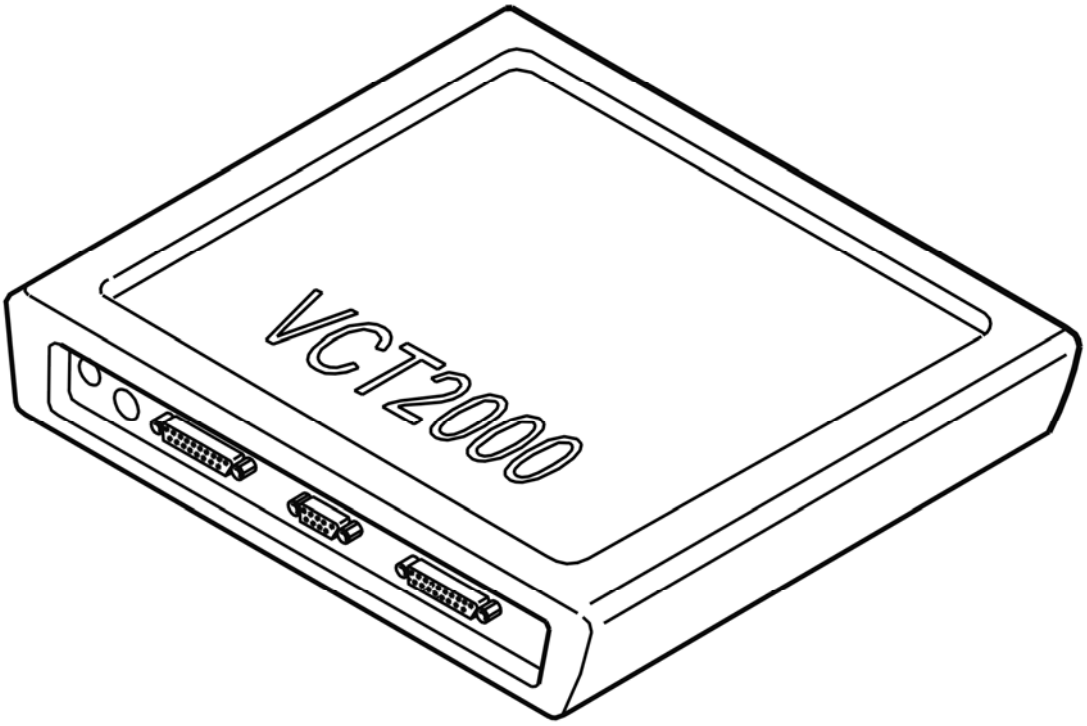

Fig. 163: Identifying VCT2000 Diagnostic Tool Symbol In VIDA
Courtesy of VOLVO CARS CORPORATION

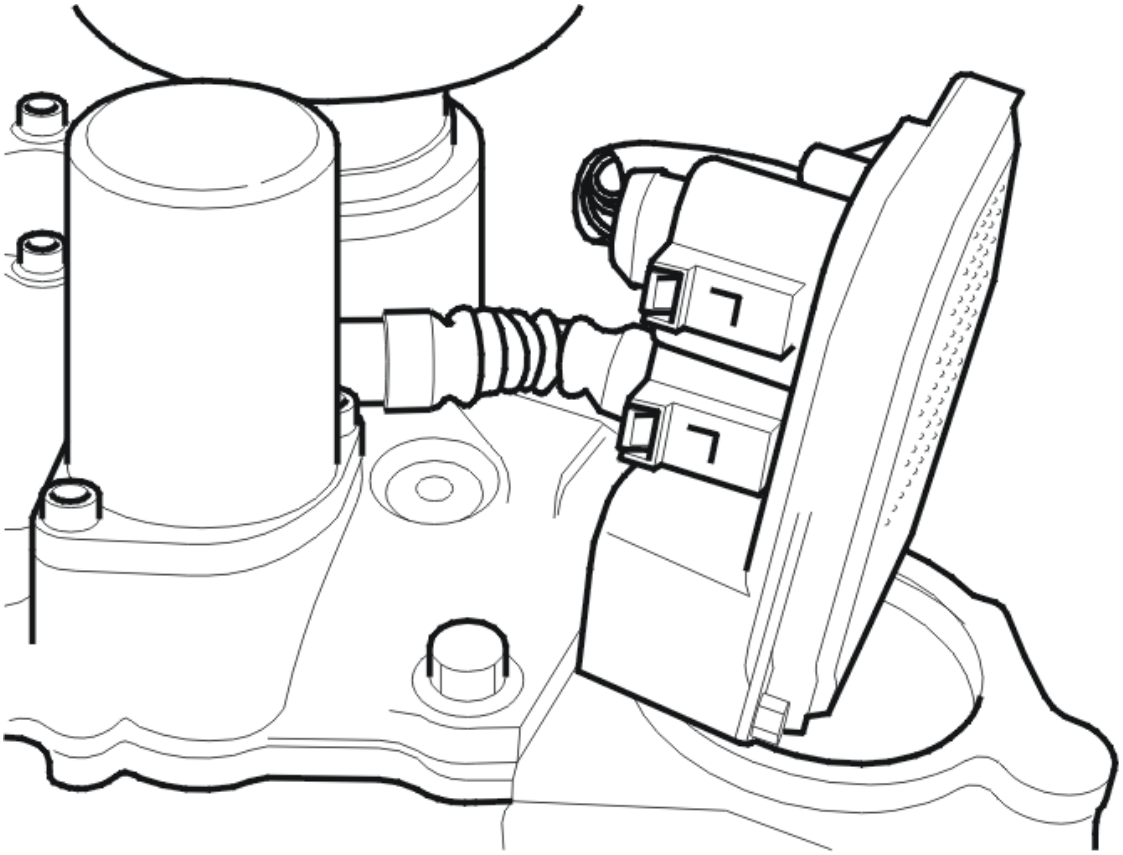

Fig. 164: Identifying Active On Demand Coupling Components
Courtesy of VOLVO CARS CORPORATION

Is the feed pump working?

- **YES**

  VERIFIED: Troubleshooting has been completed.

- **NO**

  Refer to **INFORMATION**

TEST DRIVING ACTIVE ON DEMAND COUPLING, MANUAL TRANSMISSION

TEST DRIVING

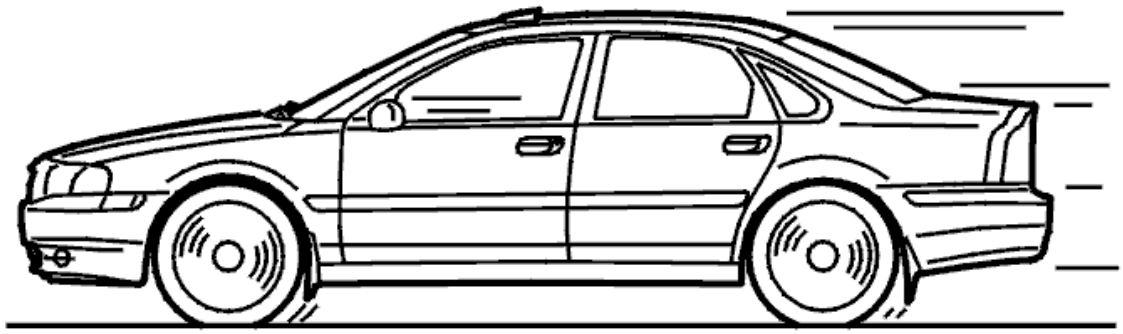

Fig. 165: Identifying Test Drive
Courtesy of VOLVO CARS CORPORATION

WARNING: **Observe all traffic regulations during the test drive.**

HINT: The test drive consists of two tests. The first test is at low engine speeds (RPM). The second is at higher engine speeds (RPM).

HINT: At low engine speeds (RPM), four wheel drive is normally disengaged. At high engine speeds, four wheel drive will be engaged. This will have a braking effect when the clutch is depressed and the accelerator pedal (AP) is released.

HINT: The stopping distance with four wheel drive engaged must be approximately half the distance of that when four wheel drive is disengaged.

The test drive

Drive the car in a circle at full lock (the smallest turning circle) at a speed of approximately 10 km/h. Press the clutch and release the accelerator pedal (AP). Let the car come to a standstill.

Note how long it took for the car to stop.

Repeat the test. Increase the engine speed to 3000-4000 RPM. Let the car come to a standstill.

The car will stop in half the distance it took to stop in the first test if the function is correct.

Drive the car while looking out for any faults in functions or noise from the rear suspension.

If there is a fault or noise, stop the test drive. Return to the workshops. Fault trace the symptoms.

DEM-P188974: OIL PRESSURE PUMP PERFORMANCE. MECHANICAL FAILURES. ACTUATOR SLIPPING (B6324S, TF-80SC AWD; B8444S, TF-80SC AWD; 2008)

DIAGNOSTIC TROUBLE CODE (DTC) INFORMATION DEM-P188974

see **DIAGNOSTIC TROUBLE CODE (DTC) INFORMATION DEM-P188974**

FAULT-TRACING

CHECKING THE OIL PRESSURE

Fig. 166: Checking Traffic Load On CAN Cables
Courtesy of VOLVO CARS CORPORATION

- Ignition on.

Read off the oil pressure in the Differential Electronic Module (DEM). The pressure must rise when the engine speed exceeds 500 RPM. Use **VIDA Vehicle communication** .

First read off the oil pressure with the ignition on and then with the engine running. At read out, the oil pressure must rise when the engine RPM exceeds 500 RPM, the pressure must rise immediately after the engine's RPM increases.

If the pressure does not rise, this means that a fault has occurred.

Does the pressure increase?

- **YES**

  Refer to **INFORMATION**

- **NO**

Refer to **CHECKING THE COMPONENT AND WIRING**

INFORMATION

NOTE: **A mechanical fault in the AOC unit can be one possible cause of the trouble code being set. Therefore a first step should be to check the AOC unit for any damage or oil leaks. Listen also for noise from the clutch/back axle.**

Remedy as necessary.

Other information:

- see **TEST DRIVING ACTIVE ON DEMAND COUPLING, AUTOMATIC TRANSMISSION**
- For replacement of the AOC unit see:**DIFFERENTIAL ELECTRONIC MODULE (DEM), REPLACING**

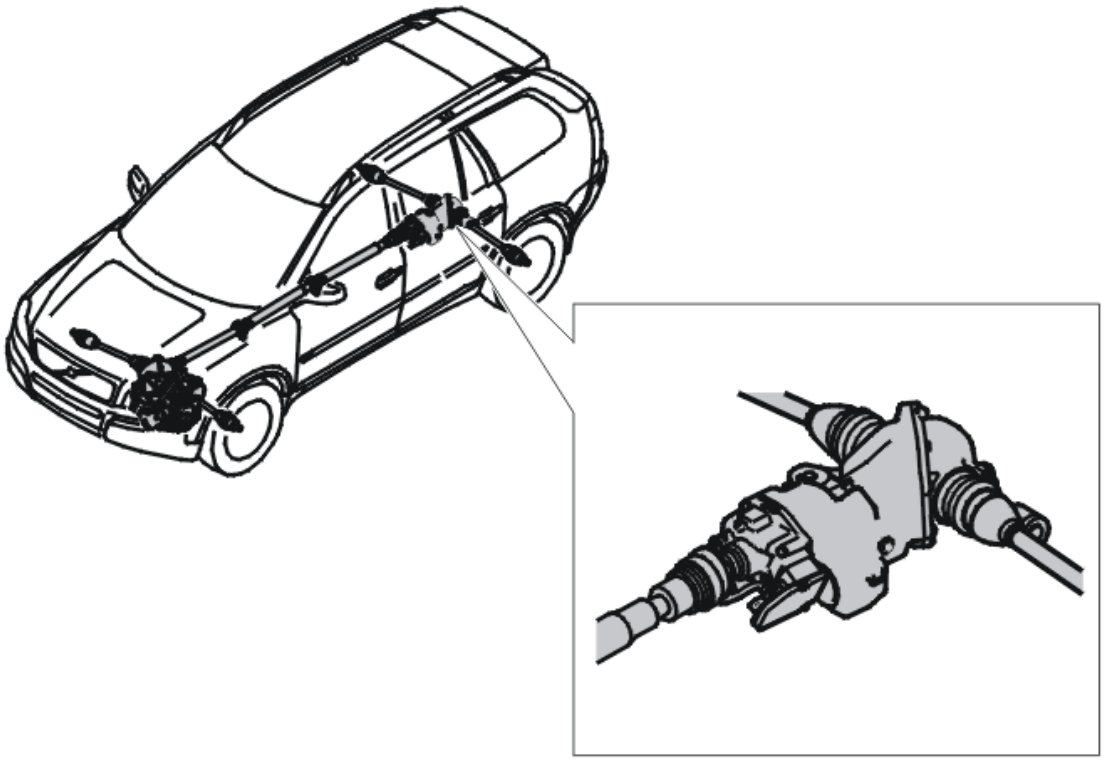

Fig. 167: Final Drive Assembly
Courtesy of VOLVO CARS CORPORATION

- **Continue**

Refer to **VERIFICATION**

CHECKING THE CONNECTORS AND LEADS

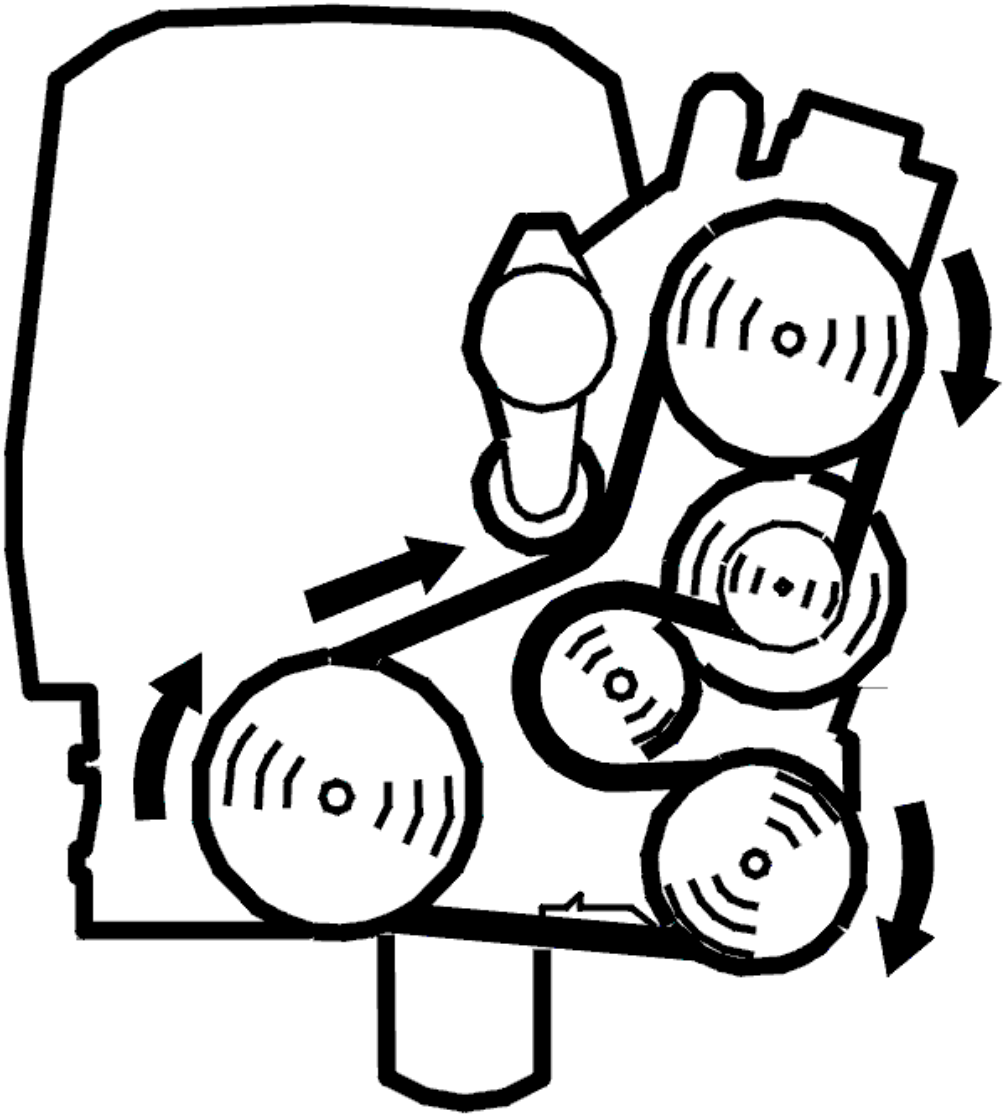

Fig. 168: Belt Routing / Engine Idling - Volvo
Courtesy of VOLVO CARS CORPORATION

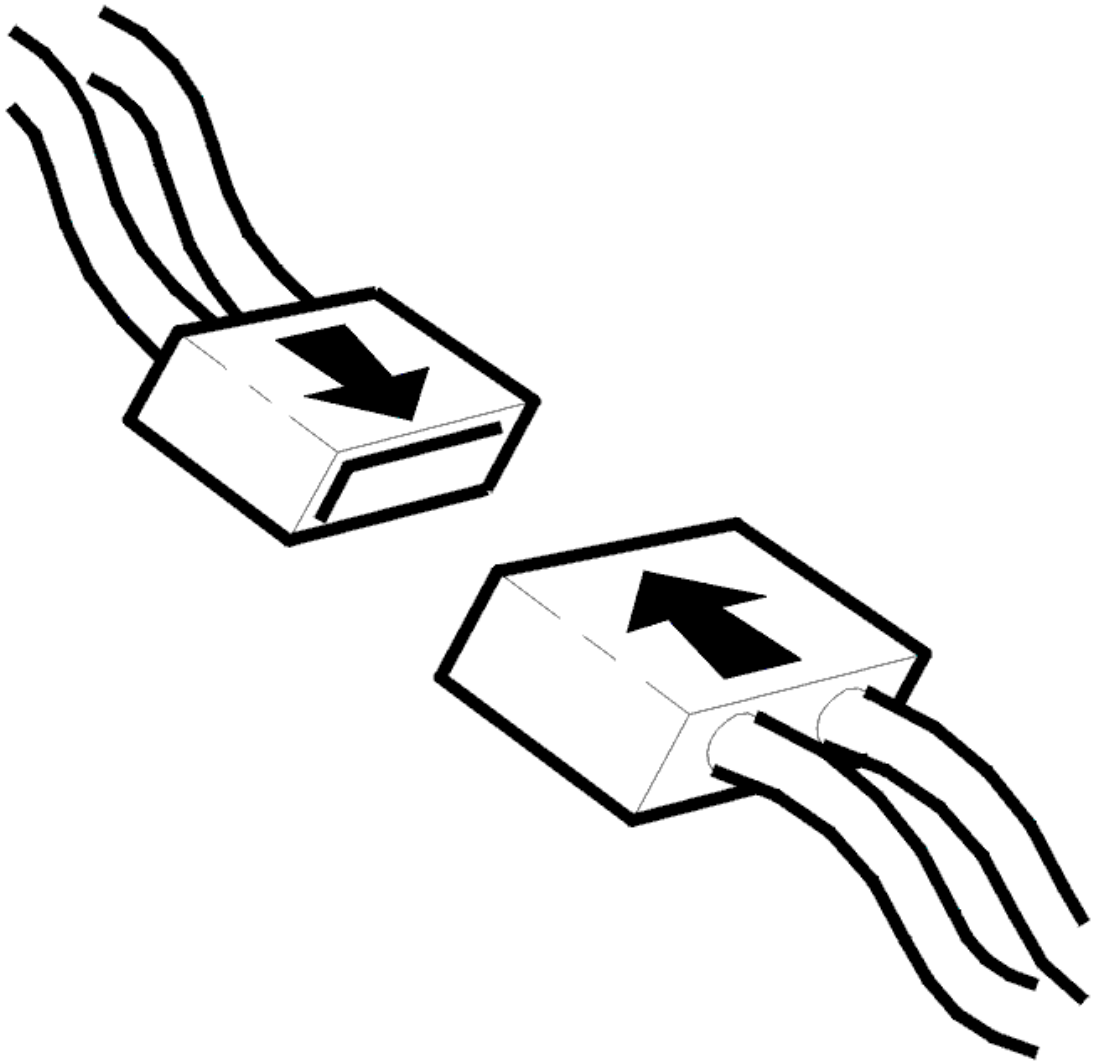

Fig. 169: Connecting Connector
Courtesy of VOLVO CARS CORPORATION

- Ignition off
- Check the connector between the Differential Electronic Module (DEM) and the feed pump with respect to contact resistance and oxidation.
- Check the lead between the Differential Electronic Module (DEM) and the feed pump for damage.
- Engine idling.

  Check the voltage by measuring with a voltmeter on the control module connector to the pump motor. Measure between #1 and #2.

NOTE: **The voltage is a pulse width modulated signal which can vary considerably and is only measurable a short while.**

Remedy as necessary.

Other information:

- see **SIGNAL SPECIFICATION**
- see **OIL PUMP ACTIVE ON DEMAND COUPLING (AOC), REPLACING**
- see **DIFFERENTIAL ELECTRONIC MODULE (DEM), REPLACING**
- see **CONTENTS**

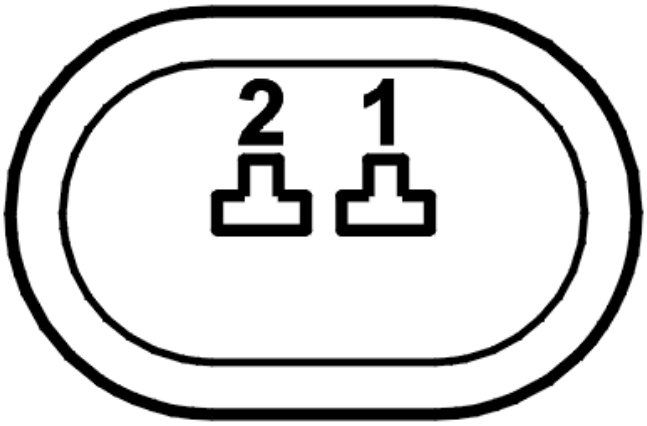

Fig. 170: Identifying Connector Terminals
Courtesy of VOLVO CARS CORPORATION

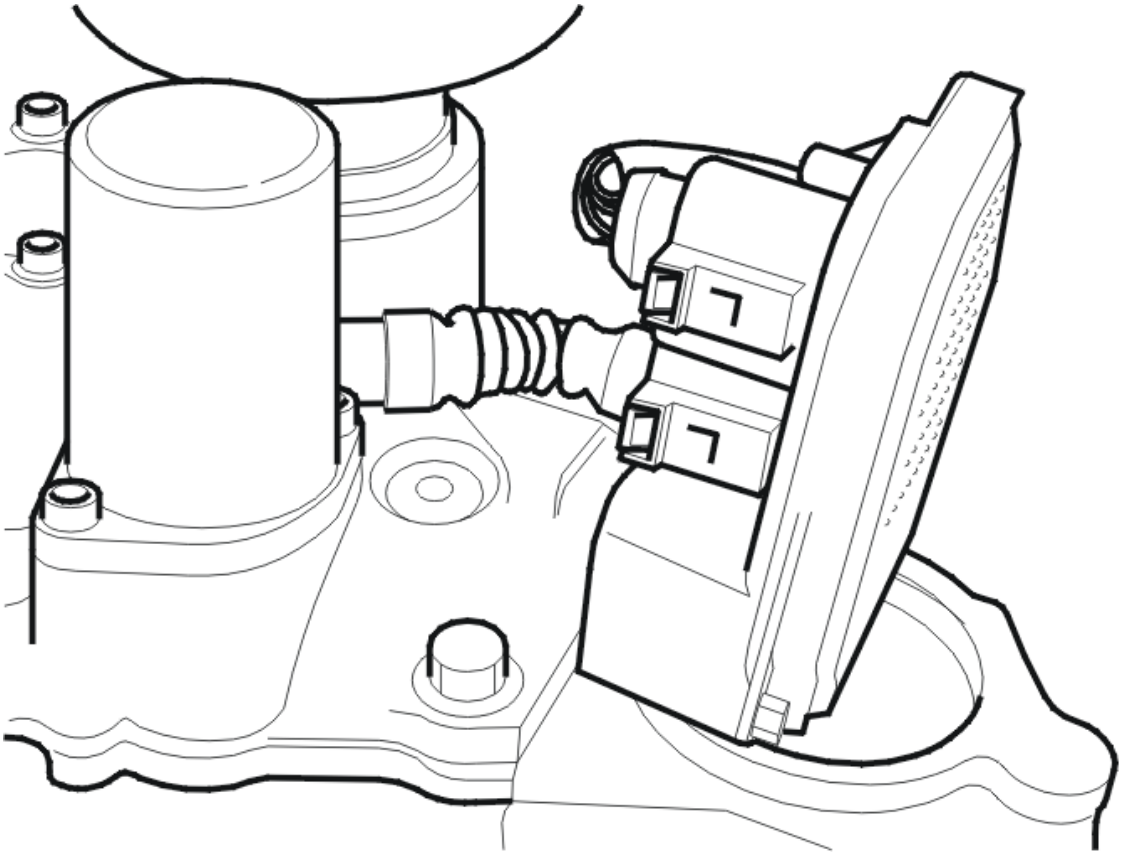

Fig. 171: Identifying Active On Demand Coupling Components
Courtesy of VOLVO CARS CORPORATION

- **Continue**

  Refer to **INFORMATION**

CHECKING THE COMPONENT AND WIRING

Fig. 172: Identifying Ignition In Off Position
Courtesy of VOLVO CARS CORPORATION

- Ignition off.

Check the connector for the Differential electronic module (DEM). Check for damage and loose connections.

Check that the cable harness is intact and not trapped or damaged.

Check that the oil pressure sensor (13) is correctly installed and that it does not have any external damage. Check that the oil pressure sensor oil ducts are intact and free of dirt.

Remedy as necessary.

If no fault is found, try a new pressure sensor.

Other information

- see **CHECKING WIRING AND TERMINALS**
- see **TEMPERATURE / PRESSURE SENSOR ACTIVE ON DEMAND COUPLING (AOC), REPLACING**

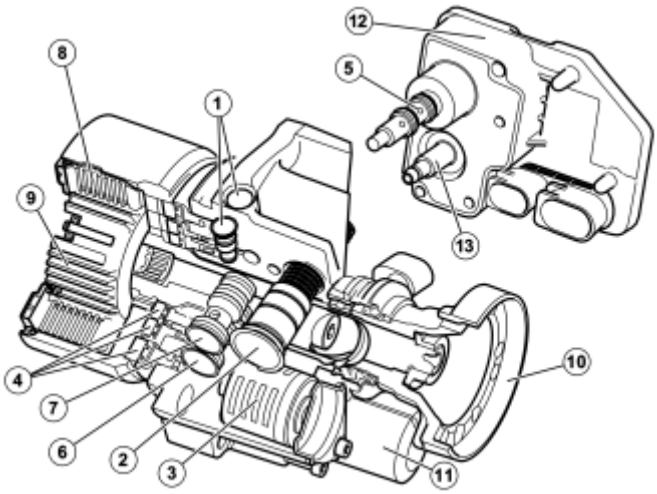

Fig. 173: Exploded View Of Rear Differential
Courtesy of VOLVO CARS CORPORATION

Is the function OK?

- **YES**

  OKAY: Troubleshooting has been completed.

- **NO**

  Refer to **CHECKING THE CONNECTORS AND LEADS**

INFORMATION

Fig. 174: Checking Traffic Load On CAN Cables
Courtesy of VOLVO CARS CORPORATION

- Ignition on.

  Check status for relevant diagnostic trouble code.

  No further corrective action is required if the diagnostic trouble code (DTC) is intermittent and does not recur.

  If the DTC status is permanent, continue with fault tracing.

Do you wish to continue with fault tracing?

- **YES**

  Refer to **CHECKING THE CONNECTORS AND LEADS**

- **NO**

  OKAY: Troubleshooting has been completed.

INFORMATION

FAULT-TRACING INFORMATION

The fault should have been detected and remedied. As this is not the case fault-tracing has failed.

Exit fault-tracing for this diagnostic trouble code (DTC) or make another attempt.

VERIFICATION

HINT: After carrying out the repair, check that the fault has been remedied.

NOTE: After the AOC unit has been repaired or replaced, a test drive is required to check that the fault has been remedied.

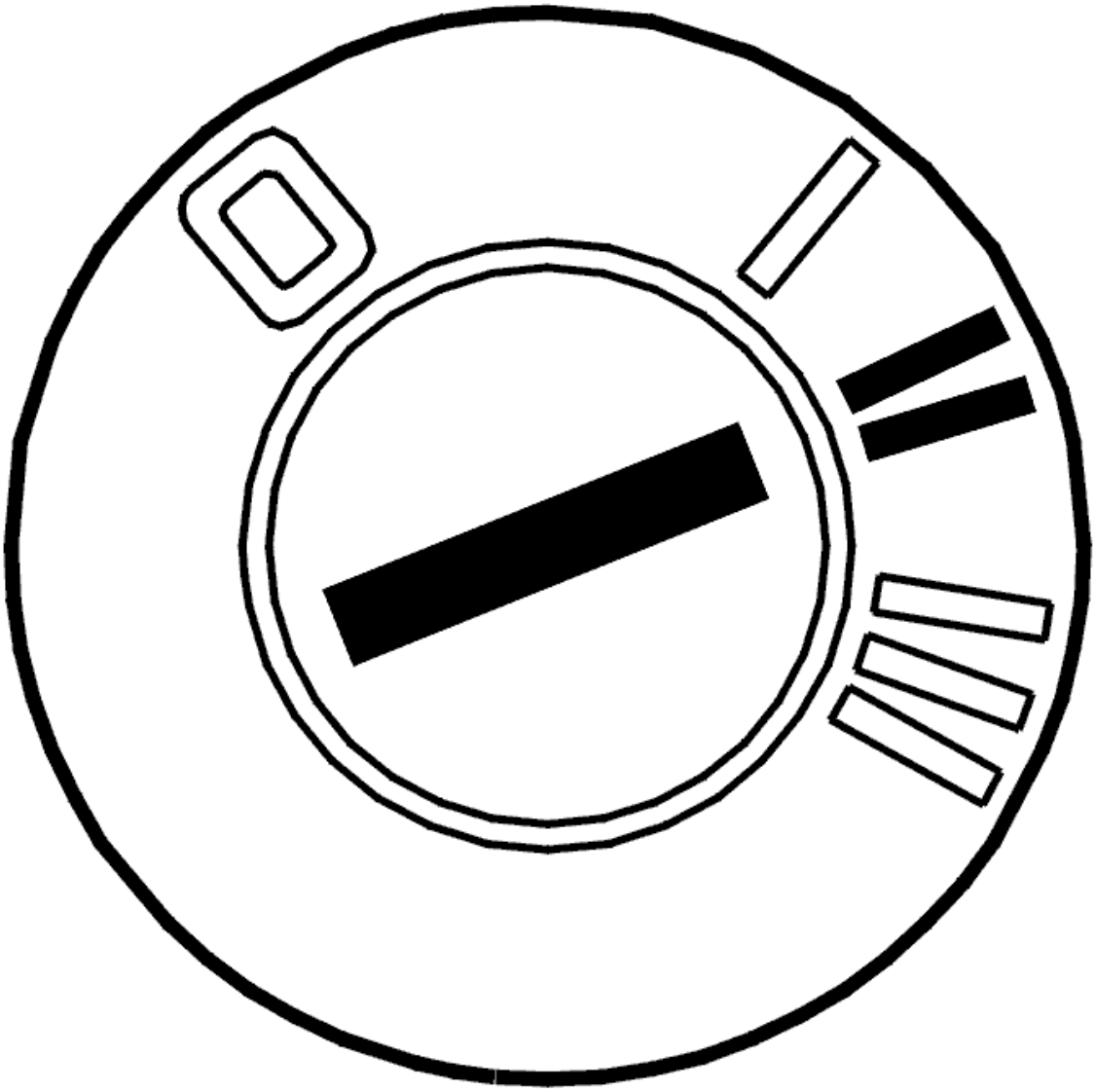

Fig. 175: Identifying Ignition ON
Courtesy of VOLVO CARS CORPORATION

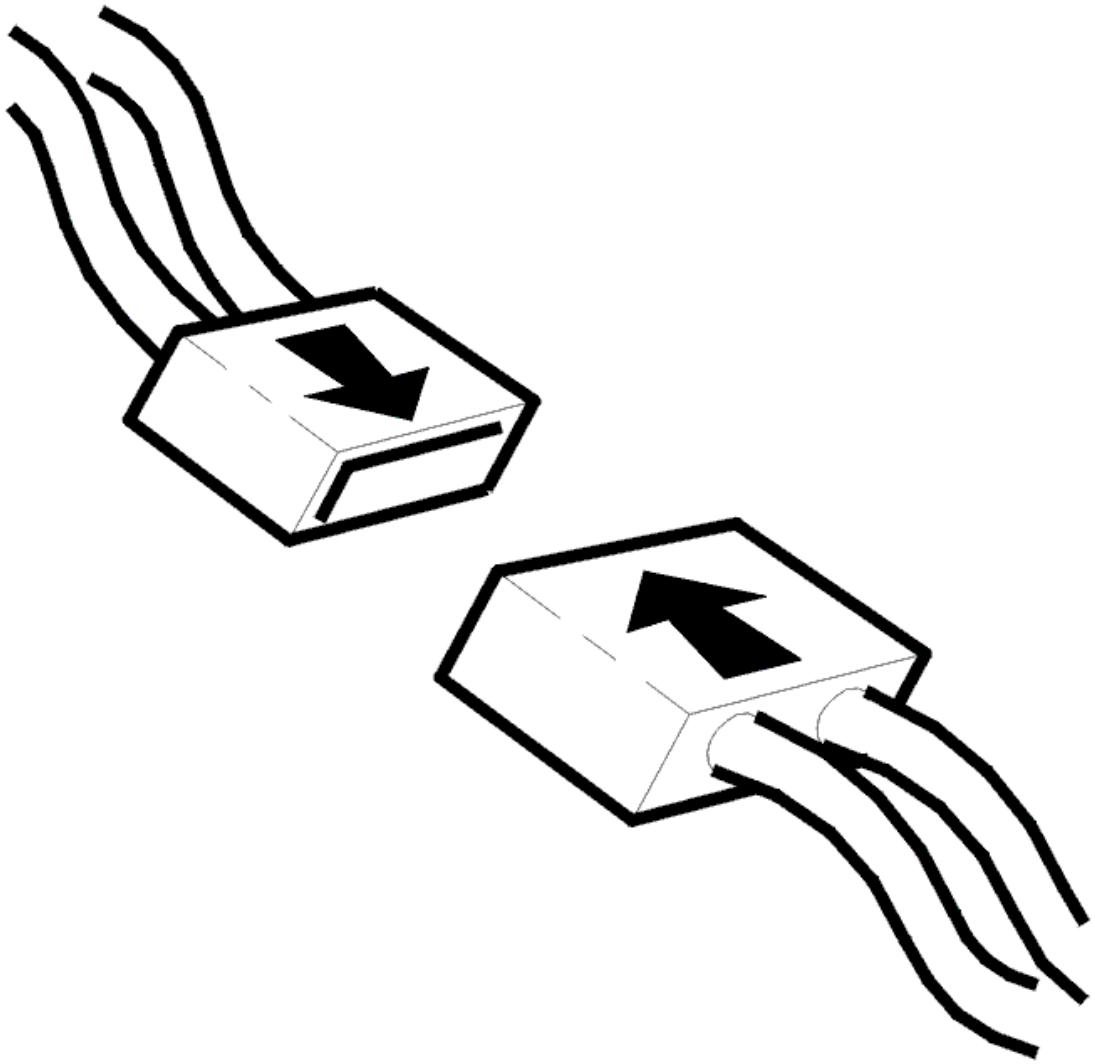

Fig. 176: Connecting Connector
Courtesy of VOLVO CARS CORPORATION

- Ignition off
- Reinstall the connectors, components etc.
- Ignition on

  Switch on the pump motor and check that it starts and runs normally.

  HINT: The motor should hum and vibrate slightly. Listen with a screwdriver or stethoscope against the ear.

  Other information:

  - see **TEST DRIVING ACTIVE ON DEMAND COUPLING, AUTOMATIC TRANSMISSION**

- see **TEST DRIVING ACTIVE ON DEMAND COUPLING, MANUAL TRANSMISSION**

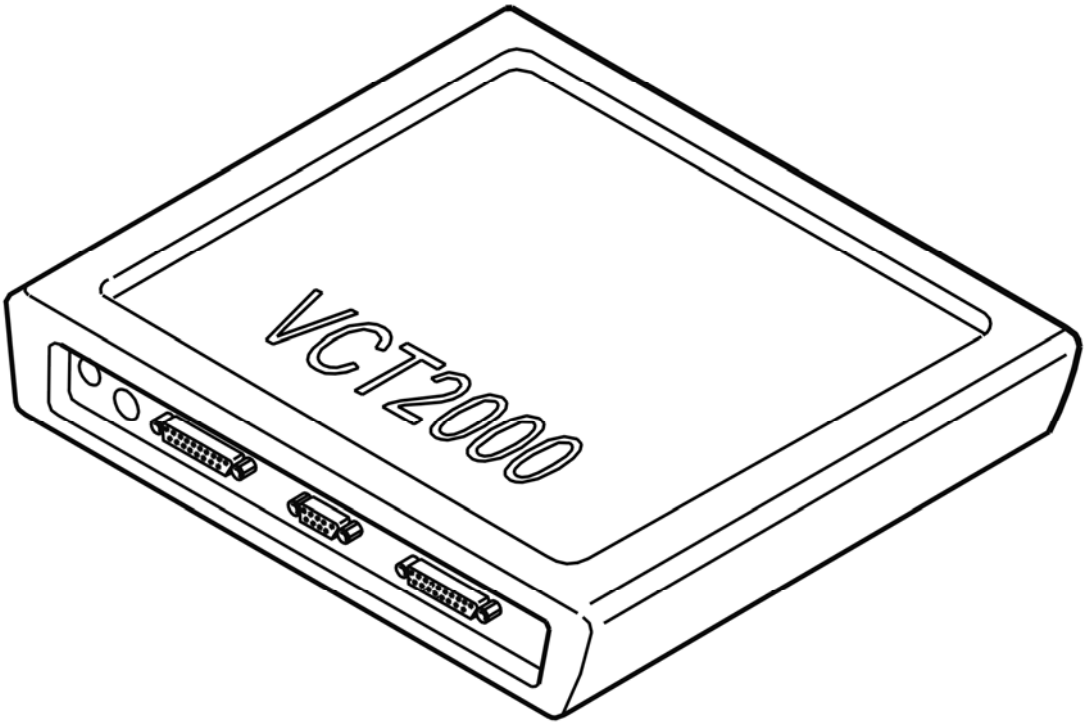

Fig. 177: Identifying VCT2000 Diagnostic Tool Symbol In VIDA
Courtesy of VOLVO CARS CORPORATION

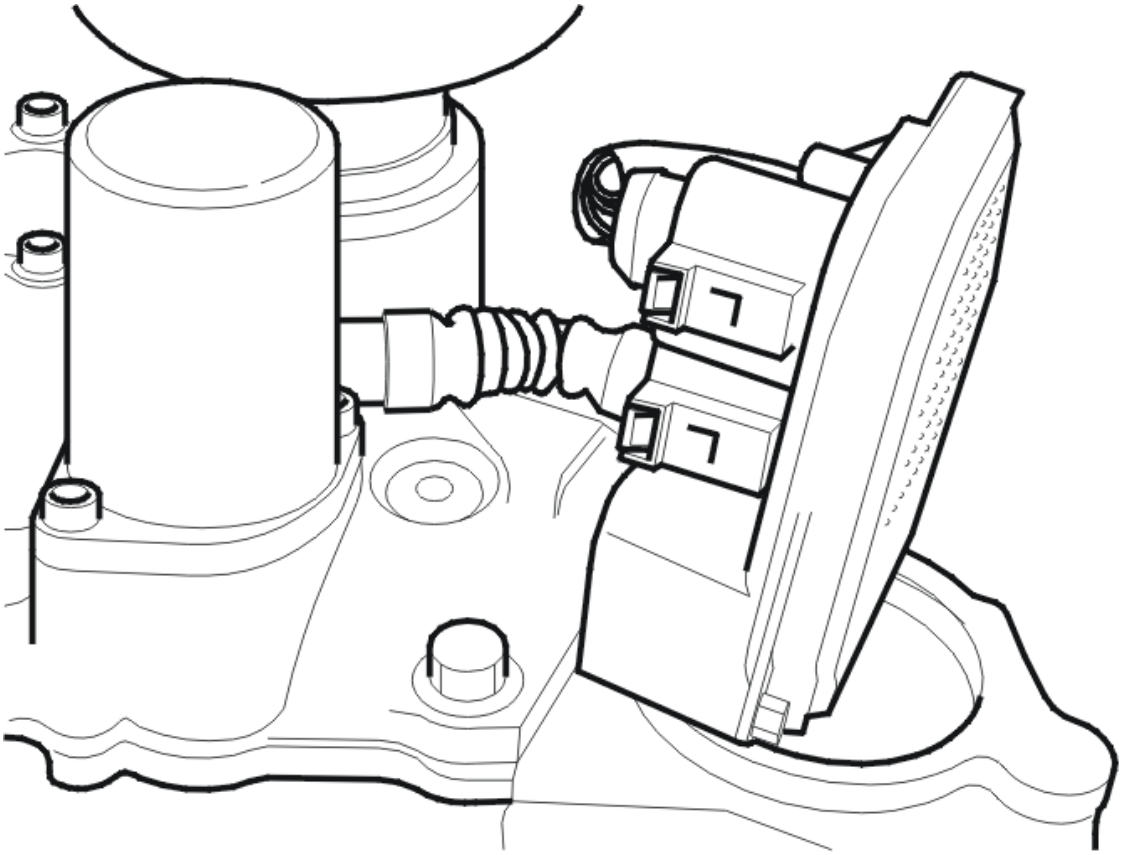

Fig. 178: Identifying Active On Demand Coupling Components
Courtesy of VOLVO CARS CORPORATION

Is the feed pump working?

- **YES**

  VERIFIED: Troubleshooting has been completed.

- **NO**

  Refer to **INFORMATION**

DEM-P188974: OIL PRESSURE PUMP PERFORMANCE. MECHANICAL FAILURES. ACTUATOR SLIPPING (B8444S, TF-80SC AWD; 2006-2007)

DIAGNOSTIC TROUBLE CODE (DTC) INFORMATION DEM-P188974

see **DIAGNOSTIC TROUBLE CODE (DTC) INFORMATION DEM-P188974**

FAULT-TRACING

see **FAULT-TRACING DEM-P188974**

DEM-P188974: OIL PRESSURE PUMP PERFORMANCE. MECHANICAL FAILURES. ACTUATOR SLIPPING (TF-80SC AWD; 2005)

DIAGNOSTIC TROUBLE CODE (DTC) INFORMATION DEM-P188974

see **DIAGNOSTIC TROUBLE CODE (DTC) INFORMATION DEM-P188974**

FAULT-TRACING

see **FAULT-TRACING DEM-P188974**

DEM-P18897A: OIL PRESSURE PUMP PERFORMANCE. MECHANICAL FAILURES. FLUID LEAK OR SEAL FAILURE (B6324S, TF-80SC AWD; 2009-2010)

DIAGNOSTIC TROUBLE CODE (DTC) INFORMATION DEM-P18897A

Condition

The Differential electronic module (DEM) checks the performance of the oil pressure pump. The control module compares the current strength from the oil pressure pump to the predefined parameters.

The diagnostic trouble code (DTC) is stored if the control module detects that:

- The oil pressure pump runs for longer than 20 seconds.

The control module's test for the diagnostic trouble code (DTC) starts in the event of:

- Engine running.
- 1 second after the accumulator has been topped up. The test is performed during a four second period but is cancelled if the accumulator requires topping up.
- The oil temperature is between 0 - 80 °C.

NOTE: **The control module can only detect the fault once the test has been started and the diagnostic trouble code (DTC) is stored when the conditions are met.**

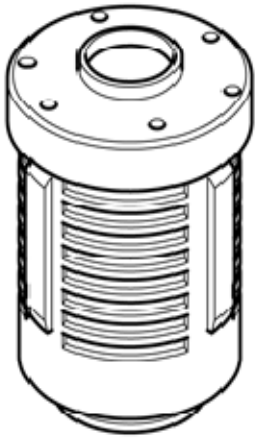

Fig. 179: Oil Filter
Courtesy of VOLVO CARS CORPORATION

Substitute Value

- None.

Possible Source

- The oil filter check valve has jammed in the open position.

Fault symptom[s]

- 4-wheel/all wheel drive/Does not work

FAULT-TRACING

FAULT-TRACING INFORMATION

This malfunction is caused by a damaged non-return valve in the oil filter or by a clogged oil filter. Solved by changing oil filter as well as oil in AOC (active on demand coupling).

Other information

- see **OIL FILTER CLUTCH FOUR WHEEL DRIVE**

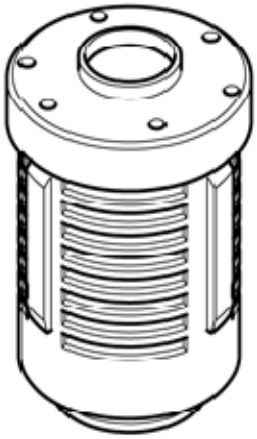

Fig. 180: Oil Filter
Courtesy of VOLVO CARS CORPORATION

DEM-P18897A: OIL PRESSURE PUMP PERFORMANCE. MECHANICAL FAILURES. FLUID LEAK OR SEAL FAILURE (B6324S5, TF-80SC AWD; 2011-2012)

DIAGNOSTIC TROUBLE CODE (DTC) INFORMATION DEM-P18897A

see **DIAGNOSTIC TROUBLE CODE (DTC) INFORMATION DEM-P18897A**

FAULT-TRACING

see **FAULT-TRACING**

DEM-P18897A: OIL PRESSURE PUMP PERFORMANCE. MECHANICAL FAILURES. FLUID LEAK OR SEAL FAILURE (B8444S, TF-80SC AWD; 2009-2011)

DIAGNOSTIC TROUBLE CODE (DTC) INFORMATION DEM-P18897A

see **DIAGNOSTIC TROUBLE CODE (DTC) INFORMATION DEM-P18897A**

FAULT-TRACING

see **FAULT-TRACING**

DEM-P188A68 DIFFERENTIAL OIL TEMPERATURE TOO HIGH/TOO LOW. ALGORITHM BASED FAILURES. EVENT INFORMATION (B6324S, TF-80SC AWD; 2009-2010)

DIAGNOSTIC TROUBLE CODE (DTC) INFORMATION DEM-P188A68

Condition

NOTE: **This diagnostic trouble code (DTC) status is an event controlled diagnostic trouble code (DTC). An event controlled diagnostic trouble code (DTC) does not mean that there is a fault in the control module when it is active, but is designed as information.**

The Differential Electronic Module (DEM) has a temperature sensor fitted on the control module's circuit board. The sensor provides the Differential Electronic Module (DEM) with information about the temperature in the control module. If the temperature exceeds a preset value all wheel drive is disabled. This is to protect the components from a too high load, which can result in internal mechanical faults.

The diagnostic trouble code (DTC) is stored if the control module detects that:

- The temperature is higher than 110 °C.
- Incorrect value lasts longer than 3 seconds.

The control module's test for the diagnostic trouble code (DTC) starts in the event of:

- Ignition switch position II.

NOTE: **The control module can only detect the fault once the test has been started and the diagnostic trouble code (DTC) is stored when the conditions are met.**

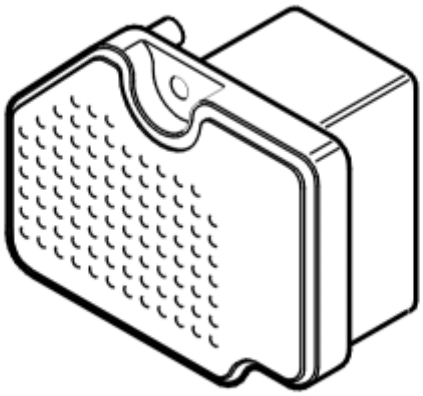

Fig. 181: Control Module
Courtesy of VOLVO CARS CORPORATION

Substitute Value

- Four-wheel drive is disengaged during the time the fault exists, and is disengaged a further 30 seconds

after the fault has disappeared.

Possible Source

- Temperature too high.

Fault symptom[s]

- 4-wheel/all wheel drive/Does not work

FAULT-TRACING INFORMATION

see **FAULT-TRACING INFORMATION**

DEM-P188A68 DIFFERENTIAL OIL TEMPERATURE TOO HIGH/TOO LOW. ALGORITHM BASED FAILURES. EVENT INFORMATION (B6324S, TF-80SC AWD; B8444S, TF-80SC AWD; 2008)

DIAGNOSTIC TROUBLE CODE (DTC) INFORMATION DEM-P188A68

Condition

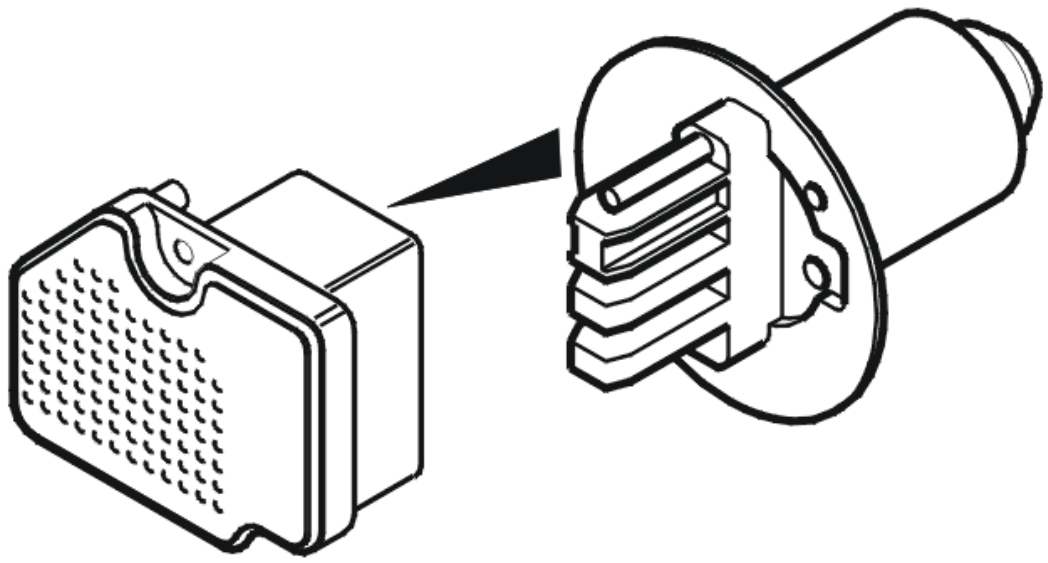

Fig. 182: Control Module And Oil Temperature Sensor

Courtesy of VOLVO CARS CORPORATION

Differential electronic module (DEM) checks the signal from the oil temperature sensor.

If the signal lies outside the working range the trouble code is set

The diagnostic trouble code can be diagnosed when the ignition is on.

Substitute Value

- Four wheel drive is disengaged.

Possible Source

- Damaged temperature sensor.
- Damaged control module.

Fault symptom[s]

- Four wheel drive is not functioning.

FAULT-TRACING

CHECKING THE CONNECTORS AND LEADS

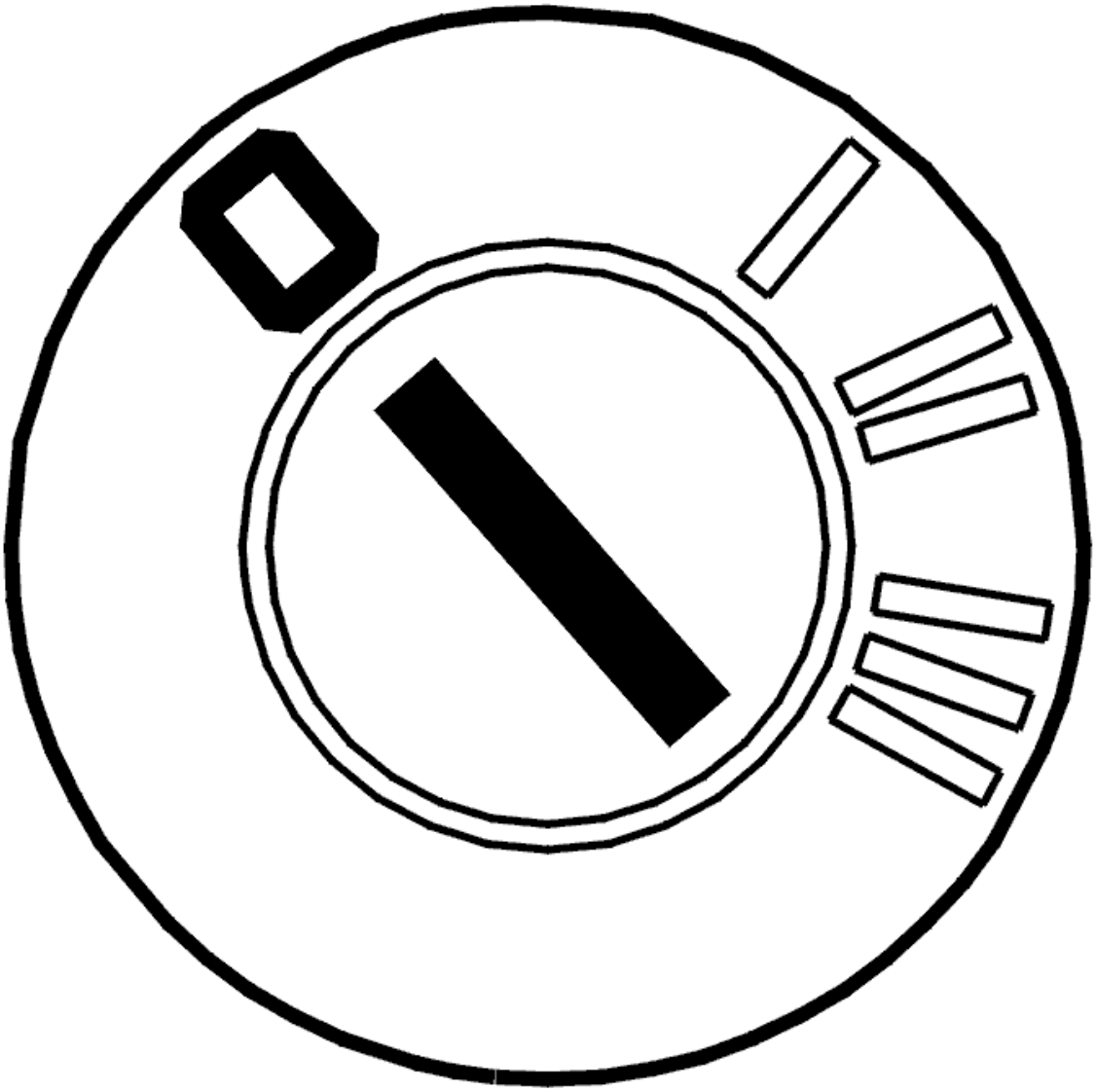

Fig. 183: Identifying Ignition OFF
Courtesy of VOLVO CARS CORPORATION

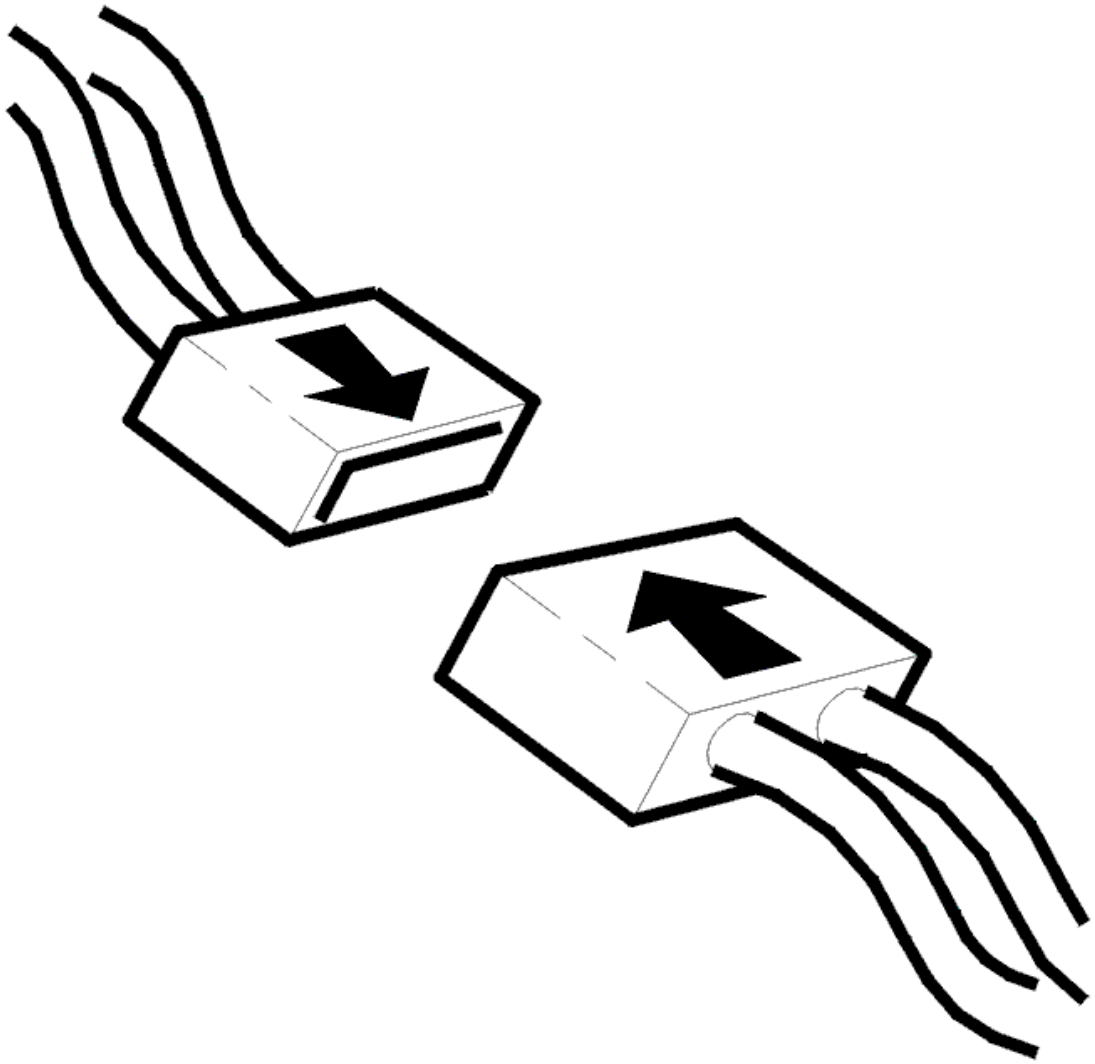

Fig. 184: Connecting Connector
Courtesy of VOLVO CARS CORPORATION

- Ignition off
- Check the connector between the Differential Electronic Module (DEM) and the temperature sensor with respect to contact resistance and oxidation.
- Check connector A with respect to depressed or damaged pins, contact resistance and oxidation.

  HINT: Read the temperature sensor signal to check the function.

  Remedy as necessary.

  Other information:

  - see **SIGNAL SPECIFICATION**

- see **TEMPERATURE / PRESSURE SENSOR ACTIVE ON DEMAND COUPLING (AOC), REPLACING**
- see **DIFFERENTIAL ELECTRONIC MODULE (DEM), REPLACING**
- see **CONTENTS**

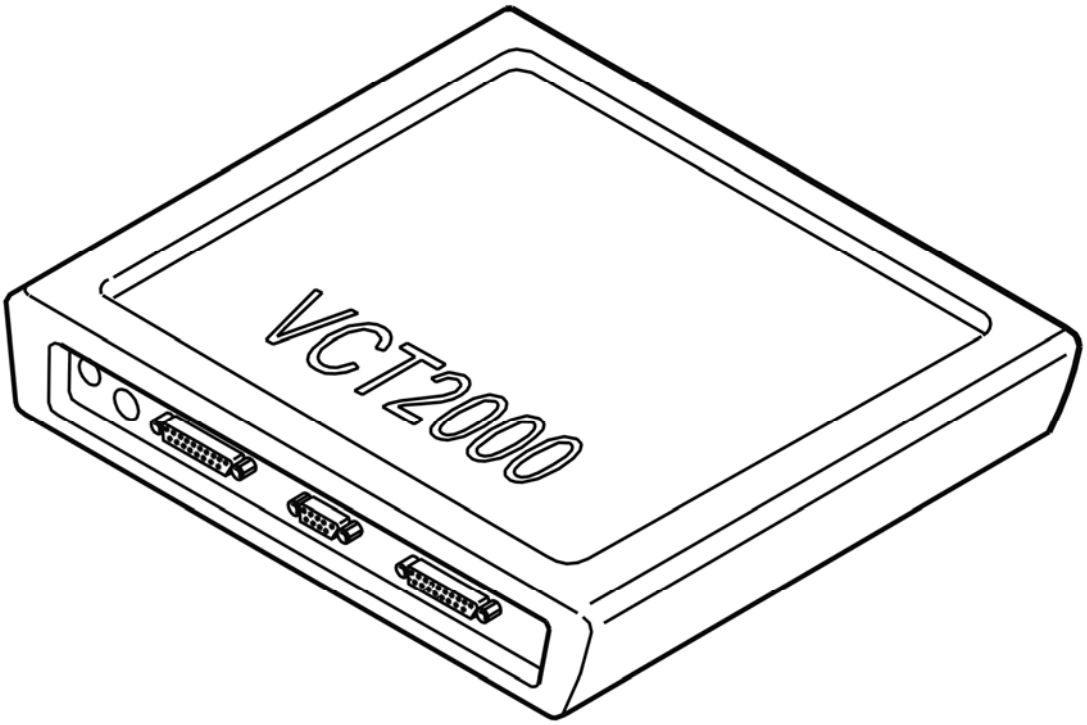

Fig. 185: Identifying VCT2000 Diagnostic Tool Symbol In VIDA
Courtesy of VOLVO CARS CORPORATION

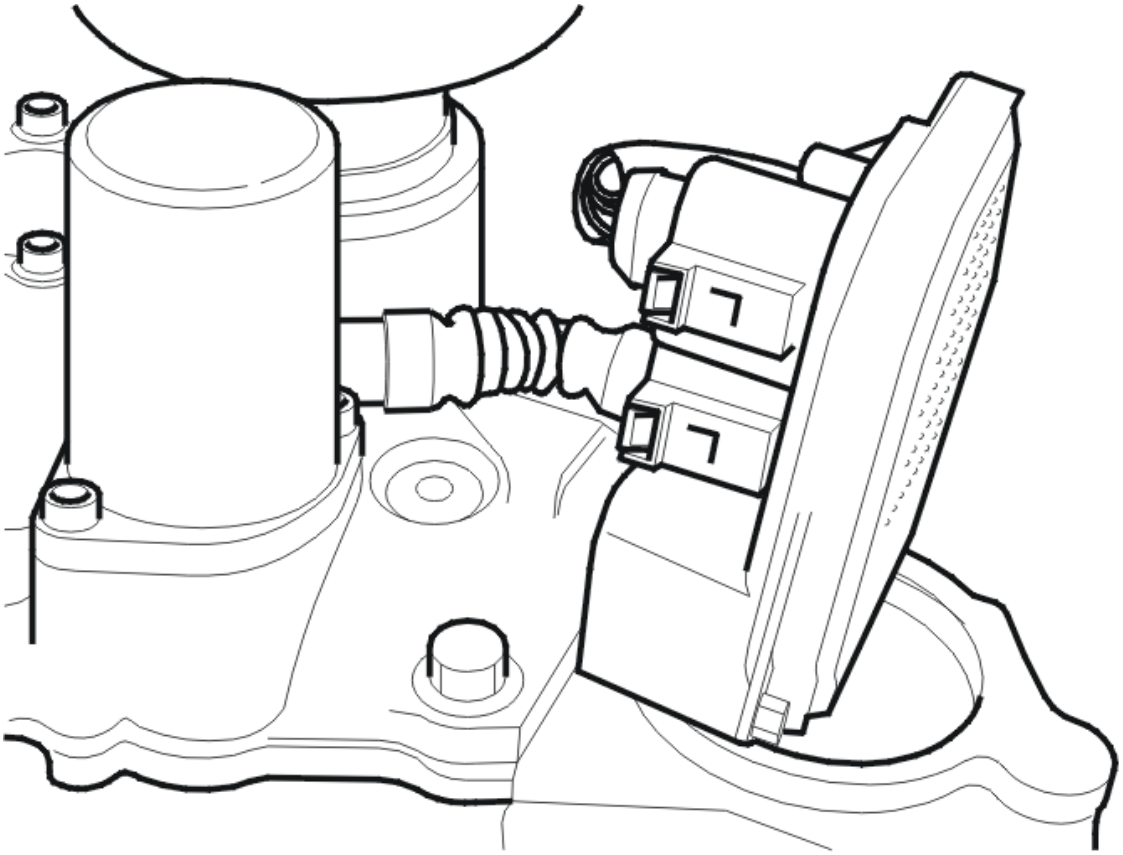

Fig. 186: Identifying Active On Demand Coupling Components
Courtesy of VOLVO CARS CORPORATION

- **Continue**

  Refer to **VERIFICATION**

VERIFICATION

HINT: After carrying out the repair, check that the fault has been remedied.

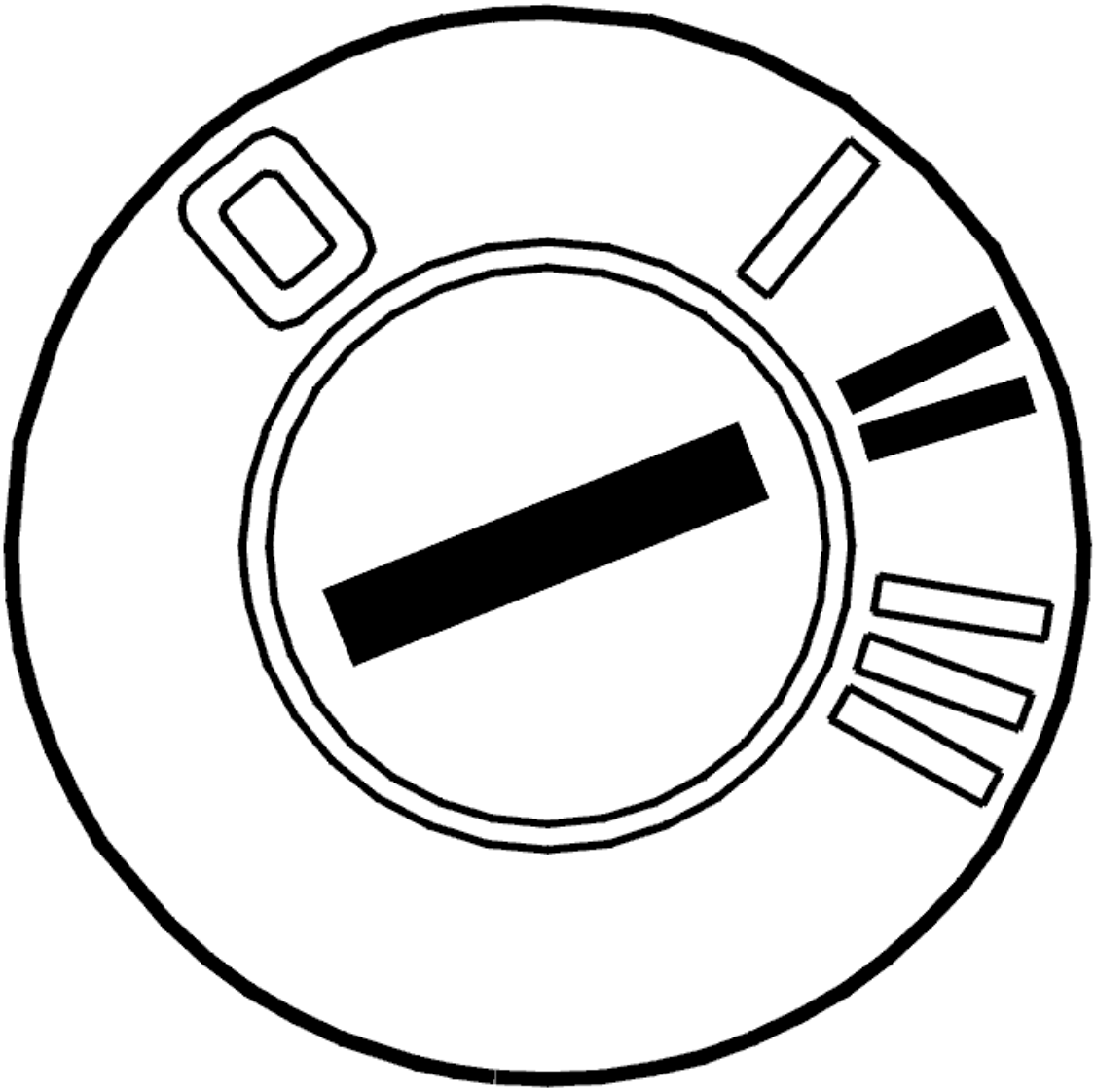

Fig. 187: Identifying Ignition ON
Courtesy of VOLVO CARS CORPORATION

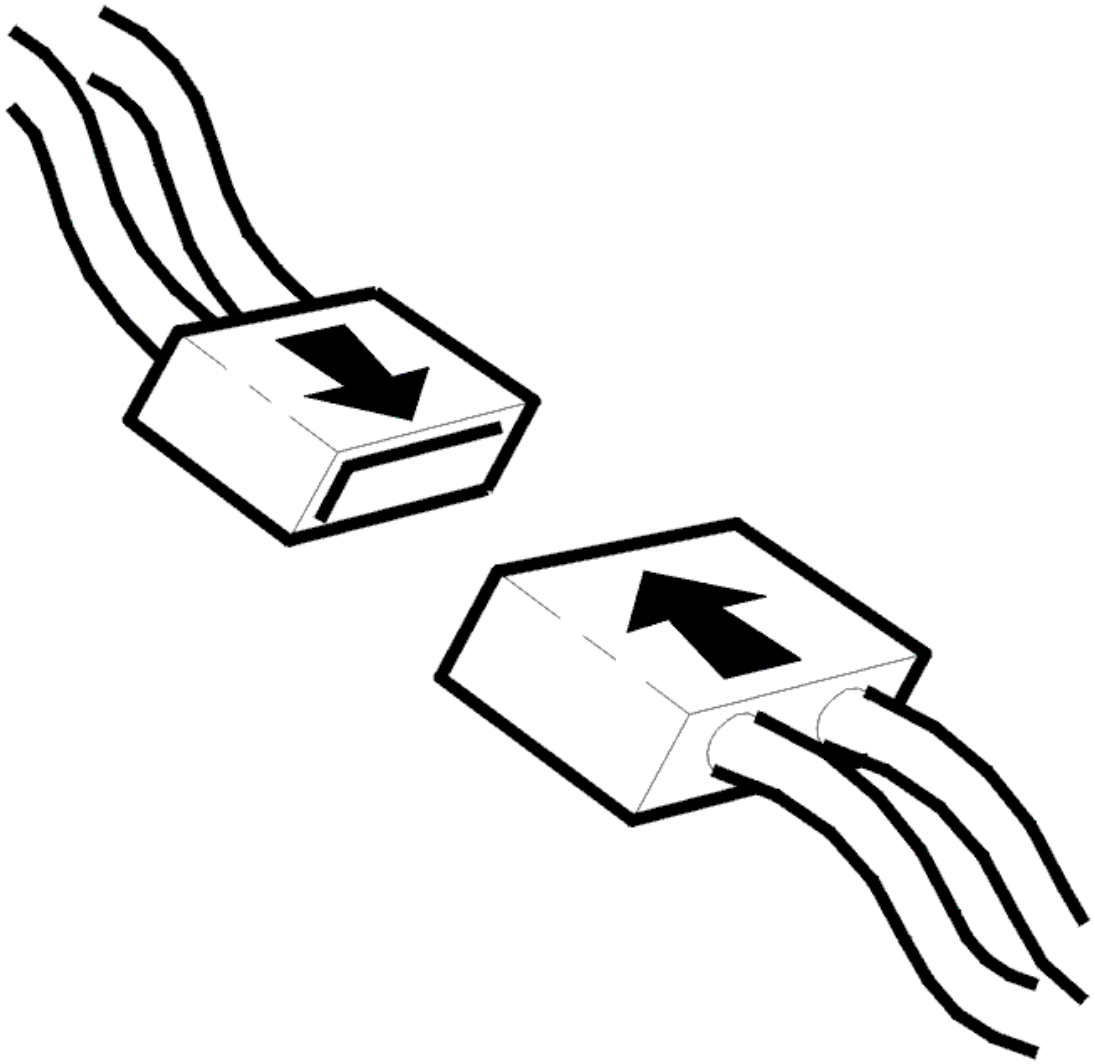

Fig. 188: Connecting Connector
Courtesy of VOLVO CARS CORPORATION

- Ignition off
- Reinstall the connectors, components etc.
- Ignition on

  Read the temperature.

  Check that the value is appropriate by comparing it with the ambient temperature.

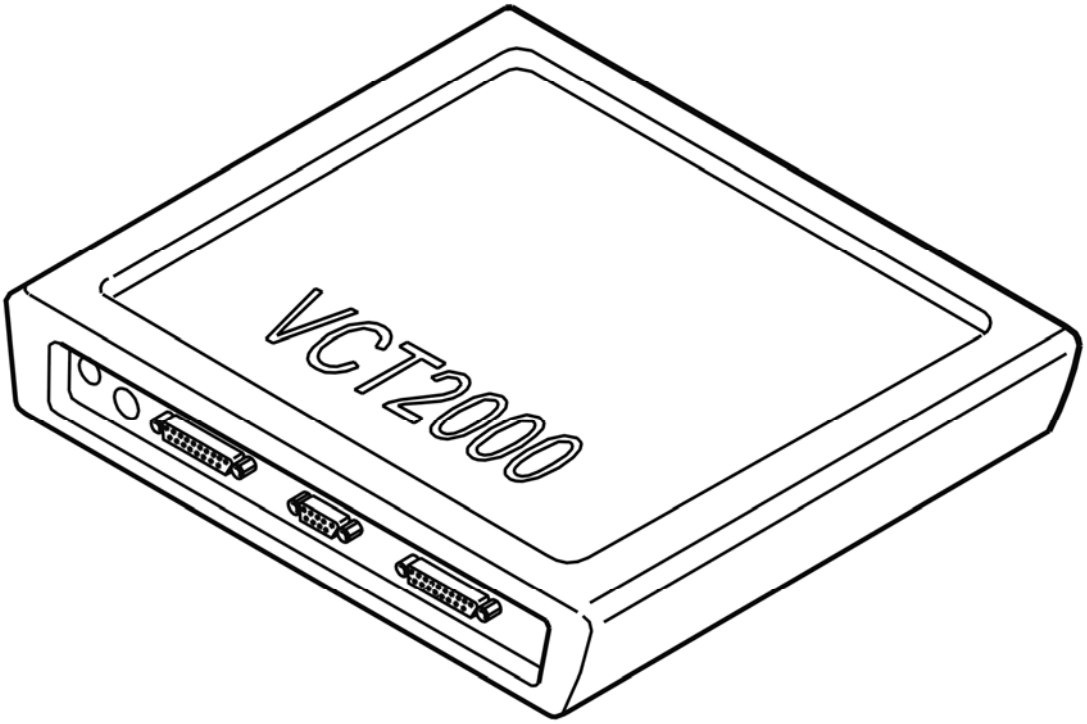

Fig. 189: Identifying VCT2000 Diagnostic Tool Symbol In VIDA
Courtesy of VOLVO CARS CORPORATION

Is the temperature OK?

- **YES**

  VERIFIED: Troubleshooting has been completed.

- **NO**

  Refer to **INFORMATION**

INFORMATION

FAULT-TRACING INFORMATION

The fault should have been detected and remedied. As this is not the case fault-tracing has failed.

Exit fault-tracing for this diagnostic trouble code (DTC) or make another attempt.

DEM-P188A68 DIFFERENTIAL OIL TEMPERATURE TOO HIGH/TOO LOW. ALGORITHM BASED FAILURES. EVENT INFORMATION (B6324S, TF-80SC

AWD; 2007)

DIAGNOSTIC TROUBLE CODE (DTC) INFORMATION DEM-P188A68

see **DIAGNOSTIC TROUBLE CODE (DTC) INFORMATION DEM-P188A68**

FAULT-TRACING

CHECKING THE CONNECTORS AND LEADS

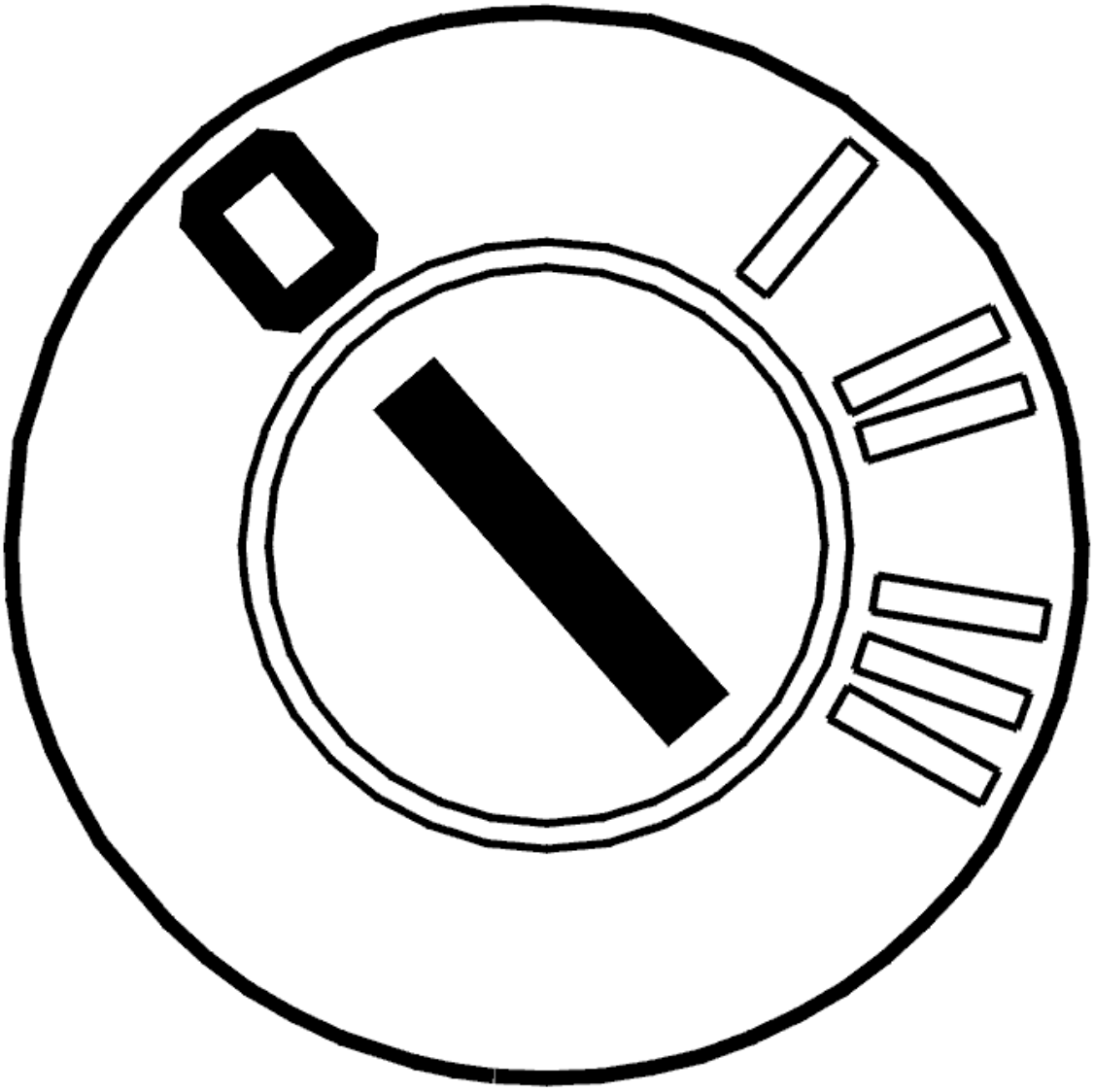

Fig. 190: Identifying Ignition OFF
Courtesy of VOLVO CARS CORPORATION

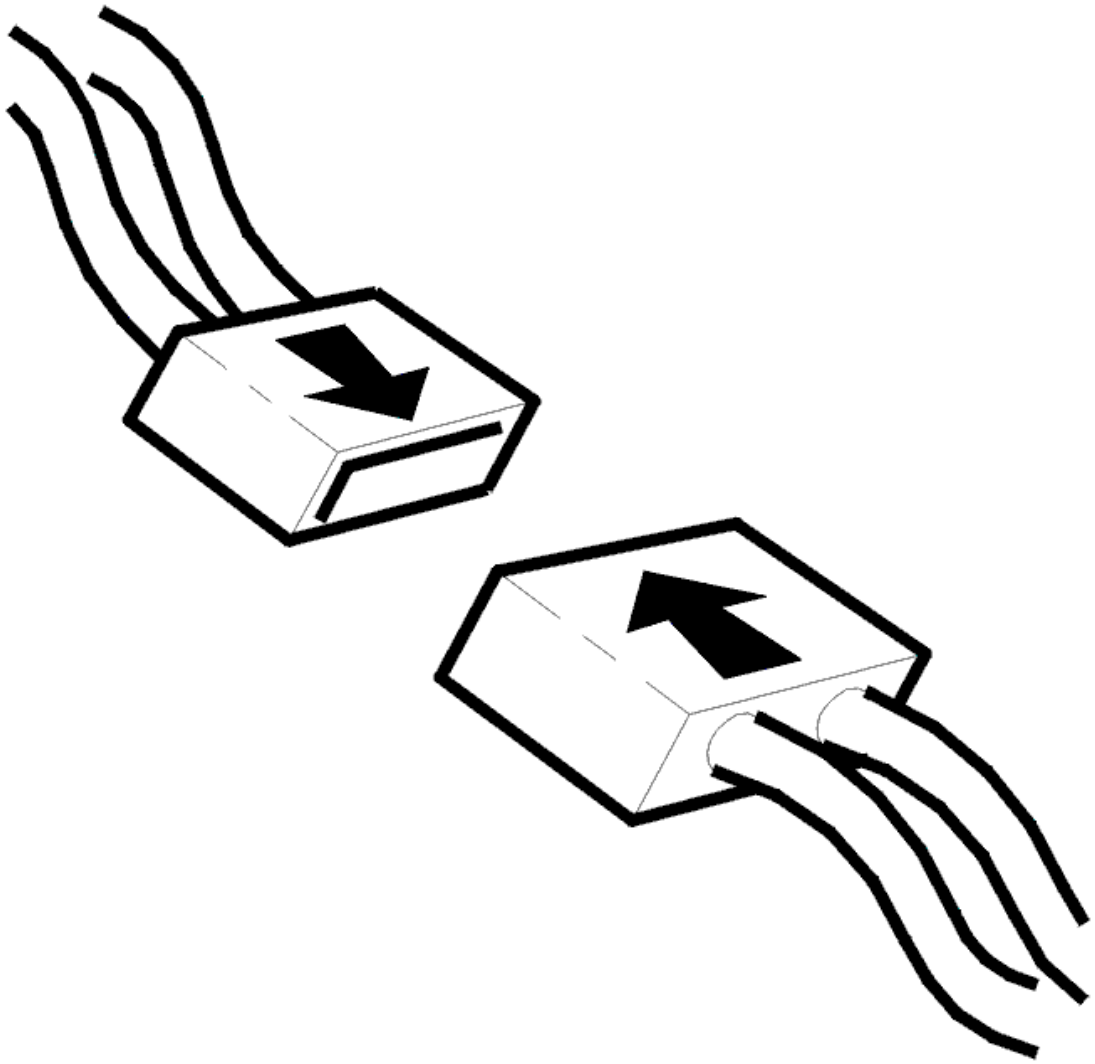

Fig. 191: Connecting Connector
Courtesy of VOLVO CARS CORPORATION

- Ignition off
- Check the connector between the Differential Electronic Module (DEM) and the temperature sensor with respect to contact resistance and oxidation.
- Check connector A with respect to depressed or damaged pins, contact resistance and oxidation.

  HINT: Read the temperature sensor signal to check the function.

  Remedy as necessary.

  Other information:

  - see **SIGNAL SPECIFICATION**

- see **TEMPERATURE / PRESSURE SENSOR ACTIVE ON DEMAND COUPLING (AOC), REPLACING**
- see **DIFFERENTIAL ELECTRONIC MODULE (DEM), REPLACING**
- see **CONTENTS**

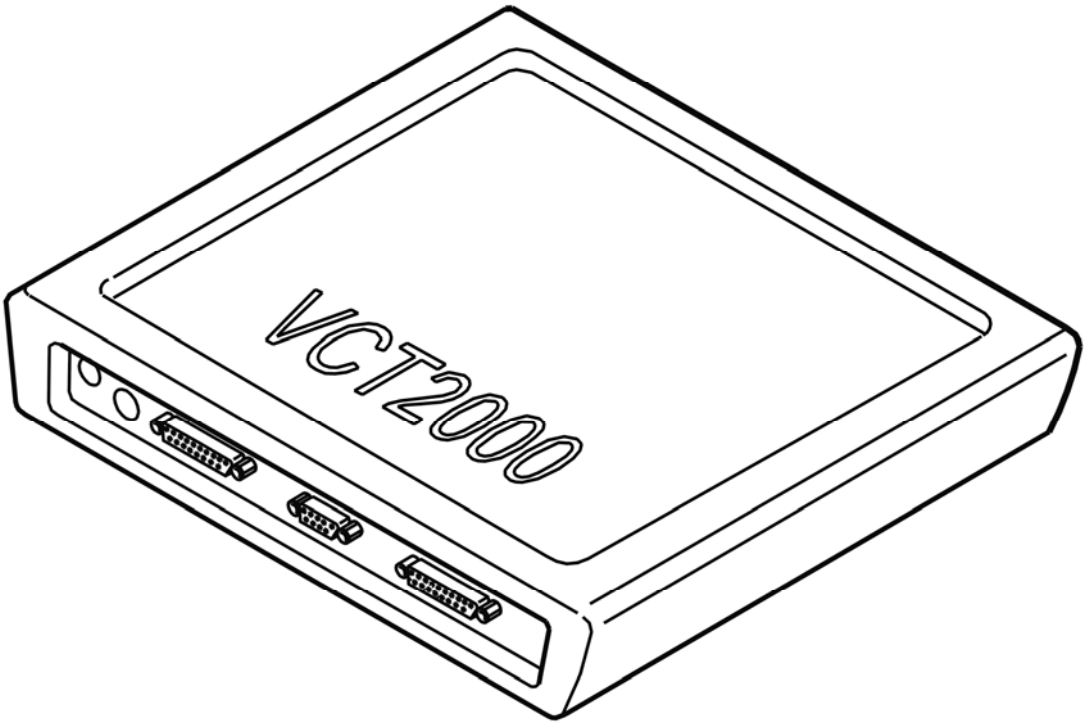

Fig. 192: Identifying VCT2000 Diagnostic Tool Symbol In VIDA
Courtesy of VOLVO CARS CORPORATION

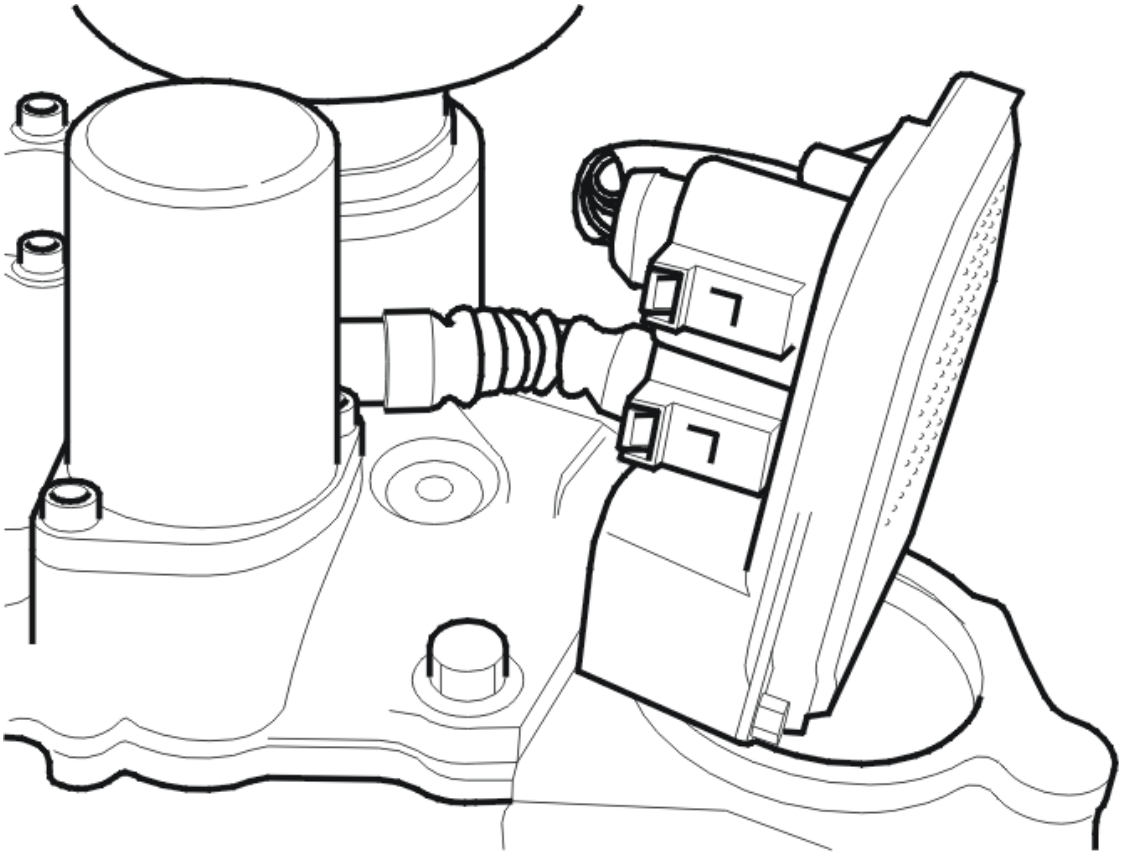

Fig. 193: Identifying Active On Demand Coupling Components
Courtesy of VOLVO CARS CORPORATION

- **Continue**

  Refer to **VERIFICATION**

VERIFICATION

HINT: After carrying out the repair, check that the fault has been remedied.

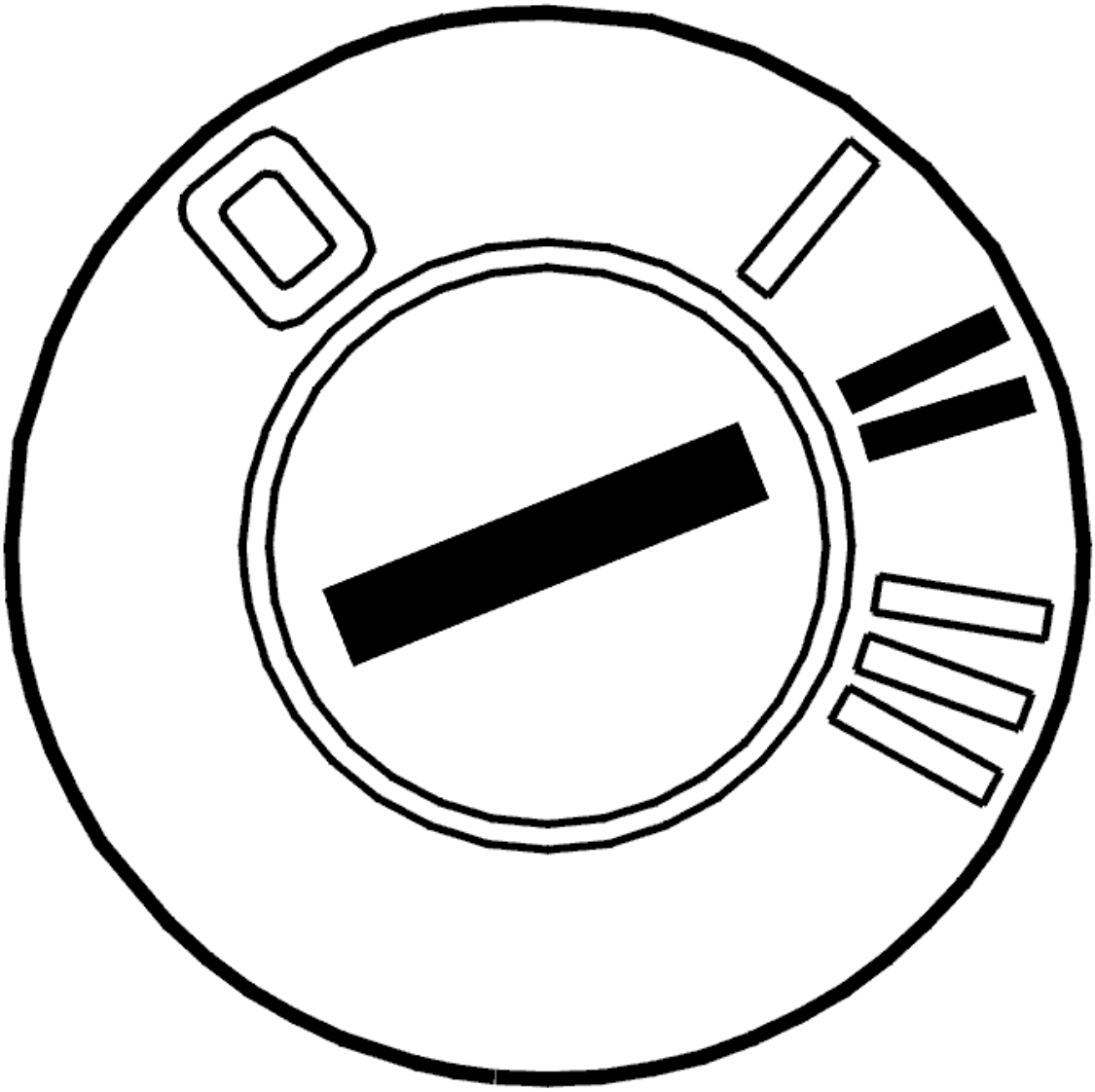

Fig. 194: Identifying Ignition ON
Courtesy of VOLVO CARS CORPORATION

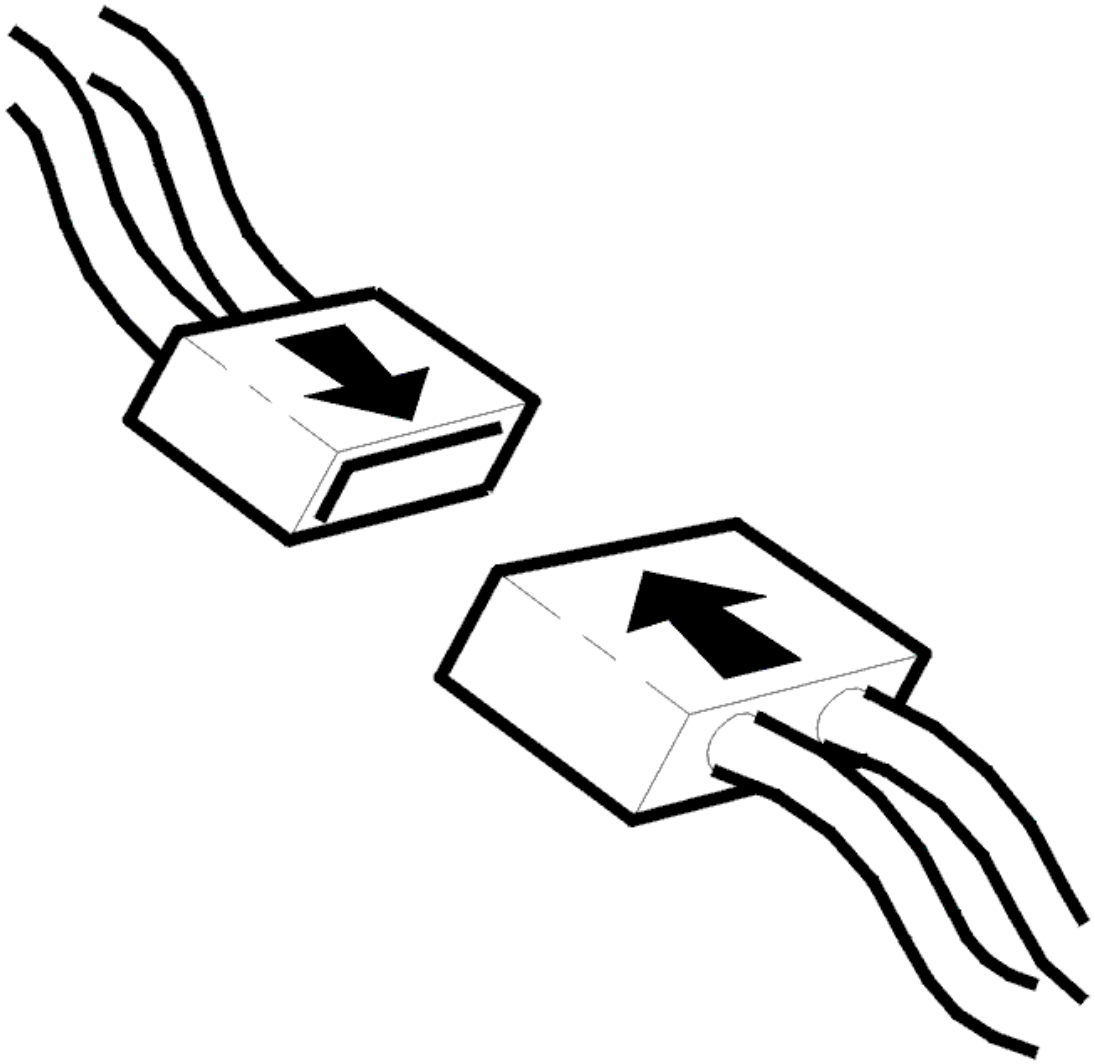

Fig. 195: Connecting Connector
Courtesy of VOLVO CARS CORPORATION

- Ignition off
- Reinstall the connectors, components etc.
- Ignition on

  Read the temperature.

  Check that the value is appropriate by comparing it with the ambient temperature.

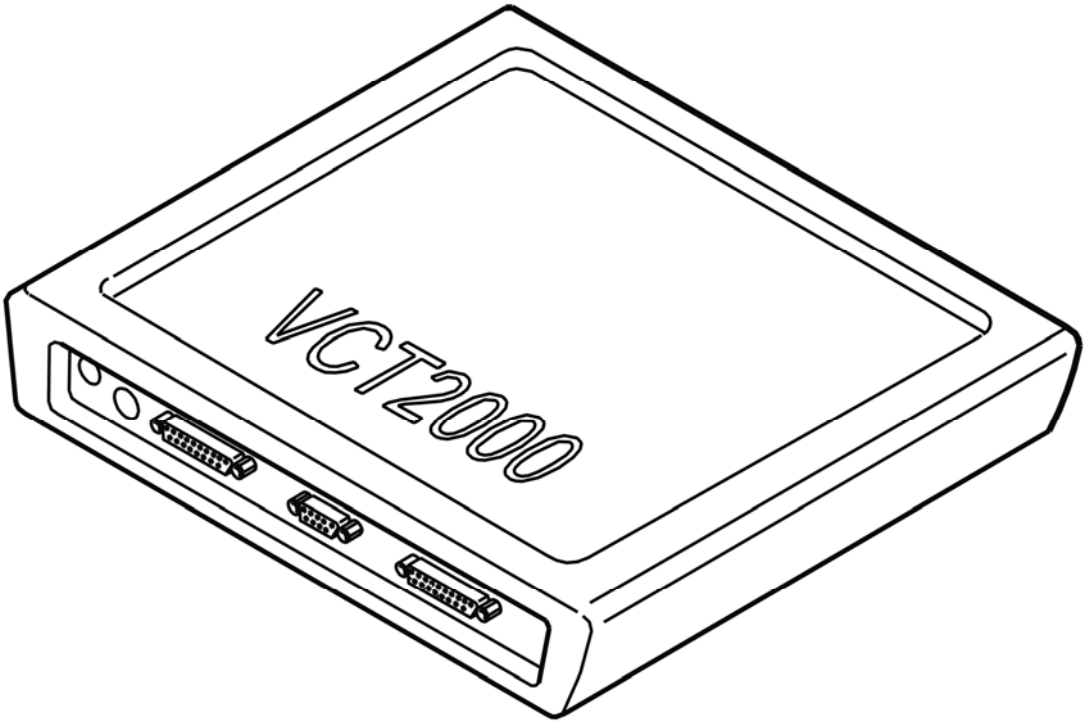

Fig. 196: Identifying VCT2000 Diagnostic Tool Symbol In VIDA
Courtesy of VOLVO CARS CORPORATION

Is the temperature OK?

- **YES**

  VERIFIED: Troubleshooting has been completed.

- **NO**

  Refer to **INFORMATION**

INFORMATION

FAULT-TRACING INFORMATION

The fault should have been detected and remedied. As this is not the case fault-tracing has failed.

Exit fault-tracing for this diagnostic trouble code (DTC) or make another attempt.

CHECKING PRESSURE AND TEMPERATURE SENSOR

NOTE: Reading out of oil pressure can take place first after the diagnostic trouble code

(DTC) has been deleted. Therefore frozen values should be printed and saved before deleting takes place.

1. Test of pressure sensor.
   - Ignition on.
   - Using Volvo Scan Tool hit the VCT2000 symbol.

     HINT: Correct pressure shall be 0.00 +/- 0.08 MPa.

   - Engine idling
   - Using Volvo Scan Tool hit the VCT2000 symbol.

     HINT: Correct pressure shall be 0.38 +/- 0.08 MPa.

2. Test of temperature sensor.
   - Ignition on.
   - Using Volvo Scan Tool hit the VCT2000 symbol.

     HINT: Normal value for ambient temperature when the vehicle is cold and (+20 to +50 °C) when the vehicle is driven.

If wrong value is read out, then diagnostic trouble code shall be erased and the sensor changed. After changing sensor, repeat the test procedure again.

NOTE: **There are two types of sensors, an 80 bar and a 40 bar. Differential electronic module (DEM) has hardware number 30759701, 30785483, 30759682, 30783198, 30735844, or 30783018, an 80 bar pressure sensor shall be installed. If Differential electronic module (DEM) has another hardware number than above, a 40 bar sensor shall be installed.**

HINT: For reading out of hardware number, see VIDA/DIAGNOSTICS/NETWORK/DEM.

Other information

- see **TEMPERATURE / PRESSURE SENSOR ACTIVE ON DEMAND COUPLING (AOC), REPLACING**

Fig. 197: Identifying VCT2000 Diagnostic Tool Symbol In VIDA
Courtesy of VOLVO CARS CORPORATION

DEM-P188A68 DIFFERENTIAL OIL TEMPERATURE TOO HIGH/TOO LOW. ALGORITHM BASED FAILURES. EVENT INFORMATION (B6324S5, TF-80SC AWD; 2011-2012)

DIAGNOSTIC TROUBLE CODE (DTC) INFORMATION DEM-P188A68

see **DIAGNOSTIC TROUBLE CODE (DTC) INFORMATION DEM-P188A68**

FAULT-TRACING INFORMATION

see **FAULT-TRACING INFORMATION**

DEM-P188A68 DIFFERENTIAL OIL TEMPERATURE TOO HIGH/TOO LOW. ALGORITHM BASED FAILURES. EVENT INFORMATION (B8444S, TF-80SC AWD; 2009-2011)

DIAGNOSTIC TROUBLE CODE (DTC) INFORMATION DEM-P188A68

see **DIAGNOSTIC TROUBLE CODE (DTC) INFORMATION DEM-P188A68**

FAULT-TRACING INFORMATION

see **FAULT-TRACING INFORMATION**

DEM-P188A68 DIFFERENTIAL OIL TEMPERATURE TOO HIGH/TOO LOW. ALGORITHM BASED FAILURES. EVENT INFORMATION (B8444S, TF-80SC AWD; 2006-2007)

DIAGNOSTIC TROUBLE CODE (DTC) INFORMATION DEM-P188A68

see **DIAGNOSTIC TROUBLE CODE (DTC) INFORMATION DEM-P188A68**

FAULT-TRACING DEM-P188A68

see **FAULT-TRACING DEM-P188A68**

DEM-P188A68 DIFFERENTIAL OIL TEMPERATURE TOO HIGH/TOO LOW. ALGORITHM BASED FAILURES. EVENT INFORMATION (TF-80SC AWD; 2005)

DIAGNOSTIC TROUBLE CODE (DTC) INFORMATION DEM-P188A68

see **DIAGNOSTIC TROUBLE CODE (DTC) INFORMATION DEM-P188A68**

FAULT-TRACING

see **FAULT-TRACING DEM-P188A68**

DEM-U000100: HIGH SPEED CAN COMMUNICATION BUS. GENERAL FAILURE INFORMATION. NO SUB TYPE INFORMATION (B6324S, TF-80SC AWD; 2009-2010)

DIAGNOSTIC TROUBLE CODE (DTC) INFORMATION DEM-U000100

Condition

The control modules transmit and receive information via a standardized serial communication method - CAN (Control Area Network).

The diagnostic trouble code (DTC) is stored if the control module detects that:

- Communication on the CAN network is interrupted by another control module on the CAN network or by the control module's own message causing interference on the CAN network.

The control module's test for the diagnostic trouble code (DTC) starts in the event of:

- Starting the control module's CAN communication.

NOTE: **The control module can only detect the fault once the test has been started and the diagnostic trouble code (DTC) is stored when the conditions are met. In the event of system communication problems, it is not possible to communicate with the control module. Therefore it will only be possible to read off the fault if it is intermittent.**

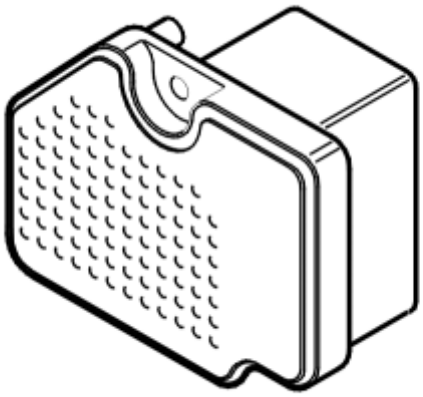

Fig. 198: Control Module
Courtesy of VOLVO CARS CORPORATION

Substitute Value

- Control module shuts itself off ("bus-off").

HINT: The control module is off until the power supply has been broken. When the power supply is connected the control module will make a new attempt to communicate.

Possible Source

- Short-circuit between the control area network (CAN) wiring.
- Open-circuit in the control area network (CAN) wiring.
- Internal fault in another control module in the same part of the control area network (CAN).
- Internal fault in the control module.

Fault symptom[s]

- 4-wheel/all wheel drive/Does not work

DEM-U000100: HIGH SPEED CAN COMMUNICATION BUS. GENERAL FAILURE INFORMATION. NO SUB TYPE INFORMATION (B6324S5, TF-80SC AWD; 2011-2012)

DIAGNOSTIC TROUBLE CODE (DTC) INFORMATION DEM-U000100

see **DIAGNOSTIC TROUBLE CODE (DTC) INFORMATION DEM-U000100**

DEM-U000100: HIGH SPEED CAN COMMUNICATION BUS. GENERAL FAILURE INFORMATION. NO SUB TYPE INFORMATION (B8444S, TF-80SC AWD; 2009-2011)

DIAGNOSTIC TROUBLE CODE (DTC) INFORMATION DEM-U000100

see **DIAGNOSTIC TROUBLE CODE (DTC) INFORMATION DEM-U000100**

DEM-U000100: HS-CAN COMMUNICATION BUS. GENERAL FAULT INFORMATION. NO INFORMATION ABOUT THE TYPE OF FAULT (B6324S, TF-80SC AWD; 2007-2008)

DIAGNOSTIC TROUBLE CODE (DTC) INFORMATION DEM-U000100

Condition

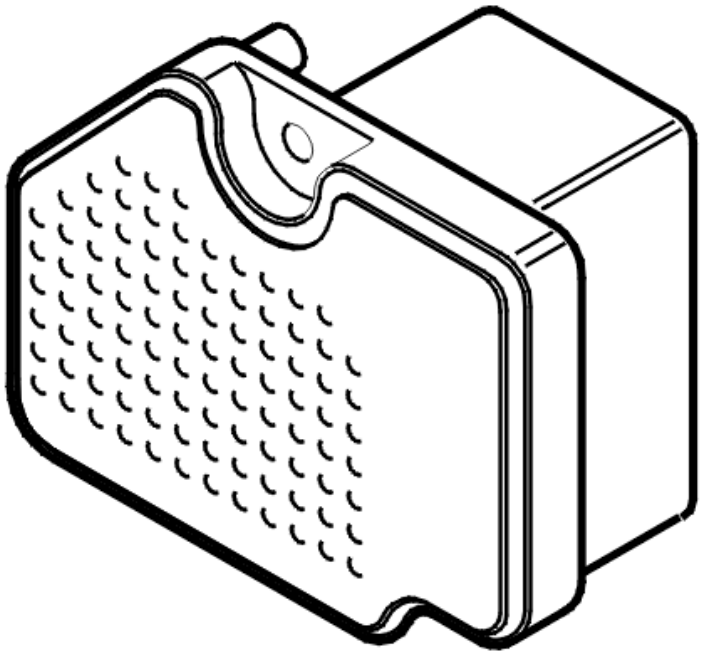

Fig. 199: Active On Demand Coupling Control Module
Courtesy of VOLVO CARS CORPORATION

The control modules transmit and receive information via a standardized serial communication method - CAN (Control Area Network). The diagnostic trouble code (DTC) is stored if the control module registers serious interference (CAN communication blocked).

NOTE: **In the event of system communication problems, it is not possible to communicate with the control module. Therefore it will only be possible to read the trouble code if the fault is intermittent.**

Substitute Value

- The control module switches itself off ("bus-off")

HINT: The control module will remain shut off until the power supply is broken (15, 30, X). When the power supply is connected the control module will make a new attempt to communicate.

Possible Source

- Short-circuit between the control area network (CAN) wiring.
- Open-circuit in the control area network (CAN) wiring.
- Internal fault in the control module

- Internal fault in another control module in the same part of the control area network (CAN).

Fault symptom[s]

- Four wheel drive is not functioning.
- Message in the display.
- The anti-spin warning lamp is illuminated.
- General warning lamp lit

DEM-U000100: HS-CAN COMMUNICATION BUS. GENERAL FAULT INFORMATION. NO INFORMATION ABOUT THE TYPE OF FAULT (B8444S, TF-80SC AWD; 2006-2008)

DIAGNOSTIC TROUBLE CODE (DTC) INFORMATION DEM-U000100

see **DIAGNOSTIC TROUBLE CODE (DTC) INFORMATION DEM-U000100**

DEM-U010000: LOST COMMUNICATION WITH ENGINE CONTROL MODULE. GENERAL FAILURE INFORMATION. NO SUB TYPE INFORMATION (B6324S, TF-80SC AWD; 2009-2010)

DIAGNOSTIC TROUBLE CODE (DTC) INFORMATION DEM-U010000

Condition

The Differential electronic module (DEM) is continually supplied with necessary information from the Engine control module (ECM) via controller area network (CAN) communication. The Engine control module (ECM) informs of the engine's torque, amongst other things. The Differential electronic module (DEM) checks the communication with the Engine control module (ECM).

The diagnostic trouble code (DTC) is stored if the control module detects that:

- No communication with the Engine control module (ECM).
- Incorrect value lasts longer than 5 seconds.

The control module's test for the diagnostic trouble code (DTC) starts in the event of:

- Ignition switch position II.

NOTE: **The control module can only detect the fault once the test has been started and the diagnostic trouble code (DTC) is stored when the conditions are met.**

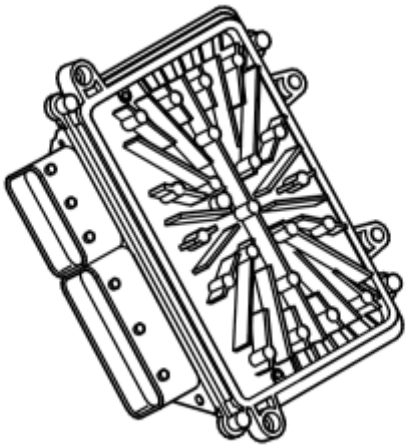

Fig. 200: Identifying Atmospheric Pressure Sensor
Courtesy of VOLVO CARS CORPORATION

Substitute Value

- Open-circuit in the communication cable.
- Short-circuit to ground in the communication cable.
- Short-circuit to supply voltage in the communication cable.
- Contact resistance or oxidation in the terminals.

Possible Source

- Locate the cause of the fault in the engine control module (ECM).

Fault symptom[s]

- 4-wheel/all wheel drive/Does not work

DEM-U010000: LOST COMMUNICATION WITH ENGINE CONTROL MODULE. GENERAL FAILURE INFORMATION. NO SUB TYPE INFORMATION (B6324S5, TF-80SC AWD; 2011-2012)

DIAGNOSTIC TROUBLE CODE (DTC) INFORMATION DEM-U010000

see **DIAGNOSTIC TROUBLE CODE (DTC) INFORMATION DEM-U010000**

DEM-U010000: LOST COMMUNICATION WITH ENGINE CONTROL MODULE. GENERAL FAILURE INFORMATION. NO SUB TYPE INFORMATION (B8444S, TF-80SC AWD; 2009-2011)

DIAGNOSTIC TROUBLE CODE (DTC) INFORMATION DEM-U010000

see **DIAGNOSTIC TROUBLE CODE (DTC) INFORMATION DEM-U010000**

DEM-U010000: FAILED COMMUNICATION WITH THE ENGINE CONTROL MODULE (ECM). GENERAL FAULT INFORMATION. TYPE OF FAULT NOT SPECIFIED. (B6324S, TF-80SC AWD; 2007-2008)

DIAGNOSTIC TROUBLE CODE (DTC) INFORMATION DDM-U010000

Condition

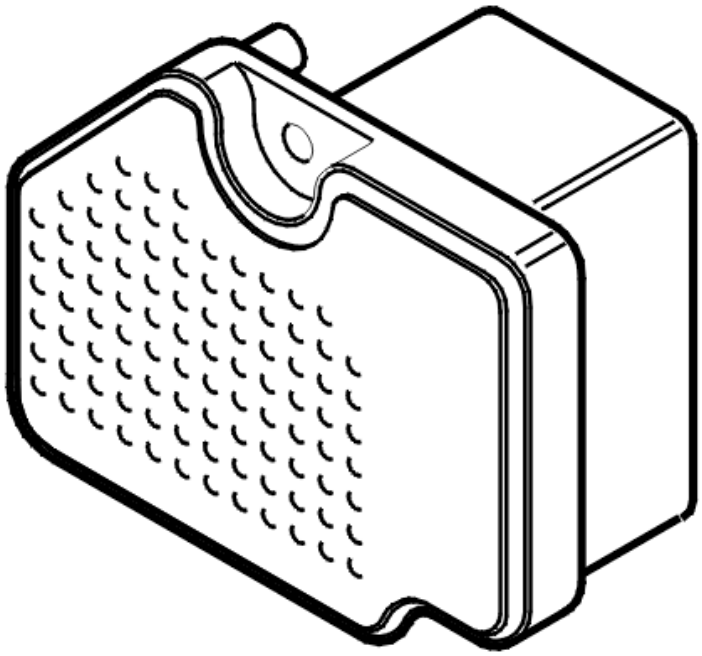

Fig. 201: Active On Demand Coupling Control Module
Courtesy of VOLVO CARS CORPORATION

The Differential Electronic Module (DEM) both sends and receives information from the Engine Control Module (ECM) via the Control Area Network (CAN). If the Differential Electronic Module (DEM) registers that there is no signal from the Engine Control Module (ECM) or a faulty signal is indicated, the trouble code is set.

The diagnostic trouble code can be diagnosed when the ignition is on and when the Control Area Network (CAN) is functioning.

Substitute Value

- Four wheel drive is disengaged.

Possible Source

- Damaged engine control module (ECM).
- Damaged Control Area Network (CAN).

Fault symptom[s]

- Four wheel drive is not functioning.

FAULT-TRACING INFORMATION

INFORMATION

No fault tracing procedure has been defined for this trouble code.

The trouble code for CAN communication can also be set in the Central Electronic module (CEM). In certain instances the trouble code is also set in other affected control modules. This trouble code must not be erased before any CAN communication trouble codes in the Central Electronic Module (CEM) and the Engine Control Module (ECM) have first been remedied and erased.

Therefore read off any trouble codes in the Central Electronic Module (CEM) and the Engine Control Module (ECM), carry out fault tracing procedures and remedy as necessary. If no trouble codes are stored, look for faults in the Control Area Network (CAN) as described below. Thereafter this trouble code may be erased.

For more information about the diagnostic trouble code (DTC) see diagnostic trouble code (DTC) information.

Other information

- see **GENERAL INFORMATION ABOUT FAULT-TRACING IN THE CAN NETWORK (2005-2012)**

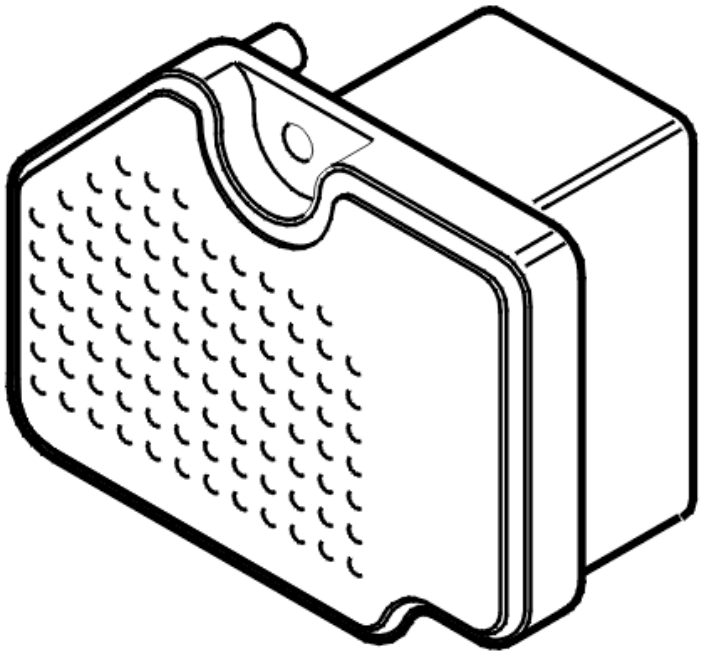

Fig. 202: Active On Demand Coupling Control Module
Courtesy of VOLVO CARS CORPORATION

DEM-U010000: FAILED COMMUNICATION WITH THE ENGINE CONTROL MODULE (ECM). GENERAL FAULT INFORMATION. TYPE OF FAULT NOT SPECIFIED. (B8444S, TF-80SC AWD; 2006-2008)

DIAGNOSTIC TROUBLE CODE (DTC) INFORMATION DDM-U010000

see **DIAGNOSTIC TROUBLE CODE (DTC) INFORMATION DDM-U010000**

FAULT-TRACING INFORMATION

see **FAULT-TRACING INFORMATION**

DEM-U010000: FAILED COMMUNICATION WITH THE ENGINE CONTROL MODULE (ECM). GENERAL FAULT INFORMATION. TYPE OF FAULT NOT SPECIFIED. (TF-80SC AWD; 2005)

DIAGNOSTIC TROUBLE CODE (DTC) INFORMATION DDM-U010000

see **DIAGNOSTIC TROUBLE CODE (DTC) INFORMATION DDM-U010000**

FAULT-TRACING INFORMATION

see **FAULT-TRACING INFORMATION**

DEM-U012900: LOST COMMUNICATION WITH BRAKE SYSTEM CONTROL MODULE. GENERAL FAILURE INFORMATION. NO SUB TYPE INFORMATION (B6324S, TF-80SC AWD; 2009-2010)

DIAGNOSTIC TROUBLE CODE (DTC) INFORMATION DEM-U012900

Condition

The Differential electronic module (DEM) is continually supplied with necessary information from the Brake control module (BCM) via controller area network (CAN) communication. The Brake control module (BCM) informs about the speed of each wheel, among other things. The Differential electronic module (DEM) checks the communication with the Brake control module (BCM).

The diagnostic trouble code (DTC) is stored if the control module detects that:

- No communication with the Brake control module (BCM).
- Incorrect value lasts longer than 5 seconds.

The control module's test for the diagnostic trouble code (DTC) starts in the event of:

- Ignition switch position II.

NOTE: The control module can only detect the fault once the test has been started and the diagnostic trouble code (DTC) is stored when the conditions are met.

Substitute Value

- Four wheel drive is disengaged.

Possible Source

- Open-circuit in the communication cable.
- Short-circuit to ground in the communication cable.
- Short-circuit to supply voltage in the communication cable.
- Contact resistance or oxidation in the terminals.
- Damaged brake control module (BCM).

Fault symptom[s]

- 4-wheel/all wheel drive/Does not work

DEM-U012900: LOST COMMUNICATION WITH BRAKE SYSTEM CONTROL MODULE. GENERAL FAILURE INFORMATION. NO SUB TYPE INFORMATION (B6324S5, TF-80SC AWD; 2011-2012)

DIAGNOSTIC TROUBLE CODE (DTC) INFORMATION DEM-U012900

see **DIAGNOSTIC TROUBLE CODE (DTC) INFORMATION DEM-U012900**

DEM-U012900: LOST COMMUNICATION WITH BRAKE SYSTEM CONTROL MODULE. GENERAL FAILURE INFORMATION. NO SUB TYPE INFORMATION (B8444S, TF-80SC AWD; 2009-2011)

DIAGNOSTIC TROUBLE CODE (DTC) INFORMATION DEM-U012900

see **DIAGNOSTIC TROUBLE CODE (DTC) INFORMATION DEM-U012900**

DEM-U012900: FAILED COMMUNICATION WITH THE BRAKE CONTROL MODULE (BCM). GENERAL FAULT INFORMATION. TYPE OF FAULT NOT SPECIFIED. (B6324S, TF-80SC AWD; 2007-2008)

DIAGNOSTIC TROUBLE CODE (DTC) INFORMATION DEM-U012900

Condition

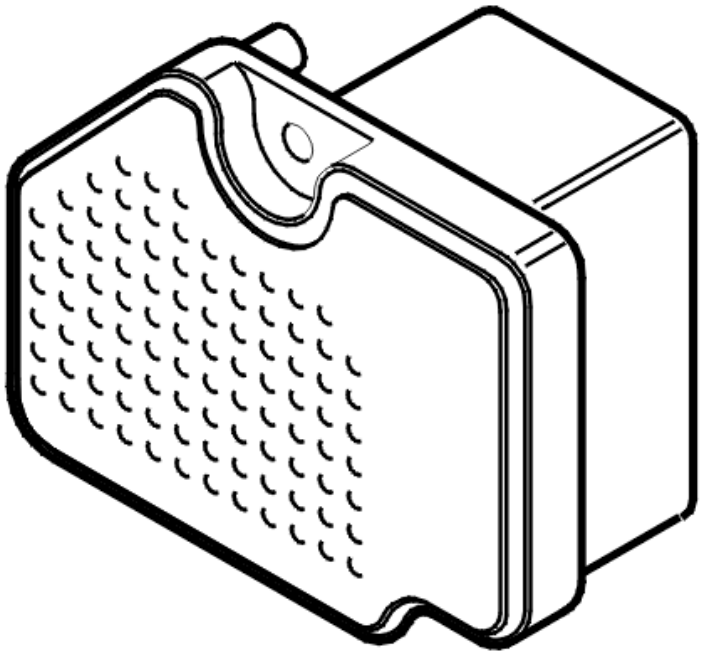

Fig. 203: Active On Demand Coupling Control Module
Courtesy of VOLVO CARS CORPORATION

The Differential Electronic Module (DEM) both sends and receives information from the Brake Control Module (BCM) via the Control Area Network (CAN). If the Differential Electronic Module (DEM) registers that there is no signal from the Brake Control Module (BCM) or a faulty signal is indicated, the trouble code is set.

The diagnostic trouble code can be diagnosed when the ignition is on.

Substitute Value

- Four wheel drive is disengaged.

Possible Source

- Damaged Brake Control Module (BCM).
- Damaged Control Area Network (CAN).

Fault symptom[s]

- Four wheel drive is not functioning.

FAULT-TRACING INFORMATION

INFORMATION

No fault tracing procedure has been defined for this trouble code.

The trouble code for CAN communication can also be set in the Central Electronic module (CEM). In certain instances the trouble code is also set in other affected control modules. This trouble code must not be erased before any CAN communication trouble codes in the Central Electronic Module (CEM) and the Brake Control Module (BCM) have first been remedied and erased.

Therefore read off any trouble codes in the Central Electronic Module (CEM) and the Brake Control Module (BCM), carry out fault tracing procedures and remedy as necessary. If no trouble codes are stored, look for faults in the Control Area Network (CAN) as described below. Thereafter this trouble code may be erased.

For more information about the diagnostic trouble code (DTC) see diagnostic trouble code (DTC) information.

Other information

- see **GENERAL INFORMATION ABOUT FAULT-TRACING IN THE CAN NETWORK (2005-2012)**

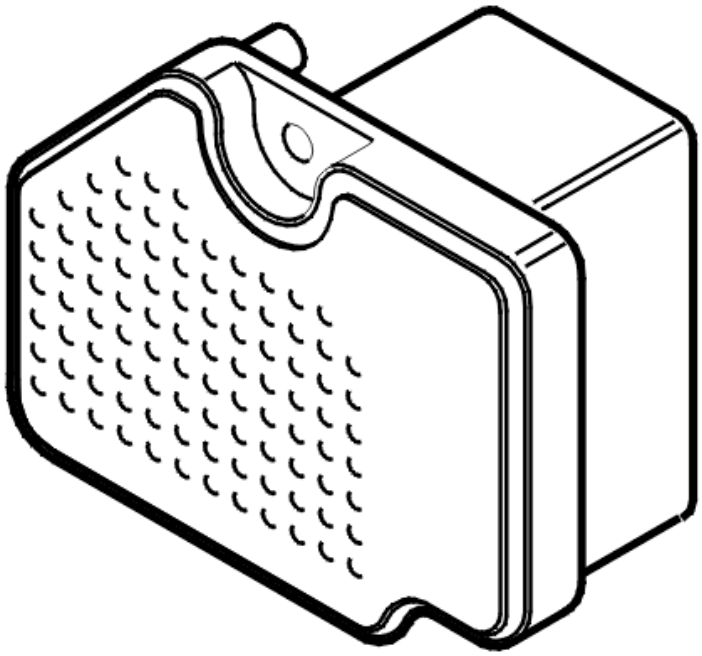

Fig. 204: Active On Demand Coupling Control Module
Courtesy of VOLVO CARS CORPORATION

DEM-U012900: FAILED COMMUNICATION WITH THE BRAKE CONTROL

MODULE (BCM). GENERAL FAULT INFORMATION. TYPE OF FAULT NOT SPECIFIED. (B8444S, TF-80SC AWD; 2006-2008)

DIAGNOSTIC TROUBLE CODE (DTC) INFORMATION DEM-U012900

see **DIAGNOSTIC TROUBLE CODE (DTC) INFORMATION DEM-U012900**

FAULT-TRACING INFORMATION

see **FAULT-TRACING INFORMATION**

DEM-U012900: FAILED COMMUNICATION WITH THE BRAKE CONTROL MODULE (BCM). GENERAL FAULT INFORMATION. TYPE OF FAULT NOT SPECIFIED. (TF-80SC AWD; 2005)

DIAGNOSTIC TROUBLE CODE (DTC) INFORMATION DEM-U012900

see **DIAGNOSTIC TROUBLE CODE (DTC) INFORMATION DEM-U012900**

FAULT-TRACING INFORMATION

see **FAULT-TRACING INFORMATION**

DEM-U014000: LOST COMMUNICATION WITH CENTRAL ELECTRONIC MODULE. GENERAL FAILURE INFORMATION. NO SUB TYPE INFORMATION (B6324S, TF-80SC AWD; 2009-2010)

DIAGNOSTIC TROUBLE CODE (DTC) INFORMATION DEM-U014000

Condition

The Differential electronic module (DEM) is continually supplied with necessary information from the Central electronic module (CEM) via controller area network (CAN) communication. The Central electronic module (CEM) informs about the ignition position and the back-up (reverse) gear status among other things. The Differential electronic module (DEM) checks the communication with the Central electronic module (CEM).

The diagnostic trouble code (DTC) is stored if the control module detects that:

- No communication with the Central electronic module (CEM).
- Incorrect value lasts longer than 5 seconds.

The control module's test for the diagnostic trouble code (DTC) starts in the event of:

- Ignition switch position II.

NOTE: **The control module can only detect the fault once the test has been started and the diagnostic trouble code (DTC) is stored when the conditions are met.**

Substitute Value

- Four wheel drive is disengaged.

Possible Source

- Open-circuit in the communication cable.
- Short-circuit to ground in the communication cable.
- Short-circuit to supply voltage in the communication cable.
- Contact resistance or oxidation in the terminals.
- Damaged central electronic module (CEM).

Fault symptom[s]

- 4-wheel/all wheel drive/Does not work

DEM-U014000: LOST COMMUNICATION WITH CENTRAL ELECTRONIC MODULE. GENERAL FAILURE INFORMATION. NO SUB TYPE INFORMATION (B6324S5, TF-80SC AWD; 2011-2012)

DIAGNOSTIC TROUBLE CODE (DTC) INFORMATION DEM-U014000

see **DIAGNOSTIC TROUBLE CODE (DTC) INFORMATION DEM-U014000**

DEM-U014000: LOST COMMUNICATION WITH CENTRAL ELECTRONIC MODULE. GENERAL FAILURE INFORMATION. NO SUB TYPE INFORMATION (B8444S, TF-80SC AWD; 2009-2011)

DIAGNOSTIC TROUBLE CODE (DTC) INFORMATION DEM-U014000

see **DIAGNOSTIC TROUBLE CODE (DTC) INFORMATION DEM-U014000**

DEM-U014000: FAILED COMMUNICATION WITH THE CENTRAL ELECTRONIC MODULE (CEM). GENERAL FAULT INFORMATION. NO INFORMATION ABOUT THE TYPE OF FAULT (B6324S, TF-80SC AWD; 2007-2008)

DIAGNOSTIC TROUBLE CODE (DTC) INFORMATION DEM-U014000

Condition

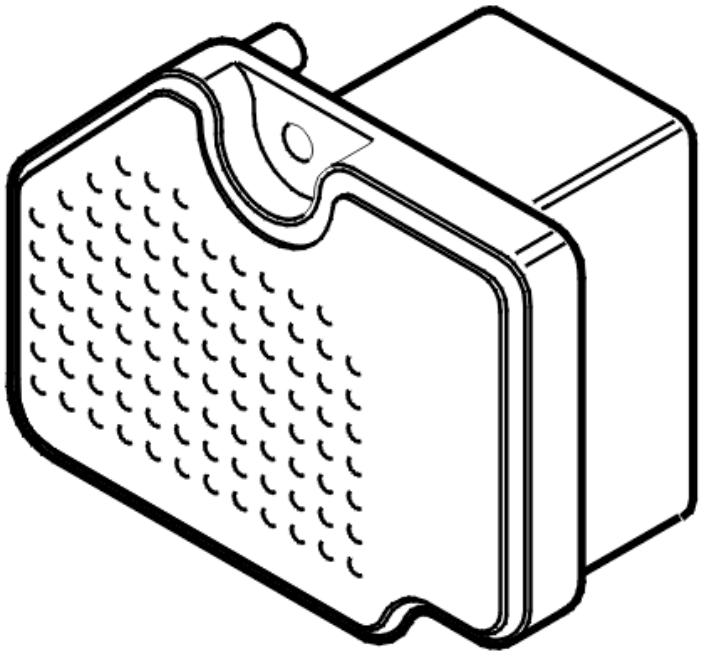

Fig. 205: Active On Demand Coupling Control Module
Courtesy of VOLVO CARS CORPORATION

The Differential Electronic Module (DEM) both sends and receives information from the Central Electronic Module (CEM) via the Control Area Network (CAN). If the Differential Electronic Module (DEM) registers that there is no signal from the Central Electronic Module (CEM) or a faulty signal is indicated, the trouble code is set.

The diagnostic trouble code can be diagnosed when the ignition is on and when the Control Area Network (CAN) is functioning.

Substitute Value

- Four wheel drive is disengaged.

Possible Source

- Damaged central electronic module (CEM).
- Damaged Control Area Network (CAN).

Fault symptom[s]

- Four wheel drive is not functioning.

FAULT-TRACING INFORMATION

INFORMATION

No fault tracing procedure has been defined for this trouble code.

The trouble code for CAN communication can also be set in the Central Electronic module (CEM). This trouble code must not be erased before any CAN communication trouble codes in the Central Electronic Module (CEM) have first been remedied and erased.

Therefore read off any trouble codes in the Central Electronic Module (CEM), carry out fault tracing procedures and remedy as necessary. If no trouble codes are stored, look for faults in the Control Area Network (CAN) as described below. Thereafter this trouble code may be erased.

For more information about the diagnostic trouble code (DTC) select, see diagnostic trouble code (DTC) information.

Other information

- see **GENERAL INFORMATION ABOUT FAULT-TRACING IN THE CAN NETWORK**

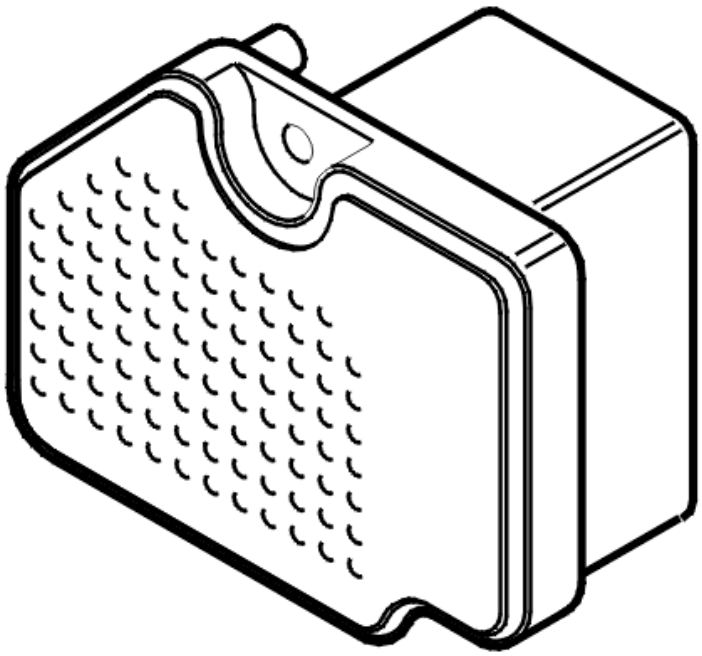

Fig. 206: Active On Demand Coupling Control Module
Courtesy of VOLVO CARS CORPORATION

DEM-U014000: FAILED COMMUNICATION WITH THE CENTRAL ELECTRONIC MODULE (CEM). GENERAL FAULT INFORMATION. NO INFORMATION ABOUT THE TYPE OF FAULT (B8444S, TF-80SC AWD; 2006-2008)

DIAGNOSTIC TROUBLE CODE (DTC) INFORMATION DEM-U014000

see **DIAGNOSTIC TROUBLE CODE (DTC) INFORMATION DEM-U014000**

FAULT-TRACING INFORMATION

see **FAULT-TRACING INFORMATION**

DEM-U014000: FAILED COMMUNICATION WITH THE CENTRAL ELECTRONIC MODULE (CEM). GENERAL FAULT INFORMATION. NO INFORMATION ABOUT THE TYPE OF FAULT (TF-80SC AWD; 2005)

DIAGNOSTIC TROUBLE CODE (DTC) INFORMATION DEM-U014000

see **DIAGNOSTIC TROUBLE CODE (DTC) INFORMATION DEM-U014000**

FAULT-TRACING INFORMATION

see **FAULT-TRACING INFORMATION**

DEM-U030000: INTERNAL CONTROL MODULE SOFTWARE INCOMPATIBILITY. GENERAL FAILURE INFORMATION. NO SUB TYPE INFORMATION (B6324S, TF-80SC AWD; 2009-2010)

DIAGNOSTIC TROUBLE CODE (DTC) INFORMATION DEM-U030000

Condition

The control modules communicate with each other for exchange of information in a network via a standardized serial communication procedure - CAN (Controller Area Network). The Central electronic module (CEM) regularly transmits messages on the CAN network. These messages contain information about which signal configuration ID applies to the vehicle. The control modules on the CAN network have the same signal configuration ID so that they can communicate with each other.

The control module compares its configuration ID with the signal configuration transmitted on the control area network (CAN) by the central electronic module (CEM).

The diagnostic trouble code (DTC) is stored if the control module detects that:

- The control module's configuration ID differ from the ID that the Central electronic module (CEM)

transmits.

The control module's test for the diagnostic trouble code (DTC) starts in the event of:

- Starting the control module's CAN communication.

NOTE: The control module can only detect the fault once the test has been started and the diagnostic trouble code (DTC) is stored when the conditions are met.

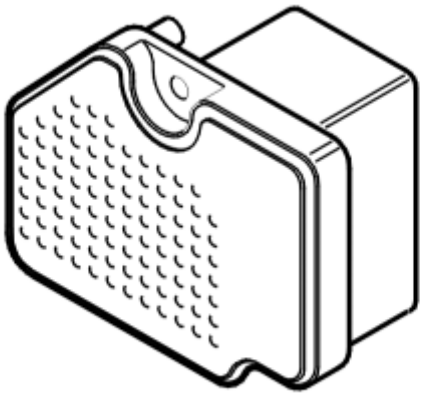

Fig. 207: Control Module
Courtesy of VOLVO CARS CORPORATION

Substitute Value

- Control module shuts itself off ("bus-off").

NOTE: When the diagnostic trouble code (DTC) is stored, the control module responds to the diagnostic commands.

Possible Source

- Incorrect configuration ID (the control module is not intended for this vehicle, for example it is a used control module with different software/hardware).
- Open-circuit in the CAN cables between the control module and the Central Electronic Module (CEM).

Fault symptom[s]

- 4-wheel/all wheel drive/Does not work

FAULT-TRACING

GENERAL INFORMATION

The diagnostic trouble code (DTC) is stored when the communication between the central electronic module (CEM) and the relevant control module has been interrupted. There can be a number of causes for interruptions in the communication:

- Faulty signal configuration in the control module that stored the diagnostic trouble code (DTC). The fault can be due to a customer or workshop replacing a control module without downloading new software for the replacement
- Intermittent open-circuit in one or both CAN cables in part of the network
- Intermittent short-circuits between the CAN cables
- Intermittent short-circuits between one of the CAN cables and ground or supply voltage
- Internal fault in the control module that stored the diagnostic trouble code (DTC).

The fault can also be due to faulty software in a control module, a hardware problem in the CAN network (faulty cables) or a fault in a control module.

NOTE: **If there is a diagnostic trouble code (DTC) for a communication fault in a control module, check whether diagnostic trouble codes (DTCs) have been stored in the central electronic module (CEM). The central electronic module (CEM) monitors the voltage level in the CAN cables and is the only control module that can directly store a diagnostic trouble code (DTC) for a short-circuit in one of the cables for ground or supply voltage. Do not replace the central electronic module (CEM) in the event of a CAN fault unless fault-tracing has indicated that the central electronic module (CEM) has an internal fault.**

Corrective actions

1. Check the cables in the CAN network according to the following fault-tracing
2. If this diagnostic trouble code (DTC) is the only communication diagnostic trouble code (DTC) stored in one of the control modules in the high speed network, try to remedy the fault by downloading new software for the control module that stored the diagnostic trouble code (DTC)
3. The control module should be replaced as a last resort.

Other information

- see **GENERAL INFORMATION ABOUT FAULT-TRACING IN THE CAN NETWORK (2005-2012)**
- Go to the tab software and program the control module with the latest software.

- **Continue**

  Refer to **VERIFICATION**

VERIFICATION

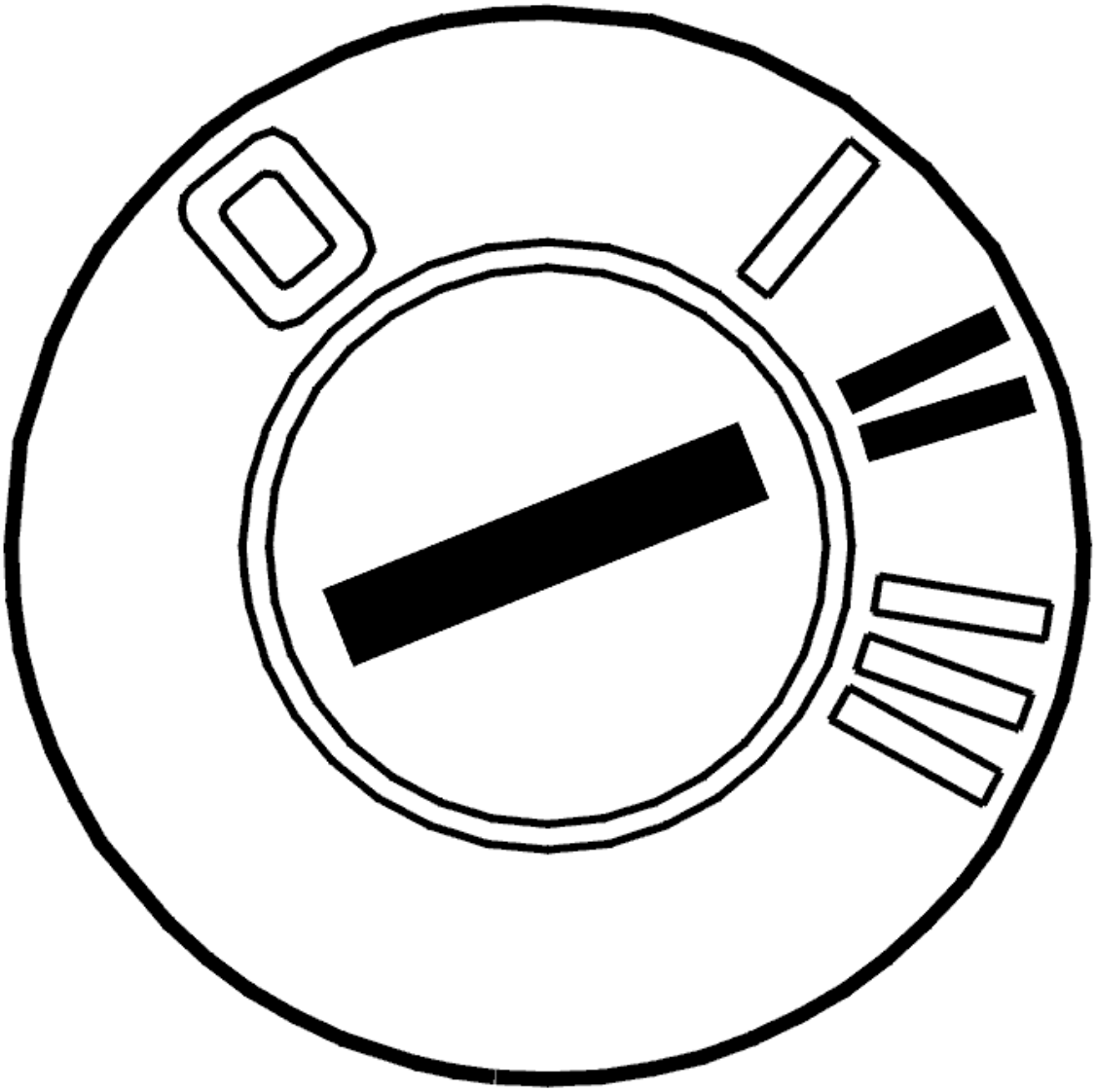

Fig. 208: Identifying Ignition ON
Courtesy of VOLVO CARS CORPORATION

- Ignition on
- Wait for 20 seconds.

NOTE: **This first verification assumes that download of new software was required in the control module that generated the diagnostic trouble code. If download of new software was not required: read out diagnostic trouble codes and check if the code status is permanent or intermittent to learn how difficult it will be to find the fault.**

Read out the diagnostic trouble codes in the vehicle via the DIAGNOSTICS tab.

Check that the diagnostic trouble code (DTC) for faulty communication is not stored again.

Has the fault been remedied?

- **YES**

  OKAY: Troubleshooting has been completed.

- **NO**

  Refer to **TAKING READING ON CABLE IN THE CAN NETWORK (HS-CAN)**

TAKING READING ON CABLE IN THE CAN NETWORK (HS-CAN)

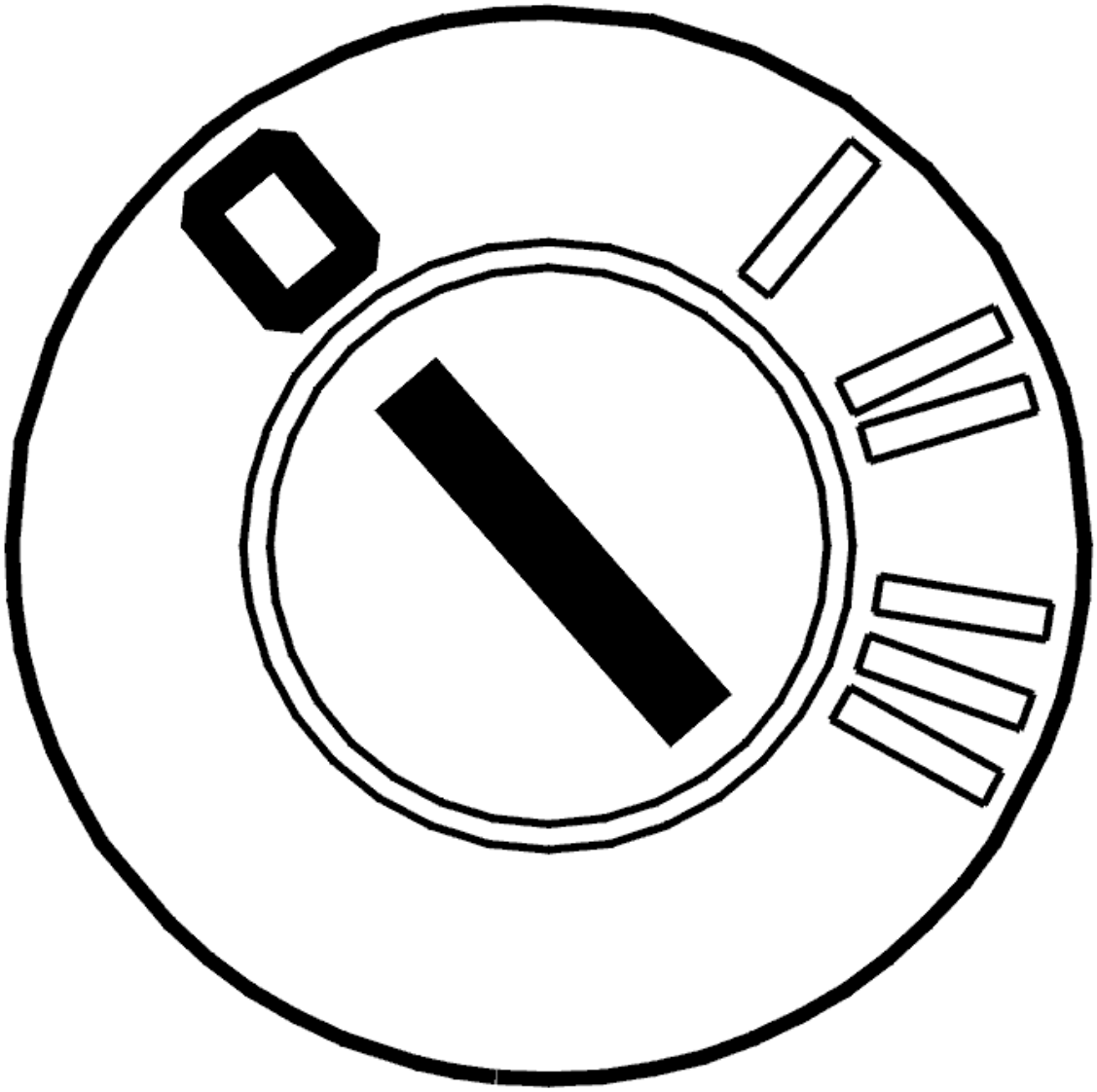

Fig. 209: Identifying Ignition OFF
Courtesy of VOLVO CARS CORPORATION

- Ignition off

- Disconnect the battery negative lead.
- Remove the central electronic module (CEM)
- Connect the breakout box to the cable harness for the central electronic module (CEM). Do not connect the central electronic module (CEM).

HINT: Where a breakout box cannot be used, take readings from the rear of the affected connectors if possible. This prevents terminal pins and socket housings being damaged.

Disconnect the CAN network to make it easier to locate a fault. A suitable point to disconnect the network is at the central electronic module (CEM). Fault-tracing therefore starts from the central electronic module (CEM).

Take resistance readings across the following terminals. Various readings will be obtained due to the structure of the network. Twist the cable harness and work the connectors at accessible points along the cable harness in order to check whether the resistance changes during each measurement. This method can be used to detect intermittent short-circuits or open-circuits.

NOTE: The following resistance readings only measure the main arteries in the high speed network, not the junctions that exist for some control modules. See the appropriate service information for the relevant car model. If an open-circuit is suspected in a cable, or a short-circuit is suspected in one of its junctions, the connector at the control module for this junction must be disconnected and the reading taken from there.

Take the following readings

- Resistance between C3:47 and C3:48. Resistance should be 120 ohms.

  NOTE: Measuring will only give value 120 ohms if the main circuit in the CAN-net is intact. If there is a short-circuit somewhere in the CAN-net (either main circuit or other branching) the resistance will be 0 ohms.

- The resistance between C3:48 and a connection to voltage as well as between C3:48 and a short-circuit to ground. The resistance shall be very high (more than 1 Mohms).
- The resistance between C3:47 and a connection to voltage as well as between C3:47 and a short-circuit to ground. The resistance shall be very high (more than 1 Mohms).

HINT: Any short-circuit detected on the CAN-net may be on the main circuit or on any branching running out to some control modules. If a fault is found, try to disconnect the junction with the fault at a point further forward. Try to locate the fault in this way.

Remedy as necessary.

Other information

- see **BATTERY, DISCONNECTING**

- see **CONNECTING THE BREAKOUT BOX**
- see **SIGNAL SPECIFICATION**
- see **CHECKING WIRING AND TERMINALS**

Was a fault detected?

- **YES**

  Refer to **VERIFICATION**

- **NO**

  Refer to **CHECKING THE TRAFFIC LOAD ON THE CAN CABLES**

CHECKING THE TRAFFIC LOAD ON THE CAN CABLES

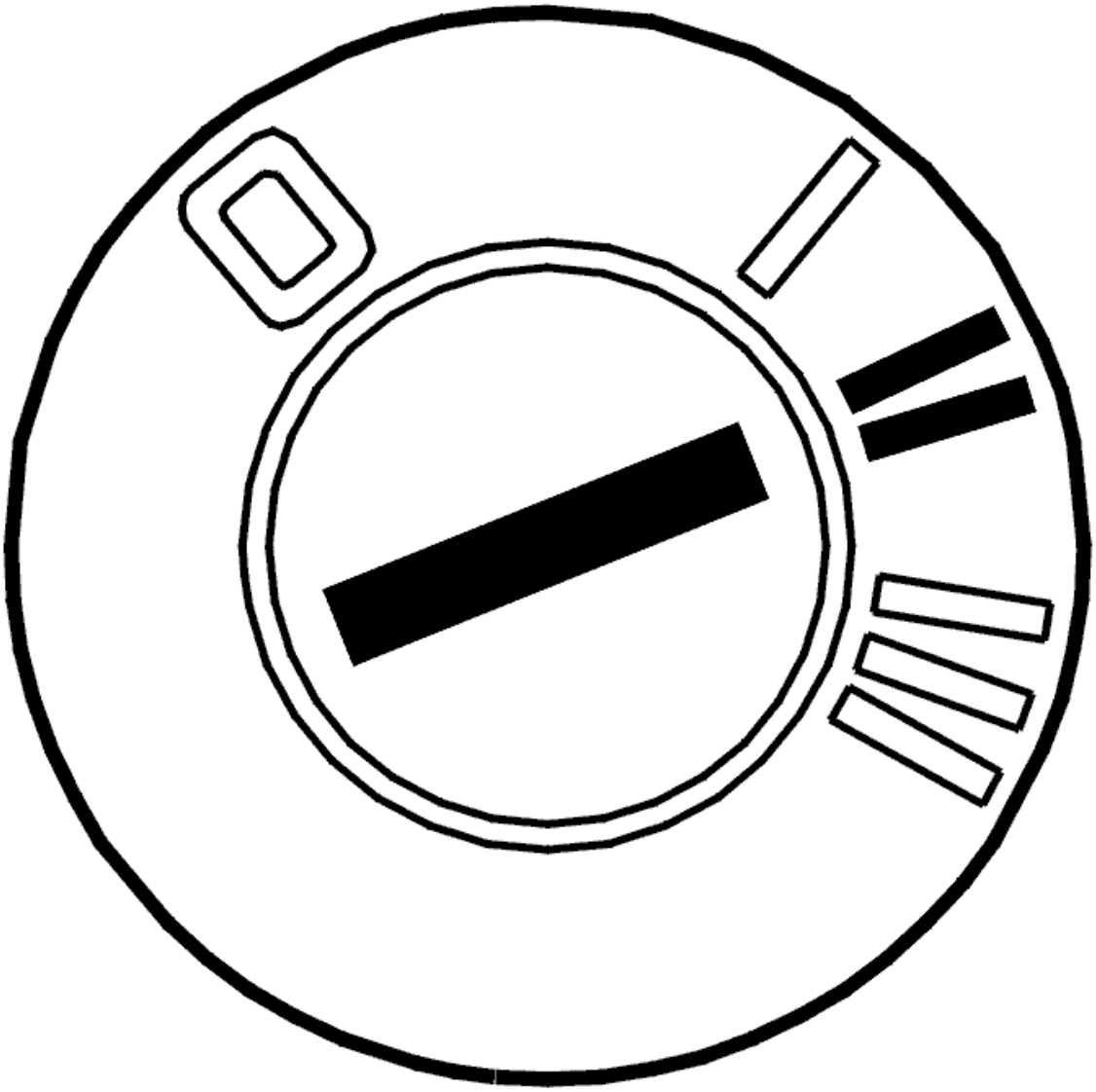

Fig. 210: Identifying Ignition ON
Courtesy of VOLVO CARS CORPORATION

- Connect the central electronic module (CEM) to the breakout box
- Connect the battery.
- Ignition on

NOTE: **When the adapter cable harness and the central electronic module (CEM) have been connected, there is access to both sides of the CAN network (both LS-CAN and HS-CAN). There will also be traffic on both networks. Be careful to check the terminals between which the readings are to be taken so that the intended reading is not taken on the wrong network.**

Faults in the CAN network may be due to a control module sending faulty messages that disrupt normal communication. When messages are sent incorrectly, this results in a considerable increase in the amount

of traffic on the CAN network. Check the load by measuring the average voltage value on the CAN cables in relation to ground.

Check as follows:

- Measure the voltage between C3:48 and ground. The voltage shall be approx. 2.3 V.
- Measure the voltage between C3:47 and ground. The voltage shall be approx. 2.8 V.

Other information

- see **CONNECTING THE BREAKOUT BOX**
- see **BATTERY, DISCONNECTING**

Is the value OK?

- **YES**

  Refer to **INFORMATION**

- **NO**

  Refer to **IDENTIFYING A CONTROL MODULE IN THE CAN NETWORK**

IDENTIFYING A CONTROL MODULE IN THE CAN NETWORK

If the load on the CAN network is too high, this may be due to a control module sending faulty messages on the CAN network (known as a disruptive control module). The fault may also be due to an intermittent short-circuit to supply voltage or ground in one of the CAN cables. This results in the control modules on the CAN network starting to send faulty messages. The faults can occur without a diagnostic trouble code (DTC) being stored by the control modules. The voltage can be measured between the CAN cables in order to check the load on the CAN network.

NOTE: **It is not necessarily the control module(s) that stored the diagnostic trouble code (DTC) that is communicating faultily. Faulty messages can come from any control module in the same section of the CAN network. However, faulty communication in one network cannot affect the communication on the other network. In other words, faulty communication on the LS-CAN cannot disrupt communication on the HS-CAN and vice versa.**

- Check communication/load on HS-CAN by measuring voltage between C3:48 and C3:47. The voltage's average value shall be approx. 0.5 V (permitted is 0.4 to 0.6 V). In case of communication error, the voltage is approx. 0.7 V and higher.

In order to identify which control module is communicating incorrectly, cut the power supply to one control module at a time. Check the voltage in the CAN cables again. The easiest way to cut the power supply is to remove the fuse(s) for the relevant control module. Continue until the voltage between the CAN cables drops to approximately 0.5 V.

HINT: When the suspected control module has been identified, connect and disconnect the supply voltage to the control module a number of times to verify that the fault appears and disappears. Ignition off between each check.

NOTE: Do not cut the power to the central electronic module (CEM) unless it is the last control module left to check.

The control module that is communicating incorrectly must be replaced.

NOTE: A faulty control module that disrupts communication can place other control modules in Limp-Home mode (i. e. they work but with limited functionality) even after switching the ignition off and on a number of times. To remedy this, disconnect and reconnect the battery negative terminal to restore the control modules to normal function.

Remedy as necessary.

- **Continue**

  Refer to **VERIFICATION**

VERIFICATION

HINT: Once a fault has been repaired, conduct a verification to check that the fault has been remedied.

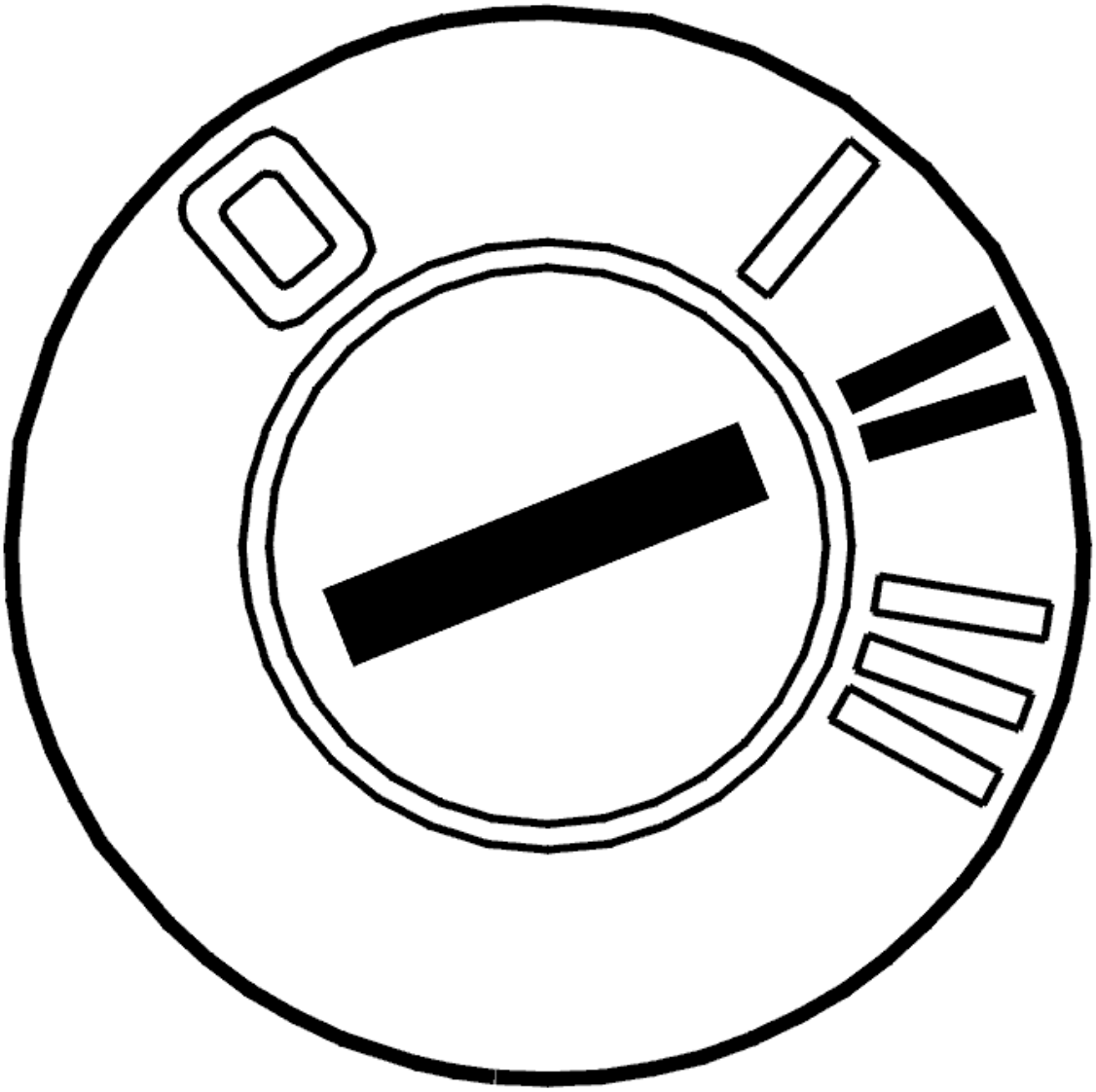

Fig. 211: Identifying Ignition ON
Courtesy of VOLVO CARS CORPORATION

- Reinstall the connectors, components etc.
- Ignition on
- Erase diagnostic trouble codes (DTCs) in all control modules
- Start the vehicle. Allow the vehicle to run for 10 minutes.

  Read out the diagnostic trouble codes in the vehicle via the DIAGNOSTICS tab.

Is the diagnostic trouble code for configuration fault regenerated?

- **YES**

  Refer to **INFORMATION**

SIGNAL SPECIFICATION

SPECIFICATIONS

All the values that are given are measured between the respective connection given in column 1 and #2 or #4 (ground).

Pins 3, 5 and 6 are not used.

U=	DC voltage in volts (V)	U_{bat} =	Battery voltage in volts (V)
I =	Current in amperes (A)	U_{low} =	Voltage approximately 0 V
F =	Frequency in Hertz (Hz)		

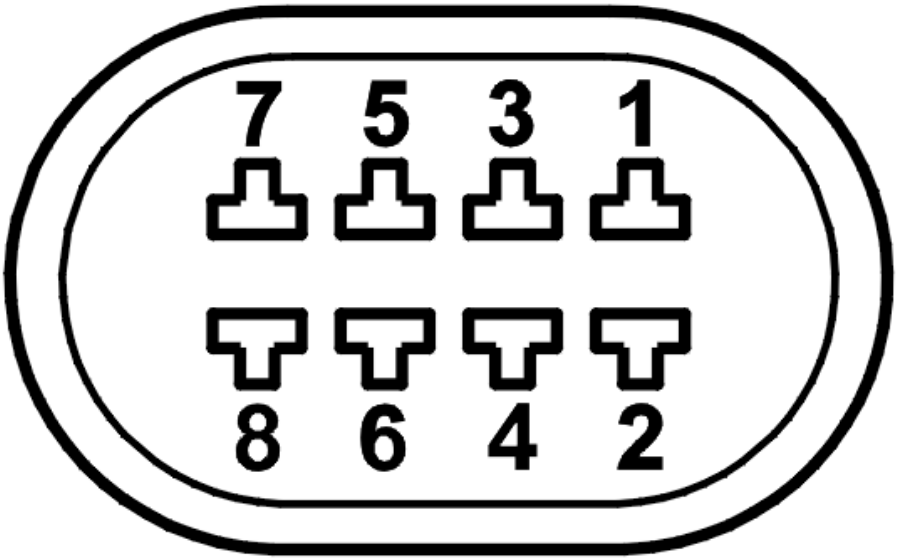

Fig. 212: Identifying Connector Terminals
Courtesy of VOLVO CARS CORPORATION

CONNECTOR C1

ECU	Signal type	Ignition on	Miscellaneous
#C1:1	Power supply	U=U_{bat}	Protected with a 10 A fuse
#C1:2	Signal ground 1	U=U_{low}	-
#C1:3	-	-	-
#C1:4	Signal ground 2	U=U_{low}	-
#C1:5	-	-	-
#C1:6	-	-	-
#C1:7	Control modules communication	U=2.5-4.0 V	-

	cable (CAN H)		
#C1:8	Control modules communication cable (CAN L)	U=1.0-2.5 V	-

All the values that are given are measured between the respective connection given in column 1 and #2 (ground)

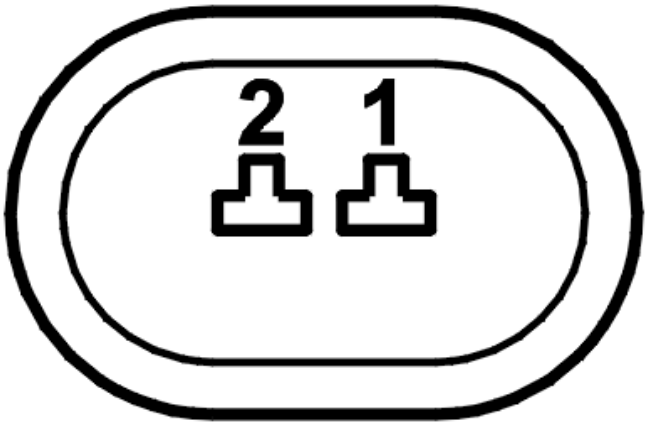

Fig. 213: Identifying Connector Terminals
Courtesy of VOLVO CARS CORPORATION

CONNECTOR C2

ECU	Signal type	Ignition on	Miscellaneous
#C2:1	Power supply	$U=U_{bat}$	-
#C2:2	Signal ground	$U=U_{low}$	-

INFORMATION

FAULT-TRACING INFORMATION

The fault should have been detected and remedied. As this is not the case fault-tracing has failed.

Exit fault-tracing for this diagnostic trouble code (DTC) or make another attempt.

INFORMATION

FAULT-TRACING INFORMATION

Verification shows that the fault is no longer present. The diagnostic trouble code (DTC) was probably caused by an intermittent fault.

Fault-tracing for this diagnostic trouble code (DTC) is not followed by a verification.

You can view the information again or exit fault-tracing for this diagnostic trouble code (DTC).

DEM-U030000: INTERNAL CONTROL MODULE SOFTWARE INCOMPATIBILITY. GENERAL FAILURE INFORMATION. NO SUB TYPE INFORMATION (B6324S5, TF-80SC AWD; 2011-2012)

DIAGNOSTIC TROUBLE CODE (DTC) INFORMATION DEM-U030000

see **DIAGNOSTIC TROUBLE CODE (DTC) INFORMATION DEM-U030000**

FAULT-TRACING

see **FAULT-TRACING**

DEM-U030000: INTERNAL CONTROL MODULE SOFTWARE INCOMPATIBILITY. GENERAL FAILURE INFORMATION. NO SUB TYPE INFORMATION (B8444S, TF-80SC AWD; 2009-2011)

DIAGNOSTIC TROUBLE CODE (DTC) INFORMATION DEM-U030000

see **DIAGNOSTIC TROUBLE CODE (DTC) INFORMATION DEM-U030000**

FAULT-TRACING

see **FAULT-TRACING**

DEM-U030000: INTERNAL SOFTWARE INCOMPATIBLE WITH THE CONTROL MODULE. GENERAL INFORMATION. NO INFORMATION ABOUT THE TYPE OF FAULT. (B6324S, TF-80SC AWD; 2007-2008)

DIAGNOSTIC TROUBLE CODE (DTC) INFORMATION DEM-U030000

Condition

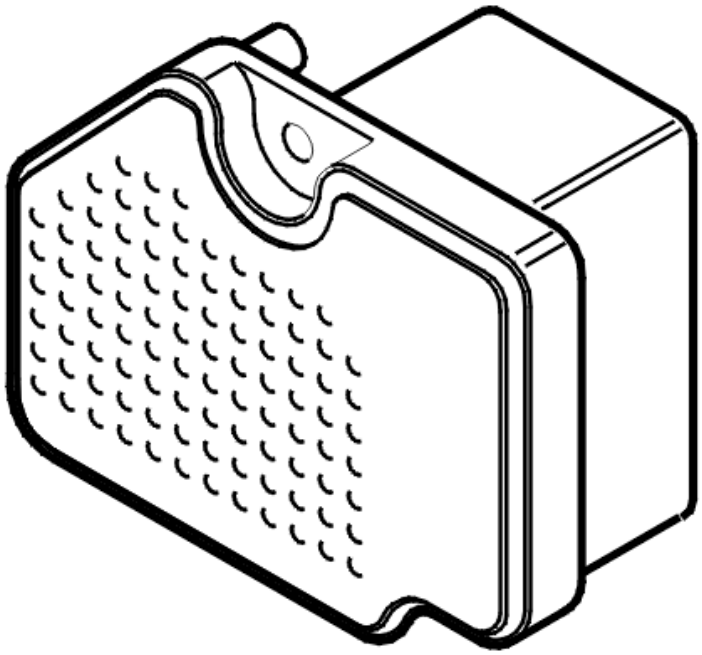

Fig. 214: Active On Demand Coupling Control Module
Courtesy of VOLVO CARS CORPORATION

The Control module compares its configuration ID with the signal configuration which the Central Electronic Module (CEM) transmits on the Control Area Network (CAN). If the two configurations do not agree the trouble code is set. The trouble code is also set if communication between the control module and the Central Electronic Module (CEM) is interrupted.

NOTE: **If communication is interrupted in both CAN leads it is not possible to communicate with the control module. Therefore it will only be possible to read the trouble code if the fault is intermittent. When the trouble code is set the control module will respond to a diagnostic command even though the normal CAN communication is not functioning (Expulsion mode).**

Substitute Value

- Nothing.

Possible Source

- Incorrect CAN configuration ID. (The node is not intended for this vehicle, e. g. it is a second-hand control module with another software/hardware).
- A break in the CAN leads between the control module and the Central Electronic Module (CEM).

Fault symptom[s]

- Four wheel drive is not functioning.
- Message in the display.
- The anti-spin warning lamp is illuminated.
- General warning lamp lit

DEM-U030000: INTERNAL SOFTWARE INCOMPATIBLE WITH THE CONTROL MODULE. GENERAL INFORMATION. NO INFORMATION ABOUT THE TYPE OF FAULT. (B8444S, TF-80SC AWD; 2006-2008)

DIAGNOSTIC TROUBLE CODE (DTC) INFORMATION DEM-U030000

see **DIAGNOSTIC TROUBLE CODE (DTC) INFORMATION DEM-U030000**

DEM-U030046: INTERNAL CONTROL MODULE SOFTWARE INCOMPATIBILITY. SYSTEM INTERNAL FAILURES. CALIBRATION / PARAMETER MEMORY FAILURE (B6324S, TF-80SC AWD; 2009-2010)

DIAGNOSTIC TROUBLE CODE (DTC) INFORMATION DEM-U030046

Condition

The control modules in the vehicle send and receive information continuously on the vehicle's controller area network (CAN). The central electronic module (CEM) transmits a signal that contains information about the vehicle module. This signal must be registered by the differential electronic module (DEM).

The diagnostic trouble code (DTC) is stored if the control module detects that:

- No or faulty signal.

The control module's test for the diagnostic trouble code (DTC) starts in the event of:

- Ignition switch position II.

NOTE: The control module can only detect the fault once the test has been started and the diagnostic trouble code (DTC) is stored when the conditions are met.

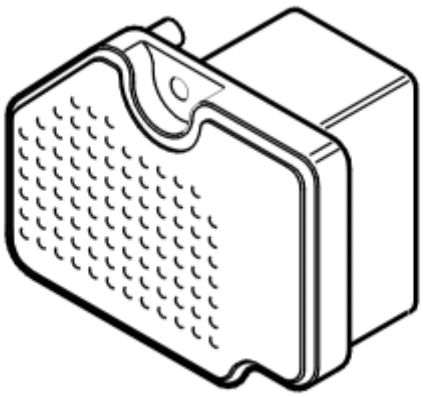

Fig. 215: Control Module
Courtesy of VOLVO CARS CORPORATION

Substitute Value

- Four wheel drive is disengaged.

Possible Source

- The Differential electronic module (DEM) is not intended for this vehicle, for example, it is a used control module with other software/hardware.
- The central electronic module (CEM) is not intended for this vehicle, for example used control module with other software/hardware.

Fault symptom[s]

- 4-wheel/all wheel drive/Does not work
- Text window and warning symbol/Text message

FAULT-TRACING

PROGRAMMING CONTROL MODULE

Differential electronic module (DEM) has registered an internal fault that may be due to incorrect software.

Go to the software manager and program the control module with the latest software.

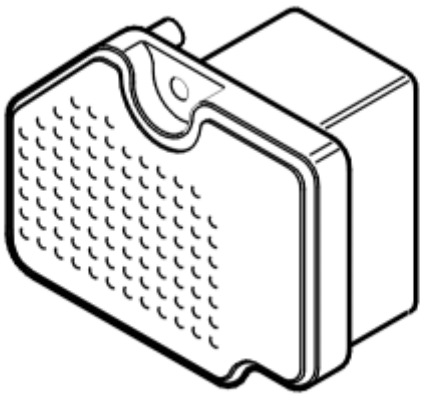

Fig. 216: Control Module
Courtesy of VOLVO CARS CORPORATION

Has the fault been remedied?

- **YES**

  OKAY: Troubleshooting has been completed.

- **NO**

  Refer to **FAULT-TRACING**

REPLACING THE CONTROL MODULE

The control module has registered an internal fault. The problem is solved by changing Differential electronic module (DEM).

Other information

- see **ACTIVE ON-DEMAND COUPLING MODULE**

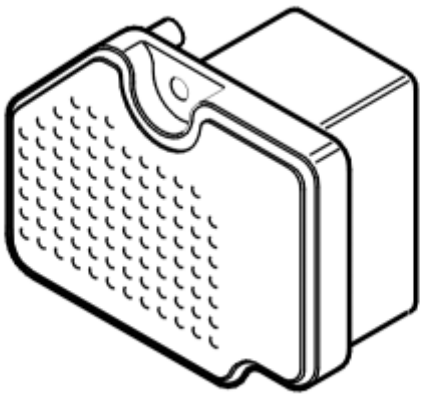

Fig. 217: Control Module
Courtesy of VOLVO CARS CORPORATION

FAULT-TRACING

GENERAL INFORMATION

The diagnostic trouble code (DTC) is stored when the communication between the central electronic module (CEM) and the relevant control module has been interrupted. There can be a number of causes for interruptions in the communication:

- Faulty signal configuration in the control module that stored the diagnostic trouble code (DTC). The fault can be due to a customer or workshop replacing a control module without downloading new software for the replacement
- Intermittent open-circuit in one or both CAN cables in part of the network
- Intermittent short-circuits between the CAN cables
- Intermittent short-circuits between one of the CAN cables and ground or supply voltage
- Internal fault in the control module that stored the diagnostic trouble code (DTC).

The fault can also be due to faulty software in a control module, a hardware problem in the CAN network (faulty cables) or a fault in a control module.

NOTE: **If there is a diagnostic trouble code (DTC) for a communication fault in a control module, check whether diagnostic trouble codes (DTCs) have been stored in the central electronic module (CEM). The central electronic module (CEM) monitors the voltage level in the CAN cables and is the only control module that can directly store a diagnostic trouble code (DTC) for a short-circuit in one of the cables for ground or supply voltage. Do not replace the central electronic module (CEM) in the event of a CAN fault unless fault-tracing has indicated that the central electronic module (CEM) has an internal fault.**

Corrective actions

1. Check the cables in the CAN network according to the following fault-tracing
2. If this diagnostic trouble code (DTC) is the only communication diagnostic trouble code (DTC) stored in one of the control modules in the high speed network, try to remedy the fault by downloading new software for the control module that stored the diagnostic trouble code (DTC)
3. The control module should be replaced as a last resort.

Other information

- see **GENERAL INFORMATION ABOUT FAULT-TRACING IN THE CAN NETWORK (2005-2012)**
- Go to the tab software and program the control module with the latest software.

- **Continue**

  Refer to **VERIFICATION**

VERIFICATION

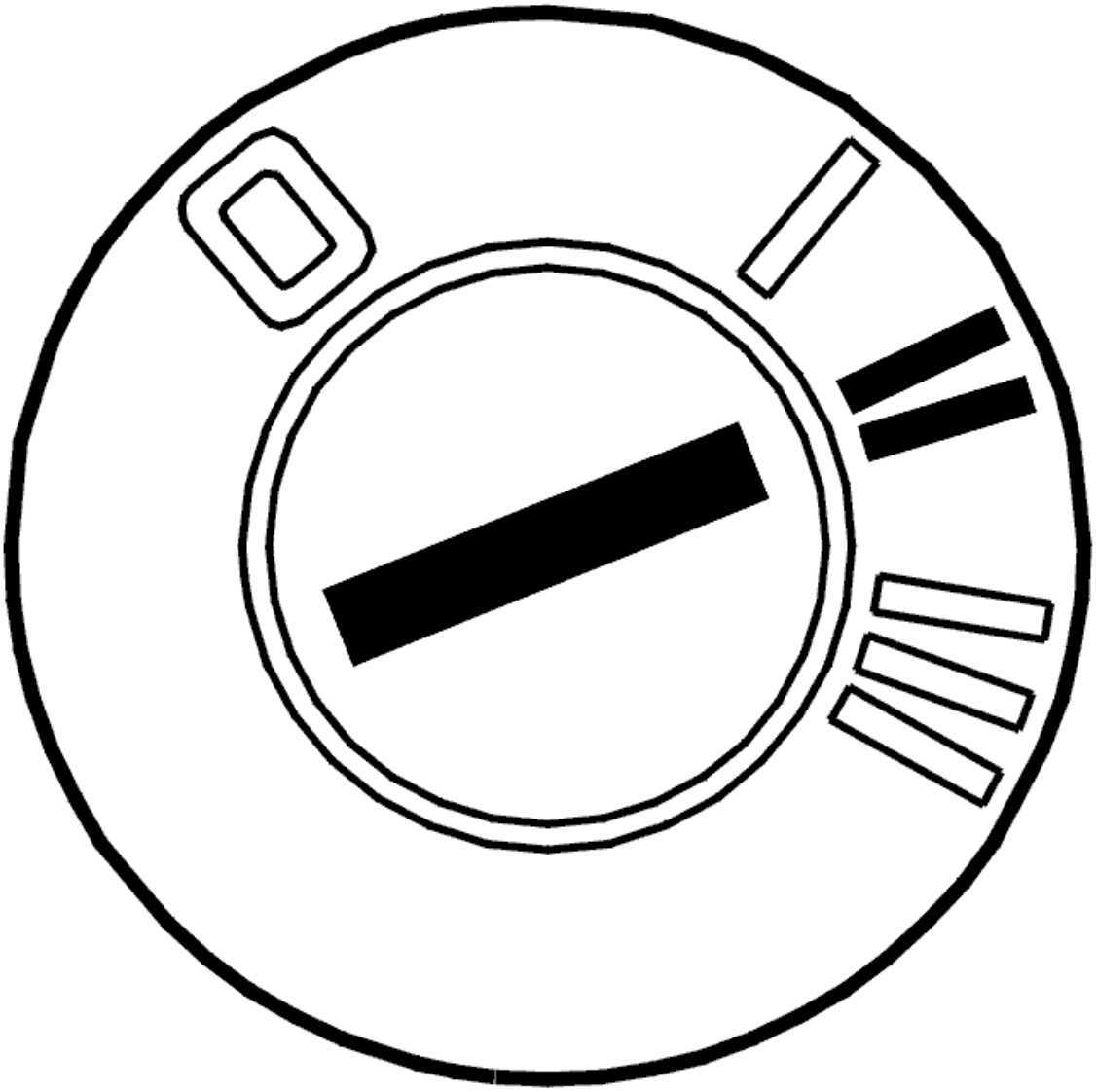

Fig. 218: Identifying Ignition ON
Courtesy of VOLVO CARS CORPORATION

- Ignition on
- Wait for 20 seconds.

NOTE: **This first verification assumes that download of new software was required in the control module that generated the diagnostic trouble code. If download of new software was not required: read out diagnostic trouble codes and check if the code status is permanent or intermittent to learn how difficult it will be to find the fault.**

Read out the diagnostic trouble codes in the vehicle via the DIAGNOSTICS tab.

Check that the diagnostic trouble code (DTC) for faulty communication is not stored again.

Has the fault been remedied?

- **YES**

  Refer to **REPLACING THE CONTROL MODULE**

- **NO**

  Refer to **TAKING READING ON CABLE IN THE CAN NETWORK (HS-CAN)**

TAKING READING ON CABLE IN THE CAN NETWORK (HS-CAN)

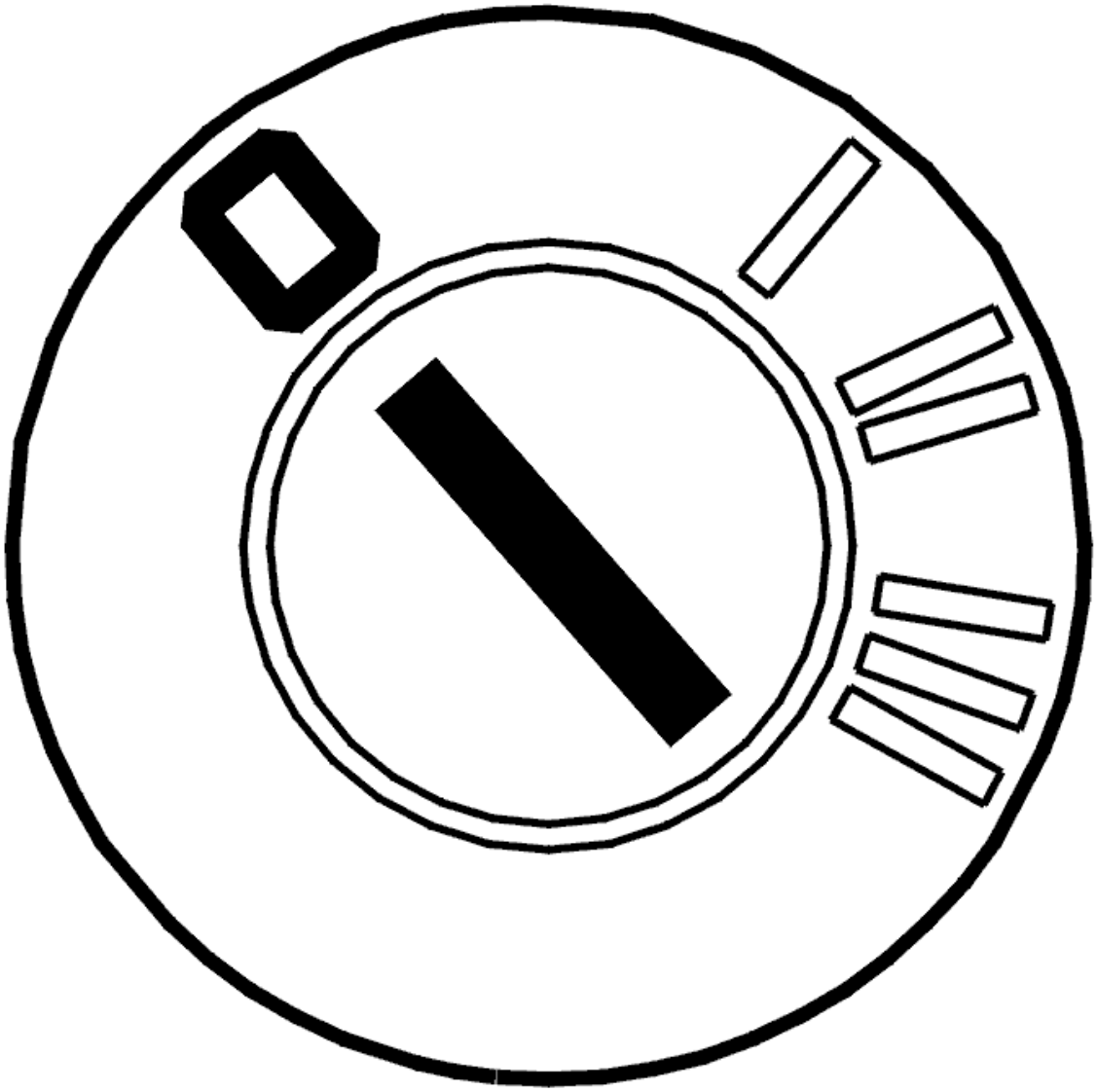

Fig. 219: Identifying Ignition OFF
Courtesy of VOLVO CARS CORPORATION

- Ignition off

- Disconnect the battery negative lead.
- Remove the central electronic module (CEM)
- Connect the breakout box to the cable harness for the central electronic module (CEM). Do not connect the central electronic module (CEM).

HINT: Where a breakout box cannot be used, take readings from the rear of the affected connectors if possible. This prevents terminal pins and socket housings being damaged.

Disconnect the CAN network to make it easier to locate a fault. A suitable point to disconnect the network is at the central electronic module (CEM). Fault-tracing therefore starts from the central electronic module (CEM).

Take resistance readings across the following terminals. Various readings will be obtained due to the structure of the network. Twist the cable harness and work the connectors at accessible points along the cable harness in order to check whether the resistance changes during each measurement. This method can be used to detect intermittent short-circuits or open-circuits.

NOTE: The following resistance readings only measure the main arteries in the high speed network, not the junctions that exist for some control modules. See the appropriate service information for the relevant car model. If an open-circuit is suspected in a cable, or a short-circuit is suspected in one of its junctions, the connector at the control module for this junction must be disconnected and the reading taken from there.

Take the following readings

- Resistance between C3:47 and C3:48. Resistance should be 120 ohms.

  NOTE: Measuring will only give value 120 ohms if the main circuit in the CAN-net is intact. If there is a short-circuit somewhere in the CAN-net (either main circuit or other branching) the resistance will be 0 ohms.

- The resistance between C3:48 and a connection to voltage as well as between C3:48 and a short-circuit to ground. The resistance shall be very high (more than 1 Mohms).
- The resistance between C3:47 and a connection to voltage as well as between C3:47 and a short-circuit to ground. The resistance shall be very high (more than 1 Mohms).

HINT: Any short-circuit detected on the CAN-net may be on the main circuit or on any branching running out to some control modules. If a fault is found, try to disconnect the junction with the fault at a point further forward. Try to locate the fault in this way.

Remedy as necessary.

Other information

- see **BATTERY, DISCONNECTING**

- see **CONNECTING THE BREAKOUT BOX**
- see **SIGNAL SPECIFICATION**
- see **CHECKING WIRING AND TERMINALS**

Was a fault detected?

- **YES**

  Refer to **VERIFICATION**

- **NO**

  Refer to **CHECKING THE TRAFFIC LOAD ON THE CAN CABLES**

CHECKING THE TRAFFIC LOAD ON THE CAN CABLES

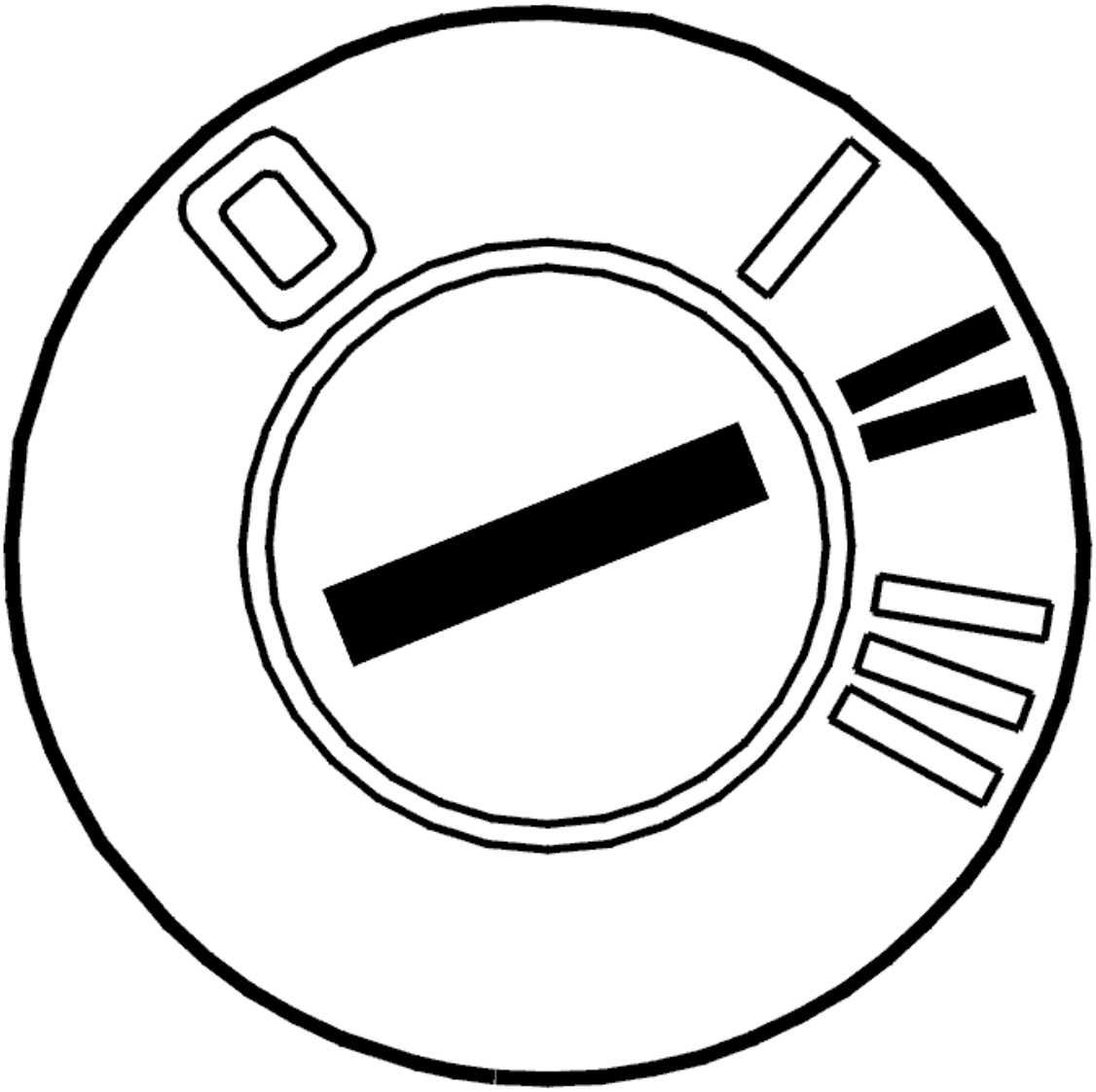

Fig. 220: Identifying Ignition ON
Courtesy of VOLVO CARS CORPORATION

- Connect the central electronic module (CEM) to the breakout box
- Connect the battery.
- Ignition on

NOTE: **When the adapter cable harness and the central electronic module (CEM) have been connected, there is access to both sides of the CAN network (both LS-CAN and HS-CAN). There will also be traffic on both networks. Be careful to check the terminals between which the readings are to be taken so that the intended reading is not taken on the wrong network.**

Faults in the CAN network may be due to a control module sending faulty messages that disrupt normal communication. When messages are sent incorrectly, this results in a considerable increase in the amount

of traffic on the CAN network. Check the load by measuring the average voltage value on the CAN cables in relation to ground.

Check as follows:

- Measure the voltage between C3:48 and ground. The voltage shall be approx. 2.3 V.
- Measure the voltage between C3:47 and ground. The voltage shall be approx. 2.8 V.

Other information

- see **CONNECTING THE BREAKOUT BOX**
- see **BATTERY, DISCONNECTING**

Is the value OK?

- **YES**

  Refer to **INFORMATION**

- **NO**

  Refer to **IDENTIFYING A CONTROL MODULE IN THE CAN NETWORK**

IDENTIFYING A CONTROL MODULE IN THE CAN NETWORK

If the load on the CAN network is too high, this may be due to a control module sending faulty messages on the CAN network (known as a disruptive control module). The fault may also be due to an intermittent short-circuit to supply voltage or ground in one of the CAN cables. This results in the control modules on the CAN network starting to send faulty messages. The faults can occur without a diagnostic trouble code (DTC) being stored by the control modules. The voltage can be measured between the CAN cables in order to check the load on the CAN network.

NOTE: **It is not necessarily the control module(s) that stored the diagnostic trouble code (DTC) that is communicating faultily. Faulty messages can come from any control module in the same section of the CAN network. However, faulty communication in one network cannot affect the communication on the other network. In other words, faulty communication on the LS-CAN cannot disrupt communication on the HS-CAN and vice versa.**

- Check communication/load on HS-CAN by measuring voltage between C3:48 and C3:47. The voltage's average value shall be approx. 0.5 V (permitted is 0.4 to 0.6 V). In case of communication error, the voltage is approx. 0.7 V and higher.

In order to identify which control module is communicating incorrectly, cut the power supply to one control module at a time. Check the voltage in the CAN cables again. The easiest way to cut the power supply is to remove the fuse(s) for the relevant control module. Continue until the voltage between the CAN cables drops to approximately 0.5 V.

HINT: When the suspected control module has been identified, connect and disconnect the supply voltage to the control module a number of times to verify that the fault appears and disappears. Ignition off between each check.

NOTE: Do not cut the power to the central electronic module (CEM) unless it is the last control module left to check.

The control module that is communicating incorrectly must be replaced.

NOTE: A faulty control module that disrupts communication can place other control modules in Limp-Home mode (i. e. they work but with limited functionality) even after switching the ignition off and on a number of times. To remedy this, disconnect and reconnect the battery negative terminal to restore the control modules to normal function.

Remedy as necessary.

- **Continue**

  Refer to **VERIFICATION**

VERIFICATION

HINT: Once a fault has been repaired, conduct a verification to check that the fault has been remedied.

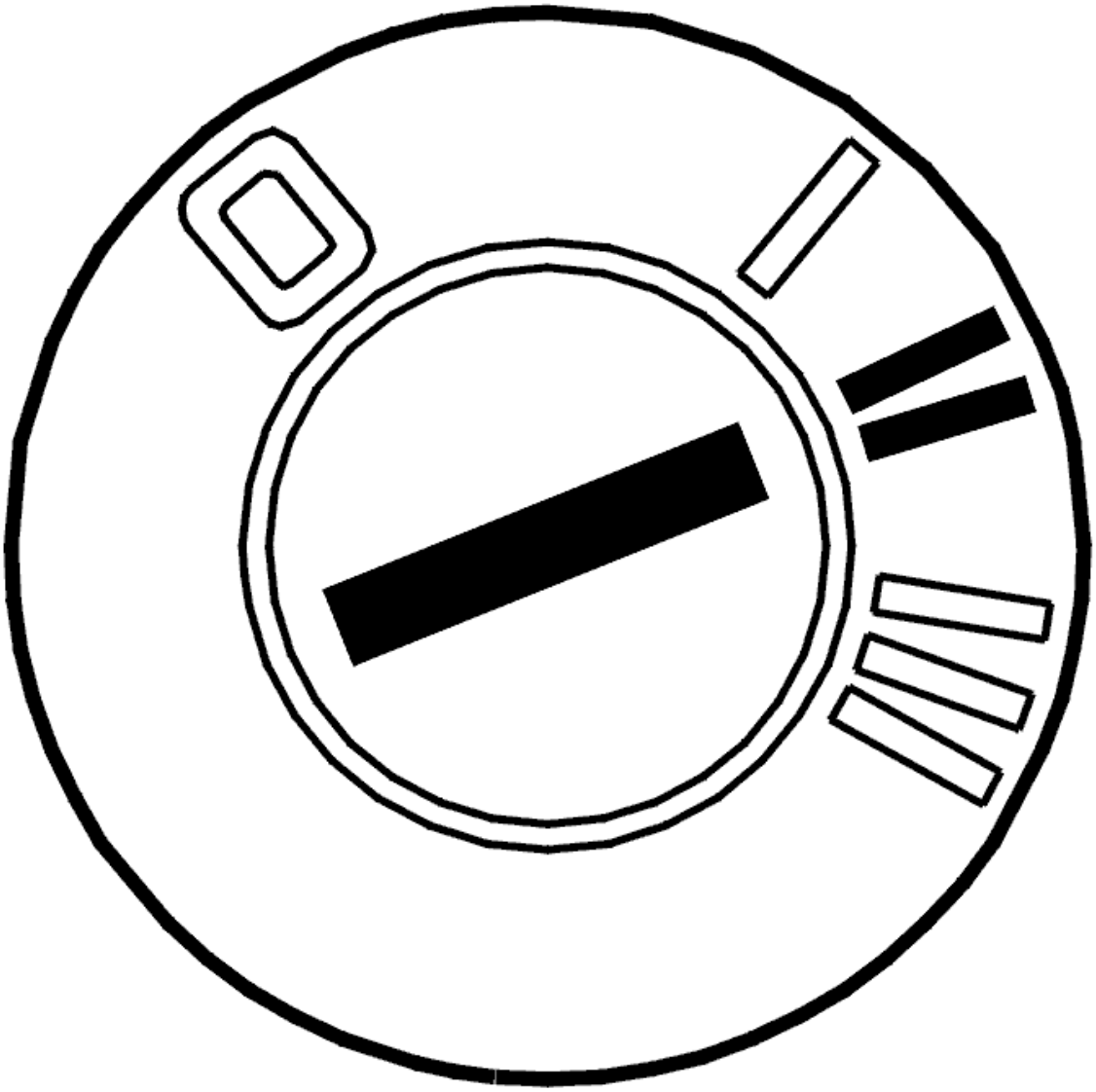

Fig. 221: Identifying Ignition ON
Courtesy of VOLVO CARS CORPORATION

- Reinstall the connectors, components etc.
- Ignition on
- Erase diagnostic trouble codes (DTCs) in all control modules
- Start the vehicle. Allow the vehicle to run for 10 minutes.

  Read out the diagnostic trouble codes in the vehicle via the DIAGNOSTICS tab.

Is the diagnostic trouble code for configuration fault regenerated?

- **YES**

  Refer to **INFORMATION**

- **NO**

  Refer to **REPLACING THE CONTROL MODULE**

INFORMATION

FAULT-TRACING INFORMATION

The fault should have been detected and remedied. As this is not the case fault-tracing has failed.

Exit fault-tracing for this diagnostic trouble code (DTC) or make another attempt.

INFORMATION

FAULT-TRACING INFORMATION

Verification shows that the fault is no longer present. The diagnostic trouble code (DTC) was probably caused by an intermittent fault.

Fault-tracing for this diagnostic trouble code (DTC) is not followed by a verification.

You can view the information again or exit fault-tracing for this diagnostic trouble code (DTC).

DEM-U030046: INTERNAL CONTROL MODULE SOFTWARE INCOMPATIBILITY. SYSTEM INTERNAL FAILURES. CALIBRATION / PARAMETER MEMORY FAILURE (B6324S5, TF-80SC AWD; 2011-2012)

DIAGNOSTIC TROUBLE CODE (DTC) INFORMATION DEM-U030046

see **DIAGNOSTIC TROUBLE CODE (DTC) INFORMATION DEM-U030046**

FAULT-TRACING

see **FAULT-TRACING**

DEM-U030046: INTERNAL CONTROL MODULE SOFTWARE INCOMPATIBILITY. SYSTEM INTERNAL FAILURES. CALIBRATION / PARAMETER MEMORY FAILURE (B8444S, TF-80SC AWD; 2009-2011)

DIAGNOSTIC TROUBLE CODE (DTC) INFORMATION DEM-U030046

see **DIAGNOSTIC TROUBLE CODE (DTC) INFORMATION DEM-U030046**

FAULT-TRACING

see **FAULT-TRACING**

DEM-U03004A: INTERNAL CONTROL MODULE SOFTWARE INCOMPATIBILITY. SYSTEM INTERNAL FAILURES. INCORRECT COMPONENT INSTALLED (B6324S, TF-80SC AWD; 2009-2010)

DIAGNOSTIC TROUBLE CODE (DTC) INFORMATION DEM-U03004A

Condition

The Differential electronic module (DEM) checks the configuration in the connector to the differential unit (AOC unit).

NOTE: A control module from another make of vehicle with a similar four wheel drive system can be incorrectly installed in a Volvo.

The diagnostic trouble code (DTC) is stored if the control module detects that:

- The connector in the control module does not have the correct configuration.

The control module's test for the diagnostic trouble code (DTC) starts in the event of:

- Ignition switch position II.

NOTE: The control module can only detect the fault once the test has been started and the diagnostic trouble code (DTC) is stored when the conditions are met.

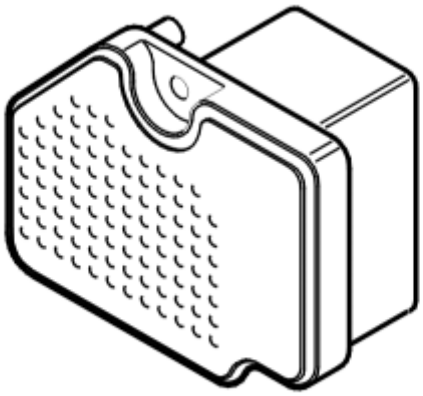

Fig. 222: Control Module
Courtesy of VOLVO CARS CORPORATION

Substitute Value

- Four wheel drive is disengaged.

Possible Source

- Incorrect Differential Electronic Module (DEM).

Fault symptom[s]

- 4-wheel/all wheel drive/Does not work
- Text window and warning symbol/Text message

FAULT-TRACING

see **FAULT-TRACING**

DEM-U03004A: INTERNAL CONTROL MODULE SOFTWARE INCOMPATIBILITY. SYSTEM INTERNAL FAILURES. INCORRECT COMPONENT INSTALLED (B6324S5, TF-80SC AWD; 2011-2012)

DIAGNOSTIC TROUBLE CODE (DTC) INFORMATION DEM-U03004A

see **DIAGNOSTIC TROUBLE CODE (DTC) INFORMATION DEM-U03004A**

FAULT-TRACING

see **FAULT-TRACING**

DEM-U03004A: INTERNAL CONTROL MODULE SOFTWARE INCOMPATIBILITY. SYSTEM INTERNAL FAILURES. INCORRECT COMPONENT INSTALLED (B8444S, TF-80SC AWD; 2009-2011)

DIAGNOSTIC TROUBLE CODE (DTC) INFORMATION DEM-U03004A

see **DIAGNOSTIC TROUBLE CODE (DTC) INFORMATION DEM-U03004A**

FAULT-TRACING

see **FAULT-TRACING**

DEM-U03004A: INTERNAL SOFTWARE IS INCOMPATIBLE WITH THE CONTROL MODULE. INTERNAL FAULT. WRONG COMPONENT (B6324S, TF-80SC AWD; 2007-2008)

DIAGNOSTIC TROUBLE CODE (DTC) INFORMATION DEM-U03004A

Condition

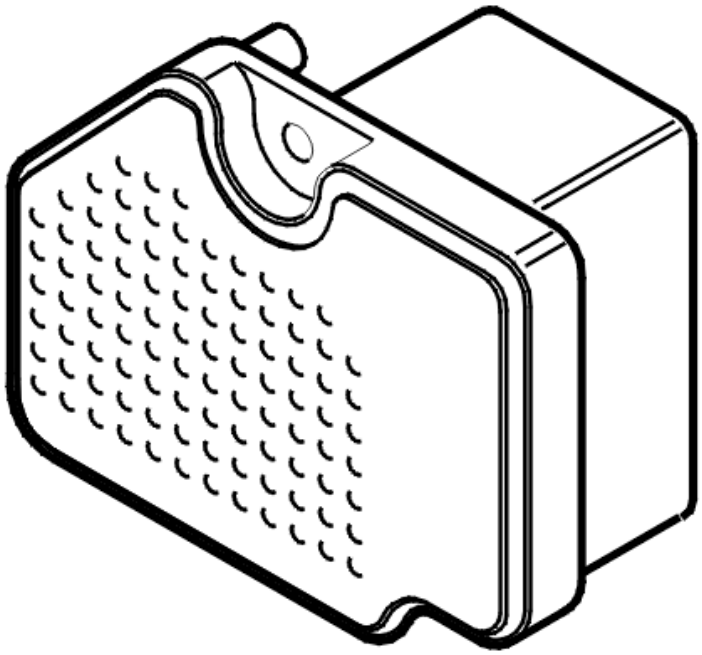

Fig. 223: Active On Demand Coupling Control Module
Courtesy of VOLVO CARS CORPORATION

The Differential Electronic Module (DEM) checks the configuration of the connector to the four wheel drive unit (AOC-unit). This is done to prevent a control module from another make of car being fitted by mistake.

NOTE: A control module from another make of car, with the same sort of four wheel drive system, can be fitted by mistake into a Volvo.

If the Differential Electronic Module (DEM) does not recognize the configuration, the trouble code is set.

The diagnostic trouble code can be diagnosed when the ignition is on.

Substitute Value

- Four wheel drive is disengaged.

Possible Source

- Incorrect Differential Electronic Module (DEM).

Fault symptom[s]

- Four wheel drive is not functioning.

FAULT TRACING DEM-U03004A

INFORMATION

The software is incompatible with the hardware. Check that the hardware is installed.

Other information:

- see **DIFFERENTIAL ELECTRONIC MODULE (DEM), REPLACING**

Remedy as necessary.

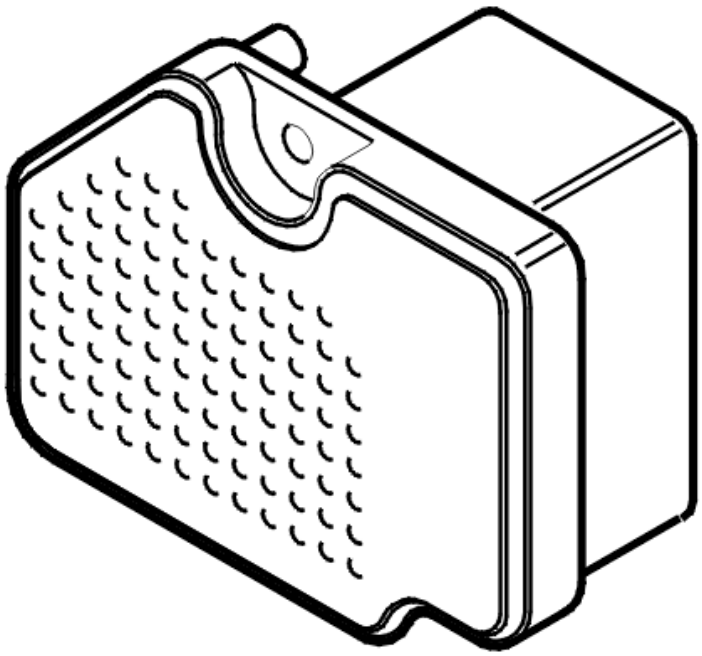

Fig. 224: Active On Demand Coupling Control Module
Courtesy of VOLVO CARS CORPORATION

- **Continue**

  Refer to **INFORMATION**

INFORMATION

FAULT-TRACING INFORMATION

In case of this defect, troubleshooting is not followed by verification.

The information can be displayed again or the fault-tracing for this fault can be interrupted.

DEM-U03004A: INTERNAL SOFTWARE IS INCOMPATIBLE WITH THE CONTROL MODULE. INTERNAL FAULT. WRONG COMPONENT (B8444S, TF-80SC AWD; 2006-2008)

DIAGNOSTIC TROUBLE CODE (DTC) INFORMATION DEM-U03004A

see **DIAGNOSTIC TROUBLE CODE (DTC) INFORMATION DEM-U03004A**

FAULT TRACING

see **FAULT TRACING DEM-U03004A**

DEM-U03004A: INTERNAL SOFTWARE IS INCOMPATIBLE WITH THE CONTROL MODULE. INTERNAL FAULT. WRONG COMPONENT (TF-80SC AWD; 2005)

DIAGNOSTIC TROUBLE CODE (DTC) INFORMATION DEM-U03004A

see **DIAGNOSTIC TROUBLE CODE (DTC) INFORMATION DEM-U03004A**

FAULT TRACING

see **FAULT TRACING DEM-U03004A**

DEM-U030054: INTERNAL CONTROL MODULE SOFTWARE INCOMPATIBILITY. SYSTEM PROGRAMMING FAILURES. MISSING CALIBRATION (B6324S, TF-80SC AWD; 2009-2010)

DIAGNOSTIC TROUBLE CODE (DTC) INFORMATION DEM-U030054

Condition

Before the vehicle leaves the production line, the differential electronic module (DEM) must be approved by the production flag in the differential electronic module (DEM) being activated.

The diagnostic trouble code (DTC) is stored if the control module detects that:

- The production flag has not been activated.

The control module's test for the diagnostic trouble code (DTC) starts in the event of:

- Ignition switch position II.

NOTE: The control module can only detect the fault once the test has been started and the diagnostic trouble code (DTC) is stored when the conditions are met.

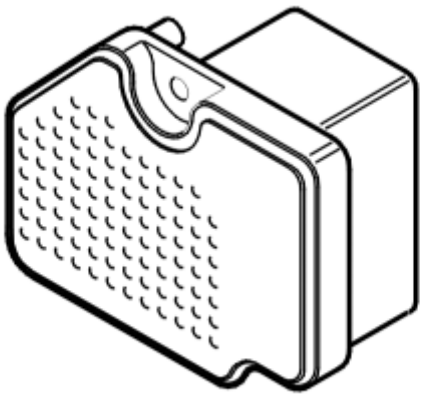

Fig. 225: Control Module
Courtesy of VOLVO CARS CORPORATION

Substitute Value

- Four wheel drive is blocked.

Possible Source

- Differential electronic module (DEM) has not been approved in production.

Fault symptom[s]

- 4-wheel/all wheel drive/Does not work
- Text window and warning symbol/Text message

FAULT-TRACING

see **FAULT-TRACING**

DEM-U030054: INTERNAL CONTROL MODULE SOFTWARE INCOMPATIBILITY. SYSTEM PROGRAMMING FAILURES. MISSING CALIBRATION (B6324S5, TF-80SC AWD; 2011-2012)

DIAGNOSTIC TROUBLE CODE (DTC) INFORMATION DEM-U030054

see **DIAGNOSTIC TROUBLE CODE (DTC) INFORMATION DEM-U030054**

FAULT-TRACING

see **FAULT-TRACING**

DEM-U030054: INTERNAL CONTROL MODULE SOFTWARE INCOMPATIBILITY. SYSTEM PROGRAMMING FAILURES. MISSING CALIBRATION (B8444S, TF-80SC AWD; 2009-2011)

DIAGNOSTIC TROUBLE CODE (DTC) INFORMATION DEM-U030054

see **DIAGNOSTIC TROUBLE CODE (DTC) INFORMATION DEM-U030054**

FAULT-TRACING

see **FAULT-TRACING**

DEM-U300362: BATTERY VOLTAGE. ALGORITHM BASED FAILURES. SIGNAL COMPARE FAILURE (B6324S, TF-80SC AWD; 2009-2010)

DIAGNOSTIC TROUBLE CODE (DTC) INFORMATION DEM-U300362

Condition

NOTE: This trouble code is only relevant for troubleshooting and action in the following cases:

- The trouble code is active in the present driving cycle and has been active for a longer period of time.
- The customer experiences malfunction that can be attributed to the trouble code.

The Differential electronic module (DEM) continuously checks its power supply. The control module compares the power supply to the Central electronic module (CEM) to its own power supply. Information about the power supply to the Central electronic module (CEM) comes from the CAN network.

The diagnostic trouble code (DTC) is stored if the control module detects that:

- Voltage of differential electronic module (DEM) is 2 V lower than voltage to central electronic module (CEM).
- Incorrect value runs longer than 10 seconds.

The control module's test for the diagnostic trouble code (DTC) starts when:

- Data has been received from the central electronic module (CEM).

NOTE: The control module can only detect the fault once the test has been started and the diagnostic trouble code (DTC) is stored when the conditions are met.

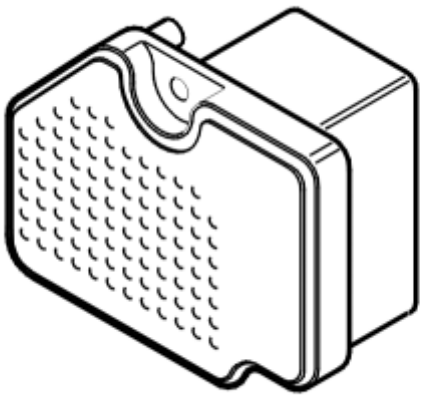

Fig. 226: Control Module
Courtesy of VOLVO CARS CORPORATION

Substitute Value

- Four wheel drive is disengaged.

Possible Source

- Faulty power supply to the Central Electronic Module (CEM).
- Connector resistance and oxidation in the connectors.

Fault symptom[s]

- 4-wheel/all wheel drive/Does not work

FAULT-TRACING

FAULT-TRACING INFORMATION

NOTE: This trouble code is only relevant for troubleshooting and action in the following cases:

- The trouble code is active in the present driving cycle and has been active for a longer period of time.
- The customer experiences malfunction that can be attributed to the trouble code.

In other cases, the DTC does not indicate a fault and must therefore be ignored and only erased.

Do you want to continue fault-tracing?

- **YES**

  Refer to **FAULT-TRACING INFORMATION**

FAULT-TRACING INFORMATION

Use the following information and general checks during fault-tracing.

NOTE: Check that the fuses are intact. For locations, see the instruction manual, cover for fuse box, fuse ratings or similar.

1. Check, if possible, relevant functions in the vehicle using buttons/controls/test drives to determine the status of the fault.

   NOTE: If the vehicle does not show any of the given symptoms in the diagnostic trouble code information (DTC), this may mean that the fault is intermittent or that the control module is not detecting the fault at this moment.

2. Use the diagnostic trouble code's **frozen values** , **status identifiers** and **counter** to determine the operating conditions when the fault was detected, the fault's current status and any degree of intermittence of the fault.
3. Check and fault-trace according to **the fault causes** that are specified in the **diagnostic trouble code (DTC) information** .
4. Use **VIDA (Volvo Scan Tool) Vehicle communication** . Read off the parameters, activate components and functions, carry out quick tests and checking routines for the diagnostic trouble codes to identify the fault.
5. Check relevant components according to **Component specifications** .
6. Check relevant signals using **wiring diagram** , **signal specification** and **breakout box** .

Remedy as necessary.

Other information

- see **DESCRIPTION OF FROZEN VALUES**
- see **DESCRIPTION OF STATUS IDENTIFIER**
- see **DESCRIPTION OF COUNTER**
- see **DESCRIPTION OF PARAMETERS**
- see **DESCRIPTION OF COMPONENT/FUNCTION ACTIVATION**
- see **LOCATION OF COMPONENTS**
- see **COMPONENT SPECIFICATION**
- see **SIGNAL SPECIFICATION**
- see **CONTENTS**

Repair

- see **OIL FILTER CLUTCH FOUR WHEEL DRIVE**
- see **OIL PUMP ACTIVE ON DEMAND COUPLING (AOC), REPLACING**
- see **ACTIVE ON-DEMAND COUPLING MODULE**

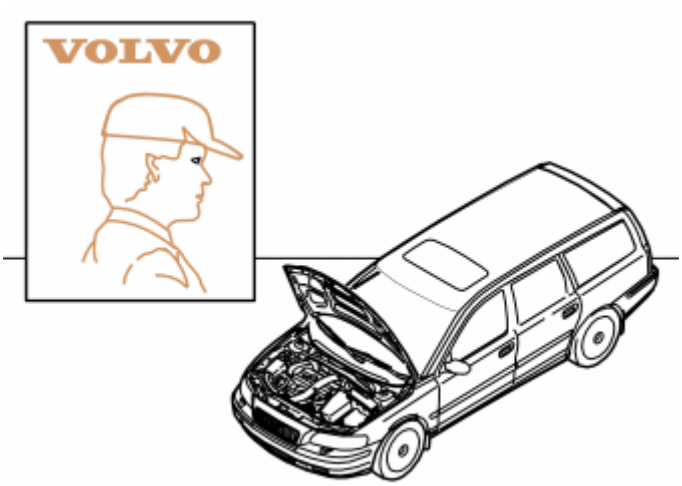

Fig. 227: Identifying VOLVO Certified Service Personnel
Courtesy of VOLVO CARS CORPORATION

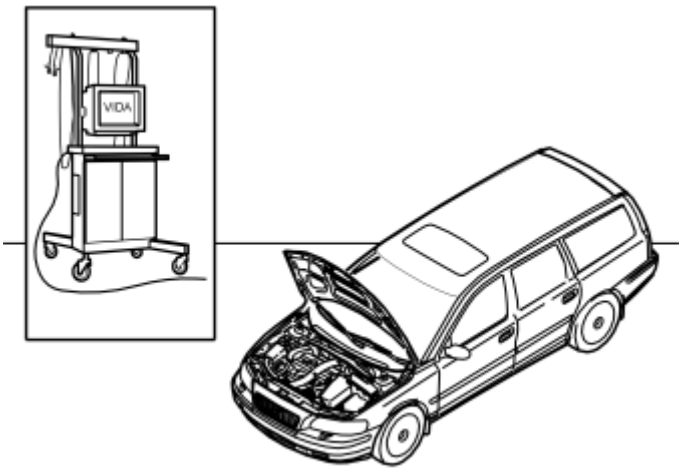

Fig. 228: Identifying VIDA
Courtesy of VOLVO CARS CORPORATION

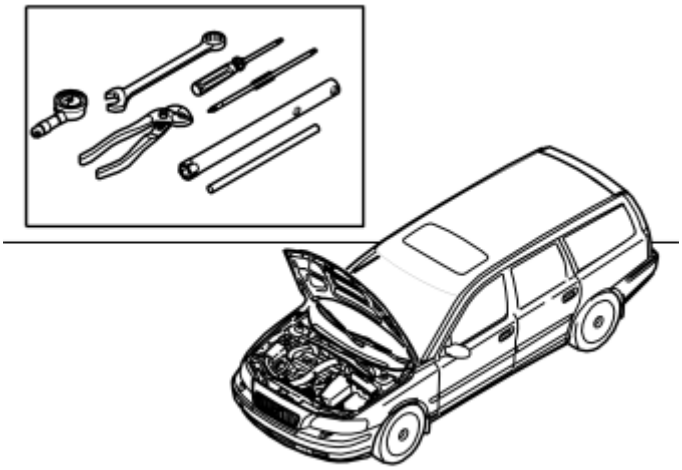

Fig. 229: Identifying Relevant Tools
Courtesy of VOLVO CARS CORPORATION

- **Continue**

  Refer to **INFORMATION**

DESCRIPTION OF FROZEN VALUES

EXPLANATION

Frozen values are parameter values stored when a Diagnostic Trouble Code (DTC) is generated.

TOTAL MILEAGE, VALUE

The value indicates the total distance covered by the vehicle at the time the Diagnostic Trouble Code (DTC) was generated.

Measurement range: 0 -16, 777, 215 km.

MECU POWER SUPPLY, VALUE

The value indicates the voltage over the Central Electronic Module (CEM) when the Diagnostic Trouble Code (DTC) was generated.

Measurement range: 0 -64 V.

Normal range: 12.0 - 14.5 V.

OUTSIDE TEMPERATURE, VALUE

The value indicates the outside temperature at the time the Diagnostic Trouble Code (DTC) was generated.

Measurement range: -40 °C to +215 °C.

ENGINE STATUS

Indicates if the engine is running.

No = Engine off

Yes = Engine running

ENGINE START IN PROGRESS

Indicates if start attempt is in progress.

No = Engine not cranking

Yes = Engine cranking

ECU-TEMPERATURE

The value shows the temperature in Differential electronic module (DEM). The temperature sensor is located on the circuit board.

POWER SUPPLY, DIFFERENTIAL ELECTRONIC MODULE (DEM), VALUE

The value indicates the power supply to the Differential Electronic Module (DEM) when the Diagnostic Trouble Code (DTC) was generated.

Measurement range: 0 -25.5 V.

Normal range: 12.0 - 14.5 V.

WHEEL SPEED, VALUE

The value indicates the wheel speed when the Diagnostic Trouble Code (DTC) was generated.

Measurement range: 0 - 255 km/h.

POWER SUPPLY, PRESSURE REDUCING VALVE

The value displays the current through the pressure reducing valve.

Measurement range 0 - 4095 mA.

POWER SUPPLY, PUMP MOTOR

The value indicates the supply through the electrically driven feed pump when the Diagnostic Trouble Code (DTC) was generated.

Measurement range 0 - 8191 mA.

DEM STATUS

Indicates the status of the differential electronic module (DEM) (software related) when the diagnostic trouble code was stored.

OK = AOC unit (coupling) is operating normally.

Coupling fully open upon request = AOC unit (coupling) fully open (requested from Brake Control Module (BCM))

Coupling inactive or faulty (open) = AOC unit (coupling) is open due to a fault in the system.

Coupling closed = AOC unit (coupling) is closed due to a fault in the system.

AOC STATUS

Indicates the status of the Active on Demand Coupling when the diagnostic trouble code (DTC) was stored. The differential electronic module (DEM) obtains the signal from the brake control module (BCM). The signal is used to deactivate the Active on Demand Coupling during special driving conditions.

Normal operation = Request from the Brake Control Module (BCM) for the AOC unit (coupling) to operate normally.

Rapid opening = Request from the Brake Control Module (BCM) for the AOC unit (coupling) to open quickly.

Slow opening = Request from the Brake Control Module (BCM) for the AOC unit (coupling) to open slowly.

Error in BCM = An error has occurred in the Brake Control Module (BCM) which means that the Differential Electronic Module (DEM) opens the AOC unit (coupling).

Completely locked = Request from the brake control module (BCM) that the Active on Demand Coupling unit (clutch) should lock completely (maximum torque to the rear axle).

Torque limiting = Request from the brake control module (BCM) that the Active on Demand Coupling unit should limit the torque to the rear axle.

DIAGNOSTIC INFORMATION, STATUS

Indicates the diagnostic status of the differential electronic module (DEM) when the diagnostic trouble code (DTC) was stored.

No diagnostic trouble code (DTC) = No diagnostic trouble code (DTC) is stored in the control module.

At least one diagnostic trouble code (DTC) = At least one diagnostic trouble code (DTC) is stored in the control module.

All diagnostic tests have not been carried out = All diagnostic tests in the control module have not been carried out.

All diagnostic tests have been carried out = All diagnostic tests in the control module have been carried out

BRAKE PEDAL, STATUS

Indicates the stop lamp switch position, activated or not activated, when the diagnostic trouble code (DTC) was stored.

Active = Brake light switch actuated.

Not active = Stop lamp switch off.

PARKING BRAKE, STATUS

Indicates the parking brake position, activated or not activated, when the diagnostic trouble code (DTC) was stored.

Active = Parking brake actuated.

Not active = Parking brake not applied.

ABS STATUS

Indicates the status of ABS control when the diagnostic trouble code (DTC) was stored. The differential electronic module (DEM) obtains the value via the control area network (CAN) from the brake control module (BCM).

Active = ABS modulation.

Inactive = No ABS modulation.

GAUGE (HIGH OIL TEMPERATURE), VALUE.

The value indicates the number of times the Differential Electronic Module (DEM) has disengaged the all-wheel drive due to excessively high oil temperature.

Measurement range: 0-65, 534 times.

ENGINE SPEED, VALUE

The value indicates the engine speed when the Diagnostic Trouble Code (DTC) was generated.

Measurement range:0-8191 r/min.

Idle speed: approx. 750 r/min.

ENGINE TORQUE

The value indicates an engine control module (ECM)-calculated torque, supplied to the Active on Demand

Coupling input shaft (propeller shaft) when the diagnostic trouble code (DTC) was stored. Calculation includes the gear ratio of the transmission and the final drive. The differential electronic module (DEM) obtains the value via the controller area network (CAN) from the engine control module (ECM).

Measurement range: -16.376 Nm to +16.384 Nm.

REAR AXLE TORQUE, VALUE

The value indicates the torque transferred to the rear axle, calculated by the AOC unit (coupling) when the Diagnostic Trouble Code (DTC) was generated.

Measurement range: 0 -8191 Nm

REQUESTED ENGINE TORQUE

The value indicates the requested engine torque of the driver when the diagnostic trouble code (DTC) was stored. The differential electronic module (DEM) uses this information to correctly transfer torque to the rear axle.

Measurement range: -16.376 Nm to +16.375 Nm.

DESCRIPTION OF STATUS IDENTIFIER

Status identifier
There are different status identifiers that can be read out for each diagnostic trouble code (DTC). The control module tests each connection more or less continuously. By reading out the diagnostic trouble code (DTC) and the associated status identifier (which detects the malfunction and stores the DTC), information about the test is obtained. Not all status identifiers need to be implemented in one control module, this varies from system to system. All status identifiers are reset and start counting again each time the control module is powered up and when erasing diagnostic trouble codes (DTCs). The possible status identifiers are described below.

Status identifier	**Explanation**
SI#01	The malfunction is validated now. Shows if the control module detects the malfunction right now. It is only when the test is in progress that the control module can detect malfunction and generate diagnostic trouble code.
SI#02	The malfunction is validated in the current operating cycle. Shows if the control module has detected the malfunction any time during this operating cycle.
SI#03	Intermittent not yet confirmed diagnostic trouble code.
SI#04	Confirmed diagnostic trouble code.
SI#05	Test status in current and/or earlier operating cycle. Shows if control module has performed test for this diagnostic trouble code in current and/or earlier operating cycle.
SI#06	The malfunction is validated in an earlier operating cycle. Shows if the control module has detected the malfunction any time during an earlier operating cycle.
SI#07	Test status in current operating cycle. Shows if control module has performed test

	for this diagnostic trouble code in current operating cycle.
SI#08	Request activate warning light/text message. Information about the diagnostic trouble code activates a warning light or text message.

DESCRIPTION OF COUNTER

Counter
There are eight different counters that are stored individually for each diagnostic trouble code (DTC). For an intermittent malfunction, the values of the different counters can be studied to determine how intermittent the malfunction is. All counters do not need to be implemented in one control module, this varies from system to system. The possible counters are described below.

Counter	**Function**
C#1	Counts the number of operating cycles since the malfunction was *last* validated. This information can be used to determine whether the malfunction is active during the current operating cycle or not. The malfunction is present now if the value is zero.
C#2	Counts the number of operating cycles since the malfunction was *last* validated, where test for the diagnostic trouble code was performed without the malfunction being detected and validated. When a test is performed, no malfunction is detected, the counter will count up by 1 for each operating cycle.
C#3	Counts the number of operating cycles since the malfunction was validated *the first time* . For each completed operating cycle the counter will count up by 1.
C#4	Counts the number of operating cycles in which the malfunction was validated since it was first validated. Counts the number of times the malfunction has occurred since the first time.
C#5	Counts the number of warm-up cycles since the MIL-light has gone off.
C#6	The counter counts the number of internal detections of the malfunction that have been performed for the diagnostic trouble code. When this counter reaches + 127, the control module considers that the malfunction is active right now. When counter is at value -127 the malfunction is not active. The value is reset to zero at each new operating cycle. If the value increases toward +127 the control module has detected a malfunction and, for each internal test, the value counts up. When the malfunction is not active, the control module counts down to minimum -127. Value can only be changed when the control module has started the test for the diagnostic trouble code. The increments with which the control module counts up or down the value may vary between control modules.
C#7	Shows maximum value for current operating cycle.
C#8	Shows maximum value for current and/or earlier operating cycle.

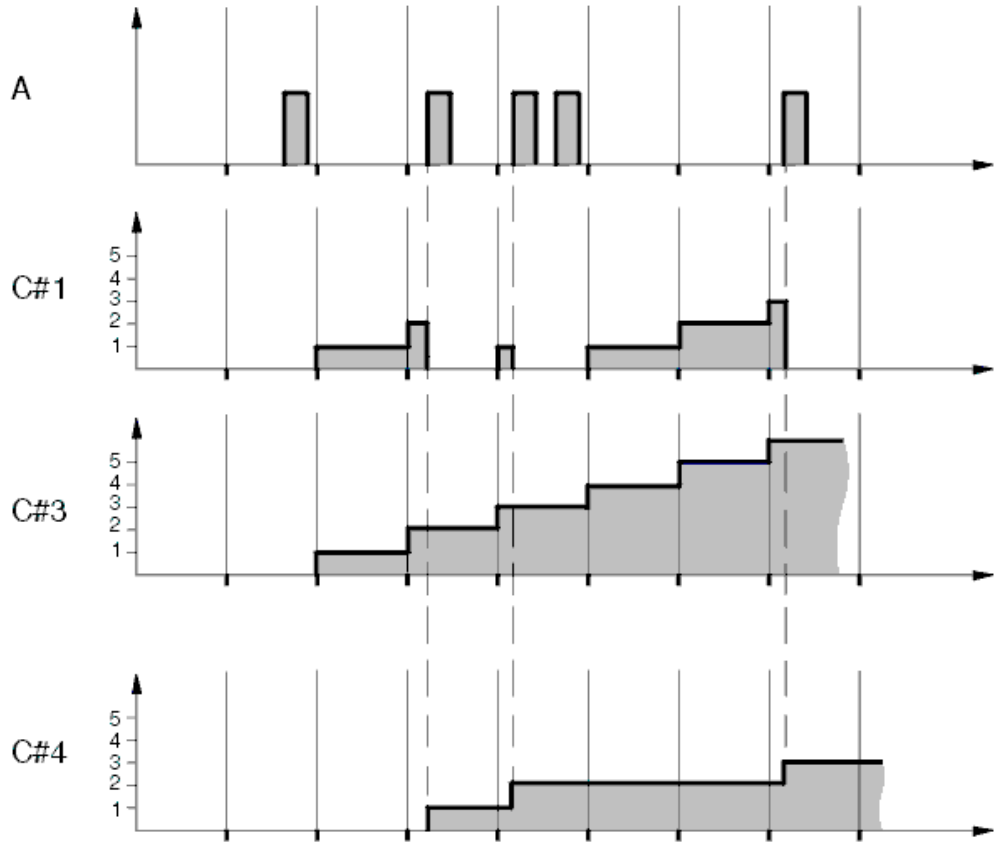

Fig. 230: Diagnostic Trouble Code (DTC) Counter Graph
Courtesy of VOLVO CARS CORPORATION

INFORMATION

FAULT-TRACING INFORMATION

In case of this defect, troubleshooting is not followed by verification.

The information can be displayed again or the fault-tracing for this fault can be interrupted.

DEM-U300362: BATTERY VOLTAGE. ALGORITHM BASED FAILURES. SIGNAL COMPARE FAILURE (B6324S5, TF-80SC AWD; 2011-2012)

DIAGNOSTIC TROUBLE CODE (DTC) INFORMATION DEM-U300362

see **DIAGNOSTIC TROUBLE CODE (DTC) INFORMATION DEM-U300362**

FAULT-TRACING

see **FAULT-TRACING**

DEM-U300362: BATTERY VOLTAGE. ALGORITHM BASED FAILURES.

SIGNAL COMPARE FAILURE (B8444S, TF-80SC AWD; 2009-2011)

DIAGNOSTIC TROUBLE CODE (DTC) INFORMATION DEM-U300362

see **DIAGNOSTIC TROUBLE CODE (DTC) INFORMATION DEM-U300362**

FAULT-TRACING

see **FAULT-TRACING**

DEM-U300362: BATTERY VOLTAGE. ALGORITHM FAULT. COMPARISON FAULT (B6324S, TF-80SC AWD; 2007-2008)

DIAGNOSTIC TROUBLE CODE (DTC) INFORMATION DEM-U300362

Condition

NOTE: **This trouble code is only relevant for troubleshooting and action in the following cases:**

- The trouble code is active in the present driving cycle and has been active for a longer period of time.
- The customer experiences malfunction that can be attributed to the trouble code.

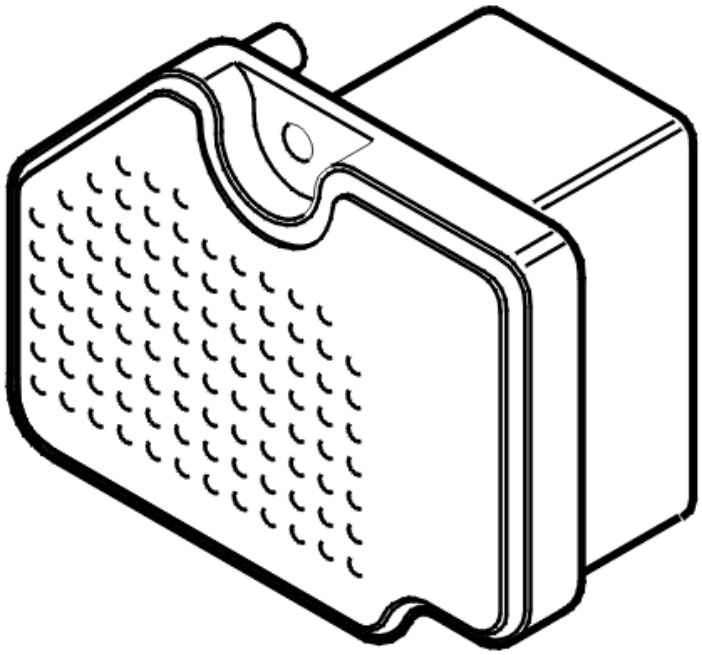

Fig. 231: Active On Demand Coupling Control Module
Courtesy of VOLVO CARS CORPORATION

The Differential Electronic Module (DEM) checks its power supply by comparing the voltage of the Differential Electronic Module (DEM) with that of the Central Electronic Module (CEM). If the control module registers a difference which exceeds 2.0 V, the fault code is set.

The trouble code may be diagnosed after 10 seconds with the ignition on.

Substitute Value

- Four wheel drive is disengaged.

Possible Source

Signal too high:

- Faulty power supply to the Central Electronic Module (CEM).

Signal too low:

- Connector resistance and oxidation in the connectors.

Fault symptom[s]

- Four wheel drive is not functioning.

FAULT TRACING

FAULT-TRACING INFORMATION

NOTE: This trouble code is only relevant for troubleshooting and action in the following cases:

- The trouble code is active in the present driving cycle and has been active for a longer period of time.
- The customer experiences malfunction that can be attributed to the trouble code.

In other cases, the DTC does not indicate a fault and must therefore be ignored and only erased.

Do you want to continue fault-tracing?

- **YES**

  Refer to **CHECKING THE STATUS**

CHECKING THE STATUS

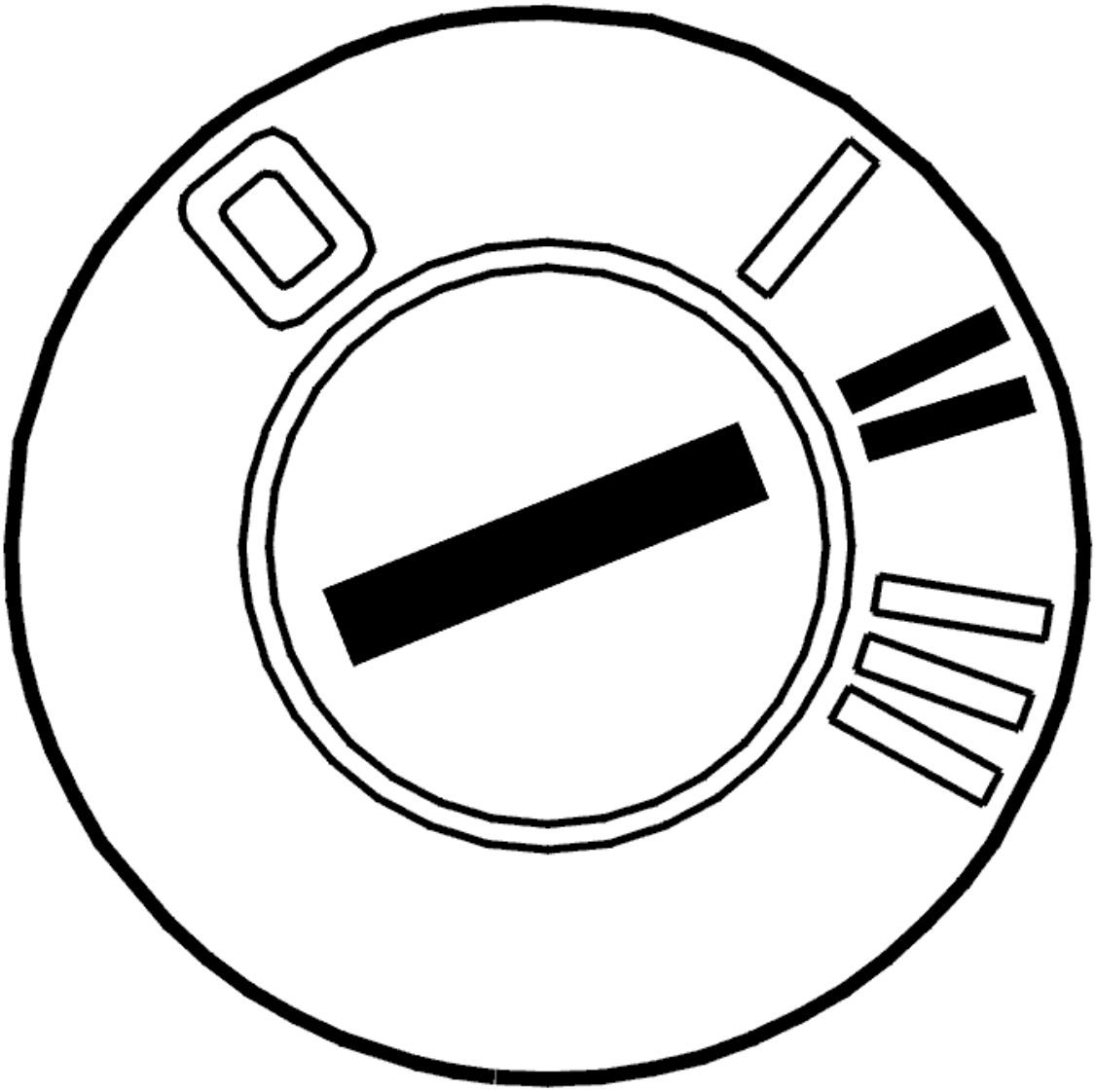

Fig. 232: Identifying Ignition ON
Courtesy of VOLVO CARS CORPORATION

- Ignition on

  Read the values of voltage supply to the Differential Electronic Module (DEM) and the Central Electronic Module (CEM).

  The two voltage levels should not differ by more than +/- 2.0 V.

  HINT: Compare with the battery voltage.

  If the voltage supply to the Differential electronic module (DEM) differs by more than 2.0 V from that of the Central Electronic Module (CEM), a permanent fault is indicated.

  If the voltage is correct, this indicates that the fault has existed previously but is not active just now (an

intermittent fault).

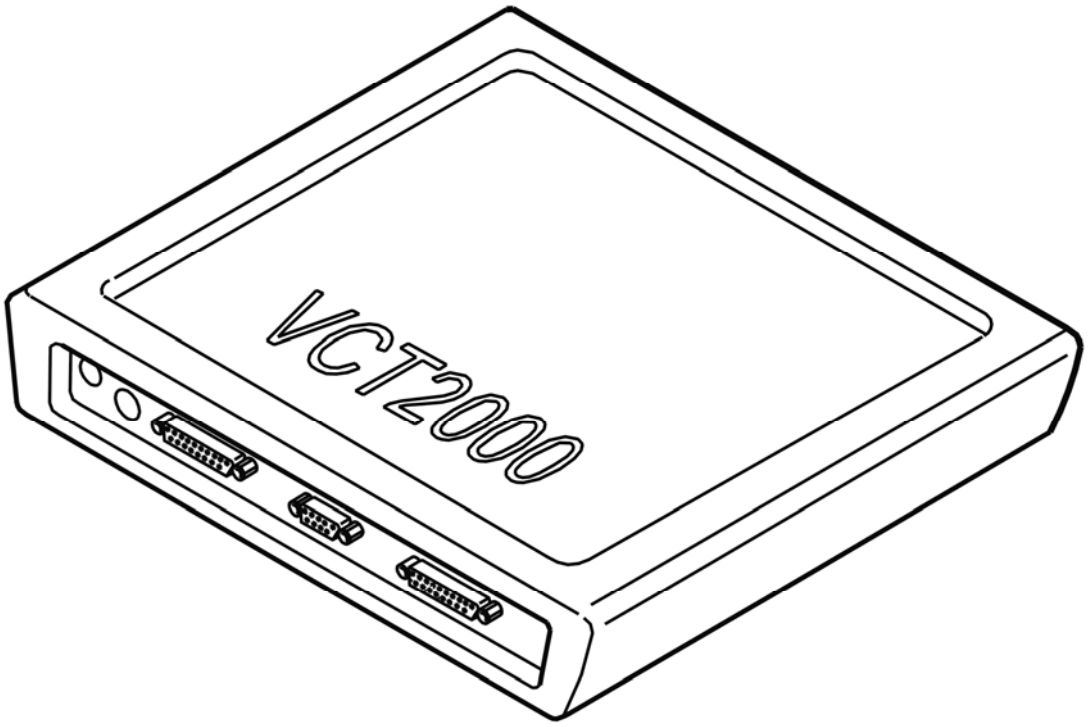

Fig. 233: Identifying VCT2000 Diagnostic Tool Symbol In VIDA
Courtesy of VOLVO CARS CORPORATION

- **Continue**

  Refer to **CHECKING THE CONNECTORS AND LEADS**

CHECKING THE CONNECTORS AND LEADS

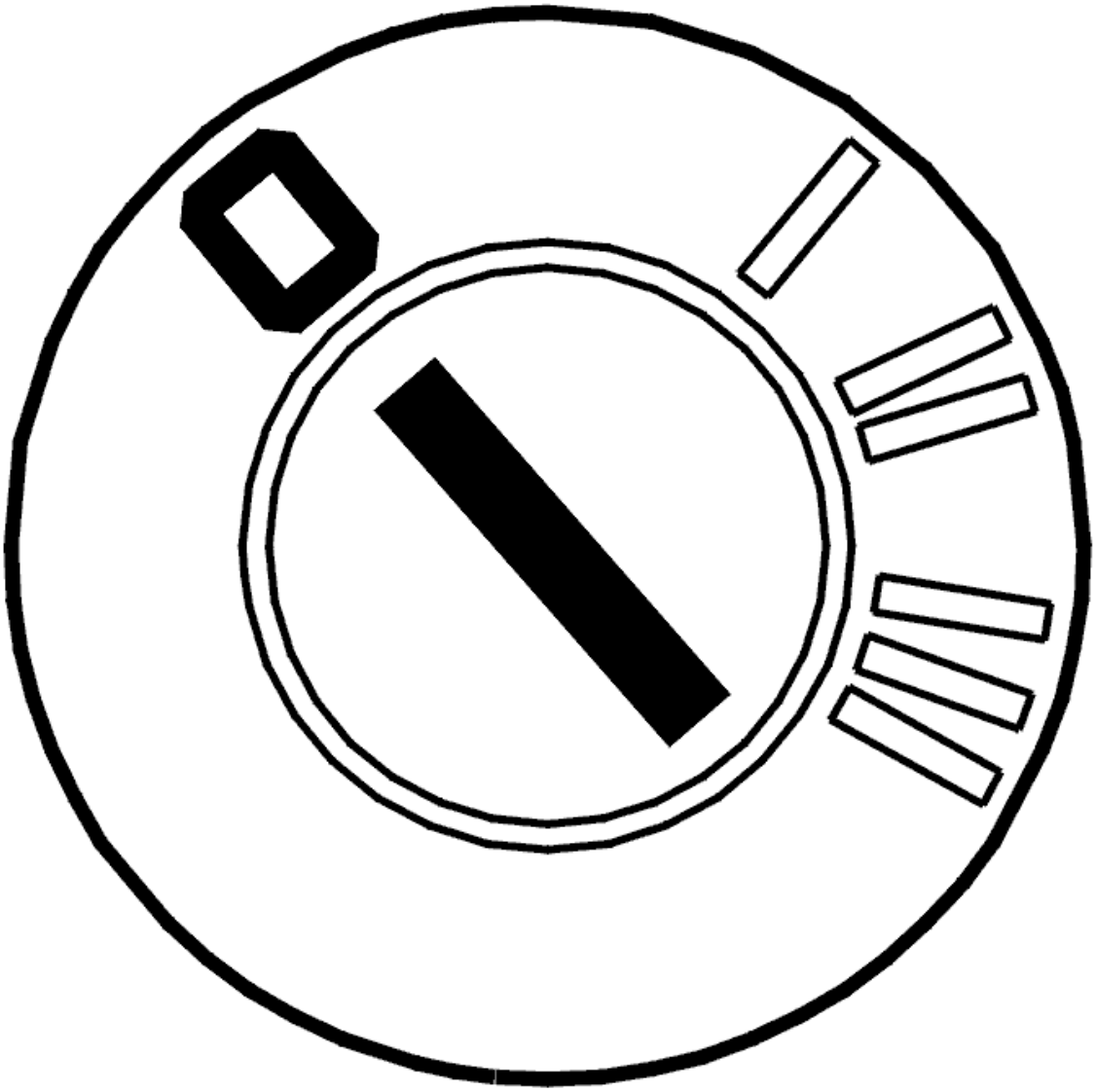

Fig. 234: Identifying Ignition OFF
Courtesy of VOLVO CARS CORPORATION

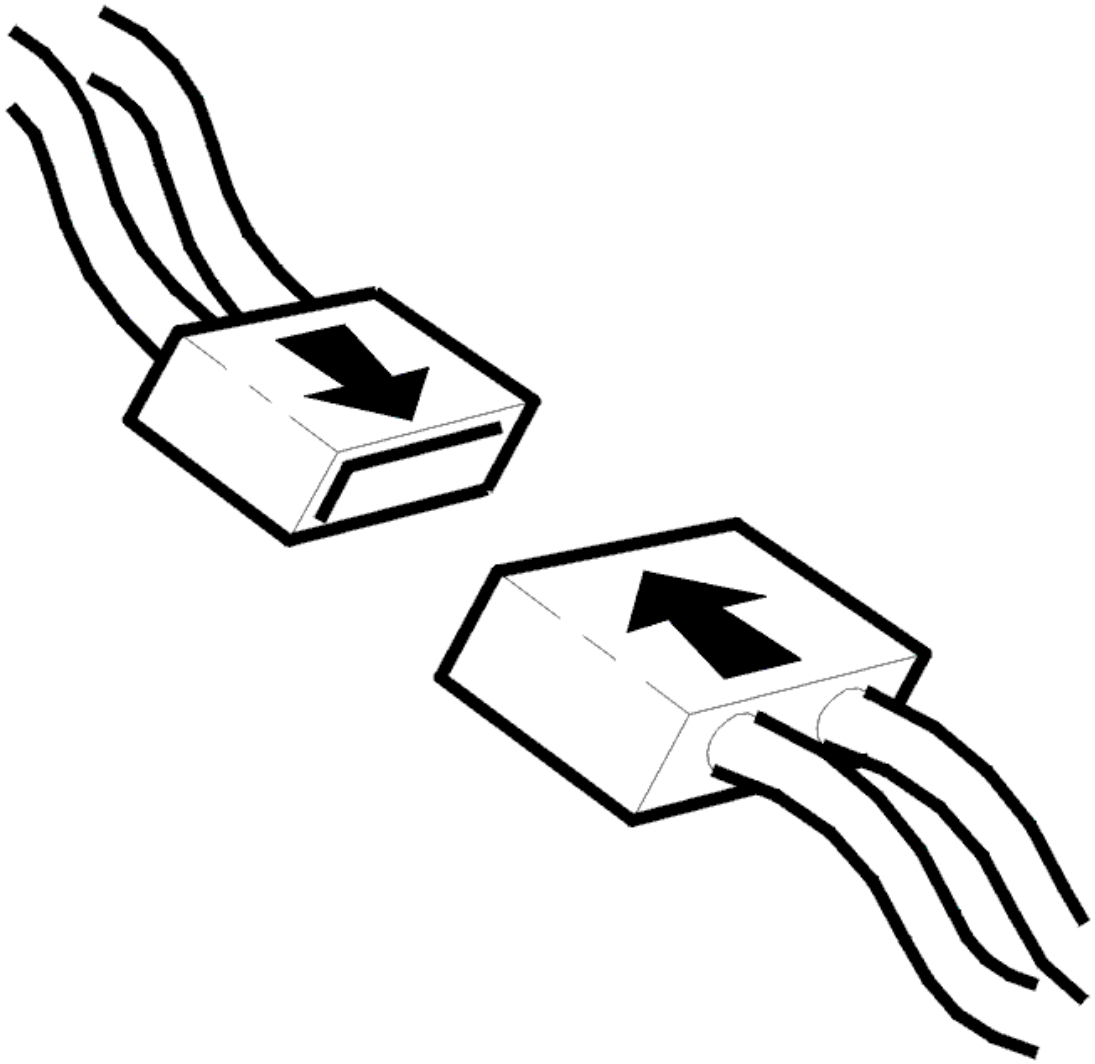

Fig. 235: Connecting Connector
Courtesy of VOLVO CARS CORPORATION

- Ignition off
- Check connector A with respect to contact resistance and oxidation.
- Check for damage to the leads to connector A.
- Ignition on

HINT: Read the voltage value to check the function.

HINT:

Remedy as necessary.

Other information:

- see **SIGNAL SPECIFICATION**
- see **DIFFERENTIAL ELECTRONIC MODULE (DEM), REPLACING**
- see **CONTENTS**

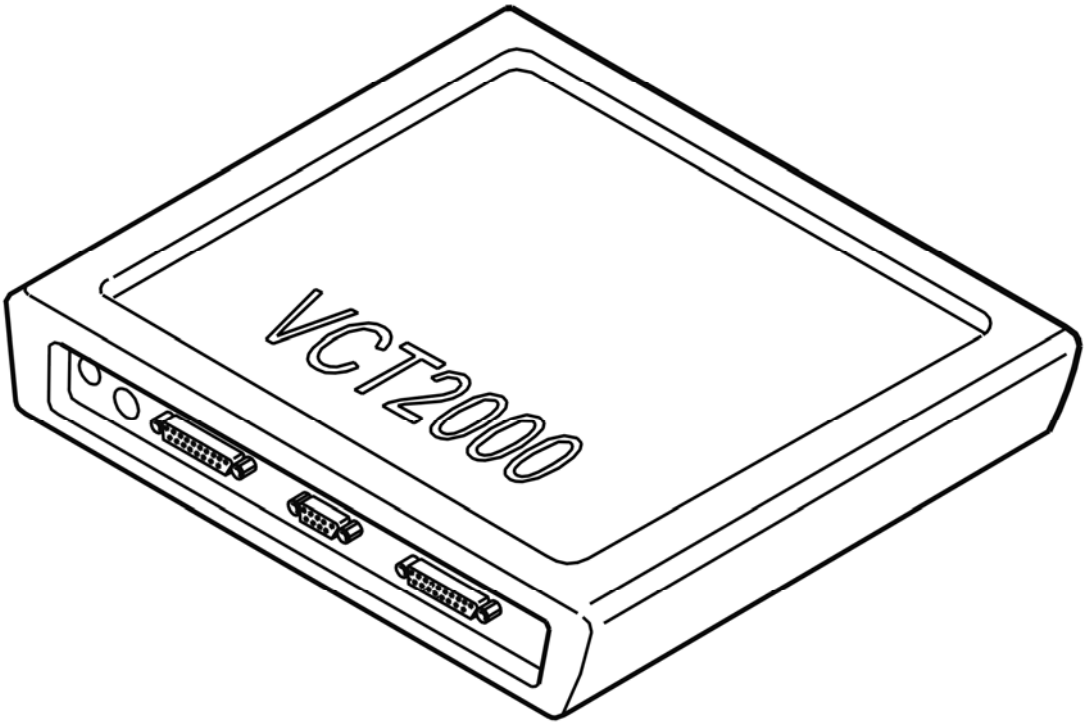

Fig. 236: Identifying VCT2000 Diagnostic Tool Symbol In VIDA
Courtesy of VOLVO CARS CORPORATION

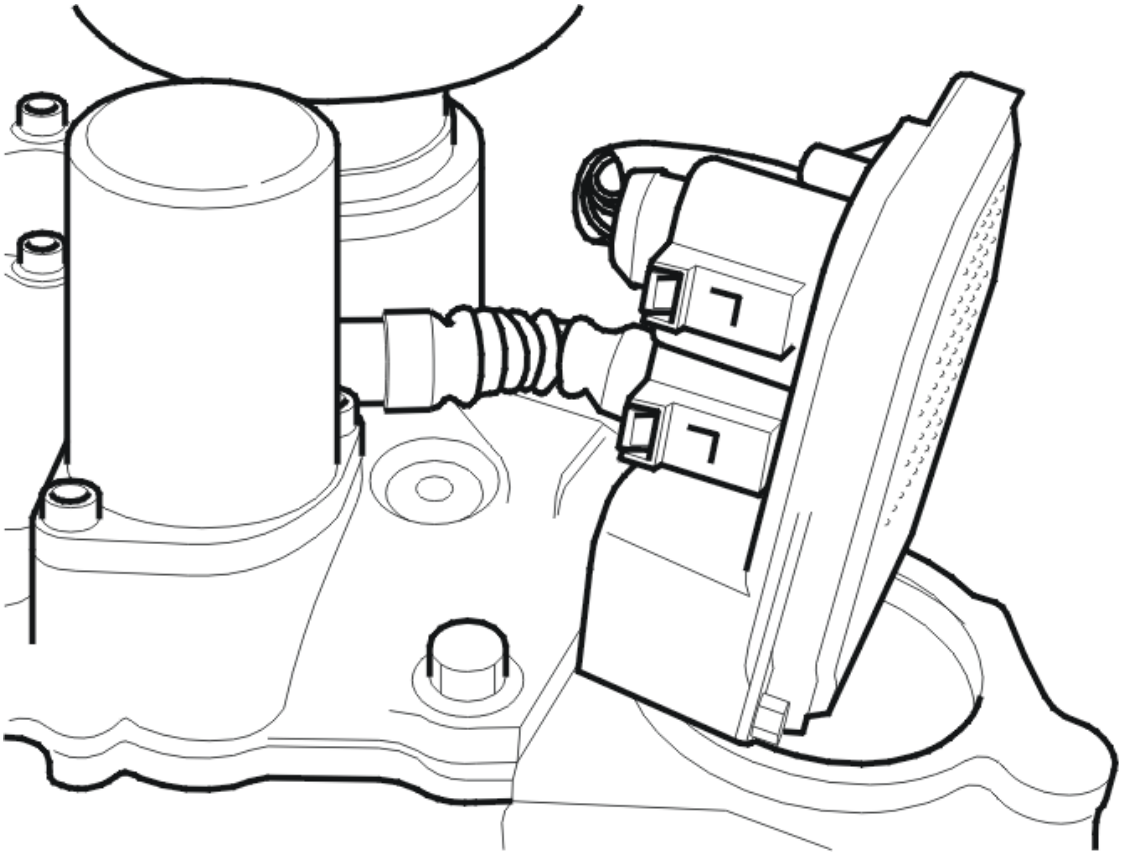

Fig. 237: Identifying Active On Demand Coupling Components
Courtesy of VOLVO CARS CORPORATION

- **Continue**

  Refer to **VERIFICATION**

VERIFICATION

HINT: After carrying out the repair, check that the fault has been remedied.

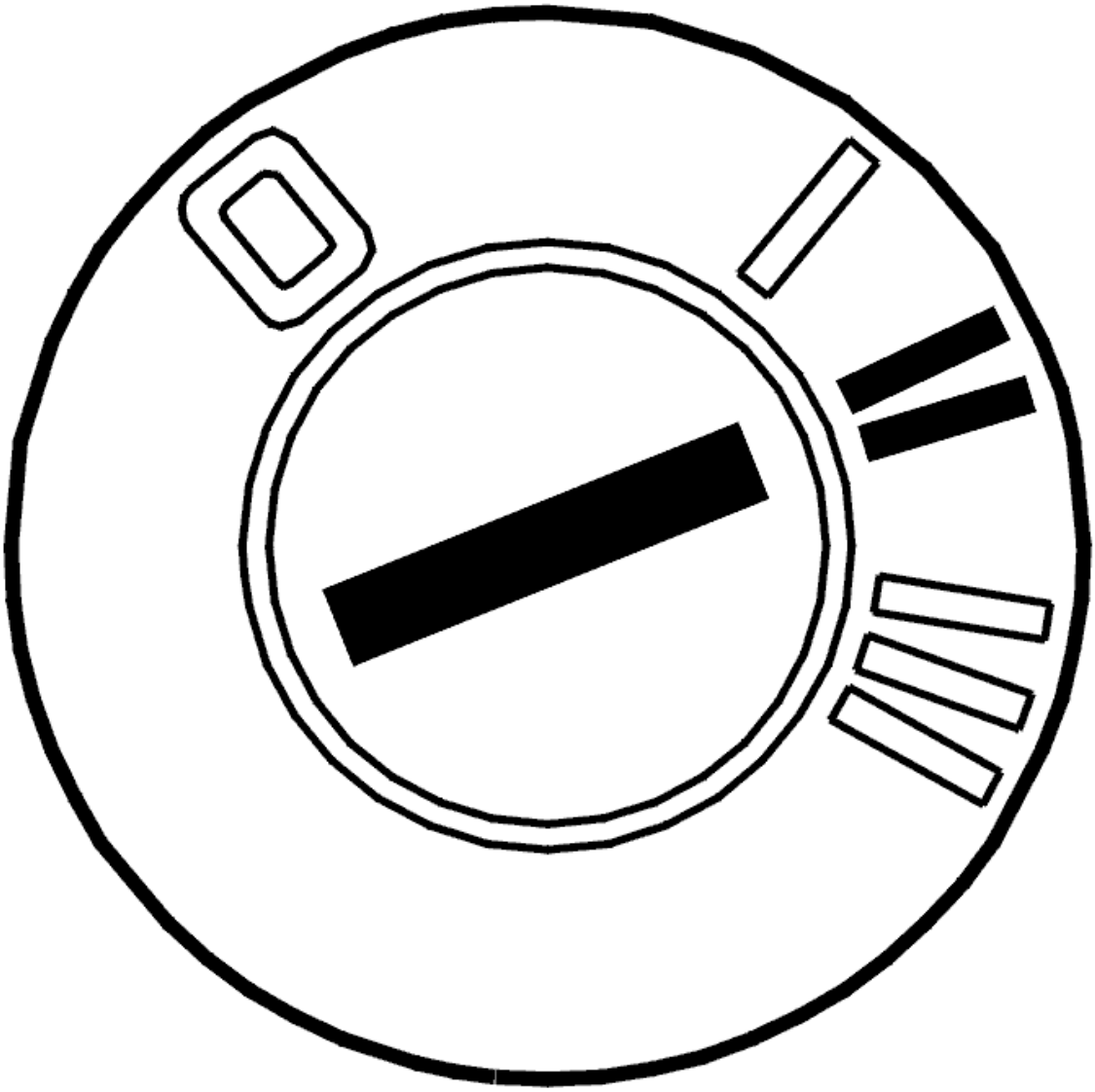

Fig. 238: Identifying Ignition ON
Courtesy of VOLVO CARS CORPORATION

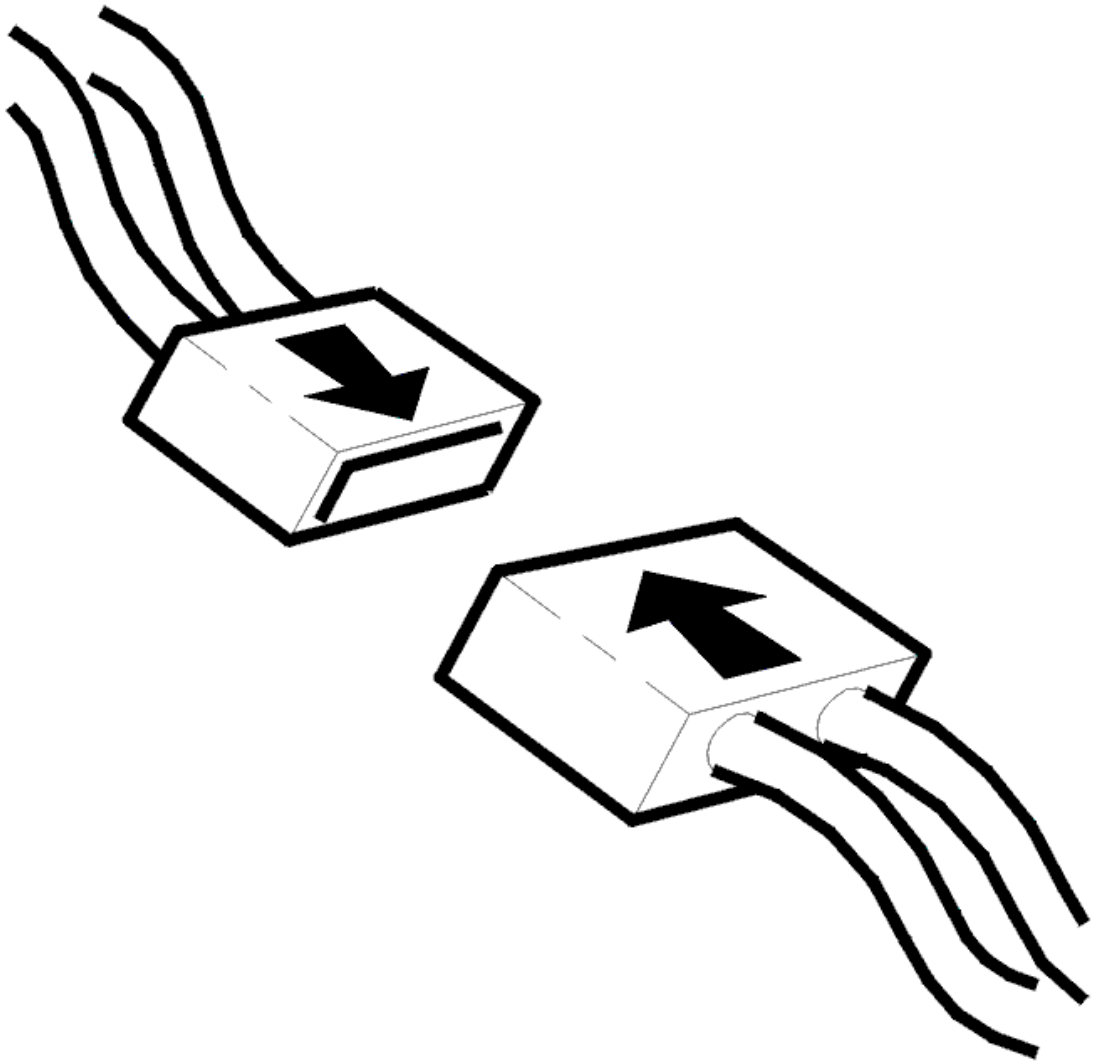

Fig. 239: Connecting Connector
Courtesy of VOLVO CARS CORPORATION

- Ignition off
- Reinstall the connectors, components etc.
- Ignition on

  Read the value of the supply voltage to the Differential Electronic Module (DEM).

  Check that the value is appropriate. The voltage should not differ by more than +/- 2.0 V from that of the Central Electronic Module (CEM).

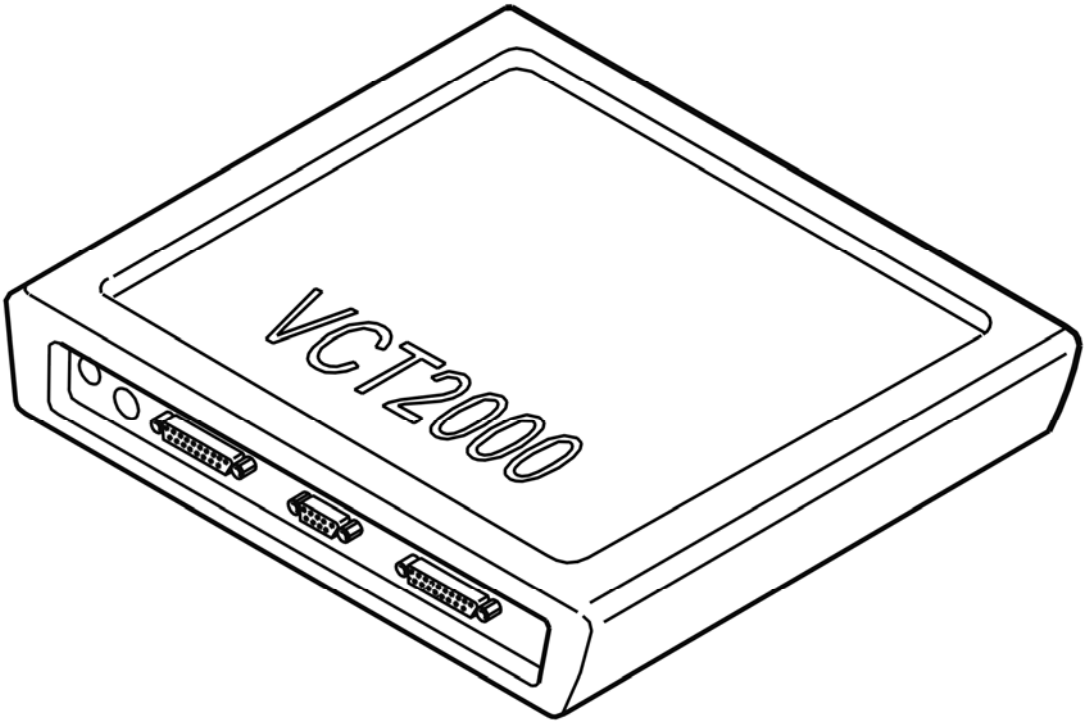

Fig. 240: Identifying VCT2000 Diagnostic Tool Symbol In VIDA
Courtesy of VOLVO CARS CORPORATION

Is the voltage OK?

- **YES**

  VERIFIED: Troubleshooting has been completed.

- **NO**

  Refer to **INFORMATION**

INFORMATION

FAULT-TRACING INFORMATION

The fault should have been detected and remedied. As this is not the case fault-tracing has failed.

Exit fault-tracing for this diagnostic trouble code (DTC) or make another attempt.

DEM-U300362: BATTERY VOLTAGE. ALGORITHM FAULT. COMPARISON FAULT (B8444S, TF-80SC AWD; 2006-2008)

DIAGNOSTIC TROUBLE CODE (DTC) INFORMATION DEM-U300362

see **DIAGNOSTIC TROUBLE CODE (DTC) INFORMATION DEM-U300362**

FAULT TRACING

see **FAULT TRACING DEM-U300362**

DEM-U300362: BATTERY VOLTAGE. ALGORITHM FAULT. COMPARISON FAULT (TF-80SC AWD; 2005)

DIAGNOSTIC TROUBLE CODE (DTC) INFORMATION DEM-U300362

see **DIAGNOSTIC TROUBLE CODE (DTC) INFORMATION DEM-U300362**

FAULT TRACING

see **FAULT TRACING DEM-U300362**

DEM-XXXX: UNKNOWN DIAGNOSTIC TROUBLE CODE (DTC) FOR THE CURRENT CONTROL MODULE VERSION (4T65 AWD; 2005-2006)

UNKNOWN DIAGNOSTIC TROUBLE CODE (DTC) FOR THE PRESENT CONTROL MODULE VERSION

READING OFF DIAGNOSTIC TROUBLE CODES (DTC)

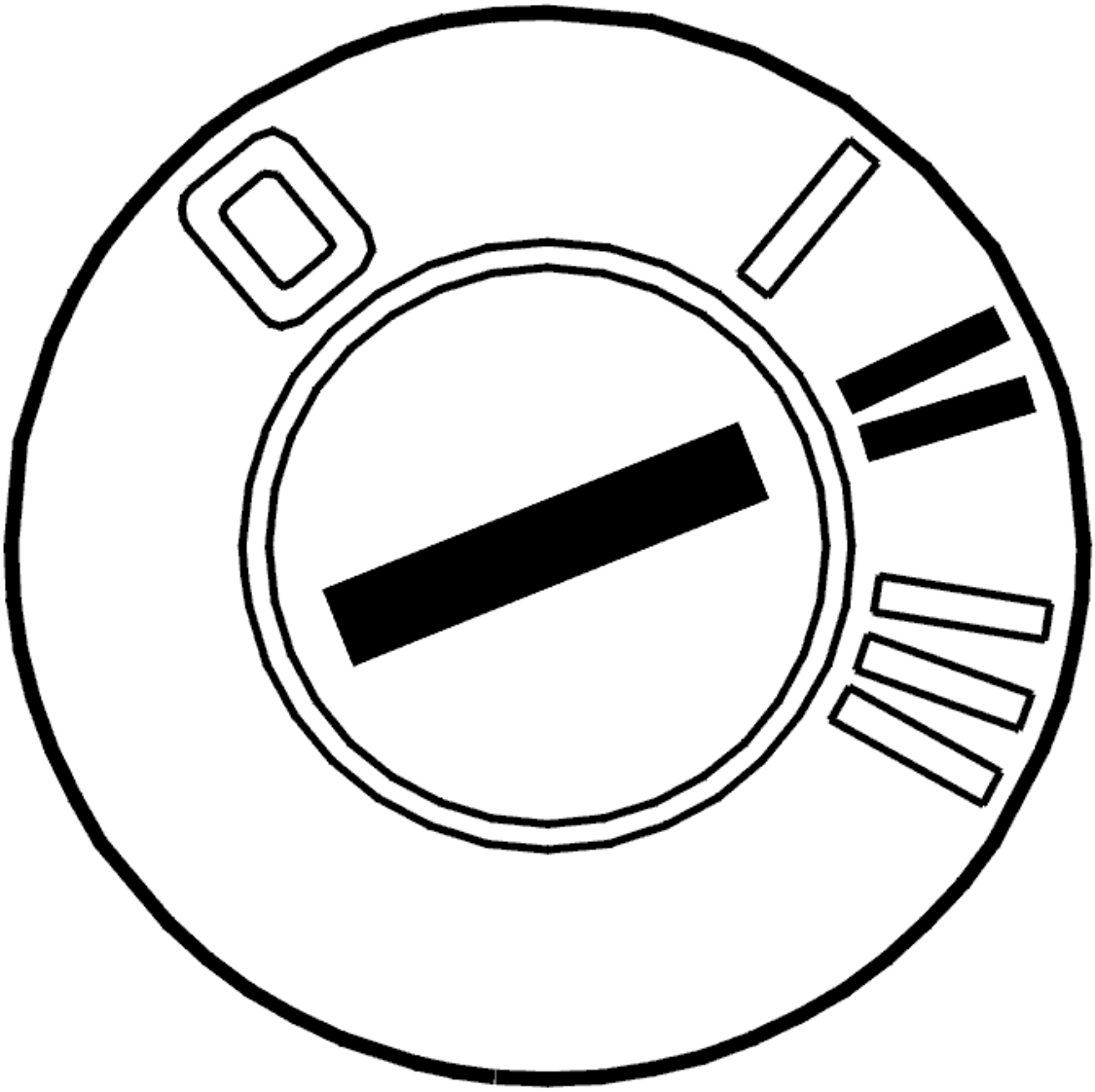

Fig. 241: Identifying Ignition ON
Courtesy of VOLVO CARS CORPORATION

- Switch on the ignition. Wait for 10 seconds.

  Read off the diagnostic trouble code (DTC) that is stored in the vehicle.

  Make a note of the code. Report the code to VIDA customer support.

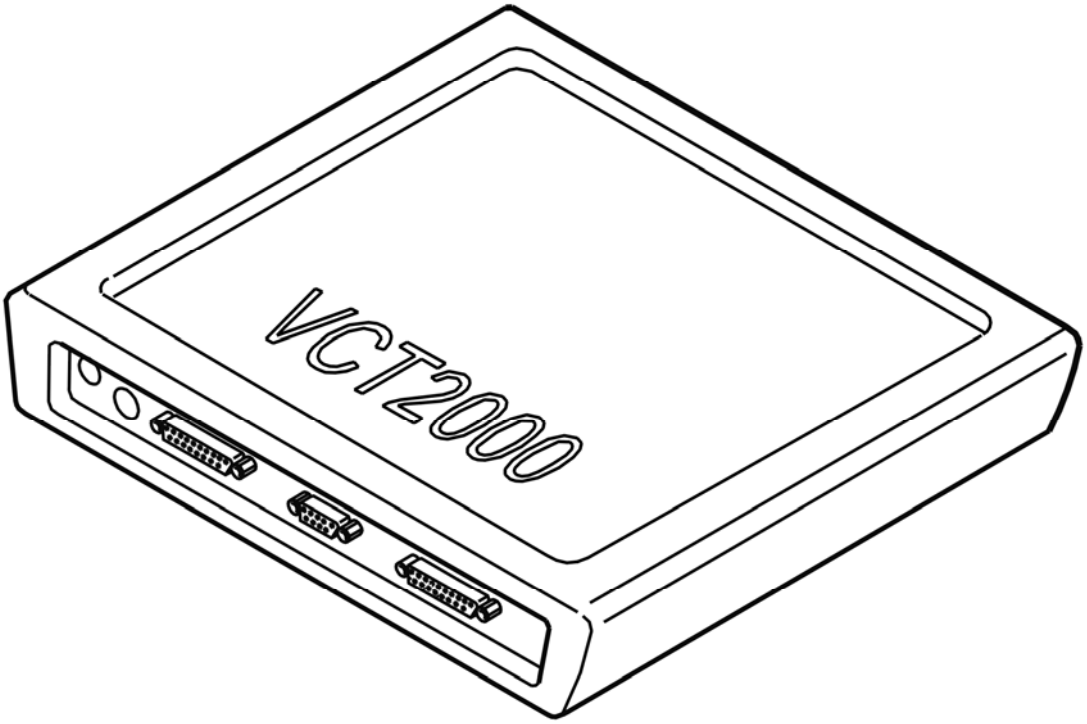

Fig. 242: Identifying VCT2000 Diagnostic Tool Symbol In VIDA
Courtesy of VOLVO CARS CORPORATION

DEM-XXXX: UNKNOWN DIAGNOSTIC TROUBLE CODE (DTC) FOR THE CURRENT CONTROL MODULE VERSION (AW50/51 AWD; 2005-2007)

UNKNOWN DIAGNOSTIC TROUBLE CODE (DTC) FOR THE PRESENT CONTROL MODULE VERSION

see **UNKNOWN DIAGNOSTIC TROUBLE CODE (DTC) FOR THE PRESENT CONTROL MODULE VERSION**

DEM-XXXXXX: UNSPECIFIED DIAGNOSTIC TROUBLE CODE (DTC) FOR CURRENT CONTROL MODULE VERSION (B6324S, TF-80SC AWD; 2007-2008)

UNKNOWN DIAGNOSTIC TROUBLE CODE (DTC) FOR THE CURRENT CONTROL MODULE VERSION

READING OFF DIAGNOSTIC TROUBLE CODES (DTC)

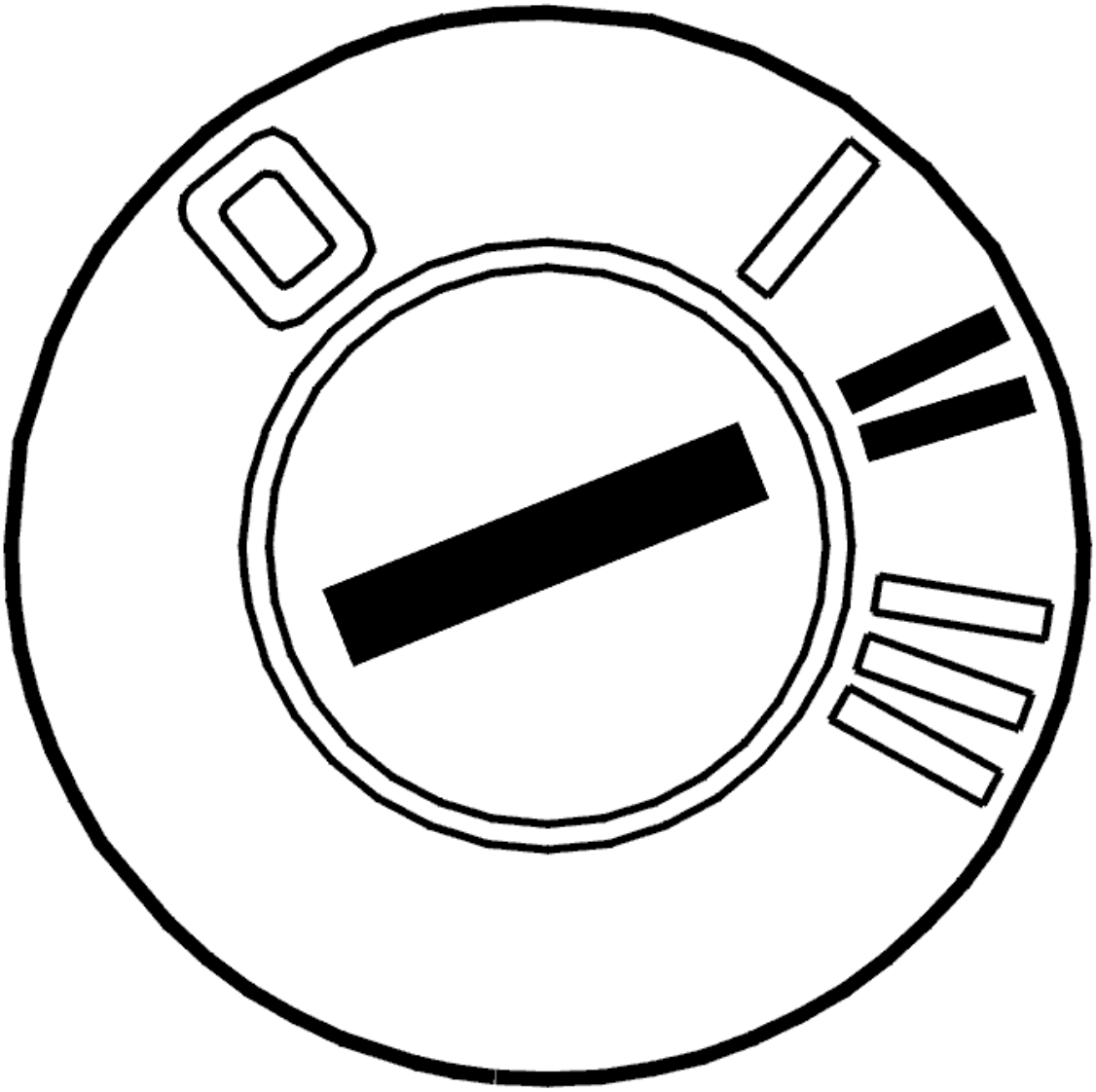

Fig. 243: Identifying Ignition ON
Courtesy of VOLVO CARS CORPORATION

- Switch on the ignition and wait for 10 seconds.

  Read the Diagnostic Trouble Codes (DTC) stored in the vehicle.

  Note down the digit combination and advise customer support.

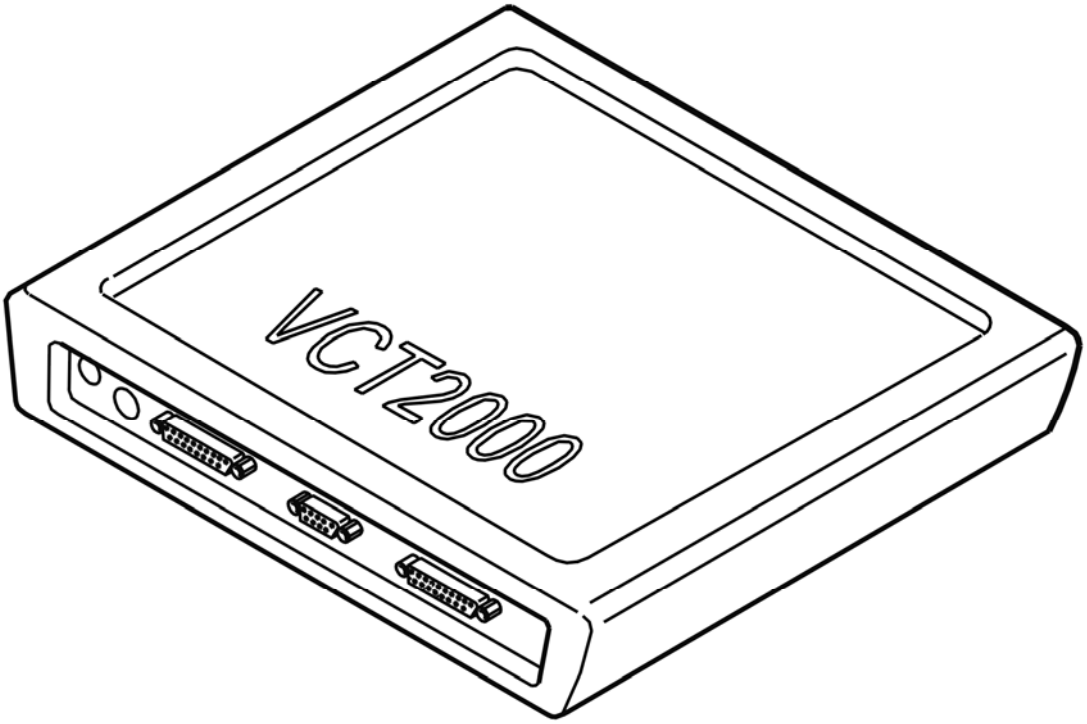

Fig. 244: Identifying VCT2000 Diagnostic Tool Symbol In VIDA
Courtesy of VOLVO CARS CORPORATION

DEM-XXXXXX: UNSPECIFIED DIAGNOSTIC TROUBLE CODE (DTC) FOR CURRENT CONTROL MODULE VERSION (B8444S, TF-80SC AWD; 2006-2008)

UNKNOWN DIAGNOSTIC TROUBLE CODE (DTC) FOR THE CURRENT CONTROL MODULE VERSION

see **UNKNOWN DIAGNOSTIC TROUBLE CODE (DTC) FOR THE CURRENT CONTROL MODULE VERSION**

DEM-XXXXXX: UNSPECIFIED DIAGNOSTIC TROUBLE CODE (DTC) FOR CURRENT CONTROL MODULE VERSION (TF-80SC AWD; 2005)

UNKNOWN DIAGNOSTIC TROUBLE CODE (DTC) FOR THE CURRENT CONTROL MODULE VERSION

see **UNKNOWN DIAGNOSTIC TROUBLE CODE (DTC) FOR THE CURRENT CONTROL MODULE VERSION**

DRIVELINE/AXLES

Rear Axle, Drive Shafts - General Diagnostics And Tests

CHECKING POWER SUPPLY AND GROUND TERMINALS (4T65 AWD; AW50/51 AWD; 2003-04)

CHECKING POWER SUPPLY AND GROUND TERMINALS

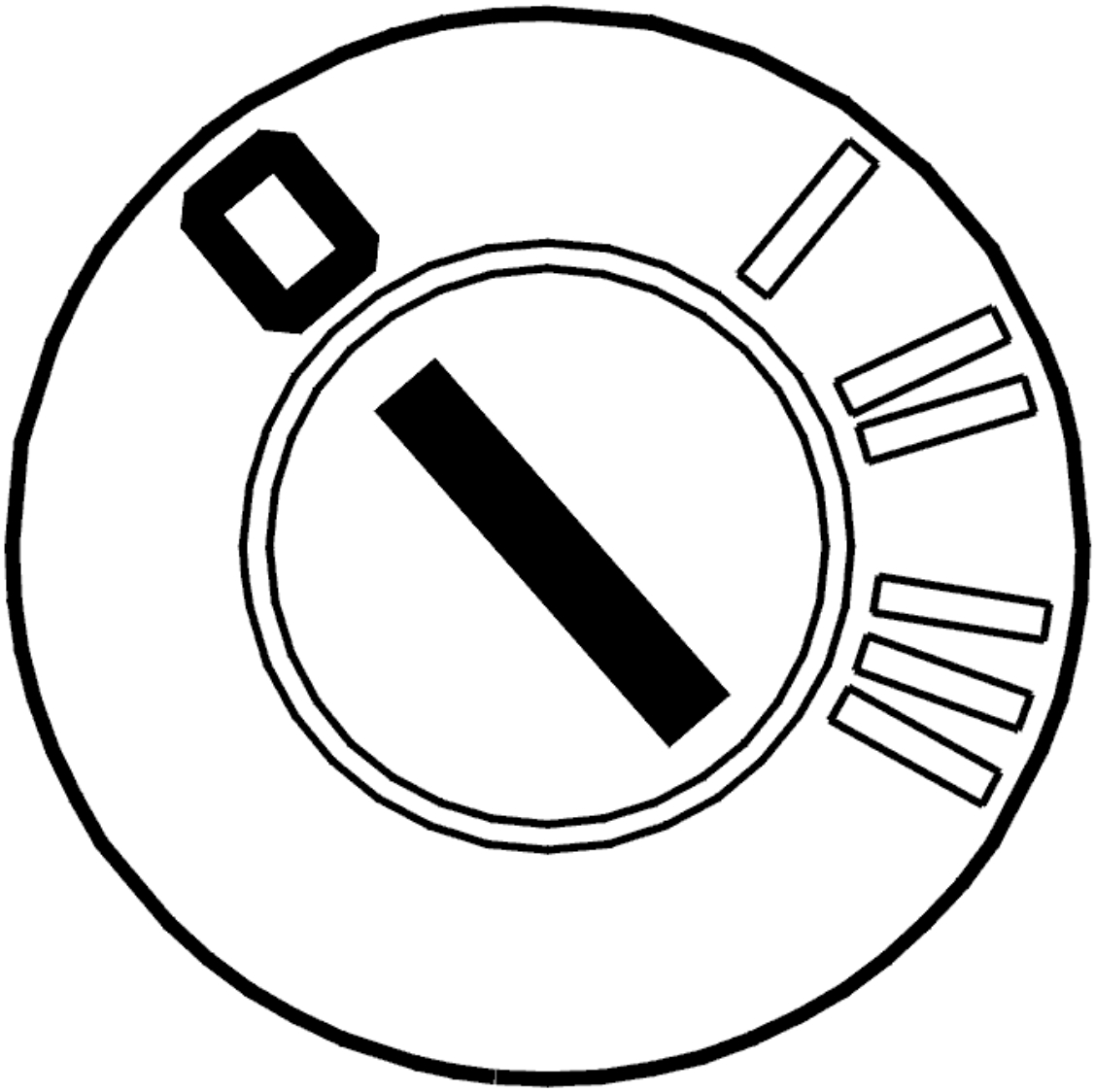

Fig. 1: Identifying Ignition OFF
Courtesy of VOLVO CARS CORPORATION

- Ignition off.

  Check the fuse for the control module for four wheel drive (Active on Demand Coupling) in the

integrated relay/fusebox in the engine compartment.

If the fuse is blown, fault trace the circuit between control module terminal #1 and the fuse. Check for a short-circuit to supply voltage. Check for a short-circuit to ground.

If the fuse is intact, check the cable between control module terminal #1 and the fuse. Check for an open-circuit.

Check the cable between control module terminal #2 and ground. Check for contact resistance. Check for an open-circuit. Check for a short-circuit to supply voltage.

Check the ground terminal connection. Check for contact resistance and oxidation.

Remedy as necessary.

Other information

- see **CONTENTS** .

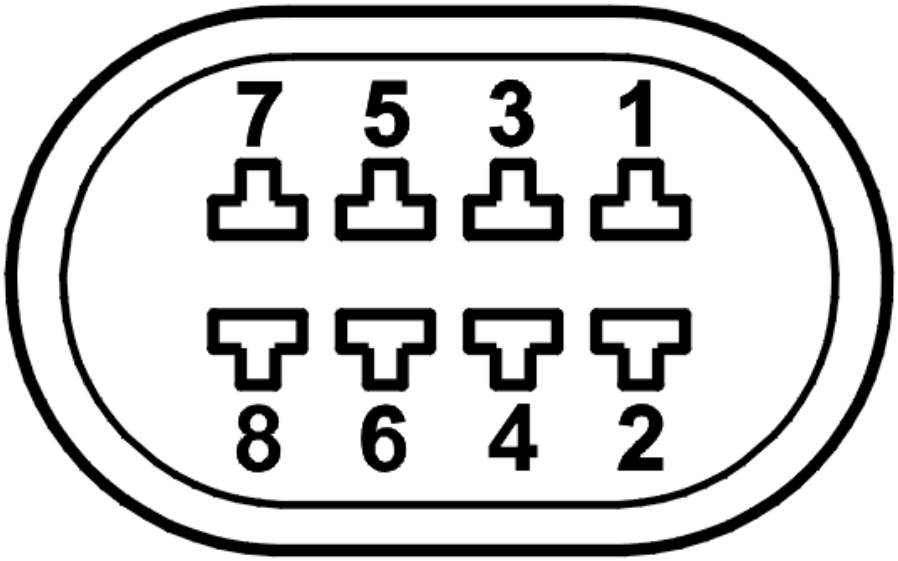

Fig. 2: Identifying Connector Terminals
Courtesy of VOLVO CARS CORPORATION

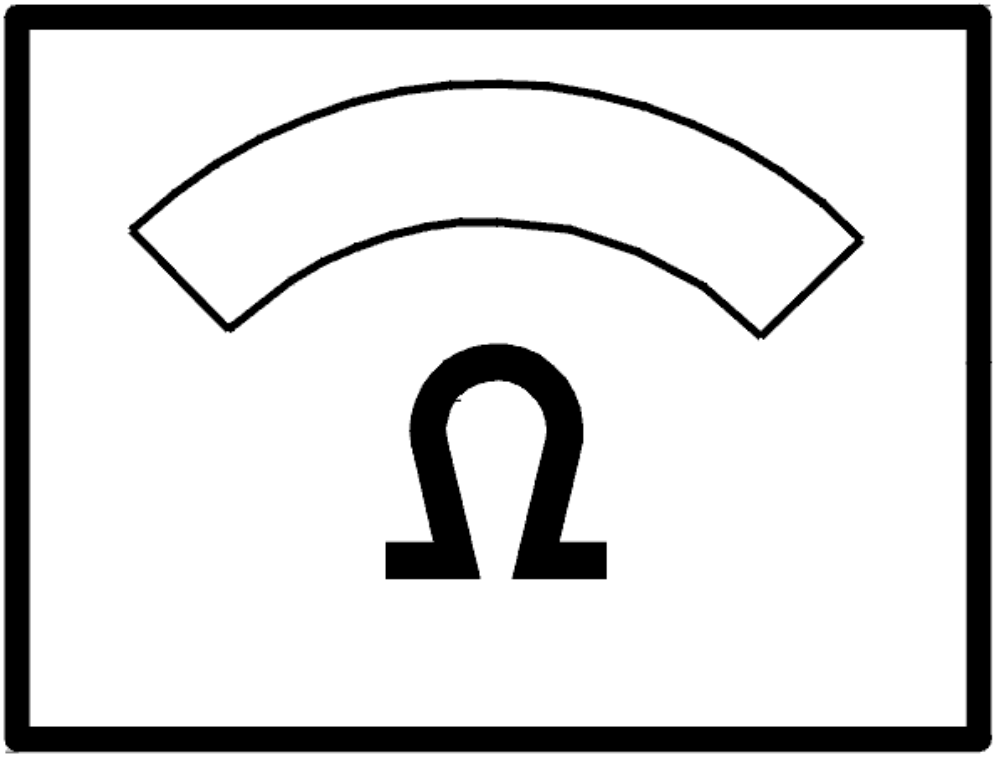

Fig. 3: Identifying Ohmmeter
Courtesy of VOLVO CARS CORPORATION

Fig. 4: Identifying Connector
Courtesy of VOLVO CARS CORPORATION

CHECKING THE VOLTAGE AND GROUND TERMINAL, DIFFERENTIAL ELECTRONIC MODULE (DEM) (B6324S, TF-80SC AWD; 2009-10)

CHECKING THE SUPPLY VOLTAGE/GROUND TERMINAL

Differential electronic module (DEM) supplied with voltage via terminal #C1:1.

With the ignition on the control module is supplied with power and therefore active.

Checking the power supply

Check the fuse for the differential electronic module (DEM) in the integrated relay/fusebox in the engine compartment.

If the fuse is blown, fault trace the circuit between control module terminal #C1:1 and the fuse. Check for a short-circuit to supply voltage. Check for a short-circuit to ground.

If the fuse is intact, check the cable between terminal #C1:1 and the fuse. Check for an open-circuit.

Ground terminal differential electronic module (DEM)

Check the cable between control module terminal #C1:2 respectively #C1:4 and ground terminal. Check for contact resistance. Check for an open-circuit. Check for a short-circuit to supply voltage.

Checking the ground terminal

Check the ground terminal connection. Check for contact resistance and oxidation.

Remedy as necessary.

Other information

- see **SIGNAL SPECIFICATION**
- see **CHECKING WIRING AND TERMINALS**

CHECKING THE VOLTAGE AND GROUND TERMINAL, DIFFERENTIAL ELECTRONIC MODULE (DEM) (B6324S, TF-80SC AWD; 2007-08)

CHECKING THE SUPPLY VOLTAGE/GROUND TERMINAL

CHECKING THE POWER SUPPLY AND GROUND TERMINALS

Power supply differential electronic module (DEM)

Differential electronic module (DEM) is supplied with power via terminal #A1 on the control module.

With the ignition on the control module is supplied with power and therefore active.

Checking the power supply

Check the fuse for the differential electronic module (DEM) in the integrated relay/fusebox in the engine compartment.

If the fuse is blown, fault trace the circuit between control module terminal #A1 and the fuse. Check for a short-circuit to supply voltage. Check for a short-circuit to ground.

If the fuse is intact, check the cable between control module terminal #A1 and the fuse. Check for an open-circuit.

Ground terminal differential electronic module (DEM)

Check the cable between control module terminal #A2, #A4 and ground terminal. Check for contact resistance. Check for an open-circuit. Check for a short-circuit to supply voltage.

Checking the ground terminal

Check the ground terminal connection. Check for contact resistance and oxidation.

Remedy as necessary.

Other information

- see **SIGNAL SPECIFICATION, DIFFERENTIAL ELECTRONIC MODULE (DEM)**

CHECKING THE VOLTAGE AND GROUND TERMINAL, DIFFERENTIAL ELECTRONIC MODULE (DEM) (B6324S5, TF-80SC AWD; 2011-12)

CHECKING THE SUPPLY VOLTAGE/GROUND TERMINAL

see **CHECKING THE SUPPLY VOLTAGE/GROUND TERMINAL**

CHECKING THE VOLTAGE AND GROUND TERMINAL, DIFFERENTIAL ELECTRONIC MODULE (DEM) (B8444S, TF-80SC AWD; 2009-11)

CHECKING THE SUPPLY VOLTAGE/GROUND TERMINAL

see **CHECKING THE SUPPLY VOLTAGE/GROUND TERMINAL**

CHECKING THE VOLTAGE AND GROUND TERMINAL, DIFFERENTIAL ELECTRONIC MODULE (DEM) (B8444S, TF-80SC AWD; 2006-08)

CHECKING THE SUPPLY VOLTAGE/GROUND TERMINAL

see **CHECKING THE SUPPLY VOLTAGE/GROUND TERMINAL**

CHECKING THE VOLTAGE AND GROUND TERMINAL, DIFFERENTIAL ELECTRONIC MODULE (DEM) (TF-80SC AWD; 2005)

CHECKING THE SUPPLY VOLTAGE/GROUND TERMINAL

see **CHECKING THE SUPPLY VOLTAGE/GROUND TERMINAL**

DRIVELINE/AXLES

Rear Axle, Drive Shafts - Removal, Replacement And Installation

FINAL DRIVE, TRANSFERRING COMPONENTS (2003-2012)

FINAL DRIVE

XC90	AW50AWD, 4T65AWD 2003- M66, AWD 2004- TF-80SCAWD 2006-	see **FINAL DRIVE, TRANSFERRING COMPONENTS**

FINAL DRIVE, TRANSFERRING COMPONENTS

NOTE: **As the illustrations in this service information are used for different model years and / or models, some variation may occur. However, the essential information is always correct.**

REMOVAL

REMOVING THE FINAL DRIVE

Remove the final drive. See **FINAL DRIVE, REPLACING** .

REMOVING THE ACTIVE ON DEMAND COUPLING

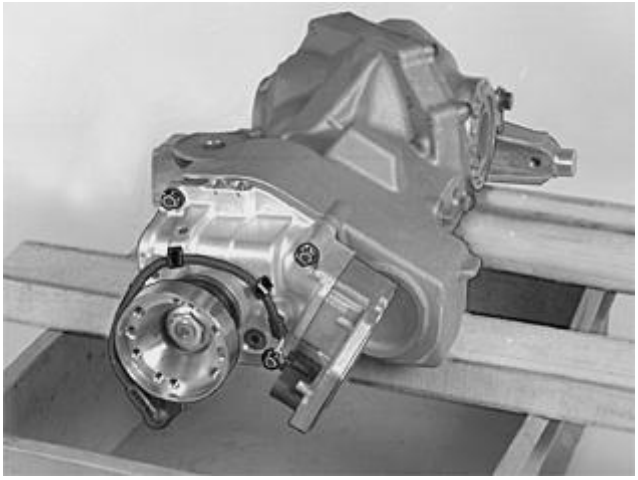

Fig. 1: Active On Demand Coupling
Courtesy of VOLVO CARS CORPORATION

Place the AOC (Active on Demand Coupling)/ final drive over a stable container together with some supports.

Remove the 4 screws holding the Active on Demand Coupling.

Pull the AOC (Active on Demand Coupling) straight out from the final drive.

Place the coupling on a clean surface.

CHECKING THE ACTIVE ON DEMAND COUPLING

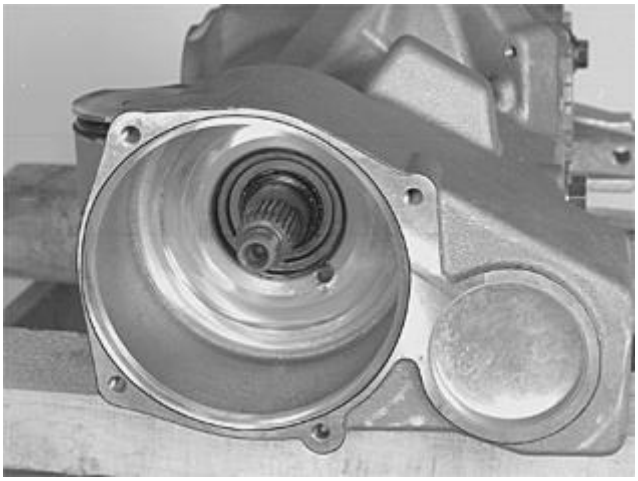

Fig. 2: Checking Active On Demand Coupling In Final Drive Housing Is Completely Clean
Courtesy of VOLVO CARS CORPORATION

Check carefully that the space for the AOC (Active on Demand Coupling) in the final drive housing is completely clean.

There must not be any lint from paper or cloths.

Fig. 3: Identifying Active On Demand Coupling
Courtesy of VOLVO CARS CORPORATION

Check thoroughly that the Active on Demand Coupling is clean. Also check that the mating surface is not damaged.

Place the new O-ring on the Active on Demand Coupling.

INSTALLATION

NOTE: For tightening torques, see TIGHTENING TORQUE.

INSTALLING THE ACTIVE ON DEMAND COUPLING

Fig. 4: Active On Demand Coupling
Courtesy of VOLVO CARS CORPORATION

Install the AOC (Active on Demand Coupling) on the new final drive.

Ensure that the gasket does not jump out of position.

Install the 4 M8 screws for the Active on Demand Coupling. Tighten.

Tighten the screws alternately and crosswise to light contact.

INSTALLING THE FINAL DRIVE

Install the final drive. See **FINAL DRIVE, REPLACING** .

FINAL DRIVE, TRANSFERRING COMPONENTS

NOTE: As the illustrations in this service information are used for different model years and / or models, some variation may occur. However, the essential information is always correct.

REMOVAL

REMOVING DRIVE SHAFTS

Remove the drive shafts according to **HALF SHAFT SEAL REAR FINAL DRIVE HOUSING, REPLACING** .

REMOVING THE FINAL DRIVE

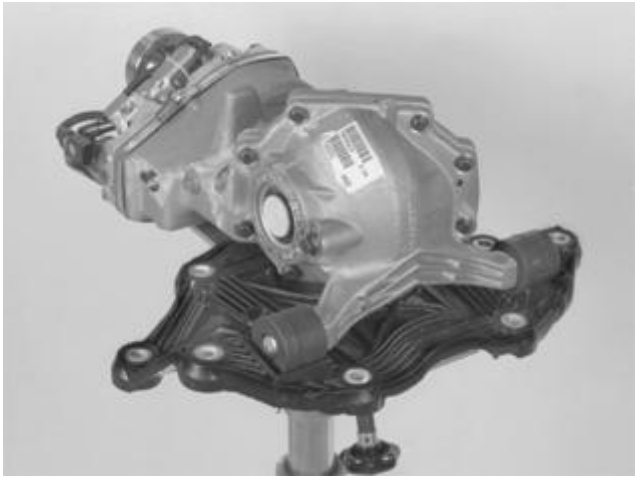

Fig. 5: Identifying Active On Demand Coupling / Final Drive
Courtesy of VOLVO CARS CORPORATION

Remove the Active on Demand Coupling / final drive from the hoist.

REMOVING THE ACTIVE ON DEMAND COUPLING

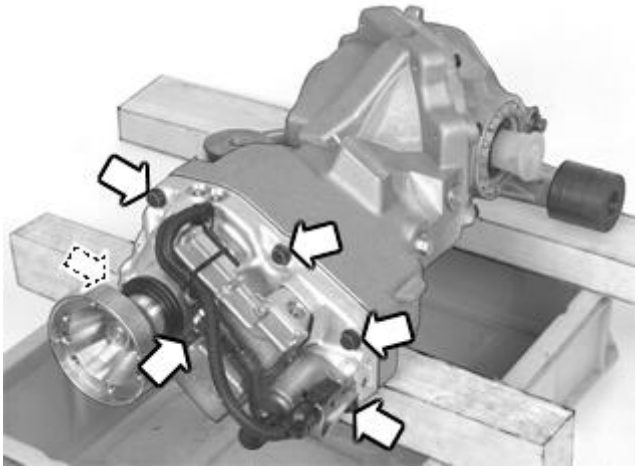

Fig. 6: Identifying Active On Demand Coupling Screws
Courtesy of VOLVO CARS CORPORATION

Place the Active on Demand Coupling / final drive over a stable container together with some supports.

Remove the 6 screws holding the Active on Demand Coupling.

Pull the Active on Demand coupling straight out from the final drive.

Place the coupling on a clean surface.

CHECKING THE ACTIVE ON DEMAND COUPLING

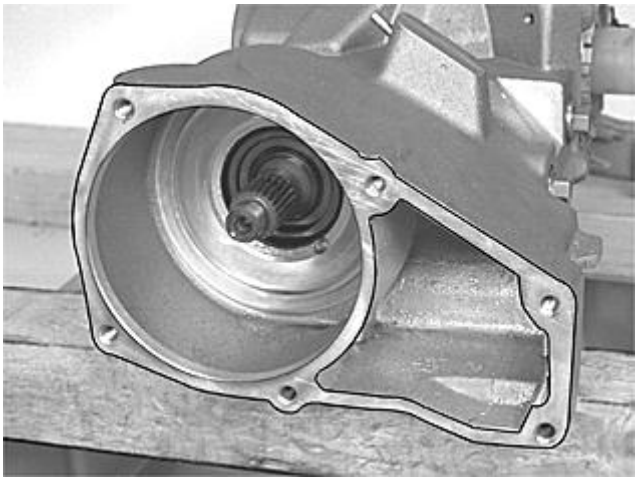

Fig. 7: Identifying Final Drive Housing
Courtesy of VOLVO CARS CORPORATION

Check carefully that the space for the Active on Demand Coupling in the final drive housing is completely clean.

There must not be any lint from paper or cloths.

Fig. 8: Identifying Active On Demand Coupling
Courtesy of VOLVO CARS CORPORATION

Check thoroughly that the Active on Demand Coupling is clean.

Place the new gasket on the Active on Demand Coupling.

INSTALLATION

INSTALLING THE ACTIVE ON DEMAND COUPLING

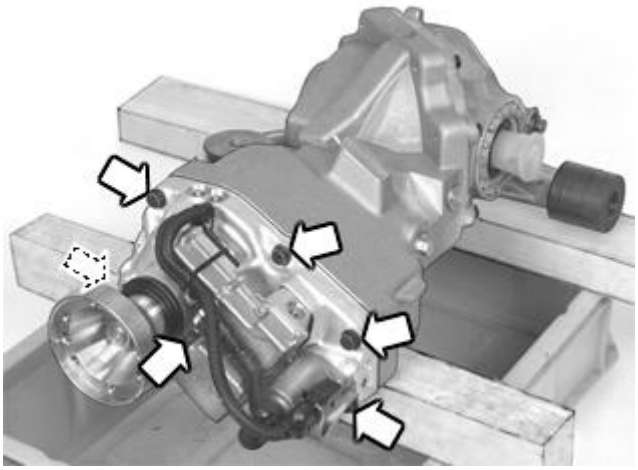

Fig. 9: Identifying Active On Demand Coupling Screws
Courtesy of VOLVO CARS CORPORATION

Install the Active on Demand Coupling on the new final drive.

Ensure that the gasket does not jump out of position.

Install the 6 screws for the Active on Demand Coupling. Do not forget the bracket for the connector.

Tighten alternately to light contact. Then tighten alternately to **25 Nm** .

INSTALLING THE ACTIVE ON DEMAND COUPLING AND THE FINAL DRIVE ON THE MOBILE JACK

Fig. 10: Identifying Lower Cover, Active On Demand Coupling & Final Drive
Courtesy of VOLVO CARS CORPORATION

Position the lower cover and the Active on Demand coupling and final drive on the mobile jack. Tighten the hose clamp over the Active on Demand coupling / final drive and the universal plate.

Lubricate the lips on the sealing rings for the drive shafts. Use grease 1161241-3.

Press the drive shafts into place in the final drive housing.

Pull the inner joint housings to check that the circlips on the shafts have engaged in their channels on the final drive

CAUTION: Be very careful when positioning the shaft in the resting position. The inner joint may be damaged if the shaft releases under its own weight.

FINAL DRIVE, TRANSFERRING COMPONENTS

REMOVING DRIVE SHAFTS

Remove the drive shafts. See **REMOVING DRIVE SHAFTS** .

REMOVING THE FINAL DRIVE

Fig. 11: Identifying Final Drive From Hoist
Courtesy of VOLVO CARS CORPORATION

Remove the final drive from the hoist.

REMOVING THE VISCOUS COUPLING HOUSING AND COUPLING

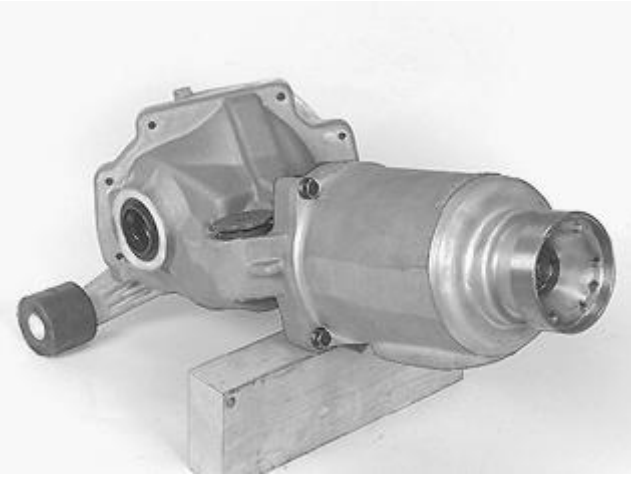

Fig. 12: Positioning Final Drive With Viscous Coupling Housing And Coupling On A Workbench
Courtesy of VOLVO CARS CORPORATION

Position the final drive with the viscous coupling housing and coupling on a workbench. Support the front with a wooden block.

Remove the 3 screws for the viscous coupling housing and coupling.

Pull the viscous coupling housing and coupling straight out of the final drive.

Clear up any oil spill.

CHECKING THE VISCOUS COUPLING HOUSING AND VISCOUS COUPLING

Check the viscous coupling housing and coupling. See **CHECKING THE VISCOUS COUPLING HOUSING AND VISCOUS COUPLING** .

INSTALLING THE VISCOUS COUPLING HOUSING AND COUPLING

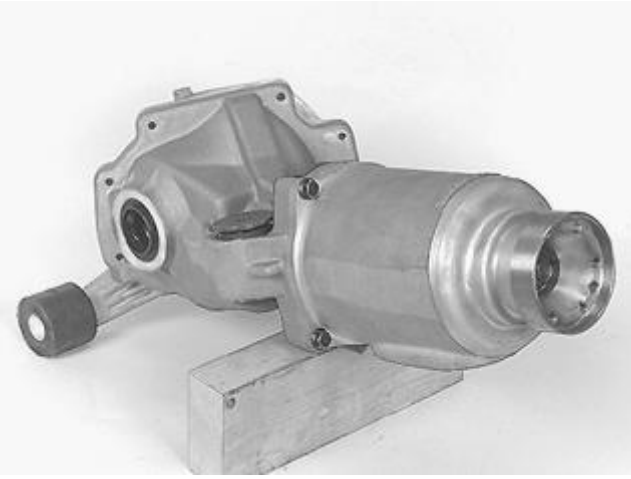

Fig. 13: Positioning Final Drive With Viscous Coupling Housing And Coupling On A Workbench
Courtesy of VOLVO CARS CORPORATION

Position the new final drive on a workbench. Support the front with a wooden block.

Lubricate the pinion seal lip with wheel bearing grease (P/N 1161241-3).

Install the unit. Tighten the screws. Tighten to **25 Nm** .

INSTALLING THE FINAL DRIVE HOUSING ON THE MOBILE JACK

Fig. 14: Identifying Lower Cover, Active On Demand Coupling & Final Drive
Courtesy of VOLVO CARS CORPORATION

Position the lower cover and the final drive on the mobile jack. Tighten the hose clamp over the viscous coupling housing and the universal plate.

Lubricate the lips on the sealing rings for the drive shafts. Use grease 1161241-3.

Press the drive shafts into place in the final drive housing.

Pull the inner joint housings to check that the snap rings on the shafts have engaged in their channels on the final drive

NOTE: Be very careful when positioning the shaft in the resting position. The inner joint may be damaged if the shaft releases under its own weight.

CENTER DIFFERENTIAL (B6324S; 2009-2010)

ACTIVE ON-DEMAND COUPLING MODULE

NOTE: Some variation may occur. However, the essential information in the illustrations is always correct.

Drain accumulator.

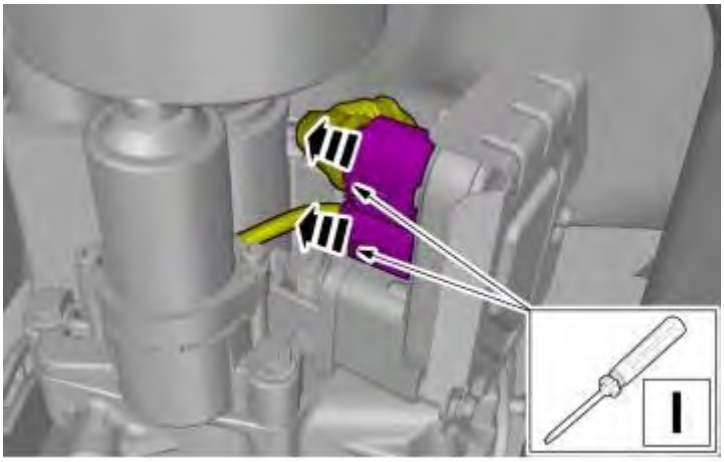

Fig. 15: Identifying Connectors
Courtesy of VOLVO CARS CORPORATION

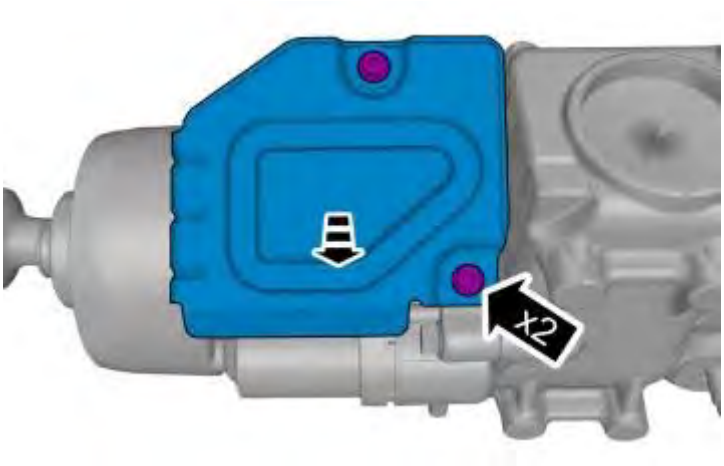

Fig. 16: Removing Casing
Courtesy of VOLVO CARS CORPORATION

WARNING: **Be prepared to collect escaping fluid.**

Tightening torque M5, 5 Nm

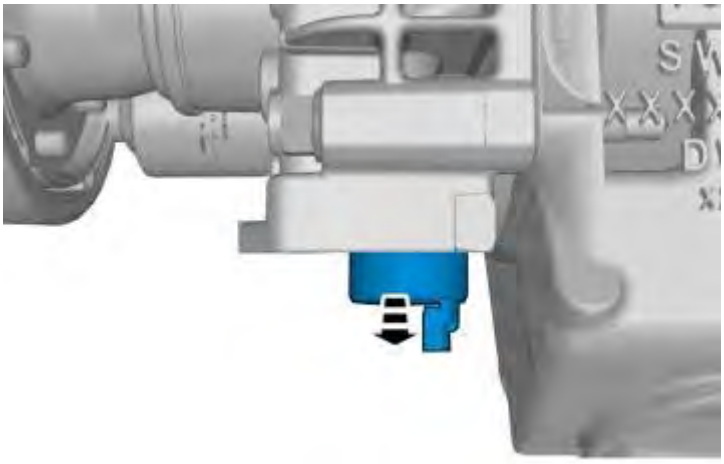

Fig. 17: Removing Component
Courtesy of VOLVO CARS CORPORATION

WARNING: Be prepared to collect escaping fluid.

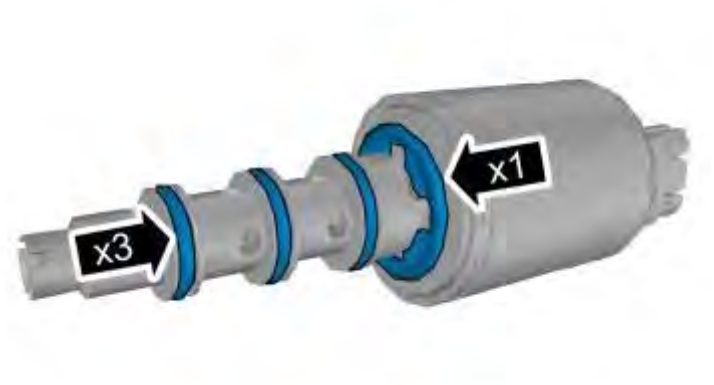

Fig. 18: Identifying Seals
Courtesy of VOLVO CARS CORPORATION

Only use the specified material to lubricate the seals. 30759648

FINISHING

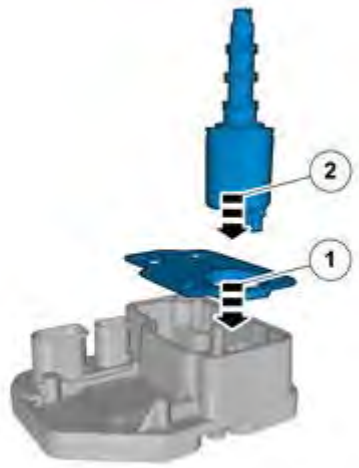

Fig. 19: Installing Components
Courtesy of VOLVO CARS CORPORATION

INSTALLATION

To install, reverse the removal procedure.

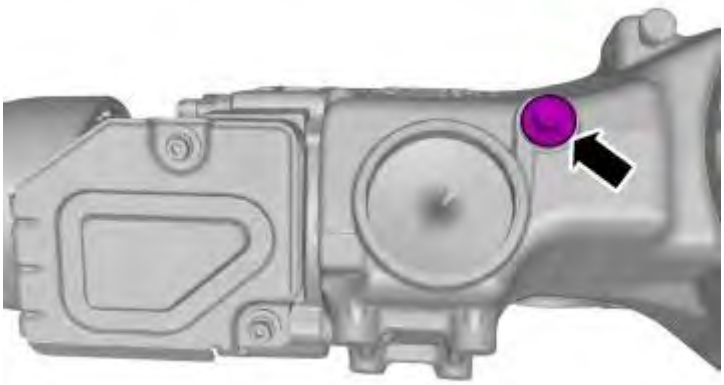

Fig. 20: Identifying Fill Bolt
Courtesy of VOLVO CARS CORPORATION

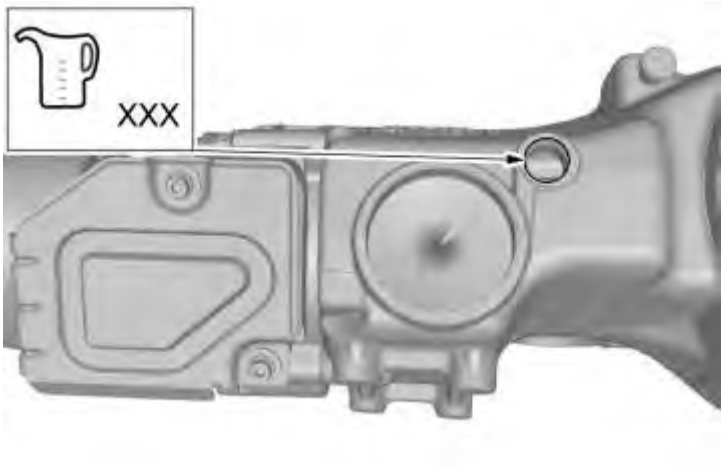

Fig. 21: Filling Transmission
Courtesy of VOLVO CARS CORPORATION

Follow the instructions for transmission lubricants acc. to **LUBRICANT TRANSMISSION**

Fig. 22: Installing Plug
Courtesy of VOLVO CARS CORPORATION

Tightening torque

Torque: Oil plug, final drive

35 Nm

Order software for the control module. See: 8688783

OIL FILTER CLUTCH FOUR WHEEL DRIVE

NOTE: **Some variation may occur. However, the essential information in the illustrations is always correct.**

REMOVAL

Remove the flange from Active On-Demand Coupling, see **ACTIVE ON-DEMAND COUPLING SEAL**

TIGHTENING TORQUE

GENERAL TIGHTENING TORQUE

CAUTION: Screws coated with a locking fluid or self locking nuts must be replaced with new when reinstalled.

See the table below to find the tightening torques for components not included in the summary.

Nuts and screws which are not self locking can be reused provided that they are in good condition.

Applies to screwed joint with strength class 8.8.	
Thread	Tightening torque (Nm)
M5	5
M6	10
M7	17
M8	24
M10	50
M12	80
M14	130

SUMMARY OF TIGHTENING TORQUES FOR SPECIFIC COMPONENTS

CAUTION: Screws coated with locking fluid or sealant must be replaced with new when reinstalled.

Always use **new screws and nuts** when angle tightening. Any exceptions to this rule will be indicated in the method.

Angle-tightening in tight spaces. See **SCREWED JOINT, TORQUE/ANGLE TIGHTENING** .

ALL DRIVE SHAFTS

Bolt drive shaft - wheel hub, front	Stage 1: 35 Nm Stage 2: 90°
Bolt drive shaft - wheel hub, version with rubber cone	50 Nm
Bolt drive shaft - wheel hub, rear	50 Nm

ALL GEARBOXES, ANGLE GEARS, CHAIN ANGLE GEARS AND REAR AXLE GEARS

Sensors	6 Nm

Filler plug, Level plug and Drain plug	35 Nm

AW, 4T65

Cover, control system (AW)	Diagonally 14 Nm
The nut for the lever and gear shift linkage rod	16 Nm
Side cover, gearbox (4T65)	Stage 1: Crosswise 10 Nm Stage 2: Crosswise 25 Nm
Bolt driver plate - torque converter 6 x bolts	35 Nm
Screws for the lower torque rod in the transmission **NOTE:** **Applies to 5-cylinder engines only**	Stage 1: 35 Nm Stage 2: 40°
Connection, oil cooler pipe to gearbox	30 Nm
Screw, oil pipe - transmission	6 Nm
Screw, oil pipe - dipstick pipe - transmission	15 Nm
Dipstick pipe for the transmission	24 Nm

TF-80SC

Integrated level plug/Torx	8 Nm
Cover, control system	Diagonally 14 Nm
Torque converter to carrier plate 6 screws	60 Nm
Gear selector mechanism (nut)	16 Nm

M56, M58, M66

Back-up (reversing) lamps switch	24 Nm
Flywheel	Stage 1:45 Nm Stage 2:65°

AWD

Bevel gear to transmission	75 Nm
Universal joint (spider) fastened with 4 bolts	Stage 1: Crosswise 16 Nm Stage 2: Crosswise 120°
Universal joint CV fastened with 6 bolts	Stage 1: Crosswise 10 Nm Crosswise 25 Nm
Pinion nut (Active on Demand Coupling)	150 Nm
Pinion nut, angle gear	180 Nm
Oil pump (AOC)	5 Nm
Control module (AOC)	5 Nm
Driveshaft (center bearing)	30 Nm
Oil plug, final drive	35 Nm
Oil plug, Active On-Demand Coupling	35 Nm

Bevel gear bracket	Stage 1: alternately to light contact Stage 2: 50 Nm
Manifold support bracket bevel gear	Stage 1: 35 Nm Stage 2: 90°

REMOVAL

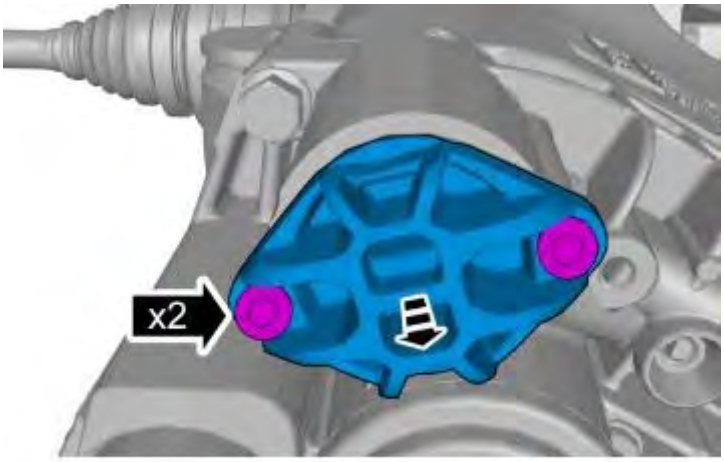

Fig. 23: Removing Flange
Courtesy of VOLVO CARS CORPORATION

WARNING: **Be prepared to collect escaping fluid.**

Tightening torque M5 acc. to

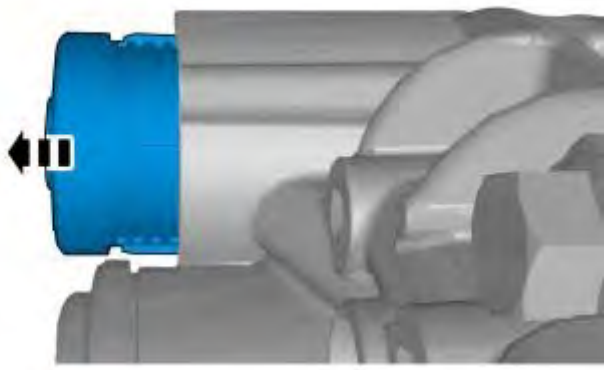

Fig. 24: Removing Component
Courtesy of VOLVO CARS CORPORATION

Fig. 25: Identifying Seal
Courtesy of VOLVO CARS CORPORATION

Only use the specified material to lubricate the seals. 30759648

Fig. 26: Identifying Seal
Courtesy of VOLVO CARS CORPORATION

Only use the specified material to lubricate the seals. 30759648

INSTALLATION

To install, reverse the removal procedure.

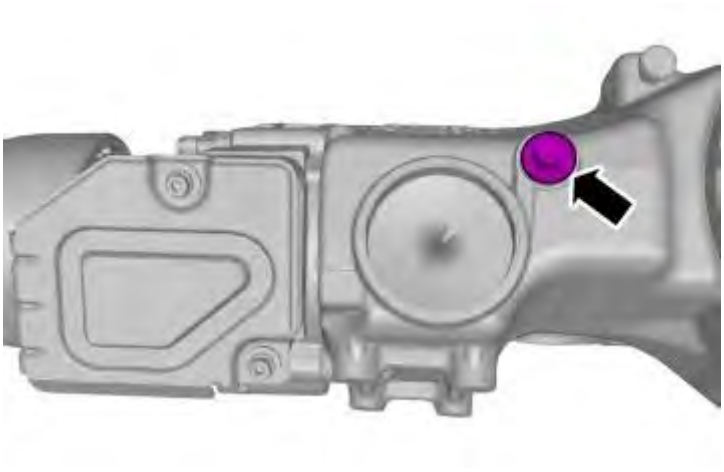

Fig. 27: Transmission Fill Plug
Courtesy of VOLVO CARS CORPORATION

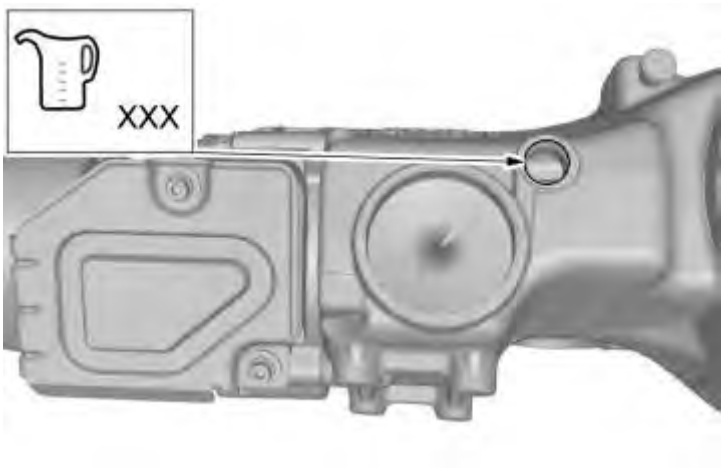

Fig. 28: Filling Transmission
Courtesy of VOLVO CARS CORPORATION

Follow the instructions for transmission lubricants acc. to **LUBRICANT TRANSMISSION**

Fig. 29: Installing Plug
Courtesy of VOLVO CARS CORPORATION

Tightening torque:

Torque: Oil plug, final drive

35 Nm

CENTER DIFFERENTIAL (B6324S, TF-80SC AWD; 2009-2010)

ACTIVE ON DEMAND COUPLING (AOC), REPLACING

NOTE: **The illustrations in this service information are used for different model years and/or models, some variation may occur. However, the essential information is always correct.**

PREPARATORY WORK

REMOVING COMPONENTS

Remove the exhaust system. Remove the propeller shaft from the active on demand coupling (AOC). See: **FINAL DRIVE, REPLACING** .

REMOVAL

REMOVING THE ACTIVE ON DEMAND COUPLING

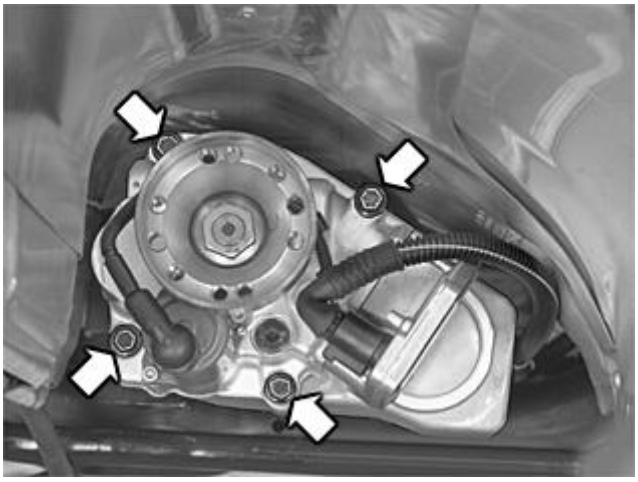

Fig. 30: Active On Demand Coupling Bolts
Courtesy of VOLVO CARS CORPORATION

Remove the connector from the Differential Electronic Module (DEM).

Place a container under the active on demand coupling (AOC)/final drive.

Remove the screws for the active on demand coupling (AOC).

Pull the coupling straight out from the final drive housing.

INSTALLATION

NOTE: For tightening torques, see: TIGHTENING TORQUE.

PREPARATIONS FOR INSTALLING THE ACTIVE ON DEMAND COUPLING (AOC)

Fig. 31: Final Drive Housing
Courtesy of VOLVO CARS CORPORATION

Clean away any contaminants in the final drive housing. There must be no residue left from cloths or paper.

Check that the mating surface is free of faults.

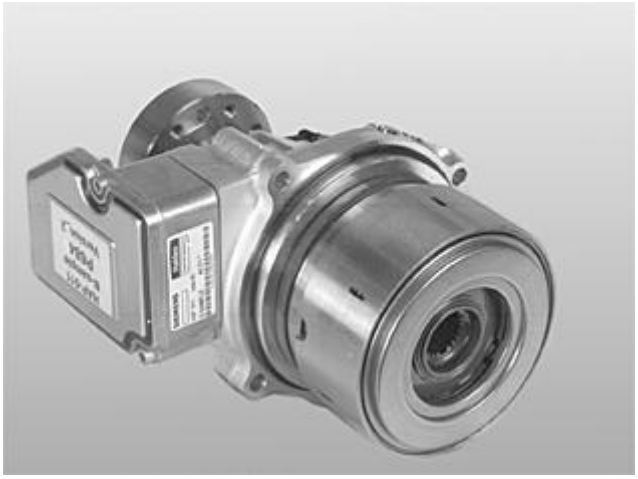

Fig. 32: Identifying Active On Demand Coupling
Courtesy of VOLVO CARS CORPORATION

Check that the mating surface of the active on demand coupling (AOC) is free of faults. Position the new O-ring

on the active on demand coupling (AOC).

INSTALLING THE ACTIVE ON DEMAND COUPLING (AOC)

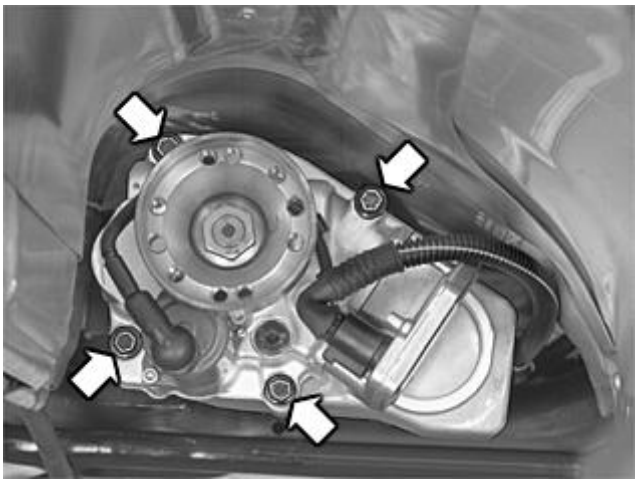

Fig. 33: Active On Demand Coupling Bolts
Courtesy of VOLVO CARS CORPORATION

Install the active on demand coupling (AOC) for the final drive housing.

Lightly install the 4 x M8 screws alternately. Tighten alternately.

Connect the connector for the Differential Electronic Module (DEM).

INSTALLING THE PROPELLER SHAFT AND EXHAUST SYSTEM

Install the propeller shaft and the exhaust system. See: **FINAL DRIVE, REPLACING** .

FINISHING

Filling and checking oil level acc. to: **ACTIVE ON DEMAND COUPLING FLUID LEVEL CHECK**

ACTIVE ON DEMAND COUPLING FLUID LEVEL CHECK

REMOVAL

Fig. 34: Identifying Transmission Fluid Check/Fill Bolt
Courtesy of VOLVO CARS CORPORATION

WARNING: Be prepared to collect escaping fluid.

FILLING

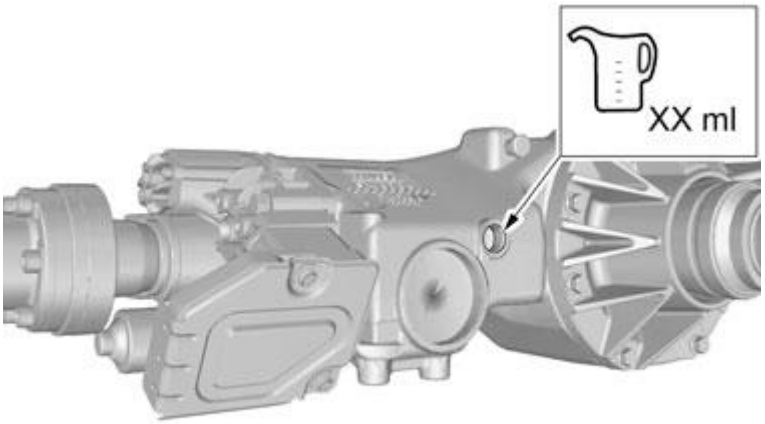

Fig. 35: Filling With Transmission Oil
Courtesy of VOLVO CARS CORPORATION

CAUTION: The fluid must be allowed to escape until a continuous flow changes into single drops.

Use: Transmission oil, 30759648

INSTALLATION

Fig. 36: Identifying Transmission Fluid Check/Fill Bolt
Courtesy of VOLVO CARS CORPORATION

Torque: Oil plug, Active On-Demand Coupling

35 Nm

Carry out a road test.

REMOVAL

Fig. 37: Identifying Transmission Fluid Check/Fill Bolt
Courtesy of VOLVO CARS CORPORATION

WARNING: **Be prepared to collect escaping fluid.**

FILLING

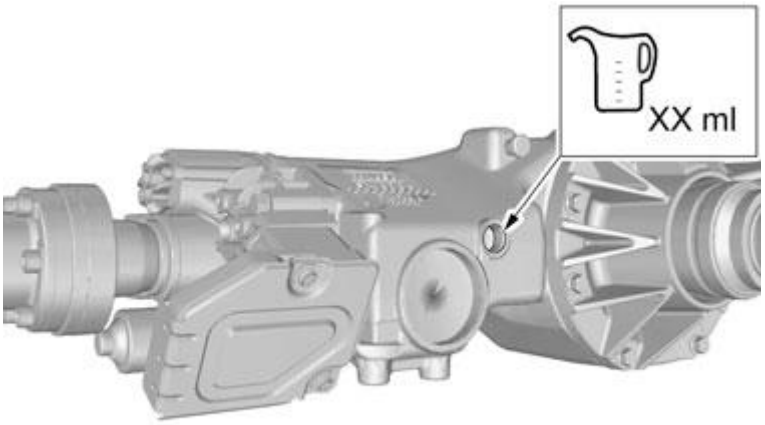

Fig. 38: Filling With Transmission Oil
Courtesy of VOLVO CARS CORPORATION

CAUTION: The fluid must be allowed to escape until a continuous flow changes into single drops.

Use: Transmission oil, 30759648

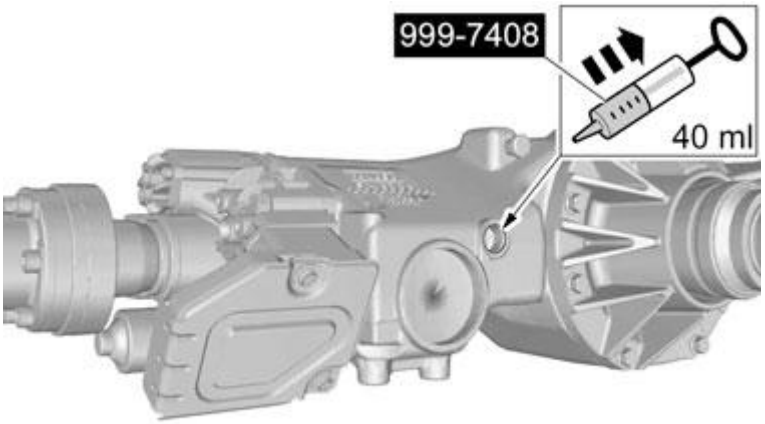

Fig. 39: Using Special Tool To Fill Transmission With Oil
Courtesy of VOLVO CARS CORPORATION

INSTALLATION

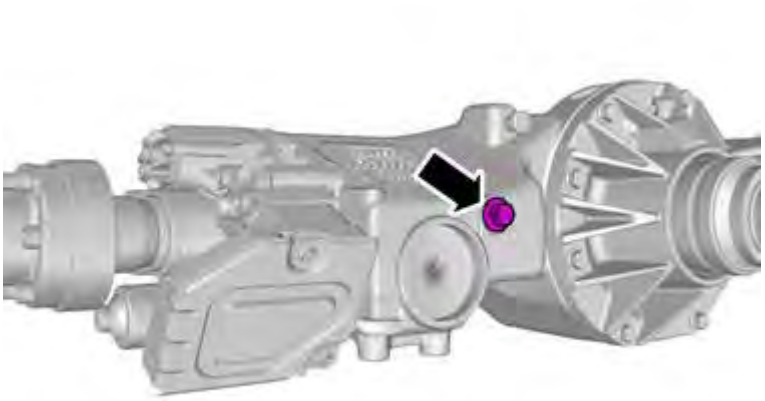

Fig. 40: Identifying Transmission Fluid Check/Fill Bolt
Courtesy of VOLVO CARS CORPORATION

Torque: Oil plug, Active On-Demand Coupling

35 Nm

ACTIVE ON-DEMAND COUPLING SEAL

special tool	
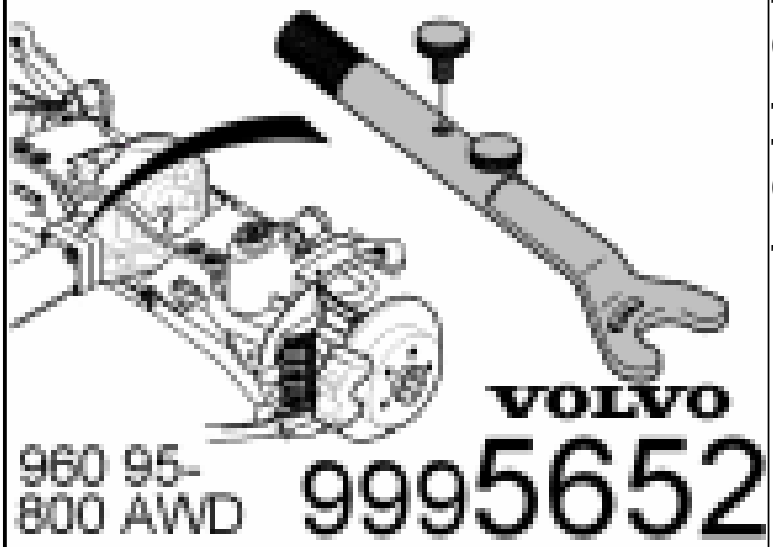	**T9995652 ANVIL BLOCK (FLEXPLATE/BEVEL-/FINAL DRIVE) 1065, 1165** **Tool number:** T9995652 **Tool description:** ANVIL BLOCK (FLEXPLATE/BEVEL-/FINAL DRIVE) 1065, 1165 **Tool boards:** EU14-1/1; SV14-1/1; US14-1/1
	T9997058 ADAPTER **Tool number:** T9997058

	Tool description: ADAPTER **Tool boards:** EU14-1/2; SV14-1/2; UK9; US14-1/2
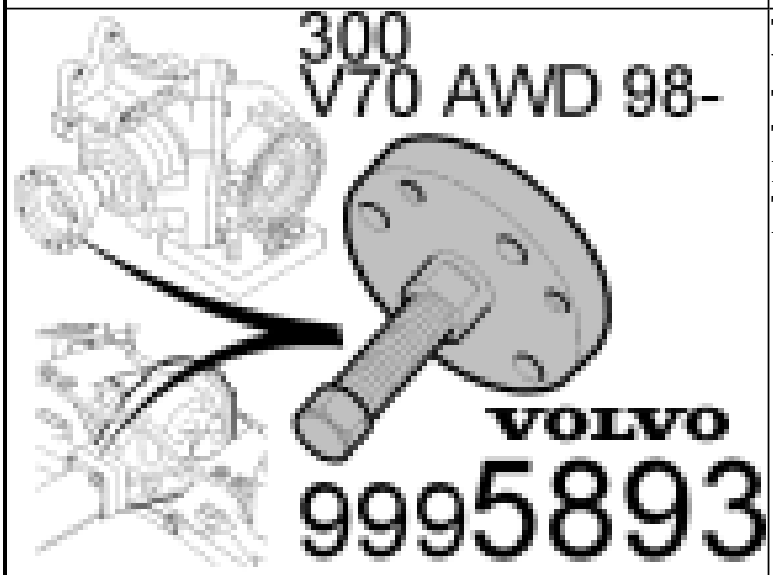	**T9995893 PULLER (FLANGE REAR WHEEL HUB) B VERSION** **Tool number:** T9995893 **Tool description:** PULLER (FLANGE REAR WHEEL HUB) B VERSION **Tool boards:** EU16/17-2; SV16/17-2; UK1; UK9
	T9995069 PULLER (SEALS) **Tool number:** T9995069 **Tool description:** PULLER (SEALS) **Tool boards:** EU14-1; SV14-1; US14-1

	T9997025 DRIFT HALDEX CLUTCH **Tool number:** T9997025 **Tool description:** DRIFT HALDEX CLUTCH **Tool boards:** EU14-2/1; SV14-2/1; US14-2/1

REMOVAL

NOTE: Removal steps in this procedure may contain installation details.

Remove the driveshaft. See **PROPELLER SHAFT** .

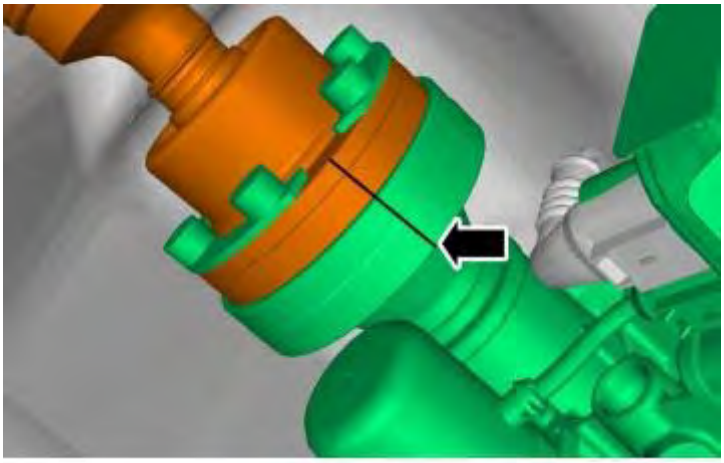

Fig. 41: Alignment Marks
Courtesy of VOLVO CARS CORPORATION

Fig. 42: Identifying Special Service Tools
Courtesy of VOLVO CARS CORPORATION

WARNING: Be prepared to collect escaping fluids.

see **9995652** , see **9997058** .

NOTE: Mark up the driver in relation to the end of the shaft.

Fig. 43: Identifying Special Service Tool
Courtesy of VOLVO CARS CORPORATION

see **9995893** .

Fig. 44: Identifying Special Service Tool
Courtesy of VOLVO CARS CORPORATION

see **9995069** .

Fig. 45: Identifying Special Service Tool
Courtesy of VOLVO CARS CORPORATION

see **9997025** .

INSTALLING

To install, reverse the removal procedure

Fill and check the oil level in the four wheel drive clutch. See **FINAL DRIVE, REPLACING**.

DIFFERENTIAL INPUTSHAFT SEAL

Special tools	
	T9997023 PULLER PINION SEAL HALDEX CLUTCH **Tool number:** T9997023 **Tool description:** PULLER PINION SEAL HALDEX CLUTCH **Tool boards:** EU14-2/1; SV14-2/1; US14-2/1

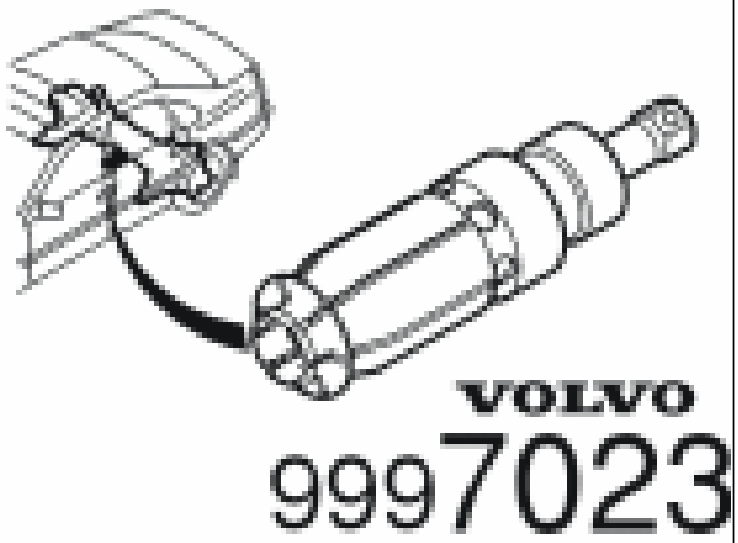	
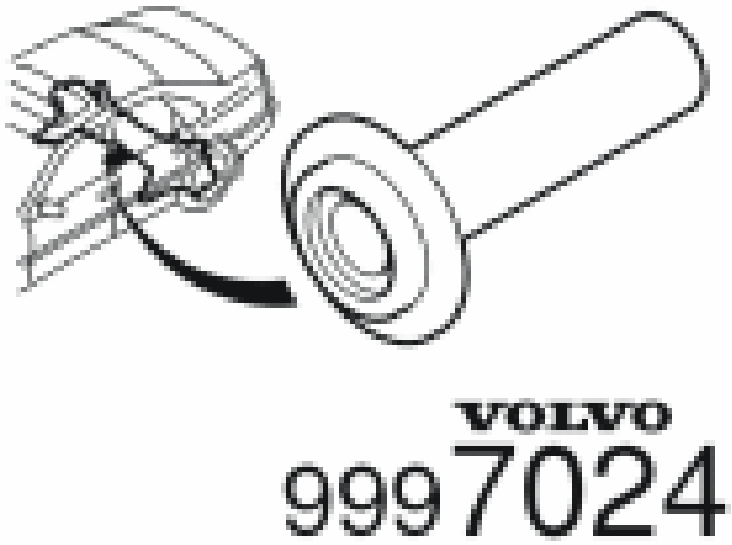	**T9997024 DRIFT PINION SEAL HALDEX CLUTCH** **Tool number:** T9997024 **Tool description:** DRIFT PINION SEAL HALDEX CLUTCH **Tool boards:** EU14-2/1; SV14-2/1; US14-2/1

NOTE: Removal steps in this procedure may contain installation details.

Remove the four-wheel drive clutch. See **CLUTCH FOUR-WHEEL DRIVE**.

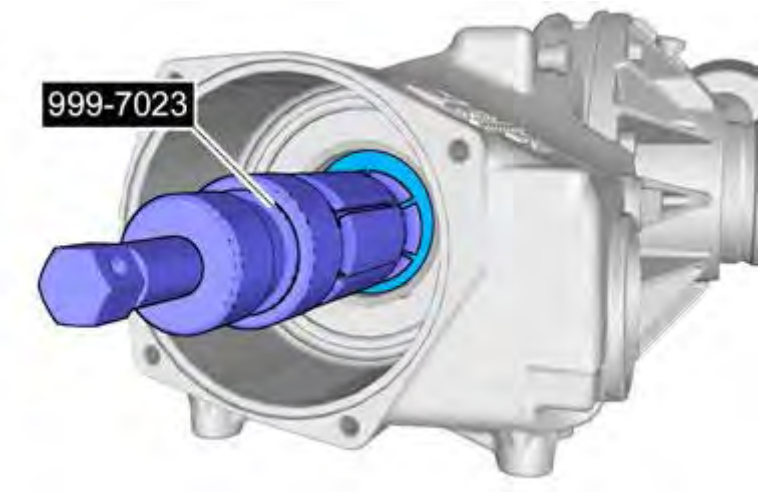

Fig. 46: Identifying Special Service Tool
Courtesy of VOLVO CARS CORPORATION

see **9997023** .

WARNING: Be prepared to collect escaping fluid.

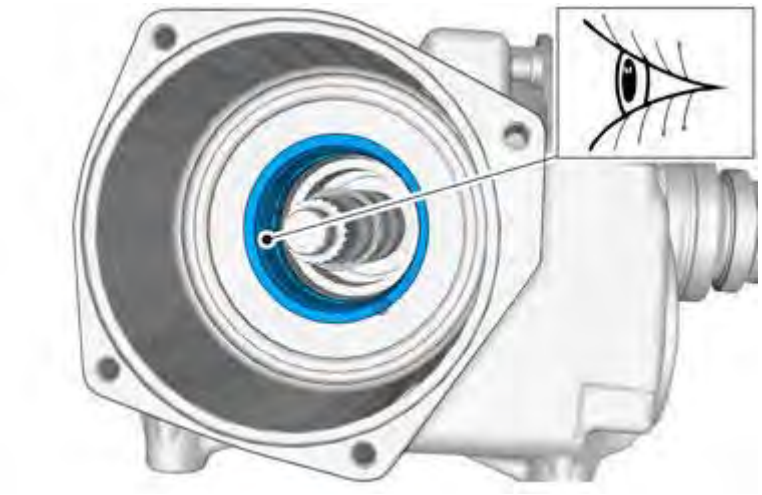

Fig. 47: Inspecting Surface
Courtesy of VOLVO CARS CORPORATION

CAUTION: Make sure that the surface is clean and free of foreign material.

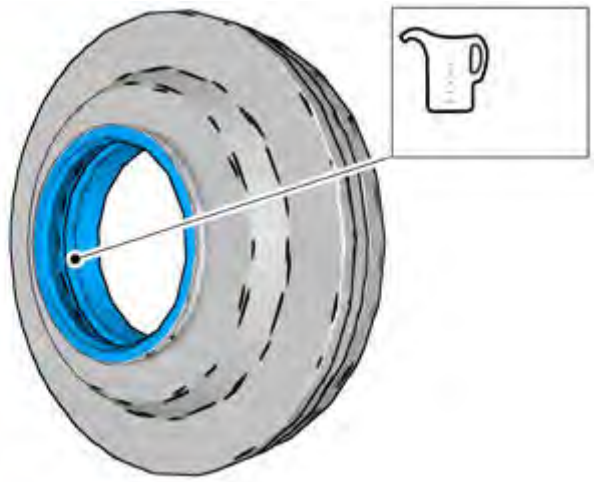

Fig. 48: Rear axle oil, 1161620
Courtesy of VOLVO CARS CORPORATION

Use: Rear axle oil, 1161620

Fig. 49: Identifying O-Ring
Courtesy of VOLVO CARS CORPORATION

see **9997339**

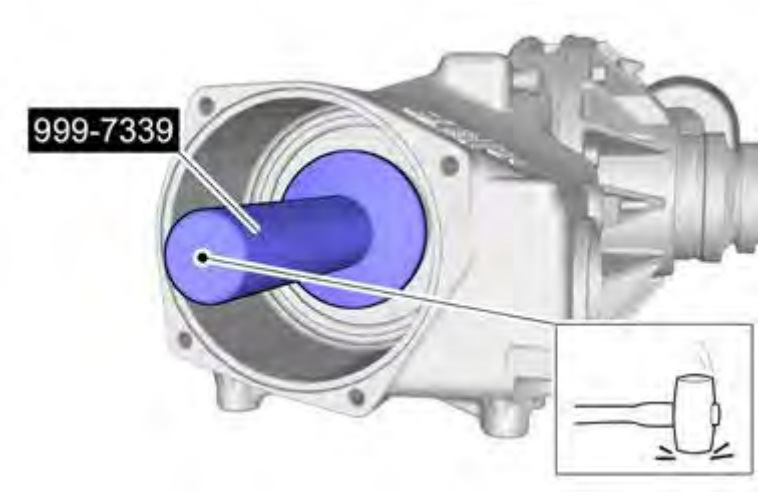

Fig. 50: Identifying Special Service Tool
Courtesy of VOLVO CARS CORPORATION

Fill and check the oil level in the final drive. See **FINAL DRIVE, REPLACING**

DIFFERENTIAL SUPPORT INSULATOR

special tool	
	T9512564 HYDRAULIC TOOL (KIT) **Tool number:** T9512564 **Tool description:** HYDRAULIC TOOL (KIT) **Tool boards:** EU99; SV99; UK99; US99
	T9992520 FLOOR STAND (FOR FIXTURES) **Tool number:** T9992520 **Tool description:** FLOOR STAND (FOR

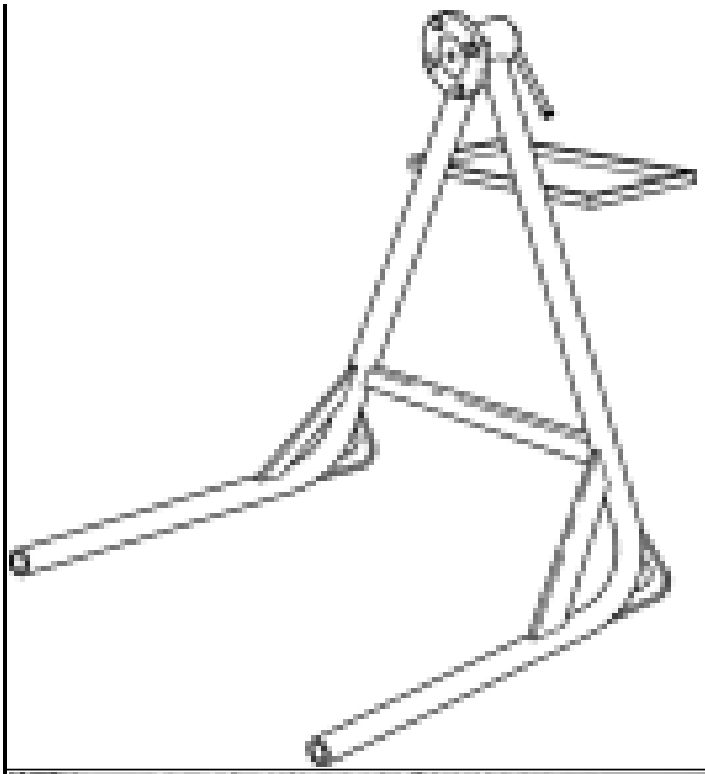	FIXTURES) **Tool boards:**
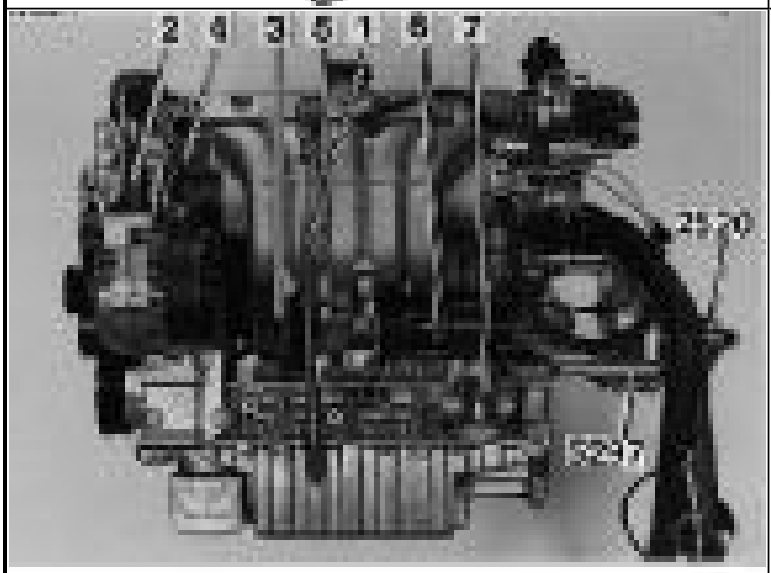	**T9995297 ENGINE FIXTURE (UNIVERSAL)** **Tool number:** T9995297 **Tool description:** ENGINE FIXTURE (UNIVERSAL) **Tool boards:** EU22-3; SV22-3; US22-3
	T9995588 DRAWBAR (M12 x 210) BUSHING REPLACEMENT/HYDRAULIC TOOL **Tool number:** T9995588 **Tool description:** DRAWBAR (M12 x 210)

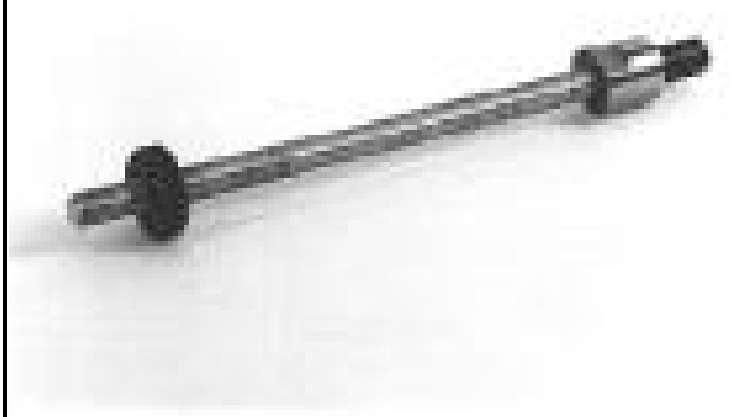	BUSHING REPLACEMENT/HYDRAULIC TOOL **Tool boards:** EU99; SV99; US99
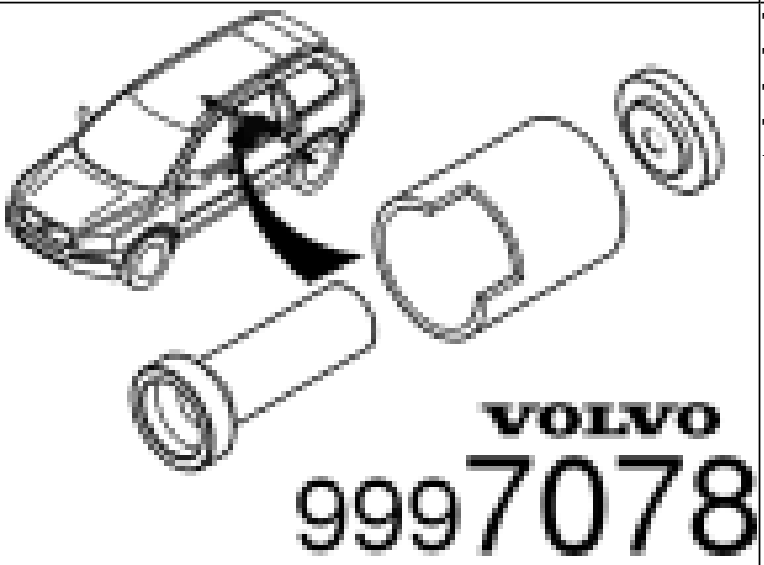	**T9997078 PRESS TOOL** **Tool number:** T9997078 **Tool description:** PRESS TOOL **Tool boards:** EU14-1/2; SV14-1/2; UK16; US14-1/2
	T9995589 DRAWBAR (M12 x 150) BUSHING REPLACEMENT/HYDRAULIC TOOL **Tool number:** T9995589 **Tool description:** DRAWBAR (M12 x 150)

	BUSHING REPLACEMENT/HYDRAULIC TOOL **Tool boards:** EU99; SV99; US99

REMOVAL

NOTE: Removal steps in this procedure may contain installation details.

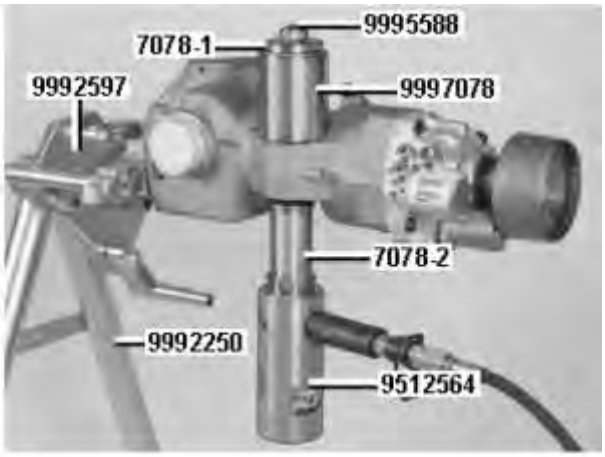

Fig. 51: Identifying Special Service Tools
Courtesy of VOLVO CARS CORPORATION

Remove the final drive. See **FINAL DRIVE, REPLACING**.

see **9512564** , see **9992520** , see **9995297** , see **9995588** , see **9997078** .

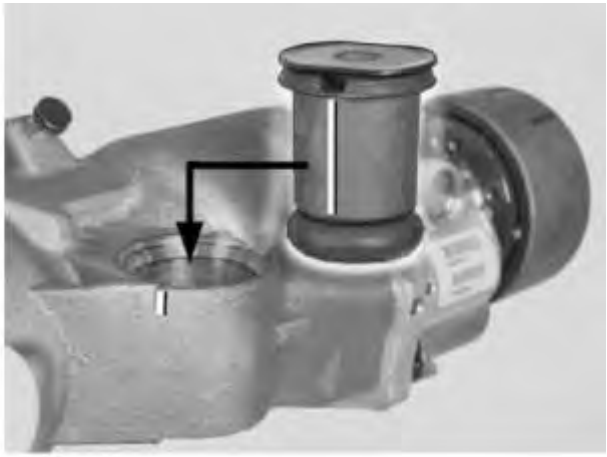

Fig. 52: Aligning Identification Marks
Courtesy of VOLVO CARS CORPORATION

Fig. 53: Identifying Special Service Tools
Courtesy of VOLVO CARS CORPORATION

see **9512564** , see **9992520** , see **9995297** , see **9995589** , see **9997078** .

INSTALLATION

To install, reverse the removal procedure

FINAL DRIVE, REPLACING

Special tools:

see **9512928**

see **9985972**

see **9997057**

NOTE: **As the illustrations in this service information are used for different model years and / or models, some variation may occur. However, the essential information is always correct.**

REMOVAL

PREPARATIONS

NOTE: **Check that the parking brake is not applied and that the gear selector is in position P or in gear.**

Ignition off

Position the rear lifting arms so that they do not obstruct the front brackets securing the rear axle arms to the body.

REMOVING DRIVE SHAFTS

Remove the drive shafts on both sides according to: **DRIVE SHAFT REAR, REPLACING**.

REMOVING THE SPARE WHEEL AND REAR SECTION OF THE EXHAUST SYSTEM

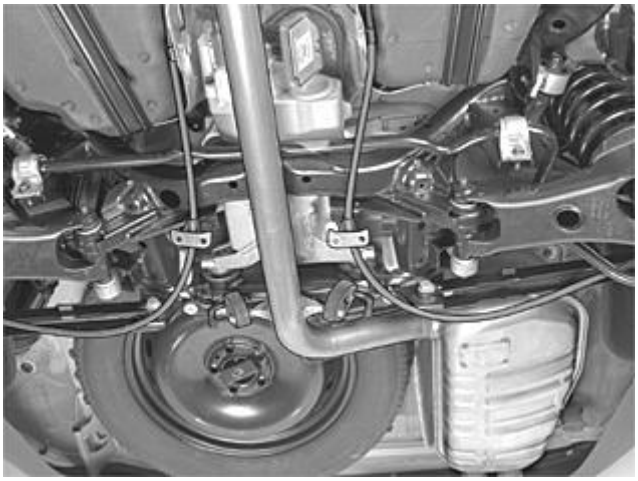

Fig. 54: Identifying Rear Section Of Exhaust System & Spare Wheel
Courtesy of VOLVO CARS CORPORATION

Remove the rear section of the exhaust system and the spare wheel.

Support the rear edge of the three-way catalytic converter (TWC) so as not to put strain on the exhaust manifold.

Remove the propeller shaft from the final drive and the member for the center bearing. See **PROPELLER SHAFT** .

REMOVING THE SCREWS FOR THE CENTER BEARING MEMBER AND PROPELLER SHAFT

Tie up the shaft.

Use the rear cross member as support.

Remove one screw and slacken off the other. Turn out the member.

REMOVING THE CABLE HARNESS

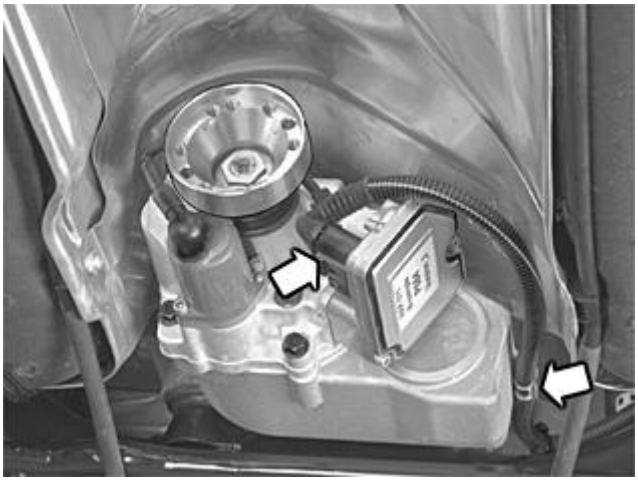

Fig. 55: Active On Demand Coupling Control Module Cable Harness
Courtesy of VOLVO CARS CORPORATION

Remove the connector from the Differential Electronic Module (DEM).

Detach the cable harness from the final drive housing and the mounting in the rear axle member.

Fold the cable harness to one side to prevent damage when removing the final drive.

REMOVING THE FINAL DRIVE

Fig. 56: Identifying Rear Axle Member Cover, Front Mounting Screws & Final Drive Housing Screws
Courtesy of VOLVO CARS CORPORATION

Remove:

- the cover for the rear axle member
- the screw for the front mounting for the final drive housing.

Slacken off the 2 rear screws for the rear axle member/final drive housing. Leave the screws in place by a few threads.

REMOVING THE REAR AXLE MEMBER

Fig. 57: Identifying Front Mounting Screws & Portable Jack Tool Attachment (998 5972)
Courtesy of VOLVO CARS CORPORATION

Bring see **9985972** into light contact with the front section of the rear axle member.

Remove the screws from the front mounting in the body for the rear axle member, on both sides.

Carefully lower the frame. Remove the jack.

REMOVING THE FINAL DRIVE HOUSING

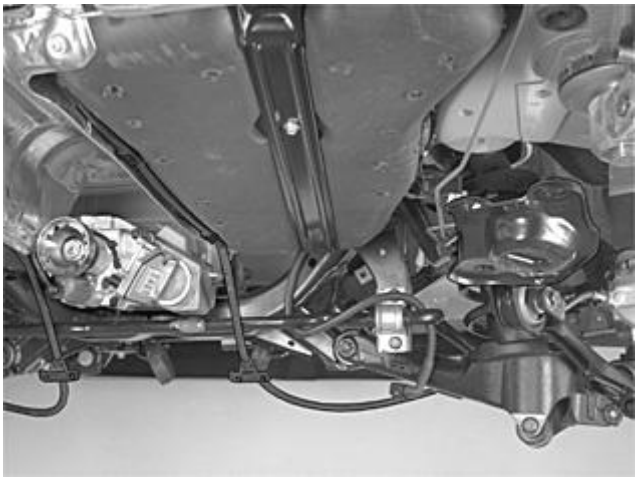

Fig. 58: Identifying Final Drive Housing & Screws
Courtesy of VOLVO CARS CORPORATION

Support the final drive housing. Remove the two loose screws.

Lift out the final drive housing from the rear axle member. Position the final drive housing on a workbench.

INSTALLATION

NOTE: For tightening torques, see: TIGHTENING TORQUE.

NOTE: To ensure that there is no exhaust leakage, see: FLANGED JOINT, ASSEMBLING .

INSTALLING THE REAR AXLE MEMBER

Fig. 59: Identifying Front Mounting Screws & Portable Jack Tool Attachment (998 5972)
Courtesy of VOLVO CARS CORPORATION

Install the final drive housing in the rear axle member. Loosely secure the final drive housing to the rear bushings in the frame using screws.

Bring see **9985972** into light contact with the front section of the rear axle member.

Install:

- the screws for the front mounting in the body for the rear axle member, on both sides.
- the 2 x M12 screws for the bracket/body. Tighten.
- the M14 screw for the bracket, the rear axle frame and body. Tighten. See: **SUMMARY OF TIGHTENING TORQUES FOR SPECIFIC COMPONENTS** .

Remove see **9985972** .

INSTALLING THE FINAL DRIVE HOUSING

Fig. 60: Identifying Rear Axle Member Cover, Front Mounting Screws & Final Drive Housing Screws
Courtesy of VOLVO CARS CORPORATION

Install:

- 1 M12 front screw for the final drive housing. Tighten
- the cover for the rear axle member using 4 M12 screws. Tighten
- the 2 x rear M12 screws for the subframe/final drive housing. Tighten.

INSTALLING THE CABLE HARNESS

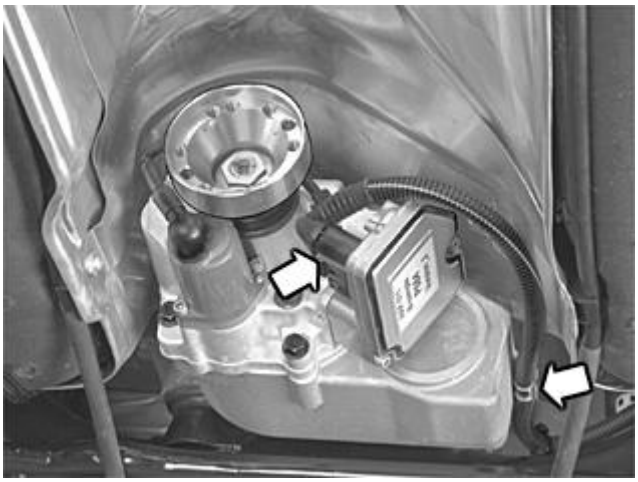

Fig. 61: Active On Demand Coupling Control Module Cable Harness
Courtesy of VOLVO CARS CORPORATION

Connect the connector for the differential electronic module (DEM). Install the cable harness in the mounting in the rear axle member.

Install the propeller shaft on the final drive. Install the member for the center bearing. See: **PROPELLER SHAFT** .

INSTALLING DRIVE SHAFTS

Install the drive shafts on both sides according to: **DRIVE SHAFT REAR, REPLACING**.

INSTALLING THE SPARE WHEEL AND REAR SECTION OF THE EXHAUST SYSTEM

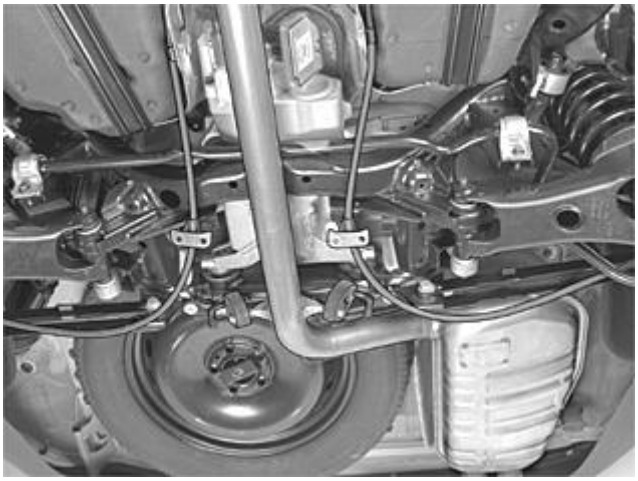

Fig. 62: Identifying Rear Section Of Exhaust System & Spare Wheel
Courtesy of VOLVO CARS CORPORATION

Check that the gasket for the flanged joint between the front and rear exhaust pipe is not damaged. Replace if necessary.

Install the rear cross member. Use 2 x M8 screws. Tighten.

FILLING AND CHECKING THE OIL LEVEL

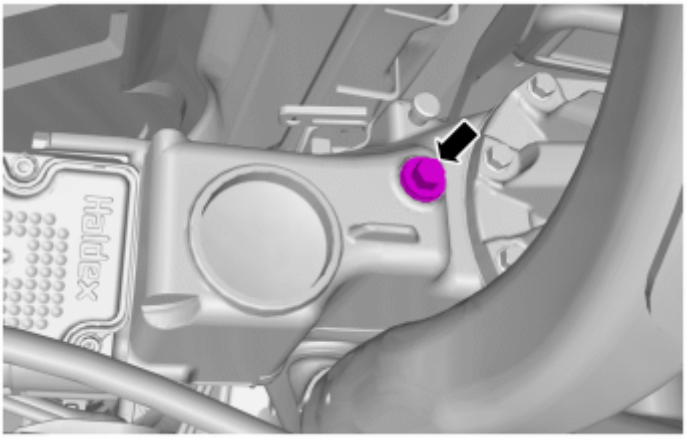

Fig. 63: Filling And Checking The Oil Level
Courtesy of VOLVO CARS CORPORATION

Top up and check the oil level in the active on demand coupling (AOC).

Use oils, see: **LUBRICANT TRANSMISSION**

Tighten both the level plugs. See: **SUMMARY OF TIGHTENING TORQUES FOR SPECIFIC COMPONENTS**.

Top up and check the oil level in the rear axle gear.

Use oils, see: **LUBRICANT TRANSMISSION**

Tighten both the level plugs. See: **TIGHTENING TORQUE**.

OIL PUMP, FOUR WHEEL DRIVE COUPLING

PREPARATORY WORK

REMOVING COMPONENTS

Remove the following items:

- the propeller shaft. See **PROPELLER SHAFT**
- the flange from the four wheel drive coupling. See **ACTIVE ON-DEMAND COUPLING SEAL**.

REMOVING THE OIL PUMP

Ignition off

NOTE: Thoroughly clean around the oil pump before beginning removal.

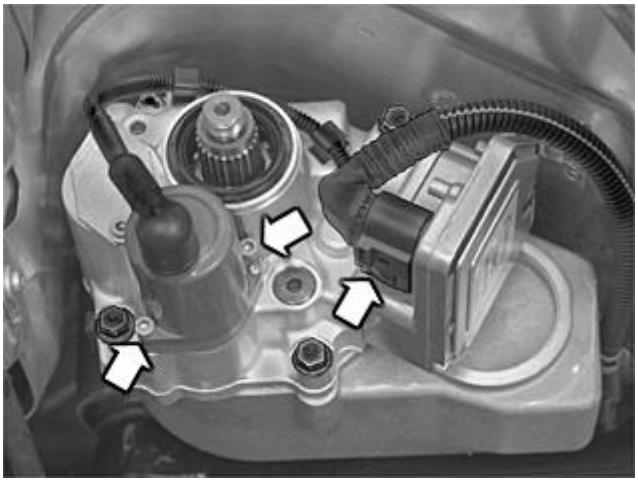

Fig. 64: Locating Oil Pump Connector And Screws
Courtesy of VOLVO CARS CORPORATION

Place a container under the active on demand coupling (AOC).

Remove:

- the connector from the Differential Electronic Module (DEM) to the active on demand coupling (AOC)
- the cable harness mountings.

Remove the two screws from the oil pump. Pull the pump straight out from the active on demand coupling (AOC).

NOTE: Later versions of the oil pump have the socket for the cable harness on the side of the oil pump housing. The cable harness is shorter. This version supersedes all previous versions, including as a replacement part.

INSTALLING

NOTE: For tightening torques, see TIGHTENING TORQUE.

INSTALLING OIL PUMP

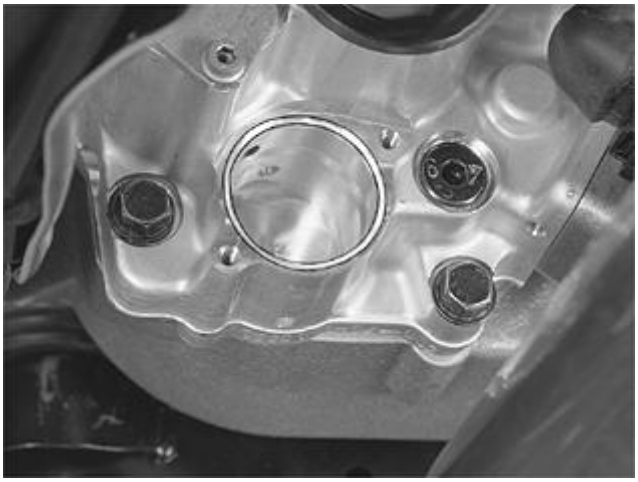

Fig. 65: Identifying Oil Pump Seat
Courtesy of VOLVO CARS CORPORATION

Thoroughly check that the oil pump seat in the active on demand coupling (AOC) is clean. There must be no residue left from cloths or paper.

Fig. 66: Identifying Oil Pump And O-Rings
Courtesy of VOLVO CARS CORPORATION

Check that the new O-rings are in position. Lubricate the O-rings. Use oil for the active on demand coupling (AOC). See: **LUBRICATION TRANSMISSION** .

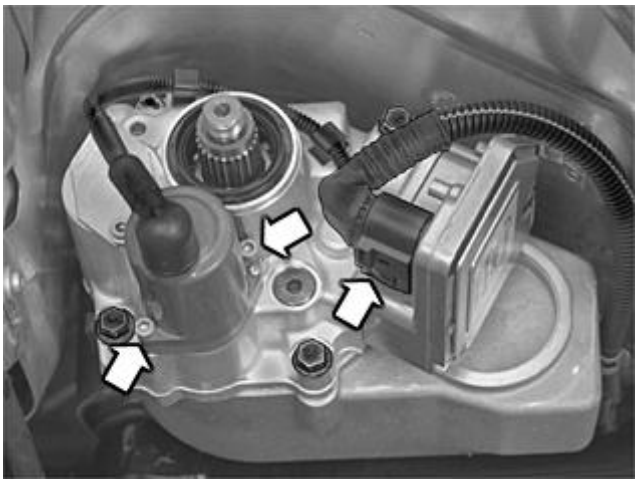

Fig. 67: Locating Oil Pump Connector And Screws
Courtesy of VOLVO CARS CORPORATION

Install the oil pump. Press the pump in as far as possible. Lightly tighten the 2 M5 screws alternately. Tighten. See **SUMMARY OF TIGHTENING TORQUES FOR SPECIFIC COMPONENTS**.

Connect the connector.

FILLING AND CHECKING THE OIL LEVEL

Top up and check the oil level in the active on demand coupling (AOC), the front level plug.

Use oil. See: **LUBRICATION TRANSMISSION** .

Tighten the level plug according to: **SUMMARY OF TIGHTENING TORQUES FOR SPECIFIC**

COMPONENTS.

Install the propeller shaft and the exhaust system. See **FINAL DRIVE, REPLACING**.

TEMPERATURE AND PRESSURE SENSOR, FOUR-WHEEL DRIVE CLUTCH

PREPARATORY WORK

Ignition off

Wait 3-4 minutes after switching the ignition off to reduce oil leakage at removal.

REMOVING THE DIFFERENTIAL ELECTRONIC MODULE (DEM)

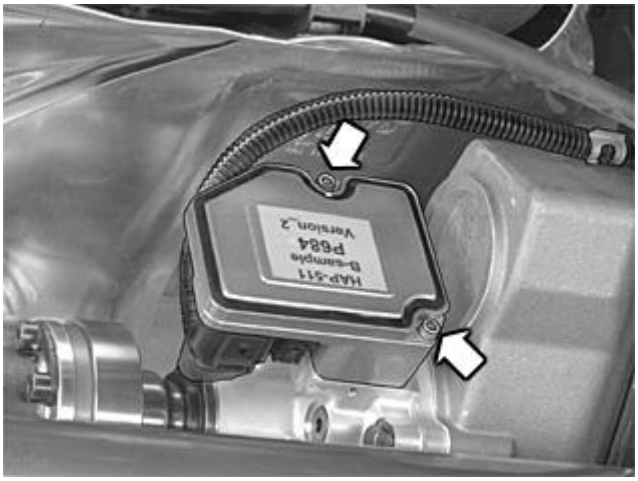

Fig. 68: Active On Demand Coupling Control Module Screws
Courtesy of VOLVO CARS CORPORATION

CAUTION: Clean the area around the control module thoroughly before beginning removal.

Place a container under the active on demand coupling (AOC). Disconnect the connectors to the control module and the oil pump.

Remove:

- the 2 x screws for the control module
- the control module together with the seal plate and the cupped washer.

REMOVING THE COMPONENTS FROM THE ACTIVE ON DEMAND COUPLING (AOC)

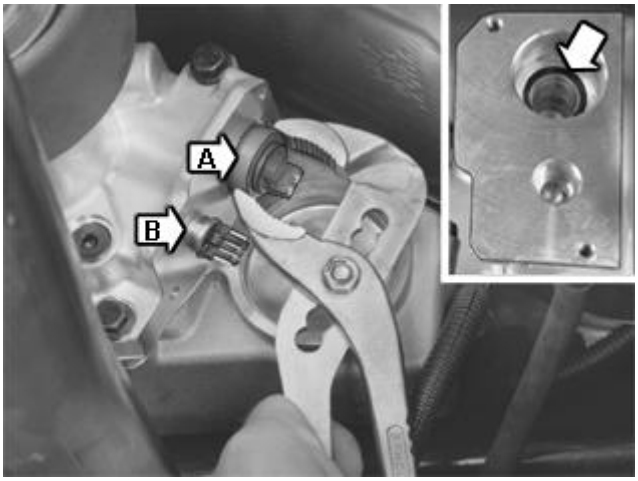

Fig. 69: Choke Valve And Temperature/Pressure Sensor
Courtesy of VOLVO CARS CORPORATION

CAUTION: Make sure that no damage is caused when removing the throttle valve. The valve cannot be replaced separately. The throttle valve is removed in order to be installed in the control module. This is done to minimize the risk of damage occurring to the contacts when installing.

Remove the throttle valve and temperature/pressure sensor from the coupling.

A = Throttle valve.

B = Temperature / pressure sensor.

To remove, use large pliers. Grasp the end of the throttle valve, hold the pliers steady and pull the valve straight out.

Remove:

- temperature-/pressure sensor as above
- The O-ring from the throttle valve seat in the coupling housing.

NOTE: For tightening torques. See TIGHTENING TORQUE.

COMPONENTS WHICH ARE INCLUDED IN THE KIT AND MUST BE REPLACED

Fig. 70: Identifying Temperature / Pressure Sensor With O-Ring
Courtesy of VOLVO CARS CORPORATION

Temperature-/pressure sensor with O-ring.

Washer.

O-ring for the throttle valve seat.

INSTALLING THE INCLUDED COMPONENTS

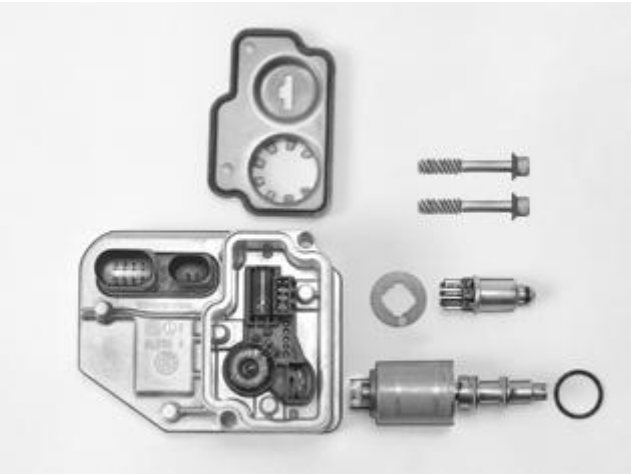

Fig. 71: Active On Demand Coupling Components
Courtesy of VOLVO CARS CORPORATION

Install:

- Differential electronic module (DEM)
- the seal plate
- the washer
- the throttle plate with the O-rings

- temperature-/pressure sensor with the O-rings
- the screws.

The O-ring for the throttle valve seat is installed separately.

PLACING THE SEALING PLATE IN THE CONTROL MODULE

Fig. 72: Active On Demand Coupling Control Module Kit
Courtesy of VOLVO CARS CORPORATION

Place the sealing plate in the control module

Press the throttle valve and the temperature-/pressure sensor into place on the control module connector. Place the cupped washer with the convex side against the temperature-/pressure sensor.

Lubricate the sealing rings on the valves. Use oil. See: **LUBRICATION TRANSMISSION** .

INSTALLING THE O-RING

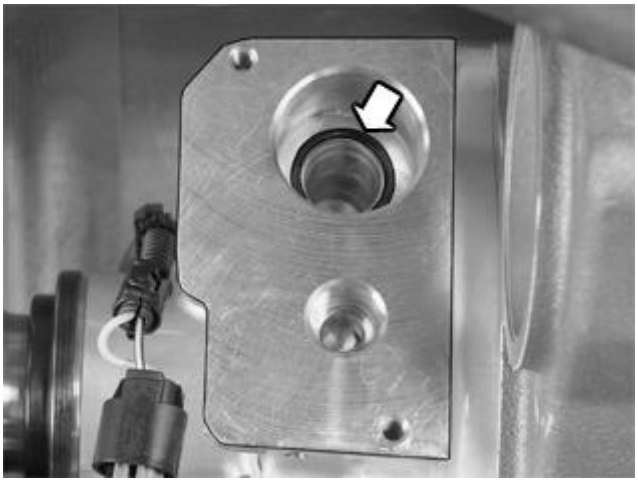

Fig. 73: Active On Demand Coupling Control Module O-Ring
Courtesy of VOLVO CARS CORPORATION

Carefully check that the control module sealing surface and the valve seats in the Active on Demand Coupling (AOC) are clean, there must be no residue left from cloths or paper.

Lubricate the new O-ring using oil. See: **LUBRICATION TRANSMISSION** and securely press into its seat.

INSTALLING THE ACTIVE ON DEMAND COUPLING (AOC)

Fig. 74: Installing Control Module For Active On Demand Coupling
Courtesy of VOLVO CARS CORPORATION

Install the control module with the valves for the coupling, hold it pressed against the coupling housing while installing the 2 x screws. Lightly tighten alternately.

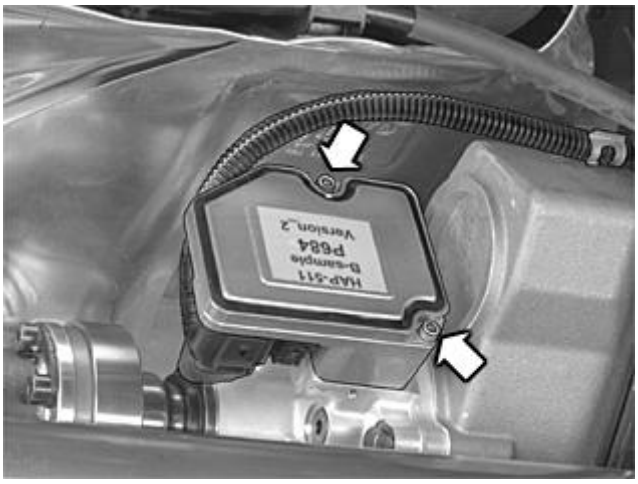

Fig. 75: Active On Demand Coupling Control Module Screws
Courtesy of VOLVO CARS CORPORATION

Tighten, see: **SUMMARY OF TIGHTENING TORQUES FOR SPECIFIC COMPONENTS**.

Connect the connectors for the control module and the oil pump.

Top up and check the oil level in the active on demand coupling (AOC). See: **FINAL DRIVE, REPLACING**.

Erase any diagnostic trouble codes (DTCs).

CENTER DIFFERENTIAL (B6324S, TF-80SC AWD; 2007-2008)

ACTIVE ON DEMAND COUPLING (AOC), REPLACING

see **ACTIVE ON DEMAND COUPLING (AOC), REPLACING**

ACTIVE ON DEMAND COUPLING FLUID LEVEL CHECK

see **ACTIVE ON DEMAND COUPLING FLUID LEVEL CHECK**

ACTIVE ON-DEMAND COUPLING MODULE

PREPARATORY WORK

Ignition off

Wait 3-4 minutes after switching the ignition off to reduce oil leakage at removal.

REMOVING/INSTALLING

Remove and install the differential electronic module(DEM). See **TEMPERATURE AND PRESSURE SENSOR, FOUR-WHEEL DRIVE CLUTCH**.

ORDERING SOFTWARE

Order software for the differential electronic module (DEM) according to the table below.

XC90	8688783

PROGRAMMING CONTROL MODULE

Program the new differential electronic module (DEM) according to the table below.

XC90	8688783

ACTIVE ON-DEMAND COUPLING SEAL

see **ACTIVE ON-DEMAND COUPLING SEAL**

CLUTCH FOUR-WHEEL DRIVE

special tool	
	T9995652 ANVIL BLOCK (FLEXPLATE/BEVEL-/FINAL DRIVE)

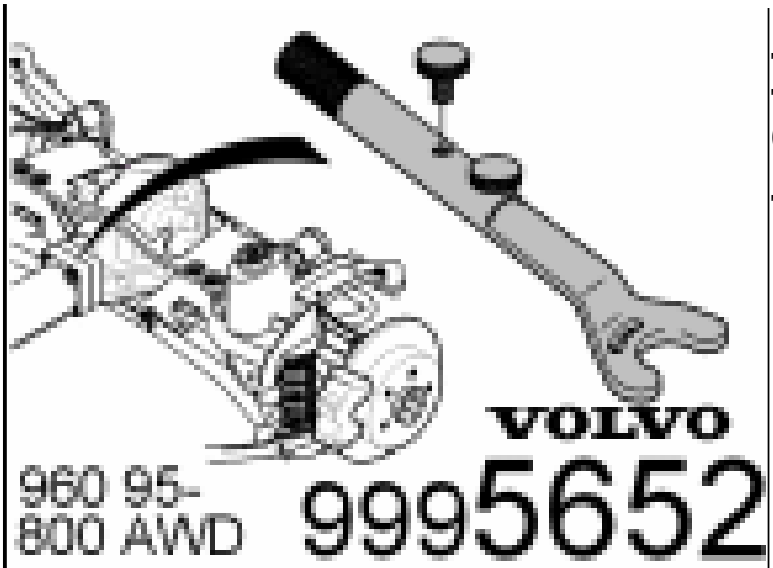	**1065, 1165** **Tool number:** T9995652 **Tool description:** ANVIL BLOCK (FLEXPLATE/BEVEL-/FINAL DRIVE) 1065, 1165 **Tool boards:** EU14-1/1; SV14-1/1; US14-1/1
	T9995759 ADAPTER FLANGE AWD **Tool number:** T9995759 **Tool description:** ADAPTER FLANGE AWD **Tool boards:**

REMOVAL

NOTE: **Removal steps in this procedure may contain installation details.**

Remove the driveshaft. See **PROPELLER SHAFT**

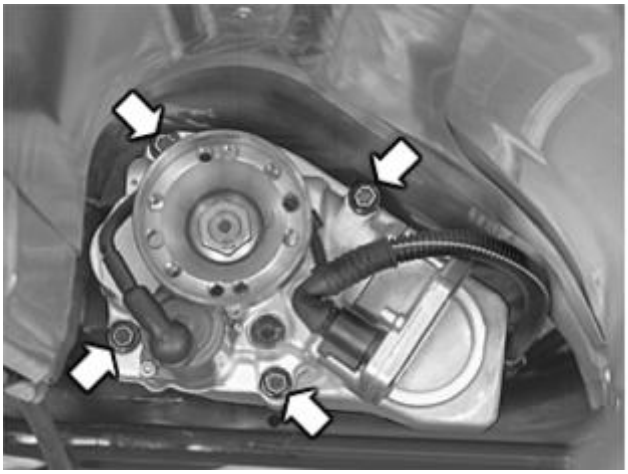

Fig. 76: Case Bolts
Courtesy of VOLVO CARS CORPORATION

see **9995652** , see **9995759**

NOTE: Be prepared to collect escaping fluids.

Torque: M8

24 Nm

Fig. 77: Final Drive
Courtesy of VOLVO CARS CORPORATION

Fig. 78: Active On Demand Coupling
Courtesy of VOLVO CARS CORPORATION

INSTALLATION

To install, reverse the removal procedure

Fill and check the oil level in the four wheel drive clutch. See **FINAL DRIVE, REPLACING**

DIFFERENTIAL INPUTSHAFT SEAL

see **DIFFERENTIAL INPUTSHAFT SEAL**

DIFFERENTIAL SUPPORT INSULATOR

see **DIFFERENTIAL SUPPORT INSULATOR**

FINAL DRIVE, REPLACING

see **FINAL DRIVE, REPLACING**

OIL PUMP, FOUR WHEEL DRIVE COUPLING

see **OIL PUMP, FOUR WHEEL DRIVE COUPLING**

TEMPERATURE AND PRESSURE SENSOR, FOUR-WHEEL DRIVE CLUTCH

see **TEMPERATURE AND PRESSURE SENSOR, FOUR-WHEEL DRIVE CLUTCH**

CENTER DIFFERENTIAL (B6324S5; 2011-2012)

ACTIVE ON-DEMAND COUPLING MODULE

see **ACTIVE ON-DEMAND COUPLING MODULE**

OIL FILTER CLUTCH FOUR WHEEL DRIVE

see **OIL FILTER CLUTCH FOUR WHEEL DRIVE**

CENTER DIFFERENTIAL (B6324S5, TF-80SC AWD; 2011-2012)

ACTIVE ON DEMAND COUPLING FLUID LEVEL CHECK

see **ACTIVE ON DEMAND COUPLING FLUID LEVEL CHECK**

ACTIVE ON-DEMAND COUPLING SEAL

see **ACTIVE ON-DEMAND COUPLING SEAL**

DIFFERENTIAL INPUTSHAFT SEAL

see **DIFFERENTIAL INPUTSHAFT SEAL**

DIFFERENTIAL SUPPORT INSULATOR

see **DIFFERENTIAL SUPPORT INSULATOR**

FINAL DRIVE, REPLACING

see **FINAL DRIVE, REPLACING**

OIL PUMP, FOUR WHEEL DRIVE COUPLING

see **OIL PUMP, FOUR WHEEL DRIVE COUPLING**

TEMPERATURE AND PRESSURE SENSOR, FOUR-WHEEL DRIVE CLUTCH

see **TEMPERATURE AND PRESSURE SENSOR, FOUR-WHEEL DRIVE CLUTCH**

CENTER DIFFERENTIAL (B8444S; 2009-2011)

ACTIVE ON-DEMAND COUPLING MODULE

see **ACTIVE ON-DEMAND COUPLING MODULE**

OIL FILTER CLUTCH FOUR WHEEL DRIVE

see **OIL FILTER CLUTCH FOUR WHEEL DRIVE**

CENTER DIFFERENTIAL (B8444S, TF-80SC AWD; 2009-2011)

ACTIVE ON DEMAND COUPLING (AOC), REPLACING

see **ACTIVE ON DEMAND COUPLING (AOC), REPLACING**

ACTIVE ON DEMAND COUPLING FLUID LEVEL CHECK

see **ACTIVE ON DEMAND COUPLING FLUID LEVEL CHECK**

BUSHING FINAL DRIVE REAR

Special tools	
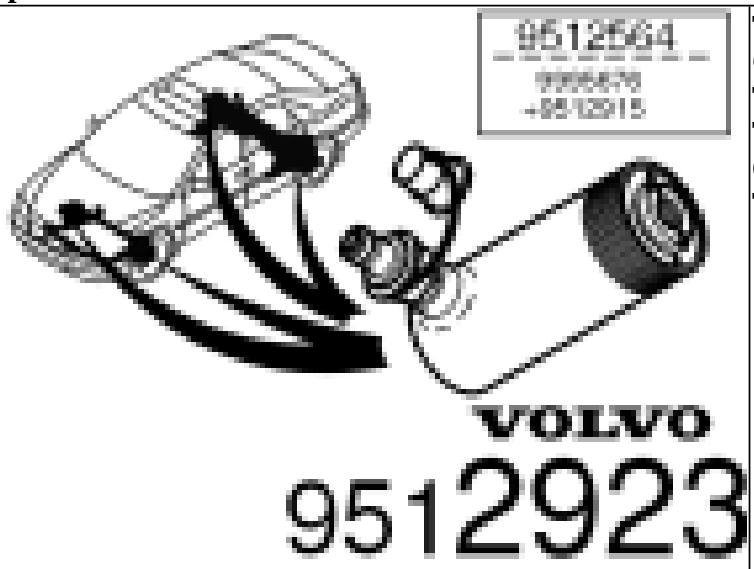	**T9512923 HYDRAULIC HOLE CYLINDER** **Tool number:** T9512923 **Tool description:** HYDRAULIC HOLE CYLINDER **Tool boards:**
	T9512566 HYDRAULIC PUMP **Tool number:** T9512566 **Tool description:** HYDRAULIC PUMP **Tool boards:**

	T9997095 SOCKET **Tool number:** T9997095 **Tool description:** SOCKET **Tool boards:**
	T9997054 ADAPTER INCL. 2 PCS. MC6C M6X12 (800 AWD, P2X) **Tool number:** T9997054 **Tool description:** ADAPTER INCL. 2 PCS. MC6C M6X12 (800 AWD, P2X)

	Tool boards:
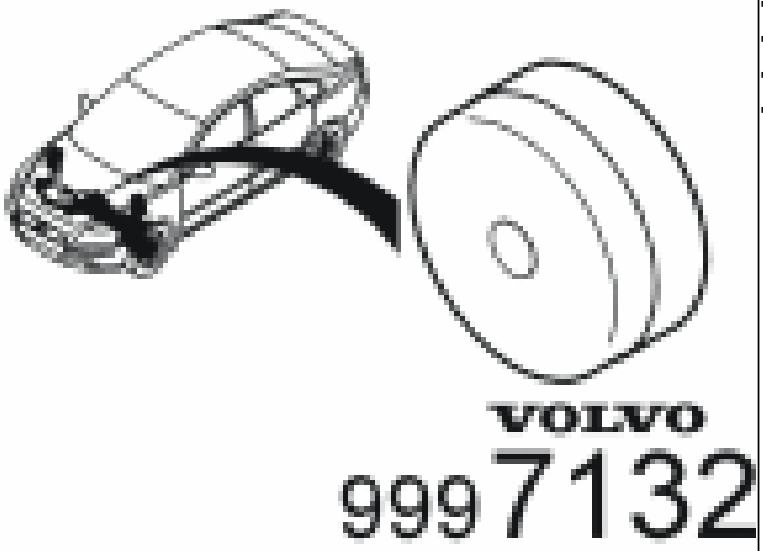	**T9997132 NUT M12** **Tool number:** T9997132 **Tool description:** NUT M12 **Tool boards:**
	T9997034 PULLER ROD M12X400 (800 AWD, P2X) **Tool number:** T9997034 **Tool description:** PULLER ROD M12X400 (800 AWD, P2X)

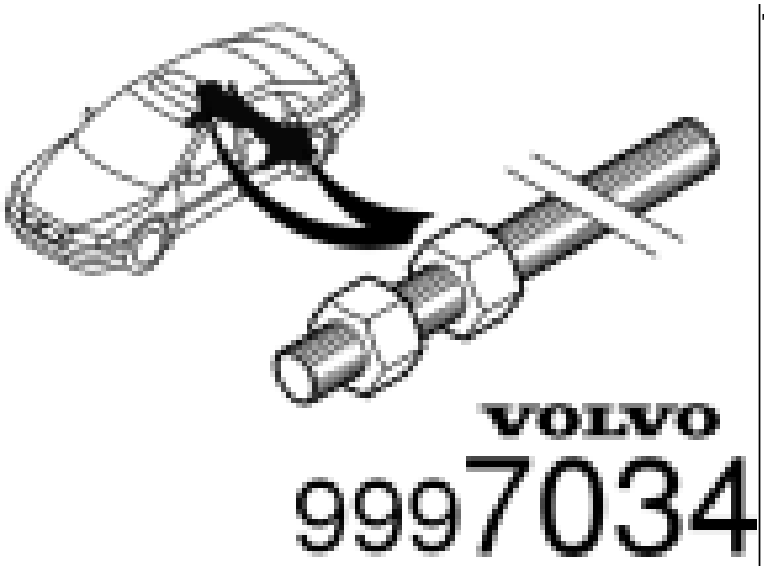	**Tool boards:**
	T9997096 RING **Tool number:** T9997096 **Tool description:** RING **Tool boards:**
	T9997330 PUNCH **Tool number:** T9997330 **Tool description:** DRIFT **Tool boards:**

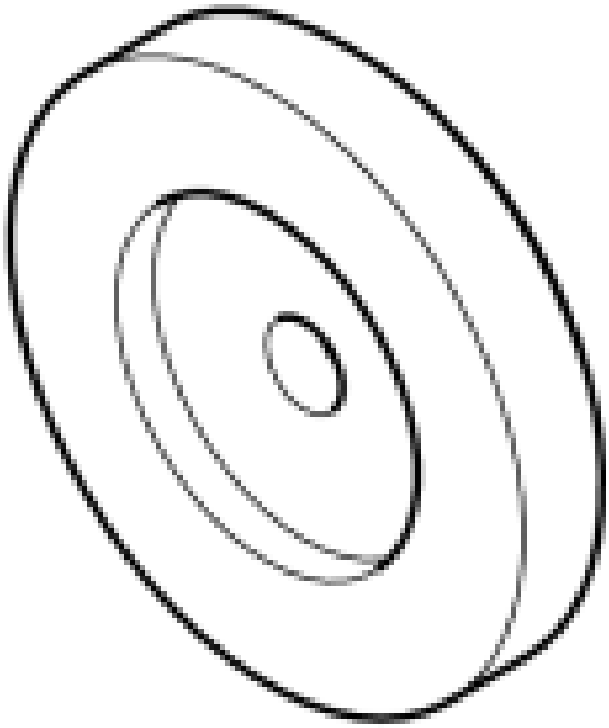	
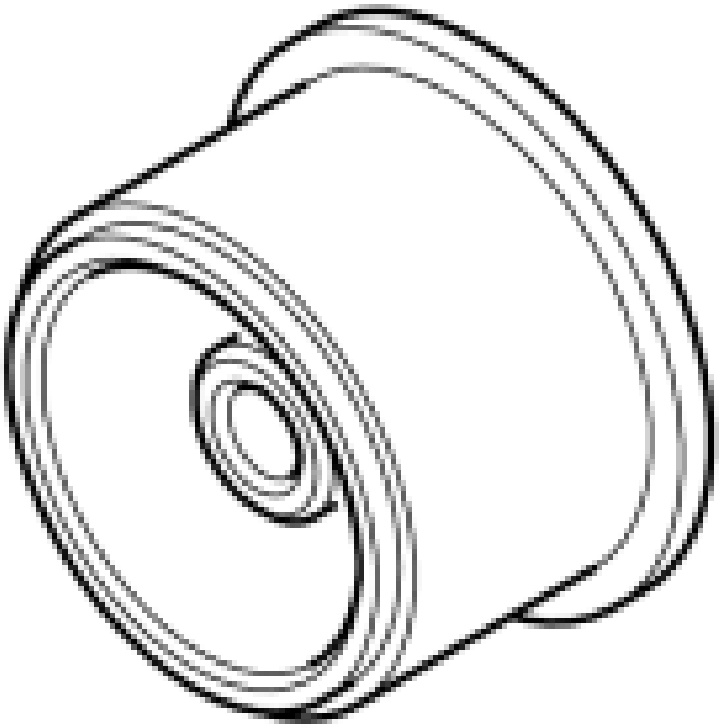	**T9997334 PUNCH** **Tool number:** T9997334 **Tool description:** DRIFT **Tool boards:**
	T9997332 PUNCH **Tool number:** T9997332 **Tool description:** DRIFT **Tool boards:**

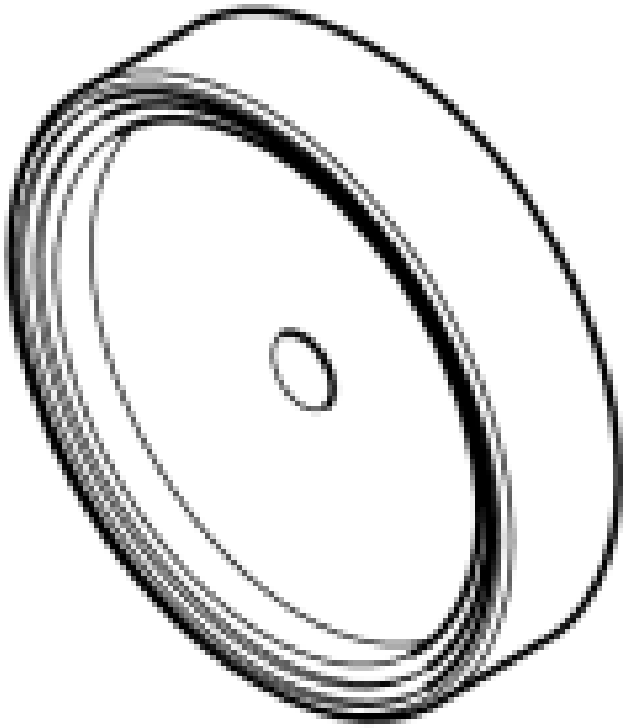	
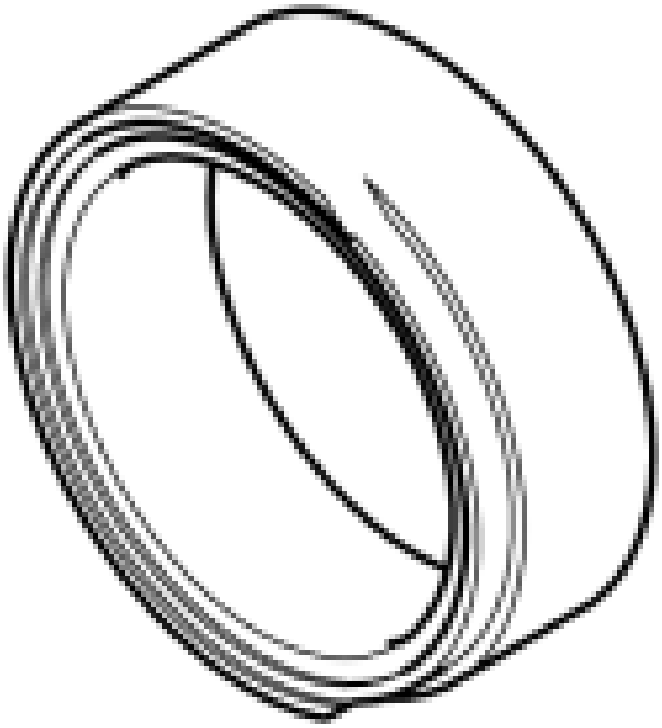	**T9997333 TAPER** **Tool number:** T9997333 **Tool description:** TAPER **Tool boards:**

NOTE: **Removal steps in this procedure may contain installation details.**

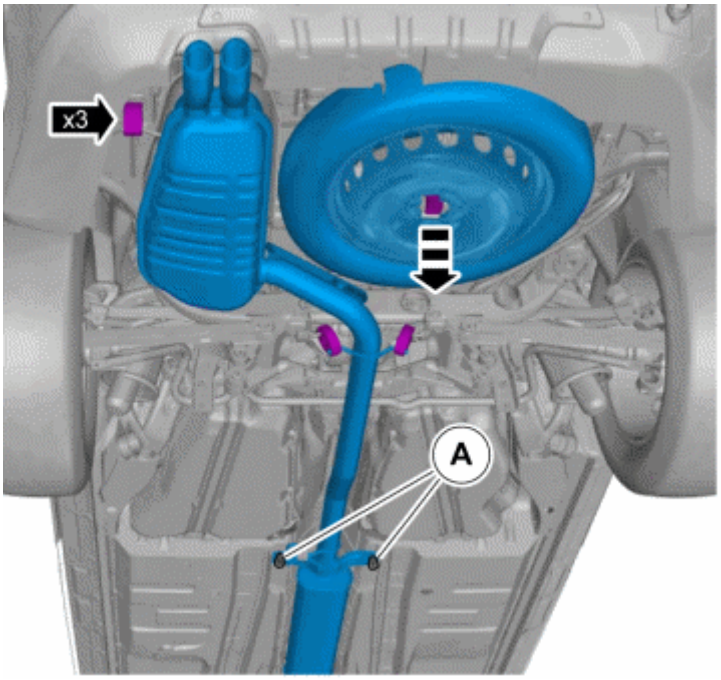

Fig. 79: Exhaust Mountings
Courtesy of VOLVO CARS CORPORATION

Remove the spare wheel (applies to specific designs).

Loosen the screws for the rear cross member (2 x A) about 10 mm.

Unhook the 3 rear rubber mountings so that the exhaust system rests on the rear cross member.

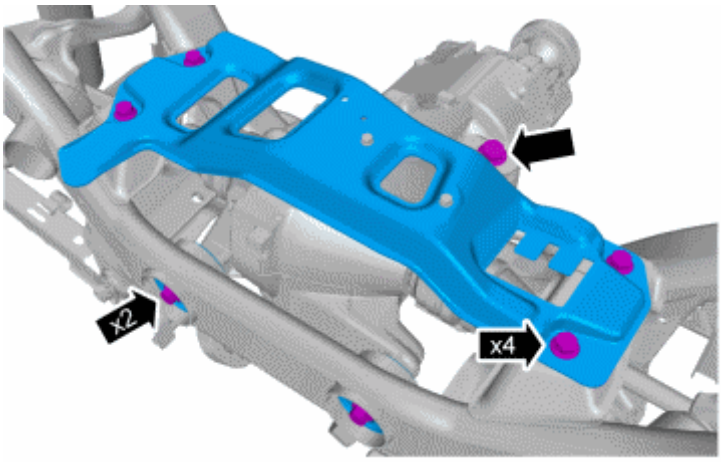

Fig. 80: Assembly Bolts
Courtesy of VOLVO CARS CORPORATION

Remove the following items:

- the cover from the sub-frame, loosen the reservoir and brackets from the cover if necessary.

- the 3 screws for the final drive.

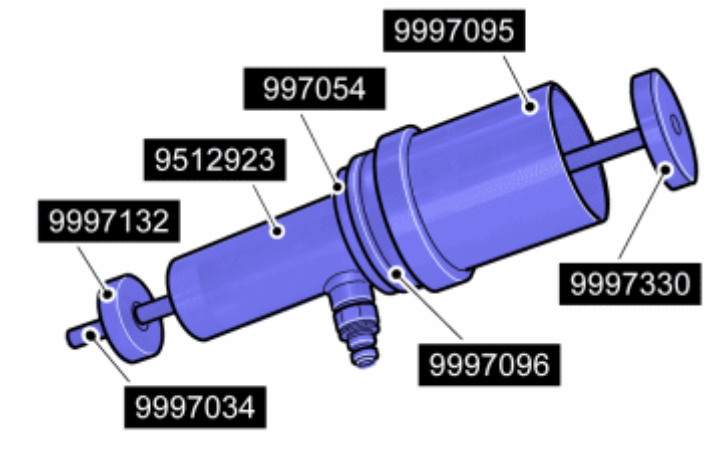

Fig. 81: Identifying Bushing Tool Assembly
Courtesy of VOLVO CARS CORPORATION

Use see **9512923** together with see **9512566**

NOTE: When using see 9512923 it may be necessary to regrip on account of the cylinder's restricted stroke length, (release the cylinder and screw the nut in on the puller rod).

see **9997095** , see **9997054** , see **9997132** , see **9512923** , see **9997034** , see **9997096** , see **9997330**

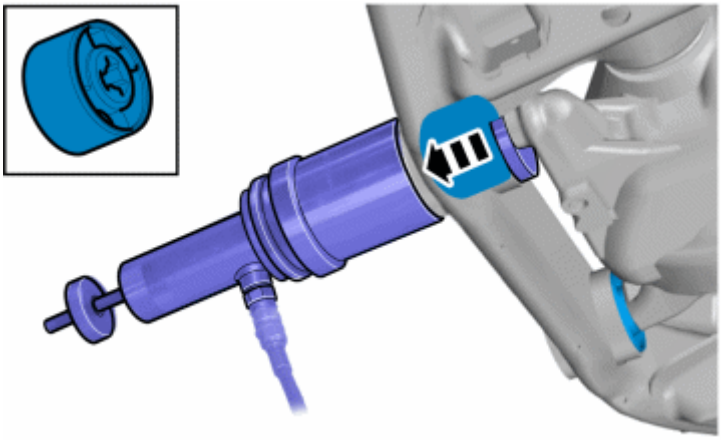

Fig. 82: Pressing Out Bushing Using Special Service Tool
Courtesy of VOLVO CARS CORPORATION

Push forward the final drive slightly, to create space at the front of the bushing.

Position the tools as illustrated.

Check that the threaded rod goes through the front punch completely, so that a full thread is obtained.

Centre the tools against the bushing and sub-frame and tighten the nut on the puller rod.

Press out the bushing.

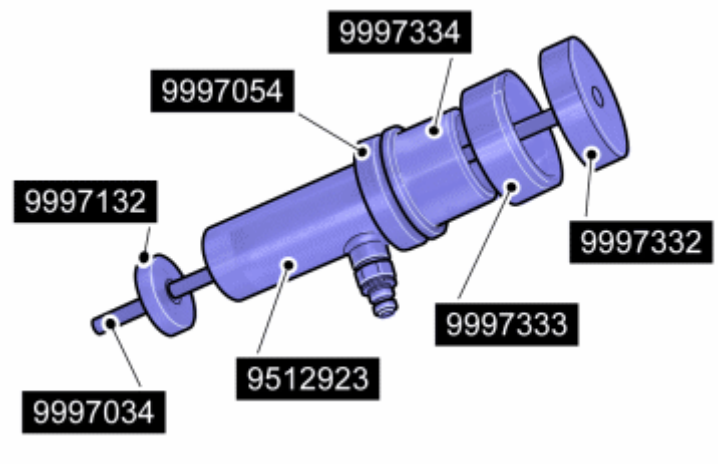

Fig. 83: Identifying Special Service Tool
Courtesy of VOLVO CARS CORPORATION

NOTE: **When using see 9512923 it may be necessary to regrip on account of the cylinder's restricted stroke length, (release the cylinder and screw the nut in on the puller rod).**

see **9997334** , see **9997054** , see **9997132** , see **9997332** , see **9997333** , see **9512923** , see **9997034**

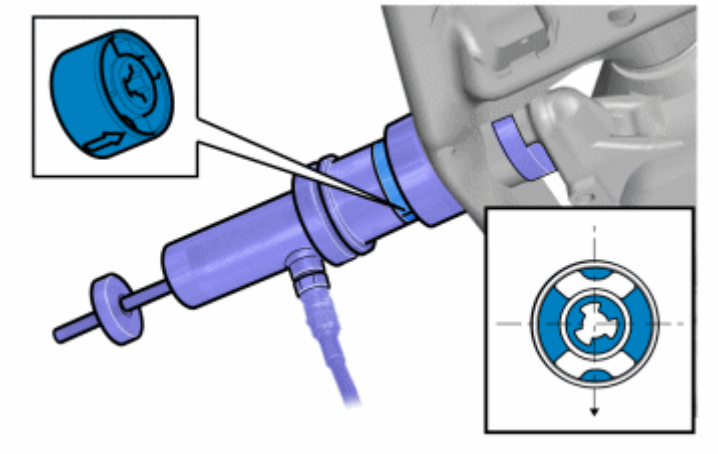

Fig. 84: Identifying Special Service Tools
Courtesy of VOLVO CARS CORPORATION

Push forward the final drive slightly, to create space at the front of the bushing.

Mark up the bushing with a line as illustrated, it is extremely important that the bushing is install in the right position.

Place the bushing and tool as illustrated

Exercise care to center the tool, tighten the nut on the puller rod and press in the bushing.

Check that the threaded rod goes through the front punch completely, so that a full thread is obtained.

Centre the tools against the bushing and sub-frame and tighten the nut on the puller rod.

NOTE: The marking on the bushing should face downward.

The bushing is in the correct position when the flange on see **9997334** rests on see **9997333** when the tool is pressed together.

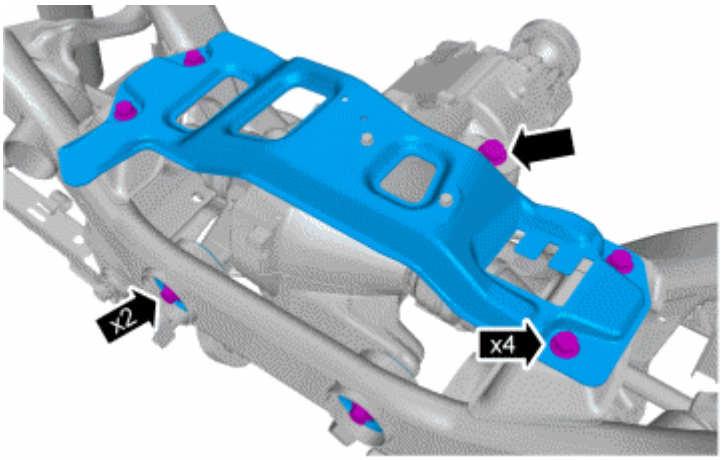

Fig. 85: Identifying Assembly Bolts
Courtesy of VOLVO CARS CORPORATION

Install the following items:

- the final drive with the 3 x M12 screws, first tighten so that the final drive lies against the two rear bushings before the screws are tightened fully.
- the cover for the sub-frame. Tighten according to: **TIGHTENING TORQUE**
- any brackets and the reservoir to the cover
- rubber mountings
- rear cross member. Tighten according to: **TIGHTENING TORQUE**
- the spare wheel (applies to specific designs).

DIFFERENTIAL INPUTSHAFT SEAL

see **DIFFERENTIAL INPUTSHAFT SEAL**

FINAL DRIVE, REPLACING

Special tools:

see **9512928**

see **9985972**

see **9997057**

NOTE: **As the illustrations in this service information are used for different model years and / or models, some variation may occur. However, the essential information is always correct.**

REMOVAL

PREPARATIONS

NOTE: **Check that the parking brake is not applied and that the gear selector is in position P or in gear.**

Ignition off

Position the rear lifting arms so that they do not obstruct the front brackets securing the rear axle arms to the body.

REMOVING DRIVE SHAFTS

Remove the drive shafts on both sides according to: **DRIVE SHAFT REAR, REPLACING**.

REMOVING THE SPARE WHEEL AND REAR SECTION OF THE EXHAUST SYSTEM

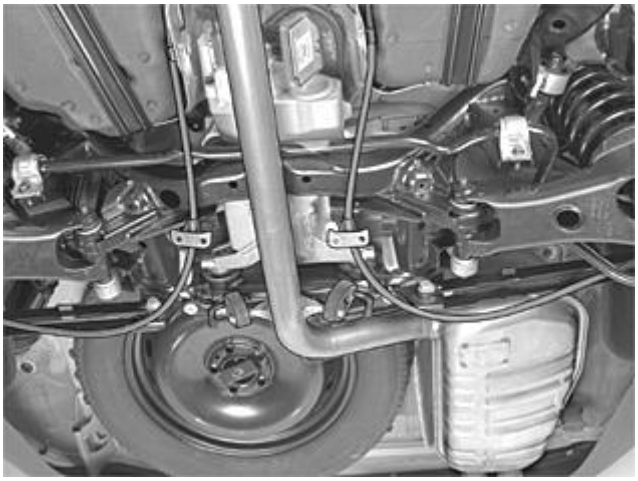

Fig. 86: Identifying Rear Section Of Exhaust System & Spare Wheel
Courtesy of VOLVO CARS CORPORATION

Remove the rear section of the exhaust system and the spare wheel.

Support the rear edge of the three-way catalytic converter (TWC) so as not to put strain on the exhaust

manifold.

Remove the propeller shaft from the final drive and the member for the center bearing. See **PROPELLER SHAFT, REPLACING** .

REMOVING THE SCREWS FOR THE CENTER BEARING MEMBER AND PROPELLER SHAFT

Tie up the shaft.

Use the rear cross member as support.

Remove one screw and slacken off the other. Turn out the member.

REMOVING THE CABLE HARNESS

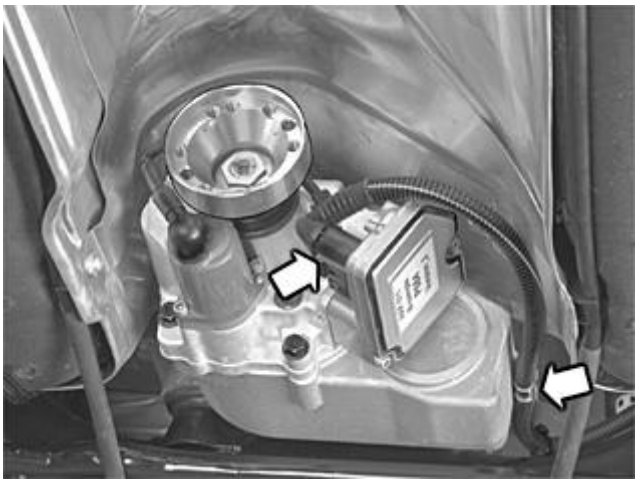

Fig. 87: Active On Demand Coupling Control Module Cable Harness
Courtesy of VOLVO CARS CORPORATION

Remove the connector from the Differential Electronic Module (DEM).

Detach the cable harness from the final drive housing and the mounting in the rear axle member.

Fold the cable harness to one side to prevent damage when removing the final drive.

REMOVING THE FINAL DRIVE

Fig. 88: Identifying Rear Axle Member Cover, Front Mounting Screws & Final Drive Housing Screws
Courtesy of VOLVO CARS CORPORATION

Remove:

- the cover for the rear axle member
- the screw for the front mounting for the final drive housing.

Slacken off the 2 rear screws for the rear axle member/final drive housing. Leave the screws in place by a few threads.

REMOVING THE REAR AXLE MEMBER

Fig. 89: Identifying Front Mounting Screws & Portable Jack Tool Attachment (998 5972)
Courtesy of VOLVO CARS CORPORATION

Bring see **9985972** into light contact with the front section of the rear axle member.

Remove the screws from the front mounting in the body for the rear axle member, on both sides.

Carefully lower the frame. Remove the jack.

REMOVING THE FINAL DRIVE HOUSING

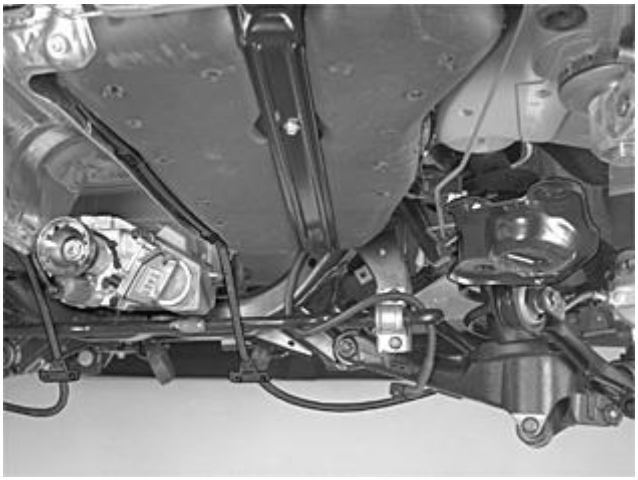

Fig. 90: Identifying Final Drive Housing & Screws
Courtesy of VOLVO CARS CORPORATION

Support the final drive housing. Remove the two loose screws.

Lift out the final drive housing from the rear axle member. Position the final drive housing on a workbench.

INSTALLATION

NOTE: **For tightening torques, see: TIGHTENING TORQUE.**

NOTE: **To ensure that there is no exhaust leakage, see: FLANGED JOINT, ASSEMBLING .**

INSTALLING THE REAR AXLE MEMBER

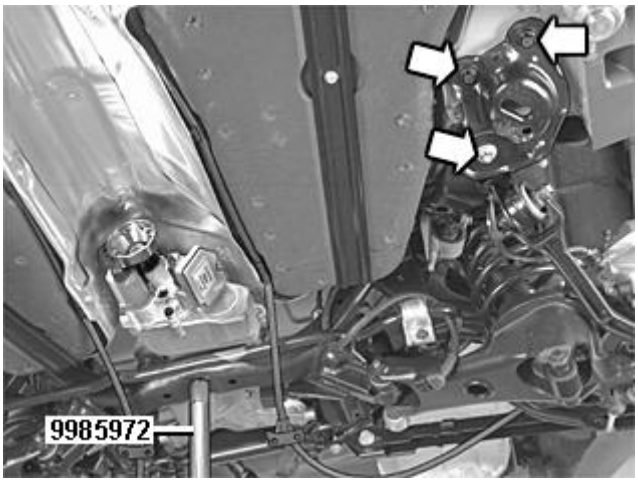

Fig. 91: Identifying Front Mounting Screws & Portable Jack Tool Attachment (998 5972)
Courtesy of VOLVO CARS CORPORATION

Install the final drive housing in the rear axle member. Loosely secure the final drive housing to the rear bushings in the frame using screws.

Bring see **9985972** into light contact with the front section of the rear axle member.

Install:

- the screws for the front mounting in the body for the rear axle member, on both sides.
- the 2 x M12 screws for the bracket/body. Tighten.
- the M14 screw for the bracket, the rear axle frame and body. Tighten. See: **SUMMARY OF TIGHTENING TORQUES FOR SPECIFIC COMPONENTS** .

Remove see **9985972** .

INSTALLING THE FINAL DRIVE HOUSING

Fig. 92: Identifying Rear Axle Member Cover, Front Mounting Screws & Final Drive Housing Screws
Courtesy of VOLVO CARS CORPORATION

Install:

- 1 M12 front screw for the final drive housing. Tighten
- the cover for the rear axle member using 4 M12 screws. Tighten
- the 2 x rear M12 screws for the subframe/final drive housing. Tighten.

INSTALLING THE CABLE HARNESS

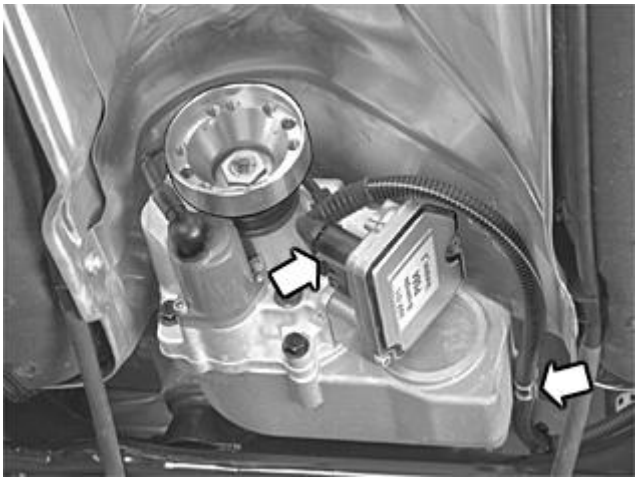

Fig. 93: Active On Demand Coupling Control Module Cable Harness
Courtesy of VOLVO CARS CORPORATION

Connect the connector for the differential electronic module (DEM). Install the cable harness in the mounting in the rear axle member.

Install the propeller shaft on the final drive. Install the member for the center bearing. See: **PROPELLER SHAFT, REPLACING** .

INSTALLING DRIVE SHAFTS

Install the drive shafts on both sides according to: **DRIVE SHAFT REAR, REPLACING**.

INSTALLING THE SPARE WHEEL AND REAR SECTION OF THE EXHAUST SYSTEM

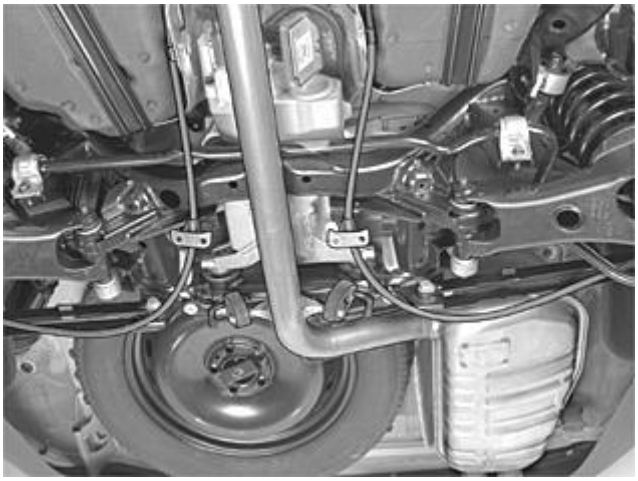

Fig. 94: Identifying Rear Section Of Exhaust System & Spare Wheel
Courtesy of VOLVO CARS CORPORATION

Check that the gasket for the flanged joint between the front and rear exhaust pipe is not damaged. Replace if necessary.

Install the rear cross member. Use 2 x M8 screws. Tighten.

FILLING AND CHECKING THE OIL LEVEL

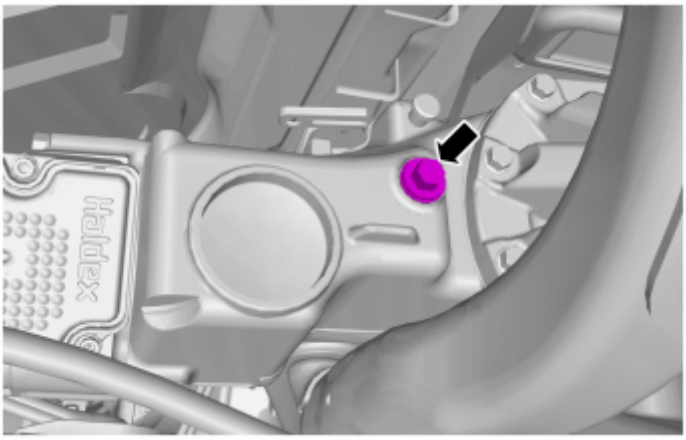

Fig. 95: Identifying Oil Check Bolt
Courtesy of VOLVO CARS CORPORATION

Top up and check the oil level in the active on demand coupling (AOC).

Use oils, see: **LUBRICANT TRANSMISSION**

Tighten both the level plugs. See: **SUMMARY OF TIGHTENING TORQUES FOR SPECIFIC COMPONENTS**.

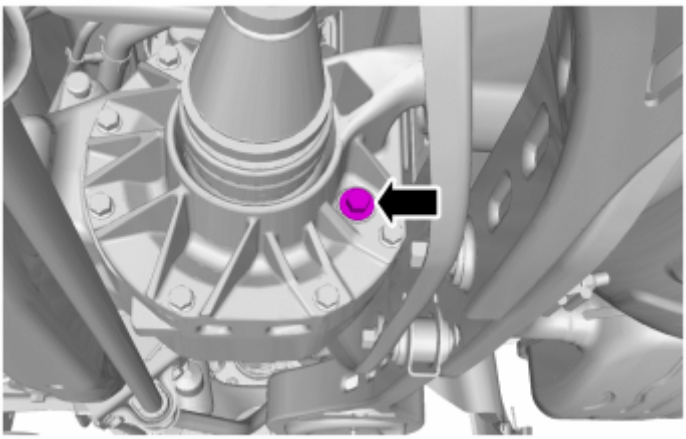

Fig. 96: Identifying Oil Check Bolt
Courtesy of VOLVO CARS CORPORATION

Top up and check the oil level in the rear axle gear.

Use oils, see: **LUBRICANT TRANSMISSION**

Tighten both the level plugs. See: **TIGHTENING TORQUESUMMARY OF TIGHTENING TORQUES FOR SPECIFIC COMPONENTS**.

TEMPERATURE / PRESSURE SENSOR ACTIVE ON DEMAND COUPLING (AOC), REPLACING

NOTE: As the illustrations in this service information are used for different model years and / or models, some variation may occur. However, the essential information is always correct.

REMOVAL

PREPARATORY WORK

Ignition off

Wait 3-4 minutes after switching the ignition off to reduce oil leakage at removal.

REMOVING THE DIFFERENTIAL ELECTRONIC MODULE (DEM)

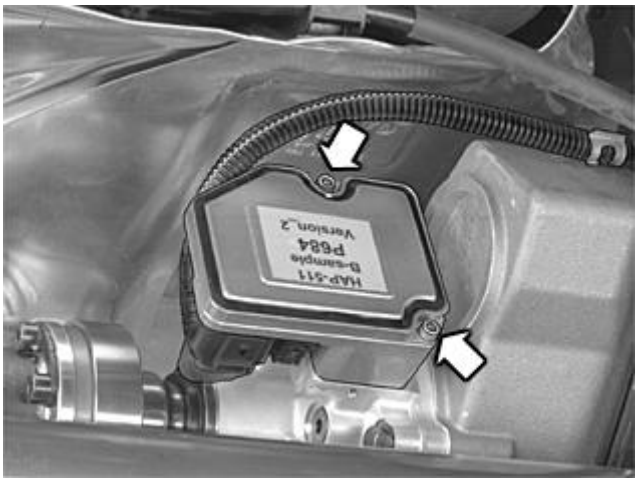

Fig. 97: Active On Demand Coupling Control Module Screws
Courtesy of VOLVO CARS CORPORATION

CAUTION: Clean the area around the control module thoroughly before beginning removal.

Place a container under the active on demand coupling (AOC). Disconnect the connectors to the control module and the oil pump.

Remove:

- the 2 x screws for the control module
- the control module together with the seal plate and the cupped washer.

REMOVING THE COMPONENTS FROM THE ACTIVE ON DEMAND COUPLING (AOC)

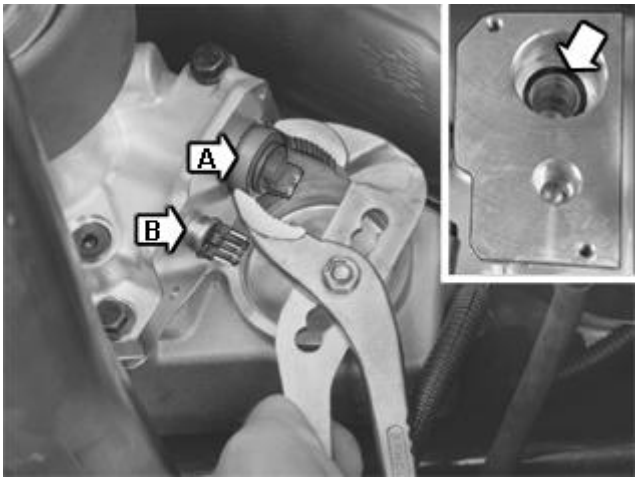

Fig. 98: Choke Valve And Temperature/Pressure Sensor
Courtesy of VOLVO CARS CORPORATION

Remove the throttle valve and temperature/pressure sensor from the coupling.

A = Throttle valve.

B = Temperature / pressure sensor.

To remove, use large pliers. Grasp the end of the throttle valve, hold the pliers steady and pull the valve straight out.

CAUTION: Make sure that no damage is caused when removing the throttle valve. The valve cannot be replaced separately. The throttle valve is removed in order to be installed in the control module. This is done to minimize the risk of damage occurring to the contacts when installing.

Remove:

- temperature-/pressure sensor as above
- The O-ring from the throttle valve seat in the coupling housing.

INSTALLATION

NOTE: For tightening torques, see: TIGHTENING TORQUE.

COMPONENTS WHICH ARE INCLUDED IN THE KIT AND MUST BE REPLACED

Fig. 99: Identifying Temperature / Pressure Sensor With O-Ring
Courtesy of VOLVO CARS CORPORATION

Temperature-/pressure sensor with O-ring.

Washer.

O-ring for the throttle valve seat.

INSTALLING THE INCLUDED COMPONENTS

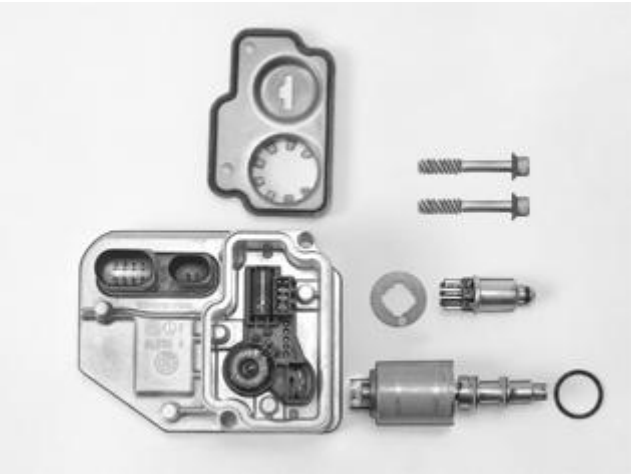

Fig. 100: Active On Demand Coupling Components
Courtesy of VOLVO CARS CORPORATION

Install:

- Differential electronic module (DEM)
- the seal plate
- the washer
- the throttle plate with the O-rings

- temperature-/pressure sensor with the O-rings
- the screws.

The O-ring for the throttle valve seat is installed separately.

PLACING THE SEALING PLATE IN THE CONTROL MODULE

Fig. 101: Active On Demand Coupling Control Module Kit
Courtesy of VOLVO CARS CORPORATION

Place the sealing plate in the control module

Press the throttle valve and the temperature-/pressure sensor into place on the control module connector. Place the cupped washer with the convex side against the temperature-/pressure sensor.

Lubricate the sealing rings on the valves. Use oil. See: **LUBRICANT TRANSMISSION** .

INSTALLING THE O-RING

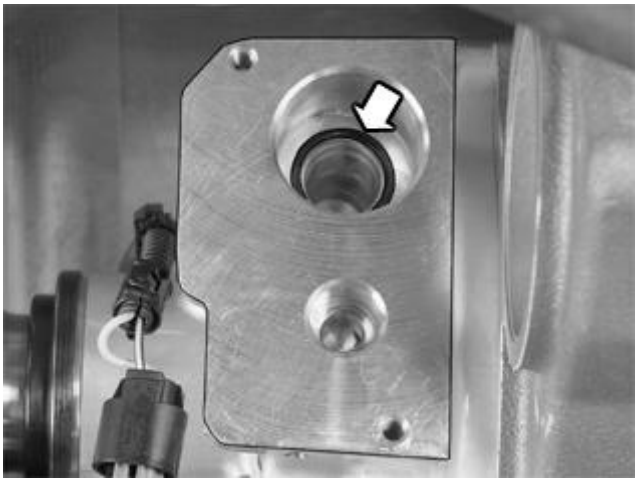

Fig. 102: Active On Demand Coupling Control Module O-Ring
Courtesy of VOLVO CARS CORPORATION

Carefully check that the control module sealing surface and the valve seats in the Active on Demand Coupling (AOC) are clean, there must be no residue left from cloths or paper.

Lubricate the new O-ring using oil. See: **LUBRICANT TRANSMISSION** and securely press into its seat.

INSTALLING THE ACTIVE ON DEMAND COUPLING (AOC)

Fig. 103: Installing Control Module For Active On Demand Coupling
Courtesy of VOLVO CARS CORPORATION

Install the control module with the valves for the coupling, hold it pressed against the coupling housing while installing the 2 x screws. Lightly tighten alternately.

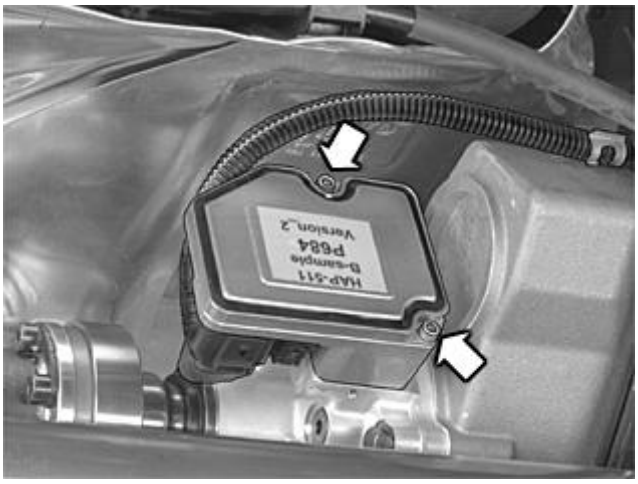

Fig. 104: Active On Demand Coupling Control Module Screws
Courtesy of VOLVO CARS CORPORATION

Tighten, see: **SUMMARY OF TIGHTENING TORQUES FOR SPECIFIC COMPONENTS**.

Connect the connectors for the control module and the oil pump.

Top up and check the oil level in the active on demand coupling (AOC). See: **FINAL DRIVE, REPLACING** .

Erase any diagnostic trouble codes (DTCs).

CENTER DIFFERENTIAL (B8444S, TF-80SC AWD; 2005-2008)

ACTIVE ON DEMAND COUPLING (AOC), REPLACING

see **ACTIVE ON DEMAND COUPLING (AOC), REPLACING**

ACTIVE ON DEMAND COUPLING FLUID LEVEL CHECK

see **ACTIVE ON DEMAND COUPLING FLUID LEVEL CHECK**

BUSHING FINAL DRIVE REAR

see **BUSHING FINAL DRIVE REAR**

DIFFERENTIAL INPUTSHAFT SEAL

see **DIFFERENTIAL INPUTSHAFT SEAL**

FINAL DRIVE, REPLACING

see **FINAL DRIVE, REPLACING**

TEMPERATURE / PRESSURE SENSOR ACTIVE ON DEMAND COUPLING (AOC), REPLACING

see **TEMPERATURE / PRESSURE SENSOR ACTIVE ON DEMAND COUPLING (AOC), REPLACING**

CENTER DIFFERENTIAL (TF-80SC AWD; 2005-2012)

BUSHINGS FINAL DRIVE HOUSING, REPLACING

Special tools:

see **9512564**

see **9992520**

see **9995297**

see **9995575**

see **9995576**

see **9995588**

see **9995589**

see **9997078**

NOTE: **As the illustrations in this service information are used for different model years and / or models, some variation may occur. However, the essential information is always correct.**

REMOVAL

PREPARATORY WORK

Remove the final drive. See: **FINAL DRIVE, REPLACING** .

REMOVING THE BUSHING

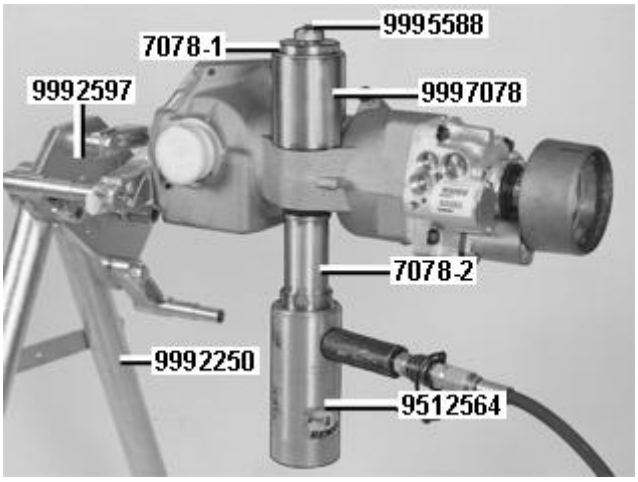

Fig. 105: Removing The Bushing
Courtesy of VOLVO CARS CORPORATION

Position the final drive in stand see **9992250** and fixture see **9995297** with corresponding screws, marked with 1 on the screw head.

When removing the bushing use puller cylinder see **9512564** or see **9995575** with corresponding pump see **9995576** .

Position connecting rod see **9995588** in the puller cylinder and sleeve 7078-2 against the puller cylinder and the bushing. Position counterhold see **9997078** with washer 7078-1. Turn the counterhold so that the cut out is against the radius on the final drive housing and so that it is supported on the cast surrounding surface.

Press out the bushing

INSTALLATION

MARKING THE BUSHING AND THE FINAL DRIVE HOUSING

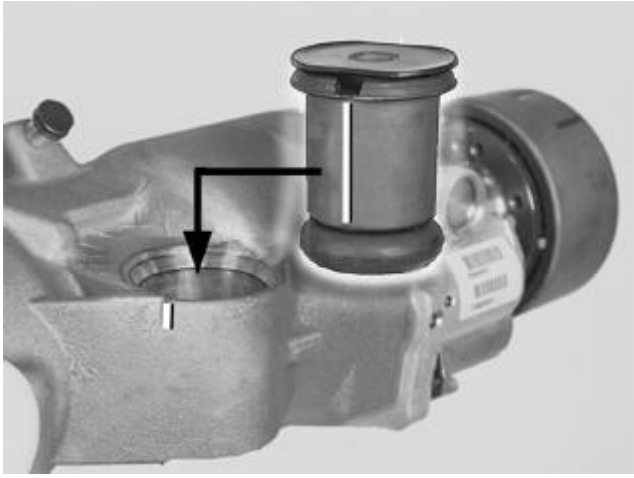

Fig. 106: Identifying Bushing And Final Drive Housing Marks
Courtesy of VOLVO CARS CORPORATION

In order to obtain the correct position of the bushing during installation, make a mark opposite the cut out in the edge of the bushing and straight down the side.

Make a mark opposite the edge, between the cast surface and the machined surface on the final drive housing, as illustrated.

Place the bushing marking opposite the marking on the final drive housing.

INSTALLING THE FINAL DRIVE HOUSING

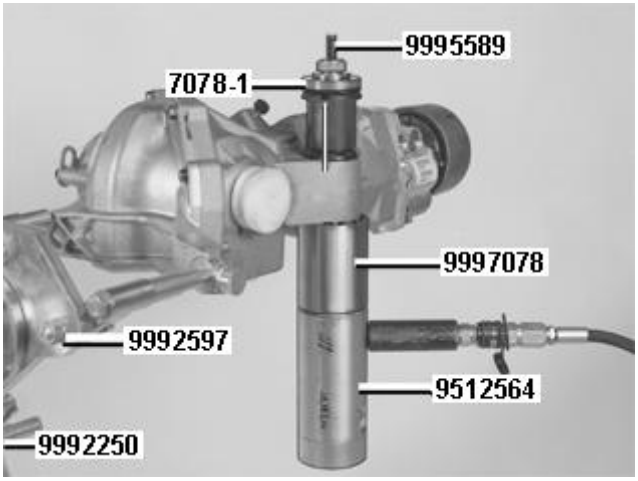

Fig. 107: Installing The Final Drive Housing
Courtesy of VOLVO CARS CORPORATION

Use puller cylinder see **9512564** alternatively see **9995575** with corresponding pump see **9995576** .

Position connecting rod see **9995589** in the puller cylinder and counterhold see **9997078** against the puller cylinder and the bushing final drive housing. Turn the counterhold so that cut out is against the radius on the final drive housing and so that it is supported on the cast surrounding surface.

Lubricate the end of the bushing and outer sleeve. Use a small amount of petroleum jelly. Position washer 7078-1 with the flat side against the bushing and lightly install the connecting rod. Turn the bushing to the correct position, as above. Press the bushing so that the flange on the bushing is against the final drive housing.

FINISHING

Install the final drive. See: **FINAL DRIVE, REPLACING** .

OIL PUMP ACTIVE ON DEMAND COUPLING (AOC), REPLACING

NOTE: As the illustrations in this service information are used for different model years and / or models, some variation may occur. However, the essential information is always correct.

PREPARATORY WORK

REMOVING COMPONENTS

Remove:

- the propeller shaft and the exhaust system. See: **FINAL DRIVE, REPLACING**
- the flange from the active on demand coupling (AOC). See: **PINION SEAL COUPLING (AOC), REPLACING**.

REMOVAL

REMOVING THE OIL PUMP

Ignition off

NOTE: Thoroughly clean around the oil pump before beginning removal.

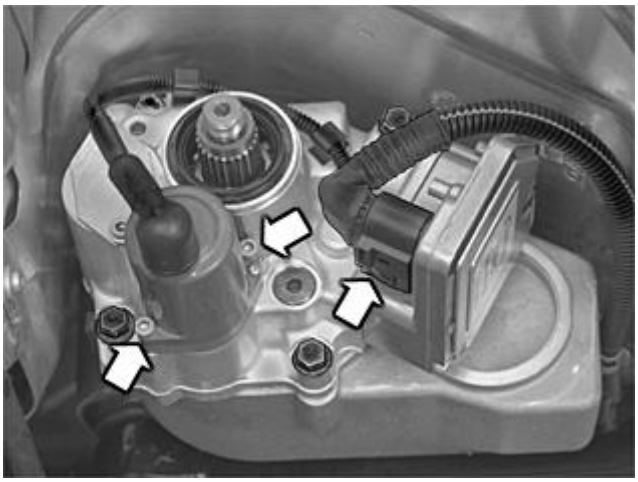

Fig. 108: Locating Oil Pump Connector And Screws
Courtesy of VOLVO CARS CORPORATION

Place a container under the active on demand coupling (AOC).

Remove:

- the connector from the Differential Electronic Module (DEM) to the active on demand coupling (AOC)
- the cable harness mountings.

Remove the two screws from the oil pump. Pull the pump straight out from the active on demand coupling (AOC).

NOTE: Later versions of the oil pump have the socket for the cable harness on the side of the oil pump housing. The cable harness is shorter. This version supersedes all previous versions, including as a replacement part.

INSTALLATION

NOTE: For tightening torques, see TIGHTENING TORQUE.

INSTALLING OIL PUMP

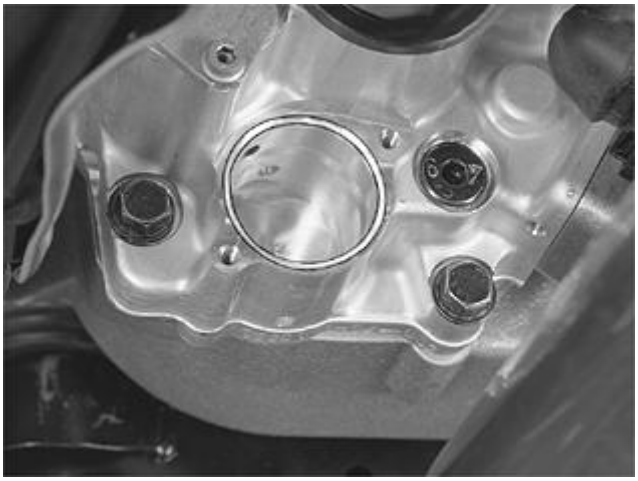

Fig. 109: Identifying Oil Pump Seat
Courtesy of VOLVO CARS CORPORATION

Thoroughly check that the oil pump seat in the active on demand coupling (AOC) is clean. There must be no residue left from cloths or paper.

Fig. 110: Identifying Oil Pump And O-Rings
Courtesy of VOLVO CARS CORPORATION

Check that the new O-rings are in position. Lubricate the O-rings. Use oil for the active on demand coupling (AOC). See: **LUBRICATION TRANSMISSION** .

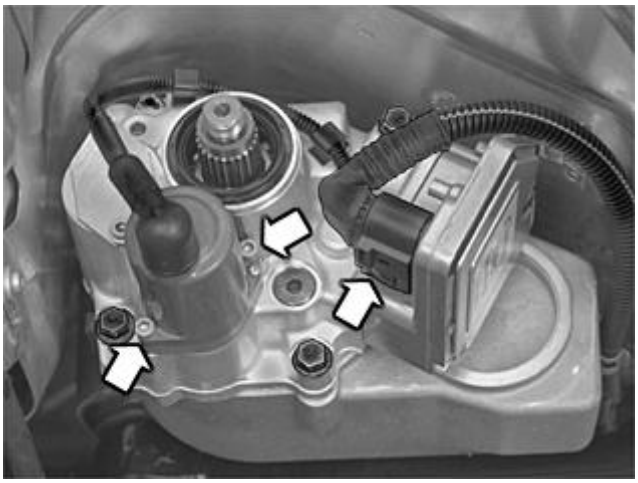

Fig. 111: Locating Oil Pump Connector And Screws
Courtesy of VOLVO CARS CORPORATION

Install the oil pump. Press the pump in as far as possible. Lightly install the 2 x M5 screws for the pump alternately. Tighten. See: **SUMMARY OF TIGHTENING TORQUES FOR SPECIFIC COMPONENTS**.

Connect the connector.

FILLING AND CHECKING THE OIL LEVEL

Top up and check the oil level in the active on demand coupling (AOC), the front level plug.

Use oil. See: **LUBRICATION TRANSMISSION** .

Tighten the level plug according to: **SUMMARY OF TIGHTENING TORQUES FOR SPECIFIC**

COMPONENTS.

Install the propeller shaft and the exhaust system. See: **FINAL DRIVE, REPLACING**.

PINION SEAL COUPLING (AOC), REPLACING

Special tools:

see **9995069**

see **9995652**

see **9995893**

see **9997025**

see **9997058**

NOTE: **As the illustrations in this service information are used for different model years and / or models, some variation may occur. However, the essential information is always correct.**

REMOVAL

REMOVING THE EXHAUST SYSTEM AND PROPELLER SHAFT

Remove the propeller shaft and the exhaust system. See: **FINAL DRIVE, REPLACING** .

REMOVING THE FLANGE

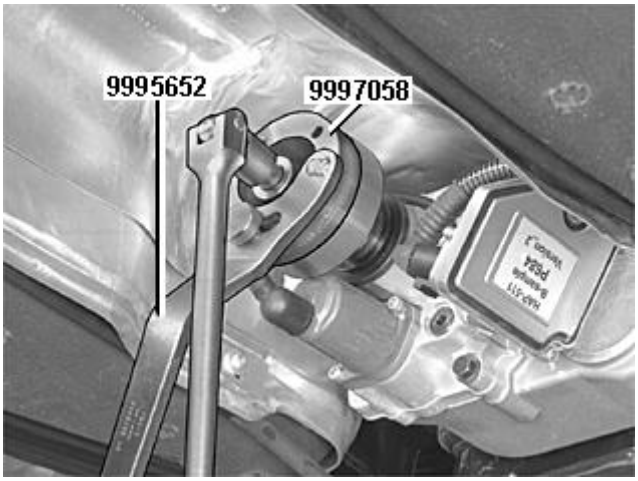

Fig. 112: Identifying Removal Of Flange Nut With Counterhold 999 5652 And Adapter 999 7058
Courtesy of VOLVO CARS CORPORATION

Remove the flange nut. Use counterhold see **9995652** together with adapter see **9997058** . Mark up the flange in

relation to the end of the shaft.

Place a container under the active on demand coupling (AOC).

Fig. 113: Identifying Removal Of Flange With 999 5893
Courtesy of VOLVO CARS CORPORATION

Remove the flange. If the flange is stuck, use puller see **9995893** .

Fig. 114: Removing Flange Using 999 5893 (2 Of 2)
Courtesy of VOLVO CARS CORPORATION

NOTE: **For cars with a vibration damper on the Active on Demand Coupling (AOC) flange.**

Use 55 mm long screws for the puller. The oil pump may be damaged if too long screws are used.

Check that the sealing surfaces of the flange are free of faults. Replace the flange with a new one if there is a fault.

REMOVING THE SEAL

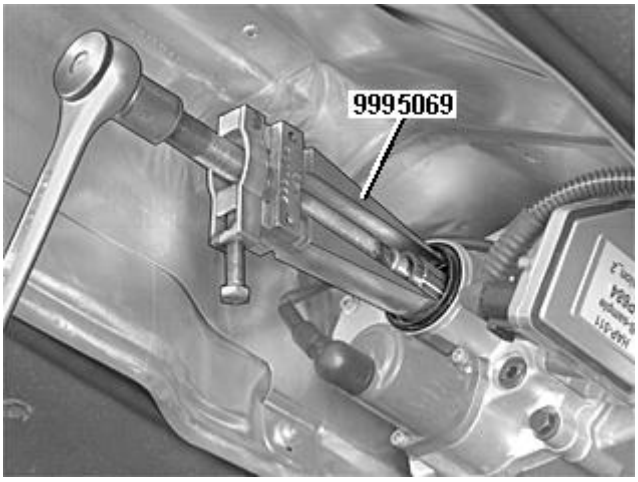

Fig. 115: Identifying Removal Of Seal From Active On Demand Coupling Using Extractor 999 5069
Courtesy of VOLVO CARS CORPORATION

Remove the Active on Demand Coupling (AOC). Use puller see **9995069** .

Thoroughly check that no seal residue remains.

INSTALLATION

INSTALLING THE SEAL

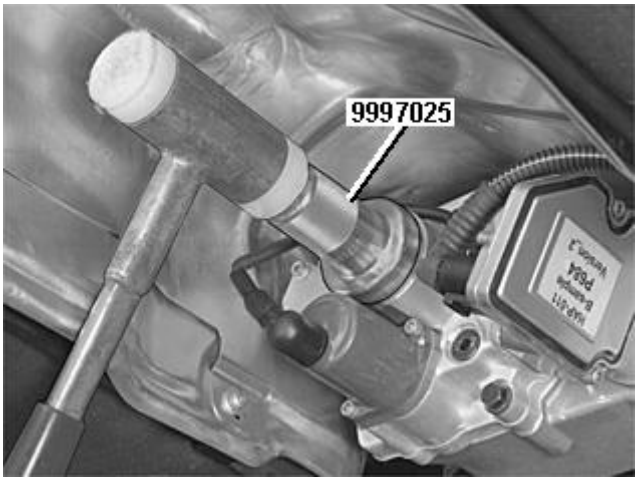

Fig. 116: Identifying Installation Of Seal Using Drift 999 7025
Courtesy of VOLVO CARS CORPORATION

Lubricate the new seal. Use oil for the active on demand coupling (AOC). See: **LUBRICATION TRANSMISSION**

Use drift see **9997025** when installing. Tap in the seal until the head of the drift is against the active on demand coupling (AOC) housing.

INSTALLING THE FLANGE

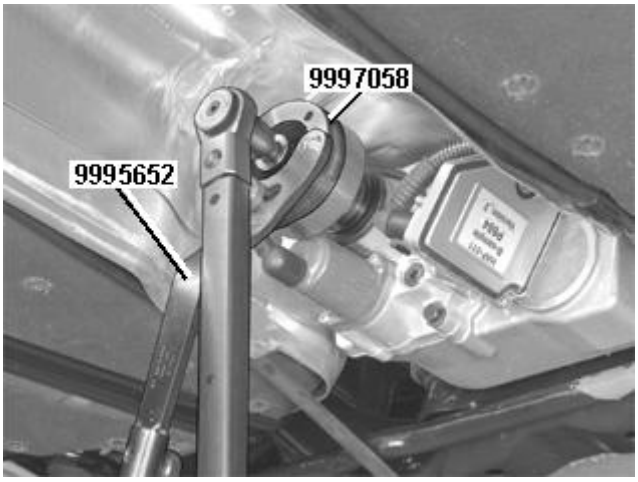

Fig. 117: Identifying Installation Of Flange Using 999 5652 And 999 7058
Courtesy of VOLVO CARS CORPORATION

Install the flange for the active on demand coupling (AOC) according to the previous mark (if the old flange is used).

Install a new nut for the shaft/flange. Use counterhold see **9995652** with adapter see **9997058** .

Tighten the nut. See: **SUMMARY OF TIGHTENING TORQUES FOR SPECIFIC COMPONENTS**.

INSTALLING THE PROPELLER SHAFT AND EXHAUST SYSTEM

Install the propeller shaft and the exhaust system. See: **FINAL DRIVE, REPLACING** .

FILLING AND CHECKING THE OIL LEVEL

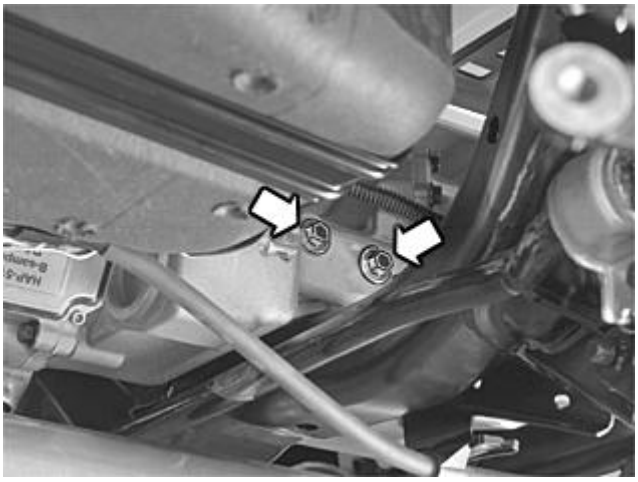

Fig. 118: Identifying Final Drive (Front & Rear) Level Plugs
Courtesy of VOLVO CARS CORPORATION

Top up and check the oil level in the active on demand coupling (AOC), the front level plug.

Use oil. See: **LUBRICATION TRANSMISSION** .

Tighten the level plug according to: **TIGHTENING TORQUE**.

PINION SEAL FINAL DRIVE, REPLACING

Special tools:

see **9997023**

see **9997024**

NOTE: As the illustrations in this service information are used for different model years and / or models, some variation may occur. However, the essential information is always correct.

REMOVAL

REMOVING THE EXHAUST SYSTEM AND PROPELLER SHAFT

Remove the propeller shaft and the exhaust system. See: **FINAL DRIVE, REPLACING** .

REMOVING THE ACTIVE ON DEMAND COUPLING

Remove the Active on Demand Coupling (AOC). See **REMOVING THE ACTIVE ON DEMAND COUPLING**.

REMOVING THE PINION SEAL

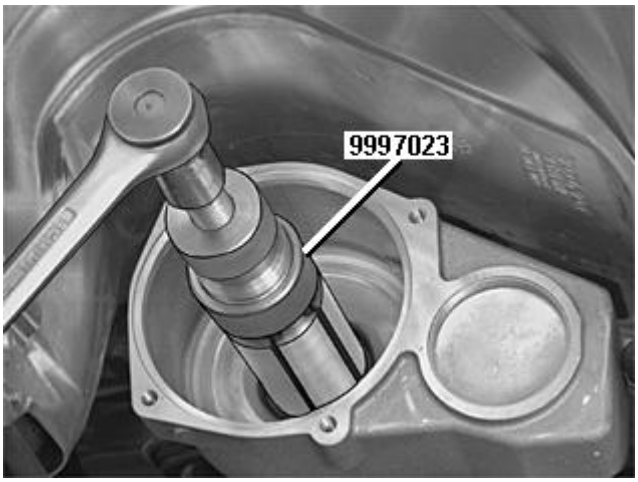

Fig. 119: Identifying Removal Of Pinion Seal Using Extractor 999 7023
Courtesy of VOLVO CARS CORPORATION

The seal consists of two parts.

Use extractor see **9997023** .

NOTE: The screw and inner socket in the extractor must be unscrewed when tapping on the extractor.

Tap the tool onto the seal so that the flat end is against the seal. Tighten the inner socket. Counter hold the outer part at the same time so that the tool expands against the seal.

Remove the seals using the screw in the extractor.

Check that no seal residue is left in the final drive.

If the inner section of the seal remains in place, tap in the extractor again and pull out the inner section.

NOTE: Do not knock in the extractor too hard. This can damage in the extractor, which in turn can scratch the mating surface on the pinion shaft.

NOTE: Check that no seal residue is left in the final drive.

INSTALLATION

INSTALLING THE PINION SEAL

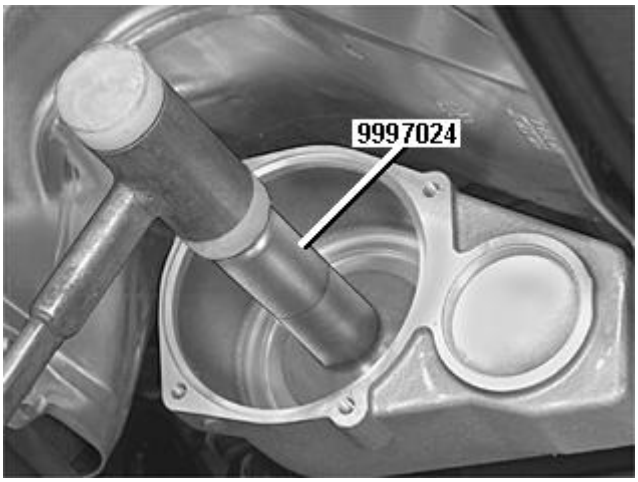

Fig. 120: Identifying Installation Of Pinion Seal Using Drift 999 7024
Courtesy of VOLVO CARS CORPORATION

The seal consists of two sections but is installed as one unit.

Lubricate the edge of the seal. Use oil for the (AOC). See: **LUBRICATION TRANSMISSION** .

Use drift see **9997024** for installation. Position the section of the seal with the largest outer diameter against the

drift. Tap in the seal until the head of the drift is against the final drive housing.

INSTALLING THE ACTIVE ON DEMAND COUPLING (AOC)

Install the active on demand coupling (AOC). See: **INSTALLING THE ACTIVE ON DEMAND COUPLING (AOC)**.

INSTALLING THE PROPELLER SHAFT AND EXHAUST SYSTEM

Install the propeller shaft and the exhaust system. See: **FINAL DRIVE, REPLACING** .

REFILLING THE OIL IN THE FINAL DRIVE

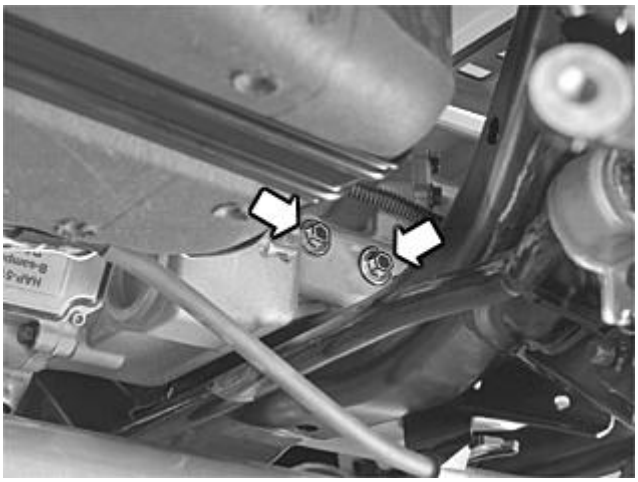

Fig. 121: Identifying Final Drive (Front & Rear) Level Plugs
Courtesy of VOLVO CARS CORPORATION

Top up and check the oil level in the active on demand coupling (AOC) (the front level plug) and in the final drive (the rear level plug).

Use oils, see: **LUBRICATION TRANSMISSION** .

Tighten the level plugs according to: **TIGHTENING TORQUE**.

CENTER DIFFERENTIAL (TF-80SC AWD; 2012)

DIFFERENTIAL FRONT BUSHING

Special tools	
	T9512564 HYDRAULIC TOOL (KIT) **Tool number:** T9512564 **Tool description:** HYDRAULIC TOOL (KIT) **Tool boards:**

9512564 Illustration pending	
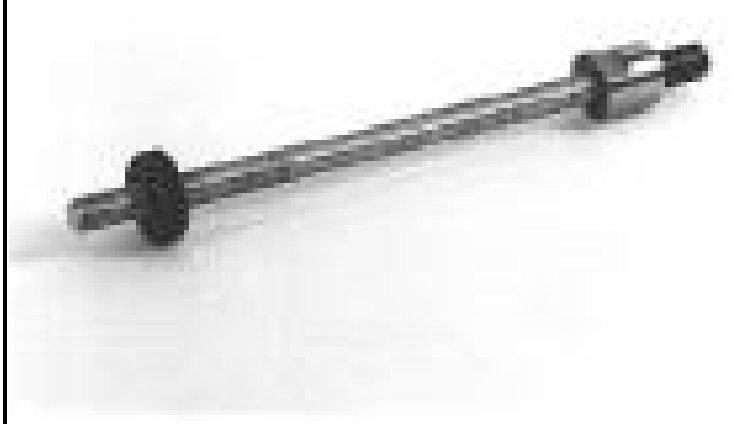	**T9995588 DRAWBAR (M12 x 210) BUSHING REPLACEMENT/HYDRAULIC TOOL** **Tool number:** T9995588 **Tool description:** DRAWBAR (M12 x 210) BUSHING REPLACEMENT/HYDRAULIC TOOL **Tool boards:**
	T9997078 PRESS TOOL **Tool number:** T9997078 **Tool description:** PRESS TOOL **Tool boards:**

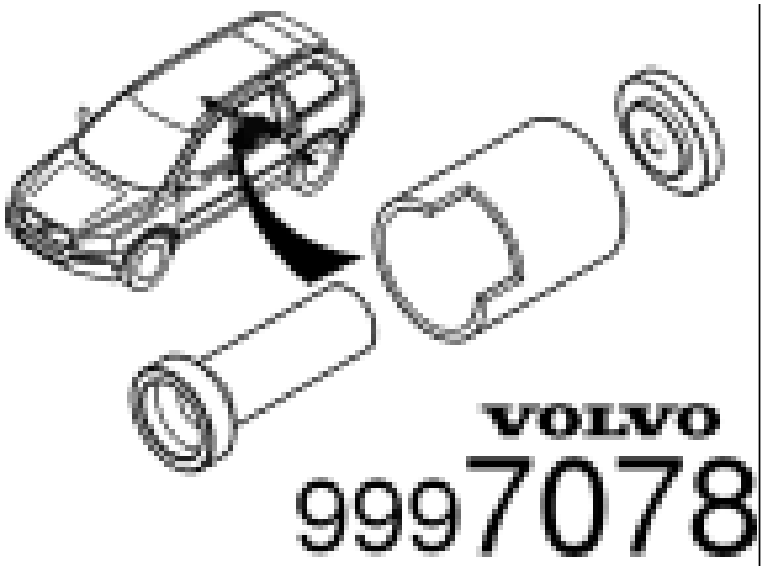

REMOVAL

Remove the final drive. See: **FINAL DRIVE, REPLACING**

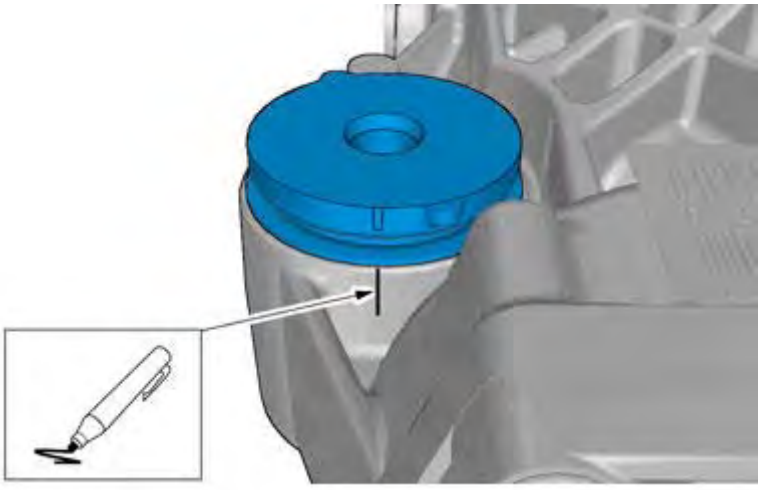

Fig. 122: Aligning Identification Marks
Courtesy of VOLVO CARS CORPORATION

CAUTION: Note the position of the component before removal.

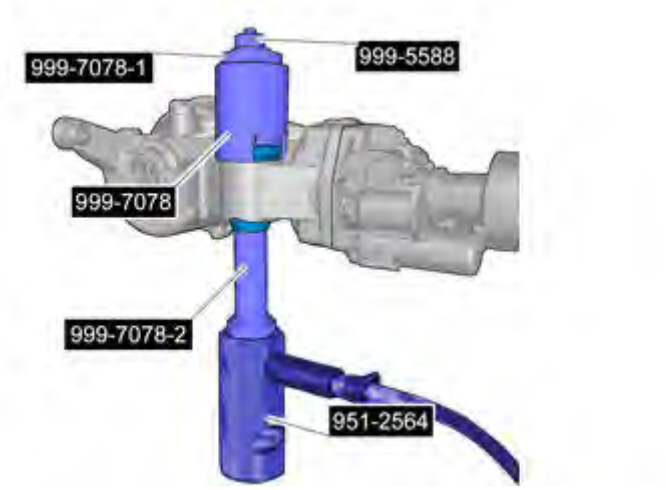

Fig. 123: Identifying Special Service Tools
Courtesy of VOLVO CARS CORPORATION

Use special tool: see **9512564** see **9995588** see **9997078**

INSTALLATION

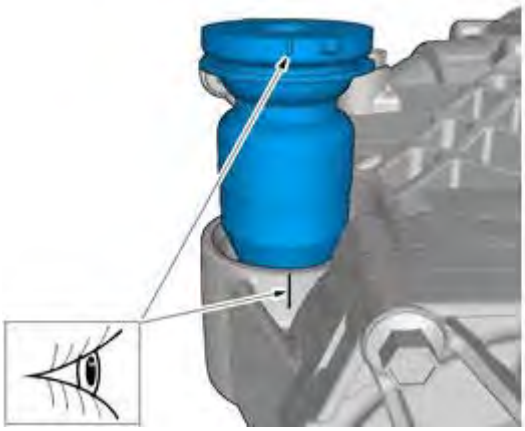

Fig. 124: Lining Up Identification Marks
Courtesy of VOLVO CARS CORPORATION

NOTE: Make sure that this component is installed to the noted removal position.

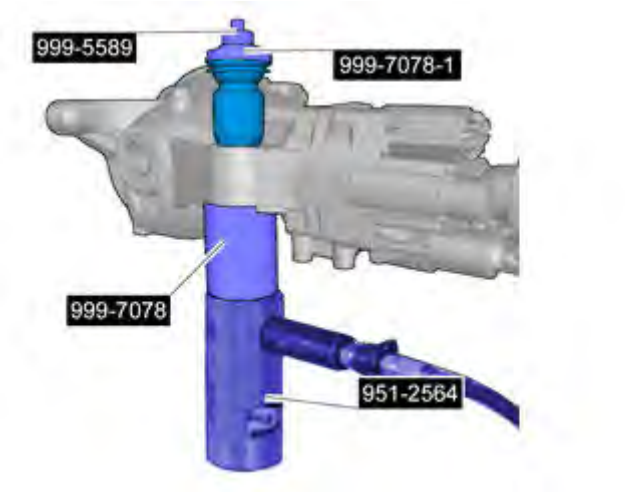

Fig. 125: Identifying Special Service Tools
Courtesy of VOLVO CARS CORPORATION

Use special tool: see **9512564** see **9995588** see **9997078**

Install the final drive. See: **FINAL DRIVE, REPLACING**

CENTER DIFFERENTIAL (TF-80SC AWD; 2005-2012)

BUSHINGS FINAL DRIVE HOUSING, REPLACING

see **BUSHINGS FINAL DRIVE HOUSING, REPLACING**

DIFFERENTIAL ELECTRONIC MODULE (DEM), REPLACING (2005-2008)

PREPARATORY WORK

Ignition off

Wait 3-4 minutes after switching the ignition off to reduce oil leakage at removal.

REMOVING/INSTALLING

Remove and install the Differential Electronic Module (DEM). See: **TEMPERATURE / PRESSURE SENSOR ACTIVE ON DEMAND COUPLING (AOC), REPLACING**.

ORDERING SOFTWARE

Order software for the Differential electronic module (DEM) according to the table below.

XC90	8688783

OIL PUMP ACTIVE ON DEMAND COUPLING (AOC), REPLACING

see **OIL PUMP ACTIVE ON DEMAND COUPLING (AOC), REPLACING**

PINION SEAL COUPLING (AOC), REPLACING

see **PINION SEAL COUPLING (AOC), REPLACING**

PINION SEAL FINAL DRIVE, REPLACING

see **PINION SEAL FINAL DRIVE, REPLACING**

CENTRE DIFFERENTIAL (B5254T2, AW50/51 AWD; 2003-2007)

ACTIVE ON DEMAND COUPLING (AOC), REPLACING

NOTE: **As the illustrations in this service information are used for different model years and / or models, some variation may occur. However, the essential information is always correct.**

PAY ATTENTION TO THE FOLLOWING WHEN REMOVING PROPELLER SHAFT

NOTE: **Applies to 6-cylinder engines only.**

Follow instructions. See **PROPELLER SHAFT, SPECIAL INFORMATION**

PREPARATORY WORK

Remove the exhaust system. Remove the propeller shaft from the Active on Demand Coupling. See **FINAL DRIVE, REPLACING** .

REMOVING THE ACTIVE ON DEMAND COUPLING

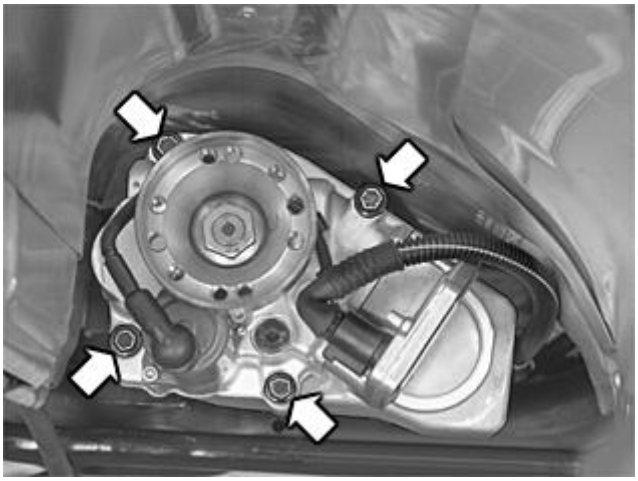

Fig. 126: Active On Demand Coupling Bolts
Courtesy of VOLVO CARS CORPORATION

Remove the connector from the differential electronic module (DEM).

Position a container underneath the AOC (Active on Demand Coupling)/ final drive.

Remove the screws for the on Demand Coupling (AOC). Pull the AOC (Active on Demand Coupling) straight out from the final drive housing.

NOTE: For tightening torques, see TIGHTENING TORQUE.

PREPARATIONS FOR INSTALLING THE ACTIVE ON DEMAND COUPLING

Fig. 127: Final Drive Housing
Courtesy of VOLVO CARS CORPORATION

Clean any dirt from the final drive housing. There must not be any lint from paper or cloths.

Check that the mating surface is undamaged.

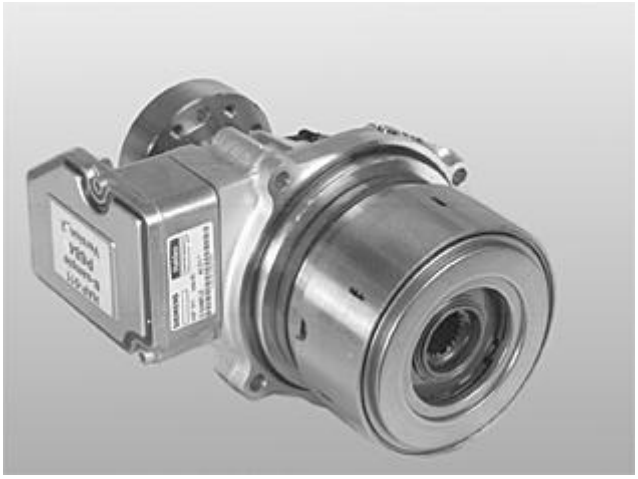

Fig. 128: Identifying Active On Demand Coupling
Courtesy of VOLVO CARS CORPORATION

Check that the Active on Demand Coupling mating surface is free of defects. Place the new O-ring on the Active on Demand Coupling.

INSTALLING THE ACTIVE ON DEMAND COUPLING

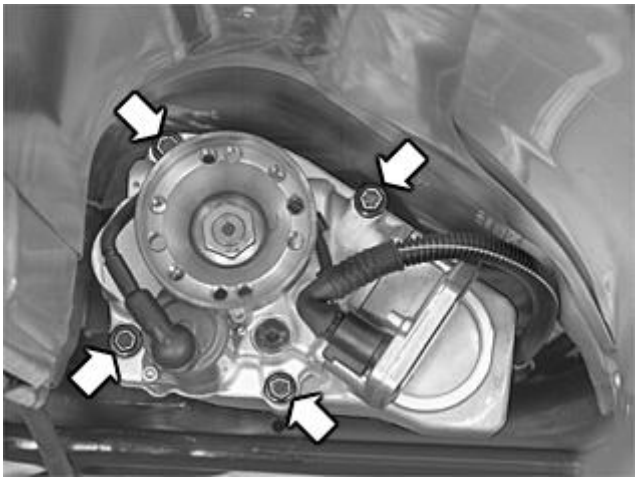

Fig. 129: Active On Demand Coupling Bolts
Courtesy of VOLVO CARS CORPORATION

Install the Active on Demand Coupling on the final drive housing.

Loosely install the 4 M8 screws crosswise. Tighten alternately.

Connect the connector to the Active on Demand coupling.

Install the propeller shaft on the Active on Demand Coupling. Install the rear exhaust pipe. See **FINAL DRIVE, REPLACING** .

FINISHING

Filling and checking oil level acc. to: **ACTIVE ON DEMAND COUPLING FLUID LEVEL CHECK**.

BUSHING FINAL DRIVE REAR

see **BUSHING FINAL DRIVE REAR**

BUSHINGS FINAL DRIVE HOUSING, REPLACING

Special tools:

see **9512564**

see **9992520**

see **9995297**

see **9995575**

see **9995576**

see **9995588**

see **9995589**

see **9997078**

NOTE: **As the illustrations in this service information are used for different model years and / or models, some variation may occur. However, the essential information is always correct.**

REMOVAL

PREPARATORY WORK

Remove the final drive. See **FINAL DRIVE, REPLACING**.

REMOVING THE BUSHING

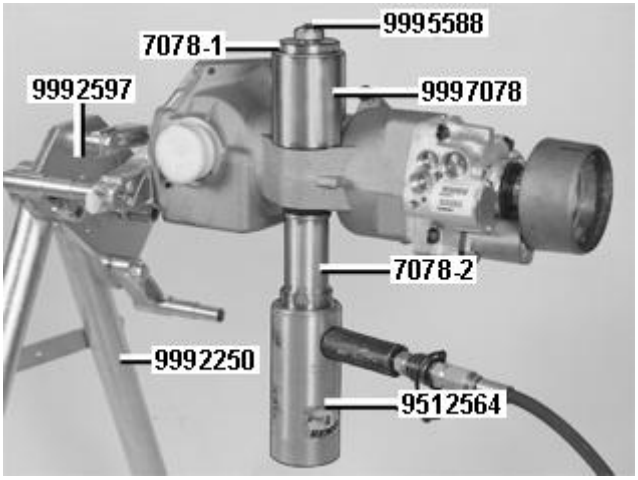

Fig. 130: Removing The Bushing
Courtesy of VOLVO CARS CORPORATION

Place the final drive on stand see **9992250** and fixture see **9995297** and associated screws, marked number 1 on the screw head.

When removing the bushing, use puller cylinder see **9512564** or see **9995575** and associated pump see **9995576** .

Place connecting rod see **9995588** in the puller cylinder and sleeve 7078-2 against the puller cylinder and the bushing. Position counterhold see **9997078** and washer 7078-1, turn the counterhold so that the cut-out is facing the radius of the final drive housing and so that it is supported on the surrounding cast surface.

Press out the bushing

INSTALLATION

MARKING THE BUSHING AND FINAL DRIVE HOUSING

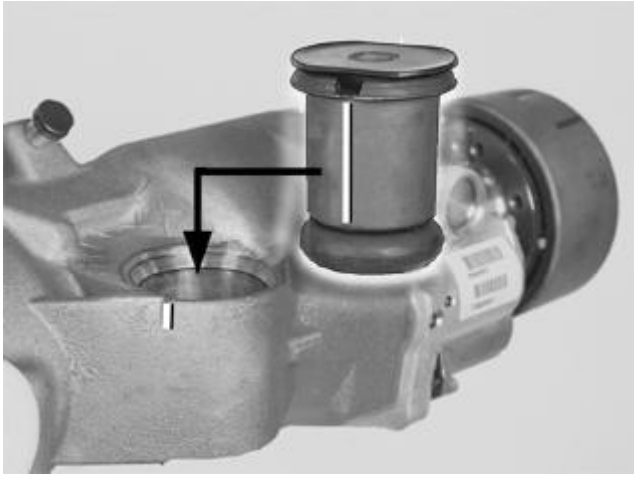

Fig. 131: Identifying Bushing And Final Drive Housing Marks
Courtesy of VOLVO CARS CORPORATION

To achieve the correct position of the bushing when installing.

Make a mark directly opposite the cut-out in the edge of the bushing and straight down the side.

Make a mark directly opposite the edge that is formed between the cast surface and the machined surface on the final drive housing, as illustrated.

Position the mark on the bushing directly opposite the mark on the final drive housing.

INSTALLING THE FINAL DRIVE HOUSING

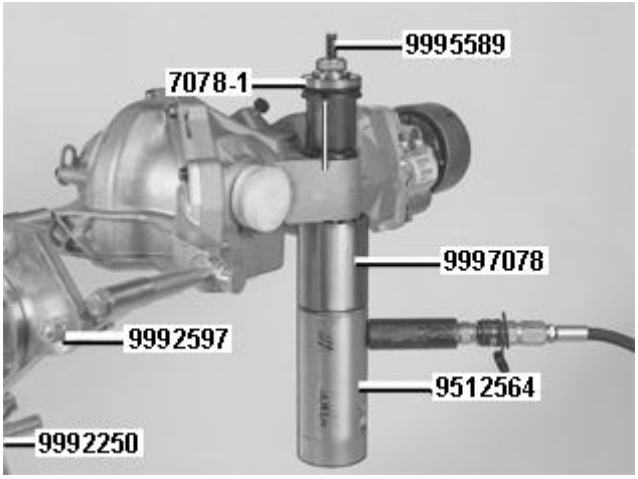

Fig. 132: Installing The Final Drive Housing

Courtesy of VOLVO CARS CORPORATION

Use puller cylinder see **9512564** or see **9995575** and associated pump see **9995576** .

Position connecting rod see **9995589** in the puller cylinder and counterhold see **9997078** against the puller cylinder and final drive housing, turn the counterhold so that the cut-out is facing the radius of the final drive housing and so that it is supported on the surrounding cast surface.

Lubricate the end of the bushing and the outer sleeve with a little petroleum jelly, position washer 7078-1 with the flat side against the bushing and gently apply the nut for the connecting rod. Turn the bushing to the correct position as above. Press the bushing into place so that the flange on the bushing is against the final drive housing.

FINISHING

Install the final drive. See **FINAL DRIVE, REPLACING**.

DIFFERENTIAL ELECTRONIC MODULE (DEM), REPLACING

NOTE: As the illustrations in this service information are used for different model years and / or models, some variation may occur. However, the essential information is always correct.

PREPARATORY WORK

Ignition off.

Wait 3-4 minutes after the ignition is switched off to minimize oil leakage on removal.

REMOVAL

REMOVING THE DIFFERENTIAL ELECTRONIC MODULE (DEM)

NOTE: Clean the area around the control module thoroughly before beginning removal.

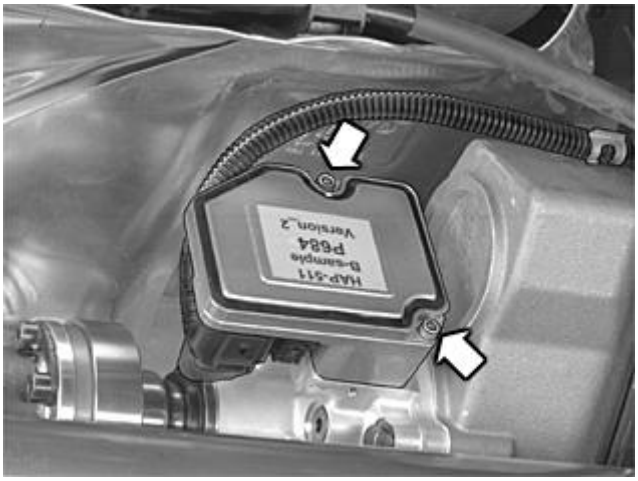

Fig. 133: Active On Demand Coupling Control Module Screws
Courtesy of VOLVO CARS CORPORATION

Position a container underneath the Active on Demand Coupling.

Disconnect the connectors for the control module and the oil pump.

Remove:

- the 2 screws for the control module
- the control module with the sealing plate and the cupped washer.

REMOVING COMPONENTS FROM THE ACTIVE ON DEMAND COUPLING

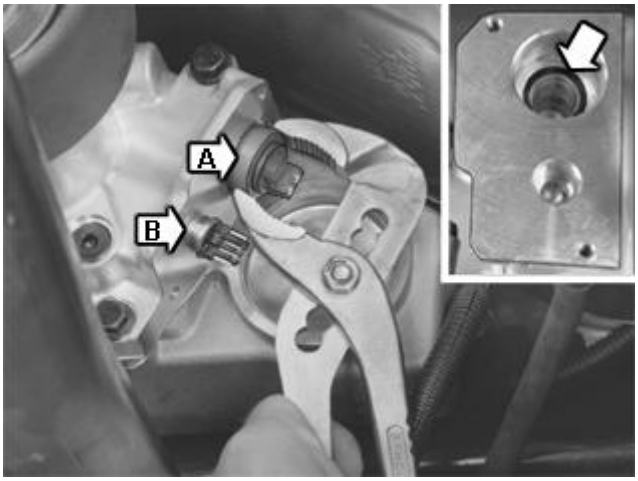

Fig. 134: Choke Valve And Temperature/Pressure Sensor
Courtesy of VOLVO CARS CORPORATION

Remove the choke valve and the temperature/pressure sensor from the coupling.

A = choke valve.

B = temperature/pressure sensor.

To remove, grasp the end of the choke valve. Use a large pliers. Hold the pliers steady. Pull the valve straight out.

Remove:

- the temperature/pressure sensor as above
- The O-ring from the choke valve seat in the Active on Demand Coupling housing.

INSTALLATION

INSTALLING RELEVANT COMPONENTS

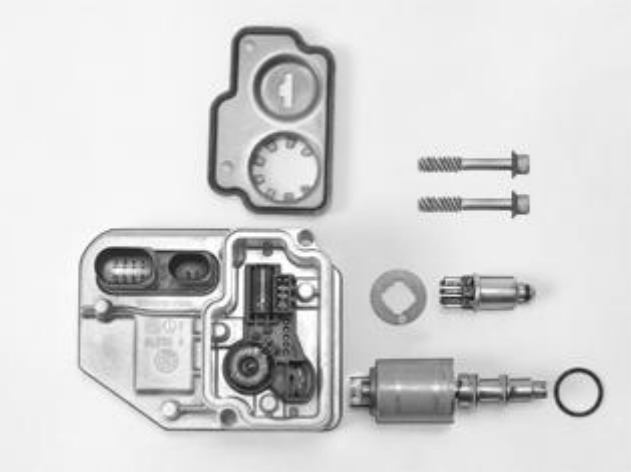

Fig. 135: Active On Demand Coupling Components
Courtesy of VOLVO CARS CORPORATION

Install:

- control module
- sealing panel
- washer
- the choke valve with O-rings
- the temperature/pressure sensor with O-ring
- the O-ring for the choke valve seat
- the screws.

POSITIONING THE SEALING PANEL IN THE CONTROL MODULE

Fig. 136: Active On Demand Coupling Control Module Kit
Courtesy of VOLVO CARS CORPORATION

Press the choke valve and temperature/pressure sensor into place on the control module contacts.

Place the cupped washer with the convex side against the temperature/pressure sensor.

Lubricate the sealing rings on the valves with oil, P/N 116 1641-4 (0.3 liters).

INSTALLING THE O-RING

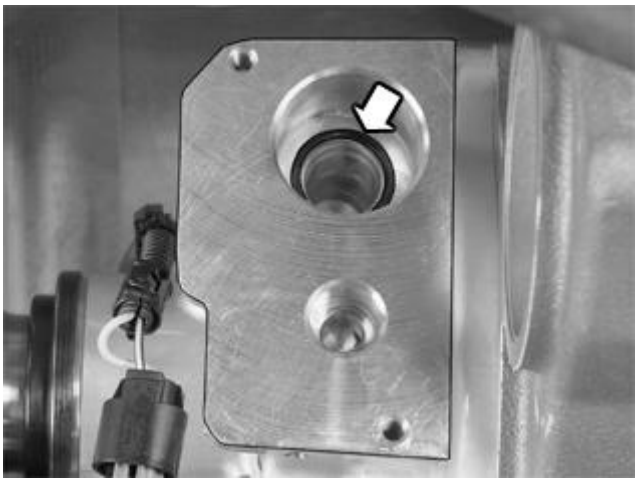

Fig. 137: Active On Demand Coupling Control Module O-Ring
Courtesy of VOLVO CARS CORPORATION

Carefully check that the mating surface for the control module and the valve seats in the Active on Demand Coupling are clean. There must be no lint or traces of paper or rags.

Lubricate the new O-ring with oil, P/N 116 1641-4 (0.3 liters). Press the O-ring into place in its seat.

INSTALLING THE CONTROL MODULE FOR THE ACTIVE ON DEMAND COUPLING

Fig. 138: Installing Control Module For Active On Demand Coupling
Courtesy of VOLVO CARS CORPORATION

Install the control module with valves in the coupling. Hold the control module pressed against the coupling housing while the 2 screws are installed and lightly tightened alternately. Tighten. See **SUMMARY OF TIGHTENING TORQUES FOR SPECIFIC COMPONENTS**.

Connect the connectors to the control module and the oil pump.

Fill the Active on Demand Coupling with oil. Check the oil level. See **FINAL DRIVE, REPLACING** .

Erase any diagnostic trouble codes (DTCs).

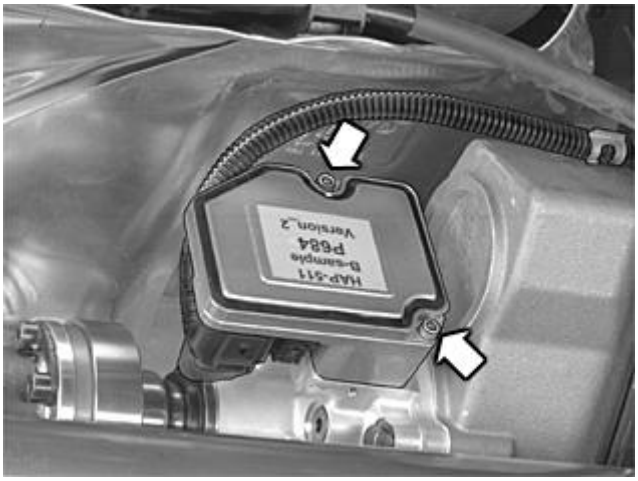

Fig. 139: Active On Demand Coupling Control Module Screws
Courtesy of VOLVO CARS CORPORATION

Ordering software

Order software for the differential electronic module (DEM) according to the table below.

S60	8688783
8688783	
XC90	8688783

FINAL DRIVE, REPLACING

Special tools:

see **9512928**

see **9985972**

see **9997057**

NOTE: Since illustrations in this service information are used for different model years and/or models, some variation may occur. However, the essential information is always correct.

REMOVAL

PREPARATIONS

NOTE: Check that the parking brake is not applied and that the gear selector is in position P.

Ignition off

Position the rear lifting arms so that they do not obstruct the front brackets securing the rear axle arms to the body.

REMOVING DRIVE SHAFTS

Remove the drive shafts on both sides. See **DRIVE SHAFT REAR, REPLACING**.

REMOVING THE SPARE WHEEL AND REAR SECTION OF THE EXHAUST SYSTEM

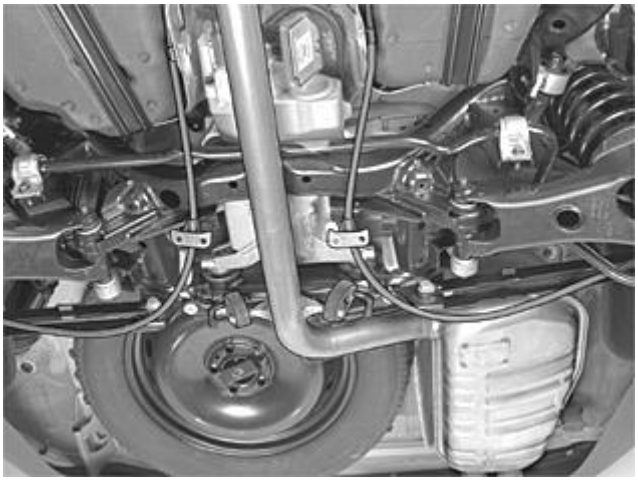

Fig. 140: Identifying Rear Section Of Exhaust System & Spare Wheel
Courtesy of VOLVO CARS CORPORATION

Remove the rear section of the exhaust system and the spare wheel.

Support the rear edge of the three-way catalytic converter (TWC) so as not to put strain on the exhaust manifold.

Pay attention to the following when removing propeller shaft

NOTE: Applies to 6-cylinder engines only.

Follow instructions. See **PROPELLER SHAFT, SPECIAL INFORMATION**

Remove the propeller shaft from the final drive. Remove the member for the center bearing. See **PROPELLER SHAFT, REPLACING** .

REMOVING THE SCREWS FOR THE PROPELLER SHAFT/CENTER BEARING MEMBER

Tie up the shaft.

Use the rear cross member as support.

Remove one screw and slacken off the other. Turn out the member.

REMOVING THE CABLE HARNESS

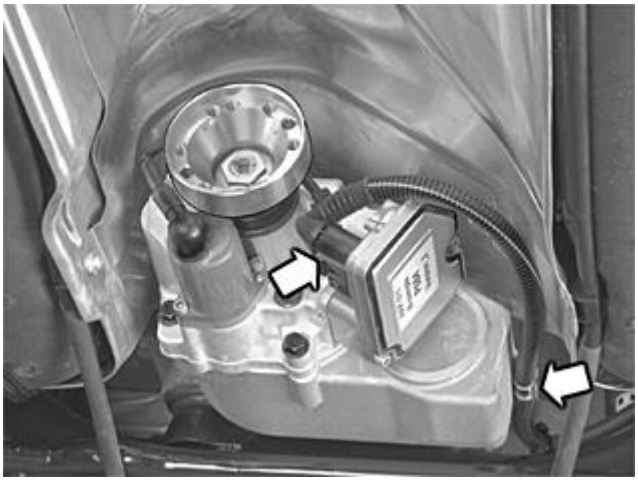

Fig. 141: Active On Demand Coupling Control Module Cable Harness
Courtesy of VOLVO CARS CORPORATION

Remove the connector from the Differential Electronic Module (DEM).

Detach the cable harness from the final drive housing and the mounting in the rear axle member.

Fold the cable harness to one side to prevent damage when removing the final drive.

REMOVING THE FINAL DRIVE

Fig. 142: Identifying Rear Axle Member Cover, Front Mounting Screws & Final Drive Housing Screws
Courtesy of VOLVO CARS CORPORATION

Remove:

- the cover for the rear axle member
- the screw for the front mounting for the final drive housing.

Slacken off the 2 rear screws for the rear axle member/final drive housing. Leave the screws in place by a few threads.

REMOVING THE REAR AXLE MEMBER

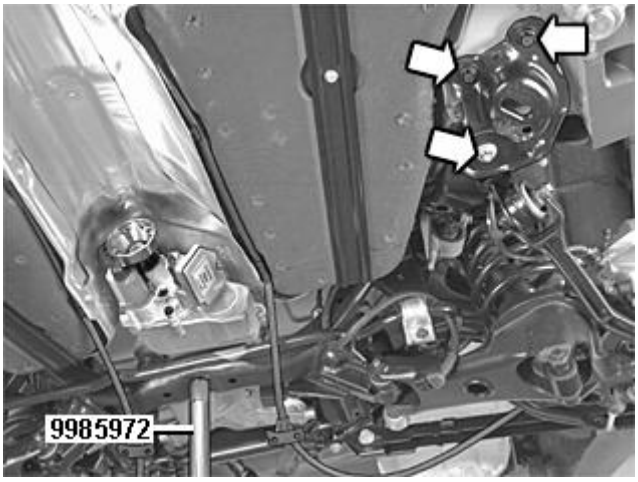

Fig. 143: Identifying Front Mounting Screws & Portable Jack Tool Attachment (998 5972)
Courtesy of VOLVO CARS CORPORATION

Bring the jack into light see **9985972** contact under the front section of the rear axle member.

Remove the screws from the front mounting in the body for the rear axle member, on both sides.

Carefully lower the frame. Remove the jack.

REMOVING THE FINAL DRIVE HOUSING

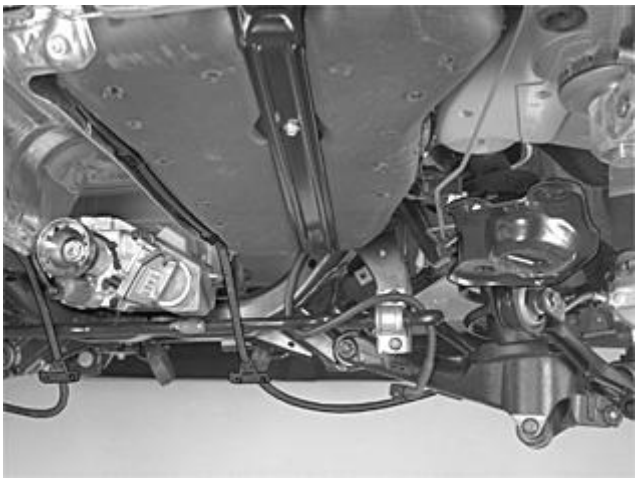

Fig. 144: Identifying Final Drive Housing & Screws
Courtesy of VOLVO CARS CORPORATION

Support the final drive housing and remove the 2 loose screws.

Lift out the final drive housing from the rear axle member. Position the final drive housing on a workbench.

REPLACING THE FINAL DRIVE HOUSING

When replacing the final drive, see **FINAL DRIVE, TRANSFERRING COMPONENTS**.

INSTALLATION

NOTE: For tightening torques, see TIGHTENING TORQUE.

NOTE: To make sure that there is no exhaust leakage, see: FLANGED JOINT, ASSEMBLING .

INSTALLING THE REAR AXLE MEMBER

Fig. 145: Identifying Front Mounting Screws & Portable Jack Tool Attachment (998 5972)
Courtesy of VOLVO CARS CORPORATION

Install the final drive housing in the rear axle member. Loosely secure the final drive housing to the rear bushings in the frame using screws.

Bring the jack into light see **9985972** contact under the front section of the rear axle member.

Install the screws in the front mounting for the rear axle member in the body on both sides.

Install the 2 M12 screws for the bracket/body.

Tighten.

Install the screw for the bracket/rear axle member/body, 1 x M12 or 1 x M14 (2005-). Tighten. See **SUMMARY OF TIGHTENING TORQUES FOR SPECIFIC COMPONENTS** .

Remove the mobile jack.

INSTALLING THE FINAL DRIVE HOUSING

Fig. 146: Identifying Rear Axle Member Cover, Front Mounting Screws & Final Drive Housing Screws
Courtesy of VOLVO CARS CORPORATION

Install:

- 1 M12 front screw for the final drive housing. Tighten
- the cover for the rear axle member using 4 M12 screws. Tighten
- the 2 rear M12 screws for the sub-frame/final drive housing. Tighten.

INSTALLING THE CABLE HARNESS

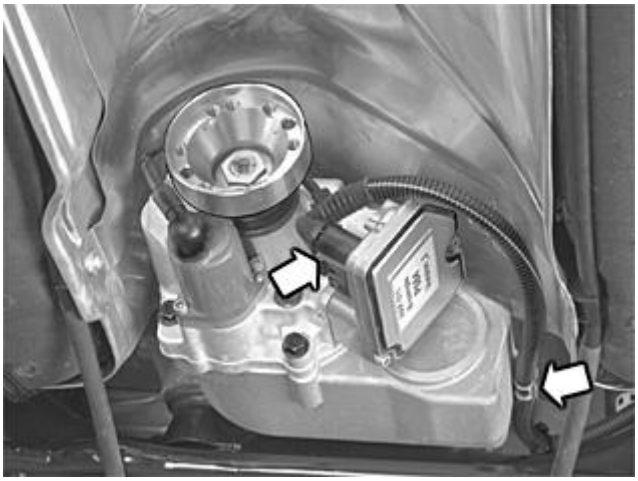

Fig. 147: Active On Demand Coupling Control Module Cable Harness
Courtesy of VOLVO CARS CORPORATION

Connect the connector to the control module for the differential electronic module (DEM). Install the cable harness in the mounting in the rear axle member.

Install the propeller shaft on the final drive. Install the member for the center bearing. See **PROPELLER SHAFT, REPLACING** .

INSTALLING DRIVE SHAFTS

Install the drive shafts on both sides. See **DRIVE SHAFT REAR, REPLACING**.

INSTALLING THE SPARE WHEEL AND REAR SECTION OF THE EXHAUST SYSTEM

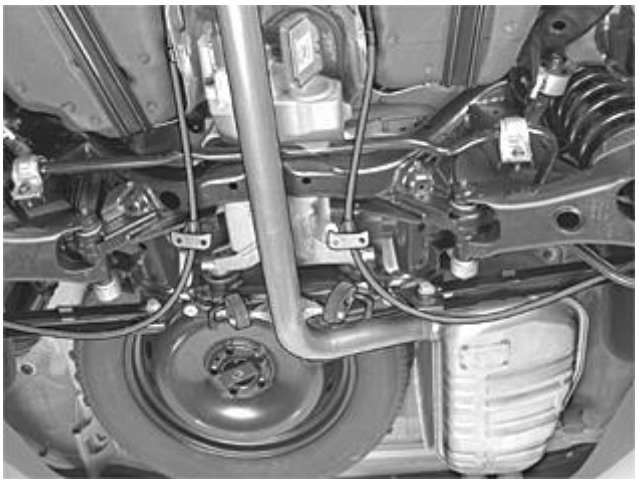

Fig. 148: Identifying Rear Section Of Exhaust System & Spare Wheel
Courtesy of VOLVO CARS CORPORATION

Check that the gasket for the flanged joint between the front and rear exhaust pipe is not damaged. Replace if necessary.

Install the rear cross member. Use 2 x M8 screws. Tighten.

FILLING AND CHECKING THE OIL LEVEL

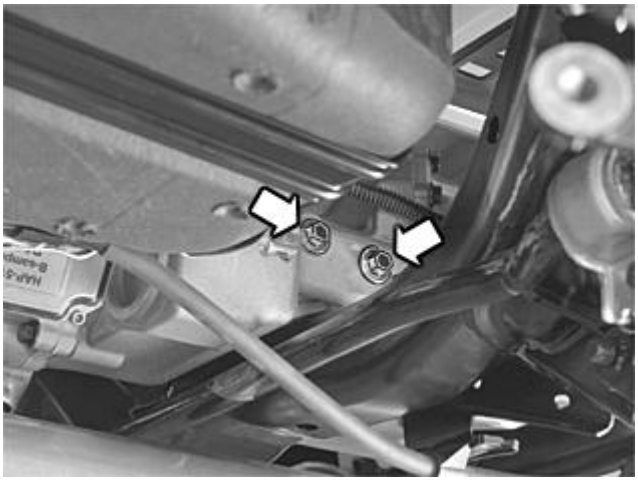

Fig. 149: Identifying Final Drive (Front & Rear) Level Plugs
Courtesy of VOLVO CARS CORPORATION

Fill and check oil in the clutch (AOC). The front level plug is for the clutch (AOC). Only use oil with part number 116 1641 (0.3 liter container)

Fill the final drive with oil. Check the oil level. The rear level plug is for the final drive. Only oil P/N 116 1620-

8 (1 liter containers) may be used

Tighten both level plugs. See **SUMMARY OF TIGHTENING TORQUES FOR SPECIFIC COMPONENTS**.

OIL PUMP ACTIVE ON DEMAND COUPLING (AOC), REPLACING

NOTE: As the illustrations in this service information are used for different model years and / or models, some variation may occur. However, the essential information is always correct.

PREPARATORY WORK

Remove:

- the rear part of the exhaust system and the propeller shaft from the flange for the Active on Demand Coupling. See **FINAL DRIVE, REPLACING**
- the flange from the Active on Demand Coupling. See **PINION SEAL COUPLING (AOC), REPLACING**.

REMOVAL

REMOVING THE OIL PUMP

Ignition off.

NOTE: Thoroughly clean around the oil pump before beginning removal.

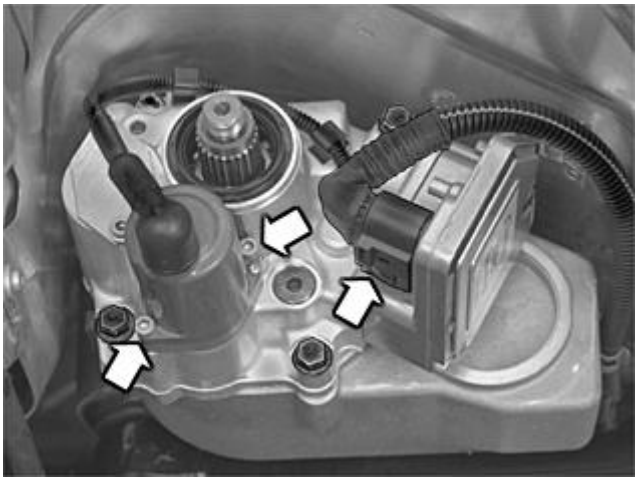

Fig. 150: Locating Oil Pump Connector And Screws
Courtesy of VOLVO CARS CORPORATION

Position a container underneath the Active on Demand Coupling.

Remove:

- the connector from the Differential Electronic Module (DEM) for the oil pump for the Active on Demand Coupling
- the cable harness mountings.

Remove the 2 screws for the oil pump. Pull the pump straight out of the Active on Demand Coupling.

NOTE: Later versions of the oil pump have the socket for the cable harness on the side of the oil pump housing. The cable harness is shorter. This version supersedes all previous versions, including as a replacement part.

INSTALLATION

NOTE: For tightening torques, see TIGHTENING TORQUE.

INSTALLING THE OIL PUMP

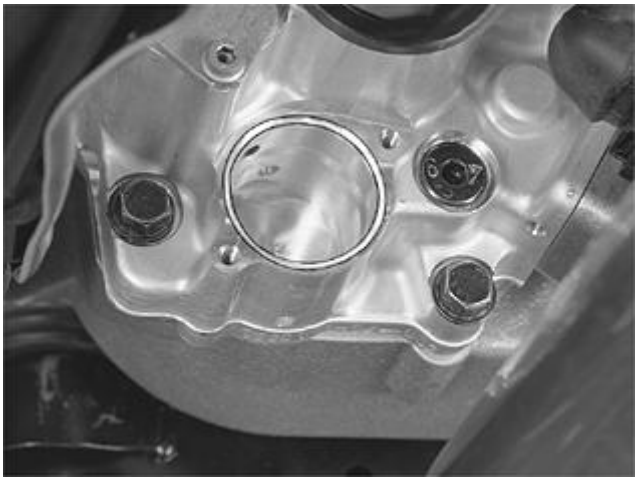

Fig. 151: Identifying Oil Pump Seat
Courtesy of VOLVO CARS CORPORATION

Thoroughly check that the oil pump seat in the Active on Demand Coupling is clean. There must not be any lint from paper or cloths.

Fig. 152: Identifying Oil Pump And O-Rings
Courtesy of VOLVO CARS CORPORATION

Check that the new O-rings are in position. Lubricate the O-rings using oil for the Active on Demand Coupling, P/N 116 1641 (1 liter container).

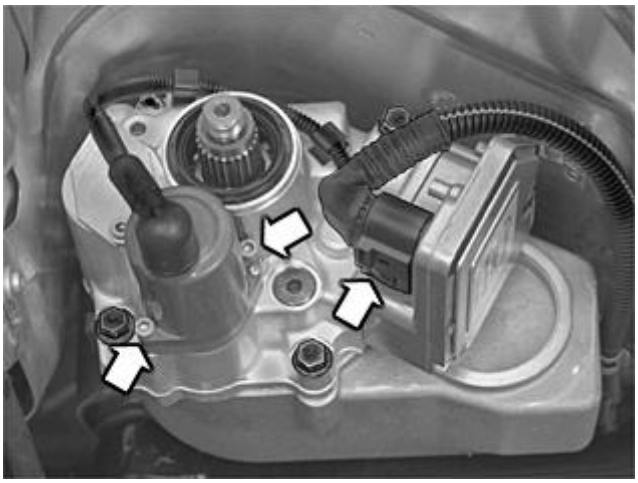

Fig. 153: Locating Oil Pump Connector And Screws
Courtesy of VOLVO CARS CORPORATION

Install the oil pump. Press the pump in as far as possible. Lightly tighten the 2 M5 screws alternately. Tighten. See **SUMMARY OF TIGHTENING TORQUES FOR SPECIFIC COMPONENTS**.

Connect the connector.

FINISHING

Fill the AOC (Active on Demand Coupling) with oil. Check the oil level. See **ACTIVE ON DEMAND COUPLING (AOC), REPLACING**.

Install the propeller shaft and the exhaust system. See **FINAL DRIVE, REPLACING**.

PINION SEAL COUPLING (AOC), REPLACING

Special tools:

see **9995069**

see **9995652**

see **9995893**

see **9997025**

see **9997058**

NOTE: **As the illustrations in this service information are used for different model years and / or models, some variation may occur. However, the essential information is always correct.**

REMOVAL

REMOVING THE EXHAUST SYSTEM

Remove the exhaust system. See **FINAL DRIVE, REPLACING** .

REMOVING THE PROPELLER SHAFT

Remove the propeller shaft from the flange for Active on Demand Coupling. See **FINAL DRIVE, REPLACING** .

REMOVING THE FLANGE

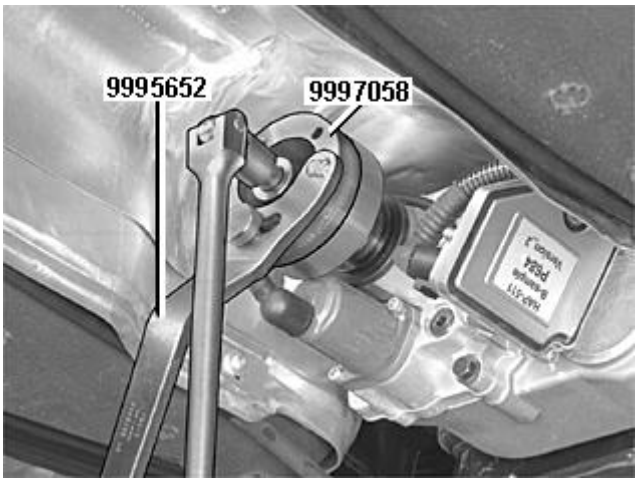

Fig. 154: Identifying Removal Of Flange Nut With Counterhold 999 5652 And Adapter 999 7058
Courtesy of VOLVO CARS CORPORATION

Remove the nut for the flange. Use counterhold see **9995652** with adapter see **9997058** . Mark the flange in relation to the end of the shaft.

Position a container underneath the Active on Demand Coupling.

Remove the flange. If the flange is stuck on the shaft, use puller see **9995893** .

Fig. 155: Identifying Removal Of Flange With 999 5893
Courtesy of VOLVO CARS CORPORATION

Check that the flange mating surface is free of defects. If not, replace the flange.

REMOVING THE SEAL

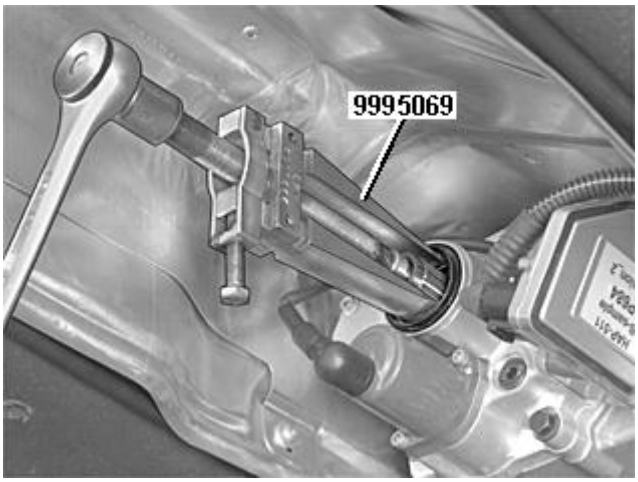

Fig. 156: Identifying Removal Of Seal From Active On Demand Coupling Using Extractor 999 5069
Courtesy of VOLVO CARS CORPORATION

Remove the seals from the Active on Demand Coupling. Use extractor see **9995069** .

Check thoroughly that no seal residue remains.

INSTALLATION

NOTE: For tightening torques, see TIGHTENING TORQUE.

INSTALLING THE SEAL

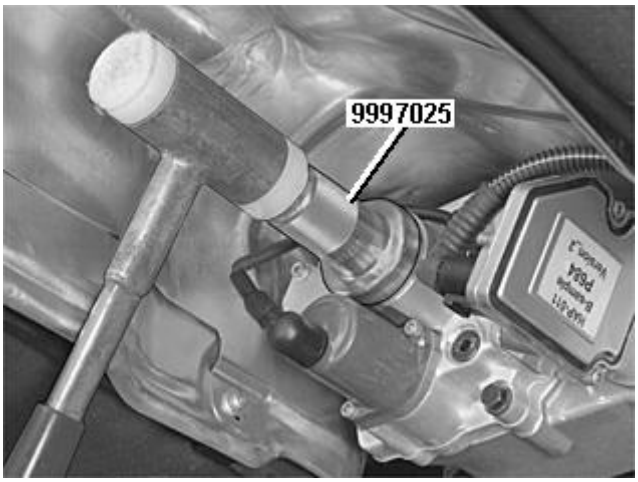

Fig. 157: Identifying Installation Of Seal Using Drift 999 7025
Courtesy of VOLVO CARS CORPORATION

Lubricate the new seal using oil for the Active on Demand Coupling, P/N 116 1641 (1 liter pack).

Use drift see **9997025** for installation. Tap the seal into place until the surface of the drift is against the housing for Active on Demand Coupling.

INSTALLING THE FLANGE

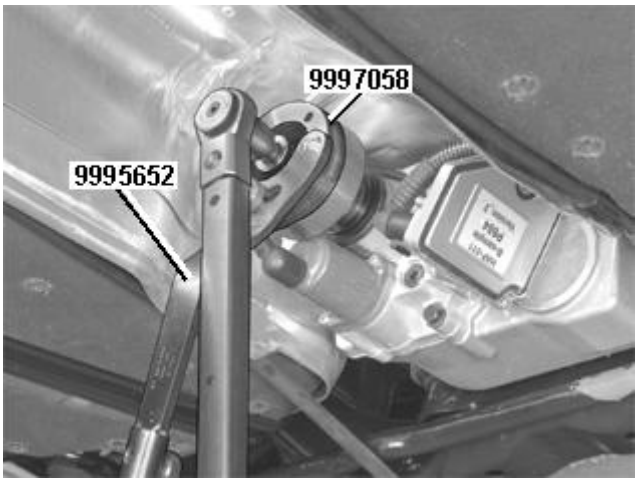

Fig. 158: Identifying Installation Of Flange Using 999 5652 And 999 7058
Courtesy of VOLVO CARS CORPORATION

Install the flange on the AOC (Active on Demand Coupling) using the previous markings (if using the old flange).

Install a new nut on the shaft - flange. Use counterhold see **9995652** with adapter see **9997058** .

Tighten. See **SUMMARY OF TIGHTENING TORQUES FOR SPECIFIC COMPONENTS**.

Fill the AOC (Active on Demand Coupling) with oil. Check the oil level.

- For AW50AWD and 4T65AWD 2003-, see **ACTIVE ON DEMAND COUPLING (AOC), REPLACING**
- For M66AWD 2004-, see **ACTIVE ON DEMAND COUPLING (AOC), REPLACING** .

INSTALLING THE PROPELLER SHAFT

Install the propeller shaft. See **FINAL DRIVE, REPLACING** .

INSTALLING THE EXHAUST SYSTEM

Install the exhaust system. See **FINAL DRIVE, REPLACING** .

PINION SEAL FINAL DRIVE, REPLACING

Special tools:

see **9997023**

see **9997024**

NOTE: **As the illustrations in this service information are used for different model years and / or models, some variation may occur. However, the essential information is always correct.**

REMOVAL

REMOVING THE ACTIVE ON DEMAND COUPLING

Remove the Active on Demand Coupling.

- For AW50AWD and 4T65AWD 2003-, see **ACTIVE ON DEMAND COUPLING (AOC), REPLACING** .
- For M66AWD 2004-, see **ACTIVE ON DEMAND COUPLING (AOC), REPLACING** .

REMOVING THE PINION SEAL

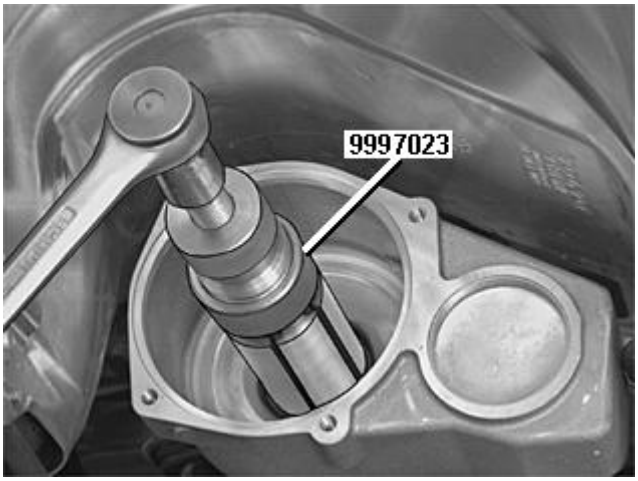

Fig. 159: Identifying Removal Of Pinion Seal Using Extractor 999 7023
Courtesy of VOLVO CARS CORPORATION

The seal consists of two parts.

Use extractor see **9997023** .

NOTE: The screw and inner socket in the extractor must be unscrewed when tapping on the extractor.

Tap the tool onto the seal so that the flat end is against the seal. Tighten the inner socket. Counter hold the outer part at the same time so that the tool expands against the seal.

Remove the seals using the screw in the extractor.

Check that no seal residue is left in the final drive.

If the inner part of the seal remains in place, tap in the extractor again and pull out the inner part.

NOTE: Do not knock in the extractor too hard. This can damage in the extractor, which in turn can scratch the mating surface on the pinion shaft.

Check that no seal residue is left in the final drive.

INSTALLATION

INSTALLING THE PINION SEAL

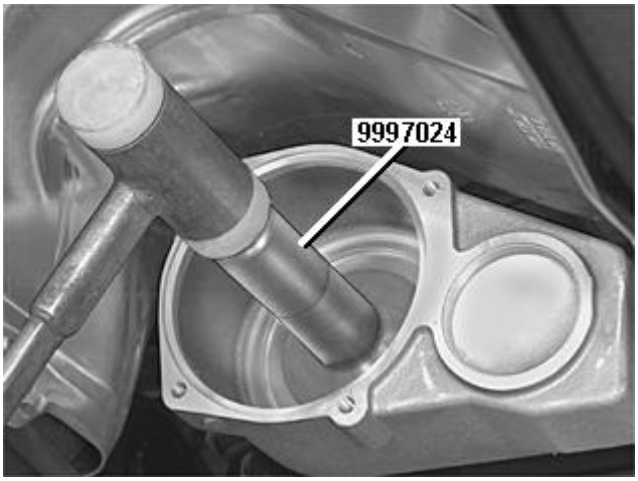

Fig. 160: Identifying Installation Of Pinion Seal Using Drift 999 7024
Courtesy of VOLVO CARS CORPORATION

The seal consists of 2 sections but is installed as one unit.

Lubricate the lip of the seal using oil for the Active on Demand Coupling, P/N 116 1641 (1 liter pack).

Use drift see **9997024** for installation. Position the section of the seal with the largest outer diameter against the drift. Tap in the seal until the head of the drift is against the final drive housing.

Install the Active on Demand coupling.

- For AW50AWD and 4T65AWD 2003-, see **ACTIVE ON DEMAND COUPLING (AOC), REPLACING**
- For M66AWD 2004-, see **ACTIVE ON DEMAND COUPLING (AOC), REPLACING** .

Fill with oil and check the level.

REFILLING THE OIL IN THE FINAL DRIVE

Top up the oil in the final drive and check the level. See **FINAL DRIVE, REPLACING** .

CENTRE DIFFERENTIAL (B6294T, 4T65 AWD; 2003-2006)

ACTIVE ON DEMAND COUPLING (AOC), REPLACING

see **ACTIVE ON DEMAND COUPLING (AOC), REPLACING**

BUSHING FINAL DRIVE REAR

see **BUSHING FINAL DRIVE REAR**

BUSHINGS FINAL DRIVE HOUSING, REPLACING

see **BUSHINGS FINAL DRIVE HOUSING, REPLACING**

DIFFERENTIAL ELECTRONIC MODULE (DEM), REPLACING

see **DIFFERENTIAL ELECTRONIC MODULE (DEM), REPLACING**

FINAL DRIVE, REPLACING

see **FINAL DRIVE, REPLACING**

OIL PUMP ACTIVE ON DEMAND COUPLING (AOC), REPLACING

see **OIL PUMP ACTIVE ON DEMAND COUPLING (AOC), REPLACING**

PINION SEAL COUPLING (AOC), REPLACING

see **PINION SEAL COUPLING (AOC), REPLACING**

PINION SEAL FINAL DRIVE, REPLACING

see **PINION SEAL FINAL DRIVE, REPLACING**

DRIVE SHAFT, CV JOINT (B5254T2, AW55-50/51SN; 2004-2007)

BOOT CV JOINT HOUSING, REPLACING

Special tools:

see **9512619**

DISASSEMBLY

NOTE: **Preparatory work, left-hand side: See REPLACING THE FRONT LEFT DRIVE SHAFT. Preparatory work, right-hand side: See REPLACING THE FRONT RIGHT DRIVE SHAFT.**

NOTE: **The inner constant velocity joint must not be split.**

REMOVING THE BOOT

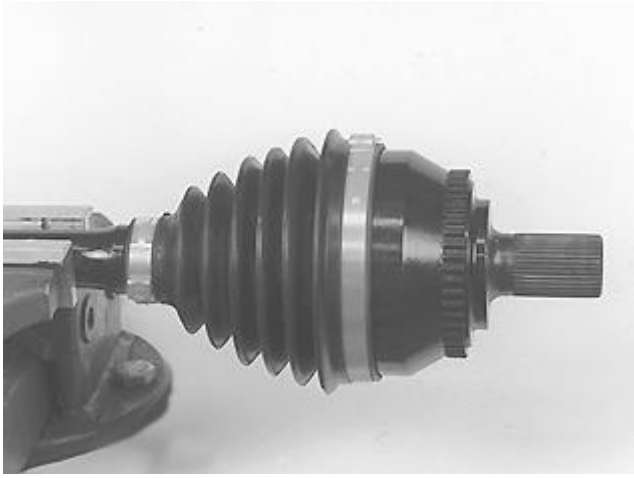

Fig. 161: Identifying Drive Shaft Held In Soft Jawed Vice
Courtesy of VOLVO CARS CORPORATION

Secure the drive shaft in a vice with soft jaws.

Remove the clamps from the boots.

Cut the boot and remove it from the shaft.

CHECKING THE MEASUREMENTS

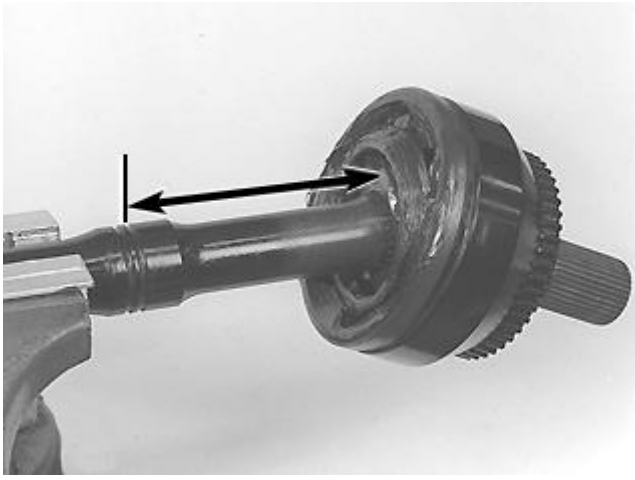

Fig. 162: Identifying Distance From Inner Ring To Inner Groove On Shaft
Courtesy of VOLVO CARS CORPORATION

Wipe off the grease from the constant velocity joint housing.

Measure the distance from the inner ring to the inner groove on the shaft. Note the measurement.

REMOVING THE CONSTANT VELOCITY JOINT HOUSING

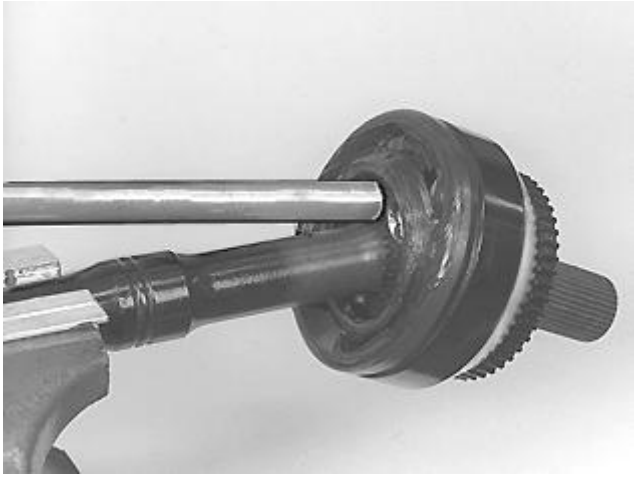

Fig. 163: Identifying Brass Drift & Constant Velocity Joint Housing
Courtesy of VOLVO CARS CORPORATION

Tap off the constant velocity joint housing.

Use a brass drift.

NOTE: Only tap the inner ring. Take care not to damage the bearing race or outer ring.

CLEANING THE CONSTANT VELOCITY JOINT HOUSING

The joint can be cleaned when assembled. See **CLEANING THE CONSTANT VELOCITY JOINT HOUSING - CONTINUED**.

If the joint needs to be disassembled, see **CLEANING / CHECKING THE OUTER CONSTANT VELOCITY JOINT**.

CLEANING THE CONSTANT VELOCITY JOINT HOUSING - CONTINUED

Fig. 164: Clamp From Inner Gaiter
Courtesy of VOLVO CARS CORPORATION

Thoroughly clean off any dirt and grease from the joint. Blow the joint dry.

For greasing/assembling, see **ASSEMBLY**.

WHEN REPLACING THE INNER BOOT

Remove the clamps from the inner boot. Cut the boot and remove it from the shaft.

NOTE: Clean and blow the inner constant velocity joint dry while assembled.

For greasing/assembling, see **ASSEMBLY**.

CLEANING / CHECKING THE OUTER CONSTANT VELOCITY JOINT

MARKING THE CONSTANT VELOCITY JOINT

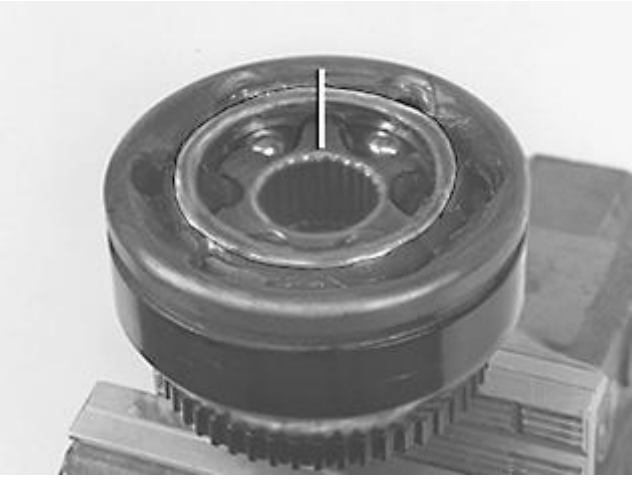

Fig. 165: Identifying Mark On Outer Ring Of Outer Constant Velocity Joint, Ball Holder And Inner Ring
Courtesy of VOLVO CARS CORPORATION

Mark the outer ring, bearing race and inner ring on the outer constant velocity joint.

Mark components in relation to each other.

Use an electric scriber.

REMOVING THE CONSTANT VELOCITY JOINT BALL BEARINGS

Fig. 166: Identifying Inner Joint Ring And Ball Holder
Courtesy of VOLVO CARS CORPORATION

Remove the ball bearings.

Turn the constant velocity joint inner ring and bearing race. Remove the ball bearings clockwise one by one.

Use the marking as the starting point when removing. See **MARKING THE CONSTANT VELOCITY JOINT**.

Place the ball bearings in order so that they can be reinstalled in the same positions.

REMOVING THE BEARING RACE AND INNER RING

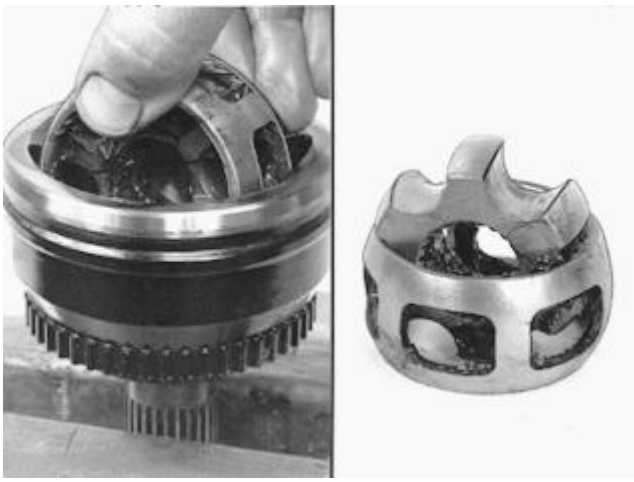

Fig. 167: Identifying Ball Holder And Inner Ring From Shaft
Courtesy of VOLVO CARS CORPORATION

Remove the bearing race and the inner ring from the shaft.

Turn the inner ring 90 degrees in relation to the bearing race.

Remove the inner ring.

CLEANING CONSTANT VELOCITY JOINT COMPONENTS

Fig. 168: Constant Velocity Joint Components
Courtesy of VOLVO CARS CORPORATION

Wash the constant velocity joint components thoroughly.

NOTE: Replace the drive shaft assembly if any component has cracking or wear damage. Scratches and minor pitting of the bearing races are permitted.

INSTALLING THE INNER RING

Fig. 169: Identifying Inner Ring & Ball Holder
Courtesy of VOLVO CARS CORPORATION

Install the inner ring in the bearing race.

Line up the markings with each other. Install a ball bearing.

NOTE: Note the position of the ball bearings.

Turn the inner ring and the bearing race.

Install the balls one by one in the same positions as before. See **REMOVING THE CONSTANT VELOCITY JOINT BALL BEARINGS**.

ASSEMBLY

LUBRICATING THE CONSTANT VELOCITY JOINT

Fig. 170: Identifying Constant Velocity Joint
Courtesy of VOLVO CARS CORPORATION

Lubricate the constant velocity joint thoroughly.

Apply grease behind the joint via the shaft hole in the inner ring.

Use half of the grease packet. The remainder will be used later in the gaiter. See **ASSEMBLING THE DRIVE SHAFT BOOT**.

INSTALLING THE SNAP RING

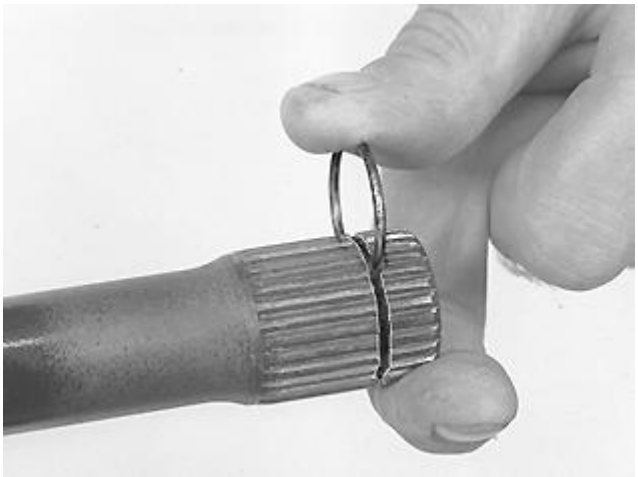

Fig. 171: Installing New Lock Ring
Courtesy of VOLVO CARS CORPORATION

Replace the snap ring.

Install the new snap ring included in the boot kit.

INSTALLING BOOTS AND THE CONSTANT VELOCITY JOINT

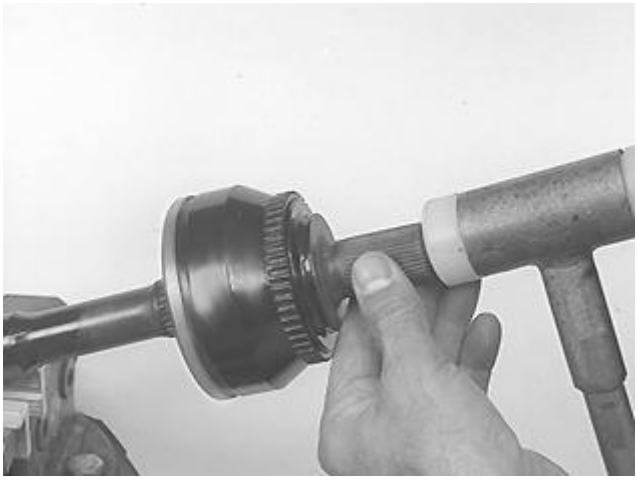

Fig. 172: Installing New Gaiters On Drive Shaft
Courtesy of VOLVO CARS CORPORATION

Install:

- the new boot(s) on the drive shaft
- the constant velocity joint on the drive shaft.

Ensure that inner ring is straight in the constant velocity joint.

Tap on the constant velocity joint. Use a rubber mallet.

Check that the lock ring is seated in its groove. Do this by measuring the distance. See **CHECKING THE MEASUREMENTS**.

ASSEMBLING THE DRIVE SHAFT BOOT

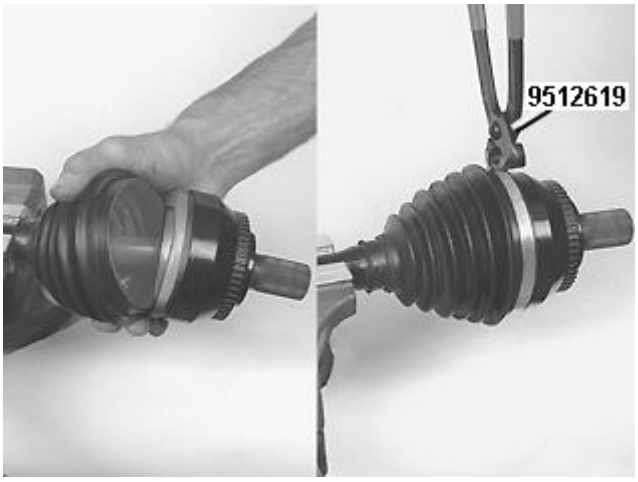

Fig. 173: Applying Grease In Boot
Courtesy of VOLVO CARS CORPORATION

Apply grease in the boot.

Apply the remaining grease from, see **LUBRICATING THE CONSTANT VELOCITY JOINT**.

NOTE: Ensure that there is no grease on the mating surfaces between the boot and the constant velocity joint and the shaft.

Remove excess grease. Use methylated spirit.

Ensure that the boot is in position on the constant velocity joint housing.

Install a new clamp. Use pliers see **9512619** .

VENTING THE BOOT

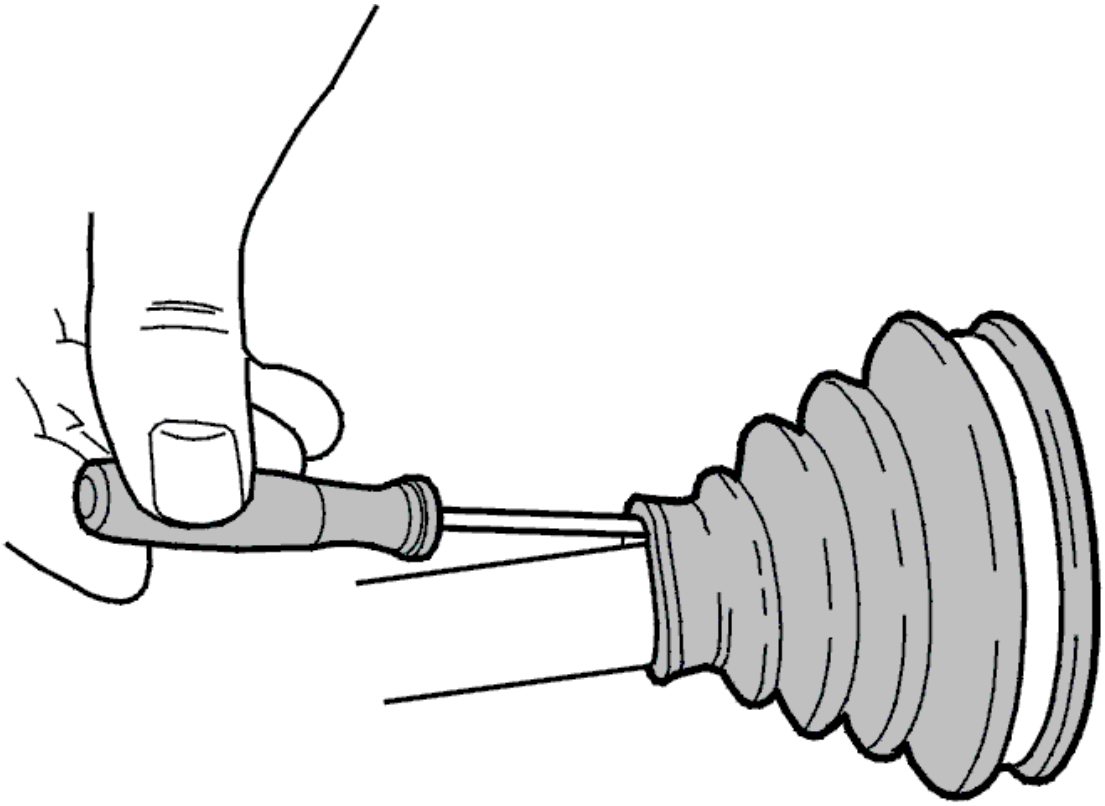

Fig. 174: Inserting Screwdriver Between Drive Shaft And Gaiter
Courtesy of VOLVO CARS CORPORATION

Venting is carried out to remove any over pressure in the boot. Use a rounded screwdriver.

Carefully insert the screwdriver between the drive shaft and boot. Ensure that the boot is in position on the drive shaft.

Ensure that the boot is aligned against the inner rib on the drive shaft.

Install a new clamp. Use pliers see **9512619** .

Install the drive shafts

For the left-hand side , see **REPLACING THE FRONT LEFT DRIVE SHAFT**.

For the right-hand side , see **REPLACING THE FRONT RIGHT DRIVE SHAFT**.

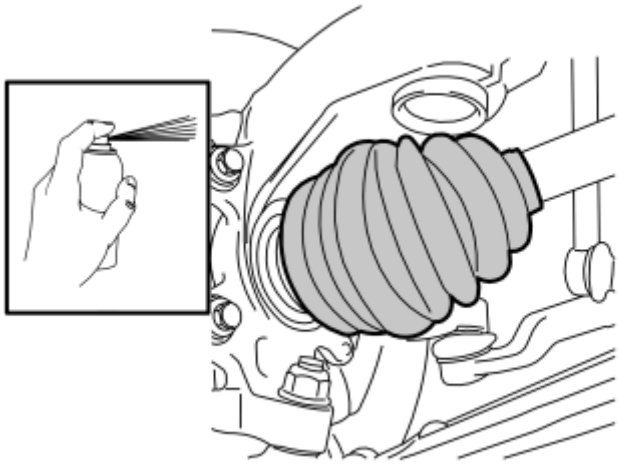

Fig. 175: Spraying Wax On Outer Gaiter
Courtesy of VOLVO CARS CORPORATION

Spray wax, part number 30787812, on the outer gaiter. After installing drive shaft in vehicle, turn the wheel and check, and improve if needed, the wax protection on the gaiter.

REPLACING THE FRONT LEFT DRIVE SHAFT

Special tools:

see **9995462**

see **9995562**

see **9995736**

see **9997062**

see **9997076**

NOTE: **As the illustrations in this service information are used for different model years and / or models, some variation may occur. However, the essential information is always correct.**

WARNING: **Do not use magnets or magnetic tools close to tooth wheels, drive shafts or wheel hubs. A magnetized tooth wheel will lose its function and generate incorrect signals resulting in fault codes.**

NOTE: **Any magnetized tooth wheel, drive shaft or wheel hub must be replaced with a new component.**

PREPARATORY WORK

DRAINING OIL

NOTE: Only applies to cars with 4T65AWD transmissions.

Drain the transmission fluid. See **REPLACING THE BEVEL GEAR/CHAIN HOUSING** .

Drain the transmission fluid, for 4T65AWD, see **REPLACING THE PINION SEAL FOR THE BEVEL GEAR** .

REMOVAL

REMOVING THE BALL JOINT FROM THE CONTROL ARM

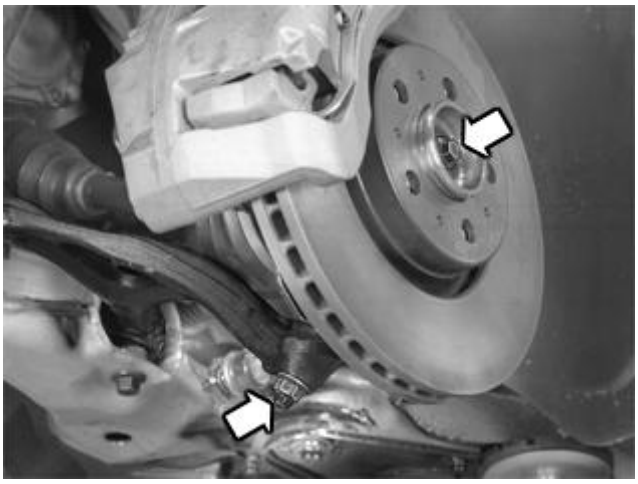

Fig. 176: Locating Drive Shaft Nut And Lower Ball Joint Nut
Courtesy of VOLVO CARS CORPORATION

Remove:

- the wheel
- the screw for the drive shaft. Counterhold using a screwdriver in the brake disc vents. Tap/press the end of the drive shaft into the hub approximately 20-25 mm
- the nut for the ball joint / control arm. If the ball joint pinion moves, counterhold the end of the lug. Use a torx wrench.

REMOVING THE BALL JOINT FROM THE CONTROL ARM, CONTINUED

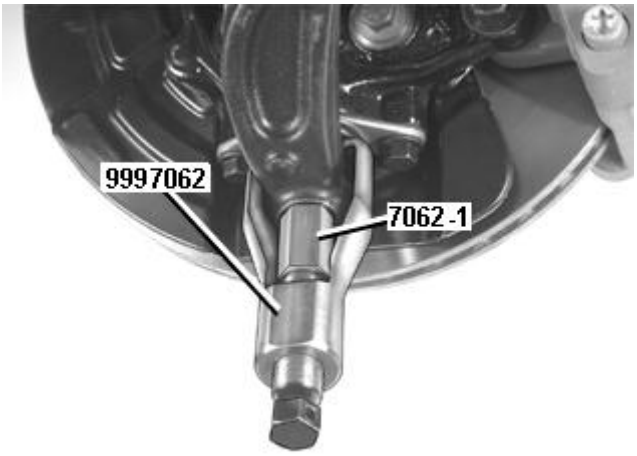

Fig. 177: Disconnecting Ball Joint Pinion From Control Arm Using 999 7062
Courtesy of VOLVO CARS CORPORATION

Disconnect the ball joint pinion from the control arm. Use tool see **9997062** .

Install cap nut 7062-1 on the ball joint pinion. Tighten the nut against the control arm. Then turn back one turn to form a gap between the cap nut and the control arm.

Position the extractor on the control arm. Detach the ball joint from the control arm.

REMOVING THE DRIVE SHAFT FROM THE WHEEL HUB

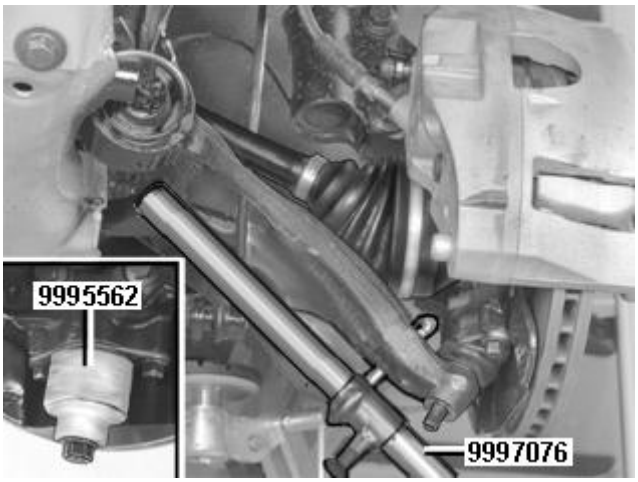

Fig. 178: Identifying Wheel Knuckle, Special Tools 999 7076 And 999 5562
Courtesy of VOLVO CARS CORPORATION

Unhook the control arm from the ball joint pinion.

Pull the control arm down. Use lever see **9997076** to move the wheel spindle to the side. At the same time, install protective sleeve see **9995562** on the ball joint pinion. Hold the sleeve in place using the nut for the ball joint.

Remove the drive shaft from the hub.

APPLIES FROM CHASSIS NO. 1354476-

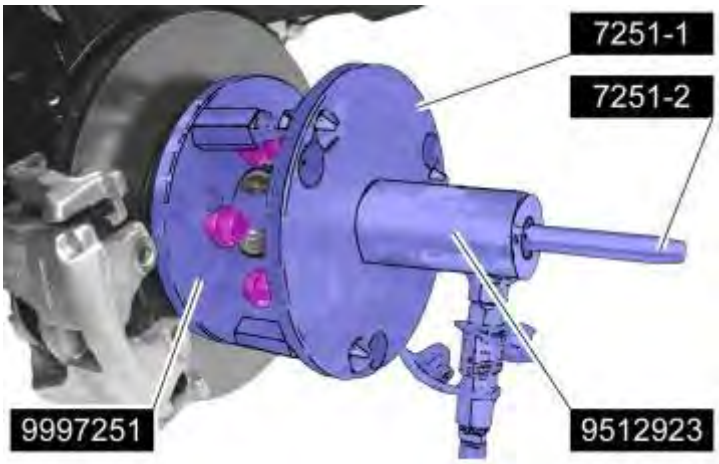

Fig. 179: Driveshaft In Hub
Courtesy of VOLVO CARS CORPORATION

Use: see **9997251** and see **9512923** .

REMOVING THE SPLASH GUARD UNDER ENGINE

Fig. 180: Identifying Under Engine Splash Guard
Courtesy of VOLVO CARS CORPORATION

NOTE: Only applies to cars with M66AWD transmissions.

Remove the splash guard under the engine.

DRAINING TRANSMISSION FLUID

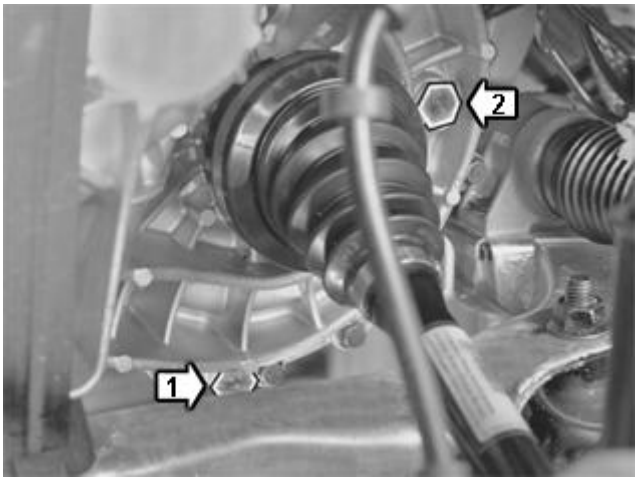

Fig. 181: Identifying Transmission Drain Plug
Courtesy of VOLVO CARS CORPORATION

NOTE: Only applies to cars with M66AWD transmissions.

Collect the oil in a container.

Remove the drain plug. Drain the oil. Install the plug with a new gasket. Tighten. See **SUMMARY OF TIGHTENING TORQUES FOR SPECIFIC COMPONENTS**.

REMOVING THE DRIVE SHAFT FROM THE TRANSMISSION

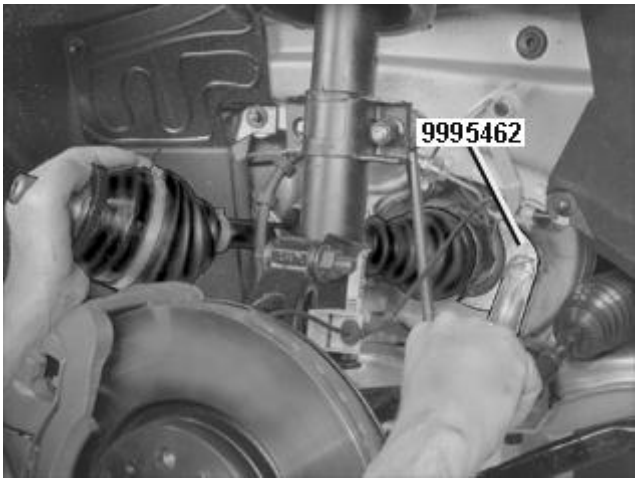

Fig. 182: Identifying Drive Shaft & Transmission
Courtesy of VOLVO CARS CORPORATION

NOTE: Only applies to cars with AW55-50 or AW50AWD transmissions.

Use jimmy bar see **9995462** B.

Turn the constant velocity joint housing so that the jimmy bar is as far into the joint as possible.

Remove the drive shaft from the transmission. Ensure that the end of the drive shaft does not damage the seal.

REMOVING THE DRIVE SHAFT FROM THE TRANSMISSION, CONTINUED

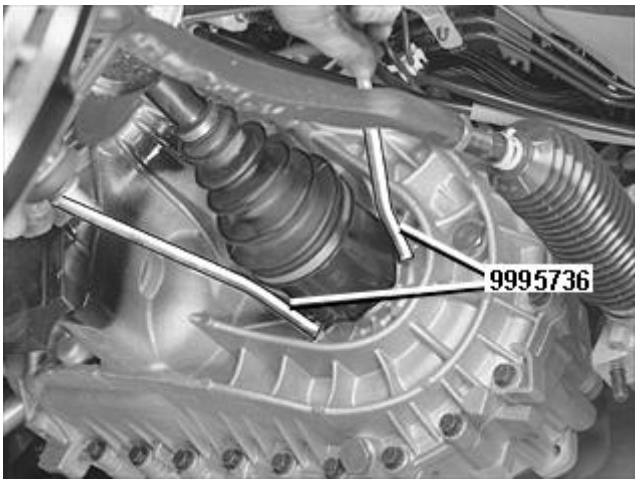

Fig. 183: Identifying Drive Shaft, Transmission & Tool 999 5462
Courtesy of VOLVO CARS CORPORATION

NOTE: Applies only to vehicles with M66AWD transmissions and drive shafts with a tripod joint.

Position the two tools opposite each other. Detach the drive shaft.

NOTE: Cars with Cross-grove drive shaft joints and M66AWD transmissions. Use jimmy bar see 9995462 B as above.

Remove the drive shaft from the transmission. Ensure that the end of the drive shaft does not damage the seal.

INSTALLATION

INSTALLING THE DRIVE SHAFT IN THE TRANSMISSION

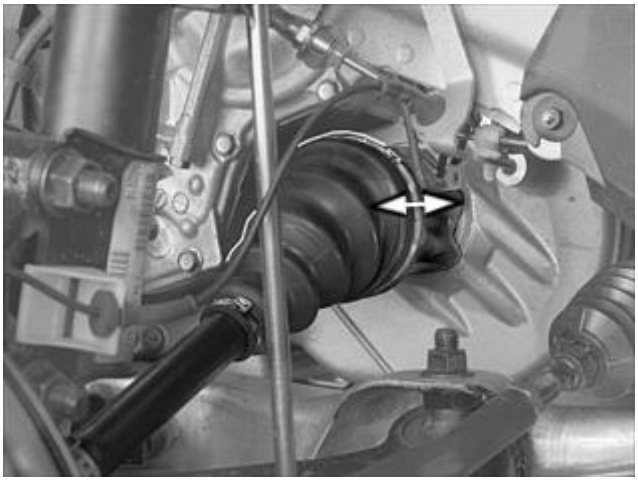

Fig. 184: Drive Shaft Mating Surface
Courtesy of VOLVO CARS CORPORATION

NOTE: Only applies to cars with 4T65AWD transmissions.

Lubricate the drive shaft mating surface.

Use oil P/N 116 1521-8 (1 liter container).

Press the drive shaft into the transmission. Check that the snap ring is in the groove on the transmission by pulling the constant velocity joint.

NOTE: Only applies to cars with M66AWD transmissions.

Lubricate the drive shaft mating surface.

Use oil P/N 116 1745 (1 liter container).

Press the drive shaft into the transmission. Check that the snap ring is in the groove on the transmission by pulling the constant velocity joint.

NOTE: Do not pull the drive shaft as the axial pinions cannot support large loads.

INSTALLING THE DRIVE SHAFT ON THE WHEEL HUB

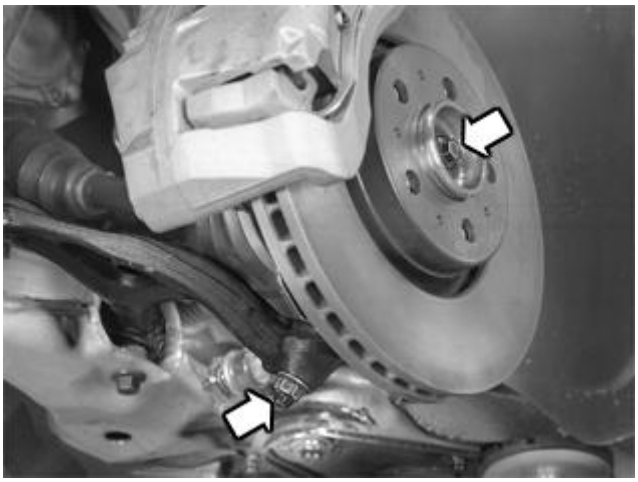

Fig. 185: Locating Drive Shaft Nut And Lower Ball Joint Nut
Courtesy of VOLVO CARS CORPORATION

Lubricate the drive shaft splines for the wheel hub. Use a small amount of oil.

Hold down the control arm as when removing. Align the drive shaft in the hub.

Remove the guard from the ball joint. Align the ball joint lug in the control arm.

Install a new lock nut on the ball joint. Tighten. See **SUMMARY OF TIGHTENING TORQUES FOR SPECIFIC COMPONENTS** .

NOTE: Counterhold the end of the ball joint whilst tightening so that the boot does not twist. Use a Torx wrench.

Install a new screw for the drive shaft/wheel hub. Tighten. See **SUMMARY OF TIGHTENING TORQUES FOR SPECIFIC COMPONENTS** .

FILLING WITH OIL

NOTE: Only applies to cars with M66AWD transmissions.

Top up with new oil. See **TRANSMISSION FLUID, REPLACING**.

INSTALLING THE SPLASH GUARD

Fig. 186: Identifying Under Engine Splash Guard
Courtesy of VOLVO CARS CORPORATION

NOTE: Only applies to cars with M66AWD transmissions.

Install the splashguard under the engine.

INSTALLING WHEELS

Install the wheel. See **INSTALLING WHEELS** .

FINISHING

FILLING AND CHECKING THE OIL LEVEL

NOTE: Only applies to cars with 4T65AWD transmissions.

Fill through the dip stick pipe. Fill with as much new oil as was drained from the transmission.

NOTE: **Oil grade: Only ATF fluid Dexron III (with G-license).**

Transmission oil, Volvo P/N 116 1521-8 (1liter container), 116 1621-6 (4 liter container).

Check the oil level. See **OIL LEVEL, CHECKING** .

REPLACING THE FRONT RIGHT DRIVE SHAFT

Special tools:

see **9995462**

NOTE: **As the illustrations in this service information are used for different model years and / or models, some variation may occur. However, the essential information is always correct.**

WARNING: **Do not use magnets or magnetic tools close to tooth wheels, drive shafts or wheel hubs. A magnetized tooth wheel will lose its function and generate incorrect signals resulting in fault codes.**

NOTE: **Any magnetized tooth wheel, drive shaft or wheel hub must be replaced with a new component.**

PREPARATORY WORK

DRAINING OIL

NOTE: **Only applies to cars with 4T65AWD transmissions.**

Drain the transmission fluid. See **REPLACING THE BEVEL GEAR/CHAIN HOUSING** .

Drain the transmission fluid, for 4T65AWD, see **REPLACING THE PINION SEAL FOR THE BEVEL GEAR** .

REMOVAL

REMOVING THE DRIVE SHAFT FROM THE WHEEL HUB

To remove the drive shaft from the wheel hub, see **REPLACING THE FRONT LEFT DRIVE SHAFT**.

REMOVING THE SPLASH GUARD

Fig. 187: Identifying Under Engine Splash Guard
Courtesy of VOLVO CARS CORPORATION

NOTE: Only applies to cars with AW55-50, AW50AWD or M66AWD transmissions.

Remove the splash guard under the engine.

DRAINING TRANSMISSION FLUID

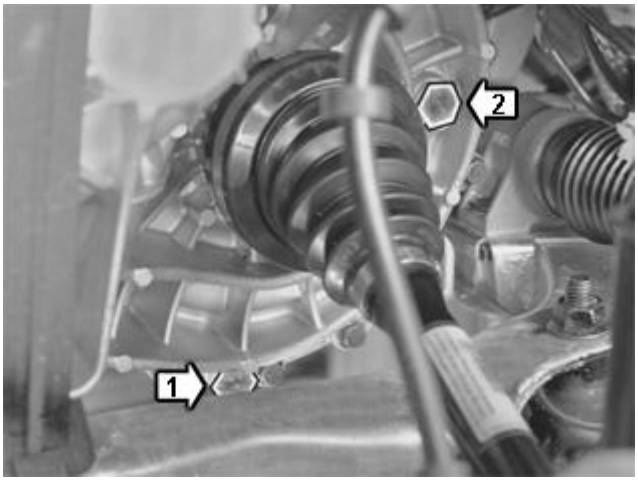

Fig. 188: Identifying Transmission Drain Plug
Courtesy of VOLVO CARS CORPORATION

NOTE: Only applies to cars with M66AWD transmissions.

Collect the oil in a container.

Remove the drain plug. Drain the oil. Install the plug with a new gasket. Tighten. See **SUMMARY OF TIGHTENING TORQUES FOR SPECIFIC COMPONENTS**.

REMOVING THE DRIVE SHAFT

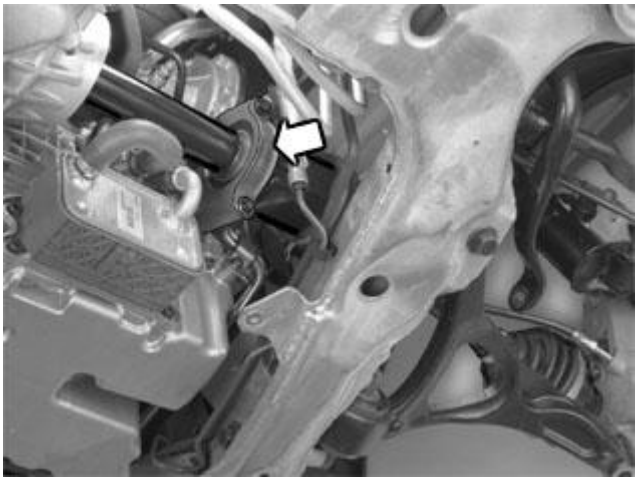

Fig. 189: Drive Shaft Support Bearing Cap
Courtesy of VOLVO CARS CORPORATION

NOTE: Only applies to cars with AW55-50, AW50AWD or M66AWD transmissions.

Remove the bearing cap for the drive shaft.

Hold down the spring strut. Pull out the drive shaft.

APPLIES FROM CHASSIS NO. 1354116-

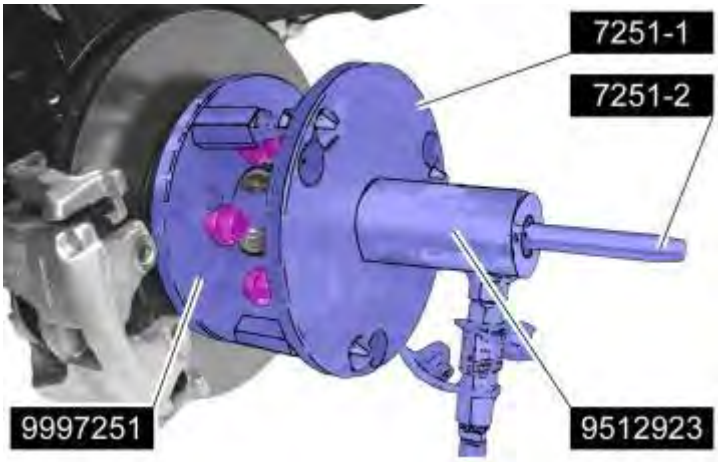

Fig. 190: Driveshaft In Hub
Courtesy of VOLVO CARS CORPORATION

Use: see **9997251** and see **9512923** .

REMOVING THE DRIVE SHAFT, CONTINUED

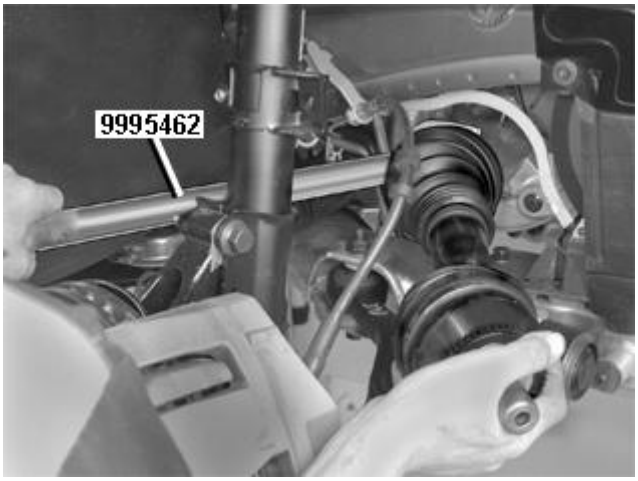

Fig. 191: Detach The Drive Shaft With Jimmy Bar
Courtesy of VOLVO CARS CORPORATION

NOTE: Only applies to cars with 4T65AWD transmissions.

Detach the drive shaft. Use jimmy bar see **9995462** B (modified according to the Tool Bulletin). Hold the spring strut out of the way and remove the drive shaft. Do not damage the sealing ring in the chain housing when removing the drive shaft.

INSTALLING THE DRIVE SHAFT

NOTE: For tightening torques, see TIGHTENING TORQUE.

INSTALLING THE DRIVE SHAFT IN THE TRANSMISSION

Fig. 192: Identifying Mating Surface Of The Drive Shaft
Courtesy of VOLVO CARS CORPORATION

NOTE: Only applies to cars with 4T65AWD transmissions.

Lubricate the mating surface of the drive shaft. Use oil P/N 116 1745-3 (1 liter container).

Press the drive shaft into the transmission. Check that the snap ring is in the groove in the transmission.

Pull the constant velocity joint to check that the drive shaft is secure.

NOTE: Do not pull the drive shaft as the axial pinions cannot support large loads.

INSTALLING THE DRIVE SHAFT IN THE TRANSMISSION, CONTINUED

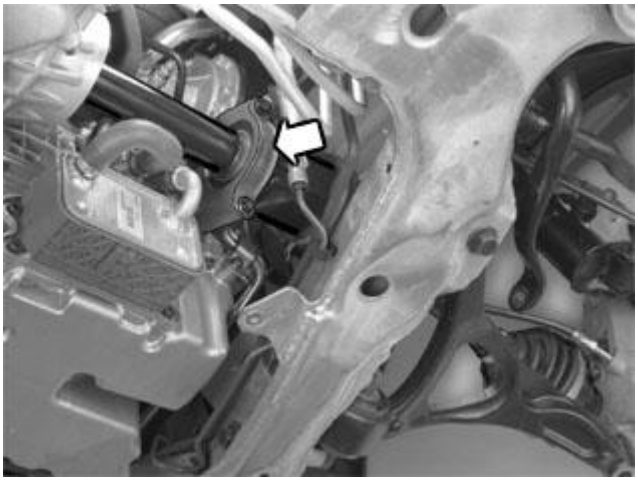

Fig. 193: Drive Shaft Support Bearing Cap
Courtesy of VOLVO CARS CORPORATION

NOTE: Only applies to cars with AW55-50, AW50AWD or M66AWD transmissions.

Install the drive shaft and bearing cap. Use two M8 screws. Tighten.

INSTALLING THE DRIVE SHAFT ON THE WHEEL HUB

To install the drive shaft on the wheel hub, see **REPLACING THE FRONT LEFT DRIVE SHAFT**.

FILLING WITH OIL

NOTE: Only applies to cars with M66AWD transmissions.

Top up with new oil. See **TRANSMISSION FLUID, REPLACING**.

INSTALLING THE SPLASH GUARD

Fig. 194: Identifying Under Engine Splash Guard
Courtesy of VOLVO CARS CORPORATION

NOTE: Only applies to cars with AW55-50, AW50AWD or M66AWD transmissions.

Install the splashguard under the engine.

INSTALLING WHEELS

Install the wheel. See **INSTALLING WHEELS** .

TRANSMISSION FLUID, REPLACING

NOTE: As the illustrations in this service information are used for different model years and / or models, some variation may occur. However, the essential information in the illustrations is always correct.

REMOVING SPLASH GUARDS AND FRONT WHEELS

Fig. 195: Identifying Splash Guard

Raise the car.

Remove:

- the splash guard under the engine
- the left front wheel.

CHECKING THE OIL LEVEL

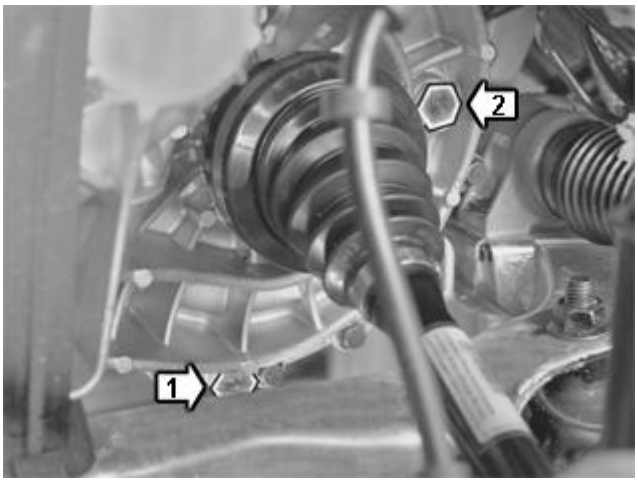

Fig. 196: Identifying Transmission Drain Plug

Draining the transmission fluid

Collect the oil in a container.

Remove the drain plug (1). Drain the oil.

Install the plug with a new gasket. Tighten. See **SUMMARY OF TIGHTENING TORQUES FOR SPECIFIC COMPONENTS** .

Remove the level plug (2). Fill with oil. Use only Volvo transmission oil P/N 116 1745 (1 liter). Volume in the transmission 2.0 liters.

Install the level plug with a new gasket. Tighten. See **SUMMARY OF TIGHTENING TORQUES FOR SPECIFIC COMPONENTS** .

INSTALLING SPLASH GUARDS AND FRONT WHEELS

NOTE: For tightening torques, see: TIGHTENING TORQUE .

Install:

- the splash guard under the engine. Tighten

- the wheel. See **INSTALLING WHEELS** .

FINISHING

FILLING AND CHECKING THE OIL LEVEL

NOTE: Only applies to cars with 4T65AWD transmissions.

Fill through the dip stick pipe. Fill with as much new oil as was drained from the transmission.

NOTE: Oil grade: Only ATF fluid Dexron III (with G-license).

Transmission oil, Volvo P/N 116 1521-8 (1 liter container), 116 1621-6 (4 liter container).

Check the oil level. See **OIL LEVEL, CHECKING** .

SEAL DRIVE SHAFT/DIFFERENTIAL, REPLACING

Special tools:

see **9995768**

see **9995769**

see **9995770**

see **9995771**

NOTE: As the illustrations in this service information are used for different model years and / or models, some variation may occur. However, the essential information in the illustrations is always correct.

LEFT-HAND SIDE

PREPARATORY WORK

Remove the drive shaft. See **REPLACING THE FRONT LEFT DRIVE SHAFT**.

Remove the splash guard under the engine.

REMOVING THE DIFFERENTIAL SEALS, LEFT-HAND SIDE

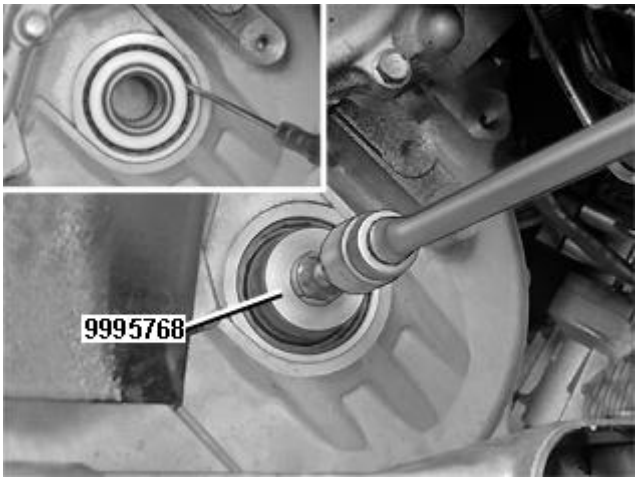

Fig. 197: Cap Nut For Extractor 999 5768 Installed
Courtesy of VOLVO CARS CORPORATION

Place a container underneath the transmission.

Remove the metal ring in the seal. Use a small screwdriver.

NOTE: Do not insert the screwdriver between the ring and the end of the shaft. This may damage the mating surface.

Install the cap nut for extractor see **9995768** .

Lightly grease the locating pin on the extractor.

Use a ratchet with an extension and socket. Press the extractor in against the seal at the same time as the extractor is turned.

Tighten so that the threaded cone screws firmly into the seal.

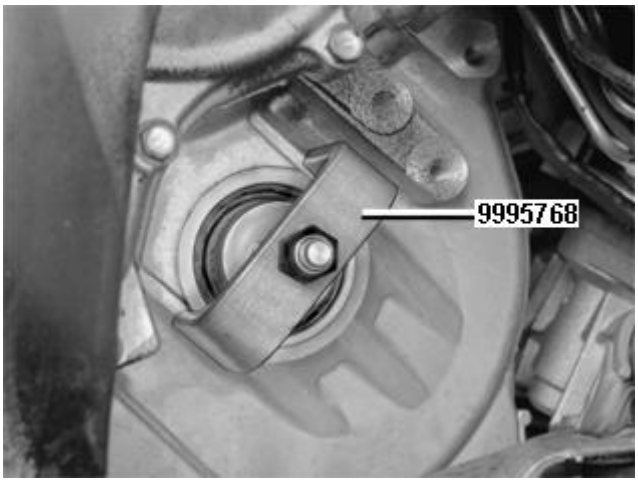

Fig. 198: Identifying Seal & Extractor 999 5768

Courtesy of VOLVO CARS CORPORATION

Remove the cap nut for the extractor.

Install the extractor bracket and nut.

Remove the seal.

Check that no seal residue is left.

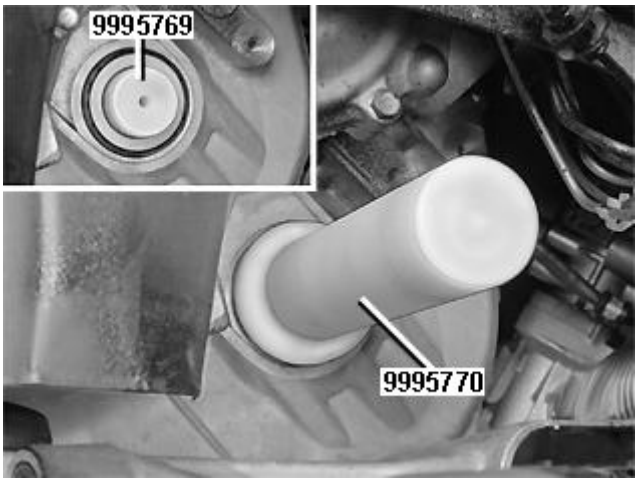

Fig. 199: Identifying Locating Pin 999 5769 And Drift 999 5770
Courtesy of VOLVO CARS CORPORATION

Lubricate the edges of the new seal using automatic transmission fluid.

Install locating pin see **9995769** .

Install the seal on the locating pin. Use drift see **9995770** .

Tap in the seal until the drift is against the transmission.

Remove the locating pin.

Install the drive shaft. See **REPLACING THE FRONT LEFT DRIVE SHAFT**.

Check the oil level. See **OIL LEVEL, CHECKING** .

Install the splashguard under the engine.

RIGHT-HAND SIDE

PREPARATORY WORK

Remove the drive shaft. See **REPLACING THE FRONT RIGHT DRIVE SHAFT**.

REMOVING THE DIFFERENTIAL SEALS, RIGHT-HAND SIDE

Fig. 200: Cap Nut For Extractor 999 5768 Installed
Courtesy of VOLVO CARS CORPORATION

Place a container underneath the transmission.

Install the cap nut for extractor see **9995768** .

Lightly grease the locating pin on the extractor.

Use a ratchet with an extension and socket. Press the extractor in against the seal at the same time as the extractor is turned.

Tighten so that the threaded cone screws firmly into the seal.

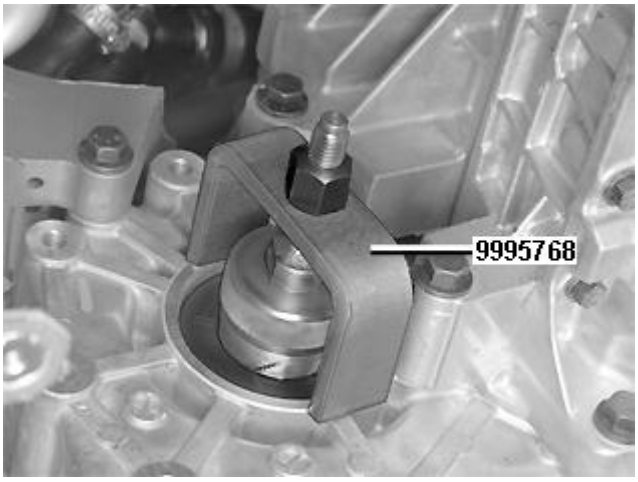

Fig. 201: Identifying Seal Removal Using Extractor 999 5768
Courtesy of VOLVO CARS CORPORATION

- Remove the cap nut from the extractor
- Install the extractor bracket and nut

- Remove the seal
- Check that no seal residue is left.

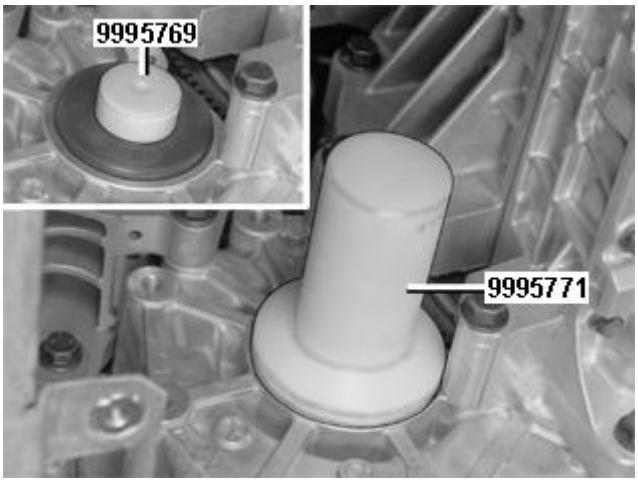

Fig. 202: Identifying Locating Pin 999 5769 And Drift 999 5771
Courtesy of VOLVO CARS CORPORATION

Lubricate the edges of the new seal using automatic transmission fluid.

Install locating pin see **9995769** .

Install the seal on the locating pin. Use drift see **9995771** .

Tap in the seal until the drift is against the transmission.

Remove the locating pin.

Install the drive shaft. See **REPLACING THE FRONT RIGHT DRIVE SHAFT**.

Check the oil level. See **OIL LEVEL, CHECKING** .

DRIVE SHAFT, CV JOINT (B6294T, 4T65 AWD; 2003-2006)

BOOT CV JOINT HOUSING, REPLACING

see **BOOT CV JOINT HOUSING, REPLACING**

DRIVE SHAFT SEAL REAR FINAL DRIVE HOUSING, REPLACING

Special tools:

see **9995591**

PREPARATORY WORK

To remove drive shafts, see **DRIVE SHAFT REAR, REPLACING**.

REMOVING THE DRIVE SHAFT SEAL

Fig. 203: REMOVING THE DRIVE SHAFT SEAL
Courtesy of VOLVO CARS CORPORATION

Use a pry bar to carefully remove the seal.

INSTALLING THE DRIVE SHAFT SEAL

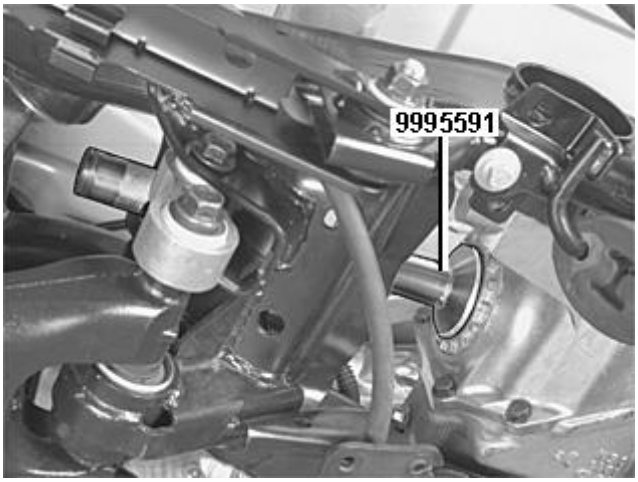

Fig. 204: Installing The Drive Shaft Seal
Courtesy of VOLVO CARS CORPORATION

Lubricate the lip of the new seal using wheel bearing grease, P/N 116 1251 (400 g).

Use tool see **9995591** .

NOTE: **It is important that the seal is positioned correctly. The positions differ between the left and right-hand sides. See below.**

POSITIONING THE SEALS

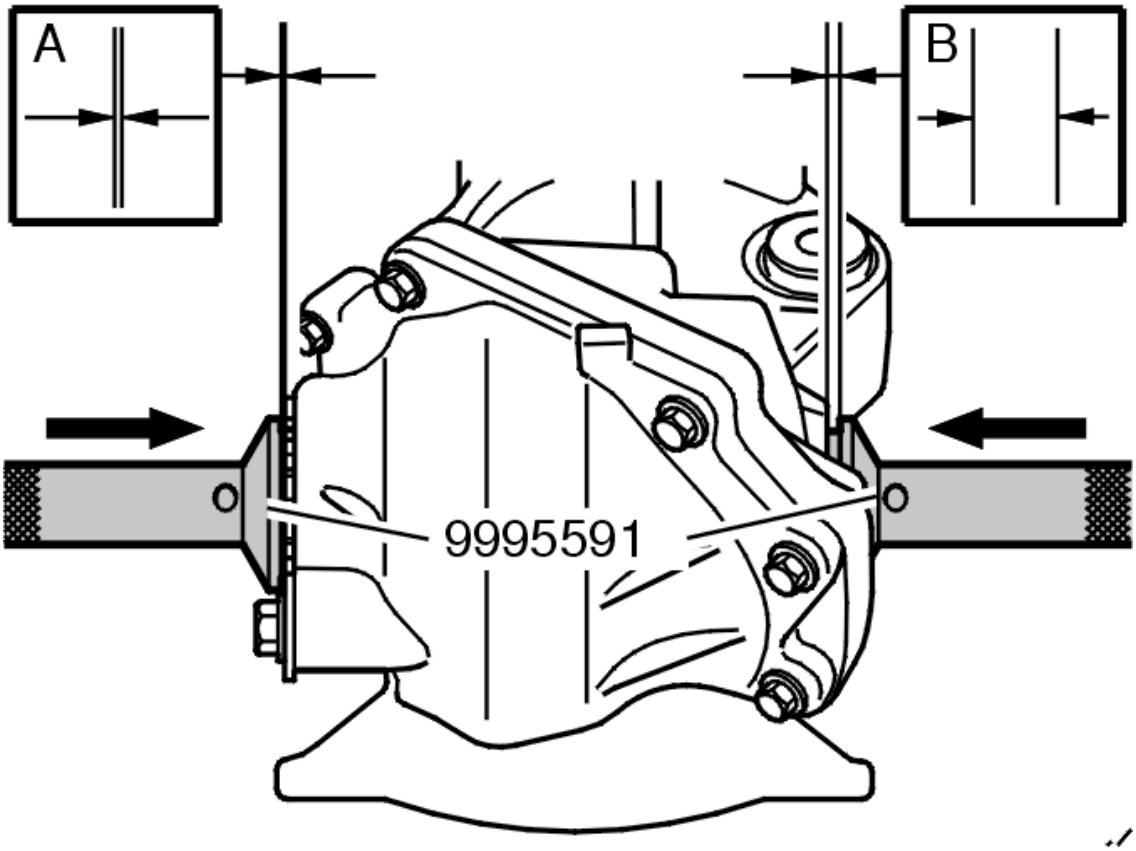

Fig. 205: Positioning The Seals
Courtesy of VOLVO CARS CORPORATION

Tap in the seals to the correct depth between the drift and the final drive housing.

NOTE: **There are different depths for the left and right-hand sides between the flange of the drift and the final drive housing.**

Left side: the measurement (A) must be **0.5 mm** ; measured from the surface of the hooks on the nut.

Right-hand side: the dimension (B) must be **6 mm** . The seal must be flush with the housing surface.

INSTALLING THE DRIVE SHAFT

To install drive shafts, see **DRIVE SHAFT REAR, REPLACING**.

FILLING AND CHECKING THE OIL LEVEL

Top up and check the oil level in the final drive. See **FINAL DRIVE, REPLACING**.

REPLACING THE FRONT LEFT DRIVE SHAFT

see **REPLACING THE FRONT LEFT DRIVE SHAFT**

REPLACING THE FRONT RIGHT DRIVE SHAFT

see **REPLACING THE FRONT RIGHT DRIVE SHAFT**

SEAL DRIVE SHAFT LEFT, REPLACING

Special tools:

see **9991801**

see **9995730**

see **9995731**

NOTE: **As the illustrations in this service information are used for different model years and / or models, some variation may occur. However, the essential information in the illustrations is always correct.**

PREPARATIONS

Fig. 206: Identifying Dip Stick Pipe & Oil Suction Device
Courtesy of VOLVO CARS CORPORATION

Drain approximately 4 liters of fluid from the transmission. Use an oil suction unit.

Remove the dip stick. Ensure that the suction pipe reaches down into the transmission.

Extract approximately 4 liters of oil.

REMOVING THE DRIVE SHAFT

Remove the drive shaft. See **REPLACING THE FRONT LEFT DRIVE SHAFT**.

REMOVING THE DRIVE SHAFT SEAL

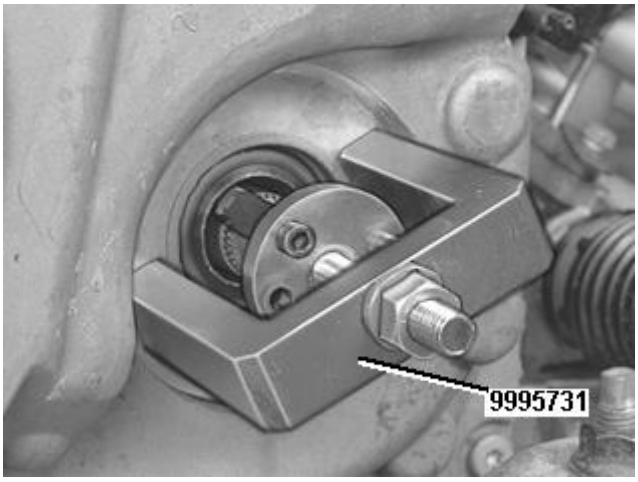

Fig. 207: Removing Drive Shaft Seal Using Puller 999 5731
Courtesy of VOLVO CARS CORPORATION

Use puller see **9995731** .

Unscrew the puller. Install a hook gradually between the shaft and sealing ring.

Secure the hooks to the puller. Tighten them using the screws.

Install the mounting bracket and the nut.

Extract the sealing ring.

NOTE: Check carefully that no residue from the old seal is left in the transmission.

INSTALLING THE DRIVE SHAFT SEAL

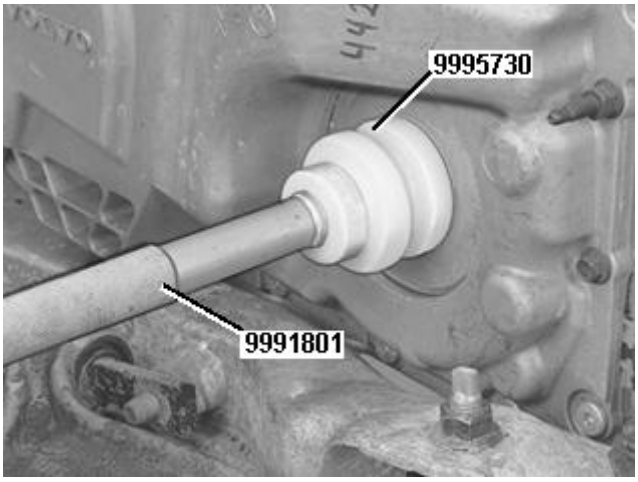

Fig. 208: Installing Drive Shaft Seal Using Drift 999 5730 And Shaft 999 1801
Courtesy of VOLVO CARS CORPORATION

NOTE: Clean thoroughly before installing the new seal.

Lubricate the seal lip using ATF oil, P/N 116 1521, (1 liter containers).

Use drift see **9995730** and shaft see **9991801** .

Carefully tap the drive shaft seal in until the drift is in contact with the transmission housing.

INSTALLING THE DRIVE SHAFT

Install the drive shaft according to **REPLACING THE FRONT LEFT DRIVE SHAFT**.

FILLING WITH TRANSMISSION FLUID

Top up the transmission with new oil, using the same quantity that was drained.

NOTE: Only ATF oil, P/N 116 1521, may be used (1 liter containers).

Check the oil level. See **OIL LEVEL, CHECKING**

SEAL DRIVE SHAFT RIGHT, REPLACING

Special tools:

see **9991801**

see **9997063**

NOTE: As the illustrations in this service information are used for different model years and / or models, some variation may occur. However, the essential information in the illustrations is always correct.

PREPARATIONS

Fig. 209: Identifying Dip Stick Pipe & Oil Suction Device
Courtesy of VOLVO CARS CORPORATION

Drain approximately 4 liters of fluid from the transmission.

Use an oil suction unit. Remove the dip stick. Ensure that the suction pipe reaches down into the transmission.

Extract approximately 4 liters of oil.

REMOVING THE DRIVE SHAFT

Remove the drive shaft. See **REPLACING THE FRONT RIGHT DRIVE SHAFT**.

REMOVING THE DRIVE SHAFT SEAL

Fig. 210: Identifying Drive Shaft Seal & Screwdriver
Courtesy of VOLVO CARS CORPORATION

Use a screwdriver.

NOTE: Do not damage the needle bearing when placing the screwdriver between the

needle bearing and the sealing ring.

Remove the sealing ring.

NOTE: Check carefully that no residue from the old seal is left in the chain housing.

INSTALLING THE DRIVE SHAFT SEAL

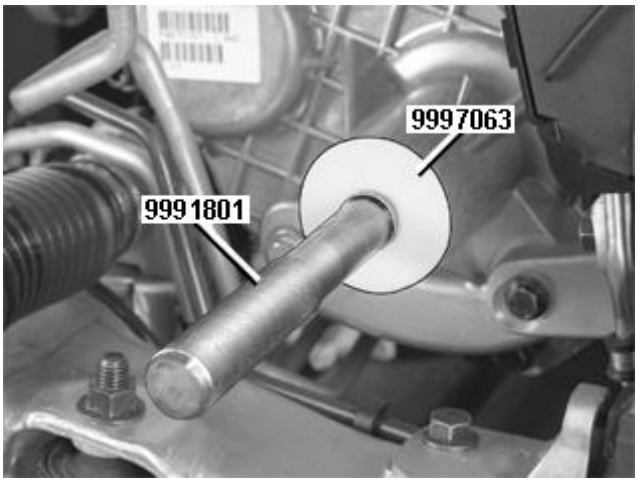

Fig. 211: Identifying Drive Shaft Seal, Drift 9997063 & Shaft 9991801
Courtesy of VOLVO CARS CORPORATION

NOTE: Clean thoroughly before installing the new seal.

Lubricate the seal lip using ATF oil, P/N 116 1521, (1 liter containers).

Use drift see **9997063** and shaft see **9991801** .

Carefully tap the drive shaft seal in until the drift is in contact with the chain housing.

INSTALLING THE DRIVE SHAFT

Install the drive shaft according to **REPLACING THE FRONT RIGHT DRIVE SHAFT**.

FILLING WITH TRANSMISSION FLUID

Top up the transmission with new oil, using the same quantity that was drained.

NOTE: Only ATF oil, P/N 116 1521, may be used (1 liter containers).

Check the oil level. See **OIL LEVEL, CHECKING** .

DRIVE SHAFT, CV JOINT (B5254T2, AW50/51 AWD; 2003-2007)

BOOT CV JOINT HOUSING, REPLACING

see **BOOT CV JOINT HOUSING, REPLACING**

DRIVE SHAFT REAR, REPLACING

Special tools:

see **9995659**

see **9985972**

see **9997060**

NOTE: **As the illustrations in this service information are used for different model years and / or models, some variation may occur. However, the essential information is always correct.**

WARNING: **Do not use magnets or magnetic tools close to tooth wheels, drive shafts or wheel hubs. A magnetized tooth wheel will lose its function and generate incorrect signals resulting in fault codes.**

NOTE: **Any magnetized tooth wheel, drive shaft or wheel hub must be replaced with a new component.**

REMOVAL

HINT: The methods displays replacement on the left-hand side but is identical to the right-hand side.

REMOVING WHEELS

Raise the car.

Remove the wheel.

PREPARATORY WORK

Push the suspension up to the specified measurement to detach the screwed joint between the control arms/struts, see **TENSIONER 999 5659, USER INSTRUCTIONS** .

DISCONNECTING THE STUB AXLE

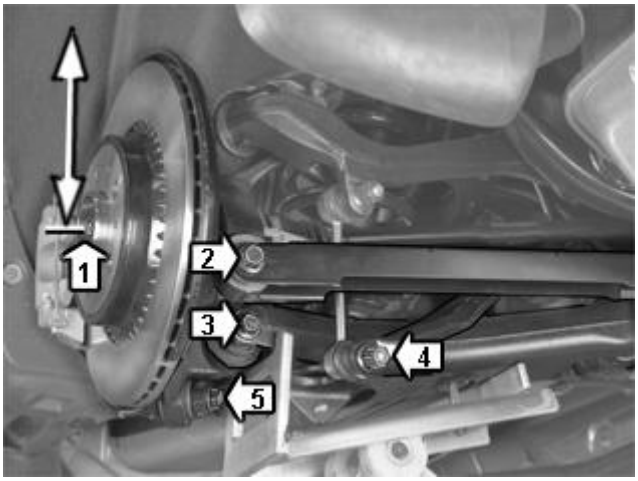

Fig. 212: Identifying Rear Suspension Assembly, Nuts & Screws
Courtesy of VOLVO CARS CORPORATION

Push up the rear suspension using tension calliper see **9995659** 500 mm between the wing edge and the center of the wheel hub.

Remove:

- the handbrake cable from the mounting in the track rod
- the screw for the drive shaft - wheel hub (1)
- the screw for the track rod mounting (2)
- the screw for the control arm mounting (3)
- the nut for the anti-roll bar link mounting (4). Counterhold using a Torx spanner so that the boot does not rotate
- the screw for the lateral link mounting (5).

REMOVING THE DRIVE SHAFT FROM THE WHEEL HUB

Fig. 213: Identifying Wheel Spindle & Mobile Jack Attachment
Courtesy of VOLVO CARS CORPORATION

Install jack see **9985972** under the stub axle and raise carefully.

NOTE: Pull out the drive shaft from the wheel hub whilst raising the stub axle. Angle the shaft past the stub axle.

Release the tensioner so that the control arm hangs in the shock absorber.

REMOVING THE DRIVE SHAFT FROM THE FINAL DRIVE HOUSING

Fig. 214: Identifying Screwdriver In Constant Velocity Joint Housing & Final Drive Housing
Courtesy of VOLVO CARS CORPORATION

Use a large screwdriver. Position the screwdriver tip between the constant velocity joint housing and the final drive housing.

Tap firmly so that the snap ring for the drive shaft releases. Pull out the drive shaft. Do not damage the drive shaft seal.

Install sealing plug see **9997060** .

INSTALLATION

NOTE: For tightening torques, see TIGHTENING TORQUE.

INSTALLING THE DRIVE SHAFT IN THE FINAL DRIVE HOUSING

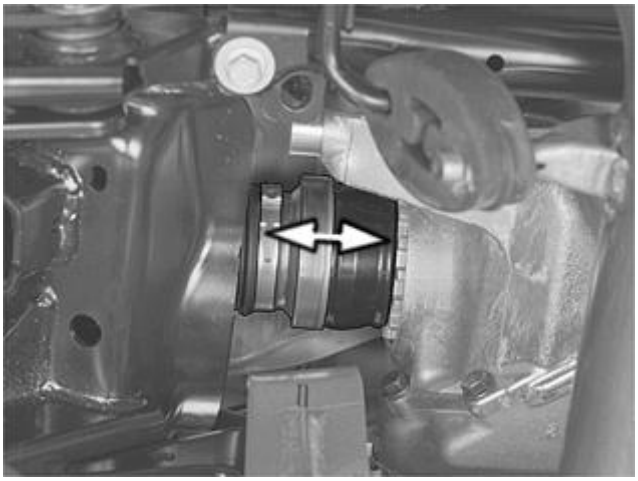

Fig. 215: Identifying Drive Shaft Mating Surface, Snap Ring & Final Drive
Courtesy of VOLVO CARS CORPORATION

Lubricate the drive shaft mating surface using P/N 116 1329-6 (0.5 liter container).

Press the drive shaft into the final drive housing. Check that the snap ring is in the groove in the final drive.

Check by pulling the constant velocity joint on the drive shaft.

INSTALLING THE DRIVE SHAFT ON THE WHEEL HUB

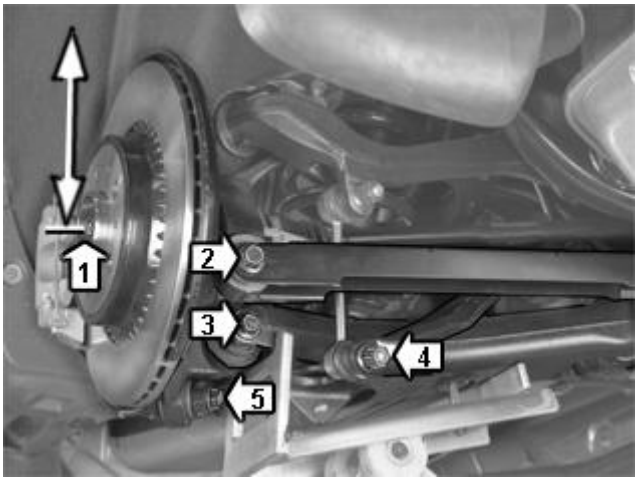

Fig. 216: Identifying Rear Suspension Assembly, Nuts & Screws
Courtesy of VOLVO CARS CORPORATION

Lubricate the drive shaft splines using a small amount of oil.

Position the drive shaft in the wheel hub. Carefully lower the mobile jack.

Remove the mobile jack.

Press up the control arm and tensioner to the previous specified measurement so that the screws can be

installed.

NOTE: **After installing the screws, press tension calliper see 9995659 up to the normal position, see TENSIONER 999 5659, USER INSTRUCTIONS , before tightening the screws**

Install:

- 1 M12 screw for the lateral link mounting (5). Tighten
- 1 M12 nut for the lateral link mounting (4). Tighten. Counterhold using a Torx spanner so that the boot does not rotate
- 1 M12 screw for the lateral link mounting (3). Tighten
- 1 M12 screw for the track rod mounting (2). Tighten
- 1 M10 screw to the drive shaft - wheel hub (1). Tighten
- the handbrake cable and mounting for the track rod.

Remove the tensioner.

INSTALLING WHEELS

Install the wheel. See **INSTALLING WHEELS** .

DRIVE SHAFT SEAL REAR FINAL DRIVE HOUSING, REPLACING

see **DRIVE SHAFT SEAL REAR FINAL DRIVE HOUSING, REPLACING**

REPLACING THE FRONT LEFT DRIVE SHAFT

see **REPLACING THE FRONT LEFT DRIVE SHAFT**

REPLACING THE FRONT RIGHT DRIVE SHAFT

see **REPLACING THE FRONT RIGHT DRIVE SHAFT**

SEAL DRIVE SHAFT/DIFFERENTIAL, REPLACING

see **SEAL DRIVE SHAFT/DIFFERENTIAL, REPLACING**

SEALING RING CONNECTING SOCKET DRIVE SHAFT/DIFFERENTIAL, REPLACING

Special tools:

see **9992615**

see **9995575**

see **9995576**

see **9995777**

see **9995778**

see **9995779**

see **9995780**

PREPARATORY WORK

Fig. 217: Identifying Removal Of Circlip From Connecting Socket
Courtesy of VOLVO CARS CORPORATION

Remove:

- the bevel gear according to **BEVEL GEAR, REPLACING**
- the circlip in the connecting socket.

CARRY OUT CORRECTIVE ACTION AT WORN SPLINES IN THE SLEEVE

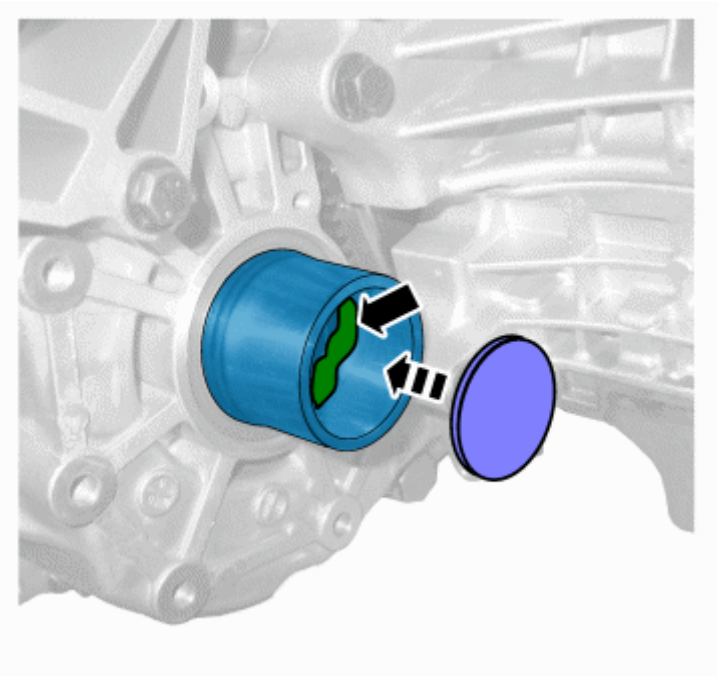

Fig. 218: Identifying Pressing Cardboard Disc Against The Seal
Courtesy of VOLVO CARS CORPORATION

Cut out a O40 mm cardboard disc and use it to prevent shavings entering the gearbox. Apply a thick bead of grease or petroleum jelly on the seal in the sleeve. Press the cardboard disc against the seal.

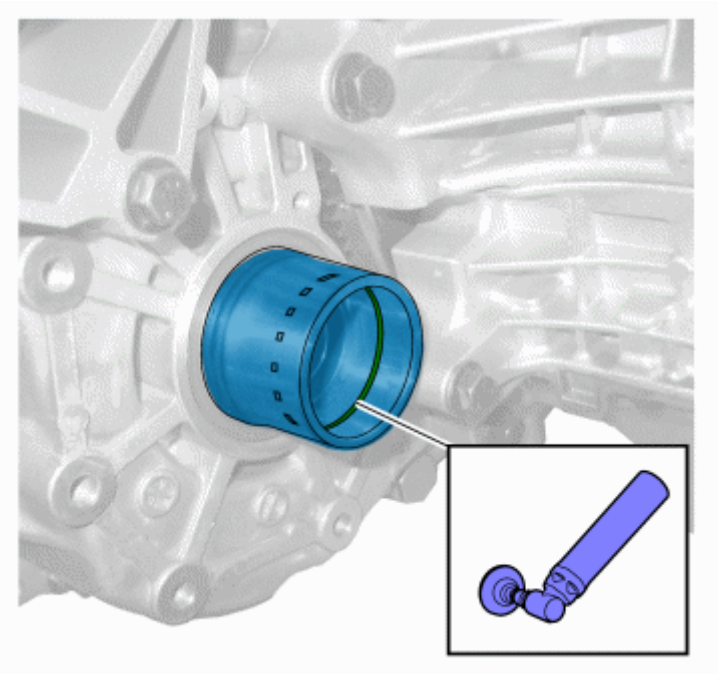

Fig. 219: Identifying Grinding A Groove Inside Of The Sleeve
Courtesy of VOLVO CARS CORPORATION

Grind a groove in the inside of the sleeve to enable the expander see **9995777** to get a hold.

The sleeve can also be heated using a hot air gun or induction heater.

INSTALLING TOOL

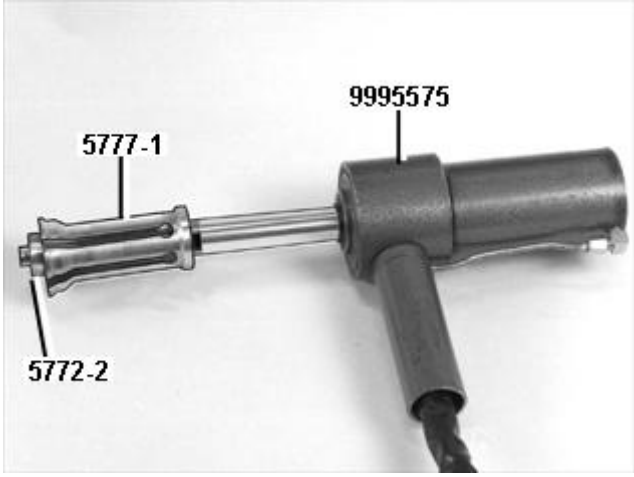

Fig. 220: Identifying Expander 999 5777, Puller Rod 999 5777 And Extractor 999 5777
Courtesy of VOLVO CARS CORPORATION

Install expander 5777-1 and connecting rod 5777-2 (these are included in extractor 999 5777) on the puller cylinder.

Puller cylinder see **9995575** is used together with hydraulic pump see **9995576** (foot-operated). Alternatively tool see **9992615** can be used, which consists of a puller cylinder and a compressed-air driven hydraulic pump.

REMOVING THE CONNECTING SOCKET

Fig. 221: Identifying Sleeve 999 5777
Courtesy of VOLVO CARS CORPORATION

Place a container underneath the gearbox. Ensure that the piston rod in the puller cylinder is in the outer position.

Position sleeve see **9995777** between the puller cylinder and the transmission. Press in the expander so that it enters the groove on the connecting sleeve.

Apply the puller cylinder. Check that the socket between the gearbox and the puller cylinder is in contact with its support surfaces.

Remove the socket.

REMOVING THE SEALING RING FROM THE GEARBOX

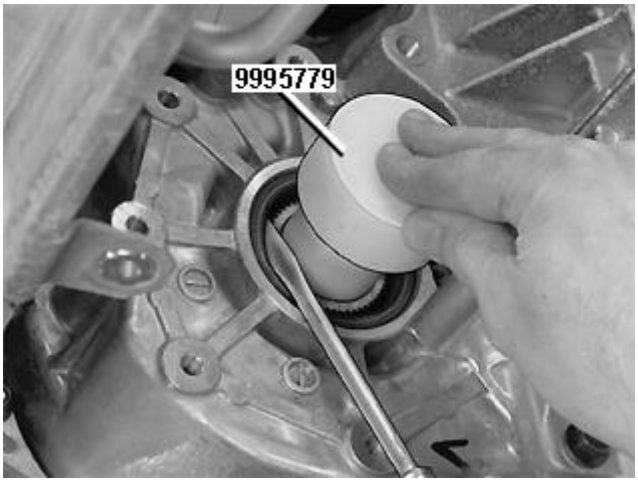

Fig. 222: Identifying Drift 999 5779
Courtesy of VOLVO CARS CORPORATION

Use a screwdriver to pry out the seal.

Position drift see **9995779** on the end of the differential to protect the sealing face from damage when removing the seal. Do not damage the surfaces in the transmission housing.

REMOVING THE SEALING RING FROM THE CONNECTING SOCKET

Fig. 223: Identifying Tapping Sealing Ring Out Of Socket Using Screwdriver

Courtesy of VOLVO CARS CORPORATION

Use a screwdriver to tap the sealing ring out of the socket.

Check the mating surface for the connecting socket. The socket must be replaced if there are signs of grooves or corrosion.

INSTALLING THE CONNECTING SOCKET

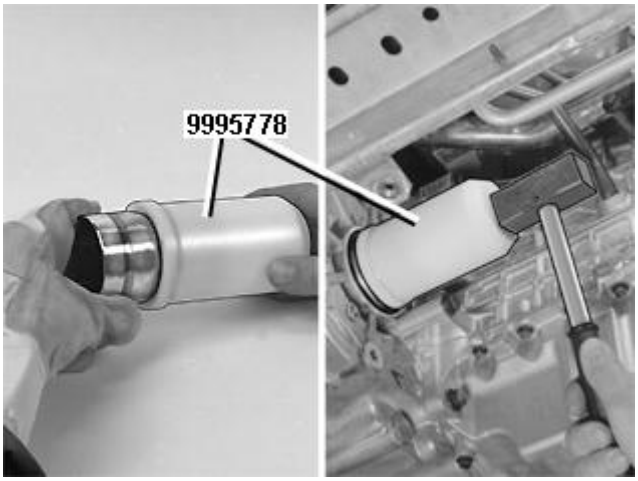

Fig. 224: Installing Connecting Socket
Courtesy of VOLVO CARS CORPORATION

Heat the sleeve to 150°-175°C in an oven and place the sleeve in drift see **9995778** . Set it against the transmission and tap in the sleeve until contacts the differential.

The above operation must be carried out quickly to prevent the heat spreading to the differential and causing the differential to expand.

Control measurement: the distance from the end of the connecting socket to the flat surface outside the sealing ring seat on the gearbox housing must be approximately 41 mm.

NOTE: Use protective gloves when handling the heated socket.

Care must be also taken to prevent burns in the remaining operations.

INSTALLING THE SEALING RING FOR THE CONNECTING SOCKET

Fig. 225: Identifying Installation Of Sealing Ring 999 5780
Courtesy of VOLVO CARS CORPORATION

Lubricate the sealing ring lip and the mating surface on the socket. Use ATF fluid.

Insert the seal ring to the sleeve. Tap the sleeve into place with drift see **9995780** . Tap in the drift until it contacts the transmission housing.

INSTALLING THE SEALING RING FOR THE DIFFERENTIAL

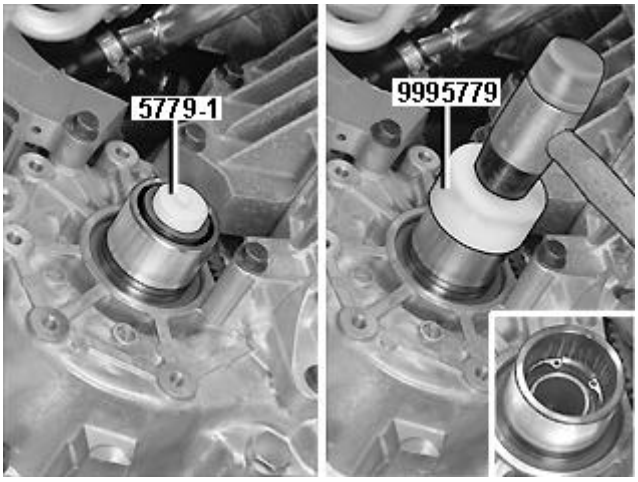

Fig. 226: Identifying Installation Of Sealing Ring For Differential
Courtesy of VOLVO CARS CORPORATION

Position locating pin 5779-1 in the end of the differential. Lubricate the sealing ring lip and the locating pin using ATF oil. Tap in the seal using drift see **9995779** . Tap the drift in until it is contact with the end of the connecting sleeve.

Install the circlip for the connecting socket.

FINISHING

Install the bevel gear according to **BEVEL GEAR, REPLACING**

Check the gearbox oil level according to **OIL LEVEL, CHECKING**

DRIVE SHAFT, CV JOINT (B8444S, TF-80SC AWD; 2011)

DRIVE SHAFT LEFT, REPLACING

Special tools:

see **9997162**

see **9997163**

see **9992709**

WARNING: Do not use magnets or magnetic tools close to tooth wheels, drive shafts or wheel hubs. A magnetized tooth wheel will lose its function and generate incorrect signals resulting in fault codes.

NOTE: Any magnetized tooth wheel, drive shaft or wheel hub must be replaced with a new component.

REMOVAL

Fig. 227: Identifying Drive Shaft Screw Removal Using A Screwdriver As A Counter Hold On Brake Disc
Courtesy of VOLVO CARS CORPORATION

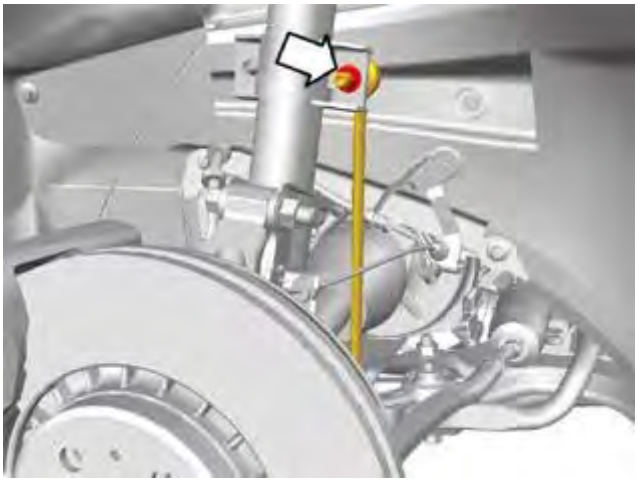

Fig. 228: Identifying Grommet
Courtesy of VOLVO CARS CORPORATION

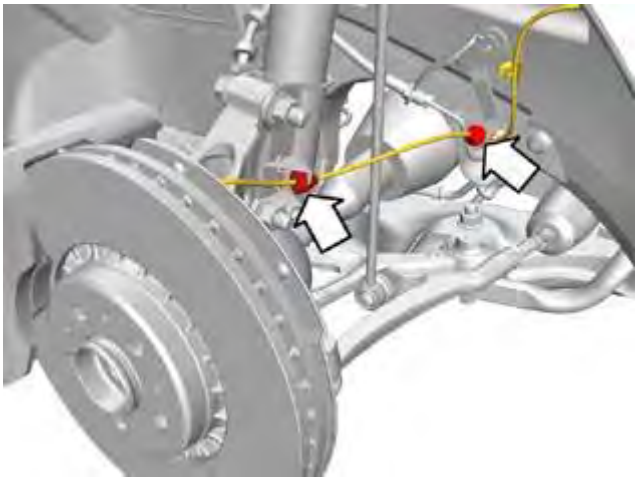

Fig. 229: Identifying Tire Pressure Sensor Line And Grommets
Courtesy of VOLVO CARS CORPORATION

Measure the position of the wheel spindle/spring strut. See: **WHEEL KNUCKLE / SPRING STRUT, CALIBRATING** .

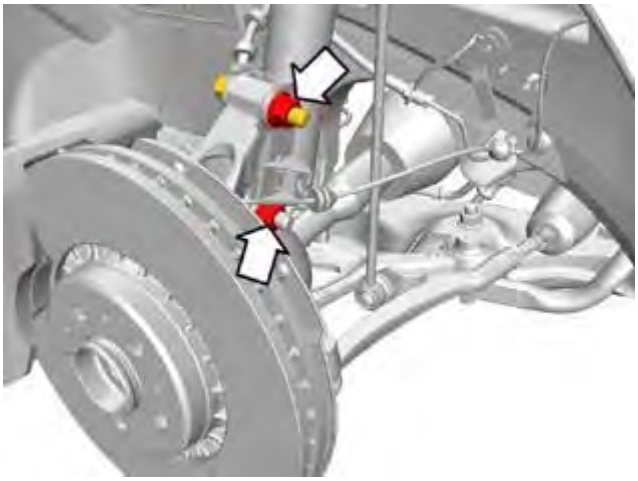

Fig. 230: Identifying Strut To Spindle Nuts
Courtesy of VOLVO CARS CORPORATION

Leave the lower screw in place.

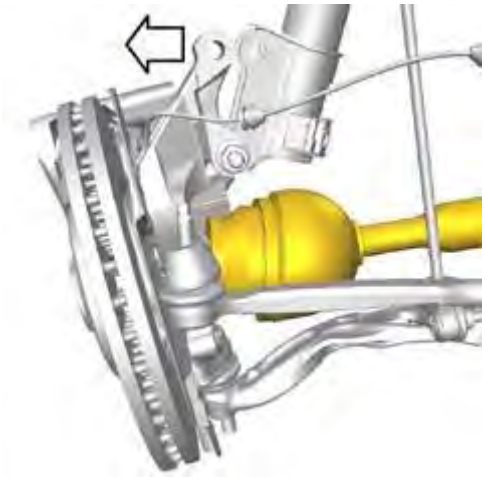

Fig. 231: Identifying Drive Shaft
Courtesy of VOLVO CARS CORPORATION

APPLIES FROM CHASSIS NO.: 1354476-

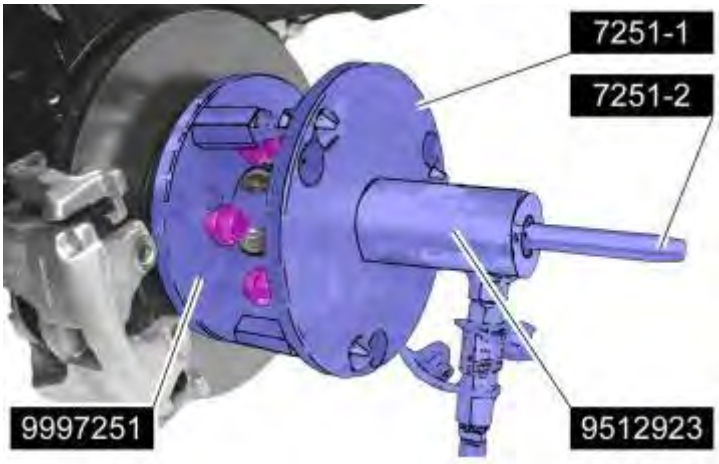

Fig. 232: Driveshaft In Hub
Courtesy of VOLVO CARS CORPORATION

Use: see **9997251** and see **9512923** .

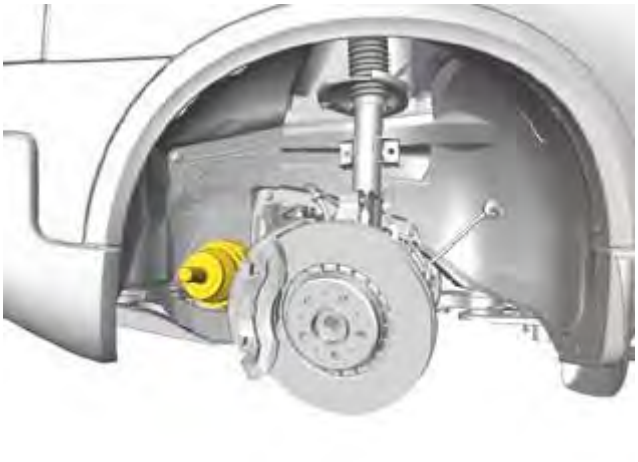

Fig. 233: Identifying Drive Shaft
Courtesy of VOLVO CARS CORPORATION

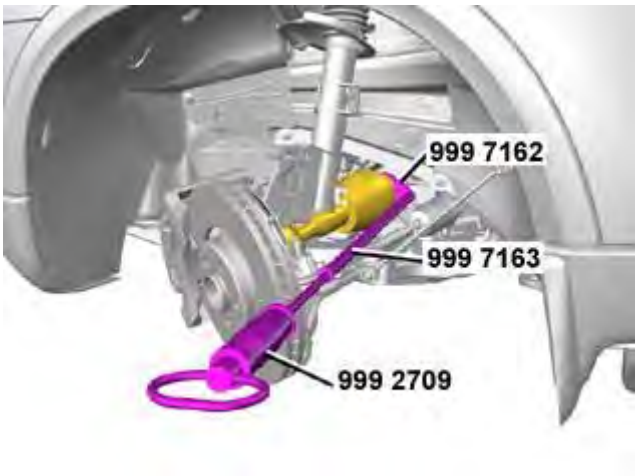

Fig. 234: Identifying Drive Shaft & Special Tool
Courtesy of VOLVO CARS CORPORATION

Use: see **9997162** with: see **9997163** and: see **9992709** and remove the drive shaft.

NOTE: Pull the constant velocity joint, not the drive shaft joints, when removing the drive shaft. There is no axial pinion.

NOTE: Do not damage the drive shaft seal.

INSTALLATION

NOTE: For tightening torques, see: TIGHTENING TORQUE.

Lubricate the drive shaft sealing surface. Use oil. See: **LUBRICATION TRANSMISSION** .

Press the drive shaft into the transmission. Check that the snap ring is in the groove in the transmission by

pulling the constant velocity joint.

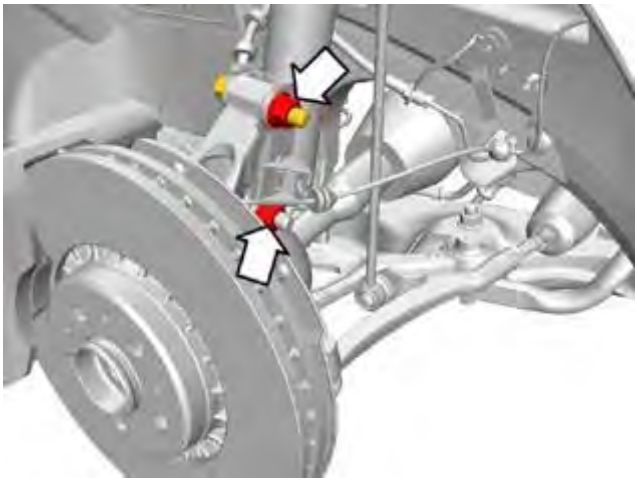

Fig. 235: Identifying Strut To Spindle Nuts
Courtesy of VOLVO CARS CORPORATION

Use new screws and nuts.

Adjust the position of the wheel spindle/spring strut. See: **WHEEL KNUCKLE / SPRING STRUT, CALIBRATING** .

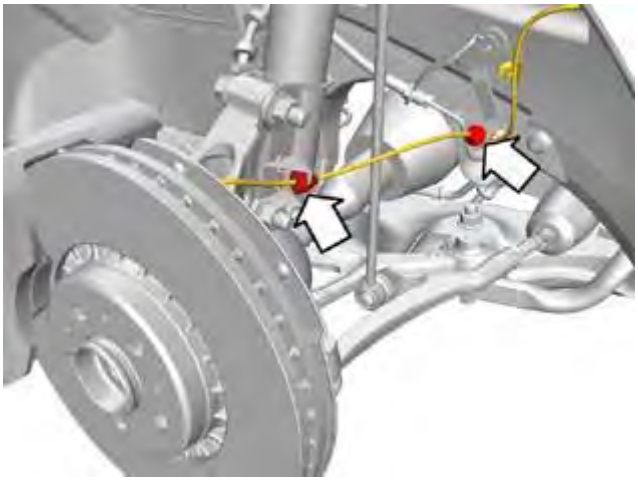

Fig. 236: Identifying Tire Pressure Sensor Line And Grommets
Courtesy of VOLVO CARS CORPORATION

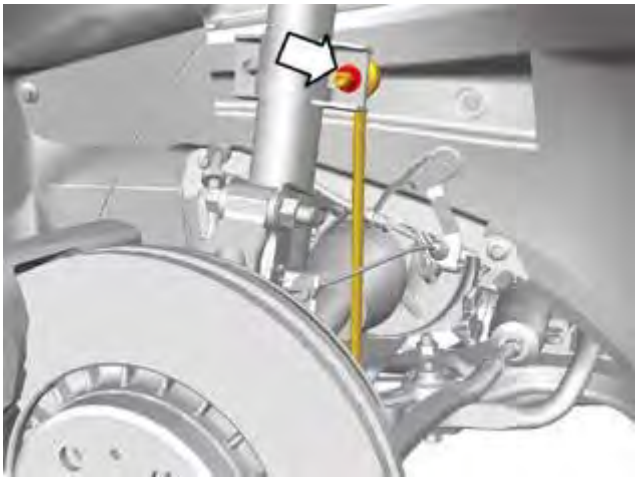

Fig. 237: Identifying Grommet
Courtesy of VOLVO CARS CORPORATION

Tighten, see: **SUMMARY OF TIGHTENING TORQUES FOR SPECIFIC COMPONENTS** .

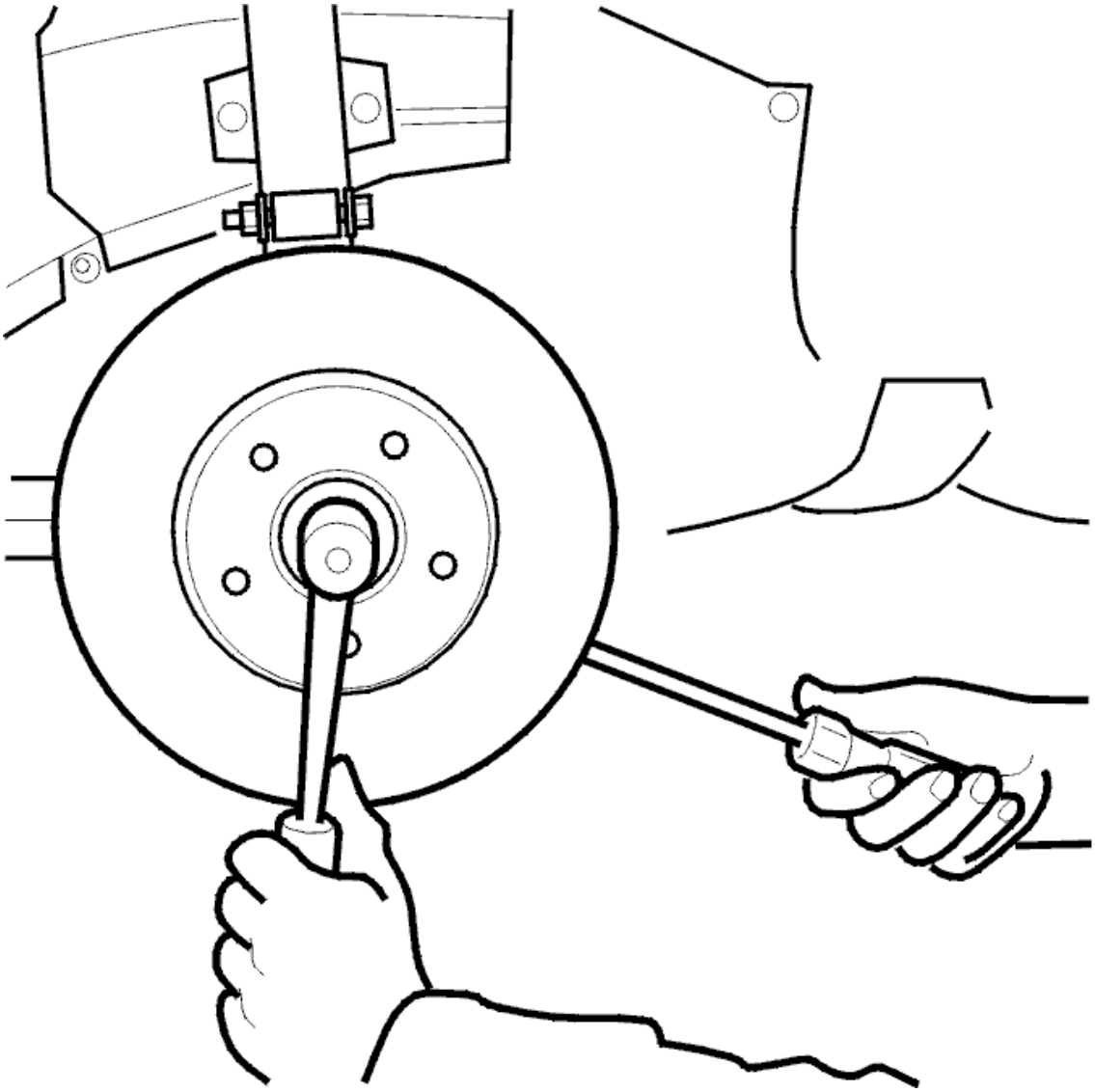

Fig. 238: Identifying Drive Shaft Screw Removal Using A Screwdriver As A Counter Hold On Brake Disc
Courtesy of VOLVO CARS CORPORATION

Tighten, see: **SUMMARY OF TIGHTENING TORQUES FOR SPECIFIC COMPONENTS**.

DRIVE SHAFT RIGHT, REPLACING

WARNING: **Do not use magnets or magnetic tools close to tooth wheels, drive shafts or wheel hubs. A magnetized tooth wheel will lose its function and generate incorrect signals resulting in fault codes.**

NOTE: **Any magnetized tooth wheel, drive shaft or wheel hub must be replaced with a new component.**

REMOVAL

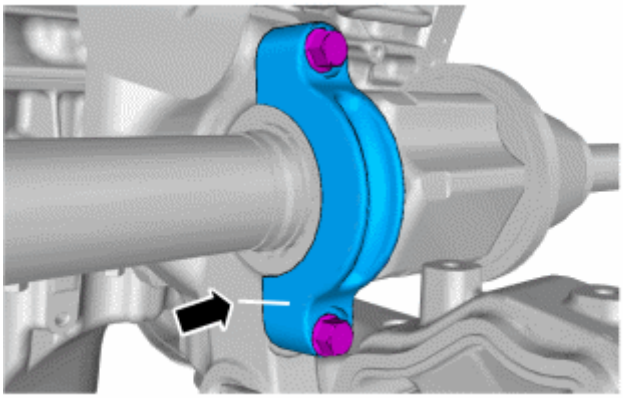

Fig. 239: Identifying Bearing Cap And Drive Shaft Support Bearing Alignment
Courtesy of VOLVO CARS CORPORATION

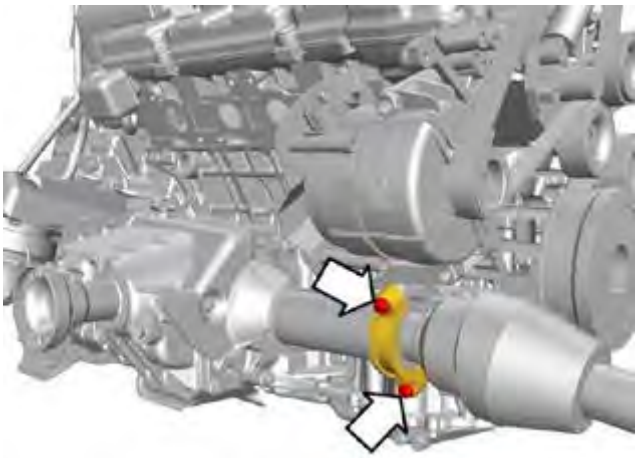

Fig. 240: Identifying Bearing Cap And Drive Shaft Support Bearing Bolts
Courtesy of VOLVO CARS CORPORATION

Fig. 241: Identifying Drive Shaft Screw Removal Using A Screwdriver As A Counter Hold On Brake Disc
Courtesy of VOLVO CARS CORPORATION

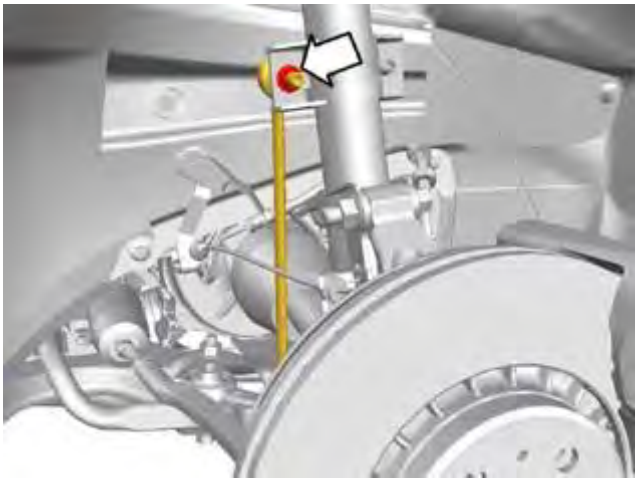

Fig. 242: Identifying Brake Grommet
Courtesy of VOLVO CARS CORPORATION

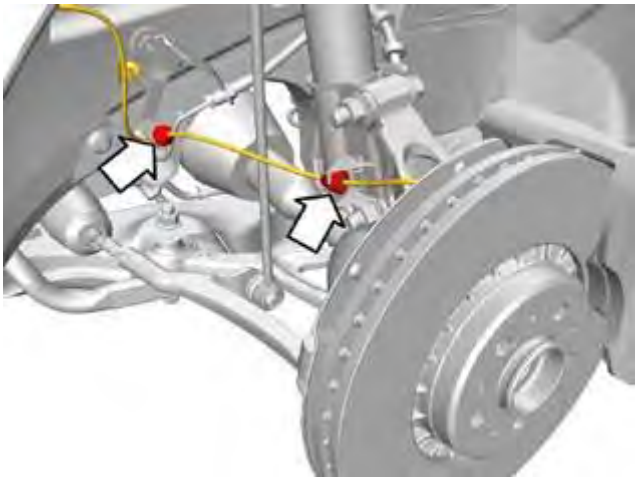

Fig. 243: Identifying Brake Grommets
Courtesy of VOLVO CARS CORPORATION

Measure the position of the wheel spindle/spring strut. See: **WHEEL KNUCKLE / SPRING STRUT, CALIBRATING** .

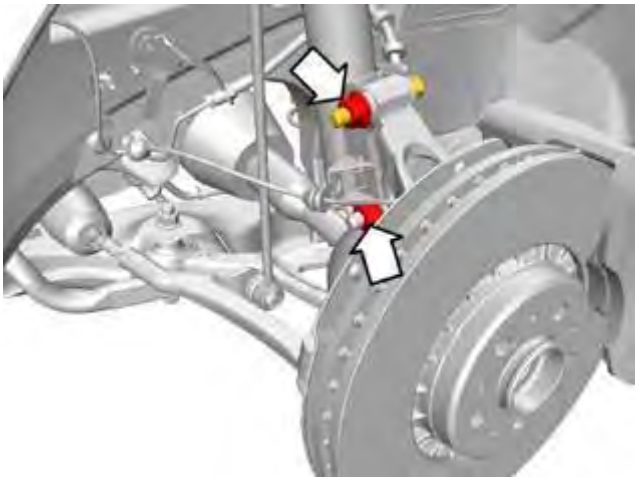

Fig. 244: Identifying Wheel Spindle / Spring Strut Lower Screw
Courtesy of VOLVO CARS CORPORATION

Leave the lower screw in place.

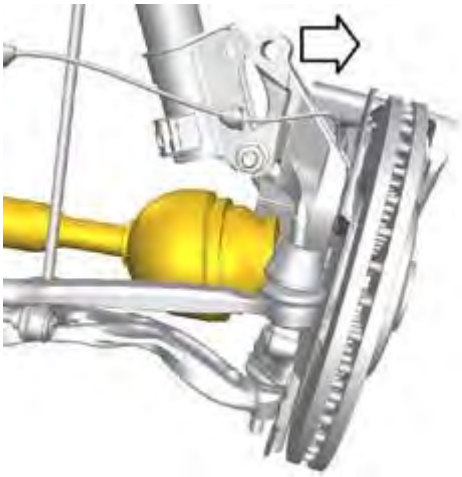

Fig. 245: Drive Shaft
Courtesy of VOLVO CARS CORPORATION

APPLIES FROM CHASSIS NO.: 1354476-

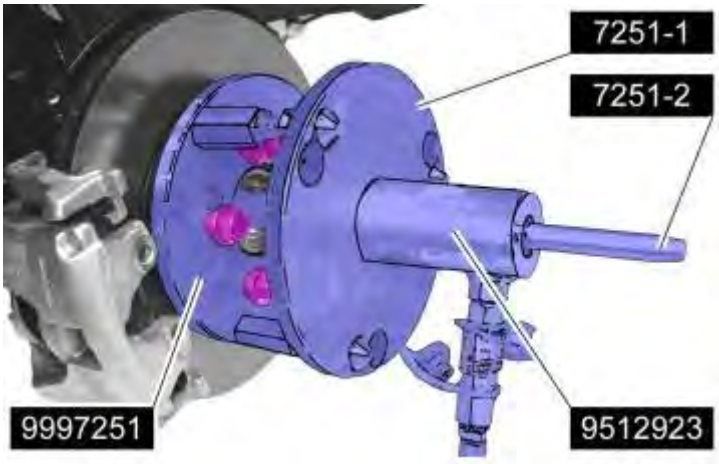

Fig. 246: Driveshaft In Hub
Courtesy of VOLVO CARS CORPORATION

Use: see **9997251** and see **9512923** .

Remove the drive shaft.

NOTE: Pull the constant velocity joint, not the drive shaft joints, when removing the drive shaft. There are no axial stops.

NOTE: Do not damage the drive shaft seal.

INSTALLATION

NOTE: For tightening torques, see: TIGHTENING TORQUE.

Lubricate the drive shaft sealing surface.

Use oil. See: **LUBRICATION TRANSMISSION** .

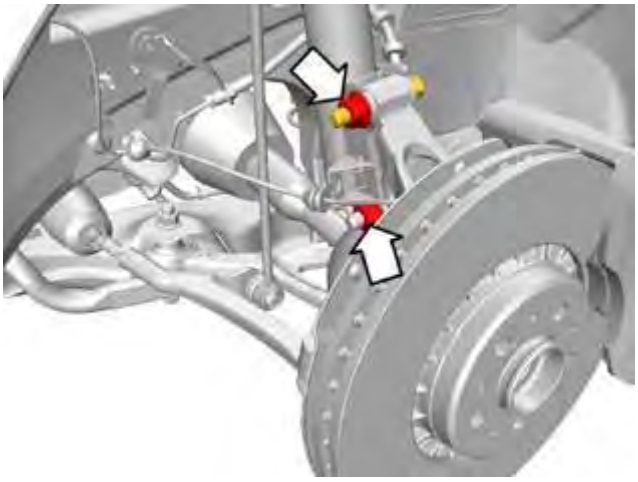

Fig. 247: Identifying Wheel Spindle / Spring Strut Lower Screw
Courtesy of VOLVO CARS CORPORATION

Use new screws and nuts.

Adjust the position of the wheel spindle/spring strut. See: **WHEEL KNUCKLE / SPRING STRUT, CALIBRATING** .

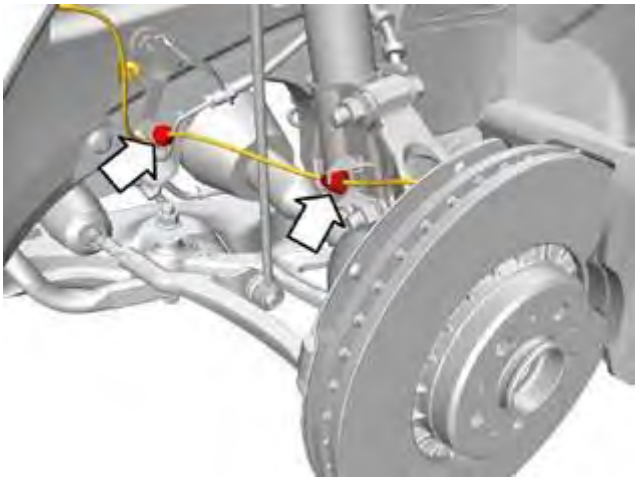

Fig. 248: Identifying Brake Grommets
Courtesy of VOLVO CARS CORPORATION

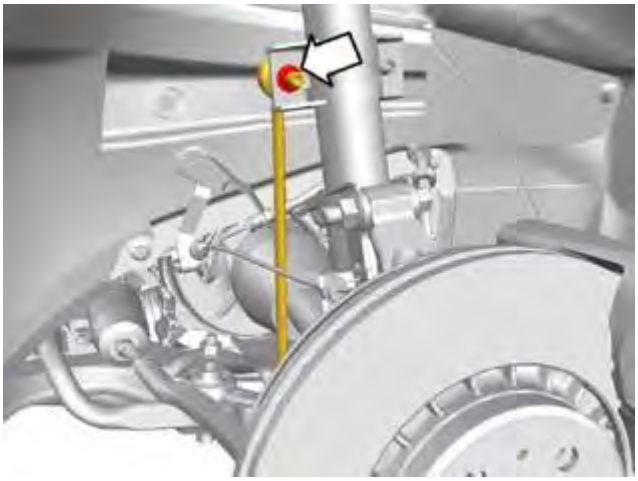

Fig. 249: Identifying Brake Grommet
Courtesy of VOLVO CARS CORPORATION

Tighten, see: **SUMMARY OF TIGHTENING TORQUES FOR SPECIFIC COMPONENTS** .

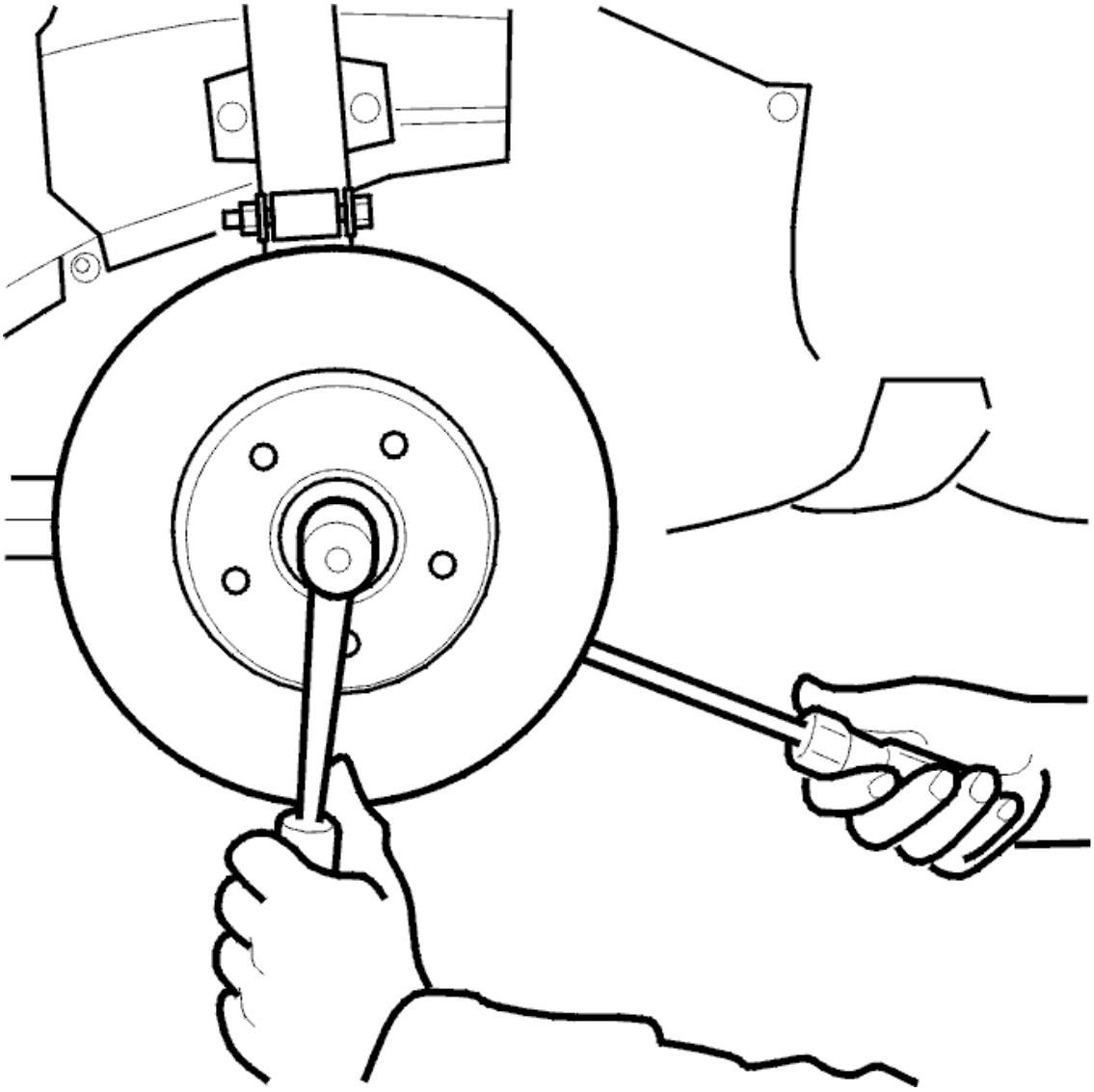

Fig. 250: Identifying Drive Shaft Screw Removal Using A Screwdriver As A Counter Hold On Brake Disc
Courtesy of VOLVO CARS CORPORATION

Tighten, see: **SUMMARY OF TIGHTENING TORQUES FOR SPECIFIC COMPONENTS**.

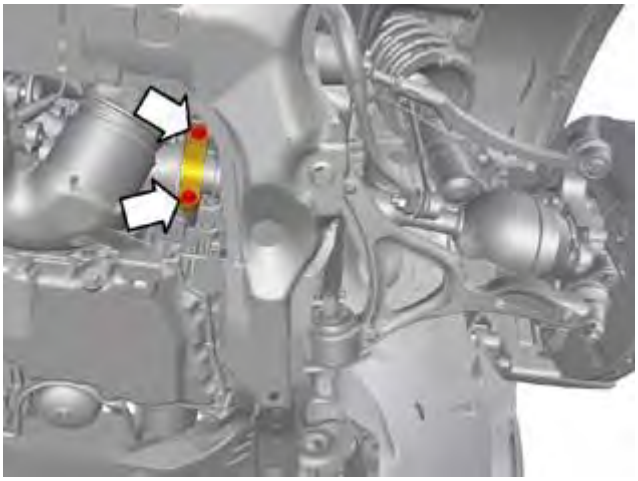

Fig. 251: Locating Driveshaft Cap And Bolts
Courtesy of VOLVO CARS CORPORATION

M8

DRIVE SHAFT, CV JOINT (TF-80SC AWD; 2005-2006)

BOOT CV JOINT HOUSING, REPLACING

Special tools:

see **9512619**

DISASSEMBLY

NOTE: **Preparatory work, left-hand side: See DRIVE SHAFT LEFT, REPLACING.**
Preparatory work, right-hand side: See DRIVE SHAFT RIGHT, REPLACING.

REMOVING THE BOOT

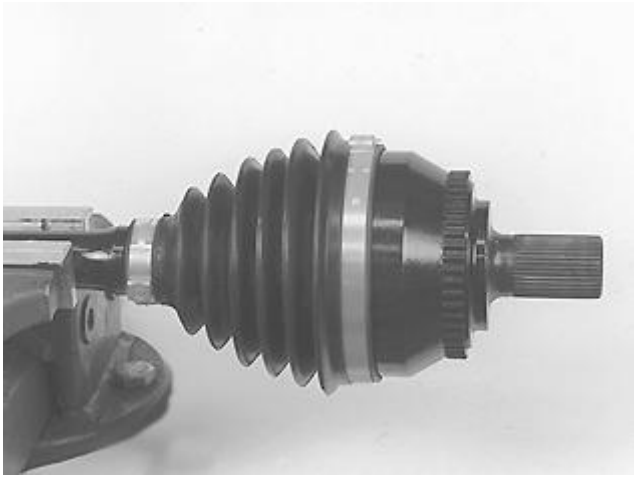

Fig. 252: Identifying Drive Shaft Held In Soft Jawed Vice
Courtesy of VOLVO CARS CORPORATION

Secure the drive shaft in a vice with soft jaws.

Remove the clamps from the boots.

Cut the boot and remove it from the shaft.

CHECKING THE MEASUREMENTS

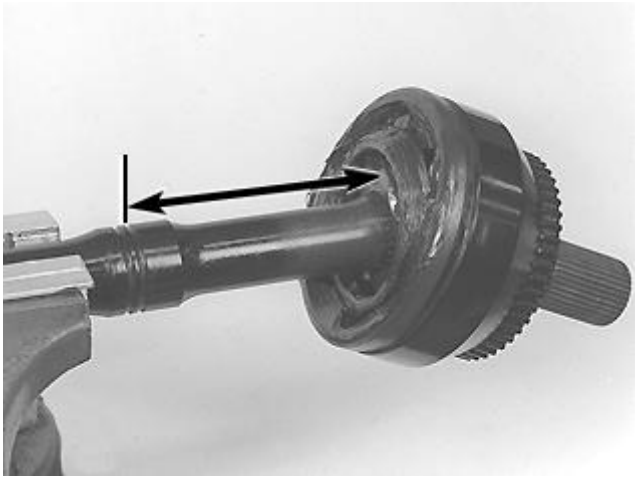

Fig. 253: Identifying Distance From Inner Ring To Inner Groove On Shaft
Courtesy of VOLVO CARS CORPORATION

Wipe off the grease from the constant velocity joint housing.

Measure the distance from the inner ring to the inner groove on the shaft. Note the measurement.

REMOVING THE CONSTANT VELOCITY JOINT HOUSING

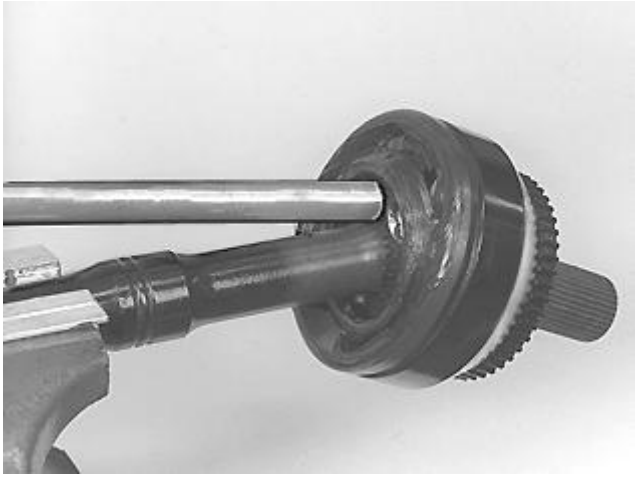

Fig. 254: Identifying Brass Drift & Constant Velocity Joint Housing

Courtesy of VOLVO CARS CORPORATION

Tap off the constant velocity joint housing.

Use a brass drift.

NOTE: Only tap the inner ring. Take care not to damage the bearing race or outer ring.

CLEANING THE CONSTANT VELOCITY JOINT HOUSING

The joint can be cleaned when assembled. See **CLEANING THE CONSTANT VELOCITY JOINT HOUSING - CONTINUED**.

If the joint needs to be disassembled, see **CLEANING / CHECKING THE OUTER CONSTANT VELOCITY JOINT**.

CLEANING THE CONSTANT VELOCITY JOINT HOUSING - CONTINUED

Fig. 255: Clamp From Inner Gaiter
Courtesy of VOLVO CARS CORPORATION

Thoroughly clean off any dirt and grease from the joint. Blow the joint dry.

For greasing/assembling, see **ASSEMBLY**.

NOTE: Inner bellows may not be serviced.

For greasing/assembling, see **ASSEMBLY**.

CLEANING / CHECKING THE OUTER CONSTANT VELOCITY JOINT

MARKING THE CONSTANT VELOCITY JOINT

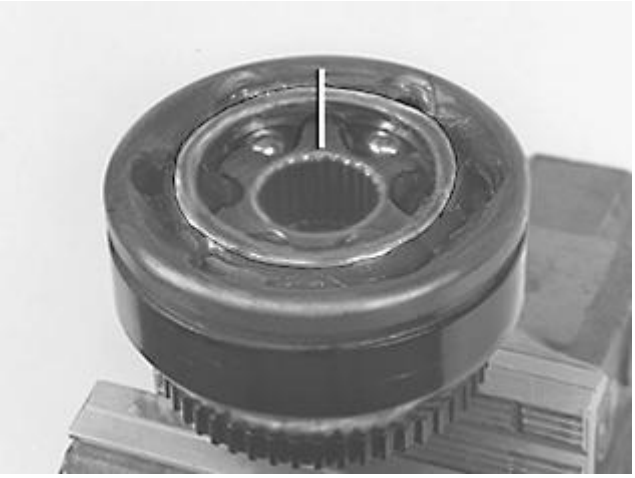

Fig. 256: Identifying Mark On Outer Ring Of Outer Constant Velocity Joint, Ball Holder And Inner Ring
Courtesy of VOLVO CARS CORPORATION

Mark the outer ring, bearing race and inner ring on the outer constant velocity joint.

Mark components in relation to each other.

Use an electric scriber.

REMOVING THE CONSTANT VELOCITY JOINT BALL BEARINGS

Fig. 257: Identifying Inner Joint Ring And Ball Holder
Courtesy of VOLVO CARS CORPORATION

Remove the ball bearings.

Turn the constant velocity joint inner ring and bearing race. Remove the ball bearings clockwise one by one.

Use the marking as the starting point when removing. See **MARKING THE CONSTANT VELOCITY JOINT**.

Place the ball bearings in order so that they can be reinstalled in the same positions.

REMOVING THE BEARING RACE AND INNER RING

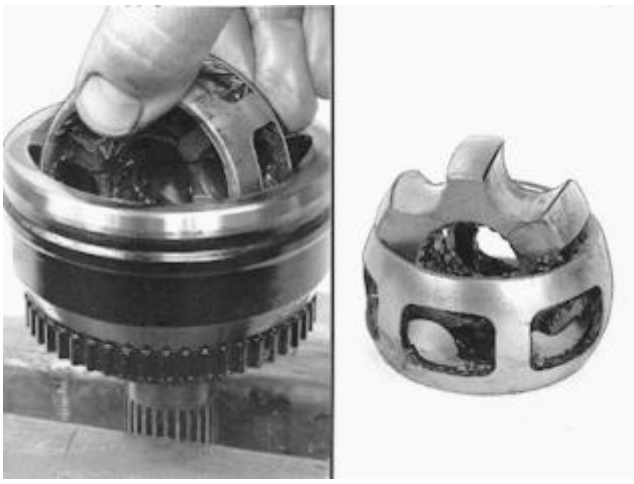

Fig. 258: Identifying Ball Holder And Inner Ring From Shaft
Courtesy of VOLVO CARS CORPORATION

Remove the bearing race and the inner ring from the shaft.

Turn the inner ring 90 degrees in relation to the bearing race.

Remove the inner ring.

CLEANING CONSTANT VELOCITY JOINT COMPONENTS

Fig. 259: Constant Velocity Joint Components
Courtesy of VOLVO CARS CORPORATION

Wash the constant velocity joint components thoroughly.

NOTE: Replace the drive shaft assembly if any component has cracking or wear

damage. Scratches and minor pitting of the bearing races are permitted.

INSTALLING THE INNER RING

Fig. 260: Identifying Inner Ring & Ball Holder
Courtesy of VOLVO CARS CORPORATION

Install the inner ring in the bearing race.

Line up the markings with each other. Install a ball bearing.

NOTE: Note the position of the ball bearings.

Turn the inner ring and the bearing race.

Install the ball bearings one by one in the same positions as before. See **REMOVING THE CONSTANT VELOCITY JOINT BALL BEARINGS**.

ASSEMBLY

LUBRICATING THE CONSTANT VELOCITY JOINT

Fig. 261: Identifying Constant Velocity Joint
Courtesy of VOLVO CARS CORPORATION

Lubricate the constant velocity joint thoroughly.

Apply grease behind the joint via the shaft hole in the inner ring.

Use half of the grease packet. The remainder will be used later in the boot. See **ASSEMBLING THE DRIVE SHAFT BOOT**.

INSTALLING THE SNAP RING

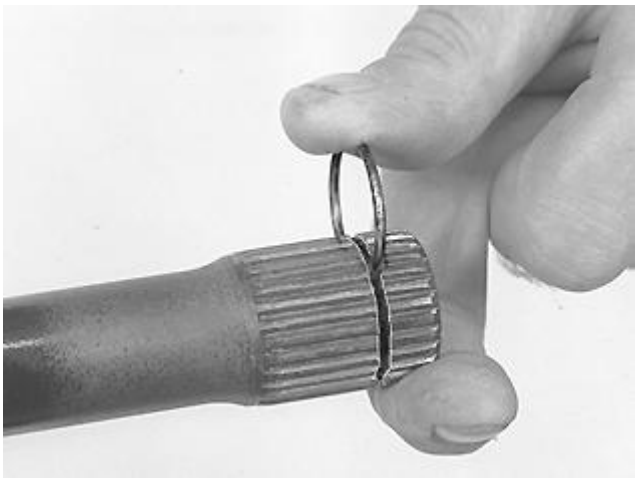

Fig. 262: Installing New Lock Ring
Courtesy of VOLVO CARS CORPORATION

Replace the snap ring.

Install the new snap ring included in the boot kit.

INSTALLING BOOTS AND THE CONSTANT VELOCITY JOINT

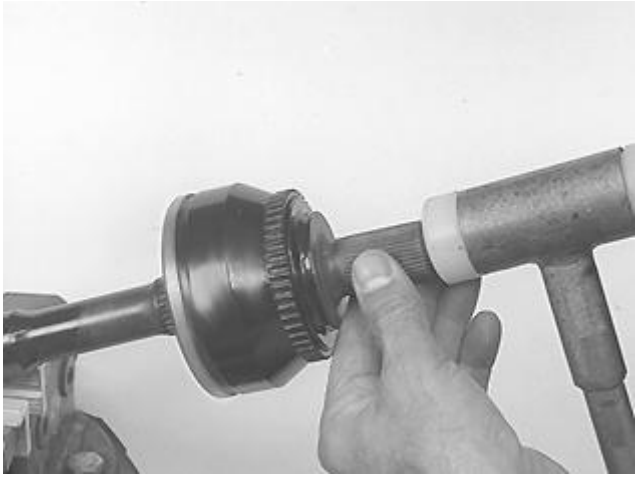

Fig. 263: Installing New Gaiters On Drive Shaft
Courtesy of VOLVO CARS CORPORATION

Install:

- the new boot(s) on the drive shaft
- the constant velocity joint on the drive shaft.

Ensure that inner ring is straight in the constant velocity joint.

Tap on the constant velocity joint. Use a rubber mallet.

Check that the snap ring is seated in its groove. Do this by measuring the distance. See **CHECKING THE MEASUREMENTS**.

ASSEMBLING THE DRIVE SHAFT BOOT

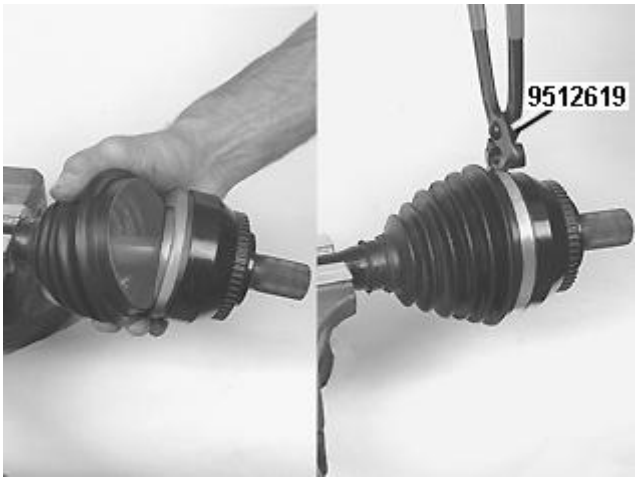

Fig. 264: Applying Grease In Boot
Courtesy of VOLVO CARS CORPORATION

Apply grease in the boot.

Apply the remaining grease from, see **LUBRICATING THE CONSTANT VELOCITY JOINT**.

NOTE: Ensure that there is no grease on the mating surfaces between the boot and the constant velocity joint and the shaft.

Remove excess grease. Use methylated spirit.

Ensure that the boot is in position on the constant velocity joint housing.

Install a new clamp. Use see **9512619** .

VENTING THE BOOT

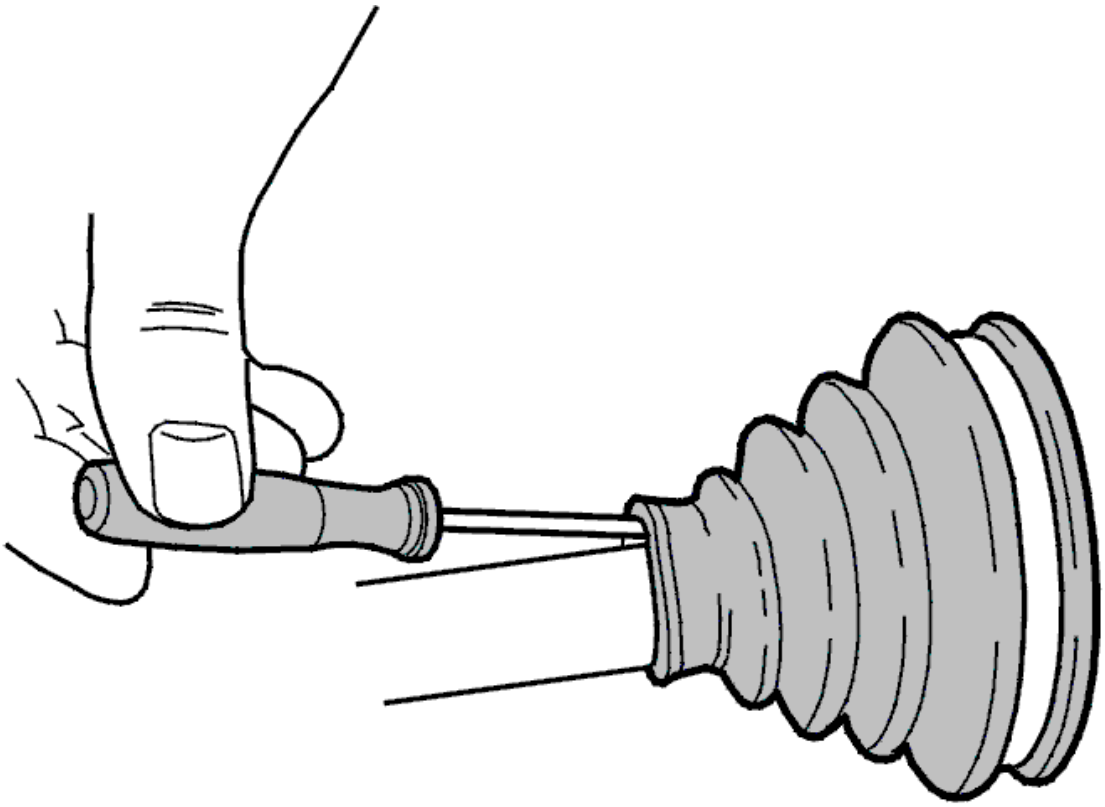

Fig. 265: Inserting Screwdriver Between Drive Shaft And Gaiter
Courtesy of VOLVO CARS CORPORATION

Venting is carried out to remove any over pressure in the boot. Use a rounded screwdriver.

Carefully insert the screwdriver between the drive shaft and boot. Ensure that the boot is in position on the drive shaft.

Ensure that the boot is aligned against the inner rib on the drive shaft.

Install a new clamp. Use see **9512619** .

Install the drive shafts

For the left-hand side , see **DRIVE SHAFT LEFT, REPLACING**.

For the right-hand side , see **DRIVE SHAFT RIGHT, REPLACING**.

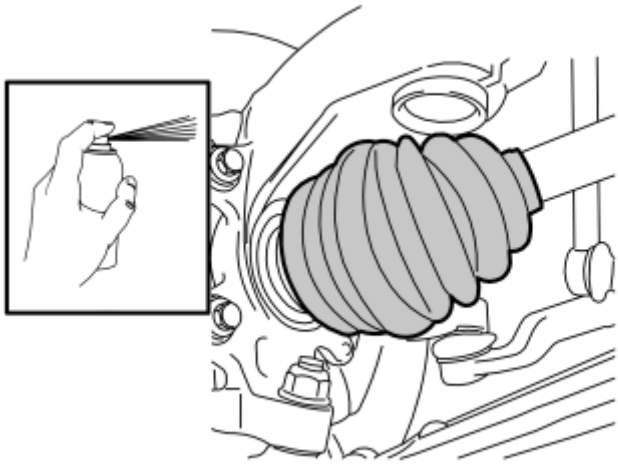

Fig. 266: Spraying Wax On Outer Gaiter
Courtesy of VOLVO CARS CORPORATION

Spray wax, part number 30787812, on the outer gaiter. After installing drive shaft in vehicle, turn the wheel and check, and improve if needed, the wax protection on the gaiter.

DRIVE SHAFT LEFT, REPLACING

see **DRIVE SHAFT LEFT, REPLACING**

DRIVE SHAFT REAR, REPLACING

Special tools:

see **9995659**

see **9985972**

see **9997060**

NOTE: **As the illustrations in this service information are used for different model years and / or models, some variation may occur. However, the essential information is always correct.**

WARNING: **Do not use magnets or magnetic tools close to tooth wheels, drive shafts or wheel hubs. A magnetized tooth wheel will lose its function and**

generate incorrect signals resulting in fault codes.

NOTE: Any magnetized tooth wheel, drive shaft or wheel hub must be replaced with a new component.

PREPARATORY WORK

Raise the vehicle. See: **JACKING POINTS, BODY** .

Remove the wheel.

Push the suspension up to the specified measurement to detach the screwed joint between the control arms/struts. See **TENSIONER 999 5659, USER INSTRUCTIONS** .

REMOVAL

REMOVING THE WHEEL SPINDLE

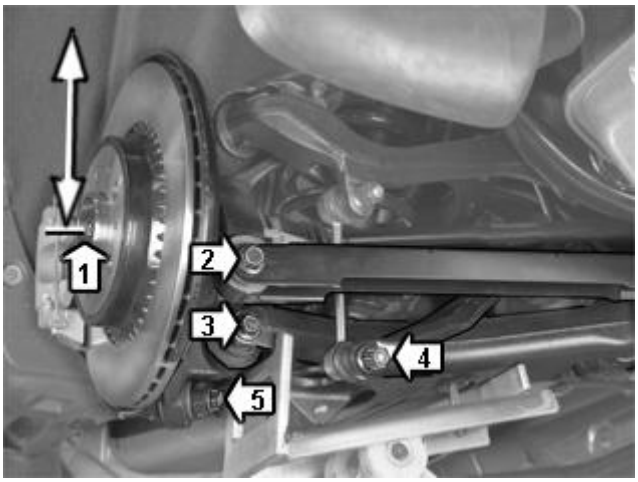

Fig. 267: Identifying Rear Suspension Assembly, Nuts & Screws
Courtesy of VOLVO CARS CORPORATION

Push up the rear end with: see **9995659** to a measurement of **500 mm** between the fender's edge and the center of wheel hub.

Remove:

- the handbrake cable from the mounting in the track rod
- the screw for the drive shaft - wheel hub (1)
- the screw for the track rod mounting (2)
- the screw for the control arm mounting (3)
- the nut for the anti-roll bar link mounting (4). Counterhold using a Torx spanner so that the boot does not rotate

- the screw for the lateral link mounting (5).

REMOVING THE DRIVE SHAFT FROM THE WHEEL HUB

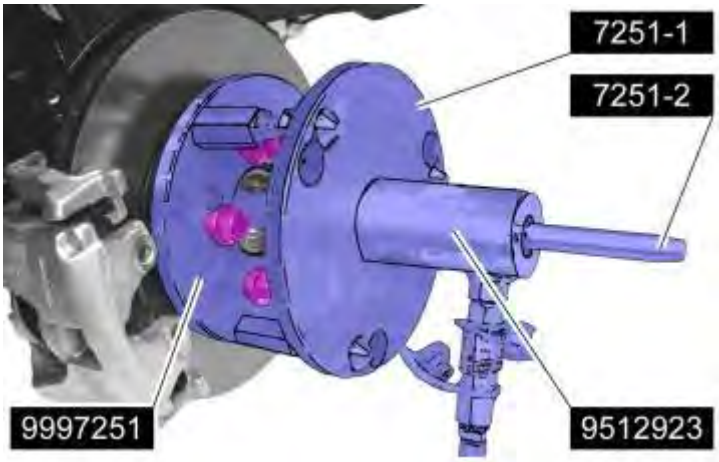

Fig. 268: Driveshaft In Hub
Courtesy of VOLVO CARS CORPORATION

see **9997251** , see **9512923**

Fig. 269: Identifying Wheel Spindle & Mobile Jack Attachment
Courtesy of VOLVO CARS CORPORATION

Place: see **9985972** under the wheel spindle and raise carefully.

NOTE: Pull out the drive shaft from the wheel hub whilst raising the stub axle. Angle the shaft past the stub axle.

Release the tensioner so that the control arm hangs in the shock absorber.

REMOVING LEFT-HAND DRIVE SHAFT FROM FINAL DRIVE HOUSING

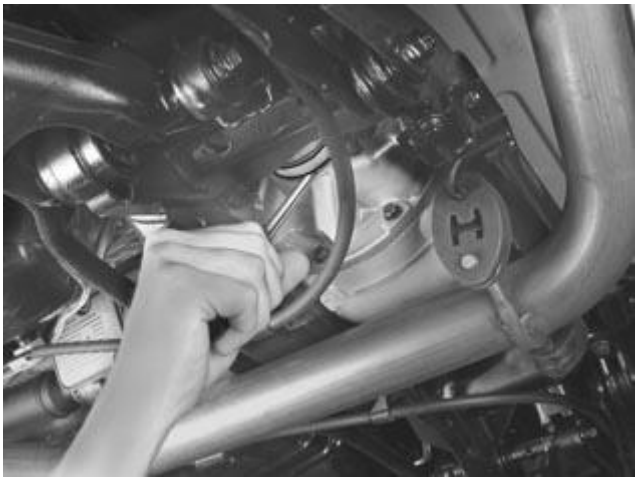

Fig. 270: Identifying Screwdriver Tip Positioned Between Constant Velocity Joint Housing & Final Drive Housing
Courtesy of VOLVO CARS CORPORATION

CAUTION: Do not damage the drive shaft seal.

Use a large screwdriver. Position the screwdriver tip between the constant velocity joint housing and the final drive housing.

Knock so that the drive shaft snap releases. Pull out the drive shaft.

Install: see **9997060** .

REMOVING RIGHT-HAND DRIVE SHAFT FROM FINAL DRIVE HOUSING

Fig. 271: Identifying Right-Hand Drive Shaft & Final Drive Housing Removal
Courtesy of VOLVO CARS CORPORATION

Use see **9997160** . Drive out the shaft with a distinct blow.

NOTE: The tool is used as a wedge.

Install: see **9997060** .

INSTALLATION

NOTE: For tightening torques, see: TIGHTENING TORQUE.

INSTALLING THE DRIVE SHAFT IN THE FINAL DRIVE HOUSING

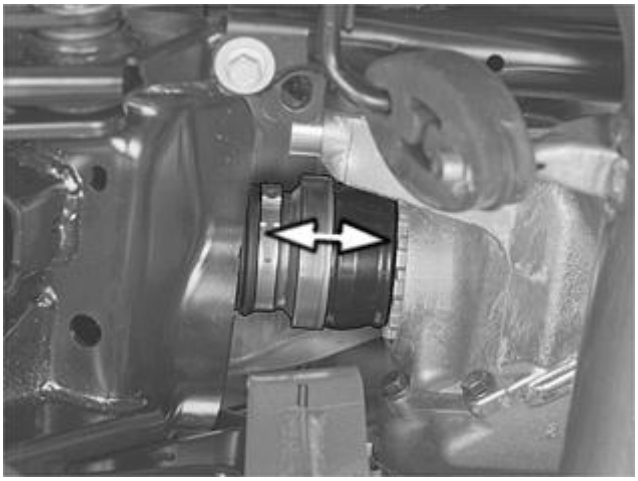

Fig. 272: Identifying Drive Shaft Mating Surface, Snap Ring & Final Drive
Courtesy of VOLVO CARS CORPORATION

NOTE: Always replace the drive shaft snap ring with a new one.

Lubricate the mating surfaces of the drive shaft. Use final drive oil. See **LUBRICANT TRANSMISSION**

Securely press the drive shaft into the final drive housing. Check that the snap ring is in the groove in the final drive by pulling the constant velocity joint on the drive shaft.

INSTALLING THE DRIVE SHAFT ON THE WHEEL HUB

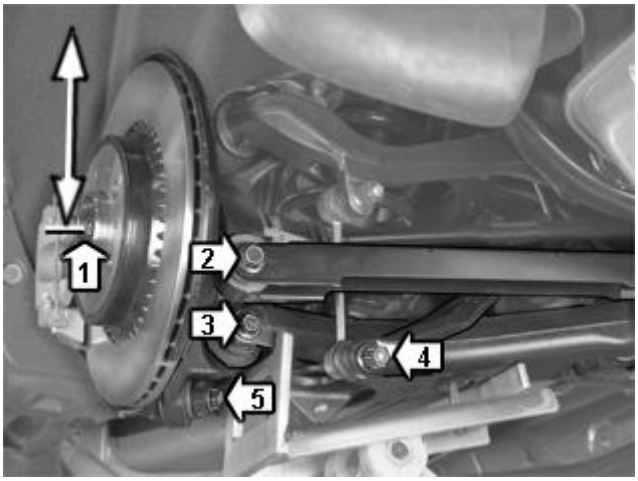

Fig. 273: Identifying Rear Suspension Assembly, Nuts & Screws
Courtesy of VOLVO CARS CORPORATION

Lubricate the drive shaft splines using a small amount of oil.

Position the drive shaft in the wheel hub. Carefully lower the mobile jack.

Remove the mobile jack.

Press up the control arm and tensioner to the previous specified measurement so that the screws can be installed.

NOTE: After installing the screws, press see 9995659 up to normal position, see: TENSIONER 999 5659, USER INSTRUCTIONS , before tightening the screws

Install:

- 1 M12 screw for the lateral link mounting (5). Tighten
- 1 M12 nut for the lateral link mounting (4). Tighten. Counterhold using a Torx spanner so that the boot does not rotate
- 1 M12 screw for the lateral link mounting (3). Tighten
- 1 M12 screw for the track rod mounting (2). Tighten
- 1 M10 screw to the drive shaft - wheel hub (1). Tighten
- the handbrake cable and mounting for the track rod.

Remove the tensioner.

INSTALLING WHEELS

Install the wheel. See: **INSTALLING WHEELS** .

DRIVE SHAFT RIGHT, REPLACING

see **DRIVE SHAFT RIGHT, REPLACING**

SEAL CV JOINT HOUSING, REPLACING

REMOVAL

PREPARATORY WORK

Remove the right-hand drive shaft. See: **DRIVE SHAFT RIGHT, REPLACING**. Remove the left-hand drive shaft. See: **DRIVE SHAFT LEFT, REPLACING**.

REMOVING THE SEALING RING FOR THE CV JOINT HOUSING FROM THE STUB AXLE

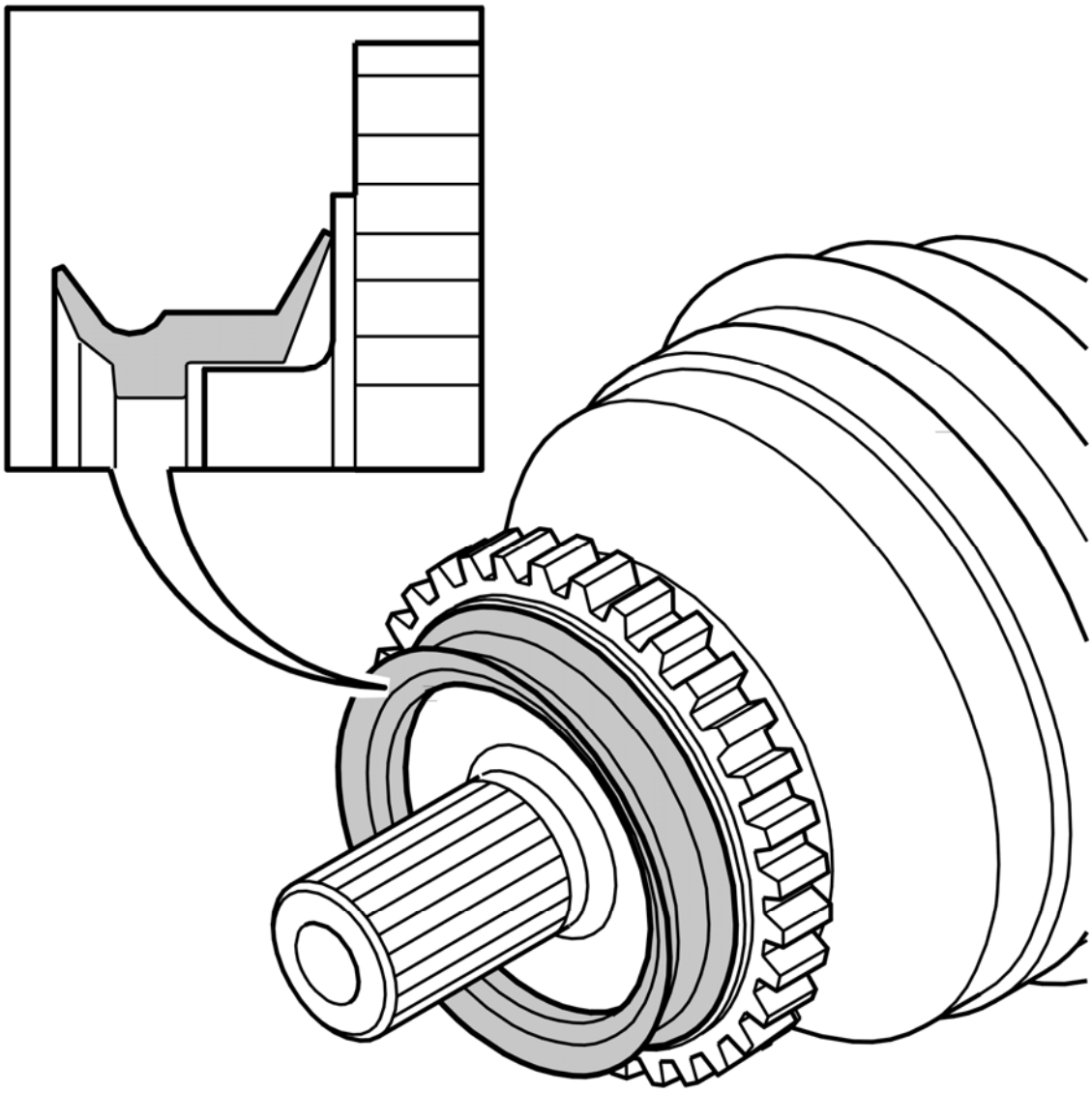

Fig. 274: Identifying Rubber Seal & Constant Velocity Joint
Courtesy of VOLVO CARS CORPORATION

Carefully remove the sealing ring.

NOTE: The sealing ring will be used again during installation.

INSTALLATION

INSTALLING THE SEALING RING FOR THE CV JOINT HOUSING ON THE STUB AXLE

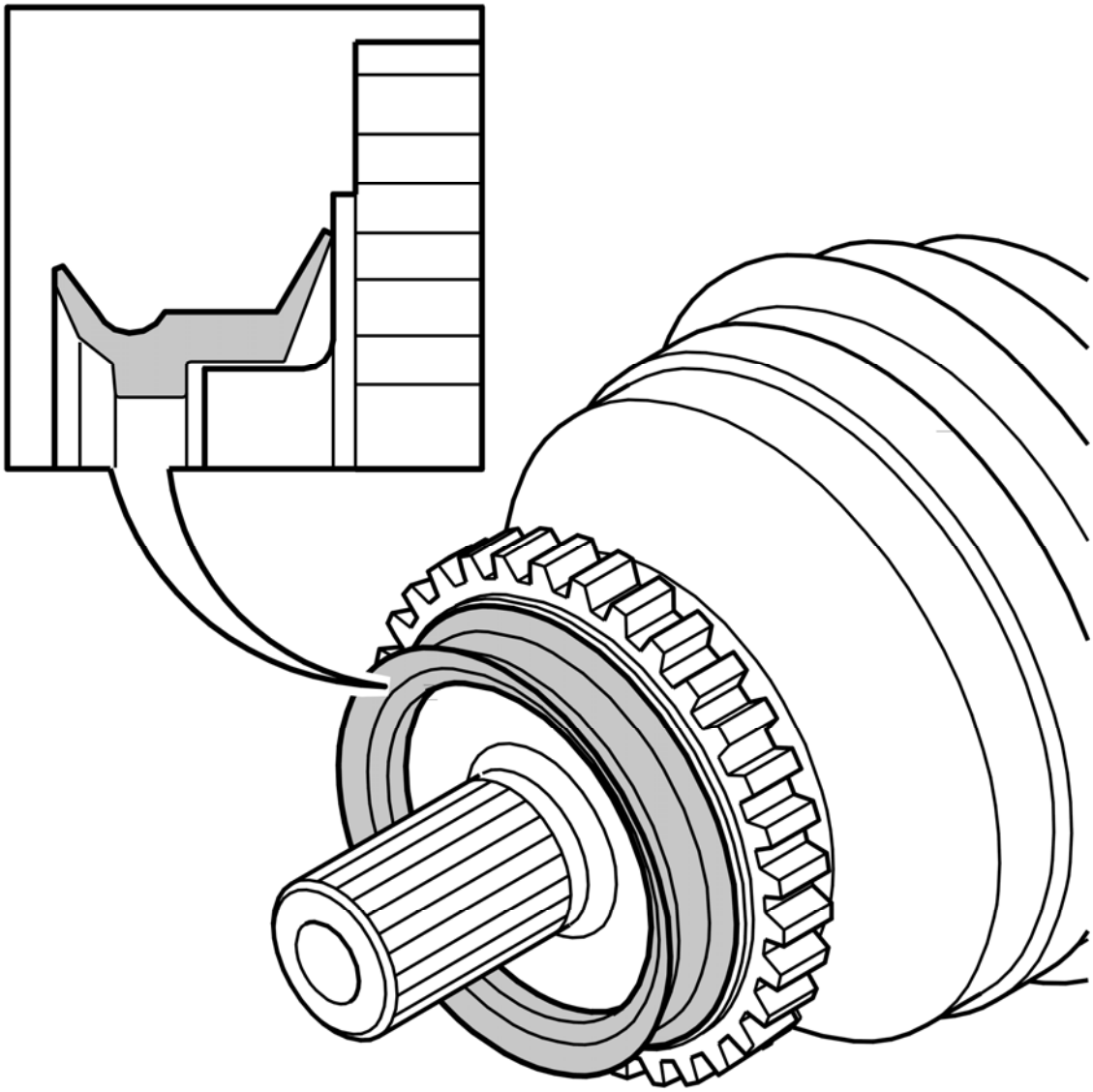

Fig. 275: Identifying Rubber Seal & Constant Velocity Joint
Courtesy of VOLVO CARS CORPORATION

NOTE: Replace the sealing ring if it is damaged or worn.

Clean around the constant velocity joint before installing the sealing ring.

Carefully install the sealing ring. Ensure that the sealing ring is correctly positioned on the drive shaft.

FINISHING

Install the right-hand drive shaft. See: **DRIVE SHAFT RIGHT, REPLACING**. Install the left-hand drive shaft. See: **DRIVE SHAFT LEFT, REPLACING**.

SEALING RING DRIVE SHAFT/DIFFERENTIAL, REPLACING

Special tools:

see **9995768**

see **9995769**

see **9995770**

NOTE: **As the illustrations in this service information are used for different model years and / or models, some variation may occur. However, the essential information is always correct.**

REMOVAL

PREPARATIONS

Remove the left drive shaft according to: **DRIVE SHAFT LEFT, REPLACING**.

REMOVING THE SEAL RING

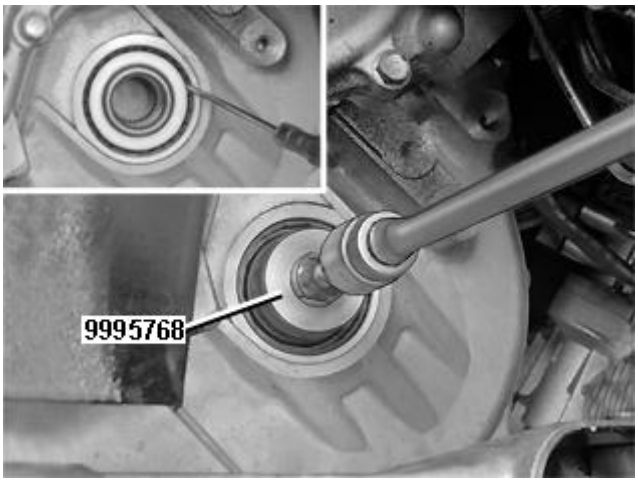

Fig. 276: Cap Nut For Extractor 999 5768 Installed
Courtesy of VOLVO CARS CORPORATION

Remove:

- the metal ring. Use a small screwdriver
- the sealing ring. Use: see **9995768** .

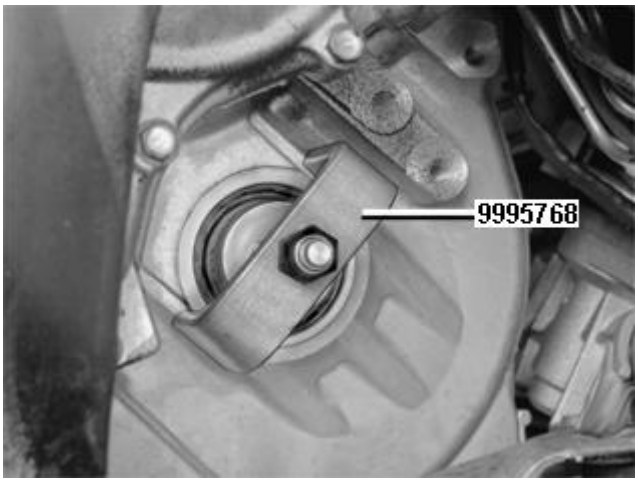

Fig. 277: Identifying Seal & Extractor 999 5768
Courtesy of VOLVO CARS CORPORATION

NOTE: Check that there is no residue of the old seal.

INSTALLATION

INSTALLING THE SEAL RING

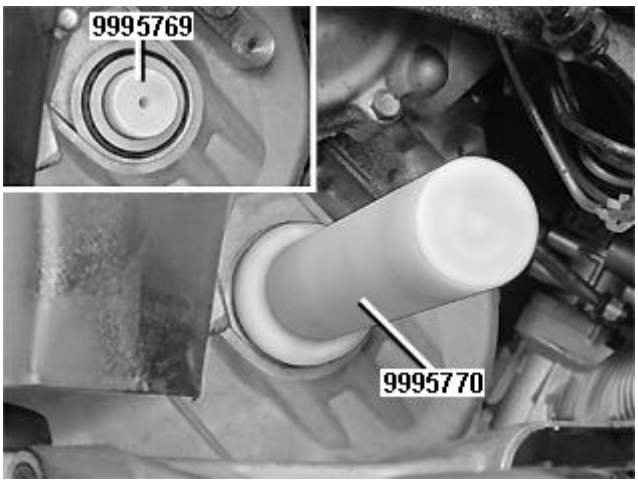

Fig. 278: Identifying Locating Pin 999 5769 And Drift 999 5770
Courtesy of VOLVO CARS CORPORATION

Carefully install the sealing ring. Use: see **9995769** and see **9995770** .

Ensure that the sealing ring is correctly positioned on the drive shaft.

FINISHING

Install the left-hand drive shaft. See: **DRIVE SHAFT LEFT, REPLACING**.

TRANSFER CASE CONNECTING SLEEVE SEALS, REPLACING

Special tools:

see **9995777**

see **9995575**

see **9995576**

see **9992615**

see **9997181**

see **9997182**

NOTE: The illustrations in this service information are used for different model years and/or models. Some variation may occur. However, the essential information in the illustrations is always correct.

REMOVAL

REMOVING BEVEL GEAR

Remove the bevel gear according to: **BEVEL GEAR, REPLACING** .

Fig. 279: Identifying Removal Of Circlip From Connecting Socket
Courtesy of VOLVO CARS CORPORATION

ACTION FOR WORN SPLINES IN SLEEVE

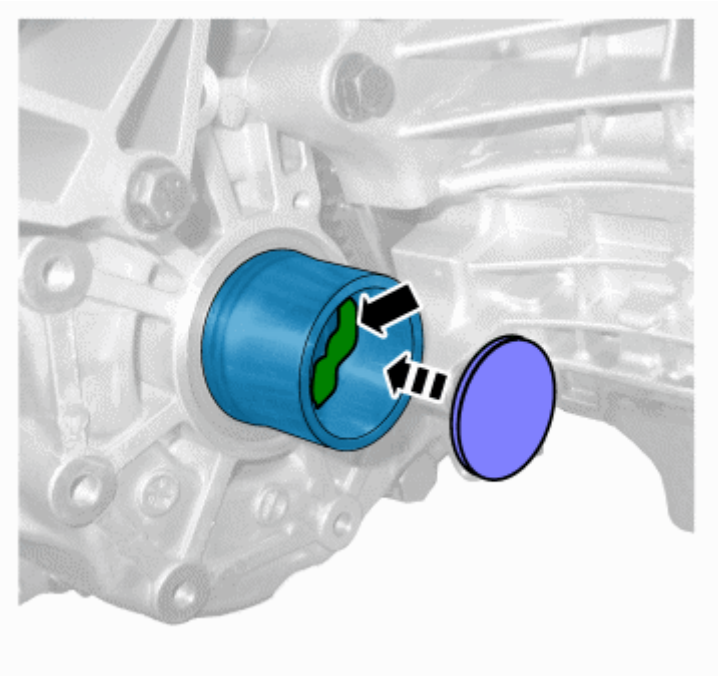

Fig. 280: Identifying Pressing Cardboard Disc Against The Seal
Courtesy of VOLVO CARS CORPORATION

Cut a O 40 mm piece of cardboard and use as protection to prevent grinding chips from ending up in the transmission. Apply a thick bead of grease or vaseline on the seal in the sleeve. Press the piece of cardboard against the seal.

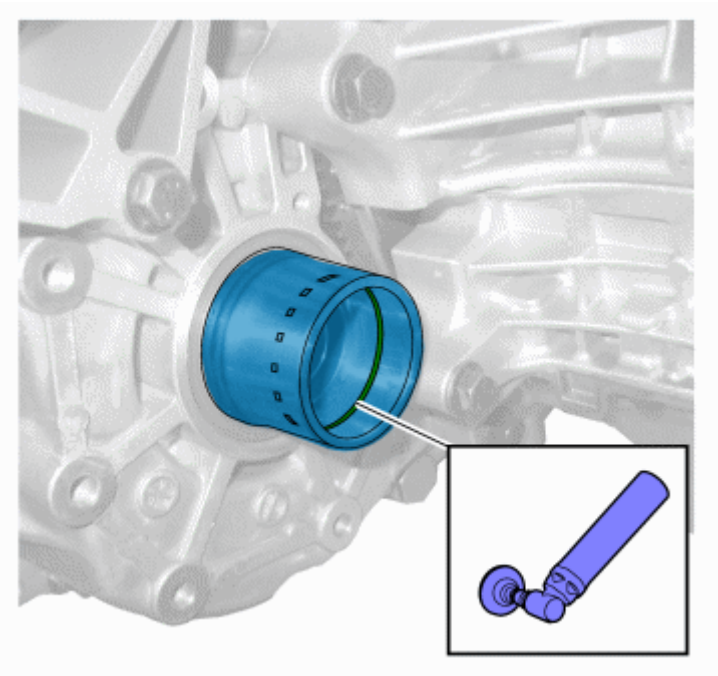

Fig. 281: Identifying Grinding A Groove Inside Of The Sleeve
Courtesy of VOLVO CARS CORPORATION

Grind a groove in the inside of the sleeve to enable the expander see **9995777** to get a hold.

The sleeve can also be heated with a hot-air gun or induction heater.

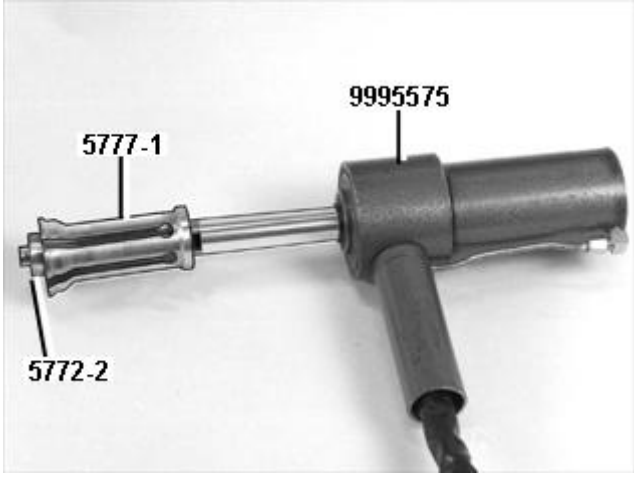

Fig. 282: Identifying Expander 999 5777, Puller Rod 999 5777 And Extractor 999 5777
Courtesy of VOLVO CARS CORPORATION

Install: see **9995777** and see **9995777** to see **9995575** .

see **9995575** used with: see **9995576** (foot operated).

Alternatively: see **9992615** , which consists of puller cylinder and a compressed air powered hydraulic pump.

Fig. 283: Identifying Sleeve 999 5777
Courtesy of VOLVO CARS CORPORATION

NOTE: Place a container underneath the transmission.

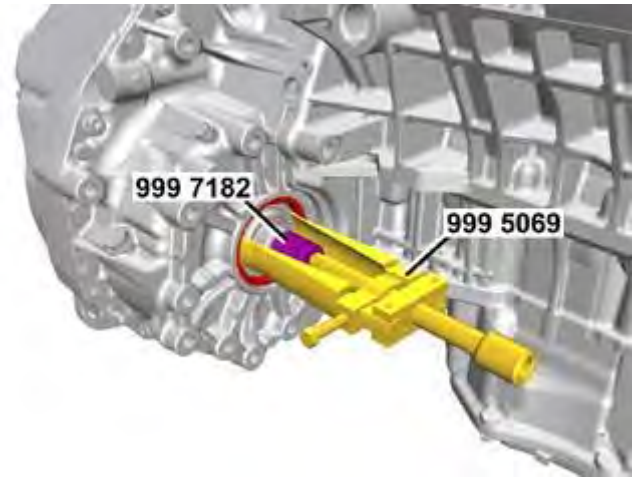

Fig. 284: Extracting Seal Using Special Tools, 999 7182 And 999 5069
Courtesy of VOLVO CARS CORPORATION

Fig. 285: Identifying Tapping Sealing Ring Out Of Socket Using Screwdriver
Courtesy of VOLVO CARS CORPORATION

INSTALLATION

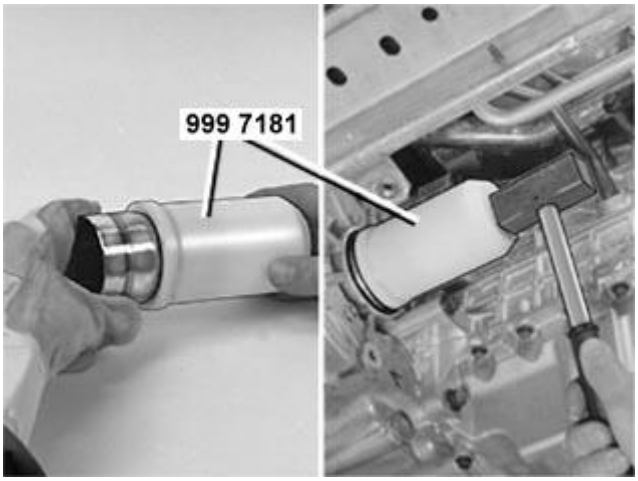

Fig. 286: Tapping Sleeve Into Differential
Courtesy of VOLVO CARS CORPORATION

Heat the sleeve in an oven to 100-120 °C and place in: see **9997181** . Install on the transmission and tap in the sleeve until it reaches the differential.

WARNING: **Use protective gloves when handling the heated sleeve.**

WARNING: **Use ear protectors**

Cool the sleeve using compressed air.

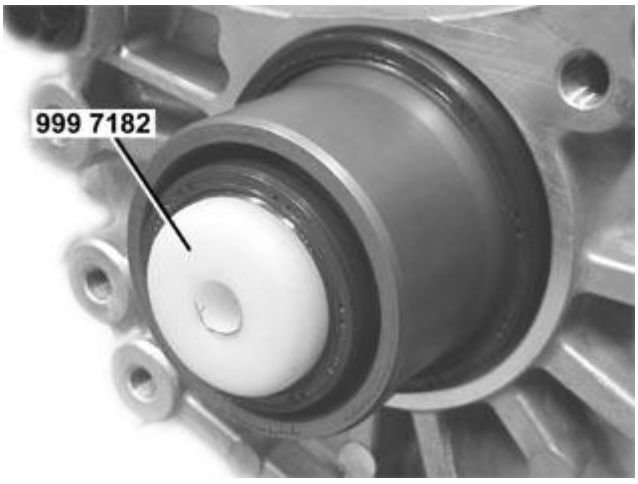

Fig. 287: Identifying Special Tool 999 7182
Courtesy of VOLVO CARS CORPORATION

Install: see **9997182** .

Carefully install both sealing rings.

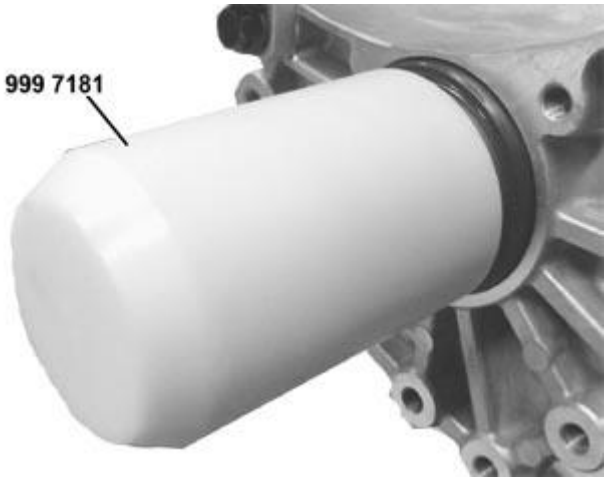

Fig. 288: Identifying Special Tool 999 7181 To Install Both Seals
Courtesy of VOLVO CARS CORPORATION

Use: see **9997181** and tap in both the seals.

Fig. 289: Identifying Removal Of Circlip From Connecting Socket
Courtesy of VOLVO CARS CORPORATION

INSTALLING THE BEVEL GEAR

Fit the bevel gear according to: **BEVEL GEAR, REPLACING**

CHECKING THE OIL LEVEL

Check the fluid level in the transmission. See: **OIL LEVEL, CHECKING** .

DRIVESHAFT CONSTANT VELOCITY JOINT (B6324S, TF-80SC; 2007-2010)

BOOT CV JOINT HOUSING, INNER

Special tools:

see **9995519**

see **9512619**

see **9997161**

REMOVAL

CAUTION: The constant velocity joint housing must not be disassembled.

REMOVING DRIVE SHAFTS

Remove drive shafts: **DRIVE SHAFT LEFT, REPLACING** and **DRIVE SHAFT RIGHT, REPLACING**.

REMOVING THE BOOT

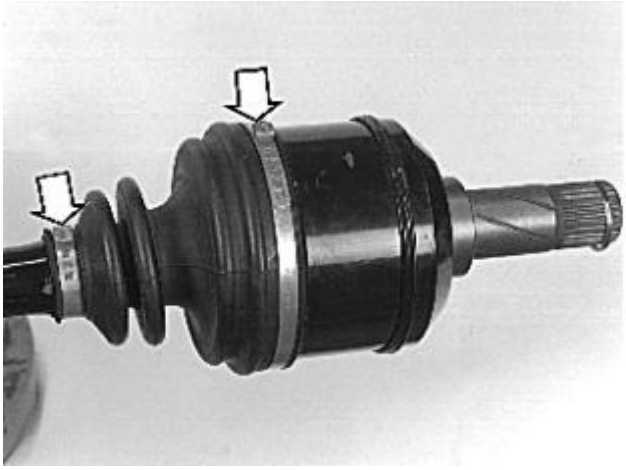

Fig. 290: Identifying Clamps On Boot
Courtesy of VOLVO CARS CORPORATION

Secure the drive shaft in a vise with soft jaws.

Remove:

- the clamps on the boot
- the boot.

Wipe off any grease.

MEASURING THE TRIPOD FOR THE CONSTANT VELOCITY JOINT HOUSING.

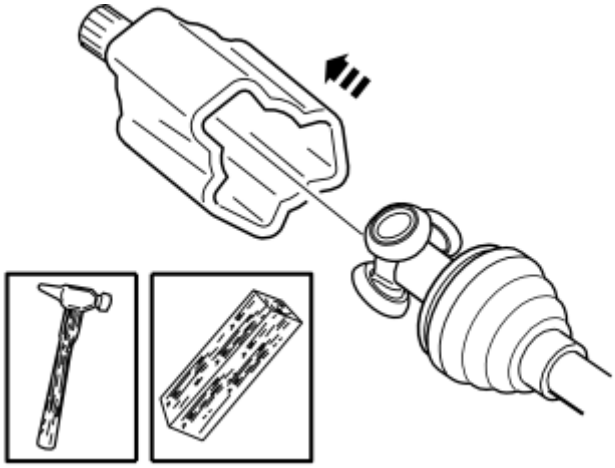

Fig. 291: Identifying Removal Of Constant Velocity Joint Housing
Courtesy of VOLVO CARS CORPORATION

Mark up the position of the tripod in relation to the constant velocity joint housing.

Remove the constant velocity joint housing by tapping the edge by the rollers so that the rollers detach, one at a time.

Use nylon or wooden shims.

REMOVING SNAP RING

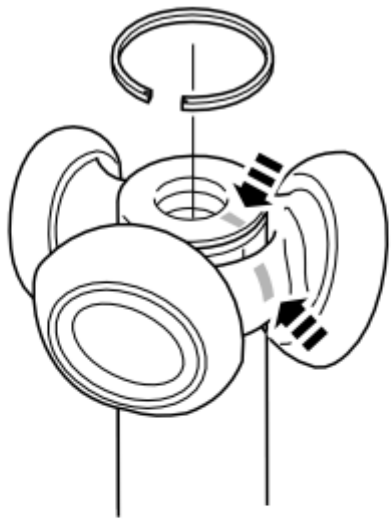

Fig. 292: Identifying Snap Ring On Constant Velocity Joint Housing
Courtesy of VOLVO CARS CORPORATION

Wipe away any grease from the constant velocity joint housing.

Remove the snap ring for the constant velocity joint housing.

NOTE: When replacing old components, mark the tripod position in relation to the drive shaft.

REMOVING THE CV JOINT HOUSING

Remove the constant velocity joint housing. Use see **9997161** .

Do not hit the rollers.

REMOVING THE BOOT ON THE OUTER CONSTANT VELOCITY JOINT HOUSING

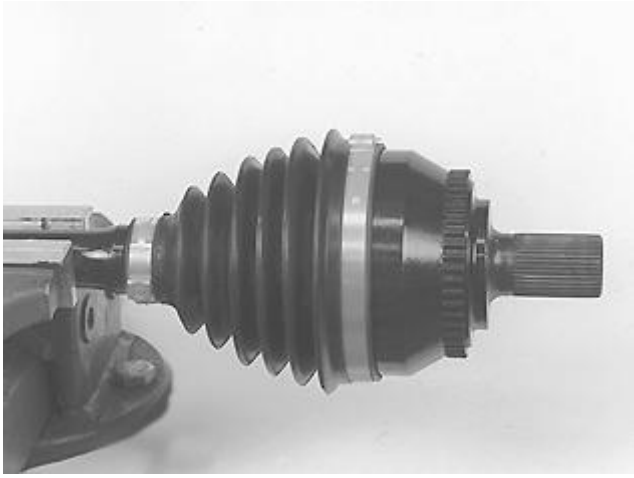

Fig. 293: Identifying Drive Shaft Held In Soft Jawed Vice
Courtesy of VOLVO CARS CORPORATION

Remove both the clamps.

Remove the boot.

Wipe off any grease.

CLEANING AND CHECKING THE OUTER JOINT

NOTE: Do not separate the outer joint.

Clean the assembled constant velocity joint and blow clean.

Check for visible damage.

Lubricate the constant velocity joint thoroughly. See **LUBRICATION TRANSMISSION** for grease quantity.

Use half the grease packaging. The remainder will be used later in the boot.

INSTALLATION

INSTALLING THE OUTER BOOT

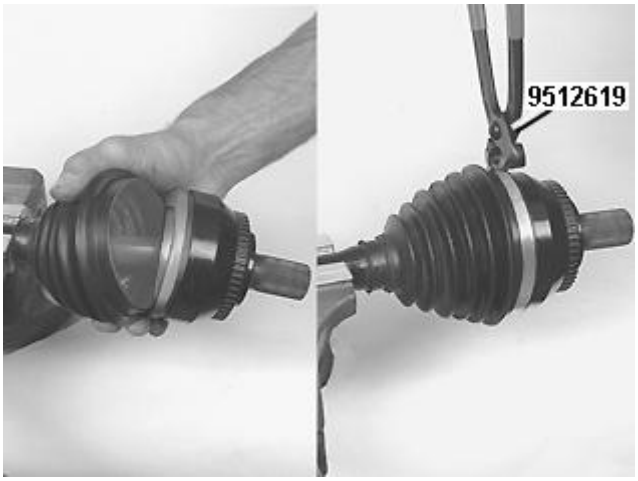

Fig. 294: Applying Grease In Boot
Courtesy of VOLVO CARS CORPORATION

NOTE: Ensure that there is no grease on the mating surfaces between the boot and the constant velocity joint housing and the drive shaft.

CAUTION: Ensure that there are no kinks in the boots when the clamps are tightened.

Apply the remaining grease to the inside of the boot.

Remove excess grease. Use isopropanol.

Ensure that the boot is in position on the constant velocity joint housing.

Install a **new** clamp. Use: see **9512619** .

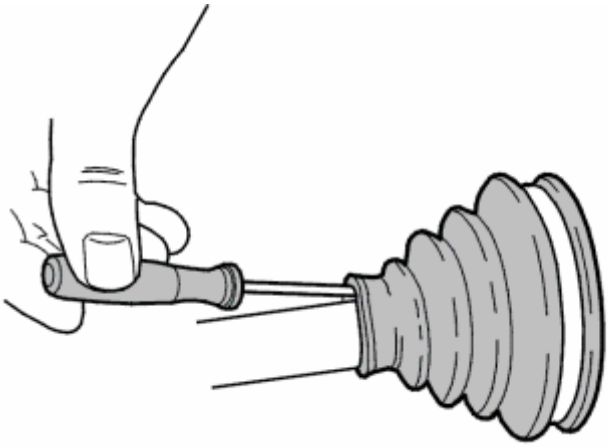

Fig. 295: Identifying Screwdriver Inserted Under Boot
Courtesy of VOLVO CARS CORPORATION

Install the inner and outer clamp. Use see **9512619** .

INSTALLING THE BOOT AND TRIPOD

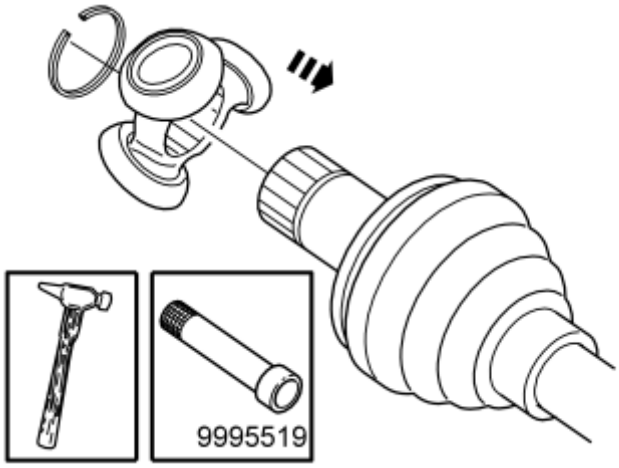

Fig. 296: Identifying Installation Of Boot And Tripod
Courtesy of VOLVO CARS CORPORATION

Install:

- a **new** boot on the drive shaft with the smaller clamp
- the tripod according to the marking with the beveled splines on the tripod towards the drive shaft.

Tap in the tripod to its stop. Use: see **9995519** .

Install the snap ring, making sure it goes into its groove.

LUBRICATING WITH GREASE

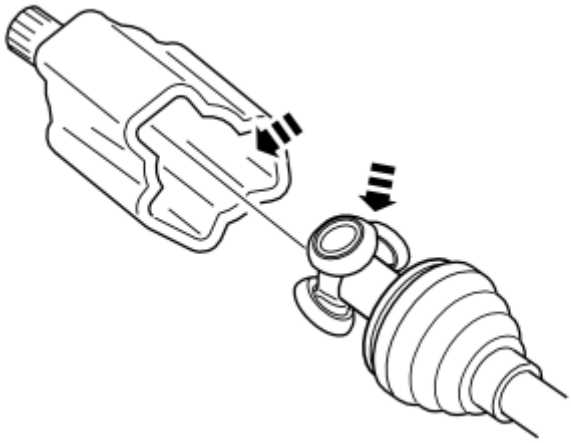

Fig. 297: Identifying Application Of Grease Inside Housing And Tripod
Courtesy of VOLVO CARS CORPORATION

Lubricate the rollers on the tripod with grease.

Apply some grease to the joint housing and the rest in the boot. See **CONSTANT VELOCITY JOINT BOOT, GREASE QUANTITY** for grease quantity.

INSTALLING THE CONSTANT VELOCITY JOINT HOUSING

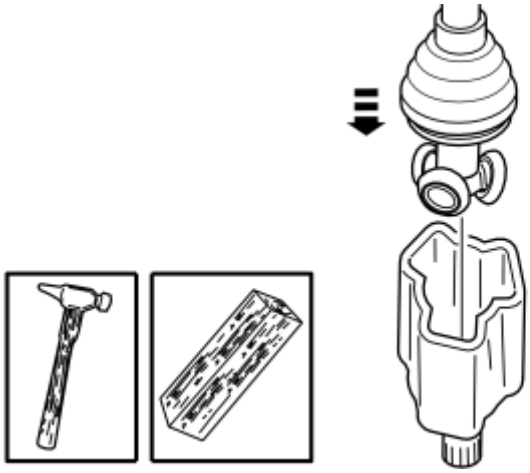

Fig. 298: Identifying Install Of Constant Velocity Joint Housing
Courtesy of VOLVO CARS CORPORATION

Install the constant velocity joint housing. Use nylon or wooden shims.

INSTALLING AND VENTING THE BOOT

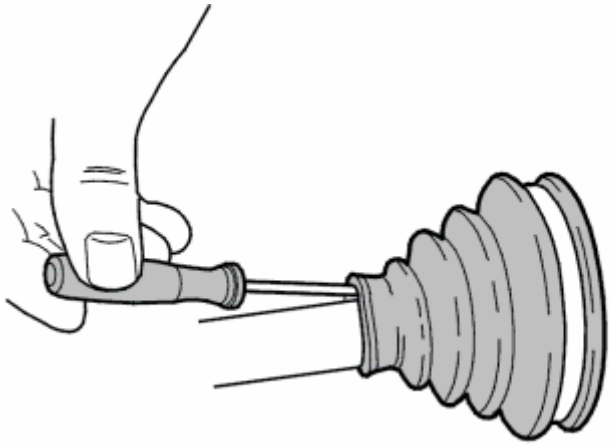

Fig. 299: Identifying Screwdriver Inserted Under Boot
Courtesy of VOLVO CARS CORPORATION

CAUTION: Ensure that there is no grease on the mating surfaces between the boot and the joint housing. Make sure that no creases form in the boot when the clamps are tightened.

Clean away excess grease with isopropanol. Slide the boot on the constant velocity joint. Ensure that the boot is in position on the constant velocity joint.

Vent the boot.

Install the cl amps.

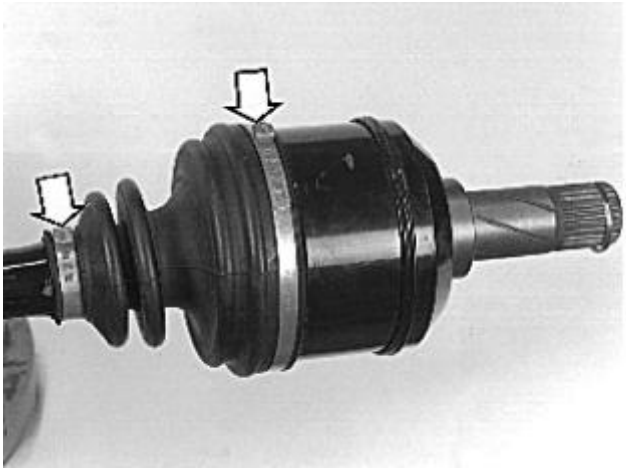

Fig. 300: Identifying Clamps On Boot
Courtesy of VOLVO CARS CORPORATION

Squeeze together the clamps. Use: 9512619.

Install a new expander ring differential.

FINISHING

INSTALLING DRIVE SHAFTS

Install the driveshafts. See **DRIVE SHAFT LEFT, REPLACING** and **DRIVE SHAFT RIGHT, REPLACING**.

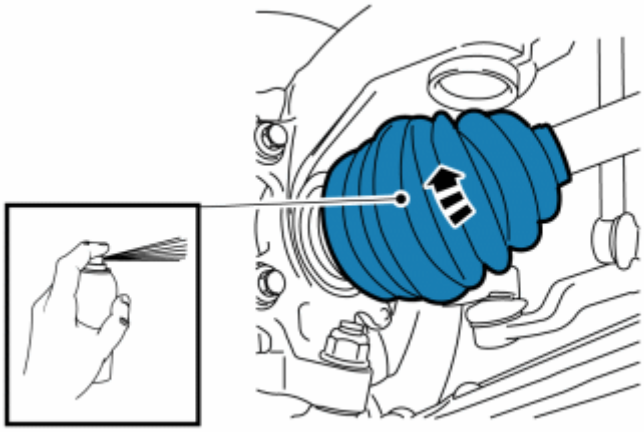

Fig. 301: Spray wax, 30787812
Courtesy of VOLVO CARS CORPORATION

Use: Spray wax, 30787812

BOOT, DRIVESHAFT CONSTANT VELOCITY JOINT, OUTER

Special tools	
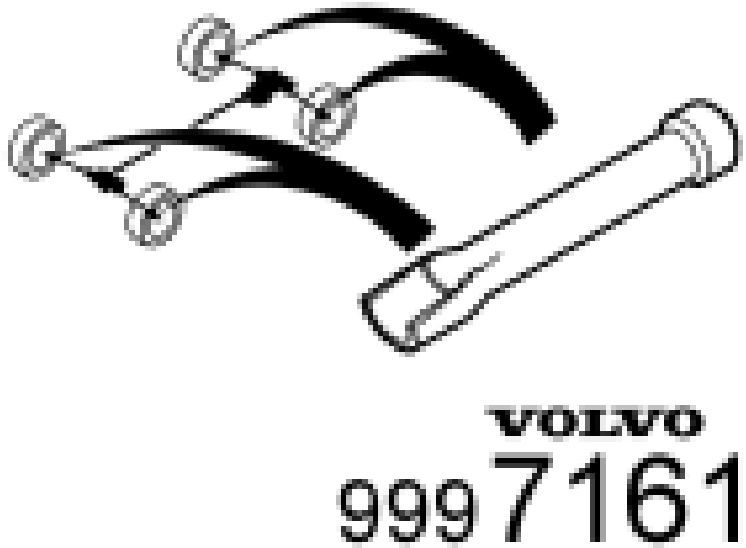	**T9997161 DRIFT** **Tool number:** T9997161 **Tool description:** DRIFT **Tool boards:**

Materials:	
Designation	**Part number**
Spray wax	30787812

Remove the following items:

- left driveshaft. See **DRIVE SHAFT LEFT, REPLACING**
- right drive shaft. See **DRIVE SHAFT RIGHT, REPLACING**

Fig. 302: Identifying Boot Retaining Rings
Courtesy of VOLVO CARS CORPORATION

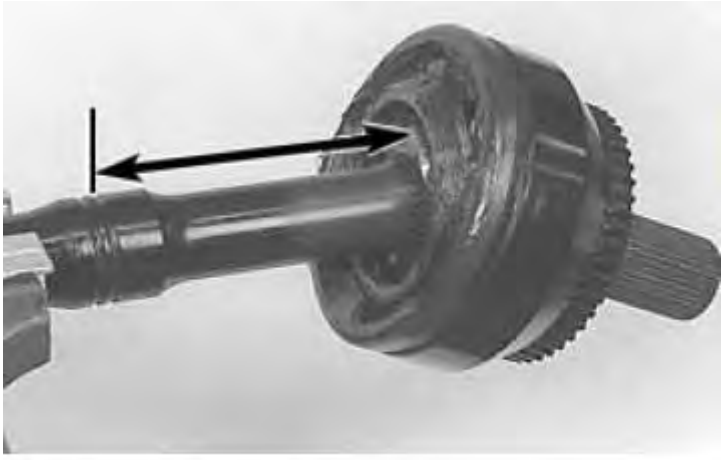

Fig. 303: Extending Bearing Hub For Removal
Courtesy of VOLVO CARS CORPORATION

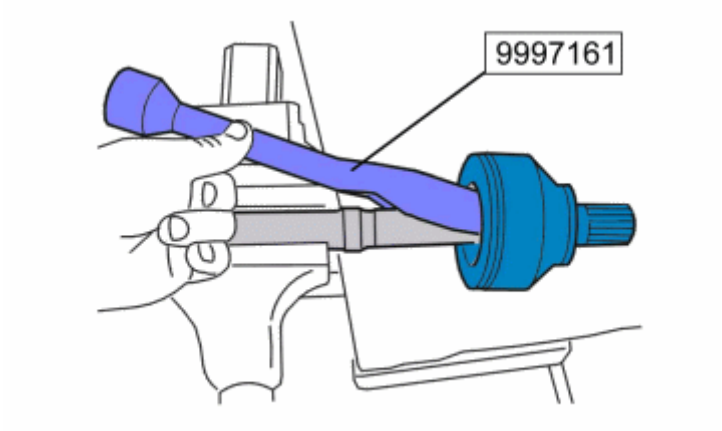

Fig. 304: Removing Axle End With Special Service Tool
Courtesy of VOLVO CARS CORPORATION

see **9997161**

Fig. 305: Identifying Bearing Balls
Courtesy of VOLVO CARS CORPORATION

Fig. 306: Removing Bearing
Courtesy of VOLVO CARS CORPORATION

Fig. 307: Cleaning Bearing Components
Courtesy of VOLVO CARS CORPORATION

REMOVING

Fig. 308: Removing Bearing
Courtesy of VOLVO CARS CORPORATION

Fig. 309: Identifying Ball Bearings
Courtesy of VOLVO CARS CORPORATION

Fig. 310: Installing Snap Ring
Courtesy of VOLVO CARS CORPORATION

Fig. 311: Installing Axle Assembly
Courtesy of VOLVO CARS CORPORATION

Apply the correct amount of grease. See **LUBRICATION TRANSMISSION**

Fig. 312: Installing Boot
Courtesy of VOLVO CARS CORPORATION

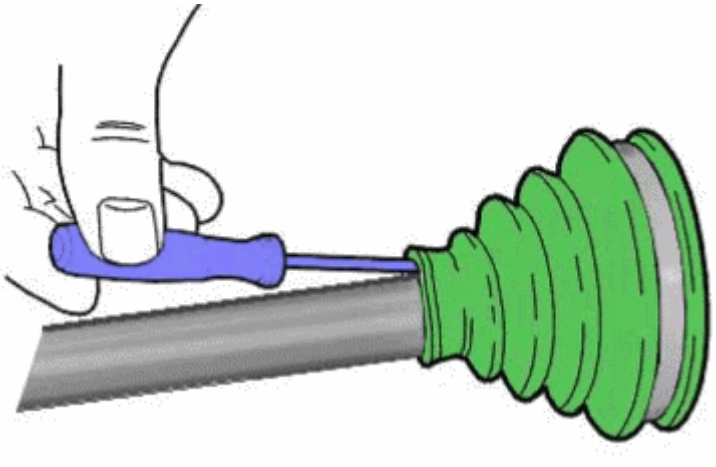

Fig. 313: Checking Boot
Courtesy of VOLVO CARS CORPORATION

Install the following items:

- left driveshaft. See **DRIVE SHAFT LEFT, REPLACING**
- right drive shaft. See **DRIVE SHAFT RIGHT, REPLACING**

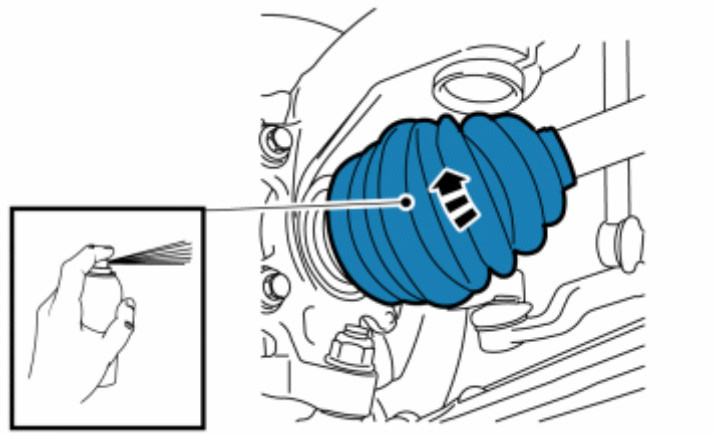

Fig. 314: Spray wax, 30787812
Courtesy of VOLVO CARS CORPORATION

Use: Spray wax, 30787812

DRIVE SHAFT LEFT, REPLACING

see **DRIVE SHAFT LEFT, REPLACING**

DRIVE SHAFT RIGHT, REPLACING

see **DRIVE SHAFT RIGHT, REPLACING**

SEALING RING, DRIVESHAFT, FRONT LEFT

REMOVING

Remove the left drive shaft. See **DRIVE SHAFT LEFT, REPLACING**.

Fig. 315: Removing O-Ring Seal
Courtesy of VOLVO CARS CORPORATION

Fig. 316: Identifying Special Service Tool
Courtesy of VOLVO CARS CORPORATION

see **9995769** .

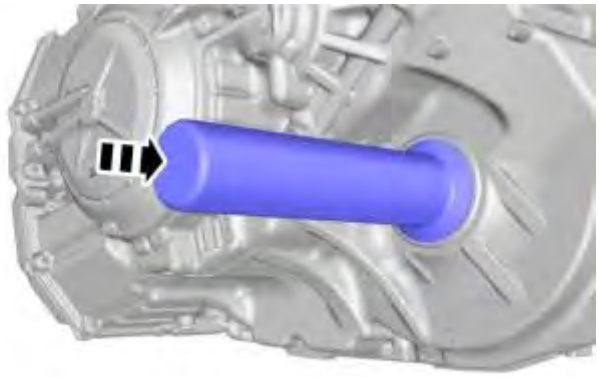

Fig. 317: 999 5769 Pilot
Courtesy of VOLVO CARS CORPORATION

see **9995770** .

Install the left drive shaft. See **DRIVE SHAFT LEFT, REPLACING**.

SEALING RING, DRIVESHAFT, FRONT RIGHT

PREPARATORY WORK

Remove the driveshaft. See **DRIVE SHAFT RIGHT, REPLACING**.

REMOVING DIFFERENTIAL SEALS

Fig. 318: Cap Nut For Extractor 999 5768 Installed
Courtesy of VOLVO CARS CORPORATION

Position a container underneath the transmission.

see **9995768** .

Lubricate the puller's guide pin with a little grease.

Use a ratchet wrench with extension and socket, press in the puller against the seal at the same time as the puller is rotated.

Tighten so that the threaded cone screws firmly into the seal.

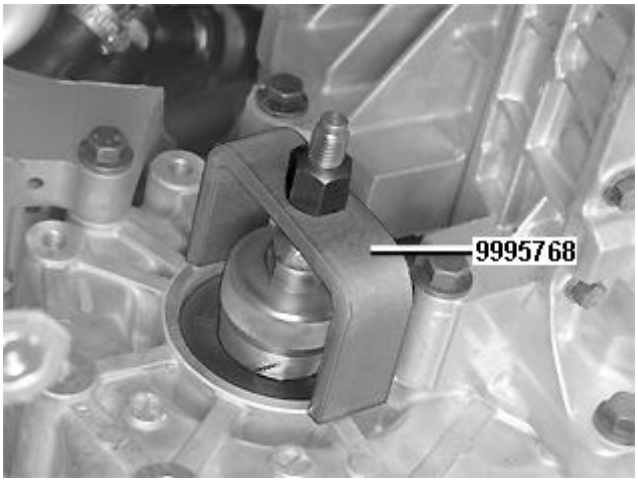

Fig. 319: Identifying Seal Removal Using Extractor 999 5768
Courtesy of VOLVO CARS CORPORATION

- Remove the puller's cap nut.
- Install the puller's bracket and nut.
- Remove the seal.
- Check that no seal residue is left.

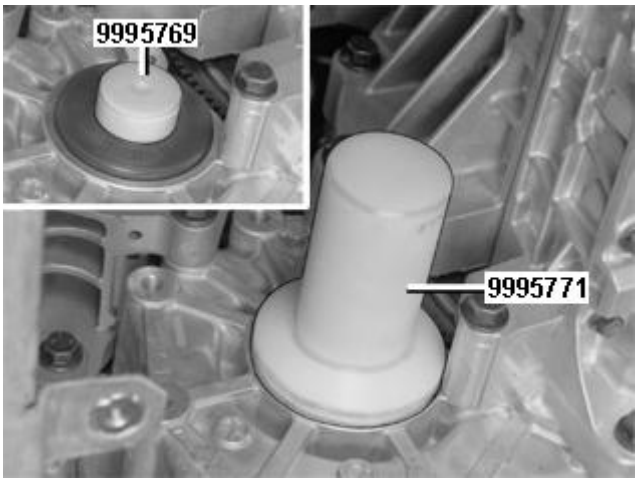

Fig. 320: Identifying Locating Pin 999 5769 And Drift 999 5771
Courtesy of VOLVO CARS CORPORATION

Lubricate the edges of the new seal using automatic transmission fluid.

see **9995769** .

Install the seal to the locating pin. see **9995771**

Tap in the seal until the drift is against the transmission.

Remove the locating pin.

Install the drive shaft. See **DRIVE SHAFT RIGHT, REPLACING**.

Check the oil level. See **OIL LEVEL, CHECKING** .

DRIVESHAFT CONSTANT VELOCITY JOINT (B6324S, TF-80SC AWD; 2007-2010)

BOOT CV JOINT HOUSING, INNER

see **BOOT CV JOINT HOUSING, INNER**

BOOT, DRIVESHAFT CONSTANT VELOCITY JOINT, OUTER

see **BOOT, DRIVESHAFT CONSTANT VELOCITY JOINT, OUTER**

DRIVE SHAFT LEFT, REPLACING

see **DRIVE SHAFT LEFT, REPLACING**

DRIVE SHAFT RIGHT, REPLACING

see **DRIVE SHAFT RIGHT, REPLACING**

SEALING RING, CONNECTING SOCKET

REMOVING BEVEL GEAR

Remove the bevel gear. See **BEVEL GEAR** .

Fig. 321: Identifying Removal Of Circlip From Connecting Socket
Courtesy of VOLVO CARS CORPORATION

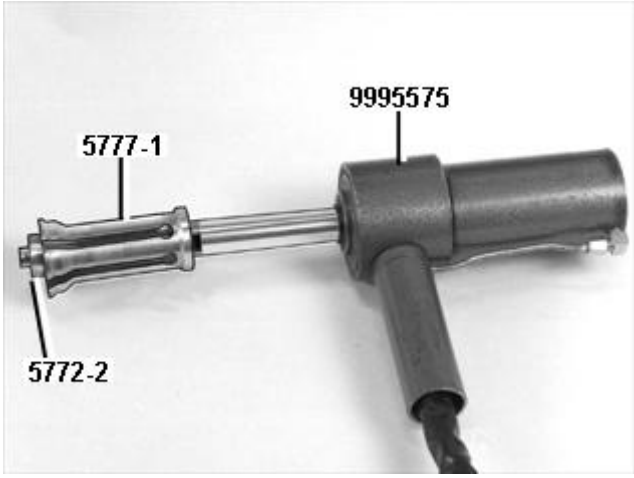

Fig. 322: Identifying Expander 999 5777, Puller Rod 999 5777 And Extractor 999 5777
Courtesy of VOLVO CARS CORPORATION

see **9995777** . see **9995777** . see **9995575** .

see **9995575** together with: see **9995576** (foot operated).

Alternatively: see **9992615** , which consists of puller cylinder and a compressed air powered hydraulic pump.

Fig. 323: Identifying Sleeve 999 5777
Courtesy of VOLVO CARS CORPORATION

NOTE: Place a container underneath the gearbox.

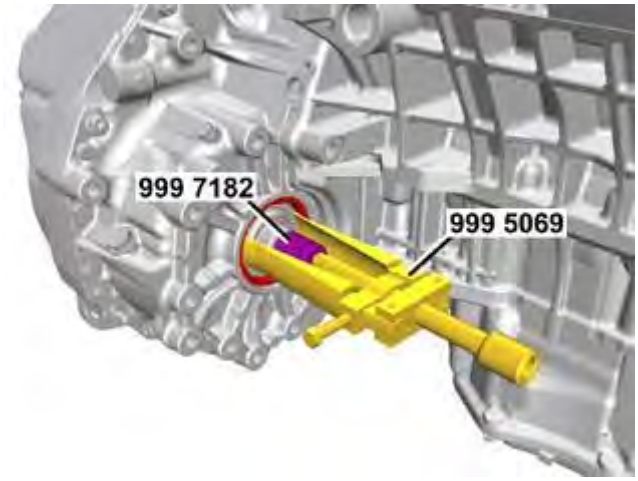

Fig. 324: Extracting Seal Using Special Tools, 999 7182 And 999 5069
Courtesy of VOLVO CARS CORPORATION

Fig. 325: Identifying Tapping Sealing Ring Out Of Socket Using Screwdriver
Courtesy of VOLVO CARS CORPORATION

REMOVAL, CONTINUED

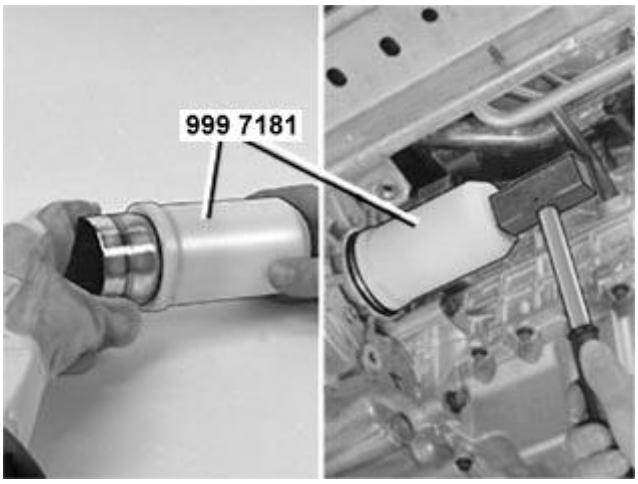

Fig. 326: Tapping Sleeve Into Differential
Courtesy of VOLVO CARS CORPORATION

Heat the sleeve in an oven to 100-120 °C and place in: see **9997181** . Install on the transmission and tap in the sleeve until it reaches the differential.

WARNING: **Use protective gloves when handling the heated sleeve.**

WARNING: **Wear ear protectors.**

Cool the socket using compressed air.

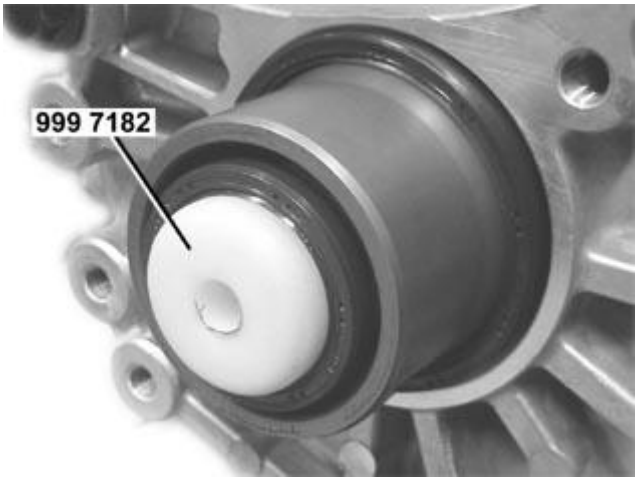

Fig. 327: Identifying Special Tool 999 7182
Courtesy of VOLVO CARS CORPORATION

see **9997182** .

Carefully install both sealing rings.

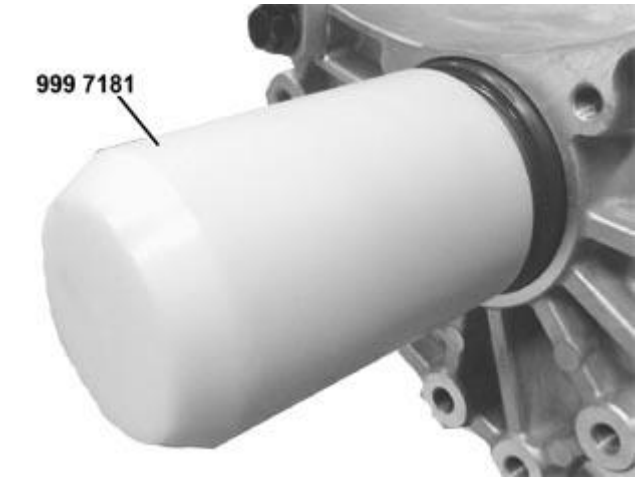

Fig. 328: Identifying Special Tool 999 7181 To Install Both Seals
Courtesy of VOLVO CARS CORPORATION

see **9997181** and tap in both the seals.

Fig. 329: Identifying Removal Of Circlip From Connecting Socket
Courtesy of VOLVO CARS CORPORATION

INSTALLING THE ANGLE GEAR

Install the bevel gear. See **BEVEL GEAR** .

CHECKING THE OIL LEVEL

Check the transmission fluid level. See **OIL LEVEL, CHECKING** .

SEALING RING, DRIVESHAFT, FRONT LEFT

see **SEALING RING, DRIVESHAFT, FRONT LEFT**

DRIVESHAFT CONSTANT VELOCITY JOINT (B6324S5, TF-80SC; 2011-2012)

BOOT CV JOINT HOUSING, INNER

see **BOOT CV JOINT HOUSING, INNER**

BOOT, DRIVESHAFT CONSTANT VELOCITY JOINT, OUTER

see **BOOT, DRIVESHAFT CONSTANT VELOCITY JOINT, OUTER**

DRIVE SHAFT LEFT, REPLACING

see **DRIVE SHAFT LEFT, REPLACING**

DRIVE SHAFT RIGHT, REPLACING

see **DRIVE SHAFT RIGHT, REPLACING**

SEALING RING, DRIVESHAFT, FRONT LEFT

see **SEALING RING, DRIVESHAFT, FRONT LEFT**

SEALING RING, DRIVESHAFT, FRONT RIGHT

see **SEALING RING, DRIVESHAFT, FRONT RIGHT**

DRIVESHAFT CONSTANT VELOCITY JOINT (B6324S5, TF-80SC, TF-80SC AWD; 2011-2012)

BOOT CV JOINT HOUSING, INNER

see **BOOT CV JOINT HOUSING, INNER**

BOOT, DRIVESHAFT CONSTANT VELOCITY JOINT, OUTER

see **BOOT, DRIVESHAFT CONSTANT VELOCITY JOINT, OUTER**

DRIVE SHAFT LEFT, REPLACING

see **DRIVE SHAFT LEFT, REPLACING**

DRIVE SHAFT RIGHT, REPLACING

see **DRIVE SHAFT RIGHT, REPLACING**

SEALING RING, DRIVESHAFT, FRONT LEFT

see **SEALING RING, DRIVESHAFT, FRONT LEFT**

SEALING RING, CONNECTING SOCKET

see **SEALING RING, CONNECTING SOCKET**

DRIVELINE/AXLES

Rear Axle, Drive Shafts - Specifications, Electrical/Electronic

COMPONENT SPECIFICATION, DIFFERENTIAL ELECTRONIC MODULE (DEM) (B6324S, TF-80SC AWD; 2009-2010)

COMPONENT SPECIFICATION

ELECTRIC FEED PUMP

COMPONENT IDENTIFICATION

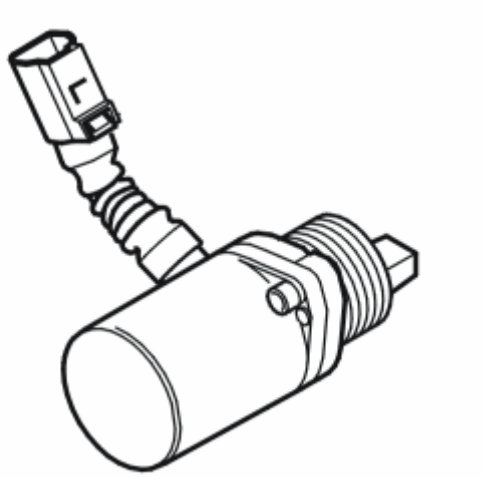

Fig. 1: Identifying Electric Feed Pump
Courtesy of VOLVO CARS CORPORATION

Type

The electrical feed pump consists of a PWM controlled electrical motor and a gear pump.

Characteristic

The resistance between terminal #1 and #2 should be approximately 3 - 5 ohms at +20 °C.

TERMINAL

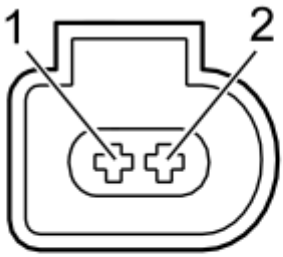

Fig. 2: Electric Feed Pump Connector Terminals
Courtesy of VOLVO CARS CORPORATION

Terminal connector	Control module terminal	Signal type	Miscellaneous
#1	#C2:1	Control signal, electrical feed pump.	PWM-signal, 5 V
#2	#C2:2	Ground	-

CHECK

Check 1

Measure the resistance between feed pump's terminal pin #1 and #2. The value should be approximately 3-5 ohms at +20 °C.

Check 2

Measure the resistance between the feed pump casing and terminal pin #1. The value should be much greater or infinite.

Check 3

Measure the resistance between the feed pump casing and terminal pin #2. The value should be much greater or infinite.

COMPONENT SPECIFICATION, DIFFERENTIAL ELECTRONIC MODULE (DEM) (B6324S5, TF-80SC AWD; 2011-2012)

COMPONENT SPECIFICATION

see **COMPONENT SPECIFICATION**

COMPONENT SPECIFICATION, DIFFERENTIAL ELECTRONIC MODULE

(DEM) (B8444S, TF-80SC AWD; 2009-2011)

COMPONENT SPECIFICATION

see **COMPONENT SPECIFICATION**

ELECTRICAL / ELECTRONIC SYSTEM SPECIFICATIONS (4T65 AWD; AW50/51 AWD; 2003-2004)

SIGNAL SPECIFICATION, CONTROL MODULE FOR FOUR WHEEL DRIVE

Fig. 3: Control Module For Four Wheel Drive
Courtesy of VOLVO CARS CORPORATION

All the values indicated are taken between the terminal in column 1 and terminal #2 (ground).

Terminals 3, 4, 5, and 6 are not used.

	U = DC in volts (V) I = current in amperes (A) F = Frequency in Hertz (Hz)	Ubat = battery voltage (V) Ulow = Voltage near 0 V

ECU	Signal type	Ignition on	Other
#1	Power supply to the control module and pump motor (power supply from the battery)	U = Ubat	With a 5 A fuse.
#2	Signal ground	U = Ulow	-
#3	-	-	-
#4	-	-	-
#5	-	-	-

#6	-	-	-
#7	Control modules communication cable (CAN H)	U=2-3 V	-
#8	Control modules communication cable (CAN L)	U=2-3 V	-

SIGNAL DESCRIPTION, DIFFERENTIAL ELECTRONIC MODULE (DEM) (B6324S, TF-80SC AWD; 2007-2008)

SIGNAL SPECIFICATION

SIGNAL SPECIFICATION

Connector A

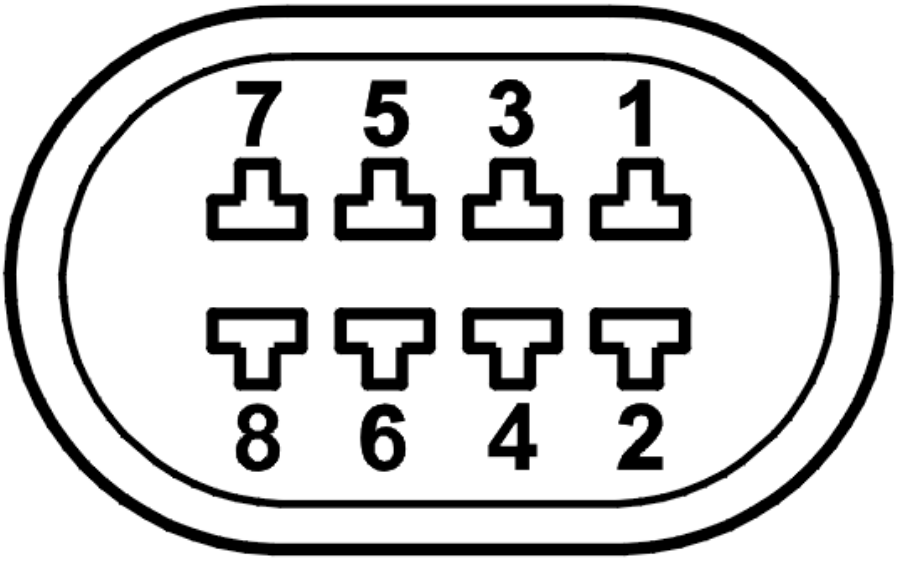

Fig. 4: Identifying Connector Terminals
Courtesy of VOLVO CARS CORPORATION

All the values that are given are measured between the respective connection given in column 1 and #2 or #4 (ground).

Pins 3, 5 and 6 are not used.

U = DC voltage (V)	U_{bat} = battery voltage (V)
I = current in amperes (A)	U_{low} = voltage near 0 V

	F = Frequency in Hertz (Hz)		

ECU	Signal type	Ignition on	Other
#A1	Power supply	$U=U_{bat}$	Protected with a 10 A fuse
#A2	Signal ground 1	$U=U_{low}$	-
#A3	-	-	-
#A4	Signal ground 2	$U=U_{low}$	-
#A5	-	-	-
#A6	-	-	-
#A7	Communication lead, control modules (CAN H)	U=2.5-4.0 V	-
#A8	Communication lead, control modules (CAN L)	U=1, 0-2, 5 V	-

Connector B

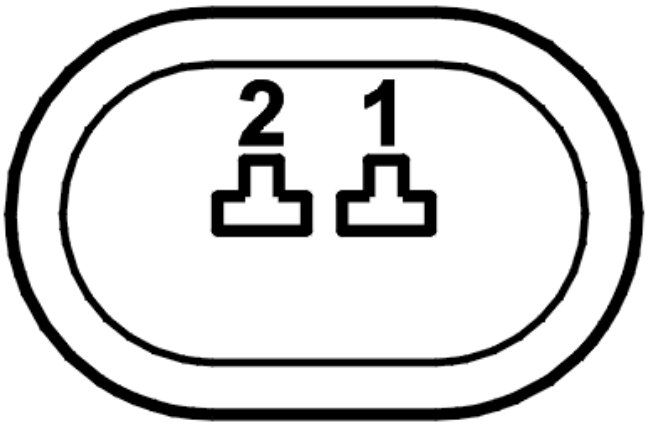

Fig. 5: Identifying Connector Terminals
Courtesy of VOLVO CARS CORPORATION

All the values that are given are measured between the respective connection given in column 1 and #2 (ground)

ECU	Signal type	Ignition on	Other
#B1	Power supply	$U=U_{bat}$	-
#B2	Signal ground	$U=U_{low}$	-

SIGNAL DESCRIPTION, DIFFERENTIAL ELECTRONIC MODULE (DEM) (B8444S, TF-80SC AWD; 2006-2008)

SIGNAL SPECIFICATION

see **SIGNAL SPECIFICATION**

SIGNAL DESCRIPTION, DIFFERENTIAL ELECTRONIC MODULE (DEM) (TF-80SC AWD; 2005)

SIGNAL SPECIFICATION

see **SIGNAL SPECIFICATION**

SIGNAL SPECIFICATION, DIFFERENTIAL ELECTRONIC MODULE (DEM) (4T65 AWD; 2005-2006)

SIGNAL SPECIFICATION, DIFFERENTIAL ELECTRONIC MODULE (DEM)

SIGNAL SPECIFICATION

Connector A

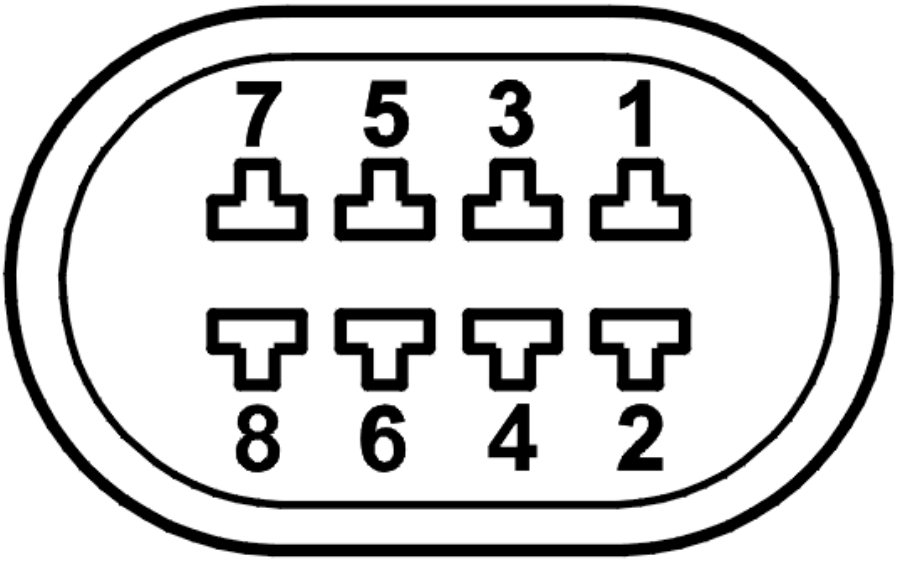

Fig. 6: Identifying Connector Terminals
Courtesy of VOLVO CARS CORPORATION

All the values indicated are taken between the terminal in column 1 and terminals #2 or #4 (ground).

Pins 3, 5, and 6 are not used.

U = DC in volts (V)	Ubat = battery voltage (V)

I = current in amperes (A)	Ulow = Voltage near 0 V
F = Frequency in Hertz (Hz)	

ECU	Signal type	Ignition on	Other
#A1	Power supply	U = Ubat	With a 10 A fuse.
#A2	Signal ground 1	U = Ulow	-
#A3	-	-	-
#A4	Signal ground 2	U = Ulow	-
#A5	-	-	-
#A6	-	-	-
#A7	Control modules communication cable (CAN H)	U=2.5-4.0 V	-
#A8	Control modules communication cable (CAN L)	U=1.0-2.5 V	-

Connector B

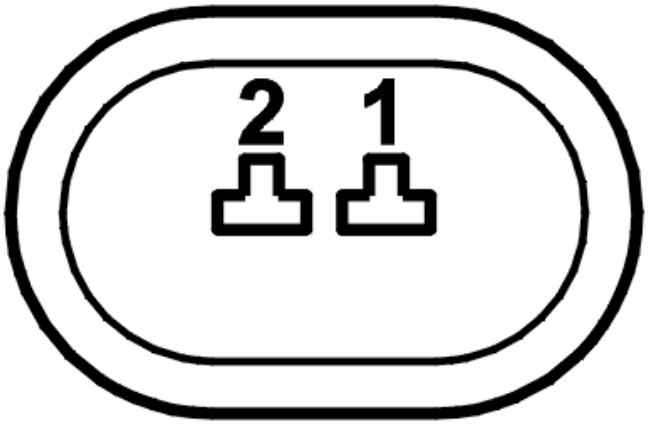

Fig. 7: Identifying Connector Terminals
Courtesy of VOLVO CARS CORPORATION

All the values indicated are taken between the terminal in column 1 and terminal #2 (ground).

ECU	Signal type	Ignition on	Other
#B1	Power supply	U = Ubat	-
#B2	Signal ground	U = Ulow	-

SIGNAL SPECIFICATION, DIFFERENTIAL ELECTRONIC MODULE (DEM) (AW50/51 AWD; 2005-2007)

SIGNAL SPECIFICATION, DIFFERENTIAL ELECTRONIC MODULE (DEM)

see **SIGNAL SPECIFICATION, DIFFERENTIAL ELECTRONIC MODULE (DEM)**

SIGNAL SPECIFICATION, DIFFERENTIAL ELECTRONIC MODULE (DEM) (B6324S, TF-80SC AWD; 2009-2010)

SIGNAL SPECIFICATION

GENERAL

All the values that are given are measured between the respective connection given in column 1 and #2 or #4 (ground).

Pins 3, 5 and 6 are not used.

U=	DC voltage in volts (V)	U_{bat} =	Battery voltage in volts (V)
I =	Current in amperes (A)	U_{low} =	Voltage approximately 0 V
F =	Frequency in Hertz (Hz)		

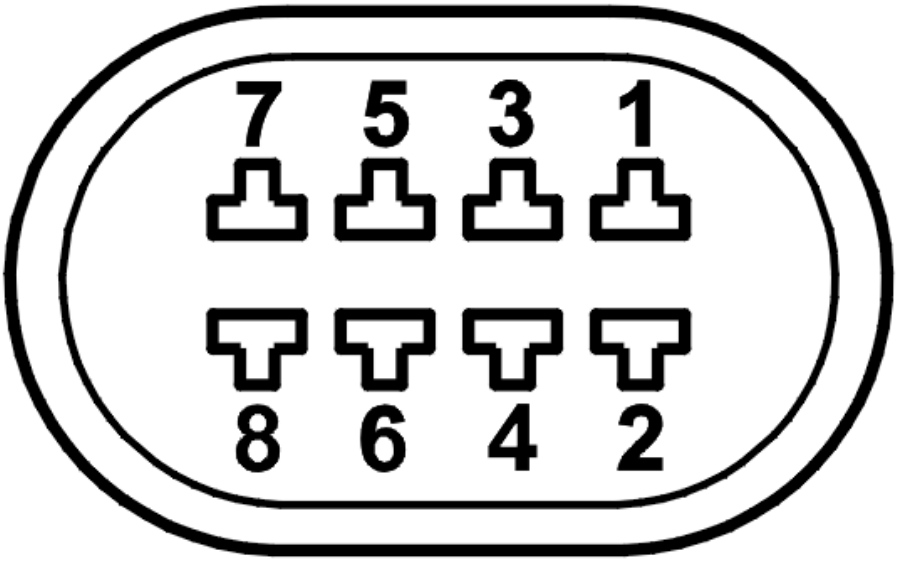

Fig. 8: Identifying Connector Terminals
Courtesy of VOLVO CARS CORPORATION

CONNECTOR C1

ECU	Signal type	Ignition on	Miscellaneous
#C1:1	Power supply	U=U_{bat}	Protected with a 10 A fuse

#C1:2	Signal ground 1	$U=U_{low}$	-
#C1:3	-	-	-
#C1:4	Signal ground 2	$U=U_{low}$	-
#C1:5	-	-	-
#C1:6	-	-	-
#C1:7	Control modules communication cable (CAN H)	U=2.5-4.0 V	-
#C1:8	Control modules communication cable (CAN L)	U=1.0-2.5 V	-

All the values that are given are measured between the respective connection given in column 1 and #2 (ground)

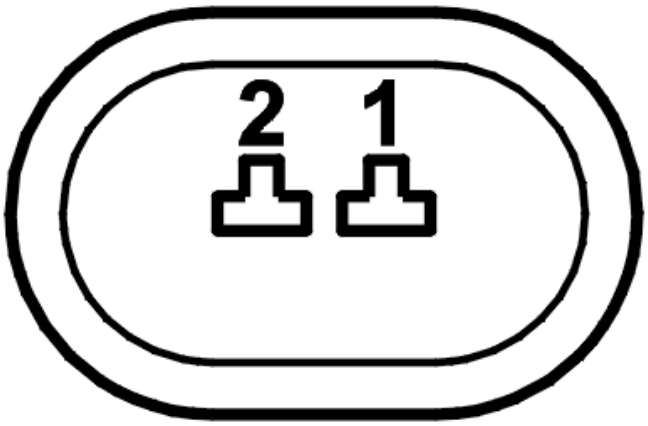

Fig. 9: Identifying Connector Terminals
Courtesy of VOLVO CARS CORPORATION

CONNECTOR C2

ECU	Signal type	Ignition on	Miscellaneous
#C2:1	Power supply	$U=U_{bat}$	-
#C2:2	Signal ground	$U=U_{low}$	-

SIGNAL SPECIFICATION, DIFFERENTIAL ELECTRONIC MODULE (DEM) (B6324S5, TF-80SC AWD; 2011-2012)

SIGNAL SPECIFICATION

see **SIGNAL SPECIFICATION**

SIGNAL SPECIFICATION, DIFFERENTIAL ELECTRONIC MODULE (DEM) (B8444S, TF-80SC AWD; 2009-2011)

SIGNAL SPECIFICATION

see **SIGNAL SPECIFICATION**

DRIVELINE/AXLES

Rear Axle, Drive Shafts - Specifications, Other

VEHICLE COMMUNICATION INFORMATION, DIFFERENTIAL ELECTRONIC MODULE (DEM) (B6324S, TF-80SC AWD; 2007-2008)

DESCRIPTION OF COMPONENT/FUNCTION ACTIVATION

HINT: All components/functions described do not need to be implemented in the Differential Electronic Module (DEM). This varies between different systems and markets.

COMPONENT/FUNCTION

ELECTRIC FEED PUMP

The feed pump is activated and builds up a basic pressure in the coupling.

A low humming noise can be heard from the feed pump when it is activated.

CONTROL VALVE

The control valve is controlled by means of the activation of the axial solenoid.

Following activation the solenoid changes the position of the control valve. In this way the pressure to the driven plates' working piston is regulated.

The activation can be made in two stages:

1. Min.

   Means a closed control valve which provides maximum pressure on the driven plates, which in turn provides maximum power transmission to the rear axle.

2. Max.

   Means an open control valve which provides minimum pressure on the driven plates, which in turn provides a limited power transmission to the rear axle.

DESCRIPTION OF PARAMETERS

PARAMETERS, STATUS

NOTE: The parameters that can be read off are determined by the systems with which the vehicle is equipped.

ENGINE STARTED

The value indicates whether the engine is started.

YES = Engine started.

NO = Engine not started

BRAKE PEDAL

The value indicates the status of the brake light switch. The Engine Control Module (ECM) sends a signal on the controller area network (CAN) on the position of the brake light switch: activated or not activated.

Active = Brake light switch actuated

Inactive = Brake light switch not actuated

PARKING BRAKE

The value indicates the position of the parking brake.

Active = Parking brake actuated

Inactive = Parking brake not actuated

DEM STATUS

The value specifies which status the Differential Electronic Module (DEM) detects it has (in terms of software).

OK = AOC unit (coupling) is operating normally.

Coupling fully open upon request = AOC unit (coupling) fully open (requested from Brake Control Module (BCM))

Coupling inactive or faulty (open) = AOC unit (coupling) is open due to a fault in the system.

Coupling closed = AOC unit (coupling) is closed due to a fault in the system.

ABS STATUS

The value indicates ABS modulation status. The Differential Electronic Module (DEM) obtains the value via the controller area network (CAN) from the Brake Control Module (BCM).

Active = ABS modulation

Inactive = No ABS modulation

AOC STATUS

The value specifies which status the AOC unit has (coupling). The Differential Electronic Module (DEM)

obtains the signal from the Brake Control Module (BCM). The signal is used for deactivating the AOC unit during special driving conditions.

Normal operation = Request from the Brake Control Module (BCM) for the AOC unit (coupling) to operate normally.

Rapid opening = Request from the Brake Control Module (BCM) for the AOC unit (coupling) to open quickly.

Slow opening = Request from the Brake Control Module (BCM) for the AOC unit (coupling) to open slowly.

Error in BCM = An error has occurred in the Brake Control Module (BCM) which means that the Differential Electronic Module (DEM) opens the AOC unit (coupling).

GAUGE (HIGH OIL TEMPERATURE)

The value indicates the number of times the Differential Electronic Module (DEM) has disengaged the all-wheel drive due to excessively high oil temperature.

Measurement range: 0-65534 times

PARAMETERS, VALUE

OUTSIDE TEMPERATURE

The value indicates the outside temperature.

Measurement range: -128 °C to +127.75 °C

POWER SUPPLY, DIFFERENTIAL ELECTRONIC MODULE (DEM)

The value indicates the power supply to the Differential Electronic Module (DEM).

Measurement range: 0-24 V

Normal range: 12.0-14.5 V

CEM SYSTEM VOLTAGE

The value indicates the voltage over the Central Electronic Module (CEM).

The control module transmits the signal on the controller area network (CAN) and the Differential Electronic Module (DEM) uses the signal to diagnose the power supply.

Measurement range: 5-30 V

Normal range: 12.0 - 14.5 V

OIL TEMPERATURE

The value indicates the oil temperature in the AOC coupling.

Measurement range: -128 °C to +127 °C

Normal range: 50-60 °C.

OIL PRESSURE

The value indicates the oil pressure in the AOC coupling.

Measurement range: 0-4 MPa

Normal range: 0.4-2.0 MPa.

POWER SUPPLY, SOLENOID

The value indicates the supply through the control valve's solenoid.

Measurement range: 0-4095 mA.

POWER SUPPLY, PUMP MOTOR

The value indicates the supply through the electrically driven feed pump.

Measurement range: 0-8191 mA.

TOTAL DISTANCE

The value indicates the total distance covered by the vehicle.

Measurement range: 0-16777215 km.

WHEEL SPEED

The value indicates wheel speed.

The Brake Control Module (BCM) transmits the speed signal on the controller area network (CAN) and the Differential Electronic Module (DEM) uses the signal to engage all-wheel drive.

Measurement range: 0-250 km/h.

ENGINE SPEED

The value indicates the engine's speed. The Differential Electronic Module (DEM) obtains the value via the controller area network (CAN) from the Engine Control Module (ECM).

Measurement range: 0-8191 r/min.

Idle speed: approx. 750 r/min.

CALCULATED ENGINE TORQUE

The value indicates an engine torque calculated by the Engine Control Module (ECM). The Differential Electronic Module (DEM) obtains the value via the controller area network (CAN) from the Engine Control Module (ECM).

Measurement range: -512 Nm to +511 Nm.

REAR AXLE TORQUE

The value indicates the torque transferred to the rear axle, calculated by the AOC unit (coupling).

Measurement range: 0-1020 Nm

REQUESTED ENGINE TORQUE

The value indicates the engine torque requested by the driver. The Differential Electronic Module (DEM) uses this information to correctly increase the torque transfer to the rear axle.

Measurement range: -512 Nm to +511 Nm.

DESCRIPTION OF READING OFF OF EXTENDED DIAGNOSTIC TROUBLE CODE (DTC) INFORMATION

CONTENTS

Select type of description.

- see **DESCRIPTION OF FROZEN VALUES**

DESCRIPTION OF FROZEN VALUES

EXPLANATION

Frozen values are parameter values stored when a Diagnostic Trouble Code (DTC) is generated.

All parameters are not readable for all Diagnostic Trouble Codes (DTC), but only where they can provide more information on the conditions which existed when the Diagnostic Trouble Code (DTC) was generated.

ENGINE STARTED, STATUS

The status indicates whether the engine was running when the Diagnostic Trouble Code (DTC) was generated.

No = engine was not running.

Yes = engine was running.

OUTSIDE TEMPERATURE, VALUE

The value indicates the outside temperature at the time the Diagnostic Trouble Code (DTC) was generated.

Measurement range: -128 °C to +127.75 °C.

POWER SUPPLY, DIFFERENTIAL ELECTRONIC MODULE (DEM), VALUE

The value indicates the power supply to the Differential Electronic Module (DEM) when the Diagnostic Trouble Code (DTC) was generated.

Measurement range: 0 - 24 V.

Normal range: 12.0 - 14.5 V.

TOTAL DISTANCE, VALUE

The value indicates the total distance covered by the vehicle at the time the Diagnostic Trouble Code (DTC) was generated.

Measurement range: 0 - 16777215 km.

CENTRAL ELECTRONIC MODULE (CEM) SYSTEM VOLTAGE, VALUE

The value indicates the voltage over the Central Electronic Module (CEM) when the Diagnostic Trouble Code (DTC) was generated.

Measurement range: 5 - 30 V.

Normal range: 12.0 - 14.5 V.

OIL TEMPERATURE, VALUE

The value indicates the oil temperature in the AOC coupling when the Diagnostic Trouble Code (DTC) was generated.

Measurement range: -128 °C to +127 °C.

Normal range: 50 - 60 °C.

OIL PRESSURE, VALUE

The value indicates the oil pressure in the AOC coupling when the Diagnostic Trouble Code (DTC) was generated.

Measurement range: 0 - 4 MPa.

Normal range: 0.4 - 2.0 MPa.

WHEEL SPEED, VALUE

The value indicates the wheel speed when the Diagnostic Trouble Code (DTC) was generated.

Measurement range: 0-250 km/h.

POWER SUPPLY, SOLENOID, VALUE

The value indicates the supply through the control valve's solenoid when the Diagnostic Trouble Code (DTC) was generated.

Measurement range 0 - 4095 mA.

POWER SUPPLY, PUMP MOTOR, VALUE

The value indicates the supply through the electrically driven feed pump when the Diagnostic Trouble Code (DTC) was generated.

Measurement range 0 - 8191 mA.

BRAKE PEDAL, STATUS

The status indicates brake light switch position, activated or not activated, when the Diagnostic Trouble Code (DTC) was generated.

Active = Brake light switch actuated.

Inactive = Brake light switch not actuated.

PARKING BRAKE, STATUS

The status indicates parking brake position, activated or not activated, when the Diagnostic Trouble Code (DTC) was generated.

Active = Parking brake actuated.

Inactive = Parking brake not actuated.

DEM STATUS, STATUS

The status indicates which status the Differential Electronic Module (DEM) detected it had (in terms of software) when the Diagnostic Trouble Code (DTC) was generated.

OK = AOC unit (coupling) is operating normally.

Coupling fully open upon request = AOC unit (coupling) fully open (requested from Brake Control Module (BCM)).

Coupling inactive or faulty (open) = AOC unit (coupling) is open due to a fault in the system.

Coupling closed = AOC unit (coupling) is closed due to a fault in the system.

ABS STATUS, STATUS

The status indicates whether or not the ABS brakes were modulated, when the Diagnostic Trouble Code (DTC) was generated.

Active = ABS modulation.

Inactive = No ABS modulation.

AOC STATUS, STATUS

The status indicates what the Brake Control Module (BCM) requested the AOC unit (coupling) to do when the Diagnostic Trouble Code (DTC) was generated.

Normal operation = Request from the Brake Control Module (BCM) for the AOC unit (coupling) to operate normally.

Rapid opening = Request from the Brake Control Module (BCM) for the AOC unit (coupling) to open quickly.

Slow opening = Request from the Brake Control Module (BCM) for the AOC unit (coupling) to open slowly.

Error in BCM = An error has occurred in the Brake Control Module (BCM) which means that the Differential Electronic Module (DEM) opens the AOC unit (coupling).

GAUGE (HIGH OIL TEMPERATURE), VALUE.

The value indicates the number of times the Differential Electronic Module (DEM) has disengaged the all-wheel drive due to excessively high oil temperature.

Measurement range: 0 - 65534 times.

ENGINE SPEED, VALUE

The value indicates the engine speed when the Diagnostic Trouble Code (DTC) was generated.

Measurement range:0-8191 r/min.

Idle speed: approx. 750 r/min.

CALCULATED ENGINE TORQUE, VALUE

The value indicates an engine torque calculated by the Engine Control Module (ECM) when the Diagnostic Trouble Code (DTC) was generated.

Measurement range: -512 Nm to +511 Nm.

REAR AXLE TORQUE, VALUE

The value indicates the torque transferred to the rear axle, calculated by the AOC unit (coupling) when the Diagnostic Trouble Code (DTC) was generated.

Measurement range: 0-1020 Nm

REQUESTED ENGINE TORQUE, VALUE

The value indicates the engine torque requested by the driver when the Diagnostic Trouble Code (DTC) was generated.

Measurement range: -512 Nm to +511 Nm.

VEHICLE COMMUNICATION INFORMATION, DIFFERENTIAL ELECTRONIC MODULE (DEM) (B6324S, TF-80SC AWD; 2009-2010)

DESCRIPTION OF COMPONENT/FUNCTION ACTIVATION

HINT: All components/functions described do not need to be implemented in the Differential Electronic Module (DEM). This varies between different systems and markets.

COMPONENT/FUNCTION

ELECTRIC FEED PUMP

The feed pump is activated and builds up a basic pressure in the coupling.

A low humming noise can be heard from the feed pump when it is activated.

Note that the feed pump may sound like it's running but in certain cases it only oscillates.

CONTROL VALVE

The control valve is controlled by means of the activation of the axial solenoid.

Following activation the solenoid changes the position of the control valve. In this way the pressure to the driven plates' working piston is regulated.

The activation can be made in two stages:

1. Min.

   Means a closed control valve which provides maximum pressure on the driven plates, which in turn provides maximum power transmission to the rear axle.

2. Max.

   Means an open control valve which provides minimum pressure on the driven plates, which in turn provides a limited power transmission to the rear axle.

DESCRIPTION OF PARAMETERS

PARAMETERS, STATUS

NOTE: The parameters that can be read off are determined by the systems with which the vehicle is equipped.

BRAKE PEDAL

The value indicates the status of the stop lamp switch. The engine control module (ECM) sends a signal on the controller area network (CAN) about the position of the stop lamp switch: activated or not activated.

Active = Brake light switch actuated

Not active = Stop lamp switch not affected

PARKING BRAKE

The value indicates the position of the parking brake.

Active = Parking brake actuated

Not Active = Parking brake not applied

TRAILER CONTACT CONNECTED

The value indicates if the trailer is connected to the vehicle.

The differential electronic module (DEM) obtains the value via the control area network (CAN) from the central electronic module (CEM).

The trailer module (TRM) informs the central electronic module (CEM).

Yes = Trailer connected.

No = Trailer not connected.

DEM STATUS

The value indicates the status of the differential electronic module (DEM) (software related).

OK = AOC unit (coupling) is operating normally.

Coupling fully open upon request = AOC unit (coupling) fully open (requested from Brake Control Module (BCM))

Coupling inactive or faulty (open) = AOC unit (coupling) is open due to a fault in the system.

Coupling closed = AOC unit (coupling) is closed due to a fault in the system.

Clutch overheated = Active on Demand Coupling overheated.

Clutch overheated (open) = the Active on Demand Coupling unit (clutch) is open due to overheating. No torque transferred to the rear axle.

The clutch completely locked on request = Active on Demand Coupling unit (clutch) completely locked (request from the brake control module (BCM)). Maximum torque transferred to the rear axle.

ABS STATUS

The value indicates the status of ABS control. The differential electronic module (DEM) obtains the value via the control area network (CAN) from the brake control module (BCM).

Active = ABS modulation

Inactive = No ABS modulation

AOC STATUS

The value specifies which status the AOC unit has (coupling). The Differential Electronic Module (DEM) obtains the signal from the Brake Control Module (BCM). The signal is used for deactivating the AOC unit during special driving conditions.

Normal operation = Request from the Brake Control Module (BCM) for the AOC unit (coupling) to operate normally.

Rapid opening = Request from the Brake Control Module (BCM) for the AOC unit (coupling) to open quickly.

Slow opening = Request from the Brake Control Module (BCM) for the AOC unit (coupling) to open slowly.

Error in BCM = An error has occurred in the Brake Control Module (BCM) which means that the Differential Electronic Module (DEM) opens the AOC unit (coupling).

Completely locked = Request from the brake control module (BCM) that the Active on Demand Coupling unit (clutch) should lock completely (maximum torque to the rear axle).

Torque limiting = Request from the brake control module (BCM) that the Active on Demand Coupling unit should limit the torque to the rear axle.

PARAMETERS, VALUE

POWER SUPPLY, DIFFERENTIAL ELECTRONIC MODULE (DEM)

The value indicates the power supply to the Differential Electronic Module (DEM).

Measurement range: 0 - 25.5 V

Normal range: 12.0 - 14.5 V

MECU POWER SUPPLY

The value indicates the voltage over the Central Electronic Module (CEM).

The control module transmits the signal on the controller area network (CAN) and the Differential Electronic Module (DEM) uses the signal to diagnose the power supply.

Measurement range: 0-63.75 V

Normal range: 12.0 - 14.5 V

POWER SUPPLY, PUMP MOTOR

The value indicates the supply through the electrically driven feed pump.

Measurement range 0 - 8191 mA.

POWER SUPPLY, PRESSURE REDUCING VALVE

The value shows the current through the pressure reducing valve. Measuring range: 0 - 4, 095 mA.

WHEEL SPEED

The value indicates wheel speed.

The brake control module (BCM) transmits the vehicle speed signal on the controller area network (CAN) and the differential electronic module (DEM) uses the signal to control four wheel drive.

Measurement range: 0 - 255 km/h.

ENGINE SPEED (RPM)

The value indicates the engine's speed. The Differential Electronic Module (DEM) obtains the value via the controller area network (CAN) from the Engine Control Module (ECM).

Idle speed: approx. 750 r/min.

Measurement range: 0-8191 r/min.

ECU-TEMPERATURE

The value shows the temperature in Differential electronic module (DEM). The temperature sensor is located on the circuit board.

Measurement range: -60 to +195 °C.

CALCULATED FRONT WHEEL DRIVE TORQUE

The value indicates one engine control module (ECM) calculated torque, supplied to the Active on Demand Coupling input shaft (propeller shaft). Calculation includes the gear ratio of the transmission and the final drive. The differential electronic module (DEM) obtains the value via the controller area network (CAN) from the engine control module (ECM).

Measurement range: -16.376 Nm to +16.384 Nm.

REAR AXLE TORQUE

The value indicates the torque transferred to the rear axle, calculated by the AOC unit (coupling).

Measurement range: 0 - 8191 Nm.

REQUESTED REAR AXLE TORQUE

The value indicates one brake control module (BCM) requested maximum rear axle torque. The differential electronic module (DEM) uses this information to correctly transfer torque to the rear axle.

Measurement range: 0 - 8191 Nm.

REQUESTED FRONT WHEEL DRIVE TORQUE

The value indicates the requested engine torque of the driver. The differential electronic module (DEM) uses this information to correctly transfer torque to the rear axle.

Measurement range: -16.376 Nm to +16.375 Nm.

DESCRIPTION OF READING OFF EXTENDED DIAGNOSTIC TROUBLE CODE (DTC) INFORMATION

CONTENTS

Select type of description.

- see **DESCRIPTION OF STATUS IDENTIFIER**
- see **DESCRIPTION OF COUNTER**
- see **DESCRIPTION OF FROZEN VALUES**

DESCRIPTION OF FROZEN VALUES

EXPLANATION

Frozen values are parameter values stored when a Diagnostic Trouble Code (DTC) is generated.

TOTAL MILEAGE, VALUE

The value indicates the total distance covered by the vehicle at the time the Diagnostic Trouble Code (DTC) was generated.

Measurement range: 0 -16,777,215 km.

MECU POWER SUPPLY, VALUE

The value indicates the voltage over the Central Electronic Module (CEM) when the Diagnostic Trouble Code (DTC) was generated.

Measurement range: 0 -64 V.

Normal range: 12.0 - 14.5 V.

OUTSIDE TEMPERATURE, VALUE

The value indicates the outside temperature at the time the Diagnostic Trouble Code (DTC) was generated.

Measurement range: -40 °C to +215 °C.

ENGINE STATUS

Indicates if the engine is running.

No = Engine off

Yes = Engine running

ENGINE START IN PROGRESS

Indicates if start attempt is in progress.

No = Engine not cranking

Yes = Engine cranking

ECU-TEMPERATURE

The value shows the temperature in Differential electronic module (DEM). The temperature sensor is located on the circuit board.

POWER SUPPLY, DIFFERENTIAL ELECTRONIC MODULE (DEM), VALUE

The value indicates the power supply to the Differential Electronic Module (DEM) when the Diagnostic

Trouble Code (DTC) was generated.

Measurement range: 0 -25.5 V.

Normal range: 12.0 - 14.5 V.

WHEEL SPEED, VALUE

The value indicates the wheel speed when the Diagnostic Trouble Code (DTC) was generated.

Measurement range: 0 - 255 km/h.

POWER SUPPLY, PRESSURE REDUCING VALVE

The value displays the current through the pressure reducing valve.

Measurement range 0 - 4095 mA.

POWER SUPPLY, PUMP MOTOR

The value indicates the supply through the electrically driven feed pump when the Diagnostic Trouble Code (DTC) was generated.

Measurement range 0 - 8191 mA.

DEM STATUS

Indicates the status of the differential electronic module (DEM) (software related) when the diagnostic trouble code was stored.

OK = AOC unit (coupling) is operating normally.

Coupling fully open upon request = AOC unit (coupling) fully open (requested from Brake Control Module (BCM))

Coupling inactive or faulty (open) = AOC unit (coupling) is open due to a fault in the system.

Coupling closed = AOC unit (coupling) is closed due to a fault in the system.

AOC STATUS

Indicates the status of the Active on Demand Coupling when the diagnostic trouble code (DTC) was stored. The differential electronic module (DEM) obtains the signal from the brake control module (BCM). The signal is used to deactivate the Active on Demand Coupling during special driving conditions.

Normal operation = Request from the Brake Control Module (BCM) for the AOC unit (coupling) to operate normally.

Rapid opening = Request from the Brake Control Module (BCM) for the AOC unit (coupling) to open quickly.

Slow opening = Request from the Brake Control Module (BCM) for the AOC unit (coupling) to open slowly.

Error in BCM = An error has occurred in the Brake Control Module (BCM) which means that the Differential Electronic Module (DEM) opens the AOC unit (coupling).

Completely locked = Request from the brake control module (BCM) that the Active on Demand Coupling unit (clutch) should lock completely (maximum torque to the rear axle).

Torque limiting = Request from the brake control module (BCM) that the Active on Demand Coupling unit should limit the torque to the rear axle.

DIAGNOSTIC INFORMATION, STATUS

Indicates the diagnostic status of the differential electronic module (DEM) when the diagnostic trouble code (DTC) was stored.

No diagnostic trouble code (DTC) = No diagnostic trouble code (DTC) is stored in the control module.

At least one diagnostic trouble code (DTC) = At least one diagnostic trouble code (DTC) is stored in the control module.

All diagnostic tests have not been carried out = All diagnostic tests in the control module have not been carried out.

All diagnostic tests have been carried out = All diagnostic tests in the control module have been carried out

BRAKE PEDAL, STATUS

Indicates the stop lamp switch position, activated or not activated, when the diagnostic trouble code (DTC) was stored.

Active = Brake light switch actuated.

Not active = Stop lamp switch off.

PARKING BRAKE, STATUS

Indicates the parking brake position, activated or not activated, when the diagnostic trouble code (DTC) was stored.

Active = Parking brake actuated.

Not active = Parking brake not applied.

ABS STATUS

Indicates the status of ABS control when the diagnostic trouble code (DTC) was stored. The differential electronic module (DEM) obtains the value via the control area network (CAN) from the brake control module (BCM).

Active = ABS modulation.

Inactive = No ABS modulation.

GAUGE (HIGH OIL TEMPERATURE), VALUE.

The value indicates the number of times the Differential Electronic Module (DEM) has disengaged the all-wheel drive due to excessively high oil temperature.

Measurement range: 0-65,534 times.

ENGINE SPEED, VALUE

The value indicates the engine speed when the Diagnostic Trouble Code (DTC) was generated.

Measurement range:0-8191 r/min.

Idle speed: approx. 750 r/min.

ENGINE TORQUE

The value indicates an engine control module (ECM)-calculated torque, supplied to the Active on Demand Coupling input shaft (propeller shaft) when the diagnostic trouble code (DTC) was stored. Calculation includes the gear ratio of the transmission and the final drive. The differential electronic module (DEM) obtains the value via the controller area network (CAN) from the engine control module (ECM).

Measurement range: -16.376 Nm to +16.384 Nm.

REAR AXLE TORQUE, VALUE

The value indicates the torque transferred to the rear axle, calculated by the AOC unit (coupling) when the Diagnostic Trouble Code (DTC) was generated.

Measurement range: 0 -8191 Nm

REQUESTED ENGINE TORQUE

The value indicates the requested engine torque of the driver when the diagnostic trouble code (DTC) was stored. The differential electronic module (DEM) uses this information to correctly transfer torque to the rear axle.

Measurement range: -16.376 Nm to +16.375 Nm.

VEHICLE COMMUNICATION INFORMATION, DIFFERENTIAL ELECTRONIC

MODULE (DEM) (B6324S5, TF-80SC AWD; 2011-2012)

DESCRIPTION OF COMPONENT/FUNCTION ACTIVATION

see **DESCRIPTION OF COMPONENT/FUNCTION ACTIVATION**

DESCRIPTION OF PARAMETERS

see **DESCRIPTION OF PARAMETERS**

DESCRIPTION OF READING OFF EXTENDED DIAGNOSTIC TROUBLE CODE (DTC) INFORMATION

see **DESCRIPTION OF READING OFF EXTENDED DIAGNOSTIC TROUBLE CODE (DTC) INFORMATION**

VEHICLE COMMUNICATION INFORMATION, DIFFERENTIAL ELECTRONIC MODULE (DEM) (B8444S, TF-80SC AWD; 2006-2008)

DESCRIPTION OF COMPONENT/FUNCTION ACTIVATION

see **DESCRIPTION OF COMPONENT/FUNCTION ACTIVATION**

DESCRIPTION OF PARAMETERS

see **DESCRIPTION OF PARAMETERS**

DESCRIPTION OF READING OFF OF EXTENDED DIAGNOSTIC TROUBLE CODE (DTC) INFORMATION

see **DESCRIPTION OF READING OFF OF EXTENDED DIAGNOSTIC TROUBLE CODE (DTC) INFORMATION**

VEHICLE COMMUNICATION INFORMATION, DIFFERENTIAL ELECTRONIC MODULE (DEM) (B8444S, TF-80SC AWD; 2009-2011)

DESCRIPTION OF COMPONENT/FUNCTION ACTIVATION

see **DESCRIPTION OF COMPONENT/FUNCTION ACTIVATION**

DESCRIPTION OF PARAMETERS

see **DESCRIPTION OF PARAMETERS**

DESCRIPTION OF READING OFF EXTENDED DIAGNOSTIC TROUBLE CODE (DTC) INFORMATION

see **DESCRIPTION OF READING OFF EXTENDED DIAGNOSTIC TROUBLE CODE (DTC) INFORMATION**

VEHICLE COMMUNICATION INFORMATION, DIFFERENTIAL ELECTRONIC MODULE (DEM) (TF-80SC AWD; 2005)

DESCRIPTION OF COMPONENT/FUNCTION ACTIVATION

see **DESCRIPTION OF COMPONENT/FUNCTION ACTIVATION**

DESCRIPTION OF PARAMETERS

see **DESCRIPTION OF PARAMETERS**

DESCRIPTION OF READING OFF OF EXTENDED DIAGNOSTIC TROUBLE CODE (DTC) INFORMATION

see **DESCRIPTION OF READING OFF OF EXTENDED DIAGNOSTIC TROUBLE CODE (DTC) INFORMATION**

VEHICLE COMMUNICATION, DIFFERENTIAL ELECTRONIC MODULE (DEM) (4T65 AWD; 2005-2006)

DESCRIPTION OF PARAMETERS

For XC90, 2009, B5254T2 with late version Differential electronic module (DEM), choose the following link, see **DESCRIPTION OF PARAMETERS**

PARAMETERS, STATUS

NOTE: **The parameters that can be read off are determined by the systems with which the vehicle is equipped.**

ENGINE RUNNING

The value indicates if the engine has started.

YES = The engine has started.

NO = Engine not started

PARAMETERS, VALUE

OUTSIDE TEMPERATURE

The value indicates the outside temperature.

Measurement range: -128 °C to +127.75 °C

PASSENGER COMPARTMENT TEMPERATURE

The value indicates the passenger compartment temperature in the car.

Measurement range: -60 °C to +195 °C.

CONTROL MODULE POWER SUPPLY

The value indicates the power supply to the differential electronic module (DEM).

Measurement range: 0 - 24 V

Normal range: 12.0 - 14.5 V

CEM SYSTEM VOLTAGE

The value indicates the voltage at the central electronic module (CEM).

The control module transmits the signal on the controller area network (CAN) and the differential electronic module (DEM) uses the signal to diagnose the power supply.

Measurement range: 5 - 30 V

Normal range: 12.0 - 14.5 V

OIL TEMPERATURE

The value indicates the oil temperature in the Active on Demand Coupling.

Measurement range: -128 °C to +127 °C

Normal range: 50 - 60 °C.

OIL PRESSURE

The value indicates the oil pressure in the Active on Demand Coupling.

Measurement range: 0 - 4 MPa

Normal range: 0.4 -2.0 Mpa.

POWER SUPPLY SOLENOID

The value indicates the current through the control solenoid for four wheel drive.

Measurement range: 0 - 4095 mA.

POWER SUPPLY PUMP MOTOR

The value displays the current through the hydraulic feed pump.

Measurement range: 0 - 8191 mA.

TOTAL MILEAGE

The value indicates the total covered mileage of the vehicle.

Measurement range: 0 - 1048575 km.

WHEEL SPEED

The value indicates the wheel speed.

The brake control module (BCM) transmits the vehicle speed signal on the controller area network (CAN) and the differential electronic module (DEM) uses the signal to activate four wheel drive.

Measurement range: 0-250 km/h.

DESCRIPTION OF PARAMETERS

PARAMETERS, STATUS

NOTE: The parameters that can be read off are determined by the systems with which the vehicle is equipped.

BRAKE PEDAL

The value indicates the status of the stop lamp switch. The engine control module (ECM) sends a signal on the controller area network (CAN) about the position of the stop lamp switch: activated or not activated.

Active = Brake light switch actuated

Not active = Stop lamp switch not affected

PARKING BRAKE

The value indicates the position of the parking brake.

Active = Parking brake actuated

Not Active = Parking brake not applied

PARAMETERS, VALUE

POWER SUPPLY, DIFFERENTIAL ELECTRONIC MODULE (DEM)

The value indicates the power supply to the Differential Electronic Module (DEM).

Measurement range: 0 - 25.5 V

Normal range: 12.0 - 14.5 V

MECU POWER SUPPLY

The value indicates the voltage over the Central Electronic Module (CEM).

The control module transmits the signal on the controller area network (CAN) and the Differential Electronic Module (DEM) uses the signal to diagnose the power supply.

Measurement range: 0-63.75 V

Normal range: 12.0 - 14.5 V

POWER SUPPLY, PUMP MOTOR

The value indicates the supply through the electrically driven feed pump.

Measurement range 0 - 8191 mA.

POWER SUPPLY, PRESSURE REDUCING VALVE

The value displays the current through the pressure reducing valve.

Measurement range 0 - 4095 mA.

WHEEL SPEED

The value indicates wheel speed.

The brake control module (BCM) transmits the vehicle speed signal on the controller area network (CAN) and the differential electronic module (DEM) uses the signal to control four wheel drive.

Measurement range: 0 - 255 km/h.

ECU-TEMPERATURE

The value indicates the temperature in the Differential Electronic Module (DEM).

The temperature sensor is located on the circuit board.

Measurement range: -127 to +128 °C.

DESCRIPTION OF READING OFF EXTENDED DIAGNOSTIC TROUBLE CODE (DTC) INFORMATION

CONTENTS

Select type of description.

- see **DESCRIPTION OF FROZEN VALUES**
- see **DESCRIPTION OF FROZEN VALUES**. Only XC90 2009 B5254T2 late version
- see **STATUS IDENTIFIER, DESCRIPTION**
- see **COUNTERS, DESCRIPTION**

DESCRIPTION OF FROZEN VALUES

EXPLANATION

Frozen values are parameter values that are stored when a diagnostic trouble code (DTC) is stored.

Not all parameters can be read off for all diagnostic trouble codes (DTCs). They can only be read off where they can provide more information about the prevailing circumstances when the diagnostic trouble code (DTC) was stored.

ENGINE STARTED, STATUS

The status displays whether the engine was running when the diagnostic trouble code (DTC) was stored.

No = the engine was not running.

Yes = the engine was running.

OUTSIDE TEMPERATURE, VALUE

The value indicates the outside temperature at the time the diagnostic trouble code (DTC) was stored.

Measurement range: -128 °C to +127.75 °C

PASSENGER COMPARTMENT TEMPERATURE, VALUE

The value indicates the passenger compartment temperature at the time the diagnostic trouble code (DTC) was stored.

Measurement range: -60 °C to +195 °C.

TOTAL MILEAGE, VALUE

The value indicates the total covered mileage at the time the diagnostic trouble code (DTC) was stored.

Measurement range: 0 - 1048575 km.

CEM SYSTEM VOLTAGE, VALUE

The value indicates the supply voltage to the central electronic module (CEM) when the diagnostic trouble code (DTC) was stored.

Measurement range: 5 - 30 V.

Normal range: 12.0 - 14.5 V.

OIL TEMPERATURE, VALUE

The value indicates the oil temperature in the Active on Demand Coupling when the diagnostic trouble code (DTC) was stored.

Measurement range: -128 °C to +127 °C

Normal range: 50 - 60 °C.

OIL PRESSURE, VALUE

The value indicates the oil pressure in the Active on Demand Coupling when the diagnostic trouble code (DTC) was stored.

Measurement range: 0 - 4 Mpa.

Normal range: 0.4 -2.0 Mpa.

POWER SUPPLY CONTROL MODULE, VALUE

The value indicates the power supply to the differential electronic module (DEM) when the diagnostic trouble code (DTC) was stored.

Measurement range: 0 - 24 V.

Normal range: 12.0 - 14.5 V.

POWER SUPPLY SOLENOID, VALUE

The value indicates the current through the control solenoid when the diagnostic trouble code (DTC) was stored.

Measurement range: 0 - 4095 mA.

POWER SUPPLY PUMP MOTOR, VALUE

The value indicates the current through the hydraulic feed pump when the diagnostic trouble code (DTC) was stored.

Measurement range: 0 - 8191 mA.

DESCRIPTION OF FROZEN VALUES

EXPLANATION

Frozen values are parameter values that are stored when a diagnostic trouble code (DTC) is stored.

Not all parameters can be read off for all diagnostic trouble codes (DTCs). They can only be read off where they can provide more information about the prevailing circumstances when the diagnostic trouble code (DTC) was stored.

BRAKE PEDAL

The value indicates the status of the brake light switch. The engine control module (ECM) sends a signal on the controller area network (CAN) about the position of the brake light switch: activated or not activated

Active = Stop lamp switch on.

Not active = Stop lamp switch off.

PARKING BRAKE

The value indicates the position of the parking brake.

Active = Parking brake actuated.

Not active = Parking brake not applied.

ENGINE STARTED, STATUS

The status displays whether the engine was running when the diagnostic trouble code (DTC) was stored.

No = engine was not running.

Yes = engine was running.

ECU-TEMPERATURE

The value shows the temperature in Differential electronic module (DEM). The temperature sensor is located on the circuit board.

POWER SUPPLY, DIFFERENTIAL ELECTRONIC MODULE (DEM)

The value indicates the power supply to the Differential Electronic Module (DEM).

Measurement range: 0 - 25.5 V.

Normal range: 12.0 - 14.5 V.

POWER SUPPLY, PUMP MOTOR

The value indicates the supply through the electrically driven feed pump.

Measurement range 0 - 8191 mA.

POWER SUPPLY, PRESSURE REDUCING VALVE

The value displays the current through the pressure reducing valve.

Measurement range 0 - 4095 mA.

WHEEL SPEED, VALUE

The value indicates wheel speed.

The brake control module (BCM) transmits the vehicle speed signal on the controller area network (CAN) and the differential electronic module (DEM) uses the signal to control four wheel drive.

Measurement range: 0 - 255 km/h.

OUTSIDE TEMPERATURE, VALUE

The value indicates the outside temperature at the time the diagnostic trouble code (DTC) was stored.

Measurement range: -128 °C to +127.75 °C.

PASSENGER COMPARTMENT TEMPERATURE, VALUE

The value indicates the vehicle's passenger compartment temperature when the Diagnostic Trouble Code (DTC) was generated.

Measurement range: -60 °C to +195 °C.

TOTAL DISTANCE, VALUE

The value indicates the total distance covered by the vehicle at the time the Diagnostic Trouble Code (DTC) was generated.

Measurement range: 0 - 1048575 km.

CEM SYSTEM VOLTAGE, VALUE

The value indicates the voltage over the Central Electronic Module (CEM) when the Diagnostic Trouble Code (DTC) was generated.

Measurement range: 5 - 30 V.

Normal range: 12.0 - 14.5 V.

VEHICLE COMMUNICATION, DIFFERENTIAL ELECTRONIC MODULE (DEM) (AW50/51 AWD; 2005-2007)

DESCRIPTION OF PARAMETERS

see **DESCRIPTION OF PARAMETERS**

DESCRIPTION OF READING OFF EXTENDED DIAGNOSTIC TROUBLE CODE (DTC) INFORMATION

see **DESCRIPTION OF READING OFF EXTENDED DIAGNOSTIC TROUBLE CODE (DTC) INFORMATION**

DRIVELINE/AXLES

Rear Axle, Drive Shafts - Symptom Related Diagnostic Procedures

CHECKING CAN CABLES (4T65 AWD; AW50/51 AWD; 2003-2004)

CHECKING CAN CABLES

CHECKING WIRING AND TERMINALS

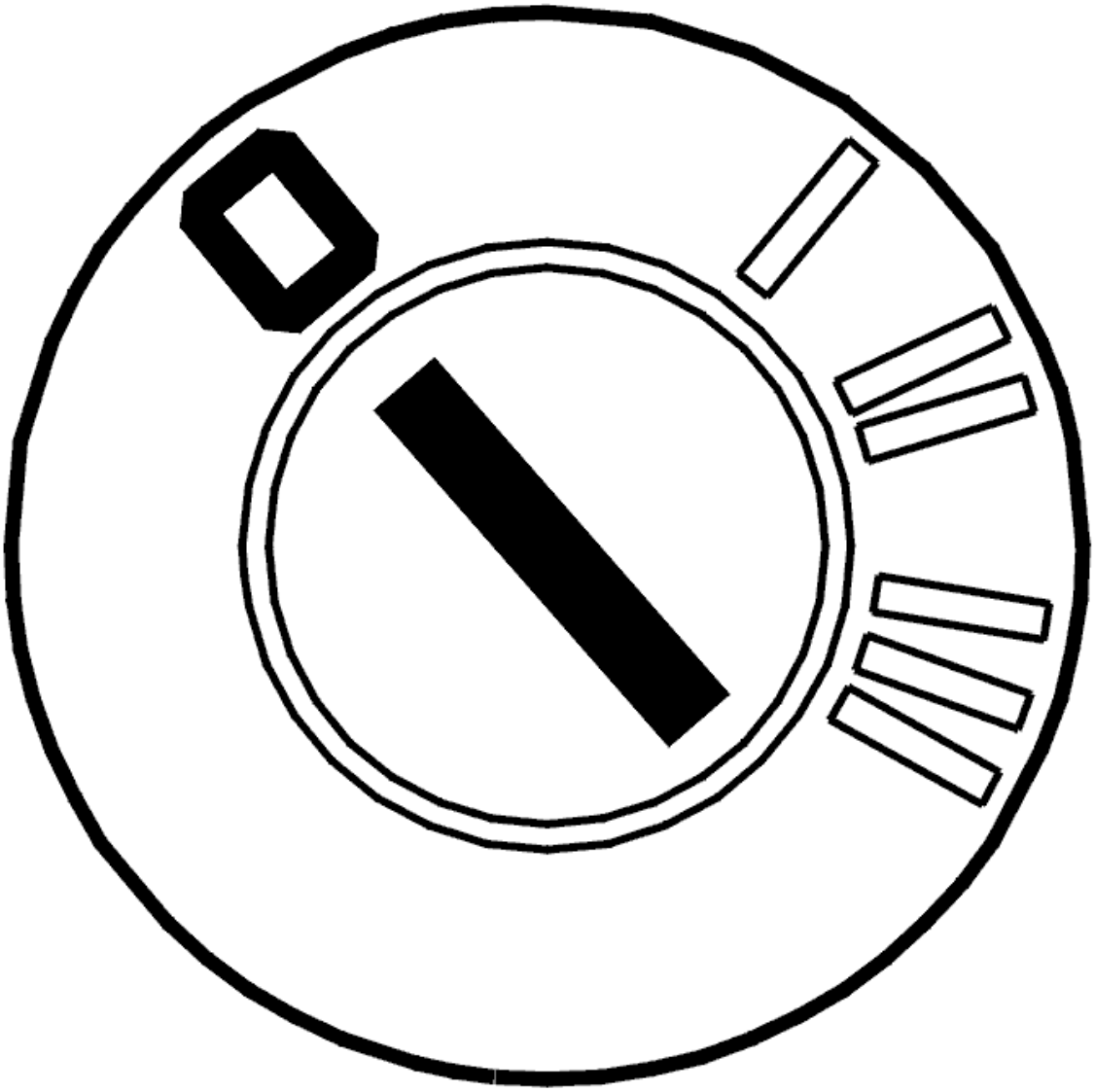

Fig. 1: Identifying Ignition OFF
Courtesy of VOLVO CARS CORPORATION

- Ignition off.

  Check the connector for the control module for four wheel drive (Active on Demand Coupling). Check

for damaged or bent terminal pins. Check for contact resistance and oxidation.

Check the wiring for CAN communication between terminal #7 on the control module for four wheel drive (Active on Demand Coupling) and brake control module (BCM) terminal #11 (#A11) and between terminal #8 on the control module for four wheel drive (Active on Demand Coupling) and brake control module (BCM) terminal #15 (#A15). Check for an open-circuit. Check for a short-circuit to ground. Check for a short-circuit to supply voltage.

Also check if the wiring for CAN communication is too close to a source of interference such as a carphone etc.

Remedy as necessary.

Other information

- To connect the breakout box to the brake control module (BCM), see **CONNECTING THE BREAKOUT BOX, BRAKE CONTROL MODULE (BCM)**
- For information about brake control module (BCM) signals, see **SIGNAL SPECIFICATION, BRAKE CONTROL MODULE (BCM) WITH STC/ TRACS**
- For information about AOC (Active on Demand Coupling) signals, see **SIGNAL SPECIFICATION, CONTROL MODULE FOR FOUR WHEEL DRIVE**
- see **CONTENTS** .

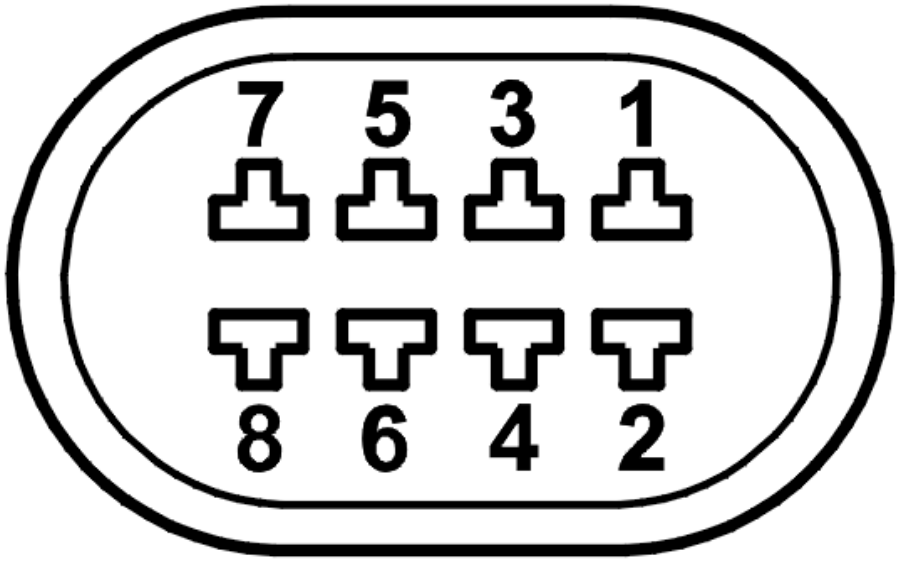

Fig. 2: Identifying Connector Terminals
Courtesy of VOLVO CARS CORPORATION

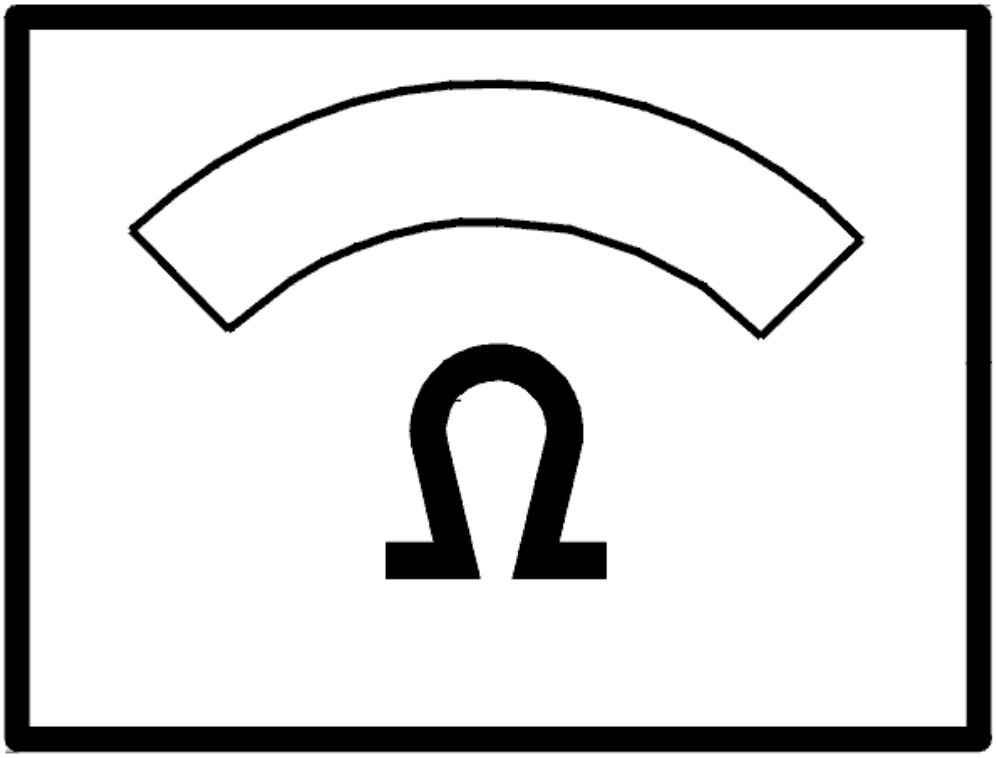

Fig. 3: Identifying Ohm Meter
Courtesy of VOLVO CARS CORPORATION

Fig. 4: Identifying Connector
Courtesy of VOLVO CARS CORPORATION

FAULT-TRACING INFORMATION

Condition

Fig. 5: Identifying Active On Demand Coupling
Courtesy of VOLVO CARS CORPORATION

No diagnostic trouble codes (DTCs) stored in the control module for four wheel drive (Active on Demand Coupling).

Possible Source

- Open-circuit, contact resistance, short-circuit to ground or short-circuit to supply voltage in the connectors for the brake control module or control module for four wheel drive (Active on Demand Coupling).

Fault symptom[s]

- No four wheel drive.

CHECKING FOR OIL LEAKAGE (4T65 AWD; AW50/51 AWD; 2003-2004)

CHECKING FOR OIL LEAKAGE

CHECKING SEALS AND SEALING JOINTS

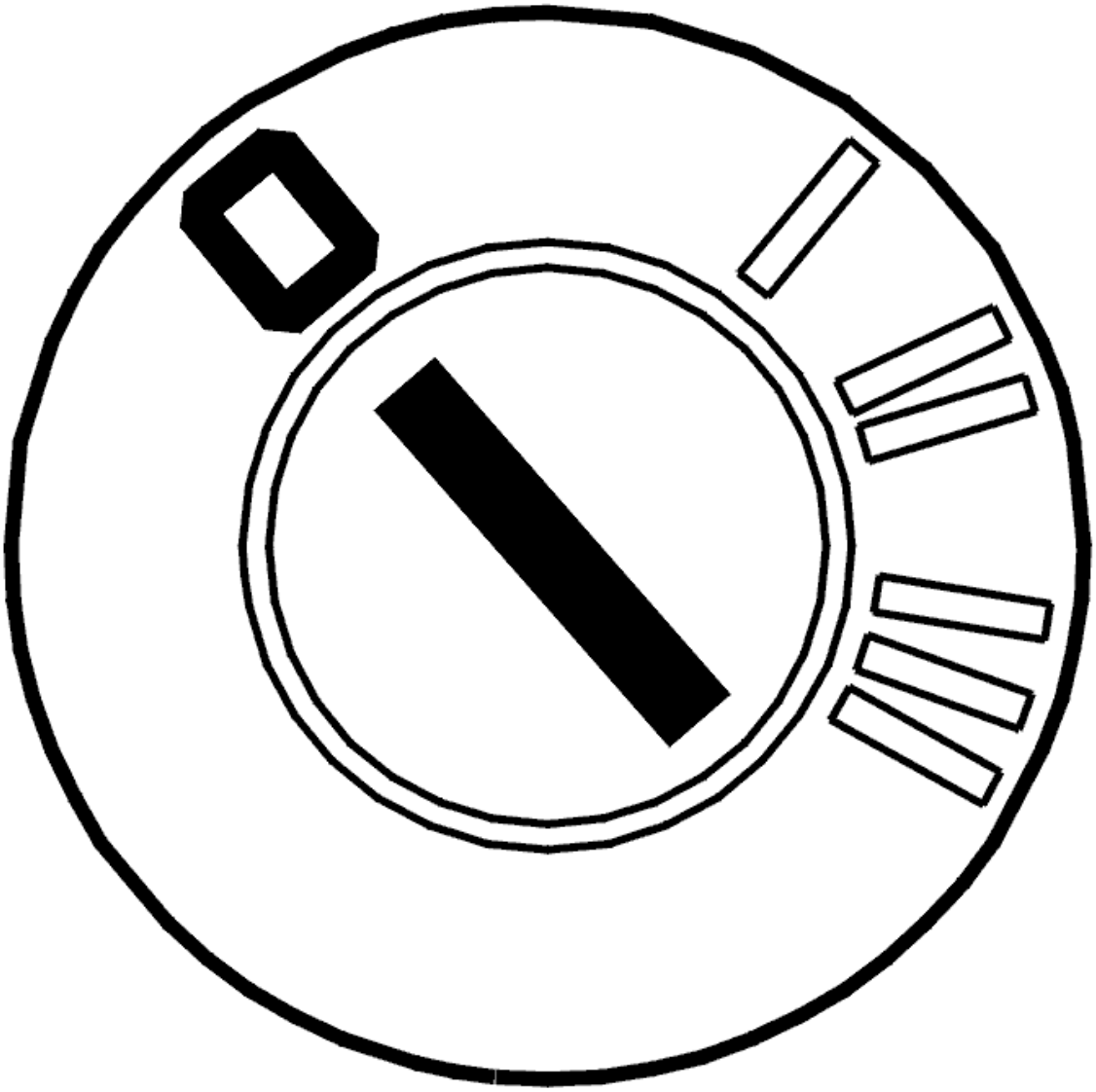

Fig. 6: Identifying Ignition OFF
Courtesy of VOLVO CARS CORPORATION

- Ignition off.

  Check the following seals and sealing joints:

  - the seal for the input shaft
  - the seal joint between the coupling (Active on Demand Coupling) and the rear axle
  - the seal joint between the control module and the housing.

  If there is oil leakage from the bleed hole:

  Remove the level plug and top up with oil, P/N 116 1329. Fill until oil escapes from the level plug hole.

Then drain 0.25 l of oil. Install the level plug.

Remedy any leakage.

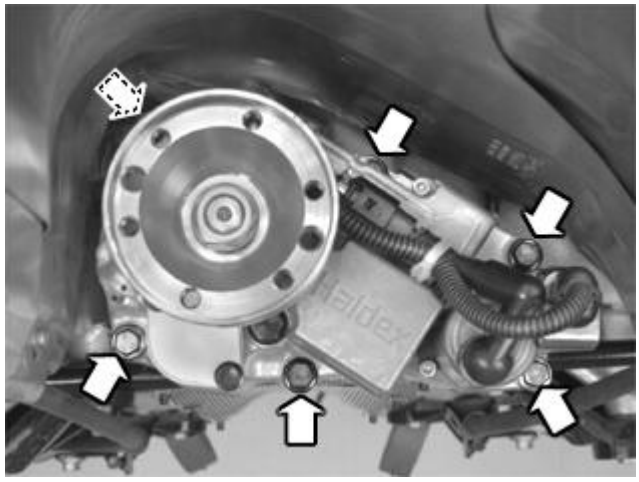

Fig. 7: Identifying Surface Of AOC (Active On Demand Coupling)
Courtesy of VOLVO CARS CORPORATION

FAULT-TRACING INFORMATION

Condition

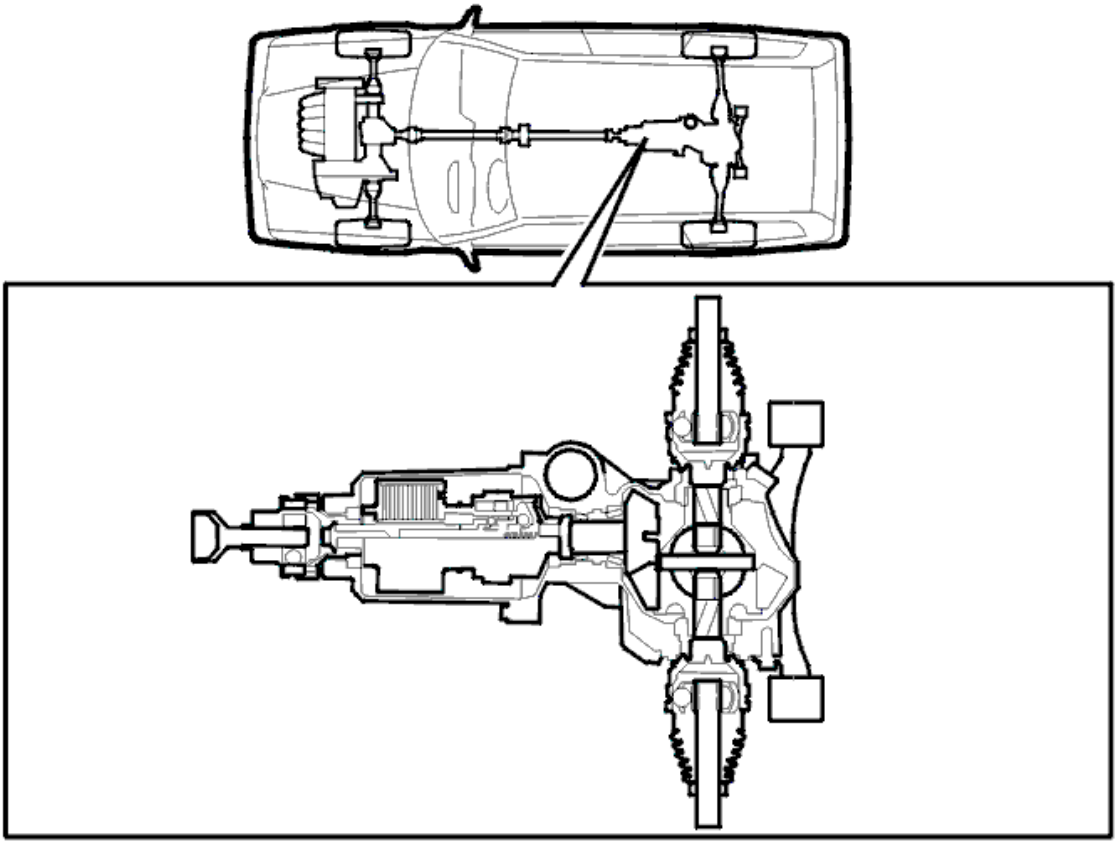

Fig. 8: Identifying Rear Differential Assembly
Courtesy of VOLVO CARS CORPORATION

No diagnostic trouble codes (DTCs) stored in the control module for four wheel drive (Active on Demand Coupling).

Possible Source

- Burnt oil
- Oil leakage.

Fault symptom[s]

- Four wheel drive is not functioning
- Oil leakage from the 4 wheel drive unit
- Noise from the rear axle
- Burnt smell from the 4 wheel drive unit.

CHECKING FOUR WHEEL DRIVE (4T65 AWD; AW50/51 AWD; 2003-2004)

CHECKING FOUR WHEEL DRIVE

FUNCTION CHECK

WARNING: Ensure that the car is safely raised. Check that no objects are caught in the tire treads.

CAUTION: Carry out the test with the car raised so that all four wheels can rotate freely with the mounting at the ends of the control arms to prevent damage to the drive shafts.

NOTE: If the car has STC or DSTC, these functions must be disengaged. Press in the STC/DSTC button on the center console. Hold the button in for at least 2 seconds. The LED on the button must go out.

If the car is equipped with TRACS (traction control system) the function must be deactivated. This is carried out by removing the fuse for the ABS modulator in the engine compartment fusebox. Note that diagnostic trouble codes (DTCs) will be stored in the brake control module (BCM). These must be erased before returning the car to the customer.

- Ignition off
- Raise the car so that all the driven wheels are clear of the ground
- Depress the brake pedal
- Move the gear selector to position P
- Start the engine and release the parking brake
- Move the gear selector to position D
- Release the brake pedal when the car is idling. If at least one wheel on each axle rotates, the Active on Demand Coupling is verified as being active and the feed pump for the Active on Demand Coupling functioning. Note any faulty function. If the front wheels rotate at normal speed and the rear wheels do not rotate this means that the Active on Demand Coupling function is faulty. Note any faulty function
- Depress the accelerator pedal (AP) and maintain a speed of approximately 60-80 km/h. Check that all wheels rotate at the same speed
- Release the accelerator pedal (AP)
- Select N immediately after releasing the accelerator pedal (AP)
- Apply the parking brake when the wheels are still rotating at 60-80 km/h. Check that the rear wheels stop abruptly and that the front wheels continue to rotate. If this is the case the quick release in the control valve functions. Note any faulty function. If all wheels stop immediately when the parking brake is applied, operation of the valve is not functioning. This may be caused by a function fault in the Active on Demand Coupling. Note any faulty function
- Release the parking brake and depress the brake pedal. All wheels must stop
- Move the gear selector to position D
- Release the brake pedal.

- **Continue**

Refer to **FUNCTION CHECK**

FUNCTION CHECK

WARNING: Ensure that the car is safely raised. Check that no objects are caught in the tire treads.

CAUTION: Carry out the test with the car raised so that all four wheels can rotate freely with the mounting at the ends of the control arms to prevent damage to the drive shafts.

NOTE: STC (stability and traction control)/DSTC (dynamic stability and traction control) function is deactivated.

- Ignition off
- Raise the car so that all the driven wheels are clear of the ground
- Depress the brake pedal
- Move the gear selector to position P
- Start the engine with the parking brake applied. The indicator lamp in the combined instrument panel must light
- Move the gear selector to position D
- Release the brake pedal when the car is idling. If the front wheels rotate slowly and the rear wheels do not rotate the Active on Demand Coupling is OK. Replace the differential electronic module (DEM) if the front wheels rotate at normal speed, the rear wheels do not rotate, the oil level is correct and the previous test was carried out without faults.

Other information:

- To replace the differential electronic module (DEM). See **DIFFERENTIAL ELECTRONIC MODULE (DEM), REPLACING**
- see **TEST DRIVING ACTIVE ON DEMAND COUPLING, MANUAL TRANSMISSION**
- see **TEST DRIVING ACTIVE ON DEMAND COUPLING, AUTOMATIC TRANSMISSION** .

Was the function OK?

- **YES**

  Refer to **FUNCTION CHECK**

- **NO**

  OKAY: Troubleshooting has been completed.

FUNCTION CHECK

WARNING: Ensure that the car is safely raised. Check that no objects are caught in the tire treads.

CAUTION: Carry out the test with the car raised so that all four wheels can rotate freely with the mounting at the ends of the control arms to prevent damage to the drive shafts.

NOTE: STC (stability and traction control)/DSTC (dynamic stability and traction control) function is deactivated.

- Ignition off
- Raise the car so that all the driven wheels are clear of the ground
- Move the gear selector to the N position
- Start the engine with the parking brake applied
- Let the engine idle. Attempt to rotate both the front wheels at the same time.

NOTE: The basic function of the Active on Demand Coupling and the function of the oil pump for the Active on Demand Coupling can be verified by checking to, see if the brake force on the rear wheels also brakes the front wheels.

- Disconnect the 2-pin connector between the differential electronic module (DEM) and the feed pump
- When the basic pressure drops, the successive reduction in basic pressure can be felt by the reduction and ceasing of the basic torque
- Connect the connector between the differential electronic module (DEM) and the feed pump
- The build up of basic pressure in the clutch can be felt when the front wheels brake via the Active on Demand Coupling
- Disconnect the 8-pin connector between the differential electronic module (DEM) and the cable from the car.

NOTE: When the power supply to the differential electronic module (DEM) is cut, the choke valve quickly opens. This is verified by the basic torque ceasing immediately.

- Connect the connector for the differential electronic module (DEM)
- Note that the feed pump for the Active on Demand Coupling starts. On Startup an increase in speed of the pump can be heard
- Switch off the engine and leave the ignition on
- Leave the parking brake applied and the gear selector in position N
- The feed pump for the Active on Demand Coupling must not rotate in this position.

If the basic function of the Active on Demand Coupling and the function of the feed pump for the Active on Demand Coupling are verified and the test is OK, replace the Active on Demand Coupling.

If the basic function of the Active on Demand Coupling and the function of the feed pump for the Active on Demand Coupling are verified and the test is **not** OK, replace the differential electronic module (DEM).

Other information

- To replace the coupling (Active on Demand Coupling):
  - For AW50AWD and 4T65AWD 2003-, see **ACTIVE ON DEMAND COUPLING (AOC), REPLACING**
  - For M66AWD 2004-, see **ACTIVE ON DEMAND COUPLING (AOC), REPLACING** .
- To replace the differential electronic module (DEM), see **DIFFERENTIAL ELECTRONIC MODULE (DEM), REPLACING**
- see **TEST DRIVING ACTIVE ON DEMAND COUPLING, MANUAL TRANSMISSION**
- see **TEST DRIVING ACTIVE ON DEMAND COUPLING, AUTOMATIC TRANSMISSION** .

TEST DRIVING ACTIVE ON DEMAND COUPLING, MANUAL TRANSMISSION

TEST DRIVING

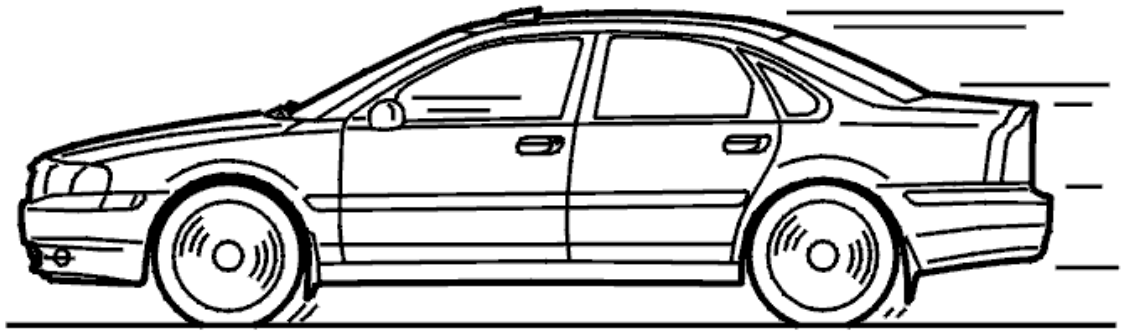

Fig. 9: Identifying Test Drive
Courtesy of VOLVO CARS CORPORATION

WARNING: **Observe all traffic regulations during the test drive.**

HINT: The test drive consists of two tests. The first test is at low engine speeds (RPM). The second is at higher engine speeds (RPM).

HINT: At low engine speeds (RPM), four wheel drive is normally disengaged. At high engine speeds, four wheel drive will be engaged. This will have a braking effect when the clutch is depressed and the accelerator pedal (AP) is released.

HINT: The stopping distance with four wheel drive engaged must be approximately half the distance of that when four wheel drive is disengaged.

The test drive

Drive the car in a circle at full lock (the smallest turning circle) at a speed of approximately 10 km/h. Press the clutch and release the accelerator pedal (AP). Let the car come to a standstill.

Note how long it took for the car to stop.

Repeat the test. Increase the engine speed to 3000-4000 rpm. Let the car come to a standstill.

The car will stop in half the distance it took to stop in the first test if the function is correct.

Drive the car while looking out for any faults in functions or noise from the rear suspension.

If there is a fault or noise, stop the test drive. Return to the workshops. Fault trace the symptoms.

CHECKING FOUR WHEEL DRIVE (4T65 AWD; 2005-2006)

CHECKING FOUR WHEEL DRIVE

FUNCTION CHECK

CAUTION: Carry out the test with the vehicle raised so that all four wheels can rotate freely with the mounting at the ends of the control arms to prevent damage to the drive shafts.

WARNING: Ensure that the vehicle is safely raised. Check that no objects are caught in the tire treads.

NOTE: If the vehicle has STC or DSTC, these functions must be disengaged. Press in the STC/DSTC button on the center console. Hold the button in for at least 2 seconds. The LED on the button must go out.

If the vehicle is equipped with TRACS (traction control system) the function must be deactivated. This is carried out by removing the fuse for the ABS

modulator in the engine compartment fusebox. Note that diagnostic trouble codes (DTCs) will be stored in the brake control module (BCM). These must be erased before returning the vehicle to the customer.

- Ignition off
- Raise the vehicle so that all the driven wheels are clear of the ground
- Depress the brake pedal
- Move the gear selector to position P
- Start the engine and release the parking brake
- Move the gear selector to position D
- Release the brake pedal when the vehicle is idling. If at least one wheel on each axle rotates, the Active on Demand Coupling is verified as being active and the feed pump for the Active on Demand Coupling is functioning. Note any faulty function. If the front wheels rotate at normal speed and the rear wheels do not rotate this means that the Active on Demand Coupling function is faulty. Note any faulty function
- Depress the accelerator pedal (AP) and maintain a speed of approximately 60-80 km/h. Check that all wheels rotate at the same speed
- Release the accelerator pedal (AP)
- Select N immediately after releasing the accelerator pedal (AP)
- Apply the parking brake when the wheels are still rotating at 60-80 km/h. Check that the rear wheels stop abruptly and that the front wheels continue to rotate. If this is the case the quick release in the control valve functions. Note any faulty function. If all wheels stop immediately when the parking brake is applied, valve control is not functioning. This may be caused by a function fault in the Active on Demand Coupling. Note any faulty function
- Release the parking brake and depress the brake pedal. All wheels must stop
- Move the gear selector to position D
- Release the brake pedal.

- **Continue**

  Refer to **FUNCTION CHECK**

FUNCTION CHECK

CAUTION: Carry out the test with the vehicle raised so that all four wheels can rotate freely with the mounting at the ends of the control arms to prevent damage to the drive shafts.

WARNING: Ensure that the vehicle is safely raised. Check that no objects are caught in the tire treads.

NOTE: STC (stability and traction control)/DSTC (dynamic stability and traction control) function is deactivated.

- Ignition off
- Raise the vehicle so that all the driven wheels are clear of the ground
- Depress the brake pedal
- Move the gear selector to position P
- Start the engine with the parking brake applied. The indicator lamp in the combined instrument panel must light
- Move the gear selector to position D
- Release the brake pedal when the vehicle is idling. If the front wheels rotate slowly and the rear wheels do not rotate the Active on Demand Coupling is OK. If the front wheels rotate at normal speed, the rear wheels are stationary, the oil level is correct and the previous test was carried out without faults, replace the differential electronic module (DEM).

Other information:

- see **DIFFERENTIAL ELECTRONIC MODULE (DEM), REPLACING**
- see **TEST DRIVING ACTIVE ON DEMAND COUPLING, AUTOMATIC TRANSMISSION**

Was the function OK?

- **YES**

  Refer to **FUNCTION CHECK**

- **NO**

  OKAY: Troubleshooting has been completed.

FUNCTION CHECK

CAUTION: Carry out the test with the vehicle raised so that all four wheels can rotate freely with the mounting at the ends of the control arms to prevent damage to the drive shafts.

WARNING: Ensure that the vehicle is safely raised. Check that no objects are caught in the tire treads.

NOTE: STC (stability and traction control)/DSTC (dynamic stability and traction control) function is deactivated.

- Ignition off
- Raise the vehicle so that all the driven wheels are clear of the ground
- Move the gear selector to the N position
- Start the engine with the parking brake applied

- Allow the engine to idle and at the same time attempt to pull round both front wheels.

NOTE: The basic function of the Active on Demand Coupling and the function of the oil pump for the Active on Demand Coupling can be verified by checking to, see if the brake force on the rear wheels also brakes the front wheels.

- Disconnect the 2-pin connector between the differential electronic module (DEM) and the feed pump
- When the basic pressure drops, the successive reduction in basic pressure can be deduced by the reduction and ceasing of the basic torque
- Connect the connector between the differential electronic module (DEM) and the feed pump
- The build up of basic pressure in the clutch can be felt when the front wheels brake via the Active on Demand Coupling
- Disconnect the 8-pin connector between the differential electronic module (DEM) and the cable from the vehicle.

NOTE: When the power supply to the differential electronic module (DEM) is cut, the choke valve quickly opens. This is verified by the basic torque ceasing immediately.

- Connect the connector for the differential electronic module (DEM)
- Note that the feed pump for the Active on Demand Coupling starts. On Startup an increase in speed of the pump can be heard
- Switch off the engine and leave the ignition on
- Leave the parking brake applied and the gear selector in position N
- The feed pump for the Active on Demand Coupling must not rotate in this position.

If the basic pressure function of the Active on Demand Coupling and the function of the feed pump for the Active on Demand Coupling are verified and the test is OK, replace the Active on Demand Coupling.

If the basic pressure function of the Active on Demand Coupling and the function of the feed pump for the Active on Demand Coupling are verified and the test is **not** OK, replace the differential electronic module (DEM).

Other information

- see **ACTIVE ON DEMAND COUPLING (AOC), REPLACING**
- see **DIFFERENTIAL ELECTRONIC MODULE (DEM), REPLACING**
- see **TEST DRIVING ACTIVE ON DEMAND COUPLING, AUTOMATIC TRANSMISSION**

CHECKING FOUR WHEEL DRIVE (AW50/51 AWD; 2005-2007)

CHECKING FOUR WHEEL DRIVE

FUNCTION CHECK

CAUTION: Carry out the test with the vehicle raised so that all four wheels can rotate freely with the mounting at the ends of the control arms to prevent damage to the drive shafts.

WARNING: Ensure that the vehicle is safely raised. Check that no objects are caught in the tire treads.

NOTE: If the vehicle has STC or DSTC, these functions must be disengaged. Press in the STC/DSTC button on the center console. Hold the button in for at least 2 seconds. The LED on the button must go out.

If the vehicle is equipped with TRACS (traction control system) the function must be deactivated. This is carried out by removing the fuse for the ABS modulator in the engine compartment fusebox. Note that diagnostic trouble codes (DTCs) will be stored in the brake control module (BCM). These must be erased before returning the vehicle to the customer.

- Ignition off
- Raise the vehicle so that all the driven wheels are clear of the ground
- Depress the brake pedal
- Move the gear selector to position P
- Start the engine and release the parking brake
- Move the gear selector to position D
- Release the brake pedal when the vehicle is idling. If at least one wheel on each axle rotates, the Active on Demand Coupling is verified as being active and the feed pump for the Active on Demand Coupling is functioning. Note any faulty function. If the front wheels rotate at normal speed and the rear wheels do not rotate this means that the Active on Demand Coupling function is faulty. Note any faulty function
- Depress the accelerator pedal (AP) and maintain a speed of approximately 60-80 km/h. Check that all wheels rotate at the same speed
- Release the accelerator pedal (AP)
- Select N immediately after releasing the accelerator pedal (AP)
- Apply the parking brake when the wheels are still rotating at 60-80 km/h. Check that the rear wheels stop abruptly and that the front wheels continue to rotate. If this is the case the quick release in the control valve functions. Note any faulty function. If all wheels stop immediately when the parking brake is applied, valve control is not functioning. This may be caused by a function fault in the Active on Demand Coupling. Note any faulty function
- Release the parking brake and depress the brake pedal. All wheels must stop
- Move the gear selector to position D
- Release the brake pedal.

- **Continue**

  Refer to **FUNCTION CHECK**

FUNCTION CHECK

CAUTION: Carry out the test with the vehicle raised so that all four wheels can rotate freely with the mounting at the ends of the control arms to prevent damage to the drive shafts.

WARNING: Ensure that the vehicle is safely raised. Check that no objects are caught in the tire treads.

NOTE: STC (stability and traction control)/DSTC (dynamic stability and traction control) function is deactivated.

- Ignition off
- Raise the vehicle so that all the driven wheels are clear of the ground
- Depress the brake pedal
- Move the gear selector to position P
- Start the engine with the parking brake applied. The indicator lamp in the combined instrument panel must light
- Move the gear selector to position D
- Release the brake pedal when the vehicle is idling. If the front wheels rotate slowly and the rear wheels do not rotate the Active on Demand Coupling is OK. If the front wheels rotate at normal speed, the rear wheels are stationary, the oil level is correct and the previous test was carried out without faults, replace the differential electronic module (DEM).

Other information:

- see **DIFFERENTIAL ELECTRONIC MODULE (DEM), REPLACING**
- see **TEST DRIVING ACTIVE ON DEMAND COUPLING, AUTOMATIC TRANSMISSION**

Was the function OK?

- **YES**

  Refer to **FUNCTION CHECK**

- **NO**

  OKAY: Troubleshooting has been completed.

FUNCTION CHECK

CAUTION: Carry out the test with the vehicle raised so that all four wheels can rotate freely with the mounting at the ends of the control arms to prevent damage to the drive shafts.

WARNING: Ensure that the vehicle is safely raised. Check that no objects are caught in the tire treads.

NOTE: STC (stability and traction control)/DSTC (dynamic stability and traction control) function is deactivated.

- Ignition off
- Raise the vehicle so that all the driven wheels are clear of the ground
- Move the gear selector to the N position
- Start the engine with the parking brake applied
- Allow the engine to idle and at the same time attempt to pull round both front wheels.

NOTE: The basic function of the Active on Demand Coupling and the function of the oil pump for the Active on Demand Coupling can be verified by checking to, see if the brake force on the rear wheels also brakes the front wheels.

- Disconnect the 2-pin connector between the differential electronic module (DEM) and the feed pump
- When the basic pressure drops, the successive reduction in basic pressure can be deduced by the reduction and ceasing of the basic torque
- Connect the connector between the differential electronic module (DEM) and the feed pump
- The build up of basic pressure in the clutch can be felt when the front wheels brake via the Active on Demand Coupling
- Disconnect the 8-pin connector between the differential electronic module (DEM) and the cable from the vehicle.

NOTE: When the power supply to the differential electronic module (DEM) is cut, the choke valve quickly opens. This is verified by the basic torque ceasing immediately.

- Connect the connector for the differential electronic module (DEM)
- Note that the feed pump for the Active on Demand Coupling starts. On Startup an increase in speed of the pump can be heard
- Switch off the engine and leave the ignition on
- Leave the parking brake applied and the gear selector in position N
- The feed pump for the Active on Demand Coupling must not rotate in this position.

If the basic pressure function of the Active on Demand Coupling and the function of the feed pump for the Active on Demand Coupling are verified and the test is OK, replace the Active on Demand Coupling.

If the basic pressure function of the Active on Demand Coupling and the function of the feed pump for the Active on Demand Coupling are verified and the test is **not** OK, replace the differential electronic module (DEM).

Other information

- see **ACTIVE ON DEMAND COUPLING (AOC), REPLACING**
- see **DIFFERENTIAL ELECTRONIC MODULE (DEM), REPLACING**
- see **TEST DRIVING ACTIVE ON DEMAND COUPLING, AUTOMATIC TRANSMISSION**

CHECKING INCORRECT ENGAGEMENT OF FOUR-WHEEL DRIVE (4T65 AWD; 2006)

CHECKING INCORRECT ENGAGEMENT OF FOUR-WHEEL DRIVE

FAULT-TRACING INFORMATION

Differential electronic module (DEM) checks engagement and disengagement of four-wheel drive. The control module controls engagement and disengagement using a number of parameters, among others, by comparing speed of the wheels. If the vehicle's tires are worn unevenly (compared front and rear, or if a tire with incorrect dimension is installed (compared with the vehicle's other tires) on the vehicle's front or rear axle, this may result in incorrect engagement of four-wheel drive. Incorrect engagement of four-wheel drive may be experienced as jerk or hack when driving.

Incorrect engagement is if four-wheel drive is activated at a time when the following parameters are fulfilled:

- Constant vehicle speed (above 20 km/h).
- Constant engine rpm.
- Brake pedal released (no braking).
- The parking brake is not applied.
- Engine brake not active (accelerator pedal pressed down).

Causes of interference can be:

- Unevenly worn tires (compared front and rear).
- Tire with incorrect dimension has been installed on front or rear axle (compare with other tires on the vehicle).

- **Continue**

  Refer to **CHECKING TIRE WEAR**

CHECKING TIRE WEAR

Check tires for wear. The tires shall be worn evenly when comparing front and rear. Check that all tires have the same dimension. If any or some tires are more worn than the others or have a different dimension, it is recommended that these are replaced.

- **Continue**

Refer to **CHECKING SOFTWARE VERSION**

CHECKING SOFTWARE VERSION

From and incl. week 39 year 2007, there is software with greater tolerance for different wheel speeds, this to minimize the risk of incorrect engagement of four-wheel drive at, e. g., slightly unevenly worn tires. The rolling circumference may vary slightly even on new tires.

Check if new software is available for download in Differential electronic module (DEM).

- **Continue**

  Refer to **TEST DRIVING AND READING OFF DIAGNOSTIC TROUBLE CODES (DTCS)**

TEST DRIVING AND READING OFF DIAGNOSTIC TROUBLE CODES (DTCS)

After changing tire and/or new software has been downloaded in the control module, the vehicle shall be test-driven and then read out with VIDA (Volvo scan tool). Before test-driving, connect VIDA and read out parameter "Number of detections of malfunction condition" via CAR COMMUNICATION/Parameters. Note the quantity.

Test-drive the vehicle and fulfill the following criteria at the same time at least once:

- Constant vehicle speed (above 20 km/h).
- Constant engine rpm.
- Brake pedal released (no braking).
- Engine brake not active (accelerator pedal pressed down).

After test-driving:

Connect VIDA and read out parameter "Number of detections of malfunction condition" via CARCOMMUNICATION/Parameters. Compare the number before and after test-driving, if the number of "detections of malfunction condition" is higher after test-driving it indicates that Differential electronic module (DEM) has detected "incorrect engagement" of four-wheel drive.

The parameter "Number of detections of malfunction condition" is only counted up once per driving cycle if "incorrect engagement" is detected.

Has the counter counted up after test-driving?

- **YES**

  Refer to **INFORMATION**

- **NO**

  Refer to **INFORMATION**

INFORMATION

FAULT-TRACING INFORMATION

In case of this defect, troubleshooting is not followed by verification.

The information can be displayed again or the fault-tracing for this fault can be interrupted.

INFORMATION

FAULT-TRACING INFORMATION

The fault should have been detected and remedied. As this is not the case fault-tracing has failed.

Exit fault-tracing for this diagnostic trouble code (DTC) or make another attempt.

CHECKING INCORRECT ENGAGEMENT OF FOUR-WHEEL DRIVE (AW50/51 AWD; 2006-2007)

CHECKING INCORRECT ENGAGEMENT OF FOUR-WHEEL DRIVE

see **CHECKING INCORRECT ENGAGEMENT OF FOUR-WHEEL DRIVE**

CHECKING INTERMITTENT FOUR-WHEEL DRIVE (B6324S, TF-80SC AWD; 2009-2010)

CHECKING INTERMITTENT FOUR-WHEEL DRIVE

CHECKING INTERMITTENT FOUR-WHEEL DRIVE

NOTE: Before troubleshooting of four-wheel drive is performed, the components included in the power transmission shall be checked with regards to mechanical damages.

A working pressure is needed to enable torque transmission to the rear axle. This pressure is built up by the feed pump. The feed pump works in intervals to build up a max. pressure. Then the working pressure is adjusted via a pressure control valve. When the feed pump is not active, the pressure is maintained in the system via an accumulator.

If the clutch has an internal leak or a damaged accumulator then the system will, when the pump is not active, lose the pressure that is needed for the torque to be transmitted. Then the four-wheel drive works intermittently, that is, it works when the feed pump works and does not work when the pump is turned off.

This may be difficult to detect by test-driving. To obtain a meaningful test of this, the following test-driving case can be performed at the same time as "power supply pump motor" is read out in the parameter list under vehicle communication. This is to check that four-wheel drive is available even when the feed pump is not active.

- Test-driving on rollers.
- Start and driving uphill on "slippery" ground.

NOTE: **This failure is not solved by replacing Differential electronic module (DEM), it is solved by replacing clutch four-wheel drive.**

Other information:

- see **ACTIVE ON-DEMAND COUPLING MODULE**

CHECKING INTERMITTENT FOUR-WHEEL DRIVE (B6324S5, TF-80SC AWD; 2011-2012)

CHECKING INTERMITTENT FOUR-WHEEL DRIVE

see **CHECKING INTERMITTENT FOUR-WHEEL DRIVE**

CHECKING INTERMITTENT FOUR-WHEEL DRIVE (B8444S, TF-80SC AWD; 2009-2011)

CHECKING INTERMITTENT FOUR-WHEEL DRIVE

see **CHECKING INTERMITTENT FOUR-WHEEL DRIVE**

CHECKING OIL (4T65 AWD; AW50/51 AWD; 2003-2004)

CHECKING OIL

CHECKING THE OIL LEVEL AND OIL GRADE

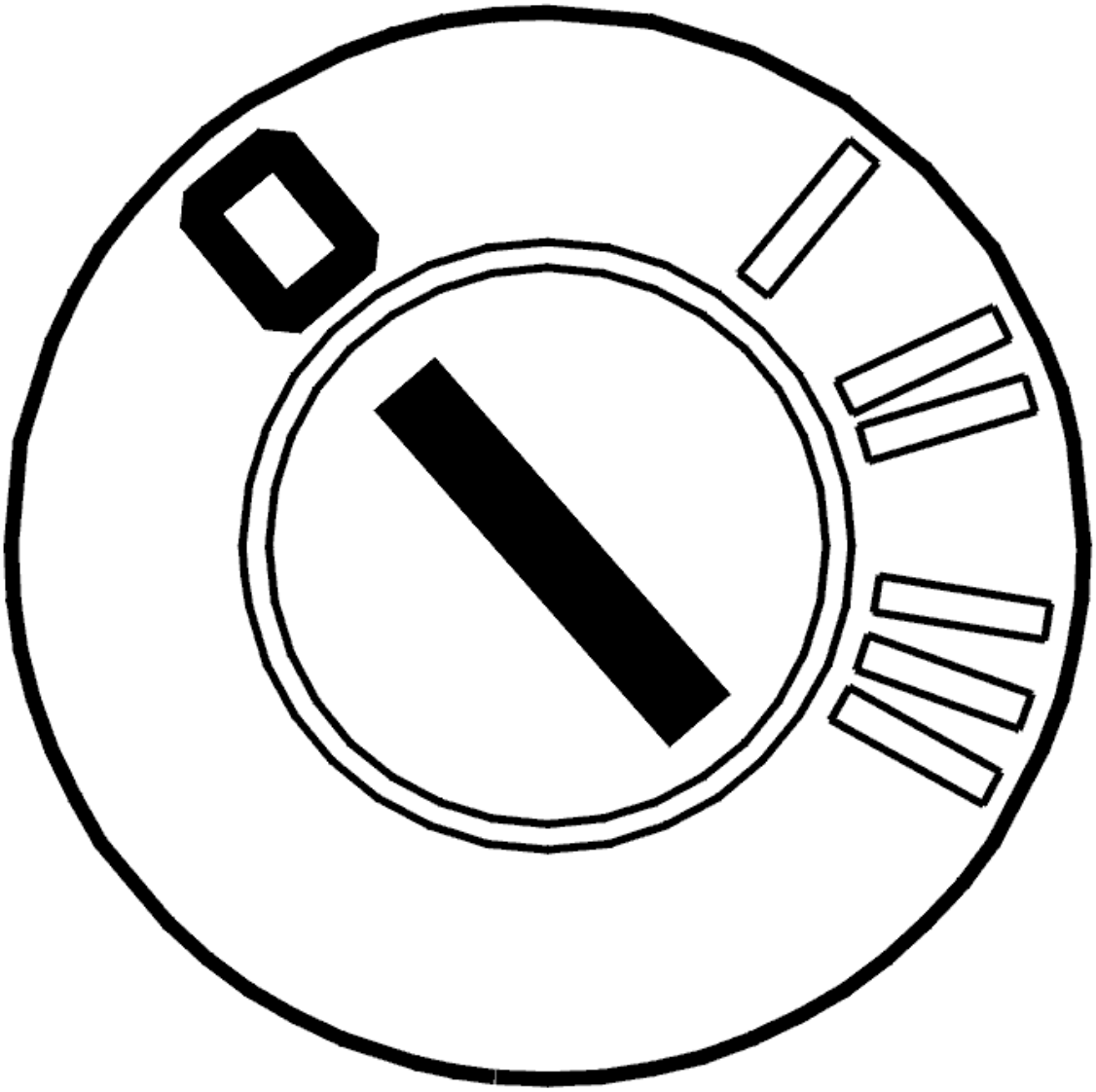

Fig. 10: Identifying Ignition OFF
Courtesy of VOLVO CARS CORPORATION

- Ignition off.

  Checking the oil level

  Check the oil level in the coupling (Active on Demand Coupling).

  If the oil level is low, check for leaks at:

  - the seal for the input shaft
  - the seal joint between the coupling (Active on Demand Coupling) and the rear axle
  - the seal joint between the control module and the housing.

Check the quality of the oil

Also check the quality of the oil by feeling and smelling it.

If the oil is dark and smells burnt, the AOC (Active on Demand Coupling)unit must be replaced.

If there are shavings or particles in the oil, the AOC (Active on Demand Coupling)unit must be replaced.

Other information

- To remove the coupling (Active on Demand Coupling):
  - For AW50AWD and 4T65AWD 2003-, see **ACTIVE ON DEMAND COUPLING (AOC), REPLACING**
  - For M66AWD 2004-, see **ACTIVE ON DEMAND COUPLING (AOC), REPLACING** .

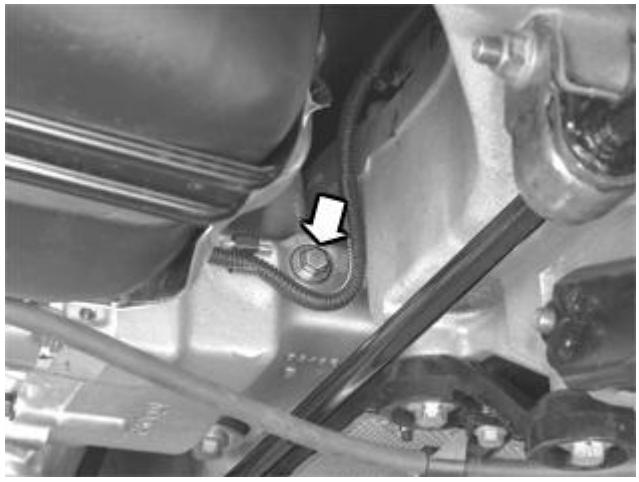

Fig. 11: Filling And Checking Oil In Active On Demand Coupling
Courtesy of VOLVO CARS CORPORATION

ACTIVE ON DEMAND COUPLING (AOC), REPLACING

NOTE: **As the illustrations in this service information are used for different model years and / or models, some variation may occur. However, the essential information is always correct.**

REMOVAL

REMOVING THE EXHAUST SYSTEM

Remove the exhaust system. See **INTAKE AND EXHAUST SYSTEM - REMOVAL, REPLACEMENT AND INSTALLATION** .

REMOVING THE PROPELLER SHAFT

Fig. 12: Identifying Mobile Jack & Jimmy Bar
Courtesy of VOLVO CARS CORPORATION

Remove the propeller shaft from the flange for Active on Demand Coupling. See **REAR AXLE, DRIVE SHAFTS - REMOVAL, REPLACEMENT AND INSTALLATION** .

Remove the screw for the front mounting for the final drive housing.

Position a mobile jack in light contact against the final drive housing. Press the anti-roll bar to one side so that the screw is exposed. Use a jimmy bar.

CAUTION: Protect the surface of the anti-roll bar from damage.

Remove the mobile jack.

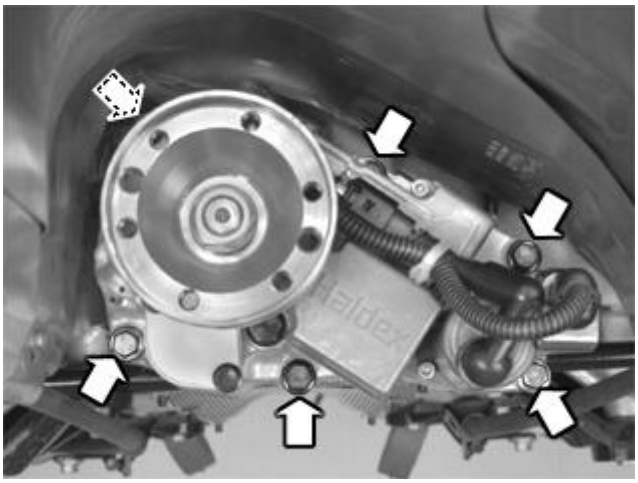

Fig. 13: Identifying Surface Of AOC (Active On Demand Coupling)
Courtesy of VOLVO CARS CORPORATION

Disconnect the connector from the wiring.

Position a container underneath the AOC (Active on Demand Coupling)/ final drive.

Remove the screws for the Active on Demand Coupling. Pull the coupling straight out of the final drive housing.

INSTALLATION

PREPARATIONS FOR INSTALLING THE ACTIVE ON DEMAND COUPLING

Fig. 14: Identifying Final Drive Housing
Courtesy of VOLVO CARS CORPORATION

Clean the final drive housing. There must not be any lint from any paper or cloths.

Check that the mating surface is undamaged.

Fig. 15: Identifying Active On Demand Coupling
Courtesy of VOLVO CARS CORPORATION

Check that the surface of the AOC (Active on Demand Coupling) is undamaged. Place the new gasket on the

coupling. Apply a little grease.

INSTALLING THE ACTIVE ON DEMAND COUPLING

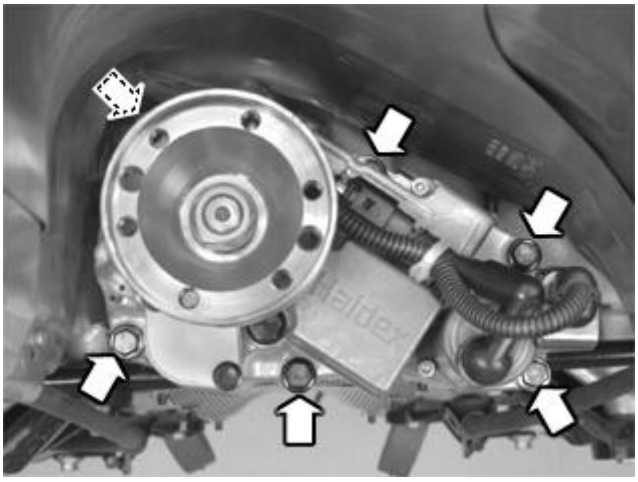

Fig. 16: Identifying Surface Of AOC (Active On Demand Coupling)
Courtesy of VOLVO CARS CORPORATION

Install the coupling on the final drive housing.

Tighten the screws crosswise to light contact. Then tighten to **25 Nm** crosswise.

Connect the connector to the wiring.

Fig. 17: Identifying Mobile Jack & Jimmy Bar
Courtesy of VOLVO CARS CORPORATION

Press the final drive up against the sub-frame.

Install the screw. Use a jimmy bar to move the anti-roll bar to one side. Tighten to **80 Nm** .

CAUTION: Protect the surface of the anti-roll bar from damage.

Remove the mobile jack.

FILLING AND CHECKING THE OIL IN THE ACTIVE ON DEMAND COUPLING

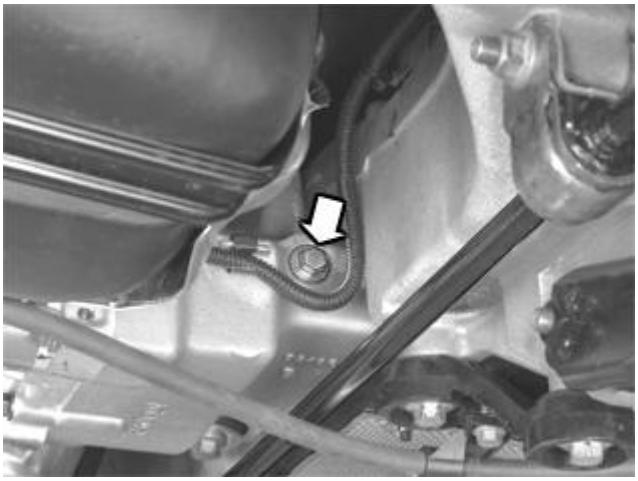

Fig. 18: Filling And Checking Oil In Active On Demand Coupling
Courtesy of VOLVO CARS CORPORATION

Only oil P/N 116 1641 (0.3 liter containers) may be used.

Tighten the level plug. Tighten to **35 Nm** .

Volume approximately 0.8 liters.

CAUTION: If the AOC (Active on Demand Coupling) has been replaced with a new one, the car must be driven carefully in tight circles in both directions and then driven for a few kilometers after the oil is filled. Recheck and top up the oil level as above.

INSTALLING THE PROPELLER SHAFT

Install the propeller shaft. See **REAR AXLE, DRIVE SHAFTS - REMOVAL, REPLACEMENT AND INSTALLATION** .

INSTALLING THE EXHAUST SYSTEM

Install the exhaust system. See **INTAKE AND EXHAUST SYSTEM - REMOVAL, REPLACEMENT AND INSTALLATION** .

FAULT-TRACING INFORMATION

Condition

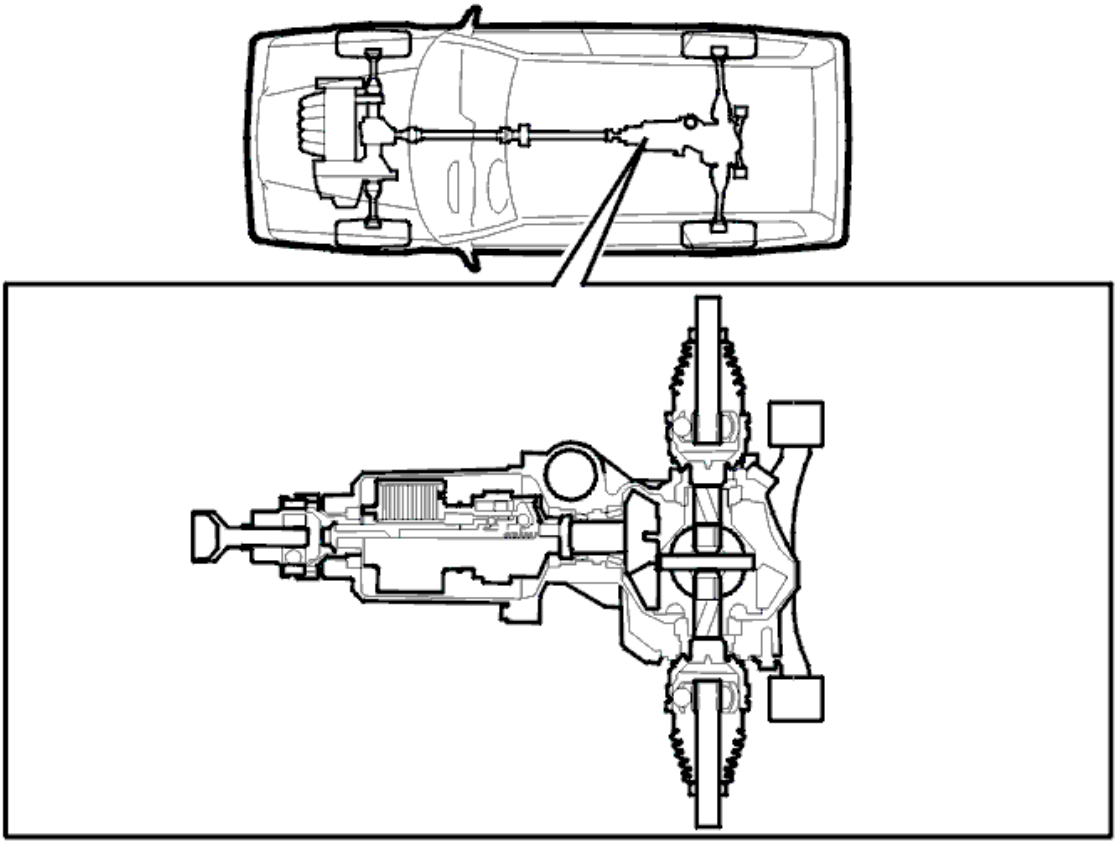

Fig. 19: Identifying Rear Differential Assembly
Courtesy of VOLVO CARS CORPORATION

No diagnostic trouble codes (DTCs) stored in the control module for four wheel drive (Active on Demand Coupling).

Possible Source

- Burnt oil
- Oil leakage.

Fault symptom[s]

- Oil leakage from the 4 wheel drive unit
- Noise from the rear axle
- Burnt smell from the 4 wheel drive unit.

CHECKING POWER SUPPLY AND GROUND TERMINALS (4T65 AWD; AW50/51 AWD; 2003-2004)

CHECKING POWER SUPPLY AND GROUND TERMINALS

see **CHECKING POWER SUPPLY AND GROUND TERMINALS**

FAULT-TRACING INFORMATION

Condition

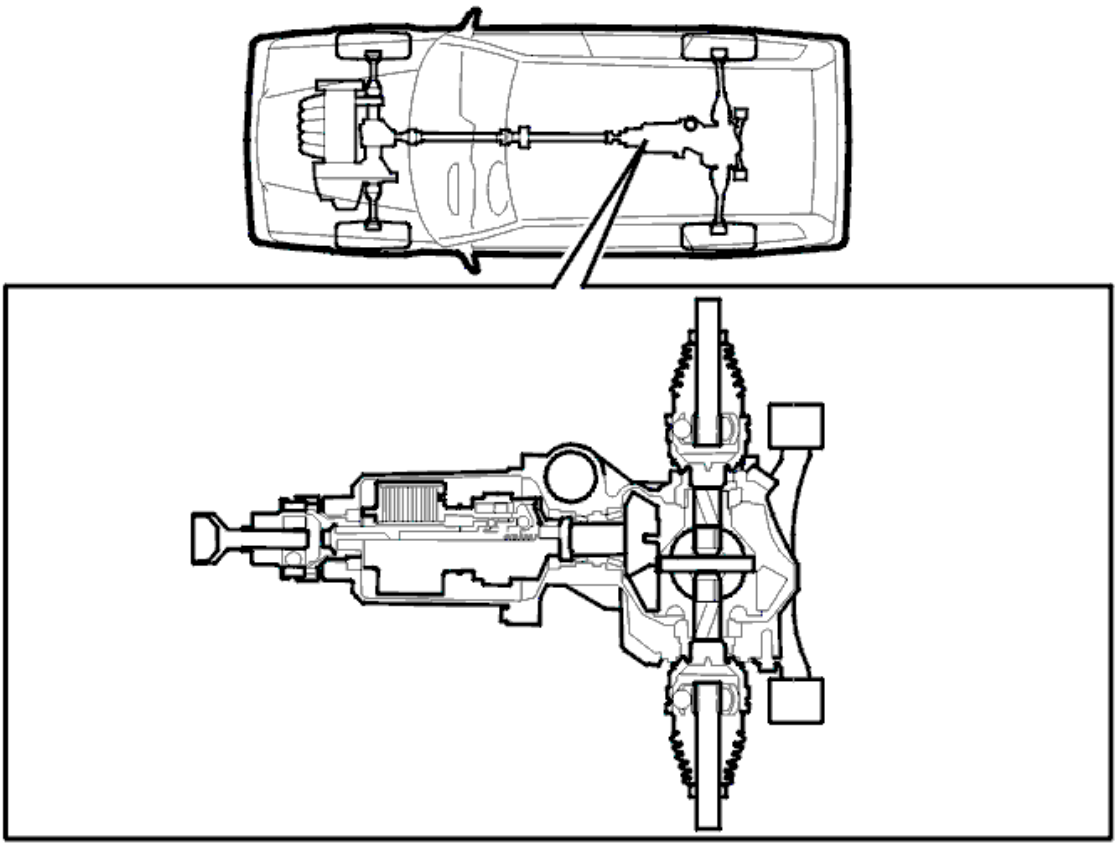

Fig. 20: Identifying Rear Differential Assembly
Courtesy of VOLVO CARS CORPORATION

No diagnostic trouble codes (DTCs) stored in the control module for four wheel drive (Active on Demand Coupling).

Possible Source

- Defective fuse
- Open-circuit, contact resistance, short-circuit to ground or short-circuit to supply voltage in the terminals for the power supply or ground terminal.

Fault symptom[s]

- No four wheel drive.

CHECKING PRESSURE CONTROL VALVE (B6324S, TF-80SC AWD; 2009-

2010)

CHECKING PRESSURE CONTROL VALVE

CHECKING PRESSURE CONTROL VALVE

The pressure control valve is located in Differential electronic module (DEM). It controls the pressure to the clutch.

If symptom like the vehicle's wheels lose traction and/or the vehicle skipping ahead when cornering, the problem may be the pressure control valve. In case of valve failure, the power transmission cannot be controlled in a correct way. This may mean that the difference, needed when the vehicle turns, between the inner and the outer wheels is lost. Test-drive the vehicle in an eight to, see if there are symptoms like; noise in rear axle, that the vehicle skips or that any of the wheels lose traction.

In case of failed pressure control valve, Differential electronic module (DEM) must be replaced.

Other information:

- see **ACTIVE ON-DEMAND COUPLING MODULE**

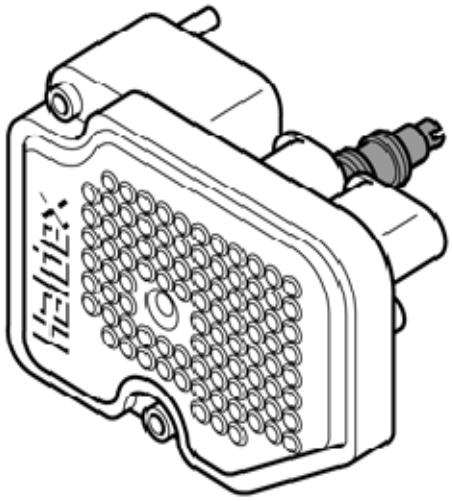

Fig. 21: AOC Module
Courtesy of VOLVO CARS CORPORATION

CHECKING PRESSURE CONTROL VALVE (B6324S5, TF-80SC AWD; 2011-2012)

CHECKING PRESSURE CONTROL VALVE

see **CHECKING PRESSURE CONTROL VALVE**

CHECKING PRESSURE CONTROL VALVE (B8444S, TF-80SC AWD; 2009-2011)

CHECKING PRESSURE CONTROL VALVE

see **CHECKING PRESSURE CONTROL VALVE**

CHECKING SOFTWARE (B6324S, TF-80SC; B6324S, TF-80SC AWD; 2007)

CHECKING SOFTWARE

see **CHECKING SOFTWARE**

CHECKING THE FOUR WHEEL DRIVE (B6324S, TF-80SC AWD; 2007-2008)

CHECKING THE FOUR WHEEL DRIVE

FUNCTION TEST

CAUTION: The test must be carried out on a raised vehicle so that all four wheels are free to turn, with attachment a long way out on the link arms, so as not to damage the drive shafts.

WARNING: Ensure that the vehicle is safely raised. Check that no objects are caught in the tire treads.

NOTE: If the vehicle has STC or DSTC, the function must be de-activated. Depress the STC/DSTC button on the centre console and hold it down for more than 2 seconds. The LED on the button should switch off.

If the vehicle has TRACS, this function must also be deactivated. This is done by removing the fuse for the ABS unit from the engine compartment electrical centre. Note that this will cause trouble codes to be set in the Brake Control Module (BCM). These codes must be erased before the vehicle is returned to the customer.

- Ignition off
- Raise the vehicle so that all the driving wheels are hanging free.
- Push down the brake pedal.
- Move the gear selector lever to the P position.
- Start the engine and release the handbrake.
- Move the gear selector lever to the D position.
- Release the brake pedal while the engine is idling. If at least one wheel on each axle rotates, verify that

both the AOC clutch and its feed pump are active. Make a note of any malfunction. If the front wheels rotate at normal speed but the rear wheels do not rotate this means that the AOC clutch is not functioning correctly. Make a note of any malfunction.

- Push down the accelerator pedal and hold a speed of about 60-80 km/h. Check that all the wheels rotate at the same speed.
- Release the accelerator pedal.
- Position the gear selector lever in the N position immediately after releasing the accelerator pedal.
- Pull on the handbrake while the wheels are still rotating and a speed of 60-80 km/h is indicated. Check that the rear wheels stop immediately and that the front wheels continue to rotate. If this is so, then the rapid opening function of the control valve is operating correctly. Make a note of any malfunction. If all the wheels stop rapidly when the handbrake is applied then the valve control is not working correctly. This may be due to a fault in the AOC clutch. Make a note of any malfunction.
- Release the handbrake and depress the brake pedal. All the wheels should stop.
- Position the gear selector lever in the D position.
- Release the brake pedal.

- **Continue**

  Refer to **FUNCTION TEST**

FUNCTION TEST

CAUTION: The test must be carried out on a raised vehicle so that all four wheels are free to turn, with attachment a long way out on the link arms, so as not to damage the drive shafts.

WARNING: Ensure that the vehicle is safely raised. Check that no objects are caught in the tire treads.

NOTE: The STC/DSTC function is deactivated.

- Ignition off
- Raise the vehicle so that all the driving wheels are hanging free.
- Push down the brake pedal.
- Move the gear selector lever to the P position.
- Start the engine with the handbrake applied. The control lamp in the combination instrument panel should illuminate.
- Move the gear selector lever to the D position.
- Release the brake pedal while the engine is idling. If the front wheels rotate slowly and the rear wheels are stationary the AOC clutch is OK. If the front wheels rotate at normal speed while the back wheels are stationary then, if the oil level is correct and no fault was found in the previous test, the Differential Electronic Module (DEM) must be replaced.

Other information:

- see **DIFFERENTIAL ELECTRONIC MODULE (DEM), REPLACING**
- see **TEST DRIVING ACTIVE ON DEMAND COUPLING, MANUAL TRANSMISSION**
- see **TEST DRIVING ACTIVE ON DEMAND COUPLING, AUTOMATIC TRANSMISSION**

Was the function OK?

- **YES**

  Refer to **FUNCTION TEST**

- **NO**

  OKAY: Troubleshooting has been completed.

FUNCTION TEST

CAUTION: The test must be carried out on a raised vehicle so that all four wheels are free to turn, with attachment a long way out on the link arms, so as not to damage the drive shafts.

WARNING: Ensure that the vehicle is safely raised. Check that no objects are caught in the tire treads.

NOTE: The STC/DSTC function is deactivated.

- Ignition off
- Raise the vehicle so that all the driving wheels are hanging free.
- Move the gear selector lever to the N position.
- Start the engine with the handbrake applied.
- Let the engine idle while attempting to rotate by hand both the front wheels.

NOTE: The base function of the AOC clutch and the function of its feed pump are verified by checking whether the braking effect on the rear wheels also brakes the front wheels.

- Unplug the 2-pin connector between the Differential Electronic Module (DEM) and the feed pump.
- The gradual sinking of the base pressure is apparent as the base torque diminishes and eventually ceases.
- Plug in the connector between the Differential Electronic Module (DEM) and the feed pump.
- The increase in the base pressure in the clutch is made apparent by the braking of the front wheels via the AOC clutch.
- Unplug the 8 pin connector between the Differential Electronic Module (DEM) and the cable from the

vehicle.

NOTE: When the power supply to the Differential Electronic Module (DEM) is removed the regulator valve will open rapidly. This is verified by the immediate cessation of the base torque.

- Plug in the connector to the Differential Electronic Module (DEM)
- Note that the feed pump to the AOC clutch starts. It can be heard that the pump runs at a higher speed when starting.
- Switch of the engine and leave the ignition on.
- Leave the handbrake on and the gear selector lever in the N position.
- The AOC clutch feed pump should not rotate under these conditions.

When the base pressure function of the AOC clutch and the function of the feed pump have been verified and the tests are OK, replace the AOC clutch.

When the base pressure function of the AOC clutch and the function of the feed pump have been verified and the tests are **not** OK, replace the Differential Electronic Module (DEM).

Other information

- see **ACTIVE ON DEMAND COUPLING (AOC), REPLACING**
- see **DIFFERENTIAL ELECTRONIC MODULE (DEM), REPLACING**
- see **TEST DRIVING ACTIVE ON DEMAND COUPLING, MANUAL TRANSMISSION**
- see **TEST DRIVING ACTIVE ON DEMAND COUPLING, AUTOMATIC TRANSMISSION**

CHECKING THE FOUR WHEEL DRIVE (B8444S, TF-80SC AWD; 2006-2008)

CHECKING THE FOUR WHEEL DRIVE

see **CHECKING THE FOUR WHEEL DRIVE**

CHECKING THE FOUR WHEEL DRIVE (TF-80SC AWD; 2005)

CHECKING THE FOUR WHEEL DRIVE

see **CHECKING THE FOUR WHEEL DRIVE**

CHECKING THE OIL PUMP (4T65 AWD; AW50/51 AWD; 2003-2004)

CHECKING THE OIL PUMP

CHECKING THE FUNCTION OF THE PUMP MOTOR

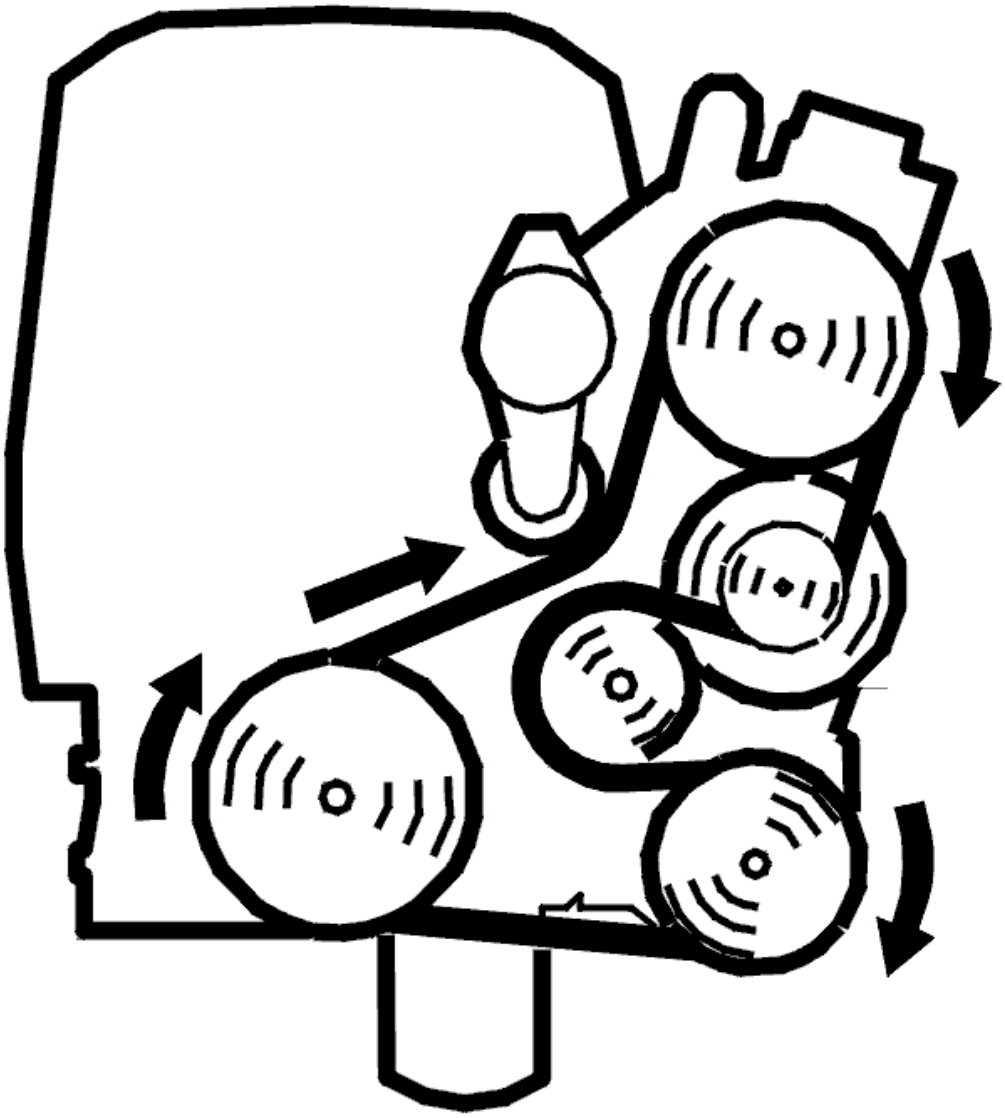

Fig. 22: Belt Routing / Engine Idling - Volvo
Courtesy of VOLVO CARS CORPORATION

- Start the engine.

  Check if the pump motor in the unit for four wheel drive (Active on Demand Coupling) starts and runs normally.

  HINT: The motor must hum and vibrate slightly. Listen using a stethoscope or a screwdriver pressed to your ear

Fig. 23: Locating Active On Demand Coupling Pump Motor
Courtesy of VOLVO CARS CORPORATION

Is the oil pump motor working?

- **YES**

  FAULT NOT FOUND: Troubleshooting has been completed.

- **NO**

  Refer to **CHECKING THE POWER SUPPLY**

CHECKING THE POWER SUPPLY

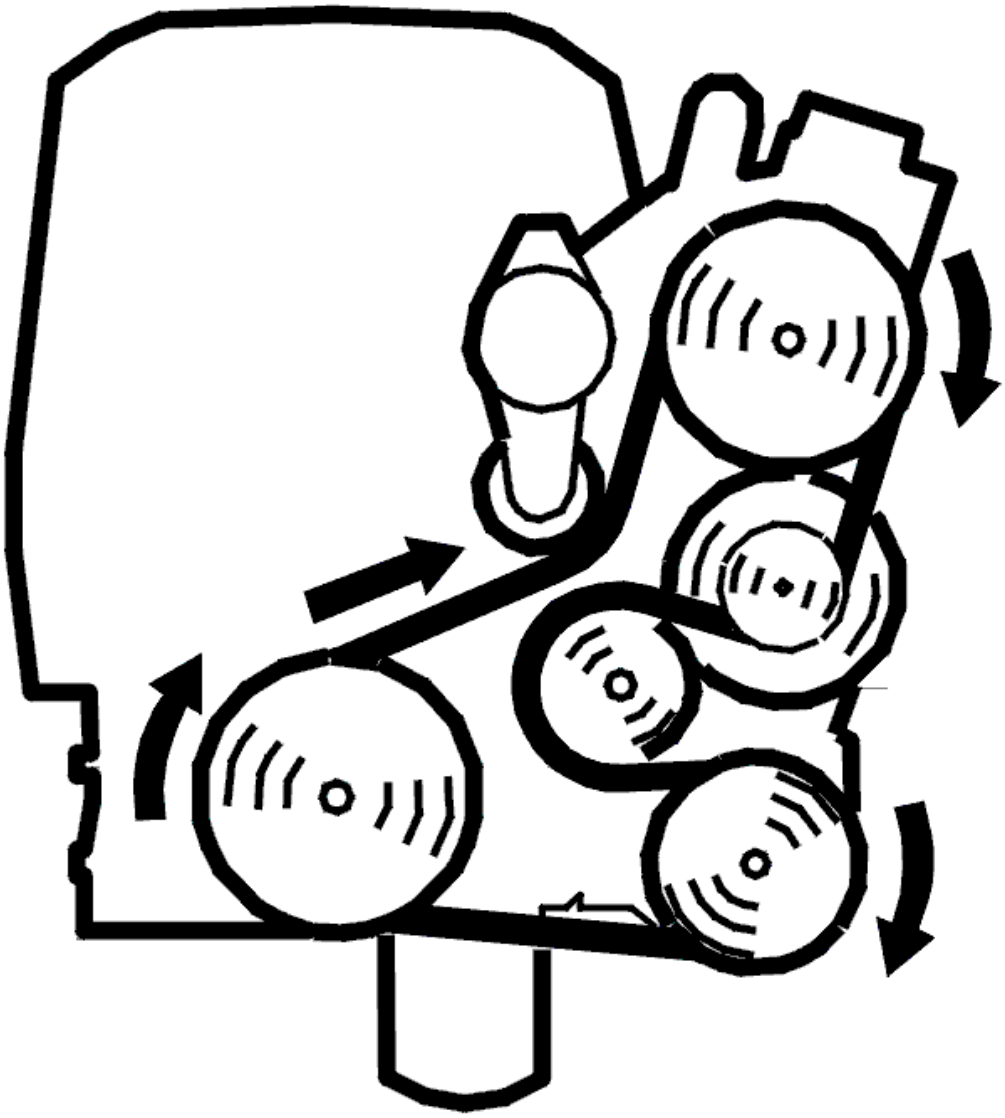

Fig. 24: Belt Routing / Engine Idling - Volvo
Courtesy of VOLVO CARS CORPORATION

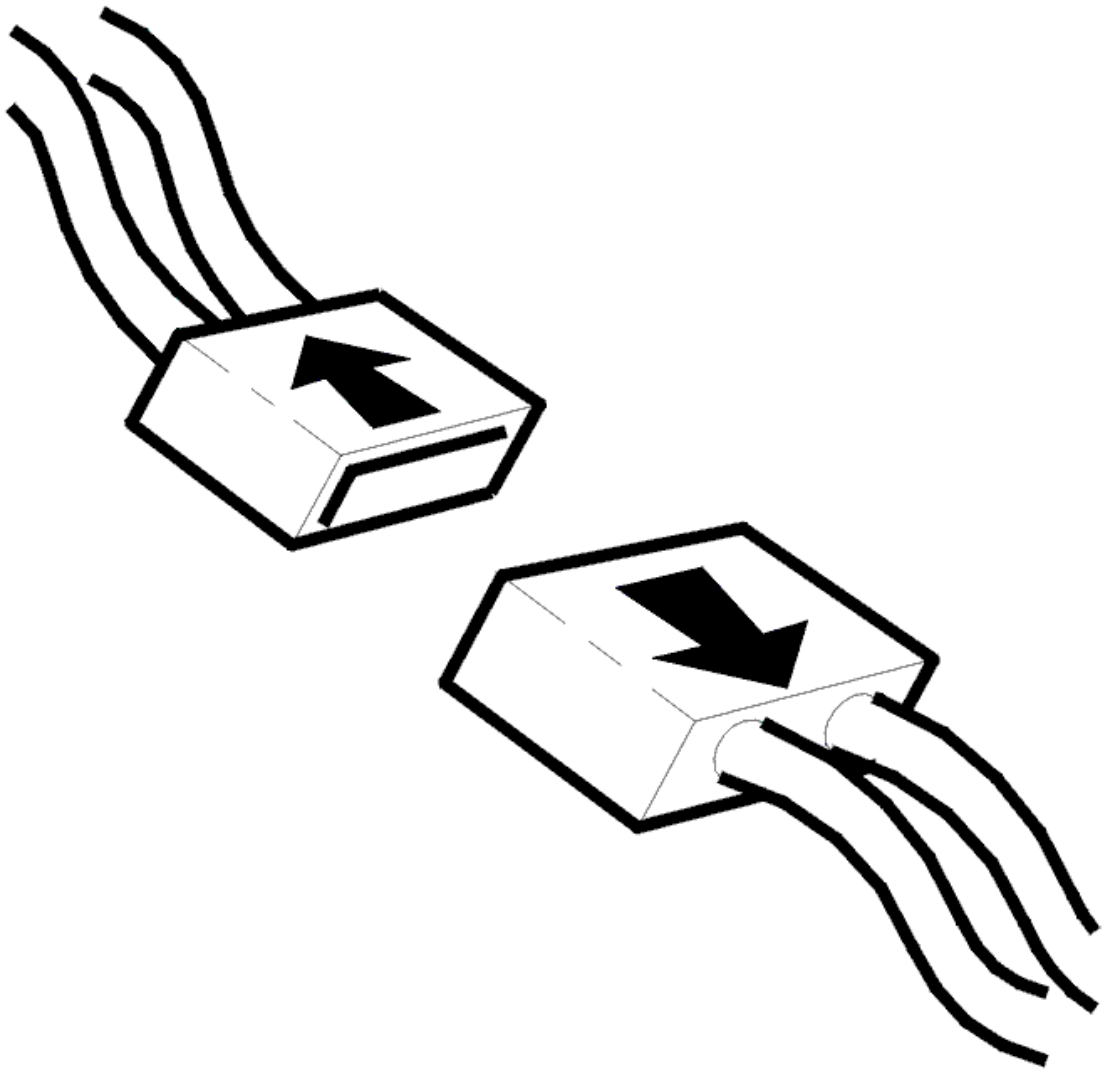

Fig. 25: Disconnecting Connector
Courtesy of VOLVO CARS CORPORATION

- Ignition off
- Disconnect the connector for the pump motor
- Start the engine.

  Check the voltage for the pump motor by taking readings between terminals #1 and #2 on the pump motor connector (control module side). The voltage must be within specification.

  If the voltage is not OK, check the wiring between the control module for four wheel drive (Active on Demand Coupling) and the pump motor. Check for an open-circuit. Check for a short-circuit to each other.

  Replace the oil pump motor if the voltage is OK.

Remedy as necessary.

Other information

- To replace the oil pump motor, see **OIL PUMP ACTIVE ON DEMAND COUPLING (AOC), REPLACING**
- For information about signals, see **SIGNAL SPECIFICATION, CONTROL MODULE FOR FOUR WHEEL DRIVE**
- see **CONTENTS** .

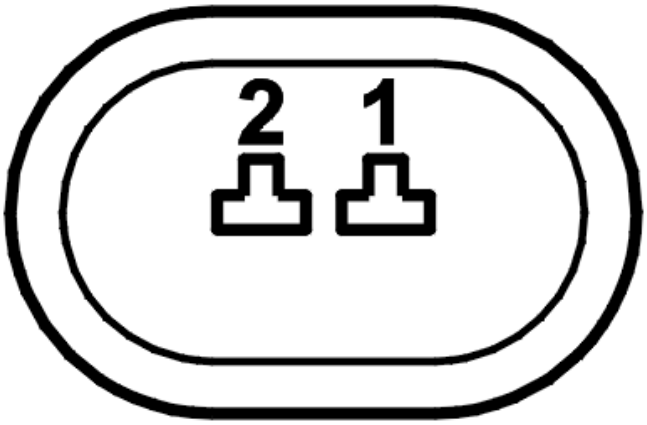

Fig. 26: Identifying Connector Terminals
Courtesy of VOLVO CARS CORPORATION

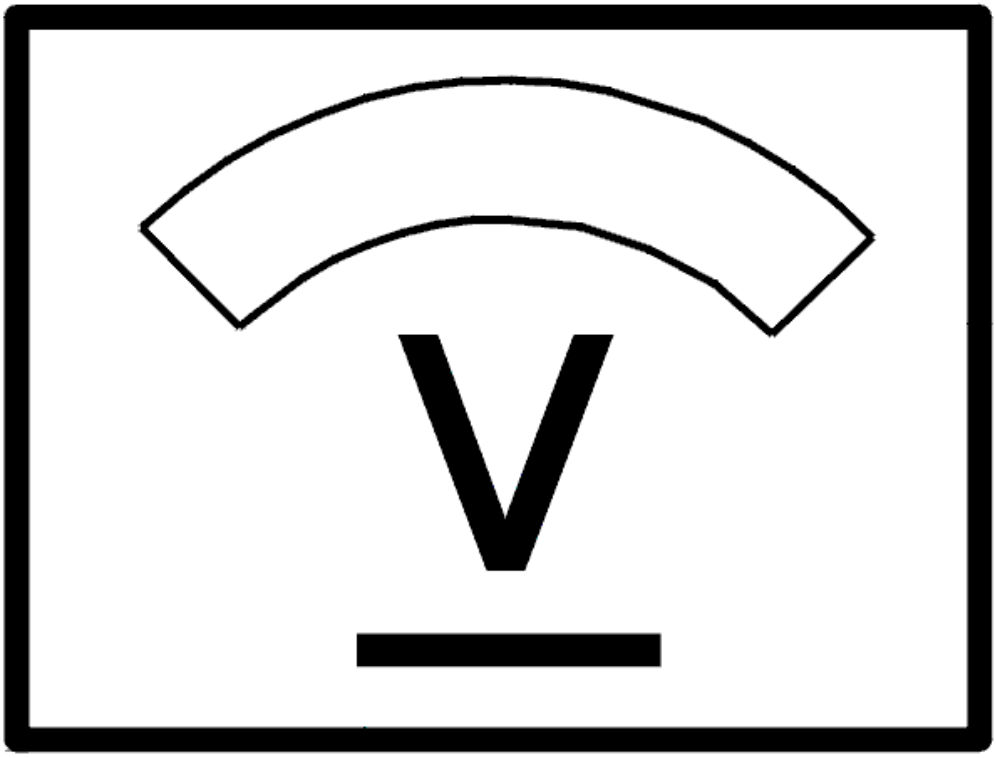

Fig. 27: Identifying Voltage Display
Courtesy of VOLVO CARS CORPORATION

Fig. 28: Locating Active On Demand Coupling Connector
Courtesy of VOLVO CARS CORPORATION

- **Continue**

  Refer to **VERIFICATION**

VERIFICATION

HINT: After carrying out the repair, check that the fault has been remedied.

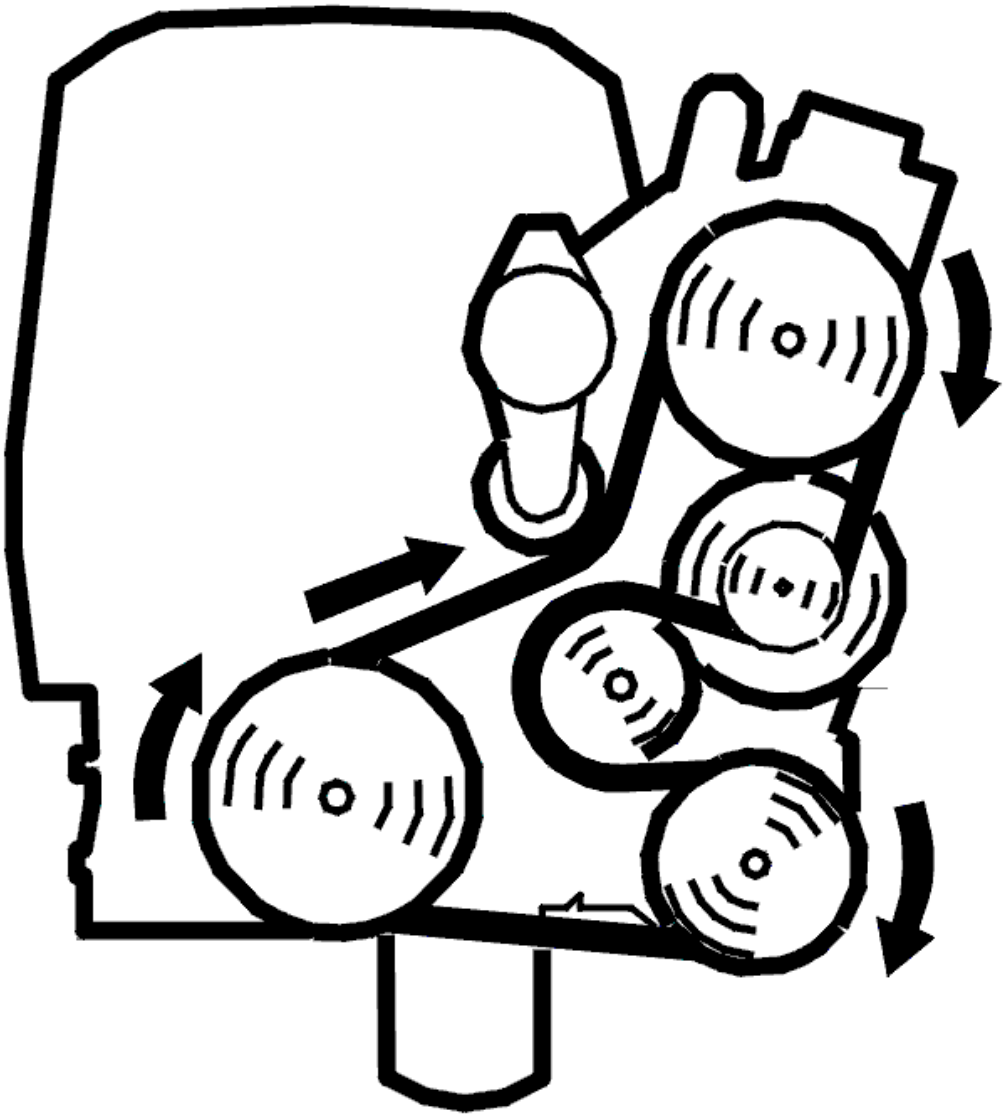

Fig. 29: Belt Routing / Engine Idling - Volvo
Courtesy of VOLVO CARS CORPORATION

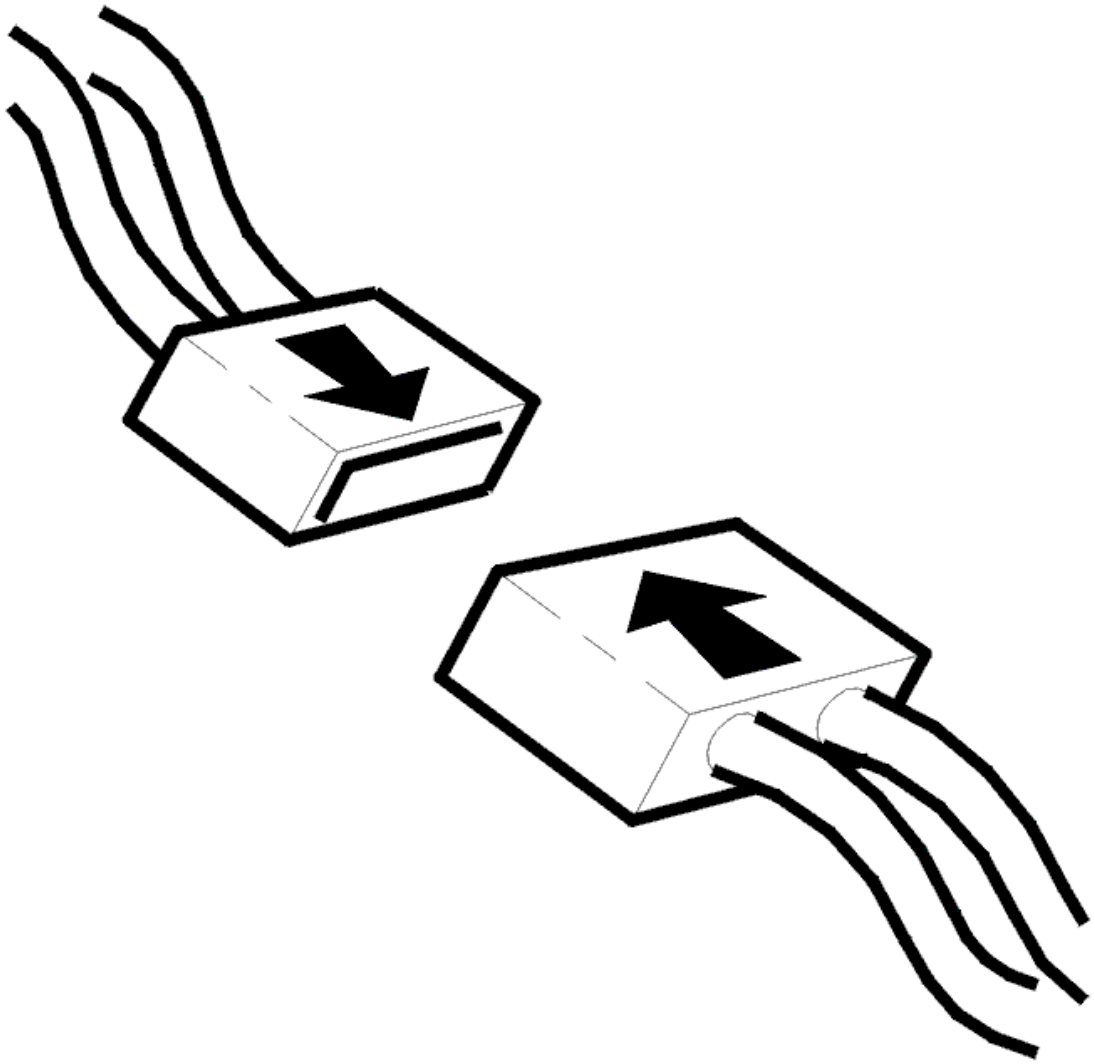

Fig. 30: Connecting Connector
Courtesy of VOLVO CARS CORPORATION

- Ignition off
- Reinstall the connectors, components etc.
- Start the engine.

  Check if the pump motor in the unit for four wheel drive (Active on Demand Coupling) starts and runs normally.

  HINT: Feel the pump motor using your fingers. The motor must hum and vibrate slightly.

Is the pump motor functioning?

- **YES**

OKAY: Troubleshooting has been completed.

- **NO**

  Refer to **INFORMATION**

INFORMATION

FAULT-TRACING INFORMATION

The fault should have been detected and remedied. As this is not the case fault-tracing has failed.

Exit fault-tracing for this diagnostic trouble code (DTC) or make another attempt.

FAULT-TRACING INFORMATION

Condition

Fig. 31: Identifying Active On Demand Pump Motor
Courtesy of VOLVO CARS CORPORATION

No diagnostic trouble codes (DTCs) stored in the control module for four wheel drive (Active on Demand Coupling).

Possible Source

- Faulty power supply
- Defective pump motor.

Fault symptom[s]

- No four wheel drive.

CHECKING THE POWER SUPPLY AND GROUND TERMINAL (4T65 AWD;

AW50/51 AWD; 2005)

CHECKING THE SUPPLY VOLTAGE/GROUND TERMINAL

see **CHECKING THE SUPPLY VOLTAGE/GROUND TERMINAL**

CHECKING WATER IN OIL (B6324S, TF-80SC AWD; 2009-2010)

CHECKING WATER IN OIL

CHECKING WATER IN OIL

If symptoms such as disc screech or noise from the clutch appear, this may be due to water in the oil. Check if the oil contains water.

If the oil contains water, the Goretex filter located on the clutch may have worked loose.

- Check if the Goretex filter has worked loose.
- Check if the oil filter is sticky and dirty.

If the oil contains water, change the oil. If the oil filter is sticky, change oil and filter. If the Goretex filter is gone, it must be replaced.

If the problem remains, replace the clutch.

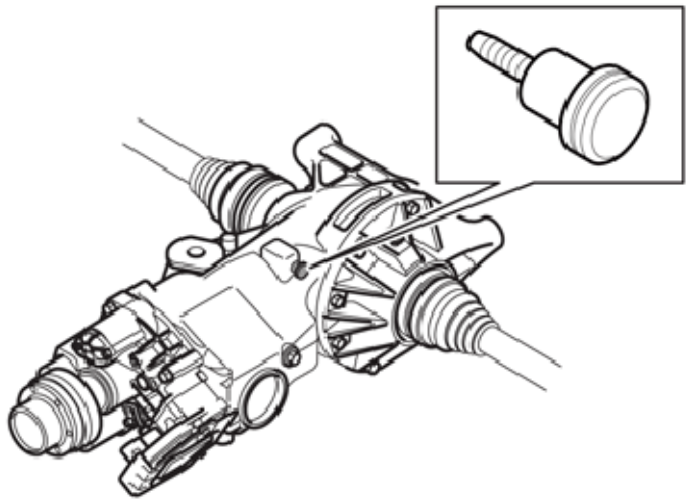

Fig. 32: Assembly Plug
Courtesy of VOLVO CARS CORPORATION

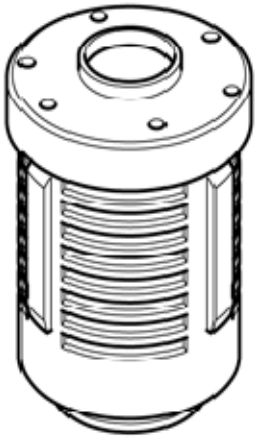

Fig. 33: Oil Filter
Courtesy of VOLVO CARS CORPORATION

CHECKING WATER IN OIL (B6324S5, TF-80SC AWD; 2011-2012)

CHECKING WATER IN OIL

see **CHECKING WATER IN OIL**

CHECKING WATER IN OIL (B8444S, TF-80SC AWD; 2009-2011)

CHECKING WATER IN OIL

see **CHECKING WATER IN OIL**

COVER BRAKE CYLINDER B4 AUTOMATIC TRANSMISSION, REPLACING (AW50/51 AWD; 2003)

COVER BRAKE CYLINDER B4 AUTOMATIC TRANSMISSION, REPLACING

INSPECTING AND REPLACING COVER

To check and replace the cover, see **COVER BRAKE CYLINDER B4 AUTOMATIC TRANSMISSION, REPLACING** .

- **Continue**

  Refer to **INFORMATION**

INFORMATION

FAULT-TRACING INFORMATION

In case of this defect, troubleshooting is not followed by verification.

The information can be displayed again or the fault-tracing for this fault can be interrupted.

SUSPENSION

Wheels, Tires, Hubs - Removal, Replacement And Installation

HUB AND BEARING

FRONT WHEEL HUB, REPLACING

Special tools:

see **9997062**

NOTE: **The illustrations in this service information are used for different model years and / or models. Therefore there may be some variation. However, the essential information in the illustrations is always correct.**

REMOVAL

PREPARATION

Remove the wheel.

REMOVING BRAKE CALIPERS

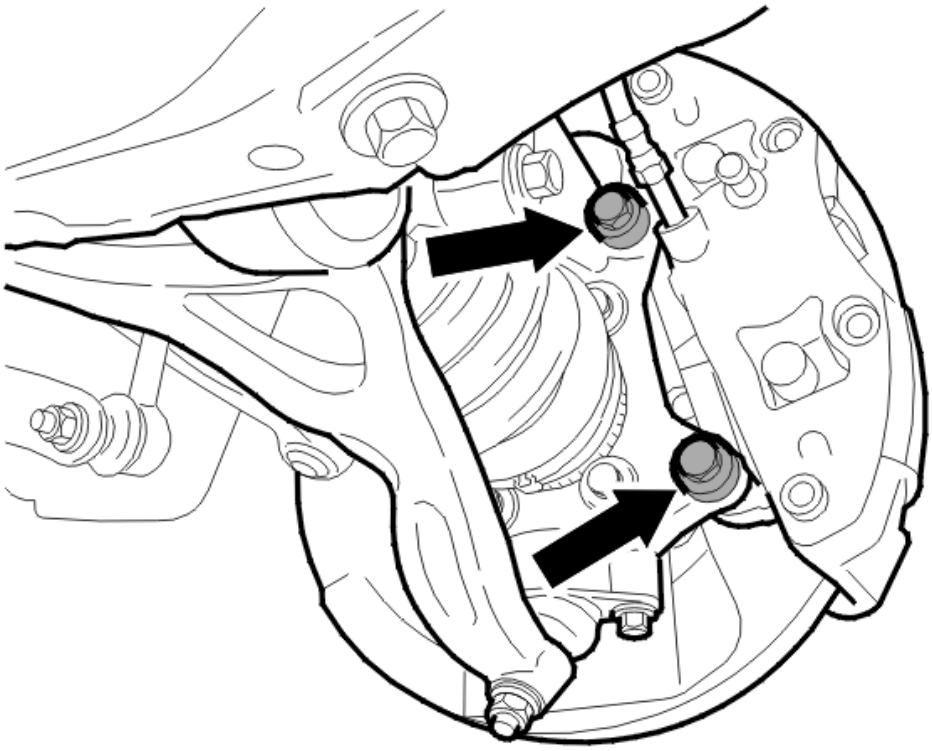

Fig. 1: Locating Brake Caliper Mounting Screws
Courtesy of VOLVO CARS CORPORATION

Remove:

- the two screws
- the brake caliper.

Hang up the caliper in a suitable position.

REMOVING THE SCREW FOR THE DRIVE SHAFT

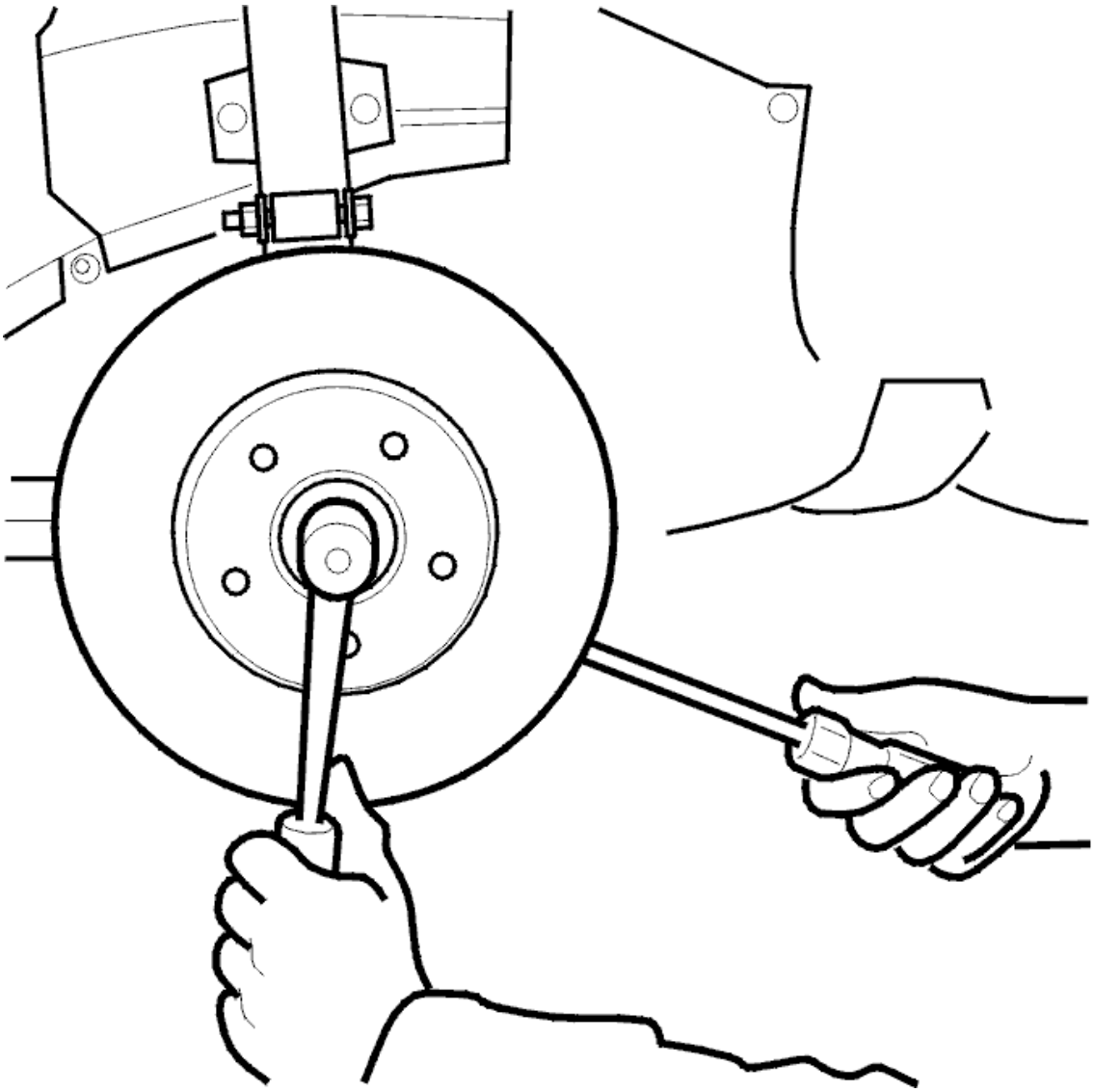

Fig. 2: Identifying Drive Shaft Screw Removal Using A Screwdriver As A Counter Hold On Brake Disc
Courtesy of VOLVO CARS CORPORATION

Remove the drive shaft screw. Use a screwdriver as a counterhold on the brake disc.

Detach the end of the drive shaft in the hub by knocking the drive shaft into the hub approximately 10-15 mm. Use a rubber or copper mallet.

REMOVING THE BRAKE DISC

Remove:

- the screw
- the brake disc.

DISCONNECTING THE STEERING ARM

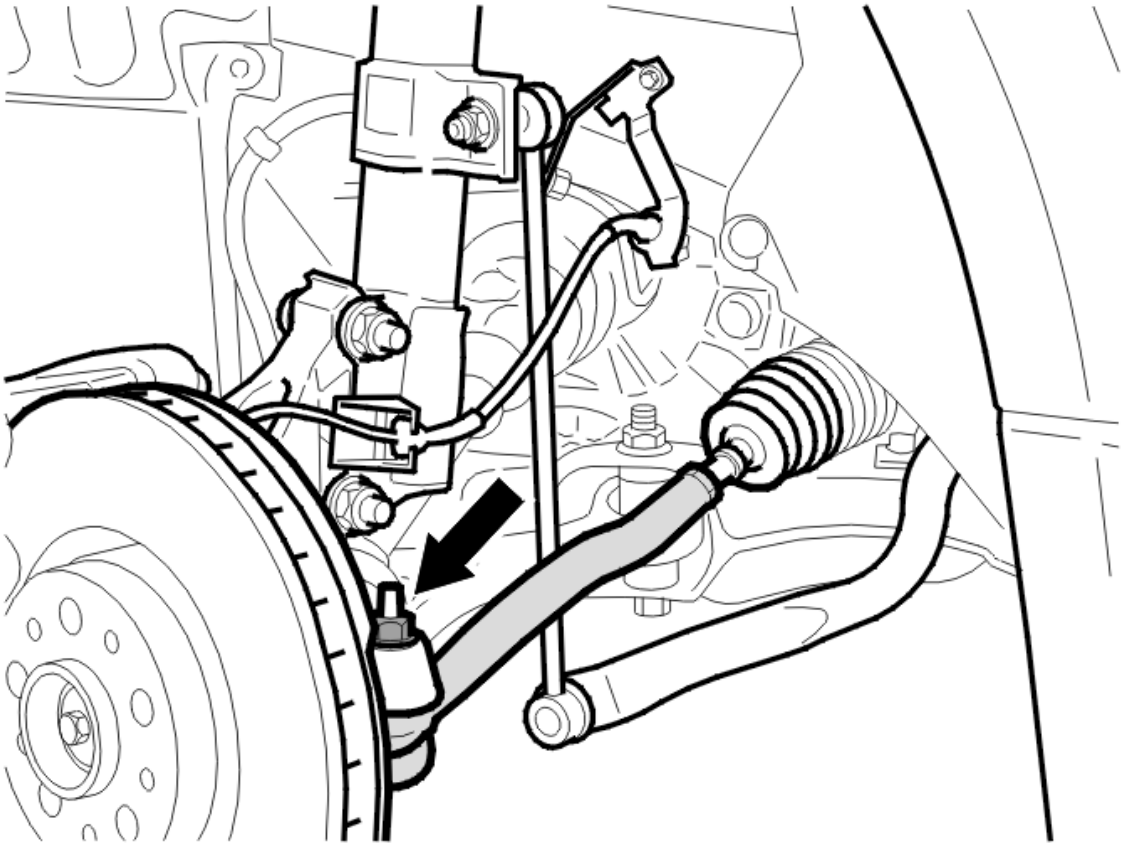

Fig. 3: Identifying Steering Arm Nut
Courtesy of VOLVO CARS CORPORATION

Remove the nut.

NOTE: Counterhold using the wrench grip so that the screw does not rotate and damage the rubber boot.

DISCONNECTING THE ANTI-ROLL BAR LINK

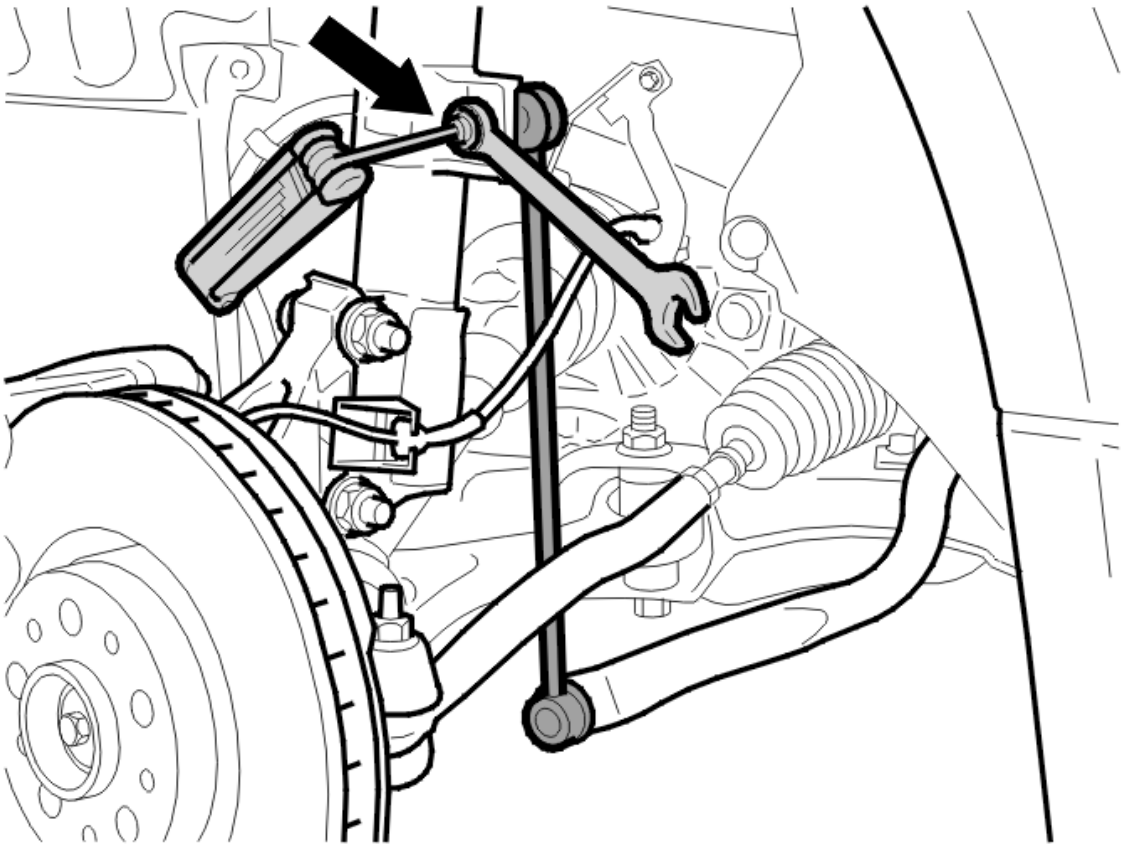

Fig. 4: Disconnecting Anti-Roll Bar Link
Courtesy of VOLVO CARS CORPORATION

Remove the nut. Pull the link out of its mounting.

NOTE: Counterhold using a Torx wrench so that the boot for the link is not damaged.

DISCONNECTING THE CABLE HARNESS FOR THE ABS SENSOR

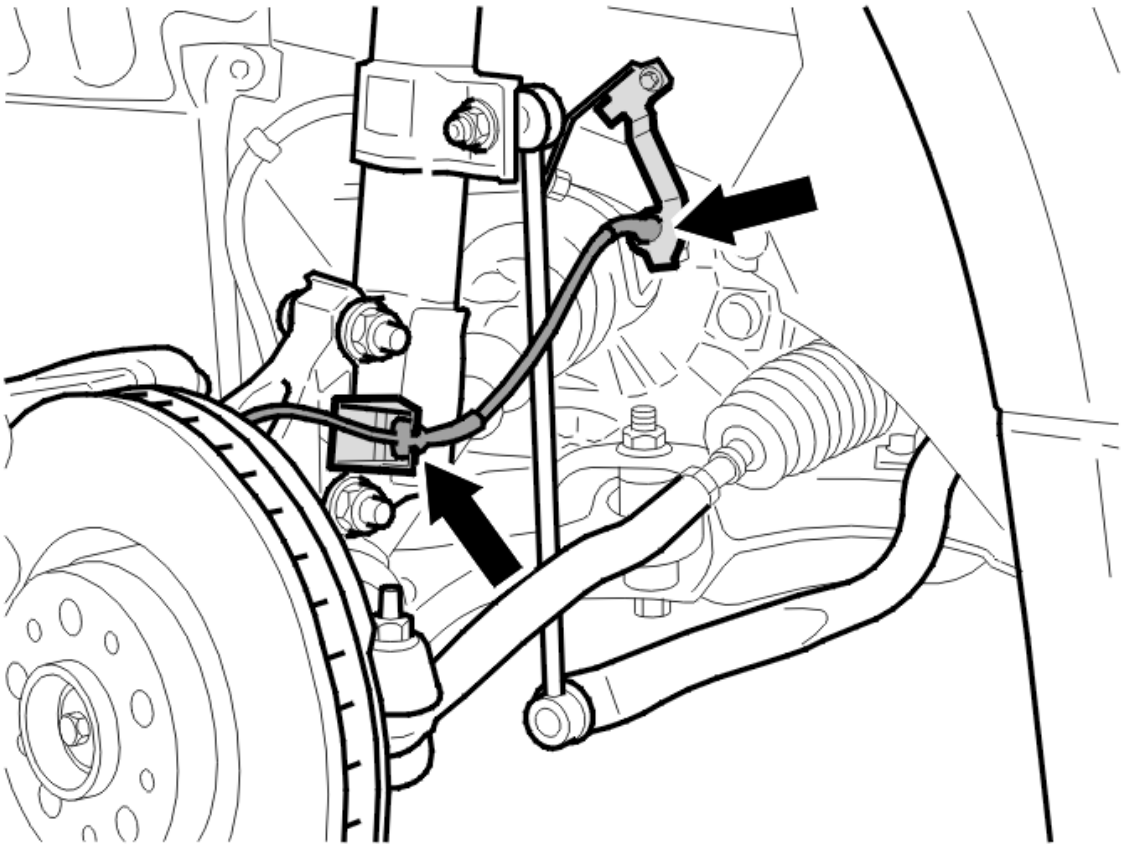

Fig. 5: Locating ABS Sensor And Brackets
Courtesy of VOLVO CARS CORPORATION

Remove the cable harness from its brackets.

REMOVING THE CONTROL ARM FROM THE BALL JOINT

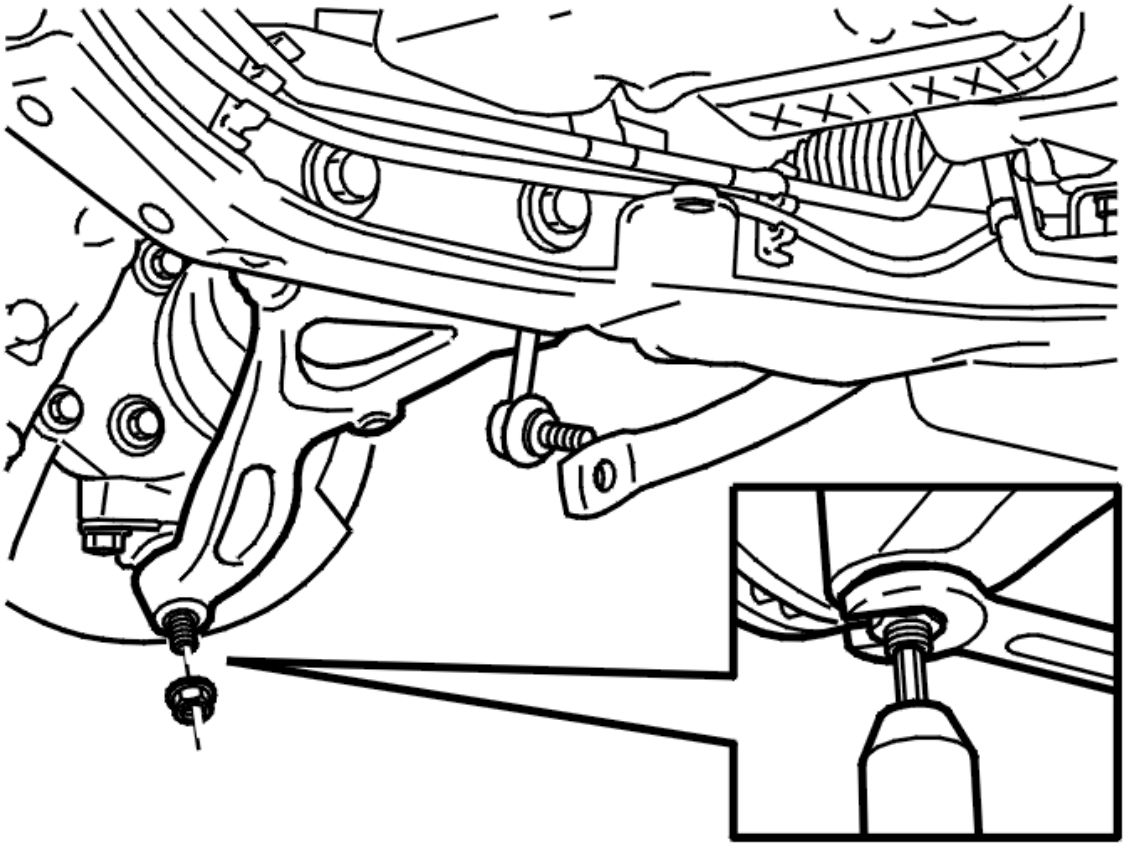

Fig. 6: Removing Control Arm From Ball Joint
Courtesy of VOLVO CARS CORPORATION

Remove the nut from the ball joint on both sides. Counterhold using a Torx wrench so that the ball joint boot is not damaged.

Press out the ball joints. Use special tool see **9997062** .

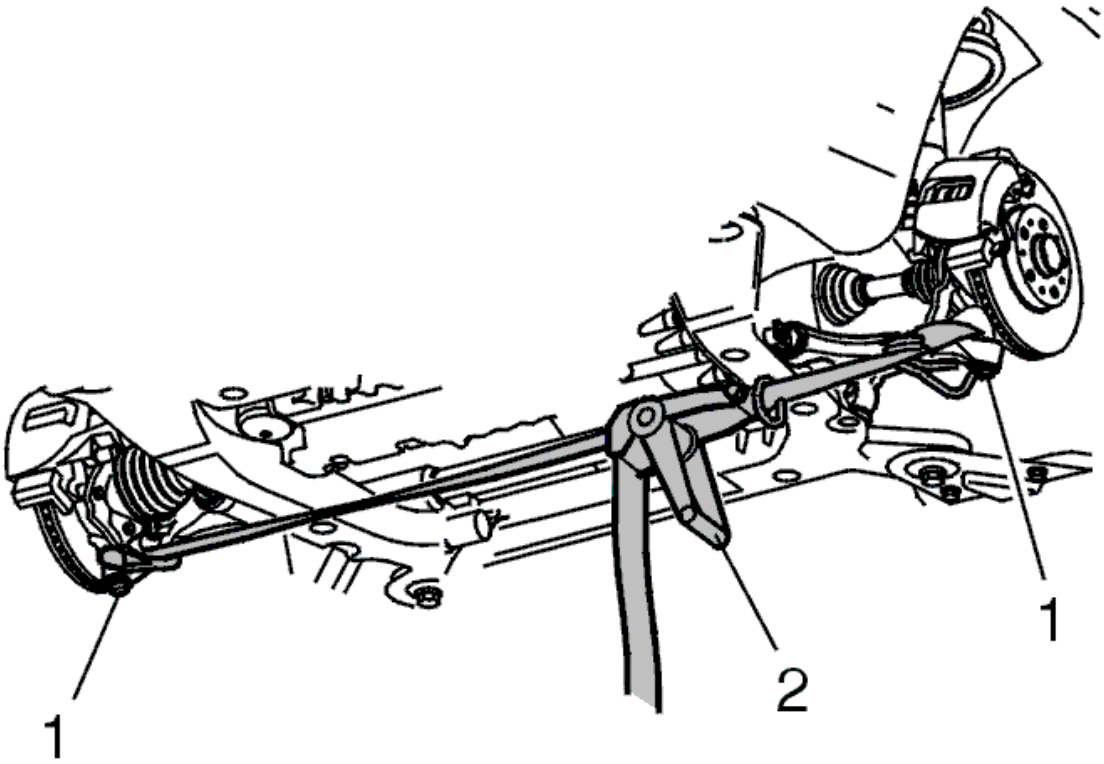

Fig. 7: Identifying Drive Shaft Installation
Courtesy of VOLVO CARS CORPORATION

Pull down the control arm (1) using a tension strap (2).

Release the spring strut from the control arm and drive shaft.

WARNING: Ensure that the tension strap is correctly secured in the control arms.

REMOVING THE HUB

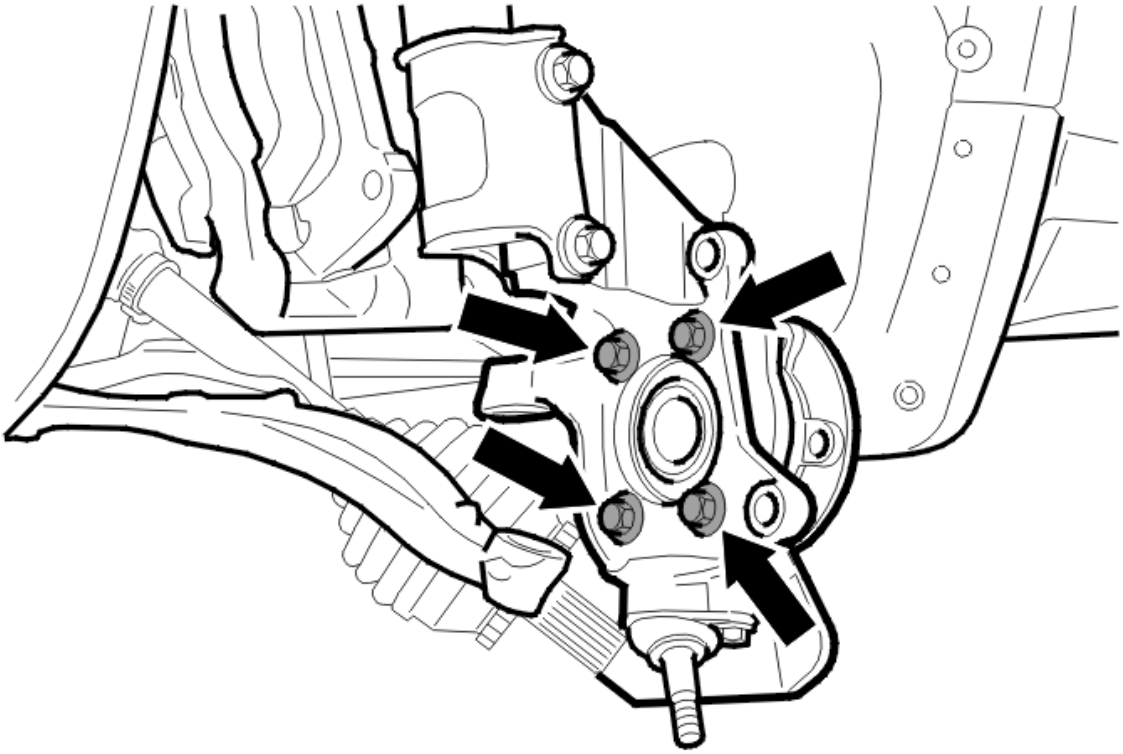

Fig. 8: Locating Hub Bolts
Courtesy of VOLVO CARS CORPORATION

Remove:

- the four screws
- the hub.

INSTALLATION

TIGHTENING TORQUE

For tightening torques, see **TIGHTENING TORQUE** .

INSTALLING THE HUB

Install:

- the hub
- the four screws.

For tightening torques, see **TIGHTENING TORQUE** .

INSTALLING THE CONTROL ARM ON THE BALL JOINT

Install the drive shaft in the hub. Align the ball joint against the control arm.

Release the tensioning strap between the control arms.

Install a nut on the ball joint. (M10)

NOTE: Counterhold using the Torx wrench so as not to damage the boot.

Remove the tensioner strap.

INSTALLING THE CABLE HARNESS FOR THE ABS SENSOR

Install the cable harness in the brackets.

INSTALLING THE ANTI-ROLL BAR LINK

Install:

- the anti-roll bar link
- the nut (M12).

NOTE: Counterhold using a Torx wrench so that the boot for the link is not damaged.

INSTALLING THE STEERING ARM

Install:

- the steering arm
- the nut.

For tightening torques, see **TIGHTENING TORQUE** .

NOTE: Counterhold using the wrench grip so that the screw does not rotates and damage the rubber boot.

INSTALLING THE BRAKE DISC

Install:

- the brake disc
- the screw.

INSTALLING THE DRIVE SHAFT SCREW

Install a new screw. Use a screwdriver as a counterhold.

For tightening torques, see **TIGHTENING TORQUE** .

INSTALLING BRAKE CALIPERS

Install:

- the brake caliper
- the two screws.

For tightening torques, see **TIGHTENING TORQUE** .

FINISHING

Install the wheel. See **INSTALLING WHEELS**.

REAR WHEEL HUB, REPLACING

Special tools:

see **9995659**

NOTE: **The illustrations in this service information are used for different model years and / or models. Therefore there may be some variation. However, the essential information in the illustrations is always correct.**

PREPARATORY WORK

ADJUSTING THE PARKING BRAKE

Loosen the parking brake adjustment. See **PARKING BRAKE SELF-ADJUSTMENT, RESETTING** or **PARKING BRAKE, ADJUSTING** .

REMOVAL

REMOVING REAR WHEELS

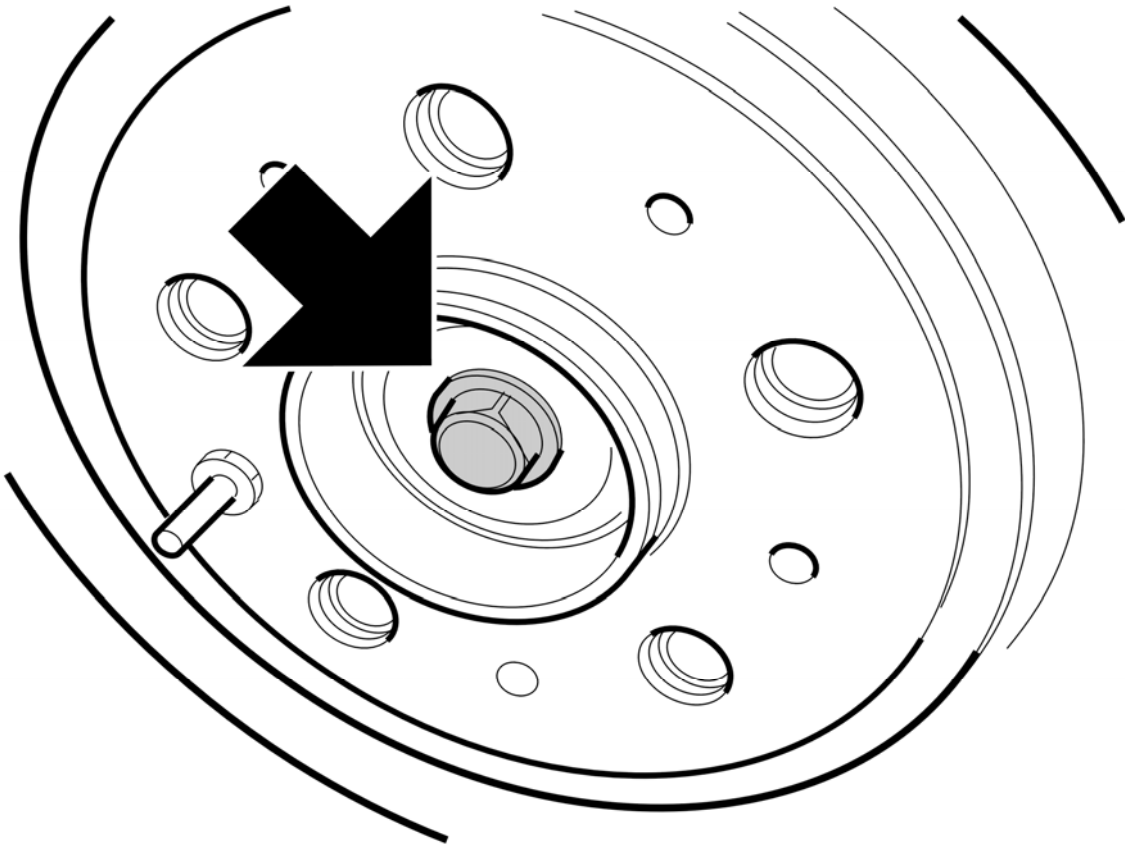

Fig. 9: Rear Wheel
Courtesy of VOLVO CARS CORPORATION

Remove the rear wheel.

REMOVING THE BRAKE CALIPER AND BRAKE DISC

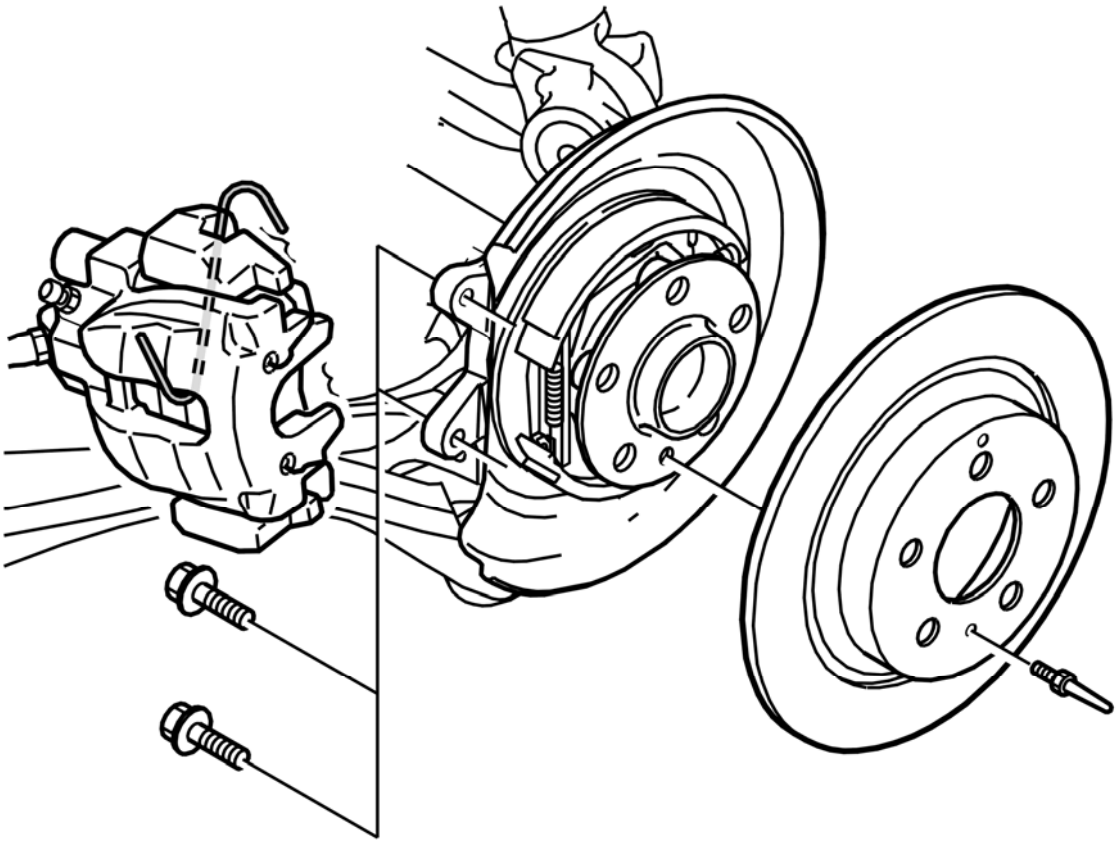

Fig. 10: Brake Caliper And Brake Disc
Courtesy of VOLVO CARS CORPORATION

Remove:

- the wheel sensor cable from the retainer on the brake hose
- the brake caliper mounting screws.

  Suspend the caliper in a steel wire.

- the brake disc locating pin/screw
- the brake disc.

REMOVING THE WHEEL SENSOR

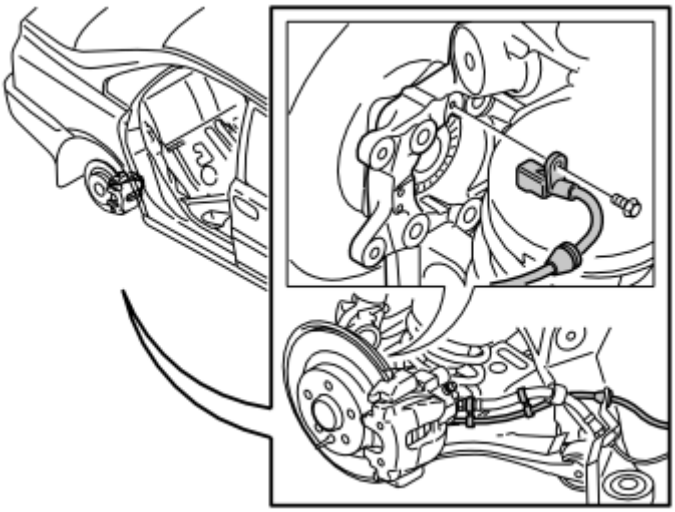

Fig. 11: Identifying Sensor From Wheel Spindle Removal
Courtesy of VOLVO CARS CORPORATION

Clean the area around the wheel sensor and remove the screw.

Carefully remove the sensor from the wheel spindle.

Bind the sensor so it is well protected.

INSTALLING THE TENSIONER

Install see **9995659** . See **TENSIONER 999 5659, USER INSTRUCTIONS** .

Support the rear suspension 500 mm up between the fender edge and the center of the wheel.

REMOVING THE HUB

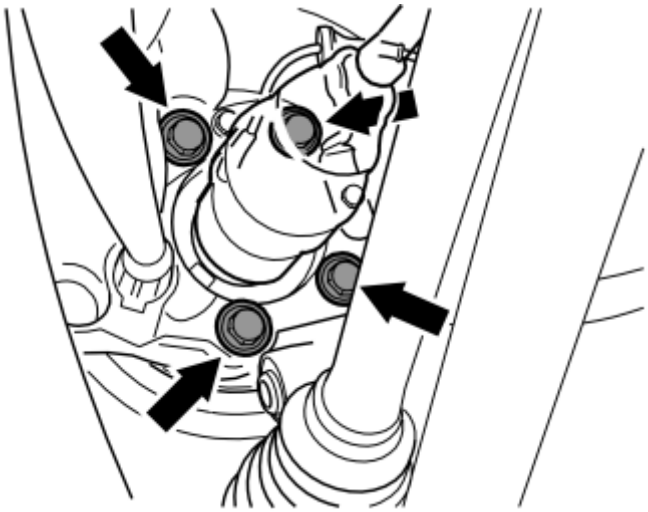

Fig. 12: Hub Screws
Courtesy of VOLVO CARS CORPORATION

Remove:

- the 4 screws
- the hub.

CLEANING

CHECKING AND CLEANING

Clean:

- the mating faces of the wheel hub in the wheel spindle
- the wheel sensor
- the sensor seat in the wheel spindle so it is absolutely clean
- the wheel sensor. Use a soft brush.

INSTALLATION

NOTE: For tightening torque, see TIGHTENING TORQUE or TIGHTENING TORQUE .

INSTALLING THE HUB

Install:

- the hub to the wheel spindle

  Use new screws. Tighten. See **TIGHTENING TORQUE** .

- The wheel sensor (M6). Tighten. See **TIGHTENING TORQUE** .

REMOVING THE TENSIONER

Remove the tensioner. See see **TENSIONER 999 5659, USER INSTRUCTIONS** .

INSTALLING THE BRAKE DISC AND BRAKE CALIPER

Install:

- the brake disc
- the brake disc locating pin/screw (M6). Tighten. See **TIGHTENING TORQUE** .
- the brake caliper
- the brake caliper mounting screws.

  Use new screws. Tighten. See **TIGHTENING TORQUE** .

- the wheel sensor cable to the retainer on the brake hose.

INSTALLING THE REAR WHEEL

Install the rear wheel. See **INSTALLING WHEELS**.

FINISHING

ADJUSTING THE PARKING BRAKE

Adjust the parking brake. See **PARKING BRAKE SELF-ADJUSTMENT, RESETTING** or **PARKING BRAKE, ADJUSTING** .

REAR WHEEL HUB AND DRIVE SHAFT, REPLACING

Special tools:

see **9995659**

NOTE: The illustrations in this service information are used for different model years and / or models. Therefore there may be some variation. However, the essential information in the illustrations is always correct.

PREPARATORY WORK

ADJUSTING THE PARKING BRAKE

Loosen the handbrake adjuster, see **PARKING BRAKE SELF-ADJUSTMENT, RESETTING** or **PARKING BRAKE, ADJUSTING** .

REMOVAL

REMOVAL OF SCREW FOR DRIVE SHAFT

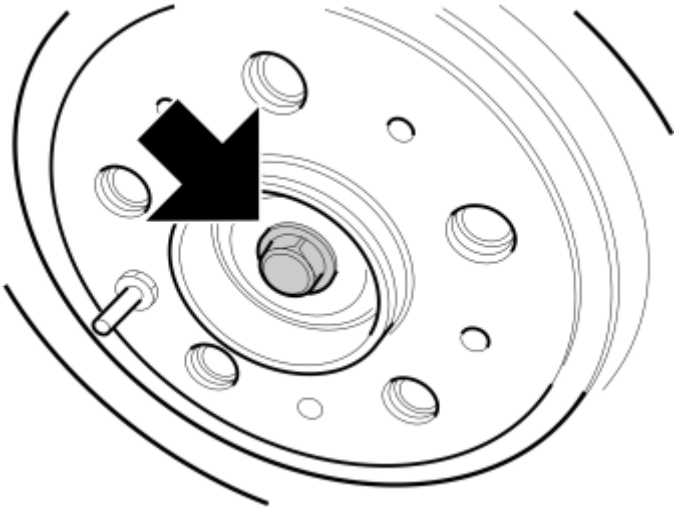

Fig. 13: Identifying Installation Of Screw To Drive Shaft
Courtesy of VOLVO CARS CORPORATION

Remove:

- the rear wheel
- the screw for the drive shaft.

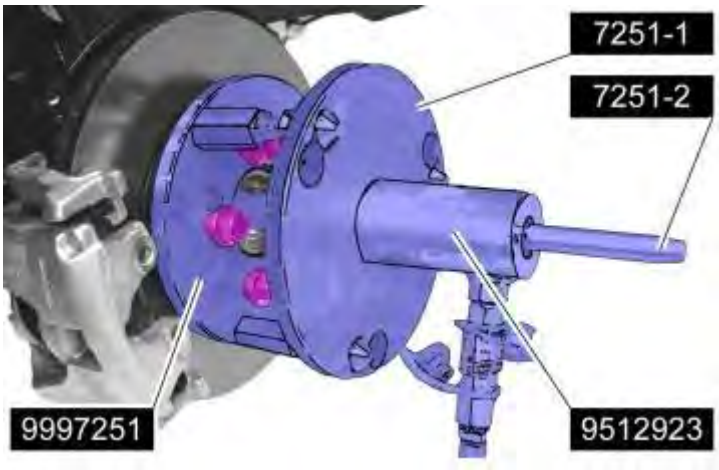

Fig. 14: Driveshaft In Hub
Courtesy of VOLVO CARS CORPORATION

see **9997251** , see **9512923**

REMOVING THE BRAKE CALIPER AND BRAKE DISC

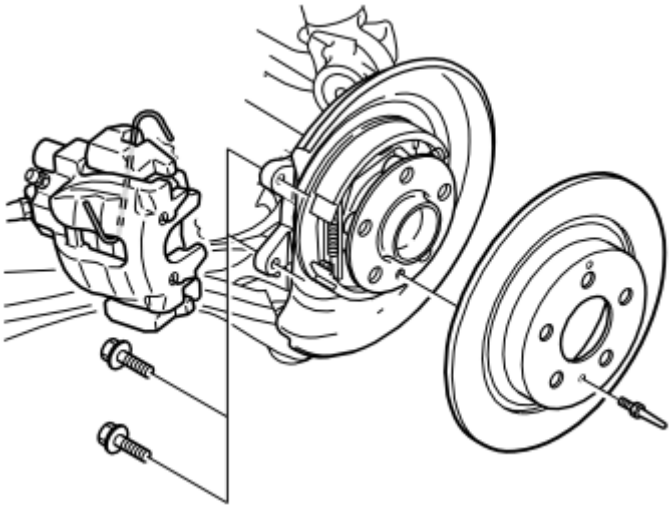

Fig. 15: Identifying Brake Disc, Brake Caliper & Screws
Courtesy of VOLVO CARS CORPORATION

Remove:

- the wheel sensor lead from the holder on the brake hose
- the brake caliper mounting screws.

Suspend the caliper with a steel wire.

- the brake disc locating pin/screw
- the brake disc.

REMOVING THE WHEEL SENSOR

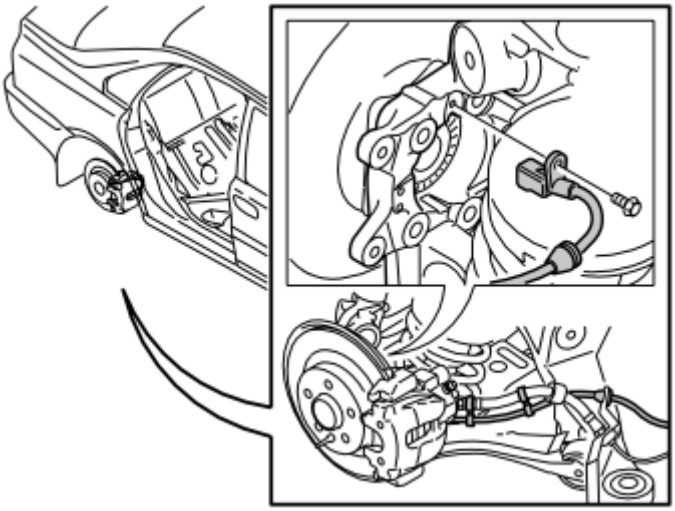

Fig. 16: Identifying Sensor From Wheel Spindle Removal
Courtesy of VOLVO CARS CORPORATION

Clean around the wheel sensor and remove the screw.

Carefully remove the sensor from the stub axle.

Tie up the sensor well protected.

INSTALLING THE TENSIONER

Fit see **9995659** as described in: **TENSIONER 999 5659, USER INSTRUCTIONS** .

Support the rear suspension 500 mm up between the wing edge and the center of the wheel.

REMOVING THE HUB

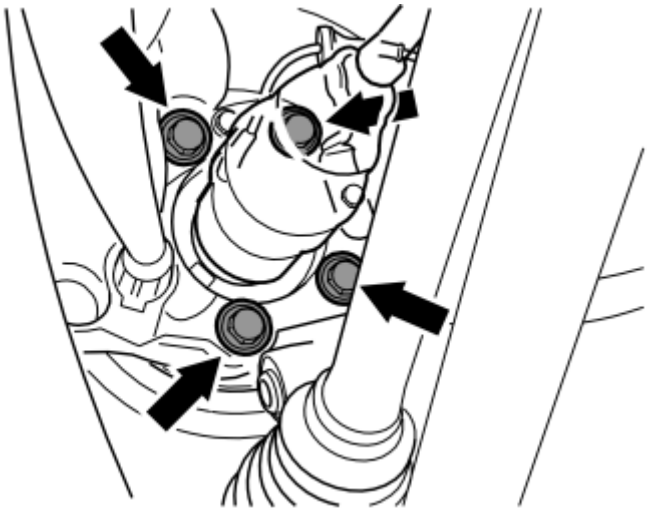

Fig. 17: Hub Screws
Courtesy of VOLVO CARS CORPORATION

Remove:

- the 4 screws
- the hub.

NOTE: **Make sure the drive shaft comes free from the rear wheel hub. There must not be any axial forces acting on the drive shaft joints.**

CLEANING

CHECKING AND CLEANING

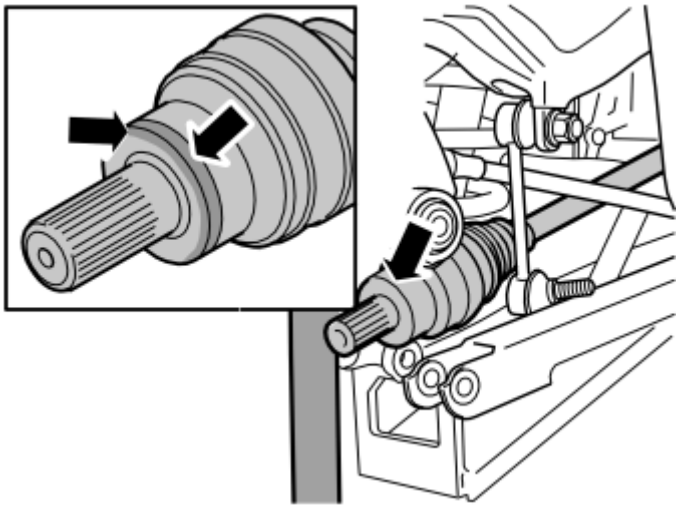

Fig. 18: Cleaning Drive Shaft End
Courtesy of VOLVO CARS CORPORATION

Clean:

- drive shaft end, especially rust on the edges, see illustration.

  (Outer wheel hub sealing ring will rest against this surface).

- the mating surfaces for wheel hub in stub axle
- the wheel sensor
- the seat for the sensor in the stub axle to ensure it is absolutely clean
- the wheel sensor. Use a soft brush.

GREASING THE SEAL

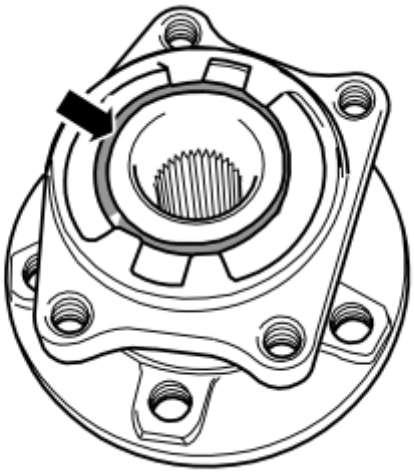

Fig. 19: Identifying Lubrication Point On Wheel Bearing Sealing Lip
Courtesy of VOLVO CARS CORPORATION

Lubricate the wheel bearing sealing lip abutting the drive shaft with a little wheel bearing grease. P/N 1161689.

Brush high pressure grease, P/N 1161246 onto the drive shaft so that the splines on the rear half of the drive shaft pin are filled.

INSTALLATION

NOTE: For tightening torque, see TIGHTENING TORQUE and TIGHTENING TORQUE .

INSTALLATION OF HUB AND DRIVE SHAFT

Install:

- the hub on the stub axle and drive shaft.

  Use new screws. Tighten. See: **SUMMARY OF TIGHTENING TORQUES FOR SPECIFIC COMPONENTS**

- a new screw loosely on the drive shaft. The screw will be tightened later
- the wheel sensor M6, tighten according to: **TIGHTENING TORQUE** .

REMOVING THE TENSIONER

Remove tensioner according to: **TENSIONER 999 5659, USER INSTRUCTIONS** .

INSTALLING THE BRAKE DISC AND BRAKE CALIPER

Install:

- the brake disc
- brake disc guide pin/screw M6, tighten according to: **TIGHTENING TORQUE**
- the brake caliper
- the brake caliper mounting screws.

  Use new screws. Tighten. See: **SUMMARY OF SPECIFIC COMPONENTS AND TIGHTENING TORQUES**

- the wheel sensor lead to the holder on the brake hose.

FITTING THE REAR WHEEL

Install the screw, M10 to the drive shaft. Use a new screw. Tighten.

Fit the rear wheel according to: **INSTALLING WHEELS**

FINISHING

ADJUSTING THE PARKING BRAKE

Adjust the hand brake according to: **PARKING BRAKE SELF-ADJUSTMENT, RESETTING** or **PARKING BRAKE, ADJUSTING** .

WHEELS

INSTALLING WHEELS

Special tools:

see **9512835**

INSTALLING

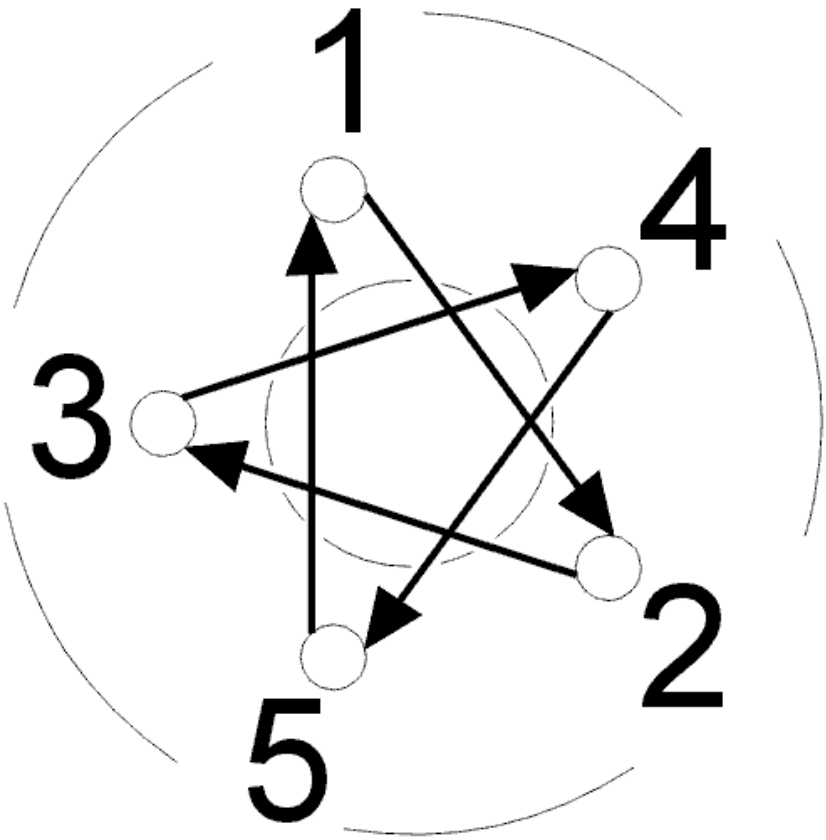

Fig. 20: Identifying Wheel Studs Tightening Sequence
Courtesy of VOLVO CARS CORPORATION

Ensure that the brake disc and wheel rim mating surfaces are clean. Grease the hub center location dowel for the rim. Use installation paste **1161397-3** .

Install the wheel studs lightly. Then tighten crosswise. Tighten to **140 Nm** . Use torque socket see **9512835** if an impact wrench is being used.

Crosswise tightening and torque tightening is important to prevent stresses in the brake disc.

NOTE: **The torque socket is designed for use with a standard, pneumatic impact nut runner providing a torque of 250-350 Nm .**

WHEELS, TIRES, HUBS

SPARE WHEEL WINCH

REMOVAL

APPLIES TO VEHICLES WITH 7 SEATS

Make sure that the third seat row is raised

Remove the jack

APPLIES TO ALL VEHICLES.

Remove the spare wheel

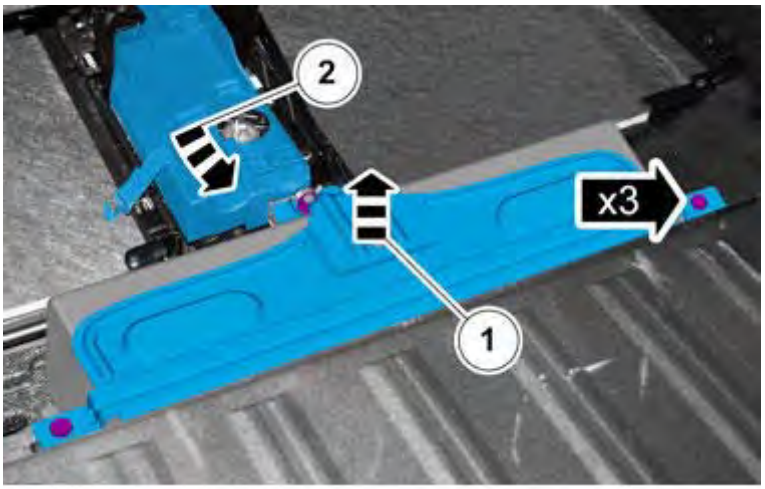

Fig. 21: Spare Wheel Winch Removal (1 of 6)
Courtesy of VOLVO CARS CORPORATION

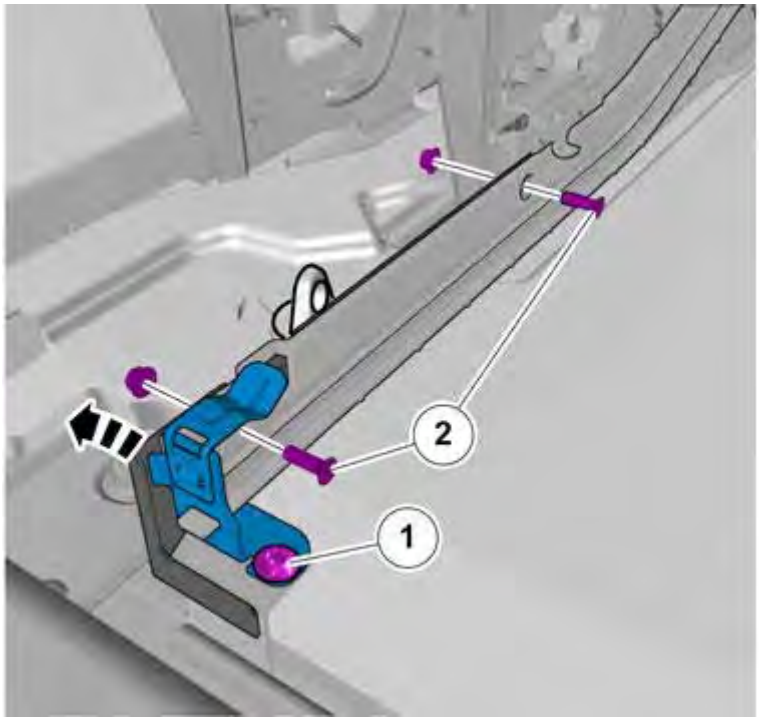

Fig. 22: Spare Wheel Winch Removal (2 of 6)
Courtesy of VOLVO CARS CORPORATION

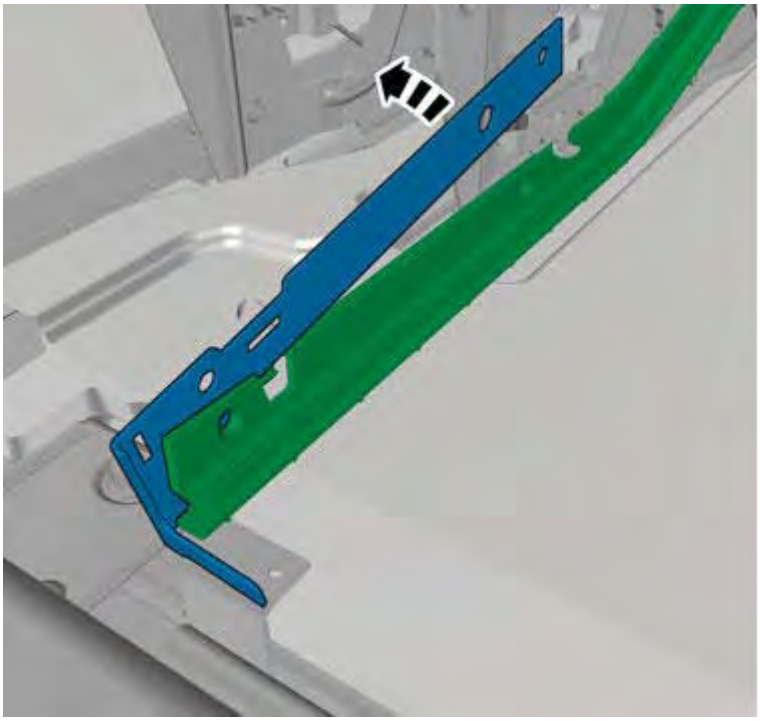

Fig. 23: Spare Wheel Winch Removal (3 of 6)
Courtesy of VOLVO CARS CORPORATION

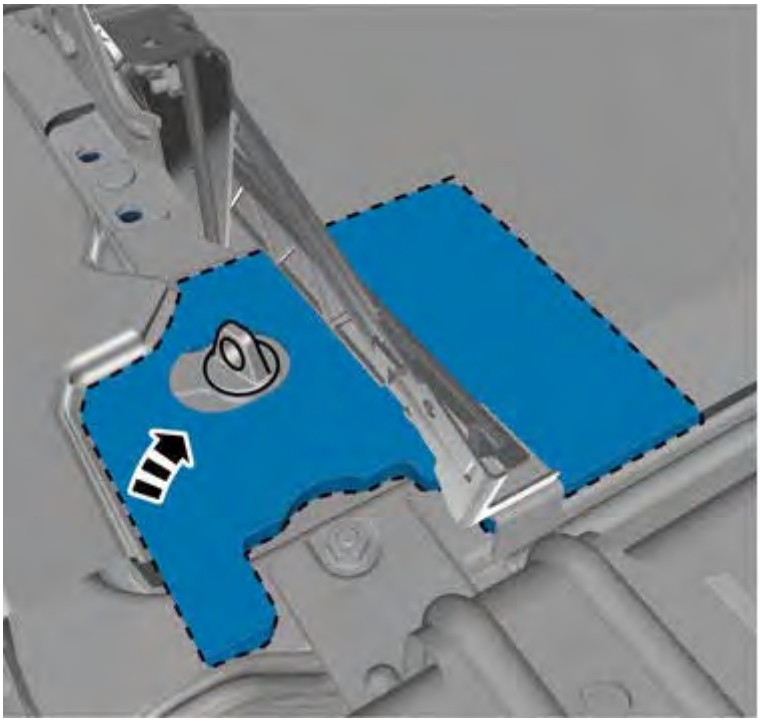

Fig. 24: Spare Wheel Winch Removal (4 of 6)
Courtesy of VOLVO CARS CORPORATION

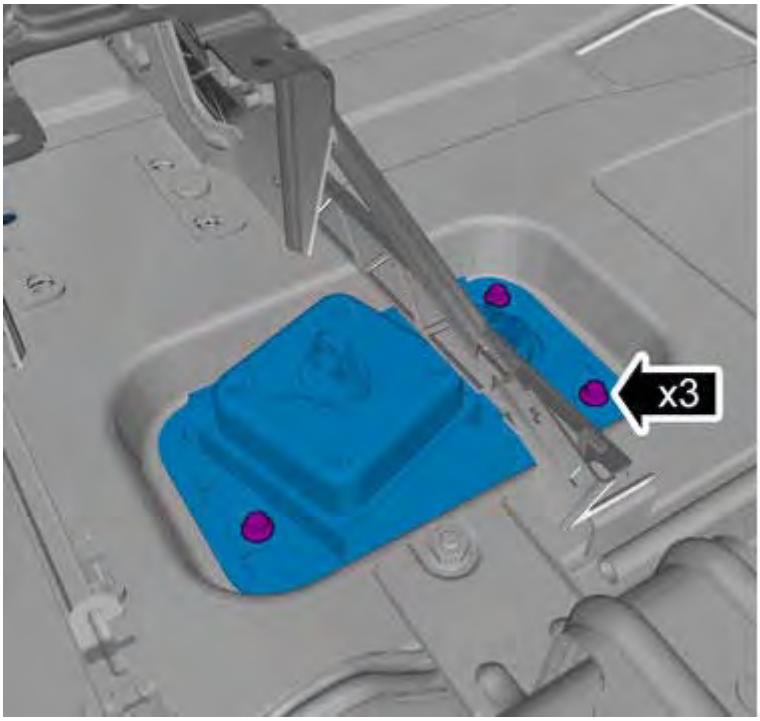

Fig. 25: Spare Wheel Winch Removal (5 of 6)
Courtesy of VOLVO CARS CORPORATION

Tighten to 10 Nm

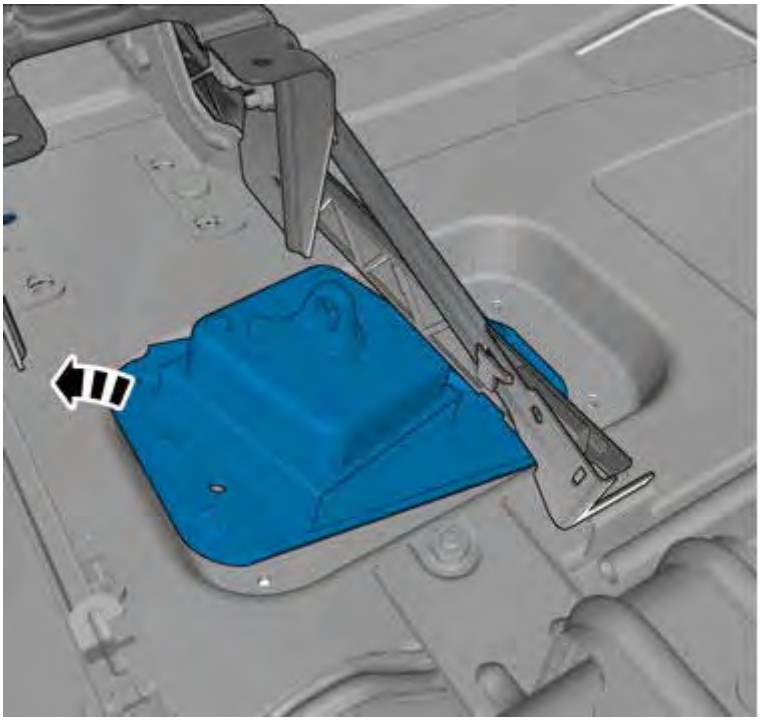

Fig. 26: Spare Wheel Winch Removal (6 of 6)
Courtesy of VOLVO CARS CORPORATION

INSTALLATION

APPLIES TO ALL VEHICLES.

Install in the reverse order.

WHEEL NUTS ANTI-THEFT PROTECTED

Special tools	
	T9997228 GROUND TERMINAL **Tool number:** T9997228 **Toll description:** GROUND TERMINAL **Tool boards:** EU16/17-1/5; SV16/17-1/5; US16/17-1/5
	T9989799 WELD NUT **Tool number:** T9989799 **Tool description:** WELD NUT **Tool boards:** EU16/17-1/5; SV16/17-1/5; US16/17-1/5
	T9997227 WELD PROTECTION **Tool number:** T9997227 **Tool description:** WELD PROTECTION **Tool boards:** EU16/17-1/5; SV16/17-1/5; US16/17-1/5

See information on welding, general. See **WELDING, GENERAL**

INSTALLATION

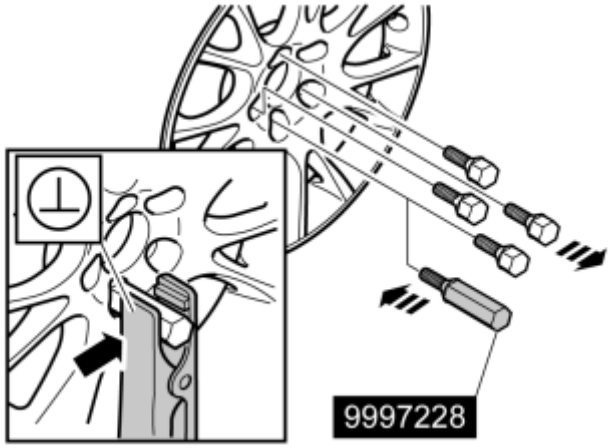

Fig. 27: Installing Special Tool (9997228)
Courtesy of VOLVO CARS CORPORATION

see **9997228**

Torque: Ground screw

25 Nm

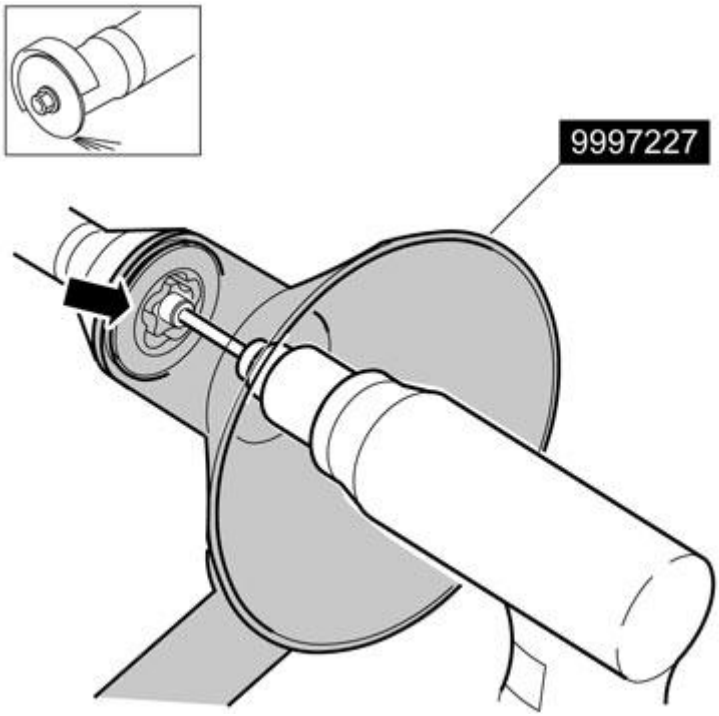

Fig. 28: Identifying Weld Protection Tool
Courtesy of VOLVO CARS CORPORATION

see **9997227**

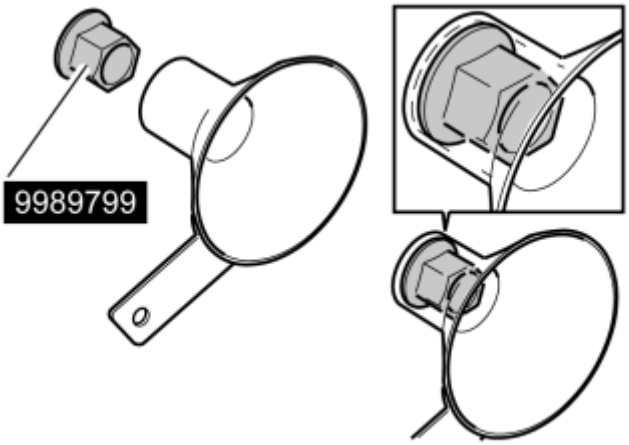

Fig. 29: Placing Weld Nut In Welding Position
Courtesy of VOLVO CARS CORPORATION

see **9989799**

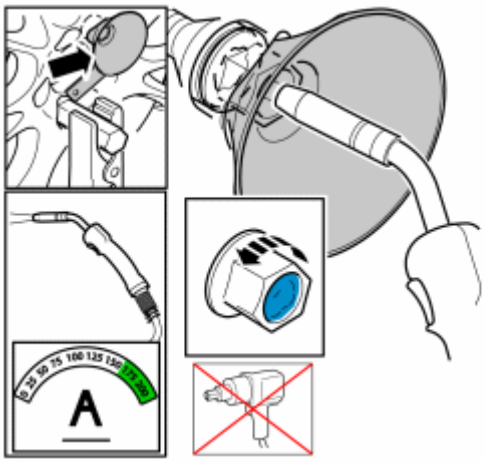

Fig. 30: Pressing Welding Protection With Weld Nut Into Broken Wheel Nut/Lock Nut
Courtesy of VOLVO CARS CORPORATION

WHEEL AND WHEEL TRIM (2011-2012)

WHEEL NUTS ANTI-THEFT PROTECTED

Special tools	
	999 7438 Hole saw **Tool number:** 999 7438 **Tool description:** Hole saw **Tool boards:** 70
	981 4127 Spiral socket **Tool number:** 981 4127 **Tool description:** Spiral socket **Tool boards:** 70

REMOVAL

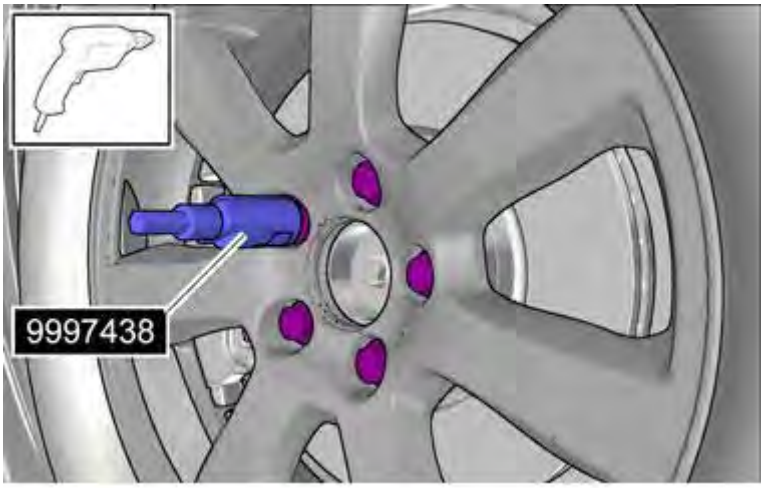

Fig. 31: Identifying Hole Saw (9997438)

Courtesy of VOLVO CARS CORPORATION

see **9997438**

Fig. 32: Installing Extraction Tool (9814127)
Courtesy of VOLVO CARS CORPORATION

see **9814127**

HUB SEAL

REMOVAL

NOTE: Removal steps in this procedure may contain installation details.

For rear wheel hub replacement see: **REAR WHEEL HUB AND DRIVE SHAFT, REPLACING**

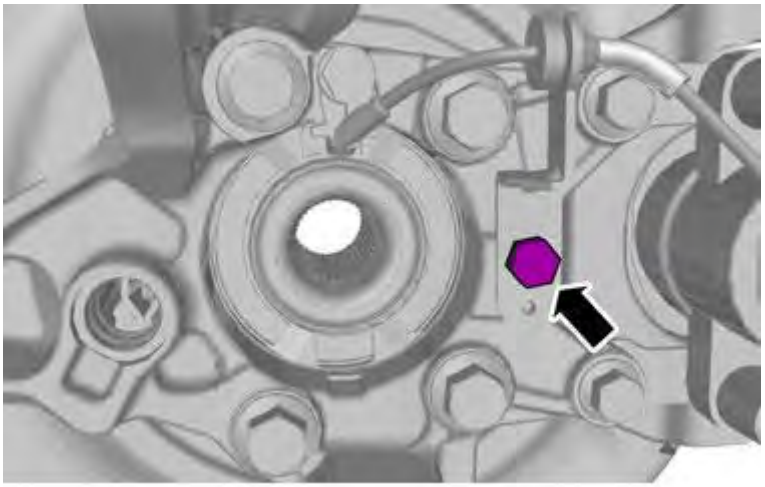

Fig. 33: Seal Bracket Bolt
Courtesy of VOLVO CARS CORPORATION

Fig. 34: Removing Seal
Courtesy of VOLVO CARS CORPORATION

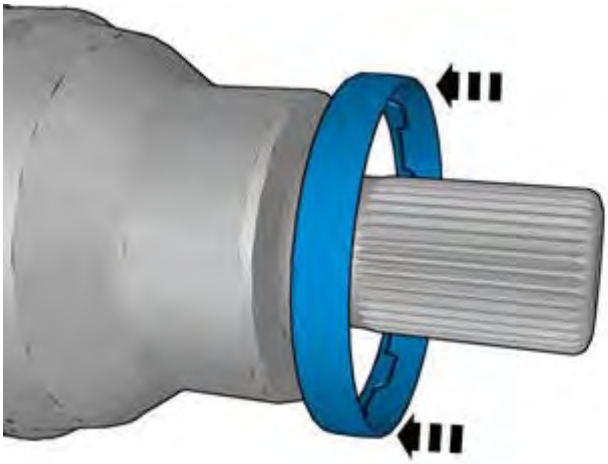

Fig. 35: Removing Outer Shaft Ring
Courtesy of VOLVO CARS CORPORATION

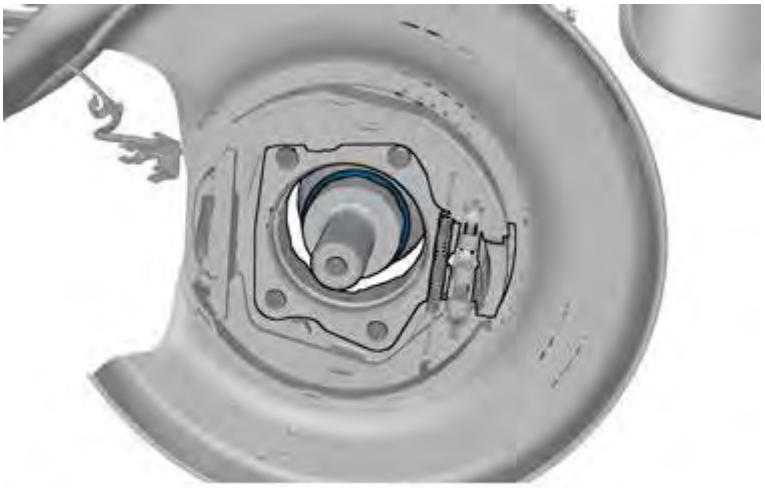

Fig. 36: Installing Outer Shaft Ring
Courtesy of VOLVO CARS CORPORATION

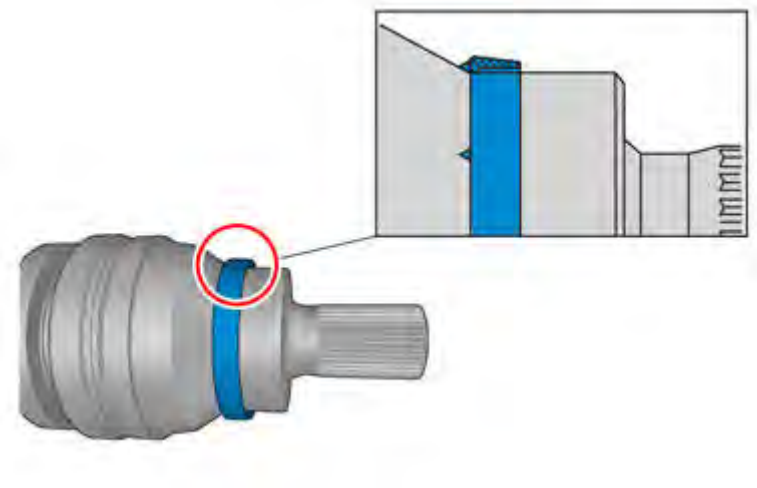

Fig. 37: Seal Positioning
Courtesy of VOLVO CARS CORPORATION

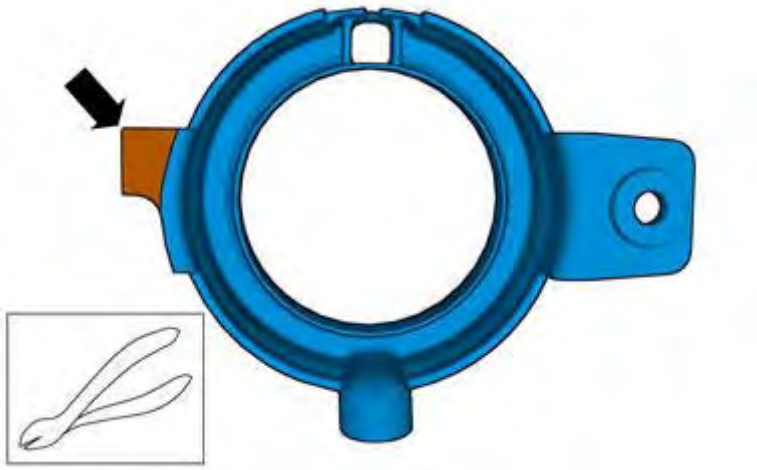

Fig. 38: Seal Preparation
Courtesy of VOLVO CARS CORPORATION

Fig. 39: Seal
Courtesy of VOLVO CARS CORPORATION

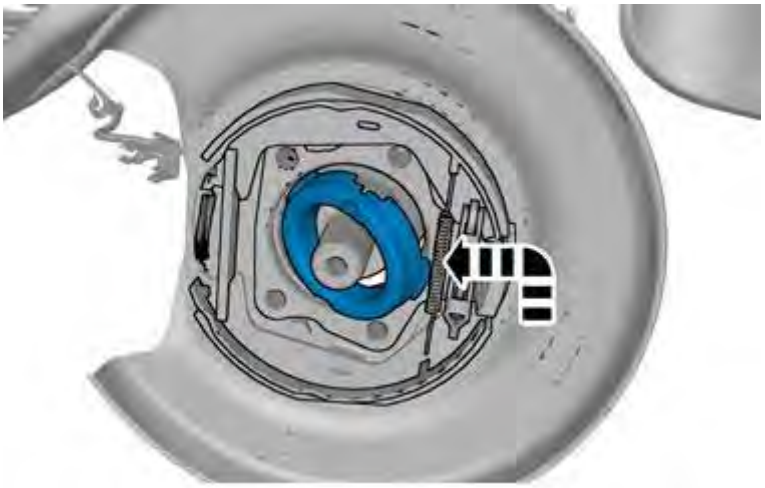

Fig. 40: Installing Seal
Courtesy of VOLVO CARS CORPORATION

Fig. 41: Installing Seal
Courtesy of VOLVO CARS CORPORATION

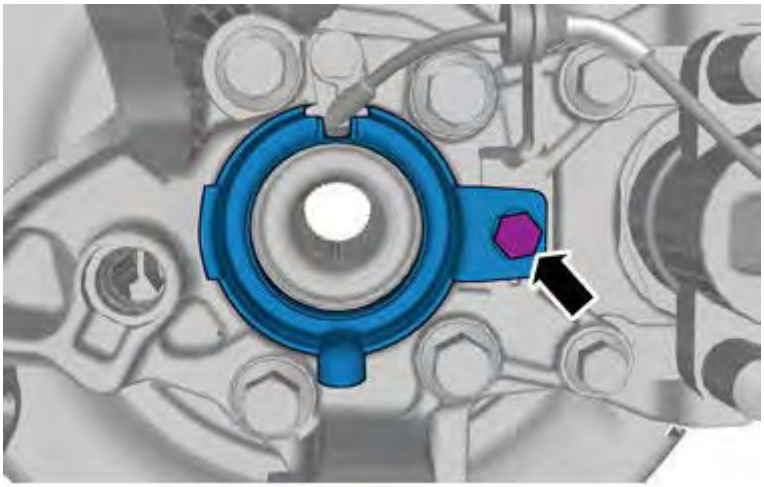

Fig. 42: Installing Seal Bracket
Courtesy of VOLVO CARS CORPORATION

Torque: M6

10 Nm

INSTALLATION

Install in the reverse order.

TIRE CONTROL (2006-2007)

TYRE PRESSURE SENSOR, REPLACEMENT

Special tools	
	T9512987 TPMS tool **Tool number:** T9512987 **Tool description:** TPMS tool **Tool boards:**

Special tools:

see **9512987**

NOTE: **The illustrations in this service information are used for different model years and/or models. Some variation may occur. However, the essential information in the illustrations is always correct.**

REMOVAL

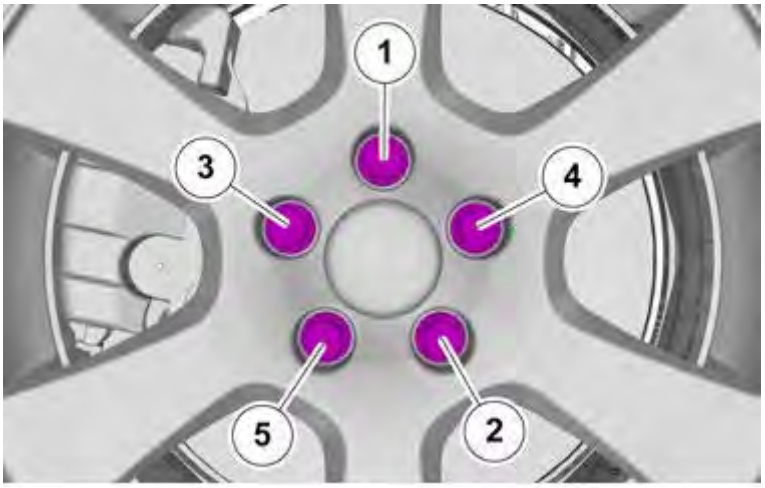

Fig. 43: Identifying Lug Nut Tightening Using Cross Pattern
Courtesy of VOLVO CARS CORPORATION

WARNING: **Make sure that the mating faces are clean and free of corrosion and foreign material.**

Tightening torque: Wheel to wheel hub

- Step 1: 20 Nm
- Step 2: 140 Nm

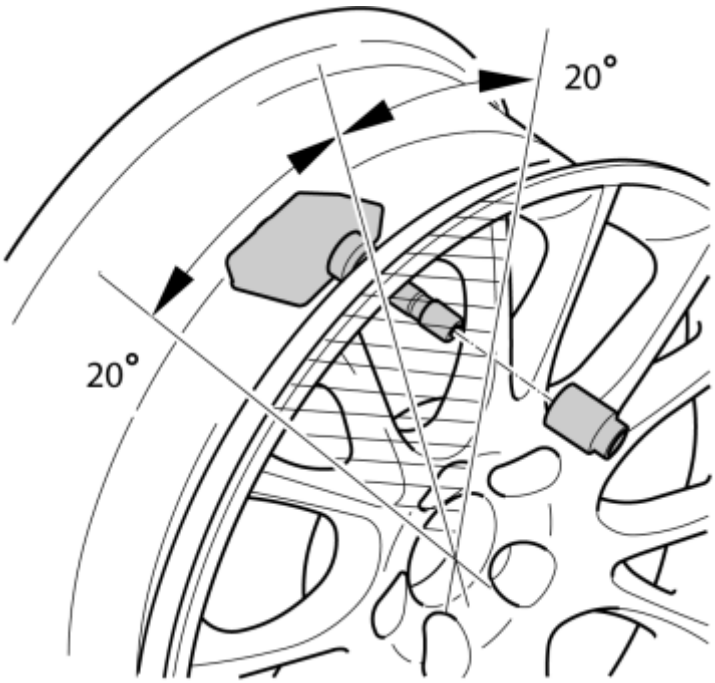

Fig. 44: Removing/Installing Sensor
Courtesy of VOLVO CARS CORPORATION

CAUTION: Make sure not to use any tools within the marked area.

CAUTION: Make sure to start just outside of the marked area and continue in the direction away from the valve.

CAUTION: Release the tire bead from the wheel rim diagonally opposite to the valve.

Remove:

- the tire from the rim
- the nut

  Tightening torque: Pressure sensor 8 Nm

- the sensor

INSTALLATION

Install in the reverse order.

ACTIVATION

After replacing the pressure sensor, activate in UEM with TPMS tool 9512987

TIRE CONTROL (2008)

PRESSURE SENSOR TIRE

REMOVAL

NOTE: Removal steps in this procedure may contain installation details.

Remove the wheel.

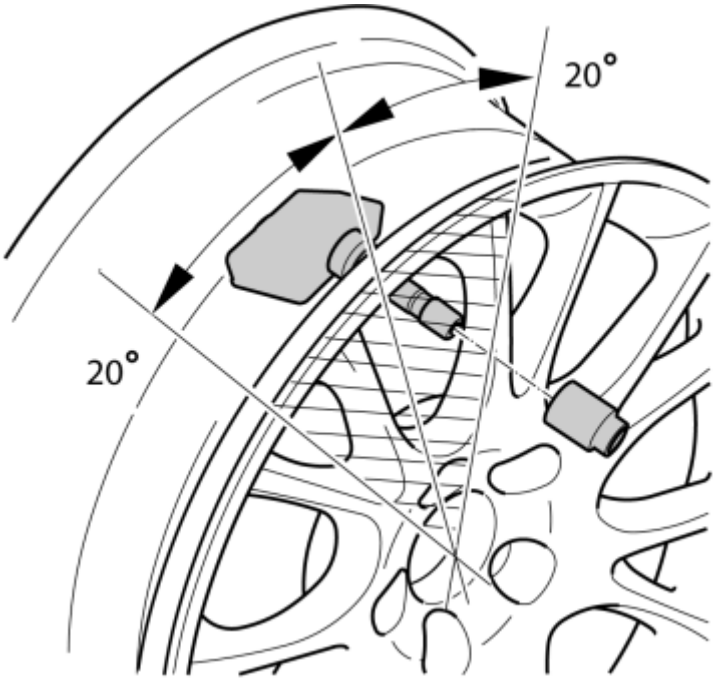

Fig. 45: Removing/Installing Sensor
Courtesy of VOLVO CARS CORPORATION

CAUTION: Do not use tools within the marked area.

CAUTION: Always start outside the marked area and continue in the direction from the valve.

CAUTION: Release the tire bead from the wheel rim diagonally opposite to the valve.

Remove the tire from the rim.

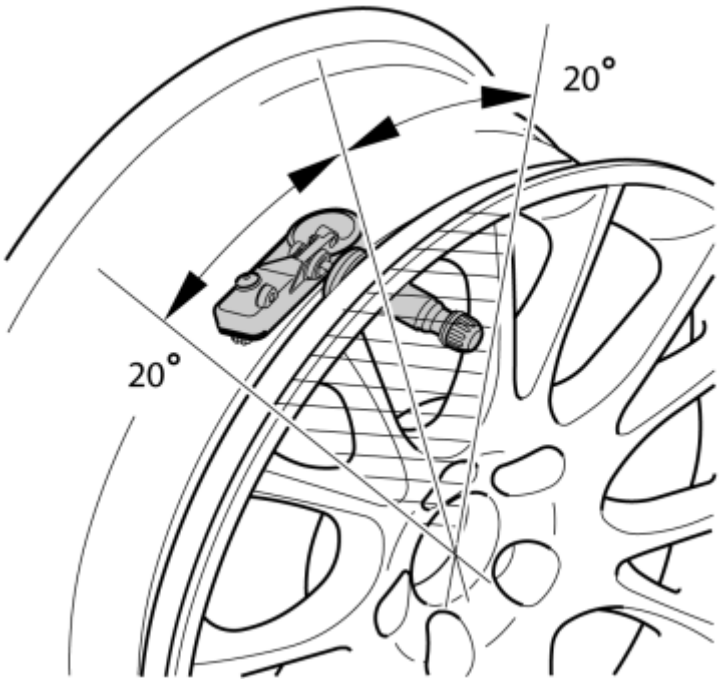

Fig. 46: Identifying Marked Area
Courtesy of VOLVO CARS CORPORATION

CAUTION: Do not use tools within the marked area.

CAUTION: Always start outside the marked area and continue in the direction from the valve.

CAUTION: Release the tire bead from the wheel rim diagonally opposite to the valve.

Remove the tire from the rim.

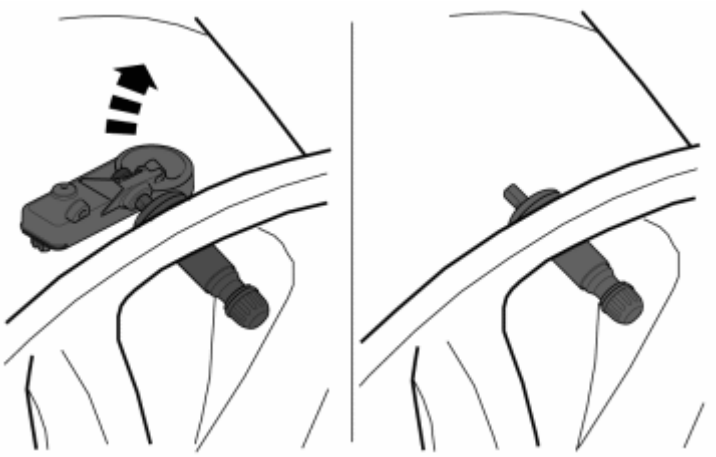

Fig. 47: Identifying Sensor & Valve
Courtesy of VOLVO CARS CORPORATION

NOTE: Always use new valves when replacing tires.

Remove the following items:

- sensor from valve.
- valve.

NOTE: Always use new gaskets when replacing tires.

Install the following items:

- the sensor.
- the nut.

Tighten the pressure sensor. See **TIGHTENING TORQUE**

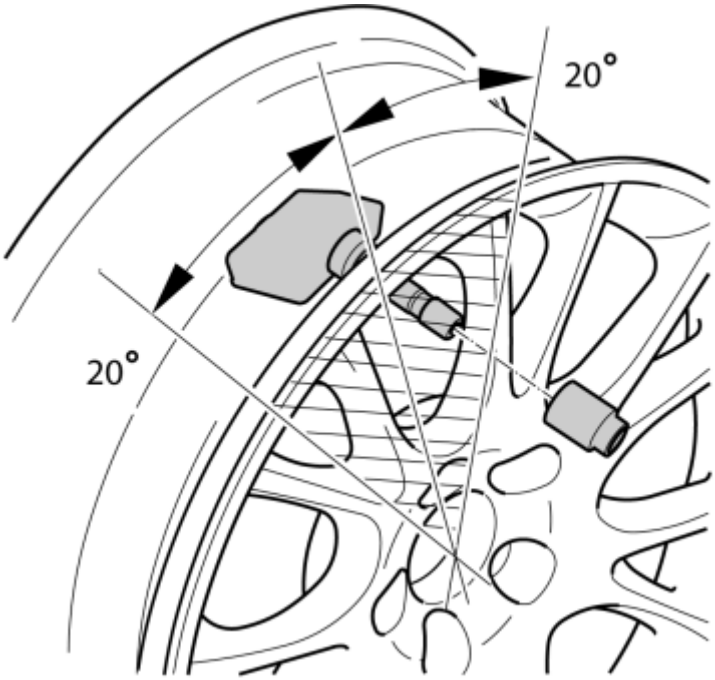

Fig. 48: Removing/Installing Sensor
Courtesy of VOLVO CARS CORPORATION

CAUTION: Do not use tools within the marked area.

CAUTION: Always start outside the marked area and continue in the direction from the valve.

Fit the tire and balance the wheel.

Install the sensor on the valve. Tighten screw. See **TIGHTENING TORQUE**

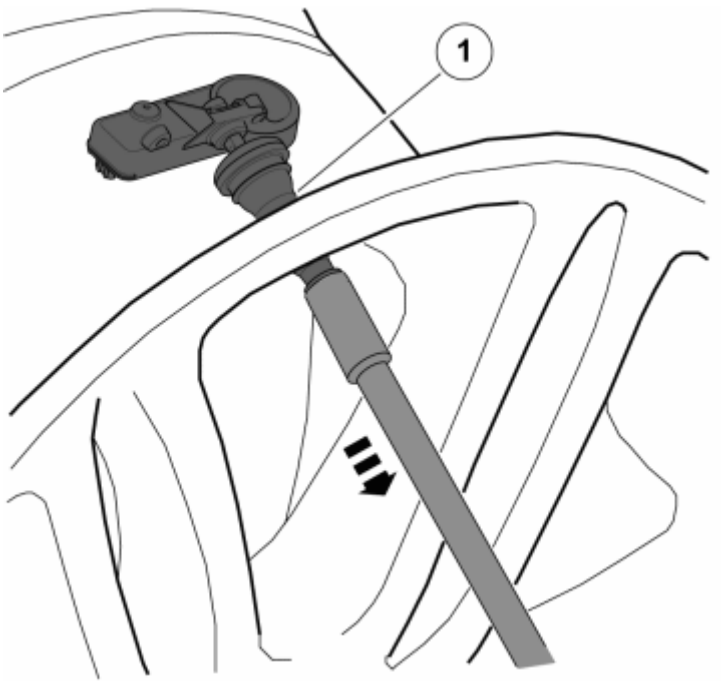

Fig. 49: Identifying Valve
Courtesy of VOLVO CARS CORPORATION

Brush the valve (1) with soapy water and install the valve on the rim.

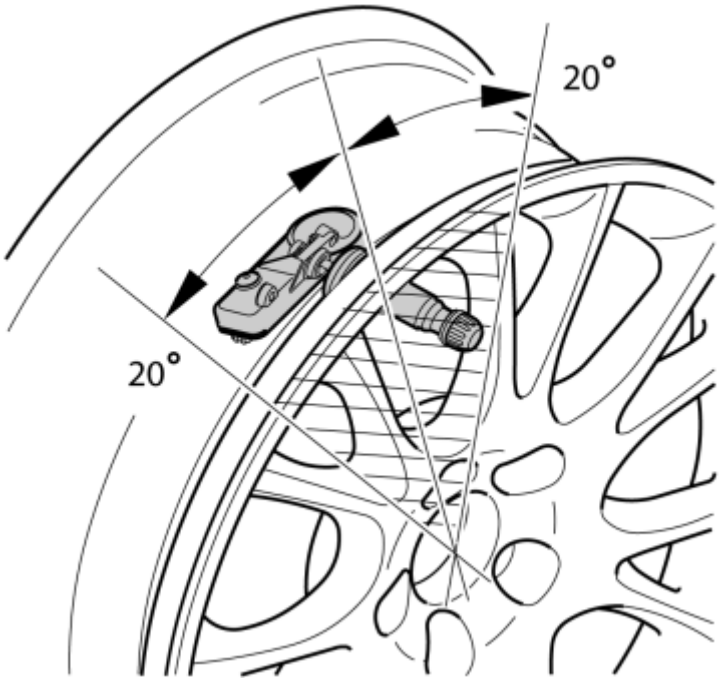

Fig. 50: Identifying Marked Area
Courtesy of VOLVO CARS CORPORATION

CAUTION: Do not use tools within the marked area.

CAUTION: Always start outside the marked area and continue in the direction from the valve.

Fit the tire and balance the wheel.

ALL VEHICLES

Install wheel. See **INSTALLING WHEELS**

After replacing sensors, the control module does not need programming. The control module contacts the sensor itself after a few minutes driving. LF initiator can be used.

TIRE CONTROL (2009-2012)

PRESSURE SENSOR TIRE

REMOVAL

NOTE: Removal steps in this procedure may contain installation details.

Remove the wheel.

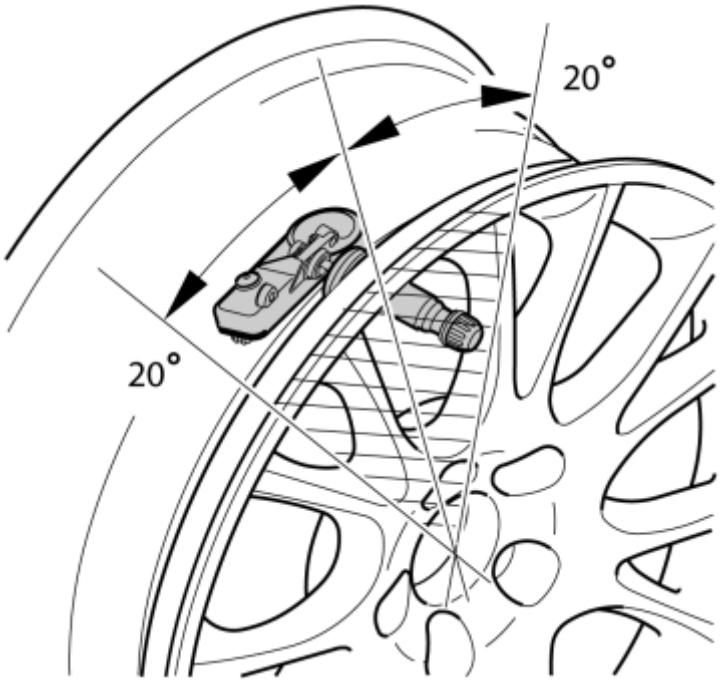

Fig. 51: Identifying Marked Area
Courtesy of VOLVO CARS CORPORATION

CAUTION: Do not use tools within the marked area.

CAUTION: Always start outside the marked area and continue in the direction from the valve.

CAUTION: Release the tire bead from the wheel rim diagonally opposite to the valve.

Remove the tire from the rim.

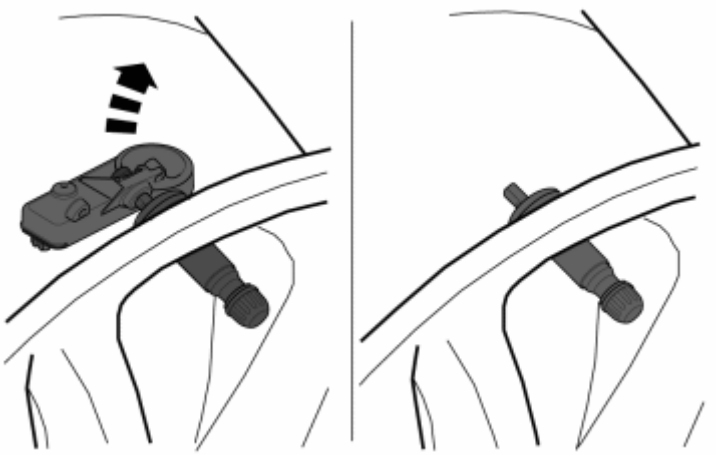

Fig. 52: Identifying Sensor & Valve
Courtesy of VOLVO CARS CORPORATION

NOTE: Always use new valves when replacing tires.

Remove the following items:

- sensor from valve.
- valve.

INSTALLING

Install the sensor on the valve. Tighten screw. See **TIGHTENING TORQUE** .

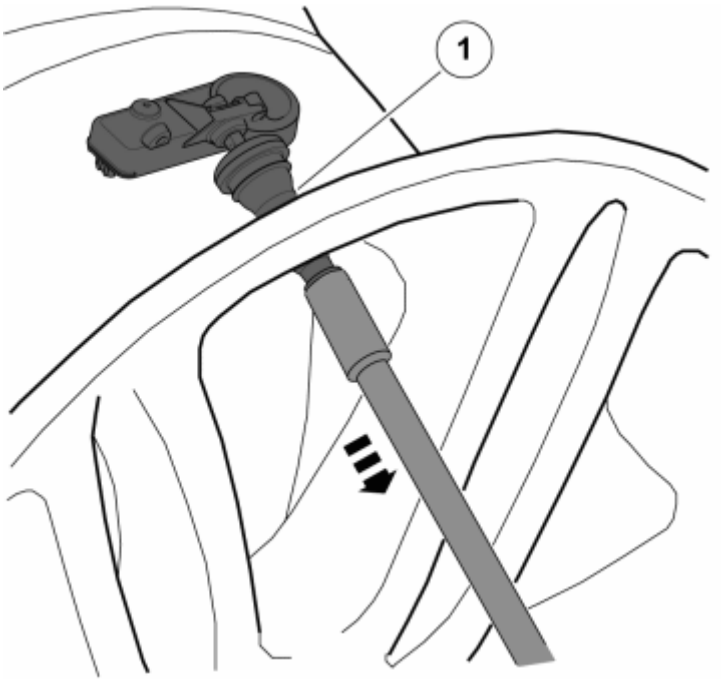

Fig. 53: Identifying Valve
Courtesy of VOLVO CARS CORPORATION

Brush the valve (1) with soapy water and install the valve on the rim.

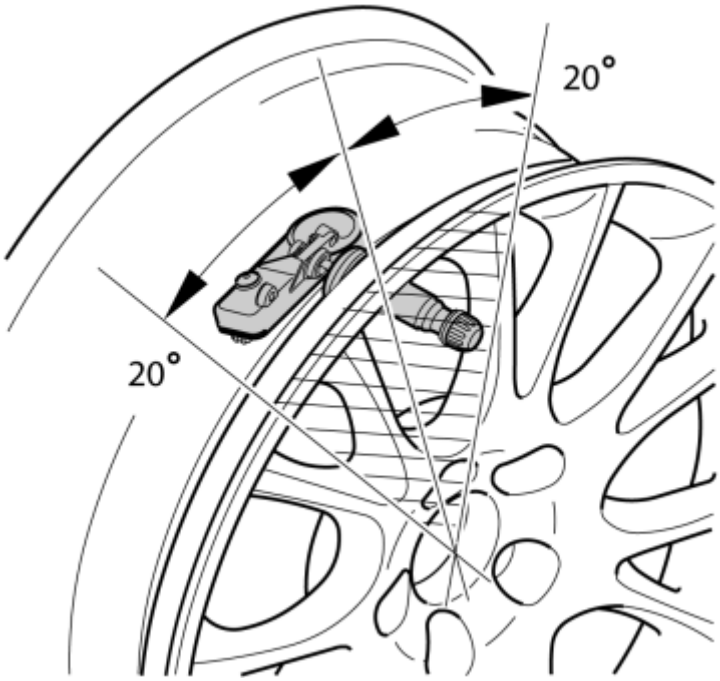

Fig. 54: Identifying Marked Area
Courtesy of VOLVO CARS CORPORATION

CAUTION: Do not use tools within the marked area.

CAUTION: Always start outside the marked area and continue in the direction from the valve.

Fit the tire and balance the wheel.

Install wheel. See **INSTALLING WHEELS**

After replacing sensors, the control module does not need programming. The control module contacts the sensor itself after a few minutes driving. LF initiator can be used.

ELECTRICAL

Alternator And Regulator - Design And Function

GENERATOR (GEN) (2005-12)

DESIGN

See **DESIGN**

FUNCTION

See **FUNCTION**

SYSTEM OVERVIEW

See **SYSTEM OVERVIEW**

GENERATOR (GEN) (2003-04)

DESIGN

See **DESIGN**

FUNCTION

See **FUNCTION**

SYSTEM OVERVIEW

See **SYSTEM OVERVIEW**

ELECTRICAL

Alternator And Regulator - Removal, Replacement And Installation

CHARGE REGULATOR (B5254T2; 2003-04)

GOVERNOR, REPLACING

REMOVAL AND INSTALLATION

NOTE: **As the graphics in this service information are used for different model years and/or models, some variation may occur. However, the essential information in the graphics is always correct.**

REMOVING THE GOVERNOR

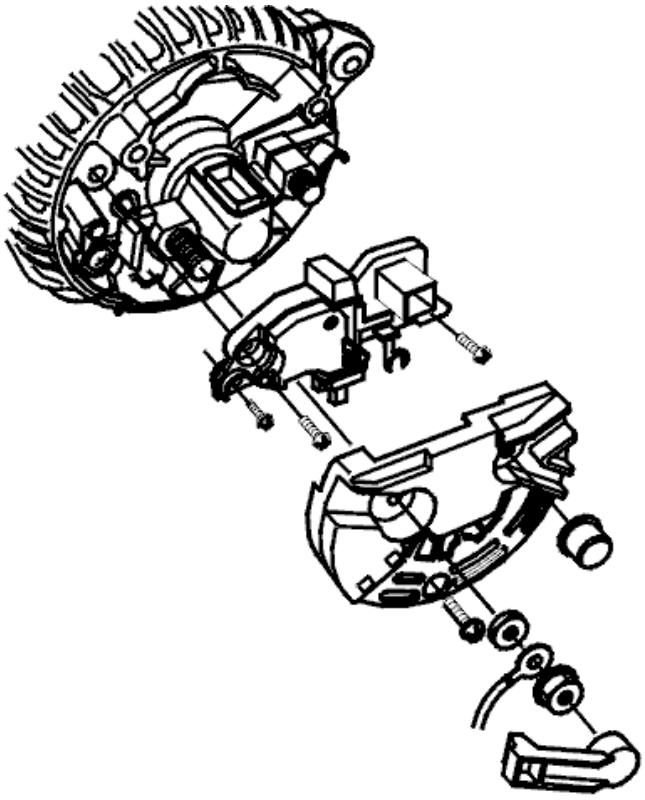

Fig. 1: Exploded View Of Generator
Courtesy of VOLVO CARS CORPORATION

Remove:

- the generator (GEN). See **GENERATOR (GEN), REPLACING**
- the nuts on the cover

- the screw
- the cover
- the 3 screws from the governor
- regulator.

INSTALLING THE GOVERNOR

Install:

- the regulator
- the 3 screws
- the cover
- the screw
- the nuts
- the generator (GEN). See **GENERATOR (GEN), REPLACING**.

CHARGE REGULATOR (B5254T2; 2005-06)

REGULATOR, REPLACING

REMOVAL AND INSTALLATION

NOTE: **As the graphics in this service information are used for different model years and/or models, some variation may occur. However, the essential information in the graphics is always correct.**

REMOVING THE GOVERNOR

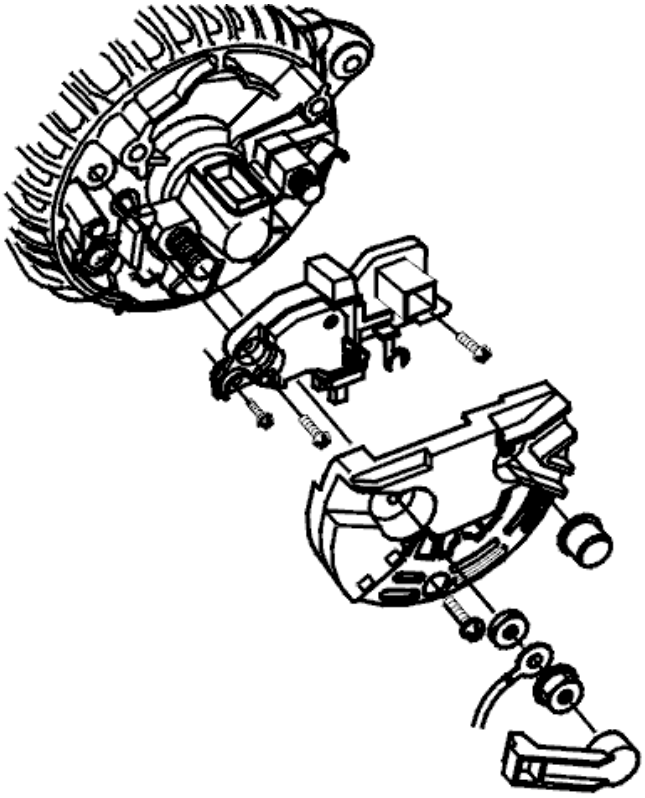

Fig. 2: Exploded View Of Generator
Courtesy of VOLVO CARS CORPORATION

Remove:

- the generator (GEN). See **GENERATOR (GEN), REPLACING**
- the nuts on the cover
- the screw
- the cover
- the 3 screws from the governor
- regulator.

INSTALLING THE GOVERNOR

Install:

- the regulator
- the 3 screws
- the cover
- the screw
- the nuts

- the generator (GEN). See **GENERATOR (GEN), REPLACING**.

CHARGE REGULATOR (B6294T; 2003-04)

GOVERNOR, REPLACING

REMOVAL AND INSTALLATION

NOTE: **As the graphics in this service information are used for different model years and/or models, some variation may occur. However, the essential information in the graphics is always correct.**

REMOVING THE GOVERNOR

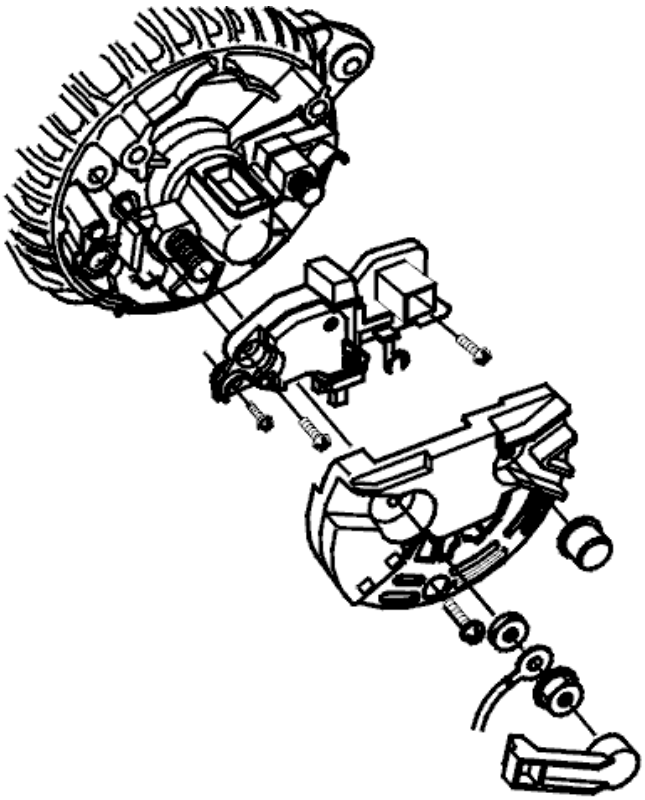

Fig. 3: Exploded View Of Generator
Courtesy of VOLVO CARS CORPORATION

Remove:

- the generator (GEN). See **GENERATOR (GEN), REPLACING**
- the nuts on the cover
- the screw

- the cover
- the 3 screws from the governor
- regulator.

INSTALLING THE GOVERNOR

Install:

- the regulator
- the 3 screws
- the cover
- the screw
- the nuts
- the generator (GEN). See **REMOVAL**.

CHARGE REGULATOR (B6294T; 2005-06)

REGULATOR, REPLACING

REMOVAL AND INSTALLATION

NOTE: **As the graphics in this service information are used for different model years and/or models, some variation may occur. However, the essential information in the graphics is always correct.**

REMOVING THE GOVERNOR

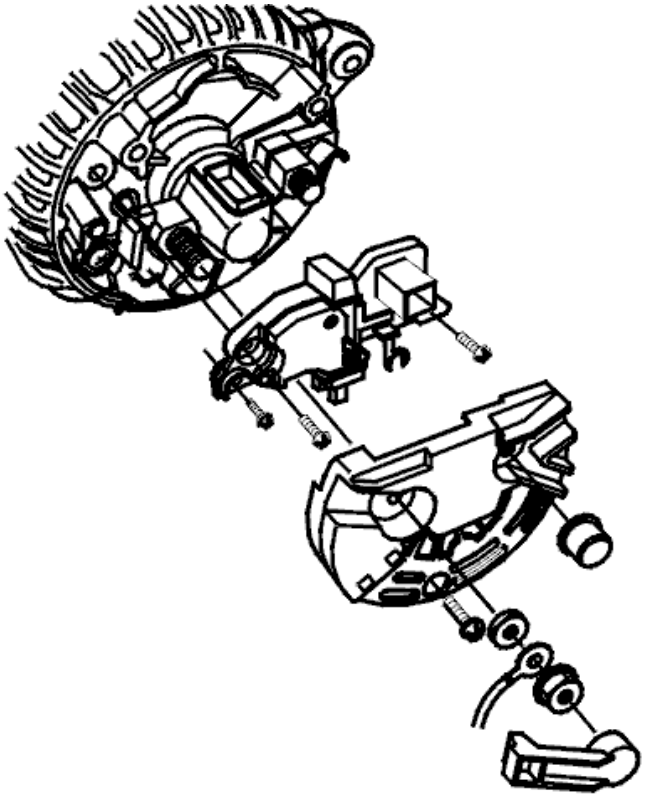

Fig. 4: Exploded View Of Generator
Courtesy of VOLVO CARS CORPORATION

Remove:

- the generator (GEN). See **GENERATOR (GEN), REPLACING**
- the nuts on the cover
- the screw
- the cover
- the 3 screws from the governor
- regulator.

INSTALLING THE GOVERNOR

Install:

- the regulator
- the 3 screws
- the cover
- the screw
- the nuts

- the generator (GEN). See **GENERATOR (GEN), REPLACING**.

CHARGE REGULATOR (B8444S; 2005-06)

GOVERNOR, REPLACEMENT

NOTE: The graphics in this service information are used for different model years and/or models. Some variation may occur. However, the essential information in the graphics is always correct.

PREPARATORY WORK

REMOVING THE GENERATOR

Remove the generator in accordance with **GENERATOR (GEN), REPLACEMENT**.

REMOVAL

REMOVING THE HEAT SHIELD

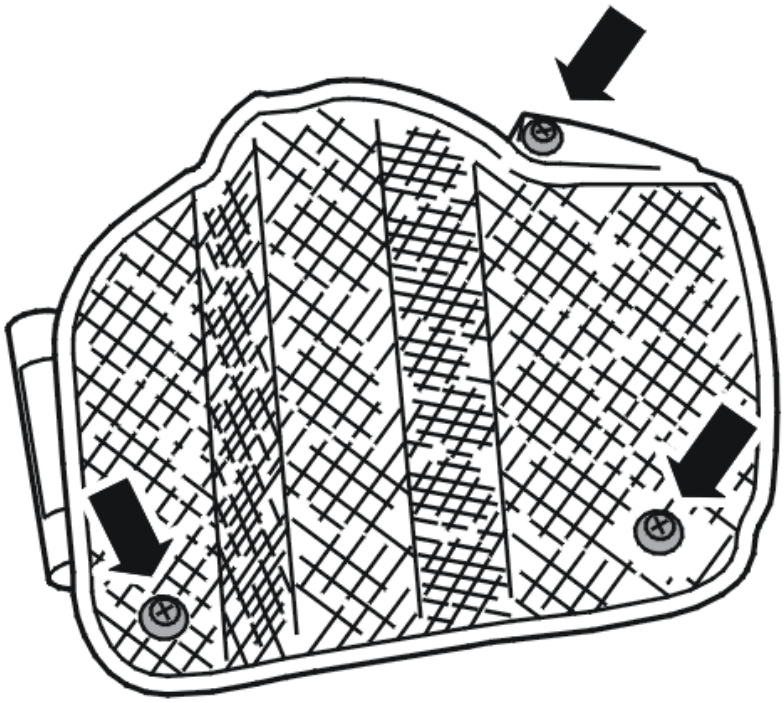

Fig. 5: Identifying Heat Shield And Bolts
Courtesy of VOLVO CARS CORPORATION

Remove:

- the bolts, x3
- the heat shield.

REMOVING THE COVER

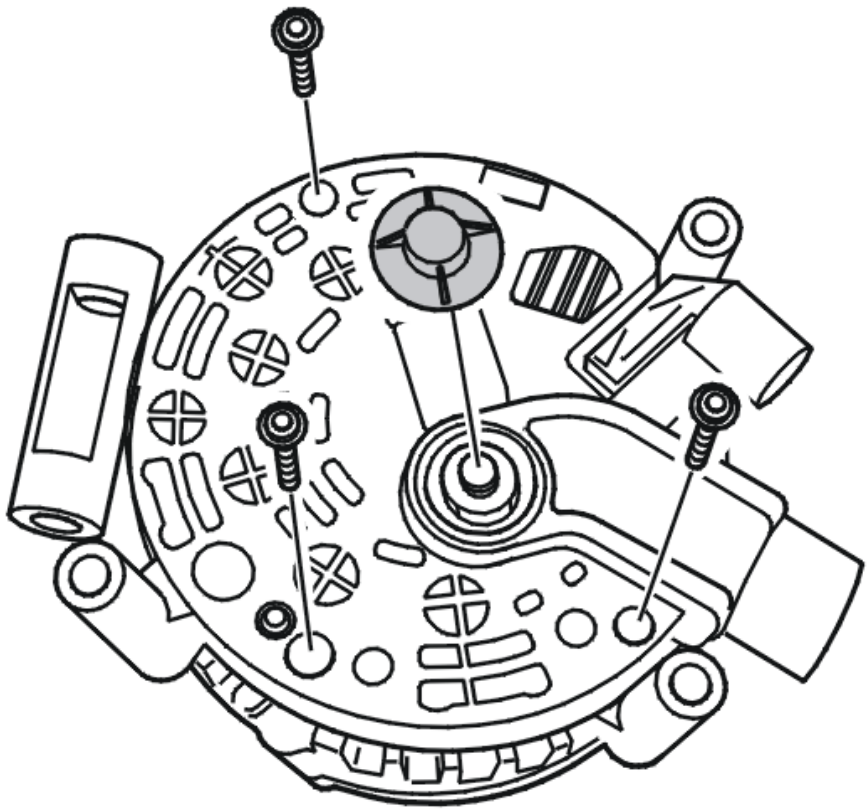

Fig. 6: Identifying Cover, Bolts, Nut And Plastic Cover
Courtesy of VOLVO CARS CORPORATION

Remove:

- the plastic cover for the nut
- the nut, x1
- the bolts, x3
- the cover.

REMOVING THE GOVERNOR

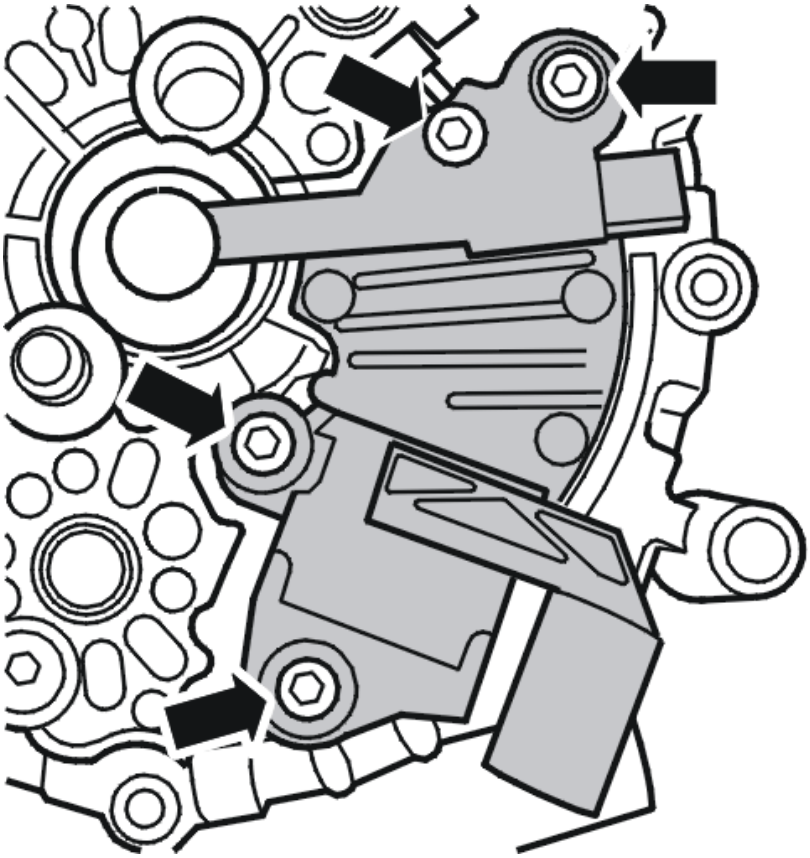

Fig. 7: Identifying Governor And Bolts
Courtesy of VOLVO CARS CORPORATION

Remove:

- the bolts, x4
- the governor.

INSTALLATION

NOTE: For tightening torques, see TIGHTENING TORQUE .

INSTALLING THE GOVERNOR

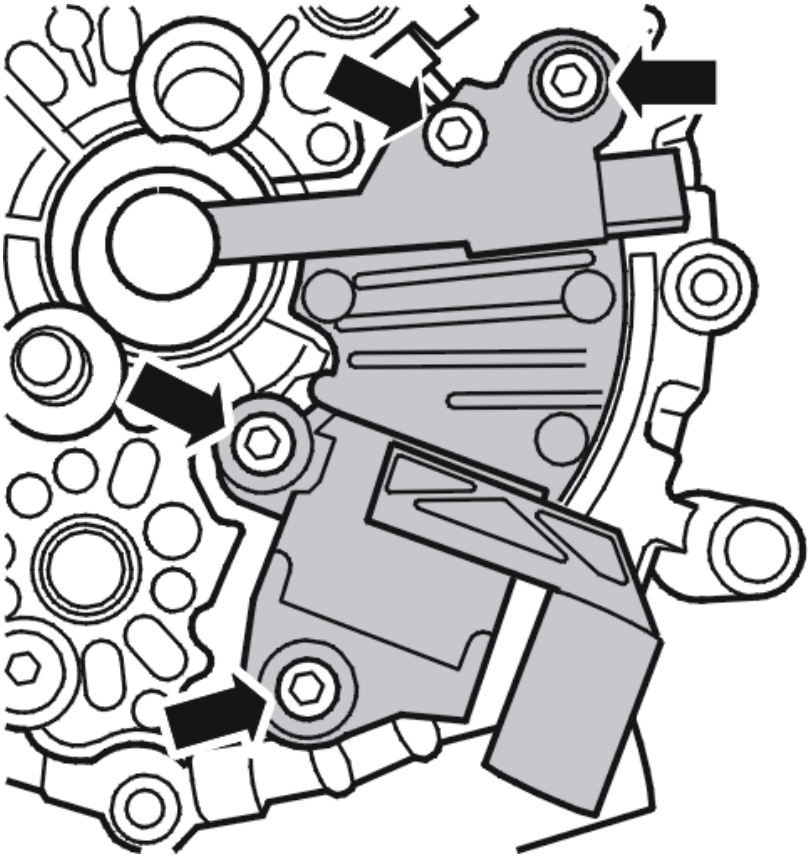

Fig. 8: Identifying Governor And Bolts
Courtesy of VOLVO CARS CORPORATION

Install:

- the governor
- the bolts, M4 x4.

INSTALLING THE COVER

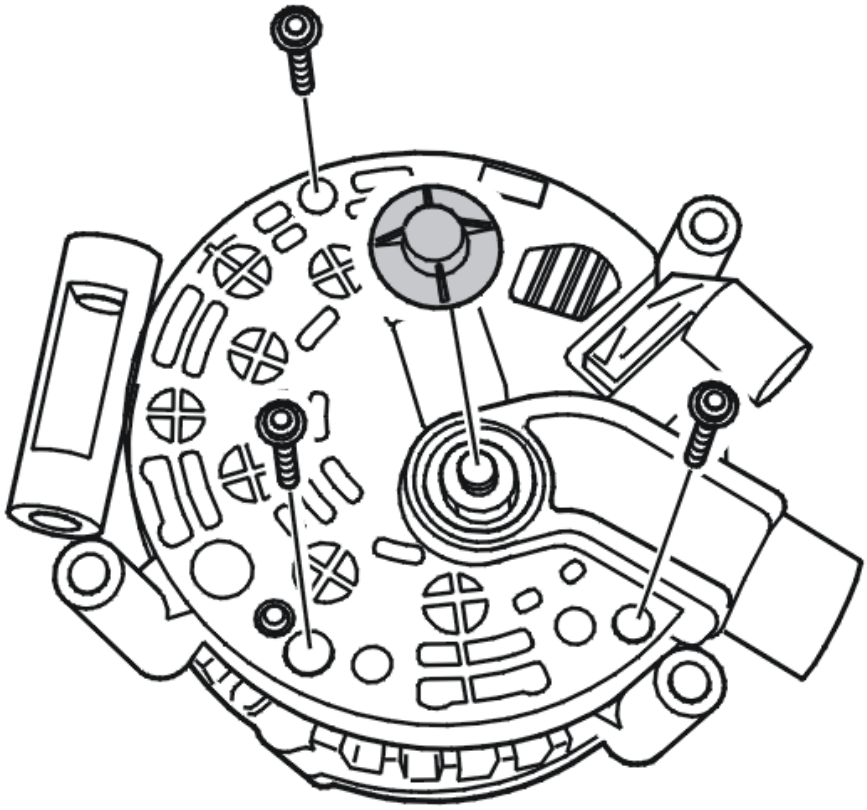

Fig. 9: Identifying Cover, Bolts, Nut And Plastic Cover
Courtesy of VOLVO CARS CORPORATION

Install:

- the cover
- the bolts, M4 x3, on the cover
- the nut. Tighten in accordance with **SUMMARY OF TIGHTENING TORQUES FOR SPECIFIC COMPONENTS** .
- the plastic cover for the nut.

INSTALLING THE HEAT SHIELD

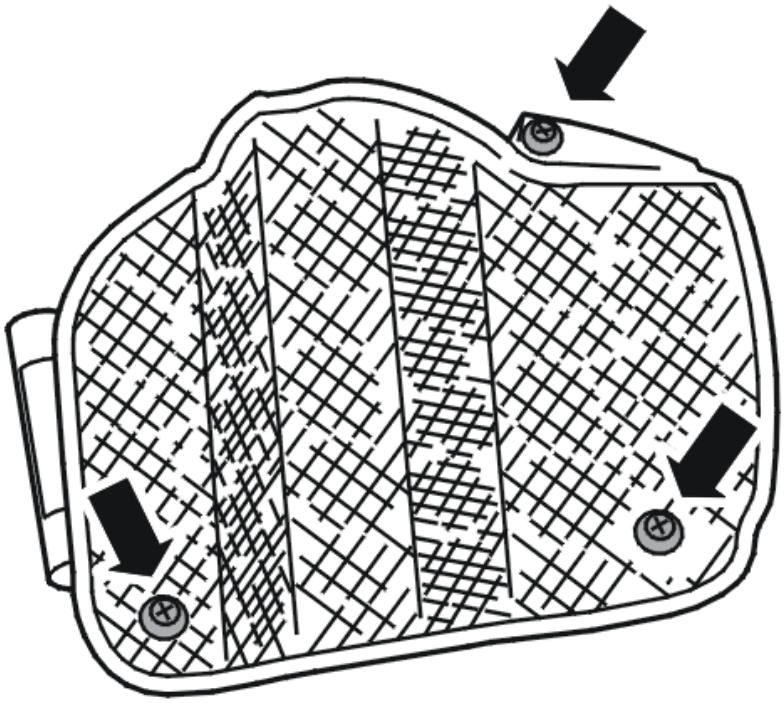

Fig. 10: Identifying Heat Shield And Bolts
Courtesy of VOLVO CARS CORPORATION

Install:

- the heat shield
- the bolts, M4 x3.

FINISHING

INSTALLING THE GENERATOR

Install the generator in accordance with **GENERATOR (GEN), REPLACEMENT**.

Check the function.

GENERATOR (GEN) (B5254T2; 2003-04)

GENERATOR (GEN), REPLACING

REMOVAL

NOTE: As the graphics in this service information are used for different model years

and/or models, some variation may occur. However, the essential information in the graphics is always correct.

PREPARATORY WORK

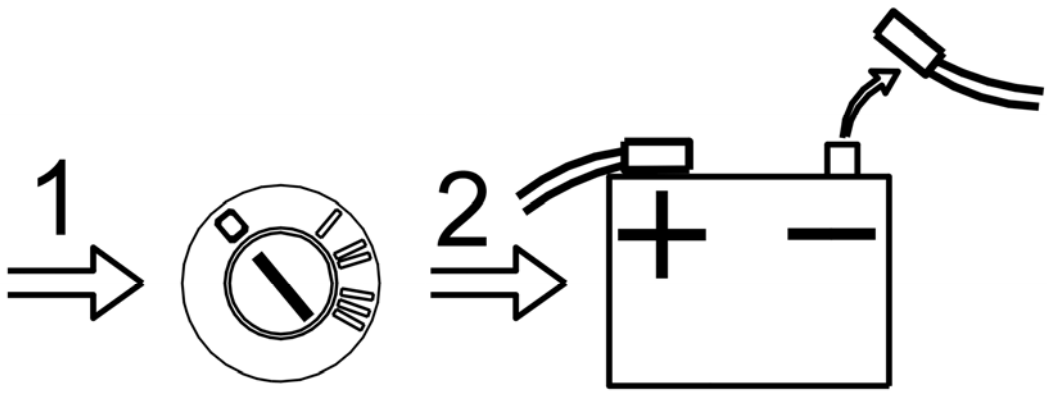

Fig. 11: Disconnecting Battery Negative Cable
Courtesy of VOLVO CARS CORPORATION

- Ignition off
- Disconnect the battery negative lead. See **BATTERY, DISCONNECTING**
- Remove the auxiliaries belt. See **AUXILIARIES BELT/BELT TENSIONER, REPLACING**
- Remove the power steering pump. See **POWER STEERING PUMP, REPLACING**
- Disconnect the turbocharger hose from the cooling system. Push the hose to one side.

REMOVING THE GENERATOR (GEN)

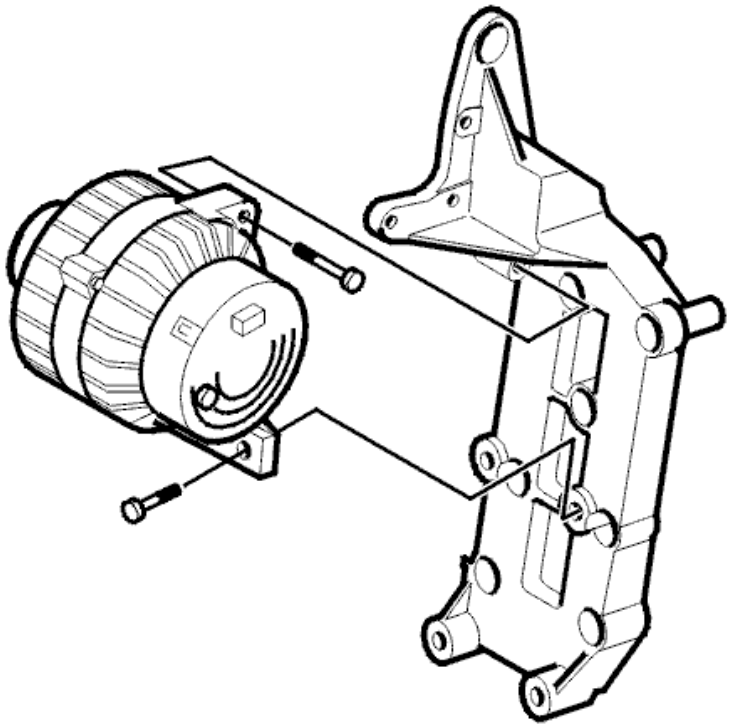

Fig. 12: Generator Without AC
Courtesy of VOLVO CARS CORPORATION

Remove the screw that runs through the upper mounting.

Remove the lower screws.

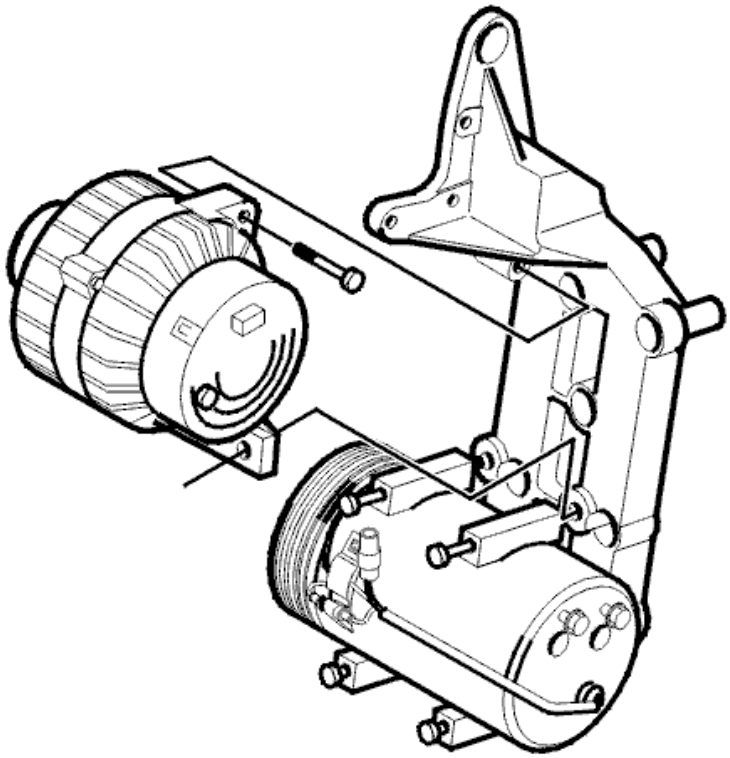

Fig. 13: Generator With AC
Courtesy of VOLVO CARS CORPORATION

- Slacken off the lower screws for the compressor (so that there is some clearance)
- Disconnect the battery positive lead
- Disconnect the connector
- Remove the generator (GEN)
- Turn the generator (GEN) into position
- Pull the generator (GEN) upwards/away.

INSTALLATION

NOTE: For tightening torques, see TIGHTENING TORQUE .

INSTALLING GENERATOR (GEN)

- Position the generator (GEN). Install the screw through the upper mounting. Do not tighten
- Connect the cable and the connector
- Install the lower screws for the generator and upper screws for the compressor
- **With AC:** Tighten the 2 lower screws for the compressor. M8
- Tighten the 3 screws for the generator (GEN). M8.

FINISHING WORK

Install:

- the turbocharger hose
- the power steering pump. See **POWER STEERING PUMP, REPLACING**
- the auxiliaries belt. See **AUXILIARIES BELT/BELT TENSIONER, REPLACING**
- the battery negative lead. See **BATTERY, DISCONNECTING** .

Test the function.

PULLEY, REPLACING

Special tools:

see **9512849**

see **9995760**

see **9512036**

NOTE: As the graphics in this service information are used for different model years and/or models, some variation may occur. However, the essential information in the graphics is always correct.

NOTE: On five cylinder models, the pulley can be replaced with the generator (GEN) still installed in the vehicle.

REMOVAL

PREPARATORY WORK

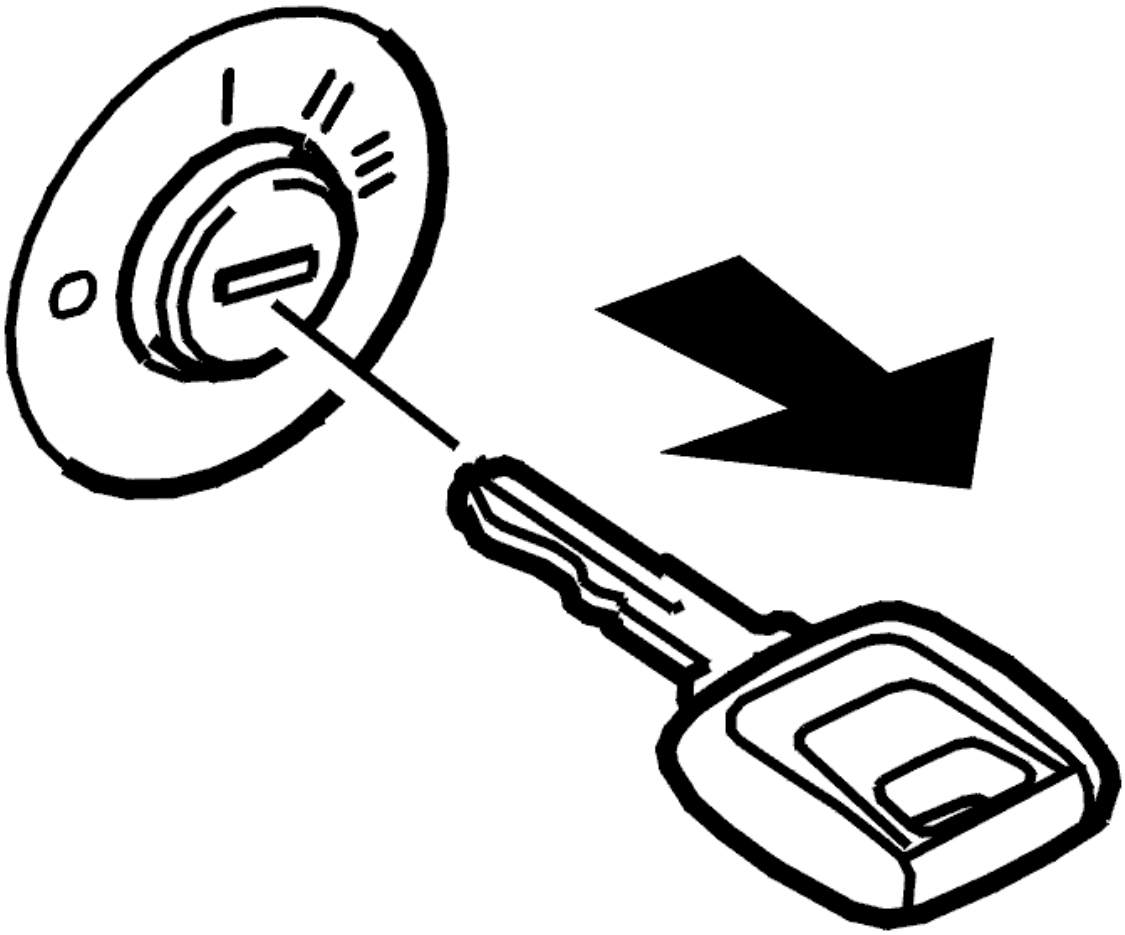

Fig. 14: Identifying Ignition Key Off
Courtesy of VOLVO CARS CORPORATION

Switch off the ignition and remove the key.

Disconnect the auxiliaries belt. See **AUXILIARIES BELT/BELT TENSIONER, REPLACING** .

REMOVING A PULLEY WITHOUT FREEWHEEL

NOTE: The rotor shaft is left-hand threaded.

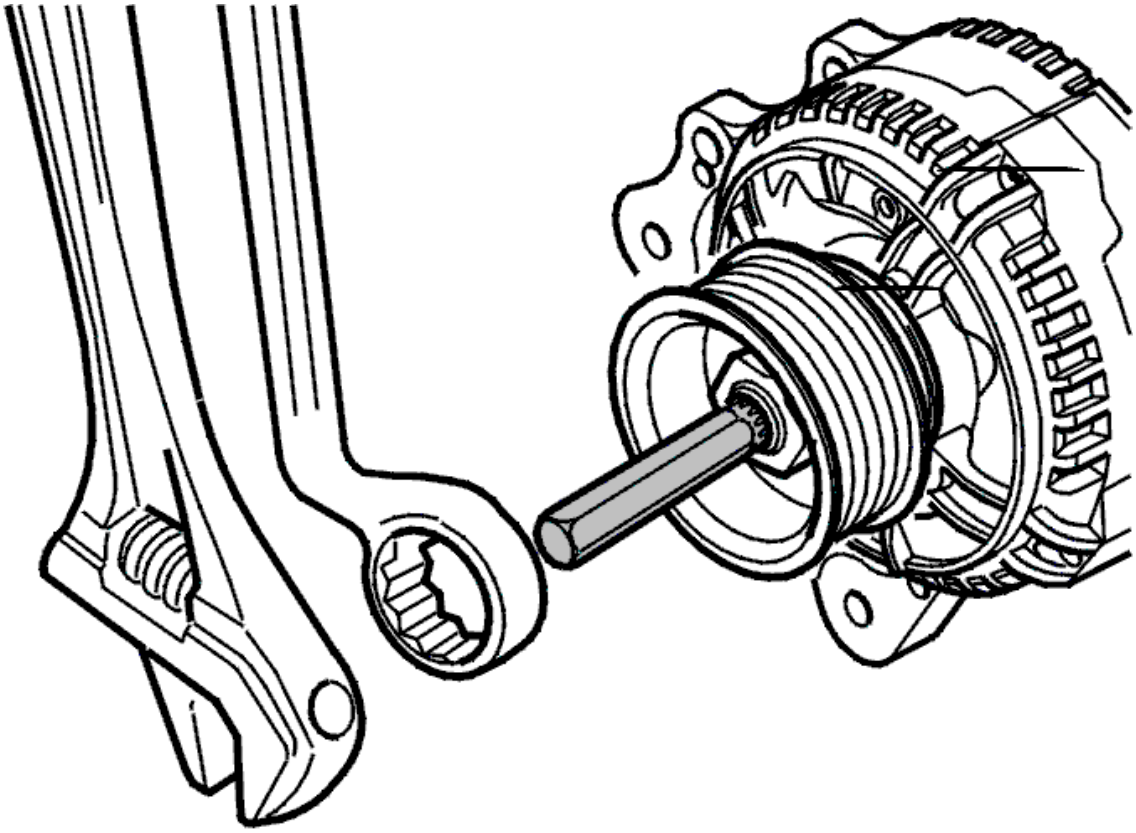

Fig. 15: Identifying Pulley And Nut Removed Using Ring Wrench
Courtesy of VOLVO CARS CORPORATION

Remove the pulley and the nut. Use ring wrench see **9512036** and twelve point socket see **9512849** .

REMOVING A PULLEY WITH FREEWHEEL

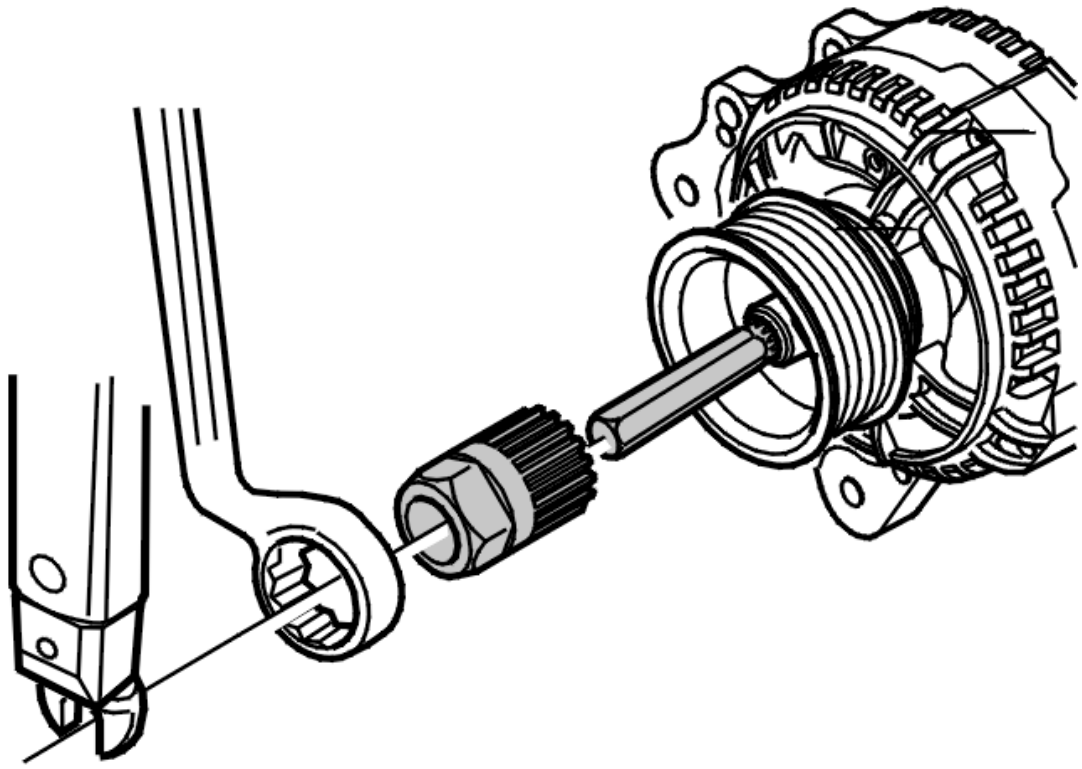

Fig. 16: Identifying Pulley Removed From Rotor Shaft
Courtesy of VOLVO CARS CORPORATION

Remove the dust cover.

Remove the pulley from the rotor shaft. Use tools see **9995760** and see **9512849** as shown.

Remove the pulley.

INSTALLATION

NOTE: For tightening torques, see TIGHTENING TORQUE .

INSTALLING A PULLEY WITHOUT FREEWHEEL

Install the pulley and the nut. Use ring wrench see **9512036** and twelve point socket see **9512849** .

Tighten.

Install the auxiliaries belt. See **AUXILIARIES BELT/BELT TENSIONER, REPLACING** .

Test the function.

INSTALLING THE PULLEY WITH FREEWHEEL

Thread the pulley on to the rotor shaft.

Tighten. Use tools see **9995760** and see **9512849** as shown.

Install the dust cover.

Install the auxiliaries belt. See **AUXILIARIES BELT/BELT TENSIONER, REPLACING** .

Test the function.

GENERATOR (GEN) (B6294T; 2005-06)

GENERATOR (GEN), REPLACING

NOTE: The graphics in this service information are used for different model years and/or models. Some variation may occur. However, the essential information in the graphics is always correct.

PREPARATORY WORK

REMOVING COMPONENTS

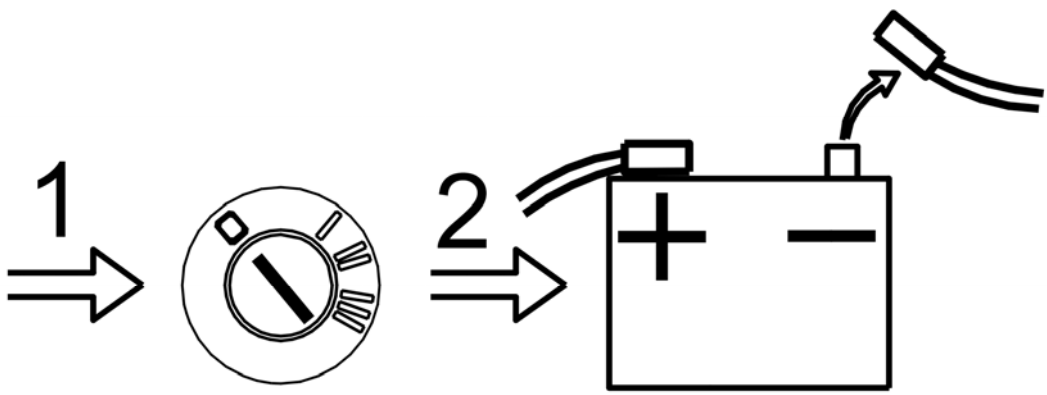

Fig. 17: Disconnecting Battery Negative Cable

Courtesy of VOLVO CARS CORPORATION

Ignition off.

Remove:

- the battery negative lead. See **BATTERY, DISCONNECTING**
- the auxiliaries belt. See **REPLACING THE ACCESSORY DRIVE BELT/BELT TENSIONER**
- the power steering pump. See **POWER STEERING PUMP, REPLACING**
- the turbo hose from the air conditioning aggregate. Push the hose to one side.

REMOVAL

DISCONNECTING THE RADIATOR HOSE

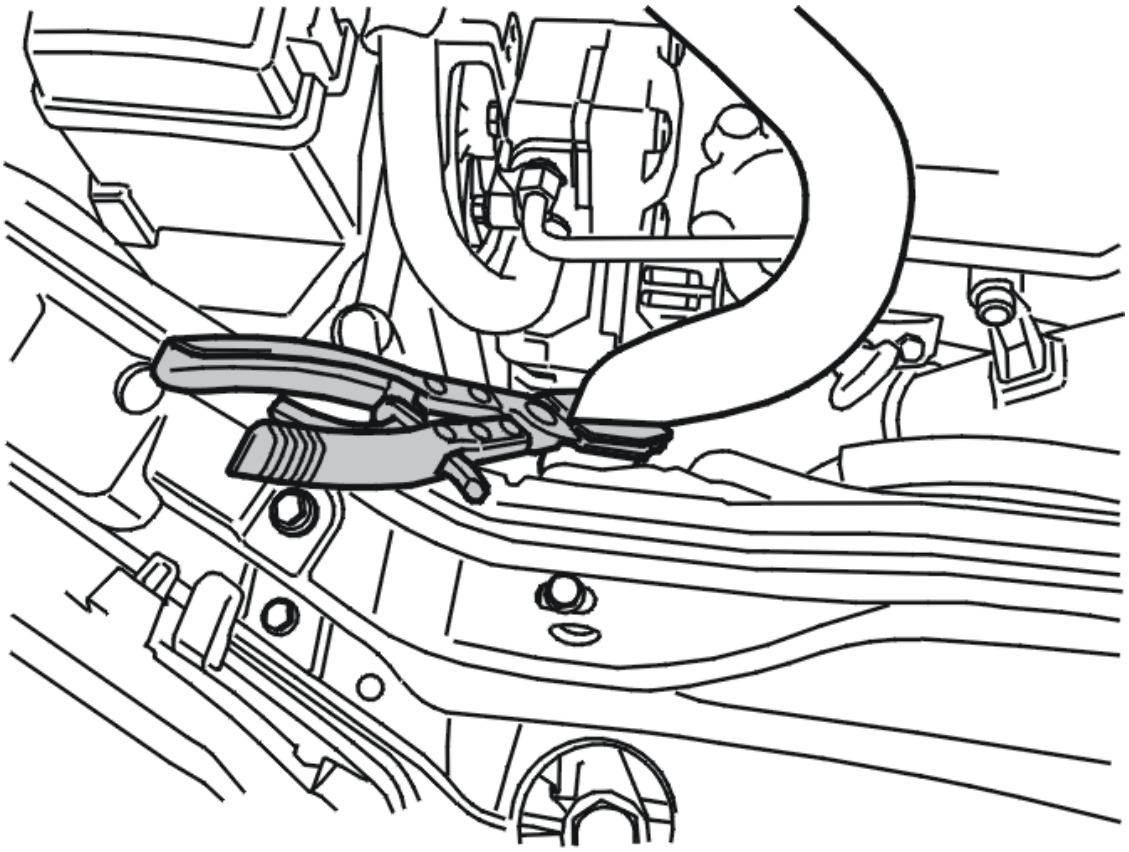

Fig. 18: Clamping And Disconnecting Radiator Hose
Courtesy of VOLVO CARS CORPORATION

Disconnect the radiator hose from the radiator and push to one side.

REMOVING THE GENERATOR (GEN)

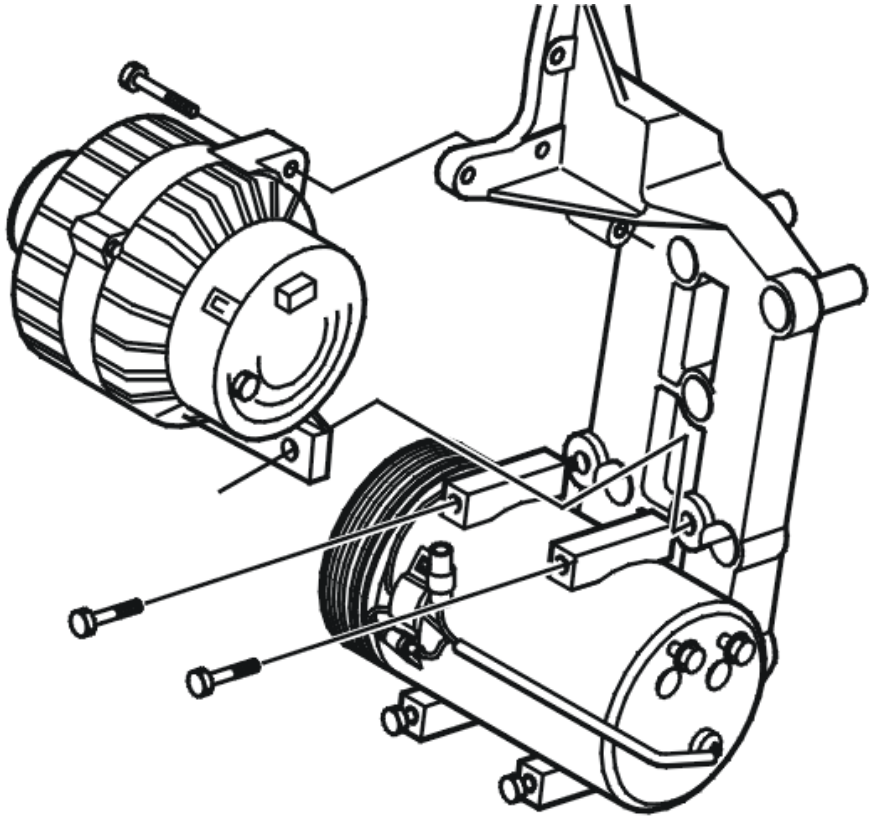

Fig. 19: Identifying Generator And Bracket
Courtesy of VOLVO CARS CORPORATION

Slacken off the lower screws for the compressor (so that there is some clearance).

Remove:

- the nut for the battery positive lead
- the connector
- the 3 screws
- the generator (GEN).

Lift out the generator.

INSTALLATION

NOTE: For tightening torques, see TIGHTENING TORQUE

INSTALLING GENERATOR (GEN)

Lift the generator into place.

Install:

- the 3x M8 screws
- the connector
- the battery positive lead. Tighten. See **SUMMARY OF TIGHTENING TORQUES FOR SPECIFIC COMPONENTS** .

NOTE: **If the vehicle is equipped with air conditioning (A/C), tighten the lower 2 x M8 screws for the compressor.**

FINISHING

INSTALLING COMPONENTS

Install:

- the radiator hose
- the turbo hose
- the power steering pump. See **POWER STEERING PUMP, REPLACING**
- the auxiliaries belt. See **REPLACING THE ACCESSORY DRIVE BELT/BELT TENSIONER**
- the battery negative lead. See **BATTERY, DISCONNECTING**

Check the fluids level. Top up if required.

Test the function.

PULLEY, REPLACING

Special tools:

see **1159079**

see **1159080**

see **9512036**

see **9995760**

REPLACING THE PULLEY WITH FREEWHEEL/FIXED PULLEY

NOTE: **As the graphics in this service information are used for different model years and/or models, some variation may occur. However, the essential information in the graphics is always correct.**

REMOVING A PULLEY WITH FREEWHEEL

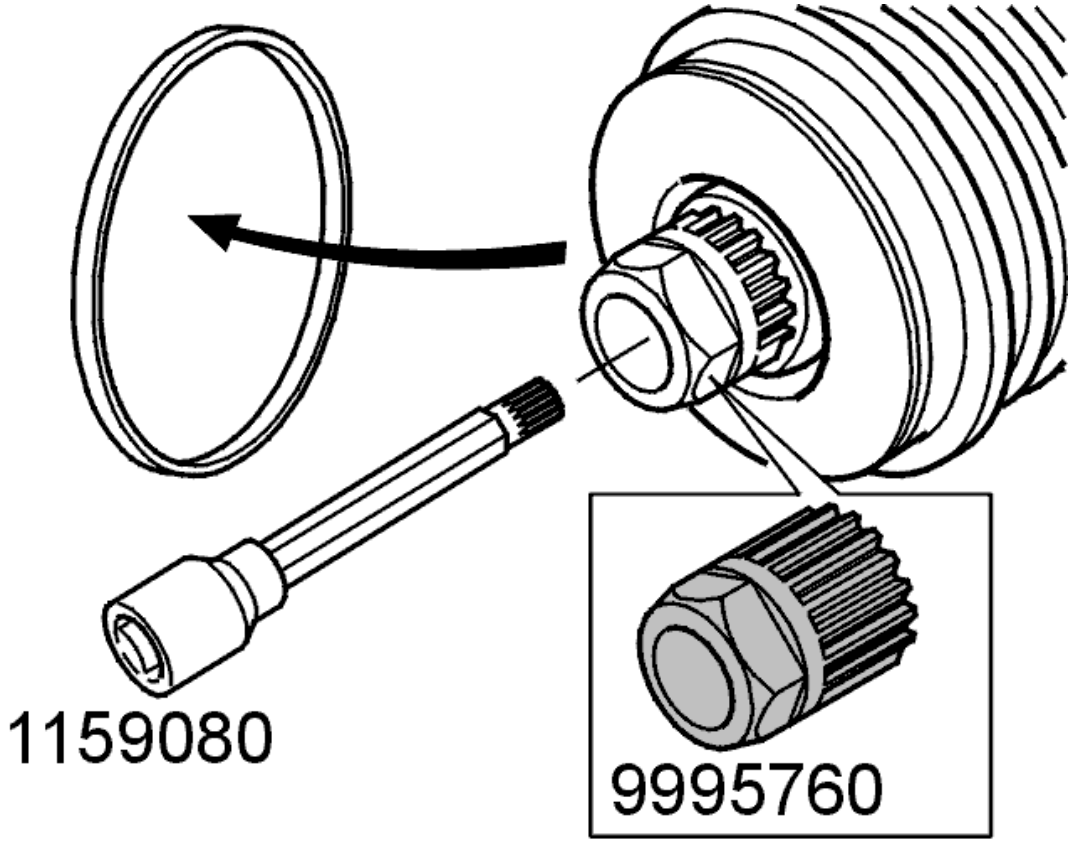

Fig. 20: Identifying Tool 9995760 And Twelve Toothed Dowel
Courtesy of VOLVO CARS CORPORATION

Removing a pulley with freewheel

- remove the dust cover
- use tool **9995760** as shown
- use a twelve toothed dowel, see **1159080** , as shown

NOTE: When removing: The rotor shaft and pulley are left-hand threaded.

- disconnect the pulley from the rotor shaft
- remove the pulley.

INSTALLING THE PULLEY WITH FREEWHEEL

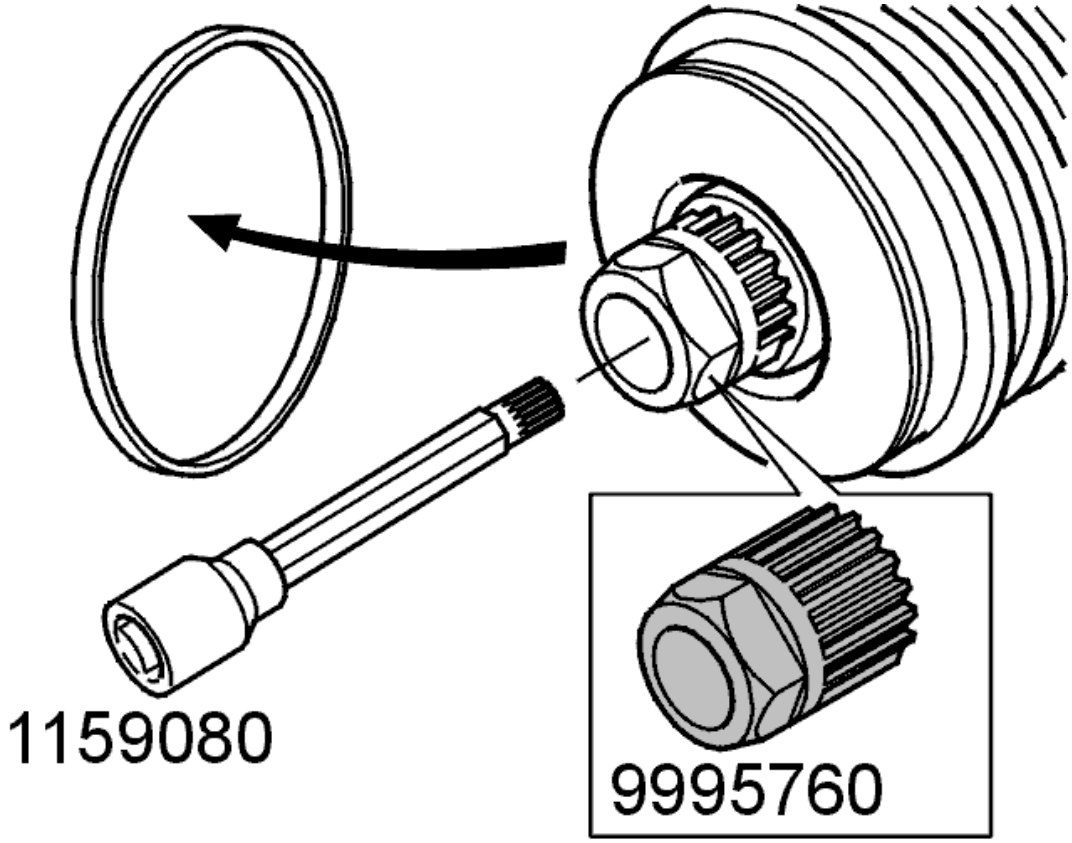

Fig. 21: Identifying Tool 9995760 And Twelve Toothed Dowel
Courtesy of VOLVO CARS CORPORATION

Installing a pulley with freewheel

- slide the pulley onto the rotor shaft
- use tool **9995760** on the pulley, as shown
- use a twelve toothed dowel, see **1159080** as shown

NOTE: The rotor shaft and pulley are left-hand threaded.

- tighten the pulley. Tighten to 80 Nm (59 lbs.)
- install the dust cover.

Checking the function of the freewheel on the generator (GEN) in the car

Check the pulley freewheel as follows:

- start the engine
- rev the engine to 3, 000 rpm.

  Ensure that no extra power consuming components are connected.

Check that only a weak clicking sound is heard when the freewheel engages and disengages

- switch off the engine. Check that the generator rotates for longer than the engine.

If it is cold, the battery charge warning lamp may light shortly after start-up because the freewheel needs to rotate and warm up the bearing grease before it locks and engages the rotor shaft.

If the warning lamp remains lit, it may be an indication that the freewheel has not locked the pulley to the rotor shaft.

Check

Checking the function of the freewheel on a removed generator (GEN)

Check the pulley freewheel as follows

- rotate the pulley counter-clockwise and brake heavily.

  The freewheel should grip the rotor shaft when rotating counter-clockwise

- stop the rotation.

  When braking the pulley, the freewheel mechanism should release so that the rotor shaft continues to rotate.

This method allows the function of the freewheel to be checked easily.

REMOVING A FIXED PULLEY

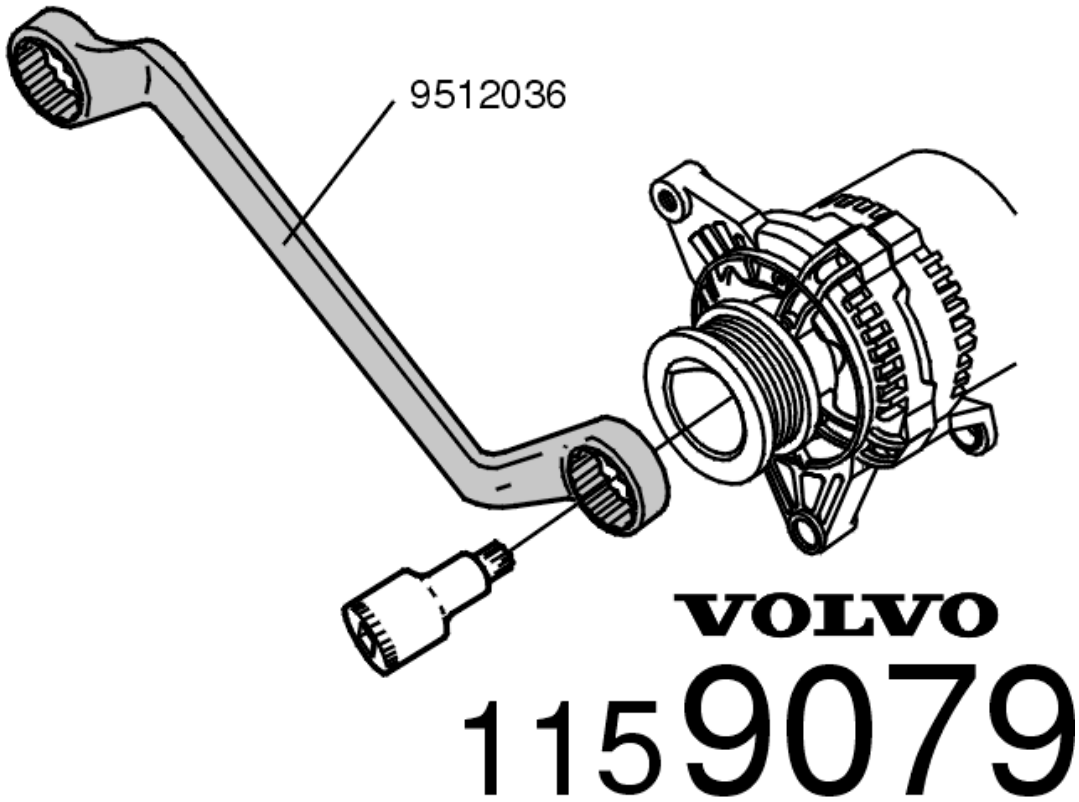

Fig. 22: BIHEXAGON BIT ADAPTOR M10
Courtesy of VOLVO CARS CORPORATION

Removing a fixed pulley

- use a wrench, see **9512036** to hold the nut as shown
- use a twelve toothed dowel, see **1159079** , on the rotor shaft
- remove the nut and remove the pulley.

INSTALLING A FIXED PULLEY

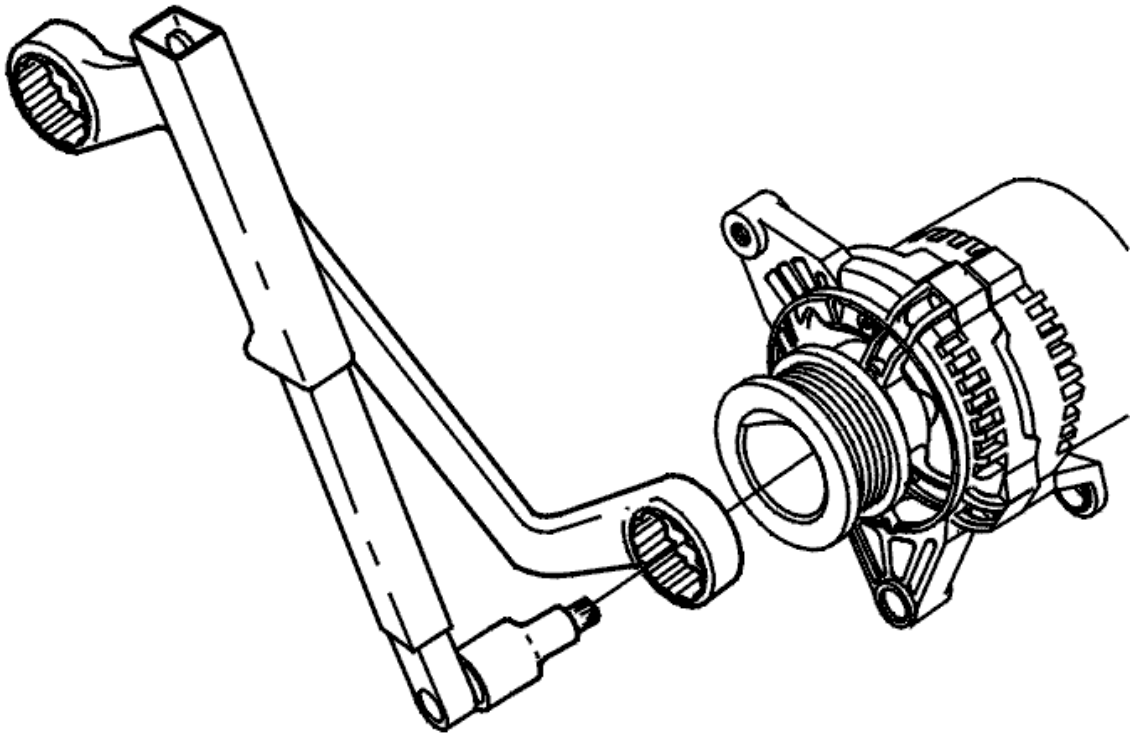

Fig. 23: Identifying Wrench And Toothed Dowel
Courtesy of VOLVO CARS CORPORATION

Installing a fixed pulley

- thread the pulley onto the rotor shaft
- thread the nut
- use a wrench, see **9512036** and a twelve toothed dowel, see **1159079** as shown
- tighten the pulley. Tighten to 65 Nm (48 ft. lb).

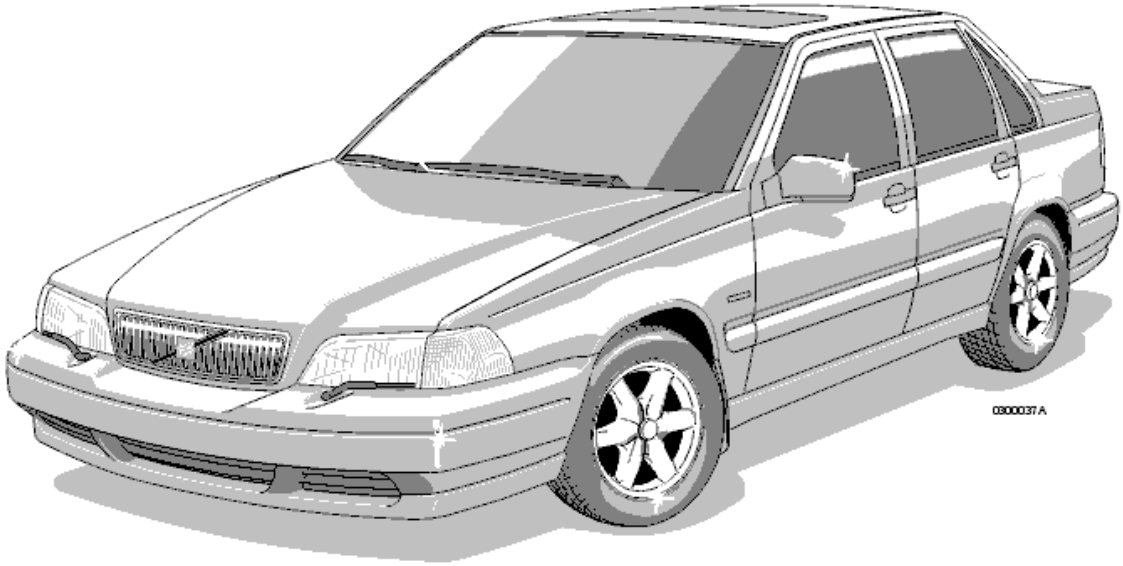

Fig. 24: Identifying Test Driving
Courtesy of VOLVO CARS CORPORATION

Function test

Start the car. Check that the generator (GEN) charges.

GENERATOR (GEN) (B6294T; 2003-04)

GENERATOR (GEN), REPLACING

REMOVAL

NOTE: **As the graphics in this service information are used for different model years and/or models, some variation may occur. However, the essential information in the graphics is always correct.**

PREPARATORY WORK

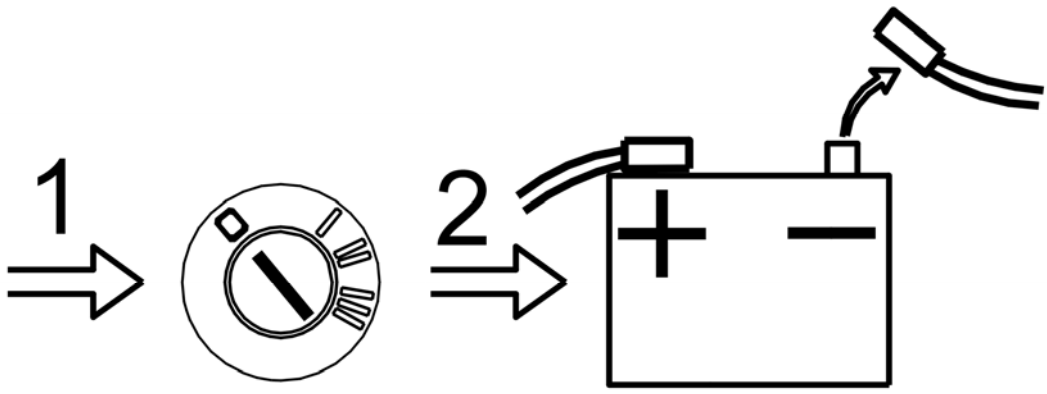

Fig. 25: Disconnecting Battery Negative Cable
Courtesy of VOLVO CARS CORPORATION

- Ignition off

- Disconnect the battery negative lead. See **BATTERY, DISCONNECTING**
- Raise the car
- Remove the lower cover plate. Position a container under the engine drain cock
- Drain the coolant. Close the cock
- Install the lower splash guard
- Lower the car
- Remove the upper engine coolant hose
- Remove the auxiliaries belt. See **REPLACING THE ACCESSORY DRIVE BELT/BELT TENSIONER**
- Remove the power steering pump. See **POWER STEERING PUMP, REPLACING**
- Disconnect the turbocharger hose from the cooling system. Push the hose to one side
- Remove the right-hand headlamp. See **HEADLIGHT/BULB, REPLACING**

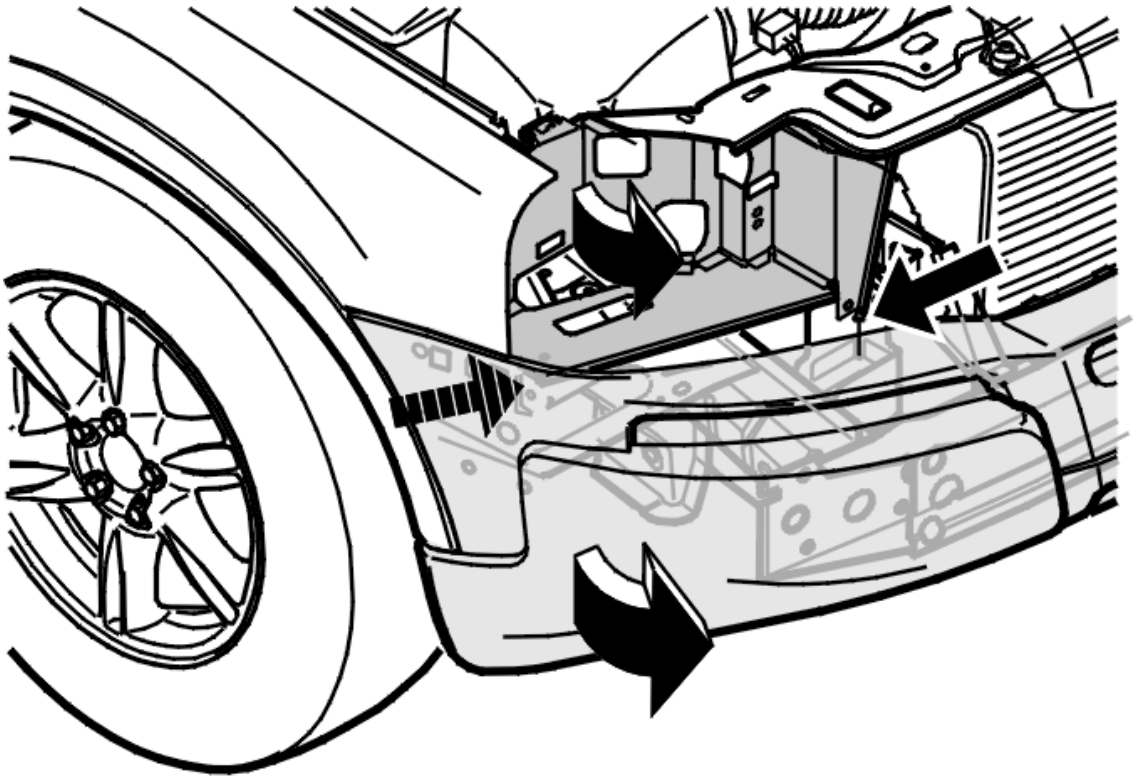

Fig. 26: Bumper Detached
Courtesy of VOLVO CARS CORPORATION

Detach the bumper cover on the right-hand side.

Remove the screws from the front panel on the right-hand side as shown.

REMOVING THE GENERATOR (GEN)

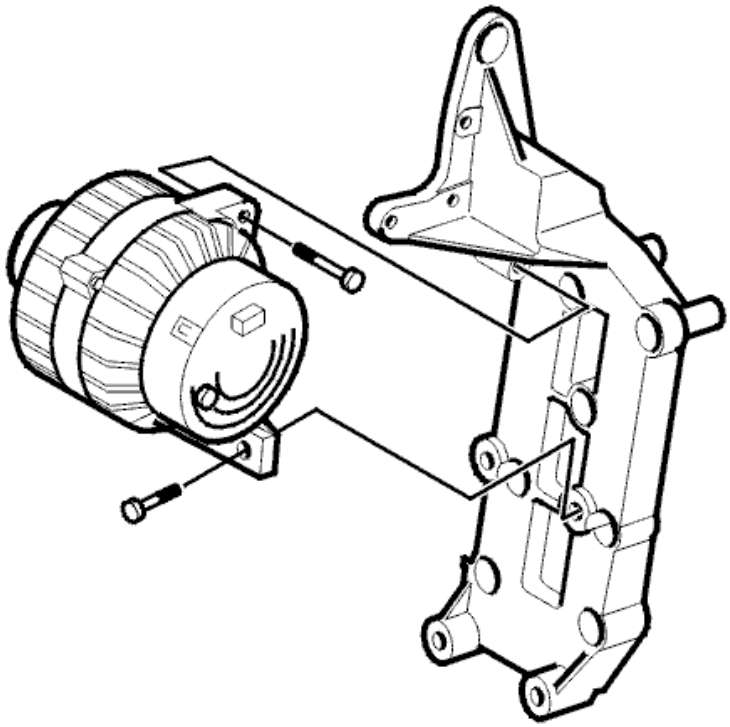

Fig. 27: Generator Without AC
Courtesy of VOLVO CARS CORPORATION

Remove:

- the screw that runs through the upper mounting
- the lower screws.

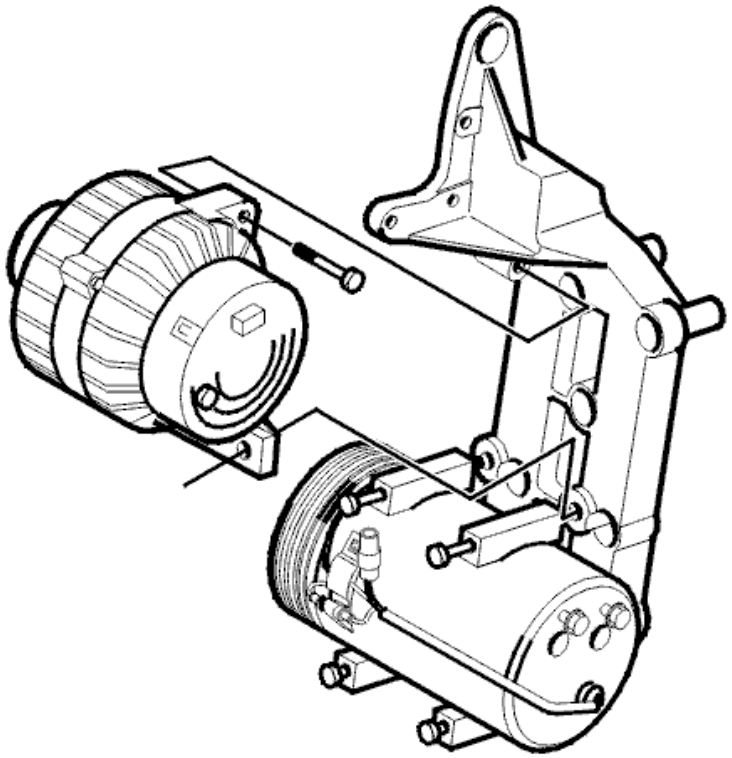

Fig. 28: Generator With AC
Courtesy of VOLVO CARS CORPORATION

- **With AC:** Slacken off the lower screws for the compressor (so that there is some clearance)
- Disconnect the battery positive lead
- Disconnect the connector
- Remove the generator (GEN)
- Turn the generator (GEN) into position
- Carefully pry the front panel forwards
- Pull the generator (GEN) upwards/away.

INSTALLATION

NOTE: For tightening torques, see TIGHTENING TORQUE .

INSTALLING GENERATOR (GEN)

- Position the generator (GEN). Install the screw through the upper mounting. Do not tighten
- Connect the cable and the connector
- Install the lower screws for the generator (upper screws for the compressor).

- **With AC:** Tighten the 2 lower screws for the compressor. M8

- Tighten the 3 screws for the generator (GEN). M8.

FINISHING WORK

Install:

- the front panel
- the bumper cover
- the right-hand headlamp. See **HEADLIGHT/BULB, REPLACING**
- the turbocharger hose
- the power steering pump. See **POWER STEERING PUMP, REPLACING**
- the auxiliaries belt. See **REPLACING THE ACCESSORY DRIVE BELT/BELT TENSIONER**
- the engine coolant hose. Top up the coolant.
- the battery negative lead. See **BATTERY, DISCONNECTING**

Test the function.

PULLEY, REPLACING

See **PULLEY, REPLACING**

GENERATOR (B5254T2; 2007)

GENERATOR (GEN), REPLACING

NOTE: The graphics in this service information are used for different model years and/or models. Some variation may occur. However, the essential information in the graphics is always correct.

PREPARATORY WORK

IGNITION OFF

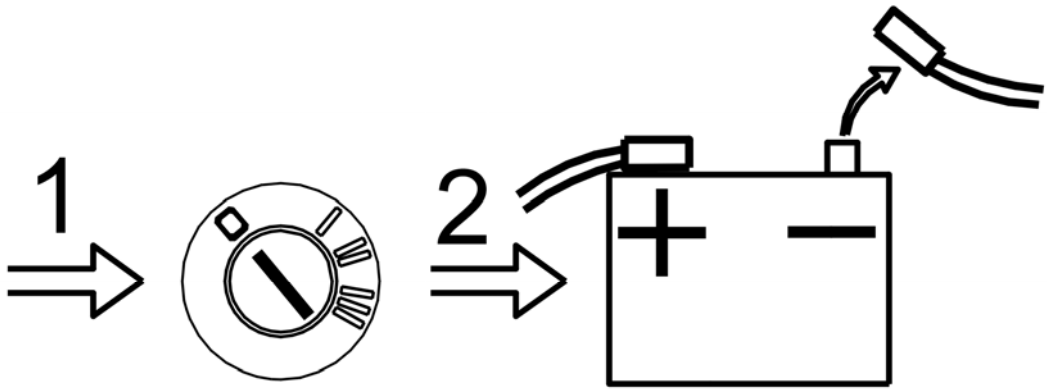

Fig. 29: Disconnecting Battery Negative Cable
Courtesy of VOLVO CARS CORPORATION

Ignition off.

Remove:

- the battery negative lead. See **BATTERY, DISCONNECTING**
- the auxiliaries belt. See **AUXILIARIES BELT/BELT TENSIONER, REPLACING**
- the power steering pump. See **POWER STEERING PUMP, REPLACING**
- the turbo hose from the air conditioning aggregate. Push the hose to one side.

REMOVAL

DISCONNECTING THE RADIATOR HOSE

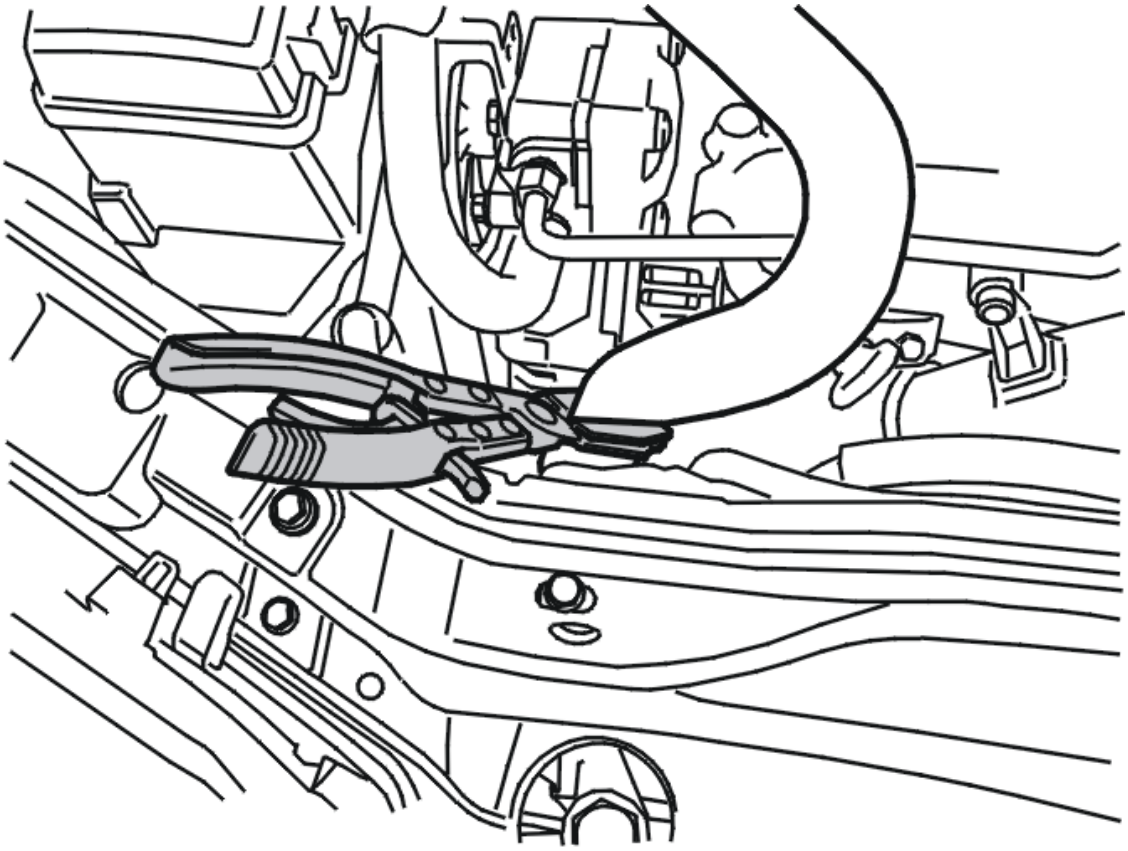

Fig. 30: Clamping And Disconnecting Radiator Hose
Courtesy of VOLVO CARS CORPORATION

Disconnect the radiator hose from the radiator and push to one side.

REMOVING THE GENERATOR (GEN)

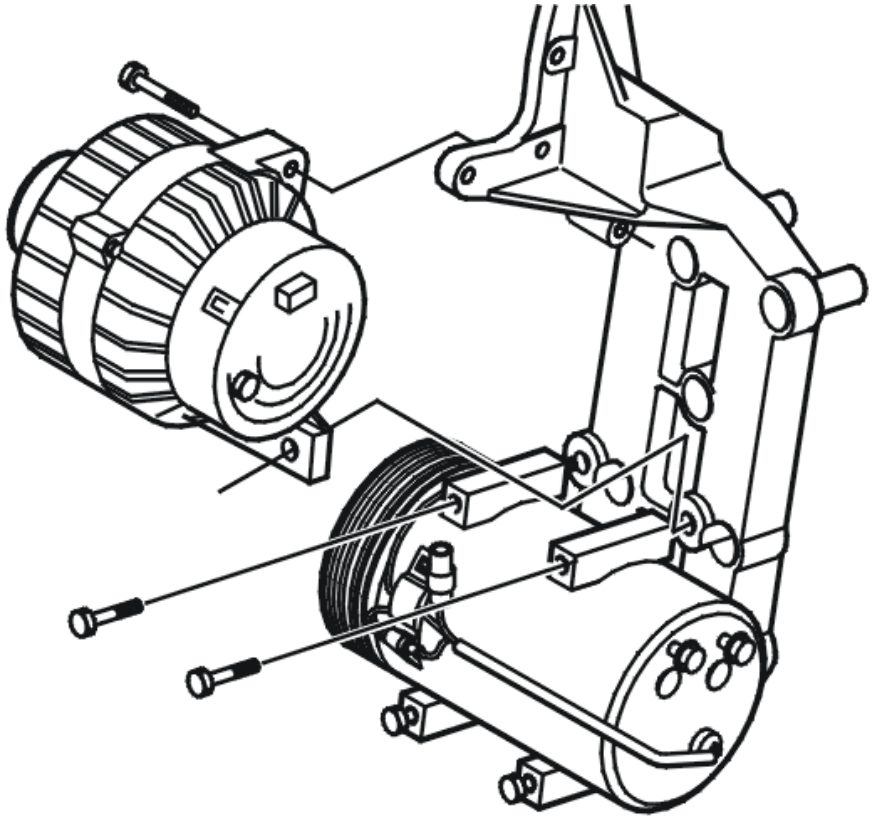

Fig. 31: Identifying Generator And Bracket
Courtesy of VOLVO CARS CORPORATION

Slacken off the lower screws for the compressor (so that there is some clearance).

Remove:

- the nut for the battery positive lead
- the connector
- the 3 screws
- the generator (GEN).

Lift out the generator.

INSTALLATION

NOTE: For tightening torques, see TIGHTENING TORQUE

INSTALLING GENERATOR (GEN)

Lift the generator into place.

Install:

- the 3x M8 screws
- the connector
- the battery positive lead. Tighten. See **SUMMARY OF TIGHTENING TORQUES FOR SPECIFIC COMPONENTS** .

NOTE: If the vehicle is equipped with air conditioning (A/C), tighten the lower 2 x M8 screws for the compressor.

FINISHING

INSTALLING COMPONENTS

Install:

- the radiator hose
- the turbo hose
- the power steering pump. See **POWER STEERING PUMP, REPLACING**
- the auxiliaries belt. See **AUXILIARIES BELT/BELT TENSIONER, REPLACING**
- the battery negative lead. See **BATTERY, DISCONNECTING**

Check the fluids level. Top up if required.

Test the function.

PULLEY, REPLACING

See **PULLEY, REPLACING**

GENERATOR (B6324S; 2007-10)

GENERATOR (2007-08)

NOTE: Removal steps in this procedure may contain installation details.

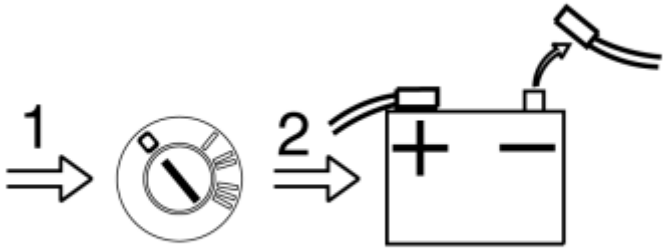

Fig. 32: Identifying Generator Removal Procedure (1 Of 4)
Courtesy of VOLVO CARS CORPORATION

Remove the following items:

- battery negative lead. See **BATTERY, DISCONNECTING**
- the intake manifold. See **INDUCTION PIPE** .

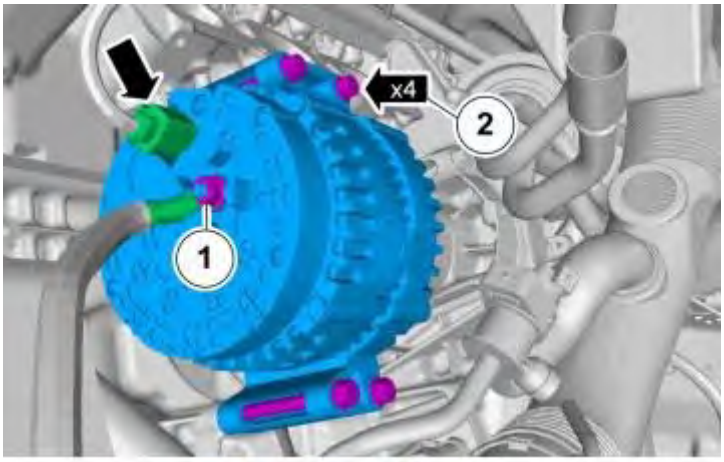

Fig. 33: Identifying Generator Removal Procedure (2 Of 4)
Courtesy of VOLVO CARS CORPORATION

- Tighten, alternator B+ connection. See **TIGHTENING TORQUE**
- Tighten, M8. See **TIGHTENING TORQUE**

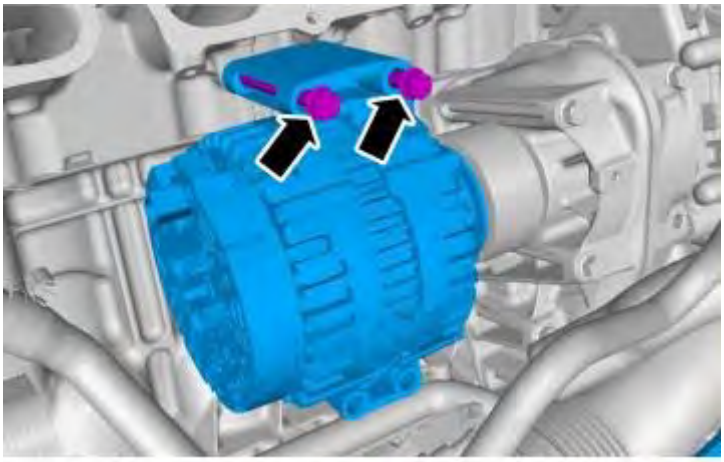

Fig. 34: Identifying Generator Removal Procedure (3 Of 4)
Courtesy of VOLVO CARS CORPORATION

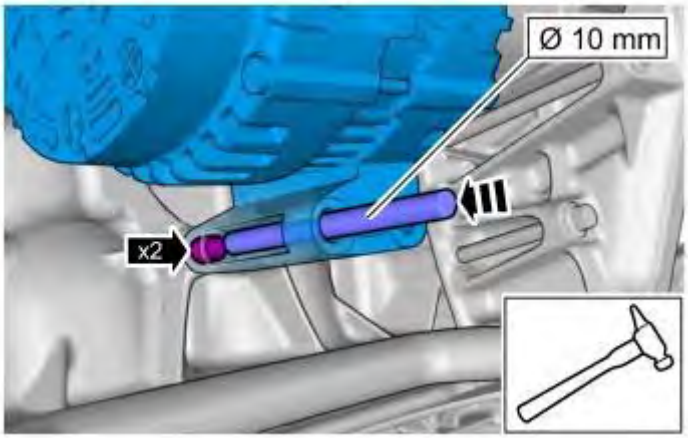

Fig. 35: Identifying Generator Removal Procedure (4 Of 4)
Courtesy of VOLVO CARS CORPORATION

Make sure that the sleeves are properly packed.

To install, reverse the removal procedure

GENERATOR PULLEY, GENERATOR

Special tools	
	T9995760 ANVIL BLOCK (REMOVE/INSTALL/FREEWHEEL GENERATOR) BOSCH, DENSO **Tool number:** T9995760 **Tool description:** ANVIL BLOCK (REMOVAL/INSTALL/FREEWHEEL GENERATOR) BOSCH, DENSO **Tool boards:** EU12-1/2; SV12-1/2; UK19; UK6; US12-1/2

	T9512849 BIHEXAGONAL SOCKET M10 (GENERATOR GENERATOR PULLEY) **Tool number:** T9512849 **Tool description:** BIHEXAGONAL SOCKET M10 (GENERATOR GENERATOR PULLEY) **Tool boards:** EU99; SV99; UK21; UK99; US99
	T9995543 SOCKET NV-22 (HEATED OXYGEN SENSOR) **Tool number:** T9995543 **Tool description:** SOCKET NV-22 (HEATED OXYGEN SENSOR) **Tool board:** EU12-2; SV12-2; UK17; UK2; UK99; US12-2

NOTE: Removal steps in this procedure may contain installation details.

Remove the generator (GEN). See **GENERATOR (2007-08)**.

NOTE: The rotor shaft is left-hand threaded.

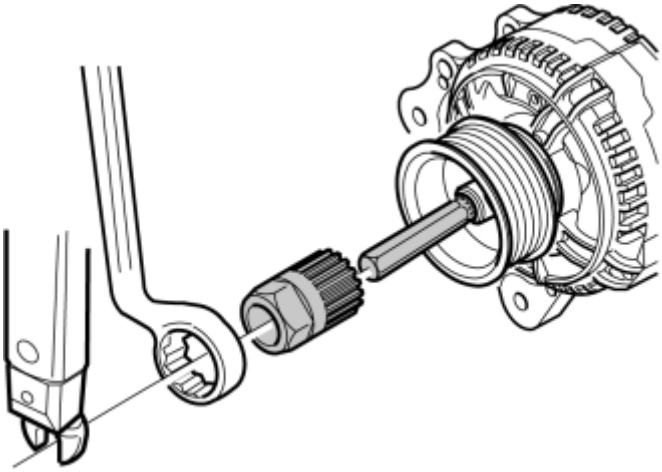

Fig. 36: Identifying M12 Tightened
Courtesy of VOLVO CARS CORPORATION

Applies to pulley with freewheel.

see **9995760** and see **9512849** .

Tighten, M12. See **TIGHTENING TORQUE**

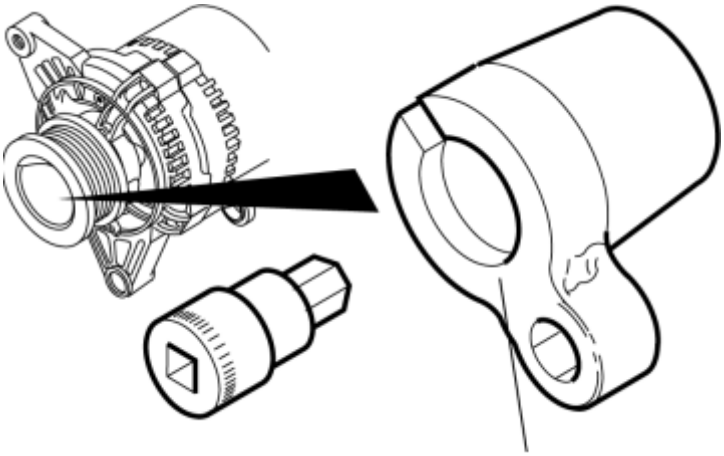

Fig. 37: Identifying Pulley From Rotor Shaft
Courtesy of VOLVO CARS CORPORATION

Applies to pulley without freewheel.

see **9995543** .

Tighten, M12. See **TIGHTENING TORQUE**

To install, reverse the removal procedure

GENERATOR (B6324S5; 2011-12)

GENERATOR PULLEY, GENERATOR

See **GENERATOR PULLEY, GENERATOR**

GENERATOR (B8444S; 2007-11)

GENERATOR (GEN), REPLACEMENT

NOTE: **The graphics in this service information are used for different model years and/or models. Some variation may occur. However, the essential information in the graphics is always correct.**

REMOVAL

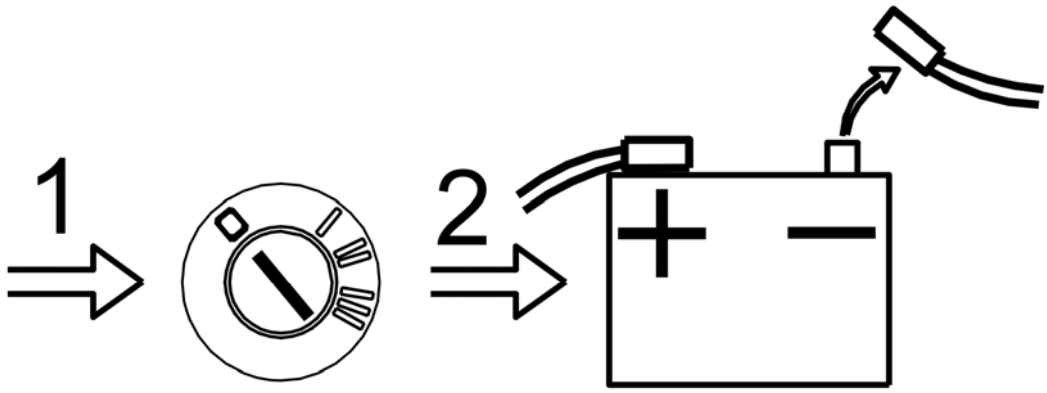

Fig. 38: Disconnecting Battery Negative Cable
Courtesy of VOLVO CARS CORPORATION

Remove the following items:

- the battery negative cable. See **BATTERY, DISCONNECTING**
- the auxiliary unit belt, see **AUXILIARIES BELT/BELT TENSIONER, REPLACEMENT**

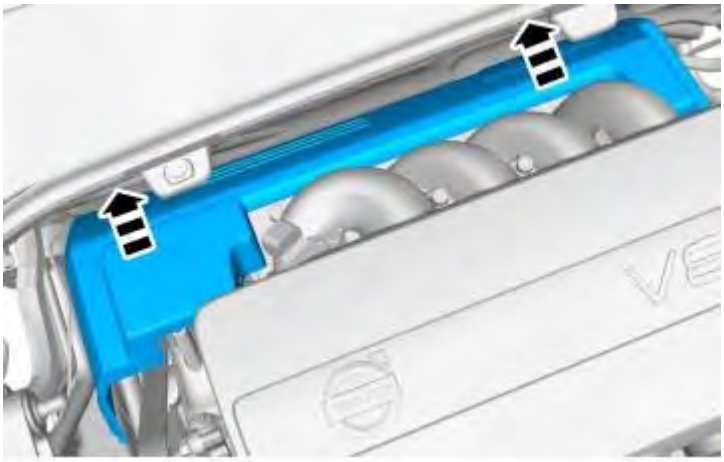

Fig. 39: Identifying Generator Removal Procedure (1 Of 8)
Courtesy of VOLVO CARS CORPORATION

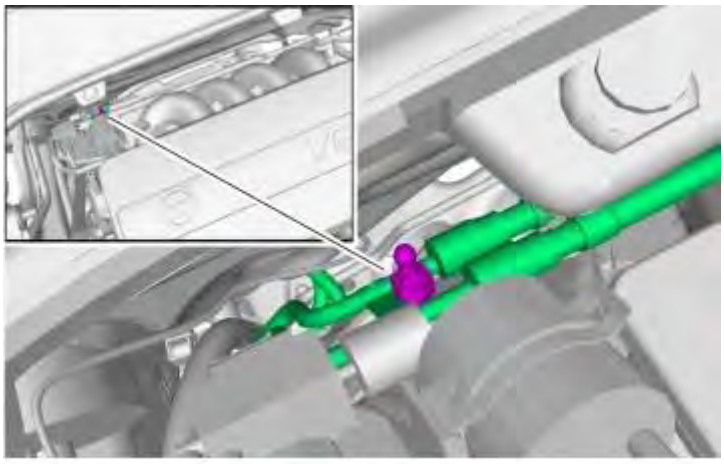

Fig. 40: Identifying Generator Removal Procedure (2 Of 8)
Courtesy of VOLVO CARS CORPORATION

Torque: M6

10 Nm

Raise the vehicle. See **JACKING POINTS, BODY**

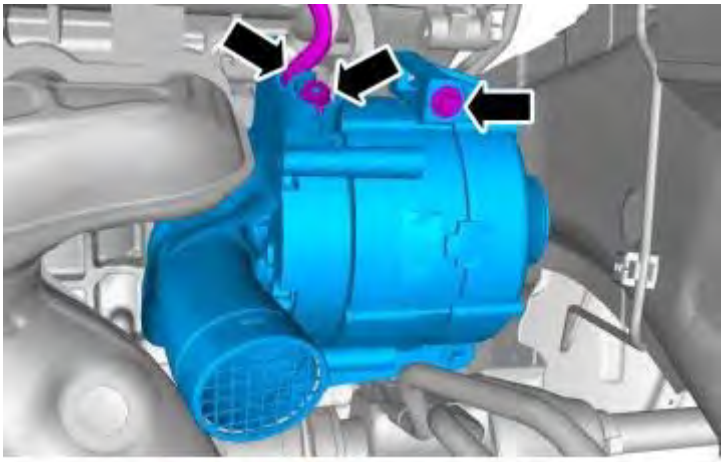

Fig. 41: Identifying Generator Removal Procedure (3 Of 8)
Courtesy of VOLVO CARS CORPORATION

Remove the following items:

- Generator B+ terminal 15 Nm
- **Torque:** M8

  24 Nm

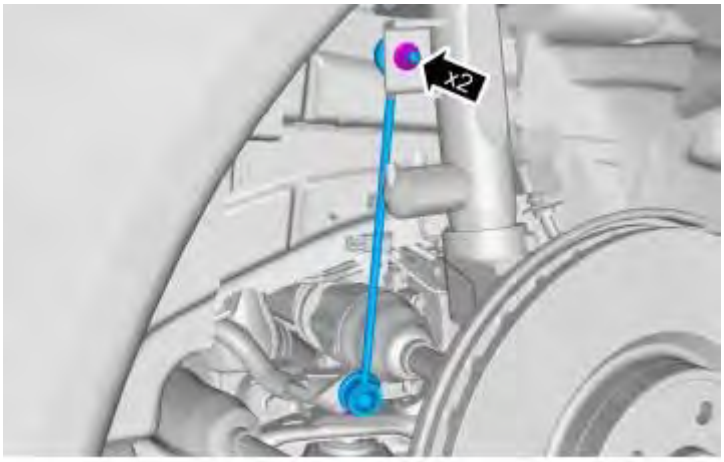

Fig. 42: Identifying Generator Removal Procedure (4 Of 8)
Courtesy of VOLVO CARS CORPORATION

NOTE: **For Tightening torque, see TIGHTENING TORQUE**

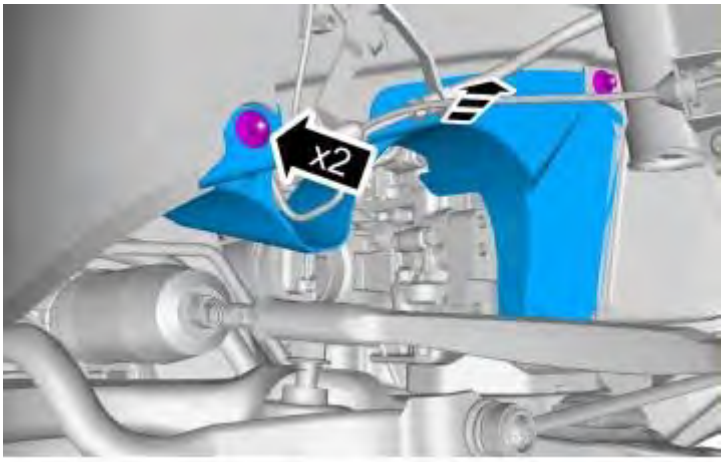

Fig. 43: Identifying Generator Removal Procedure (5 Of 8)
Courtesy of VOLVO CARS CORPORATION

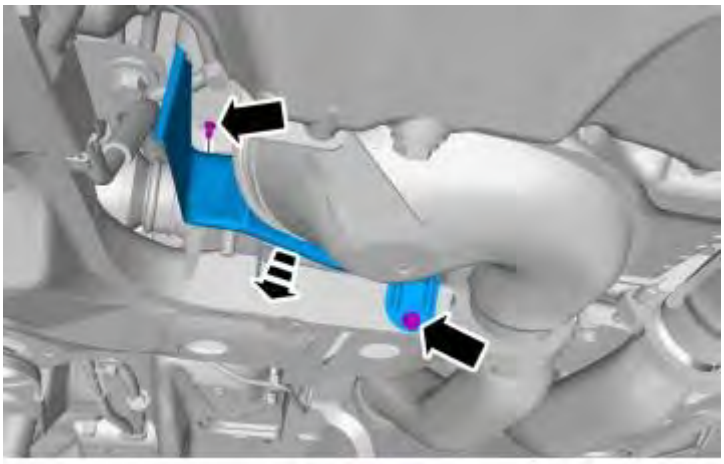

Fig. 44: Identifying Generator Removal Procedure (6 Of 8)
Courtesy of VOLVO CARS CORPORATION

Torque: M6

10 Nm

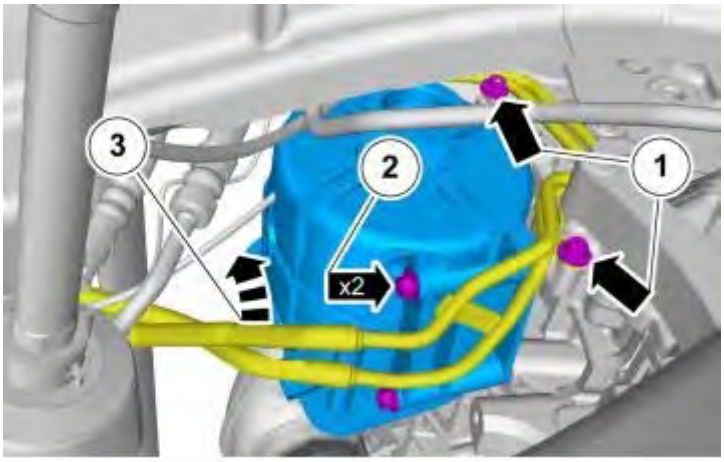

Fig. 45: Identifying Generator Removal Procedure (7 Of 8)
Courtesy of VOLVO CARS CORPORATION

CAUTION: Ensure that the components are not bent violently.

Remove the following items:

- **Torque:** M8

  24 Nm

- **Torque:** M6

  10 Nm

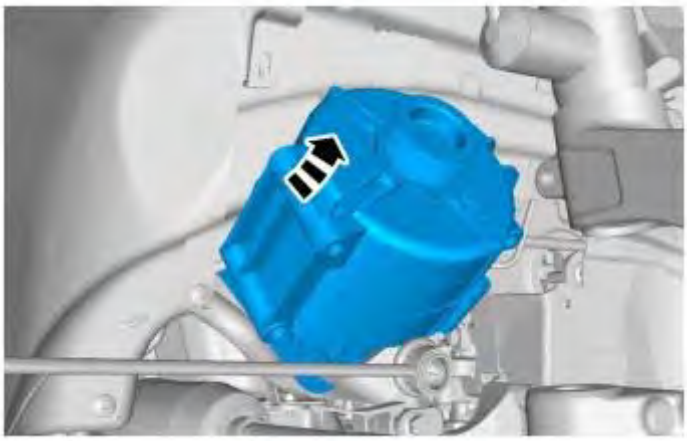

Fig. 46: Identifying Generator Removal Procedure (8 Of 8)
Courtesy of VOLVO CARS CORPORATION

INSTALLATION

To install, reverse the removal procedure.

PULLEY, REPLACEMENT

Special tools:

see **9995543**

NOTE: **The graphics in this service information are used for different model years and/or models. Some variation may occur. However, the essential information in the graphics is always correct.**

PREPARATORY WORK

REMOVING THE GENERATOR

Remove the generator in accordance with **GENERATOR (GEN), REPLACEMENT**.

REMOVAL

REMOVING THE PULLEY

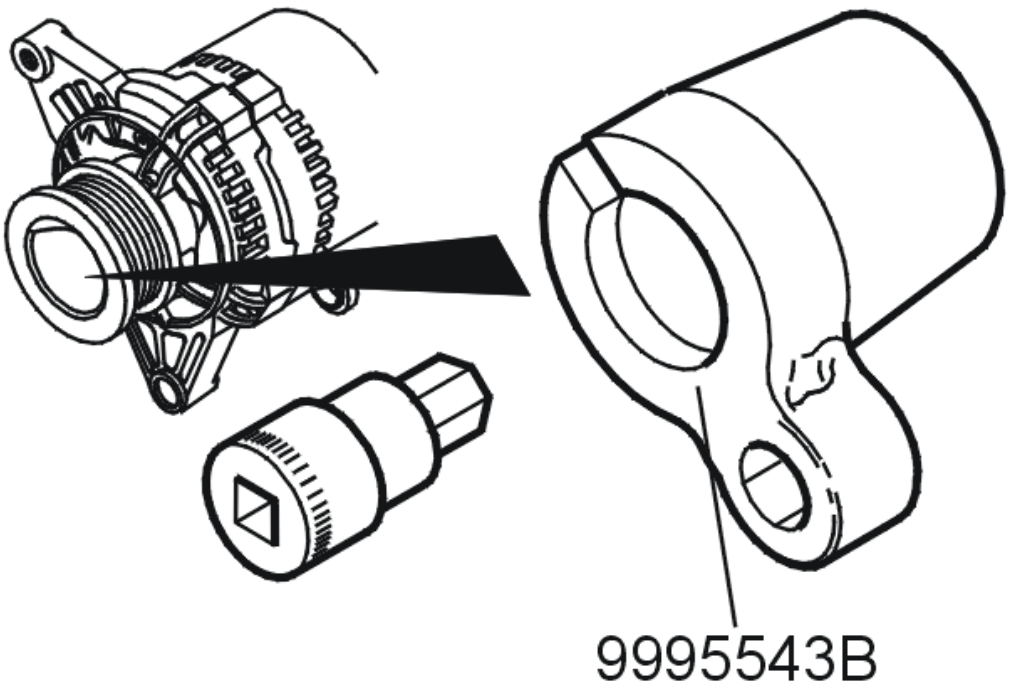

Fig. 47: Removing Pulley From Rotor Shaft
Courtesy of VOLVO CARS CORPORATION

Remove the pulley from the rotor shaft, use Torx wrench and tool: see **9995543** .

INSTALLATION

INSTALLING THE PULLEY

Screw on the pulley and tighten it, use tool: see **9995543** and Torx wrench. Tighten in accordance with **SUMMARY OF TIGHTENING TORQUES FOR SPECIFIC COMPONENTS** .

FINISHING

INSTALLING THE GENERATOR

Install the generator in accordance with **GENERATOR (GEN), REPLACEMENT**.

Check the function.

CHARGE REGULATOR (B5254T2; 2007)

REGULATOR, REPLACING

See **REGULATOR, REPLACING**

CHARGE REGULATOR (B6324S; 2007-10)

CHARGE REGULATOR

NOTE: Removal steps in this procedure may contain installation details.

Remove the following items:

- battery negative lead. See **BATTERY, DISCONNECTING**
- the intake manifold. See **INDUCTION PIPE** .

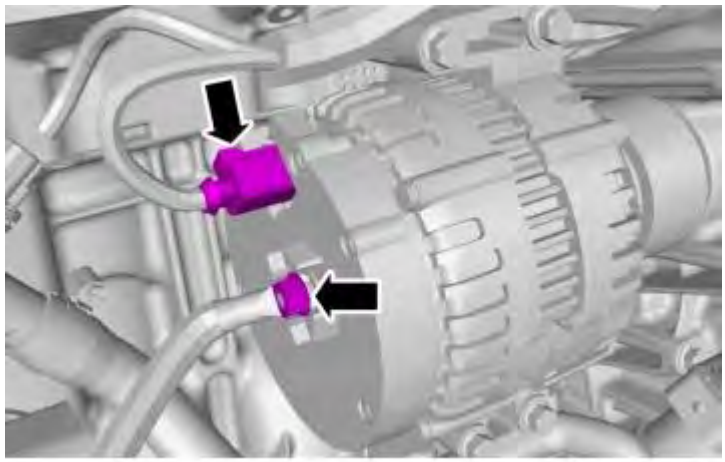

Fig. 48: Identifying Charge Regulator Removal Procedure (1 Of 2)
Courtesy of VOLVO CARS CORPORATION

Fig. 49: Identifying Charge Regulator Removal Procedure (2 Of 2)
Courtesy of VOLVO CARS CORPORATION

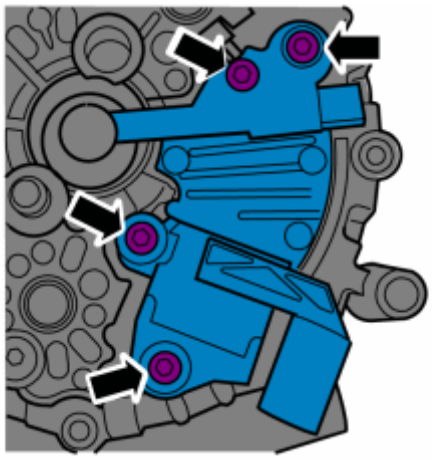

Fig. 50: Identifying M4 Generator Bolts
Courtesy of VOLVO CARS CORPORATION

Tighten, M4. See **TIGHTENING TORQUE**

To install, reverse the removal procedure

CHARGE REGULATOR (B6324S5; 2011-12)

CHARGE REGULATOR

See **CHARGE REGULATOR**

CHARGE REGULATOR (B8444S; 2007-11)

GOVERNOR, REPLACEMENT

See **GOVERNOR, REPLACEMENT**

ELECTRICAL

Battery And Mounting - Cleaning, Inspection And Adjustment

BATTERY

BATTERY, CHARGING

see **BATTERY, CHARGING**

STANDBY CURRENT, MEASURING/FAULT-TRACING (2003-04)

PREPARATIONS FOR MEASURING THE STANDBY POWER CONSUMPTION

Factors such as whether the alarm is on or off or whether any doors are open affect the rate at which the car will reach standby power consumption. The lowest power consumption is reached most quickly if the alarm is on (approximately 12 minutes after activation).

When the car doors are closed, it takes approximately 12 minutes after the last door was shut and the ignition switched off. If any of the doors are open, it takes approximately 20 minutes.

For time considerations, it is recommended that the alarm is switched on. This is the case described below.

Preparations for measuring the standby power consumption

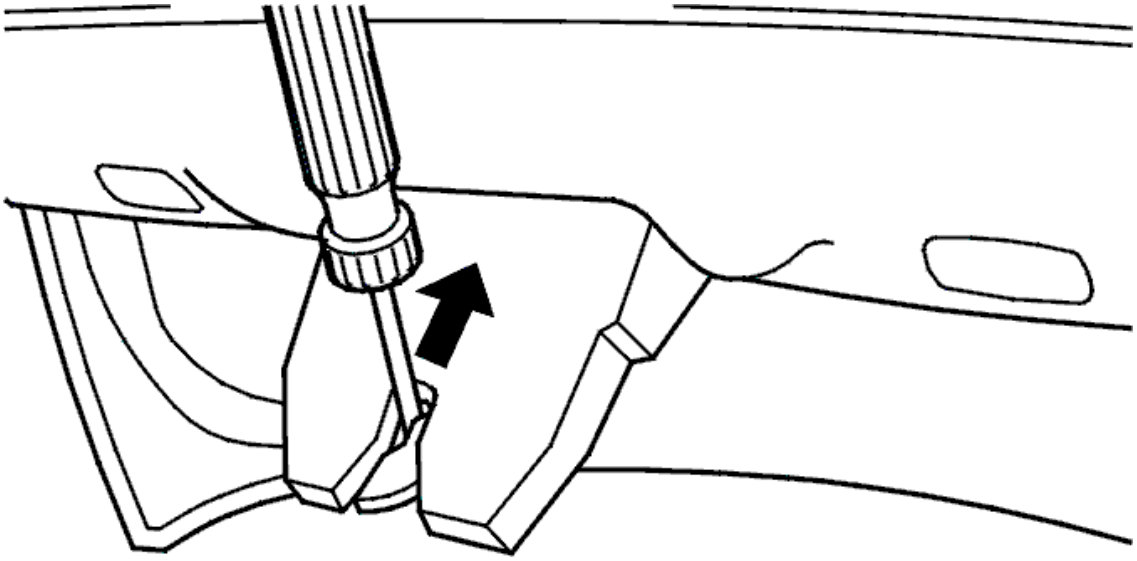

Fig. 1: Using Screwdriver To Lock Driver's Side Door Lock
Courtesy of VOLVO CARS CORPORATION

- Check that all the lighting is switched off
- Open the boot lid or tailgate. Use a screwdriver to set the lock to the lock position
- Close and lock the doors. Activate the alarm if an alarm is installed
- Allow the car to reach the lowest electrical consumption, see **TYPE CURVES, STAND-BY CURRENT** for stand-by current.

NOTE: Do not open any doors or the test will have to be restarted from the beginning.

- Remove the fuse for the alarm siren
- After approximately 12 minutes, the power consumption should have reached its lowest level, <22 mA for an unalarmed car and <35 mA for an alarmed car.

CONNECTING THE MEASURING INSTRUMENT

When measuring the power consumption, it will soon become evident if there is power consuming component in the car drawing an excessive amount of the battery capacity. If it is obvious that the car is using more current than the listed limits, check the fuse of each power consuming component. See **STAND-BY CURRENT, CONSUMPTION VALUE** .

The curves and graphs supplied should be seen as guide values. The consumption may vary depending on the level of equipment in the car. The contents are for a car with the full equipment level, although not including customer installed power consuming components.

Two different methods of measuring total standby power consumption are described below. The simplest and surest method is to use crocodile clips or battery isolator with multimeter. This minimizes the risk of blowing the instrument's internal fuse and is a simpler way of making the connection.

The car's standby consumption can be measured one of two ways depending on whether you have an instrument with or without crocodile clips. The first alternative below is for an instrument with crocodile clips. The second alternative can be performed with a multimeter.

MEASUREMENT METHOD

The battery negative terminal must be connected to measure the total power consumption.

HINT: First select Option 1.

OPTION 1. CONNECTING CROCODILE CLIPS AND THE MULTIMETER

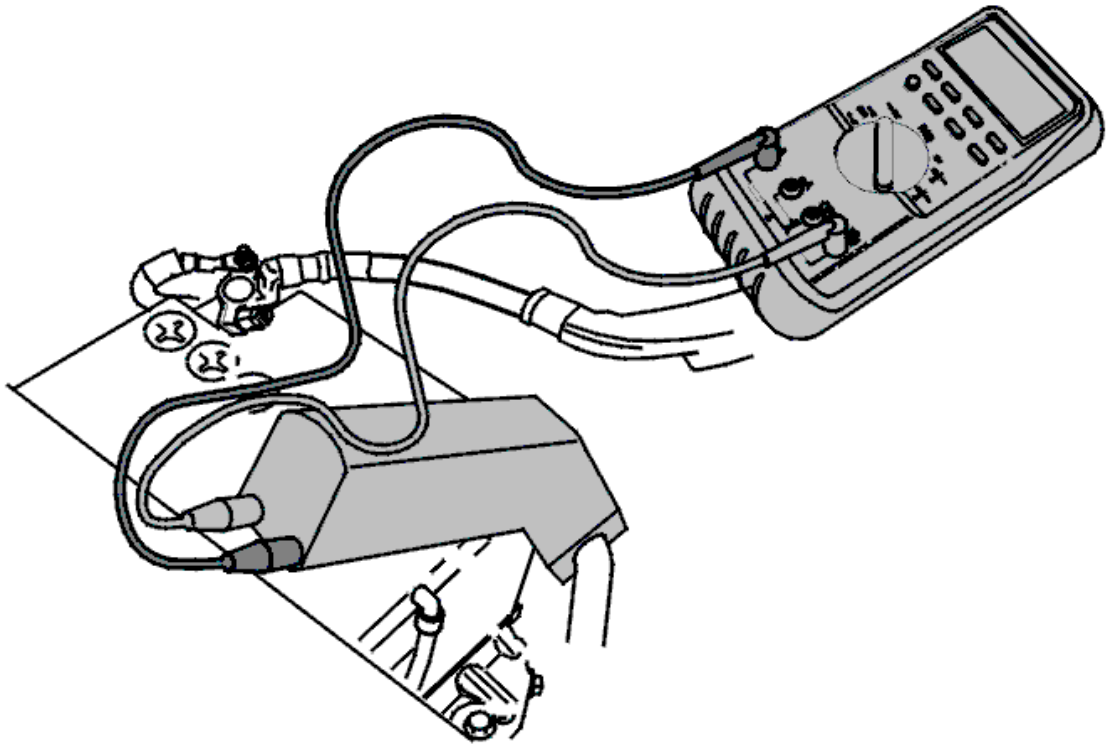

Fig. 2: Crocodile Clips And Multimeter
Courtesy of VOLVO CARS CORPORATION

- Set the crocodile clips and the measuring instrument/multimeter to 10A. Secure the crocodile clips to the

battery negative terminal.

Reading off and measuring the total stand-by current

- Read off the power consumption and compare with, see **TYPE CURVES, STAND-BY CURRENT**.
- **HINT: In order to ensure accuracy when taking the reading, change to a lower measurement range as the power consumption falls. See TYPE CURVES, STAND-BY CURRENT for stand-by current consumption.**
- The total stand-by current should be <22 mA for an unalarmed car and <35 mA for an alarmed car
- Return the car to its normal status if the stand-by current is OK
- If the result is >25 mA for an unalarmed car or >35 mA for an alarmed car, continue to **MEASURING AND FAULT-TRACING THE STAND-BY CURRENT PER FUSE**.

NOTE: Do not forget to unlock the boot lid or tailgate.

OPTION 2. CONNECTING THE MEASURING INSTRUMENT/MULTIMETER AND NEGATIVE BATTERY TERMINAL

NOTE: To avoid current surges that could damage the measuring instrument when the battery lead is connected, carry out the following.

- Disconnect the battery negative lead. See **BATTERY, DISCONNECTING** .

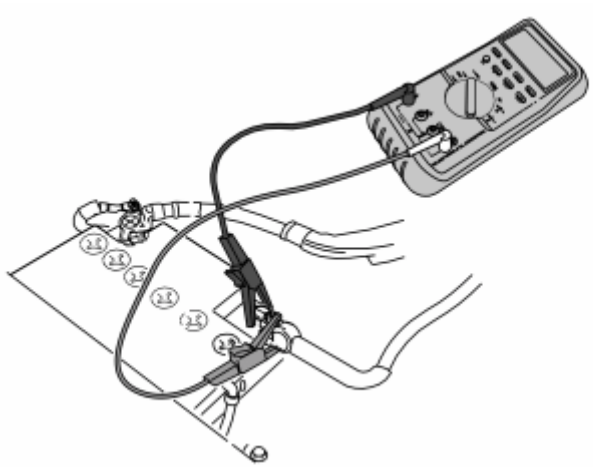

Fig. 3: Connecting Multimeter To Negative Battery Terminal And Ground Cable
Courtesy of VOLVO CARS CORPORATION

Set the measuring instrument/multimeter to 10 A.

NOTE: Check that the connections are secure. If the circuit is broken, the stand-by current must be re-checked from the beginning.

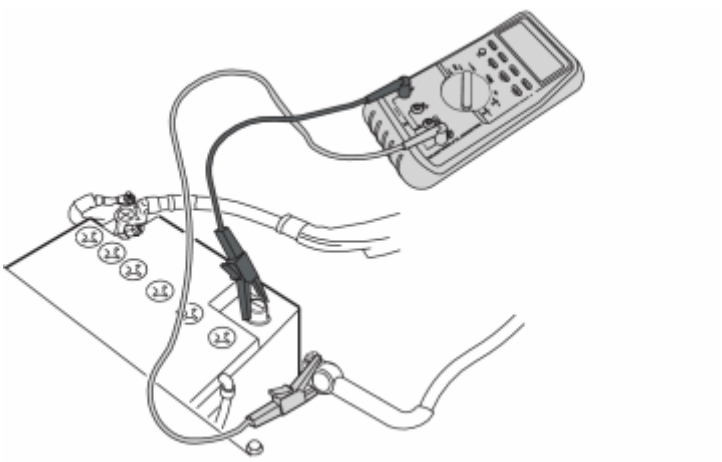

Fig. 4: Detaching Ground Cable From Negative Terminal
Courtesy of VOLVO CARS CORPORATION

Connect the measuring instrument to the negative battery terminal and ground cable. Connect the ground cable to the body.

Reading off and measuring the total stand-by current

- Detach the ground cable from the negative terminal.
- Read off the standby current consumption and compare with the type curves in, see **TYPE CURVES, STAND-BY CURRENT**.
- **HINT: In order to ensure accuracy when taking the reading, change to a lower measurement range as the power consumption falls. See TYPE CURVES, STAND-BY CURRENT for stand-by current consumption.**
- The total stand-by current should be <22 mA for an unalarmed car and <35 mA for an alarmed car
- Return the car to its normal status if the stand-by current is OK
- If the result is >25 mA for an unalarmed car or >35 mA for an alarmed car, continue to **MEASURING AND FAULT-TRACING THE STAND-BY CURRENT PER FUSE**.

NOTE: Do not forget to unlock the boot lid or tailgate.

MEASURING AND FAULT-TRACING THE STAND-BY CURRENT PER FUSE

NOTE: If the car is using considerably more current (>20%) than the value shown in the standby current curve, there may be a component fault in the car. For type curves, see TYPE CURVES, STAND-BY CURRENT. Readings should only be taken per fuse if the power consumption exceeds the curve by >20%.

When taking readings with the fuses in place, it is important to ensure that the system fed by the fuse is still carrying current during connection.

- Close and lock the doors (except for the driver's door) and the tailgate or boot lid. Arm the alarm if installed

- Check that all the lighting is switched off

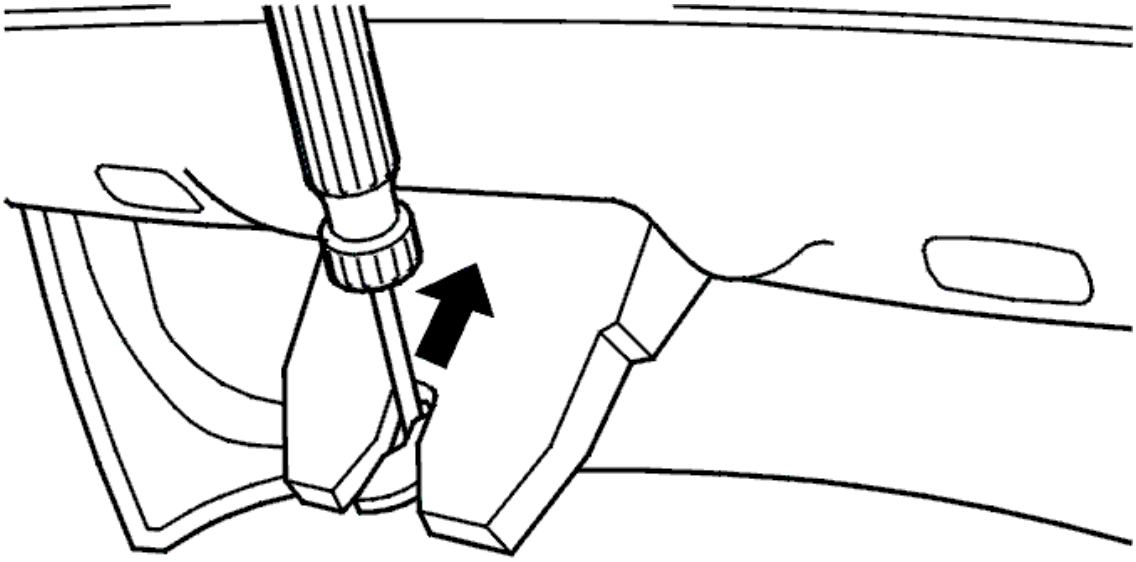

Fig. 5: Using Screwdriver To Lock Driver's Side Door Lock
Courtesy of VOLVO CARS CORPORATION

- Use a screwdriver to lock the driver's side door lock
- After approximately 12 minutes, the electrical/power consumption should have reached its lowest level, <22 mA for an unalarmed car and <25 mA for an alarmed car.

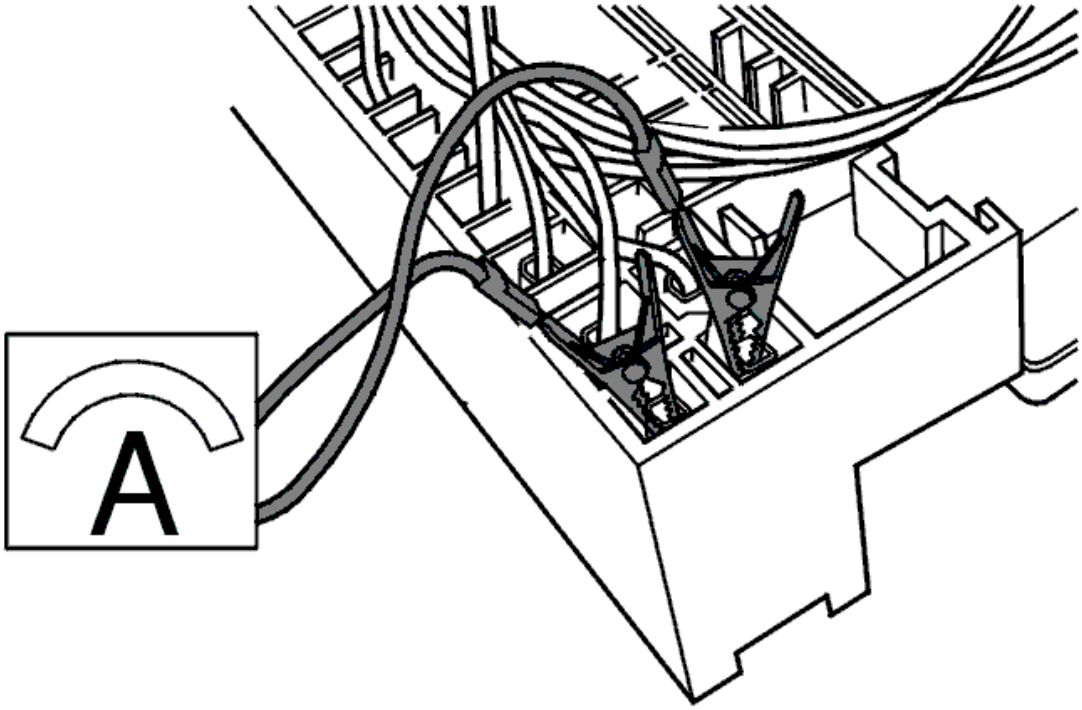

Fig. 6: Connecting Instrument To Terminal Pin On Reverse Of Fuse
Courtesy of VOLVO CARS CORPORATION

- Expose the fuse/fusebox. See **INTEGRATED RELAY/FUSEBOX, ENGINE COMPARTMENT, REPLACING**.
- Set the measuring instrument to the correct range. Connect the instrument to the terminal pin on the reverse of the fuse
- Remove the fuse
- Read off the stand-by current consumption for the relevant component. Compare the value with, see **STAND-BY CURRENT, CONSUMPTION VALUE** .
- Install the fuse and then disconnect the measuring instrument
- Repeat the reading until the faulty component has been localised
- Return the car to its normal status if the stand-by current consumption is OK.

NOTE: Do not forget to unlock doors and the boot lid or tailgate.

TYPE CURVES, STAND-BY CURRENT

NOTE: The following values are not absolute limits.

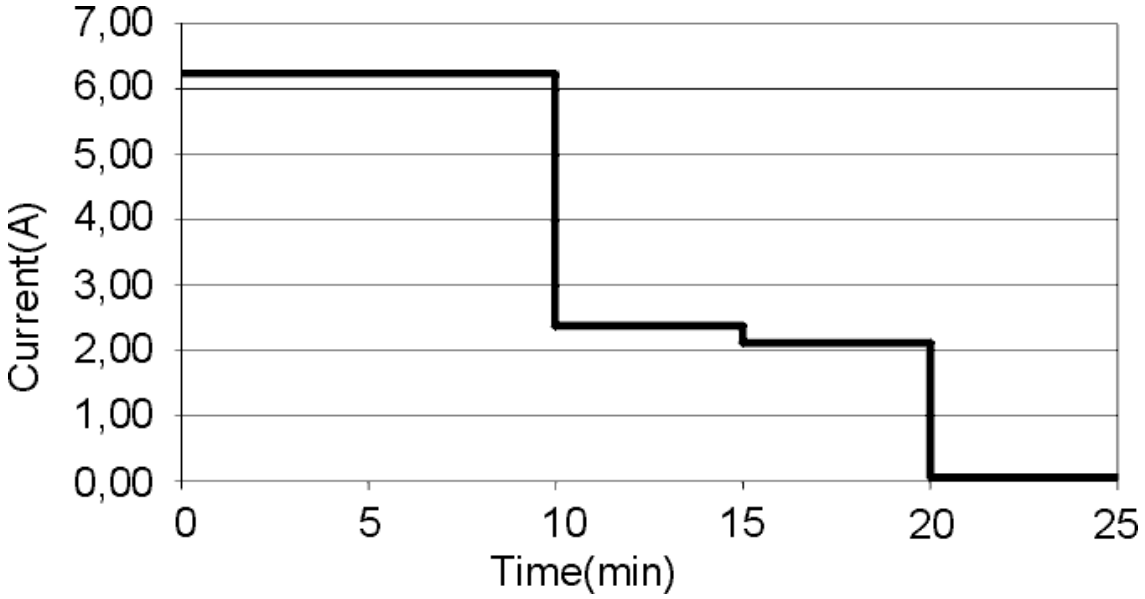

Fig. 7: Identifying Stand-By Current Chart -- From And Including 1998 Week 15 (Open Door)
Courtesy of VOLVO CARS CORPORATION

From and including 1998 week 15 (open door)

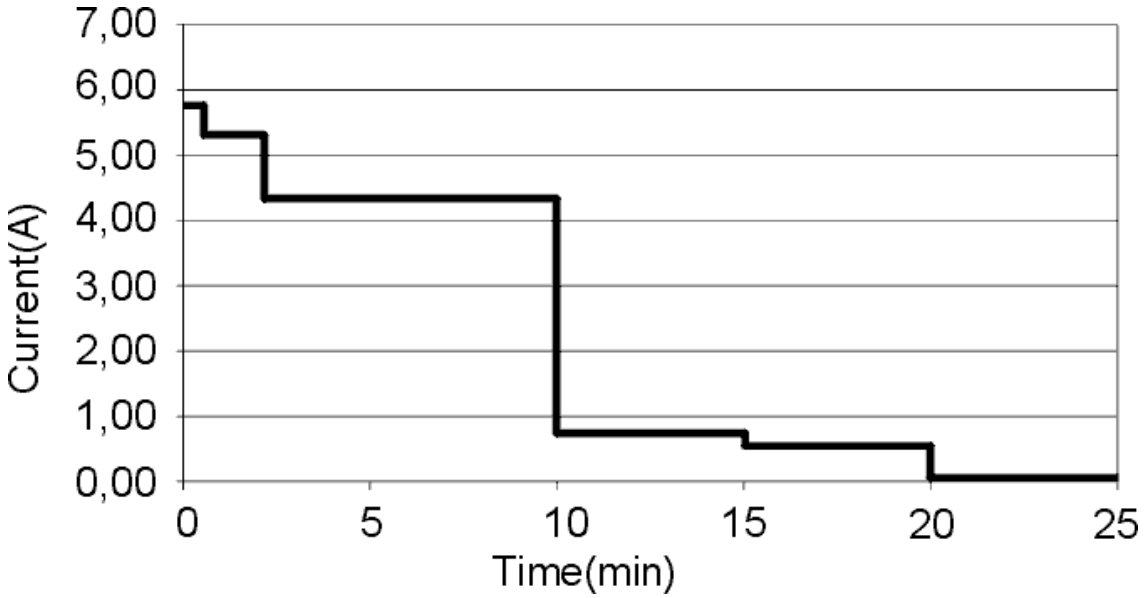

Fig. 8: Identifying Stand-By Current Chart -- From And Including 1999 Week 50 (Open Door)
Courtesy of VOLVO CARS CORPORATION

From and including 1999 week 50 (open door)

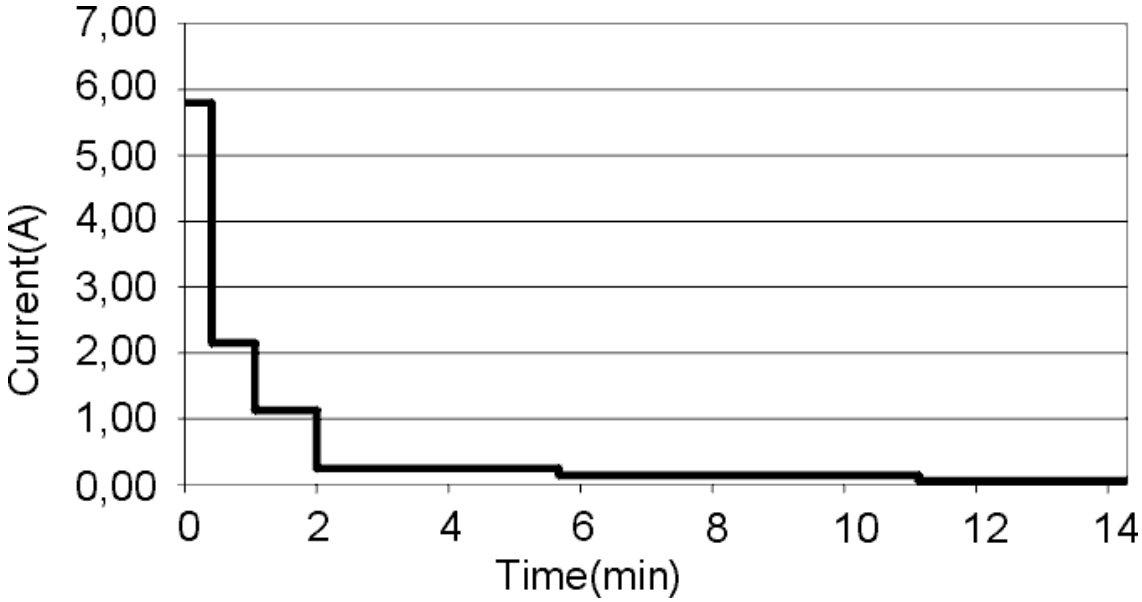

Fig. 9: Identifying Stand-By Current Chart -- From And Including 2000 Week 20 (Closed Door)
Courtesy of VOLVO CARS CORPORATION

From and including 2000 week 20 (closed door)

INTEGRATED RELAY/FUSEBOX, ENGINE COMPARTMENT, REPLACING

IDENTIFYING THE INTEGRATED RELAY/FUSEBOX IN THE ENGINE COMPARTMENT

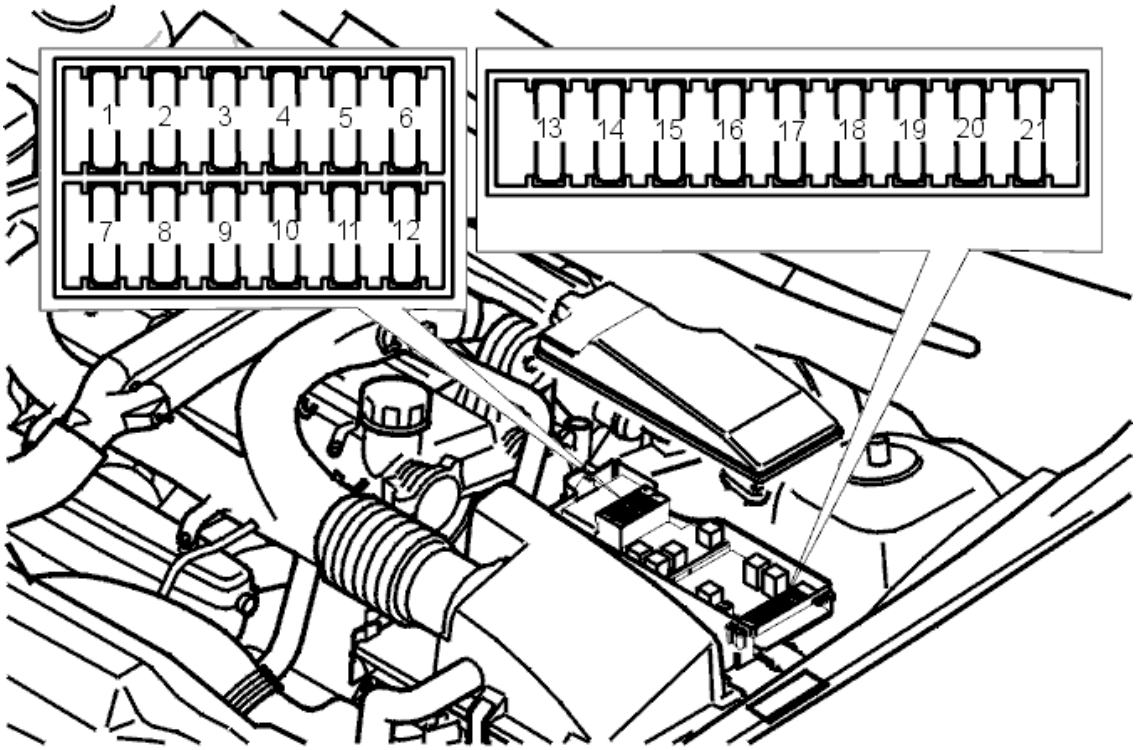

Fig. 10: Identifying Fuses In Engine Compartment Integrated Relay/Fusebox
Courtesy of VOLVO CARS CORPORATION

For the location of the relays and fuses, see

1. Decals at both the integrated relay box and fusebox in the car
2. Pocket data book
3. Owner's Manual.

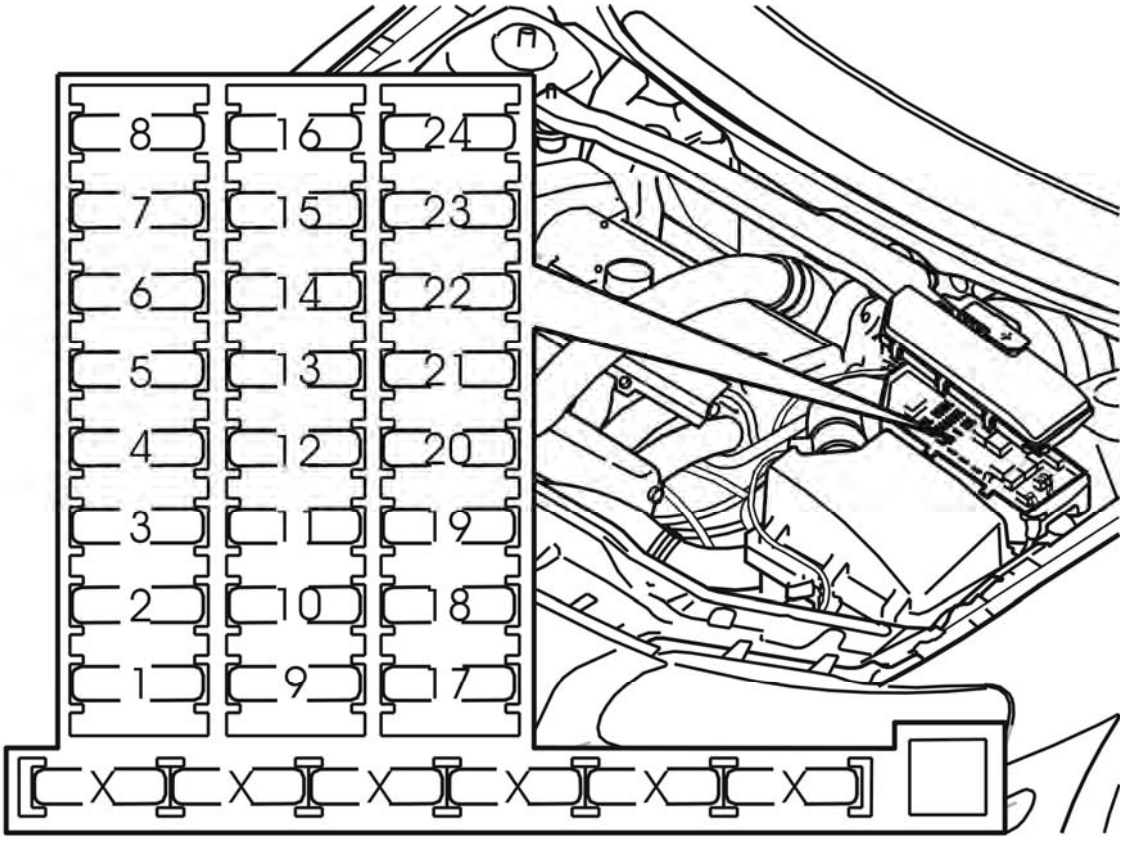

Fig. 11: Identifying Fuse 11B
Courtesy of VOLVO CARS CORPORATION

Select the relevant integrated relay/fusebox

- For integrated relay/fuseboxes with 21 fuses, see **INTEGRATED RELAY/FUSEBOX IN ENGINE COMPARTMENT**
- For integrated relay/fuseboxes with 24 fuses, see **INTEGRATED RELAY/FUSEBOX IN ENGINE COMPARTMENT**

ELECTRICAL

Battery And Mounting - Design And Function

BATTERY (ALL)

DESIGN AND FUNCTION

See **DESIGN AND FUNCTION**

TERMINOLOGY

See **TERMINOLOGY**

ELECTRICAL

Battery And Mounting - General Diagnostics And Tests

FAULT-TRACING AND TESTING THE ELECTRICAL GENERATING SYSTEM AND POWER CONSUMING COMPONENTS (2005-12)

FAULT-TRACING AND TESTING THE VOLTAGE SUPPLY SYSTEM

Check the battery, starter motor and generator terminals and cables for loose, corroded or damaged cable terminals and wiring.

Check the generator (GEN) charge current and charge voltage.

Ensure that the freewheeling generator pulley functions correctly (where applicable):

- Rev the engine to 3,000 rpm. No extra electrical consumers should be switched on.
- Switch off the engine. Check that the generator rotates for longer than the engine.

In cold weather, the battery warning lamp in the combined instrument panel may light up for a few seconds after start. This is because the freewheel may require a few revolutions to heat up the bearing grease. A battery warning lamp which is continuously lit may indicate a freewheel which does not lock against the generator (GEN) rotor shaft.

Check the auxiliary belt tension. Inspect the belt for wear.

Measure the vehicle's stand by voltage consumption (below).

Measuring the stand-by current consumption

see **CHECKING STANDBY CURRENT**

Calculating the maximum permissible stand-by voltage

Identify the capacity of the battery in the car in order to calculate the maximum permitted stand-by voltage.

Formula

*Ah / 504 h / 4 = I mA

(* = the battery capacity, I = the stand-by current)

E. g.:

capacity / 3 weeks * 25% = stand by voltage

65 Ah / 504 h * 0.25 =32.2 mA

FAULT-TRACING BATTERIES (2003-12)

FAULT-TRACING AND TESTING THE BATTERY

NOTE: **As the graphics in this service information are used for different model years and / or models, some variation may occur. However, the essential information in the graphics is always correct.**

WARNING: **Oxyhydrogen is formed when batteries are being charged. Oxyhydrogen is extremely explosive. Smoking, welding, grinding and naked flames in the vicinity of the battery may result in the battery exploding causing personal injury and damage to the car. Only charge the battery in a well ventilated area. Ensure that ventilation is good**

WARNING: **Watch out for acid splash The battery contains sulfuric acid which can cause serious corrosive damage. If the electrolyte comes into contact with your eyes, skin or clothes - flush using large quantities of water. Contact a doctor immediately if acid splashes into eyes Use protective goggles when handling batteries.**

CLEANING AND CHECKING BATTERIES

CLEANING AND CHECKING BATTERIES EXTERNALLY

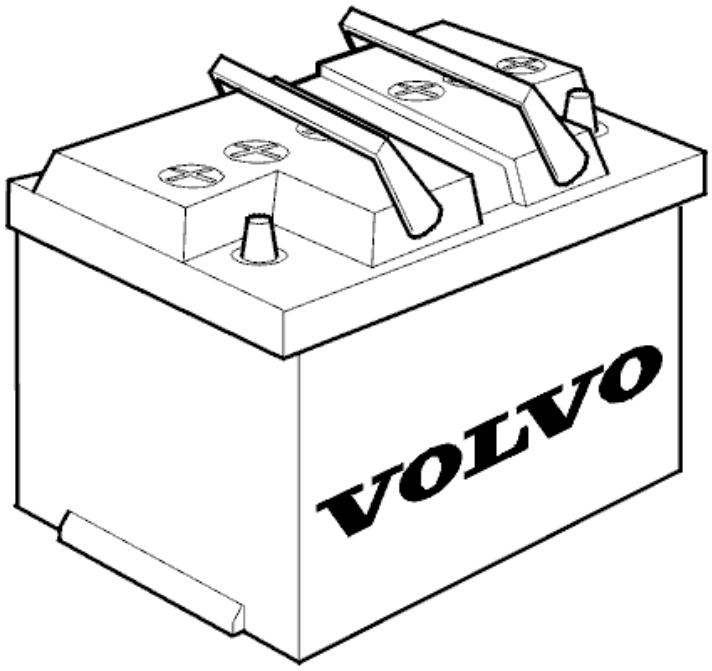

Fig. 1: Identifying Battery
Courtesy of VOLVO CARS CORPORATION

Cleaning

- Remove the battery from the car. Always disconnect the negative terminal first to prevent sparking
- Check that the battery is clean. Dirt can cause leakage currents between the battery posts
- Wash the battery using water. A mild cleaning agent can be used if necessary. Ensure that no dirt or water penetrates any of the cells
- Wipe clean and dry.

External checks

- Check the battery for signs of the following damage and remedy as necessary:
  - Dirty or loose posts
  - The battery is not secure and is loose in the engine compartment or cargo compartment
  - Worn, oxidized or damaged battery leads.
- Discard the battery if any of the following faults are found:
  - Cracked container
  - Leakage

  - Bent, loose or damaged terminals
  - Battery damaged by freezing.

- Reinstall the battery in the car after checking it. Connect the positive terminal first
- Check that the battery is secure in the engine compartment or cargo compartment.

WARNING: The battery can develop oxyhydrogen, which is highly explosive. Ensure that any evacuation hose (the hose which evacuates oxyhydrogen from the cargo compartment) is correctly connected to the battery and that the hose leads downwards to the dedicated outlet in the bodywork

CHECKING THE ELECTROLYTE LEVEL

Check the electrolyte level. Top up the electrolyte if necessary. To check and top up, see **BATTERY ACID LEVEL, CHECKING** .

TESTING THE BATTERY

CHOOSING THE TEST METHOD

Select the method to be used to test the battery:

NOTE: There is now a new version of Volvo Battery Analyzer, Volvo Battery Analyzer 3200 . The main difference between the 3100 and the new 3200 is that it is possible to print via an IR port on the 3200.

To print, see PRINT, VIEW OR EXPORT.

North America:

- see **TESTING WITH VOLVO BATTERY ANALYZER 3100/3200**

NOTE: North American dealers must always use Volvo Battery Analyzer 3100/3200.

Other markets:

- see **TESTING WITH VOLVO BATTERY ANALYZER 3100/3200**
- see **ALTERNATIVE TEST METHOD**

Volvo recommends that the battery is tested with the Volvo Battery Analyzer 3100/3200.

TESTING WITH VOLVO BATTERY ANALYZER 3100/3200

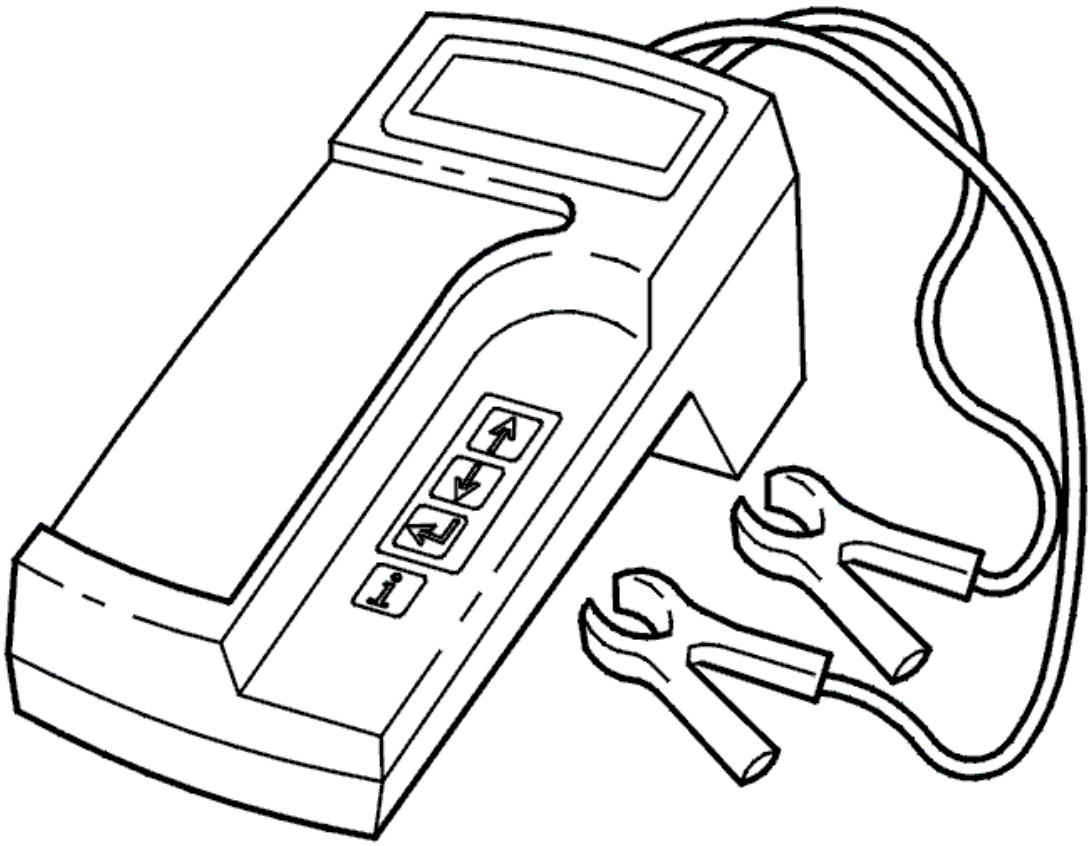

Fig. 2: Identifying Volvo Battery Analyzer 3100/3200
Courtesy of VOLVO CARS CORPORATION

Volvo Battery Analyzer 3100/3200 is used to test batteries as follows

Volvo Battery Analyzer 3100/3200 is used to test the battery. The following is a description of how the tool is used and the text shown in the display.

For further instructions, see the separate instruction card supplied with Volvo Battery Analyzer 3100/3200.

Setting the language

Set the language according to the instructions on the separate instruction card. English must be selected for markets where the relevant language cannot be selected for Volvo Battery Analyzer 3100/3200.

The display when testing batteries

Connect the tool cables directly to the battery.

The start window (below) is displayed for 3 seconds:

VOLVO 3100/3200 VERSION 1.0

NOTE: **The test tool must always be connected directly to the battery posts or to the cable terminals on the battery leads. The resistance of the battery leads may affect the readings and provide incorrect results if the tool is connected anywhere other than in the engine compartment.**

Scroll to select whether the test will take place inside or outside the vehicle (see the instruction card). Outside the car means that the battery is not connected to the vehicle's electrical system. Then press ENTER (see the instruction card).

NOTE: **It is important that the correct test mode is selected (inside or outside the vehicle) to obtain accurate results.**

SELECT TEST ^˘
IN-VEHICLE <--

SELECT TEST ^˘
OUT-OF-VEHICLE <--

Then select whether the battery to be tested is a genuine Volvo battery or another make.

BATTERY TYPE ^˘
VOLVO BATTERY <--

BATTERY TYPE ^˘
NON-VOLVO <--

Establish the test standard by checking the markings on the battery. CCA/SAE and DIN tests use different standards. Select the test standard. Press ENTER.

NOTE: **North American dealers must always select the CCA test**

NOTE: **It is essential that the battery markings are read correctly (i. e. whether the cold cranking amperes is listed according to the CCA/SAE or DIN standard. This is listed on the label on the battery. See BATTERY MARKING.**

SELECT MODE ^˘
BY CCA<--

SELECT MODE ^˘
BY DIN (A) <--

Scroll to the relevant value for the cold cranking amperes (cold cranking amperes according to CCA/SAE or DIN - listed on the battery). Press ENTER:

SELECT RATING ^˘
500 A <--

NOTE: The following display applies only to North America

SELECT RATING ^˘
500 CCA <--

The instrument now analyzes the battery and one of the following is displayed:

*** TESTING ***
500 A (SAE)

*** TESTING ***
500 A (DIN)

When the analysis is complete, the instrument will display one of the following results:

xxxx V
GOOD BATTERY

xxxx V
GOOD-RECHARGE

xxxx V
CHARGE & RETEST

xxxx V
REPLACE BATTERY

xxxx V
BAD CELL-REPLACE

NOTE: The text describes the condition of the battery.

The voltage displayed is an indication of the charge status of the battery.

After displaying the above result, the test instrument will shift between this result and the charge status. The state of charge (%) is displayed in intervals of 25%.

NOTE: The window for the state of charge is only displayed when testing VOLVO batteries.

GOOD BATTERY

If GOOD BATTERY is displayed, the following text for the state of charge will be shown:

STATE OF CHARGE: 75-100%

GOOD-RECHARGE / CHARGE & RETEST

If GOOD-RECHARGE or CHARGE & RETEST is displayed, one of the following alternatives for the state of charge will be shown in the display:

STATE OF CHARGE: 0-25%

STATE OF CHARGE: 25-50%

STATE OF CHARGE: 50-75%

CHARGE & RETEST means that the battery must be recharged and then tested again. The battery must be discarded if the same result is obtained.

REPLACE BATTERY/BAD CELL-REPLACE

If REPLACE BATTERY or BAD CELL-REPLACE is displayed, the following text for the state of charge will be shown:

STATE OF CHARGE: REPLACE BATTERY

REPLACE BATTERY means that the battery must be discarded.

ADDITIONAL FUNCTIONS OF THE VOLVO BATTERY ANALYZER 3100/3200

Test code

The INFORMATION (i) button (see the instruction card) can be pressed at any time when reading off the test results or state of charge to read off the test code. Press INFORMATION again to return to test results or state of charge. The test code is used when making warranty claims.

TEST CODE XXXX XXXX

NOTE: The test code is only accessible when testing genuine VOLVO batteries.

If the INFORMATION button is pressed after testing a battery other than a VOLVO original battery, the following message is displayed:

NON-VOLVO BATTERY TEST

Charging code

The ENTER button (see the instruction card) can be pressed at any time when reading off test results or the state of charge to obtain the charging code. Press ENTER again to return to the test results or state of charge.

CHARGE CODE XX

NOTE: This function is not used at present.

Eliminating surface charging

When testing in the car is selected and the tester detects surface charge, a message will be displayed requesting that the headlamps are switched on to remove the surface charge. For an explanation of surface charging, see **SURFACE CHARGING** .

1/ SURFACE CHARGE DETECTED

2/ TURN KEY ON HEADLAMPS ON

3/ LOAD ON DETECTED

4/ TURN KEY OFF HEADLAMPS OFF

5/ LOAD OFF DETECTED

After the tester has detected that the surface charge has gone, it will automatically carry out the test and display the results as described previously.

** RETESTING ** 500 A (SAE)

** RETESTING **
500 A (DIN)

If the surface charge is not removed correctly, a warning window will be displayed, followed by a message. These two windows will be displayed for 3 seconds each, followed by an appropriate remedy as in windows 2 and 4 above.

*** WARNING ***

LOAD ON
NOT DETECTED

LOAD OFF
NOT DETECTED

If this sequence is repeated for more than 30 seconds, the following window will be displayed. The tester must then be disconnected from the battery, reconnected and the test started from the beginning again.

DISCONNECT AND RETEST

Testing before or after charging

To obtain a more exact test result, the tester will ask if it is testing before or after charging. Select the correct alternative. Then press the ENTER button (see the instruction card).

SELECT MODE ^˘
BEFORE CHARGE <--

SELECT MODE ^˘
AFTER CHARGE <--

Detecting system noise

If the tester detects system noise from the control modules, ignition system or another consumer the following message will be displayed. Switch off as many power consuming components as possible. The tester will retest automatically.

SYSTEM NOISE
CHECK LOADS

** RETESTING **
500 A (SAE)

** RETESTING **

500 A (DIN)

Temperature compensation

If the tester determines that the battery temperature may affect the test result, the following message is displayed. Check the temperature of the battery. Then select above or below 0°C (32°F). Then press ENTER (see the instruction card) to continue the test.

In cold conditions, measure the temperature of the battery container.

BATTERY TEMP. ^˘
ABOVE 0°C <--

BATTERY TEMP. ^˘
BELOW 0°C <--

The retest window will be displayed and then the test result.

** RETESTING **
500 A (SAE)

** RETESTING **
500 A (DIN)

Protection against 24-volt systems

If for any reason an attempt is made to test a battery other than a 12 volt battery, or if an attempt is made to test both the 12 volt batteries in a 24-volt system at the same time, the following warning window will be displayed:

NON 12 VOLT
BATTERY DETECTED

Message to check the connections

If a good connection to the battery is not obtained, the following message will be displayed. If this is the case, check the connections by working the cable terminals on the test tool forwards and backwards.

CHECK CONNECTION

ALTERNATIVE TEST METHOD

NOTE: **This method does not apply to North American dealers. North American dealers must always follow the Volvo Battery Analyzer 3100/3200 test method.**

Follow the steps below:

1. Checking the density of the acid

The density of the acid can be measured using an electrolyte gauge or a refractometer on the battery at room temperature.

Measure the density in all the cells. Check the following:

- If the density is above 1.225 g/cm^3 in each cell and the difference in density between the cells is less than 0.03 g/cm^3 , the battery must be tested for load. See point 4 below, *Load check*
- If the density is below 1.225 g/cm^3 in each cell and the difference in density between the cells is less than 0.03 g/cm^3 , the battery must be charged. See **BATTERY, CHARGING**
- If the density in two adjacent cells is considerably lower than in other cell (i. e. if the difference is greater than 0.03 g/cm^3 , there is probably leakage between the two cells. Discard the battery
- If the density is markedly lower in only one cell, the fault is probably a short-circuit. Check the battery acid for discoloration. Discard the battery.

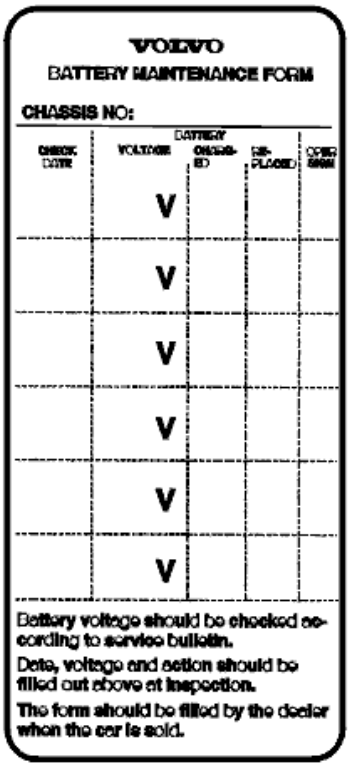
VOLVO

BATTERY MAINTENANCE FORM

CHASSIS NO:

CHECK DATE	VOLTAGE	BATTERY CHARGED	RE-PLACED	OPEC SIGN
	V			
	V			
	V			
	V			
	V			
	V			

Battery voltage should be checked according to service bulletin.

Date, voltage and action should be filled out above at inspection.

The form should be filled by the dealer when the car is sold.

Fig. 3: Battery Maintenance Card
Courtesy of VOLVO CARS CORPORATION

2. Checking the stand-by voltage

Check the stand-by voltage as follows:

- Disconnect the cable from the battery negative terminal

- Leave the battery disconnected for at least 2 hours
- Measure the stand-by voltage using a digital multimeter. The battery must be recharged immediately if the stand-by voltage is lower than 12.45 V. For information about charging, see **BATTERY, CHARGING**
- If the car has not been delivered to a customer - update the Battery Maintenance Card as shown.
- Connect the battery negative terminal.

3. Charging

If the battery is not charged, it must be charged according to **BATTERY, CHARGING** .

Check that the battery takes the charge.

- If the charge is OK, the battery must be load tested. See point 4 below, *Load check*
- The battery may be sulfated if it does not charge. Sulfating means that the battery is damaged due to insufficient charge. Discard the battery.

4. Load check

During a load test, the load current must rise to at least 3 times the battery capacity in amperes (A).

For example: A battery with a capacity of 60 Ah must be loaded with a current of 180 A (= 3 x 60).

Read off the battery voltage after approximately 15 seconds. The voltage must then be 9.6 V. If this voltage is not reached there may be an open-circuit or a short-circuit in the battery.

- An **open-circuit** can be identified, for example, by the voltage dropping rapidly towards 0 V when the battery is loaded, or if the voltmeter does not give a reading when connected to the battery. Discard the battery if there is an open-circuit
- A **short-circuit** is most often evident under load when the short-circuited cell or cells begin to boil. Discard the battery if there is an short-circuit.

5. Self-discharge

If the battery has been checked according to points 1-4 above, but is not showing signs of the above faults, set the battery to self-discharge to check that the self-discharge is normal.

If the battery self-discharges abnormally and does not retain a charge for more than a couple of days, this may be a sign of a potential short-circuit. Discard the battery.

PRINT, VIEW OR EXPORT

PRINT, VIEW OR EXPORT THE MOST RECENT TEST RESULT (ONLY VOLVO BATTERY ANALYZER 3200)

1. Press the PRINT key. Hold the key down until the display shows
2. Choose between "Print", "View" or "Export" and confirm your choice

3. If you choose to print, you must first ensure that the printer is switched on and correctly positioned with the Volvo Battery Analyzer 3200
4. If you choose to export, you must first ensure that the printer is switched on and correctly positioned in relation to Volvo Battery Analyzer 3200.

SETTING ADAPTED PRINT-OUTS (ONLY VOLVO BATTERY ANALYZER 3200)

The print-out can be adapted to include the company name, address and telephone number.

NOTE: Volvo Battery Analyzer 3200 must not be connected to the car battery.

Press the PRINT key and hold it down until the display appears.

Use the arrow keys to scroll down to "Setting user address". Press the ENTER button.

Use the arrow keys to move to the required character or letter. Press the ENTER key to confirm your choice. Then proceed until all information has been entered.

The maximum number of rows is 6.

BATTERY MARKING

Performance

The performance of a car battery is normally expressed as follows:

- Cold cranking amperes, CCA. See the explanation in, see **COLD CRANKING AMPERES**
- Reserve capacity, RC. See the explanation in, see **RESERVE CAPACITY, RC**
- Capacity, C20 (in certain cases). See the explanation in, see **CAPACITY** .

Recommended charge current

The cold cranking amperes according to the SAE and DIN norms and the corresponding capacity and recommended charge current are shown in the table below.

COLD CRANKING AMPERES ACCORDING TO THE SAE NORM AND THE CORRESPONDING CAPACITY AND RECOMMENDED CONSTANT CHARGE CURRENT

Cold cranking amperes (CCA) according to SAE	Capacity	Recommended constant charge current
420 A	45 Ah	4 A
440 A	50 Ah	4 A
520 A	50-60 Ah	5 A
600 A	65-70 Ah	6 A
680 A	90 Ah	7 A

COLD CRANKING AMPERES ACCORDING TO THE DIN NORM AND THE CORRESPONDING CAPACITY AND RECOMMENDED CONSTANT CHARGE CURRENT

Cold cranking amperes according to DIN	Capacity	Recommended constant charge current
250 A	45 Ah	4 A
310 A	63 Ah	5 A
420 A	72 Ah	7 A
590 A	60 Ah	9 A

Volvo battery labels

The graphics show an example of how the battery labels may appear.

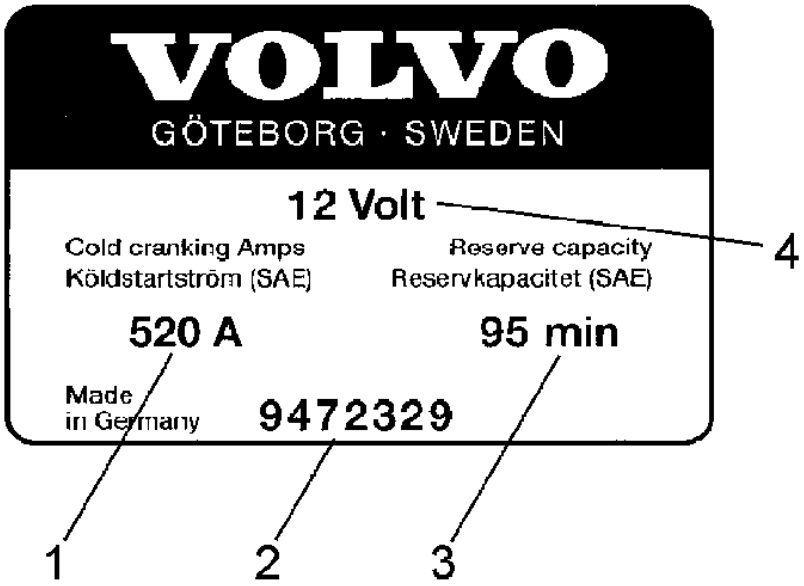

Fig. 4: European Battery Label
Courtesy of VOLVO CARS CORPORATION

European label

1. Cold cranking amperes, CCA, according to the SAE norm (520 A)
2. Volvo part number (9472329)
3. Reserve capacity, RC, according to the SAE norm (95 min)
4. The nominal terminal voltage of the battery (12 V)*.

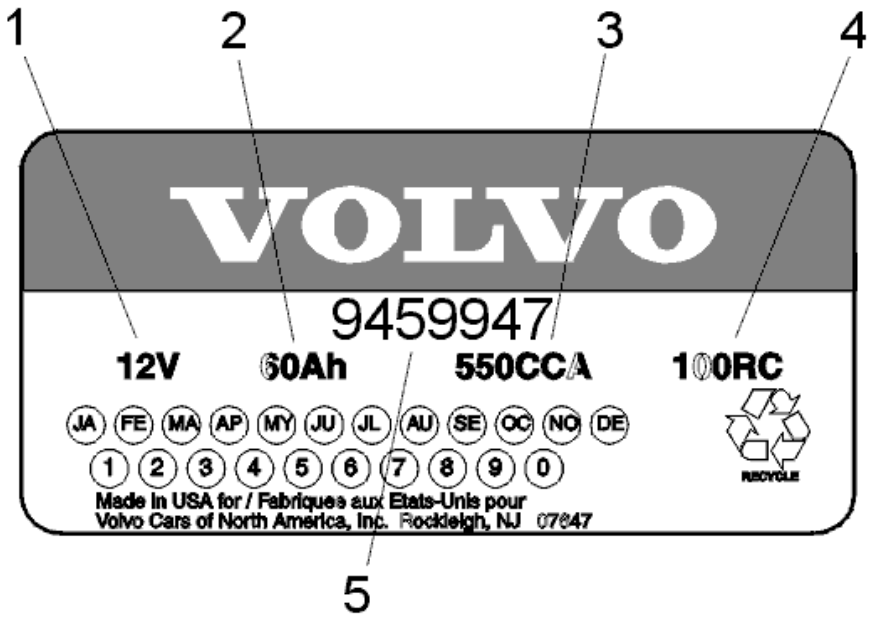

Fig. 5: American Battery Label
Courtesy of VOLVO CARS CORPORATION

American labels

1. The nominal terminal voltage of the battery (12 V)*
2. Capacity (60 Ah)
3. Cold cranking amperes, CCA (550 A)
4. Reserve capacity, RC (100 min)
5. Volvo part number (9459947).

*12 V is the nominal terminal voltage. This means that the battery has a stand-by voltage of 12.72 V when fully charged. Note that a battery with a stand-by voltage of 12 V is only charged to approximately 35% of capacity (see the diagram in **ACID DENSITY**).

ELECTRICAL

Battery And Mounting - General Information

ELECTRICAL CONSUMPTION, GENERAL (2003-04)

The change from traditional electrical systems with hardware based functions to flexible CAN based electrical systems where a number of nodes govern a large number of software based functions has increased the number of functions in cars. This has also caused an increase in electrical power consumption.

The generator (GEN) has been designed to supply the car with sufficient current for normal electrical loads when driving. The battery functions as a buffer for extreme loads or driving conditions. When the engine is switched off, it is the battery that supplies the car with energy.

POST DRIVING POWER CONSUMING COMPONENTS

Engine cooling fan (FC)

After driving in hot conditions, the engine cooling fan (FC) may run on for approximately 6 minutes.

Blower fan

After driving with the air conditioning (A/C) on, the blower fan may run for 8 minutes for up to 50 minutes after disengagement to remove moisture from the condenser.

Alarm siren

Note that the battery for the alarm siren starts its charging cycle after the battery poles has been disconnected and then reconnected. This means that the stand-by current consumption can reach 50 mA during the first 14 hours.

POWER CONSUMPTION

Ignition setting 0 with closed but not locked doors

Approximately 2 A, after 12 minutes approximately 20 mA (if the siren is not charging).

Ignition switch position I (radio position) with closed doors

Approximately 10 A, after 12 minutes approximately 20 mA (if the siren is not charging).

HINT: Consumption depends on factors such as the radio, interior lighting and blower fan. The power consumption can vary therefore.

Ignition switch position 0 or I with open or incorrectly closed doors

Approximately 6 A, after 12 minutes approximately 1 A (if the siren is not charging). After 20 minutes, the

interior lighting switches off and consumption drops to approximately 20 mA.

HINT: Consumption can reach more than 6 A depending on factors such as the radio, door lighting and blower fan.

Door locked and alarm on

Approximately 30 mA depending on the equipment level of the car and the accessories.

NOTE: It takes approximately 10 minutes before all nodes are closed down after the car is locked.

Other power consuming components that may be running in ignition switch positions I and II

- Blower fan; approximately 4-23 A

  NOTE: A blower fan activated at low speed is not audible in a workshop.

- Radio; approximately 1-6 A
- Low beam; approximately 9 A
- In ignition switch position II, (programming position), all CAN nodes are activated and the automatic low beam system is activated (if applicable).

BATTERY

NOTE: The power consumption in a car with the ignition switch in position I or 2 (engine off) can reach in excess of 20 A. In 30-60 minutes, more than 50% of the battery charge status can drain, at which point the plates start to sulfate which causes permanent damage to the battery and reduces its service life. Ensure wherever possible that:

- **all doors are closed correctly**
- **that low beam and the interior lighting is off**
- **the blower fan is switched off**
- **deactivate the seat heaters and rear demist.**

Connect a battery charger if the repair work allows for this. This applies even when downloading software to nodes, even if the electrical/power consumption is lower than is normal for key position II. Downloads take time, during which the entire CAN network and all associated components are activated. There is also a risk that the data transfer will fail if the system voltage falls below 10.5 V.

For further information about the function of the battery and fault-tracing, see **BATTERY, CHARGING** and **FAULT-TRACING AND TESTING THE BATTERY** .

HANDLING UNSERVICEABLE BATTERIES (2003-12)

HANDLING UNSERVICEABLE BATTERIES

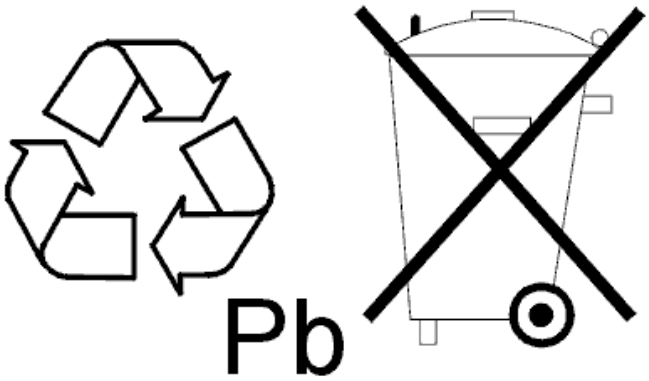

Fig. 1: Handling Unserviceable Batteries
Courtesy of VOLVO CARS CORPORATION

A lead battery contains substances that are harmful to the environment and hazardous to health, such as lead and sulfuric acid. Therefore an unserviceable battery must always be recycled to avoid dangerous substances being released into the environment.

Unserviceable batteries must be treated as hazardous waste. Such batteries must be handled according to the policies of each country.

WARNING: **The battery contains sulfuric acid which can cause serious corrosive damage. If the electrolyte comes into contact with your eyes, skin or clothes - flush using large quantities of water. Contact a doctor immediately if acid splashes into eyes. Use protective goggles when handling batteries.**

ELECTRICAL

Battery And Mounting - Removal, Replacement And Installation

BATTERY

BATTERY, REPLACING

NOTE: **As the graphics in this service information are used for different model years and/or models, some variation may occur. However, the essential information in the graphics is always correct.**

NOTE: **Check the performance of the battery to determine whether it is defective or not. See FAULT-TRACING AND TESTING THE BATTERY .**

PREPARATORY WORK

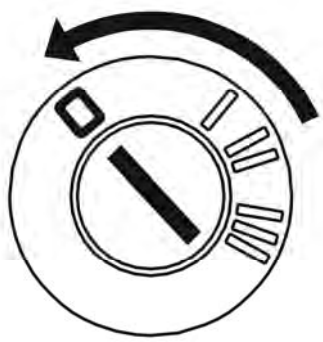

Fig. 1: Identifying Ignition In OFF Position
Courtesy of VOLVO CARS CORPORATION

Ignition off.

WARNING: See BATTERY, DISCONNECTING .

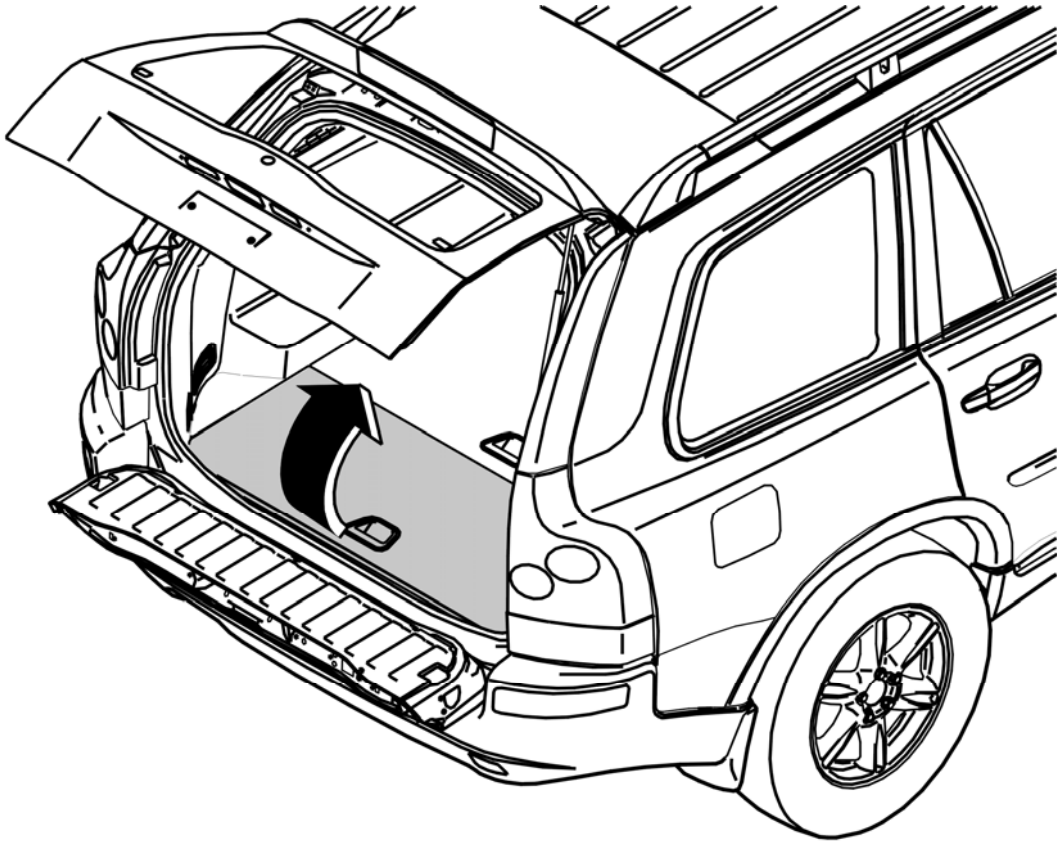

Fig. 2: Folding Up Floor Hatch
Courtesy of VOLVO CARS CORPORATION

Fold up the floor hatch.

Unhook the strap.

Push the floor hatch and compartment to one side.

REMOVAL

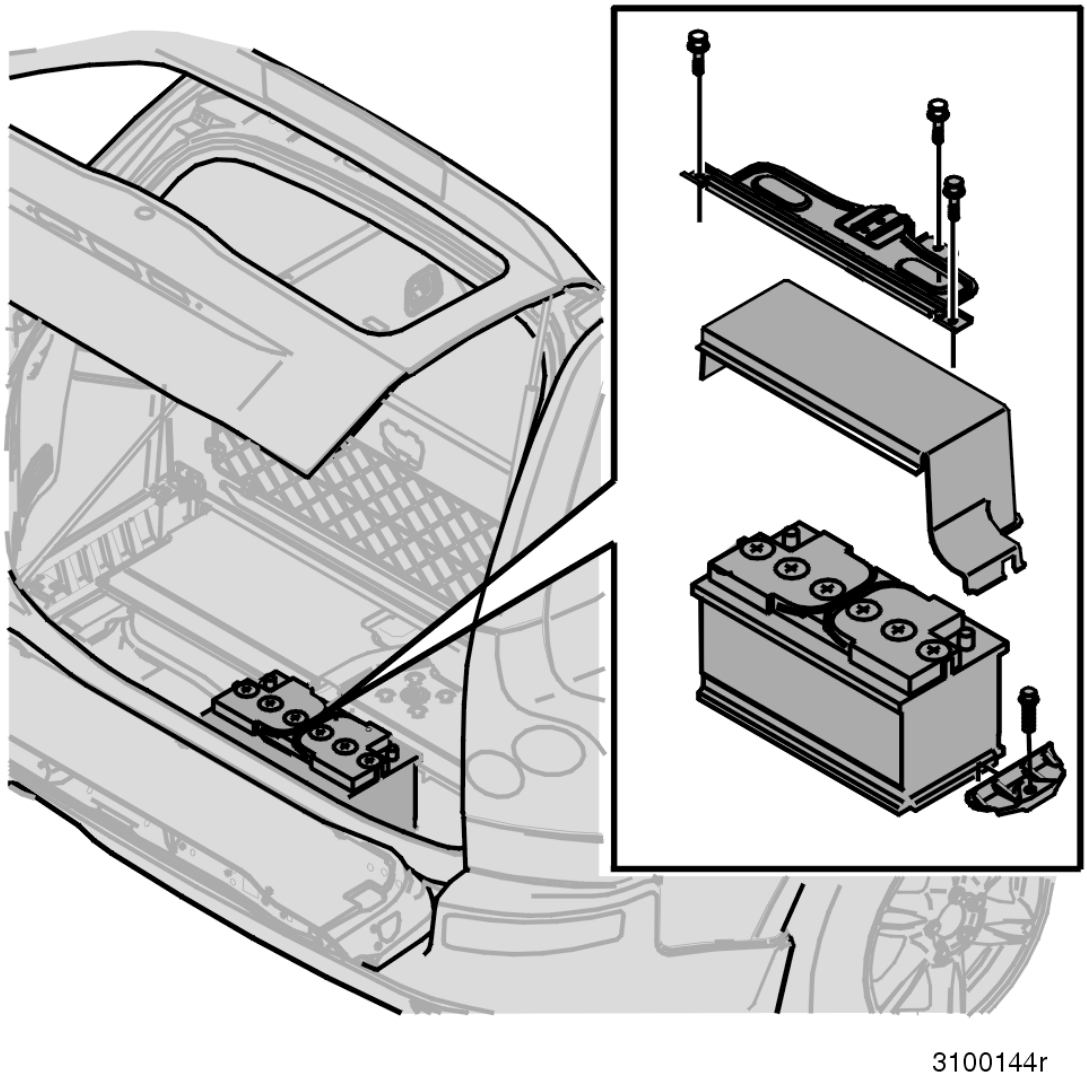

Fig. 3: Identifying Battery Mounting Bracket & Screws
Courtesy of VOLVO CARS CORPORATION

Remove:

- the nut securing the mounting bracket to the floor
- the screws holding the mounting bracket against the rear crossmember
- the mounting bracket
- the protective cover
- the drain hose (1) from the side of the battery
- the battery negative lead
- the battery positive lead.

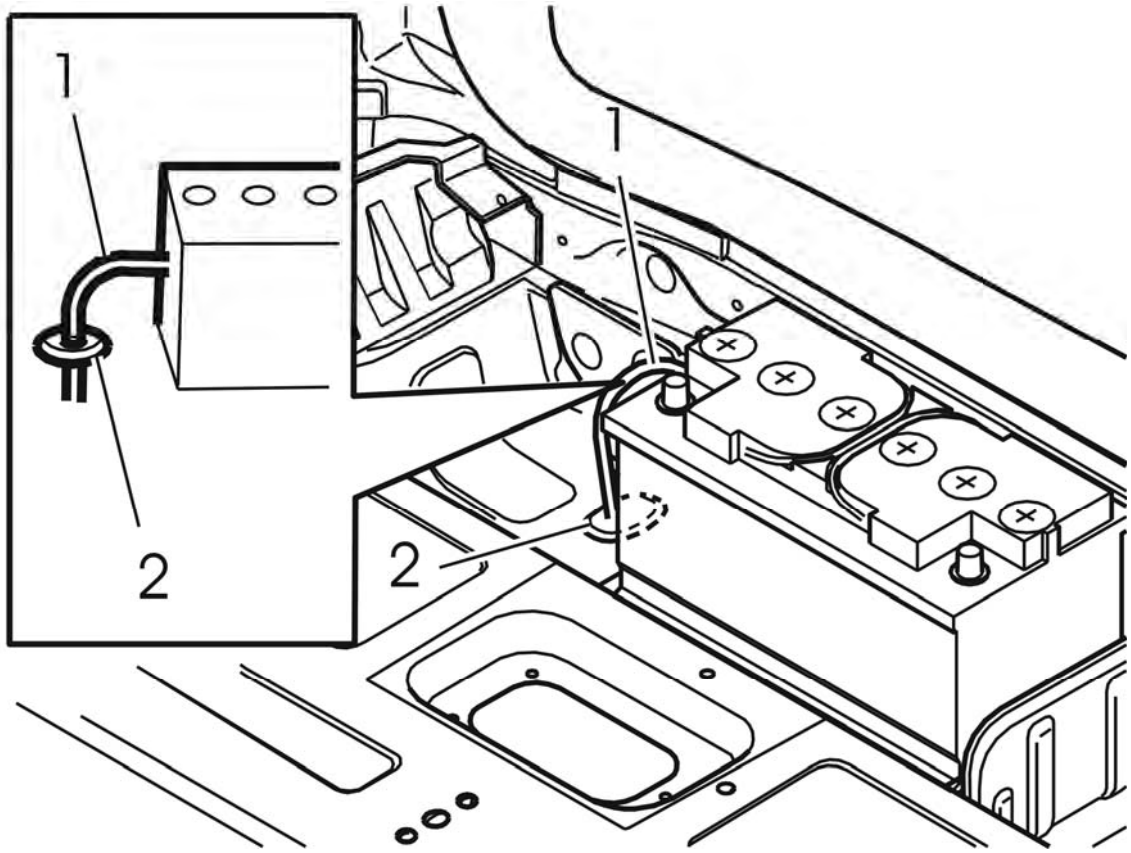

Fig. 4: Draining Battery
Courtesy of VOLVO CARS CORPORATION

Detach the battery mounting.

Remove the battery.

NOTE: **For tightening torques, see TIGHTENING TORQUE .**

WARNING: **see BATTERY, DISCONNECTING .**

INSTALLATION

Install:

- the battery
- the battery mounting. Screw into place
- the battery positive lead. Screw into place
- the battery negative lead. Screw into place
- the drain hose on the side of the battery

- the protective cover
- the mounting bracket
- the screws holding the mounting bracket against the rear crossmember
- the nut securing the mounting bracket to the floor
- the floor compartment and hatch. Hook the strap into place. Close the hatch.

ELECTRICAL

Battery And Mounting - Service Programs

BATTERY MAINTENANCE

BATTERY ACID LEVEL, CHECKING

CHECKING THE ELECTROLYTE LEVEL

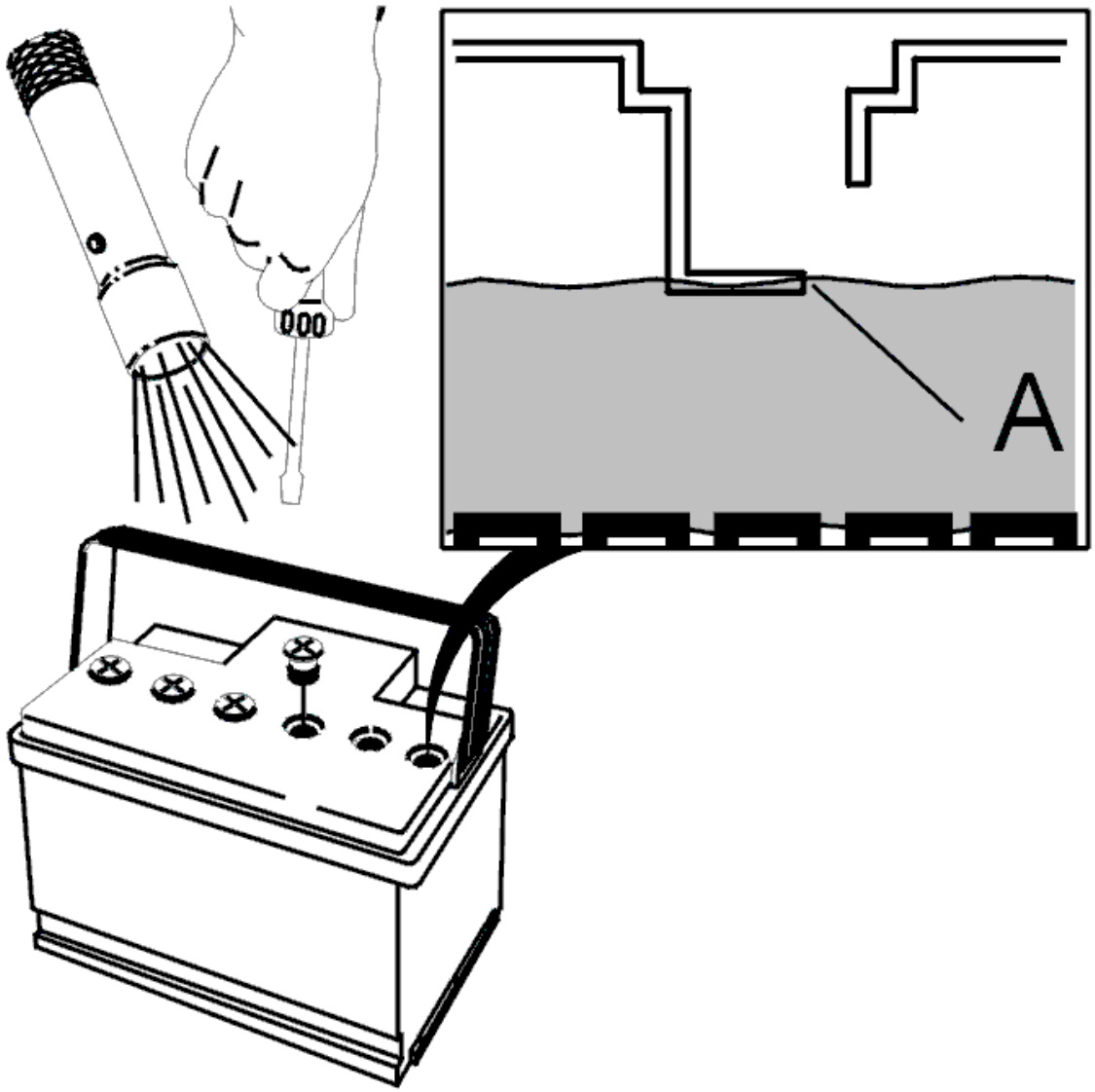

Fig. 1: Checking Electrolyte Level
Courtesy of VOLVO CARS CORPORATION

Check the electrolyte level at every regular service. More regular checks may be required for cars with heavy usage or used in hot climates. **Always** check the electrolyte level both before and after charging the battery.

- Remove the battery plugs
- Check the level in all the battery cells. Each cell has its own maximum mark (A). It is recommended that a flashlight is used.
- Top up to the maximum mark (A) using distilled or deionized water. **Never use tap water** . Tap water may damage the battery.

CAUTION: Never fill above the maximum mark (A) This may cause the electrolyte to leak.

- Install plugs.

  Never switch gray plugs (with a gas release filter) with black sealed plugs

- Tighten the plugs fully.

WARNING: Remember that the battery contains oxyhydrogen . Oxyhydrogen is highly explosive . A naked flame or smoking near the battery can cause it to explode resulting in personal injury and/or damage to the car.

WARNING: The battery contains sulphuric acid . This can cause serious corrosive damage . If the electrolyte comes into contact with your eyes, skin or clothes - flush using large quantities of water. Contact a doctor immediately if acid splashes into eyes.

BATTERY, CHARGING

CHARGING BATTERIES USING A CONSTANT CHARGE CURRENT

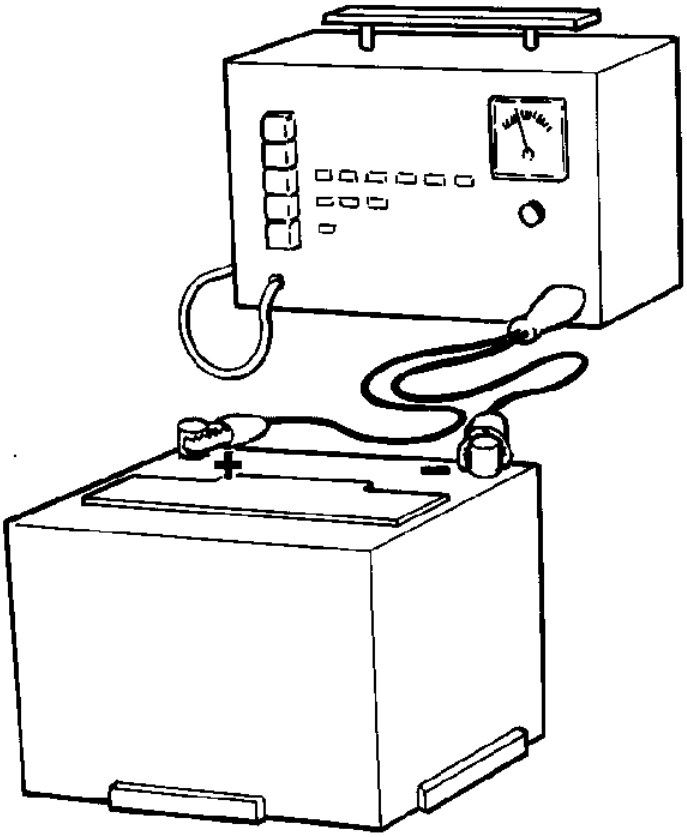

Fig. 2: Charging Battery
Courtesy of VOLVO CARS CORPORATION

WARNING: Explosive oxyhydrogen accumulates when the battery charges. Smoking, welding, grinding or other activities involving sparks or naked flames are prohibited in the vicinity of a charging battery. Batteries must never be charged in the car. Batteries must be charged in a well ventilated place. Ensure that ventilation is good.

WARNING: Watch out for acid splash The battery contains sulphuric acid . This can cause serious corrosive damage . If the electrolyte comes into contact with your eyes, skin or clothes - flush using large quantities of water. Contact a doctor immediately if acid splashes into eyes.

CAUTION: Boost charging (using a high current) will damage the battery. Boost charging is prohibited. Never charge using a voltage in excess of 14.5 volts.

1. Checking the electrolyte level before charging

The electrolyte level must be checked before the battery is charged. See **BATTERY ACID LEVEL, CHECKING**. Never charge a battery when the electrolyte level is low.

2. Charging the battery

- Remove the battery from the car. Always disconnect the negative terminal first to prevent sparking
- Connect the battery charger to the battery terminals. Charge the battery for approximately 10 hours at the recommended constant current. For the recommended constant charge current, see the table in, see **BATTERY MARKING**.
- Reinstall the battery after charging. Connect the positive terminal first.

WARNING: **The battery can develop oxyhydrogen, which is highly explosive. Ensure that any evacuation hose (the hose which evacuates oxyhydrogen from the cargo compartment) is correctly connected to the battery and that the hose leads downwards to the dedicated outlet in the bodywork**

3. Checking the electrolyte level after charging

After charging, the electrolyte level must be checked again and topped up if necessary. See **BATTERY ACID LEVEL, CHECKING**.

BATTERY MARKING

Performance

The performance of a car battery is normally expressed as follows:

- Cold cranking amperes, CCA. See the explanation in, see **COLD CRANKING AMPERES**
- Reserve capacity, RC. See the explanation in, see **RESERVE CAPACITY, RC**
- Capacity, C20 (in certain cases). See the explanation in, see **CAPACITY** .

Recommended charge current

The cold cranking amperes according to the SAE and DIN norms and the corresponding capacity and recommended charge current are shown in the table below.

COLD CRANKING AMPERES ACCORDING TO THE SAE NORM AND THE CORRESPONDING CAPACITY AND RECOMMENDED CONSTANT CHARGE CURRENT

Cold cranking amperes (CCA) according to SAE	Capacity	Recommended constant charge current
420 A	45 Ah	4 A
440 A	50 Ah	4 A
520 A	50-60 Ah	5 A
600 A	65-70 Ah	6 A
680 A	90 Ah	7 A

COLD CRANKING AMPERES ACCORDING TO THE DIN NORM AND THE CORRESPONDING CAPACITY AND RECOMMENDED CONSTANT CHARGE CURRENT

Cold cranking amperes according to DIN	Capacity	Recommended constant charge current
250 A	45 Ah	4 A
310 A	63 Ah	5 A
420 A	72 Ah	7 A
590 A	60 Ah	9 A

Volvo battery labels

The graphics show an example of how the battery labels may appear.

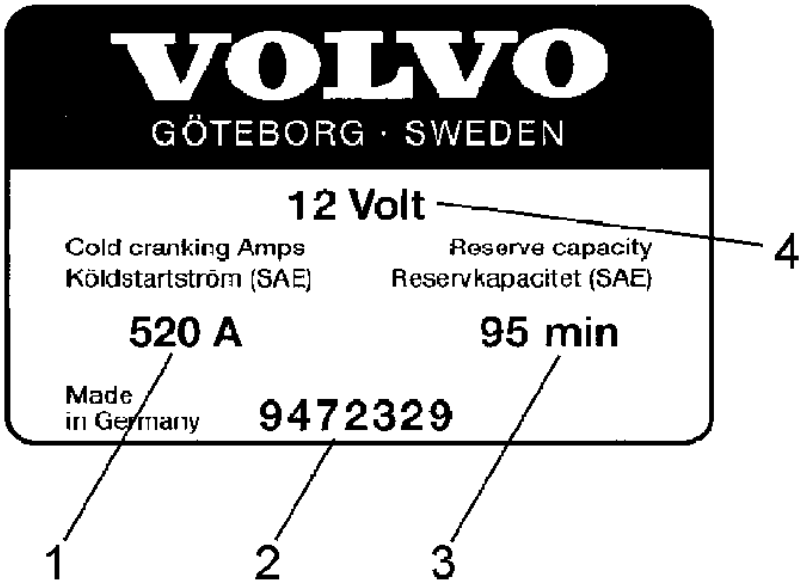

Fig. 3: European Battery Label
Courtesy of VOLVO CARS CORPORATION

European label

1. Cold cranking amperes, CCA, according to the SAE norm (520 A)
2. Volvo part number (9472329)
3. Reserve capacity, RC, according to the SAE norm (95 min)
4. The nominal terminal voltage of the battery (12 V)*.

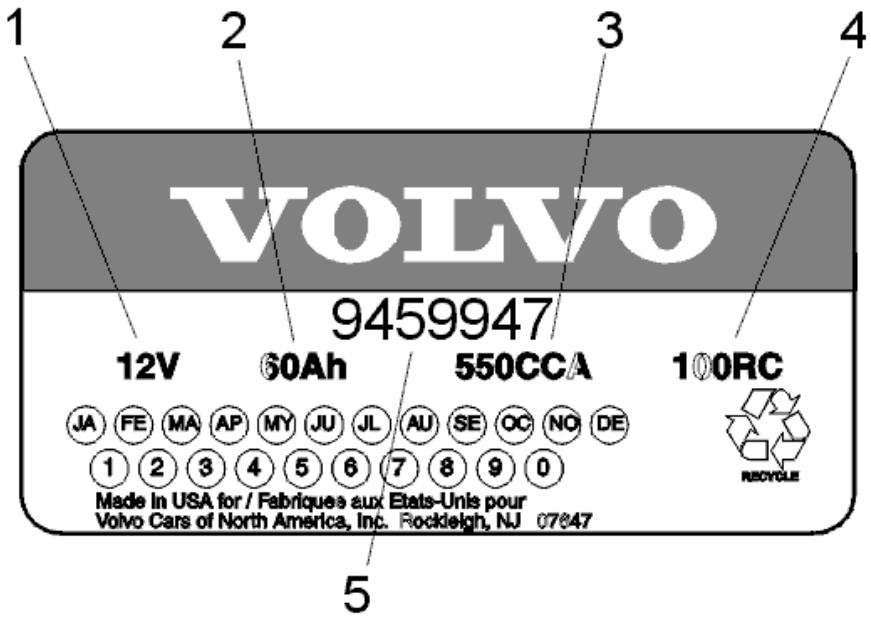

Fig. 4: American Battery Label
Courtesy of VOLVO CARS CORPORATION

American labels

1. The nominal terminal voltage of the battery (12 V)*
2. Capacity (60 Ah)
3. Cold cranking amperes, CCA (550 A)
4. Reserve capacity, RC (100 min)
5. Volvo part number (9459947).

*12 V is the nominal terminal voltage. This means that the battery has a stand-by voltage of 12.72 V when fully charged. Note that a battery with a stand-by voltage of 12 V is only charged to approximately 35% of capacity (see the diagram in, see **ACID DENSITY**).

REMOVING THE BATTERY ISOLATOR (2003-06)

REMOVING THE BATTERY ISOLATOR

See **REMOVING THE BATTERY ISOLATOR**

ELECTRICAL

Cables And Fuses - Cleaning, Inspection And Adjustment

WIRES

OPTICAL WIRING HARNESS CHECK

CHECK

NOTE: Check that special tool 9512867 is working before using it. This is done as follows.

- Select the desired socket for connection by setting the SELECTOR SWITCH to position 2+0 or 2+4.
- Connect a suitable optical test cable, with the instrument supplied, to the selected socket
- Select visual indication (green light - LED) or sound indication (buzzer - BEEP) by setting the right switch BEEP/LED in the desired position.
- Set the special tool's switch OFF/ON in position **ON** . The red light (POWER ON) shall light up.
- Press the red button (2+0 TEST or 2+4 TEST) on the lower section of the special tool which corresponds to a connected test cable. The unit now transmits a light signal through the test cable.
- The transmitted signal will be received as long as there is now a complete optical loop. If visual indication is selected, the green lamp Rx will light to indicate that the signal has been received. If sound indication is selected the buzzer will sound to indicate that the signal has been received.
- When the check is complete, set the OFF/ON switch on the special tool to position **OFF** .

The following must be carried out after repairs, checks or replacement of fiber optic wiring.

- Connect the desired connector on the MOST cable to the relevant socket on the special tool
- Select the connected socket by setting the SELECTOR SWITCH to position 2+0 or 2+4
- Set the special tool's switch OFF/ON in position **ON** . The red light (POWER ON) shall light up.
- Activate the Infotainment system.

HINT: If the infotainment system has been activated and there is not an open-circuit in the fibre optic network, the display on the infotainment control module (ICM) must be lit.

HINT: It is also possible to check visually if there is a light signal in the MOST cable from a control module in the network to the connector for the next control module without switching on the ignition. This is done by connecting the special tool to the connector on the MOST cable at the relevant control module.

- Select the socket which is connected on the special tool by setting the SELECTOR SWITCH to position 2+0 or 2+4
- Disconnect the MOST cable from the next control module
- Set the special tool's switch OFF/ON in position **ON** . The red light (POWER ON) shall light up.

- Press the red button (2+0 TEST or 2+4 TEST) on the lower section of the special tool which corresponds to a connected MOST cable. The special tool now transmits a light signal through the cable. Check that there is a red light at the next connector on the MOST cable
- When the check is complete, set the OFF/ON switch on the special tool to position **OFF** .

NOTE: **The visual check is not a verification of the function of the system. However the strength of the light signal must exceed a certain level for there to be full functionality in the system.**

ELECTRICAL

Cables And Fuses - Component Location

RELAYS, FUSE BOXES AND WIRING

RELAYS, FUSE BOXES AND WIRING

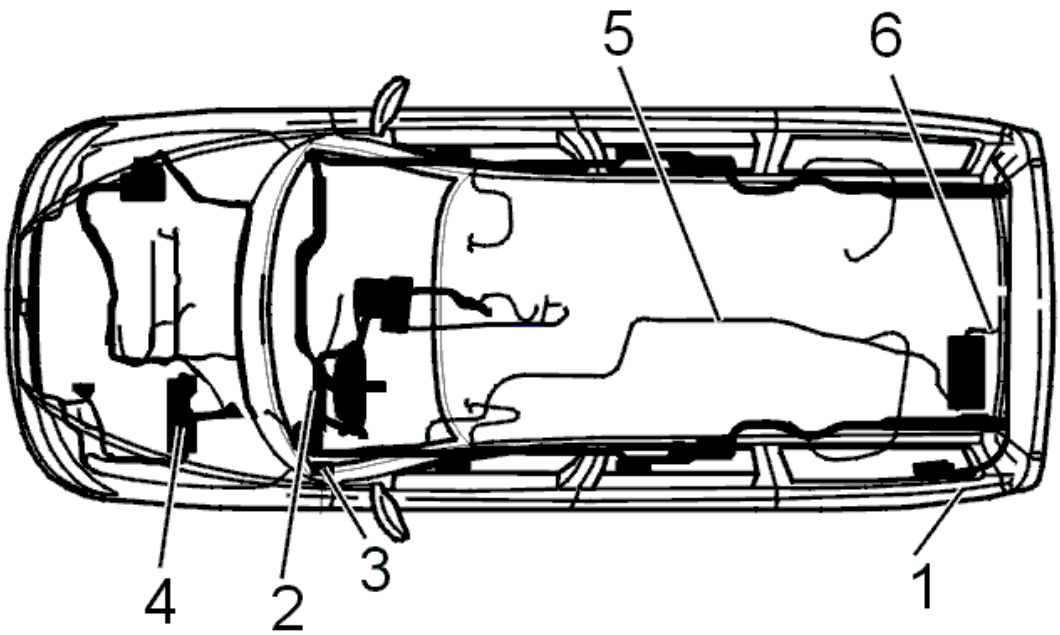

Fig. 1: Locating Relay Box, Integrated Relay/Fuseboxes, Cable Harness, And Battery Ground Cable
Courtesy of VOLVO CARS CORPORATION

1. Integrated relay/fusebox in the cargo compartment, rear electronic module
2. Relay box in the passenger compartment, central electronic module (CEM)
3. Fusebox in the passenger compartment
4. Integrated relay/fusebox in engine compartment
5. Cable harness
6. Ground cable, battery.

COMPONENT LOCATION, ACCESSORY USB UNIT (AUU) (2008-12)

LOCATION OF COMPONENTS

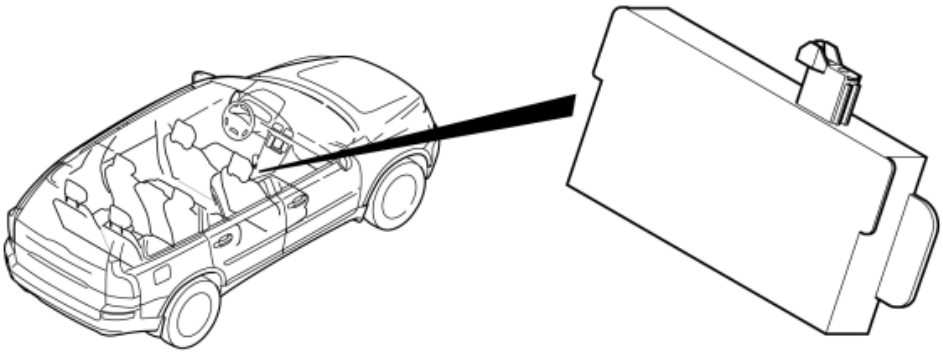

Fig. 2: Identifying Accessory USB Unit (AUU)
Courtesy of VOLVO CARS CORPORATION

Overview

1. Accessory USB unit (AUU)

COMPONENT LOCATION, CENTRAL ELECTRONIC MODULE (CEM) (2005-12)

LOCATION OF COMPONENTS

NOTE: **The graphics in this service information are used for different model years and/or models. Some variation may occur. However, the essential information is always correct.**

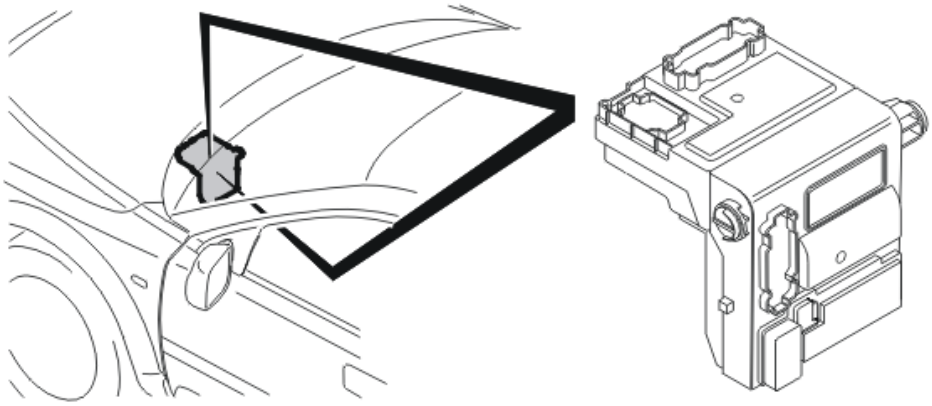

Fig. 3: Locating Central Electronic Module (CEM)
Courtesy of VOLVO CARS CORPORATION

central electronic module (CEM)

1. Central electronic module (CEM).

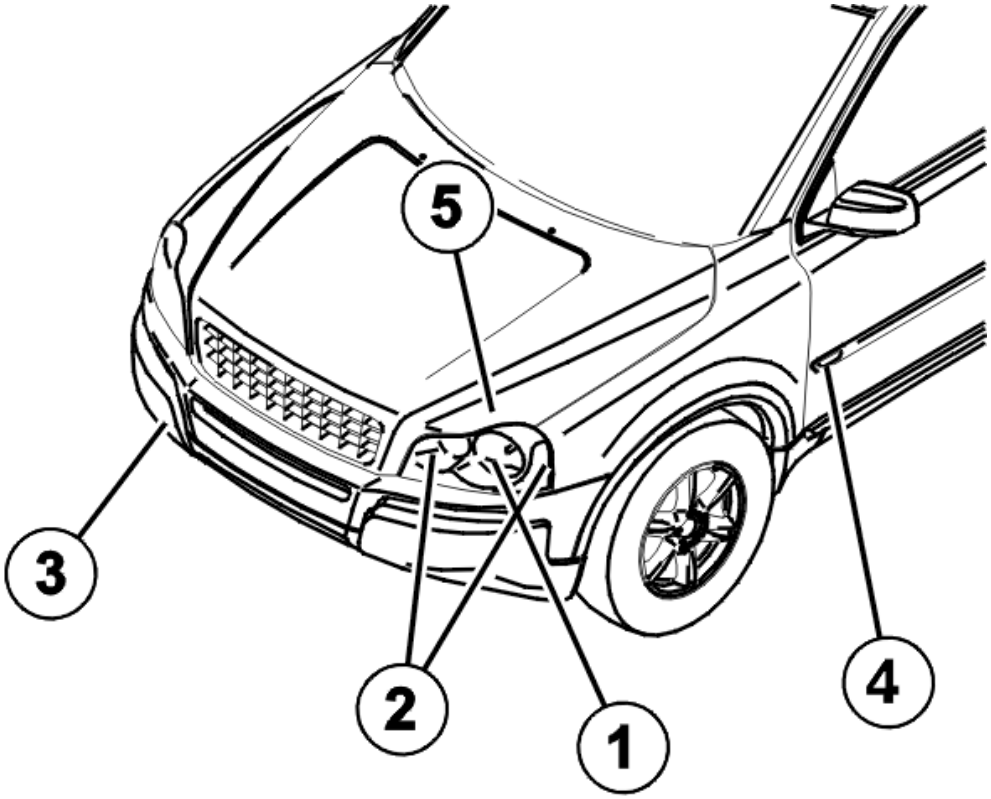

Fig. 4: Locating Exterior Lighting Components -- Front
Courtesy of VOLVO CARS CORPORATION

Lighting exterior, front

1. Headlamps
2. Front turn signal lamps
3. Front fog lamps
4. Front side turn signal flashers
5. Motor for headlamp beam height control.

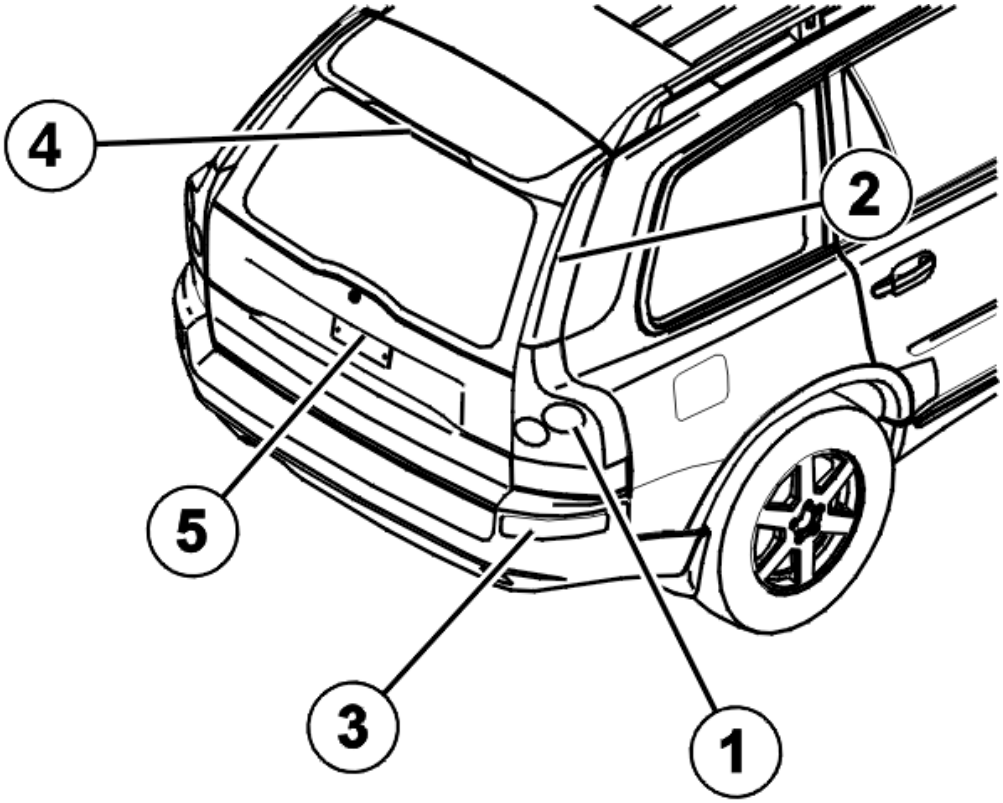

Fig. 5: Locating Exterior Lighting Components -- Rear
Courtesy of VOLVO CARS CORPORATION

Lighting exterior, rear

1. Lower tail lamp
2. Upper tail lamp
3. Tail lamps in the bumper
4. High level stop lamp
5. License plate lighting.

Inner lighting

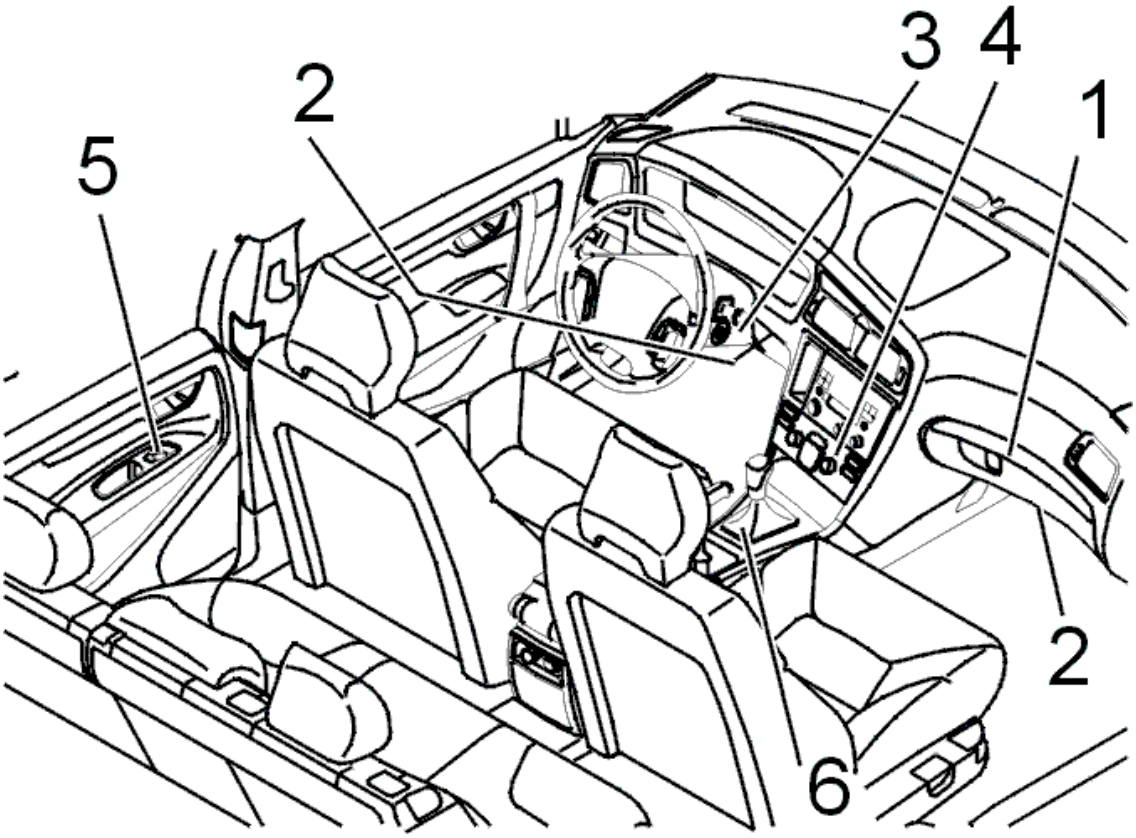

Fig. 6: Locating Interior Lighting Components (1 Of 2)
Courtesy of VOLVO CARS CORPORATION

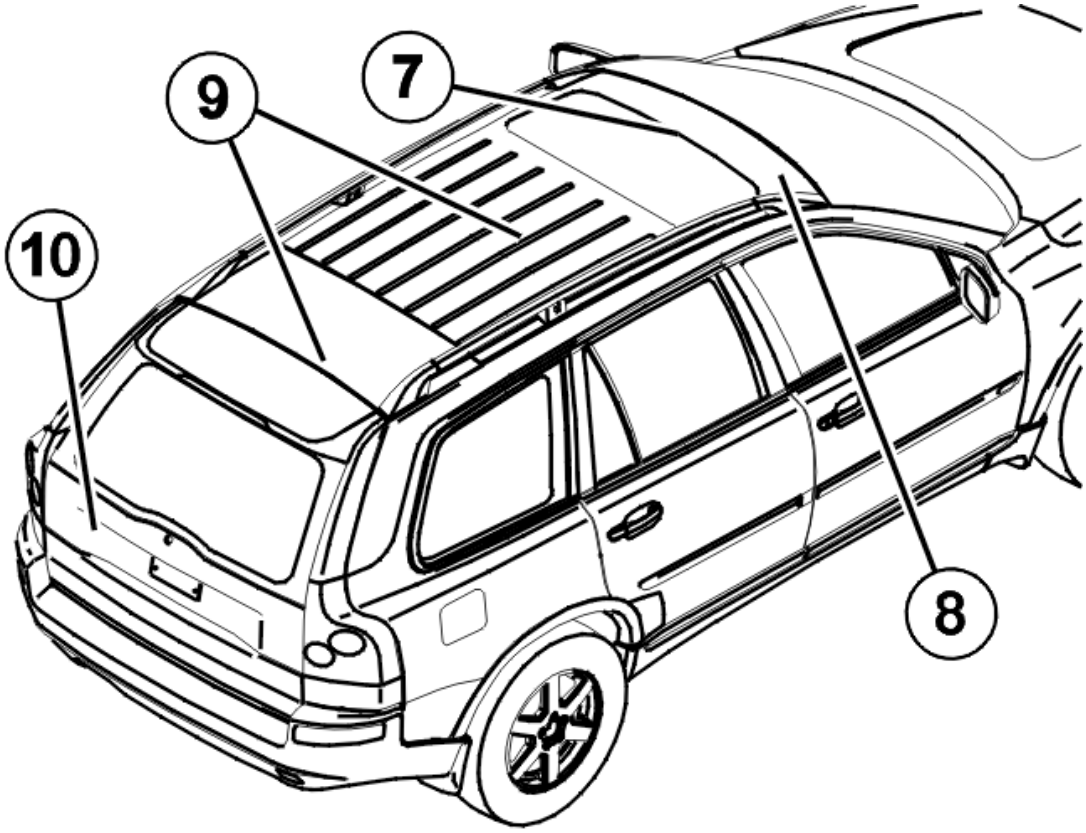

Fig. 7: Locating Interior Lighting Components (2 Of 2)
Courtesy of VOLVO CARS CORPORATION

1. Lighting glove compartment
2. Courtesy lighting
3. Ignition key lighting
4. Dashboard environment panel lighting
5. Door switch
6. Gear selector lighting.
7. Interior lighting and the upper electronic module (UEM)
8. Vanity mirror lighting
9. Rear reading lamp
10. Cargo compartment lighting.

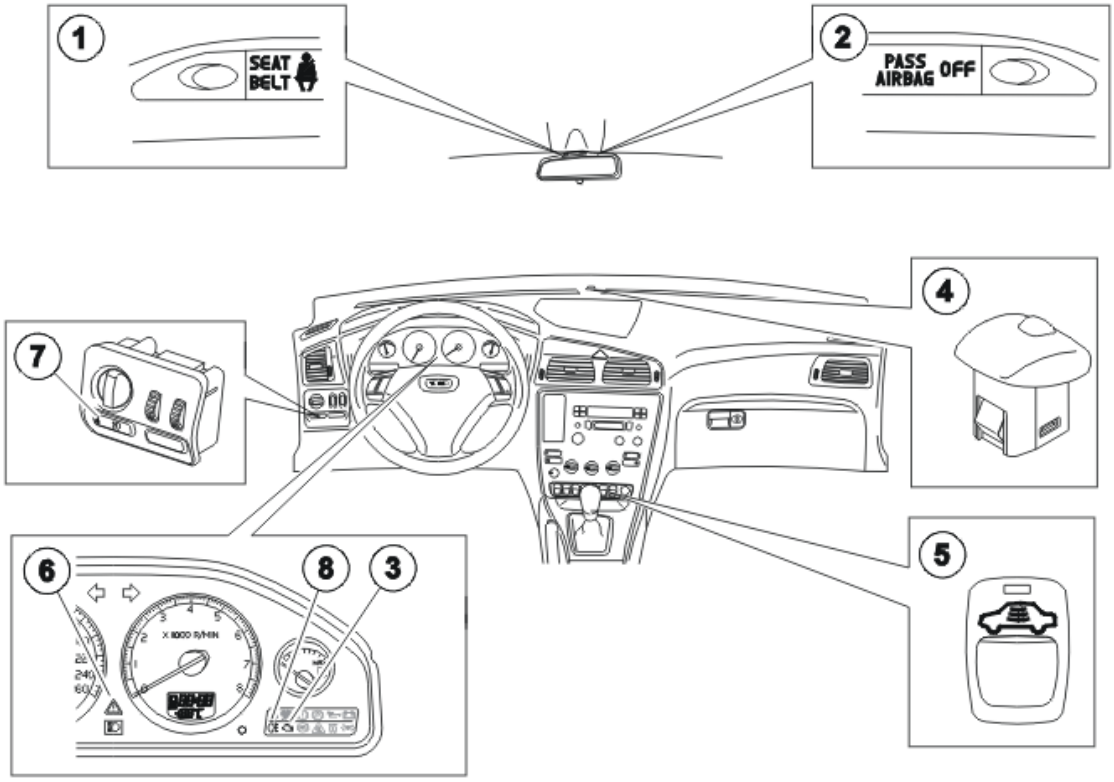

Fig. 8: Locating Warning And Indicator Lamps
Courtesy of VOLVO CARS CORPORATION

Warning and indicator lamps

1. Seat belt reminder
2. PAD lamp
3. MIL lamp
4. Alarm diode
5. Indication reduced alarm
6. Indicator lamp hazard warning signal flashers
7. Indicator lamp fog lamp front
8. Indicator lamp fog lamp rear.

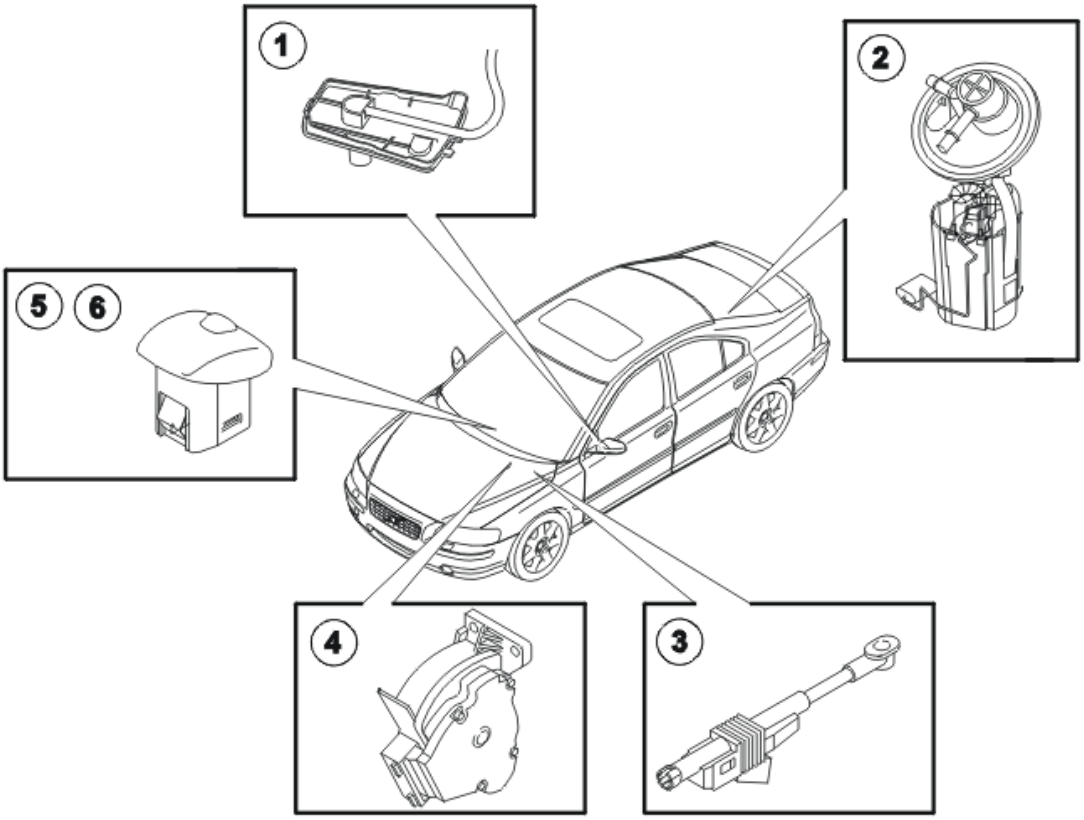

Fig. 9: Locating Sensors
Courtesy of VOLVO CARS CORPORATION

Sensors

1. Outside temperature
2. Fuel level (Gasoline)
3. Clutch pedal
4. Accelerator pedal (AP) position sensor
5. Twilight sensor
6. Sun sensor.

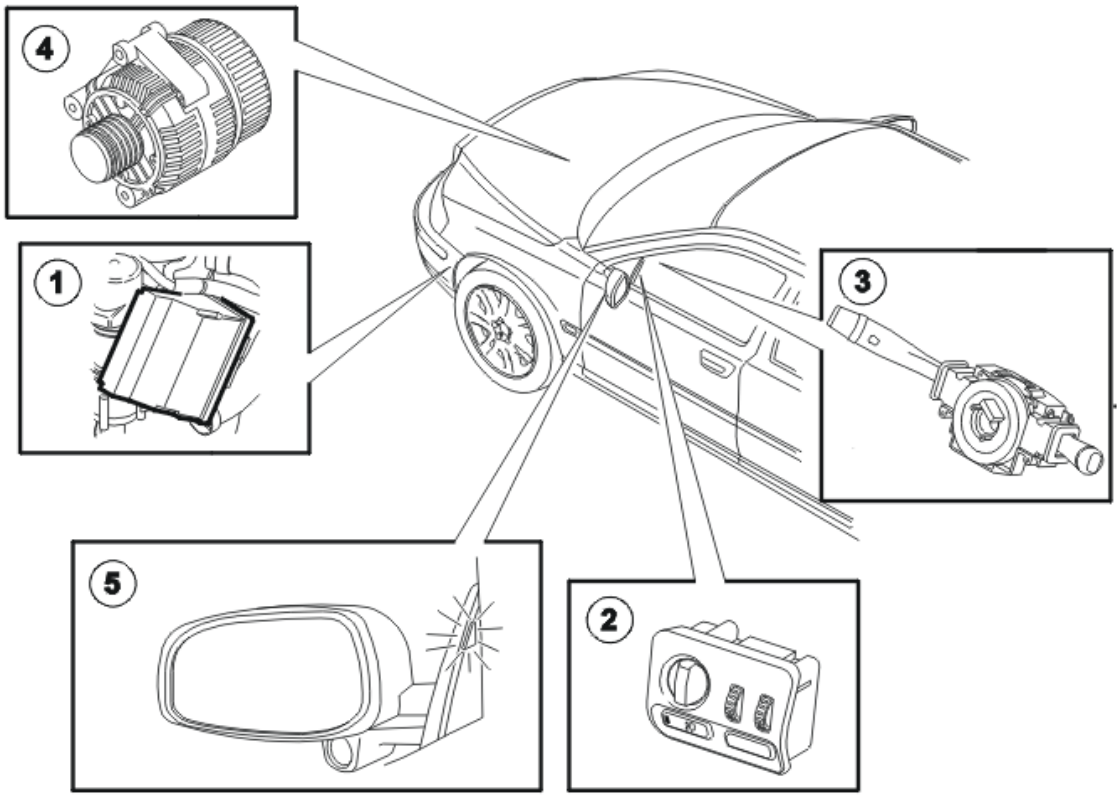

Fig. 10: Locating LIN Nodes
Courtesy of VOLVO CARS CORPORATION

LIN nodes

1. Combustion preheater module (CPM)
2. Light switch module (LSM)
3. Steering wheel module (SWM)
4. Alternator control module (ACM)
5. Blind Spot Information System (BLIS).

ELECTRICAL

Cables And Fuses - Design And Function

LIN - LOCAL INTERCONNECT NETWORK (2003-12)

CONTROL MODULES THAT COMMUNICATE VIA LIN

See **CONTROL MODULES THAT COMMUNICATE VIA LIN**

ERROR MANAGEMENT IN THE LOCAL INTERCONNECT NETWORK (LIN)

See **ERROR MANAGEMENT IN THE LOCAL INTERCONNECT NETWORK (LIN)**

LIN (LOCAL INTERCONNECT NETWORK)

See **LIN (LOCAL INTERCONNECT NETWORK)**

NETWORK

See **NETWORK**

NETWORK STRUCTURE

See **NETWORK STRUCTURE**

MOST NETWORK (2009-12)

CONTROL MODULES IN MOST NETWORK

See **CONTROL MODULES IN MOST NETWORK**

FAULT MANAGEMENT ON MOST NETWORK

See **FAULT MANAGEMENT ON MOST NETWORK**

MOST-NETWORK

See **MOST-NETWORK**

NETWORK DESIGN

See **NETWORK DESIGN**

THE NETWORK

See **THE NETWORK**

MOST NETWORK (2007-08)

CONTROL MODULES IN MOST NETWORK

See **CONTROL MODULES IN MOST NETWORK**

FAULT MANAGEMENT ON MOST NETWORK

See **FAULT MANAGEMENT ON MOST NETWORK**

MOST NETWORK

See **MOST NETWORK**

NETWORK DESIGN

See **NETWORK DESIGN**

THE NETWORK

See **THE NETWORK**

MOST NETWORK (2003-06)

CONSTRUCTION OF THE NETWORK

See **CONSTRUCTION OF THE NETWORK**

CONTROL MODULES IN THE MOST NETWORK

See **CONTROL MODULES IN THE MOST NETWORK**

FAULT MANAGEMENT ON THE MOST NETWORK

See **FAULT MANAGEMENT ON THE MOST NETWORK**

MOST NETWORK

See **MOST NETWORK**

THE NETWORK

See **THE NETWORK**

THE CONTROLLER AREA NETWORK (CAN) (2005-12)

CAN-NETWORK (CONTROLLER AREA NETWORK)

See **CAN-NETWORK (CONTROLLER AREA NETWORK)**

CONSTRUCTION OF THE NETWORK

See **CONSTRUCTION OF THE NETWORK**

CONTROL MODULES IN THE CONTROL AREA NETWORK (CAN)

See **CONTROL MODULES IN THE CONTROL AREA NETWORK (CAN)**

ERROR MANAGEMENT IN THE CONTROLLER AREA NETWORK (CAN)

See **ERROR MANAGEMENT IN THE CONTROLLER AREA NETWORK (CAN)**

THE NETWORK

See **THE NETWORK**

THE CONTROLLER AREA NETWORK (CAN) (2003-04)

CAN-NETWORK (CONTROLLER AREA NETWORK)

See **CAN-NETWORK (CONTROLLER AREA NETWORK)**

CONTROL MODULES IN THE CONTROL AREA NETWORK (CAN)

See **CONTROL MODULES IN THE CONTROL AREA NETWORK (CAN)**

ERROR MANAGEMENT IN THE CONTROLLER AREA NETWORK (CAN)

See **ERROR MANAGEMENT IN THE CONTROLLER AREA NETWORK (CAN)**

THE NETWORK

See **THE NETWORK**

THE NETWORK CONSTRUCTION

See **THE NETWORK CONSTRUCTION**

ACCESSORY ELECTRONIC MODULE (AEM) (2003-12)

DESIGN

See **DESIGN**

DIAGNOSTIC FUNCTIONS

See **DIAGNOSTIC FUNCTIONS**

DOWNLOADING SOFTWARE AND REPLACING THE CONTROL MODULE

See **DOWNLOADING SOFTWARE AND REPLACING THE CONTROL MODULE**

FUNCTION

See **FUNCTION**

SYSTEM OVERVIEW

See **SYSTEM OVERVIEW**

ACCESSORY USB UNIT (AUU) (2007-10)

DESIGN

See **DESIGN**

DIAGNOSTIC FUNCTIONS.

See **DIAGNOSTIC FUNCTIONS.**

DOWNLOADING SOFTWARE AND REPLACING THE CONTROL MODULE

See **DOWNLOADING SOFTWARE AND REPLACING THE CONTROL MODULE**

FUNCTION

See **FUNCTION**

SYSTEM OVERVIEW

See **SYSTEM OVERVIEW**

CENTRAL ELECTRONIC MODULE (CEM) (2003-04)

DESIGN

See **DESIGN**

DIAGNOSTIC FUNCTIONS

See **DIAGNOSTIC FUNCTIONS**

DOWNLOADING SOFTWARE AND REPLACING THE CONTROL MODULE

See **DOWNLOADING SOFTWARE AND REPLACING THE CONTROL MODULE**

FUNCTION

See **FUNCTION**

SYSTEM OVERVIEW

See **SYSTEM OVERVIEW**

CENTRAL ELECTRONIC MODULE (CEM) (2005-12)

DESIGN

See **DESIGN**

DIAGNOSTIC FUNCTIONS

See **DIAGNOSTIC FUNCTIONS**

DOWNLOADING SOFTWARE AND REPLACING THE CONTROL MODULE

See **DOWNLOADING SOFTWARE AND REPLACING THE CONTROL MODULE**

FUNCTION

See **FUNCTION**

SYSTEM OVERVIEW

See **SYSTEM OVERVIEW**

REAR ELECTRONIC MODULE (REM) (2003-04)

DESIGN

See **DESIGN**

DIAGNOSTIC FUNCTIONS

See **DIAGNOSTIC FUNCTIONS**

DOWNLOADING SOFTWARE AND REPLACING THE CONTROL MODULE

See **DOWNLOADING SOFTWARE AND REPLACING THE CONTROL MODULE**

FUNCTION

See **FUNCTION**

SYSTEM OVERVIEW

See **SYSTEM OVERVIEW**

REAR ELECTRONIC MODULE (REM) (2005-12)

DESIGN

See **DESIGN**

DIAGNOSTIC FUNCTIONS

See **DIAGNOSTIC FUNCTIONS**

DOWNLOADING SOFTWARE AND REPLACING THE CONTROL MODULE

See **DOWNLOADING SOFTWARE AND REPLACING THE CONTROL MODULE**

FUNCTION

See **FUNCTION**

SYSTEM OVERVIEW

See **SYSTEM OVERVIEW**

UPPER ELECTRONIC MODULE (2003-04)

DESIGN

See **DESIGN**

DIAGNOSTIC FUNCTIONS

See **DIAGNOSTIC FUNCTIONS**

DOWNLOADING SOFTWARE AND REPLACING THE CONTROL MODULE

See **DOWNLOADING SOFTWARE AND REPLACING THE CONTROL MODULE**

FUNCTION

See **FUNCTION**

SYSTEM OVERVIEW

See **SYSTEM OVERVIEW**

UPPER ELECTRONIC MODULE (UEM) (2005-12)

DESIGN

See **DESIGN**

DIAGNOSTIC FUNCTIONS

See **DIAGNOSTIC FUNCTIONS**

DOWNLOADING SOFTWARE AND REPLACING THE CONTROL MODULE

See **DOWNLOADING SOFTWARE AND REPLACING THE CONTROL MODULE**

FUNCTION

See **FUNCTION**

SYSTEM OVERVIEW

See **SYSTEM OVERVIEW**

ELECTRICAL

Cables And Fuses - Diagnostic Trouble Codes and Associated Procedures

CEM-1A52: COMMUNICATION WITH THE DRIVER DOOR MODULE (DDM). SIGNAL MISSING (2003-2004)

DIAGNOSTIC TROUBLE CODE (DTC) INFORMATION CEM-1A52

Condition

Diagnostic trouble codes (DTCs) are stored if the central electronic module (CEM) registers that communication with the driver's door module (DDM) is not operating.

NOTE: In the event of CEM-1A5X diagnostic trouble codes (DTCs), the central electronic module (CEM) must not be replaced as the diagnostic trouble code (DTC) indicates a communication fault in the Control area network

Substitute Value

None.

Possible Source

- No power supply to the driver's door module (DDM)
- Open-circuit in the ground lead to the driver's door module (DDM)
- Contact resistance in the terminals
- Open-circuit in the wiring for the CAN low speed network to the driver's door module (DDM)
- The driver's door module (DDM) is not intended for this car (for example a used control module with different software/hardware).

HINT: If several diagnostic trouble codes (DTCs) are stored in the central electronic module (CEM) for communication faults with other control modules in the low speed network, this indicates a common fault in the Control area network.

Fault symptom[s]

- Does not lock / unlock a door
- The driver's door switch panel does not work.

SIGNAL MISSING

CHECKING THE FUNCTION OF THE DRIVER DOOR MODULE (DDM)

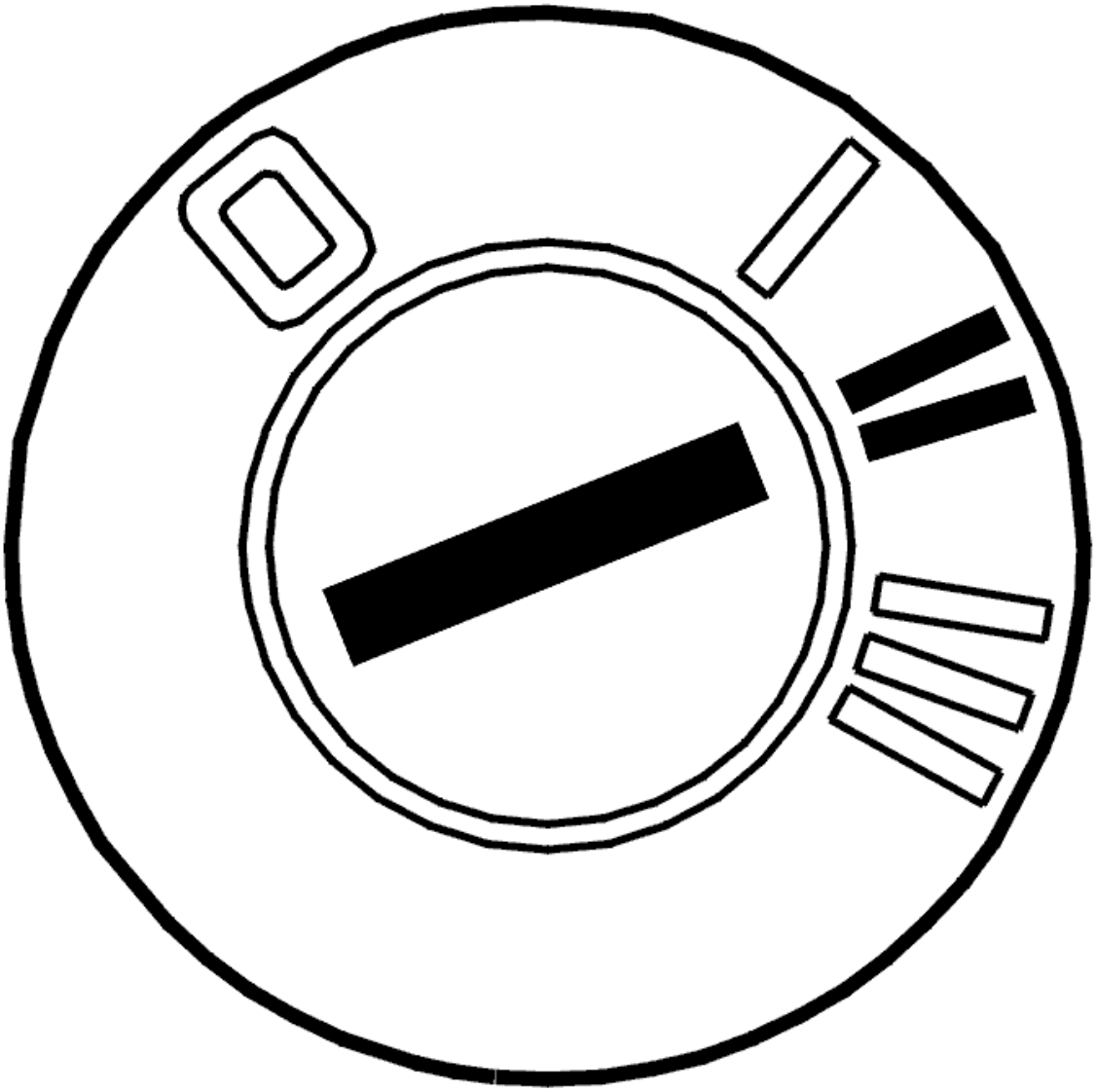

Fig. 1: Identifying Ignition ON
Courtesy of VOLVO CARS CORPORATION

- Ignition on.

  Check the function of the control module by pressing the up and down buttons for the power window mechanism. The window must open or close

  Also activate the central locking buttons. The doors must lock and unlock.

Is the function OK?

- **YES**

  Refer to **CHECKING THE COMMUNICATION WITH THE DRIVER DOOR MODULE (DDM)**

- **NO**

  Refer to **CHECKING THE POWER SUPPLY AND GROUND FOR THE DRIVER DOOR MODULE (DDM)**

CHECKING THE POWER SUPPLY AND GROUND FOR THE DRIVER DOOR MODULE (DDM)

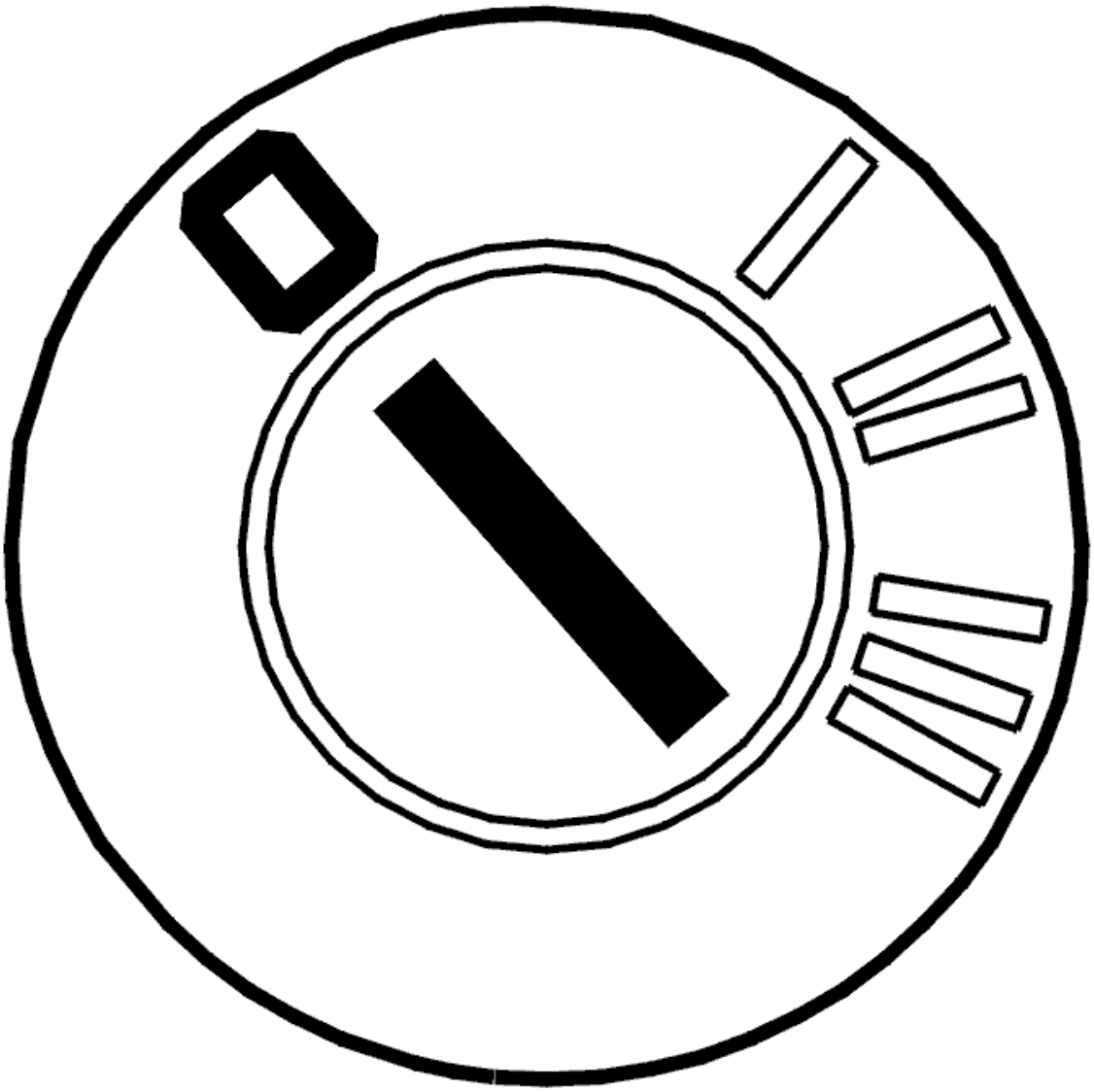

Fig. 2: Identifying Ignition OFF
Courtesy of VOLVO CARS CORPORATION

- Ignition off.

  Check that the fuse for the driver door module (DDM) in the passenger compartment fusebox is intact.

  Connect a voltmeter between the power supply cable to the control module and ground.

The voltage between the control module power cable and ground must be battery voltage when the ignition is off.

Check the cable between the control module and ground: the left or right front seat support. Check for a short-circuit to ground. Check for an open-circuit.

Other information:

- To access the driver door module (DDM), see **DRIVER DOOR MODULE (DDM), REPLACING**
- To connect the breakout box, see **CONNECTING THE BREAKOUT BOX**
- For further information about signals and other values, see **SIGNAL SPECIFICATION**
- To check the wiring and connections, see **CHECKING WIRING AND TERMINALS** .

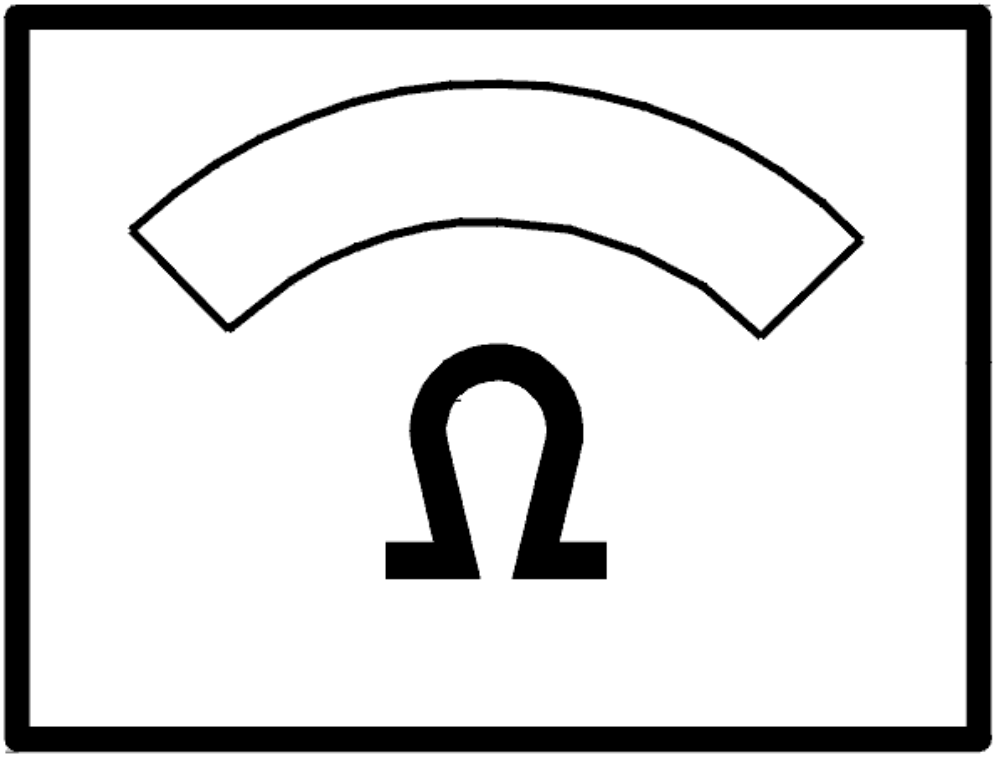

Fig. 3: Identifying Ohm Meter

Courtesy of VOLVO CARS CORPORATION

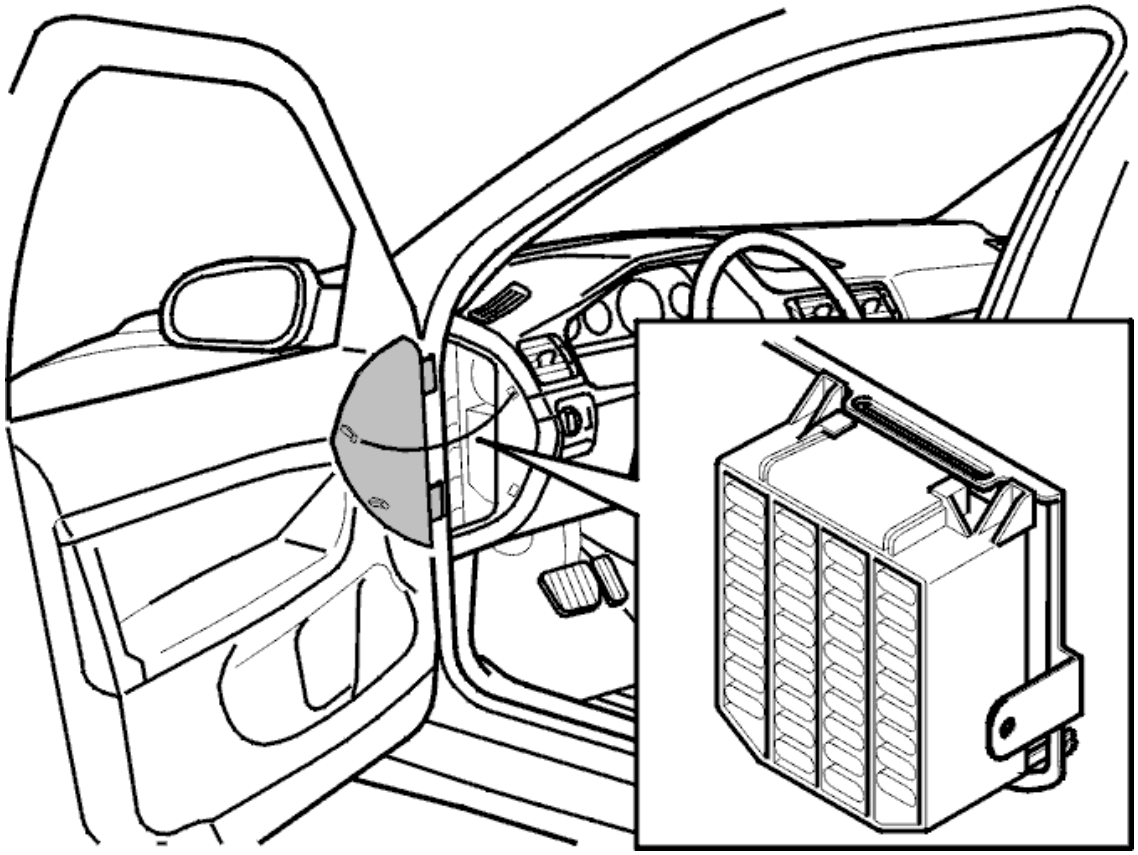

Fig. 4: Identifying Passenger Compartment Fusebox
Courtesy of VOLVO CARS CORPORATION

Was a fault detected?

- **YES**

  Refer to **CHECKING THE FUNCTION OF THE DRIVER DOOR MODULE (DDM)**

- **NO**

  Refer to **SIGNAL MISSING**

CHECKING THE COMMUNICATION WITH THE DRIVER DOOR MODULE (DDM)

HINT: The CAN communication with the control module is probably OK if the control module ID can be read off. In that case the fault is probably intermittent and will then be more difficult to trace.

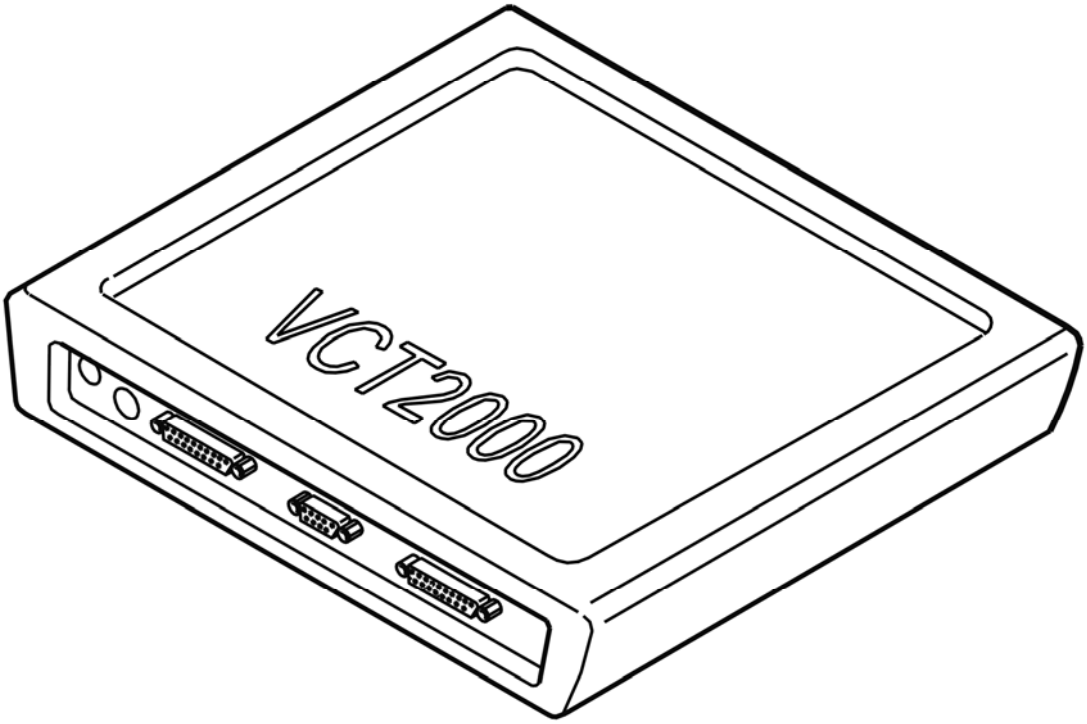

Fig. 5: Identifying VCT2000 Diagnostic Tool Symbol In VIDA
Courtesy of VOLVO CARS CORPORATION

- Ignition on
- Try to communicate with the driver door module (DDM) by reading off the control module ID
- Use the VCT2000 (or appropriate scan tool)

- **Continue**

  Refer to **SIGNAL MISSING**

CHECKING THE FUNCTION OF THE DRIVER DOOR MODULE (DDM)

HINT: After carrying out the repair, check that the fault has been remedied.

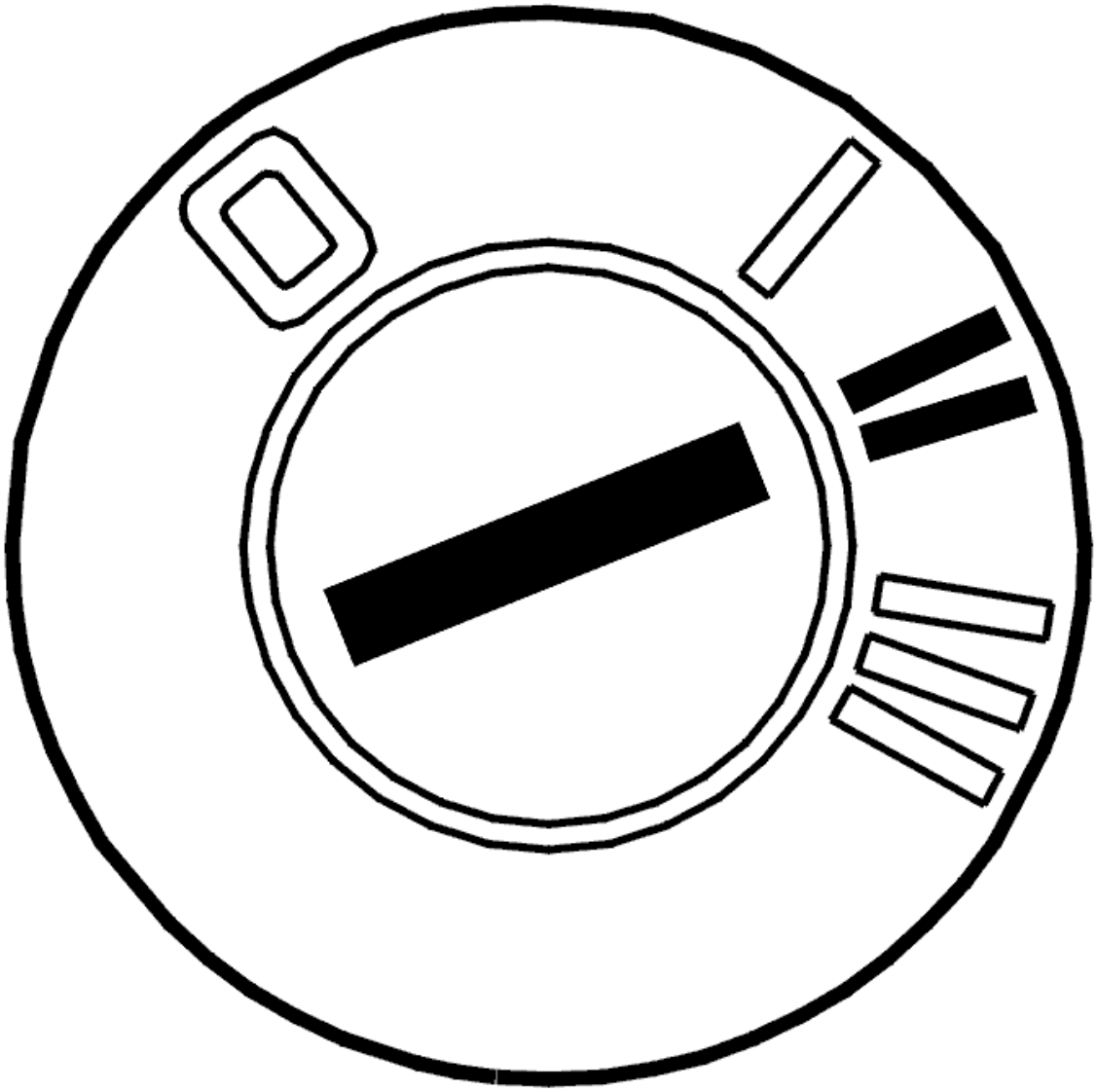

Fig. 6: Identifying Ignition ON
Courtesy of VOLVO CARS CORPORATION

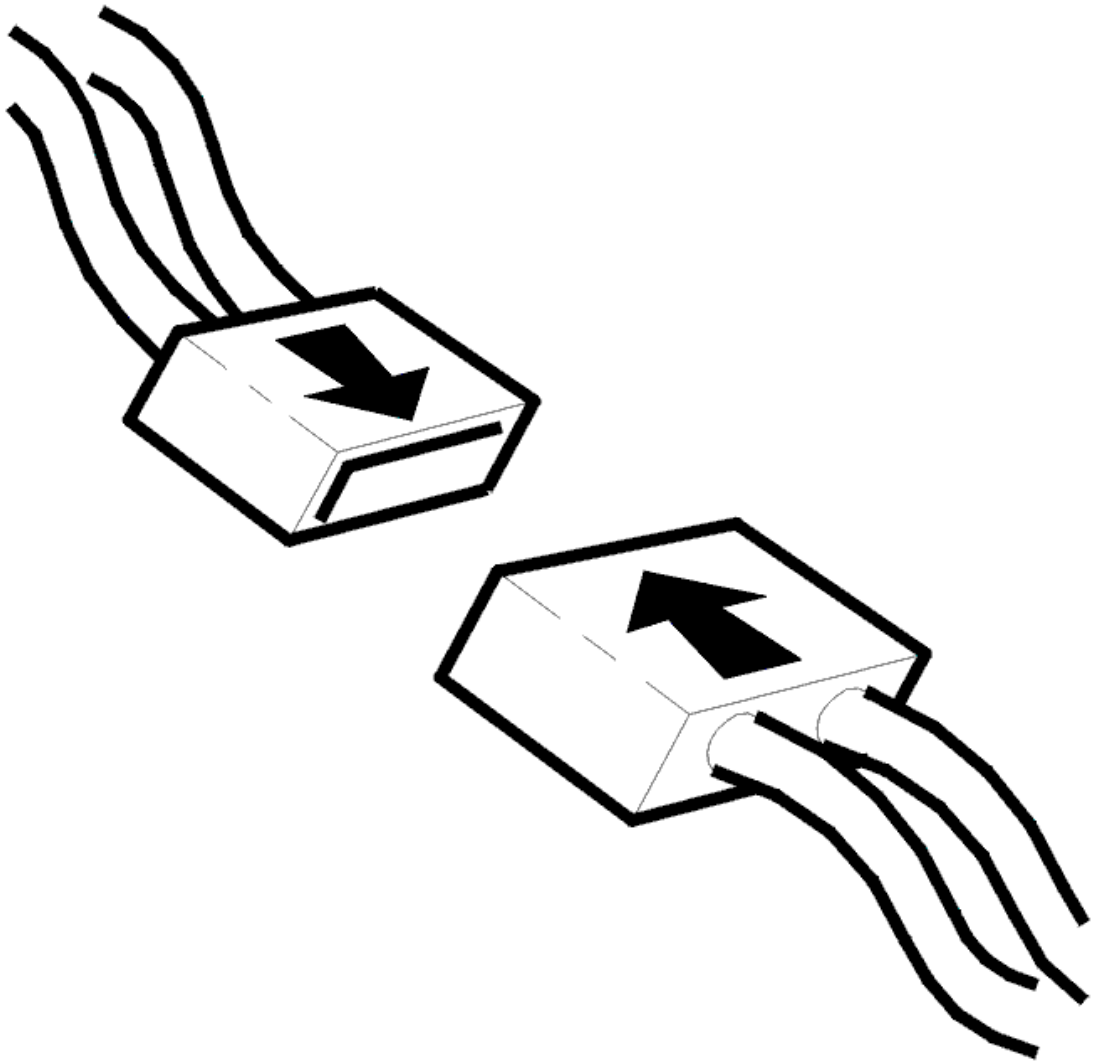

Fig. 7: Connecting Connector
Courtesy of VOLVO CARS CORPORATION

- Ignition off
- Reconnect the connectors. Reinstall the components
- Ignition on.

  Check the function of the control module by pressing the up and down buttons for the power window mechanism. The window must open or close

  Also activate the central locking buttons. The doors must lock and unlock.

Is the function OK?

- **YES**

OKAY: Troubleshooting has been completed.

- **NO**

  Refer to **INFORMATION**

SIGNAL MISSING

GENERAL INFORMATION

HINT: For general information about fault-tracing the control area network (CAN), see the linked document below. See GENERAL INFORMATION ABOUT FAULT-TRACING IN THE CAN NETWORK (2005-2012)

In order to check the control area network (CAN) cables, the resistance in the network must be measured. The resistance between the two CAN cables, with the network connected, must be 60ohms in both the high speed network and the low speed network.

NOTE: **Resistance will only be 60 ohms if the main artery of the CAN network is whole and the network is connected. If the main artery of the CAN network is split somewhere and a reading is taken between the CAN cables, resistance will be 120 ohms.**

If diagnostic trouble codes (DTCs) can be read off from the relevant control module, the fault is probably intermittent. The locations that must be checked in the event of a fault in the low speed network are the junctions behind the central electronic module (CEM) and the audio module (AUM) as well as the cable harness behind the Audio module (AUM).

Intermittent fault in the current supply to the actual control module is indicated by the DTC in the Central electronic module (CEM) (CEM-1A5X or CEM-1A6X). There is probably no diagnostic trouble code (DTC) in the relevant control module as the control module cannot store a diagnostic trouble code (DTC) when it is without power.

- **Continue**

  Refer to **CHECKING THE RESISTANCE OF THE CONTROL AREA NETWORK (CAN) CABLES**

CHECKING THE RESISTANCE OF THE CONTROL AREA NETWORK (CAN) CABLES

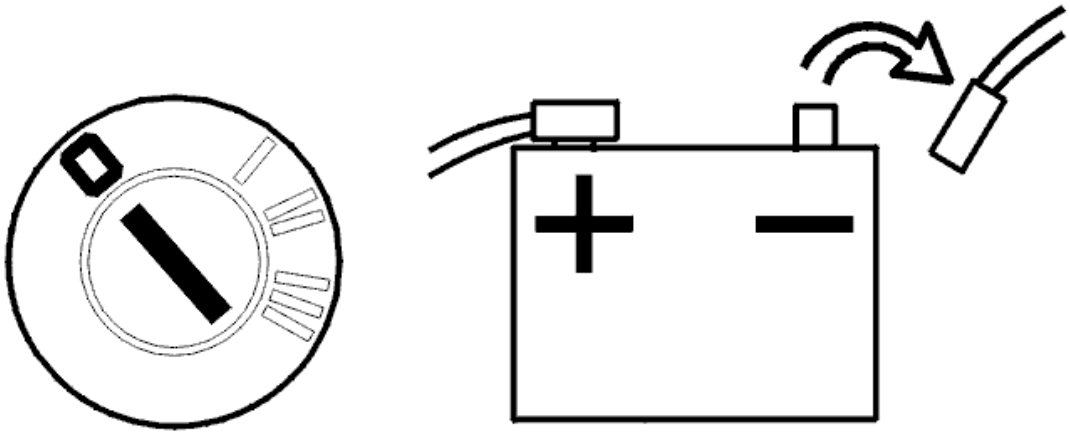

Fig. 8: Identifying Ignition In Off Position And Disconnecting Negative Cable From Battery
Courtesy of VOLVO CARS CORPORATION

- Disconnect the battery negative lead. The network must not be powered when taking resistance readings. Otherwise an incorrect value may be obtained.
- Connect the adapter wiring to the central electronic module (CEM).

  HINT: Where a breakout box cannot be used, take readings from the rear of the affected connectors if possible. This prevents terminal pins and socket housings being damaged.

  When taking readings on the low speed network

  - When taking readings on the low speed network the adapter wiring should be connected to the Central electronic module (CEM) and readings taken from there. Readings can even be taken in the connector for the Power seat module (PSM). The advantage of the adapter wiring to the Central electronic module (CEM) is that all control module can be connected in the network when taking readings and access can be gained to both the high speed and low speed networks.

    The resistance reading only measures the main arteries in the low speed network, not the junctions that exist for different control modules.

  When taking readings on the high speed network

  - When taking readings on the high speed network the adapter wiring should be connected to the Engine control module (ECM) and readings taken from there. The Engine control module (ECM) must be connected. This resistance reading only measures the main arteries in the high speed network.

  Connect an ohmmeter to the terminals for CAN-L and CAN-H on the relevant network. Turn the contacts and turn the cable harness. Resistance must be approximately 60 ohms.

NOTE: **Resistance will only be 60 ohms if the main artery of the CAN network is whole and the network is connected. If the main artery of the CAN network is split somewhere and a reading is taken between the CAN cables, resistance will be 120 ohms.**

Other information

- see **BATTERY, DISCONNECTING**
- see **CONNECTING THE BREAKOUT BOX**
- see **CHECKING WIRING AND TERMINALS**

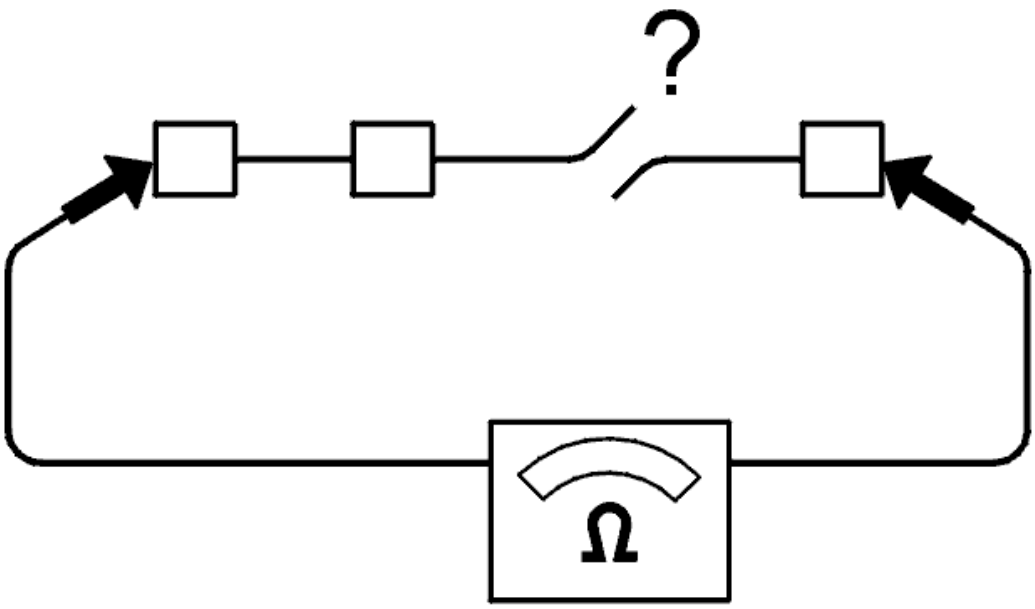

Fig. 9: Checking For Open Circuit
Courtesy of VOLVO CARS CORPORATION

Is the value OK?

- **YES**

  Refer to **CHECKING A SHORT-CIRCUIT IN CAN CABLES**

- **NO**

  Refer to **IDENTIFYING FAULT CAUSES IN THE CAN NETWORK**

CHECKING A SHORT-CIRCUIT IN CAN CABLES

Connect an ohmmeter between respective CAN cable and voltage supply and between the CAN cables and ground. Turn the contacts and turn the cable harness. The resistance must be infinite or very high.

HINT: Readings can be taken from one and the same connector if the CAN wiring, voltage supply and ground is pre-routed. If possible, measure from the rear of the affected connectors in order to minimize any damage and future loose connections. If this is not possible, use the adapter wiring or loose terminal pin for good contact.

Was a fault detected?

- **YES**

  Refer to **IDENTIFYING FAULT CAUSES IN THE CAN NETWORK**

- **NO**

  Refer to **CHECKING THE TRAFFIC LOAD ON THE CAN CABLES**

CHECKING THE TRAFFIC LOAD ON THE CAN CABLES

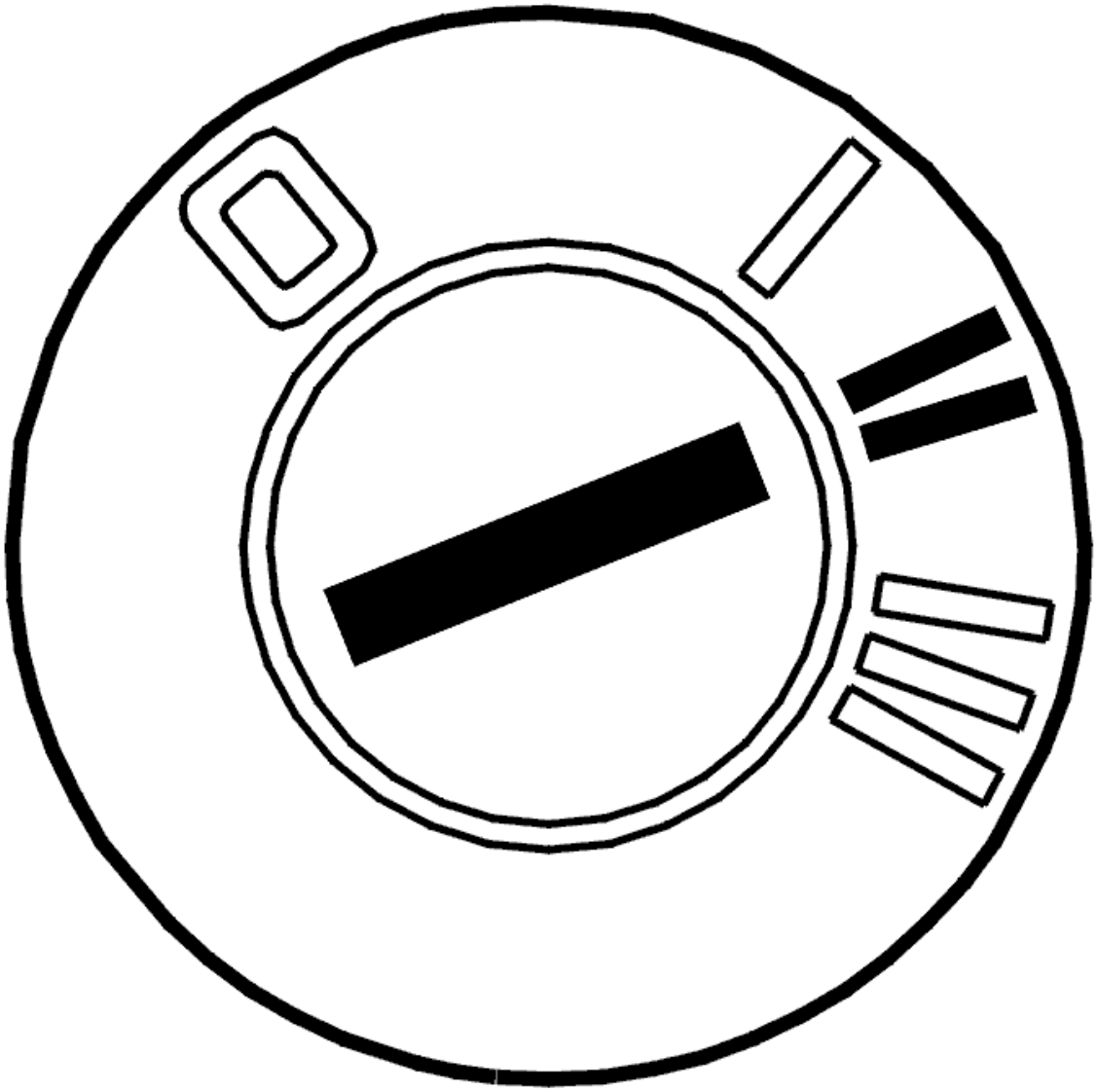

Fig. 10: Identifying Ignition ON
Courtesy of VOLVO CARS CORPORATION

- Connect the battery.
- Ignition on.

Faults in the CAN network may be due to a control module sending faulty messages that disrupt normal communication. When messages are sent incorrectly, this results in a considerable increase in the amount of traffic on the CAN network. The load can be checked by reading the average value of the voltage on the CAN cables in relation to ground.

The following applies for model year -2004:

Connect a voltmeter between CAN-L and ground. The voltage shall be approx. 2.3 V.

Then connect a voltmeter between CAN-H and ground. The voltage shall be approx. 2.8 V.

The following applies for model year 2004-:

Connect a voltmeter between CAN-L and ground. The voltage should be approx: V

Connect a voltmeter between CAN-H and ground. The voltage should be approx: V

NOTE: **For vehicles of later model years, normal voltage values lie within a specific interval due to increased traffic between the control modules on the CAN network upon update of the electrical system.**

HINT: If possible, measure from the rear of the affected connectors so that they are not damaged.

Other information

- see **BATTERY, DISCONNECTING**

Is the value OK?

- **YES**

  Refer to **INFORMATION**

- **NO**

  Refer to **IDENTIFYING A CONTROL MODULE IN THE CAN NETWORK**

IDENTIFYING FAULT CAUSES IN THE CAN NETWORK

- Disconnect a control module that disconnects the CAN network (a control module that has four terminals to the CAN network).

  HINT: For the low speed network, suitable places for disconnecting the network are at the steering wheel module (SWM), the driver information module (DIM) or the climate control module (CCM).

  In the event of an short-circuit between on of the CAN cables and voltage or ground, the fault can be localized disconnecting a control module that splits the CAN network. Readings can then be taken to determine on which side the fault is on the disconnected control module.

  Connect an ohmmeter between the CAN cable and voltage supply respectively ground. Take readings from both ends of the CAN networks at the network junction. Twist and bend the cable harness to find any intermittent short-circuits. The resistance must be infinite or very high (more than 1 Mohms).

  If a fault can be localized in one direction, split the network at a point further on in the CAN network in the direction that the fault was discovered and take a new reading. Try to locate the fault in this way.

  HINT: A short-circuit between the CAN cables and supply voltage or ground may be in either the wiring or in a control module.

Remedy the cables as necessary. If a fault is found on one control module, replace the control module.

- **Continue**

  Refer to **VERIFICATION**

IDENTIFYING A CONTROL MODULE IN THE CAN NETWORK

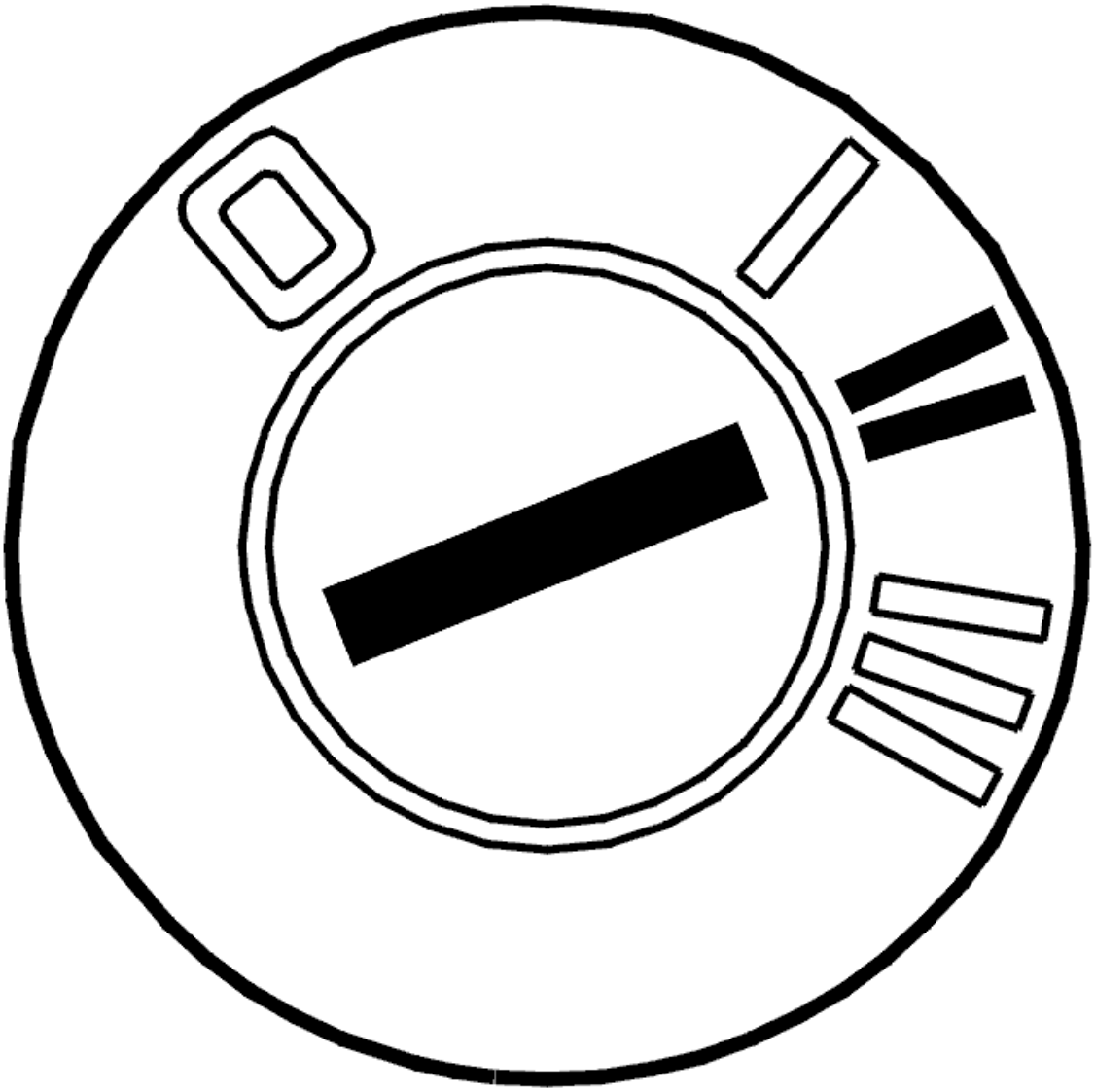

Fig. 11: Identifying Ignition ON
Courtesy of VOLVO CARS CORPORATION

- Connect the battery.
- Ignition on.

  If the load on the CAN network is too high, this may be due to a control module transmitting faulty messages on the CAN network. This is called a disruptive control module. The fault may also be due to

an intermittent short-circuit to supply voltage or ground in one of the CAN cables. This results in the control modules on the CAN network starting to send faulty messages. The fault may occur without any of the control modules storing a diagnostic trouble code (DTC). The voltage can be measured between the CAN cables in order to check the load on the CAN network.

The following applies for model year -2004:

Connect a voltmeter between the CAN cables. In the event of correct communication on the network, the average value of the voltage must be approximately 0.5 V (0.4 V to 0.6 V).

The following applies for model year 2004-:The following applies for model year 2004-:

Connect a voltmeter between the CAN cables. During correct CAN network communication, voltage should be about 0.6-1.4 V.

NOTE: For vehicles of later model years, the normal voltage value is slightly higher due to increased traffic between the control modules on the CAN network upon update of the electrical system.

In the event of a communication fault the voltage is significantly higher than the above specified values. In order to identify which control module has faulty communication, cut the power supply to one control module at a time. Check the voltage in the CAN cables again. The easiest way to cut the power supply is to remove the fuse(s) for the relevant control module. Repeat until the voltage between the CAN wiring drops to the normal level.

HINT: When the probable faulty control module has been identified, connect and disconnect the supply voltage to the control module a number of times to verify that the fault appears and disappears.

NOTE: Do not cut the power to the central electronic module (CEM) unless it is the last control module left to check.

The control module that is communicating incorrectly must be replaced. Remedy as necessary.

NOTE: After a fault with "interfering" control modules, other control modules may remain in "Limp-Home mode" even when the ignition has been switched off and on several times. To remedy this, disconnect and reconnect the battery negative terminal to restore the control modules to normal function.

Other information

- see **BATTERY, DISCONNECTING**

- **Continue**

Refer to **VERIFICATION**

IDENTIFYING FAULT CAUSES IN THE CAN NETWORK

- Disconnect a control module that disconnects the CAN network (a control module that has four terminals to the CAN network).

  HINT: For the low speed network, suitable places for disconnecting the network are at the steering wheel module (SWM), the driver information module (DIM) or the climate control module (CCM).

  In the event of an open-circuit on, or short-circuit between the CAN cables, the fault can be localized by disconnecting a control module that splits the CAN network. Readings can then be taken to determine on which side the fault is on the disconnected control module.

  Connect an ohmmeter between the CAN cables. Take readings from both ends of the CAN networks at the network junction. Twist and bend the cable harness to find any intermittent short-circuits. Resistance should be 120 ohms.

  If a fault can be localized in one direction, split the network at a point further on in the CAN network in the direction that the fault was discovered and take a new reading. Try to locate the fault in this way.

  Remedy the cables as necessary.

- **Continue**

  Refer to **VERIFICATION**

VERIFICATION

HINT: After rectifying a fault, a verification should be carried out.

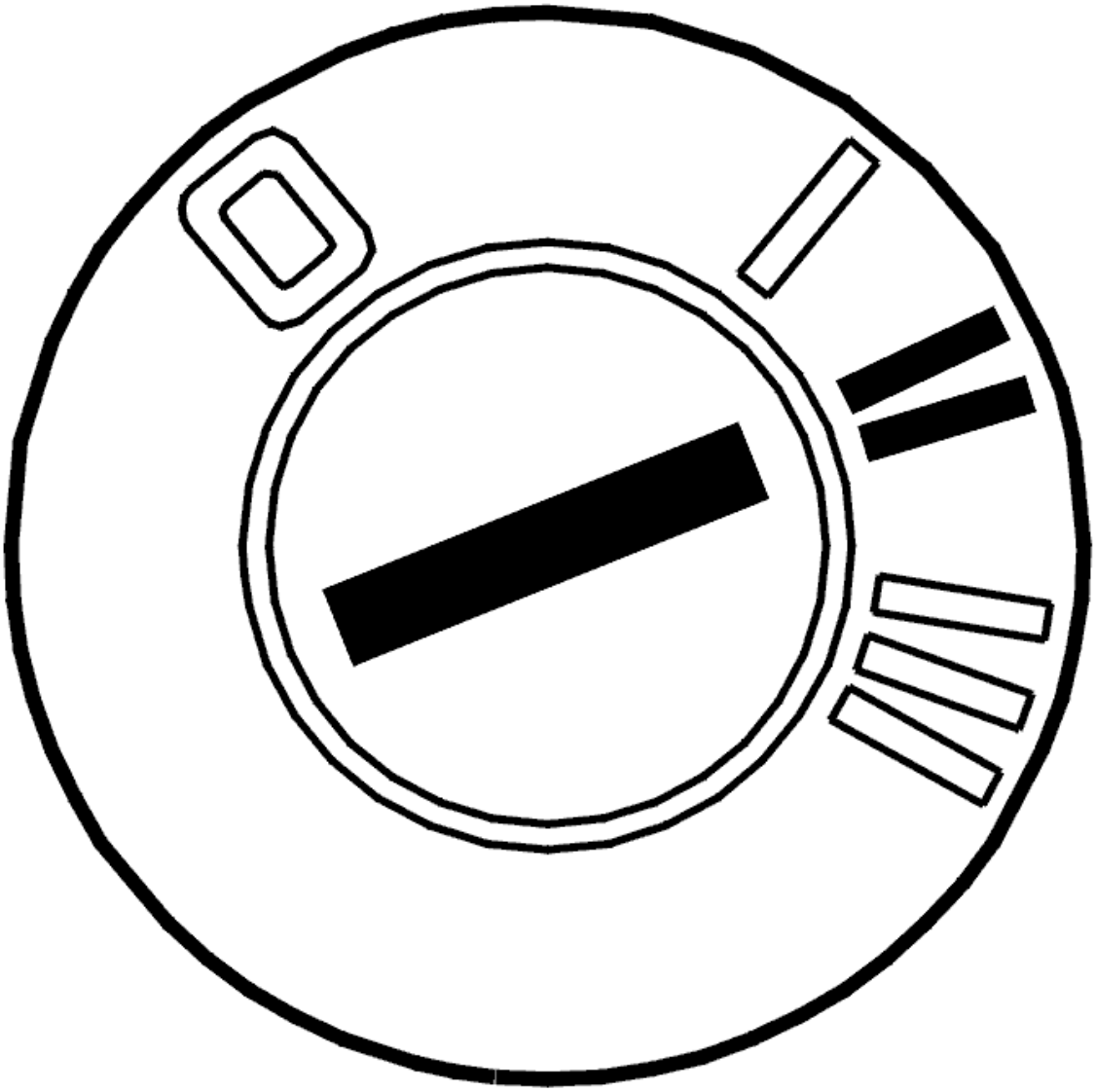

Fig. 12: Identifying Ignition ON
Courtesy of VOLVO CARS CORPORATION

- Reinstall the connectors, components etc.
- Ignition on.
- Erase diagnostic trouble codes using the VCT2000 (or appropriate scan tool).
- Start the car. Allow the vehicle to run for 10 minutes.
- Read off diagnostic trouble codes (DTCs).

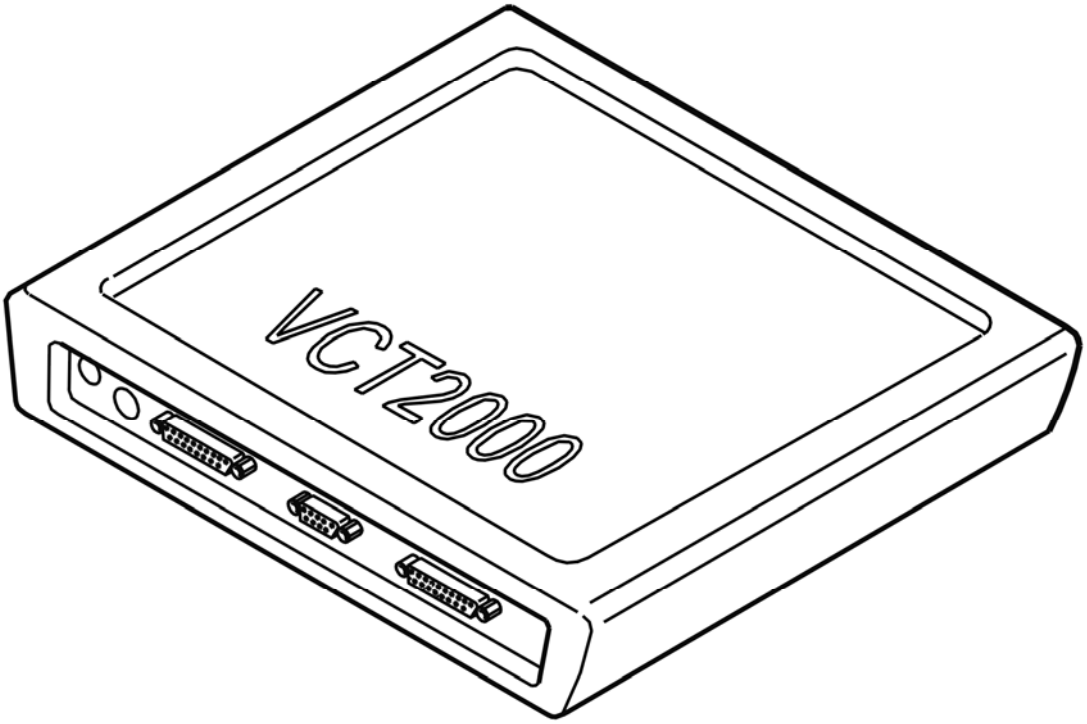

Fig. 13: Identifying VCT2000 Diagnostic Tool Symbol In VIDA
Courtesy of VOLVO CARS CORPORATION

Does the diagnostic trouble code (DTC) for a communication fault recur (CEM-1A5X or CEM-1A6X)?

- **YES**

  Refer to **INFORMATION**

- **NO**

  OKAY: Troubleshooting has been completed.

INFORMATION

FAULT-TRACING INFORMATION

Verification shows that the fault is no longer present. The diagnostic trouble code (DTC) was probably caused by an intermittent fault.

Fault-tracing for this diagnostic trouble code (DTC) is not followed by a verification.

You can view the information again or exit fault-tracing for this diagnostic trouble code (DTC).

INFORMATION

FAULT-TRACING INFORMATION

The fault should have been detected and remedied. As this is not the case fault-tracing has failed.

Exit fault-tracing for this diagnostic trouble code (DTC) or make another attempt.

CEM-1A53: COMMUNICATION WITH THE PASSENGER DOOR MODULE (PDM). SIGNAL MISSING (2005-2012)

DIAGNOSTIC TROUBLE CODE (DTC) INFORMATION CEM-1A53

Condition

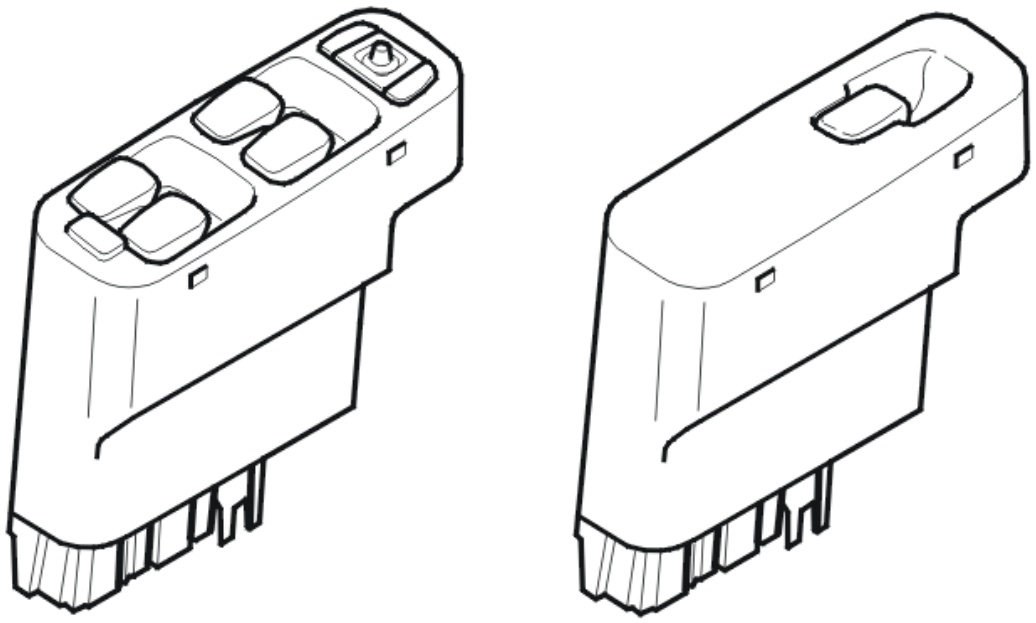

Fig. 14: Identifying Driver's Door Module
Courtesy of VOLVO CARS CORPORATION

The diagnostic trouble code (DTC) is stored if the central electronic module (CEM) registers that communication with the passenger door module (PDM) is not operating.

The diagnostic trouble code (DTC) can be diagnosed when the ignition has been on for more than 10 seconds.

NOTE: **In the event of CEM-1A5X diagnostic trouble codes (DTCs), the central electronic module (CEM) must not be replaced as the diagnostic trouble code (DTC) indicates a communication fault in the controller area network (CAN)**

Substitute Value

- None.

Possible Source

- No power supply to passenger door module (PDM)
- Open-circuit in the ground lead for the passenger door module (PDM)
- Contact resistance in the terminals
- Open-circuit in the wiring for the CAN low speed network to the passenger door module (PDM)
- The passenger door module (PDM) is not intended for this vehicle (for example a used control module with different software/hardware).

HINT: If several diagnostic trouble codes (DTCs) are stored in the central electronic module (CEM) for communication faults with other control modules in the low speed network, this indicates a common fault in the controller area network (CAN).

Fault symptom[s]

- Does not lock / unlock a door.
- The passenger door switch panel does not work.

SIGNAL MISSING

CHECKING THE POWER SUPPLY AND GROUND FOR THE PASSENGER DOOR MODULE (PDM)

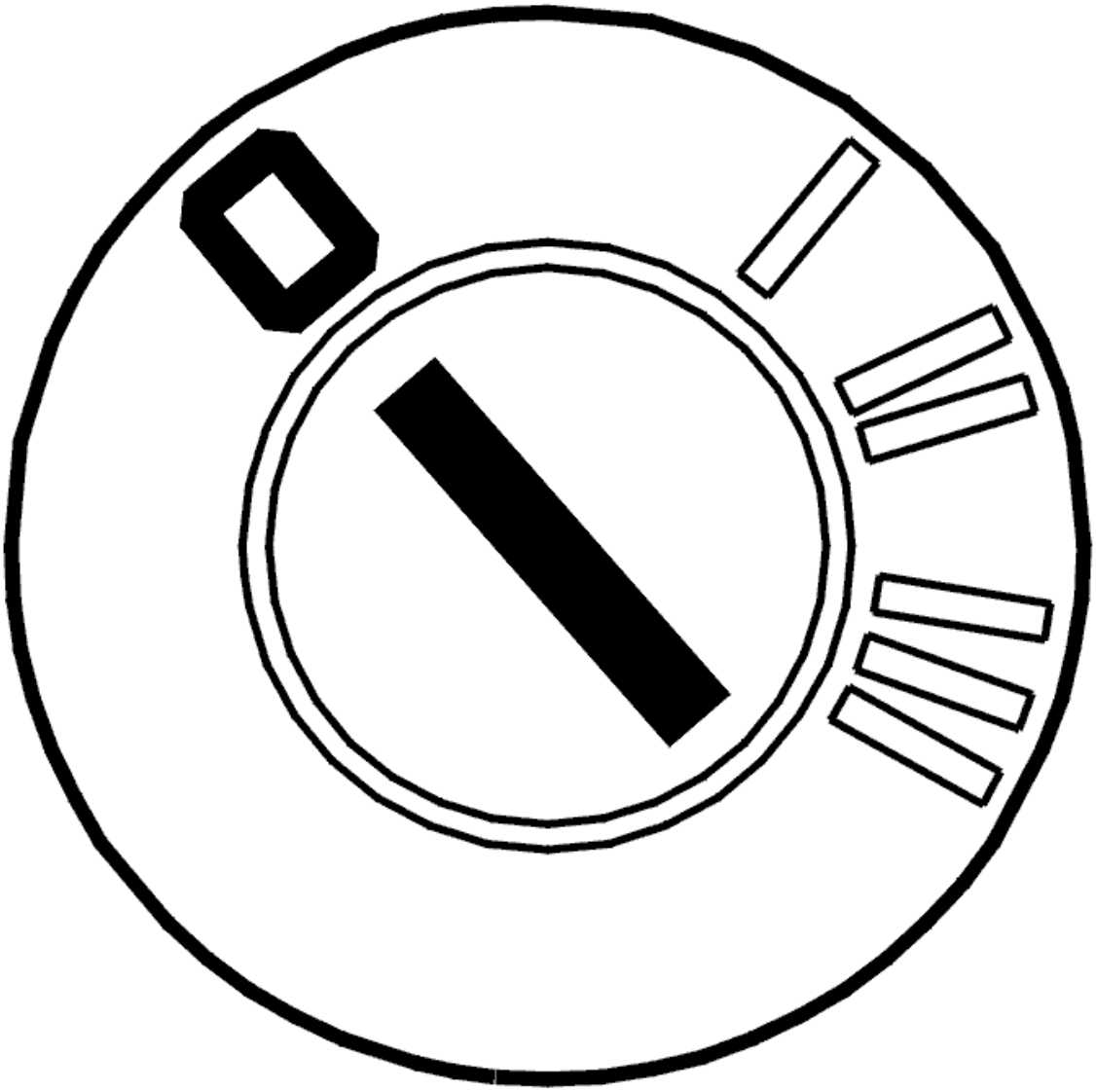

Fig. 15: Identifying Ignition OFF
Courtesy of VOLVO CARS CORPORATION

- Ignition off.

  Check that the fuse for the control module is intact.

  Check the power supply and ground terminal as instructed.

  Other information:

  - see **CHECKING THE POWER SUPPLY AND GROUND TERMINALS**
  - see **CHECKING WIRING AND TERMINALS**

Was a fault detected?

- **YES**

  Refer to **CHECKING THE FUNCTION OF THE PASSENGER DOOR MODULE (PDM)**

- **NO**

  Refer to **CHECKING COMMUNICATION WITH THE PASSENGER DOOR MODULE (PDM)**

CHECKING COMMUNICATION WITH THE PASSENGER DOOR MODULE (PDM)

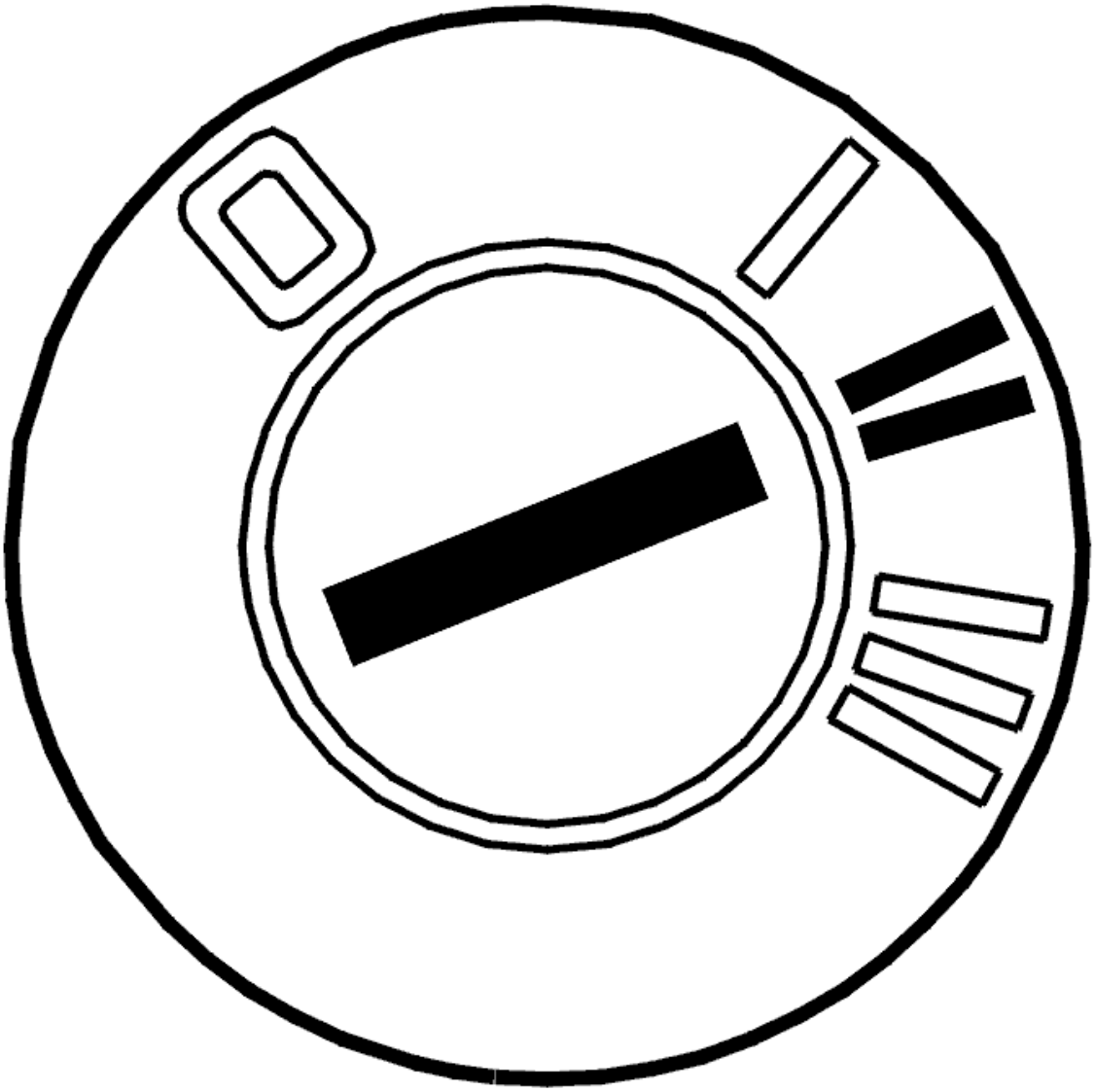

Fig. 16: Identifying Ignition ON
Courtesy of VOLVO CARS CORPORATION

- Ignition on.

  HINT: The CAN communication with the control module is probably OK if the control module ID

can be read off. The fault is probably intermittent and may therefore be difficult to locate.

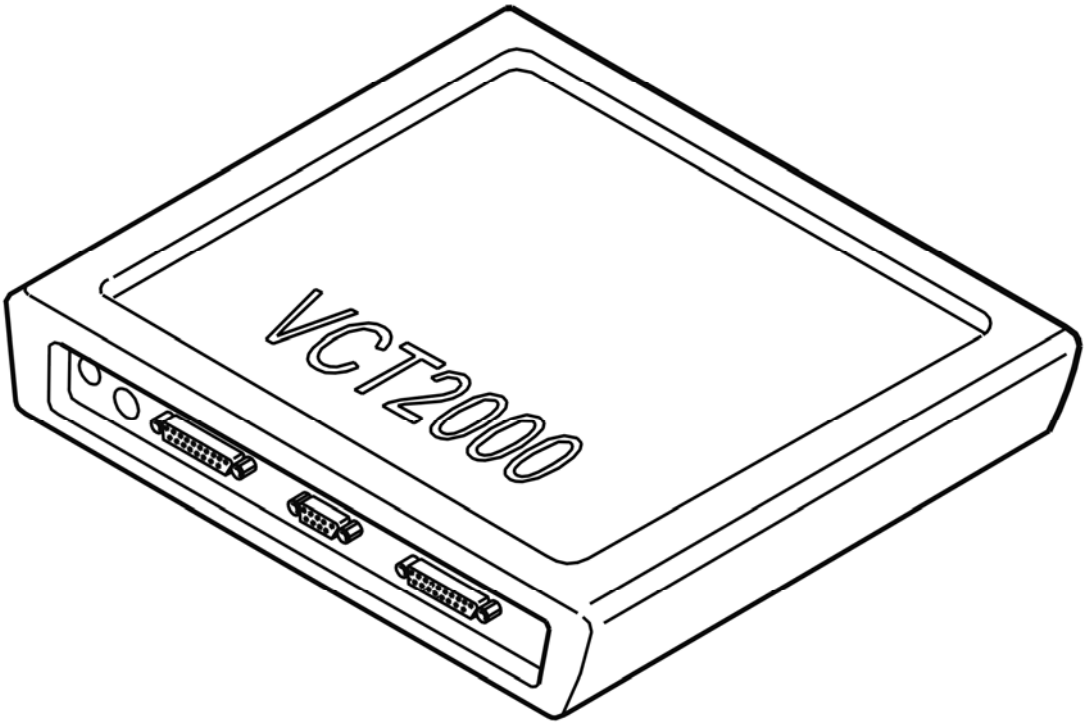

Fig. 17: Identifying VCT2000 Diagnostic Tool Symbol In VIDA
Courtesy of VOLVO CARS CORPORATION

- Try to communicate with the passenger door module (PDM) by reading off the control module ID
- Use the VCT2000 (or appropriate scan tool)

- **Continue**

  Refer to **SIGNAL MISSING**

CHECKING THE FUNCTION OF THE PASSENGER DOOR MODULE (PDM)

HINT: After carrying out the repair, check that the fault has been remedied.

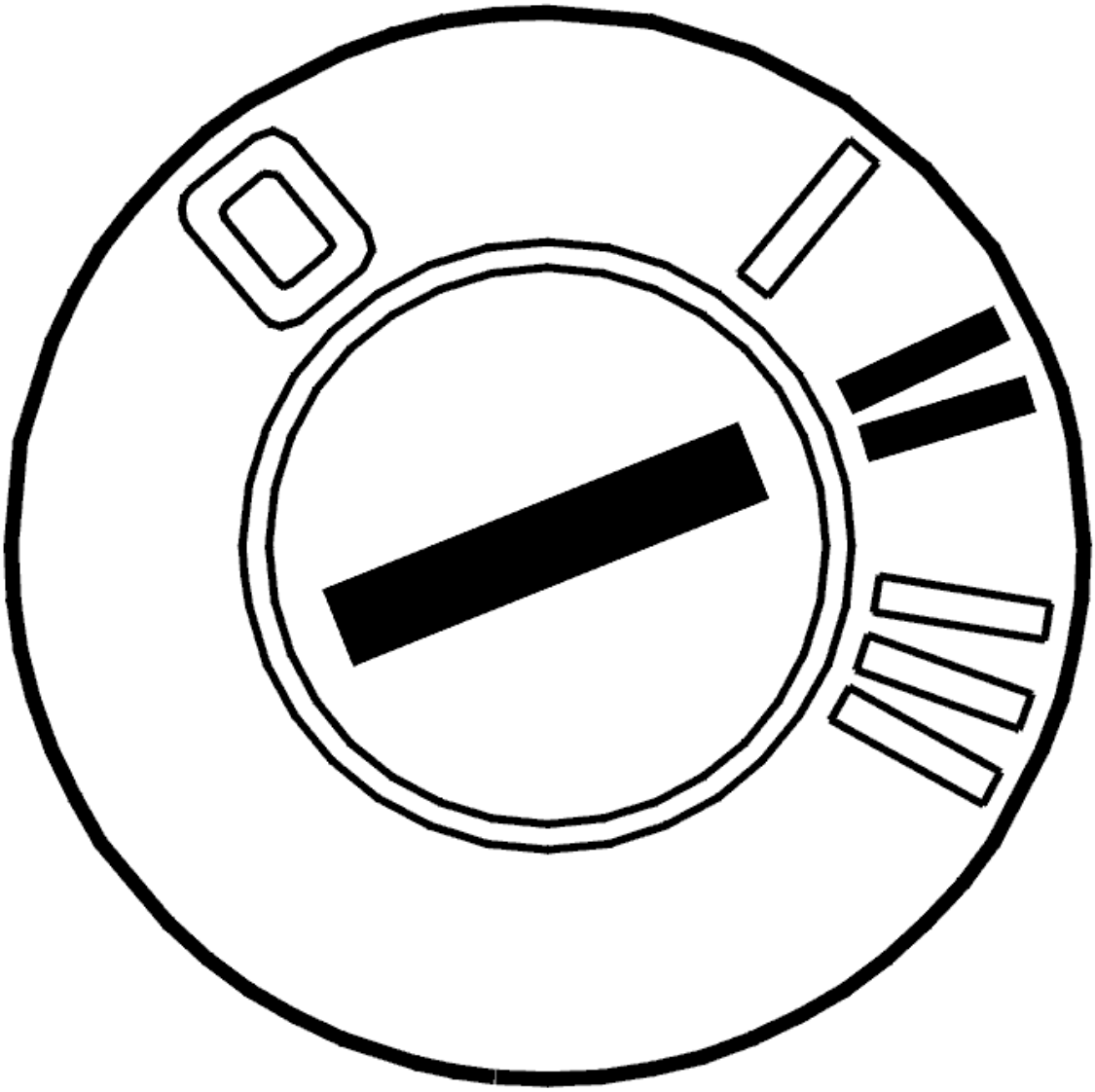

Fig. 18: Identifying Ignition ON
Courtesy of VOLVO CARS CORPORATION

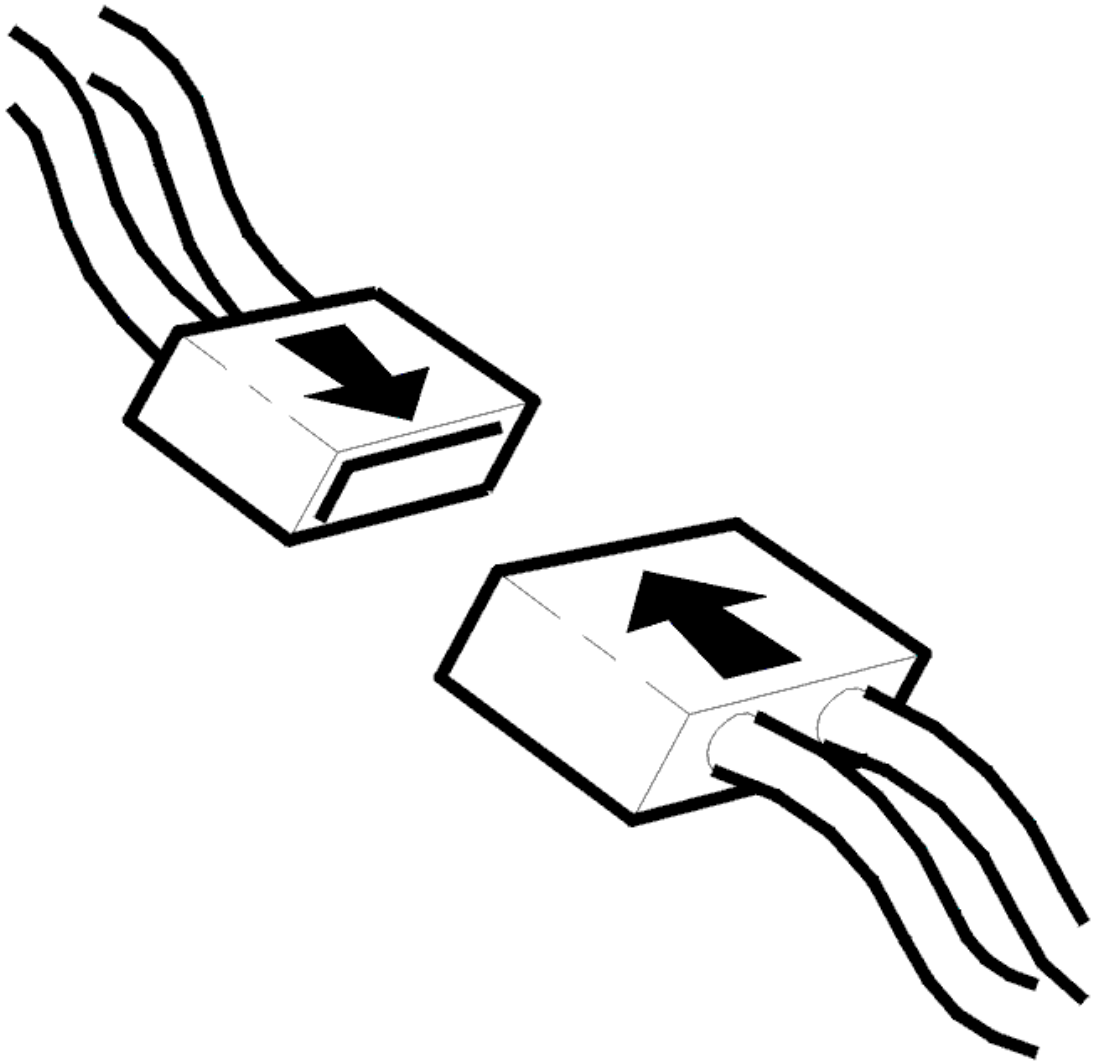

Fig. 19: Connecting Connector
Courtesy of VOLVO CARS CORPORATION

- Ignition off
- Reinstall the components and connectors etc.
- Ignition on.

  Check the function of the control module by pressing the up and down buttons for the power window mechanism. The window must open or close.

  Also activate the central locking buttons. The doors must lock and unlock.

Is the function OK?

- **YES**

OKAY: Troubleshooting has been completed.

- **NO**

  Refer to **INFORMATION**

SIGNAL MISSING

GENERAL INFORMATION

NOTE: Illustrations shown are only examples.

For general information about CAN-troubleshooting, see: **GENERAL INFORMATION ABOUT FAULT-TRACING IN THE CAN NETWORK**

- **General about CAN-related diagnostic trouble codes:**

  CEM-DF01 - DF17 can only be stored in Central electronic module (CEM). These diagnostic trouble codes are stored when an electric fault is detected in CAN-lines. Start with these diagnostic trouble codes first.

  CEM-1AXX only stored in Central electronic module (CEM). One diagnostic trouble code for every control module on the CAN-net. These diagnostic trouble codes indicate that Central electronic module (CEM) does not receive any reply from other control modules.

  XXX-E000 (HS-CAN)/E001 (LS-CAN) can be stored in all CAN-connected control modules. These diagnostic trouble codes indicate that the control module has detected interference on the CAN-net.

  XXX-E003 can be stored in all CAN-connected control modules except in Central electronic module (CEM). The control modules on the CAN-net listen for a message (identity number) that is sent out at regular intervals from Central electronic module (CEM). This diagnostic trouble code indicates that the control module has not received any identity number, or that the expected number is not correct. Interference on the CAN-net can also store this diagnostic trouble code.

  NOTE: In case of CAN-related faults, it is likely that a combination of above diagnostic trouble codes occur.

  NOTE: After fault with control modules that interfere with communication, other control modules may remain in Limp-Home (that is, they work with reduced functionality) even when the ignition has been turned off and on a few times. For certain faults in the CAN-net where control modules have stopped communicating, it may help to disconnect/reconnect the battery to "restart" the control module/CAN-net.

  If diagnostic trouble codes (DTCs) for communication faults can be read off from a control module, the fault is probably intermittent.

Intermittent fault in the voltage supply and ground to a control module on the CAN network results in the Central electronic module (CEM) storing a diagnostic trouble code (DTC) for an open-circuit in communication with the control module where the voltage supply does not work. There will probably not be a diagnostic trouble code (DTC) in the control module where the open-circuit in the voltage supply occurred as the control module cannot store a diagnostic trouble code (DTC) when it is not supplied with power.

NOTE: **Central electronic module (CEM) should not be replaced in case of CAN-fault, unless troubleshooting reveals that Central electronic module (CEM) has an internal fault.**

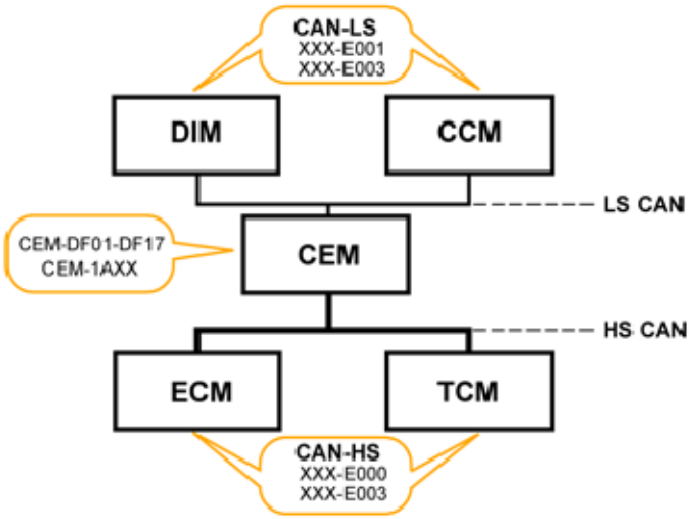

Fig. 20: High-Speed CAN And Low-Speed CAN Communication Diagram
Courtesy of VOLVO CARS CORPORATION

- **Continue**

Refer to **CHECKING RESISTANCE IN CAN-NET**

CHECKING RESISTANCE IN CAN-NET

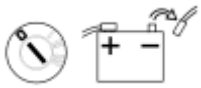

Fig. 21: Ignition Off And Disconnecting Battery Negative Lead
Courtesy of VOLVO CARS CORPORATION

- Ignition off
- Disconnect the battery negative lead
- Connect OBDII-Box **(951 3015)** to the diagnostics socket.

For general information about CAN-troubleshooting, see: **GENERAL INFORMATION ABOUT FAULT-TRACING IN THE CAN NETWORK**

Measure resistance between the following connections on the OBDII-box/diagnostics socket.

- #3 and #11. The resistance should be approx. 55 - 65 ohms.
- If resistance is approx. 120 ohms, this indicates open circuit in the circuit so that only one terminating resistor (120 ohms) has been measured.
- If resistance is above 1 kohms this indicates open circuit/high contact resistance somewhere in the circuit.
- If resistance is below 55 ohms this indicates short-circuiting/contact resistance between the CAN-lines somewhere in the circuit.

HINT: For LS-CAN, terminating resistors are located in Upper electronic module (UEM) and Rear electronic module (REM).

Twist the cable harness and wiggle connectors where they can be accessed along the cable harness during every measurement, and note if the resistance changes to detect intermittent short-circuits or open circuit.

NOTE: **Resistance measurement measures only main lines in the CAN-net (in circuit where both terminating resistors are found), not branches to certain control modules. Open circuit on branching without a terminating resistor cannot be detected with this measurement. However, short-circuiting on a branch can be detected. To measure resistance in the CAN-net to control modules located in a branching of their own, the measurement shall be done against the CAN-net at that control module. The values shall be as above.**

NOTE: **After fault with control modules that interfere with communication, other control modules may remain in Limp-Home (that is, they work with reduced functionality) even when the ignition has been turned off and on a few times. For certain faults in the CAN-net where control modules have stopped communicating, it may help to disconnect/reconnect the battery to "restart" the control module/CAN-net.**

Remedy as necessary.

Other information

- see **BATTERY, DISCONNECTING**
- see **CHECKING WIRING AND TERMINALS**

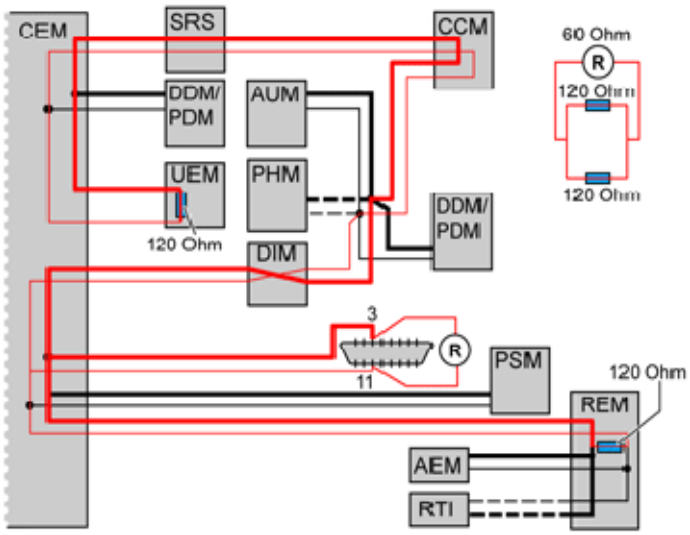

Fig. 22: Checking Resistance In CAN Lines
Courtesy of VOLVO CARS CORPORATION

Was a fault detected?

- **YES**

  Refer to **VERIFICATION**

- **NO**

  Refer to **CHECKING SHORT-CIRCUITING TO GROUND/VOLTAGE IN CAN-NET**

CHECKING THE AMOUNT OF TRAFFIC ON THE LS-CAN

Fig. 23: Identifying Ignition On Position
Courtesy of VOLVO CARS CORPORATION

- Connect the battery
- Ignition on.
- Connect OBDII-Box **(951 3015)** to the diagnostics socket.

  For general information about CAN-troubleshooting, see: **GENERAL INFORMATION ABOUT FAULT-TRACING IN THE CAN NETWORK**

  Faults in the CAN network may be due to a control module sending faulty messages that disrupt normal

communication. When messages are sent incorrectly, this results in a considerable increase in the amount of traffic on the CAN network. The load can be checked by reading the average value of the voltage on the CAN cables in relation to ground.

Measure voltage between the following connections on the OBDII-box/diagnostics socket.

- #3 and #4 (ground). The voltage should be approx:2, 8 - 3, 2 V.
- #11 and #4 (ground). The voltage should be approx:1, 8 - 2, 2 V.
- #3 and #11. The voltage shall be between approx. 0.55-1.4 V. The voltage shall normally be between 0.55 - 0.90 V. A higher voltage may indicate increased traffic on the CAN-net. In case of fault in communication/too high traffic on the CAN-net, the voltage is considerably higher than the above stated values.

NOTE: After fault with control modules that interfere with communication, other control modules may remain in Limp-Home even when the ignition has been turned off and on a few times. For certain faults in the CAN-net where control modules have stopped communicating, it may help to disconnect/reconnect the battery to "restart" the control module/CAN-net.

HINT: DiCE can be used as fault detection tool if fault is suspected on the CAN-net that cannot be detected with normal troubleshooting. Interference, intermittent faults, faulty messages on the CAN-net etc., are examples of such faults. The tool registers fault messages used on the CAN-net. Fault messages may be caused by short intermittent malfunctions on the CAN-net or by a control module sending fault messages. See tools:951 3010 as well as associated TJ 20402.

- Ignition on.
- Connect DiCE to the diagnostics socket.
- Note the blue LED-indicator. The indicator flashes to show detection of fault messages.

NOTE: Certain interference may occur without any real fault

Cable fault

- Shake the cables lightly and pull lightly on the connections during the check to locate any fault. Note the blue LED-indicator.

"Chatting" control modules

- "Chatting" control modules may be difficult to find and troubleshooting may take time. Let the vehicle stand with DiCE connected for an extended time period. Afterwards, activate functions to provoke a malfunction. It may take up to several hours before the fault messages are sent. When the indicator starts to flash, remove the fuse for one control module at a time until the indicator stops flashing. When the indicator stops flashing, restore the fuse for the relevant control module and check that the indicator starts to flash again. Then it is likely that the problem is identified.

Remedy wiring as necessary.

Other information

- see **BATTERY, DISCONNECTING**
- see **TROUBLESHOOTING USING DICE ERROR FRAME FINDER**
- see **CHECKING WIRING AND TERMINALS**

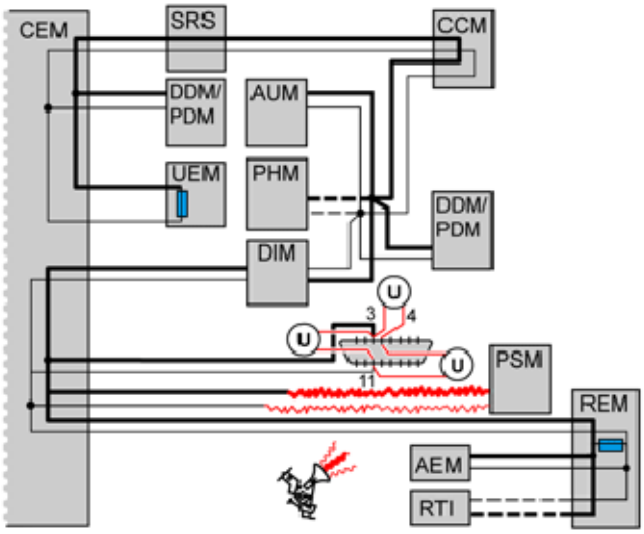

Fig. 24: Checking Amount Of Traffic On LS-CAN
Courtesy of VOLVO CARS CORPORATION

Was a fault detected?

- **YES**

  Refer to **IDENTIFYING A CONTROL MODULE IN THE CAN NETWORK**

- **NO**

  Refer to **CHECKING VOLTAGE-DROP IN CABLE FOR CAN-H AND CAN-L, RESPECTIVELY**

IDENTIFYING A CONTROL MODULE IN THE CAN NETWORK

Fig. 25: Identifying Ignition On Position
Courtesy of VOLVO CARS CORPORATION

For general information about CAN-troubleshooting, see: **GENERAL INFORMATION ABOUT FAULT-**

TRACING IN THE CAN NETWORK

HINT: DiCE can be used as fault detection tool if fault is suspected on the CAN-net that cannot be detected with normal troubleshooting. Interference, intermittent faults, faulty messages on the CAN-net (chattering control modules) etc., are examples of such faults. The tool registers fault messages used on the CAN-net. Fault messages may be caused by short intermittent malfunctions on the CAN-net or by a control module sending fault messages. See tools:951 3010 (memory card) as well as associated TJ 20402. If the load on the CAN network is too high, this may be due to a control module transmitting faulty messages on the CAN network. This is called a disruptive control module. The fault may also be due to an intermittent short-circuit to supply voltage or ground in one of the CAN cables. This results in the control modules on the CAN network starting to send faulty messages. The fault may occur without any of the control modules storing a diagnostic trouble code (DTC). The voltage can be measured between the CAN cables in order to check the load on the CAN network.

NOTE: **It is not necessarily the control module that has set the diagnostic trouble code that communicates incorrectly. Faulty messages can come from any control module in the same section of the CAN network. However, faulty communication in one network cannot affect the communication on the other network. In other words, faulty communication on the LS-CAN cannot disrupt communication on the HS-CAN and vice versa.**

- Ignition on.
- Connect OBDII-Box **(951 3015)** to the diagnostics socket.

Check communication/load on CAN-net by measuring voltage between CAN-L and CAN-H. Measure voltage between the following connections on the OBDII-box/diagnostics socket.

- #3 and #11. The average value of the voltage must be approximately 0.6-1.4 V. The voltage shall normally be between 0.55 - 0.90 V. A higher voltage may indicate increased traffic on the CAN-net. In case of fault in communication/too high traffic on the CAN-net, the voltage is considerably higher than the above stated values.

In order to identify which control module has faulty communication, cut the power supply to one control module at a time. Check the voltage in the CAN cables again. The easiest way to cut the power supply is to remove the fuse(s) for the relevant control module. Repeat until the voltage between the CAN wiring drops to the normal level.

NOTE: **When connecting and disconnecting certain control modules, diagnostic trouble codes (DTCs) may be stored in other control modules.**

HINT: When the suspected defective control module has been identified, connect and disconnect the supply voltage to the control module a number of times to verify that the malfunction appears and disappears. Switch off the ignition between each check.

NOTE: **Do not cut the power to the central electronic module (CEM) unless it is the last control module left to check.**

A control module that is communicating incorrectly must be replaced. See Repairing and installing/Removing, replacing and installing.

NOTE: **After fault with control modules that interfere with communication, other control modules may remain in Limp-Home (that is, they work with reduced functionality) even when the ignition has been turned off and on a few times. For certain faults in the CAN-net where control modules have stopped communicating, it may help to disconnect/reconnect the battery to "restart" the control module/CAN-net.**

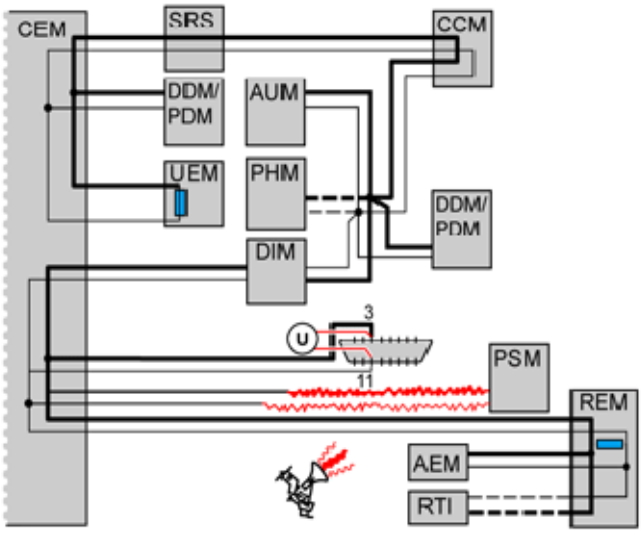

Fig. 26: Checking Communication/Load On CAN-net Between CAN-L And CAN-H
Courtesy of VOLVO CARS CORPORATION

- **Continue**

  Refer to **VERIFICATION**

VERIFICATION

HINT: After rectifying a fault, a verification should be carried out.

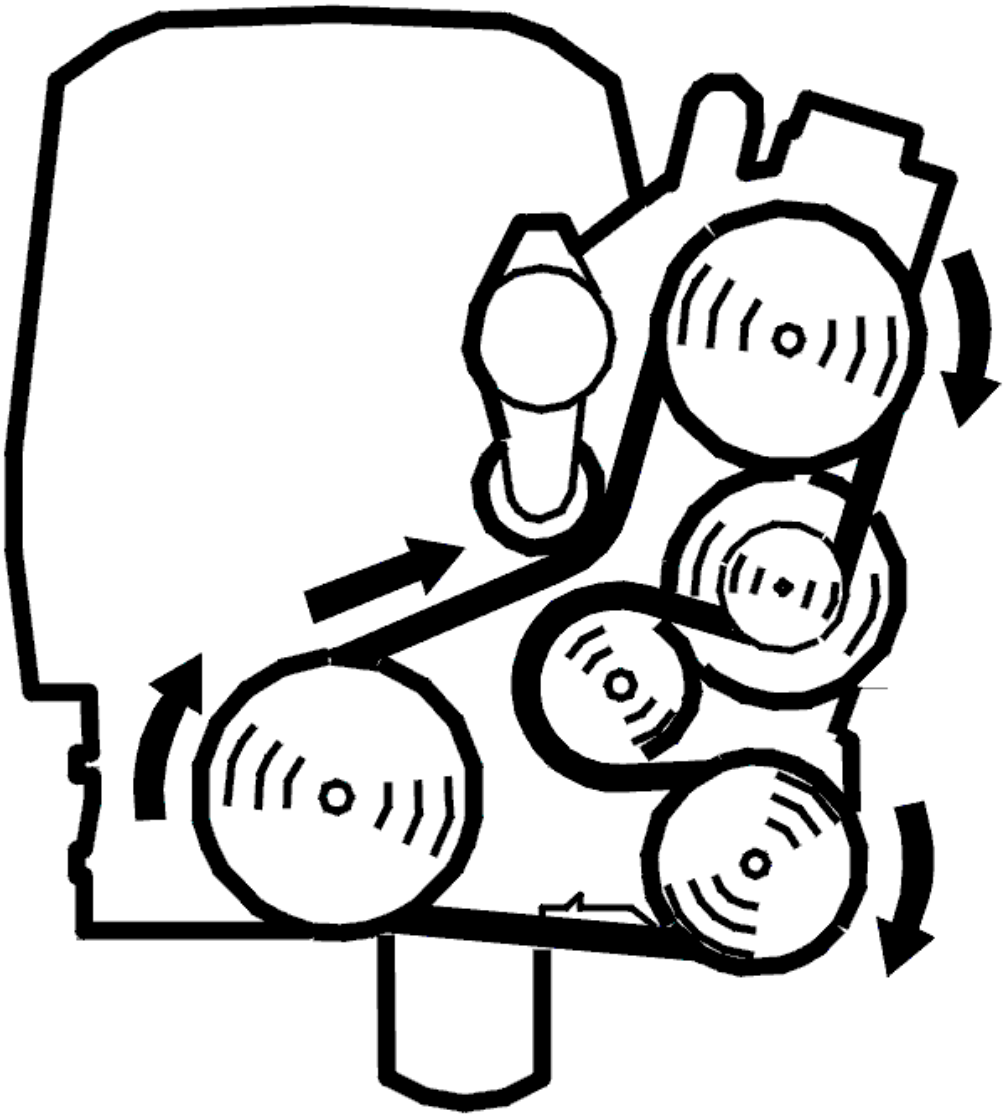

Fig. 27: Belt Routing / Engine Idling - Volvo
Courtesy of VOLVO CARS CORPORATION

Fig. 28: Identifying Ignition On Position
Courtesy of VOLVO CARS CORPORATION

- Reinstall the connectors, components etc.
- Ignition on.

NOTE: **For certain faults in the CAN-net where control modules have stopped communicating, it may help to disconnect/reconnect the battery to "restart" the control module/CAN-net.**

- Erase diagnostic trouble codes (DTCs) in all control modules.
- Ignition off.
- Ignition on.
- Start the vehicle. Allow the vehicle to run for 10 minutes. Start the engine. Allow the engine to run at idle speed for 10 minutes
- Read out the diagnostic trouble codes in the vehicle via the DIAGNOSTICS tab.

Does the diagnostic trouble code (DTC) for faulty communication return?

- **YES**

  Refer to **INFORMATION**

- **NO**

  OKAY: Troubleshooting has been completed.

CHECKING SHORT-CIRCUITING TO GROUND/VOLTAGE IN CAN-NET

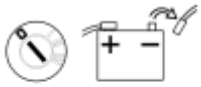

Fig. 29: Ignition Off And Disconnecting Battery Negative Lead
Courtesy of VOLVO CARS CORPORATION

- Ignition off.
- Disconnect the battery negative lead.
- Connect OBDII-Box **(951 3015)** to the diagnostics socket.

  For general information about CAN-troubleshooting, see: **GENERAL INFORMATION ABOUT FAULT-TRACING IN THE CAN NETWORK**

  Checking for a short-circuit to ground

  Measure resistance between the following connections on the OBDII-box/diagnostics socket.

  - #3 and #4 (ground). Measurement is shown in the illustration. The resistance should be above 1 kohms.

- #11 and #4 (ground). The resistance should be above 1 kohms.

If resistance is below 1 kohms this indicates short-circuiting between the CAN-line and ground.

Checking for a short-circuit to voltage

Measure resistance between the following connections on the OBDII-box/diagnostics socket.

- #3 and #16 (voltage). Measurement is shown in the illustration. The resistance should be above 1 kohms.
- #11 and #16 (voltage). The resistance should be above 1 kohms.

If resistance is below 1 kohms this indicates short-circuiting between the CAN-line and voltage cable.

Twist the cable harness and wiggle connectors where they can be accessed along the cable harness during every measurement, and note if the resistance changes to detect intermittent short-circuits or open circuit.

HINT: Part the CAN-net at suitable points to decide where a short-circuit may be found.

NOTE: After fault with control modules that interfere with communication, other control modules may remain in Limp-Home (that is, they work with reduced functionality) even when the ignition has been turned off and on a few times. For certain faults in the CAN-net where control modules have stopped communicating, it may help to disconnect/reconnect the battery to "restart" the control module/CAN-net.

Remedy as necessary.

Other information

- see **BATTERY, DISCONNECTING**
- see **CHECKING WIRING AND TERMINALS**

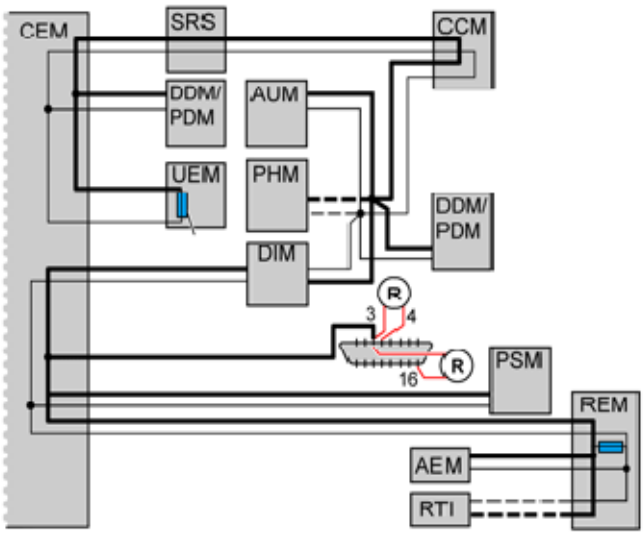

Fig. 30: Checking For Short-Circuiting To Ground/Voltage In CAN-net
Courtesy of VOLVO CARS CORPORATION

Was a fault detected?

- **YES**

  Refer to **VERIFICATION**

- **NO**

  Refer to **CHECKING THE AMOUNT OF TRAFFIC ON THE LS-CAN**

CHECKING VOLTAGE-DROP IN CABLE FOR CAN-H AND CAN-L, RESPECTIVELY

Fig. 31: Identifying Ignition On Position
Courtesy of VOLVO CARS CORPORATION

- Connect the battery.
- Ignition on.
- Connect OBDII-Box **(951 3015)** to the diagnostics socket.

  For general information about CAN-troubleshooting, see: **GENERAL INFORMATION ABOUT FAULT-TRACING IN THE CAN NETWORK**

  In principle, the voltage measured in each cable in the CAN-net shall be the same at each control module

in the network. This means that the voltage-drop in the cable for CAN-H and CAN-L, respectively, between the control modules should be very low. If there is a voltage-difference in the CAN-lines between the diagnostics socket/Central electronic module (CEM) and a control module due to, e. g., contact resistance in a connector or branching, communication may be lost/interfered with. Check if there is voltage-drop in the cable for CAN-H and CAN-L between the diagnostics socket/Central electronic module (CEM) and the control module where there is problem with communication.

Carry out the following:

Measure voltage between the following connections on the OBDII-box/diagnostics socket.

- #3 and corresponding connection on relevant control module for CAN-H. The voltage shall be lower than 50 mV.
- #11 and corresponding connection on relevant control module for CAN-L. The voltage shall be lower than 50 mV.

If voltage is too high, this indicates too high contact resistance in cable, connector, or branching. Check the circuit between the diagnostics socket and control module in question for contact resistance and oxidation.

NOTE: **After fault with control modules that interfere with communication, other control modules may remain in Limp-Home (that is, they work with reduced functionality) even when the ignition has been turned off and on a few times. For certain faults in the CAN-net where control modules have stopped communicating, it may help to disconnect/reconnect the battery to "restart" the control module/CAN-net.**

Remedy wiring as necessary.

Other information

- see **CHECKING WIRING AND TERMINALS**

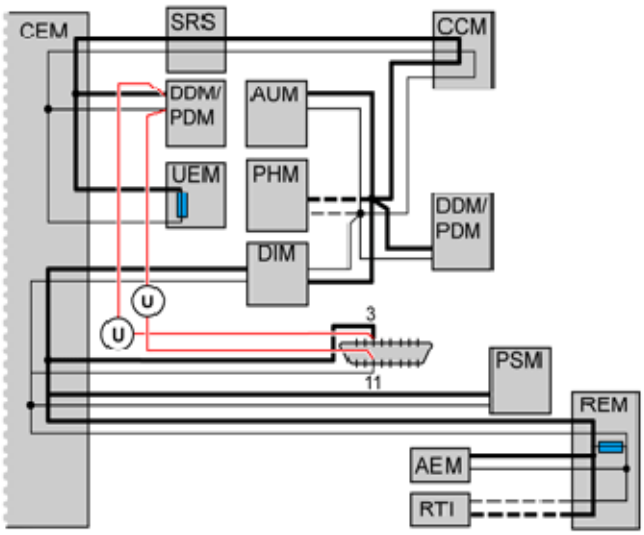

Fig. 32: Checking For Voltage-Drop In Cable For CAN-H And CAN-L
Courtesy of VOLVO CARS CORPORATION

- **Continue**

  Refer to **VERIFICATION**

INFORMATION

FAULT-TRACING INFORMATION

The fault should have been detected and remedied. As this is not the case fault-tracing has failed.

Exit fault-tracing for this diagnostic trouble code (DTC) or make another attempt.

CEM-1A53: COMMUNICATION WITH THE PASSENGER DOOR MODULE (PDM). SIGNAL MISSING (2003-2004)

DIAGNOSTIC TROUBLE CODE (DTC) INFORMATION CEM-1A53

Condition

Diagnostic trouble codes (DTCs) are stored if the central electronic module (CEM) registers that communication with the passenger door module (PDM) is not operating.

NOTE: In the event of CEM-1A5X diagnostic trouble codes (DTCs), the central electronic module (CEM) must not be replaced as the diagnostic trouble code (DTC) indicates a communication fault in the Control area network

Substitute Value

None.

Possible Source

- No power supply to passenger door module (PDM)
- Open-circuit in the ground lead to the passenger door module (PDM)
- Contact resistance in the terminals
- Open-circuit in the wiring for the CAN low speed network to the passenger door module (PDM)
- The passenger door module (PDM) is not intended for this car (for example a used control module with different software/hardware).

HINT: If several diagnostic trouble codes (DTCs) are stored in the central electronic module (CEM) for communication faults with other control modules in the low speed network, this indicates a common fault in the Control area network.

Fault symptom[s]

- Does not lock / unlock a door
- The passenger door switch panel does not work.

SIGNAL MISSING

CHECKING THE FUNCTION OF THE PASSENGER DOOR MODULE (PDM)

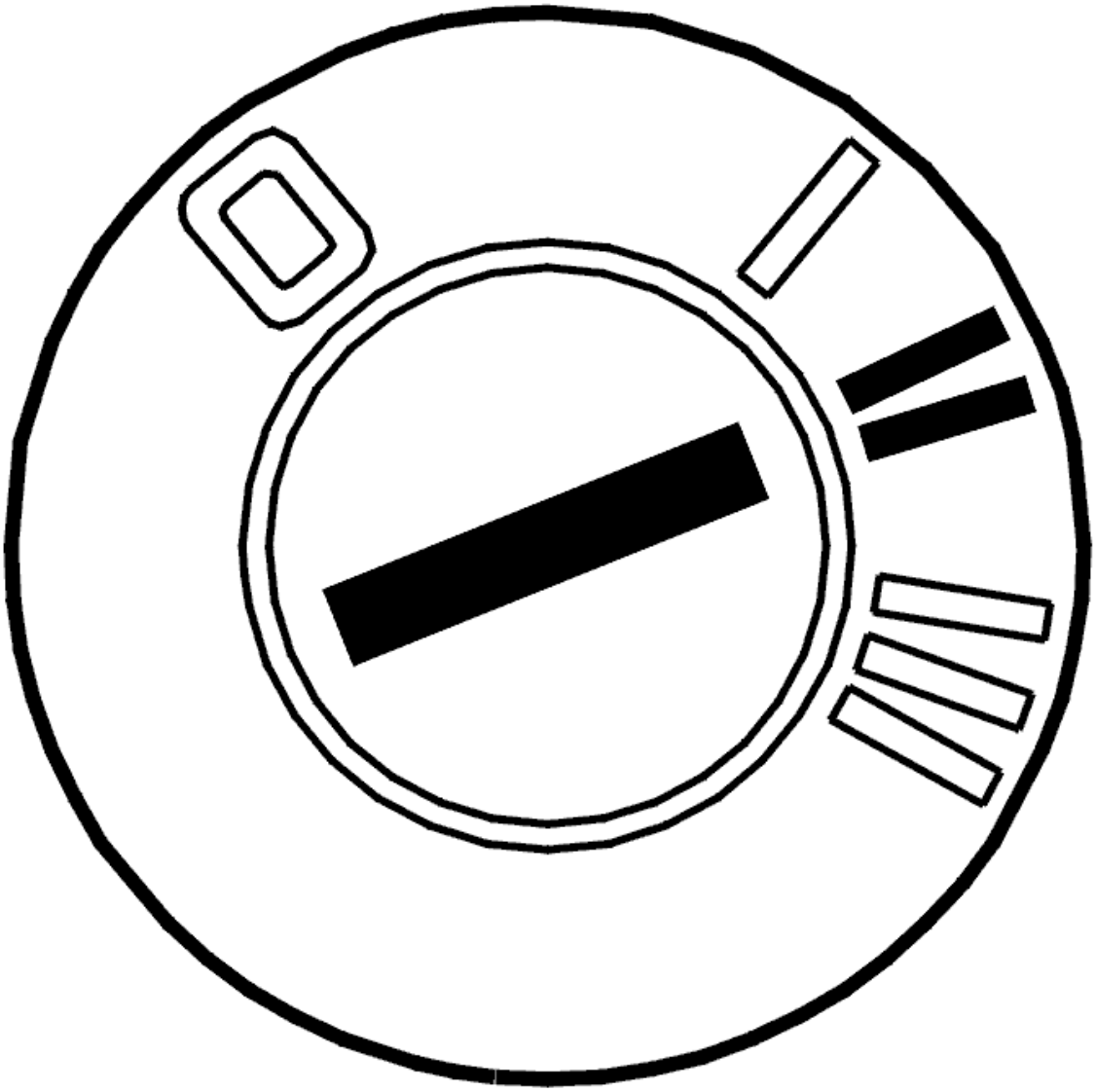

Fig. 33: Identifying Ignition ON
Courtesy of VOLVO CARS CORPORATION

- Ignition on.

  Check the function of the control module by pressing the up and down buttons for the power window mechanism. The window must open or close

  Also activate the central locking buttons. The doors must lock and unlock.

Is the function OK?

- **YES**

  Refer to **CHECKING COMMUNICATION WITH THE PASSENGER DOOR MODULE (PDM)**

- **NO**

  Refer to **CHECKING THE POWER SUPPLY AND GROUND FOR THE PASSENGER DOOR MODULE (PDM)**

CHECKING THE POWER SUPPLY AND GROUND FOR THE PASSENGER DOOR MODULE (PDM)

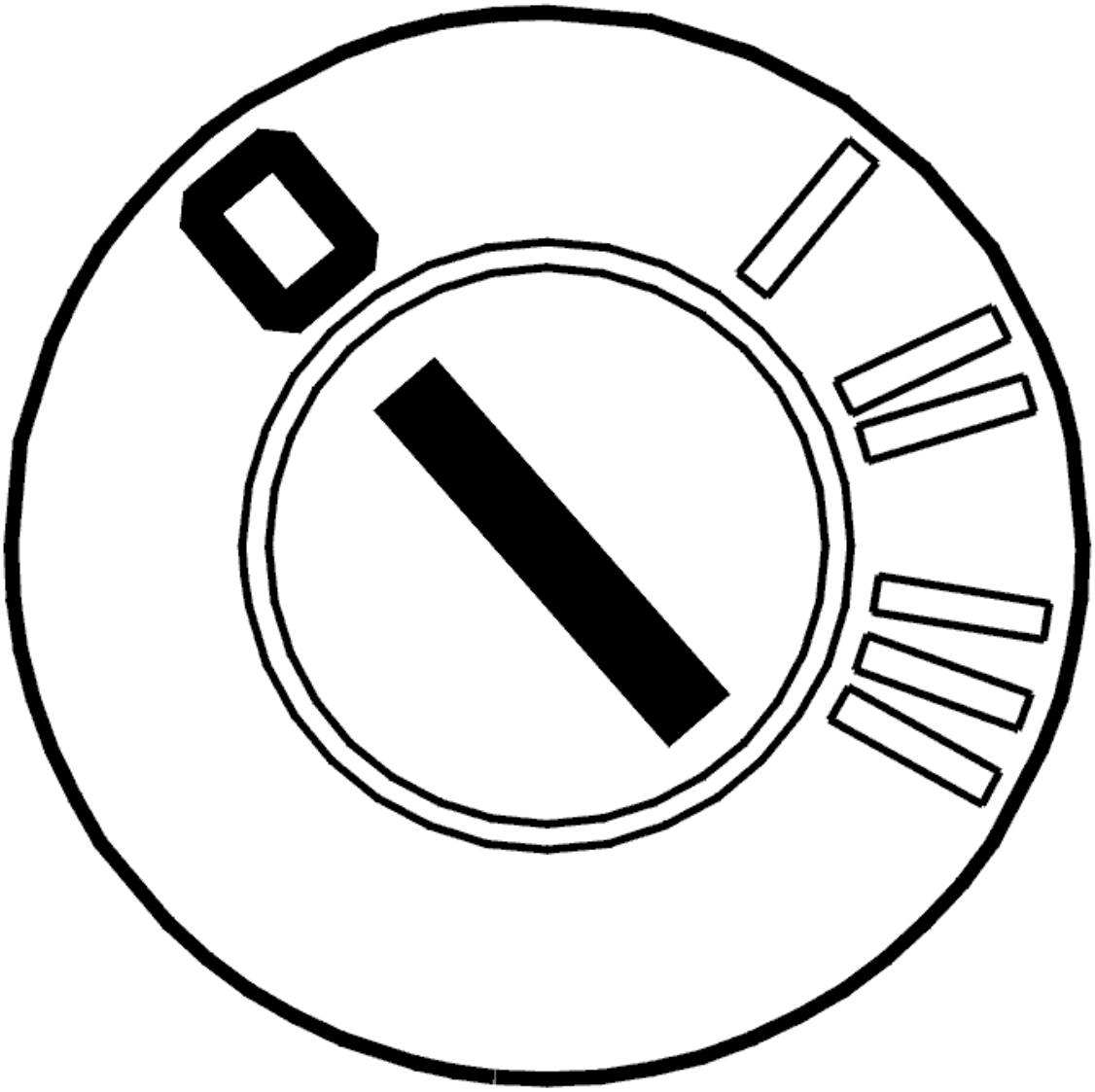

Fig. 34: Identifying Ignition OFF
Courtesy of VOLVO CARS CORPORATION

- Ignition off.

  Check that the fuse for the passenger door module (PDM) in the passenger compartment fusebox is intact.

  Connect a voltmeter between the power supply cable to the control module and ground.

The voltage between the control module power cable and ground must be battery voltage when the ignition is off.

Check the cable between the control module and ground: the left or right front seat support. Check for a short-circuit to ground. Check for an open-circuit.

Other information:

- To access the door control module, see **DRIVER DOOR MODULE (DDM), REPLACING**
- To connect the breakout box, see **CONNECTING THE BREAKOUT BOX**
- For further information about signals and other values, see **SIGNAL SPECIFICATION**
- To check the wiring and connections, see **CHECKING WIRING AND TERMINALS**

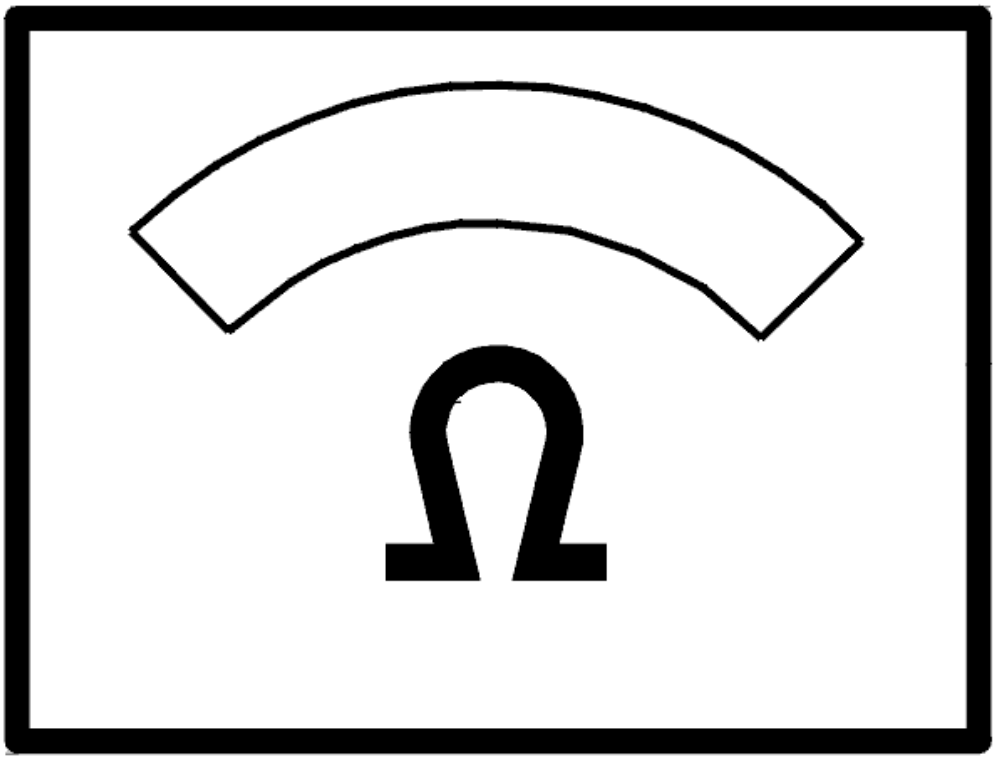

Fig. 35: Identifying Ohm Meter
Courtesy of VOLVO CARS CORPORATION

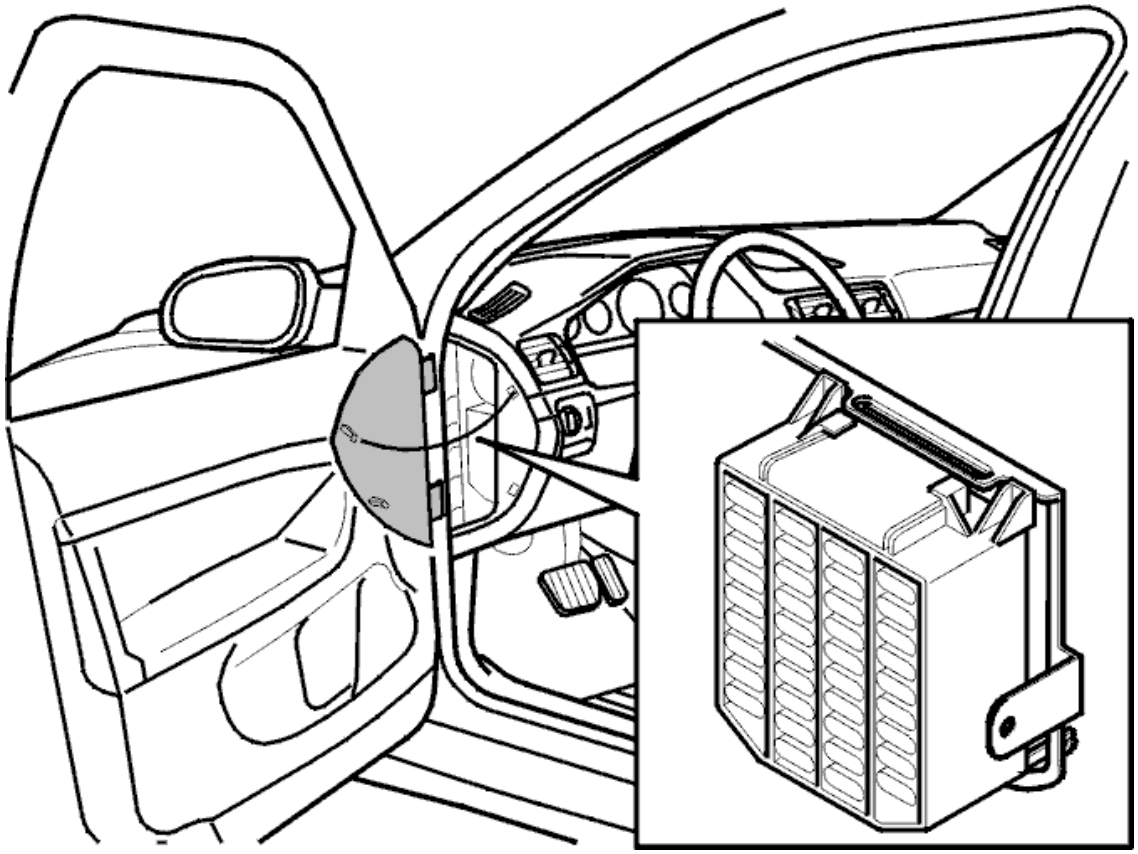

Fig. 36: Identifying Passenger Compartment Fusebox
Courtesy of VOLVO CARS CORPORATION

Was a fault detected?

- **YES**

  Refer to **CHECKING THE FUNCTION OF THE PASSENGER DOOR MODULE (PDM)**

- **NO**

  Refer to **SIGNAL MISSING**

CHECKING COMMUNICATION WITH THE PASSENGER DOOR MODULE (PDM)

HINT: The CAN communication with the control module is probably OK if the control module ID can be read off. In that case the fault is probably intermittent and will then be more difficult to trace.

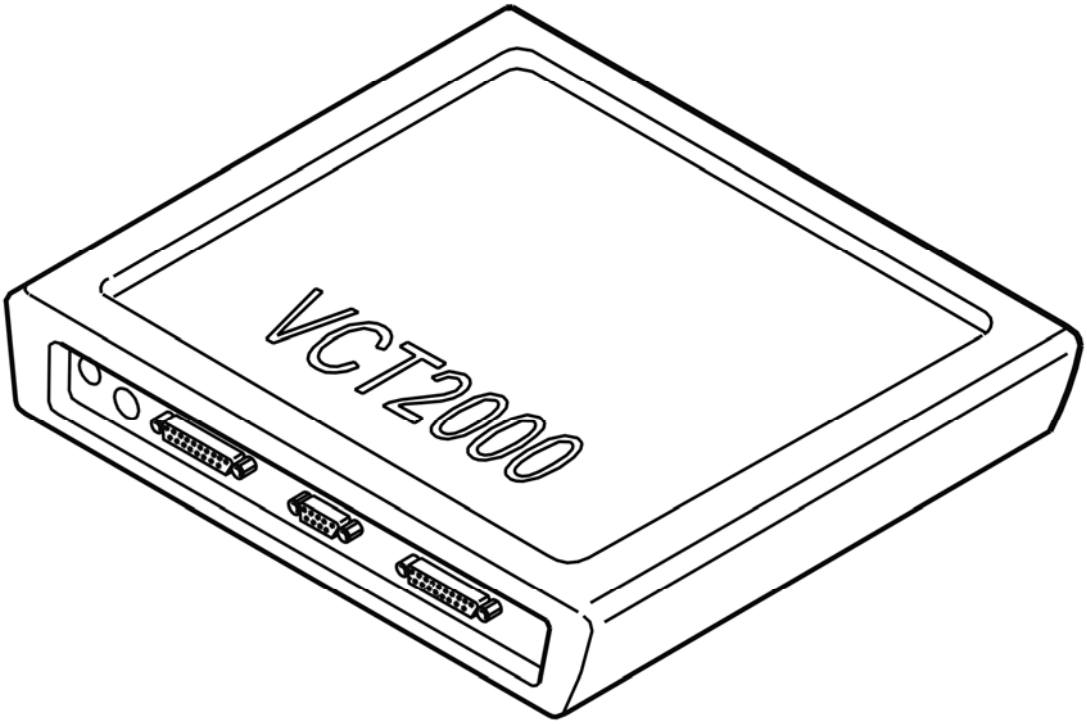

Fig. 37: Identifying VCT2000 Diagnostic Tool Symbol In VIDA
Courtesy of VOLVO CARS CORPORATION

- Try to communicate with the passenger door module (PDM) by reading off the control module ID
- Use the VCT2000 (or appropriate scan tool)
- **Continue**

  Refer to **SIGNAL MISSING**

CHECKING THE FUNCTION OF THE PASSENGER DOOR MODULE (PDM)

HINT: After carrying out the repair, check that the fault has been remedied.

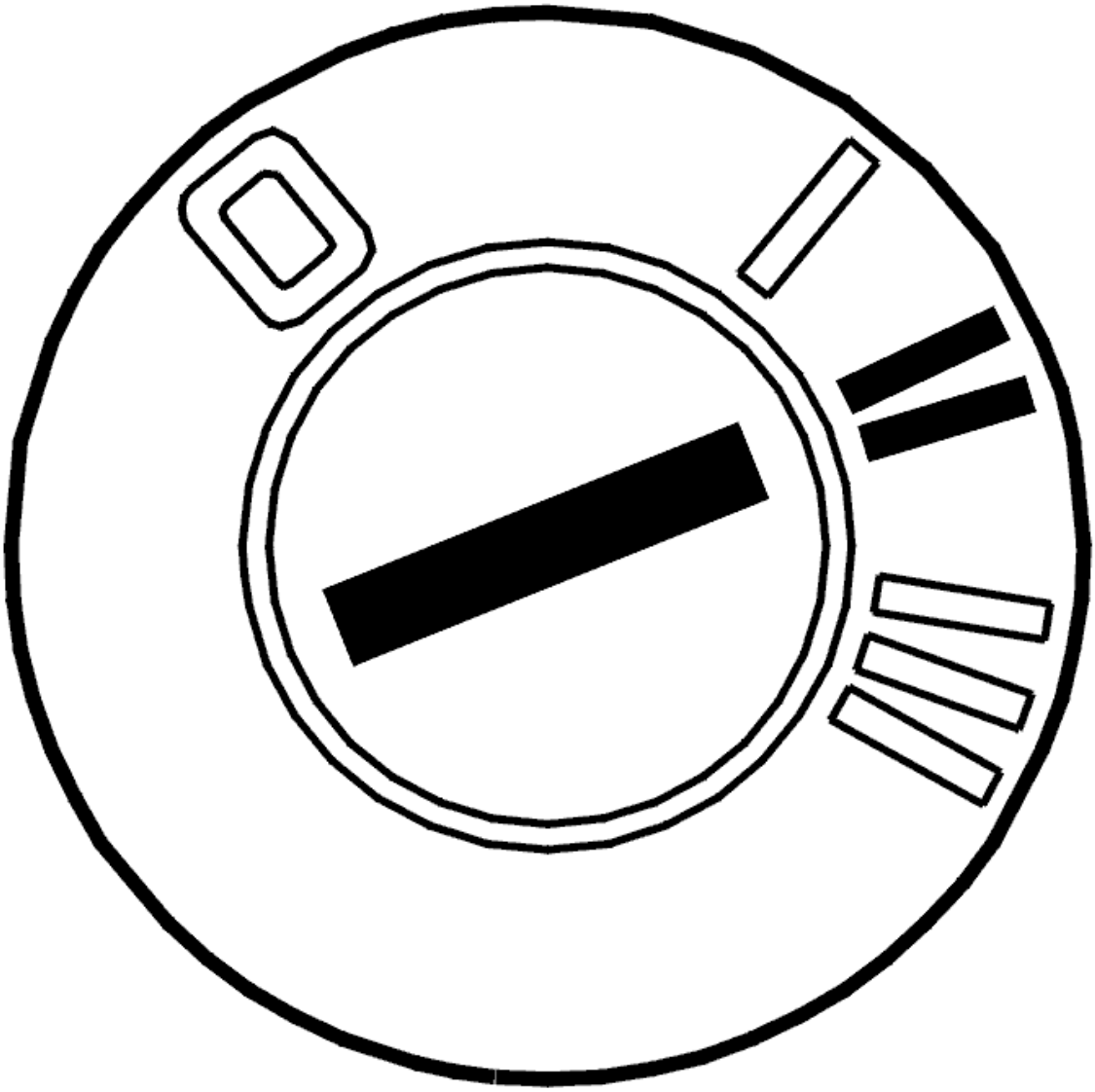

Fig. 38: Identifying Ignition ON
Courtesy of VOLVO CARS CORPORATION

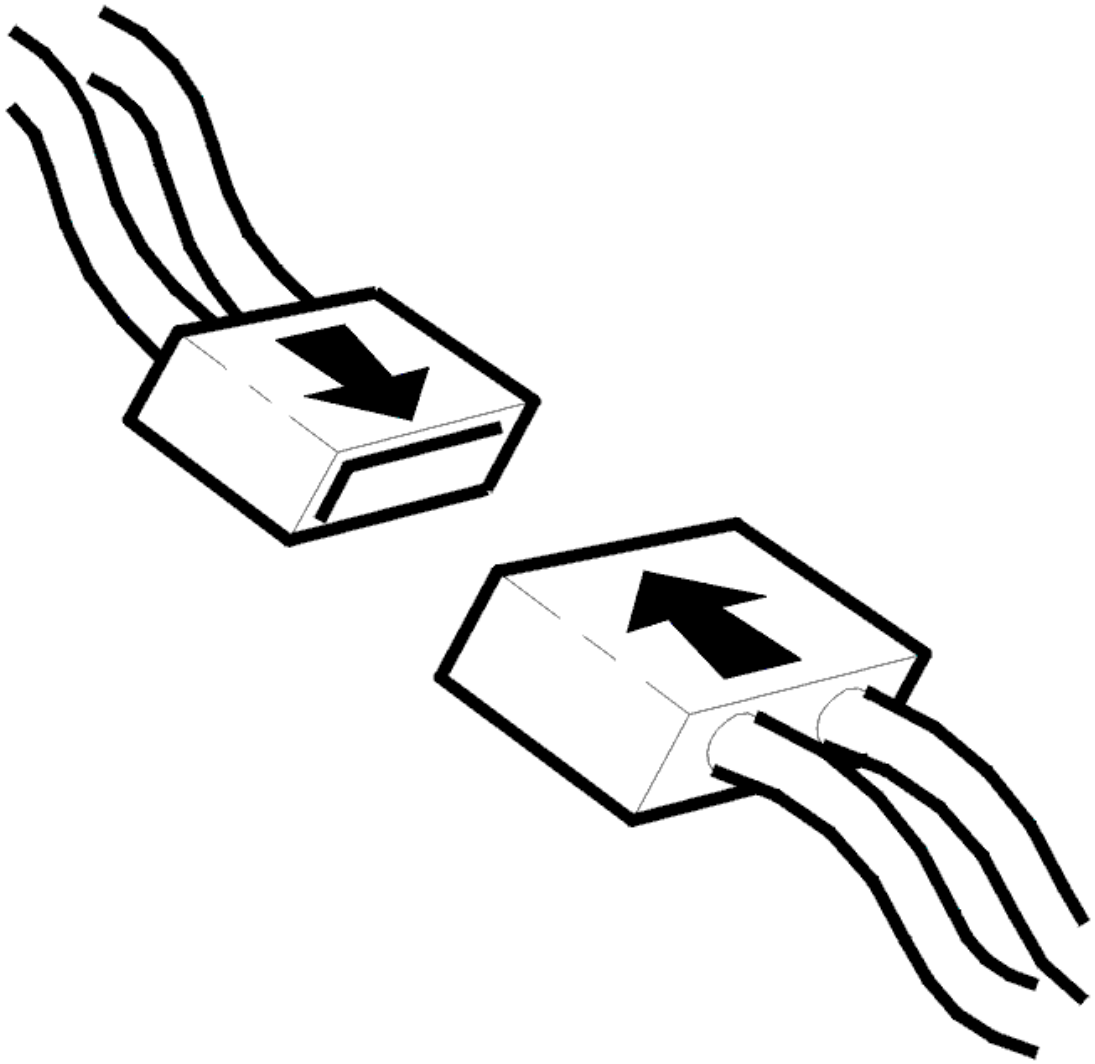

Fig. 39: Connecting Connector
Courtesy of VOLVO CARS CORPORATION

- Ignition off
- Reconnect the connectors. Reinstall the components
- Ignition on.

  Check the function of the control module by pressing the up and down buttons for the power window mechanism. The window must open or close

  Also activate the central locking buttons. The doors must lock and unlock.

Is the function OK?

- **YES**

OKAY: Troubleshooting has been completed.

- **NO**

  Refer to **INFORMATION**

SIGNAL MISSING

GENERAL INFORMATION

HINT: For general information about fault-tracing the control area network (CAN), see the linked document below. See GENERAL INFORMATION ABOUT FAULT-TRACING IN THE CAN NETWORK (2005-2012)

In order to check the control area network (CAN) cables, the resistance in the network must be measured. The resistance between the two CAN cables, with the network connected, must be 60ohms in both the high speed network and the low speed network.

NOTE: **Resistance will only be 60 ohms if the main artery of the CAN network is whole and the network is connected. If the main artery of the CAN network is split somewhere and a reading is taken between the CAN cables, resistance will be 120 ohms.**

If diagnostic trouble codes (DTCs) can be read off from the relevant control module, the fault is probably intermittent. The locations that must be checked in the event of a fault in the low speed network are the junctions behind the central electronic module (CEM) and the audio module (AUM) as well as the cable harness behind the Audio module (AUM).

Intermittent fault in the current supply to the actual control module is indicated by the DTC in the Central electronic module (CEM) (CEM-1A5X or CEM-1A6X). There is probably no diagnostic trouble code (DTC) in the relevant control module as the control module cannot store a diagnostic trouble code (DTC) when it is without power.

- **Continue**

  Refer to **CHECKING THE RESISTANCE OF THE CONTROL AREA NETWORK (CAN) CABLES**

CHECKING THE RESISTANCE OF THE CONTROL AREA NETWORK (CAN) CABLES

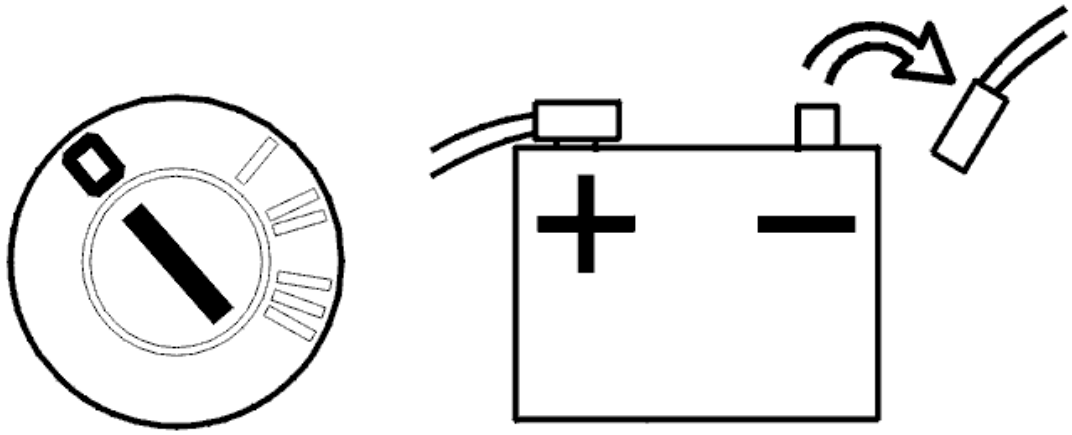

Fig. 40: Identifying Ignition In Off Position And Disconnecting Negative Cable From Battery
Courtesy of VOLVO CARS CORPORATION

- Disconnect the battery negative lead. The network must not be powered when taking resistance readings. Otherwise an incorrect value may be obtained.
- Connect the adapter wiring to the central electronic module (CEM).

HINT: Where a breakout box cannot be used, take readings from the rear of the affected connectors if possible. This prevents terminal pins and socket housings being damaged.

When taking readings on the low speed network

- When taking readings on the low speed network the adapter wiring should be connected to the Central electronic module (CEM) and readings taken from there. Readings can even be taken in the connector for the Power seat module (PSM). The advantage of the adapter wiring to the Central electronic module (CEM) is that all control module can be connected in the network when taking readings and access can be gained to both the high speed and low speed networks.

  The resistance reading only measures the main arteries in the low speed network, not the junctions that exist for different control modules.

When taking readings on the high speed network

- When taking readings on the high speed network the adapter wiring should be connected to the Engine control module (ECM) and readings taken from there. The Engine control module (ECM) must be connected. This resistance reading only measures the main arteries in the high speed network.

Connect an ohmmeter to the terminals for CAN-L and CAN-H on the relevant network. Turn the contacts and turn the cable harness. Resistance must be approximately 60 ohms.

NOTE: **Resistance will only be 60 ohms if the main artery of the CAN network is whole and the network is connected. If the main artery of the CAN network is split somewhere and a reading is taken between the CAN cables, resistance will be 120 ohms.**

Other information

- see **BATTERY, DISCONNECTING**
- see **CONNECTING THE BREAKOUT BOX**
- see **CHECKING WIRING AND TERMINALS**

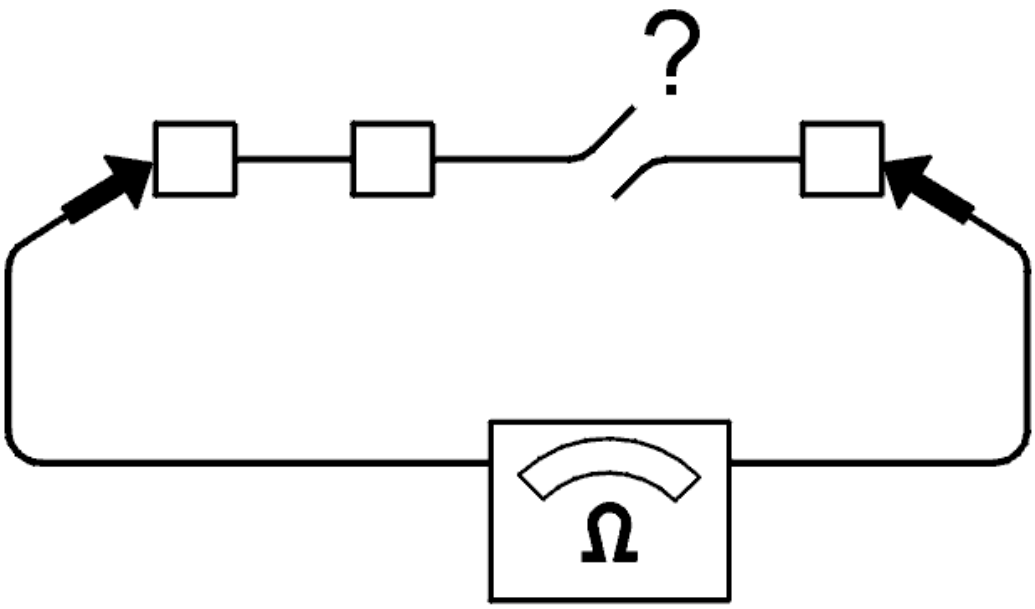

Fig. 41: Checking For Open Circuit
Courtesy of VOLVO CARS CORPORATION

Is the value OK?

- **YES**

  Refer to **CHECKING A SHORT-CIRCUIT IN CAN CABLES**

- **NO**

  Refer to **IDENTIFYING FAULT CAUSES IN THE CAN NETWORK**

CHECKING A SHORT-CIRCUIT IN CAN CABLES

Connect an ohmmeter between respective CAN cable and voltage supply and between the CAN cables and ground. Turn the contacts and turn the cable harness. The resistance must be infinite or very high.

HINT: Readings can be taken from one and the same connector if the CAN wiring, voltage supply and ground is pre-routed. If possible, measure from the rear of the affected connectors in order to minimize any damage and future loose connections. If this is not possible, use the adapter wiring or loose terminal pin for good contact.

Was a fault detected?

- **YES**

  Refer to **IDENTIFYING FAULT CAUSES IN THE CAN NETWORK**

- **NO**

  Refer to **CHECKING THE TRAFFIC LOAD ON THE CAN CABLES**

CHECKING THE TRAFFIC LOAD ON THE CAN CABLES

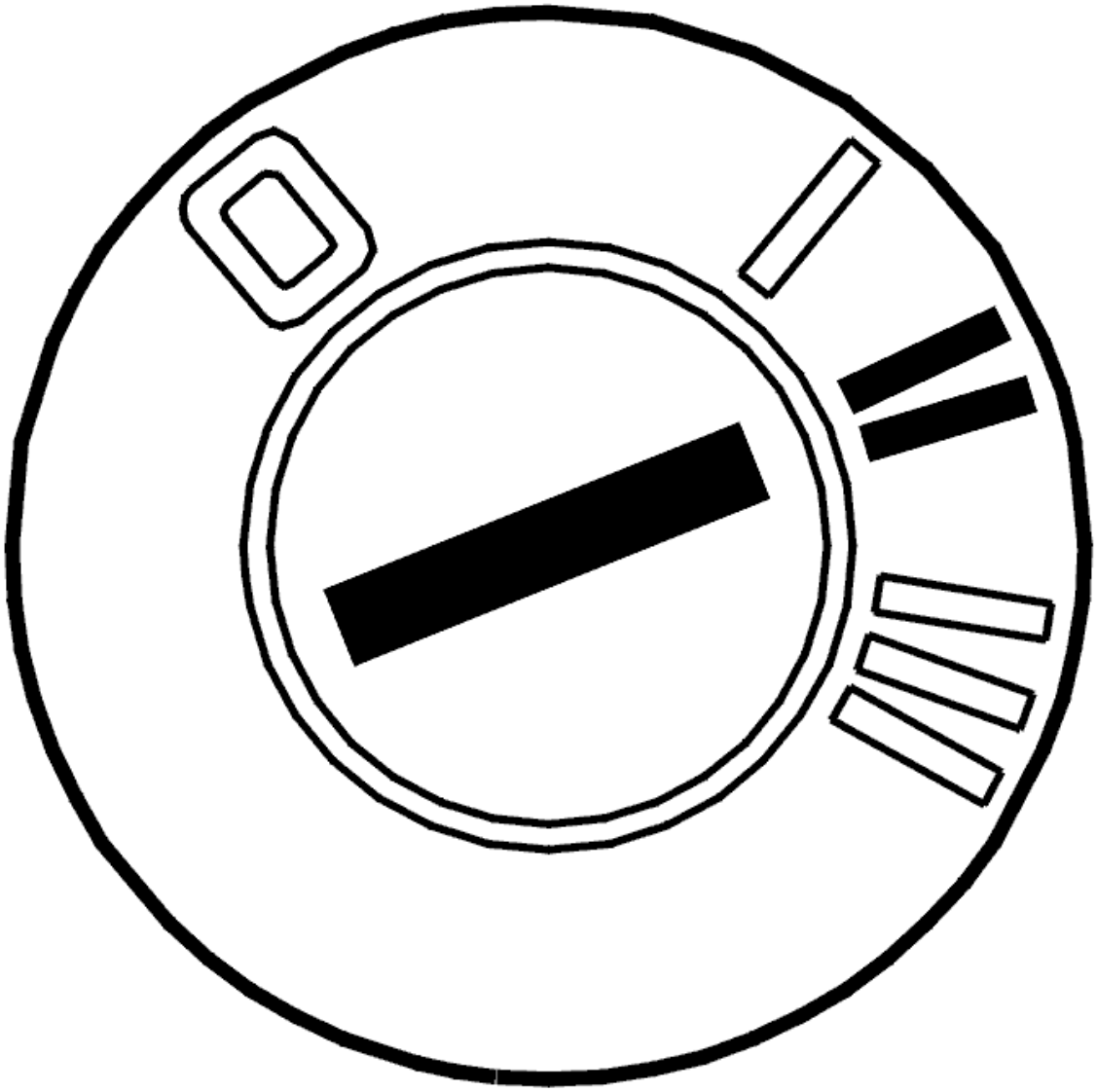

Fig. 42: Identifying Ignition ON
Courtesy of VOLVO CARS CORPORATION

- Connect the battery.
- Ignition on.

Faults in the CAN network may be due to a control module sending faulty messages that disrupt normal communication. When messages are sent incorrectly, this results in a considerable increase in the amount of traffic on the CAN network. The load can be checked by reading the average value of the voltage on the CAN cables in relation to ground.

The following applies for model year -2004:

Connect a voltmeter between CAN-L and ground. The voltage shall be approx. 2.3 V.

Then connect a voltmeter between CAN-H and ground. The voltage shall be approx. 2.8 V.

The following applies for model year 2004-:

Connect a voltmeter between CAN-L and ground. The voltage should be approx: V

Connect a voltmeter between CAN-H and ground. The voltage should be approx: V

NOTE: **For vehicles of later model years, normal voltage values lie within a specific interval due to increased traffic between the control modules on the CAN network upon update of the electrical system.**

HINT: If possible, measure from the rear of the affected connectors so that they are not damaged.

Other information

- see **BATTERY, DISCONNECTING**

Is the value OK?

- **YES**

  Refer to **INFORMATION**

- **NO**

  Refer to **IDENTIFYING A CONTROL MODULE IN THE CAN NETWORK**

IDENTIFYING FAULT CAUSES IN THE CAN NETWORK

- Disconnect a control module that disconnects the CAN network (a control module that has four terminals to the CAN network).

  HINT: For the low speed network, suitable places for disconnecting the network are at the steering wheel module (SWM), the driver information module (DIM) or the climate control module (CCM).

  In the event of an short-circuit between on of the CAN cables and voltage or ground, the fault can be localized disconnecting a control module that splits the CAN network. Readings can then be taken to determine on which side the fault is on the disconnected control module.

  Connect an ohmmeter between the CAN cable and voltage supply respectively ground. Take readings from both ends of the CAN networks at the network junction. Twist and bend the cable harness to find any intermittent short-circuits. The resistance must be infinite or very high (more than 1 Mohms).

  If a fault can be localized in one direction, split the network at a point further on in the CAN network in the direction that the fault was discovered and take a new reading. Try to locate the fault in this way.

  HINT: A short-circuit between the CAN cables and supply voltage or ground may be in either the wiring or in a control module.

Remedy the cables as necessary. If a fault is found on one control module, replace the control module.

- **Continue**

  Refer to **VERIFICATION**

IDENTIFYING A CONTROL MODULE IN THE CAN NETWORK

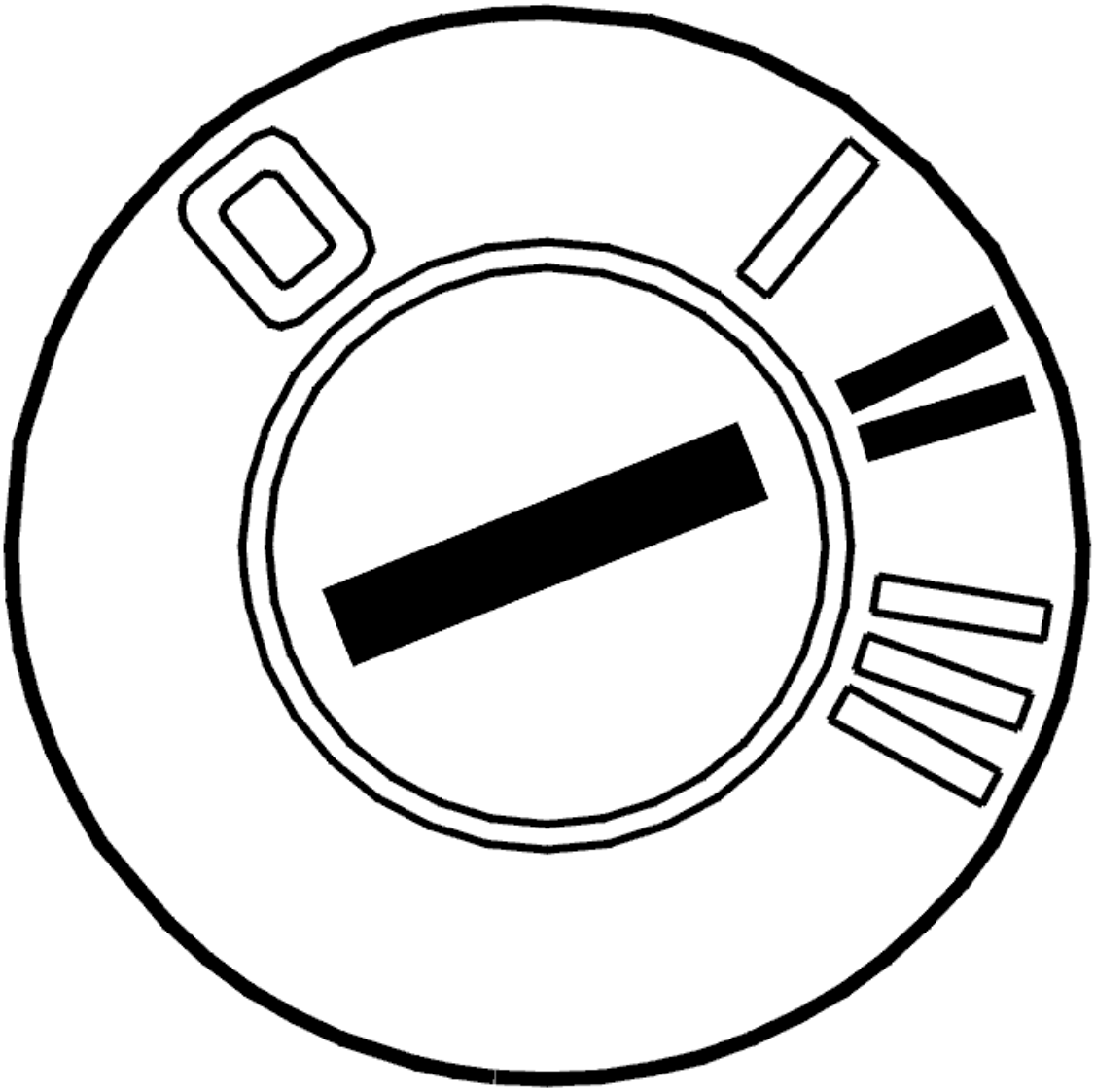

Fig. 43: Identifying Ignition ON
Courtesy of VOLVO CARS CORPORATION

- Connect the battery.
- Ignition on.

  If the load on the CAN network is too high, this may be due to a control module transmitting faulty messages on the CAN network. This is called a disruptive control module. The fault may also be due to

an intermittent short-circuit to supply voltage or ground in one of the CAN cables. This results in the control modules on the CAN network starting to send faulty messages. The fault may occur without any of the control modules storing a diagnostic trouble code (DTC). The voltage can be measured between the CAN cables in order to check the load on the CAN network.

The following applies for model year -2004:

Connect a voltmeter between the CAN cables. In the event of correct communication on the network, the average value of the voltage must be approximately 0.5 V (0.4 V to 0.6 V).

The following applies for model year 2004-:The following applies for model year 2004-:

Connect a voltmeter between the CAN cables. During correct CAN network communication, voltage should be about 0.6-1.4 V.

NOTE: For vehicles of later model years, the normal voltage value is slightly higher due to increased traffic between the control modules on the CAN network upon update of the electrical system.

In the event of a communication fault the voltage is significantly higher than the above specified values. In order to identify which control module has faulty communication, cut the power supply to one control module at a time. Check the voltage in the CAN cables again. The easiest way to cut the power supply is to remove the fuse(s) for the relevant control module. Repeat until the voltage between the CAN wiring drops to the normal level.

HINT: When the probable faulty control module has been identified, connect and disconnect the supply voltage to the control module a number of times to verify that the fault appears and disappears.

NOTE: Do not cut the power to the central electronic module (CEM) unless it is the last control module left to check.

The control module that is communicating incorrectly must be replaced. Remedy as necessary.

NOTE: After a fault with "interfering" control modules, other control modules may remain in "Limp-Home mode" even when the ignition has been switched off and on several times. To remedy this, disconnect and reconnect the battery negative terminal to restore the control modules to normal function.

Other information

- see **BATTERY, DISCONNECTING**

- **Continue**

Refer to **VERIFICATION**

IDENTIFYING FAULT CAUSES IN THE CAN NETWORK

- Disconnect a control module that disconnects the CAN network (a control module that has four terminals to the CAN network).

  HINT: For the low speed network, suitable places for disconnecting the network are at the steering wheel module (SWM), the driver information module (DIM) or the climate control module (CCM).

  In the event of an open-circuit on, or short-circuit between the CAN cables, the fault can be localized by disconnecting a control module that splits the CAN network. Readings can then be taken to determine on which side the fault is on the disconnected control module.

  Connect an ohmmeter between the CAN cables. Take readings from both ends of the CAN networks at the network junction. Twist and bend the cable harness to find any intermittent short-circuits. Resistance should be 120 ohms.

  If a fault can be localized in one direction, split the network at a point further on in the CAN network in the direction that the fault was discovered and take a new reading. Try to locate the fault in this way.

  Remedy the cables as necessary.

- **Continue**

  Refer to **VERIFICATION**

VERIFICATION

HINT: After rectifying a fault, a verification should be carried out.

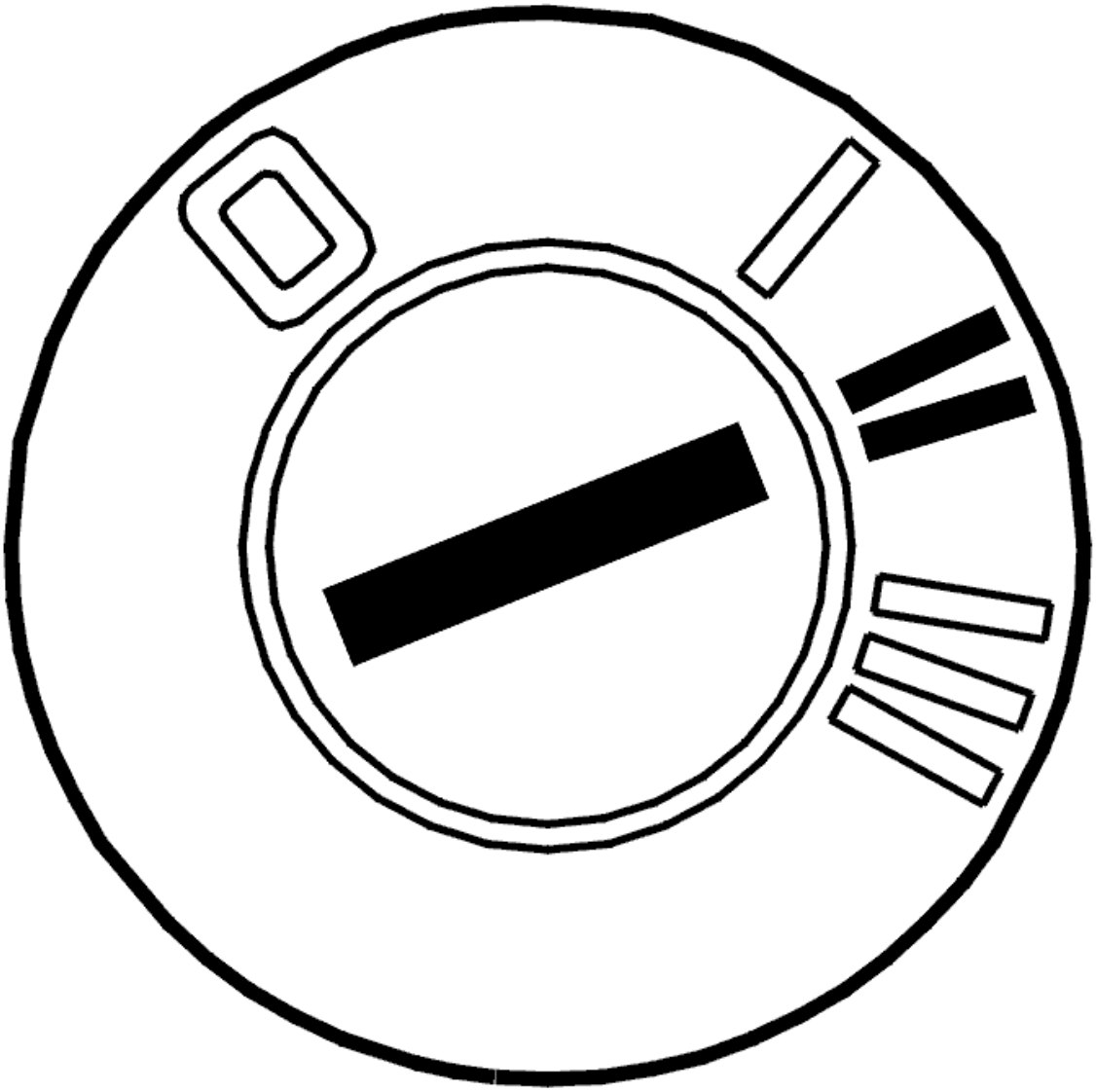

Fig. 44: Identifying Ignition ON
Courtesy of VOLVO CARS CORPORATION

- Reinstall the connectors, components etc.
- Ignition on.
- Erase diagnostic trouble codes using the VCT2000 (or appropriate scan tool).
- Start the car. Allow the vehicle to run for 10 minutes.
- Read off diagnostic trouble codes (DTCs).

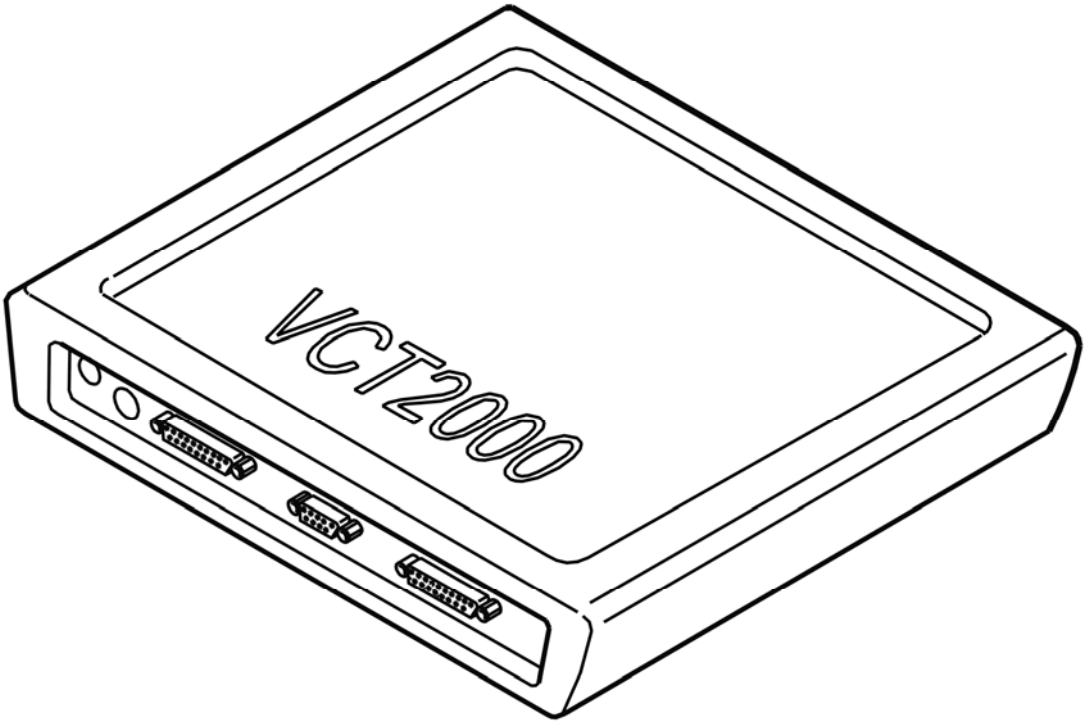

Fig. 45: Identifying VCT2000 Diagnostic Tool Symbol In VIDA
Courtesy of VOLVO CARS CORPORATION

Does the diagnostic trouble code (DTC) for a communication fault recur (CEM-1A5X or CEM-1A6X)?

- **YES**

  Refer to **INFORMATION**

- **NO**

  OKAY: Troubleshooting has been completed.

INFORMATION

FAULT-TRACING INFORMATION

Verification shows that the fault is no longer present. The diagnostic trouble code (DTC) was probably caused by an intermittent fault.

Fault-tracing for this diagnostic trouble code (DTC) is not followed by a verification.

You can view the information again or exit fault-tracing for this diagnostic trouble code (DTC).

INFORMATION

FAULT-TRACING INFORMATION

The fault should have been detected and remedied. As this is not the case fault-tracing has failed.

Exit fault-tracing for this diagnostic trouble code (DTC) or make another attempt.

CEM-1A54: COMMUNICATION WITH THE POWER SEAT MODULE (PSM). SIGNAL MISSING (2003-2004)

DIAGNOSTIC TROUBLE CODE (DTC) INFORMATION CEM-1A54

Condition

Diagnostic trouble codes (DTCs) are stored if the central electronic module (CEM) registers that communication with the power seat module (PSM) is not operating.

NOTE: In the event of CEM-1A5X diagnostic trouble codes (DTCs), the central electronic module (CEM) must not be replaced as the diagnostic trouble code (DTC) indicates a communication fault in the Control area network

Substitute Value

None.

Possible Source

- No power supply to the power seat module (PSM)
- Open-circuit in the ground lead to the power seat module (PSM)
- Contact resistance in the terminals
- Open-circuit in the wiring for the CAN low speed network to the power seat module (PSM)
- The power seat module (PSM) is not intended for this car (for example a used control module with different software/hardware).

HINT: If several diagnostic trouble codes (DTCs) are stored in the central electronic module (CEM) for communication faults with other control modules in the low speed network, this indicates a common fault in the Control area network.

Fault symptom[s]

- Power seat does not operate at all
- Automatic seat/door mirror operation does not function.

SIGNAL MISSING

CHECKING THE FUNCTION OF THE POWER SEAT MODULE (PSM)

Check the function of the control module by operating the seat using the controls.

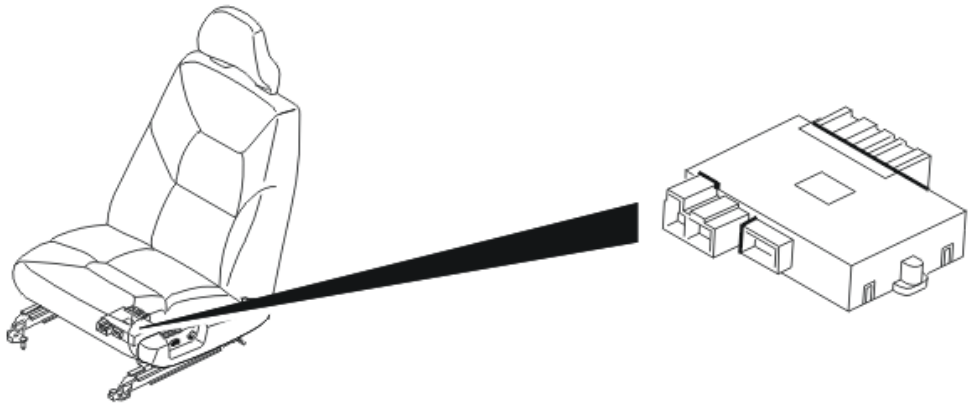

Fig. 46: Identifying Power Seat Control Module
Courtesy of VOLVO CARS CORPORATION

Can the seat be operated?

- **YES**

  Refer to **CHECKING COMMUNICATION WITH THE POWER SEAT MODULE (PSM)**

- **NO**

  Refer to **CHECKING THE POWER SUPPLY AND GROUND FOR THE POWER SEAT MODULE (PSM)**

CHECKING THE POWER SUPPLY AND GROUND FOR THE POWER SEAT MODULE (PSM)

Check the fuse for the power seat module (PSM) in the passenger compartment fusebox. Check the cable between the power seat and the passenger compartment fuse. Check for an open-circuit. If the fuse is blown, also check for a short-circuit to ground.

Check the passenger compartment fuse for the supply relay for the power seat module (PSM). The relay is on the central electronic module (CEM). Check the cable between the supply relay for the power seat module (PSM) and the passenger compartment fuse. Check for an open-circuit. Fault-trace if the fuse has blown. Check for a short-circuit to ground.

If necessary, check that the supply relay is not defective by trying it in another location.

Check the cable between the supply relay and the power seat module (PSM). Check for a short-circuit to ground. Check for an open-circuit. Also check the ground terminals for the power seat module (PSM).

Check the connector on the power seat module (PSM). Check for contact resistance and oxidation. Check for damage.

Remedy as necessary.

Other information:

- See **POWER SEAT MODULE (PSM), REPLACING** (-2004) or **POWER SEAT MODULE (PSM), REPLACING** (2005-).
- To connect the breakout box, see **CONNECTING THE BREAKOUT BOX, POWER SEAT MODULE (PSM)**
- For information about connectors / signals, see **SIGNAL SPECIFICATION, POWER SEAT MODULE**
- For information about checking wiring and terminals, see **CHECKING WIRING AND TERMINALS**

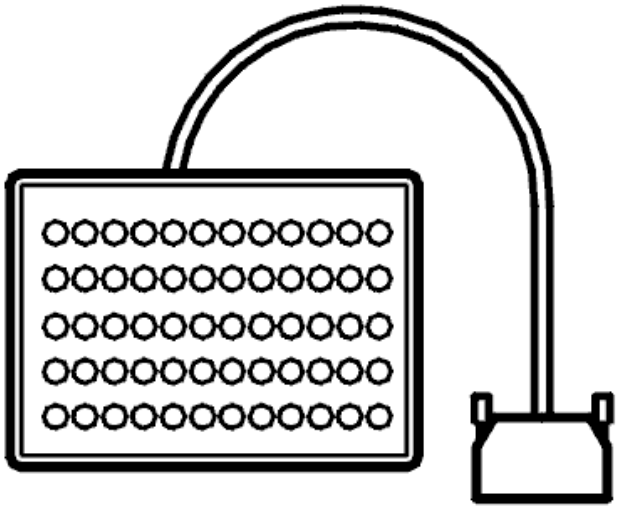

Fig. 47: Breakout Box
Courtesy of VOLVO CARS CORPORATION

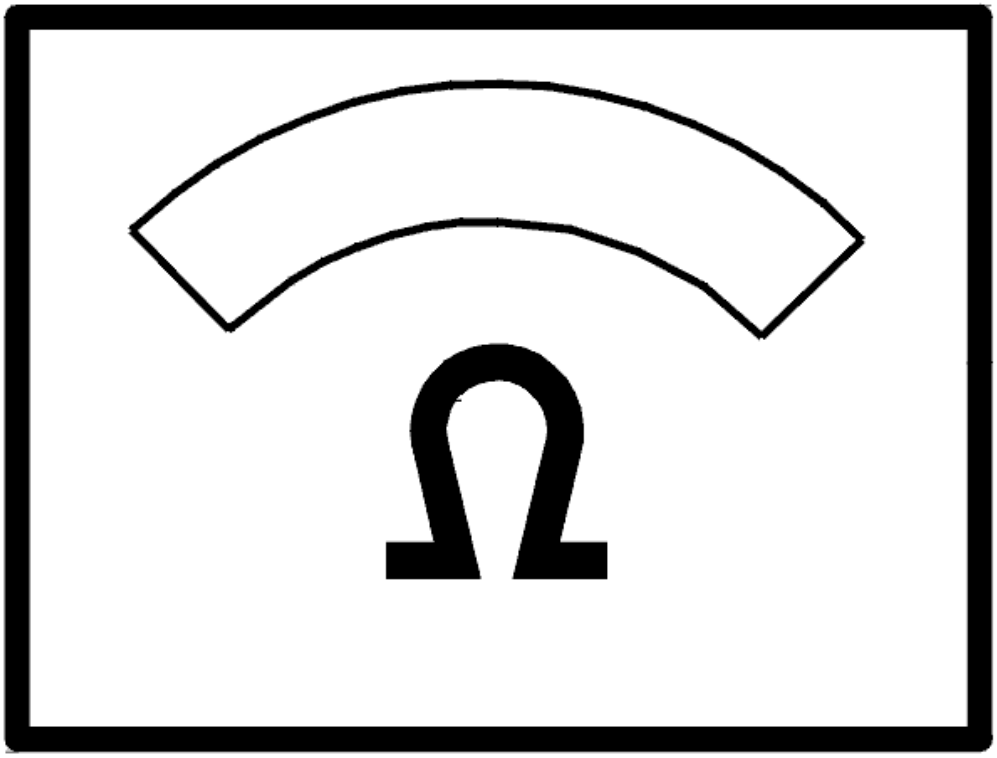

Fig. 48: Identifying Ohm Meter
Courtesy of VOLVO CARS CORPORATION

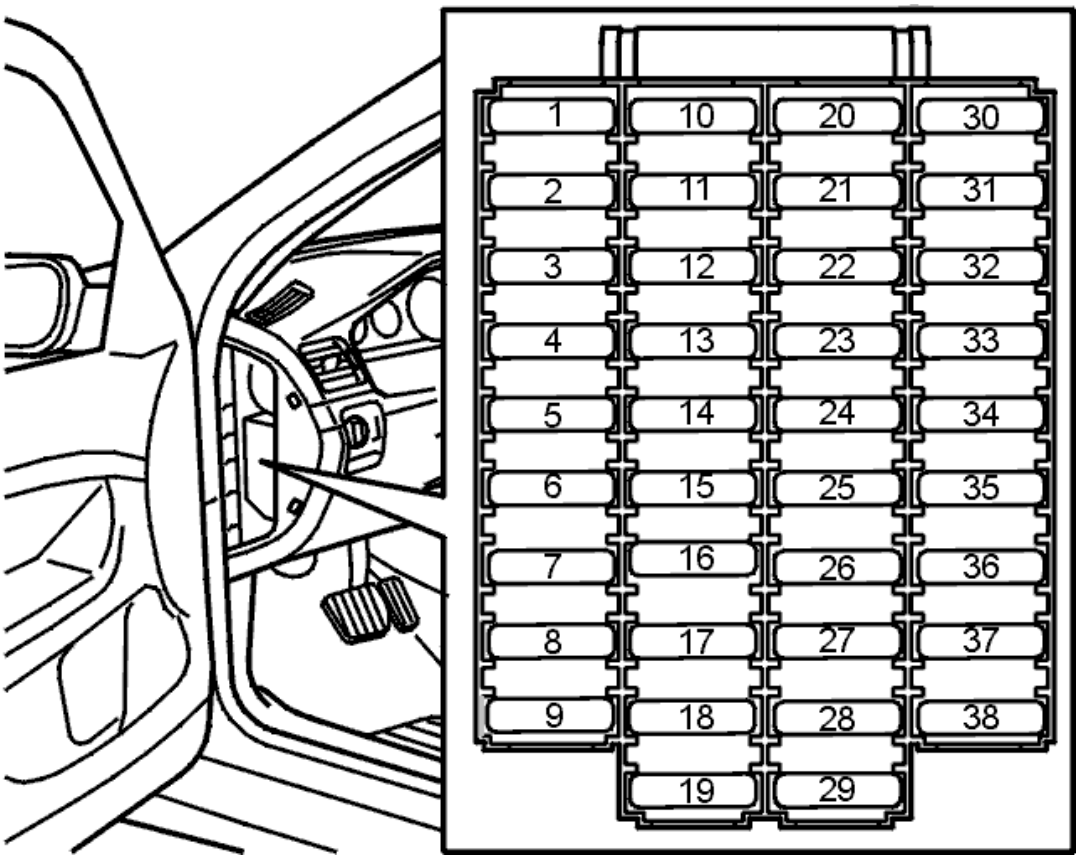

Fig. 49: Fuse Holder (Passenger Compartment)
Courtesy of VOLVO CARS CORPORATION

Was a fault detected?

- **YES**

  Refer to **CHECKING THE FUNCTION OF THE POWER SEAT MODULE (PSM)**

- **NO**

  Refer to **SIGNAL MISSING**

CHECKING COMMUNICATION WITH THE POWER SEAT MODULE (PSM)

HINT: The CAN communication with the control module is probably OK if the control module ID can be read off. In that case the fault is probably intermittent and will then be more difficult to trace.

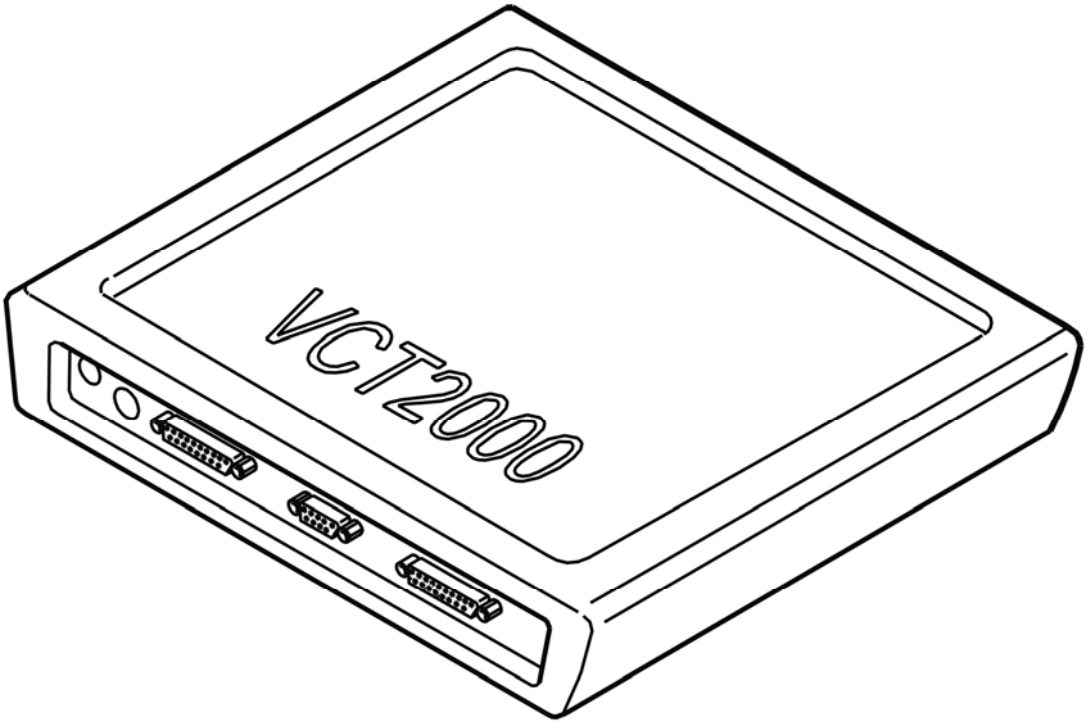

Fig. 50: Identifying VCT2000 Diagnostic Tool Symbol In VIDA
Courtesy of VOLVO CARS CORPORATION

- Try to communicate with the power seat module (PSM) by reading off the control module ID
- Use the VCT2000 (or appropriate scan tool)

- **Continue**

  Refer to **SIGNAL MISSING**

CHECKING THE FUNCTION OF THE POWER SEAT MODULE (PSM)

HINT: After carrying out the repair, check that the fault has been remedied.

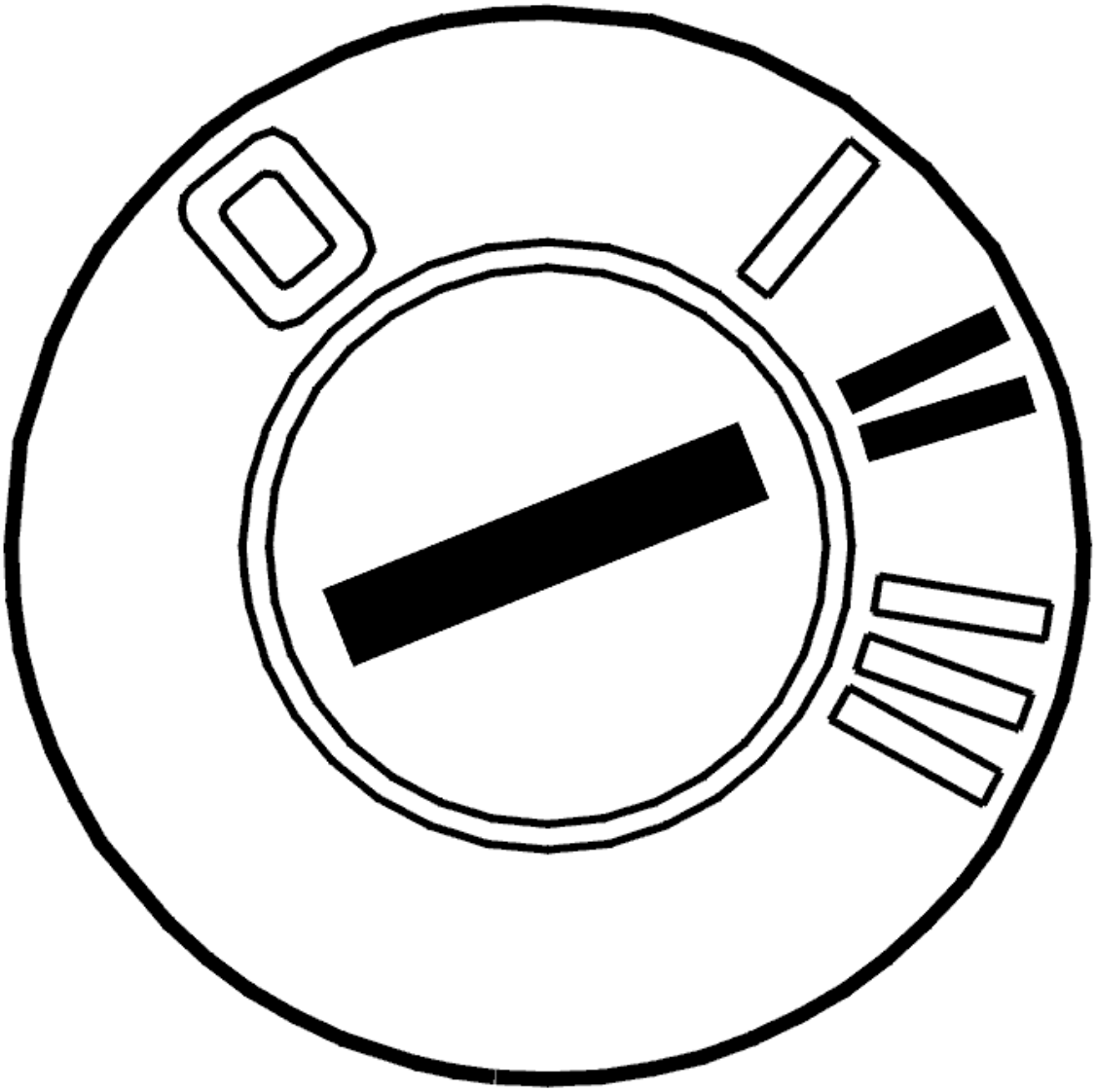

Fig. 51: Identifying Ignition ON
Courtesy of VOLVO CARS CORPORATION

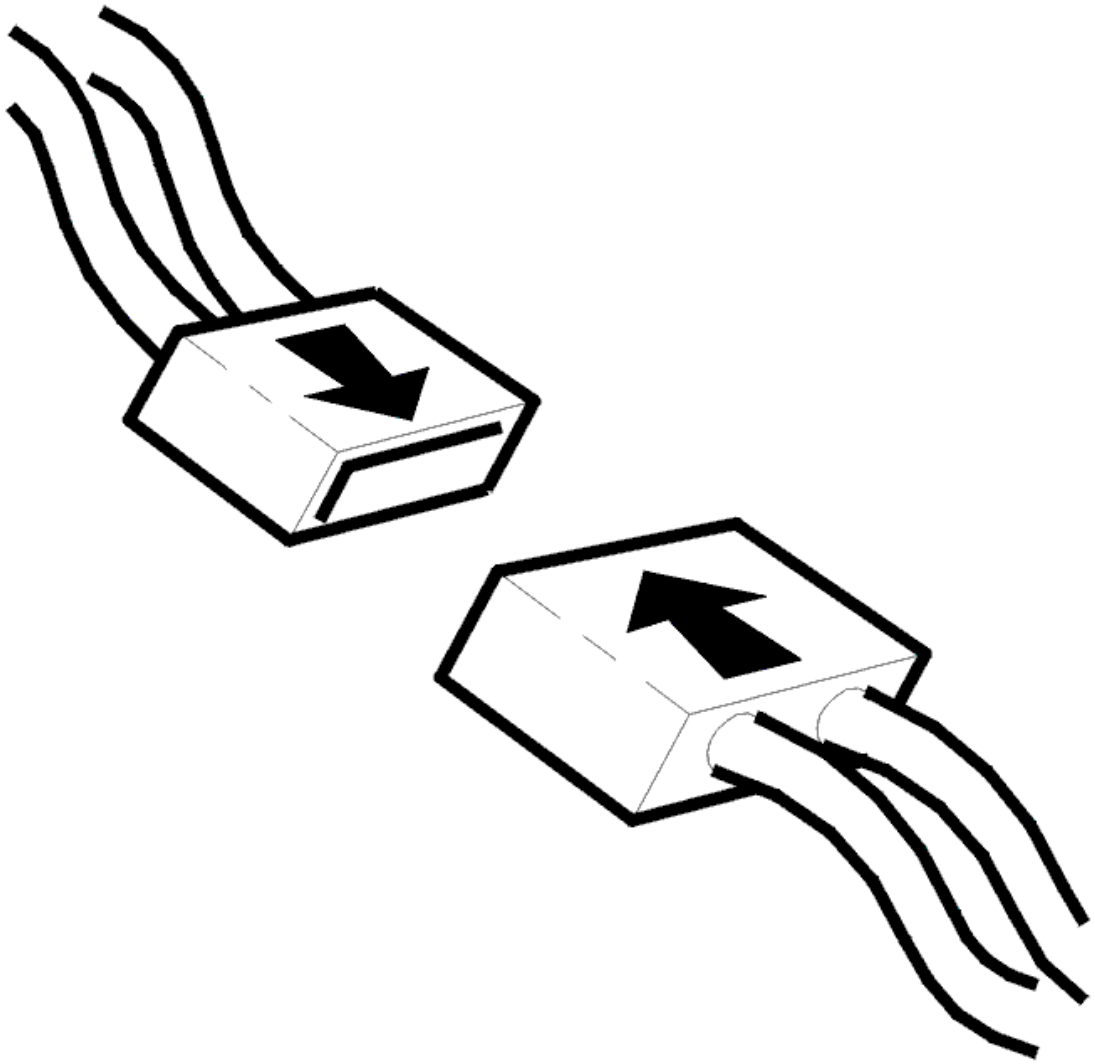

Fig. 52: Connecting Connector
Courtesy of VOLVO CARS CORPORATION

- Ignition off
- Reconnect the connectors. Reinstall the components
- Ignition on.

  Check the function of the control module by operating the seat using the controls.

  Also check the memory function of the seat, that the seat position can be programmed, recalled and that automatic setting of the seat and door mirrors occurs when the car is unlocked using the remote control.

Can the seat be operated?

- **YES**

OKAY: Troubleshooting has been completed.

- **NO**

  Refer to **INFORMATION**

SIGNAL MISSING

GENERAL INFORMATION

HINT: For general information about fault-tracing the control area network (CAN), see the linked document below. See GENERAL INFORMATION ABOUT FAULT-TRACING IN THE CAN NETWORK (2005-2012)

In order to check the control area network (CAN) cables, the resistance in the network must be measured. The resistance between the two CAN cables, with the network connected, must be 60ohms in both the high speed network and the low speed network.

NOTE: **Resistance will only be 60 ohms if the main artery of the CAN network is whole and the network is connected. If the main artery of the CAN network is split somewhere and a reading is taken between the CAN cables, resistance will be 120 ohms.**

If diagnostic trouble codes (DTCs) can be read off from the relevant control module, the fault is probably intermittent. The locations that must be checked in the event of a fault in the low speed network are the junctions behind the central electronic module (CEM) and the audio module (AUM) as well as the cable harness behind the Audio module (AUM).

Intermittent fault in the current supply to the actual control module is indicated by the DTC in the Central electronic module (CEM) (CEM-1A5X or CEM-1A6X). There is probably no diagnostic trouble code (DTC) in the relevant control module as the control module cannot store a diagnostic trouble code (DTC) when it is without power.

- **Continue**

  Refer to **CHECKING THE RESISTANCE OF THE CONTROL AREA NETWORK (CAN) CABLES**

CHECKING THE RESISTANCE OF THE CONTROL AREA NETWORK (CAN) CABLES

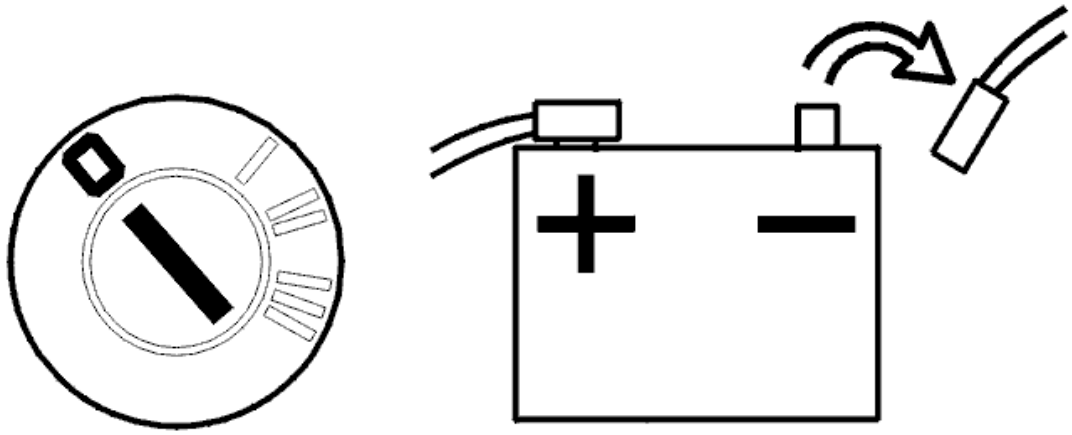

Fig. 53: Identifying Ignition In Off Position And Disconnecting Negative Cable From Battery
Courtesy of VOLVO CARS CORPORATION

- Disconnect the battery negative lead. The network must not be powered when taking resistance readings. Otherwise an incorrect value may be obtained.
- Connect the adapter wiring to the central electronic module (CEM).

HINT: Where a breakout box cannot be used, take readings from the rear of the affected connectors if possible. This prevents terminal pins and socket housings being damaged.

When taking readings on the low speed network

- When taking readings on the low speed network the adapter wiring should be connected to the Central electronic module (CEM) and readings taken from there. Readings can even be taken in the connector for the Power seat module (PSM). The advantage of the adapter wiring to the Central electronic module (CEM) is that all control module can be connected in the network when taking readings and access can be gained to both the high speed and low speed networks.

  The resistance reading only measures the main arteries in the low speed network, not the junctions that exist for different control modules.

When taking readings on the high speed network

- When taking readings on the high speed network the adapter wiring should be connected to the Engine control module (ECM) and readings taken from there. The Engine control module (ECM) must be connected. This resistance reading only measures the main arteries in the high speed network.

Connect an ohmmeter to the terminals for CAN-L and CAN-H on the relevant network. Turn the contacts and turn the cable harness. Resistance must be approximately 60 ohms.

NOTE: **Resistance will only be 60 ohms if the main artery of the CAN network is whole and the network is connected. If the main artery of the CAN network is split somewhere and a reading is taken between the CAN cables, resistance will be 120 ohms.**

Other information

- see **BATTERY, DISCONNECTING**
- see **CONNECTING THE BREAKOUT BOX**
- see **CHECKING WIRING AND TERMINALS**

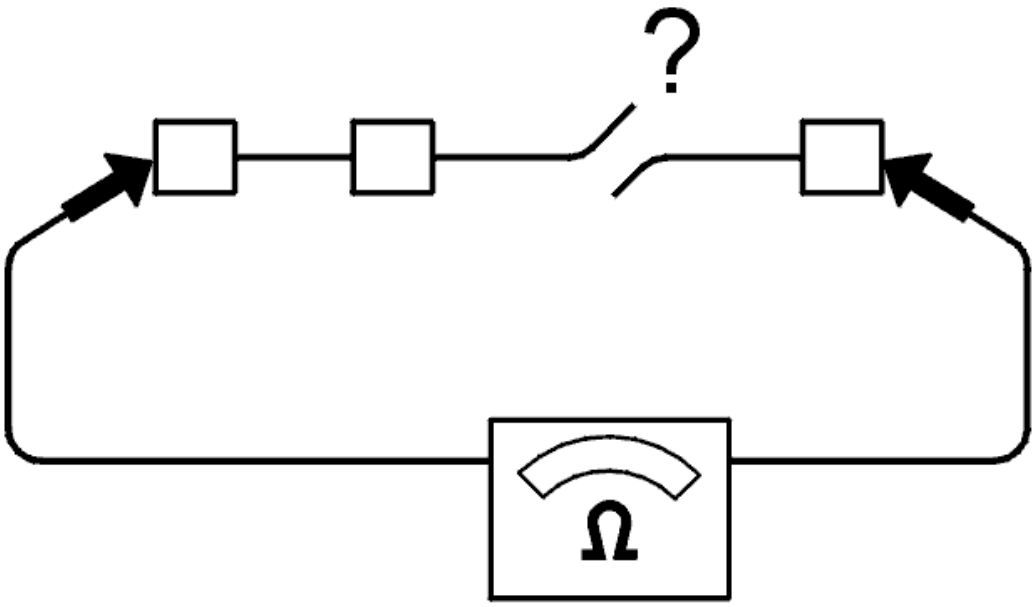

Fig. 54: Checking For Open Circuit
Courtesy of VOLVO CARS CORPORATION

Is the value OK?

- **YES**

  Refer to **CHECKING A SHORT-CIRCUIT IN CAN CABLES**

- **NO**

  Refer to **IDENTIFYING FAULT CAUSES IN THE CAN NETWORK**

CHECKING A SHORT-CIRCUIT IN CAN CABLES

Connect an ohmmeter between respective CAN cable and voltage supply and between the CAN cables and ground. Turn the contacts and turn the cable harness. The resistance must be infinite or very high.

HINT: Readings can be taken from one and the same connector if the CAN wiring, voltage supply and ground is pre-routed. If possible, measure from the rear of the affected connectors in order to minimize any damage and future loose connections. If this is not possible, use the adapter wiring or loose terminal pin for good contact.

Was a fault detected?

- **YES**

  Refer to **IDENTIFYING FAULT CAUSES IN THE CAN NETWORK**

- **NO**

  Refer to **CHECKING THE TRAFFIC LOAD ON THE CAN CABLES**

CHECKING THE TRAFFIC LOAD ON THE CAN CABLES

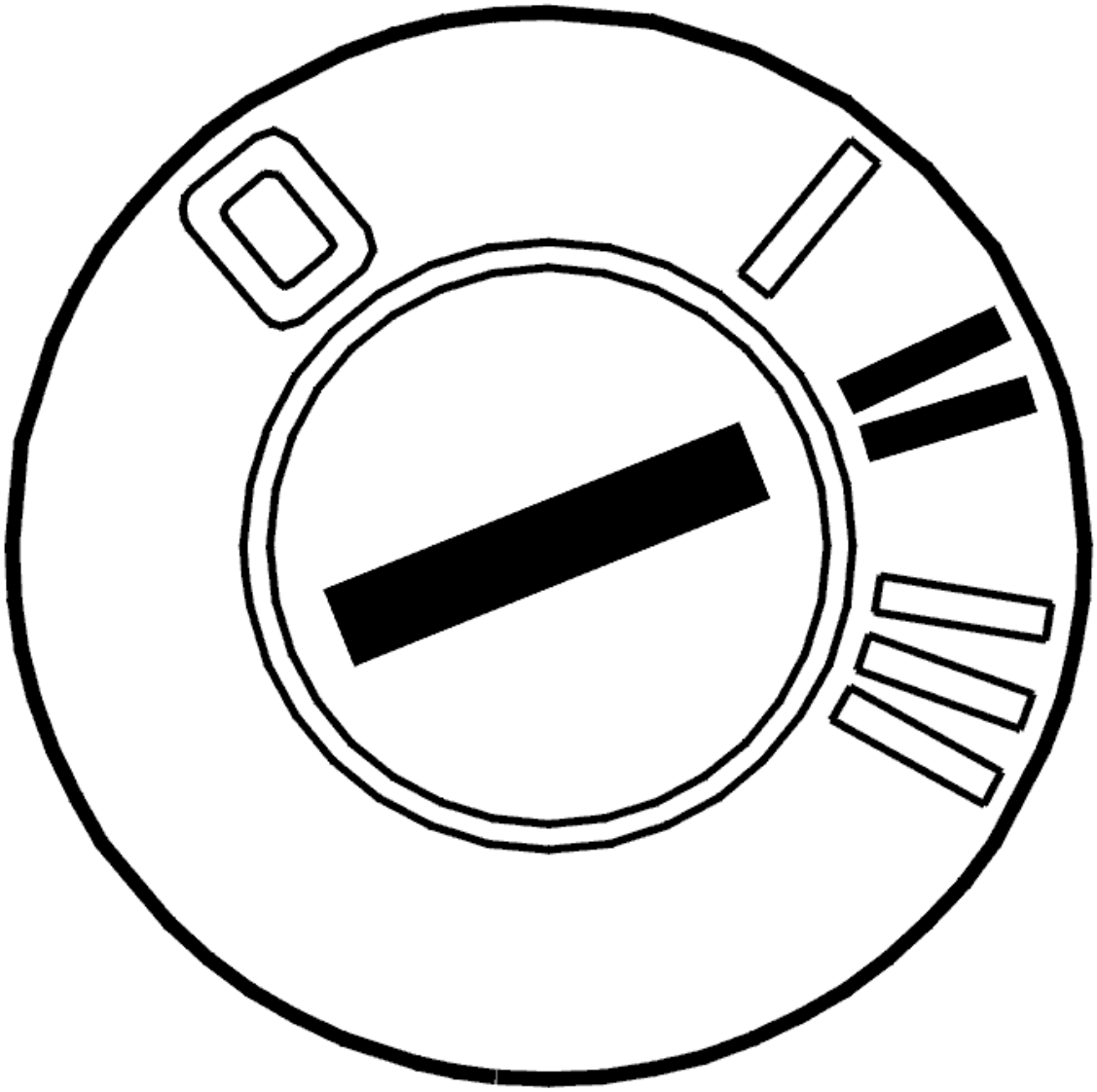

Fig. 55: Identifying Ignition ON
Courtesy of VOLVO CARS CORPORATION

- Connect the battery.
- Ignition on.

Faults in the CAN network may be due to a control module sending faulty messages that disrupt normal communication. When messages are sent incorrectly, this results in a considerable increase in the amount of traffic on the CAN network. The load can be checked by reading the average value of the voltage on the CAN cables in relation to ground.

The following applies for model year -2004:

Connect a voltmeter between CAN-L and ground. The voltage shall be approx. 2.3 V.

Then connect a voltmeter between CAN-H and ground. The voltage shall be approx. 2.8 V.

The following applies for model year 2004-:

Connect a voltmeter between CAN-L and ground. The voltage should be approx: V

Connect a voltmeter between CAN-H and ground. The voltage should be approx: V

NOTE: **For vehicles of later model years, normal voltage values lie within a specific interval due to increased traffic between the control modules on the CAN network upon update of the electrical system.**

HINT: If possible, measure from the rear of the affected connectors so that they are not damaged.

Other information

- see **BATTERY, DISCONNECTING**

Is the value OK?

- **YES**

  Refer to **INFORMATION**

- **NO**

  Refer to **IDENTIFYING A CONTROL MODULE IN THE CAN NETWORK**

IDENTIFYING FAULT CAUSES IN THE CAN NETWORK

- Disconnect a control module that disconnects the CAN network (a control module that has four terminals to the CAN network).

  HINT: For the low speed network, suitable places for disconnecting the network are at the steering wheel module (SWM), the driver information module (DIM) or the climate control module (CCM).

  In the event of an short-circuit between on of the CAN cables and voltage or ground, the fault can be localized disconnecting a control module that splits the CAN network. Readings can then be taken to determine on which side the fault is on the disconnected control module.

  Connect an ohmmeter between the CAN cable and voltage supply respectively ground. Take readings from both ends of the CAN networks at the network junction. Twist and bend the cable harness to find any intermittent short-circuits. The resistance must be infinite or very high (more than 1 Mohms).

  If a fault can be localized in one direction, split the network at a point further on in the CAN network in the direction that the fault was discovered and take a new reading. Try to locate the fault in this way.

  HINT: A short-circuit between the CAN cables and supply voltage or ground may be in either the wiring or in a control module.

Remedy the cables as necessary. If a fault is found on one control module, replace the control module.

- **Continue**

  Refer to **VERIFICATION**

IDENTIFYING A CONTROL MODULE IN THE CAN NETWORK

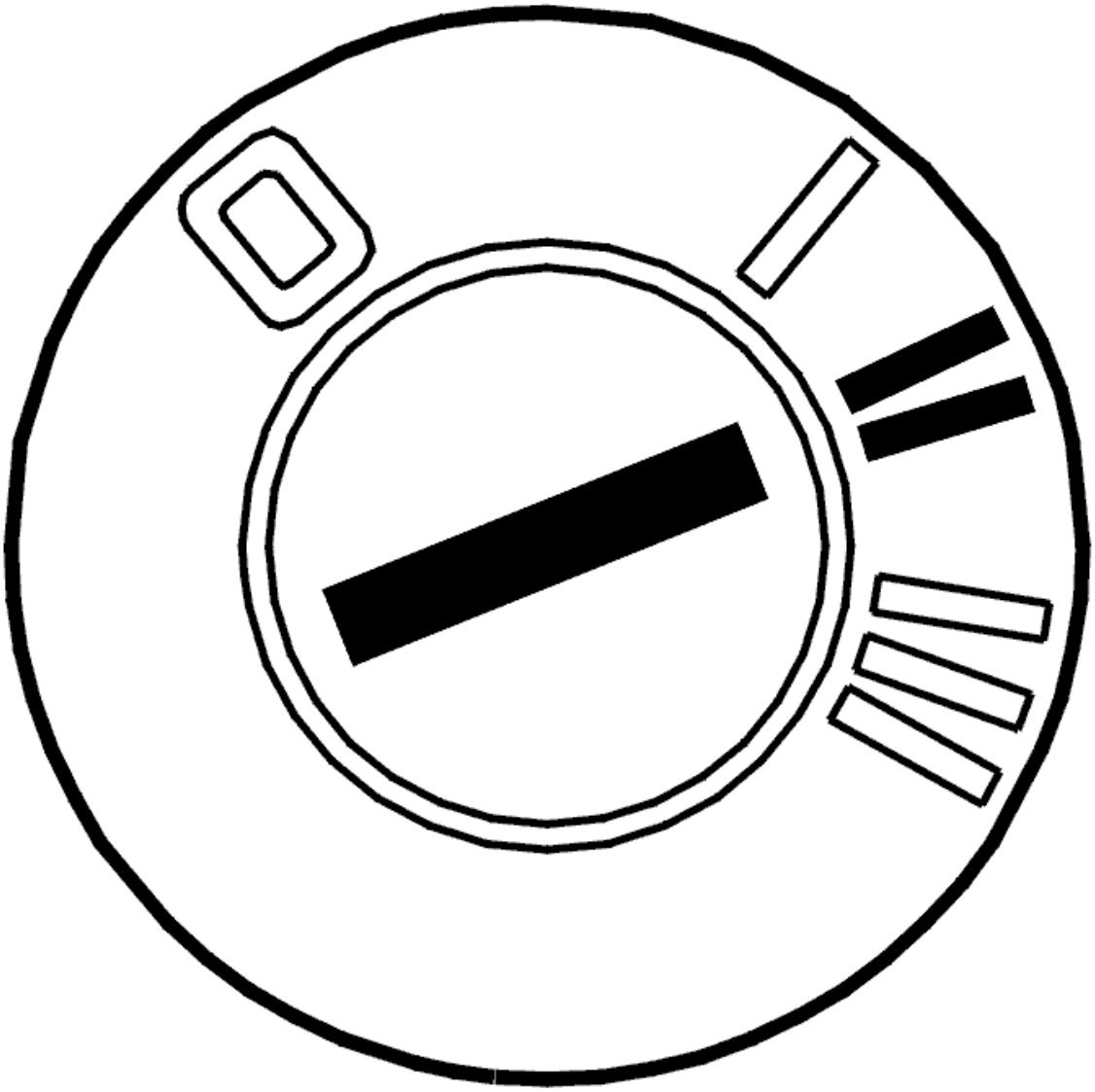

Fig. 56: Identifying Ignition ON
Courtesy of VOLVO CARS CORPORATION

- Connect the battery.
- Ignition on.

  If the load on the CAN network is too high, this may be due to a control module transmitting faulty messages on the CAN network. This is called a disruptive control module. The fault may also be due to

an intermittent short-circuit to supply voltage or ground in one of the CAN cables. This results in the control modules on the CAN network starting to send faulty messages. The fault may occur without any of the control modules storing a diagnostic trouble code (DTC). The voltage can be measured between the CAN cables in order to check the load on the CAN network.

The following applies for model year -2004:

Connect a voltmeter between the CAN cables. In the event of correct communication on the network, the average value of the voltage must be approximately 0.5 V (0.4 V to 0.6 V).

The following applies for model year 2004-:The following applies for model year 2004-:

Connect a voltmeter between the CAN cables. During correct CAN network communication, voltage should be about 0.6-1.4 V.

NOTE: For vehicles of later model years, the normal voltage value is slightly higher due to increased traffic between the control modules on the CAN network upon update of the electrical system.

In the event of a communication fault the voltage is significantly higher than the above specified values. In order to identify which control module has faulty communication, cut the power supply to one control module at a time. Check the voltage in the CAN cables again. The easiest way to cut the power supply is to remove the fuse(s) for the relevant control module. Repeat until the voltage between the CAN wiring drops to the normal level.

HINT: When the probable faulty control module has been identified, connect and disconnect the supply voltage to the control module a number of times to verify that the fault appears and disappears.

NOTE: Do not cut the power to the central electronic module (CEM) unless it is the last control module left to check.

The control module that is communicating incorrectly must be replaced. Remedy as necessary.

NOTE: After a fault with "interfering" control modules, other control modules may remain in "Limp-Home mode" even when the ignition has been switched off and on several times. To remedy this, disconnect and reconnect the battery negative terminal to restore the control modules to normal function.

Other information

- see **BATTERY, DISCONNECTING**

- **Continue**

Refer to **VERIFICATION**

IDENTIFYING FAULT CAUSES IN THE CAN NETWORK

- Disconnect a control module that disconnects the CAN network (a control module that has four terminals to the CAN network).

  HINT: For the low speed network, suitable places for disconnecting the network are at the steering wheel module (SWM), the driver information module (DIM) or the climate control module (CCM).

  In the event of an open-circuit on, or short-circuit between the CAN cables, the fault can be localized by disconnecting a control module that splits the CAN network. Readings can then be taken to determine on which side the fault is on the disconnected control module.

  Connect an ohmmeter between the CAN cables. Take readings from both ends of the CAN networks at the network junction. Twist and bend the cable harness to find any intermittent short-circuits. Resistance should be 120 ohms.

  If a fault can be localized in one direction, split the network at a point further on in the CAN network in the direction that the fault was discovered and take a new reading. Try to locate the fault in this way.

  Remedy the cables as necessary.

- **Continue**

  Refer to **VERIFICATION**

VERIFICATION

HINT: After rectifying a fault, a verification should be carried out.

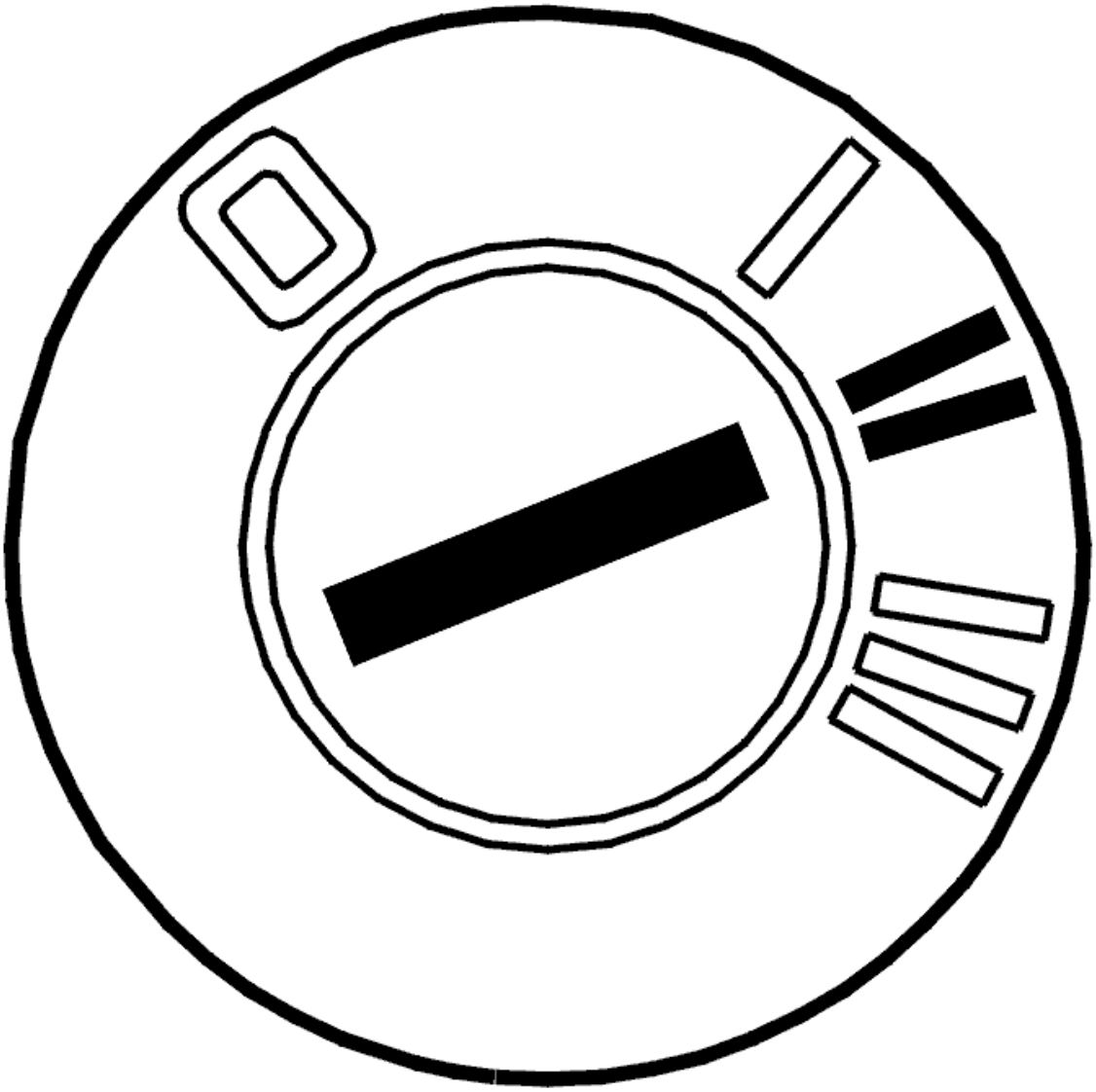

Fig. 57: Identifying Ignition ON
Courtesy of VOLVO CARS CORPORATION

- Reinstall the connectors, components etc.
- Ignition on.
- Erase diagnostic trouble codes using the VCT2000 (or appropriate scan tool).
- Start the car. Allow the vehicle to run for 10 minutes.
- Read off diagnostic trouble codes (DTCs).

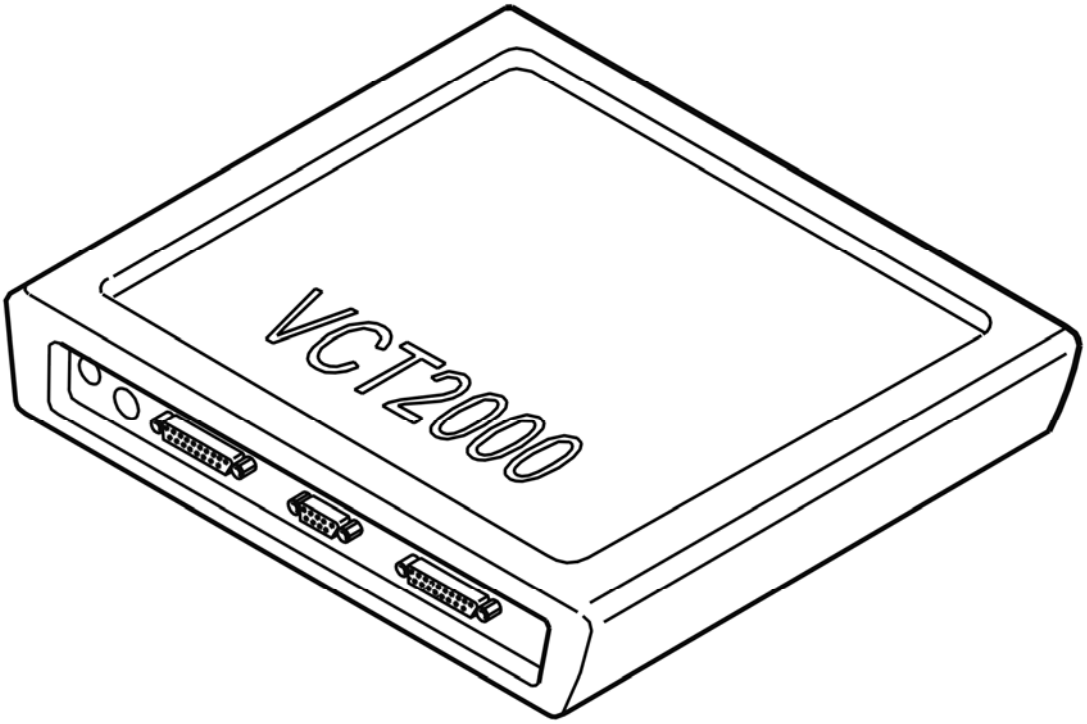

Fig. 58: Identifying VCT2000 Diagnostic Tool Symbol In VIDA
Courtesy of VOLVO CARS CORPORATION

Does the diagnostic trouble code (DTC) for a communication fault recur (CEM-1A5X or CEM-1A6X)?

- **YES**

  Refer to **INFORMATION**

- **NO**

  OKAY: Troubleshooting has been completed.

INFORMATION

FAULT-TRACING INFORMATION

Verification shows that the fault is no longer present. The diagnostic trouble code (DTC) was probably caused by an intermittent fault.

Fault-tracing for this diagnostic trouble code (DTC) is not followed by a verification.

You can view the information again or exit fault-tracing for this diagnostic trouble code (DTC).

INFORMATION

FAULT-TRACING INFORMATION

The fault should have been detected and remedied. As this is not the case fault-tracing has failed.

Exit fault-tracing for this diagnostic trouble code (DTC) or make another attempt.

CEM-1A54: COMMUNICATION WITH THE POWER SEAT MODULE (PSM). SIGNAL MISSING (2005-2012)

DIAGNOSTIC TROUBLE CODE (DTC) INFORMATION CEM-1A54

Condition

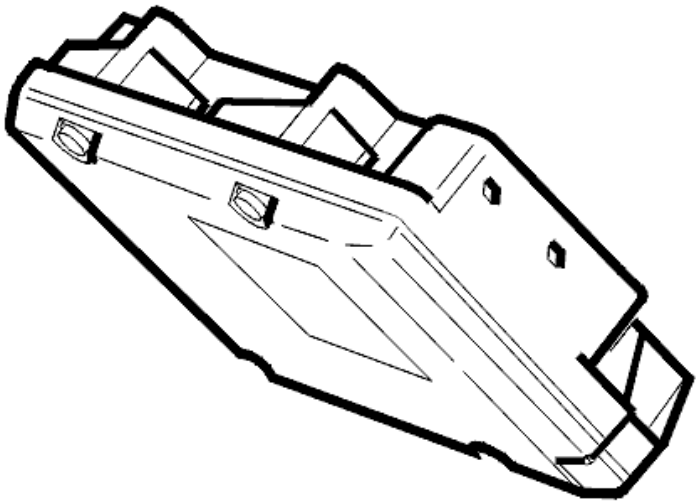

Fig. 59: Brake Control Module
Courtesy of VOLVO CARS CORPORATION

The diagnostic trouble code (DTC) is stored if the central electronic module (CEM) registers that communication with the power seat module (PSM) is not operating.

The diagnostic trouble code (DTC) can be diagnosed when the ignition has been on for more than 10 seconds.

NOTE: **In the event of CEM-1A5X diagnostic trouble codes (DTCs), the central electronic module (CEM) must not be replaced as the diagnostic trouble code (DTC) indicates a communication fault in the controller area network (CAN).**

Substitute Value

- None.

Possible Source

- No power supply to the power seat module (PSM)
- Open-circuit in the ground lead for the power seat module (PSM)
- Contact resistance in the terminals
- Open-circuit in the wiring for the CAN low speed network to the power seat module (PSM)
- The power seat module (PSM) is not intended for this vehicle (for example a used control module with different software/hardware).

HINT: If several diagnostic trouble codes (DTCs) are stored in the central electronic module (CEM) for communication faults with other control modules in the low speed network, this indicates a common fault in the controller area network (CAN).

Fault symptom[s]

- Power seat does not operate at all.
- Automatic seat/door mirror operation does not function.

SIGNAL MISSING

CHECKING THE FUNCTION OF THE POWER SEAT MODULE (PSM)

Check the function of the power seat module (PSM) by operating the seat using the controls.

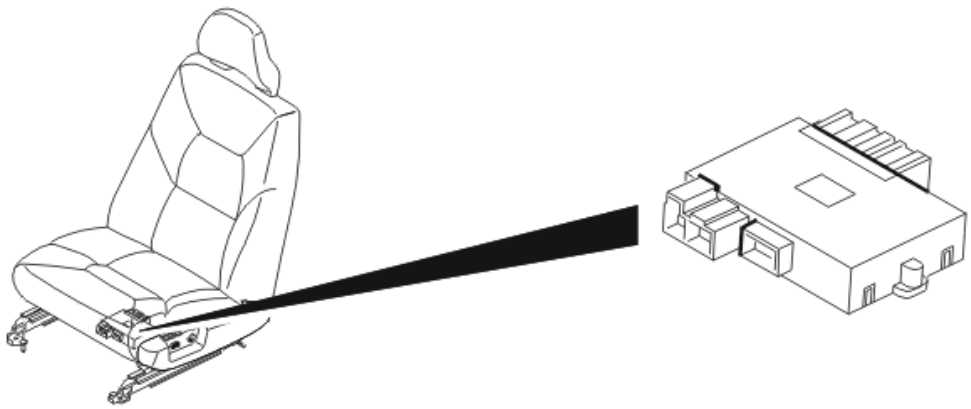

Fig. 60: Identifying Power Seat Control Module
Courtesy of VOLVO CARS CORPORATION

Can the seat be operated?

- **YES**

  Refer to **CHECKING COMMUNICATION WITH THE POWER SEAT MODULE (PSM)**

- **NO**

  Refer to **CHECKING THE POWER SUPPLY AND GROUND TERMINALS**

CHECKING THE POWER SUPPLY AND GROUND TERMINALS

Check that the fuse for the control module is intact.

Check the power supply and ground terminal for the power seat module (PSM) as follows.

Remedy as necessary.

Other information:

- Power seat module (PSM): **CHECKING GROUND POINTS**
- see **CHECKING WIRING AND TERMINALS**

Was a fault detected?

- **YES**

  Refer to **CHECKING THE FUNCTION OF THE POWER SEAT MODULE (PSM)**

- **NO**

  Refer to **SIGNAL MISSING**

CHECKING COMMUNICATION WITH THE POWER SEAT MODULE (PSM)

HINT: The CAN communication with the control module is probably OK if the control module ID can be read off. The fault is probably intermittent and may therefore be difficult to locate.

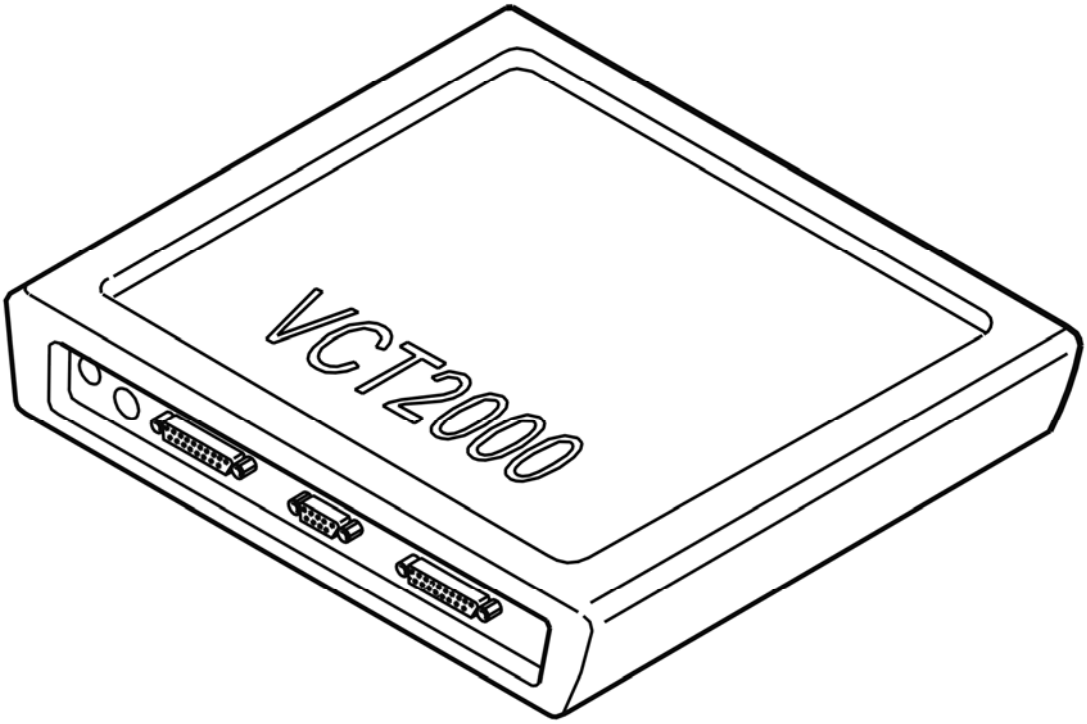

Fig. 61: Identifying VCT2000 Diagnostic Tool Symbol In VIDA
Courtesy of VOLVO CARS CORPORATION

- Try to communicate with the passenger seat module (PSM) by reading off the control module ID
- Use the VCT2000 (or appropriate scan tool)
- **Continue**

  Refer to **SIGNAL MISSING**

CHECKING THE FUNCTION OF THE POWER SEAT MODULE (PSM)

HINT: After carrying out the repair, check that the fault has been remedied.

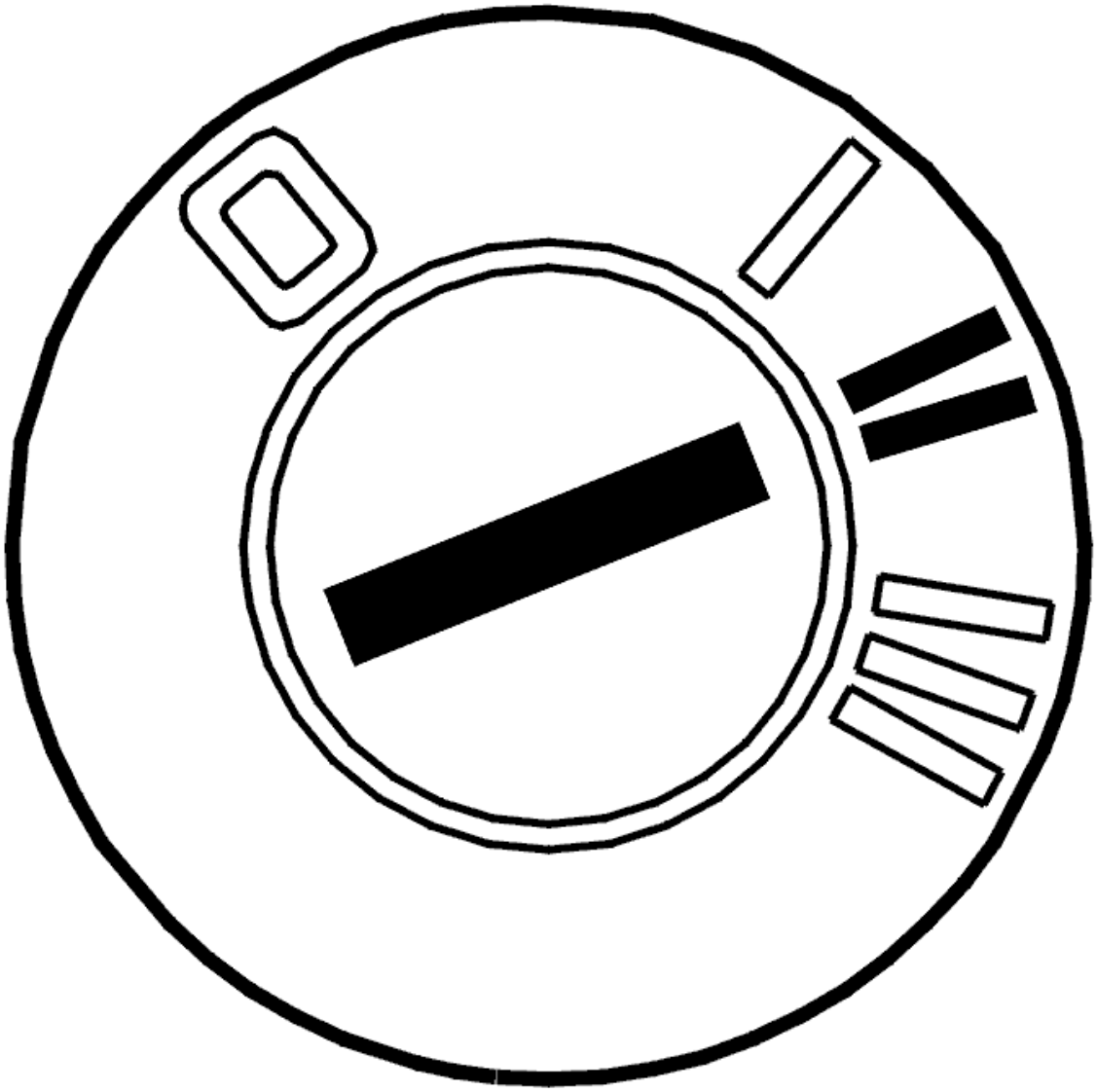

Fig. 62: Identifying Ignition ON
Courtesy of VOLVO CARS CORPORATION

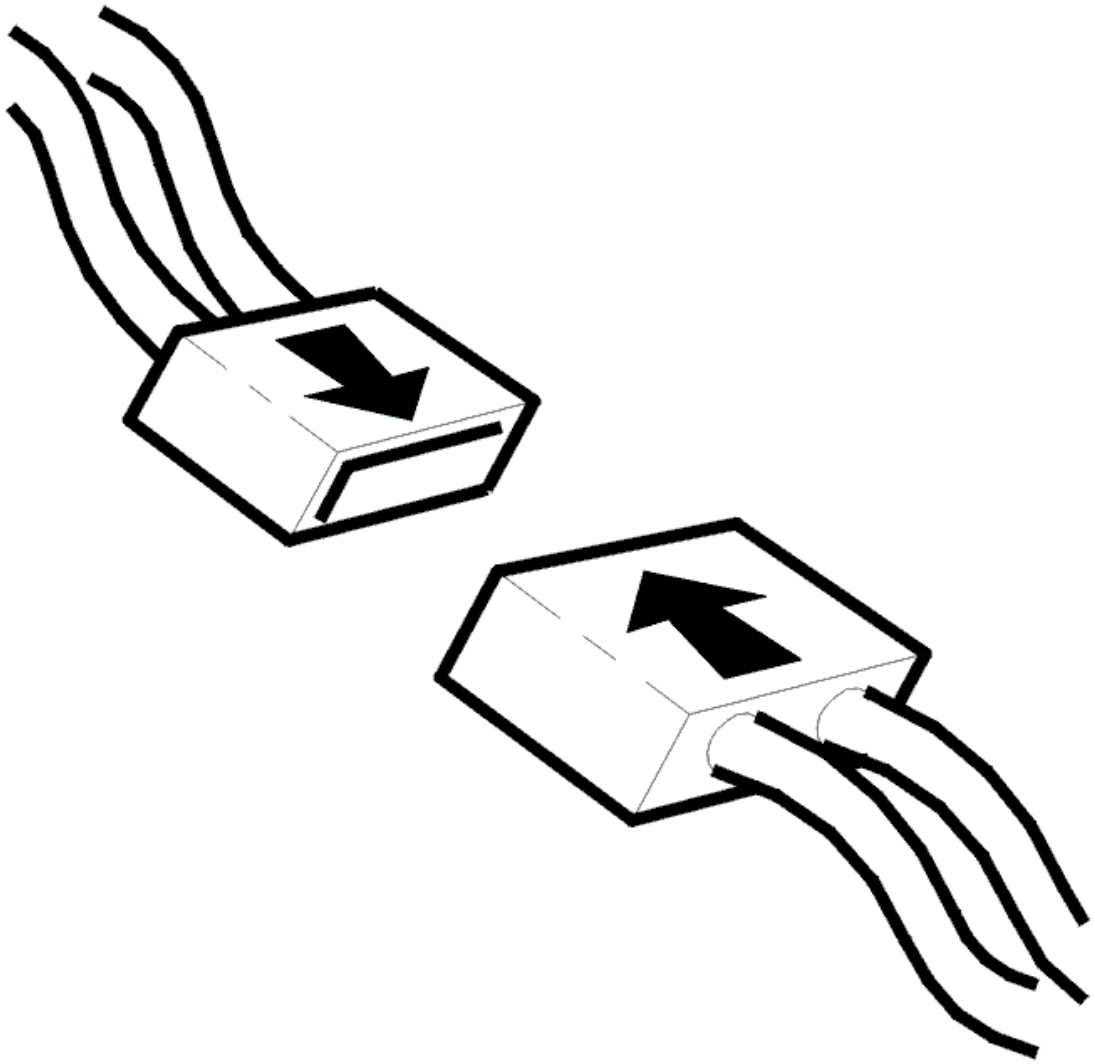

Fig. 63: Connecting Connector
Courtesy of VOLVO CARS CORPORATION

- Ignition off
- Reconnect the connectors. Reinstall the components
- Ignition on.

  Check the function of the control module by operating the seat using the controls.

  Also check the memory function of the seat, that the seat position can be programmed, recalled and that automatic setting of the seat and door mirrors occurs when the car is unlocked using the remote control.

Can the seat be operated?

- **YES**

OKAY: Troubleshooting has been completed.

- **NO**

  Refer to **INFORMATION**

SIGNAL MISSING

GENERAL INFORMATION

NOTE: Illustrations shown are only examples.

HINT: For general information about CAN-troubleshooting, see: GENERAL INFORMATION ABOUT FAULT-TRACING IN THE CAN NETWORK

- **General about CAN-related diagnostic trouble codes:**

  CEM-DF01 - DF17 can only be stored in Central electronic module (CEM). These diagnostic trouble codes are stored when an electric fault is detected in CAN-lines. Start with these diagnostic trouble codes first.

  CEM-1AXX only stored in Central electronic module (CEM). One diagnostic trouble code for every control module on the CAN-net. These diagnostic trouble codes indicate that Central electronic module (CEM) does not receive any reply from other control modules.

  XXX-E000 (HS-CAN)/E001 (LS-CAN) can be stored in all CAN-connected control modules. These diagnostic trouble codes indicate that the control module has detected interference on the CAN-net.

  XXX-E003 can be stored in all CAN-connected control modules except in Central electronic module (CEM). The control modules on the CAN-net listen for a message (identity number) that is sent out at regular intervals from Central electronic module (CEM). This diagnostic trouble code indicates that the control module has not received any identity number, or that the expected number is not correct. Interference on the CAN-net can also store this diagnostic trouble code.

  NOTE: In case of CAN-related faults, it is likely that a combination of above diagnostic trouble codes occur.

  NOTE: After fault with control modules that interfere with communication, other control modules may remain in Limp-Home (that is, they work with reduced functionality) even when the ignition has been turned off and on a few times. For certain faults in the CAN-net where control modules have stopped communicating, it may help to disconnect/reconnect the battery to "restart" the control module/CAN-net.

  If diagnostic trouble codes (DTCs) for communication faults can be read off from a control module, the fault is probably intermittent.

Intermittent fault in the voltage supply and ground to a control module on the CAN network results in the Central electronic module (CEM) storing a diagnostic trouble code (DTC) for an open-circuit in communication with the control module where the voltage supply does not work. There will probably not be a diagnostic trouble code (DTC) in the control module where the open-circuit in the voltage supply occurred as the control module cannot store a diagnostic trouble code (DTC) when it is not supplied with power.

NOTE: **Central electronic module (CEM) should not be replaced in case of CAN-fault, unless troubleshooting reveals that Central electronic module (CEM) has an internal fault.**

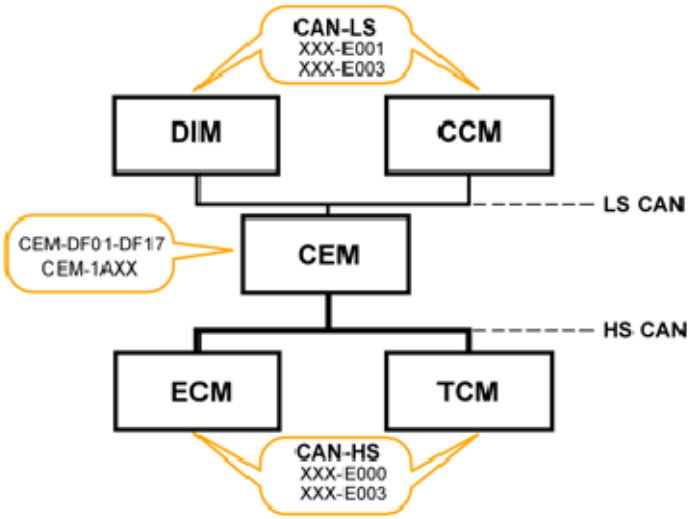

Fig. 64: High-Speed CAN And Low-Speed CAN Communication Diagram
Courtesy of VOLVO CARS CORPORATION

- **Continue**

Refer to **CHECKING RESISTANCE IN CAN-NET**

CHECKING RESISTANCE IN CAN-NET

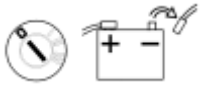

Fig. 65: Ignition Off And Disconnecting Battery Negative Lead
Courtesy of VOLVO CARS CORPORATION

- Ignition off
- Disconnect the battery negative lead
- Connect OBDII-Box **(951 3015)** to the diagnostics socket.

For general information about CAN-troubleshooting, see: **GENERAL INFORMATION ABOUT FAULT-TRACING IN THE CAN NETWORK**

Measure resistance between the following connections on the OBDII-box/diagnostics socket.

- #3 and #11. The resistance should be approx. 55 - 65 ohms.
- If resistance is approx. 120 ohms, this indicates open circuit in the circuit so that only one terminating resistor (120 ohms) has been measured.
- If resistance is above 1 kohms this indicates open circuit/high contact resistance somewhere in the circuit.
- If resistance is below 55 ohms this indicates short-circuiting/contact resistance between the CAN-lines somewhere in the circuit.

HINT: For LS-CAN, terminating resistors are located in Upper electronic module (UEM) and Rear electronic module (REM).

Twist the cable harness and wiggle connectors where they can be accessed along the cable harness during every measurement, and note if the resistance changes to detect intermittent short-circuits or open circuit.

NOTE: **Resistance measurement measures only main lines in the CAN-net (in circuit where both terminating resistors are found), not branches to certain control modules. Open circuit on branching without a terminating resistor cannot be detected with this measurement. However, short-circuiting on a branch can be detected. To measure resistance in the CAN-net to control modules located in a branching of their own, the measurement shall be done against the CAN-net at that control module. The values shall be as above.**

NOTE: **After fault with control modules that interfere with communication, other control modules may remain in Limp-Home (that is, they work with reduced functionality) even when the ignition has been turned off and on a few times. For certain faults in the CAN-net where control modules have stopped communicating, it may help to disconnect/reconnect the battery to "restart" the control module/CAN-net.**

Remedy as necessary.

Other information

- see **BATTERY, DISCONNECTING**
- see **CHECKING WIRING AND TERMINALS**

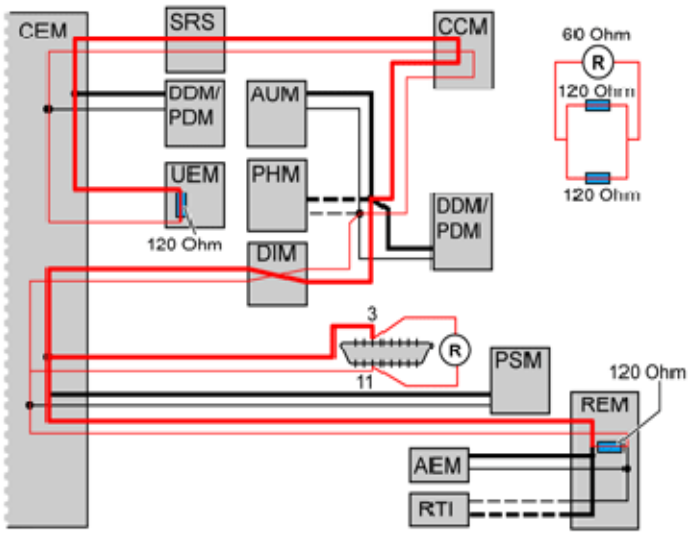

Fig. 66: Checking Resistance In CAN Lines
Courtesy of VOLVO CARS CORPORATION

Was a fault detected?

- **YES**

  Refer to **VERIFICATION**

- **NO**

  Refer to **CHECKING SHORT-CIRCUITING TO GROUND/VOLTAGE IN CAN-NET**

CHECKING THE AMOUNT OF TRAFFIC ON THE LS-CAN

Fig. 67: Identifying Ignition On Position
Courtesy of VOLVO CARS CORPORATION

- Connect the battery
- Ignition on.
- Connect OBDII-Box **(951 3015)** to the diagnostics socket.

  For general information about CAN-troubleshooting, see: **GENERAL INFORMATION ABOUT FAULT-TRACING IN THE CAN NETWORK**

  Faults in the CAN network may be due to a control module sending faulty messages that disrupt normal

communication. When messages are sent incorrectly, this results in a considerable increase in the amount of traffic on the CAN network. The load can be checked by reading the average value of the voltage on the CAN cables in relation to ground.

Measure voltage between the following connections on the OBDII-box/diagnostics socket.

- #3 and #4 (ground). The voltage should be approx:2, 8 - 3, 2 V.
- #11 and #4 (ground). The voltage should be approx:1, 8 - 2, 2 V.
- #3 and #11. The voltage shall be between approx. 0.55-1.4 V. The voltage shall normally be between 0.55 - 0.90 V. A higher voltage may indicate increased traffic on the CAN-net. In case of fault in communication/too high traffic on the CAN-net, the voltage is considerably higher than the above stated values.

NOTE: After fault with control modules that interfere with communication, other control modules may remain in Limp-Home even when the ignition has been turned off and on a few times. For certain faults in the CAN-net where control modules have stopped communicating, it may help to disconnect/reconnect the battery to "restart" the control module/CAN-net.

HINT: DiCE can be used as fault detection tool if fault is suspected on the CAN-net that cannot be detected with normal troubleshooting. Interference, intermittent faults, faulty messages on the CAN-net etc., are examples of such faults. The tool registers fault messages used on the CAN-net. Fault messages may be caused by short intermittent malfunctions on the CAN-net or by a control module sending fault messages. See tools:951 3010 as well as associated TJ 20402.

- Ignition on.
- Connect DiCE to the diagnostics socket.
- Note the blue LED-indicator. The indicator flashes to show detection of fault messages.

NOTE: Certain interference may occur without any real fault

Cable fault

- Shake the cables lightly and pull lightly on the connections during the check to locate any fault. Note the blue LED-indicator.

"Chatting" control modules

- "Chatting" control modules may be difficult to find and troubleshooting may take time. Let the vehicle stand with DiCE connected for an extended time period. Afterwards, activate functions to provoke a malfunction. It may take up to several hours before the fault messages are sent. When the indicator starts to flash, remove the fuse for one control module at a time until the indicator stops flashing. When the indicator stops flashing, restore the fuse for the relevant control module and check that the indicator starts to flash again. Then it is likely that the problem is identified.

Remedy wiring as necessary.

Other information

- see **BATTERY, DISCONNECTING**
- see **TROUBLESHOOTING USING DICE ERROR FRAME FINDER**
- see **CHECKING WIRING AND TERMINALS**

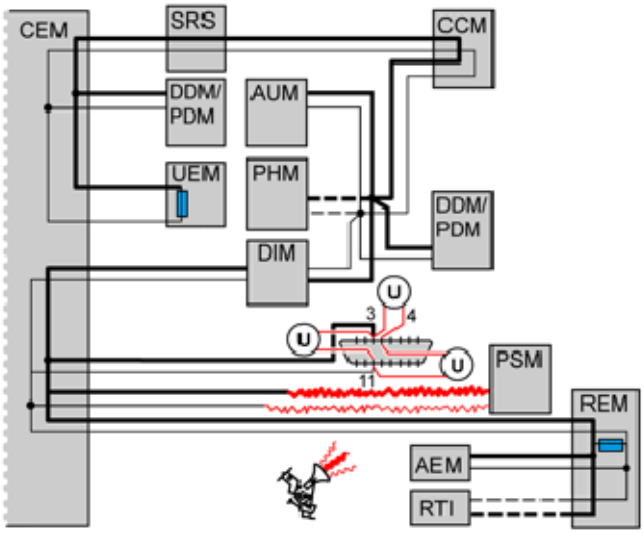

Fig. 68: Checking Amount Of Traffic On LS-CAN
Courtesy of VOLVO CARS CORPORATION

Was a fault detected?

- **YES**

  Refer to **IDENTIFYING A CONTROL MODULE IN THE CAN NETWORK**

- **NO**

  Refer to **CHECKING VOLTAGE-DROP IN CABLE FOR CAN-H AND CAN-L, RESPECTIVELY**

IDENTIFYING A CONTROL MODULE IN THE CAN NETWORK

Fig. 69: Identifying Ignition On Position
Courtesy of VOLVO CARS CORPORATION

For general information about CAN-troubleshooting, see: **GENERAL INFORMATION ABOUT FAULT-**

TRACING IN THE CAN NETWORK

HINT: DiCE can be used as fault detection tool if fault is suspected on the CAN-net that cannot be detected with normal troubleshooting. Interference, intermittent faults, faulty messages on the CAN-net (chattering control modules) etc., are examples of such faults. The tool registers fault messages used on the CAN-net. Fault messages may be caused by short intermittent malfunctions on the CAN-net or by a control module sending fault messages. See tools:951 3010 (memory card) as well as associated TJ 20402. If the load on the CAN network is too high, this may be due to a control module transmitting faulty messages on the CAN network. This is called a disruptive control module. The fault may also be due to an intermittent short-circuit to supply voltage or ground in one of the CAN cables. This results in the control modules on the CAN network starting to send faulty messages. The fault may occur without any of the control modules storing a diagnostic trouble code (DTC). The voltage can be measured between the CAN cables in order to check the load on the CAN network.

NOTE: **It is not necessarily the control module that has set the diagnostic trouble code that communicates incorrectly. Faulty messages can come from any control module in the same section of the CAN network. However, faulty communication in one network cannot affect the communication on the other network. In other words, faulty communication on the LS-CAN cannot disrupt communication on the HS-CAN and vice versa.**

- Ignition on.
- Connect OBDII-Box **(951 3015)** to the diagnostics socket.

Check communication/load on CAN-net by measuring voltage between CAN-L and CAN-H. Measure voltage between the following connections on the OBDII-box/diagnostics socket.

- #3 and #11. The average value of the voltage must be approximately 0.6-1.4 V. The voltage shall normally be between 0.55 - 0.90 V. A higher voltage may indicate increased traffic on the CAN-net. In case of fault in communication/too high traffic on the CAN-net, the voltage is considerably higher than the above stated values.

In order to identify which control module has faulty communication, cut the power supply to one control module at a time. Check the voltage in the CAN cables again. The easiest way to cut the power supply is to remove the fuse(s) for the relevant control module. Repeat until the voltage between the CAN wiring drops to the normal level.

NOTE: **When connecting and disconnecting certain control modules, diagnostic trouble codes (DTCs) may be stored in other control modules.**

HINT: When the suspected defective control module has been identified, connect and disconnect the supply voltage to the control module a number of times to verify that the malfunction appears and disappears. Switch off the ignition between each check.

NOTE: **Do not cut the power to the central electronic module (CEM) unless it is the last control module left to check.**

A control module that is communicating incorrectly must be replaced. See Repairing and installing/Removing, replacing and installing.

NOTE: **After fault with control modules that interfere with communication, other control modules may remain in Limp-Home (that is, they work with reduced functionality) even when the ignition has been turned off and on a few times. For certain faults in the CAN-net where control modules have stopped communicating, it may help to disconnect/reconnect the battery to "restart" the control module/CAN-net.**

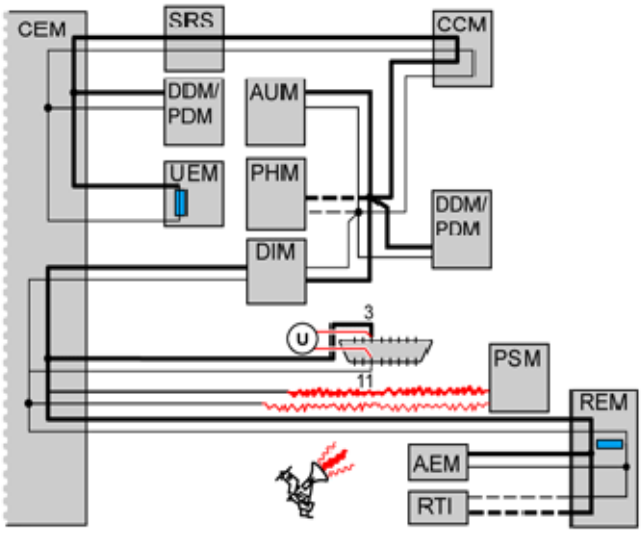

Fig. 70: Checking Communication/Load On CAN-net Between CAN-L And CAN-H
Courtesy of VOLVO CARS CORPORATION

- **Continue**

  Refer to **VERIFICATION**

VERIFICATION

HINT: After rectifying a fault, a verification should be carried out.

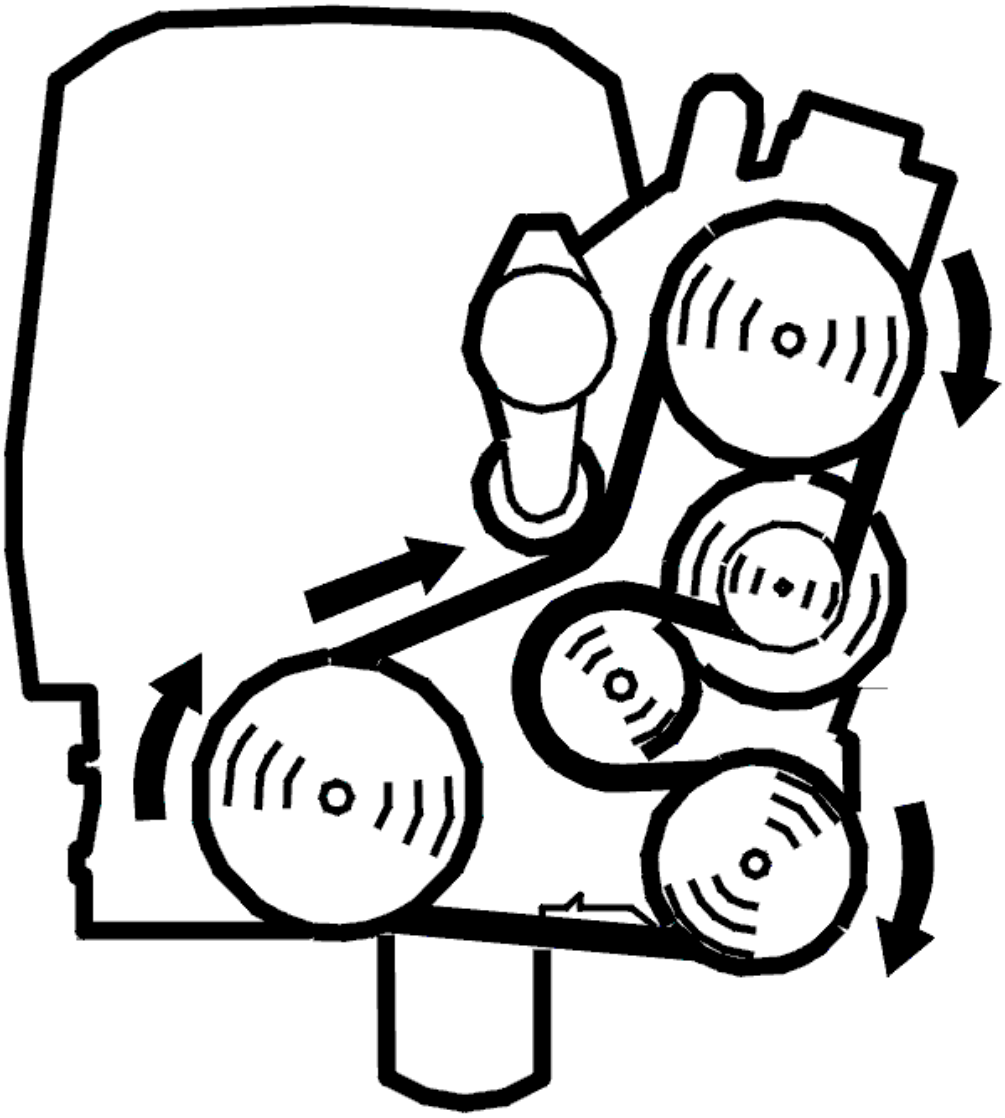

Fig. 71: Belt Routing / Engine Idling - Volvo
Courtesy of VOLVO CARS CORPORATION

Fig. 72: Identifying Ignition On Position
Courtesy of VOLVO CARS CORPORATION

- Reinstall the connectors, components etc.
- Ignition on.

NOTE: **For certain faults in the CAN-net where control modules have stopped communicating, it may help to disconnect/reconnect the battery to "restart" the control module/CAN-net.**

- Erase diagnostic trouble codes (DTCs) in all control modules.
- Ignition off.
- Ignition on.
- Start the vehicle. Allow the vehicle to run for 10 minutes. Start the engine. Allow the engine to run at idle speed for 10 minutes
- Read out the diagnostic trouble codes in the vehicle via the DIAGNOSTICS tab.

Does the diagnostic trouble code (DTC) for faulty communication return?

- **YES**

  Refer to **INFORMATION**

- **NO**

  OKAY: Troubleshooting has been completed.

CHECKING SHORT-CIRCUITING TO GROUND/VOLTAGE IN CAN-NET

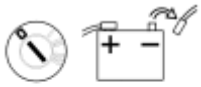

Fig. 73: Ignition Off And Disconnecting Battery Negative Lead
Courtesy of VOLVO CARS CORPORATION

- Ignition off.
- Disconnect the battery negative lead.
- Connect OBDII-Box **(951 3015)** to the diagnostics socket.

  For general information about CAN-troubleshooting, see: **GENERAL INFORMATION ABOUT FAULT-TRACING IN THE CAN NETWORK**

  Checking for a short-circuit to ground

  Measure resistance between the following connections on the OBDII-box/diagnostics socket.

  - #3 and #4 (ground). Measurement is shown in the illustration. The resistance should be above 1 kohms.

- #11 and #4 (ground). The resistance should be above 1 kohms.

If resistance is below 1 kohms this indicates short-circuiting between the CAN-line and ground.

Checking for a short-circuit to voltage

Measure resistance between the following connections on the OBDII-box/diagnostics socket.

- #3 and #16 (voltage). Measurement is shown in the illustration. The resistance should be above 1 kohms.
- #11 and #16 (voltage). The resistance should be above 1 kohms.

If resistance is below 1 kohms this indicates short-circuiting between the CAN-line and voltage cable.

Twist the cable harness and wiggle connectors where they can be accessed along the cable harness during every measurement, and note if the resistance changes to detect intermittent short-circuits or open circuit.

HINT: Part the CAN-net at suitable points to decide where a short-circuit may be found.

NOTE: After fault with control modules that interfere with communication, other control modules may remain in Limp-Home (that is, they work with reduced functionality) even when the ignition has been turned off and on a few times. For certain faults in the CAN-net where control modules have stopped communicating, it may help to disconnect/reconnect the battery to "restart" the control module/CAN-net.

Remedy as necessary.

Other information

- see **BATTERY, DISCONNECTING**
- see **CHECKING WIRING AND TERMINALS**

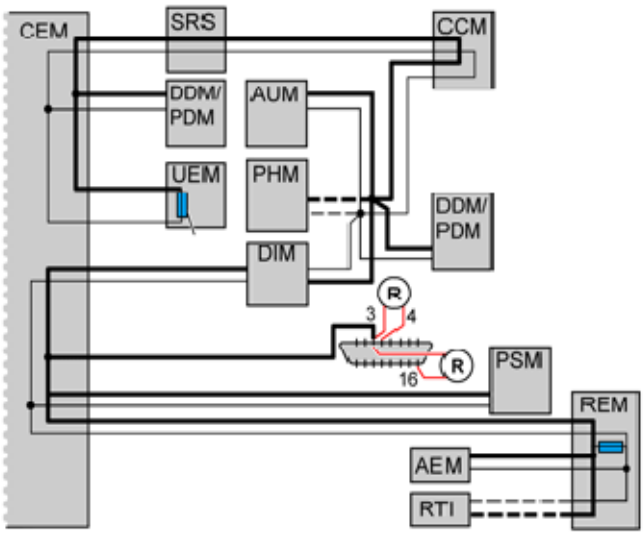

Fig. 74: Checking For Short-Circuiting To Ground/Voltage In CAN-net
Courtesy of VOLVO CARS CORPORATION

Was a fault detected?

- **YES**

  Refer to **VERIFICATION**

- **NO**

  Refer to **CHECKING THE AMOUNT OF TRAFFIC ON THE LS-CAN**

CHECKING VOLTAGE-DROP IN CABLE FOR CAN-H AND CAN-L, RESPECTIVELY

Fig. 75: Identifying Ignition On Position
Courtesy of VOLVO CARS CORPORATION

- Connect the battery.
- Ignition on.
- Connect OBDII-Box **(951 3015)** to the diagnostics socket.

  For general information about CAN-troubleshooting, see: **GENERAL INFORMATION ABOUT FAULT-TRACING IN THE CAN NETWORK**

  In principle, the voltage measured in each cable in the CAN-net shall be the same at each control module

in the network. This means that the voltage-drop in the cable for CAN-H and CAN-L, respectively, between the control modules should be very low. If there is a voltage-difference in the CAN-lines between the diagnostics socket/Central electronic module (CEM) and a control module due to, e. g., contact resistance in a connector or branching, communication may be lost/interfered with. Check if there is voltage-drop in the cable for CAN-H and CAN-L between the diagnostics socket/Central electronic module (CEM) and the control module where there is problem with communication.

Carry out the following:

Measure voltage between the following connections on the OBDII-box/diagnostics socket.

- #3 and corresponding connection on relevant control module for CAN-H. The voltage shall be lower than 50 mV.
- #11 and corresponding connection on relevant control module for CAN-L. The voltage shall be lower than 50 mV.

If voltage is too high, this indicates too high contact resistance in cable, connector, or branching. Check the circuit between the diagnostics socket and control module in question for contact resistance and oxidation.

NOTE: **After fault with control modules that interfere with communication, other control modules may remain in Limp-Home (that is, they work with reduced functionality) even when the ignition has been turned off and on a few times. For certain faults in the CAN-net where control modules have stopped communicating, it may help to disconnect/reconnect the battery to "restart" the control module/CAN-net.**

Remedy wiring as necessary.

Other information

- see **CHECKING WIRING AND TERMINALS**

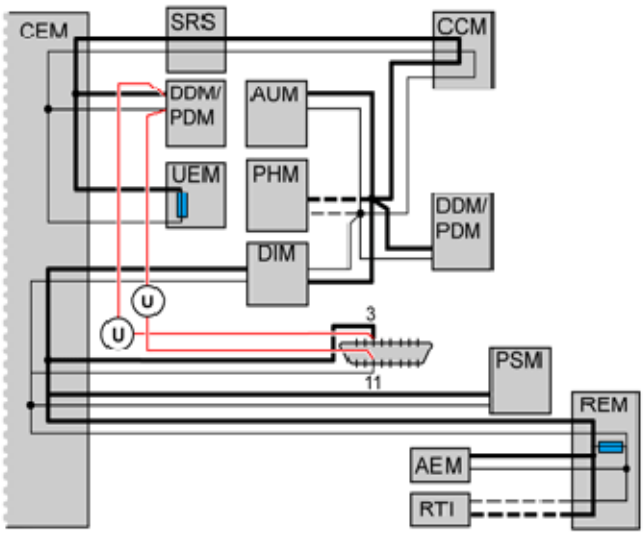

Fig. 76: Checking For Voltage-Drop In Cable For CAN-H And CAN-L
Courtesy of VOLVO CARS CORPORATION

- **Continue**

  Refer to **VERIFICATION**

INFORMATION

FAULT-TRACING INFORMATION

The fault should have been detected and remedied. As this is not the case fault-tracing has failed.

Exit fault-tracing for this diagnostic trouble code (DTC) or make another attempt.

CEM-1A55: COMMUNICATION WITH THE CLIMATE CONTROL MODULE (CCM). SIGNAL MISSING (2003-2004)

DIAGNOSTIC TROUBLE CODE (DTC) INFORMATION CEM-1A55

Condition

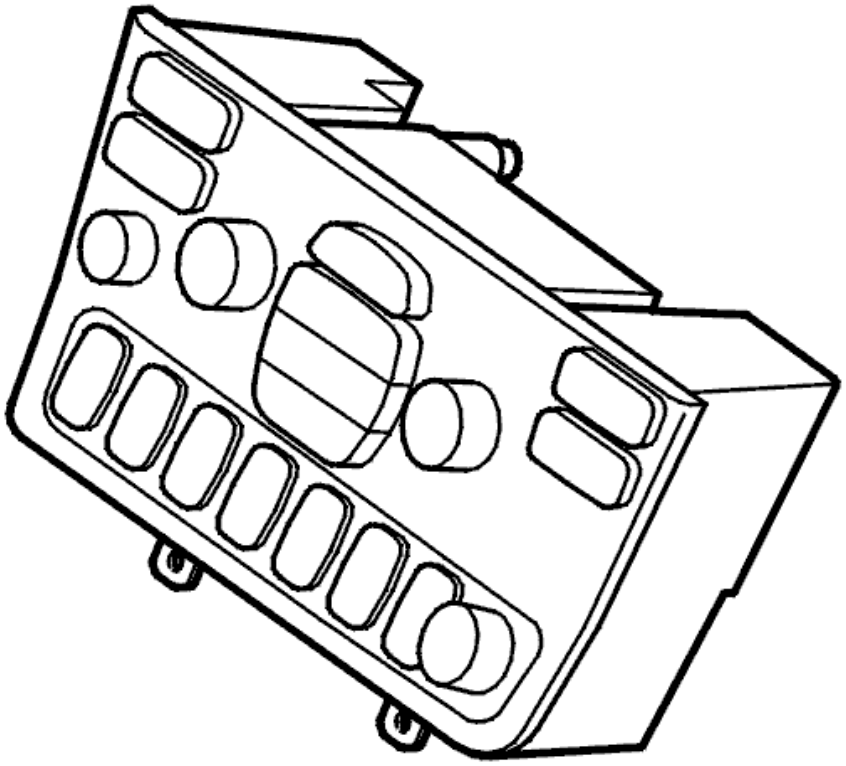

Fig. 77: Climate Control Module
Courtesy of VOLVO CARS CORPORATION

Diagnostic trouble codes (DTCs) are stored if the central electronic module (CEM) registers that communication with the climate control module (CCM) is not operating.

NOTE: **In the event of CEM-1A5X diagnostic trouble codes (DTCs), the central electronic module (CEM) must not be replaced as the diagnostic trouble code (DTC) indicates a communication fault in the Control area network**

Substitute Value

None.

Possible Source

- No power supply to climate control module (CCM)
- Open-circuit in the ground lead to the climate control module (CCM)
- Contact resistance in the terminals
- Open-circuit in the wiring for the CAN low speed network to the climate control module (CCM)
- The climate control module (CCM) is not intended for this car (for example a used control module with different software/hardware).

NOTE: **In the event of missing CAN communication, but with the power supply still on, the climate control module (CCM) will function for a few minutes after the key has been removed (Limp-home function).**

HINT: If several diagnostic trouble codes (DTCs) are stored in the central electronic module (CEM) for communication faults with other control modules in the low speed network, this indicates a common fault in the Control area network.

Fault symptom[s]

- The climate control system does not function
- The lower row of buttons on the climate control system does not function
- The climate control system functions after the key has been removed.

SIGNAL MISSING

CHECKING THE FUNCTION OF THE CLIMATE CONTROL MODULE (CCM)

- Ignition on.

  Check the power supply to the control module by switching on the climate control module (CCM).

  The blower fan must blow and it must be possible to regulate the fan speed.

Does the blower fan start?

- **YES**

  Refer to **CHECKING COMMUNICATION WITH THE CLIMATE CONTROL MODULE (CCM)**

- **NO**

  Refer to **CHECKING THE POWER SUPPLY AND GROUND FOR THE CLIMATE CONTROL MODULE (CCM)**

CHECKING THE POWER SUPPLY AND GROUND FOR THE CLIMATE CONTROL MODULE (CCM)

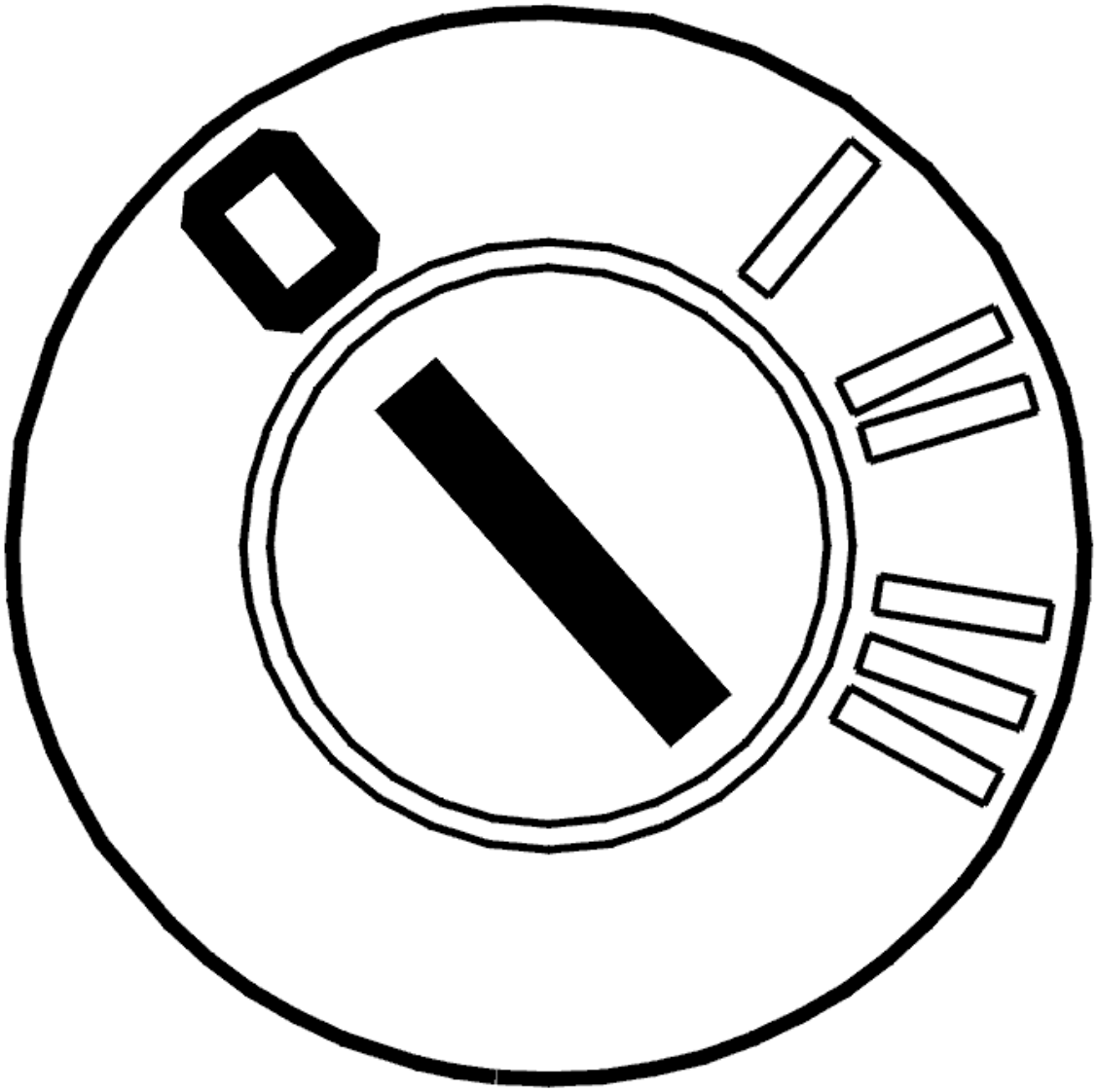

Fig. 78: Identifying Ignition OFF
Courtesy of VOLVO CARS CORPORATION

- Ignition off

  Check the power supply cable for the climate control module (CCM). Check for an open-circuit. Check for a short-circuit to ground.

  Check the fuse for the power supply relay for the climate control module (CCM). The relay is on the central electronic module (CEM). If the fuse is blown, check the circuit after the fuse for a short-circuit to ground before replacing the fuse. Then replace the fuse.

  Check the function of the power supply relay by replacing it with a new one.

  Check the ground cable between the climate control module (CCM) and the ground terminal. Check for an open-circuit. Also check the ground terminal. Check for contact resistance and oxidation.

Remedy as necessary.

Other information:

- To access or replace the control module, see **CLIMATE CONTROL MODULE (CCM), REPLACING**
- To connect the breakout box, see **CONNECTING THE BREAKOUT BOX**
- For information about signals and connectors, see **SIGNAL DESCRIPTION, CLIMATE CONTROL MODULE (CCM), CONNECTOR A**
- For information about checking wiring and terminals, see **CHECKING WIRING AND TERMINALS** .

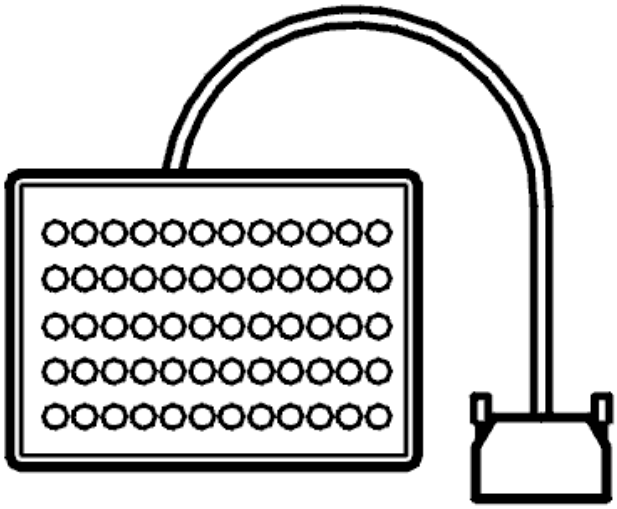

Fig. 79: Breakout Box
Courtesy of VOLVO CARS CORPORATION

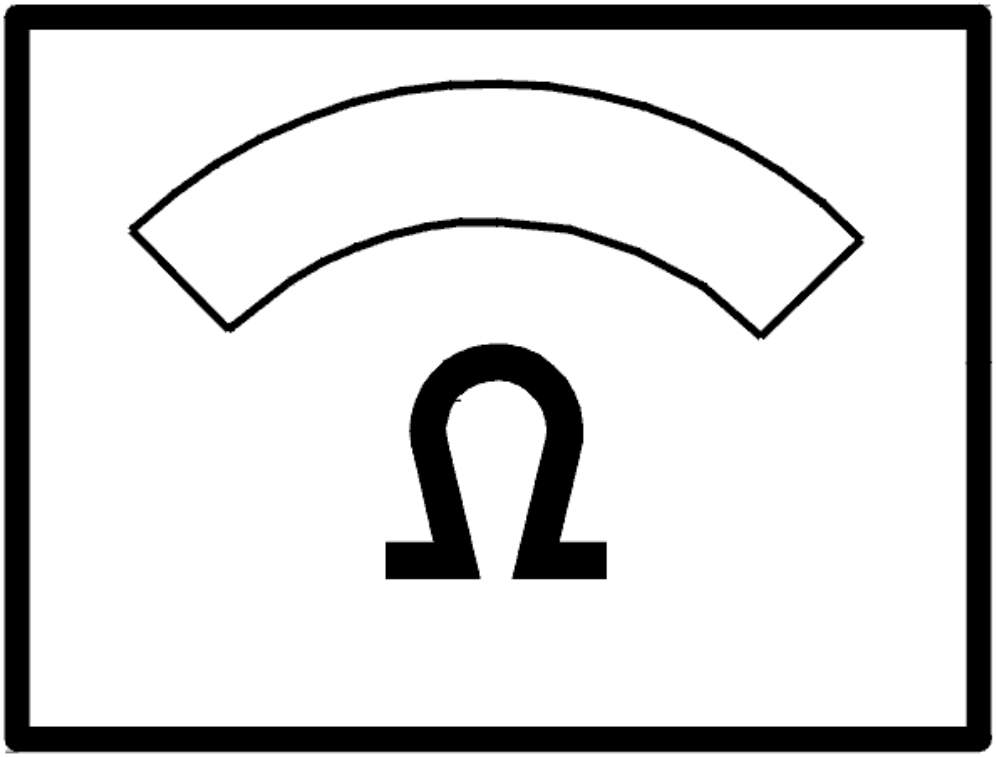

Fig. 80: Identifying Ohm Meter
Courtesy of VOLVO CARS CORPORATION

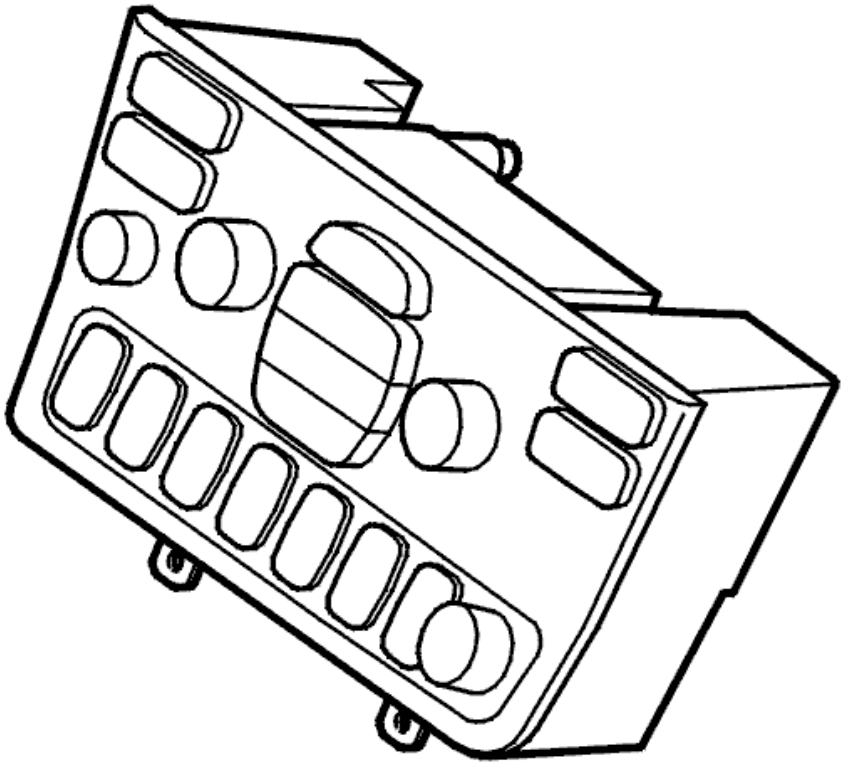

Fig. 81: Climate Control Module
Courtesy of VOLVO CARS CORPORATION

Was a fault detected?

- **YES**

  Refer to **CHECKING THE FUNCTION OF THE CLIMATE CONTROL MODULE (CCM)**

- **NO**

  Refer to **SIGNAL MISSING**

CHECKING COMMUNICATION WITH THE CLIMATE CONTROL MODULE (CCM)

HINT: The CAN communication with the control module is probably OK if the control module ID can be read off. In that case the fault is probably intermittent and will then be more difficult to trace.

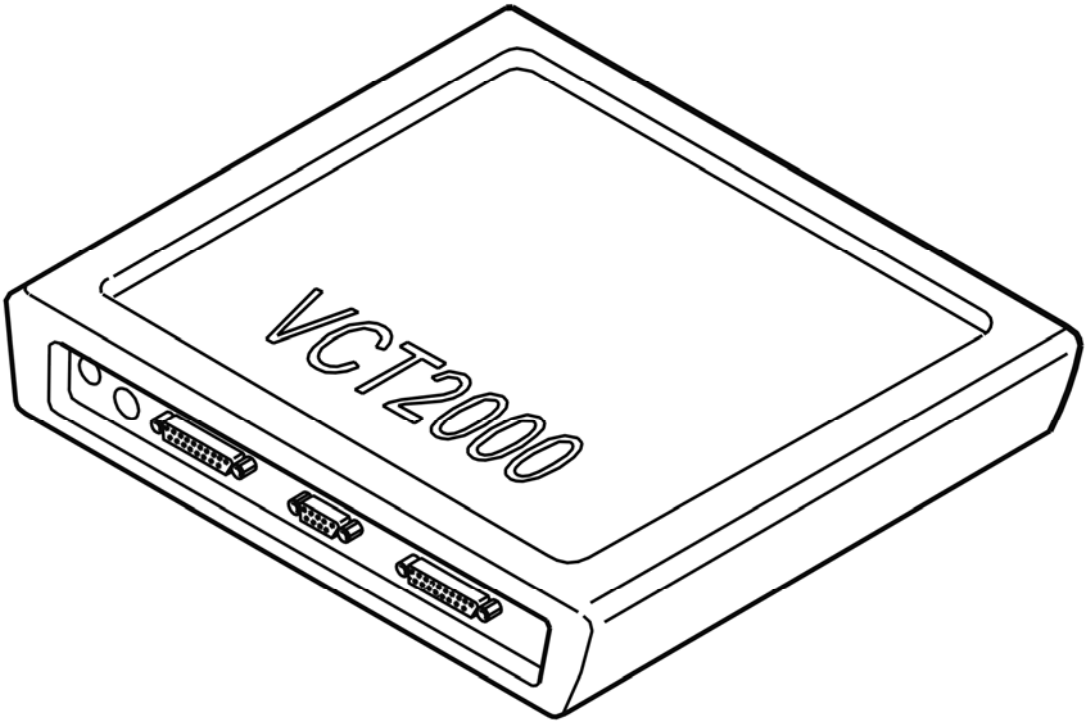

Fig. 82: Identifying VCT2000 Diagnostic Tool Symbol In VIDA
Courtesy of VOLVO CARS CORPORATION

- Try to communicate with the climate control module (CCM) by reading off the control module ID
- Use the VCT2000 (or appropriate scan tool)
- **Continue**

  Refer to **SIGNAL MISSING**

CHECKING THE FUNCTION OF THE CLIMATE CONTROL MODULE (CCM)

HINT: After carrying out the repair, check that the fault has been remedied.

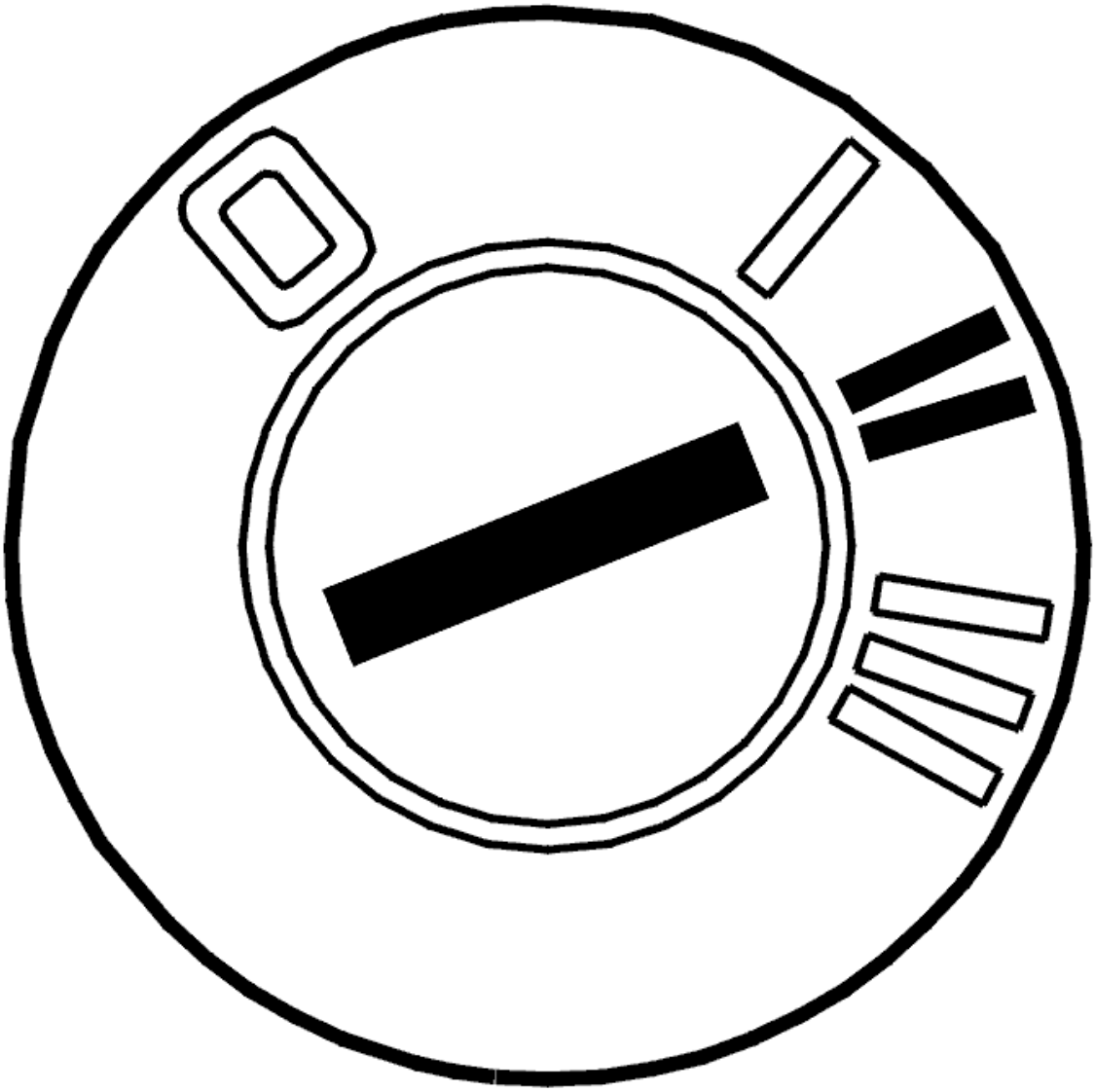

Fig. 83: Identifying Ignition ON
Courtesy of VOLVO CARS CORPORATION

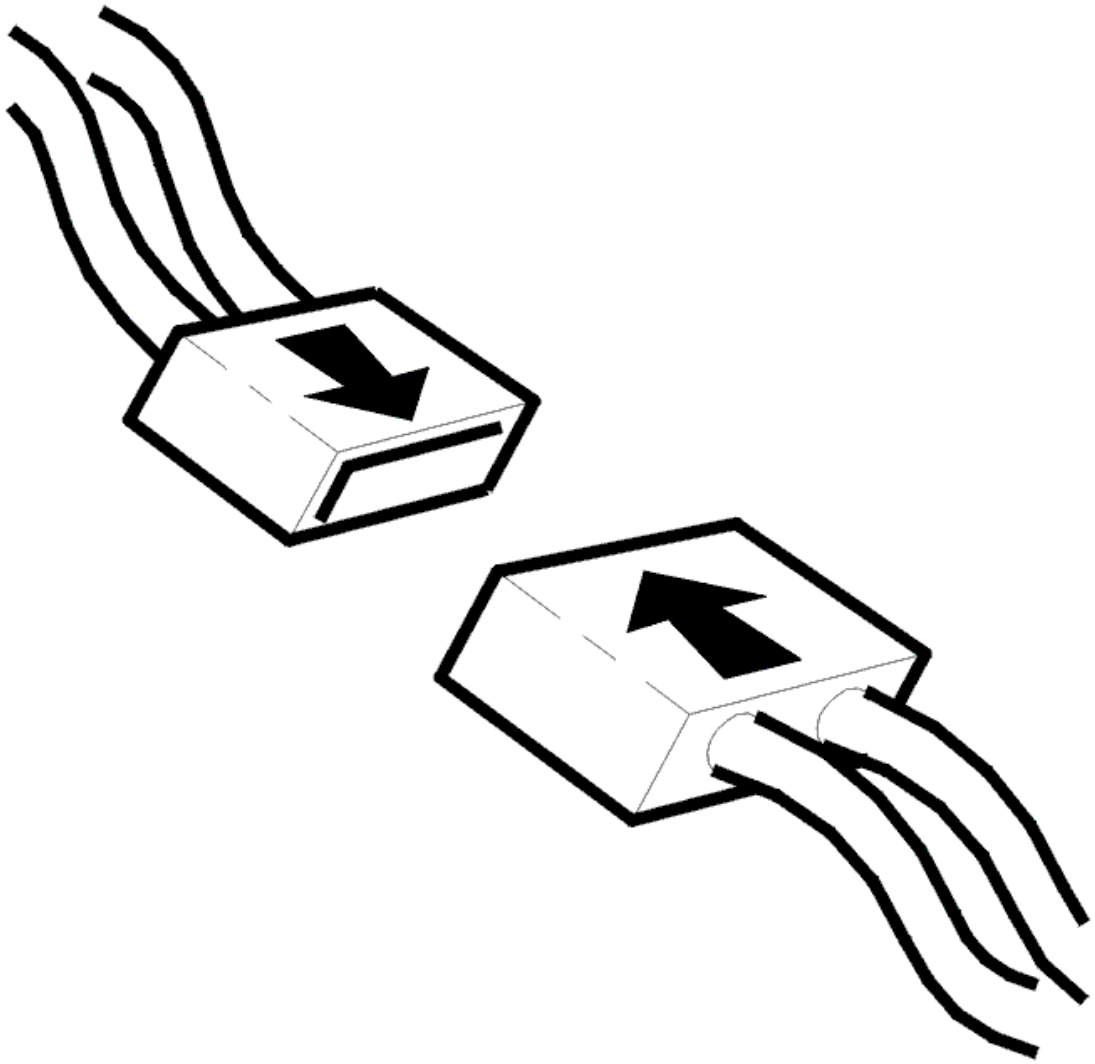

Fig. 84: Connecting Connector
Courtesy of VOLVO CARS CORPORATION

- Ignition off
- Reconnect the connectors. Reinstall the components
- Ignition on.

  Check the power supply to the control module by switching on the climate control module (CCM).

  The blower fan must blow and it must be possible to regulate the fan speed.

Does the blower fan start?

- **YES**

OKAY: Troubleshooting has been completed.

- **NO**

  Refer to **INFORMATION**

SIGNAL MISSING

GENERAL INFORMATION

HINT: For general information about fault-tracing the control area network (CAN), see the linked document below. See GENERAL INFORMATION ABOUT FAULT-TRACING IN THE CAN NETWORK (2005-2012)

In order to check the control area network (CAN) cables, the resistance in the network must be measured. The resistance between the two CAN cables, with the network connected, must be 60ohms in both the high speed network and the low speed network.

NOTE: **Resistance will only be 60 ohms if the main artery of the CAN network is whole and the network is connected. If the main artery of the CAN network is split somewhere and a reading is taken between the CAN cables, resistance will be 120 ohms.**

If diagnostic trouble codes (DTCs) can be read off from the relevant control module, the fault is probably intermittent. The locations that must be checked in the event of a fault in the low speed network are the junctions behind the central electronic module (CEM) and the audio module (AUM) as well as the cable harness behind the Audio module (AUM).

Intermittent fault in the current supply to the actual control module is indicated by the DTC in the Central electronic module (CEM) (CEM-1A5X or CEM-1A6X). There is probably no diagnostic trouble code (DTC) in the relevant control module as the control module cannot store a diagnostic trouble code (DTC) when it is without power.

- **Continue**

  Refer to **CHECKING THE RESISTANCE OF THE CONTROL AREA NETWORK (CAN) CABLES**

CHECKING THE RESISTANCE OF THE CONTROL AREA NETWORK (CAN) CABLES

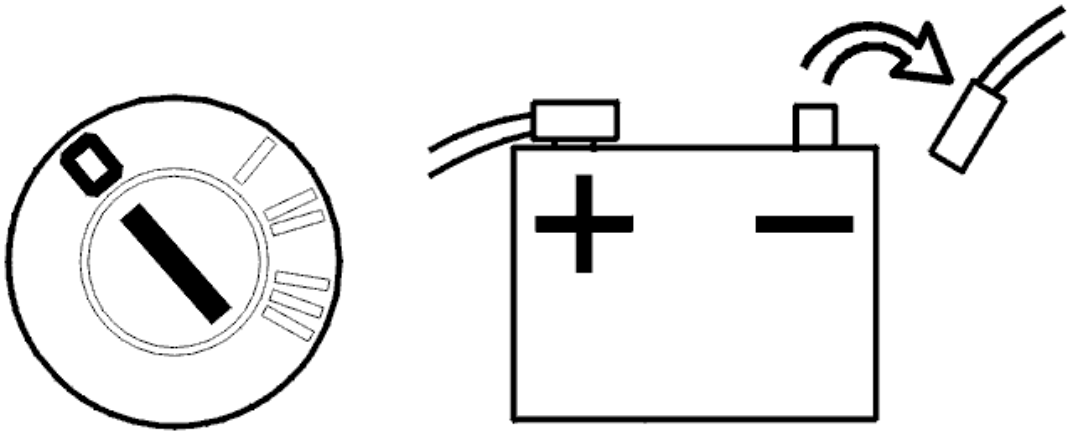

Fig. 85: Identifying Ignition In Off Position And Disconnecting Negative Cable From Battery
Courtesy of VOLVO CARS CORPORATION

- Disconnect the battery negative lead. The network must not be powered when taking resistance readings. Otherwise an incorrect value may be obtained.
- Connect the adapter wiring to the central electronic module (CEM).

HINT: Where a breakout box cannot be used, take readings from the rear of the affected connectors if possible. This prevents terminal pins and socket housings being damaged.

When taking readings on the low speed network

- When taking readings on the low speed network the adapter wiring should be connected to the Central electronic module (CEM) and readings taken from there. Readings can even be taken in the connector for the Power seat module (PSM). The advantage of the adapter wiring to the Central electronic module (CEM) is that all control module can be connected in the network when taking readings and access can be gained to both the high speed and low speed networks.

  The resistance reading only measures the main arteries in the low speed network, not the junctions that exist for different control modules.

When taking readings on the high speed network

- When taking readings on the high speed network the adapter wiring should be connected to the Engine control module (ECM) and readings taken from there. The Engine control module (ECM) must be connected. This resistance reading only measures the main arteries in the high speed network.

Connect an ohmmeter to the terminals for CAN-L and CAN-H on the relevant network. Turn the contacts and turn the cable harness. Resistance must be approximately 60 ohms.

NOTE: **Resistance will only be 60 ohms if the main artery of the CAN network is whole and the network is connected. If the main artery of the CAN network is split somewhere and a reading is taken between the CAN cables, resistance will be 120 ohms.**

Other information

- see **BATTERY, DISCONNECTING**
- see **CONNECTING THE BREAKOUT BOX**
- see **CHECKING WIRING AND TERMINALS**

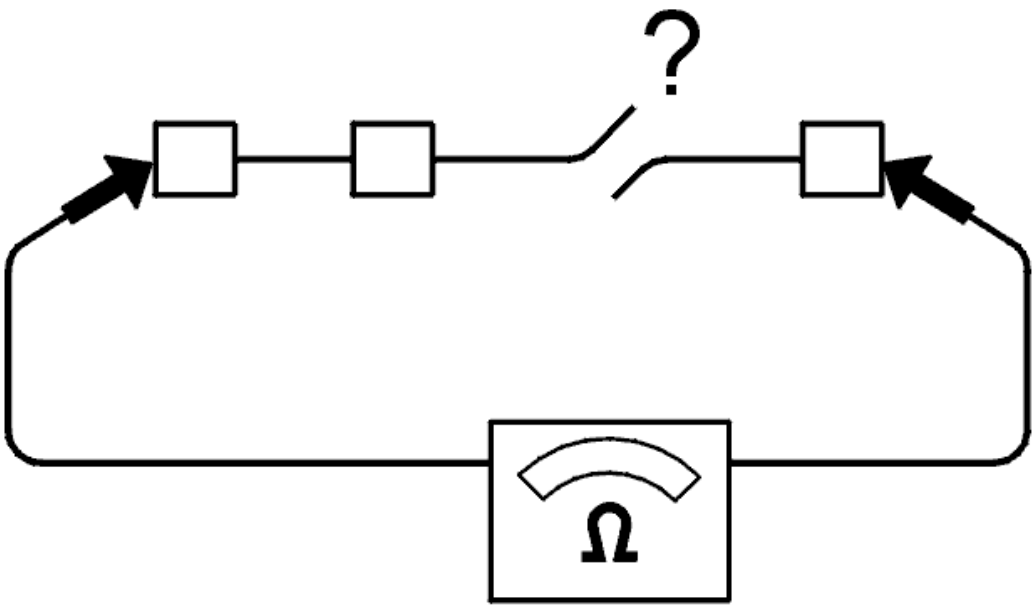

Fig. 86: Checking For Open Circuit
Courtesy of VOLVO CARS CORPORATION

Is the value OK?

- **YES**

  Refer to **CHECKING A SHORT-CIRCUIT IN CAN CABLES**

- **NO**

  Refer to **IDENTIFYING FAULT CAUSES IN THE CAN NETWORK**

CHECKING A SHORT-CIRCUIT IN CAN CABLES

Connect an ohmmeter between respective CAN cable and voltage supply and between the CAN cables and ground. Turn the contacts and turn the cable harness. The resistance must be infinite or very high.

HINT: Readings can be taken from one and the same connector if the CAN wiring, voltage supply and ground is pre-routed. If possible, measure from the rear of the affected connectors in order to minimize any damage and future loose connections. If this is not possible, use the adapter wiring or loose terminal pin for good contact.

Was a fault detected?

- **YES**

  Refer to **IDENTIFYING FAULT CAUSES IN THE CAN NETWORK**

- **NO**

  Refer to **CHECKING THE TRAFFIC LOAD ON THE CAN CABLES**

CHECKING THE TRAFFIC LOAD ON THE CAN CABLES

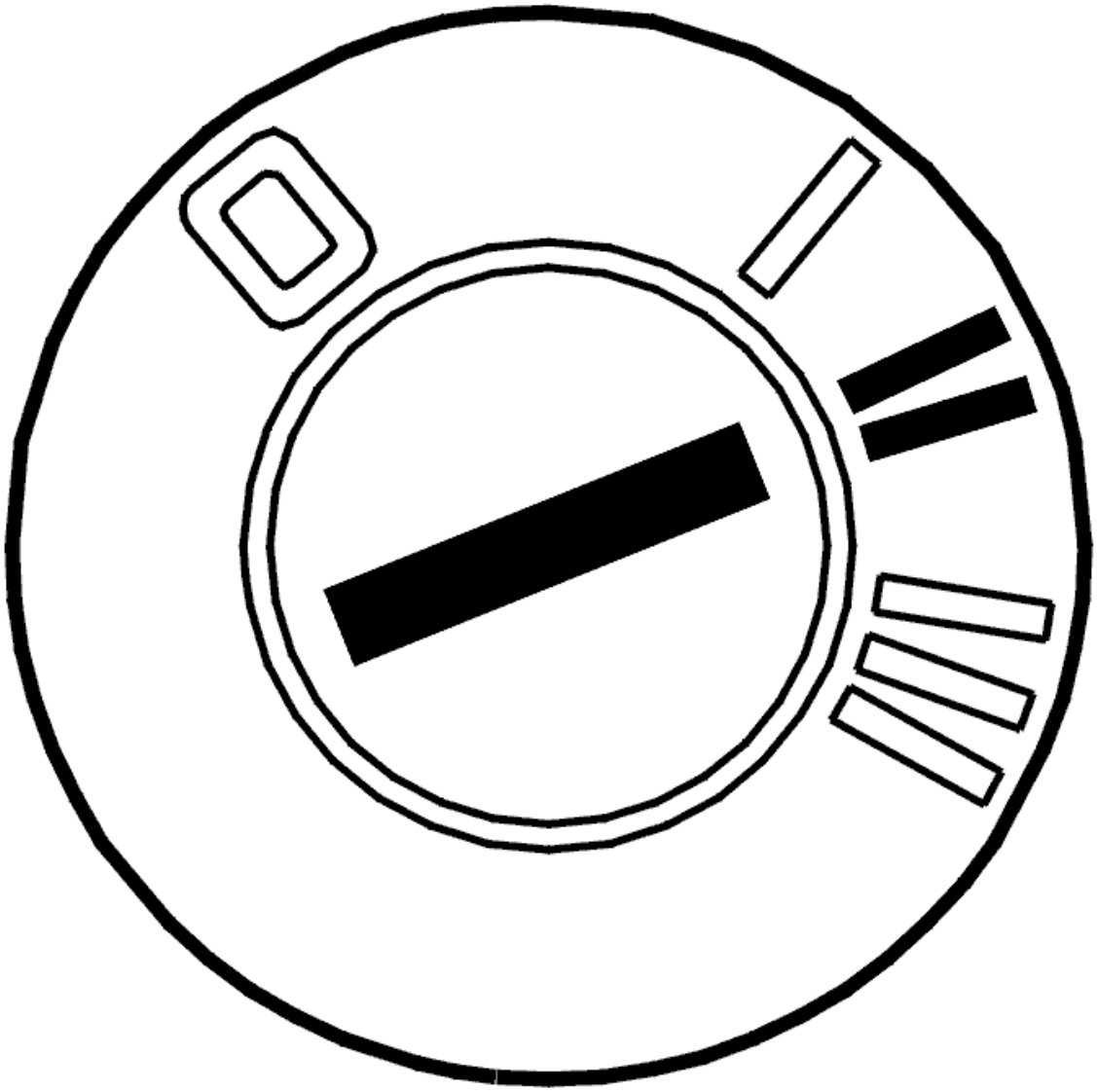

Fig. 87: Identifying Ignition ON
Courtesy of VOLVO CARS CORPORATION

- Connect the battery.
- Ignition on.

Faults in the CAN network may be due to a control module sending faulty messages that disrupt normal communication. When messages are sent incorrectly, this results in a considerable increase in the amount of traffic on the CAN network. The load can be checked by reading the average value of the voltage on the CAN cables in relation to ground.

The following applies for model year -2004:

Connect a voltmeter between CAN-L and ground. The voltage shall be approx. 2.3 V.

Then connect a voltmeter between CAN-H and ground. The voltage shall be approx. 2.8 V.

The following applies for model year 2004-:

Connect a voltmeter between CAN-L and ground. The voltage should be approx: V

Connect a voltmeter between CAN-H and ground. The voltage should be approx: V

NOTE: **For vehicles of later model years, normal voltage values lie within a specific interval due to increased traffic between the control modules on the CAN network upon update of the electrical system.**

HINT: If possible, measure from the rear of the affected connectors so that they are not damaged.

Other information

- see **BATTERY, DISCONNECTING**

Is the value OK?

- **YES**

  Refer to **INFORMATION**

- **NO**

  Refer to **IDENTIFYING A CONTROL MODULE IN THE CAN NETWORK**

IDENTIFYING FAULT CAUSES IN THE CAN NETWORK

- Disconnect a control module that disconnects the CAN network (a control module that has four terminals to the CAN network).

  HINT: For the low speed network, suitable places for disconnecting the network are at the steering wheel module (SWM), the driver information module (DIM) or the climate control module (CCM).

  In the event of an short-circuit between on of the CAN cables and voltage or ground, the fault can be localized disconnecting a control module that splits the CAN network. Readings can then be taken to determine on which side the fault is on the disconnected control module.

  Connect an ohmmeter between the CAN cable and voltage supply respectively ground. Take readings from both ends of the CAN networks at the network junction. Twist and bend the cable harness to find any intermittent short-circuits. The resistance must be infinite or very high (more than 1 Mohms).

  If a fault can be localized in one direction, split the network at a point further on in the CAN network in the direction that the fault was discovered and take a new reading. Try to locate the fault in this way.

  HINT: A short-circuit between the CAN cables and supply voltage or ground may be in either the wiring or in a control module.

Remedy the cables as necessary. If a fault is found on one control module, replace the control module.

- **Continue**

  Refer to **VERIFICATION**

IDENTIFYING A CONTROL MODULE IN THE CAN NETWORK

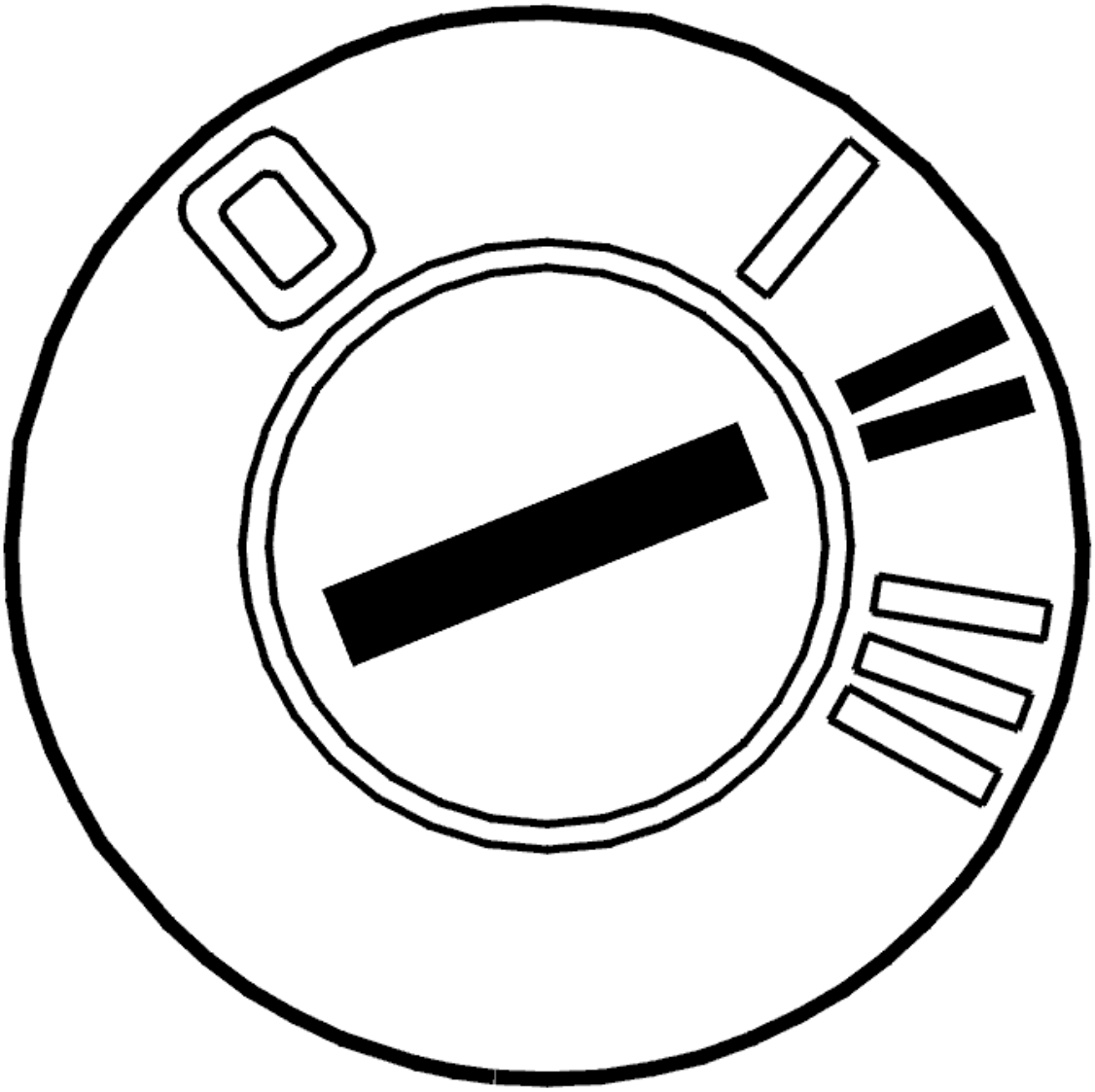

Fig. 88: Identifying Ignition ON
Courtesy of VOLVO CARS CORPORATION

- Connect the battery.
- Ignition on.

  If the load on the CAN network is too high, this may be due to a control module transmitting faulty messages on the CAN network. This is called a disruptive control module. The fault may also be due to

an intermittent short-circuit to supply voltage or ground in one of the CAN cables. This results in the control modules on the CAN network starting to send faulty messages. The fault may occur without any of the control modules storing a diagnostic trouble code (DTC). The voltage can be measured between the CAN cables in order to check the load on the CAN network.

The following applies for model year -2004:

Connect a voltmeter between the CAN cables. In the event of correct communication on the network, the average value of the voltage must be approximately 0.5 V (0.4 V to 0.6 V).

The following applies for model year 2004-:The following applies for model year 2004-:

Connect a voltmeter between the CAN cables. During correct CAN network communication, voltage should be about 0.6-1.4 V.

NOTE: For vehicles of later model years, the normal voltage value is slightly higher due to increased traffic between the control modules on the CAN network upon update of the electrical system.

In the event of a communication fault the voltage is significantly higher than the above specified values. In order to identify which control module has faulty communication, cut the power supply to one control module at a time. Check the voltage in the CAN cables again. The easiest way to cut the power supply is to remove the fuse(s) for the relevant control module. Repeat until the voltage between the CAN wiring drops to the normal level.

HINT: When the probable faulty control module has been identified, connect and disconnect the supply voltage to the control module a number of times to verify that the fault appears and disappears.

NOTE: Do not cut the power to the central electronic module (CEM) unless it is the last control module left to check.

The control module that is communicating incorrectly must be replaced. Remedy as necessary.

NOTE: After a fault with "interfering" control modules, other control modules may remain in "Limp-Home mode" even when the ignition has been switched off and on several times. To remedy this, disconnect and reconnect the battery negative terminal to restore the control modules to normal function.

Other information

- see **BATTERY, DISCONNECTING**

- **Continue**

Refer to **VERIFICATION**

IDENTIFYING FAULT CAUSES IN THE CAN NETWORK

- Disconnect a control module that disconnects the CAN network (a control module that has four terminals to the CAN network).

  HINT: For the low speed network, suitable places for disconnecting the network are at the steering wheel module (SWM), the driver information module (DIM) or the climate control module (CCM).

  In the event of an open-circuit on, or short-circuit between the CAN cables, the fault can be localized by disconnecting a control module that splits the CAN network. Readings can then be taken to determine on which side the fault is on the disconnected control module.

  Connect an ohmmeter between the CAN cables. Take readings from both ends of the CAN networks at the network junction. Twist and bend the cable harness to find any intermittent short-circuits. Resistance should be 120 ohms.

  If a fault can be localized in one direction, split the network at a point further on in the CAN network in the direction that the fault was discovered and take a new reading. Try to locate the fault in this way.

  Remedy the cables as necessary.

- **Continue**

  Refer to **VERIFICATION**

VERIFICATION

HINT: After rectifying a fault, a verification should be carried out.

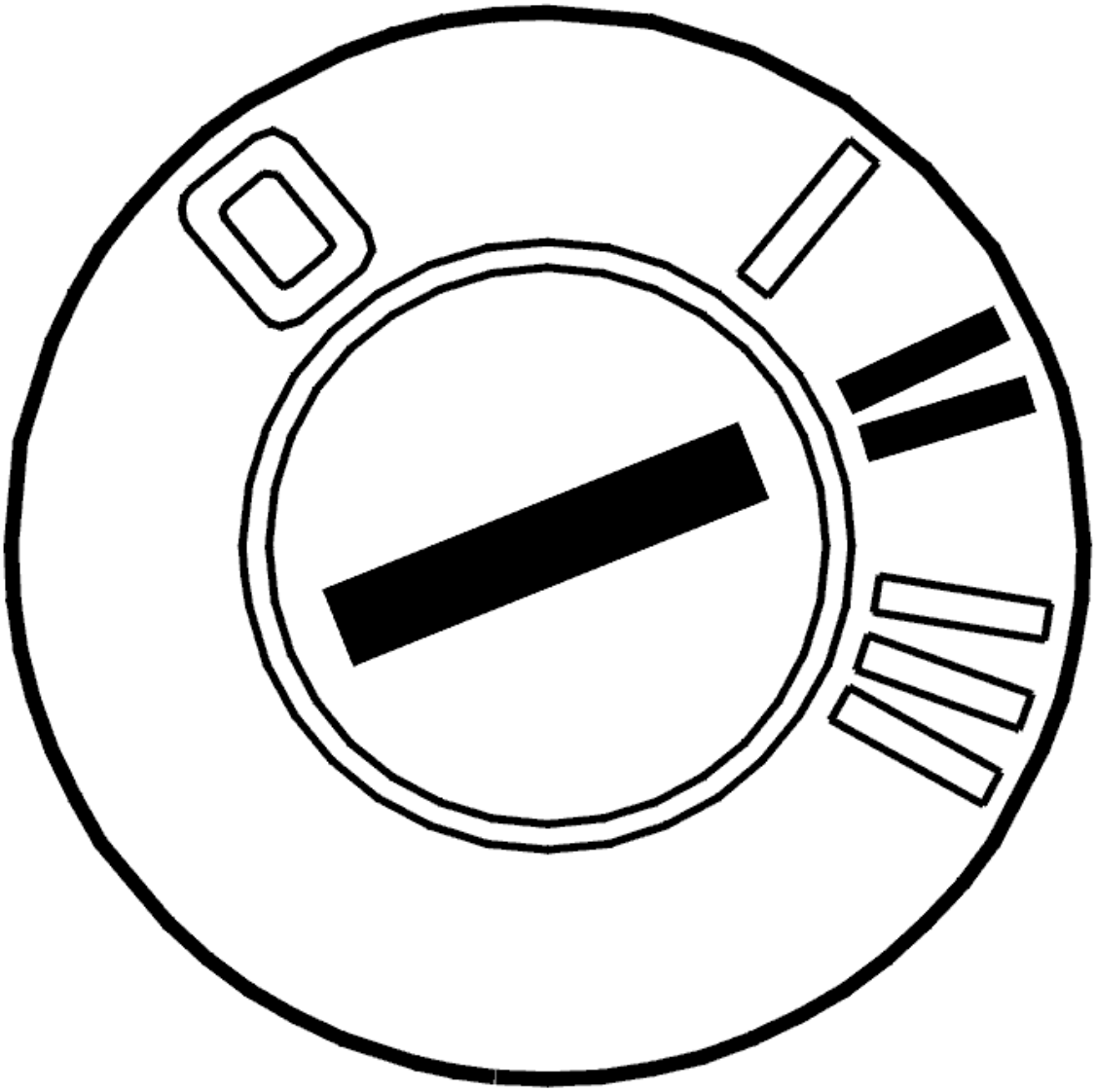

Fig. 89: Identifying Ignition ON
Courtesy of VOLVO CARS CORPORATION

- Reinstall the connectors, components etc.
- Ignition on.
- Erase diagnostic trouble codes using the VCT2000 (or appropriate scan tool).
- Start the car. Allow the vehicle to run for 10 minutes.
- Read off diagnostic trouble codes (DTCs).

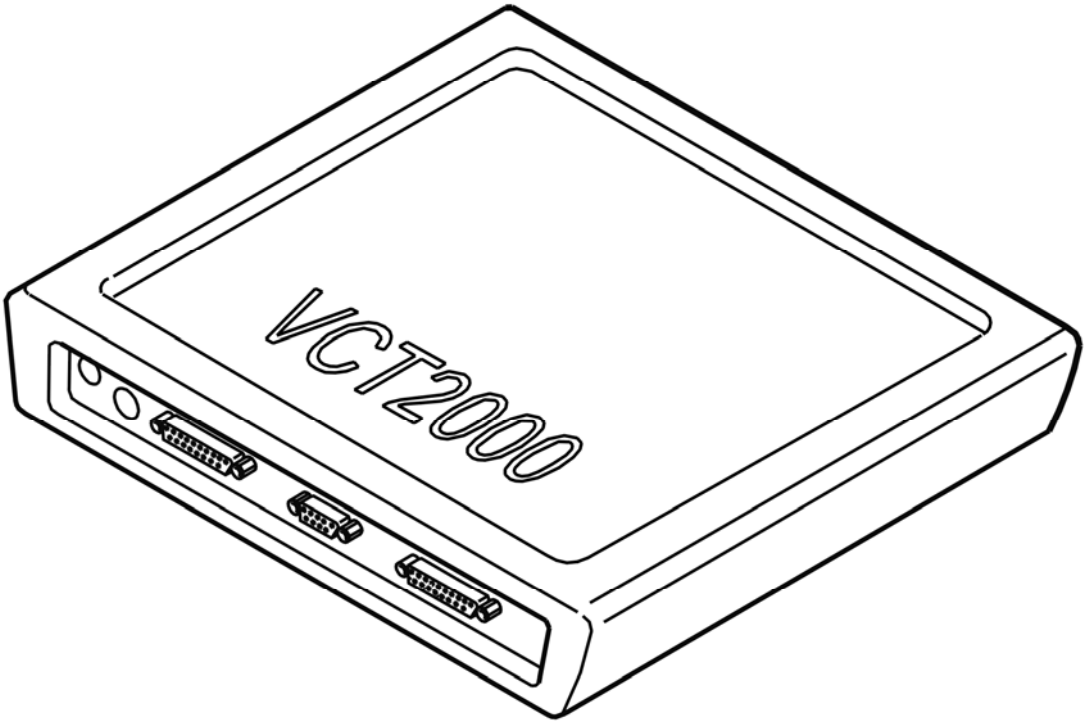

Fig. 90: Identifying VCT2000 Diagnostic Tool Symbol In VIDA
Courtesy of VOLVO CARS CORPORATION

Does the diagnostic trouble code (DTC) for a communication fault recur (CEM-1A5X or CEM-1A6X)?

- **YES**

  Refer to **INFORMATION**

- **NO**

  OKAY: Troubleshooting has been completed.

INFORMATION

FAULT-TRACING INFORMATION

Verification shows that the fault is no longer present. The diagnostic trouble code (DTC) was probably caused by an intermittent fault.

Fault-tracing for this diagnostic trouble code (DTC) is not followed by a verification.

You can view the information again or exit fault-tracing for this diagnostic trouble code (DTC).

INFORMATION

FAULT-TRACING INFORMATION

The fault should have been detected and remedied. As this is not the case fault-tracing has failed.

Exit fault-tracing for this diagnostic trouble code (DTC) or make another attempt.

CEM-1A55: COMMUNICATION WITH THE CLIMATE CONTROL MODULE (CCM). SIGNAL MISSING (2005-2012)

DIAGNOSTIC TROUBLE CODE (DTC) INFORMATION CEM-1A55

Condition

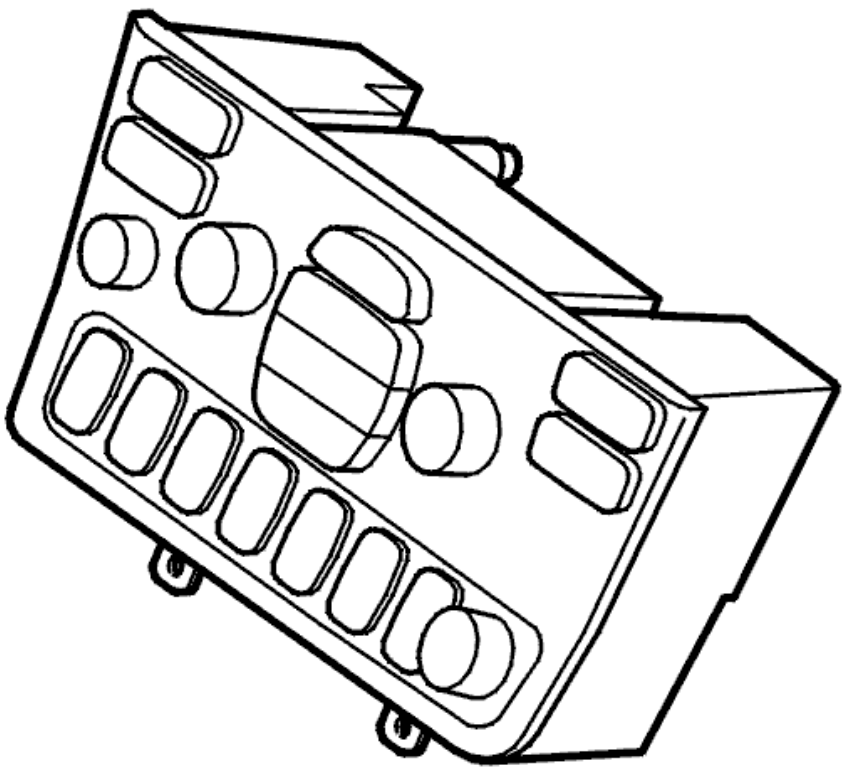

Fig. 91: Climate Control Module
Courtesy of VOLVO CARS CORPORATION

The diagnostic trouble code (DTC) is stored if the central electronic module (CEM) registers that communication with the climate control module (CCM) is not operating.

The diagnostic trouble code (DTC) can be diagnosed when the ignition has been on for more than 10 seconds.

NOTE: **In the event of CEM-1A5X diagnostic trouble codes (DTCs), the central electronic module (CEM) must not be replaced as the diagnostic trouble code (DTC) indicates a communication fault in the controller area network (CAN).**

Substitute Value

- None.

Possible Source

- No power supply to climate control module (CCM)
- Open-circuit in the ground lead for the climate control module (CCM)
- Contact resistance in the terminals
- Open-circuit in the wiring for the CAN low speed network to the climate control module (CCM)
- The climate control module (CCM) is not intended for this vehicle (for example a used control module with different software/hardware).

NOTE: **In the event of missing CAN communication, but with the power supply still on, the climate control module (CCM) will function for a few minutes after the key has been removed (Limp-home function).**

HINT: If several diagnostic trouble codes (DTCs) are stored in the central electronic module (CEM) for communication faults with other control modules in the low speed network, this indicates a common fault in the controller area network (CAN).

Fault symptom[s]

- The climate control system does not function at all.
- The lower row of buttons on the climate control system does not function.
- The climate control system functions after the key has been removed.

SIGNAL MISSING

CHECKING THE FUNCTION OF THE CLIMATE CONTROL MODULE (CCM)

- Ignition on.

  Check the power supply to the control module by switching on the climate control module (CCM).

  The blower fan must blow and it must be possible to regulate the fan speed.

Does the blower fan start?

- **YES**

Refer to **CHECKING COMMUNICATION WITH THE CLIMATE CONTROL MODULE (CCM)**

- **NO**

  Refer to **CHECKING THE POWER SUPPLY AND GROUND FOR THE CLIMATE CONTROL MODULE (CCM)**

CHECKING THE POWER SUPPLY AND GROUND FOR THE CLIMATE CONTROL MODULE (CCM)

Check that the fuse for the control module is intact.

Check the power supply and ground terminal for the climate control module (CCM) as follows.

Remedy as necessary.

Other information:

- Climate control module (CCM): **CHECKING THE SUPPLY VOLTAGE/GROUND TERMINAL**
- see **CHECKING WIRING AND TERMINALS**

Was a fault detected?

- **YES**

  Refer to **CHECKING THE FUNCTION OF THE CLIMATE CONTROL MODULE (CCM)**

- **NO**

  Refer to **SIGNAL MISSING**

CHECKING COMMUNICATION WITH THE CLIMATE CONTROL MODULE (CCM)

HINT: The CAN communication with the control module is probably OK if the control module ID can be read off. The fault is probably intermittent and may therefore be difficult to locate.

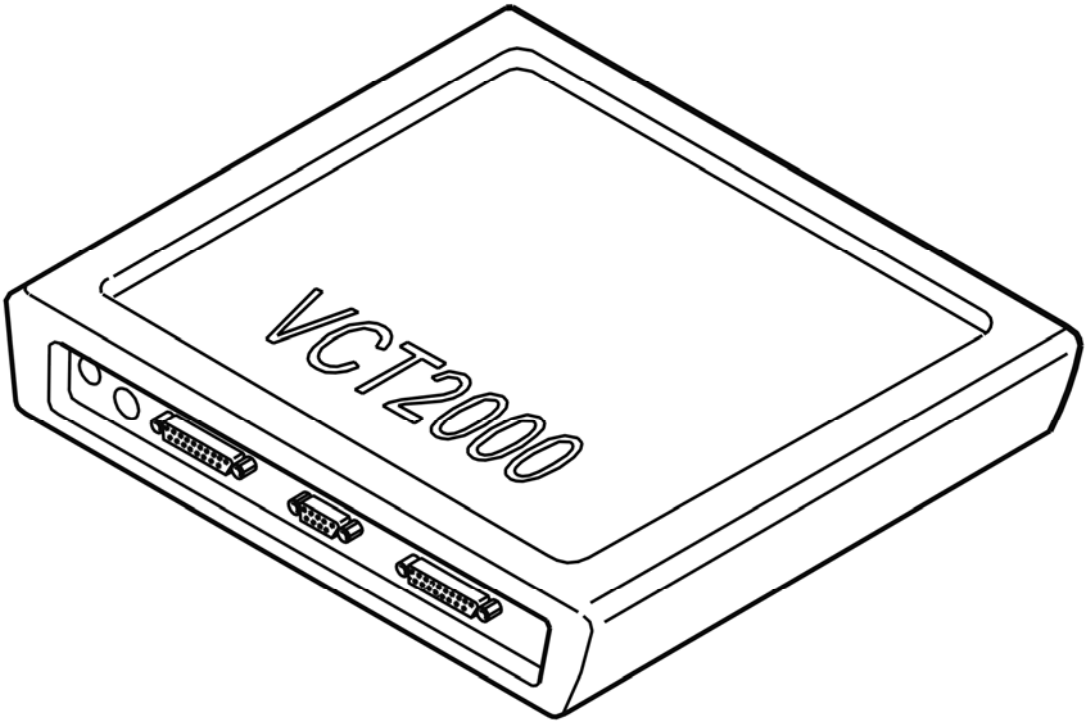

Fig. 92: Identifying VCT2000 Diagnostic Tool Symbol In VIDA
Courtesy of VOLVO CARS CORPORATION

- Try to communicate with the climate control module (CCM) by reading off the control module ID
- Use the VCT2000 (or appropriate scan tool)

- **Continue**

  Refer to **SIGNAL MISSING**

CHECKING THE FUNCTION OF THE CLIMATE CONTROL MODULE (CCM)

HINT: After carrying out the repair, check that the fault has been remedied.

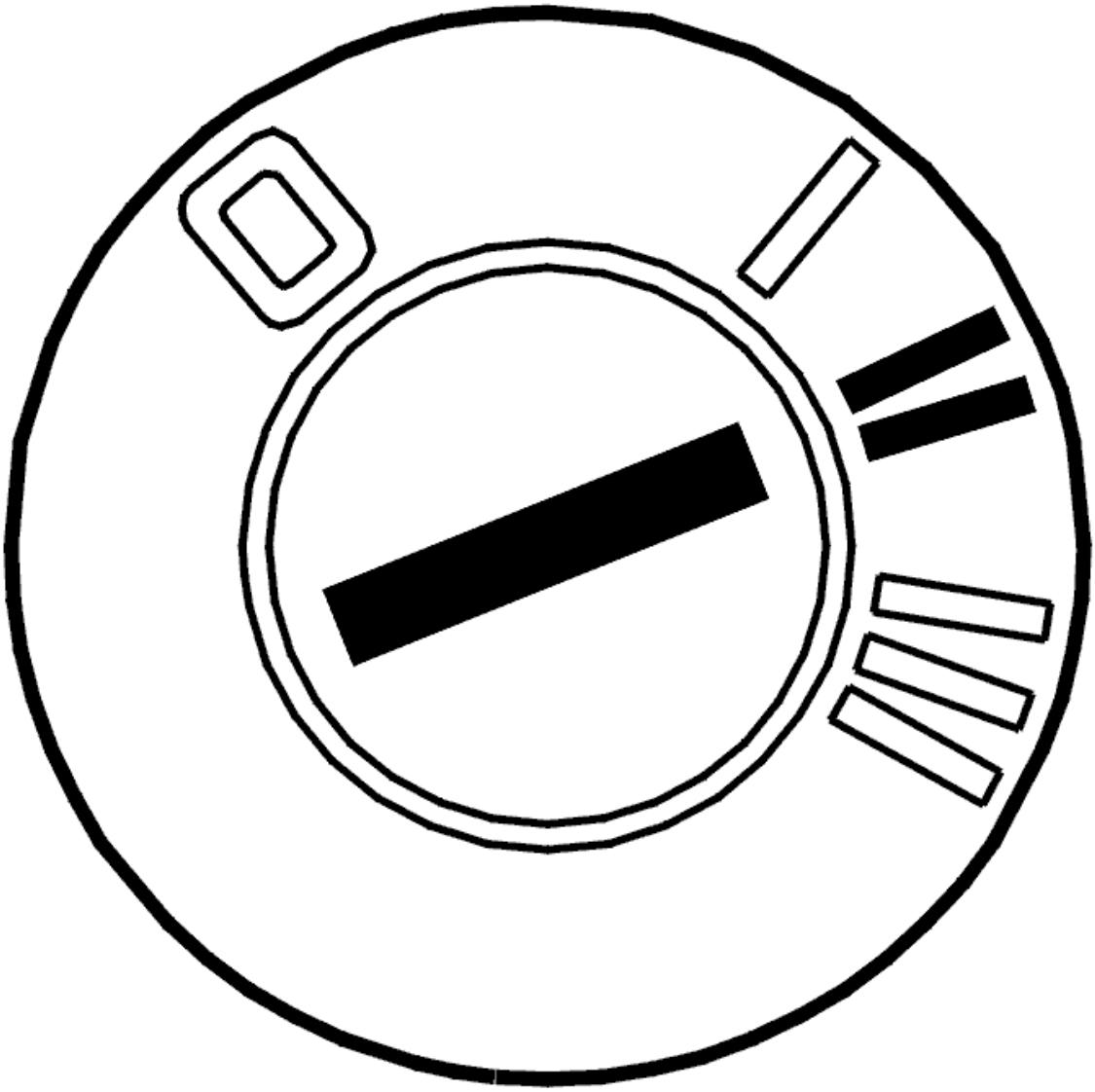

Fig. 93: Identifying Ignition ON
Courtesy of VOLVO CARS CORPORATION

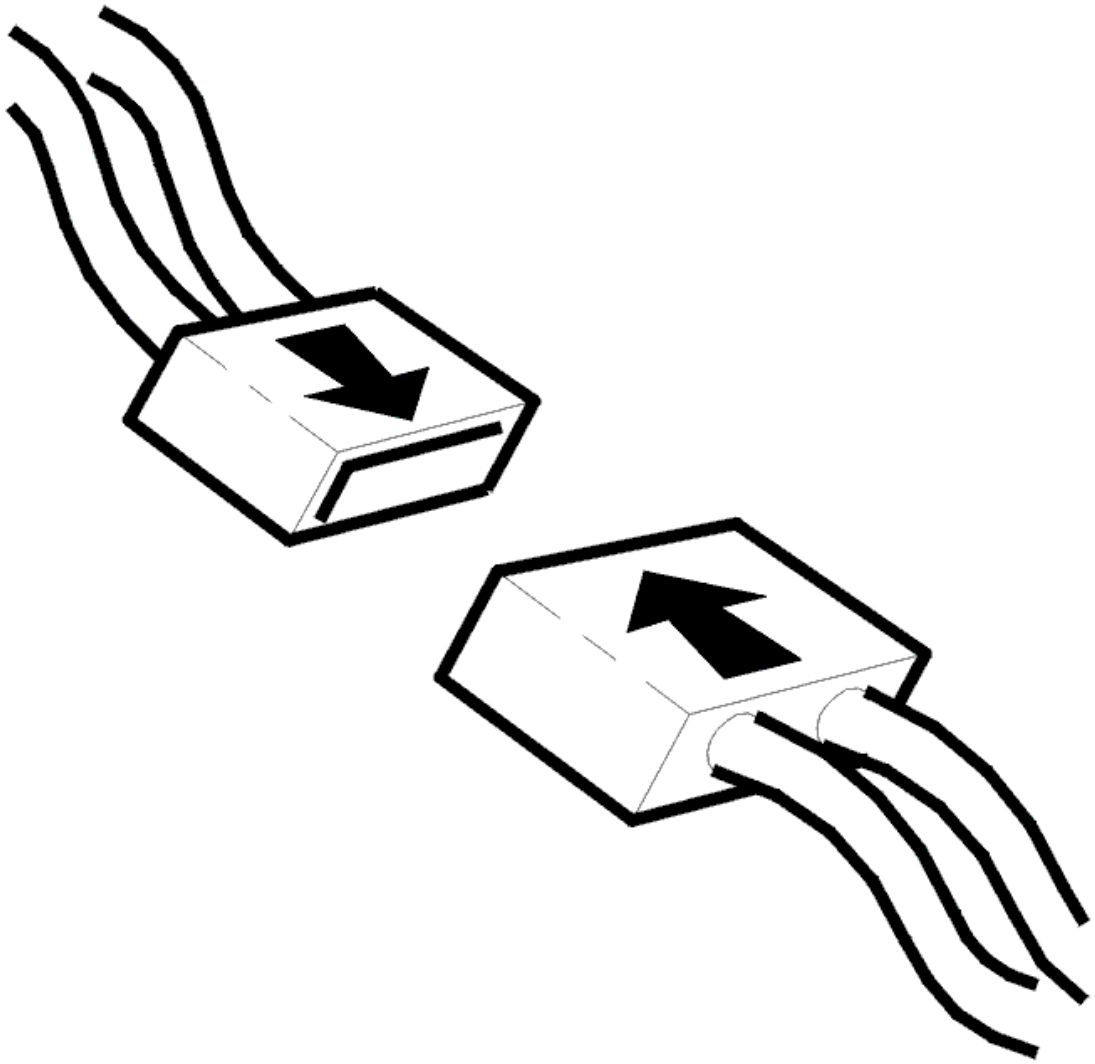

Fig. 94: Connecting Connector
Courtesy of VOLVO CARS CORPORATION

- Ignition off
- Reconnect the connectors. Reinstall the components
- Ignition on.

  Check the power supply to the control module by switching on the climate control module (CCM).

  The blower fan must blow and it must be possible to regulate the fan speed.

Does the blower fan start?

- **YES**

OKAY: Troubleshooting has been completed.

- **NO**

  Refer to **INFORMATION**

SIGNAL MISSING

GENERAL INFORMATION

NOTE: Illustrations shown are only examples.

HINT: For general information about CAN-troubleshooting, see: GENERAL INFORMATION ABOUT FAULT-TRACING IN THE CAN NETWORK

- **General about CAN-related diagnostic trouble codes:**

  CEM-DF01 - DF17 can only be stored in Central electronic module (CEM). These diagnostic trouble codes are stored when an electric fault is detected in CAN-lines. Start with these diagnostic trouble codes first.

  CEM-1AXX only stored in Central electronic module (CEM). One diagnostic trouble code for every control module on the CAN-net. These diagnostic trouble codes indicate that Central electronic module (CEM) does not receive any reply from other control modules.

  XXX-E000 (HS-CAN)/E001 (LS-CAN) can be stored in all CAN-connected control modules. These diagnostic trouble codes indicate that the control module has detected interference on the CAN-net.

  XXX-E003 can be stored in all CAN-connected control modules except in Central electronic module (CEM). The control modules on the CAN-net listen for a message (identity number) that is sent out at regular intervals from Central electronic module (CEM). This diagnostic trouble code indicates that the control module has not received any identity number, or that the expected number is not correct. Interference on the CAN-net can also store this diagnostic trouble code.

  NOTE: In case of CAN-related faults, it is likely that a combination of above diagnostic trouble codes occur.

  NOTE: After fault with control modules that interfere with communication, other control modules may remain in Limp-Home (that is, they work with reduced functionality) even when the ignition has been turned off and on a few times. For certain faults in the CAN-net where control modules have stopped communicating, it may help to disconnect/reconnect the battery to "restart" the control module/CAN-net.

  If diagnostic trouble codes (DTCs) for communication faults can be read off from a control module, the fault is probably intermittent.

Intermittent fault in the voltage supply and ground to a control module on the CAN network results in the Central electronic module (CEM) storing a diagnostic trouble code (DTC) for an open-circuit in communication with the control module where the voltage supply does not work. There will probably not be a diagnostic trouble code (DTC) in the control module where the open-circuit in the voltage supply occurred as the control module cannot store a diagnostic trouble code (DTC) when it is not supplied with power.

NOTE: **Central electronic module (CEM) should not be replaced in case of CAN-fault, unless troubleshooting reveals that Central electronic module (CEM) has an internal fault.**

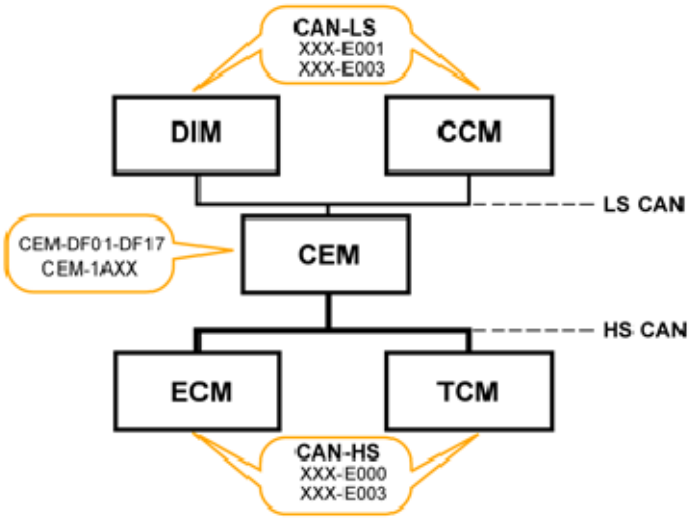

Fig. 95: High-Speed CAN And Low-Speed CAN Communication Diagram
Courtesy of VOLVO CARS CORPORATION

- **Continue**

Refer to **CHECKING RESISTANCE IN CAN-NET**

CHECKING RESISTANCE IN CAN-NET

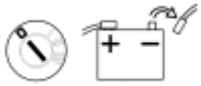

Fig. 96: Ignition Off And Disconnecting Battery Negative Lead
Courtesy of VOLVO CARS CORPORATION

- Ignition off
- Disconnect the battery negative lead
- Connect OBDII-Box **(951 3015)** to the diagnostics socket.

For general information about CAN-troubleshooting, see: **GENERAL INFORMATION ABOUT FAULT-TRACING IN THE CAN NETWORK**

Measure resistance between the following connections on the OBDII-box/diagnostics socket.

- #3 and #11. The resistance should be approx. 55 - 65 ohms.
- If resistance is approx. 120 ohms, this indicates open circuit in the circuit so that only one terminating resistor (120 ohms) has been measured.
- If resistance is above 1 kohms this indicates open circuit/high contact resistance somewhere in the circuit.
- If resistance is below 55 ohms this indicates short-circuiting/contact resistance between the CAN-lines somewhere in the circuit.

HINT: For LS-CAN, terminating resistors are located in Upper electronic module (UEM) and Rear electronic module (REM).

Twist the cable harness and wiggle connectors where they can be accessed along the cable harness during every measurement, and note if the resistance changes to detect intermittent short-circuits or open circuit.

NOTE: **Resistance measurement measures only main lines in the CAN-net (in circuit where both terminating resistors are found), not branches to certain control modules. Open circuit on branching without a terminating resistor cannot be detected with this measurement. However, short-circuiting on a branch can be detected. To measure resistance in the CAN-net to control modules located in a branching of their own, the measurement shall be done against the CAN-net at that control module. The values shall be as above.**

NOTE: **After fault with control modules that interfere with communication, other control modules may remain in Limp-Home (that is, they work with reduced functionality) even when the ignition has been turned off and on a few times. For certain faults in the CAN-net where control modules have stopped communicating, it may help to disconnect/reconnect the battery to "restart" the control module/CAN-net.**

Remedy as necessary.

Other information

- see **BATTERY, DISCONNECTING**
- see **CHECKING WIRING AND TERMINALS**

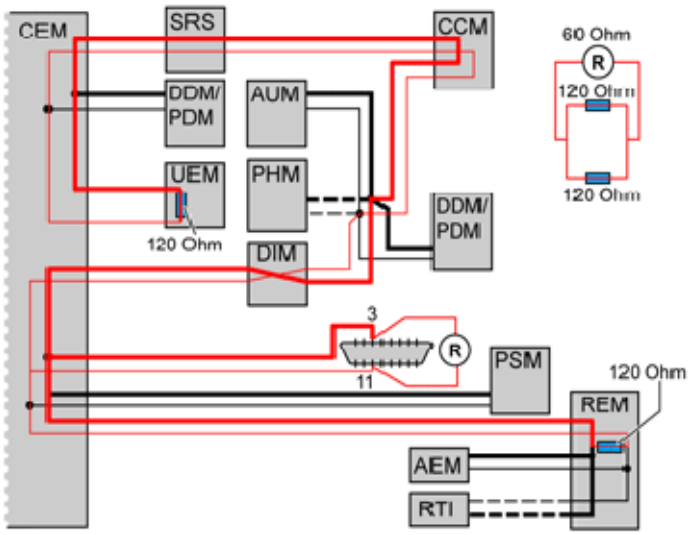

Fig. 97: Checking Resistance In CAN Lines
Courtesy of VOLVO CARS CORPORATION

Was a fault detected?

- **YES**

  Refer to **VERIFICATION**

- **NO**

  Refer to **CHECKING SHORT-CIRCUITING TO GROUND/VOLTAGE IN CAN-NET**

CHECKING THE AMOUNT OF TRAFFIC ON THE LS-CAN

Fig. 98: Identifying Ignition On Position
Courtesy of VOLVO CARS CORPORATION

- Connect the battery
- Ignition on.
- Connect OBDII-Box **(951 3015)** to the diagnostics socket.

  For general information about CAN-troubleshooting, see: **GENERAL INFORMATION ABOUT FAULT-TRACING IN THE CAN NETWORK**

  Faults in the CAN network may be due to a control module sending faulty messages that disrupt normal

communication. When messages are sent incorrectly, this results in a considerable increase in the amount of traffic on the CAN network. The load can be checked by reading the average value of the voltage on the CAN cables in relation to ground.

Measure voltage between the following connections on the OBDII-box/diagnostics socket.

- #3 and #4 (ground). The voltage should be approx:2, 8 - 3, 2 V.
- #11 and #4 (ground). The voltage should be approx:1, 8 - 2, 2 V.
- #3 and #11. The voltage shall be between approx. 0.55-1.4 V. The voltage shall normally be between 0.55 - 0.90 V. A higher voltage may indicate increased traffic on the CAN-net. In case of fault in communication/too high traffic on the CAN-net, the voltage is considerably higher than the above stated values.

NOTE: After fault with control modules that interfere with communication, other control modules may remain in Limp-Home even when the ignition has been turned off and on a few times. For certain faults in the CAN-net where control modules have stopped communicating, it may help to disconnect/reconnect the battery to "restart" the control module/CAN-net.

HINT: DiCE can be used as fault detection tool if fault is suspected on the CAN-net that cannot be detected with normal troubleshooting. Interference, intermittent faults, faulty messages on the CAN-net etc., are examples of such faults. The tool registers fault messages used on the CAN-net. Fault messages may be caused by short intermittent malfunctions on the CAN-net or by a control module sending fault messages. See tools:951 3010 as well as associated TJ 20402.

- Ignition on.
- Connect DiCE to the diagnostics socket.
- Note the blue LED-indicator. The indicator flashes to show detection of fault messages.

NOTE: Certain interference may occur without any real fault

Cable fault

- Shake the cables lightly and pull lightly on the connections during the check to locate any fault. Note the blue LED-indicator.

"Chatting" control modules

- "Chatting" control modules may be difficult to find and troubleshooting may take time. Let the vehicle stand with DiCE connected for an extended time period. Afterwards, activate functions to provoke a malfunction. It may take up to several hours before the fault messages are sent. When the indicator starts to flash, remove the fuse for one control module at a time until the indicator stops flashing. When the indicator stops flashing, restore the fuse for the relevant control module and check that the indicator starts to flash again. Then it is likely that the problem is identified.

Remedy wiring as necessary.

Other information

- see **BATTERY, DISCONNECTING**
- see **TROUBLESHOOTING USING DICE ERROR FRAME FINDER**
- see **CHECKING WIRING AND TERMINALS**

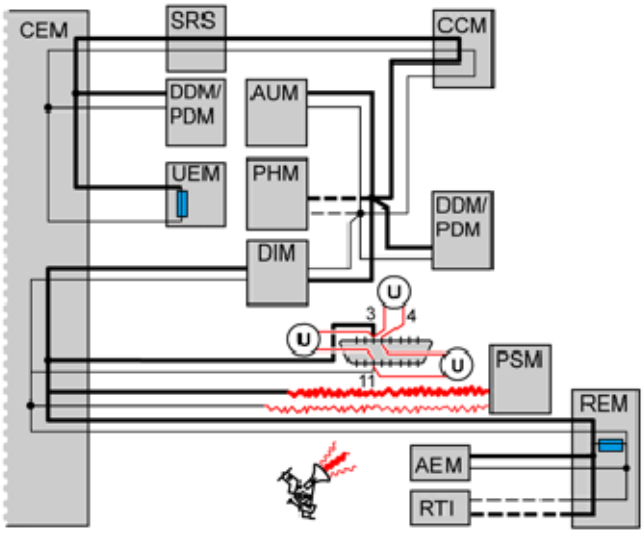

Fig. 99: Checking Amount Of Traffic On LS-CAN
Courtesy of VOLVO CARS CORPORATION

Was a fault detected?

- **YES**

  Refer to **IDENTIFYING A CONTROL MODULE IN THE CAN NETWORK**

- **NO**

  Refer to **CHECKING VOLTAGE-DROP IN CABLE FOR CAN-H AND CAN-L, RESPECTIVELY**

IDENTIFYING A CONTROL MODULE IN THE CAN NETWORK

Fig. 100: Identifying Ignition On Position
Courtesy of VOLVO CARS CORPORATION

For general information about CAN-troubleshooting, see: **GENERAL INFORMATION ABOUT FAULT-**

TRACING IN THE CAN NETWORK

HINT: DiCE can be used as fault detection tool if fault is suspected on the CAN-net that cannot be detected with normal troubleshooting. Interference, intermittent faults, faulty messages on the CAN-net (chattering control modules) etc., are examples of such faults. The tool registers fault messages used on the CAN-net. Fault messages may be caused by short intermittent malfunctions on the CAN-net or by a control module sending fault messages. See tools:951 3010 (memory card) as well as associated TJ 20402. If the load on the CAN network is too high, this may be due to a control module transmitting faulty messages on the CAN network. This is called a disruptive control module. The fault may also be due to an intermittent short-circuit to supply voltage or ground in one of the CAN cables. This results in the control modules on the CAN network starting to send faulty messages. The fault may occur without any of the control modules storing a diagnostic trouble code (DTC). The voltage can be measured between the CAN cables in order to check the load on the CAN network.

NOTE: **It is not necessarily the control module that has set the diagnostic trouble code that communicates incorrectly. Faulty messages can come from any control module in the same section of the CAN network. However, faulty communication in one network cannot affect the communication on the other network. In other words, faulty communication on the LS-CAN cannot disrupt communication on the HS-CAN and vice versa.**

- Ignition on.
- Connect OBDII-Box **(951 3015)** to the diagnostics socket.

Check communication/load on CAN-net by measuring voltage between CAN-L and CAN-H. Measure voltage between the following connections on the OBDII-box/diagnostics socket.

- #3 and #11. The average value of the voltage must be approximately 0.6-1.4 V. The voltage shall normally be between 0.55 - 0.90 V. A higher voltage may indicate increased traffic on the CAN-net. In case of fault in communication/too high traffic on the CAN-net, the voltage is considerably higher than the above stated values.

In order to identify which control module has faulty communication, cut the power supply to one control module at a time. Check the voltage in the CAN cables again. The easiest way to cut the power supply is to remove the fuse(s) for the relevant control module. Repeat until the voltage between the CAN wiring drops to the normal level.

NOTE: **When connecting and disconnecting certain control modules, diagnostic trouble codes (DTCs) may be stored in other control modules.**

HINT: When the suspected defective control module has been identified, connect and disconnect the supply voltage to the control module a number of times to verify that the malfunction appears and disappears. Switch off the ignition between each check.

NOTE: **Do not cut the power to the central electronic module (CEM) unless it is the last control module left to check.**

A control module that is communicating incorrectly must be replaced. See Repairing and installing/Removing, replacing and installing.

NOTE: **After fault with control modules that interfere with communication, other control modules may remain in Limp-Home (that is, they work with reduced functionality) even when the ignition has been turned off and on a few times. For certain faults in the CAN-net where control modules have stopped communicating, it may help to disconnect/reconnect the battery to "restart" the control module/CAN-net.**

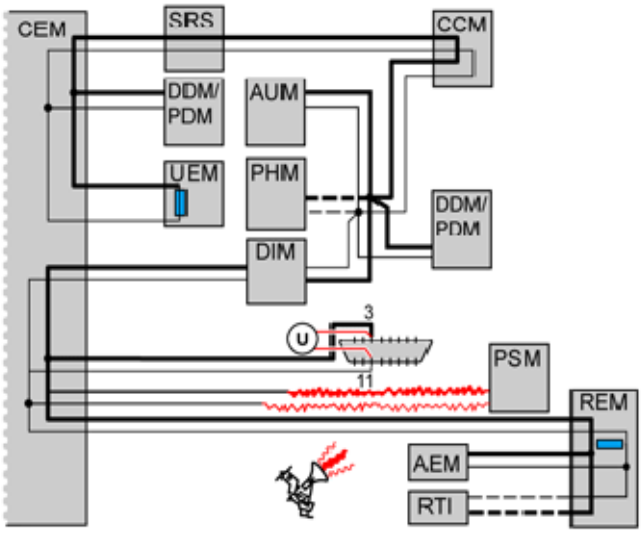

Fig. 101: Checking Communication/Load On CAN-net Between CAN-L And CAN-H
Courtesy of VOLVO CARS CORPORATION

- **Continue**

  Refer to **VERIFICATION**

VERIFICATION

HINT: After rectifying a fault, a verification should be carried out.

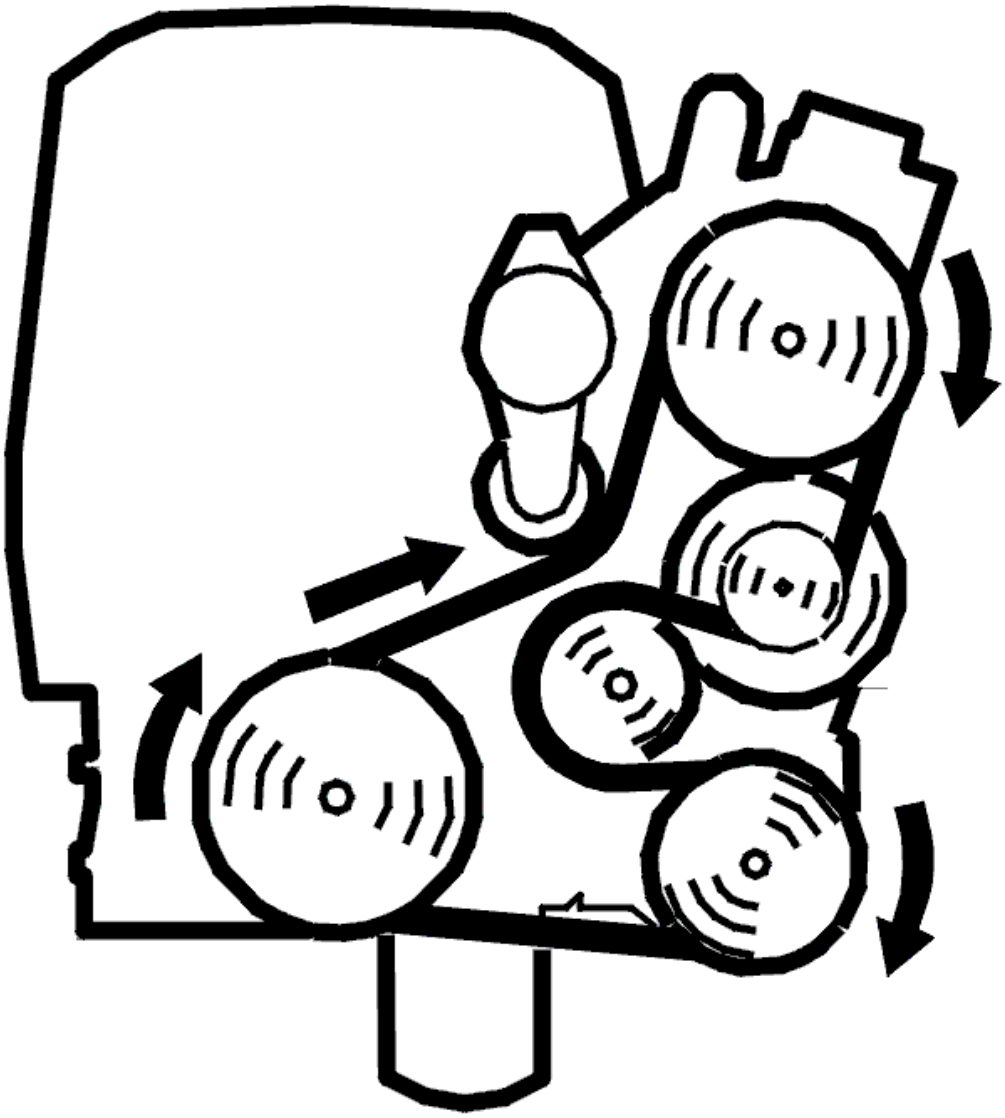

Fig. 102: Belt Routing / Engine Idling - Volvo
Courtesy of VOLVO CARS CORPORATION

Fig. 103: Identifying Ignition On Position
Courtesy of VOLVO CARS CORPORATION

- Reinstall the connectors, components etc.
- Ignition on.

NOTE: **For certain faults in the CAN-net where control modules have stopped communicating, it may help to disconnect/reconnect the battery to "restart" the control module/CAN-net.**

- Erase diagnostic trouble codes (DTCs) in all control modules.
- Ignition off.
- Ignition on.
- Start the vehicle. Allow the vehicle to run for 10 minutes. Start the engine. Allow the engine to run at idle speed for 10 minutes
- Read out the diagnostic trouble codes in the vehicle via the DIAGNOSTICS tab.

Does the diagnostic trouble code (DTC) for faulty communication return?

- **YES**

  Refer to **INFORMATION**

- **NO**

  OKAY: Troubleshooting has been completed.

CHECKING SHORT-CIRCUITING TO GROUND/VOLTAGE IN CAN-NET

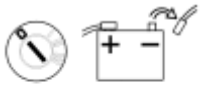

Fig. 104: Ignition Off And Disconnecting Battery Negative Lead
Courtesy of VOLVO CARS CORPORATION

- Ignition off.
- Disconnect the battery negative lead.
- Connect OBDII-Box **(951 3015)** to the diagnostics socket.

  For general information about CAN-troubleshooting, see: **GENERAL INFORMATION ABOUT FAULT-TRACING IN THE CAN NETWORK**

  Checking for a short-circuit to ground

  Measure resistance between the following connections on the OBDII-box/diagnostics socket.

  - #3 and #4 (ground). Measurement is shown in the illustration. The resistance should be above 1 kohms.

- #11 and #4 (ground). The resistance should be above 1 kohms.

If resistance is below 1 kohms this indicates short-circuiting between the CAN-line and ground.

Checking for a short-circuit to voltage

Measure resistance between the following connections on the OBDII-box/diagnostics socket.

- #3 and #16 (voltage). Measurement is shown in the illustration. The resistance should be above 1 kohms.
- #11 and #16 (voltage). The resistance should be above 1 kohms.

If resistance is below 1 kohms this indicates short-circuiting between the CAN-line and voltage cable.

Twist the cable harness and wiggle connectors where they can be accessed along the cable harness during every measurement, and note if the resistance changes to detect intermittent short-circuits or open circuit.

HINT: Part the CAN-net at suitable points to decide where a short-circuit may be found.

NOTE: After fault with control modules that interfere with communication, other control modules may remain in Limp-Home (that is, they work with reduced functionality) even when the ignition has been turned off and on a few times. For certain faults in the CAN-net where control modules have stopped communicating, it may help to disconnect/reconnect the battery to "restart" the control module/CAN-net.

Remedy as necessary.

Other information

- see **BATTERY, DISCONNECTING**
- see **CHECKING WIRING AND TERMINALS**

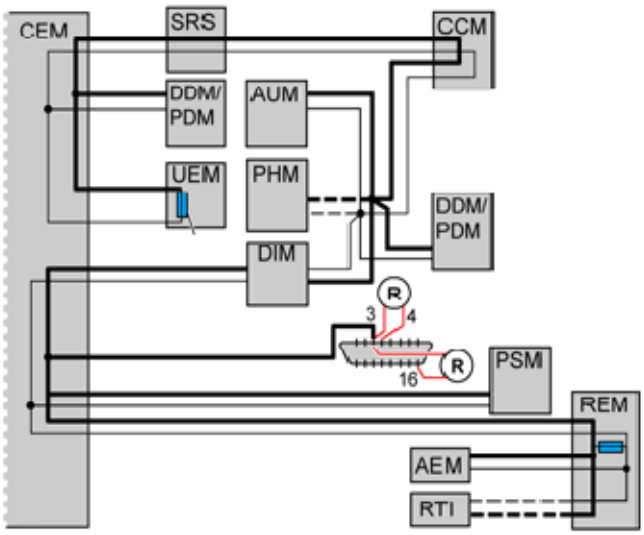

Fig. 105: Checking For Short-Circuiting To Ground/Voltage In CAN-net
Courtesy of VOLVO CARS CORPORATION

Was a fault detected?

- **YES**

  Refer to **VERIFICATION**

- **NO**

  Refer to **CHECKING THE AMOUNT OF TRAFFIC ON THE LS-CAN**

CHECKING VOLTAGE-DROP IN CABLE FOR CAN-H AND CAN-L, RESPECTIVELY

Fig. 106: Identifying Ignition On Position
Courtesy of VOLVO CARS CORPORATION

- Connect the battery.
- Ignition on.
- Connect OBDII-Box **(951 3015)** to the diagnostics socket.

  For general information about CAN-troubleshooting, see: **GENERAL INFORMATION ABOUT FAULT-TRACING IN THE CAN NETWORK**

  In principle, the voltage measured in each cable in the CAN-net shall be the same at each control module

in the network. This means that the voltage-drop in the cable for CAN-H and CAN-L, respectively, between the control modules should be very low. If there is a voltage-difference in the CAN-lines between the diagnostics socket/Central electronic module (CEM) and a control module due to, e. g., contact resistance in a connector or branching, communication may be lost/interfered with. Check if there is voltage-drop in the cable for CAN-H and CAN-L between the diagnostics socket/Central electronic module (CEM) and the control module where there is problem with communication.

Carry out the following:

Measure voltage between the following connections on the OBDII-box/diagnostics socket.

- #3 and corresponding connection on relevant control module for CAN-H. The voltage shall be lower than 50 mV.
- #11 and corresponding connection on relevant control module for CAN-L. The voltage shall be lower than 50 mV.

If voltage is too high, this indicates too high contact resistance in cable, connector, or branching. Check the circuit between the diagnostics socket and control module in question for contact resistance and oxidation.

NOTE: **After fault with control modules that interfere with communication, other control modules may remain in Limp-Home (that is, they work with reduced functionality) even when the ignition has been turned off and on a few times. For certain faults in the CAN-net where control modules have stopped communicating, it may help to disconnect/reconnect the battery to "restart" the control module/CAN-net.**

Remedy wiring as necessary.

Other information

- see **CHECKING WIRING AND TERMINALS**

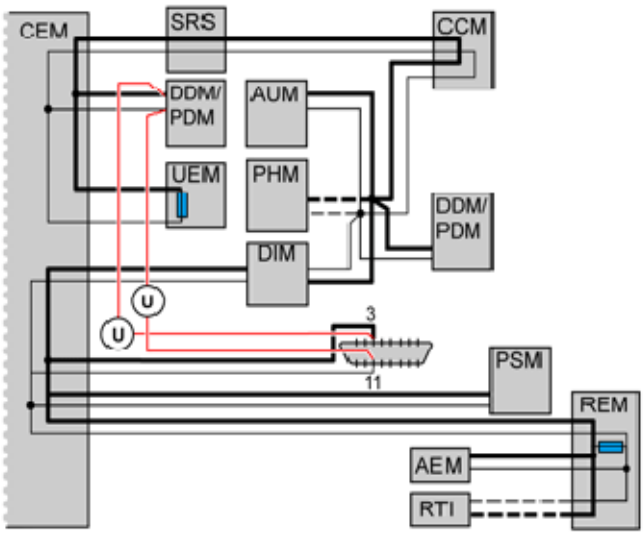

Fig. 107: Checking For Voltage-Drop In Cable For CAN-H And CAN-L
Courtesy of VOLVO CARS CORPORATION

- **Continue**

  Refer to **VERIFICATION**

INFORMATION

FAULT-TRACING INFORMATION

The fault should have been detected and remedied. As this is not the case fault-tracing has failed.

Exit fault-tracing for this diagnostic trouble code (DTC) or make another attempt.

CEM-1A56: COMMUNICATION WITH THE DRIVER INFORMATION MODULE (DIM). SIGNAL MISSING (2003-2004)

DIAGNOSTIC TROUBLE CODE (DTC) INFORMATION CEM-1A56

Condition

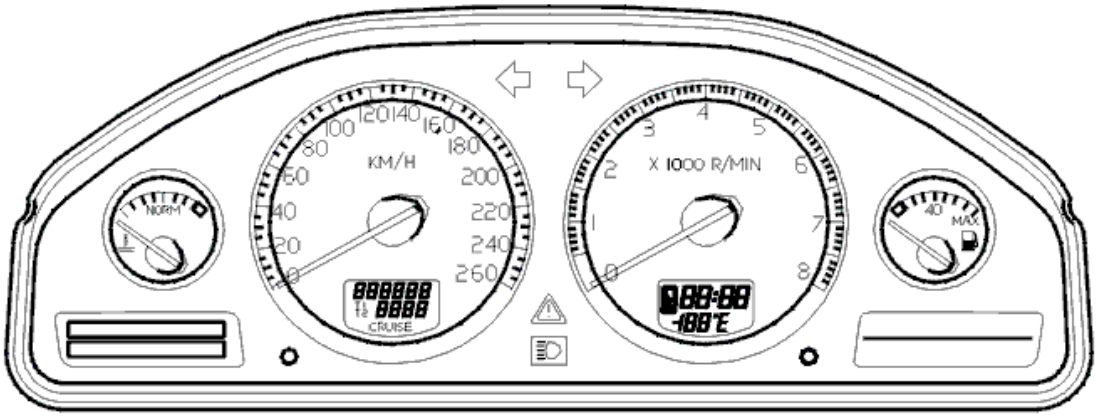

Fig. 108: Driver Information Module
Courtesy of VOLVO CARS CORPORATION

Diagnostic trouble codes (DTCs) are stored if the central electronic module (CEM) registers that communication with the driver information module (DIM) is not operating.

NOTE: **In the event of CEM-1A5X diagnostic trouble codes (DTCs), the central electronic module (CEM) must not be replaced as the diagnostic trouble code (DTC) indicates a communication fault in the Control area network**

Substitute Value

None.

Possible Source

- No power supply to the driver information module (DIM)
- Open-circuit in the ground lead to the driver information module (DIM)
- Contact resistance in the terminals
- Open-circuit in the wiring for the CAN low speed network to the drive information module (DIM)
- The driver information module (DIM) is not intended for this car (for example a used control module with different software/hardware).

HINT: If several diagnostic trouble codes (DTCs) are stored in the central electronic module (CEM) for communication faults with other control modules in the low speed network, this indicates a common fault in the Control area network.

Fault symptom[s]

- No gauges working
- The instrument lighting does not operate.

SIGNAL MISSING

CHECKING THE FUNCTION OF THE DRIVER INFORMATION MODULE (DIM)

Check the power supply for the driver information module (DIM) by switching on the ignition.

The lighting in the instrument panel must light up.

Does the lighting in the driver information module (DIM) light up?

- **YES**

  Refer to **CHECKING COMMUNICATION WITH THE DRIVER INFORMATION MODULE (DIM)**

- **NO**

  Refer to **CHECKING THE POWER SUPPLY AND GROUND FOR THE DRIVER INFORMATION MODULE (DIM)**

CHECKING THE POWER SUPPLY AND GROUND FOR THE DRIVER INFORMATION MODULE (DIM)

Check the fuse in the passenger compartment fusebox for the power supply relay for the driver information module (DIM).

NOTE: If the fuse has blown, check the circuit after the fuse before replacing the fuse. Check for a short-circuit to ground. Then replace the fuse.

Check the cable between the fusebox and the power supply relay for the driver information module (DIM). Check for an open-circuit.

Check the cable between the power supply relay and the driver information module (DIM). Check for an open-circuit.

Check the ground lead between the driver information module (DIM) and the ground terminal. Check for an open-circuit. Also check the ground terminal. Check for contact resistance and oxidation.

Check the connector and the cable harness behind the dashboard. Check for damage.

Remedy as necessary.

Other information:

- To access or replace the driver information module (DIM), see **DRIVER INFORMATION MODULE (DIM), REPLACING**
- To connect the breakout box, see **CONNECTING THE DRIVER INFORMATION MODULE (DIM) TEST BOX**
- For information about signals and connectors, see **DRIVER INFORMATION MODULE (DIM) SIGNAL DESCRIPTION**
- For information about checking wiring and terminals, see **CHECKING WIRING AND TERMINALS** .

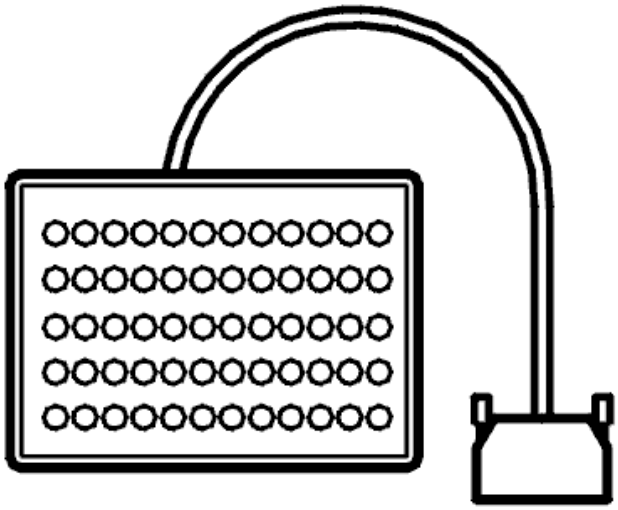

Fig. 109: Breakout Box
Courtesy of VOLVO CARS CORPORATION

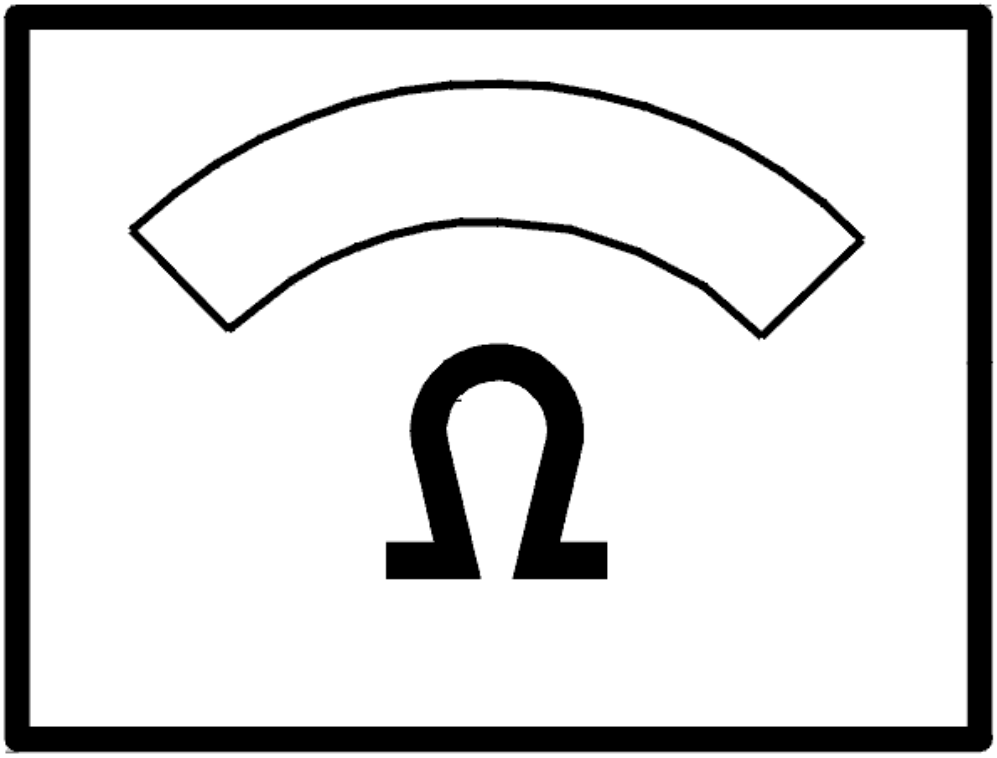

Fig. 110: Identifying Ohm Meter
Courtesy of VOLVO CARS CORPORATION

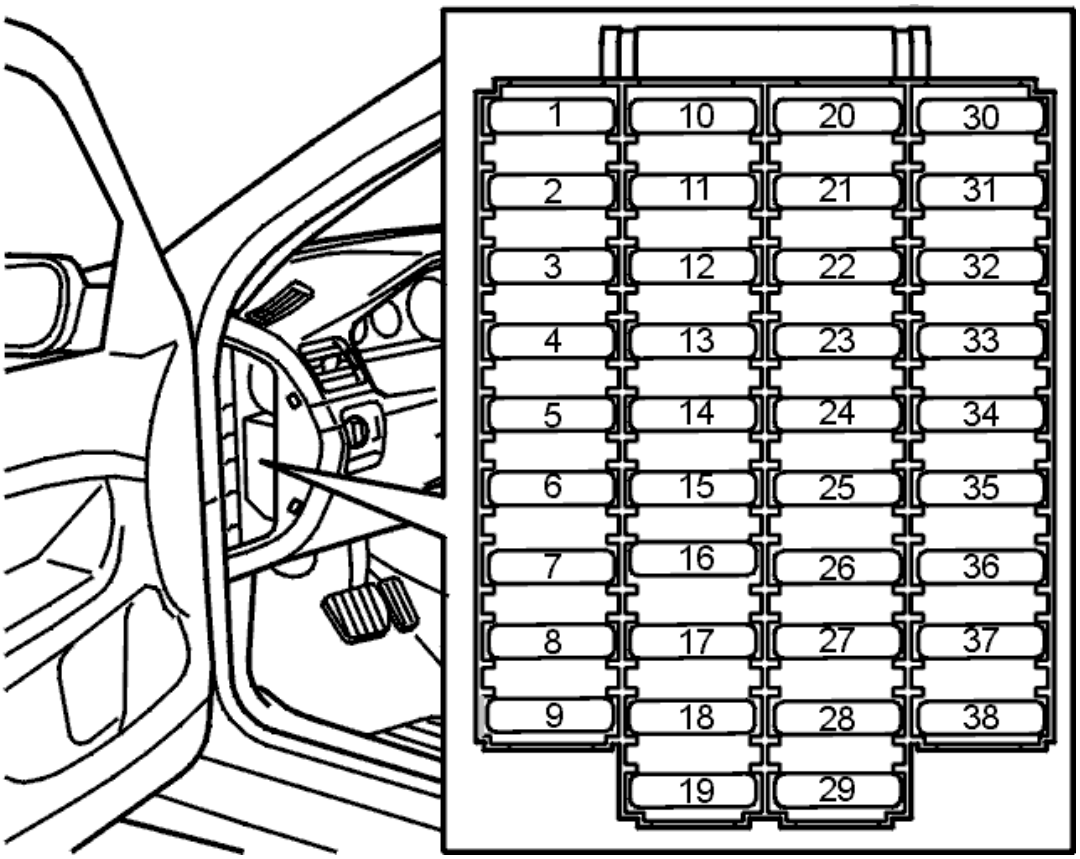

Fig. 111: Fuse Holder (Passenger Compartment)
Courtesy of VOLVO CARS CORPORATION

Was a fault detected?

- **YES**

  Refer to **CHECKING THE FUNCTION OF THE DRIVER INFORMATION MODULE (DIM)**

- **NO**

  Refer to **SIGNAL MISSING**

CHECKING COMMUNICATION WITH THE DRIVER INFORMATION MODULE (DIM)

HINT: The CAN communication with the control module is probably OK if the control module ID can be read off. In that case the fault is probably intermittent and will then be more difficult to trace.

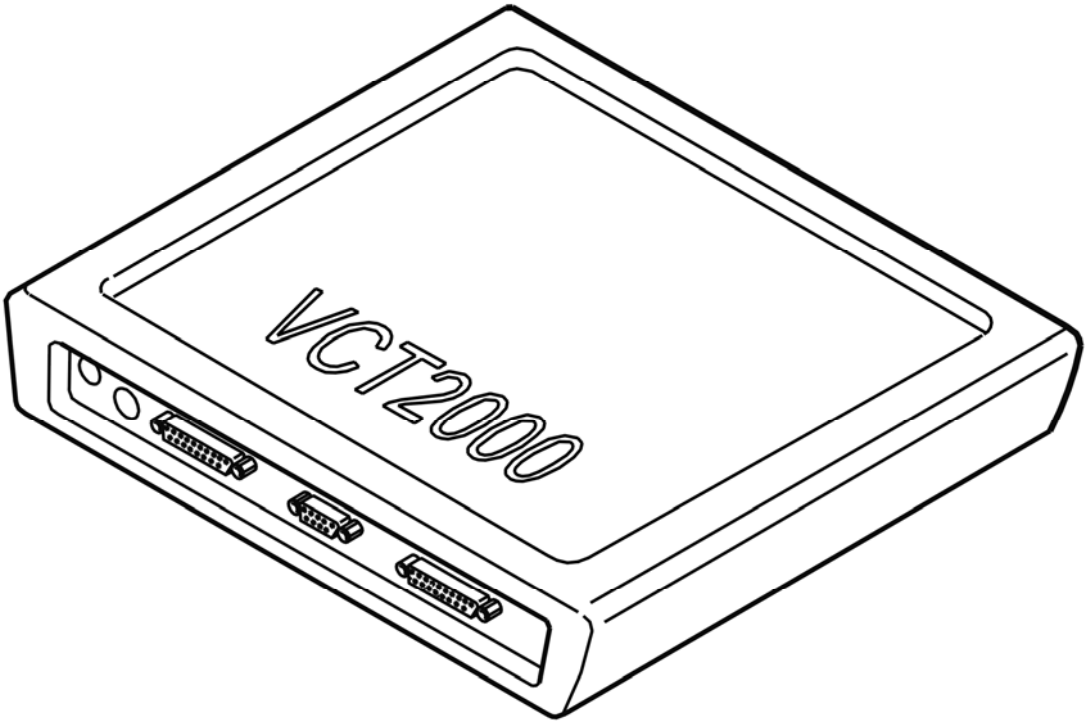

Fig. 112: Identifying VCT2000 Diagnostic Tool Symbol In VIDA
Courtesy of VOLVO CARS CORPORATION

- Try to communicate with the driver information module (DIM) by reading off the control module ID
- Use the VCT2000 (or appropriate scan tool)

- **Continue**

  Refer to **SIGNAL MISSING**

CHECKING THE FUNCTION OF THE DRIVER INFORMATION MODULE (DIM)

HINT: After carrying out the repair, check that the fault has been remedied.

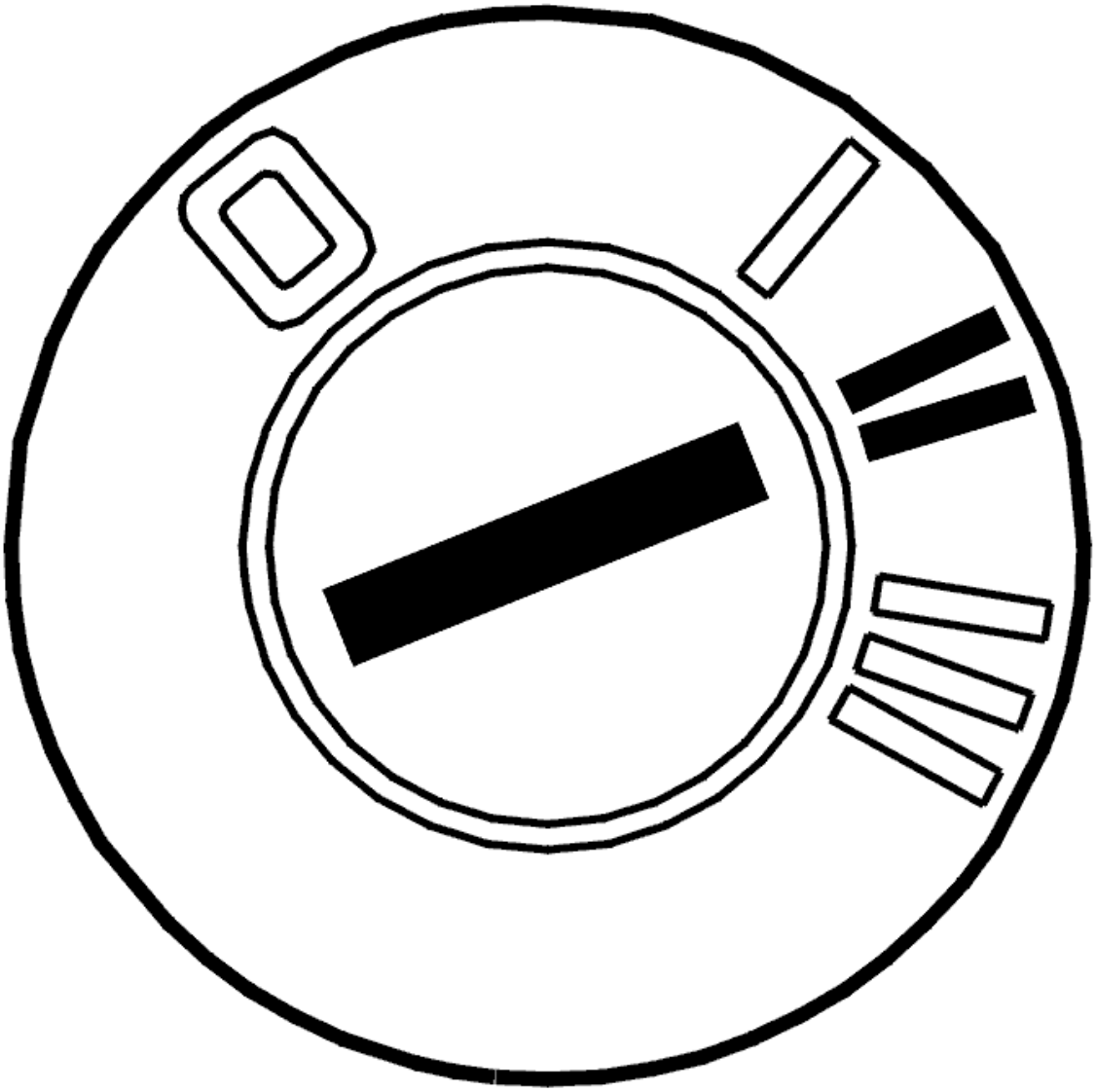

Fig. 113: Identifying Ignition ON
Courtesy of VOLVO CARS CORPORATION

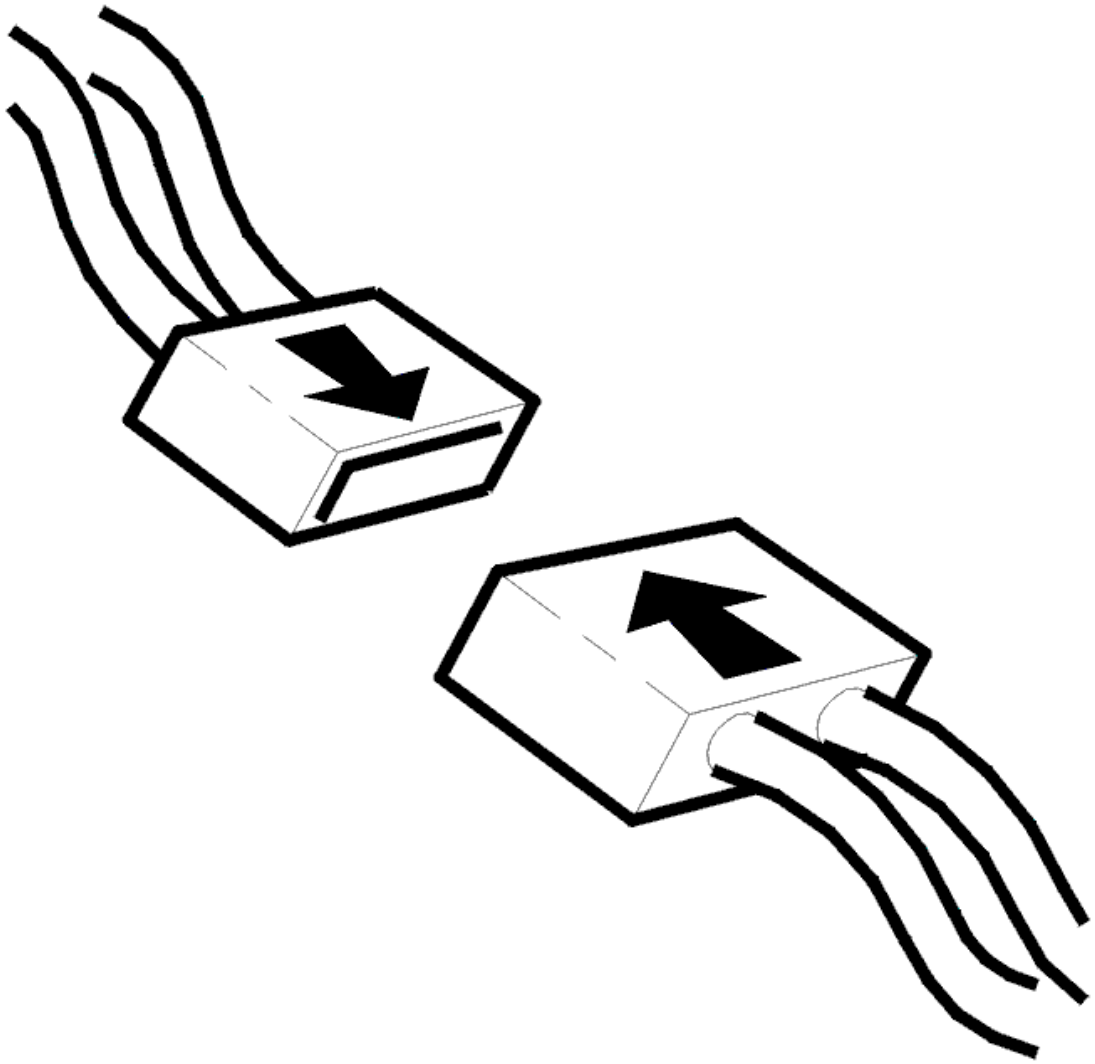

Fig. 114: Connecting Connector
Courtesy of VOLVO CARS CORPORATION

- Ignition off
- Reconnect the connectors. Reinstall the components
- Ignition on.

  Check the power supply for the driver information module (DIM) by switching on the ignition.

  The lighting in the instrument panel must light up.

  If the above works, start the engine and check that the indicator lamps go out correctly and that the tachometer reacts to changes in engine speed.

Is the driver information module (DIM) working?

- **YES**

  OKAY: Troubleshooting has been completed.

- **NO**

  Refer to **INFORMATION**

SIGNAL MISSING

GENERAL INFORMATION

HINT: For general information about fault-tracing the control area network (CAN), see the linked document below. See GENERAL INFORMATION ABOUT FAULT-TRACING IN THE CAN NETWORK (2005-2012)

In order to check the control area network (CAN) cables, the resistance in the network must be measured. The resistance between the two CAN cables, with the network connected, must be 60ohms in both the high speed network and the low speed network.

NOTE: **Resistance will only be 60 ohms if the main artery of the CAN network is whole and the network is connected. If the main artery of the CAN network is split somewhere and a reading is taken between the CAN cables, resistance will be 120 ohms.**

If diagnostic trouble codes (DTCs) can be read off from the relevant control module, the fault is probably intermittent. The locations that must be checked in the event of a fault in the low speed network are the junctions behind the central electronic module (CEM) and the audio module (AUM) as well as the cable harness behind the Audio module (AUM).

Intermittent fault in the current supply to the actual control module is indicated by the DTC in the Central electronic module (CEM) (CEM-1A5X or CEM-1A6X). There is probably no diagnostic trouble code (DTC) in the relevant control module as the control module cannot store a diagnostic trouble code (DTC) when it is without power.

- **Continue**

  Refer to **CHECKING THE RESISTANCE OF THE CONTROL AREA NETWORK (CAN) CABLES**

CHECKING THE RESISTANCE OF THE CONTROL AREA NETWORK (CAN) CABLES

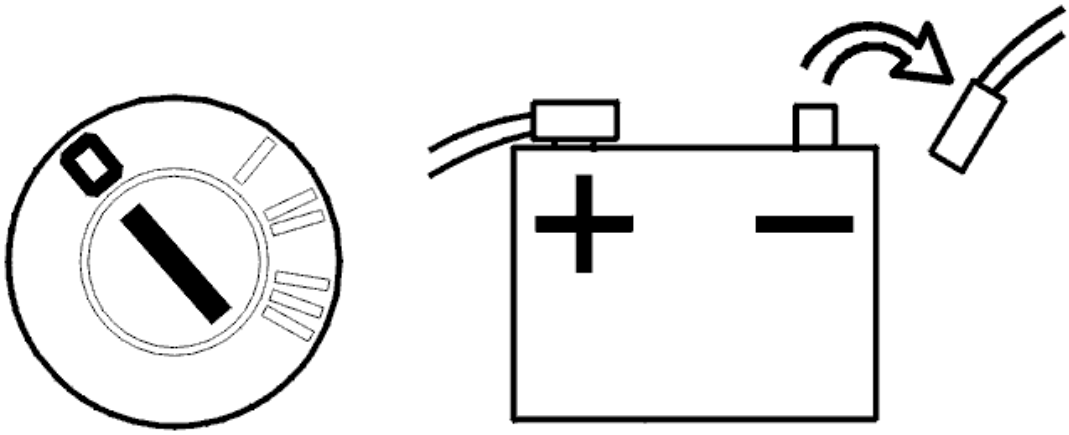

Fig. 115: Identifying Ignition In Off Position And Disconnecting Negative Cable From Battery
Courtesy of VOLVO CARS CORPORATION

- Disconnect the battery negative lead. The network must not be powered when taking resistance readings. Otherwise an incorrect value may be obtained.
- Connect the adapter wiring to the central electronic module (CEM).

  HINT: Where a breakout box cannot be used, take readings from the rear of the affected connectors if possible. This prevents terminal pins and socket housings being damaged.

  When taking readings on the low speed network

  - When taking readings on the low speed network the adapter wiring should be connected to the Central electronic module (CEM) and readings taken from there. Readings can even be taken in the connector for the Power seat module (PSM). The advantage of the adapter wiring to the Central electronic module (CEM) is that all control module can be connected in the network when taking readings and access can be gained to both the high speed and low speed networks.

    The resistance reading only measures the main arteries in the low speed network, not the junctions that exist for different control modules.

  When taking readings on the high speed network

  - When taking readings on the high speed network the adapter wiring should be connected to the Engine control module (ECM) and readings taken from there. The Engine control module (ECM) must be connected. This resistance reading only measures the main arteries in the high speed network.

  Connect an ohmmeter to the terminals for CAN-L and CAN-H on the relevant network. Turn the contacts and turn the cable harness. Resistance must be approximately 60 ohms.

NOTE: **Resistance will only be 60 ohms if the main artery of the CAN network is whole and the network is connected. If the main artery of the CAN network is split somewhere and a reading is taken between the CAN cables, resistance will be 120 ohms.**

Other information

- see **BATTERY, DISCONNECTING**
- see **CONNECTING THE BREAKOUT BOX**
- see **CHECKING WIRING AND TERMINALS**

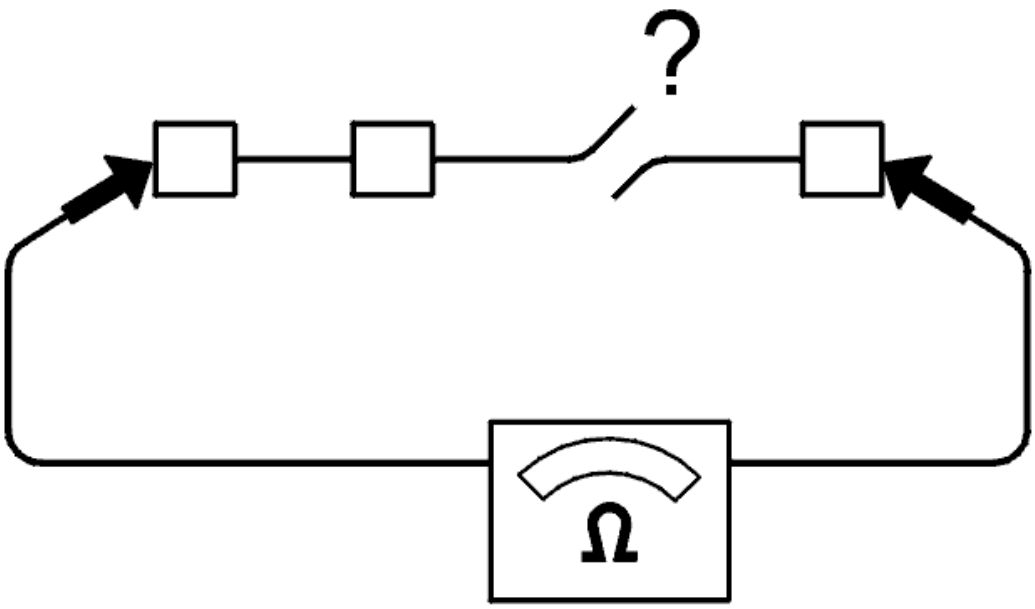

Fig. 116: Checking For Open Circuit
Courtesy of VOLVO CARS CORPORATION

Is the value OK?

- **YES**

  Refer to **CHECKING A SHORT-CIRCUIT IN CAN CABLES**

- **NO**

  Refer to **IDENTIFYING FAULT CAUSES IN THE CAN NETWORK**

CHECKING A SHORT-CIRCUIT IN CAN CABLES

Connect an ohmmeter between respective CAN cable and voltage supply and between the CAN cables and ground. Turn the contacts and turn the cable harness. The resistance must be infinite or very high.

HINT: Readings can be taken from one and the same connector if the CAN wiring, voltage supply and ground is pre-routed. If possible, measure from the rear of the affected connectors in order to minimize any damage and future loose connections. If this is not possible, use the adapter wiring or loose terminal pin for good contact.

Was a fault detected?

- **YES**

  Refer to **IDENTIFYING FAULT CAUSES IN THE CAN NETWORK**

- **NO**

  Refer to **CHECKING THE TRAFFIC LOAD ON THE CAN CABLES**

CHECKING THE TRAFFIC LOAD ON THE CAN CABLES

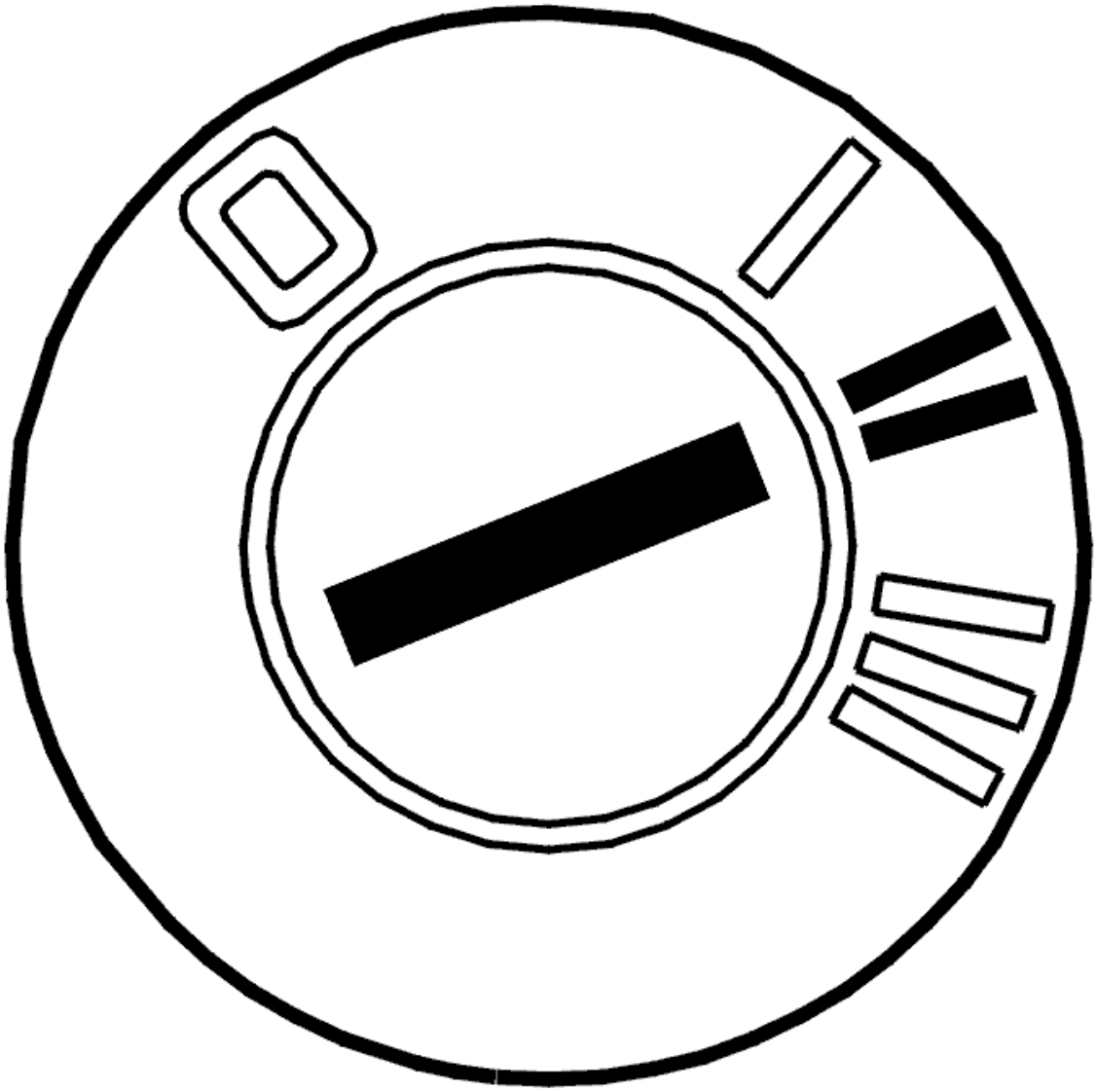

Fig. 117: Identifying Ignition ON
Courtesy of VOLVO CARS CORPORATION

- Connect the battery.
- Ignition on.

Faults in the CAN network may be due to a control module sending faulty messages that disrupt normal communication. When messages are sent incorrectly, this results in a considerable increase in the amount of traffic on the CAN network. The load can be checked by reading the average value of the voltage on the CAN cables in relation to ground.

The following applies for model year -2004:

Connect a voltmeter between CAN-L and ground. The voltage shall be approx. 2.3 V.

Then connect a voltmeter between CAN-H and ground. The voltage shall be approx. 2.8 V.

The following applies for model year 2004-:

Connect a voltmeter between CAN-L and ground. The voltage should be approx: V

Connect a voltmeter between CAN-H and ground. The voltage should be approx: V

NOTE: **For vehicles of later model years, normal voltage values lie within a specific interval due to increased traffic between the control modules on the CAN network upon update of the electrical system.**

HINT: If possible, measure from the rear of the affected connectors so that they are not damaged.

Other information

- see **BATTERY, DISCONNECTING**

Is the value OK?

- **YES**

  Refer to **INFORMATION**

- **NO**

  Refer to **IDENTIFYING A CONTROL MODULE IN THE CAN NETWORK**

IDENTIFYING FAULT CAUSES IN THE CAN NETWORK

- Disconnect a control module that disconnects the CAN network (a control module that has four terminals to the CAN network).

  HINT: For the low speed network, suitable places for disconnecting the network are at the steering wheel module (SWM), the driver information module (DIM) or the climate control module (CCM).

  In the event of an short-circuit between on of the CAN cables and voltage or ground, the fault can be localized disconnecting a control module that splits the CAN network. Readings can then be taken to determine on which side the fault is on the disconnected control module.

  Connect an ohmmeter between the CAN cable and voltage supply respectively ground. Take readings from both ends of the CAN networks at the network junction. Twist and bend the cable harness to find any intermittent short-circuits. The resistance must be infinite or very high (more than 1 Mohms).

  If a fault can be localized in one direction, split the network at a point further on in the CAN network in the direction that the fault was discovered and take a new reading. Try to locate the fault in this way.

  HINT: A short-circuit between the CAN cables and supply voltage or ground may be in either the wiring or in a control module.

Remedy the cables as necessary. If a fault is found on one control module, replace the control module.

- **Continue**

  Refer to **VERIFICATION**

IDENTIFYING A CONTROL MODULE IN THE CAN NETWORK

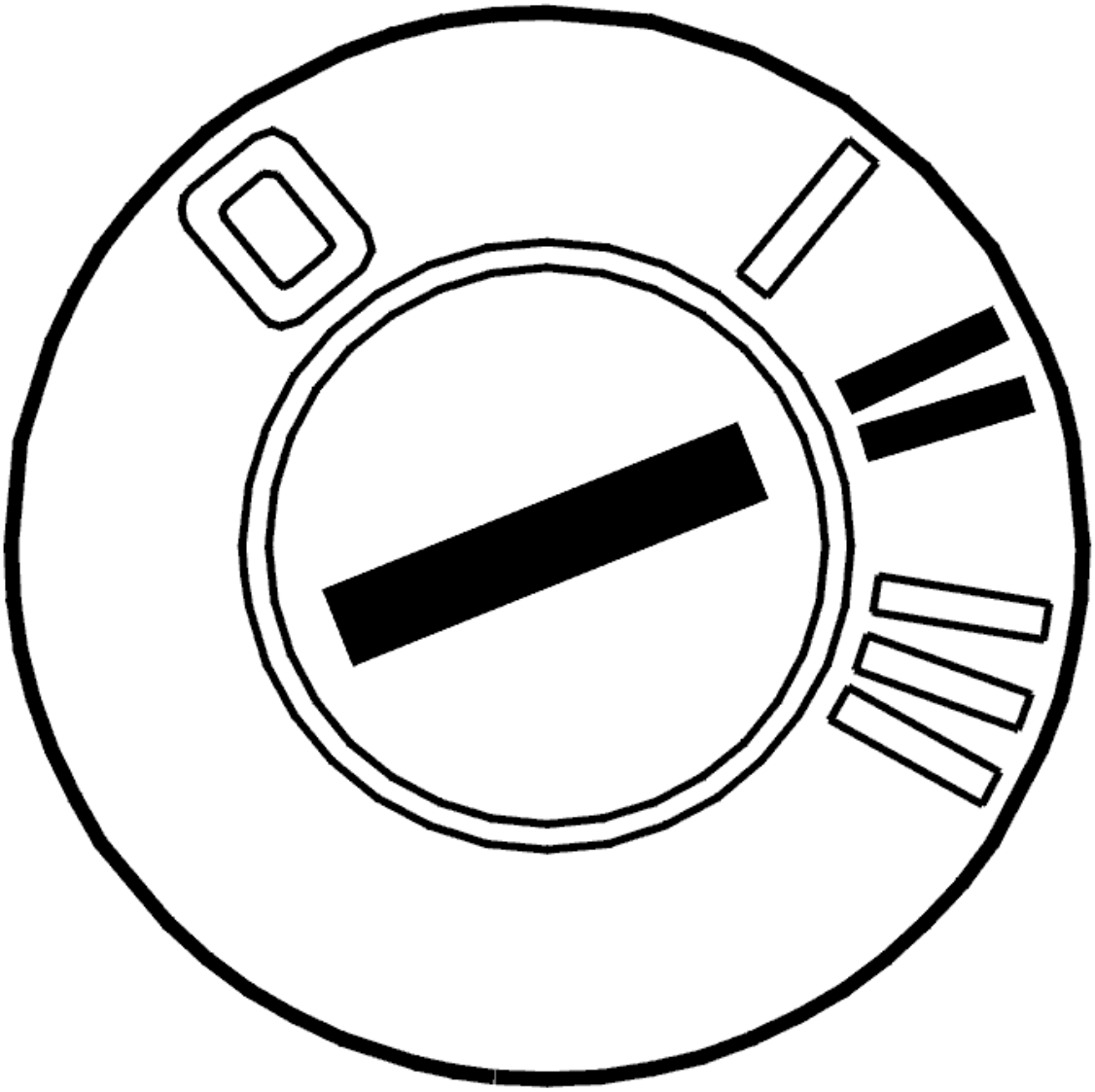

Fig. 118: Identifying Ignition ON
Courtesy of VOLVO CARS CORPORATION

- Connect the battery.
- Ignition on.

  If the load on the CAN network is too high, this may be due to a control module transmitting faulty messages on the CAN network. This is called a disruptive control module. The fault may also be due to

an intermittent short-circuit to supply voltage or ground in one of the CAN cables. This results in the control modules on the CAN network starting to send faulty messages. The fault may occur without any of the control modules storing a diagnostic trouble code (DTC). The voltage can be measured between the CAN cables in order to check the load on the CAN network.

The following applies for model year -2004:

Connect a voltmeter between the CAN cables. In the event of correct communication on the network, the average value of the voltage must be approximately 0.5 V (0.4 V to 0.6 V).

The following applies for model year 2004-:The following applies for model year 2004-:

Connect a voltmeter between the CAN cables. During correct CAN network communication, voltage should be about 0.6-1.4 V.

NOTE: For vehicles of later model years, the normal voltage value is slightly higher due to increased traffic between the control modules on the CAN network upon update of the electrical system.

In the event of a communication fault the voltage is significantly higher than the above specified values. In order to identify which control module has faulty communication, cut the power supply to one control module at a time. Check the voltage in the CAN cables again. The easiest way to cut the power supply is to remove the fuse(s) for the relevant control module. Repeat until the voltage between the CAN wiring drops to the normal level.

HINT: When the probable faulty control module has been identified, connect and disconnect the supply voltage to the control module a number of times to verify that the fault appears and disappears.

NOTE: Do not cut the power to the central electronic module (CEM) unless it is the last control module left to check.

The control module that is communicating incorrectly must be replaced. Remedy as necessary.

NOTE: After a fault with "interfering" control modules, other control modules may remain in "Limp-Home mode" even when the ignition has been switched off and on several times. To remedy this, disconnect and reconnect the battery negative terminal to restore the control modules to normal function.

Other information

- see **BATTERY, DISCONNECTING**

- **Continue**

Refer to **VERIFICATION**

IDENTIFYING FAULT CAUSES IN THE CAN NETWORK

- Disconnect a control module that disconnects the CAN network (a control module that has four terminals to the CAN network).

  HINT: For the low speed network, suitable places for disconnecting the network are at the steering wheel module (SWM), the driver information module (DIM) or the climate control module (CCM).

  In the event of an open-circuit on, or short-circuit between the CAN cables, the fault can be localized by disconnecting a control module that splits the CAN network. Readings can then be taken to determine on which side the fault is on the disconnected control module.

  Connect an ohmmeter between the CAN cables. Take readings from both ends of the CAN networks at the network junction. Twist and bend the cable harness to find any intermittent short-circuits. Resistance should be 120 ohms.

  If a fault can be localized in one direction, split the network at a point further on in the CAN network in the direction that the fault was discovered and take a new reading. Try to locate the fault in this way.

  Remedy the cables as necessary.

- **Continue**

  Refer to **VERIFICATION**

VERIFICATION

HINT: After rectifying a fault, a verification should be carried out.

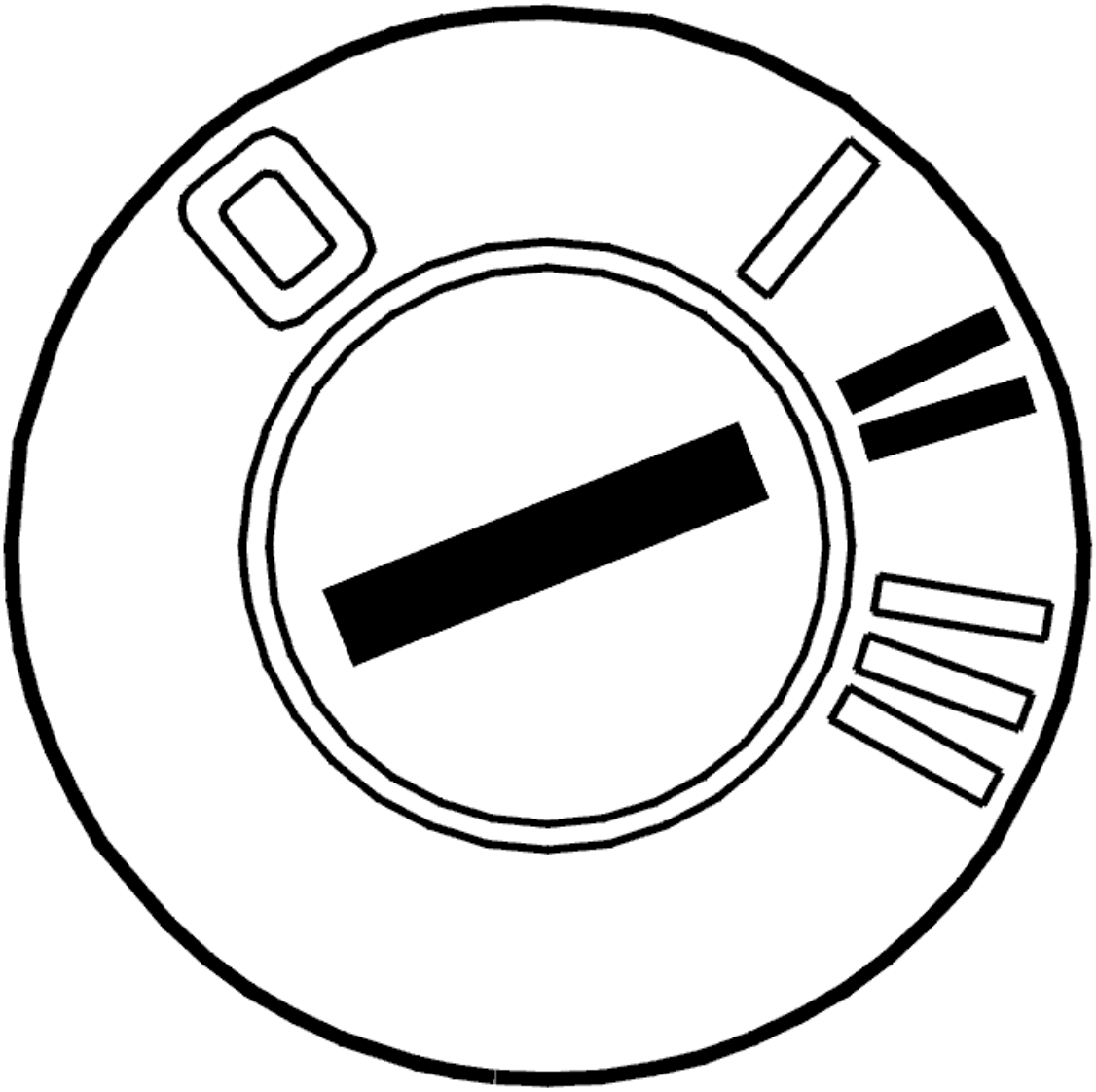

Fig. 119: Identifying Ignition ON
Courtesy of VOLVO CARS CORPORATION

- Reinstall the connectors, components etc.
- Ignition on.
- Erase diagnostic trouble codes using the VCT2000 (or appropriate scan tool).
- Start the car. Allow the vehicle to run for 10 minutes.
- Read off diagnostic trouble codes (DTCs).

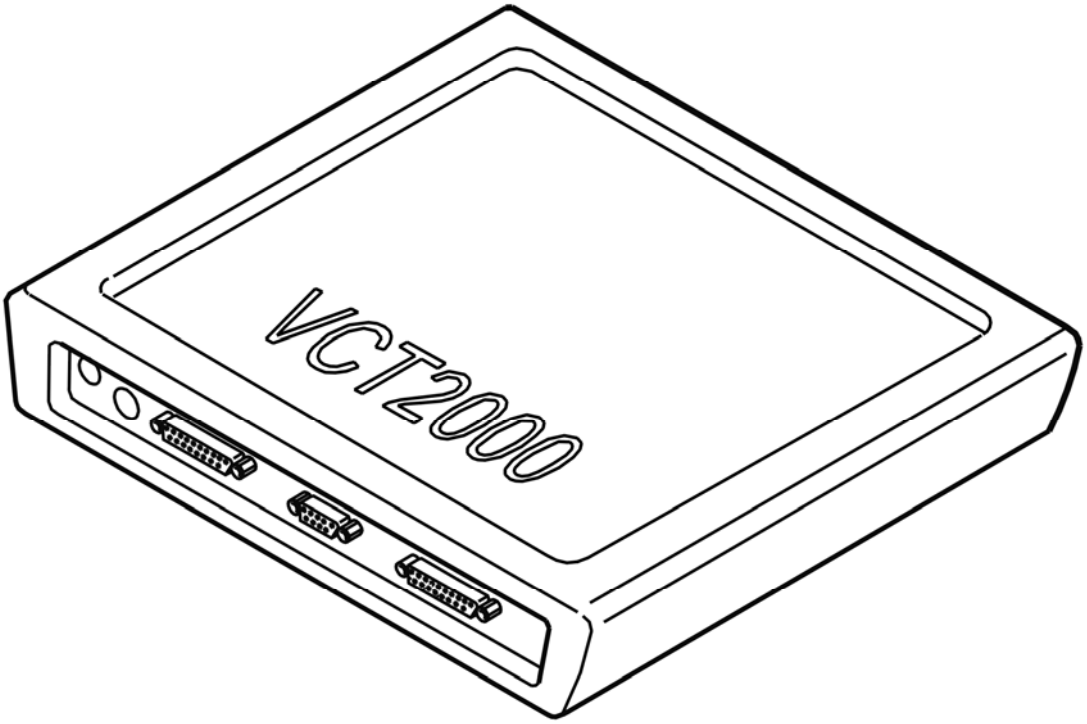

Fig. 120: Identifying VCT2000 Diagnostic Tool Symbol In VIDA
Courtesy of VOLVO CARS CORPORATION

Does the diagnostic trouble code (DTC) for a communication fault recur (CEM-1A5X or CEM-1A6X)?

- **YES**

  Refer to **INFORMATION**

- **NO**

  OKAY: Troubleshooting has been completed.

INFORMATION

FAULT-TRACING INFORMATION

Verification shows that the fault is no longer present. The diagnostic trouble code (DTC) was probably caused by an intermittent fault.

Fault-tracing for this diagnostic trouble code (DTC) is not followed by a verification.

You can view the information again or exit fault-tracing for this diagnostic trouble code (DTC).

INFORMATION

FAULT-TRACING INFORMATION

The fault should have been detected and remedied. As this is not the case fault-tracing has failed.

Exit fault-tracing for this diagnostic trouble code (DTC) or make another attempt.

CEM-1A56: COMMUNICATION WITH THE DRIVER INFORMATION MODULE (DIM). SIGNAL MISSING (2005-2012)

DIAGNOSTIC TROUBLE CODE (DTC) INFORMATION CEM-1A56

Condition

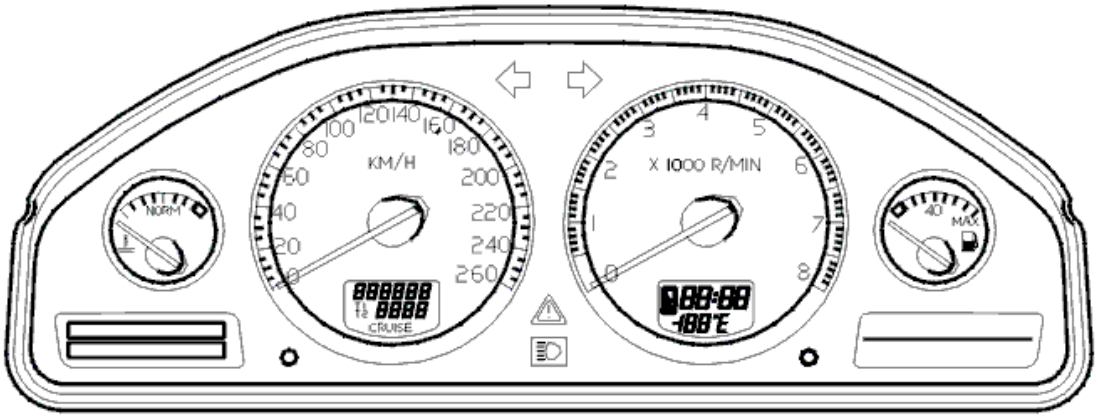

Fig. 121: Driver Information Module
Courtesy of VOLVO CARS CORPORATION

The diagnostic trouble code (DTC) is stored if the central electronic module (CEM) registers that communication with the driver information module (DIM) is not operating.

The diagnostic trouble code (DTC) can be diagnosed when the ignition has been on for more than 10 seconds.

NOTE: **In the event of CEM-1A5X diagnostic trouble codes (DTCs), the central electronic module (CEM) must not be replaced as the diagnostic trouble code (DTC) indicates a communication fault in the controller area network (CAN).**

Substitute Value

- None.

Possible Source

- No power supply to the driver information module (DIM)
- Open-circuit in the ground lead for the driver information module (DIM)
- Contact resistance in the terminals
- Open-circuit in the wiring for the CAN low speed network to the drive information module (DIM)
- The driver information module (DIM) is not intended for this vehicle (for example a used control module with different software/hardware).

HINT: If several diagnostic trouble codes (DTCs) are stored in the central electronic module (CEM) for communication faults with other control modules in the low speed network, this indicates a common fault in the controller area network (CAN).

Fault symptom[s]

- No gauges working.
- The instrument lighting does not operate.

SIGNAL MISSING

CHECKING THE FUNCTION OF THE DRIVER INFORMATION MODULE (DIM)

Check the power supply for the driver information module (DIM) by switching on the ignition.

The lighting in the instrument panel must light up.

Does the lighting in the driver information module (DIM) light up?

- **YES**

  Refer to **CHECKING COMMUNICATION WITH THE DRIVER INFORMATION MODULE (DIM)**

- **NO**

  Refer to **CHECKING THE POWER SUPPLY AND GROUND FOR THE DRIVER INFORMATION MODULE (DIM)**

CHECKING THE POWER SUPPLY AND GROUND FOR THE DRIVER INFORMATION MODULE (DIM)

Check that the fuse for the control module is intact.

Check the power supply and ground terminal for the driver information module (DIM) as follows.

Remedy as necessary.

Other information:

- Driver information module (DIM): **CHECKING THE VOLTAGE / GROUND TERMINAL**
- see **CHECKING WIRING AND TERMINALS**

Was a fault detected?

- **YES**

  Refer to **CHECKING THE FUNCTION OF THE DRIVER INFORMATION MODULE (DIM)**

- **NO**

  Refer to **SIGNAL MISSING**

CHECKING COMMUNICATION WITH THE DRIVER INFORMATION MODULE (DIM)

HINT: The CAN communication with the control module is probably OK if the control module ID can be read off. The fault is probably intermittent and may therefore be difficult to locate.

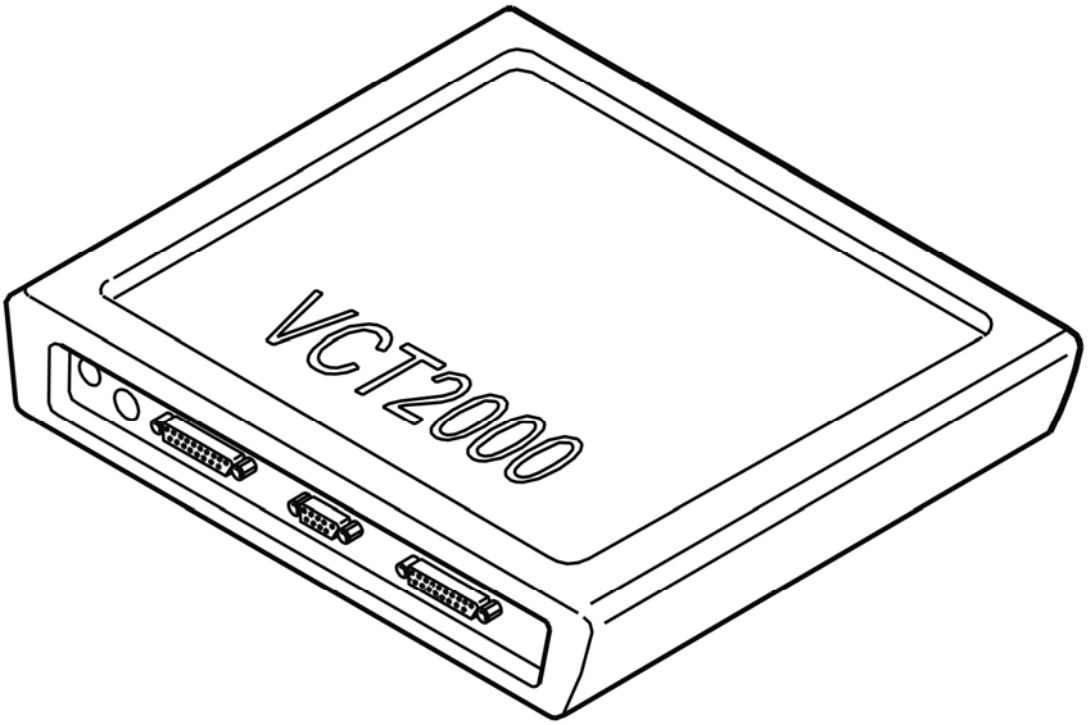

Fig. 122: Identifying VCT2000 Diagnostic Tool Symbol In VIDA
Courtesy of VOLVO CARS CORPORATION

- Try to communicate with the driver information module (DIM) by reading off the control module ID
- Use the VCT2000 (or appropriate scan tool)

- **Continue**

  Refer to **SIGNAL MISSING**

CHECKING THE FUNCTION OF THE DRIVER INFORMATION MODULE (DIM)

HINT: After carrying out the repair, check that the fault has been remedied.

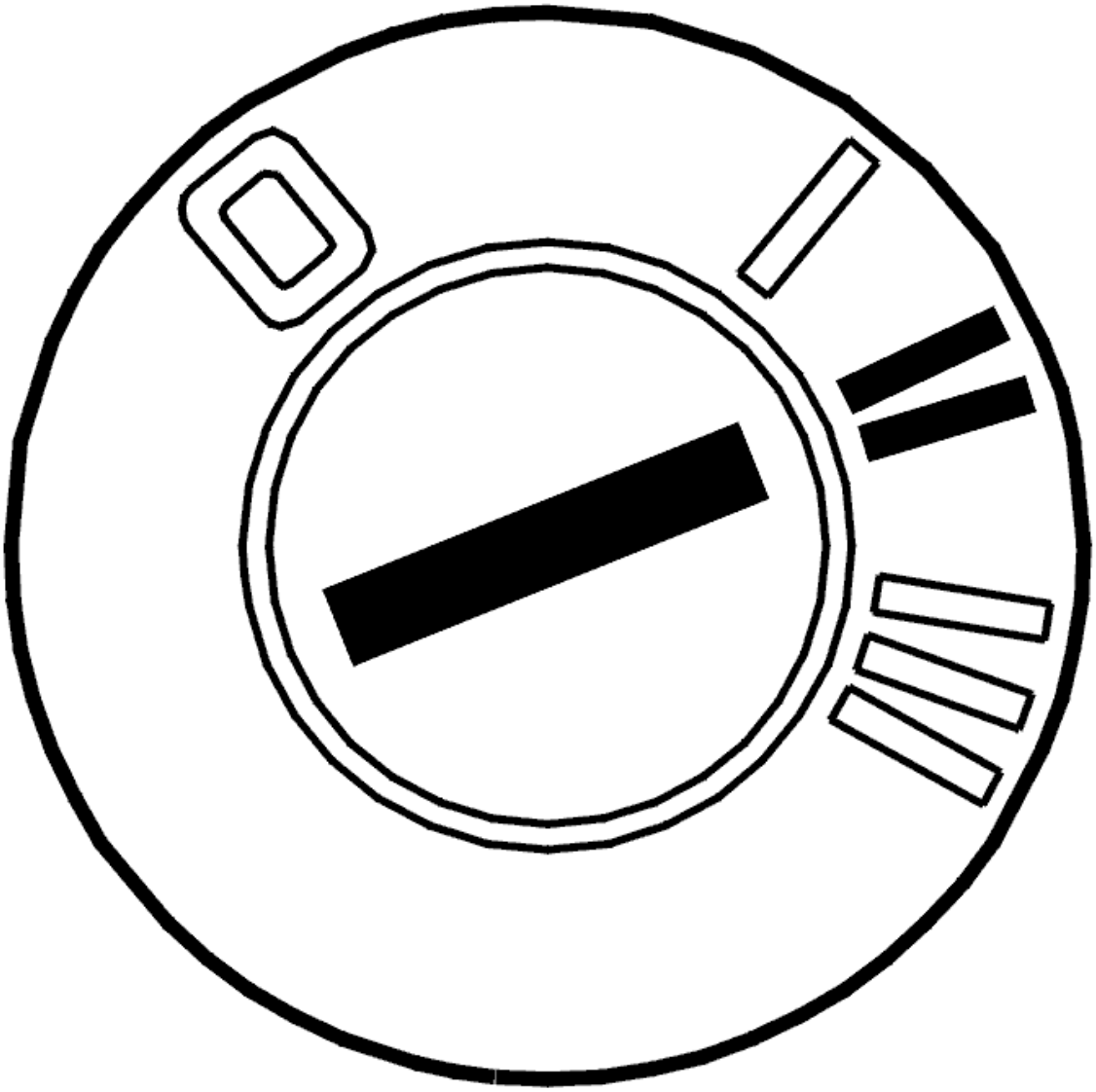

Fig. 123: Identifying Ignition ON
Courtesy of VOLVO CARS CORPORATION

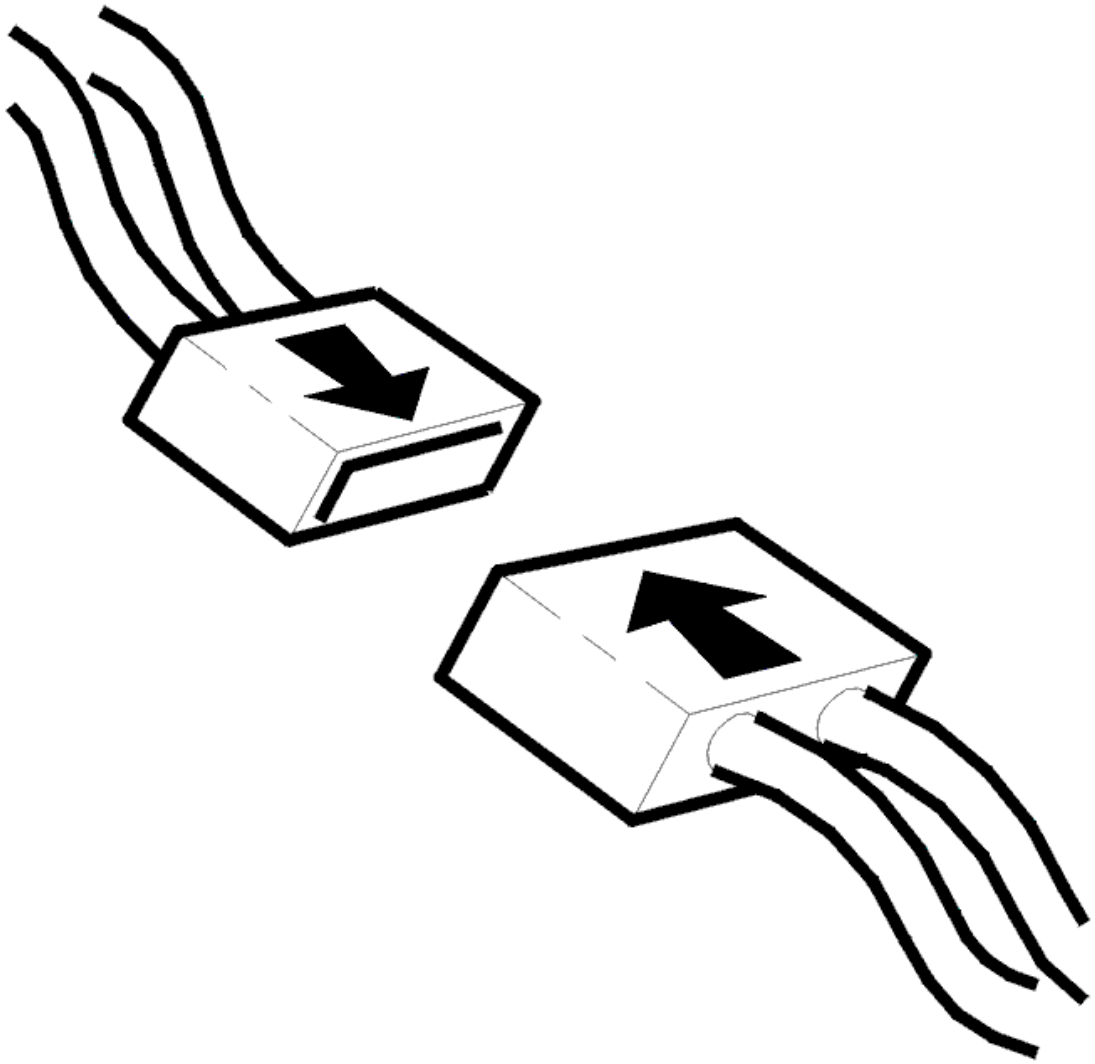

Fig. 124: Connecting Connector
Courtesy of VOLVO CARS CORPORATION

- Ignition off
- Reconnect the connectors. Reinstall the components
- Ignition on.

  Check the power supply for the driver information module (DIM) by switching on the ignition.

  The lighting in the instrument panel must light up.

  If the above works, start the engine and check that the indicator lamps go out correctly and that the tachometer reacts to changes in engine speed.

Is the driver information module (DIM) working?

- **YES**

  OKAY: Troubleshooting has been completed.

- **NO**

  Refer to **INFORMATION**

SIGNAL MISSING

GENERAL INFORMATION

NOTE: Illustrations shown are only examples.

HINT: For general information about CAN-troubleshooting, see: GENERAL INFORMATION ABOUT FAULT-TRACING IN THE CAN NETWORK

- **General about CAN-related diagnostic trouble codes:**

  CEM-DF01 - DF17 can only be stored in Central electronic module (CEM). These diagnostic trouble codes are stored when an electric fault is detected in CAN-lines. Start with these diagnostic trouble codes first.

  CEM-1AXX only stored in Central electronic module (CEM). One diagnostic trouble code for every control module on the CAN-net. These diagnostic trouble codes indicate that Central electronic module (CEM) does not receive any reply from other control modules.

  XXX-E000 (HS-CAN)/E001 (LS-CAN) can be stored in all CAN-connected control modules. These diagnostic trouble codes indicate that the control module has detected interference on the CAN-net.

  XXX-E003 can be stored in all CAN-connected control modules except in Central electronic module (CEM). The control modules on the CAN-net listen for a message (identity number) that is sent out at regular intervals from Central electronic module (CEM). This diagnostic trouble code indicates that the control module has not received any identity number, or that the expected number is not correct. Interference on the CAN-net can also store this diagnostic trouble code.

  NOTE: In case of CAN-related faults, it is likely that a combination of above diagnostic trouble codes occur.

  NOTE: After fault with control modules that interfere with communication, other control modules may remain in Limp-Home (that is, they work with reduced functionality) even when the ignition has been turned off and on a few times. For certain faults in the CAN-net where control modules have stopped communicating, it may help to disconnect/reconnect the battery to "restart" the control module/CAN-net.

If diagnostic trouble codes (DTCs) for communication faults can be read off from a control module, the fault is probably intermittent.

Intermittent fault in the voltage supply and ground to a control module on the CAN network results in the Central electronic module (CEM) storing a diagnostic trouble code (DTC) for an open-circuit in communication with the control module where the voltage supply does not work. There will probably not be a diagnostic trouble code (DTC) in the control module where the open-circuit in the voltage supply occurred as the control module cannot store a diagnostic trouble code (DTC) when it is not supplied with power.

NOTE: Central electronic module (CEM) should not be replaced in case of CAN-fault, unless troubleshooting reveals that Central electronic module (CEM) has an internal fault.

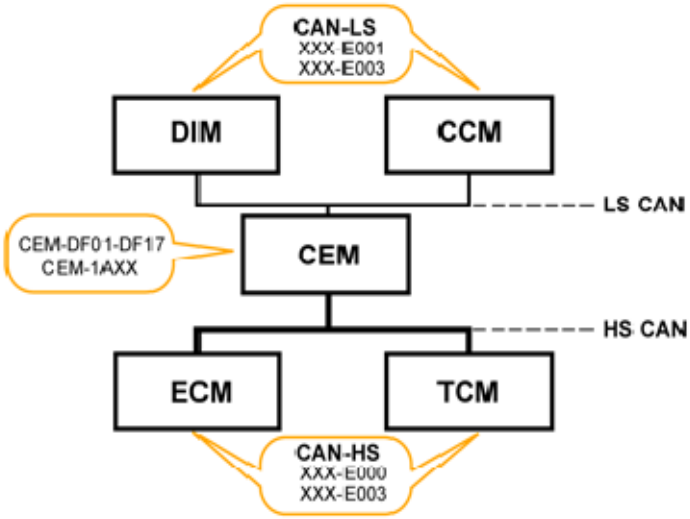

Fig. 125: High-Speed CAN And Low-Speed CAN Communication Diagram
Courtesy of VOLVO CARS CORPORATION

- **Continue**

Refer to **CHECKING RESISTANCE IN CAN-NET**

CHECKING RESISTANCE IN CAN-NET

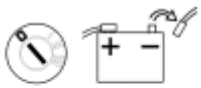

Fig. 126: Ignition Off And Disconnecting Battery Negative Lead
Courtesy of VOLVO CARS CORPORATION

- Ignition off
- Disconnect the battery negative lead
- Connect OBDII-Box **(951 3015)** to the diagnostics socket.

For general information about CAN-troubleshooting, see: **GENERAL INFORMATION ABOUT FAULT-TRACING IN THE CAN NETWORK**

Measure resistance between the following connections on the OBDII-box/diagnostics socket.

- #3 and #11. The resistance should be approx. 55 - 65 ohms.
- If resistance is approx. 120 ohms, this indicates open circuit in the circuit so that only one terminating resistor (120 ohms) has been measured.
- If resistance is above 1 kohms this indicates open circuit/high contact resistance somewhere in the circuit.
- If resistance is below 55 ohms this indicates short-circuiting/contact resistance between the CAN-lines somewhere in the circuit.

HINT: For LS-CAN, terminating resistors are located in Upper electronic module (UEM) and Rear electronic module (REM).

Twist the cable harness and wiggle connectors where they can be accessed along the cable harness during every measurement, and note if the resistance changes to detect intermittent short-circuits or open circuit.

NOTE: **Resistance measurement measures only main lines in the CAN-net (in circuit where both terminating resistors are found), not branches to certain control modules. Open circuit on branching without a terminating resistor cannot be detected with this measurement. However, short-circuiting on a branch can be detected. To measure resistance in the CAN-net to control modules located in a branching of their own, the measurement shall be done against the CAN-net at that control module. The values shall be as above.**

NOTE: **After fault with control modules that interfere with communication, other control modules may remain in Limp-Home (that is, they work with reduced functionality) even when the ignition has been turned off and on a few times. For certain faults in the CAN-net where control modules have stopped communicating, it may help to disconnect/reconnect the battery to "restart" the control module/CAN-net.**

Remedy as necessary.

Other information

- see **BATTERY, DISCONNECTING**
- see **CHECKING WIRING AND TERMINALS**

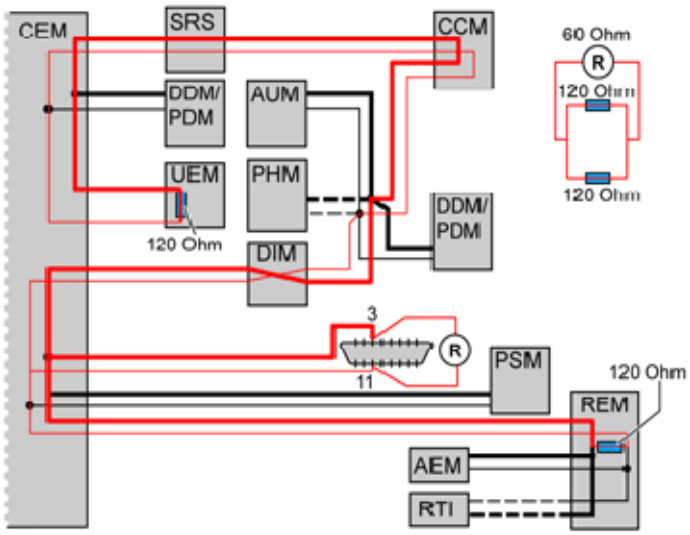

Fig. 127: Checking Resistance In CAN Lines
Courtesy of VOLVO CARS CORPORATION

Was a fault detected?

- **YES**

  Refer to **VERIFICATION**

- **NO**

  Refer to **CHECKING SHORT-CIRCUITING TO GROUND/VOLTAGE IN CAN-NET**

CHECKING THE AMOUNT OF TRAFFIC ON THE LS-CAN

Fig. 128: Identifying Ignition On Position
Courtesy of VOLVO CARS CORPORATION

- Connect the battery
- Ignition on.
- Connect OBDII-Box **(951 3015)** to the diagnostics socket.

  For general information about CAN-troubleshooting, see: **GENERAL INFORMATION ABOUT FAULT-TRACING IN THE CAN NETWORK**

  Faults in the CAN network may be due to a control module sending faulty messages that disrupt normal

communication. When messages are sent incorrectly, this results in a considerable increase in the amount of traffic on the CAN network. The load can be checked by reading the average value of the voltage on the CAN cables in relation to ground.

Measure voltage between the following connections on the OBDII-box/diagnostics socket.

- #3 and #4 (ground). The voltage should be approx:2, 8 - 3, 2 V.
- #11 and #4 (ground). The voltage should be approx:1, 8 - 2, 2 V.
- #3 and #11. The voltage shall be between approx. 0.55-1.4 V. The voltage shall normally be between 0.55 - 0.90 V. A higher voltage may indicate increased traffic on the CAN-net. In case of fault in communication/too high traffic on the CAN-net, the voltage is considerably higher than the above stated values.

NOTE: After fault with control modules that interfere with communication, other control modules may remain in Limp-Home even when the ignition has been turned off and on a few times. For certain faults in the CAN-net where control modules have stopped communicating, it may help to disconnect/reconnect the battery to "restart" the control module/CAN-net.

HINT: DiCE can be used as fault detection tool if fault is suspected on the CAN-net that cannot be detected with normal troubleshooting. Interference, intermittent faults, faulty messages on the CAN-net etc., are examples of such faults. The tool registers fault messages used on the CAN-net. Fault messages may be caused by short intermittent malfunctions on the CAN-net or by a control module sending fault messages. See tools:951 3010 as well as associated TJ 20402.

- Ignition on.
- Connect DiCE to the diagnostics socket.
- Note the blue LED-indicator. The indicator flashes to show detection of fault messages.

NOTE: Certain interference may occur without any real fault

Cable fault

- Shake the cables lightly and pull lightly on the connections during the check to locate any fault. Note the blue LED-indicator.

"Chatting" control modules

- "Chatting" control modules may be difficult to find and troubleshooting may take time. Let the vehicle stand with DiCE connected for an extended time period. Afterwards, activate functions to provoke a malfunction. It may take up to several hours before the fault messages are sent. When the indicator starts to flash, remove the fuse for one control module at a time until the indicator stops flashing. When the indicator stops flashing, restore the fuse for the relevant control module and check that the indicator starts to flash again. Then it is likely that the problem is identified.

Remedy wiring as necessary.

Other information

- see **BATTERY, DISCONNECTING**
- see **TROUBLESHOOTING USING DICE ERROR FRAME FINDER**
- see **CHECKING WIRING AND TERMINALS**

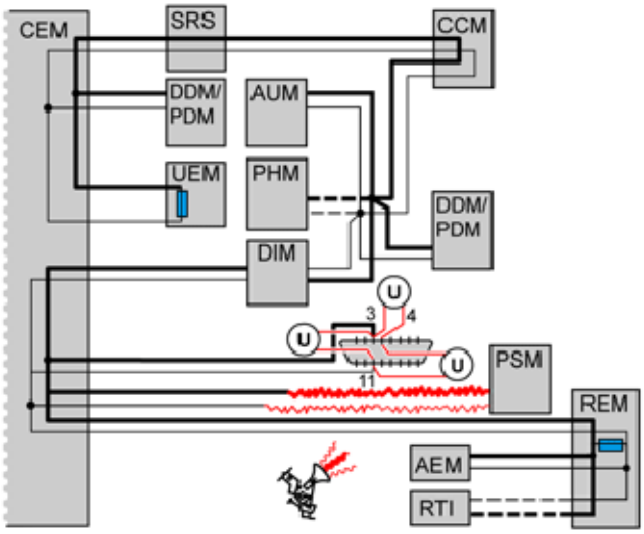

Fig. 129: Checking Amount Of Traffic On LS-CAN
Courtesy of VOLVO CARS CORPORATION

Was a fault detected?

- **YES**

  Refer to **IDENTIFYING A CONTROL MODULE IN THE CAN NETWORK**

- **NO**

  Refer to **CHECKING VOLTAGE-DROP IN CABLE FOR CAN-H AND CAN-L, RESPECTIVELY**

IDENTIFYING A CONTROL MODULE IN THE CAN NETWORK

Fig. 130: Identifying Ignition On Position
Courtesy of VOLVO CARS CORPORATION

For general information about CAN-troubleshooting, see: **GENERAL INFORMATION ABOUT FAULT-**

TRACING IN THE CAN NETWORK

HINT: DiCE can be used as fault detection tool if fault is suspected on the CAN-net that cannot be detected with normal troubleshooting. Interference, intermittent faults, faulty messages on the CAN-net (chattering control modules) etc., are examples of such faults. The tool registers fault messages used on the CAN-net. Fault messages may be caused by short intermittent malfunctions on the CAN-net or by a control module sending fault messages. See tools:951 3010 (memory card) as well as associated TJ 20402. If the load on the CAN network is too high, this may be due to a control module transmitting faulty messages on the CAN network. This is called a disruptive control module. The fault may also be due to an intermittent short-circuit to supply voltage or ground in one of the CAN cables. This results in the control modules on the CAN network starting to send faulty messages. The fault may occur without any of the control modules storing a diagnostic trouble code (DTC). The voltage can be measured between the CAN cables in order to check the load on the CAN network.

NOTE: **It is not necessarily the control module that has set the diagnostic trouble code that communicates incorrectly. Faulty messages can come from any control module in the same section of the CAN network. However, faulty communication in one network cannot affect the communication on the other network. In other words, faulty communication on the LS-CAN cannot disrupt communication on the HS-CAN and vice versa.**

- Ignition on.
- Connect OBDII-Box **(951 3015)** to the diagnostics socket.

Check communication/load on CAN-net by measuring voltage between CAN-L and CAN-H. Measure voltage between the following connections on the OBDII-box/diagnostics socket.

- #3 and #11. The average value of the voltage must be approximately 0.6-1.4 V. The voltage shall normally be between 0.55 - 0.90 V. A higher voltage may indicate increased traffic on the CAN-net. In case of fault in communication/too high traffic on the CAN-net, the voltage is considerably higher than the above stated values.

In order to identify which control module has faulty communication, cut the power supply to one control module at a time. Check the voltage in the CAN cables again. The easiest way to cut the power supply is to remove the fuse(s) for the relevant control module. Repeat until the voltage between the CAN wiring drops to the normal level.

NOTE: **When connecting and disconnecting certain control modules, diagnostic trouble codes (DTCs) may be stored in other control modules.**

HINT: When the suspected defective control module has been identified, connect and disconnect the supply voltage to the control module a number of times to verify that the malfunction appears and disappears. Switch off the ignition between each check.

NOTE: **Do not cut the power to the central electronic module (CEM) unless it is the last control module left to check.**

A control module that is communicating incorrectly must be replaced. See Repairing and installing/Removing, replacing and installing.

NOTE: **After fault with control modules that interfere with communication, other control modules may remain in Limp-Home (that is, they work with reduced functionality) even when the ignition has been turned off and on a few times. For certain faults in the CAN-net where control modules have stopped communicating, it may help to disconnect/reconnect the battery to "restart" the control module/CAN-net.**

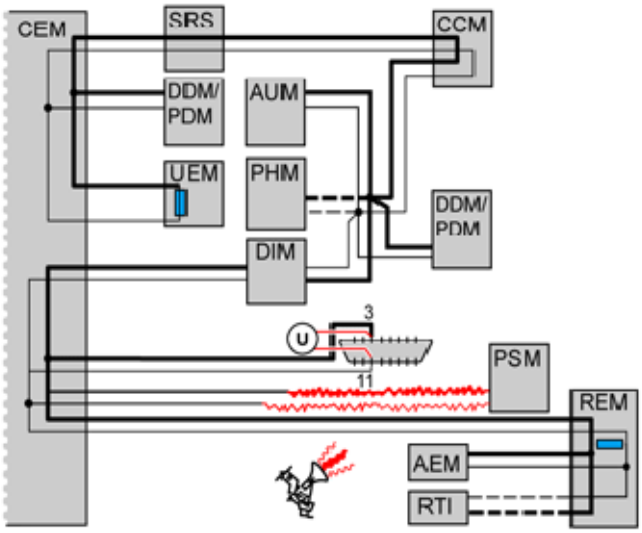

Fig. 131: Checking Communication/Load On CAN-net Between CAN-L And CAN-H
Courtesy of VOLVO CARS CORPORATION

- **Continue**

  Refer to **VERIFICATION**

VERIFICATION

HINT: After rectifying a fault, a verification should be carried out.

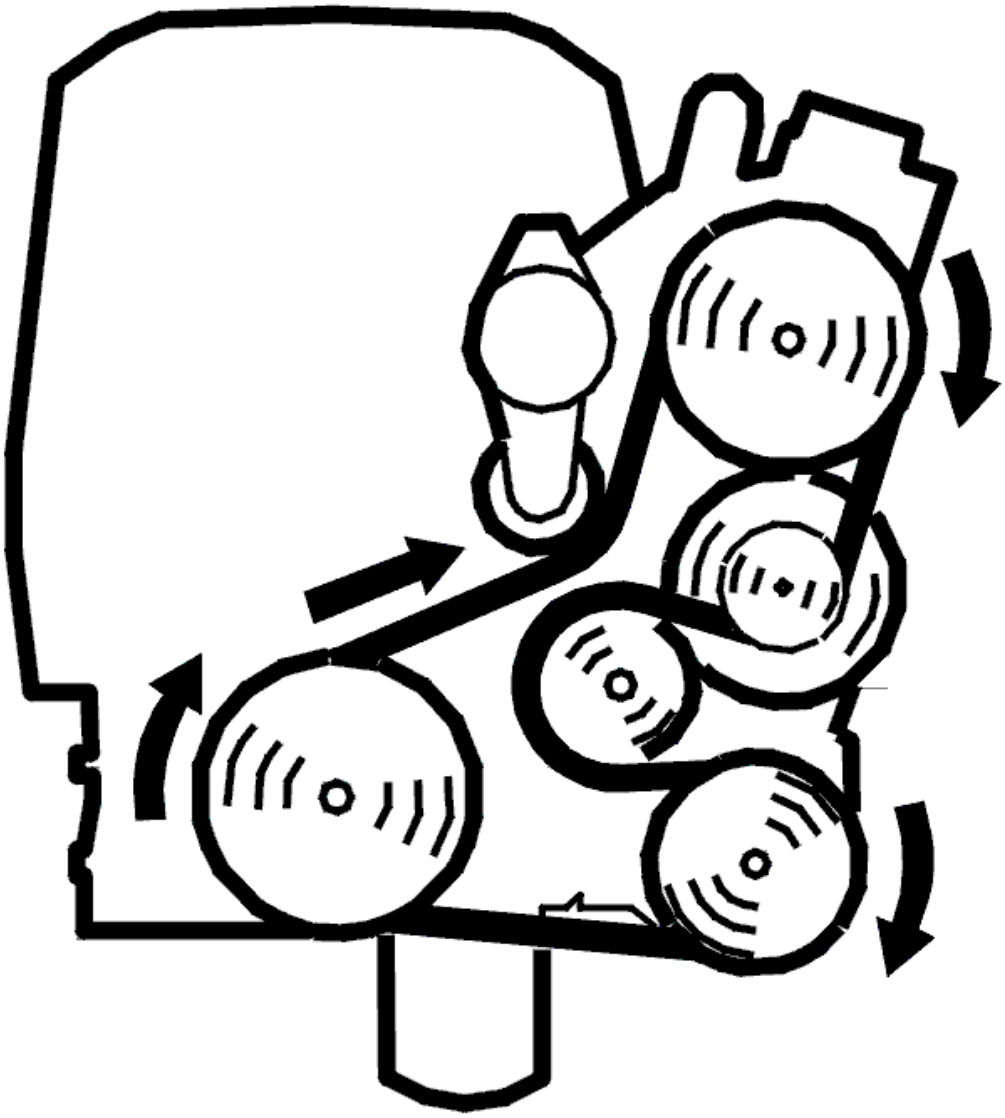

Fig. 132: Belt Routing / Engine Idling - Volvo
Courtesy of VOLVO CARS CORPORATION

Fig. 133: Identifying Ignition On Position
Courtesy of VOLVO CARS CORPORATION

- Reinstall the connectors, components etc.
- Ignition on.

NOTE: **For certain faults in the CAN-net where control modules have stopped communicating, it may help to disconnect/reconnect the battery to "restart" the control module/CAN-net.**

- Erase diagnostic trouble codes (DTCs) in all control modules.
- Ignition off.
- Ignition on.
- Start the vehicle. Allow the vehicle to run for 10 minutes. Start the engine. Allow the engine to run at idle speed for 10 minutes
- Read out the diagnostic trouble codes in the vehicle via the DIAGNOSTICS tab.

Does the diagnostic trouble code (DTC) for faulty communication return?

- **YES**

  Refer to **INFORMATION**

- **NO**

  OKAY: Troubleshooting has been completed.

CHECKING SHORT-CIRCUITING TO GROUND/VOLTAGE IN CAN-NET

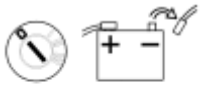

Fig. 134: Ignition Off And Disconnecting Battery Negative Lead
Courtesy of VOLVO CARS CORPORATION

- Ignition off.
- Disconnect the battery negative lead.
- Connect OBDII-Box **(951 3015)** to the diagnostics socket.

  For general information about CAN-troubleshooting, see: **GENERAL INFORMATION ABOUT FAULT-TRACING IN THE CAN NETWORK**

  Checking for a short-circuit to ground

  Measure resistance between the following connections on the OBDII-box/diagnostics socket.

  - #3 and #4 (ground). Measurement is shown in the illustration. The resistance should be above 1 kohms.

- #11 and #4 (ground). The resistance should be above 1 kohms.

If resistance is below 1 kohms this indicates short-circuiting between the CAN-line and ground.

Checking for a short-circuit to voltage

Measure resistance between the following connections on the OBDII-box/diagnostics socket.

- #3 and #16 (voltage). Measurement is shown in the illustration. The resistance should be above 1 kohms.
- #11 and #16 (voltage). The resistance should be above 1 kohms.

If resistance is below 1 kohms this indicates short-circuiting between the CAN-line and voltage cable.

Twist the cable harness and wiggle connectors where they can be accessed along the cable harness during every measurement, and note if the resistance changes to detect intermittent short-circuits or open circuit.

HINT: Part the CAN-net at suitable points to decide where a short-circuit may be found.

NOTE: After fault with control modules that interfere with communication, other control modules may remain in Limp-Home (that is, they work with reduced functionality) even when the ignition has been turned off and on a few times. For certain faults in the CAN-net where control modules have stopped communicating, it may help to disconnect/reconnect the battery to "restart" the control module/CAN-net.

Remedy as necessary.

Other information

- see **BATTERY, DISCONNECTING**
- see **CHECKING WIRING AND TERMINALS**

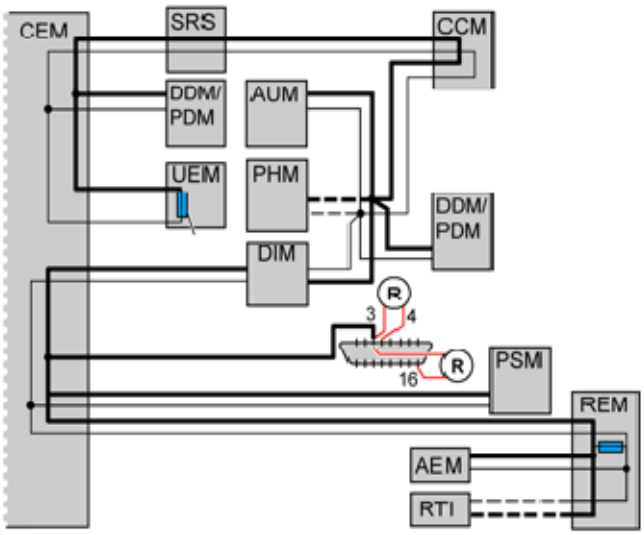

Fig. 135: Checking For Short-Circuiting To Ground/Voltage In CAN-net
Courtesy of VOLVO CARS CORPORATION

Was a fault detected?

- **YES**

  Refer to **VERIFICATION**

- **NO**

  Refer to **CHECKING THE AMOUNT OF TRAFFIC ON THE LS-CAN**

CHECKING VOLTAGE-DROP IN CABLE FOR CAN-H AND CAN-L, RESPECTIVELY

Fig. 136: Identifying Ignition On Position
Courtesy of VOLVO CARS CORPORATION

- Connect the battery.
- Ignition on.
- Connect OBDII-Box **(951 3015)** to the diagnostics socket.

  For general information about CAN-troubleshooting, see: **GENERAL INFORMATION ABOUT FAULT-TRACING IN THE CAN NETWORK**

  In principle, the voltage measured in each cable in the CAN-net shall be the same at each control module

in the network. This means that the voltage-drop in the cable for CAN-H and CAN-L, respectively, between the control modules should be very low. If there is a voltage-difference in the CAN-lines between the diagnostics socket/Central electronic module (CEM) and a control module due to, e. g., contact resistance in a connector or branching, communication may be lost/interfered with. Check if there is voltage-drop in the cable for CAN-H and CAN-L between the diagnostics socket/Central electronic module (CEM) and the control module where there is problem with communication.

Carry out the following:

Measure voltage between the following connections on the OBDII-box/diagnostics socket.

- #3 and corresponding connection on relevant control module for CAN-H. The voltage shall be lower than 50 mV.
- #11 and corresponding connection on relevant control module for CAN-L. The voltage shall be lower than 50 mV.

If voltage is too high, this indicates too high contact resistance in cable, connector, or branching. Check the circuit between the diagnostics socket and control module in question for contact resistance and oxidation.

NOTE: **After fault with control modules that interfere with communication, other control modules may remain in Limp-Home (that is, they work with reduced functionality) even when the ignition has been turned off and on a few times. For certain faults in the CAN-net where control modules have stopped communicating, it may help to disconnect/reconnect the battery to "restart" the control module/CAN-net.**

Remedy wiring as necessary.

Other information

- see **CHECKING WIRING AND TERMINALS**

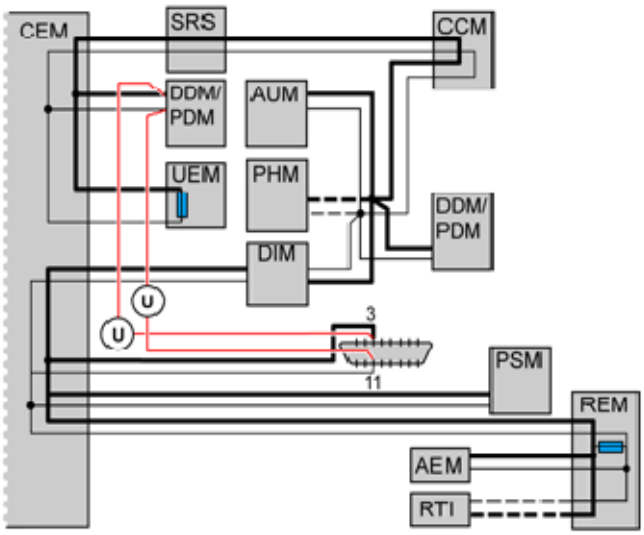

Fig. 137: Checking For Voltage-Drop In Cable For CAN-H And CAN-L
Courtesy of VOLVO CARS CORPORATION

- **Continue**

  Refer to **VERIFICATION**

INFORMATION

FAULT-TRACING INFORMATION

The fault should have been detected and remedied. As this is not the case fault-tracing has failed.

Exit fault-tracing for this diagnostic trouble code (DTC) or make another attempt.

CEM-1A58: COMMUNICATION WITH THE CARPHONE MODULE (PHM). SIGNAL MISSING (2003-2004)

DIAGNOSTIC TROUBLE CODE (DTC) INFORMATION

Condition

Diagnostic trouble code (DTC) CEM-1A58 is stored if the central electronic module (CEM) registers that communication with the carphone module (PHM) is not operating.

Substitute Value

None

Possible Source

- No power supply to the carphone module (PHM)

- Contact resistance in the terminals
- Open-circuit in the control area network (CAN) bus
- Defective carphone module (PHM).

Fault symptom[s]

- No or reduced functionality in the telephone.

SIGNAL MISSING

CHECKING POWER SUPPLY AND GROUND

CHECKING THE POWER SUPPLY AND GROUND FOR THE CONTROL MODULE

Check the keypad and carphone module (PHM) connector A. Check for contact resistance and oxidation.

Check fuse 11C/29 for the keypad and carphone module (PHM) in the passenger compartment fusebox.

NOTE: If the fuse is blown, check the circuit after the fuse. Check for a short-circuit to ground before replacing the fuse. Then replace the fuse.

Check the cable for the power supply between fuse 11C/29 in the passenger compartment fusebox and the keypad and carphone module (PHM) terminal #A6. Check for an open-circuit.

Check the ground lead between keypad and carphone module (PHM) terminal #A18 and ground terminal 31/84. Check for an open-circuit. Check ground terminal 31/84. Check for contact resistance and oxidation.

Remedy as necessary.

Other information:

- To access or replace the keypad and carphone control module, see **PHONE MODULE (PHM), REPLACING**
- To connect the breakout box, see **CONNECTING THE BREAKOUT BOX**
- For information about signals and connectors, see **SIGNAL SPECIFICATION**
- see **CHECKING WIRING AND TERMINALS**

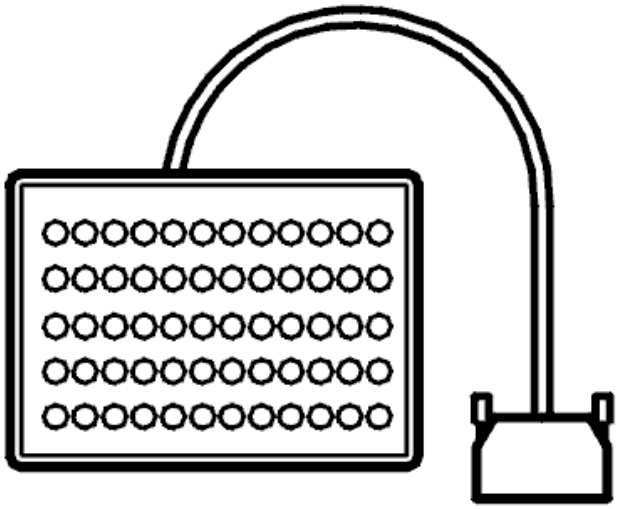

Fig. 138: Breakout Box
Courtesy of VOLVO CARS CORPORATION

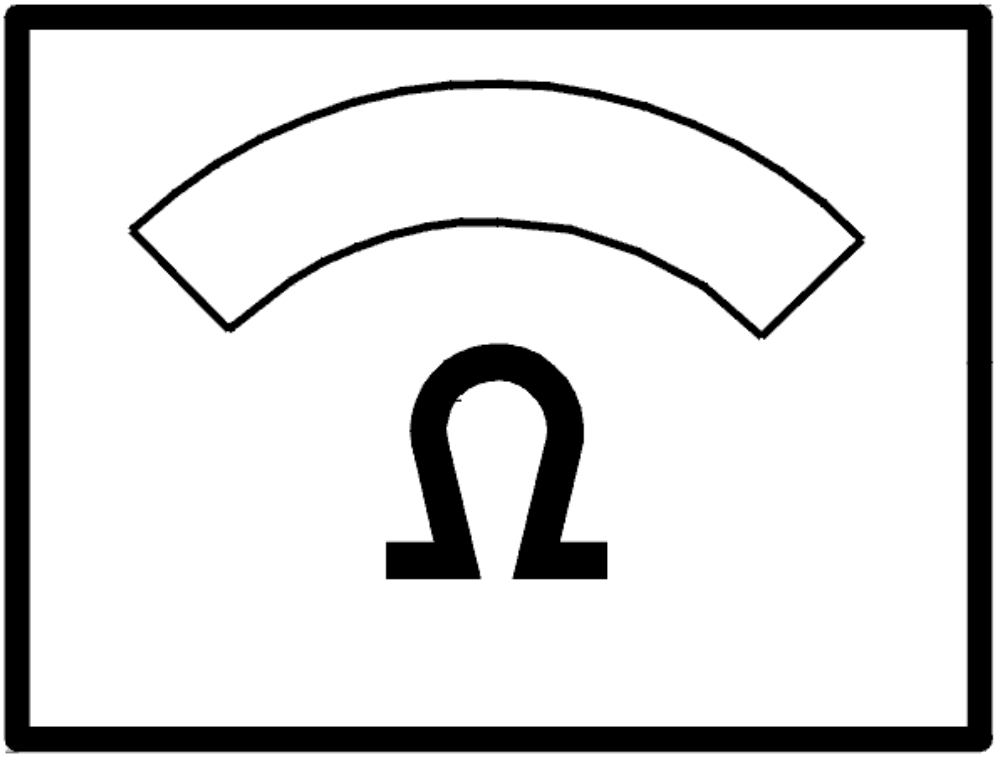

Fig. 139: Identifying Ohm Meter
Courtesy of VOLVO CARS CORPORATION

Was a fault detected?

- **YES**

  Refer to **VERIFICATION**

- **NO**

  Refer to **CHECKING CONNECTORS**

CHECKING CONNECTORS

Check the carphone module (PHM) connector. Check for contact resistance and oxidation. Remedy if

necessary. Check for any damage.

HINT: If the fault cause is found, reinstall the components, connectors etc. If the fault cause is not found, do not reinstall the carphone module (PHM).

Other information:

- To access the connector in the carphone module (PHM), see **PHONE MODULE (PHM), REPLACING**
- see **CHECKING WIRING AND TERMINALS** .

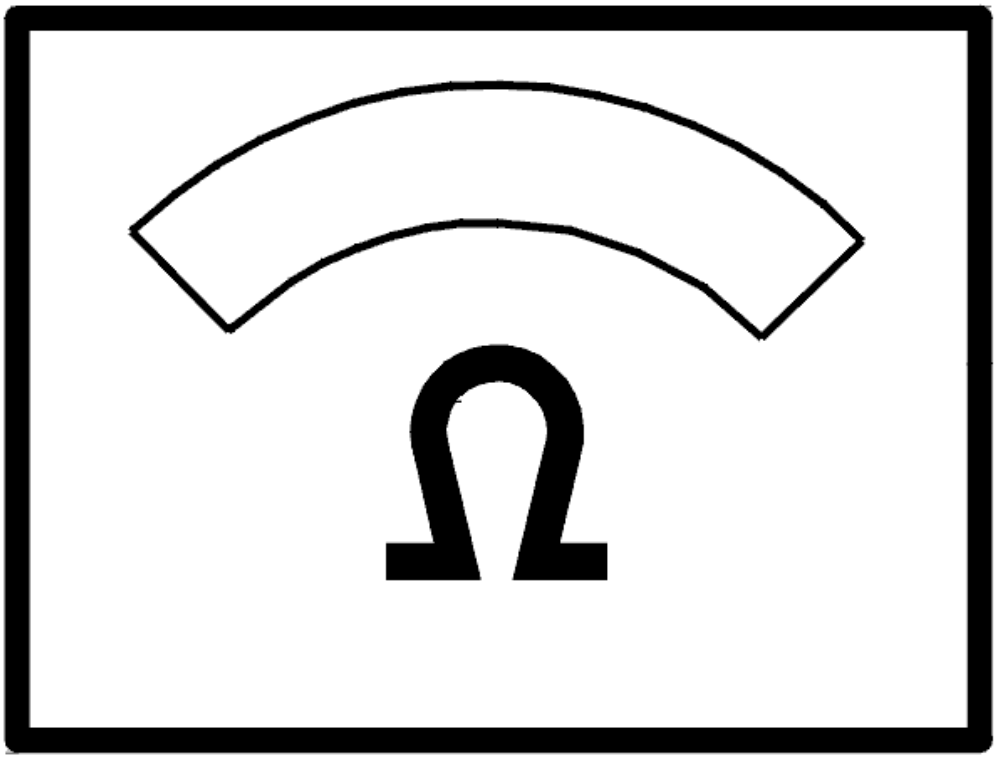

Fig. 140: Identifying Ohm Meter
Courtesy of VOLVO CARS CORPORATION

Was a fault detected?

- **YES**

Refer to **VERIFICATION**

- **NO**

  Refer to **CHECKING THE BUS CABLE**

CHECKING THE BUS CABLE

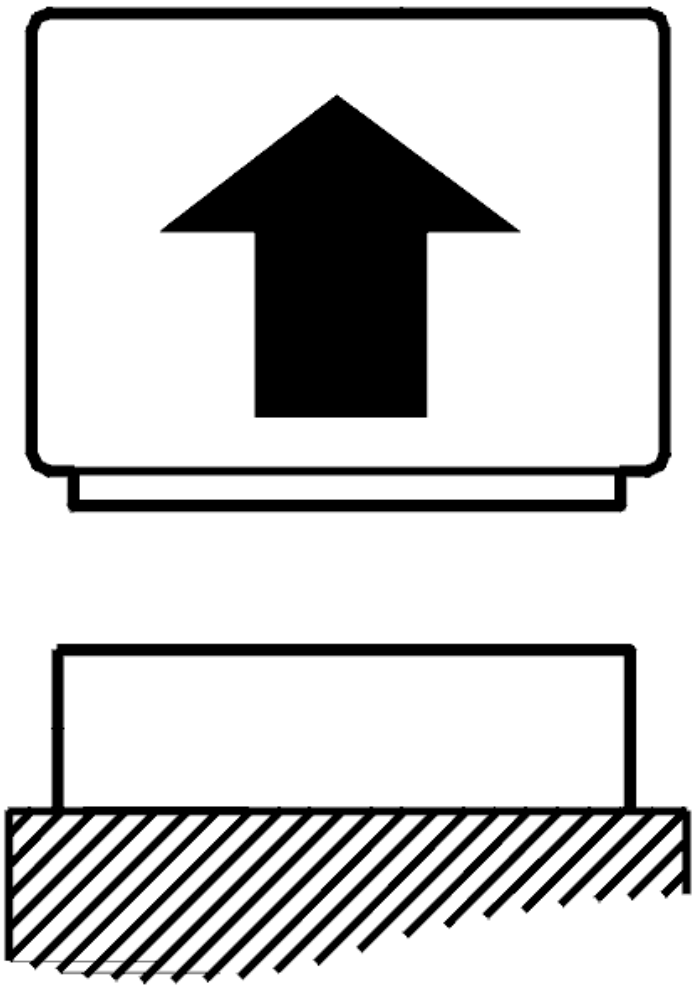

Fig. 141: Disconnecting Connector
Courtesy of VOLVO CARS CORPORATION

- Disconnect the carphone module (PHM) from the bus cable, pull the connector out from the control module.

  Measure the resistance between terminals #A5 and #A15.

NOTE: **Take care that you measure directly on the connector so that it is not damaged.**

NOTE: **To obtain the correct value the battery must be disconnected during resistance measurement.**

Other information:

- The resistance must be approximately 60 ohms. If another reading is given, there may be an open-circuit in the bus cable
- To connect the breakout box to the carphone module (PHM), see **CONNECTING THE BREAKOUT BOX**
- To disconnect the battery, see **BATTERY, DISCONNECTING** .

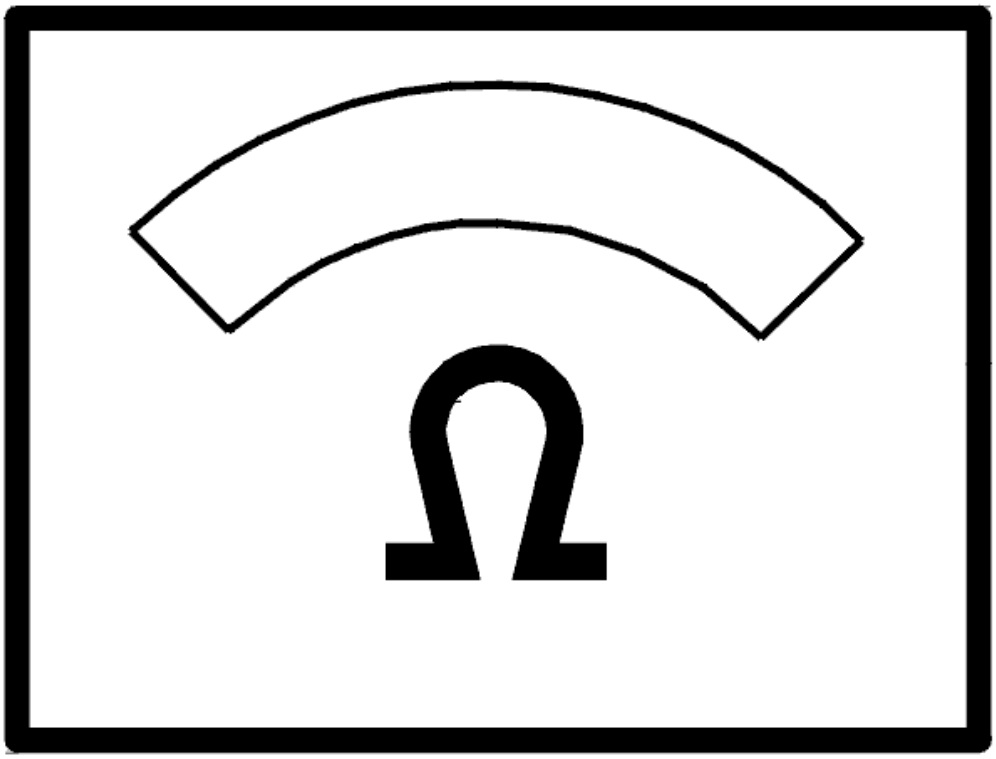

Fig. 142: Identifying Ohm Meter

Courtesy of VOLVO CARS CORPORATION

Does the measuring instrument display a resistance of approximately 60 ohms?

- **YES**

  Refer to **REPLACING THE CARPHONE MODULE (PHM)**

- **NO**

  Refer to **OPEN-CIRCUIT IN THE CAN BUS. LOW SPEED NETWORK. PERMANENT FAULT**

REPLACING THE CARPHONE MODULE (PHM)

Replace carphone module (PHM), see **PHONE MODULE (PHM), REPLACING** .

- **Continue**

  Refer to **VERIFICATION**

OPEN-CIRCUIT IN THE CAN BUS. LOW SPEED NETWORK. PERMANENT FAULT

CHECKING THE LOW SPEED NETWORK

The fault source on the bus cable may be a long way from where the check is carried out. Therefore start the check at one end of the cable and work through the bus system methodically until the fault is found. Disconnecting the connector from the control module splits the bus cable into two parts. If the resistance does not correspond to the given value (60 or 120 Ohm) when examining one of the components, the fault is localized in that component.

Information

- The resistance must be approximately 60 ohms when taking readings on a connected CAN
- The resistance must be approximately 120 ohms when taking readings on a CAN that is not connected.

Check the bus cable. Check for an open-circuit according to **OPEN-CIRCUIT, PERMANENT FAULTS** . Remember that the CAN bus is only a communication network. There are no fuses, contact breakers or sensors.

HINT: If the fault is detected before all the following cables have been examined, the following cables need not be checked.

HINT: If possible measure from the rear of the affected connectors so that they are not damaged.

The following cables and connectors must be examined to localize a open-circuit.

The cable between:

- driver information module (DIM) #3 and climate control module (CCM) #12A
- driver information module (DIM) #2 and climate control module (CCM) #14A
- Accessory control module (AEM) #4A and rear electronic module (REM) #14A
- Accessory control module (AEM) #3A and rear electronic module (REM) #16A
- rear electronic module (REM) #14A and driver information module (DIM) #8 and intermediate connector 54/40
- rear electronic module (REM) #16A and driver information module (DIM) #9 and intermediate connector 54/40
- central electronic module (CEM) #2D and driver information module (DIM) #9
- central electronic module (CEM) #3D and driver information module (DIM) #8
- power seat module (PSM) #3B and driver information module (DIM) #9
- power seat module (PSM) #2B and driver information module (DIM) #8
- infotainment control module (ICM) #4A and climate control module (CCM) #12A
- infotainment control module (ICM) #6A and climate control module (CCM) #14A
- infotainment control module (ICM) #3A and driver information module (DIM) #3A
- infotainment control module (ICM) #5A and driver information module (DIM) #2A
- carphone module (PHM) #5A and climate control module (CCM) #12A
- carphone module (PHM) #15A and climate control module (CCM) #14A
- passenger door module (PDM) #3A and climate control module (CCM) #12A and intermediate connector 54/11
- passenger door module (PDM) #2A and climate control module (CCM) #14A and intermediate connector 54/11
- climate control module (CCM) #11A and steering wheel module (SWM) #19
- climate control module (CCM) #13A and steering wheel module (SWM) #9
- steering wheel module (SWM) #20 and SRS control module #25B
- steering wheel module (SWM) #10 and SRS control module #23B
- SRS control module #26B and upper electronic module (UEM) #5 and intermediate connector 54/13
- SRS control module #24B and upper electronic module (UEM) #3 and intermediate connector 54/13
- driver door module (DDM) #3A and upper electronic module (UEM) #5 and intermediate connector 54/10
- driver door module (DDM) #2A and upper electronic module (UEM) #3 and intermediate connector 54/10.

Other information

- To connect the breakout box to the driver information module (DIM), see **CONNECTING THE DRIVER INFORMATION MODULE (DIM) TEST BOX**
- To connect the breakout box to the climate control module (CCM), see **CONNECTING THE BREAKOUT BOX**
- To connect the breakout box to the RTI control module, see **CONNECTING THE BREAKOUT BOX**

TO THE ROAD TRAFFIC INFORMATION (RTI) CONTROL MODULE

- To connect the breakout box to the rear electronic module (REM), see **CONNECTING THE BREAKOUT BOX TO THE REAR ELECTRONIC MODULE (REM)**
- To connect the breakout box to the AEM control module, see **CONNECTING THE BREAKOUT BOX. ACCESSORY ELECTRONIC MODULE**
- To connect the breakout box to the central electronic module (CEM), see **CONNECTING THE BREAKOUT BOX**
- To connect the breakout box to the power seat module (PSM), see **CONNECTING THE BREAKOUT BOX, POWER SEAT MODULE (PSM)**
- To connect the breakout box to the audio control module, see **CONNECTING THE BREAKOUT BOX, AUDIO CONTROL MODULE**
- To connect the breakout box to the infotainment control module (ICM), see **CONNECTING THE BREAKOUT BOX**
- To connect the breakout box to the carphone module (PHM), see **CONNECTING THE BREAKOUT BOX, CARPHONE MODULE**
- To connect the breakout box to the passenger door module (PDM) or driver door module (DDM), see **CONNECTING THE BREAKOUT BOX**
- To connect the breakout box to the steering wheel module (SWM), see **CONNECTING THE BREAKOUT BOX**
- To connect the breakout box to the SRS control module:
  - For model year 2003-2004, see **CONNECTING THE BREAKOUT BOX** .
  - For model year 2005-, see **CONNECTING THE BREAKOUT BOX** .
- To connect the breakout box to the upper electronic module (UEM), see **CONNECTING THE BREAKOUT BOX**

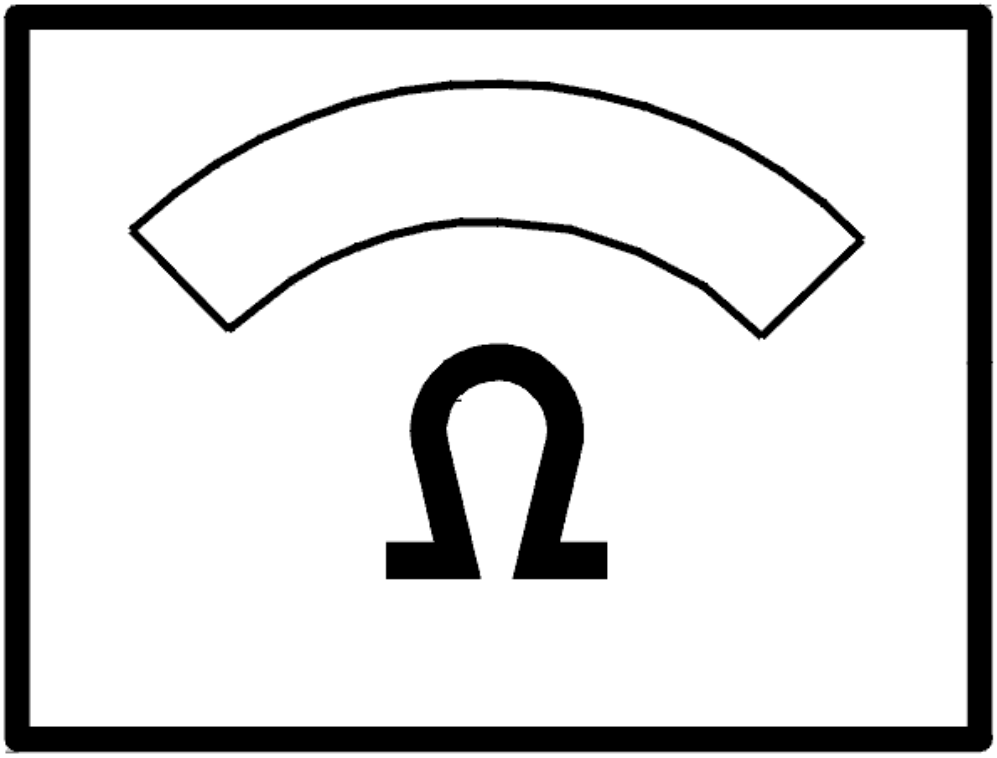

Fig. 143: Identifying Ohm Meter
Courtesy of VOLVO CARS CORPORATION

Was a fault detected?

- **YES**

  Refer to **VERIFICATION**

- **NO**

  Refer to **REPLACING THE CARPHONE MODULE (PHM)**

VERIFICATION

VERIFICATION

HINT: After the repair it is necessary to check that the fault has been rectified.

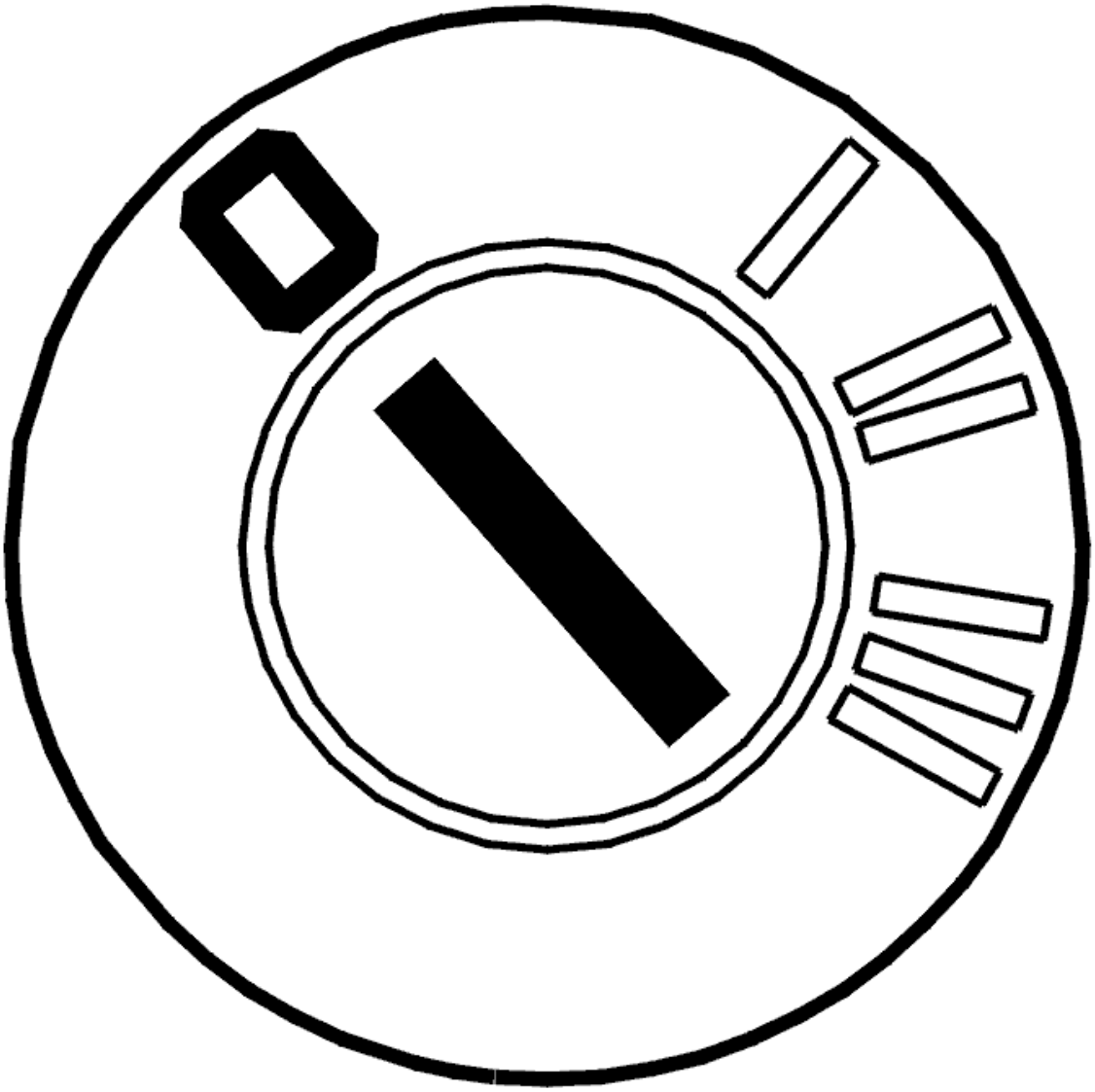

Fig. 144: Identifying Ignition OFF
Courtesy of VOLVO CARS CORPORATION

- Ignition off
- Connect connector, install components etc.
- Ignition on for at least 10 seconds.

Check that diagnostic trouble code status is showing Intermittent.

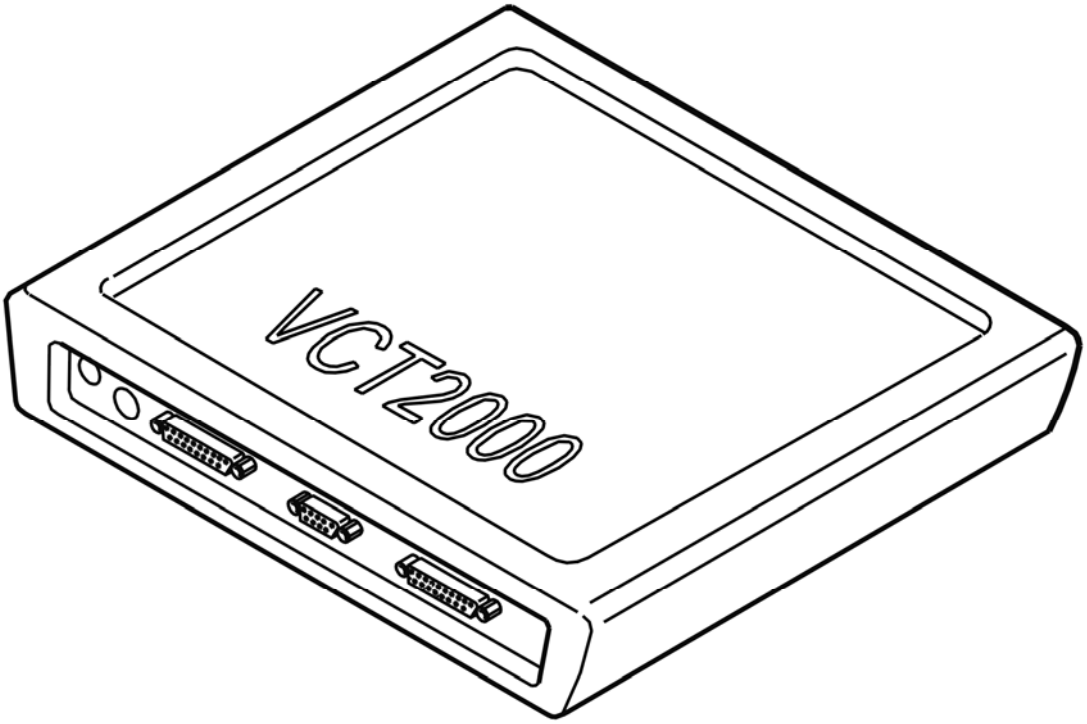

Fig. 145: Identifying VCT2000 Diagnostic Tool Symbol In VIDA
Courtesy of VOLVO CARS CORPORATION

Is the status of the diagnostic trouble code Intermittent?

- **YES**

  VERIFIED: Troubleshooting has been completed.

- **NO**

  Refer to **INFORMATION**

INFORMATION

FAULT-TRACING INFORMATION

The fault should have been detected and remedied. As this is not the case fault-tracing has failed.

Exit fault-tracing for this diagnostic trouble code (DTC) or make another attempt.

CEM-1A58: COMMUNICATION WITH THE PHONE MODULE (PHM). SIGNAL MISSING (2005-2012)

DIAGNOSTIC TROUBLE CODE (DTC) INFORMATION CEM-1A58

Condition

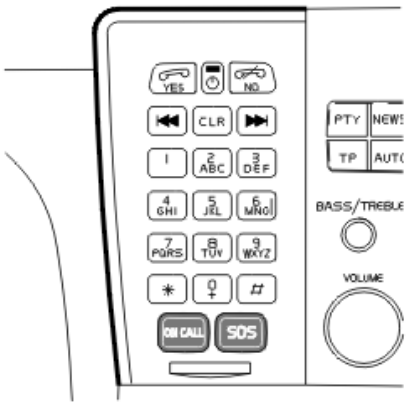

Fig. 146: Identifying Radio And Car Phone
Courtesy of VOLVO CARS CORPORATION

The diagnostic trouble code (DTC) is stored if the central electronic module (CEM) registers that communication with the phone module (PHM) is not operating.

The diagnostic trouble code (DTC) can be diagnosed when the ignition has been on for more than 10 seconds.

NOTE: **In the event of CEM-1A5X diagnostic trouble codes (DTCs), the central electronic module (CEM) must not be replaced as the diagnostic trouble code (DTC) indicates a communication fault in the controller area network (CAN).**

Substitute Value

- None.

Possible Source

- No power supply to the phone module (PHM)
- Open-circuit in the ground lead for the phone module (PHM)
- Contact resistance in the terminals
- Open-circuit in the wiring for the CAN low speed network to the phone module (PHM)
- The phone module (PHM) is not intended for this vehicle (for example a used control module with different software/hardware).

HINT: If several diagnostic trouble codes (DTCs) are stored in the central electronic module (CEM) for communication faults with other control modules in the low speed network, this indicates a common fault in the controller area network (CAN).

Fault symptom[s]

- The phone is not working.
- The menu system does not operate.

SIGNAL MISSING

CHECKING THE FUNCTION OF THE PHONE MODULE (PHM)

Check that the phone module (PHM) is powered and grounded by pressing the ON/OFF button and then pressing the YES button.

The LED in the ON/OFF button must light.

Does the LED in the ON/OFF button light?

- **YES**

  Refer to **CHECKING COMMUNICATION WITH THE PHONE MODULE (PHM)**

- **NO**

  Refer to **CHECKING THE POWER SUPPLY AND GROUND FOR THE PHONE MODULE (PHM)**

CHECKING THE POWER SUPPLY AND GROUND FOR THE PHONE MODULE (PHM)

Check that the fuse for the control module is intact.

Check the power supply and the ground terminal for the phone module (PHM).

Remedy as necessary.

Other information:

- see **CHECKING THE GROUND TERMINAL**
- see **CHECKING WIRING AND TERMINALS**

Was a fault detected?

- **YES**

  Refer to **CHECKING THE FUNCTION OF THE PHONE MODULE (PHM)**

- **NO**

  Refer to **SIGNAL MISSING**

CHECKING COMMUNICATION WITH THE PHONE MODULE (PHM)

HINT: The CAN communication with the control module is probably OK if the control module ID can be read off. The fault is probably intermittent and may therefore be difficult to locate.

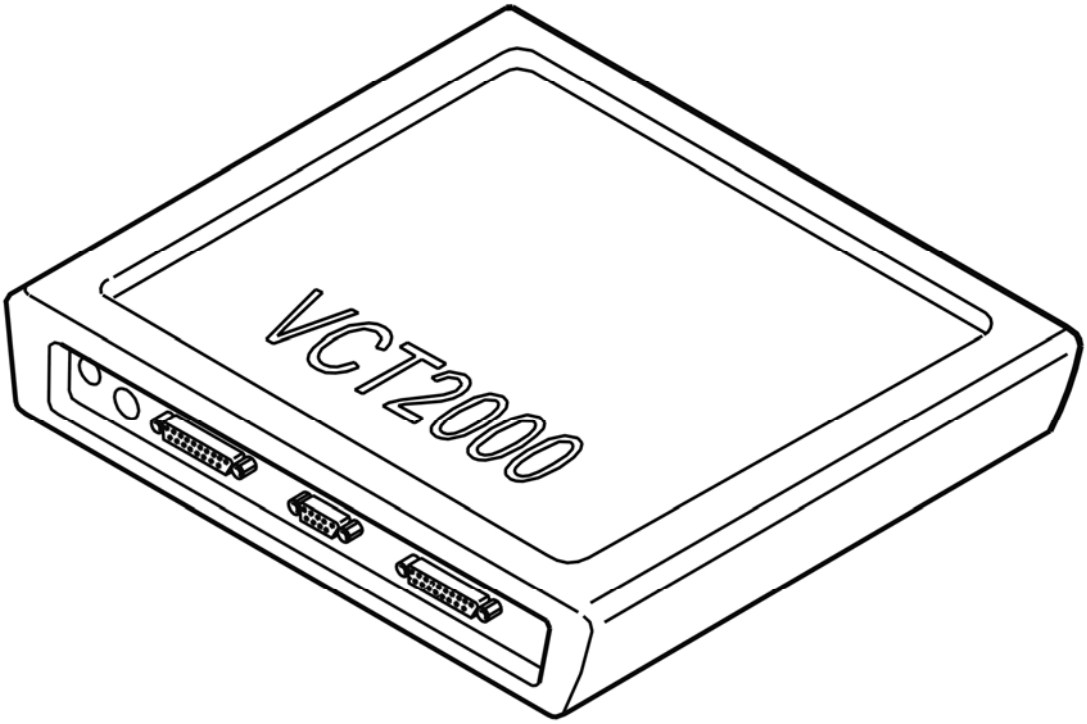

Fig. 147: Identifying VCT2000 Diagnostic Tool Symbol In VIDA
Courtesy of VOLVO CARS CORPORATION

- Try to communicate with the phone module (PHM) by reading off the control module ID
- Use the VCT2000 (or appropriate scan tool)

- **Continue**

  Refer to **SIGNAL MISSING**

CHECKING THE FUNCTION OF THE PHONE MODULE (PHM)

HINT: After carrying out the repair, check that the fault has been remedied.

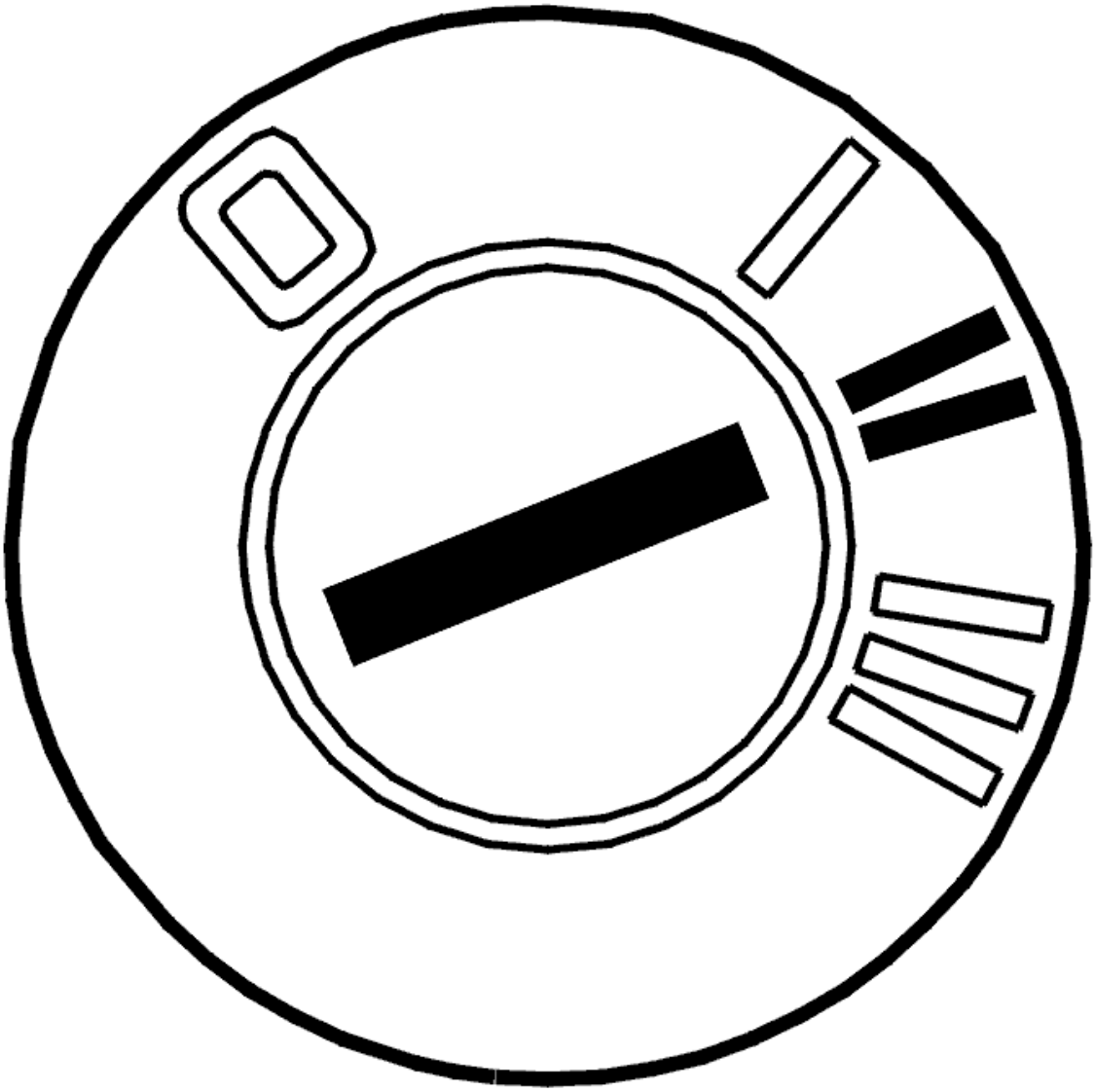

Fig. 148: Identifying Ignition ON
Courtesy of VOLVO CARS CORPORATION

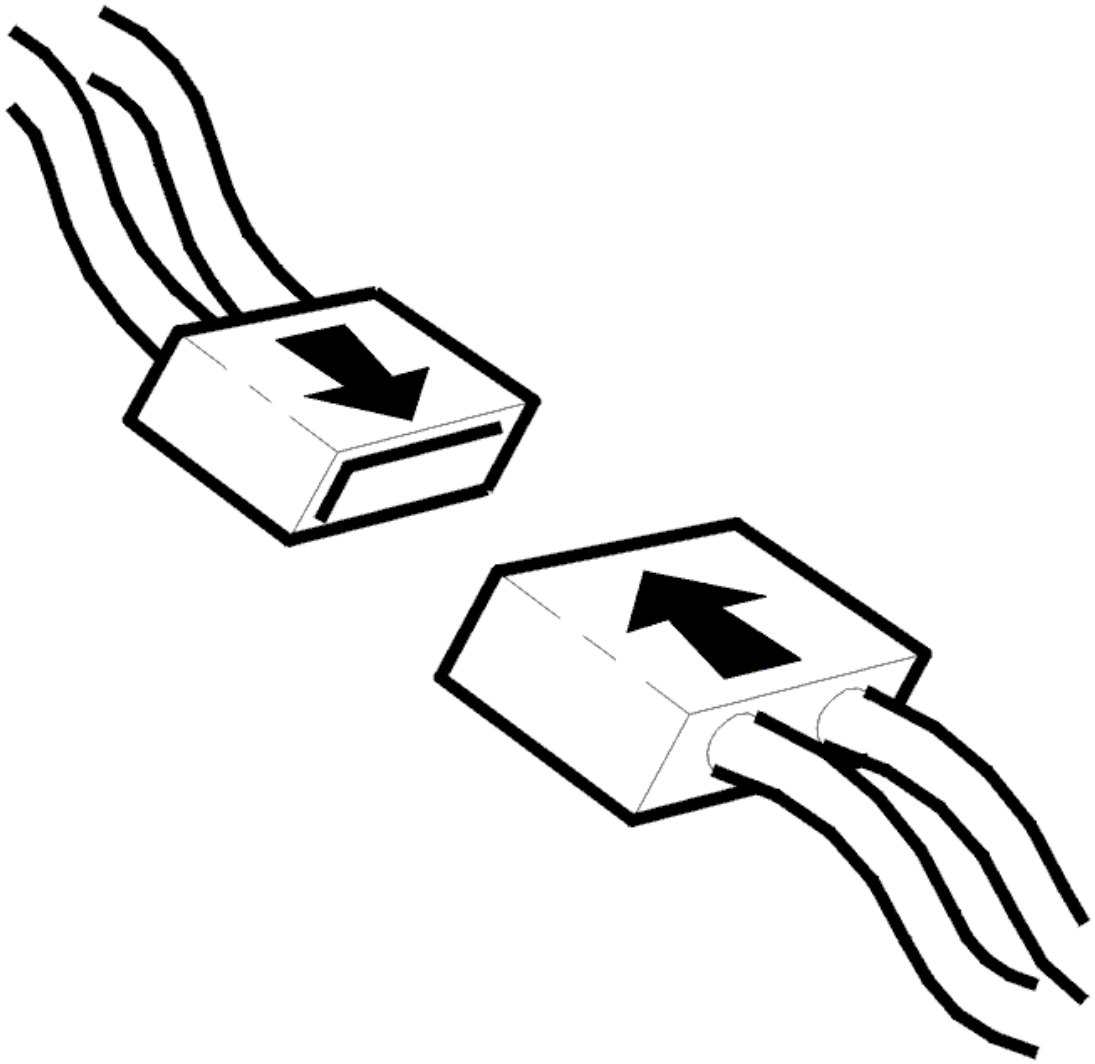

Fig. 149: Connecting Connector
Courtesy of VOLVO CARS CORPORATION

- Ignition off
- Reconnect the connectors. Reinstall the components
- Ignition on.

  Check that the phone module (PHM) is powered and grounded by pressing the ON/OFF button and then pressing the YES button.

  The LED in the ON/OFF button must light. A text message must appear in the display on the driver information module (DIM).

Does the LED in the ON/OFF button light?

- **YES**

  OKAY: Troubleshooting has been completed.

- **NO**

  Refer to **INFORMATION**

SIGNAL MISSING

GENERAL INFORMATION

NOTE: Illustrations shown are only examples.

HINT: For general information about CAN-troubleshooting, see: GENERAL INFORMATION ABOUT FAULT-TRACING IN THE CAN NETWORK

- **General about CAN-related diagnostic trouble codes:**

  CEM-DF01 - DF17 can only be stored in Central electronic module (CEM). These diagnostic trouble codes are stored when an electric fault is detected in CAN-lines. Start with these diagnostic trouble codes first.

  CEM-1AXX only stored in Central electronic module (CEM). One diagnostic trouble code for every control module on the CAN-net. These diagnostic trouble codes indicate that Central electronic module (CEM) does not receive any reply from other control modules.

  XXX-E000 (HS-CAN)/E001 (LS-CAN) can be stored in all CAN-connected control modules. These diagnostic trouble codes indicate that the control module has detected interference on the CAN-net.

  XXX-E003 can be stored in all CAN-connected control modules except in Central electronic module (CEM). The control modules on the CAN-net listen for a message (identity number) that is sent out at regular intervals from Central electronic module (CEM). This diagnostic trouble code indicates that the control module has not received any identity number, or that the expected number is not correct. Interference on the CAN-net can also store this diagnostic trouble code.

  NOTE: In case of CAN-related faults, it is likely that a combination of above diagnostic trouble codes occur.

  NOTE: After fault with control modules that interfere with communication, other control modules may remain in Limp-Home (that is, they work with reduced functionality) even when the ignition has been turned off and on a few times. For certain faults in the CAN-net where control modules have stopped communicating, it may help to disconnect/reconnect the battery to "restart" the control module/CAN-net.

If diagnostic trouble codes (DTCs) for communication faults can be read off from a control module, the fault is probably intermittent.

Intermittent fault in the voltage supply and ground to a control module on the CAN network results in the Central electronic module (CEM) storing a diagnostic trouble code (DTC) for an open-circuit in communication with the control module where the voltage supply does not work. There will probably not be a diagnostic trouble code (DTC) in the control module where the open-circuit in the voltage supply occurred as the control module cannot store a diagnostic trouble code (DTC) when it is not supplied with power.

NOTE: Central electronic module (CEM) should not be replaced in case of CAN-fault, unless troubleshooting reveals that Central electronic module (CEM) has an internal fault.

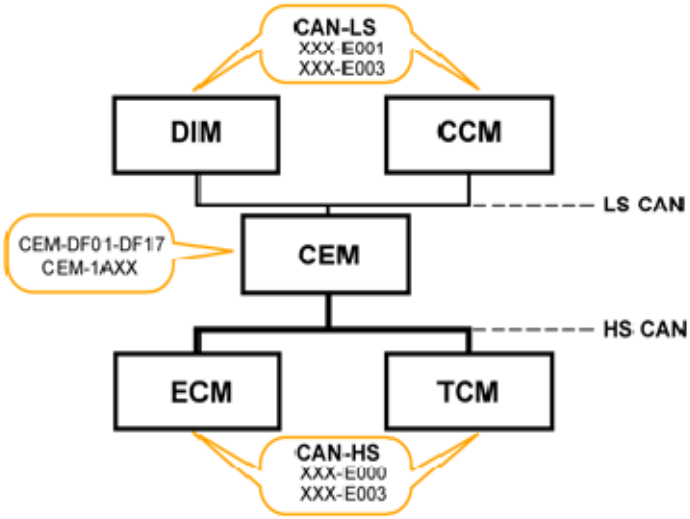

Fig. 150: High-Speed CAN And Low-Speed CAN Communication Diagram
Courtesy of VOLVO CARS CORPORATION

- **Continue**

Refer to **CHECKING RESISTANCE IN CAN-NET**

CHECKING RESISTANCE IN CAN-NET

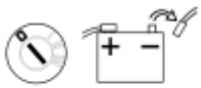

Fig. 151: Ignition Off And Disconnecting Battery Negative Lead
Courtesy of VOLVO CARS CORPORATION

- Ignition off
- Disconnect the battery negative lead
- Connect OBDII-Box **(951 3015)** to the diagnostics socket.

For general information about CAN-troubleshooting, see: **GENERAL INFORMATION ABOUT FAULT-TRACING IN THE CAN NETWORK**

- see **GENERAL INFORMATION ABOUT FAULT-TRACING IN THE CAN NETWORK**

Measure resistance between the following connections on the OBDII-box/diagnostics socket.

- #3 and #11. The resistance should be approx. 55 - 65 ohms.
- If resistance is approx. 120 ohms, this indicates open circuit in the circuit so that only one terminating resistor (120 ohms) has been measured.
- If resistance is above 1 kohms this indicates open circuit/high contact resistance somewhere in the circuit.
- If resistance is below 55 ohms this indicates short-circuiting/contact resistance between the CAN-lines somewhere in the circuit.

HINT: For LS-CAN, terminating resistors are located in Upper electronic module (UEM) and Rear electronic module (REM).

Twist the cable harness and wiggle connectors where they can be accessed along the cable harness during every measurement, and note if the resistance changes to detect intermittent short-circuits or open circuit.

NOTE: **Resistance measurement measures only main lines in the CAN-net (in circuit where both terminating resistors are found), not branches to certain control modules. Open circuit on branching without a terminating resistor cannot be detected with this measurement. However, short-circuiting on a branch can be detected. To measure resistance in the CAN-net to control modules located in a branching of their own, the measurement shall be done against the CAN-net at that control module. The values shall be as above.**

NOTE: **After fault with control modules that interfere with communication, other control modules may remain in Limp-Home (that is, they work with reduced functionality) even when the ignition has been turned off and on a few times. For certain faults in the CAN-net where control modules have stopped communicating, it may help to disconnect/reconnect the battery to "restart" the control module/CAN-net.**

Remedy as necessary.

Other information

- see **BATTERY, DISCONNECTING**
- see **CHECKING WIRING AND TERMINALS**

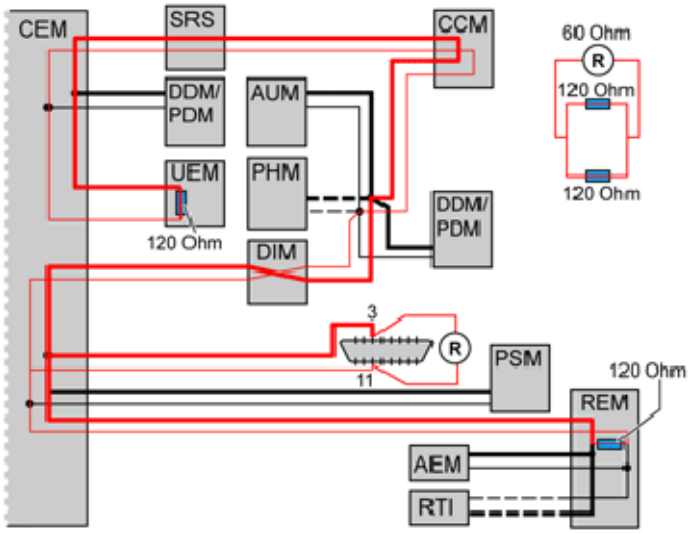

Fig. 152: Checking Resistance In CAN Lines
Courtesy of VOLVO CARS CORPORATION

Was a fault detected?

- **YES**

  Refer to **VERIFICATION**

- **NO**

  Refer to **CHECKING SHORT-CIRCUITING TO GROUND/VOLTAGE IN CAN-NET**

CHECKING THE AMOUNT OF TRAFFIC ON THE LS-CAN

Fig. 153: Identifying Ignition On Position
Courtesy of VOLVO CARS CORPORATION

- Connect the battery
- Ignition on.
- Connect OBDII-Box **(951 3015)** to the diagnostics socket.

  For general information about CAN-troubleshooting, see: **GENERAL INFORMATION ABOUT**

FAULT-TRACING IN THE CAN NETWORK

Faults in the CAN network may be due to a control module sending faulty messages that disrupt normal communication. When messages are sent incorrectly, this results in a considerable increase in the amount of traffic on the CAN network. The load can be checked by reading the average value of the voltage on the CAN cables in relation to ground.

Measure voltage between the following connections on the OBDII-box/diagnostics socket.

- #3 and #4 (ground). The voltage should be approx:2, 8 - 3, 2 V.
- #11 and #4 (ground). The voltage should be approx:1, 8 - 2, 2 V.
- #3 and #11. The voltage shall be between approx. 0.55-1.4 V. The voltage shall normally be between 0.55 - 0.90 V. A higher voltage may indicate increased traffic on the CAN-net. In case of fault in communication/too high traffic on the CAN-net, the voltage is considerably higher than the above stated values.

NOTE: After fault with control modules that interfere with communication, other control modules may remain in Limp-Home even when the ignition has been turned off and on a few times. For certain faults in the CAN-net where control modules have stopped communicating, it may help to disconnect/reconnect the battery to "restart" the control module/CAN-net.

HINT: DiCE can be used as fault detection tool if fault is suspected on the CAN-net that cannot be detected with normal troubleshooting. Interference, intermittent faults, faulty messages on the CAN-net etc., are examples of such faults. The tool registers fault messages used on the CAN-net. Fault messages may be caused by short intermittent malfunctions on the CAN-net or by a control module sending fault messages. See tools:951 3010 as well as associated TJ 20402.

- Ignition on.
- Connect DiCE to the diagnostics socket.
- Note the blue LED-indicator. The indicator flashes to show detection of fault messages.

NOTE: Certain interference may occur without any real fault

Cable fault

- Shake the cables lightly and pull lightly on the connections during the check to locate any fault. Note the blue LED-indicator.

"Chatting" control modules

- "Chatting" control modules may be difficult to find and troubleshooting may take time. Let the vehicle stand with DiCE connected for an extended time period. Afterwards, activate functions to provoke a malfunction. It may take up to several hours before the fault messages are sent. When the indicator starts to flash, remove the fuse for one control module at a time until the indicator stops flashing. When the indicator stops flashing, restore the fuse for the relevant control module and

check that the indicator starts to flash again. Then it is likely that the problem is identified.

Remedy wiring as necessary.

Other information

- see **BATTERY, DISCONNECTING**
- see **TROUBLESHOOTING USING DICE ERROR FRAME FINDER**
- see **CHECKING WIRING AND TERMINALS**

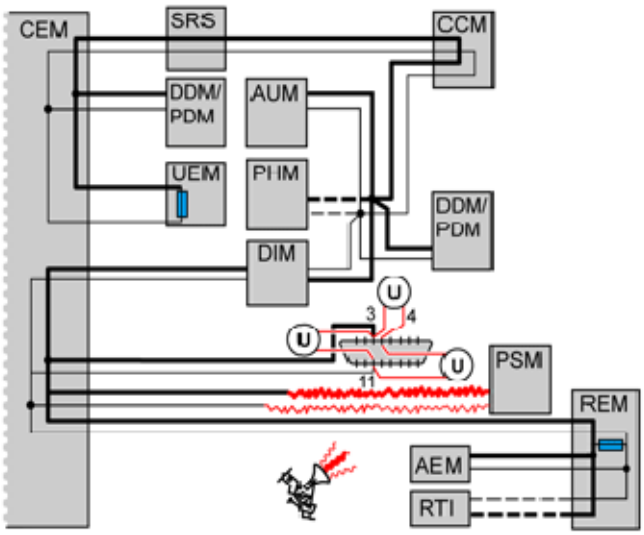

Fig. 154: Checking Amount Of Traffic On LS-CAN
Courtesy of VOLVO CARS CORPORATION

Was a fault detected?

- **YES**

  Refer to **IDENTIFYING A CONTROL MODULE IN THE CAN NETWORK**

- **NO**

  Refer to **CHECKING VOLTAGE-DROP IN CABLE FOR CAN-H AND CAN-L, RESPECTIVELY**

IDENTIFYING A CONTROL MODULE IN THE CAN NETWORK

Fig. 155: Identifying Ignition On Position
Courtesy of VOLVO CARS CORPORATION

For general information about CAN-troubleshooting, see: **GENERAL INFORMATION ABOUT FAULT-TRACING IN THE CAN NETWORK**

HINT: DiCE can be used as fault detection tool if fault is suspected on the CAN-net that cannot be detected with normal troubleshooting. Interference, intermittent faults, faulty messages on the CAN-net (chattering control modules) etc., are examples of such faults. The tool registers fault messages used on the CAN-net. Fault messages may be caused by short intermittent malfunctions on the CAN-net or by a control module sending fault messages. See tools:951 3010 (memory card) as well as associated TJ 20402. If the load on the CAN network is too high, this may be due to a control module transmitting faulty messages on the CAN network. This is called a disruptive control module. The fault may also be due to an intermittent short-circuit to supply voltage or ground in one of the CAN cables. This results in the control modules on the CAN network starting to send faulty messages. The fault may occur without any of the control modules storing a diagnostic trouble code (DTC). The voltage can be measured between the CAN cables in order to check the load on the CAN network.

NOTE: **It is not necessarily the control module that has set the diagnostic trouble code that communicates incorrectly. Faulty messages can come from any control module in the same section of the CAN network. However, faulty communication in one network cannot affect the communication on the other network. In other words, faulty communication on the LS-CAN cannot disrupt communication on the HS-CAN and vice versa.**

- Ignition on.
- Connect OBDII-Box **(951 3015)** to the diagnostics socket.

Check communication/load on CAN-net by measuring voltage between CAN-L and CAN-H. Measure voltage between the following connections on the OBDII-box/diagnostics socket.

- #3 and #11. The average value of the voltage must be approximately 0.6-1.4 V. The voltage shall normally be between 0.55 - 0.90 V. A higher voltage may indicate increased traffic on the CAN-net. In case of fault in communication/too high traffic on the CAN-net, the voltage is considerably higher than the above stated values.

In order to identify which control module has faulty communication, cut the power supply to one control module at a time. Check the voltage in the CAN cables again. The easiest way to cut the power supply is to remove the fuse(s) for the relevant control module. Repeat until the voltage between the CAN wiring drops to the normal level.

NOTE: **When connecting and disconnecting certain control modules, diagnostic trouble codes (DTCs) may be stored in other control modules.**

HINT: When the suspected defective control module has been identified, connect and disconnect the supply voltage to the control module a number of times to verify that the malfunction appears and disappears. Switch off the ignition between each check.

NOTE: **Do not cut the power to the central electronic module (CEM) unless it is the last control module left to check.**

A control module that is communicating incorrectly must be replaced. See Repairing and installing/Removing, replacing and installing.

NOTE: **After fault with control modules that interfere with communication, other control modules may remain in Limp-Home (that is, they work with reduced functionality) even when the ignition has been turned off and on a few times. For certain faults in the CAN-net where control modules have stopped communicating, it may help to disconnect/reconnect the battery to "restart" the control module/CAN-net.**

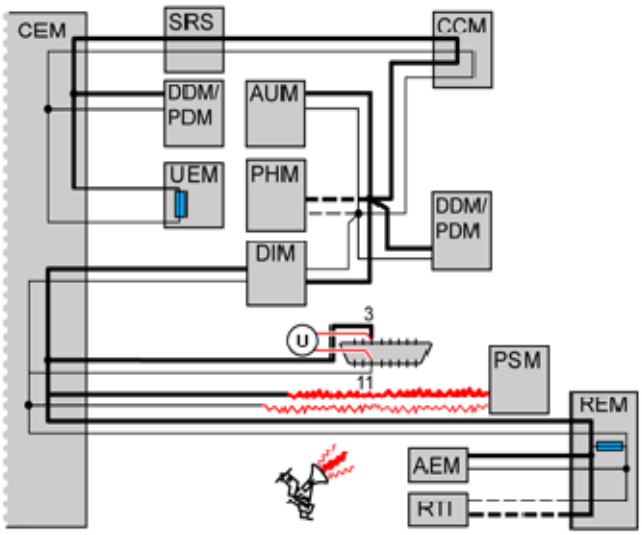

Fig. 156: Checking Communication/Load On CAN-net Between CAN-L And CAN-H
Courtesy of VOLVO CARS CORPORATION

- **Continue**

  Refer to **VERIFICATION**

VERIFICATION

HINT: After rectifying a fault, a verification should be carried out.

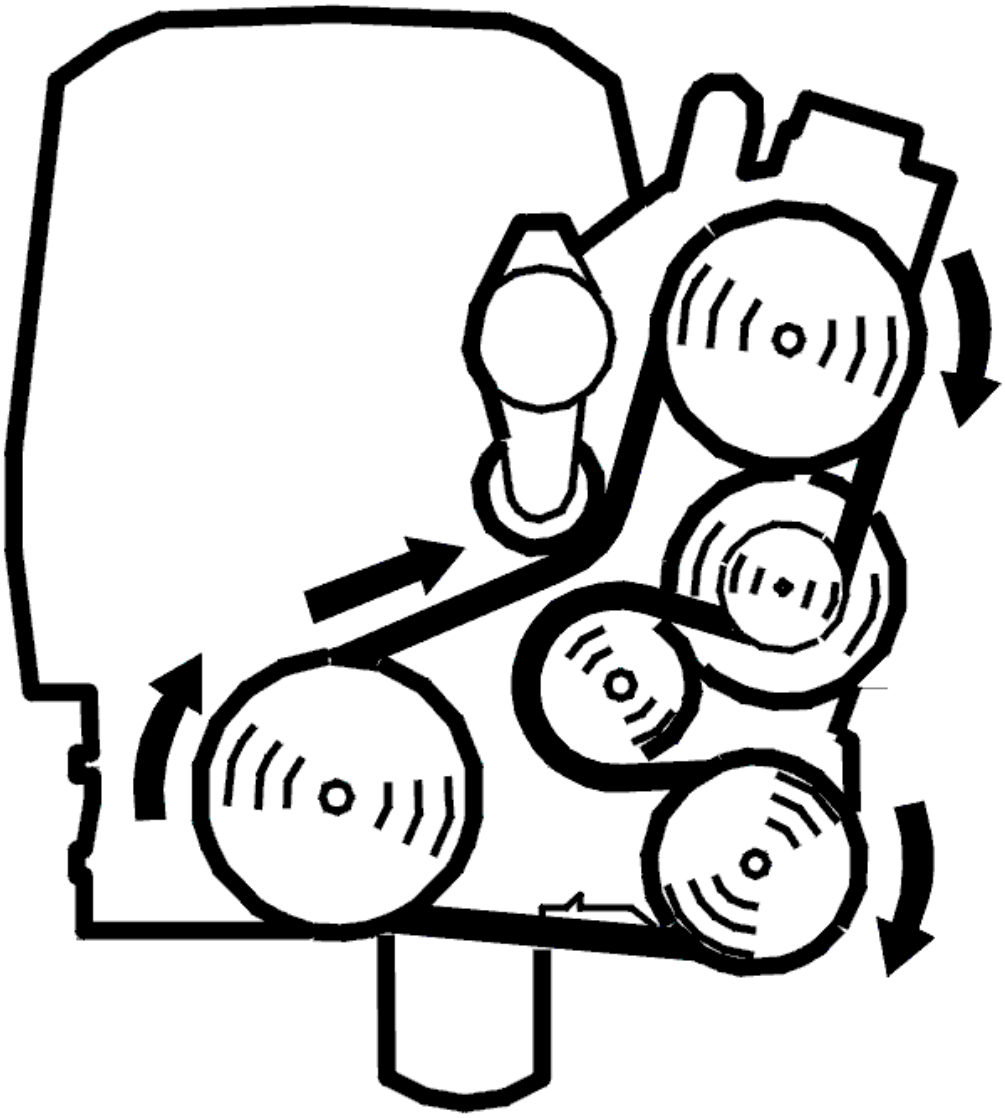

Fig. 157: Belt Routing / Engine Idling - Volvo
Courtesy of VOLVO CARS CORPORATION

Fig. 158: Identifying Ignition On Position
Courtesy of VOLVO CARS CORPORATION

- Reinstall the connectors, components etc.
- Ignition on.

NOTE: **For certain faults in the CAN-net where control modules have stopped communicating, it may help to disconnect/reconnect the battery to "restart" the control module/CAN-net.**

- Erase diagnostic trouble codes (DTCs) in all control modules.
- Ignition off.
- Ignition on.
- Start the vehicle. Allow the vehicle to run for 10 minutes. Start the engine. Allow the engine to run at idle speed for 10 minutes
- Read out the diagnostic trouble codes in the vehicle via the DIAGNOSTICS tab.

Does the diagnostic trouble code (DTC) for faulty communication return?

- **YES**

  Refer to **INFORMATION**

- **NO**

  OKAY: Troubleshooting has been completed.

CHECKING SHORT-CIRCUITING TO GROUND/VOLTAGE IN CAN-NET

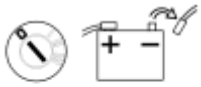

Fig. 159: Ignition Off And Disconnecting Battery Negative Lead
Courtesy of VOLVO CARS CORPORATION

- Ignition off.
- Disconnect the battery negative lead.
- Connect OBDII-Box **(951 3015)** to the diagnostics socket.

  For general information about CAN-troubleshooting, see: **GENERAL INFORMATION ABOUT FAULT-TRACING IN THE CAN NETWORK**

  Checking for a short-circuit to ground

  Measure resistance between the following connections on the OBDII-box/diagnostics socket.

  - #3 and #4 (ground). Measurement is shown in the illustration. The resistance should be above 1 kohms.

- #11 and #4 (ground). The resistance should be above 1 kohms.

If resistance is below 1 kohms this indicates short-circuiting between the CAN-line and ground.

Checking for a short-circuit to voltage

Measure resistance between the following connections on the OBDII-box/diagnostics socket.

- #3 and #16 (voltage). Measurement is shown in the illustration. The resistance should be above 1 kohms.
- #11 and #16 (voltage). The resistance should be above 1 kohms.

If resistance is below 1 kohms this indicates short-circuiting between the CAN-line and voltage cable.

Twist the cable harness and wiggle connectors where they can be accessed along the cable harness during every measurement, and note if the resistance changes to detect intermittent short-circuits or open circuit.

HINT: Part the CAN-net at suitable points to decide where a short-circuit may be found.

NOTE: After fault with control modules that interfere with communication, other control modules may remain in Limp-Home (that is, they work with reduced functionality) even when the ignition has been turned off and on a few times. For certain faults in the CAN-net where control modules have stopped communicating, it may help to disconnect/reconnect the battery to "restart" the control module/CAN-net.

Remedy as necessary.

Other information

- see **BATTERY, DISCONNECTING**
- see **CHECKING WIRING AND TERMINALS**

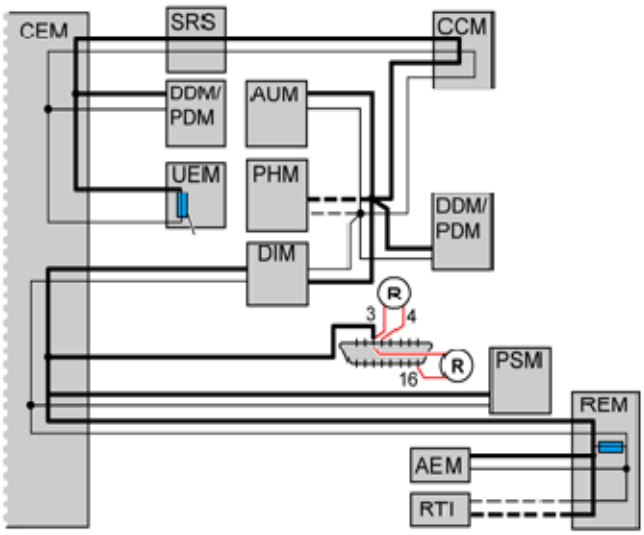

Fig. 160: Checking For Short-Circuiting To Ground/Voltage In CAN-net
Courtesy of VOLVO CARS CORPORATION

Was a fault detected?

- **YES**

  Refer to **VERIFICATION**

- **NO**

  Refer to **CHECKING THE AMOUNT OF TRAFFIC ON THE LS-CAN**

CHECKING VOLTAGE-DROP IN CABLE FOR CAN-H AND CAN-L, RESPECTIVELY

Fig. 161: Identifying Ignition On Position
Courtesy of VOLVO CARS CORPORATION

- Connect the battery.
- Ignition on.
- Connect OBDII-Box **(951 3015)** to the diagnostics socket.

  For general information about CAN-troubleshooting, see: **GENERAL INFORMATION ABOUT FAULT-TRACING IN THE CAN NETWORK**

  In principle, the voltage measured in each cable in the CAN-net shall be the same at each control module

in the network. This means that the voltage-drop in the cable for CAN-H and CAN-L, respectively, between the control modules should be very low. If there is a voltage-difference in the CAN-lines between the diagnostics socket/Central electronic module (CEM) and a control module due to, e. g., contact resistance in a connector or branching, communication may be lost/interfered with. Check if there is voltage-drop in the cable for CAN-H and CAN-L between the diagnostics socket/Central electronic module (CEM) and the control module where there is problem with communication.

Carry out the following:

Measure voltage between the following connections on the OBDII-box/diagnostics socket.

- #3 and corresponding connection on relevant control module for CAN-H. The voltage shall be lower than 50 mV.
- #11 and corresponding connection on relevant control module for CAN-L. The voltage shall be lower than 50 mV.

If voltage is too high, this indicates too high contact resistance in cable, connector, or branching. Check the circuit between the diagnostics socket and control module in question for contact resistance and oxidation.

NOTE: **After fault with control modules that interfere with communication, other control modules may remain in Limp-Home (that is, they work with reduced functionality) even when the ignition has been turned off and on a few times. For certain faults in the CAN-net where control modules have stopped communicating, it may help to disconnect/reconnect the battery to "restart" the control module/CAN-net.**

Remedy wiring as necessary.

Other information

- see **CHECKING WIRING AND TERMINALS**

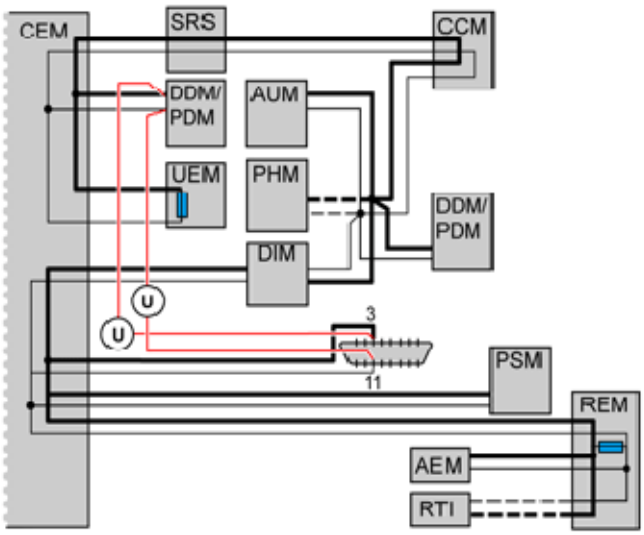

Fig. 162: Checking For Voltage-Drop In Cable For CAN-H And CAN-L
Courtesy of VOLVO CARS CORPORATION

- **Continue**

  Refer to **VERIFICATION**

INFORMATION

FAULT-TRACING INFORMATION

The fault should have been detected and remedied. As this is not the case fault-tracing has failed.

Exit fault-tracing for this diagnostic trouble code (DTC) or make another attempt.

CHECKING THE GROUND TERMINAL

CONNECTING THE BREAKOUT BOX

Connect the breakout box according to **CONNECTING THE BREAKOUT BOX TO THE CARPHONE MODULE** .

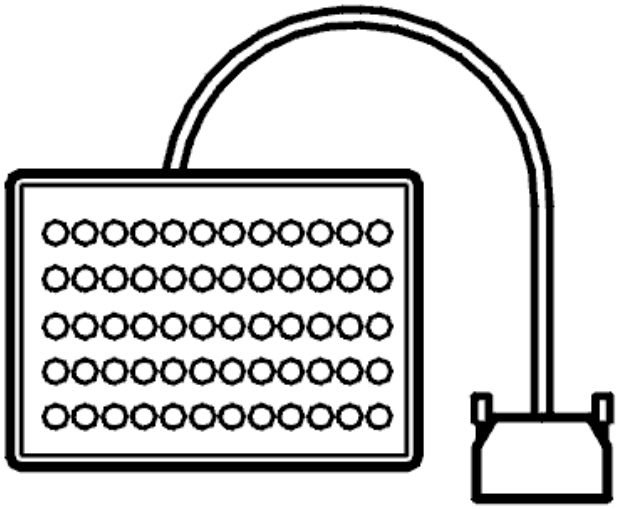

Fig. 163: Breakout Box
Courtesy of VOLVO CARS CORPORATION

- **Continue**

  see **CHECKING THE GROUND TERMINAL**

CHECKING THE GROUND TERMINAL

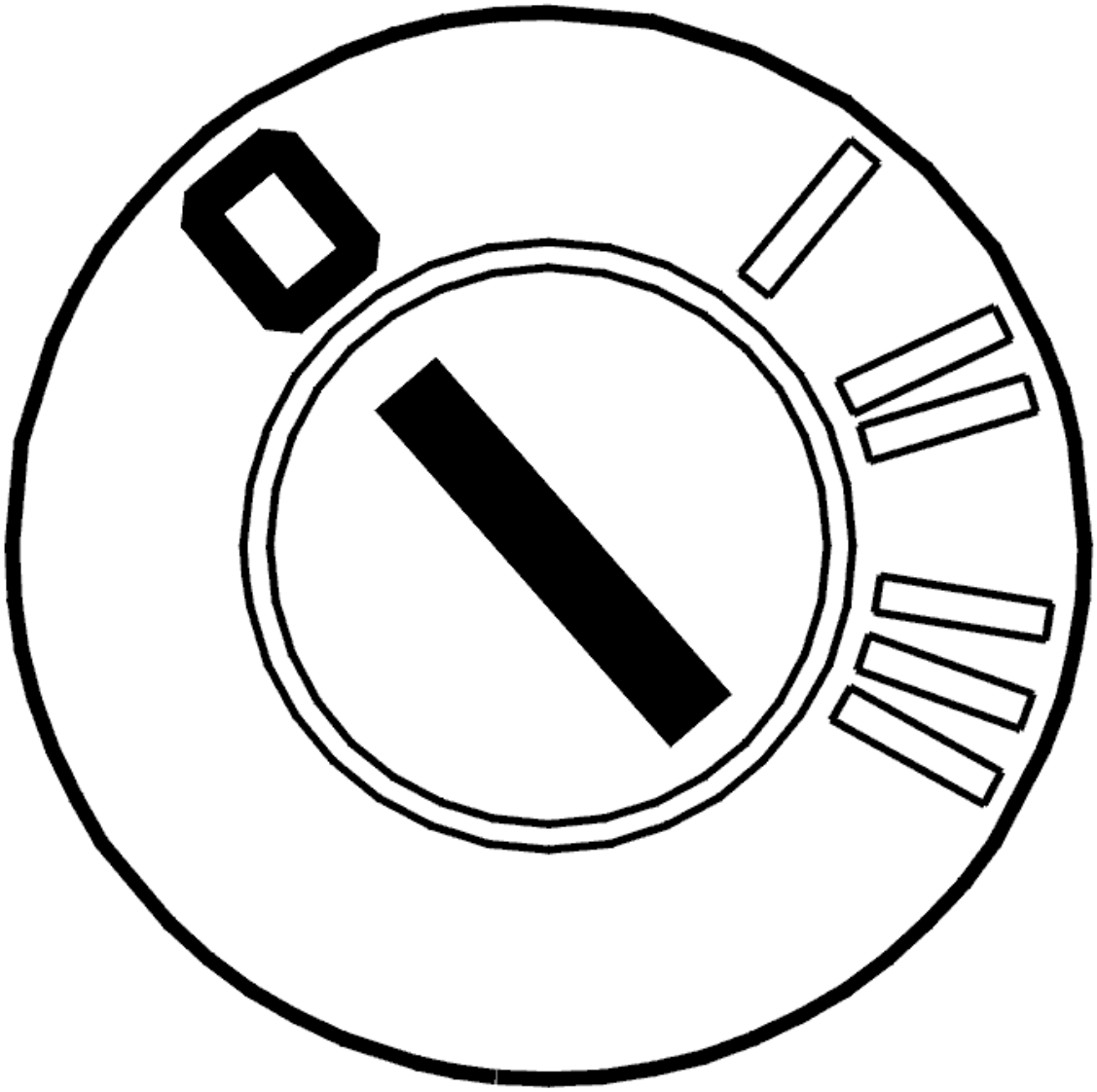

Fig. 164: Identifying Ignition OFF
Courtesy of VOLVO CARS CORPORATION

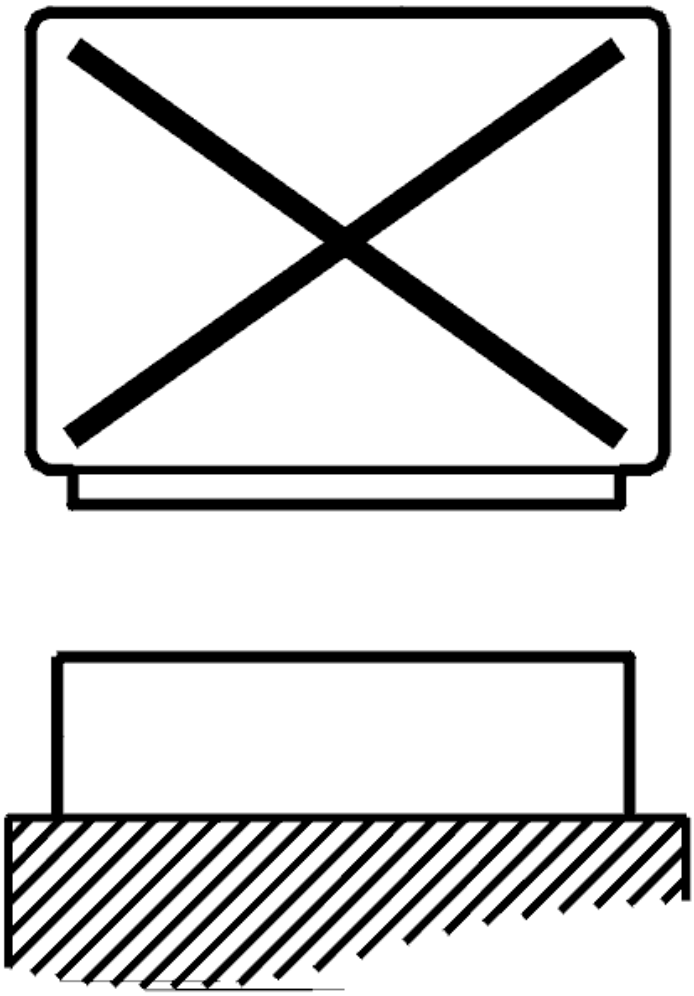

Fig. 165: Disconnecting Control Unit
Courtesy of VOLVO CARS CORPORATION

- Ignition off
- Main unit disconnected.
- Switch off all equipment that takes power from the battery (courtesy lighting, radio etc).

Connect an ohmmeter between terminal #18 on the breakout box and the battery negative terminal.

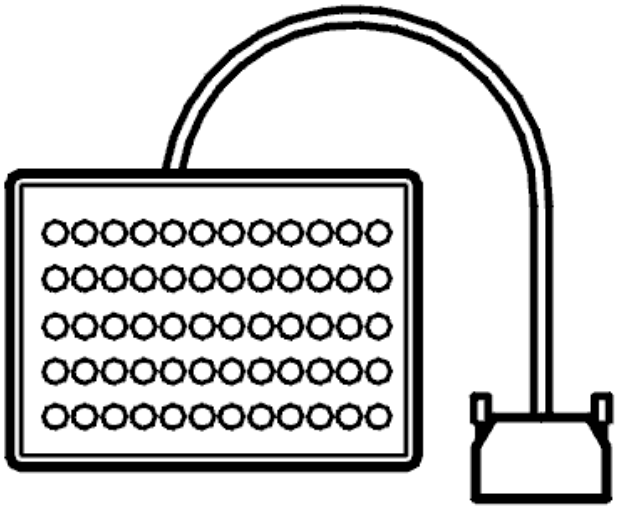

Fig. 166: Breakout Box
Courtesy of VOLVO CARS CORPORATION

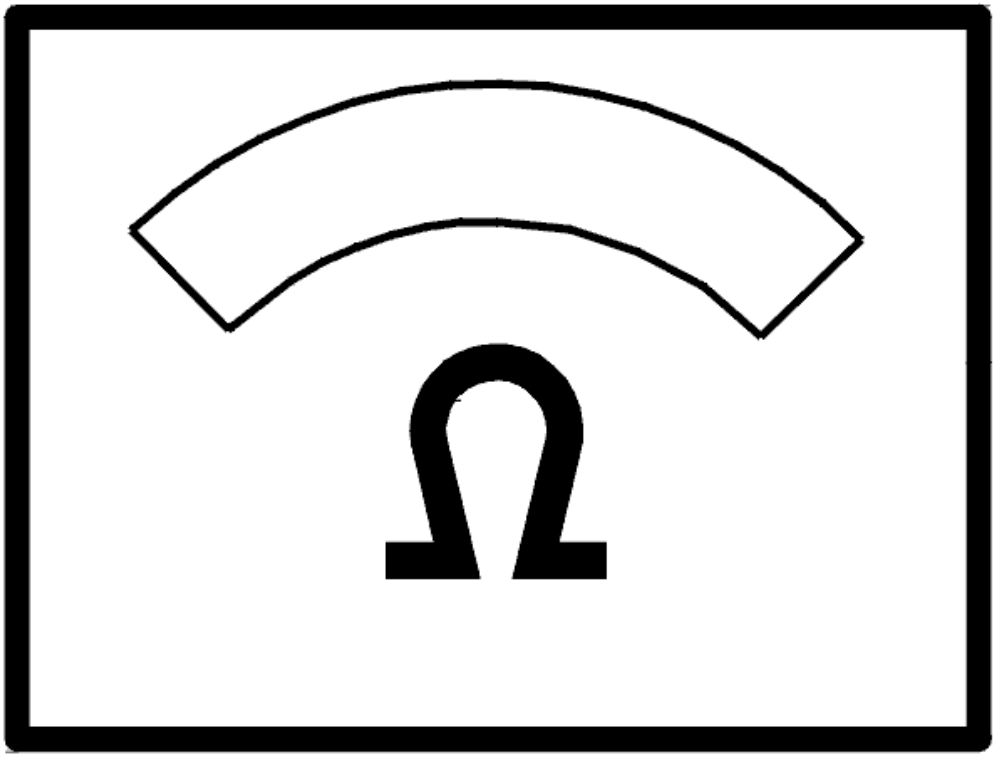

Fig. 167: Identifying Ohm Meter
Courtesy of VOLVO CARS CORPORATION

The ohmmeter should read approximately 0 ohms.

- **OK**

  OKAY: Troubleshooting has been completed.

- **NOT OK**

  see **CHECKING FOR OPEN-CIRCUITS, CONTACT RESISTANCE AND OXIDATION**

CHECKING FOR OPEN-CIRCUITS, CONTACT RESISTANCE AND OXIDATION

Check ground terminal 31/84 and the wiring connected to it. Check for an open-circuit according to **OPEN-**

CIRCUIT, PERMANENT FAULTS . Check for contact resistance and oxidation according to **CONTACT RESISTANCE AND OXIDATION** .

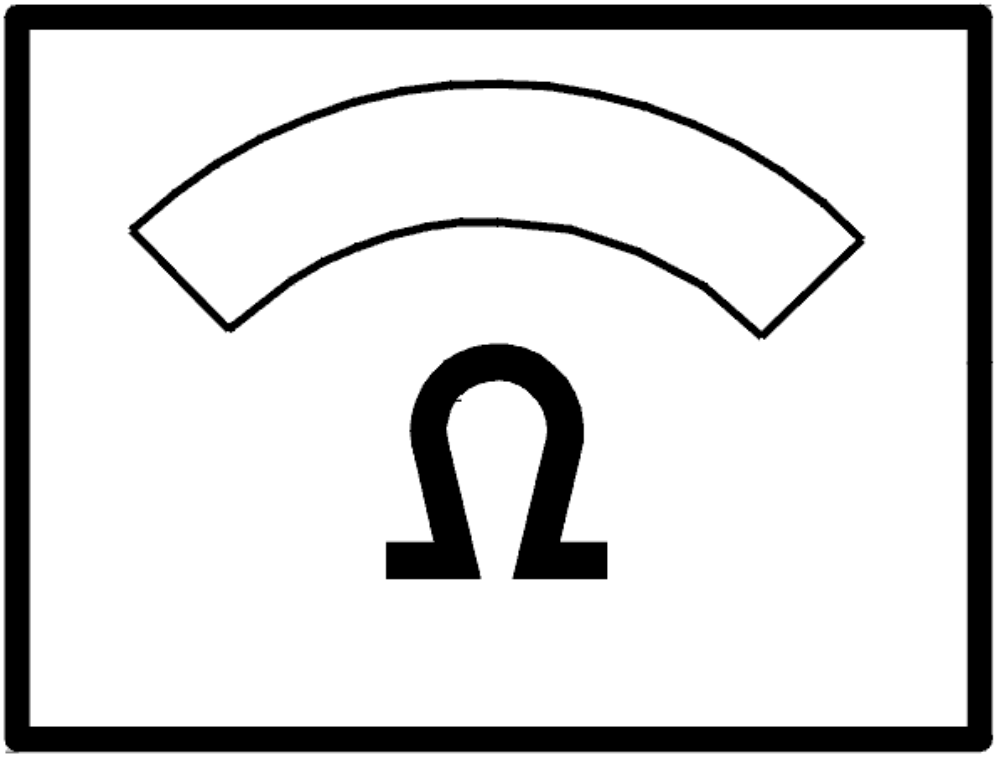

Fig. 168: Identifying Ohm Meter
Courtesy of VOLVO CARS CORPORATION

- **Continue**

  see **VERIFICATION**

VERIFICATION

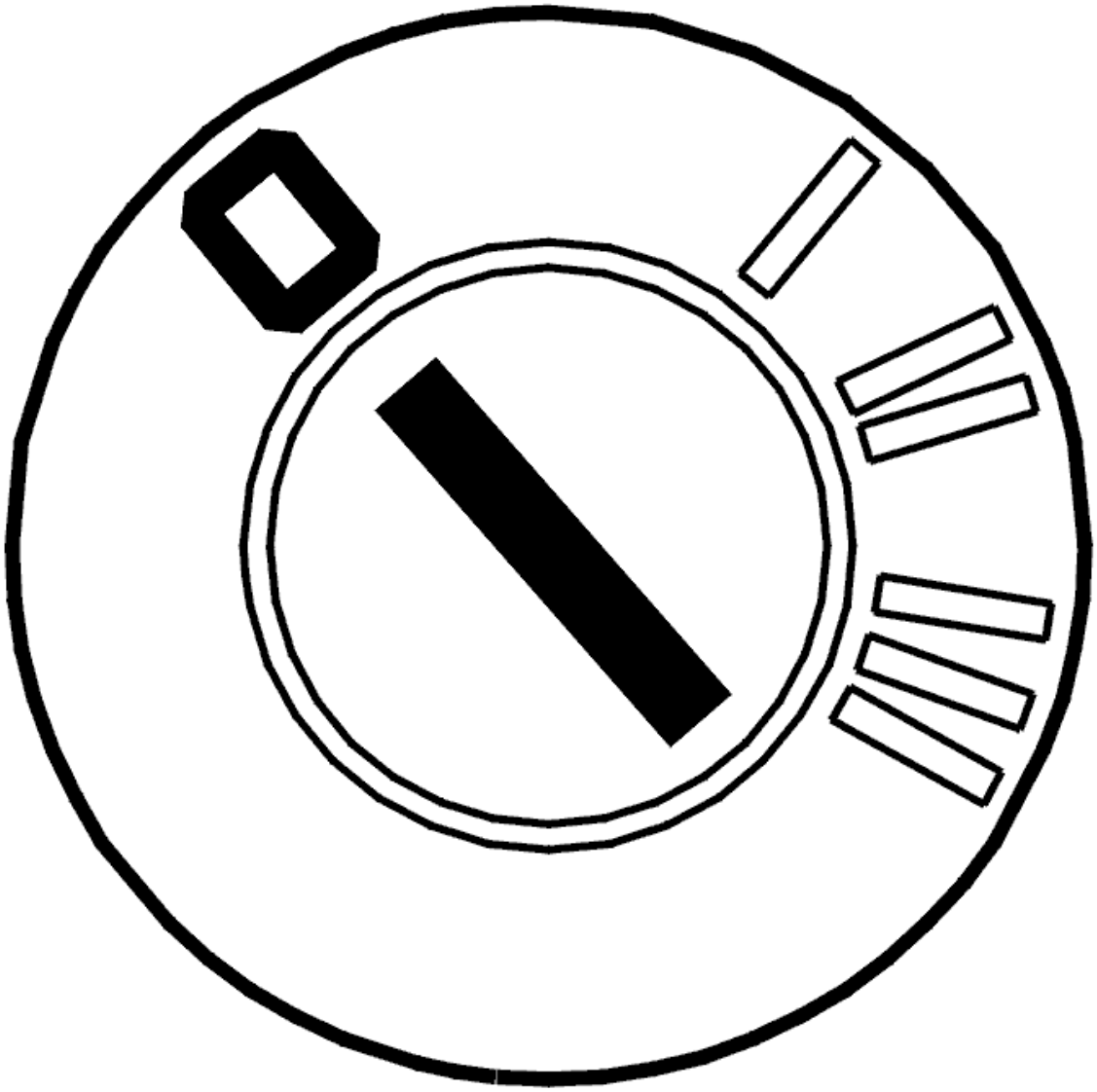

Fig. 169: Identifying Ignition OFF
Courtesy of VOLVO CARS CORPORATION

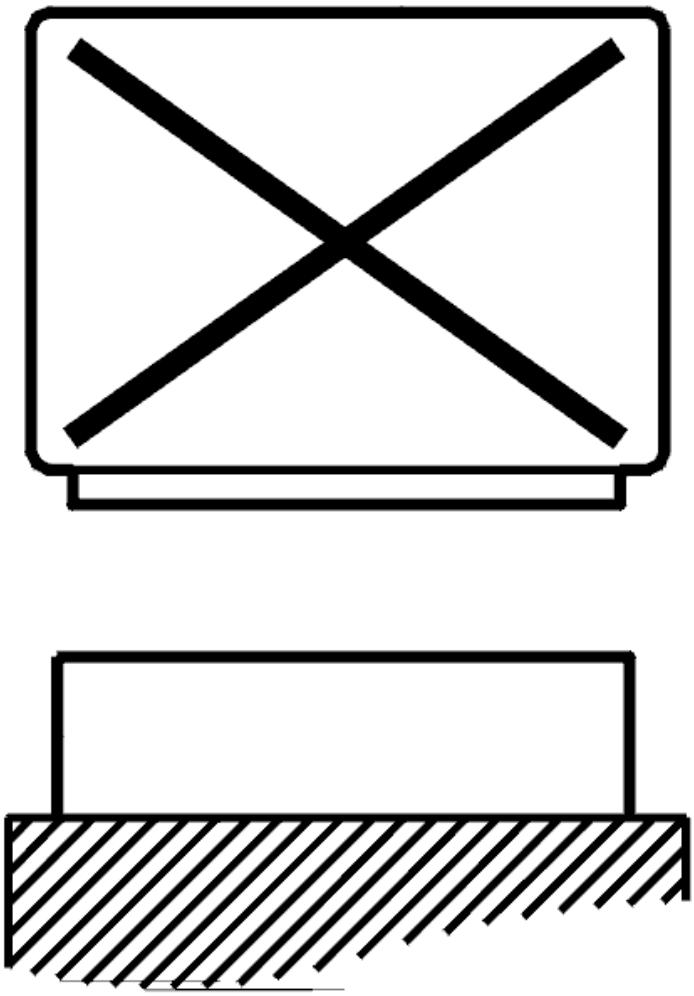

Fig. 170: Disconnecting Control Unit
Courtesy of VOLVO CARS CORPORATION

- Ignition off
- Module disconnected.
- Switch off all equipment that takes power from the battery (courtesy lighting, radio etc).

Connect an ohmmeter between terminal #18 on the breakout box and the battery negative terminal.

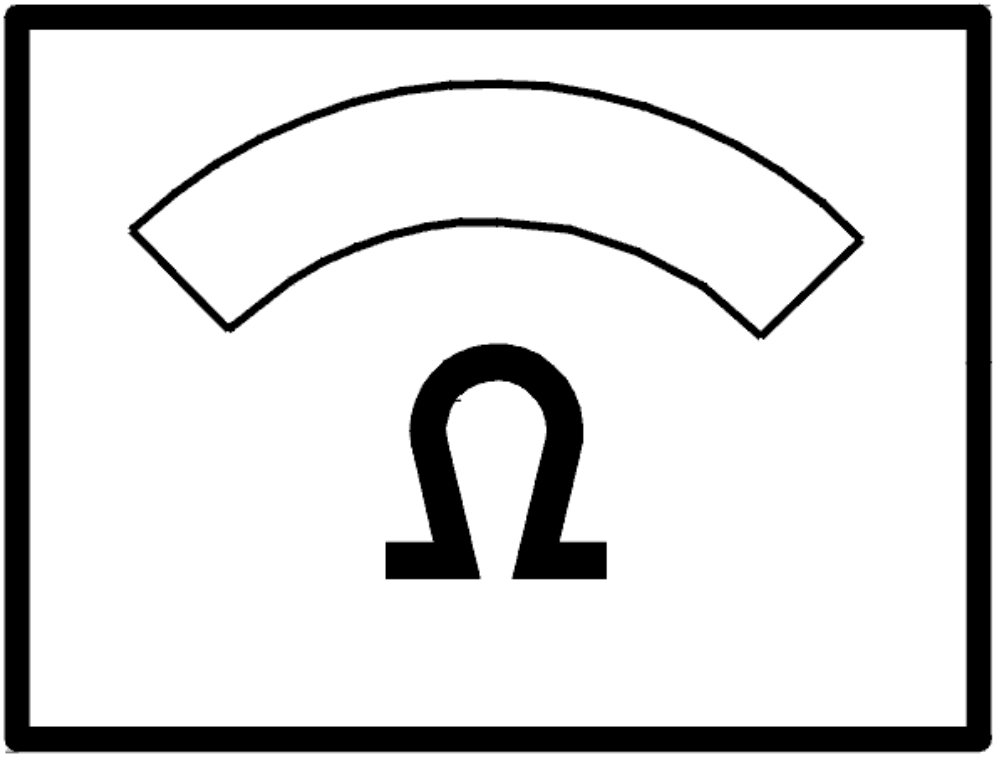

Fig. 171: Identifying Ohm Meter
Courtesy of VOLVO CARS CORPORATION

The ohmmeter should read 0 ohms.

- **YES**

  OKAY: Troubleshooting has been completed.

- **NO**

  see **FAULT-TRACING INFORMATION**

FAULT-TRACING INFORMATION

- **FAULT TRACING FAILED:**

The fault should have been detected and remedied. As this is not the case fault-tracing has failed. Exit fault-tracing for this diagnostic trouble code (DTC) or make another attempt.

CEM-1A59: COMMUNICATION WITH THE AUDIO MODULE (AUM). SIGNAL MISSING (2005-2012)

DIAGNOSTIC TROUBLE CODE (DTC) INFORMATION CEM-1A59

Condition

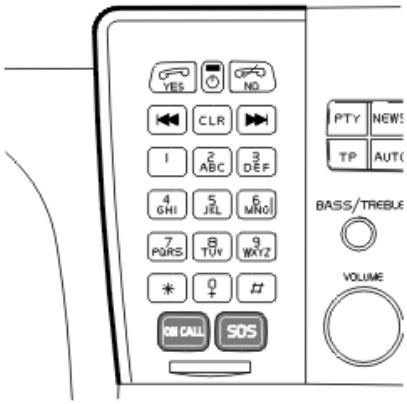

Fig. 172: Identifying Radio And Car Phone
Courtesy of VOLVO CARS CORPORATION

The diagnostic trouble code (DTC) is stored if the central electronic module (CEM) registers that communication with the audio module (AUM) is not operating.

The diagnostic trouble code (DTC) can be diagnosed when the ignition has been on for more than 10 seconds.

NOTE: **In the event of CEM-1A5X diagnostic trouble codes (DTCs), the central electronic module (CEM) must not be replaced as the diagnostic trouble code (DTC) indicates a communication fault in the controller area network (CAN).**

Substitute Value

- None.

Possible Source

- No power supply to the audio module (AUM)
- Open-circuit in the ground lead for the audio module (AUM)
- Contact resistance in the terminals
- Open-circuit in the wiring for the CAN low speed network to the audio module (AUM)
- The audio module (AUM) is not intended for this vehicle (for example a used control module with different software/hardware).

HINT: If several diagnostic trouble codes (DTCs) are stored in the central electronic module (CEM) for communication faults with other control modules in the low speed network, this indicates a common fault in the controller area network (CAN).

Fault symptom[s]

- The rheostat function on the audio system is not working.
- Cannot be controlled with the remote control.
- The radio buttons on the steering wheel do not function

SIGNAL MISSING

CHECKING THE FUNCTION OF THE AUDIO MODULE (AUM)

Check the power supply for the control module by switching on the radio or playing a CD. There must be sound from the radio or CD.

NOTE: **Radio reception may be poor indoors. On certain cars, the radio reception may deteriorate if the trunk lid is open.**

Is there sound from the radio?

- **YES**

  Refer to **CHECKING COMMUNICATION WITH THE AUDIO MODULE (AUM)**

- **NO**

  Refer to **CHECKING THE POWER SUPPLY AND GROUND FOR THE AUDIO MODULE (AUM)**

CHECKING THE POWER SUPPLY AND GROUND FOR THE AUDIO MODULE (AUM)

Check the fuses for the main unit/audio module (AUM).

NOTE: **If a fuse is blown, check the circuit after the fuse before replacing the fuse. Check for a short-circuit to ground. Then replace the fuse. For further information about the circuit after the fuse.**

Check the connector for the main unit/audio module (AUM). Check for contact resistance and oxidation.

Check the power supply cable for the main unit/audio module (AUM). Check for an open-circuit.

Check the ground cable between the main unit/audio module (AUM) and the ground terminal. Check for an open-circuit. Also check the ground terminal. Check for contact resistance and oxidation.

Remedy as necessary.

Other information:

- see **MEDIA, COMMUNICATION AND NAVIGATION - REMOVAL, REPLACEMENT & INSTALLATION**
- see **CONNECTING THE BREAKOUT BOX, AUDIO CONTROL MODULE**
- see **SIGNAL SPECIFICATION, AUDIO CONTROL MODULE**
- see **CHECKING WIRING AND TERMINALS**

Was a fault detected?

- **YES**

  Refer to **CHECKING THE FUNCTION OF THE AUDIO MODULE (AUM)**

- **NO**

  Refer to **SIGNAL MISSING**

CHECKING COMMUNICATION WITH THE AUDIO MODULE (AUM)

HINT: The CAN communication with the control module is probably OK if the control module ID can be read off. The fault is probably intermittent and may therefore be difficult to locate.

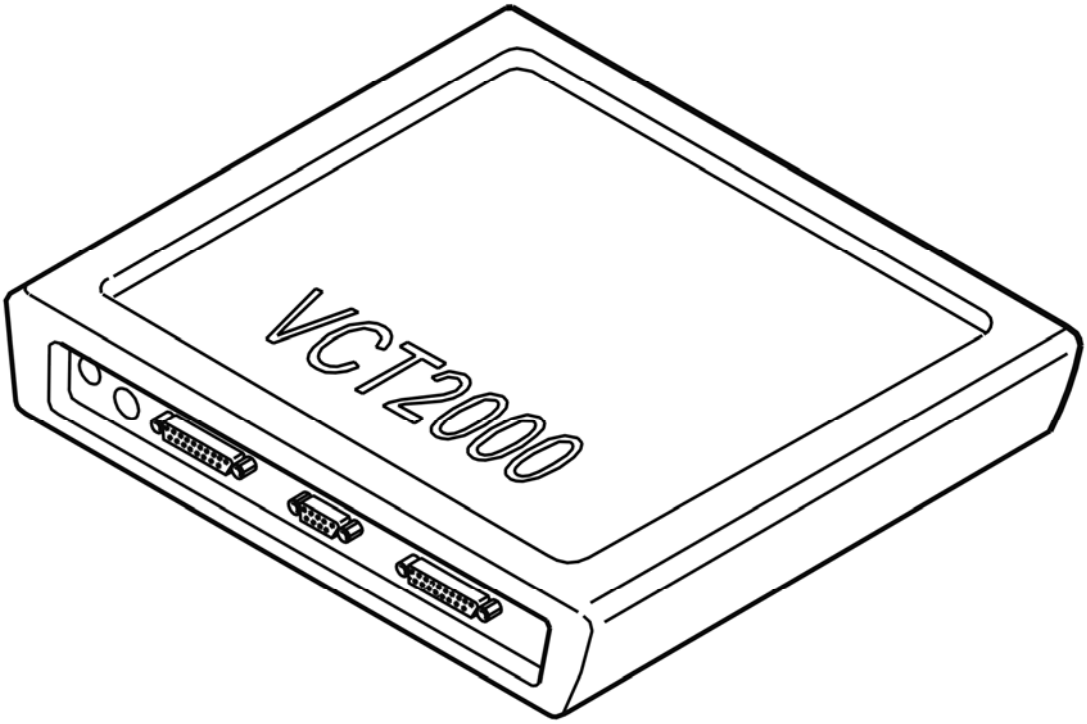

Fig. 173: Identifying VCT2000 Diagnostic Tool Symbol In VIDA
Courtesy of VOLVO CARS CORPORATION

- Try to communicate with the audio module (AUM) by reading off the control module ID
- Use the VCT2000 (or appropriate scan tool)
- **Continue**

  Refer to **SIGNAL MISSING**

CHECKING THE FUNCTION OF THE AUDIO MODULE (AUM)

HINT: After carrying out the repair, check that the fault has been remedied.

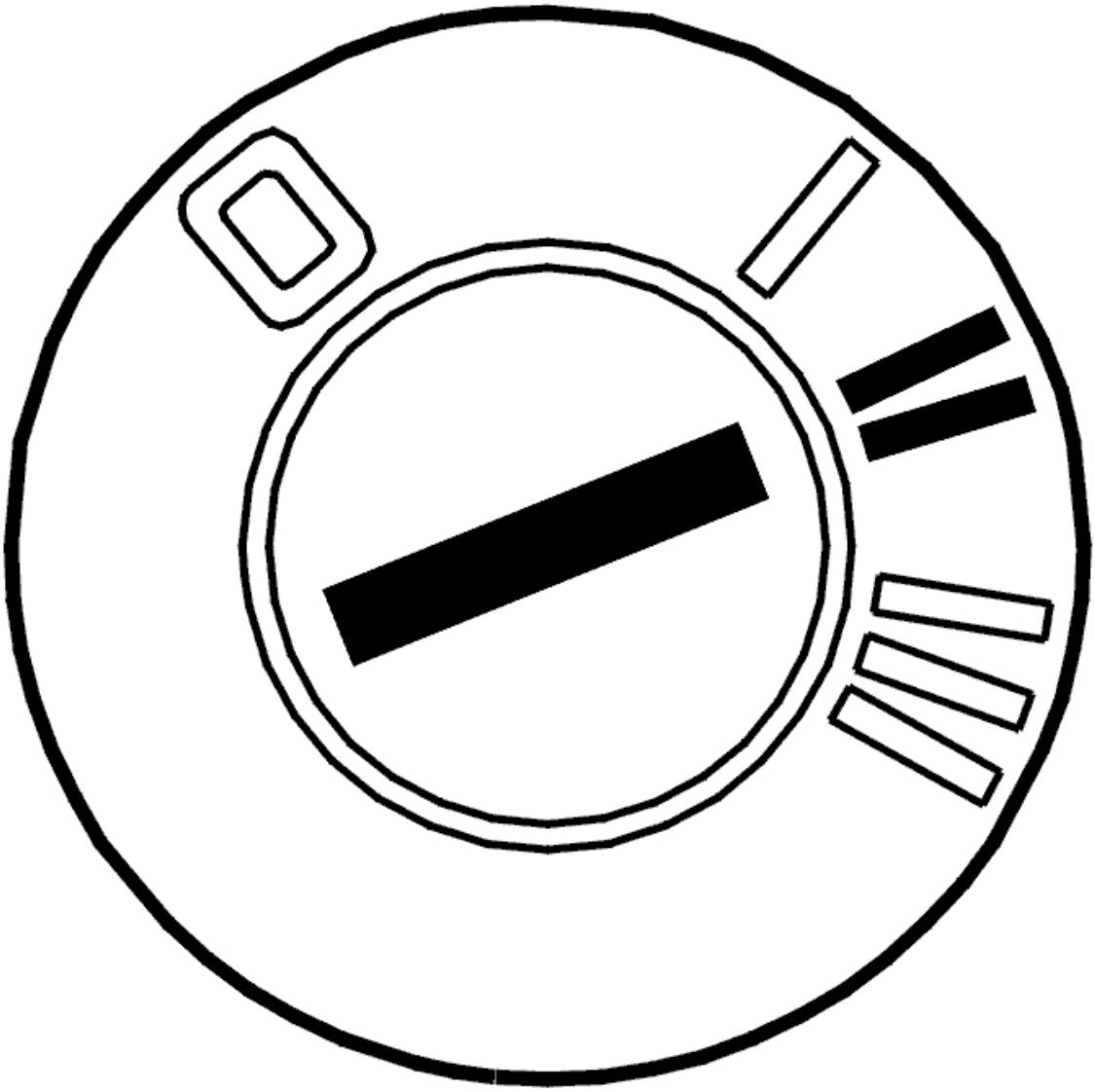

Fig. 174: Identifying Ignition ON
Courtesy of VOLVO CARS CORPORATION

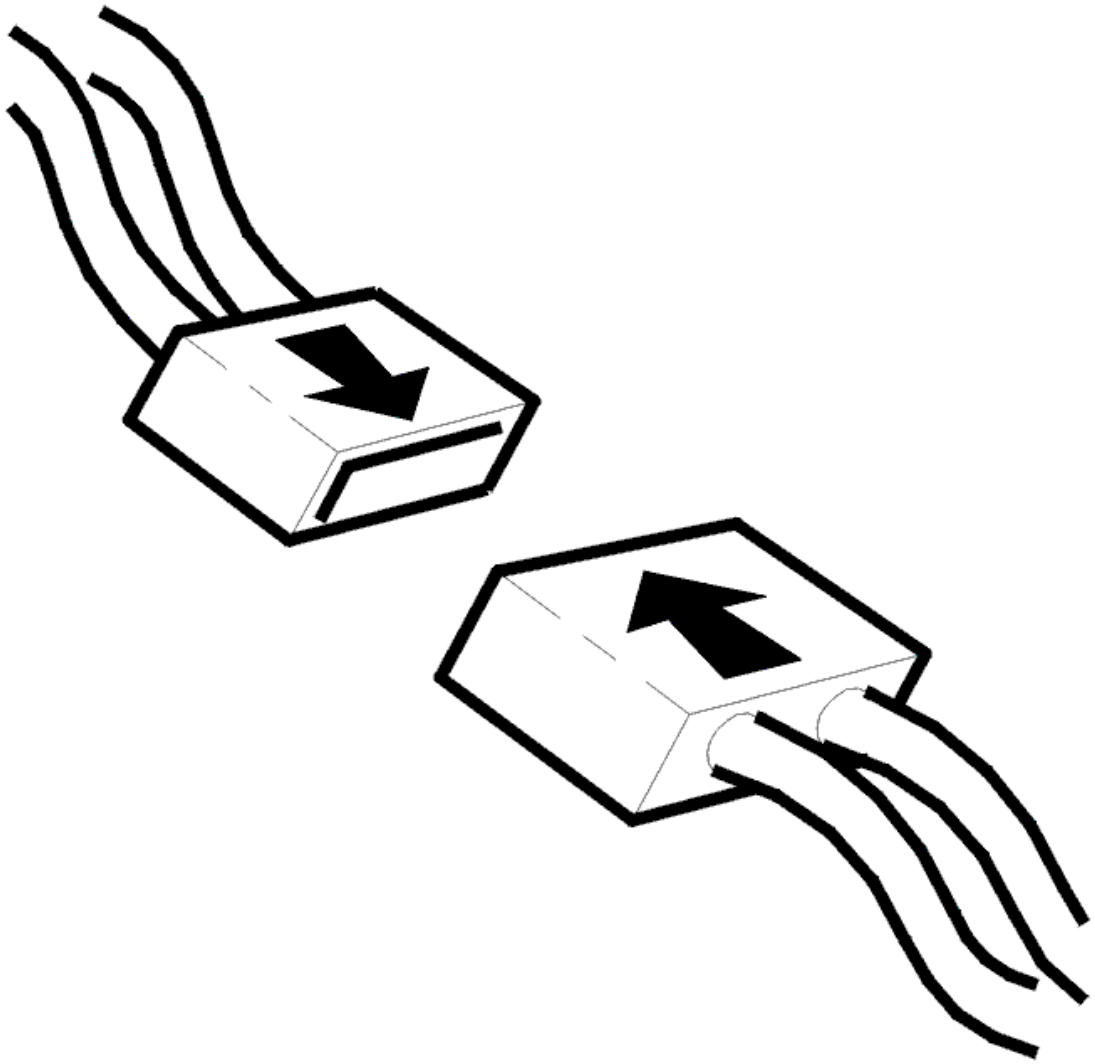

Fig. 175: Connecting Connector
Courtesy of VOLVO CARS CORPORATION

- Ignition off
- Reconnect the connectors. Reinstall the components
- Ignition on.

Check the power supply for the control module by switching on the radio or playing a CD.

There must be sound from the radio or CD.

NOTE: **Radio reception may be poor indoors. On certain cars, the radio reception may deteriorate if the trunk lid is open.**

Is there sound from the radio?

- **YES**

  OKAY: Troubleshooting has been completed.

- **NO**

  Refer to **INFORMATION**

SIGNAL MISSING

GENERAL INFORMATION

NOTE: Illustrations shown are only examples.

HINT: For general information about CAN-troubleshooting, see: GENERAL INFORMATION ABOUT FAULT-TRACING IN THE CAN NETWORK

- **General about CAN-related diagnostic trouble codes:**

  CEM-DF01 - DF17 can only be stored in Central electronic module (CEM). These diagnostic trouble codes are stored when an electric fault is detected in CAN-lines. Start with these diagnostic trouble codes first.

  CEM-1AXX only stored in Central electronic module (CEM). One diagnostic trouble code for every control module on the CAN-net. These diagnostic trouble codes indicate that Central electronic module (CEM) does not receive any reply from other control modules.

  XXX-E000 (HS-CAN)/E001 (LS-CAN) can be stored in all CAN-connected control modules. These diagnostic trouble codes indicate that the control module has detected interference on the CAN-net.

  XXX-E003 can be stored in all CAN-connected control modules except in Central electronic module (CEM). The control modules on the CAN-net listen for a message (identity number) that is sent out at regular intervals from Central electronic module (CEM). This diagnostic trouble code indicates that the control module has not received any identity number, or that the expected number is not correct. Interference on the CAN-net can also store this diagnostic trouble code.

  NOTE: In case of CAN-related faults, it is likely that a combination of above diagnostic trouble codes occur.

  NOTE: After fault with control modules that interfere with communication, other control modules may remain in Limp-Home (that is, they work with reduced functionality) even when the ignition has been turned off and on a few times. For certain faults in the CAN-net where control modules have stopped communicating, it may help to disconnect/reconnect the battery to "restart" the control module/CAN-net.

If diagnostic trouble codes (DTCs) for communication faults can be read off from a control module, the fault is probably intermittent.

Intermittent fault in the voltage supply and ground to a control module on the CAN network results in the Central electronic module (CEM) storing a diagnostic trouble code (DTC) for an open-circuit in communication with the control module where the voltage supply does not work. There will probably not be a diagnostic trouble code (DTC) in the control module where the open-circuit in the voltage supply occurred as the control module cannot store a diagnostic trouble code (DTC) when it is not supplied with power.

NOTE: Central electronic module (CEM) should not be replaced in case of CAN-fault, unless troubleshooting reveals that Central electronic module (CEM) has an internal fault.

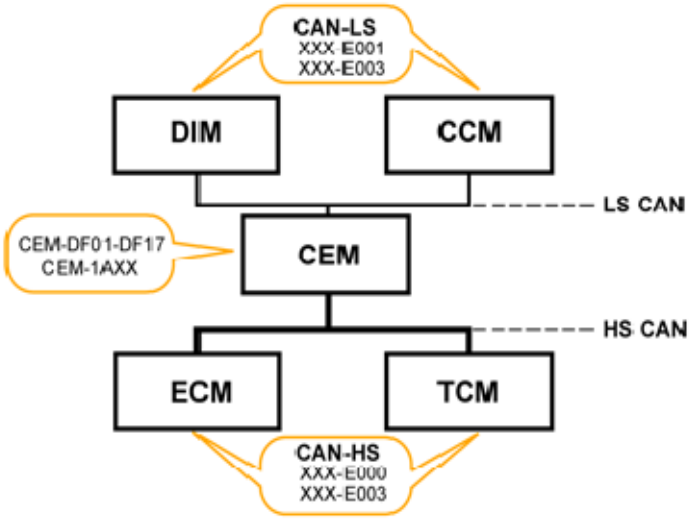

Fig. 176: High-Speed CAN And Low-Speed CAN Communication Diagram
Courtesy of VOLVO CARS CORPORATION

- **Continue**

Refer to **CHECKING RESISTANCE IN CAN-NET**

CHECKING RESISTANCE IN CAN-NET

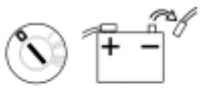

Fig. 177: Ignition Off And Disconnecting Battery Negative Lead
Courtesy of VOLVO CARS CORPORATION

- Ignition off
- Disconnect the battery negative lead
- Connect OBDII-Box **(951 3015)** to the diagnostics socket.

For general information about CAN-troubleshooting, see: **GENERAL INFORMATION ABOUT FAULT-TRACING IN THE CAN NETWORK**

Measure resistance between the following connections on the OBDII-box/diagnostics socket.

- #3 and #11. The resistance should be approx. 55 - 65 ohms.
- If resistance is approx. 120 ohms, this indicates open circuit in the circuit so that only one terminating resistor (120 ohms) has been measured.
- If resistance is above 1 kohms this indicates open circuit/high contact resistance somewhere in the circuit.
- If resistance is below 55 ohms this indicates short-circuiting/contact resistance between the CAN-lines somewhere in the circuit.

HINT: For LS-CAN, terminating resistors are located in Upper electronic module (UEM) and Rear electronic module (REM).

Twist the cable harness and wiggle connectors where they can be accessed along the cable harness during every measurement, and note if the resistance changes to detect intermittent short-circuits or open circuit.

NOTE: **Resistance measurement measures only main lines in the CAN-net (in circuit where both terminating resistors are found), not branches to certain control modules. Open circuit on branching without a terminating resistor cannot be detected with this measurement. However, short-circuiting on a branch can be detected. To measure resistance in the CAN-net to control modules located in a branching of their own, the measurement shall be done against the CAN-net at that control module. The values shall be as above.**

NOTE: **After fault with control modules that interfere with communication, other control modules may remain in Limp-Home (that is, they work with reduced functionality) even when the ignition has been turned off and on a few times. For certain faults in the CAN-net where control modules have stopped communicating, it may help to disconnect/reconnect the battery to "restart" the control module/CAN-net.**

Remedy as necessary.

Other information

- see **BATTERY, DISCONNECTING**
- see **CHECKING WIRING AND TERMINALS**

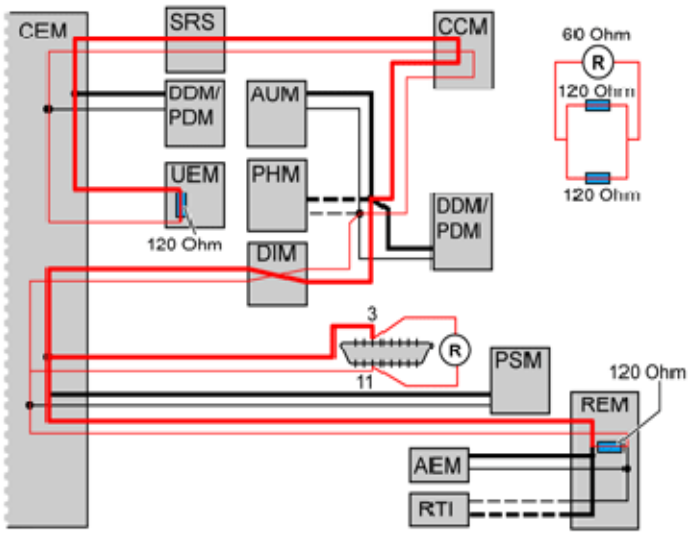

Fig. 178: Checking Resistance In CAN Lines
Courtesy of VOLVO CARS CORPORATION

Was a fault detected?

- **YES**

  Refer to **VERIFICATION**

- **NO**

  Refer to **CHECKING SHORT-CIRCUITING TO GROUND/VOLTAGE IN CAN-NET**

CHECKING THE AMOUNT OF TRAFFIC ON THE LS-CAN

Fig. 179: Identifying Ignition On Position
Courtesy of VOLVO CARS CORPORATION

- Connect the battery
- Ignition on.
- Connect OBDII-Box **(951 3015)** to the diagnostics socket.

  For general information about CAN-troubleshooting, see: **GENERAL INFORMATION ABOUT FAULT-TRACING IN THE CAN NETWORK**

  Faults in the CAN network may be due to a control module sending faulty messages that disrupt normal

communication. When messages are sent incorrectly, this results in a considerable increase in the amount of traffic on the CAN network. The load can be checked by reading the average value of the voltage on the CAN cables in relation to ground.

Measure voltage between the following connections on the OBDII-box/diagnostics socket.

- #3 and #4 (ground). The voltage should be approx:2, 8 - 3, 2 V.
- #11 and #4 (ground). The voltage should be approx:1, 8 - 2, 2 V.
- #3 and #11. The voltage shall be between approx. 0.55-1.4 V. The voltage shall normally be between 0.55 - 0.90 V. A higher voltage may indicate increased traffic on the CAN-net. In case of fault in communication/too high traffic on the CAN-net, the voltage is considerably higher than the above stated values.

NOTE: After fault with control modules that interfere with communication, other control modules may remain in Limp-Home even when the ignition has been turned off and on a few times. For certain faults in the CAN-net where control modules have stopped communicating, it may help to disconnect/reconnect the battery to "restart" the control module/CAN-net.

HINT: DiCE can be used as fault detection tool if fault is suspected on the CAN-net that cannot be detected with normal troubleshooting. Interference, intermittent faults, faulty messages on the CAN-net etc., are examples of such faults. The tool registers fault messages used on the CAN-net. Fault messages may be caused by short intermittent malfunctions on the CAN-net or by a control module sending fault messages. See tools:951 3010 as well as associated TJ 20402.

- Ignition on.
- Connect DiCE to the diagnostics socket.
- Note the blue LED-indicator. The indicator flashes to show detection of fault messages.

NOTE: Certain interference may occur without any real fault

Cable fault

- Shake the cables lightly and pull lightly on the connections during the check to locate any fault. Note the blue LED-indicator.

"Chatting" control modules

- "Chatting" control modules may be difficult to find and troubleshooting may take time. Let the vehicle stand with DiCE connected for an extended time period. Afterwards, activate functions to provoke a malfunction. It may take up to several hours before the fault messages are sent. When the indicator starts to flash, remove the fuse for one control module at a time until the indicator stops flashing. When the indicator stops flashing, restore the fuse for the relevant control module and check that the indicator starts to flash again. Then it is likely that the problem is identified.

Remedy wiring as necessary.

Other information

- see **BATTERY, DISCONNECTING**
- see **TROUBLESHOOTING USING DICE ERROR FRAME FINDER**
- see **CHECKING WIRING AND TERMINALS**

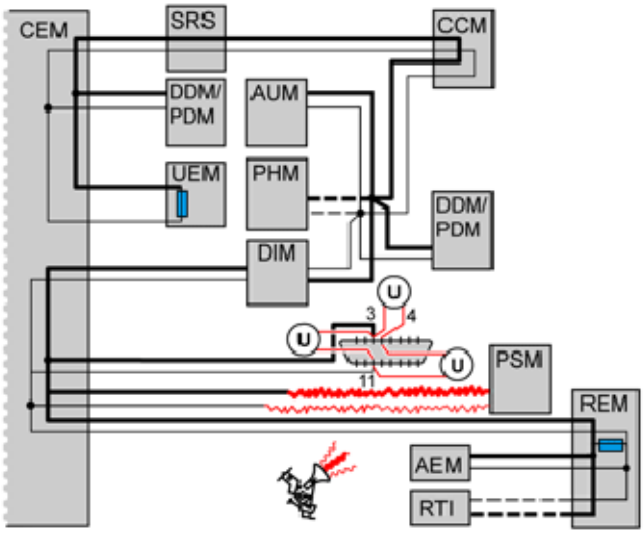

Fig. 180: Checking Amount Of Traffic On LS-CAN
Courtesy of VOLVO CARS CORPORATION

Was a fault detected?

- **YES**

  Refer to **IDENTIFYING A CONTROL MODULE IN THE CAN NETWORK**

- **NO**

  Refer to **CHECKING VOLTAGE-DROP IN CABLE FOR CAN-H AND CAN-L, RESPECTIVELY**

IDENTIFYING A CONTROL MODULE IN THE CAN NETWORK

Fig. 181: Identifying Ignition On Position
Courtesy of VOLVO CARS CORPORATION

For general information about CAN-troubleshooting, see: **GENERAL INFORMATION ABOUT FAULT-**

TRACING IN THE CAN NETWORK

HINT: DiCE can be used as fault detection tool if fault is suspected on the CAN-net that cannot be detected with normal troubleshooting. Interference, intermittent faults, faulty messages on the CAN-net (chattering control modules) etc., are examples of such faults. The tool registers fault messages used on the CAN-net. Fault messages may be caused by short intermittent malfunctions on the CAN-net or by a control module sending fault messages. See tools:951 3010 (memory card) as well as associated TJ 20402. If the load on the CAN network is too high, this may be due to a control module transmitting faulty messages on the CAN network. This is called a disruptive control module. The fault may also be due to an intermittent short-circuit to supply voltage or ground in one of the CAN cables. This results in the control modules on the CAN network starting to send faulty messages. The fault may occur without any of the control modules storing a diagnostic trouble code (DTC). The voltage can be measured between the CAN cables in order to check the load on the CAN network.

NOTE: **It is not necessarily the control module that has set the diagnostic trouble code that communicates incorrectly. Faulty messages can come from any control module in the same section of the CAN network. However, faulty communication in one network cannot affect the communication on the other network. In other words, faulty communication on the LS-CAN cannot disrupt communication on the HS-CAN and vice versa.**

- Ignition on.
- Connect OBDII-Box **(951 3015)** to the diagnostics socket.

Check communication/load on CAN-net by measuring voltage between CAN-L and CAN-H. Measure voltage between the following connections on the OBDII-box/diagnostics socket.

- #3 and #11. The average value of the voltage must be approximately 0.6-1.4 V. The voltage shall normally be between 0.55 - 0.90 V. A higher voltage may indicate increased traffic on the CAN-net. In case of fault in communication/too high traffic on the CAN-net, the voltage is considerably higher than the above stated values.

In order to identify which control module has faulty communication, cut the power supply to one control module at a time. Check the voltage in the CAN cables again. The easiest way to cut the power supply is to remove the fuse(s) for the relevant control module. Repeat until the voltage between the CAN wiring drops to the normal level.

NOTE: **When connecting and disconnecting certain control modules, diagnostic trouble codes (DTCs) may be stored in other control modules.**

HINT: When the suspected defective control module has been identified, connect and disconnect the supply voltage to the control module a number of times to verify that the malfunction appears and disappears. Switch off the ignition between each check.

NOTE: **Do not cut the power to the central electronic module (CEM) unless it is the last control module left to check.**

A control module that is communicating incorrectly must be replaced. See Repairing and installing/Removing, replacing and installing.

NOTE: **After fault with control modules that interfere with communication, other control modules may remain in Limp-Home (that is, they work with reduced functionality) even when the ignition has been turned off and on a few times. For certain faults in the CAN-net where control modules have stopped communicating, it may help to disconnect/reconnect the battery to "restart" the control module/CAN-net.**

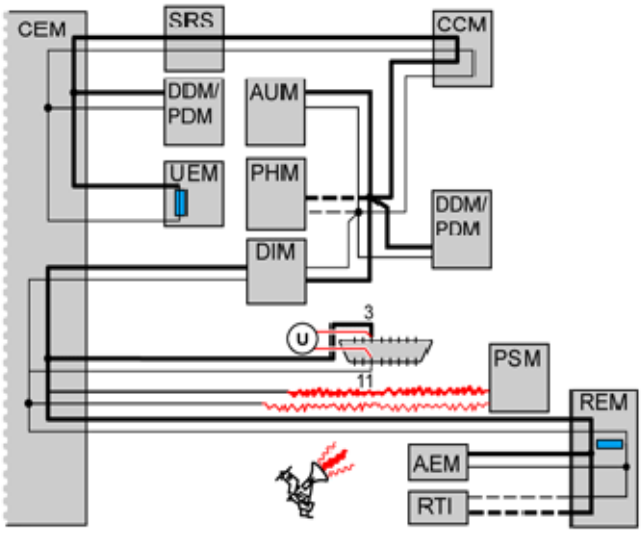

Fig. 182: Checking Communication/Load On CAN-net Between CAN-L And CAN-H
Courtesy of VOLVO CARS CORPORATION

- **Continue**

  Refer to **VERIFICATION**

VERIFICATION

HINT: After rectifying a fault, a verification should be carried out.

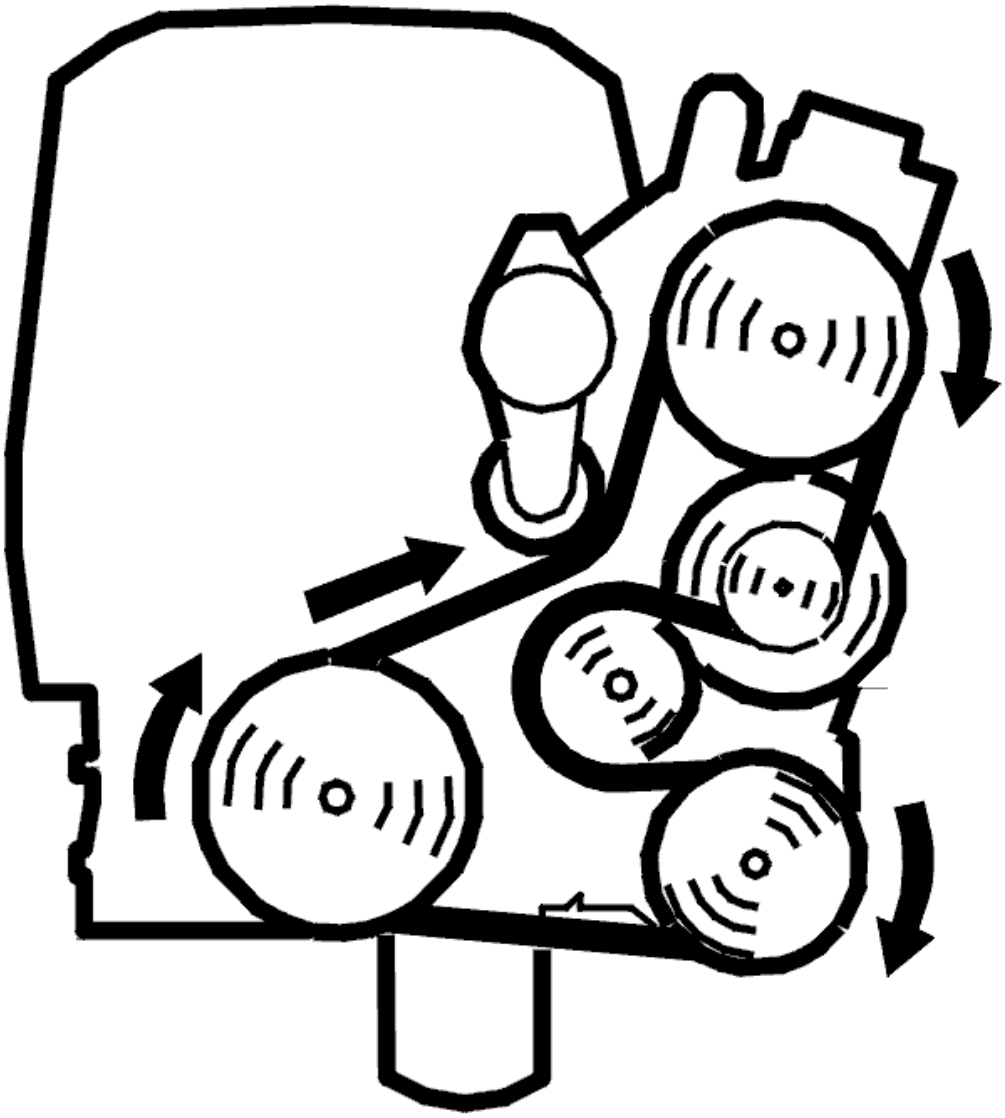

Fig. 183: Belt Routing / Engine Idling - Volvo
Courtesy of VOLVO CARS CORPORATION

Fig. 184: Identifying Ignition On Position
Courtesy of VOLVO CARS CORPORATION

- Reinstall the connectors, components etc.
- Ignition on.

NOTE: **For certain faults in the CAN-net where control modules have stopped communicating, it may help to disconnect/reconnect the battery to "restart" the control module/CAN-net.**

- Erase diagnostic trouble codes (DTCs) in all control modules.
- Ignition off.
- Ignition on.
- Start the vehicle. Allow the vehicle to run for 10 minutes. Start the engine. Allow the engine to run at idle speed for 10 minutes
- Read out the diagnostic trouble codes in the vehicle via the DIAGNOSTICS tab.

Does the diagnostic trouble code (DTC) for faulty communication return?

- **YES**

  Refer to **INFORMATION**

- **NO**

  OKAY: Troubleshooting has been completed.

CHECKING SHORT-CIRCUITING TO GROUND/VOLTAGE IN CAN-NET

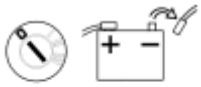

Fig. 185: Ignition Off And Disconnecting Battery Negative Lead
Courtesy of VOLVO CARS CORPORATION

- Ignition off.
- Disconnect the battery negative lead.
- Connect OBDII-Box **(951 3015)** to the diagnostics socket.

  For general information about CAN-troubleshooting, see: **GENERAL INFORMATION ABOUT FAULT-TRACING IN THE CAN NETWORK**

  Checking for a short-circuit to ground

  Measure resistance between the following connections on the OBDII-box/diagnostics socket.

  - #3 and #4 (ground). Measurement is shown in the illustration. The resistance should be above 1 kohms.

- #11 and #4 (ground). The resistance should be above 1 kohms.

If resistance is below 1 kohms this indicates short-circuiting between the CAN-line and ground.

Checking for a short-circuit to voltage

Measure resistance between the following connections on the OBDII-box/diagnostics socket.

- #3 and #16 (voltage). Measurement is shown in the illustration. The resistance should be above 1 kohms.
- #11 and #16 (voltage). The resistance should be above 1 kohms.

If resistance is below 1 kohms this indicates short-circuiting between the CAN-line and voltage cable.

Twist the cable harness and wiggle connectors where they can be accessed along the cable harness during every measurement, and note if the resistance changes to detect intermittent short-circuits or open circuit.

HINT: Part the CAN-net at suitable points to decide where a short-circuit may be found.

NOTE: After fault with control modules that interfere with communication, other control modules may remain in Limp-Home (that is, they work with reduced functionality) even when the ignition has been turned off and on a few times. For certain faults in the CAN-net where control modules have stopped communicating, it may help to disconnect/reconnect the battery to "restart" the control module/CAN-net.

Remedy as necessary.

Other information

- see **BATTERY, DISCONNECTING**
- see **CHECKING WIRING AND TERMINALS**

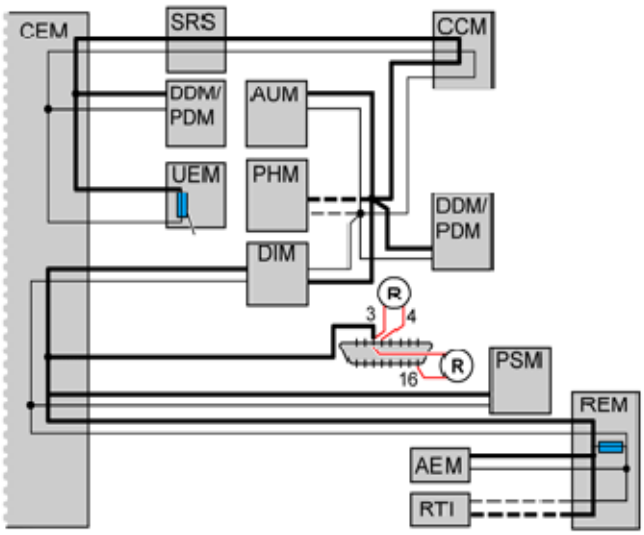

Fig. 186: Checking For Short-Circuiting To Ground/Voltage In CAN-net
Courtesy of VOLVO CARS CORPORATION

Was a fault detected?

- **YES**

  Refer to **VERIFICATION**

- **NO**

  Refer to **CHECKING THE AMOUNT OF TRAFFIC ON THE LS-CAN**

CHECKING VOLTAGE-DROP IN CABLE FOR CAN-H AND CAN-L, RESPECTIVELY

Fig. 187: Identifying Ignition On Position
Courtesy of VOLVO CARS CORPORATION

- Connect the battery.
- Ignition on.
- Connect OBDII-Box **(951 3015)** to the diagnostics socket.

  For general information about CAN-troubleshooting, see: **GENERAL INFORMATION ABOUT FAULT-TRACING IN THE CAN NETWORK**

  In principle, the voltage measured in each cable in the CAN-net shall be the same at each control module

in the network. This means that the voltage-drop in the cable for CAN-H and CAN-L, respectively, between the control modules should be very low. If there is a voltage-difference in the CAN-lines between the diagnostics socket/Central electronic module (CEM) and a control module due to, e. g., contact resistance in a connector or branching, communication may be lost/interfered with. Check if there is voltage-drop in the cable for CAN-H and CAN-L between the diagnostics socket/Central electronic module (CEM) and the control module where there is problem with communication.

Carry out the following:

Measure voltage between the following connections on the OBDII-box/diagnostics socket.

- #3 and corresponding connection on relevant control module for CAN-H. The voltage shall be lower than 50 mV.
- #11 and corresponding connection on relevant control module for CAN-L. The voltage shall be lower than 50 mV.

If voltage is too high, this indicates too high contact resistance in cable, connector, or branching. Check the circuit between the diagnostics socket and control module in question for contact resistance and oxidation.

NOTE: **After fault with control modules that interfere with communication, other control modules may remain in Limp-Home (that is, they work with reduced functionality) even when the ignition has been turned off and on a few times. For certain faults in the CAN-net where control modules have stopped communicating, it may help to disconnect/reconnect the battery to "restart" the control module/CAN-net.**

Remedy wiring as necessary.

Other information

- see **CHECKING WIRING AND TERMINALS**

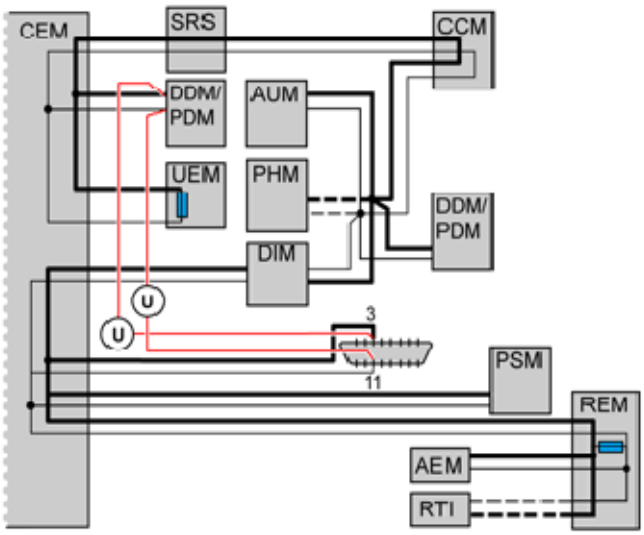

Fig. 188: Checking For Voltage-Drop In Cable For CAN-H And CAN-L
Courtesy of VOLVO CARS CORPORATION

- **Continue**

  Refer to **VERIFICATION**

INFORMATION

FAULT-TRACING INFORMATION

The fault should have been detected and remedied. As this is not the case fault-tracing has failed.

Exit fault-tracing for this diagnostic trouble code (DTC) or make another attempt.

RADIO CASSETTE PLAYER, REPLACING

- For -2004, see: **MEDIA, COMMUNICATION AND NAVIGATION - REMOVAL, REPLACEMENT & INSTALLATION** .
- For 2005-, see: **MEDIA, COMMUNICATION AND NAVIGATION - REMOVAL, REPLACEMENT & INSTALLATION** .

CEM-1A5A: COMMUNICATION WITH THE REAR ELECTRONIC MODULE (REM). SIGNAL MISSING (2005-2012)

DIAGNOSTIC TROUBLE CODE (DTC) INFORMATION CEM-1A5A

Condition

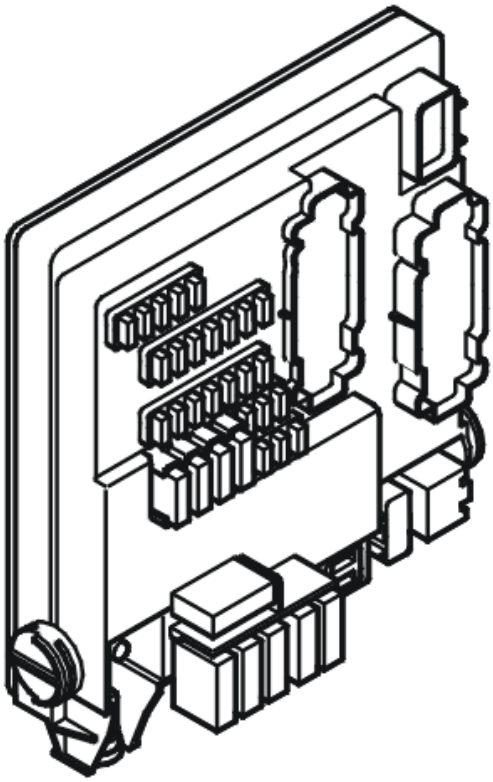

Fig. 189: Identifying Central Electronic Module (CEM)
Courtesy of VOLVO CARS CORPORATION

The diagnostic trouble code (DTC) is stored if the central electronic module (CEM) registers that communication with the rear electronic module (REM) is not operating.

The diagnostic trouble code (DTC) can be diagnosed when the ignition has been on for more than 10 seconds.

NOTE: **In the event of CEM-1A5X diagnostic trouble codes (DTCs), the central electronic module (CEM) must not be replaced as the diagnostic trouble code (DTC) indicates a communication fault in the controller area network (CAN).**

Substitute Value

- None.

Possible Source

- Damaged fuse F5 in the Rear electronic module (REM).
- No power supply to rear electronic module (REM)
- Open-circuit in the ground lead for the rear electronic module (REM)
- Contact resistance in the terminals

- Open-circuit in the wiring for the CAN low speed network to the rear electronic module (REM)
- The rear electronic module (REM) is not intended for this vehicle (for example a used control module with different software/hardware).

HINT: If several diagnostic trouble codes (DTCs) are stored in the central electronic module (CEM) for communication faults with other control modules in the low speed network, this indicates a common fault in the controller area network (CAN).

Fault symptom[s]

- The fuel gauge indicates zero even though there is fuel in the tank.
- Rear de-mist does not operate.
- Retractable headrest not operating.
- The central locking system does not function at all.
- No unlocking of the trunk lid.

SIGNAL MISSING

CHECKING THE POWER SUPPLY AND GROUND FOR THE REAR ELECTRONIC MODULE (REM)

Check that the fuse for the Rear electronic module (REM) is intact.

Check the power supply and ground for the rear electronic module (REM) as follows.

Other information:

- see **CHECKING THE SUPPLY VOLTAGE/GROUND TERMINAL**
- see **CHECKING WIRING AND TERMINALS**

Was a fault detected?

- **YES**

  Refer to **CHECKING THE FUNCTION OF THE REAR ELECTRONIC MODULE (REM)**

- **NO**

  Refer to **CHECKING COMMUNICATION WITH THE REAR ELECTRONIC MODULE (REM)**

CHECKING COMMUNICATION WITH THE REAR ELECTRONIC MODULE (REM)

HINT: The CAN communication with the control module is probably OK if the control module ID can be read off. The fault is probably intermittent and may therefore be difficult to locate.

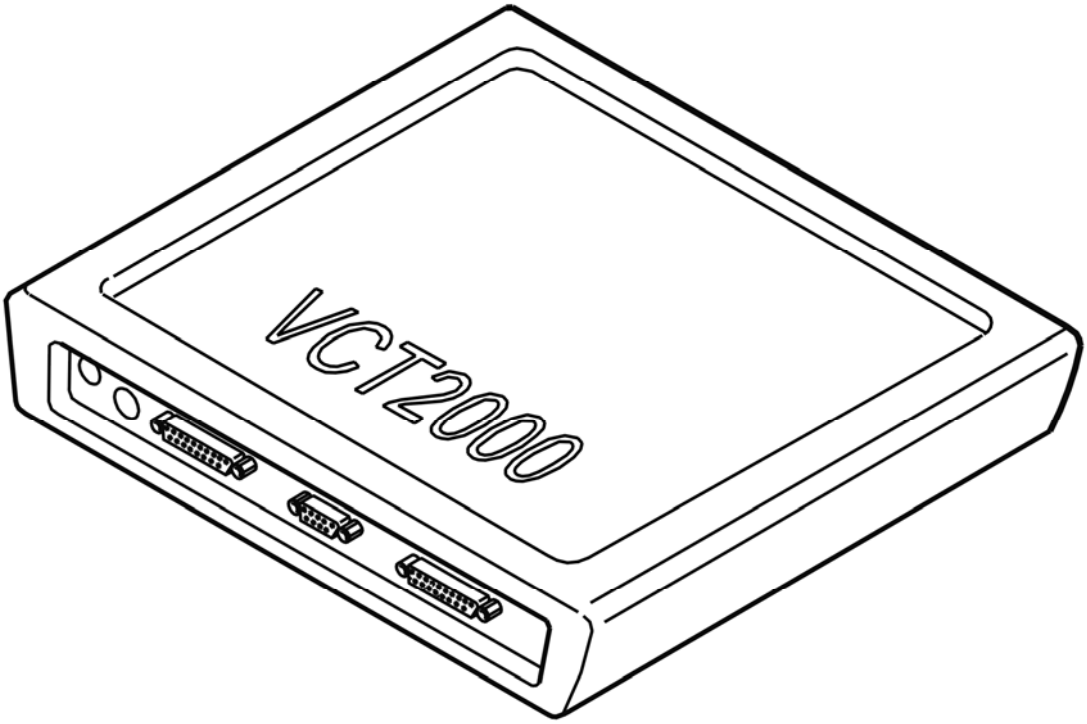

Fig. 190: Identifying VCT2000 Diagnostic Tool Symbol In VIDA
Courtesy of VOLVO CARS CORPORATION

- Try to communicate with the rear electronic module (REM) by reading off the control module ID
- Use the VCT2000 (or appropriate scan tool)
- **Continue**

  Refer to **SIGNAL MISSING**

CHECKING THE FUNCTION OF THE REAR ELECTRONIC MODULE (REM)

HINT: After carrying out the repair, check that the fault has been remedied.

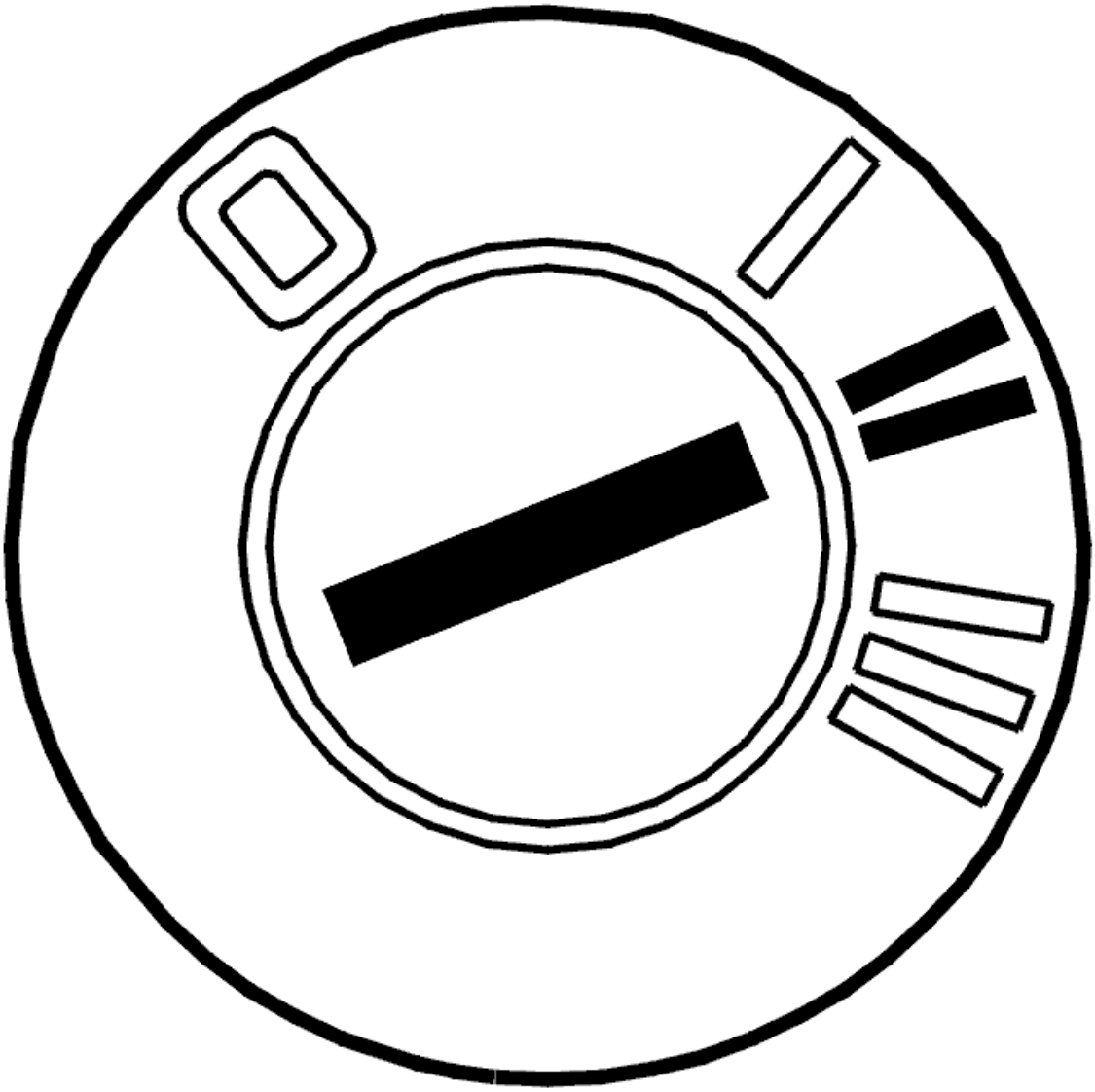

Fig. 191: Identifying Ignition ON
Courtesy of VOLVO CARS CORPORATION

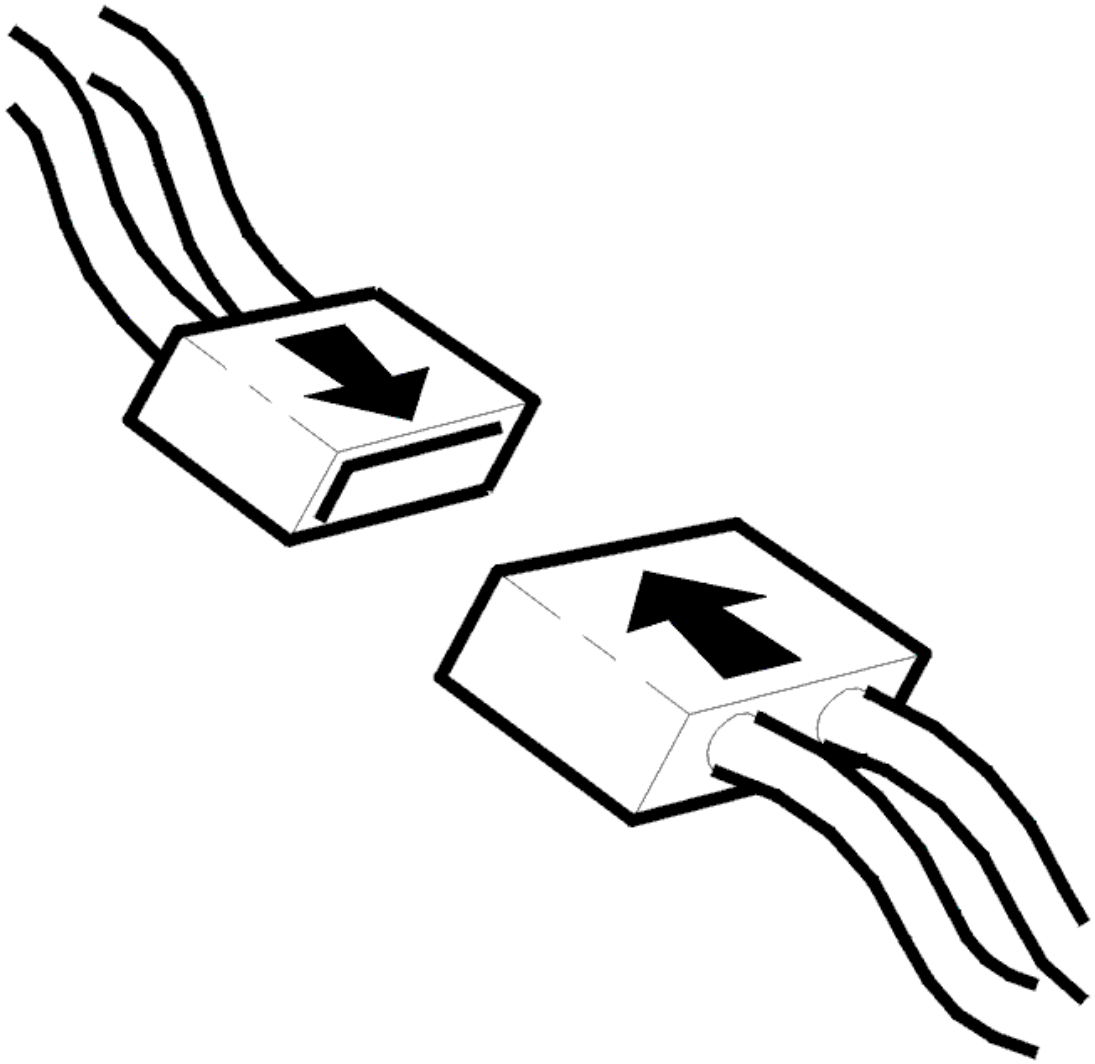

Fig. 192: Connecting Connector
Courtesy of VOLVO CARS CORPORATION

- Ignition off
- Reconnect the connectors. Reinstall the components
- Ignition on.

  Check the power supply and the ground for the rear electronic module (REM) by switching on the rear fog lamp using the button on the dashboard.

  If the central electronic module (CEM) is definitely powered, the power supply for the rear electronic module (REM) can also be checked by pressing the brake pedal. The stop lamp must then light.

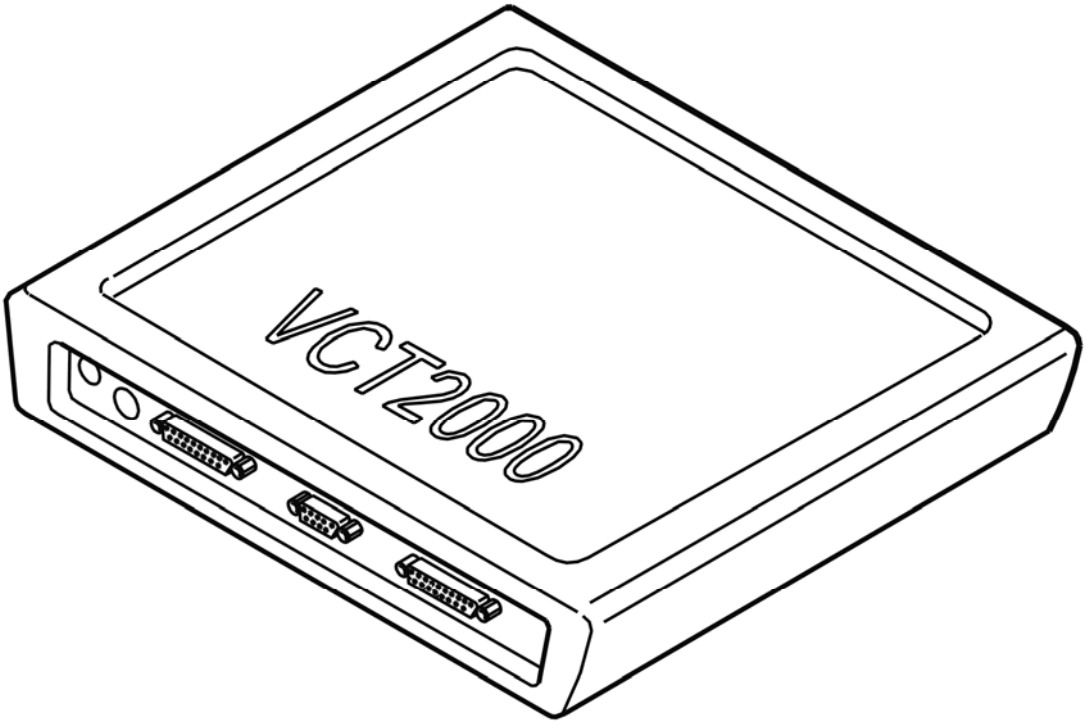

Fig. 193: Identifying VCT2000 Diagnostic Tool Symbol In VIDA
Courtesy of VOLVO CARS CORPORATION

- Try to communicate with the rear electronic module (REM) by reading off the control module ID
- Use the VCT2000 (or appropriate scan tool)

Can the control module ID be read out?

- **YES**

  OKAY: Troubleshooting has been completed.

- **NO**

  Refer to **INFORMATION**

SIGNAL MISSING

GENERAL INFORMATION

NOTE: Illustrations shown are only examples.

HINT: For general information about CAN-troubleshooting, see: GENERAL INFORMATION ABOUT

FAULT-TRACING IN THE CAN NETWORK

- **General about CAN-related diagnostic trouble codes:**

  CEM-DF01 - DF17 can only be stored in Central electronic module (CEM). These diagnostic trouble codes are stored when an electric fault is detected in CAN-lines. Start with these diagnostic trouble codes first.

  CEM-1AXX only stored in Central electronic module (CEM). One diagnostic trouble code for every control module on the CAN-net. These diagnostic trouble codes indicate that Central electronic module (CEM) does not receive any reply from other control modules.

  XXX-E000 (HS-CAN)/E001 (LS-CAN) can be stored in all CAN-connected control modules. These diagnostic trouble codes indicate that the control module has detected interference on the CAN-net.

  XXX-E003 can be stored in all CAN-connected control modules except in Central electronic module (CEM). The control modules on the CAN-net listen for a message (identity number) that is sent out at regular intervals from Central electronic module (CEM). This diagnostic trouble code indicates that the control module has not received any identity number, or that the expected number is not correct. Interference on the CAN-net can also store this diagnostic trouble code.

  NOTE: **In case of CAN-related faults, it is likely that a combination of above diagnostic trouble codes occur.**

  NOTE: **After fault with control modules that interfere with communication, other control modules may remain in Limp-Home (that is, they work with reduced functionality) even when the ignition has been turned off and on a few times. For certain faults in the CAN-net where control modules have stopped communicating, it may help to disconnect/reconnect the battery to "restart" the control module/CAN-net.**

  If diagnostic trouble codes (DTCs) for communication faults can be read off from a control module, the fault is probably intermittent.

  Intermittent fault in the voltage supply and ground to a control module on the CAN network results in the Central electronic module (CEM) storing a diagnostic trouble code (DTC) for an open-circuit in communication with the control module where the voltage supply does not work. There will probably not be a diagnostic trouble code (DTC) in the control module where the open-circuit in the voltage supply occurred as the control module cannot store a diagnostic trouble code (DTC) when it is not supplied with power.

  NOTE: **Central electronic module (CEM) should not be replaced in case of CAN-fault, unless troubleshooting reveals that Central electronic module (CEM) has an internal fault.**

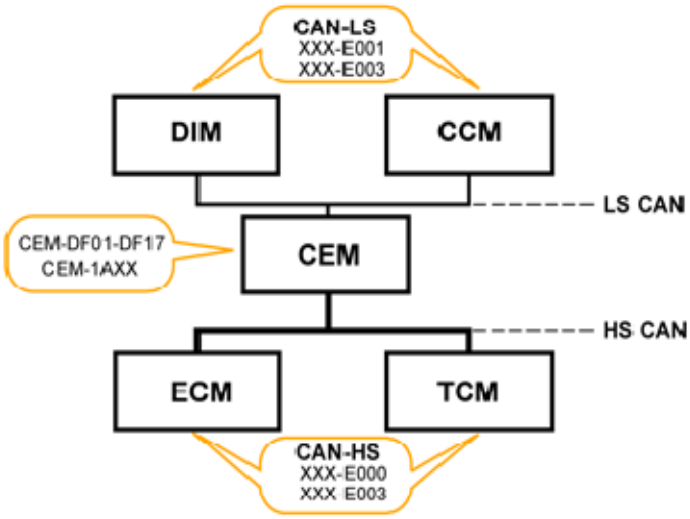

Fig. 194: High-Speed CAN And Low-Speed CAN Communication Diagram
Courtesy of VOLVO CARS CORPORATION

- **Continue**

  Refer to **CHECKING RESISTANCE IN CAN-NET**

CHECKING RESISTANCE IN CAN-NET

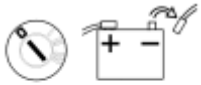

Fig. 195: Ignition Off And Disconnecting Battery Negative Lead
Courtesy of VOLVO CARS CORPORATION

- Ignition off
- Disconnect the battery negative lead
- Connect OBDII-Box **(951 3015)** to the diagnostics socket.

  For general information about CAN-troubleshooting, see: **GENERAL INFORMATION ABOUT FAULT-TRACING IN THE CAN NETWORK**

  Measure resistance between the following connections on the OBDII-box/diagnostics socket.

  - #3 and #11. The resistance should be approx. 55 - 65 ohms.
  - If resistance is approx. 120 ohms, this indicates open circuit in the circuit so that only one terminating resistor (120 ohms) has been measured.
  - If resistance is above 1 kohms this indicates open circuit/high contact resistance somewhere in the circuit.

- If resistance is below 55 ohms this indicates short-circuiting/contact resistance between the CAN-lines somewhere in the circuit.

HINT: For LS-CAN, terminating resistors are located in Upper electronic module (UEM) and Rear electronic module (REM).

Twist the cable harness and wiggle connectors where they can be accessed along the cable harness during every measurement, and note if the resistance changes to detect intermittent short-circuits or open circuit.

NOTE: **Resistance measurement measures only main lines in the CAN-net (in circuit where both terminating resistors are found), not branches to certain control modules. Open circuit on branching without a terminating resistor cannot be detected with this measurement. However, short-circuiting on a branch can be detected. To measure resistance in the CAN-net to control modules located in a branching of their own, the measurement shall be done against the CAN-net at that control module. The values shall be as above.**

NOTE: **After fault with control modules that interfere with communication, other control modules may remain in Limp-Home (that is, they work with reduced functionality) even when the ignition has been turned off and on a few times. For certain faults in the CAN-net where control modules have stopped communicating, it may help to disconnect/reconnect the battery to "restart" the control module/CAN-net.**

Remedy as necessary.

Other information

- see **BATTERY, DISCONNECTING**
- see **CHECKING WIRING AND TERMINALS**

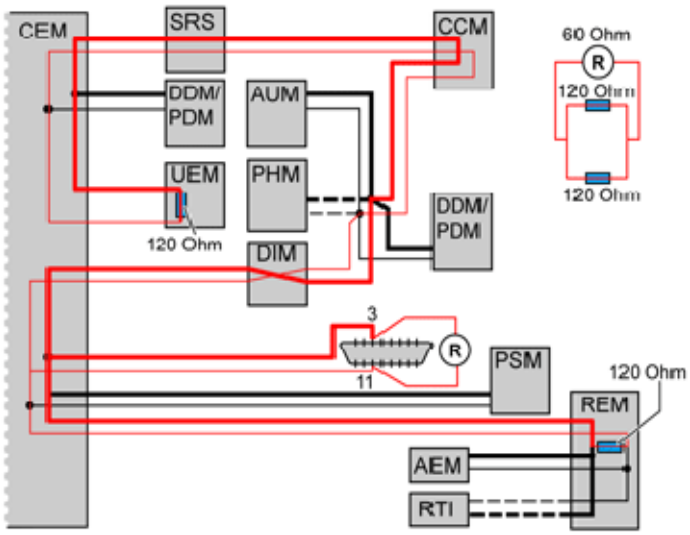

Fig. 196: Checking Resistance In CAN Lines
Courtesy of VOLVO CARS CORPORATION

Was a fault detected?

- **YES**

  Refer to **VERIFICATION**

- **NO**

  Refer to **CHECKING SHORT-CIRCUITING TO GROUND/VOLTAGE IN CAN-NET**

CHECKING THE AMOUNT OF TRAFFIC ON THE LS-CAN

Fig. 197: Identifying Ignition On Position
Courtesy of VOLVO CARS CORPORATION

- Connect the battery
- Ignition on.
- Connect OBDII-Box **(951 3015)** to the diagnostics socket.

  For general information about CAN-troubleshooting, see: **GENERAL INFORMATION ABOUT FAULT-TRACING IN THE CAN NETWORK**

  Faults in the CAN network may be due to a control module sending faulty messages that disrupt normal

communication. When messages are sent incorrectly, this results in a considerable increase in the amount of traffic on the CAN network. The load can be checked by reading the average value of the voltage on the CAN cables in relation to ground.

Measure voltage between the following connections on the OBDII-box/diagnostics socket.

- #3 and #4 (ground). The voltage should be approx:2, 8 - 3, 2 V.
- #11 and #4 (ground). The voltage should be approx:1, 8 - 2, 2 V.
- #3 and #11. The voltage shall be between approx. 0.55-1.4 V. The voltage shall normally be between 0.55 - 0.90 V. A higher voltage may indicate increased traffic on the CAN-net. In case of fault in communication/too high traffic on the CAN-net, the voltage is considerably higher than the above stated values.

NOTE: After fault with control modules that interfere with communication, other control modules may remain in Limp-Home even when the ignition has been turned off and on a few times. For certain faults in the CAN-net where control modules have stopped communicating, it may help to disconnect/reconnect the battery to "restart" the control module/CAN-net.

HINT: DiCE can be used as fault detection tool if fault is suspected on the CAN-net that cannot be detected with normal troubleshooting. Interference, intermittent faults, faulty messages on the CAN-net etc., are examples of such faults. The tool registers fault messages used on the CAN-net. Fault messages may be caused by short intermittent malfunctions on the CAN-net or by a control module sending fault messages. See tools:951 3010 as well as associated TJ 20402.

- Ignition on.
- Connect DiCE to the diagnostics socket.
- Note the blue LED-indicator. The indicator flashes to show detection of fault messages.

NOTE: Certain interference may occur without any real fault

Cable fault

- Shake the cables lightly and pull lightly on the connections during the check to locate any fault. Note the blue LED-indicator.

"Chatting" control modules

- "Chatting" control modules may be difficult to find and troubleshooting may take time. Let the vehicle stand with DiCE connected for an extended time period. Afterwards, activate functions to provoke a malfunction. It may take up to several hours before the fault messages are sent. When the indicator starts to flash, remove the fuse for one control module at a time until the indicator stops flashing. When the indicator stops flashing, restore the fuse for the relevant control module and check that the indicator starts to flash again. Then it is likely that the problem is identified.

Remedy wiring as necessary.

Other information

- see **BATTERY, DISCONNECTING**
- see **TROUBLESHOOTING USING DICE ERROR FRAME FINDER**
- see **CHECKING WIRING AND TERMINALS**

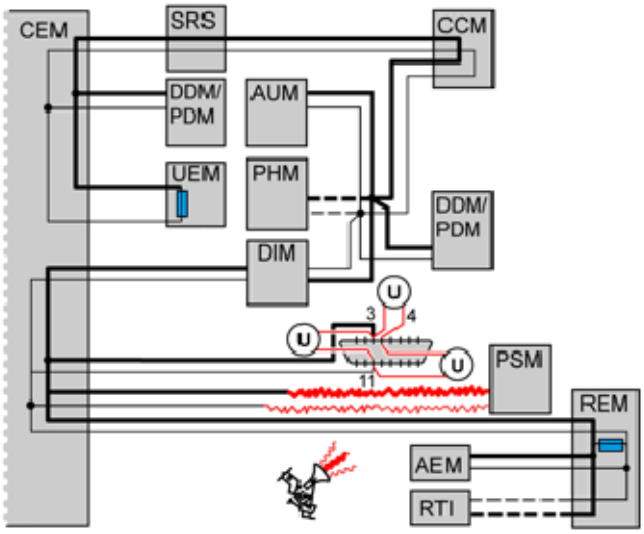

Fig. 198: Checking Amount Of Traffic On LS-CAN
Courtesy of VOLVO CARS CORPORATION

Was a fault detected?

- **YES**

  Refer to **IDENTIFYING A CONTROL MODULE IN THE CAN NETWORK**

- **NO**

  Refer to **CHECKING VOLTAGE-DROP IN CABLE FOR CAN-H AND CAN-L, RESPECTIVELY**

IDENTIFYING A CONTROL MODULE IN THE CAN NETWORK

Fig. 199: Identifying Ignition On Position
Courtesy of VOLVO CARS CORPORATION

For general information about CAN-troubleshooting, see: **GENERAL INFORMATION ABOUT FAULT-**

TRACING IN THE CAN NETWORK

HINT: DiCE can be used as fault detection tool if fault is suspected on the CAN-net that cannot be detected with normal troubleshooting. Interference, intermittent faults, faulty messages on the CAN-net (chattering control modules) etc., are examples of such faults. The tool registers fault messages used on the CAN-net. Fault messages may be caused by short intermittent malfunctions on the CAN-net or by a control module sending fault messages. See tools:951 3010 (memory card) as well as associated TJ 20402. If the load on the CAN network is too high, this may be due to a control module transmitting faulty messages on the CAN network. This is called a disruptive control module. The fault may also be due to an intermittent short-circuit to supply voltage or ground in one of the CAN cables. This results in the control modules on the CAN network starting to send faulty messages. The fault may occur without any of the control modules storing a diagnostic trouble code (DTC). The voltage can be measured between the CAN cables in order to check the load on the CAN network.

NOTE: **It is not necessarily the control module that has set the diagnostic trouble code that communicates incorrectly. Faulty messages can come from any control module in the same section of the CAN network. However, faulty communication in one network cannot affect the communication on the other network. In other words, faulty communication on the LS-CAN cannot disrupt communication on the HS-CAN and vice versa.**

- Ignition on.
- Connect OBDII-Box **(951 3015)** to the diagnostics socket.

Check communication/load on CAN-net by measuring voltage between CAN-L and CAN-H. Measure voltage between the following connections on the OBDII-box/diagnostics socket.

- #3 and #11. The average value of the voltage must be approximately 0.6-1.4 V. The voltage shall normally be between 0.55 - 0.90 V. A higher voltage may indicate increased traffic on the CAN-net. In case of fault in communication/too high traffic on the CAN-net, the voltage is considerably higher than the above stated values.

In order to identify which control module has faulty communication, cut the power supply to one control module at a time. Check the voltage in the CAN cables again. The easiest way to cut the power supply is to remove the fuse(s) for the relevant control module. Repeat until the voltage between the CAN wiring drops to the normal level.

NOTE: **When connecting and disconnecting certain control modules, diagnostic trouble codes (DTCs) may be stored in other control modules.**

HINT: When the suspected defective control module has been identified, connect and disconnect the supply voltage to the control module a number of times to verify that the malfunction appears and disappears. Switch off the ignition between each check.

NOTE: **Do not cut the power to the central electronic module (CEM) unless it is the last control module left to check.**

A control module that is communicating incorrectly must be replaced. See Repairing and installing/Removing, replacing and installing.

NOTE: **After fault with control modules that interfere with communication, other control modules may remain in Limp-Home (that is, they work with reduced functionality) even when the ignition has been turned off and on a few times. For certain faults in the CAN-net where control modules have stopped communicating, it may help to disconnect/reconnect the battery to "restart" the control module/CAN-net.**

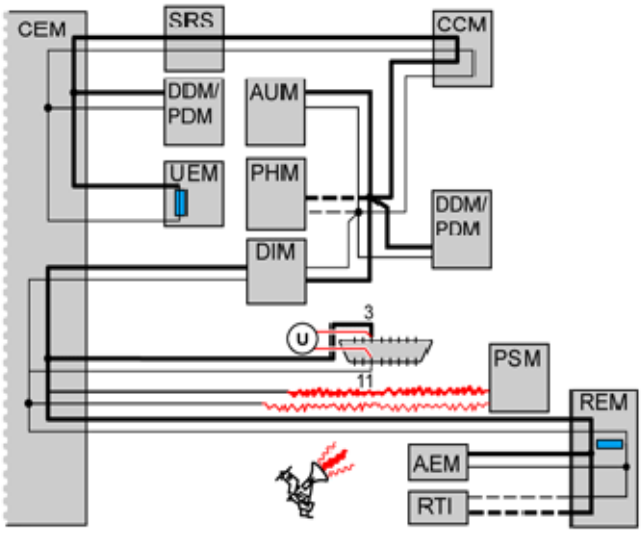

Fig. 200: Checking Communication/Load On CAN-net Between CAN-L And CAN-H
Courtesy of VOLVO CARS CORPORATION

- **Continue**

  Refer to **VERIFICATION**

VERIFICATION

HINT: After rectifying a fault, a verification should be carried out.

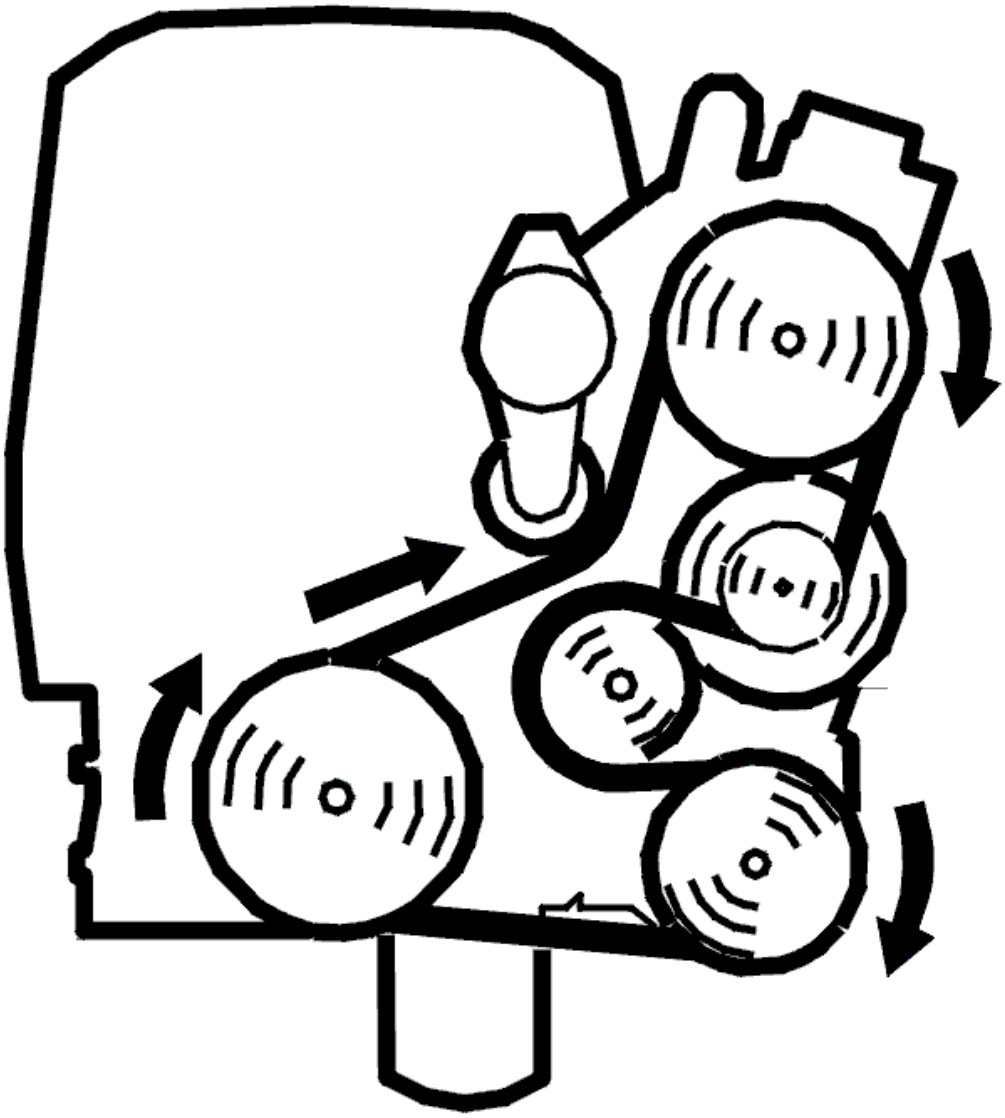

Fig. 201: Belt Routing / Engine Idling - Volvo
Courtesy of VOLVO CARS CORPORATION

Fig. 202: Identifying Ignition On Position
Courtesy of VOLVO CARS CORPORATION

- Reinstall the connectors, components etc.
- Ignition on.

NOTE: **For certain faults in the CAN-net where control modules have stopped communicating, it may help to disconnect/reconnect the battery to "restart" the control module/CAN-net.**

- Erase diagnostic trouble codes (DTCs) in all control modules.
- Ignition off.
- Ignition on.
- Start the vehicle. Allow the vehicle to run for 10 minutes. Start the engine. Allow the engine to run at idle speed for 10 minutes
- Read out the diagnostic trouble codes in the vehicle via the DIAGNOSTICS tab.

Does the diagnostic trouble code (DTC) for faulty communication return?

- **YES**

  Refer to **INFORMATION**

- **NO**

  OKAY: Troubleshooting has been completed.

CHECKING SHORT-CIRCUITING TO GROUND/VOLTAGE IN CAN-NET

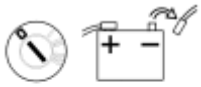

Fig. 203: Ignition Off And Disconnecting Battery Negative Lead
Courtesy of VOLVO CARS CORPORATION

- Ignition off.
- Disconnect the battery negative lead.
- Connect OBDII-Box **(951 3015)** to the diagnostics socket.

  For general information about CAN-troubleshooting, see: **GENERAL INFORMATION ABOUT FAULT-TRACING IN THE CAN NETWORK**

  Checking for a short-circuit to ground

  Measure resistance between the following connections on the OBDII-box/diagnostics socket.

  - #3 and #4 (ground). Measurement is shown in the illustration. The resistance should be above 1 kohms.

- #11 and #4 (ground). The resistance should be above 1 kohms.

If resistance is below 1 kohms this indicates short-circuiting between the CAN-line and ground.

Checking for a short-circuit to voltage

Measure resistance between the following connections on the OBDII-box/diagnostics socket.

- #3 and #16 (voltage). Measurement is shown in the illustration. The resistance should be above 1 kohms.
- #11 and #16 (voltage). The resistance should be above 1 kohms.

If resistance is below 1 kohms this indicates short-circuiting between the CAN-line and voltage cable.

Twist the cable harness and wiggle connectors where they can be accessed along the cable harness during every measurement, and note if the resistance changes to detect intermittent short-circuits or open circuit.

HINT: Part the CAN-net at suitable points to decide where a short-circuit may be found.

NOTE: After fault with control modules that interfere with communication, other control modules may remain in Limp-Home (that is, they work with reduced functionality) even when the ignition has been turned off and on a few times. For certain faults in the CAN-net where control modules have stopped communicating, it may help to disconnect/reconnect the battery to "restart" the control module/CAN-net.

Remedy as necessary.

Other information

- see **BATTERY, DISCONNECTING**
- see **CHECKING WIRING AND TERMINALS**

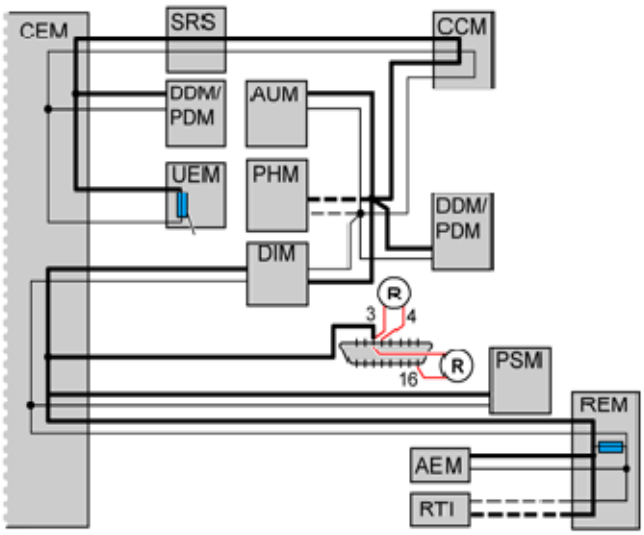

Fig. 204: Checking For Short-Circuiting To Ground/Voltage In CAN-net
Courtesy of VOLVO CARS CORPORATION

Was a fault detected?

- **YES**

  Refer to **VERIFICATION**

- **NO**

  Refer to **CHECKING THE AMOUNT OF TRAFFIC ON THE LS-CAN**

CHECKING VOLTAGE-DROP IN CABLE FOR CAN-H AND CAN-L, RESPECTIVELY

Fig. 205: Identifying Ignition On Position
Courtesy of VOLVO CARS CORPORATION

- Connect the battery.
- Ignition on.
- Connect OBDII-Box **(951 3015)** to the diagnostics socket.

  For general information about CAN-troubleshooting, see: **GENERAL INFORMATION ABOUT FAULT-TRACING IN THE CAN NETWORK**

  In principle, the voltage measured in each cable in the CAN-net shall be the same at each control module

in the network. This means that the voltage-drop in the cable for CAN-H and CAN-L, respectively, between the control modules should be very low. If there is a voltage-difference in the CAN-lines between the diagnostics socket/Central electronic module (CEM) and a control module due to, e. g., contact resistance in a connector or branching, communication may be lost/interfered with. Check if there is voltage-drop in the cable for CAN-H and CAN-L between the diagnostics socket/Central electronic module (CEM) and the control module where there is problem with communication.

Carry out the following:

Measure voltage between the following connections on the OBDII-box/diagnostics socket.

- #3 and corresponding connection on relevant control module for CAN-H. The voltage shall be lower than 50 mV.
- #11 and corresponding connection on relevant control module for CAN-L. The voltage shall be lower than 50 mV.

If voltage is too high, this indicates too high contact resistance in cable, connector, or branching. Check the circuit between the diagnostics socket and control module in question for contact resistance and oxidation.

NOTE: **After fault with control modules that interfere with communication, other control modules may remain in Limp-Home (that is, they work with reduced functionality) even when the ignition has been turned off and on a few times. For certain faults in the CAN-net where control modules have stopped communicating, it may help to disconnect/reconnect the battery to "restart" the control module/CAN-net.**

Remedy wiring as necessary.

Other information

- see **CHECKING WIRING AND TERMINALS**

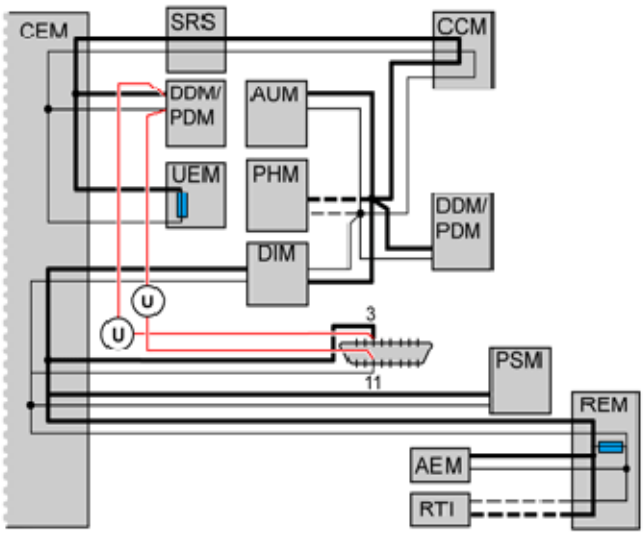

Fig. 206: Checking For Voltage-Drop In Cable For CAN-H And CAN-L
Courtesy of VOLVO CARS CORPORATION

- **Continue**

  Refer to **VERIFICATION**

INFORMATION

FAULT-TRACING INFORMATION

The fault should have been detected and remedied. As this is not the case fault-tracing has failed.

Exit fault-tracing for this diagnostic trouble code (DTC) or make another attempt.

CEM-1A5A: COMMUNICATION WITH THE REAR ELECTRONIC MODULE (REM). SIGNAL MISSING (2003-2004)

DIAGNOSTIC TROUBLE CODE (DTC) INFORMATION CEM-1A5A

Condition

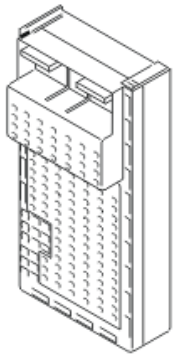

Fig. 207: Central Electronic Module Control module
Courtesy of VOLVO CARS CORPORATION

Diagnostic trouble codes (DTCs) are stored if the central electronic module (CEM) registers that communication with the rear electronic module (REM) is not operating.

NOTE: In the event of CEM-1A5X diagnostic trouble codes (DTCs), the central electronic module (CEM) must not be replaced as the diagnostic trouble code (DTC) indicates a communication fault in the Control area network

Substitute Value

None.

Possible Source

- No power supply to rear electronic module (REM)
- Open-circuit in the ground lead to the rear electronic module (REM)
- Contact resistance in the terminals
- Open-circuit in the wiring for the CAN low speed network to the rear electronic module (REM)
- The rear electronic module (REM) is not intended for this car for example a used control module with different software/hardware).

HINT: If several diagnostic trouble codes (DTCs) are stored in the central electronic module (CEM) for communication faults with other control modules in the low speed network, this indicates a common fault in the Control area network.

Fault symptom[s]

- The fuel indicator indicates the minimum value even though there is fuel in the tank
- Rear de-mist does not operate
- Retractable headrest not operating
- No locking/unlocking of rear doors

- No unlocking of trunk lid
- The power window mechanism in the rear door does not operate.

SIGNAL MISSING

CHECKING THE FUNCTION OF THE REAR ELECTRONIC MODULE (REM)

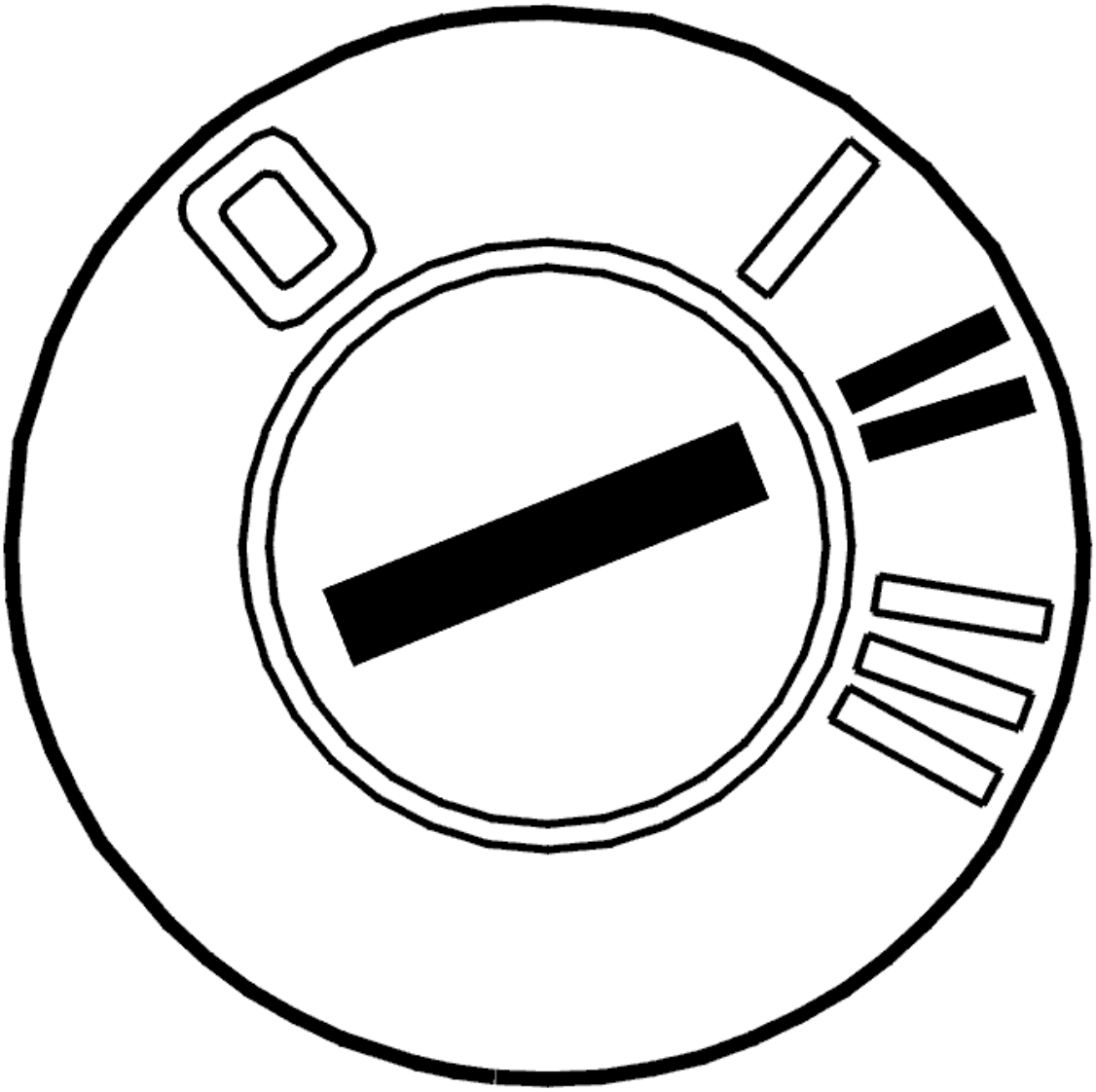

Fig. 208: Identifying Ignition ON
Courtesy of VOLVO CARS CORPORATION

- Ignition on.

  Check the power supply and the ground for the rear electronic module (REM) by switching on the rear fog lamp using the button on the dashboard.

Check that the central electronic module (CEM) is powered by activating the hazard warning signal flasher switch. If this is the case, the power supply for the rear electronic module (REM) can also be checked by pressing the brake pedal. The stop lamp must then light.

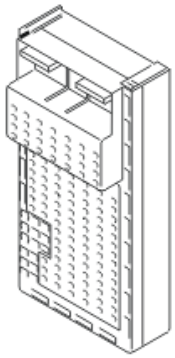

Fig. 209: Central Electronic Module Control module
Courtesy of VOLVO CARS CORPORATION

Is there power and ground for the rear electronic module (REM)?

- **YES**

  Refer to **CHECKING COMMUNICATION WITH THE REAR ELECTRONIC MODULE (REM)**

- **NO**

  Refer to **CHECKING THE POWER SUPPLY AND GROUND FOR THE REAR ELECTRONIC MODULE (REM)**

CHECKING THE POWER SUPPLY AND GROUND FOR THE REAR ELECTRONIC MODULE (REM)

Check the fuse in the cargo compartment fusebox for the rear electronic module (REM).

NOTE: If the fuse has blown, check the circuit after the fuse before replacing the fuse. Check for a short-circuit to ground. Then replace the fuse.

Check the connector for the rear electronic module (REM). Check for contact resistance and oxidation.

Check the ground lead between the control module and the ground terminal. Check for an open-circuit. Also check the ground terminal. Check for contact resistance and oxidation.

Remedy as necessary.

Other information:

- To access the connector for the rear electronic module (REM) and the rear fuses, see **RELAY/FUSE**

BOX CARGO COMPARTMENT/REAR ELECTRONIC MODULE (REM), REPLACING

- To connect the breakout box, see **CONNECTING THE BREAKOUT BOX**
- For information about signals and connectors, see **SIGNAL SPECIFICATION**
- For information about checking wiring and terminals, see **CHECKING WIRING AND TERMINALS** .

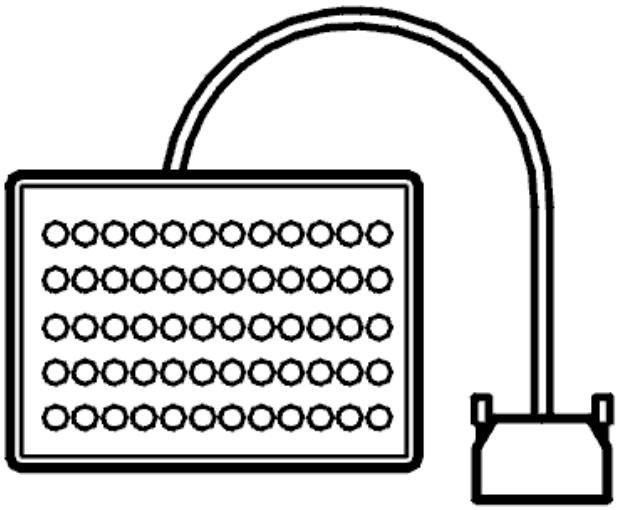

Fig. 210: Breakout Box
Courtesy of VOLVO CARS CORPORATION

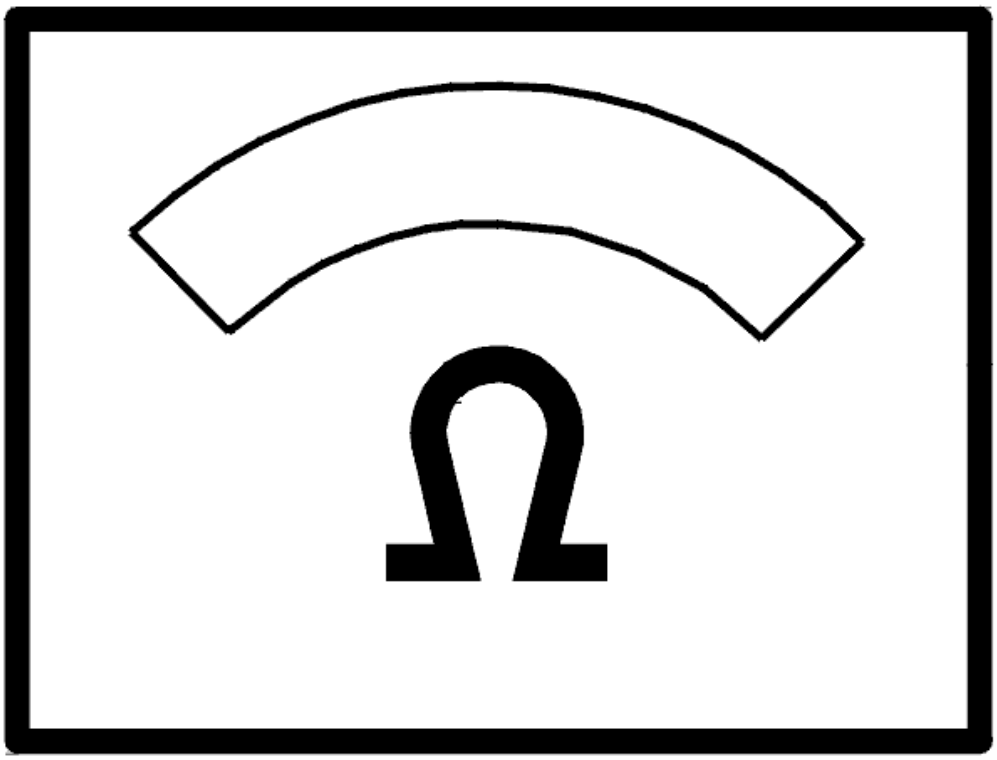

Fig. 211: Identifying Ohm Meter
Courtesy of VOLVO CARS CORPORATION

Was a fault detected?

- **YES**

  Refer to **CHECKING THE FUNCTION OF THE REAR ELECTRONIC MODULE (REM)**

- **NO**

  Refer to **SIGNAL MISSING**

CHECKING COMMUNICATION WITH THE REAR ELECTRONIC MODULE (REM)

HINT: The CAN communication with the control module is probably OK if the control module ID can be

read off. In that case the fault is probably intermittent and will then be more difficult to trace.

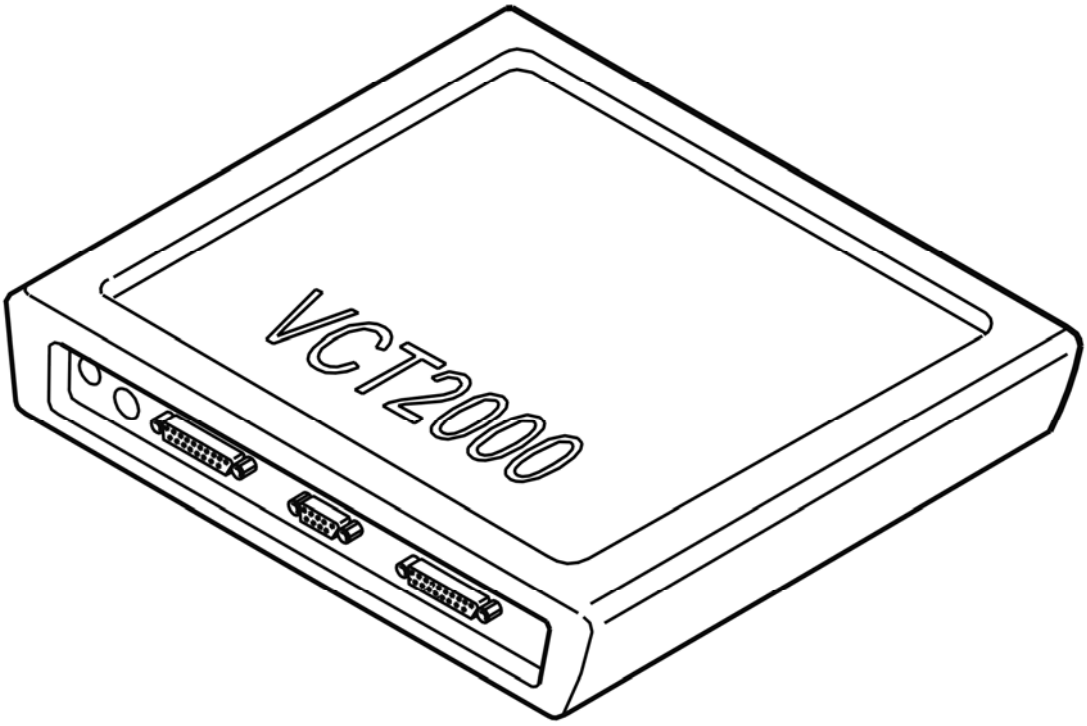

Fig. 212: Identifying VCT2000 Diagnostic Tool Symbol In VIDA
Courtesy of VOLVO CARS CORPORATION

- Try to communicate with the rear electronic module (REM) by reading off the control module ID
- Use the VCT2000 (or appropriate scan tool)
- **Continue**

  Refer to **SIGNAL MISSING**

CHECKING THE FUNCTION OF THE REAR ELECTRONIC MODULE (REM)

HINT: After carrying out the repair, check that the fault has been remedied.

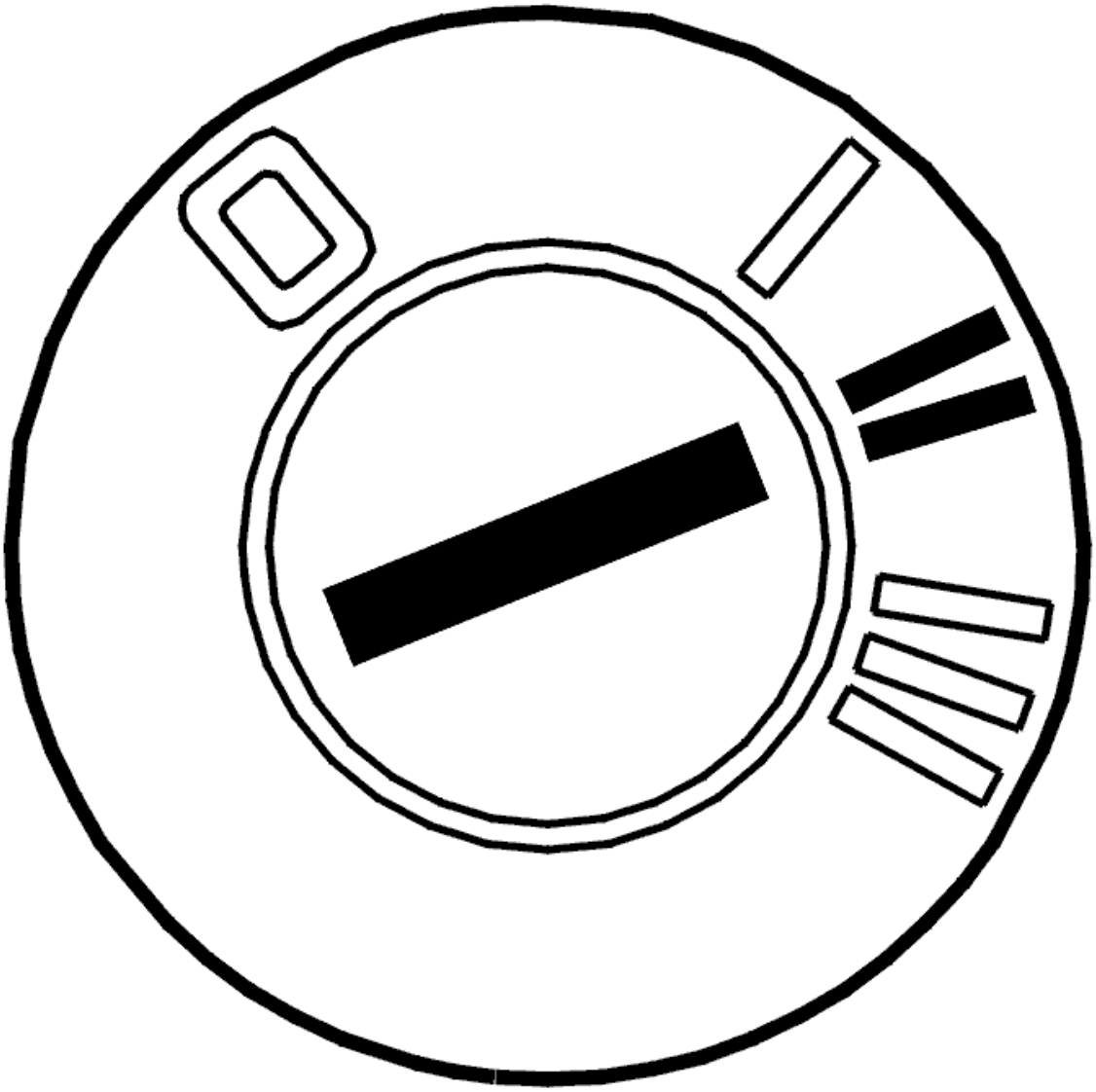

Fig. 213: Identifying Ignition ON
Courtesy of VOLVO CARS CORPORATION

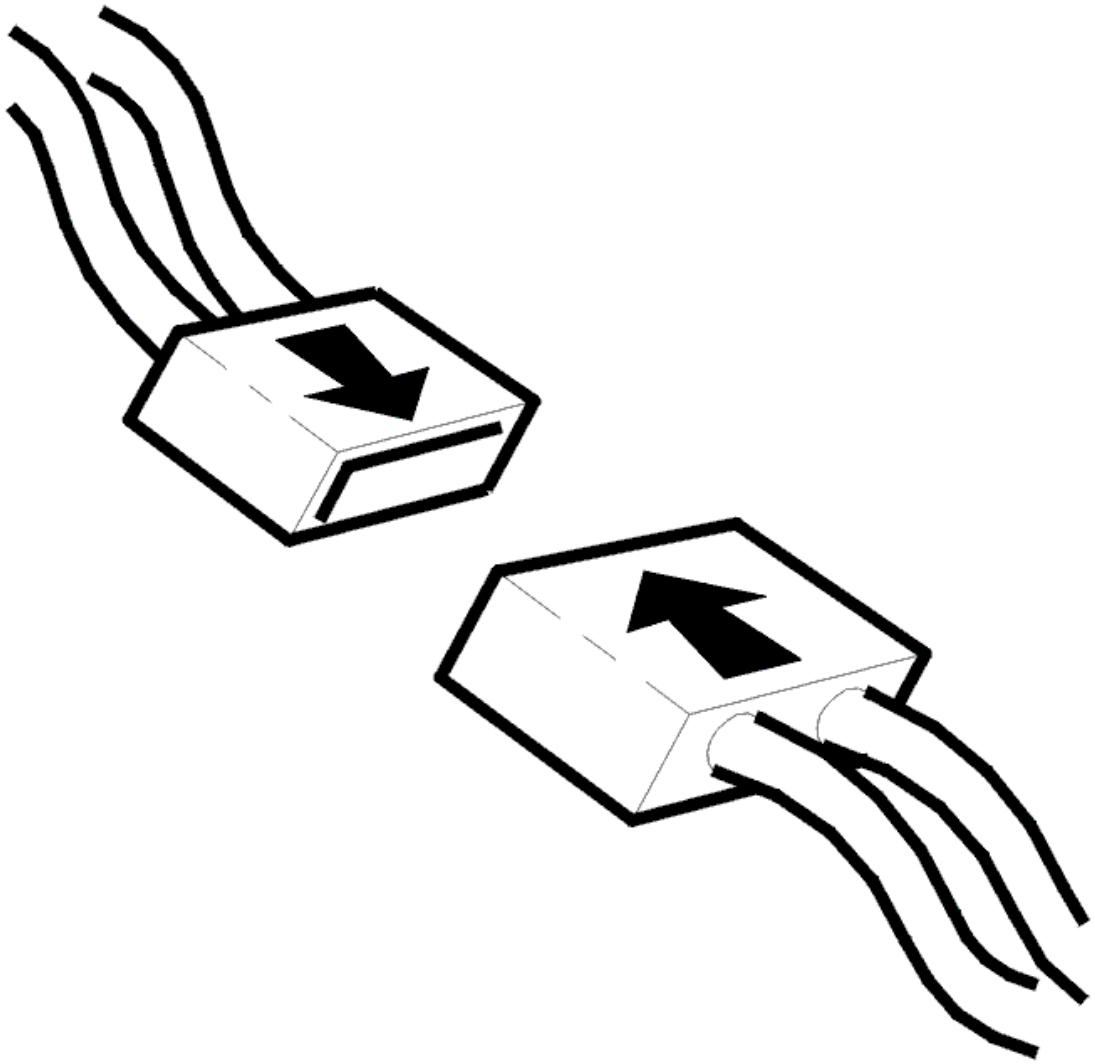

Fig. 214: Connecting Connector
Courtesy of VOLVO CARS CORPORATION

- Ignition off
- Reconnect the connectors. Reinstall the components
- Ignition on.

  Check the power supply and the ground for the rear electronic module (REM) by switching on the rear fog lamp using the button on the dashboard.

  If the central electronic module (CEM) is definitely powered, the power supply for the rear electronic module (REM) can also be checked by pressing the brake pedal. The stop lamp must then light.

Is there power and ground for the rear electronic module (REM)?

- **YES**

  OKAY: Troubleshooting has been completed.

- **NO**

  Refer to **INFORMATION**

SIGNAL MISSING

GENERAL INFORMATION

HINT: For general information about fault-tracing the control area network (CAN), see the linked document below. See GENERAL INFORMATION ABOUT FAULT-TRACING IN THE CAN NETWORK (2005-2012)

In order to check the control area network (CAN) cables, the resistance in the network must be measured. The resistance between the two CAN cables, with the network connected, must be 60ohms in both the high speed network and the low speed network.

NOTE: **Resistance will only be 60 ohms if the main artery of the CAN network is whole and the network is connected. If the main artery of the CAN network is split somewhere and a reading is taken between the CAN cables, resistance will be 120 ohms.**

If diagnostic trouble codes (DTCs) can be read off from the relevant control module, the fault is probably intermittent. The locations that must be checked in the event of a fault in the low speed network are the junctions behind the central electronic module (CEM) and the audio module (AUM) as well as the cable harness behind the Audio module (AUM).

Intermittent fault in the current supply to the actual control module is indicated by the DTC in the Central electronic module (CEM) (CEM-1A5X or CEM-1A6X). There is probably no diagnostic trouble code (DTC) in the relevant control module as the control module cannot store a diagnostic trouble code (DTC) when it is without power.

- **Continue**

  Refer to **CHECKING THE RESISTANCE OF THE CONTROL AREA NETWORK (CAN) CABLES**

CHECKING THE RESISTANCE OF THE CONTROL AREA NETWORK (CAN) CABLES

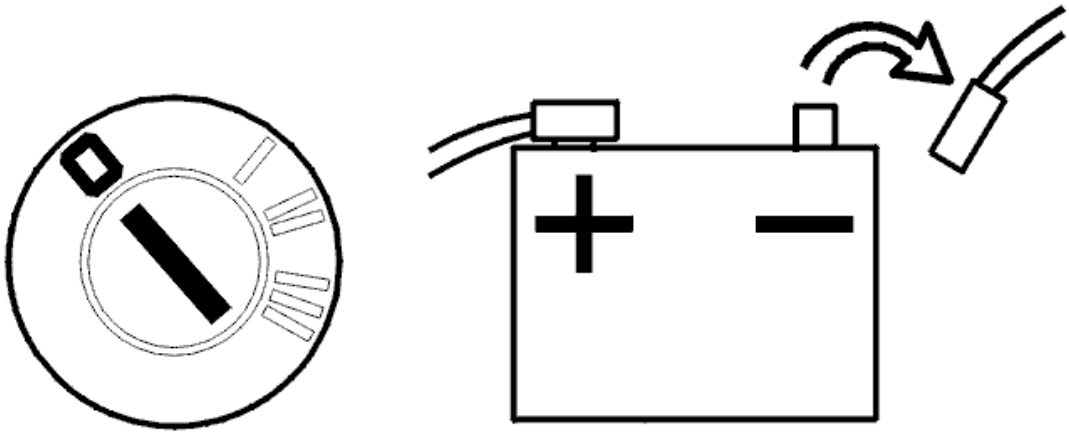

Fig. 215: Identifying Ignition In Off Position And Disconnecting Negative Cable From Battery
Courtesy of VOLVO CARS CORPORATION

- Disconnect the battery negative lead. The network must not be powered when taking resistance readings. Otherwise an incorrect value may be obtained.
- Connect the adapter wiring to the central electronic module (CEM).

  HINT: Where a breakout box cannot be used, take readings from the rear of the affected connectors if possible. This prevents terminal pins and socket housings being damaged.

  When taking readings on the low speed network

  - When taking readings on the low speed network the adapter wiring should be connected to the Central electronic module (CEM) and readings taken from there. Readings can even be taken in the connector for the Power seat module (PSM). The advantage of the adapter wiring to the Central electronic module (CEM) is that all control module can be connected in the network when taking readings and access can be gained to both the high speed and low speed networks.

    The resistance reading only measures the main arteries in the low speed network, not the junctions that exist for different control modules.

  When taking readings on the high speed network

  - When taking readings on the high speed network the adapter wiring should be connected to the Engine control module (ECM) and readings taken from there. The Engine control module (ECM) must be connected. This resistance reading only measures the main arteries in the high speed network.

  Connect an ohmmeter to the terminals for CAN-L and CAN-H on the relevant network. Turn the contacts and turn the cable harness. Resistance must be approximately 60 ohms.

NOTE: **Resistance will only be 60 ohms if the main artery of the CAN network is whole and the network is connected. If the main artery of the CAN network is split somewhere and a reading is taken between the CAN cables, resistance will be 120 ohms.**

Other information

- see **BATTERY, DISCONNECTING**
- see **CONNECTING THE BREAKOUT BOX**
- see **CHECKING WIRING AND TERMINALS**

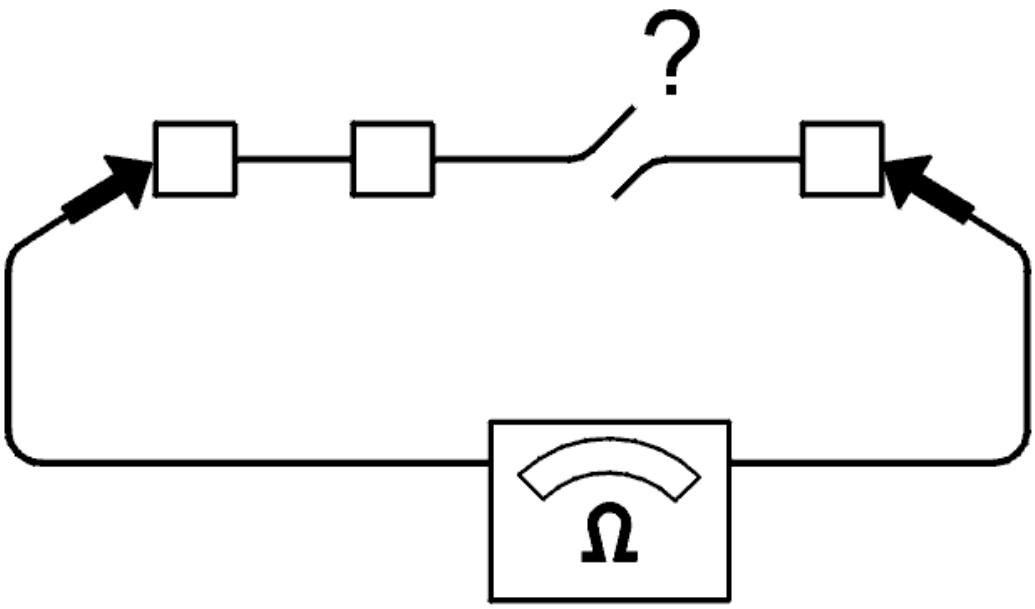

Fig. 216: Checking For Open Circuit
Courtesy of VOLVO CARS CORPORATION

Is the value OK?

- **YES**

  Refer to **CHECKING A SHORT-CIRCUIT IN CAN CABLES**

- **NO**

  Refer to **IDENTIFYING FAULT CAUSES IN THE CAN NETWORK**

CHECKING A SHORT-CIRCUIT IN CAN CABLES

Connect an ohmmeter between respective CAN cable and voltage supply and between the CAN cables and ground. Turn the contacts and turn the cable harness. The resistance must be infinite or very high.

HINT: Readings can be taken from one and the same connector if the CAN wiring, voltage supply and ground is pre-routed. If possible, measure from the rear of the affected connectors in order to minimize any damage and future loose connections. If this is not possible, use the adapter wiring or loose terminal pin for good contact.

Was a fault detected?

- **YES**

  Refer to **IDENTIFYING FAULT CAUSES IN THE CAN NETWORK**

- **NO**

  Refer to **CHECKING THE TRAFFIC LOAD ON THE CAN CABLES**

CHECKING THE TRAFFIC LOAD ON THE CAN CABLES

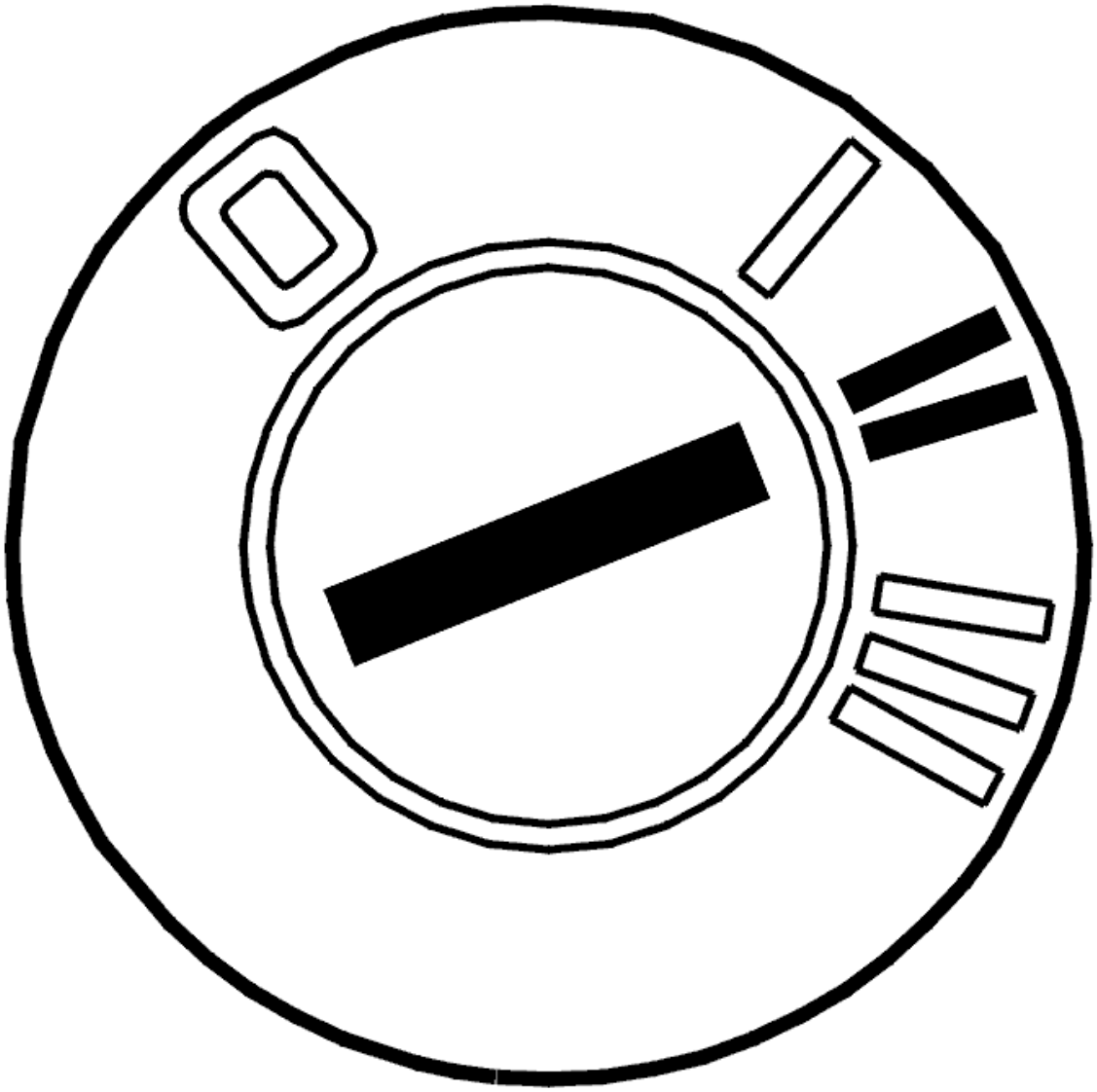

Fig. 217: Identifying Ignition ON
Courtesy of VOLVO CARS CORPORATION

- Connect the battery.
- Ignition on.

Faults in the CAN network may be due to a control module sending faulty messages that disrupt normal communication. When messages are sent incorrectly, this results in a considerable increase in the amount of traffic on the CAN network. The load can be checked by reading the average value of the voltage on the CAN cables in relation to ground.

The following applies for model year -2004:

Connect a voltmeter between CAN-L and ground. The voltage shall be approx. 2.3 V.

Then connect a voltmeter between CAN-H and ground. The voltage shall be approx. 2.8 V.

The following applies for model year 2004-:

Connect a voltmeter between CAN-L and ground. The voltage should be approx: V

Connect a voltmeter between CAN-H and ground. The voltage should be approx: V

NOTE: **For vehicles of later model years, normal voltage values lie within a specific interval due to increased traffic between the control modules on the CAN network upon update of the electrical system.**

HINT: If possible, measure from the rear of the affected connectors so that they are not damaged.

Other information

- see **BATTERY, DISCONNECTING**

Is the value OK?

- **YES**

  Refer to **INFORMATION**

- **NO**

  Refer to **IDENTIFYING A CONTROL MODULE IN THE CAN NETWORK**

IDENTIFYING FAULT CAUSES IN THE CAN NETWORK

- Disconnect a control module that disconnects the CAN network (a control module that has four terminals to the CAN network).

  HINT: For the low speed network, suitable places for disconnecting the network are at the steering wheel module (SWM), the driver information module (DIM) or the climate control module (CCM).

  In the event of an short-circuit between on of the CAN cables and voltage or ground, the fault can be localized disconnecting a control module that splits the CAN network. Readings can then be taken to determine on which side the fault is on the disconnected control module.

  Connect an ohmmeter between the CAN cable and voltage supply respectively ground. Take readings from both ends of the CAN networks at the network junction. Twist and bend the cable harness to find any intermittent short-circuits. The resistance must be infinite or very high (more than 1 Mohms).

  If a fault can be localized in one direction, split the network at a point further on in the CAN network in the direction that the fault was discovered and take a new reading. Try to locate the fault in this way.

  HINT: A short-circuit between the CAN cables and supply voltage or ground may be in either the wiring or in a control module.

Remedy the cables as necessary. If a fault is found on one control module, replace the control module.

- **Continue**

  Refer to **VERIFICATION**

IDENTIFYING A CONTROL MODULE IN THE CAN NETWORK

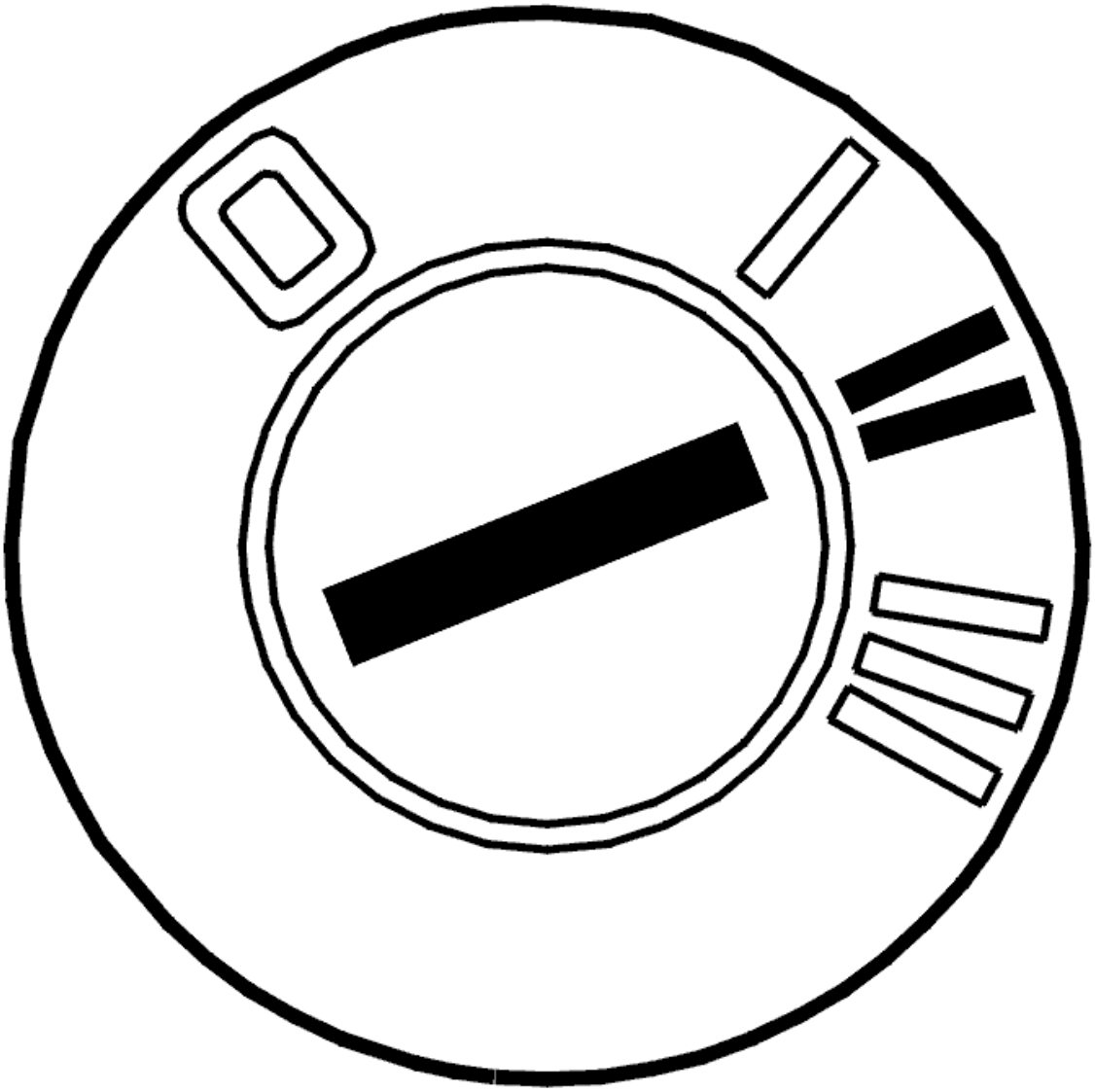

Fig. 218: Identifying Ignition ON
Courtesy of VOLVO CARS CORPORATION

- Connect the battery.
- Ignition on.

  If the load on the CAN network is too high, this may be due to a control module transmitting faulty messages on the CAN network. This is called a disruptive control module. The fault may also be due to

an intermittent short-circuit to supply voltage or ground in one of the CAN cables. This results in the control modules on the CAN network starting to send faulty messages. The fault may occur without any of the control modules storing a diagnostic trouble code (DTC). The voltage can be measured between the CAN cables in order to check the load on the CAN network.

The following applies for model year -2004:

Connect a voltmeter between the CAN cables. In the event of correct communication on the network, the average value of the voltage must be approximately 0.5 V (0.4 V to 0.6 V).

The following applies for model year 2004-:The following applies for model year 2004-:

Connect a voltmeter between the CAN cables. During correct CAN network communication, voltage should be about 0.6-1.4 V.

NOTE: For vehicles of later model years, the normal voltage value is slightly higher due to increased traffic between the control modules on the CAN network upon update of the electrical system.

In the event of a communication fault the voltage is significantly higher than the above specified values. In order to identify which control module has faulty communication, cut the power supply to one control module at a time. Check the voltage in the CAN cables again. The easiest way to cut the power supply is to remove the fuse(s) for the relevant control module. Repeat until the voltage between the CAN wiring drops to the normal level.

HINT: When the probable faulty control module has been identified, connect and disconnect the supply voltage to the control module a number of times to verify that the fault appears and disappears.

NOTE: Do not cut the power to the central electronic module (CEM) unless it is the last control module left to check.

The control module that is communicating incorrectly must be replaced. Remedy as necessary.

NOTE: After a fault with "interfering" control modules, other control modules may remain in "Limp-Home mode" even when the ignition has been switched off and on several times. To remedy this, disconnect and reconnect the battery negative terminal to restore the control modules to normal function.

Other information

- see **BATTERY, DISCONNECTING**

- **Continue**

Refer to **VERIFICATION**

IDENTIFYING FAULT CAUSES IN THE CAN NETWORK

- Disconnect a control module that disconnects the CAN network (a control module that has four terminals to the CAN network).

  HINT: For the low speed network, suitable places for disconnecting the network are at the steering wheel module (SWM), the driver information module (DIM) or the climate control module (CCM).

  In the event of an open-circuit on, or short-circuit between the CAN cables, the fault can be localized by disconnecting a control module that splits the CAN network. Readings can then be taken to determine on which side the fault is on the disconnected control module.

  Connect an ohmmeter between the CAN cables. Take readings from both ends of the CAN networks at the network junction. Twist and bend the cable harness to find any intermittent short-circuits. Resistance should be 120 ohms.

  If a fault can be localized in one direction, split the network at a point further on in the CAN network in the direction that the fault was discovered and take a new reading. Try to locate the fault in this way.

  Remedy the cables as necessary.

- **Continue**

  Refer to **VERIFICATION**

VERIFICATION

HINT: After rectifying a fault, a verification should be carried out.

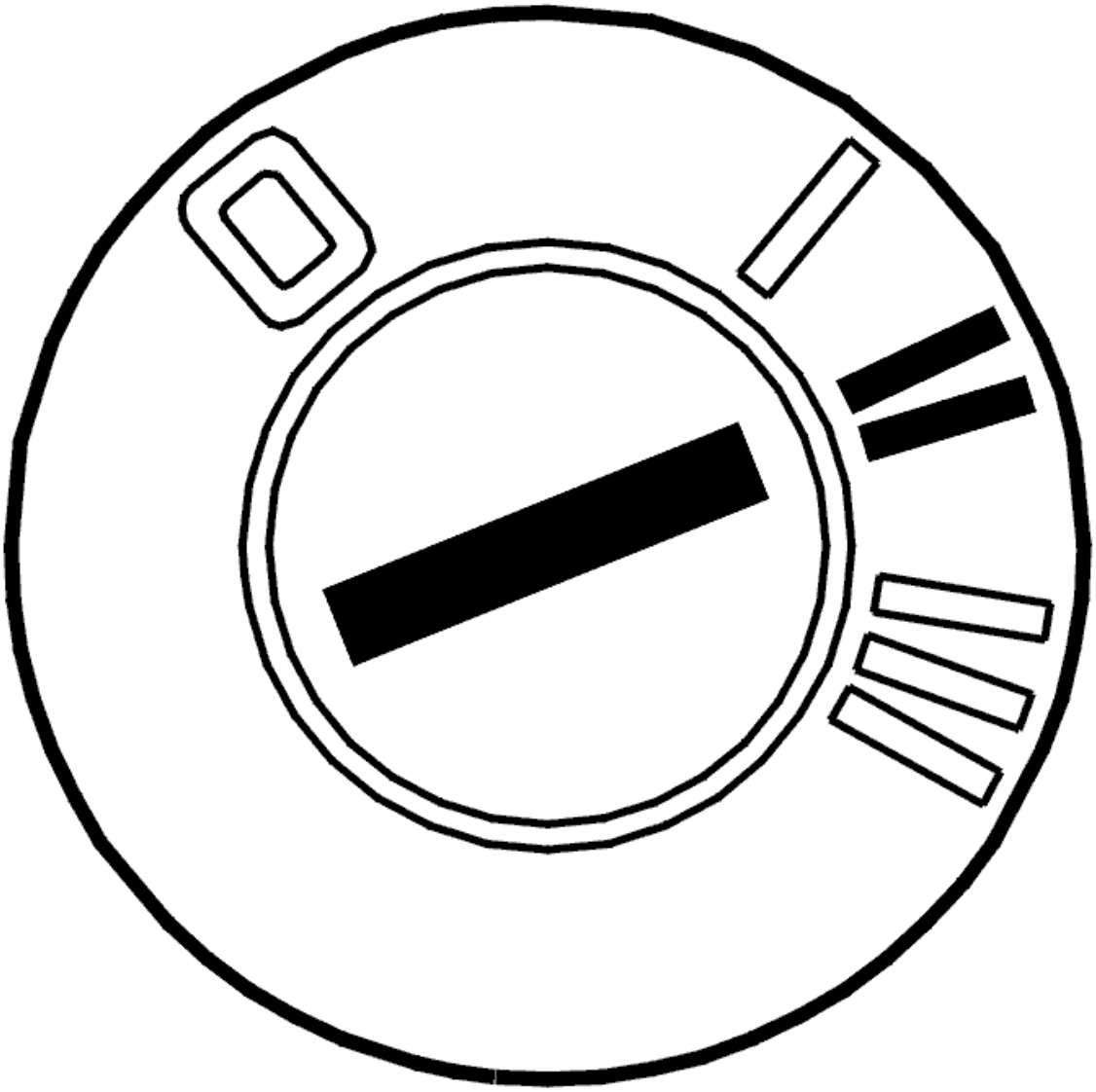

Fig. 219: Identifying Ignition ON
Courtesy of VOLVO CARS CORPORATION

- Reinstall the connectors, components etc.
- Ignition on.
- Erase diagnostic trouble codes using the VCT2000 (or appropriate scan tool).
- Start the car. Allow the vehicle to run for 10 minutes.
- Read off diagnostic trouble codes (DTCs).

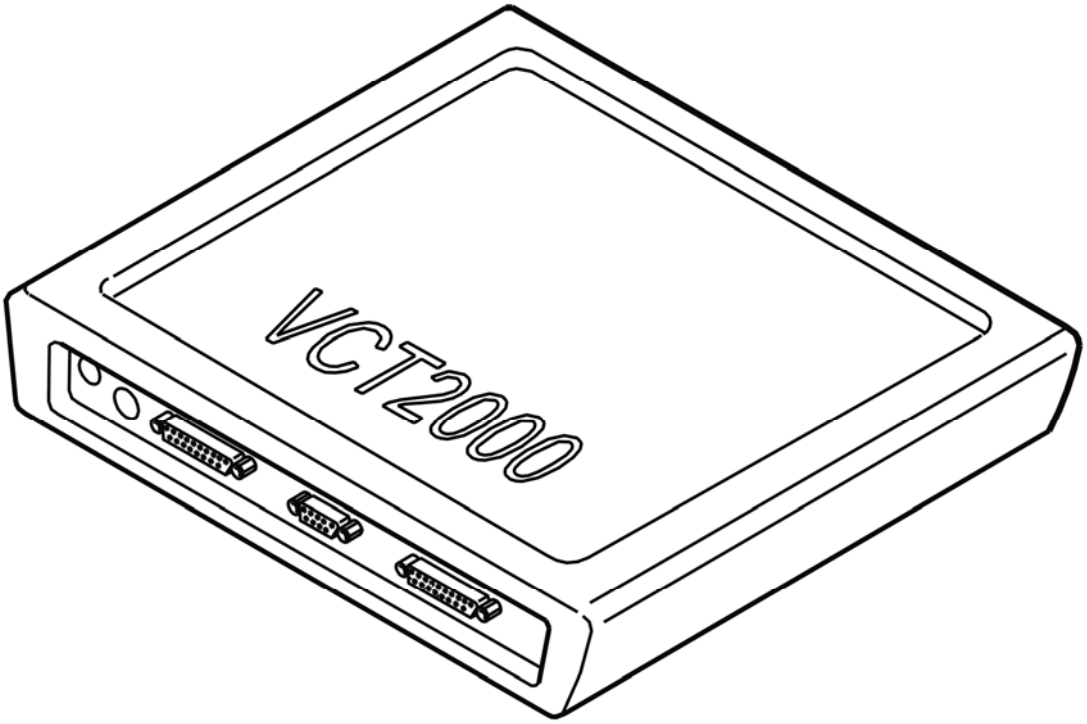

Fig. 220: Identifying VCT2000 Diagnostic Tool Symbol In VIDA
Courtesy of VOLVO CARS CORPORATION

Does the diagnostic trouble code (DTC) for a communication fault recur (CEM-1A5X or CEM-1A6X)?

- **YES**

  Refer to **INFORMATION**

- **NO**

  OKAY: Troubleshooting has been completed.

INFORMATION

FAULT-TRACING INFORMATION

Verification shows that the fault is no longer present. The diagnostic trouble code (DTC) was probably caused by an intermittent fault.

Fault-tracing for this diagnostic trouble code (DTC) is not followed by a verification.

You can view the information again or exit fault-tracing for this diagnostic trouble code (DTC).

INFORMATION

FAULT-TRACING INFORMATION

The fault should have been detected and remedied. As this is not the case fault-tracing has failed.

Exit fault-tracing for this diagnostic trouble code (DTC) or make another attempt.

SIGNAL SPECIFICATION

REAR ELECTRONIC MODULE (REM) CONNECTORS A-E

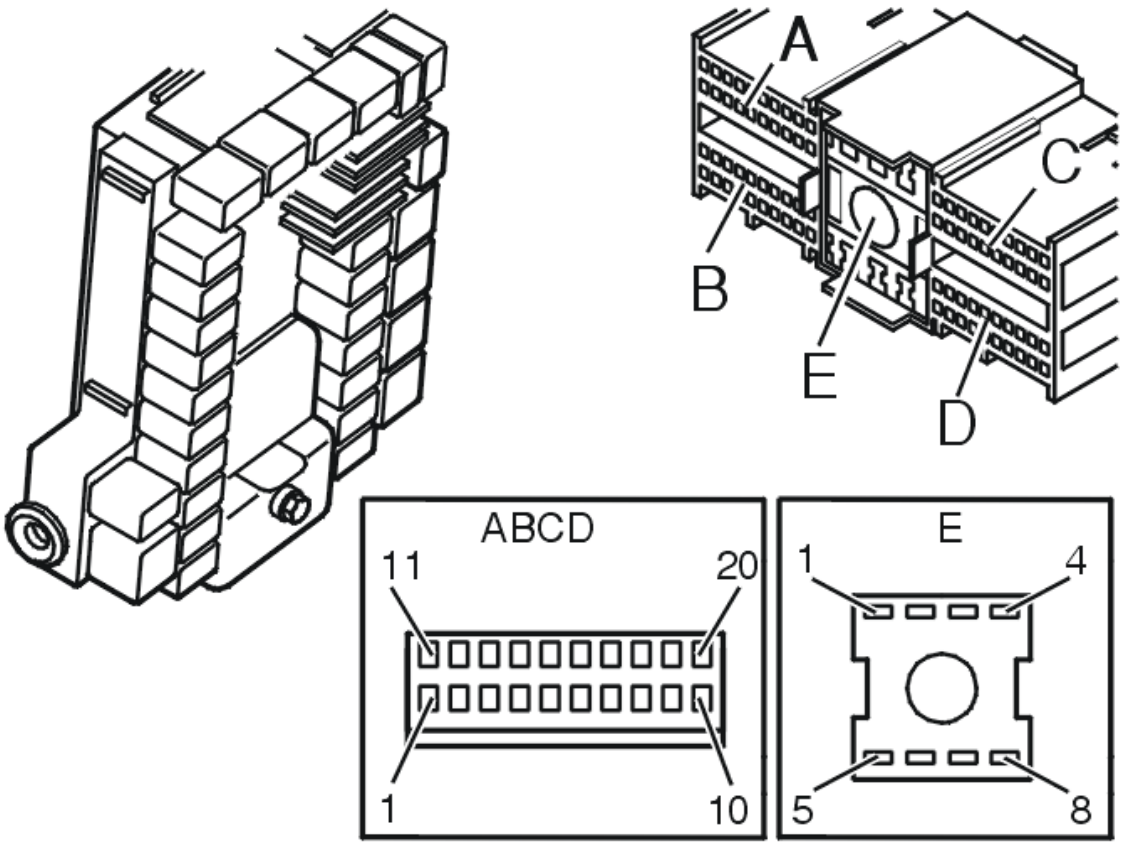

Fig. 221: Identifying Rear Electronic Module (REM) And Connector Terminals
Courtesy of VOLVO CARS CORPORATION

Connector A, terminals #A1-#A20

The following values are measured between the relevant terminal and terminal #E1 (power ground) unless otherwise stated.

The values are measured with the control module in "Active mode".

NOTE: **It is important to connect the breakout box and check the ground terminals before taking readings.**

U = DC in volts (V).

Ubat = battery voltage in volts (V).

Ulow = Voltage close to 0 V.

NC = Not connected

NC* = grounded via capacitor (C=22nF)

Terminal, breakout box	Terminal, control module	Signal type	Ignition off Active / not active	Ignition on Active / not active	Other
#A01	#A1	Spare input (30)	U~Ubat	U~Ubat	At no input
#A02	#A2	Fuel level sensor, left-hand side (+). Switched signal, 5/35 ms.	U~Ulow	U=0.54-3.96 V	Full: 0.54 V Empty: 3.96 V For Bi-fuel cars this applies to the LPG gas tank The terminal is not used if the tank is PZEVEVAP or EVAP 2.
#A03	#A3	Reserve output (switch to ground)	U~Ulow	U~Ulow	
#A04	#A4	Stop lamp, relay driver from the central electronic module (CEM)	U~Ulow / Ubat	U~Ulow / Ubat	
#A05	#A5	-	-	-	
#A06	#A6	Reserve, analog input signal	NC*	NC*	
#A07	#A7	Signal ground (-)	U~Ulow	U~Ulow	
#A08	#A8	Fuel level sensor, right-hand side (+). Switched signal, 5/35 ms.	U~Ulow	U=0.54-3.96 V	Full: 0.54 V Empty: 3.96 V
#A09	#A9	Spare input (30)	U~Ubat	U~Ubat	At no input
#A10	#A10	Fuel level sensor common ground	U~Ulow	U~Ulow	
#A11	#A11	Reserve, analog input signal	NC*	NC*	
#A12	#A12	Signal ground (-)	U~Ulow	U~Ulow	
#A13	#A13	Reserve output (switch to ground)	U~Ulow	U~Ulow	
#A14	#A14	CAN H	-	-	During

					communication U=2.0-3.5 V
#A15	#A15	Volcano Lite CAN H	-	-	During communication U=2.0-3.5 V
#A16	#A16	CAN L	-	-	During communication U=2.0-3.5 V
#A17	#A17	Volcano Lite CAN L	-	-	During communication U=2.0-3.5 V
#A18	#A18	Reserve	U~Ulow	U~Ulow	NC
#A19	#A19	Reserve output (switch to ground)	U~Ulow	U~Ulow	
#A20	#A20	-	-	-	
#A21	#B1	Spare input (GND)	U~Ulow	U~Ulow	At no input
#A22	#B2	Spare input (GND)	U~Ulow	U~Ulow	At no input
#A23	#B3	Reserve output (switch to ground)	U~Ulow	U~Ulow	
#A24	#B4	Reserve	U~Ulow	U~Ulow	NC
#A25	#B5	Power supply, fuel level sensor, CNG	U~Ulow	U~ 5V	Bi-fuel
#A26	#B6	Signal ground, position sensor for headlamp beam height control	U~Ulow	U~Ulow	
#A27	#B7	Reserve output (switch to ground)	U~Ulow	U~Ulow	
#A28	#B8	Analog input signal from the position sensor for headlamp beam height control.	U~Ulow	U=1.7-3.2V	NC
#A29	#B9	Reserve	U~Ulow	U~Ulow	NC
#A30	#B10	Power supply, position sensor for headlamp beam height control	U~Ulow	U=5 V	
#A31	#B11	Reserve	U~Ulow	U~Ulow	NC
#A32	#B12	Reserve	U~Ulow	U~Ulow	NC
#A33	#B13	Reserve	U~Ulow	U~Ulow	NC
#A34	#B14	Reserve	U~Ulow	U~Ulow	NC
#A35	#B15	Reserve	U~Ulow	U~Ulow	NC
#A36	#B16	Input signal fuel level sensor (pressure), CNG	U~Ulow	U=0.5V-4.5V	Full (200bar): 4.5V Empty (0 bar): 0.5V
#A37	#B17	Reserve	U~Ulow	U~Ulow	NC

#A38	#B18	Reserve	U~Ulow	U~Ulow	NC
#A39	#B19	Reserve	U~Ulow	U~Ulow	NC
#A40	#B20	Reserve	U~Ulow	U~Ulow	NC
#A41	#C1	Input signal, fuel level sensor (temperature), CNG	U~Ulow	U=0V-5V	0°C~4 V 25°C~2.5 V
#A42	#C2	Signal ground fuel level sensor, CNG	U~Ulow	U~Ulow	Bi-fuel
#A43	#C3	Reserve	U~Ulow	U~Ulow	NC
#A44	#C4	-	-	-	
#A45	#C5	-	-	-	
#A46	#C6	Reserve output (switch to ground)	U~Ulow	U~Ulow	
#A47	#C7	Reserve	U~Ulow	U~Ulow	NC
#A48	#C8	Reserve output (switch to ground)	U~Ulow	U~Ulow	
#A49	#C9	Reserve	U~Ulow	U~Ulow	NC
#A50	#C10	Reserve	U~Ulow	U~Ulow	NC
#A51	#C11	Reserve output (switch to ground)	U~Ulow	U~Ulow	
#A52	#C12	Reserve output (switch to ground)	U~Ulow	U~Ulow	
#A53	#C13	Reserve	U~Ulow	U~Ulow	NC
#A54	#C14	Reserve	U~Ulow	U~Ulow	NC
#A55	#C15	Reserve	U~Ulow	U~Ulow	NC
#A56	#C16	Reserve	U~Ulow	U~Ulow	NC
#A57	#C17	Spare input (30)	U~Ubat	U~Ubat	At no input
#A58	#C18	Spare input (30)	U~Ubat	U~Ubat	At no input
#A59	#C19	Reserve	U~Ulow	U~Ulow	NC
#A60	#C20	Reserve output (switch to ground)	U~Ulow	U~Ulow	
#B01	#D1	Relay driver, rear windshield heating	U~Ubat	U~Ulow / Ubat	Grounded when the relay is activated
#B02	#D2	Relay driver, rear 15l-supply	-	-	
#B03	#D3	Reserve	U~Ulow	U~Ulow	NC
#B04	#D4	Signal voltage, high mounted stop lamp	U~Ubat / Ulow	U~Ubat / Ulow	5 door
#B05	#D5	Reserve	5V / Ulow	5V / Ulow	NC
#B06	#D6	Serial communication, input signal from the level sensor control	During communication U=8-11 V	During communication U=8-11 V	Communicates when the car is alarmed.

		module			Conditional on the car being equipped with an inclination sensor module (ISM).
#B07	#D7	Input signal from the tailgate handle	U~Ulow / Ubat	U~Ulow / Ubat	Applies to 4-door models. Grounded when the tailgate handle is pressed in.
#B08	#D8	Spare input (30)	Ubat	Ubat	At no input
#B09	#D9	Spare input (30)	Ubat	Ubat	At no input
#B10	#D10	Spare input (30)	Ubat	Ubat	At no input
#B11	#D11	-	U~Ulow	U~Ulow	NC
#B12	#D12	Reserve, relay RMA 04	U~Ulow	U~Ulow	
#B13	#D13	Reserve, relay RMI 09	U~Ulow	U~Ulow	
#B14	#D14	Reserve, relay RMI 10	U~Ulow	U~Ulow	
#B15	#D15	Reserve, relay RMI 25	U~Ulow	U~Ulow	
#B16	#D16	Relay driver, warm-up cycle diesel filter	U~Ulow	U~Ulow / Ubat	
#B17	#D17	Reserve, relay RST 01	U~Ulow	U~Ulow	
#B18	#D18	Relay driver, rear X-supply	-	-	
#B19	#D19	Reserve output (switch to ground)	U~Ulow	U~Ulow	
#B20	#D20	Power supply to the tilt sensor. Output signal.	U~Ulow / Ubat	U~Ulow	Supplied with voltage when the car is alarmed. Conditional on the car being equipped with an inclination sensor module (ISM).

The power signals below are measured between the relevant terminal and terminal #E1 (power ground)

Terminal, breakout box	**Terminal, control module**	**Signal type**	**Ignition off Active / not active**	**Ignition on Active / not active**	**Other**
#B21	#E1	Power ground	U~Ulow	U~Ulow	
#B22	#E2	Power supply to the cargo compartment lighting. Output signal.	U~Ulow / Ubat	U~Ulow / Ubat	Applies to 4-door models. Activated when the trunk lid is

					open. Goes out after 30 minutes Goes out when driving forward with the trunk lid open. The ignition must be switched off before it lights again. Can be switched off via the upper electronic module (UEM).
#B23	#E3	Reserve	U~Ulow	U~Ulow	NC
#B24	#E4	Power supply to the rear fog lamp. Input signal.	U~Ubat	U~Ubat	
#B25	#E5	Reserve	U~Ulow	U~Ulow	NC
#B26	#E6	Power supply to the rear electronic module (REM)	U~Ubat	U~Ubat	
#B27	#E7	Reserve	U~Ulow	U~Ulow	NC
#B28	#E8	Reserve	U~Ulow	U~Ulow	NC

RESISTANCE VALUES, FUEL LEVEL SENSOR

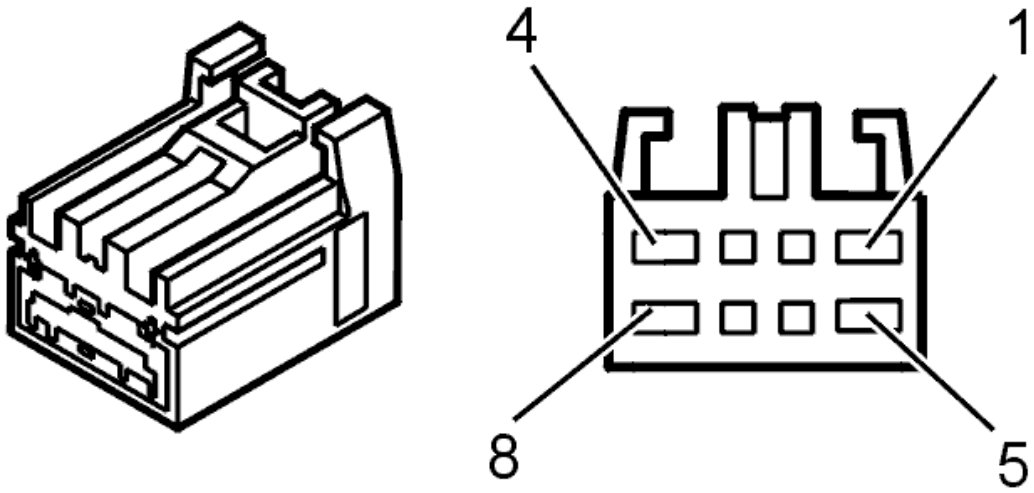

Fig. 222: Fuel Level Sensor Terminals
Courtesy of VOLVO CARS CORPORATION

Readings for the left fuel level sensor are taken between terminals #5 and #6.

Readings for the right fuel level sensor are taken between terminals #7 and #6.

The following table lists the fuel level sensor resistance and the corresponding fuel volume.

Resistance (ohm)	**Fuel volume (liters)**
12	40
38	35
66	30
96	25
130	20
171	15
223	10
297	5
383	1

ELECTRICAL

Cables And Fuses - Diagnostic Trouble Codes and Associated Procedures

CEM-1A5B: COMMUNICATION WITH THE STEERING WHEEL MODULE (SWM). SIGNAL MISSING (2003-2004)

DIAGNOSTIC TROUBLE CODE (DTC) INFORMATION CEM-1A5B

Condition

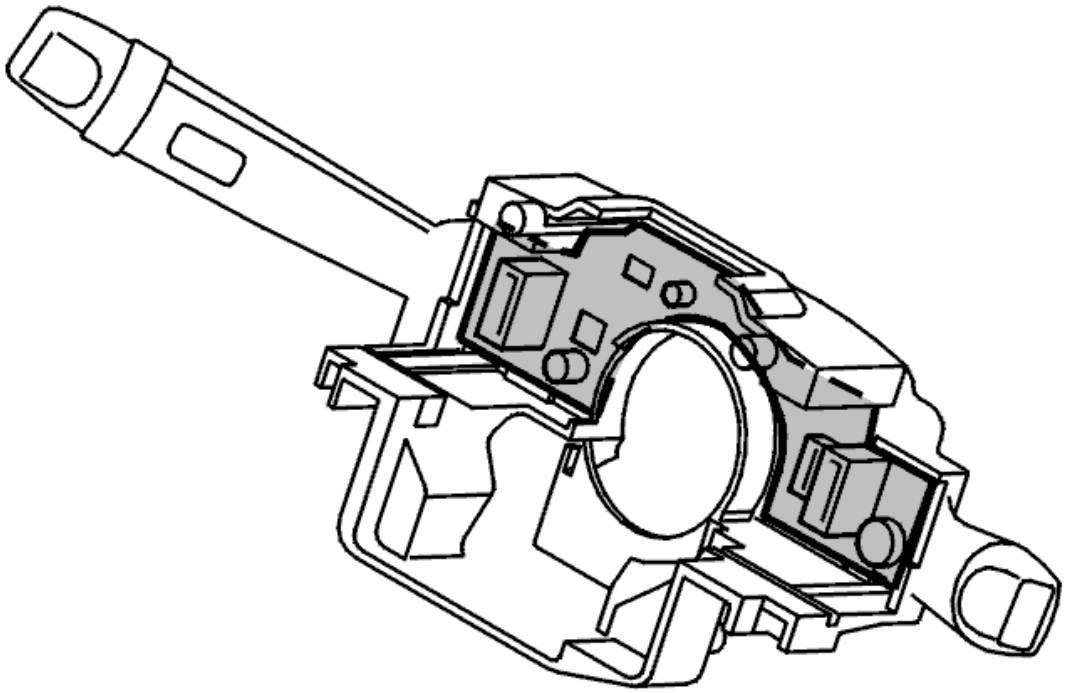

Fig. 1: Identifying Steering Wheel Module
Courtesy of VOLVO CARS CORPORATION

Diagnostic trouble codes (DTCs) are stored if the central electronic module (CEM) registers that communication with the steering wheel module (SWM) is not operating.

NOTE: **In the event of CEM-1A5X diagnostic trouble codes (DTCs), the central electronic module (CEM) must not be replaced as the diagnostic trouble code (DTC) indicates a communication fault in the Control area network**

Substitute Value

None.

Possible Source

- No power supply to the steering wheel module (SWM)
- Open-circuit in the ground lead to the steering wheel module (SWM)
- Contact resistance in the terminals
- Open-circuit in the wiring for the CAN low speed network to the steering wheel module (SWM)
- The steering wheel module (SWM) is not intended for this car for example a used control module with different software/hardware).

HINT: If several diagnostic trouble codes (DTCs) are stored in the central electronic module (CEM) for communication faults with other control modules in the low speed network, this indicates a common fault in the Control area network.

Fault symptom[s]

- Cruise control does not function at all
- Windshield wipers only operate at lowest speed
- The turn signal lamps are not operating
- Buttons on the steering wheel are not working.

SIGNAL MISSING

CHECKING THE FUNCTION OF THE STEERING WHEEL MODULE (SWM)

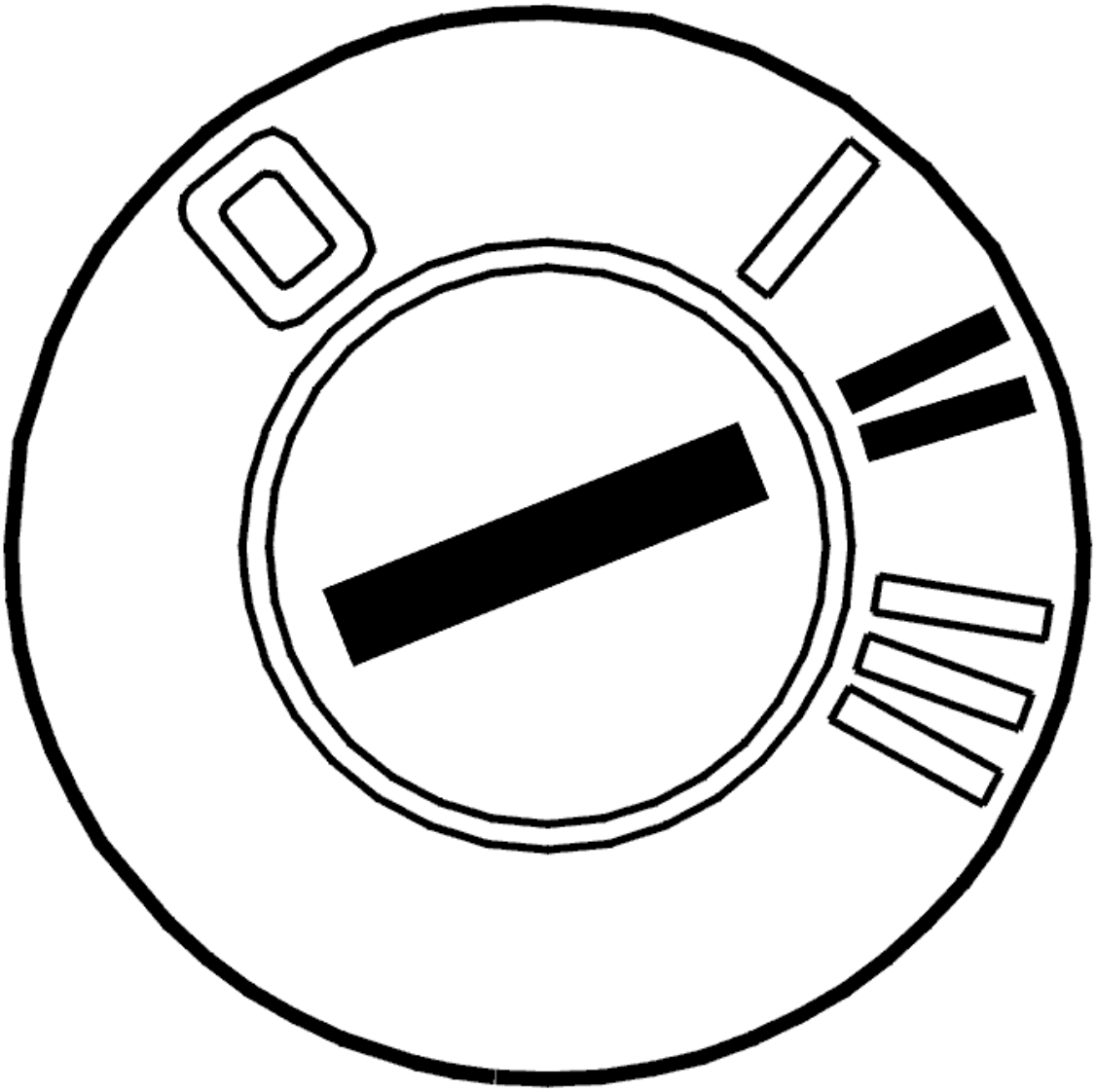

Fig. 2: Identifying Ignition ON
Courtesy of VOLVO CARS CORPORATION

- Ignition on.

  Check that the central electronic module (CEM) is powered and grounded by activating the hazard warning signal flasher switch.

  The hazard warning signal flashers must start.

  Check that the steering wheel module (SWM) is powered and grounded by activating the horn. The horn must sound.

  HINT: If the central electronic module (CEM) is powered but the horn does not sound, check the fuse for the power supply relay for the horn in the fusebox in the engine compartment and then try again.

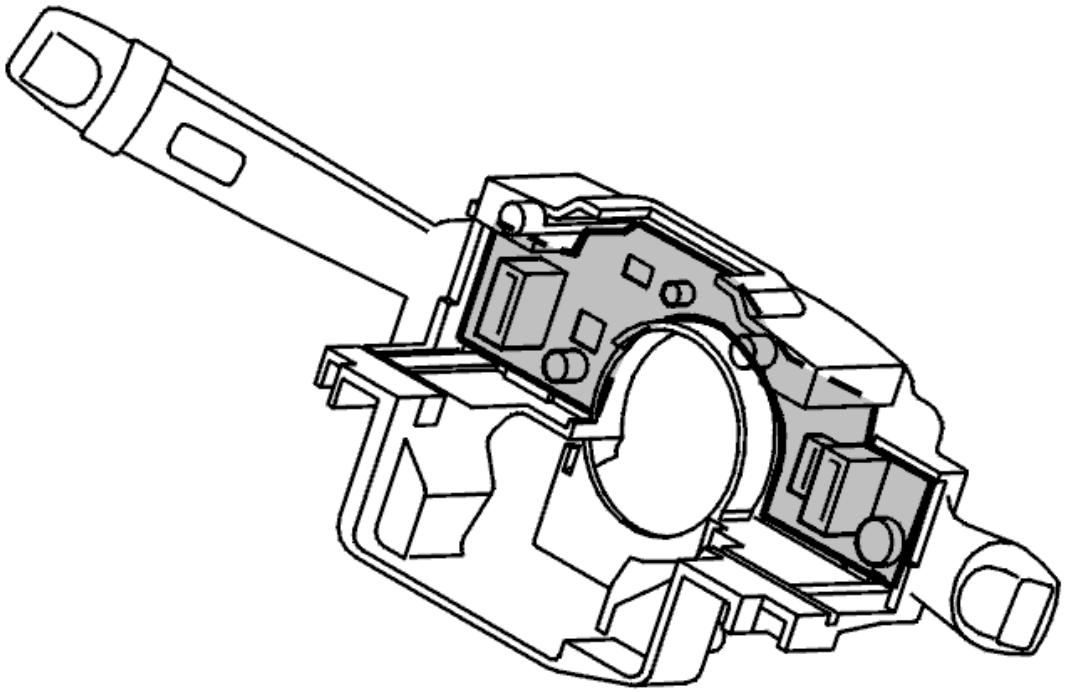

Fig. 3: Identifying Steering Wheel Module
Courtesy of VOLVO CARS CORPORATION

Does the horn sound?

- **YES**

  Refer to **CHECKING COMMUNICATION WITH THE STEERING WHEEL MODULE (SWM)**

- **NO**

  Refer to **CHECKING THE POWER SUPPLY AND GROUND FOR THE STEERING WHEEL MODULE (SWM)**

CHECKING THE POWER SUPPLY AND GROUND FOR THE STEERING WHEEL MODULE (SWM)

Check the fuse in the passenger compartment fusebox for the steering wheel module (SWM).

NOTE: **If the fuse has blown, check the circuit after the fuse before replacing the fuse. Check for a short-circuit to ground. Then replace the fuse.**

Check the steering wheel module (SWM) connector. Check for contact resistance and oxidation.

Check the ground lead between the control module and the ground terminal. Check for an open-circuit. Also check the ground terminal. Check for contact resistance and oxidation.

Remedy as necessary.

Other information:

- To access or replace the fuses, see **FUSEBOX, PASSENGER COMPARTMENT, REPLACING**
- To access or replace the steering wheel module (SWM), see **STEERING WHEEL MODULE (SWM), REPLACING**
- To connect the breakout box, see **CONNECTING THE BREAKOUT BOX**
- For information about signals and connectors, see **SIGNAL SPECIFICATION**
- For information about checking wiring and terminals, see **CHECKING WIRING AND TERMINALS** .

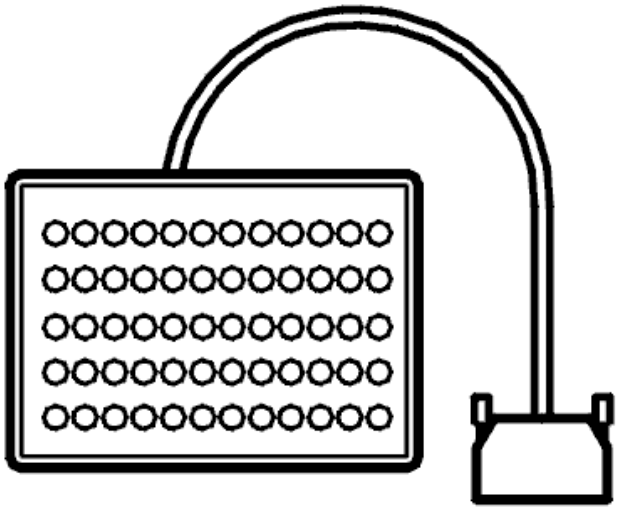

Fig. 4: Breakout Box
Courtesy of VOLVO CARS CORPORATION

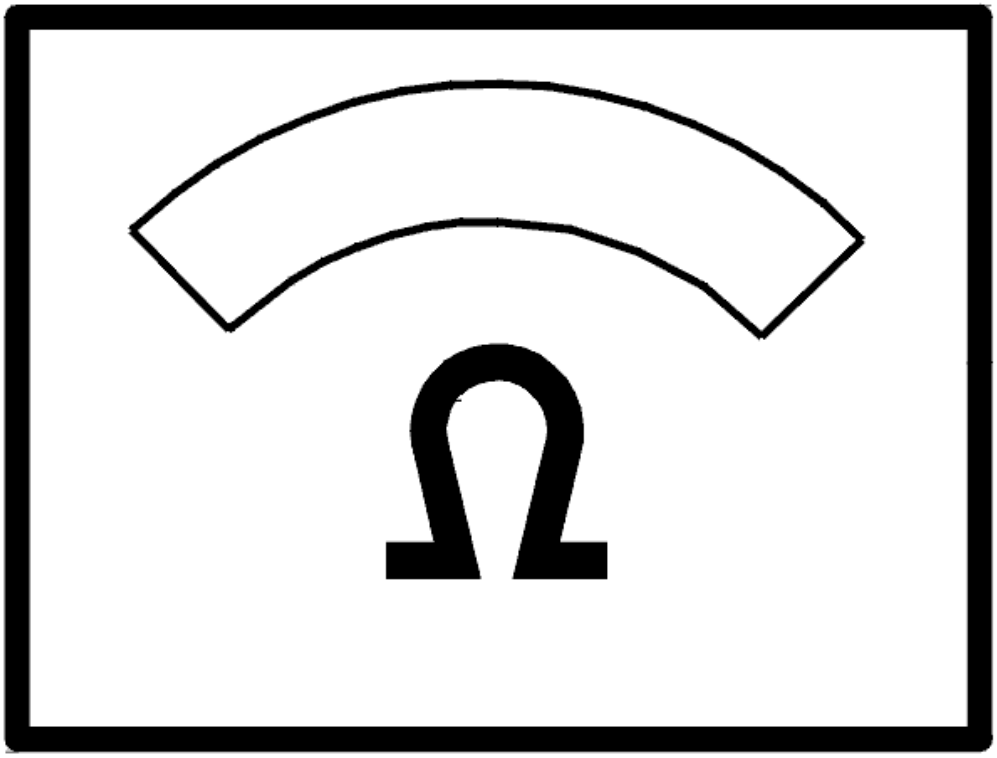

Fig. 5: Identifying Ohm Meter
Courtesy of VOLVO CARS CORPORATION

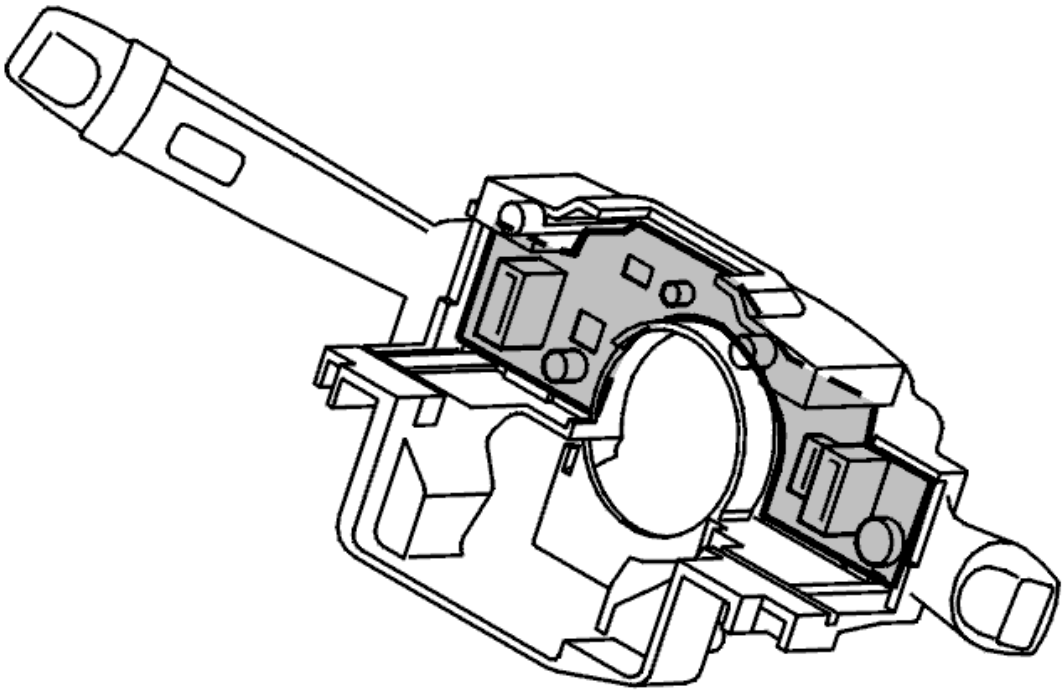

Fig. 6: Identifying Steering Wheel Module
Courtesy of VOLVO CARS CORPORATION

Was a fault detected?

- **YES**

  Refer to **CHECKING THE FUNCTION OF THE STEERING WHEEL MODULE (SWM)**

- **NO**

  Refer to **SIGNAL MISSING**

CHECKING COMMUNICATION WITH THE STEERING WHEEL MODULE (SWM)

HINT: The CAN communication with the control module is probably OK if the control module ID can be read off. In that case the fault is probably intermittent and will then be more difficult to trace.

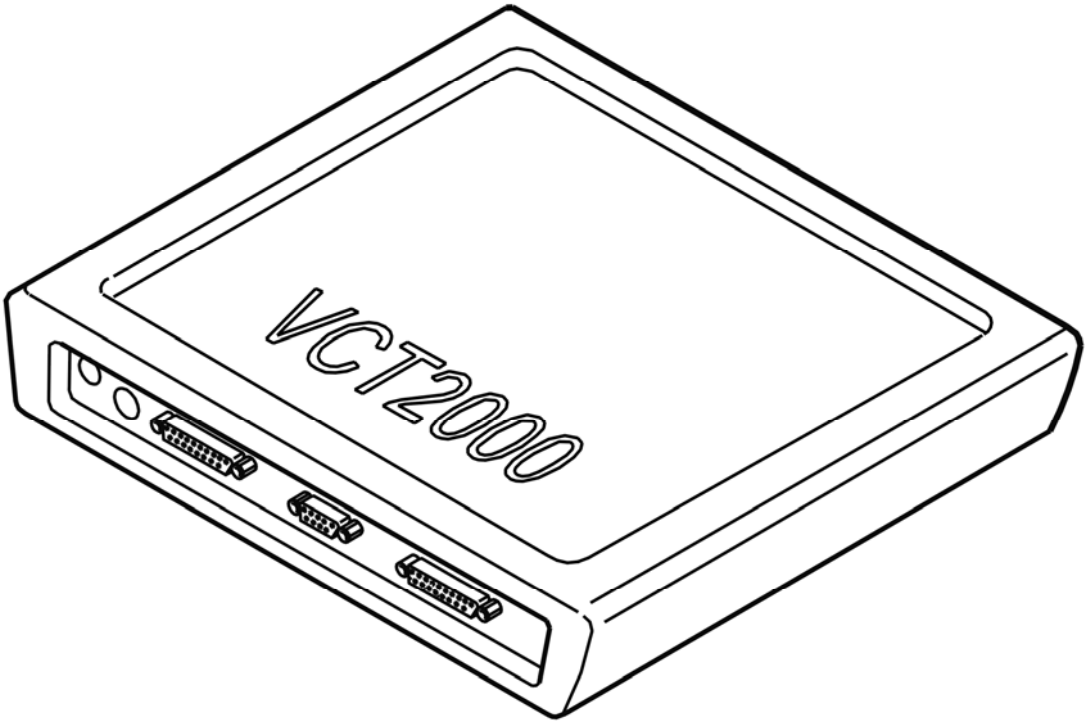

Fig. 7: Identifying VCT2000 Diagnostic Tool Symbol In VIDA
Courtesy of VOLVO CARS CORPORATION

- Try to communicate with the steering wheel module (SWM) by reading off the control module ID
- Use the VCT2000 (or appropriate scan tool)
- **Continue**

  Refer to **SIGNAL MISSING**

CHECKING THE FUNCTION OF THE STEERING WHEEL MODULE (SWM)

HINT: After carrying out the repair, check that the fault has been remedied.

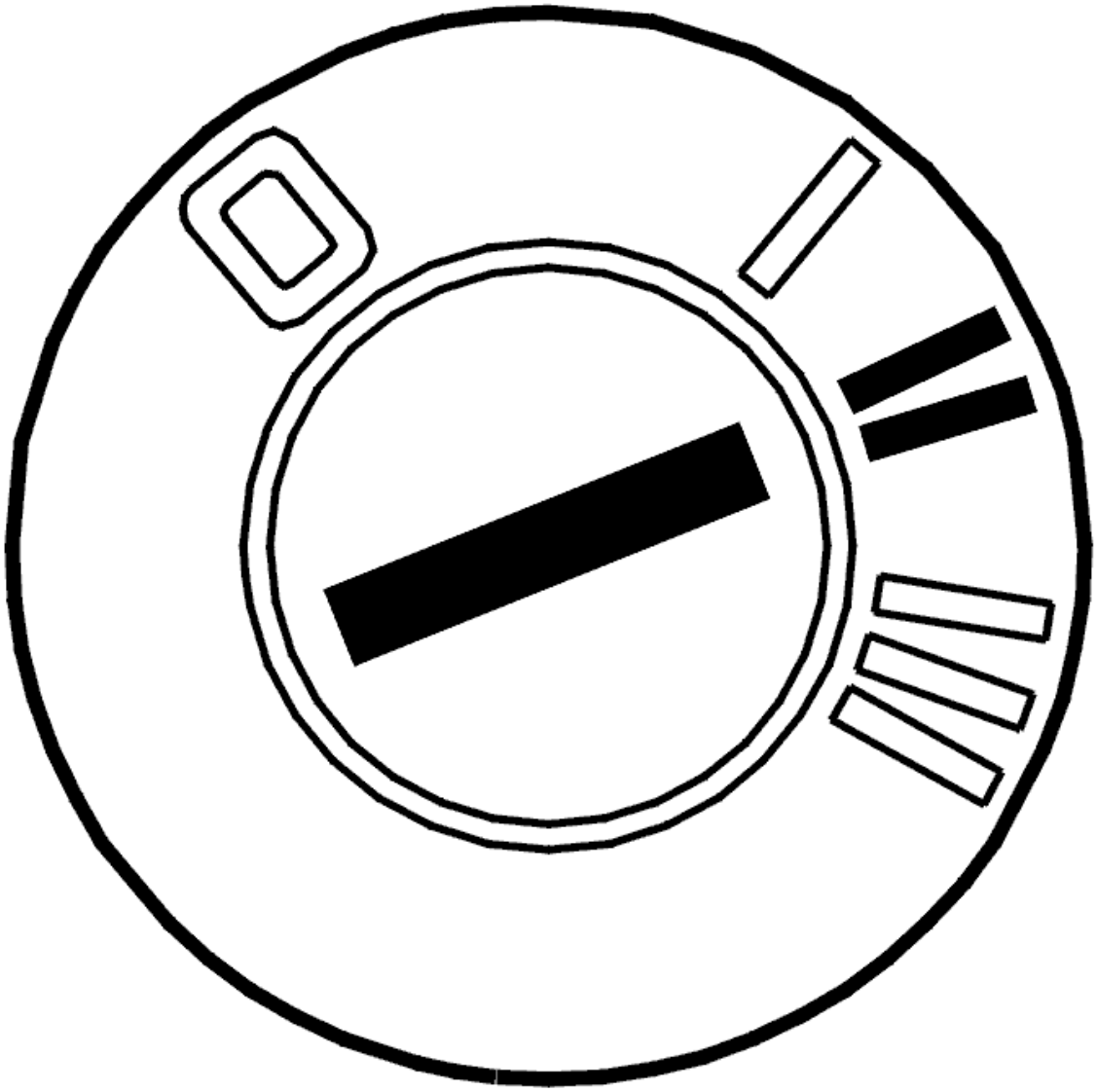

Fig. 8: Identifying Ignition ON
Courtesy of VOLVO CARS CORPORATION

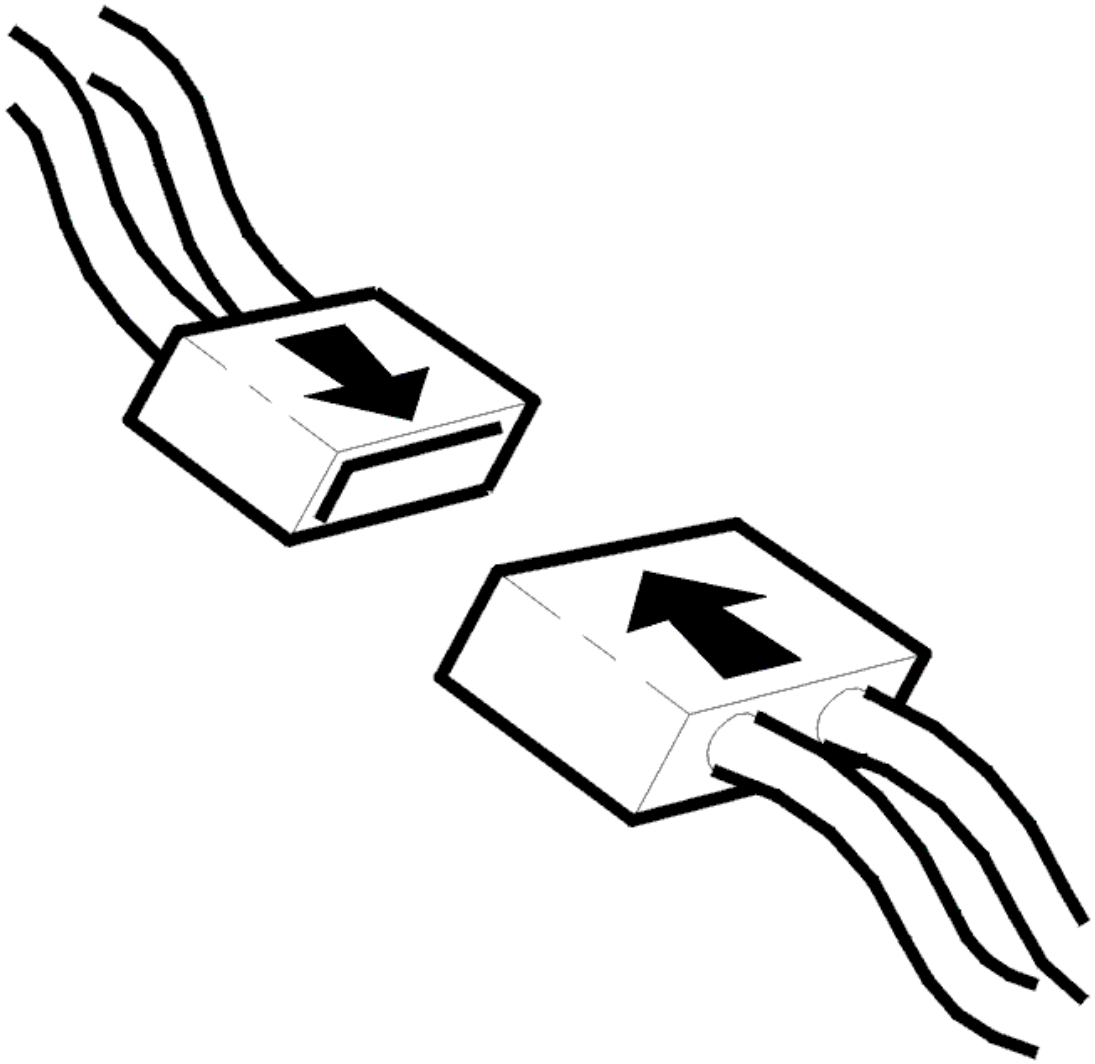

Fig. 9: Connecting Connector
Courtesy of VOLVO CARS CORPORATION

- Ignition off
- Reconnect the connectors. Reinstall the components
- Ignition on.

  Check that the central electronic module (CEM) is powered and grounded by activating the hazard warning signal flasher switch.

  Check that the steering wheel module (SWM) is powered and grounded by activating the horn. The horn must sound. Also check that the buttons on the steering wheel are working.

Is the function OK?

- **YES**

  OKAY: Troubleshooting has been completed.

- **NO**

  Refer to **INFORMATION**

SIGNAL MISSING

GENERAL INFORMATION

HINT: For general information about fault-tracing the control area network (CAN), see the linked document below. See GENERAL INFORMATION ABOUT FAULT-TRACING IN THE CAN NETWORK (2005-2012)

In order to check the control area network (CAN) cables, the resistance in the network must be measured. The resistance between the two CAN cables, with the network connected, must be 60ohms in both the high speed network and the low speed network.

NOTE: **Resistance will only be 60 ohms if the main artery of the CAN network is whole and the network is connected. If the main artery of the CAN network is split somewhere and a reading is taken between the CAN cables, resistance will be 120 ohms.**

If diagnostic trouble codes (DTCs) can be read off from the relevant control module, the fault is probably intermittent. The locations that must be checked in the event of a fault in the low speed network are the junctions behind the central electronic module (CEM) and the audio module (AUM) as well as the cable harness behind the Audio module (AUM).

Intermittent fault in the current supply to the actual control module is indicated by the DTC in the Central electronic module (CEM) (CEM-1A5X or CEM-1A6X). There is probably no diagnostic trouble code (DTC) in the relevant control module as the control module cannot store a diagnostic trouble code (DTC) when it is without power.

- **Continue**

  Refer to **CHECKING THE RESISTANCE OF THE CONTROL AREA NETWORK (CAN) CABLES**

CHECKING THE RESISTANCE OF THE CONTROL AREA NETWORK (CAN) CABLES

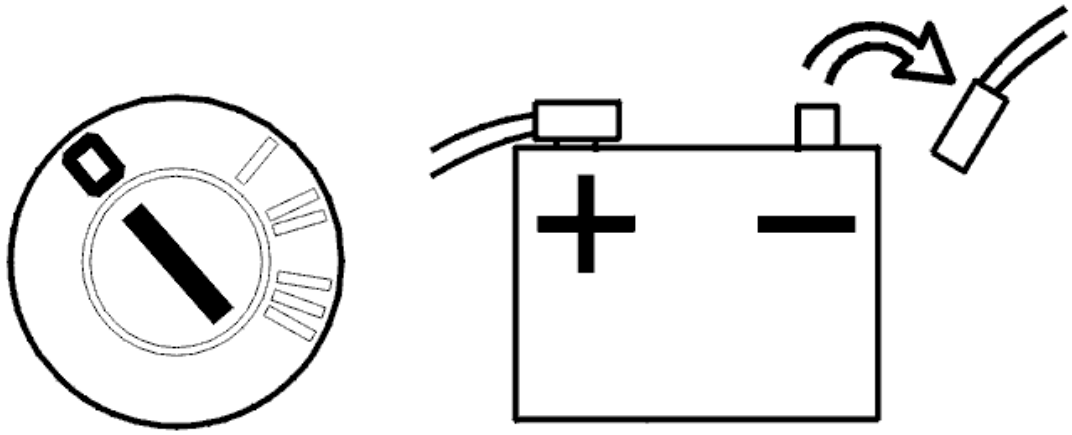

Fig. 10: Identifying Ignition In Off Position And Disconnecting Negative Cable From Battery
Courtesy of VOLVO CARS CORPORATION

- Disconnect the battery negative lead. The network must not be powered when taking resistance readings. Otherwise an incorrect value may be obtained.
- Connect the adapter wiring to the central electronic module (CEM).

  HINT: Where a breakout box cannot be used, take readings from the rear of the affected connectors if possible. This prevents terminal pins and socket housings being damaged.

  When taking readings on the low speed network

  - When taking readings on the low speed network the adapter wiring should be connected to the Central electronic module (CEM) and readings taken from there. Readings can even be taken in the connector for the Power seat module (PSM). The advantage of the adapter wiring to the Central electronic module (CEM) is that all control module can be connected in the network when taking readings and access can be gained to both the high speed and low speed networks.

    The resistance reading only measures the main arteries in the low speed network, not the junctions that exist for different control modules.

  When taking readings on the high speed network

  - When taking readings on the high speed network the adapter wiring should be connected to the Engine control module (ECM) and readings taken from there. The Engine control module (ECM) must be connected. This resistance reading only measures the main arteries in the high speed network.

  Connect an ohmmeter to the terminals for CAN-L and CAN-H on the relevant network. Turn the contacts and turn the cable harness. Resistance must be approximately 60 ohms.

NOTE: **Resistance will only be 60 ohms if the main artery of the CAN network is whole and the network is connected. If the main artery of the CAN network is split somewhere and a reading is taken between the CAN cables, resistance will be 120 ohms.**

Other information

- see **BATTERY, DISCONNECTING**
- see **CONNECTING THE BREAKOUT BOX**
- see **CHECKING WIRING AND TERMINALS**

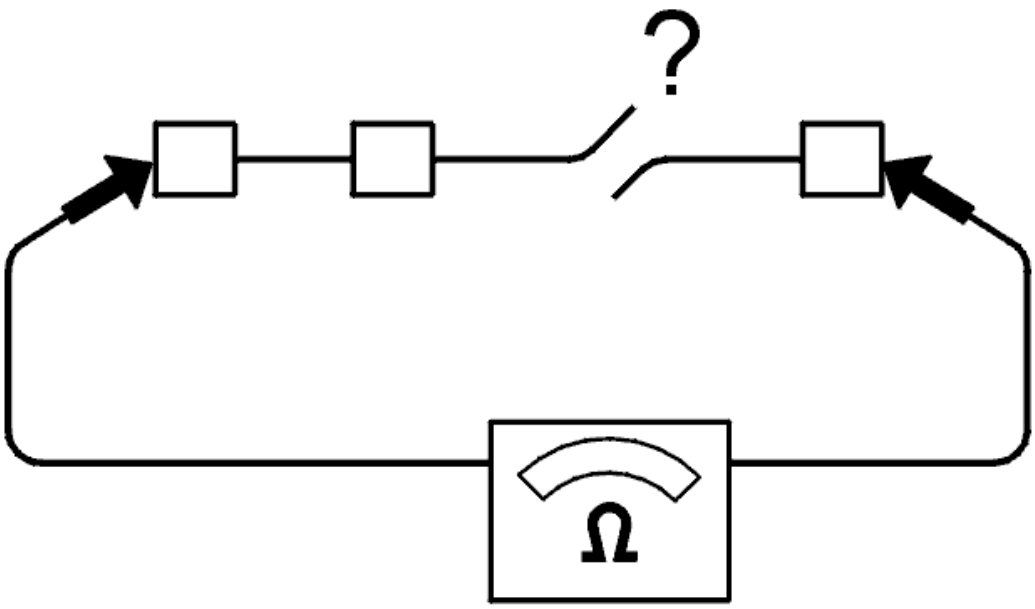

Fig. 11: Checking For Open Circuit
Courtesy of VOLVO CARS CORPORATION

Is the value OK?

- **YES**

  Refer to **CHECKING A SHORT-CIRCUIT IN CAN CABLES**

- **NO**

  Refer to **IDENTIFYING FAULT CAUSES IN THE CAN NETWORK**

CHECKING A SHORT-CIRCUIT IN CAN CABLES

Connect an ohmmeter between respective CAN cable and voltage supply and between the CAN cables and ground. Turn the contacts and turn the cable harness. The resistance must be infinite or very high.

HINT: Readings can be taken from one and the same connector if the CAN wiring, voltage supply and ground is pre-routed. If possible, measure from the rear of the affected connectors in order to minimize any damage and future loose connections. If this is not possible, use the adapter wiring or loose terminal pin for good contact.

Was a fault detected?

- **YES**

  Refer to **IDENTIFYING FAULT CAUSES IN THE CAN NETWORK**

- **NO**

  Refer to **CHECKING THE TRAFFIC LOAD ON THE CAN CABLES**

CHECKING THE TRAFFIC LOAD ON THE CAN CABLES

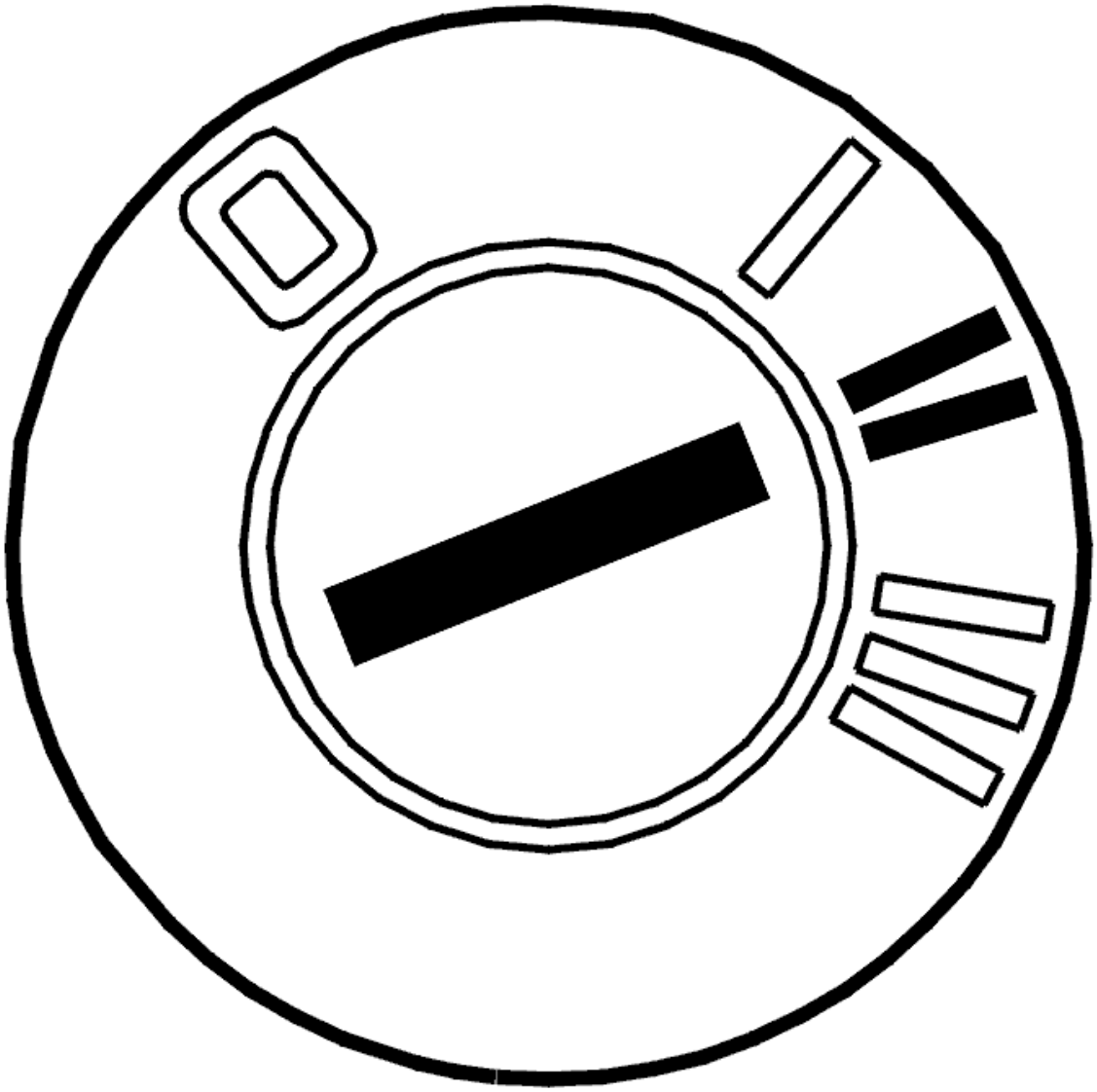

Fig. 12: Identifying Ignition ON
Courtesy of VOLVO CARS CORPORATION

- Connect the battery.
- Ignition on.

Faults in the CAN network may be due to a control module sending faulty messages that disrupt normal communication. When messages are sent incorrectly, this results in a considerable increase in the amount of traffic on the CAN network. The load can be checked by reading the average value of the voltage on the CAN cables in relation to ground.

The following applies for model year -2004:

Connect a voltmeter between CAN-L and ground. The voltage shall be approx. 2.3 V.

Then connect a voltmeter between CAN-H and ground. The voltage shall be approx. 2.8 V.

The following applies for model year 2004-:

Connect a voltmeter between CAN-L and ground. The voltage should be approx: V

Connect a voltmeter between CAN-H and ground. The voltage should be approx: V

NOTE: **For vehicles of later model years, normal voltage values lie within a specific interval due to increased traffic between the control modules on the CAN network upon update of the electrical system.**

HINT: If possible, measure from the rear of the affected connectors so that they are not damaged.

Other information

- see **BATTERY, DISCONNECTING**

Is the value OK?

- **YES**

  Refer to **INFORMATION**

- **NO**

  Refer to **IDENTIFYING A CONTROL MODULE IN THE CAN NETWORK**

IDENTIFYING FAULT CAUSES IN THE CAN NETWORK

- Disconnect a control module that disconnects the CAN network (a control module that has four terminals to the CAN network).

  HINT: For the low speed network, suitable places for disconnecting the network are at the steering wheel module (SWM), the driver information module (DIM) or the climate control module (CCM).

  In the event of an short-circuit between on of the CAN cables and voltage or ground, the fault can be localized disconnecting a control module that splits the CAN network. Readings can then be taken to determine on which side the fault is on the disconnected control module.

  Connect an ohmmeter between the CAN cable and voltage supply respectively ground. Take readings from both ends of the CAN networks at the network junction. Twist and bend the cable harness to find any intermittent short-circuits. The resistance must be infinite or very high (more than 1 Mohms).

  If a fault can be localized in one direction, split the network at a point further on in the CAN network in the direction that the fault was discovered and take a new reading. Try to locate the fault in this way.

  HINT: A short-circuit between the CAN cables and supply voltage or ground may be in either the wiring or in a control module.

Remedy the cables as necessary. If a fault is found on one control module, replace the control module.

- **Continue**

  Refer to **VERIFICATION**

IDENTIFYING A CONTROL MODULE IN THE CAN NETWORK

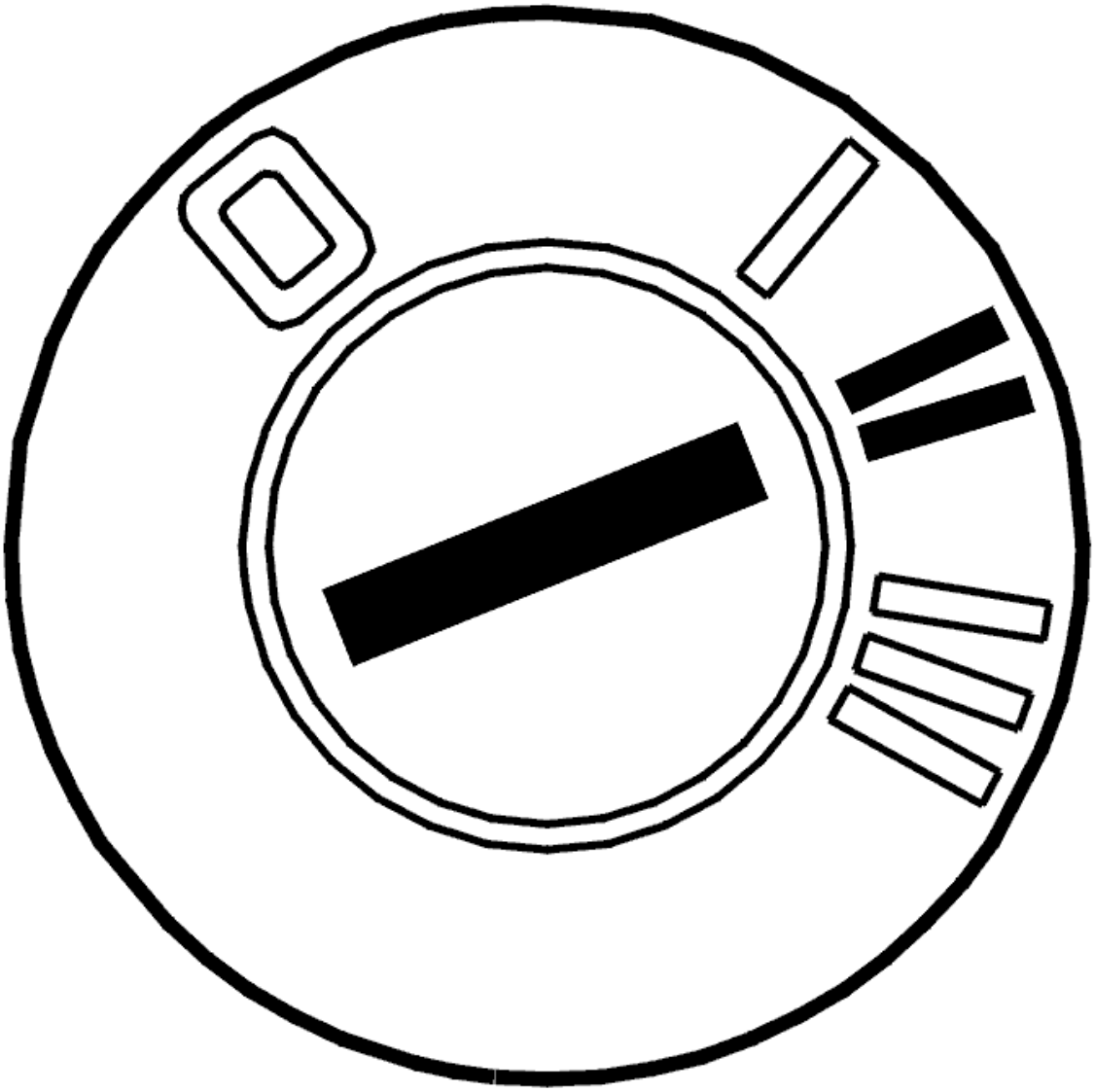

Fig. 13: Identifying Ignition ON
Courtesy of VOLVO CARS CORPORATION

- Connect the battery.
- Ignition on.

  If the load on the CAN network is too high, this may be due to a control module transmitting faulty messages on the CAN network. This is called a disruptive control module. The fault may also be due to

an intermittent short-circuit to supply voltage or ground in one of the CAN cables. This results in the control modules on the CAN network starting to send faulty messages. The fault may occur without any of the control modules storing a diagnostic trouble code (DTC). The voltage can be measured between the CAN cables in order to check the load on the CAN network.

The following applies for model year -2004:

Connect a voltmeter between the CAN cables. In the event of correct communication on the network, the average value of the voltage must be approximately 0.5 V (0.4 V to 0.6 V).

The following applies for model year 2004-:The following applies for model year 2004-:

Connect a voltmeter between the CAN cables. During correct CAN network communication, voltage should be about 0.6-1.4 V.

NOTE: For vehicles of later model years, the normal voltage value is slightly higher due to increased traffic between the control modules on the CAN network upon update of the electrical system.

In the event of a communication fault the voltage is significantly higher than the above specified values. In order to identify which control module has faulty communication, cut the power supply to one control module at a time. Check the voltage in the CAN cables again. The easiest way to cut the power supply is to remove the fuse(s) for the relevant control module. Repeat until the voltage between the CAN wiring drops to the normal level.

HINT: When the probable faulty control module has been identified, connect and disconnect the supply voltage to the control module a number of times to verify that the fault appears and disappears.

NOTE: Do not cut the power to the central electronic module (CEM) unless it is the last control module left to check.

The control module that is communicating incorrectly must be replaced. Remedy as necessary.

NOTE: After a fault with "interfering" control modules, other control modules may remain in "Limp-Home mode" even when the ignition has been switched off and on several times. To remedy this, disconnect and reconnect the battery negative terminal to restore the control modules to normal function.

Other information

- see **BATTERY, DISCONNECTING**

- **Continue**

Refer to **VERIFICATION**

IDENTIFYING FAULT CAUSES IN THE CAN NETWORK

- Disconnect a control module that disconnects the CAN network (a control module that has four terminals to the CAN network).

  HINT: For the low speed network, suitable places for disconnecting the network are at the steering wheel module (SWM), the driver information module (DIM) or the climate control module (CCM).

  In the event of an open-circuit on, or short-circuit between the CAN cables, the fault can be localized by disconnecting a control module that splits the CAN network. Readings can then be taken to determine on which side the fault is on the disconnected control module.

  Connect an ohmmeter between the CAN cables. Take readings from both ends of the CAN networks at the network junction. Twist and bend the cable harness to find any intermittent short-circuits. Resistance should be 120 ohms.

  If a fault can be localized in one direction, split the network at a point further on in the CAN network in the direction that the fault was discovered and take a new reading. Try to locate the fault in this way.

  Remedy the cables as necessary.

- **Continue**

  Refer to **VERIFICATION**

VERIFICATION

HINT: After rectifying a fault, a verification should be carried out.

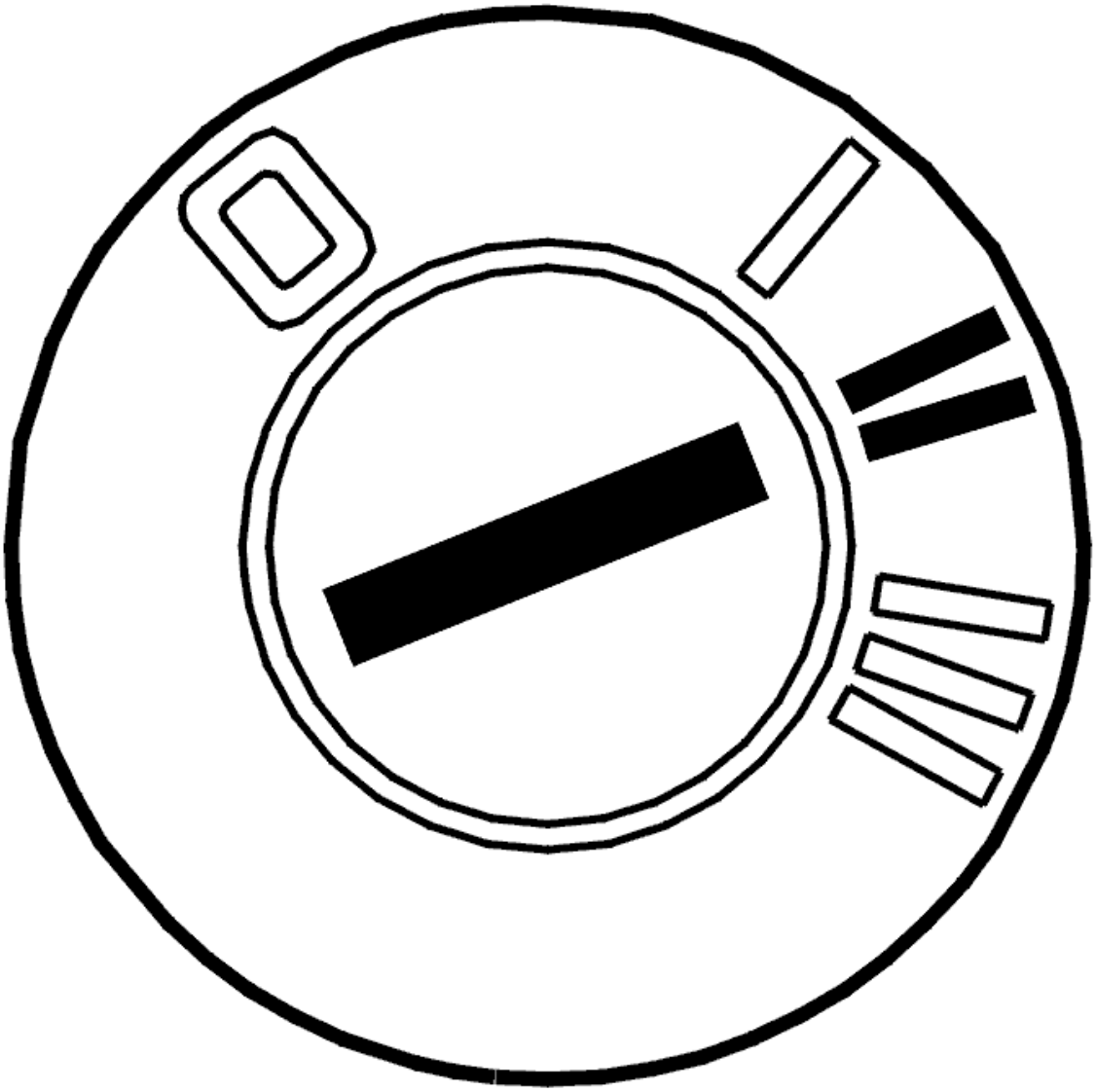

Fig. 14: Identifying Ignition ON
Courtesy of VOLVO CARS CORPORATION

- Reinstall the connectors, components etc.
- Ignition on.
- Erase diagnostic trouble codes using the VCT2000 (or appropriate scan tool).
- Start the car. Allow the vehicle to run for 10 minutes.
- Read off diagnostic trouble codes (DTCs).

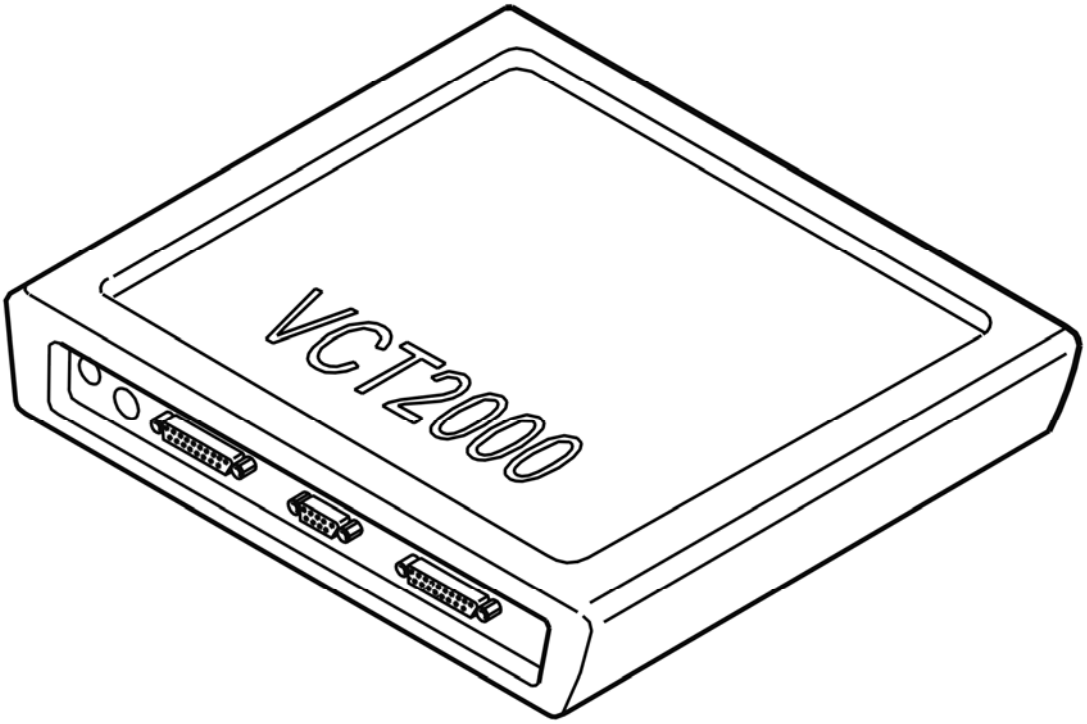

Fig. 15: Identifying VCT2000 Diagnostic Tool Symbol In VIDA
Courtesy of VOLVO CARS CORPORATION

Does the diagnostic trouble code (DTC) for a communication fault recur (CEM-1A5X or CEM-1A6X)?

- **YES**

  Refer to **INFORMATION**

- **NO**

  OKAY: Troubleshooting has been completed.

INFORMATION

FAULT-TRACING INFORMATION

Verification shows that the fault is no longer present. The diagnostic trouble code (DTC) was probably caused by an intermittent fault.

Fault-tracing for this diagnostic trouble code (DTC) is not followed by a verification.

You can view the information again or exit fault-tracing for this diagnostic trouble code (DTC).

INFORMATION

FAULT-TRACING INFORMATION

The fault should have been detected and remedied. As this is not the case fault-tracing has failed.

Exit fault-tracing for this diagnostic trouble code (DTC) or make another attempt.

CEM-1A5C: COMMUNICATION WITH THE UPPER ELECTRONIC MODULE (UEM). SIGNAL MISSING (2003-2004)

DIAGNOSTIC TROUBLE CODE (DTC) INFORMATION CEM-1A5C

Condition

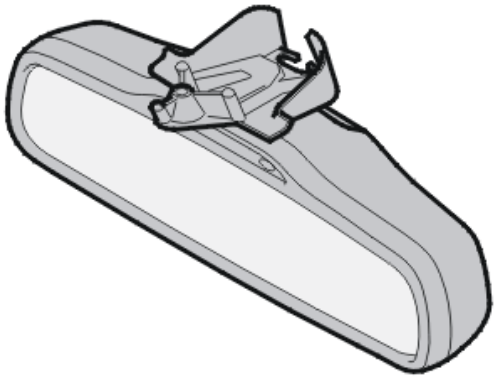

Fig. 16: Identifying Rear View Mirror
Courtesy of VOLVO CARS CORPORATION

Diagnostic trouble codes (DTCs) are stored if the central electronic module (CEM) registers that communication with the upper electronic module (UEM) is not operating.

NOTE: In the event of CEM-1A5X diagnostic trouble codes (DTCs), the central electronic module (CEM) must not be replaced as the diagnostic trouble code (DTC) indicates a communication fault in the Control area network

Substitute Value

None.

Possible Source

- No power supply to the upper electronic module (UEM)
- Open-circuit in the ground lead to the upper electronic module (UEM)
- Contact resistance in the terminals

- Open-circuit in the wiring for the CAN low speed network to the upper electronic module (UEM)
- The upper electronic module (UEM) is not intended for this car (for example a used control module with different software/hardware.

HINT: If several diagnostic trouble codes (DTCs) are stored in the central electronic module (CEM) for communication faults with other control modules in the low speed network, this indicates a common fault in the Control area network.

Fault symptom[s]

- Cannot be controlled with the remote control
- The power sun roof does not operate
- The interior lighting does not work.

SIGNAL MISSING

CHECKING THE FUNCTION OF THE UPPER ELECTRONIC MODULE (UEM)

Check that the upper electronic module (UEM) is powered by switching on one of the rear reading lamps.

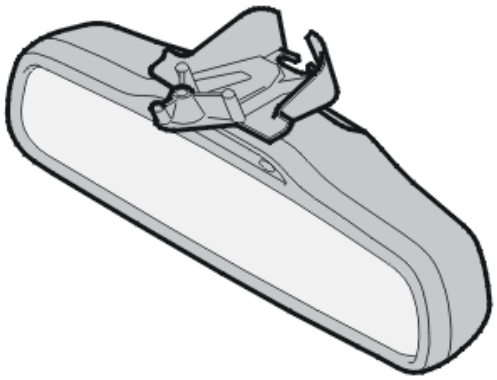

Fig. 17: Identifying Rear View Mirror
Courtesy of VOLVO CARS CORPORATION

Does one of the rear reading lamps light?

- **YES**

  Refer to **CHECKING COMMUNICATION WITH THE UPPER ELECTRONIC MODULE (UEM)**

- **NO**

  Refer to **CHECKING THE POWER SUPPLY AND GROUND FOR THE UPPER ELECTRONIC MODULE (UEM)**

CHECKING THE POWER SUPPLY AND GROUND FOR THE UPPER ELECTRONIC MODULE (UEM)

Check that the fuse in the fusebox in the passenger compartment for the upper electronic module (UEM) is intact.

NOTE: If the fuse has blown, check the circuit after the fuse before replacing the fuse. Check for a short-circuit to ground. Then replace the fuse.

Check the connectors and wiring for the upper electronic module (UEM) and the battery connection. Check for contact resistance and oxidation. Check for loose connections.

Check the cable between the control module and ground. Check for an open-circuit. Check for a short-circuit to supply voltage.

Remedy as necessary.

Other information:

- To access or replace the fuses, see **FUSEBOX, PASSENGER COMPARTMENT, REPLACING**
- To access or replace the upper electronic module (UEM), see **UPPER ELECTRONIC MODULE (UEM)/REARVIEW MIRROR, REPLACING**
- To connect the breakout box, see **CONNECTING THE BREAKOUT BOX**
- For information about signals and connectors, see **SIGNAL DESCRIPTION, UPPER ELECTRONIC MODULE (UEM)**
- For information about checking wiring and terminals, see **CHECKING WIRING AND TERMINALS. PERMANENT FAULT** .

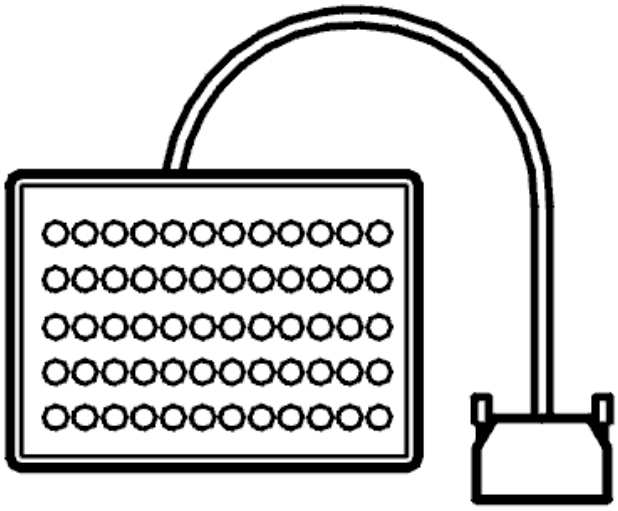

Fig. 18: Breakout Box
Courtesy of VOLVO CARS CORPORATION

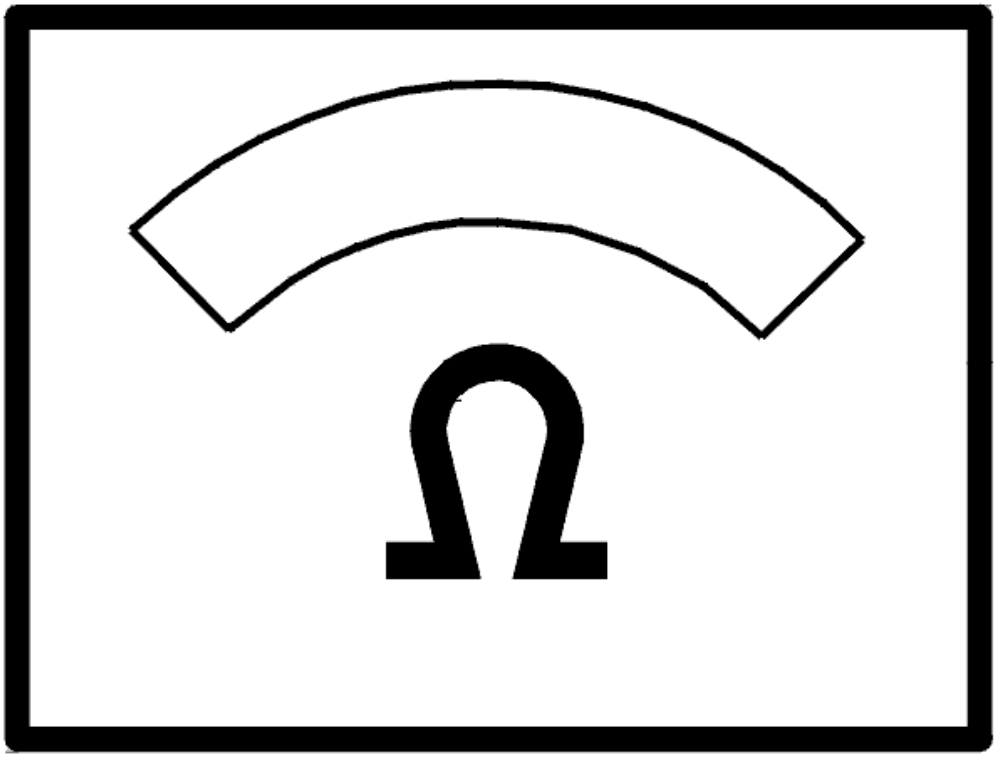

Fig. 19: Identifying Ohm Meter
Courtesy of VOLVO CARS CORPORATION

Was a fault detected?

- **YES**

  Refer to **CHECKING THE FUNCTION OF THE UPPER ELECTRONIC MODULE (UEM)**

- **NO**

  Refer to **SIGNAL MISSING**

CHECKING COMMUNICATION WITH THE UPPER ELECTRONIC MODULE (UEM)

HINT: The CAN communication with the control module is probably OK if the control module ID can be

read off. In that case the fault is probably intermittent and will then be more difficult to trace.

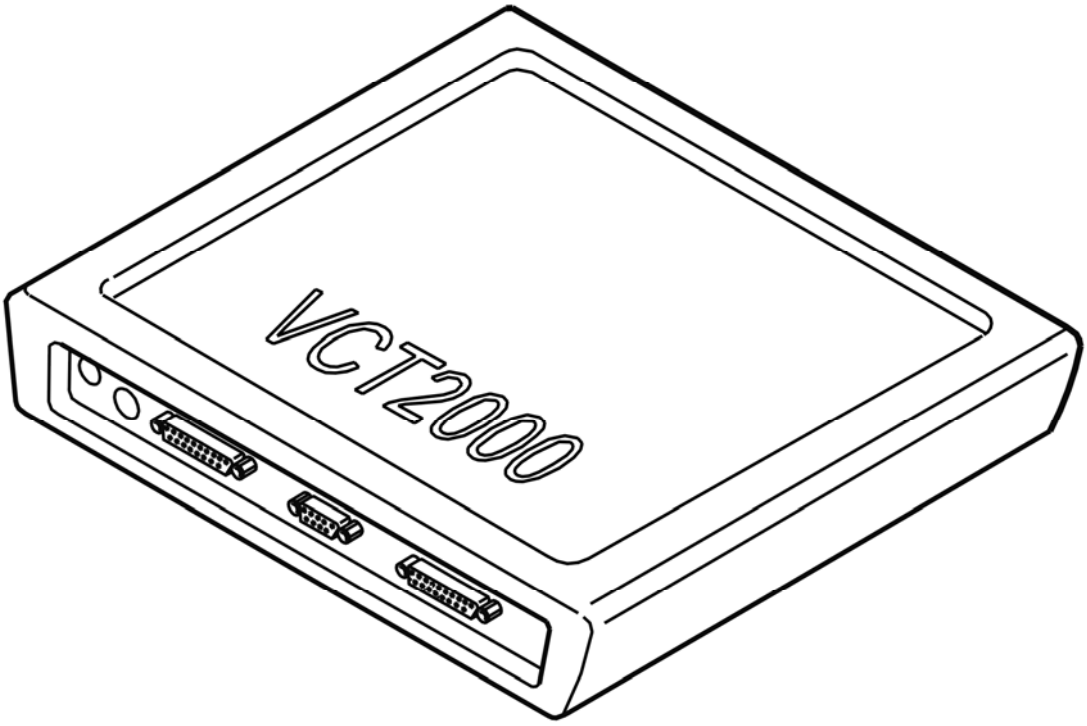

Fig. 20: Identifying VCT2000 Diagnostic Tool Symbol In VIDA
Courtesy of VOLVO CARS CORPORATION

- Try to communicate with the upper electronic module (UEM) by reading off the control module ID
- Use the VCT2000 (or appropriate scan tool)
- **Continue**

  Refer to **SIGNAL MISSING**

CHECKING THE FUNCTION OF THE UPPER ELECTRONIC MODULE (UEM)

HINT: After carrying out the repair, check that the fault has been remedied.

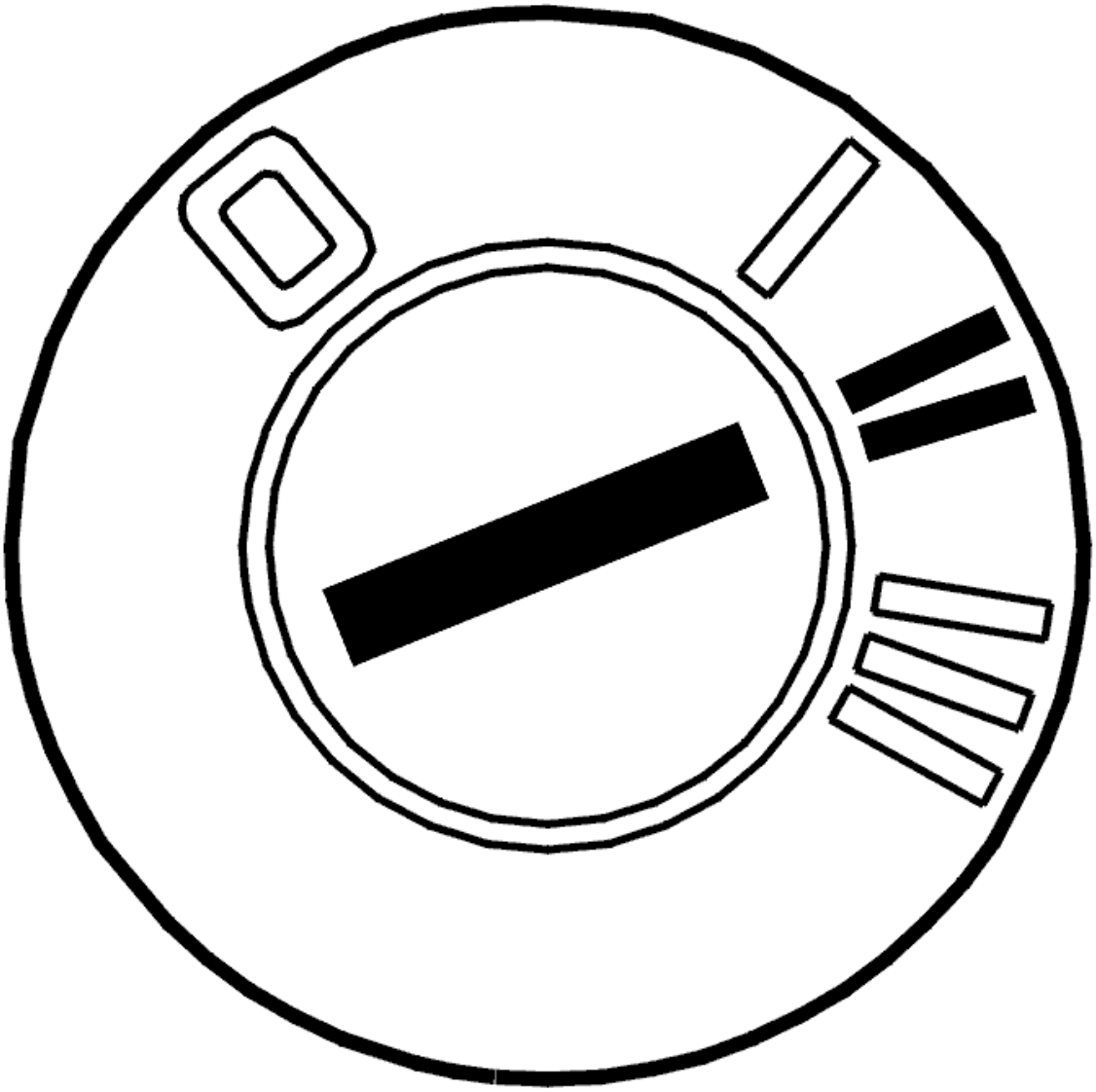

Fig. 21: Identifying Ignition ON
Courtesy of VOLVO CARS CORPORATION

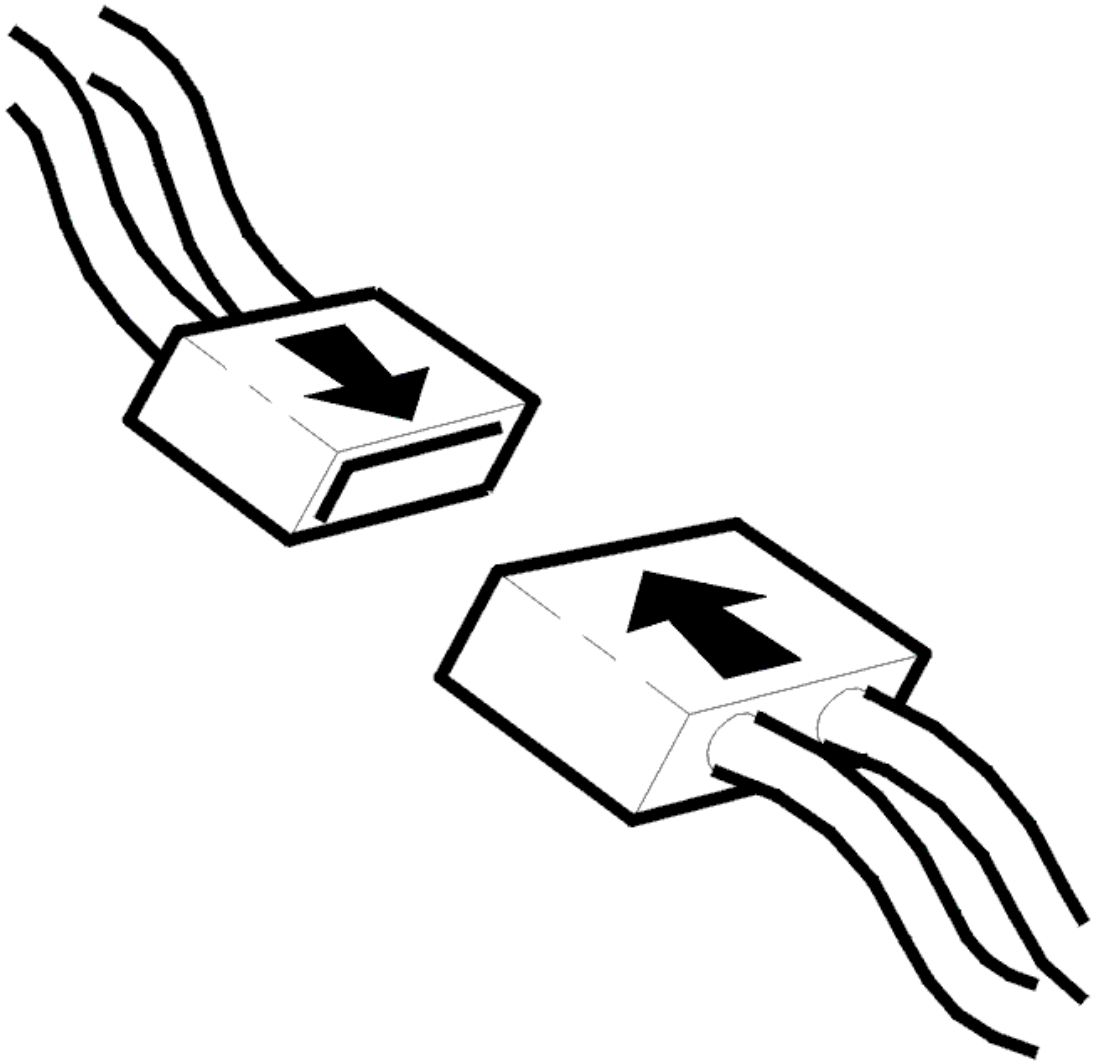

Fig. 22: Connecting Connector
Courtesy of VOLVO CARS CORPORATION

- Ignition off
- Reconnect the connectors. Reinstall the components
- Ignition on.

  Check that the upper electronic module (UEM) is powered by switching on one of the rear reading lamps.

Does one of the rear reading lamps light?

- **YES**

  OKAY: Troubleshooting has been completed.

- **NO**

  Refer to **INFORMATION**

SIGNAL MISSING

GENERAL INFORMATION

HINT: For general information about fault-tracing the control area network (CAN), see the linked document below. See GENERAL INFORMATION ABOUT FAULT-TRACING IN THE CAN NETWORK (2005-2012)

In order to check the control area network (CAN) cables, the resistance in the network must be measured. The resistance between the two CAN cables, with the network connected, must be 60ohms in both the high speed network and the low speed network.

NOTE: Resistance will only be 60 ohms if the main artery of the CAN network is whole and the network is connected. If the main artery of the CAN network is split somewhere and a reading is taken between the CAN cables, resistance will be 120 ohms.

If diagnostic trouble codes (DTCs) can be read off from the relevant control module, the fault is probably intermittent. The locations that must be checked in the event of a fault in the low speed network are the junctions behind the central electronic module (CEM) and the audio module (AUM) as well as the cable harness behind the Audio module (AUM).

Intermittent fault in the current supply to the actual control module is indicated by the DTC in the Central electronic module (CEM) (CEM-1A5X or CEM-1A6X). There is probably no diagnostic trouble code (DTC) in the relevant control module as the control module cannot store a diagnostic trouble code (DTC) when it is without power.

- **Continue**

  Refer to **CHECKING THE RESISTANCE OF THE CONTROL AREA NETWORK (CAN) CABLES**

CHECKING THE RESISTANCE OF THE CONTROL AREA NETWORK (CAN) CABLES

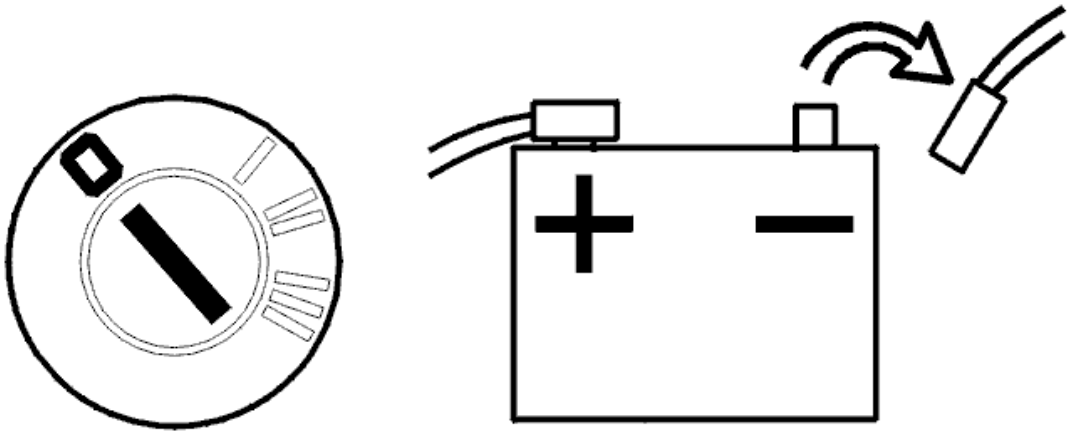

Fig. 23: Identifying Ignition In Off Position And Disconnecting Negative Cable From Battery
Courtesy of VOLVO CARS CORPORATION

- Disconnect the battery negative lead. The network must not be powered when taking resistance readings. Otherwise an incorrect value may be obtained.
- Connect the adapter wiring to the central electronic module (CEM).

  HINT: Where a breakout box cannot be used, take readings from the rear of the affected connectors if possible. This prevents terminal pins and socket housings being damaged.

  When taking readings on the low speed network

  - When taking readings on the low speed network the adapter wiring should be connected to the Central electronic module (CEM) and readings taken from there. Readings can even be taken in the connector for the Power seat module (PSM). The advantage of the adapter wiring to the Central electronic module (CEM) is that all control module can be connected in the network when taking readings and access can be gained to both the high speed and low speed networks.

    The resistance reading only measures the main arteries in the low speed network, not the junctions that exist for different control modules.

  When taking readings on the high speed network

  - When taking readings on the high speed network the adapter wiring should be connected to the Engine control module (ECM) and readings taken from there. The Engine control module (ECM) must be connected. This resistance reading only measures the main arteries in the high speed network.

  Connect an ohmmeter to the terminals for CAN-L and CAN-H on the relevant network. Turn the contacts and turn the cable harness. Resistance must be approximately 60 ohms.

NOTE: **Resistance will only be 60 ohms if the main artery of the CAN network is whole and the network is connected. If the main artery of the CAN network is split somewhere and a reading is taken between the CAN cables, resistance will be 120 ohms.**

Other information

- see **BATTERY, DISCONNECTING**
- see **CONNECTING THE BREAKOUT BOX**
- see **CHECKING WIRING AND TERMINALS**

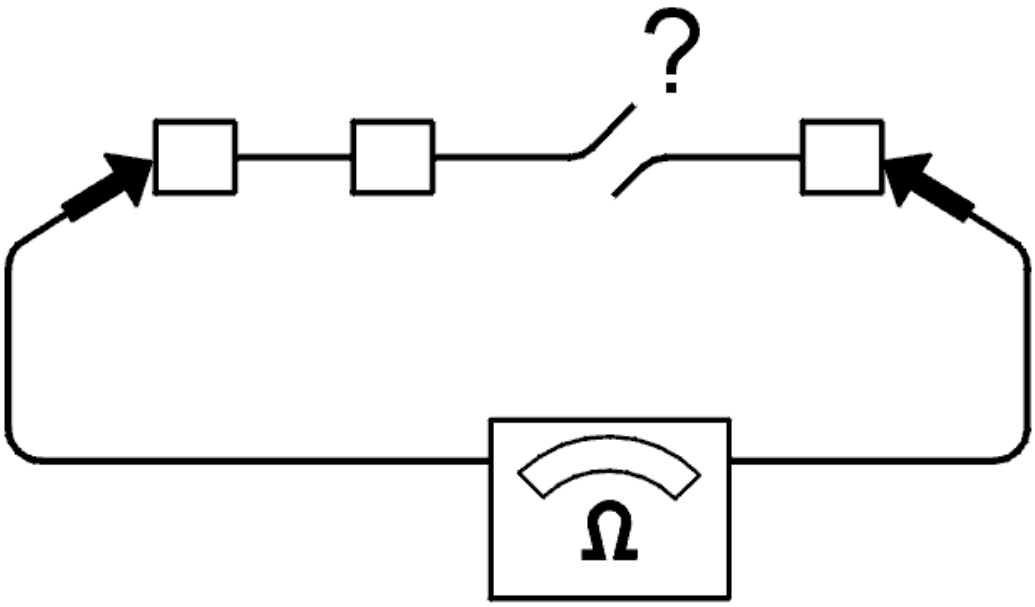

Fig. 24: Checking For Open Circuit
Courtesy of VOLVO CARS CORPORATION

Is the value OK?

- **YES**

  Refer to **CHECKING A SHORT-CIRCUIT IN CAN CABLES**

- **NO**

  Refer to **IDENTIFYING FAULT CAUSES IN THE CAN NETWORK**

CHECKING A SHORT-CIRCUIT IN CAN CABLES

Connect an ohmmeter between respective CAN cable and voltage supply and between the CAN cables and ground. Turn the contacts and turn the cable harness. The resistance must be infinite or very high.

HINT: Readings can be taken from one and the same connector if the CAN wiring, voltage supply and ground is pre-routed. If possible, measure from the rear of the affected connectors in order to minimize any damage and future loose connections. If this is not possible, use the adapter wiring or loose terminal pin for good contact.

Was a fault detected?

- **YES**

  Refer to **IDENTIFYING FAULT CAUSES IN THE CAN NETWORK**

- **NO**

  Refer to **CHECKING THE TRAFFIC LOAD ON THE CAN CABLES**

CHECKING THE TRAFFIC LOAD ON THE CAN CABLES

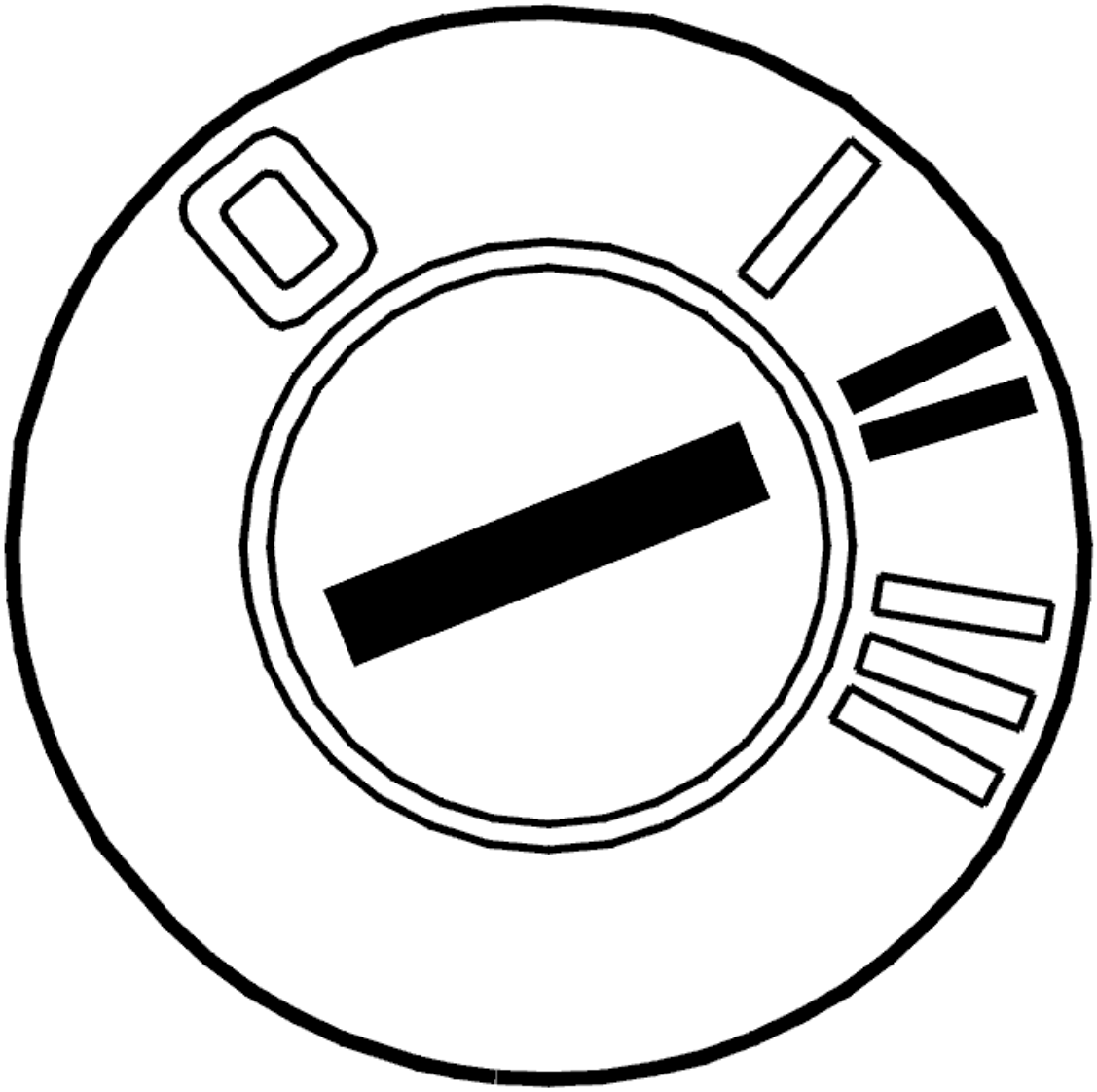

Fig. 25: Identifying Ignition ON
Courtesy of VOLVO CARS CORPORATION

- Connect the battery.
- Ignition on.

Faults in the CAN network may be due to a control module sending faulty messages that disrupt normal communication. When messages are sent incorrectly, this results in a considerable increase in the amount of traffic on the CAN network. The load can be checked by reading the average value of the voltage on the CAN cables in relation to ground.

The following applies for model year -2004:

Connect a voltmeter between CAN-L and ground. The voltage shall be approx. 2.3 V.

Then connect a voltmeter between CAN-H and ground. The voltage shall be approx. 2.8 V.

The following applies for model year 2004-:

Connect a voltmeter between CAN-L and ground. The voltage should be approx: V

Connect a voltmeter between CAN-H and ground. The voltage should be approx: V

NOTE: **For vehicles of later model years, normal voltage values lie within a specific interval due to increased traffic between the control modules on the CAN network upon update of the electrical system.**

HINT: If possible, measure from the rear of the affected connectors so that they are not damaged.

Other information

- see **BATTERY, DISCONNECTING**

Is the value OK?

- **YES**

  Refer to **INFORMATION**

- **NO**

  Refer to **IDENTIFYING A CONTROL MODULE IN THE CAN NETWORK**

IDENTIFYING FAULT CAUSES IN THE CAN NETWORK

- Disconnect a control module that disconnects the CAN network (a control module that has four terminals to the CAN network).

  HINT: For the low speed network, suitable places for disconnecting the network are at the steering wheel module (SWM), the driver information module (DIM) or the climate control module (CCM).

  In the event of an short-circuit between on of the CAN cables and voltage or ground, the fault can be localized disconnecting a control module that splits the CAN network. Readings can then be taken to determine on which side the fault is on the disconnected control module.

  Connect an ohmmeter between the CAN cable and voltage supply respectively ground. Take readings from both ends of the CAN networks at the network junction. Twist and bend the cable harness to find any intermittent short-circuits. The resistance must be infinite or very high (more than 1 Mohms).

  If a fault can be localized in one direction, split the network at a point further on in the CAN network in the direction that the fault was discovered and take a new reading. Try to locate the fault in this way.

  HINT: A short-circuit between the CAN cables and supply voltage or ground may be in either the wiring or in a control module.

Remedy the cables as necessary. If a fault is found on one control module, replace the control module.

- **Continue**

  Refer to **VERIFICATION**

IDENTIFYING A CONTROL MODULE IN THE CAN NETWORK

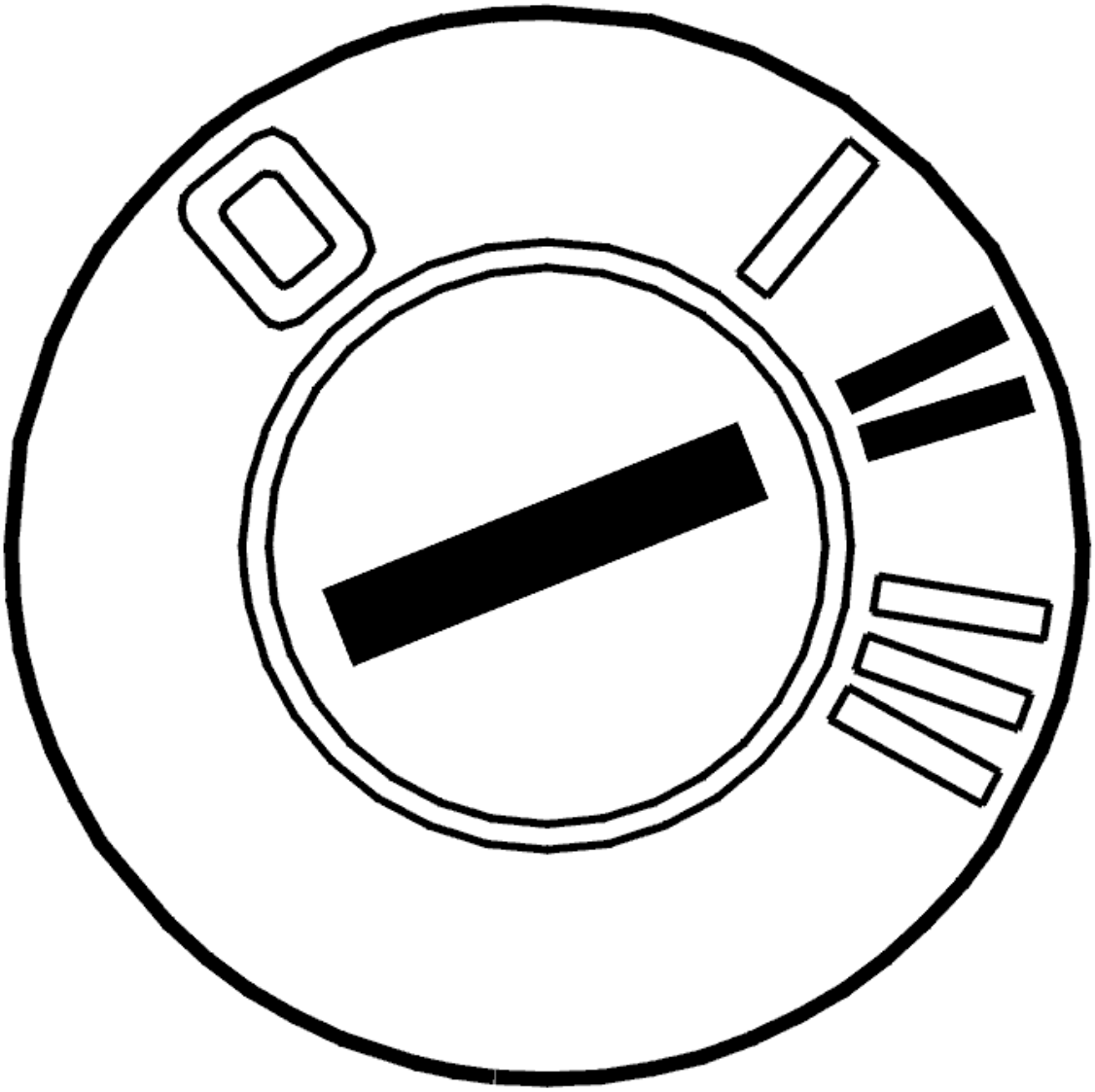

Fig. 26: Identifying Ignition ON
Courtesy of VOLVO CARS CORPORATION

- Connect the battery.
- Ignition on.

  If the load on the CAN network is too high, this may be due to a control module transmitting faulty messages on the CAN network. This is called a disruptive control module. The fault may also be due to

an intermittent short-circuit to supply voltage or ground in one of the CAN cables. This results in the control modules on the CAN network starting to send faulty messages. The fault may occur without any of the control modules storing a diagnostic trouble code (DTC). The voltage can be measured between the CAN cables in order to check the load on the CAN network.

The following applies for model year -2004:

Connect a voltmeter between the CAN cables. In the event of correct communication on the network, the average value of the voltage must be approximately 0.5 V (0.4 V to 0.6 V).

The following applies for model year 2004-:The following applies for model year 2004-:

Connect a voltmeter between the CAN cables. During correct CAN network communication, voltage should be about 0.6-1.4 V.

NOTE: For vehicles of later model years, the normal voltage value is slightly higher due to increased traffic between the control modules on the CAN network upon update of the electrical system.

In the event of a communication fault the voltage is significantly higher than the above specified values. In order to identify which control module has faulty communication, cut the power supply to one control module at a time. Check the voltage in the CAN cables again. The easiest way to cut the power supply is to remove the fuse(s) for the relevant control module. Repeat until the voltage between the CAN wiring drops to the normal level.

HINT: When the probable faulty control module has been identified, connect and disconnect the supply voltage to the control module a number of times to verify that the fault appears and disappears.

NOTE: Do not cut the power to the central electronic module (CEM) unless it is the last control module left to check.

The control module that is communicating incorrectly must be replaced. Remedy as necessary.

NOTE: After a fault with "interfering" control modules, other control modules may remain in "Limp-Home mode" even when the ignition has been switched off and on several times. To remedy this, disconnect and reconnect the battery negative terminal to restore the control modules to normal function.

Other information

- see **BATTERY, DISCONNECTING**

- **Continue**

Refer to **VERIFICATION**

IDENTIFYING FAULT CAUSES IN THE CAN NETWORK

- Disconnect a control module that disconnects the CAN network (a control module that has four terminals to the CAN network).

  HINT: For the low speed network, suitable places for disconnecting the network are at the steering wheel module (SWM), the driver information module (DIM) or the climate control module (CCM).

  In the event of an open-circuit on, or short-circuit between the CAN cables, the fault can be localized by disconnecting a control module that splits the CAN network. Readings can then be taken to determine on which side the fault is on the disconnected control module.

  Connect an ohmmeter between the CAN cables. Take readings from both ends of the CAN networks at the network junction. Twist and bend the cable harness to find any intermittent short-circuits. Resistance should be 120 ohms.

  If a fault can be localized in one direction, split the network at a point further on in the CAN network in the direction that the fault was discovered and take a new reading. Try to locate the fault in this way.

  Remedy the cables as necessary.

- **Continue**

  Refer to **VERIFICATION**

VERIFICATION

HINT: After rectifying a fault, a verification should be carried out.

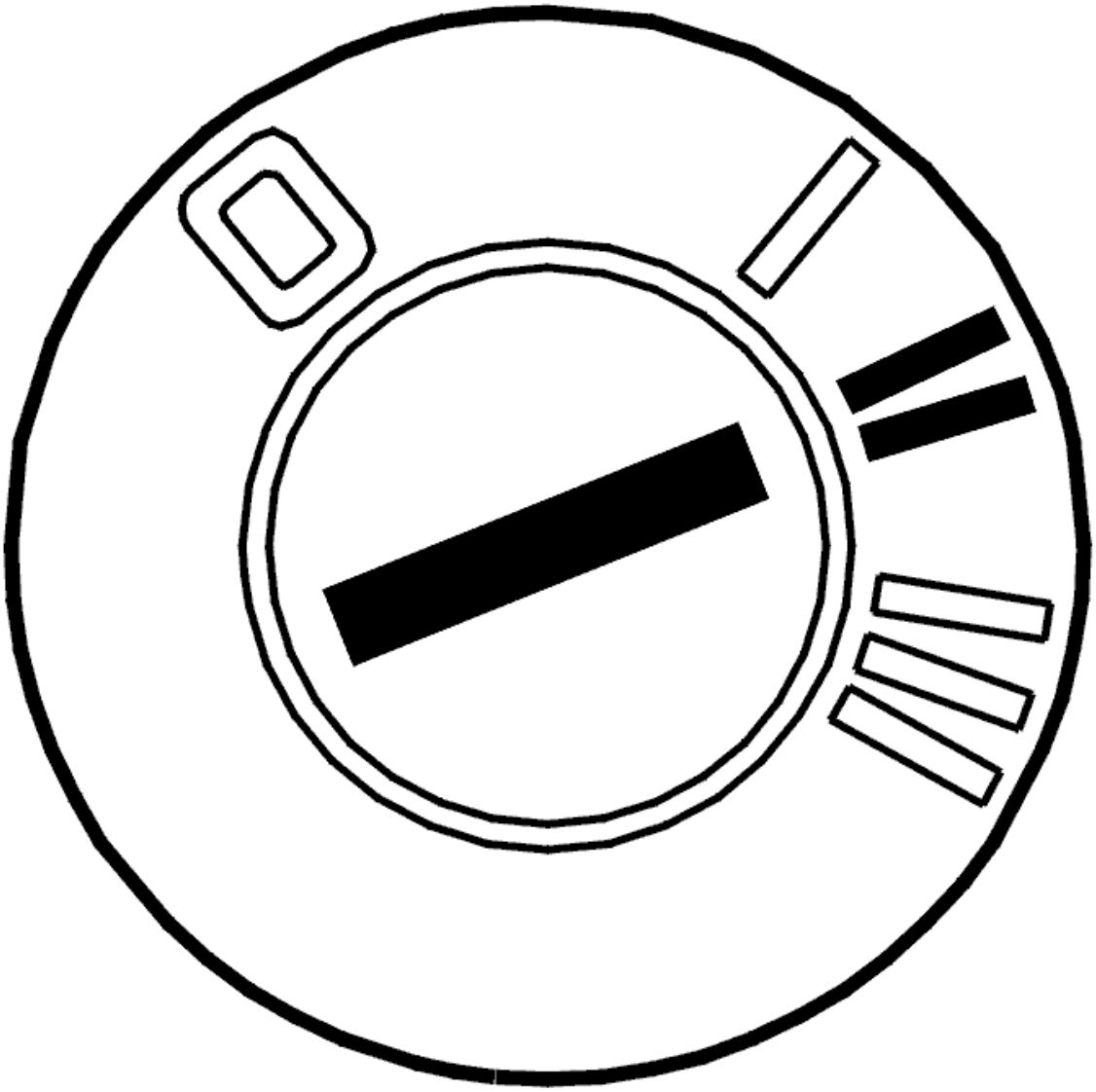

Fig. 27: Identifying Ignition ON
Courtesy of VOLVO CARS CORPORATION

- Reinstall the connectors, components etc.
- Ignition on.
- Erase diagnostic trouble codes using the VCT2000 (or appropriate scan tool).
- Start the car. Allow the vehicle to run for 10 minutes.
- Read off diagnostic trouble codes (DTCs).

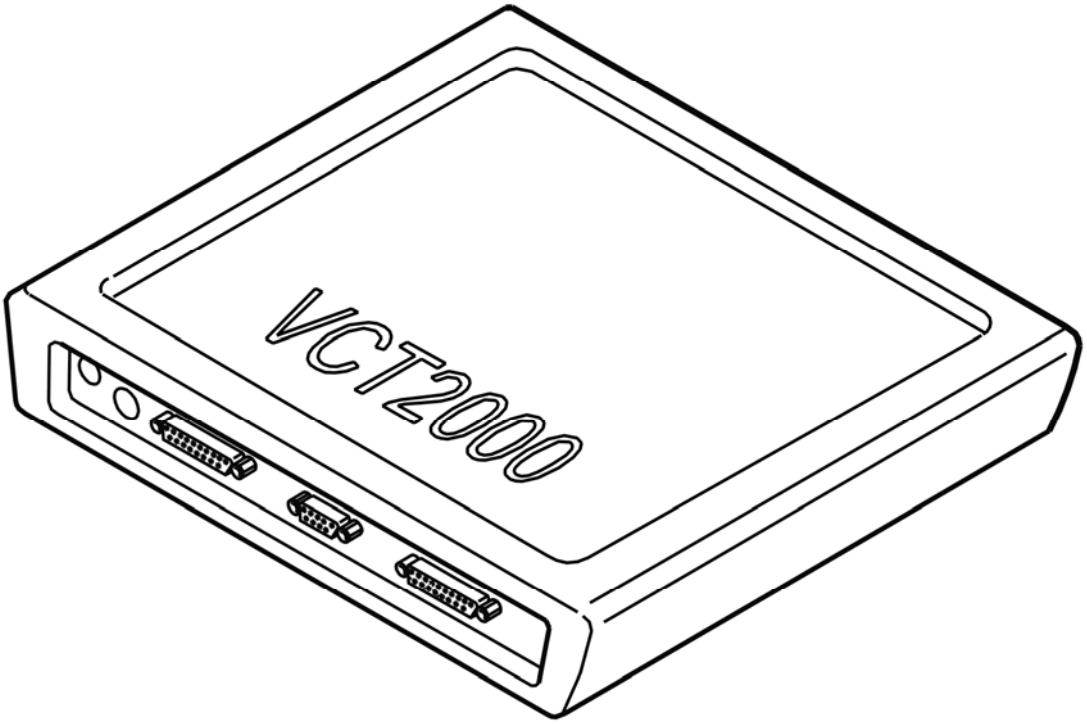

Fig. 28: Identifying VCT2000 Diagnostic Tool Symbol In VIDA
Courtesy of VOLVO CARS CORPORATION

Does the diagnostic trouble code (DTC) for a communication fault recur (CEM-1A5X or CEM-1A6X)?

- **YES**

  Refer to **INFORMATION**

- **NO**

  OKAY: Troubleshooting has been completed.

INFORMATION

FAULT-TRACING INFORMATION

Verification shows that the fault is no longer present. The diagnostic trouble code (DTC) was probably caused by an intermittent fault.

Fault-tracing for this diagnostic trouble code (DTC) is not followed by a verification.

You can view the information again or exit fault-tracing for this diagnostic trouble code (DTC).

INFORMATION

FAULT-TRACING INFORMATION

The fault should have been detected and remedied. As this is not the case fault-tracing has failed.

Exit fault-tracing for this diagnostic trouble code (DTC) or make another attempt.

INFORMATION

FAULT-TRACING INFORMATION

The fault should have been detected and remedied. As this is not the case fault-tracing has failed.

Exit fault-tracing for this diagnostic trouble code (DTC) or make another attempt.

CEM-1A5C: COMMUNICATION WITH THE UPPER ELECTRONIC MODULE (UEM). SIGNAL MISSING (2005-2012)

DIAGNOSTIC TROUBLE CODE (DTC) INFORMATION CEM-1A5C

Condition

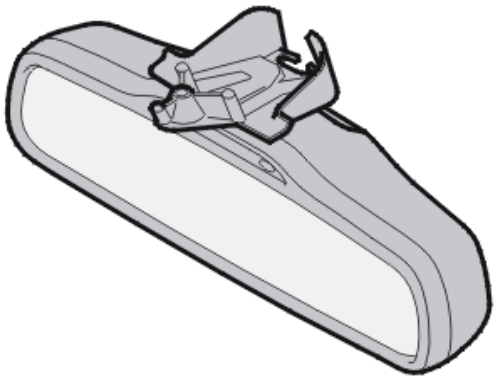

Fig. 29: Identifying Rear View Mirror
Courtesy of VOLVO CARS CORPORATION

The diagnostic trouble code (DTC) is stored if the central electronic module (CEM) registers that communication with the upper electronic module (UEM) is not operating.

The diagnostic trouble code (DTC) can be diagnosed when the ignition has been on for more than 10 seconds.

NOTE: In the event of CEM-1A5X diagnostic trouble codes (DTCs), the central electronic module (CEM) must not be replaced as the diagnostic trouble code (DTC) indicates a communication fault in the controller area network (CAN).

Substitute Value

- None.

Possible Source

- No power supply to the upper electronic module (UEM)
- Open-circuit in the ground lead for the upper electronic module (UEM)
- Contact resistance in the terminals
- Open-circuit in the wiring for the CAN low speed network to the upper electronic module (UEM)
- The upper electronic module (UEM) is not intended for this vehicle (for example a used control module with different software/hardware).

HINT: If several diagnostic trouble codes (DTCs) are stored in the central electronic module (CEM) for communication faults with other control modules in the low speed network, this indicates a common fault in the controller area network (CAN).

Fault symptom[s]

- SRS warning light on
- Cannot be controlled with the remote control.
- The power sun roof does not operate.
- The interior lighting does not work.

SIGNAL MISSING

CHECKING THE FUNCTION OF THE UPPER ELECTRONIC MODULE (UEM)

Check that the upper electronic module (UEM) is powered by switching on one of the rear reading lamps.

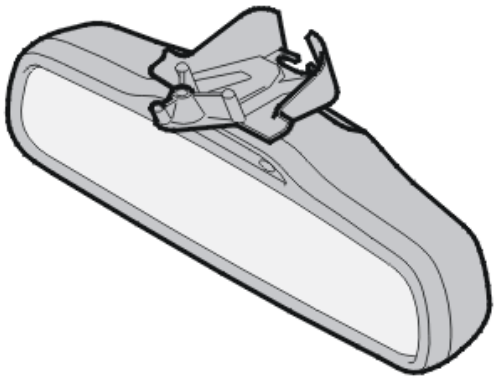

Fig. 30: Identifying Rear View Mirror
Courtesy of VOLVO CARS CORPORATION

Does one of the rear reading lamps light?

- **YES**

  Refer to **CHECKING COMMUNICATION WITH THE UPPER ELECTRONIC MODULE (UEM)**

- **NO**

  Refer to **CHECKING THE POWER SUPPLY AND GROUND FOR THE UPPER ELECTRONIC MODULE (UEM)**

CHECKING THE POWER SUPPLY AND GROUND FOR THE UPPER ELECTRONIC MODULE (UEM)

Check that the fuse for the control module is intact.

Check the power supply and ground for the upper electronic module (UEM) as follows.

Remedy as necessary.

Other information:

- see **CHECKING THE GROUND TERMINAL**
- see **CHECKING WIRING AND TERMINALS**

Was a fault detected?

- **YES**

  Refer to **CHECKING THE FUNCTION OF THE UPPER ELECTRONIC MODULE (UEM)**

- **NO**

  Refer to **SIGNAL MISSING**

CHECKING COMMUNICATION WITH THE UPPER ELECTRONIC MODULE (UEM)

HINT: The CAN communication with the control module is probably OK if the control module ID can be read off. In that case the fault is probably intermittent and will then be more difficult to trace.

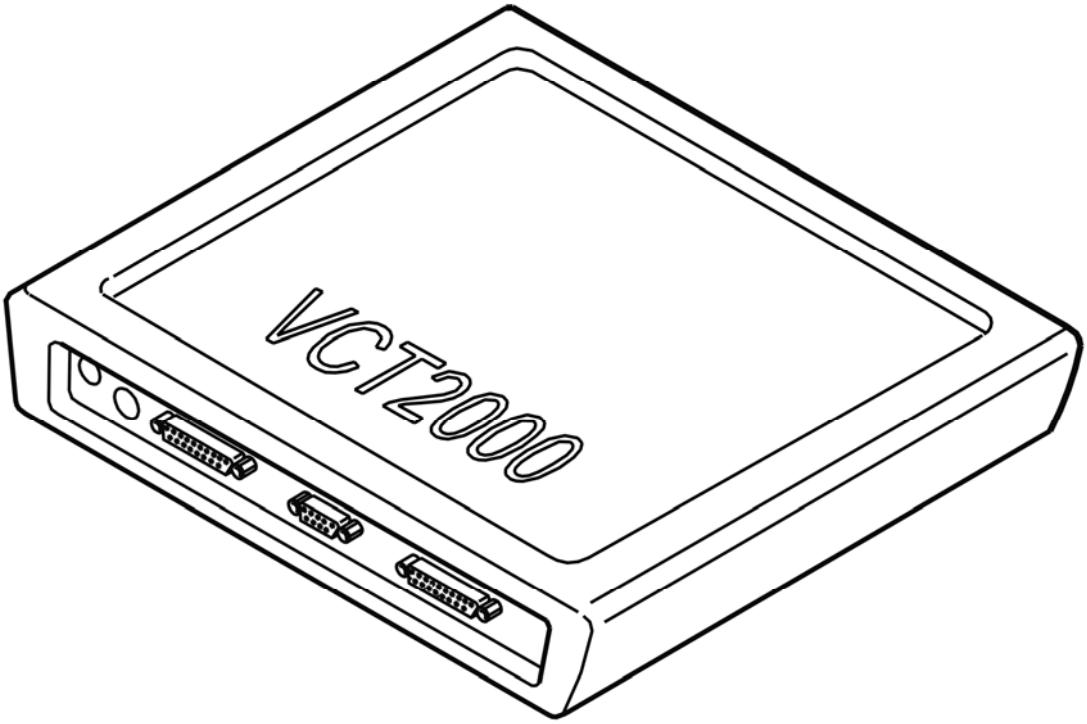

Fig. 31: Identifying VCT2000 Diagnostic Tool Symbol In VIDA
Courtesy of VOLVO CARS CORPORATION

- Try to communicate with the upper electronic module (UEM) by reading off the control module ID
- Use the VCT2000 (or appropriate scan tool)

- **Continue**

  Refer to **SIGNAL MISSING**

CHECKING THE FUNCTION OF THE UPPER ELECTRONIC MODULE (UEM)

HINT: After carrying out the repair, check that the fault has been remedied.

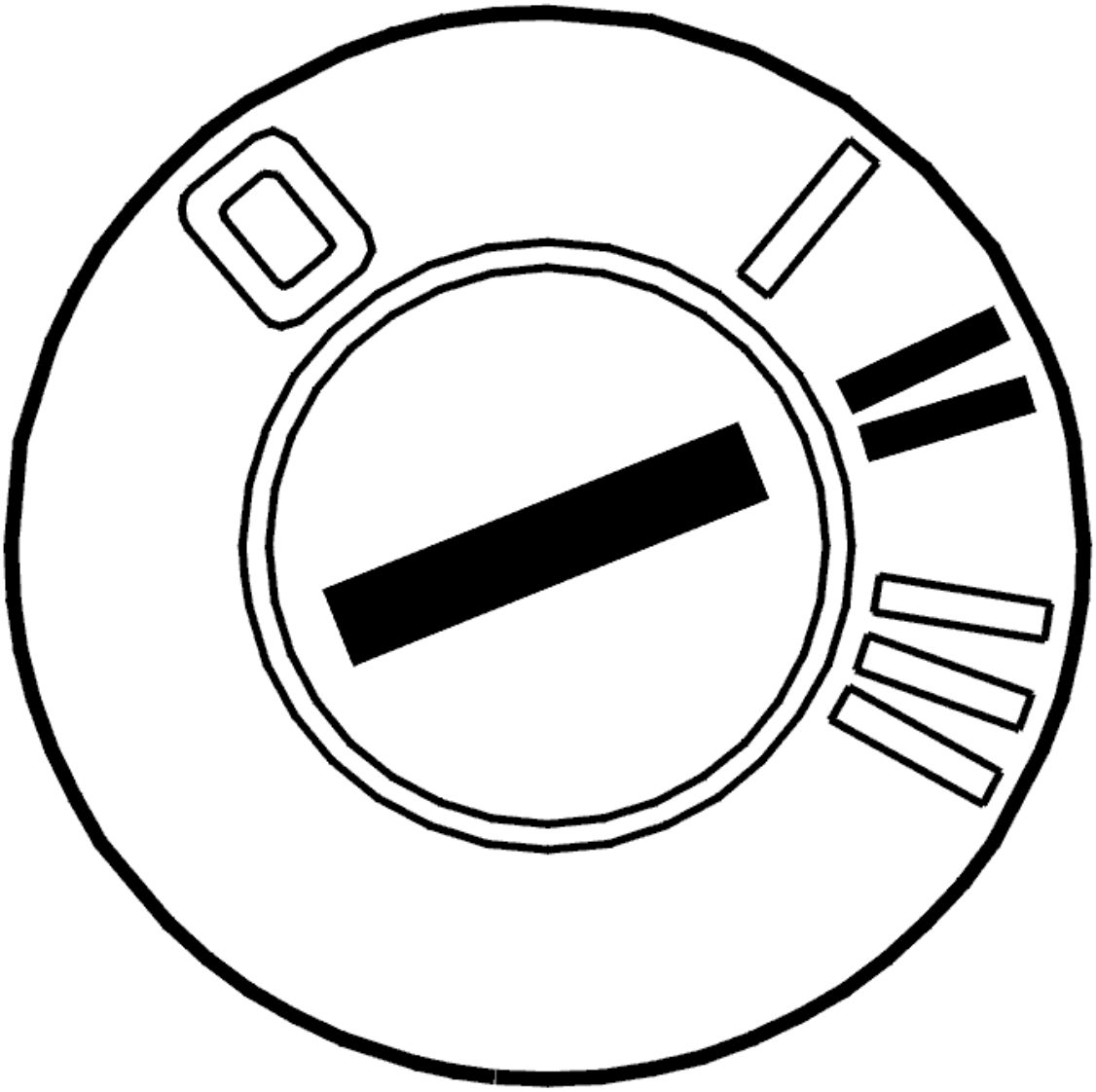

Fig. 32: Identifying Ignition ON
Courtesy of VOLVO CARS CORPORATION

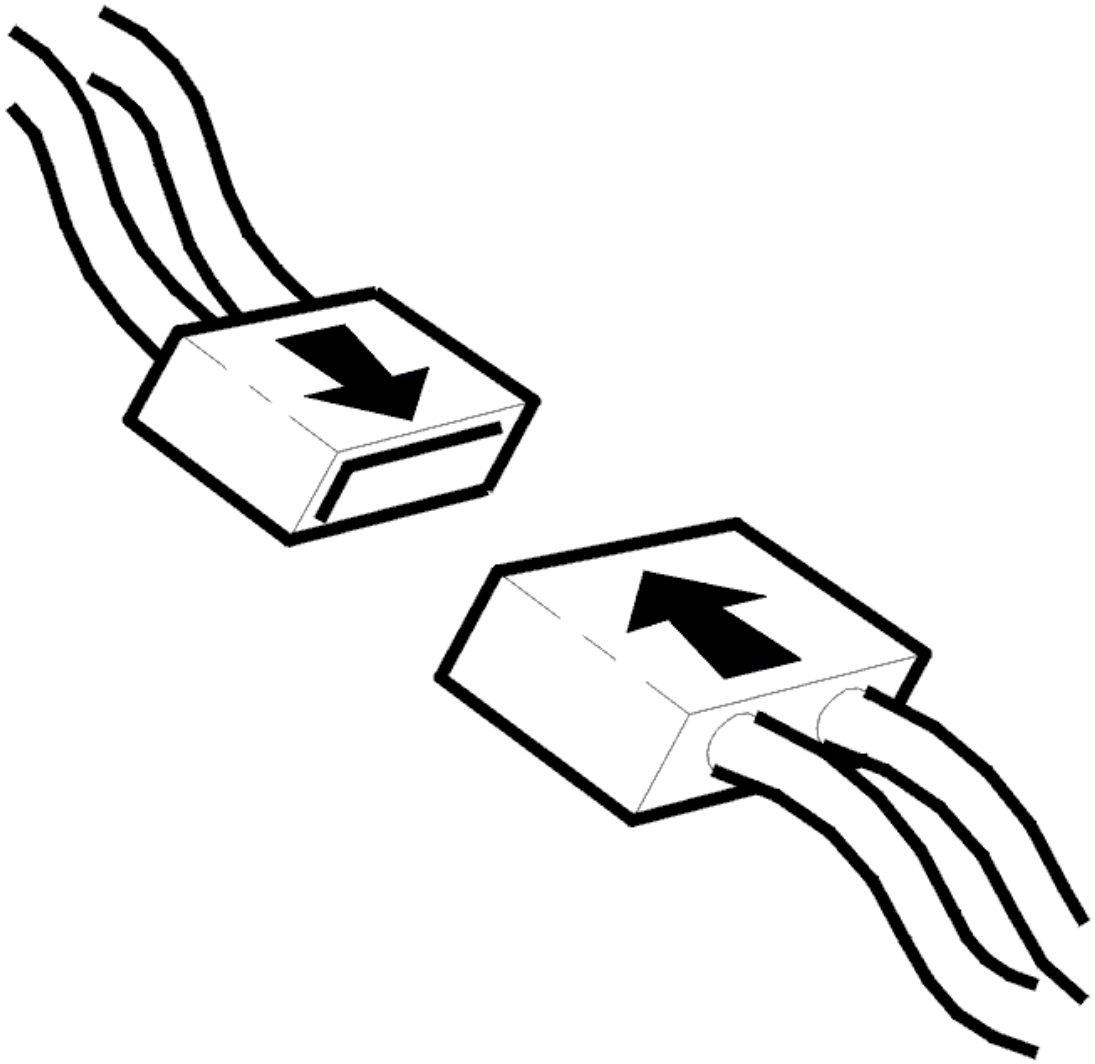

Fig. 33: Connecting Connector
Courtesy of VOLVO CARS CORPORATION

- Ignition off
- Reconnect the connectors. Reinstall the components
- Ignition on.

  Check that the upper electronic module (UEM) is powered by switching on one of the rear reading lamps.

Does one of the rear reading lamps light?

- **YES**

  OKAY: Troubleshooting has been completed.

- **NO**

  Refer to **INFORMATION**

SIGNAL MISSING

GENERAL INFORMATION

NOTE: Illustrations shown are only examples.

HINT: For general information about CAN-troubleshooting, see: GENERAL INFORMATION ABOUT FAULT-TRACING IN THE CAN NETWORK

- **General about CAN-related diagnostic trouble codes:**

  CEM-DF01 - DF17 can only be stored in Central electronic module (CEM). These diagnostic trouble codes are stored when an electric fault is detected in CAN-lines. Start with these diagnostic trouble codes first.

  CEM-1AXX only stored in Central electronic module (CEM). One diagnostic trouble code for every control module on the CAN-net. These diagnostic trouble codes indicate that Central electronic module (CEM) does not receive any reply from other control modules.

  XXX-E000 (HS-CAN)/E001 (LS-CAN) can be stored in all CAN-connected control modules. These diagnostic trouble codes indicate that the control module has detected interference on the CAN-net.

  XXX-E003 can be stored in all CAN-connected control modules except in Central electronic module (CEM). The control modules on the CAN-net listen for a message (identity number) that is sent out at regular intervals from Central electronic module (CEM). This diagnostic trouble code indicates that the control module has not received any identity number, or that the expected number is not correct. Interference on the CAN-net can also store this diagnostic trouble code.

  NOTE: In case of CAN-related faults, it is likely that a combination of above diagnostic trouble codes occur.

  NOTE: After fault with control modules that interfere with communication, other control modules may remain in Limp-Home (that is, they work with reduced functionality) even when the ignition has been turned off and on a few times. For certain faults in the CAN-net where control modules have stopped communicating, it may help to disconnect/reconnect the battery to "restart" the control module/CAN-net.

  If diagnostic trouble codes (DTCs) for communication faults can be read off from a control module, the fault is probably intermittent.

  Intermittent fault in the voltage supply and ground to a control module on the CAN network results in the

Central electronic module (CEM) storing a diagnostic trouble code (DTC) for an open-circuit in communication with the control module where the voltage supply does not work. There will probably not be a diagnostic trouble code (DTC) in the control module where the open-circuit in the voltage supply occurred as the control module cannot store a diagnostic trouble code (DTC) when it is not supplied with power.

NOTE: **Central electronic module (CEM) should not be replaced in case of CAN-fault, unless troubleshooting reveals that Central electronic module (CEM) has an internal fault.**

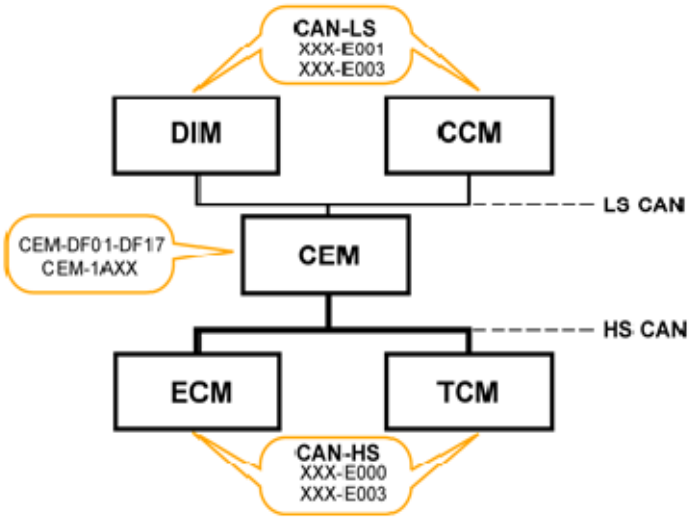

Fig. 34: High-Speed CAN And Low-Speed CAN Communication Diagram
Courtesy of VOLVO CARS CORPORATION

- **Continue**

Refer to **CHECKING RESISTANCE IN CAN-NET**

CHECKING RESISTANCE IN CAN-NET

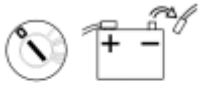

Fig. 35: Ignition Off And Disconnecting Battery Negative Lead
Courtesy of VOLVO CARS CORPORATION

- Ignition off
- Disconnect the battery negative lead
- Connect OBDII-Box **(951 3015)** to the diagnostics socket.

For general information about CAN-troubleshooting, see: **GENERAL INFORMATION ABOUT FAULT-TRACING IN THE CAN NETWORK**

Measure resistance between the following connections on the OBDII-box/diagnostics socket.

- #3 and #11. The resistance should be approx. 55 - 65 ohms.
- If resistance is approx. 120 ohms, this indicates open circuit in the circuit so that only one terminating resistor (120 ohms) has been measured.
- If resistance is above 1 kohms this indicates open circuit/high contact resistance somewhere in the circuit.
- If resistance is below 55 ohms this indicates short-circuiting/contact resistance between the CAN-lines somewhere in the circuit.

HINT: For LS-CAN, terminating resistors are located in Upper electronic module (UEM) and Rear electronic module (REM).

Twist the cable harness and wiggle connectors where they can be accessed along the cable harness during every measurement, and note if the resistance changes to detect intermittent short-circuits or open circuit.

NOTE: **Resistance measurement measures only main lines in the CAN-net (in circuit where both terminating resistors are found), not branches to certain control modules. Open circuit on branching without a terminating resistor cannot be detected with this measurement. However, short-circuiting on a branch can be detected. To measure resistance in the CAN-net to control modules located in a branching of their own, the measurement shall be done against the CAN-net at that control module. The values shall be as above.**

NOTE: **After fault with control modules that interfere with communication, other control modules may remain in Limp-Home (that is, they work with reduced functionality) even when the ignition has been turned off and on a few times. For certain faults in the CAN-net where control modules have stopped communicating, it may help to disconnect/reconnect the battery to "restart" the control module/CAN-net.**

Remedy as necessary.

Other information

- see **BATTERY, DISCONNECTING**
- see **CHECKING WIRING AND TERMINALS**

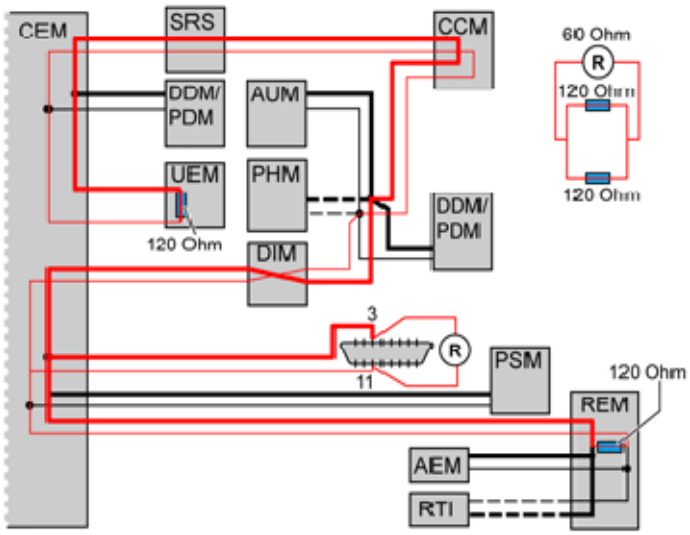

Fig. 36: Checking Resistance In CAN Lines
Courtesy of VOLVO CARS CORPORATION

Was a fault detected?

- **YES**

  Refer to **VERIFICATION**

- **NO**

  Refer to **CHECKING SHORT-CIRCUITING TO GROUND/VOLTAGE IN CAN-NET**

CHECKING THE AMOUNT OF TRAFFIC ON THE LS-CAN

Fig. 37: Identifying Ignition On Position
Courtesy of VOLVO CARS CORPORATION

- Connect the battery
- Ignition on.
- Connect OBDII-Box **(951 3015)** to the diagnostics socket.

  For general information about CAN-troubleshooting, see: **GENERAL INFORMATION ABOUT FAULT-TRACING IN THE CAN NETWORK**

  Faults in the CAN network may be due to a control module sending faulty messages that disrupt normal

communication. When messages are sent incorrectly, this results in a considerable increase in the amount of traffic on the CAN network. The load can be checked by reading the average value of the voltage on the CAN cables in relation to ground.

Measure voltage between the following connections on the OBDII-box/diagnostics socket.

- #3 and #4 (ground). The voltage should be approx:2, 8 - 3, 2 V.
- #11 and #4 (ground). The voltage should be approx:1, 8 - 2, 2 V.
- #3 and #11. The voltage shall be between approx. 0.55-1.4 V. The voltage shall normally be between 0.55 - 0.90 V. A higher voltage may indicate increased traffic on the CAN-net. In case of fault in communication/too high traffic on the CAN-net, the voltage is considerably higher than the above stated values.

NOTE: After fault with control modules that interfere with communication, other control modules may remain in Limp-Home even when the ignition has been turned off and on a few times. For certain faults in the CAN-net where control modules have stopped communicating, it may help to disconnect/reconnect the battery to "restart" the control module/CAN-net.

HINT: DiCE can be used as fault detection tool if fault is suspected on the CAN-net that cannot be detected with normal troubleshooting. Interference, intermittent faults, faulty messages on the CAN-net etc., are examples of such faults. The tool registers fault messages used on the CAN-net. Fault messages may be caused by short intermittent malfunctions on the CAN-net or by a control module sending fault messages. See tools:951 3010 as well as associated TJ 20402.

- Ignition on.
- Connect DiCE to the diagnostics socket.
- Note the blue LED-indicator. The indicator flashes to show detection of fault messages.

NOTE: Certain interference may occur without any real fault

Cable fault

- Shake the cables lightly and pull lightly on the connections during the check to locate any fault. Note the blue LED-indicator.

"Chatting" control modules

- "Chatting" control modules may be difficult to find and troubleshooting may take time. Let the vehicle stand with DiCE connected for an extended time period. Afterwards, activate functions to provoke a malfunction. It may take up to several hours before the fault messages are sent. When the indicator starts to flash, remove the fuse for one control module at a time until the indicator stops flashing. When the indicator stops flashing, restore the fuse for the relevant control module and check that the indicator starts to flash again. Then it is likely that the problem is identified.

Remedy wiring as necessary.

Other information

- see **BATTERY, DISCONNECTING**
- see **TROUBLESHOOTING USING DICE ERROR FRAME FINDER**
- see **CHECKING WIRING AND TERMINALS**

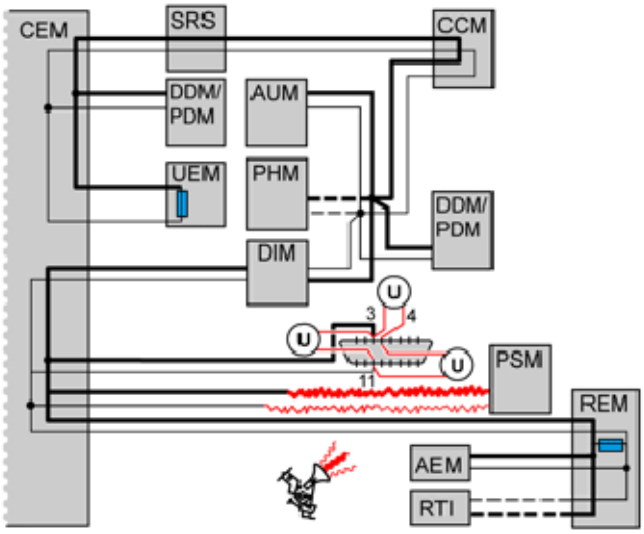

Fig. 38: Checking Amount Of Traffic On LS-CAN
Courtesy of VOLVO CARS CORPORATION

Was a fault detected?

- **YES**

  Refer to **IDENTIFYING A CONTROL MODULE IN THE CAN NETWORK**

- **NO**

  Refer to **CHECKING VOLTAGE-DROP IN CABLE FOR CAN-H AND CAN-L, RESPECTIVELY**

IDENTIFYING A CONTROL MODULE IN THE CAN NETWORK

Fig. 39: Identifying Ignition On Position
Courtesy of VOLVO CARS CORPORATION

For general information about CAN-troubleshooting, see: **GENERAL INFORMATION ABOUT FAULT-**

TRACING IN THE CAN NETWORK

HINT: DiCE can be used as fault detection tool if fault is suspected on the CAN-net that cannot be detected with normal troubleshooting. Interference, intermittent faults, faulty messages on the CAN-net (chattering control modules) etc., are examples of such faults. The tool registers fault messages used on the CAN-net. Fault messages may be caused by short intermittent malfunctions on the CAN-net or by a control module sending fault messages. See tools:951 3010 (memory card) as well as associated TJ 20402. If the load on the CAN network is too high, this may be due to a control module transmitting faulty messages on the CAN network. This is called a disruptive control module. The fault may also be due to an intermittent short-circuit to supply voltage or ground in one of the CAN cables. This results in the control modules on the CAN network starting to send faulty messages. The fault may occur without any of the control modules storing a diagnostic trouble code (DTC). The voltage can be measured between the CAN cables in order to check the load on the CAN network.

NOTE: **It is not necessarily the control module that has set the diagnostic trouble code that communicates incorrectly. Faulty messages can come from any control module in the same section of the CAN network. However, faulty communication in one network cannot affect the communication on the other network. In other words, faulty communication on the LS-CAN cannot disrupt communication on the HS-CAN and vice versa.**

- Ignition on.
- Connect OBDII-Box **(951 3015)** to the diagnostics socket.

Check communication/load on CAN-net by measuring voltage between CAN-L and CAN-H. Measure voltage between the following connections on the OBDII-box/diagnostics socket.

- #3 and #11. The average value of the voltage must be approximately 0.6-1.4 V. The voltage shall normally be between 0.55 - 0.90 V. A higher voltage may indicate increased traffic on the CAN-net. In case of fault in communication/too high traffic on the CAN-net, the voltage is considerably higher than the above stated values.

In order to identify which control module has faulty communication, cut the power supply to one control module at a time. Check the voltage in the CAN cables again. The easiest way to cut the power supply is to remove the fuse(s) for the relevant control module. Repeat until the voltage between the CAN wiring drops to the normal level.

NOTE: **When connecting and disconnecting certain control modules, diagnostic trouble codes (DTCs) may be stored in other control modules.**

HINT: When the suspected defective control module has been identified, connect and disconnect the supply voltage to the control module a number of times to verify that the malfunction appears and disappears. Switch off the ignition between each check.

NOTE: **Do not cut the power to the central electronic module (CEM) unless it is the last control module left to check.**

A control module that is communicating incorrectly must be replaced. See Repairing and installing/Removing, replacing and installing.

NOTE: **After fault with control modules that interfere with communication, other control modules may remain in Limp-Home (that is, they work with reduced functionality) even when the ignition has been turned off and on a few times. For certain faults in the CAN-net where control modules have stopped communicating, it may help to disconnect/reconnect the battery to "restart" the control module/CAN-net.**

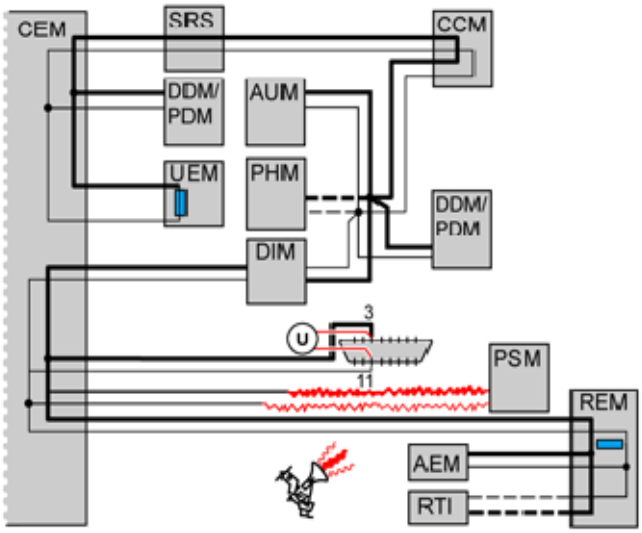

Fig. 40: Checking Communication/Load On CAN-net Between CAN-L And CAN-H
Courtesy of VOLVO CARS CORPORATION

- **Continue**

  Refer to **VERIFICATION**

VERIFICATION

HINT: After rectifying a fault, a verification should be carried out.

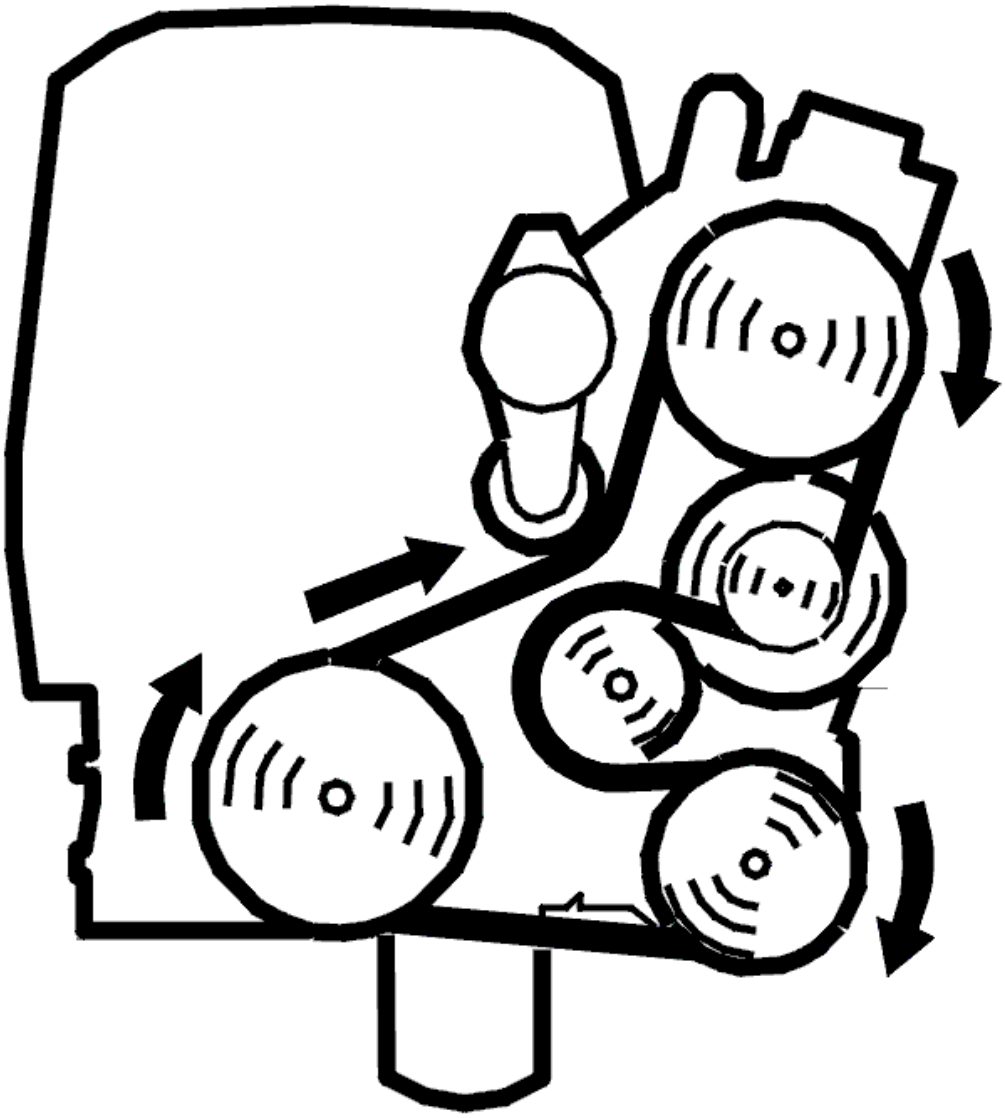

Fig. 41: Belt Routing / Engine Idling - Volvo
Courtesy of VOLVO CARS CORPORATION

Fig. 42: Identifying Ignition On Position
Courtesy of VOLVO CARS CORPORATION

- Reinstall the connectors, components etc.
- Ignition on.

NOTE: **For certain faults in the CAN-net where control modules have stopped communicating, it may help to disconnect/reconnect the battery to "restart" the control module/CAN-net.**

- Erase diagnostic trouble codes (DTCs) in all control modules.
- Ignition off.
- Ignition on.
- Start the vehicle. Allow the vehicle to run for 10 minutes. Start the engine. Allow the engine to run at idle speed for 10 minutes
- Read out the diagnostic trouble codes in the vehicle via the DIAGNOSTICS tab.

Does the diagnostic trouble code (DTC) for faulty communication return?

- **YES**

  Refer to **INFORMATION**

- **NO**

  OKAY: Troubleshooting has been completed.

CHECKING SHORT-CIRCUITING TO GROUND/VOLTAGE IN CAN-NET

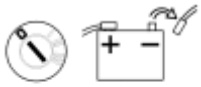

Fig. 43: Ignition Off And Disconnecting Battery Negative Lead
Courtesy of VOLVO CARS CORPORATION

- Ignition off.
- Disconnect the battery negative lead.
- Connect OBDII-Box **(951 3015)** to the diagnostics socket.

  For general information about CAN-troubleshooting, see: **GENERAL INFORMATION ABOUT FAULT-TRACING IN THE CAN NETWORK**

  Checking for a short-circuit to ground

  Measure resistance between the following connections on the OBDII-box/diagnostics socket.

  - #3 and #4 (ground). Measurement is shown in the illustration. The resistance should be above 1 kohms.

- #11 and #4 (ground). The resistance should be above 1 kohms.

If resistance is below 1 kohms this indicates short-circuiting between the CAN-line and ground.

Checking for a short-circuit to voltage

Measure resistance between the following connections on the OBDII-box/diagnostics socket.

- #3 and #16 (voltage). Measurement is shown in the illustration. The resistance should be above 1 kohms.
- #11 and #16 (voltage). The resistance should be above 1 kohms.

If resistance is below 1 kohms this indicates short-circuiting between the CAN-line and voltage cable.

Twist the cable harness and wiggle connectors where they can be accessed along the cable harness during every measurement, and note if the resistance changes to detect intermittent short-circuits or open circuit.

HINT: Part the CAN-net at suitable points to decide where a short-circuit may be found.

NOTE: After fault with control modules that interfere with communication, other control modules may remain in Limp-Home (that is, they work with reduced functionality) even when the ignition has been turned off and on a few times. For certain faults in the CAN-net where control modules have stopped communicating, it may help to disconnect/reconnect the battery to "restart" the control module/CAN-net.

Remedy as necessary.

Other information

- see **BATTERY, DISCONNECTING**
- see **CHECKING WIRING AND TERMINALS**

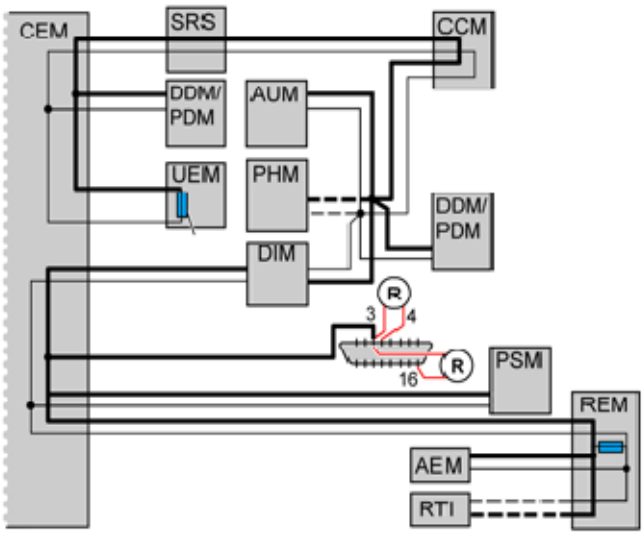

Fig. 44: Checking For Short-Circuiting To Ground/Voltage In CAN-net
Courtesy of VOLVO CARS CORPORATION

Was a fault detected?

- **YES**

  Refer to **VERIFICATION**

- **NO**

  Refer to **CHECKING THE AMOUNT OF TRAFFIC ON THE LS-CAN**

CHECKING VOLTAGE-DROP IN CABLE FOR CAN-H AND CAN-L, RESPECTIVELY

Fig. 45: Identifying Ignition On Position
Courtesy of VOLVO CARS CORPORATION

- Connect the battery.
- Ignition on.
- Connect OBDII-Box **(951 3015)** to the diagnostics socket.

  For general information about CAN-troubleshooting, see: **GENERAL INFORMATION ABOUT FAULT-TRACING IN THE CAN NETWORK**

  In principle, the voltage measured in each cable in the CAN-net shall be the same at each control module

in the network. This means that the voltage-drop in the cable for CAN-H and CAN-L, respectively, between the control modules should be very low. If there is a voltage-difference in the CAN-lines between the diagnostics socket/Central electronic module (CEM) and a control module due to, e. g., contact resistance in a connector or branching, communication may be lost/interfered with. Check if there is voltage-drop in the cable for CAN-H and CAN-L between the diagnostics socket/Central electronic module (CEM) and the control module where there is problem with communication.

Carry out the following:

Measure voltage between the following connections on the OBDII-box/diagnostics socket.

- #3 and corresponding connection on relevant control module for CAN-H. The voltage shall be lower than 50 mV.
- #11 and corresponding connection on relevant control module for CAN-L. The voltage shall be lower than 50 mV.

If voltage is too high, this indicates too high contact resistance in cable, connector, or branching. Check the circuit between the diagnostics socket and control module in question for contact resistance and oxidation.

NOTE: **After fault with control modules that interfere with communication, other control modules may remain in Limp-Home (that is, they work with reduced functionality) even when the ignition has been turned off and on a few times. For certain faults in the CAN-net where control modules have stopped communicating, it may help to disconnect/reconnect the battery to "restart" the control module/CAN-net.**

Remedy wiring as necessary.

Other information

- see **CHECKING WIRING AND TERMINALS**

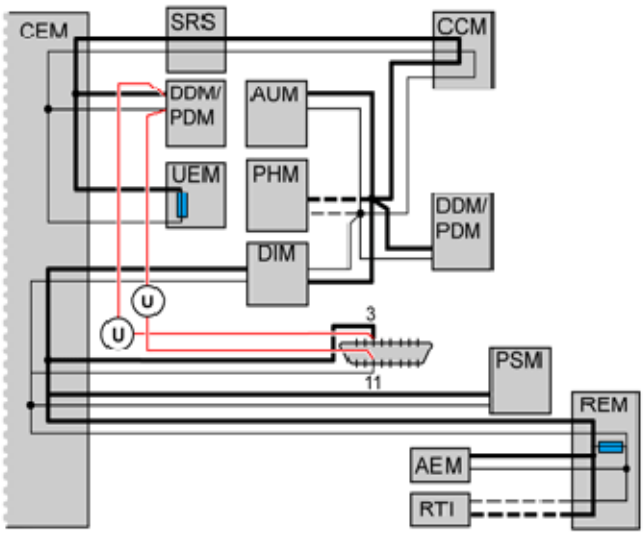

Fig. 46: Checking For Voltage-Drop In Cable For CAN-H And CAN-L
Courtesy of VOLVO CARS CORPORATION

- **Continue**

  Refer to **VERIFICATION**

INFORMATION

FAULT-TRACING INFORMATION

The fault should have been detected and remedied. As this is not the case fault-tracing has failed.

Exit fault-tracing for this diagnostic trouble code (DTC) or make another attempt.

INFORMATION

FAULT-TRACING INFORMATION

The fault should have been detected and remedied. As this is not the case fault-tracing has failed.

Exit fault-tracing for this diagnostic trouble code (DTC) or make another attempt.

CEM-1A5E: COMMUNICATION WITH THE STEERING WHEEL ANGLE SENSOR MODULE (SAS). SIGNAL MISSING (2005-2012)

DIAGNOSTIC TROUBLE CODE (DTC) INFORMATION CEM-1A5E

Condition

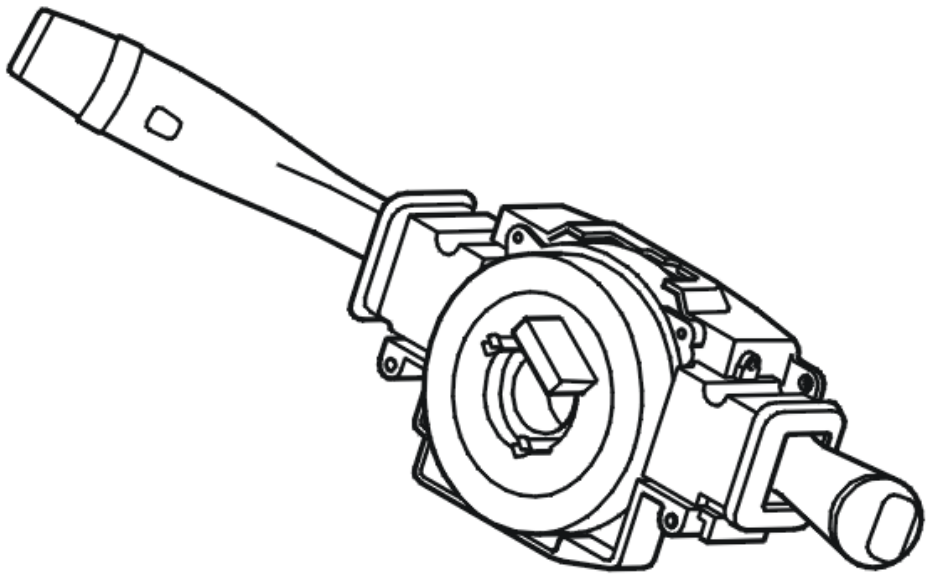

Fig. 47: Identifying Steering Wheel Control Module
Courtesy of VOLVO CARS CORPORATION

The diagnostic trouble code (DTC) is stored if the central electronic module (CEM) registers that communication with the steering wheel angle sensor module (SAS) is not operating.

The steering wheel angle sensor module (SAS) is located inside, and is supplied with power by, the steering wheel module (SWM). Only the steering wheel angle sensor module (SAS) communicates on the controller area network (CAN).

The diagnostic trouble code (DTC) can be diagnosed when the ignition has been on for more than 10 seconds.

NOTE: **In the event of CEM-1A5X diagnostic trouble codes (DTCs), the central electronic module (CEM) must not be replaced as the diagnostic trouble code (DTC) indicates a communication fault in the controller area network (CAN)**

Substitute Value

- None.

Possible Source

- No power supply to the steering wheel module (SWM)

- Open-circuit in the ground lead for the steering wheel module (SWM)
- Contact resistance in the terminals
- Open-circuit in the wiring for the CAN high speed network to the steering wheel angle sensor module (SAS)
- The steering wheel module (SWM) is not intended for this vehicle (for example a used control module with different software/hardware).

HINT: If several diagnostic trouble codes (DTCs) are stored in the central electronic module (CEM) for communication faults with other control modules in the high speed network, this indicates a common fault in the controller area network (CAN).

Fault symptom[s]

- No stability function.
- Message in the display.

CEM-1A5E: COMMUNICATION WITH THE STEERING WHEEL ANGLE SENSOR MODULE (SAS). SIGNAL MISSING (2003-2004)

DIAGNOSTIC TROUBLE CODE (DTC) INFORMATION CEM-1A5E

Condition

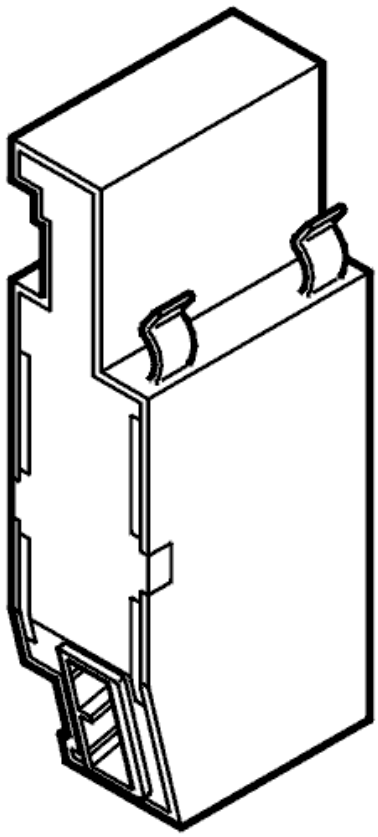

Fig. 48: Control Module For Steering Wheel Angle Sensor
Courtesy of VOLVO CARS CORPORATION

Diagnostic trouble codes (DTCs) are stored if the central electronic module (CEM) registers that communication with the steering wheel angle sensor module (SAS) is not operating.

NOTE: **In the event of CEM-1A5X diagnostic trouble codes (DTCs), the central electronic module (CEM) must not be replaced as the diagnostic trouble code (DTC) indicates a communication fault in the Control area network**

Substitute Value

- None.

Possible Source

- No power supply to the steering wheel angle sensor module (SAS)
- Open-circuit in the ground lead to the steering wheel angle sensor module (SAS)
- Contact resistance in the terminals
- Open-circuit in the wiring for the CAN high speed network to the steering wheel angle sensor module (SAS)
- The steering wheel angle sensor module (SAS) is not intended for this car (for example a used control

module with different software/hardware).

HINT: If several diagnostic trouble codes (DTCs) are stored in the central electronic module (CEM) for communication faults with other control modules in the low speed network, this indicates a common fault in the Control area network.

Fault symptom[s]

- The anti-spin warning lamp is lit (up to and including 2002 model year)
- General yellow warning lamp lit (from model year 2003 inclusive)
- No stability function
- Message in the display.

SIGNAL MISSING

CHECKING THE POWER SUPPLY AND GROUND FOR THE STEERING WHEEL ANGLE SENSOR MODULE (SAS)

Check the fuse for the steering wheel angle sensor module (SAS) in the fusebox in the passenger compartment.

NOTE: If the fuse is blown, check the circuit after the fuse before replacing the fuse. Check for a short-circuit to ground. Then replace the fuse.

Check the cable between the fuse and the steering wheel angle sensor module (SAS). Check for an open-circuit.

Check the ground cable between the steering wheel angle sensor module (SAS) and the ground terminal. Check for contact resistance and oxidation. Check for an open-circuit.

Remedy as necessary.

Other information

- To access and replace the control module, see **STEERING WHEEL ANGLE SENSOR MODULE (SAS), REPLACING**
- To connect the breakout box to the steering wheel angle sensor module (SAS), see **CONNECTING THE BREAKOUT BOX TO THE STEERING ANGLE SENSOR**
- To disconnect the battery voltage, see **BATTERY, DISCONNECTING**
- see **CHECKING WIRING AND TERMINALS** .

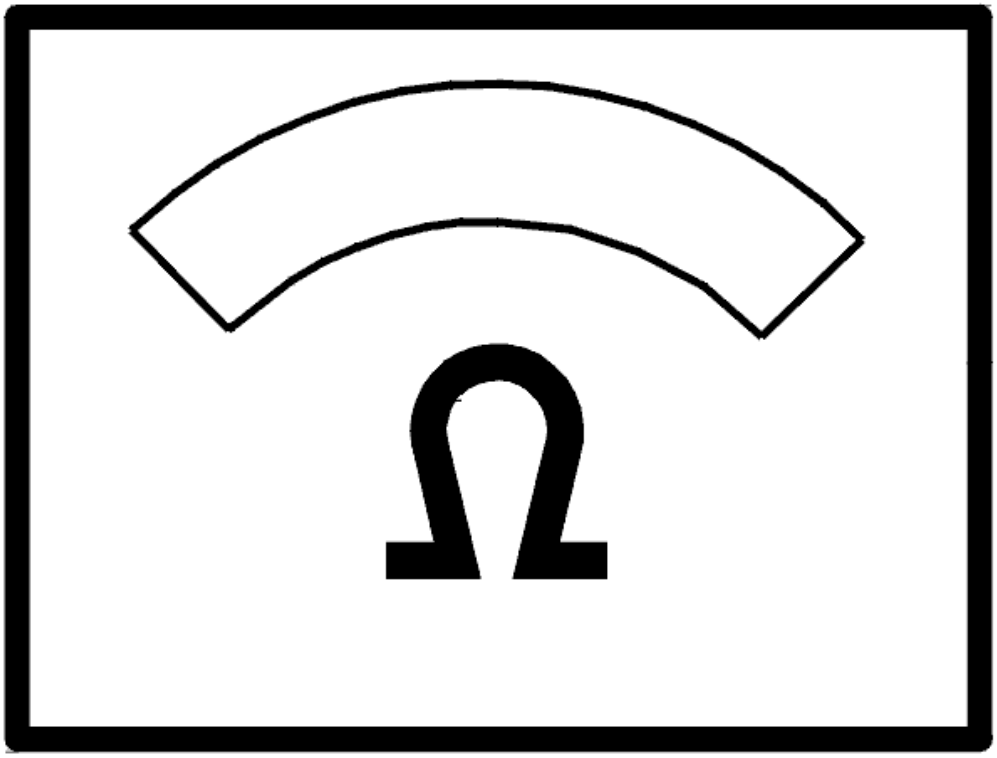

Fig. 49: Identifying Ohm Meter
Courtesy of VOLVO CARS CORPORATION

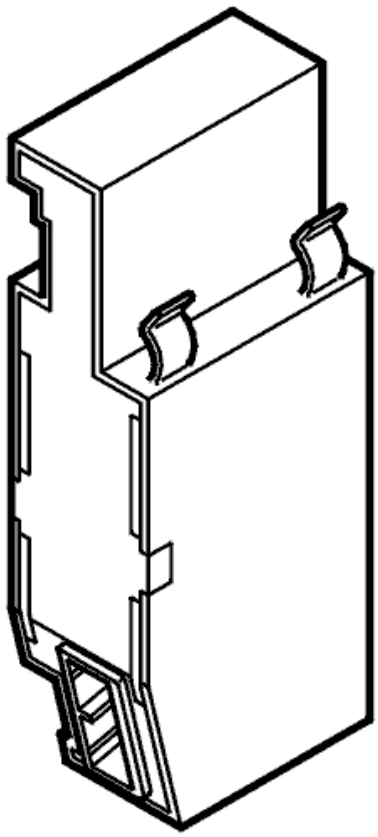

Fig. 50: Control Module For Steering Wheel Angle Sensor
Courtesy of VOLVO CARS CORPORATION

Was a fault detected?

- **YES**

  Refer to **CHECKING THE STEERING WHEEL ANGLE SENSOR MODULE (SAS)**

- **NO**

  Refer to **CHECKING COMMUNICATION WITH THE STEERING WHEEL ANGLE SENSOR MODULE (SAS)**

CHECKING COMMUNICATION WITH THE STEERING WHEEL ANGLE SENSOR MODULE (SAS)

HINT: The CAN communication with the control module is probably OK if the control module ID can be read off. In that case the fault is probably intermittent and will then be more difficult to trace.

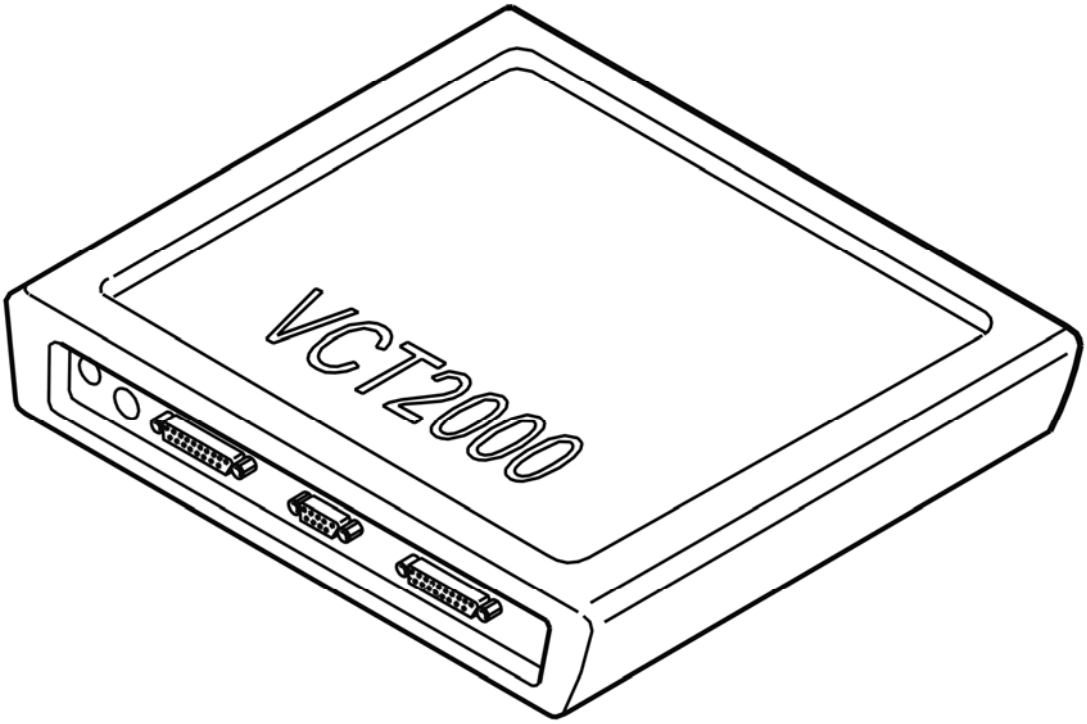

Fig. 51: Identifying VCT2000 Diagnostic Tool Symbol In VIDA
Courtesy of VOLVO CARS CORPORATION

- Try to communicate with the steering wheel angle sensor module (SAS) by reading off the control module ID
- Use the VCT2000 (or appropriate scan tool)
- **Continue**

  Refer to **SIGNAL MISSING**

CHECKING THE STEERING WHEEL ANGLE SENSOR MODULE (SAS)

HINT: After carrying out the repair, check that the fault has been remedied.

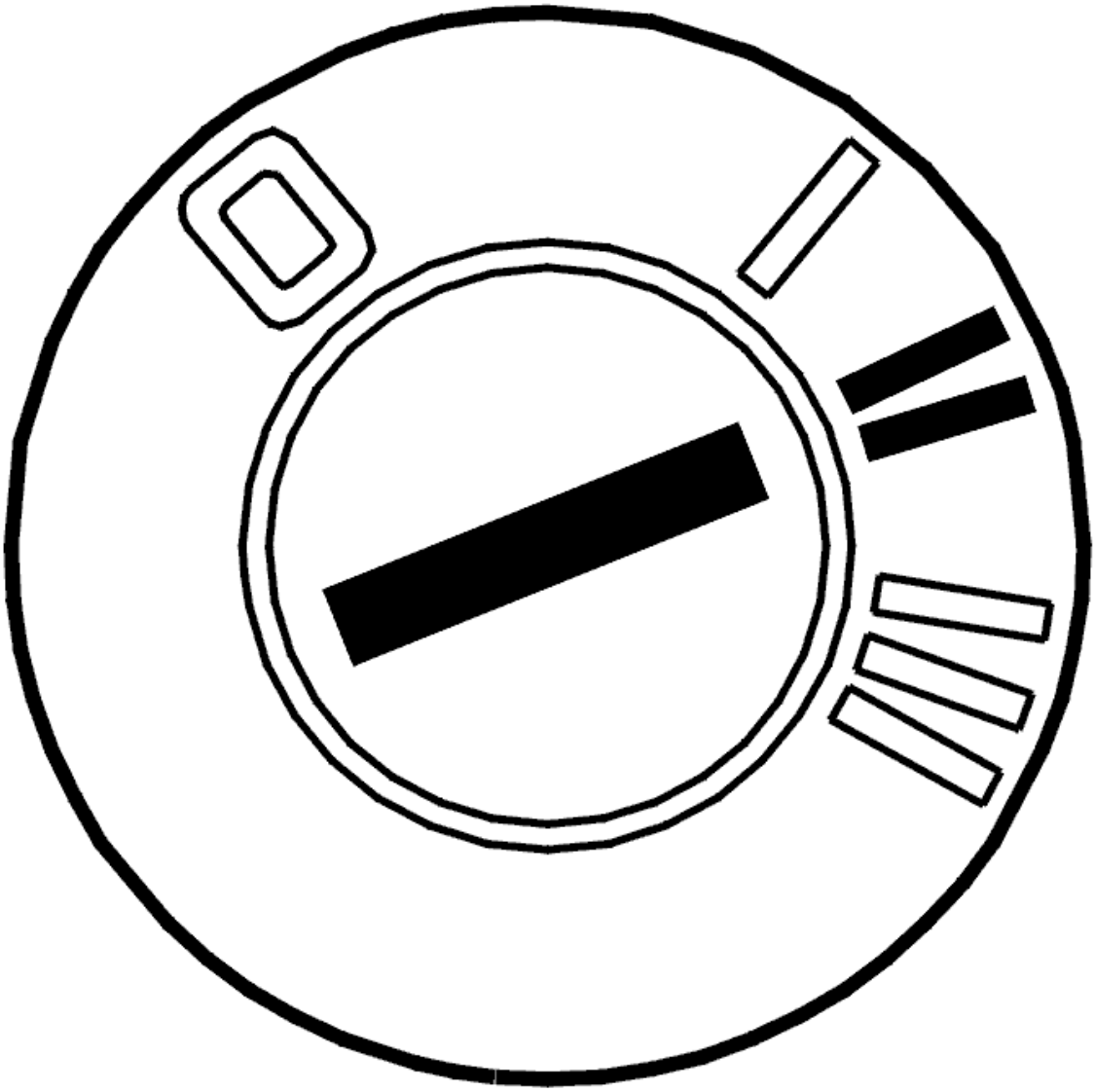

Fig. 52: Identifying Ignition ON
Courtesy of VOLVO CARS CORPORATION

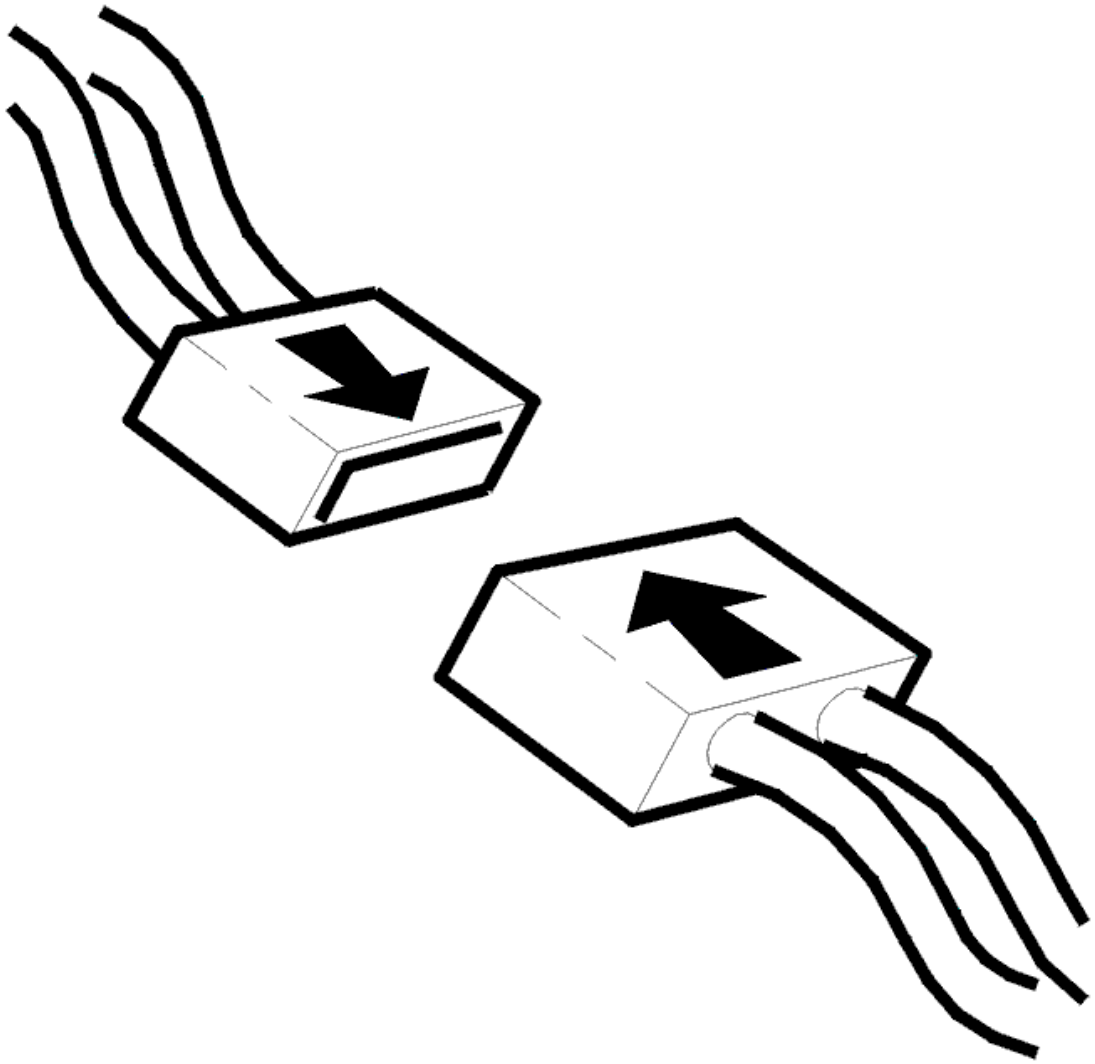

Fig. 53: Connecting Connector
Courtesy of VOLVO CARS CORPORATION

- Ignition off
- Reconnect the connectors. Reinstall the components
- Ignition on.

  Check that the DSTC indicator lamp in the row of buttons on the climate control system lights.

Does the lamp light?

- **YES**

  OKAY: Troubleshooting has been completed.

- **NO**

  Refer to **INFORMATION**

SIGNAL MISSING

GENERAL INFORMATION

HINT: For general information about fault-tracing the control area network (CAN), see the linked document below. See GENERAL INFORMATION ABOUT FAULT-TRACING IN THE CAN NETWORK (2005-2012)

In order to check the control area network (CAN) cables, the resistance in the network must be measured. The resistance between the two CAN cables, with the network connected, must be 60ohms in both the high speed network and the low speed network.

NOTE: Resistance will only be 60 ohms if the main artery of the CAN network is whole and the network is connected. If the main artery of the CAN network is split somewhere and a reading is taken between the CAN cables, resistance will be 120 ohms.

If diagnostic trouble codes (DTCs) can be read off from the relevant control module, the fault is probably intermittent. The locations that must be checked in the event of a fault in the low speed network are the junctions behind the central electronic module (CEM) and the audio module (AUM) as well as the cable harness behind the Audio module (AUM).

Intermittent fault in the current supply to the actual control module is indicated by the DTC in the Central electronic module (CEM) (CEM-1A5X or CEM-1A6X). There is probably no diagnostic trouble code (DTC) in the relevant control module as the control module cannot store a diagnostic trouble code (DTC) when it is without power.

- **Continue**

  Refer to **CHECKING THE RESISTANCE OF THE CONTROL AREA NETWORK (CAN) CABLES**

CHECKING THE RESISTANCE OF THE CONTROL AREA NETWORK (CAN) CABLES

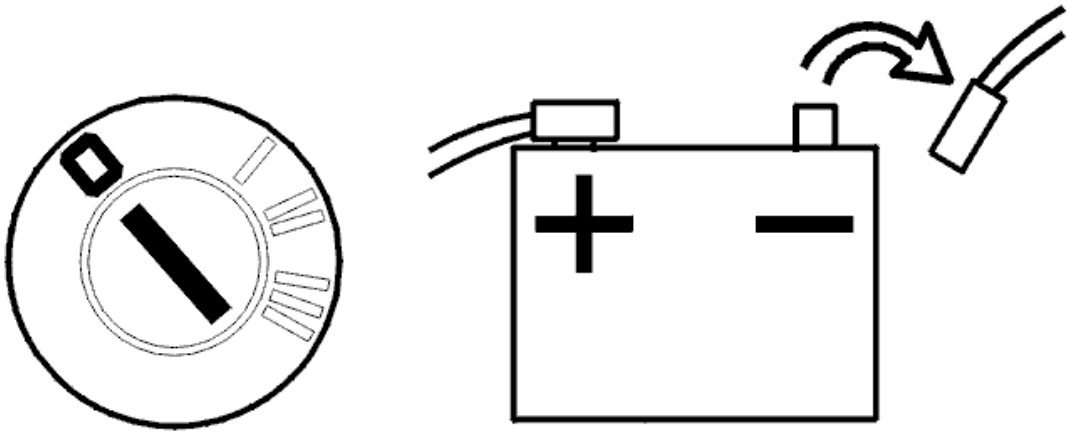

Fig. 54: Identifying Ignition In Off Position And Disconnecting Negative Cable From Battery
Courtesy of VOLVO CARS CORPORATION

- Disconnect the battery negative lead. The network must not be powered when taking resistance readings. Otherwise an incorrect value may be obtained.
- Connect the adapter wiring to the central electronic module (CEM).

HINT: Where a breakout box cannot be used, take readings from the rear of the affected connectors if possible. This prevents terminal pins and socket housings being damaged.

When taking readings on the low speed network

- When taking readings on the low speed network the adapter wiring should be connected to the Central electronic module (CEM) and readings taken from there. Readings can even be taken in the connector for the Power seat module (PSM). The advantage of the adapter wiring to the Central electronic module (CEM) is that all control module can be connected in the network when taking readings and access can be gained to both the high speed and low speed networks.

  The resistance reading only measures the main arteries in the low speed network, not the junctions that exist for different control modules.

When taking readings on the high speed network

- When taking readings on the high speed network the adapter wiring should be connected to the Engine control module (ECM) and readings taken from there. The Engine control module (ECM) must be connected. This resistance reading only measures the main arteries in the high speed network.

Connect an ohmmeter to the terminals for CAN-L and CAN-H on the relevant network. Turn the contacts and turn the cable harness. Resistance must be approximately 60 ohms.

NOTE: **Resistance will only be 60 ohms if the main artery of the CAN network is whole and the network is connected. If the main artery of the CAN network is split somewhere and a reading is taken between the CAN cables, resistance will be 120 ohms.**

Other information

- see **BATTERY, DISCONNECTING**
- see **CONNECTING THE BREAKOUT BOX**
- see **CHECKING WIRING AND TERMINALS**

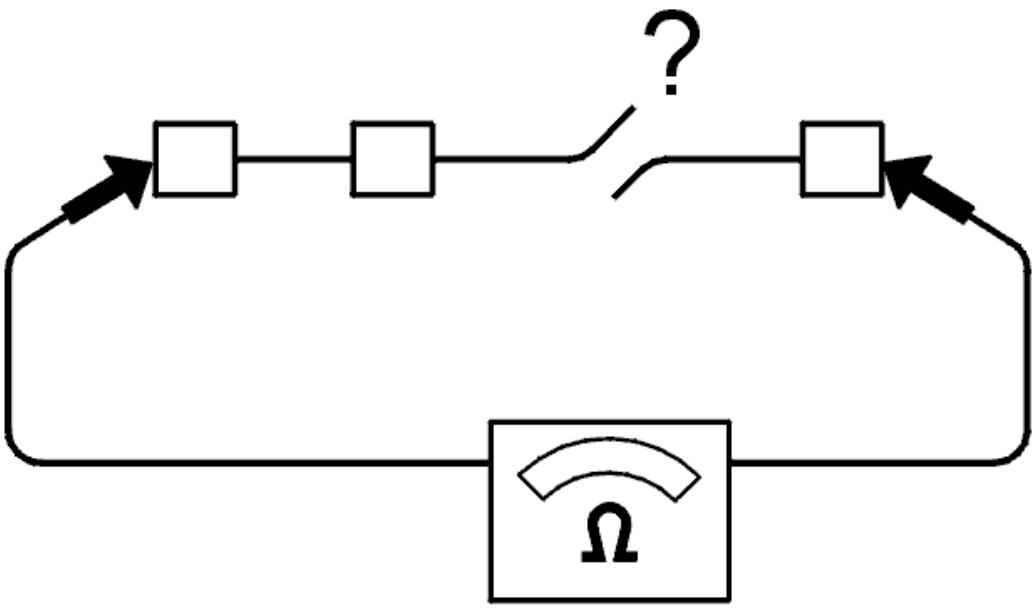

Fig. 55: Checking For Open Circuit
Courtesy of VOLVO CARS CORPORATION

Is the value OK?

- **YES**

  Refer to **CHECKING A SHORT-CIRCUIT IN CAN CABLES**

- **NO**

  Refer to **IDENTIFYING FAULT CAUSES IN THE CAN NETWORK**

CHECKING A SHORT-CIRCUIT IN CAN CABLES

Connect an ohmmeter between respective CAN cable and voltage supply and between the CAN cables and ground. Turn the contacts and turn the cable harness. The resistance must be infinite or very high.

HINT: Readings can be taken from one and the same connector if the CAN wiring, voltage supply and ground is pre-routed. If possible, measure from the rear of the affected connectors in order to minimize any damage and future loose connections. If this is not possible, use the adapter wiring or loose terminal pin for good contact.

Was a fault detected?

- **YES**

  Refer to **IDENTIFYING FAULT CAUSES IN THE CAN NETWORK**

- **NO**

  Refer to **CHECKING THE TRAFFIC LOAD ON THE CAN CABLES**

CHECKING THE TRAFFIC LOAD ON THE CAN CABLES

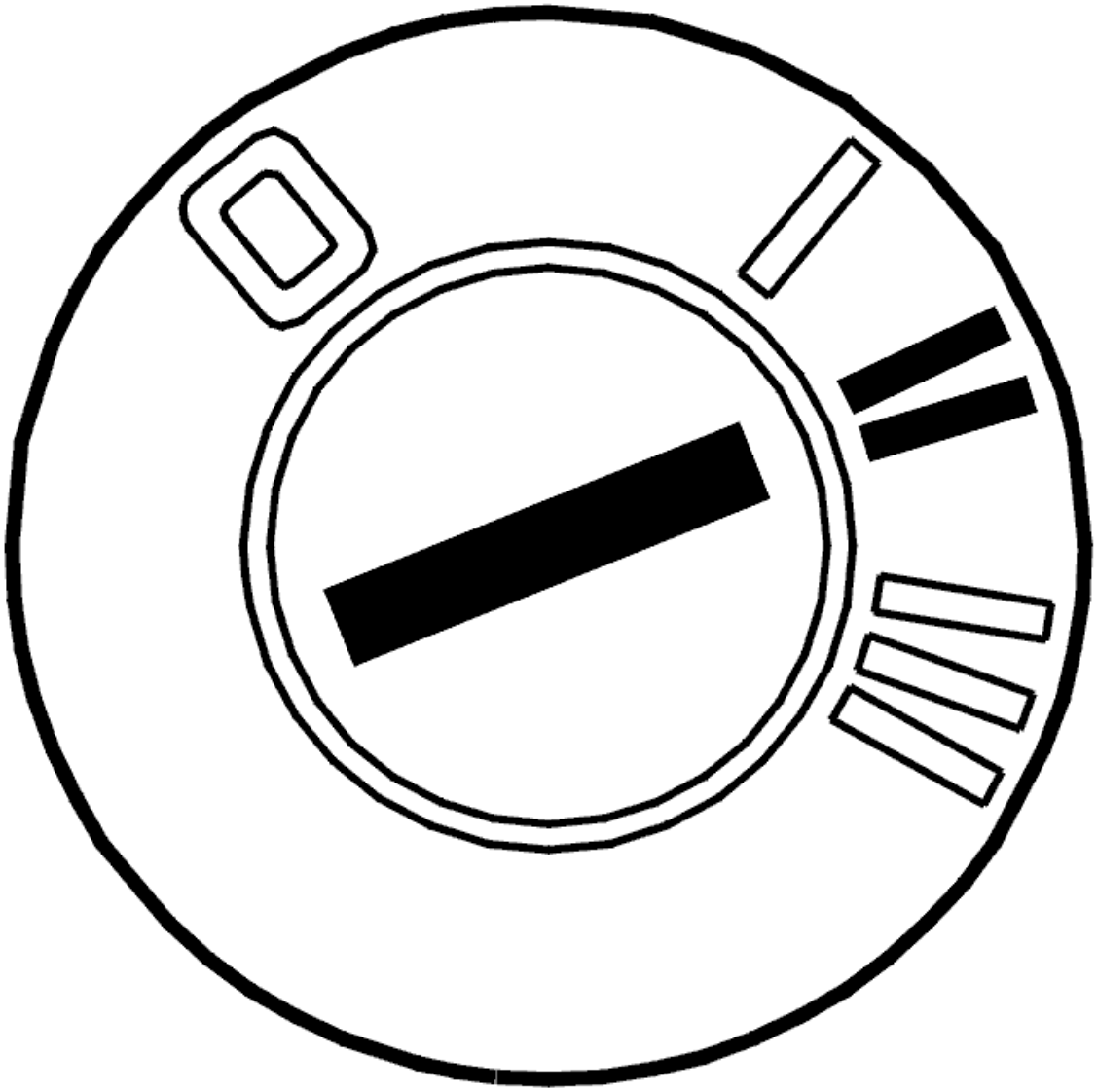

Fig. 56: Identifying Ignition ON
Courtesy of VOLVO CARS CORPORATION

- Connect the battery.
- Ignition on.

Faults in the CAN network may be due to a control module sending faulty messages that disrupt normal communication. When messages are sent incorrectly, this results in a considerable increase in the amount of traffic on the CAN network. The load can be checked by reading the average value of the voltage on the CAN cables in relation to ground.

The following applies for model year -2004:

Connect a voltmeter between CAN-L and ground. The voltage shall be approx. 2.3 V.

Then connect a voltmeter between CAN-H and ground. The voltage shall be approx. 2.8 V.

The following applies for model year 2004-:

Connect a voltmeter between CAN-L and ground. The voltage should be approx: V

Connect a voltmeter between CAN-H and ground. The voltage should be approx: V

NOTE: **For vehicles of later model years, normal voltage values lie within a specific interval due to increased traffic between the control modules on the CAN network upon update of the electrical system.**

HINT: If possible, measure from the rear of the affected connectors so that they are not damaged.

Other information

- see **BATTERY, DISCONNECTING**

Is the value OK?

- **YES**

  Refer to **INFORMATION**

- **NO**

  Refer to **IDENTIFYING A CONTROL MODULE IN THE CAN NETWORK**

IDENTIFYING FAULT CAUSES IN THE CAN NETWORK

- Disconnect a control module that disconnects the CAN network (a control module that has four terminals to the CAN network).

  HINT: For the low speed network, suitable places for disconnecting the network are at the steering wheel module (SWM), the driver information module (DIM) or the climate control module (CCM).

  In the event of an short-circuit between on of the CAN cables and voltage or ground, the fault can be localized disconnecting a control module that splits the CAN network. Readings can then be taken to determine on which side the fault is on the disconnected control module.

  Connect an ohmmeter between the CAN cable and voltage supply respectively ground. Take readings from both ends of the CAN networks at the network junction. Twist and bend the cable harness to find any intermittent short-circuits. The resistance must be infinite or very high (more than 1 Mohms).

  If a fault can be localized in one direction, split the network at a point further on in the CAN network in the direction that the fault was discovered and take a new reading. Try to locate the fault in this way.

  HINT: A short-circuit between the CAN cables and supply voltage or ground may be in either the wiring or in a control module.

Remedy the cables as necessary. If a fault is found on one control module, replace the control module.

- **Continue**

  Refer to **VERIFICATION**

IDENTIFYING A CONTROL MODULE IN THE CAN NETWORK

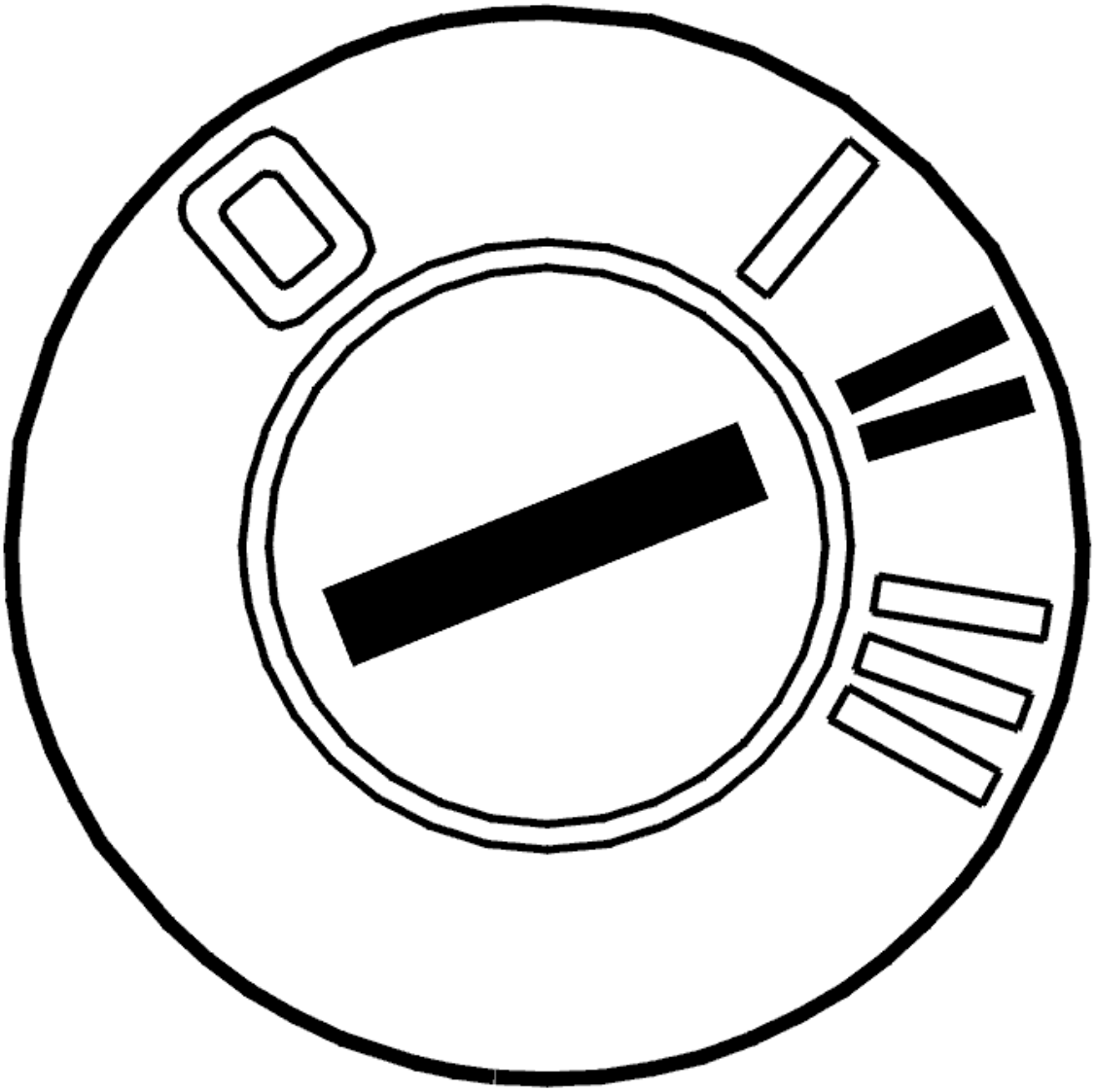

Fig. 57: Identifying Ignition ON
Courtesy of VOLVO CARS CORPORATION

- Connect the battery.
- Ignition on.

  If the load on the CAN network is too high, this may be due to a control module transmitting faulty messages on the CAN network. This is called a disruptive control module. The fault may also be due to

an intermittent short-circuit to supply voltage or ground in one of the CAN cables. This results in the control modules on the CAN network starting to send faulty messages. The fault may occur without any of the control modules storing a diagnostic trouble code (DTC). The voltage can be measured between the CAN cables in order to check the load on the CAN network.

The following applies for model year -2004:

Connect a voltmeter between the CAN cables. In the event of correct communication on the network, the average value of the voltage must be approximately 0.5 V (0.4 V to 0.6 V).

The following applies for model year 2004-:The following applies for model year 2004-:

Connect a voltmeter between the CAN cables. During correct CAN network communication, voltage should be about 0.6-1.4 V.

NOTE: For vehicles of later model years, the normal voltage value is slightly higher due to increased traffic between the control modules on the CAN network upon update of the electrical system.

In the event of a communication fault the voltage is significantly higher than the above specified values. In order to identify which control module has faulty communication, cut the power supply to one control module at a time. Check the voltage in the CAN cables again. The easiest way to cut the power supply is to remove the fuse(s) for the relevant control module. Repeat until the voltage between the CAN wiring drops to the normal level.

HINT: When the probable faulty control module has been identified, connect and disconnect the supply voltage to the control module a number of times to verify that the fault appears and disappears.

NOTE: Do not cut the power to the central electronic module (CEM) unless it is the last control module left to check.

The control module that is communicating incorrectly must be replaced. Remedy as necessary.

NOTE: After a fault with "interfering" control modules, other control modules may remain in "Limp-Home mode" even when the ignition has been switched off and on several times. To remedy this, disconnect and reconnect the battery negative terminal to restore the control modules to normal function.

Other information

- see **BATTERY, DISCONNECTING**

- **Continue**

Refer to **VERIFICATION**

IDENTIFYING FAULT CAUSES IN THE CAN NETWORK

- Disconnect a control module that disconnects the CAN network (a control module that has four terminals to the CAN network).

  HINT: For the low speed network, suitable places for disconnecting the network are at the steering wheel module (SWM), the driver information module (DIM) or the climate control module (CCM).

  In the event of an open-circuit on, or short-circuit between the CAN cables, the fault can be localized by disconnecting a control module that splits the CAN network. Readings can then be taken to determine on which side the fault is on the disconnected control module.

  Connect an ohmmeter between the CAN cables. Take readings from both ends of the CAN networks at the network junction. Twist and bend the cable harness to find any intermittent short-circuits. Resistance should be 120 ohms.

  If a fault can be localized in one direction, split the network at a point further on in the CAN network in the direction that the fault was discovered and take a new reading. Try to locate the fault in this way.

  Remedy the cables as necessary.

- **Continue**

  Refer to **VERIFICATION**

VERIFICATION

HINT: After rectifying a fault, a verification should be carried out.

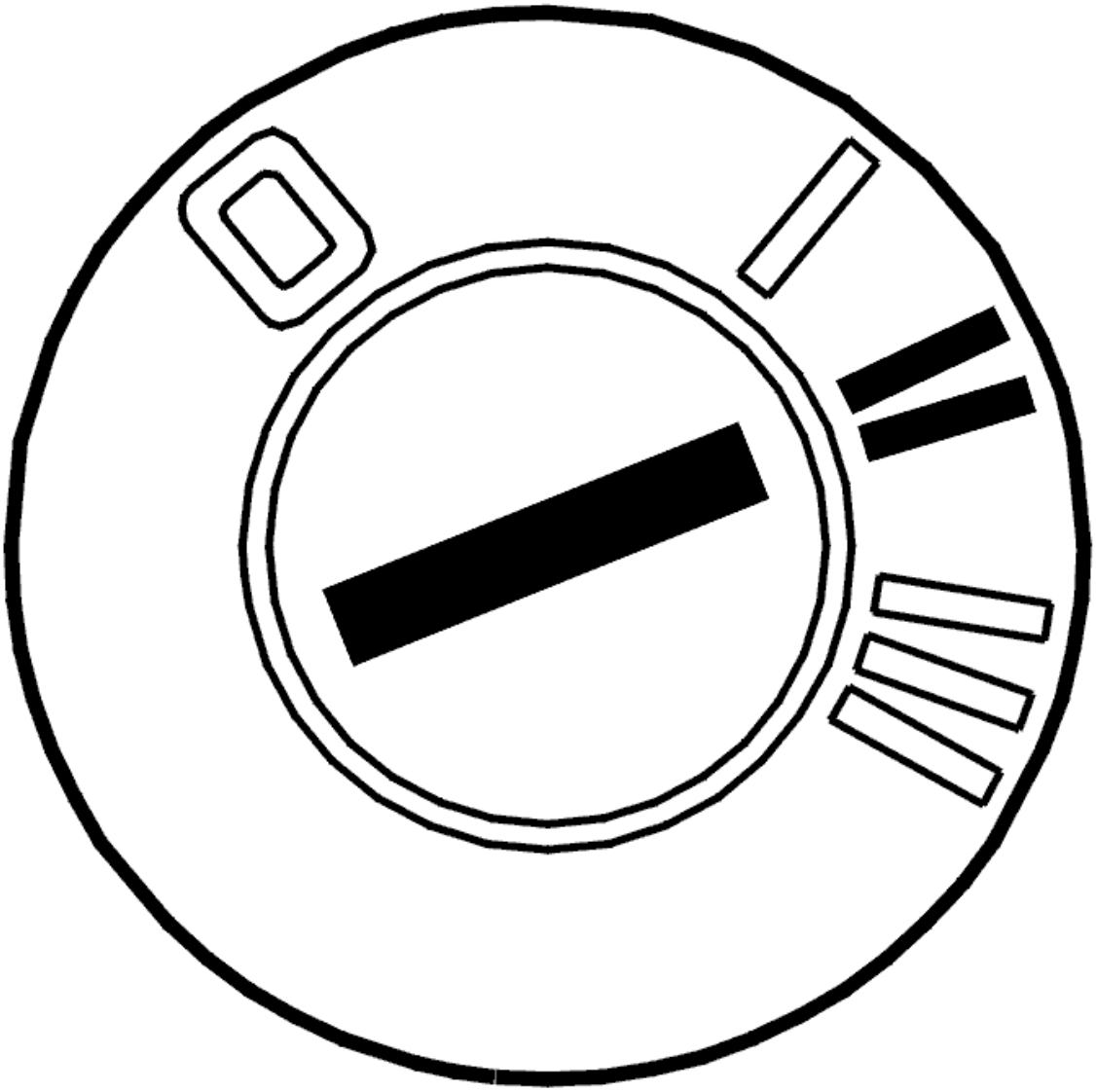

Fig. 58: Identifying Ignition ON
Courtesy of VOLVO CARS CORPORATION

- Reinstall the connectors, components etc.
- Ignition on.
- Erase diagnostic trouble codes using the VCT2000 (or appropriate scan tool).
- Start the car. Allow the vehicle to run for 10 minutes.
- Read off diagnostic trouble codes (DTCs).

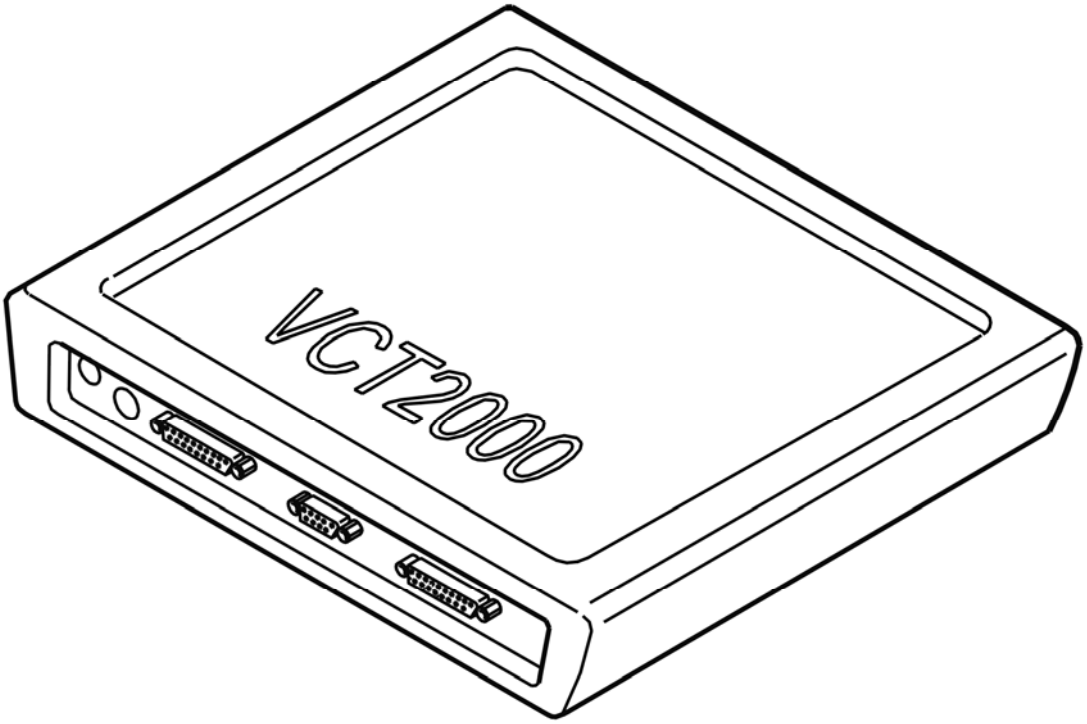

Fig. 59: Identifying VCT2000 Diagnostic Tool Symbol In VIDA
Courtesy of VOLVO CARS CORPORATION

Does the diagnostic trouble code (DTC) for a communication fault recur (CEM-1A5X or CEM-1A6X)?

- **YES**

  Refer to **INFORMATION**

- **NO**

  OKAY: Troubleshooting has been completed.

INFORMATION

FAULT-TRACING INFORMATION

Verification shows that the fault is no longer present. The diagnostic trouble code (DTC) was probably caused by an intermittent fault.

Fault-tracing for this diagnostic trouble code (DTC) is not followed by a verification.

You can view the information again or exit fault-tracing for this diagnostic trouble code (DTC).

INFORMATION

FAULT-TRACING INFORMATION

The fault should have been detected and remedied. As this is not the case fault-tracing has failed.

Exit fault-tracing for this diagnostic trouble code (DTC) or make another attempt.

CEM-1A5E: COMMUNICATION WITH THE STEERING WHEEL ANGLE SENSOR MODULE (SAS). SIGNAL MISSING (B5254T2; 2005-2007)

SIGNAL MISSING

CHECKING THE POWER SUPPLY AND GROUND FOR THE STEERING WHEEL MODULE (SWM)

NOTE: **Steering wheel angle sensor module (SAS) is located inside, and is supplied with power by, the steering wheel module (SWM). Only the steering wheel angle sensor module (SAS) communicates on the controller area network (CAN). The brake control module (BCM) will store a diagnostic trouble code (DTC) if the communication between the brake control module (BCM) and the steering wheel angle sensor module (SAS) has been interrupted. DSTC will not be activated after a fault in the system has been repaired until the vehicle reaches a speed of approximately 50 km/h.**

Check that the fuse for the control module is intact.

Check the power supply and ground for the steering wheel module (SWM) as follows.

Remedy as necessary.

Other information

- see **CHECKING THE VOLTAGE / GROUND TERMINAL**
- see **CHECKING WIRING AND TERMINALS**

Was a fault detected?

- **YES**

  Refer to **CHECKING THE STEERING WHEEL ANGLE SENSOR MODULE (SAS)**

- **NO**

  Refer to **CHECKING COMMUNICATION WITH THE STEERING WHEEL ANGLE SENSOR MODULE (SAS)**

CHECKING COMMUNICATION WITH THE STEERING WHEEL ANGLE SENSOR MODULE (SAS)

HINT: The CAN communication with the control module is probably OK if the control module ID can be read off. In that case the fault is probably intermittent and will then be more difficult to trace.

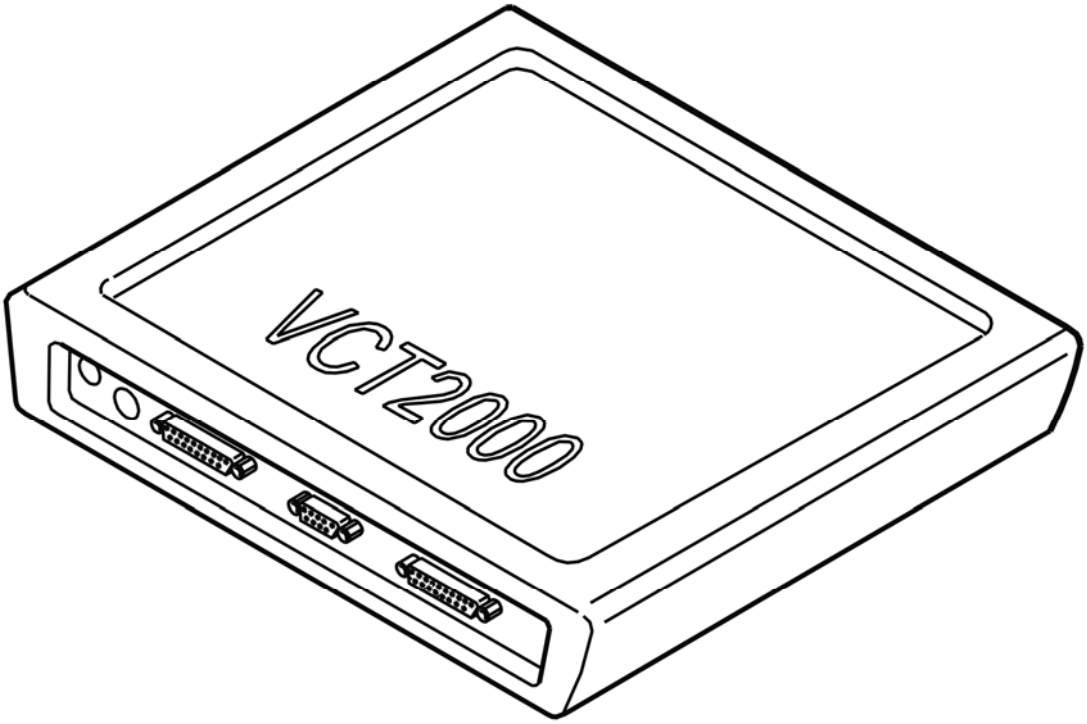

Fig. 60: Identifying VCT2000 Diagnostic Tool Symbol In VIDA
Courtesy of VOLVO CARS CORPORATION

- Try to communicate with the steering wheel angle sensor module (SAS) by reading off the control module ID
- Use the VCT2000 (or appropriate scan tool)
- **Continue**

  Refer to **SIGNAL MISSING**

CHECKING THE STEERING WHEEL ANGLE SENSOR MODULE (SAS)

HINT: After carrying out the repair, check that the fault has been remedied.

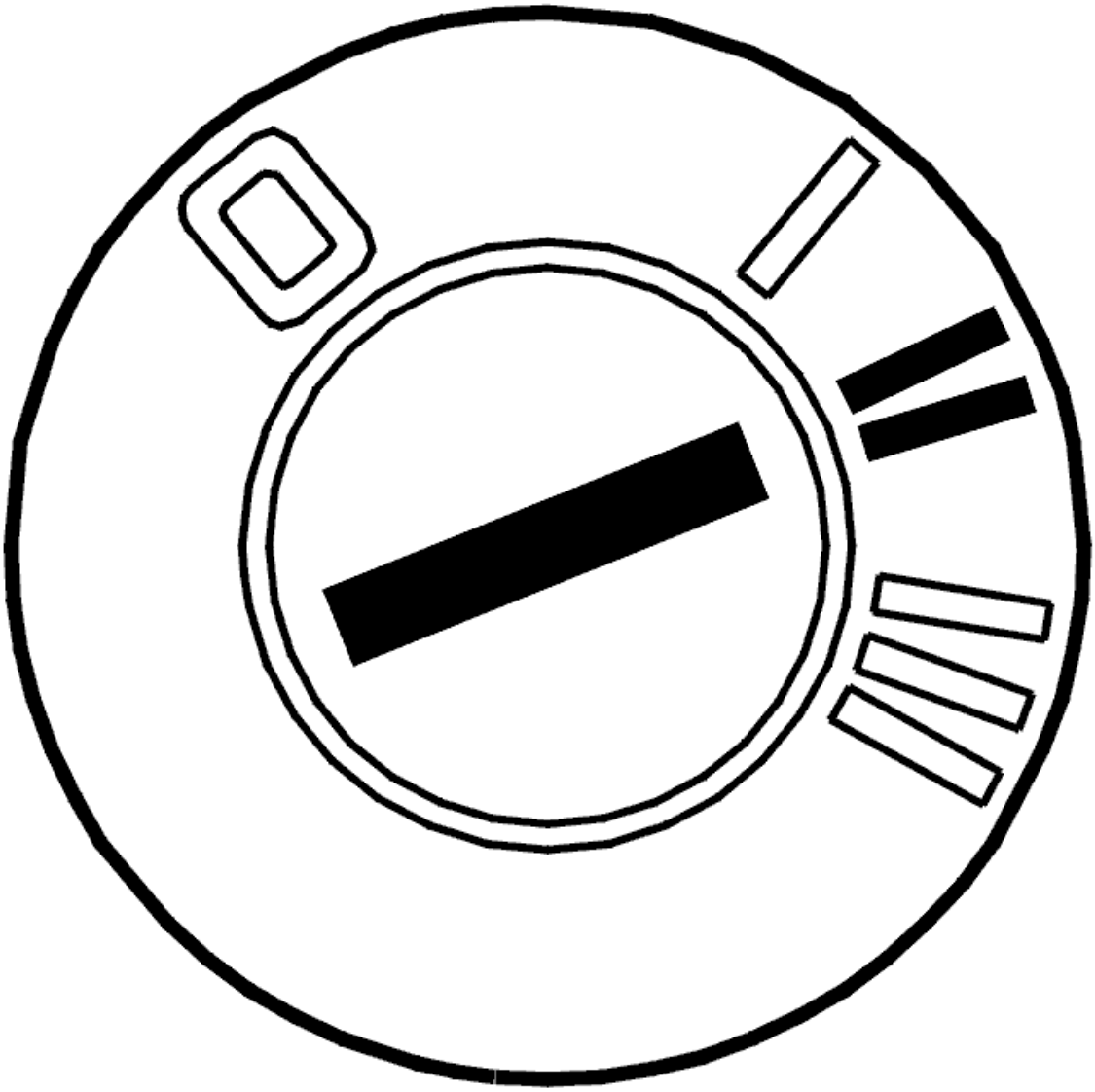

Fig. 61: Identifying Ignition ON
Courtesy of VOLVO CARS CORPORATION

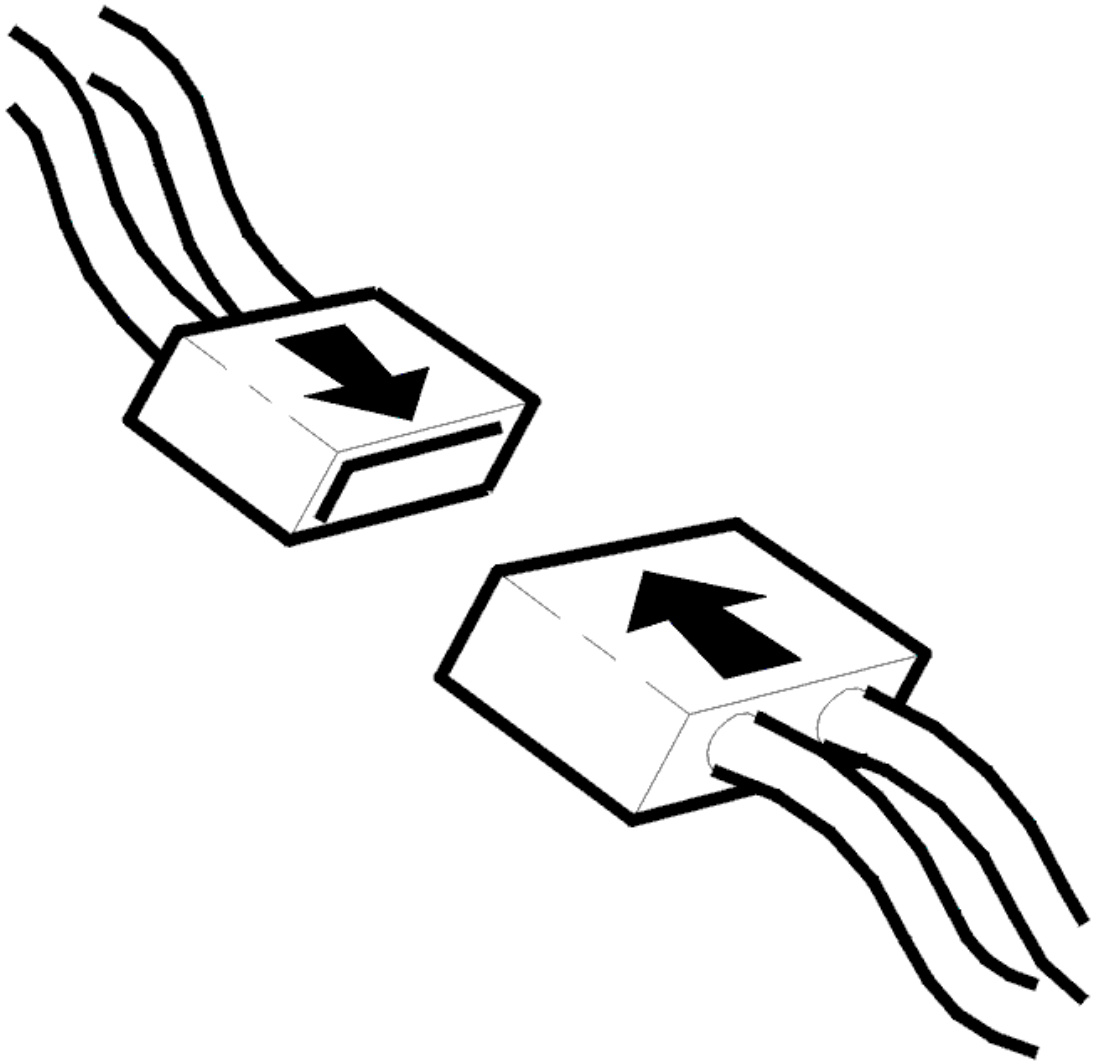

Fig. 62: Connecting Connector
Courtesy of VOLVO CARS CORPORATION

- Ignition off
- Reconnect the connectors. Reinstall the components
- Ignition on.

  Read off the parameters under vehicle communication to check the function of the steering wheel angle sensor module (SAS).

Is the function OK?

- **YES**

  OKAY: Troubleshooting has been completed.

- **NO**

  Refer to **INFORMATION**

SIGNAL MISSING

GENERAL INFORMATION

NOTE: Illustrations shown are only examples.

HINT: For general information about CAN-troubleshooting, see: GENERAL INFORMATION ABOUT FAULT-TRACING IN THE CAN NETWORK

- **General about CAN-related diagnostic trouble codes:**

  CEM-DF01 - DF17 can only be stored in Central electronic module (CEM). These diagnostic trouble codes are stored when an electric fault is detected in CAN-lines. Start with these diagnostic trouble codes first.

  CEM-1AXX only stored in Central electronic module (CEM). One diagnostic trouble code for every control module on the CAN-net. These diagnostic trouble codes indicate that Central electronic module (CEM) does not receive any reply from other control modules.

  XXX-E000 (HS-CAN)/E001 (LS-CAN) can be stored in all CAN-connected control modules. These diagnostic trouble codes indicate that the control module has detected interference on the CAN-net.

  XXX-E003 can be stored in all CAN-connected control modules except in Central electronic module (CEM). The control modules on the CAN-net listen for a message (identity number) that is sent out at regular intervals from Central electronic module (CEM). This diagnostic trouble code indicates that the control module has not received any identity number, or that the expected number is not correct. Interference on the CAN-net can also store this diagnostic trouble code.

  NOTE: In case of CAN-related faults, it is likely that a combination of above diagnostic trouble codes occur.

  NOTE: After fault with control modules that interfere with communication, other control modules may remain in Limp-Home (that is, they work with reduced functionality) even when the ignition has been turned off and on a few times. For certain faults in the CAN-net where control modules have stopped communicating, it may help to disconnect/reconnect the battery to "restart" the control module/CAN-net.

  If a communication diagnostic trouble code can be read from the control module, the malfunction is probably intermittent.

  Intermittent fault in the voltage supply and ground to a control module on the CAN network results in the

Central electronic module (CEM) storing a diagnostic trouble code (DTC) for an open-circuit in communication with the control module where the voltage supply does not work. There will probably not be a diagnostic trouble code (DTC) in the control module where the open-circuit in the voltage supply occurred as the control module cannot store a diagnostic trouble code (DTC) when it is not supplied with power.

NOTE: **Central electronic module (CEM) should not be replaced in case of CAN-fault, unless troubleshooting reveals that Central electronic module (CEM) has an internal fault.**

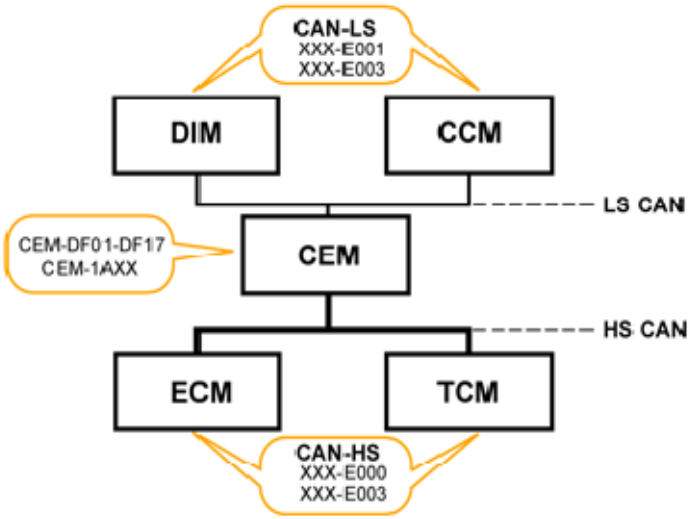

Fig. 63: High-Speed CAN And Low-Speed CAN Communication Diagram
Courtesy of VOLVO CARS CORPORATION

- **Continue**

Refer to **CHECKING RESISTANCE IN CAN-NET**

CHECKING RESISTANCE IN CAN-NET

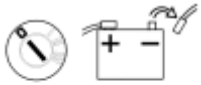

Fig. 64: Ignition Off And Disconnecting Battery Negative Lead
Courtesy of VOLVO CARS CORPORATION

- Ignition off
- Disconnect the battery negative lead
- Connect OBDII-Box **(951 3015)** to the diagnostics socket.

For general information about CAN-troubleshooting, see: **GENERAL INFORMATION ABOUT FAULT-TRACING IN THE CAN NETWORK**

Measure resistance between the following connections on the OBDII-box/diagnostics socket.

- #6 and #14. The resistance should be approx. 55 - 65 ohms.
- If resistance is approx. 120 ohms, this indicates open circuit in the circuit so that only one terminating resistor (120 ohms) has been measured.
- If resistance is above 1 kohms this indicates open circuit/high contact resistance somewhere in the circuit.
- If resistance is below 55 ohms this indicates short-circuiting/contact resistance between the CAN-lines somewhere in the circuit.

HINT: For HS-CAN the terminating resistors are located in Brake control module (BCM) and in Engine control module (ECM).

Twist the cable harness and wiggle connectors where they can be accessed along the cable harness during every measurement, and note if the resistance changes to detect intermittent short-circuits or open circuit.

NOTE: **Resistance measurement measures only main lines in the CAN-net (in circuit where both terminating resistors are found), not branches to certain control modules.**

Open circuit on branching without a terminating resistor cannot be detected with this measurement. However, short-circuiting on a branch can be detected. To measure resistance in the CAN-net to control modules located in a branching of their own, the measurement shall be done against the CAN-net at that control module. The values shall be as above.

NOTE: **After fault with control modules that interfere with communication, other control modules may remain in Limp-Home (that is, they work with reduced functionality) even when the ignition has been turned off and on a few times. For certain faults in the CAN-net where control modules have stopped communicating, it may help to disconnect/reconnect the battery to "restart" the control module/CAN-net.**

Remedy wiring as necessary.

Other information

- see **BATTERY, DISCONNECTING**
- see **CHECKING WIRING AND TERMINALS**

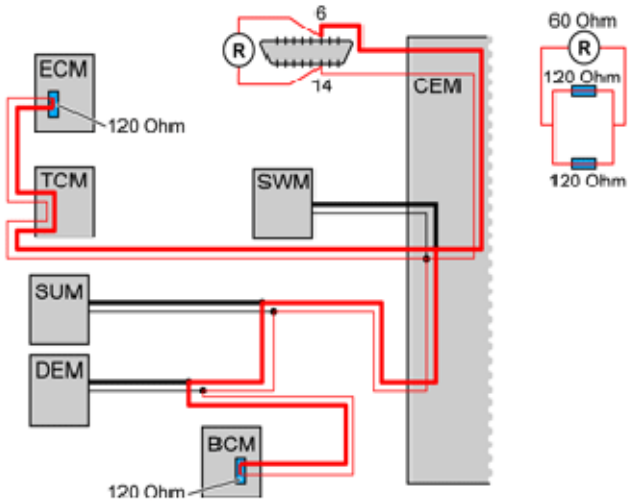

Fig. 65: Checking Resistance In CAN Lines
Courtesy of VOLVO CARS CORPORATION

Was a fault detected?

- **YES**

  Refer to **VERIFICATION**

- **NO**

  Refer to **CHECKING SHORT-CIRCUITING TO GROUND/VOLTAGE IN CAN-NET**

CHECKING THE TRAFFIC LOAD ON THE CAN CABLES

Fig. 66: Identifying Ignition On Position
Courtesy of VOLVO CARS CORPORATION

- Connect the battery
- Ignition on.
- Connect OBDII-Box **(951 3015)** to the diagnostics socket.

  For general information about CAN-troubleshooting, see: **GENERAL INFORMATION ABOUT FAULT-TRACING IN THE CAN NETWORK**

  Faults in the CAN network may be due to a control module sending faulty messages that disrupt normal

communication. When messages are sent incorrectly, this results in a considerable increase in the amount of traffic on the CAN network. Check the load by measuring the average voltage value on the CAN cables in relation to ground.

Measure voltage between the following connections on the OBDII-box/diagnostics socket.

- #6 and #4 (ground). The voltage should be approx:2, 8 - 3, 2 V.
- #14 and #4 (ground). The voltage should be approx:1, 8 - 2, 2 V.
- #6 and #14. The voltage shall be between approx. 0.55-1.4 V. The voltage shall normally be between 0.55 - 0.90 V. A higher voltage may indicate increased traffic on the CAN-net. In case of fault in communication/too high traffic on the CAN-net, the voltage is considerably higher than the above stated values.

NOTE: After fault with control modules that interfere with communication, other control modules may remain in Limp-Home even when the ignition has been turned off and on a few times. For certain faults in the CAN-net where control modules have stopped communicating, it may help to disconnect/reconnect the battery to "restart" the control module/CAN-net.

HINT: DiCE can be used as fault detection tool if fault is suspected on the CAN-net that cannot be detected with normal troubleshooting. Interference, intermittent faults, faulty messages on the CAN-net etc., are examples of such faults. The tool registers fault messages used on the CAN-net. Fault messages may be caused by short intermittent malfunctions on the CAN-net or by a control module sending fault messages. See tools:951 3010 as well as associated TJ 20402.

- Ignition on.
- Connect DiCE to the diagnostics socket.
- Note the blue LED-indicator. The indicator flashes to show detection of fault messages.

NOTE: Certain interference may occur without any real fault

Cable fault

- Shake the cables lightly and pull lightly on the connections during the check to locate any fault. Note the blue LED-indicator.

"Chatting" control modules

- "Chatting" control modules may be difficult to find and troubleshooting may take time. Let the vehicle stand with DiCE connected for an extended time period. Afterwards, activate functions to provoke a malfunction. It may take up to several hours before the fault messages are sent. When the indicator starts to flash, remove the fuse for one control module at a time until the indicator stops flashing. When the indicator stops flashing, restore the fuse for the relevant control module and check that the indicator starts to flash again. Then it is likely that the problem is identified.

Remedy wiring as necessary.

Other information

- see **BATTERY, DISCONNECTING**
- see **CHECKING WIRING AND TERMINALS**

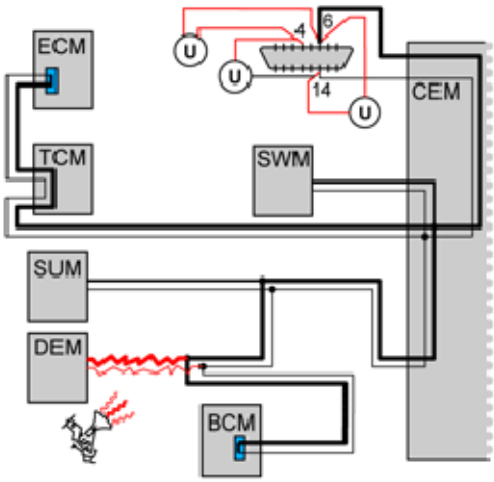

Fig. 67: Checking Traffic Load On CAN Cables
Courtesy of VOLVO CARS CORPORATION

Was a fault detected?

- **YES**

  Refer to **IDENTIFYING A CONTROL MODULE IN THE CAN NETWORK**

- **NO**

  Refer to **CHECKING VOLTAGE-DROP IN CABLE FOR CAN-H AND CAN-L, RESPECTIVELY**

IDENTIFYING A CONTROL MODULE IN THE CAN NETWORK

Fig. 68: Identifying Ignition On Position
Courtesy of VOLVO CARS CORPORATION

For general information about CAN-troubleshooting, see: **GENERAL INFORMATION ABOUT FAULT-TRACING IN THE CAN NETWORK**

HINT: DiCE can be used as fault detection tool if fault is suspected on the CAN-net that cannot be detected with normal troubleshooting. Interference, intermittent faults, faulty messages on the CAN-net (chattering control modules) etc., are examples of such faults. The tool registers fault messages used on the CAN-net. Fault messages may be caused by short intermittent malfunctions on the CAN-net or by a control module sending fault messages. See tools:951 3010 (memory card) as well as associated TJ 20402.

If the load on the CAN network is too high, this may be due to a control module sending faulty messages on the CAN network (known as a disruptive control module). The fault may also be due to an intermittent short-circuit to supply voltage or ground in one of the CAN cables. This results in the control modules on the CAN network starting to send faulty messages. The faults can occur without a diagnostic trouble code (DTC) being stored by the control modules. The voltage can be measured between the CAN cables in order to check the load on the CAN network.

NOTE: **It is not necessarily the control module(s) that stored the diagnostic trouble code (DTC) that is communicating faultily. Faulty messages can come from any control module in the same section of the CAN network. However, faulty communication in one network cannot affect the communication on the other network. In other words, faulty communication on the LS-CAN cannot disrupt communication on the HS-CAN and vice versa.**

- Ignition on.
- Connect OBDII-Box **(951 3015)** to the diagnostics socket.

Check communication/load on CAN-net by measuring voltage between CAN-L and CAN-H. Measure voltage between the following connections on the OBDII-box/diagnostics socket.

- #6 and #14. The average value of the voltage must be approximately 0.6-1.4 V. The voltage shall normally be between 0.55 - 0.90 V. A higher voltage may indicate increased traffic on the CAN-net. In case of fault in communication/too high traffic on the CAN-net, the voltage is considerably higher than the above stated values.

In order to identify which control module has faulty communication, cut the power supply to one control module at a time. Check the voltage in the CAN cables again. The easiest way to cut the power supply is to remove the fuse(s) for the relevant control module. Repeat until the voltage between the CAN wiring drops to the normal level.

NOTE: **When connecting and disconnecting individual control modules, other diagnostic trouble codes (DTCs) may be stored in certain control modules.**

HINT: When the suspected defective control module has been identified, connect and disconnect the supply voltage to the control module a number of times to verify that the malfunction appears and disappears. Switch off the ignition between each check.

NOTE: **Do not cut the power to the central electronic module (CEM) unless it is the last control module left to check.**

A control module that is communicating incorrectly must be replaced. See Repairing and installing/Removing, replacing and installing.

NOTE: **After fault with control modules that interfere with communication, other control modules may remain in Limp-Home (that is, they work with reduced functionality) even when the ignition has been turned off and on a few times. For certain faults in the CAN-net where control modules have stopped communicating, it may help to disconnect/reconnect the battery to "restart" the control module/CAN-net.**

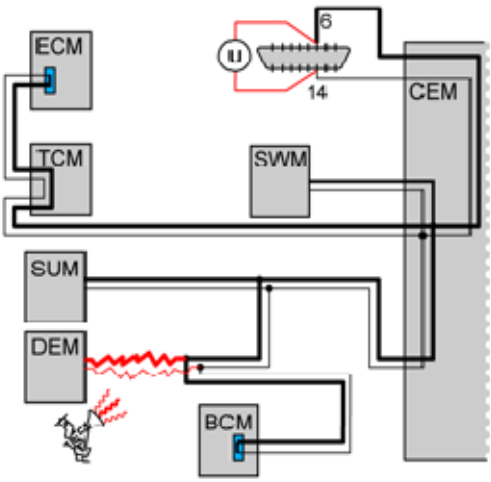

Fig. 69: Checking Communication/Load On CAN-Net Between CAN-L And CAN-H
Courtesy of VOLVO CARS CORPORATION

- **Continue**

  Refer to **VERIFICATION**

VERIFICATION

HINT: After rectifying a fault, a verification should be carried out.

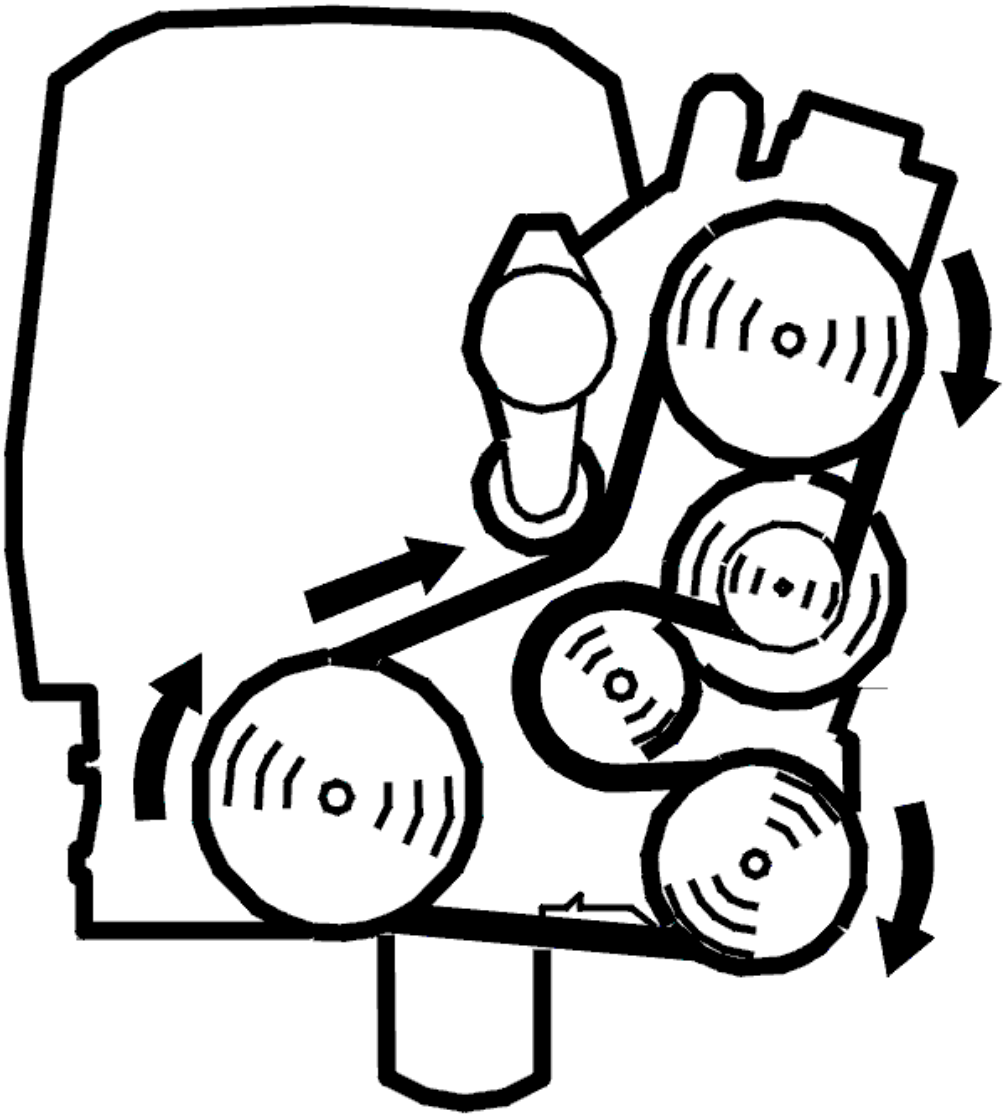

Fig. 70: Belt Routing / Engine Idling - Volvo
Courtesy of VOLVO CARS CORPORATION

Fig. 71: Identifying Ignition On Position
Courtesy of VOLVO CARS CORPORATION

- Reinstall the connectors, components etc.
- Ignition on.

NOTE: **For certain faults in the CAN-net where control modules have stopped communicating, it may help to disconnect/reconnect the battery to "restart" the control module/CAN-net.**

- Erase diagnostic trouble codes (DTCs) in all control modules.
- Ignition off.
- Ignition on.
- Start the vehicle. Allow the vehicle to run for 10 minutes.
- Read out the diagnostic trouble codes in the vehicle via the DIAGNOSTICS tab.

Does the diagnostic trouble code (DTC) for faulty communication return?

- **YES**

  Refer to **INFORMATION**

- **NO**

  OKAY: Troubleshooting has been completed.

CHECKING SHORT-CIRCUITING TO GROUND/VOLTAGE IN CAN-NET

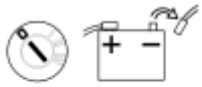

Fig. 72: Ignition Off And Disconnecting Battery Negative Lead
Courtesy of VOLVO CARS CORPORATION

- Ignition off.
- Disconnect the battery negative lead.
- Connect OBDII-Box **(951 3015)** to the diagnostics socket.

  For general information about CAN-troubleshooting, see: **GENERAL INFORMATION ABOUT FAULT-TRACING IN THE CAN NETWORK**

  Checking for a short-circuit to ground

  Measure resistance between the following connections on the OBDII-box/diagnostics socket.

  - #6 and #4 (ground). Measurement is shown in the illustration. The resistance should be above 1 kohms.
  - #14 and #4 (ground). The resistance should be above 1 kohms.

If resistance is below 1 kohms this indicates short-circuiting between the CAN-line and ground.

Checking for a short-circuit to voltage

Measure resistance between the following connections on the OBDII-box/diagnostics socket.

- #6 and #16 (voltage). Measurement is shown in the illustration. The resistance should be above 1 kohms.
- #14 and #16 (voltage). The resistance should be above 1 kohms.

If resistance is below 1 kohms this indicates short-circuiting between the CAN-line and voltage cable.

Twist the cable harness and wiggle connectors where they can be accessed along the cable harness during every measurement, and note if the resistance changes to detect intermittent short-circuits or open circuit.

HINT: Part the CAN-net at suitable points to decide where a short-circuit may be found.

NOTE: After fault with control modules that interfere with communication, other control modules may remain in Limp-Home (that is, they work with reduced functionality) even when the ignition has been turned off and on a few times. For certain faults in the CAN-net where control modules have stopped communicating, it may help to disconnect/reconnect the battery to "restart" the control module/CAN-net.

Remedy wiring as necessary.

Other information

- see **BATTERY, DISCONNECTING**
- see **CHECKING WIRING AND TERMINALS**

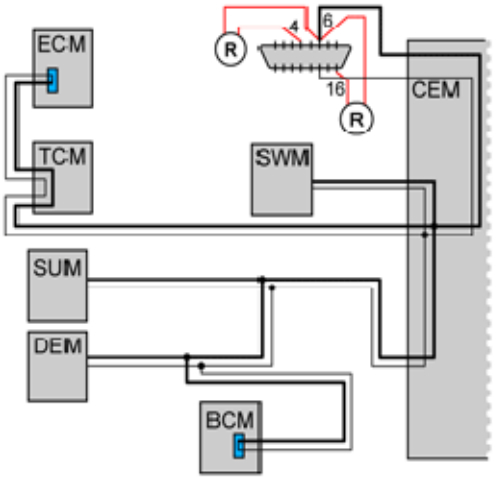

Fig. 73: CAN-Net Communication Diagram
Courtesy of VOLVO CARS CORPORATION

Was a fault detected?

- **YES**

  Refer to **VERIFICATION**

- **NO**

  Refer to **CHECKING THE TRAFFIC LOAD ON THE CAN CABLES**

CHECKING VOLTAGE-DROP IN CABLE FOR CAN-H AND CAN-L, RESPECTIVELY

Fig. 74: Identifying Ignition On Position
Courtesy of VOLVO CARS CORPORATION

- Connect the battery.
- Ignition on.
- Connect OBDII-Box **(951 3015)** to the diagnostics socket.

  For general information about CAN-troubleshooting, see: **GENERAL INFORMATION ABOUT FAULT-TRACING IN THE CAN NETWORK**

  In principle, the voltage measured in each cable in the CAN-net shall be the same at each control module in the network. This means that the voltage-drop in the cable for CAN-H and CAN-L, respectively, between the control modules should be very low. If there is a voltage-difference in the CAN-lines between the diagnostics socket/Central electronic module (CEM) and a control module due to, e. g., contact resistance in a connector or branching, communication may be lost/interfered with.

  Check if there is voltage-drop in the cable for CAN-H and CAN-L between the diagnostics socket/Central electronic module (CEM) and the control module where there is problem with communication.

  Carry out the following:

  Measure voltage between the following connections on the OBDII-box/diagnostics socket.

  - #6 and corresponding connection on relevant control module for CAN-H. The voltage shall be lower than 50 mV.
  - #14 and corresponding connection on relevant control module for CAN-L. The voltage shall be

lower than 50 mV.

If voltage is too high, this indicates too high contact resistance in cable, connector, or branching. Check the circuit between the diagnostics socket and control module in question for contact resistance and oxidation.

NOTE: **After fault with control modules that interfere with communication, other control modules may remain in Limp-Home (that is, they work with reduced functionality) even when the ignition has been turned off and on a few times. For certain faults in the CAN-net where control modules have stopped communicating, it may help to disconnect/reconnect the battery to "restart" the control module/CAN-net.**

Remedy wiring as necessary.

Other information

- see **CHECKING WIRING AND TERMINALS**

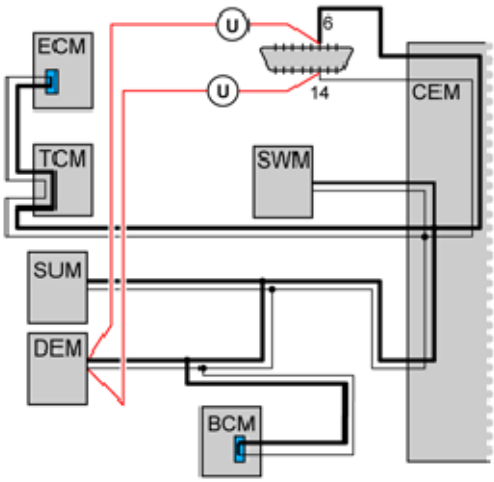

Fig. 75: CAN-Net Communication Diagram
Courtesy of VOLVO CARS CORPORATION

- **Continue**

Refer to **VERIFICATION**

INFORMATION

FAULT-TRACING INFORMATION

The fault should have been detected and remedied. As this is not the case fault-tracing has failed.

Exit fault-tracing for this diagnostic trouble code (DTC) or make another attempt.

CEM-1A5E: COMMUNICATION WITH THE STEERING WHEEL ANGLE SENSOR MODULE (SAS). SIGNAL MISSING (B6294T; 2005-2006)

SIGNAL MISSING

see **SIGNAL MISSING**

CEM-1A5E: COMMUNICATION WITH THE STEERING WHEEL ANGLE SENSOR MODULE (SAS). SIGNAL MISSING (B6324S; 2007-2010)

SIGNAL MISSING

see **SIGNAL MISSING**

CEM-1A5E: COMMUNICATION WITH THE STEERING WHEEL ANGLE SENSOR MODULE (SAS). SIGNAL MISSING (B6324S5; 2011-2012)

SIGNAL MISSING

see **SIGNAL MISSING**

CEM-1A5E: COMMUNICATION WITH THE STEERING WHEEL ANGLE SENSOR MODULE (SAS). SIGNAL MISSING (B8444S; 2005-2011)

SIGNAL MISSING

CHECKING THE POWER SUPPLY AND GROUND FOR THE STEERING WHEEL MODULE (SWM)

NOTE: **Steering wheel angle sensor module (SAS) is located inside, and is supplied with power by, the steering wheel module (SWM). Only the steering wheel angle sensor module (SAS) communicates on the controller area network (CAN). The brake control module (BCM) will store a diagnostic trouble code (DTC) if the communication between the brake control module (BCM) and the steering wheel angle sensor module (SAS) has been interrupted. DSTC will not be activated after a fault in the system has been repaired until the vehicle reaches a speed of approximately 50 km/h.**

Check that the fuse for the control module is intact.

Check the power supply and ground for the steering wheel module (SWM) as follows.

Remedy as necessary.

Other information

- see **CHECKING THE VOLTAGE / GROUND TERMINAL**
- see **CHECKING WIRING AND TERMINALS**

Was a fault detected?

- **YES**

  Refer to **CHECKING THE STEERING WHEEL ANGLE SENSOR MODULE (SAS)**

- **NO**

  Refer to **CHECKING COMMUNICATION WITH THE STEERING WHEEL ANGLE SENSOR MODULE (SAS)**

CHECKING COMMUNICATION WITH THE STEERING WHEEL ANGLE SENSOR MODULE (SAS)

HINT: The CAN communication with the control module is probably OK if the control module ID can be read off. In that case the fault is probably intermittent and will then be more difficult to trace.

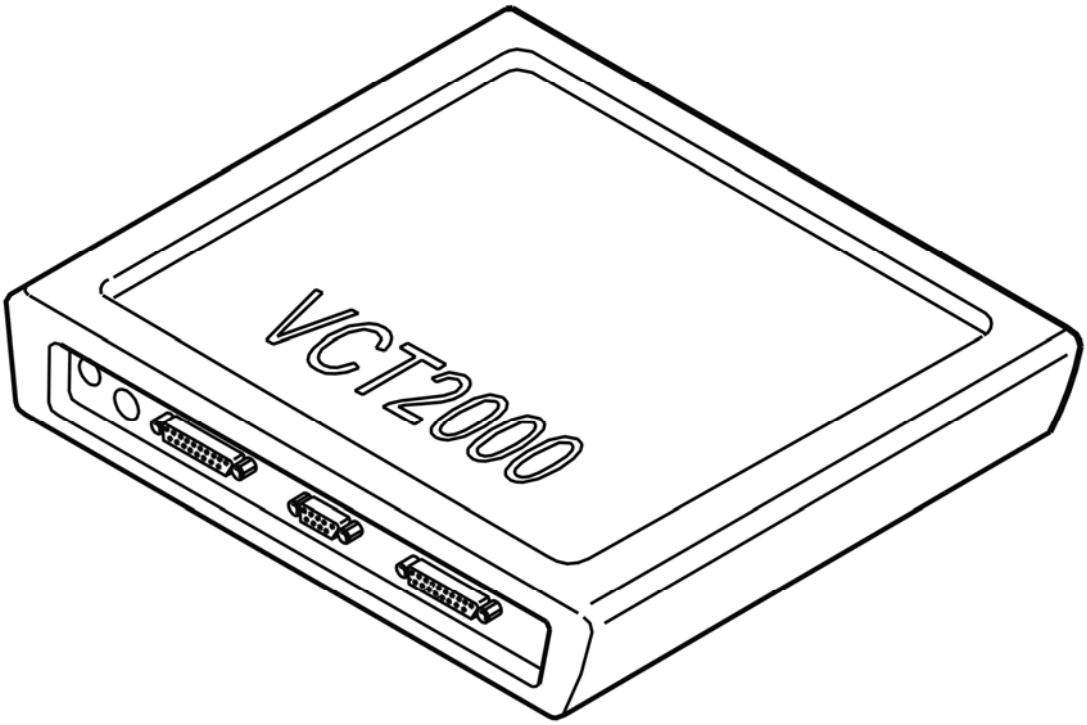

Fig. 76: Identifying VCT2000 Diagnostic Tool Symbol In VIDA
Courtesy of VOLVO CARS CORPORATION

- Try to communicate with the steering wheel angle sensor module (SAS) by reading off the control module ID
- Use the VCT2000 (or appropriate scan tool)
- **Continue**

  Refer to **SIGNAL MISSING**

CHECKING THE STEERING WHEEL ANGLE SENSOR MODULE (SAS)

HINT: After carrying out the repair, check that the fault has been remedied.

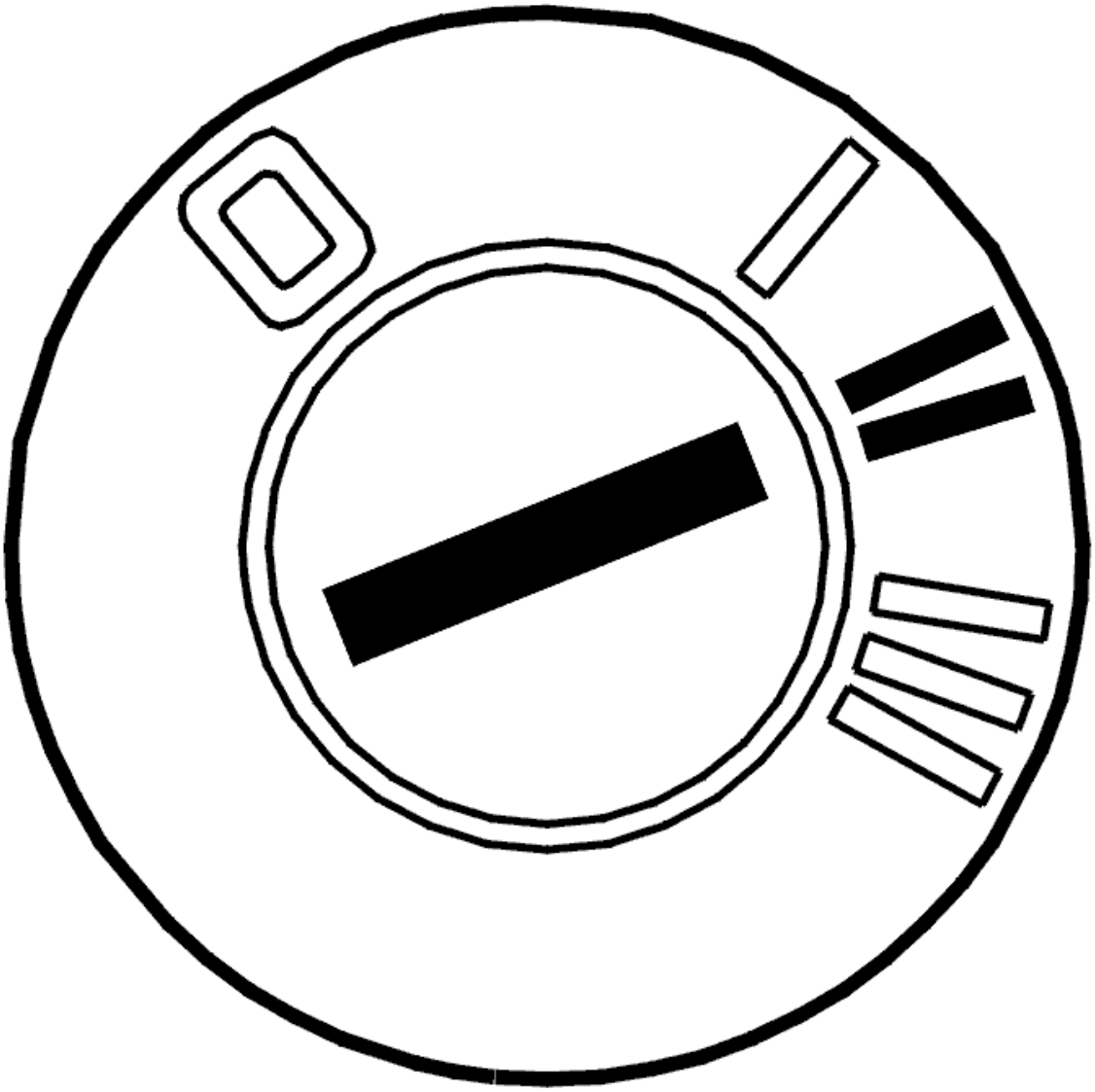

Fig. 77: Identifying Ignition ON
Courtesy of VOLVO CARS CORPORATION

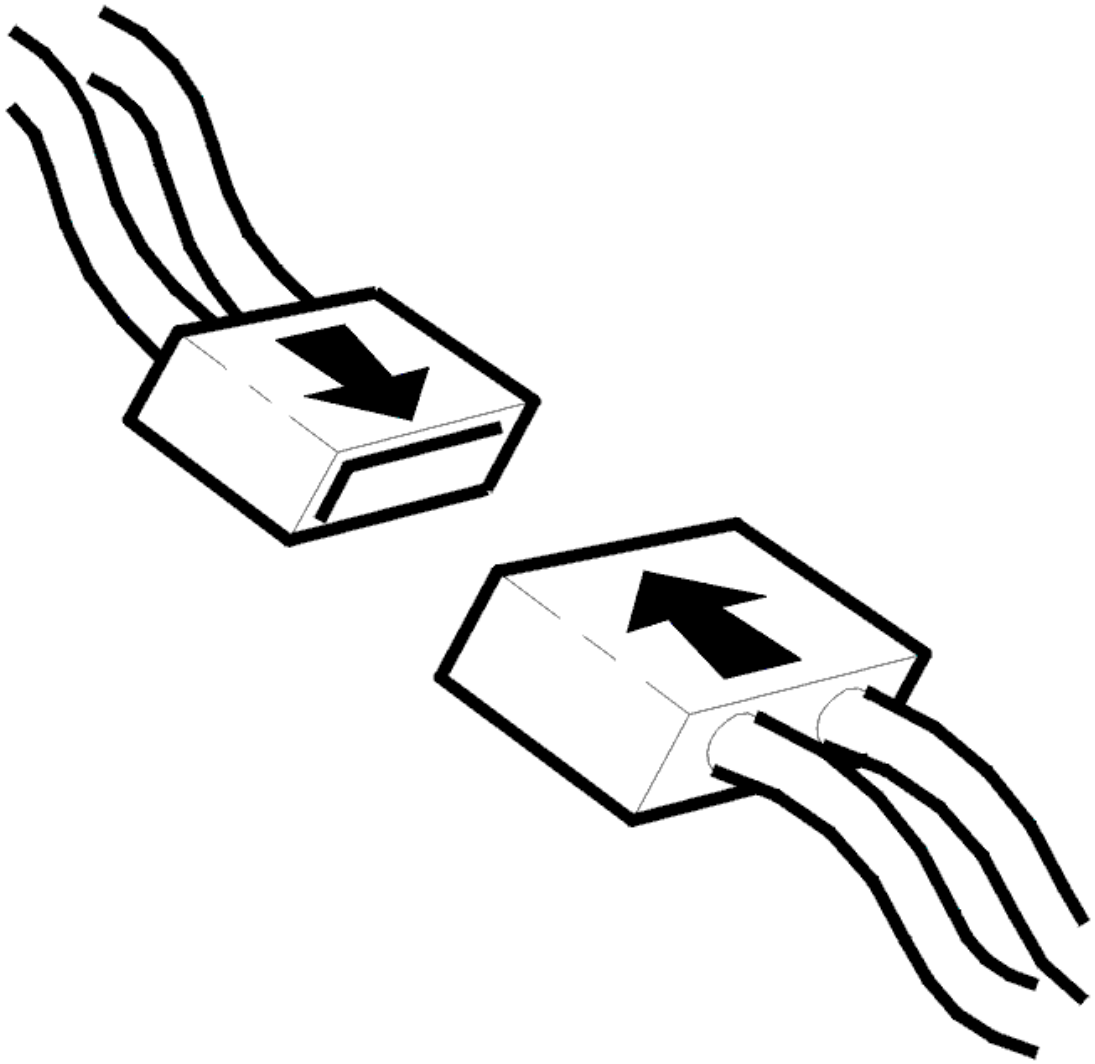

Fig. 78: Connecting Connector
Courtesy of VOLVO CARS CORPORATION

- Ignition off
- Reconnect the connectors. Reinstall the components
- Ignition on.

  Read off the parameters under vehicle communication to check the function of the steering wheel angle sensor module (SAS).

Is the function OK?

- **YES**

  OKAY: Troubleshooting has been completed.

- **NO**

  Refer to **INFORMATION**

SIGNAL MISSING

GENERAL INFORMATION

NOTE: Illustrations shown are only examples.

HINT: For general information about CAN-troubleshooting, see: GENERAL INFORMATION ABOUT FAULT-TRACING IN THE CAN NETWORK

- **General about CAN-related diagnostic trouble codes:**

  CEM-DF01 - DF17 can only be stored in Central electronic module (CEM). These diagnostic trouble codes are stored when an electric fault is detected in CAN-lines. Start with these diagnostic trouble codes first.

  CEM-1AXX only stored in Central electronic module (CEM). One diagnostic trouble code for every control module on the CAN-net. These diagnostic trouble codes indicate that Central electronic module (CEM) does not receive any reply from other control modules.

  XXX-E000 (HS-CAN)/E001 (LS-CAN) can be stored in all CAN-connected control modules. These diagnostic trouble codes indicate that the control module has detected interference on the CAN-net.

  XXX-E003 can be stored in all CAN-connected control modules except in Central electronic module (CEM). The control modules on the CAN-net listen for a message (identity number) that is sent out at regular intervals from Central electronic module (CEM). This diagnostic trouble code indicates that the control module has not received any identity number, or that the expected number is not correct. Interference on the CAN-net can also store this diagnostic trouble code.

  NOTE: In case of CAN-related faults, it is likely that a combination of above diagnostic trouble codes occur.

  NOTE: After fault with control modules that interfere with communication, other control modules may remain in Limp-Home (that is, they work with reduced functionality) even when the ignition has been turned off and on a few times. For certain faults in the CAN-net where control modules have stopped communicating, it may help to disconnect/reconnect the battery to "restart" the control module/CAN-net.

  If a communication diagnostic trouble code can be read from the control module, the malfunction is probably intermittent.

  Intermittent fault in the voltage supply and ground to a control module on the CAN network results in the

Central electronic module (CEM) storing a diagnostic trouble code (DTC) for an open-circuit in communication with the control module where the voltage supply does not work. There will probably not be a diagnostic trouble code (DTC) in the control module where the open-circuit in the voltage supply occurred as the control module cannot store a diagnostic trouble code (DTC) when it is not supplied with power.

NOTE: **Central electronic module (CEM) should not be replaced in case of CAN-fault, unless troubleshooting reveals that Central electronic module (CEM) has an internal fault.**

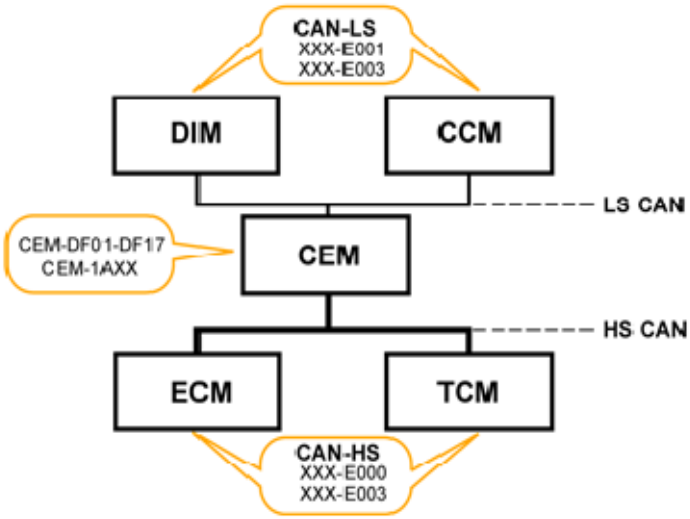

Fig. 79: High-Speed CAN And Low-Speed CAN Communication Diagram
Courtesy of VOLVO CARS CORPORATION

- **Continue**

Refer to **CHECKING RESISTANCE IN CAN-NET**

CHECKING RESISTANCE IN CAN-NET

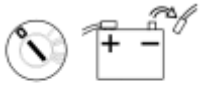

Fig. 80: Ignition Off And Disconnecting Battery Negative Lead
Courtesy of VOLVO CARS CORPORATION

- Ignition off
- Disconnect the battery negative lead
- Connect OBDII-Box **(951 3015)** to the diagnostics socket.

For general information about CAN-troubleshooting, see: **GENERAL INFORMATION ABOUT FAULT-TRACING IN THE CAN NETWORK**

Measure resistance between the following connections on the OBDII-box/diagnostics socket.

- #6 and #14. The resistance should be approx. 55 - 65 ohms.
- If resistance is approx. 120 ohms, this indicates open circuit in the circuit so that only one terminating resistor (120 ohms) has been measured.
- If resistance is above 1 kohms this indicates open circuit/high contact resistance somewhere in the circuit.
- If resistance is below 55 ohms this indicates short-circuiting/contact resistance between the CAN-lines somewhere in the circuit.

HINT: For HS-CAN the terminating resistors are located in Brake control module (BCM) and in Engine control module (ECM).

Twist the cable harness and wiggle connectors where they can be accessed along the cable harness during every measurement, and note if the resistance changes to detect intermittent short-circuits or open circuit.

NOTE: **Resistance measurement measures only main lines in the CAN-net (in circuit where both terminating resistors are found), not branches to certain control modules.**

Open circuit on branching without a terminating resistor cannot be detected with this measurement. However, short-circuiting on a branch can be detected. To measure resistance in the CAN-net to control modules located in a branching of their own, the measurement shall be done against the CAN-net at that control module. The values shall be as above.

NOTE: **After fault with control modules that interfere with communication, other control modules may remain in Limp-Home (that is, they work with reduced functionality) even when the ignition has been turned off and on a few times. For certain faults in the CAN-net where control modules have stopped communicating, it may help to disconnect/reconnect the battery to "restart" the control module/CAN-net.**

Remedy wiring as necessary.

Other information

- see **BATTERY, DISCONNECTING**
- see **CHECKING WIRING AND TERMINALS**

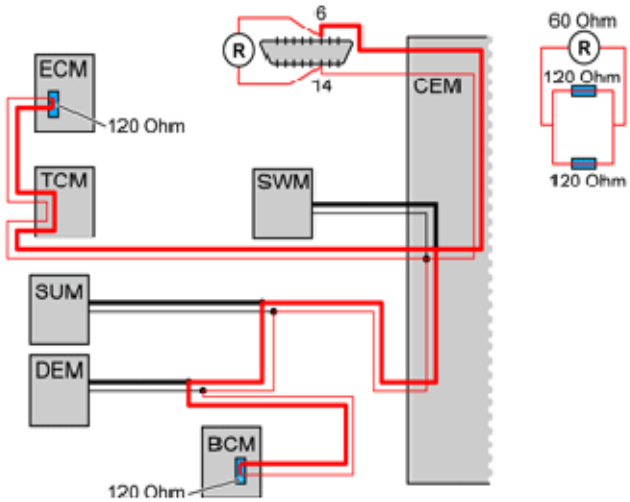

Fig. 81: Checking Resistance In CAN Lines
Courtesy of VOLVO CARS CORPORATION

Was a fault detected?

- **YES**

  Refer to **VERIFICATION**

- **NO**

  Refer to **CHECKING SHORT-CIRCUITING TO GROUND/VOLTAGE IN CAN-NET**

CHECKING THE TRAFFIC LOAD ON THE CAN CABLES

Fig. 82: Identifying Ignition On Position
Courtesy of VOLVO CARS CORPORATION

- Connect the battery
- Ignition on.
- Connect OBDII-Box **(951 3015)** to the diagnostics socket.

  For general information about CAN-troubleshooting, see: **GENERAL INFORMATION ABOUT FAULT-TRACING IN THE CAN NETWORK**

  Faults in the CAN network may be due to a control module sending faulty messages that disrupt normal

communication. When messages are sent incorrectly, this results in a considerable increase in the amount of traffic on the CAN network. Check the load by measuring the average voltage value on the CAN cables in relation to ground.

Measure voltage between the following connections on the OBDII-box/diagnostics socket.

- #6 and #4 (ground). The voltage should be approx:2, 8 - 3, 2 V.
- #14 and #4 (ground). The voltage should be approx:1, 8 - 2, 2 V.
- #6 and #14. The voltage shall be between approx. 0.55-1.4 V. The voltage shall normally be between 0.55 - 0.90 V. A higher voltage may indicate increased traffic on the CAN-net. In case of fault in communication/too high traffic on the CAN-net, the voltage is considerably higher than the above stated values.

NOTE: After fault with control modules that interfere with communication, other control modules may remain in Limp-Home even when the ignition has been turned off and on a few times. For certain faults in the CAN-net where control modules have stopped communicating, it may help to disconnect/reconnect the battery to "restart" the control module/CAN-net.

HINT: DiCE can be used as fault detection tool if fault is suspected on the CAN-net that cannot be detected with normal troubleshooting. Interference, intermittent faults, faulty messages on the CAN-net etc., are examples of such faults. The tool registers fault messages used on the CAN-net. Fault messages may be caused by short intermittent malfunctions on the CAN-net or by a control module sending fault messages. See tools:951 3010 as well as associated TJ 20402.

- Ignition on.
- Connect DiCE to the diagnostics socket.
- Note the blue LED-indicator. The indicator flashes to show detection of fault messages.

NOTE: Certain interference may occur without any real fault

Cable fault

- Shake the cables lightly and pull lightly on the connections during the check to locate any fault. Note the blue LED-indicator.

"Chatting" control modules

- "Chatting" control modules may be difficult to find and troubleshooting may take time. Let the vehicle stand with DiCE connected for an extended time period. Afterwards, activate functions to provoke a malfunction. It may take up to several hours before the fault messages are sent. When the indicator starts to flash, remove the fuse for one control module at a time until the indicator stops flashing. When the indicator stops flashing, restore the fuse for the relevant control module and check that the indicator starts to flash again. Then it is likely that the problem is identified.

Remedy wiring as necessary.

Other information

- see **BATTERY, DISCONNECTING**
- see **CHECKING WIRING AND TERMINALS**

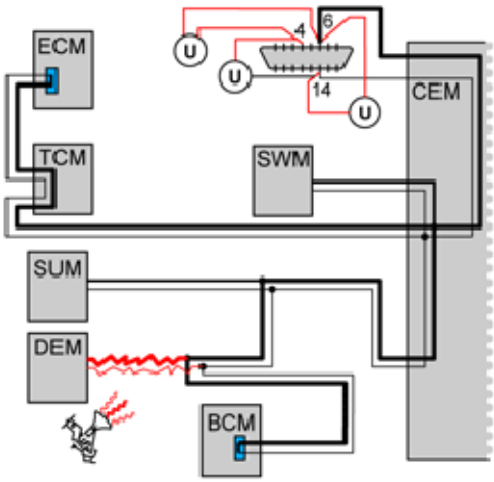

Fig. 83: Checking Traffic Load On CAN Cables
Courtesy of VOLVO CARS CORPORATION

Was a fault detected?

- **YES**

  Refer to **IDENTIFYING A CONTROL MODULE IN THE CAN NETWORK**

- **NO**

  Refer to **CHECKING VOLTAGE-DROP IN CABLE FOR CAN-H AND CAN-L, RESPECTIVELY**

IDENTIFYING A CONTROL MODULE IN THE CAN NETWORK

Fig. 84: Identifying Ignition On Position
Courtesy of VOLVO CARS CORPORATION

For general information about CAN-troubleshooting, see: **GENERAL INFORMATION ABOUT FAULT-TRACING IN THE CAN NETWORK**

HINT: DiCE can be used as fault detection tool if fault is suspected on the CAN-net that cannot be detected with normal troubleshooting. Interference, intermittent faults, faulty messages on the CAN-net (chattering control modules) etc., are examples of such faults. The tool registers fault messages used on the CAN-net. Fault messages may be caused by short intermittent malfunctions on the CAN-net or by a control module sending fault messages. See tools:951 3010 (memory card) as well as associated TJ 20402.

If the load on the CAN network is too high, this may be due to a control module sending faulty messages on the CAN network (known as a disruptive control module). The fault may also be due to an intermittent short-circuit to supply voltage or ground in one of the CAN cables. This results in the control modules on the CAN network starting to send faulty messages. The faults can occur without a diagnostic trouble code (DTC) being stored by the control modules. The voltage can be measured between the CAN cables in order to check the load on the CAN network.

NOTE: **It is not necessarily the control module(s) that stored the diagnostic trouble code (DTC) that is communicating faultily. Faulty messages can come from any control module in the same section of the CAN network. However, faulty communication in one network cannot affect the communication on the other network. In other words, faulty communication on the LS-CAN cannot disrupt communication on the HS-CAN and vice versa.**

- Ignition on.
- Connect OBDII-Box **(951 3015)** to the diagnostics socket.

Check communication/load on CAN-net by measuring voltage between CAN-L and CAN-H. Measure voltage between the following connections on the OBDII-box/diagnostics socket.

- #6 and #14. The average value of the voltage must be approximately 0.6-1.4 V. The voltage shall normally be between 0.55 - 0.90 V. A higher voltage may indicate increased traffic on the CAN-net. In case of fault in communication/too high traffic on the CAN-net, the voltage is considerably higher than the above stated values.

In order to identify which control module has faulty communication, cut the power supply to one control module at a time. Check the voltage in the CAN cables again. The easiest way to cut the power supply is to remove the fuse(s) for the relevant control module. Repeat until the voltage between the CAN wiring drops to the normal level.

NOTE: **When connecting and disconnecting individual control modules, other diagnostic trouble codes (DTCs) may be stored in certain control modules.**

HINT: When the suspected defective control module has been identified, connect and disconnect the supply voltage to the control module a number of times to verify that the malfunction appears and disappears. Switch off the ignition between each check.

NOTE: **Do not cut the power to the central electronic module (CEM) unless it is the last control module left to check.**

A control module that is communicating incorrectly must be replaced. See Repairing and installing/Removing, replacing and installing.

NOTE: **After fault with control modules that interfere with communication, other control modules may remain in Limp-Home (that is, they work with reduced functionality) even when the ignition has been turned off and on a few times. For certain faults in the CAN-net where control modules have stopped communicating, it may help to disconnect/reconnect the battery to "restart" the control module/CAN-net.**

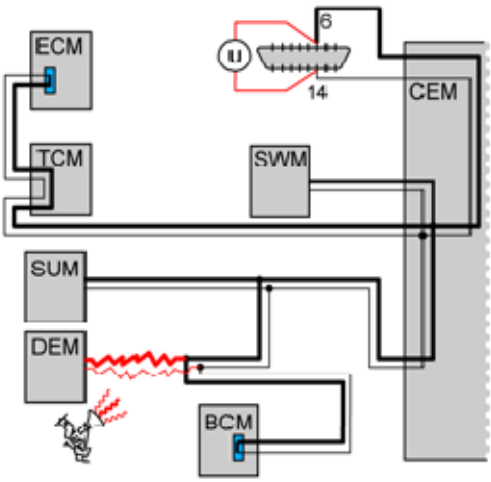

Fig. 85: Checking Communication/Load On CAN-Net Between CAN-L And CAN-H
Courtesy of VOLVO CARS CORPORATION

- **Continue**

  Refer to **VERIFICATION**

VERIFICATION

HINT: After rectifying a fault, a verification should be carried out.

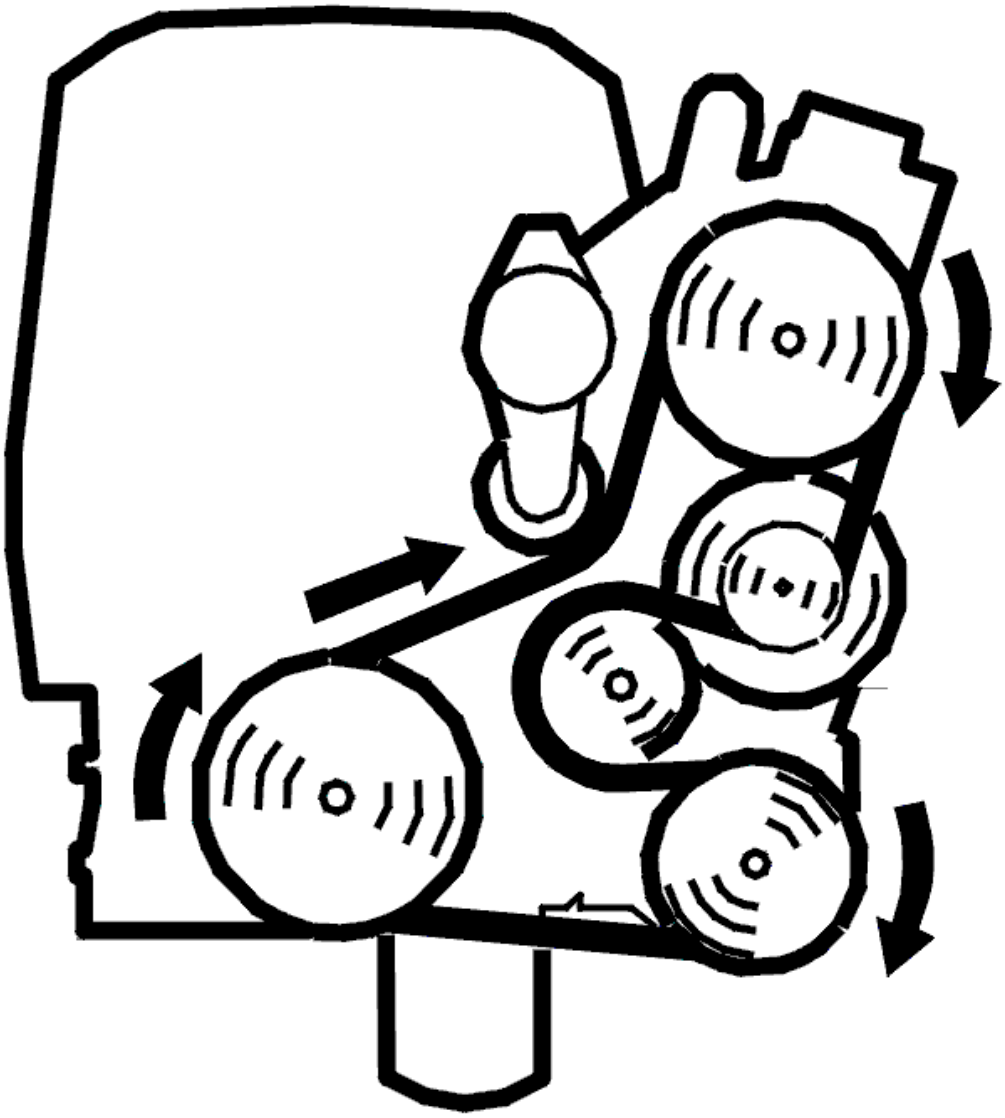

Fig. 86: Belt Routing / Engine Idling - Volvo
Courtesy of VOLVO CARS CORPORATION

Fig. 87: Identifying Ignition On Position
Courtesy of VOLVO CARS CORPORATION

- Reinstall the connectors, components etc.
- Ignition on.

NOTE: **For certain faults in the CAN-net where control modules have stopped communicating, it may help to disconnect/reconnect the battery to "restart" the control module/CAN-net.**

- Erase diagnostic trouble codes (DTCs) in all control modules.
- Ignition off.
- Ignition on.
- Start the vehicle. Allow the vehicle to run for 10 minutes.
- Read out the diagnostic trouble codes in the vehicle via the DIAGNOSTICS tab.

Does the diagnostic trouble code (DTC) for faulty communication return?

- **YES**

  Refer to **INFORMATION**

- **NO**

  OKAY: Troubleshooting has been completed.

CHECKING SHORT-CIRCUITING TO GROUND/VOLTAGE IN CAN-NET

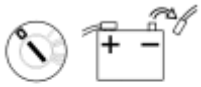

Fig. 88: Ignition Off And Disconnecting Battery Negative Lead
Courtesy of VOLVO CARS CORPORATION

- Ignition off.
- Disconnect the battery negative lead.
- Connect OBDII-Box **(951 3015)** to the diagnostics socket.

  For general information about CAN-troubleshooting, see: **GENERAL INFORMATION ABOUT FAULT-TRACING IN THE CAN NETWORK**

  Checking for a short-circuit to ground

  Measure resistance between the following connections on the OBDII-box/diagnostics socket.

  - #6 and #4 (ground). Measurement is shown in the illustration. The resistance should be above 1 kohms.
  - #14 and #4 (ground). The resistance should be above 1 kohms.

If resistance is below 1 kohms this indicates short-circuiting between the CAN-line and ground.

Checking for a short-circuit to voltage

Measure resistance between the following connections on the OBDII-box/diagnostics socket.

- #6 and #16 (voltage). Measurement is shown in the illustration. The resistance should be above 1 kohms.
- #14 and #16 (voltage). The resistance should be above 1 kohms.

If resistance is below 1 kohms this indicates short-circuiting between the CAN-line and voltage cable.

Twist the cable harness and wiggle connectors where they can be accessed along the cable harness during every measurement, and note if the resistance changes to detect intermittent short-circuits or open circuit.

HINT: Part the CAN-net at suitable points to decide where a short-circuit may be found.

NOTE: After fault with control modules that interfere with communication, other control modules may remain in Limp-Home (that is, they work with reduced functionality) even when the ignition has been turned off and on a few times. For certain faults in the CAN-net where control modules have stopped communicating, it may help to disconnect/reconnect the battery to "restart" the control module/CAN-net.

Remedy wiring as necessary.

Other information

- see **BATTERY, DISCONNECTING**
- see **CHECKING WIRING AND TERMINALS**

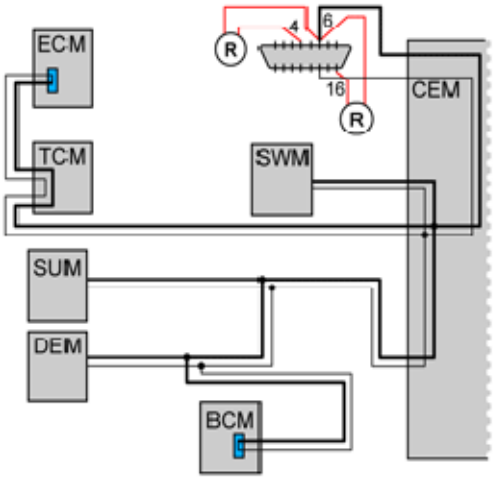

Fig. 89: CAN-Net Communication Diagram
Courtesy of VOLVO CARS CORPORATION

Was a fault detected?

- **YES**

  Refer to **VERIFICATION**

- **NO**

  Refer to **CHECKING THE TRAFFIC LOAD ON THE CAN CABLES**

CHECKING VOLTAGE-DROP IN CABLE FOR CAN-H AND CAN-L, RESPECTIVELY

Fig. 90: Identifying Ignition On Position
Courtesy of VOLVO CARS CORPORATION

- Connect the battery.
- Ignition on.
- Connect OBDII-Box **(951 3015)** to the diagnostics socket.

  For general information about CAN-troubleshooting, see: **GENERAL INFORMATION ABOUT FAULT-TRACING IN THE CAN NETWORK**

  In principle, the voltage measured in each cable in the CAN-net shall be the same at each control module in the network. This means that the voltage-drop in the cable for CAN-H and CAN-L, respectively, between the control modules should be very low. If there is a voltage-difference in the CAN-lines between the diagnostics socket/Central electronic module (CEM) and a control module due to, e. g., contact resistance in a connector or branching, communication may be lost/interfered with.

  Check if there is voltage-drop in the cable for CAN-H and CAN-L between the diagnostics socket/Central electronic module (CEM) and the control module where there is problem with communication.

  Carry out the following:

  Measure voltage between the following connections on the OBDII-box/diagnostics socket.

  - #6 and corresponding connection on relevant control module for CAN-H. The voltage shall be lower than 50 mV.
  - #14 and corresponding connection on relevant control module for CAN-L. The voltage shall be

lower than 50 mV.

If voltage is too high, this indicates too high contact resistance in cable, connector, or branching. Check the circuit between the diagnostics socket and control module in question for contact resistance and oxidation.

NOTE: **After fault with control modules that interfere with communication, other control modules may remain in Limp-Home (that is, they work with reduced functionality) even when the ignition has been turned off and on a few times. For certain faults in the CAN-net where control modules have stopped communicating, it may help to disconnect/reconnect the battery to "restart" the control module/CAN-net.**

Remedy wiring as necessary.

Other information

- see **CHECKING WIRING AND TERMINALS**

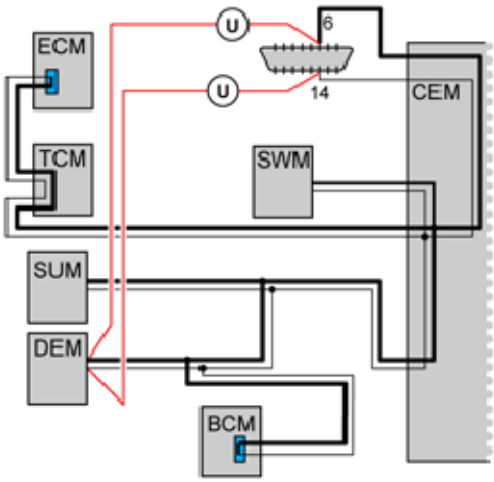

Fig. 91: CAN-Net Communication Diagram
Courtesy of VOLVO CARS CORPORATION

- **Continue**

Refer to **VERIFICATION**

INFORMATION

FAULT-TRACING INFORMATION

The fault should have been detected and remedied. As this is not the case fault-tracing has failed.

Exit fault-tracing for this diagnostic trouble code (DTC) or make another attempt.

CEM-1A5F: COMMUNICATION WITH THE BRAKE CONTROL MODULE (BCM). SIGNAL MISSING (2005-2012)

DIAGNOSTIC TROUBLE CODE (DTC) INFORMATION CEM-1A5F

Condition

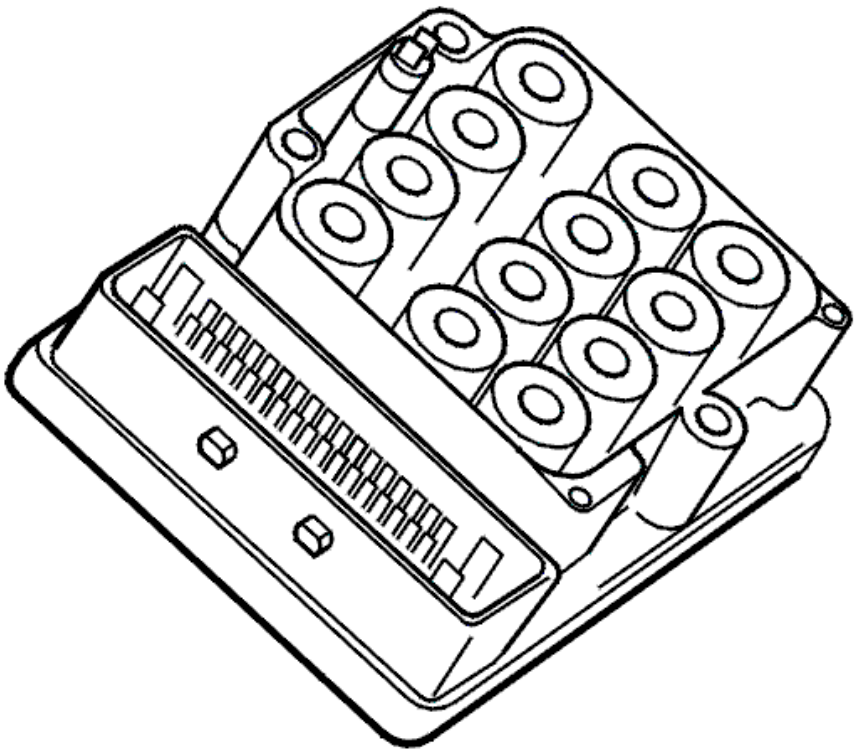

Fig. 92: ABS Control Module
Courtesy of VOLVO CARS CORPORATION

The diagnostic trouble code (DTC) is stored if the central electronic module (CEM) registers that communication with the brake control module (BCM) is not operating.

The diagnostic trouble code (DTC) can be diagnosed when the ignition has been on for more than 10 seconds.

NOTE: **In the event of CEM-1A5X diagnostic trouble codes (DTCs), the central electronic module (CEM) must not be replaced as the diagnostic trouble code (DTC) indicates a communication fault in the controller area network (CAN)**

Substitute Value

- None.

Possible Source

- No power supply to the brake control module (BCM)
- Open-circuit in the ground lead to the brake control module (BCM)
- Contact resistance in the terminals
- Open-circuit in the wiring for the CAN high speed network to the brake control module (BCM)
- The brake control module (BCM) is not intended for this vehicle, for example a used control module with different software/hardware.

HINT: If several diagnostic trouble codes (DTCs) are stored in the central electronic module (CEM) for communication faults with other control modules in the high speed network, this indicates a common fault in the Control area network.

Fault symptom[s]

- ABS warning lamp lit.
- No ABS function
- Message in the display.

SIGNAL MISSING

CHECKING THE POWER SUPPLY AND GROUND FOR THE BRAKE CONTROL MODULE (BCM)

Check that the fuse for the control module is intact.

Check the power supply and ground for the brake control module (BCM) as follows.

Remedy as necessary.

Other information:

- see **CHECKING THE POWER SUPPLY, BRAKE CONTROL MODULE**
- see **CHECKING THE GROUND TERMINALS, BRAKE CONTROL MODULE**
- see **CHECKING WIRING AND TERMINALS**

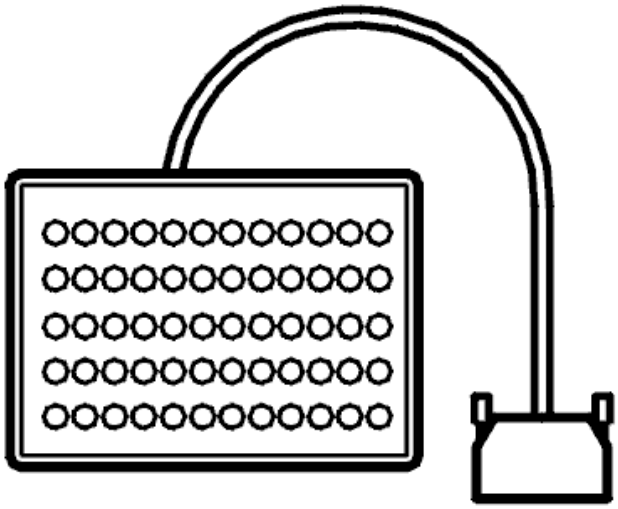

Fig. 93: Breakout Box
Courtesy of VOLVO CARS CORPORATION

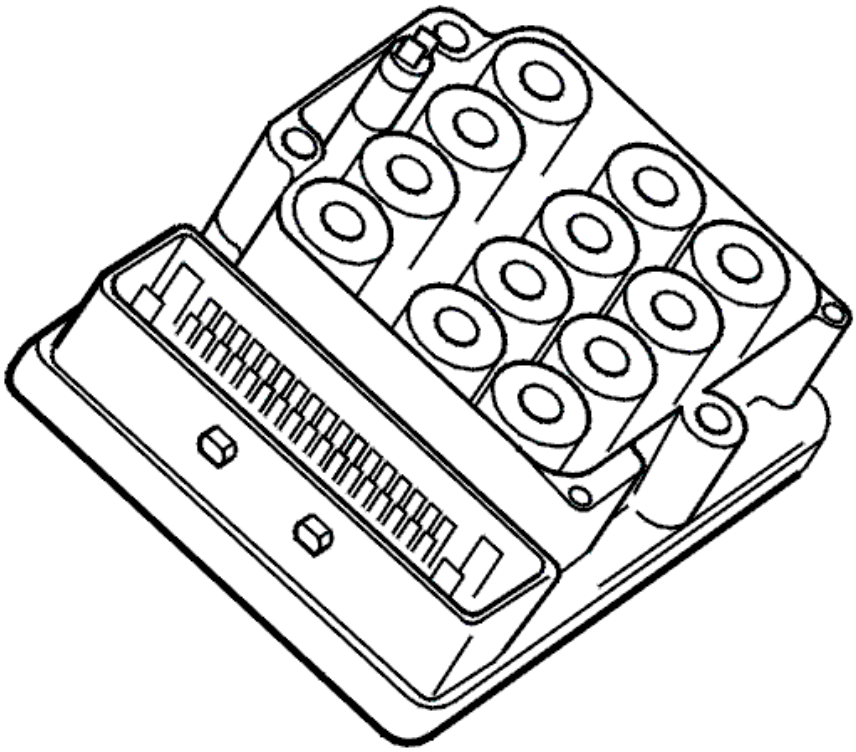

Fig. 94: ABS Control Module
Courtesy of VOLVO CARS CORPORATION

Was a fault detected?

- **YES**

Refer to **CHECKING THE BRAKE CONTROL MODULE (BCM)**

- **NO**

  Refer to **CHECKING COMMUNICATION WITH THE BRAKE CONTROL MODULE (BCM)**

CHECKING COMMUNICATION WITH THE BRAKE CONTROL MODULE (BCM)

HINT: The CAN communication with the control module is probably OK if the control module ID can be read off. In that case the fault is probably intermittent and will then be more difficult to trace.

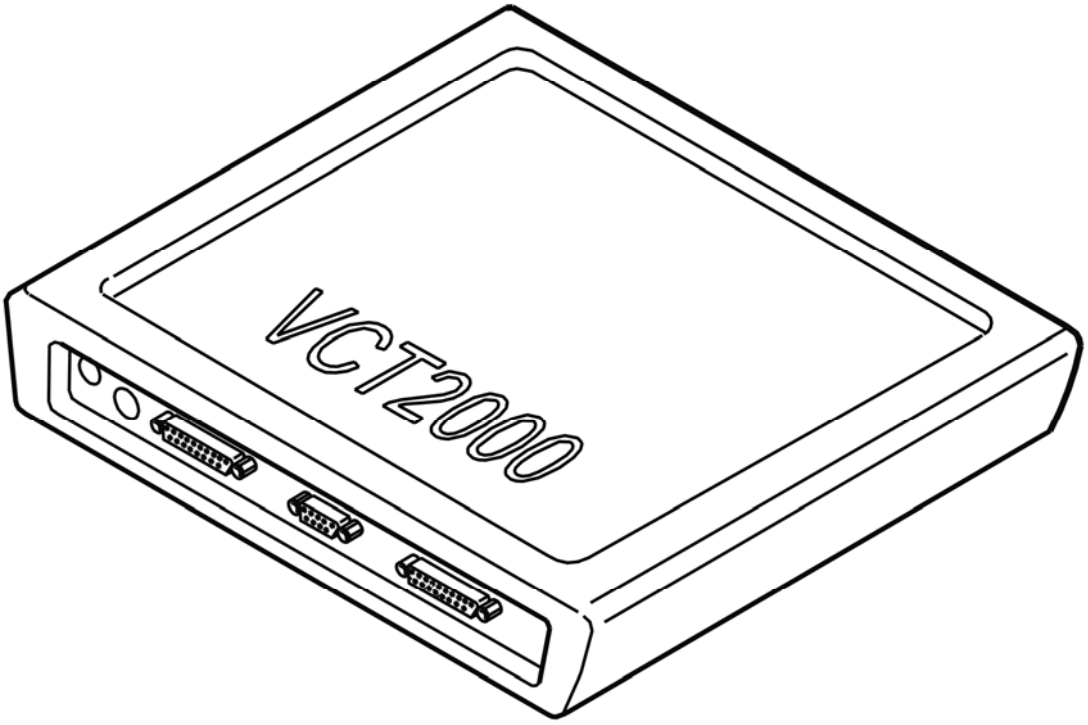

Fig. 95: Identifying VCT2000 Diagnostic Tool Symbol In VIDA
Courtesy of VOLVO CARS CORPORATION

- Try to communicate with the brake control module (BCM) by reading off the control module ID
- Use the VCT2000 (or appropriate scan tool)

- **Continue**

  Refer to **SIGNAL MISSING**

CHECKING THE BRAKE CONTROL MODULE (BCM)

HINT: After carrying out the repair, check that the fault has been remedied.

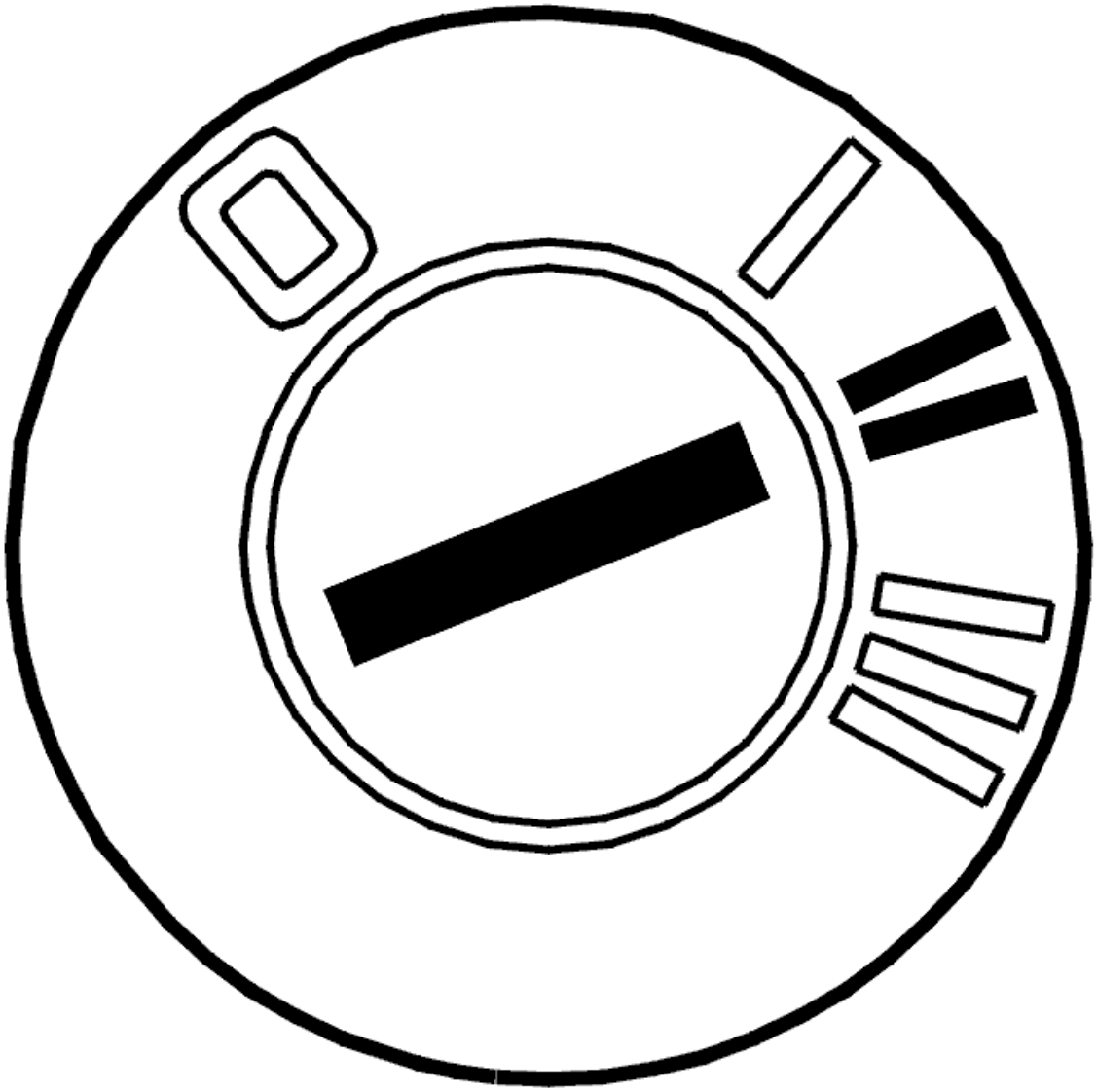

Fig. 96: Identifying Ignition ON
Courtesy of VOLVO CARS CORPORATION

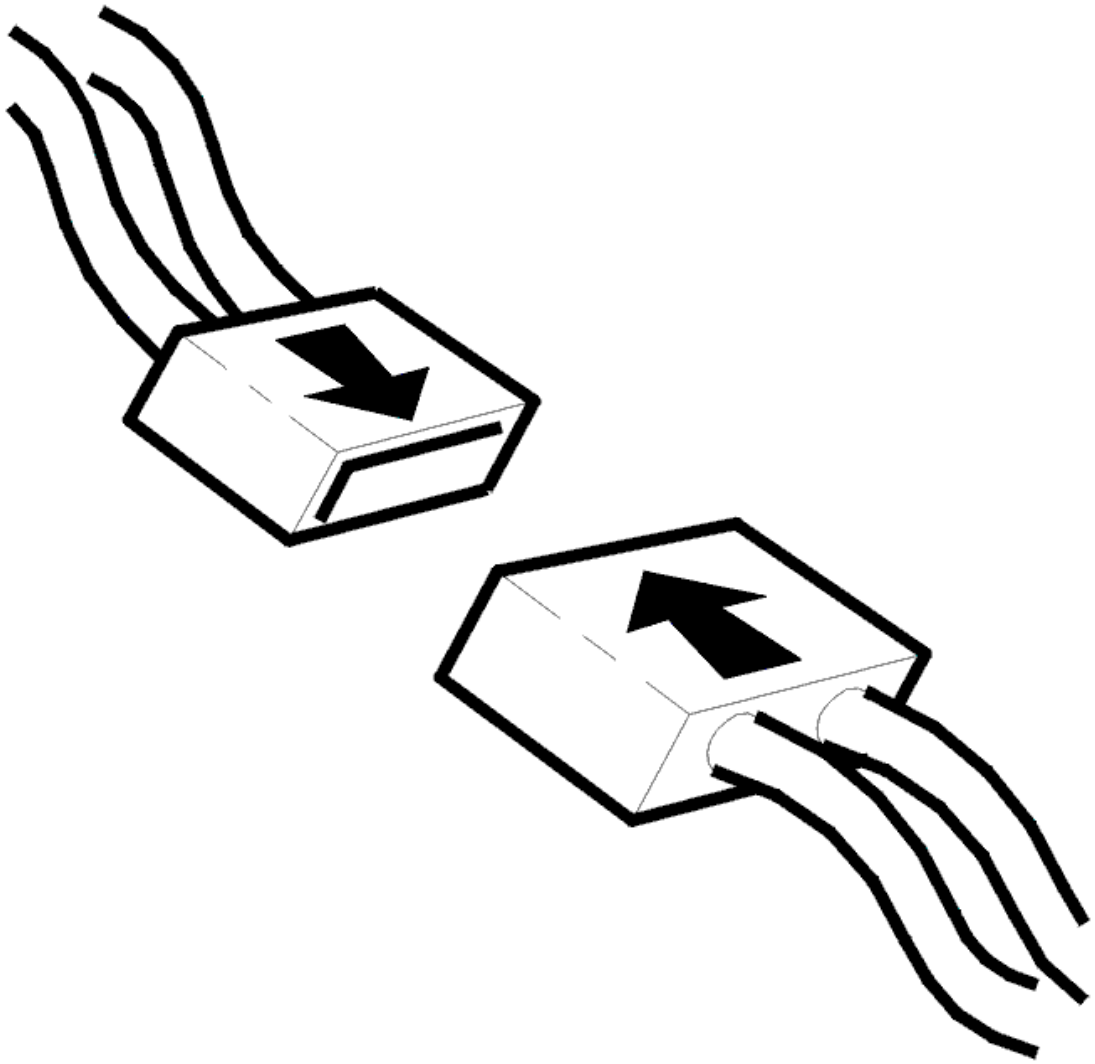

Fig. 97: Connecting Connector
Courtesy of VOLVO CARS CORPORATION

- Ignition off
- Reconnect the connectors. Reinstall the components
- Ignition on for at least 10 seconds.

  Read off the control module ID from the brake control module (BCM) using the VCT2000 (or appropriate scan tool).

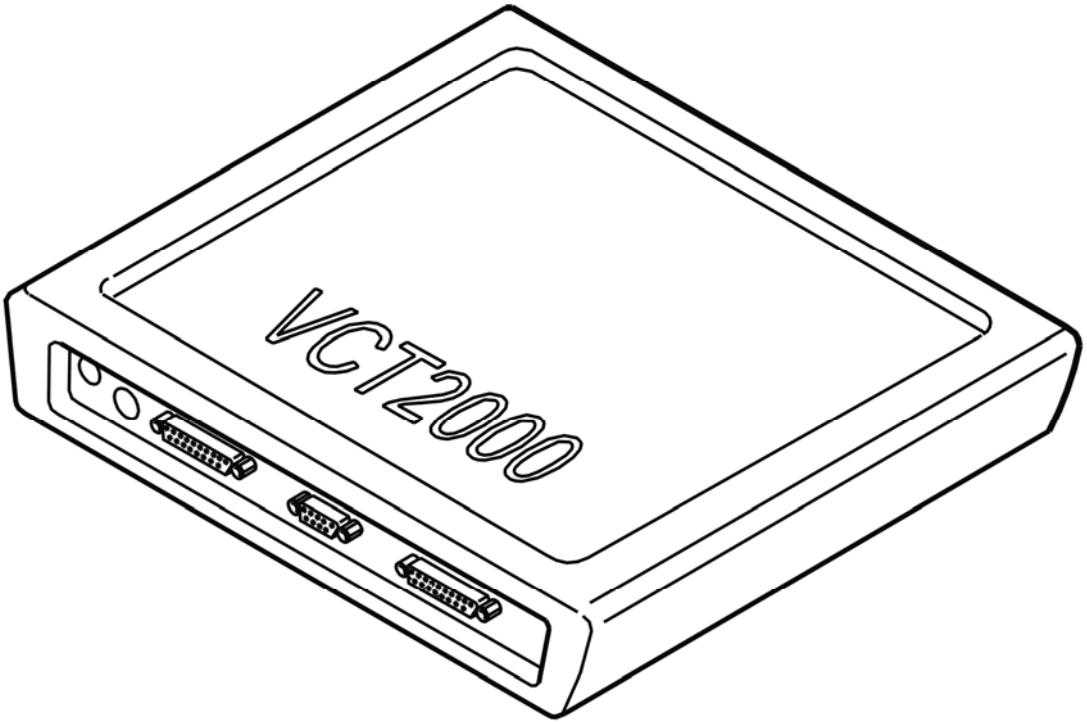

Fig. 98: Identifying VCT2000 Diagnostic Tool Symbol In VIDA
Courtesy of VOLVO CARS CORPORATION

Could the control module ID be read off?

- **YES**

  OKAY: Troubleshooting has been completed.

- **NO**

  Refer to **INFORMATION**

SIGNAL MISSING

GENERAL INFORMATION

NOTE: Illustrations shown are only examples.

HINT: For general information about CAN-troubleshooting, see: GENERAL INFORMATION ABOUT FAULT-TRACING IN THE CAN NETWORK

- **General about CAN-related diagnostic trouble codes:**

CEM-DF01 - DF17 can only be stored in Central electronic module (CEM). These diagnostic trouble codes are stored when an electric fault is detected in CAN-lines. Start with these diagnostic trouble codes first.

CEM-1AXX only stored in Central electronic module (CEM). One diagnostic trouble code for every control module on the CAN-net. These diagnostic trouble codes indicate that Central electronic module (CEM) does not receive any reply from other control modules.

XXX-E000 (HS-CAN)/E001 (LS-CAN) can be stored in all CAN-connected control modules. These diagnostic trouble codes indicate that the control module has detected interference on the CAN-net.

XXX-E003 can be stored in all CAN-connected control modules except in Central electronic module (CEM). The control modules on the CAN-net listen for a message (identity number) that is sent out at regular intervals from Central electronic module (CEM). This diagnostic trouble code indicates that the control module has not received any identity number, or that the expected number is not correct. Interference on the CAN-net can also store this diagnostic trouble code.

NOTE: **In case of CAN-related faults, it is likely that a combination of above diagnostic trouble codes occur.**

NOTE: **After fault with control modules that interfere with communication, other control modules may remain in Limp-Home (that is, they work with reduced functionality) even when the ignition has been turned off and on a few times. For certain faults in the CAN-net where control modules have stopped communicating, it may help to disconnect/reconnect the battery to "restart" the control module/CAN-net.**

If a communication diagnostic trouble code can be read from the control module, the malfunction is probably intermittent.

Intermittent fault in the voltage supply and ground to a control module on the CAN network results in the Central electronic module (CEM) storing a diagnostic trouble code (DTC) for an open-circuit in communication with the control module where the voltage supply does not work. There will probably not be a diagnostic trouble code (DTC) in the control module where the open-circuit in the voltage supply occurred as the control module cannot store a diagnostic trouble code (DTC) when it is not supplied with power.

NOTE: **Central electronic module (CEM) should not be replaced in case of CAN-fault, unless troubleshooting reveals that Central electronic module (CEM) has an internal fault.**

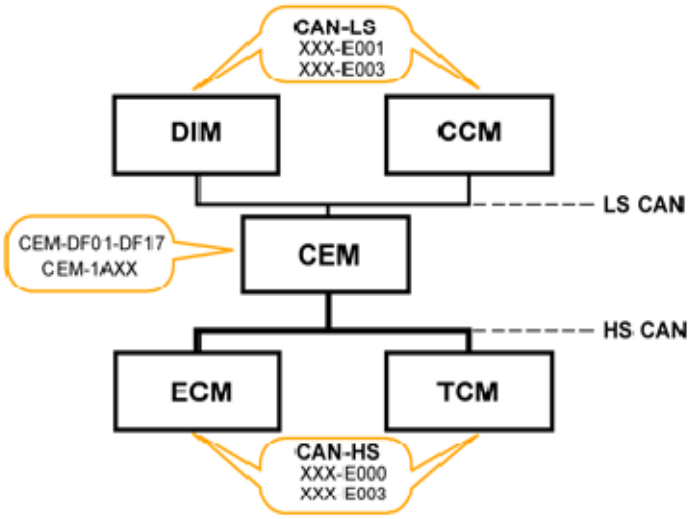

Fig. 99: High-Speed CAN And Low-Speed CAN Communication Diagram
Courtesy of VOLVO CARS CORPORATION

- **Continue**

  Refer to **CHECKING RESISTANCE IN CAN-NET**

CHECKING RESISTANCE IN CAN-NET

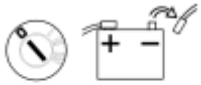

Fig. 100: Ignition Off And Disconnecting Battery Negative Lead
Courtesy of VOLVO CARS CORPORATION

- Ignition off
- Disconnect the battery negative lead
- Connect OBDII-Box **(951 3015)** to the diagnostics socket.

  For general information about CAN-troubleshooting, see: **GENERAL INFORMATION ABOUT FAULT-TRACING IN THE CAN NETWORK**

  Measure resistance between the following connections on the OBDII-box/diagnostics socket.

  - #6 and #14. The resistance should be approx. 55 - 65 ohms.
  - If resistance is approx. 120 ohms, this indicates open circuit in the circuit so that only one terminating resistor (120 ohms) has been measured.
  - If resistance is above 1 kohms this indicates open circuit/high contact resistance somewhere in the circuit.

- If resistance is below 55 ohms this indicates short-circuiting/contact resistance between the CAN-lines somewhere in the circuit.

HINT: For HS-CAN the terminating resistors are located in Brake control module (BCM) and in Engine control module (ECM).

Twist the cable harness and wiggle connectors where they can be accessed along the cable harness during every measurement, and note if the resistance changes to detect intermittent short-circuits or open circuit.

NOTE: **Resistance measurement measures only main lines in the CAN-net (in circuit where both terminating resistors are found), not branches to certain control modules.**

Open circuit on branching without a terminating resistor cannot be detected with this measurement. However, short-circuiting on a branch can be detected. To measure resistance in the CAN-net to control modules located in a branching of their own, the measurement shall be done against the CAN-net at that control module. The values shall be as above.

NOTE: **After fault with control modules that interfere with communication, other control modules may remain in Limp-Home (that is, they work with reduced functionality) even when the ignition has been turned off and on a few times. For certain faults in the CAN-net where control modules have stopped communicating, it may help to disconnect/reconnect the battery to "restart" the control module/CAN-net.**

Remedy wiring as necessary.

Other information

- see **BATTERY, DISCONNECTING**
- see **CHECKING WIRING AND TERMINALS**

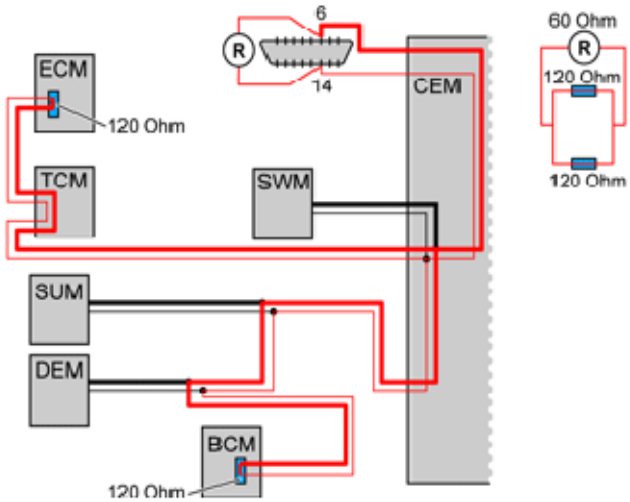

Fig. 101: Checking Resistance In CAN Lines
Courtesy of VOLVO CARS CORPORATION

Was a fault detected?

- **YES**

  Refer to **VERIFICATION**

- **NO**

  Refer to **CHECKING SHORT-CIRCUITING TO GROUND/VOLTAGE IN CAN-NET**

CHECKING THE TRAFFIC LOAD ON THE CAN CABLES

Fig. 102: Identifying Ignition On Position
Courtesy of VOLVO CARS CORPORATION

- Connect the battery
- Ignition on.
- Connect OBDII-Box **(951 3015)** to the diagnostics socket.

  For general information about CAN-troubleshooting, see: **GENERAL INFORMATION ABOUT FAULT-TRACING IN THE CAN NETWORK**

  Faults in the CAN network may be due to a control module sending faulty messages that disrupt normal

communication. When messages are sent incorrectly, this results in a considerable increase in the amount of traffic on the CAN network. Check the load by measuring the average voltage value on the CAN cables in relation to ground.

Measure voltage between the following connections on the OBDII-box/diagnostics socket.

- #6 and #4 (ground). The voltage should be approx:2, 8 - 3, 2 V.
- #14 and #4 (ground). The voltage should be approx:1, 8 - 2, 2 V.
- #6 and #14. The voltage shall be between approx. 0.55-1.4 V. The voltage shall normally be between 0.55 - 0.90 V. A higher voltage may indicate increased traffic on the CAN-net. In case of fault in communication/too high traffic on the CAN-net, the voltage is considerably higher than the above stated values.

NOTE: After fault with control modules that interfere with communication, other control modules may remain in Limp-Home even when the ignition has been turned off and on a few times. For certain faults in the CAN-net where control modules have stopped communicating, it may help to disconnect/reconnect the battery to "restart" the control module/CAN-net.

HINT: DiCE can be used as fault detection tool if fault is suspected on the CAN-net that cannot be detected with normal troubleshooting. Interference, intermittent faults, faulty messages on the CAN-net etc., are examples of such faults. The tool registers fault messages used on the CAN-net. Fault messages may be caused by short intermittent malfunctions on the CAN-net or by a control module sending fault messages. See tools:951 3010 as well as associated TJ 20402.

- Ignition on.
- Connect DiCE to the diagnostics socket.
- Note the blue LED-indicator. The indicator flashes to show detection of fault messages.

NOTE: Certain interference may occur without any real fault

Cable fault

- Shake the cables lightly and pull lightly on the connections during the check to locate any fault. Note the blue LED-indicator.

"Chatting" control modules

- "Chatting" control modules may be difficult to find and troubleshooting may take time. Let the vehicle stand with DiCE connected for an extended time period. Afterwards, activate functions to provoke a malfunction. It may take up to several hours before the fault messages are sent. When the indicator starts to flash, remove the fuse for one control module at a time until the indicator stops flashing. When the indicator stops flashing, restore the fuse for the relevant control module and check that the indicator starts to flash again. Then it is likely that the problem is identified.

Remedy wiring as necessary.

Other information

- see **BATTERY, DISCONNECTING**
- see **CHECKING WIRING AND TERMINALS**

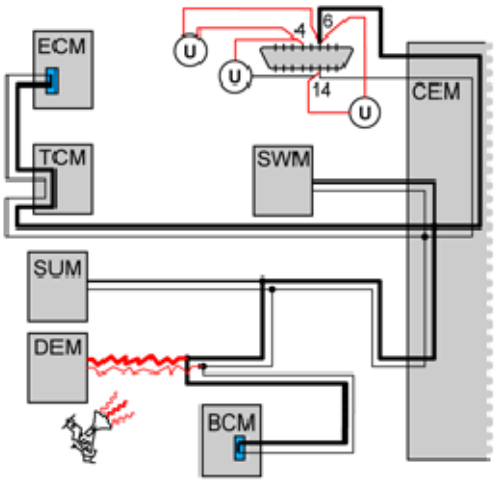

Fig. 103: Checking Traffic Load On CAN Cables
Courtesy of VOLVO CARS CORPORATION

Was a fault detected?

- **YES**

  Refer to **IDENTIFYING A CONTROL MODULE IN THE CAN NETWORK**

- **NO**

  Refer to **CHECKING VOLTAGE-DROP IN CABLE FOR CAN-H AND CAN-L, RESPECTIVELY**

IDENTIFYING A CONTROL MODULE IN THE CAN NETWORK

Fig. 104: Identifying Ignition On Position
Courtesy of VOLVO CARS CORPORATION

For general information about CAN-troubleshooting, see: **GENERAL INFORMATION ABOUT FAULT-TRACING IN THE CAN NETWORK**

HINT: DiCE can be used as fault detection tool if fault is suspected on the CAN-net that cannot be detected with normal troubleshooting. Interference, intermittent faults, faulty messages on the CAN-net (chattering control modules) etc., are examples of such faults. The tool registers fault messages used on the CAN-net. Fault messages may be caused by short intermittent malfunctions on the CAN-net or by a control module sending fault messages. See tools:951 3010 (memory card) as well as associated TJ 20402.

If the load on the CAN network is too high, this may be due to a control module sending faulty messages on the CAN network (known as a disruptive control module). The fault may also be due to an intermittent short-circuit to supply voltage or ground in one of the CAN cables. This results in the control modules on the CAN network starting to send faulty messages. The faults can occur without a diagnostic trouble code (DTC) being stored by the control modules. The voltage can be measured between the CAN cables in order to check the load on the CAN network.

NOTE: **It is not necessarily the control module(s) that stored the diagnostic trouble code (DTC) that is communicating faultily. Faulty messages can come from any control module in the same section of the CAN network. However, faulty communication in one network cannot affect the communication on the other network. In other words, faulty communication on the LS-CAN cannot disrupt communication on the HS-CAN and vice versa.**

- Ignition on.
- Connect OBDII-Box **(951 3015)** to the diagnostics socket.

Check communication/load on CAN-net by measuring voltage between CAN-L and CAN-H. Measure voltage between the following connections on the OBDII-box/diagnostics socket.

- #6 and #14. The average value of the voltage must be approximately 0.6-1.4 V. The voltage shall normally be between 0.55 - 0.90 V. A higher voltage may indicate increased traffic on the CAN-net. In case of fault in communication/too high traffic on the CAN-net, the voltage is considerably higher than the above stated values.

In order to identify which control module has faulty communication, cut the power supply to one control module at a time. Check the voltage in the CAN cables again. The easiest way to cut the power supply is to remove the fuse(s) for the relevant control module. Repeat until the voltage between the CAN wiring drops to the normal level.

NOTE: **When connecting and disconnecting individual control modules, other diagnostic trouble codes (DTCs) may be stored in certain control modules.**

HINT: When the suspected defective control module has been identified, connect and disconnect the supply voltage to the control module a number of times to verify that the malfunction appears and disappears. Switch off the ignition between each check.

NOTE: **Do not cut the power to the central electronic module (CEM) unless it is the last control module left to check.**

A control module that is communicating incorrectly must be replaced. See Repairing and installing/Removing, replacing and installing.

NOTE: **After fault with control modules that interfere with communication, other control modules may remain in Limp-Home (that is, they work with reduced functionality) even when the ignition has been turned off and on a few times. For certain faults in the CAN-net where control modules have stopped communicating, it may help to disconnect/reconnect the battery to "restart" the control module/CAN-net.**

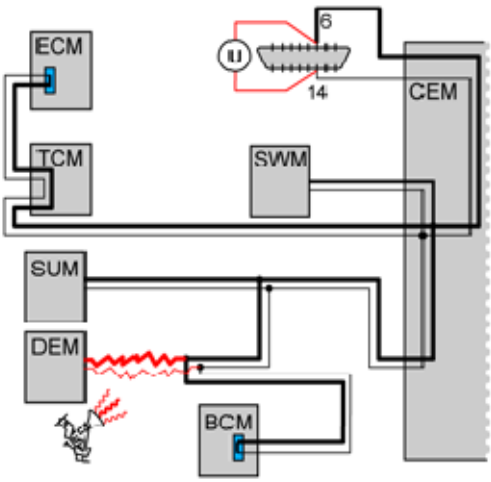

Fig. 105: Checking Communication/Load On CAN-Net Between CAN-L And CAN-H
Courtesy of VOLVO CARS CORPORATION

- **Continue**

  Refer to **VERIFICATION**

VERIFICATION

HINT: After rectifying a fault, a verification should be carried out.

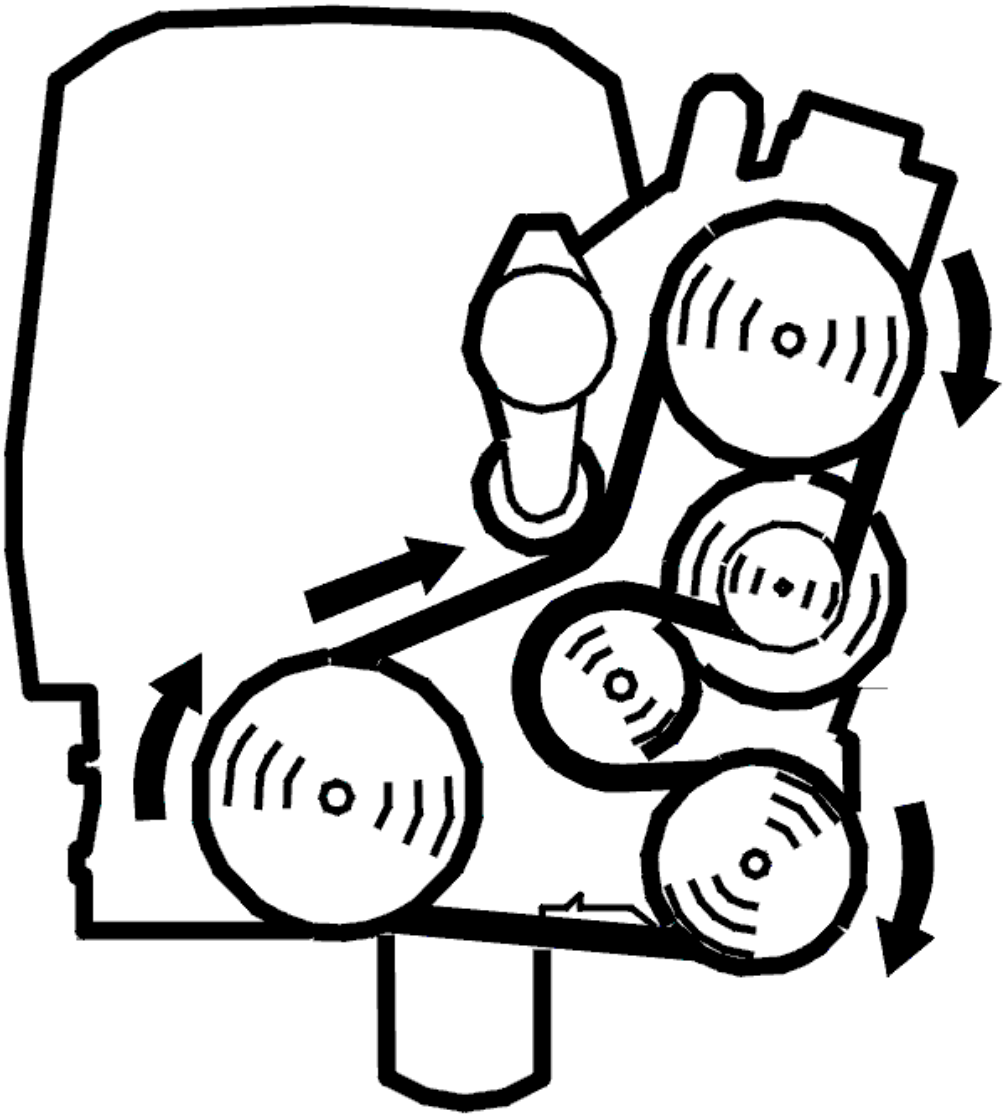

Fig. 106: Belt Routing / Engine Idling - Volvo
Courtesy of VOLVO CARS CORPORATION

Fig. 107: Identifying Ignition On Position
Courtesy of VOLVO CARS CORPORATION

- Reinstall the connectors, components etc.
- Ignition on.

NOTE: **For certain faults in the CAN-net where control modules have stopped communicating, it may help to disconnect/reconnect the battery to "restart" the control module/CAN-net.**

- Erase diagnostic trouble codes (DTCs) in all control modules.
- Ignition off.
- Ignition on.
- Start the vehicle. Allow the vehicle to run for 10 minutes.
- Read out the diagnostic trouble codes in the vehicle via the DIAGNOSTICS tab.

Does the diagnostic trouble code (DTC) for faulty communication return?

- **YES**

  Refer to **INFORMATION**

- **NO**

  OKAY: Troubleshooting has been completed.

CHECKING SHORT-CIRCUITING TO GROUND/VOLTAGE IN CAN-NET

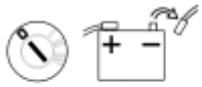

Fig. 108: Ignition Off And Disconnecting Battery Negative Lead
Courtesy of VOLVO CARS CORPORATION

- Ignition off.
- Disconnect the battery negative lead.
- Connect OBDII-Box **(951 3015)** to the diagnostics socket.

  For general information about CAN-troubleshooting, see: **GENERAL INFORMATION ABOUT FAULT-TRACING IN THE CAN NETWORK**

  Checking for a short-circuit to ground

  Measure resistance between the following connections on the OBDII-box/diagnostics socket.

  - #6 and #4 (ground). Measurement is shown in the illustration. The resistance should be above 1 kohms.
  - #14 and #4 (ground). The resistance should be above 1 kohms.

If resistance is below 1 kohms this indicates short-circuiting between the CAN-line and ground.

Checking for a short-circuit to voltage

Measure resistance between the following connections on the OBDII-box/diagnostics socket.

- #6 and #16 (voltage). Measurement is shown in the illustration. The resistance should be above 1 kohms.
- #14 and #16 (voltage). The resistance should be above 1 kohms.

If resistance is below 1 kohms this indicates short-circuiting between the CAN-line and voltage cable.

Twist the cable harness and wiggle connectors where they can be accessed along the cable harness during every measurement, and note if the resistance changes to detect intermittent short-circuits or open circuit.

HINT: Part the CAN-net at suitable points to decide where a short-circuit may be found.

NOTE: After fault with control modules that interfere with communication, other control modules may remain in Limp-Home (that is, they work with reduced functionality) even when the ignition has been turned off and on a few times. For certain faults in the CAN-net where control modules have stopped communicating, it may help to disconnect/reconnect the battery to "restart" the control module/CAN-net.

Remedy wiring as necessary.

Other information

- see **BATTERY, DISCONNECTING**
- see **CHECKING WIRING AND TERMINALS**

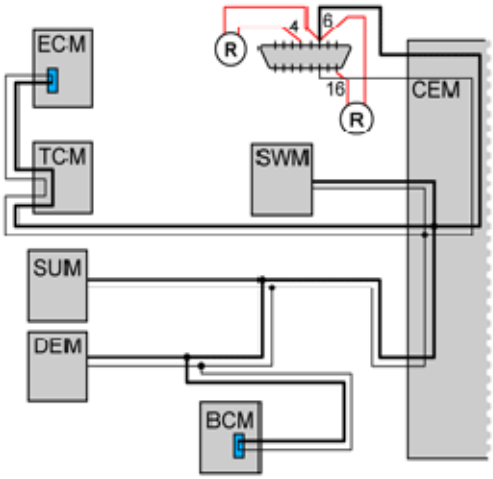

Fig. 109: CAN-Net Communication Diagram
Courtesy of VOLVO CARS CORPORATION

Was a fault detected?

- **YES**

  Refer to **VERIFICATION**

- **NO**

  Refer to **CHECKING THE TRAFFIC LOAD ON THE CAN CABLES**

CHECKING VOLTAGE-DROP IN CABLE FOR CAN-H AND CAN-L, RESPECTIVELY

Fig. 110: Identifying Ignition On Position
Courtesy of VOLVO CARS CORPORATION

- Connect the battery.
- Ignition on.
- Connect OBDII-Box **(951 3015)** to the diagnostics socket.

  For general information about CAN-troubleshooting, see: **GENERAL INFORMATION ABOUT FAULT-TRACING IN THE CAN NETWORK**

  In principle, the voltage measured in each cable in the CAN-net shall be the same at each control module in the network. This means that the voltage-drop in the cable for CAN-H and CAN-L, respectively, between the control modules should be very low. If there is a voltage-difference in the CAN-lines between the diagnostics socket/Central electronic module (CEM) and a control module due to, e. g., contact resistance in a connector or branching, communication may be lost/interfered with.

  Check if there is voltage-drop in the cable for CAN-H and CAN-L between the diagnostics socket/Central electronic module (CEM) and the control module where there is problem with communication.

  Carry out the following:

  Measure voltage between the following connections on the OBDII-box/diagnostics socket.

  - #6 and corresponding connection on relevant control module for CAN-H. The voltage shall be lower than 50 mV.
  - #14 and corresponding connection on relevant control module for CAN-L. The voltage shall be

lower than 50 mV.

If voltage is too high, this indicates too high contact resistance in cable, connector, or branching. Check the circuit between the diagnostics socket and control module in question for contact resistance and oxidation.

NOTE: **After fault with control modules that interfere with communication, other control modules may remain in Limp-Home (that is, they work with reduced functionality) even when the ignition has been turned off and on a few times. For certain faults in the CAN-net where control modules have stopped communicating, it may help to disconnect/reconnect the battery to "restart" the control module/CAN-net.**

Remedy wiring as necessary.

Other information

- see **CHECKING WIRING AND TERMINALS**

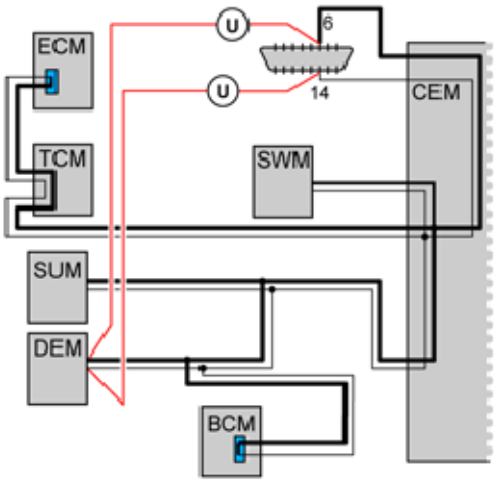

Fig. 111: CAN-Net Communication Diagram
Courtesy of VOLVO CARS CORPORATION

- **Continue**

Refer to **VERIFICATION**

INFORMATION

FAULT-TRACING INFORMATION

The fault should have been detected and remedied. As this is not the case fault-tracing has failed.

Exit fault-tracing for this diagnostic trouble code (DTC) or make another attempt.

INFORMATION

FAULT-TRACING INFORMATION

The fault should have been detected and remedied. As this is not the case fault-tracing has failed.

Exit fault-tracing for this diagnostic trouble code (DTC) or make another attempt.

CEM-1A5F: COMMUNICATION WITH THE BRAKE CONTROL MODULE (BCM). SIGNAL MISSING (B8444S; 2005-2011)

SIGNAL MISSING

CHECKING THE POWER SUPPLY AND GROUND FOR THE BRAKE CONTROL MODULE (BCM)

Check that the fuse for the control module is intact.

Check the power supply and ground for the brake control module (BCM) as follows.

Remedy as necessary.

Other information:

- see **CHECKING THE POWER SUPPLY, BRAKE CONTROL MODULE**
- see **CHECKING THE GROUND TERMINALS, BRAKE CONTROL MODULE**
- see **CHECKING WIRING AND TERMINALS**

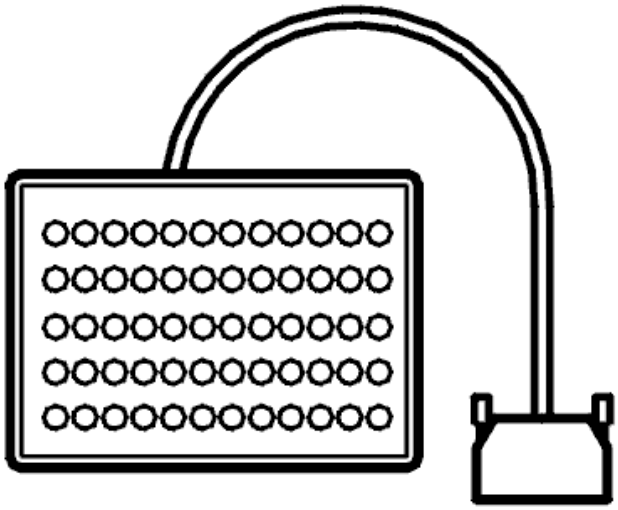

Fig. 112: Breakout Box
Courtesy of VOLVO CARS CORPORATION

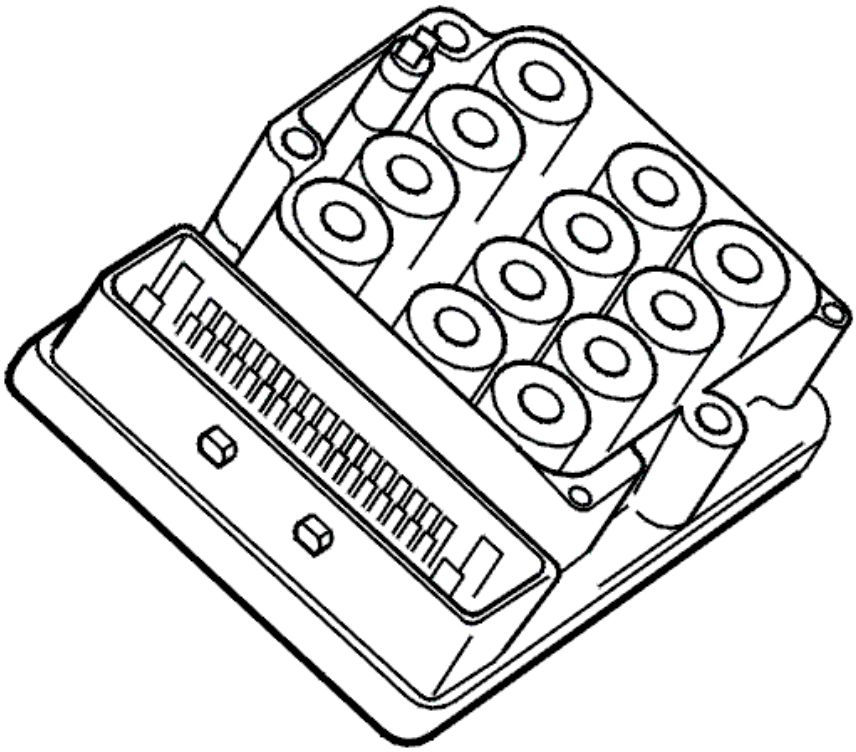

Fig. 113: ABS Control Module
Courtesy of VOLVO CARS CORPORATION

Was a fault detected?

- **YES**

  Refer to **CHECKING THE BRAKE CONTROL MODULE (BCM)**

- **NO**

  Refer to **CHECKING COMMUNICATION WITH THE BRAKE CONTROL MODULE (BCM)**

CHECKING COMMUNICATION WITH THE BRAKE CONTROL MODULE (BCM)

HINT: The CAN communication with the control module is probably OK if the control module ID can be read off. In that case the fault is probably intermittent and will then be more difficult to trace.

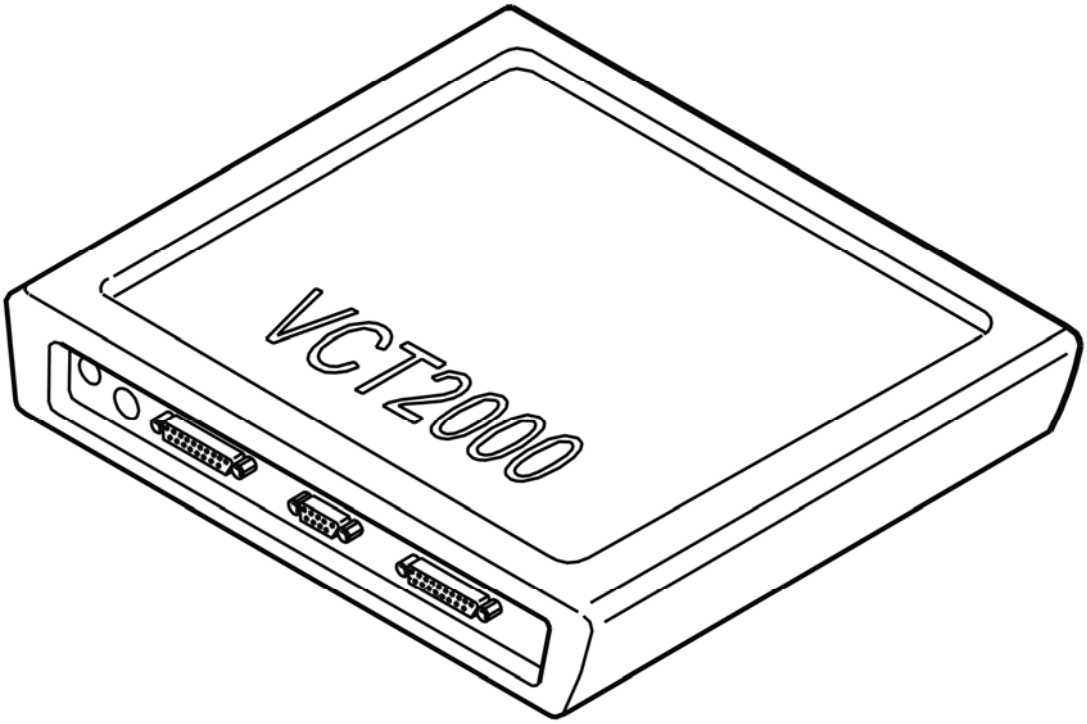

Fig. 114: Identifying VCT2000 Diagnostic Tool Symbol In VIDA
Courtesy of VOLVO CARS CORPORATION

- Try to communicate with the brake control module (BCM) by reading off the control module ID
- Use the VCT2000 (or appropriate scan tool)

- **Continue**

  Refer to **SIGNAL MISSING**

CHECKING THE BRAKE CONTROL MODULE (BCM)

HINT: After carrying out the repair, check that the fault has been remedied.

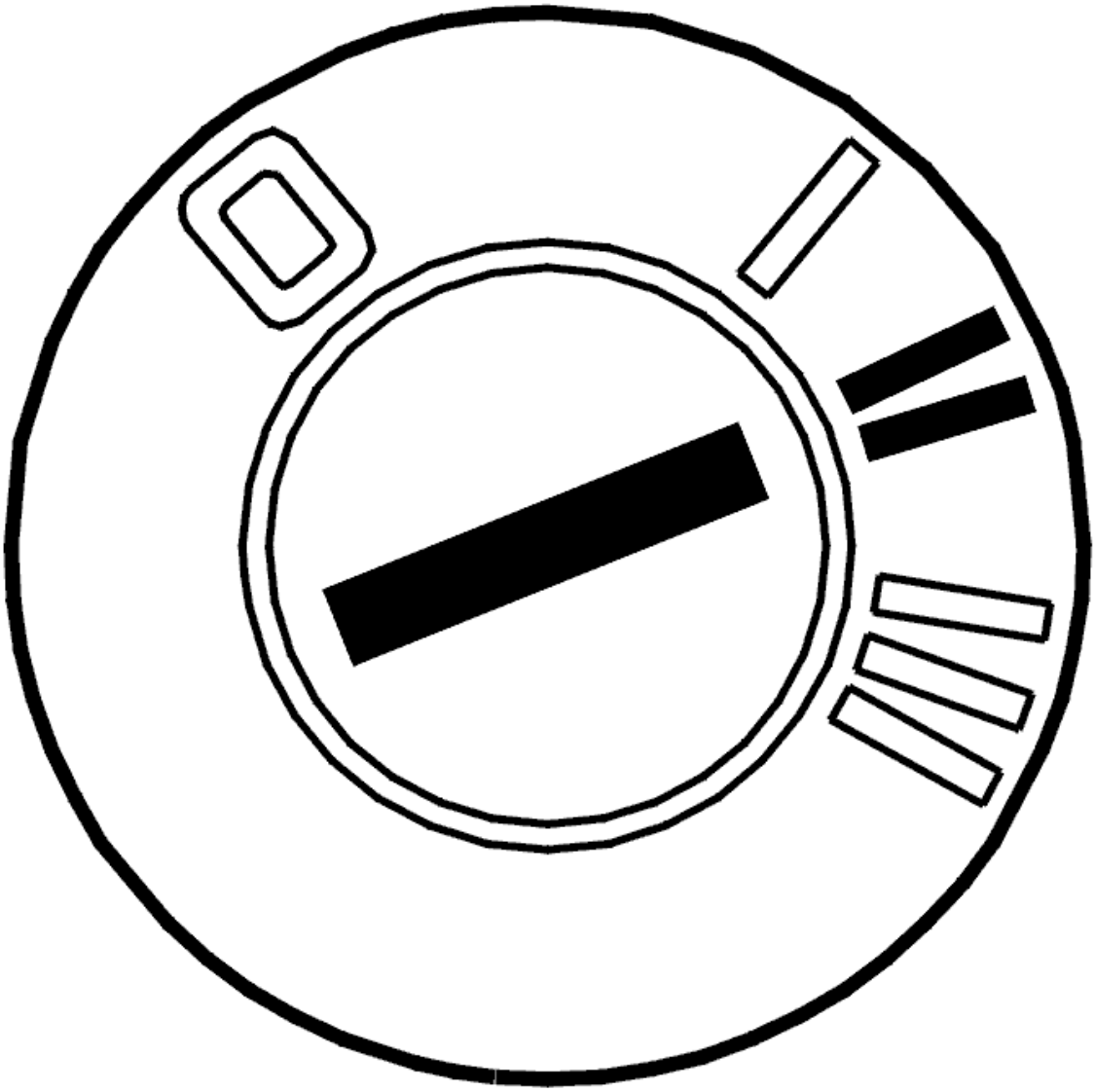

Fig. 115: Identifying Ignition ON
Courtesy of VOLVO CARS CORPORATION

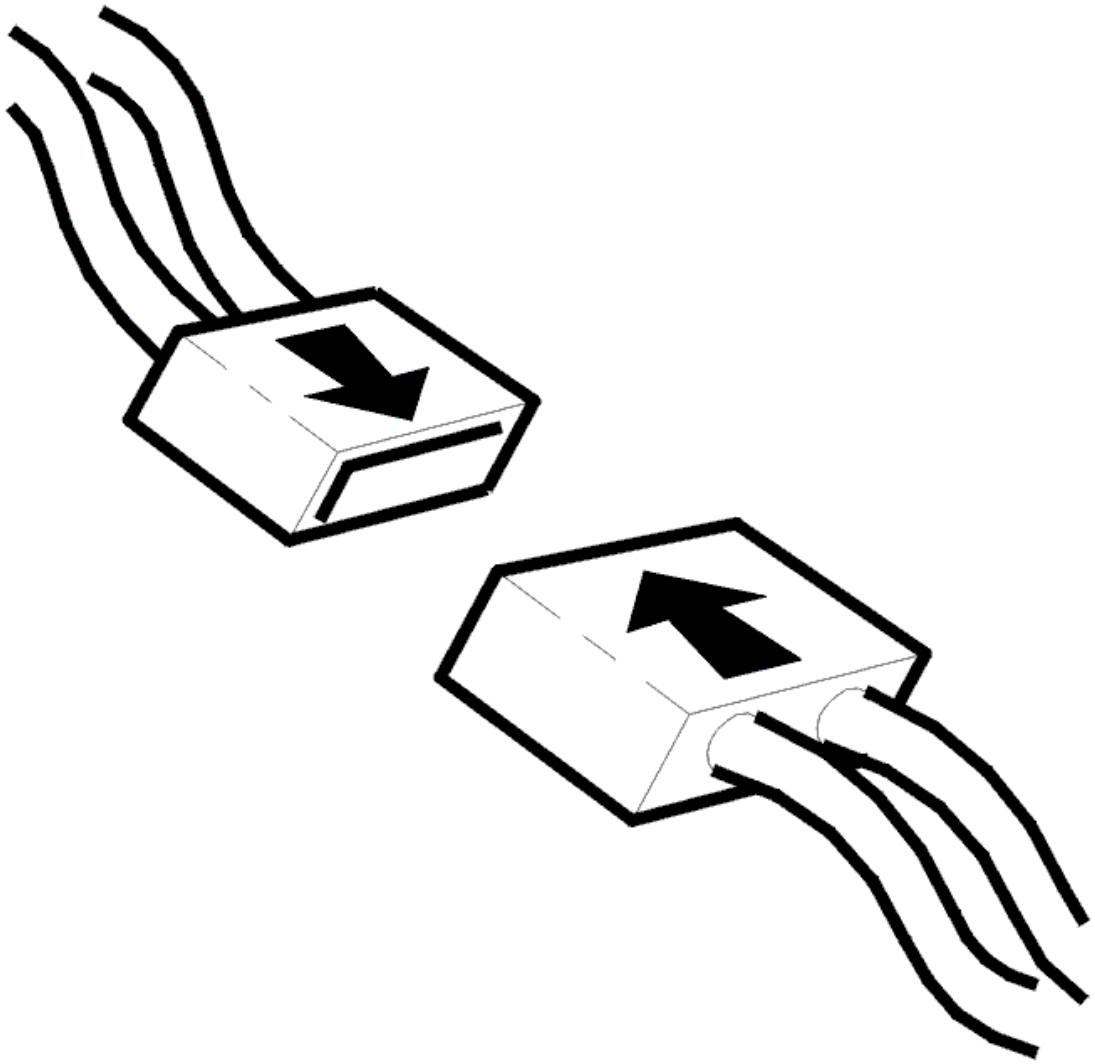

Fig. 116: Connecting Connector
Courtesy of VOLVO CARS CORPORATION

- Ignition off
- Reconnect the connectors. Reinstall the components
- Ignition on for at least 10 seconds.

  Read off the control module ID from the brake control module (BCM) using the VCT2000 (or appropriate scan tool).

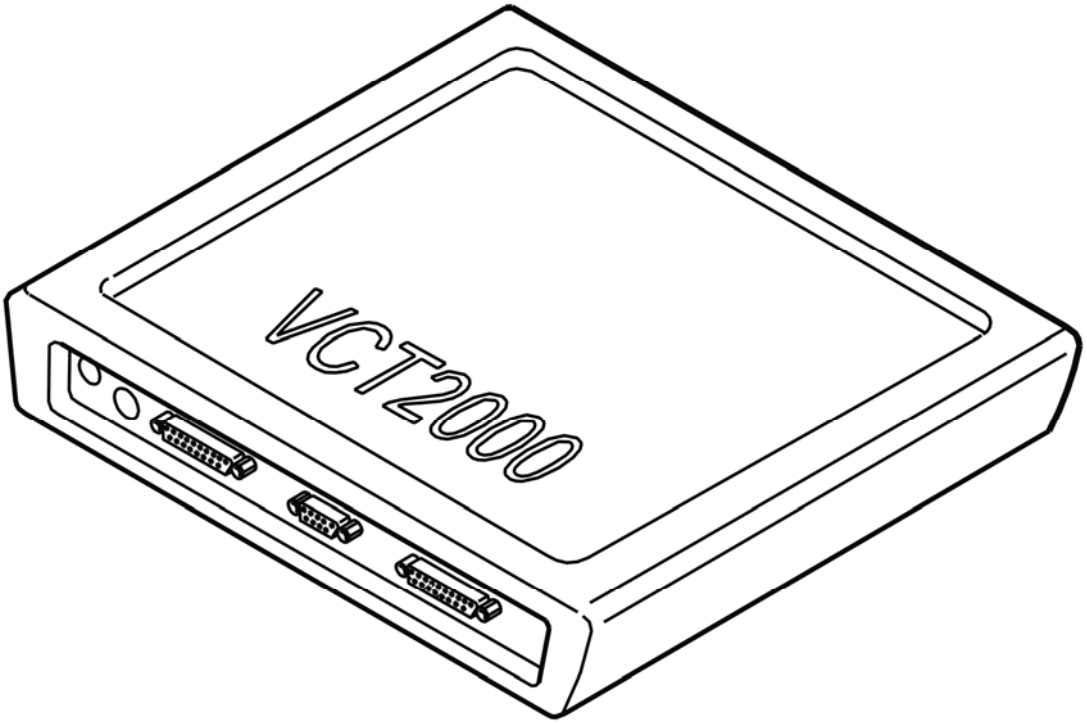

Fig. 117: Identifying VCT2000 Diagnostic Tool Symbol In VIDA
Courtesy of VOLVO CARS CORPORATION

Could the control module ID be read off?

- **YES**

  OKAY: Troubleshooting has been completed.

- **NO**

  Refer to **INFORMATION**

SIGNAL MISSING

GENERAL INFORMATION

NOTE: Illustrations shown are only examples.

HINT: For general information about CAN-troubleshooting, see: GENERAL INFORMATION ABOUT FAULT-TRACING IN THE CAN NETWORK

- **General about CAN-related diagnostic trouble codes:**

CEM-DF01 - DF17 can only be stored in Central electronic module (CEM). These diagnostic trouble codes are stored when an electric fault is detected in CAN-lines. Start with these diagnostic trouble codes first.

CEM-1AXX only stored in Central electronic module (CEM). One diagnostic trouble code for every control module on the CAN-net. These diagnostic trouble codes indicate that Central electronic module (CEM) does not receive any reply from other control modules.

XXX-E000 (HS-CAN)/E001 (LS-CAN) can be stored in all CAN-connected control modules. These diagnostic trouble codes indicate that the control module has detected interference on the CAN-net.

XXX-E003 can be stored in all CAN-connected control modules except in Central electronic module (CEM). The control modules on the CAN-net listen for a message (identity number) that is sent out at regular intervals from Central electronic module (CEM). This diagnostic trouble code indicates that the control module has not received any identity number, or that the expected number is not correct. Interference on the CAN-net can also store this diagnostic trouble code.

NOTE: **In case of CAN-related faults, it is likely that a combination of above diagnostic trouble codes occur.**

NOTE: **After fault with control modules that interfere with communication, other control modules may remain in Limp-Home (that is, they work with reduced functionality) even when the ignition has been turned off and on a few times. For certain faults in the CAN-net where control modules have stopped communicating, it may help to disconnect/reconnect the battery to "restart" the control module/CAN-net.**

If a communication diagnostic trouble code can be read from the control module, the malfunction is probably intermittent.

Intermittent fault in the voltage supply and ground to a control module on the CAN network results in the Central electronic module (CEM) storing a diagnostic trouble code (DTC) for an open-circuit in communication with the control module where the voltage supply does not work. There will probably not be a diagnostic trouble code (DTC) in the control module where the open-circuit in the voltage supply occurred as the control module cannot store a diagnostic trouble code (DTC) when it is not supplied with power.

NOTE: **Central electronic module (CEM) should not be replaced in case of CAN-fault, unless troubleshooting reveals that Central electronic module (CEM) has an internal fault.**

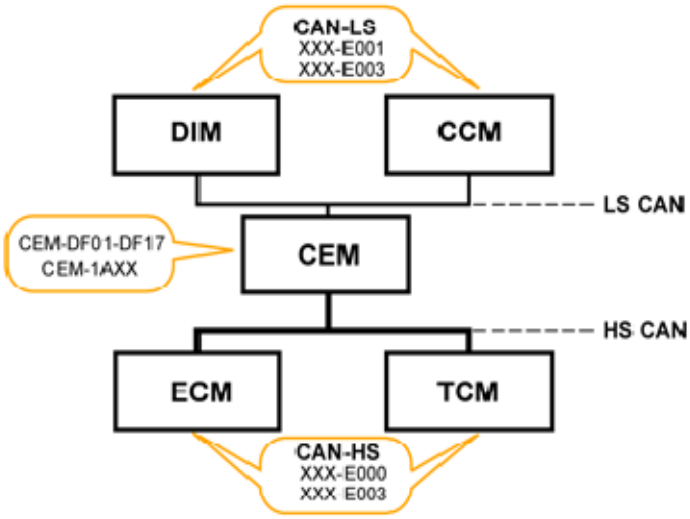

Fig. 118: High-Speed CAN And Low-Speed CAN Communication Diagram
Courtesy of VOLVO CARS CORPORATION

- **Continue**

  Refer to **CHECKING RESISTANCE IN CAN-NET**

CHECKING RESISTANCE IN CAN-NET

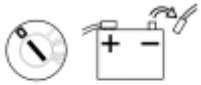

Fig. 119: Ignition Off And Disconnecting Battery Negative Lead
Courtesy of VOLVO CARS CORPORATION

- Ignition off
- Disconnect the battery negative lead
- Connect OBDII-Box **(951 3015)** to the diagnostics socket.

  For general information about CAN-troubleshooting, see: **GENERAL INFORMATION ABOUT FAULT-TRACING IN THE CAN NETWORK**

  Measure resistance between the following connections on the OBDII-box/diagnostics socket.

  - #6 and #14. The resistance should be approx. 55 - 65 ohms.
  - If resistance is approx. 120 ohms, this indicates open circuit in the circuit so that only one terminating resistor (120 ohms) has been measured.
  - If resistance is above 1 kohms this indicates open circuit/high contact resistance somewhere in the circuit.

- If resistance is below 55 ohms this indicates short-circuiting/contact resistance between the CAN-lines somewhere in the circuit.

HINT: For HS-CAN the terminating resistors are located in Brake control module (BCM) and in Engine control module (ECM).

Twist the cable harness and wiggle connectors where they can be accessed along the cable harness during every measurement, and note if the resistance changes to detect intermittent short-circuits or open circuit.

NOTE: **Resistance measurement measures only main lines in the CAN-net (in circuit where both terminating resistors are found), not branches to certain control modules.**

Open circuit on branching without a terminating resistor cannot be detected with this measurement. However, short-circuiting on a branch can be detected. To measure resistance in the CAN-net to control modules located in a branching of their own, the measurement shall be done against the CAN-net at that control module. The values shall be as above.

NOTE: **After fault with control modules that interfere with communication, other control modules may remain in Limp-Home (that is, they work with reduced functionality) even when the ignition has been turned off and on a few times. For certain faults in the CAN-net where control modules have stopped communicating, it may help to disconnect/reconnect the battery to "restart" the control module/CAN-net.**

Remedy wiring as necessary.

Other information

- see **BATTERY, DISCONNECTING**
- see **CHECKING WIRING AND TERMINALS**

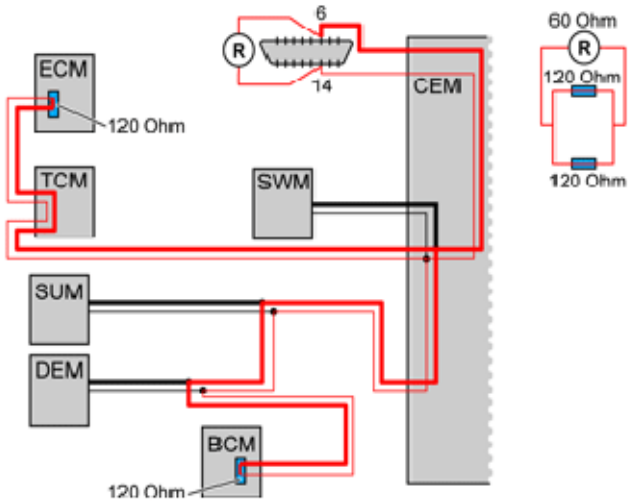

Fig. 120: Checking Resistance In CAN Lines
Courtesy of VOLVO CARS CORPORATION

Was a fault detected?

- **YES**

  Refer to **VERIFICATION**

- **NO**

  Refer to **CHECKING SHORT-CIRCUITING TO GROUND/VOLTAGE IN CAN-NET**

CHECKING THE TRAFFIC LOAD ON THE CAN CABLES

Fig. 121: Identifying Ignition On Position
Courtesy of VOLVO CARS CORPORATION

- Connect the battery
- Ignition on.
- Connect OBDII-Box **(951 3015)** to the diagnostics socket.

  For general information about CAN-troubleshooting, see: **GENERAL INFORMATION ABOUT FAULT-TRACING IN THE CAN NETWORK**

  Faults in the CAN network may be due to a control module sending faulty messages that disrupt normal

communication. When messages are sent incorrectly, this results in a considerable increase in the amount of traffic on the CAN network. Check the load by measuring the average voltage value on the CAN cables in relation to ground.

Measure voltage between the following connections on the OBDII-box/diagnostics socket.

- #6 and #4 (ground). The voltage should be approx:2, 8 - 3, 2 V.
- #14 and #4 (ground). The voltage should be approx:1, 8 - 2, 2 V.
- #6 and #14. The voltage shall be between approx. 0.55-1.4 V. The voltage shall normally be between 0.55 - 0.90 V. A higher voltage may indicate increased traffic on the CAN-net. In case of fault in communication/too high traffic on the CAN-net, the voltage is considerably higher than the above stated values.

NOTE: After fault with control modules that interfere with communication, other control modules may remain in Limp-Home even when the ignition has been turned off and on a few times. For certain faults in the CAN-net where control modules have stopped communicating, it may help to disconnect/reconnect the battery to "restart" the control module/CAN-net.

HINT: DiCE can be used as fault detection tool if fault is suspected on the CAN-net that cannot be detected with normal troubleshooting. Interference, intermittent faults, faulty messages on the CAN-net etc., are examples of such faults. The tool registers fault messages used on the CAN-net. Fault messages may be caused by short intermittent malfunctions on the CAN-net or by a control module sending fault messages. See tools:951 3010 as well as associated TJ 20402.

- Ignition on.
- Connect DiCE to the diagnostics socket.
- Note the blue LED-indicator. The indicator flashes to show detection of fault messages.

NOTE: Certain interference may occur without any real fault

Cable fault

- Shake the cables lightly and pull lightly on the connections during the check to locate any fault. Note the blue LED-indicator.

"Chatting" control modules

- "Chatting" control modules may be difficult to find and troubleshooting may take time. Let the vehicle stand with DiCE connected for an extended time period. Afterwards, activate functions to provoke a malfunction. It may take up to several hours before the fault messages are sent. When the indicator starts to flash, remove the fuse for one control module at a time until the indicator stops flashing. When the indicator stops flashing, restore the fuse for the relevant control module and check that the indicator starts to flash again. Then it is likely that the problem is identified.

Remedy wiring as necessary.

Other information

- see **BATTERY, DISCONNECTING**
- see **CHECKING WIRING AND TERMINALS**

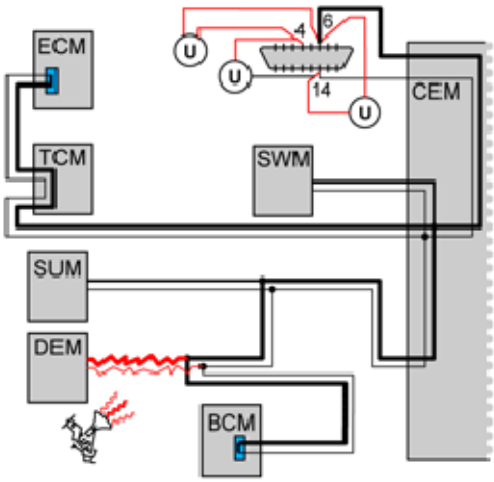

Fig. 122: Checking Traffic Load On CAN Cables
Courtesy of VOLVO CARS CORPORATION

Was a fault detected?

- **YES**

  Refer to **IDENTIFYING A CONTROL MODULE IN THE CAN NETWORK**

- **NO**

  Refer to **CHECKING VOLTAGE-DROP IN CABLE FOR CAN-H AND CAN-L, RESPECTIVELY**

IDENTIFYING A CONTROL MODULE IN THE CAN NETWORK

Fig. 123: Identifying Ignition On Position
Courtesy of VOLVO CARS CORPORATION

For general information about CAN-troubleshooting, see: **GENERAL INFORMATION ABOUT FAULT-TRACING IN THE CAN NETWORK**

HINT: DiCE can be used as fault detection tool if fault is suspected on the CAN-net that cannot be detected with normal troubleshooting. Interference, intermittent faults, faulty messages on the CAN-net (chattering control modules) etc., are examples of such faults. The tool registers fault messages used on the CAN-net. Fault messages may be caused by short intermittent malfunctions on the CAN-net or by a control module sending fault messages. See tools:951 3010 (memory card) as well as associated TJ 20402.

If the load on the CAN network is too high, this may be due to a control module sending faulty messages on the CAN network (known as a disruptive control module). The fault may also be due to an intermittent short-circuit to supply voltage or ground in one of the CAN cables. This results in the control modules on the CAN network starting to send faulty messages. The faults can occur without a diagnostic trouble code (DTC) being stored by the control modules. The voltage can be measured between the CAN cables in order to check the load on the CAN network.

NOTE: **It is not necessarily the control module(s) that stored the diagnostic trouble code (DTC) that is communicating faultily. Faulty messages can come from any control module in the same section of the CAN network. However, faulty communication in one network cannot affect the communication on the other network. In other words, faulty communication on the LS-CAN cannot disrupt communication on the HS-CAN and vice versa.**

- Ignition on.
- Connect OBDII-Box **(951 3015)** to the diagnostics socket.

Check communication/load on CAN-net by measuring voltage between CAN-L and CAN-H. Measure voltage between the following connections on the OBDII-box/diagnostics socket.

- #6 and #14. The average value of the voltage must be approximately 0.6-1.4 V. The voltage shall normally be between 0.55 - 0.90 V. A higher voltage may indicate increased traffic on the CAN-net. In case of fault in communication/too high traffic on the CAN-net, the voltage is considerably higher than the above stated values.

In order to identify which control module has faulty communication, cut the power supply to one control module at a time. Check the voltage in the CAN cables again. The easiest way to cut the power supply is to remove the fuse(s) for the relevant control module. Repeat until the voltage between the CAN wiring drops to the normal level.

NOTE: **When connecting and disconnecting individual control modules, other diagnostic trouble codes (DTCs) may be stored in certain control modules.**

HINT: When the suspected defective control module has been identified, connect and disconnect the supply voltage to the control module a number of times to verify that the malfunction appears and disappears. Switch off the ignition between each check.

NOTE: **Do not cut the power to the central electronic module (CEM) unless it is the last control module left to check.**

A control module that is communicating incorrectly must be replaced. See Repairing and installing/Removing, replacing and installing.

NOTE: **After fault with control modules that interfere with communication, other control modules may remain in Limp-Home (that is, they work with reduced functionality) even when the ignition has been turned off and on a few times. For certain faults in the CAN-net where control modules have stopped communicating, it may help to disconnect/reconnect the battery to "restart" the control module/CAN-net.**

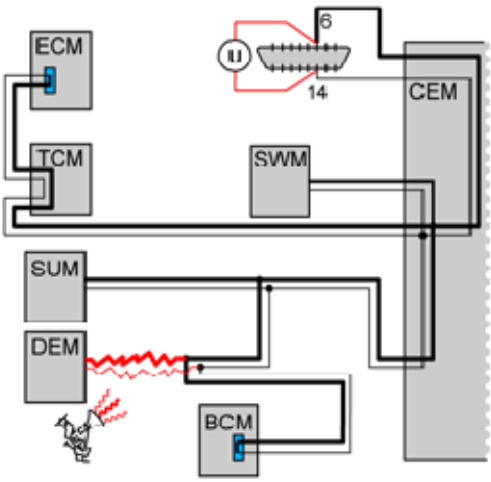

Fig. 124: Checking Communication/Load On CAN-Net Between CAN-L And CAN-H
Courtesy of VOLVO CARS CORPORATION

- **Continue**

  Refer to **VERIFICATION**

VERIFICATION

HINT: After rectifying a fault, a verification should be carried out.

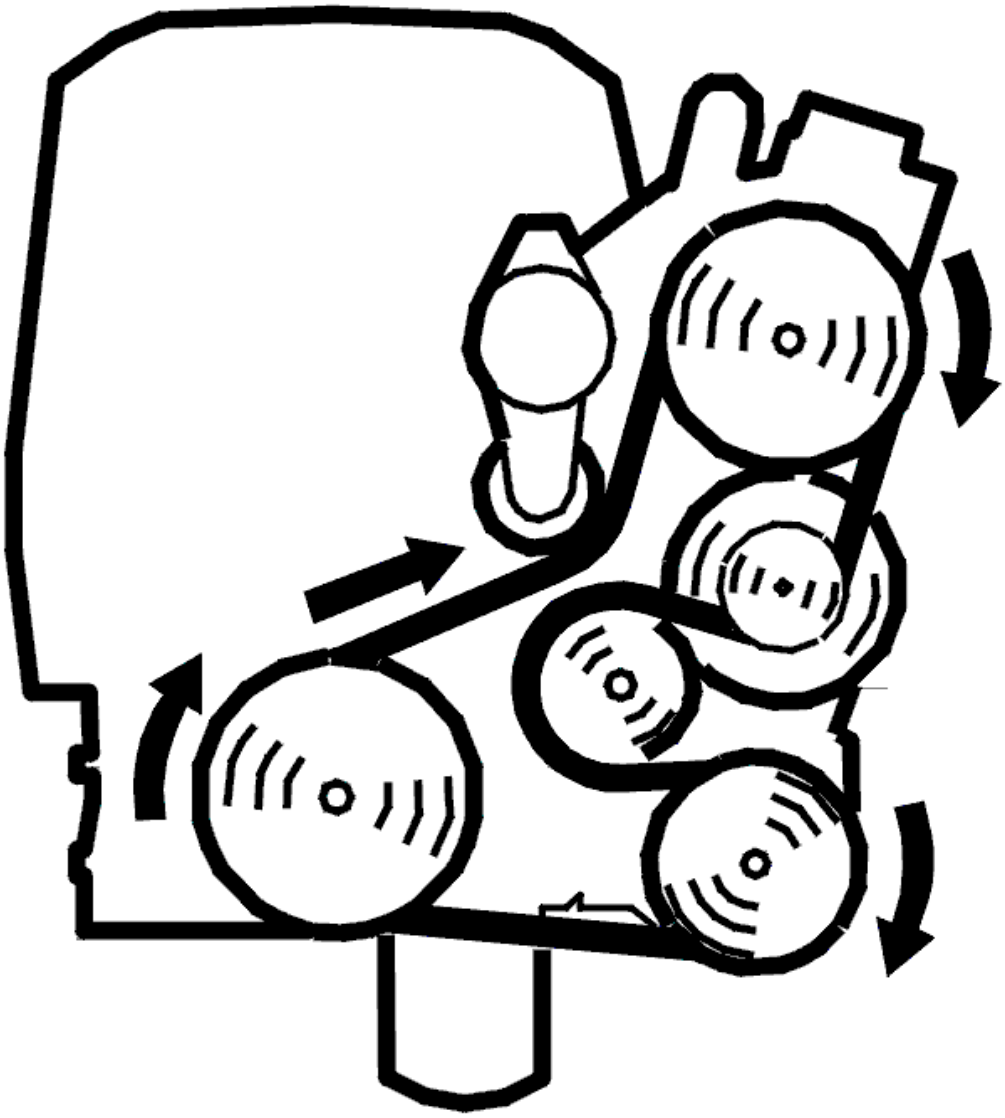

Fig. 125: Belt Routing / Engine Idling - Volvo
Courtesy of VOLVO CARS CORPORATION

Fig. 126: Identifying Ignition On Position
Courtesy of VOLVO CARS CORPORATION

- Reinstall the connectors, components etc.
- Ignition on.

NOTE: **For certain faults in the CAN-net where control modules have stopped communicating, it may help to disconnect/reconnect the battery to "restart" the control module/CAN-net.**

- Erase diagnostic trouble codes (DTCs) in all control modules.
- Ignition off.
- Ignition on.
- Start the vehicle. Allow the vehicle to run for 10 minutes.
- Read out the diagnostic trouble codes in the vehicle via the DIAGNOSTICS tab.

Does the diagnostic trouble code (DTC) for faulty communication return?

- **YES**

  Refer to **INFORMATION**

- **NO**

  OKAY: Troubleshooting has been completed.

CHECKING SHORT-CIRCUITING TO GROUND/VOLTAGE IN CAN-NET

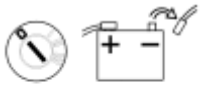

Fig. 127: Ignition Off And Disconnecting Battery Negative Lead
Courtesy of VOLVO CARS CORPORATION

- Ignition off.
- Disconnect the battery negative lead.
- Connect OBDII-Box **(951 3015)** to the diagnostics socket.

  For general information about CAN-troubleshooting, see: **GENERAL INFORMATION ABOUT FAULT-TRACING IN THE CAN NETWORK**

  Checking for a short-circuit to ground

  Measure resistance between the following connections on the OBDII-box/diagnostics socket.

  - #6 and #4 (ground). Measurement is shown in the illustration. The resistance should be above 1 kohms.
  - #14 and #4 (ground). The resistance should be above 1 kohms.

If resistance is below 1 kohms this indicates short-circuiting between the CAN-line and ground.

Checking for a short-circuit to voltage

Measure resistance between the following connections on the OBDII-box/diagnostics socket.

- #6 and #16 (voltage). Measurement is shown in the illustration. The resistance should be above 1 kohms.
- #14 and #16 (voltage). The resistance should be above 1 kohms.

If resistance is below 1 kohms this indicates short-circuiting between the CAN-line and voltage cable.

Twist the cable harness and wiggle connectors where they can be accessed along the cable harness during every measurement, and note if the resistance changes to detect intermittent short-circuits or open circuit.

HINT: Part the CAN-net at suitable points to decide where a short-circuit may be found.

NOTE: After fault with control modules that interfere with communication, other control modules may remain in Limp-Home (that is, they work with reduced functionality) even when the ignition has been turned off and on a few times. For certain faults in the CAN-net where control modules have stopped communicating, it may help to disconnect/reconnect the battery to "restart" the control module/CAN-net.

Remedy wiring as necessary.

Other information

- see **BATTERY, DISCONNECTING**
- see **CHECKING WIRING AND TERMINALS**

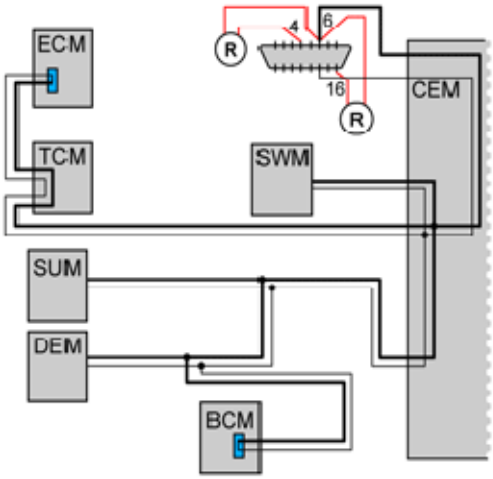

Fig. 128: CAN-Net Communication Diagram
Courtesy of VOLVO CARS CORPORATION

Was a fault detected?

- **YES**

  Refer to **VERIFICATION**

- **NO**

  Refer to **CHECKING THE TRAFFIC LOAD ON THE CAN CABLES**

CHECKING VOLTAGE-DROP IN CABLE FOR CAN-H AND CAN-L, RESPECTIVELY

Fig. 129: Identifying Ignition On Position
Courtesy of VOLVO CARS CORPORATION

- Connect the battery.
- Ignition on.
- Connect OBDII-Box **(951 3015)** to the diagnostics socket.

  For general information about CAN-troubleshooting, see: **GENERAL INFORMATION ABOUT FAULT-TRACING IN THE CAN NETWORK**

  In principle, the voltage measured in each cable in the CAN-net shall be the same at each control module in the network. This means that the voltage-drop in the cable for CAN-H and CAN-L, respectively, between the control modules should be very low. If there is a voltage-difference in the CAN-lines between the diagnostics socket/Central electronic module (CEM) and a control module due to, e. g., contact resistance in a connector or branching, communication may be lost/interfered with.

  Check if there is voltage-drop in the cable for CAN-H and CAN-L between the diagnostics socket/Central electronic module (CEM) and the control module where there is problem with communication.

  Carry out the following:

  Measure voltage between the following connections on the OBDII-box/diagnostics socket.

  - #6 and corresponding connection on relevant control module for CAN-H. The voltage shall be lower than 50 mV.
  - #14 and corresponding connection on relevant control module for CAN-L. The voltage shall be

lower than 50 mV.

If voltage is too high, this indicates too high contact resistance in cable, connector, or branching. Check the circuit between the diagnostics socket and control module in question for contact resistance and oxidation.

NOTE: **After fault with control modules that interfere with communication, other control modules may remain in Limp-Home (that is, they work with reduced functionality) even when the ignition has been turned off and on a few times. For certain faults in the CAN-net where control modules have stopped communicating, it may help to disconnect/reconnect the battery to "restart" the control module/CAN-net.**

Remedy wiring as necessary.

Other information

- see **CHECKING WIRING AND TERMINALS**

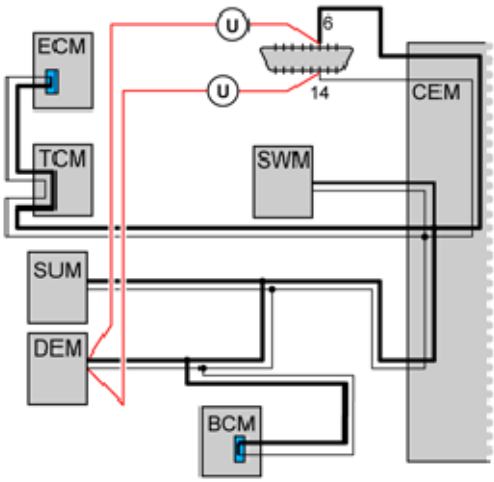

Fig. 130: CAN-Net Communication Diagram
Courtesy of VOLVO CARS CORPORATION

- **Continue**

Refer to **VERIFICATION**

INFORMATION

FAULT-TRACING INFORMATION

The fault should have been detected and remedied. As this is not the case fault-tracing has failed.

Exit fault-tracing for this diagnostic trouble code (DTC) or make another attempt.

CEM-1A5F: COMMUNICATION WITH THE BRAKE CONTROL MODULE. SIGNAL MISSING (2003-2004)

DIAGNOSTIC TROUBLE CODE (DTC) INFORMATION CEM-1A5F

Condition

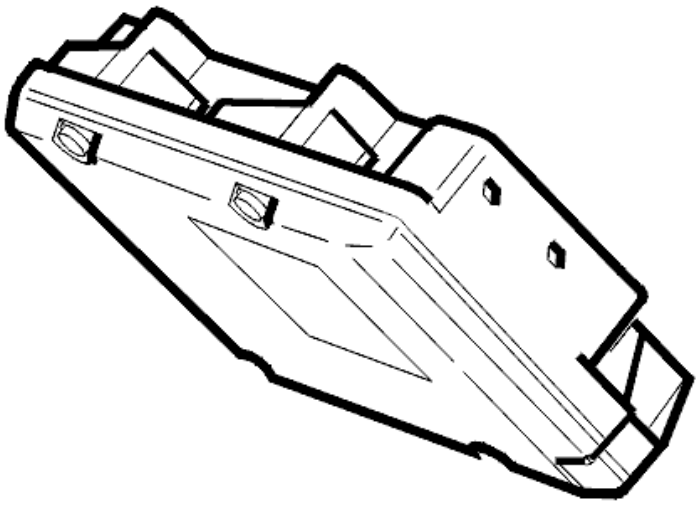

Fig. 131: Brake Control Module
Courtesy of VOLVO CARS CORPORATION

Diagnostic trouble codes (DTCs) are stored if the central electronic module (CEM) registers that communication with the brake control module (BCM) is not operating.

NOTE: **In the event of CEM-1A5X diagnostic trouble codes (DTCs), the central electronic module (CEM) must not be replaced as the diagnostic trouble code (DTC) indicates a communication fault in the Control area network**

Substitute Value

No ABS function.

Possible Source

- No power supply to the brake control module (BCM)
- Open-circuit in the ground lead to the brake control module (BCM)
- Contact resistance in the terminals
- Open-circuit in the wiring for the CAN high speed network to the brake control module (BCM)
- The brake control module (BCM) is not intended for this car (for example a used control module with different software/hardware).

HINT: If several diagnostic trouble codes (DTCs) are generated in the central electronic module (CEM) for communication errors with other control modules in the high speed network, this indicates a common fault in the Control area network.

Fault symptom[s]

- The ABS warning lamp is lit
- No ABS function
- Message in the display.

SIGNAL MISSING

CHECKING THE POWER SUPPLY AND GROUND FOR THE BRAKE CONTROL MODULE (BCM)

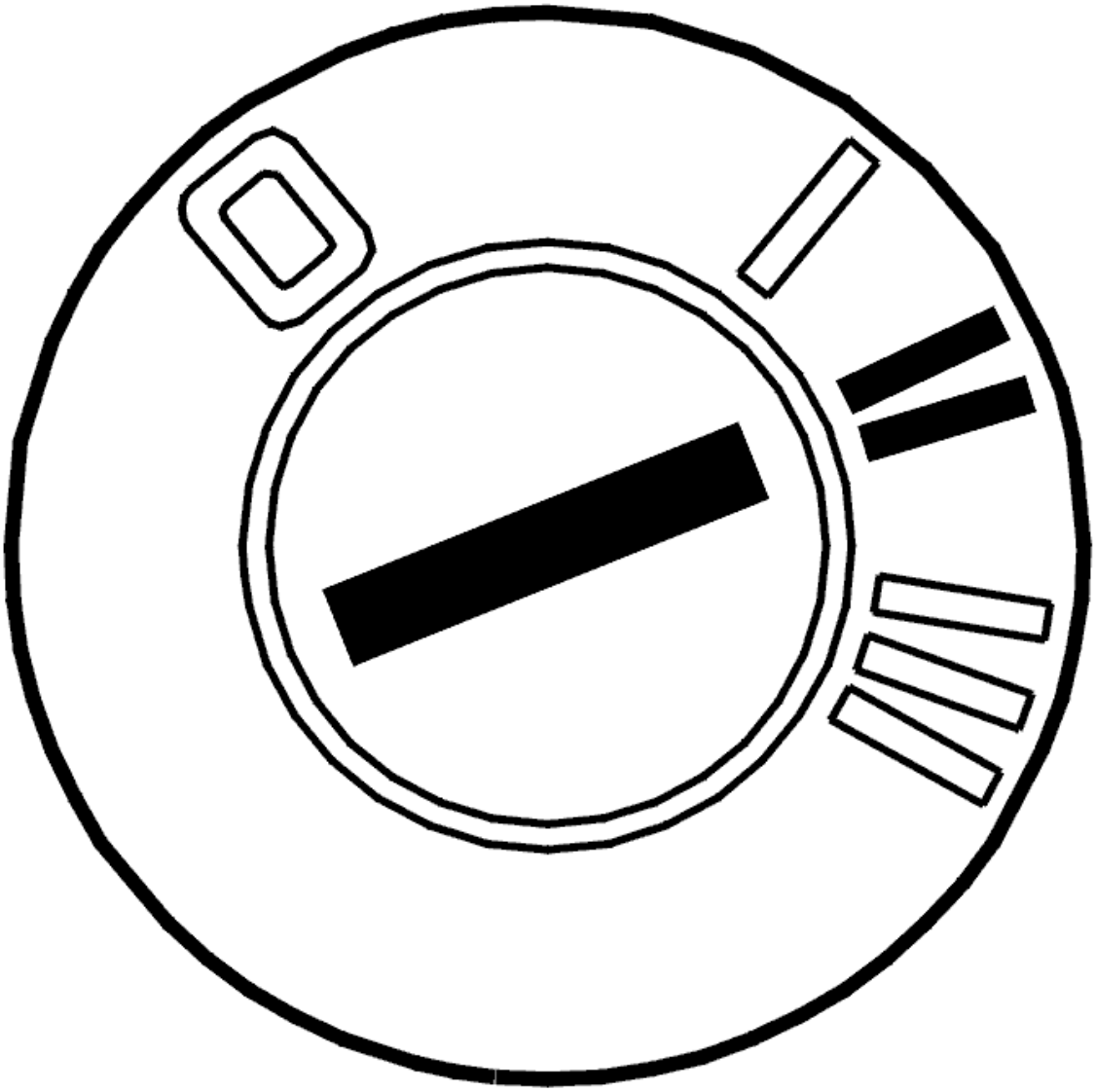

Fig. 132: Identifying Ignition ON
Courtesy of VOLVO CARS CORPORATION

- Ignition on.

  Check the fuses in the fusebox in the engine compartment (30-supply) for the brake control module (BCM).

  NOTE: If any fuses are blown, check the circuit after the fuse for a short-circuit to ground before replacing the fuse. Then replace the fuse.

  Check the fuse in the fusebox in the passenger compartment (15-supply) for the brake control module (BCM).

  If the fuse is blown, check the cable between the brake control module (BCM) and the fuse. Check for a short-circuit to ground.

If the fuse is intact, check the cable between the control module and the fuse. Check for an open-circuit.

Check the ground lead between the control module and the ground terminal. Check for an open-circuit. Also check the ground terminal. Check for contact resistance and oxidation.

Remedy as necessary.

Other information:

- To access or replace the fuses, see **FUSEBOX, PASSENGER COMPARTMENT, REPLACING**
- To connect the breakout box, see **CONNECTING THE BREAKOUT BOX**
- For information about signals, see **SIGNAL SPECIFICATION, BRAKE CONTROL MODULE (BCM) WITH STC/ TRACS** (vehicles with STC/ TRACS), or **SIGNAL SPECIFICATION, BRAKE CONTROL MODULE (BCM) WITH DSTC (DYNAMIC STABILITY AND TRACTION CONTROL)** (vehicles with DSTC (dynamic stability and traction control)
- For information about checking wiring and terminals, see **CHECKING WIRING AND TERMINALS** .

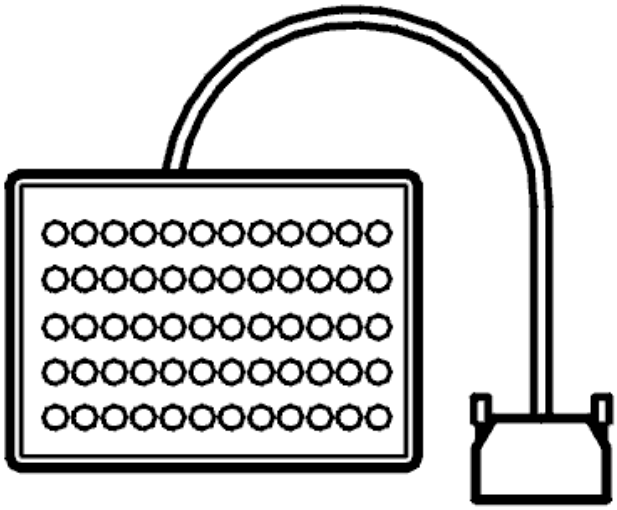

Fig. 133: Breakout Box
Courtesy of VOLVO CARS CORPORATION

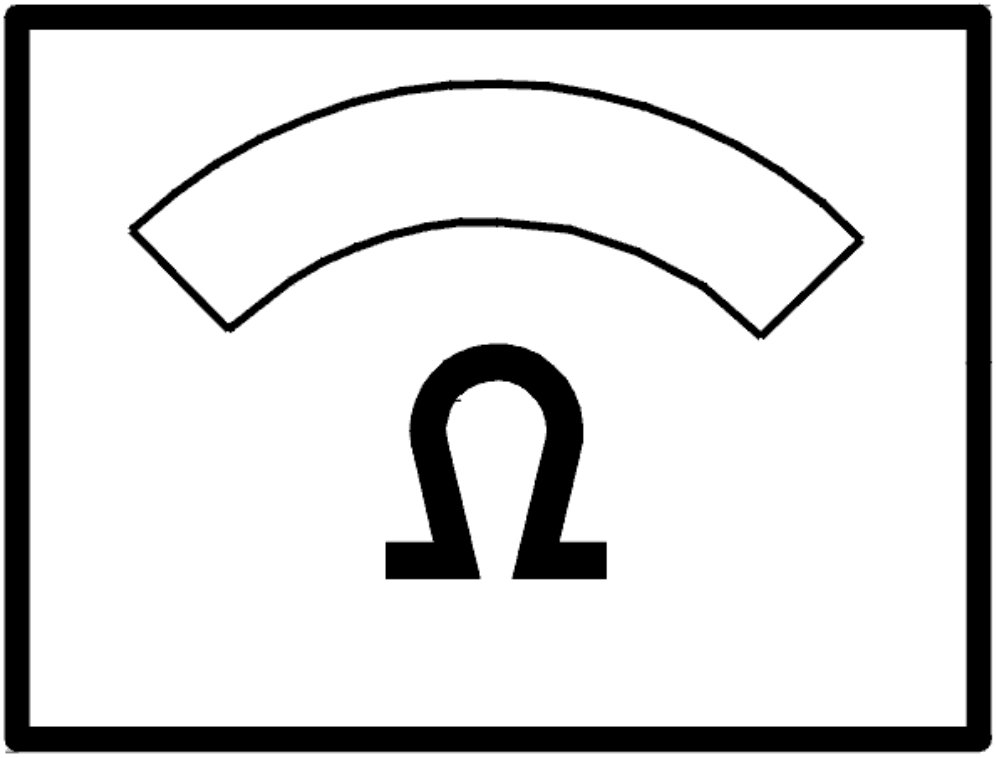

Fig. 134: Identifying Ohm Meter
Courtesy of VOLVO CARS CORPORATION

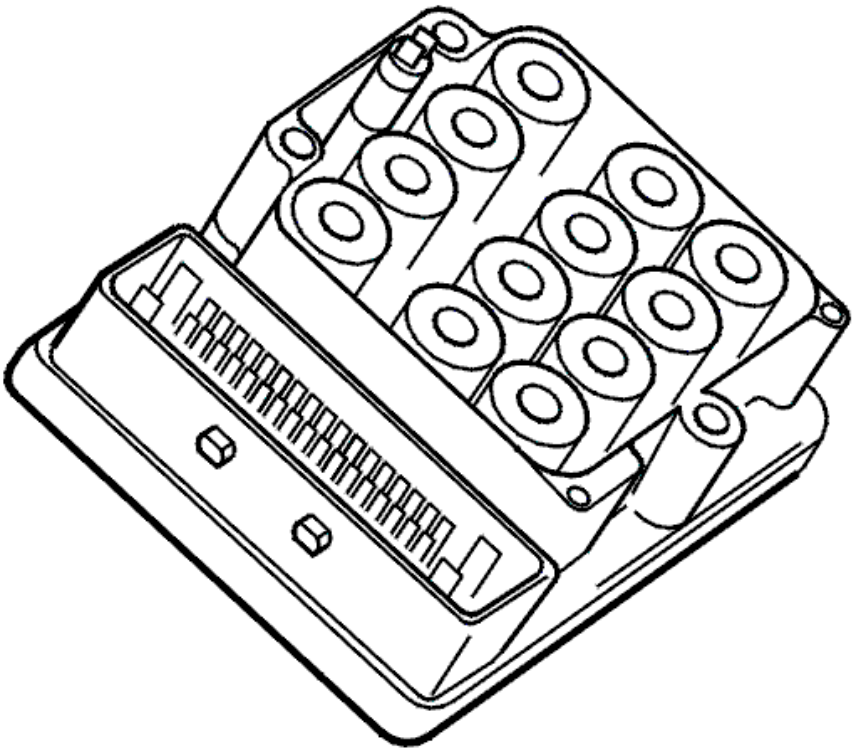

Fig. 135: ABS Control Module
Courtesy of VOLVO CARS CORPORATION

Was a fault detected?

- **YES**

  Refer to **CHECKING THE BRAKE CONTROL MODULE (BCM)**

- **NO**

  Refer to **CHECKING COMMUNICATION WITH THE BRAKE CONTROL MODULE (BCM)**

CHECKING COMMUNICATION WITH THE BRAKE CONTROL MODULE (BCM)

HINT: The CAN communication with the control module is probably OK if the control module ID can be read off. In that case the fault is probably intermittent and will then be more difficult to trace.

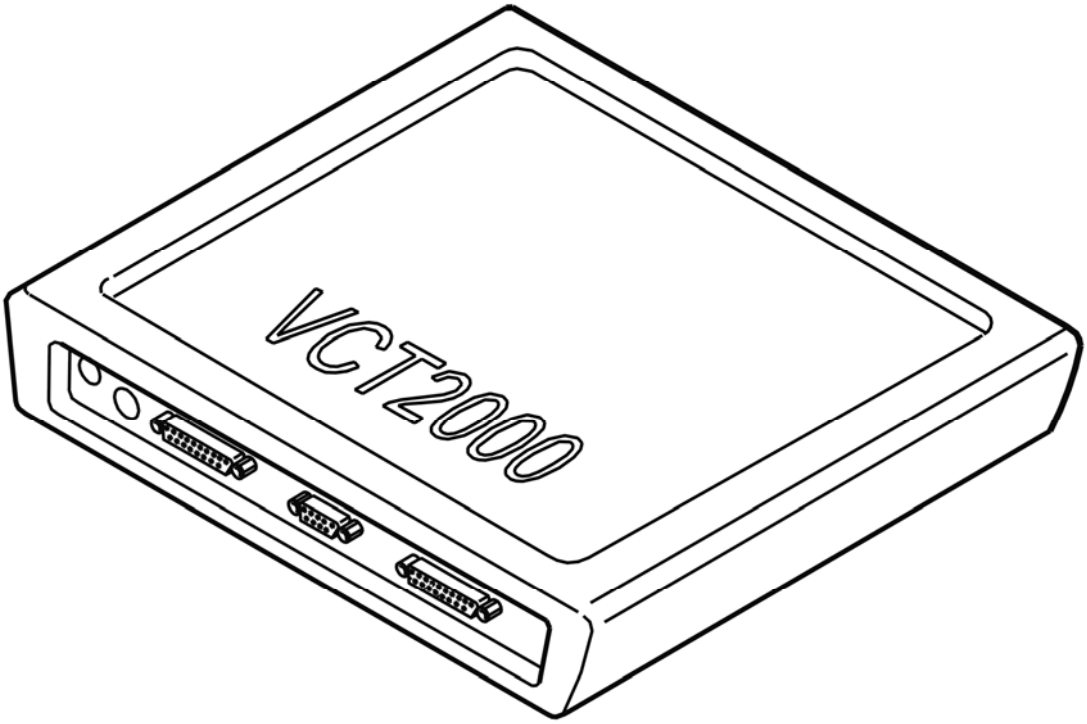

Fig. 136: Identifying VCT2000 Diagnostic Tool Symbol In VIDA
Courtesy of VOLVO CARS CORPORATION

- Try to communicate with the brake control module (BCM) by reading off the control module ID
- Use the VCT2000 (or appropriate scan tool)

- **Continue**

  Refer to **SIGNAL MISSING**

CHECKING THE BRAKE CONTROL MODULE (BCM)

HINT: After carrying out the repair, check that the fault has been remedied.

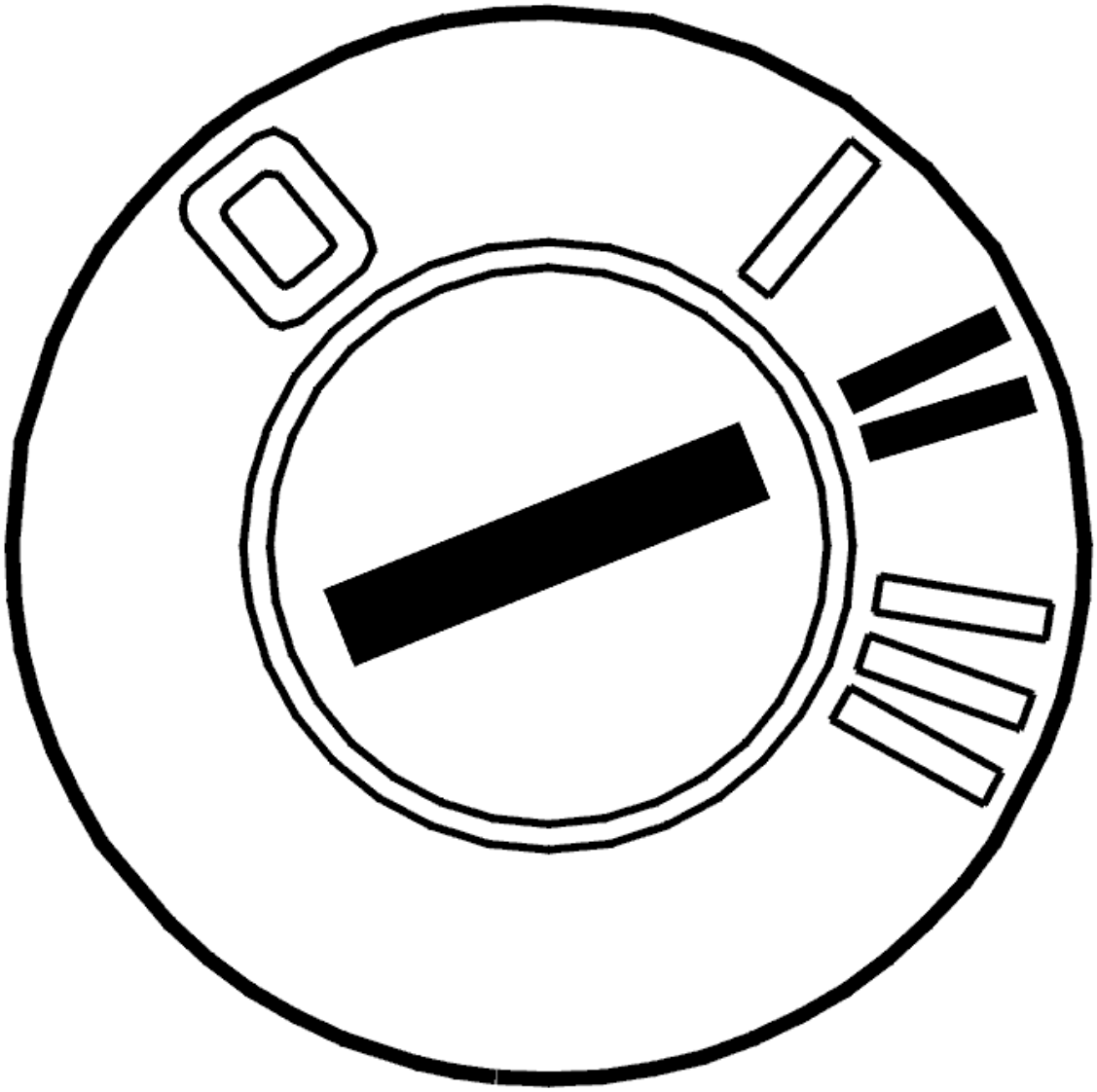

Fig. 137: Identifying Ignition ON
Courtesy of VOLVO CARS CORPORATION

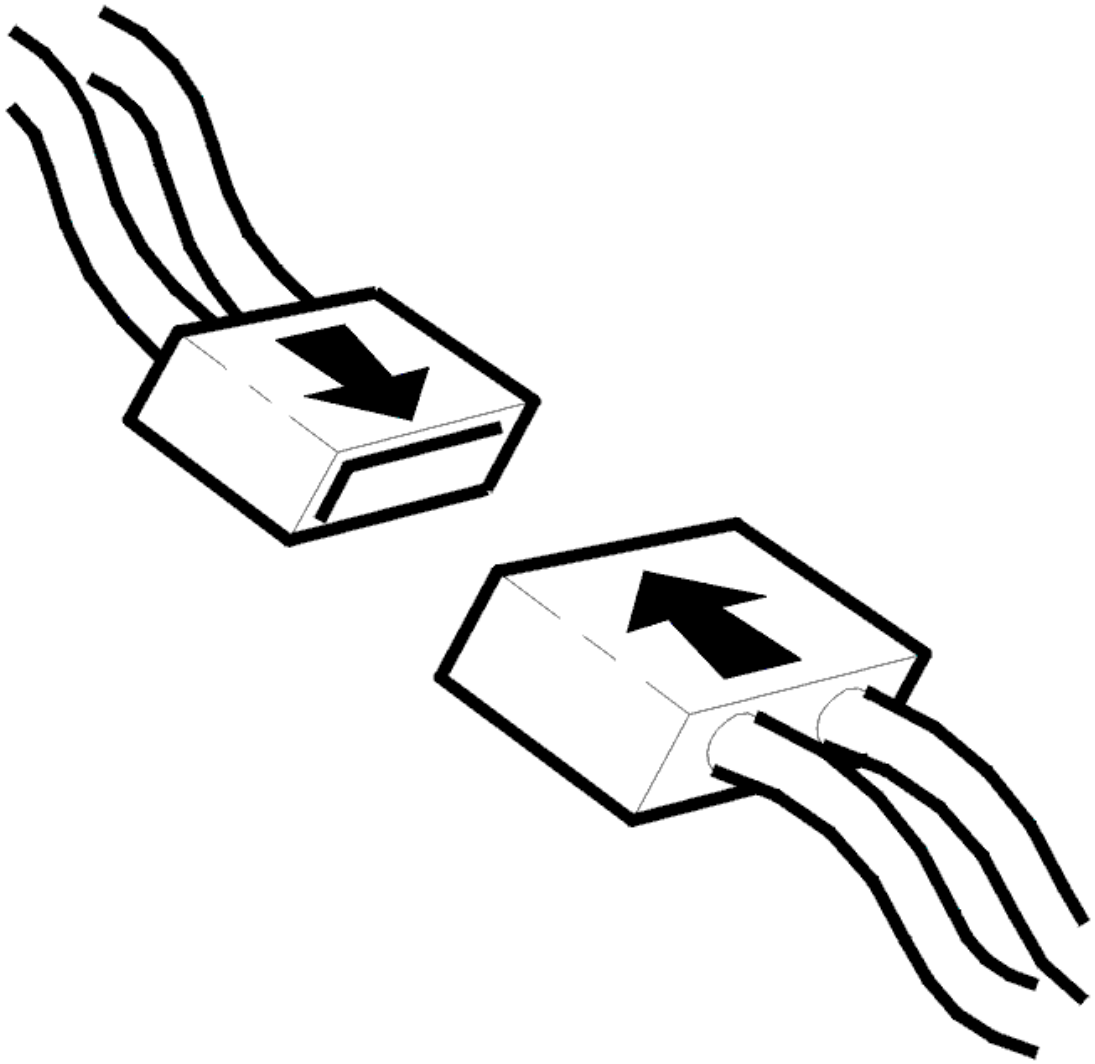

Fig. 138: Connecting Connector
Courtesy of VOLVO CARS CORPORATION

- Ignition off
- Reconnect the connectors. Reinstall the components
- Switch on the ignition for at least 10 seconds.

  Read off the control module ID from the brake control module (BCM) using the VCT2000 (or appropriate scan tool).

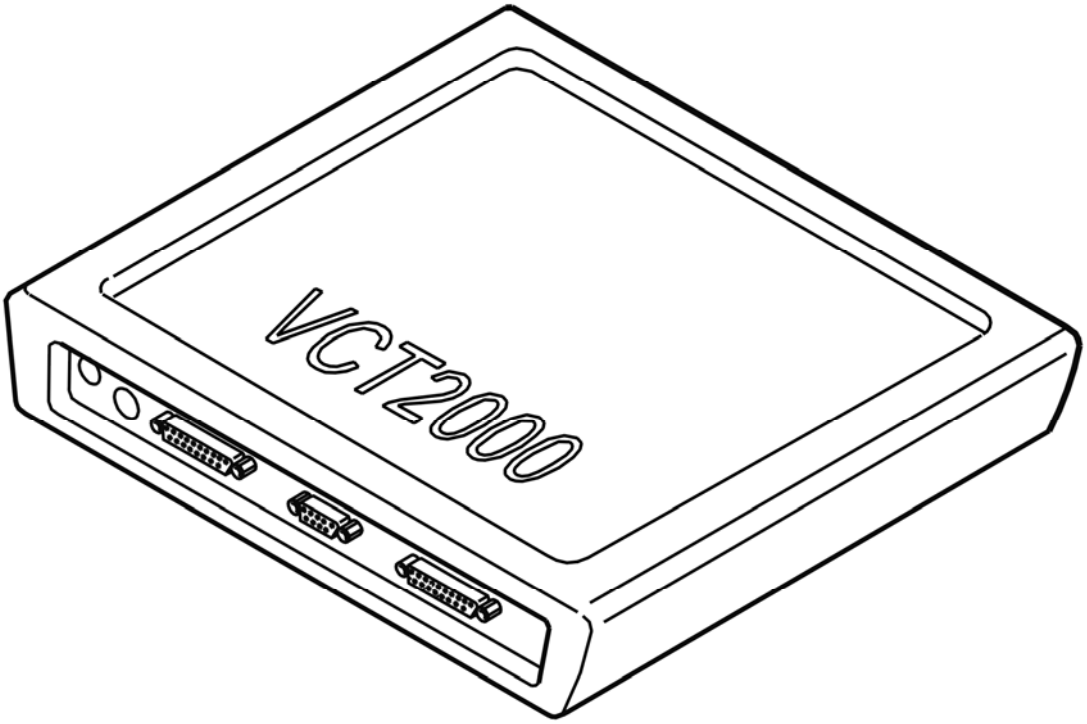

Fig. 139: Identifying VCT2000 Diagnostic Tool Symbol In VIDA
Courtesy of VOLVO CARS CORPORATION

Could the control module ID be read off?

- **YES**

  OKAY: Troubleshooting has been completed.

- **NO**

  Refer to **INFORMATION**

SIGNAL MISSING

GENERAL INFORMATION

HINT: For general information about fault-tracing the control area network (CAN), see the linked document below. See GENERAL INFORMATION ABOUT FAULT-TRACING IN THE CAN NETWORK (2005-2012)

In order to check the control area network (CAN) cables, the resistance in the network must be measured. The resistance between the two CAN cables, with the network connected, must be 60ohms in both the high speed network and the low speed network.

NOTE: **Resistance will only be 60 ohms if the main artery of the CAN network is whole and the network is connected. If the main artery of the CAN network is split somewhere and a reading is taken between the CAN cables, resistance will be 120 ohms.**

If diagnostic trouble codes (DTCs) can be read off from the relevant control module, the fault is probably intermittent. The locations that must be checked in the event of a fault in the low speed network are the junctions behind the central electronic module (CEM) and the audio module (AUM) as well as the cable harness behind the Audio module (AUM).

Intermittent fault in the current supply to the actual control module is indicated by the DTC in the Central electronic module (CEM) (CEM-1A5X or CEM-1A6X). There is probably no diagnostic trouble code (DTC) in the relevant control module as the control module cannot store a diagnostic trouble code (DTC) when it is without power.

- **Continue**

  Refer to **CHECKING THE RESISTANCE OF THE CONTROL AREA NETWORK (CAN) CABLES**

CHECKING THE RESISTANCE OF THE CONTROL AREA NETWORK (CAN) CABLES

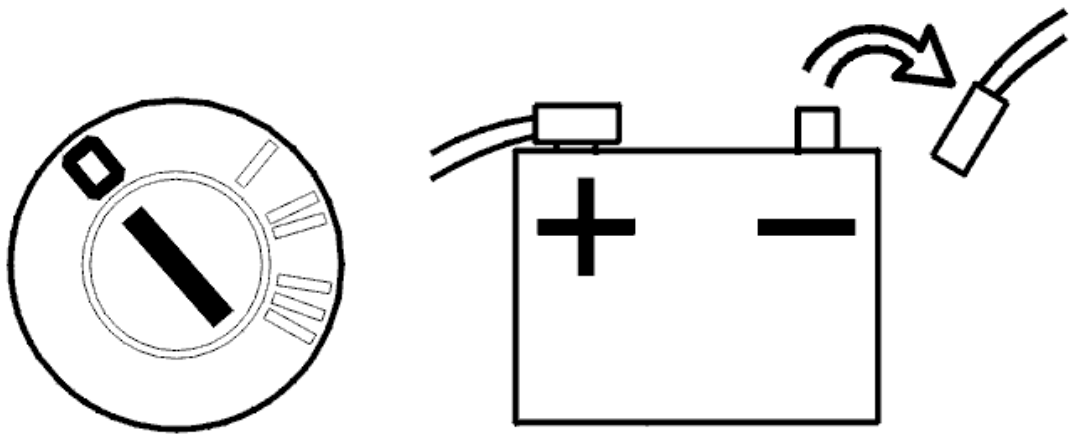

Fig. 140: Identifying Ignition In Off Position And Disconnecting Negative Cable From Battery
Courtesy of VOLVO CARS CORPORATION

- Disconnect the battery negative lead. The network must not be powered when taking resistance readings. Otherwise an incorrect value may be obtained.
- Connect the adapter wiring to the central electronic module (CEM).

  HINT: Where a breakout box cannot be used, take readings from the rear of the affected connectors if possible. This prevents terminal pins and socket housings being damaged.

When taking readings on the low speed network

- When taking readings on the low speed network the adapter wiring should be connected to the Central electronic module (CEM) and readings taken from there. Readings can even be taken in the connector for the Power seat module (PSM). The advantage of the adapter wiring to the Central electronic module (CEM) is that all control module can be connected in the network when taking readings and access can be gained to both the high speed and low speed networks.

  The resistance reading only measures the main arteries in the low speed network, not the junctions that exist for different control modules.

When taking readings on the high speed network

- When taking readings on the high speed network the adapter wiring should be connected to the Engine control module (ECM) and readings taken from there. The Engine control module (ECM) must be connected. This resistance reading only measures the main arteries in the high speed network.

Connect an ohmmeter to the terminals for CAN-L and CAN-H on the relevant network. Turn the contacts and turn the cable harness. Resistance must be approximately 60 ohms.

NOTE: **Resistance will only be 60 ohms if the main artery of the CAN network is whole and the network is connected. If the main artery of the CAN network is split somewhere and a reading is taken between the CAN cables, resistance will be 120 ohms.**

Other information

- see **BATTERY, DISCONNECTING**
- see **CONNECTING THE BREAKOUT BOX**
- see **CHECKING WIRING AND TERMINALS**

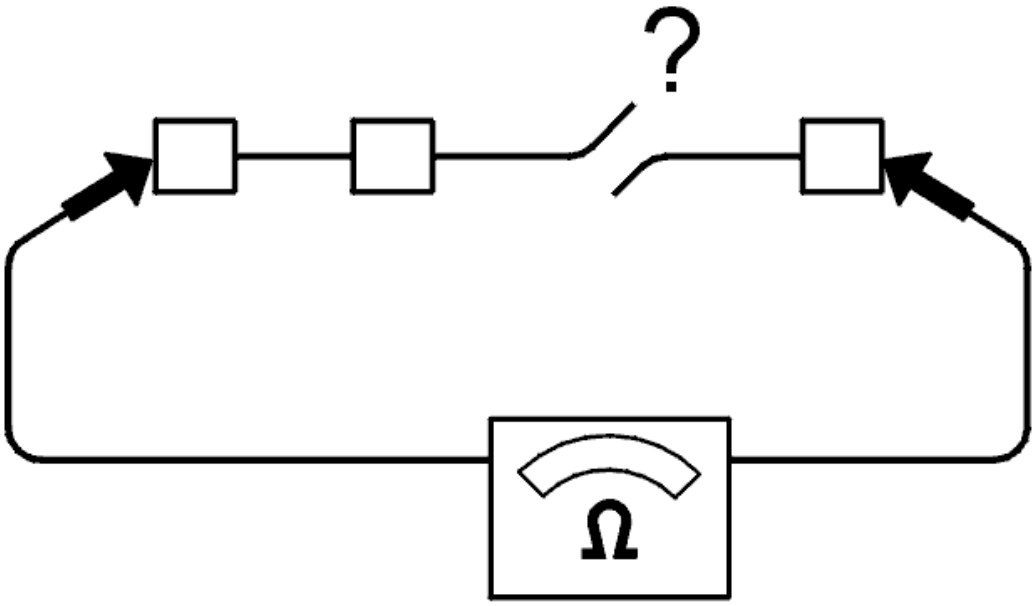

Fig. 141: Checking For Open Circuit
Courtesy of VOLVO CARS CORPORATION

Is the value OK?

- **YES**

  Refer to **CHECKING A SHORT-CIRCUIT IN CAN CABLES**

- **NO**

  Refer to **IDENTIFYING FAULT CAUSES IN THE CAN NETWORK**

CHECKING A SHORT-CIRCUIT IN CAN CABLES

Connect an ohmmeter between respective CAN cable and voltage supply and between the CAN cables and ground. Turn the contacts and turn the cable harness. The resistance must be infinite or very high.

HINT: Readings can be taken from one and the same connector if the CAN wiring, voltage supply and ground is pre-routed. If possible, measure from the rear of the affected connectors in order to minimize any damage and future loose connections. If this is not possible, use the adapter wiring or loose terminal pin for good contact.

Was a fault detected?

- **YES**

  Refer to **IDENTIFYING FAULT CAUSES IN THE CAN NETWORK**

- **NO**

  Refer to **CHECKING THE TRAFFIC LOAD ON THE CAN CABLES**

CHECKING THE TRAFFIC LOAD ON THE CAN CABLES

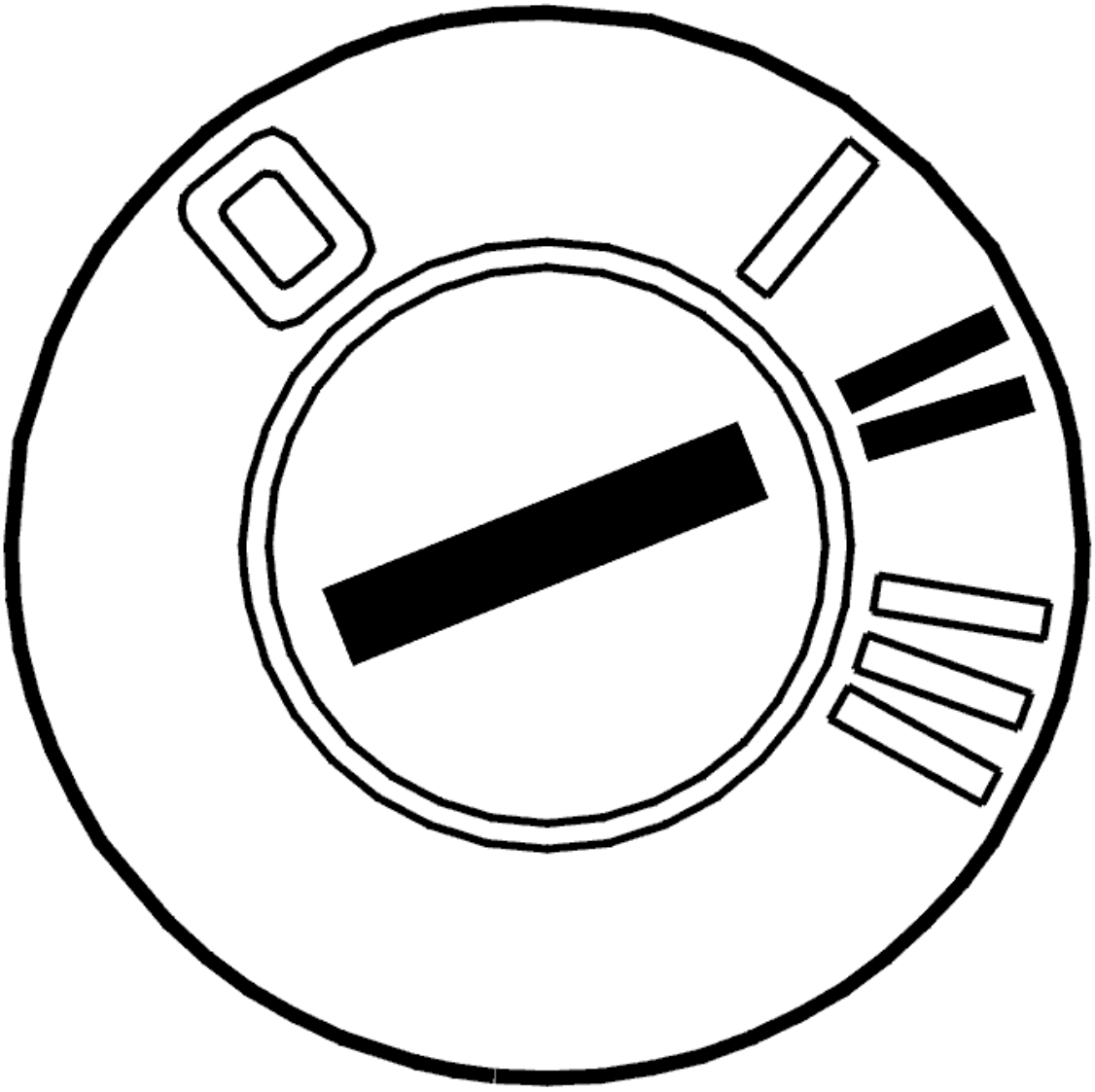

Fig. 142: Identifying Ignition ON
Courtesy of VOLVO CARS CORPORATION

- Connect the battery.
- Ignition on.

Faults in the CAN network may be due to a control module sending faulty messages that disrupt normal communication. When messages are sent incorrectly, this results in a considerable increase in the amount of traffic on the CAN network. The load can be checked by reading the average value of the voltage on the CAN cables in relation to ground.

The following applies for model year -2004:

Connect a voltmeter between CAN-L and ground. The voltage shall be approx. 2.3 V.

Then connect a voltmeter between CAN-H and ground. The voltage shall be approx. 2.8 V.

The following applies for model year 2004-:

Connect a voltmeter between CAN-L and ground. The voltage should be approx: V

Connect a voltmeter between CAN-H and ground. The voltage should be approx: V

NOTE: For vehicles of later model years, normal voltage values lie within a specific interval due to increased traffic between the control modules on the CAN network upon update of the electrical system.

HINT: If possible, measure from the rear of the affected connectors so that they are not damaged.

Other information

- see **BATTERY, DISCONNECTING**

Is the value OK?

- **YES**

  Refer to **INFORMATION**

- **NO**

  Refer to **IDENTIFYING A CONTROL MODULE IN THE CAN NETWORK**

IDENTIFYING FAULT CAUSES IN THE CAN NETWORK

- Disconnect a control module that disconnects the CAN network (a control module that has four terminals to the CAN network).

  HINT: For the low speed network, suitable places for disconnecting the network are at the steering wheel module (SWM), the driver information module (DIM) or the climate control module (CCM).

  In the event of an short-circuit between on of the CAN cables and voltage or ground, the fault can be localized disconnecting a control module that splits the CAN network. Readings can then be taken to

determine on which side the fault is on the disconnected control module.

Connect an ohmmeter between the CAN cable and voltage supply respectively ground. Take readings from both ends of the CAN networks at the network junction. Twist and bend the cable harness to find any intermittent short-circuits. The resistance must be infinite or very high (more than 1 Mohms).

If a fault can be localized in one direction, split the network at a point further on in the CAN network in the direction that the fault was discovered and take a new reading. Try to locate the fault in this way.

HINT: A short-circuit between the CAN cables and supply voltage or ground may be in either the wiring or in a control module.

Remedy the cables as necessary. If a fault is found on one control module, replace the control module.

- **Continue**

  Refer to **VERIFICATION**

IDENTIFYING A CONTROL MODULE IN THE CAN NETWORK

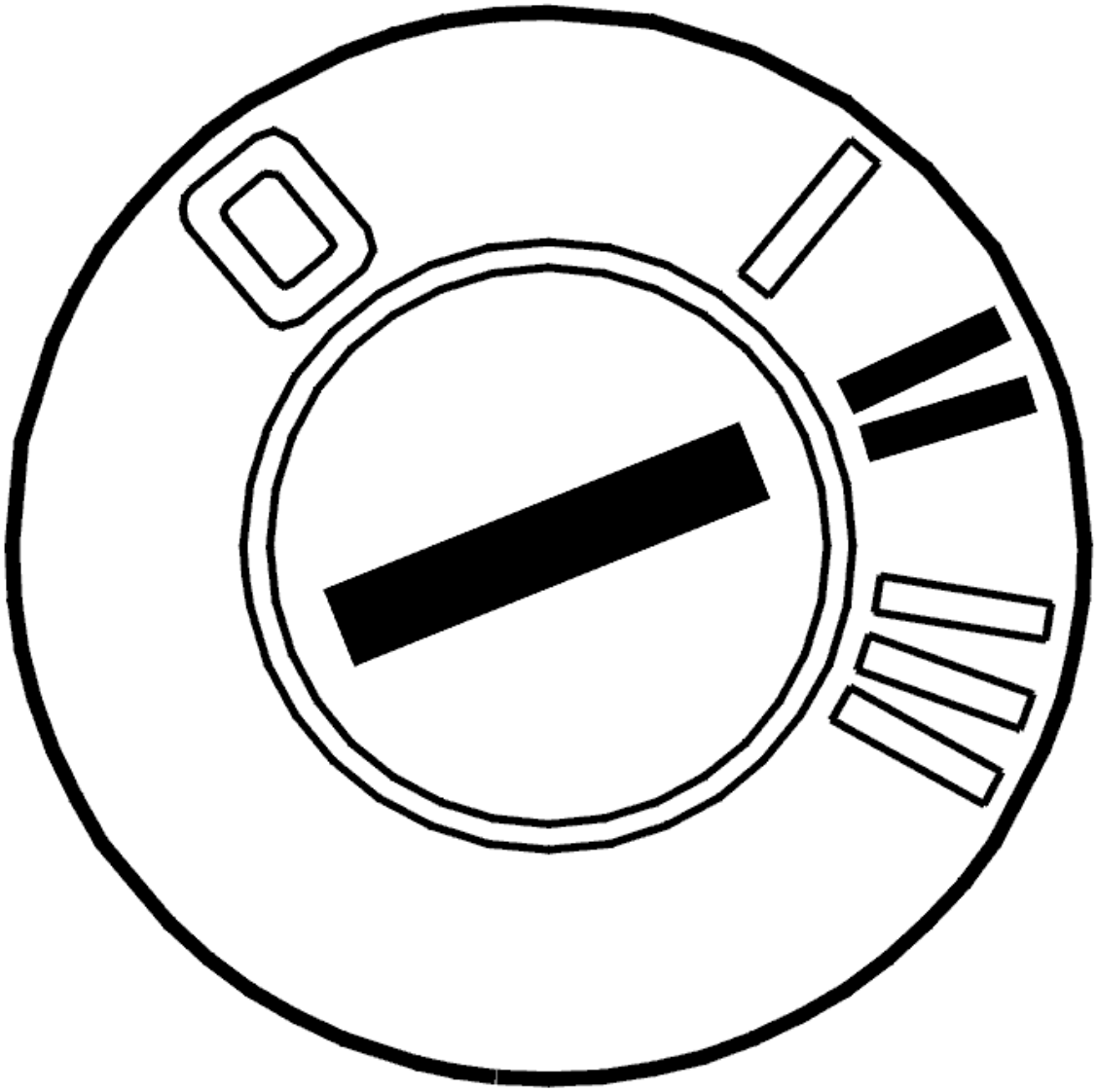

Fig. 143: Identifying Ignition ON
Courtesy of VOLVO CARS CORPORATION

- Connect the battery.
- Ignition on.

If the load on the CAN network is too high, this may be due to a control module transmitting faulty messages on the CAN network. This is called a disruptive control module. The fault may also be due to an intermittent short-circuit to supply voltage or ground in one of the CAN cables. This results in the control modules on the CAN network starting to send faulty messages. The fault may occur without any of the control modules storing a diagnostic trouble code (DTC). The voltage can be measured between the CAN cables in order to check the load on the CAN network.

The following applies for model year -2004:

Connect a voltmeter between the CAN cables. In the event of correct communication on the network, the

average value of the voltage must be approximately 0.5 V (0.4 V to 0.6 V).

The following applies for model year 2004-:The following applies for model year 2004-:

Connect a voltmeter between the CAN cables. During correct CAN network communication, voltage should be about 0.6-1.4 V.

NOTE: For vehicles of later model years, the normal voltage value is slightly higher due to increased traffic between the control modules on the CAN network upon update of the electrical system.

In the event of a communication fault the voltage is significantly higher than the above specified values. In order to identify which control module has faulty communication, cut the power supply to one control module at a time. Check the voltage in the CAN cables again. The easiest way to cut the power supply is to remove the fuse(s) for the relevant control module. Repeat until the voltage between the CAN wiring drops to the normal level.

HINT: When the probable faulty control module has been identified, connect and disconnect the supply voltage to the control module a number of times to verify that the fault appears and disappears.

NOTE: Do not cut the power to the central electronic module (CEM) unless it is the last control module left to check.

The control module that is communicating incorrectly must be replaced. Remedy as necessary.

NOTE: After a fault with "interfering" control modules, other control modules may remain in "Limp-Home mode" even when the ignition has been switched off and on several times. To remedy this, disconnect and reconnect the battery negative terminal to restore the control modules to normal function.

Other information

- see **BATTERY, DISCONNECTING**

- **Continue**

Refer to **VERIFICATION**

IDENTIFYING FAULT CAUSES IN THE CAN NETWORK

- Disconnect a control module that disconnects the CAN network (a control module that has four terminals to the CAN network).

HINT: For the low speed network, suitable places for disconnecting the network are at the steering wheel module (SWM), the driver information module (DIM) or the climate control module (CCM).

In the event of an open-circuit on, or short-circuit between the CAN cables, the fault can be localized by disconnecting a control module that splits the CAN network. Readings can then be taken to determine on which side the fault is on the disconnected control module.

Connect an ohmmeter between the CAN cables. Take readings from both ends of the CAN networks at the network junction. Twist and bend the cable harness to find any intermittent short-circuits. Resistance should be 120 ohms.

If a fault can be localized in one direction, split the network at a point further on in the CAN network in the direction that the fault was discovered and take a new reading. Try to locate the fault in this way.

Remedy the cables as necessary.

- **Continue**

Refer to **VERIFICATION**

VERIFICATION

HINT: After rectifying a fault, a verification should be carried out.

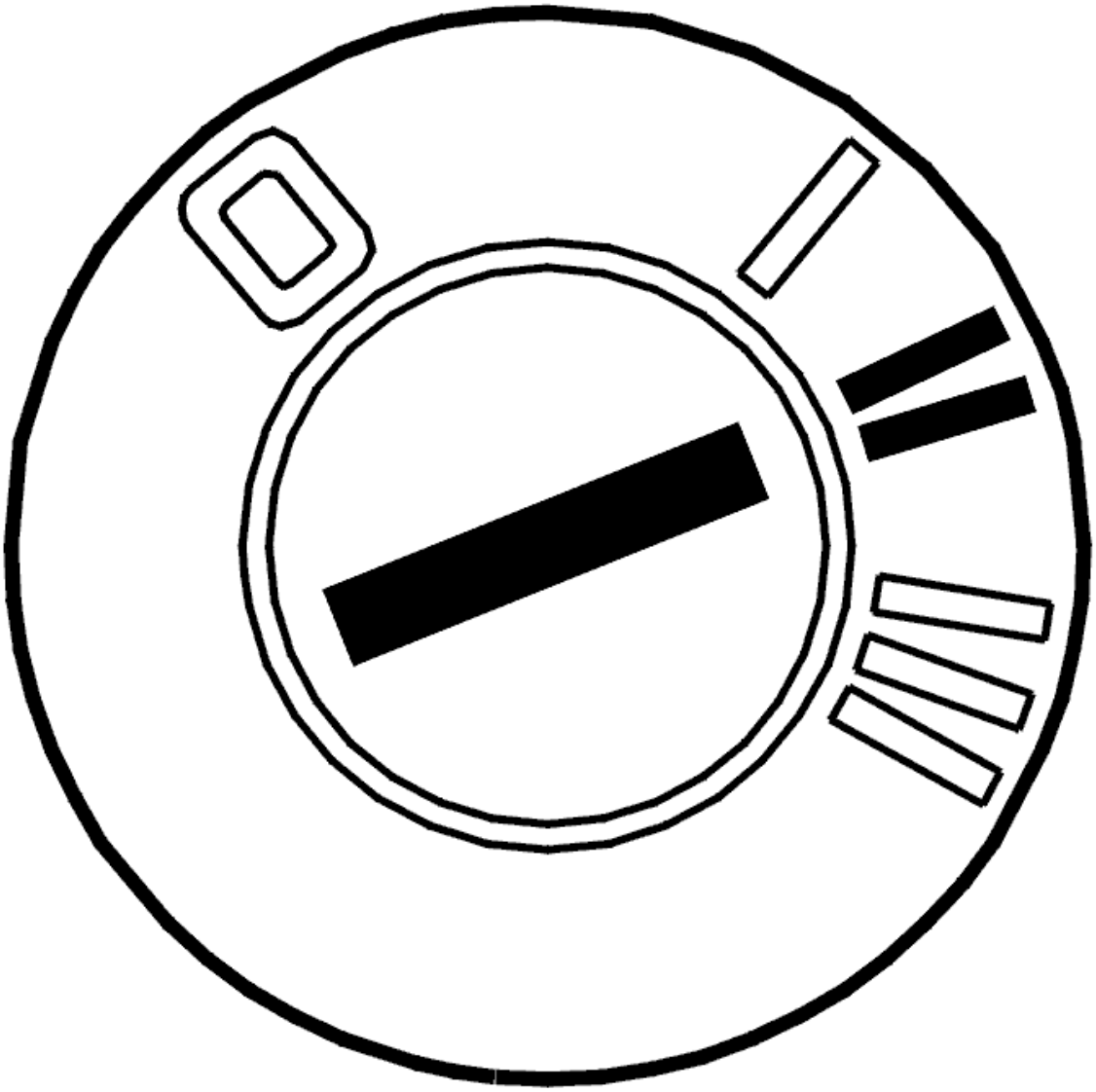

Fig. 144: Identifying Ignition ON
Courtesy of VOLVO CARS CORPORATION

- Reinstall the connectors, components etc.
- Ignition on.
- Erase diagnostic trouble codes using the VCT2000 (or appropriate scan tool).
- Start the car. Allow the vehicle to run for 10 minutes.
- Read off diagnostic trouble codes (DTCs).

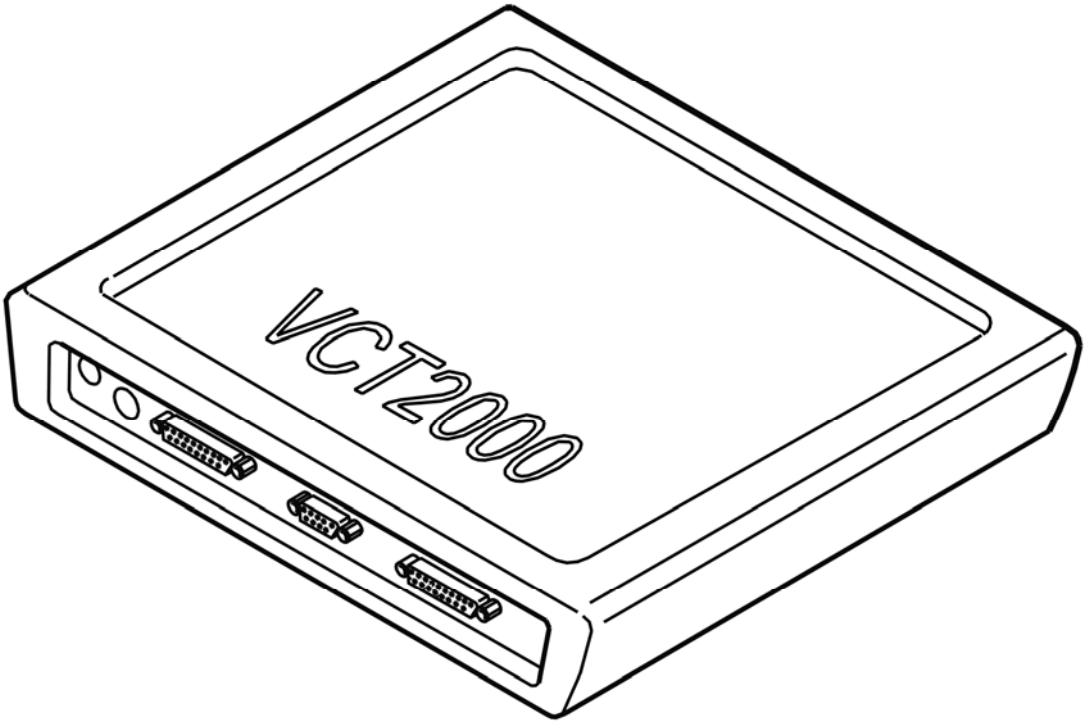

Fig. 145: Identifying VCT2000 Diagnostic Tool Symbol In VIDA
Courtesy of VOLVO CARS CORPORATION

Does the diagnostic trouble code (DTC) for a communication fault recur (CEM-1A5X or CEM-1A6X)?

- **YES**

  Refer to **INFORMATION**

- **NO**

  OKAY: Troubleshooting has been completed.

INFORMATION

FAULT-TRACING INFORMATION

Verification shows that the fault is no longer present. The diagnostic trouble code (DTC) was probably caused by an intermittent fault.

Fault-tracing for this diagnostic trouble code (DTC) is not followed by a verification.

You can view the information again or exit fault-tracing for this diagnostic trouble code (DTC).

INFORMATION

FAULT-TRACING INFORMATION

The fault should have been detected and remedied. As this is not the case fault-tracing has failed.

Exit fault-tracing for this diagnostic trouble code (DTC) or make another attempt.

CEM-1A61: COMMUNICATION WITH THE TRANSMISSION CONTROL MODULE (TCM). SIGNAL MISSING (4T65 AWD; AW50/51 AWD; AW55-50/51SN; 2003-2004)

DIAGNOSTIC TROUBLE CODE (DTC) INFORMATION CEM-1A61

Condition

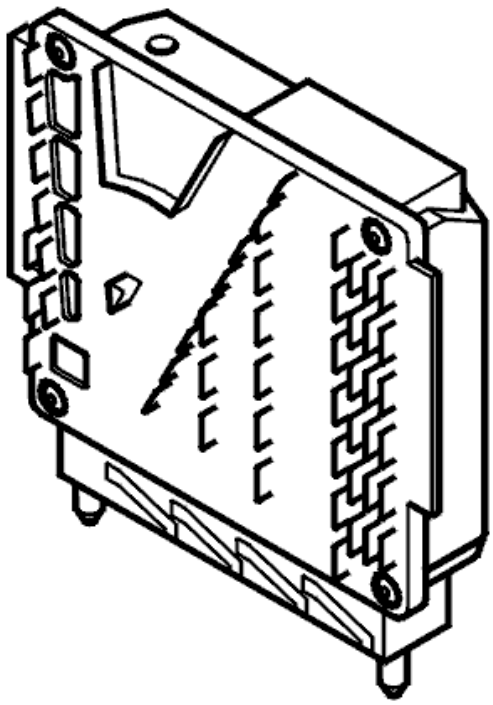

Fig. 146: Identifying Transmission Control Module
Courtesy of VOLVO CARS CORPORATION

Diagnostic trouble codes (DTCs) are stored if the central electronic module (CEM) registers that communication with the transmission control module (TCM) is not operating.

NOTE: NOTE In the event of CEM-1A6x diagnostic trouble codes (DTCs), the central

electronic module (CEM) must not be replaced as the diagnostic trouble code (DTC) indicates a communication fault in the Control area network

Substitute Value

A substitute gear is engaged.

Possible Source

- No power supply to the transmission control module (TCM)
- Open-circuit in the ground lead to the transmission control module (TCM)
- Contact resistance in the terminals
- Open-circuit in the wiring for the CAN high speed network to the transmission control module (TCM)
- - The transmission control module (TCM) is not intended for this car (for example a used control module with different software/hardware).

HINT: If several diagnostic trouble codes (DTCs) are stored in the central electronic module (CEM) for communication faults with other control modules in the high speed network, this indicates a common fault in the Control area network.

Fault symptom[s]

- No shifting
- Malfunction indicator lamp (MIL) lit
- Message in the display.

SIGNAL MISSING

CHECKING POWER SUPPLY AND GROUND TERMINALS. PERMANENT FAULT

CONNECTING THE BREAKOUT BOX (AUTOMATIC TRANSMISSION)

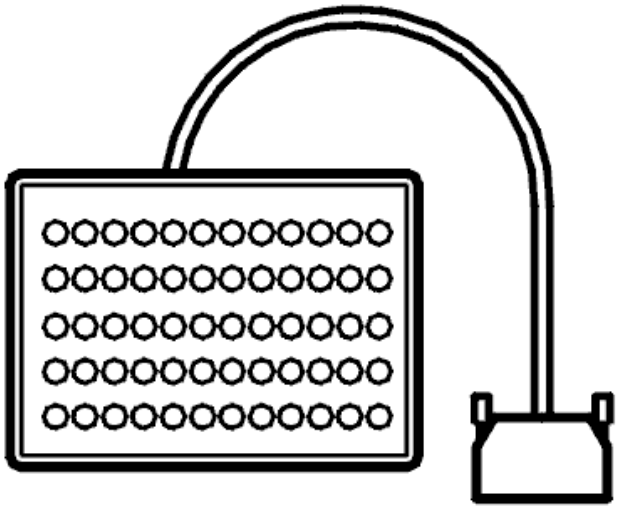

Fig. 147: Breakout Box
Courtesy of VOLVO CARS CORPORATION

Is the breakout box connected to the control module?

- **YES**

  Refer to **CHECKING THE CONNECTORS**

- **NO**

  Refer to **CONNECTING BREAKOUT BOX, TRANSMISSION CONTROL MODULE (TCM)**

CHECKING GROUND TERMINALS

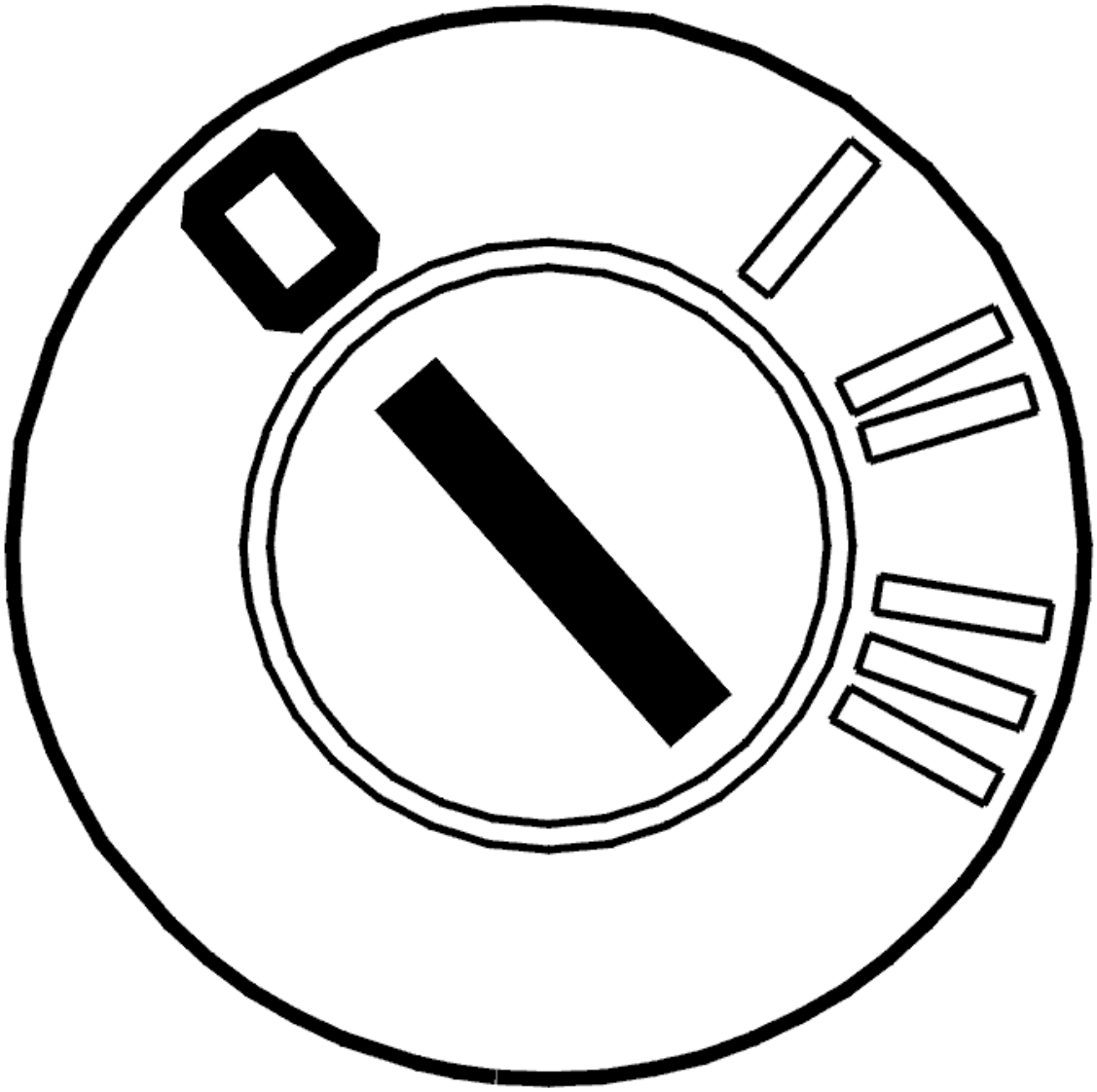

Fig. 148: Identifying Ignition OFF
Courtesy of VOLVO CARS CORPORATION

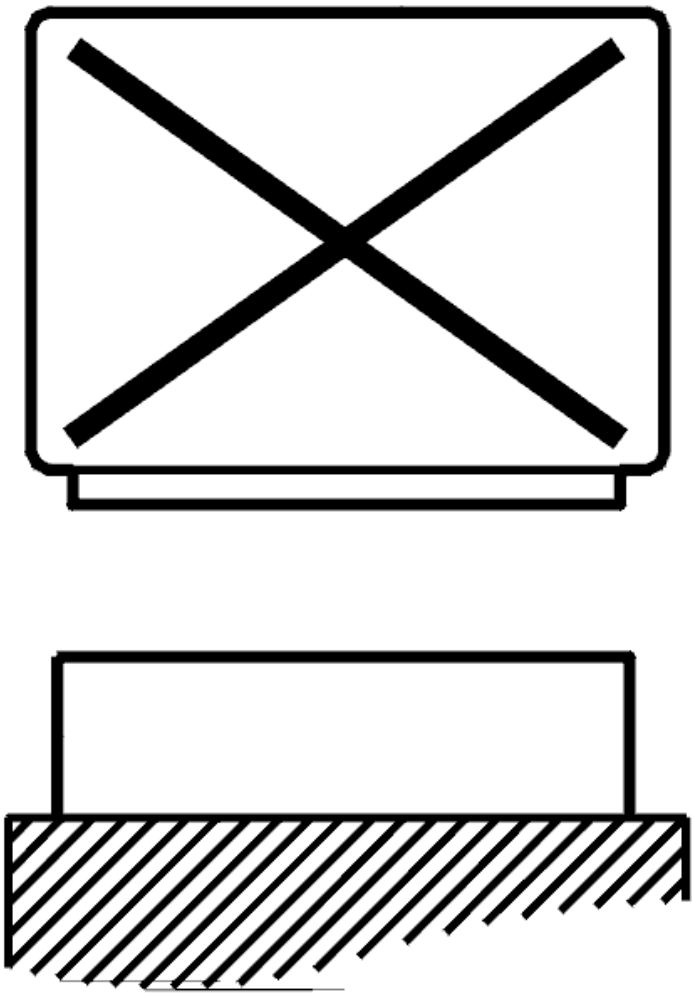

Fig. 149: Disconnecting Control Unit
Courtesy of VOLVO CARS CORPORATION

- Ignition off.
- Control module disconnected.
- Turn of all equipment in the car that takes power from the battery (the interior lighting and radio etc).

  Connect an ohmmeter between #53 on the breakout box and the battery negative terminal.

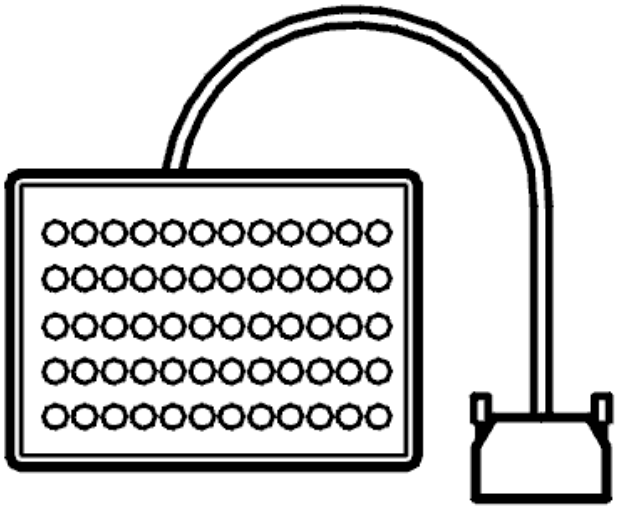

Fig. 150: Breakout Box
Courtesy of VOLVO CARS CORPORATION

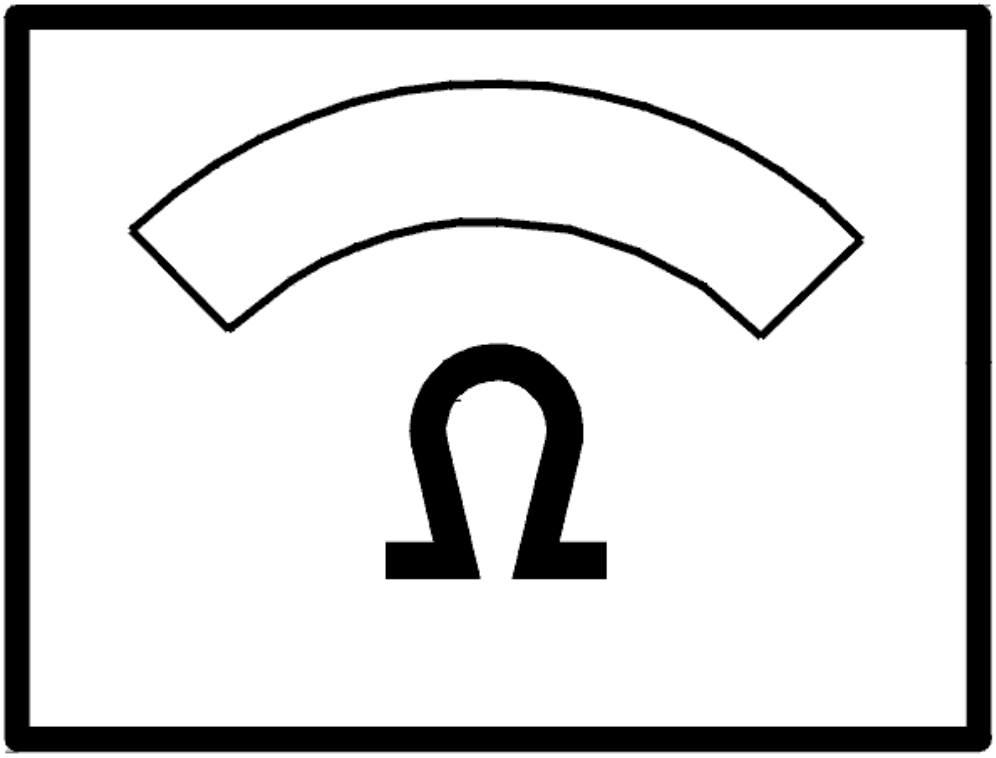

Fig. 151: Identifying Ohm Meter
Courtesy of VOLVO CARS CORPORATION

The ohmmeter should read approximately 0 ohms.

- **OK**

  Refer to **CHECKING CONTROL MODULE POWER SUPPLY**

- **NOT OK**

  Refer to **CHECKING FOR AN OPEN-CIRCUIT, CONTACT RESISTANCE AND OXIDATION**

CHECKING FOR AN OPEN-CIRCUIT, CONTACT RESISTANCE AND OXIDATION

Check the ground terminals 31/96 and the cables between ground terminals and control module #A53 for an

open-circuit according to **OPEN-CIRCUIT, PERMANENT FAULTS** and contact resistance and oxidation according to **CONTACT RESISTANCE AND OXIDATION** .

Check ground lead between battery and bodywork for an open-circuit according to **OPEN-CIRCUIT, PERMANENT FAULTS** and contact resistance and oxidation according to **CHECKING WIRING AND TERMINALS. PERMANENT FAULT** .

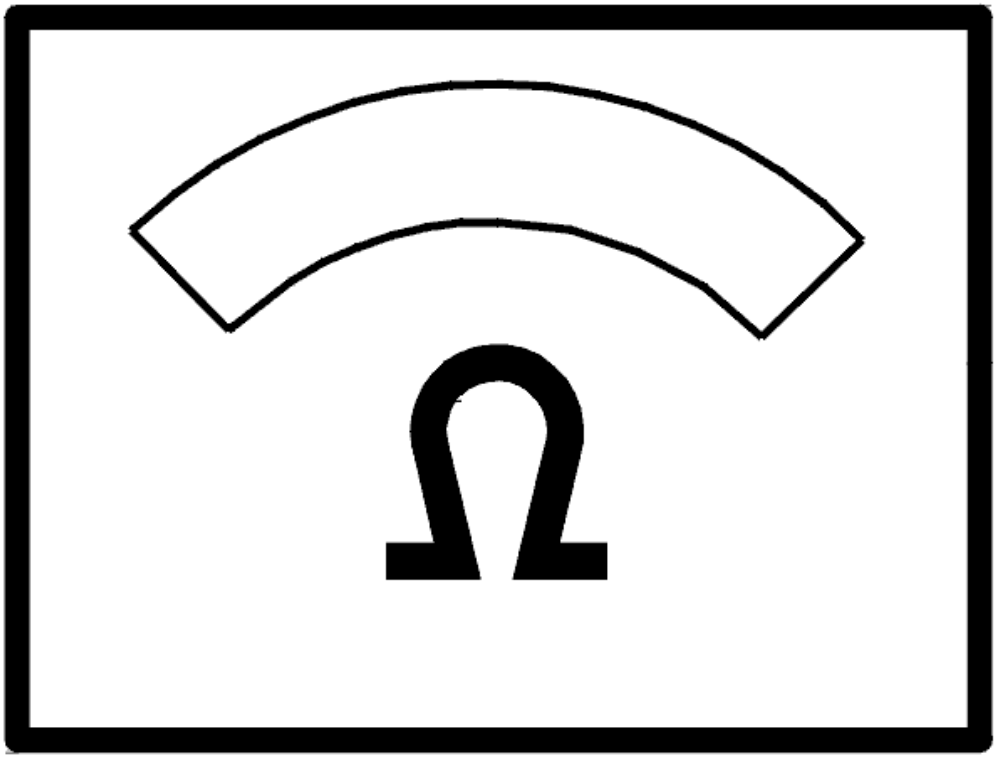

Fig. 152: Identifying Ohm Meter
Courtesy of VOLVO CARS CORPORATION

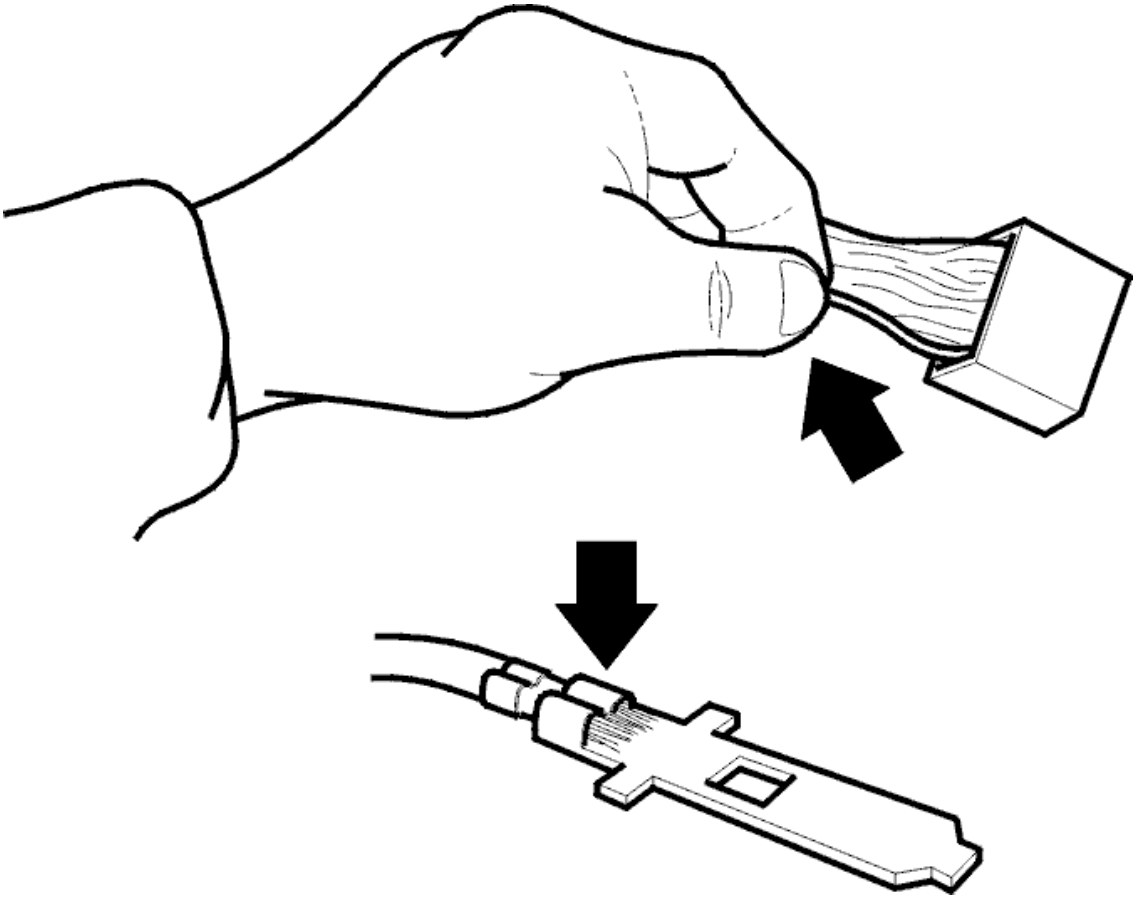

Fig. 153: Checking Contact Resistance & Oxidation
Courtesy of VOLVO CARS CORPORATION

- **Continue**

  Refer to **VERIFICATION**

CHECKING CONTROL MODULE POWER SUPPLY

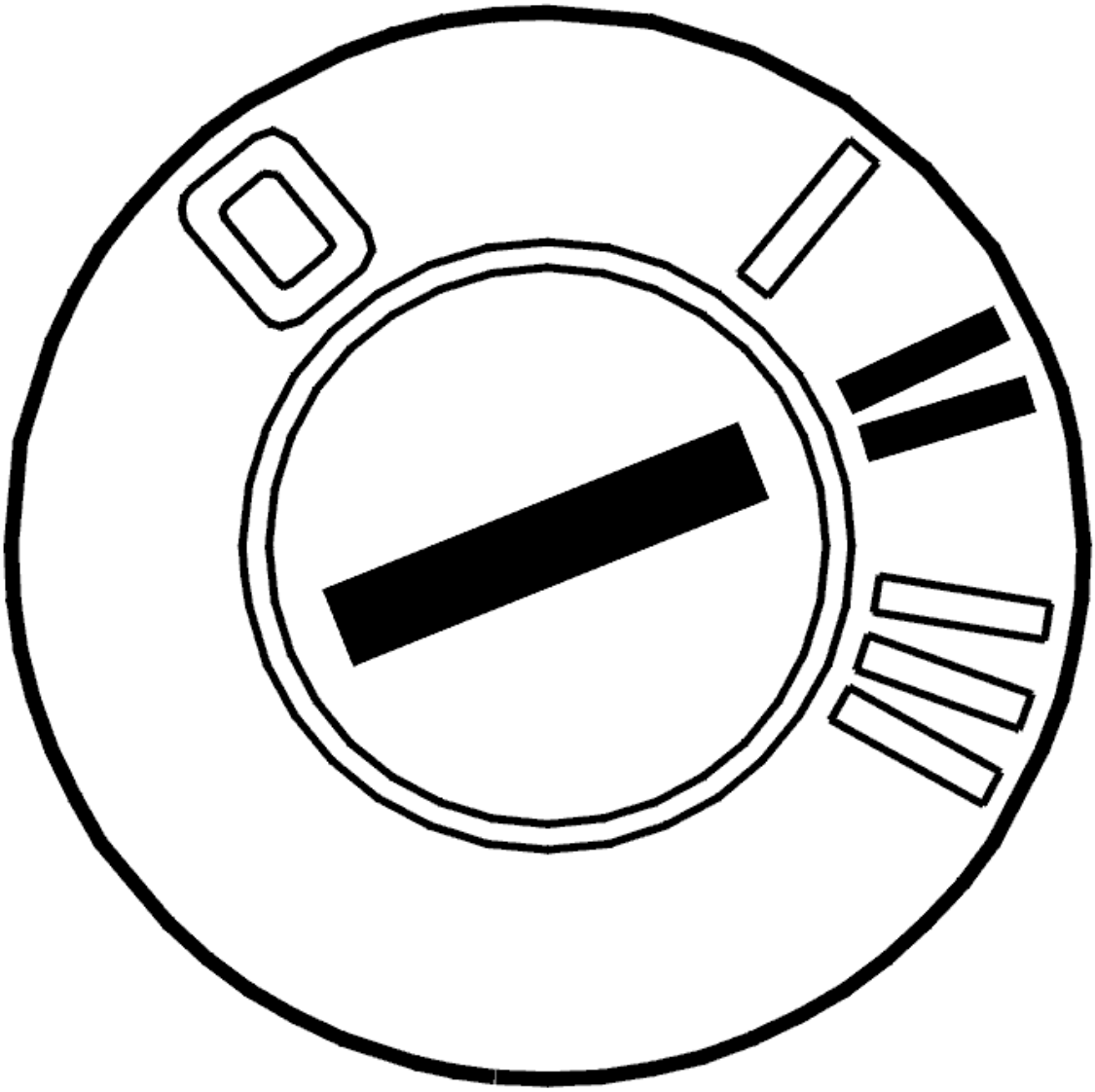

Fig. 154: Identifying Ignition ON
Courtesy of VOLVO CARS CORPORATION

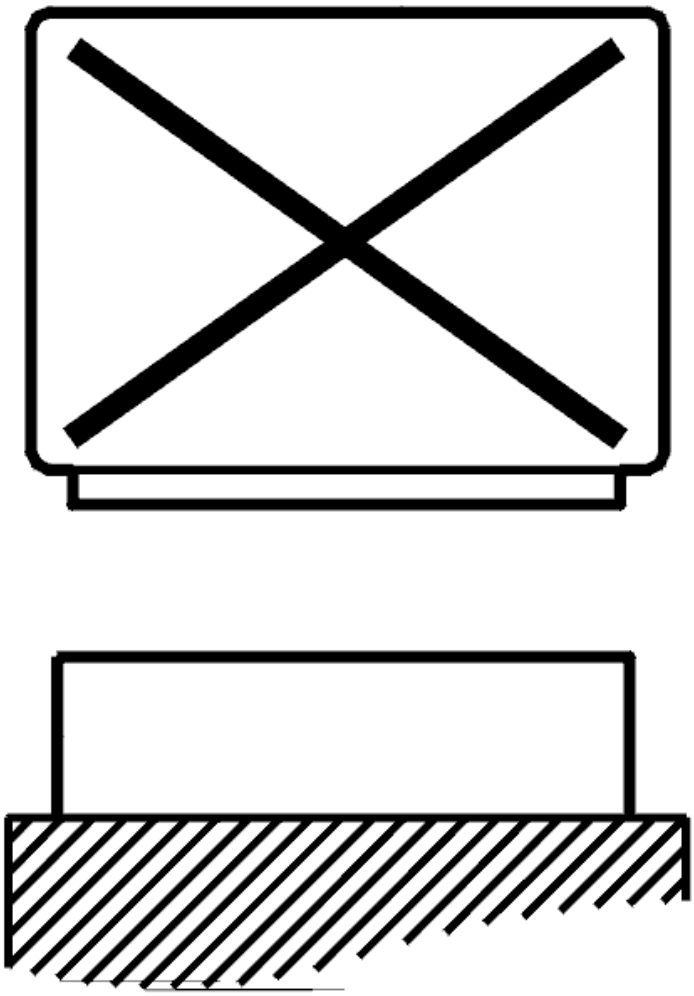

Fig. 155: Disconnecting Control Unit
Courtesy of VOLVO CARS CORPORATION

- Ignition off.
- Control module disconnected.
- Ignition on.

Connect a voltmeter between #35 (#A35) and #53 (#A53) on the breakout box.

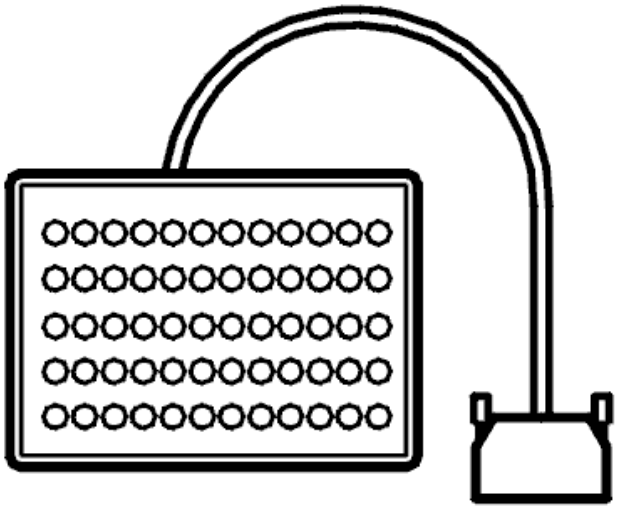

Fig. 156: Breakout Box
Courtesy of VOLVO CARS CORPORATION

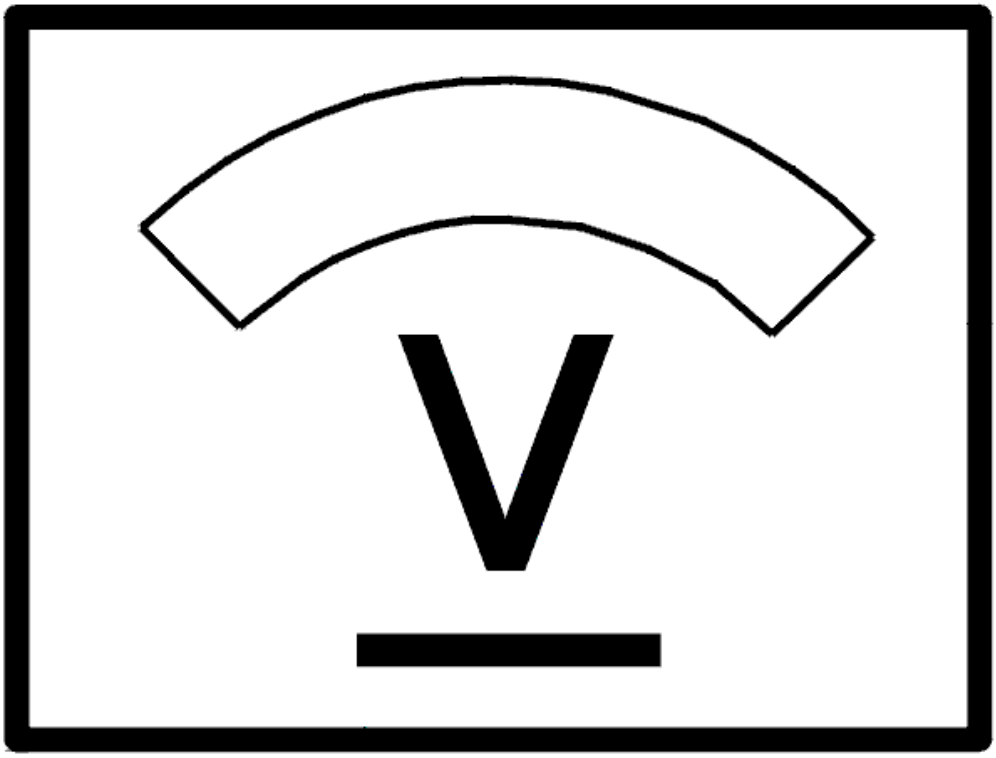

Fig. 157: Identifying Voltage Display
Courtesy of VOLVO CARS CORPORATION

The voltmeter should read battery voltage

- **OK**

  Refer to **CHECKING THE CONNECTORS**

- **NOT OK**

  Refer to **CHECKING FUSE 16**

CHECKING FUSE 16

Check that fuse 16 in the in the integrated relay/fusebox in the engine compartment is intact. If the fuse is

blown, check cable between control module #35 (#A35) and fuse 16 for a short-circuit to ground according to **SHORT-CIRCUIT TO GROUND, PERMANENT FAULTS** .

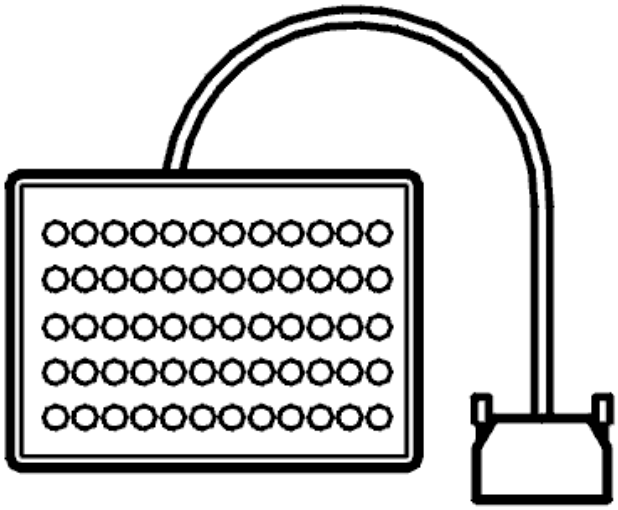

Fig. 158: Breakout Box
Courtesy of VOLVO CARS CORPORATION

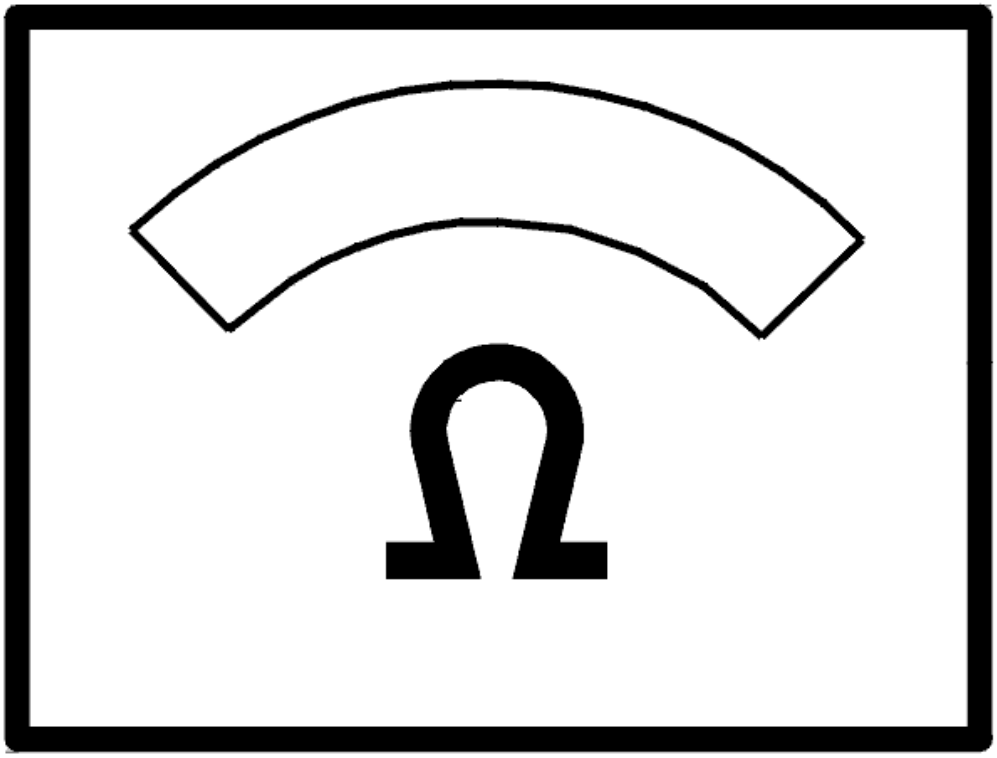

Fig. 159: Identifying Ohm Meter
Courtesy of VOLVO CARS CORPORATION

Is the fuse intact?

- **YES**

  Refer to **CHECKING THE VOLTAGE BEFORE THE FUSE**

- **NO**

  Refer to **VERIFICATION**

CHECKING THE VOLTAGE BEFORE THE FUSE

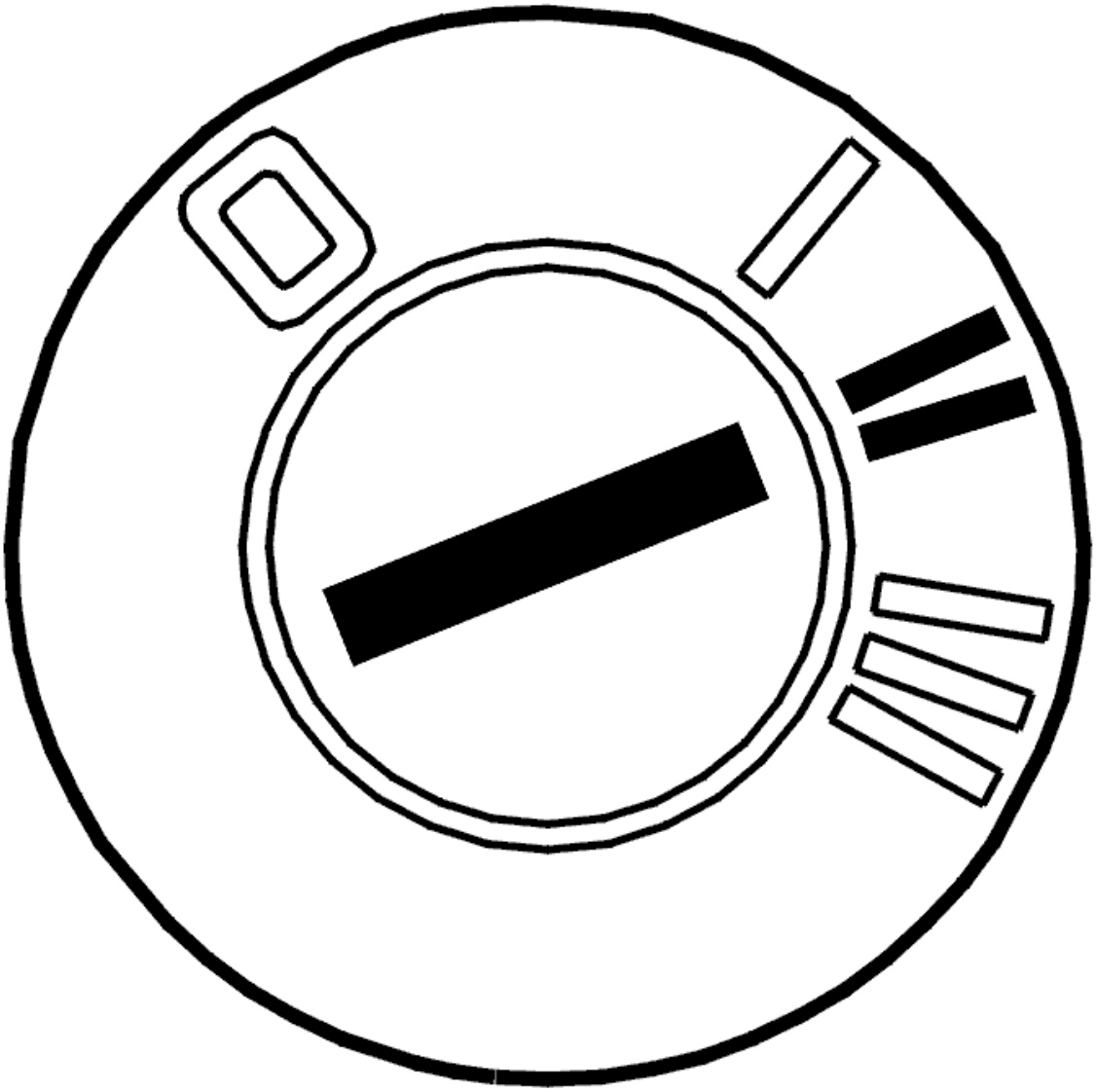

Fig. 160: Identifying Ignition ON
Courtesy of VOLVO CARS CORPORATION

- Ignition on

  Connect a voltmeter between the fuse and the left socket on the fuse holder to fuse 16 and ground.

  If the voltage is approximately 12 V, check the cable between the fuse and the control module #35 (#A35) for an open-circuit according to **OPEN-CIRCUIT, PERMANENT FAULTS** .

  If the voltage is approximately 0 V, check the cable between the ignition switch terminal 15l and fuse 16 for an open-circuit according to **OPEN-CIRCUIT, PERMANENT FAULTS** .

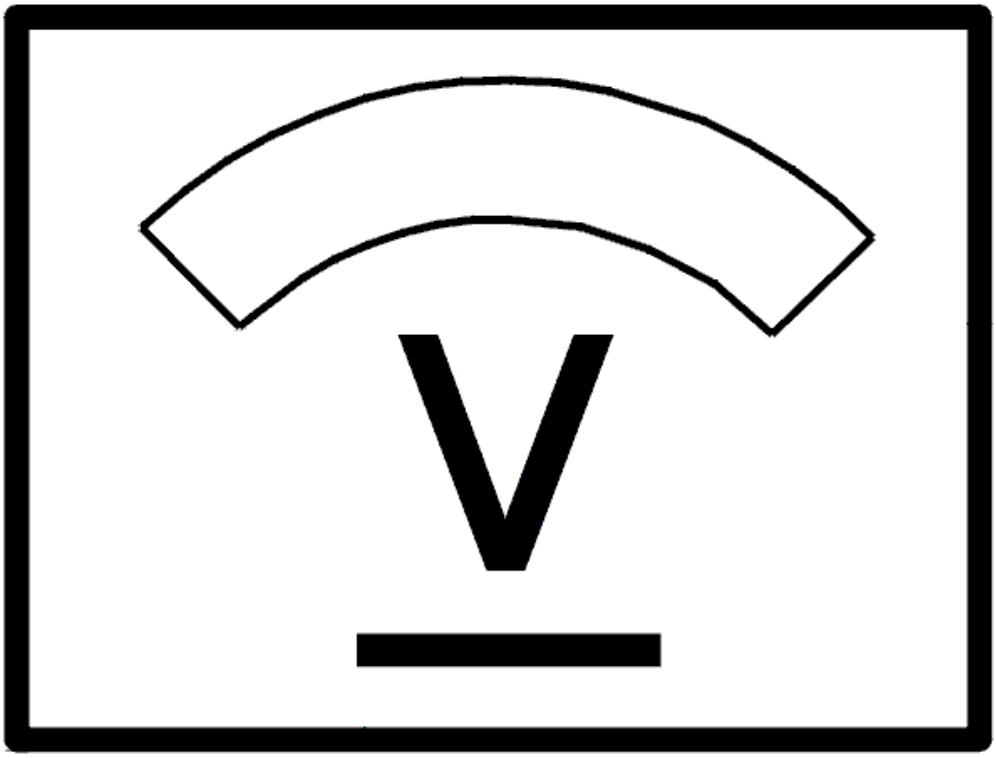

Fig. 161: Identifying Voltage Display
Courtesy of VOLVO CARS CORPORATION

Was a fault detected?

- **YES**

  Refer to **VERIFICATION**

- **NO**

  Refer to **CHECKING THE CONNECTORS**

CHECKING THE CONNECTORS

Check the connector 54/3 and the transmission control module (TCM) connector. Check for contact resistance

and oxidation. Remedy if necessary. Check for any damage.

HINT: If the fault cause is found, reinstall the components and connectors. If the fault cause is not found, do not reinstall the control module.

Other information:

- To access the transmission control module (TCM) connector, see **TRANSMISSION CONTROL MODULE (TCM), REPLACING**
- see **CHECKING WIRING AND TERMINALS** .

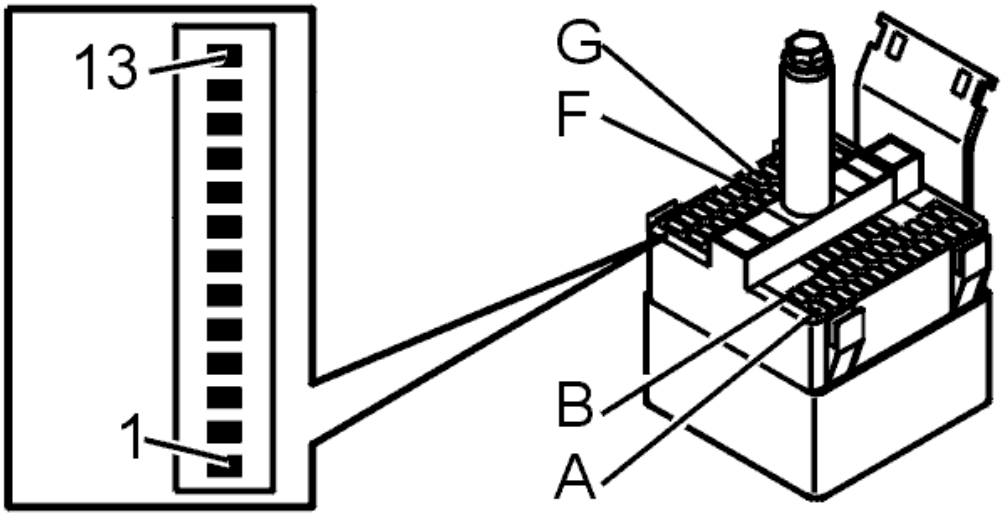

Fig. 162: Identifying Connector Terminals
Courtesy of VOLVO CARS CORPORATION

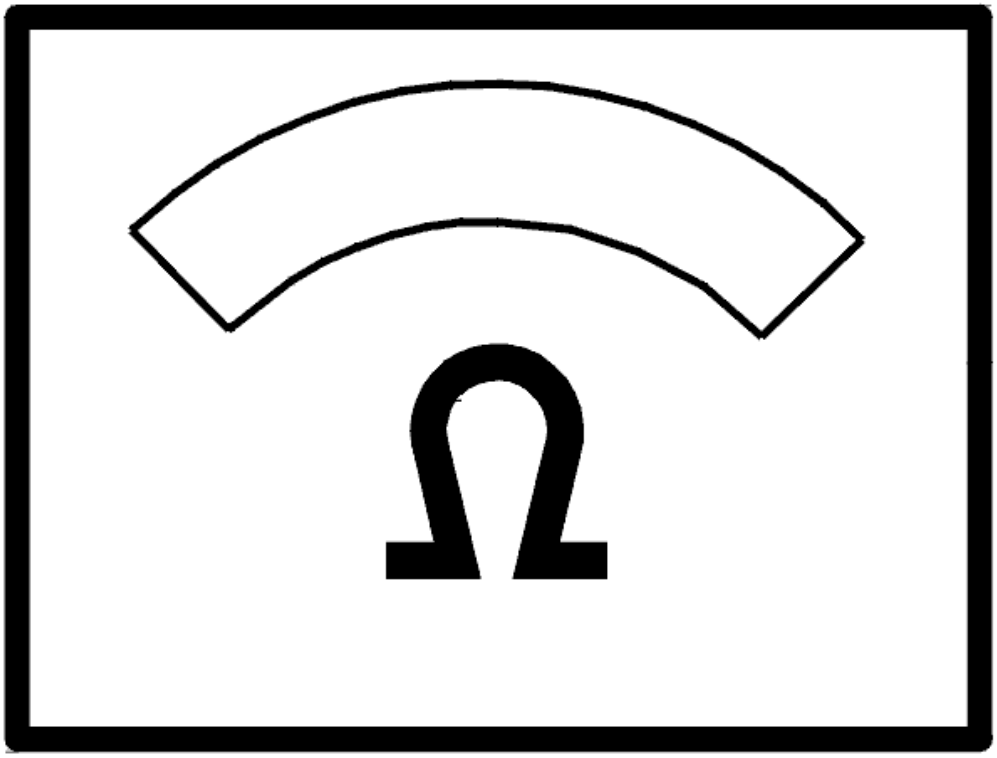

Fig. 163: Identifying Ohm Meter
Courtesy of VOLVO CARS CORPORATION

Was a fault detected?

- **YES**

  Refer to **VERIFICATION**

- **NO**

  Refer to **SIGNAL MISSING**

CONNECTING BREAKOUT BOX, TRANSMISSION CONTROL MODULE (TCM)

Special tools:

see **9511428**

see **9511504**

CONNECTING THE BREAKOUT BOX

CAUTION: The voltage supply to the control module must be disconnected when disconnecting the breakout box. Failure to observe this procedure could seriously damage the control module.

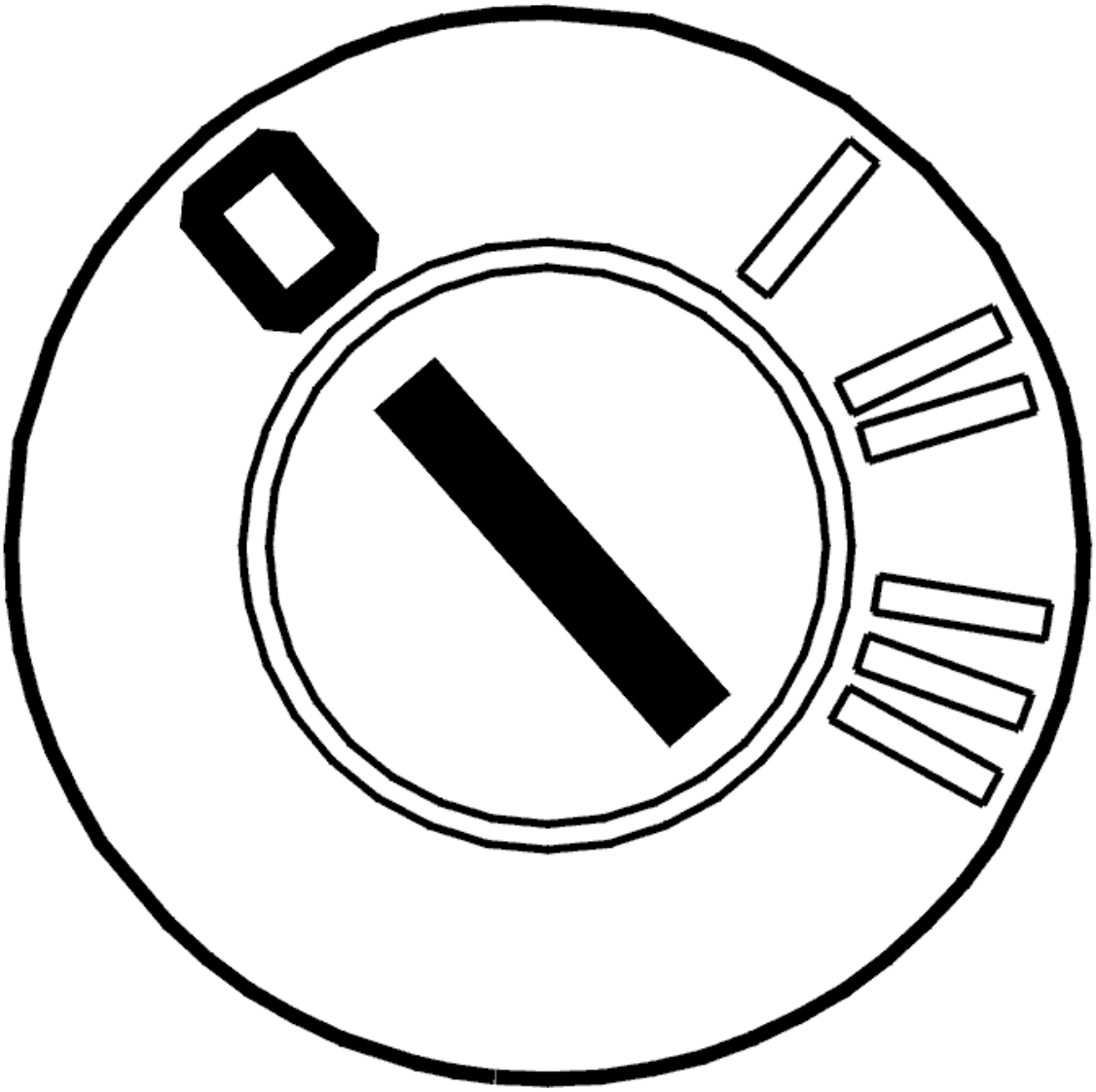

Fig. 164: Identifying Ignition OFF
Courtesy of VOLVO CARS CORPORATION

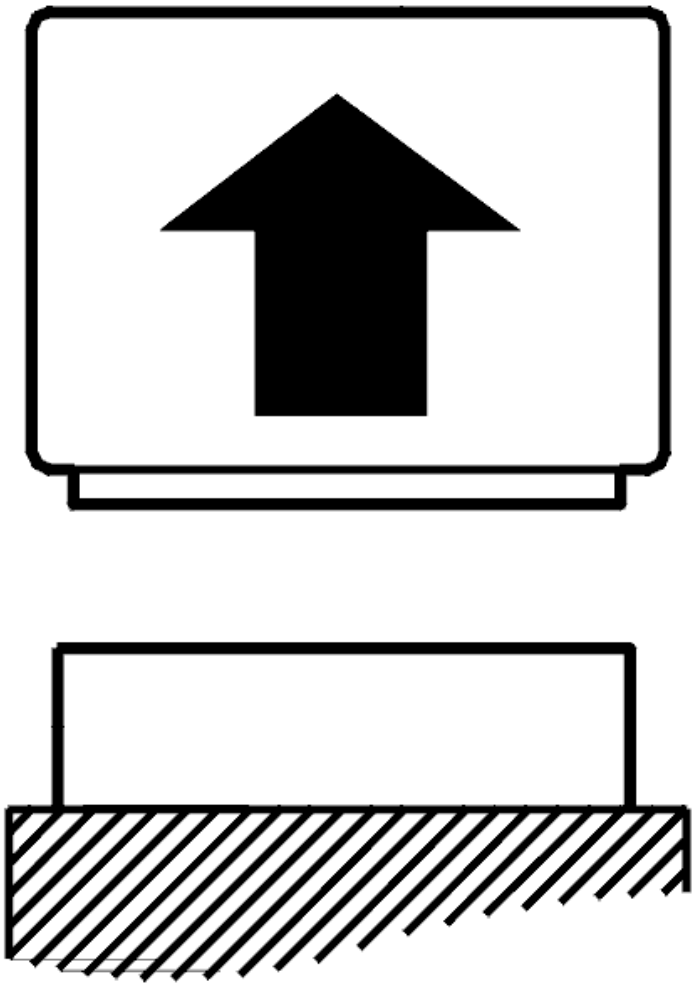

Fig. 165: Disconnecting Connector
Courtesy of VOLVO CARS CORPORATION

- For more help with connection, see **MEASURING INSTRUMENTS** .
- Ignition off
- Disconnect the transmission control module (TCM).
- Connect adapter see **9511504** to transmission control module (TCM) connector and connect breakout box see **9511428** to the adapter.

NOTE: **Ensure that the adapter is the right way round - with the breakout box cable harness outwards towards the fender.**

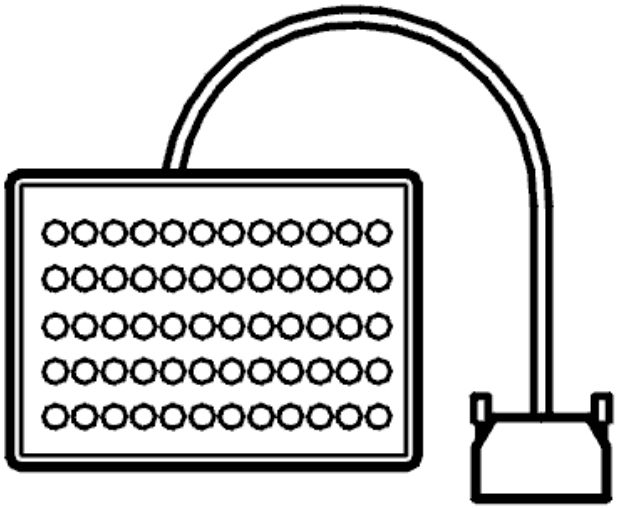

Fig. 166: Breakout Box
Courtesy of VOLVO CARS CORPORATION

- **Continue**

  Refer to **CHECKING GROUND TERMINALS**

SIGNAL MISSING

GENERAL INFORMATION

HINT: For general information about fault-tracing the control area network (CAN), see the linked document below. See GENERAL INFORMATION ABOUT FAULT-TRACING IN THE CAN NETWORK (2005-2012)

In order to check the control area network (CAN) cables, the resistance in the network must be measured. The resistance between the two CAN cables, with the network connected, must be 60ohms in both the high speed network and the low speed network.

NOTE: Resistance will only be 60 ohms if the main artery of the CAN network is whole and the network is connected. If the main artery of the CAN network is split somewhere and a reading is taken between the CAN cables, resistance will be 120 ohms.

If diagnostic trouble codes (DTCs) can be read off from the relevant control module, the fault is probably intermittent. The locations that must be checked in the event of a fault in the low speed network are the junctions behind the central electronic module (CEM) and the audio module (AUM) as well as the cable harness behind the Audio module (AUM).

Intermittent fault in the current supply to the actual control module is indicated by the DTC in the Central electronic module (CEM) (CEM-1A5X or CEM-1A6X). There is probably no diagnostic trouble code (DTC) in the relevant control module as the control module cannot store a diagnostic trouble code (DTC) when it is without power.

- **Continue**

  Refer to **CHECKING THE RESISTANCE OF THE CONTROL AREA NETWORK (CAN) CABLES**

CHECKING THE RESISTANCE OF THE CONTROL AREA NETWORK (CAN) CABLES

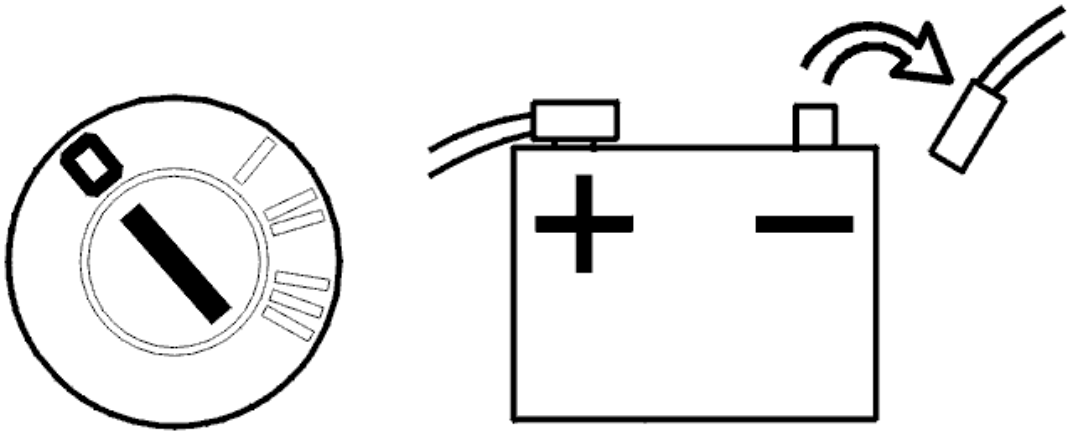

Fig. 167: Identifying Ignition In Off Position And Disconnecting Negative Cable From Battery
Courtesy of VOLVO CARS CORPORATION

- Disconnect the battery negative lead. The network must not be powered when taking resistance readings. Otherwise an incorrect value may be obtained.
- Connect the adapter wiring to the central electronic module (CEM).

  HINT: Where a breakout box cannot be used, take readings from the rear of the affected connectors if possible. This prevents terminal pins and socket housings being damaged.

  When taking readings on the low speed network

  - When taking readings on the low speed network the adapter wiring should be connected to the Central electronic module (CEM) and readings taken from there. Readings can even be taken in the connector for the Power seat module (PSM). The advantage of the adapter wiring to the Central electronic module (CEM) is that all control module can be connected in the network when taking readings and access can be gained to both the high speed and low speed networks.

    The resistance reading only measures the main arteries in the low speed network, not the junctions that exist for different control modules.

  When taking readings on the high speed network

  - When taking readings on the high speed network the adapter wiring should be connected to the

Engine control module (ECM) and readings taken from there. The Engine control module (ECM) must be connected. This resistance reading only measures the main arteries in the high speed network.

Connect an ohmmeter to the terminals for CAN-L and CAN-H on the relevant network. Turn the contacts and turn the cable harness. Resistance must be approximately 60 ohms.

NOTE: **Resistance will only be 60 ohms if the main artery of the CAN network is whole and the network is connected. If the main artery of the CAN network is split somewhere and a reading is taken between the CAN cables, resistance will be 120 ohms.**

Other information

- see **BATTERY, DISCONNECTING**
- see **CONNECTING THE BREAKOUT BOX**
- see **CHECKING WIRING AND TERMINALS**

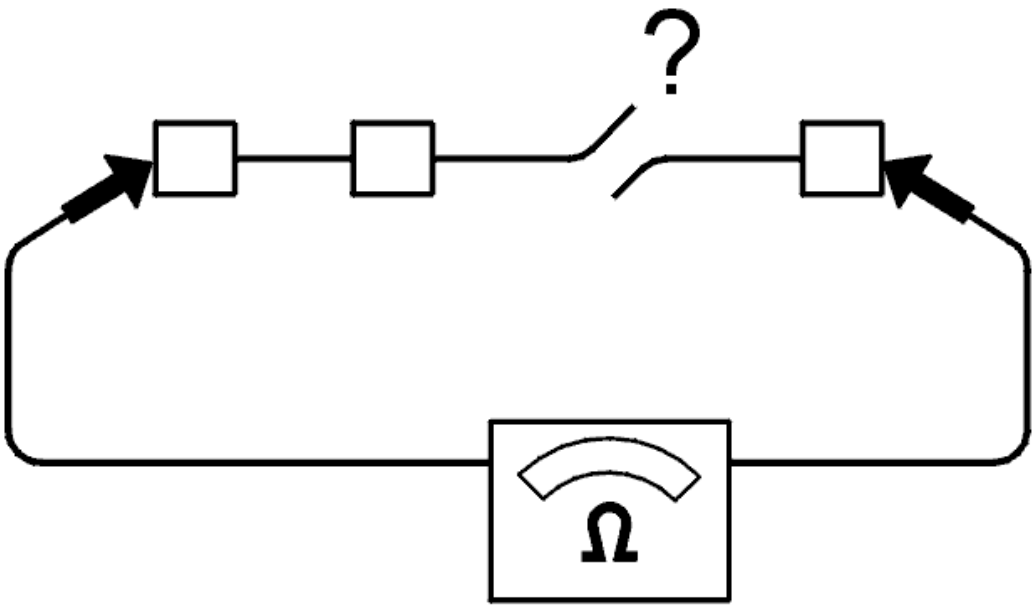

Fig. 168: Checking For Open Circuit
Courtesy of VOLVO CARS CORPORATION

Is the value OK?

- **YES**

  Refer to **CHECKING A SHORT-CIRCUIT IN CAN CABLES**

- **NO**

  Refer to **IDENTIFYING FAULT CAUSES IN THE CAN NETWORK**

CHECKING A SHORT-CIRCUIT IN CAN CABLES

Connect an ohmmeter between respective CAN cable and voltage supply and between the CAN cables and ground. Turn the contacts and turn the cable harness. The resistance must be infinite or very high.

HINT: Readings can be taken from one and the same connector if the CAN wiring, voltage supply and ground is pre-routed. If possible, measure from the rear of the affected connectors in order to minimize any damage and future loose connections. If this is not possible, use the adapter wiring or loose terminal pin for good contact.

Was a fault detected?

- **YES**

  Refer to **IDENTIFYING FAULT CAUSES IN THE CAN NETWORK**

- **NO**

  Refer to **CHECKING THE TRAFFIC LOAD ON THE CAN CABLES**

CHECKING THE TRAFFIC LOAD ON THE CAN CABLES

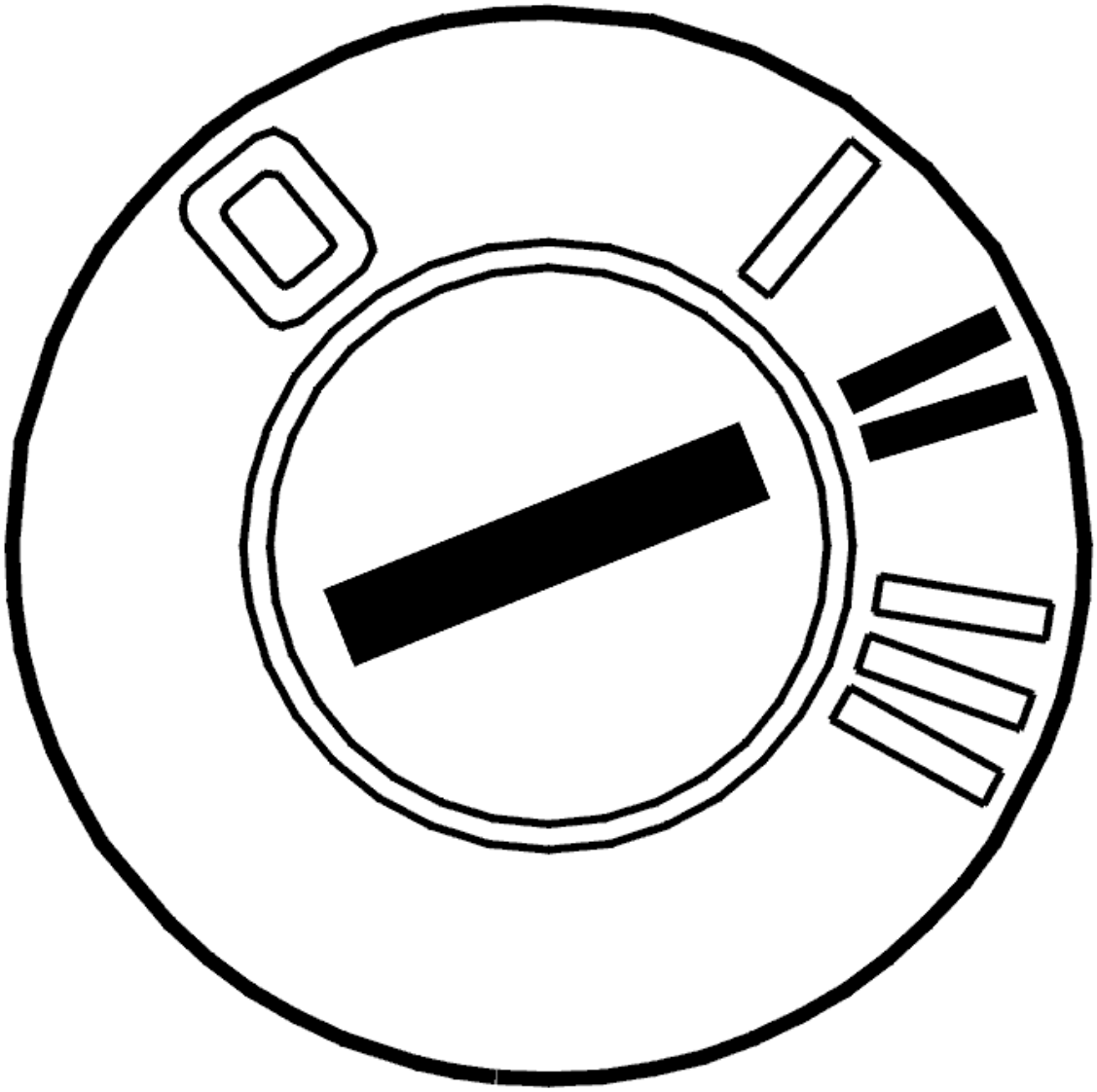

Fig. 169: Identifying Ignition ON
Courtesy of VOLVO CARS CORPORATION

- Connect the battery.
- Ignition on.

Faults in the CAN network may be due to a control module sending faulty messages that disrupt normal communication. When messages are sent incorrectly, this results in a considerable increase in the amount of traffic on the CAN network. The load can be checked by reading the average value of the voltage on the CAN cables in relation to ground.

The following applies for model year -2004:

Connect a voltmeter between CAN-L and ground. The voltage shall be approx. 2.3 V.

Then connect a voltmeter between CAN-H and ground. The voltage shall be approx. 2.8 V.

The following applies for model year 2004-:

Connect a voltmeter between CAN-L and ground. The voltage should be approx: V

Connect a voltmeter between CAN-H and ground. The voltage should be approx: V

NOTE: **For vehicles of later model years, normal voltage values lie within a specific interval due to increased traffic between the control modules on the CAN network upon update of the electrical system.**

HINT: If possible, measure from the rear of the affected connectors so that they are not damaged.

Other information

- see **BATTERY, DISCONNECTING**

Is the value OK?

- **YES**

  Refer to **INFORMATION**

- **NO**

  Refer to **IDENTIFYING A CONTROL MODULE IN THE CAN NETWORK**

IDENTIFYING FAULT CAUSES IN THE CAN NETWORK

- Disconnect a control module that disconnects the CAN network (a control module that has four terminals to the CAN network).

  HINT: For the low speed network, suitable places for disconnecting the network are at the steering wheel module (SWM), the driver information module (DIM) or the climate control module (CCM).

  In the event of an short-circuit between on of the CAN cables and voltage or ground, the fault can be localized disconnecting a control module that splits the CAN network. Readings can then be taken to determine on which side the fault is on the disconnected control module.

  Connect an ohmmeter between the CAN cable and voltage supply respectively ground. Take readings from both ends of the CAN networks at the network junction. Twist and bend the cable harness to find any intermittent short-circuits. The resistance must be infinite or very high (more than 1 Mohms).

  If a fault can be localized in one direction, split the network at a point further on in the CAN network in the direction that the fault was discovered and take a new reading. Try to locate the fault in this way.

  HINT: A short-circuit between the CAN cables and supply voltage or ground may be in either the wiring or in a control module.

Remedy the cables as necessary. If a fault is found on one control module, replace the control module.

- **Continue**

  Refer to **VERIFICATION**

IDENTIFYING A CONTROL MODULE IN THE CAN NETWORK

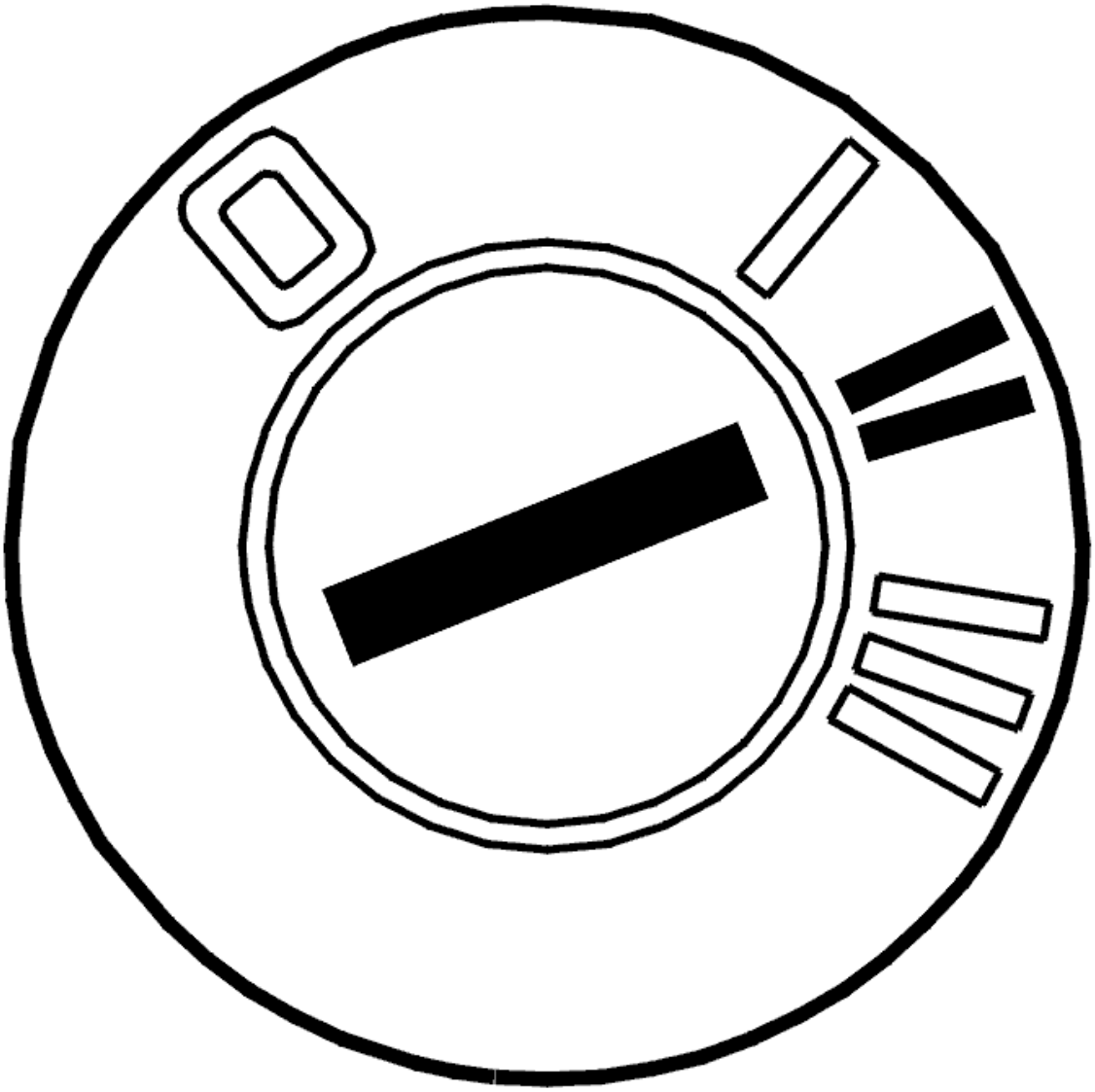

Fig. 170: Identifying Ignition ON
Courtesy of VOLVO CARS CORPORATION

- Connect the battery.
- Ignition on.

  If the load on the CAN network is too high, this may be due to a control module transmitting faulty messages on the CAN network. This is called a disruptive control module. The fault may also be due to

an intermittent short-circuit to supply voltage or ground in one of the CAN cables. This results in the control modules on the CAN network starting to send faulty messages. The fault may occur without any of the control modules storing a diagnostic trouble code (DTC). The voltage can be measured between the CAN cables in order to check the load on the CAN network.

The following applies for model year -2004:

Connect a voltmeter between the CAN cables. In the event of correct communication on the network, the average value of the voltage must be approximately 0.5 V (0.4 V to 0.6 V).

The following applies for model year 2004-:The following applies for model year 2004-:

Connect a voltmeter between the CAN cables. During correct CAN network communication, voltage should be about 0.6-1.4 V.

NOTE: For vehicles of later model years, the normal voltage value is slightly higher due to increased traffic between the control modules on the CAN network upon update of the electrical system.

In the event of a communication fault the voltage is significantly higher than the above specified values. In order to identify which control module has faulty communication, cut the power supply to one control module at a time. Check the voltage in the CAN cables again. The easiest way to cut the power supply is to remove the fuse(s) for the relevant control module. Repeat until the voltage between the CAN wiring drops to the normal level.

HINT: When the probable faulty control module has been identified, connect and disconnect the supply voltage to the control module a number of times to verify that the fault appears and disappears.

NOTE: Do not cut the power to the central electronic module (CEM) unless it is the last control module left to check.

The control module that is communicating incorrectly must be replaced. Remedy as necessary.

NOTE: After a fault with "interfering" control modules, other control modules may remain in "Limp-Home mode" even when the ignition has been switched off and on several times. To remedy this, disconnect and reconnect the battery negative terminal to restore the control modules to normal function.

Other information

- see **BATTERY, DISCONNECTING**

- **Continue**

Refer to **VERIFICATION**

IDENTIFYING FAULT CAUSES IN THE CAN NETWORK

- Disconnect a control module that disconnects the CAN network (a control module that has four terminals to the CAN network).

  HINT: For the low speed network, suitable places for disconnecting the network are at the steering wheel module (SWM), the driver information module (DIM) or the climate control module (CCM).

  In the event of an open-circuit on, or short-circuit between the CAN cables, the fault can be localized by disconnecting a control module that splits the CAN network. Readings can then be taken to determine on which side the fault is on the disconnected control module.

  Connect an ohmmeter between the CAN cables. Take readings from both ends of the CAN networks at the network junction. Twist and bend the cable harness to find any intermittent short-circuits. Resistance should be 120 ohms.

  If a fault can be localized in one direction, split the network at a point further on in the CAN network in the direction that the fault was discovered and take a new reading. Try to locate the fault in this way.

  Remedy the cables as necessary.

- **Continue**

  Refer to **VERIFICATION**

VERIFICATION

HINT: After rectifying a fault, a verification should be carried out.

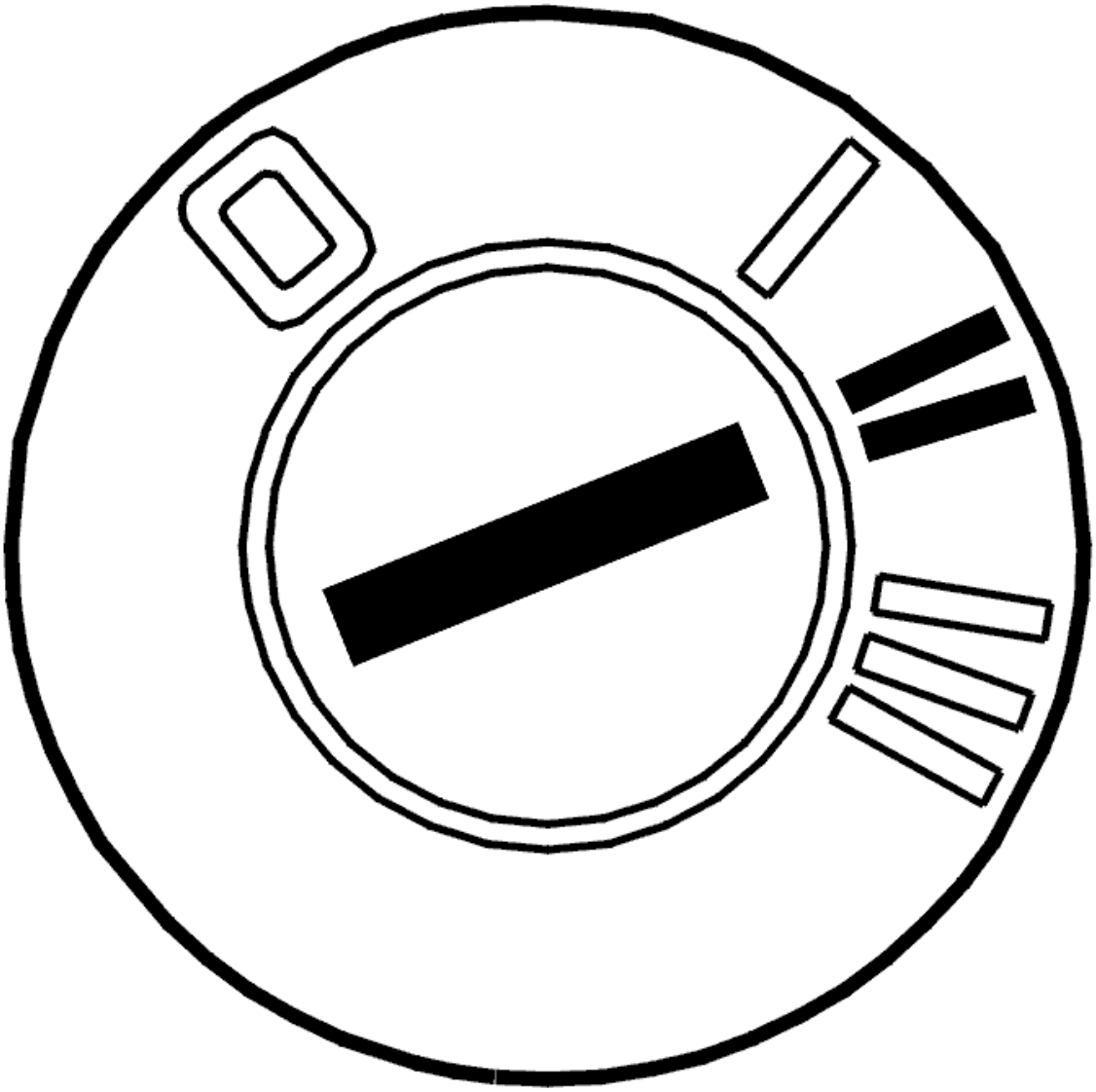

Fig. 171: Identifying Ignition ON
Courtesy of VOLVO CARS CORPORATION

- Reinstall the connectors, components etc.
- Ignition on.
- Erase diagnostic trouble codes using the VCT2000 (or appropriate scan tool).
- Start the car. Allow the vehicle to run for 10 minutes.
- Read off diagnostic trouble codes (DTCs).

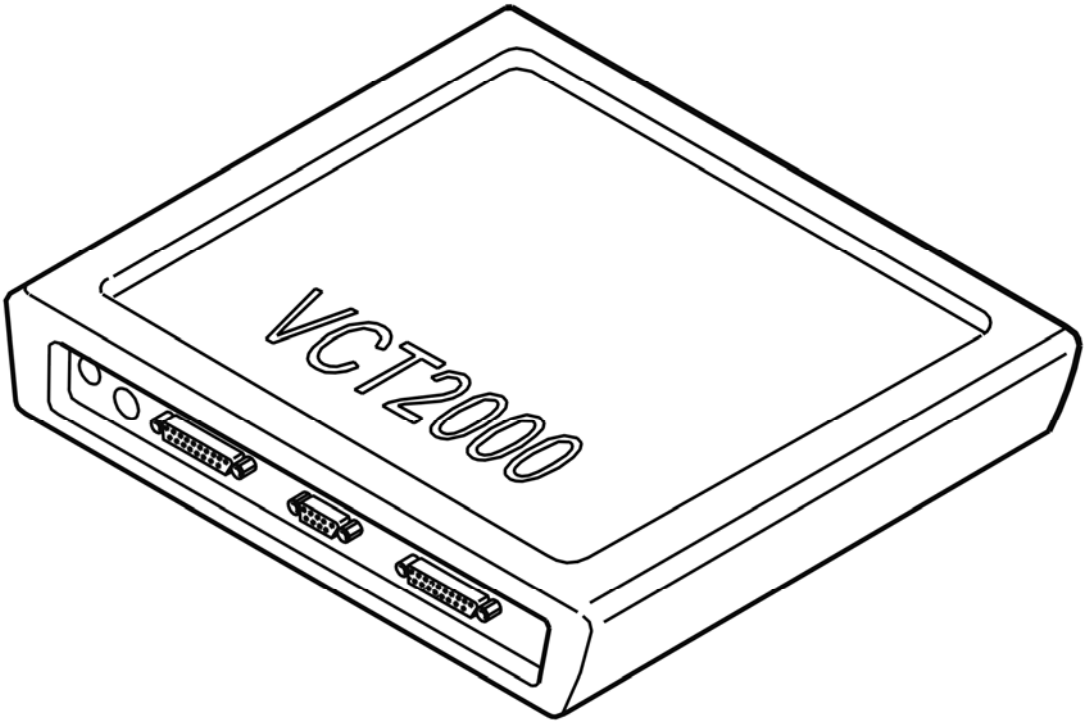

Fig. 172: Identifying VCT2000 Diagnostic Tool Symbol In VIDA
Courtesy of VOLVO CARS CORPORATION

Does the diagnostic trouble code (DTC) for a communication fault recur (CEM-1A5X or CEM-1A6X)?

- **YES**

  Refer to **INFORMATION**

- **NO**

  OKAY: Troubleshooting has been completed.

INFORMATION

FAULT-TRACING INFORMATION

Verification shows that the fault is no longer present. The diagnostic trouble code (DTC) was probably caused by an intermittent fault.

Fault-tracing for this diagnostic trouble code (DTC) is not followed by a verification.

You can view the information again or exit fault-tracing for this diagnostic trouble code (DTC).

INFORMATION

FAULT-TRACING INFORMATION

The fault should have been detected and remedied. As this is not the case fault-tracing has failed.

Exit fault-tracing for this diagnostic trouble code (DTC) or make another attempt.

VERIFICATION

VERIFICATION

HINT: After the repair it is necessary to check that the fault has been rectified.

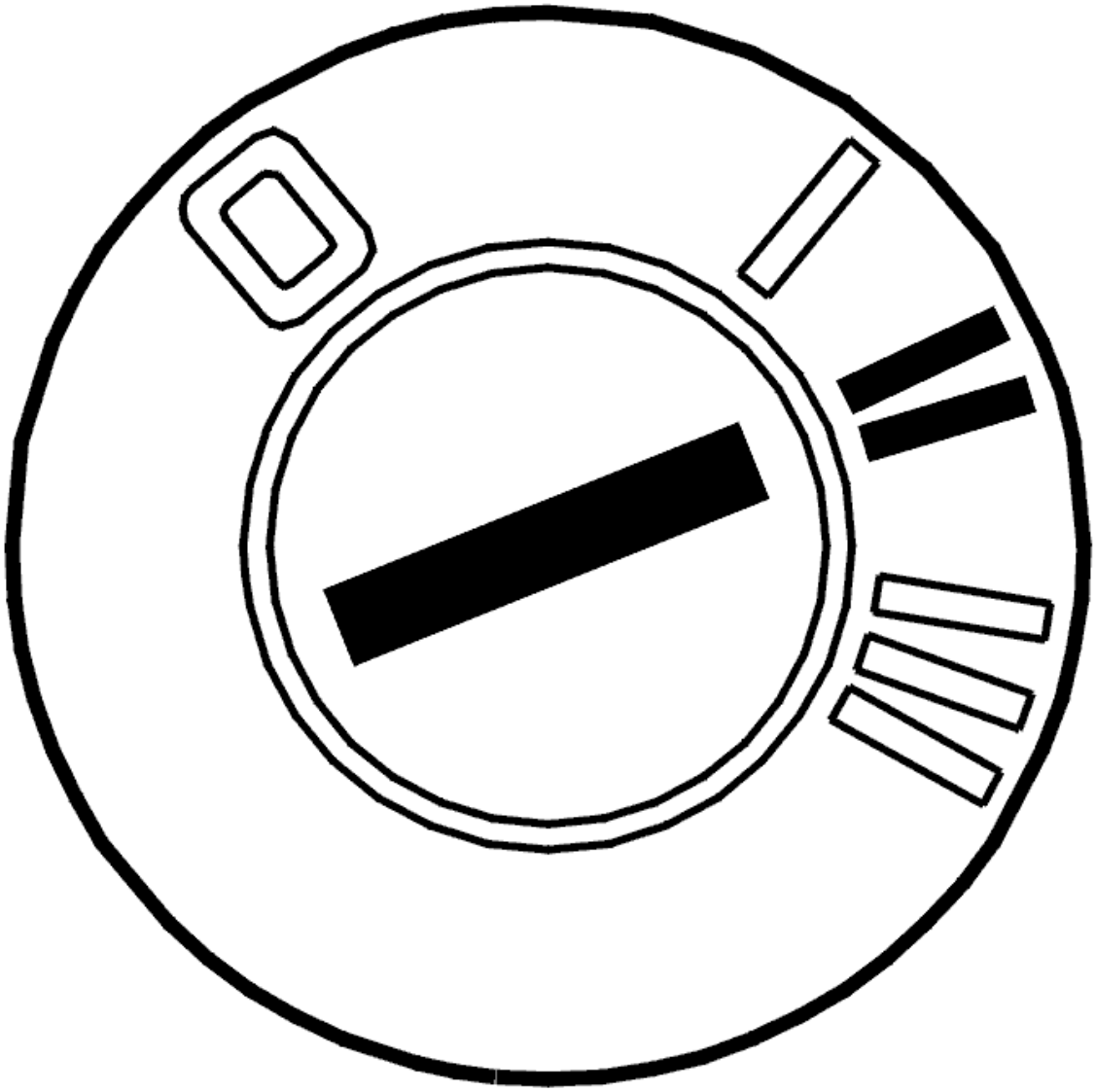

Fig. 173: Identifying Ignition ON
Courtesy of VOLVO CARS CORPORATION

- Ignition off.
- Connect connectors, install components, etc.
- Ignition on. Wait for ten seconds.

  Check that diagnostic trouble code status is showing Intermittent.

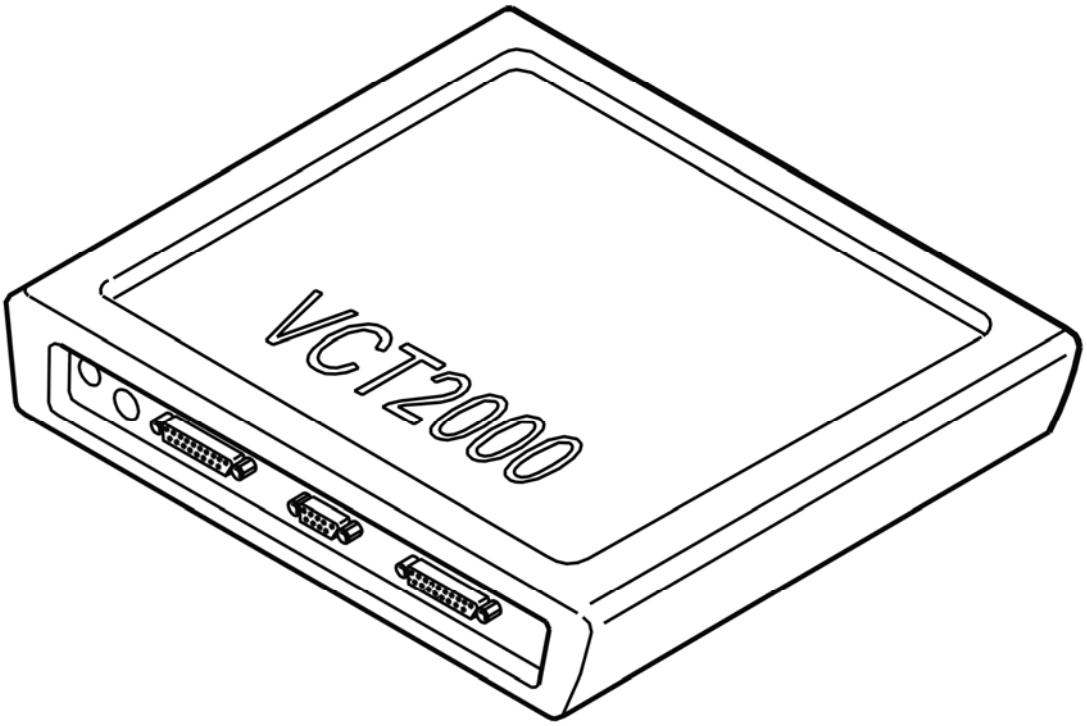

Fig. 174: Identifying VCT2000 Diagnostic Tool Symbol In VIDA
Courtesy of VOLVO CARS CORPORATION

Does the diagnostic trouble code status show Intermittent?

- **YES**

  VERIFIED: Troubleshooting has been completed.

- **NO**

  Refer to **INFORMATION**

CEM-1A61: COMMUNICATION WITH THE TRANSMISSION CONTROL MODULE (TCM). SIGNAL MISSING (4T65 AWD; 2005-2006)

DIAGNOSTIC TROUBLE CODE (DTC) INFORMATION CEM-1A61

Condition

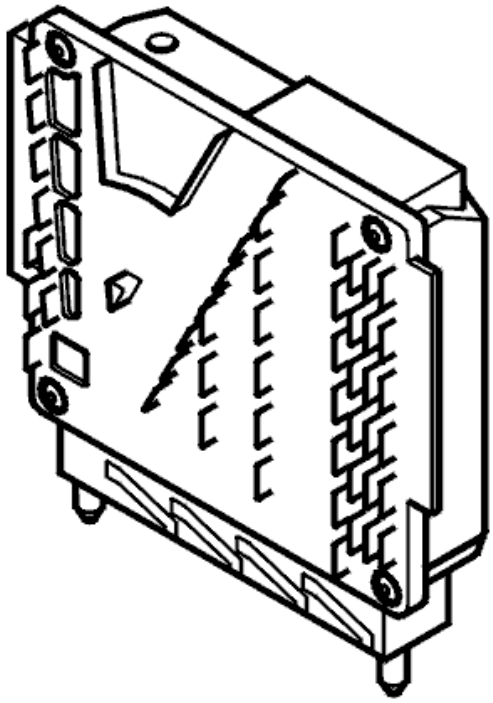

Fig. 175: Identifying Transmission Control Module
Courtesy of VOLVO CARS CORPORATION

The diagnostic trouble code (DTC) is stored if the central electronic module (CEM) registers that communication with the transmission control module (TCM) is not operating.

The diagnostic trouble code (DTC) can be diagnosed when the ignition has been on for more than 10 seconds.

NOTE: **If CEM-1A6X diagnostic trouble codes (DTCs) are stored, the central electronic module (CEM) must not be replaced as the diagnostic trouble code (DTC) indicates a communication fault in the Control area network**

Substitute Value

- None.

Possible Source

- No power supply to the transmission control module (TCM)

- Open-circuit in the ground lead to the transmission control module (TCM)
- Contact resistance in the terminals
- Open-circuit in the wiring for the CAN high speed network to the transmission control module (TCM)
- The transmission control module (TCM) is not intended for this vehicle, for example a used control module with different software/hardware.

HINT: If several diagnostic trouble codes (DTCs) are stored in the central electronic module (CEM) for communication faults with other control modules in the high speed network, this indicates a common fault in the Control area network.

Fault symptom[s]

- No shifting.
- Malfunction indicator lamp (MIL) lit
- Message in the display.

SIGNAL MISSING

CHECKING THE POWER SUPPLY AND GROUND FOR THE TRANSMISSION CONTROL MODULE (TCM)

Check that the fuse for the control module is intact.

Check the power supply and ground for the transmission control module (TCM) as follows.

Remedy as necessary.

Other information:

- see **CHECKING THE POWER SUPPLY AND GROUND TERMINALS**
- see **CHECKING WIRING AND TERMINALS**

Was a fault detected?

- **YES**

  Refer to **CHECKING THE TRANSMISSION CONTROL MODULE (TCM)**

- **NO**

  Refer to **CHECKING THE COMMUNICATION WITH THE TRANSMISSION CONTROL MODULE (TCM)**

CHECKING THE COMMUNICATION WITH THE TRANSMISSION CONTROL MODULE (TCM)

HINT: The CAN communication with the control module is probably OK if the control module ID can be read off. In that case the fault is probably intermittent and will then be more difficult to trace.

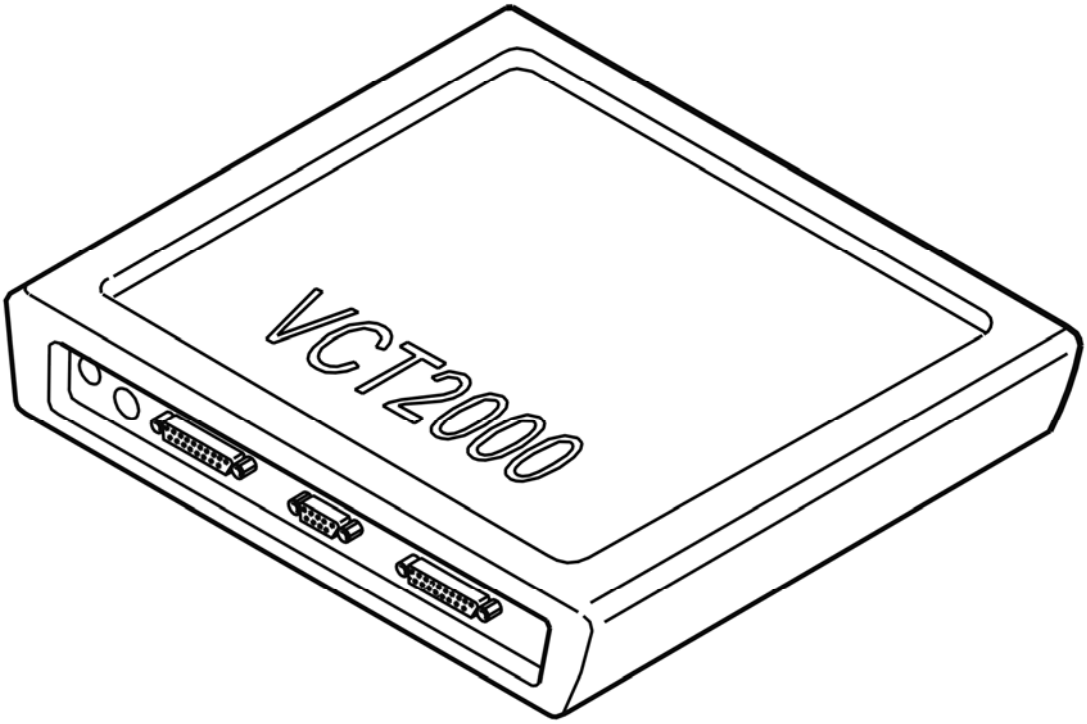

Fig. 176: Identifying VCT2000 Diagnostic Tool Symbol In VIDA
Courtesy of VOLVO CARS CORPORATION

- Try to communicate with the transmission control module (TCM) by reading off the control module ID
- Use the VCT2000 (or appropriate scan tool)

- **Continue**

  Refer to **SIGNAL MISSING**

CHECKING THE TRANSMISSION CONTROL MODULE (TCM)

HINT: After carrying out the repair, check that the fault has been remedied.

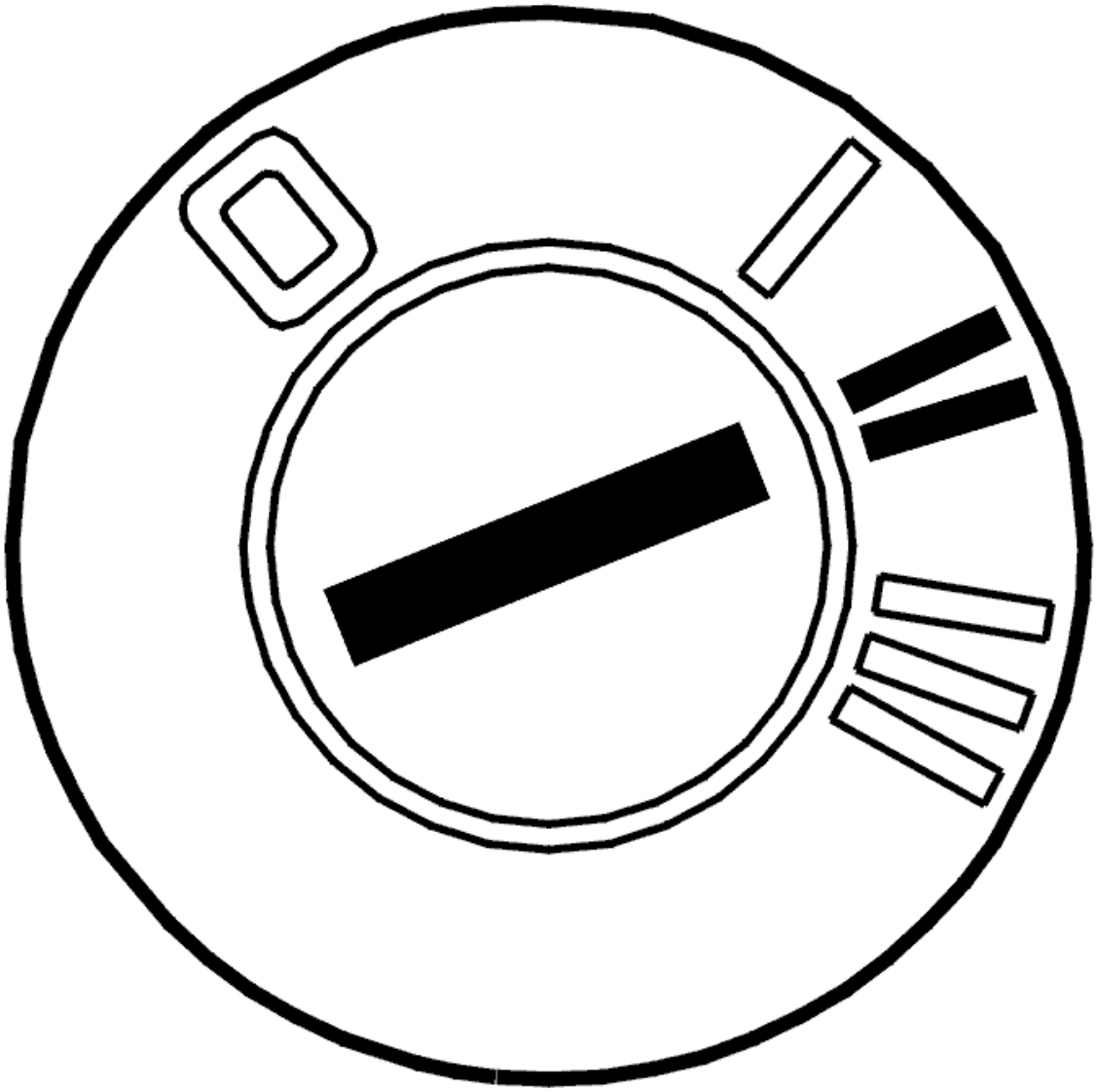

Fig. 177: Identifying Ignition ON
Courtesy of VOLVO CARS CORPORATION

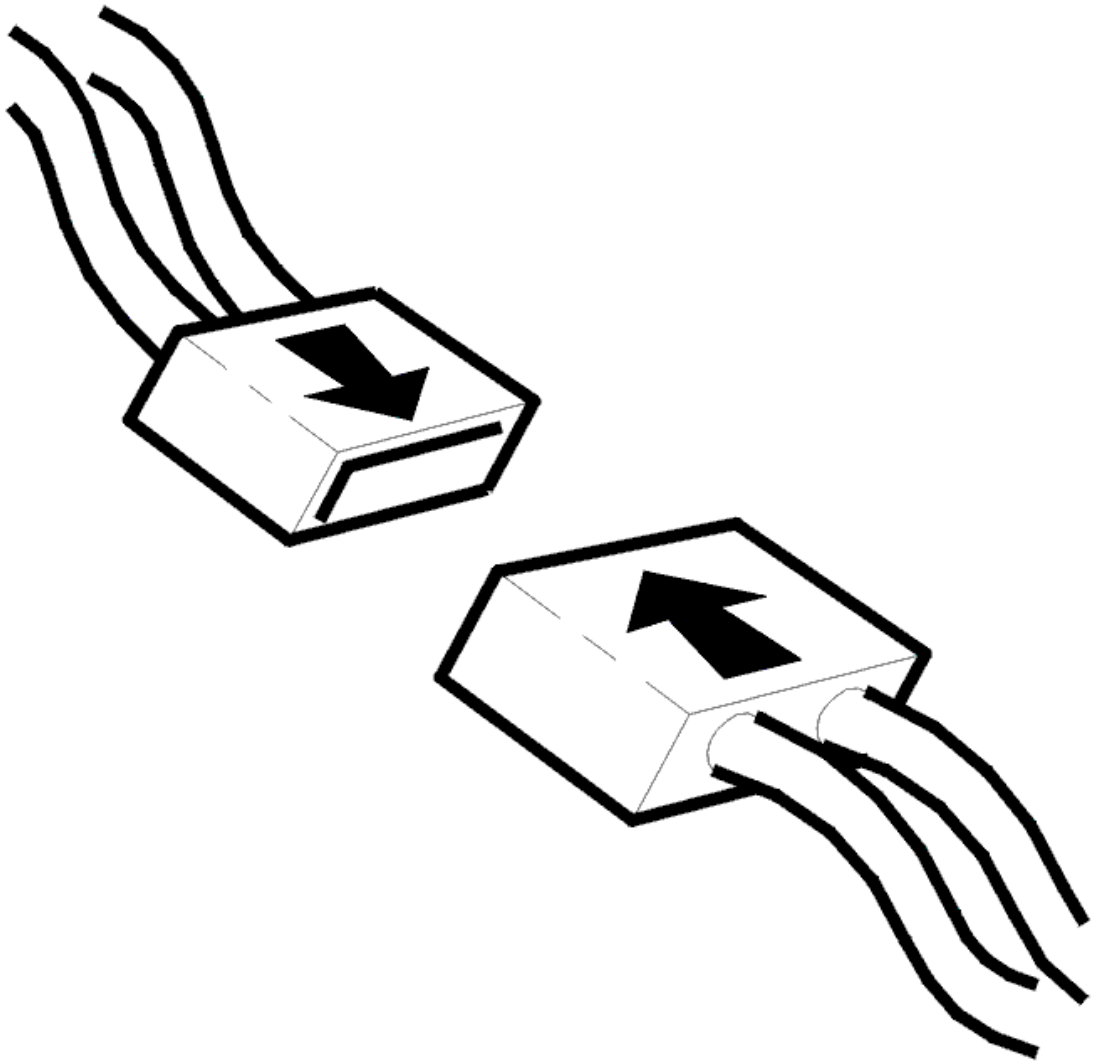

Fig. 178: Connecting Connector
Courtesy of VOLVO CARS CORPORATION

- Ignition off
- Reconnect the connectors. Reinstall the components
- Ignition on for at least 10 seconds.

  Read off the control module ID from the transmission control module (TCM) using the VCT2000 (or appropriate scan tool).

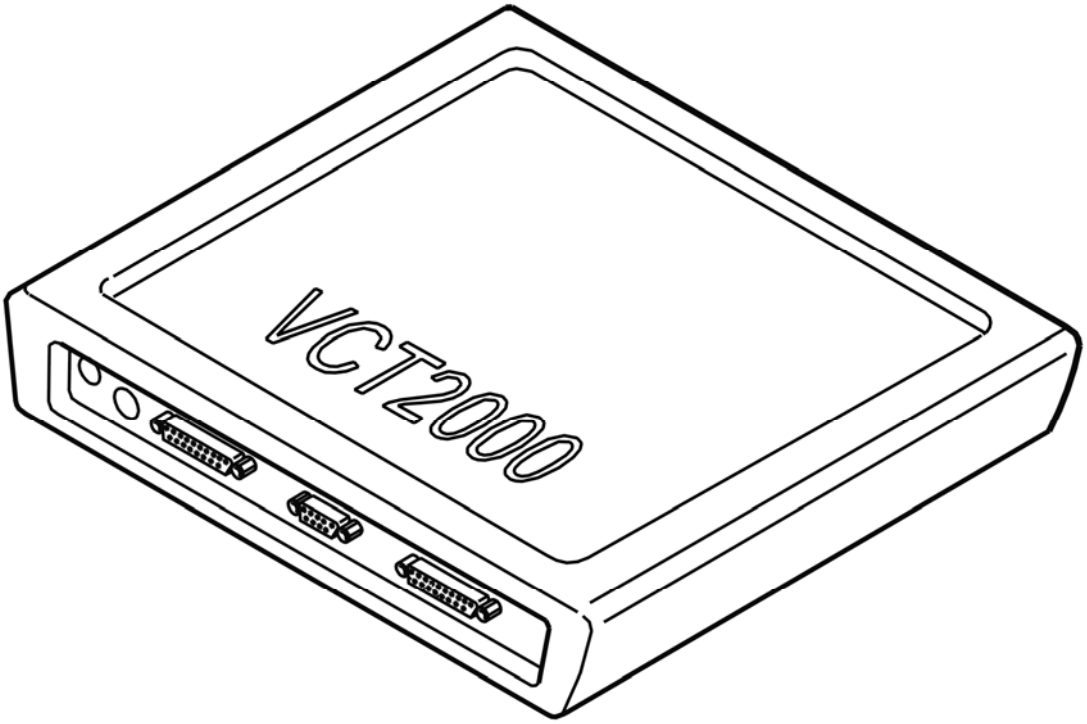

Fig. 179: Identifying VCT2000 Diagnostic Tool Symbol In VIDA
Courtesy of VOLVO CARS CORPORATION

Could the control module ID be read off?

- **YES**

  OKAY: Troubleshooting has been completed.

- **NO**

  Refer to **INFORMATION**

SIGNAL MISSING

GENERAL INFORMATION

NOTE: Illustrations shown are only examples.

HINT: For general information about CAN-troubleshooting, see: GENERAL INFORMATION ABOUT FAULT-TRACING IN THE CAN NETWORK

- **General about CAN-related diagnostic trouble codes:**

CEM-DF01 - DF17 can only be stored in Central electronic module (CEM). These diagnostic trouble codes are stored when an electric fault is detected in CAN-lines. Start with these diagnostic trouble codes first.

CEM-1AXX only stored in Central electronic module (CEM). One diagnostic trouble code for every control module on the CAN-net. These diagnostic trouble codes indicate that Central electronic module (CEM) does not receive any reply from other control modules.

XXX-E000 (HS-CAN)/E001 (LS-CAN) can be stored in all CAN-connected control modules. These diagnostic trouble codes indicate that the control module has detected interference on the CAN-net.

XXX-E003 can be stored in all CAN-connected control modules except in Central electronic module (CEM). The control modules on the CAN-net listen for a message (identity number) that is sent out at regular intervals from Central electronic module (CEM). This diagnostic trouble code indicates that the control module has not received any identity number, or that the expected number is not correct. Interference on the CAN-net can also store this diagnostic trouble code.

NOTE: **In case of CAN-related faults, it is likely that a combination of above diagnostic trouble codes occur.**

NOTE: **After fault with control modules that interfere with communication, other control modules may remain in Limp-Home (that is, they work with reduced functionality) even when the ignition has been turned off and on a few times. For certain faults in the CAN-net where control modules have stopped communicating, it may help to disconnect/reconnect the battery to "restart" the control module/CAN-net.**

If a communication diagnostic trouble code can be read from the control module, the malfunction is probably intermittent.

Intermittent fault in the voltage supply and ground to a control module on the CAN network results in the Central electronic module (CEM) storing a diagnostic trouble code (DTC) for an open-circuit in communication with the control module where the voltage supply does not work. There will probably not be a diagnostic trouble code (DTC) in the control module where the open-circuit in the voltage supply occurred as the control module cannot store a diagnostic trouble code (DTC) when it is not supplied with power.

NOTE: **Central electronic module (CEM) should not be replaced in case of CAN-fault, unless troubleshooting reveals that Central electronic module (CEM) has an internal fault.**

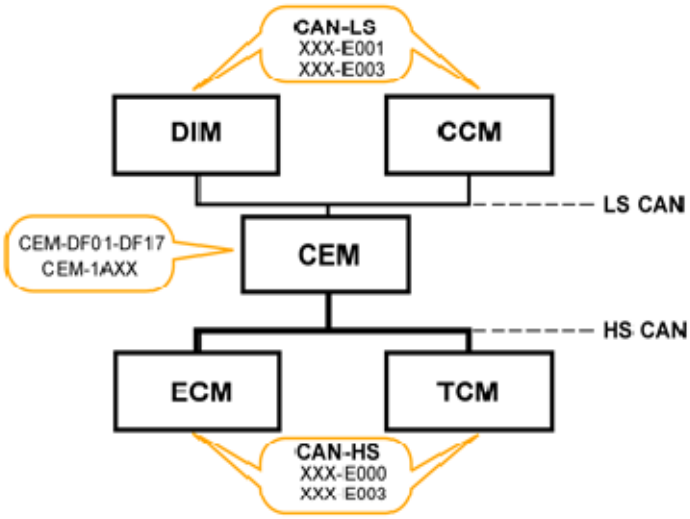

Fig. 180: High-Speed CAN And Low-Speed CAN Communication Diagram
Courtesy of VOLVO CARS CORPORATION

- **Continue**

  Refer to **CHECKING RESISTANCE IN CAN-NET**

CHECKING RESISTANCE IN CAN-NET

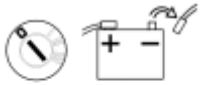

Fig. 181: Ignition Off And Disconnecting Battery Negative Lead
Courtesy of VOLVO CARS CORPORATION

- Ignition off
- Disconnect the battery negative lead
- Connect OBDII-Box **(951 3015)** to the diagnostics socket.

  For general information about CAN-troubleshooting, see: **GENERAL INFORMATION ABOUT FAULT-TRACING IN THE CAN NETWORK**

  Measure resistance between the following connections on the OBDII-box/diagnostics socket.

  - #6 and #14. The resistance should be approx. 55 - 65 ohms.
  - If resistance is approx. 120 ohms, this indicates open circuit in the circuit so that only one terminating resistor (120 ohms) has been measured.
  - If resistance is above 1 kohms this indicates open circuit/high contact resistance somewhere in the circuit.

- If resistance is below 55 ohms this indicates short-circuiting/contact resistance between the CAN-lines somewhere in the circuit.

HINT: For HS-CAN the terminating resistors are located in Brake control module (BCM) and in Engine control module (ECM).

Twist the cable harness and wiggle connectors where they can be accessed along the cable harness during every measurement, and note if the resistance changes to detect intermittent short-circuits or open circuit.

NOTE: **Resistance measurement measures only main lines in the CAN-net (in circuit where both terminating resistors are found), not branches to certain control modules.**

Open circuit on branching without a terminating resistor cannot be detected with this measurement. However, short-circuiting on a branch can be detected. To measure resistance in the CAN-net to control modules located in a branching of their own, the measurement shall be done against the CAN-net at that control module. The values shall be as above.

NOTE: **After fault with control modules that interfere with communication, other control modules may remain in Limp-Home (that is, they work with reduced functionality) even when the ignition has been turned off and on a few times. For certain faults in the CAN-net where control modules have stopped communicating, it may help to disconnect/reconnect the battery to "restart" the control module/CAN-net.**

Remedy wiring as necessary.

Other information

- see **BATTERY, DISCONNECTING**
- see **CHECKING WIRING AND TERMINALS**

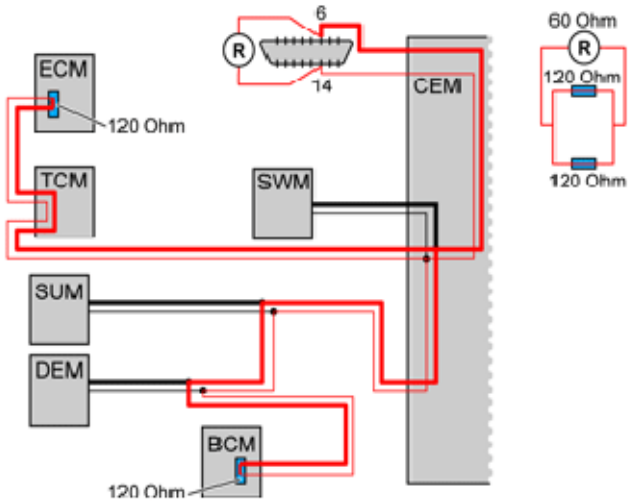

Fig. 182: Checking Resistance In CAN Lines
Courtesy of VOLVO CARS CORPORATION

Was a fault detected?

- **YES**

  Refer to **VERIFICATION**

- **NO**

  Refer to **CHECKING SHORT-CIRCUITING TO GROUND/VOLTAGE IN CAN-NET**

CHECKING THE TRAFFIC LOAD ON THE CAN CABLES

Fig. 183: Identifying Ignition On Position
Courtesy of VOLVO CARS CORPORATION

- Connect the battery
- Ignition on.
- Connect OBDII-Box **(951 3015)** to the diagnostics socket.

  For general information about CAN-troubleshooting, see: **GENERAL INFORMATION ABOUT FAULT-TRACING IN THE CAN NETWORK**

  Faults in the CAN network may be due to a control module sending faulty messages that disrupt normal

communication. When messages are sent incorrectly, this results in a considerable increase in the amount of traffic on the CAN network. Check the load by measuring the average voltage value on the CAN cables in relation to ground.

Measure voltage between the following connections on the OBDII-box/diagnostics socket.

- #6 and #4 (ground). The voltage should be approx:2, 8 - 3, 2 V.
- #14 and #4 (ground). The voltage should be approx:1, 8 - 2, 2 V.
- #6 and #14. The voltage shall be between approx. 0.55-1.4 V. The voltage shall normally be between 0.55 - 0.90 V. A higher voltage may indicate increased traffic on the CAN-net. In case of fault in communication/too high traffic on the CAN-net, the voltage is considerably higher than the above stated values.

NOTE: After fault with control modules that interfere with communication, other control modules may remain in Limp-Home even when the ignition has been turned off and on a few times. For certain faults in the CAN-net where control modules have stopped communicating, it may help to disconnect/reconnect the battery to "restart" the control module/CAN-net.

HINT: DiCE can be used as fault detection tool if fault is suspected on the CAN-net that cannot be detected with normal troubleshooting. Interference, intermittent faults, faulty messages on the CAN-net etc., are examples of such faults. The tool registers fault messages used on the CAN-net. Fault messages may be caused by short intermittent malfunctions on the CAN-net or by a control module sending fault messages. See tools:951 3010 as well as associated TJ 20402.

- Ignition on.
- Connect DiCE to the diagnostics socket.
- Note the blue LED-indicator. The indicator flashes to show detection of fault messages.

NOTE: Certain interference may occur without any real fault

Cable fault

- Shake the cables lightly and pull lightly on the connections during the check to locate any fault. Note the blue LED-indicator.

"Chatting" control modules

- "Chatting" control modules may be difficult to find and troubleshooting may take time. Let the vehicle stand with DiCE connected for an extended time period. Afterwards, activate functions to provoke a malfunction. It may take up to several hours before the fault messages are sent. When the indicator starts to flash, remove the fuse for one control module at a time until the indicator stops flashing. When the indicator stops flashing, restore the fuse for the relevant control module and check that the indicator starts to flash again. Then it is likely that the problem is identified.

Remedy wiring as necessary.

Other information

- see **BATTERY, DISCONNECTING**
- see **CHECKING WIRING AND TERMINALS**

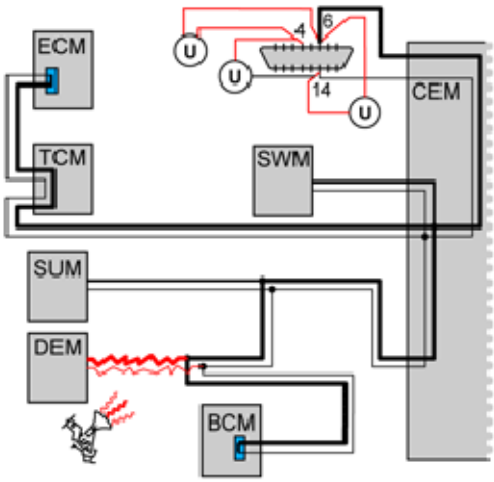

Fig. 184: Checking Traffic Load On CAN Cables
Courtesy of VOLVO CARS CORPORATION

Was a fault detected?

- **YES**

  Refer to **IDENTIFYING A CONTROL MODULE IN THE CAN NETWORK**

- **NO**

  Refer to **CHECKING VOLTAGE-DROP IN CABLE FOR CAN-H AND CAN-L, RESPECTIVELY**

IDENTIFYING A CONTROL MODULE IN THE CAN NETWORK

Fig. 185: Identifying Ignition On Position
Courtesy of VOLVO CARS CORPORATION

For general information about CAN-troubleshooting, see: **GENERAL INFORMATION ABOUT FAULT-TRACING IN THE CAN NETWORK**

HINT: DiCE can be used as fault detection tool if fault is suspected on the CAN-net that cannot be detected with normal troubleshooting. Interference, intermittent faults, faulty messages on the CAN-net (chattering control modules) etc., are examples of such faults. The tool registers fault messages used on the CAN-net. Fault messages may be caused by short intermittent malfunctions on the CAN-net or by a control module sending fault messages. See tools:951 3010 (memory card) as well as associated TJ 20402.

If the load on the CAN network is too high, this may be due to a control module sending faulty messages on the CAN network (known as a disruptive control module). The fault may also be due to an intermittent short-circuit to supply voltage or ground in one of the CAN cables. This results in the control modules on the CAN network starting to send faulty messages. The faults can occur without a diagnostic trouble code (DTC) being stored by the control modules. The voltage can be measured between the CAN cables in order to check the load on the CAN network.

NOTE: **It is not necessarily the control module(s) that stored the diagnostic trouble code (DTC) that is communicating faultily. Faulty messages can come from any control module in the same section of the CAN network. However, faulty communication in one network cannot affect the communication on the other network. In other words, faulty communication on the LS-CAN cannot disrupt communication on the HS-CAN and vice versa.**

- Ignition on.
- Connect OBDII-Box **(951 3015)** to the diagnostics socket.

Check communication/load on CAN-net by measuring voltage between CAN-L and CAN-H. Measure voltage between the following connections on the OBDII-box/diagnostics socket.

- #6 and #14. The average value of the voltage must be approximately 0.6-1.4 V. The voltage shall normally be between 0.55 - 0.90 V. A higher voltage may indicate increased traffic on the CAN-net. In case of fault in communication/too high traffic on the CAN-net, the voltage is considerably higher than the above stated values.

In order to identify which control module has faulty communication, cut the power supply to one control module at a time. Check the voltage in the CAN cables again. The easiest way to cut the power supply is to remove the fuse(s) for the relevant control module. Repeat until the voltage between the CAN wiring drops to the normal level.

NOTE: **When connecting and disconnecting individual control modules, other diagnostic trouble codes (DTCs) may be stored in certain control modules.**

HINT: When the suspected defective control module has been identified, connect and disconnect the supply voltage to the control module a number of times to verify that the malfunction appears and disappears. Switch off the ignition between each check.

NOTE: **Do not cut the power to the central electronic module (CEM) unless it is the last control module left to check.**

A control module that is communicating incorrectly must be replaced. See Repairing and installing/Removing, replacing and installing.

NOTE: **After fault with control modules that interfere with communication, other control modules may remain in Limp-Home (that is, they work with reduced functionality) even when the ignition has been turned off and on a few times. For certain faults in the CAN-net where control modules have stopped communicating, it may help to disconnect/reconnect the battery to "restart" the control module/CAN-net.**

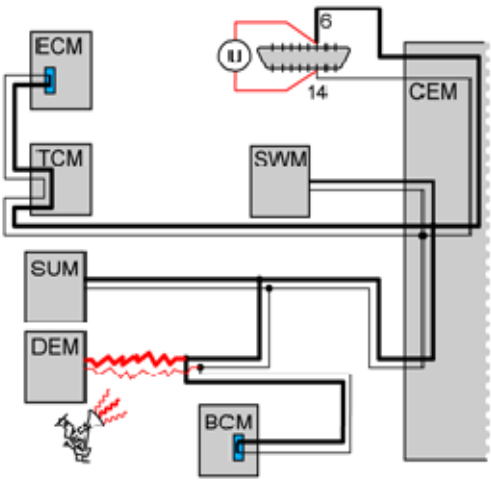

Fig. 186: Checking Communication/Load On CAN-Net Between CAN-L And CAN-H
Courtesy of VOLVO CARS CORPORATION

- **Continue**

  Refer to **VERIFICATION**

VERIFICATION

HINT: After rectifying a fault, a verification should be carried out.

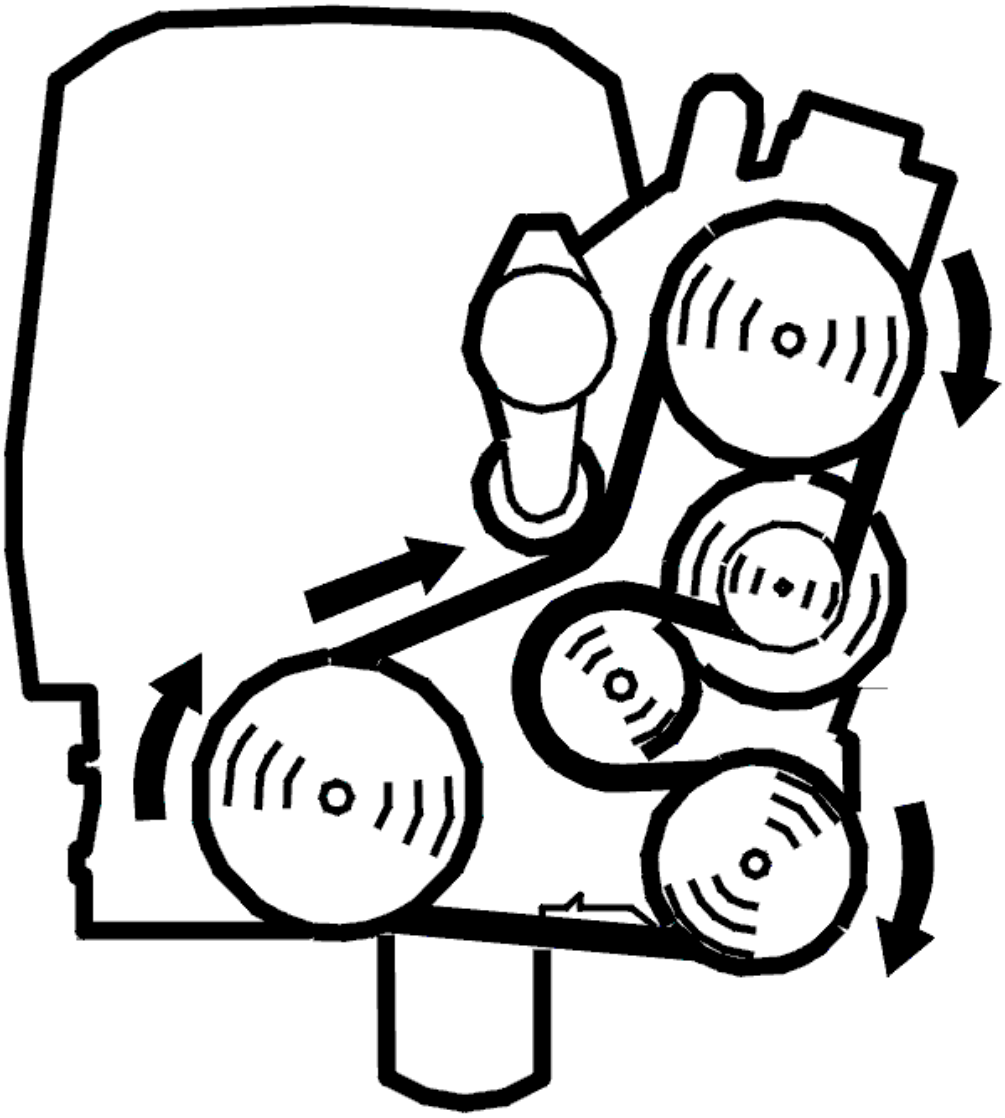

Fig. 187: Belt Routing / Engine Idling - Volvo
Courtesy of VOLVO CARS CORPORATION

Fig. 188: Identifying Ignition On Position
Courtesy of VOLVO CARS CORPORATION

- Reinstall the connectors, components etc.
- Ignition on.

NOTE: **For certain faults in the CAN-net where control modules have stopped communicating, it may help to disconnect/reconnect the battery to "restart" the control module/CAN-net.**

- Erase diagnostic trouble codes (DTCs) in all control modules.
- Ignition off.
- Ignition on.
- Start the vehicle. Allow the vehicle to run for 10 minutes.
- Read out the diagnostic trouble codes in the vehicle via the DIAGNOSTICS tab.

Does the diagnostic trouble code (DTC) for faulty communication return?

- **YES**

  Refer to **INFORMATION**

- **NO**

  OKAY: Troubleshooting has been completed.

CHECKING SHORT-CIRCUITING TO GROUND/VOLTAGE IN CAN-NET

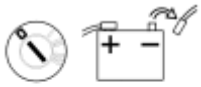

Fig. 189: Ignition Off And Disconnecting Battery Negative Lead
Courtesy of VOLVO CARS CORPORATION

- Ignition off.
- Disconnect the battery negative lead.
- Connect OBDII-Box **(951 3015)** to the diagnostics socket.

  For general information about CAN-troubleshooting, see: **GENERAL INFORMATION ABOUT FAULT-TRACING IN THE CAN NETWORK**

  Checking for a short-circuit to ground

  Measure resistance between the following connections on the OBDII-box/diagnostics socket.

  - #6 and #4 (ground). Measurement is shown in the illustration. The resistance should be above 1 kohms.
  - #14 and #4 (ground). The resistance should be above 1 kohms.

If resistance is below 1 kohms this indicates short-circuiting between the CAN-line and ground.

Checking for a short-circuit to voltage

Measure resistance between the following connections on the OBDII-box/diagnostics socket.

- #6 and #16 (voltage). Measurement is shown in the illustration. The resistance should be above 1 kohms.
- #14 and #16 (voltage). The resistance should be above 1 kohms.

If resistance is below 1 kohms this indicates short-circuiting between the CAN-line and voltage cable.

Twist the cable harness and wiggle connectors where they can be accessed along the cable harness during every measurement, and note if the resistance changes to detect intermittent short-circuits or open circuit.

HINT: Part the CAN-net at suitable points to decide where a short-circuit may be found.

NOTE: After fault with control modules that interfere with communication, other control modules may remain in Limp-Home (that is, they work with reduced functionality) even when the ignition has been turned off and on a few times. For certain faults in the CAN-net where control modules have stopped communicating, it may help to disconnect/reconnect the battery to "restart" the control module/CAN-net.

Remedy wiring as necessary.

Other information

- see **BATTERY, DISCONNECTING**
- see **CHECKING WIRING AND TERMINALS**

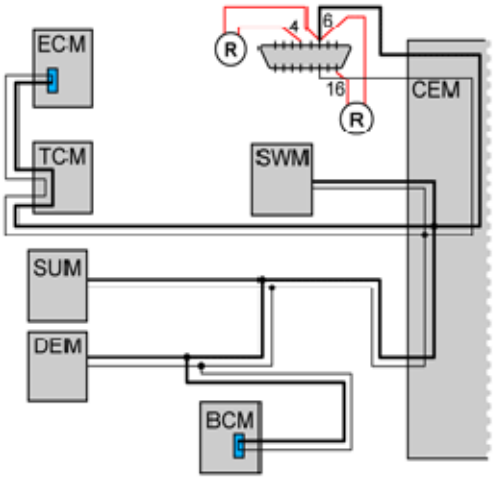

Fig. 190: CAN-Net Communication Diagram
Courtesy of VOLVO CARS CORPORATION

Was a fault detected?

- **YES**

  Refer to **VERIFICATION**

- **NO**

  Refer to **CHECKING THE TRAFFIC LOAD ON THE CAN CABLES**

CHECKING VOLTAGE-DROP IN CABLE FOR CAN-H AND CAN-L, RESPECTIVELY

Fig. 191: Identifying Ignition On Position
Courtesy of VOLVO CARS CORPORATION

- Connect the battery.
- Ignition on.
- Connect OBDII-Box **(951 3015)** to the diagnostics socket.

  For general information about CAN-troubleshooting, see: **GENERAL INFORMATION ABOUT FAULT-TRACING IN THE CAN NETWORK**

  In principle, the voltage measured in each cable in the CAN-net shall be the same at each control module in the network. This means that the voltage-drop in the cable for CAN-H and CAN-L, respectively, between the control modules should be very low. If there is a voltage-difference in the CAN-lines between the diagnostics socket/Central electronic module (CEM) and a control module due to, e. g., contact resistance in a connector or branching, communication may be lost/interfered with.

  Check if there is voltage-drop in the cable for CAN-H and CAN-L between the diagnostics socket/Central electronic module (CEM) and the control module where there is problem with communication.

  Carry out the following:

  Measure voltage between the following connections on the OBDII-box/diagnostics socket.

  - #6 and corresponding connection on relevant control module for CAN-H. The voltage shall be lower than 50 mV.
  - #14 and corresponding connection on relevant control module for CAN-L. The voltage shall be

lower than 50 mV.

If voltage is too high, this indicates too high contact resistance in cable, connector, or branching. Check the circuit between the diagnostics socket and control module in question for contact resistance and oxidation.

NOTE: **After fault with control modules that interfere with communication, other control modules may remain in Limp-Home (that is, they work with reduced functionality) even when the ignition has been turned off and on a few times. For certain faults in the CAN-net where control modules have stopped communicating, it may help to disconnect/reconnect the battery to "restart" the control module/CAN-net.**

Remedy wiring as necessary.

Other information

- see **CHECKING WIRING AND TERMINALS**

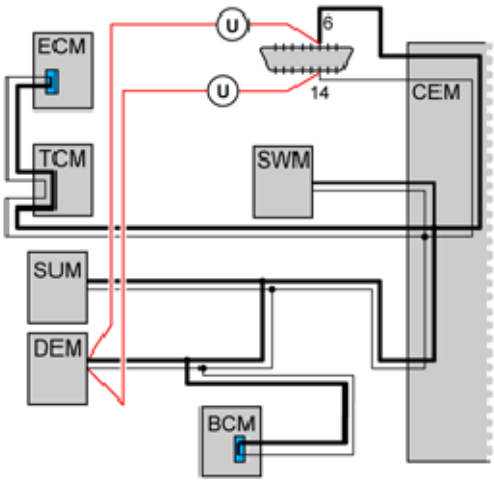

Fig. 192: CAN-Net Communication Diagram
Courtesy of VOLVO CARS CORPORATION

- **Continue**

Refer to **VERIFICATION**

INFORMATION

FAULT-TRACING INFORMATION

The fault should have been detected and remedied. As this is not the case fault-tracing has failed.

Exit fault-tracing for this diagnostic trouble code (DTC) or make another attempt.

CEM-1A61: COMMUNICATION WITH THE TRANSMISSION CONTROL MODULE (TCM). SIGNAL MISSING (AW50/51 AWD; AW55-50/51SN; 2005-2007)

DIAGNOSTIC TROUBLE CODE (DTC) INFORMATION CEM-1A61

see **DIAGNOSTIC TROUBLE CODE (DTC) INFORMATION CEM-1A61**

SIGNAL MISSING

see **SIGNAL MISSING**

CEM-1A61: COMMUNICATION WITH THE TRANSMISSION CONTROL MODULE (TCM). SIGNAL MISSING (TF-80SC; 2011-2012)

DIAGNOSTIC TROUBLE CODE (DTC) INFORMATION CEM-1A61

see **DIAGNOSTIC TROUBLE CODE (DTC) INFORMATION CEM-1A61**

CEM-1A61: COMMUNICATION WITH THE TRANSMISSION CONTROL MODULE (TCM). SIGNAL MISSING (TF-80SC AWD; 2005-2012)

DIAGNOSTIC TROUBLE CODE (DTC) INFORMATION CEM-1A61

see **DIAGNOSTIC TROUBLE CODE (DTC) INFORMATION CEM-1A61**

SIGNAL MISSING

CHECKING THE POWER SUPPLY AND GROUND FOR THE TRANSMISSION CONTROL MODULE (TCM)

Check that the fuse for the control module is intact.

Check the power supply and ground for the transmission control module (TCM) as follows.

Remedy as necessary.

Other information:

- see **CHECKING THE POWER SUPPLY AND GROUND TERMINALS**
- see **CHECKING WIRING AND TERMINALS**

Was a fault detected?

- **YES**

  Refer to **CHECKING THE TRANSMISSION CONTROL MODULE (TCM)**

- **NO**

  Refer to **CHECKING THE COMMUNICATION WITH THE TRANSMISSION CONTROL MODULE (TCM)**

CHECKING THE COMMUNICATION WITH THE TRANSMISSION CONTROL MODULE (TCM)

HINT: The CAN communication with the control module is probably OK if the control module ID can be read off. In that case the fault is probably intermittent and will then be more difficult to trace.

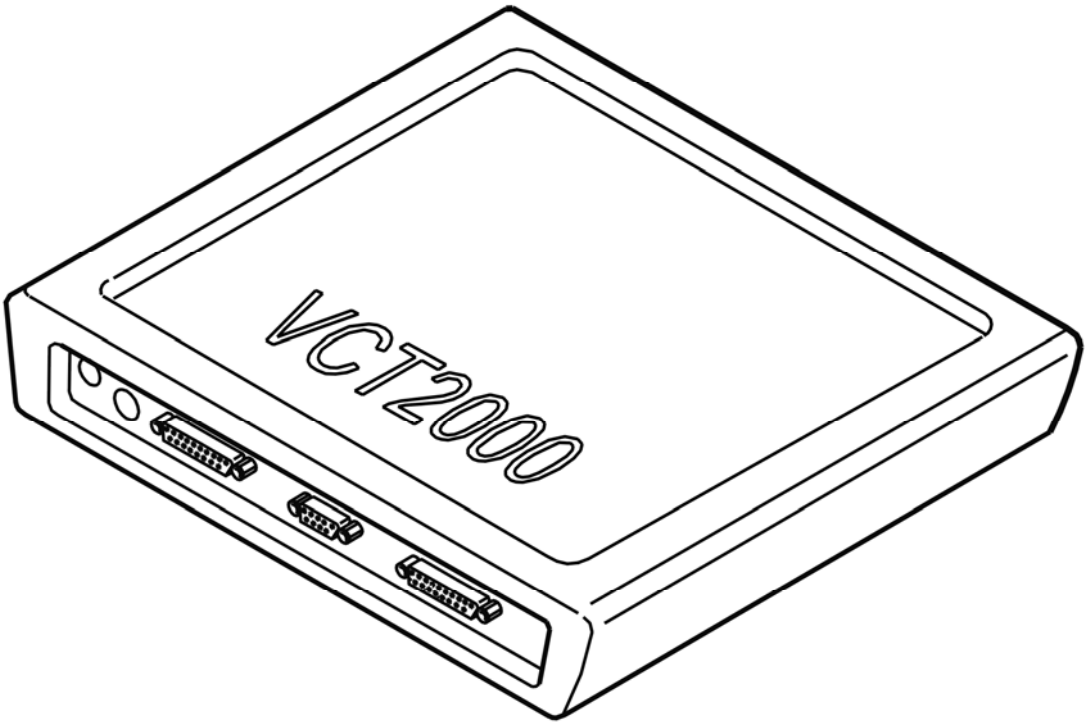

Fig. 193: Identifying VCT2000 Diagnostic Tool Symbol In VIDA
Courtesy of VOLVO CARS CORPORATION

- Try to communicate with the transmission control module (TCM) by reading off the control module ID
- Use the VCT2000 (or appropriate scan tool)

- **Continue**

  Refer to **SIGNAL MISSING**

CHECKING THE TRANSMISSION CONTROL MODULE (TCM)

HINT: After carrying out the repair, check that the fault has been remedied.

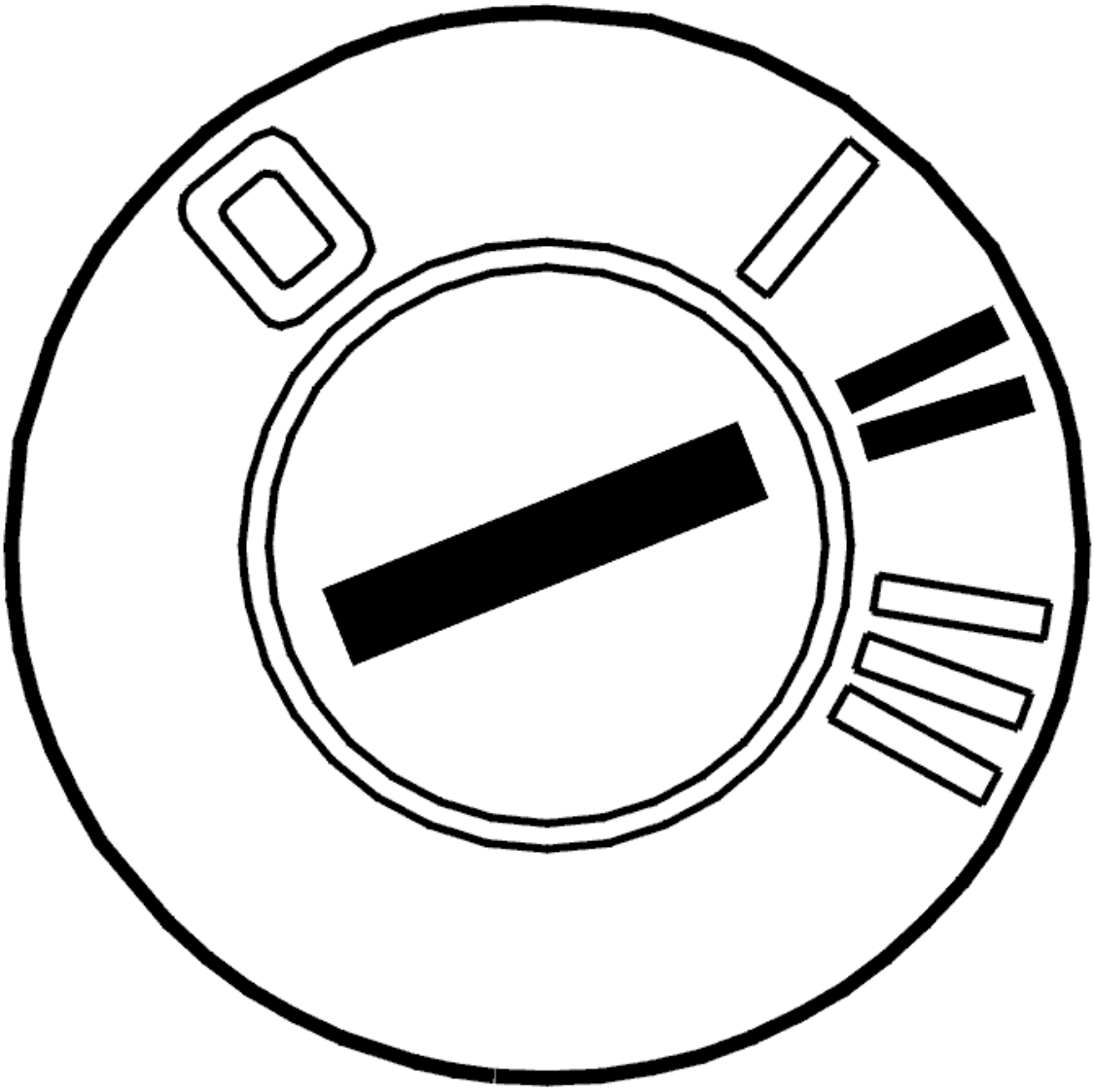

Fig. 194: Identifying Ignition ON
Courtesy of VOLVO CARS CORPORATION

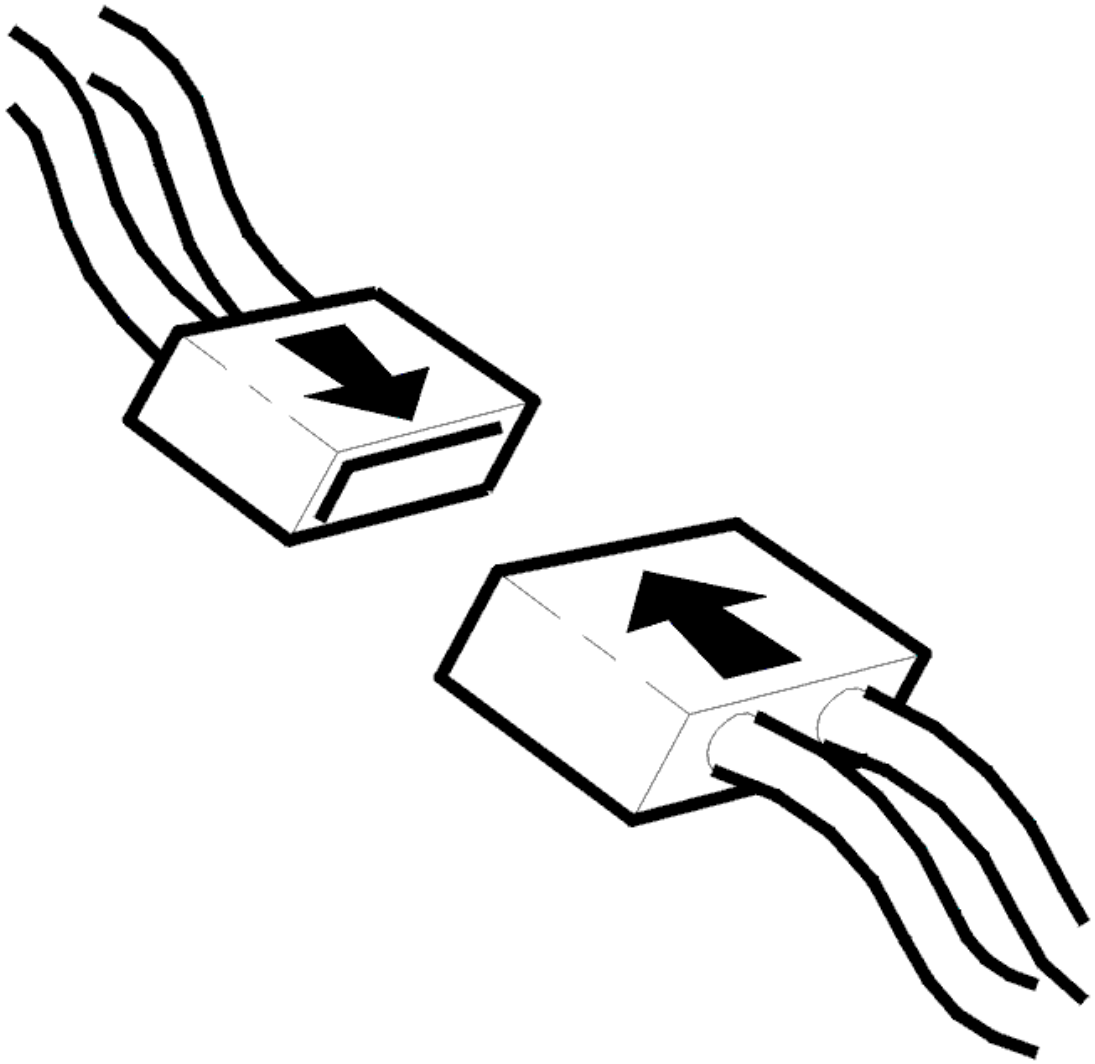

Fig. 195: Connecting Connector
Courtesy of VOLVO CARS CORPORATION

- Ignition off
- Reconnect the connectors. Reinstall the components
- Ignition on for at least 10 seconds.

  Read off the control module ID from the transmission control module (TCM) using the VCT2000 (or appropriate scan tool).

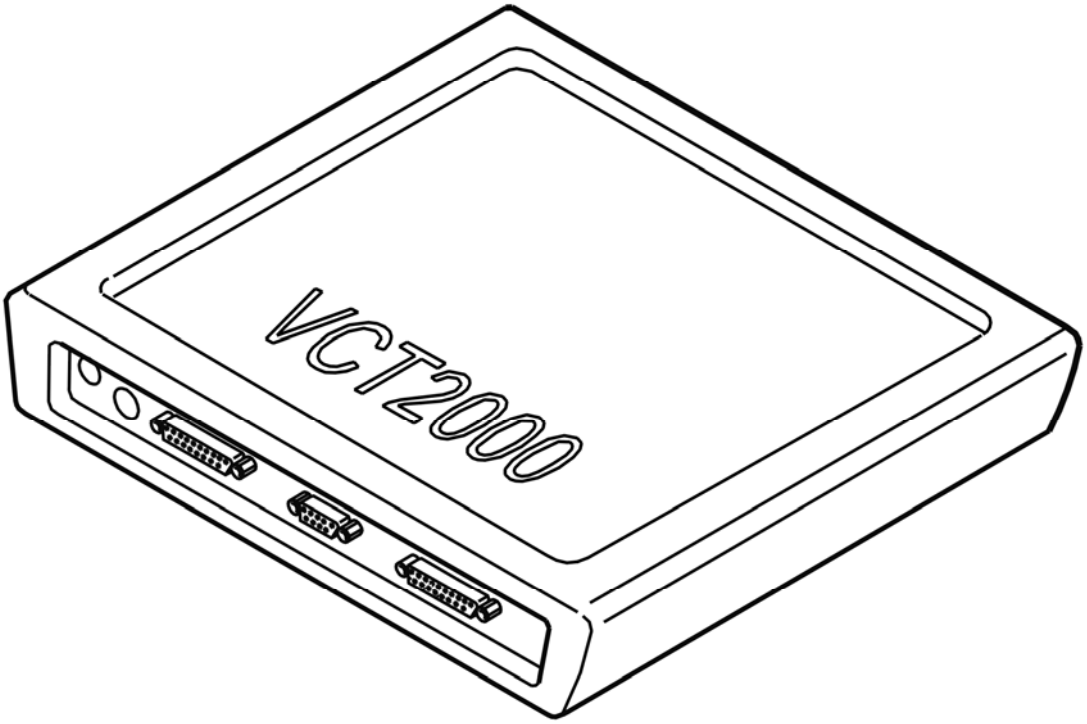

Fig. 196: Identifying VCT2000 Diagnostic Tool Symbol In VIDA
Courtesy of VOLVO CARS CORPORATION

Could the control module ID be read off?

- **YES**

  OKAY: Troubleshooting has been completed.

- **NO**

  Refer to **INFORMATION**

SIGNAL MISSING

GENERAL INFORMATION

NOTE: Illustrations shown are only examples.

HINT: For general information about CAN-troubleshooting, see: GENERAL INFORMATION ABOUT FAULT-TRACING IN THE CAN NETWORK

- **General about CAN-related diagnostic trouble codes:**

CEM-DF01 - DF17 can only be stored in Central electronic module (CEM). These diagnostic trouble codes are stored when an electric fault is detected in CAN-lines. Start with these diagnostic trouble codes first.

CEM-1AXX only stored in Central electronic module (CEM). One diagnostic trouble code for every control module on the CAN-net. These diagnostic trouble codes indicate that Central electronic module (CEM) does not receive any reply from other control modules.

XXX-E000 (HS-CAN)/E001 (LS-CAN) can be stored in all CAN-connected control modules. These diagnostic trouble codes indicate that the control module has detected interference on the CAN-net.

XXX-E003 can be stored in all CAN-connected control modules except in Central electronic module (CEM). The control modules on the CAN-net listen for a message (identity number) that is sent out at regular intervals from Central electronic module (CEM). This diagnostic trouble code indicates that the control module has not received any identity number, or that the expected number is not correct. Interference on the CAN-net can also store this diagnostic trouble code.

NOTE: **In case of CAN-related faults, it is likely that a combination of above diagnostic trouble codes occur.**

NOTE: **After fault with control modules that interfere with communication, other control modules may remain in Limp-Home (that is, they work with reduced functionality) even when the ignition has been turned off and on a few times. For certain faults in the CAN-net where control modules have stopped communicating, it may help to disconnect/reconnect the battery to "restart" the control module/CAN-net.**

If a communication diagnostic trouble code can be read from the control module, the malfunction is probably intermittent.

Intermittent fault in the voltage supply and ground to a control module on the CAN network results in the Central electronic module (CEM) storing a diagnostic trouble code (DTC) for an open-circuit in communication with the control module where the voltage supply does not work. There will probably not be a diagnostic trouble code (DTC) in the control module where the open-circuit in the voltage supply occurred as the control module cannot store a diagnostic trouble code (DTC) when it is not supplied with power.

NOTE: **Central electronic module (CEM) should not be replaced in case of CAN-fault, unless troubleshooting reveals that Central electronic module (CEM) has an internal fault.**

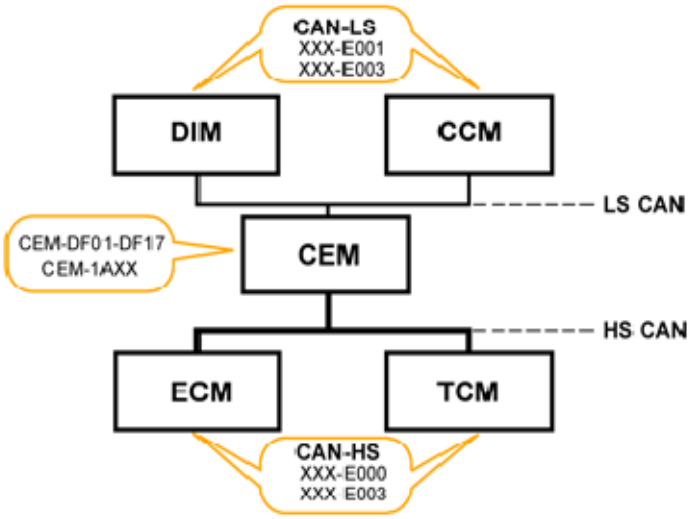

Fig. 197: High-Speed CAN And Low-Speed CAN Communication Diagram
Courtesy of VOLVO CARS CORPORATION

- **Continue**

  Refer to **CHECKING RESISTANCE IN CAN-NET**

CHECKING RESISTANCE IN CAN-NET

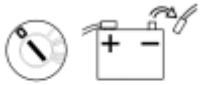

Fig. 198: Ignition Off And Disconnecting Battery Negative Lead
Courtesy of VOLVO CARS CORPORATION

- Ignition off
- Disconnect the battery negative lead
- Connect OBDII-Box **(951 3015)** to the diagnostics socket.

  For general information about CAN-troubleshooting, see: **GENERAL INFORMATION ABOUT FAULT-TRACING IN THE CAN NETWORK**

  Measure resistance between the following connections on the OBDII-box/diagnostics socket.

  - #6 and #14. The resistance should be approx. 55 - 65 ohms.
  - If resistance is approx. 120 ohms, this indicates open circuit in the circuit so that only one terminating resistor (120 ohms) has been measured.
  - If resistance is above 1 kohms this indicates open circuit/high contact resistance somewhere in the circuit.

- If resistance is below 55 ohms this indicates short-circuiting/contact resistance between the CAN-lines somewhere in the circuit.

HINT: For HS-CAN the terminating resistors are located in Brake control module (BCM) and in Engine control module (ECM).

Twist the cable harness and wiggle connectors where they can be accessed along the cable harness during every measurement, and note if the resistance changes to detect intermittent short-circuits or open circuit.

NOTE: **Resistance measurement measures only main lines in the CAN-net (in circuit where both terminating resistors are found), not branches to certain control modules.**

Open circuit on branching without a terminating resistor cannot be detected with this measurement. However, short-circuiting on a branch can be detected. To measure resistance in the CAN-net to control modules located in a branching of their own, the measurement shall be done against the CAN-net at that control module. The values shall be as above.

NOTE: **After fault with control modules that interfere with communication, other control modules may remain in Limp-Home (that is, they work with reduced functionality) even when the ignition has been turned off and on a few times. For certain faults in the CAN-net where control modules have stopped communicating, it may help to disconnect/reconnect the battery to "restart" the control module/CAN-net.**

Remedy wiring as necessary.

Other information

- see **BATTERY, DISCONNECTING**
- see **CHECKING WIRING AND TERMINALS**

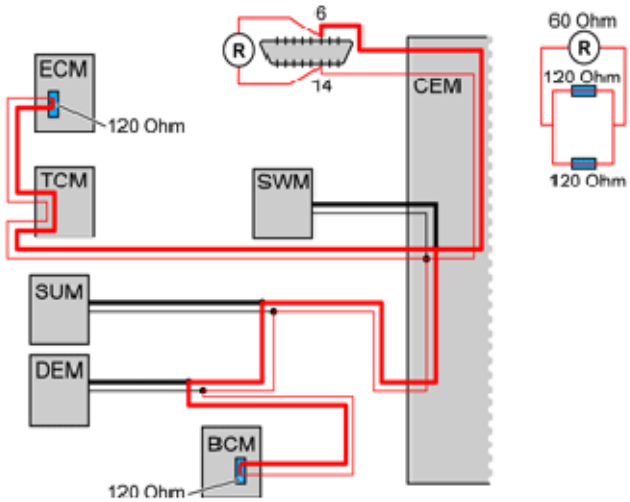

Fig. 199: Checking Resistance In CAN Lines
Courtesy of VOLVO CARS CORPORATION

Was a fault detected?

- **YES**

  Refer to **VERIFICATION**

- **NO**

  Refer to **CHECKING SHORT-CIRCUITING TO GROUND/VOLTAGE IN CAN-NET**

CHECKING THE TRAFFIC LOAD ON THE CAN CABLES

Fig. 200: Identifying Ignition On Position
Courtesy of VOLVO CARS CORPORATION

- Connect the battery
- Ignition on.
- Connect OBDII-Box **(951 3015)** to the diagnostics socket.

  For general information about CAN-troubleshooting, see: **GENERAL INFORMATION ABOUT FAULT-TRACING IN THE CAN NETWORK**

  Faults in the CAN network may be due to a control module sending faulty messages that disrupt normal

communication. When messages are sent incorrectly, this results in a considerable increase in the amount of traffic on the CAN network. Check the load by measuring the average voltage value on the CAN cables in relation to ground.

Measure voltage between the following connections on the OBDII-box/diagnostics socket.

- #6 and #4 (ground). The voltage should be approx:2, 8 - 3, 2 V.
- #14 and #4 (ground). The voltage should be approx:1, 8 - 2, 2 V.
- #6 and #14. The voltage shall be between approx. 0.55-1.4 V. The voltage shall normally be between 0.55 - 0.90 V. A higher voltage may indicate increased traffic on the CAN-net. In case of fault in communication/too high traffic on the CAN-net, the voltage is considerably higher than the above stated values.

NOTE: After fault with control modules that interfere with communication, other control modules may remain in Limp-Home even when the ignition has been turned off and on a few times. For certain faults in the CAN-net where control modules have stopped communicating, it may help to disconnect/reconnect the battery to "restart" the control module/CAN-net.

HINT: DiCE can be used as fault detection tool if fault is suspected on the CAN-net that cannot be detected with normal troubleshooting. Interference, intermittent faults, faulty messages on the CAN-net etc., are examples of such faults. The tool registers fault messages used on the CAN-net. Fault messages may be caused by short intermittent malfunctions on the CAN-net or by a control module sending fault messages. See tools:951 3010 as well as associated TJ 20402.

- Ignition on.
- Connect DiCE to the diagnostics socket.
- Note the blue LED-indicator. The indicator flashes to show detection of fault messages.

NOTE: Certain interference may occur without any real fault

Cable fault

- Shake the cables lightly and pull lightly on the connections during the check to locate any fault. Note the blue LED-indicator.

"Chatting" control modules

- "Chatting" control modules may be difficult to find and troubleshooting may take time. Let the vehicle stand with DiCE connected for an extended time period. Afterwards, activate functions to provoke a malfunction. It may take up to several hours before the fault messages are sent. When the indicator starts to flash, remove the fuse for one control module at a time until the indicator stops flashing. When the indicator stops flashing, restore the fuse for the relevant control module and check that the indicator starts to flash again. Then it is likely that the problem is identified.

Remedy wiring as necessary.

Other information

- see **BATTERY, DISCONNECTING**
- see **CHECKING WIRING AND TERMINALS**

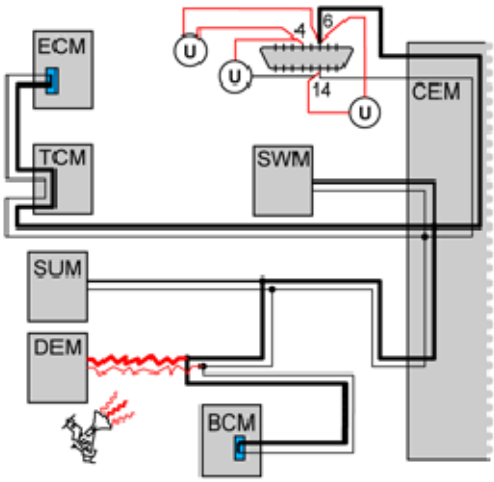

Fig. 201: Checking Traffic Load On CAN Cables
Courtesy of VOLVO CARS CORPORATION

Was a fault detected?

- **YES**

  Refer to **IDENTIFYING A CONTROL MODULE IN THE CAN NETWORK**

- **NO**

  Refer to **CHECKING VOLTAGE-DROP IN CABLE FOR CAN-H AND CAN-L, RESPECTIVELY**

IDENTIFYING A CONTROL MODULE IN THE CAN NETWORK

Fig. 202: Identifying Ignition On Position
Courtesy of VOLVO CARS CORPORATION

For general information about CAN-troubleshooting, see: **GENERAL INFORMATION ABOUT FAULT-TRACING IN THE CAN NETWORK**

HINT: DiCE can be used as fault detection tool if fault is suspected on the CAN-net that cannot be detected with normal troubleshooting. Interference, intermittent faults, faulty messages on the CAN-net (chattering control modules) etc., are examples of such faults. The tool registers fault messages used on the CAN-net. Fault messages may be caused by short intermittent malfunctions on the CAN-net or by a control module sending fault messages. See tools:951 3010 (memory card) as well as associated TJ 20402.

If the load on the CAN network is too high, this may be due to a control module sending faulty messages on the CAN network (known as a disruptive control module). The fault may also be due to an intermittent short-circuit to supply voltage or ground in one of the CAN cables. This results in the control modules on the CAN network starting to send faulty messages. The faults can occur without a diagnostic trouble code (DTC) being stored by the control modules. The voltage can be measured between the CAN cables in order to check the load on the CAN network.

NOTE: **It is not necessarily the control module(s) that stored the diagnostic trouble code (DTC) that is communicating faultily. Faulty messages can come from any control module in the same section of the CAN network. However, faulty communication in one network cannot affect the communication on the other network. In other words, faulty communication on the LS-CAN cannot disrupt communication on the HS-CAN and vice versa.**

- Ignition on.
- Connect OBDII-Box **(951 3015)** to the diagnostics socket.

Check communication/load on CAN-net by measuring voltage between CAN-L and CAN-H. Measure voltage between the following connections on the OBDII-box/diagnostics socket.

- #6 and #14. The average value of the voltage must be approximately 0.6-1.4 V. The voltage shall normally be between 0.55 - 0.90 V. A higher voltage may indicate increased traffic on the CAN-net. In case of fault in communication/too high traffic on the CAN-net, the voltage is considerably higher than the above stated values.

In order to identify which control module has faulty communication, cut the power supply to one control module at a time. Check the voltage in the CAN cables again. The easiest way to cut the power supply is to remove the fuse(s) for the relevant control module. Repeat until the voltage between the CAN wiring drops to the normal level.

NOTE: **When connecting and disconnecting individual control modules, other diagnostic trouble codes (DTCs) may be stored in certain control modules.**

HINT: When the suspected defective control module has been identified, connect and disconnect the supply voltage to the control module a number of times to verify that the malfunction appears and disappears. Switch off the ignition between each check.

NOTE: **Do not cut the power to the central electronic module (CEM) unless it is the last control module left to check.**

A control module that is communicating incorrectly must be replaced. See Repairing and installing/Removing, replacing and installing.

NOTE: **After fault with control modules that interfere with communication, other control modules may remain in Limp-Home (that is, they work with reduced functionality) even when the ignition has been turned off and on a few times. For certain faults in the CAN-net where control modules have stopped communicating, it may help to disconnect/reconnect the battery to "restart" the control module/CAN-net.**

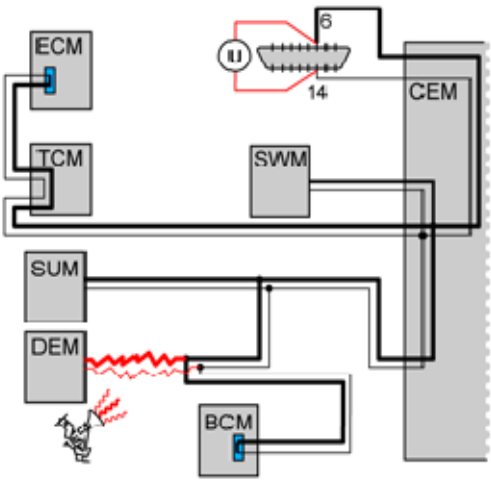

Fig. 203: Checking Communication/Load On CAN-Net Between CAN-L And CAN-H
Courtesy of VOLVO CARS CORPORATION

- **Continue**

  Refer to **VERIFICATION**

VERIFICATION

HINT: After rectifying a fault, a verification should be carried out.

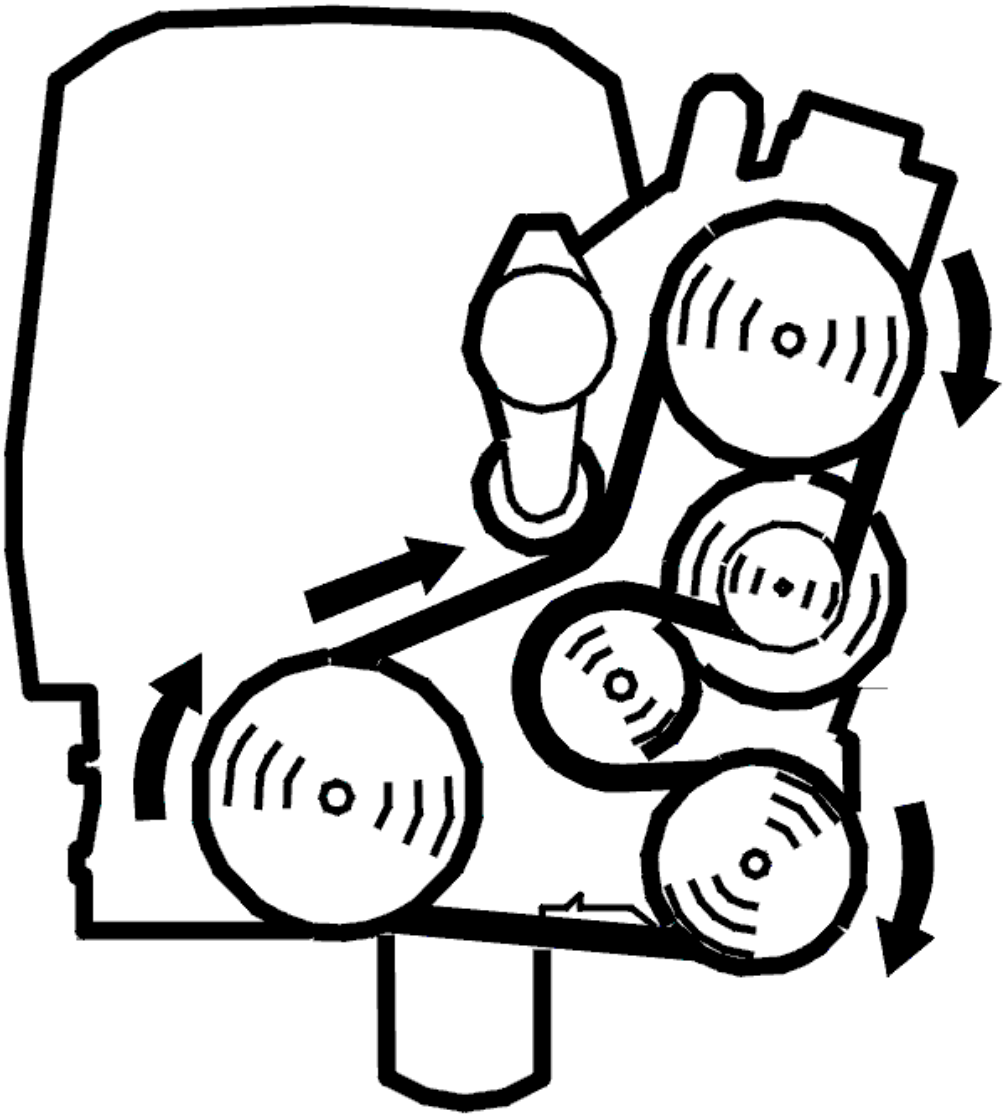

Fig. 204: Belt Routing / Engine Idling - Volvo
Courtesy of VOLVO CARS CORPORATION

Fig. 205: Identifying Ignition On Position
Courtesy of VOLVO CARS CORPORATION

- Reinstall the connectors, components etc.
- Ignition on.

NOTE: **For certain faults in the CAN-net where control modules have stopped communicating, it may help to disconnect/reconnect the battery to "restart" the control module/CAN-net.**

- Erase diagnostic trouble codes (DTCs) in all control modules.
- Ignition off.
- Ignition on.
- Start the vehicle. Allow the vehicle to run for 10 minutes.
- Read out the diagnostic trouble codes in the vehicle via the DIAGNOSTICS tab.

Does the diagnostic trouble code (DTC) for faulty communication return?

- **YES**

  Refer to **INFORMATION**

- **NO**

  OKAY: Troubleshooting has been completed.

CHECKING SHORT-CIRCUITING TO GROUND/VOLTAGE IN CAN-NET

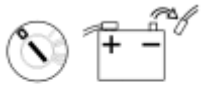

Fig. 206: Ignition Off And Disconnecting Battery Negative Lead
Courtesy of VOLVO CARS CORPORATION

- Ignition off.
- Disconnect the battery negative lead.
- Connect OBDII-Box **(951 3015)** to the diagnostics socket.

  For general information about CAN-troubleshooting, see: **GENERAL INFORMATION ABOUT FAULT-TRACING IN THE CAN NETWORK**

  Checking for a short-circuit to ground

  Measure resistance between the following connections on the OBDII-box/diagnostics socket.

  - #6 and #4 (ground). Measurement is shown in the illustration. The resistance should be above 1 kohms.
  - #14 and #4 (ground). The resistance should be above 1 kohms.

If resistance is below 1 kohms this indicates short-circuiting between the CAN-line and ground.

Checking for a short-circuit to voltage

Measure resistance between the following connections on the OBDII-box/diagnostics socket.

- #6 and #16 (voltage). Measurement is shown in the illustration. The resistance should be above 1 kohms.
- #14 and #16 (voltage). The resistance should be above 1 kohms.

If resistance is below 1 kohms this indicates short-circuiting between the CAN-line and voltage cable.

Twist the cable harness and wiggle connectors where they can be accessed along the cable harness during every measurement, and note if the resistance changes to detect intermittent short-circuits or open circuit.

HINT: Part the CAN-net at suitable points to decide where a short-circuit may be found.

NOTE: After fault with control modules that interfere with communication, other control modules may remain in Limp-Home (that is, they work with reduced functionality) even when the ignition has been turned off and on a few times. For certain faults in the CAN-net where control modules have stopped communicating, it may help to disconnect/reconnect the battery to "restart" the control module/CAN-net.

Remedy wiring as necessary.

Other information

- see **BATTERY, DISCONNECTING**
- see **CHECKING WIRING AND TERMINALS**

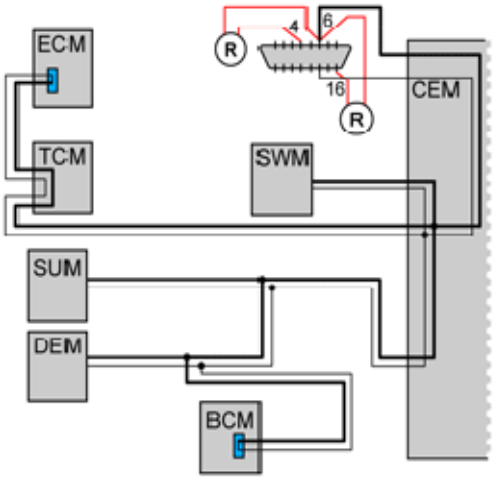

Fig. 207: CAN-Net Communication Diagram
Courtesy of VOLVO CARS CORPORATION

Was a fault detected?

- **YES**

  Refer to **VERIFICATION**

- **NO**

  Refer to **CHECKING THE TRAFFIC LOAD ON THE CAN CABLES**

CHECKING VOLTAGE-DROP IN CABLE FOR CAN-H AND CAN-L, RESPECTIVELY

Fig. 208: Identifying Ignition On Position
Courtesy of VOLVO CARS CORPORATION

- Connect the battery.
- Ignition on.
- Connect OBDII-Box **(951 3015)** to the diagnostics socket.

  For general information about CAN-troubleshooting, see: **GENERAL INFORMATION ABOUT FAULT-TRACING IN THE CAN NETWORK**

  In principle, the voltage measured in each cable in the CAN-net shall be the same at each control module in the network. This means that the voltage-drop in the cable for CAN-H and CAN-L, respectively, between the control modules should be very low. If there is a voltage-difference in the CAN-lines between the diagnostics socket/Central electronic module (CEM) and a control module due to, e. g., contact resistance in a connector or branching, communication may be lost/interfered with.

  Check if there is voltage-drop in the cable for CAN-H and CAN-L between the diagnostics socket/Central electronic module (CEM) and the control module where there is problem with communication.

  Carry out the following:

  Measure voltage between the following connections on the OBDII-box/diagnostics socket.

  - #6 and corresponding connection on relevant control module for CAN-H. The voltage shall be lower than 50 mV.
  - #14 and corresponding connection on relevant control module for CAN-L. The voltage shall be

lower than 50 mV.

If voltage is too high, this indicates too high contact resistance in cable, connector, or branching. Check the circuit between the diagnostics socket and control module in question for contact resistance and oxidation.

NOTE: **After fault with control modules that interfere with communication, other control modules may remain in Limp-Home (that is, they work with reduced functionality) even when the ignition has been turned off and on a few times. For certain faults in the CAN-net where control modules have stopped communicating, it may help to disconnect/reconnect the battery to "restart" the control module/CAN-net.**

Remedy wiring as necessary.

Other information

- see **CHECKING WIRING AND TERMINALS**

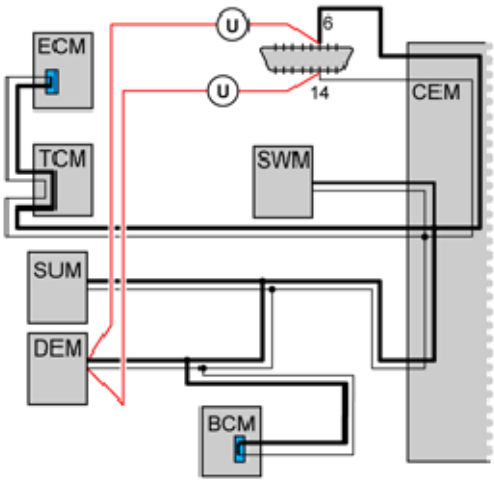

Fig. 209: CAN-Net Communication Diagram
Courtesy of VOLVO CARS CORPORATION

- **Continue**

Refer to **VERIFICATION**

INFORMATION

FAULT-TRACING INFORMATION

The fault should have been detected and remedied. As this is not the case fault-tracing has failed.

Exit fault-tracing for this diagnostic trouble code (DTC) or make another attempt.

CEM-1A62: COMMUNICATION WITH THE ENGINE CONTROL MODULE (ECM). SIGNAL MISSING (2003-2004)

DIAGNOSTIC TROUBLE CODE (DTC) INFORMATION CEM-1A62

Condition

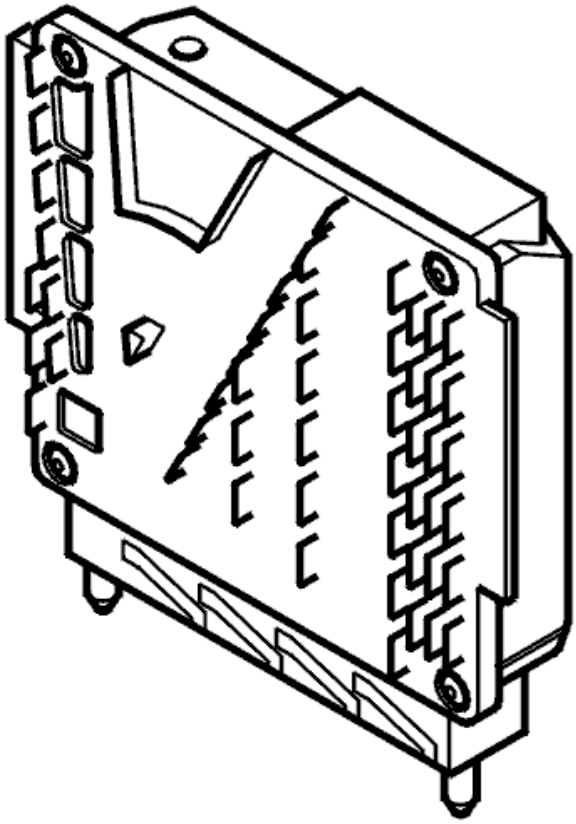

Fig. 210: Engine Control Module
Courtesy of VOLVO CARS CORPORATION

Diagnostic trouble codes (DTCs) are stored if the central electronic module (CEM) registers that communication with the engine control module (ECM) is not operating.

NOTE: **In the event of CEM-1A6x diagnostic trouble codes (DTCs), the central electronic module (CEM) must not be replaced as the diagnostic trouble code (DTC) indicates a communication fault in the Control area network**

Substitute Value

None.

Possible Source

- No power supply to the engine control module (ECM)
- Open-circuit in the ground lead to the engine control module (ECM)
- Contact resistance in the terminals
- Open-circuit in the wiring for the CAN high speed network to the engine control module (ECM)
- - The engine control module (ECM) is not intended for this car (for example a used control module with different software/hardware).

HINT: If several diagnostic trouble codes (DTCs) are stored in the central electronic module (CEM) for communication faults with other control modules in the high speed network, this indicates a common fault in the Control area network.

Fault symptom[s]

- The starter motor turns but the engine does not start
- The engine cuts out
- Engine feels sluggish
- Malfunction indicator lamp (MIL) lit
- Message in the display.

SIGNAL MISSING

CHECKING THE POWER SUPPLY AND GROUND FOR THE ENGINE CONTROL MODULE (ECM)

Checking the power supply

- Check the fuse for the engine control module (ECM) in the fusebox in the engine compartment. If the fuse is blown, check the circuit after the fuse. Check for a short-circuit to ground.
- Check the power supply to the engine control module (ECM). The voltage must be approximately battery voltage.

Checking the ground terminal

- Check the ground leads between the engine control module (ECM) and the ground terminal. Check for an open-circuit
- Check the ground terminal for the engine control module (ECM). Check for contact resistance and oxidation.

Remedy as necessary

Other information

- see **CONNECTING THE BREAKOUT BOX**
- For 6 cylinder engines -2004, see **SIGNAL SPECIFICATION**

- For 6 cylinder engines 2005-, see **SIGNAL SPECIFICATION** .
- Signal specification 5-cyl naturally aspirated engine: **SIGNAL SPECIFICATION**
- For 5 cylinder turbocharged engines -2004, see **SIGNAL DESCRIPTION**
- For 5 cylinder turbocharged engines 2005-, see **SIGNAL SPECIFICATION** .

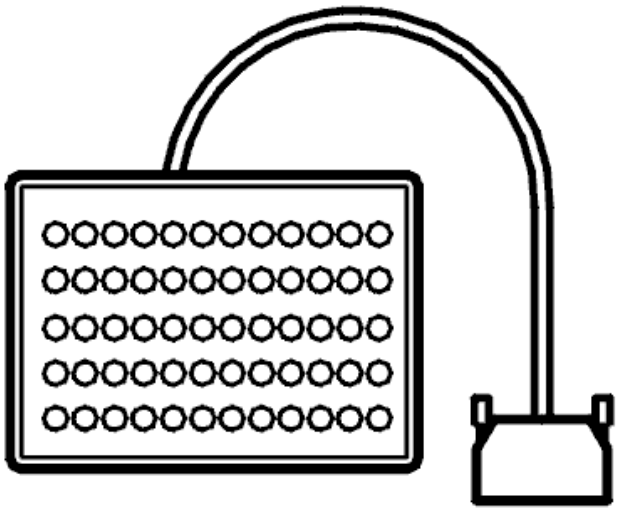

Fig. 211: Breakout Box
Courtesy of VOLVO CARS CORPORATION

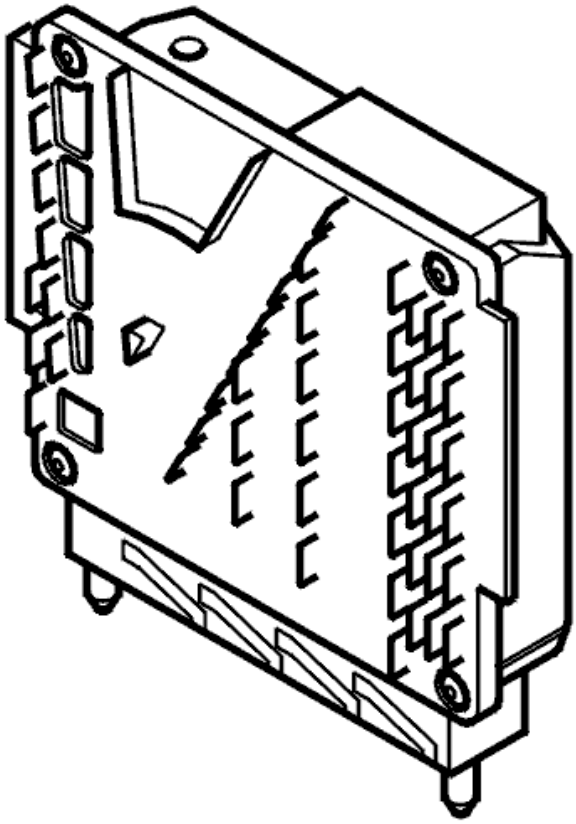

Fig. 212: Engine Control Module
Courtesy of VOLVO CARS CORPORATION

Was a fault detected?

- **YES**

  Refer to **CHECKING THE ENGINE CONTROL MODULE (ECM)**

- **NO**

  Refer to **CHECKING COMMUNICATION WITH THE ENGINE CONTROL MODULE (ECM)**

CHECKING COMMUNICATION WITH THE ENGINE CONTROL MODULE (ECM)

HINT: The controller area network (CAN) communication with the control module is probably OK if the control module ID can be read off. In that case the fault is probably intermittent and will then be more difficult to trace.

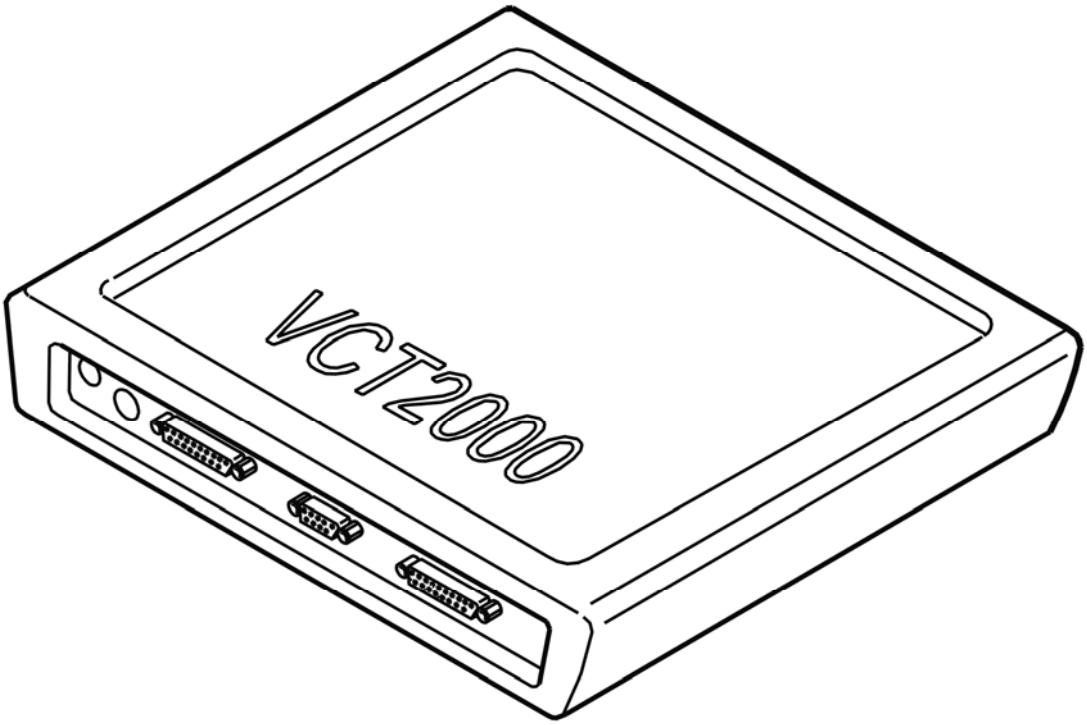

Fig. 213: Identifying VCT2000 Diagnostic Tool Symbol In VIDA
Courtesy of VOLVO CARS CORPORATION

- Try to communicate with the engine control module (ECM) by reading off the control module ID.
- Use the VCT2000 (or appropriate scan tool)

- **Continue**

  Refer to **SIGNAL MISSING**

CHECKING THE ENGINE CONTROL MODULE (ECM)

HINT: After carrying out the repair, check that the fault has been remedied.

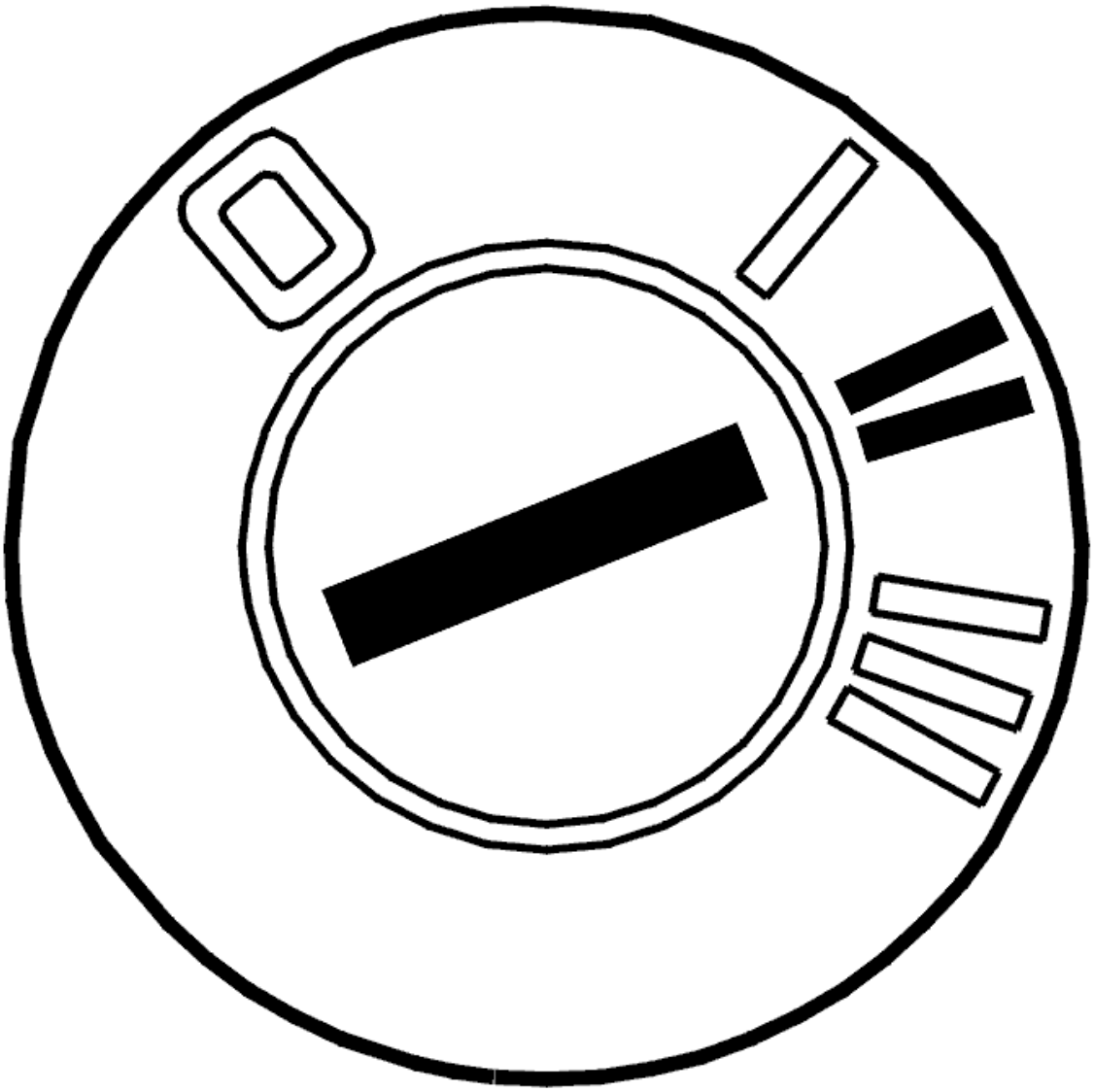

Fig. 214: Identifying Ignition ON
Courtesy of VOLVO CARS CORPORATION

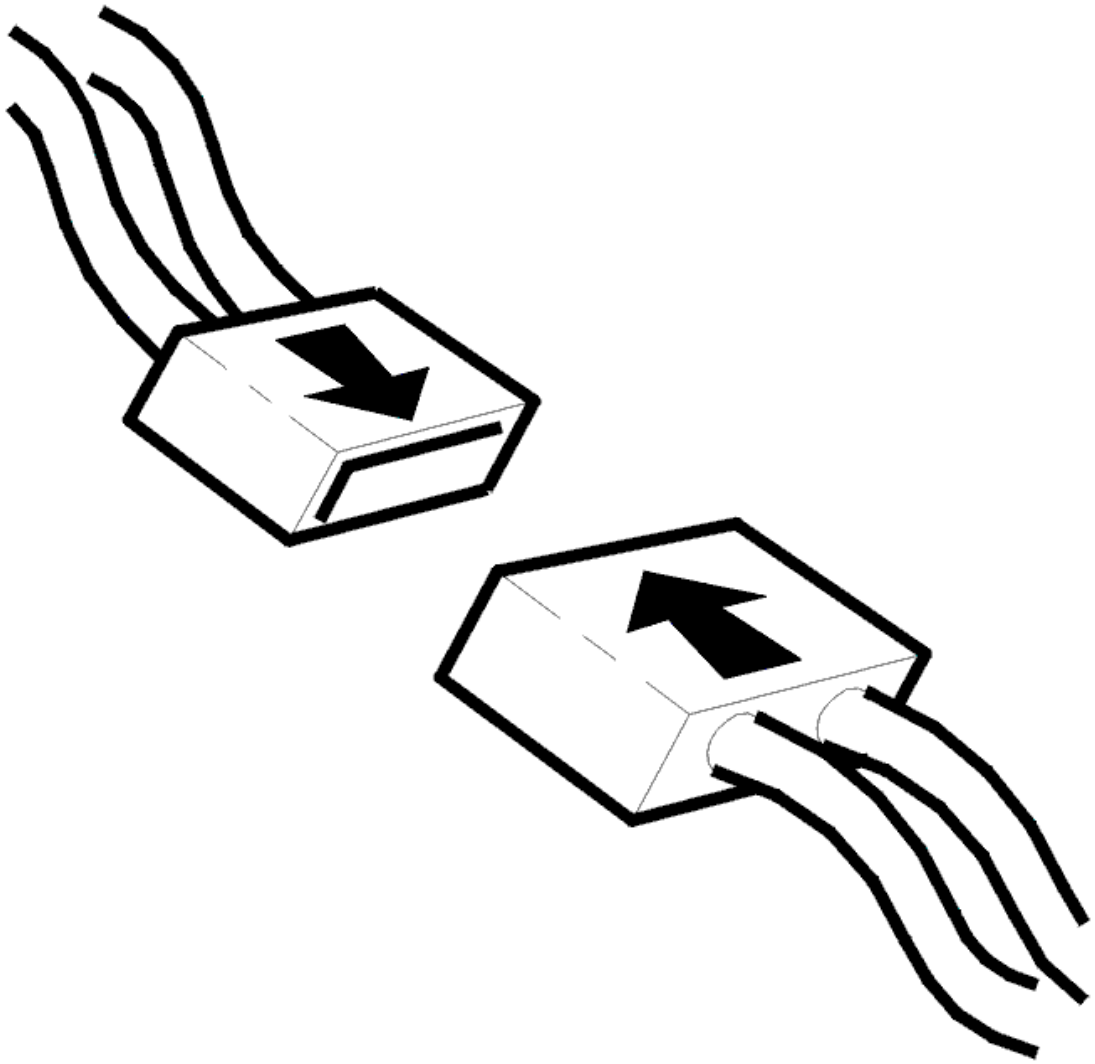

Fig. 215: Connecting Connector
Courtesy of VOLVO CARS CORPORATION

- Ignition off
- Reinstall the connectors, components etc.
- Ignition on for at least 10 seconds.

  Read off the control module ID from the engine control module (ECM) using the VCT2000 (or appropriate scan tool).

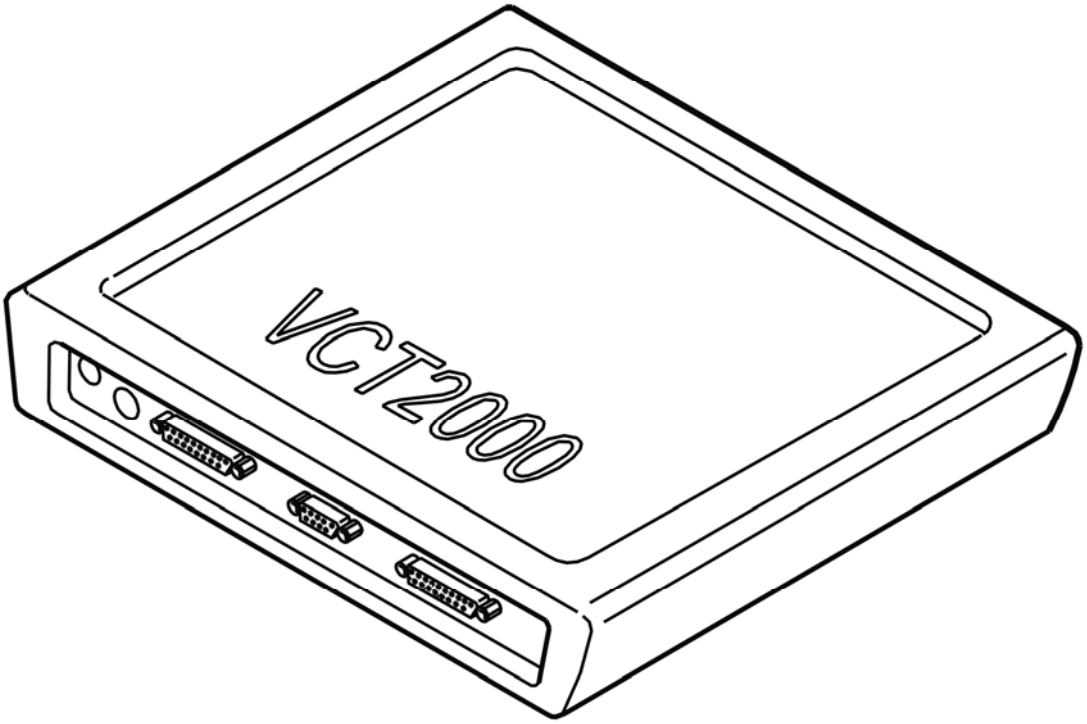

Fig. 216: Identifying VCT2000 Diagnostic Tool Symbol In VIDA
Courtesy of VOLVO CARS CORPORATION

Could the control module ID be read off?

- **YES**

  OKAY: Troubleshooting has been completed.

- **NO**

  Refer to **INFORMATION**

SIGNAL MISSING

GENERAL INFORMATION

HINT: For general information about fault-tracing the control area network (CAN), see the linked document below. See GENERAL INFORMATION ABOUT FAULT-TRACING IN THE CAN NETWORK (2005-2012)

In order to check the control area network (CAN) cables, the resistance in the network must be measured. The resistance between the two CAN cables, with the network connected, must be 60ohms in both the high speed network and the low speed network.

NOTE: **Resistance will only be 60 ohms if the main artery of the CAN network is whole and the network is connected. If the main artery of the CAN network is split somewhere and a reading is taken between the CAN cables, resistance will be 120 ohms.**

If diagnostic trouble codes (DTCs) can be read off from the relevant control module, the fault is probably intermittent. The locations that must be checked in the event of a fault in the low speed network are the junctions behind the central electronic module (CEM) and the audio module (AUM) as well as the cable harness behind the Audio module (AUM).

Intermittent fault in the current supply to the actual control module is indicated by the DTC in the Central electronic module (CEM) (CEM-1A5X or CEM-1A6X). There is probably no diagnostic trouble code (DTC) in the relevant control module as the control module cannot store a diagnostic trouble code (DTC) when it is without power.

- **Continue**

  Refer to **CHECKING THE RESISTANCE OF THE CONTROL AREA NETWORK (CAN) CABLES**

CHECKING THE RESISTANCE OF THE CONTROL AREA NETWORK (CAN) CABLES

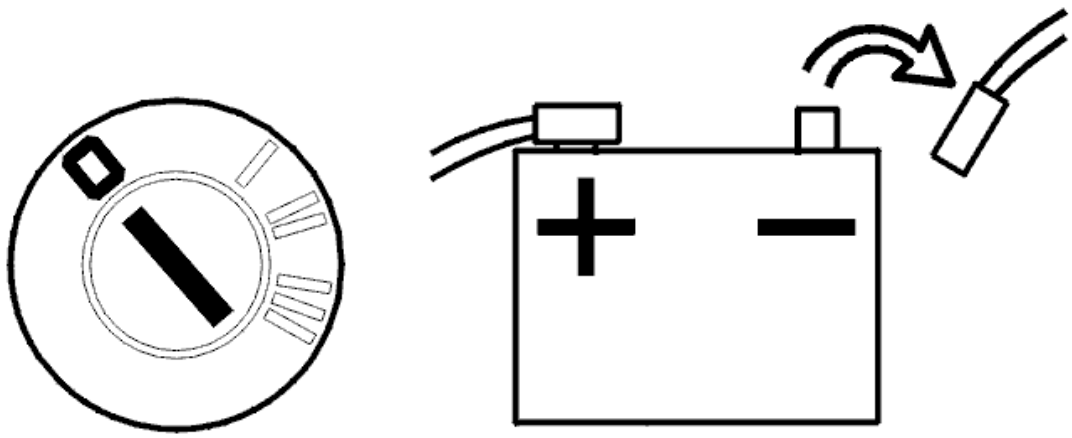

Fig. 217: Identifying Ignition In Off Position And Disconnecting Negative Cable From Battery
Courtesy of VOLVO CARS CORPORATION

- Disconnect the battery negative lead. The network must not be powered when taking resistance readings. Otherwise an incorrect value may be obtained.
- Connect the adapter wiring to the central electronic module (CEM).

  HINT: Where a breakout box cannot be used, take readings from the rear of the affected connectors if possible. This prevents terminal pins and socket housings being damaged.

When taking readings on the low speed network

- When taking readings on the low speed network the adapter wiring should be connected to the Central electronic module (CEM) and readings taken from there. Readings can even be taken in the connector for the Power seat module (PSM). The advantage of the adapter wiring to the Central electronic module (CEM) is that all control module can be connected in the network when taking readings and access can be gained to both the high speed and low speed networks.

  The resistance reading only measures the main arteries in the low speed network, not the junctions that exist for different control modules.

When taking readings on the high speed network

- When taking readings on the high speed network the adapter wiring should be connected to the Engine control module (ECM) and readings taken from there. The Engine control module (ECM) must be connected. This resistance reading only measures the main arteries in the high speed network.

Connect an ohmmeter to the terminals for CAN-L and CAN-H on the relevant network. Turn the contacts and turn the cable harness. Resistance must be approximately 60 ohms.

NOTE: **Resistance will only be 60 ohms if the main artery of the CAN network is whole and the network is connected. If the main artery of the CAN network is split somewhere and a reading is taken between the CAN cables, resistance will be 120 ohms.**

Other information

- see **BATTERY, DISCONNECTING**
- see **CONNECTING THE BREAKOUT BOX**
- see **CHECKING WIRING AND TERMINALS**

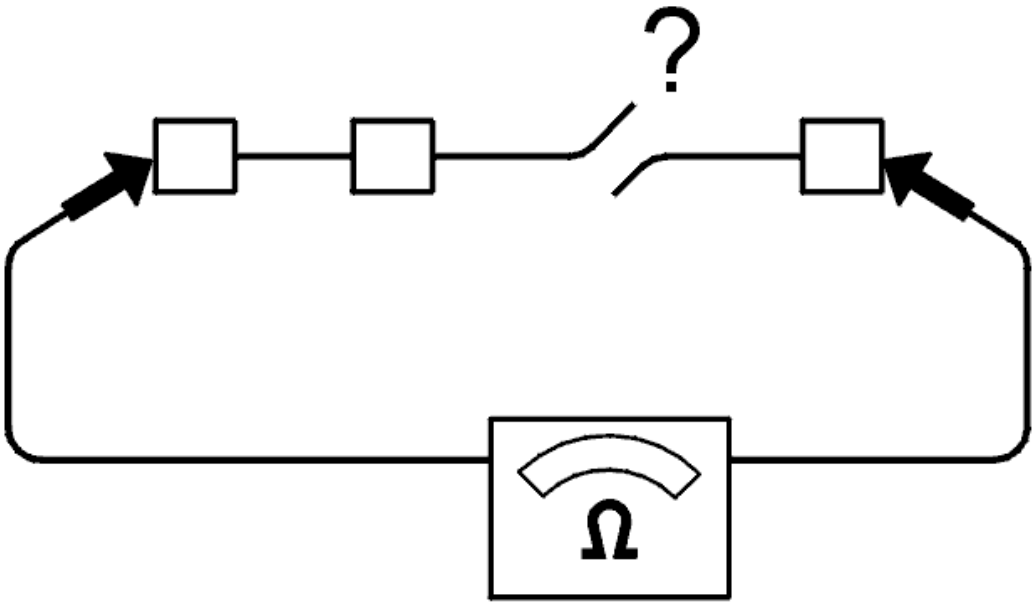

Fig. 218: Checking For Open Circuit
Courtesy of VOLVO CARS CORPORATION

Is the value OK?

- **YES**

  Refer to **CHECKING A SHORT-CIRCUIT IN CAN CABLES**

- **NO**

  Refer to **IDENTIFYING FAULT CAUSES IN THE CAN NETWORK**

CHECKING A SHORT-CIRCUIT IN CAN CABLES

Connect an ohmmeter between respective CAN cable and voltage supply and between the CAN cables and ground. Turn the contacts and turn the cable harness. The resistance must be infinite or very high.

HINT: Readings can be taken from one and the same connector if the CAN wiring, voltage supply and ground is pre-routed. If possible, measure from the rear of the affected connectors in order to minimize any damage and future loose connections. If this is not possible, use the adapter wiring or loose terminal pin for good contact.

Was a fault detected?

- **YES**

  Refer to **IDENTIFYING FAULT CAUSES IN THE CAN NETWORK**

- **NO**

  Refer to **CHECKING THE TRAFFIC LOAD ON THE CAN CABLES**

CHECKING THE TRAFFIC LOAD ON THE CAN CABLES

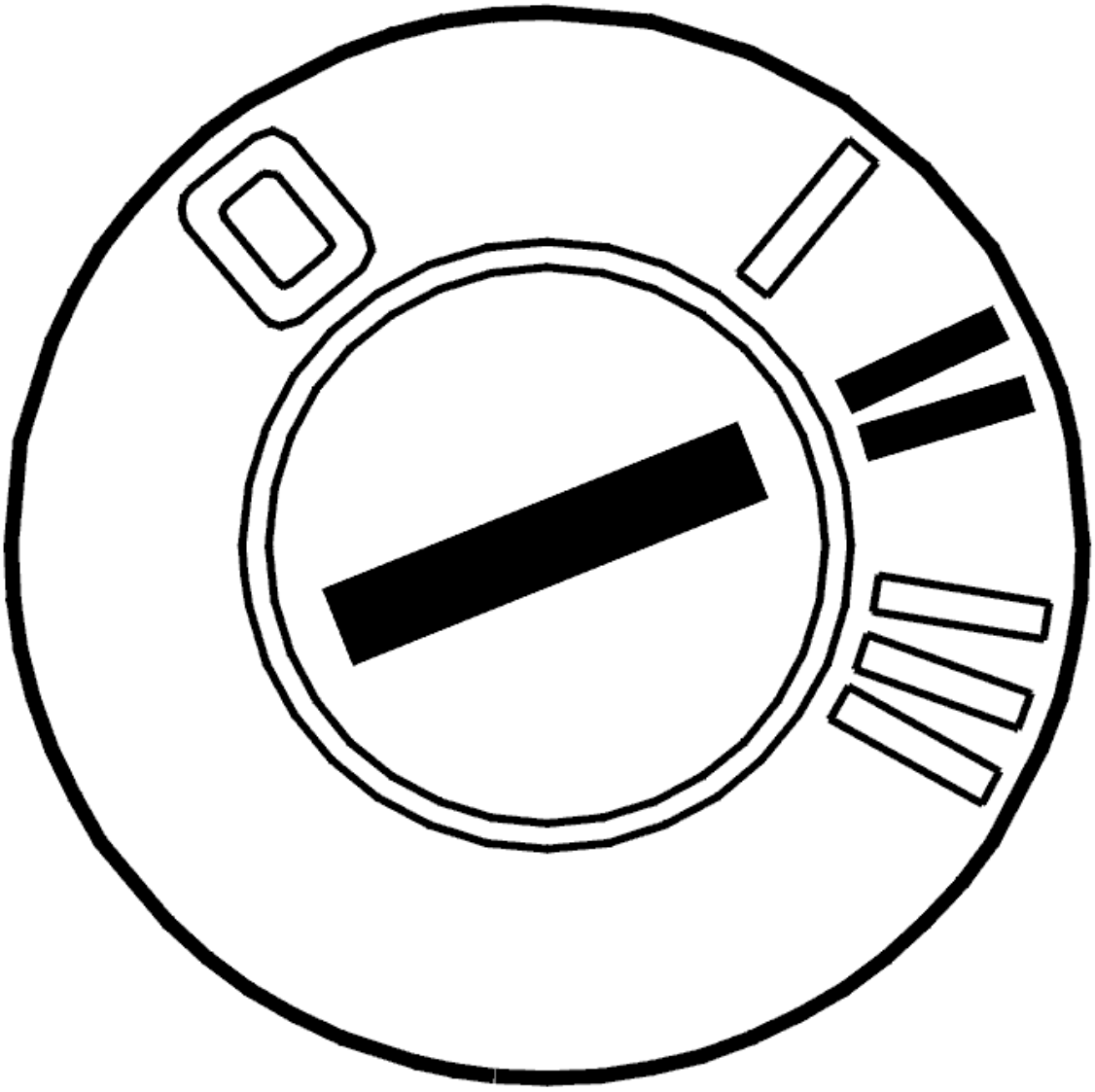

Fig. 219: Identifying Ignition ON
Courtesy of VOLVO CARS CORPORATION

- Connect the battery.
- Ignition on.

Faults in the CAN network may be due to a control module sending faulty messages that disrupt normal communication. When messages are sent incorrectly, this results in a considerable increase in the amount of traffic on the CAN network. The load can be checked by reading the average value of the voltage on the CAN cables in relation to ground.

The following applies for model year -2004:

Connect a voltmeter between CAN-L and ground. The voltage shall be approx. 2.3 V.

Then connect a voltmeter between CAN-H and ground. The voltage shall be approx. 2.8 V.

The following applies for model year 2004-:

Connect a voltmeter between CAN-L and ground. The voltage should be approx: V

Connect a voltmeter between CAN-H and ground. The voltage should be approx: V

NOTE: For vehicles of later model years, normal voltage values lie within a specific interval due to increased traffic between the control modules on the CAN network upon update of the electrical system.

HINT: If possible, measure from the rear of the affected connectors so that they are not damaged.

Other information

- see **BATTERY, DISCONNECTING**

Is the value OK?

- **YES**

  Refer to **INFORMATION**

- **NO**

  Refer to **IDENTIFYING A CONTROL MODULE IN THE CAN NETWORK**

IDENTIFYING FAULT CAUSES IN THE CAN NETWORK

- Disconnect a control module that disconnects the CAN network (a control module that has four terminals to the CAN network).

  HINT: For the low speed network, suitable places for disconnecting the network are at the steering wheel module (SWM), the driver information module (DIM) or the climate control module (CCM).

  In the event of an short-circuit between on of the CAN cables and voltage or ground, the fault can be localized disconnecting a control module that splits the CAN network. Readings can then be taken to

determine on which side the fault is on the disconnected control module.

Connect an ohmmeter between the CAN cable and voltage supply respectively ground. Take readings from both ends of the CAN networks at the network junction. Twist and bend the cable harness to find any intermittent short-circuits. The resistance must be infinite or very high (more than 1 Mohms).

If a fault can be localized in one direction, split the network at a point further on in the CAN network in the direction that the fault was discovered and take a new reading. Try to locate the fault in this way.

HINT: A short-circuit between the CAN cables and supply voltage or ground may be in either the wiring or in a control module.

Remedy the cables as necessary. If a fault is found on one control module, replace the control module.

- **Continue**

  Refer to **VERIFICATION**

IDENTIFYING A CONTROL MODULE IN THE CAN NETWORK

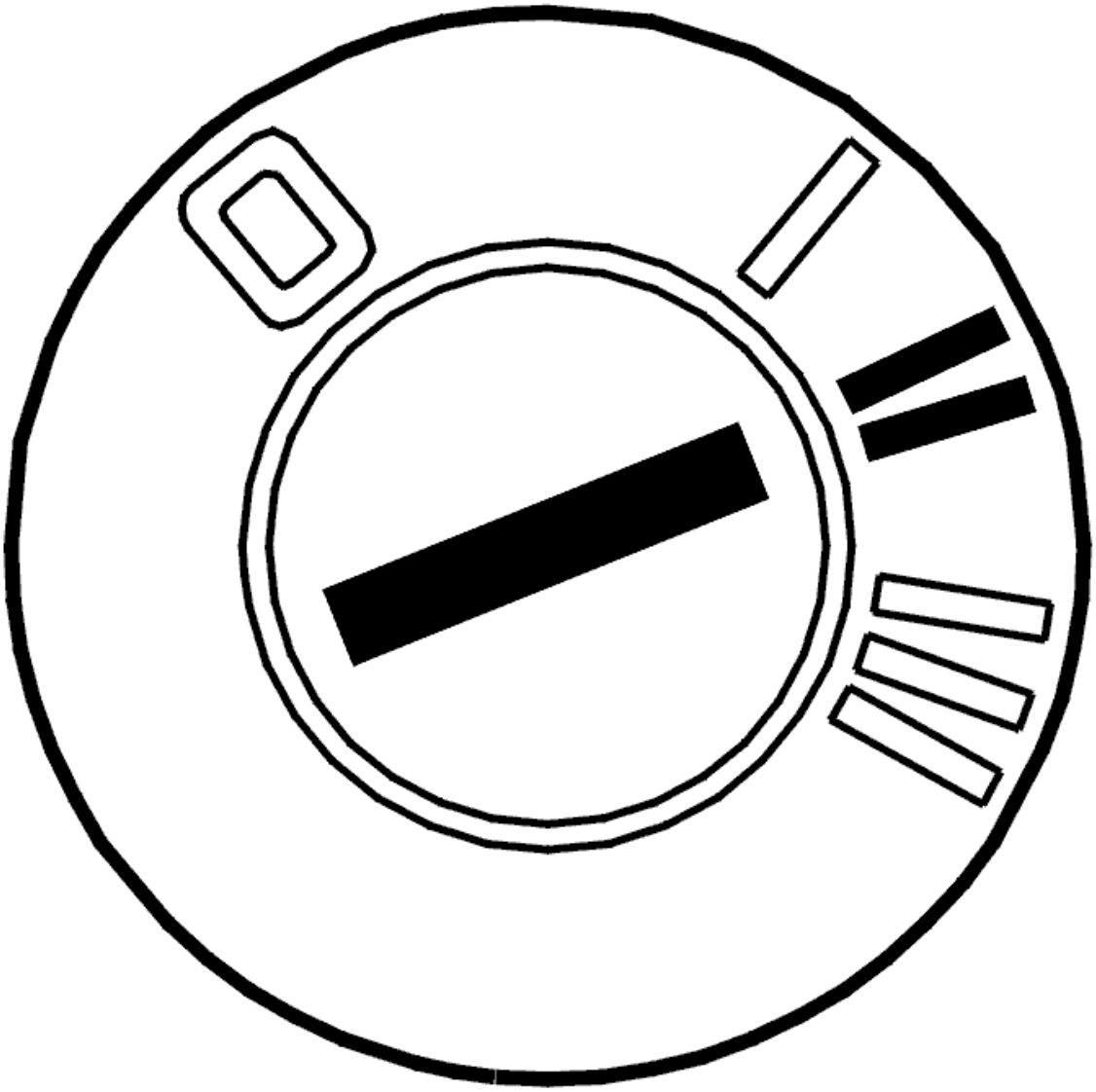

Fig. 220: Identifying Ignition ON
Courtesy of VOLVO CARS CORPORATION

- Connect the battery.
- Ignition on.

If the load on the CAN network is too high, this may be due to a control module transmitting faulty messages on the CAN network. This is called a disruptive control module. The fault may also be due to an intermittent short-circuit to supply voltage or ground in one of the CAN cables. This results in the control modules on the CAN network starting to send faulty messages. The fault may occur without any of the control modules storing a diagnostic trouble code (DTC). The voltage can be measured between the CAN cables in order to check the load on the CAN network.

The following applies for model year -2004:

Connect a voltmeter between the CAN cables. In the event of correct communication on the network, the

average value of the voltage must be approximately 0.5 V (0.4 V to 0.6 V).

The following applies for model year 2004-:The following applies for model year 2004-:

Connect a voltmeter between the CAN cables. During correct CAN network communication, voltage should be about 0.6-1.4 V.

NOTE: For vehicles of later model years, the normal voltage value is slightly higher due to increased traffic between the control modules on the CAN network upon update of the electrical system.

In the event of a communication fault the voltage is significantly higher than the above specified values. In order to identify which control module has faulty communication, cut the power supply to one control module at a time. Check the voltage in the CAN cables again. The easiest way to cut the power supply is to remove the fuse(s) for the relevant control module. Repeat until the voltage between the CAN wiring drops to the normal level.

HINT: When the probable faulty control module has been identified, connect and disconnect the supply voltage to the control module a number of times to verify that the fault appears and disappears.

NOTE: Do not cut the power to the central electronic module (CEM) unless it is the last control module left to check.

The control module that is communicating incorrectly must be replaced. Remedy as necessary.

NOTE: After a fault with "interfering" control modules, other control modules may remain in "Limp-Home mode" even when the ignition has been switched off and on several times. To remedy this, disconnect and reconnect the battery negative terminal to restore the control modules to normal function.

Other information

- see **BATTERY, DISCONNECTING**

- **Continue**

Refer to **VERIFICATION**

IDENTIFYING FAULT CAUSES IN THE CAN NETWORK

- Disconnect a control module that disconnects the CAN network (a control module that has four terminals to the CAN network).

HINT: For the low speed network, suitable places for disconnecting the network are at the steering wheel module (SWM), the driver information module (DIM) or the climate control module (CCM).

In the event of an open-circuit on, or short-circuit between the CAN cables, the fault can be localized by disconnecting a control module that splits the CAN network. Readings can then be taken to determine on which side the fault is on the disconnected control module.

Connect an ohmmeter between the CAN cables. Take readings from both ends of the CAN networks at the network junction. Twist and bend the cable harness to find any intermittent short-circuits. Resistance should be 120 ohms.

If a fault can be localized in one direction, split the network at a point further on in the CAN network in the direction that the fault was discovered and take a new reading. Try to locate the fault in this way.

Remedy the cables as necessary.

- **Continue**

Refer to **VERIFICATION**

VERIFICATION

HINT: After rectifying a fault, a verification should be carried out.

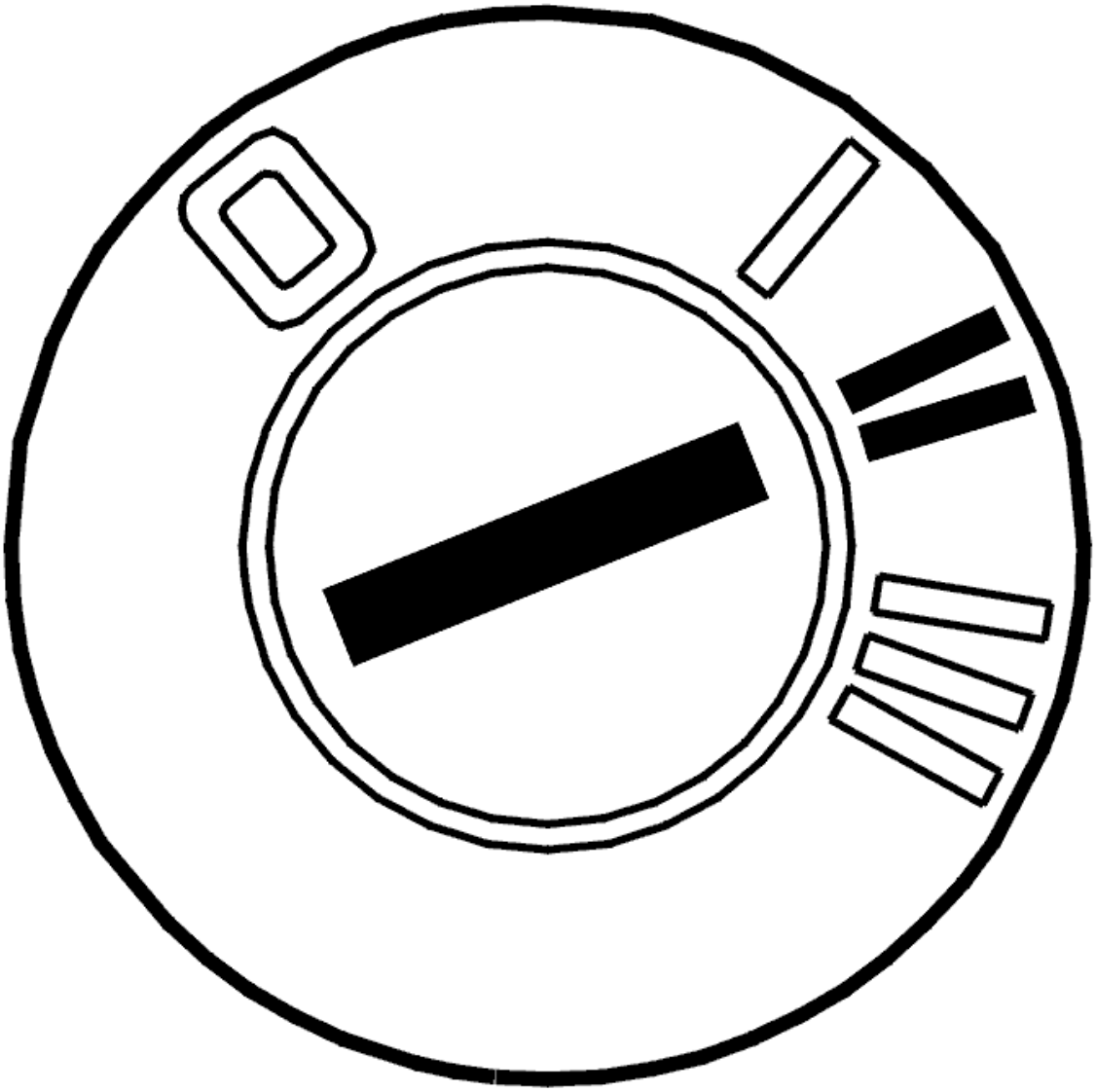

Fig. 221: Identifying Ignition ON
Courtesy of VOLVO CARS CORPORATION

- Reinstall the connectors, components etc.
- Ignition on.
- Erase diagnostic trouble codes using the VCT2000 (or appropriate scan tool).
- Start the car. Allow the vehicle to run for 10 minutes.
- Read off diagnostic trouble codes (DTCs).

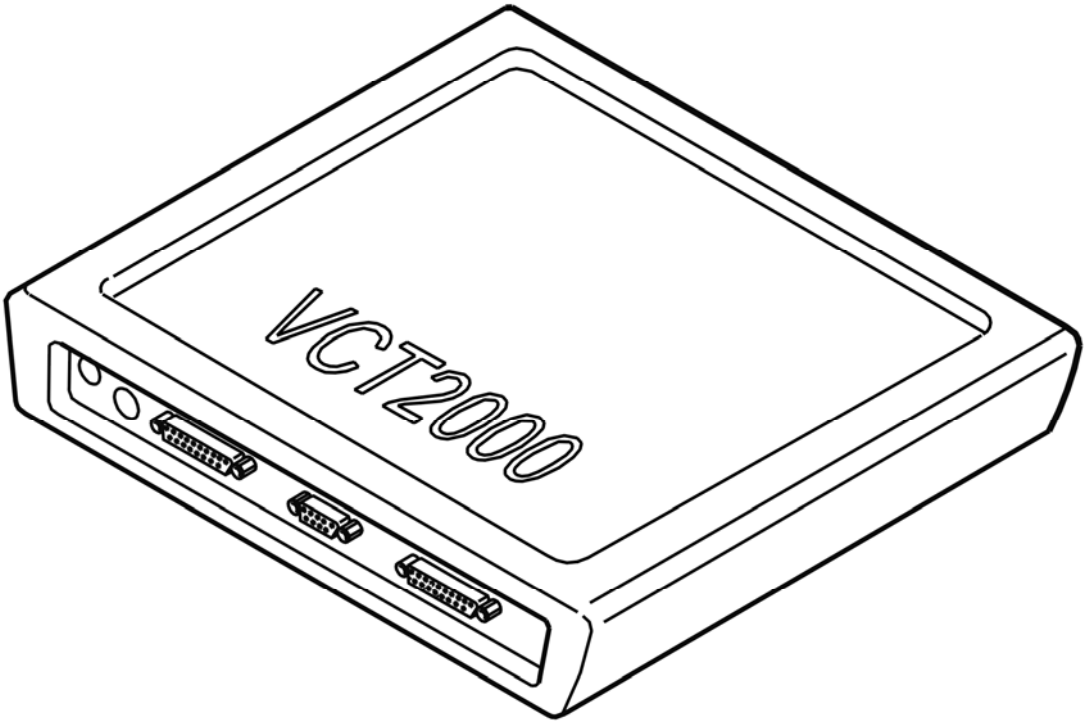

Fig. 222: Identifying VCT2000 Diagnostic Tool Symbol In VIDA
Courtesy of VOLVO CARS CORPORATION

Does the diagnostic trouble code (DTC) for a communication fault recur (CEM-1A5X or CEM-1A6X)?

- **YES**

  Refer to **INFORMATION**

- **NO**

  OKAY: Troubleshooting has been completed.

INFORMATION

FAULT-TRACING INFORMATION

Verification shows that the fault is no longer present. The diagnostic trouble code (DTC) was probably caused by an intermittent fault.

Fault-tracing for this diagnostic trouble code (DTC) is not followed by a verification.

You can view the information again or exit fault-tracing for this diagnostic trouble code (DTC).

INFORMATION

FAULT-TRACING INFORMATION

The fault should have been detected and remedied. As this is not the case fault-tracing has failed.

Exit fault-tracing for this diagnostic trouble code (DTC) or make another attempt.

INFORMATION

FAULT-TRACING INFORMATION

The fault should have been detected and remedied. As this is not the case fault-tracing has failed.

Exit fault-tracing for this diagnostic trouble code (DTC) or make another attempt.

INFORMATION

FAULT-TRACING INFORMATION

The fault should have been detected and remedied. As this is not the case fault-tracing has failed.

Exit fault-tracing for this diagnostic trouble code (DTC) or make another attempt.

SIGNAL SPECIFICATION

General

All values given below are between the terminals stated in column 1 and breakout box terminal #B2. Control module terminals #A1-#A60 correspond to terminals #A1-#A60 on the breakout box, terminals #A61-#A70 correspond to terminals #B1-#B10 on the breakout box and terminals #B1-#B50 correspond to terminals #B10-#B60 on the breakout box.

NOTE: It is important to connect the breakout box and check the ground terminals before taking readings.

HINT: If the numbering of the connector is different from the numbering on the breakout box, the connector number is given first, terminal #A61, followed by the breakout box number in brackets, (terminal #B1). Example: #A61 (#B1).

U=	DC voltage in volts (V)	U A/C =	AC voltage in volts (V)
U_{bat} =	Battery voltage in volts (V)	f =	Frequency in Hertz (Hz)
U_{low} =	Voltage approximately 0 V	%pulse =	Pulse ratio (%)
t =	Time in milliseconds (ms)		

CONNECTOR TERMINALS #A1-#A70

Terminal	Breakout box	Signal type	Ignition on	Idle	Other
#A1	(#A1)	-	-	-	-
#A2	(#A2)	Control signal Canister purge (CP) valve	U = Ubat	-	Pulse width modulation (PWM) signal during activation of the EVAP canister shut-off valve
#A3	(#A3)	-	-	-	-
#A4	(#A4)	Signal (+) intake temperature sensor, integrated in the mass air flow (MAF) sensor	-	(+10°C) U=2.01 V (+20°C) U=2.62 V (+30°C) U=3.21 V	-
#A5	(#A5)	-	-	-	-
#A6	(#A6)	-	-	-	-
#A7	(#A7)	Control signal to the engine cooling fan control module	Pulse width modulation (PWM) signal Ulow = 1.5 V pulse ratio = 10 %-90 %	- Uhigh = Ubat -1.5 V f=100Hz	-
#A8	(#A8)	-	-	-	-
#A9	(#A9)	-	-	-	-
#A10	(#A10)	-	-	-	-
#A11	(#A11)	Control signal preheating rear heated oxygen sensor (HO2S)	U = Ubat	Preheating OFF U = Ubat Preheating ON U = Ulow	-
#A12	(#A12)	Reset valve camshaft	Pulse width modulation (PWM) signal Utop = Ubat t = 0.6 ms pulse ratio = 14 %	Pulse width modulation (PWM) signal Utop = Ubat -1 V t=2 ms pulse ratio = 50 %	The pulse ratio changes with engine speed (RPM)
#A13	(#A13)	-	-	-	-
#A14	(#A14)	Control signal injector 5	U = Ubat	t = 2-3 ms	t increases with engine speed (RPM) and load
#A15	(#A15)	Control signal injector 3	U = Ubat	tlow = 2-3 ms	t increases with engine speed (RPM) and load

#A16	(#A16)	Control signal injector 1	U = Ubat	tlow = 2-3 ms	t increases with engine speed (RPM) and load
#A17	(#A17)	-	-	-	-
#A18	(#A18)	Control signal preheating front heated oxygen sensor (HO2S)	U = Ubat	Preheating OFF U = Ubat Preheating ON U = Ubat	-
#A19	(#A19)	-	-	-	-
#A20	(#A20)	-	-	-	-
#A21	(#A21)	Signal A/C pressure sensor	U=0.9 V (at approximately 20° C)	-	U increases with increased pressure in the system
#A22	(#A22)	Mass air flow (MAF) sensor signal	U = 0.58 V	U = 1.33 V Unloaded, engine at operating temperature	U increases with increasing air mass
#A23	(#A23)	Signal manifold absolute pressure (MAP) sensor	U = 1.64 V atmospheric pressure at sea level	-	U increases with increasing pressure in the intake manifold
#A24	(#A24)	Signal (+) front heated oxygen sensor (HO2S) signal (+)	-	lambda=0.95 V>700 mV lambda=1.10 V<200 mV	-
#A25	(#A25)	-	-	-	-
#A26	(#A26)	-	-	-	-
#A27	(#A27)	-	-	-	-
#A28	(#A28)	Signal ignition discharge module (IDM) check, ignition coils	-	-	-
#A29	(#A29)	Control signal ignition coil no. 3	U = Ulow	U = 2.5 volt thigh = 2 ms	The frequency varies according to engine speed (RPM)
#A30	(#A30)	Control signal ignition coil no. 2	U = Ulow	U = 2.5 volt thigh = 2 ms	The frequency varies according to engine speed (RPM)
#A31	(#A31)	Control signal ignition coil no. 1	U = Ulow	U = 2.5 volt thigh = 2.5 ms	The frequency varies according to engine speed

					(RPM)
#A32	(#A32)	-	-	-	-
#A33	(#A33)	Control signal injector 4	U = Ubat	tlow = 2-3 ms	t increases with engine speed (RPM) and load
#A34	(#A34)	Control signal injector 2	U = Ubat	tlow = 2-3 ms	t increases with engine speed (RPM) and load
#A35	(#A35)	-	-	-	-
#A36	(#A36)	Power ground preheating, front heated oxygen sensor (HO2S)	U = Ulow	-	-
#A37	(#A37)	Communication cable control modules (CAN H)	-	-	Between the engine control module (ECM) and the throttle unit
#A38	(#A38)	Control signal stop lamp switch	U = Ulow (not activated) U = Uhigh (activated)	-	Between the engine control module (ECM) and the throttle unit
#A39	(#A39)	Oil pressure switch	U = Ulow (no oil pressure)	U = Ubat	-
#A40	(#A40)	Signal (+) engine coolant temperature (ECT) sensor	-	(+20°C) U = 3.1 V (+30°C) U = 2.6 V (+80°C) U = 0.9 V (+100°C) U = 0.5 V	-
#A41	(#A41)	Signal (-) front heated oxygen sensor (HO2S)	-	lambda=1 when the current is approximately +0.2 mA	Negative current when the fuel air mixture is rich. Range: [-12 mA, +12 mA]
#A42	(#A42)	Signal (+) front heated oxygen sensor (HO2S)	-	lambda= 1 when the current is approximately +0.2 mA	Positive current when the fuel air mixture is lean. Range: [-12 mA, +12 mA]
#A43	(#A43)	-	-	-	-
#A44	(#A44)	-	-	-	-
#A45	(#A45)	-	-	-	-

#A46	(#A46)	Signal (+) knock sensor (KS)	-	-	-
#A47	(#A47)	Signal (+) camshaft position (CMP) sensor	Uapprox.5 V or U=Ulow	fapprox.35 Hz Uapprox.2.5 V	The frequency increases with engine speed (RPM)
#A48	(#A48)	Signal (+) flywheel sensor	U=2.5 V	U = sine wave voltage Utop = 3.5 V Uoffset = 2.5 V	-
#A49	(#A49)	-	-	-	-
#A50	(#A50)	Control signal ignition coil no. 5	U = Ulow	U = 2.5 volt thigh = 2 ms	The frequency varies according to engine speed (RPM)
#A51	(#A51)	Control signal ignition coil no. 4	U = Ulow	U = 2.5 volt thigh = 2 ms	The frequency varies according to engine speed (RPM)
#A52	(#A52)	Control signal Air assisted control valve (AACV)	-	-	-
#A53	(#A53)	Power ground 3	Ulow	-	-
#A54	(#A54)	Power ground 2	Ulow	-	-
#A55	(#A55)	Communication cable control modules (CAN L)	-	-	Between the engine control module (ECM) and the throttle unit
#A56	(#A56)	Control signal accelerator pedal (AP) position sensor, pulse width modulation (PWM) signal	Utop = 12 V t = 4 ms pulse ratio = 8 %-88 %	-	Between the engine control module (ECM) and the throttle unit
#A57	(#A57)	Power supply, camshaft position (CMP) sensor	U =5 V	-	-
#A58	(#A58)	Power supply, manifold absolute pressure (MAP) sensor A/C pressure sensor	U =5 V	-	-
#A59	(#A59)	-	-	-	-
#A60	(#A60)	Signal ground	U = Ulow	-	-

		mass air flow (MAF) sensor			
#A61	(#B1)	Signal ground intake temperature engine coolant temperature (ECT) sensor rear heated oxygen sensor (HO2S)	U = Ulow	-	-
#A62	(#B2)	Power ground 1	U = Ulow	-	-
#A63	(#B3)	-	-	-	-
#A64	(#B4)	Signal (-) knock sensor (KS)	-	-	-
#A65	(#B5)	Signal ground camshaft position (CMP) sensor	U = Ulow	-	-
#A66	(#B6)	Signal ground flywheel sensor	U = Ulow	-	-
#A67	(#B7)	-	-	-	-
#A68	(#B8)	-	-	-	-
#A69	(#B9)	Control signal preheating front heated oxygen sensor (HO2S)	U = Ubat	Preheating off U = Ubat Preheating U = Ubat	B+ from the system relay
#A70	(#B10)	Power supply	U = Ubat	-	B+ from the system relay

CONNECTOR TERMINALS #B1-#B50

Terminal	Breakout box	Signal type	Ignition on	Engine idling	Other
#B1	(#B11)	Communication cable control modules (CAN L)	-	-	Between the engine control module (ECM) and the transmission control module (TCM)
#B2	(#B12)	-	-		-
#B3	(#B13)	-	-	-	-
#B4	(#B14)	Signal ground intake manifold air temperature sensor fuel tank pressure sensor clutch pedal sensor	U = Ulow	-	-

		brake pedal sensor			
#B5	(#B15)	Signal ground accelerator pedal (AP) position sensor	U = Ulow	-	-
#B6	(#B16)	-	-	-	-
#B7	(#B17)	-	-	-	-
#B8	(#B18)	Coolant level sensor	U = Ulow	-	-
#B9	(#B19)	Power supply accelerator pedal (AP) position sensor, analog sensor	U =5 V	-	-
#B10	(#B20)	Power supply fuel tank pressure sensor	U =5 V	-	-
#B11	(#B21)	30-supply (Power supply from the battery)	U = Ubat	-	-
#B12	(#B22)	-	-	-	-
#B13	(#B23)	Control modules communication cable (CAN H)	-	-	Between the engine control module (ECM) and the transmission control module (TCM)
#B14	(#B24)	-	-	-	-
#B15	(#B25)	Signal clutch pedal sensor	U=3.3 V (unaffected) U = 2.2 V (fully depressed, 100 mm)	-	Varies depending on the position of the clutch pedal
#B16	(#B26)	Signal brake sensor	U = 4.4 V (unaffected) U = 3.9 V (25 mm depressed)	-	Varies depending on the position of the brake pedal
#B17	(#B27)	Signal accelerator pedal (AP) position sensor, analog signal	U=0.4 V (idle) U=4.4 V (wide open throttle (WOT))	-	Varies depending on the position of the accelerator pedal (AP)
#B18	(#B28)	-	-	-	-
#B19	(#B29)	-	-	-	-

#B20	(#B30)	-	-	-	-
#B21	(#B31)	-	-	-	-
#B22	(#B32)	Diagnostic lead C-link	U=90 % of Ubat	Other values apply if a generic fault-tracing instrument is connected to the data link connector (DLC)	-
#B23	(#B33)	Signal (+) crank, +50 supply	U = Ulow	U = Ulow	U = Ubat at crank
#B24	(#B34)	-	-	-	-
#B25	(#B35)	Signal (+) accelerator pedal (AP) position sensor, Pulse width modulated (PWM) signal	Utop = Ubat t = 4 ms pulse ratio = 8-88%	-	Between the accelerator pedal (AP) position sensor and the engine control module (ECM)
#B26	(#B36	Signal (+) stop lamp switch	U = Ubat when the brake pedal is depressed U = Ulow when the brake pedal is not depressed	-	-
#B27	(#B37)	-	-	-	-
#B28	(#B38)	-	-	-	-
#B29	(#B39)	Signal outside temperature sensor	(0°C) U = 3.99 V (+10°C) U = 3.53 V (+20°C) U = 3.01 V (+30°C) U = 2.47 V	-	Temperature range: -50°C to +120°C
#B30	(#B40)	-	-	-	-
#B31	(#B41)	Signal fuel tank pressure sensor	U = 2.5 V at 1 kPa negative pressure U=3.3 V at atmospheric pressure (0 kPa overpressure) U=4.1 V at 1 kPa overpressure	-	-
#B32	(#B42)	-	-	-	-
#B33	(#B43)	-	-	-	-
#B34	(#B44)	-	-	-	-

#B35	(#B45)	-	-	-	-
#B36	(#B46)	-	-	-	-
#B37	(#B47)	Signal ignition ON signal, +15 supply	U = Ubat	-	-
#B38	(#B48)	System relay control signal	U = Ulow	U = Ulow	Relay activated: U = Ulow Relay not activated: U = Ubat The system relay runs on (2-5 minutes)
#B39	(#B49)	-	-	-	-
#B40	(#B50)	Control signal EVAP canister shut-off valve	U=3.82 V	-	-
#B41	(#B51)	-	-	-	-
#B42	(#B52)	-	-	-	-
#B43	(#B53)	-	-	-	-
#B44	(#B54)	Control signal A/C activation	U = Ubat (not activated) U = Ulow (activated)	-	-
#B45	(#B55)	Control signal fuel pump (FP) activation	Pulse width modulation (PWM) signal	-	Control signal to the central electronic module (CEM) to control the fuel pump (FP)
#B46	(#B56)	Control signal malfunction indicator lamp (MIL)	U = Ulow	U = Ubat (not activated) U = Ulow (activated)	-
#B47	(#B57)	-	-	-	-
#B48	(#B58)	Control signal engine start inhibiting	U = Ulow (activated) U = Uhigh (not activated)	-	Certain markets only. The engine can only be started with the clutch pedal depressed (U=Ulow)
#B49	(#B59)	-	-	-	-
#B50	(#B60)	-	-	-	-

ELECTRICAL

Cables And Fuses - Diagnostic Trouble Codes and Associated Procedures

CEM-1A62: COMMUNICATION WITH THE ENGINE CONTROL MODULE (ECM). SIGNAL MISSING (2005-2012)

DIAGNOSTIC TROUBLE CODE (DTC) INFORMATION CEM-1A62

Condition

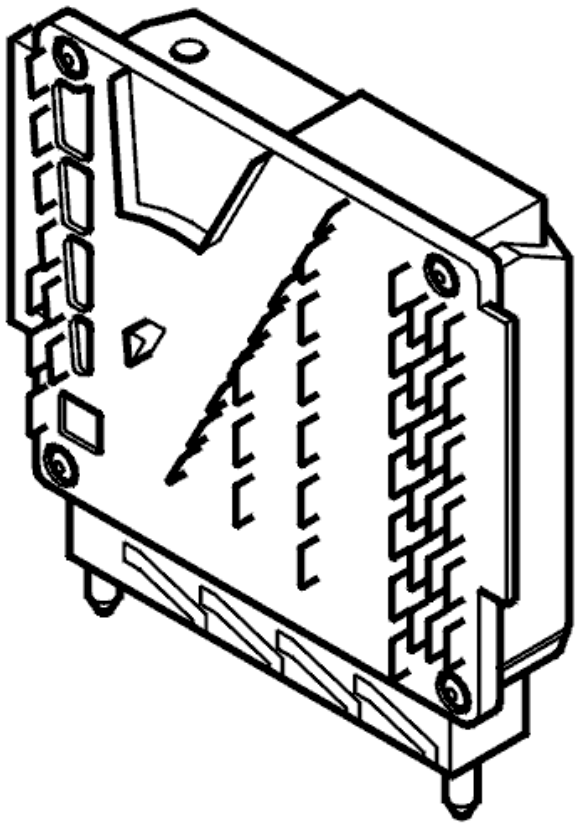

Fig. 1: Engine Control Module
Courtesy of VOLVO CARS CORPORATION

The diagnostic trouble code (DTC) is stored if the central electronic module (CEM) registers that communication with the engine control module (ECM) is not operating.

The diagnostic trouble code (DTC) can be diagnosed when the ignition has been on for more than 10 seconds.

NOTE: **If CEM-1A6X diagnostic trouble codes (DTCs) are stored, the central electronic module (CEM) must not be replaced as the diagnostic trouble code (DTC) indicates a communication fault in the Control area network**

Substitute Value

- None.

Possible Source

- No power supply to the engine control module (ECM)
- Open-circuit in the ground lead for the engine control module (ECM)
- Contact resistance in the terminals
- Open-circuit in the wiring for the CAN high speed network to the engine control module (ECM)
- The engine control module (ECM) is not intended for this vehicle, for example a used control module with different software/hardware.

HINT: If several diagnostic trouble codes (DTCs) are stored in the central electronic module (CEM) for communication faults with other control modules in the high speed network, this indicates a common fault in the Control area network.

Fault symptom[s]

- The engine does not start.
- Engine cuts out when running
- Engine feels sluggish.
- Malfunction indicator lamp (MIL) lit.
- Message in the display.

CEM-1A62: COMMUNICATION WITH THE ENGINE CONTROL MODULE (ECM). SIGNAL MISSING (B5254T2; 2005-2007)

SIGNAL MISSING

CHECKING THE POWER SUPPLY AND GROUND FOR THE ENGINE CONTROL MODULE (ECM)

Check that the fuse for the control module is intact.

Check the power supply and ground for the engine control module (ECM) as follows.

Remedy as necessary.

Other information:

- see **CHECKING POWER SUPPLY AND GROUND TERMINAL, ENGINE CONTROL MODULE (ECM)**
- see **CHECKING WIRING AND TERMINALS**

Was a fault detected?

- **YES**

  Refer to **CHECKING THE ENGINE CONTROL MODULE (ECM)**

- **NO**

  Refer to **CHECKING COMMUNICATION WITH THE ENGINE CONTROL MODULE (ECM)**

CHECKING COMMUNICATION WITH THE ENGINE CONTROL MODULE (ECM)

HINT: The CAN communication with the control module is probably OK if the control module ID can be read off. In that case the fault is probably intermittent and will then be more difficult to trace.

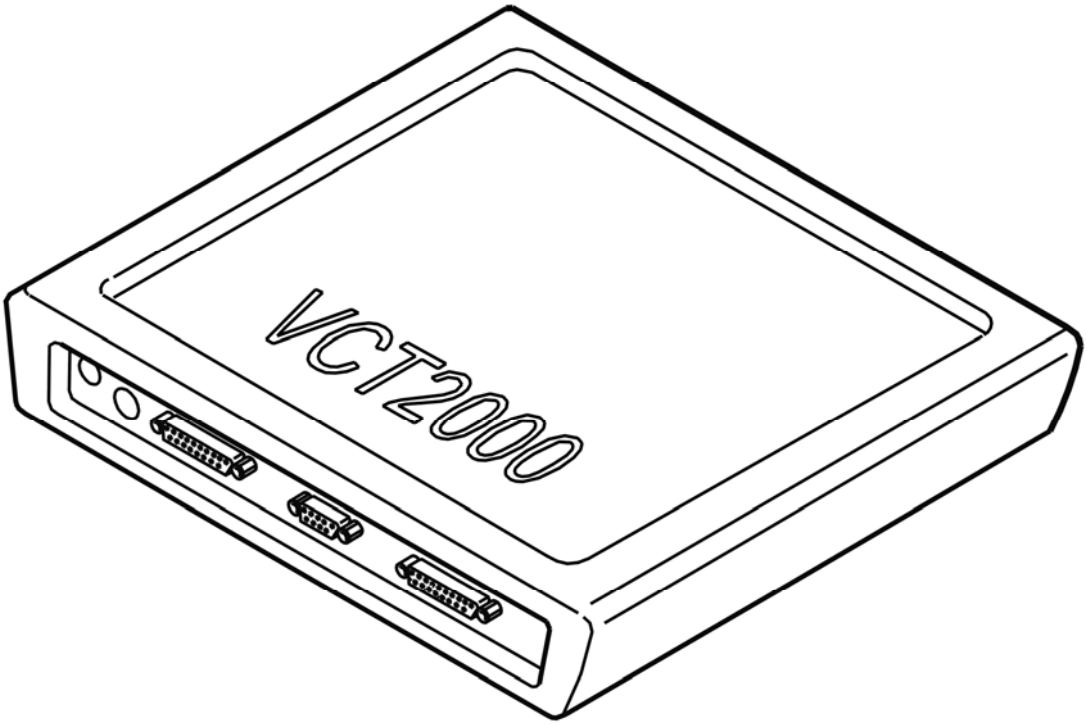

Fig. 2: Identifying VCT2000 Diagnostic Tool Symbol In VIDA
Courtesy of VOLVO CARS CORPORATION

- Try to communicate with the engine control module (ECM) by reading off the control module ID.
- Use the VCT2000 (or appropriate scan tool)

- **Continue**

  Refer to **SIGNAL MISSING**

CHECKING THE ENGINE CONTROL MODULE (ECM)

HINT: After carrying out the repair, check that the fault has been remedied.

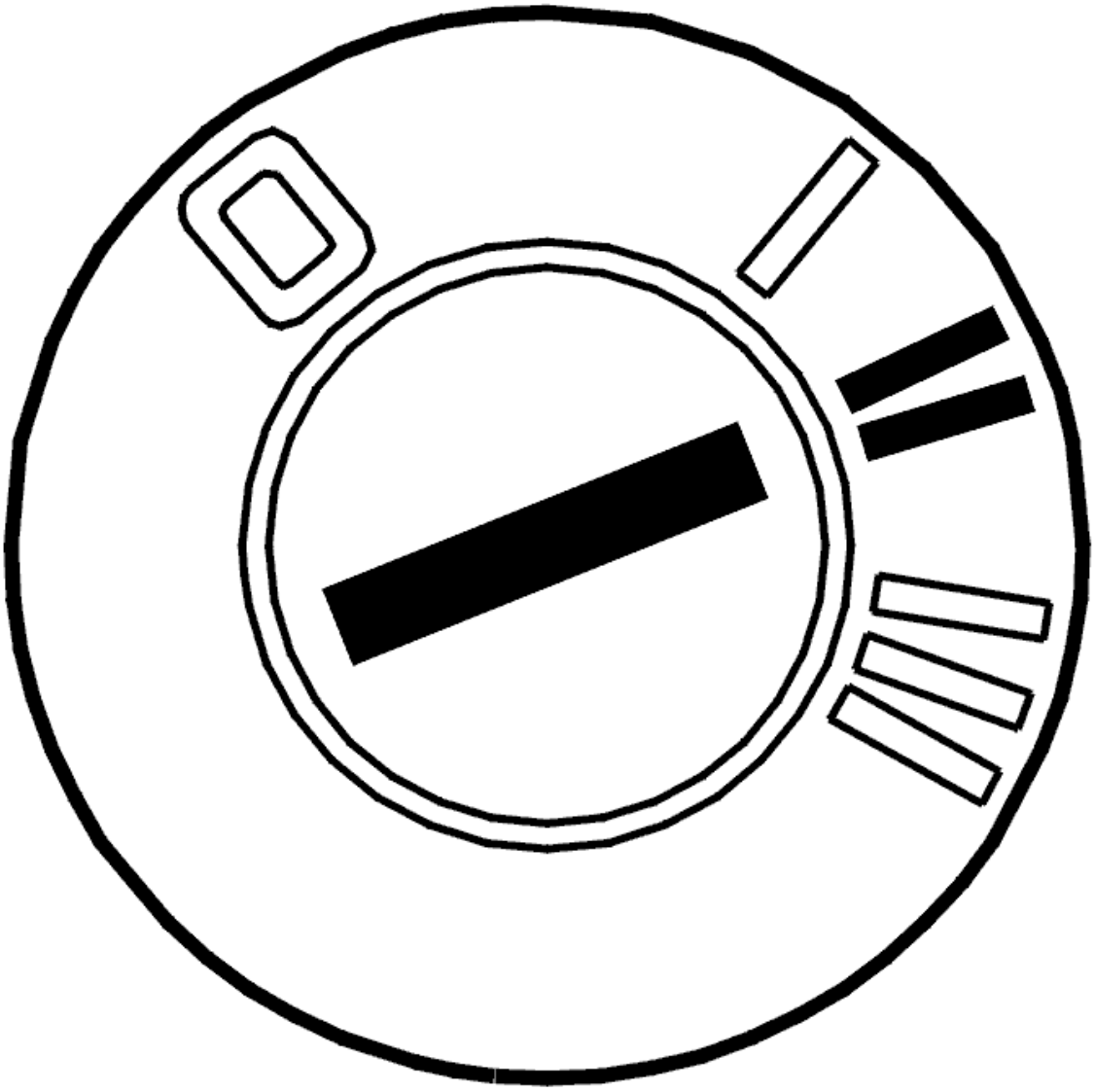

Fig. 3: Identifying Ignition ON
Courtesy of VOLVO CARS CORPORATION

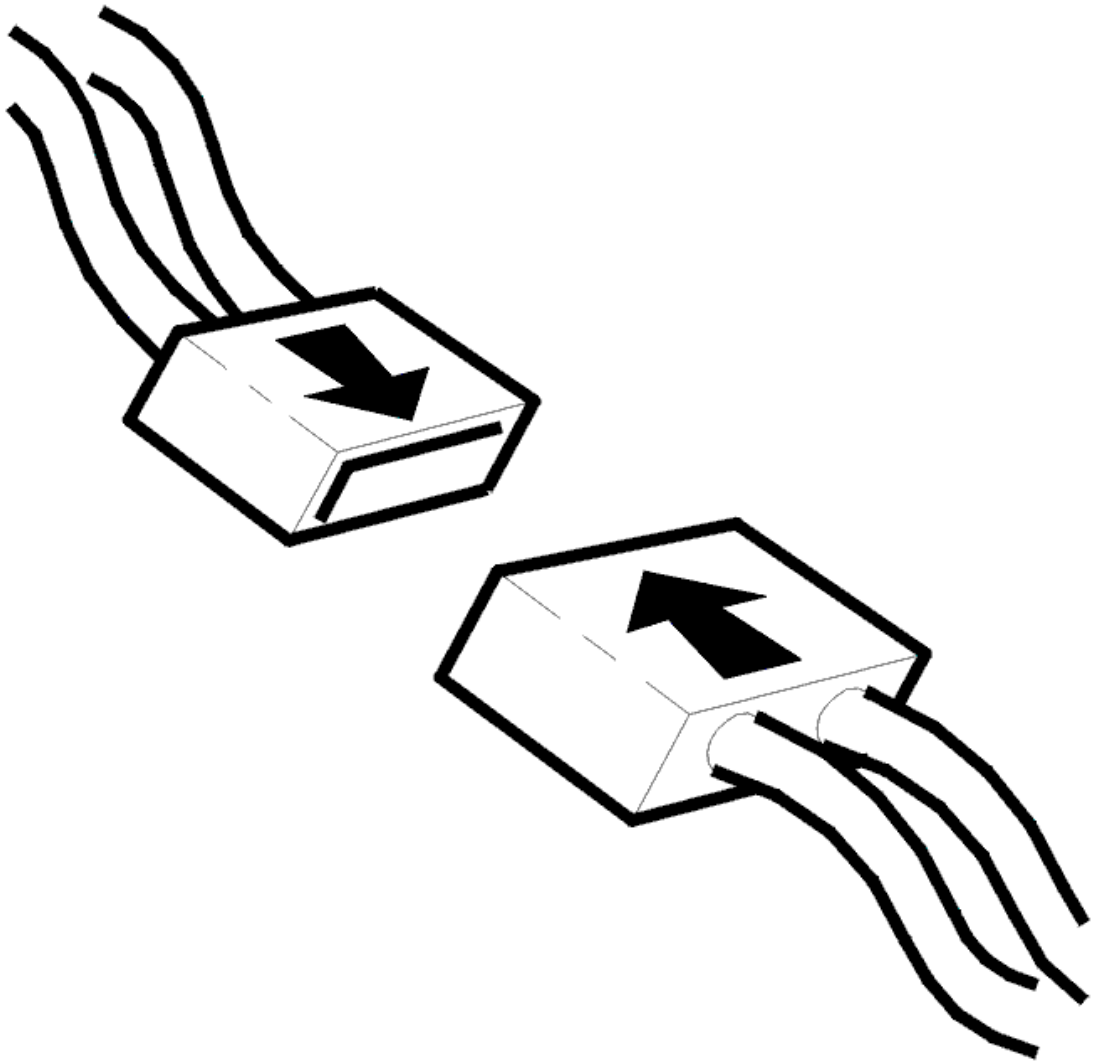

Fig. 4: Connecting Connector
Courtesy of VOLVO CARS CORPORATION

- Ignition off
- Reinstall the connectors, components etc.
- Erase diagnostic trouble codes using the VCT2000 (or appropriate scan tool)
- Start the engine. Allow the engine to run at idle speed for 10 minutes
- Read off diagnostic trouble codes (DTCs).

Does the diagnostic trouble code (DTC) for faulty communication return?

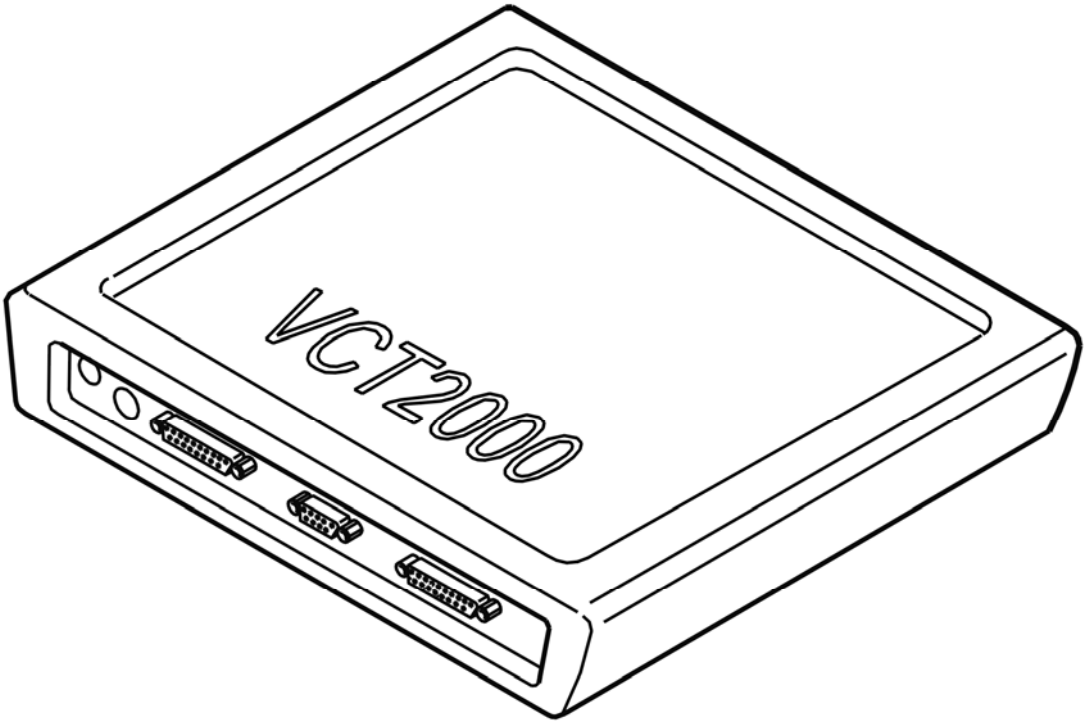

Fig. 5: Identifying VCT2000 Diagnostic Tool Symbol In VIDA
Courtesy of VOLVO CARS CORPORATION

Does the diagnostic trouble code (DTC) recur?

- **YES**

  Refer to **INFORMATION**

- **NO**

  OKAY: Troubleshooting has been completed.

SIGNAL MISSING

GENERAL INFORMATION

NOTE: Illustrations shown are only examples.

HINT: For general information about CAN-troubleshooting, see: GENERAL INFORMATION ABOUT FAULT-TRACING IN THE CAN NETWORK

- **General about CAN-related diagnostic trouble codes:**

CEM-DF01 - DF17 can only be stored in Central electronic module (CEM). These diagnostic trouble codes are stored when an electric fault is detected in CAN-lines. Start with these diagnostic trouble codes first.

CEM-1AXX only stored in Central electronic module (CEM). One diagnostic trouble code for every control module on the CAN-net. These diagnostic trouble codes indicate that Central electronic module (CEM) does not receive any reply from other control modules.

XXX-E000 (HS-CAN)/E001 (LS-CAN) can be stored in all CAN-connected control modules. These diagnostic trouble codes indicate that the control module has detected interference on the CAN-net.

XXX-E003 can be stored in all CAN-connected control modules except in Central electronic module (CEM). The control modules on the CAN-net listen for a message (identity number) that is sent out at regular intervals from Central electronic module (CEM). This diagnostic trouble code indicates that the control module has not received any identity number, or that the expected number is not correct. Interference on the CAN-net can also store this diagnostic trouble code.

NOTE: **In case of CAN-related faults, it is likely that a combination of above diagnostic trouble codes occur.**

NOTE: **After fault with control modules that interfere with communication, other control modules may remain in Limp-Home (that is, they work with reduced functionality) even when the ignition has been turned off and on a few times. For certain faults in the CAN-net where control modules have stopped communicating, it may help to disconnect/reconnect the battery to "restart" the control module/CAN-net.**

If a communication diagnostic trouble code can be read from the control module, the malfunction is probably intermittent.

Intermittent fault in the voltage supply and ground to a control module on the CAN network results in the Central electronic module (CEM) storing a diagnostic trouble code (DTC) for an open-circuit in communication with the control module where the voltage supply does not work. There will probably not be a diagnostic trouble code (DTC) in the control module where the open-circuit in the voltage supply occurred as the control module cannot store a diagnostic trouble code (DTC) when it is not supplied with power.

NOTE: **Central electronic module (CEM) should not be replaced in case of CAN-fault, unless troubleshooting reveals that Central electronic module (CEM) has an internal fault.**

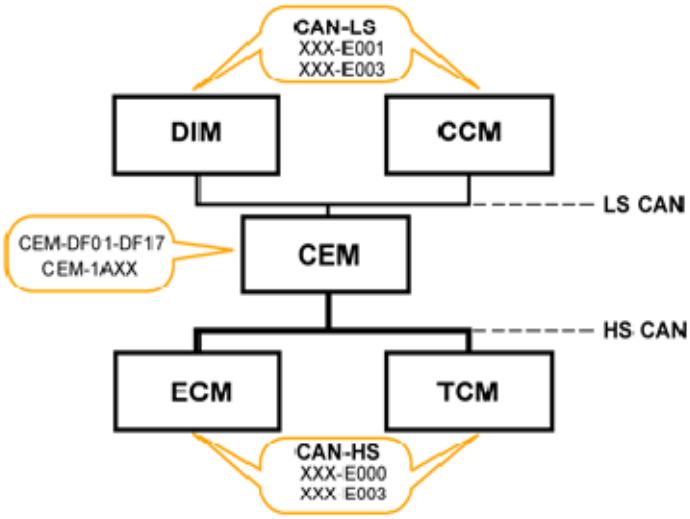

Fig. 6: High-Speed CAN And Low-Speed CAN Communication Diagram
Courtesy of VOLVO CARS CORPORATION

- **Continue**

  Refer to **CHECKING RESISTANCE IN CAN-NET**

CHECKING RESISTANCE IN CAN-NET

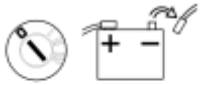

Fig. 7: Ignition Off And Disconnecting Battery Negative Lead
Courtesy of VOLVO CARS CORPORATION

- Ignition off
- Disconnect the battery negative lead
- Connect OBDII-Box **(951 3015)** to the diagnostics socket.

  For general information about CAN-troubleshooting, see: **GENERAL INFORMATION ABOUT FAULT-TRACING IN THE CAN NETWORK**

  Measure resistance between the following connections on the OBDII-box/diagnostics socket.

  - #6 and #14. The resistance should be approx. 55 - 65 ohms.
  - If resistance is approx. 120 ohms, this indicates open circuit in the circuit so that only one terminating resistor (120 ohms) has been measured.
  - If resistance is above 1 kohms this indicates open circuit/high contact resistance somewhere in the circuit.

- If resistance is below 55 ohms this indicates short-circuiting/contact resistance between the CAN-lines somewhere in the circuit.

HINT: For HS-CAN the terminating resistors are located in Brake control module (BCM) and in Engine control module (ECM).

Twist the cable harness and wiggle connectors where they can be accessed along the cable harness during every measurement, and note if the resistance changes to detect intermittent short-circuits or open circuit.

NOTE: **Resistance measurement measures only main lines in the CAN-net (in circuit where both terminating resistors are found), not branches to certain control modules.**

Open circuit on branching without a terminating resistor cannot be detected with this measurement. However, short-circuiting on a branch can be detected. To measure resistance in the CAN-net to control modules located in a branching of their own, the measurement shall be done against the CAN-net at that control module. The values shall be as above.

NOTE: **After fault with control modules that interfere with communication, other control modules may remain in Limp-Home (that is, they work with reduced functionality) even when the ignition has been turned off and on a few times. For certain faults in the CAN-net where control modules have stopped communicating, it may help to disconnect/reconnect the battery to "restart" the control module/CAN-net.**

Remedy wiring as necessary.

Other information

- see **BATTERY, DISCONNECTING**
- see **CHECKING WIRING AND TERMINALS**

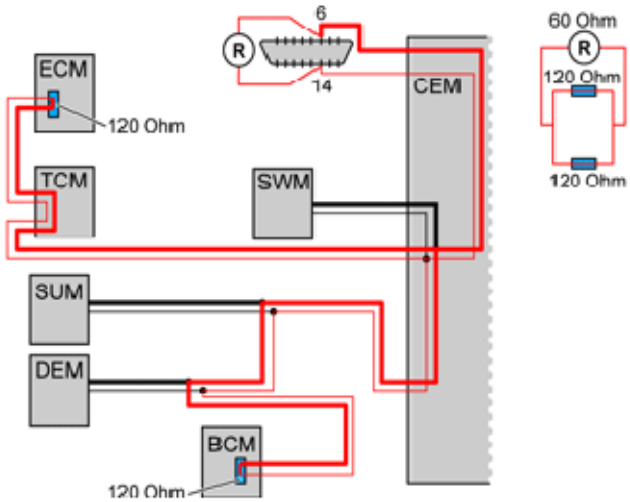

Fig. 8: Checking Resistance In CAN Lines
Courtesy of VOLVO CARS CORPORATION

Was a fault detected?

- **YES**

  Refer to **VERIFICATION**

- **NO**

  Refer to **CHECKING SHORT-CIRCUITING TO GROUND/VOLTAGE IN CAN-NET**

CHECKING THE TRAFFIC LOAD ON THE CAN CABLES

Fig. 9: Identifying Ignition On Position
Courtesy of VOLVO CARS CORPORATION

- Connect the battery
- Ignition on.
- Connect OBDII-Box **(951 3015)** to the diagnostics socket.

  For general information about CAN-troubleshooting, see: **GENERAL INFORMATION ABOUT FAULT-TRACING IN THE CAN NETWORK**

  Faults in the CAN network may be due to a control module sending faulty messages that disrupt normal

communication. When messages are sent incorrectly, this results in a considerable increase in the amount of traffic on the CAN network. Check the load by measuring the average voltage value on the CAN cables in relation to ground.

Measure voltage between the following connections on the OBDII-box/diagnostics socket.

- #6 and #4 (ground). The voltage should be approx:2, 8 - 3, 2 V.
- #14 and #4 (ground). The voltage should be approx:1, 8 - 2, 2 V.
- #6 and #14. The voltage shall be between approx. 0.55-1.4 V. The voltage shall normally be between 0.55 - 0.90 V. A higher voltage may indicate increased traffic on the CAN-net. In case of fault in communication/too high traffic on the CAN-net, the voltage is considerably higher than the above stated values.

NOTE: After fault with control modules that interfere with communication, other control modules may remain in Limp-Home even when the ignition has been turned off and on a few times. For certain faults in the CAN-net where control modules have stopped communicating, it may help to disconnect/reconnect the battery to "restart" the control module/CAN-net.

HINT: DiCE can be used as fault detection tool if fault is suspected on the CAN-net that cannot be detected with normal troubleshooting. Interference, intermittent faults, faulty messages on the CAN-net etc., are examples of such faults. The tool registers fault messages used on the CAN-net. Fault messages may be caused by short intermittent malfunctions on the CAN-net or by a control module sending fault messages. See tools:951 3010 as well as associated TJ 20402.

- Ignition on.
- Connect DiCE to the diagnostics socket.
- Note the blue LED-indicator. The indicator flashes to show detection of fault messages.

NOTE: Certain interference may occur without any real fault

Cable fault

- Shake the cables lightly and pull lightly on the connections during the check to locate any fault. Note the blue LED-indicator.

"Chatting" control modules

- "Chatting" control modules may be difficult to find and troubleshooting may take time. Let the vehicle stand with DiCE connected for an extended time period. Afterwards, activate functions to provoke a malfunction. It may take up to several hours before the fault messages are sent. When the indicator starts to flash, remove the fuse for one control module at a time until the indicator stops flashing. When the indicator stops flashing, restore the fuse for the relevant control module and check that the indicator starts to flash again. Then it is likely that the problem is identified.

Remedy wiring as necessary.

Other information

- see **BATTERY, DISCONNECTING**
- see **CHECKING WIRING AND TERMINALS**

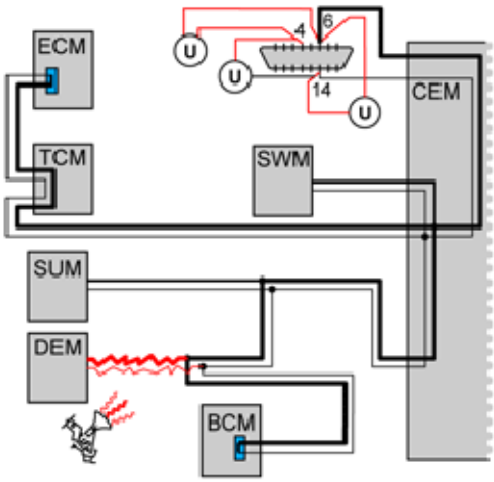

Fig. 10: Checking Traffic Load On CAN Cables
Courtesy of VOLVO CARS CORPORATION

Was a fault detected?

- **YES**

  Refer to **IDENTIFYING A CONTROL MODULE IN THE CAN NETWORK**

- **NO**

  Refer to **CHECKING VOLTAGE-DROP IN CABLE FOR CAN-H AND CAN-L, RESPECTIVELY**

IDENTIFYING A CONTROL MODULE IN THE CAN NETWORK

Fig. 11: Identifying Ignition On Position
Courtesy of VOLVO CARS CORPORATION

For general information about CAN-troubleshooting, see: **GENERAL INFORMATION ABOUT FAULT-TRACING IN THE CAN NETWORK**

HINT: DiCE can be used as fault detection tool if fault is suspected on the CAN-net that cannot be detected with normal troubleshooting. Interference, intermittent faults, faulty messages on the CAN-net (chattering control modules) etc., are examples of such faults. The tool registers fault messages used on the CAN-net. Fault messages may be caused by short intermittent malfunctions on the CAN-net or by a control module sending fault messages. See tools:951 3010 (memory card) as well as associated TJ 20402.

If the load on the CAN network is too high, this may be due to a control module sending faulty messages on the CAN network (known as a disruptive control module). The fault may also be due to an intermittent short-circuit to supply voltage or ground in one of the CAN cables. This results in the control modules on the CAN network starting to send faulty messages. The faults can occur without a diagnostic trouble code (DTC) being stored by the control modules. The voltage can be measured between the CAN cables in order to check the load on the CAN network.

NOTE: **It is not necessarily the control module(s) that stored the diagnostic trouble code (DTC) that is communicating faultily. Faulty messages can come from any control module in the same section of the CAN network. However, faulty communication in one network cannot affect the communication on the other network. In other words, faulty communication on the LS-CAN cannot disrupt communication on the HS-CAN and vice versa.**

- Ignition on.
- Connect OBDII-Box **(951 3015)** to the diagnostics socket.

Check communication/load on CAN-net by measuring voltage between CAN-L and CAN-H. Measure voltage between the following connections on the OBDII-box/diagnostics socket.

- #6 and #14. The average value of the voltage must be approximately 0.6-1.4 V. The voltage shall normally be between 0.55 - 0.90 V. A higher voltage may indicate increased traffic on the CAN-net. In case of fault in communication/too high traffic on the CAN-net, the voltage is considerably higher than the above stated values.

In order to identify which control module has faulty communication, cut the power supply to one control module at a time. Check the voltage in the CAN cables again. The easiest way to cut the power supply is to remove the fuse(s) for the relevant control module. Repeat until the voltage between the CAN wiring drops to the normal level.

NOTE: **When connecting and disconnecting individual control modules, other diagnostic trouble codes (DTCs) may be stored in certain control modules.**

HINT: When the suspected defective control module has been identified, connect and disconnect the supply voltage to the control module a number of times to verify that the malfunction appears and disappears. Switch off the ignition between each check.

NOTE: **Do not cut the power to the central electronic module (CEM) unless it is the last control module left to check.**

A control module that is communicating incorrectly must be replaced. See Repairing and installing/Removing, replacing and installing.

NOTE: **After fault with control modules that interfere with communication, other control modules may remain in Limp-Home (that is, they work with reduced functionality) even when the ignition has been turned off and on a few times. For certain faults in the CAN-net where control modules have stopped communicating, it may help to disconnect/reconnect the battery to "restart" the control module/CAN-net.**

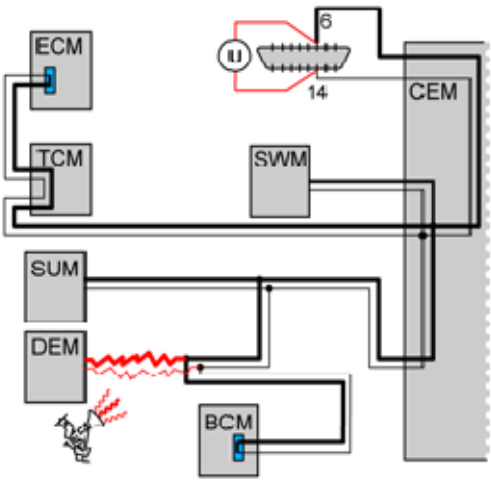

Fig. 12: Checking Communication/Load On CAN-Net Between CAN-L And CAN-H
Courtesy of VOLVO CARS CORPORATION

- **Continue**

  Refer to **VERIFICATION**

VERIFICATION

HINT: After rectifying a fault, a verification should be carried out.

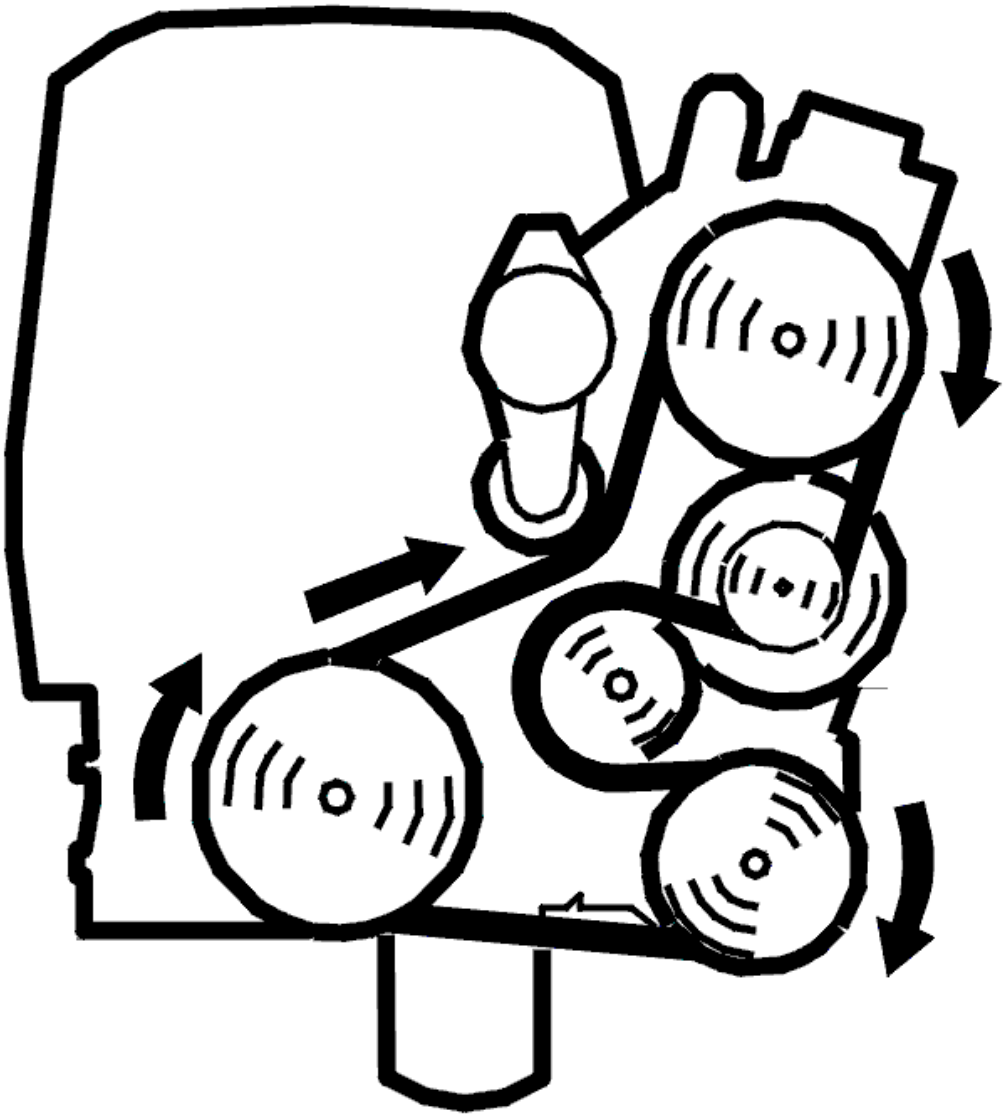

Fig. 13: Belt Routing / Engine Idling - Volvo
Courtesy of VOLVO CARS CORPORATION

Fig. 14: Identifying Ignition On Position
Courtesy of VOLVO CARS CORPORATION

- Reinstall the connectors, components etc.
- Ignition on.

NOTE: **For certain faults in the CAN-net where control modules have stopped communicating, it may help to disconnect/reconnect the battery to "restart" the control module/CAN-net.**

- Erase diagnostic trouble codes (DTCs) in all control modules.
- Ignition off.
- Ignition on.
- Start the vehicle. Allow the vehicle to run for 10 minutes.
- Read out the diagnostic trouble codes in the vehicle via the DIAGNOSTICS tab.

Does the diagnostic trouble code (DTC) for faulty communication return?

- **YES**

  Refer to **INFORMATION**

- **NO**

  OKAY: Troubleshooting has been completed.

CHECKING SHORT-CIRCUITING TO GROUND/VOLTAGE IN CAN-NET

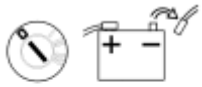

Fig. 15: Ignition Off And Disconnecting Battery Negative Lead
Courtesy of VOLVO CARS CORPORATION

- Ignition off.
- Disconnect the battery negative lead.
- Connect OBDII-Box **(951 3015)** to the diagnostics socket.

  For general information about CAN-troubleshooting, see: **GENERAL INFORMATION ABOUT FAULT-TRACING IN THE CAN NETWORK**

  Checking for a short-circuit to ground

  Measure resistance between the following connections on the OBDII-box/diagnostics socket.

  - #6 and #4 (ground). Measurement is shown in the illustration. The resistance should be above 1 kohms.
  - #14 and #4 (ground). The resistance should be above 1 kohms.

If resistance is below 1 kohms this indicates short-circuiting between the CAN-line and ground.

Checking for a short-circuit to voltage

Measure resistance between the following connections on the OBDII-box/diagnostics socket.

- #6 and #16 (voltage). Measurement is shown in the illustration. The resistance should be above 1 kohms.
- #14 and #16 (voltage). The resistance should be above 1 kohms.

If resistance is below 1 kohms this indicates short-circuiting between the CAN-line and voltage cable.

Twist the cable harness and wiggle connectors where they can be accessed along the cable harness during every measurement, and note if the resistance changes to detect intermittent short-circuits or open circuit.

HINT: Part the CAN-net at suitable points to decide where a short-circuit may be found.

NOTE: After fault with control modules that interfere with communication, other control modules may remain in Limp-Home (that is, they work with reduced functionality) even when the ignition has been turned off and on a few times. For certain faults in the CAN-net where control modules have stopped communicating, it may help to disconnect/reconnect the battery to "restart" the control module/CAN-net.

Remedy wiring as necessary.

Other information

- see **BATTERY, DISCONNECTING**
- see **CHECKING WIRING AND TERMINALS**

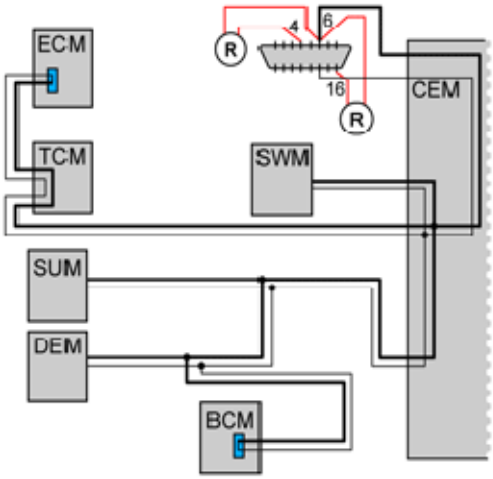

Fig. 16: CAN-Net Communication Diagram
Courtesy of VOLVO CARS CORPORATION

Was a fault detected?

- **YES**

  Refer to **VERIFICATION**

- **NO**

  Refer to **CHECKING THE TRAFFIC LOAD ON THE CAN CABLES**

CHECKING VOLTAGE-DROP IN CABLE FOR CAN-H AND CAN-L, RESPECTIVELY

Fig. 17: Identifying Ignition On Position
Courtesy of VOLVO CARS CORPORATION

- Connect the battery.
- Ignition on.
- Connect OBDII-Box **(951 3015)** to the diagnostics socket.

  For general information about CAN-troubleshooting, see: **GENERAL INFORMATION ABOUT FAULT-TRACING IN THE CAN NETWORK**

  In principle, the voltage measured in each cable in the CAN-net shall be the same at each control module in the network. This means that the voltage-drop in the cable for CAN-H and CAN-L, respectively, between the control modules should be very low. If there is a voltage-difference in the CAN-lines between the diagnostics socket/Central electronic module (CEM) and a control module due to, e. g., contact resistance in a connector or branching, communication may be lost/interfered with.

  Check if there is voltage-drop in the cable for CAN-H and CAN-L between the diagnostics socket/Central electronic module (CEM) and the control module where there is problem with communication.

  Carry out the following:

  Measure voltage between the following connections on the OBDII-box/diagnostics socket.

  - #6 and corresponding connection on relevant control module for CAN-H. The voltage shall be lower than 50 mV.
  - #14 and corresponding connection on relevant control module for CAN-L. The voltage shall be

lower than 50 mV.

If voltage is too high, this indicates too high contact resistance in cable, connector, or branching. Check the circuit between the diagnostics socket and control module in question for contact resistance and oxidation.

NOTE: **After fault with control modules that interfere with communication, other control modules may remain in Limp-Home (that is, they work with reduced functionality) even when the ignition has been turned off and on a few times. For certain faults in the CAN-net where control modules have stopped communicating, it may help to disconnect/reconnect the battery to "restart" the control module/CAN-net.**

Remedy wiring as necessary.

Other information

- see **CHECKING WIRING AND TERMINALS**

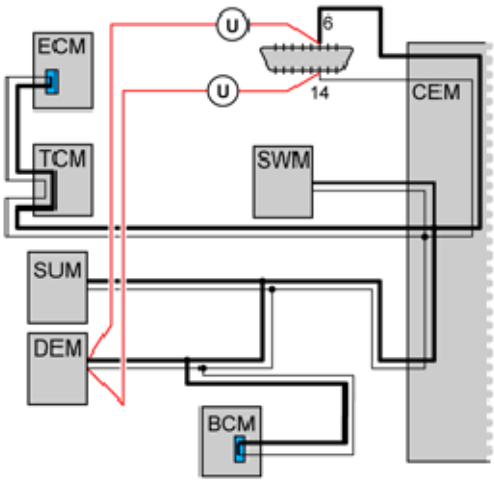

Fig. 18: CAN-Net Communication Diagram
Courtesy of VOLVO CARS CORPORATION

- **Continue**

Refer to **VERIFICATION**

INFORMATION

FAULT-TRACING INFORMATION

The fault should have been detected and remedied. As this is not the case fault-tracing has failed.

Exit fault-tracing for this diagnostic trouble code (DTC) or make another attempt.

CEM-1A62: COMMUNICATION WITH THE ENGINE CONTROL MODULE (ECM). SIGNAL MISSING (B6294T; 2005-2006)

SIGNAL MISSING

see **SIGNAL MISSING**

CEM-1A62: COMMUNICATION WITH THE ENGINE CONTROL MODULE (ECM). SIGNAL MISSING (B8444S; 2005-2011)

SIGNAL MISSING

CHECKING THE POWER SUPPLY AND GROUND FOR THE ENGINE CONTROL MODULE (ECM)

Check that the fuse for the control module is intact.

Check the power supply and ground for the engine control module (ECM) as follows.

Remedy as necessary.

Other information:

- see **CHECKING THE VOLTAGE / GROUND TERMINAL**
- see **CHECKING WIRING AND TERMINALS**

Was a fault detected?

- **YES**

  Refer to **CHECKING THE ENGINE CONTROL MODULE (ECM)**

- **NO**

  Refer to **CHECKING COMMUNICATION WITH THE ENGINE CONTROL MODULE (ECM)**

CHECKING COMMUNICATION WITH THE ENGINE CONTROL MODULE (ECM)

HINT: The CAN communication with the control module is probably OK if the control module ID can be read off. In that case the fault is probably intermittent and will then be more difficult to trace.

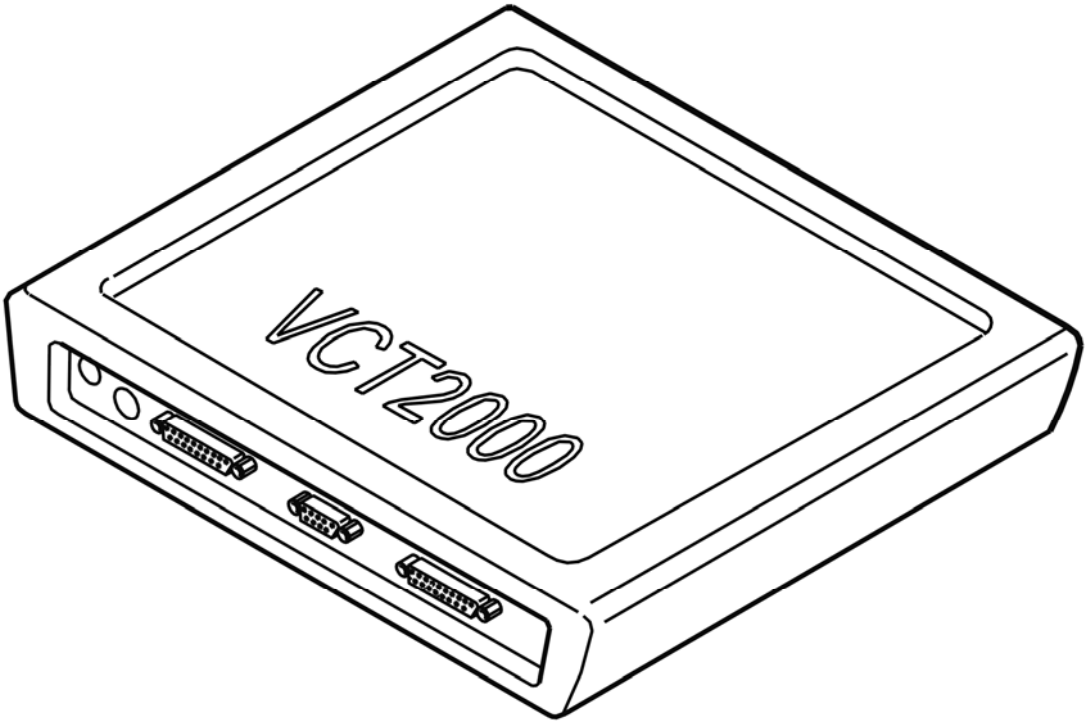

Fig. 19: Identifying VCT2000 Diagnostic Tool Symbol In VIDA
Courtesy of VOLVO CARS CORPORATION

- Try to communicate with the engine control module (ECM) by reading off the control module ID.
- Use the VCT2000 (or appropriate scan tool)
- **Continue**

  Refer to **SIGNAL MISSING**

CHECKING THE ENGINE CONTROL MODULE (ECM)

HINT: After carrying out the repair, check that the fault has been remedied.

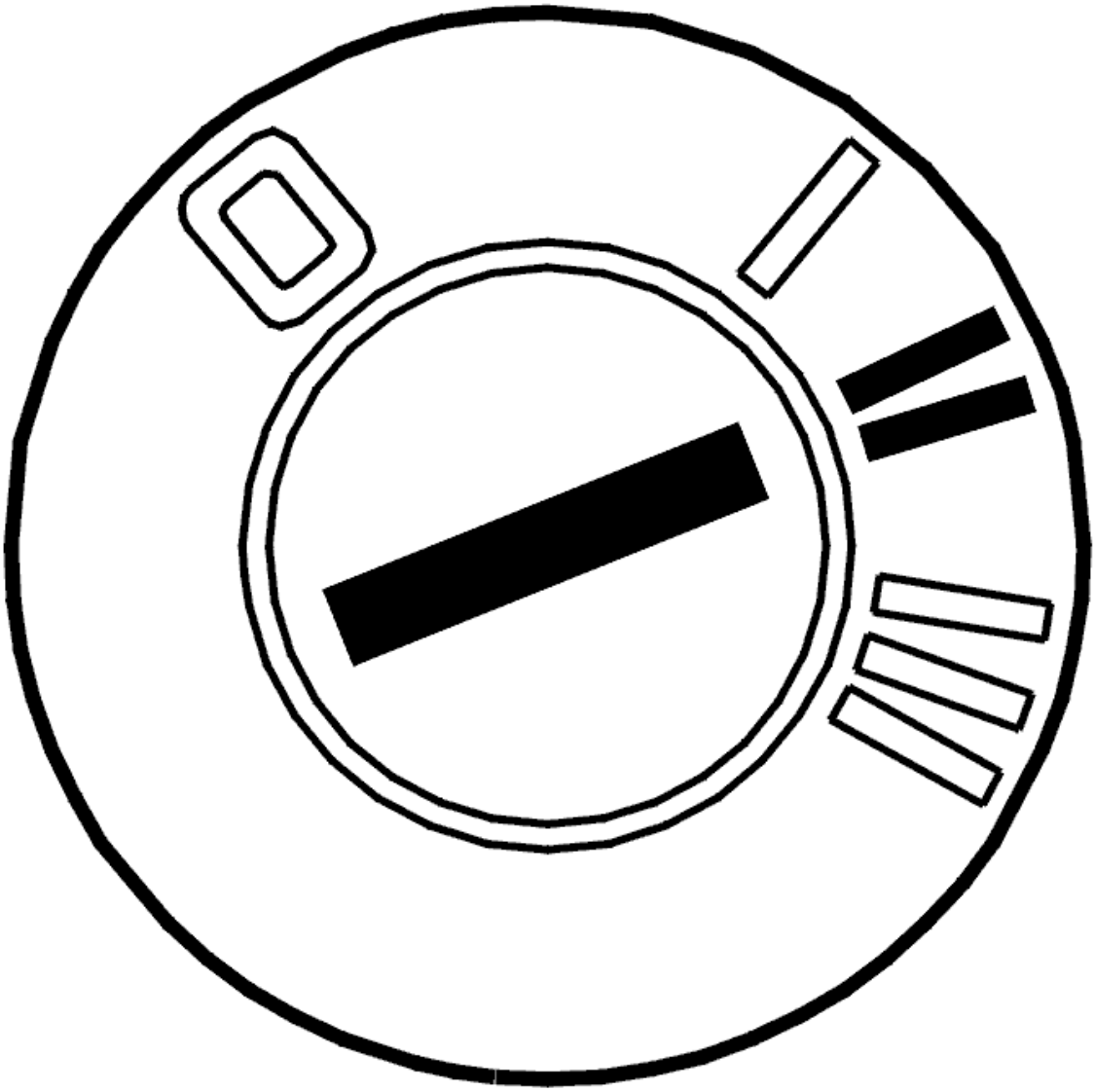

Fig. 20: Identifying Ignition ON
Courtesy of VOLVO CARS CORPORATION

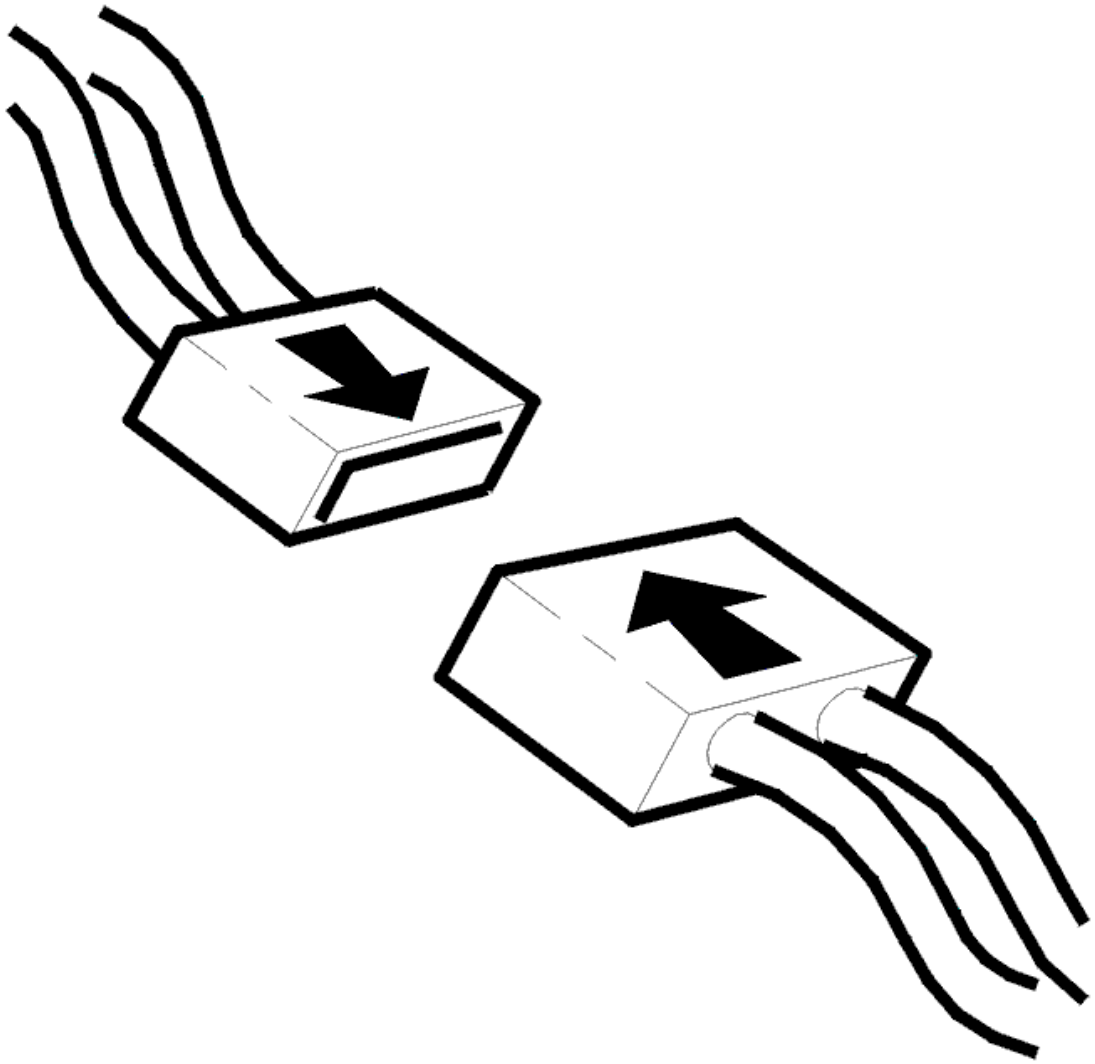

Fig. 21: Connecting Connector
Courtesy of VOLVO CARS CORPORATION

- Ignition off
- Reinstall the connectors, components etc.
- Erase diagnostic trouble codes using the VCT2000 (or appropriate scan tool)
- Start the engine. Allow the engine to run at idle speed for 10 minutes
- Read off diagnostic trouble codes (DTCs).

Does the diagnostic trouble code (DTC) for faulty communication return?

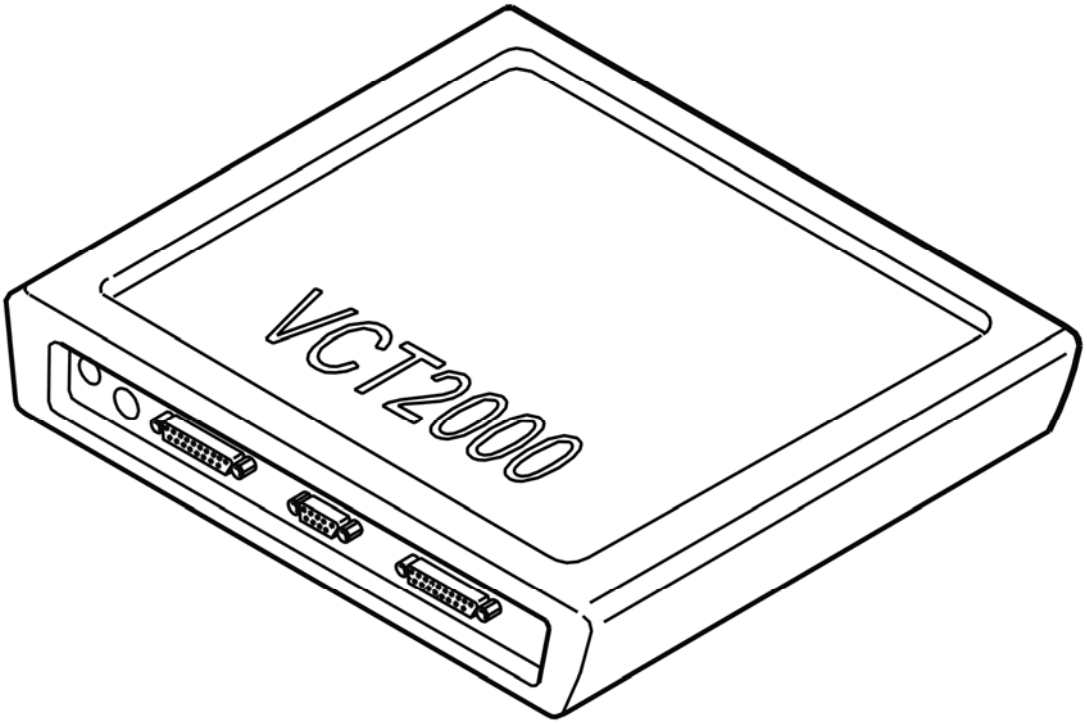

Fig. 22: Identifying VCT2000 Diagnostic Tool Symbol In VIDA
Courtesy of VOLVO CARS CORPORATION

Does the diagnostic trouble code (DTC) recur?

- **YES**

  Refer to **INFORMATION**

- **NO**

  OKAY: Troubleshooting has been completed.

SIGNAL MISSING

GENERAL INFORMATION

NOTE: Illustrations shown are only examples.

HINT: For general information about CAN-troubleshooting, see:

- **General about CAN-related diagnostic trouble codes:**

  CEM-DF01 - DF17 can only be stored in Central electronic module (CEM). These diagnostic trouble

codes are stored when an electric fault is detected in CAN-lines. Start with these diagnostic trouble codes first.

CEM-1AXX only stored in Central electronic module (CEM). One diagnostic trouble code for every control module on the CAN-net. These diagnostic trouble codes indicate that Central electronic module (CEM) does not receive any reply from other control modules.

XXX-E000 (HS-CAN)/E001 (LS-CAN) can be stored in all CAN-connected control modules. These diagnostic trouble codes indicate that the control module has detected interference on the CAN-net.

XXX-E003 can be stored in all CAN-connected control modules except in Central electronic module (CEM). The control modules on the CAN-net listen for a message (identity number) that is sent out at regular intervals from Central electronic module (CEM). This diagnostic trouble code indicates that the control module has not received any identity number, or that the expected number is not correct. Interference on the CAN-net can also store this diagnostic trouble code.

NOTE: **In case of CAN-related faults, it is likely that a combination of above diagnostic trouble codes occur.**

NOTE: **After fault with control modules that interfere with communication, other control modules may remain in Limp-Home (that is, they work with reduced functionality) even when the ignition has been turned off and on a few times. For certain faults in the CAN-net where control modules have stopped communicating, it may help to disconnect/reconnect the battery to "restart" the control module/CAN-net.**

If a communication diagnostic trouble code can be read from the control module, the malfunction is probably intermittent.

Intermittent fault in the voltage supply and ground to a control module on the CAN network results in the Central electronic module (CEM) storing a diagnostic trouble code (DTC) for an open-circuit in communication with the control module where the voltage supply does not work. There will probably not be a diagnostic trouble code (DTC) in the control module where the open-circuit in the voltage supply occurred as the control module cannot store a diagnostic trouble code (DTC) when it is not supplied with power.

NOTE: **Central electronic module (CEM) should not be replaced in case of CAN-fault, unless troubleshooting reveals that Central electronic module (CEM) has an internal fault.**

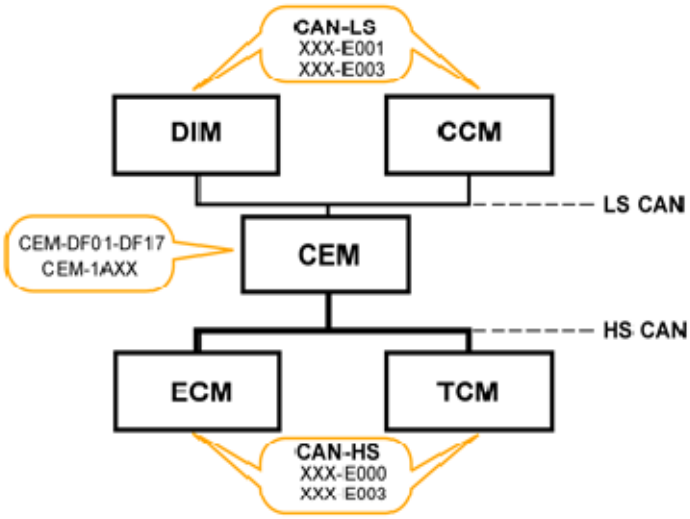

Fig. 23: High-Speed CAN And Low-Speed CAN Communication Diagram
Courtesy of VOLVO CARS CORPORATION

- **Continue**

  Refer to **CHECKING RESISTANCE IN CAN-NET**

CHECKING RESISTANCE IN CAN-NET

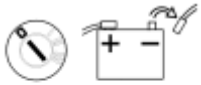

Fig. 24: Ignition Off And Disconnecting Battery Negative Lead
Courtesy of VOLVO CARS CORPORATION

- Ignition off
- Disconnect the battery negative lead
- Connect OBDII-Box **(951 3015)** to the diagnostics socket.

  For general information about CAN-troubleshooting, see: **GENERAL INFORMATION ABOUT FAULT-TRACING IN THE CAN NETWORK**

  Measure resistance between the following connections on the OBDII-box/diagnostics socket.

  - #6 and #14. The resistance should be approx. 55 - 65 ohms.
  - If resistance is approx. 120 ohms, this indicates open circuit in the circuit so that only one terminating resistor (120 ohms) has been measured.
  - If resistance is above 1 kohms this indicates open circuit/high contact resistance somewhere in the circuit.

- If resistance is below 55 ohms this indicates short-circuiting/contact resistance between the CAN-lines somewhere in the circuit.

HINT: For HS-CAN the terminating resistors are located in Brake control module (BCM) and in Engine control module (ECM).

Twist the cable harness and wiggle connectors where they can be accessed along the cable harness during every measurement, and note if the resistance changes to detect intermittent short-circuits or open circuit.

NOTE: **Resistance measurement measures only main lines in the CAN-net (in circuit where both terminating resistors are found), not branches to certain control modules.**

Open circuit on branching without a terminating resistor cannot be detected with this measurement. However, short-circuiting on a branch can be detected. To measure resistance in the CAN-net to control modules located in a branching of their own, the measurement shall be done against the CAN-net at that control module. The values shall be as above.

NOTE: **After fault with control modules that interfere with communication, other control modules may remain in Limp-Home (that is, they work with reduced functionality) even when the ignition has been turned off and on a few times. For certain faults in the CAN-net where control modules have stopped communicating, it may help to disconnect/reconnect the battery to "restart" the control module/CAN-net.**

Remedy wiring as necessary.

Other information

- see **BATTERY, DISCONNECTING**
- see **CHECKING WIRING AND TERMINALS**

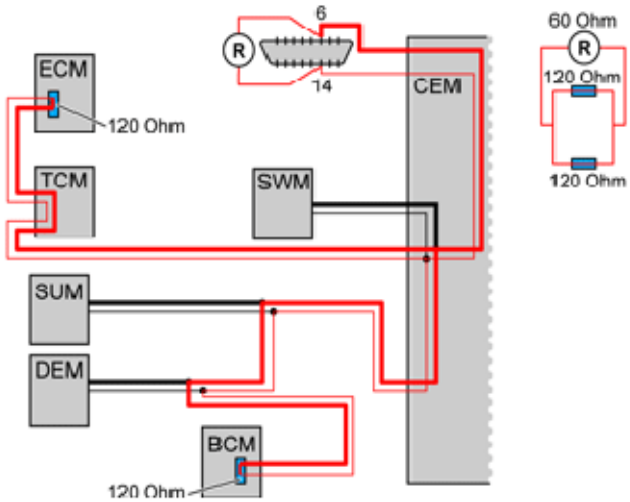

Fig. 25: Checking Resistance In CAN Lines
Courtesy of VOLVO CARS CORPORATION

Was a fault detected?

- **YES**

  Refer to **VERIFICATION**

- **NO**

  Refer to **CHECKING SHORT-CIRCUITING TO GROUND/VOLTAGE IN CAN-NET**

CHECKING THE TRAFFIC LOAD ON THE CAN CABLES

Fig. 26: Identifying Ignition On Position
Courtesy of VOLVO CARS CORPORATION

- Connect the battery
- Ignition on.
- Connect OBDII-Box **(951 3015)** to the diagnostics socket.

  For general information about CAN-troubleshooting, see: **GENERAL INFORMATION ABOUT FAULT-TRACING IN THE CAN NETWORK**

  Faults in the CAN network may be due to a control module sending faulty messages that disrupt normal

communication. When messages are sent incorrectly, this results in a considerable increase in the amount of traffic on the CAN network. Check the load by measuring the average voltage value on the CAN cables in relation to ground.

Measure voltage between the following connections on the OBDII-box/diagnostics socket.

- #6 and #4 (ground). The voltage should be approx:2, 8 - 3, 2 V.
- #14 and #4 (ground). The voltage should be approx:1, 8 - 2, 2 V.
- #6 and #14. The voltage shall be between approx. 0.55-1.4 V. The voltage shall normally be between 0.55 - 0.90 V. A higher voltage may indicate increased traffic on the CAN-net. In case of fault in communication/too high traffic on the CAN-net, the voltage is considerably higher than the above stated values.

NOTE: After fault with control modules that interfere with communication, other control modules may remain in Limp-Home even when the ignition has been turned off and on a few times. For certain faults in the CAN-net where control modules have stopped communicating, it may help to disconnect/reconnect the battery to "restart" the control module/CAN-net.

HINT: DiCE can be used as fault detection tool if fault is suspected on the CAN-net that cannot be detected with normal troubleshooting. Interference, intermittent faults, faulty messages on the CAN-net etc., are examples of such faults. The tool registers fault messages used on the CAN-net. Fault messages may be caused by short intermittent malfunctions on the CAN-net or by a control module sending fault messages. See tools:951 3010 as well as associated TJ 20402.

- Ignition on.
- Connect DiCE to the diagnostics socket.
- Note the blue LED-indicator. The indicator flashes to show detection of fault messages.

NOTE: Certain interference may occur without any real fault

Cable fault

- Shake the cables lightly and pull lightly on the connections during the check to locate any fault. Note the blue LED-indicator.

"Chatting" control modules

- "Chatting" control modules may be difficult to find and troubleshooting may take time. Let the vehicle stand with DiCE connected for an extended time period. Afterwards, activate functions to provoke a malfunction. It may take up to several hours before the fault messages are sent. When the indicator starts to flash, remove the fuse for one control module at a time until the indicator stops flashing. When the indicator stops flashing, restore the fuse for the relevant control module and check that the indicator starts to flash again. Then it is likely that the problem is identified.

Remedy wiring as necessary.

Other information

- see **BATTERY, DISCONNECTING**
- see **CHECKING WIRING AND TERMINALS**

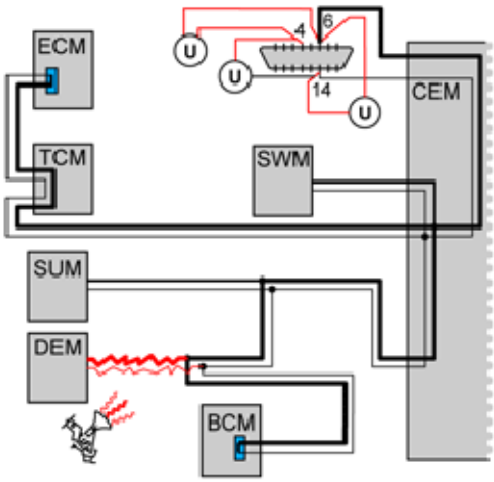

Fig. 27: Checking Traffic Load On CAN Cables
Courtesy of VOLVO CARS CORPORATION

Was a fault detected?

- **YES**

  Refer to **IDENTIFYING A CONTROL MODULE IN THE CAN NETWORK**

- **NO**

  Refer to **CHECKING VOLTAGE-DROP IN CABLE FOR CAN-H AND CAN-L, RESPECTIVELY**

IDENTIFYING A CONTROL MODULE IN THE CAN NETWORK

Fig. 28: Identifying Ignition On Position
Courtesy of VOLVO CARS CORPORATION

For general information about CAN-troubleshooting, see: **GENERAL INFORMATION ABOUT FAULT-TRACING IN THE CAN NETWORK**

HINT: DiCE can be used as fault detection tool if fault is suspected on the CAN-net that cannot be detected with normal troubleshooting. Interference, intermittent faults, faulty messages on the CAN-net (chattering control modules) etc., are examples of such faults. The tool registers fault messages used on the CAN-net. Fault messages may be caused by short intermittent malfunctions on the CAN-net or by a control module sending fault messages. See tools:951 3010 (memory card) as well as associated TJ 20402.

If the load on the CAN network is too high, this may be due to a control module sending faulty messages on the CAN network (known as a disruptive control module). The fault may also be due to an intermittent short-circuit to supply voltage or ground in one of the CAN cables. This results in the control modules on the CAN network starting to send faulty messages. The faults can occur without a diagnostic trouble code (DTC) being stored by the control modules. The voltage can be measured between the CAN cables in order to check the load on the CAN network.

NOTE: **It is not necessarily the control module(s) that stored the diagnostic trouble code (DTC) that is communicating faultily. Faulty messages can come from any control module in the same section of the CAN network. However, faulty communication in one network cannot affect the communication on the other network. In other words, faulty communication on the LS-CAN cannot disrupt communication on the HS-CAN and vice versa.**

- Ignition on.
- Connect OBDII-Box **(951 3015)** to the diagnostics socket.

Check communication/load on CAN-net by measuring voltage between CAN-L and CAN-H. Measure voltage between the following connections on the OBDII-box/diagnostics socket.

- #6 and #14. The average value of the voltage must be approximately 0.6-1.4 V. The voltage shall normally be between 0.55 - 0.90 V. A higher voltage may indicate increased traffic on the CAN-net. In case of fault in communication/too high traffic on the CAN-net, the voltage is considerably higher than the above stated values.

In order to identify which control module has faulty communication, cut the power supply to one control module at a time. Check the voltage in the CAN cables again. The easiest way to cut the power supply is to remove the fuse(s) for the relevant control module. Repeat until the voltage between the CAN wiring drops to the normal level.

NOTE: **When connecting and disconnecting individual control modules, other diagnostic trouble codes (DTCs) may be stored in certain control modules.**

HINT: When the suspected defective control module has been identified, connect and disconnect the supply voltage to the control module a number of times to verify that the malfunction appears and disappears. Switch off the ignition between each check.

NOTE: **Do not cut the power to the central electronic module (CEM) unless it is the last control module left to check.**

A control module that is communicating incorrectly must be replaced. See Repairing and installing/Removing, replacing and installing.

NOTE: **After fault with control modules that interfere with communication, other control modules may remain in Limp-Home (that is, they work with reduced functionality) even when the ignition has been turned off and on a few times. For certain faults in the CAN-net where control modules have stopped communicating, it may help to disconnect/reconnect the battery to "restart" the control module/CAN-net.**

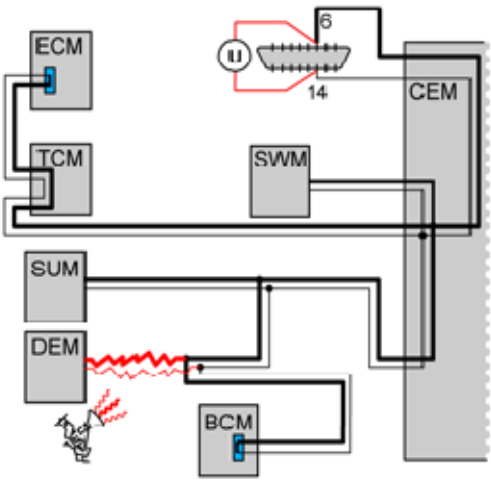

Fig. 29: Checking Communication/Load On CAN-Net Between CAN-L And CAN-H
Courtesy of VOLVO CARS CORPORATION

- **Continue**

  Refer to **VERIFICATION**

VERIFICATION

HINT: After rectifying a fault, a verification should be carried out.

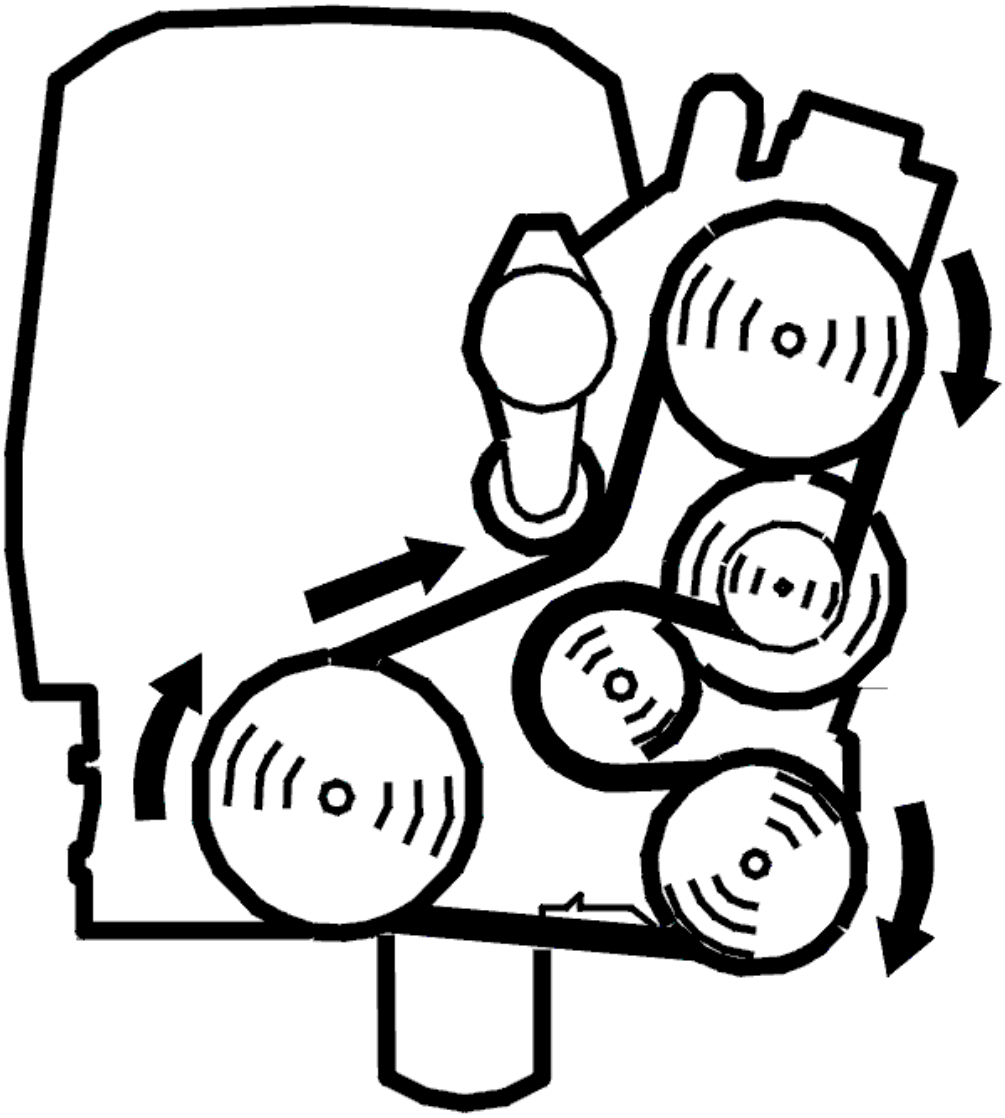

Fig. 30: Belt Routing / Engine Idling - Volvo
Courtesy of VOLVO CARS CORPORATION

Fig. 31: Identifying Ignition On Position
Courtesy of VOLVO CARS CORPORATION

- Reinstall the connectors, components etc.
- Ignition on.

NOTE: **For certain faults in the CAN-net where control modules have stopped communicating, it may help to disconnect/reconnect the battery to "restart" the control module/CAN-net.**

- Erase diagnostic trouble codes (DTCs) in all control modules.
- Ignition off.
- Ignition on.
- Start the vehicle. Allow the vehicle to run for 10 minutes.
- Read out the diagnostic trouble codes in the vehicle via the DIAGNOSTICS tab.

Does the diagnostic trouble code (DTC) for faulty communication return?

- **YES**

  Refer to **INFORMATION**

- **NO**

  OKAY: Troubleshooting has been completed.

CHECKING SHORT-CIRCUITING TO GROUND/VOLTAGE IN CAN-NET

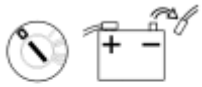

Fig. 32: Ignition Off And Disconnecting Battery Negative Lead
Courtesy of VOLVO CARS CORPORATION

- Ignition off.
- Disconnect the battery negative lead.
- Connect OBDII-Box **(951 3015)** to the diagnostics socket.

  For general information about CAN-troubleshooting, see: **GENERAL INFORMATION ABOUT FAULT-TRACING IN THE CAN NETWORK**

  Checking for a short-circuit to ground

  Measure resistance between the following connections on the OBDII-box/diagnostics socket.

  - #6 and #4 (ground). Measurement is shown in the illustration. The resistance should be above 1 kohms.
  - #14 and #4 (ground). The resistance should be above 1 kohms.

If resistance is below 1 kohms this indicates short-circuiting between the CAN-line and ground.

Checking for a short-circuit to voltage

Measure resistance between the following connections on the OBDII-box/diagnostics socket.

- #6 and #16 (voltage). Measurement is shown in the illustration. The resistance should be above 1 kohms.
- #14 and #16 (voltage). The resistance should be above 1 kohms.

If resistance is below 1 kohms this indicates short-circuiting between the CAN-line and voltage cable.

Twist the cable harness and wiggle connectors where they can be accessed along the cable harness during every measurement, and note if the resistance changes to detect intermittent short-circuits or open circuit.

HINT: Part the CAN-net at suitable points to decide where a short-circuit may be found.

NOTE: After fault with control modules that interfere with communication, other control modules may remain in Limp-Home (that is, they work with reduced functionality) even when the ignition has been turned off and on a few times. For certain faults in the CAN-net where control modules have stopped communicating, it may help to disconnect/reconnect the battery to "restart" the control module/CAN-net.

Remedy wiring as necessary.

Other information

- see **BATTERY, DISCONNECTING**
- see **CHECKING WIRING AND TERMINALS**

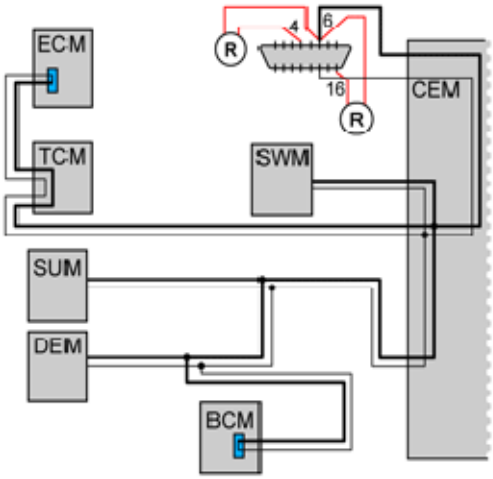

Fig. 33: CAN-Net Communication Diagram
Courtesy of VOLVO CARS CORPORATION

Was a fault detected?

- **YES**

  Refer to **VERIFICATION**

- **NO**

  Refer to **CHECKING THE TRAFFIC LOAD ON THE CAN CABLES**

CHECKING VOLTAGE-DROP IN CABLE FOR CAN-H AND CAN-L, RESPECTIVELY

Fig. 34: Identifying Ignition On Position
Courtesy of VOLVO CARS CORPORATION

- Connect the battery.
- Ignition on.
- Connect OBDII-Box **(951 3015)** to the diagnostics socket.

  For general information about CAN-troubleshooting, see: **GENERAL INFORMATION ABOUT FAULT-TRACING IN THE CAN NETWORK**

  In principle, the voltage measured in each cable in the CAN-net shall be the same at each control module in the network. This means that the voltage-drop in the cable for CAN-H and CAN-L, respectively, between the control modules should be very low. If there is a voltage-difference in the CAN-lines between the diagnostics socket/Central electronic module (CEM) and a control module due to, e. g., contact resistance in a connector or branching, communication may be lost/interfered with.

  Check if there is voltage-drop in the cable for CAN-H and CAN-L between the diagnostics socket/Central electronic module (CEM) and the control module where there is problem with communication.

  Carry out the following:

  Measure voltage between the following connections on the OBDII-box/diagnostics socket.

  - #6 and corresponding connection on relevant control module for CAN-H. The voltage shall be lower than 50 mV.
  - #14 and corresponding connection on relevant control module for CAN-L. The voltage shall be

lower than 50 mV.

If voltage is too high, this indicates too high contact resistance in cable, connector, or branching. Check the circuit between the diagnostics socket and control module in question for contact resistance and oxidation.

NOTE: **After fault with control modules that interfere with communication, other control modules may remain in Limp-Home (that is, they work with reduced functionality) even when the ignition has been turned off and on a few times. For certain faults in the CAN-net where control modules have stopped communicating, it may help to disconnect/reconnect the battery to "restart" the control module/CAN-net.**

Remedy wiring as necessary.

Other information

- see **CHECKING WIRING AND TERMINALS**

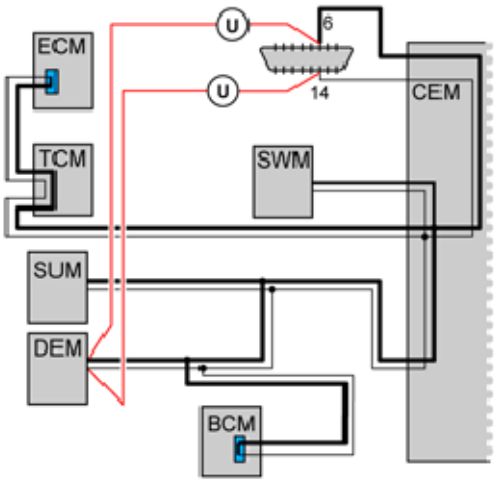

Fig. 35: CAN-Net Communication Diagram
Courtesy of VOLVO CARS CORPORATION

- **Continue**

Refer to **VERIFICATION**

INFORMATION

FAULT-TRACING INFORMATION

The fault should have been detected and remedied. As this is not the case fault-tracing has failed.

Exit fault-tracing for this diagnostic trouble code (DTC) or make another attempt.

CEM-1A63: COMMUNICATION WITH THE ACCESSORY ELECTRONIC MODULE (AEM). SIGNAL MISSING (2005-2012)

DIAGNOSTIC TROUBLE CODE (DTC) INFORMATION CEM-1A63

Condition

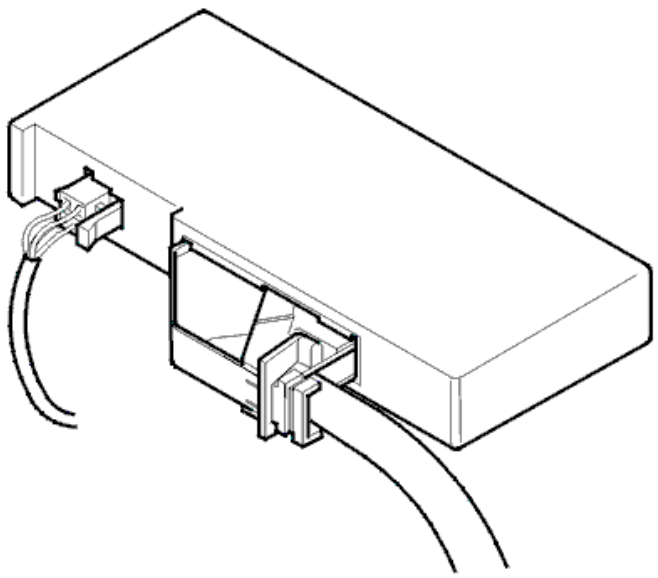

Fig. 36: Accessory Electronic Module
Courtesy of VOLVO CARS CORPORATION

The diagnostic trouble code (DTC) is stored if the central electronic module (CEM) registers that communication with the accessory electronic module (AEM) is not operating.

The diagnostic trouble code (DTC) can be diagnosed when the ignition has been on for more than 10 seconds.

NOTE: **If CEM-1A6X diagnostic trouble codes (DTCs) are stored, the central electronic module (CEM) must not be replaced as the diagnostic trouble code (DTC) indicates a communication fault in the Control area network**

Substitute Value

- None.

Possible Source

- No power supply to the accessory electronic module (AEM)
- Open-circuit in the ground lead for the accessory electronic module (AEM)

- Contact resistance in the terminals
- Open-circuit in the wiring for the CAN low speed network to the accessory electronic module (AEM)
- The accessory electronic module (AEM) is not intended for this vehicle, for example a used control module with different software/hardware.

HINT: If several diagnostic trouble codes (DTCs) are stored in the central electronic module (CEM) for communication faults with other control modules in the low speed network, this indicates a common fault in the Control area network.

Fault symptom[s]

- Accessories connected to the control module do not function.

SIGNAL MISSING

CHECKING THE POWER SUPPLY AND GROUND FOR THE ACCESSORY ELECTRONIC MODULE (AEM)

Check that the fuse for the control module is intact.

Check the power supply and ground for the accessory electronic module (AEM) as follows.

Other information:

- see **CHECKING THE GROUND TERMINAL**
- see **CHECKING WIRING AND TERMINALS**

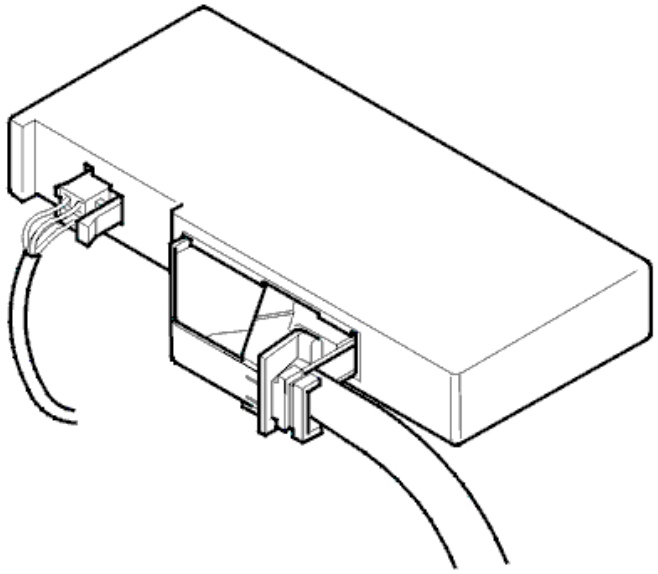

Fig. 37: Accessory Electronic Module
Courtesy of VOLVO CARS CORPORATION

Was a fault detected?

- **YES**

  Refer to **CHECKING THE ACCESSORY ELECTRONIC MODULE (AEM)**

- **NO**

  Refer to **CHECKING COMMUNICATION WITH THE ACCESSORY ELECTRONIC MODULE (AEM)**

CHECKING COMMUNICATION WITH THE ACCESSORY ELECTRONIC MODULE (AEM)

HINT: The CAN communication with the control module is probably OK if the control module ID can be read off. In that case the fault is probably intermittent and will then be more difficult to trace.

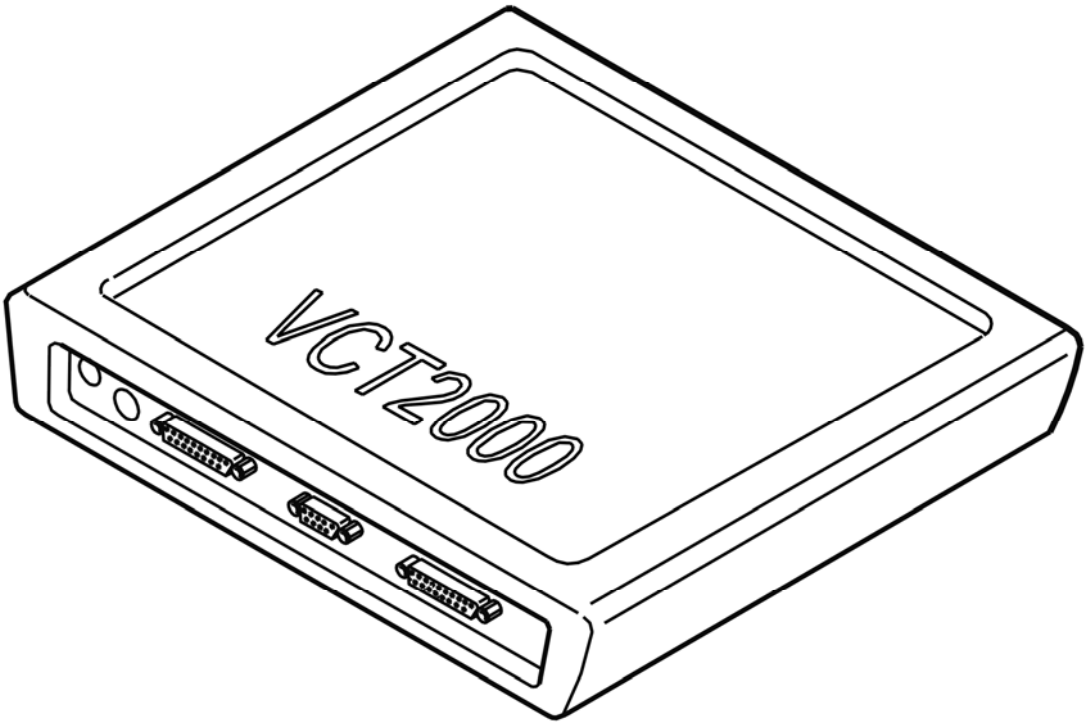

Fig. 38: Identifying VCT2000 Diagnostic Tool Symbol In VIDA
Courtesy of VOLVO CARS CORPORATION

- Try to communicate with the accessory electronic module (AEM) by reading off the control module ID
- Use the VCT2000 (or appropriate scan tool)

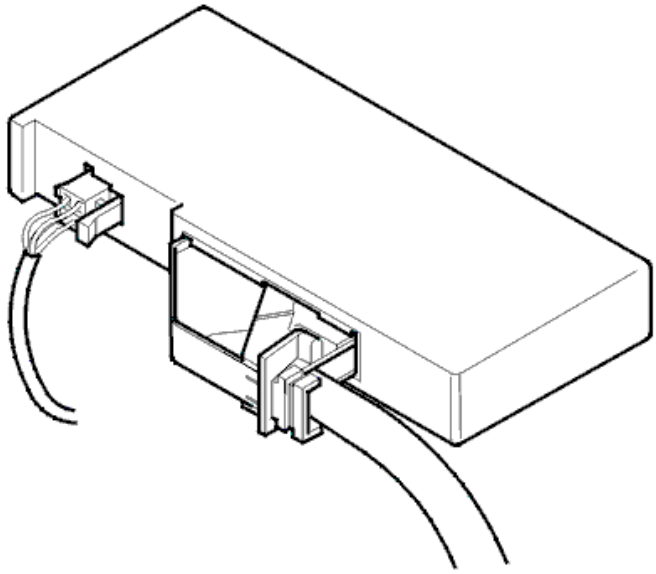

Fig. 39: Accessory Electronic Module
Courtesy of VOLVO CARS CORPORATION

- **Continue**

  Refer to **SIGNAL MISSING**

CHECKING THE ACCESSORY ELECTRONIC MODULE (AEM)

HINT: After carrying out the repair, check that the fault has been remedied.

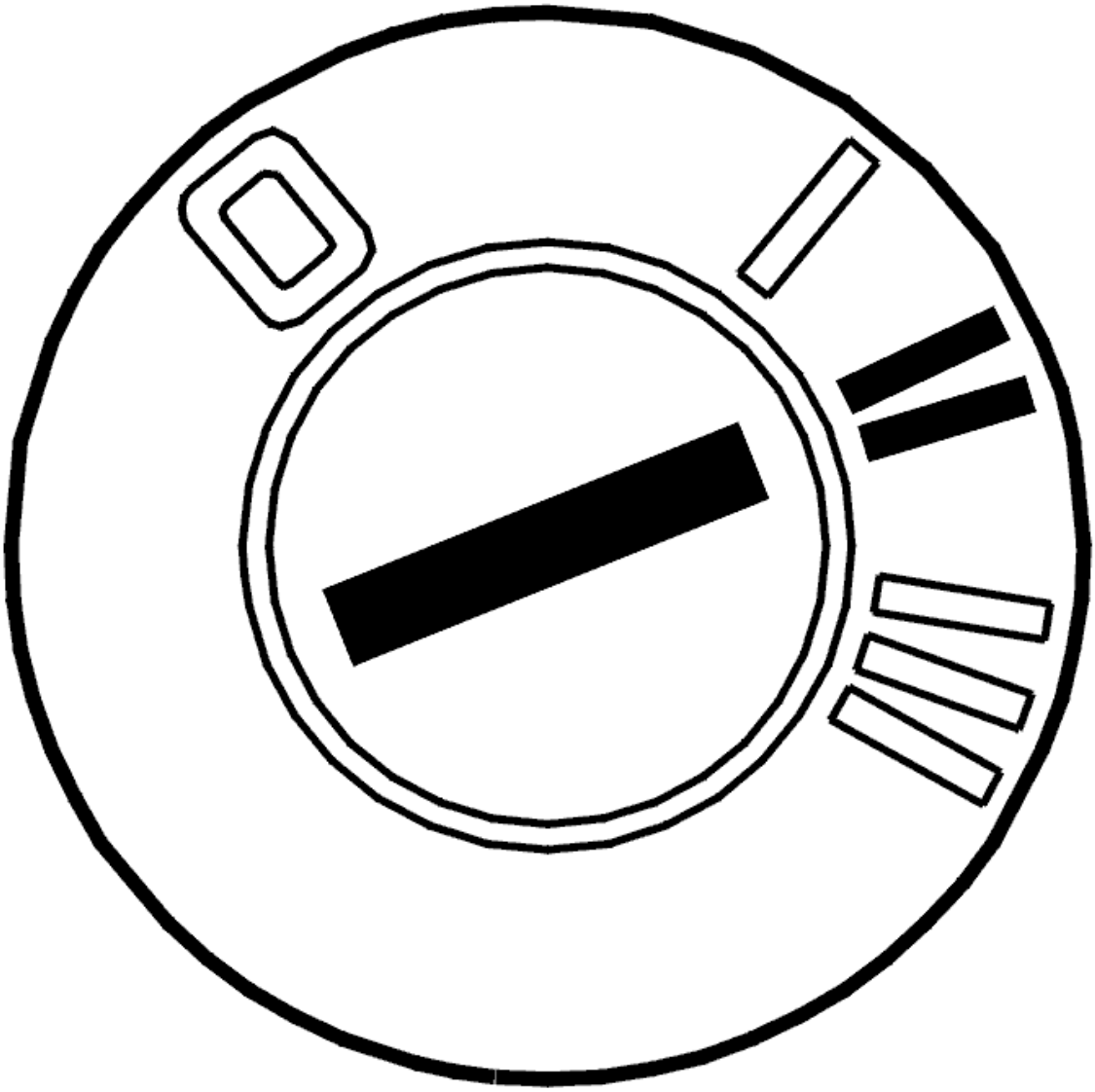

Fig. 40: Identifying Ignition ON
Courtesy of VOLVO CARS CORPORATION

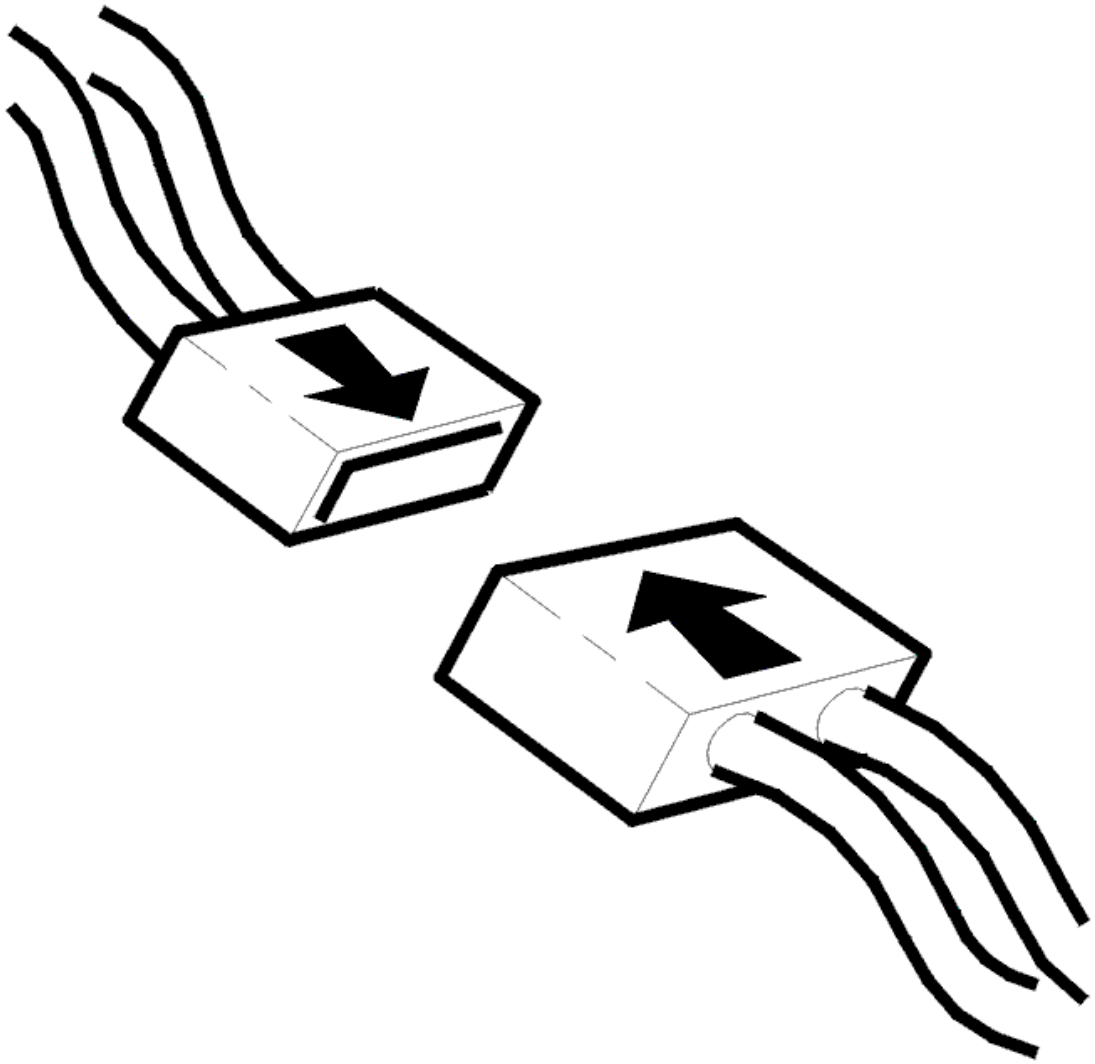

Fig. 41: Connecting Connector
Courtesy of VOLVO CARS CORPORATION

- Ignition off
- Reconnect the connectors. Reinstall the components
- Ignition on for at least 10 seconds.

  Read off the control module ID from the accessory electronic module (AEM) using the VCT2000 (or appropriate scan tool).

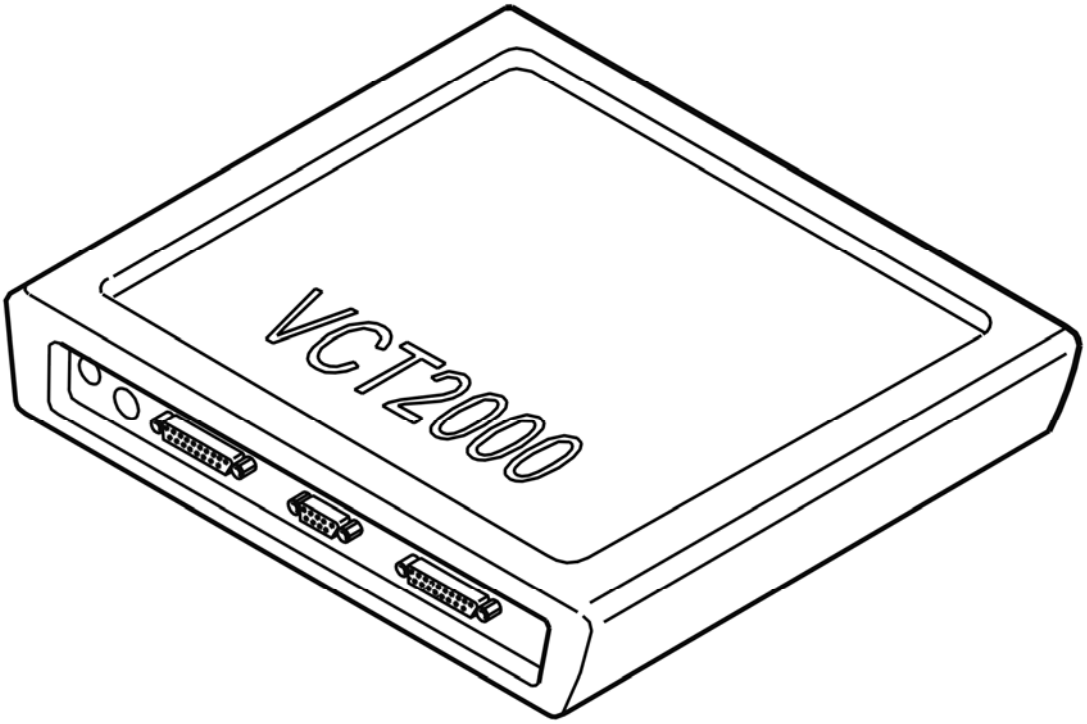

Fig. 42: Identifying VCT2000 Diagnostic Tool Symbol In VIDA
Courtesy of VOLVO CARS CORPORATION

Could the control module ID be read off?

- **YES**

  OKAY: Troubleshooting has been completed.

- **NO**

  Refer to **INFORMATION**

SIGNAL MISSING

GENERAL INFORMATION

NOTE: Illustrations shown are only examples.

HINT: For general information about CAN-troubleshooting, see:

- **General about CAN-related diagnostic trouble codes:**

  CEM-DF01 - DF17 can only be stored in Central electronic module (CEM). These diagnostic trouble

codes are stored when an electric fault is detected in CAN-lines. Start with these diagnostic trouble codes first.

CEM-1AXX only stored in Central electronic module (CEM). One diagnostic trouble code for every control module on the CAN-net. These diagnostic trouble codes indicate that Central electronic module (CEM) does not receive any reply from other control modules.

XXX-E000 (HS-CAN)/E001 (LS-CAN) can be stored in all CAN-connected control modules. These diagnostic trouble codes indicate that the control module has detected interference on the CAN-net.

XXX-E003 can be stored in all CAN-connected control modules except in Central electronic module (CEM). The control modules on the CAN-net listen for a message (identity number) that is sent out at regular intervals from Central electronic module (CEM). This diagnostic trouble code indicates that the control module has not received any identity number, or that the expected number is not correct. Interference on the CAN-net can also store this diagnostic trouble code.

NOTE: **In case of CAN-related faults, it is likely that a combination of above diagnostic trouble codes occur.**

NOTE: **After fault with control modules that interfere with communication, other control modules may remain in Limp-Home (that is, they work with reduced functionality) even when the ignition has been turned off and on a few times. For certain faults in the CAN-net where control modules have stopped communicating, it may help to disconnect/reconnect the battery to "restart" the control module/CAN-net.**

If diagnostic trouble codes (DTCs) for communication faults can be read off from a control module, the fault is probably intermittent.

Intermittent fault in the voltage supply and ground to a control module on the CAN network results in the Central electronic module (CEM) storing a diagnostic trouble code (DTC) for an open-circuit in communication with the control module where the voltage supply does not work. There will probably not be a diagnostic trouble code (DTC) in the control module where the open-circuit in the voltage supply occurred as the control module cannot store a diagnostic trouble code (DTC) when it is not supplied with power.

NOTE: **Central electronic module (CEM) should not be replaced in case of CAN-fault, unless troubleshooting reveals that Central electronic module (CEM) has an internal fault.**

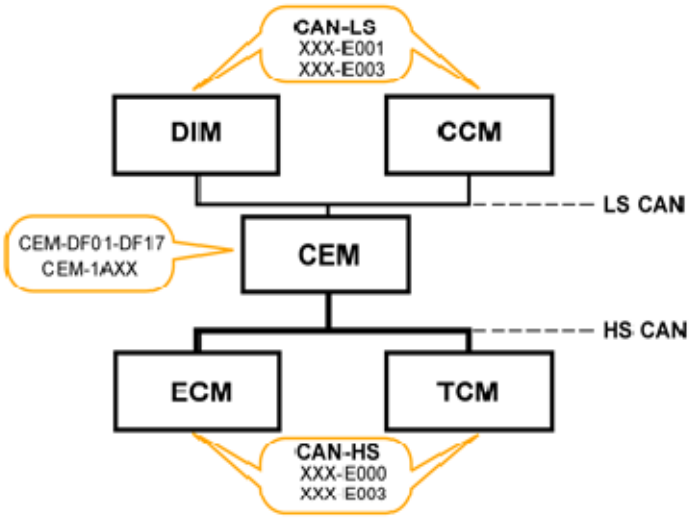

Fig. 43: High-Speed CAN And Low-Speed CAN Communication Diagram
Courtesy of VOLVO CARS CORPORATION

- **Continue**

  Refer to **CHECKING RESISTANCE IN CAN-NET**

CHECKING RESISTANCE IN CAN-NET

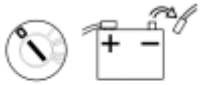

Fig. 44: Ignition Off And Disconnecting Battery Negative Lead
Courtesy of VOLVO CARS CORPORATION

- Ignition off
- Disconnect the battery negative lead
- Connect OBDII-Box **(951 3015)** to the diagnostics socket.

  For general information about CAN-troubleshooting, see: **GENERAL INFORMATION ABOUT FAULT-TRACING IN THE CAN NETWORK**

  Measure resistance between the following connections on the OBDII-box/diagnostics socket.

  - #3 and #11. The resistance should be approx. 55 - 65 ohms.
  - If resistance is approx. 120 ohms, this indicates open circuit in the circuit so that only one terminating resistor (120 ohms) has been measured.
  - If resistance is above 1 kohms this indicates open circuit/high contact resistance somewhere in the circuit.

- If resistance is below 55 ohms this indicates short-circuiting/contact resistance between the CAN-lines somewhere in the circuit.

HINT: For LS-CAN, terminating resistors are located in Upper electronic module (UEM) and Rear electronic module (REM).

Twist the cable harness and wiggle connectors where they can be accessed along the cable harness during every measurement, and note if the resistance changes to detect intermittent short-circuits or open circuit.

NOTE: **Resistance measurement measures only main lines in the CAN-net (in circuit where both terminating resistors are found), not branches to certain control modules. Open circuit on branching without a terminating resistor cannot be detected with this measurement. However, short-circuiting on a branch can be detected. To measure resistance in the CAN-net to control modules located in a branching of their own, the measurement shall be done against the CAN-net at that control module. The values shall be as above.**

NOTE: **After fault with control modules that interfere with communication, other control modules may remain in Limp-Home (that is, they work with reduced functionality) even when the ignition has been turned off and on a few times. For certain faults in the CAN-net where control modules have stopped communicating, it may help to disconnect/reconnect the battery to "restart" the control module/CAN-net.**

Remedy as necessary.

Other information

- see **BATTERY, DISCONNECTING**
- see **CHECKING WIRING AND TERMINALS**

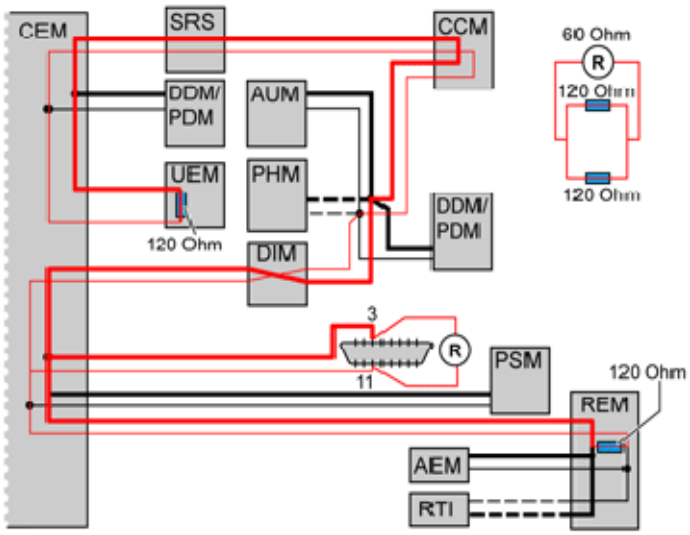

Fig. 45: Checking Resistance In CAN Lines
Courtesy of VOLVO CARS CORPORATION

Was a fault detected?

- **YES**

  Refer to **VERIFICATION**

- **NO**

  Refer to **CHECKING SHORT-CIRCUITING TO GROUND/VOLTAGE IN CAN-NET**

CHECKING THE AMOUNT OF TRAFFIC ON THE LS-CAN

Fig. 46: Identifying Ignition On Position
Courtesy of VOLVO CARS CORPORATION

- Connect the battery
- Ignition on.
- Connect OBDII-Box **(951 3015)** to the diagnostics socket.

  For general information about CAN-troubleshooting, see: **GENERAL INFORMATION ABOUT FAULT-TRACING IN THE CAN NETWORK**

  Faults in the CAN network may be due to a control module sending faulty messages that disrupt normal

communication. When messages are sent incorrectly, this results in a considerable increase in the amount of traffic on the CAN network. The load can be checked by reading the average value of the voltage on the CAN cables in relation to ground.

Measure voltage between the following connections on the OBDII-box/diagnostics socket.

- #3 and #4 (ground). The voltage should be approx:2, 8 - 3, 2 V.
- #11 and #4 (ground). The voltage should be approx:1, 8 - 2, 2 V.
- #3 and #11. The voltage shall be between approx. 0.55-1.4 V. The voltage shall normally be between 0.55 - 0.90 V. A higher voltage may indicate increased traffic on the CAN-net. In case of fault in communication/too high traffic on the CAN-net, the voltage is considerably higher than the above stated values.

NOTE: After fault with control modules that interfere with communication, other control modules may remain in Limp-Home even when the ignition has been turned off and on a few times. For certain faults in the CAN-net where control modules have stopped communicating, it may help to disconnect/reconnect the battery to "restart" the control module/CAN-net.

HINT: DiCE can be used as fault detection tool if fault is suspected on the CAN-net that cannot be detected with normal troubleshooting. Interference, intermittent faults, faulty messages on the CAN-net etc., are examples of such faults. The tool registers fault messages used on the CAN-net. Fault messages may be caused by short intermittent malfunctions on the CAN-net or by a control module sending fault messages. See tools:951 3010 as well as associated TJ 20402.

- Ignition on.
- Connect DiCE to the diagnostics socket.
- Note the blue LED-indicator. The indicator flashes to show detection of fault messages.

NOTE: Certain interference may occur without any real fault

Cable fault

- Shake the cables lightly and pull lightly on the connections during the check to locate any fault. Note the blue LED-indicator.

"Chatting" control modules

- "Chatting" control modules may be difficult to find and troubleshooting may take time. Let the vehicle stand with DiCE connected for an extended time period. Afterwards, activate functions to provoke a malfunction. It may take up to several hours before the fault messages are sent. When the indicator starts to flash, remove the fuse for one control module at a time until the indicator stops flashing. When the indicator stops flashing, restore the fuse for the relevant control module and check that the indicator starts to flash again. Then it is likely that the problem is identified.

Remedy wiring as necessary.

Other information

- see **BATTERY, DISCONNECTING**
- see **TROUBLESHOOTING USING DICE ERROR FRAME FINDER**
- see **CHECKING WIRING AND TERMINALS**

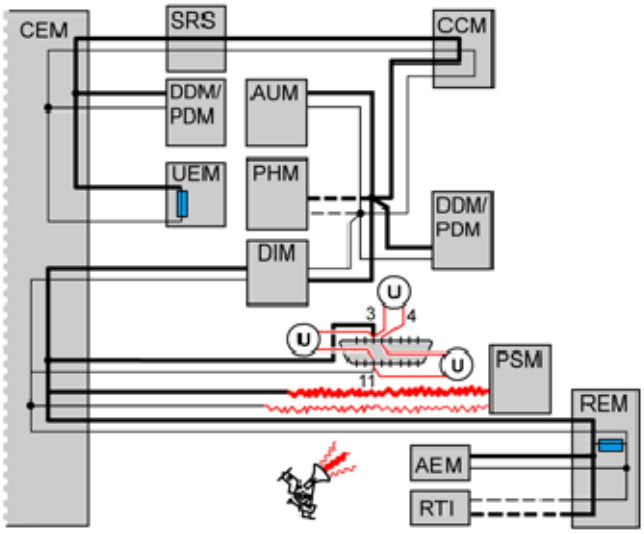

Fig. 47: Checking Amount Of Traffic On LS-CAN
Courtesy of VOLVO CARS CORPORATION

Was a fault detected?

- **YES**

  Refer to **IDENTIFYING A CONTROL MODULE IN THE CAN NETWORK**

- **NO**

  Refer to **CHECKING VOLTAGE-DROP IN CABLE FOR CAN-H AND CAN-L, RESPECTIVELY**

IDENTIFYING A CONTROL MODULE IN THE CAN NETWORK

Fig. 48: Identifying Ignition On Position
Courtesy of VOLVO CARS CORPORATION

For general information about CAN-troubleshooting, see: **GENERAL INFORMATION ABOUT FAULT-**

TRACING IN THE CAN NETWORK

HINT: DiCE can be used as fault detection tool if fault is suspected on the CAN-net that cannot be detected with normal troubleshooting. Interference, intermittent faults, faulty messages on the CAN-net (chattering control modules) etc., are examples of such faults. The tool registers fault messages used on the CAN-net. Fault messages may be caused by short intermittent malfunctions on the CAN-net or by a control module sending fault messages. See tools:951 3010 (memory card) as well as associated TJ 20402. If the load on the CAN network is too high, this may be due to a control module transmitting faulty messages on the CAN network. This is called a disruptive control module. The fault may also be due to an intermittent short-circuit to supply voltage or ground in one of the CAN cables. This results in the control modules on the CAN network starting to send faulty messages. The fault may occur without any of the control modules storing a diagnostic trouble code (DTC). The voltage can be measured between the CAN cables in order to check the load on the CAN network.

NOTE: **It is not necessarily the control module that has set the diagnostic trouble code that communicates incorrectly. Faulty messages can come from any control module in the same section of the CAN network. However, faulty communication in one network cannot affect the communication on the other network. In other words, faulty communication on the LS-CAN cannot disrupt communication on the HS-CAN and vice versa.**

- Ignition on.
- Connect OBDII-Box **(951 3015)** to the diagnostics socket.

Check communication/load on CAN-net by measuring voltage between CAN-L and CAN-H. Measure voltage between the following connections on the OBDII-box/diagnostics socket.

- #3 and #11. The average value of the voltage must be approximately 0.6-1.4 V. The voltage shall normally be between 0.55 - 0.90 V. A higher voltage may indicate increased traffic on the CAN-net. In case of fault in communication/too high traffic on the CAN-net, the voltage is considerably higher than the above stated values.

In order to identify which control module has faulty communication, cut the power supply to one control module at a time. Check the voltage in the CAN cables again. The easiest way to cut the power supply is to remove the fuse(s) for the relevant control module. Repeat until the voltage between the CAN wiring drops to the normal level.

NOTE: **When connecting and disconnecting certain control modules, diagnostic trouble codes (DTCs) may be stored in other control modules.**

HINT: When the suspected defective control module has been identified, connect and disconnect the supply voltage to the control module a number of times to verify that the malfunction appears and disappears. Switch off the ignition between each check.

NOTE: **Do not cut the power to the central electronic module (CEM) unless it is the last control module left to check.**

A control module that is communicating incorrectly must be replaced. See Repairing and installing/Removing, replacing and installing.

NOTE: **After fault with control modules that interfere with communication, other control modules may remain in Limp-Home (that is, they work with reduced functionality) even when the ignition has been turned off and on a few times. For certain faults in the CAN-net where control modules have stopped communicating, it may help to disconnect/reconnect the battery to "restart" the control module/CAN-net.**

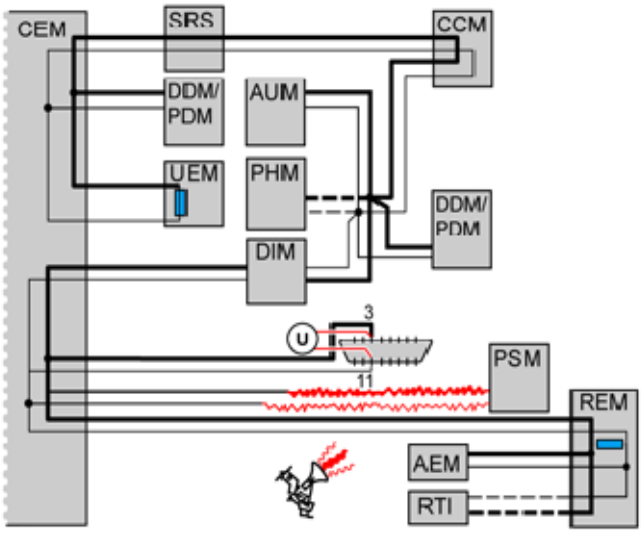

Fig. 49: Checking Communication/Load On CAN-net Between CAN-L And CAN-H
Courtesy of VOLVO CARS CORPORATION

- **Continue**

  Refer to **VERIFICATION**

VERIFICATION

HINT: After rectifying a fault, a verification should be carried out.

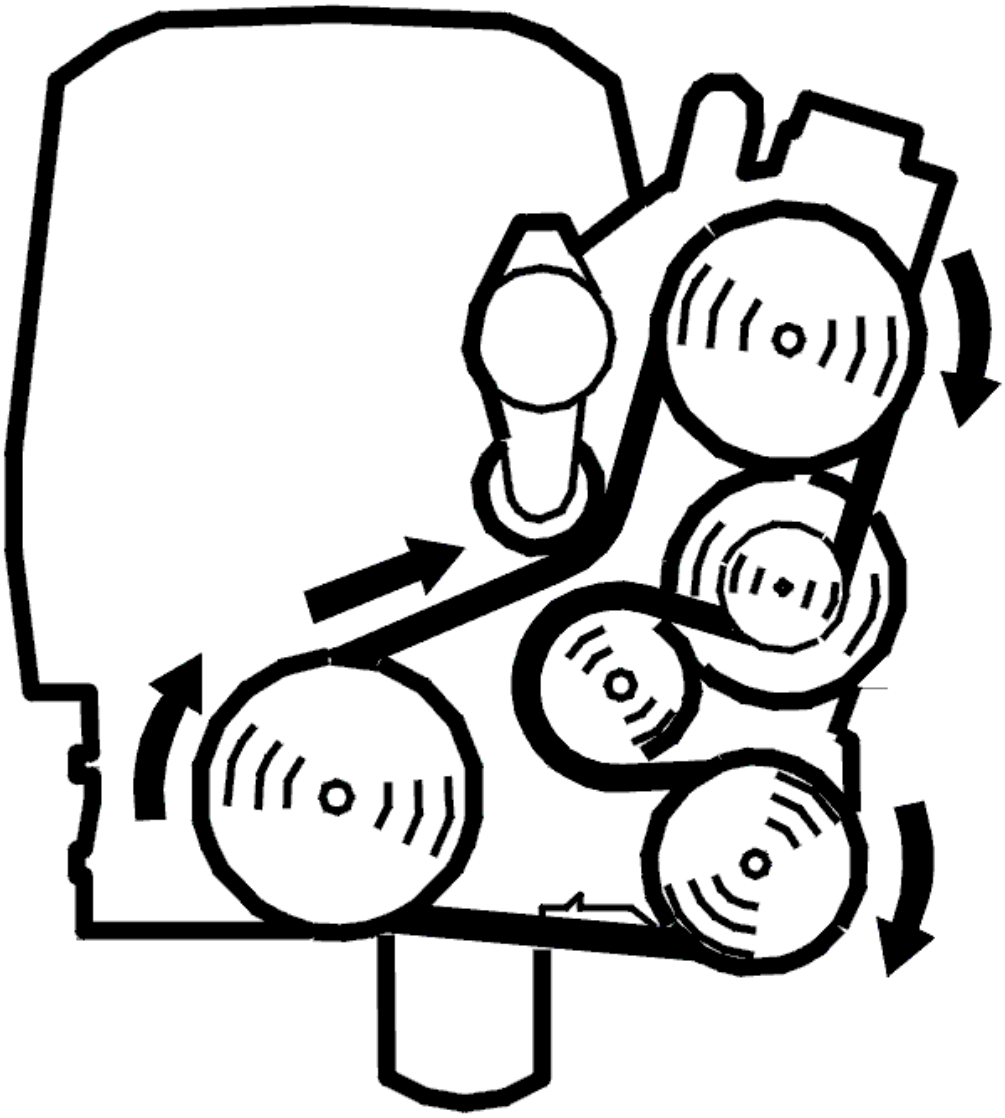

Fig. 50: Belt Routing / Engine Idling - Volvo
Courtesy of VOLVO CARS CORPORATION

Fig. 51: Identifying Ignition On Position
Courtesy of VOLVO CARS CORPORATION

- Reinstall the connectors, components etc.
- Ignition on.

NOTE: **For certain faults in the CAN-net where control modules have stopped communicating, it may help to disconnect/reconnect the battery to "restart" the control module/CAN-net.**

- Erase diagnostic trouble codes (DTCs) in all control modules.
- Ignition off.
- Ignition on.
- Start the vehicle. Allow the vehicle to run for 10 minutes. Start the engine. Allow the engine to run at idle speed for 10 minutes
- Read out the diagnostic trouble codes in the vehicle via the DIAGNOSTICS tab.

Does the diagnostic trouble code (DTC) for faulty communication return?

- **YES**

  Refer to **INFORMATION**

- **NO**

  OKAY: Troubleshooting has been completed.

CHECKING SHORT-CIRCUITING TO GROUND/VOLTAGE IN CAN-NET

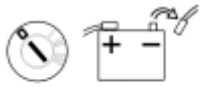

Fig. 52: Ignition Off And Disconnecting Battery Negative Lead
Courtesy of VOLVO CARS CORPORATION

- Ignition off.
- Disconnect the battery negative lead.
- Connect OBDII-Box **(951 3015)** to the diagnostics socket.

  For general information about CAN-troubleshooting, see:

  - see **GENERAL INFORMATION ABOUT FAULT-TRACING IN THE CAN NETWORK**

  Checking for a short-circuit to ground

  Measure resistance between the following connections on the OBDII-box/diagnostics socket.

  - #3 and #4 (ground). Measurement is shown in the illustration. The resistance should be above 1 kohms.

- #11 and #4 (ground). The resistance should be above 1 kohms.

If resistance is below 1 kohms this indicates short-circuiting between the CAN-line and ground.

Checking for a short-circuit to voltage

Measure resistance between the following connections on the OBDII-box/diagnostics socket.

- #3 and #16 (voltage). Measurement is shown in the illustration. The resistance should be above 1 kohms.
- #11 and #16 (voltage). The resistance should be above 1 kohms.

If resistance is below 1 kohms this indicates short-circuiting between the CAN-line and voltage cable.

Twist the cable harness and wiggle connectors where they can be accessed along the cable harness during every measurement, and note if the resistance changes to detect intermittent short-circuits or open circuit.

HINT: Part the CAN-net at suitable points to decide where a short-circuit may be found.

NOTE: After fault with control modules that interfere with communication, other control modules may remain in Limp-Home (that is, they work with reduced functionality) even when the ignition has been turned off and on a few times. For certain faults in the CAN-net where control modules have stopped communicating, it may help to disconnect/reconnect the battery to "restart" the control module/CAN-net.

Remedy as necessary.

Other information

- see **BATTERY, DISCONNECTING**
- see **CHECKING WIRING AND TERMINALS**

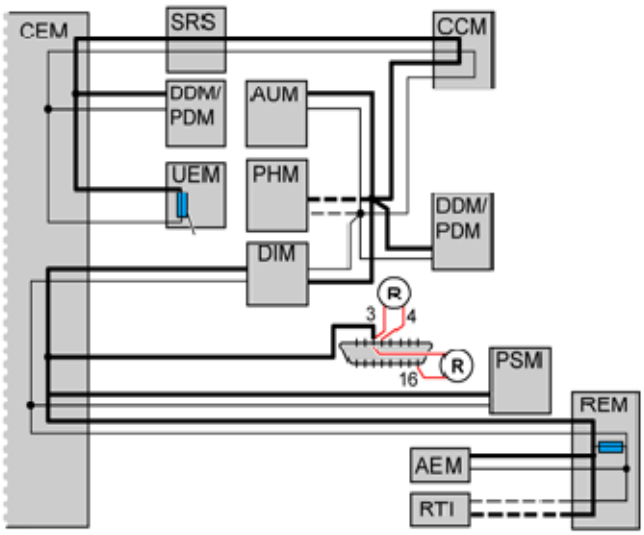

Fig. 53: Checking For Short-Circuiting To Ground/Voltage In CAN-net
Courtesy of VOLVO CARS CORPORATION

Was a fault detected?

- **YES**

  Refer to **VERIFICATION**

- **NO**

  Refer to **CHECKING THE AMOUNT OF TRAFFIC ON THE LS-CAN**

CHECKING VOLTAGE-DROP IN CABLE FOR CAN-H AND CAN-L, RESPECTIVELY

Fig. 54: Identifying Ignition On Position
Courtesy of VOLVO CARS CORPORATION

- Connect the battery.
- Ignition on.
- Connect OBDII-Box **(951 3015)** to the diagnostics socket.

  For general information about CAN-troubleshooting, see:

  - see **GENERAL INFORMATION ABOUT FAULT-TRACING IN THE CAN NETWORK**

In principle, the voltage measured in each cable in the CAN-net shall be the same at each control module in the network. This means that the voltage-drop in the cable for CAN-H and CAN-L, respectively, between the control modules should be very low. If there is a voltage-difference in the CAN-lines between the diagnostics socket/Central electronic module (CEM) and a control module due to, e. g., contact resistance in a connector or branching, communication may be lost/interfered with. Check if there is voltage-drop in the cable for CAN-H and CAN-L between the diagnostics socket/Central electronic module (CEM) and the control module where there is problem with communication.

Carry out the following:

Measure voltage between the following connections on the OBDII-box/diagnostics socket.

- #3 and corresponding connection on relevant control module for CAN-H. The voltage shall be lower than 50 mV.
- #11 and corresponding connection on relevant control module for CAN-L. The voltage shall be lower than 50 mV.

If voltage is too high, this indicates too high contact resistance in cable, connector, or branching. Check the circuit between the diagnostics socket and control module in question for contact resistance and oxidation.

NOTE: **After fault with control modules that interfere with communication, other control modules may remain in Limp-Home (that is, they work with reduced functionality) even when the ignition has been turned off and on a few times. For certain faults in the CAN-net where control modules have stopped communicating, it may help to disconnect/reconnect the battery to "restart" the control module/CAN-net.**

Remedy wiring as necessary.

Other information

- see **CHECKING WIRING AND TERMINALS**

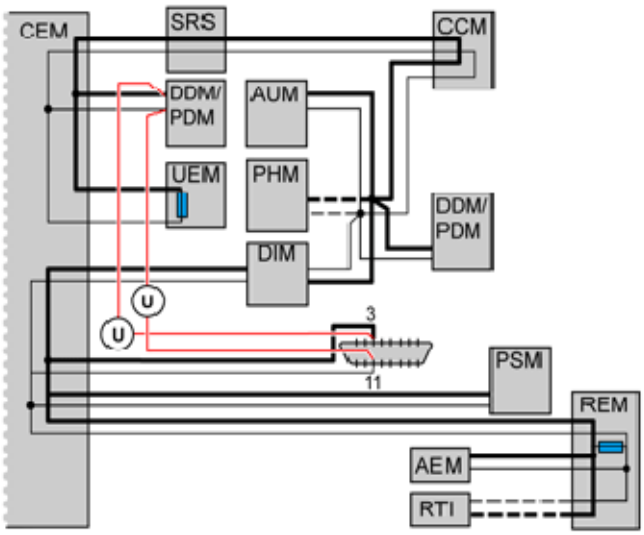

Fig. 55: Checking For Voltage-Drop In Cable For CAN-H And CAN-L
Courtesy of VOLVO CARS CORPORATION

- **Continue**

  Refer to **VERIFICATION**

INFORMATION

FAULT-TRACING INFORMATION

The fault should have been detected and remedied. As this is not the case fault-tracing has failed.

Exit fault-tracing for this diagnostic trouble code (DTC) or make another attempt.

CEM-1A63: COMMUNICATION WITH THE ACCESSORY ELECTRONIC MODULE. SIGNAL MISSING (2003-2004)

DIAGNOSTIC TROUBLE CODE (DTC) INFORMATION CEM-1A63

Condition

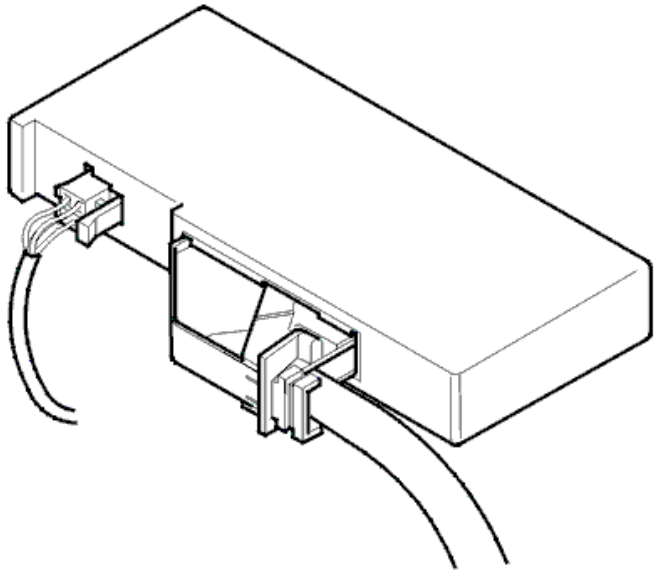

Fig. 56: Accessory Electronic Module
Courtesy of VOLVO CARS CORPORATION

Diagnostic trouble codes (DTCs) are stored if the central electronic module (CEM) registers that communication with the accessory electronic module (AEM) is not operating.

NOTE: In the event of CEM-1A6x diagnostic trouble codes (DTCs), the central electronic module (CEM) must not be replaced as the diagnostic trouble code (DTC) indicates a communication fault in the Control area network

Substitute Value

- None.

Possible Source

- No power supply to the accessory electronic module (AEM)
- Open-circuit in the ground lead to the accessory electronic module (AEM)
- Contact resistance in the terminals
- Open-circuit in the wiring for the CAN low speed network to the accessory electronic module (AEM)
- The accessory electronic module (AEM) is not intended for this car (for example a used control module with different software/hardware).

HINT: If several diagnostic trouble codes (DTCs) are stored in the central electronic module (CEM) for communication faults with other control modules in the low speed network, this indicates a common fault in the Control area network.

Fault symptom[s]

- Accessories connected to the control module do not function.

SIGNAL MISSING

CHECKING THE POWER SUPPLY AND GROUND FOR THE ACCESSORY ELECTRONIC MODULE (AEM)

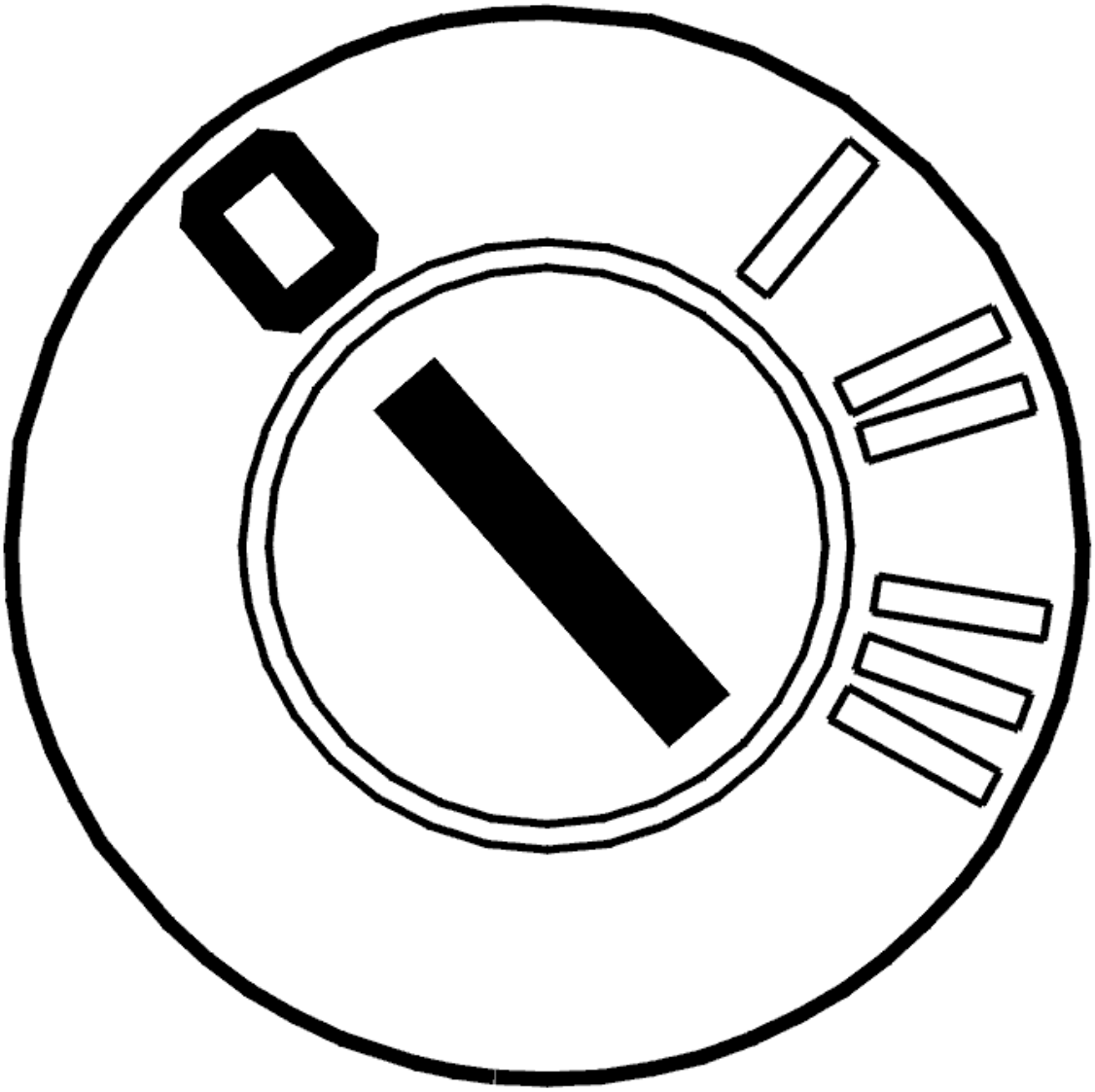

Fig. 57: Identifying Ignition OFF
Courtesy of VOLVO CARS CORPORATION

- Ignition off.

  Check the fuse in the cargo compartment fusebox for the accessory electronic module (AEM). In particular check the fuse mating surfaces. Check for contact resistance and oxidation.

  Check the cable between the fuse and the accessory electronic module (AEM). Check for an open-circuit. Check for a short-circuit to ground. Check for a short-circuit to supply voltage.

Check the cable between the accessory electronic module (AEM) and the ground terminal. Check for an open-circuit. Check for a short-circuit to ground. Check for a short-circuit to supply voltage.

Check the ground terminal for the accessory electronic module (AEM). Check for contact resistance and oxidation.

Other information:

- To access the accessory electronic module (AEM), see **ACCESSORY ELECTRONIC MODULE (AEM), REPLACING**
- To connect the breakout box to the accessory electronic module (AEM), see **CONNECTING THE BREAKOUT BOX. ACCESSORY ELECTRONIC MODULE**
- For further information about signals and other values, see **SIGNAL DESCRIPTION. ACCESSORY ELECTRONIC MODULE (AEM)**
- see **CHECKING WIRING AND TERMINALS** .

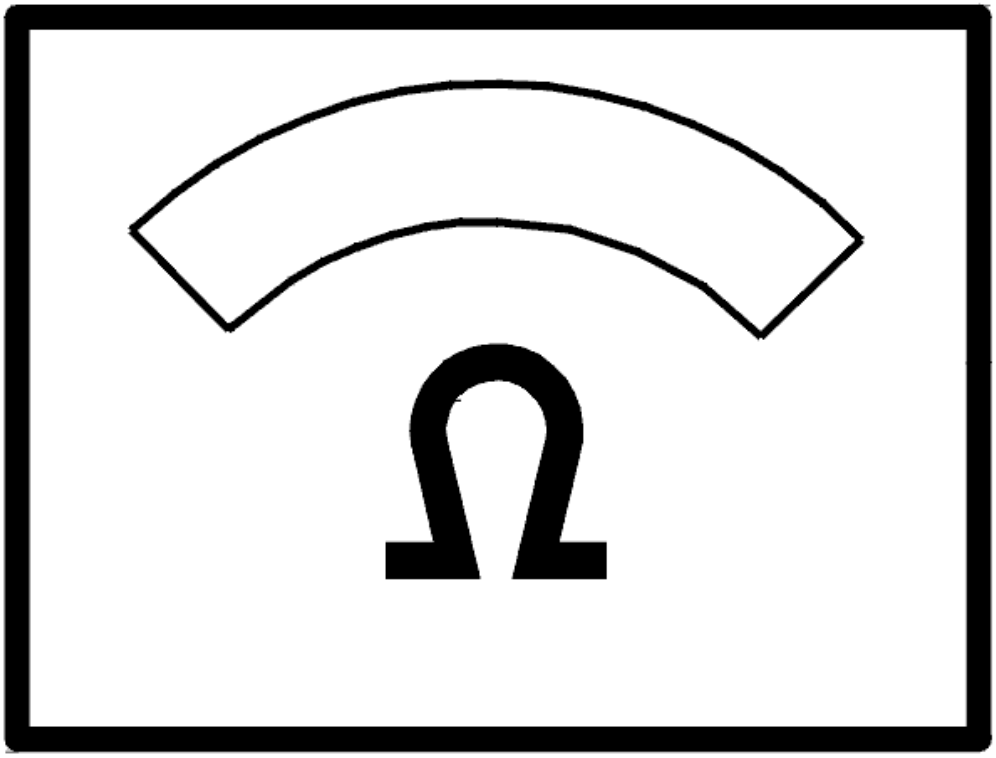

Fig. 58: Identifying Ohm Meter
Courtesy of VOLVO CARS CORPORATION

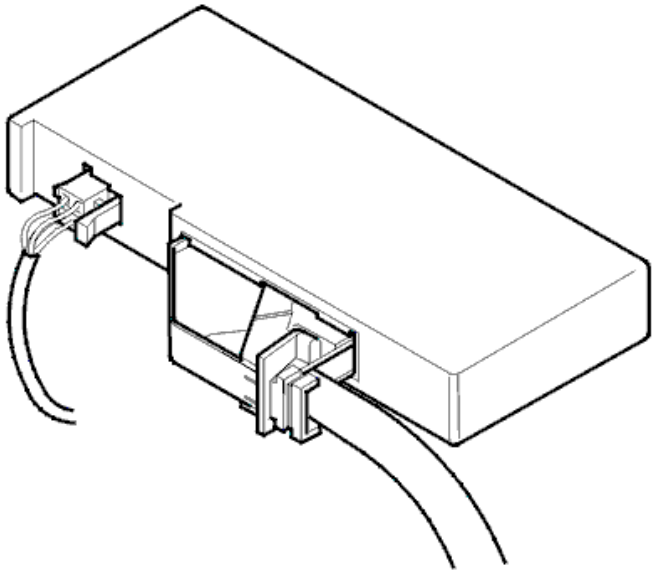

Fig. 59: Accessory Electronic Module
Courtesy of VOLVO CARS CORPORATION

Was a fault detected?

- **YES**

  Refer to **CHECKING THE ACCESSORY ELECTRONIC MODULE (AEM)**

- **NO**

  Refer to **CHECKING COMMUNICATION WITH THE ACCESSORY ELECTRONIC MODULE (AEM)**

CHECKING COMMUNICATION WITH THE ACCESSORY ELECTRONIC MODULE (AEM)

HINT: The CAN communication with the control module is probably OK if the control module ID can be read off. In that case the fault is probably intermittent and will then be more difficult to trace.

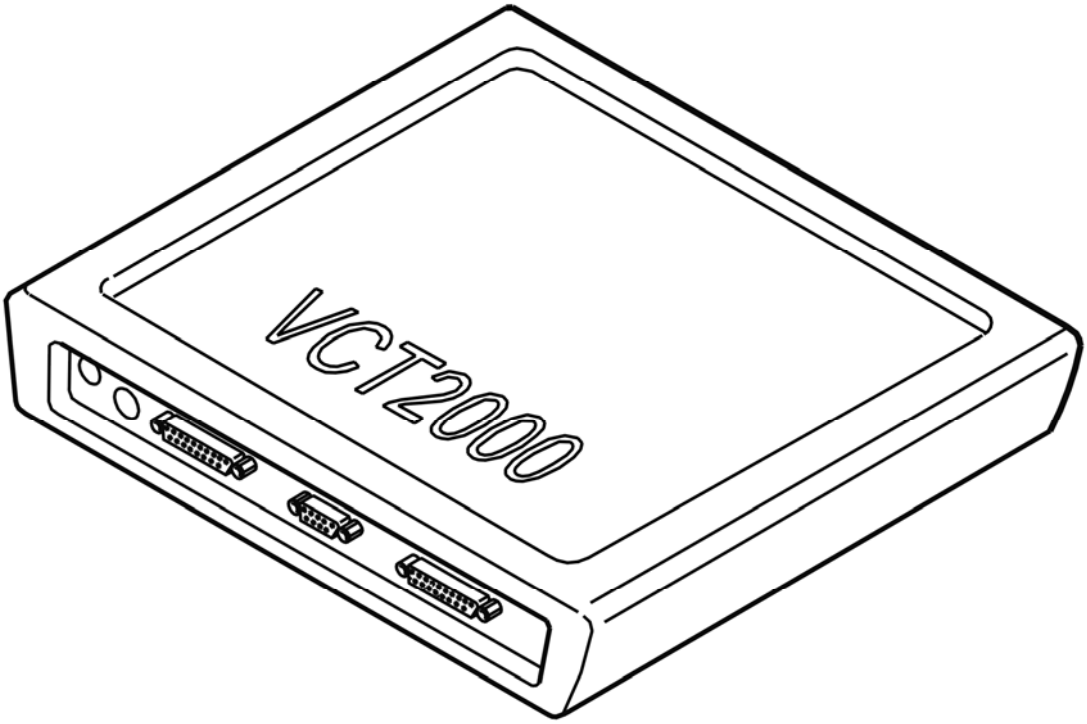

Fig. 60: Identifying VCT2000 Diagnostic Tool Symbol In VIDA
Courtesy of VOLVO CARS CORPORATION

- Try to communicate with the accessory electronic module (AEM) by reading off the control module ID
- Use the VCT2000 (or appropriate scan tool)

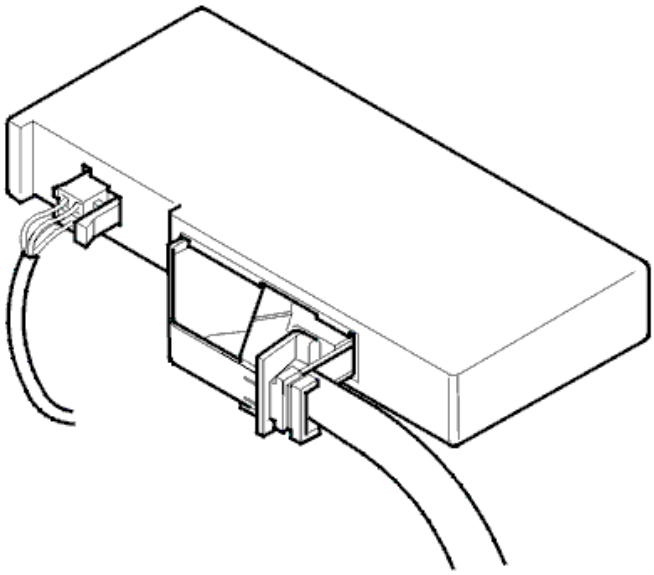

Fig. 61: Accessory Electronic Module
Courtesy of VOLVO CARS CORPORATION

- **Continue**

  Refer to **SIGNAL MISSING**

CHECKING THE ACCESSORY ELECTRONIC MODULE (AEM)

HINT: After carrying out the repair, check that the fault has been remedied.

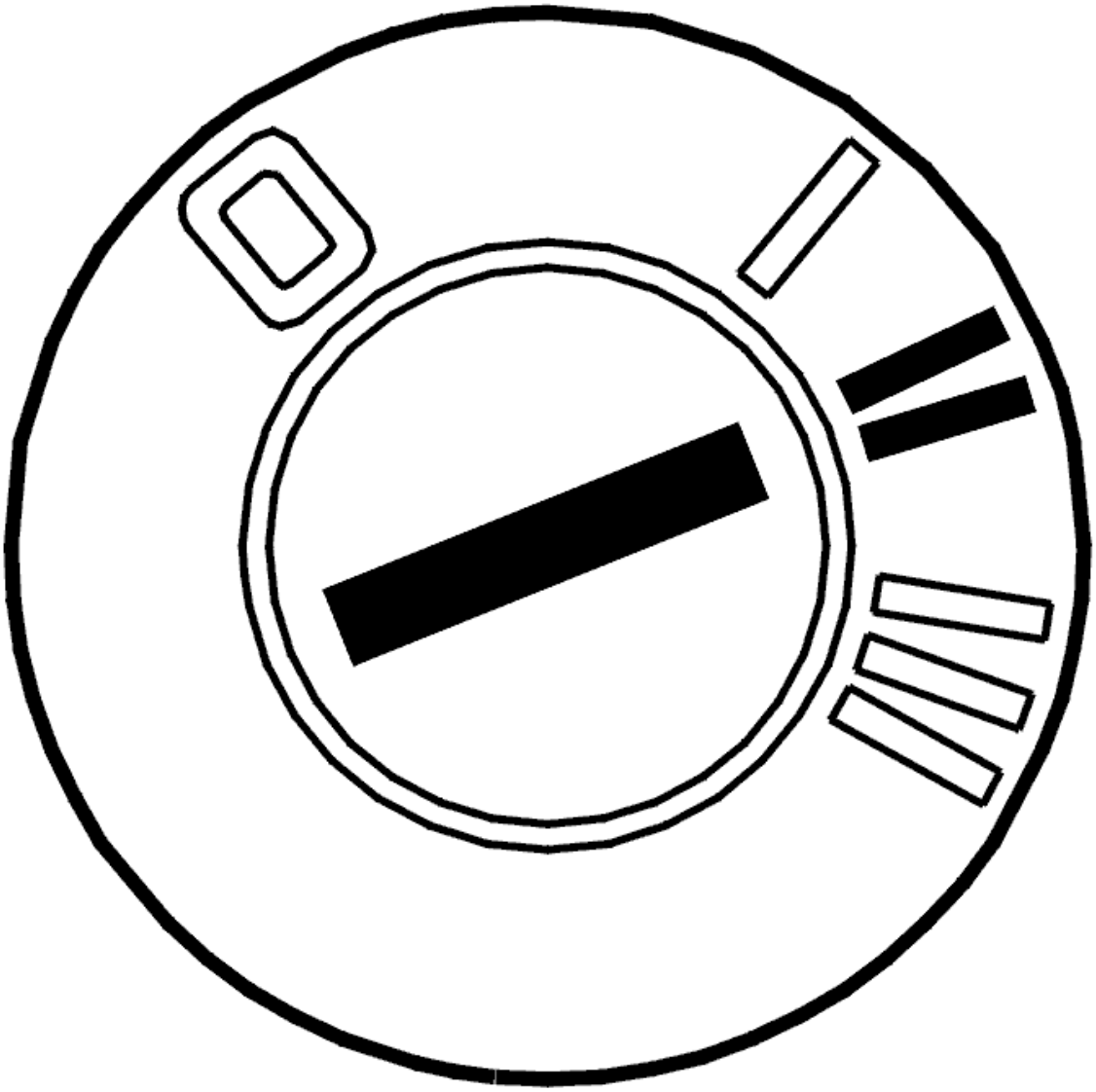

Fig. 62: Identifying Ignition ON
Courtesy of VOLVO CARS CORPORATION

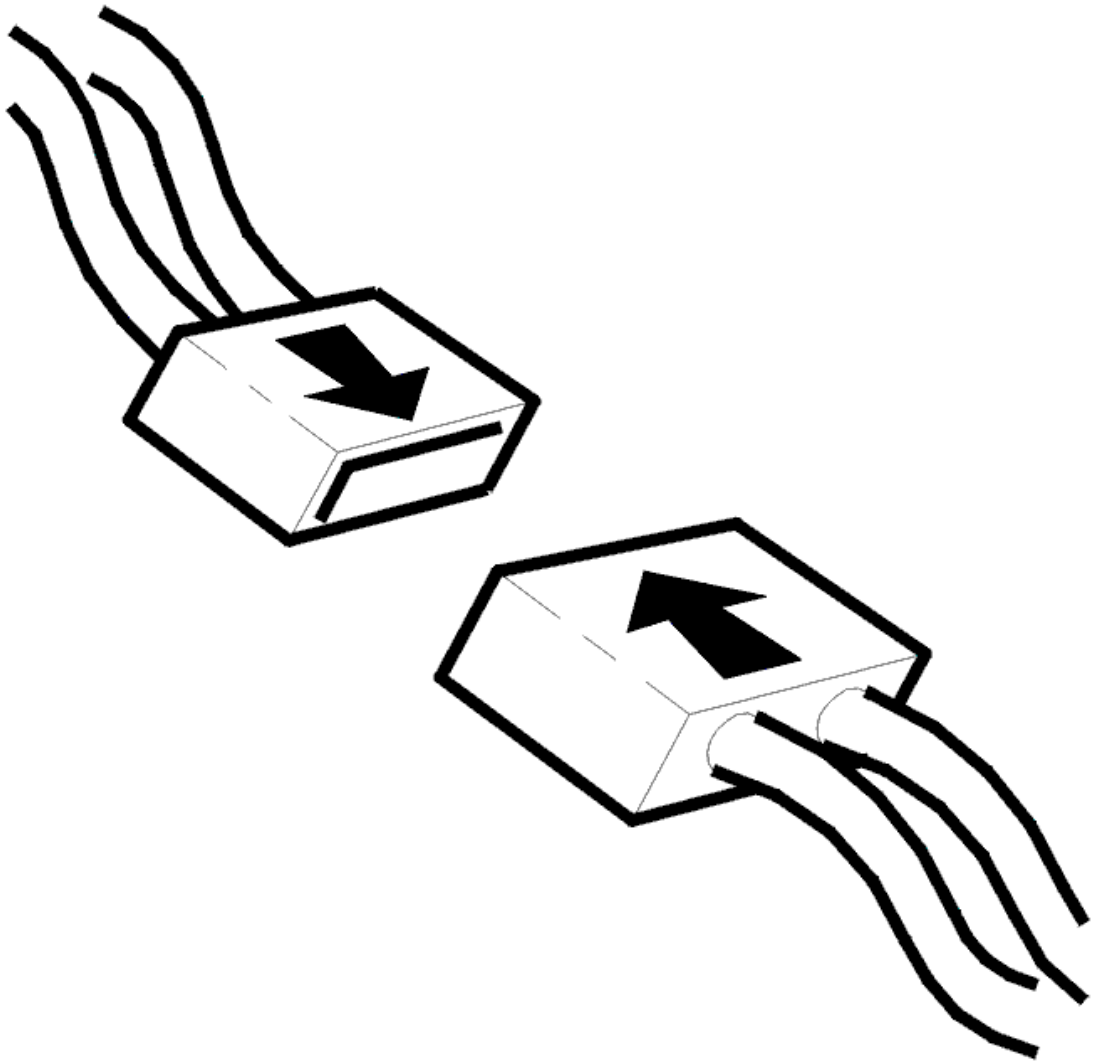

Fig. 63: Connecting Connector
Courtesy of VOLVO CARS CORPORATION

- Ignition off
- Reinstall the connectors, components etc.
- Switch on the ignition for at least 10 seconds.

  Read off the control module ID from the accessory electronic module (AEM) using the VCT2000 (or appropriate scan tool).

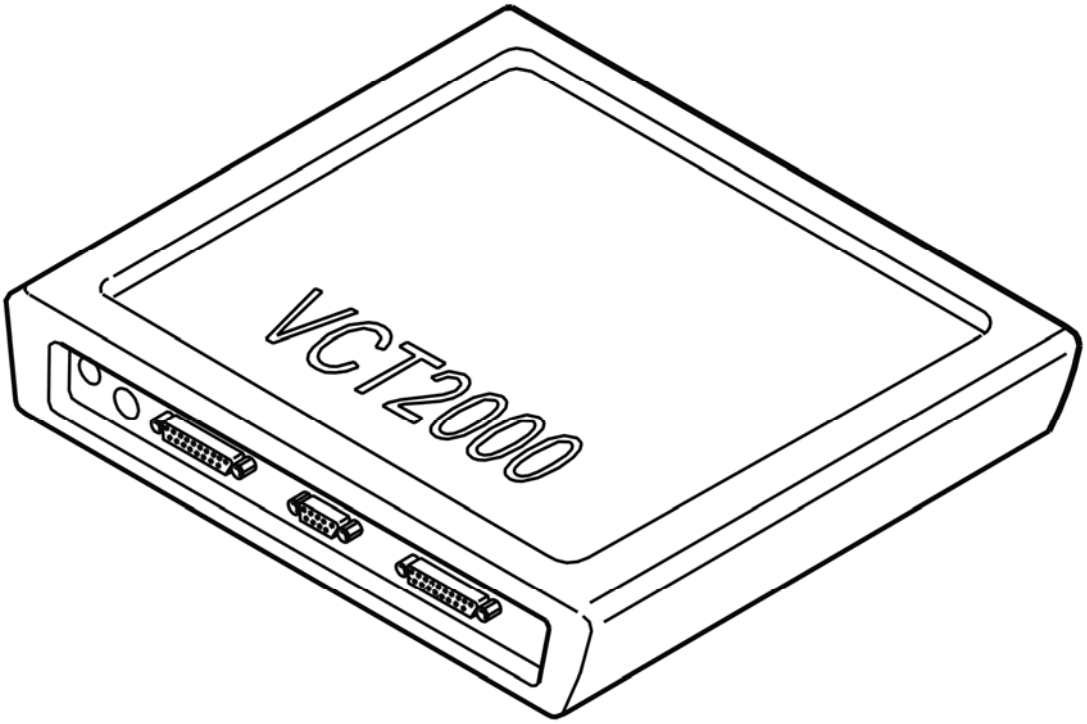

Fig. 64: Identifying VCT2000 Diagnostic Tool Symbol In VIDA
Courtesy of VOLVO CARS CORPORATION

Could the control module ID be read off?

- **YES**

  OKAY: Troubleshooting has been completed.

- **NO**

  Refer to **INFORMATION**

SIGNAL MISSING

GENERAL INFORMATION

HINT: For general information about fault-tracing the control area network (CAN), see the linked document below. See GENERAL INFORMATION ABOUT FAULT-TRACING IN THE CAN NETWORK (2005-2012)

In order to check the control area network (CAN) cables, the resistance in the network must be measured. The resistance between the two CAN cables, with the network connected, must be 60ohms in both the high speed network and the low speed network.

NOTE: **Resistance will only be 60 ohms if the main artery of the CAN network is whole and the network is connected. If the main artery of the CAN network is split somewhere and a reading is taken between the CAN cables, resistance will be 120 ohms.**

If diagnostic trouble codes (DTCs) can be read off from the relevant control module, the fault is probably intermittent. The locations that must be checked in the event of a fault in the low speed network are the junctions behind the central electronic module (CEM) and the audio module (AUM) as well as the cable harness behind the Audio module (AUM).

Intermittent fault in the current supply to the actual control module is indicated by the DTC in the Central electronic module (CEM) (CEM-1A5X or CEM-1A6X). There is probably no diagnostic trouble code (DTC) in the relevant control module as the control module cannot store a diagnostic trouble code (DTC) when it is without power.

- **Continue**

  Refer to **CHECKING THE RESISTANCE OF THE CONTROL AREA NETWORK (CAN) CABLES**

CHECKING THE RESISTANCE OF THE CONTROL AREA NETWORK (CAN) CABLES

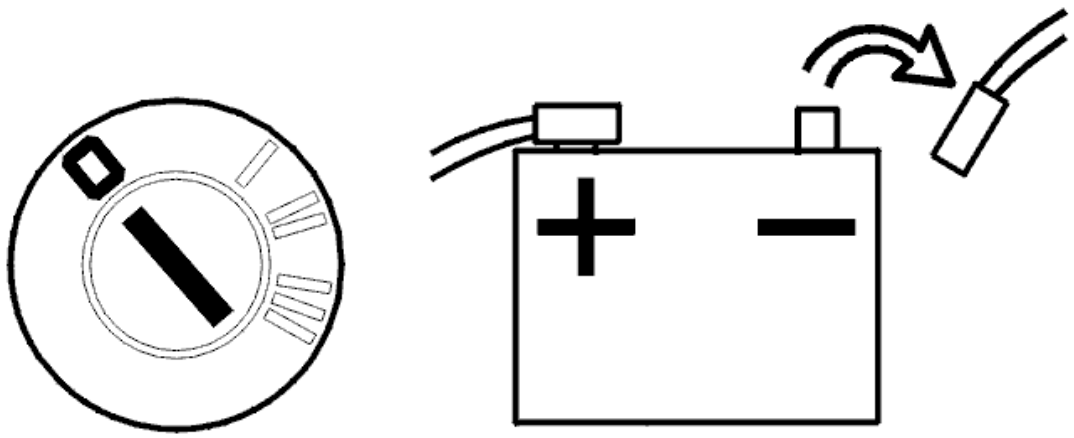

Fig. 65: Identifying Ignition In Off Position And Disconnecting Negative Cable From Battery
Courtesy of VOLVO CARS CORPORATION

- Disconnect the battery negative lead. The network must not be powered when taking resistance readings. Otherwise an incorrect value may be obtained.
- Connect the adapter wiring to the central electronic module (CEM).

  HINT: Where a breakout box cannot be used, take readings from the rear of the affected connectors if possible. This prevents terminal pins and socket housings being damaged.

When taking readings on the low speed network

- When taking readings on the low speed network the adapter wiring should be connected to the Central electronic module (CEM) and readings taken from there. Readings can even be taken in the connector for the Power seat module (PSM). The advantage of the adapter wiring to the Central electronic module (CEM) is that all control module can be connected in the network when taking readings and access can be gained to both the high speed and low speed networks.

  The resistance reading only measures the main arteries in the low speed network, not the junctions that exist for different control modules.

When taking readings on the high speed network

- When taking readings on the high speed network the adapter wiring should be connected to the Engine control module (ECM) and readings taken from there. The Engine control module (ECM) must be connected. This resistance reading only measures the main arteries in the high speed network.

Connect an ohmmeter to the terminals for CAN-L and CAN-H on the relevant network. Turn the contacts and turn the cable harness. Resistance must be approximately 60 ohms.

NOTE: **Resistance will only be 60 ohms if the main artery of the CAN network is whole and the network is connected. If the main artery of the CAN network is split somewhere and a reading is taken between the CAN cables, resistance will be 120 ohms.**

Other information

- see **BATTERY, DISCONNECTING**
- see **CONNECTING THE BREAKOUT BOX**
- see **CHECKING WIRING AND TERMINALS**

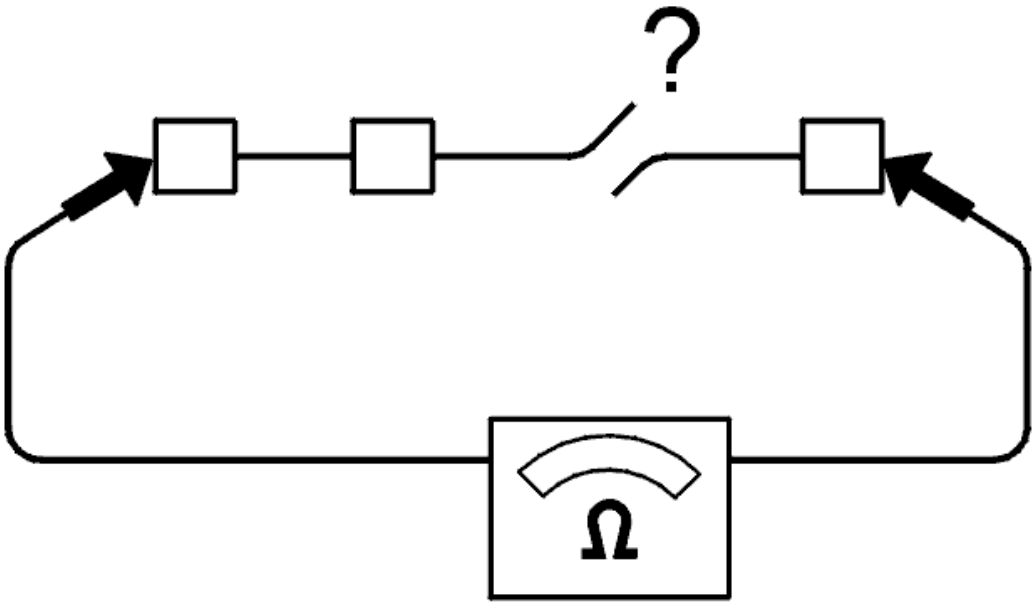

Fig. 66: Checking For Open Circuit
Courtesy of VOLVO CARS CORPORATION

Is the value OK?

- **YES**

  Refer to **CHECKING A SHORT-CIRCUIT IN CAN CABLES**

- **NO**

  Refer to **IDENTIFYING FAULT CAUSES IN THE CAN NETWORK**

CHECKING A SHORT-CIRCUIT IN CAN CABLES

Connect an ohmmeter between respective CAN cable and voltage supply and between the CAN cables and ground. Turn the contacts and turn the cable harness. The resistance must be infinite or very high.

HINT: Readings can be taken from one and the same connector if the CAN wiring, voltage supply and ground is pre-routed. If possible, measure from the rear of the affected connectors in order to minimize any damage and future loose connections. If this is not possible, use the adapter wiring or loose terminal pin for good contact.

Was a fault detected?

- **YES**

  Refer to **IDENTIFYING FAULT CAUSES IN THE CAN NETWORK**

- **NO**

  Refer to **CHECKING THE TRAFFIC LOAD ON THE CAN CABLES**

CHECKING THE TRAFFIC LOAD ON THE CAN CABLES

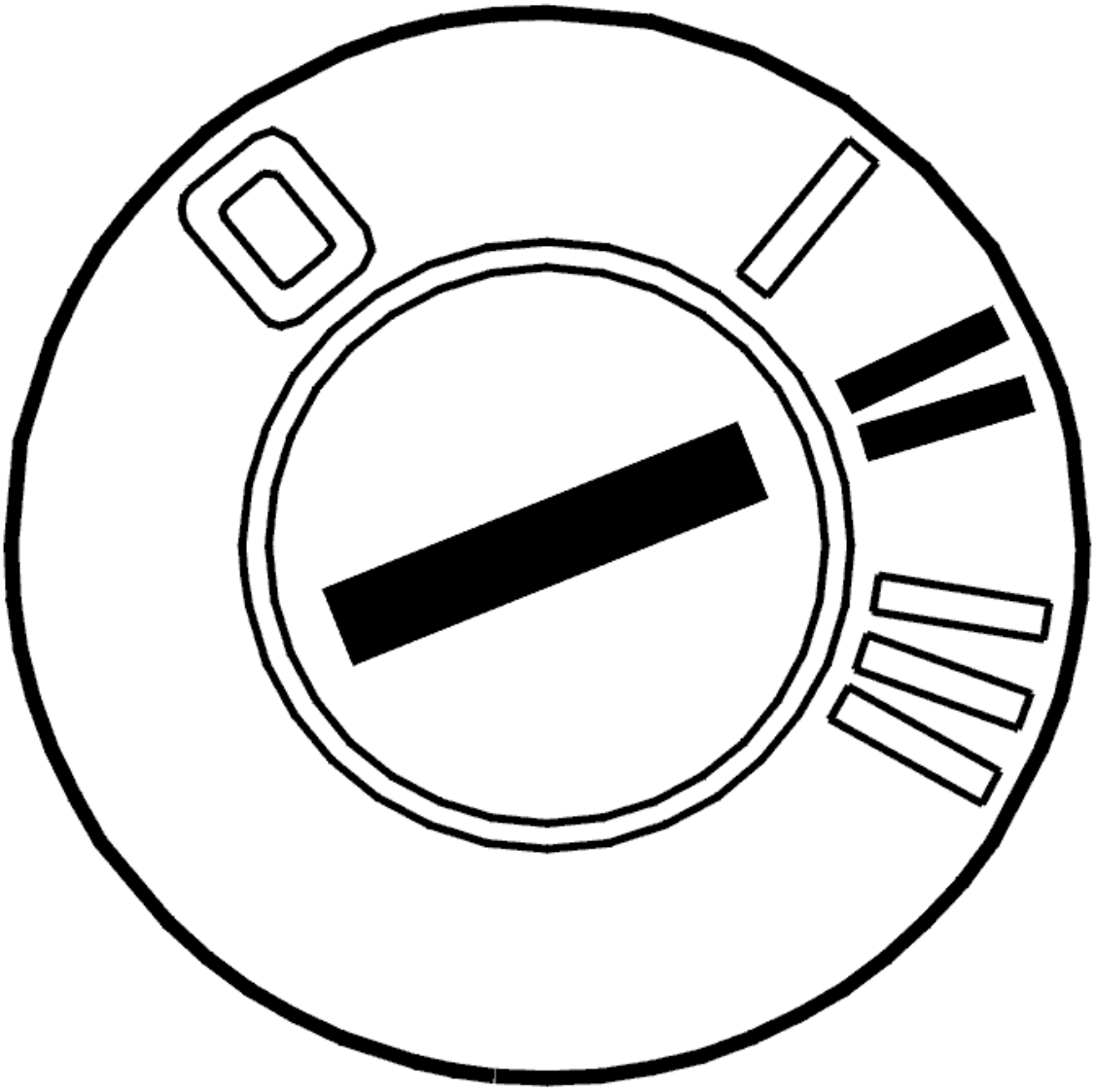

Fig. 67: Identifying Ignition ON
Courtesy of VOLVO CARS CORPORATION

- Connect the battery.
- Ignition on.

Faults in the CAN network may be due to a control module sending faulty messages that disrupt normal communication. When messages are sent incorrectly, this results in a considerable increase in the amount of traffic on the CAN network. The load can be checked by reading the average value of the voltage on the CAN cables in relation to ground.

The following applies for model year -2004:

Connect a voltmeter between CAN-L and ground. The voltage shall be approx. 2.3 V.

Then connect a voltmeter between CAN-H and ground. The voltage shall be approx. 2.8 V.

The following applies for model year 2004-:

Connect a voltmeter between CAN-L and ground. The voltage should be approx: V

Connect a voltmeter between CAN-H and ground. The voltage should be approx: V

NOTE: For vehicles of later model years, normal voltage values lie within a specific interval due to increased traffic between the control modules on the CAN network upon update of the electrical system.

HINT: If possible, measure from the rear of the affected connectors so that they are not damaged.

Other information

- see **BATTERY, DISCONNECTING**

Is the value OK?

- **YES**

  Refer to **INFORMATION**

- **NO**

  Refer to **IDENTIFYING A CONTROL MODULE IN THE CAN NETWORK**

IDENTIFYING FAULT CAUSES IN THE CAN NETWORK

- Disconnect a control module that disconnects the CAN network (a control module that has four terminals to the CAN network).

  HINT: For the low speed network, suitable places for disconnecting the network are at the steering wheel module (SWM), the driver information module (DIM) or the climate control module (CCM).

  In the event of an short-circuit between on of the CAN cables and voltage or ground, the fault can be localized disconnecting a control module that splits the CAN network. Readings can then be taken to

determine on which side the fault is on the disconnected control module.

Connect an ohmmeter between the CAN cable and voltage supply respectively ground. Take readings from both ends of the CAN networks at the network junction. Twist and bend the cable harness to find any intermittent short-circuits. The resistance must be infinite or very high (more than 1 Mohms).

If a fault can be localized in one direction, split the network at a point further on in the CAN network in the direction that the fault was discovered and take a new reading. Try to locate the fault in this way.

HINT: A short-circuit between the CAN cables and supply voltage or ground may be in either the wiring or in a control module.

Remedy the cables as necessary. If a fault is found on one control module, replace the control module.

- **Continue**

  Refer to **VERIFICATION**

IDENTIFYING A CONTROL MODULE IN THE CAN NETWORK

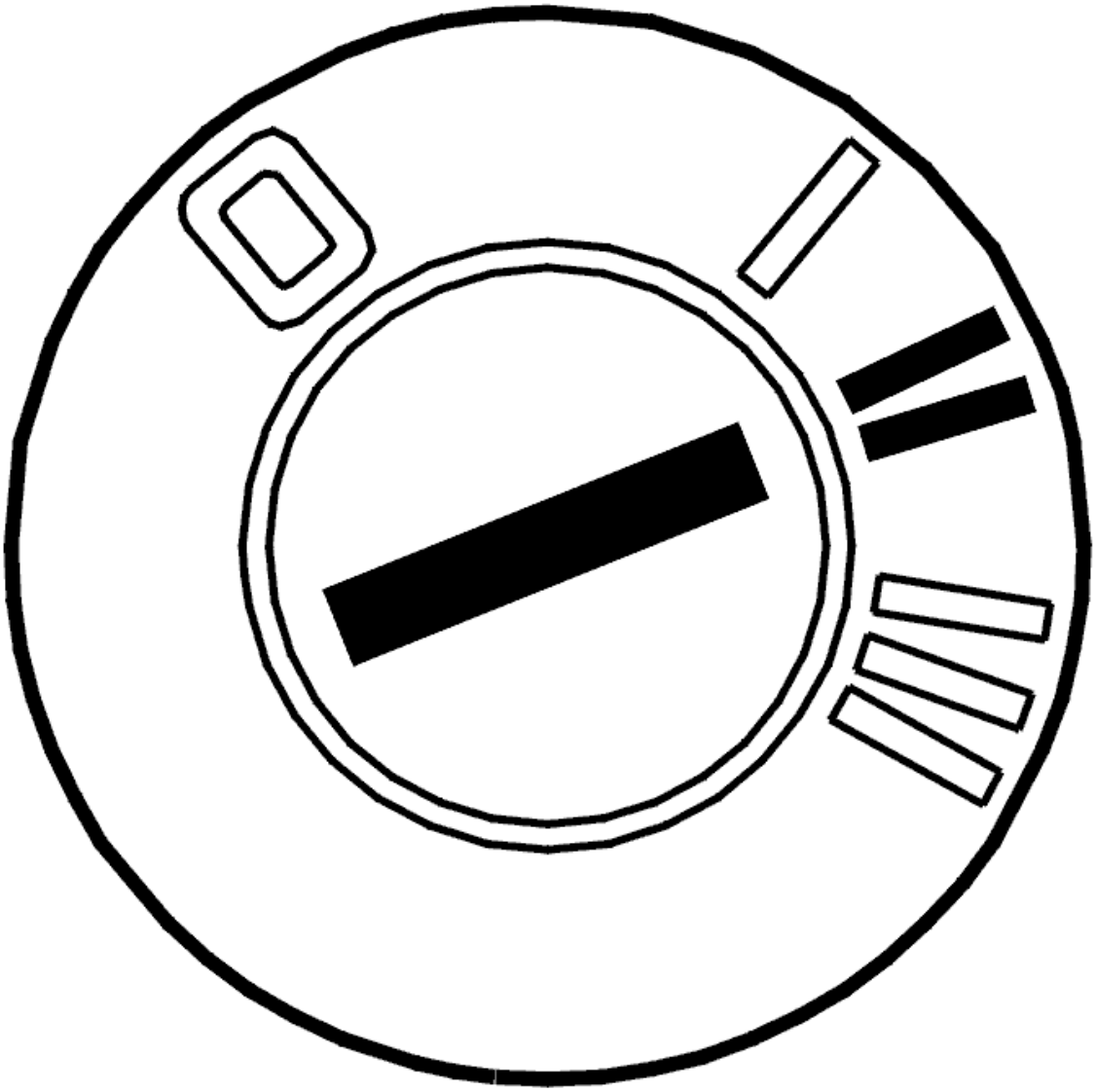

Fig. 68: Identifying Ignition ON
Courtesy of VOLVO CARS CORPORATION

- Connect the battery.
- Ignition on.

If the load on the CAN network is too high, this may be due to a control module transmitting faulty messages on the CAN network. This is called a disruptive control module. The fault may also be due to an intermittent short-circuit to supply voltage or ground in one of the CAN cables. This results in the control modules on the CAN network starting to send faulty messages. The fault may occur without any of the control modules storing a diagnostic trouble code (DTC). The voltage can be measured between the CAN cables in order to check the load on the CAN network.

The following applies for model year -2004:

Connect a voltmeter between the CAN cables. In the event of correct communication on the network, the

average value of the voltage must be approximately 0.5 V (0.4 V to 0.6 V).

The following applies for model year 2004-:The following applies for model year 2004-:

Connect a voltmeter between the CAN cables. During correct CAN network communication, voltage should be about 0.6-1.4 V.

NOTE: For vehicles of later model years, the normal voltage value is slightly higher due to increased traffic between the control modules on the CAN network upon update of the electrical system.

In the event of a communication fault the voltage is significantly higher than the above specified values. In order to identify which control module has faulty communication, cut the power supply to one control module at a time. Check the voltage in the CAN cables again. The easiest way to cut the power supply is to remove the fuse(s) for the relevant control module. Repeat until the voltage between the CAN wiring drops to the normal level.

HINT: When the probable faulty control module has been identified, connect and disconnect the supply voltage to the control module a number of times to verify that the fault appears and disappears.

NOTE: Do not cut the power to the central electronic module (CEM) unless it is the last control module left to check.

The control module that is communicating incorrectly must be replaced. Remedy as necessary.

NOTE: After a fault with "interfering" control modules, other control modules may remain in "Limp-Home mode" even when the ignition has been switched off and on several times. To remedy this, disconnect and reconnect the battery negative terminal to restore the control modules to normal function.

Other information

- see **BATTERY, DISCONNECTING**

- **Continue**

Refer to **VERIFICATION**

IDENTIFYING FAULT CAUSES IN THE CAN NETWORK

- Disconnect a control module that disconnects the CAN network (a control module that has four terminals to the CAN network).

HINT: For the low speed network, suitable places for disconnecting the network are at the steering wheel module (SWM), the driver information module (DIM) or the climate control module (CCM).

In the event of an open-circuit on, or short-circuit between the CAN cables, the fault can be localized by disconnecting a control module that splits the CAN network. Readings can then be taken to determine on which side the fault is on the disconnected control module.

Connect an ohmmeter between the CAN cables. Take readings from both ends of the CAN networks at the network junction. Twist and bend the cable harness to find any intermittent short-circuits. Resistance should be 120 ohms.

If a fault can be localized in one direction, split the network at a point further on in the CAN network in the direction that the fault was discovered and take a new reading. Try to locate the fault in this way.

Remedy the cables as necessary.

- **Continue**

Refer to **VERIFICATION**

VERIFICATION

HINT: After rectifying a fault, a verification should be carried out.

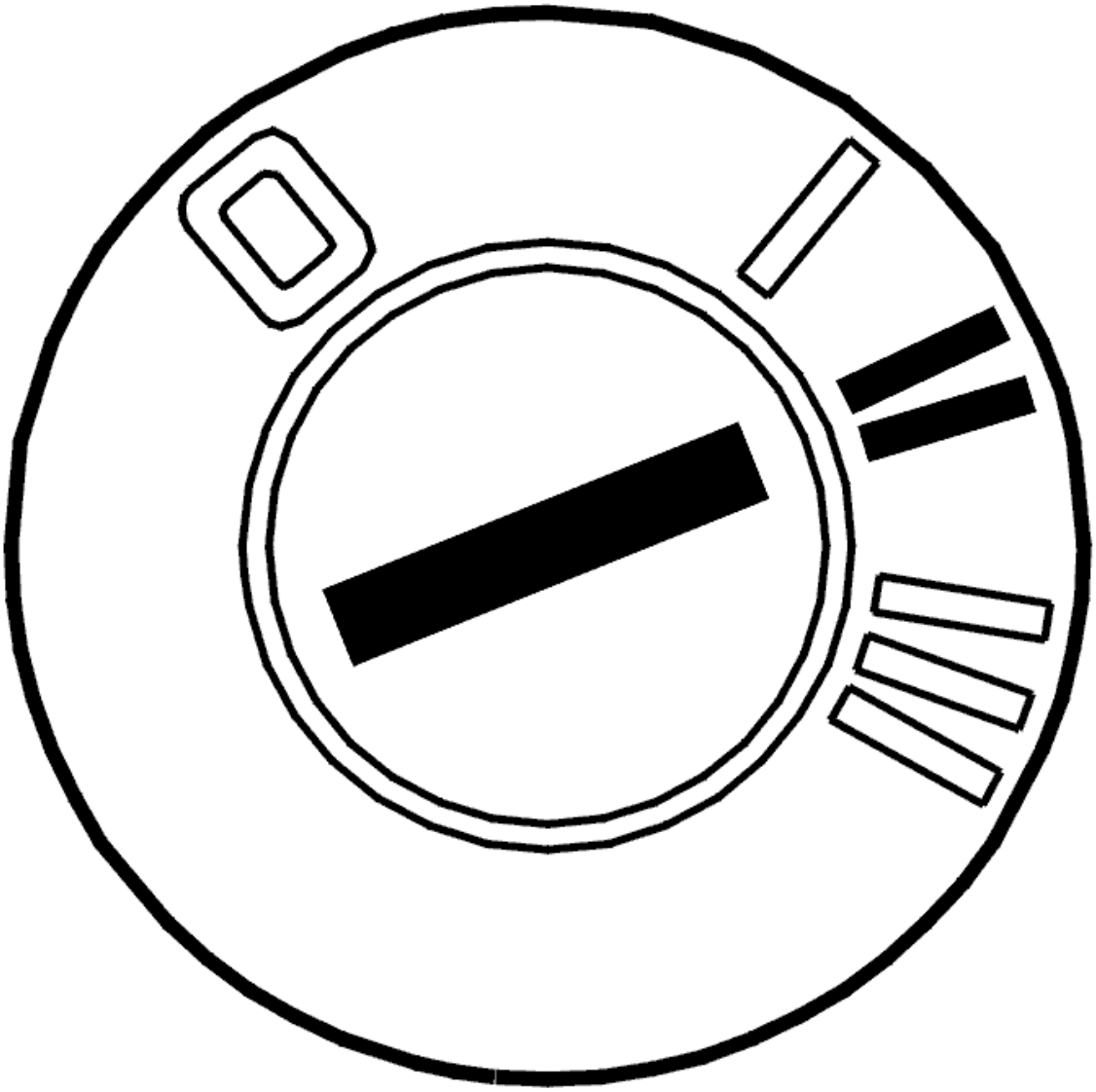

Fig. 69: Identifying Ignition ON
Courtesy of VOLVO CARS CORPORATION

- Reinstall the connectors, components etc.
- Ignition on.
- Erase diagnostic trouble codes using the VCT2000 (or appropriate scan tool).
- Start the car. Allow the vehicle to run for 10 minutes.
- Read off diagnostic trouble codes (DTCs).

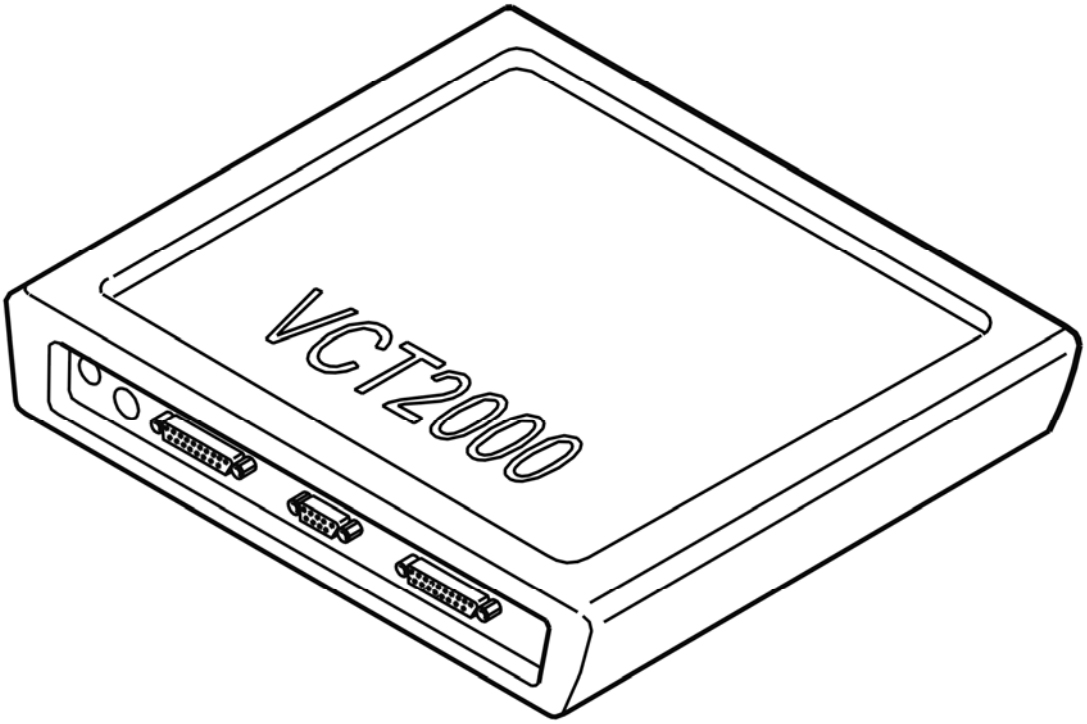

Fig. 70: Identifying VCT2000 Diagnostic Tool Symbol In VIDA
Courtesy of VOLVO CARS CORPORATION

Does the diagnostic trouble code (DTC) for a communication fault recur (CEM-1A5X or CEM-1A6X)?

- **YES**

  Refer to **INFORMATION**

- **NO**

  OKAY: Troubleshooting has been completed.

INFORMATION

FAULT-TRACING INFORMATION

Verification shows that the fault is no longer present. The diagnostic trouble code (DTC) was probably caused by an intermittent fault.

Fault-tracing for this diagnostic trouble code (DTC) is not followed by a verification.

You can view the information again or exit fault-tracing for this diagnostic trouble code (DTC).

INFORMATION

FAULT-TRACING INFORMATION

The fault should have been detected and remedied. As this is not the case fault-tracing has failed.

Exit fault-tracing for this diagnostic trouble code (DTC) or make another attempt.

CEM-1A64: COMMUNICATION WITH THE DIFFERENTIAL ELECTRONIC MODULE (DEM). SIGNAL MISSING (2003-2004)

DIAGNOSTIC TROUBLE CODE (DTC) INFORMATION CEM-1A64

Condition

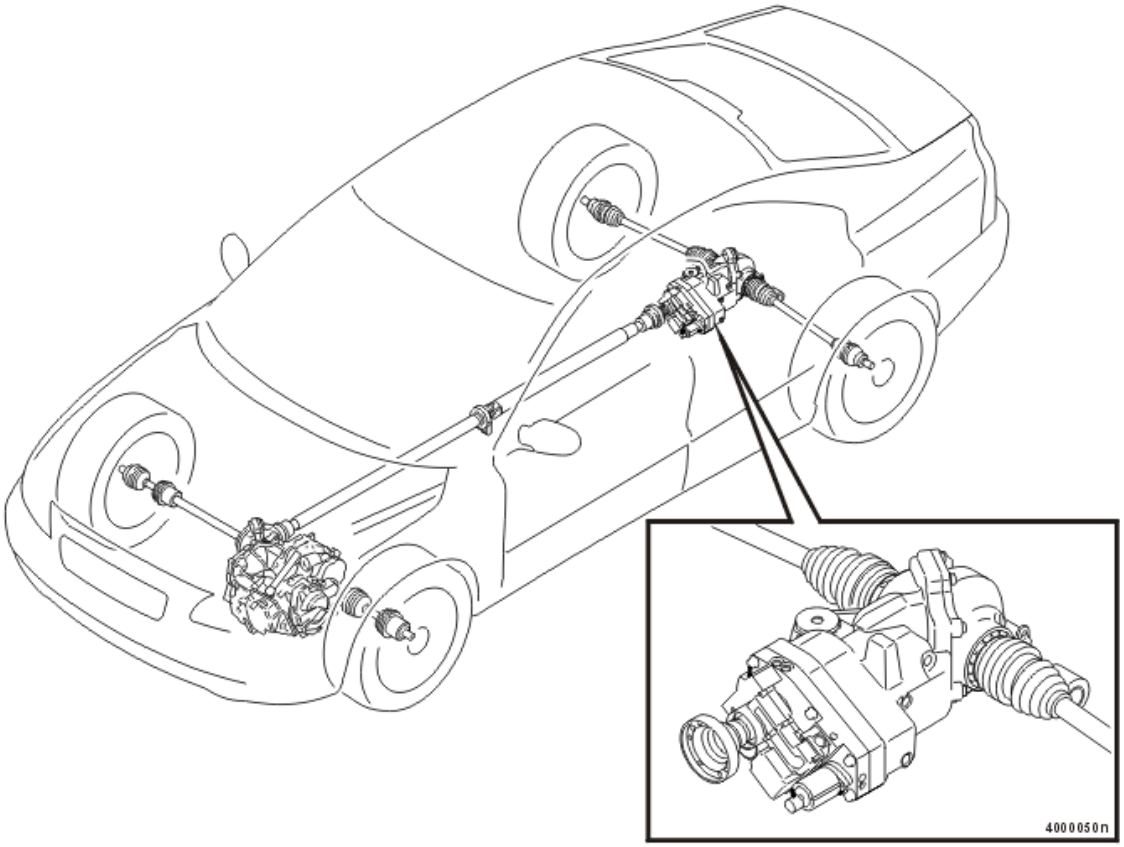

Fig. 71: Active On Demand Coupling
Courtesy of VOLVO CARS CORPORATION

Diagnostic trouble codes (DTCs) are stored if the central electronic module (CEM) registers that communication with the differential electronic module (DEM) is not operating.

The diagnostic trouble code (DTC) can be detected when the ignition is on for at least 10 seconds and the battery voltage is above > 10.5 volts.

NOTE: **In the event of CEM-1A6x diagnostic trouble codes (DTCs), the central electronic module (CEM) must not be replaced as the diagnostic trouble code (DTC) indicates a communication fault in the Control area network**

Substitute Value

- None.

Possible Source

- No power supply to the differential electronic module (DEM)
- Open-circuit in the ground lead to the differential electronic module (DEM)
- Contact resistance in the terminals
- Open-circuit in the wiring for the CAN high speed network to the differential electronic module (DEM)
- The differential electronic module (DEM) is not intended for this car (for example a used control module with different software/hardware).

HINT: If several diagnostic trouble codes (DTCs) are stored in the central electronic module (CEM) for communication faults with other control modules in the high speed network, this indicates a common fault in the Control area network.

Fault symptom[s]

- Four wheel drive is not functioning
- Message in the display (not S60 model year 2002)
- The anti-spin warning lamp is lit (up to and including 2002 model year)
- General yellow warning lamp lit (from model year 2003 inclusive).

SIGNAL MISSING

CHECKING THE POWER SUPPLY AND GROUND FOR THE DIFFERENTIAL ELECTRONIC MODULE (DEM)

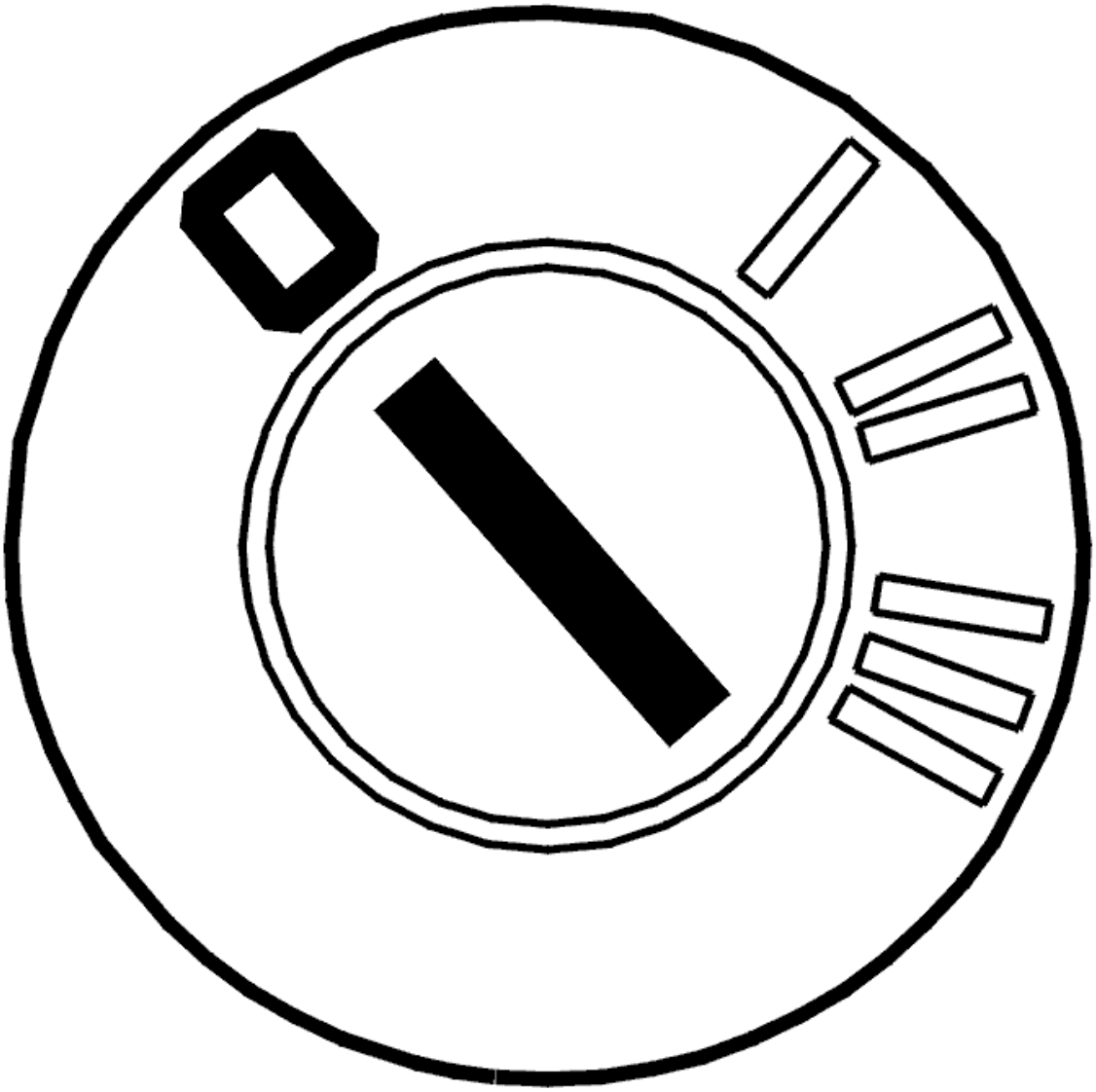

Fig. 72: Identifying Ignition OFF
Courtesy of VOLVO CARS CORPORATION

- Ignition off.

  Check that the fuse by the main fuse for the battery for the differential electronic module (DEM). Check that the fuse in the fuse box in the cargo compartment for the rear electronic module is intact.

  Check the cable between the fuse and the power supply relay for the differential electronic module (DEM). Check for an open-circuit. Check for a short-circuit to ground. Check for a short-circuit to supply voltage.

  Check the cable between the power supply relay for the differential electronic module (DEM) and the control module. Check for an open-circuit. Check for a short-circuit to ground. Check for a short-circuit to supply voltage.

Check the connectors and wiring for the differential electronic module (DEM) and the battery terminal. Check for contact resistance and oxidation. Check for loose connections.

If necessary, check the function of the power supply relay by moving it to another position.

Check the cable between the ground terminal and the differential electronic module (DEM). Check for an open-circuit. Check for a short-circuit to ground. Check for a short-circuit to supply voltage.

Check the ground terminal for the differential electronic module (DEM). Check for contact resistance and oxidation.

Other information:

- For AW50AWD and 4T65AWD 2003-, see **DIFFERENTIAL ELECTRONIC MODULE (DEM), REPLACING**
- For M66AWD 2004-, see **DIFFERENTIAL ELECTRONIC MODULE (DEM), REPLACING** .
- For TF-80SC 2005- see **DIFFERENTIAL ELECTRONIC MODULE (DEM), REPLACING (2005-2008)** .
- see **CHECKING WIRING AND TERMINALS** .

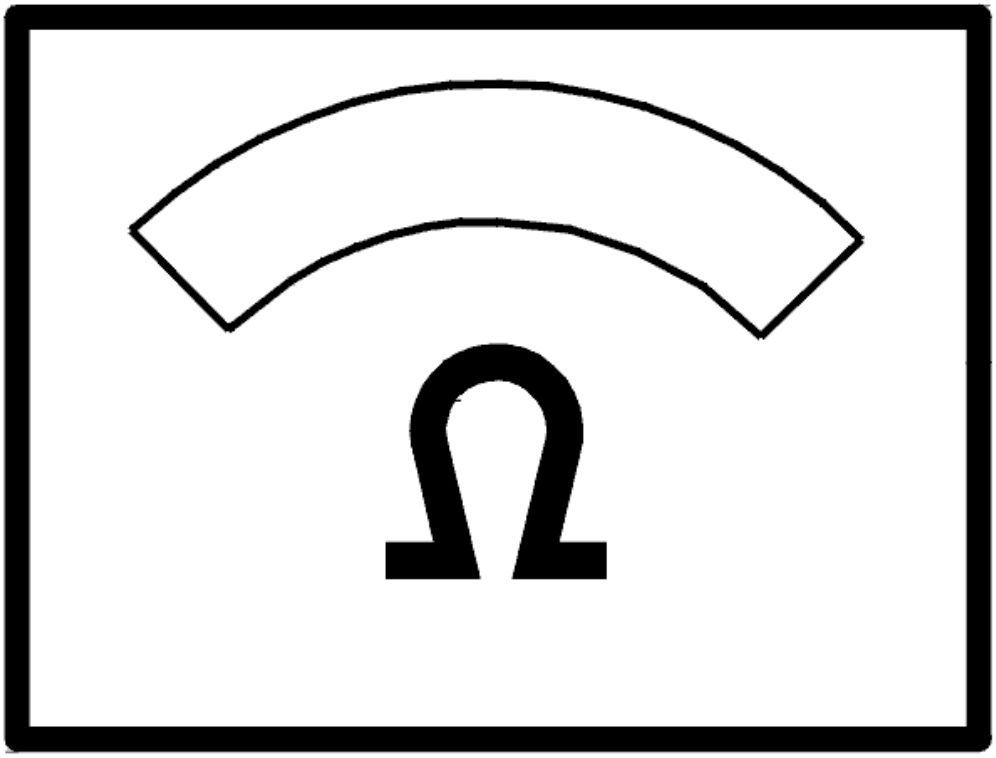

Fig. 73: Identifying Ohm Meter
Courtesy of VOLVO CARS CORPORATION

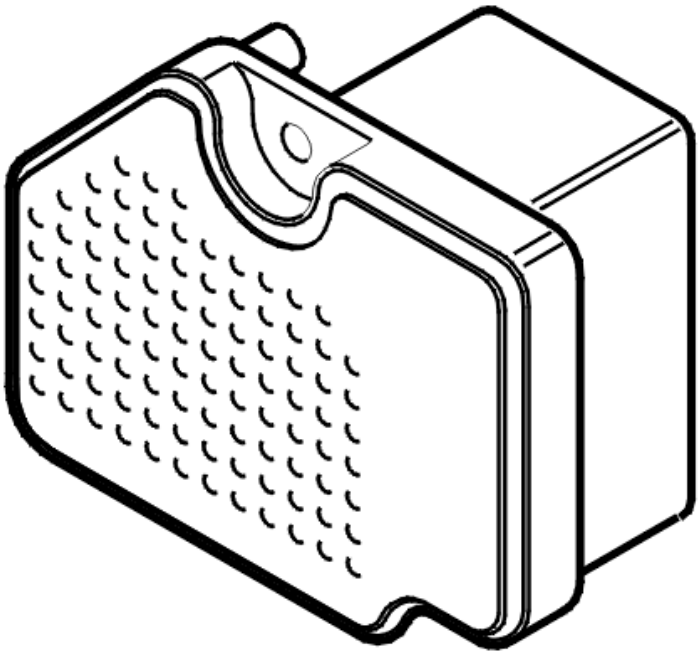

Fig. 74: Active On Demand Coupling Control Module
Courtesy of VOLVO CARS CORPORATION

Was a fault detected?

- **YES**

  Refer to **CHECKING THE DIFFERENTIAL ELECTRONIC MODULE (DEM)**

- **NO**

  Refer to **CHECKING COMMUNICATION WITH THE DIFFERENTIAL ELECTRONIC MODULE (DEM)**

CHECKING COMMUNICATION WITH THE DIFFERENTIAL ELECTRONIC MODULE (DEM)

HINT: The CAN communication with the control module is probably OK if the control module ID can be read off. In that case the fault is probably intermittent and will then be more difficult to trace.

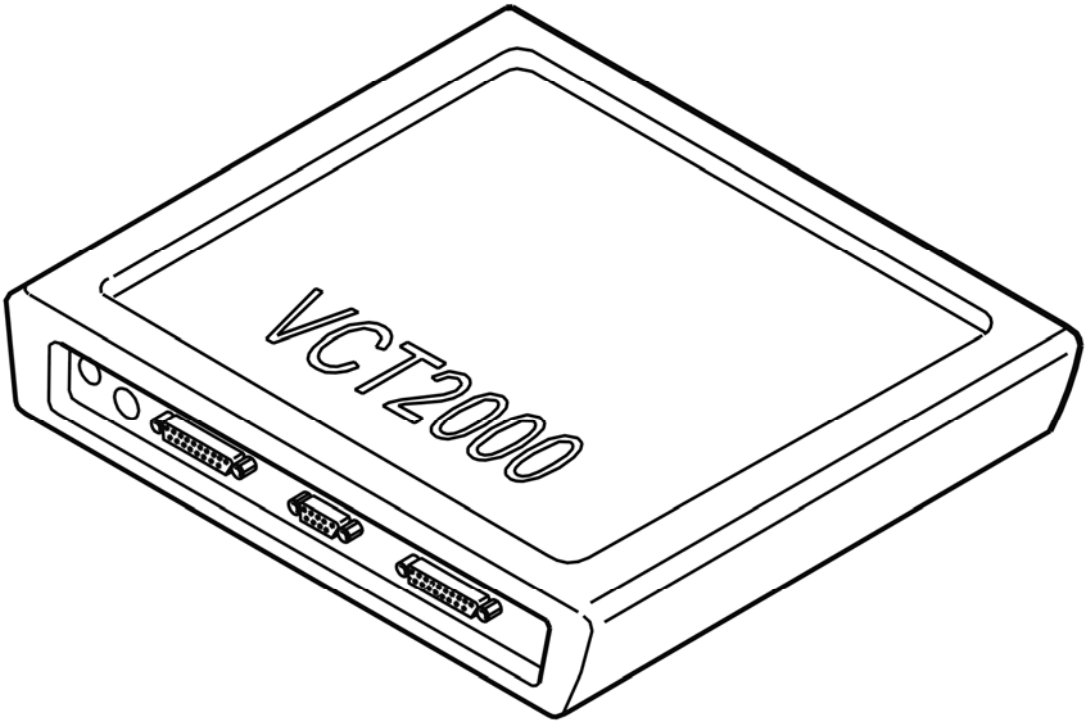

Fig. 75: Identifying VCT2000 Diagnostic Tool Symbol In VIDA
Courtesy of VOLVO CARS CORPORATION

- Try to communicate with the differential electronic module (DEM) by reading off the control module ID
- Use the VCT2000 (or appropriate scan tool)

- **Continue**

  Refer to **SIGNAL MISSING**

CHECKING THE DIFFERENTIAL ELECTRONIC MODULE (DEM)

HINT: After carrying out the repair, check that the fault has been remedied.

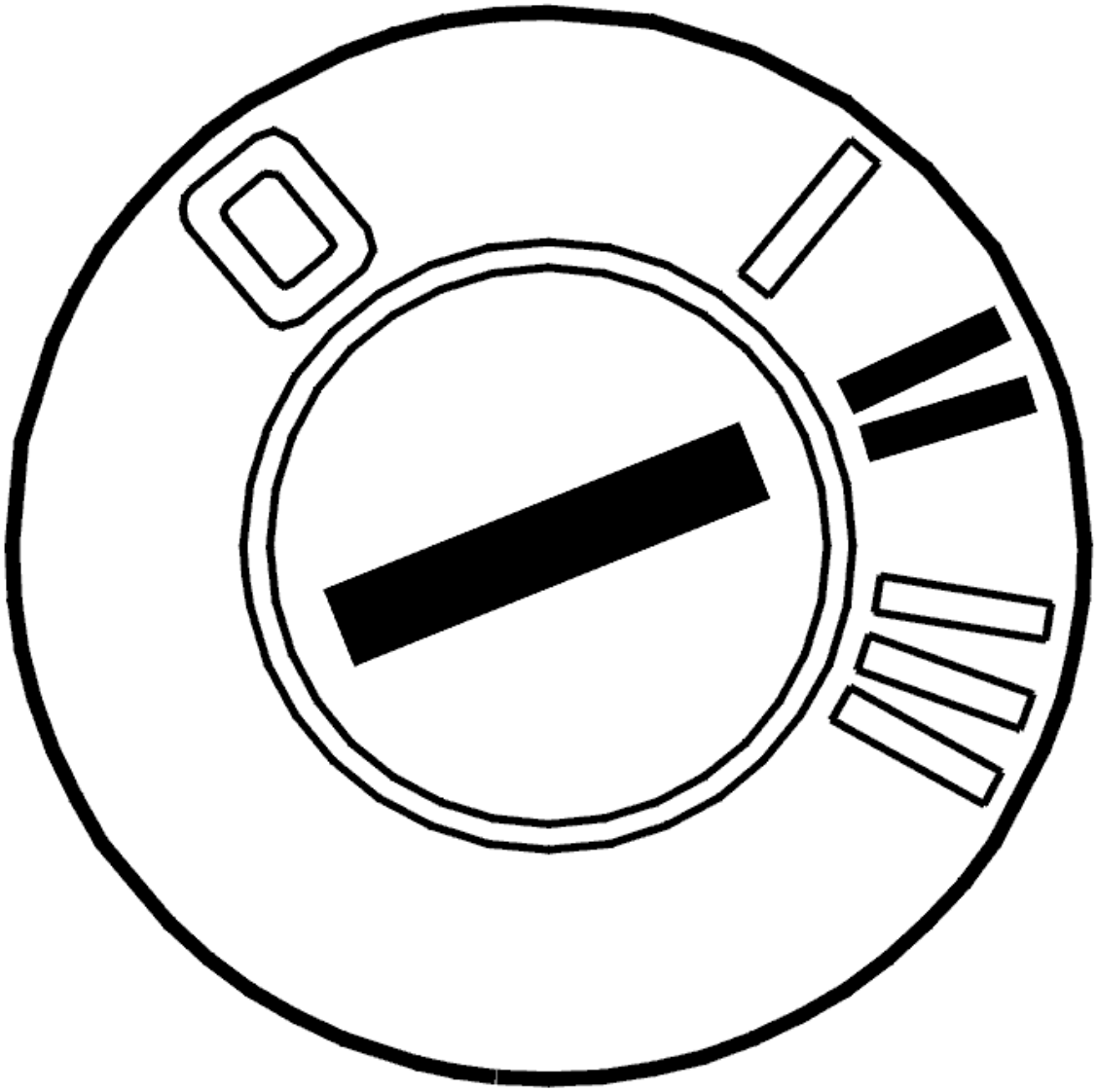

Fig. 76: Identifying Ignition ON
Courtesy of VOLVO CARS CORPORATION

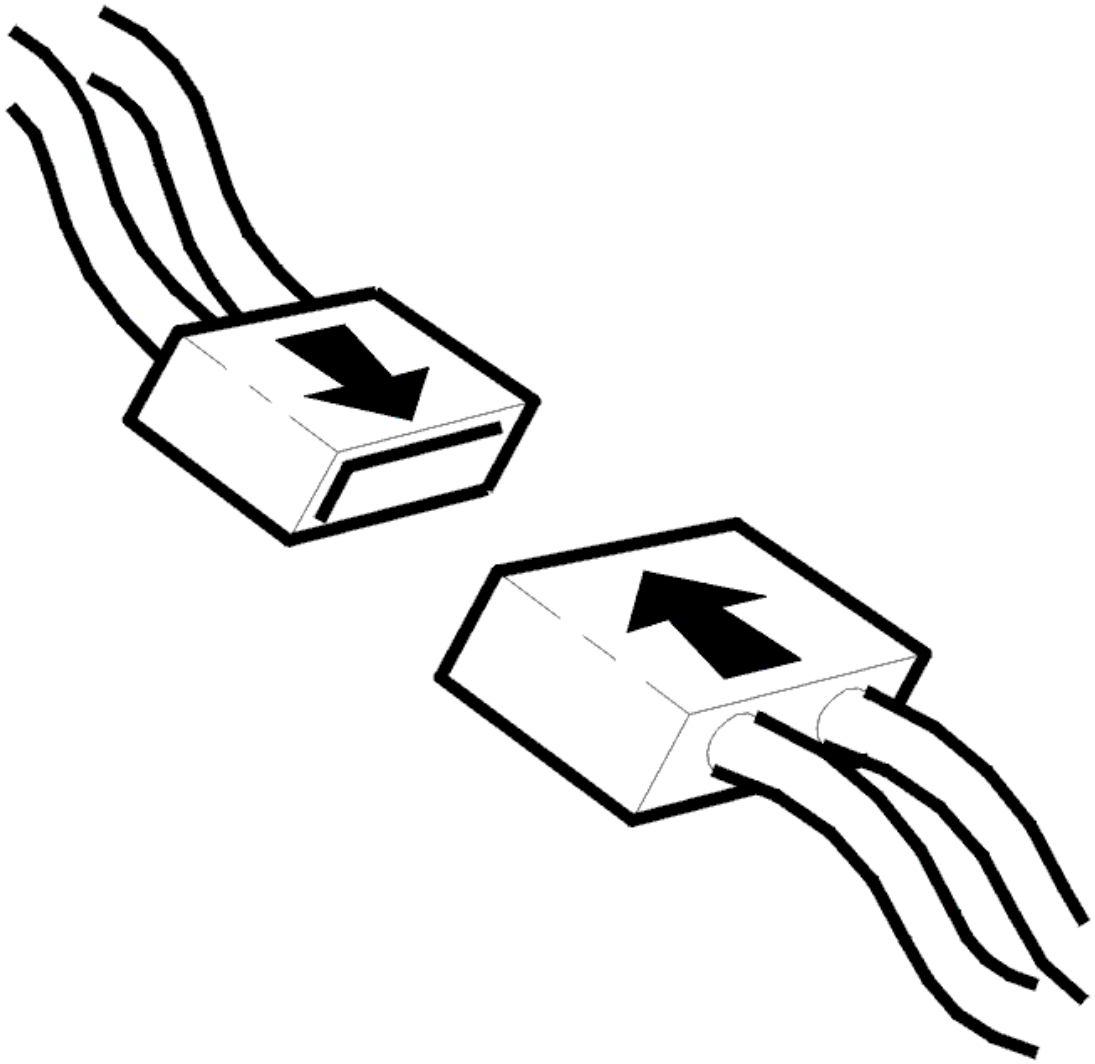

Fig. 77: Connecting Connector
Courtesy of VOLVO CARS CORPORATION

- Ignition off
- Reinstall the connectors, components etc.
- Switch on the ignition for at least 10 seconds.

  Read off the control module ID from the differential electronic module (DEM) using the VCT2000 (or appropriate scan tool).

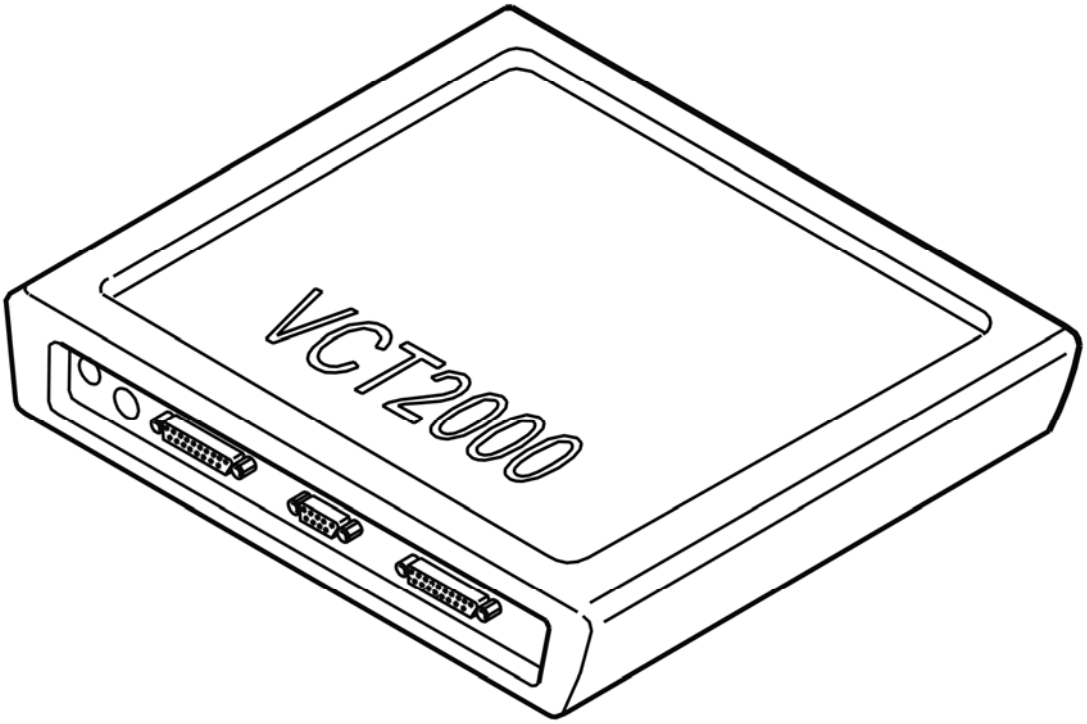

Fig. 78: Identifying VCT2000 Diagnostic Tool Symbol In VIDA
Courtesy of VOLVO CARS CORPORATION

Could the control module ID be read off?

- **YES**

  OKAY: Troubleshooting has been completed.

- **NO**

  Refer to **INFORMATION**

SIGNAL MISSING

GENERAL INFORMATION

HINT: For general information about fault-tracing the control area network (CAN), see the linked document below. See GENERAL INFORMATION ABOUT FAULT-TRACING IN THE CAN NETWORK (2005-2012)

In order to check the control area network (CAN) cables, the resistance in the network must be measured. The resistance between the two CAN cables, with the network connected, must be 60ohms in both the high speed network and the low speed network.

NOTE: **Resistance will only be 60 ohms if the main artery of the CAN network is whole and the network is connected. If the main artery of the CAN network is split somewhere and a reading is taken between the CAN cables, resistance will be 120 ohms.**

If diagnostic trouble codes (DTCs) can be read off from the relevant control module, the fault is probably intermittent. The locations that must be checked in the event of a fault in the low speed network are the junctions behind the central electronic module (CEM) and the audio module (AUM) as well as the cable harness behind the Audio module (AUM).

Intermittent fault in the current supply to the actual control module is indicated by the DTC in the Central electronic module (CEM) (CEM-1A5X or CEM-1A6X). There is probably no diagnostic trouble code (DTC) in the relevant control module as the control module cannot store a diagnostic trouble code (DTC) when it is without power.

- **Continue**

  Refer to **CHECKING THE RESISTANCE OF THE CONTROL AREA NETWORK (CAN) CABLES**

CHECKING THE RESISTANCE OF THE CONTROL AREA NETWORK (CAN) CABLES

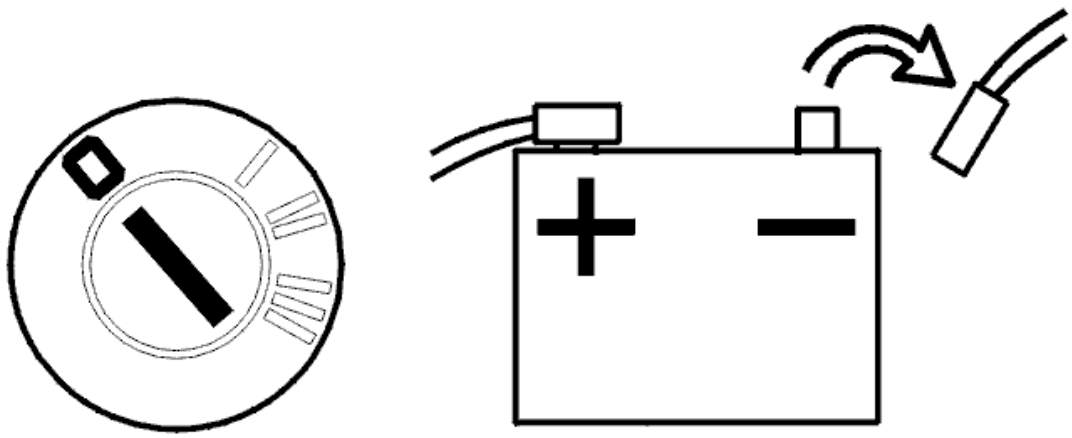

Fig. 79: Identifying Ignition In Off Position And Disconnecting Negative Cable From Battery
Courtesy of VOLVO CARS CORPORATION

- Disconnect the battery negative lead. The network must not be powered when taking resistance readings. Otherwise an incorrect value may be obtained.
- Connect the adapter wiring to the central electronic module (CEM).

  HINT: Where a breakout box cannot be used, take readings from the rear of the affected connectors if possible. This prevents terminal pins and socket housings being damaged.

When taking readings on the low speed network

- When taking readings on the low speed network the adapter wiring should be connected to the Central electronic module (CEM) and readings taken from there. Readings can even be taken in the connector for the Power seat module (PSM). The advantage of the adapter wiring to the Central electronic module (CEM) is that all control module can be connected in the network when taking readings and access can be gained to both the high speed and low speed networks.

  The resistance reading only measures the main arteries in the low speed network, not the junctions that exist for different control modules.

When taking readings on the high speed network

- When taking readings on the high speed network the adapter wiring should be connected to the Engine control module (ECM) and readings taken from there. The Engine control module (ECM) must be connected. This resistance reading only measures the main arteries in the high speed network.

Connect an ohmmeter to the terminals for CAN-L and CAN-H on the relevant network. Turn the contacts and turn the cable harness. Resistance must be approximately 60 ohms.

NOTE: **Resistance will only be 60 ohms if the main artery of the CAN network is whole and the network is connected. If the main artery of the CAN network is split somewhere and a reading is taken between the CAN cables, resistance will be 120 ohms.**

Other information

- see **BATTERY, DISCONNECTING**
- see **CONNECTING THE BREAKOUT BOX**
- see **CHECKING WIRING AND TERMINALS**

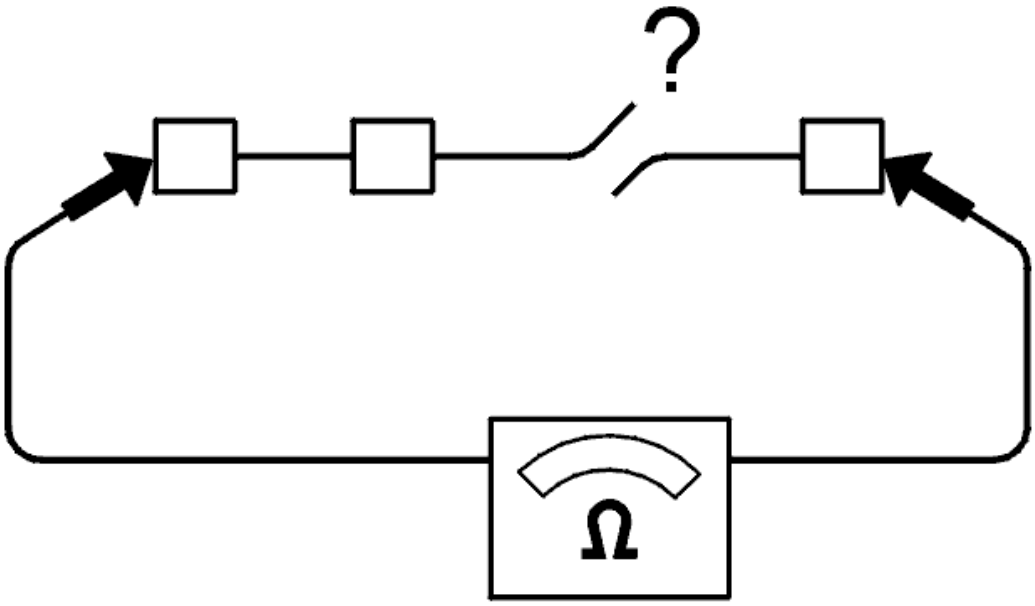

Fig. 80: Checking For Open Circuit
Courtesy of VOLVO CARS CORPORATION

Is the value OK?

- **YES**

  Refer to **CHECKING A SHORT-CIRCUIT IN CAN CABLES**

- **NO**

  Refer to **IDENTIFYING FAULT CAUSES IN THE CAN NETWORK**

CHECKING A SHORT-CIRCUIT IN CAN CABLES

Connect an ohmmeter between respective CAN cable and voltage supply and between the CAN cables and ground. Turn the contacts and turn the cable harness. The resistance must be infinite or very high.

HINT: Readings can be taken from one and the same connector if the CAN wiring, voltage supply and ground is pre-routed. If possible, measure from the rear of the affected connectors in order to minimize any damage and future loose connections. If this is not possible, use the adapter wiring or loose terminal pin for good contact.

Was a fault detected?

- **YES**

  Refer to **IDENTIFYING FAULT CAUSES IN THE CAN NETWORK**

- **NO**

  Refer to **CHECKING THE TRAFFIC LOAD ON THE CAN CABLES**

CHECKING THE TRAFFIC LOAD ON THE CAN CABLES

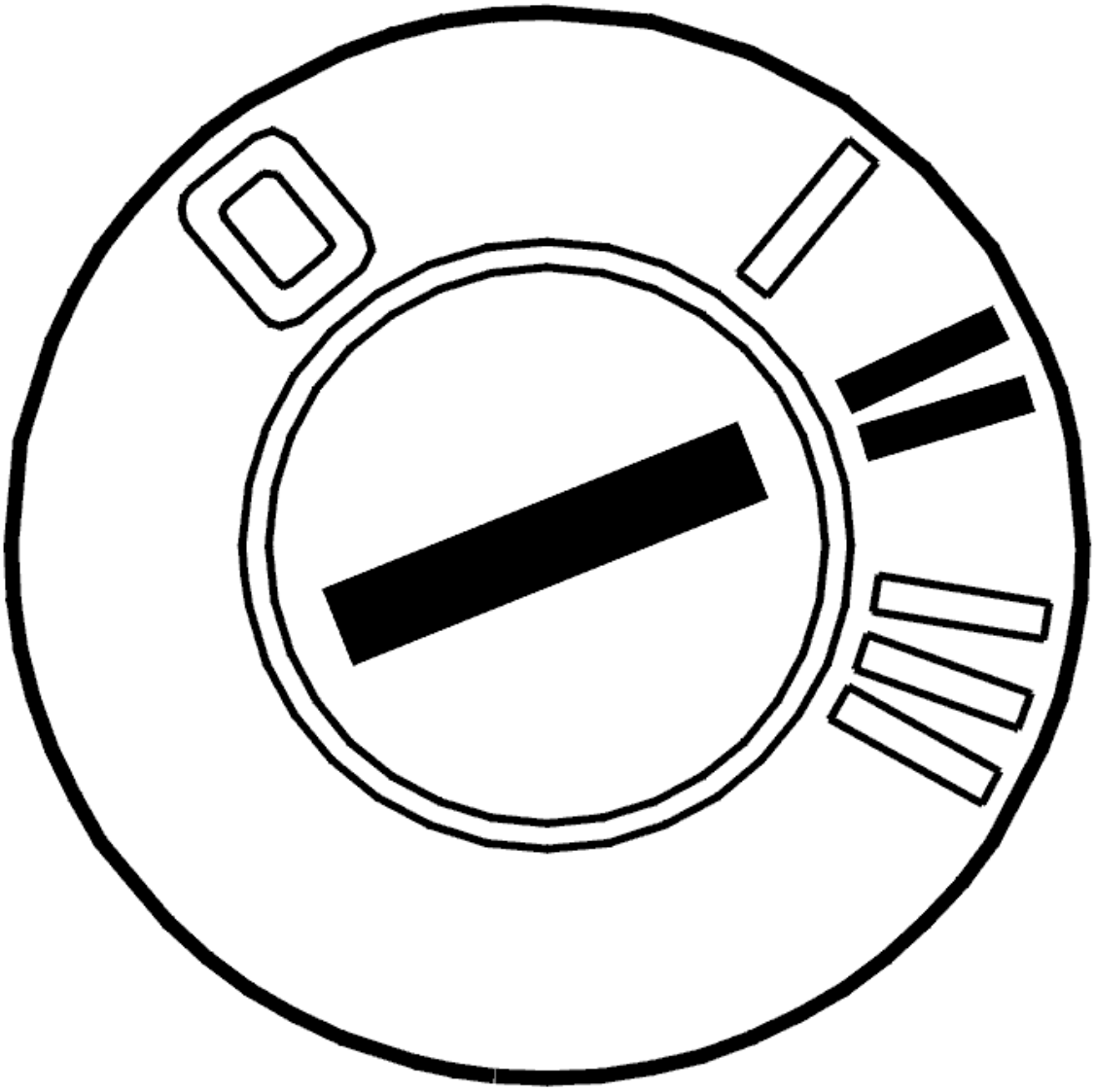

Fig. 81: Identifying Ignition ON
Courtesy of VOLVO CARS CORPORATION

- Connect the battery.
- Ignition on.

Faults in the CAN network may be due to a control module sending faulty messages that disrupt normal communication. When messages are sent incorrectly, this results in a considerable increase in the amount of traffic on the CAN network. The load can be checked by reading the average value of the voltage on the CAN cables in relation to ground.

The following applies for model year -2004:

Connect a voltmeter between CAN-L and ground. The voltage shall be approx. 2.3 V.

Then connect a voltmeter between CAN-H and ground. The voltage shall be approx. 2.8 V.

The following applies for model year 2004-:

Connect a voltmeter between CAN-L and ground. The voltage should be approx: V

Connect a voltmeter between CAN-H and ground. The voltage should be approx: V

NOTE: For vehicles of later model years, normal voltage values lie within a specific interval due to increased traffic between the control modules on the CAN network upon update of the electrical system.

HINT: If possible, measure from the rear of the affected connectors so that they are not damaged.

Other information

- see **BATTERY, DISCONNECTING**

Is the value OK?

- **YES**

  Refer to **INFORMATION**

- **NO**

  Refer to **IDENTIFYING A CONTROL MODULE IN THE CAN NETWORK**

IDENTIFYING FAULT CAUSES IN THE CAN NETWORK

- Disconnect a control module that disconnects the CAN network (a control module that has four terminals to the CAN network).

  HINT: For the low speed network, suitable places for disconnecting the network are at the steering wheel module (SWM), the driver information module (DIM) or the climate control module (CCM).

  In the event of an short-circuit between on of the CAN cables and voltage or ground, the fault can be localized disconnecting a control module that splits the CAN network. Readings can then be taken to

determine on which side the fault is on the disconnected control module.

Connect an ohmmeter between the CAN cable and voltage supply respectively ground. Take readings from both ends of the CAN networks at the network junction. Twist and bend the cable harness to find any intermittent short-circuits. The resistance must be infinite or very high (more than 1 Mohms).

If a fault can be localized in one direction, split the network at a point further on in the CAN network in the direction that the fault was discovered and take a new reading. Try to locate the fault in this way.

HINT: A short-circuit between the CAN cables and supply voltage or ground may be in either the wiring or in a control module.

Remedy the cables as necessary. If a fault is found on one control module, replace the control module.

- **Continue**

  Refer to **VERIFICATION**

IDENTIFYING A CONTROL MODULE IN THE CAN NETWORK

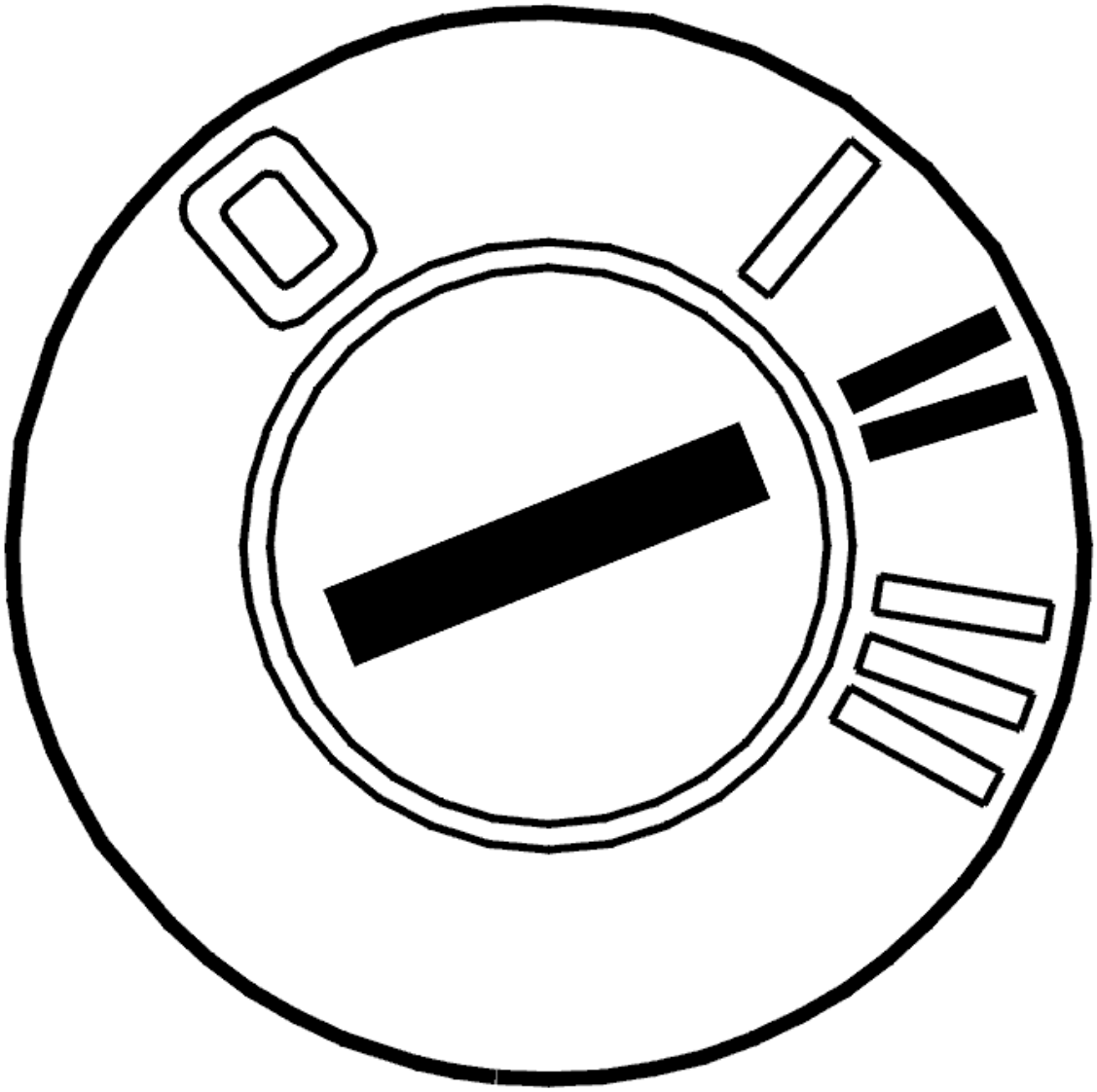

Fig. 82: Identifying Ignition ON
Courtesy of VOLVO CARS CORPORATION

- Connect the battery.
- Ignition on.

If the load on the CAN network is too high, this may be due to a control module transmitting faulty messages on the CAN network. This is called a disruptive control module. The fault may also be due to an intermittent short-circuit to supply voltage or ground in one of the CAN cables. This results in the control modules on the CAN network starting to send faulty messages. The fault may occur without any of the control modules storing a diagnostic trouble code (DTC). The voltage can be measured between the CAN cables in order to check the load on the CAN network.

The following applies for model year -2004:

Connect a voltmeter between the CAN cables. In the event of correct communication on the network, the

average value of the voltage must be approximately 0.5 V (0.4 V to 0.6 V).

The following applies for model year 2004-:The following applies for model year 2004-:

Connect a voltmeter between the CAN cables. During correct CAN network communication, voltage should be about 0.6-1.4 V.

NOTE: For vehicles of later model years, the normal voltage value is slightly higher due to increased traffic between the control modules on the CAN network upon update of the electrical system.

In the event of a communication fault the voltage is significantly higher than the above specified values. In order to identify which control module has faulty communication, cut the power supply to one control module at a time. Check the voltage in the CAN cables again. The easiest way to cut the power supply is to remove the fuse(s) for the relevant control module. Repeat until the voltage between the CAN wiring drops to the normal level.

HINT: When the probable faulty control module has been identified, connect and disconnect the supply voltage to the control module a number of times to verify that the fault appears and disappears.

NOTE: Do not cut the power to the central electronic module (CEM) unless it is the last control module left to check.

The control module that is communicating incorrectly must be replaced. Remedy as necessary.

NOTE: After a fault with "interfering" control modules, other control modules may remain in "Limp-Home mode" even when the ignition has been switched off and on several times. To remedy this, disconnect and reconnect the battery negative terminal to restore the control modules to normal function.

Other information

- see **BATTERY, DISCONNECTING**

- **Continue**

Refer to **VERIFICATION**

IDENTIFYING FAULT CAUSES IN THE CAN NETWORK

- Disconnect a control module that disconnects the CAN network (a control module that has four terminals to the CAN network).

HINT: For the low speed network, suitable places for disconnecting the network are at the steering wheel module (SWM), the driver information module (DIM) or the climate control module (CCM).

In the event of an open-circuit on, or short-circuit between the CAN cables, the fault can be localized by disconnecting a control module that splits the CAN network. Readings can then be taken to determine on which side the fault is on the disconnected control module.

Connect an ohmmeter between the CAN cables. Take readings from both ends of the CAN networks at the network junction. Twist and bend the cable harness to find any intermittent short-circuits. Resistance should be 120 ohms.

If a fault can be localized in one direction, split the network at a point further on in the CAN network in the direction that the fault was discovered and take a new reading. Try to locate the fault in this way.

Remedy the cables as necessary.

- **Continue**

Refer to **VERIFICATION**

VERIFICATION

HINT: After rectifying a fault, a verification should be carried out.

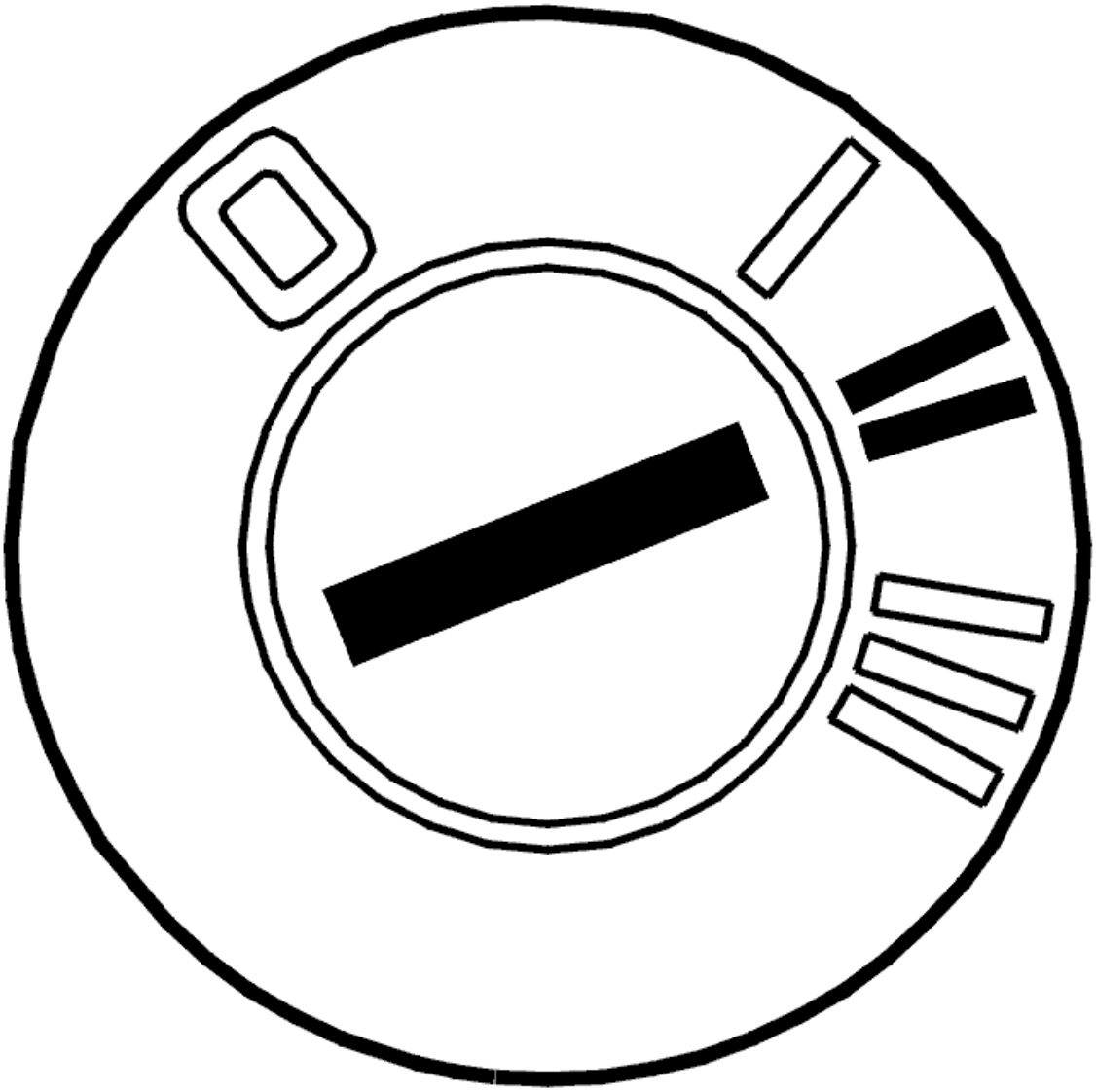

Fig. 83: Identifying Ignition ON
Courtesy of VOLVO CARS CORPORATION

- Reinstall the connectors, components etc.
- Ignition on.
- Erase diagnostic trouble codes using the VCT2000 (or appropriate scan tool).
- Start the car. Allow the vehicle to run for 10 minutes.
- Read off diagnostic trouble codes (DTCs).

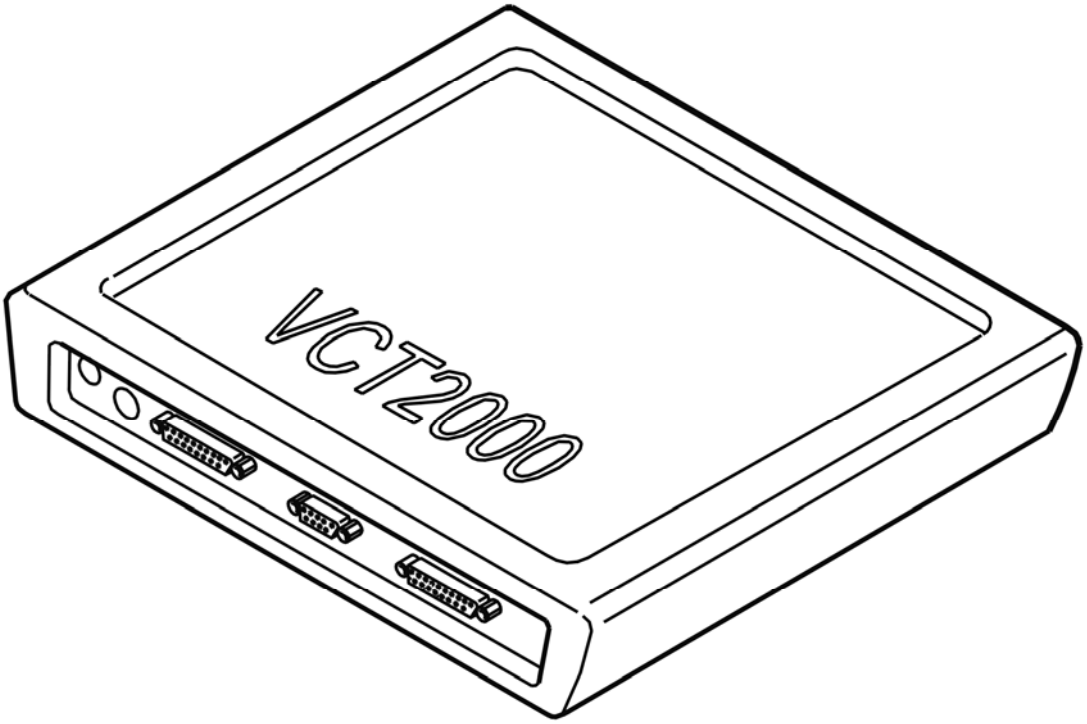

Fig. 84: Identifying VCT2000 Diagnostic Tool Symbol In VIDA
Courtesy of VOLVO CARS CORPORATION

Does the diagnostic trouble code (DTC) for a communication fault recur (CEM-1A5X or CEM-1A6X)?

- **YES**

  Refer to **INFORMATION**

- **NO**

  OKAY: Troubleshooting has been completed.

INFORMATION

FAULT-TRACING INFORMATION

Verification shows that the fault is no longer present. The diagnostic trouble code (DTC) was probably caused by an intermittent fault.

Fault-tracing for this diagnostic trouble code (DTC) is not followed by a verification.

You can view the information again or exit fault-tracing for this diagnostic trouble code (DTC).

INFORMATION

FAULT-TRACING INFORMATION

The fault should have been detected and remedied. As this is not the case fault-tracing has failed.

Exit fault-tracing for this diagnostic trouble code (DTC) or make another attempt.

CEM-1A64: COMMUNICATION WITH THE DIFFERENTIAL ELECTRONIC MODULE (DEM). SIGNAL MISSING (2005-2012)

DIAGNOSTIC TROUBLE CODE (DTC) INFORMATION CEM-1A64

Condition

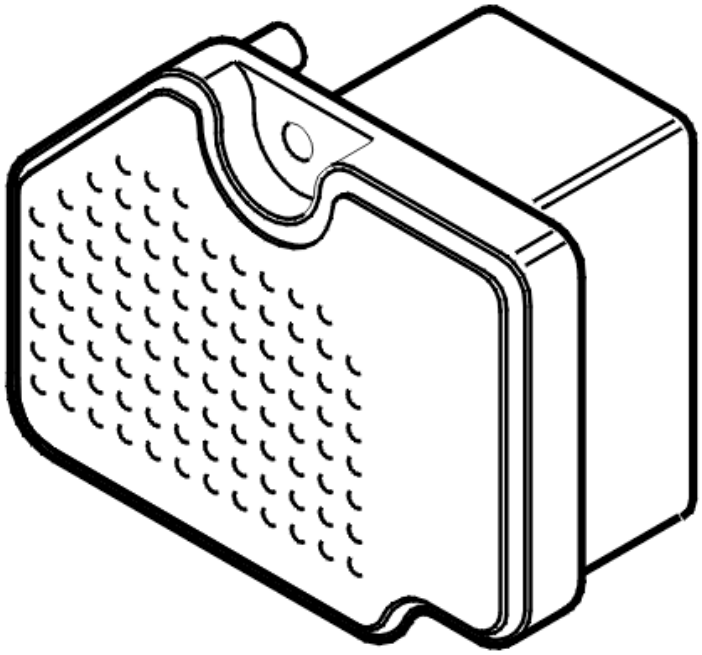

Fig. 85: Active On Demand Coupling Control Module
Courtesy of VOLVO CARS CORPORATION

The diagnostic trouble code (DTC) is stored if the central electronic module (CEM) registers that communication with the differential electronic module (DEM) is not operating.

The diagnostic trouble code (DTC) can be diagnosed when the ignition has been on for more than 10 seconds.

NOTE: **If CEM-1A6X diagnostic trouble codes (DTCs) are stored, the central electronic module (CEM) must not be replaced as the diagnostic trouble code (DTC) indicates a communication fault in the Control area network**

Substitute Value

- None.

Possible Source

- No power supply to the differential electronic module (DEM)
- Open-circuit in the ground lead for the differential electronic module (DEM)
- Contact resistance in the terminals
- Open-circuit in the wiring for the CAN high speed network to the differential electronic module (DEM)
- The differential electronic module (DEM) is not intended for this vehicle, for example a used control module with different software/hardware.

HINT: If several diagnostic trouble codes (DTCs) are stored in the central electronic module (CEM) for communication faults with other control modules in the high speed network, this indicates a common fault in the Control area network.

Fault symptom[s]

- Four wheel drive is not functioning.
- Message in the display
- General warning lamp lit

CEM-1A64: COMMUNICATION WITH THE DIFFERENTIAL ELECTRONIC MODULE (DEM). SIGNAL MISSING (B5254T2; 2005-2007)

SIGNAL MISSING

CHECKING THE POWER SUPPLY AND GROUND FOR THE DIFFERENTIAL ELECTRONIC MODULE (DEM)

Check that the fuse for the control module is intact.

Checking the power supply and ground terminal for the differential electronic module (DEM).

Other information:

- see **CHECKING THE SUPPLY VOLTAGE/GROUND TERMINAL**
- see **CHECKING WIRING AND TERMINALS**

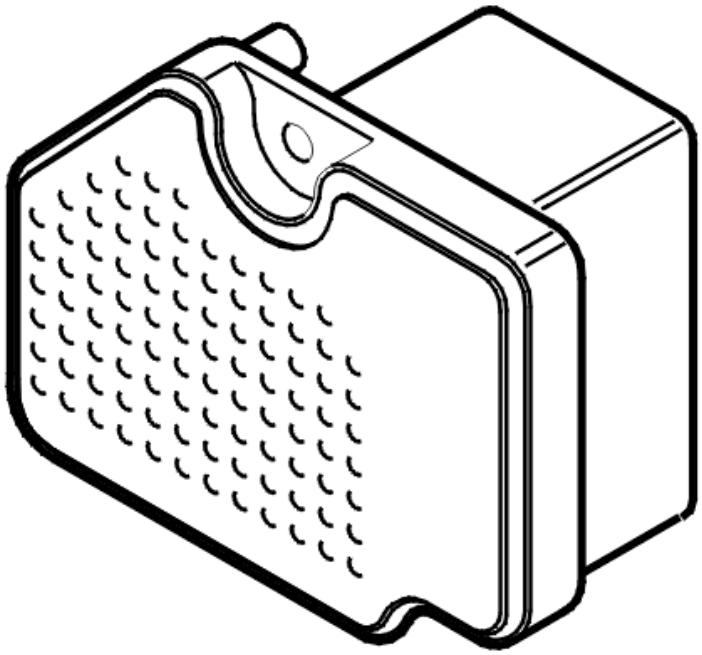

Fig. 86: Active On Demand Coupling Control Module
Courtesy of VOLVO CARS CORPORATION

Was a fault detected?

- **YES**

  Refer to **CHECKING THE DIFFERENTIAL ELECTRONIC MODULE (DEM)**

- **NO**

  Refer to **CHECKING COMMUNICATION WITH THE DIFFERENTIAL ELECTRONIC MODULE (DEM)**

CHECKING COMMUNICATION WITH THE DIFFERENTIAL ELECTRONIC MODULE (DEM)

HINT: The CAN communication with the control module is probably OK if the control module ID can be read off. In that case the fault is probably intermittent and will then be more difficult to trace.

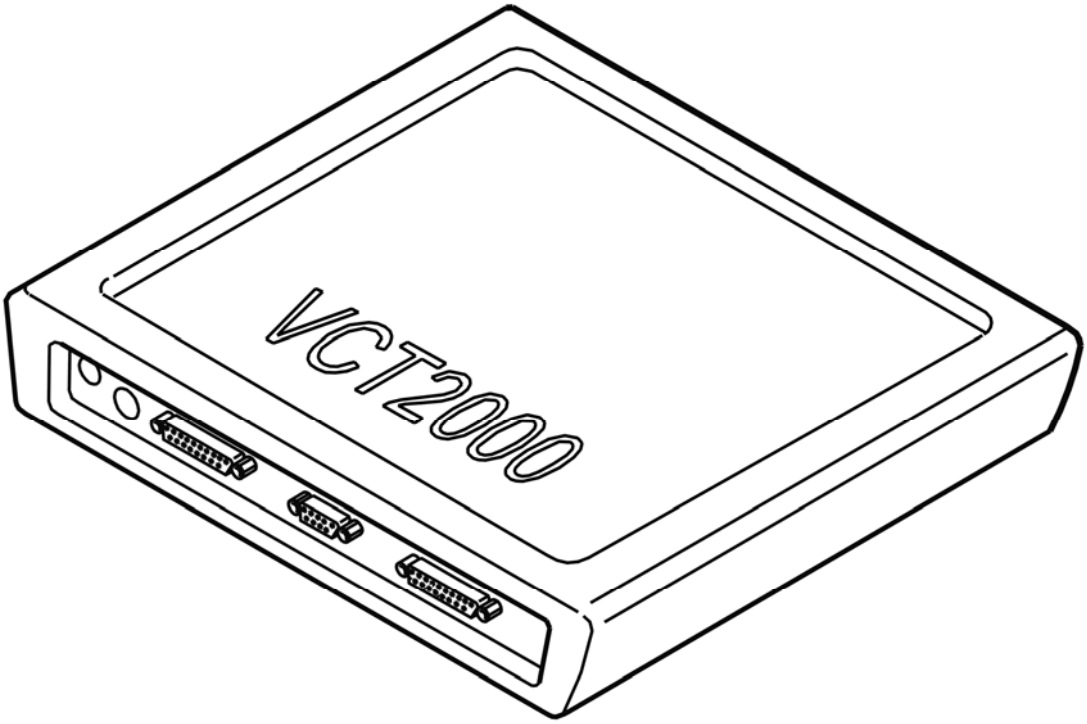

Fig. 87: Identifying VCT2000 Diagnostic Tool Symbol In VIDA
Courtesy of VOLVO CARS CORPORATION

- Try to communicate with the differential electronic module (DEM) by reading off the control module ID
- Use the VCT2000 (or appropriate scan tool)

- **Continue**

  Refer to **SIGNAL MISSING**

CHECKING THE DIFFERENTIAL ELECTRONIC MODULE (DEM)

HINT: After carrying out the repair, check that the fault has been remedied.

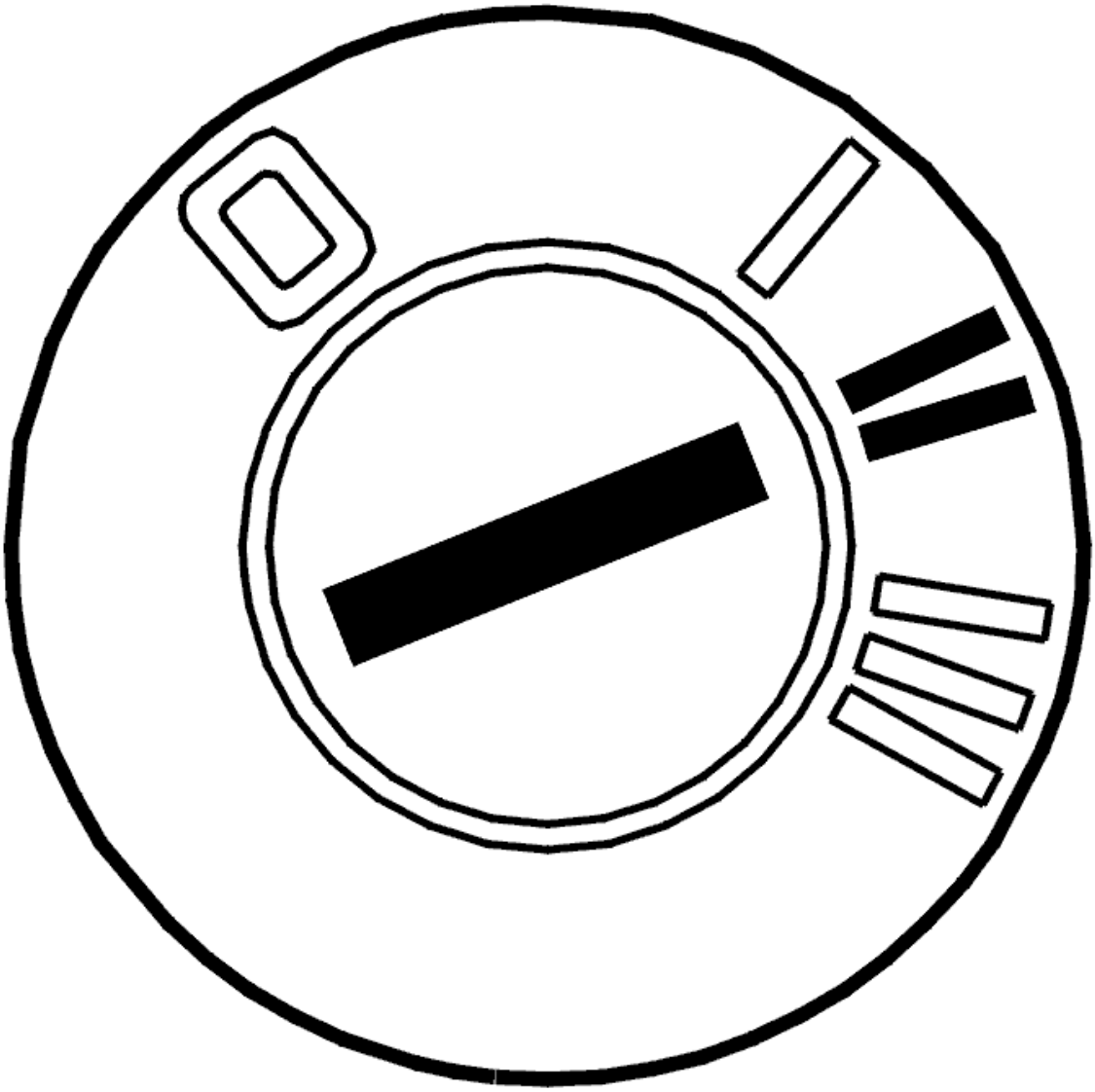

Fig. 88: Identifying Ignition ON
Courtesy of VOLVO CARS CORPORATION

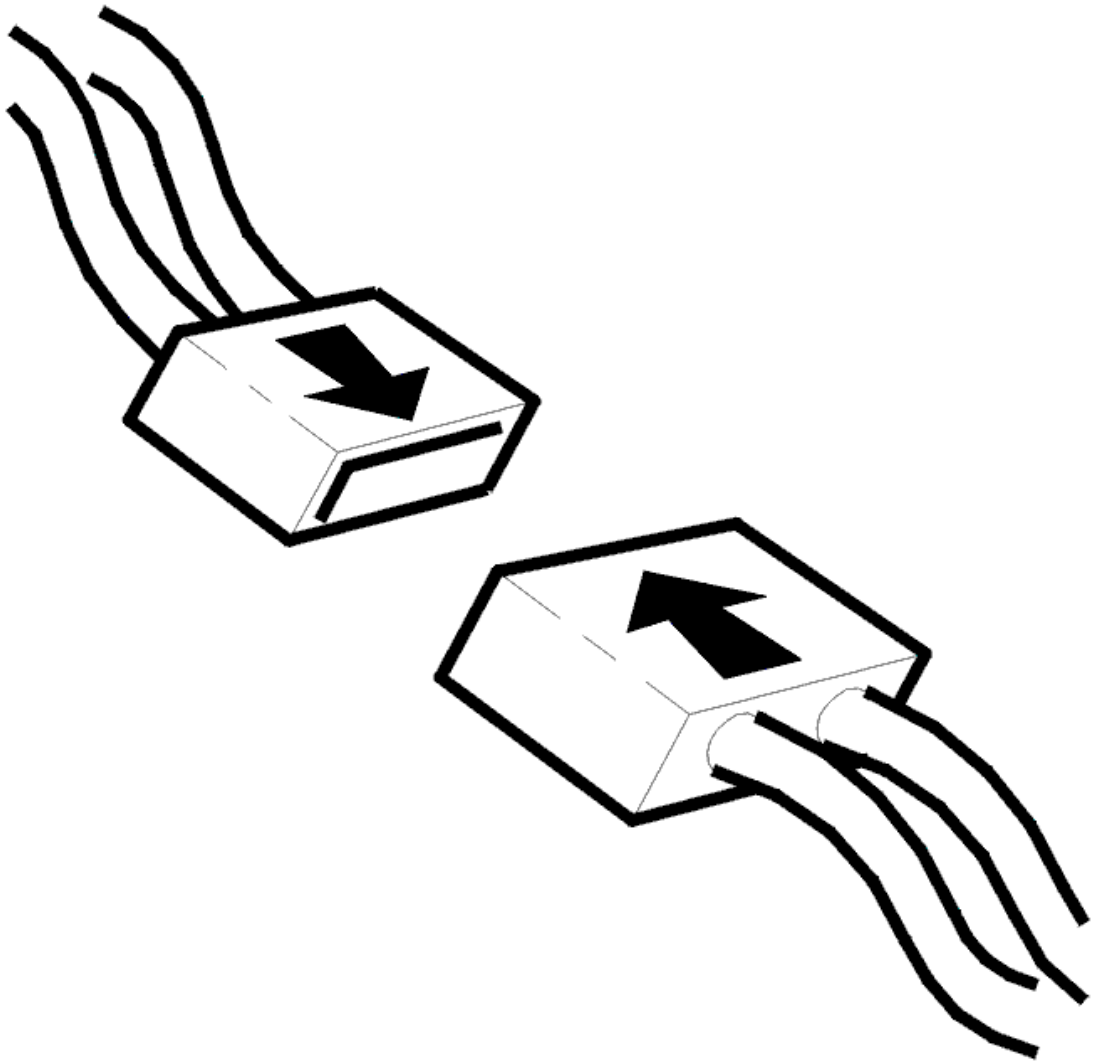

Fig. 89: Connecting Connector
Courtesy of VOLVO CARS CORPORATION

- Ignition off
- Reconnect the connectors. Reinstall the components
- Ignition on for at least 10 seconds.

  Read off the control module ID from the differential electronic module (DEM) using the VCT2000 (or appropriate scan tool).

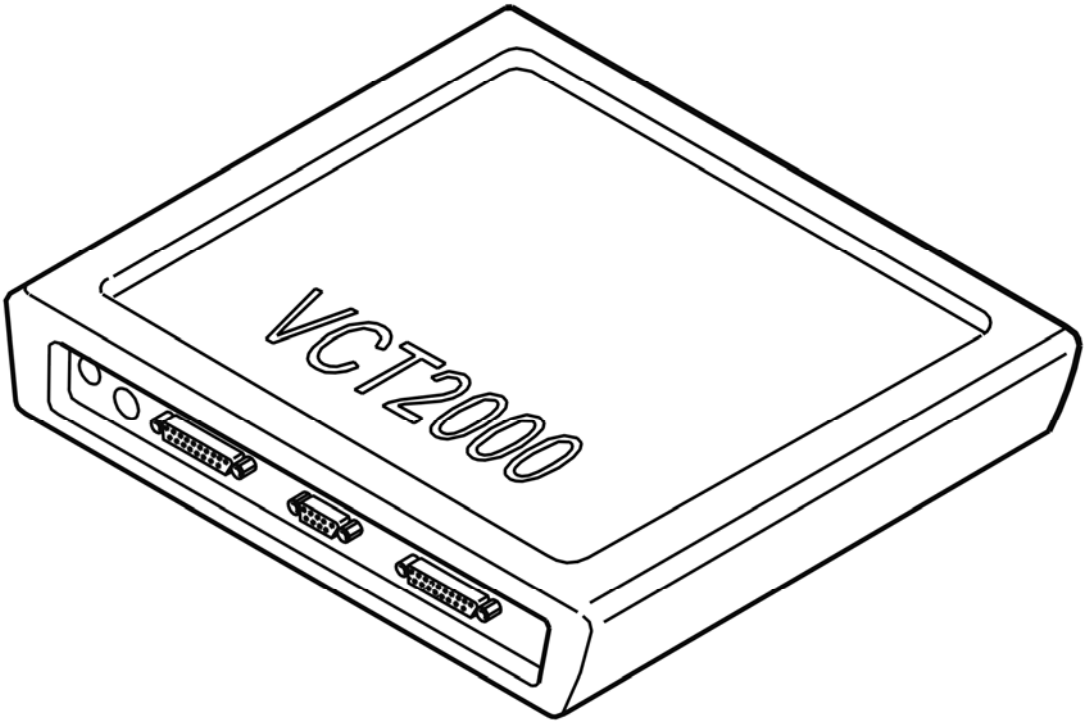

Fig. 90: Identifying VCT2000 Diagnostic Tool Symbol In VIDA
Courtesy of VOLVO CARS CORPORATION

Could the control module ID be read off?

- **YES**

  OKAY: Troubleshooting has been completed.

- **NO**

  Refer to **INFORMATION**

SIGNAL MISSING

GENERAL INFORMATION

NOTE: Illustrations shown are only examples.

HINT: For general information about CAN-troubleshooting, see:

- **General about CAN-related diagnostic trouble codes:**

  CEM-DF01 - DF17 can only be stored in Central electronic module (CEM). These diagnostic trouble

codes are stored when an electric fault is detected in CAN-lines. Start with these diagnostic trouble codes first.

CEM-1AXX only stored in Central electronic module (CEM). One diagnostic trouble code for every control module on the CAN-net. These diagnostic trouble codes indicate that Central electronic module (CEM) does not receive any reply from other control modules.

XXX-E000 (HS-CAN)/E001 (LS-CAN) can be stored in all CAN-connected control modules. These diagnostic trouble codes indicate that the control module has detected interference on the CAN-net.

XXX-E003 can be stored in all CAN-connected control modules except in Central electronic module (CEM). The control modules on the CAN-net listen for a message (identity number) that is sent out at regular intervals from Central electronic module (CEM). This diagnostic trouble code indicates that the control module has not received any identity number, or that the expected number is not correct. Interference on the CAN-net can also store this diagnostic trouble code.

NOTE: **In case of CAN-related faults, it is likely that a combination of above diagnostic trouble codes occur.**

NOTE: **After fault with control modules that interfere with communication, other control modules may remain in Limp-Home (that is, they work with reduced functionality) even when the ignition has been turned off and on a few times. For certain faults in the CAN-net where control modules have stopped communicating, it may help to disconnect/reconnect the battery to "restart" the control module/CAN-net.**

If a communication diagnostic trouble code can be read from the control module, the malfunction is probably intermittent.

Intermittent fault in the voltage supply and ground to a control module on the CAN network results in the Central electronic module (CEM) storing a diagnostic trouble code (DTC) for an open-circuit in communication with the control module where the voltage supply does not work. There will probably not be a diagnostic trouble code (DTC) in the control module where the open-circuit in the voltage supply occurred as the control module cannot store a diagnostic trouble code (DTC) when it is not supplied with power.

NOTE: **Central electronic module (CEM) should not be replaced in case of CAN-fault, unless troubleshooting reveals that Central electronic module (CEM) has an internal fault.**

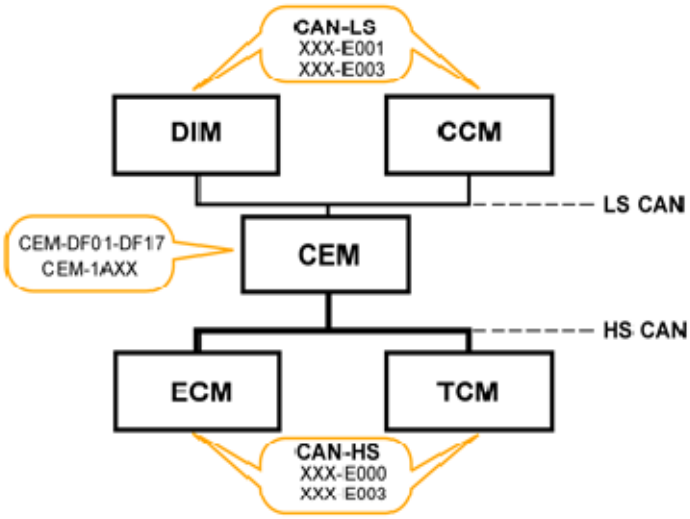

Fig. 91: High-Speed CAN And Low-Speed CAN Communication Diagram
Courtesy of VOLVO CARS CORPORATION

- **Continue**

  Refer to **CHECKING RESISTANCE IN CAN-NET**

CHECKING RESISTANCE IN CAN-NET

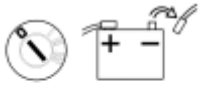

Fig. 92: Ignition Off And Disconnecting Battery Negative Lead
Courtesy of VOLVO CARS CORPORATION

- Ignition off
- Disconnect the battery negative lead
- Connect OBDII-Box **(951 3015)** to the diagnostics socket.

  For general information about CAN-troubleshooting, see: **GENERAL INFORMATION ABOUT FAULT-TRACING IN THE CAN NETWORK**

  Measure resistance between the following connections on the OBDII-box/diagnostics socket.

  - #6 and #14. The resistance should be approx. 55 - 65 ohms.
  - If resistance is approx. 120 ohms, this indicates open circuit in the circuit so that only one terminating resistor (120 ohms) has been measured.
  - If resistance is above 1 kohms this indicates open circuit/high contact resistance somewhere in the circuit.

- If resistance is below 55 ohms this indicates short-circuiting/contact resistance between the CAN-lines somewhere in the circuit.

HINT: For HS-CAN the terminating resistors are located in Brake control module (BCM) and in Engine control module (ECM).

Twist the cable harness and wiggle connectors where they can be accessed along the cable harness during every measurement, and note if the resistance changes to detect intermittent short-circuits or open circuit.

NOTE: **Resistance measurement measures only main lines in the CAN-net (in circuit where both terminating resistors are found), not branches to certain control modules.**

Open circuit on branching without a terminating resistor cannot be detected with this measurement. However, short-circuiting on a branch can be detected. To measure resistance in the CAN-net to control modules located in a branching of their own, the measurement shall be done against the CAN-net at that control module. The values shall be as above.

NOTE: **After fault with control modules that interfere with communication, other control modules may remain in Limp-Home (that is, they work with reduced functionality) even when the ignition has been turned off and on a few times. For certain faults in the CAN-net where control modules have stopped communicating, it may help to disconnect/reconnect the battery to "restart" the control module/CAN-net.**

Remedy wiring as necessary.

Other information

- see **BATTERY, DISCONNECTING**
- see **CHECKING WIRING AND TERMINALS**

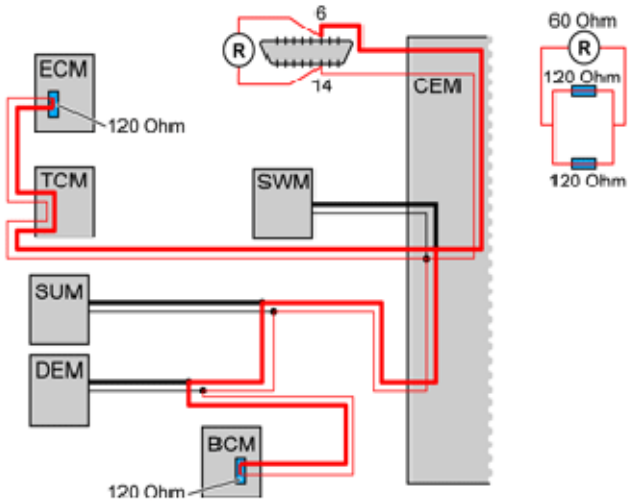

Fig. 93: Checking Resistance In CAN Lines
Courtesy of VOLVO CARS CORPORATION

Was a fault detected?

- **YES**

  Refer to **VERIFICATION**

- **NO**

  Refer to **CHECKING SHORT-CIRCUITING TO GROUND/VOLTAGE IN CAN-NET**

CHECKING THE TRAFFIC LOAD ON THE CAN CABLES

Fig. 94: Identifying Ignition On Position
Courtesy of VOLVO CARS CORPORATION

- Connect the battery
- Ignition on.
- Connect OBDII-Box **(951 3015)** to the diagnostics socket.

  For general information about CAN-troubleshooting, see: **GENERAL INFORMATION ABOUT FAULT-TRACING IN THE CAN NETWORK**

  Faults in the CAN network may be due to a control module sending faulty messages that disrupt normal

communication. When messages are sent incorrectly, this results in a considerable increase in the amount of traffic on the CAN network. Check the load by measuring the average voltage value on the CAN cables in relation to ground.

Measure voltage between the following connections on the OBDII-box/diagnostics socket.

- #6 and #4 (ground). The voltage should be approx:2, 8 - 3, 2 V.
- #14 and #4 (ground). The voltage should be approx:1, 8 - 2, 2 V.
- #6 and #14. The voltage shall be between approx. 0.55-1.4 V. The voltage shall normally be between 0.55 - 0.90 V. A higher voltage may indicate increased traffic on the CAN-net. In case of fault in communication/too high traffic on the CAN-net, the voltage is considerably higher than the above stated values.

NOTE: After fault with control modules that interfere with communication, other control modules may remain in Limp-Home even when the ignition has been turned off and on a few times. For certain faults in the CAN-net where control modules have stopped communicating, it may help to disconnect/reconnect the battery to "restart" the control module/CAN-net.

HINT: DiCE can be used as fault detection tool if fault is suspected on the CAN-net that cannot be detected with normal troubleshooting. Interference, intermittent faults, faulty messages on the CAN-net etc., are examples of such faults. The tool registers fault messages used on the CAN-net. Fault messages may be caused by short intermittent malfunctions on the CAN-net or by a control module sending fault messages. See tools:951 3010 as well as associated TJ 20402.

- Ignition on.
- Connect DiCE to the diagnostics socket.
- Note the blue LED-indicator. The indicator flashes to show detection of fault messages.

NOTE: Certain interference may occur without any real fault

Cable fault

- Shake the cables lightly and pull lightly on the connections during the check to locate any fault. Note the blue LED-indicator.

"Chatting" control modules

- "Chatting" control modules may be difficult to find and troubleshooting may take time. Let the vehicle stand with DiCE connected for an extended time period. Afterwards, activate functions to provoke a malfunction. It may take up to several hours before the fault messages are sent. When the indicator starts to flash, remove the fuse for one control module at a time until the indicator stops flashing. When the indicator stops flashing, restore the fuse for the relevant control module and check that the indicator starts to flash again. Then it is likely that the problem is identified.

Remedy wiring as necessary.

Other information

- see **BATTERY, DISCONNECTING**
- see **CHECKING WIRING AND TERMINALS**

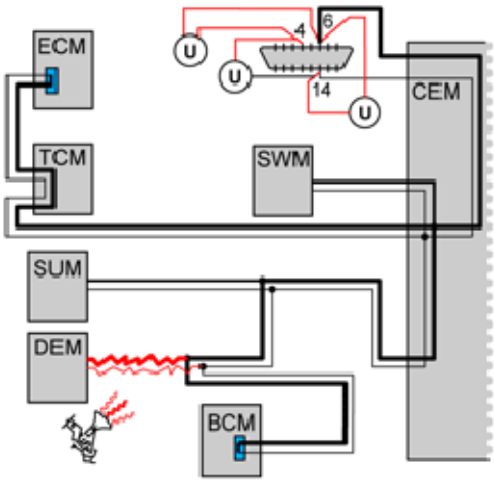

Fig. 95: Checking Traffic Load On CAN Cables
Courtesy of VOLVO CARS CORPORATION

Was a fault detected?

- **YES**

  Refer to **IDENTIFYING A CONTROL MODULE IN THE CAN NETWORK**

- **NO**

  Refer to **CHECKING VOLTAGE-DROP IN CABLE FOR CAN-H AND CAN-L, RESPECTIVELY**

IDENTIFYING A CONTROL MODULE IN THE CAN NETWORK

Fig. 96: Identifying Ignition On Position
Courtesy of VOLVO CARS CORPORATION

For general information about CAN-troubleshooting, see: **GENERAL INFORMATION ABOUT FAULT-TRACING IN THE CAN NETWORK**

HINT: DiCE can be used as fault detection tool if fault is suspected on the CAN-net that cannot be detected with normal troubleshooting. Interference, intermittent faults, faulty messages on the CAN-net (chattering control modules) etc., are examples of such faults. The tool registers fault messages used on the CAN-net. Fault messages may be caused by short intermittent malfunctions on the CAN-net or by a control module sending fault messages. See tools:951 3010 (memory card) as well as associated TJ 20402.

If the load on the CAN network is too high, this may be due to a control module sending faulty messages on the CAN network (known as a disruptive control module). The fault may also be due to an intermittent short-circuit to supply voltage or ground in one of the CAN cables. This results in the control modules on the CAN network starting to send faulty messages. The faults can occur without a diagnostic trouble code (DTC) being stored by the control modules. The voltage can be measured between the CAN cables in order to check the load on the CAN network.

NOTE: **It is not necessarily the control module(s) that stored the diagnostic trouble code (DTC) that is communicating faultily. Faulty messages can come from any control module in the same section of the CAN network. However, faulty communication in one network cannot affect the communication on the other network. In other words, faulty communication on the LS-CAN cannot disrupt communication on the HS-CAN and vice versa.**

- Ignition on.
- Connect OBDII-Box **(951 3015)** to the diagnostics socket.

Check communication/load on CAN-net by measuring voltage between CAN-L and CAN-H. Measure voltage between the following connections on the OBDII-box/diagnostics socket.

- #6 and #14. The average value of the voltage must be approximately 0.6-1.4 V. The voltage shall normally be between 0.55 - 0.90 V. A higher voltage may indicate increased traffic on the CAN-net. In case of fault in communication/too high traffic on the CAN-net, the voltage is considerably higher than the above stated values.

In order to identify which control module has faulty communication, cut the power supply to one control module at a time. Check the voltage in the CAN cables again. The easiest way to cut the power supply is to remove the fuse(s) for the relevant control module. Repeat until the voltage between the CAN wiring drops to the normal level.

NOTE: **When connecting and disconnecting individual control modules, other diagnostic trouble codes (DTCs) may be stored in certain control modules.**

HINT: When the suspected defective control module has been identified, connect and disconnect the supply voltage to the control module a number of times to verify that the malfunction appears and disappears. Switch off the ignition between each check.

NOTE: **Do not cut the power to the central electronic module (CEM) unless it is the last control module left to check.**

A control module that is communicating incorrectly must be replaced. See Repairing and installing/Removing, replacing and installing.

NOTE: **After fault with control modules that interfere with communication, other control modules may remain in Limp-Home (that is, they work with reduced functionality) even when the ignition has been turned off and on a few times. For certain faults in the CAN-net where control modules have stopped communicating, it may help to disconnect/reconnect the battery to "restart" the control module/CAN-net.**

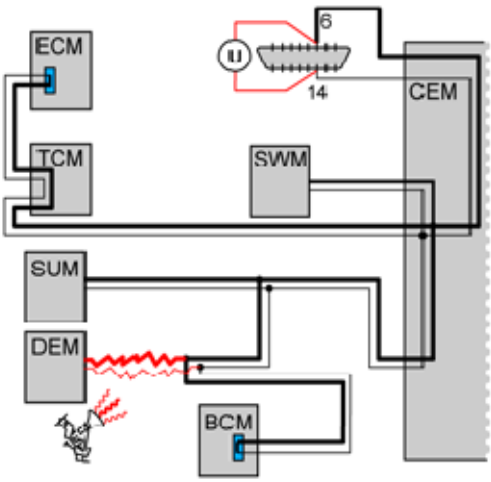

Fig. 97: Checking Communication/Load On CAN-Net Between CAN-L And CAN-H
Courtesy of VOLVO CARS CORPORATION

- **Continue**

  Refer to **VERIFICATION**

VERIFICATION

HINT: After rectifying a fault, a verification should be carried out.

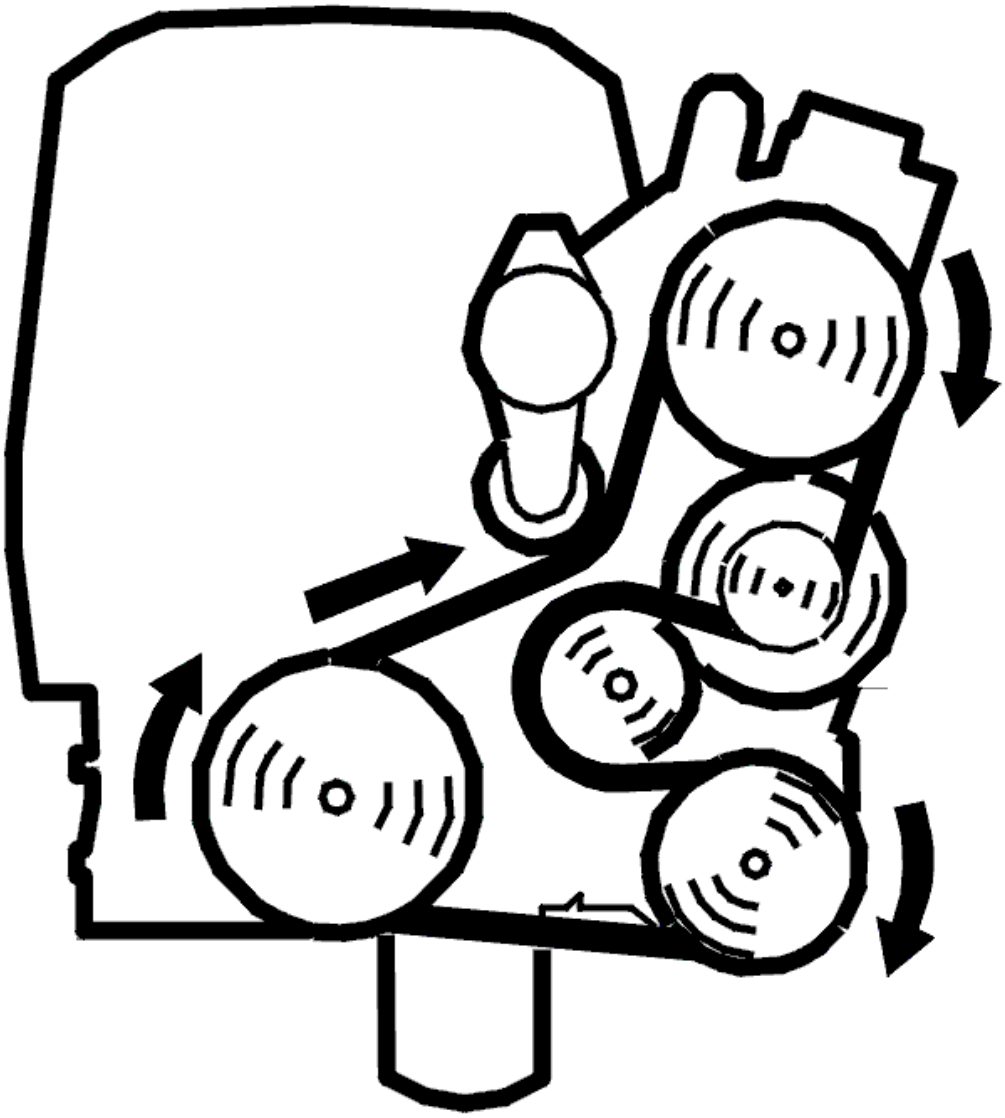

Fig. 98: Belt Routing / Engine Idling - Volvo
Courtesy of VOLVO CARS CORPORATION

Fig. 99: Identifying Ignition On Position
Courtesy of VOLVO CARS CORPORATION

- Reinstall the connectors, components etc.
- Ignition on.

NOTE: **For certain faults in the CAN-net where control modules have stopped communicating, it may help to disconnect/reconnect the battery to "restart" the control module/CAN-net.**

- Erase diagnostic trouble codes (DTCs) in all control modules.
- Ignition off.
- Ignition on.
- Start the vehicle. Allow the vehicle to run for 10 minutes.
- Read out the diagnostic trouble codes in the vehicle via the DIAGNOSTICS tab.

Does the diagnostic trouble code (DTC) for faulty communication return?

- **YES**

  Refer to **INFORMATION**

- **NO**

  OKAY: Troubleshooting has been completed.

CHECKING SHORT-CIRCUITING TO GROUND/VOLTAGE IN CAN-NET

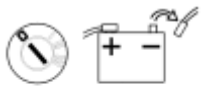

Fig. 100: Ignition Off And Disconnecting Battery Negative Lead
Courtesy of VOLVO CARS CORPORATION

- Ignition off.
- Disconnect the battery negative lead.
- Connect OBDII-Box **(951 3015)** to the diagnostics socket.

  For general information about CAN-troubleshooting, see: **GENERAL INFORMATION ABOUT FAULT-TRACING IN THE CAN NETWORK**

  Checking for a short-circuit to ground

  Measure resistance between the following connections on the OBDII-box/diagnostics socket.

  - #6 and #4 (ground). Measurement is shown in the illustration. The resistance should be above 1 kohms.
  - #14 and #4 (ground). The resistance should be above 1 kohms.

If resistance is below 1 kohms this indicates short-circuiting between the CAN-line and ground.

Checking for a short-circuit to voltage

Measure resistance between the following connections on the OBDII-box/diagnostics socket.

- #6 and #16 (voltage). Measurement is shown in the illustration. The resistance should be above 1 kohms.
- #14 and #16 (voltage). The resistance should be above 1 kohms.

If resistance is below 1 kohms this indicates short-circuiting between the CAN-line and voltage cable.

Twist the cable harness and wiggle connectors where they can be accessed along the cable harness during every measurement, and note if the resistance changes to detect intermittent short-circuits or open circuit.

HINT: Part the CAN-net at suitable points to decide where a short-circuit may be found.

NOTE: After fault with control modules that interfere with communication, other control modules may remain in Limp-Home (that is, they work with reduced functionality) even when the ignition has been turned off and on a few times. For certain faults in the CAN-net where control modules have stopped communicating, it may help to disconnect/reconnect the battery to "restart" the control module/CAN-net.

Remedy wiring as necessary.

Other information

- see **BATTERY, DISCONNECTING**
- see **CHECKING WIRING AND TERMINALS**

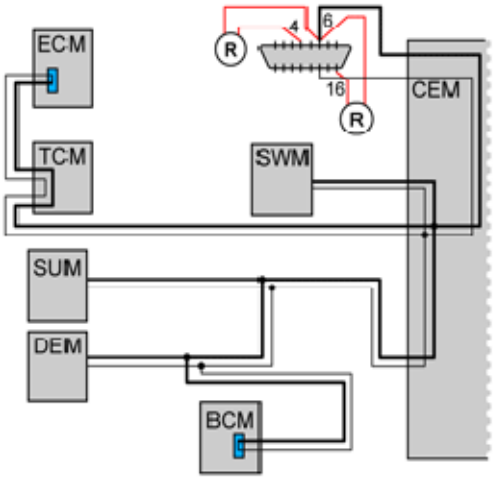

Fig. 101: CAN-Net Communication Diagram
Courtesy of VOLVO CARS CORPORATION

Was a fault detected?

- **YES**

  Refer to **VERIFICATION**

- **NO**

  Refer to **CHECKING THE TRAFFIC LOAD ON THE CAN CABLES**

CHECKING VOLTAGE-DROP IN CABLE FOR CAN-H AND CAN-L, RESPECTIVELY

Fig. 102: Identifying Ignition On Position
Courtesy of VOLVO CARS CORPORATION

- Connect the battery.
- Ignition on.
- Connect OBDII-Box **(951 3015)** to the diagnostics socket.

  For general information about CAN-troubleshooting, see: **GENERAL INFORMATION ABOUT FAULT-TRACING IN THE CAN NETWORK**

  In principle, the voltage measured in each cable in the CAN-net shall be the same at each control module in the network. This means that the voltage-drop in the cable for CAN-H and CAN-L, respectively, between the control modules should be very low. If there is a voltage-difference in the CAN-lines between the diagnostics socket/Central electronic module (CEM) and a control module due to, e. g., contact resistance in a connector or branching, communication may be lost/interfered with.

  Check if there is voltage-drop in the cable for CAN-H and CAN-L between the diagnostics socket/Central electronic module (CEM) and the control module where there is problem with communication.

  Carry out the following:

  Measure voltage between the following connections on the OBDII-box/diagnostics socket.

  - #6 and corresponding connection on relevant control module for CAN-H. The voltage shall be lower than 50 mV.
  - #14 and corresponding connection on relevant control module for CAN-L. The voltage shall be

lower than 50 mV.

If voltage is too high, this indicates too high contact resistance in cable, connector, or branching. Check the circuit between the diagnostics socket and control module in question for contact resistance and oxidation.

NOTE: **After fault with control modules that interfere with communication, other control modules may remain in Limp-Home (that is, they work with reduced functionality) even when the ignition has been turned off and on a few times. For certain faults in the CAN-net where control modules have stopped communicating, it may help to disconnect/reconnect the battery to "restart" the control module/CAN-net.**

Remedy wiring as necessary.

Other information

- see **CHECKING WIRING AND TERMINALS**

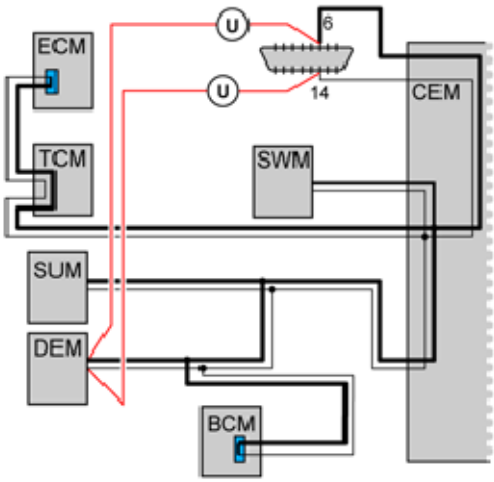

Fig. 103: CAN-Net Communication Diagram
Courtesy of VOLVO CARS CORPORATION

- **Continue**

Refer to **VERIFICATION**

INFORMATION

FAULT-TRACING INFORMATION

The fault should have been detected and remedied. As this is not the case fault-tracing has failed.

Exit fault-tracing for this diagnostic trouble code (DTC) or make another attempt.

CEM-1A64: COMMUNICATION WITH THE DIFFERENTIAL ELECTRONIC MODULE (DEM). SIGNAL MISSING (B6294T; 2005-2006)

SIGNAL MISSING

see **SIGNAL MISSING**

CEM-1A64: COMMUNICATION WITH THE DIFFERENTIAL ELECTRONIC MODULE (DEM). SIGNAL MISSING (B6324S; 2007-2010)

SIGNAL MISSING

CHECKING THE POWER SUPPLY AND GROUND FOR THE DIFFERENTIAL ELECTRONIC MODULE (DEM)

Check that the fuse for the control module is intact.

Checking the power supply and ground terminal for the differential electronic module (DEM).

Other information:

- see **CHECKING THE SUPPLY VOLTAGE/GROUND TERMINAL**
- see **CHECKING WIRING AND TERMINALS**

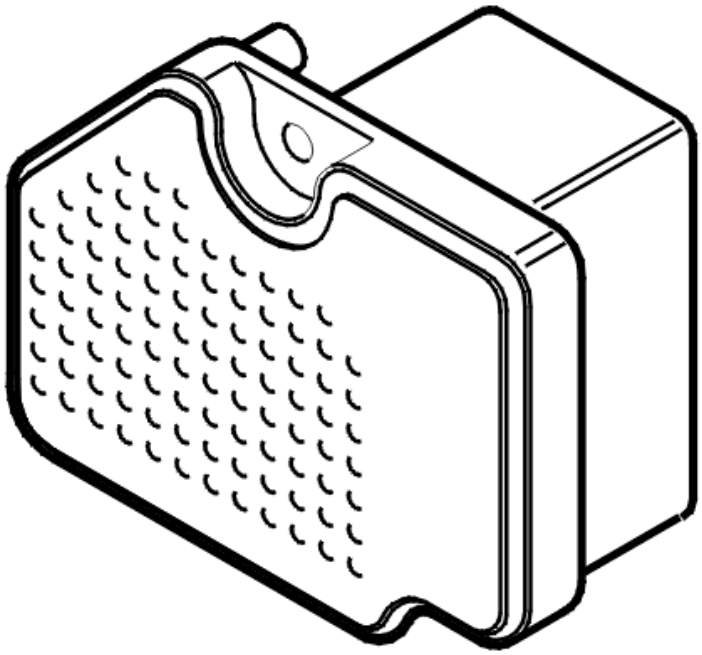

Fig. 104: Active On Demand Coupling Control Module
Courtesy of VOLVO CARS CORPORATION

Was a fault detected?

- **YES**

  Refer to **CHECKING THE DIFFERENTIAL ELECTRONIC MODULE (DEM)**

- **NO**

  Refer to **CHECKING COMMUNICATION WITH THE DIFFERENTIAL ELECTRONIC MODULE (DEM)**

CHECKING COMMUNICATION WITH THE DIFFERENTIAL ELECTRONIC MODULE (DEM)

HINT: The CAN communication with the control module is probably OK if the control module ID can be read off. In that case the fault is probably intermittent and will then be more difficult to trace.

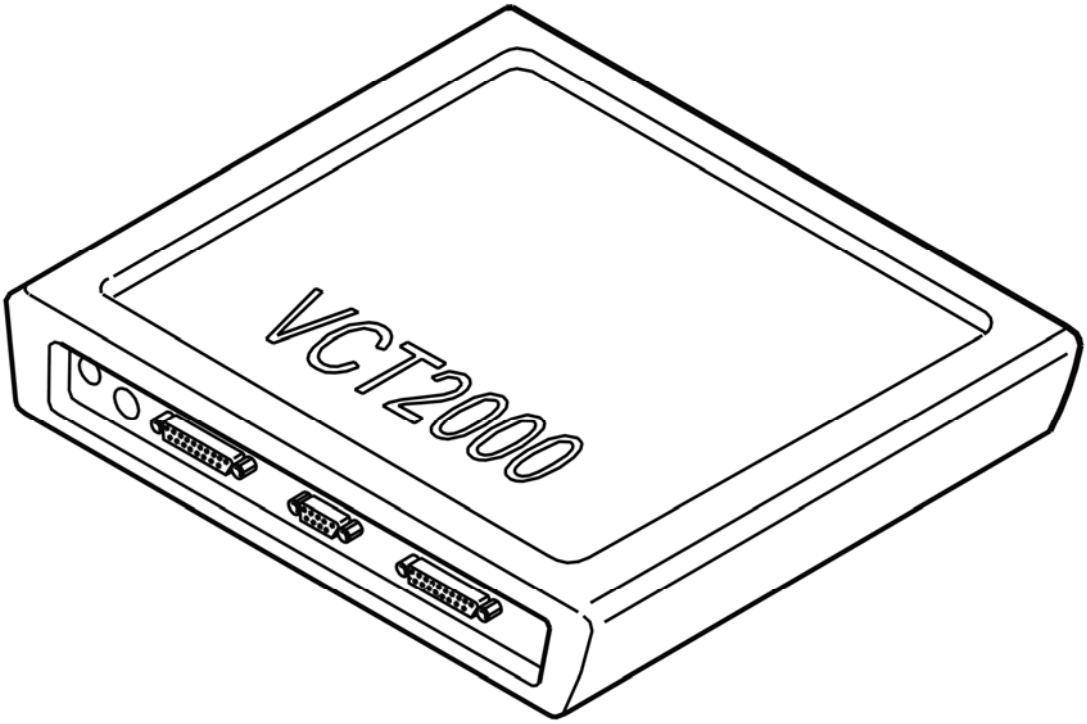

Fig. 105: Identifying VCT2000 Diagnostic Tool Symbol In VIDA
Courtesy of VOLVO CARS CORPORATION

- Try to communicate with the differential electronic module (DEM) by reading off the control module ID
- Use the VCT2000 (or appropriate scan tool)

- **Continue**

  Refer to **SIGNAL MISSING**

CHECKING THE DIFFERENTIAL ELECTRONIC MODULE (DEM)

HINT: After carrying out the repair, check that the fault has been remedied.

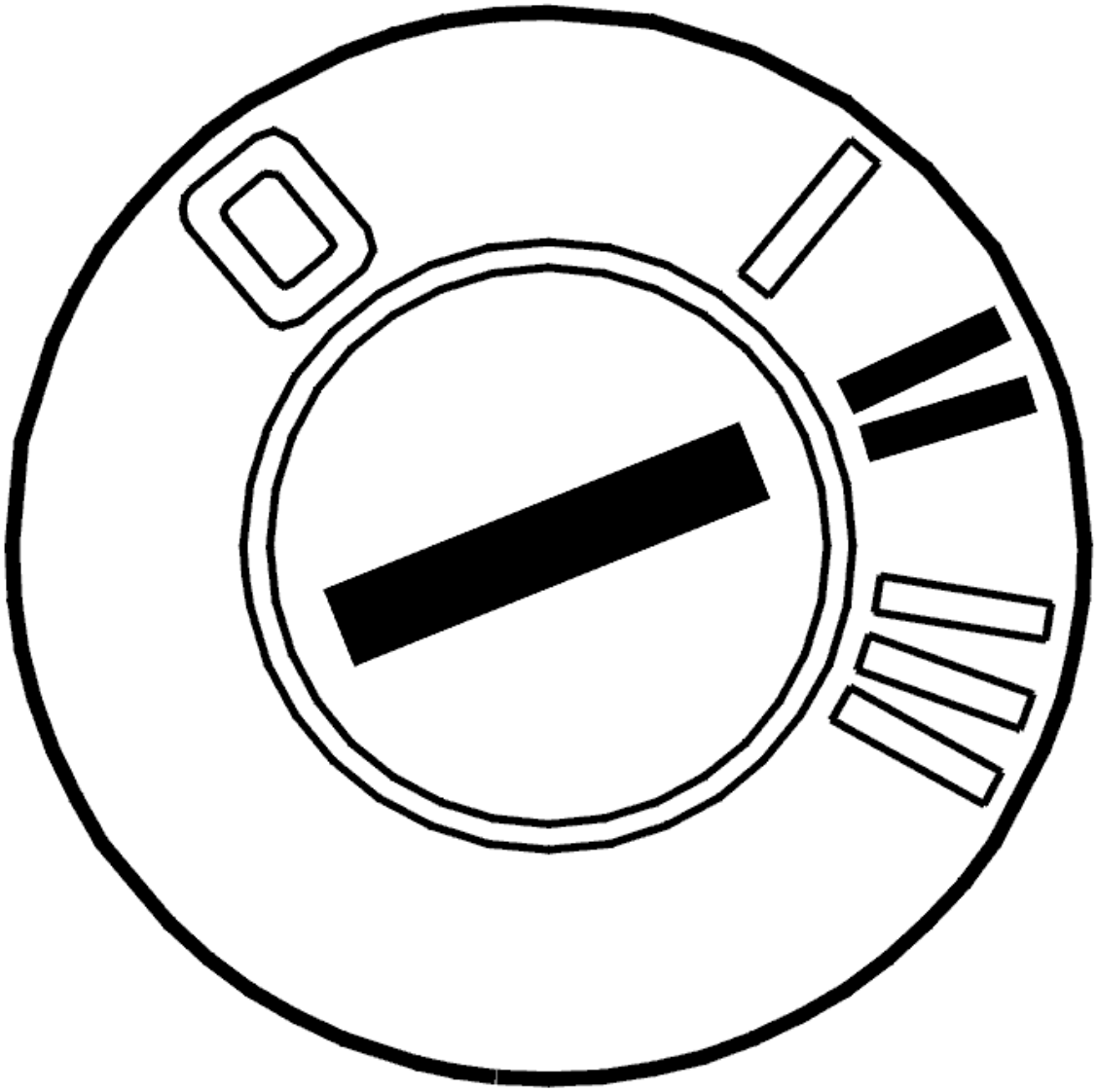

Fig. 106: Identifying Ignition ON
Courtesy of VOLVO CARS CORPORATION

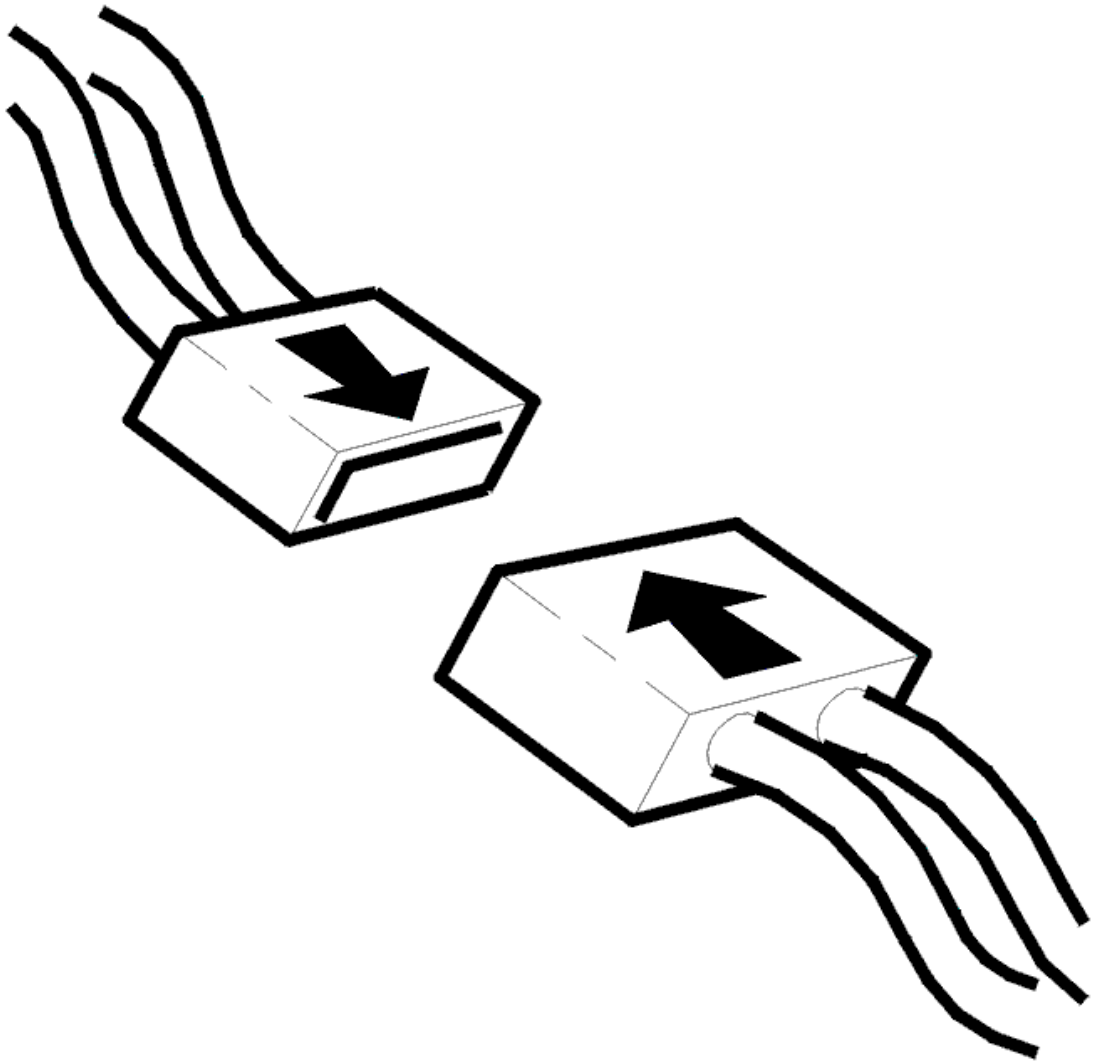

Fig. 107: Connecting Connector
Courtesy of VOLVO CARS CORPORATION

- Ignition off
- Reconnect the connectors. Reinstall the components
- Ignition on for at least 10 seconds.

  Read off the control module ID from the differential electronic module (DEM) using the VCT2000 (or appropriate scan tool).

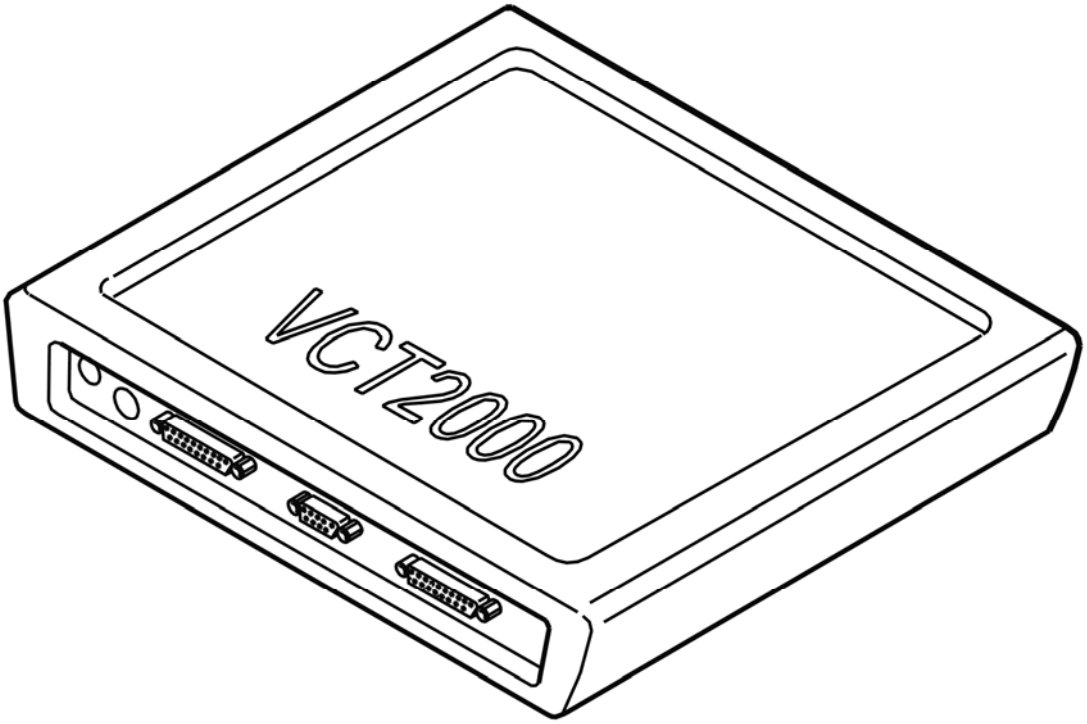

Fig. 108: Identifying VCT2000 Diagnostic Tool Symbol In VIDA
Courtesy of VOLVO CARS CORPORATION

Could the control module ID be read off?

- **YES**

  OKAY: Troubleshooting has been completed.

- **NO**

  Refer to **INFORMATION**

SIGNAL MISSING

GENERAL INFORMATION

NOTE: Illustrations shown are only examples.

HINT: For general information about CAN-troubleshooting, see:

- **General about CAN-related diagnostic trouble codes:**

  CEM-DF01 - DF17 can only be stored in Central electronic module (CEM). These diagnostic trouble

codes are stored when an electric fault is detected in CAN-lines. Start with these diagnostic trouble codes first.

CEM-1AXX only stored in Central electronic module (CEM). One diagnostic trouble code for every control module on the CAN-net. These diagnostic trouble codes indicate that Central electronic module (CEM) does not receive any reply from other control modules.

XXX-E000 (HS-CAN)/E001 (LS-CAN) can be stored in all CAN-connected control modules. These diagnostic trouble codes indicate that the control module has detected interference on the CAN-net.

XXX-E003 can be stored in all CAN-connected control modules except in Central electronic module (CEM). The control modules on the CAN-net listen for a message (identity number) that is sent out at regular intervals from Central electronic module (CEM). This diagnostic trouble code indicates that the control module has not received any identity number, or that the expected number is not correct. Interference on the CAN-net can also store this diagnostic trouble code.

NOTE: **In case of CAN-related faults, it is likely that a combination of above diagnostic trouble codes occur.**

NOTE: **After fault with control modules that interfere with communication, other control modules may remain in Limp-Home (that is, they work with reduced functionality) even when the ignition has been turned off and on a few times. For certain faults in the CAN-net where control modules have stopped communicating, it may help to disconnect/reconnect the battery to "restart" the control module/CAN-net.**

If a communication diagnostic trouble code can be read from the control module, the malfunction is probably intermittent.

Intermittent fault in the voltage supply and ground to a control module on the CAN network results in the Central electronic module (CEM) storing a diagnostic trouble code (DTC) for an open-circuit in communication with the control module where the voltage supply does not work. There will probably not be a diagnostic trouble code (DTC) in the control module where the open-circuit in the voltage supply occurred as the control module cannot store a diagnostic trouble code (DTC) when it is not supplied with power.

NOTE: **Central electronic module (CEM) should not be replaced in case of CAN-fault, unless troubleshooting reveals that Central electronic module (CEM) has an internal fault.**

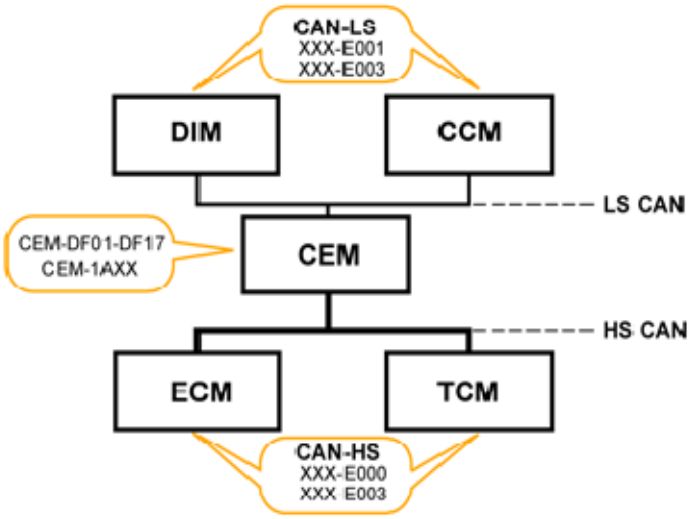

Fig. 109: High-Speed CAN And Low-Speed CAN Communication Diagram
Courtesy of VOLVO CARS CORPORATION

- **Continue**

  Refer to **CHECKING RESISTANCE IN CAN-NET**

CHECKING RESISTANCE IN CAN-NET

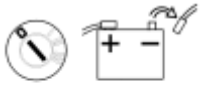

Fig. 110: Ignition Off And Disconnecting Battery Negative Lead
Courtesy of VOLVO CARS CORPORATION

- Ignition off
- Disconnect the battery negative lead
- Connect OBDII-Box **(951 3015)** to the diagnostics socket.

  For general information about CAN-troubleshooting, see: **GENERAL INFORMATION ABOUT FAULT-TRACING IN THE CAN NETWORK**

  Measure resistance between the following connections on the OBDII-box/diagnostics socket.

  - #6 and #14. The resistance should be approx. 55 - 65 ohms.
  - If resistance is approx. 120 ohms, this indicates open circuit in the circuit so that only one terminating resistor (120 ohms) has been measured.
  - If resistance is above 1 kohms this indicates open circuit/high contact resistance somewhere in the circuit.

- If resistance is below 55 ohms this indicates short-circuiting/contact resistance between the CAN-lines somewhere in the circuit.

HINT: For HS-CAN the terminating resistors are located in Brake control module (BCM) and in Engine control module (ECM).

Twist the cable harness and wiggle connectors where they can be accessed along the cable harness during every measurement, and note if the resistance changes to detect intermittent short-circuits or open circuit.

NOTE: **Resistance measurement measures only main lines in the CAN-net (in circuit where both terminating resistors are found), not branches to certain control modules.**

Open circuit on branching without a terminating resistor cannot be detected with this measurement. However, short-circuiting on a branch can be detected. To measure resistance in the CAN-net to control modules located in a branching of their own, the measurement shall be done against the CAN-net at that control module. The values shall be as above.

NOTE: **After fault with control modules that interfere with communication, other control modules may remain in Limp-Home (that is, they work with reduced functionality) even when the ignition has been turned off and on a few times. For certain faults in the CAN-net where control modules have stopped communicating, it may help to disconnect/reconnect the battery to "restart" the control module/CAN-net.**

Remedy wiring as necessary.

Other information

- see **BATTERY, DISCONNECTING**
- see **CHECKING WIRING AND TERMINALS**

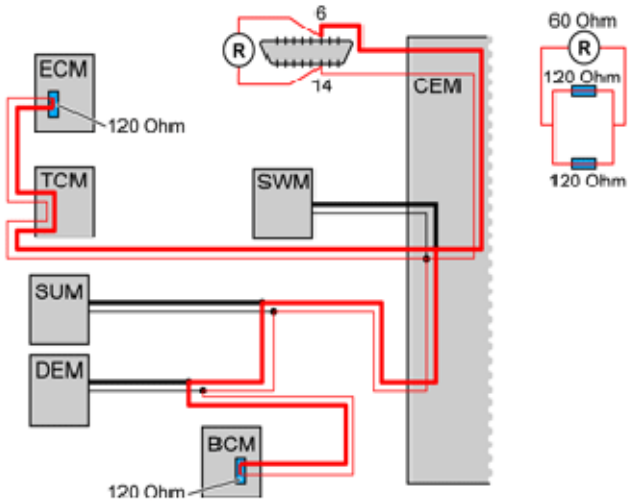

Fig. 111: Checking Resistance In CAN Lines
Courtesy of VOLVO CARS CORPORATION

Was a fault detected?

- **YES**

  Refer to **VERIFICATION**

- **NO**

  Refer to **CHECKING SHORT-CIRCUITING TO GROUND/VOLTAGE IN CAN-NET**

CHECKING THE TRAFFIC LOAD ON THE CAN CABLES

Fig. 112: Identifying Ignition On Position
Courtesy of VOLVO CARS CORPORATION

- Connect the battery
- Ignition on.
- Connect OBDII-Box **(951 3015)** to the diagnostics socket.

  For general information about CAN-troubleshooting, see: **GENERAL INFORMATION ABOUT FAULT-TRACING IN THE CAN NETWORK**

  Faults in the CAN network may be due to a control module sending faulty messages that disrupt normal

communication. When messages are sent incorrectly, this results in a considerable increase in the amount of traffic on the CAN network. Check the load by measuring the average voltage value on the CAN cables in relation to ground.

Measure voltage between the following connections on the OBDII-box/diagnostics socket.

- #6 and #4 (ground). The voltage should be approx:2, 8 - 3, 2 V.
- #14 and #4 (ground). The voltage should be approx:1, 8 - 2, 2 V.
- #6 and #14. The voltage shall be between approx. 0.55-1.4 V. The voltage shall normally be between 0.55 - 0.90 V. A higher voltage may indicate increased traffic on the CAN-net. In case of fault in communication/too high traffic on the CAN-net, the voltage is considerably higher than the above stated values.

NOTE: After fault with control modules that interfere with communication, other control modules may remain in Limp-Home even when the ignition has been turned off and on a few times. For certain faults in the CAN-net where control modules have stopped communicating, it may help to disconnect/reconnect the battery to "restart" the control module/CAN-net.

HINT: DiCE can be used as fault detection tool if fault is suspected on the CAN-net that cannot be detected with normal troubleshooting. Interference, intermittent faults, faulty messages on the CAN-net etc., are examples of such faults. The tool registers fault messages used on the CAN-net. Fault messages may be caused by short intermittent malfunctions on the CAN-net or by a control module sending fault messages. See tools:951 3010 as well as associated TJ 20402.

- Ignition on.
- Connect DiCE to the diagnostics socket.
- Note the blue LED-indicator. The indicator flashes to show detection of fault messages.

NOTE: Certain interference may occur without any real fault

Cable fault

- Shake the cables lightly and pull lightly on the connections during the check to locate any fault. Note the blue LED-indicator.

"Chatting" control modules

- "Chatting" control modules may be difficult to find and troubleshooting may take time. Let the vehicle stand with DiCE connected for an extended time period. Afterwards, activate functions to provoke a malfunction. It may take up to several hours before the fault messages are sent. When the indicator starts to flash, remove the fuse for one control module at a time until the indicator stops flashing. When the indicator stops flashing, restore the fuse for the relevant control module and check that the indicator starts to flash again. Then it is likely that the problem is identified.

Remedy wiring as necessary.

Other information

- see **BATTERY, DISCONNECTING**
- see **CHECKING WIRING AND TERMINALS**

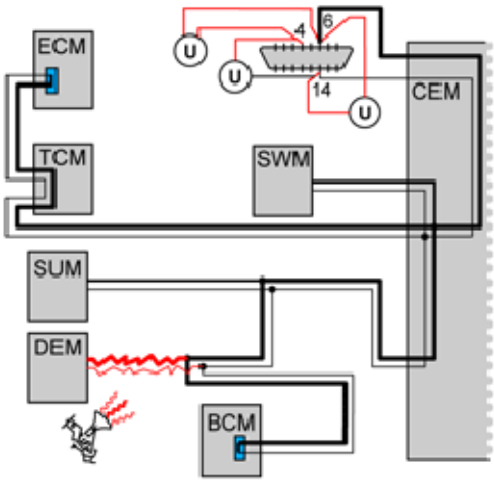

Fig. 113: Checking Traffic Load On CAN Cables
Courtesy of VOLVO CARS CORPORATION

Was a fault detected?

- **YES**

  Refer to **IDENTIFYING A CONTROL MODULE IN THE CAN NETWORK**

- **NO**

  Refer to **CHECKING VOLTAGE-DROP IN CABLE FOR CAN-H AND CAN-L, RESPECTIVELY**

IDENTIFYING A CONTROL MODULE IN THE CAN NETWORK

Fig. 114: Identifying Ignition On Position
Courtesy of VOLVO CARS CORPORATION

For general information about CAN-troubleshooting, see: **GENERAL INFORMATION ABOUT FAULT-TRACING IN THE CAN NETWORK**

HINT: DiCE can be used as fault detection tool if fault is suspected on the CAN-net that cannot be detected with normal troubleshooting. Interference, intermittent faults, faulty messages on the CAN-net (chattering control modules) etc., are examples of such faults. The tool registers fault messages used on the CAN-net. Fault messages may be caused by short intermittent malfunctions on the CAN-net or by a control module sending fault messages. See tools:951 3010 (memory card) as well as associated TJ 20402.

If the load on the CAN network is too high, this may be due to a control module sending faulty messages on the CAN network (known as a disruptive control module). The fault may also be due to an intermittent short-circuit to supply voltage or ground in one of the CAN cables. This results in the control modules on the CAN network starting to send faulty messages. The faults can occur without a diagnostic trouble code (DTC) being stored by the control modules. The voltage can be measured between the CAN cables in order to check the load on the CAN network.

NOTE: **It is not necessarily the control module(s) that stored the diagnostic trouble code (DTC) that is communicating faultily. Faulty messages can come from any control module in the same section of the CAN network. However, faulty communication in one network cannot affect the communication on the other network. In other words, faulty communication on the LS-CAN cannot disrupt communication on the HS-CAN and vice versa.**

- Ignition on.
- Connect OBDII-Box **(951 3015)** to the diagnostics socket.

Check communication/load on CAN-net by measuring voltage between CAN-L and CAN-H. Measure voltage between the following connections on the OBDII-box/diagnostics socket.

- #6 and #14. The average value of the voltage must be approximately 0.6-1.4 V. The voltage shall normally be between 0.55 - 0.90 V. A higher voltage may indicate increased traffic on the CAN-net. In case of fault in communication/too high traffic on the CAN-net, the voltage is considerably higher than the above stated values.

In order to identify which control module has faulty communication, cut the power supply to one control module at a time. Check the voltage in the CAN cables again. The easiest way to cut the power supply is to remove the fuse(s) for the relevant control module. Repeat until the voltage between the CAN wiring drops to the normal level.

NOTE: **When connecting and disconnecting individual control modules, other diagnostic trouble codes (DTCs) may be stored in certain control modules.**

HINT: When the suspected defective control module has been identified, connect and disconnect the supply voltage to the control module a number of times to verify that the malfunction appears and disappears. Switch off the ignition between each check.

NOTE: **Do not cut the power to the central electronic module (CEM) unless it is the last control module left to check.**

A control module that is communicating incorrectly must be replaced. See Repairing and installing/Removing, replacing and installing.

NOTE: **After fault with control modules that interfere with communication, other control modules may remain in Limp-Home (that is, they work with reduced functionality) even when the ignition has been turned off and on a few times. For certain faults in the CAN-net where control modules have stopped communicating, it may help to disconnect/reconnect the battery to "restart" the control module/CAN-net.**

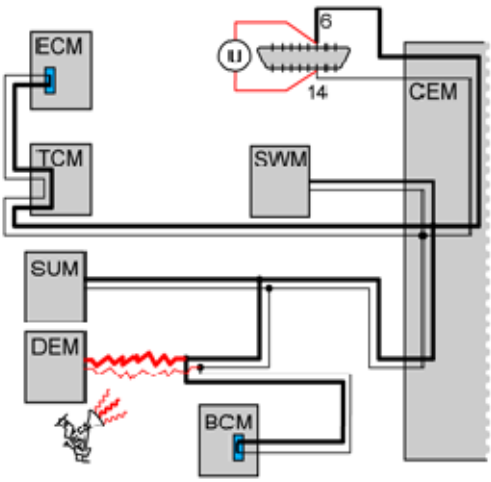

Fig. 115: Checking Communication/Load On CAN-Net Between CAN-L And CAN-H
Courtesy of VOLVO CARS CORPORATION

- **Continue**

  Refer to **VERIFICATION**

VERIFICATION

HINT: After rectifying a fault, a verification should be carried out.

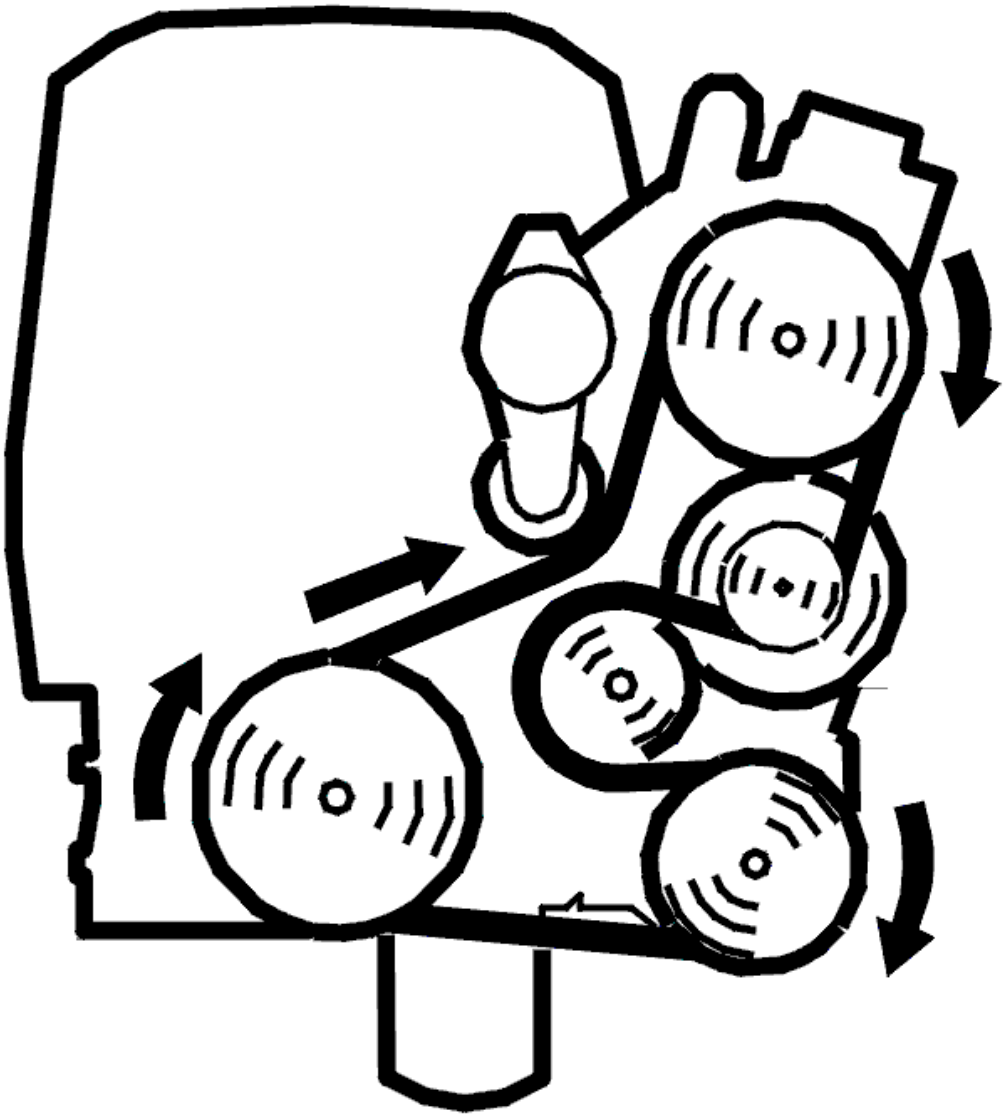

Fig. 116: Belt Routing / Engine Idling - Volvo
Courtesy of VOLVO CARS CORPORATION

Fig. 117: Identifying Ignition On Position
Courtesy of VOLVO CARS CORPORATION

- Reinstall the connectors, components etc.
- Ignition on.

NOTE: **For certain faults in the CAN-net where control modules have stopped communicating, it may help to disconnect/reconnect the battery to "restart" the control module/CAN-net.**

- Erase diagnostic trouble codes (DTCs) in all control modules.
- Ignition off.
- Ignition on.
- Start the vehicle. Allow the vehicle to run for 10 minutes.
- Read out the diagnostic trouble codes in the vehicle via the DIAGNOSTICS tab.

Does the diagnostic trouble code (DTC) for faulty communication return?

- **YES**

  Refer to **INFORMATION**

- **NO**

  OKAY: Troubleshooting has been completed.

CHECKING SHORT-CIRCUITING TO GROUND/VOLTAGE IN CAN-NET

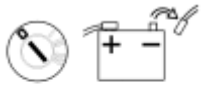

Fig. 118: Ignition Off And Disconnecting Battery Negative Lead
Courtesy of VOLVO CARS CORPORATION

- Ignition off.
- Disconnect the battery negative lead.
- Connect OBDII-Box **(951 3015)** to the diagnostics socket.

  For general information about CAN-troubleshooting, see: **GENERAL INFORMATION ABOUT FAULT-TRACING IN THE CAN NETWORK**

  Checking for a short-circuit to ground

  Measure resistance between the following connections on the OBDII-box/diagnostics socket.

  - #6 and #4 (ground). Measurement is shown in the illustration. The resistance should be above 1 kohms.
  - #14 and #4 (ground). The resistance should be above 1 kohms.

If resistance is below 1 kohms this indicates short-circuiting between the CAN-line and ground.

Checking for a short-circuit to voltage

Measure resistance between the following connections on the OBDII-box/diagnostics socket.

- #6 and #16 (voltage). Measurement is shown in the illustration. The resistance should be above 1 kohms.
- #14 and #16 (voltage). The resistance should be above 1 kohms.

If resistance is below 1 kohms this indicates short-circuiting between the CAN-line and voltage cable.

Twist the cable harness and wiggle connectors where they can be accessed along the cable harness during every measurement, and note if the resistance changes to detect intermittent short-circuits or open circuit.

HINT: Part the CAN-net at suitable points to decide where a short-circuit may be found.

NOTE: After fault with control modules that interfere with communication, other control modules may remain in Limp-Home (that is, they work with reduced functionality) even when the ignition has been turned off and on a few times. For certain faults in the CAN-net where control modules have stopped communicating, it may help to disconnect/reconnect the battery to "restart" the control module/CAN-net.

Remedy wiring as necessary.

Other information

- see **BATTERY, DISCONNECTING**
- see **CHECKING WIRING AND TERMINALS**

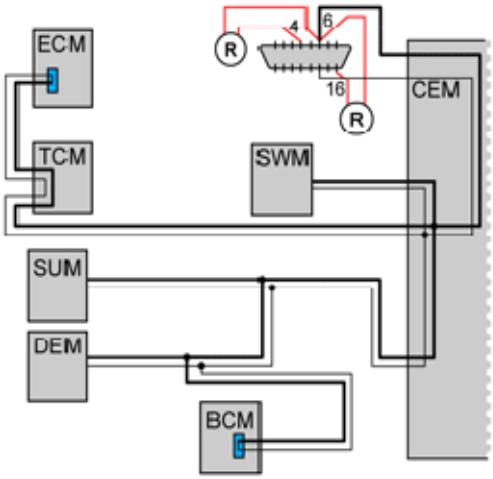

Fig. 119: CAN-Net Communication Diagram
Courtesy of VOLVO CARS CORPORATION

Was a fault detected?

- **YES**

  Refer to **VERIFICATION**

- **NO**

  Refer to **CHECKING THE TRAFFIC LOAD ON THE CAN CABLES**

CHECKING VOLTAGE-DROP IN CABLE FOR CAN-H AND CAN-L, RESPECTIVELY

Fig. 120: Identifying Ignition On Position
Courtesy of VOLVO CARS CORPORATION

- Connect the battery.
- Ignition on.
- Connect OBDII-Box **(951 3015)** to the diagnostics socket.

  For general information about CAN-troubleshooting, see: **GENERAL INFORMATION ABOUT FAULT-TRACING IN THE CAN NETWORK**

  In principle, the voltage measured in each cable in the CAN-net shall be the same at each control module in the network. This means that the voltage-drop in the cable for CAN-H and CAN-L, respectively, between the control modules should be very low. If there is a voltage-difference in the CAN-lines between the diagnostics socket/Central electronic module (CEM) and a control module due to, e. g., contact resistance in a connector or branching, communication may be lost/interfered with.

  Check if there is voltage-drop in the cable for CAN-H and CAN-L between the diagnostics socket/Central electronic module (CEM) and the control module where there is problem with communication.

  Carry out the following:

  Measure voltage between the following connections on the OBDII-box/diagnostics socket.

  - #6 and corresponding connection on relevant control module for CAN-H. The voltage shall be lower than 50 mV.
  - #14 and corresponding connection on relevant control module for CAN-L. The voltage shall be

lower than 50 mV.

If voltage is too high, this indicates too high contact resistance in cable, connector, or branching. Check the circuit between the diagnostics socket and control module in question for contact resistance and oxidation.

NOTE: **After fault with control modules that interfere with communication, other control modules may remain in Limp-Home (that is, they work with reduced functionality) even when the ignition has been turned off and on a few times. For certain faults in the CAN-net where control modules have stopped communicating, it may help to disconnect/reconnect the battery to "restart" the control module/CAN-net.**

Remedy wiring as necessary.

Other information

- see **CHECKING WIRING AND TERMINALS**

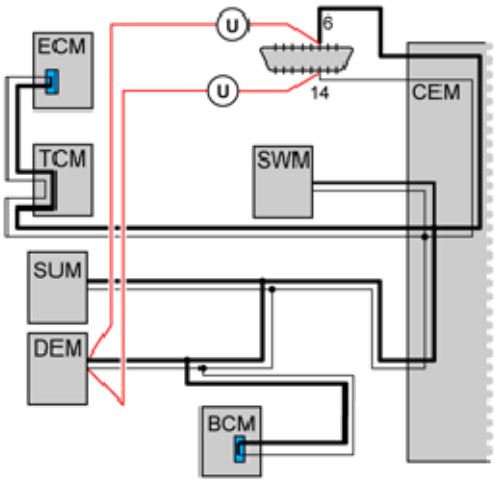

Fig. 121: CAN-Net Communication Diagram
Courtesy of VOLVO CARS CORPORATION

- **Continue**

Refer to **VERIFICATION**

INFORMATION

FAULT-TRACING INFORMATION

The fault should have been detected and remedied. As this is not the case fault-tracing has failed.

Exit fault-tracing for this diagnostic trouble code (DTC) or make another attempt.

CEM-1A64: COMMUNICATION WITH THE DIFFERENTIAL ELECTRONIC MODULE (DEM). SIGNAL MISSING (B6324S5; 2011-2012)

SIGNAL MISSING

see **SIGNAL MISSING**

CEM-1A64: COMMUNICATION WITH THE DIFFERENTIAL ELECTRONIC MODULE (DEM). SIGNAL MISSING (B8444S; 2005-2011)

SIGNAL MISSING

see **SIGNAL MISSING**

CEM-1A66: COMMUNICATION WITH THE INFOTAINMENT CONTROL MODULE (ICM). SIGNAL MISSING (2003-2004)

DIAGNOSTIC TROUBLE CODE (DTC) INFORMATION CEM-1A66

Condition

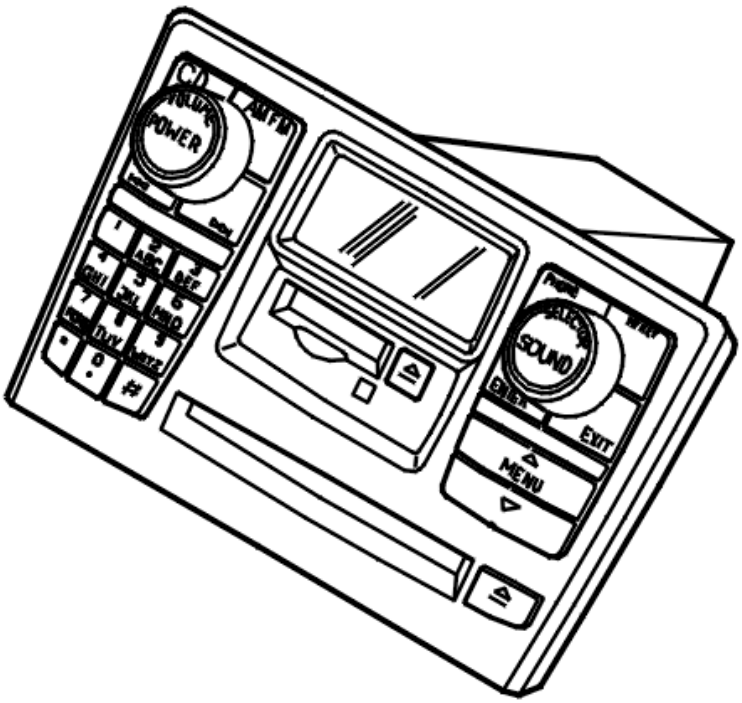

Fig. 122: Identifying Infotainment Control Module
Courtesy of VOLVO CARS CORPORATION

The central electronic module (CEM) checks the communication with the infotainment control module (ICM).

Diagnostic trouble codes (DTCs) are stored if the central electronic module (CEM) registers a fault in the communication with the infotainment control module (ICM).

The diagnostic trouble code (DTC) can be detected when the ignition is on for at least 10 seconds and the battery voltage is above > 10.5 volts.

NOTE: **In the event of CEM-1A6x diagnostic trouble codes (DTCs), the central electronic module (CEM) must not be replaced as the diagnostic trouble code (DTC) indicates a communication fault in the Control area network**

Substitute Value

- None.

Possible Source

- No power supply to the infotainment control module (ICM)
- Open-circuit in the ground lead to the infotainment control module (ICM)

- Contact resistance in the terminals
- Open-circuit in the wiring for the CAN low speed network to the infotainment control module (ICM)
- The infotainment control module (ICM) is not intended for this car (for example a used control module with different software/hardware).

HINT: If several diagnostic trouble codes (DTCs) are stored in the central electronic module (CEM) for communication faults with other control modules in the low speed network, this indicates a common fault in the Control area network.

Fault symptom[s]

- The audio system display does not function.

SIGNAL MISSING

CHECKING THE FUNCTION OF THE INFOTAINMENT CONTROL MODULE (ICM)

With the ignition key in position I or II, check that the infotainment control module (ICM) is powered and grounded by checking that the button illumination for the infotainment control module (ICM) lights.

If the button illumination lights up, the infotainment control module (ICM) is powered and grounded.

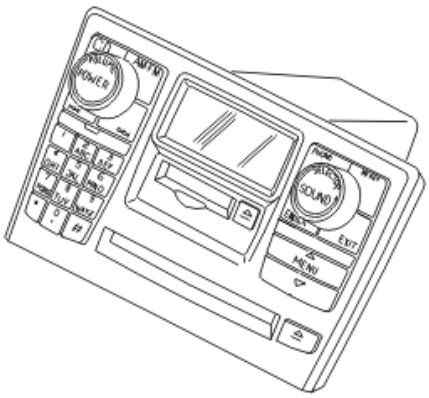

Fig. 123: Identifying Infotainment Control Module (ICM)
Courtesy of VOLVO CARS CORPORATION

Does the button illumination light?

- **YES**

  Refer to **CHECKING COMMUNICATION WITH THE INFOTAINMENT CONTROL MODULE (ICM)**

- **NO**

  Refer to **CHECKING THE POWER SUPPLY AND GROUND FOR THE INFOTAINMENT**

CONTROL MODULE (ICM)

CHECKING THE POWER SUPPLY AND GROUND FOR THE INFOTAINMENT CONTROL MODULE (ICM)

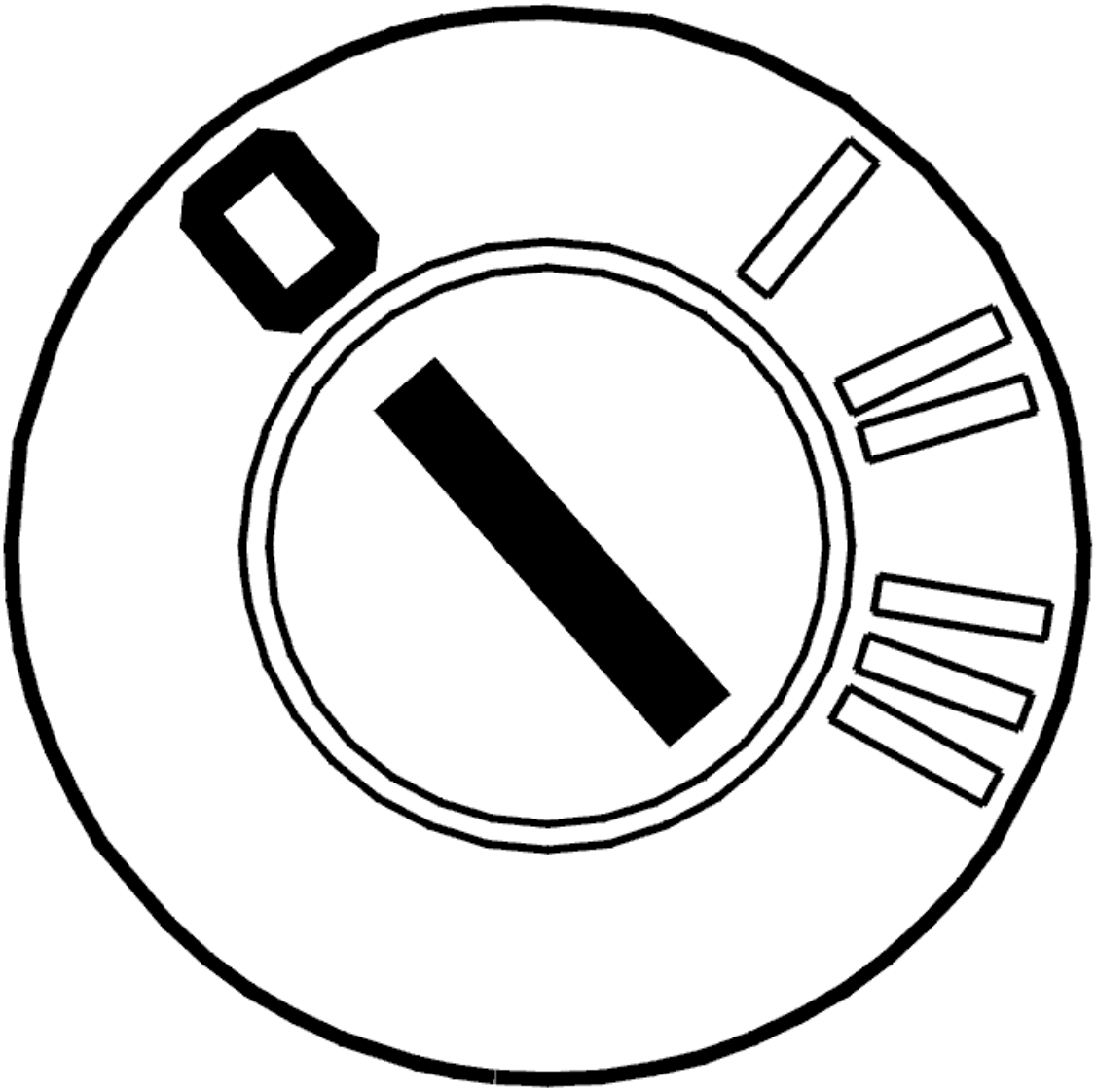

Fig. 124: Identifying Ignition OFF
Courtesy of VOLVO CARS CORPORATION

- Ignition off.

  Check that the fuses for the infotainment control module (ICM) are intact.

  Check the infotainment relay.

  HINT: Diagnostic trouble codes (DTCs) are stored in the central electronic module (CEM) in the event of a fault in the infotainment relay. If diagnostic trouble codes (DTCs) are stored for the relay, fault trace accordingly.

Check the cable between the fuse and the infotainment relay. Check for an open-circuit. Check for a short-circuit to ground. Check the cable between the infotainment relay and the infotainment control module (ICM). Check for an open-circuit. Check for a short-circuit to ground.

If necessary, check the function of the power supply relay by moving it to another position.

Check the cable between the infotainment control module (ICM) and ground. Check for an open-circuit. Check for a short-circuit to supply voltage.

Other information:

- To access the infotainment control module (ICM) connector, see **INFOTAINMENT CONTROL MODULE (ICM), REPLACING**
- To connect the breakout box to the infotainment control module (ICM), see **CONNECTING THE BREAKOUT BOX**
- For further information about signals and other values, see **SIGNAL SPECIFICATION**
- see **CHECKING WIRING AND TERMINALS** .

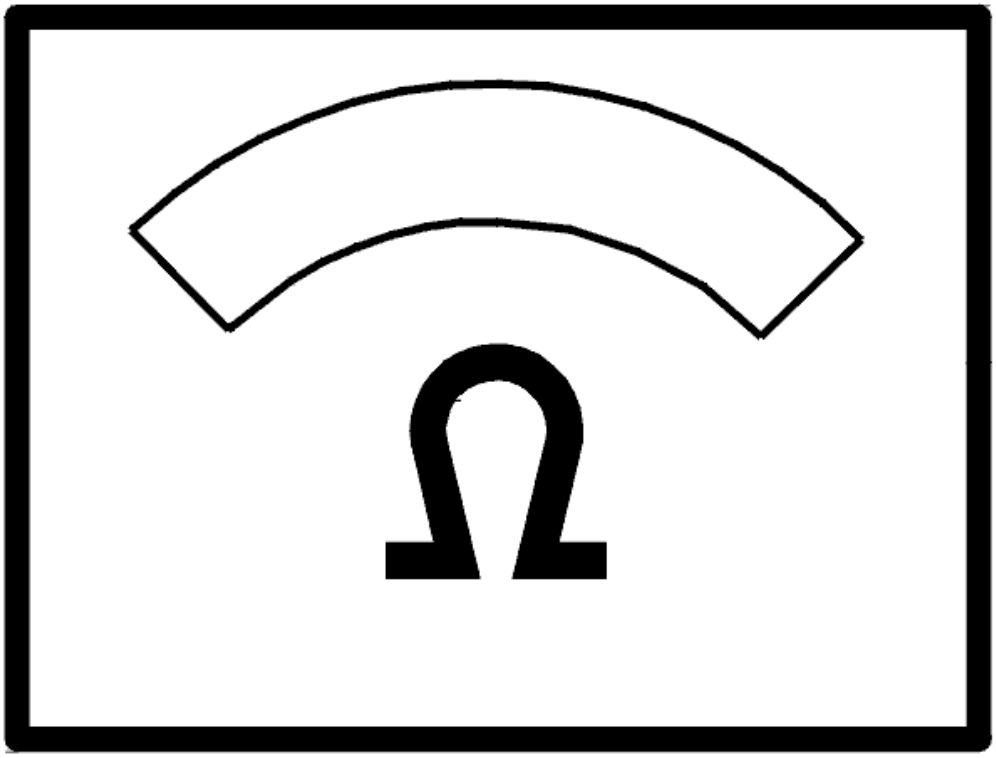

Fig. 125: Identifying Ohm Meter
Courtesy of VOLVO CARS CORPORATION

Was a fault detected?

- **YES**

  Refer to **CHECKING THE INFOTAINMENT CONTROL MODULE (ICM)**

- **NO**

  Refer to **CHECKING COMMUNICATION WITH THE INFOTAINMENT CONTROL MODULE (ICM)**

CHECKING COMMUNICATION WITH THE INFOTAINMENT CONTROL MODULE (ICM)

HINT: The CAN communication with the control module is probably OK if the control module ID can be read off. In that case the fault is probably intermittent and will then be more difficult to trace.

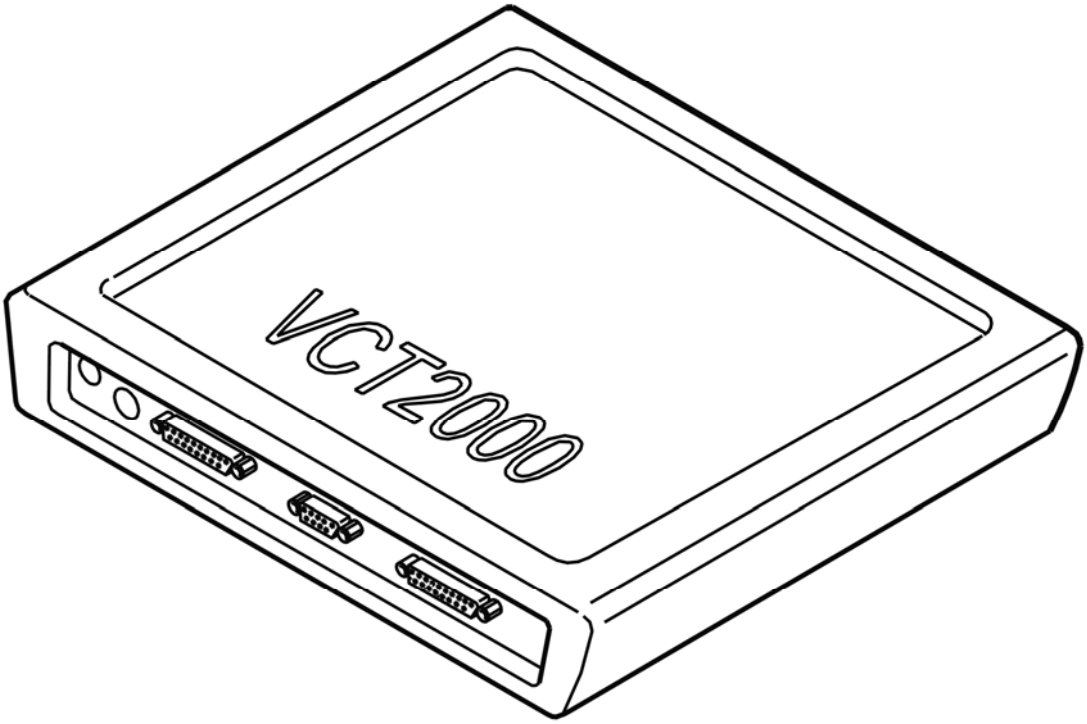

Fig. 126: Identifying VCT2000 Diagnostic Tool Symbol In VIDA
Courtesy of VOLVO CARS CORPORATION

- Try to communicate with the infotainment control module (ICM) by reading off the control module ID
- Use the VCT2000 (or appropriate scan tool)

- **Continue**

  Refer to **SIGNAL MISSING**

CHECKING THE INFOTAINMENT CONTROL MODULE (ICM)

HINT: After carrying out the repair, check that the fault has been remedied.

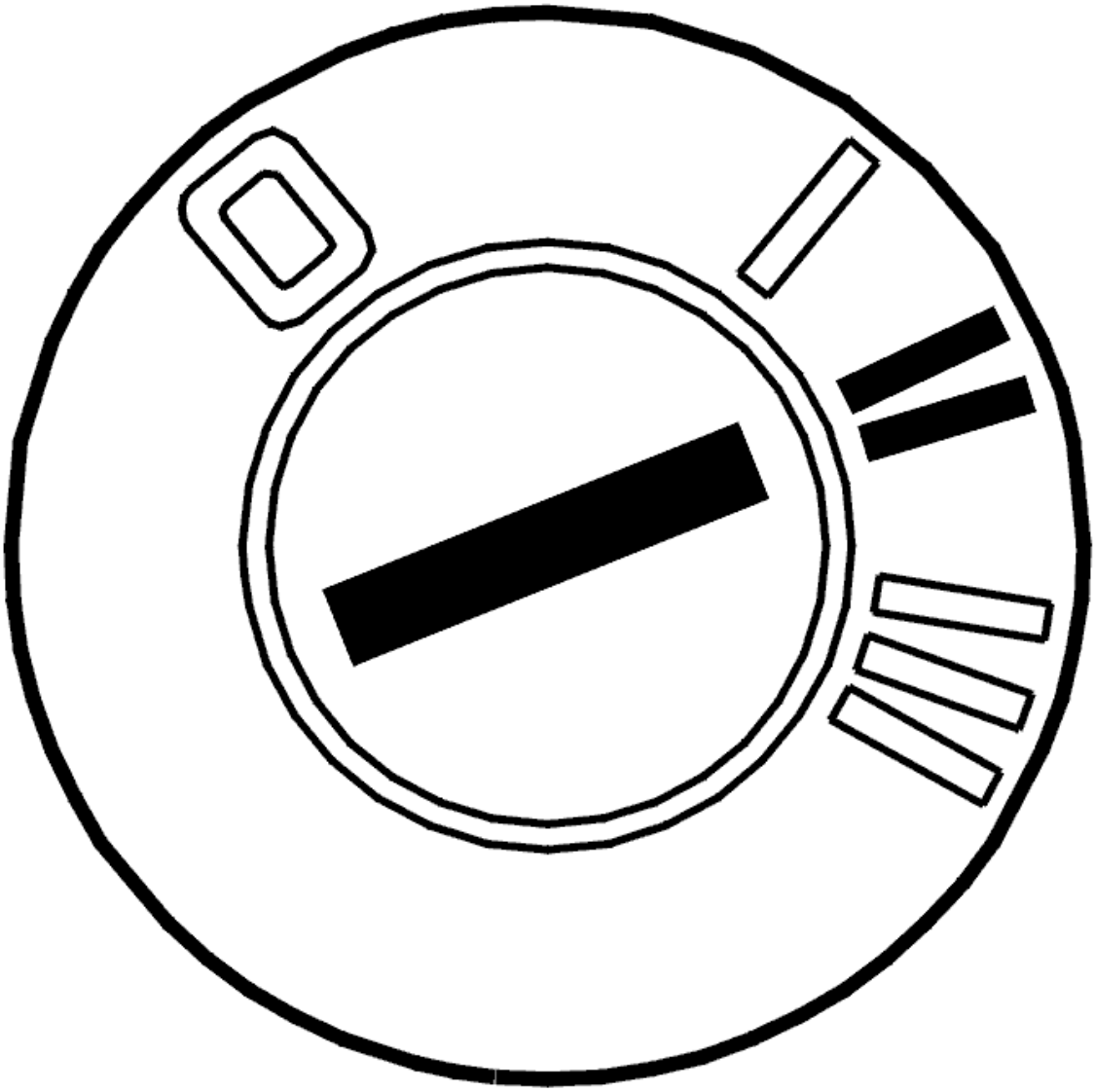

Fig. 127: Identifying Ignition ON
Courtesy of VOLVO CARS CORPORATION

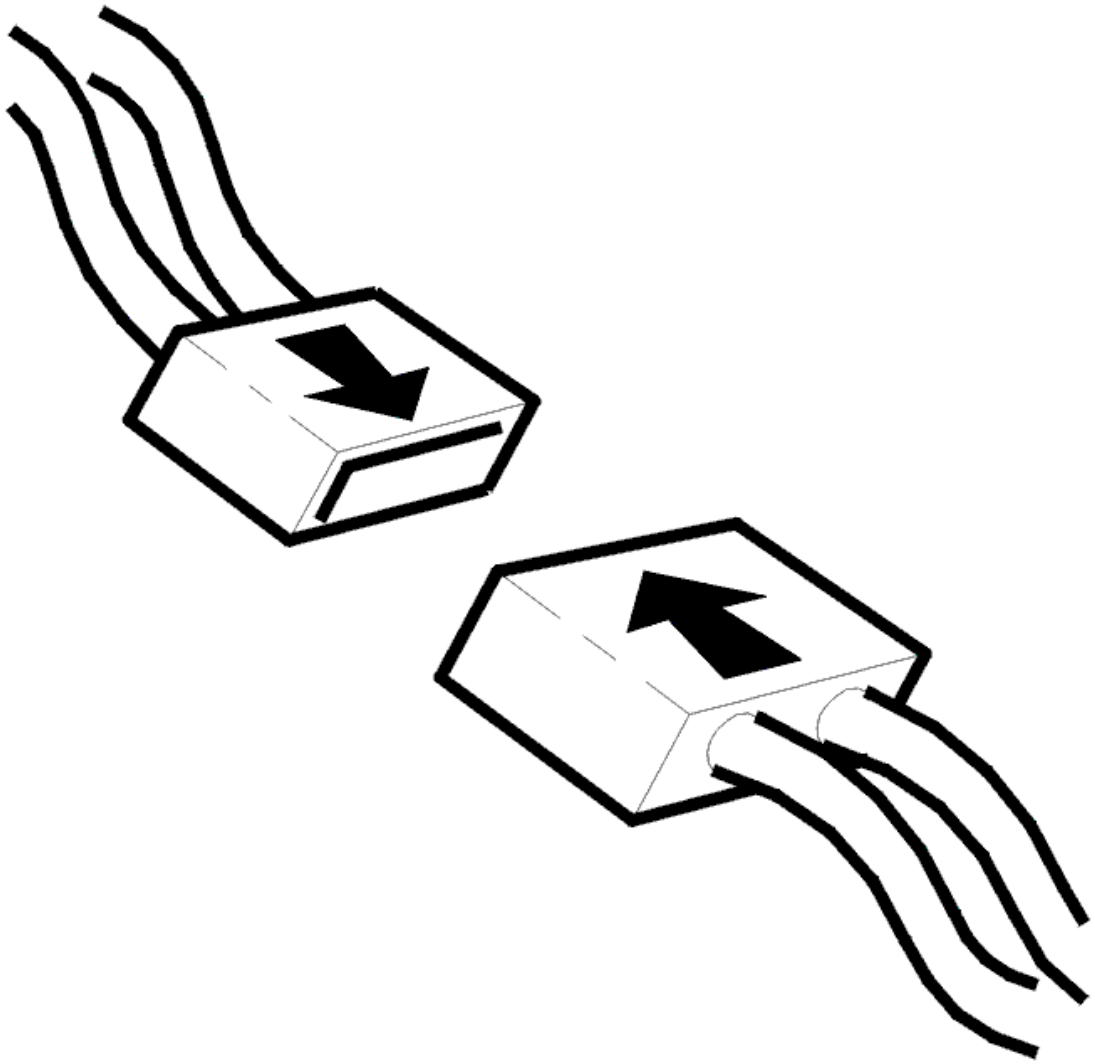

Fig. 128: Connecting Connector
Courtesy of VOLVO CARS CORPORATION

- Ignition off
- Reinstall the connectors, components etc.
- Switch on the ignition for at least 10 seconds.

  With the ignition key in position I or II, check that the infotainment control module (ICM) is powered and grounded by checking that the button illumination for the infotainment control module (ICM) lights. If the button illumination lights up, the infotainment control module (ICM) is powered and grounded.

Does the button illumination light?

- **YES**

OKAY: Troubleshooting has been completed.

- **NO**

  Refer to **INFORMATION**

SIGNAL MISSING

GENERAL INFORMATION

HINT: For general information about fault-tracing the control area network (CAN), see the linked document below. See GENERAL INFORMATION ABOUT FAULT-TRACING IN THE CAN NETWORK (2005-2012)

In order to check the control area network (CAN) cables, the resistance in the network must be measured. The resistance between the two CAN cables, with the network connected, must be 60ohms in both the high speed network and the low speed network.

NOTE: **Resistance will only be 60 ohms if the main artery of the CAN network is whole and the network is connected. If the main artery of the CAN network is split somewhere and a reading is taken between the CAN cables, resistance will be 120 ohms.**

If diagnostic trouble codes (DTCs) can be read off from the relevant control module, the fault is probably intermittent. The locations that must be checked in the event of a fault in the low speed network are the junctions behind the central electronic module (CEM) and the audio module (AUM) as well as the cable harness behind the Audio module (AUM).

Intermittent fault in the current supply to the actual control module is indicated by the DTC in the Central electronic module (CEM) (CEM-1A5X or CEM-1A6X). There is probably no diagnostic trouble code (DTC) in the relevant control module as the control module cannot store a diagnostic trouble code (DTC) when it is without power.

- **Continue**

  Refer to **CHECKING THE RESISTANCE OF THE CONTROL AREA NETWORK (CAN) CABLES**

CHECKING THE RESISTANCE OF THE CONTROL AREA NETWORK (CAN) CABLES

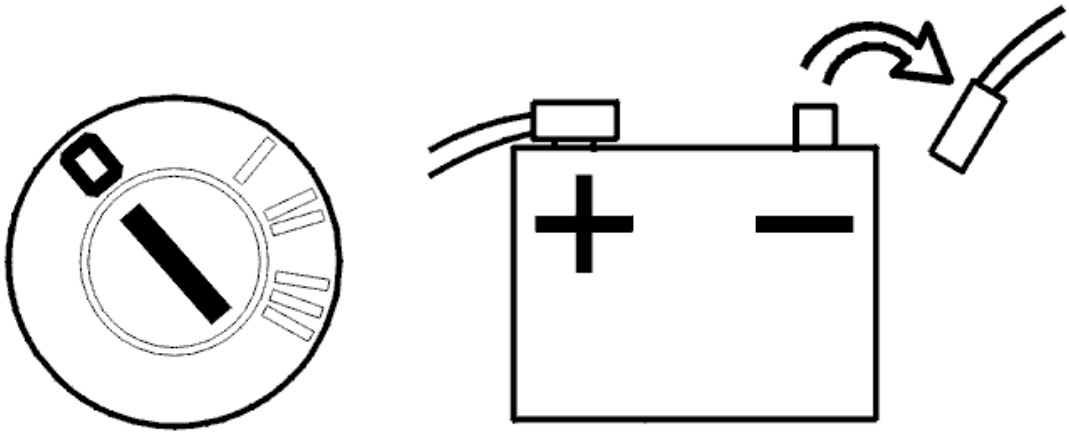

Fig. 129: Identifying Ignition In Off Position And Disconnecting Negative Cable From Battery
Courtesy of VOLVO CARS CORPORATION

- Disconnect the battery negative lead. The network must not be powered when taking resistance readings. Otherwise an incorrect value may be obtained.
- Connect the adapter wiring to the central electronic module (CEM).

HINT: Where a breakout box cannot be used, take readings from the rear of the affected connectors if possible. This prevents terminal pins and socket housings being damaged.

When taking readings on the low speed network

- When taking readings on the low speed network the adapter wiring should be connected to the Central electronic module (CEM) and readings taken from there. Readings can even be taken in the connector for the Power seat module (PSM). The advantage of the adapter wiring to the Central electronic module (CEM) is that all control module can be connected in the network when taking readings and access can be gained to both the high speed and low speed networks.

  The resistance reading only measures the main arteries in the low speed network, not the junctions that exist for different control modules.

When taking readings on the high speed network

- When taking readings on the high speed network the adapter wiring should be connected to the Engine control module (ECM) and readings taken from there. The Engine control module (ECM) must be connected. This resistance reading only measures the main arteries in the high speed network.

Connect an ohmmeter to the terminals for CAN-L and CAN-H on the relevant network. Turn the contacts and turn the cable harness. Resistance must be approximately 60 ohms.

NOTE: **Resistance will only be 60 ohms if the main artery of the CAN network is whole and the network is connected. If the main artery of the CAN network is split somewhere and a reading is taken between the CAN cables, resistance will be 120 ohms.**

Other information

- see **BATTERY, DISCONNECTING**
- see **CONNECTING THE BREAKOUT BOX**
- see **CHECKING WIRING AND TERMINALS**

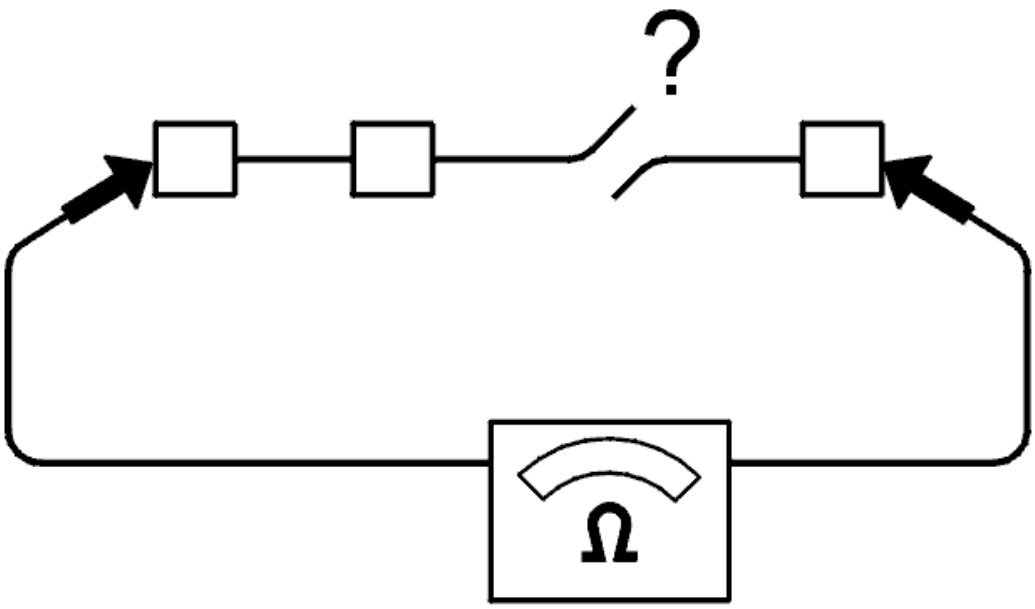

Fig. 130: Checking For Open Circuit
Courtesy of VOLVO CARS CORPORATION

Is the value OK?

- **YES**

  Refer to **CHECKING A SHORT-CIRCUIT IN CAN CABLES**

- **NO**

  Refer to **IDENTIFYING FAULT CAUSES IN THE CAN NETWORK**

CHECKING A SHORT-CIRCUIT IN CAN CABLES

Connect an ohmmeter between respective CAN cable and voltage supply and between the CAN cables and ground. Turn the contacts and turn the cable harness. The resistance must be infinite or very high.

HINT: Readings can be taken from one and the same connector if the CAN wiring, voltage supply and ground is pre-routed. If possible, measure from the rear of the affected connectors in order to minimize any damage and future loose connections. If this is not possible, use the adapter wiring or loose terminal pin for good contact.

Was a fault detected?

- **YES**

  Refer to **IDENTIFYING FAULT CAUSES IN THE CAN NETWORK**

- **NO**

  Refer to **CHECKING THE TRAFFIC LOAD ON THE CAN CABLES**

CHECKING THE TRAFFIC LOAD ON THE CAN CABLES

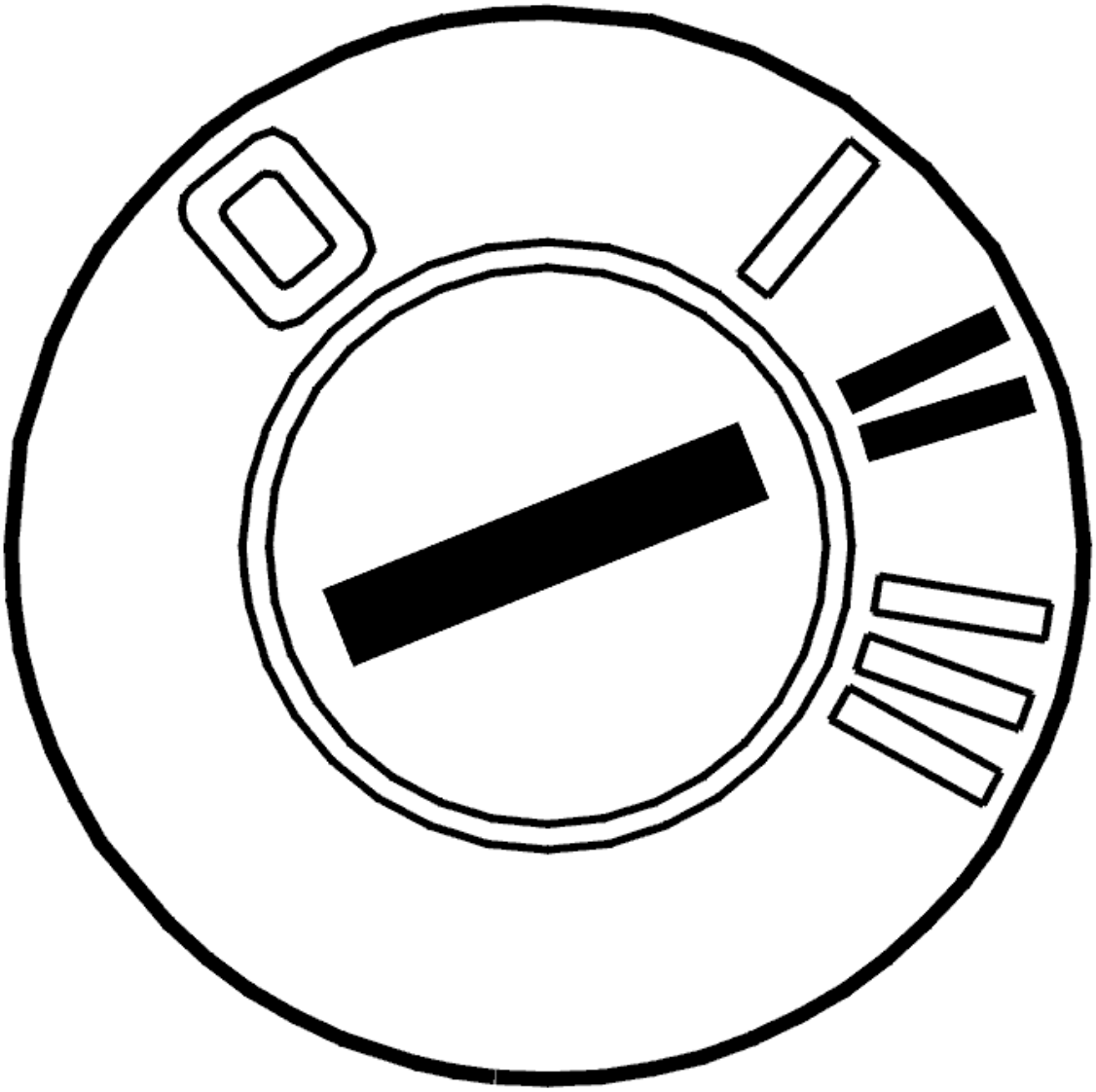

Fig. 131: Identifying Ignition ON
Courtesy of VOLVO CARS CORPORATION

- Connect the battery.
- Ignition on.

Faults in the CAN network may be due to a control module sending faulty messages that disrupt normal communication. When messages are sent incorrectly, this results in a considerable increase in the amount of traffic on the CAN network. The load can be checked by reading the average value of the voltage on the CAN cables in relation to ground.

The following applies for model year -2004:

Connect a voltmeter between CAN-L and ground. The voltage shall be approx. 2.3 V.

Then connect a voltmeter between CAN-H and ground. The voltage shall be approx. 2.8 V.

The following applies for model year 2004-:

Connect a voltmeter between CAN-L and ground. The voltage should be approx: V

Connect a voltmeter between CAN-H and ground. The voltage should be approx: V

NOTE: **For vehicles of later model years, normal voltage values lie within a specific interval due to increased traffic between the control modules on the CAN network upon update of the electrical system.**

HINT: If possible, measure from the rear of the affected connectors so that they are not damaged.

Other information

- see **BATTERY, DISCONNECTING**

Is the value OK?

- **YES**

  Refer to **INFORMATION**

- **NO**

  Refer to **IDENTIFYING A CONTROL MODULE IN THE CAN NETWORK**

IDENTIFYING FAULT CAUSES IN THE CAN NETWORK

- Disconnect a control module that disconnects the CAN network (a control module that has four terminals to the CAN network).

  HINT: For the low speed network, suitable places for disconnecting the network are at the steering wheel module (SWM), the driver information module (DIM) or the climate control module (CCM).

  In the event of an short-circuit between on of the CAN cables and voltage or ground, the fault can be localized disconnecting a control module that splits the CAN network. Readings can then be taken to determine on which side the fault is on the disconnected control module.

  Connect an ohmmeter between the CAN cable and voltage supply respectively ground. Take readings from both ends of the CAN networks at the network junction. Twist and bend the cable harness to find any intermittent short-circuits. The resistance must be infinite or very high (more than 1 Mohms).

  If a fault can be localized in one direction, split the network at a point further on in the CAN network in the direction that the fault was discovered and take a new reading. Try to locate the fault in this way.

  HINT: A short-circuit between the CAN cables and supply voltage or ground may be in either the wiring or in a control module.

Remedy the cables as necessary. If a fault is found on one control module, replace the control module.

- **Continue**

  Refer to **VERIFICATION**

IDENTIFYING A CONTROL MODULE IN THE CAN NETWORK

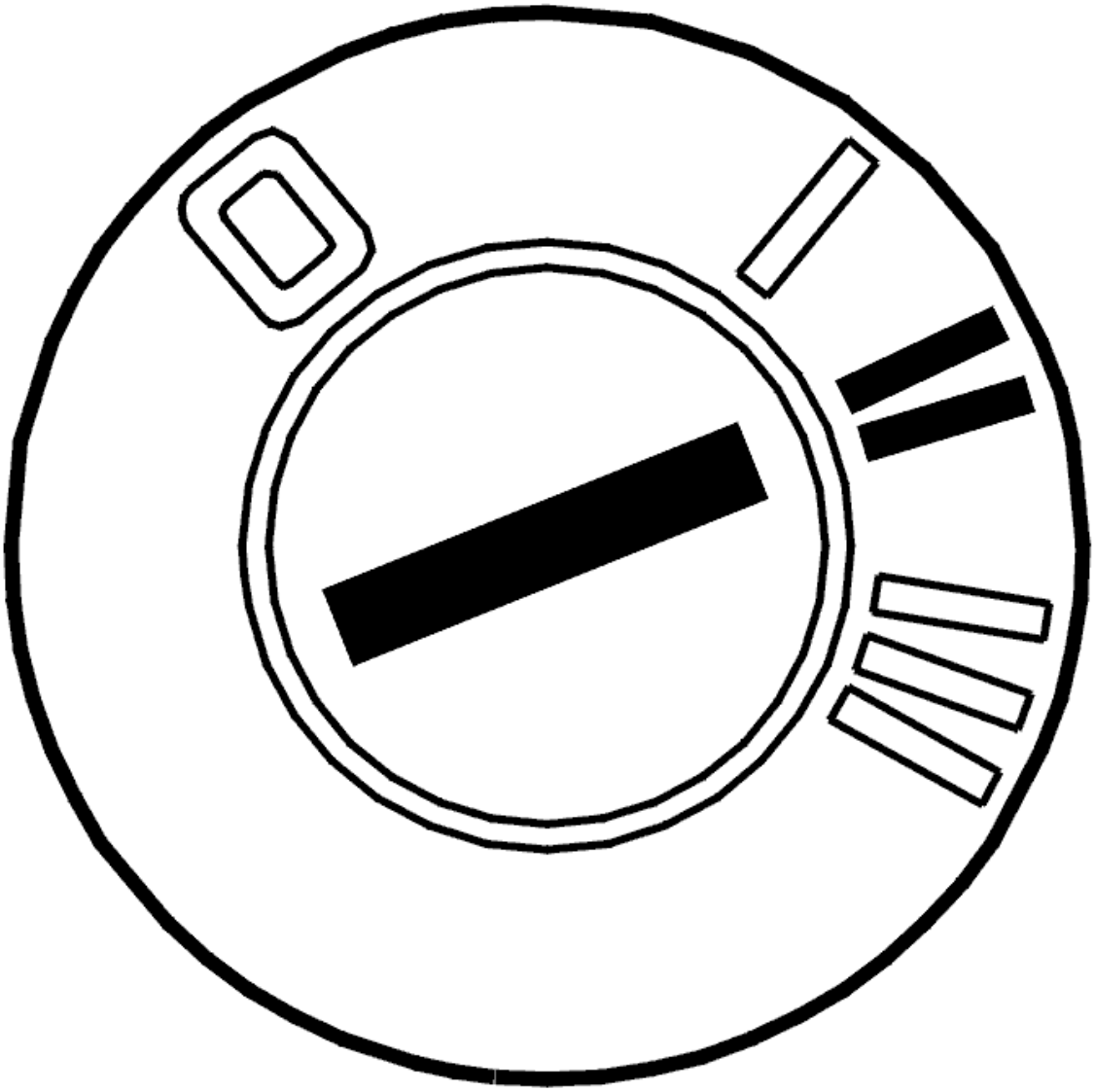

Fig. 132: Identifying Ignition ON
Courtesy of VOLVO CARS CORPORATION

- Connect the battery.
- Ignition on.

  If the load on the CAN network is too high, this may be due to a control module transmitting faulty messages on the CAN network. This is called a disruptive control module. The fault may also be due to

an intermittent short-circuit to supply voltage or ground in one of the CAN cables. This results in the control modules on the CAN network starting to send faulty messages. The fault may occur without any of the control modules storing a diagnostic trouble code (DTC). The voltage can be measured between the CAN cables in order to check the load on the CAN network.

The following applies for model year -2004:

Connect a voltmeter between the CAN cables. In the event of correct communication on the network, the average value of the voltage must be approximately 0.5 V (0.4 V to 0.6 V).

The following applies for model year 2004-:The following applies for model year 2004-:

Connect a voltmeter between the CAN cables. During correct CAN network communication, voltage should be about 0.6-1.4 V.

NOTE: For vehicles of later model years, the normal voltage value is slightly higher due to increased traffic between the control modules on the CAN network upon update of the electrical system.

In the event of a communication fault the voltage is significantly higher than the above specified values. In order to identify which control module has faulty communication, cut the power supply to one control module at a time. Check the voltage in the CAN cables again. The easiest way to cut the power supply is to remove the fuse(s) for the relevant control module. Repeat until the voltage between the CAN wiring drops to the normal level.

HINT: When the probable faulty control module has been identified, connect and disconnect the supply voltage to the control module a number of times to verify that the fault appears and disappears.

NOTE: Do not cut the power to the central electronic module (CEM) unless it is the last control module left to check.

The control module that is communicating incorrectly must be replaced. Remedy as necessary.

NOTE: After a fault with "interfering" control modules, other control modules may remain in "Limp-Home mode" even when the ignition has been switched off and on several times. To remedy this, disconnect and reconnect the battery negative terminal to restore the control modules to normal function.

Other information

- see **BATTERY, DISCONNECTING**

- **Continue**

Refer to **VERIFICATION**

IDENTIFYING FAULT CAUSES IN THE CAN NETWORK

- Disconnect a control module that disconnects the CAN network (a control module that has four terminals to the CAN network).

  HINT: For the low speed network, suitable places for disconnecting the network are at the steering wheel module (SWM), the driver information module (DIM) or the climate control module (CCM).

  In the event of an open-circuit on, or short-circuit between the CAN cables, the fault can be localized by disconnecting a control module that splits the CAN network. Readings can then be taken to determine on which side the fault is on the disconnected control module.

  Connect an ohmmeter between the CAN cables. Take readings from both ends of the CAN networks at the network junction. Twist and bend the cable harness to find any intermittent short-circuits. Resistance should be 120 ohms.

  If a fault can be localized in one direction, split the network at a point further on in the CAN network in the direction that the fault was discovered and take a new reading. Try to locate the fault in this way.

  Remedy the cables as necessary.

- **Continue**

  Refer to **VERIFICATION**

VERIFICATION

HINT: After rectifying a fault, a verification should be carried out.

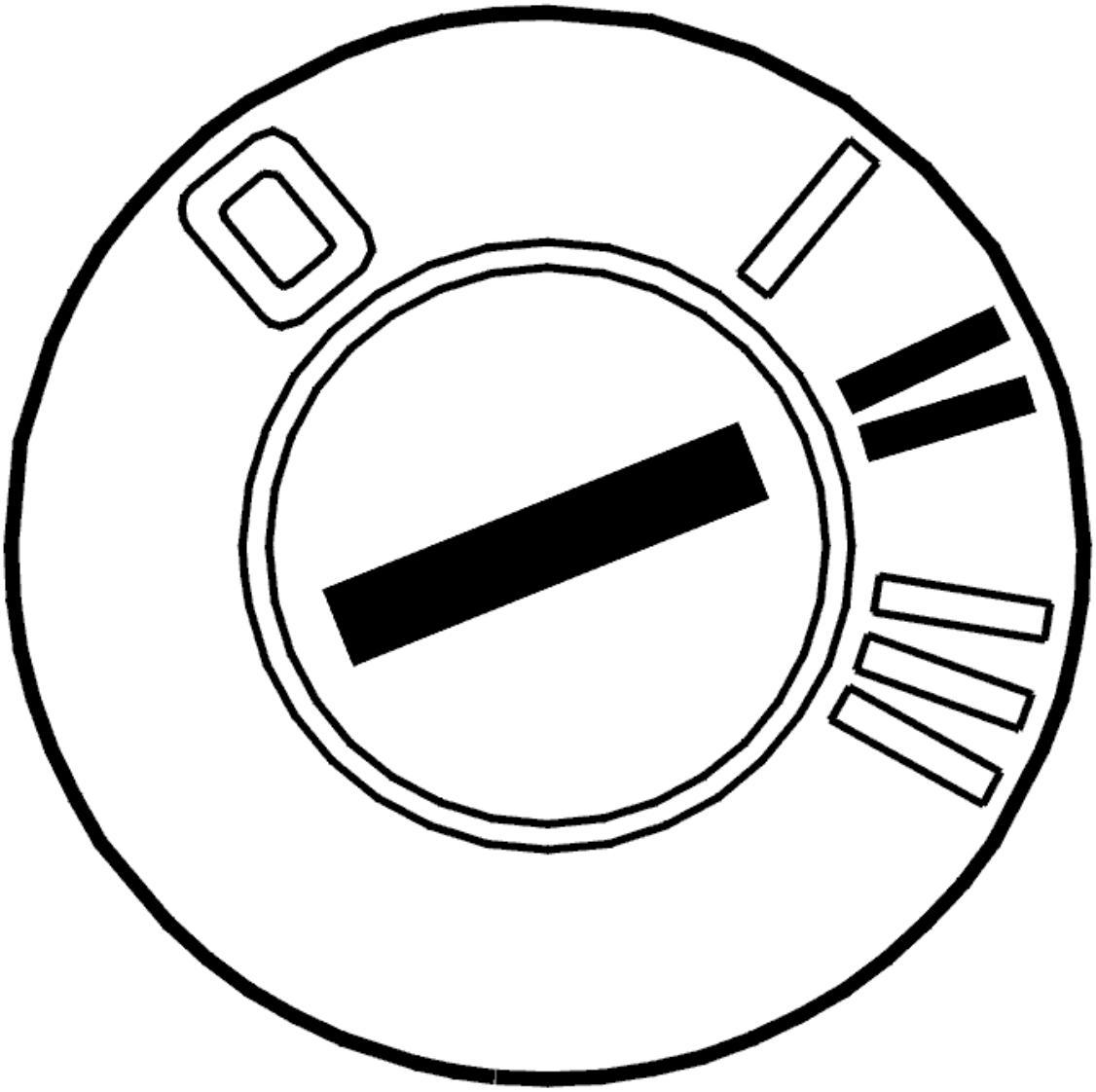

Fig. 133: Identifying Ignition ON
Courtesy of VOLVO CARS CORPORATION

- Reinstall the connectors, components etc.
- Ignition on.
- Erase diagnostic trouble codes using the VCT2000 (or appropriate scan tool).
- Start the car. Allow the vehicle to run for 10 minutes.
- Read off diagnostic trouble codes (DTCs).

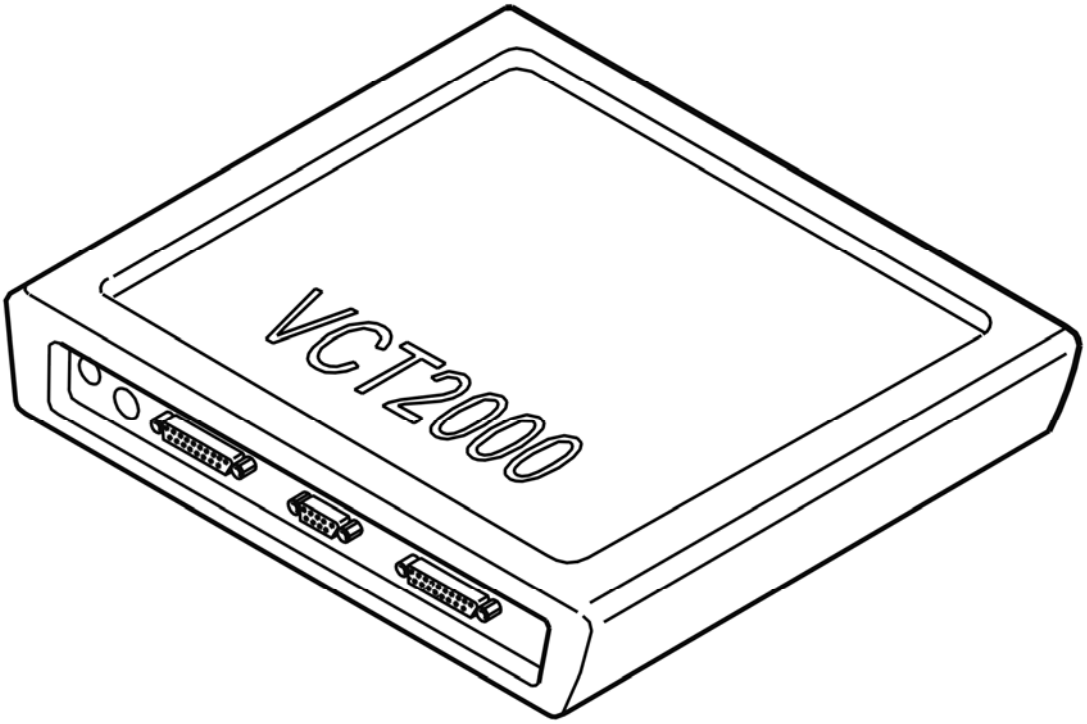

Fig. 134: Identifying VCT2000 Diagnostic Tool Symbol In VIDA
Courtesy of VOLVO CARS CORPORATION

Does the diagnostic trouble code (DTC) for a communication fault recur (CEM-1A5X or CEM-1A6X)?

- **YES**

  Refer to **INFORMATION**

- **NO**

  OKAY: Troubleshooting has been completed.

INFORMATION

FAULT-TRACING INFORMATION

Verification shows that the fault is no longer present. The diagnostic trouble code (DTC) was probably caused by an intermittent fault.

Fault-tracing for this diagnostic trouble code (DTC) is not followed by a verification.

You can view the information again or exit fault-tracing for this diagnostic trouble code (DTC).

INFORMATION

FAULT-TRACING INFORMATION

The fault should have been detected and remedied. As this is not the case fault-tracing has failed.

Exit fault-tracing for this diagnostic trouble code (DTC) or make another attempt.

CEM-1A66: COMMUNICATION WITH THE INFOTAINMENT CONTROL MODULE (ICM). SIGNAL MISSING (2005-2012)

DIAGNOSTIC TROUBLE CODE (DTC) INFORMATION CEM-1A66

Condition

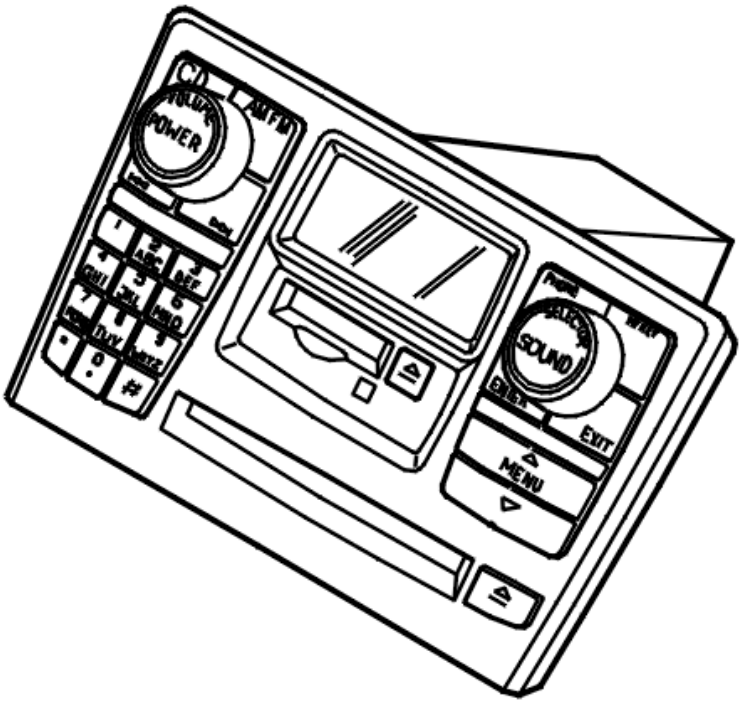

Fig. 135: Identifying Infotainment Control Module
Courtesy of VOLVO CARS CORPORATION

The diagnostic trouble code (DTC) is stored if the central electronic module (CEM) registers that communication with the infotainment control module (ICM) is not operating.

The diagnostic trouble code (DTC) can be diagnosed when the ignition has been on for more than 10 seconds.

NOTE: **If CEM-1A6X diagnostic trouble codes (DTCs) are stored, the central electronic module (CEM) must not be replaced as the diagnostic trouble code (DTC) indicates a communication fault in the Control area network**

Substitute Value

- None.

Possible Source

- No power supply to the infotainment control module (ICM)
- Open-circuit in the ground lead for the infotainment control module (ICM)
- Contact resistance in the terminals
- Open-circuit in the wiring for the CAN low speed network to the infotainment control module (ICM)
- The infotainment control module (ICM) is not intended for this vehicle, for example a used control module with different software/hardware.

HINT: If several diagnostic trouble codes (DTCs) are stored in the central electronic module (CEM) for communication faults with other control modules in the low speed network, this indicates a common fault in the Control area network.

Fault symptom[s]

- The audio system display does not function.
- Functions in the infotainment system do not work.

SIGNAL MISSING

CHECKING THE FUNCTION OF THE INFOTAINMENT CONTROL MODULE (ICM)

With the ignition key in position I or II, check that the infotainment control module (ICM) is powered and grounded by checking that the button illumination for the infotainment control module (ICM) lights.

If the button illumination lights up, the infotainment control module (ICM) is powered and grounded.

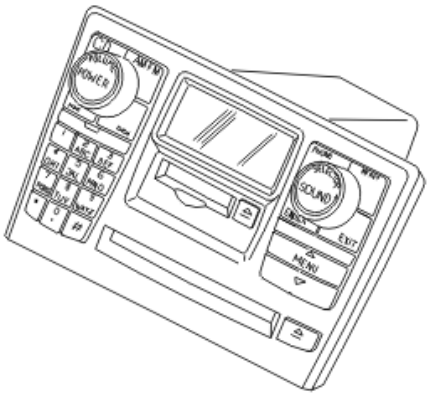

Fig. 136: Identifying Infotainment Control Module (ICM)
Courtesy of VOLVO CARS CORPORATION

Does the button illumination light?

- **YES**

  Refer to **CHECKING COMMUNICATION WITH THE INFOTAINMENT CONTROL MODULE (ICM)**

- **NO**

  Refer to **CHECKING THE POWER SUPPLY AND GROUND FOR THE INFOTAINMENT CONTROL MODULE (ICM)**

CHECKING THE POWER SUPPLY AND GROUND FOR THE INFOTAINMENT CONTROL MODULE (ICM)

Check that the fuse for the control module is intact.

Checking the power supply and ground for the infotainment control module (ICM).

Other information:

- see **CHECKING THE VOLTAGE / GROUND TERMINAL**
- see **CHECKING WIRING AND TERMINALS**

Was a fault detected?

- **YES**

  Refer to **CHECKING THE INFOTAINMENT CONTROL MODULE (ICM)**

- **NO**

  Refer to **CHECKING COMMUNICATION WITH THE INFOTAINMENT CONTROL MODULE**

(ICM)

CHECKING COMMUNICATION WITH THE INFOTAINMENT CONTROL MODULE (ICM)

HINT: The CAN communication with the control module is probably OK if the control module ID can be read off. In that case the fault is probably intermittent and will then be more difficult to trace.

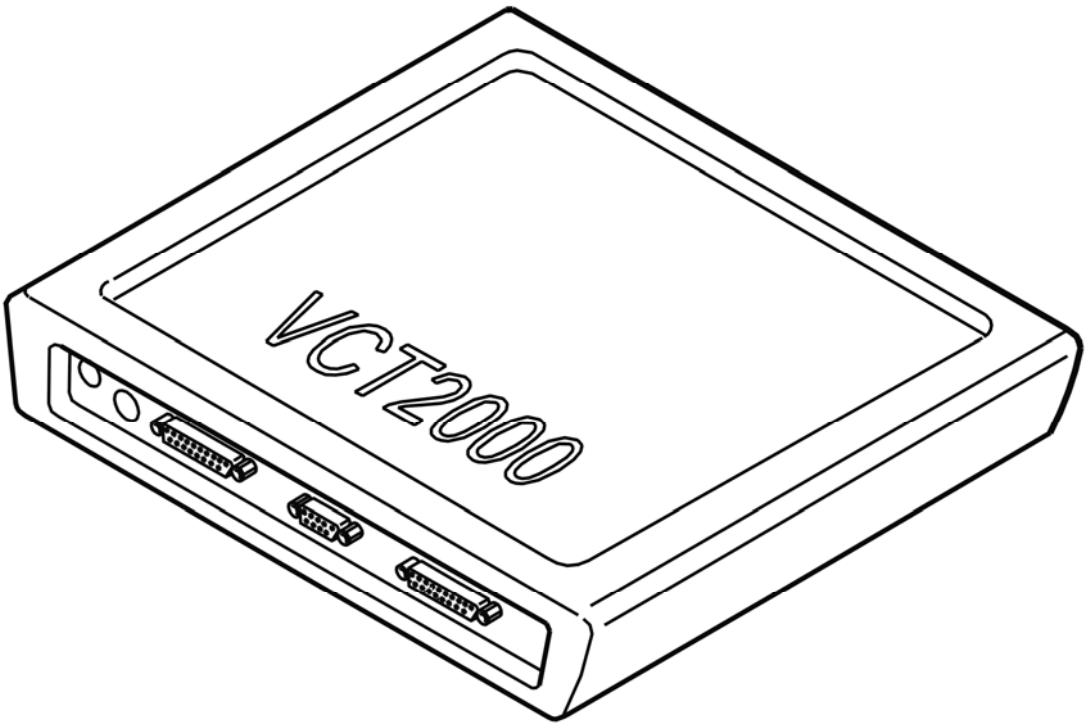

Fig. 137: Identifying VCT2000 Diagnostic Tool Symbol In VIDA
Courtesy of VOLVO CARS CORPORATION

- Try to communicate with the infotainment control module (ICM) by reading off the control module ID
- Use the VCT2000 (or appropriate scan tool)

- **Continue**

  Refer to **SIGNAL MISSING**

CHECKING THE INFOTAINMENT CONTROL MODULE (ICM)

HINT: After carrying out the repair, check that the fault has been remedied.

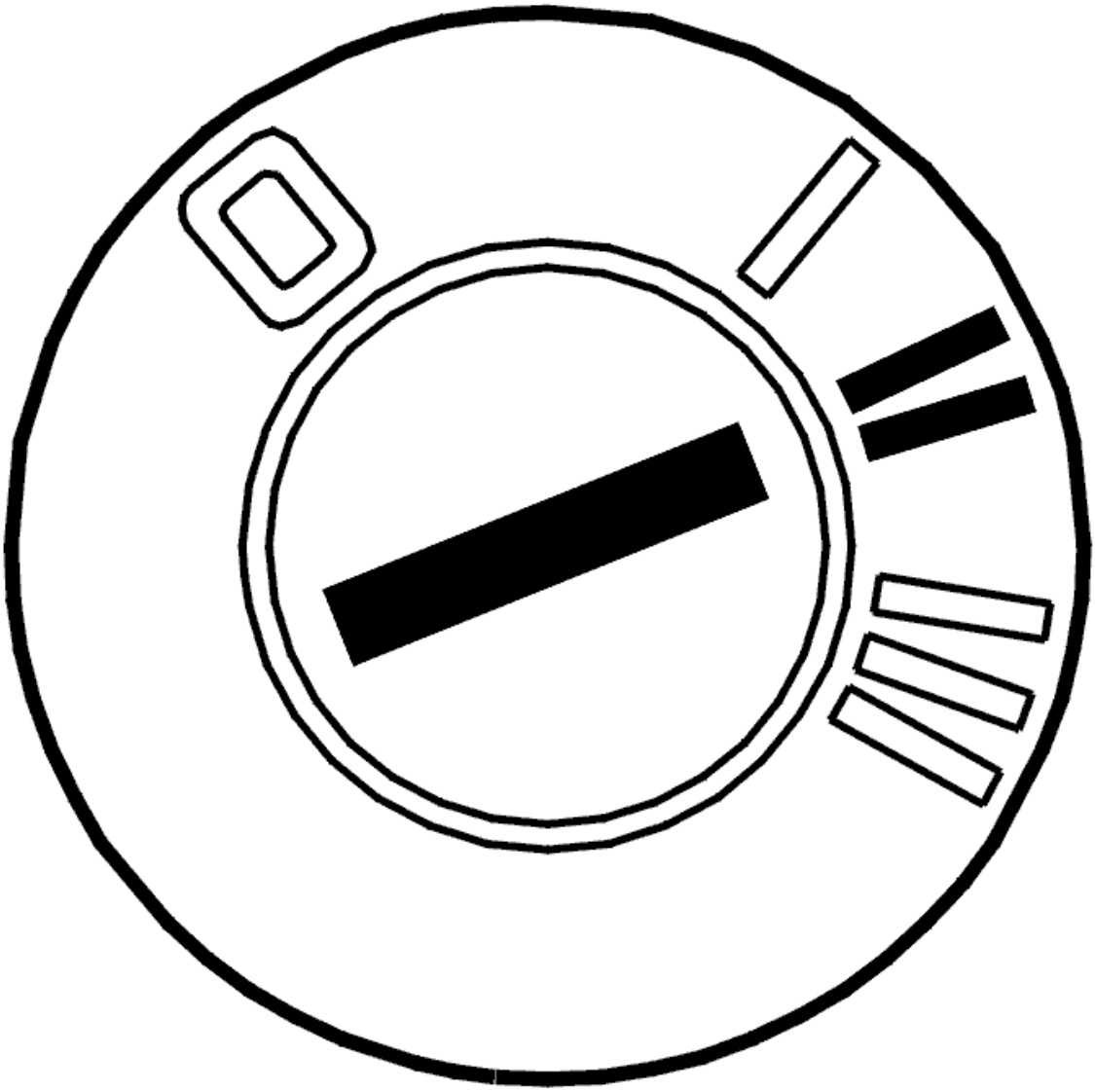

Fig. 138: Identifying Ignition ON
Courtesy of VOLVO CARS CORPORATION

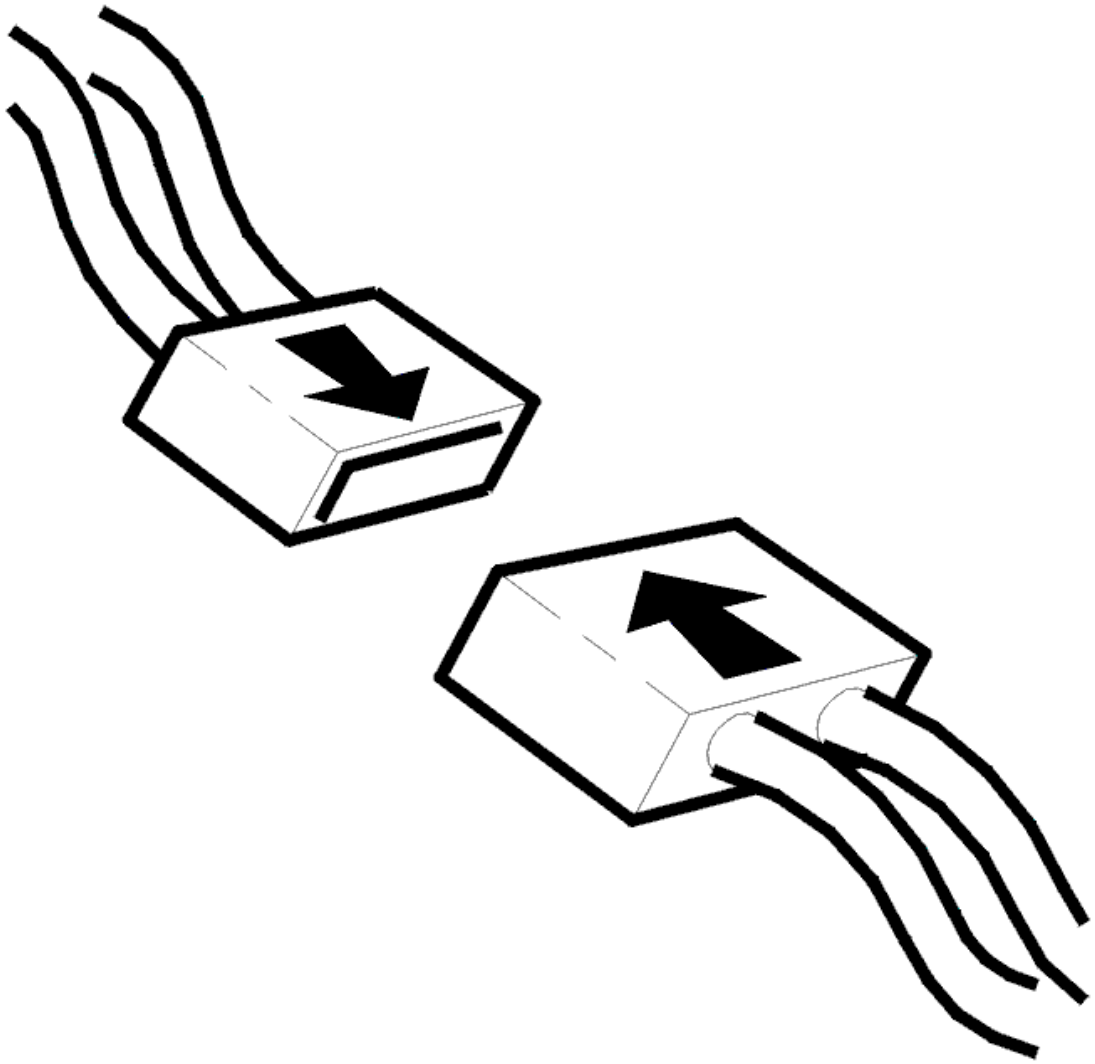

Fig. 139: Connecting Connector
Courtesy of VOLVO CARS CORPORATION

- Ignition off
- Reconnect the connectors. Reinstall the components
- Ignition on for at least 10 seconds.

  With the ignition key in position I or II, check that the infotainment control module (ICM) is powered and grounded by checking that the button illumination for the infotainment control module (ICM) lights. If the button illumination lights up, the infotainment control module (ICM) is powered and grounded.

Does the button illumination light?

- **YES**

OKAY: Troubleshooting has been completed.

- **NO**

  Refer to **INFORMATION**

SIGNAL MISSING

GENERAL INFORMATION

NOTE: Illustrations shown are only examples.

HINT: For general information about CAN-troubleshooting, see:

- **General about CAN-related diagnostic trouble codes:**

  CEM-DF01 - DF17 can only be stored in Central electronic module (CEM). These diagnostic trouble codes are stored when an electric fault is detected in CAN-lines. Start with these diagnostic trouble codes first.

  CEM-1AXX only stored in Central electronic module (CEM). One diagnostic trouble code for every control module on the CAN-net. These diagnostic trouble codes indicate that Central electronic module (CEM) does not receive any reply from other control modules.

  XXX-E000 (HS-CAN)/E001 (LS-CAN) can be stored in all CAN-connected control modules. These diagnostic trouble codes indicate that the control module has detected interference on the CAN-net.

  XXX-E003 can be stored in all CAN-connected control modules except in Central electronic module (CEM). The control modules on the CAN-net listen for a message (identity number) that is sent out at regular intervals from Central electronic module (CEM). This diagnostic trouble code indicates that the control module has not received any identity number, or that the expected number is not correct. Interference on the CAN-net can also store this diagnostic trouble code.

  NOTE: In case of CAN-related faults, it is likely that a combination of above diagnostic trouble codes occur.

  NOTE: After fault with control modules that interfere with communication, other control modules may remain in Limp-Home (that is, they work with reduced functionality) even when the ignition has been turned off and on a few times. For certain faults in the CAN-net where control modules have stopped communicating, it may help to disconnect/reconnect the battery to "restart" the control module/CAN-net.

  If diagnostic trouble codes (DTCs) for communication faults can be read off from a control module, the fault is probably intermittent.

  Intermittent fault in the voltage supply and ground to a control module on the CAN network results in the

Central electronic module (CEM) storing a diagnostic trouble code (DTC) for an open-circuit in communication with the control module where the voltage supply does not work. There will probably not be a diagnostic trouble code (DTC) in the control module where the open-circuit in the voltage supply occurred as the control module cannot store a diagnostic trouble code (DTC) when it is not supplied with power.

NOTE: **Central electronic module (CEM) should not be replaced in case of CAN-fault, unless troubleshooting reveals that Central electronic module (CEM) has an internal fault.**

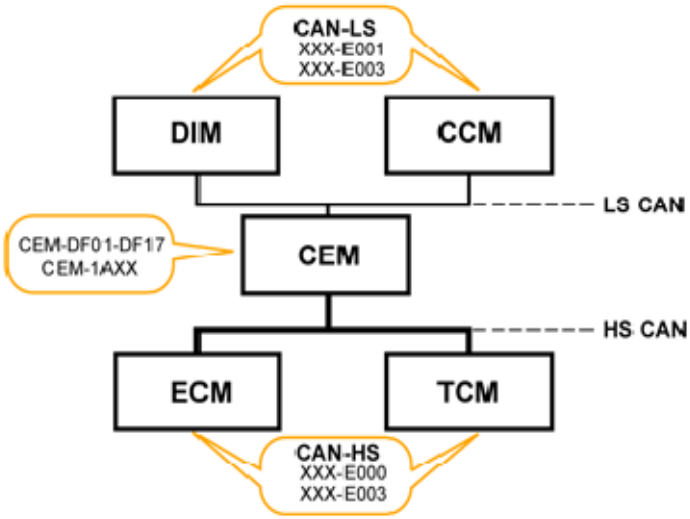

Fig. 140: High-Speed CAN And Low-Speed CAN Communication Diagram
Courtesy of VOLVO CARS CORPORATION

- **Continue**

Refer to **CHECKING RESISTANCE IN CAN-NET**

CHECKING RESISTANCE IN CAN-NET

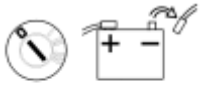

Fig. 141: Ignition Off And Disconnecting Battery Negative Lead
Courtesy of VOLVO CARS CORPORATION

- Ignition off
- Disconnect the battery negative lead
- Connect OBDII-Box **(951 3015)** to the diagnostics socket.

For general information about CAN-troubleshooting, see: **GENERAL INFORMATION ABOUT FAULT-TRACING IN THE CAN NETWORK**

Measure resistance between the following connections on the OBDII-box/diagnostics socket.

- #3 and #11. The resistance should be approx. 55 - 65 ohms.
- If resistance is approx. 120 ohms, this indicates open circuit in the circuit so that only one terminating resistor (120 ohms) has been measured.
- If resistance is above 1 kohms this indicates open circuit/high contact resistance somewhere in the circuit.
- If resistance is below 55 ohms this indicates short-circuiting/contact resistance between the CAN-lines somewhere in the circuit.

HINT: For LS-CAN, terminating resistors are located in Upper electronic module (UEM) and Rear electronic module (REM).

Twist the cable harness and wiggle connectors where they can be accessed along the cable harness during every measurement, and note if the resistance changes to detect intermittent short-circuits or open circuit.

NOTE: **Resistance measurement measures only main lines in the CAN-net (in circuit where both terminating resistors are found), not branches to certain control modules. Open circuit on branching without a terminating resistor cannot be detected with this measurement. However, short-circuiting on a branch can be detected. To measure resistance in the CAN-net to control modules located in a branching of their own, the measurement shall be done against the CAN-net at that control module. The values shall be as above.**

NOTE: **After fault with control modules that interfere with communication, other control modules may remain in Limp-Home (that is, they work with reduced functionality) even when the ignition has been turned off and on a few times. For certain faults in the CAN-net where control modules have stopped communicating, it may help to disconnect/reconnect the battery to "restart" the control module/CAN-net.**

Remedy as necessary.

Other information

- see **BATTERY, DISCONNECTING**
- see **CHECKING WIRING AND TERMINALS**

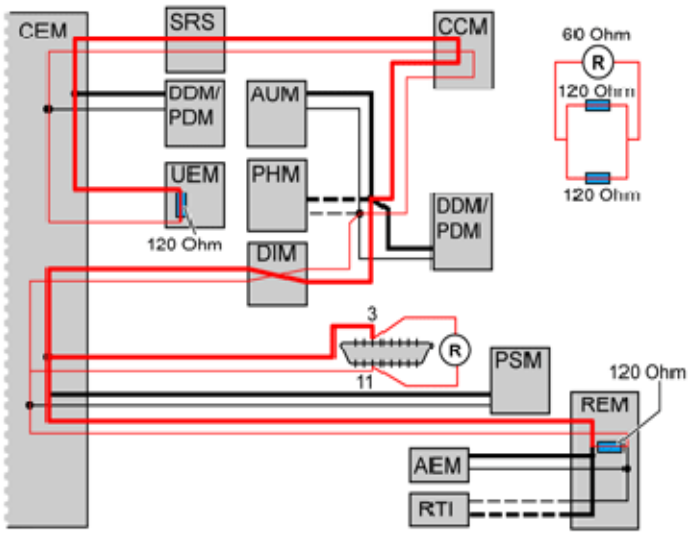

Fig. 142: Checking Resistance In CAN Lines
Courtesy of VOLVO CARS CORPORATION

Was a fault detected?

- **YES**

  Refer to **VERIFICATION**

- **NO**

  Refer to **CHECKING SHORT-CIRCUITING TO GROUND/VOLTAGE IN CAN-NET**

CHECKING THE AMOUNT OF TRAFFIC ON THE LS-CAN

Fig. 143: Identifying Ignition On Position
Courtesy of VOLVO CARS CORPORATION

- Connect the battery
- Ignition on.
- Connect OBDII-Box **(951 3015)** to the diagnostics socket.

  For general information about CAN-troubleshooting, see: **GENERAL INFORMATION ABOUT FAULT-TRACING IN THE CAN NETWORK**

  Faults in the CAN network may be due to a control module sending faulty messages that disrupt normal

communication. When messages are sent incorrectly, this results in a considerable increase in the amount of traffic on the CAN network. The load can be checked by reading the average value of the voltage on the CAN cables in relation to ground.

Measure voltage between the following connections on the OBDII-box/diagnostics socket.

- #3 and #4 (ground). The voltage should be approx:2, 8 - 3, 2 V.
- #11 and #4 (ground). The voltage should be approx:1, 8 - 2, 2 V.
- #3 and #11. The voltage shall be between approx. 0.55-1.4 V. The voltage shall normally be between 0.55 - 0.90 V. A higher voltage may indicate increased traffic on the CAN-net. In case of fault in communication/too high traffic on the CAN-net, the voltage is considerably higher than the above stated values.

NOTE: After fault with control modules that interfere with communication, other control modules may remain in Limp-Home even when the ignition has been turned off and on a few times. For certain faults in the CAN-net where control modules have stopped communicating, it may help to disconnect/reconnect the battery to "restart" the control module/CAN-net.

HINT: DiCE can be used as fault detection tool if fault is suspected on the CAN-net that cannot be detected with normal troubleshooting. Interference, intermittent faults, faulty messages on the CAN-net etc., are examples of such faults. The tool registers fault messages used on the CAN-net. Fault messages may be caused by short intermittent malfunctions on the CAN-net or by a control module sending fault messages. See tools:951 3010 as well as associated TJ 20402.

- Ignition on.
- Connect DiCE to the diagnostics socket.
- Note the blue LED-indicator. The indicator flashes to show detection of fault messages.

NOTE: Certain interference may occur without any real fault

Cable fault

- Shake the cables lightly and pull lightly on the connections during the check to locate any fault. Note the blue LED-indicator.

"Chatting" control modules

- "Chatting" control modules may be difficult to find and troubleshooting may take time. Let the vehicle stand with DiCE connected for an extended time period. Afterwards, activate functions to provoke a malfunction. It may take up to several hours before the fault messages are sent. When the indicator starts to flash, remove the fuse for one control module at a time until the indicator stops flashing. When the indicator stops flashing, restore the fuse for the relevant control module and check that the indicator starts to flash again. Then it is likely that the problem is identified.

Remedy wiring as necessary.

Other information

- see **BATTERY, DISCONNECTING**
- see **TROUBLESHOOTING USING DICE ERROR FRAME FINDER**
- see **CHECKING WIRING AND TERMINALS**

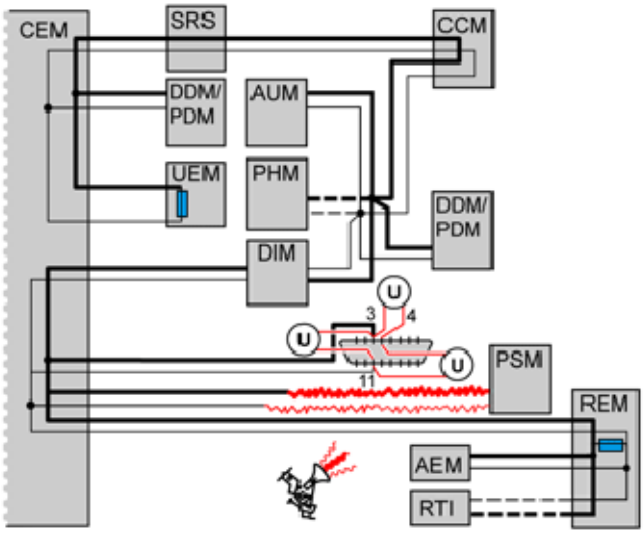

Fig. 144: Checking Amount Of Traffic On LS-CAN
Courtesy of VOLVO CARS CORPORATION

Was a fault detected?

- **YES**

  Refer to **IDENTIFYING A CONTROL MODULE IN THE CAN NETWORK**

- **NO**

  Refer to **CHECKING VOLTAGE-DROP IN CABLE FOR CAN-H AND CAN-L, RESPECTIVELY**

IDENTIFYING A CONTROL MODULE IN THE CAN NETWORK

Fig. 145: Identifying Ignition On Position
Courtesy of VOLVO CARS CORPORATION

For general information about CAN-troubleshooting, see: **GENERAL INFORMATION ABOUT FAULT-**

TRACING IN THE CAN NETWORK

HINT: DiCE can be used as fault detection tool if fault is suspected on the CAN-net that cannot be detected with normal troubleshooting. Interference, intermittent faults, faulty messages on the CAN-net (chattering control modules) etc., are examples of such faults. The tool registers fault messages used on the CAN-net. Fault messages may be caused by short intermittent malfunctions on the CAN-net or by a control module sending fault messages. See tools:951 3010 (memory card) as well as associated TJ 20402. If the load on the CAN network is too high, this may be due to a control module transmitting faulty messages on the CAN network. This is called a disruptive control module. The fault may also be due to an intermittent short-circuit to supply voltage or ground in one of the CAN cables. This results in the control modules on the CAN network starting to send faulty messages. The fault may occur without any of the control modules storing a diagnostic trouble code (DTC). The voltage can be measured between the CAN cables in order to check the load on the CAN network.

NOTE: **It is not necessarily the control module that has set the diagnostic trouble code that communicates incorrectly. Faulty messages can come from any control module in the same section of the CAN network. However, faulty communication in one network cannot affect the communication on the other network. In other words, faulty communication on the LS-CAN cannot disrupt communication on the HS-CAN and vice versa.**

- Ignition on.
- Connect OBDII-Box **(951 3015)** to the diagnostics socket.

Check communication/load on CAN-net by measuring voltage between CAN-L and CAN-H. Measure voltage between the following connections on the OBDII-box/diagnostics socket.

- #3 and #11. The average value of the voltage must be approximately 0.6-1.4 V. The voltage shall normally be between 0.55 - 0.90 V. A higher voltage may indicate increased traffic on the CAN-net. In case of fault in communication/too high traffic on the CAN-net, the voltage is considerably higher than the above stated values.

In order to identify which control module has faulty communication, cut the power supply to one control module at a time. Check the voltage in the CAN cables again. The easiest way to cut the power supply is to remove the fuse(s) for the relevant control module. Repeat until the voltage between the CAN wiring drops to the normal level.

NOTE: **When connecting and disconnecting certain control modules, diagnostic trouble codes (DTCs) may be stored in other control modules.**

HINT: When the suspected defective control module has been identified, connect and disconnect the supply voltage to the control module a number of times to verify that the malfunction appears and disappears. Switch off the ignition between each check.

NOTE: **Do not cut the power to the central electronic module (CEM) unless it is the last control module left to check.**

A control module that is communicating incorrectly must be replaced. See Repairing and installing/Removing, replacing and installing.

NOTE: **After fault with control modules that interfere with communication, other control modules may remain in Limp-Home (that is, they work with reduced functionality) even when the ignition has been turned off and on a few times. For certain faults in the CAN-net where control modules have stopped communicating, it may help to disconnect/reconnect the battery to "restart" the control module/CAN-net.**

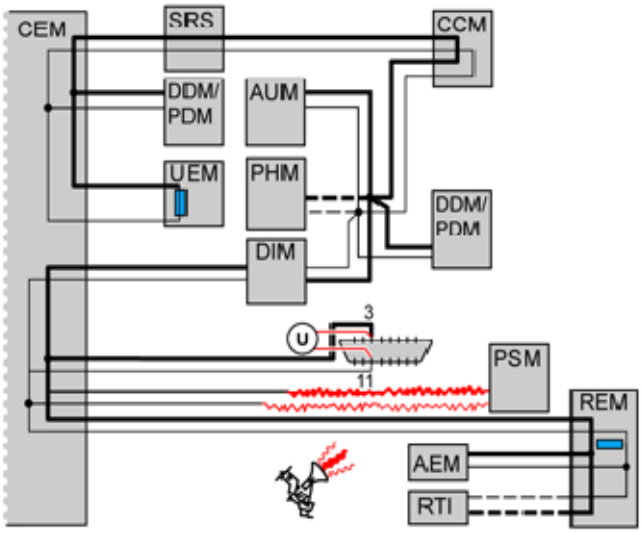

Fig. 146: Checking Communication/Load On CAN-net Between CAN-L And CAN-H
Courtesy of VOLVO CARS CORPORATION

- **Continue**

  Refer to **VERIFICATION**

VERIFICATION

HINT: After rectifying a fault, a verification should be carried out.

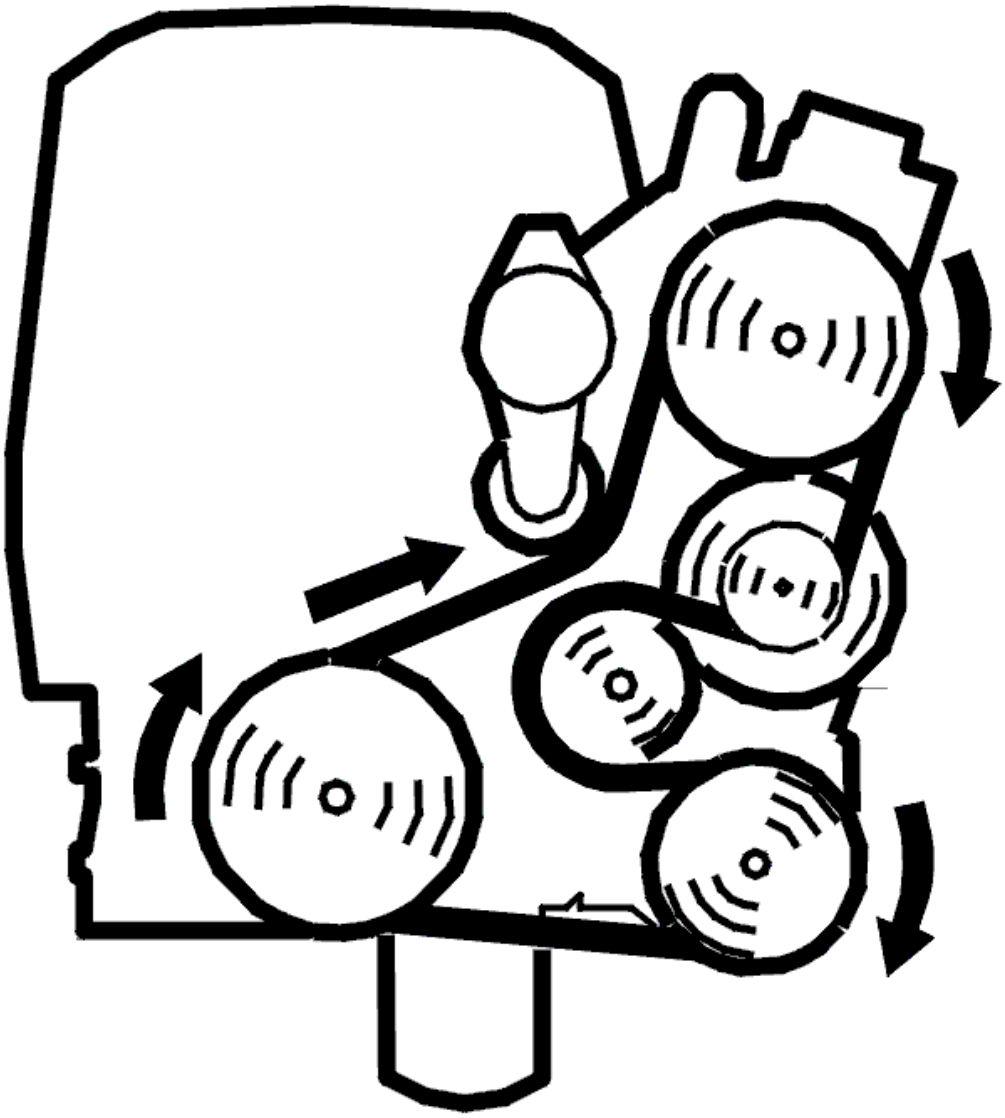

Fig. 147: Belt Routing / Engine Idling - Volvo
Courtesy of VOLVO CARS CORPORATION

Fig. 148: Identifying Ignition On Position
Courtesy of VOLVO CARS CORPORATION

- Reinstall the connectors, components etc.
- Ignition on.

NOTE: **For certain faults in the CAN-net where control modules have stopped communicating, it may help to disconnect/reconnect the battery to "restart" the control module/CAN-net.**

- Erase diagnostic trouble codes (DTCs) in all control modules.
- Ignition off.
- Ignition on.
- Start the vehicle. Allow the vehicle to run for 10 minutes. Start the engine. Allow the engine to run at idle speed for 10 minutes
- Read out the diagnostic trouble codes in the vehicle via the DIAGNOSTICS tab.

Does the diagnostic trouble code (DTC) for faulty communication return?

- **YES**

  Refer to **INFORMATION**

- **NO**

  OKAY: Troubleshooting has been completed.

CHECKING SHORT-CIRCUITING TO GROUND/VOLTAGE IN CAN-NET

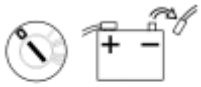

Fig. 149: Ignition Off And Disconnecting Battery Negative Lead
Courtesy of VOLVO CARS CORPORATION

- Ignition off.
- Disconnect the battery negative lead.
- Connect OBDII-Box **(951 3015)** to the diagnostics socket.

  For general information about CAN-troubleshooting, see: **GENERAL INFORMATION ABOUT FAULT-TRACING IN THE CAN NETWORK**

  Checking for a short-circuit to ground

  Measure resistance between the following connections on the OBDII-box/diagnostics socket.

  - #3 and #4 (ground). Measurement is shown in the illustration. The resistance should be above 1 kohms.

- #11 and #4 (ground). The resistance should be above 1 kohms.

If resistance is below 1 kohms this indicates short-circuiting between the CAN-line and ground.

Checking for a short-circuit to voltage

Measure resistance between the following connections on the OBDII-box/diagnostics socket.

- #3 and #16 (voltage). Measurement is shown in the illustration. The resistance should be above 1 kohms.
- #11 and #16 (voltage). The resistance should be above 1 kohms.

If resistance is below 1 kohms this indicates short-circuiting between the CAN-line and voltage cable.

Twist the cable harness and wiggle connectors where they can be accessed along the cable harness during every measurement, and note if the resistance changes to detect intermittent short-circuits or open circuit.

HINT: Part the CAN-net at suitable points to decide where a short-circuit may be found.

NOTE: After fault with control modules that interfere with communication, other control modules may remain in Limp-Home (that is, they work with reduced functionality) even when the ignition has been turned off and on a few times. For certain faults in the CAN-net where control modules have stopped communicating, it may help to disconnect/reconnect the battery to "restart" the control module/CAN-net.

Remedy as necessary.

Other information

- see **BATTERY, DISCONNECTING**
- see **CHECKING WIRING AND TERMINALS**

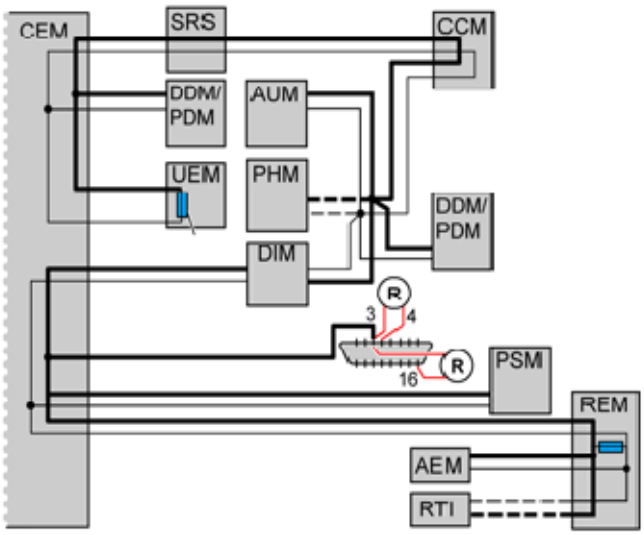

Fig. 150: Checking For Short-Circuiting To Ground/Voltage In CAN-net
Courtesy of VOLVO CARS CORPORATION

Was a fault detected?

- **YES**

  Refer to **VERIFICATION**

- **NO**

  Refer to **CHECKING THE AMOUNT OF TRAFFIC ON THE LS-CAN**

CHECKING VOLTAGE-DROP IN CABLE FOR CAN-H AND CAN-L, RESPECTIVELY

Fig. 151: Identifying Ignition On Position
Courtesy of VOLVO CARS CORPORATION

- Connect the battery.
- Ignition on.
- Connect OBDII-Box **(951 3015)** to the diagnostics socket.

  For general information about CAN-troubleshooting, see: **GENERAL INFORMATION ABOUT FAULT-TRACING IN THE CAN NETWORK**

  In principle, the voltage measured in each cable in the CAN-net shall be the same at each control module

in the network. This means that the voltage-drop in the cable for CAN-H and CAN-L, respectively, between the control modules should be very low. If there is a voltage-difference in the CAN-lines between the diagnostics socket/Central electronic module (CEM) and a control module due to, e. g., contact resistance in a connector or branching, communication may be lost/interfered with. Check if there is voltage-drop in the cable for CAN-H and CAN-L between the diagnostics socket/Central electronic module (CEM) and the control module where there is problem with communication.

Carry out the following:

Measure voltage between the following connections on the OBDII-box/diagnostics socket.

- #3 and corresponding connection on relevant control module for CAN-H. The voltage shall be lower than 50 mV.
- #11 and corresponding connection on relevant control module for CAN-L. The voltage shall be lower than 50 mV.

If voltage is too high, this indicates too high contact resistance in cable, connector, or branching. Check the circuit between the diagnostics socket and control module in question for contact resistance and oxidation.

NOTE: **After fault with control modules that interfere with communication, other control modules may remain in Limp-Home (that is, they work with reduced functionality) even when the ignition has been turned off and on a few times. For certain faults in the CAN-net where control modules have stopped communicating, it may help to disconnect/reconnect the battery to "restart" the control module/CAN-net.**

Remedy wiring as necessary.

Other information

- see **CHECKING WIRING AND TERMINALS**

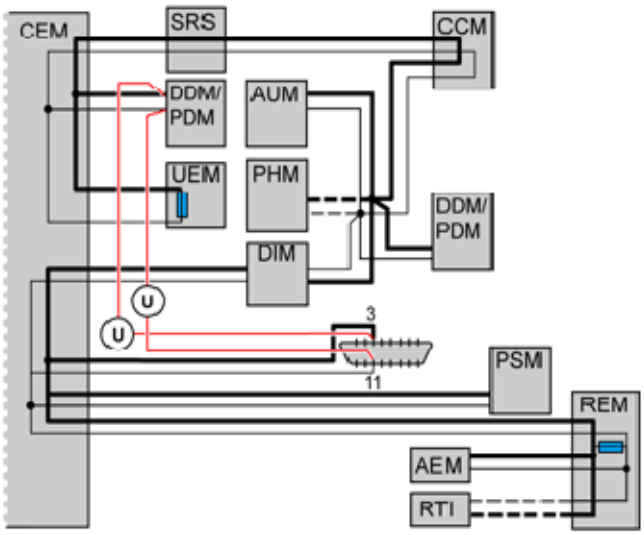

Fig. 152: Checking For Voltage-Drop In Cable For CAN-H And CAN-L
Courtesy of VOLVO CARS CORPORATION

- **Continue**

  Refer to **VERIFICATION**

INFORMATION

FAULT-TRACING INFORMATION

The fault should have been detected and remedied. As this is not the case fault-tracing has failed.

Exit fault-tracing for this diagnostic trouble code (DTC) or make another attempt.

CEM-1A67: COMMUNICATION WITH HCM CONTROL MODULE SIGNAL MISSING (2007-2012)

DIAGNOSTIC TROUBLE CODE (DTC) INFORMATION CEM-1A67

Condition

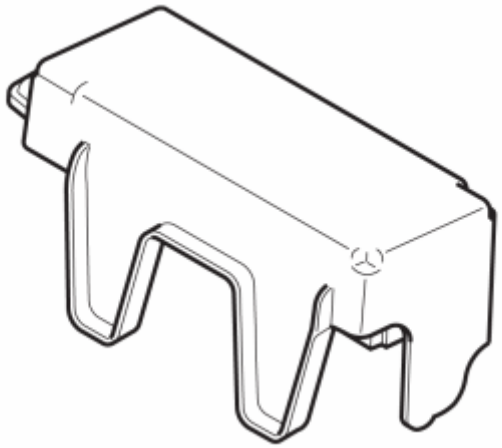

Fig. 153: Identifying Headlight Control Module (HCM)
Courtesy of VOLVO CARS CORPORATION

The diagnostic trouble code (DTC) is generated if the central electronic module (CEM) registers that communication with the headlight control module (HCM) is not operating.

The diagnostic trouble code (DTC) can be diagnosed when the ignition has been on for more than 10 seconds.

NOTE: **If CEM-1A6X diagnostic trouble codes (DTCs) are stored, the central electronic module (CEM) must not be replaced as the diagnostic trouble code (DTC) indicates a communication fault in the Control area network**

Substitute Value

- None.

Possible Source

- Voltage feed to Headlight Control Module (HCM) missing.
- Open circuit on ground cable to Headlight Control Module (HCM)
- Contact resistance in the terminals
- Open circuit on CAN cables to headlight control module (HCM).
- Headlight Control Module (HCM) not intended for this car, e. g., used control module with other hardware/software.

HINT: If several diagnostic trouble codes for communication errors with other control modules in the high-speed network are stored in the Central electronic module (CEM), this indicates some common problem in the CAN-network.

Fault symptom[s]

- Active Bi-Xenon light; No Functionality

CEM-1A67: COMMUNICATION WITH HCM CONTROL MODULE SIGNAL MISSING (B5254T2; 2007)

SIGNAL MISSING

CHECKING THE POWER SUPPLY AND GROUND

Check that the fuse for the control module is intact.

Check the power supply and grounding point of the headlight control module (HCM).

Other information

- see **CHECKING THE POWER SUPPLY AND GROUND TERMINAL**
- see **CHECKING WIRING AND TERMINALS**

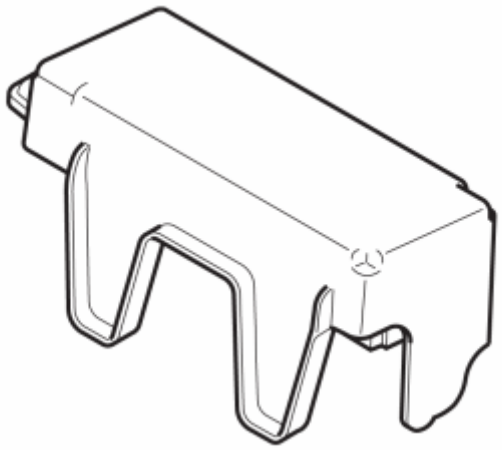

Fig. 154: Identifying Headlight Control Module (HCM)
Courtesy of VOLVO CARS CORPORATION

Was a fault detected?

- **YES**

  Refer to **CHECKING HEADLIGHT CONTROL MODULE (HCM)**

- **NO**

  Refer to **CHECKING COMMUNICATION WITH THE HEADLIGHT CONTROL MODULE (HCM)**

CHECKING COMMUNICATION WITH THE HEADLIGHT CONTROL MODULE (HCM)

Fig. 155: Identifying Ignition On Position
Courtesy of VOLVO CARS CORPORATION

HINT: The CAN communication with the control module is probably OK if the control module ID can be read off. In that case the fault is probably intermittent and will then be more difficult to trace.

- Ignition on.
- Try to communicate with the headlight control module (HCM) by reading off the control module ID.
- Use the VCT2000 (or appropriate scan tool).

Fig. 156: Identifying VCT2000 Diagnostic Tool Symbol In VIDA
Courtesy of VOLVO CARS CORPORATION

- **Continue**

  Refer to **SIGNAL MISSING**

CHECKING HEADLIGHT CONTROL MODULE (HCM)

Fig. 157: Identifying Ignition On Position
Courtesy of VOLVO CARS CORPORATION

HINT: After carrying out the repair, check that the fault has been remedied.

- Ignition off.
- Reinstall the connectors, components etc.
- Ignition on.

Obtain the ID of the headlight control module (HCM) using the VCT2000 (or appropriate scan tool).

Fig. 158: Identifying VCT2000 Diagnostic Tool Symbol In VIDA
Courtesy of VOLVO CARS CORPORATION

Could the control module ID be read off?

- **YES**

  OKAY: Troubleshooting has been completed.

- **NO**

  Refer to **INFORMATION**

SIGNAL MISSING

GENERAL INFORMATION

NOTE: Illustrations shown are only examples.

HINT: For general information about CAN-troubleshooting, see:

- **General about CAN-related diagnostic trouble codes:**

  CEM-DF01 - DF17 can only be stored in Central electronic module (CEM). These diagnostic trouble codes are stored when an electric fault is detected in CAN-lines. Start with these diagnostic trouble codes first.

  CEM-1AXX only stored in Central electronic module (CEM). One diagnostic trouble code for every control module on the CAN-net. These diagnostic trouble codes indicate that Central electronic module (CEM) does not receive any reply from other control modules.

  XXX-E000 (HS-CAN)/E001 (LS-CAN) can be stored in all CAN-connected control modules. These diagnostic trouble codes indicate that the control module has detected interference on the CAN-net.

  XXX-E003 can be stored in all CAN-connected control modules except in Central electronic module (CEM). The control modules on the CAN-net listen for a message (identity number) that is sent out at regular intervals from Central electronic module (CEM). This diagnostic trouble code indicates that the control module has not received any identity number, or that the expected number is not correct. Interference on the CAN-net can also store this diagnostic trouble code.

  NOTE: In case of CAN-related faults, it is likely that a combination of above

diagnostic trouble codes occur.

NOTE: **After fault with control modules that interfere with communication, other control modules may remain in Limp-Home (that is, they work with reduced functionality) even when the ignition has been turned off and on a few times. For certain faults in the CAN-net where control modules have stopped communicating, it may help to disconnect/reconnect the battery to "restart" the control module/CAN-net.**

If a communication diagnostic trouble code can be read from the control module, the malfunction is probably intermittent.

Intermittent fault in the voltage supply and ground to a control module on the CAN network results in the Central electronic module (CEM) storing a diagnostic trouble code (DTC) for an open-circuit in communication with the control module where the voltage supply does not work. There will probably not be a diagnostic trouble code (DTC) in the control module where the open-circuit in the voltage supply occurred as the control module cannot store a diagnostic trouble code (DTC) when it is not supplied with power.

NOTE: **Central electronic module (CEM) should not be replaced in case of CAN-fault, unless troubleshooting reveals that Central electronic module (CEM) has an internal fault.**

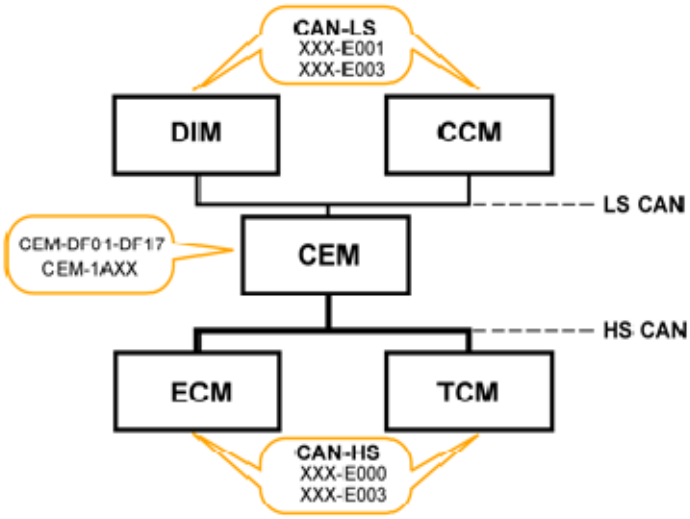

Fig. 159: High-Speed CAN And Low-Speed CAN Communication Diagram
Courtesy of VOLVO CARS CORPORATION

- **Continue**

Refer to **CHECKING RESISTANCE IN CAN-NET**

CHECKING RESISTANCE IN CAN-NET

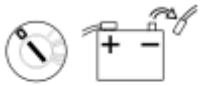

Fig. 160: Ignition Off And Disconnecting Battery Negative Lead
Courtesy of VOLVO CARS CORPORATION

- Ignition off
- Disconnect the battery negative lead
- Connect OBDII-Box **(951 3015)** to the diagnostics socket.

For general information about CAN-troubleshooting, see: **GENERAL INFORMATION ABOUT FAULT-TRACING IN THE CAN NETWORK**

Measure resistance between the following connections on the OBDII-box/diagnostics socket.

- #6 and #14. The resistance should be approx. 55 - 65 ohms.
- If resistance is approx. 120 ohms, this indicates open circuit in the circuit so that only one terminating resistor (120 ohms) has been measured.
- If resistance is above 1 kohms this indicates open circuit/high contact resistance somewhere in the circuit.
- If resistance is below 55 ohms this indicates short-circuiting/contact resistance between the CAN-lines somewhere in the circuit.

HINT: For HS-CAN the terminating resistors are located in Brake control module (BCM) and in Engine control module (ECM).

Twist the cable harness and wiggle connectors where they can be accessed along the cable harness during every measurement, and note if the resistance changes to detect intermittent short-circuits or open circuit.

NOTE: **Resistance measurement measures only main lines in the CAN-net (in circuit where both terminating resistors are found), not branches to certain control modules.**

Open circuit on branching without a terminating resistor cannot be detected with this measurement. However, short-circuiting on a branch can be detected. To measure resistance in the CAN-net to control modules located in a branching of their own, the measurement shall be done against the CAN-net at that control module. The values shall be as above.

NOTE: **After fault with control modules that interfere with communication, other control modules may remain in Limp-Home (that is, they work with reduced functionality) even when the ignition has been turned off and on a few times. For certain faults in the CAN-net where control modules have**

stopped communicating, it may help to disconnect/reconnect the battery to "restart" the control module/CAN-net.

Remedy wiring as necessary.

Other information

- see **BATTERY, DISCONNECTING**
- see **CHECKING WIRING AND TERMINALS**

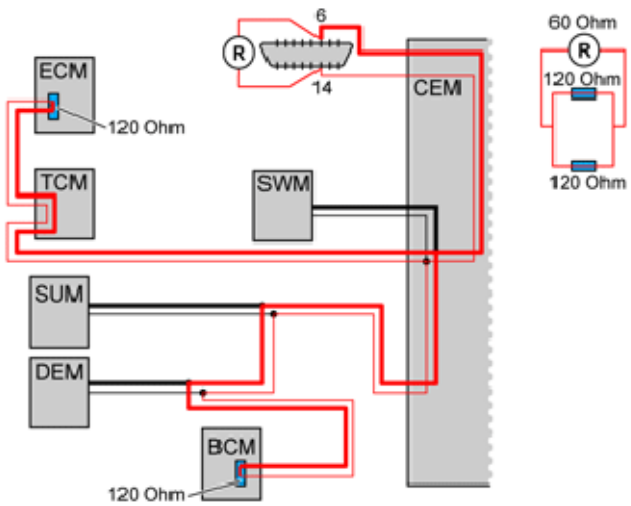

Fig. 161: Checking Resistance In CAN Lines
Courtesy of VOLVO CARS CORPORATION

Was a fault detected?

- **YES**

  Refer to **VERIFICATION**

- **NO**

  Refer to **CHECKING SHORT-CIRCUITING TO GROUND/VOLTAGE IN CAN-NET**

CHECKING THE TRAFFIC LOAD ON THE CAN CABLES

Fig. 162: Identifying Ignition On Position

Courtesy of VOLVO CARS CORPORATION

- Connect the battery
- Ignition on.
- Connect OBDII-Box **(951 3015)** to the diagnostics socket.

For general information about CAN-troubleshooting, see: **GENERAL INFORMATION ABOUT FAULT-TRACING IN THE CAN NETWORK**

Faults in the CAN network may be due to a control module sending faulty messages that disrupt normal communication. When messages are sent incorrectly, this results in a considerable increase in the amount of traffic on the CAN network. Check the load by measuring the average voltage value on the CAN cables in relation to ground.

Measure voltage between the following connections on the OBDII-box/diagnostics socket.

- #6 and #4 (ground). The voltage should be approx:2, 8 - 3, 2 V.
- #14 and #4 (ground). The voltage should be approx:1, 8 - 2, 2 V.
- #6 and #14. The voltage shall be between approx. 0.55-1.4 V. The voltage shall normally be between 0.55 - 0.90 V. A higher voltage may indicate increased traffic on the CAN-net. In case of fault in communication/too high traffic on the CAN-net, the voltage is considerably higher than the above stated values.

NOTE: After fault with control modules that interfere with communication, other control modules may remain in Limp-Home even when the ignition has been turned off and on a few times. For certain faults in the CAN-net where control modules have stopped communicating, it may help to disconnect/reconnect the battery to "restart" the control module/CAN-net.

HINT: DiCE can be used as fault detection tool if fault is suspected on the CAN-net that cannot be detected with normal troubleshooting. Interference, intermittent faults, faulty messages on the CAN-net etc., are examples of such faults. The tool registers fault messages used on the CAN-net. Fault messages may be caused by short intermittent malfunctions on the CAN-net or by a control module sending fault messages. See tools:951 3010 as well as associated TJ 20402.

- Ignition on.
- Connect DiCE to the diagnostics socket.
- Note the blue LED-indicator. The indicator flashes to show detection of fault messages.

NOTE: Certain interference may occur without any real fault

Cable fault

- Shake the cables lightly and pull lightly on the connections during the check to locate any fault. Note the blue LED-indicator.

"Chatting" control modules

- "Chatting" control modules may be difficult to find and troubleshooting may take time. Let the vehicle stand with DiCE connected for an extended time period. Afterwards, activate functions to provoke a malfunction. It may take up to several hours before the fault messages are sent. When the indicator starts to flash, remove the fuse for one control module at a time until the indicator stops flashing. When the indicator stops flashing, restore the fuse for the relevant control module and check that the indicator starts to flash again. Then it is likely that the problem is identified.

Remedy wiring as necessary.

Other information

- see **BATTERY, DISCONNECTING**
- see **CHECKING WIRING AND TERMINALS**

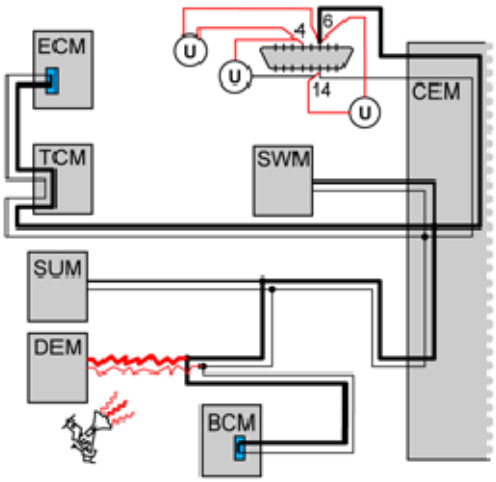

Fig. 163: Checking Traffic Load On CAN Cables
Courtesy of VOLVO CARS CORPORATION

Was a fault detected?

- **YES**

  Refer to **IDENTIFYING A CONTROL MODULE IN THE CAN NETWORK**

- **NO**

  Refer to **CHECKING VOLTAGE-DROP IN CABLE FOR CAN-H AND CAN-L, RESPECTIVELY**

IDENTIFYING A CONTROL MODULE IN THE CAN NETWORK

Fig. 164: Identifying Ignition On Position
Courtesy of VOLVO CARS CORPORATION

For general information about CAN-troubleshooting, see: **GENERAL INFORMATION ABOUT FAULT-TRACING IN THE CAN NETWORK**

HINT: DiCE can be used as fault detection tool if fault is suspected on the CAN-net that cannot be detected with normal troubleshooting. Interference, intermittent faults, faulty messages on the CAN-net (chattering control modules) etc., are examples of such faults. The tool registers fault messages used on the CAN-net. Fault messages may be caused by short intermittent malfunctions on the CAN-net or by a control module sending fault messages. See tools:951 3010 (memory card) as well as associated TJ 20402.

If the load on the CAN network is too high, this may be due to a control module sending faulty messages on the CAN network (known as a disruptive control module). The fault may also be due to an intermittent short-circuit to supply voltage or ground in one of the CAN cables. This results in the control modules on the CAN network starting to send faulty messages. The faults can occur without a diagnostic trouble code (DTC) being stored by the control modules. The voltage can be measured between the CAN cables in order to check the load on the CAN network.

NOTE: **It is not necessarily the control module(s) that stored the diagnostic trouble code (DTC) that is communicating faultily. Faulty messages can come from any control module in the same section of the CAN network. However, faulty communication in one network cannot affect the communication on the other network. In other words, faulty communication on the LS-CAN cannot disrupt communication on the HS-CAN and vice versa.**

- Ignition on.
- Connect OBDII-Box **(951 3015)** to the diagnostics socket.

Check communication/load on CAN-net by measuring voltage between CAN-L and CAN-H. Measure voltage between the following connections on the OBDII-box/diagnostics socket.

- #6 and #14. The average value of the voltage must be approximately 0.6-1.4 V. The voltage shall normally be between 0.55 - 0.90 V. A higher voltage may indicate increased traffic on the CAN-net. In case of fault in communication/too high traffic on the CAN-net, the voltage is considerably higher than the above stated values.

In order to identify which control module has faulty communication, cut the power supply to one control module at a time. Check the voltage in the CAN cables again. The easiest way to cut the power supply is to remove the fuse(s) for the relevant control module. Repeat until the voltage between the CAN wiring drops to the normal level.

NOTE: **When connecting and disconnecting individual control modules, other diagnostic trouble codes (DTCs) may be stored in certain control modules.**

HINT: When the suspected defective control module has been identified, connect and disconnect the supply voltage to the control module a number of times to verify that the malfunction appears and disappears. Switch off the ignition between each check.

NOTE: **Do not cut the power to the central electronic module (CEM) unless it is the last control module left to check.**

A control module that is communicating incorrectly must be replaced. See Repairing and installing/Removing, replacing and installing.

NOTE: **After fault with control modules that interfere with communication, other control modules may remain in Limp-Home (that is, they work with reduced functionality) even when the ignition has been turned off and on a few times. For certain faults in the CAN-net where control modules have stopped communicating, it may help to disconnect/reconnect the battery to "restart" the control module/CAN-net.**

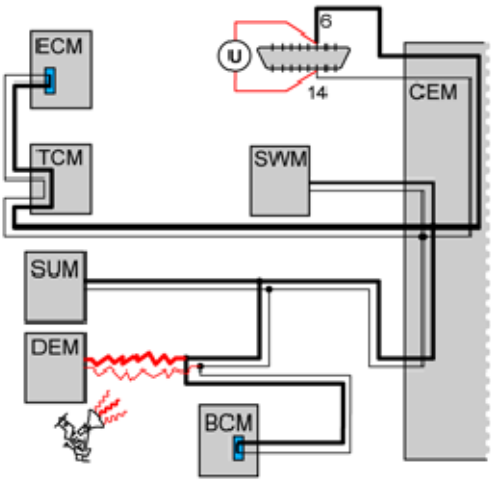

Fig. 165: Checking Communication/Load On CAN-Net Between CAN-L And CAN-H
Courtesy of VOLVO CARS CORPORATION

- **Continue**

  Refer to **VERIFICATION**

VERIFICATION

HINT: After rectifying a fault, a verification should be carried out.

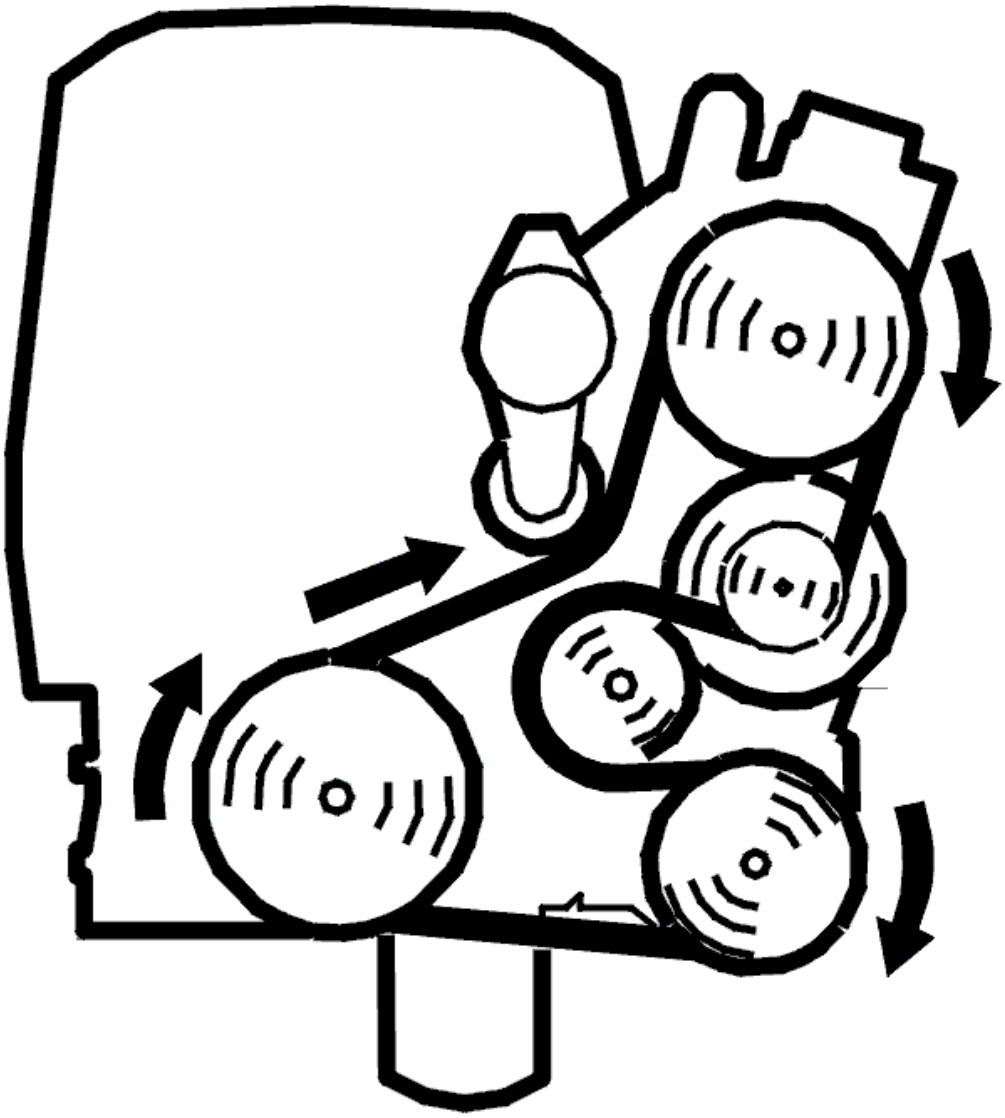

Fig. 166: Belt Routing / Engine Idling - Volvo
Courtesy of VOLVO CARS CORPORATION

Fig. 167: Identifying Ignition On Position
Courtesy of VOLVO CARS CORPORATION

- Reinstall the connectors, components etc.
- Ignition on.

NOTE: **For certain faults in the CAN-net where control modules have stopped communicating, it may help to disconnect/reconnect the battery to "restart" the control module/CAN-net.**

- Erase diagnostic trouble codes (DTCs) in all control modules.
- Ignition off.
- Ignition on.
- Start the vehicle. Allow the vehicle to run for 10 minutes.
- Read out the diagnostic trouble codes in the vehicle via the DIAGNOSTICS tab.

Does the diagnostic trouble code (DTC) for faulty communication return?

- **YES**

  Refer to **INFORMATION**

- **NO**

  OKAY: Troubleshooting has been completed.

CHECKING SHORT-CIRCUITING TO GROUND/VOLTAGE IN CAN-NET

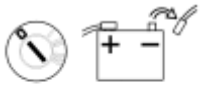

Fig. 168: Ignition Off And Disconnecting Battery Negative Lead
Courtesy of VOLVO CARS CORPORATION

- Ignition off.
- Disconnect the battery negative lead.
- Connect OBDII-Box **(951 3015)** to the diagnostics socket.

  For general information about CAN-troubleshooting, see: **GENERAL INFORMATION ABOUT FAULT-TRACING IN THE CAN NETWORK**

  Checking for a short-circuit to ground

  Measure resistance between the following connections on the OBDII-box/diagnostics socket.

  - #6 and #4 (ground). Measurement is shown in the illustration. The resistance should be above 1 kohms.
  - #14 and #4 (ground). The resistance should be above 1 kohms.

If resistance is below 1 kohms this indicates short-circuiting between the CAN-line and ground.

Checking for a short-circuit to voltage

Measure resistance between the following connections on the OBDII-box/diagnostics socket.

- #6 and #16 (voltage). Measurement is shown in the illustration. The resistance should be above 1 kohms.
- #14 and #16 (voltage). The resistance should be above 1 kohms.

If resistance is below 1 kohms this indicates short-circuiting between the CAN-line and voltage cable.

Twist the cable harness and wiggle connectors where they can be accessed along the cable harness during every measurement, and note if the resistance changes to detect intermittent short-circuits or open circuit.

HINT: Part the CAN-net at suitable points to decide where a short-circuit may be found.

NOTE: After fault with control modules that interfere with communication, other control modules may remain in Limp-Home (that is, they work with reduced functionality) even when the ignition has been turned off and on a few times. For certain faults in the CAN-net where control modules have stopped communicating, it may help to disconnect/reconnect the battery to "restart" the control module/CAN-net.

Remedy wiring as necessary.

Other information

- see **BATTERY, DISCONNECTING**
- see **CHECKING WIRING AND TERMINALS**

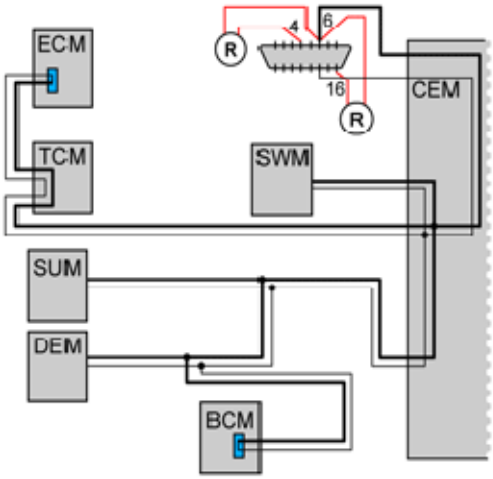

Fig. 169: CAN-Net Communication Diagram
Courtesy of VOLVO CARS CORPORATION

Was a fault detected?

- **YES**

  Refer to **VERIFICATION**

- **NO**

  Refer to **CHECKING THE TRAFFIC LOAD ON THE CAN CABLES**

CHECKING VOLTAGE-DROP IN CABLE FOR CAN-H AND CAN-L, RESPECTIVELY

Fig. 170: Identifying Ignition On Position
Courtesy of VOLVO CARS CORPORATION

- Connect the battery.
- Ignition on.
- Connect OBDII-Box **(951 3015)** to the diagnostics socket.

  For general information about CAN-troubleshooting, see: **GENERAL INFORMATION ABOUT FAULT-TRACING IN THE CAN NETWORK**

  In principle, the voltage measured in each cable in the CAN-net shall be the same at each control module in the network. This means that the voltage-drop in the cable for CAN-H and CAN-L, respectively, between the control modules should be very low. If there is a voltage-difference in the CAN-lines between the diagnostics socket/Central electronic module (CEM) and a control module due to, e. g., contact resistance in a connector or branching, communication may be lost/interfered with.

  Check if there is voltage-drop in the cable for CAN-H and CAN-L between the diagnostics socket/Central electronic module (CEM) and the control module where there is problem with communication.

  Carry out the following:

  Measure voltage between the following connections on the OBDII-box/diagnostics socket.

  - #6 and corresponding connection on relevant control module for CAN-H. The voltage shall be lower than 50 mV.
  - #14 and corresponding connection on relevant control module for CAN-L. The voltage shall be

lower than 50 mV.

If voltage is too high, this indicates too high contact resistance in cable, connector, or branching. Check the circuit between the diagnostics socket and control module in question for contact resistance and oxidation.

NOTE: **After fault with control modules that interfere with communication, other control modules may remain in Limp-Home (that is, they work with reduced functionality) even when the ignition has been turned off and on a few times. For certain faults in the CAN-net where control modules have stopped communicating, it may help to disconnect/reconnect the battery to "restart" the control module/CAN-net.**

Remedy wiring as necessary.

Other information

- see **CHECKING WIRING AND TERMINALS**

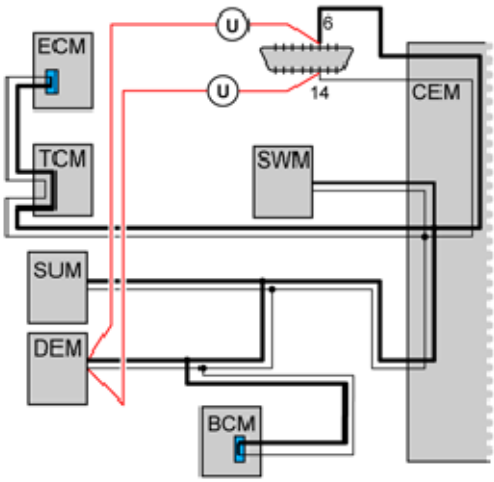

Fig. 171: CAN-Net Communication Diagram
Courtesy of VOLVO CARS CORPORATION

- **Continue**

Refer to **VERIFICATION**

INFORMATION

FAULT-TRACING INFORMATION

The fault should have been detected and remedied. As this is not the case fault-tracing has failed.

Exit fault-tracing for this diagnostic trouble code (DTC) or make another attempt.

CEM-1A67: COMMUNICATION WITH HCM CONTROL MODULE SIGNAL MISSING (B6324S; 2007-2010)

SIGNAL MISSING

CHECKING THE POWER SUPPLY AND GROUND

Check that the fuse for the control module is intact.

Check the power supply and grounding point of the headlight control module (HCM).

Other information

- see **CHECKING THE POWER SUPPLY AND GROUND TERMINAL**
- see **CHECKING WIRING AND TERMINALS**

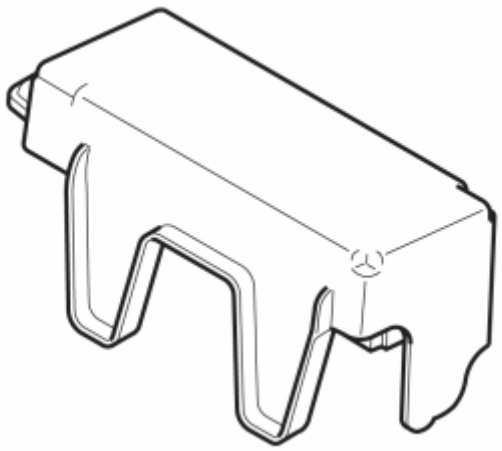

Fig. 172: Identifying Headlight Control Module (HCM)
Courtesy of VOLVO CARS CORPORATION

Was a fault detected?

- **YES**

  Refer to **CHECKING HEADLIGHT CONTROL MODULE (HCM)**

- **NO**

  Refer to **CHECKING COMMUNICATION WITH THE HEADLIGHT CONTROL MODULE (HCM)**

CHECKING COMMUNICATION WITH THE HEADLIGHT CONTROL MODULE (HCM)

Fig. 173: Identifying Ignition On Position
Courtesy of VOLVO CARS CORPORATION

HINT: The CAN communication with the control module is probably OK if the control module ID can be read off. In that case the fault is probably intermittent and will then be more difficult to trace.

- Ignition on.
- Try to communicate with the headlight control module (HCM) by reading off the control module ID.
- Use the VCT2000 (or appropriate scan tool).

Fig. 174: Identifying VCT2000 Diagnostic Tool Symbol In VIDA
Courtesy of VOLVO CARS CORPORATION

- **Continue**

  Refer to **SIGNAL MISSING**

CHECKING HEADLIGHT CONTROL MODULE (HCM)

Fig. 175: Identifying Ignition On Position
Courtesy of VOLVO CARS CORPORATION

HINT: After carrying out the repair, check that the fault has been remedied.

- Ignition off.
- Reinstall the connectors, components etc.
- Ignition on.

Obtain the ID of the headlight control module (HCM) using the VCT2000 (or appropriate scan tool).

Fig. 176: Identifying VCT2000 Diagnostic Tool Symbol In VIDA
Courtesy of VOLVO CARS CORPORATION

Could the control module ID be read off?

- **YES**

  OKAY: Troubleshooting has been completed.

- **NO**

  Refer to **INFORMATION**

SIGNAL MISSING

GENERAL INFORMATION

NOTE: Illustrations shown are only examples.

HINT: For general information about CAN-troubleshooting, see:

- **General about CAN-related diagnostic trouble codes:**

  CEM-DF01 - DF17 can only be stored in Central electronic module (CEM). These diagnostic trouble codes are stored when an electric fault is detected in CAN-lines. Start with these diagnostic trouble codes first.

  CEM-1AXX only stored in Central electronic module (CEM). One diagnostic trouble code for every control module on the CAN-net. These diagnostic trouble codes indicate that Central electronic module (CEM) does not receive any reply from other control modules.

  XXX-E000 (HS-CAN)/E001 (LS-CAN) can be stored in all CAN-connected control modules. These diagnostic trouble codes indicate that the control module has detected interference on the CAN-net.

  XXX-E003 can be stored in all CAN-connected control modules except in Central electronic module (CEM). The control modules on the CAN-net listen for a message (identity number) that is sent out at regular intervals from Central electronic module (CEM). This diagnostic trouble code indicates that the control module has not received any identity number, or that the expected number is not correct. Interference on the CAN-net can also store this diagnostic trouble code.

NOTE: **In case of CAN-related faults, it is likely that a combination of above diagnostic trouble codes occur.**

NOTE: **After fault with control modules that interfere with communication, other control modules may remain in Limp-Home (that is, they work with reduced functionality) even when the ignition has been turned off and on a few times. For certain faults in the CAN-net where control modules have stopped communicating, it may help to disconnect/reconnect the battery to "restart" the control module/CAN-net.**

If a communication diagnostic trouble code can be read from the control module, the malfunction is probably intermittent.

Intermittent fault in the voltage supply and ground to a control module on the CAN network results in the Central electronic module (CEM) storing a diagnostic trouble code (DTC) for an open-circuit in communication with the control module where the voltage supply does not work. There will probably not be a diagnostic trouble code (DTC) in the control module where the open-circuit in the voltage supply occurred as the control module cannot store a diagnostic trouble code (DTC) when it is not supplied with power.

NOTE: **Central electronic module (CEM) should not be replaced in case of CAN-fault, unless troubleshooting reveals that Central electronic module (CEM) has an internal fault.**

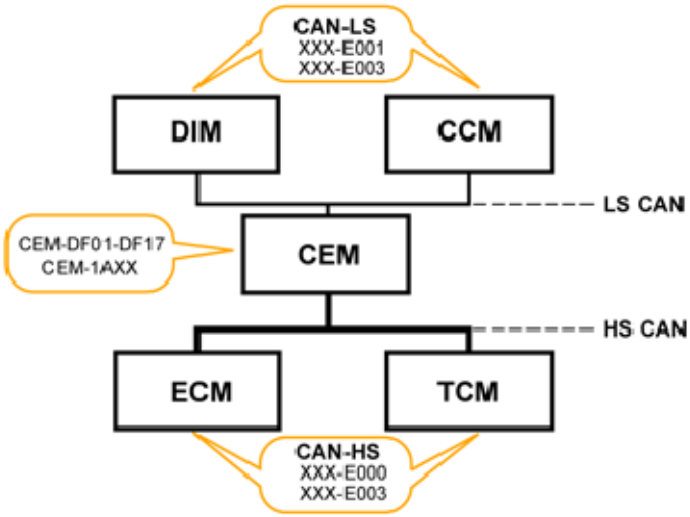

Fig. 177: High-Speed CAN And Low-Speed CAN Communication Diagram
Courtesy of VOLVO CARS CORPORATION

- **Continue**

Refer to **CHECKING RESISTANCE IN CAN-NET**

CHECKING RESISTANCE IN CAN-NET

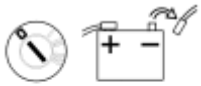

Fig. 178: Ignition Off And Disconnecting Battery Negative Lead
Courtesy of VOLVO CARS CORPORATION

- Ignition off
- Disconnect the battery negative lead
- Connect OBDII-Box **(951 3015)** to the diagnostics socket.

For general information about CAN-troubleshooting, see: **GENERAL INFORMATION ABOUT FAULT-TRACING IN THE CAN NETWORK**

Measure resistance between the following connections on the OBDII-box/diagnostics socket.

- #6 and #14. The resistance should be approx. 55 - 65 ohms.
- If resistance is approx. 120 ohms, this indicates open circuit in the circuit so that only one terminating resistor (120 ohms) has been measured.
- If resistance is above 1 kohms this indicates open circuit/high contact resistance somewhere in the circuit.
- If resistance is below 55 ohms this indicates short-circuiting/contact resistance between the CAN-lines somewhere in the circuit.

HINT: For HS-CAN the terminating resistors are located in Brake control module (BCM) and in Engine control module (ECM).

Twist the cable harness and wiggle connectors where they can be accessed along the cable harness during every measurement, and note if the resistance changes to detect intermittent short-circuits or open circuit.

NOTE: **Resistance measurement measures only main lines in the CAN-net (in circuit where both terminating resistors are found), not branches to certain control modules.**

Open circuit on branching without a terminating resistor cannot be detected with this measurement. However, short-circuiting on a branch can be detected. To measure resistance in the CAN-net to control modules located in a branching of their own, the measurement shall be done against the CAN-net at that control module. The values shall be as above.

NOTE: **After fault with control modules that interfere with communication, other control modules may remain in Limp-Home (that is, they work with reduced functionality) even when the ignition has been turned off and on a few times. For certain faults in the CAN-net where control modules have**

stopped communicating, it may help to disconnect/reconnect the battery to "restart" the control module/CAN-net.

Remedy wiring as necessary.

Other information

- see **BATTERY, DISCONNECTING**
- see **CHECKING WIRING AND TERMINALS**

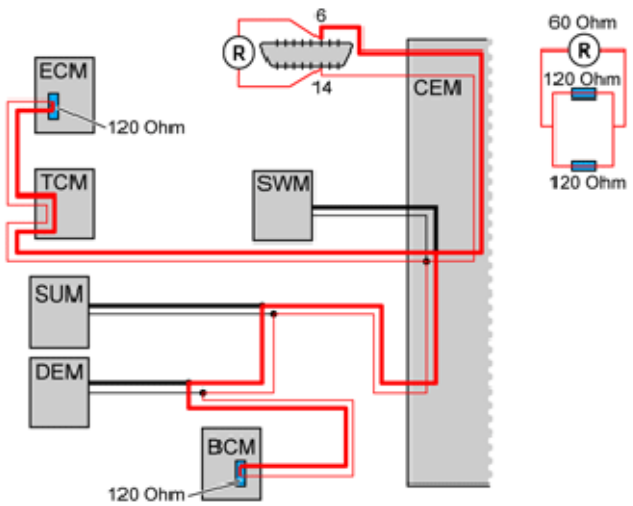

Fig. 179: Checking Resistance In CAN Lines
Courtesy of VOLVO CARS CORPORATION

Was a fault detected?

- **YES**

  Refer to **VERIFICATION**

- **NO**

  Refer to **CHECKING SHORT-CIRCUITING TO GROUND/VOLTAGE IN CAN-NET**

CHECKING THE TRAFFIC LOAD ON THE CAN CABLES

Fig. 180: Identifying Ignition On Position

Courtesy of VOLVO CARS CORPORATION

- Connect the battery
- Ignition on.
- Connect OBDII-Box **(951 3015)** to the diagnostics socket.

For general information about CAN-troubleshooting, see: **GENERAL INFORMATION ABOUT FAULT-TRACING IN THE CAN NETWORK**

Faults in the CAN network may be due to a control module sending faulty messages that disrupt normal communication. When messages are sent incorrectly, this results in a considerable increase in the amount of traffic on the CAN network. Check the load by measuring the average voltage value on the CAN cables in relation to ground.

Measure voltage between the following connections on the OBDII-box/diagnostics socket.

- #6 and #4 (ground). The voltage should be approx:2, 8 - 3, 2 V.
- #14 and #4 (ground). The voltage should be approx:1, 8 - 2, 2 V.
- #6 and #14. The voltage shall be between approx. 0.55-1.4 V. The voltage shall normally be between 0.55 - 0.90 V. A higher voltage may indicate increased traffic on the CAN-net. In case of fault in communication/too high traffic on the CAN-net, the voltage is considerably higher than the above stated values.

NOTE: After fault with control modules that interfere with communication, other control modules may remain in Limp-Home even when the ignition has been turned off and on a few times. For certain faults in the CAN-net where control modules have stopped communicating, it may help to disconnect/reconnect the battery to "restart" the control module/CAN-net.

HINT: DiCE can be used as fault detection tool if fault is suspected on the CAN-net that cannot be detected with normal troubleshooting. Interference, intermittent faults, faulty messages on the CAN-net etc., are examples of such faults. The tool registers fault messages used on the CAN-net. Fault messages may be caused by short intermittent malfunctions on the CAN-net or by a control module sending fault messages. See tools:951 3010 as well as associated TJ 20402.

- Ignition on.
- Connect DiCE to the diagnostics socket.
- Note the blue LED-indicator. The indicator flashes to show detection of fault messages.

NOTE: Certain interference may occur without any real fault

Cable fault

- Shake the cables lightly and pull lightly on the connections during the check to locate any fault. Note the blue LED-indicator.

"Chatting" control modules

- "Chatting" control modules may be difficult to find and troubleshooting may take time. Let the vehicle stand with DiCE connected for an extended time period. Afterwards, activate functions to provoke a malfunction. It may take up to several hours before the fault messages are sent. When the indicator starts to flash, remove the fuse for one control module at a time until the indicator stops flashing. When the indicator stops flashing, restore the fuse for the relevant control module and check that the indicator starts to flash again. Then it is likely that the problem is identified.

Remedy wiring as necessary.

Other information

- see **BATTERY, DISCONNECTING**
- see **CHECKING WIRING AND TERMINALS**

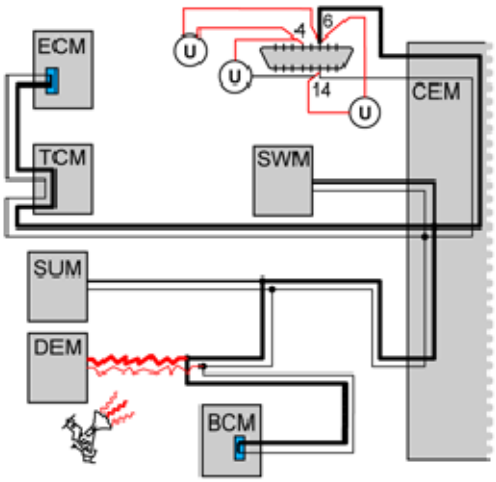

Fig. 181: Checking Traffic Load On CAN Cables
Courtesy of VOLVO CARS CORPORATION

Was a fault detected?

- **YES**

  Refer to **IDENTIFYING A CONTROL MODULE IN THE CAN NETWORK**

- **NO**

  Refer to **CHECKING VOLTAGE-DROP IN CABLE FOR CAN-H AND CAN-L, RESPECTIVELY**

IDENTIFYING A CONTROL MODULE IN THE CAN NETWORK

Fig. 182: Identifying Ignition On Position
Courtesy of VOLVO CARS CORPORATION

For general information about CAN-troubleshooting, see: **GENERAL INFORMATION ABOUT FAULT-TRACING IN THE CAN NETWORK**

HINT: DiCE can be used as fault detection tool if fault is suspected on the CAN-net that cannot be detected with normal troubleshooting. Interference, intermittent faults, faulty messages on the CAN-net (chattering control modules) etc., are examples of such faults. The tool registers fault messages used on the CAN-net. Fault messages may be caused by short intermittent malfunctions on the CAN-net or by a control module sending fault messages. See tools:951 3010 (memory card) as well as associated TJ 20402.

If the load on the CAN network is too high, this may be due to a control module sending faulty messages on the CAN network (known as a disruptive control module). The fault may also be due to an intermittent short-circuit to supply voltage or ground in one of the CAN cables. This results in the control modules on the CAN network starting to send faulty messages. The faults can occur without a diagnostic trouble code (DTC) being stored by the control modules. The voltage can be measured between the CAN cables in order to check the load on the CAN network.

NOTE: **It is not necessarily the control module(s) that stored the diagnostic trouble code (DTC) that is communicating faultily. Faulty messages can come from any control module in the same section of the CAN network. However, faulty communication in one network cannot affect the communication on the other network. In other words, faulty communication on the LS-CAN cannot disrupt communication on the HS-CAN and vice versa.**

- Ignition on.
- Connect OBDII-Box **(951 3015)** to the diagnostics socket.

Check communication/load on CAN-net by measuring voltage between CAN-L and CAN-H. Measure voltage between the following connections on the OBDII-box/diagnostics socket.

- #6 and #14. The average value of the voltage must be approximately 0.6-1.4 V. The voltage shall normally be between 0.55 - 0.90 V. A higher voltage may indicate increased traffic on the CAN-net. In case of fault in communication/too high traffic on the CAN-net, the voltage is considerably higher than the above stated values.

In order to identify which control module has faulty communication, cut the power supply to one control module at a time. Check the voltage in the CAN cables again. The easiest way to cut the power supply is to remove the fuse(s) for the relevant control module. Repeat until the voltage between the CAN wiring drops to the normal level.

NOTE: **When connecting and disconnecting individual control modules, other diagnostic trouble codes (DTCs) may be stored in certain control modules.**

HINT: When the suspected defective control module has been identified, connect and disconnect the supply voltage to the control module a number of times to verify that the malfunction appears and disappears. Switch off the ignition between each check.

NOTE: **Do not cut the power to the central electronic module (CEM) unless it is the last control module left to check.**

A control module that is communicating incorrectly must be replaced. See Repairing and installing/Removing, replacing and installing.

NOTE: **After fault with control modules that interfere with communication, other control modules may remain in Limp-Home (that is, they work with reduced functionality) even when the ignition has been turned off and on a few times. For certain faults in the CAN-net where control modules have stopped communicating, it may help to disconnect/reconnect the battery to "restart" the control module/CAN-net.**

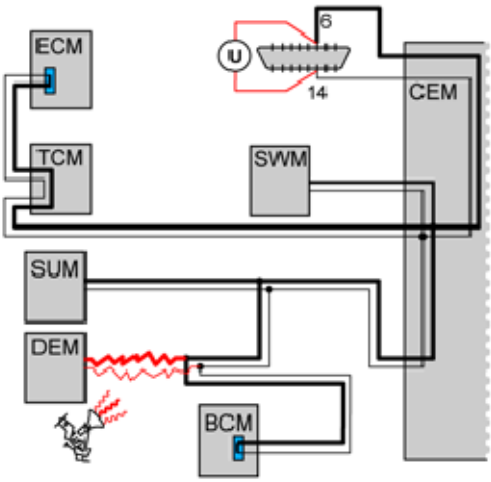

Fig. 183: Checking Communication/Load On CAN-Net Between CAN-L And CAN-H
Courtesy of VOLVO CARS CORPORATION

- **Continue**

  Refer to **VERIFICATION**

VERIFICATION

HINT: After rectifying a fault, a verification should be carried out.

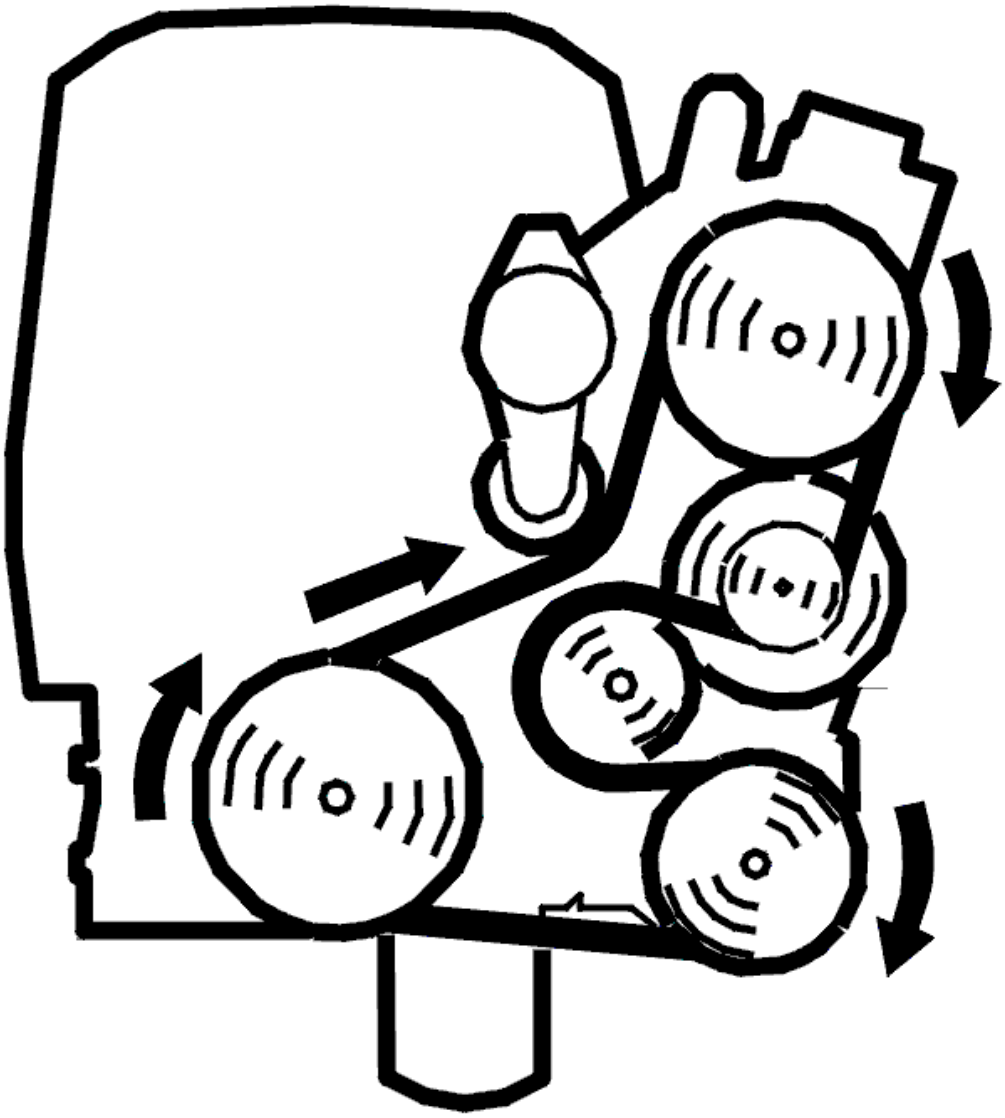

Fig. 184: Belt Routing / Engine Idling - Volvo
Courtesy of VOLVO CARS CORPORATION

Fig. 185: Identifying Ignition On Position
Courtesy of VOLVO CARS CORPORATION

- Reinstall the connectors, components etc.
- Ignition on.

NOTE: **For certain faults in the CAN-net where control modules have stopped communicating, it may help to disconnect/reconnect the battery to "restart" the control module/CAN-net.**

- Erase diagnostic trouble codes (DTCs) in all control modules.
- Ignition off.
- Ignition on.
- Start the vehicle. Allow the vehicle to run for 10 minutes.
- Read out the diagnostic trouble codes in the vehicle via the DIAGNOSTICS tab.

Does the diagnostic trouble code (DTC) for faulty communication return?

- **YES**

  Refer to **INFORMATION**

- **NO**

  OKAY: Troubleshooting has been completed.

CHECKING SHORT-CIRCUITING TO GROUND/VOLTAGE IN CAN-NET

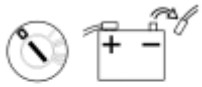

Fig. 186: Ignition Off And Disconnecting Battery Negative Lead
Courtesy of VOLVO CARS CORPORATION

- Ignition off.
- Disconnect the battery negative lead.
- Connect OBDII-Box **(951 3015)** to the diagnostics socket.

  For general information about CAN-troubleshooting, see: **GENERAL INFORMATION ABOUT FAULT-TRACING IN THE CAN NETWORK**

  Checking for a short-circuit to ground

  Measure resistance between the following connections on the OBDII-box/diagnostics socket.

  - #6 and #4 (ground). Measurement is shown in the illustration. The resistance should be above 1 kohms.
  - #14 and #4 (ground). The resistance should be above 1 kohms.

If resistance is below 1 kohms this indicates short-circuiting between the CAN-line and ground.

Checking for a short-circuit to voltage

Measure resistance between the following connections on the OBDII-box/diagnostics socket.

- #6 and #16 (voltage). Measurement is shown in the illustration. The resistance should be above 1 kohms.
- #14 and #16 (voltage). The resistance should be above 1 kohms.

If resistance is below 1 kohms this indicates short-circuiting between the CAN-line and voltage cable.

Twist the cable harness and wiggle connectors where they can be accessed along the cable harness during every measurement, and note if the resistance changes to detect intermittent short-circuits or open circuit.

HINT: Part the CAN-net at suitable points to decide where a short-circuit may be found.

NOTE: After fault with control modules that interfere with communication, other control modules may remain in Limp-Home (that is, they work with reduced functionality) even when the ignition has been turned off and on a few times. For certain faults in the CAN-net where control modules have stopped communicating, it may help to disconnect/reconnect the battery to "restart" the control module/CAN-net.

Remedy wiring as necessary.

Other information

- see **BATTERY, DISCONNECTING**
- see **CHECKING WIRING AND TERMINALS**

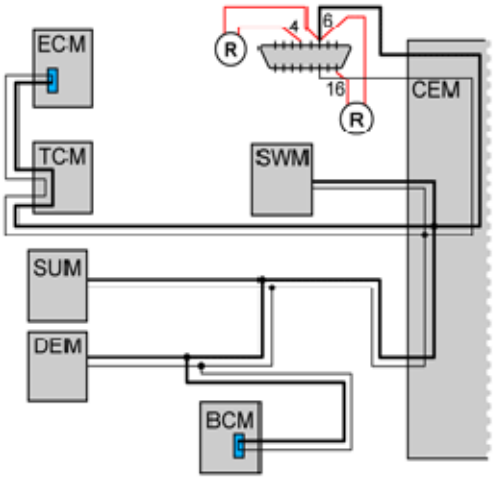

Fig. 187: CAN-Net Communication Diagram
Courtesy of VOLVO CARS CORPORATION

Was a fault detected?

- **YES**

  Refer to **VERIFICATION**

- **NO**

  Refer to **CHECKING THE TRAFFIC LOAD ON THE CAN CABLES**

CHECKING VOLTAGE-DROP IN CABLE FOR CAN-H AND CAN-L, RESPECTIVELY

Fig. 188: Identifying Ignition On Position
Courtesy of VOLVO CARS CORPORATION

- Connect the battery.
- Ignition on.
- Connect OBDII-Box **(951 3015)** to the diagnostics socket.

  For general information about CAN-troubleshooting, see: **GENERAL INFORMATION ABOUT FAULT-TRACING IN THE CAN NETWORK**

  In principle, the voltage measured in each cable in the CAN-net shall be the same at each control module in the network. This means that the voltage-drop in the cable for CAN-H and CAN-L, respectively, between the control modules should be very low. If there is a voltage-difference in the CAN-lines between the diagnostics socket/Central electronic module (CEM) and a control module due to, e. g., contact resistance in a connector or branching, communication may be lost/interfered with.

  Check if there is voltage-drop in the cable for CAN-H and CAN-L between the diagnostics socket/Central electronic module (CEM) and the control module where there is problem with communication.

  Carry out the following:

  Measure voltage between the following connections on the OBDII-box/diagnostics socket.

  - #6 and corresponding connection on relevant control module for CAN-H. The voltage shall be lower than 50 mV.
  - #14 and corresponding connection on relevant control module for CAN-L. The voltage shall be

lower than 50 mV.

If voltage is too high, this indicates too high contact resistance in cable, connector, or branching. Check the circuit between the diagnostics socket and control module in question for contact resistance and oxidation.

NOTE: **After fault with control modules that interfere with communication, other control modules may remain in Limp-Home (that is, they work with reduced functionality) even when the ignition has been turned off and on a few times. For certain faults in the CAN-net where control modules have stopped communicating, it may help to disconnect/reconnect the battery to "restart" the control module/CAN-net.**

Remedy wiring as necessary.

Other information

- see **CHECKING WIRING AND TERMINALS**

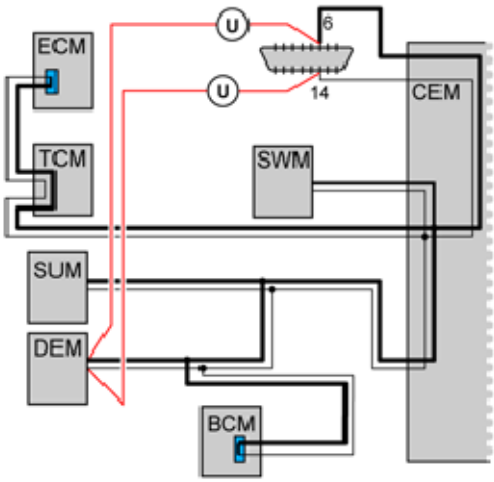

Fig. 189: CAN-Net Communication Diagram
Courtesy of VOLVO CARS CORPORATION

- **Continue**

Refer to **VERIFICATION**

INFORMATION

FAULT-TRACING INFORMATION

The fault should have been detected and remedied. As this is not the case fault-tracing has failed.

Exit fault-tracing for this diagnostic trouble code (DTC) or make another attempt.

CEM-1A67: COMMUNICATION WITH HCM CONTROL MODULE SIGNAL MISSING (B6324S5; 2011-2012)

SIGNAL MISSING

see **SIGNAL MISSING**

CEM-1A67: COMMUNICATION WITH HCM CONTROL MODULE SIGNAL MISSING (B8444S; 2007-2011)

SIGNAL MISSING

see **SIGNAL MISSING**

CEM-1C01: L SIGNAL. SIGNAL TOO HIGH. INTERMITTENT FAULT (2003-2004)

DIAGNOSTIC TROUBLE CODE (DTC) INFORMATION

Condition

Diagnostic trouble code (DTC) CEM-1C01 is stored if the control module registers that the L signal is high or missing, or that a regulator fault has occurred.

Substitute Value

None.

Possible Source

- The generator (GEN) is not charging because of a missing energy source, a faulty central electronic module or faulty diode.

Fault symptom[s]

- The "Generator not charging" warning lamp is lit when the engine is running
- The "Generator not charging" warning lamp is not lit when the ignition is switched on
- The battery discharges
- Low rotation speed in the starter motor.

SIGNAL TOO HIGH. INTERMITTENT FAULT

INTERMITTENT FAULT

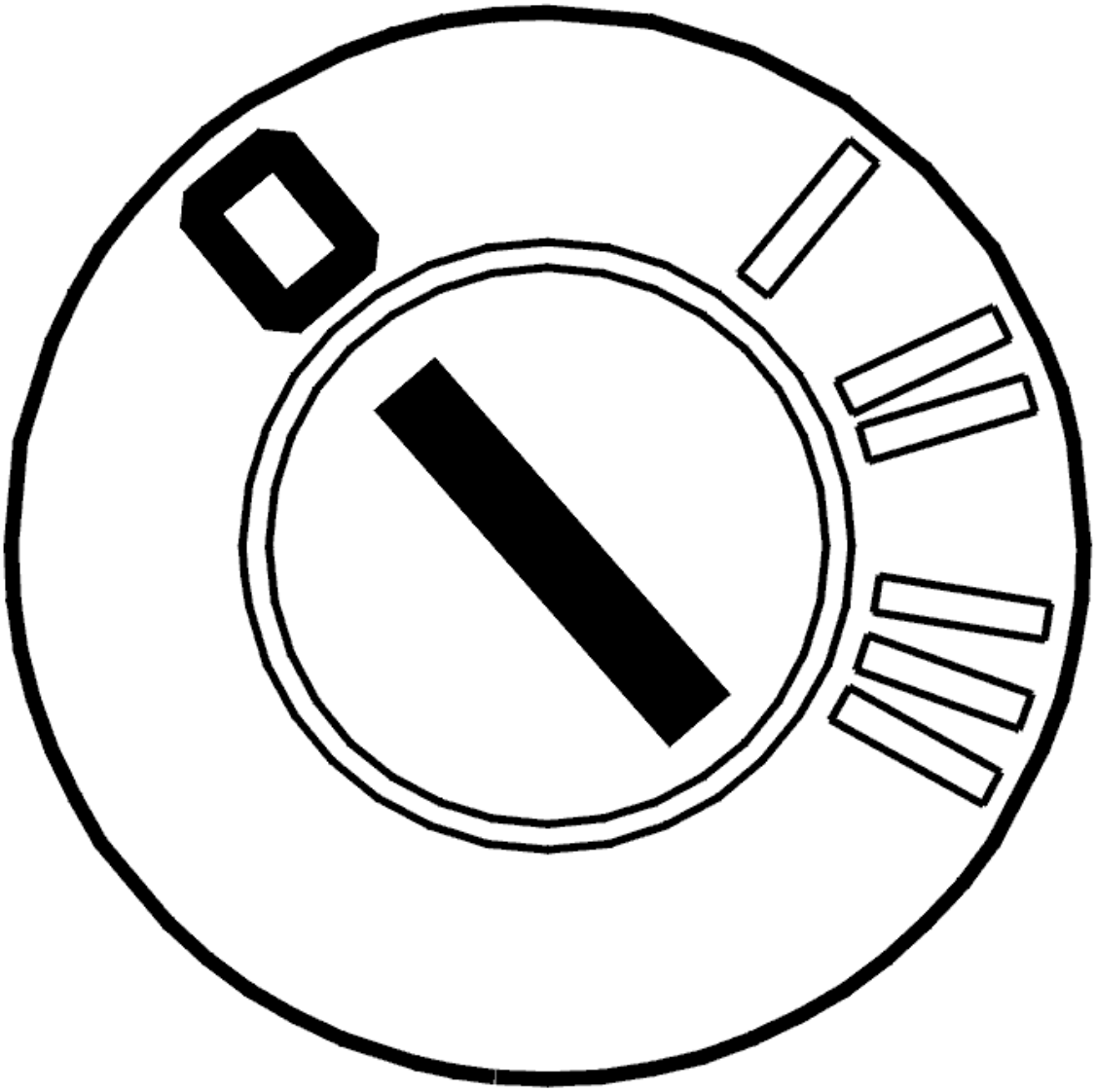

Fig. 190: Identifying Ignition OFF
Courtesy of VOLVO CARS CORPORATION

- Ignition off.

  Check the signal cable between central electronic module (CEM) terminal #5A and generator (GEN) terminal #1B (the red / white cable with flat pin). Check for a short-circuit to supply voltage according to **SHORT-CIRCUIT TO SUPPLY VOLTAGE, INTERMITTENT FAULTS** . Check for an open-circuit according to **OPEN-CIRCUIT, INTERMITTENT FAULTS** .

  Remedy as necessary.

  Other information:

  - To connect the breakout box, see **CONNECTING THE BREAKOUT BOX** .

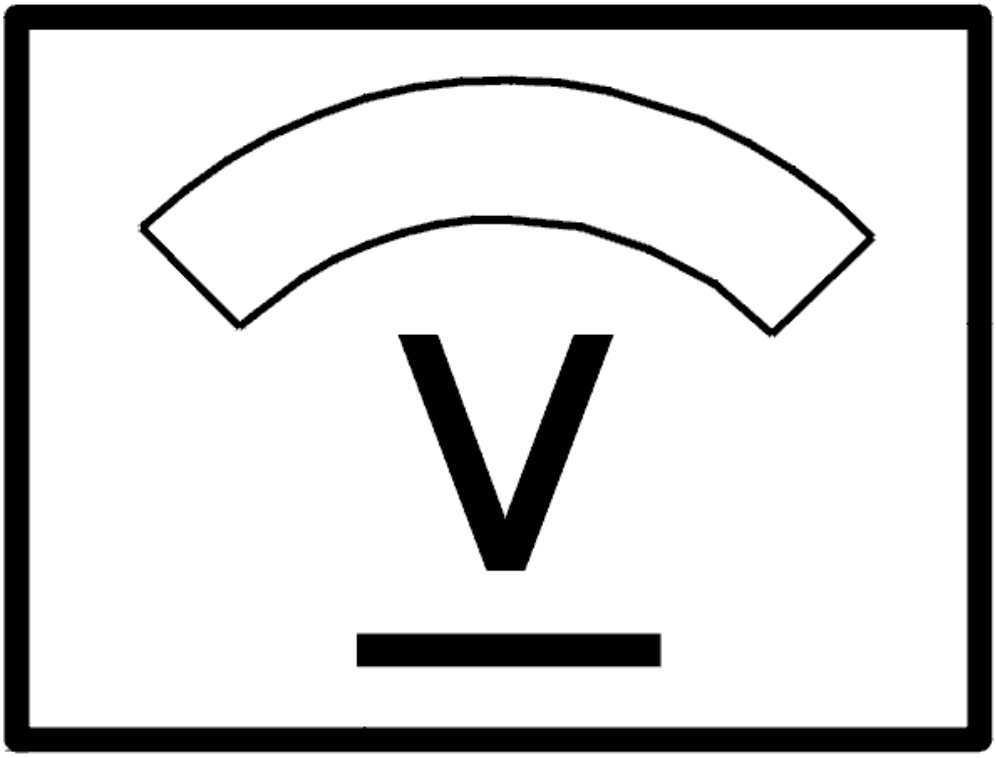

Fig. 191: Identifying Voltage Display
Courtesy of VOLVO CARS CORPORATION

- **Continue**

  Refer to **INFORMATION**

INFORMATION

FAULT-TRACING INFORMATION

If the fault is intermittent, do not verify fault-tracing if the fault does not recur.

It is possible to view the information again, or leave fault-tracing for this diagnostic trouble code (DTC).

CEM-1C01: L SIGNAL. SIGNAL TOO HIGH. PERMANENT FAULT (2003-2004)

DIAGNOSTIC TROUBLE CODE (DTC) INFORMATION

see **DIAGNOSTIC TROUBLE CODE (DTC) INFORMATION**

SIGNAL TOO HIGH OR SIGNAL MISSING. PERMANENT FAULT

CHECKING THE SIGNAL CABLE

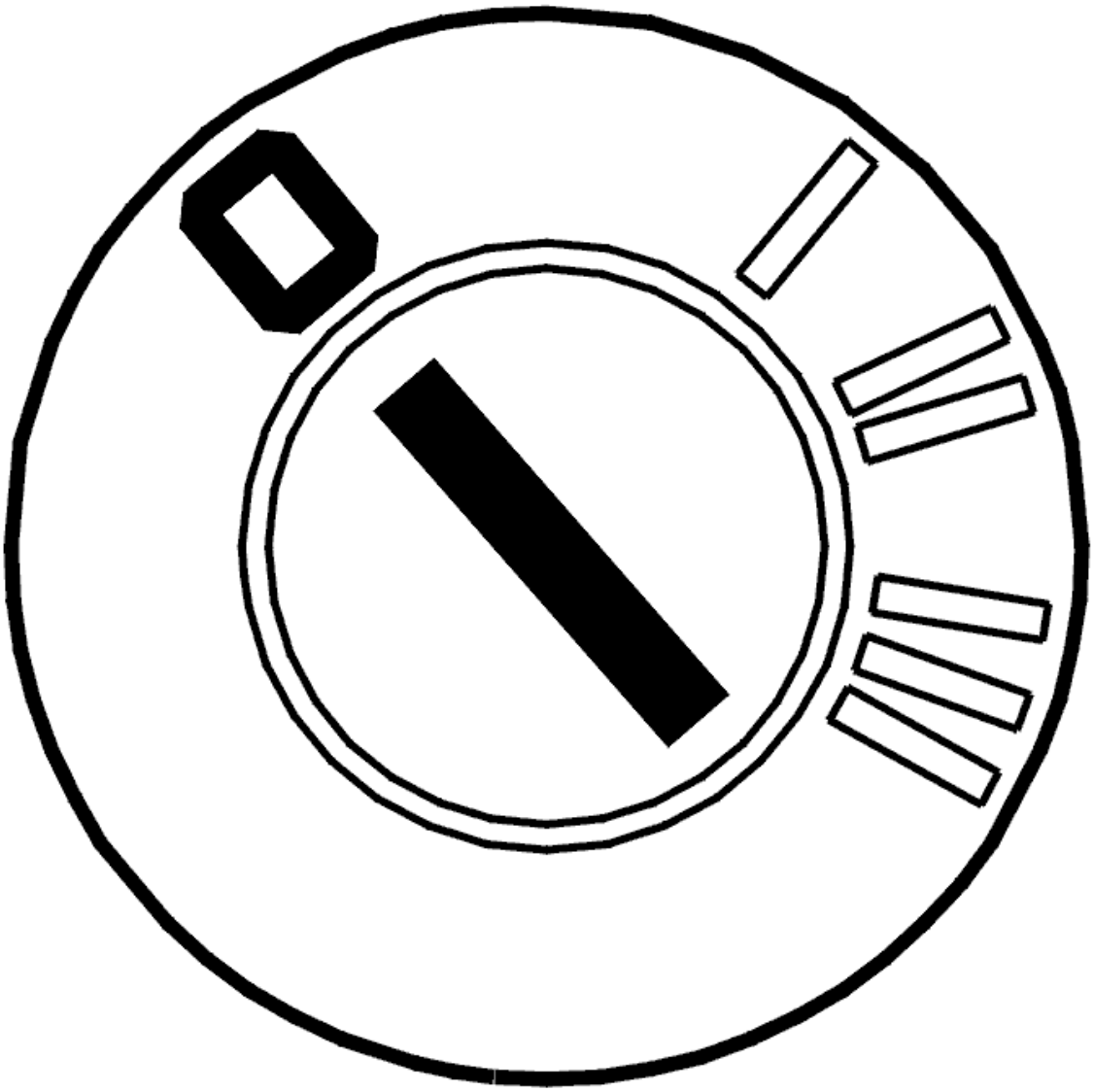

Fig. 192: Identifying Ignition OFF
Courtesy of VOLVO CARS CORPORATION

- Ignition off
- Disconnect the 20-pin connector (group A) from the central electronic module (CEM)
- Disconnect the 1-pin connector from the generator (GEN) (1B).

Check the signal cable between central electronic module (CEM) terminal #5A and generator (GEN) terminal #1B (the red / white cable with flat pin). Check for a short-circuit to supply voltage. Check for an open-circuit.

In the event of an open-circuit, also check connectors 54/1 and 54/3.

Remedy as necessary.

Other information:

- For -2004, see: **CENTRAL ELECTRONIC MODULE (CEM), REPLACING**
- For 2005-, see: **CENTRAL ELECTRONIC MODULE (CEM), REPLACING** .
- To connect the breakout box, see **CONNECTING THE BREAKOUT BOX**
- For B5xx4T, see **GENERATOR (GEN), REPLACING** .
- For B6xx4T, - 2004, see **GENERATOR (GEN), REPLACING** .
- For B6xx4T, 2005 -, see **GENERATOR (GEN), REPLACING** .
- For B8444S, 2005 -, see **GENERATOR (GEN), REPLACEMENT** .
- see **CHECKING WIRING AND TERMINALS** .

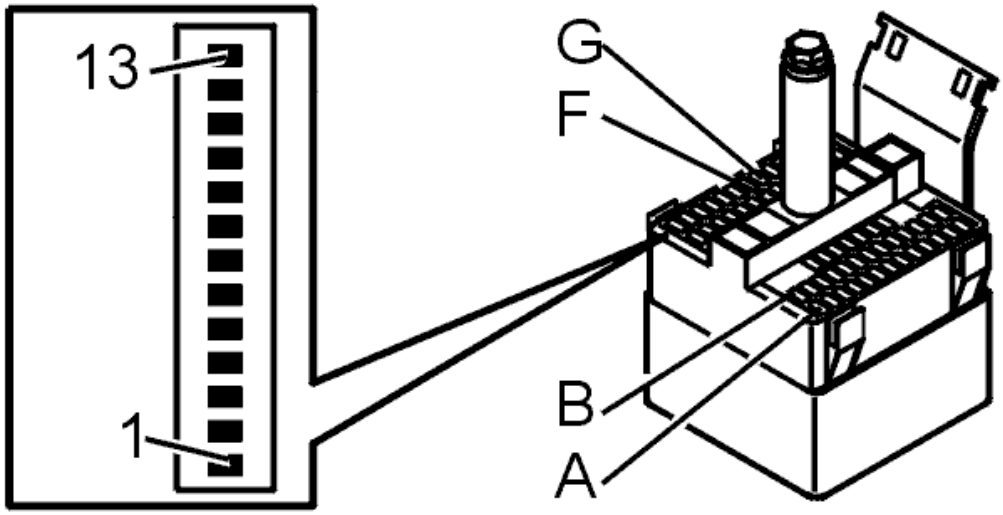

Fig. 193: Identifying Connector Terminals
Courtesy of VOLVO CARS CORPORATION

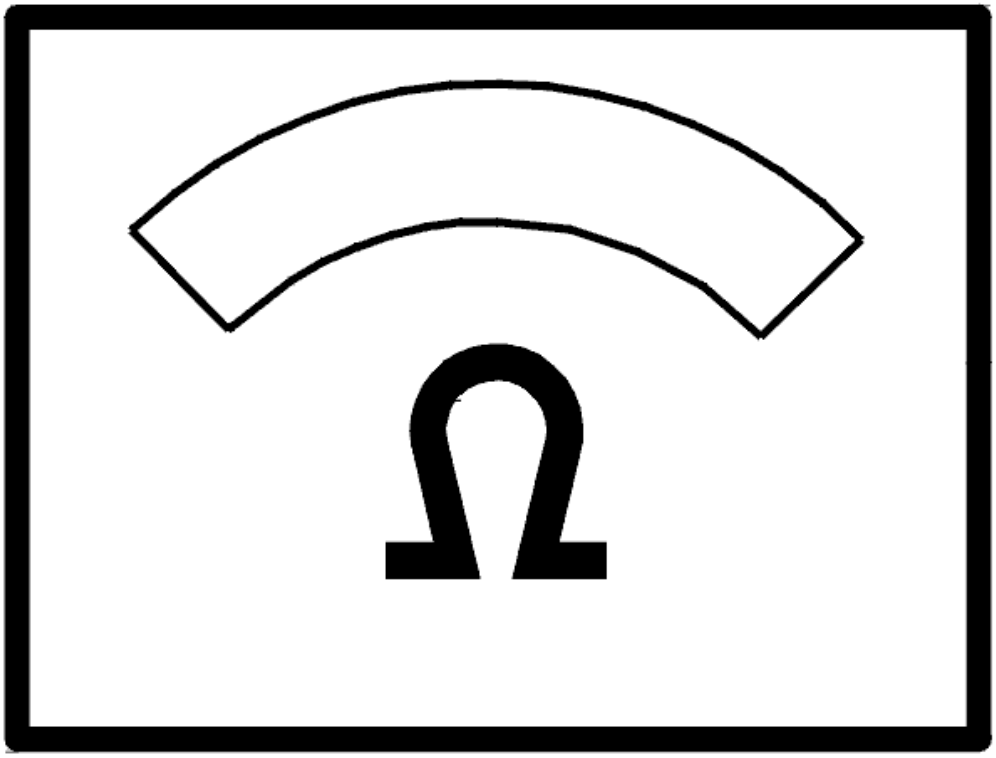

Fig. 194: Identifying Ohm Meter
Courtesy of VOLVO CARS CORPORATION

Is the signal cable OK?

- **YES**

  Refer to **REPLACING THE COMPONENT**

- **NO**

  Refer to **VERIFICATION**

REPLACING THE COMPONENT

Replace the governor.

- For B5xx4T, - 2004, see **GOVERNOR, REPLACING** .
- For B5xx4T, 2005 -, see **REGULATOR, REPLACING** .
- For B6xx4T, - 2004, see **GOVERNOR, REPLACING** .
- For B6xx4T, 2005 -, see **REGULATOR, REPLACING** .
- For B8444S, 2005 -, see **GOVERNOR, REPLACEMENT** .

- **Continue**

  Refer to **VERIFICATION**

VERIFICATION

VERIFICATION

HINT: After the repair it is necessary to check that the fault has been rectified.

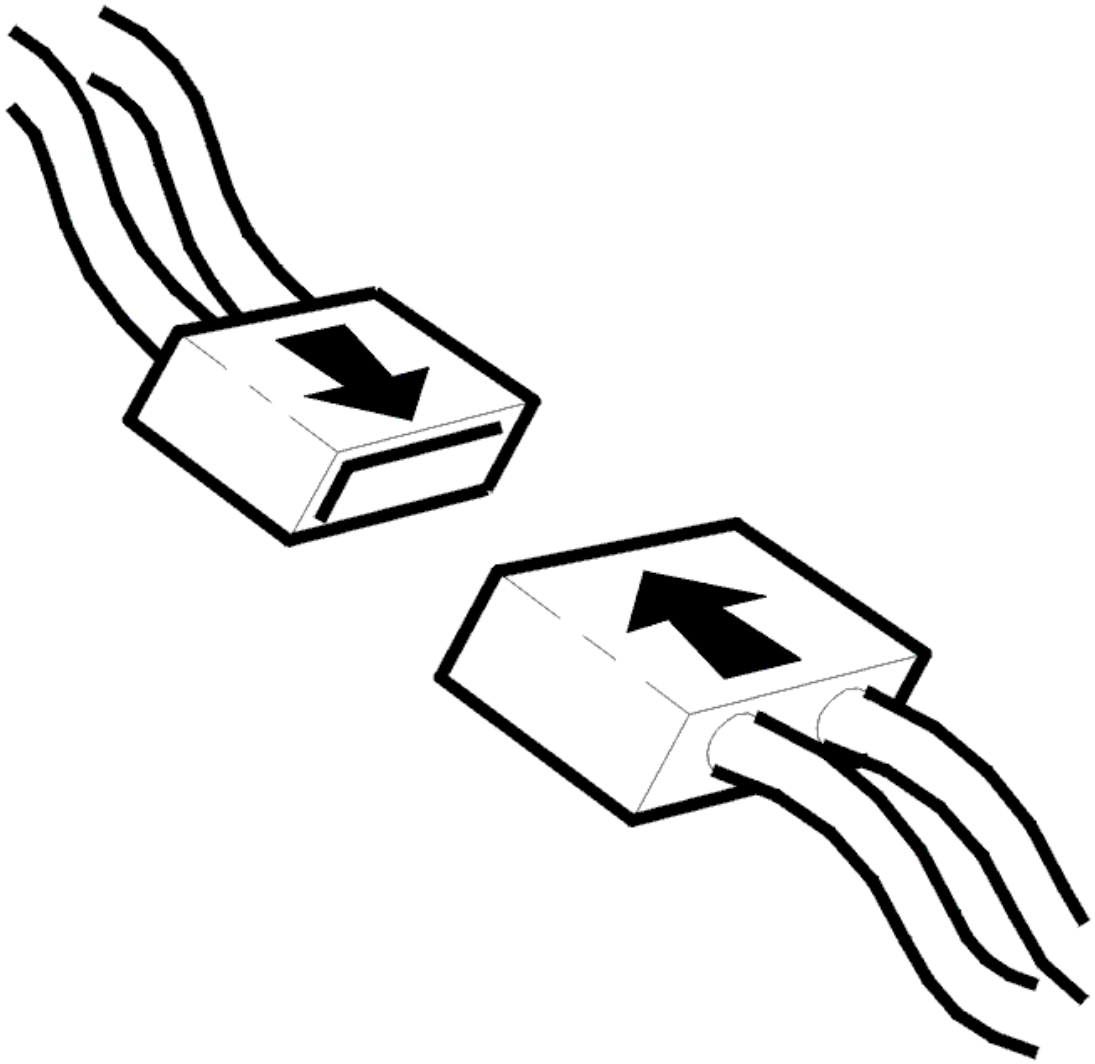

Fig. 195: Connecting Connector
Courtesy of VOLVO CARS CORPORATION

- Ignition off.
- Connect connectors, install components, etc.

  Switch ignition on and off several times. Check that diagnostic trouble code status has changed from Permanent to Intermittent.

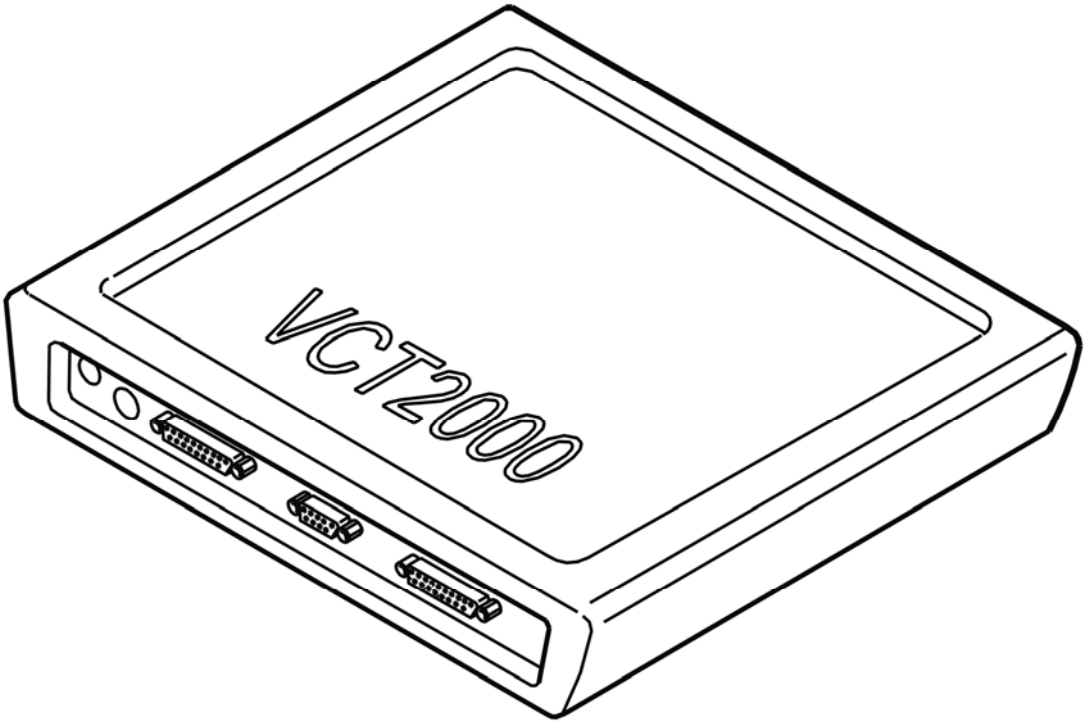

Fig. 196: Identifying VCT2000 Diagnostic Tool Symbol In VIDA
Courtesy of VOLVO CARS CORPORATION

Is the status of the diagnostic trouble code Intermittent?

- **YES**

  VERIFIED: Troubleshooting has been completed.

- **NO**

  Refer to **INFORMATION**

INFORMATION

FAULT-TRACING INFORMATION

The fault should have been detected and remedied. As this is not the case fault-tracing has failed.

Exit fault-tracing for this diagnostic trouble code (DTC) or make another attempt.

CEM-1C02: L SIGNAL. SIGNAL TOO LOW. INTERMITTENT FAULT (2003-2004)

DIAGNOSTIC TROUBLE CODE (DTC) INFORMATION

Condition

Diagnostic trouble code (DTC) CEM-1C02 is stored if the control module registers that the L signal is low or that the generator (GEN) is not charging.

Substitute Value

None

Possible Source

- The generator (GEN) is not charging because of a missing energy source, a broken belt or faulty diode.

Fault symptom[s]

- Low rotation speed in the starter motor
- The "Generator not charging" warning lamp is not lit when the ignition is switched on
- The battery discharges.

SIGNAL TOO LOW. INTERMITTENT FAULT

INTERMITTENT FAULT

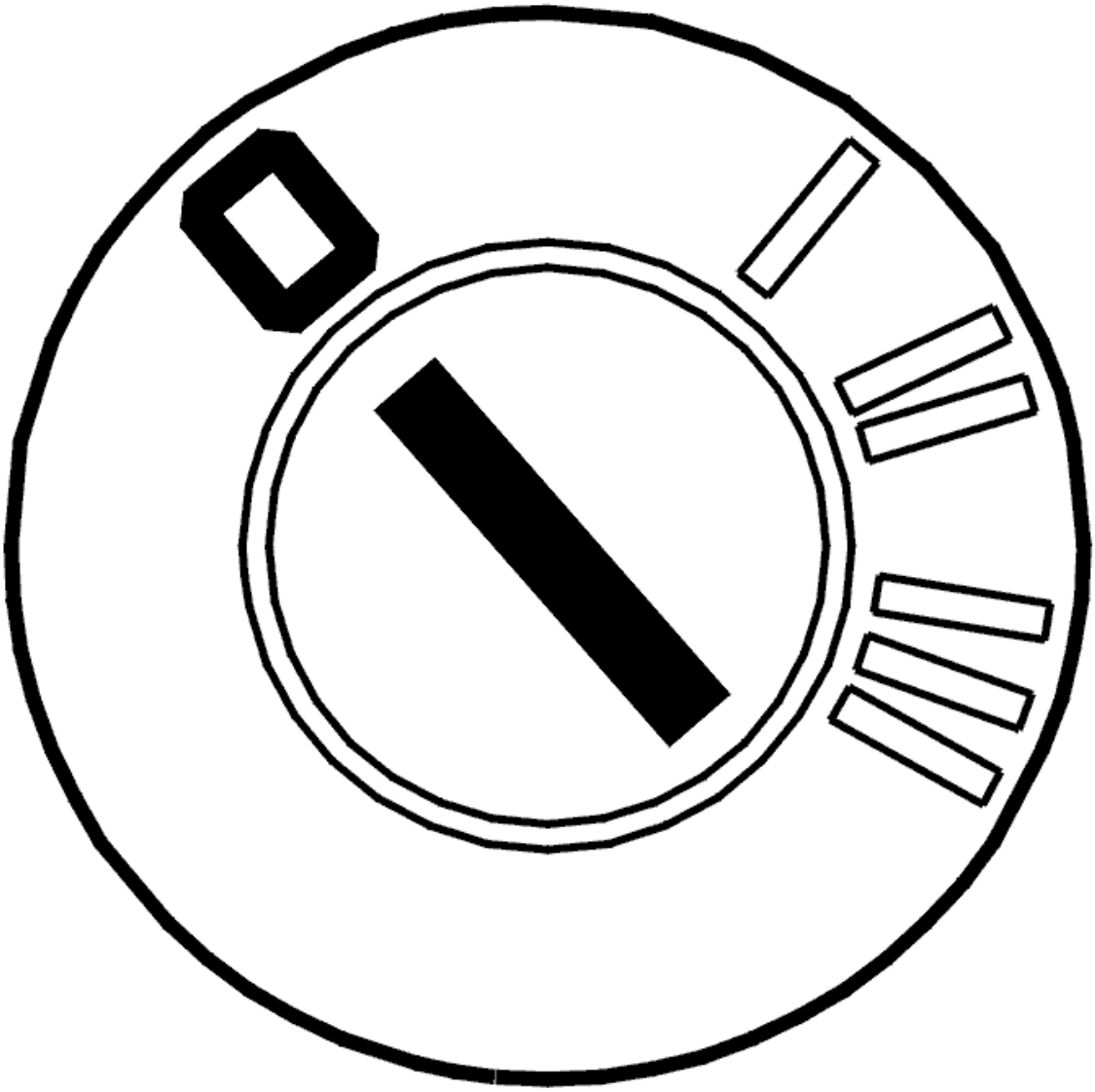

Fig. 197: Identifying Ignition OFF
Courtesy of VOLVO CARS CORPORATION

- Ignition off.

  Check the signal cable between central electronic module (CEM) terminal #5A and generator (GEN) terminal #1B (the red / white cable with flat pin) for a short-circuit to ground according to **SHORT-CIRCUIT TO GROUND, INTERMITTENT FAULTS** .

  Remedy as necessary.

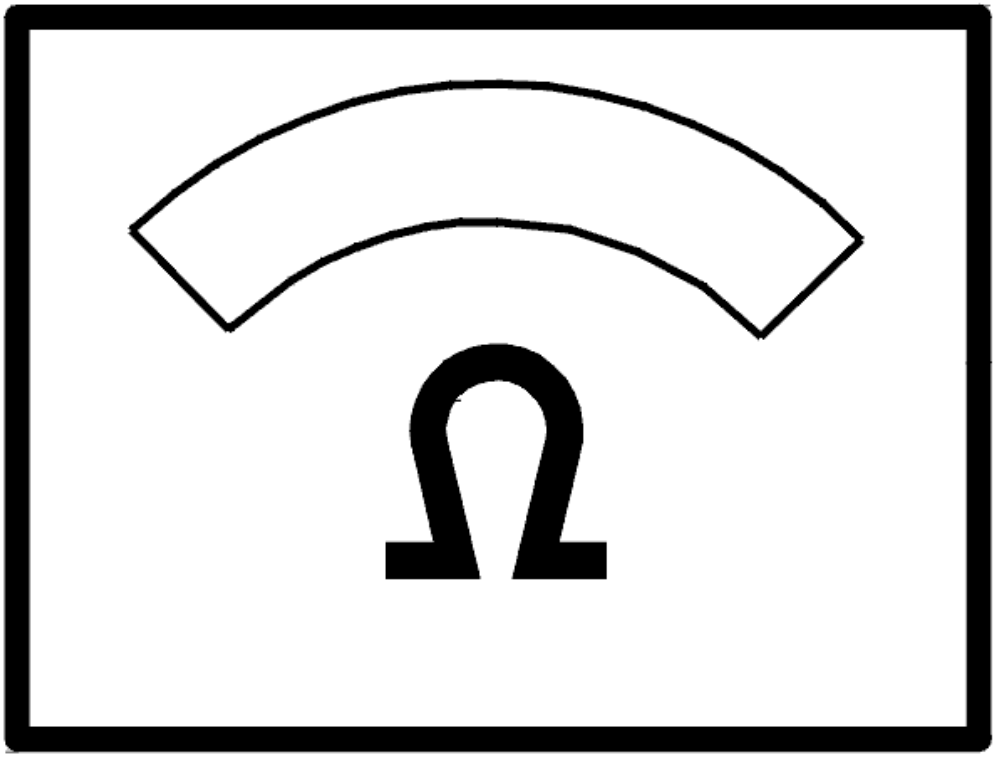

Fig. 198: Identifying Ohm Meter
Courtesy of VOLVO CARS CORPORATION

- **Continue**

  Refer to **INFORMATION**

INFORMATION

FAULT-TRACING INFORMATION

If the fault is intermittent, do not verify fault-tracing if the fault does not recur.

It is possible to view the information again, or leave fault-tracing for this diagnostic trouble code (DTC).

CEM-1C02: L SIGNAL. SIGNAL TOO LOW. PERMANENT FAULT (2003-2004)

DIAGNOSTIC TROUBLE CODE (DTC) INFORMATION

see **DIAGNOSTIC TROUBLE CODE (DTC) INFORMATION**

SIGNAL TOO LOW. PERMANENT FAULT

CHECKING THE SIGNAL CABLE

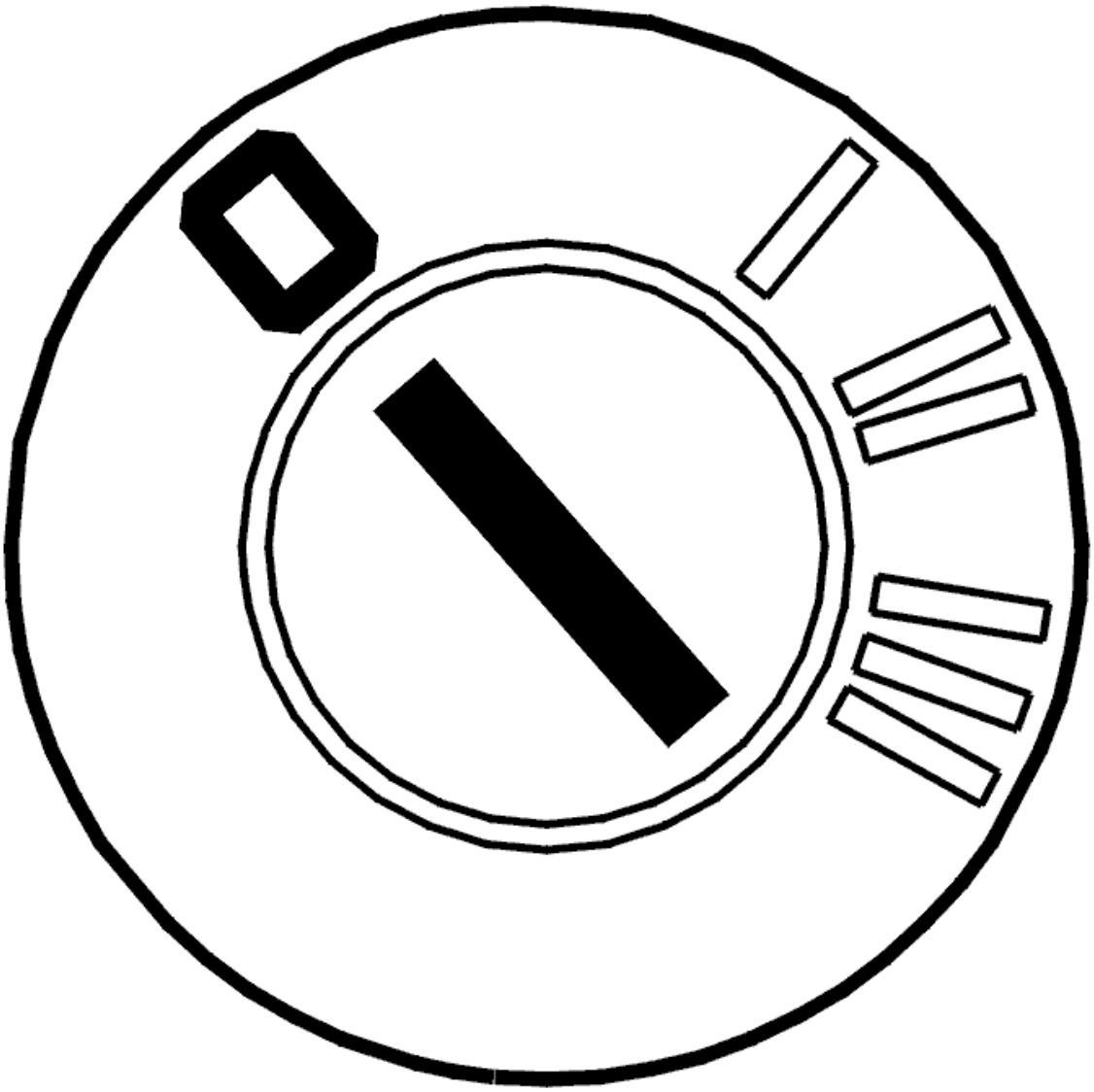

Fig. 199: Identifying Ignition OFF
Courtesy of VOLVO CARS CORPORATION

- Ignition off
- Disconnect the 20-pin connector (group A) from the central electronic module (CEM)
- Disconnect the 1-pin connector from the generator (GEN) (1B).

Check the signal cable between the central electronic module (CEM) terminal #5A and generator (GEN) terminal #1B (the red / white cable with flat pin). Check for a short-circuit to ground.

Remedy as necessary.

Other information:

- For -2004, see: **CENTRAL ELECTRONIC MODULE (CEM), REPLACING**
- For 2005-, see: **CENTRAL ELECTRONIC MODULE (CEM), REPLACING** .
- see **CHECKING WIRING AND TERMINALS** .

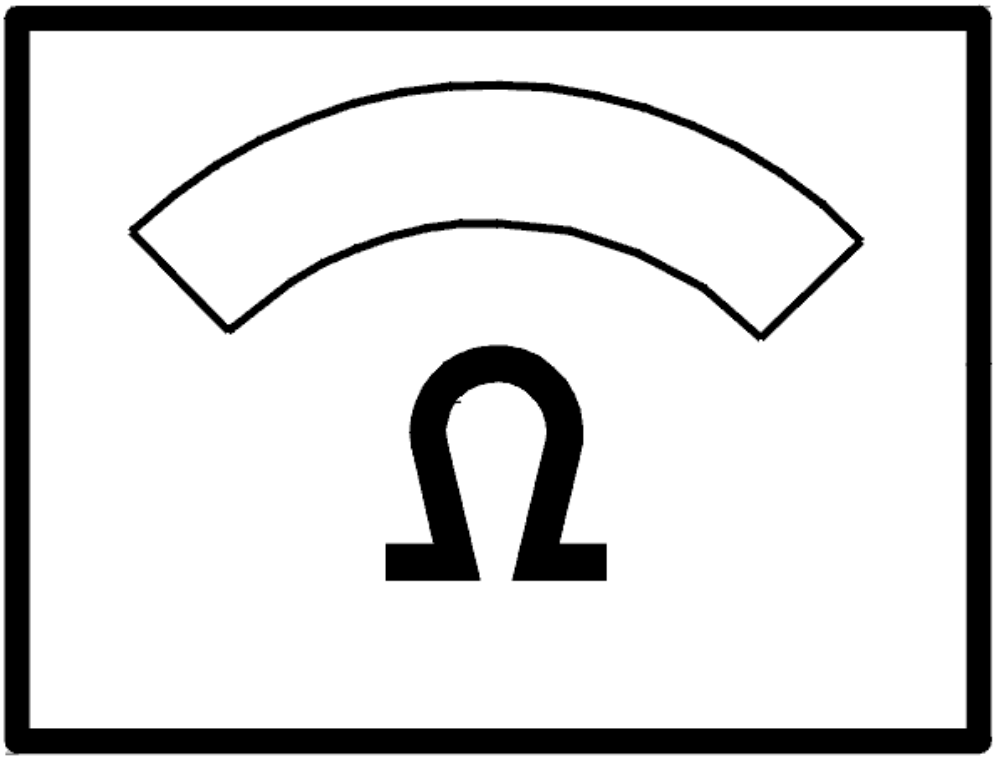

Fig. 200: Identifying Ohm Meter
Courtesy of VOLVO CARS CORPORATION

Is the signal cable OK?

- **YES**

  Refer to **REPLACING THE COMPONENT**

- **NO**

  Refer to **VERIFICATION**

REPLACING THE COMPONENT

Replace the governor.

- For B5xx4T, - 2004, see **GOVERNOR, REPLACING** .
- For B5xx4T, 2005 -, see **REGULATOR, REPLACING** .
- For B6xx4T, - 2004, see **GOVERNOR, REPLACING** .
- For B6xx4T, 2005 -, see **REGULATOR, REPLACING** .
- For B8444S, 2005 -, see **GOVERNOR, REPLACEMENT** .

- **Continue**

  Refer to **VERIFICATION**

VERIFICATION

VERIFICATION

HINT: After the repair it is necessary to check that the fault has been rectified.

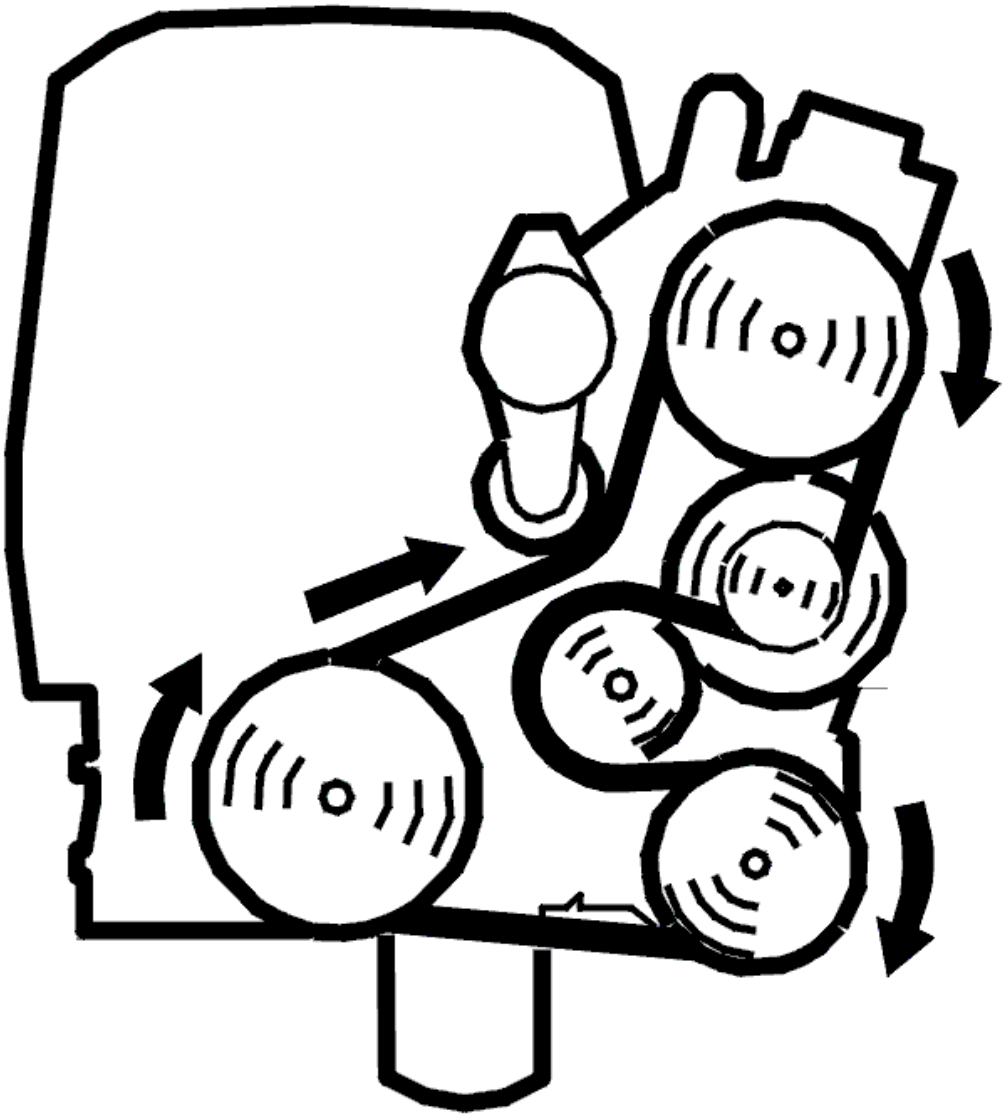

Fig. 201: Belt Routing / Engine Idling - Volvo
Courtesy of VOLVO CARS CORPORATION

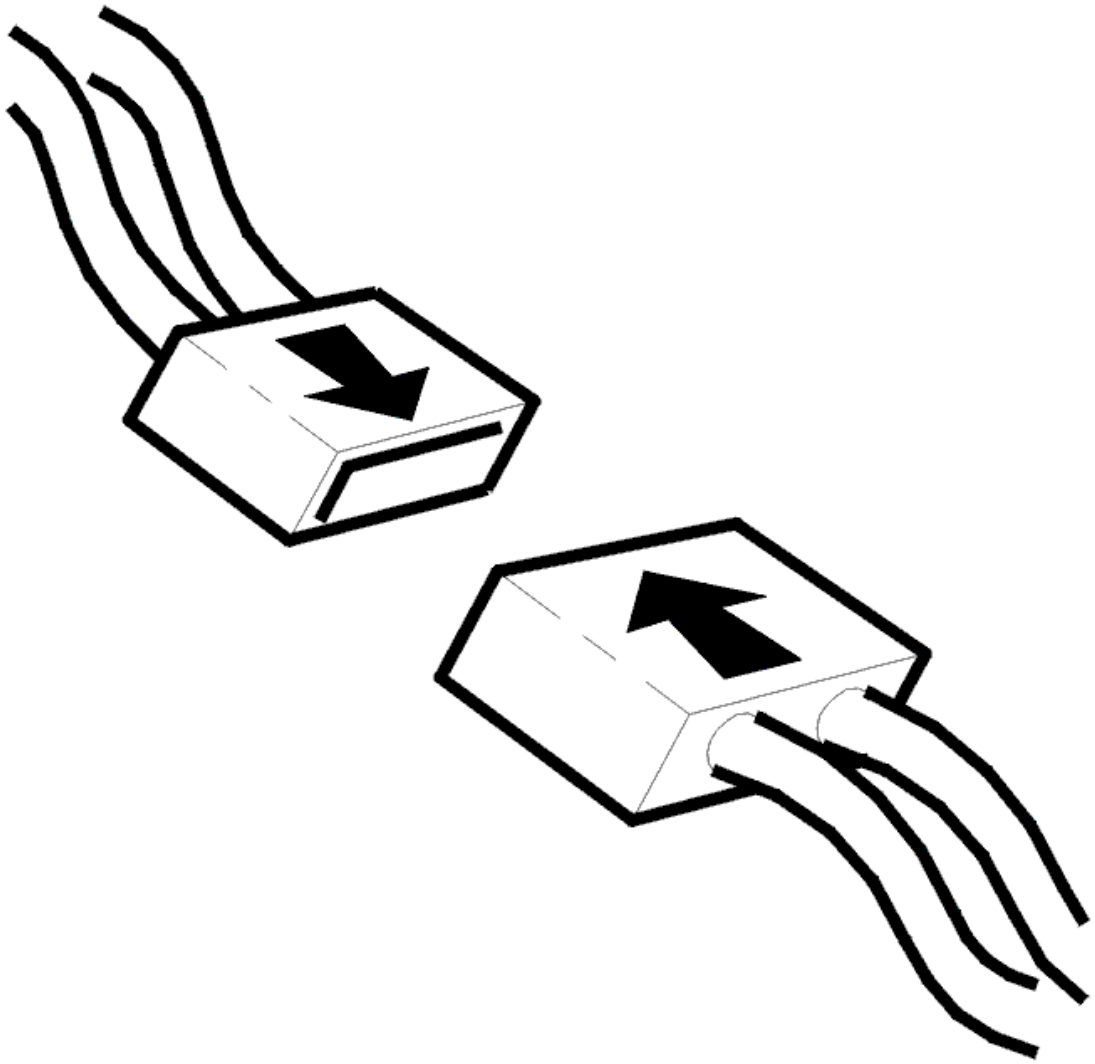

Fig. 202: Connecting Connector
Courtesy of VOLVO CARS CORPORATION

- Ignition off.
- Connect connectors, install components, etc.
- Start the engine.

  Check that diagnostic trouble code status changes from permanent to intermittent.

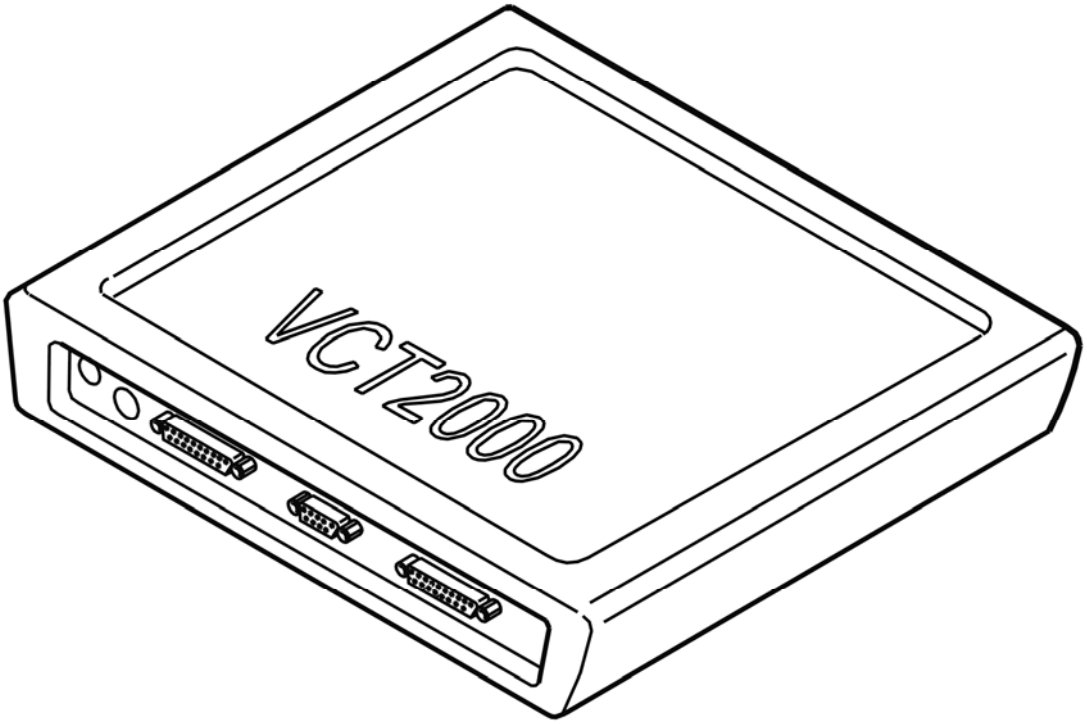

Fig. 203: Identifying VCT2000 Diagnostic Tool Symbol In VIDA
Courtesy of VOLVO CARS CORPORATION

Is the diagnostic trouble code status intermittent?

- **YES**

  VERIFIED: Troubleshooting has been completed.

- **NO**

  Refer to **INFORMATION**

INFORMATION

FAULT-TRACING INFORMATION

The fault should have been detected and remedied. As this is not the case fault-tracing has failed.

Exit fault-tracing for this diagnostic trouble code (DTC) or make another attempt.

CEM-1C04: 30 POWER SUPPLY. SIGNAL TOO HIGH. INTERMITTENT FAULT (2003-2004)

DIAGNOSTIC TROUBLE CODE (DTC) INFORMATION

Condition

Diagnostic trouble code (DTC) CEM-1C04 is stored if the central electronic module (CEM) registers that the 30-supply to the central electronic module (CEM) terminals #3E and #6E is too high.

Substitute Value

None.

Possible Source

- Defective generator (GEN)
- Defective battery.

Fault symptom[s]

- The "Generator not charging" warning lamp is lit when the engine is running
- The headlamp bulb blows
- The "Generator not charging" warning lamp is not lit when the ignition is switched on
- Low rotation speed in the starter motor
- The electrolyte in battery boils with the engine running
- The battery discharges.

SIGNAL TOO HIGH. INTERMITTENT FAULT

CHECKING THE GENERATOR (GEN)

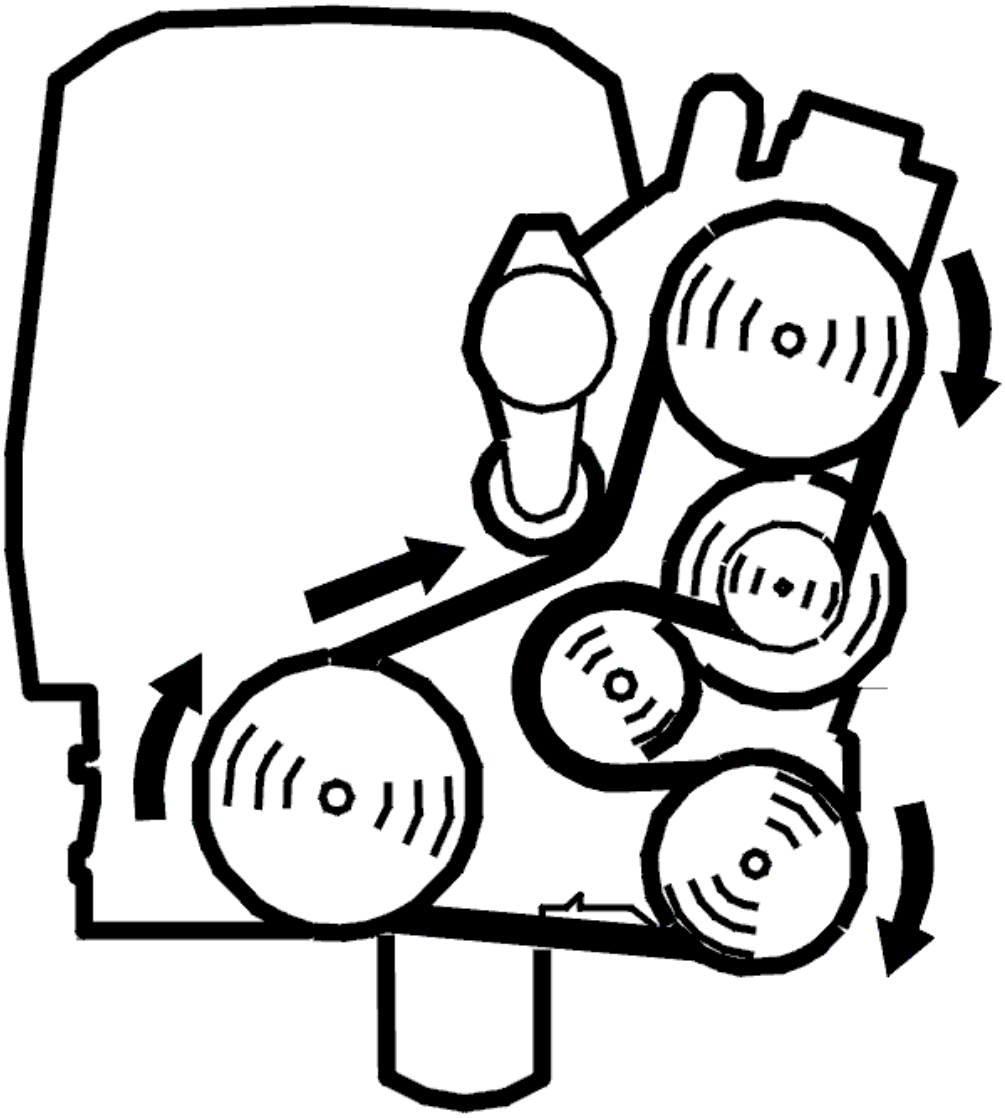

Fig. 204: Belt Routing / Engine Idling - Volvo
Courtesy of VOLVO CARS CORPORATION

- Ignition off
- Disconnect the 1-pin connector from the generator (GEN) (1B)
- Start the engine.

  Check that the voltage does not exceed 16 volts at 2, 000 RPM.

  Remedy as necessary.

  Other information:

  - For -2004, see: **CENTRAL ELECTRONIC MODULE (CEM), REPLACING**
  - For 2005-, see: **CENTRAL ELECTRONIC MODULE (CEM), REPLACING** .

- To connect the breakout box, see **CONNECTING THE BREAKOUT BOX**
- For B5xx4T, see **GENERATOR (GEN), REPLACING** .
- For B6xx4T, - 2004, see **GENERATOR (GEN), REPLACING** .
- For B6xx4T, 2005 -, see **GENERATOR (GEN), REPLACING** .
- For B8444S, 2005 -, see **GENERATOR (GEN), REPLACEMENT** .

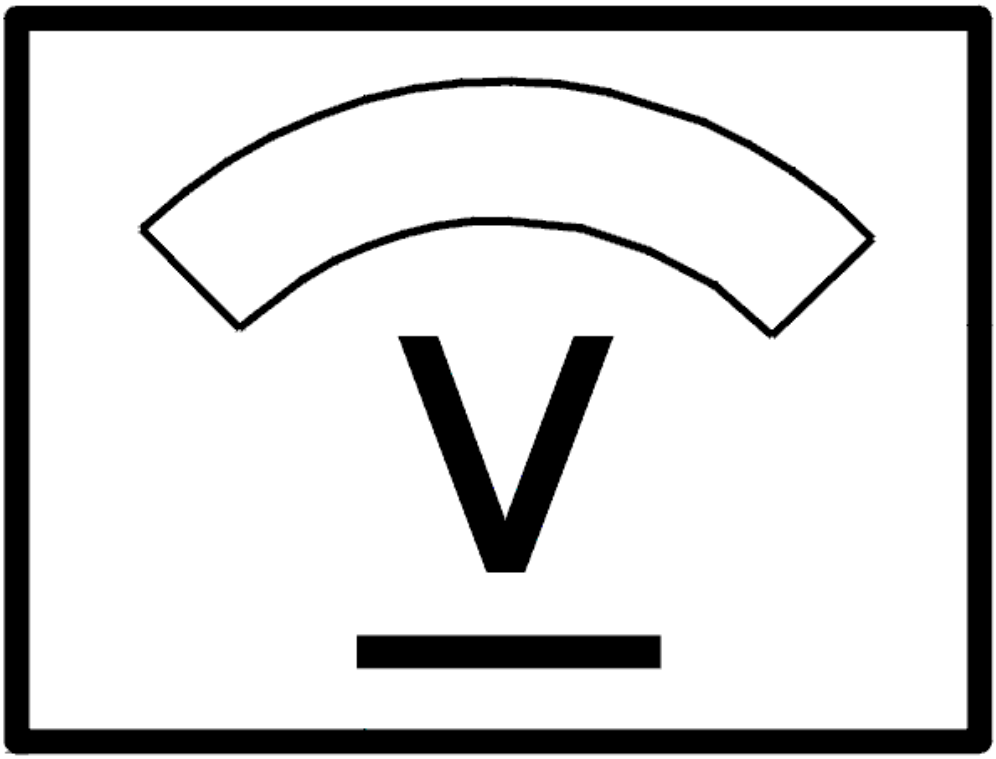

Fig. 205: Identifying Voltage Display
Courtesy of VOLVO CARS CORPORATION

- **Continue**

  Refer to **INFORMATION**

INFORMATION

FAULT-TRACING INFORMATION

If the fault is intermittent, do not verify fault-tracing if the fault does not recur.

It is possible to view the information again, or leave fault-tracing for this diagnostic trouble code (DTC).

CEM-1C04: 30 POWER SUPPLY. SIGNAL TOO HIGH. PERMANENT FAULT (2003-2004)

DIAGNOSTIC TROUBLE CODE (DTC) INFORMATION

see **DIAGNOSTIC TROUBLE CODE (DTC) INFORMATION**

SIGNAL TOO HIGH. PERMANENT FAULT

CHECKING THE GENERATOR (GEN) AND BATTERY

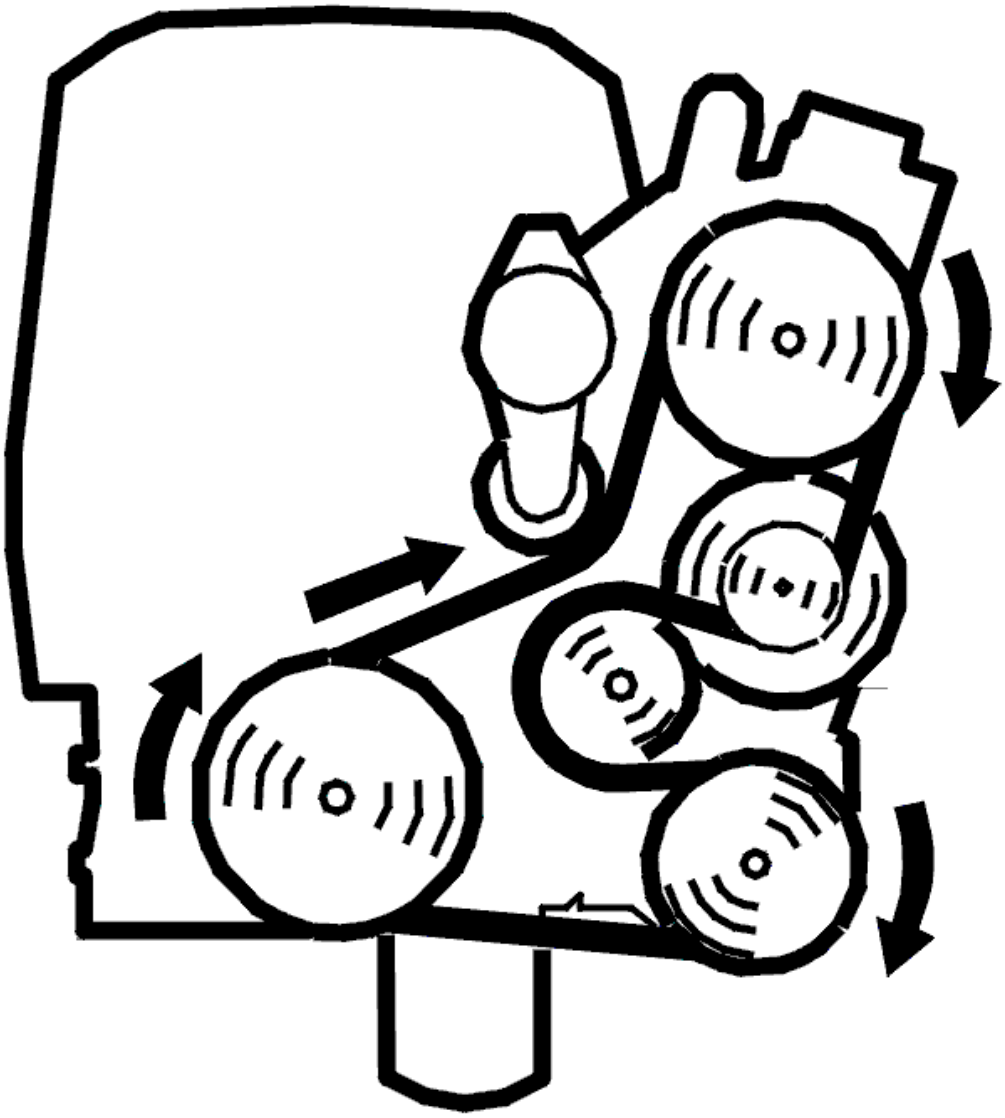

Fig. 206: Belt Routing / Engine Idling - Volvo
Courtesy of VOLVO CARS CORPORATION

- Ignition off
- Connect the breakout box to the central electronic module (CEM)
- Start the engine.

Check the 30-supply to central electronic module (CEM) terminal #3E (breakout box terminal #B23) and terminal #6E (breakout box terminal #B26). The voltage must not exceed 15 volts at 2, 000 RPM.

Also check that the battery is not over-charging.

Remedy as necessary.

Other information:

- For -2004, see: **CENTRAL ELECTRONIC MODULE (CEM), REPLACING**
- For 2005-, see: **CENTRAL ELECTRONIC MODULE (CEM), REPLACING** .
- To connect the breakout box, see **CONNECTING THE BREAKOUT BOX**
- For B5xx4T, see **GENERATOR (GEN), REPLACING** .
- For B6xx4T, - 2004, see **GENERATOR (GEN), REPLACING** .
- For B6xx4T, 2005 -, see **GENERATOR (GEN), REPLACING** .
- For B8444S, 2005 -, see **GENERATOR (GEN), REPLACEMENT** .

Was the function OK?

- **YES**

  Refer to **VERIFICATION**

- **NO**

  Refer to **REPLACING THE COMPONENT**

REPLACING THE COMPONENT

Replace the charge regulator on the generator (GEN).

Start the engine and wait for at least 1 minute. Read off diagnostic trouble codes (DTCs).

Other information:

- To connect the breakout box, see **CONNECTING THE BREAKOUT BOX**
- To access or replace the charge regulator:
  - For B5xx4T, - 2004, see **GOVERNOR, REPLACING** .
  - For B5xx4T, 2005 -, see **REGULATOR, REPLACING** .
  - For B6xx4T, - 2004, see **GOVERNOR, REPLACING** .
  - For B6xx4T, 2005 -, see **REGULATOR, REPLACING** .
  - For B8444S, 2005 -, see **GOVERNOR, REPLACEMENT** .

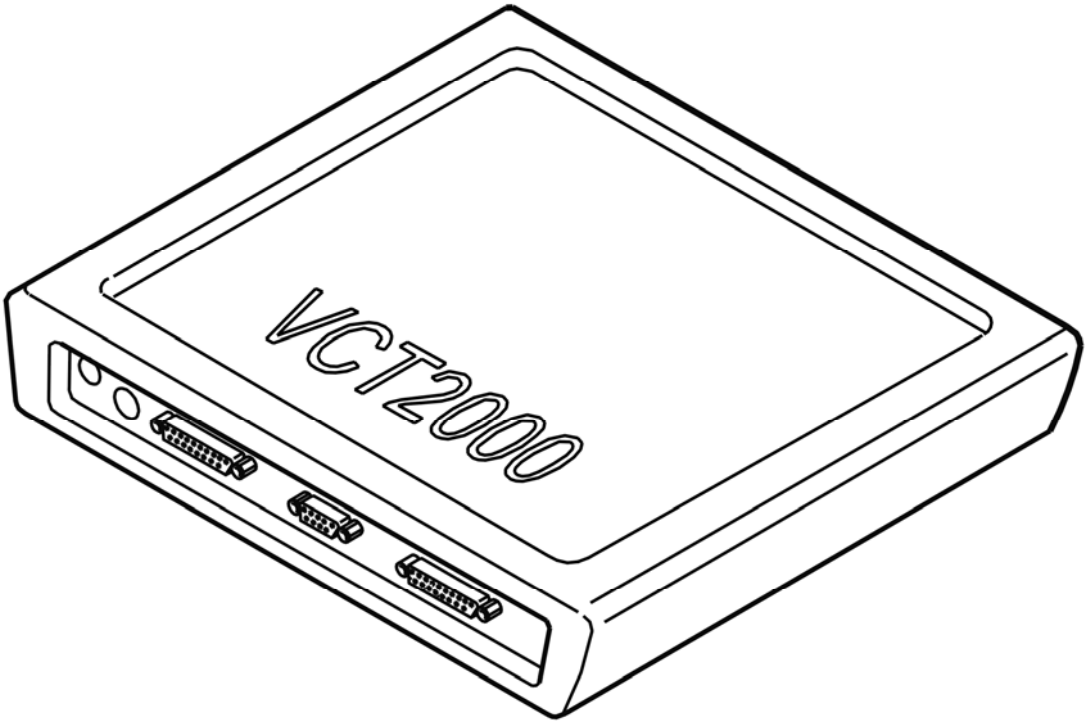

Fig. 207: Identifying VCT2000 Diagnostic Tool Symbol In VIDA
Courtesy of VOLVO CARS CORPORATION

Is the fault intermittent?

- **YES**

  Refer to **VERIFICATION**

- **NO**

  Refer to **REPLACING THE COMPONENT**

REPLACING THE COMPONENT

Replace the battery.

Other information:

- When replacing the battery, see **BATTERY, DISCONNECTING** .
- **Continue**

  Refer to **VERIFICATION**

VERIFICATION

VERIFICATION

HINT: After the repair it is necessary to check that the fault has been rectified.

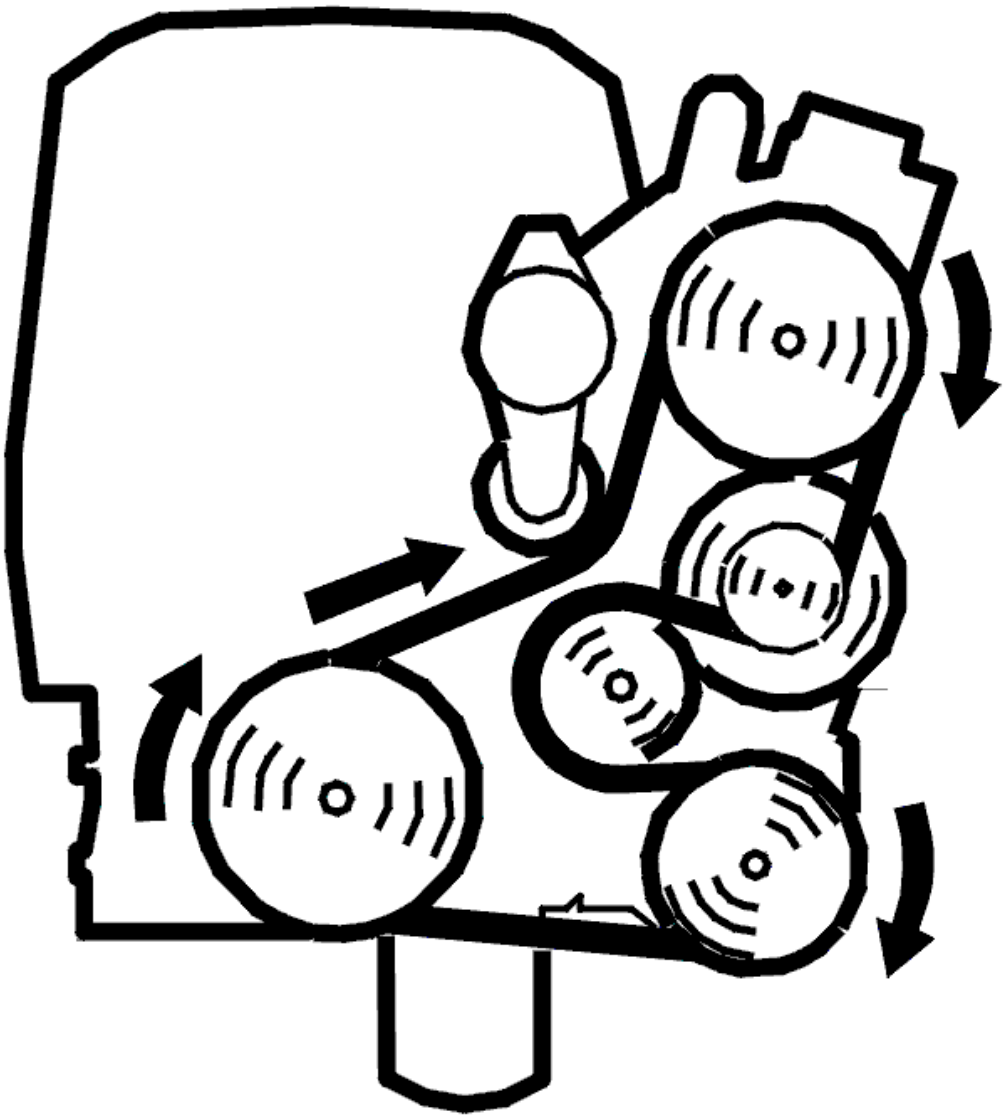

Fig. 208: Belt Routing / Engine Idling - Volvo
Courtesy of VOLVO CARS CORPORATION

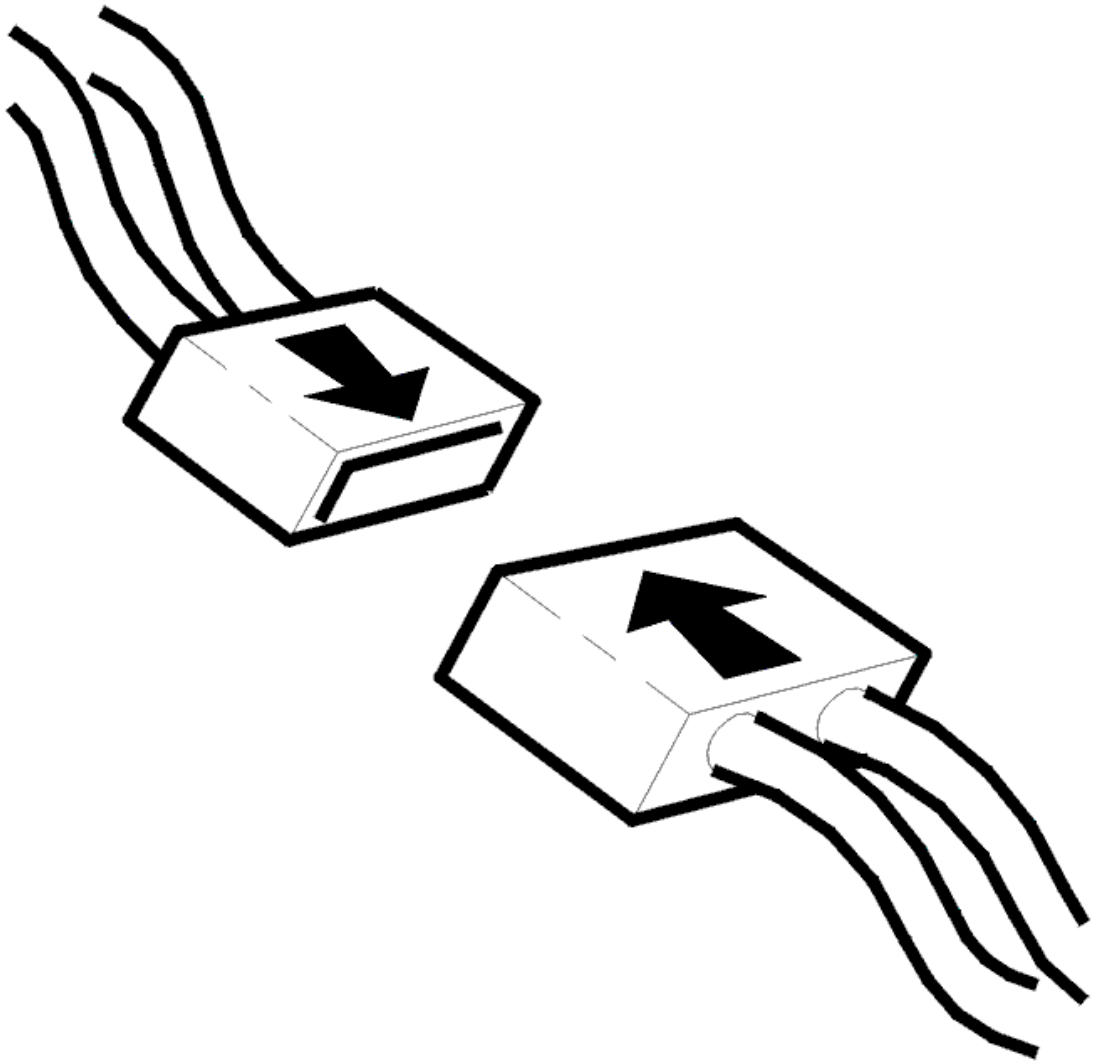

Fig. 209: Connecting Connector
Courtesy of VOLVO CARS CORPORATION

- Ignition off.
- Connect connectors, install components, etc.
- Start the engine.

  Check that diagnostic trouble code status changes from permanent to intermittent.

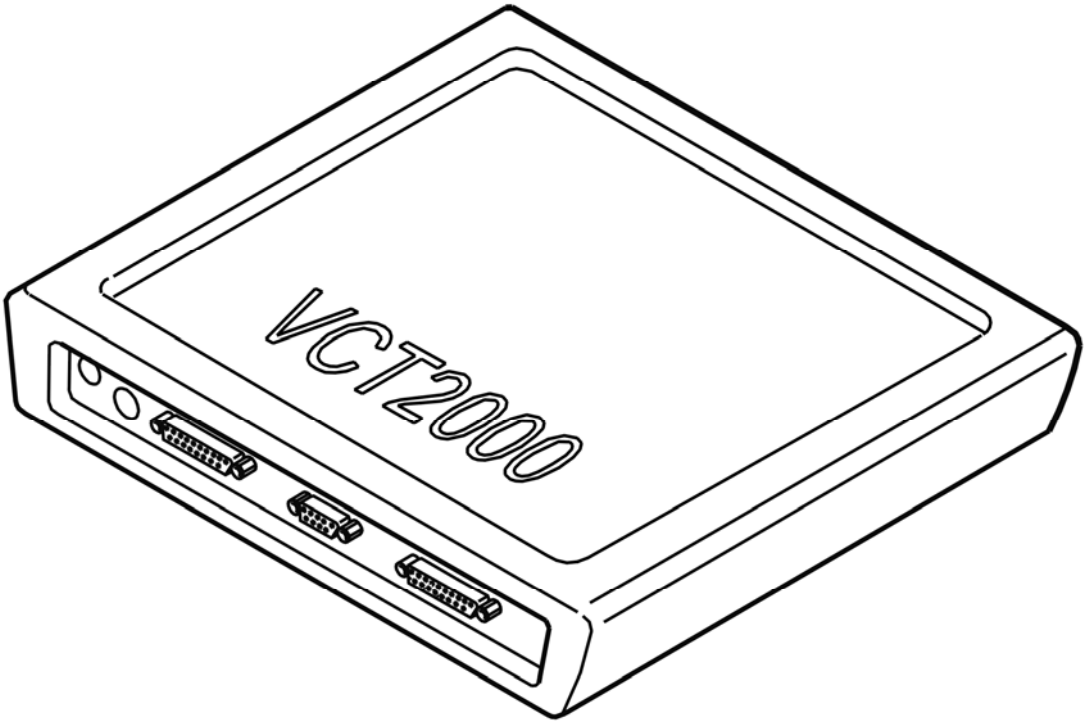

Fig. 210: Identifying VCT2000 Diagnostic Tool Symbol In VIDA
Courtesy of VOLVO CARS CORPORATION

Is the diagnostic trouble code status intermittent?

- **YES**

  VERIFIED: Troubleshooting has been completed.

- **NO**

  Refer to **INFORMATION**

INFORMATION

FAULT-TRACING INFORMATION

The fault should have been detected and remedied. As this is not the case fault-tracing has failed.

Exit fault-tracing for this diagnostic trouble code (DTC) or make another attempt.

CEM-1C05: 30-POWER SUPPLY. SIGNAL TOO LOW (2005-2012)

DIAGNOSTIC TROUBLE CODE (DTC) INFORMATION CEM-1C05

Condition

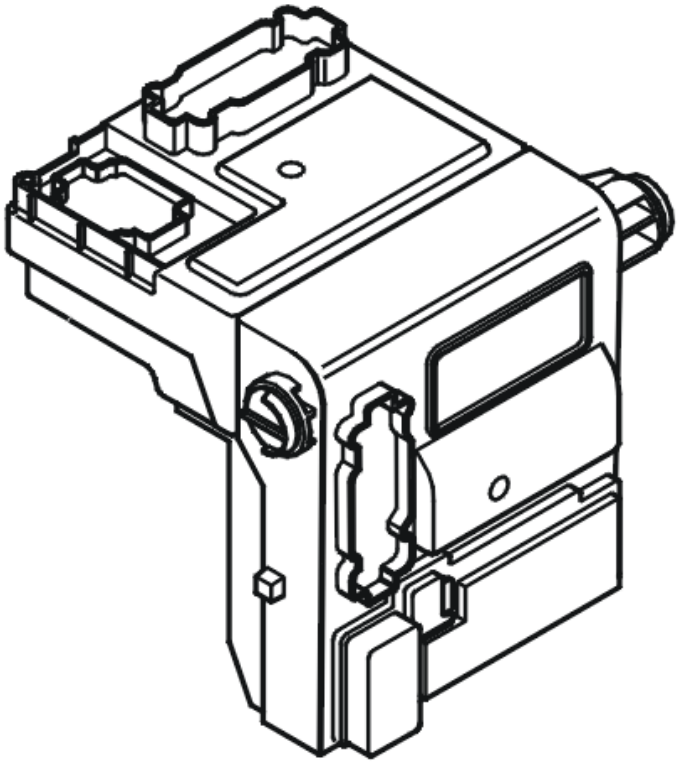

Fig. 211: Identifying Central Electronic Module (CEM)
Courtesy of VOLVO CARS CORPORATION

The central electronic module (CEM) continuously monitors its own power supply.

The diagnostic trouble code (DTC) is stored if the central electronic module (CEM) registers that the power supply from the battery (30-supply) is too low.

The diagnostic trouble code (DTC) can be diagnosed with the ignition key in position II and with the engine running.

Substitute Value

- None.

Possible Source

- Poor battery charging
- The battery is fully discharged.

Fault symptom[s]

- Starting/Engine does not start/Unsure when/at all times
- Warning lights and chimes/Generator warning indication/no indication
- Alternator and charge regulator/Power supply problems

SIGNAL TOO LOW

CHECKING THE CABLE BETWEEN THE BATTERY AND GENERATOR (GEN)

- Check that the battery is charged
- Charge the battery if necessary.

  Check the cable between generator (GEN) terminal #A1 and starter motor terminal #2. Check for an open-circuit. Check for a short-circuit to ground.

  Check the cable between the battery positive terminal and starter motor terminal #1. Check for an open-circuit. Check for a short-circuit to ground.

  Remedy as necessary.

  Other information

  - see **LOCATION OF COMPONENTS**
  - see **CHECKING WIRING AND TERMINALS**

Was a fault detected?

- **YES**

  Refer to **VERIFICATION**

- **NO**

  Refer to **CHECKING THE POWER SUPPLY**

CHECKING THE POWER SUPPLY

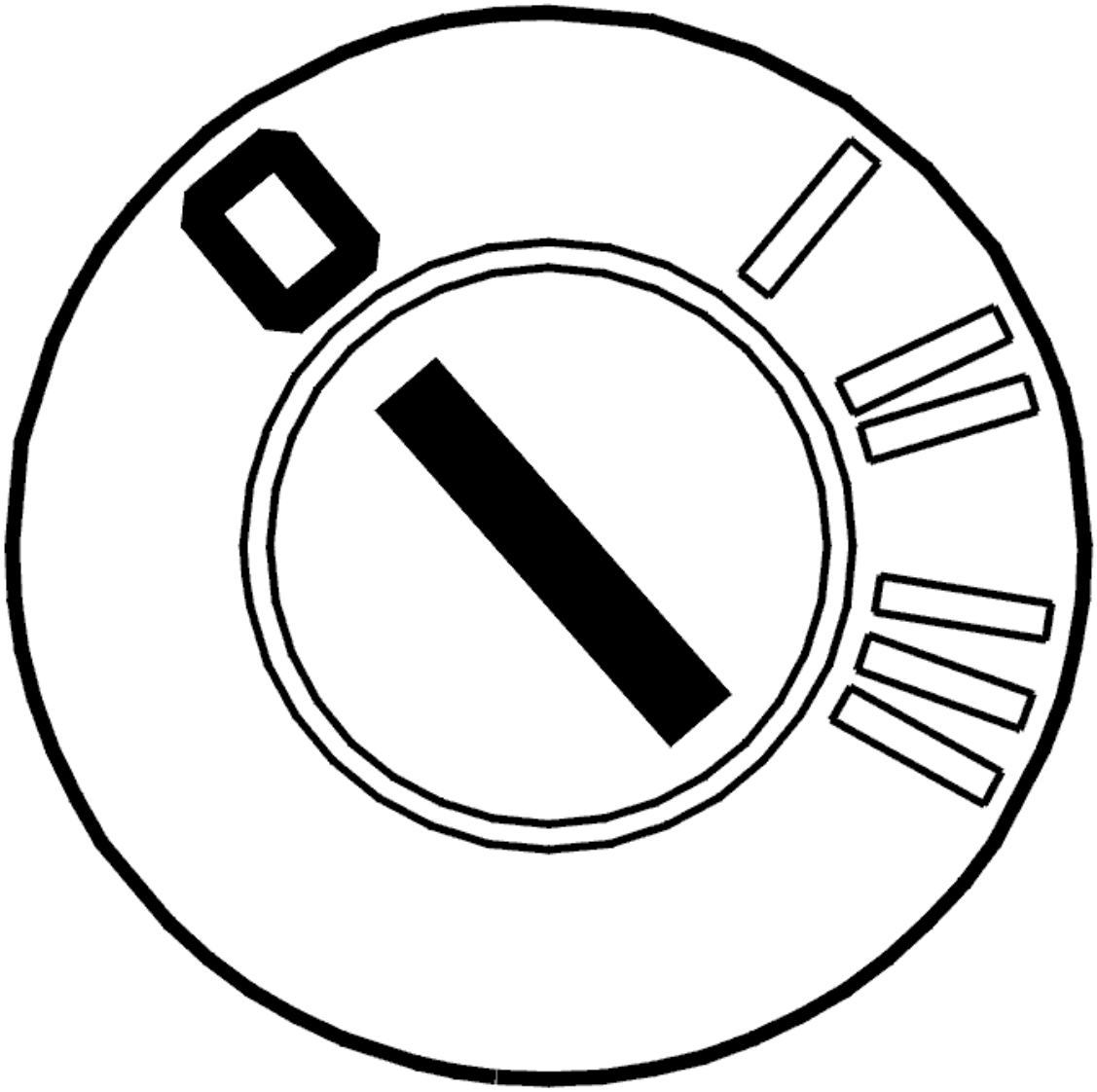

Fig. 212: Identifying Ignition OFF
Courtesy of VOLVO CARS CORPORATION

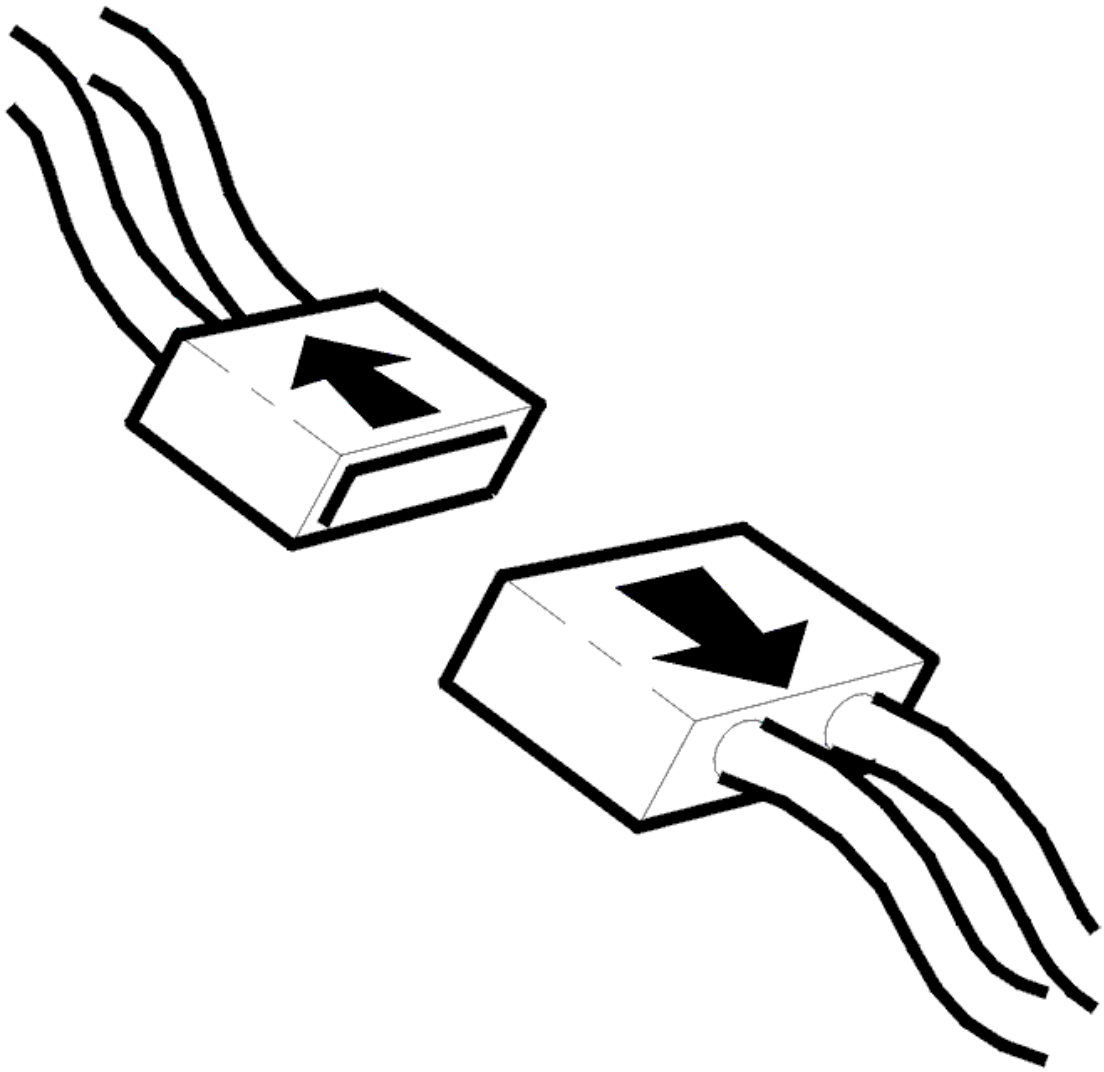

Fig. 213: Disconnecting Connector
Courtesy of VOLVO CARS CORPORATION

- Ignition off
- Disconnect central electronic module (CEM) connector E.

  Check central electronic module (CEM) connector E. Check for contact resistance and oxidation. Check for damage carefully.

  Check the power supply to central electronic module (CEM) terminals #EA and #EB from the rear electronic module (REM). Also check the intermediate fuses. The voltage must be at least battery voltage minus 3 V.

  NOTE: Also check the power supply from the battery to rear electronic module (REM) terminal #K1. Check for an open-circuit. Check for loose

connections. Check for contact resistance and oxidation. Check the fuse.

Remedy as necessary.

Other information

- see **CONNECTING THE BREAKOUT BOX**
- -2004: **SIGNAL SPECIFICATION**
- 2005-: **SIGNAL SPECIFICATION**
- see **LOCATION OF COMPONENTS**
- see **CHECKING WIRING AND TERMINALS**

Was a fault detected?

- **YES**

  Refer to **VERIFICATION**

- **NO**

  Refer to **CHECKING THE GROUND TERMINAL**

CHECKING THE GROUND TERMINAL

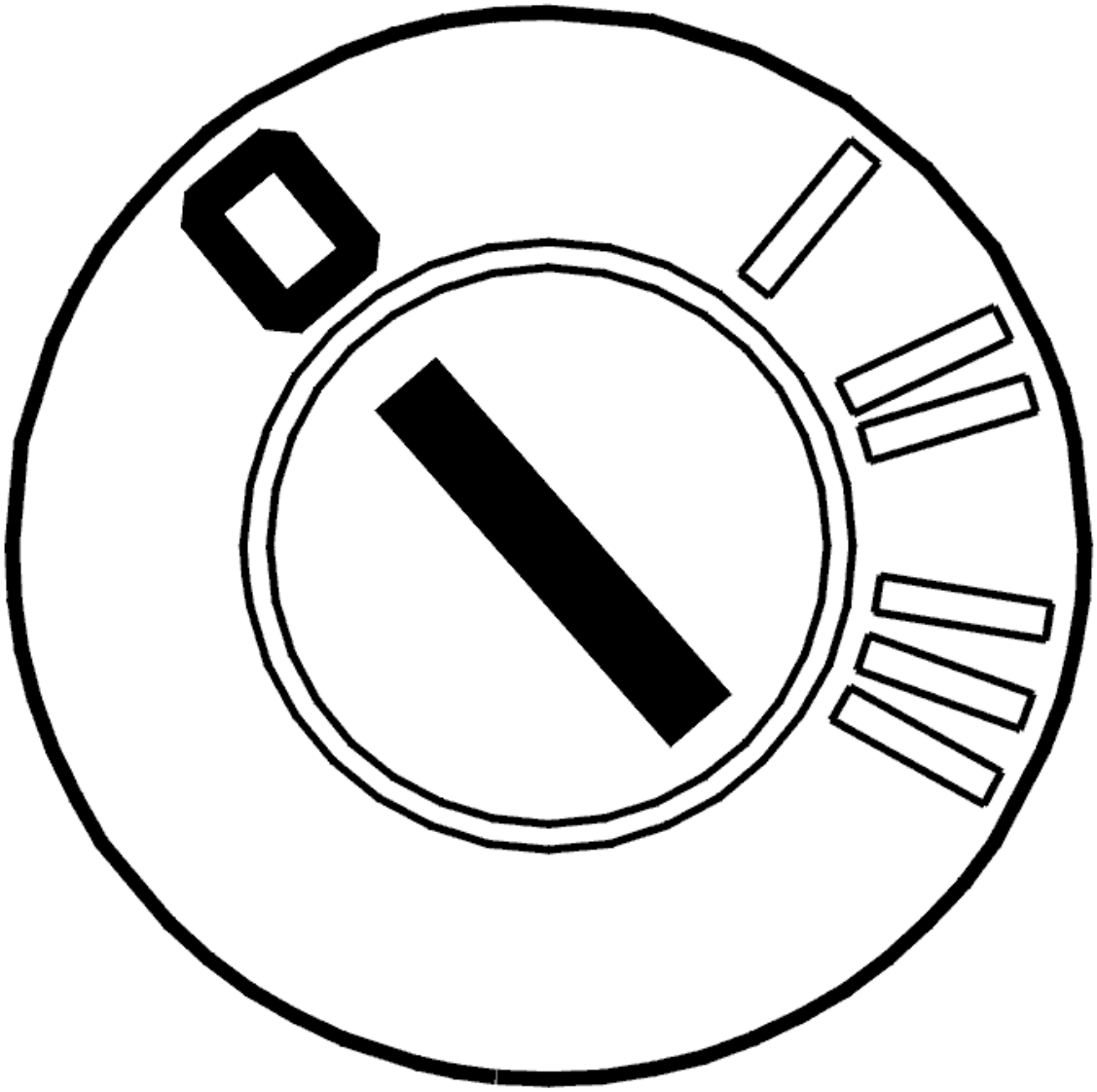

Fig. 214: Identifying Ignition OFF
Courtesy of VOLVO CARS CORPORATION

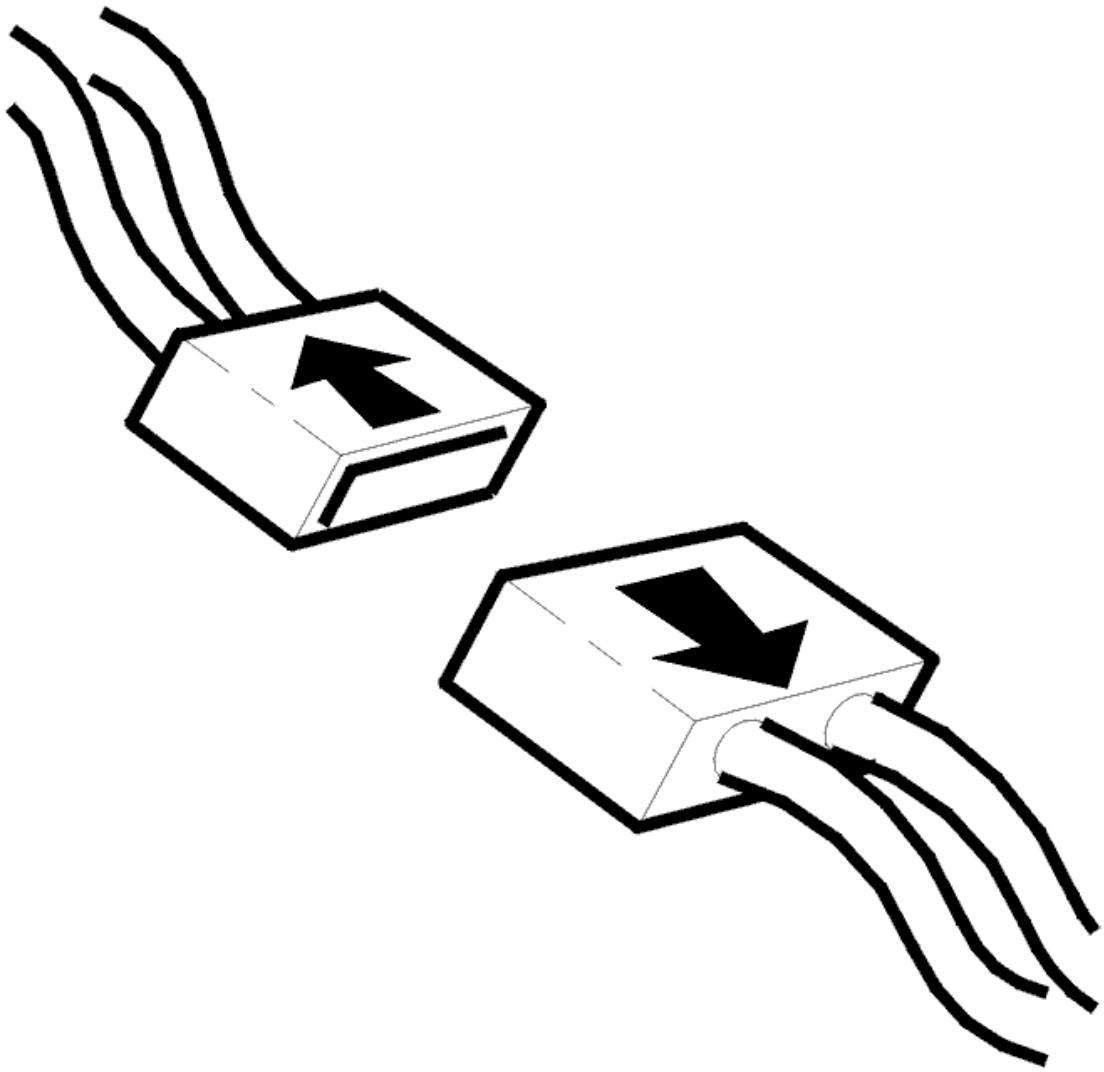

Fig. 215: Disconnecting Connector
Courtesy of VOLVO CARS CORPORATION

- Ignition off
- Disconnect central electronic module (CEM) connector D.

  Check central electronic module (CEM) connector D. Check for contact resistance and oxidation. Check for damage carefully.

  Check the ground lead between central electronic module (CEM) terminal #D6 (#6) and the ground terminal. Check for an open-circuit. Check for loose connections. Check for contact resistance and oxidation. With the ignition on, the drop in voltage between the ground connection for the central electronic module (CEM) and the ground terminal must not be greater than 0.5 V.

  Remedy as necessary.

Other information

- see **CONNECTING THE BREAKOUT BOX**
- -2004: **SIGNAL SPECIFICATION**
- 2005-: **SIGNAL SPECIFICATION**
- see **LOCATION OF COMPONENTS**
- see **CHECKING WIRING AND TERMINALS**

Was a fault detected?

- **YES**

  Refer to **VERIFICATION**

- **NO**

  Refer to **CHECKING THE BATTERY**

CHECKING THE BATTERY

Check the condition of the battery.

Is the battery OK?

- **YES**

  Refer to **CHECKING THE GENERATOR (GEN)**

- **NO**

  Refer to **REPLACING BATTERY**

REPLACING BATTERY

Replace the battery.

Other information

- see **BATTERY, DISCONNECTING**

- **Continue**

  Refer to **VERIFICATION**

CHECKING THE GENERATOR (GEN)

Check that the generator (GEN) is working correctly.

Remedy as necessary.

Other information

- For B5xx4T, see **GENERATOR (GEN), REPLACING** .
- For B6xx4T, - 2004, see **GENERATOR (GEN), REPLACING** .
- For B6xx4T, 2005 -, see **GENERATOR (GEN), REPLACING** .
- For B8444S, 2005 -, see **GENERATOR (GEN), REPLACEMENT** .

- **Continue**

  Refer to **VERIFICATION**

VERIFICATION

VERIFICATION

HINT: After carrying out the repair, check that the fault has been remedied.

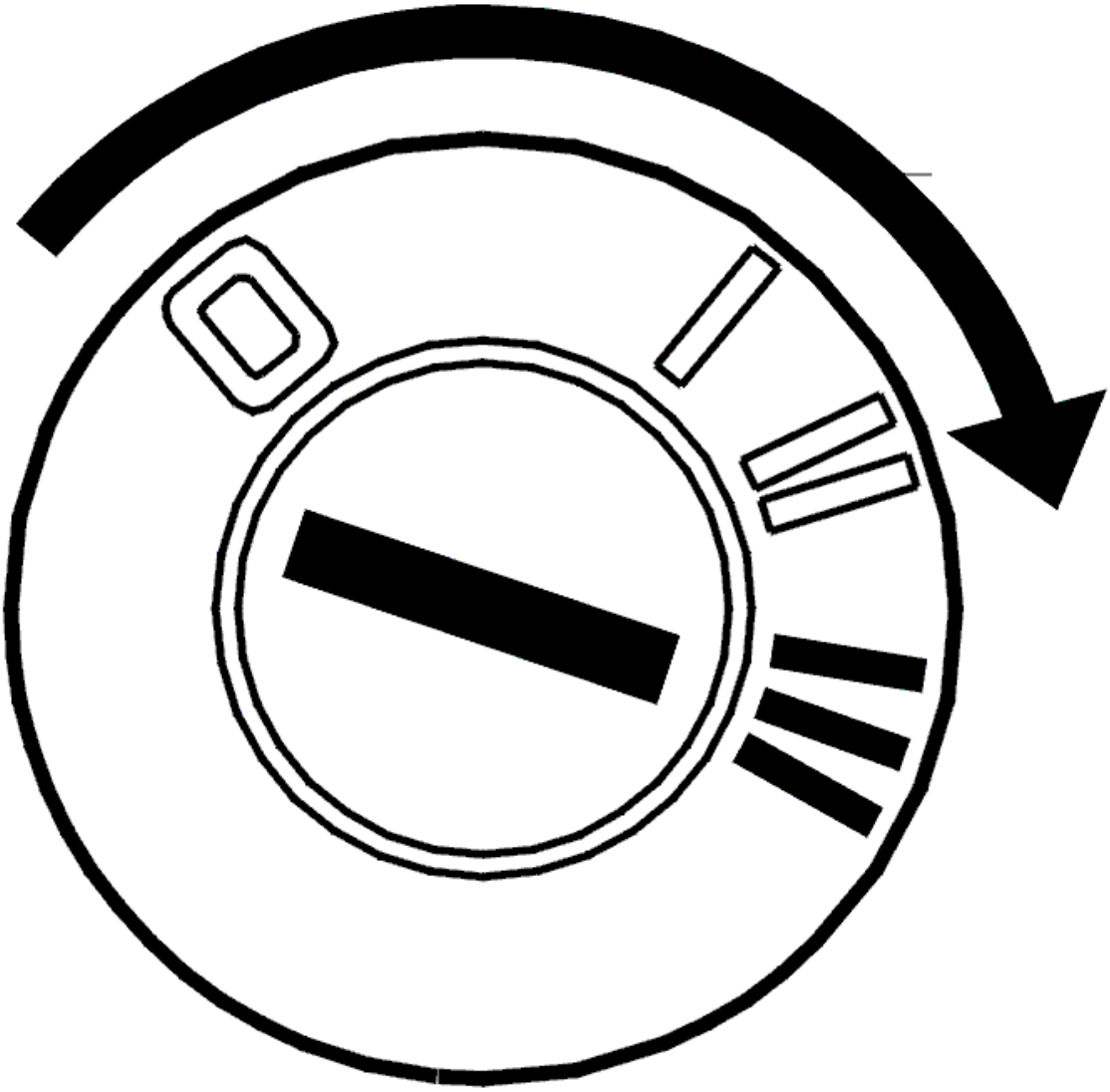

Fig. 216: Identifying Engine START Position
Courtesy of VOLVO CARS CORPORATION

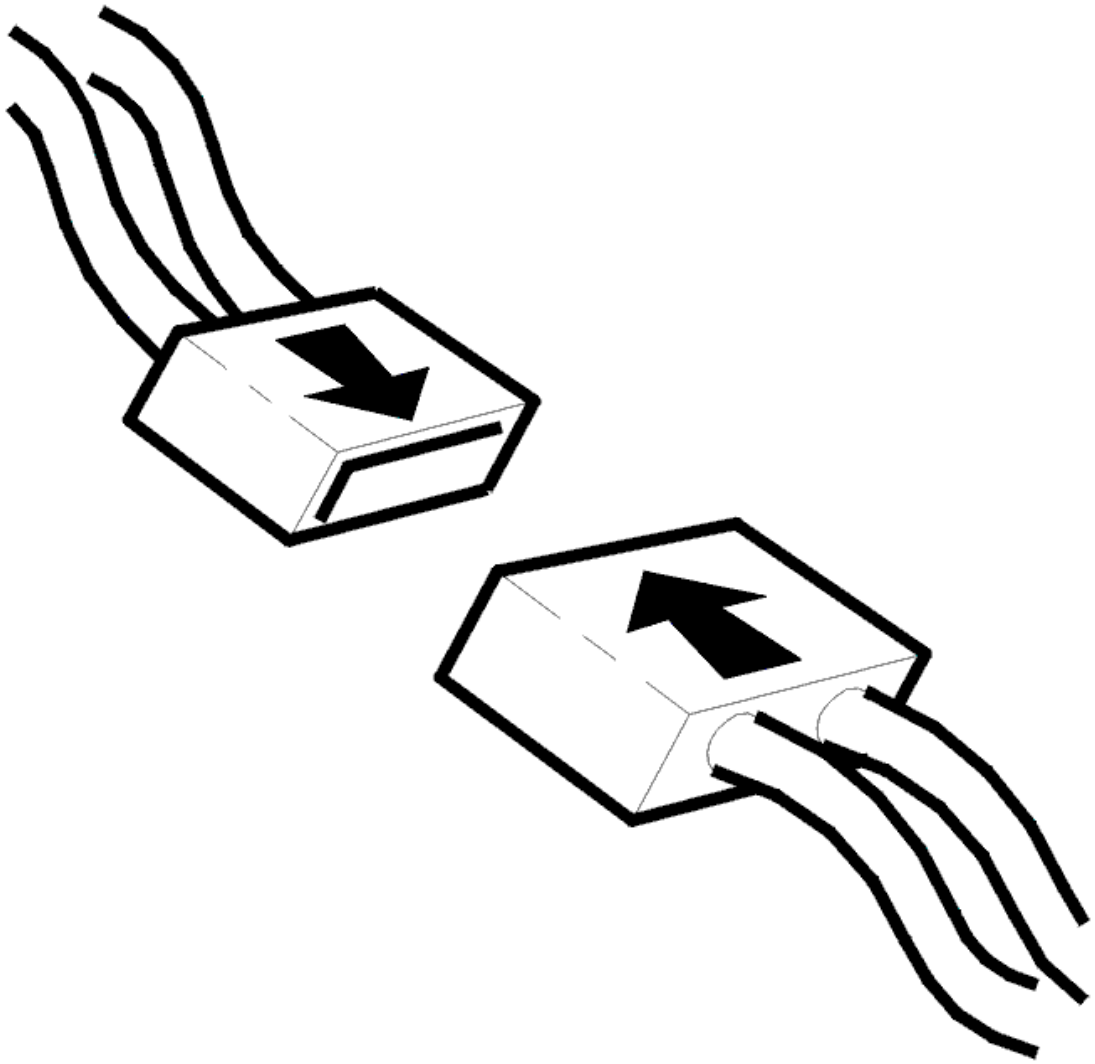

Fig. 217: Connecting Connector
Courtesy of VOLVO CARS CORPORATION

- Ignition off
- Reinstall the connectors, components etc.
- Start the engine. Allow the engine to idle for at least 5 minutes.

  Check the power supply to the central electronic module (CEM). The voltage must be at least battery voltage minus 3 V.

Is the voltage OK?

- **YES**

  VERIFIED: Troubleshooting has been completed.

- **NO**

  Refer to **INFORMATION**

INFORMATION

FAULT-TRACING INFORMATION

The fault should have been detected and remedied. As this is not the case fault-tracing has failed.

Exit fault-tracing for this diagnostic trouble code (DTC) or make another attempt.

CEM-1C06: ALTERNATOR CONTROL MODULE (ACM). ELECTRICAL FAULT (B5254T2; 2005-2007)

DIAGNOSTIC TROUBLE CODE (DTC) INFORMATION CEM-1C06

Condition

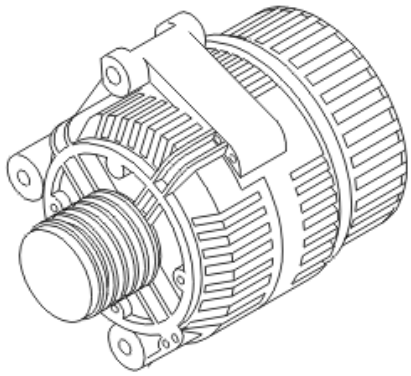

Fig. 218: Freewheel Generator
Courtesy of VOLVO CARS CORPORATION

The central electronic module (CEM) communicates with the alternator control module (ACM).

The diagnostic trouble code (DTC) is stored if the central electronic module (CEM) receives information from the alternator control module (ACM) indicating an electrical fault in the generator (GEN).

The diagnostic trouble code (DTC) can be diagnosed at engine speeds (RPM) above 600 RPM.

Substitute Value

- None.

Possible Source

- A battery charger with too high charge voltage has been connected previously
- Worn brushes (carbon)
- Damaged alternator control module (ACM)
- Damaged generator (GEN).

Fault symptom[s]

- The "Generator not charging" warning lamp is lit when the engine is running
- Warning lights and chimes/Generator warning indication/no indication
- Alternator and charge regulator/Power supply problems
- The battery discharges
- Low rotation speed in the starter motor
- The electrolyte in battery boils with the engine running
- The headlamp bulb blows.
- Starting/Engine does not start/Unsure when/at all times

ELECTRICAL FAULT

CHECKING BATTERY VOLTAGE

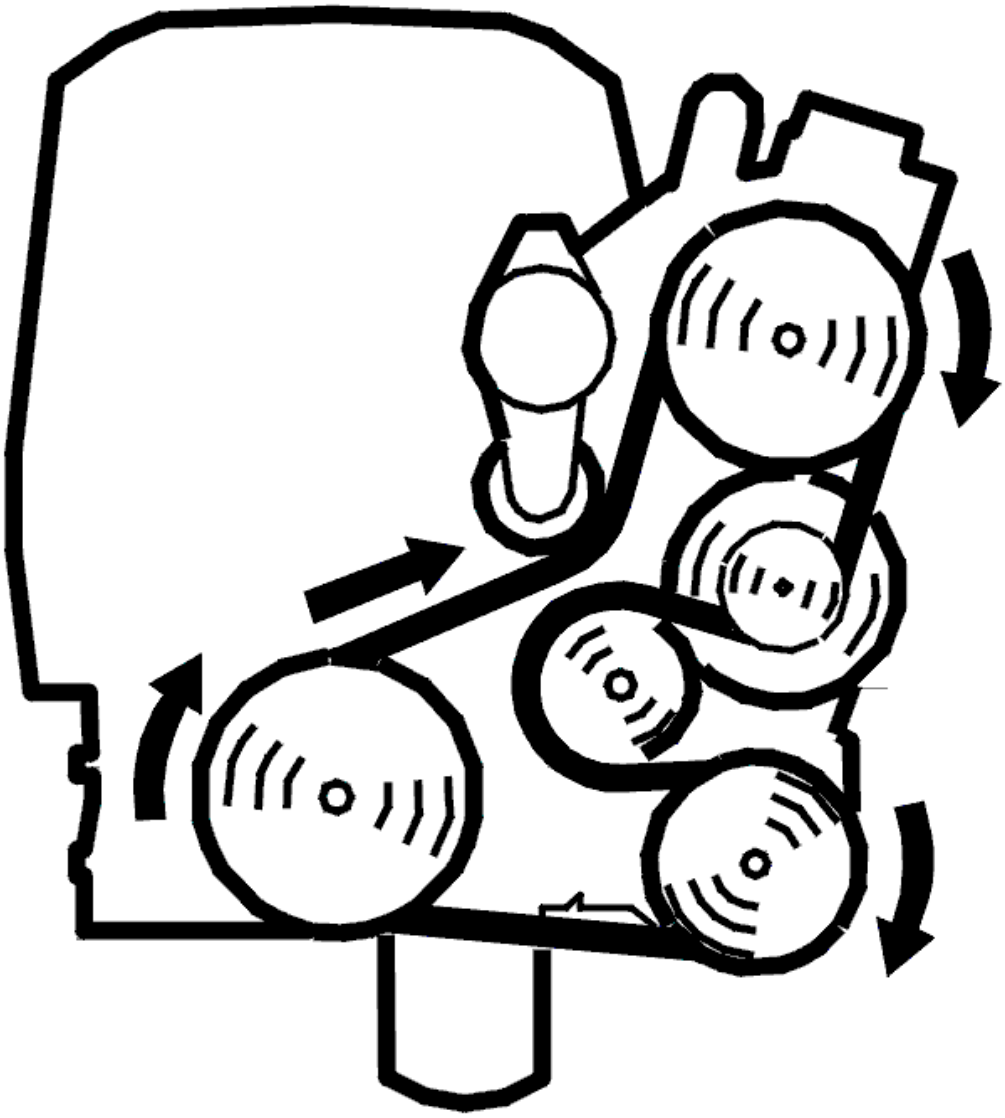

Fig. 219: Belt Routing / Engine Idling - Volvo
Courtesy of VOLVO CARS CORPORATION

- Start the engine
- Read off the battery voltage. The central electronic module (CEM) uses the prevailing outside temperature to calculate the voltage at which the battery should be charged
- Switch on a few major power consuming components, such as the blower fan.

  Check that the voltage is within the limits of 13.5-14.9 V. Try at different engine speeds (RPM).

  The fault is permanent if the voltage is outside the permitted range.

  If the voltage is within the permitted range, the fault was present previously but is not active at the moment, i. e. an intermittent fault.

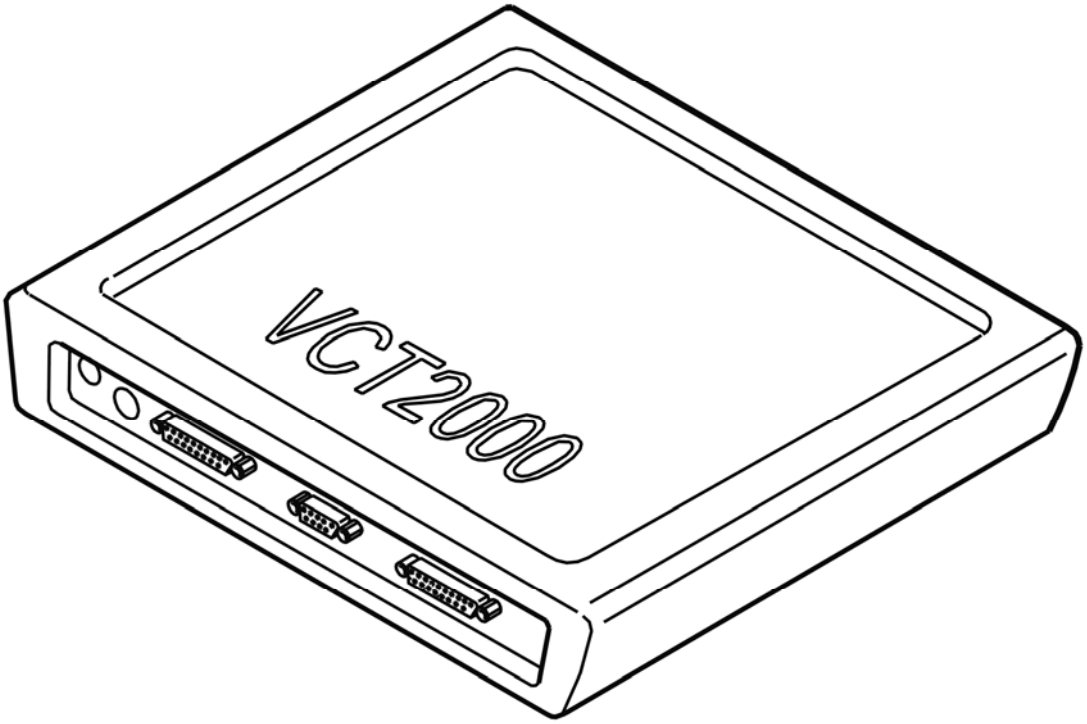

Fig. 220: Identifying VCT2000 Diagnostic Tool Symbol In VIDA
Courtesy of VOLVO CARS CORPORATION

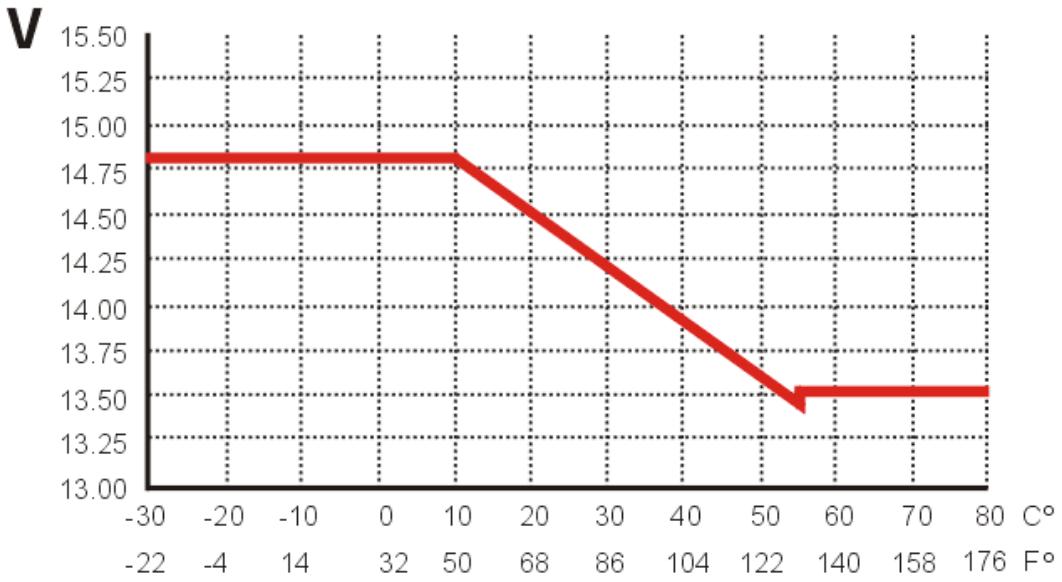

Fig. 221: Identifying Voltage And Temperature Chart
Courtesy of VOLVO CARS CORPORATION

- **Continue**

  Refer to **CHECKING THE COMPONENT**

CHECKING THE COMPONENT

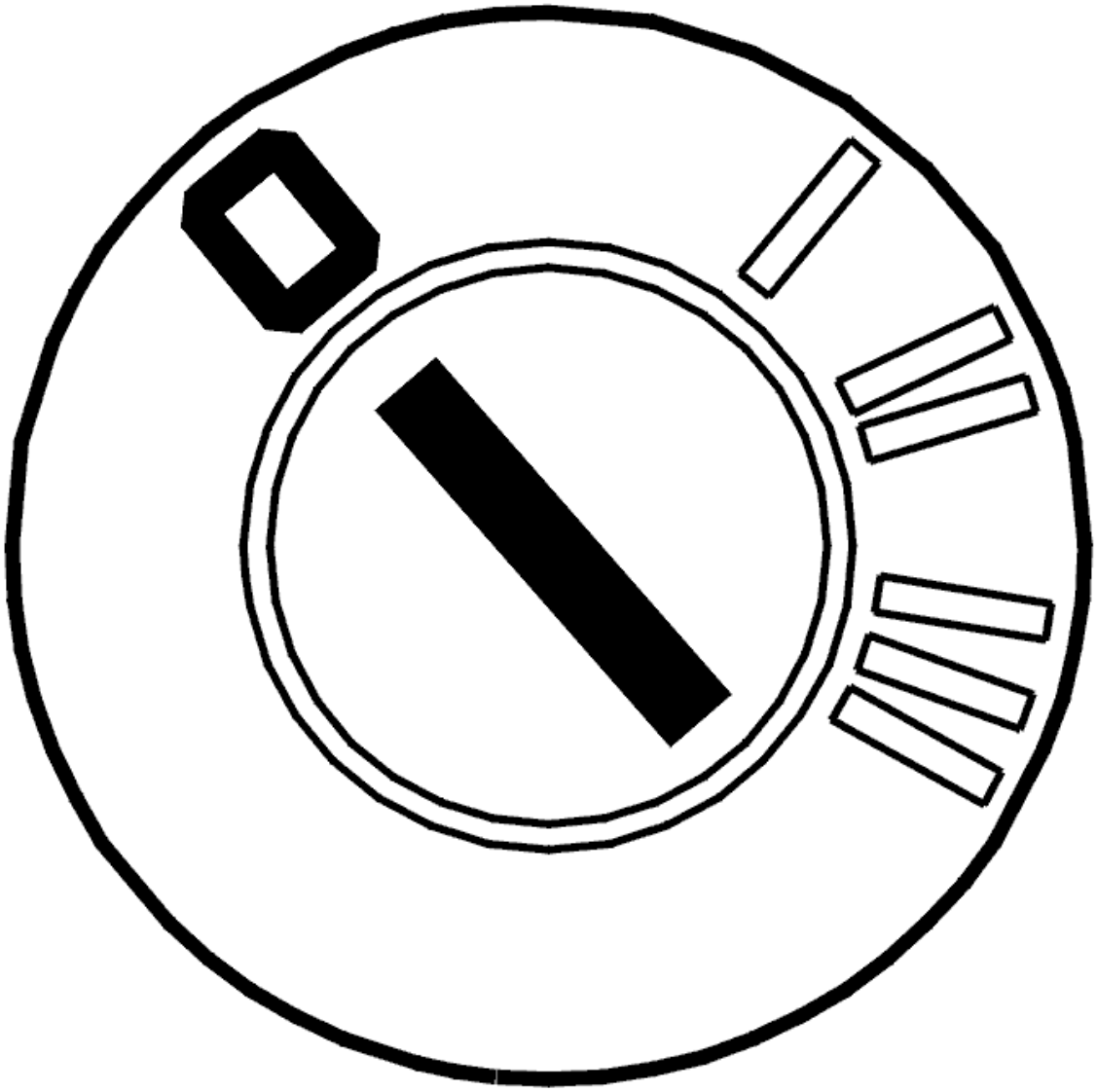

Fig. 222: Identifying Ignition OFF
Courtesy of VOLVO CARS CORPORATION

- Ignition off.

  Check the carbon brushes. If the brushes are worn, replace the alternator control module (ACM). Check that the brushes can move in the regulator housing. The brushes are lightly sprung. At the same time, check the slip rings. Replace the generator (GEN) if they are worn out.

  If the brushes and slip rings appear to be OK, try a new alternator control module (ACM) (charge regulator). If this does not help, try a new generator (GEN).

  Remedy as necessary.

  Other information:

- see **CHECKING WIRING AND TERMINALS**

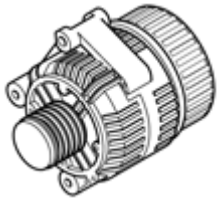

Fig. 223: Identifying Generator (GEN)
Courtesy of VOLVO CARS CORPORATION

- **Continue**

  Refer to **VERIFICATION**

VERIFICATION

VERIFICATION

HINT: After carrying out the repair, check that the fault has been remedied.

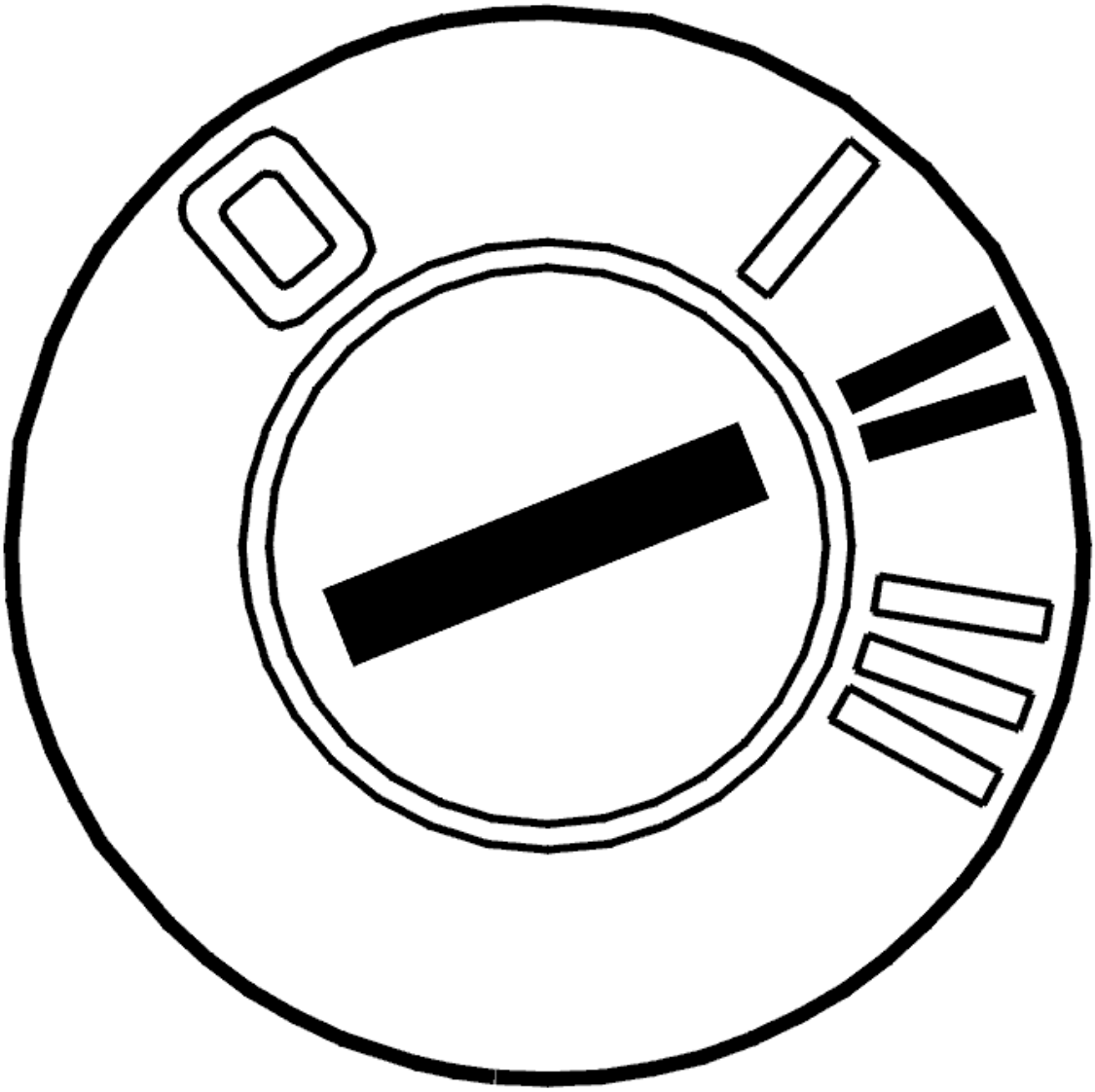

Fig. 224: Identifying Ignition ON
Courtesy of VOLVO CARS CORPORATION

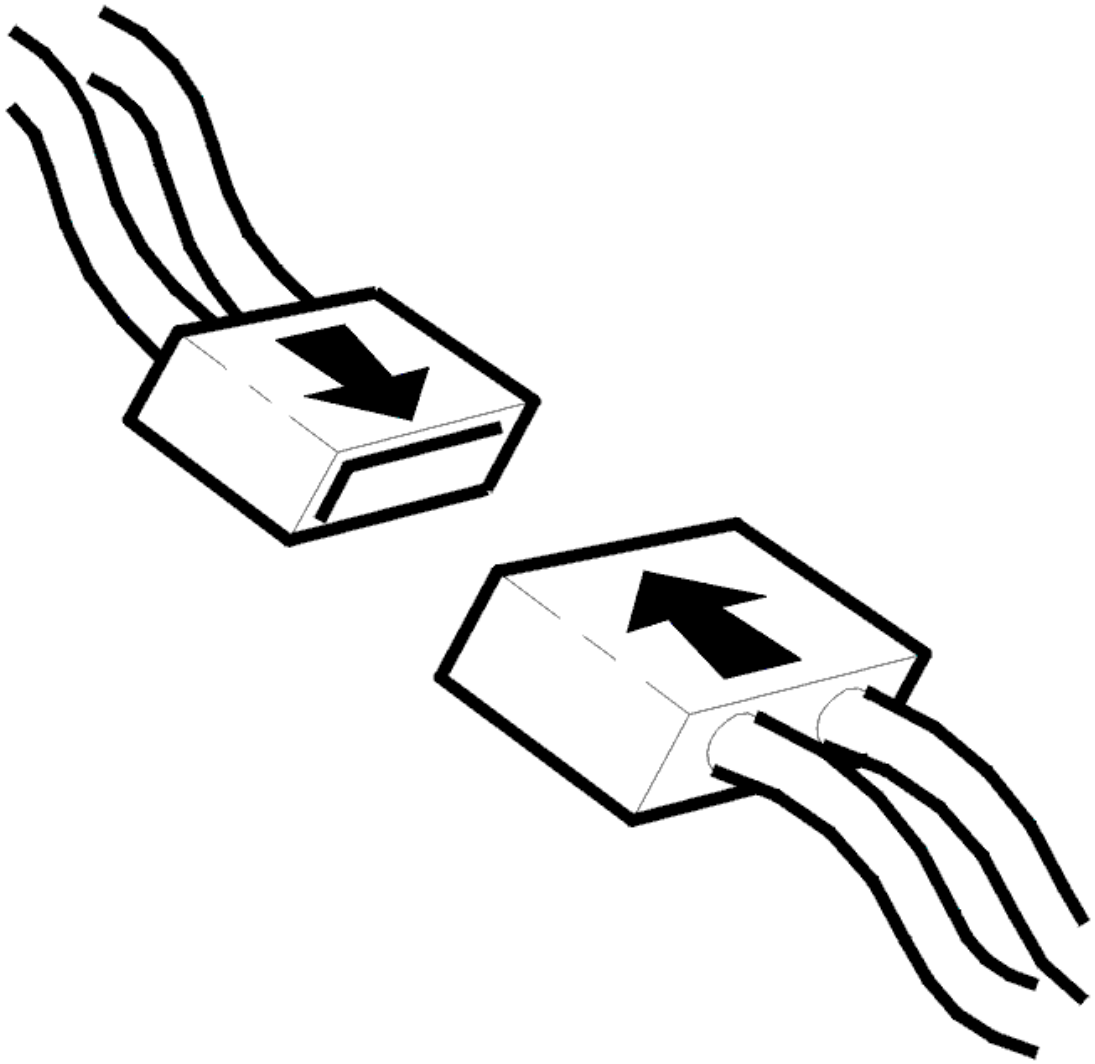

Fig. 225: Connecting Connector
Courtesy of VOLVO CARS CORPORATION

- Ignition off
- Reinstall the connectors, components etc.
- Ignition on
- Read off the battery voltage. The central electronic module (CEM) uses the prevailing outside temperature to calculate the voltage at which the battery should be charged
- Switch on a few major power consuming components, such as the blower fan.

  Check that the voltage is within the limits of 13.5-14.9 V. Try at different engine speeds (RPM).

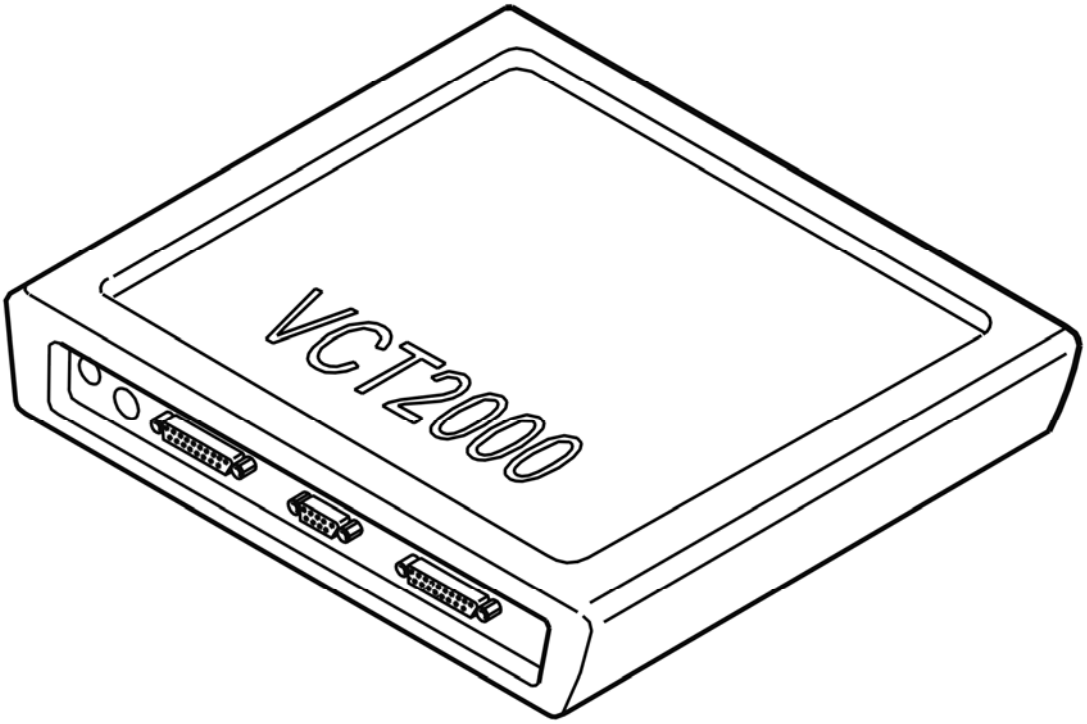

Fig. 226: Identifying VCT2000 Diagnostic Tool Symbol In VIDA
Courtesy of VOLVO CARS CORPORATION

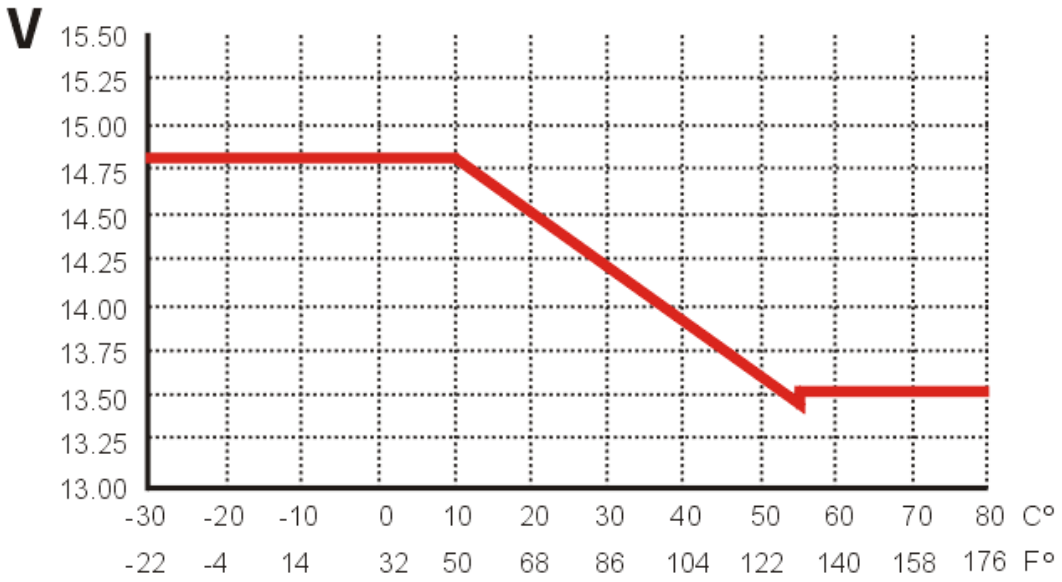

Fig. 227: Identifying Voltage And Temperature Chart
Courtesy of VOLVO CARS CORPORATION

Is the voltage OK?

- **YES**

  VERIFIED: Troubleshooting has been completed.

- **NO**

  Refer to **INFORMATION**

INFORMATION

FAULT-TRACING INFORMATION

The fault should have been detected and remedied. As this is not the case fault-tracing has failed.

Exit fault-tracing for this diagnostic trouble code (DTC) or make another attempt.

CEM-1C06: ALTERNATOR CONTROL MODULE (ACM). ELECTRICAL FAULT (B6294T; 2005-2006)

DIAGNOSTIC TROUBLE CODE (DTC) INFORMATION CEM-1C06

see **DIAGNOSTIC TROUBLE CODE (DTC) INFORMATION CEM-1C06**

ELECTRICAL FAULT

see **ELECTRICAL FAULT**

CEM-1C07: ALTERNATOR CONTROL MODULE (ACM). OVER HEATED (B6294T; 2005-2006)

DIAGNOSTIC TROUBLE CODE (DTC) INFORMATION CEM-1C07

Condition

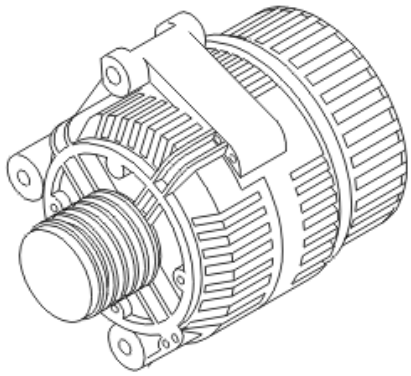

Fig. 228: Freewheel Generator
Courtesy of VOLVO CARS CORPORATION

The central electronic module (CEM) communicates with the alternator control module (ACM).

The diagnostic trouble code (DTC) is stored if the central electronic module (CEM) receives information from the alternator control module (ACM) indicating overheating in the generator (GEN).

The diagnostic trouble code (DTC) can be diagnosed at engine speeds (RPM) above 600 RPM.

Substitute Value

- None.

Possible Source

- The air ducts for the generator (GEN) are blocked.

Fault symptom[s]

- The "Generator not charging" warning lamp is lit when the engine is running
- Warning lights and chimes/Generator warning indication/no indication
- The battery discharges
- Starting/Engine does not start/Unsure when/at all times
- Low rotation speed in the starter motor.
- Alternator and charge regulator/Power supply problems

OVER HEATED

CHECKING THE COMPONENT

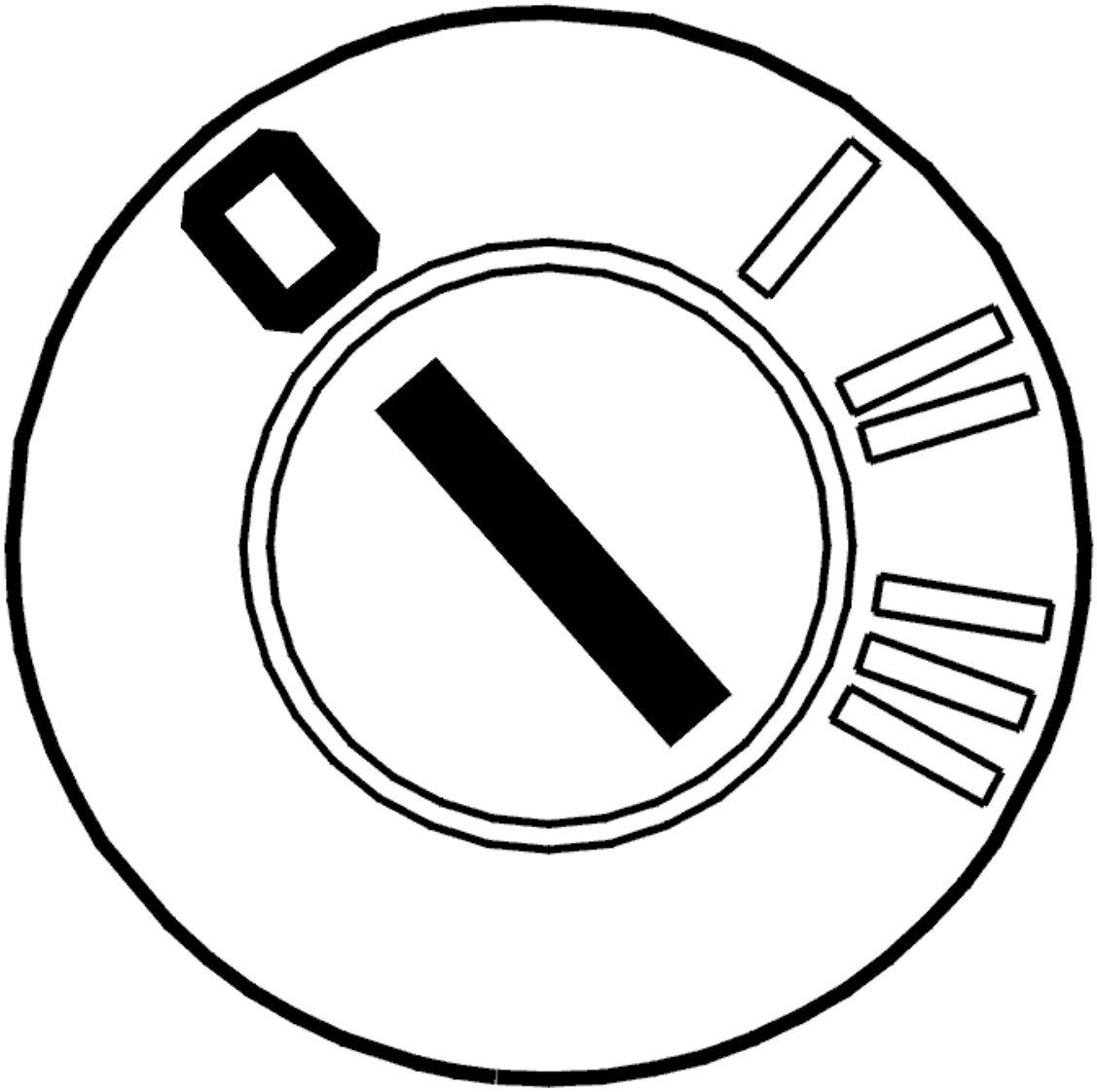

Fig. 229: Identifying Ignition OFF
Courtesy of VOLVO CARS CORPORATION

- Ignition off.

  Check that the air ducts for the generator (GEN) are not blocked.

  HINT: If the diagnostic trouble code is stored again after driving, replace the generator (GEN).

  Remedy as necessary.

  Other information

  - see **LOCATION OF COMPONENTS**
  - see **CHECKING WIRING AND TERMINALS**

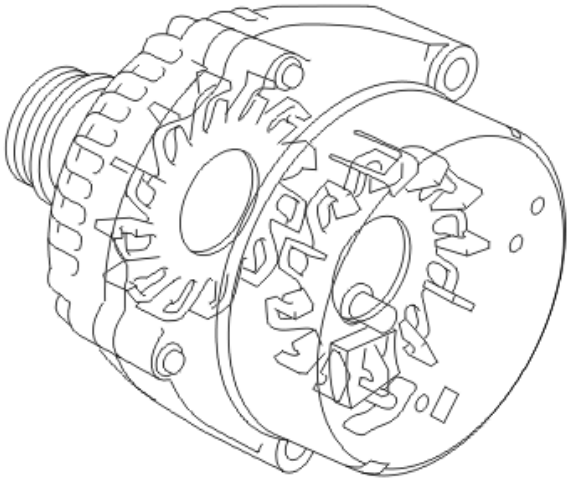

Fig. 230: Cooling Fans
Courtesy of VOLVO CARS CORPORATION

Was a fault detected?

- **YES**

  Refer to **INFORMATION**

- **NO**

  FAULT NOT FOUND: Troubleshooting has been completed.

INFORMATION

FAULT-TRACING INFORMATION

In case of this defect, troubleshooting is not followed by verification.

The information can be displayed again or the fault-tracing for this fault can be interrupted.

CEM-1C08: ALTERNATOR CONTROL MODULE (ACM). MECHANICAL FAULT (B5254T2; 2005-2007)

DIAGNOSTIC TROUBLE CODE (DTC) INFORMATION CEM-1C08

Condition

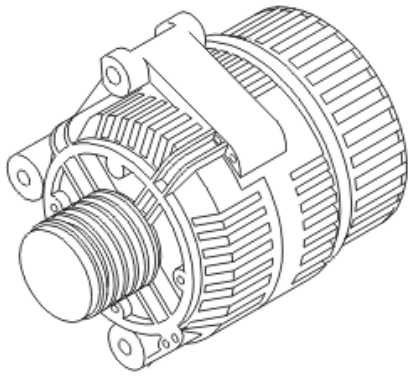

Fig. 231: Freewheel Generator
Courtesy of VOLVO CARS CORPORATION

The central electronic module (CEM) communicates with the alternator control module (ACM).

The diagnostic trouble code (DTC) is stored if the central electronic module (CEM) receives information from the alternator control module (ACM) indicating an internal mechanical fault in the generator (GEN).

The diagnostic trouble code (DTC) can be diagnosed at engine speeds (RPM) above 600 RPM.

Substitute Value

- None.

Possible Source

- Defective auxiliaries belt and belt tensioner
- Damaged freewheel
- Damaged generator (GEN).

Fault symptom[s]

- The "Generator not charging" warning lamp is lit when the engine is running
- Warning lights and chimes/Generator warning indication/no indication
- Alternator and charge regulator/Power supply problems

- The battery discharges
- Starting/Engine hard to start/cranks slowly/Unsure when/at all times
- Low rotation speed in the starter motor
- Noise from the generator (GEN)
- Noise from the belt transmission
- The engine judders under acceleration.

MECHANICAL FAULT

CHECKING BATTERY VOLTAGE

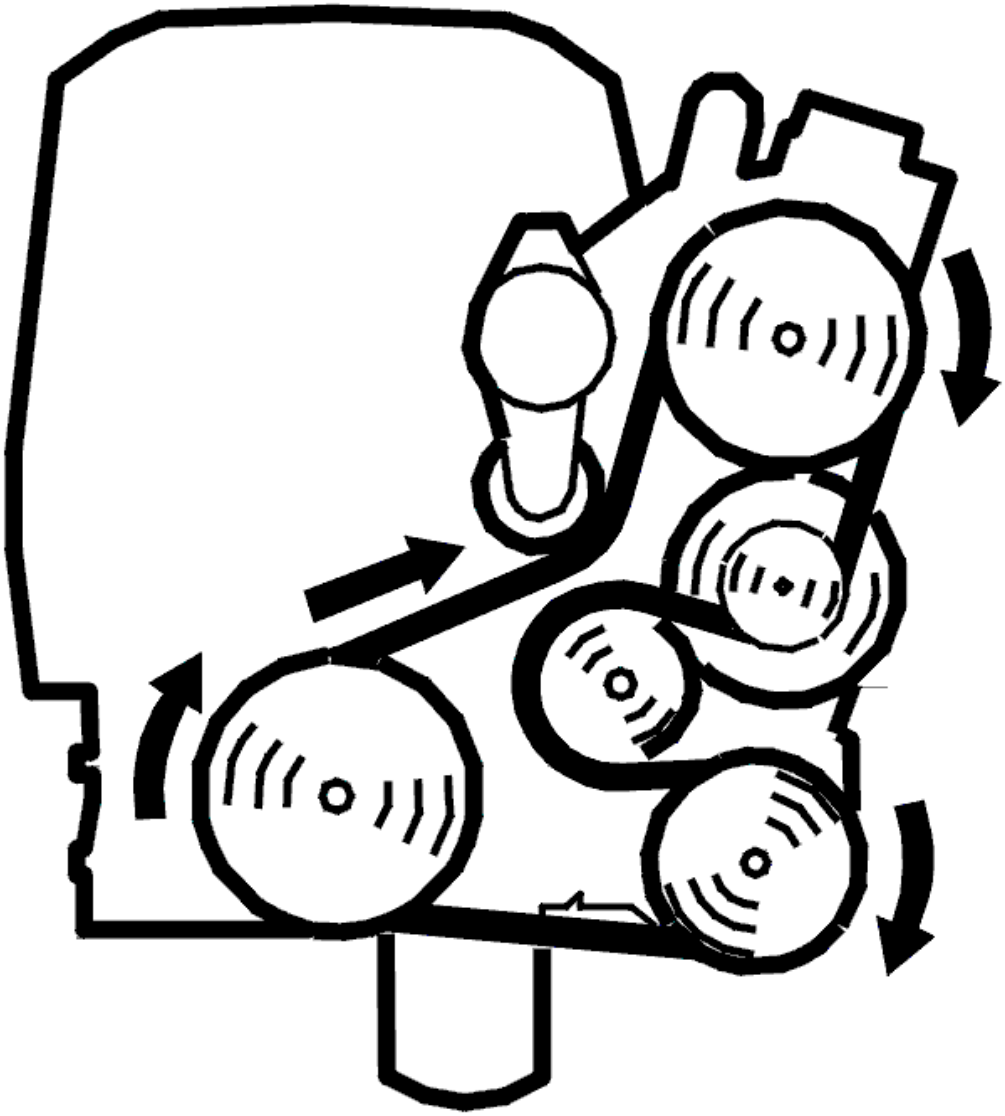

Fig. 232: Belt Routing / Engine Idling - Volvo
Courtesy of VOLVO CARS CORPORATION

- Start the engine
- Read off the battery voltage. The central electronic module (CEM) uses the prevailing outside temperature to calculate the voltage at which the battery should be charged
- Switch on a few major power consuming components, such as the blower fan.

  Check that the voltage is within the limits of 13.5-14.9 V. Try at different engine speeds (RPM).

  Also check for abnormal noise from the generator (GEN) or auxiliaries belt.

  The fault is permanent if the voltage is outside the permitted range.

  If the voltage is within the permitted range, the fault was present previously but is not active at the moment, i. e. an intermittent fault.

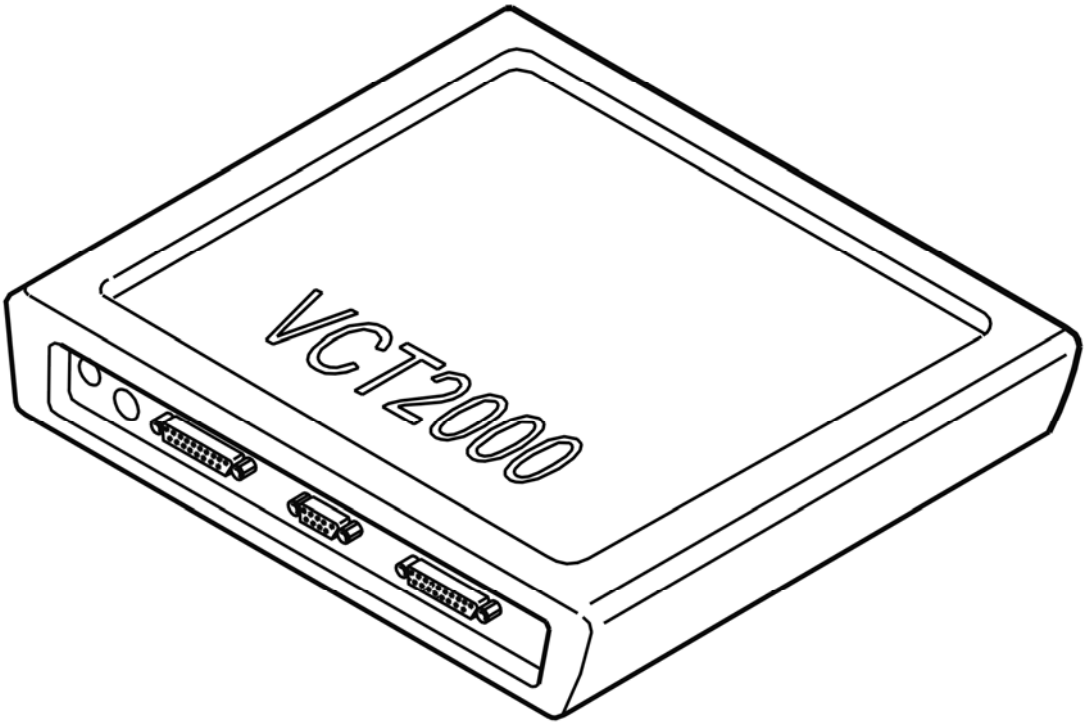

Fig. 233: Identifying VCT2000 Diagnostic Tool Symbol In VIDA
Courtesy of VOLVO CARS CORPORATION

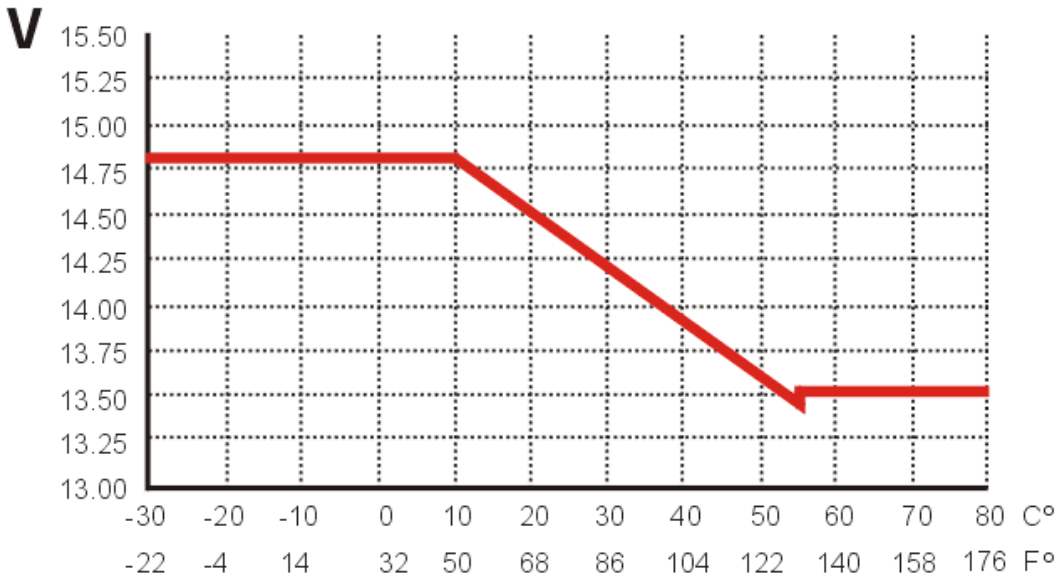

Fig. 234: Identifying Voltage And Temperature Chart
Courtesy of VOLVO CARS CORPORATION

- **Continue**

  Refer to **CHECKING THE AUXILIARIES BELT AND BELT TENSIONER**

CHECKING THE AUXILIARIES BELT AND BELT TENSIONER

Check the tension of the auxiliaries belt. The belt tensioner must adjust the belt tension so that the belt does not slip on the generator pulley.

Check that the auxiliaries belt lies in the groove and runs in line with the pulleys.

Check the auxiliaries belt. Check for wear. An oily or damaged belt must be replaced.

Remedy as necessary.

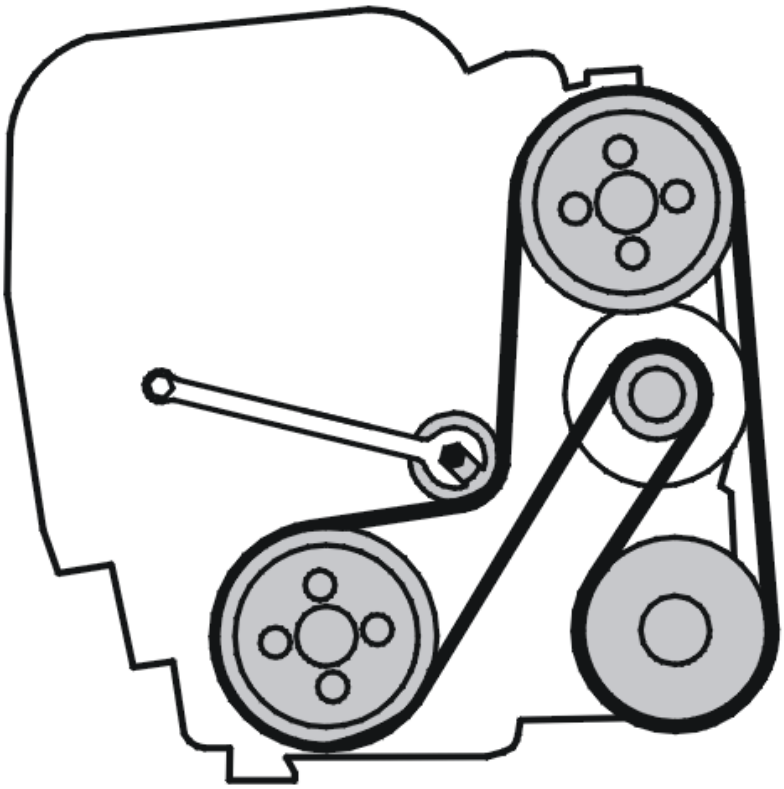

Fig. 235: Checking Auxiliaries Belt And Belt Tensioner
Courtesy of VOLVO CARS CORPORATION

Was a fault detected?

- **YES**

  Refer to **VERIFICATION**

- **NO**

  Refer to **CHECKING THE FREEWHEEL ON A GENERATOR (GEN)**

CHECKING THE FREEWHEEL ON A GENERATOR (GEN)

Check the function of the free wheel as follows.

Checking the function of the freewheel on the generator (GEN) in the car

- Ensure that no extra power consuming components are connected
- Start the engine. Rev the engine to 3000 RPM
- Check that only a faint clicking sound is heard when the freewheel engages and disengages
- Quickly switch off the engine. Check that the generator rotates for longer than the engine.

NOTE: **If it is cold, the battery charge warning lamp may light shortly after start-up because the freewheel needs to rotate and warm up the bearing grease before it locks and engages the rotor shaft. If the warning lamp remains lit, it may be an indication that the freewheel has not locked the pulley to the rotor shaft.**

Checking the function of the freewheel on a removed generator (GEN)

- Rotate the pulley counter-clockwise and brake the pulley heavily. The freewheel must grip the rotor shaft when rotating counter-clockwise
- Stop the rotation by braking the pulley. When braking the pulley, the freewheel mechanism should release so that the rotor shaft continues to rotate.

Remedy as necessary.

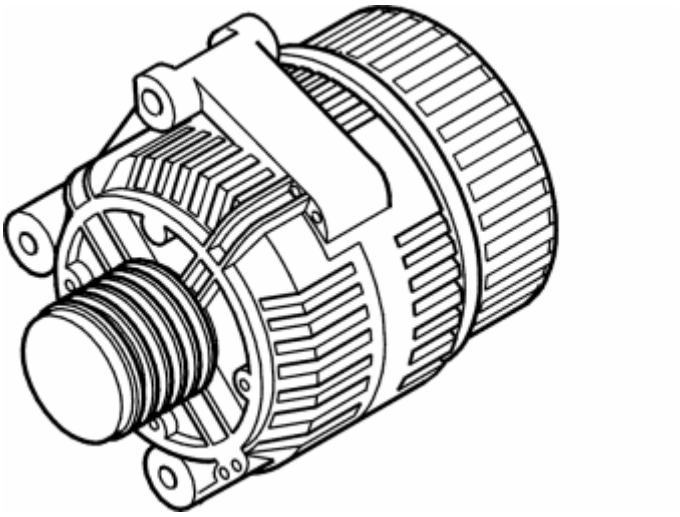

Fig. 236: Identifying Generator
Courtesy of VOLVO CARS CORPORATION

Were any faults found in the freewheel?

- **YES**

  Refer to **VERIFICATION**

- **NO**

  Refer to **CHECKING THE COMPONENT**

CHECKING THE COMPONENT

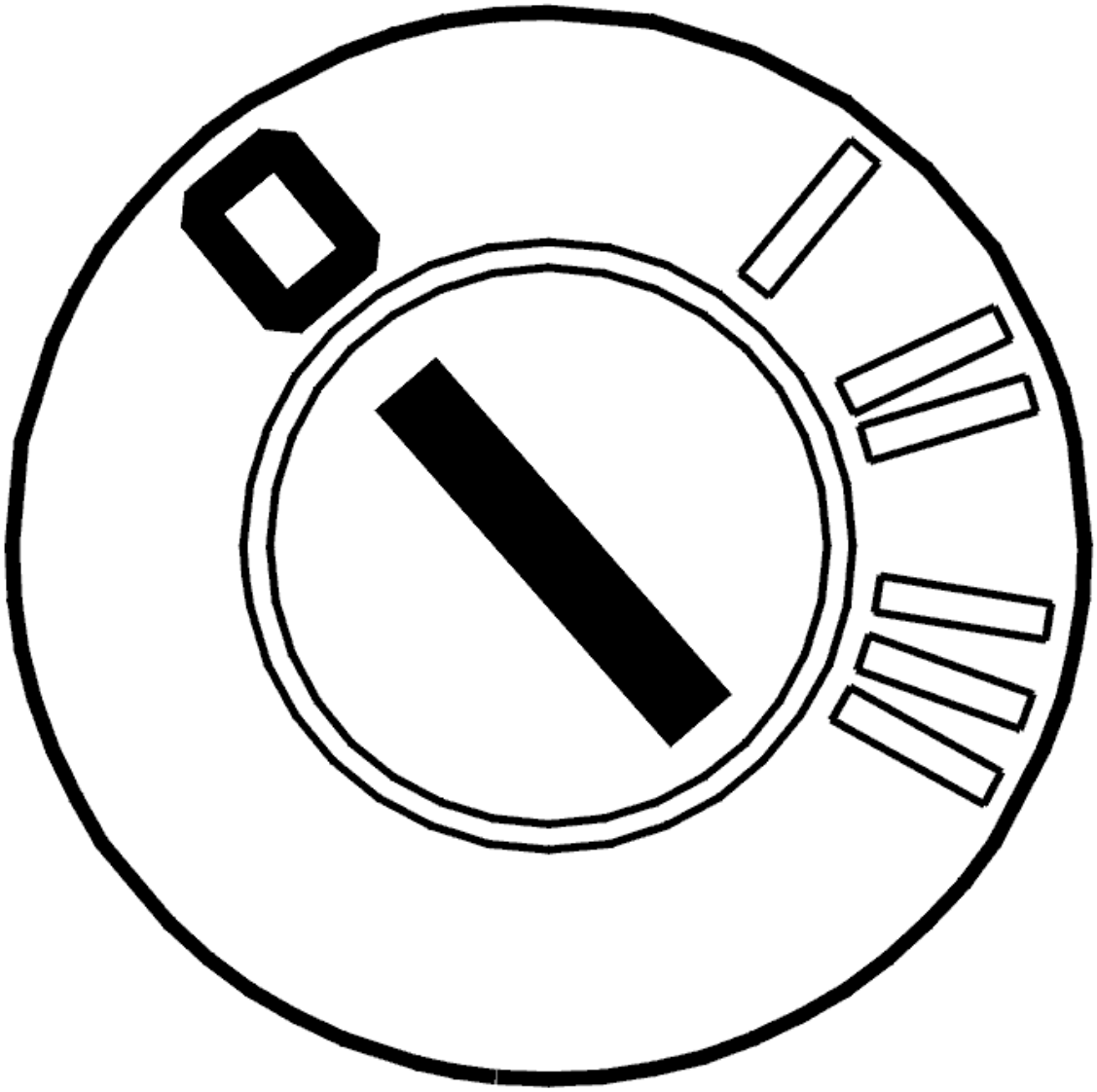

Fig. 237: Identifying Ignition OFF
Courtesy of VOLVO CARS CORPORATION

- Ignition off.

  If the diagnostic trouble code is stored again after driving, replace the generator (GEN).

  Remedy as necessary.

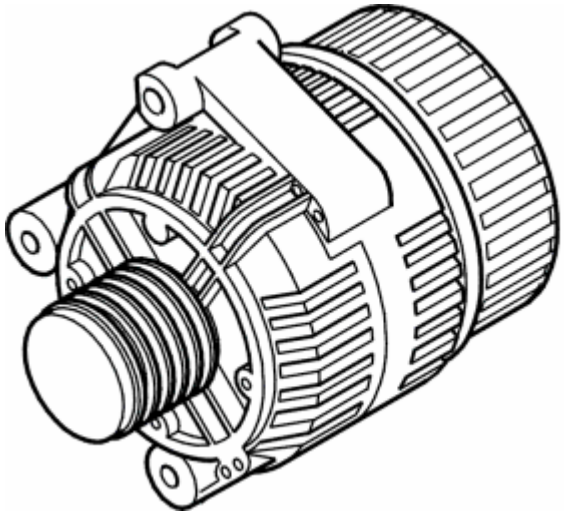

Fig. 238: Identifying Generator
Courtesy of VOLVO CARS CORPORATION

- **Continue**

  Refer to **VERIFICATION**

VERIFICATION

VERIFICATION

HINT: After carrying out the repair, check that the fault has been remedied.

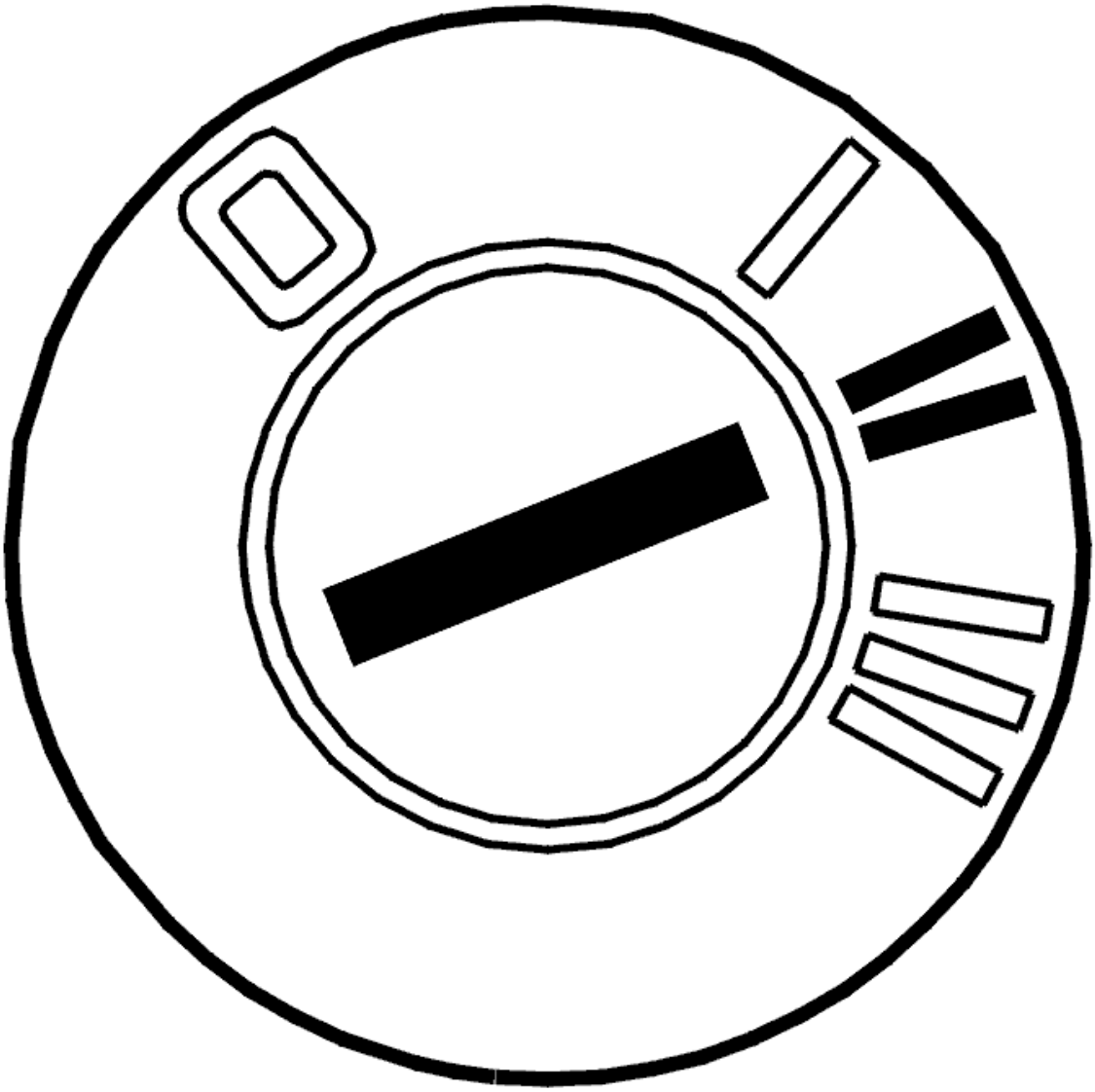

Fig. 239: Identifying Ignition ON
Courtesy of VOLVO CARS CORPORATION

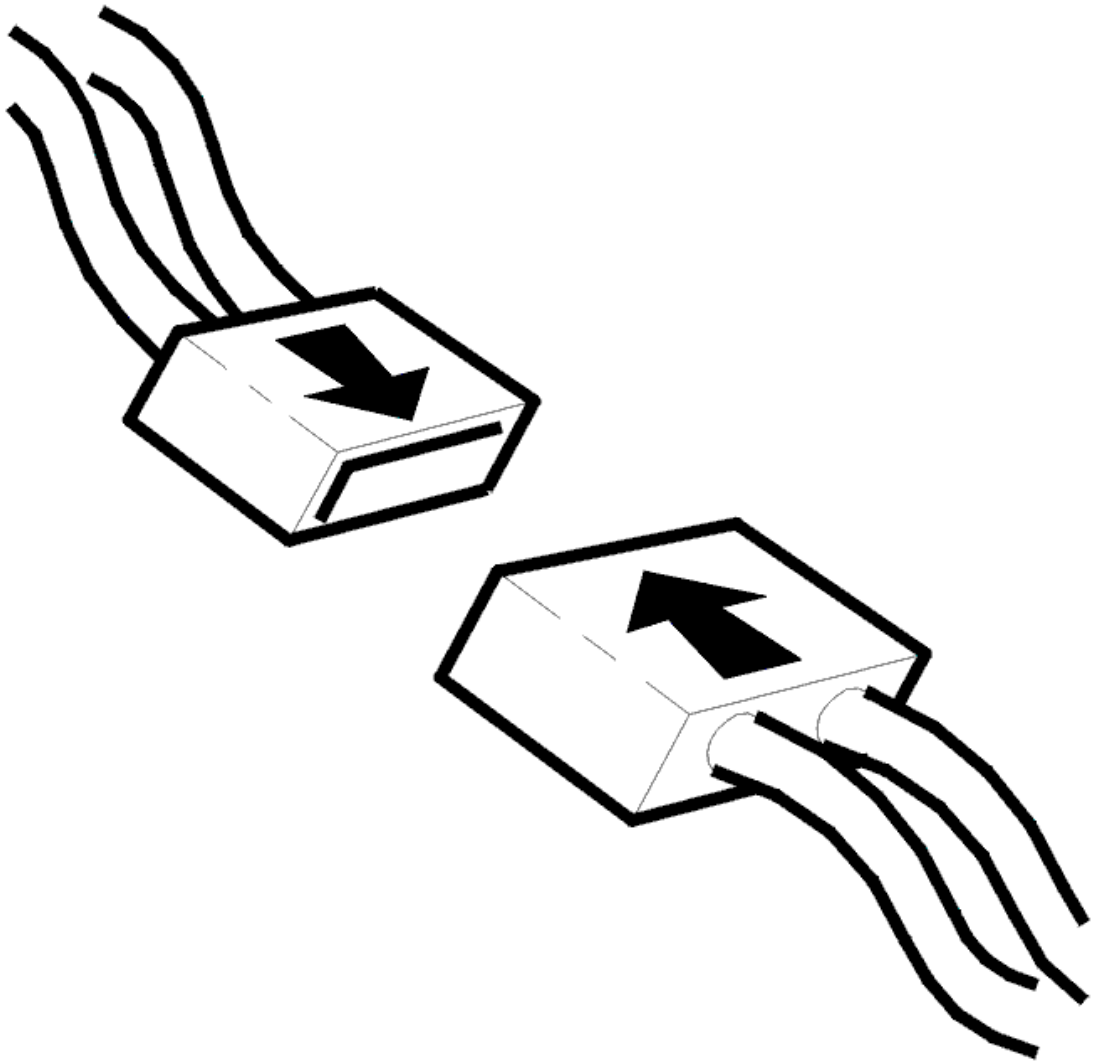

Fig. 240: Connecting Connector
Courtesy of VOLVO CARS CORPORATION

- Ignition off
- Reinstall the connectors, components etc.
- Ignition on
- Read off the battery voltage. The central electronic module (CEM) uses the prevailing outside temperature to calculate the voltage at which the battery should be charged
- Switch on a few major power consuming components, such as the blower fan.

  Check that the voltage is within the limits of 13.5-14.9 V. Try at different engine speeds (RPM).

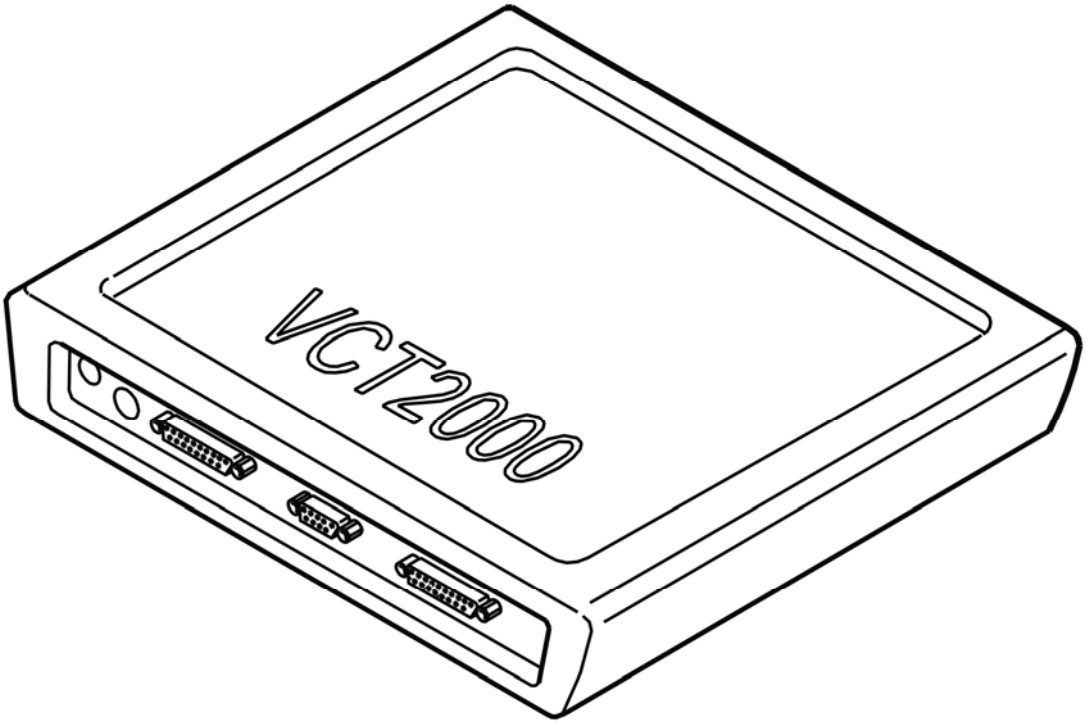

Fig. 241: Identifying VCT2000 Diagnostic Tool Symbol In VIDA
Courtesy of VOLVO CARS CORPORATION

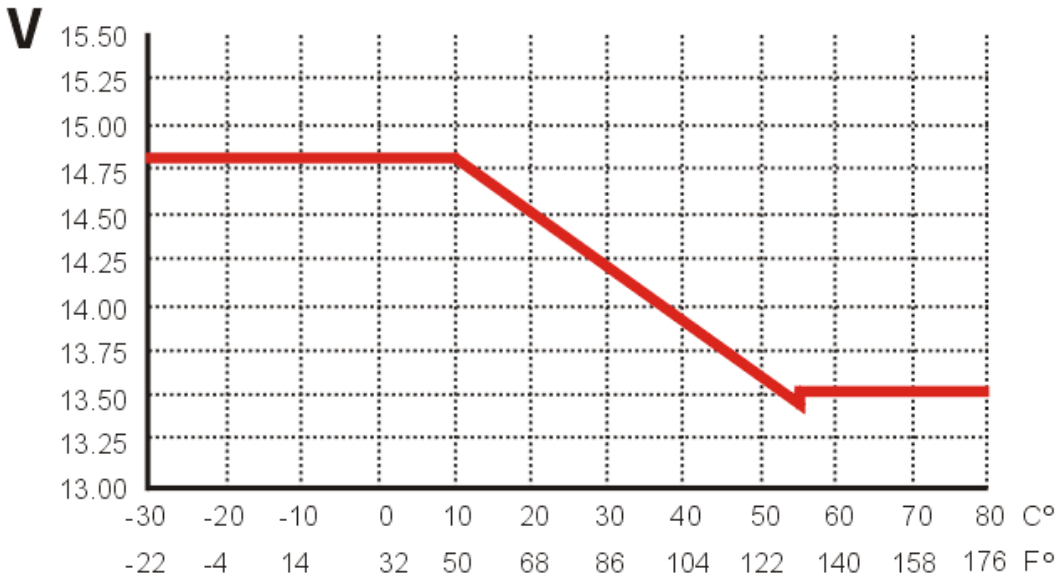

Fig. 242: Identifying Voltage And Temperature Chart
Courtesy of VOLVO CARS CORPORATION

Is the voltage OK?

- **YES**

  VERIFIED: Troubleshooting has been completed.

- **NO**

  Refer to **INFORMATION**

INFORMATION

FAULT-TRACING INFORMATION

The fault should have been detected and remedied. As this is not the case fault-tracing has failed.

Exit fault-tracing for this diagnostic trouble code (DTC) or make another attempt.

CEM-1C08: ALTERNATOR CONTROL MODULE (ACM). MECHANICAL FAULT (B6294T; 2005-2006)

DIAGNOSTIC TROUBLE CODE (DTC) INFORMATION CEM-1C08

see **DIAGNOSTIC TROUBLE CODE (DTC) INFORMATION CEM-1C08**

MECHANICAL FAULT

see **MECHANICAL FAULT**

CEM-1C0A: ALTERNATOR CONTROL MODULE (ACM). VOLTAGE TOO HIGH (B5254T2; 2005-2007)

DIAGNOSTIC TROUBLE CODE (DTC) INFORMATION CEM-1C0A

Condition

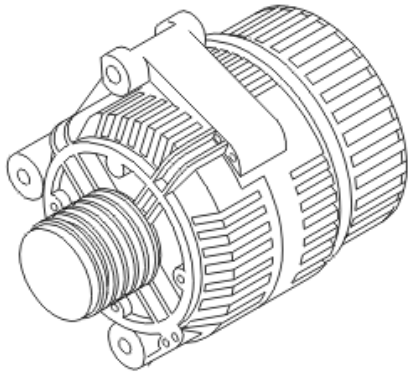

Fig. 1: Freewheel Generator
Courtesy of VOLVO CARS CORPORATION

The central electronic module (CEM) continuously checks the charge status of the battery.

The diagnostic trouble code (DTC) is stored if the central electronic module (CEM) detects excessive voltage (above 16 V).

The diagnostic trouble code (DTC) can be diagnosed at engine speeds (RPM) above 600 RPM.

NOTE: **The voltage of the battery is measured by Rear electronic module (REM) and the voltage value is transmitted to Central electronic module (CEM) via CAN-net. This means that the diagnostic trouble code can be generated if the rear electronic module (REM) sends incorrect data.**

Substitute Value

- None.

Possible Source

- A battery charger with too high charge voltage has been connected previously
- Damaged alternator control module (ACM).

Fault symptom[s]

- The electrolyte in battery boils with the engine running
- The headlamp bulb blows.
- Starting/Engine does not start/Unsure when/at all times
- Warning lights and chimes/Generator warning indication/no indication
- Alternator and charge regulator/Power supply problems

VOLTAGE TOO HIGH

CHECKING THE POWER SUPPLY

Fig. 2: Identifying Ignition On Position
Courtesy of VOLVO CARS CORPORATION

- Start the engine.
- Read off and compare the voltage feed to central electronic module (CEM) and Rear electronic module (REM) using the VCT2000 (or appropriate scan tool).

  The voltage for Rear electronic module (REM) and the Central electronic module (CEM) should be approximately the same.

  The tool also shows the value of the voltage the rear electronic module (REM) transmits on the CAN network.

  The value should match other measurement values.

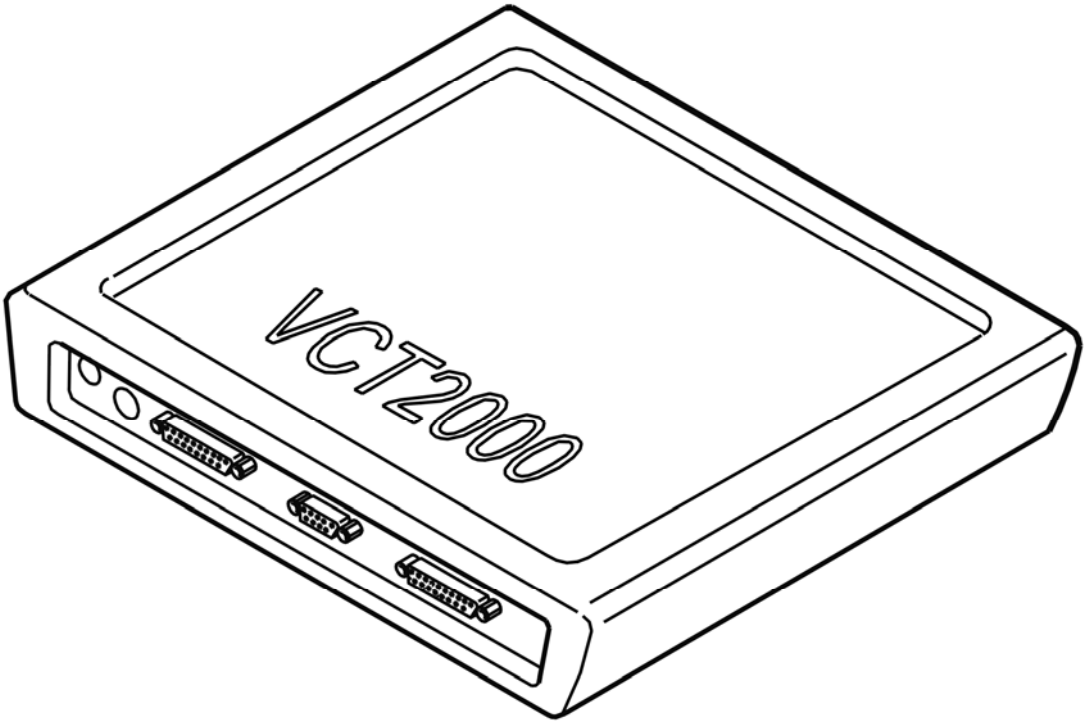

Fig. 3: Identifying VCT2000 Diagnostic Tool Symbol In VIDA
Courtesy of VOLVO CARS CORPORATION

Is the power supply OK?

- **YES**

  Refer to **CHECKING BATTERY VOLTAGE**

- **NO**

  Refer to **CHECKING THE POWER SUPPLY AND GROUND AT REAR ELECTRONIC MODULE (REM)**

CHECKING BATTERY VOLTAGE

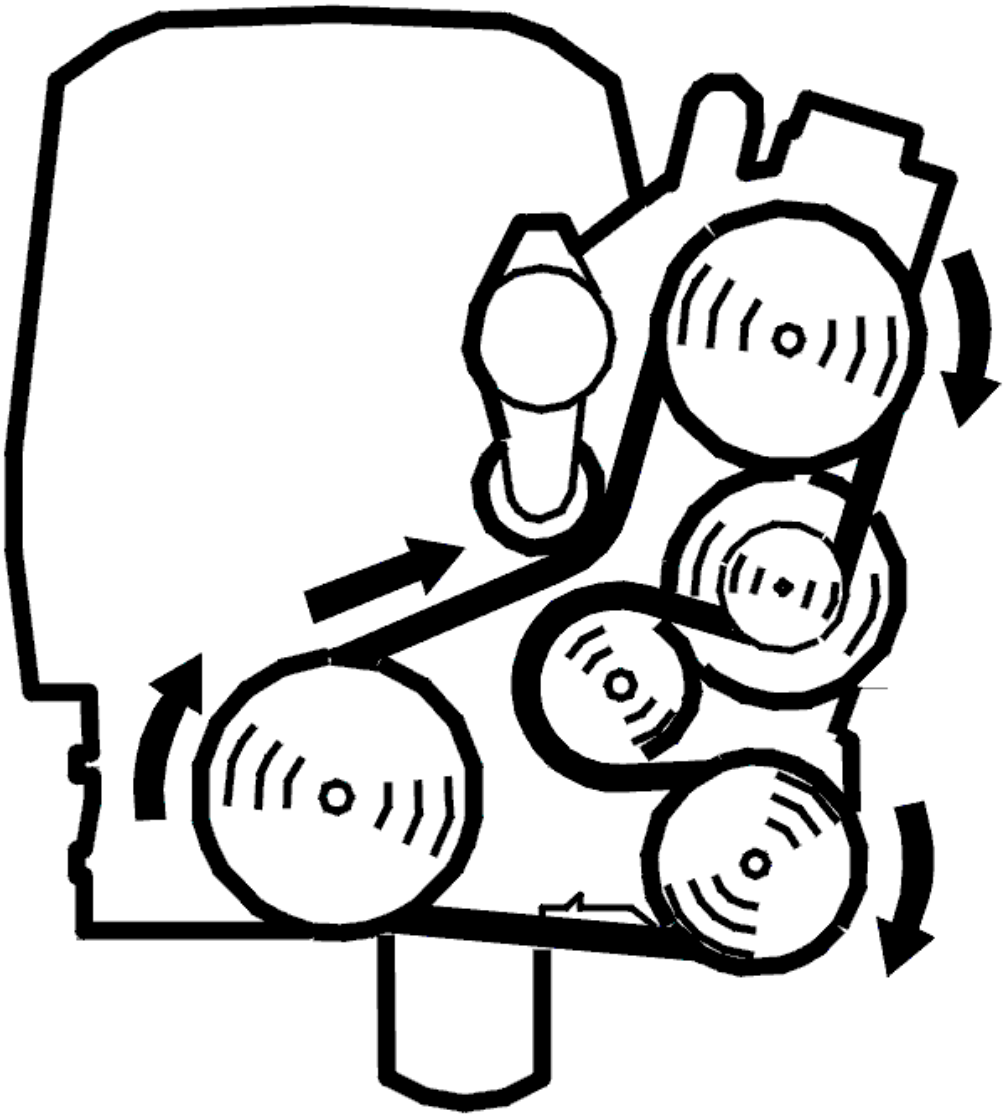

Fig. 4: Belt Routing / Engine Idling - Volvo
Courtesy of VOLVO CARS CORPORATION

- Start the engine
- Read off the battery voltage. The central electronic module (CEM) uses the prevailing outside temperature to calculate the voltage at which the battery should be charged
- Switch on a few major power consuming components, such as the blower fan.

  Check that the voltage is within the limits of 13.5-14.9 V. Try at different engine speeds (RPM).

  The fault is permanent if the voltage is outside the permitted range.

  If the voltage is within the permitted range, the fault was present previously but is not active at the moment, i. e. an intermittent fault.

NOTE: **This diagnostic trouble code can be stored if a battery charger with too high charge voltage has been connected.**

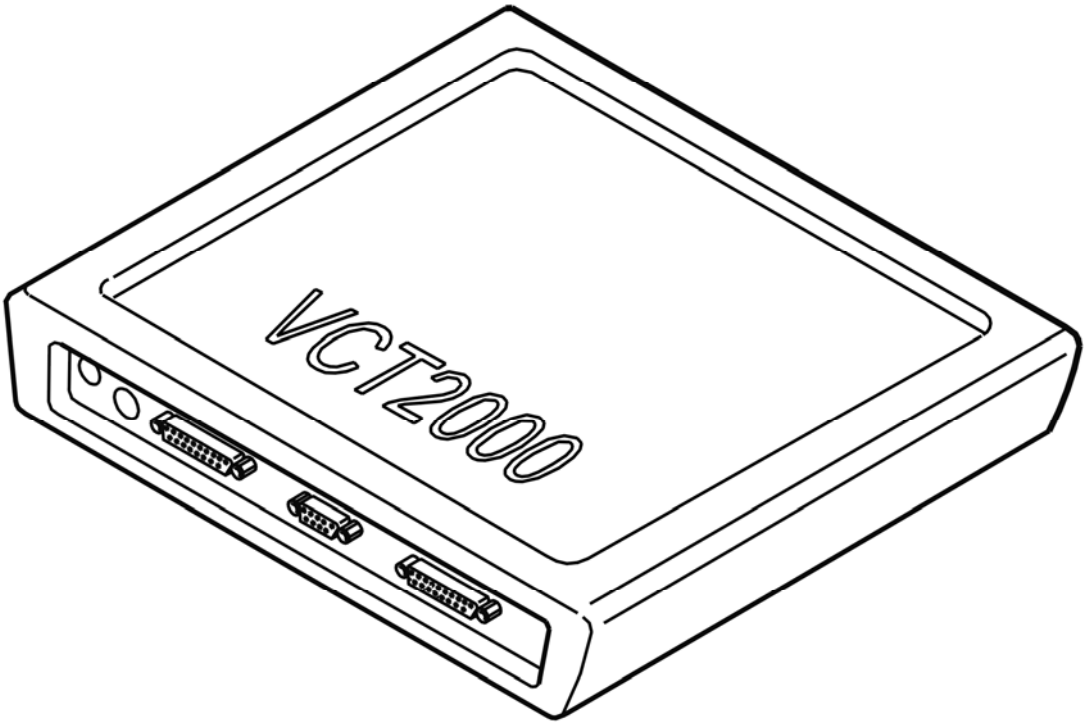

Fig. 5: Identifying VCT2000 Diagnostic Tool Symbol In VIDA
Courtesy of VOLVO CARS CORPORATION

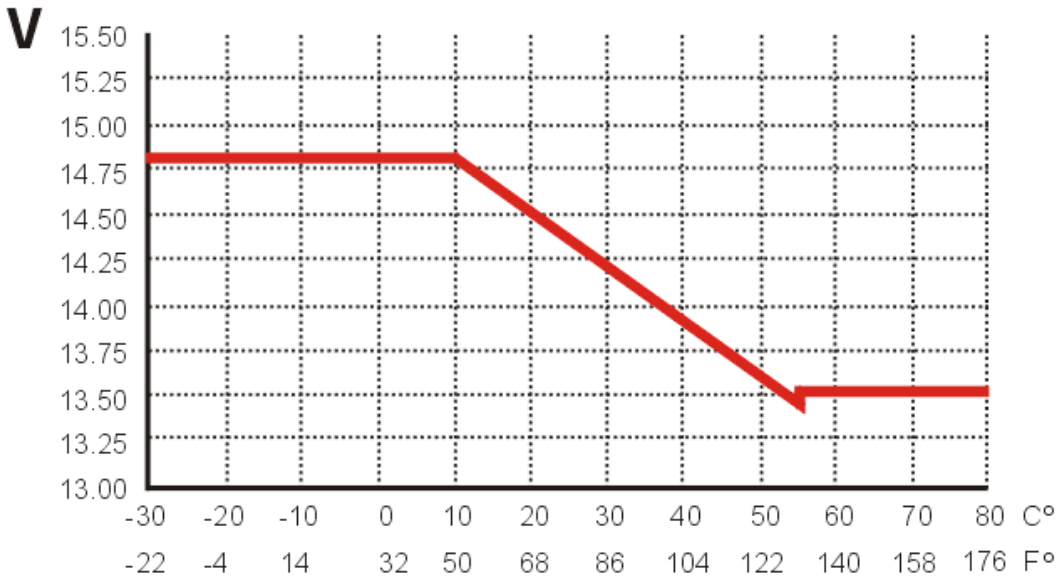

Fig. 6: Identifying Voltage And Temperature Chart
Courtesy of VOLVO CARS CORPORATION

- **Continue**

  Refer to **CHECKING THE COMPONENT**

CHECKING THE COMPONENT

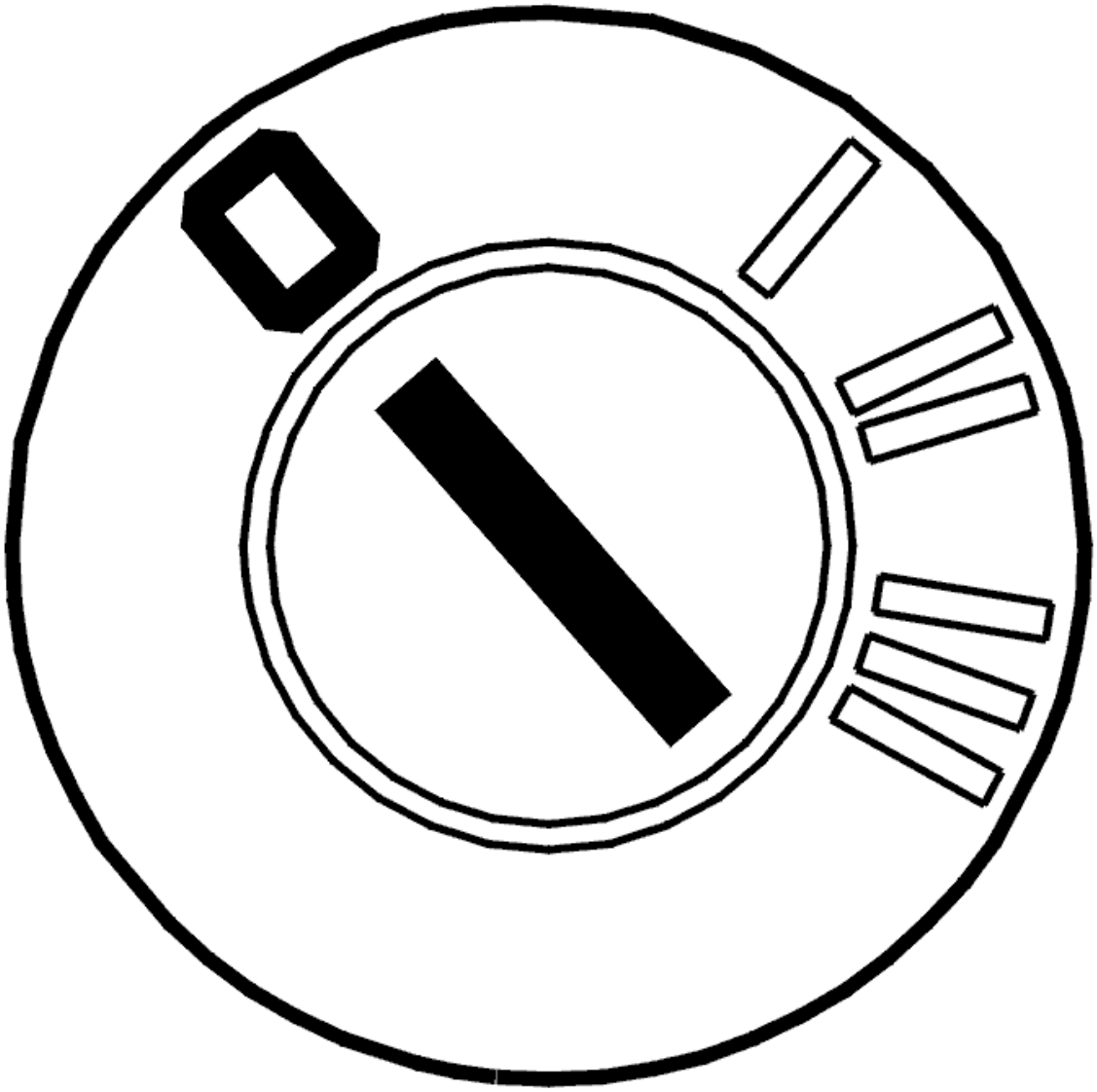

Fig. 7: Identifying Ignition OFF
Courtesy of VOLVO CARS CORPORATION

- Ignition off.

  Try a new alternator control module (ACM) (charge regulator).

  Remedy as necessary.

  Other information:

  - see **CHECKING WIRING AND TERMINALS**

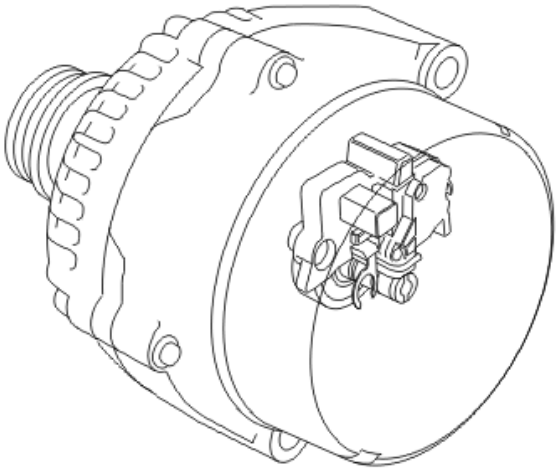

Fig. 8: Charge Regulator
Courtesy of VOLVO CARS CORPORATION

- **Continue**

  Refer to **VERIFICATION**

CHECKING THE POWER SUPPLY AND GROUND AT REAR ELECTRONIC MODULE (REM)

Check the connectors for the Rear electronic module (REM) for contact resistance and oxidation.

Check the connection for voltage feed (30-feed) from the battery to Rear electronic module (REM) (screw connection) for contact resistance and oxidation. Also check the connections for the fuse to Rear electronic module (REM).

Check ground connection from Rear electronic module (REM) #12 (#D12) and ground connection for contact resistance and oxidation.

If no problem is found, replace the Rear electronic module (REM).

Remedy as necessary.

Other information

- see **CONNECTING THE BREAKOUT BOX**
- see **SIGNAL SPECIFICATION**
- For -2004, see: **RELAY/FUSE BOX CARGO COMPARTMENT/REAR ELECTRONIC MODULE (REM), REPLACING**
- For 2005-, see: **REAR ELECTRONIC MODULE (REM), REPLACING** .
- see **CHECKING WIRING AND TERMINALS**

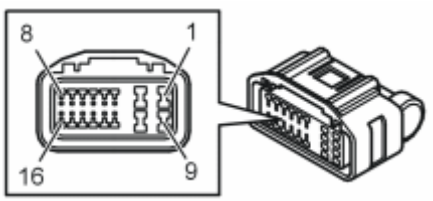

Fig. 9: Identifying Connector Terminals
Courtesy of VOLVO CARS CORPORATION

- **Continue**

  Refer to **VERIFICATION**

VERIFICATION

HINT: After carrying out the repair, check that the fault has been remedied.

- Ignition off.
- Reinstall the connectors, components etc.
- Ignition on.
- Read off and compare the voltage feed to central electronic module (CEM) and Rear electronic module (REM) using the VCT2000 (or appropriate scan tool).

The voltage for Rear electronic module (REM) and the Central electronic module (CEM) should be approximately the same.

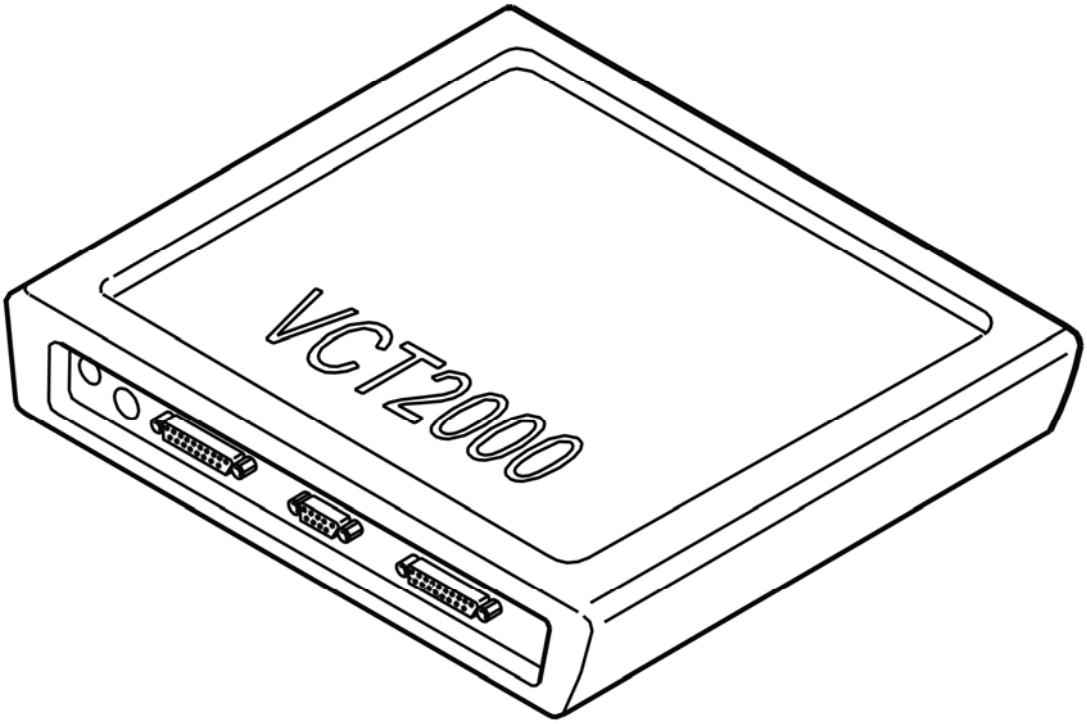

Fig. 10: Identifying VCT2000 Diagnostic Tool Symbol In VIDA
Courtesy of VOLVO CARS CORPORATION

Is the power supply OK?

- **YES**

  OKAY: Troubleshooting has been completed.

- **NO**

  Refer to **INFORMATION**

VERIFICATION

VERIFICATION

HINT: After carrying out the repair, check that the fault has been remedied.

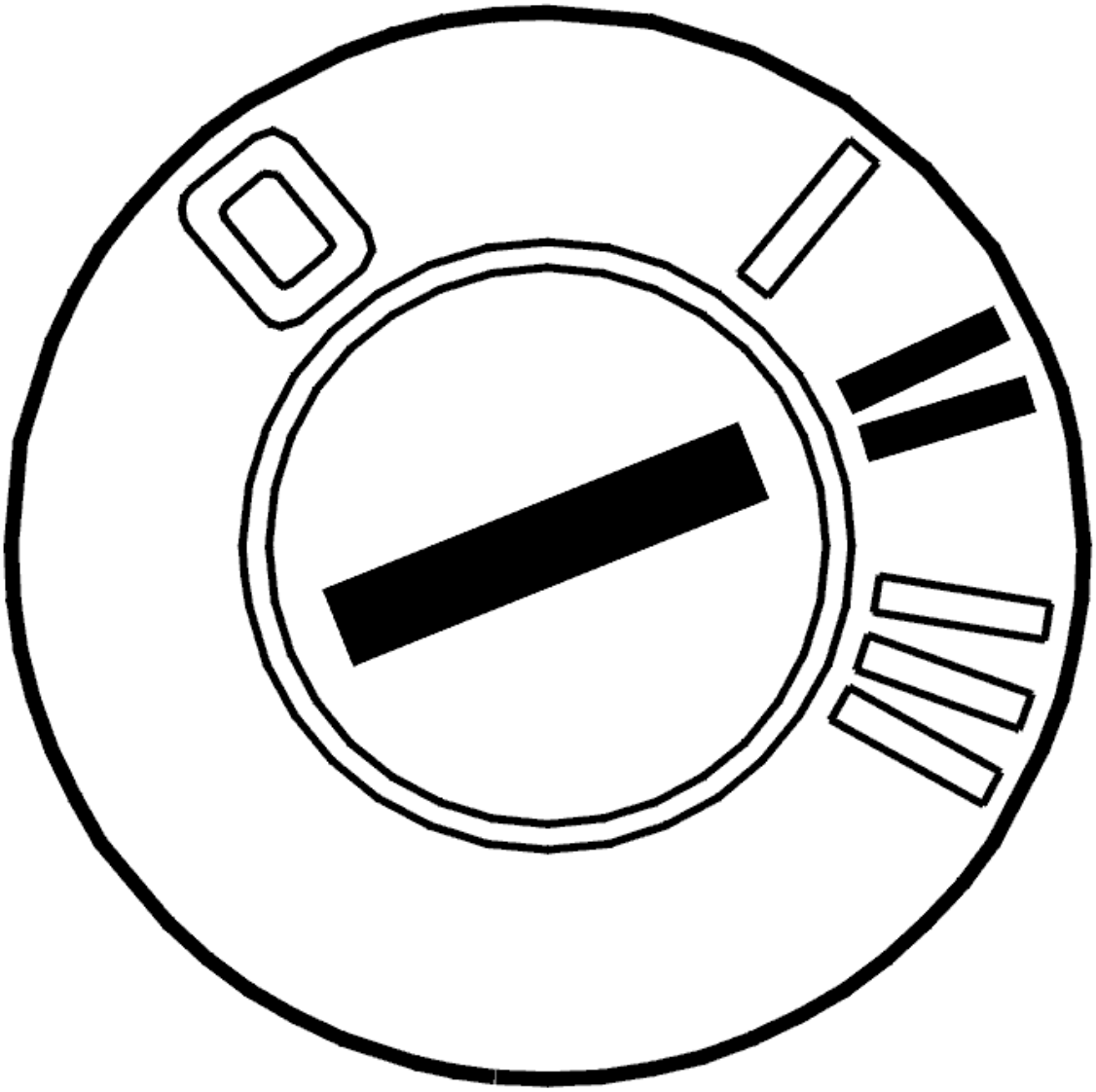

Fig. 11: Identifying Ignition ON
Courtesy of VOLVO CARS CORPORATION

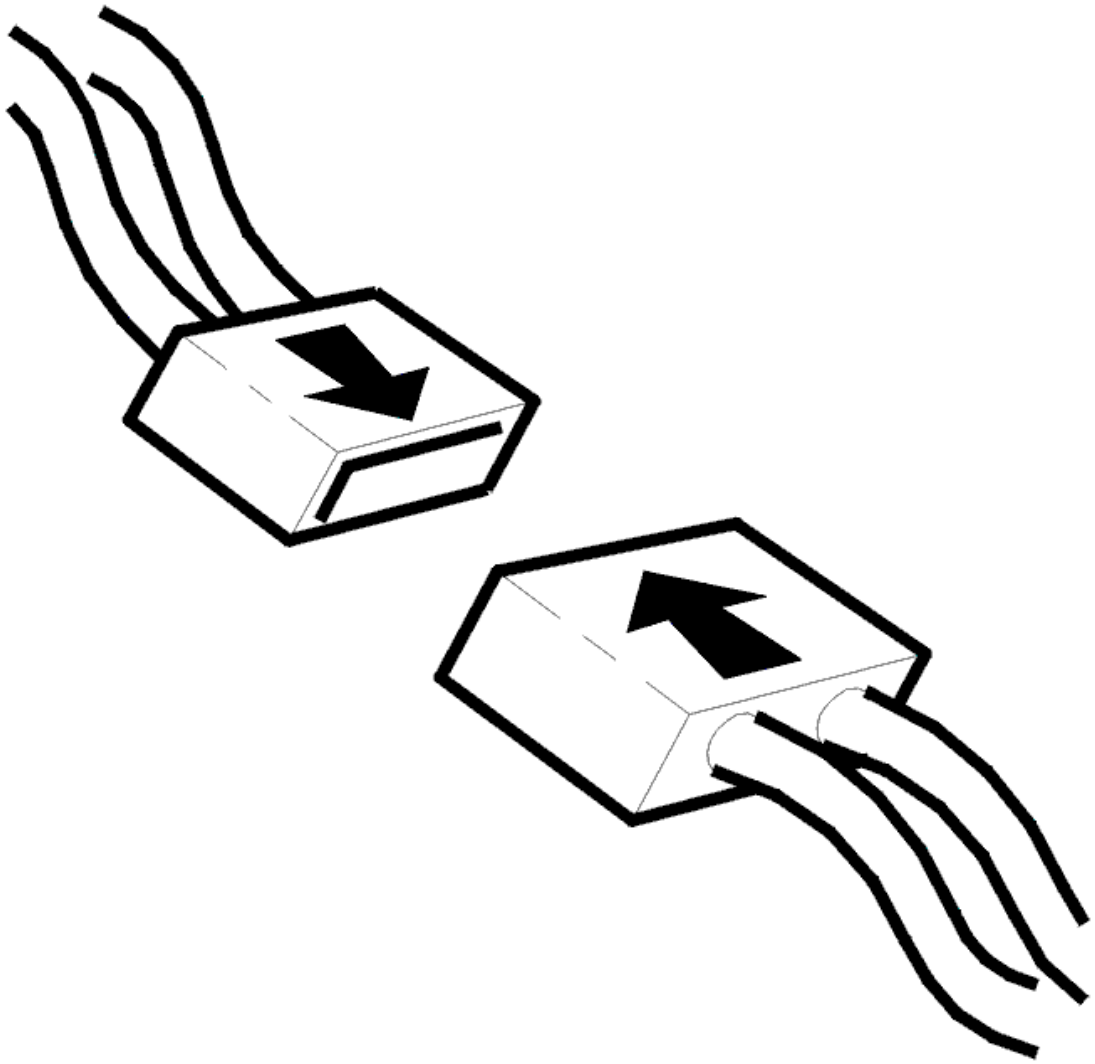

Fig. 12: Connecting Connector
Courtesy of VOLVO CARS CORPORATION

- Ignition off
- Reinstall the connectors, components etc.
- Ignition on
- Read off the battery voltage. The central electronic module (CEM) uses the prevailing outside temperature to calculate the voltage at which the battery should be charged
- Switch on a few major power consuming components, such as the blower fan.

  Check that the voltage is within the limits of 13.5-14.9 V. Try at different engine speeds (RPM).

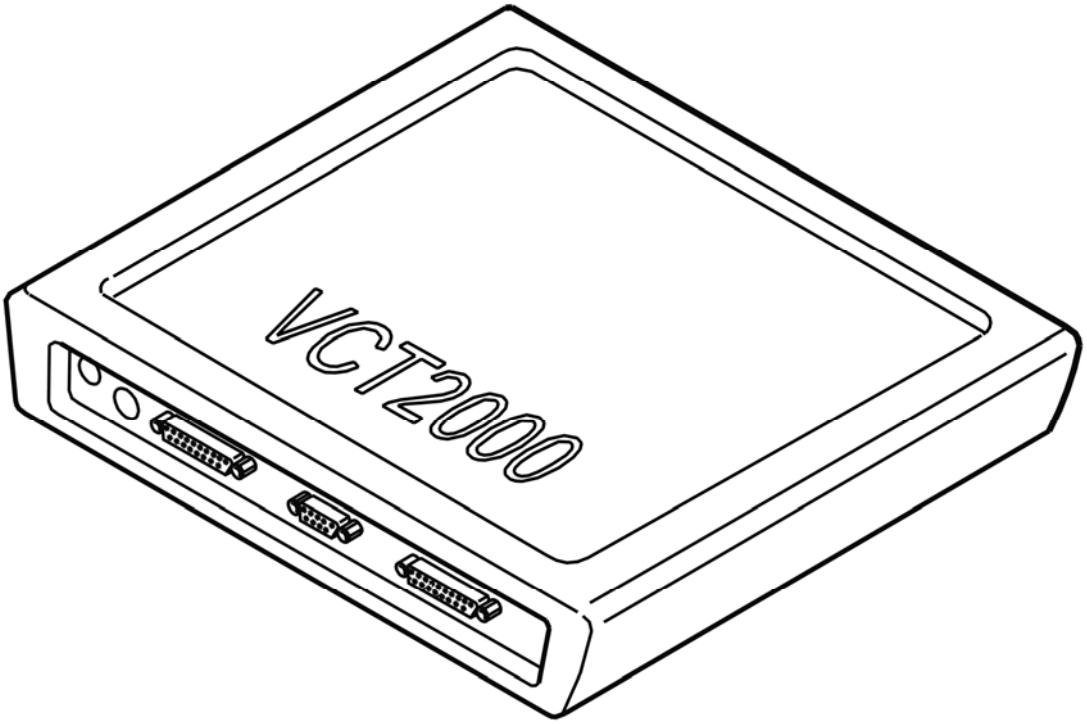

Fig. 13: Identifying VCT2000 Diagnostic Tool Symbol In VIDA
Courtesy of VOLVO CARS CORPORATION

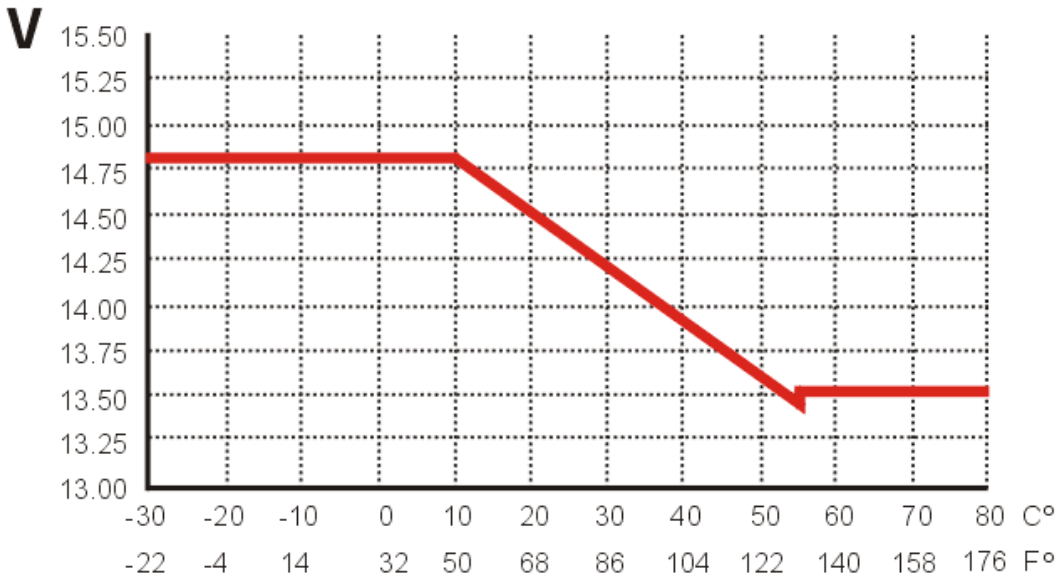

Fig. 14: Identifying Voltage And Temperature Chart
Courtesy of VOLVO CARS CORPORATION

Is the voltage OK?

- **YES**

  VERIFIED: Troubleshooting has been completed.

- **NO**

  Refer to **INFORMATION**

INFORMATION

FAULT-TRACING INFORMATION

The fault should have been detected and remedied. As this is not the case fault-tracing has failed.

Exit fault-tracing for this diagnostic trouble code (DTC) or make another attempt.

CEM-1C0A: ALTERNATOR CONTROL MODULE (ACM). VOLTAGE TOO HIGH (B6294T; 2005-2006)

DIAGNOSTIC TROUBLE CODE (DTC) INFORMATION CEM-1C0A

see **DIAGNOSTIC TROUBLE CODE (DTC) INFORMATION CEM-1C0A**

VOLTAGE TOO HIGH

see **VOLTAGE TOO HIGH**

CEM-1C21: RELAY, INFOTAINMENT. SIGNAL TOO HIGH (2003-2004)

DIAGNOSTIC TROUBLE CODE (DTC) INFORMATION CEM-1C21

Condition

The central electronic module (CEM) checks the output signal to the relay coil for relay infotainment.

Diagnostic trouble code (DTC) CEM-1C21 is stored if the central electronic module (CEM) registers that the output signal to the relay coil is too high.

Diagnostic trouble code (DTC) CEM-1C21 can be detected when the relay is activated.

Substitute Value

- None.

Possible Source

- Short-circuit to supply voltage in the relay circuit
- Defective relay.

Fault symptom[s]

- Audio unit not operating.

SIGNAL TOO HIGH

CHECKING AND REPLACING THE COMPONENT

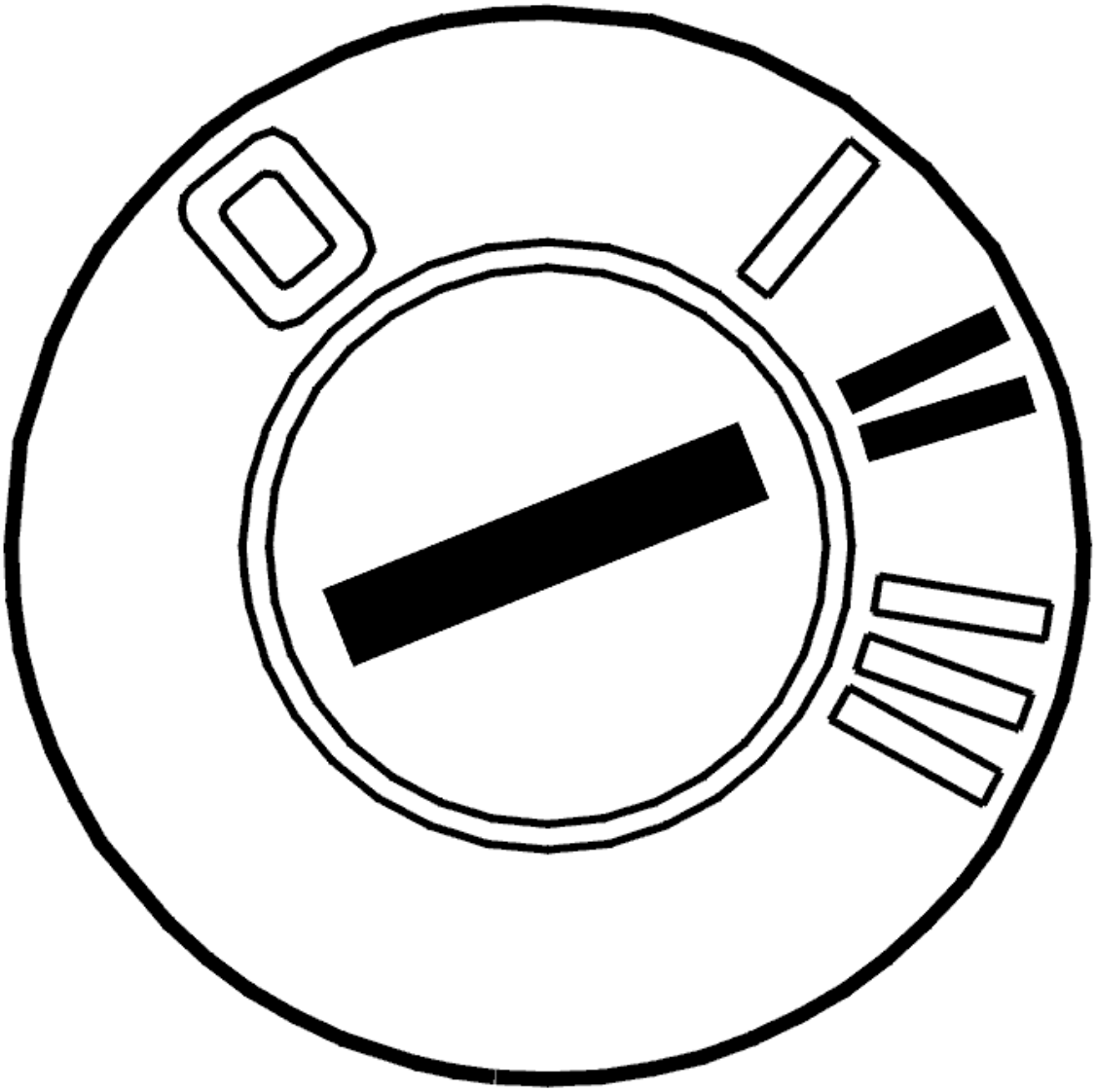

Fig. 15: Identifying Ignition ON
Courtesy of VOLVO CARS CORPORATION

- Ignition off
- Replace the infotainment relay
- Ignition on.

  Activate the relay. The relay should click.

  If the function is OK, the cause of the fault was a defective relay (short-circuit in the relay).

  Other information

  - To access and replace the relay:
    - For -2004, see: **CENTRAL ELECTRONIC MODULE (CEM), REPLACING**

- For 2005-, see: **CENTRAL ELECTRONIC MODULE (CEM), REPLACING** .

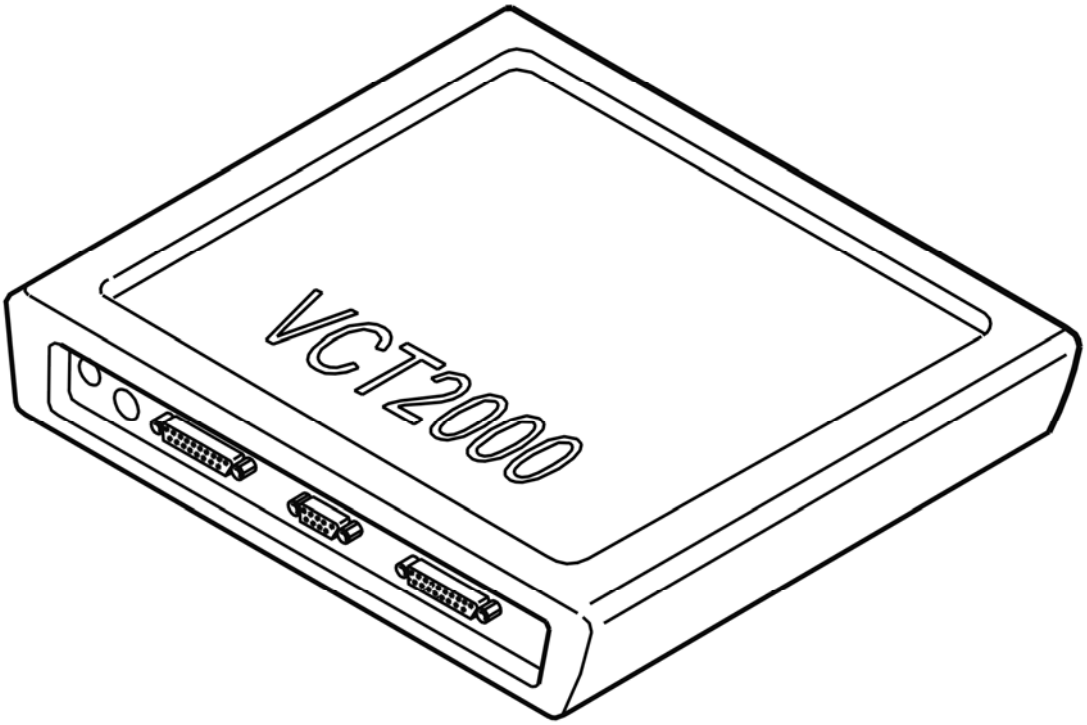

Fig. 16: Identifying VCT2000 Diagnostic Tool Symbol In VIDA
Courtesy of VOLVO CARS CORPORATION

Was the function OK?

- **YES**

  OKAY: Troubleshooting has been completed.

- **NO**

  Refer to **CHECKING THE CONTROL MODULE**

CHECKING THE CONTROL MODULE

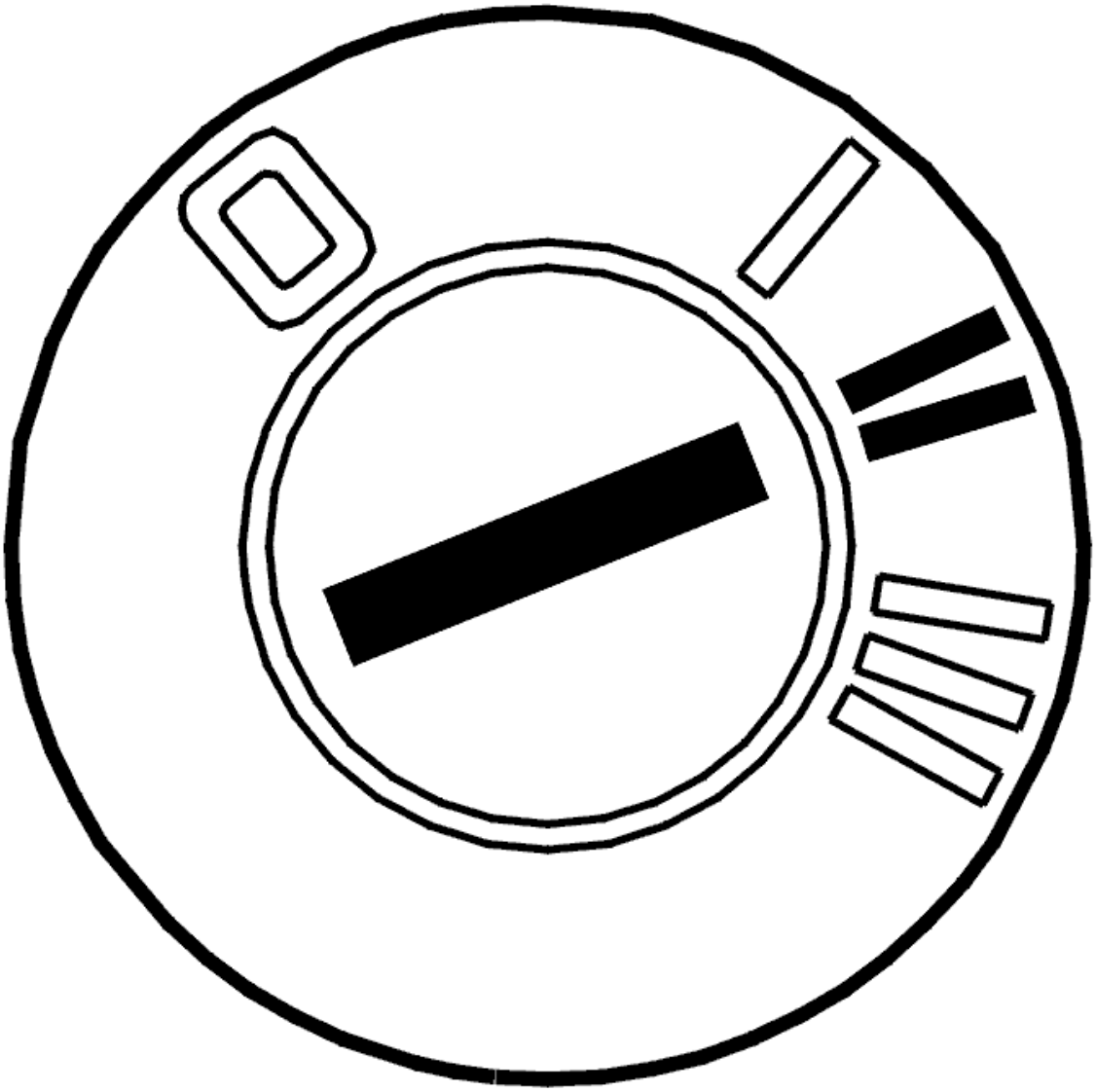

Fig. 17: Identifying Ignition ON
Courtesy of VOLVO CARS CORPORATION

- Ignition off
- Remove the relay
- Ignition on.

Check the relay coil driver circuit for a short-circuit to supply voltage by taking a voltmeter reading at terminal #2 in the relay base.

HINT: The voltage between terminal #2 and ground should be approximately 0 V.

Remedy as necessary.

Other information

- For -2004, see: **CENTRAL ELECTRONIC MODULE (CEM), REPLACING**
- For 2005-, see: **CENTRAL ELECTRONIC MODULE (CEM), REPLACING** .
- see **CHECKING WIRING AND TERMINALS** .

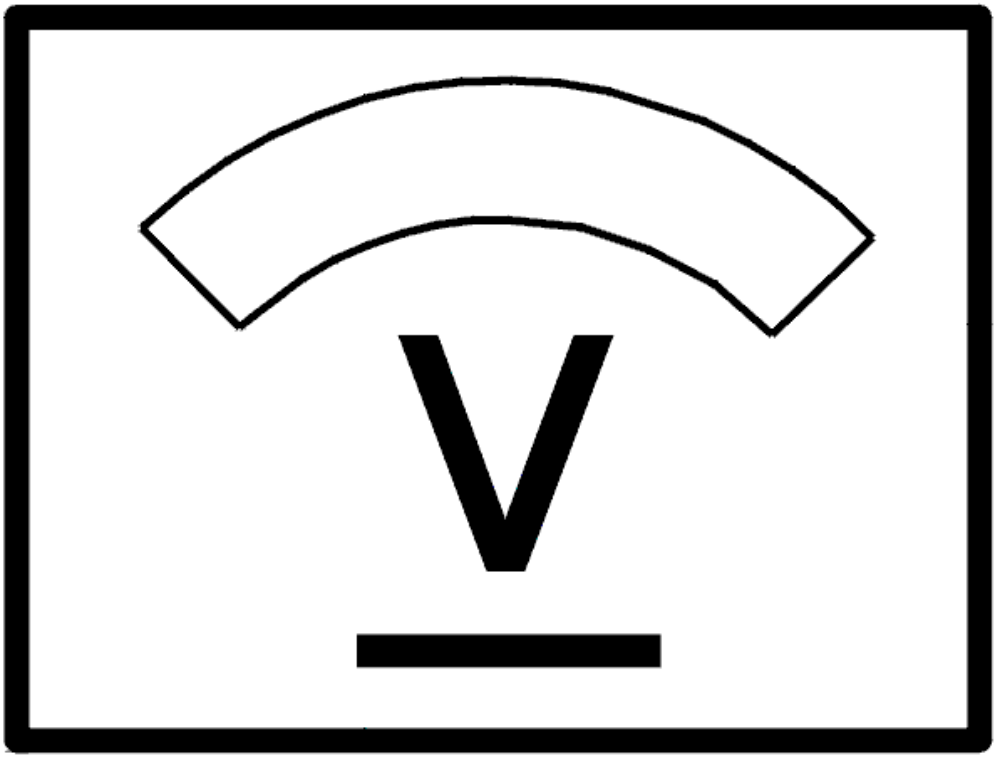

Fig. 18: Identifying Voltage Display
Courtesy of VOLVO CARS CORPORATION

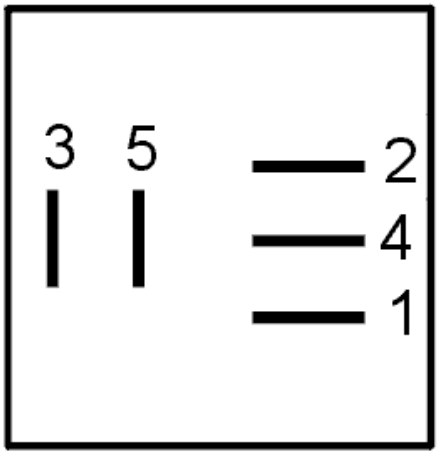

Fig. 19: Identifying Terminals
Courtesy of VOLVO CARS CORPORATION

- **Continue**

  Refer to **VERIFICATION**

VERIFICATION

VERIFICATION

HINT: After carrying out the repair, check that the fault has been remedied.

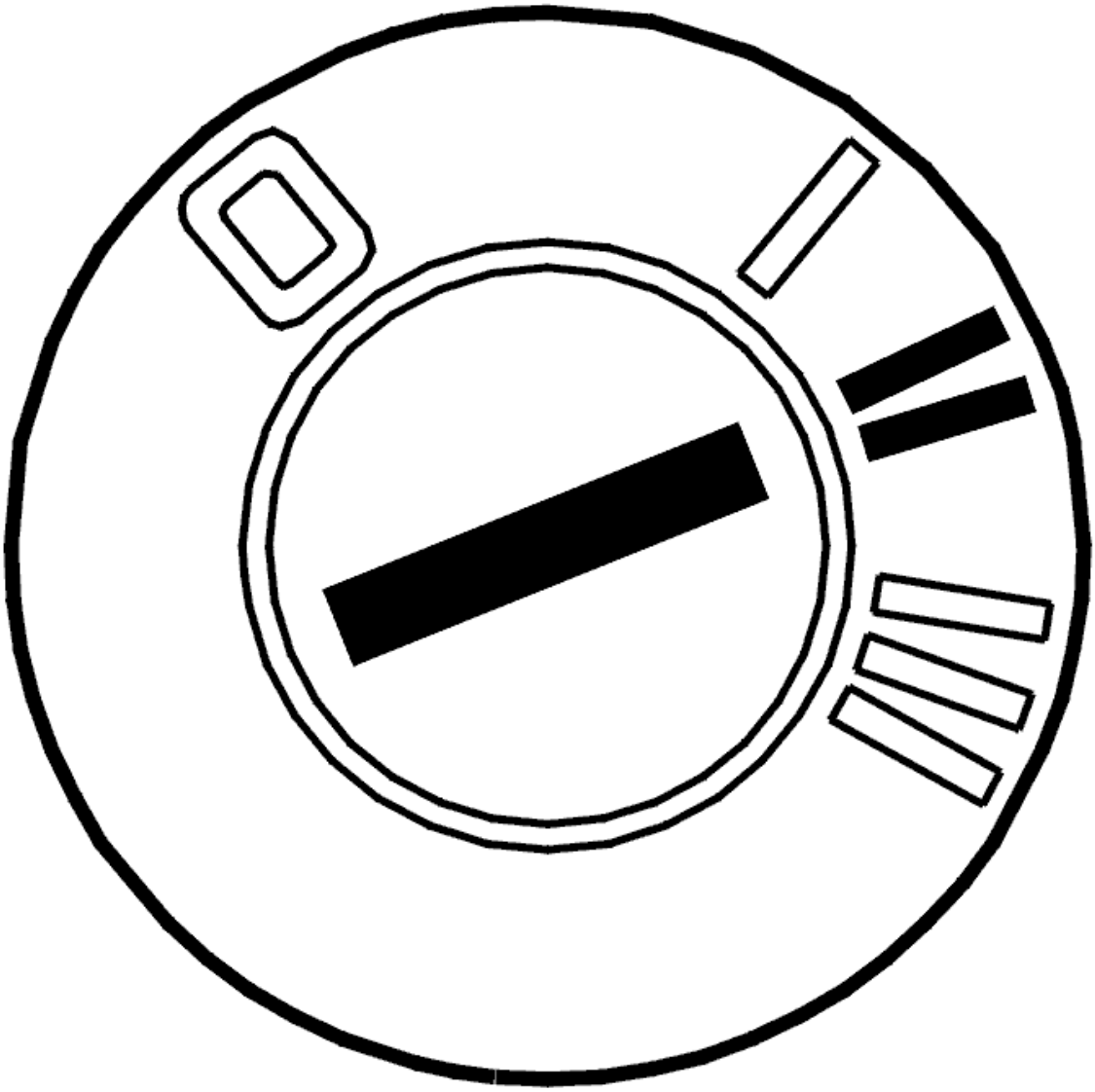

Fig. 20: Identifying Ignition ON
Courtesy of VOLVO CARS CORPORATION

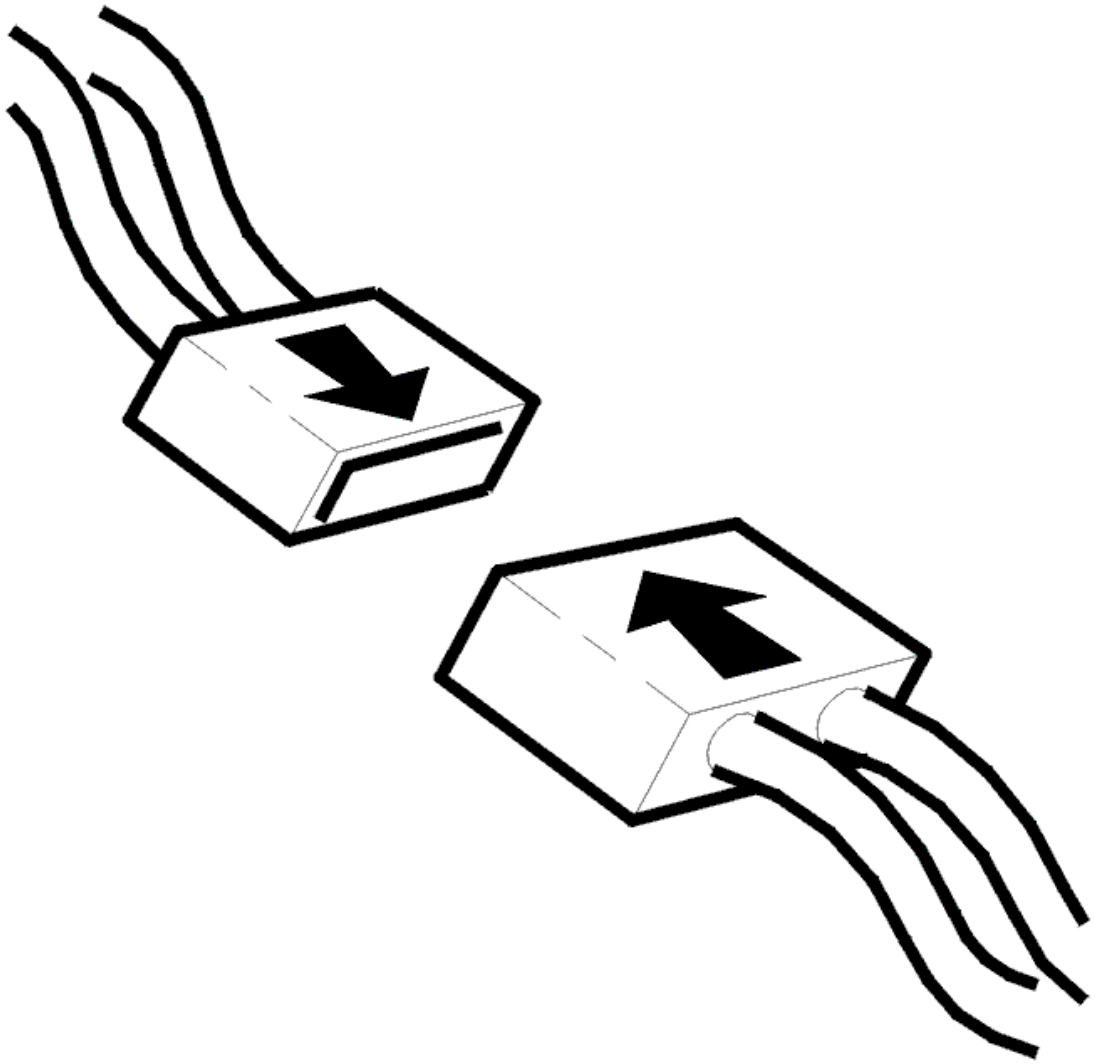

Fig. 21: Connecting Connector
Courtesy of VOLVO CARS CORPORATION

- Ignition off
- Reinstall the connectors, components etc.
- Ignition on.

Activate and deactivate the infotainment relay.

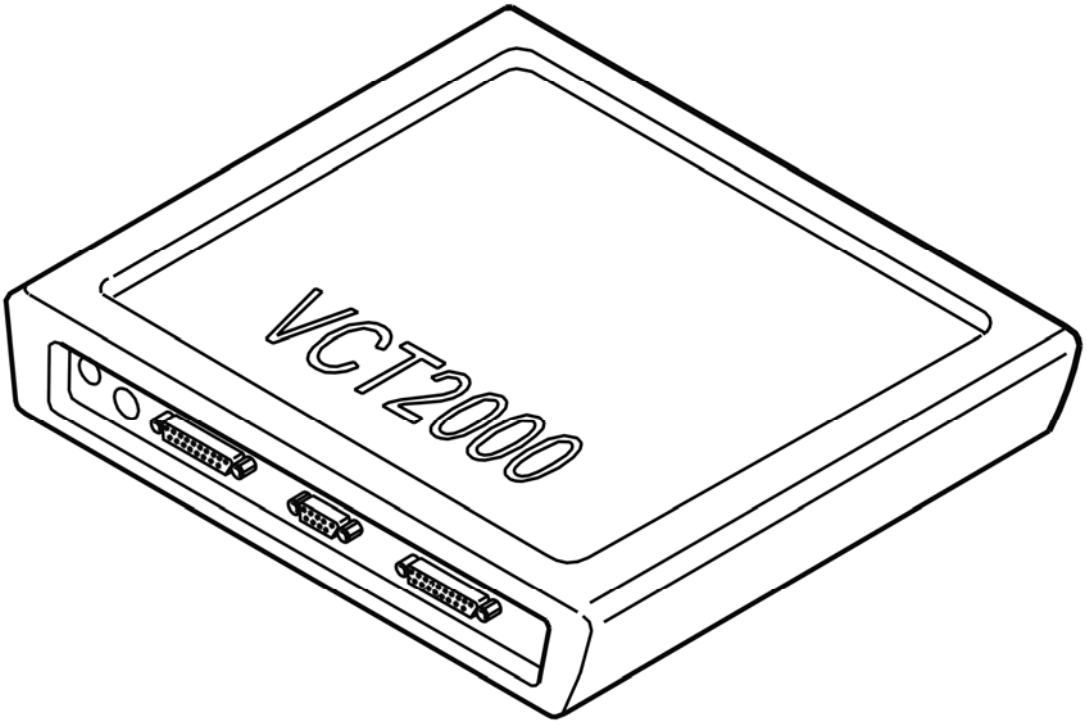

Fig. 22: Identifying VCT2000 Diagnostic Tool Symbol In VIDA
Courtesy of VOLVO CARS CORPORATION

Does the relay click at activation and deactivation?

- **YES**

  VERIFIED: Troubleshooting has been completed.

- **NO**

  Refer to **INFORMATION**

INFORMATION

FAULT-TRACING INFORMATION

The fault should have been detected and remedied. As this is not the case fault-tracing has failed.

Exit fault-tracing for this diagnostic trouble code (DTC) or make another attempt.

CEM-1C22: RELAY, INFOTAINMENT. SIGNAL TOO LOW/SIGNAL MISSING (2003-2004)

DIAGNOSTIC TROUBLE CODE (DTC) INFORMATION CEM-1C22

Condition

The central electronic module (CEM) checks the output signal to the relay coil for relay infotainment.

Diagnostic trouble code (DTC) CEM-1C22 is stored if the central electronic module (CEM) registers that the output signal to the relay coil is too low/absent.

Diagnostic trouble code (DTC) CEM-1C22 can be detected when the relay driver is not activated.

Substitute Value

- None.

Possible Source

- Relay missing
- Defective relay
- Contact resistance in the relay base.

Fault symptom[s]

- Audio unit not operating.

SIGNAL TOO LOW OR SIGNAL MISSING

CHECKING AND REPLACING THE COMPONENT

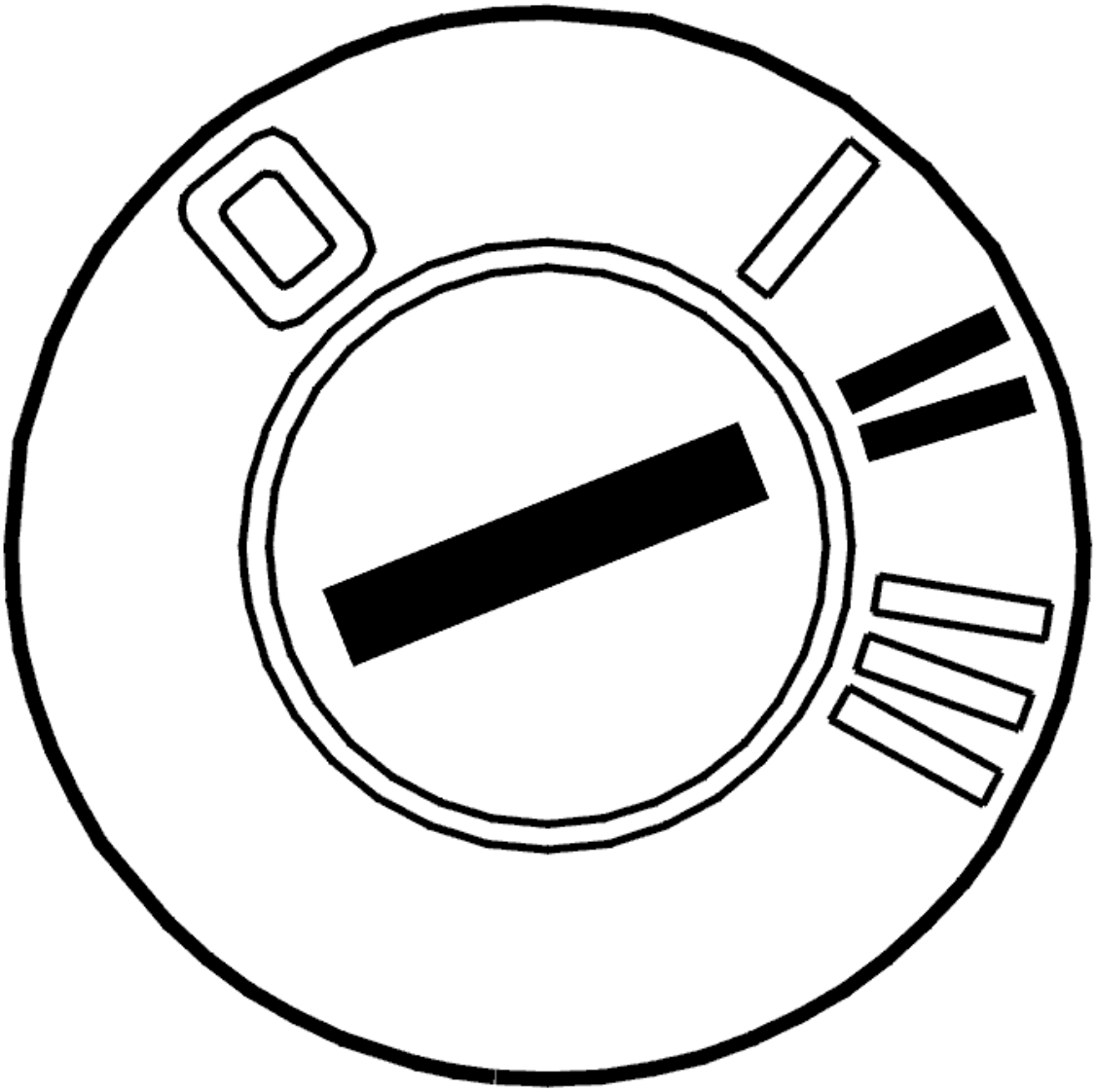

Fig. 23: Identifying Ignition ON
Courtesy of VOLVO CARS CORPORATION

- Ignition off
- Remove infotainment relay and check the relay base switches. Check for contact resistance and oxidation
- Install the relay
- Ignition on.

  Activate and deactivate the relay. The relay must click.

  If the function is now OK the fault was caused by a contact fault in the relay base.

  Other information

  - For -2004, see: **CENTRAL ELECTRONIC MODULE (CEM), REPLACING**

- For 2005-, see: **CENTRAL ELECTRONIC MODULE (CEM), REPLACING** .
- see **CHECKING WIRING AND TERMINALS** .

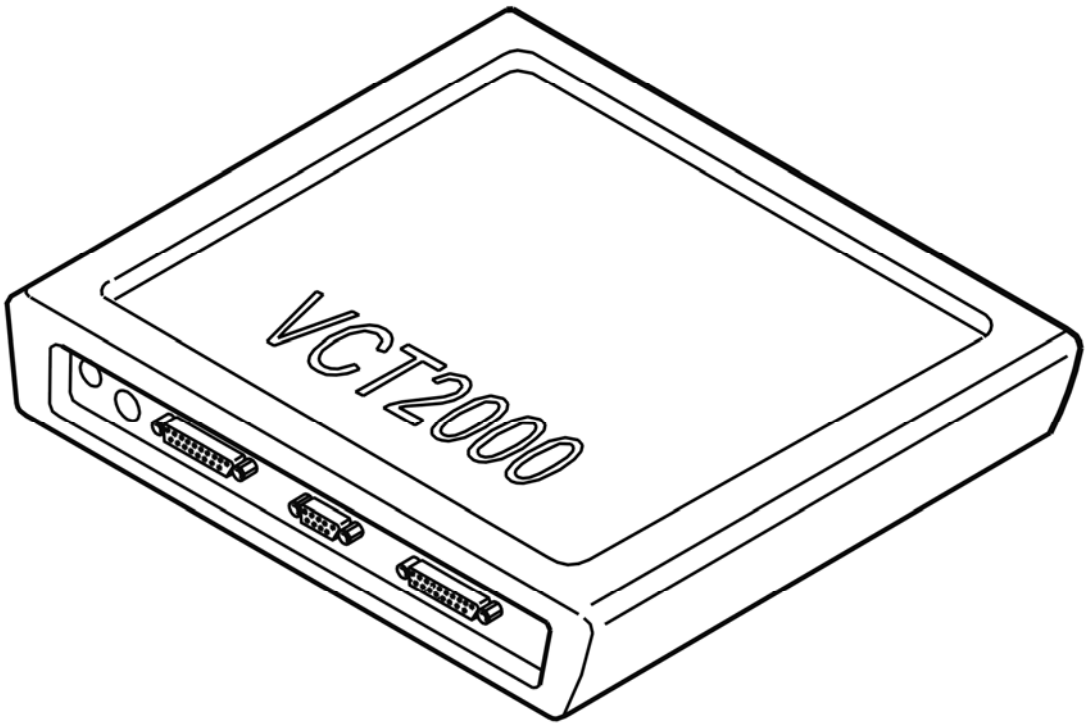

Fig. 24: Identifying VCT2000 Diagnostic Tool Symbol In VIDA
Courtesy of VOLVO CARS CORPORATION

Was the function OK?

- **YES**

  Refer to **VERIFICATION**

- **NO**

  Refer to **REPLACING THE COMPONENT**

REPLACING THE COMPONENT

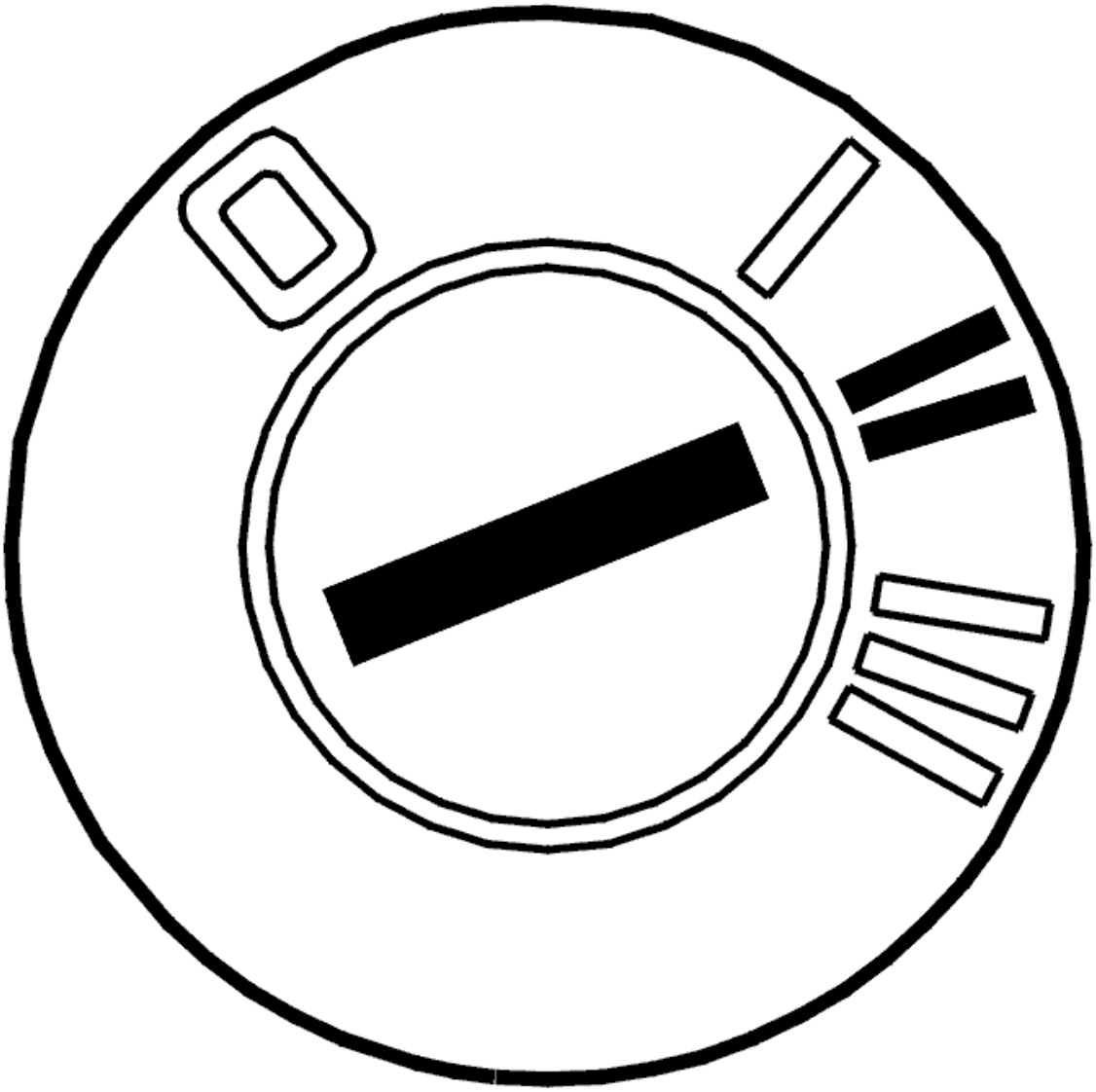

Fig. 25: Identifying Ignition ON
Courtesy of VOLVO CARS CORPORATION

- Ignition off
- Replace the infotainment relay
- Ignition on.

  Activate and deactivate the relay. The relay must click.

  If the function is now OK, the cause of the fault was a defective relay (short-circuit to ground or an open-circuit in the relay coil).

  Other information

  - For -2004, see: **CENTRAL ELECTRONIC MODULE (CEM), REPLACING**

- For 2005-, see: **CENTRAL ELECTRONIC MODULE (CEM), REPLACING** .

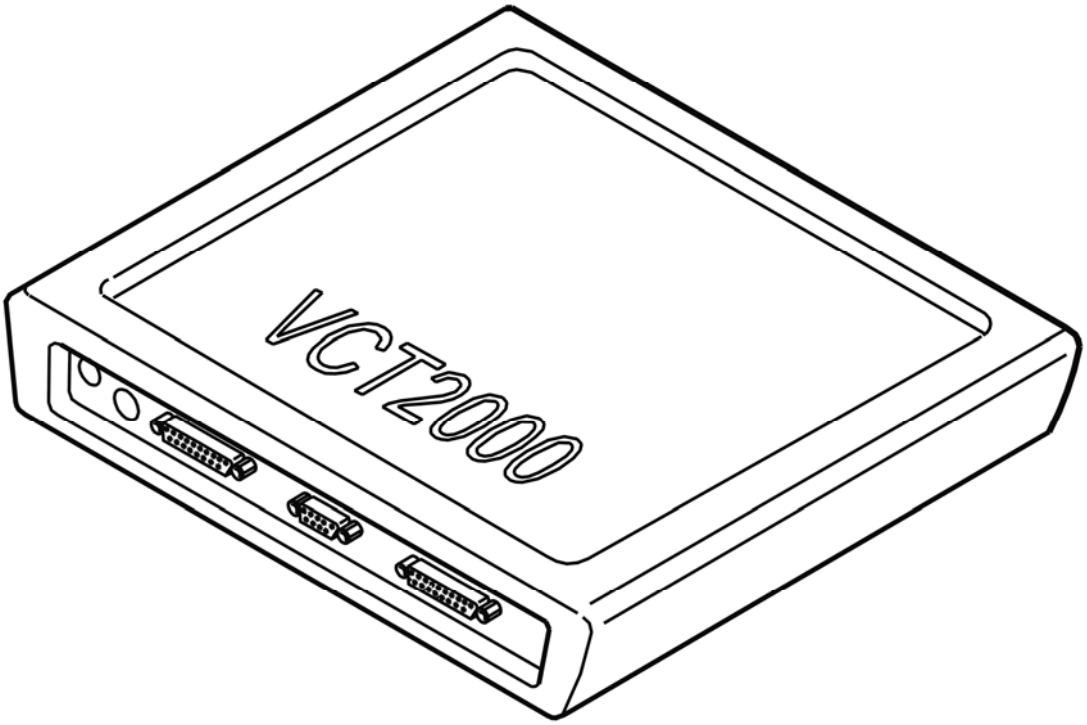

Fig. 26: Identifying VCT2000 Diagnostic Tool Symbol In VIDA
Courtesy of VOLVO CARS CORPORATION

Was the function OK?

- **YES**

  OKAY: Troubleshooting has been completed.

- **NO**

  Refer to **CHECKING THE CONTROL MODULE FOR OPEN-CIRCUITS**

CHECKING THE CONTROL MODULE FOR OPEN-CIRCUITS

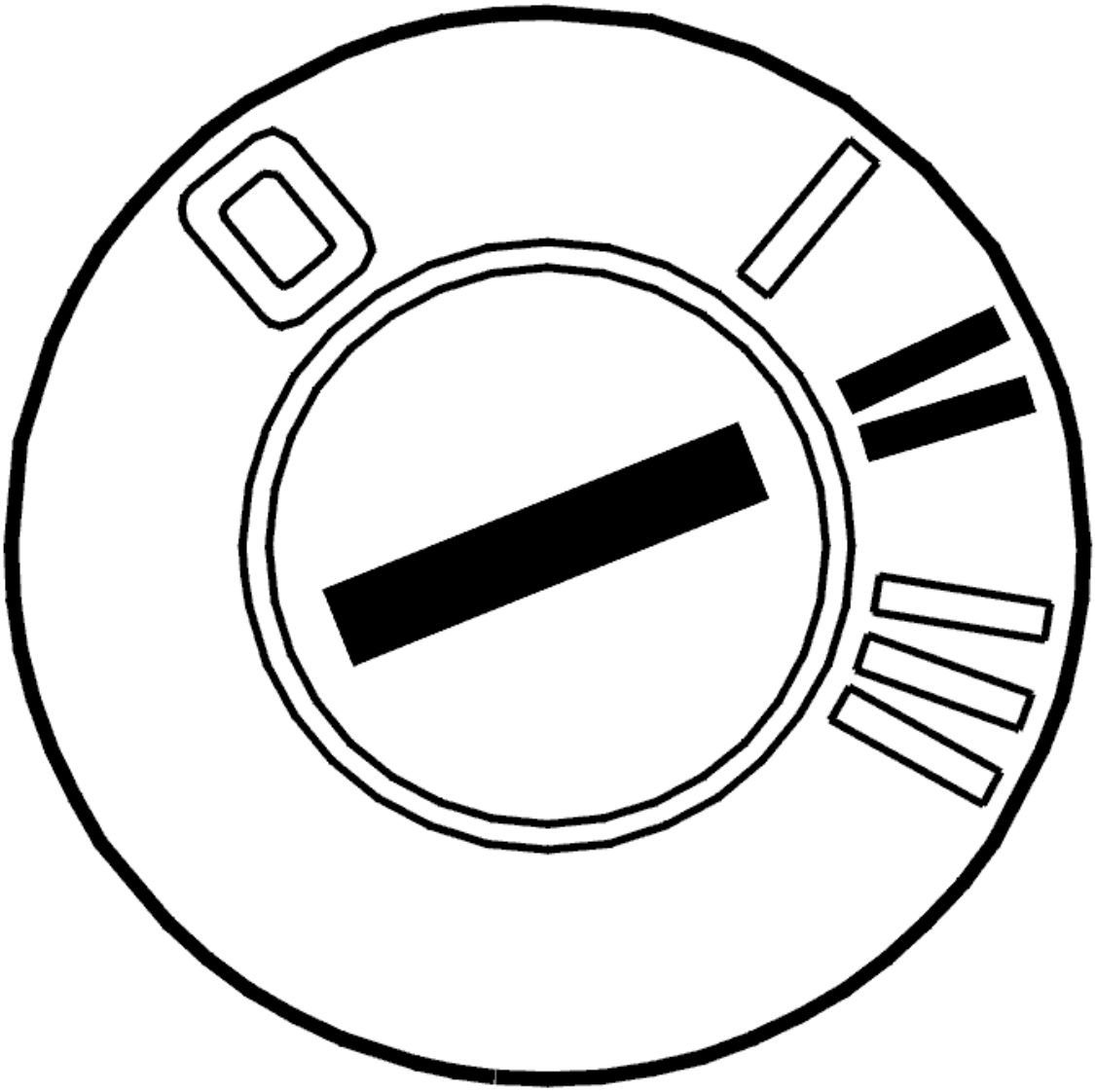

Fig. 27: Identifying Ignition ON
Courtesy of VOLVO CARS CORPORATION

- Ignition off
- Remove the infotainment relay
- Ignition on.

Check the driver circuit for the relay coil for an open-circuit as follows: activate the relay driver. Measure the voltage between terminals #1 and #2 on the relay base.

The voltage between terminals #1 and #2 should be battery voltage.

If the value deviates excessively, check the voltage between terminal #2 and the battery and between terminal #1 and ground. Both should equal battery voltage.

HINT: Do not forget to check that the power supply to the control module is OK.

Other information

- For -2004, see: **CENTRAL ELECTRONIC MODULE (CEM), REPLACING**
- For 2005-, see: **CENTRAL ELECTRONIC MODULE (CEM), REPLACING** .
- see **CHECKING WIRING AND TERMINALS** .

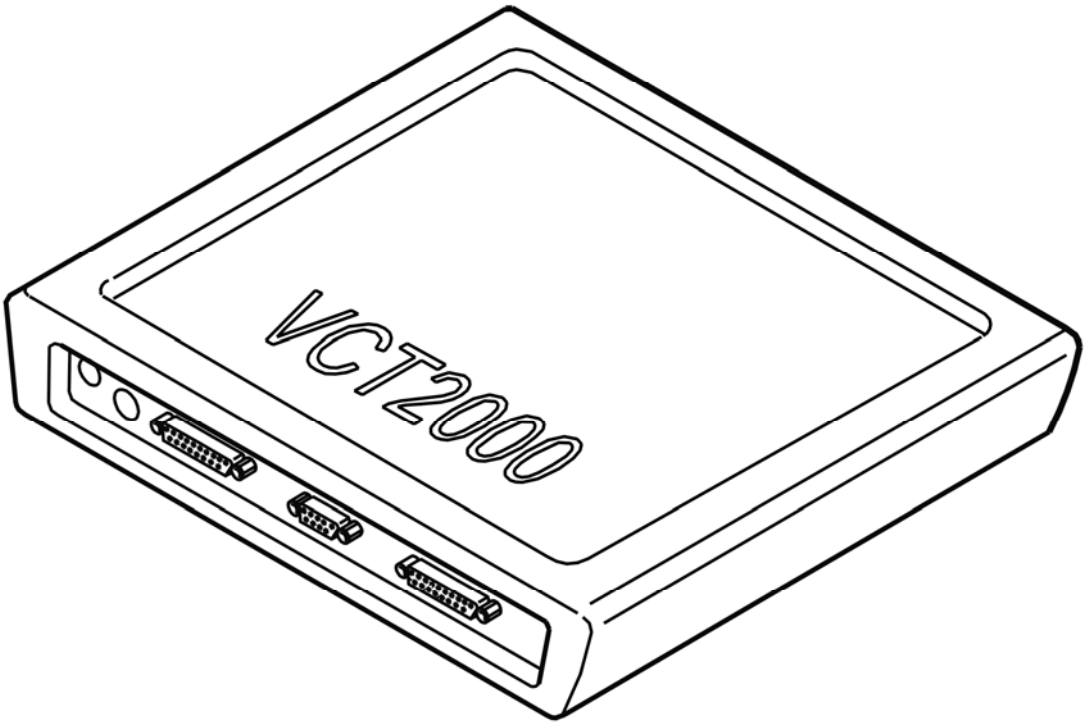

Fig. 28: Identifying VCT2000 Diagnostic Tool Symbol In VIDA
Courtesy of VOLVO CARS CORPORATION

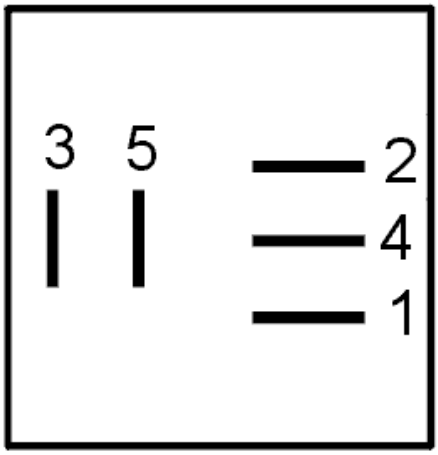

Fig. 29: Identifying Terminals
Courtesy of VOLVO CARS CORPORATION

Was a fault detected?

- **YES**

  Refer to **VERIFICATION**

- **NO**

  Refer to **CHECKING THE CONTROL MODULE FOR SHORT-CIRCUITS**

CHECKING THE CONTROL MODULE FOR SHORT-CIRCUITS

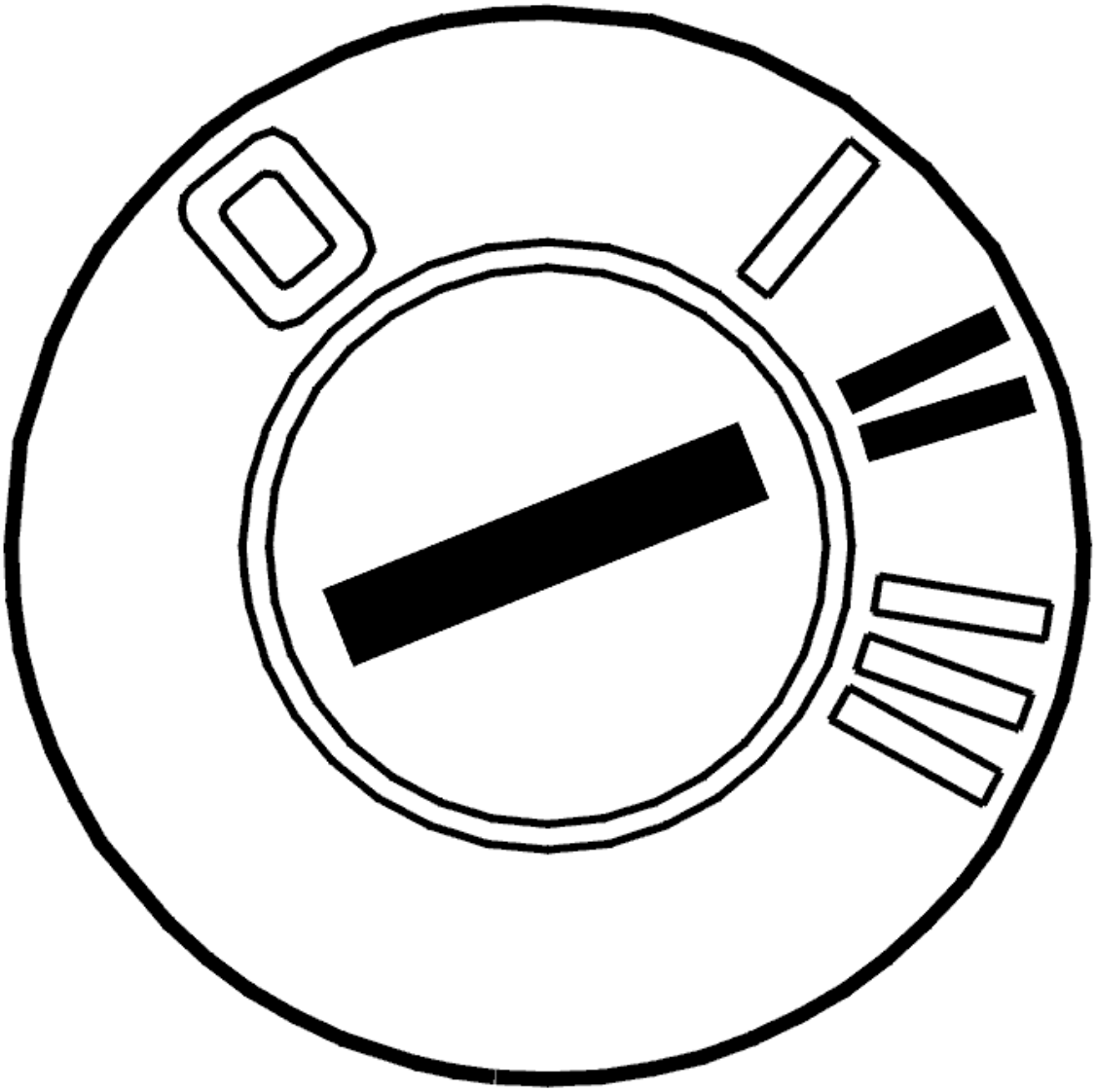

Fig. 30: Identifying Ignition ON
Courtesy of VOLVO CARS CORPORATION

- Ignition on.

  Activate the relay driver.

  Measure the resistance between terminal #2 and ground when the relay driver is active.

  The resistance must be low when the relay driver is active.

  Remedy as necessary.

  Other information

  - For -2004, see: **CENTRAL ELECTRONIC MODULE (CEM), REPLACING**

- For 2005-, see: **CENTRAL ELECTRONIC MODULE (CEM), REPLACING** .

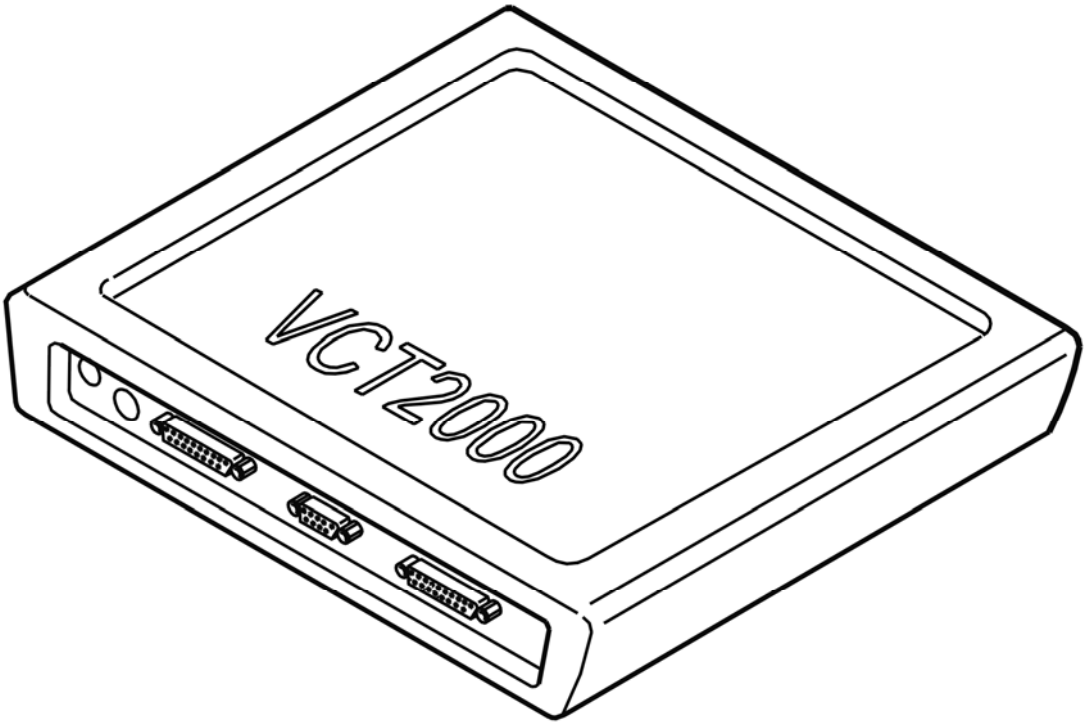

Fig. 31: Identifying VCT2000 Diagnostic Tool Symbol In VIDA
Courtesy of VOLVO CARS CORPORATION

- **Continue**

  Refer to **VERIFICATION**

VERIFICATION

VERIFICATION

HINT: After carrying out the repair, check that the fault has been remedied.

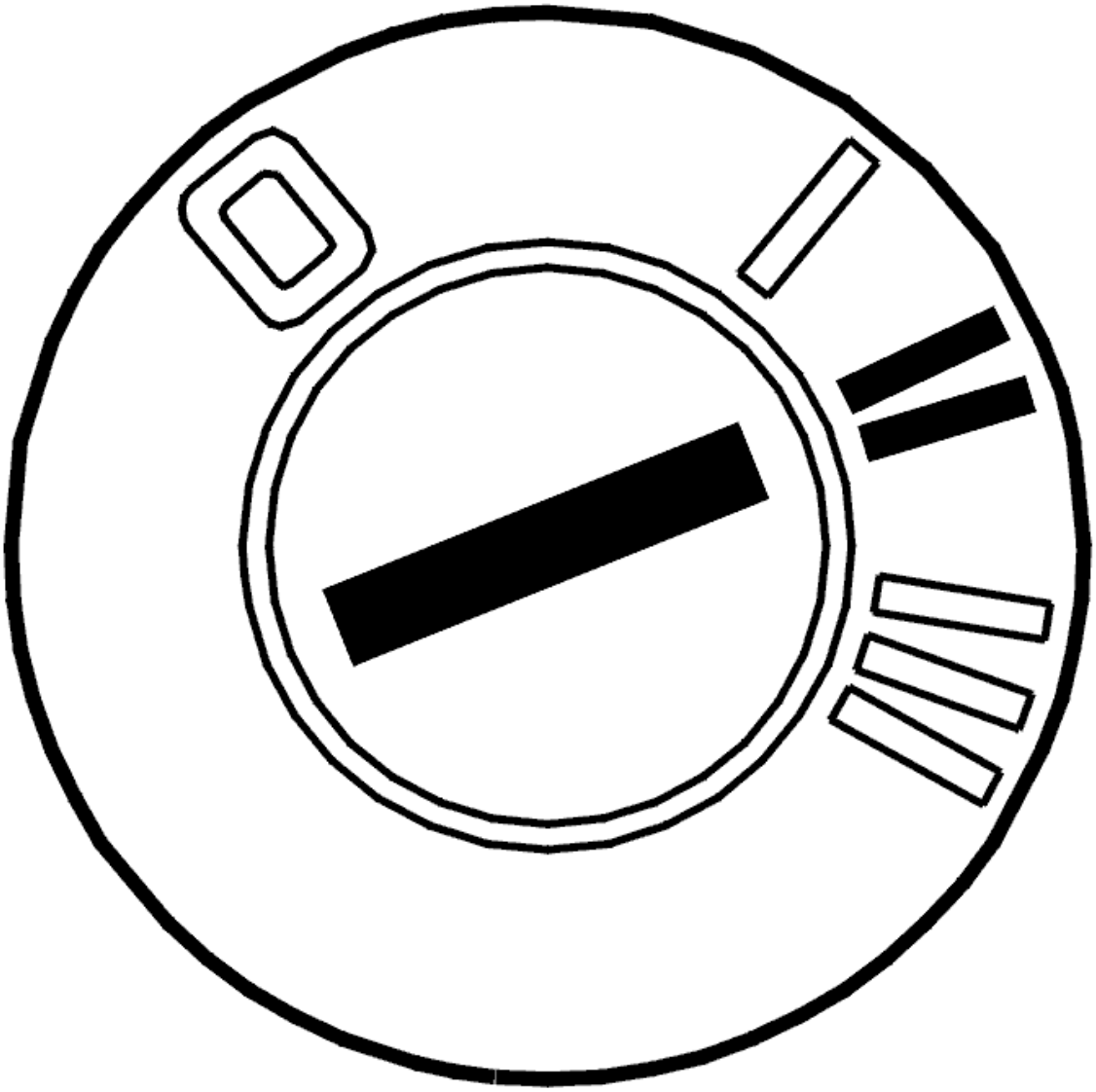

Fig. 32: Identifying Ignition ON
Courtesy of VOLVO CARS CORPORATION

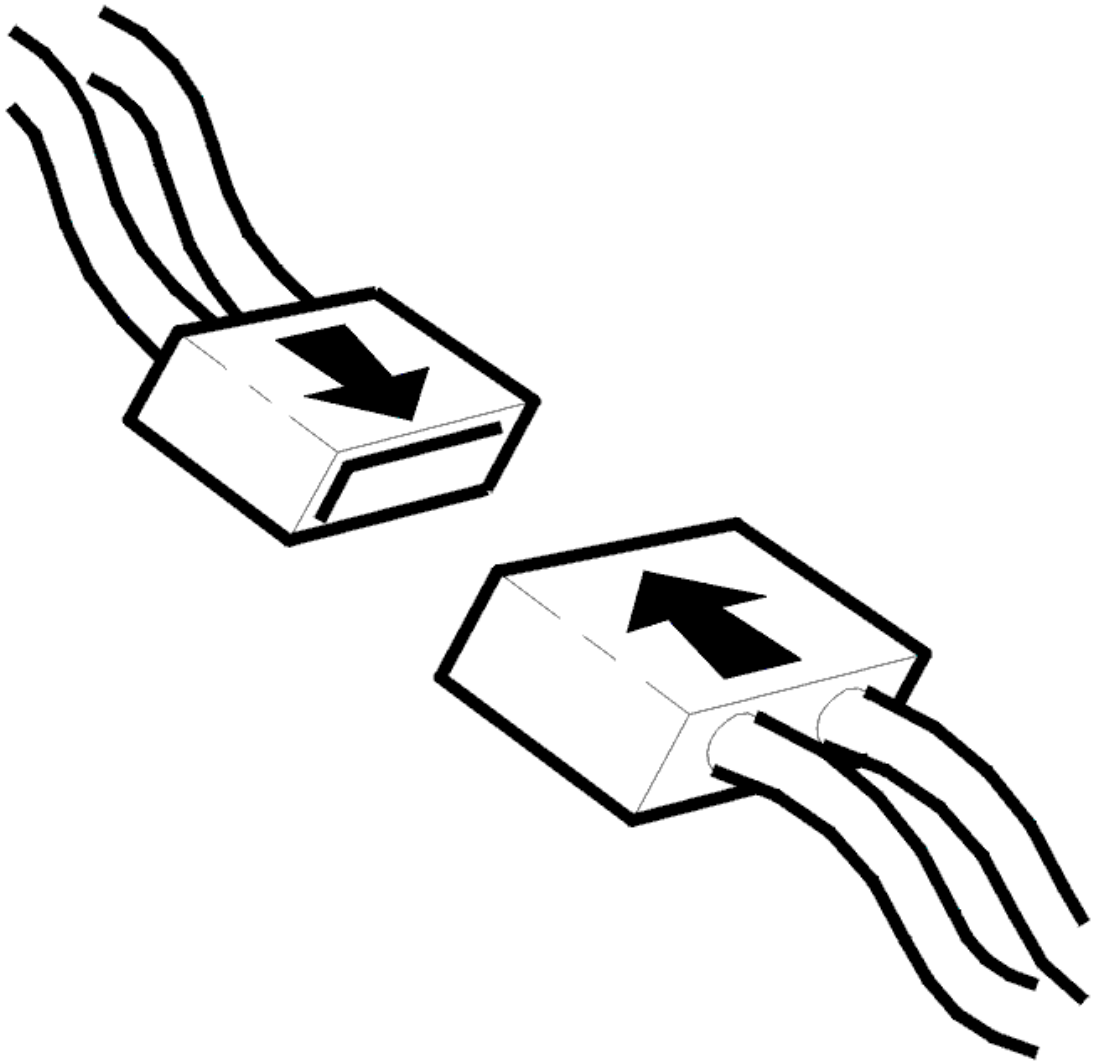

Fig. 33: Connecting Connector
Courtesy of VOLVO CARS CORPORATION

- Ignition off
- Reinstall the connectors, components etc.
- Ignition on.

Activate and deactivate the infotainment relay.

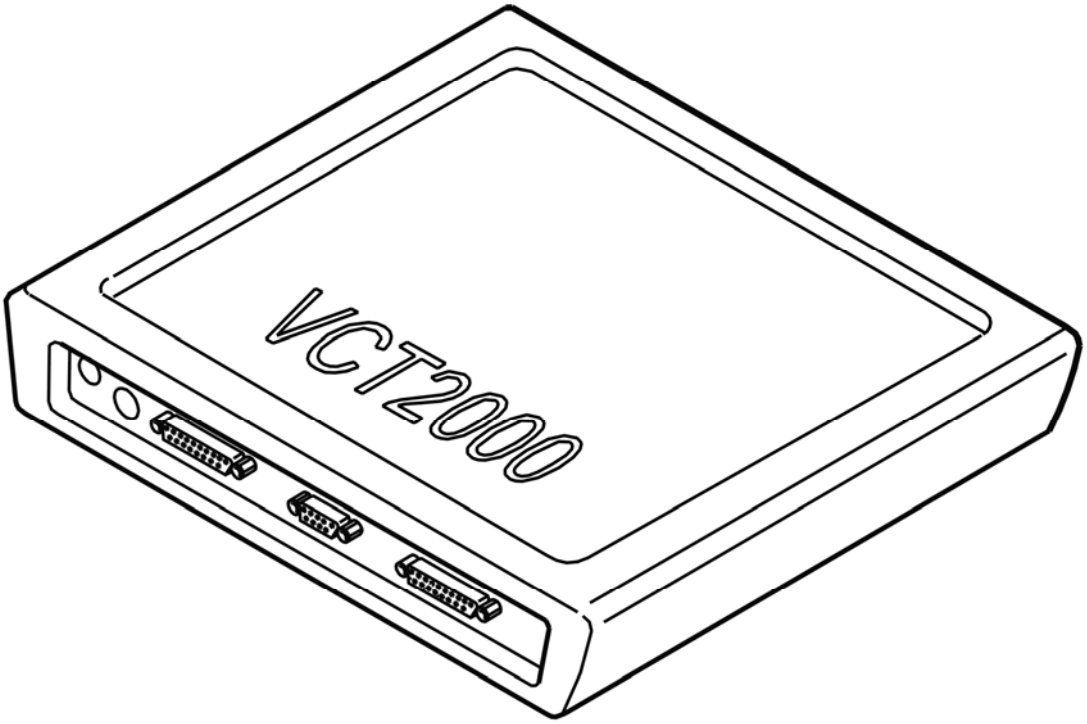

Fig. 34: Identifying VCT2000 Diagnostic Tool Symbol In VIDA
Courtesy of VOLVO CARS CORPORATION

Does the relay click at activation and deactivation?

- **YES**

  VERIFIED: Troubleshooting has been completed.

- **NO**

  Refer to **INFORMATION**

INFORMATION

FAULT-TRACING INFORMATION

The fault should have been detected and remedied. As this is not the case fault-tracing has failed.

Exit fault-tracing for this diagnostic trouble code (DTC) or make another attempt.

CEM-1D01: CONTROL MODULE. INTERNAL FAULT (2005-2012)

DIAGNOSTIC TROUBLE CODE (DTC) INFORMATION CEM-1D01

Condition

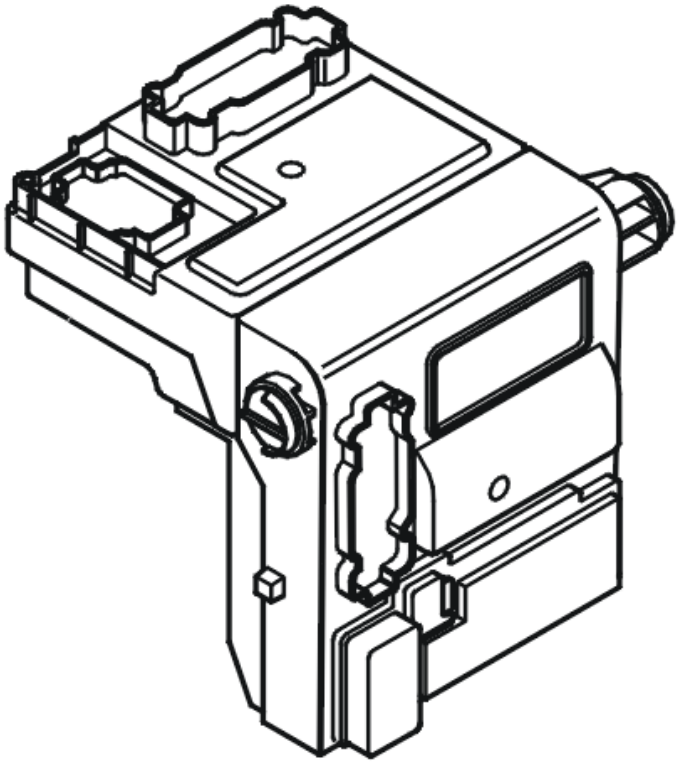

Fig. 35: Identifying Central Electronic Module (CEM)
Courtesy of VOLVO CARS CORPORATION

The diagnostic trouble code (DTC) is stored if the central electronic module (CEM) registers an internal fault.

The diagnostic trouble code (DTC) can be diagnosed 5 minutes after the ignition has been switched off.

Substitute Value

- None.

Possible Source

- Internal fault in the control module.

Fault symptom[s]

- No gauges are working
- The instrument lighting does not operate
- The turn signal lamps are not operating
- Poor performance.

INTERNAL FAULT

REPLACING THE COMPONENT

The central electronic module (CEM) has registered an internal fault.

If the fault is intermittent, it has been registered previously but is no longer present. Intermittent faults can be caused by interference at start up of the central electronic module (CEM) or may be a different type of fault which occurs on different occasions. The fault is evaluated depending on how it occurs. Replace the central electronic module (CEM) if the fault recurs.

Replace the central electronic module (CEM) if the fault is permanent.

Remedy as necessary.

Other information

- For -2004, see: **CENTRAL ELECTRONIC MODULE (CEM), REPLACING**
- For 2005-, see: **CENTRAL ELECTRONIC MODULE (CEM), REPLACING** .

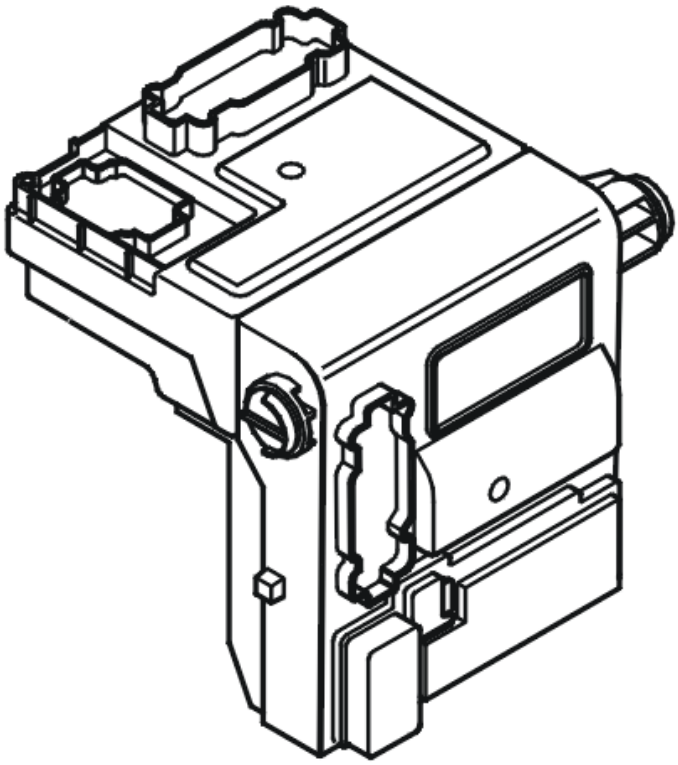

Fig. 36: Identifying Central Electronic Module (CEM)
Courtesy of VOLVO CARS CORPORATION

- **Continue**

Refer to **INFORMATION**

INFORMATION

FAULT-TRACING INFORMATION

In case of this defect, troubleshooting is not followed by verification.

The information can be displayed again or the fault-tracing for this fault can be interrupted.

CEM-1D01: CONTROL MODULE. INTERNAL FAULT. INTERMITTENT FAULT (2003-2004)

DIAGNOSTIC TROUBLE CODE (DTC) INFORMATION

Condition

Diagnostic trouble code (DTC) CEM-1D01 is stored if the central electronic module (CEM) registers an internal fault 5 minutes after the ignition has been switched off.

Substitute Value

Limp home

Possible Source

- Internal fault in the control module.

Fault symptom[s]

- No instruments operating.
- The instrument lighting does not operate.
- The turn signal lamps are not operating.
- Poor performance.

INTERNAL FAULT. INTERMITTENT FAULT

FAULT-TRACING INFORMATION

The diagnostic trouble code (DTC) indicates that the control module has previously registered an intermittent fault, but that the fault is no longer present.

CEM-1D01: CONTROL MODULE. INTERNAL FAULT. PERMANENT FAULT (2003-2004)

DIAGNOSTIC TROUBLE CODE (DTC) INFORMATION

see **DIAGNOSTIC TROUBLE CODE (DTC) INFORMATION**

INTERNAL FAULT. PERMANENT FAULT

CHECKING PROGRAMMING

NOTE: **Read off the customer parameters from the control module before it is replaced. Use the VCT2000 (or appropriate scan tool). Make a note of the values.**

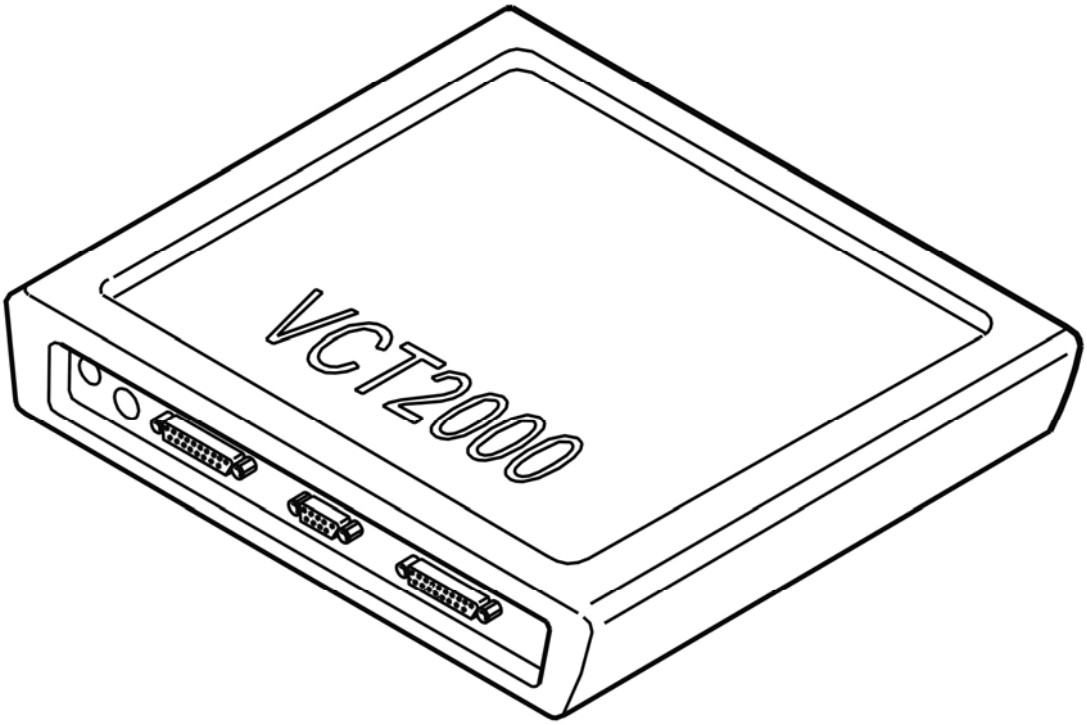

Fig. 37: Identifying VCT2000 Diagnostic Tool Symbol In VIDA
Courtesy of VOLVO CARS CORPORATION

- **Continue**

  Refer to **REPLACING THE CONTROL MODULE**

REPLACING THE CONTROL MODULE

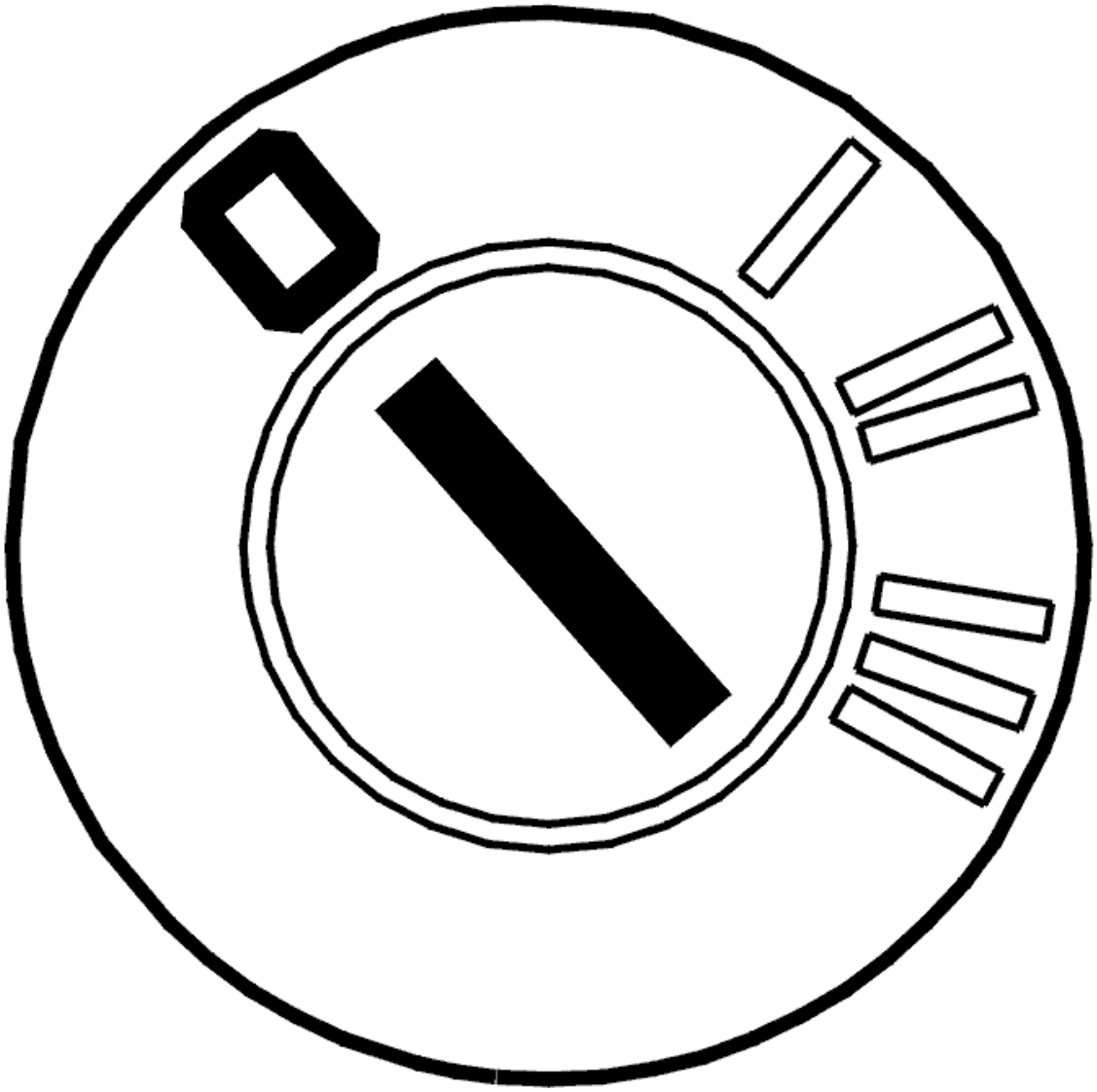

Fig. 38: Identifying Ignition OFF
Courtesy of VOLVO CARS CORPORATION

- Ignition off.

  The central electronic module (CEM) has registered an internal fault.

  Replace the central electronic module (CEM).

  - For -2004, see: **CENTRAL ELECTRONIC MODULE (CEM), REPLACING**
  - For 2005-, see: **CENTRAL ELECTRONIC MODULE (CEM), REPLACING** .

CEM-1D02: CONTROL MODULE, SOFTWARE. INTERNAL FAULT. INTERMITTENT FAULT (2003-2004)

DIAGNOSTIC TROUBLE CODE (DTC) INFORMATION

Condition

Diagnostic trouble code (DTC) CEM-1D02 is stored if the control module registers an internal fault in the software.

Substitute Value

Limp home.

Possible Source

- Fault in the control module software.

Fault symptom[s]

- No gauges working.
- The instrument lighting does not operate.
- The turn signal lamps are not operating.
- Poor performance.

INTERNAL FAULT. INTERMITTENT FAULT

FAULT-TRACING INFORMATION

The diagnostic trouble code (DTC) indicates that the control module has previously registered an intermittent fault, but that the fault is no longer present.

CEM-1D02: CONTROL MODULE, SOFTWARE. INTERNAL FAULT. PERMANENT FAULT (2003-2004)

DIAGNOSTIC TROUBLE CODE (DTC) INFORMATION

see **DIAGNOSTIC TROUBLE CODE (DTC) INFORMATION**

INTERNAL FAULT. PERMANENT FAULT

ORDERING SOFTWARE

The control module has registered an internal fault in the software.

The control module must be reprogrammed to remedy the fault.

The customer parameters must be read off if this has not already been done. Use the VCT2000 (or appropriate scan tool). Make a note of the values.

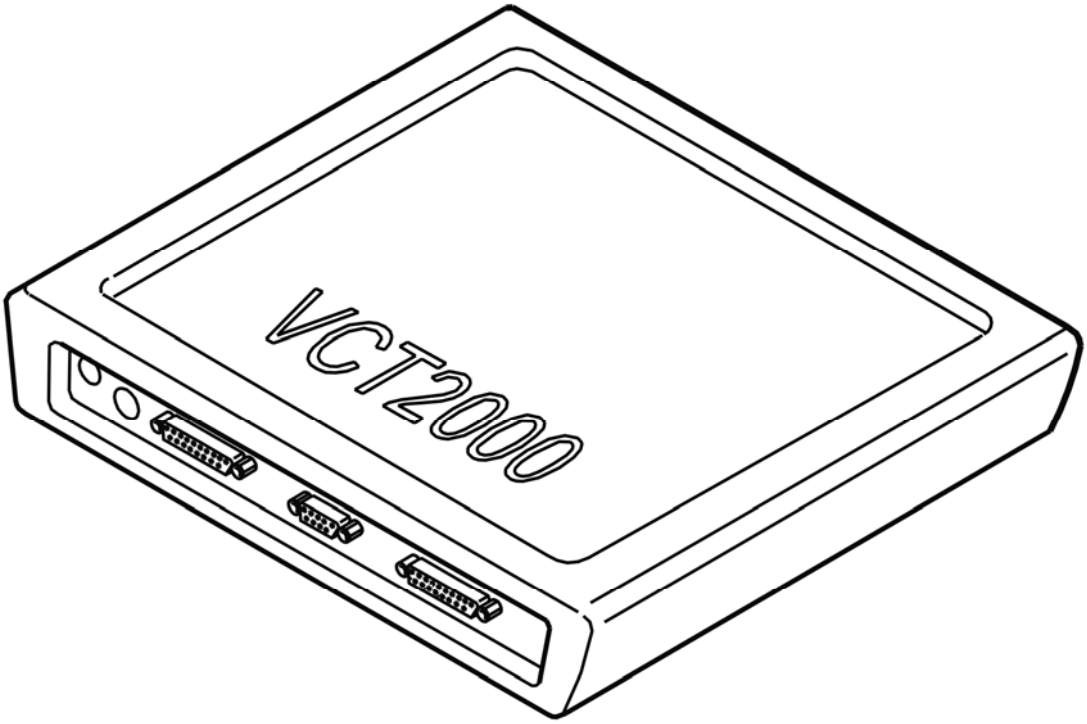

Fig. 39: Identifying VCT2000 Diagnostic Tool Symbol In VIDA
Courtesy of VOLVO CARS CORPORATION

- **Continue**

  Refer to **PROGRAMMING**

PROGRAMMING

Order software according to the table below.

XC90	9438273

Program the control module again according to the table below.

XC90	9438273

Program the customer parameters from the previous software.

- **Continue**

  Refer to **PROGRAMMING CONTROL MODULE**

PROGRAMMING CONTROL MODULE

PROGRAMMING PROCEDURES

The following can be programmed in the Central electronic module (CEM) according to customer's wishes.

Programming

1. Seat temperature.

   Refer to **PROGRAMMING THE SEAT TEMPERATURE (CENTRAL ELECTRONIC MODULE)**

2. Approach lights.

   Refer to **PROGRAMMING THE HOME SAFE LIGHTS**

3. Daytime running lights.

   Refer to **PROGRAMMING DAYTIME RUNNING LAMPS**

4. Tailgate window wiper (5 DRS).

   Refer to **PROGRAMMING THE WIPER FUNCTION FOR THE REAR WINDSHIELD (5 DOOR MODELS)**

Do you want to program any more parameters?

- **YES**

  Refer to **PROGRAMMING PROCEDURES**

- **NO**

  OKAY: Troubleshooting has been completed.

Do you want to program any more parameters?

- **YES**

  Refer to **PROGRAMMING PROCEDURES**

- **NO**

  OKAY: Troubleshooting has been completed.

Do you want to program any more parameters?

- **YES**

  Refer to **PROGRAMMING PROCEDURES**

- **NO**

  OKAY: Troubleshooting has been completed.

Do you want to program any more parameters?

- **YES**

  Refer to **PROGRAMMING PROCEDURES**

- **NO**

  OKAY: Troubleshooting has been completed.

PROGRAMMING THE SEAT TEMPERATURE (CENTRAL ELECTRONIC MODULE)

PROGRAMMING THE SEAT TEMPERATURE (CENTRAL ELECTRONIC MODULE)

The heated seat temperature can be adjusted.

This can be carried out for both the left and right seats.

There are two values that can be programmed: low temperature and high temperature.

Programming must be carried out so that the high temperature setting is higher than the low temperature setting.

Do you want to program in Celsius or Fahrenheit?

1. Celsius

   Refer to **CELSIUS**

2. Fahrenheit.

   Refer to **FAHRENHEIT**

CELSIUS

The seat temperature can be set between 0°C and 43°C.

Which seat do you want to reprogram:

1. Left seat

Refer to **CHECKING THE LEFT SEAT**

2. Right seat.

   Refer to **CHECKING THE RIGHT SEAT**

FAHRENHEIT

The seat temperature can be set between 32°F and 109.4°F.

Which seat do you want to reprogram:

1. Left seat

   Refer to **CHECKING THE LEFT SEAT**

2. Right seat.

   Refer to **CHECKING THE RIGHT SEAT**

CHECKING THE LEFT SEAT

Read off the programming using the VCT2000 (or appropriate scan tool).

To change the seat temperature, mark the desired value in the scrolling list and start programming.

Programming must be carried out so that the high temperature setting is higher than the low temperature setting.

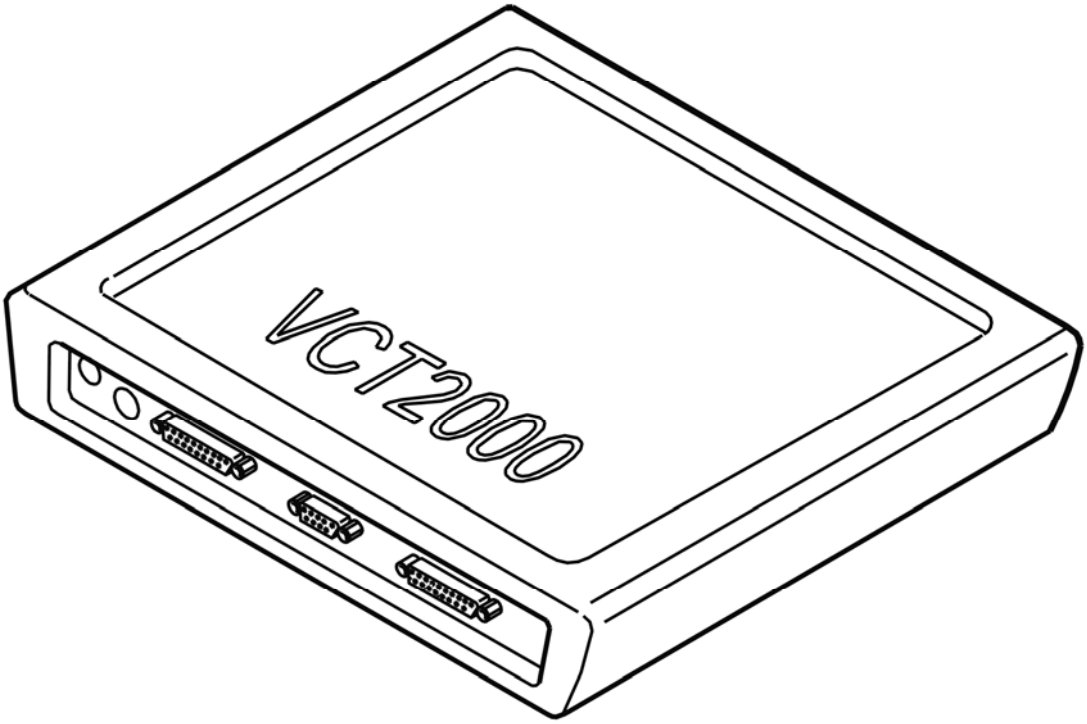

Fig. 40: Identifying VCT2000 Diagnostic Tool Symbol In VIDA
Courtesy of VOLVO CARS CORPORATION

- **Continue**

  Refer to **SAVE THE PROGRAMMED VALUE**

CHECKING THE RIGHT SEAT

Read off the programming using the VCT2000 (or appropriate scan tool).

To change the seat temperature, mark the desired value in the scrolling list and start programming.

Programming must be carried out so that the high temperature setting is higher than the low temperature setting.

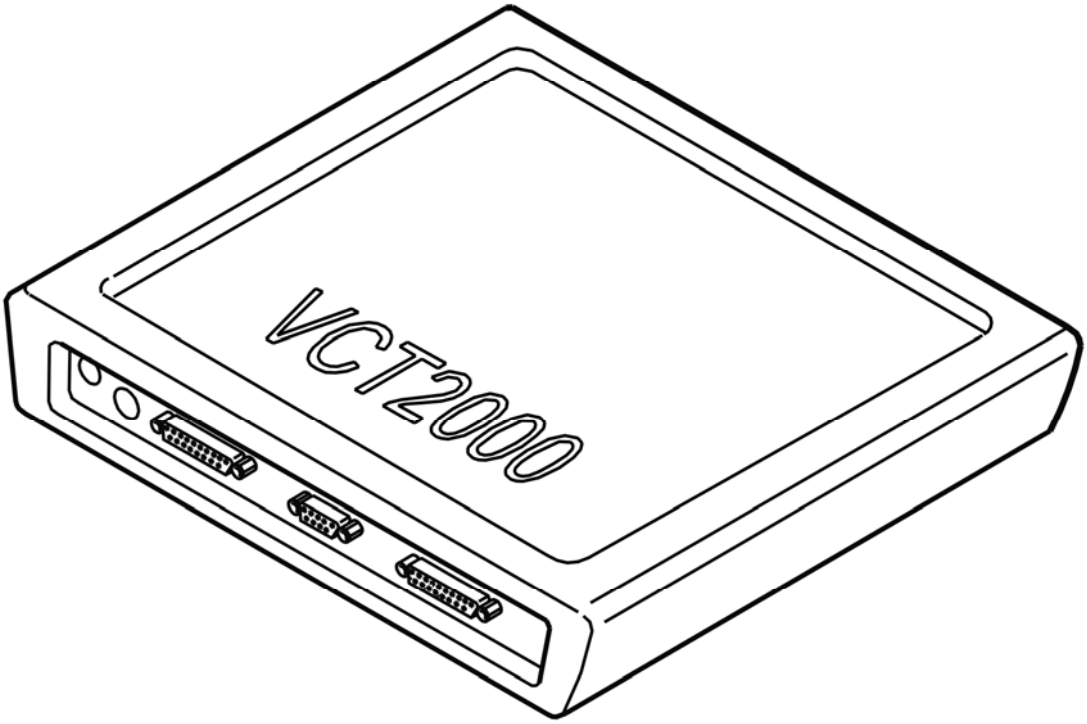

Fig. 41: Identifying VCT2000 Diagnostic Tool Symbol In VIDA
Courtesy of VOLVO CARS CORPORATION

- **Continue**

  Refer to **SAVE THE PROGRAMMED VALUE**

CHECKING THE LEFT SEAT

Read off the programming using the VCT2000 (or appropriate scan tool).

To change the seat temperature, mark the desired value in the scrolling list and start programming.

Programming must be carried out so that the high temperature setting is higher than the low temperature setting.

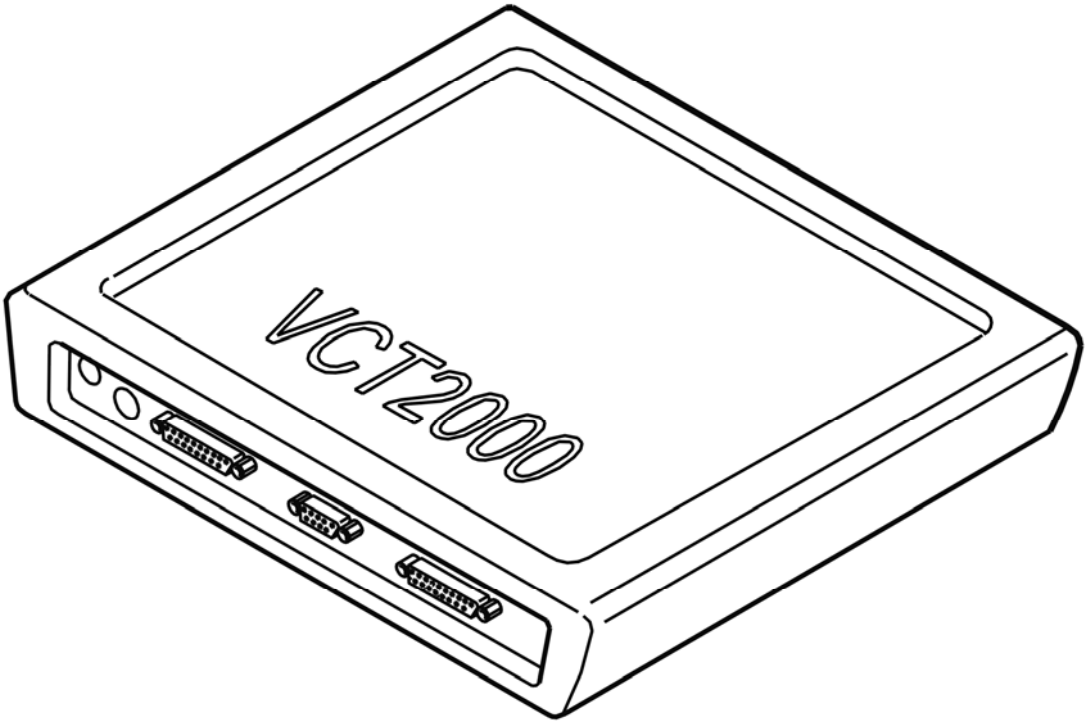

Fig. 42: Identifying VCT2000 Diagnostic Tool Symbol In VIDA
Courtesy of VOLVO CARS CORPORATION

- **Continue**

  Refer to **SAVE THE PROGRAMMED VALUE**

CHECKING THE RIGHT SEAT

Read off the programming using the VCT2000 (or appropriate scan tool).

To change the seat temperature, mark the desired value in the scrolling list and start programming.

Programming must be carried out so that the high temperature setting is higher than the low temperature setting.

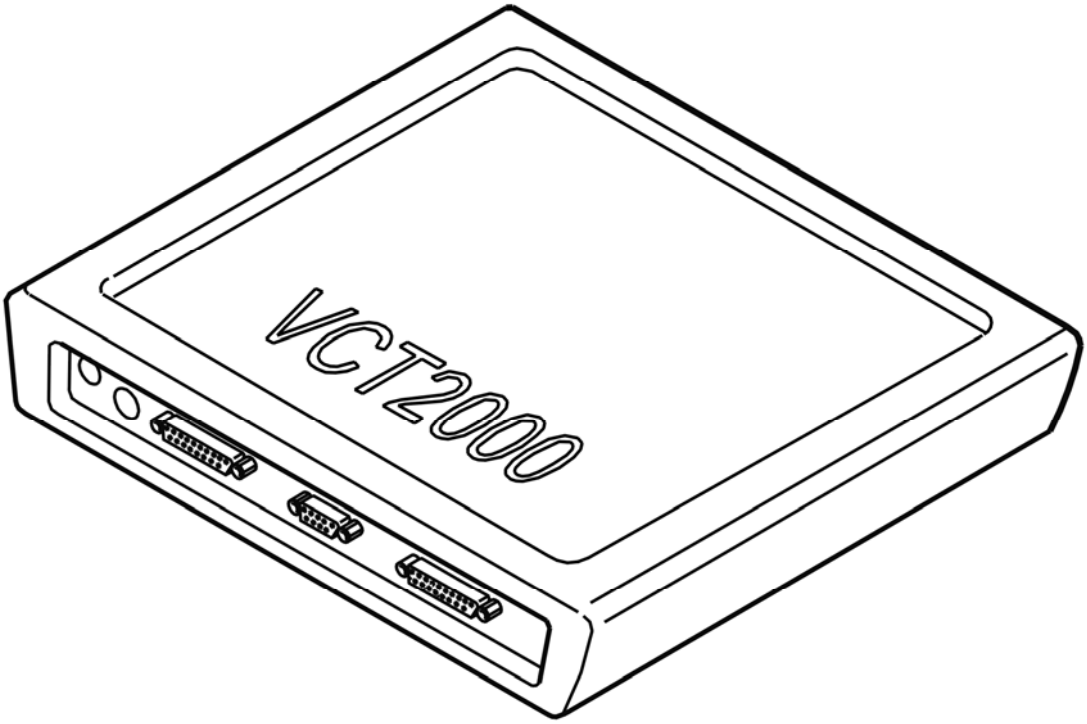

Fig. 43: Identifying VCT2000 Diagnostic Tool Symbol In VIDA
Courtesy of VOLVO CARS CORPORATION

- **Continue**

  Refer to **SAVE THE PROGRAMMED VALUE**

SAVE THE PROGRAMMED VALUE

To ensure that the programmed information is stored, use the VCT2000 (or appropriate scan tool) to force the entry.

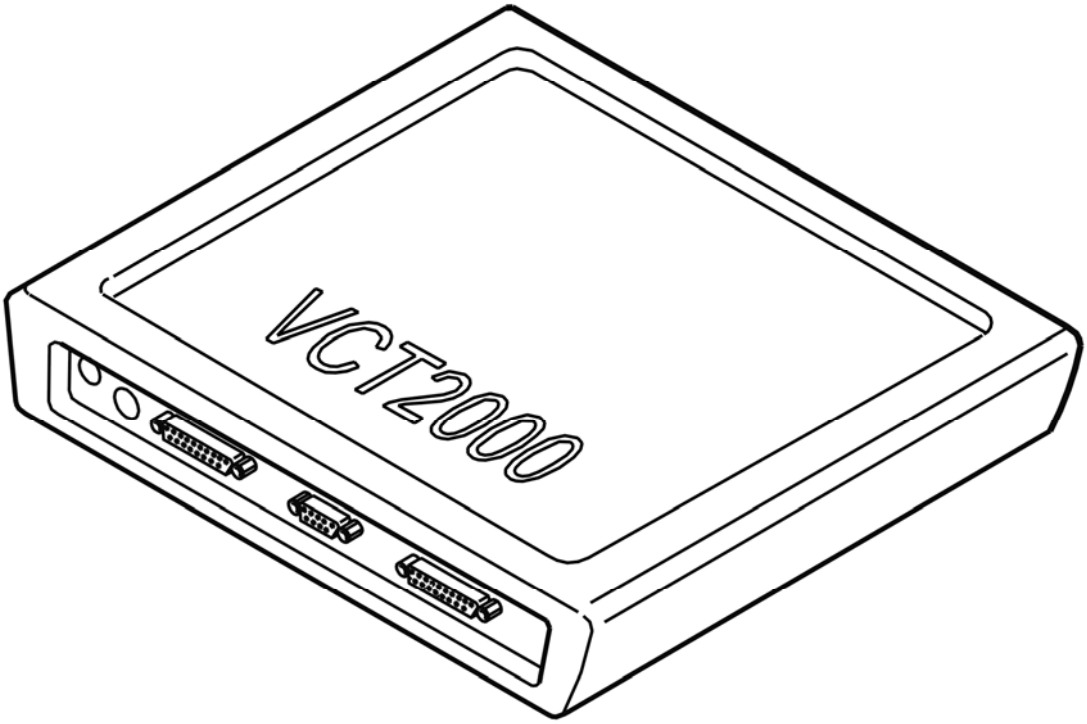

Fig. 44: Identifying VCT2000 Diagnostic Tool Symbol In VIDA
Courtesy of VOLVO CARS CORPORATION

- **Continue**

  Refer to **PROGRAMMING PROCEDURES**

PROGRAMMING THE HOME SAFE LIGHTS

PROGRAMMING THE HOME SAFE LIGHTS

The home safe lights can be programmed to stay on for a longer or shorter time according to the wishes of the customer.

The factory setting is 30 seconds. The time can be set to 0, 30, 60 or 90 seconds.

Read off the programming using the VCT2000 (or appropriate scan tool).

To change the time set, mark the desired value in the scrolling list and start programming.

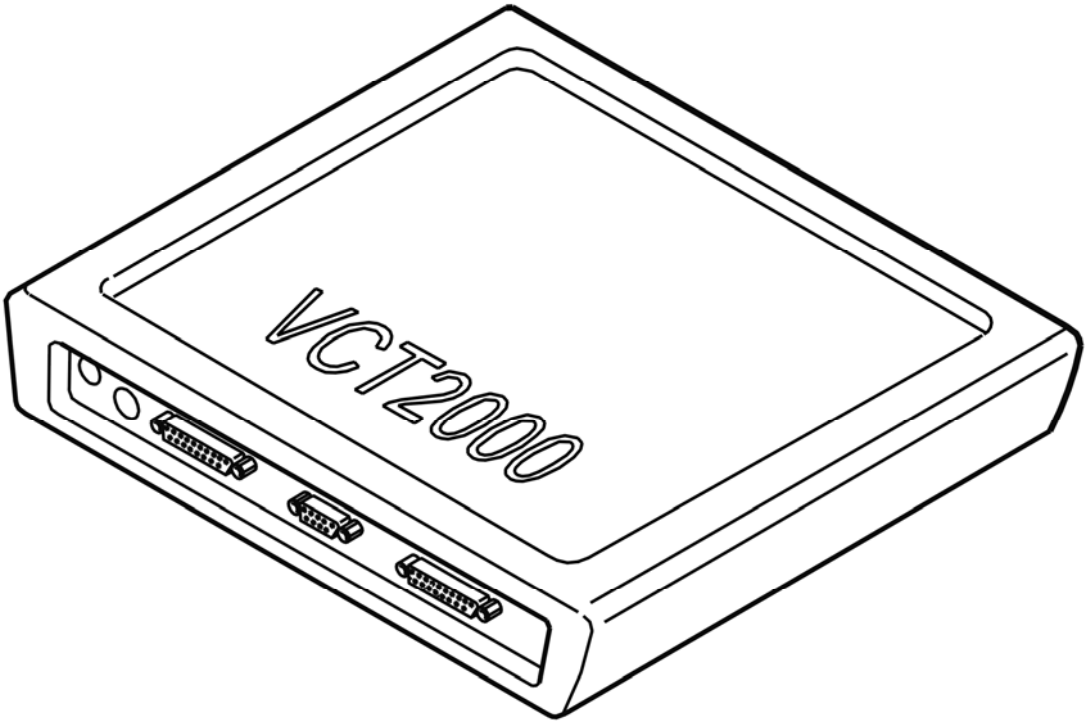

Fig. 45: Identifying VCT2000 Diagnostic Tool Symbol In VIDA
Courtesy of VOLVO CARS CORPORATION

- **Continue**

  Refer to **SAVE THE PROGRAMMED VALUE**

SAVE THE PROGRAMMED VALUE

To ensure that the programmed information is stored, use the VCT2000 (or appropriate scan tool) to force the entry.

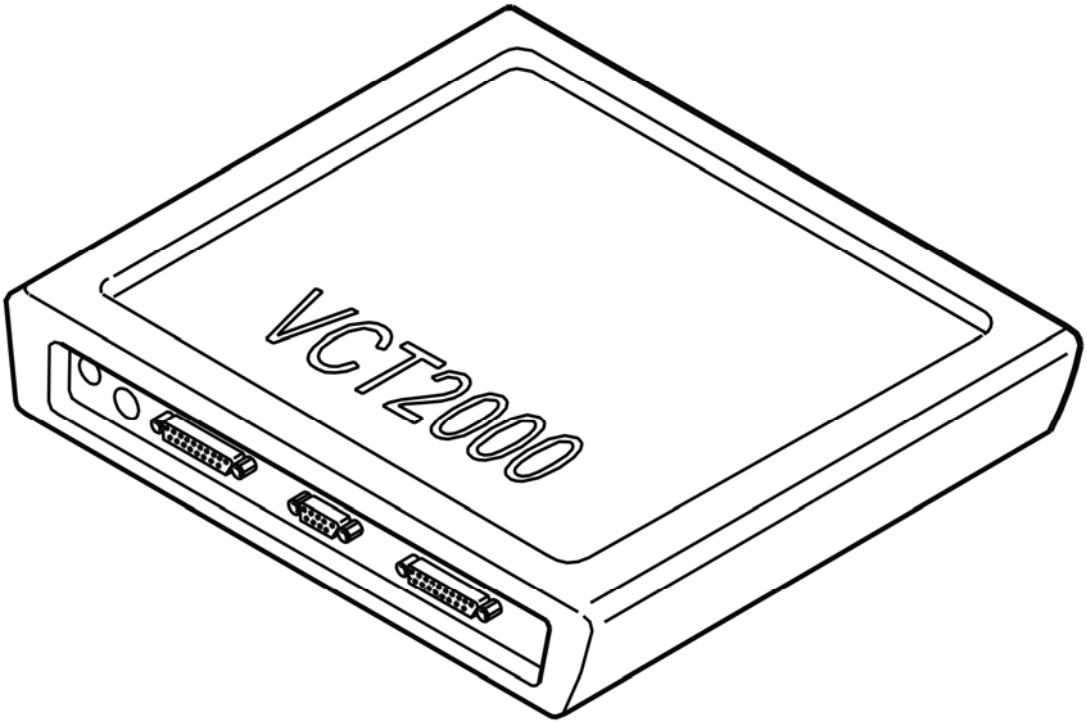

Fig. 46: Identifying VCT2000 Diagnostic Tool Symbol In VIDA
Courtesy of VOLVO CARS CORPORATION

- **Continue**

  Refer to **PROGRAMMING PROCEDURES**

PROGRAMMING DAYTIME RUNNING LAMPS

PROGRAMMING DAYTIME RUNNING LAMPS

Three different daytime running light functions can be programmed:

1. Low beam in all switch positions except the parking light position (Flex zero)

Position light switch:

OFF: Parking and daytime running lamps or Xenon lamps are activated depending on the signal from the twilight sensor.

Parking lamps: Only parking lamps activated.

On: Parking and Xenon lamps are activated.

2. The light switch functioning on the basis of: off, parking light and low beam (Flex standard)

Position light switch:

OFF: Daytime running lamps are activated. If the twilight sensor registers insufficient light, all lighting is switched off (Xenon lamps are not activated).

Parking lamps: Only parking lamps activated.

On: Parking and Xenon lamps are activated.

3. Low beam always on regardless of the position of the light switch (Flex low)

Position light switch:

OFF: Parking and daytime running lamps or Xenon lamps are activated depending on the signal from the twilight sensor.

Parking lamps: Parking and Xenon lamps are activated.

On: Parking and Xenon lamps are activated.

It is essential that the legal requirements of each country are followed.

NOTE: It is not permitted to change this programming in the Canadian market.

Read off the programming using the VCT2000 (or appropriate scan tool).

To change the setting, mark the desired value in the scrolling list and start programming.

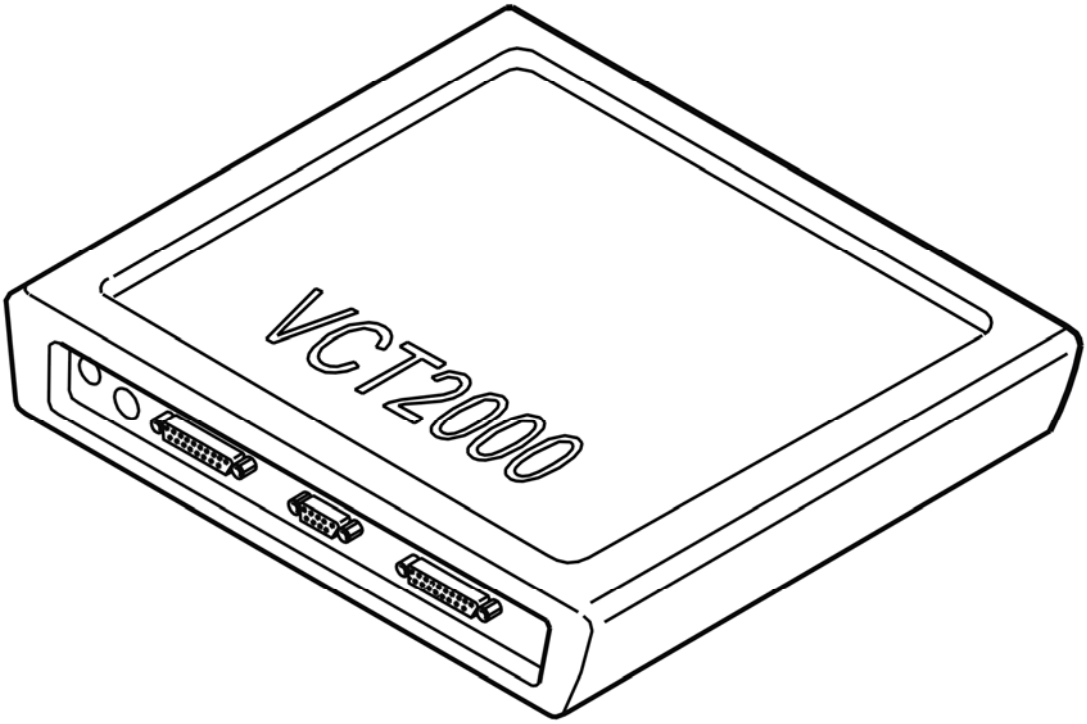

Fig. 47: Identifying VCT2000 Diagnostic Tool Symbol In VIDA
Courtesy of VOLVO CARS CORPORATION

- **Continue**

  Refer to **SAVE THE PROGRAMMED VALUE**

SAVE THE PROGRAMMED VALUE

To ensure that the programmed information is stored, use the VCT2000 (or appropriate scan tool) to force the entry.

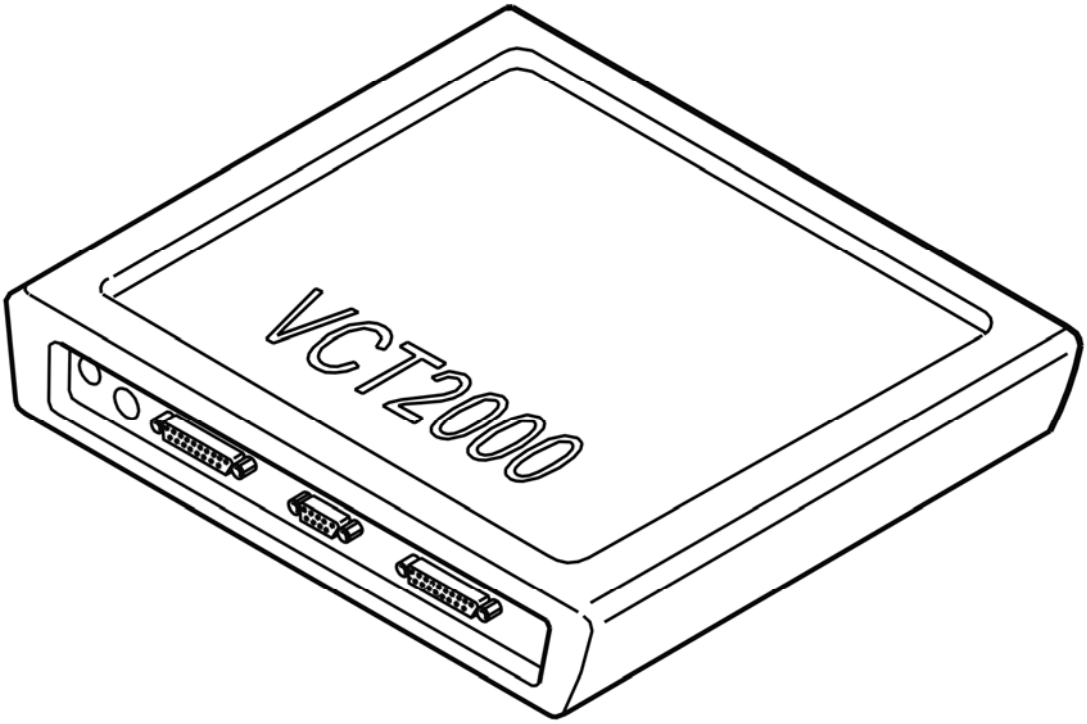

Fig. 48: Identifying VCT2000 Diagnostic Tool Symbol In VIDA
Courtesy of VOLVO CARS CORPORATION

- **Continue**

  Refer to **PROGRAMMING PROCEDURES**

PROGRAMMING THE WIPER FUNCTION FOR THE REAR WINDSHIELD (5 DOOR MODELS)

PROGRAMMING THE WIPER FUNCTION FOR THE REAR WINDSHIELD (5 DOOR MODELS)

- The wiper function for the rear windshield can be programmed. There are two versions:

  1. The rear windshield wiper can only be activated manually.

  2. The rear windshield wiper can be activated automatically when back-up (reverse) gear is selected and the front wipers are activated.

  Read off the programming using the VCT2000 (or appropriate scan tool).

  To change the setting, mark the desired value in the scrolling list and start programming.

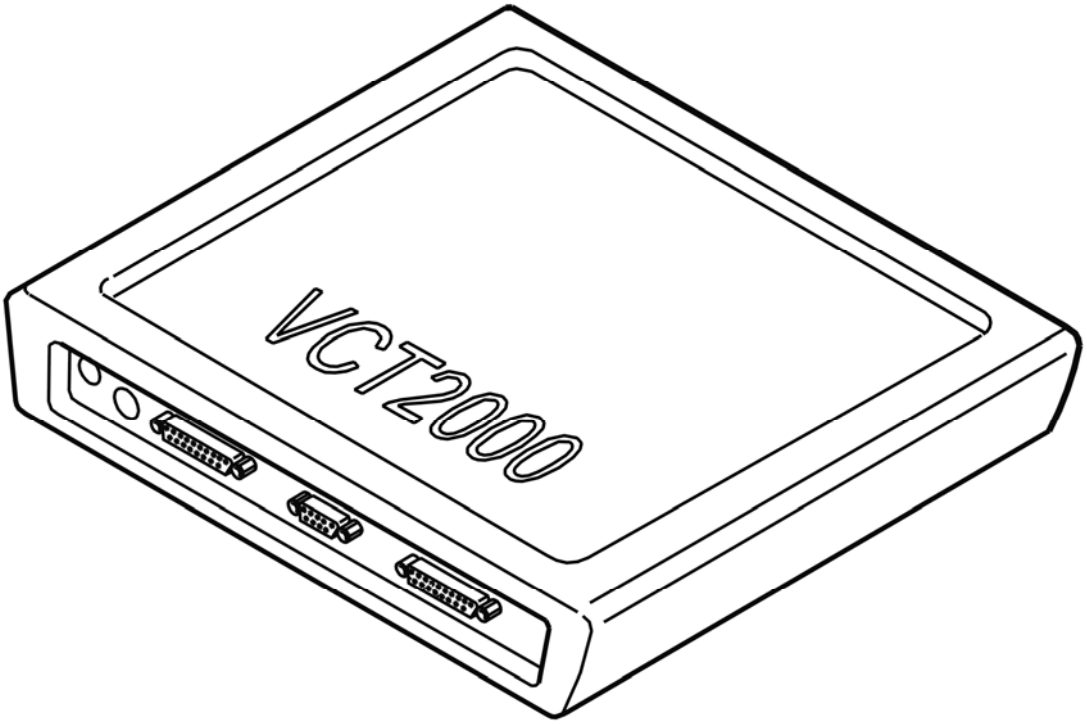

Fig. 49: Identifying VCT2000 Diagnostic Tool Symbol In VIDA
Courtesy of VOLVO CARS CORPORATION

- **Continue**

  Refer to **SAVE THE PROGRAMMED VALUE**

SAVE THE PROGRAMMED VALUE

To ensure that the programmed information is stored, use the VCT2000 (or appropriate scan tool) to force the entry.

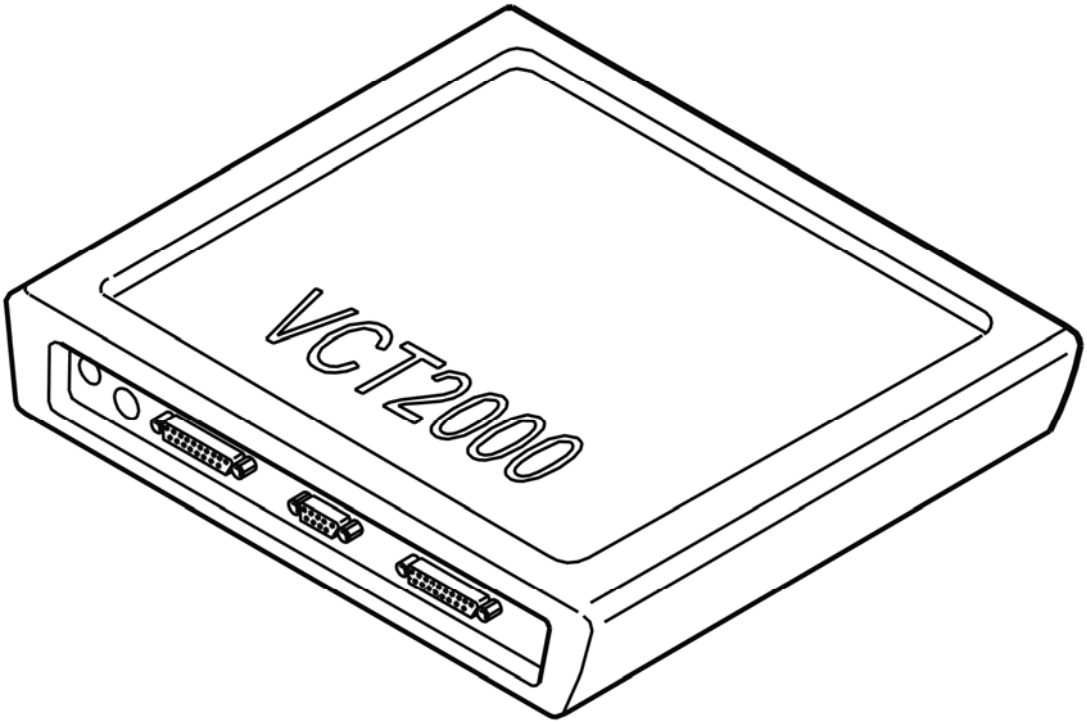

Fig. 50: Identifying VCT2000 Diagnostic Tool Symbol In VIDA
Courtesy of VOLVO CARS CORPORATION

- **Continue**

  Refer to **PROGRAMMING PROCEDURES**

CEM-1D02: CONTROL MODULE. INTERNAL FAULT (2005-2012)

DIAGNOSTIC TROUBLE CODE (DTC) INFORMATION CEM-1D02

Condition

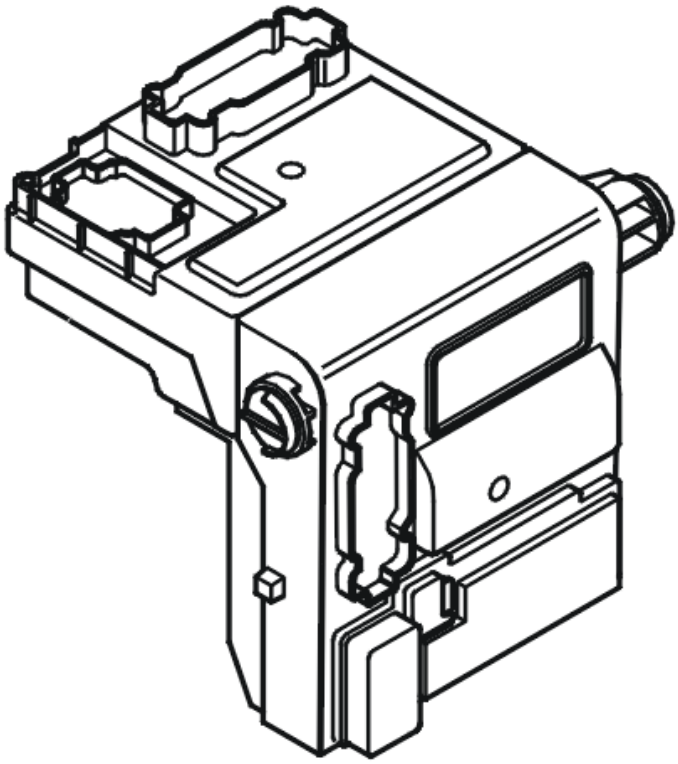

Fig. 51: Identifying Central Electronic Module (CEM)
Courtesy of VOLVO CARS CORPORATION

The diagnostic trouble code (DTC) is stored if the central electronic module (CEM) registers an internal software fault.

The diagnostic trouble code (DTC) can be diagnosed in ignition positions I and II.

Substitute Value

- None.

Possible Source

- Internal fault in the control module.

Fault symptom[s]

- No gauges are working
- The instrument lighting does not operate
- The turn signal lamps are not operating
- Poor performance.

INTERNAL FAULT

REPLACING THE COMPONENT

The central electronic module (CEM) has registered an internal fault.

If the fault is intermittent, it has been registered previously but is no longer present. Intermittent faults can be caused by interference at start up of the central electronic module (CEM) or may be a different type of fault which occurs on different occasions. The fault is evaluated depending on how it occurs. Replace the central electronic module (CEM) if the fault recurs.

Replace the central electronic module (CEM) if the fault is permanent.

Remedy as necessary.

Other information

- For -2004, see: **CENTRAL ELECTRONIC MODULE (CEM), REPLACING**
- For 2005-, see: **CENTRAL ELECTRONIC MODULE (CEM), REPLACING** .

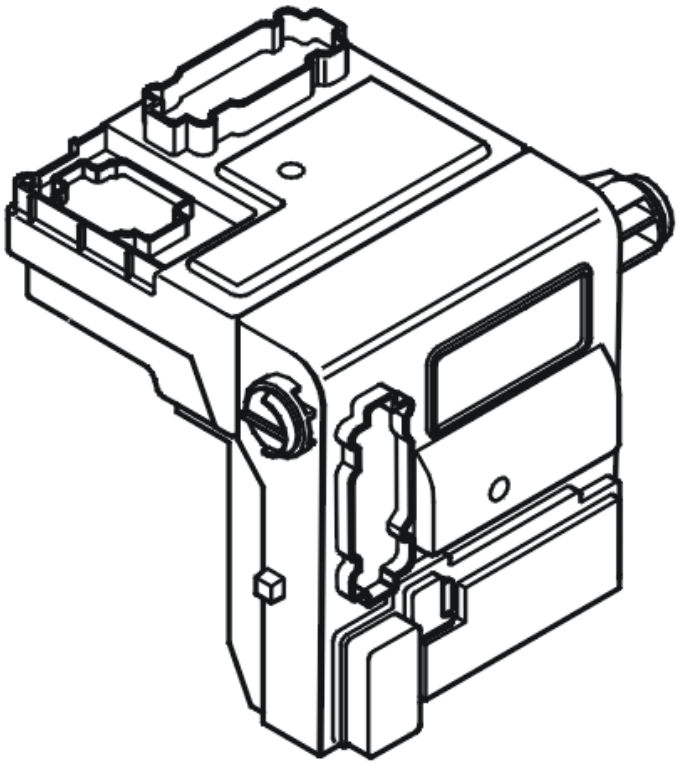

Fig. 52: Identifying Central Electronic Module (CEM)
Courtesy of VOLVO CARS CORPORATION

- **Continue**

Refer to **INFORMATION**

INFORMATION

FAULT-TRACING INFORMATION

In case of this defect, troubleshooting is not followed by verification.

The information can be displayed again or the fault-tracing for this fault can be interrupted.

CEM-1D03: CONTROL MODULE NOT FULLY PROGRAMMED. INTERNAL FAULT (2005-2012)

DIAGNOSTIC TROUBLE CODE (DTC) INFORMATION CEM-1D03

Condition

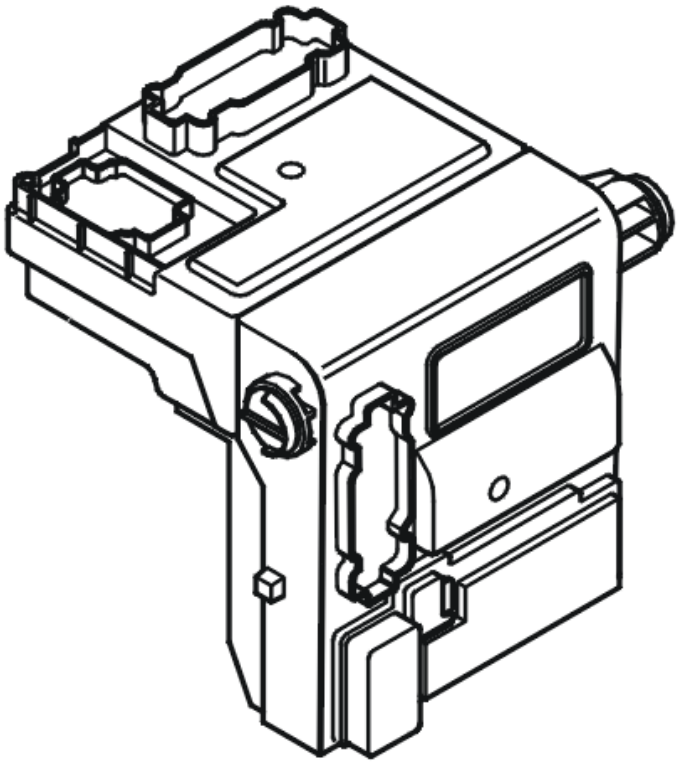

Fig. 53: Identifying Central Electronic Module (CEM)
Courtesy of VOLVO CARS CORPORATION

The diagnostic trouble code (DTC) is stored if the central electronic module (CEM) registers that the software download is not complete.

Other nodes in the CAN network store diagnostic trouble code (DTC) XXX-E003.

The diagnostic trouble code (DTC) can be diagnosed in ignition positions I and II.

Substitute Value

- None.

Possible Source

- The software download is not complete.

Fault symptom[s]

- No gauges working.

INTERNAL FAULT

REPLACING THE COMPONENT

The central electronic module (CEM) has registered an internal fault.

If the fault is intermittent, it has been registered previously but is no longer present. Intermittent faults can be caused by interference at start up of the central electronic module (CEM) or may be a different type of fault which occurs on different occasions. The fault is evaluated depending on how it occurs. Replace the central electronic module (CEM) if the fault recurs.

Reprogram the central electronic module (CEM) if the fault is permanent.

Remedy as necessary.

Other information

- For -2004, see: **CENTRAL ELECTRONIC MODULE (CEM), REPLACING**
- For 2005-, see: **CENTRAL ELECTRONIC MODULE (CEM), REPLACING** .

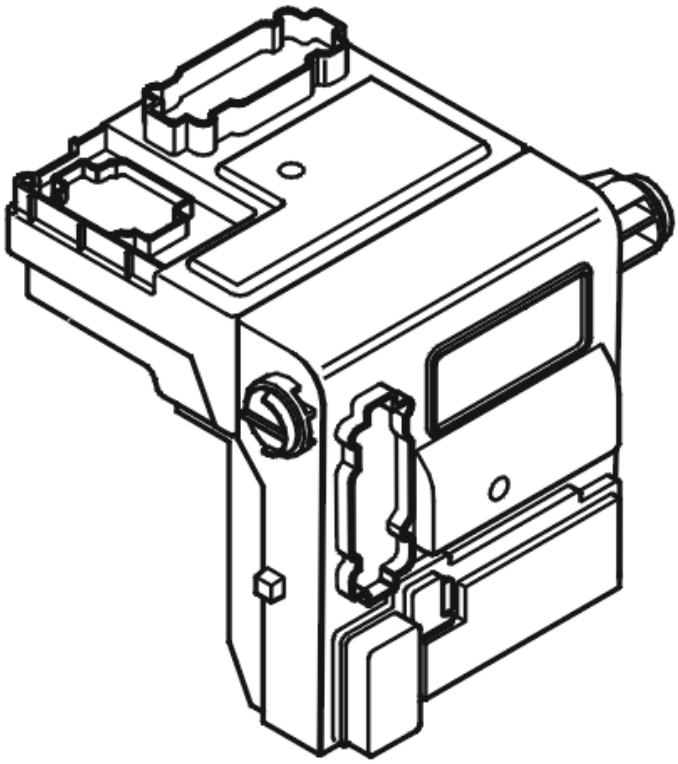

Fig. 54: Identifying Central Electronic Module (CEM)
Courtesy of VOLVO CARS CORPORATION

- **Continue**

  Refer to **INFORMATION**

INFORMATION

FAULT-TRACING INFORMATION

In case of this defect, troubleshooting is not followed by verification.

The information can be displayed again or the fault-tracing for this fault can be interrupted.

CEM-1D03: CONTROL MODULE NOT FULLY PROGRAMMED. INTERNAL FAULT. INTERMITTENT FAULT (2003-2004)

DIAGNOSTIC TROUBLE CODE (DTC) INFORMATION

Condition

Diagnostic trouble code (DTC) n CEM-1D03 is stored if the central electronic module (CEM)registers that the

software download is not complete.

Substitute Value

- None.

Possible Source

- Software download not complete.

Fault symptom[s]

- -

INTERNAL FAULT. INTERMITTENT FAULT

FAULT-TRACING INFORMATION

Diagnostic trouble code (DTC) 1D03 indicates that the software download has failed and must be repeated. Try downloading the software again.

To download new software:

- For -2004, see: **CENTRAL ELECTRONIC MODULE (CEM), REPLACING**
- For 2005-, see: **CENTRAL ELECTRONIC MODULE (CEM), REPLACING** .

Was the software download successful?

- **YES**

  OKAY: Troubleshooting has been completed.

- **NO**

  Refer to **INFORMATION**

INFORMATION

FAULT-TRACING INFORMATION

The fault should have been detected and remedied. As this is not the case fault-tracing has failed.

Exit fault-tracing for this diagnostic trouble code (DTC) or make another attempt.

CEM-1D03: CONTROL MODULE NOT FULLY PROGRAMMED. INTERNAL FAULT. PERMANENT FAULT (2003-2004)

DIAGNOSTIC TROUBLE CODE (DTC) INFORMATION

see **DIAGNOSTIC TROUBLE CODE (DTC) INFORMATION**

INTERNAL FAULT. PERMANENT FAULT

FAULT-TRACING INFORMATION

Diagnostic trouble code (DTC) 1D03 indicates that the software download has failed and must be repeated. Try downloading the software again.

To download new software:

- For -2004, see: **CENTRAL ELECTRONIC MODULE (CEM), REPLACING**
- For 2005-, see: **CENTRAL ELECTRONIC MODULE (CEM), REPLACING** .

Was the software download successful?

- **YES**

  OKAY: Troubleshooting has been completed.

- **NO**

  Refer to **INFORMATION**

INFORMATION

FAULT-TRACING INFORMATION

The fault should have been detected and remedied. As this is not the case fault-tracing has failed.

Exit fault-tracing for this diagnostic trouble code (DTC) or make another attempt.

CEM-1D04: ECM, SOFTWARE. FAULTY SIGNAL. INTERMITTENT FAULT (2003-2004)

DIAGNOSTIC TROUBLE CODE (DTC) INFORMATION

Condition

Diagnostic trouble code (DTC) CEM-1D04 is stored if the control module registers faulty or modified software in the engine control module (ECM).

Substitute Value

None

Possible Source

- Incorrect software check sum.

Fault symptom[s]

- -

FAULTY SIGNAL. INTERMITTENT FAULT

FAULT-TRACING INFORMATION

The diagnostic trouble code (DTC) indicates that the control module has previously registered an intermittent fault, but that the fault is no longer present.

CEM-1D04: ECM, SOFTWARE. FAULTY SIGNAL. PERMANENT FAULT (2003-2004)

DIAGNOSTIC TROUBLE CODE (DTC) INFORMATION

see **DIAGNOSTIC TROUBLE CODE (DTC) INFORMATION**

FAULTY SIGNAL. PERMANENT FAULT

CHECKING PROGRAMMING

NOTE: **The diagnostic trouble code (DTC) is stored if the central electronic module registers that the software in the engine control module (ECM) is faulty or modified . It is therefore important that no steps are taken to remedy modified software in the engine control module (ECM) without first consulting the customer. Neither may software be remedied if the software has been changed by the customer, but this is not the reason for the repair work.**

-
- **Continue**

  Refer to **REPLACING SOFTWARE**

REPLACING SOFTWARE

New software must be downloaded to remedy faulty or changed software in the engine control module (ECM).

Download new software for the engine control module (ECM) according to **ENGINE CONTROL MODULE (ECM), REPLACING** .

CEM-1D05: TCM, SOFTWARE. FAULTY SIGNAL. INTERMITTENT FAULT (2003-2004)

DIAGNOSTIC TROUBLE CODE (DTC) INFORMATION

Condition

Diagnostic trouble code (DTC) CEM-1D05 is stored if the control module registers faulty or modified software in the transmission control module (TCM).

Substitute Value

None

Possible Source

- Incorrect software check sum.

Fault symptom[s]

- -

FAULTY SIGNAL. INTERMITTENT FAULT

see **FAULTY SIGNAL. INTERMITTENT FAULT**

CEM-1D05: TCM, SOFTWARE. FAULTY SIGNAL. PERMANENT FAULT (2003-2004)

DIAGNOSTIC TROUBLE CODE (DTC) INFORMATION

see **DIAGNOSTIC TROUBLE CODE (DTC) INFORMATION**

FAULTY SIGNAL. PERMANENT FAULT

CHECKING PROGRAMMING

NOTE: **The diagnostic trouble code (DTC) is stored if the central electronic module registers that the software in the transmission control module (TCM) is faulty or modified . It is therefore important that no steps are taken to remedy modified software in the transmission control module (TCM) without first consulting the customer. Neither may software be remedied if the software has been changed by the customer, but this is not the reason for the repair work.**

-

- **Continue**

  Refer to **REPLACING SOFTWARE**

REPLACING SOFTWARE

New software must be downloaded to remedy faulty or changed software in the transmission control module (TCM).

Download new software for the transmission control module (TCM) according to **TRANSMISSION CONTROL MODULE (TCM), REPLACING** .

CEM-1D06: CONTROL MODULE. CONFIGURATION FAULT (2003-2004)

DIAGNOSTIC TROUBLE CODE (DTC) INFORMATION

Condition

The central electronic module checks whether there are 140 parameters in the vehicle configuration file.

Diagnostic trouble code (DTC) CEM-1D06 is stored in the central electronic module if the module registers an incorrect number of parameters in the vehicle configuration file.

Diagnostic trouble code (DTC) CEM-1D06 can be detected when the central electronic module is initiated after a reset.

Substitute Value

- None.

Possible Source

- Incorrect number of parameters in the vehicle configuration file.

Fault symptom[s]

-

CONFIGURATION FAULT

ORDERING SOFTWARE

The control module has registered that there are not 140 parameters in the vehicle configuration file.

The control module must be reprogrammed to remedy the fault.

The customer parameters must be read off if this has not already been done. Use the VCT2000 (or appropriate

scan tool). Make a note of the values.

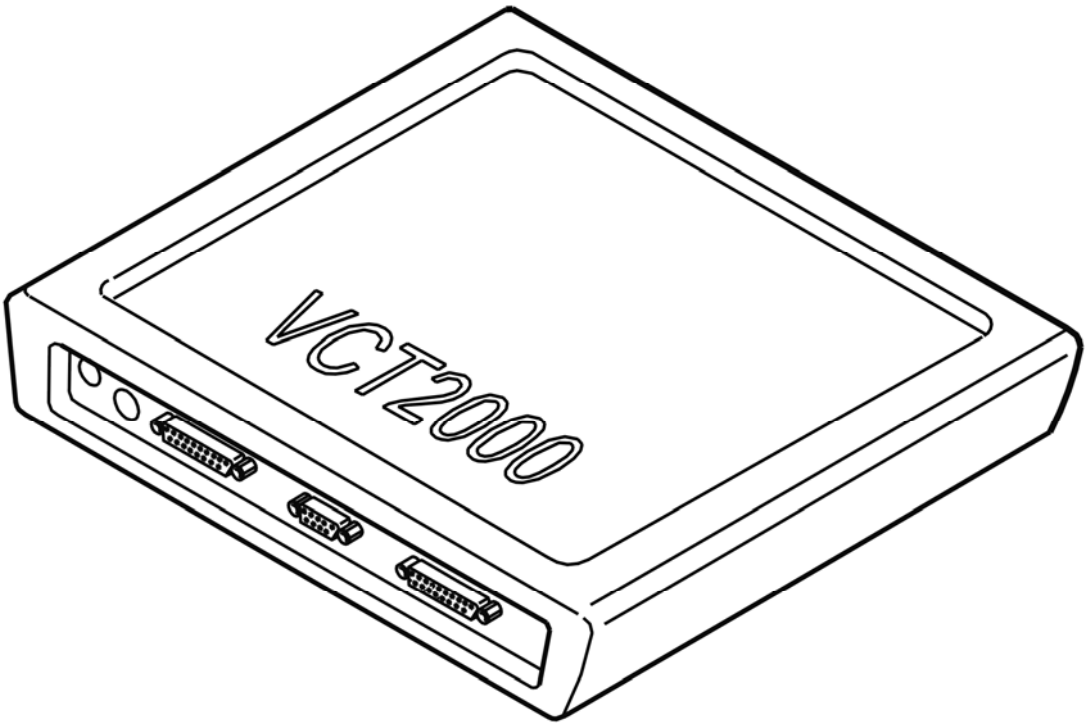

Fig. 55: Identifying VCT2000 Diagnostic Tool Symbol In VIDA
Courtesy of VOLVO CARS CORPORATION

- **Continue**

  Refer to **PROGRAMMING**

PROGRAMMING

Order software according to the table below.

XC90	9438273

Program the control module again according to the table below.

XC90	9438273

Program the customer parameters from the previous software.

- **Continue**

Refer to **PROGRAMMING CONTROL MODULE**

PROGRAMMING CONTROL MODULE

PROGRAMMING PROCEDURES

The following can be programmed in the Central electronic module (CEM) according to customer's wishes.

Programming

1. Seat temperature.

   Refer to **PROGRAMMING THE SEAT TEMPERATURE (CENTRAL ELECTRONIC MODULE)**

2. Approach lights.

   Refer to **PROGRAMMING THE HOME SAFE LIGHTS**

3. Daytime running lights.

   Refer to **PROGRAMMING DAYTIME RUNNING LAMPS**

4. Tailgate window wiper (5 DRS).

   Refer to **PROGRAMMING THE WIPER FUNCTION FOR THE REAR WINDSHIELD (5 DOOR MODELS)**

Do you want to program any more parameters?

- **YES**

  Refer to **PROGRAMMING PROCEDURES**

- **NO**

  OKAY: Troubleshooting has been completed.

Do you want to program any more parameters?

- **YES**

  Refer to **PROGRAMMING PROCEDURES**

- **NO**

  OKAY: Troubleshooting has been completed.

Do you want to program any more parameters?

- **YES**

  Refer to **PROGRAMMING PROCEDURES**

- **NO**

  OKAY: Troubleshooting has been completed.

Do you want to program any more parameters?

- **YES**

  Refer to **PROGRAMMING PROCEDURES**

- **NO**

  OKAY: Troubleshooting has been completed.

PROGRAMMING THE SEAT TEMPERATURE (CENTRAL ELECTRONIC MODULE)

PROGRAMMING THE SEAT TEMPERATURE (CENTRAL ELECTRONIC MODULE)

The heated seat temperature can be adjusted.

This can be carried out for both the left and right seats.

There are two values that can be programmed: low temperature and high temperature.

Programming must be carried out so that the high temperature setting is higher than the low temperature setting.

Do you want to program in Celsius or Fahrenheit?

1. Celsius

   Refer to **CELSIUS**

2. Fahrenheit.

   Refer to **FAHRENHEIT**

CELSIUS

The seat temperature can be set between 0°C and 43°C.

Which seat do you want to reprogram:

1. Left seat

   Refer to **CHECKING THE LEFT SEAT**

2. Right seat.

   Refer to **CHECKING THE RIGHT SEAT**

FAHRENHEIT

The seat temperature can be set between 32°F and 109.4°F.

Which seat do you want to reprogram:

1. Left seat

   Refer to **CHECKING THE LEFT SEAT**

2. Right seat.

   Refer to **CHECKING THE RIGHT SEAT**

CHECKING THE LEFT SEAT

Read off the programming using the VCT2000 (or appropriate scan tool).

To change the seat temperature, mark the desired value in the scrolling list and start programming.

Programming must be carried out so that the high temperature setting is higher than the low temperature setting.

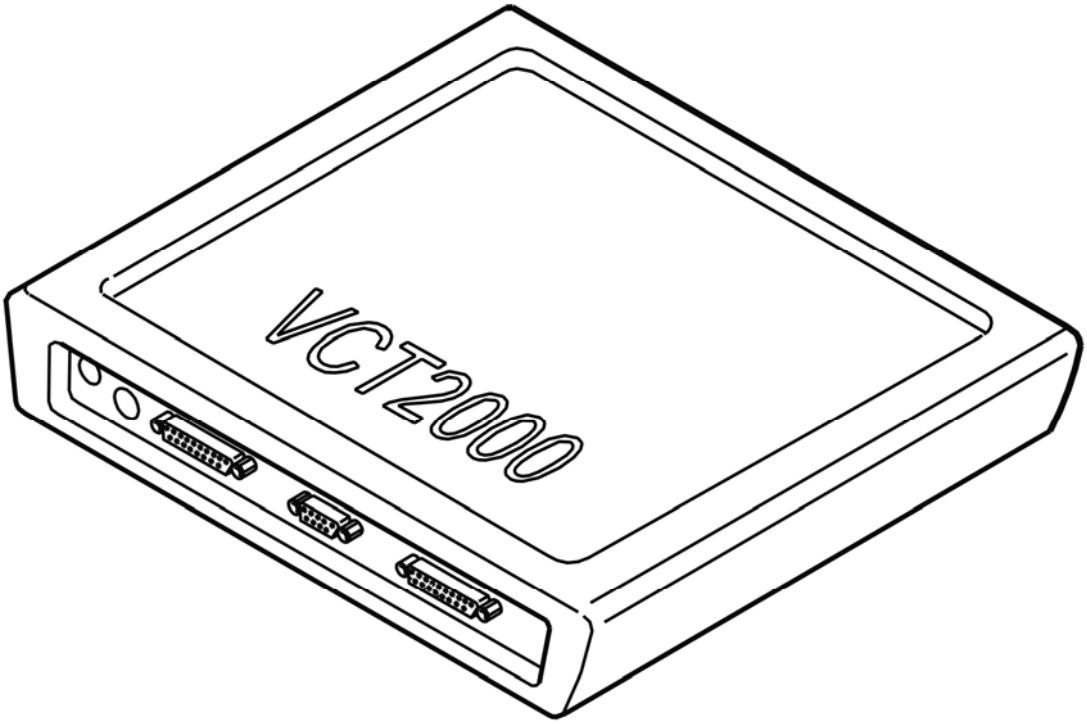

Fig. 56: Identifying VCT2000 Diagnostic Tool Symbol In VIDA
Courtesy of VOLVO CARS CORPORATION

- **Continue**

  Refer to **SAVE THE PROGRAMMED VALUE**

CHECKING THE RIGHT SEAT

Read off the programming using the VCT2000 (or appropriate scan tool).

To change the seat temperature, mark the desired value in the scrolling list and start programming.

Programming must be carried out so that the high temperature setting is higher than the low temperature setting.

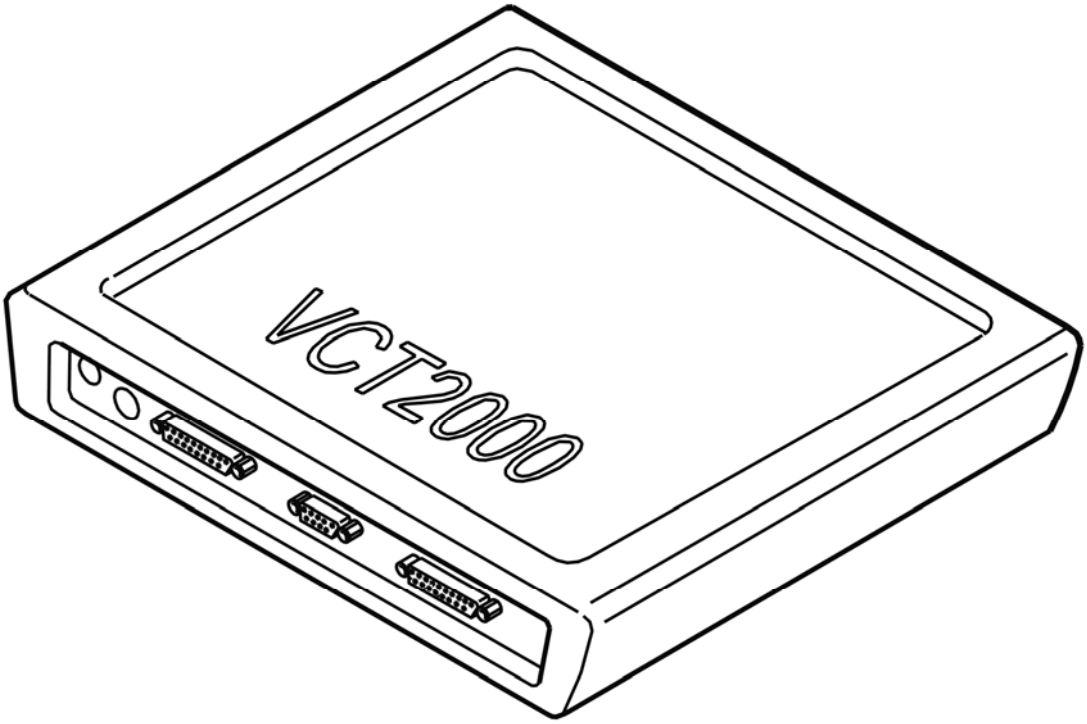

Fig. 57: Identifying VCT2000 Diagnostic Tool Symbol In VIDA
Courtesy of VOLVO CARS CORPORATION

- **Continue**

  Refer to **SAVE THE PROGRAMMED VALUE**

CHECKING THE LEFT SEAT

Read off the programming using the VCT2000 (or appropriate scan tool).

To change the seat temperature, mark the desired value in the scrolling list and start programming.

Programming must be carried out so that the high temperature setting is higher than the low temperature setting.

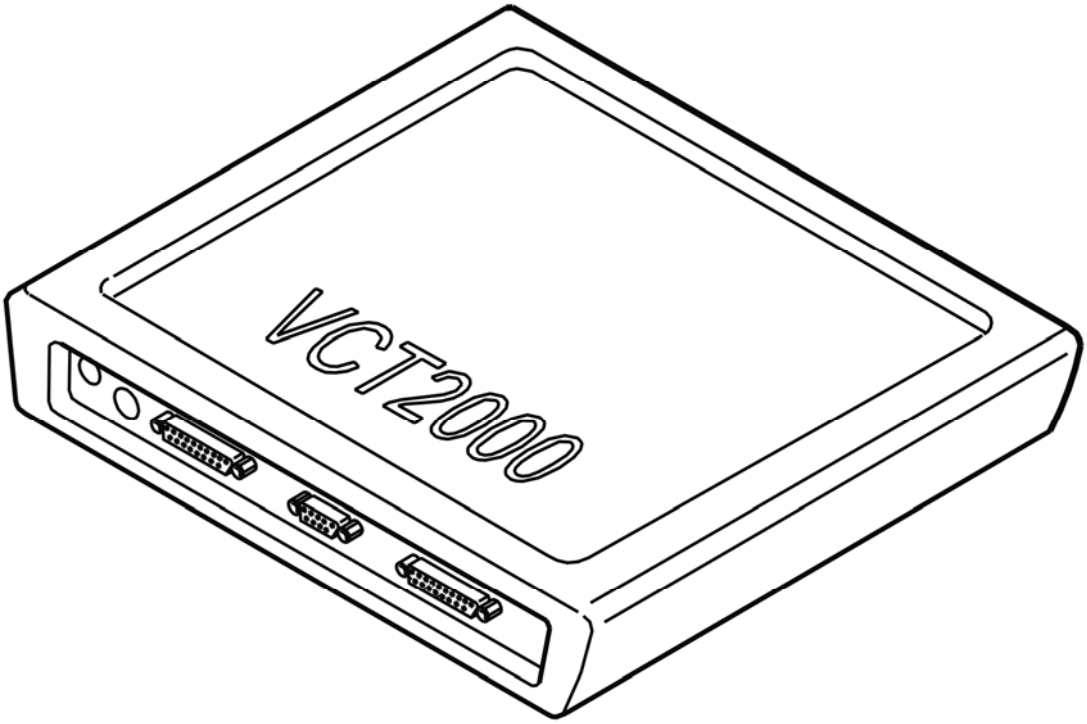

Fig. 58: Identifying VCT2000 Diagnostic Tool Symbol In VIDA
Courtesy of VOLVO CARS CORPORATION

- **Continue**

  Refer to **SAVE THE PROGRAMMED VALUE**

CHECKING THE RIGHT SEAT

Read off the programming using the VCT2000 (or appropriate scan tool).

To change the seat temperature, mark the desired value in the scrolling list and start programming.

Programming must be carried out so that the high temperature setting is higher than the low temperature setting.

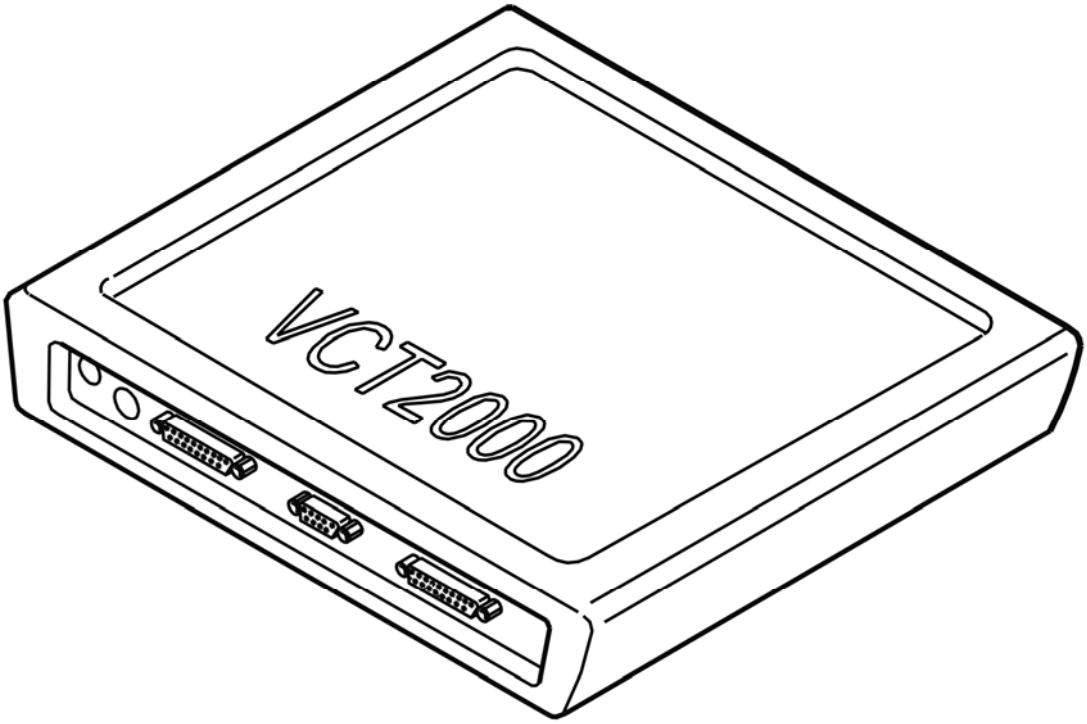

Fig. 59: Identifying VCT2000 Diagnostic Tool Symbol In VIDA
Courtesy of VOLVO CARS CORPORATION

- **Continue**

  Refer to **SAVE THE PROGRAMMED VALUE**

SAVE THE PROGRAMMED VALUE

To ensure that the programmed information is stored, use the VCT2000 (or appropriate scan tool) to force the entry.

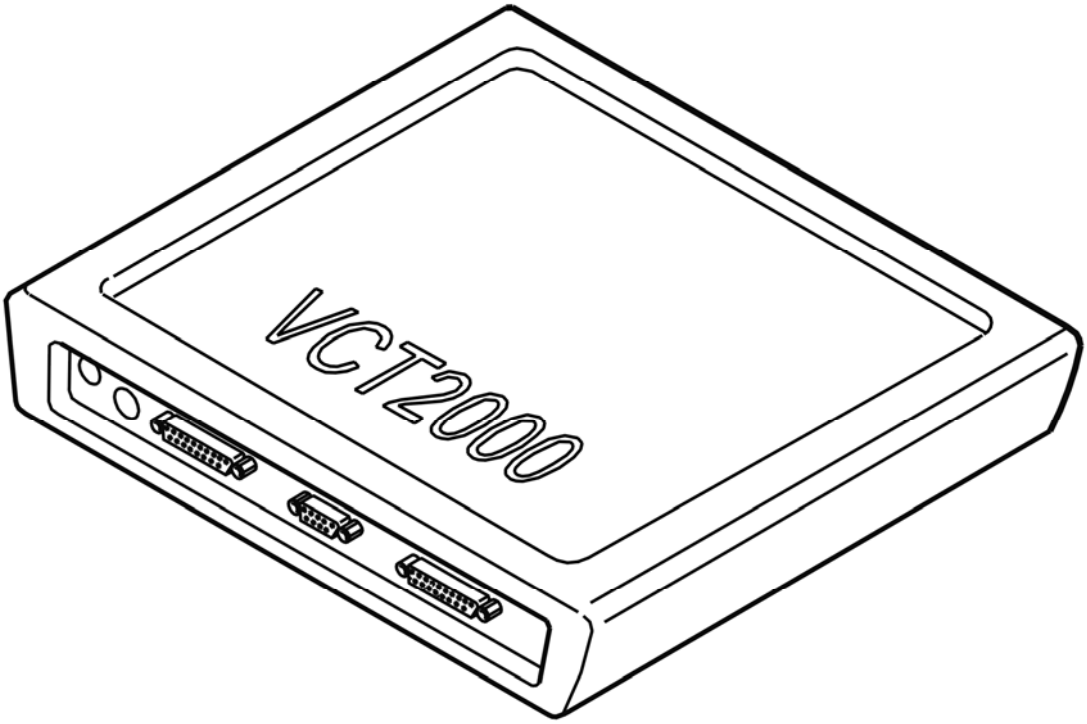

Fig. 60: Identifying VCT2000 Diagnostic Tool Symbol In VIDA
Courtesy of VOLVO CARS CORPORATION

- **Continue**

  Refer to **PROGRAMMING PROCEDURES**

PROGRAMMING THE HOME SAFE LIGHTS

PROGRAMMING THE HOME SAFE LIGHTS

The home safe lights can be programmed to stay on for a longer or shorter time according to the wishes of the customer.

The factory setting is 30 seconds. The time can be set to 0, 30, 60 or 90 seconds.

Read off the programming using the VCT2000 (or appropriate scan tool).

To change the time set, mark the desired value in the scrolling list and start programming.

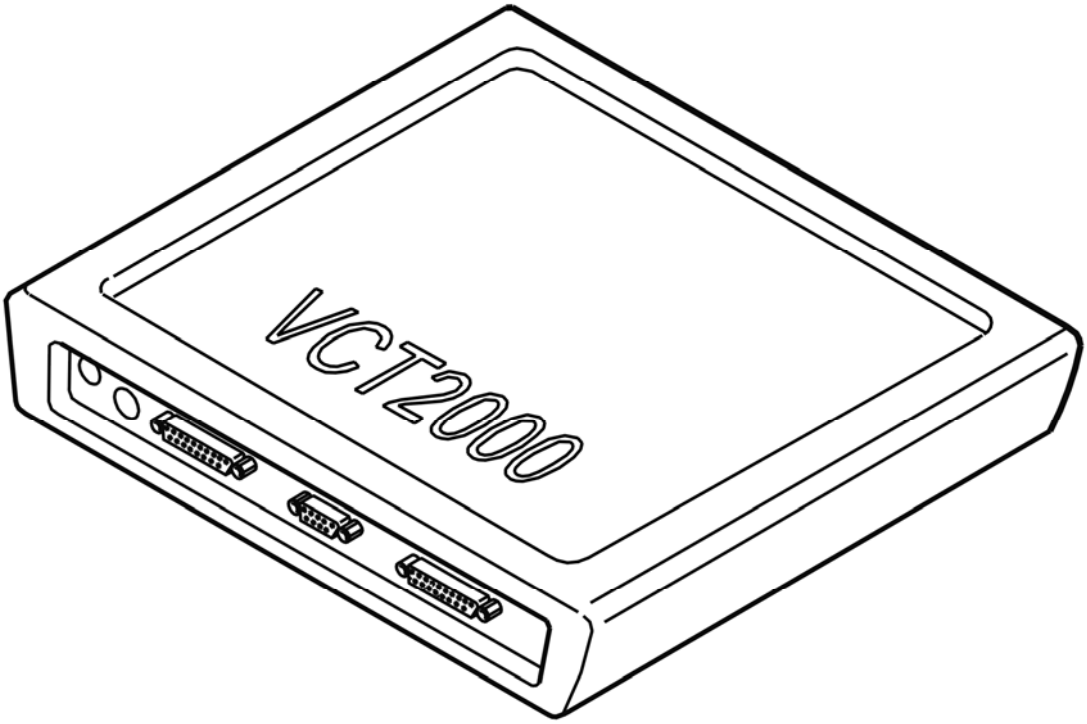

Fig. 61: Identifying VCT2000 Diagnostic Tool Symbol In VIDA
Courtesy of VOLVO CARS CORPORATION

- **Continue**

  Refer to **SAVE THE PROGRAMMED VALUE**

SAVE THE PROGRAMMED VALUE

To ensure that the programmed information is stored, use the VCT2000 (or appropriate scan tool) to force the entry.

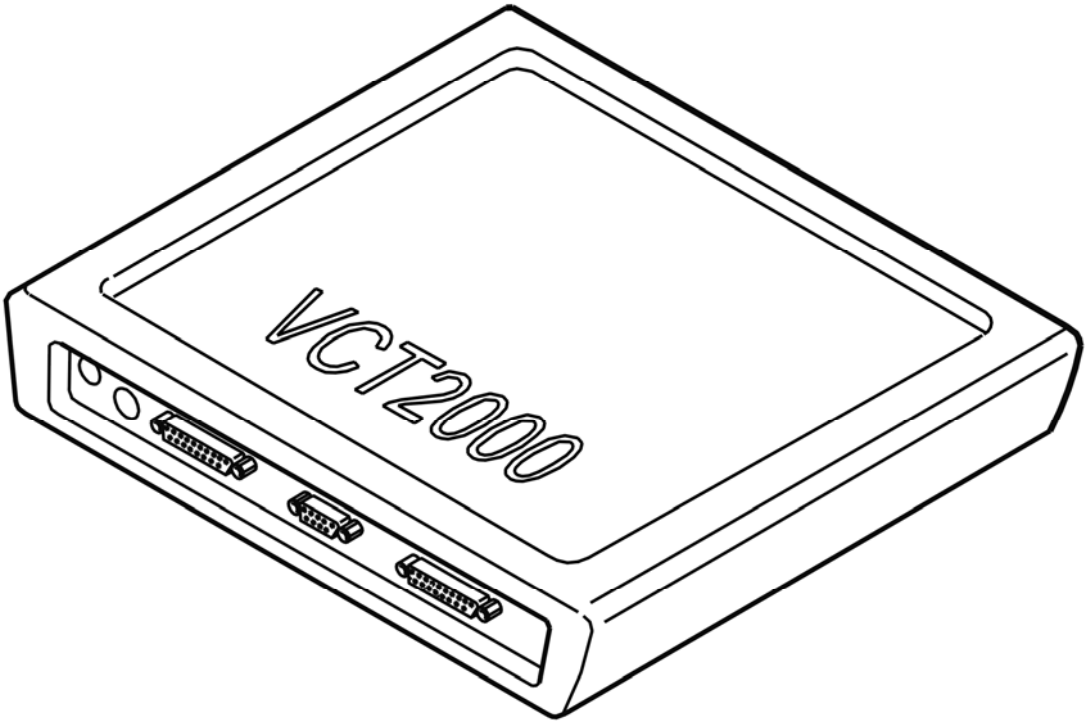

Fig. 62: Identifying VCT2000 Diagnostic Tool Symbol In VIDA
Courtesy of VOLVO CARS CORPORATION

- **Continue**

  Refer to **PROGRAMMING PROCEDURES**

PROGRAMMING DAYTIME RUNNING LAMPS

PROGRAMMING DAYTIME RUNNING LAMPS

Three different daytime running light functions can be programmed:

1. Low beam in all switch positions except the parking light position (Flex zero)

Position light switch:

OFF: Parking and daytime running lamps or Xenon lamps are activated depending on the signal from the twilight sensor.

Parking lamps: Only parking lamps activated.

On: Parking and Xenon lamps are activated.

2. The light switch functioning on the basis of: off, parking light and low beam (Flex standard)

Position light switch:

OFF: Daytime running lamps are activated. If the twilight sensor registers insufficient light, all lighting is switched off (Xenon lamps are not activated).

Parking lamps: Only parking lamps activated.

On: Parking and Xenon lamps are activated.

3. Low beam always on regardless of the position of the light switch (Flex low)

Position light switch:

OFF: Parking and daytime running lamps or Xenon lamps are activated depending on the signal from the twilight sensor.

Parking lamps: Parking and Xenon lamps are activated.

On: Parking and Xenon lamps are activated.

It is essential that the legal requirements of each country are followed.

NOTE: It is not permitted to change this programming in the Canadian market.

Read off the programming using the VCT2000 (or appropriate scan tool).

To change the setting, mark the desired value in the scrolling list and start programming.

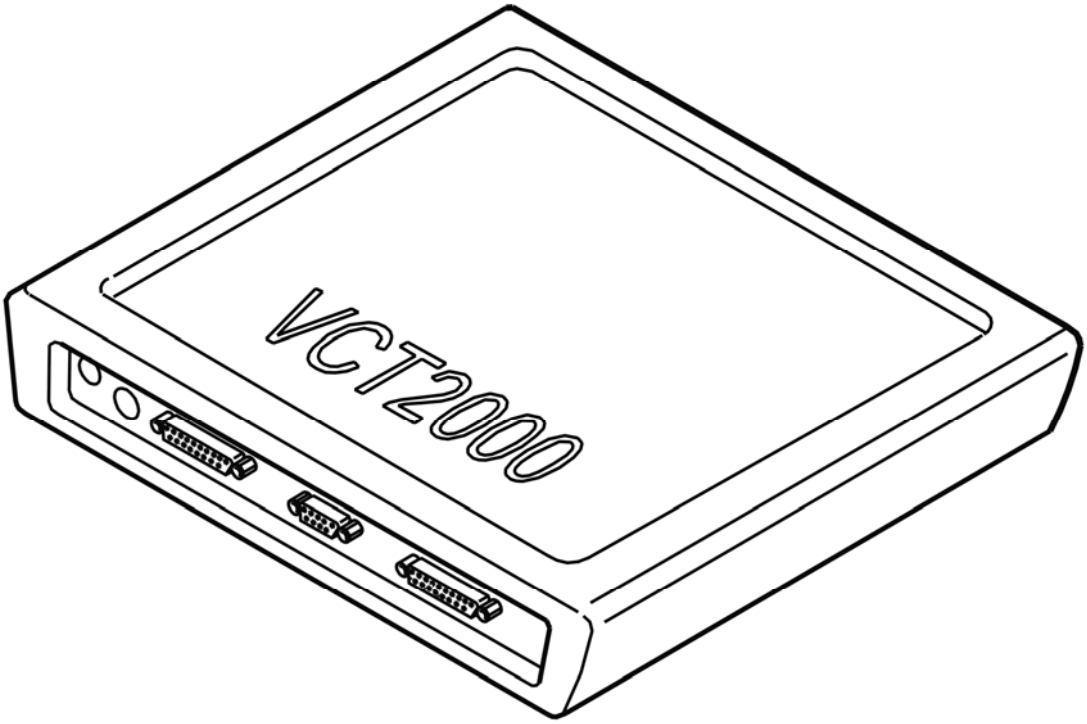

Fig. 63: Identifying VCT2000 Diagnostic Tool Symbol In VIDA
Courtesy of VOLVO CARS CORPORATION

- **Continue**

  Refer to **SAVE THE PROGRAMMED VALUE**

SAVE THE PROGRAMMED VALUE

To ensure that the programmed information is stored, use the VCT2000 (or appropriate scan tool) to force the entry.

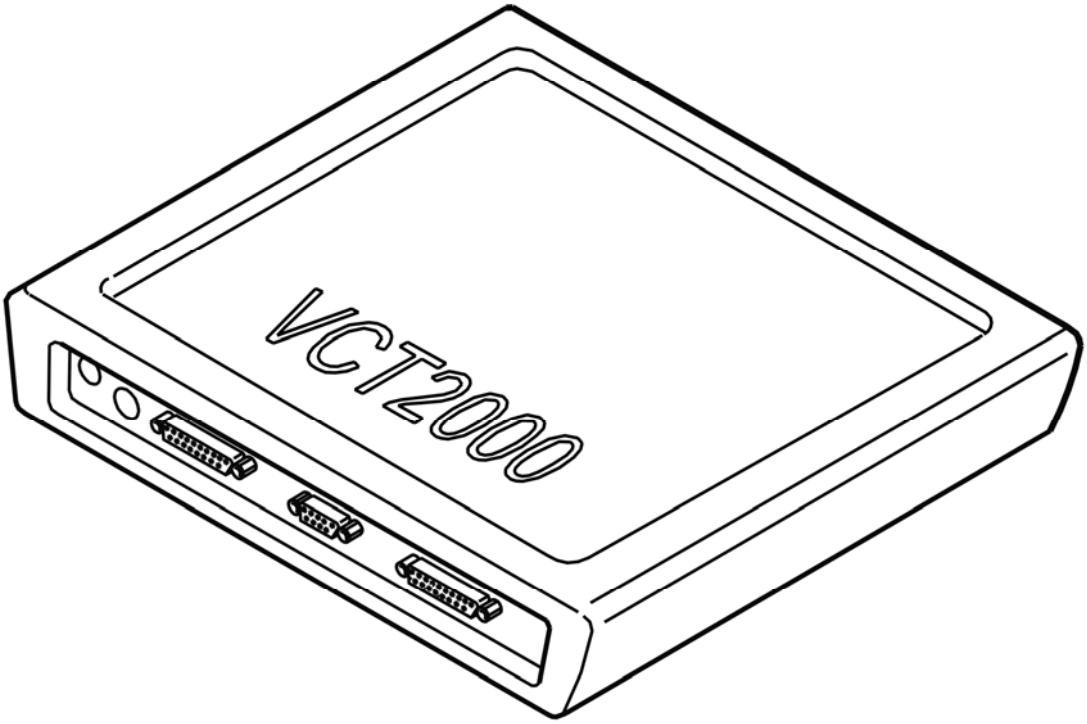

Fig. 64: Identifying VCT2000 Diagnostic Tool Symbol In VIDA
Courtesy of VOLVO CARS CORPORATION

- **Continue**

  Refer to **PROGRAMMING PROCEDURES**

PROGRAMMING THE WIPER FUNCTION FOR THE REAR WINDSHIELD (5 DOOR MODELS)

PROGRAMMING THE WIPER FUNCTION FOR THE REAR WINDSHIELD (5 DOOR MODELS)

- The wiper function for the rear windshield can be programmed. There are two versions:

  1. The rear windshield wiper can only be activated manually.

  2. The rear windshield wiper can be activated automatically when back-up (reverse) gear is selected and the front wipers are activated.

  Read off the programming using the VCT2000 (or appropriate scan tool).

  To change the setting, mark the desired value in the scrolling list and start programming.

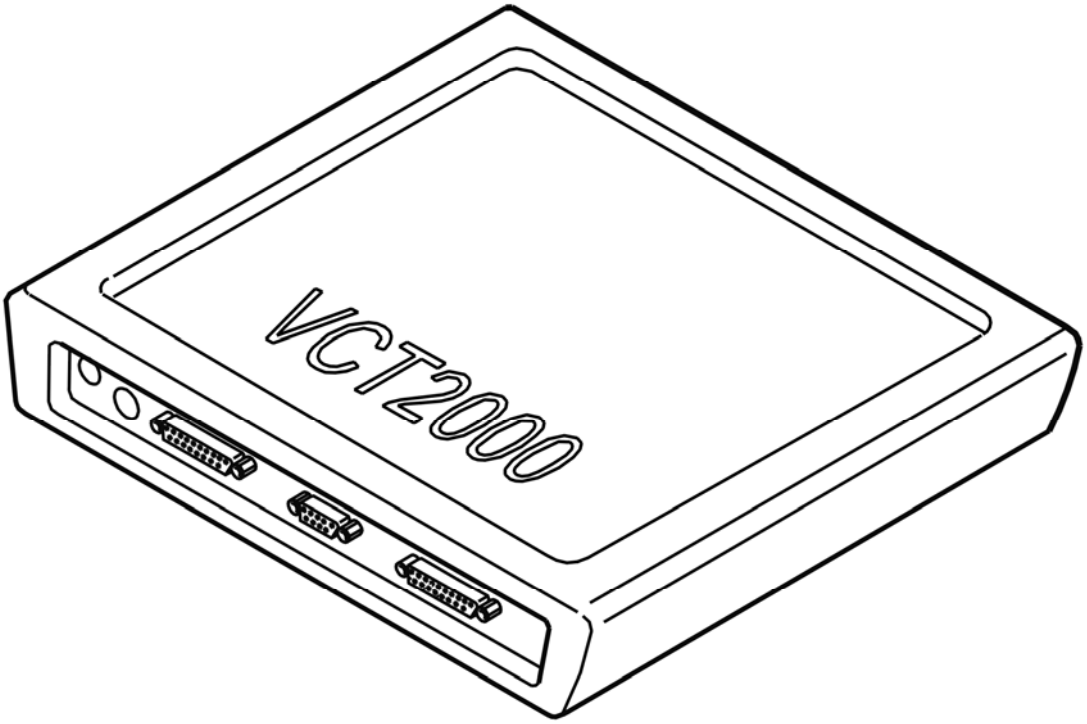

Fig. 65: Identifying VCT2000 Diagnostic Tool Symbol In VIDA
Courtesy of VOLVO CARS CORPORATION

- **Continue**

  Refer to **SAVE THE PROGRAMMED VALUE**

SAVE THE PROGRAMMED VALUE

To ensure that the programmed information is stored, use the VCT2000 (or appropriate scan tool) to force the entry.

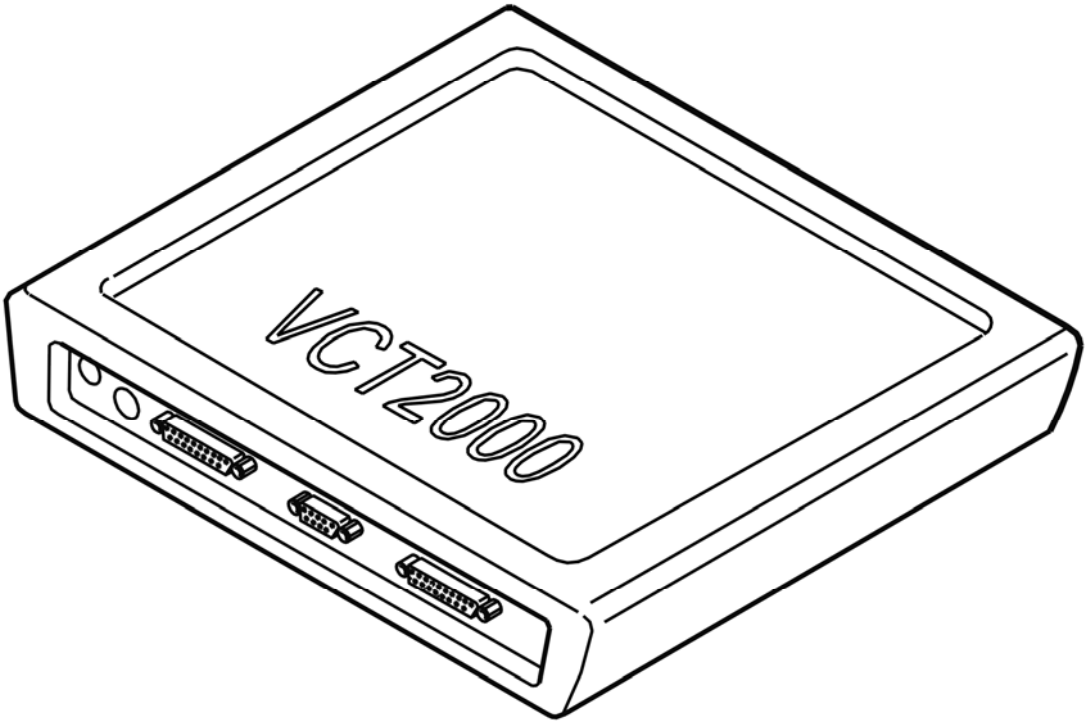

Fig. 66: Identifying VCT2000 Diagnostic Tool Symbol In VIDA
Courtesy of VOLVO CARS CORPORATION

- **Continue**

  Refer to **PROGRAMMING PROCEDURES**

CEM-1D06: CONTROL MODULE. CONFIGURATION FAULT (2005-2012)

DIAGNOSTIC TROUBLE CODE (DTC) INFORMATION CEM-1D06

Condition

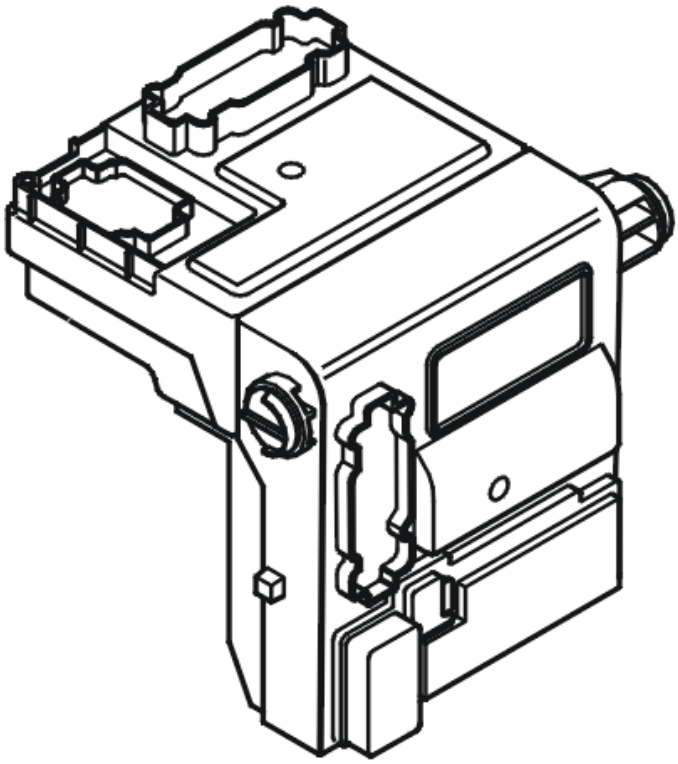

Fig. 67: Identifying Central Electronic Module (CEM)
Courtesy of VOLVO CARS CORPORATION

The central electronic module (CEM) checks the number of parameters in the vehicle configuration file is correct.

The diagnostic trouble code (DTC) is stored if the central electronic module (CEM) registers an incorrect number of parameters in the vehicle configuration file.

The diagnostic trouble code (DTC) can be detected when the central electronic module (CEM) is initialized after a reset.

Substitute Value

- None.

Possible Source

- Incorrect number of parameters in the vehicle configuration file.

Fault symptom[s]

- None.

CONFIGURATION FAULT

CHECKING THE PROGRAMMED VALUES

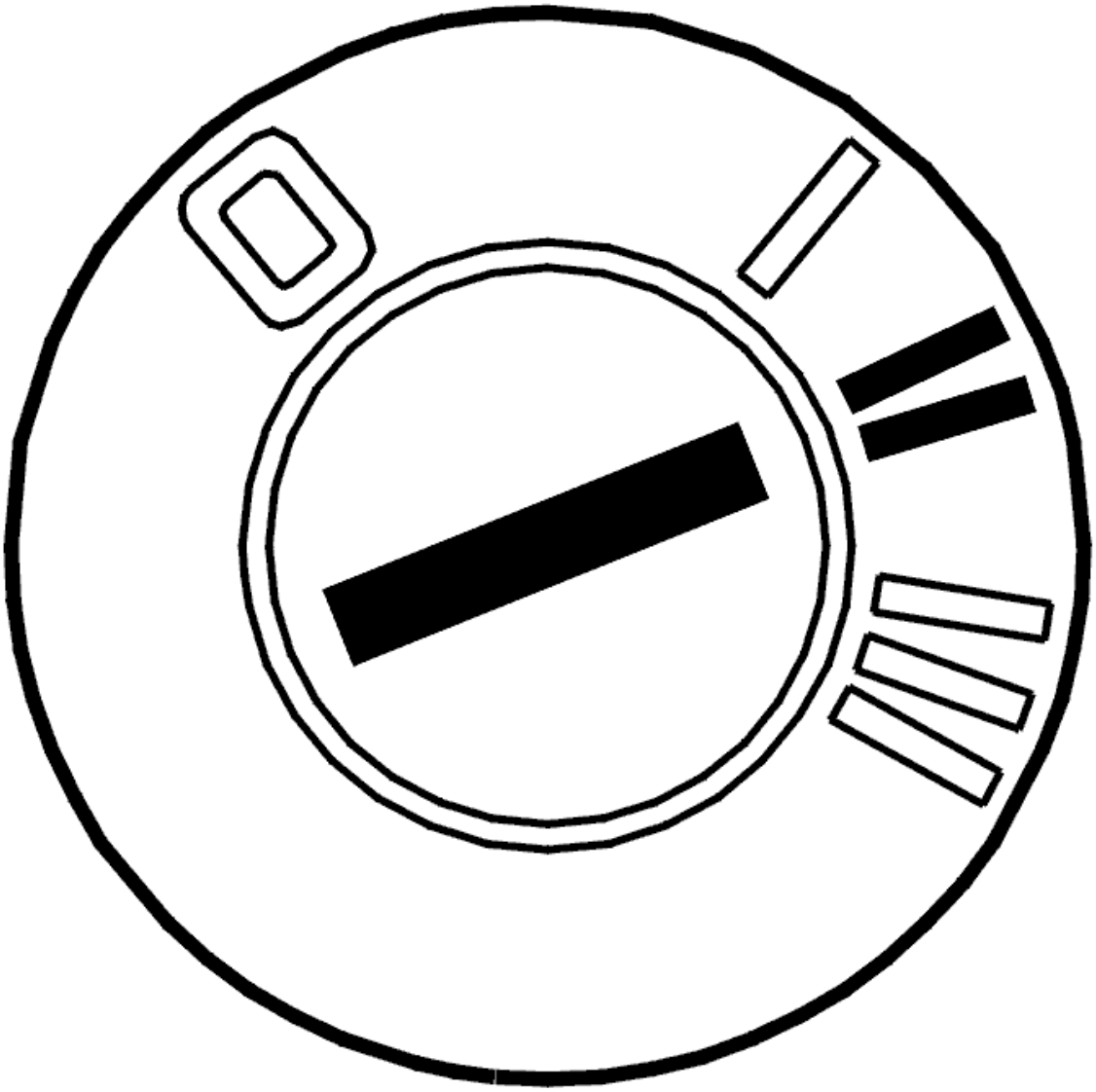

Fig. 68: Identifying Ignition ON
Courtesy of VOLVO CARS CORPORATION

- Ignition on.

  The control module has registered an incorrect number of parameters in the vehicle configuration file.

  If the fault is intermittent, it has been registered previously but is no longer present. Intermittent faults can be caused by interference at start up of the central electronic module (CEM) or may be a different type of fault which occurs on different occasions. The fault is evaluated depending on how it occurs.

  The control module must be reprogrammed to remedy the fault.

The customer parameters must be read off, if not already been done, before the software is downloaded.

Read off and note the values.

These parameters must be re-entered using VIDA (Volvo scan tool) after programming.

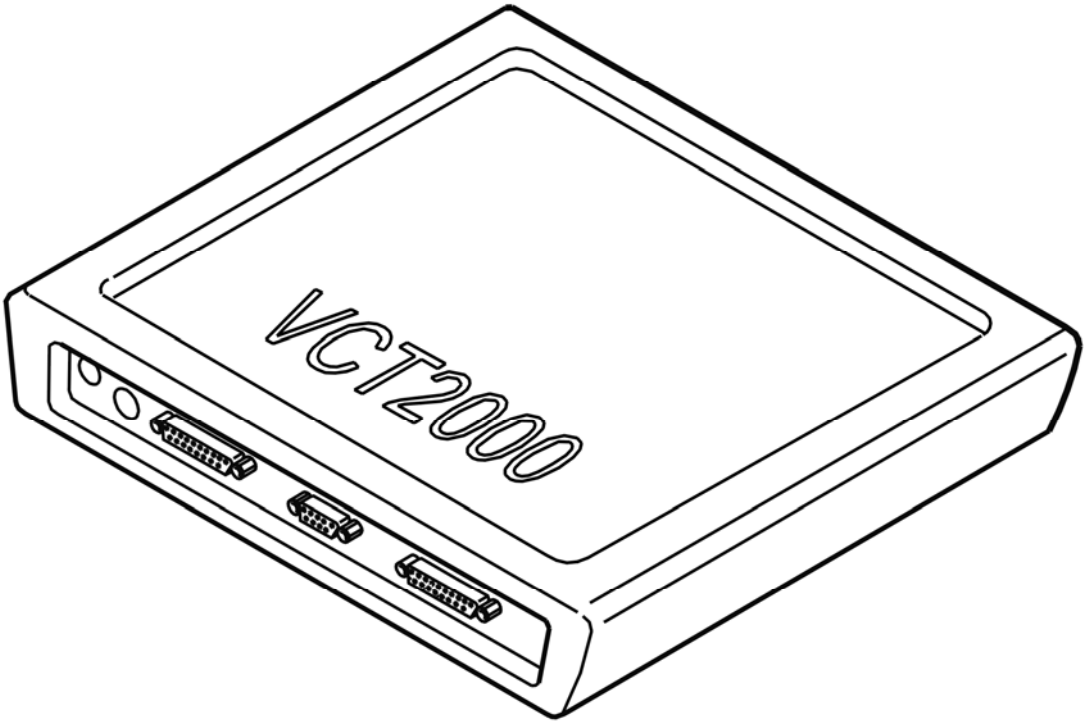

Fig. 69: Identifying VCT2000 Diagnostic Tool Symbol In VIDA
Courtesy of VOLVO CARS CORPORATION

CEM-1D07: CONTROL MODULE. INTERNAL FAULT (2005-2012)

DIAGNOSTIC TROUBLE CODE (DTC) INFORMATION CEM-1D07

Condition

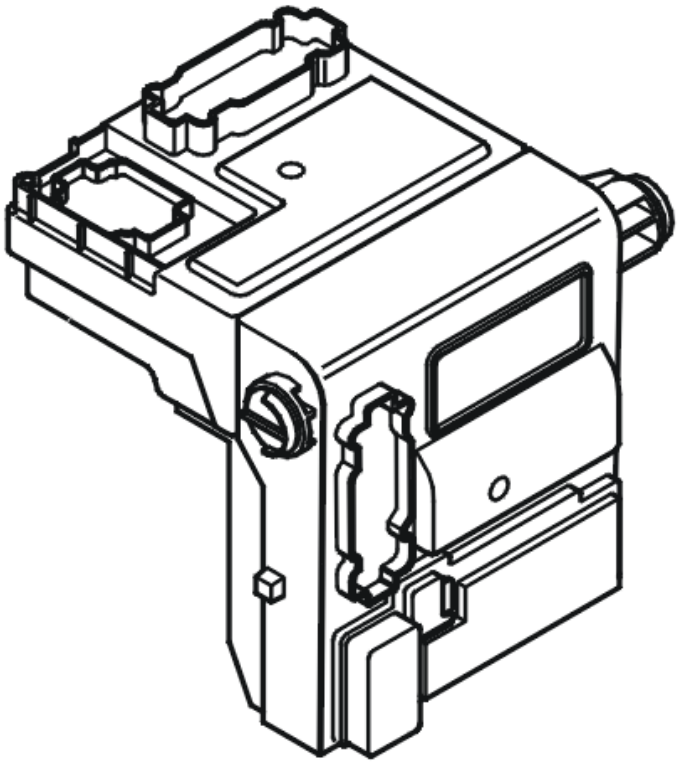

Fig. 70: Identifying Central Electronic Module (CEM)
Courtesy of VOLVO CARS CORPORATION

The diagnostic trouble code (DTC) is stored if the central electronic module (CEM) registers an internal fault.

The diagnostic trouble code (DTC) can be diagnosed 5 minutes after the ignition has been switched off.

Substitute Value

- None.

Possible Source

- Internal fault in the control module.

Fault symptom[s]

- No gauges are working
- The instrument lighting does not operate
- The turn signal lamps are not operating
- Poor performance.

INTERNAL FAULT

REPLACING THE COMPONENT

The central electronic module (CEM) has registered an internal fault.

If the fault is intermittent, it has been registered previously but is no longer present. Intermittent faults can be caused by interference at start up of the central electronic module (CEM) or may be a different type of fault which occurs on different occasions. The fault is evaluated depending on how it occurs. Replace the central electronic module (CEM) if the fault recurs.

Replace the central electronic module (CEM) if the fault is permanent.

Remedy as necessary.

Other information

- For -2004, see: **CENTRAL ELECTRONIC MODULE (CEM), REPLACING**
- For 2005-, see: **CENTRAL ELECTRONIC MODULE (CEM), REPLACING** .

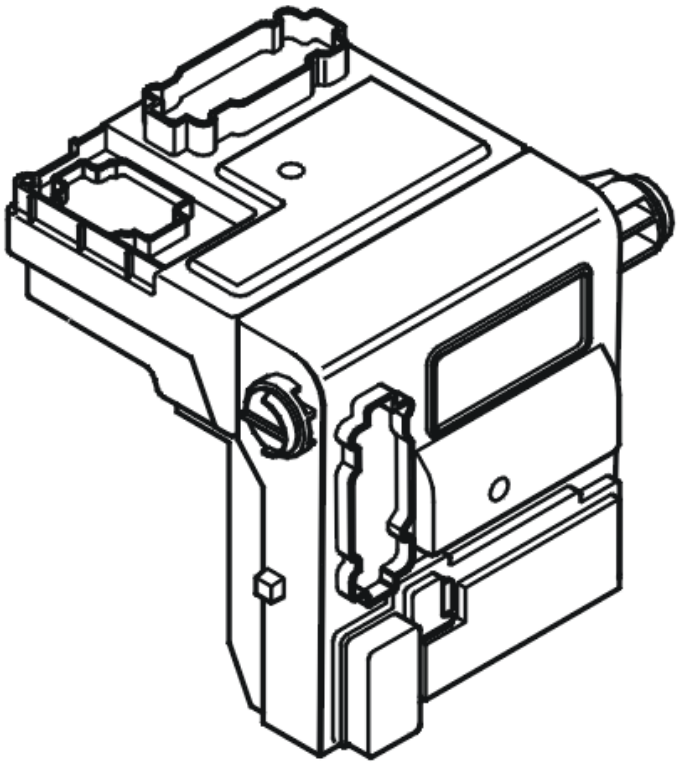

Fig. 71: Identifying Central Electronic Module (CEM)
Courtesy of VOLVO CARS CORPORATION

- **Continue**

  Refer to **INFORMATION**

INFORMATION

FAULT-TRACING INFORMATION

In case of this defect, troubleshooting is not followed by verification.

The information can be displayed again or the fault-tracing for this fault can be interrupted.

CEM-1D07: CONTROL MODULE. INTERNAL FAULT. INTERMITTENT FAULT (2003-2004)

DIAGNOSTIC TROUBLE CODE (DTC) INFORMATION

Condition

Diagnostic trouble code (DTC) CEM-1D07 is stored if the central electronic module (CEM) registers an internal fault 5 minutes after the ignition has been switched off.

Substitute Value

None

Possible Source

- Internal fault in the central electronic module (CEM).

Fault symptom[s]

- -

INTERNAL FAULT. INTERMITTENT FAULT

FAULT-TRACING INFORMATION

The diagnostic trouble code (DTC) indicates that the control module has previously registered an intermittent fault, but that the fault is no longer present.

CEM-1D07: CONTROL MODULE. INTERNAL FAULT. PERMANENT FAULT (2003-2004)

DIAGNOSTIC TROUBLE CODE (DTC) INFORMATION

see **DIAGNOSTIC TROUBLE CODE (DTC) INFORMATION**

INTERNAL FAULT. PERMANENT FAULT

CHECKING PROGRAMMING

NOTE: **If possible, read off the customer parameters from the control module before it is replaced.**

Use the VCT2000 (or appropriate scan tool). Make a note of the values.

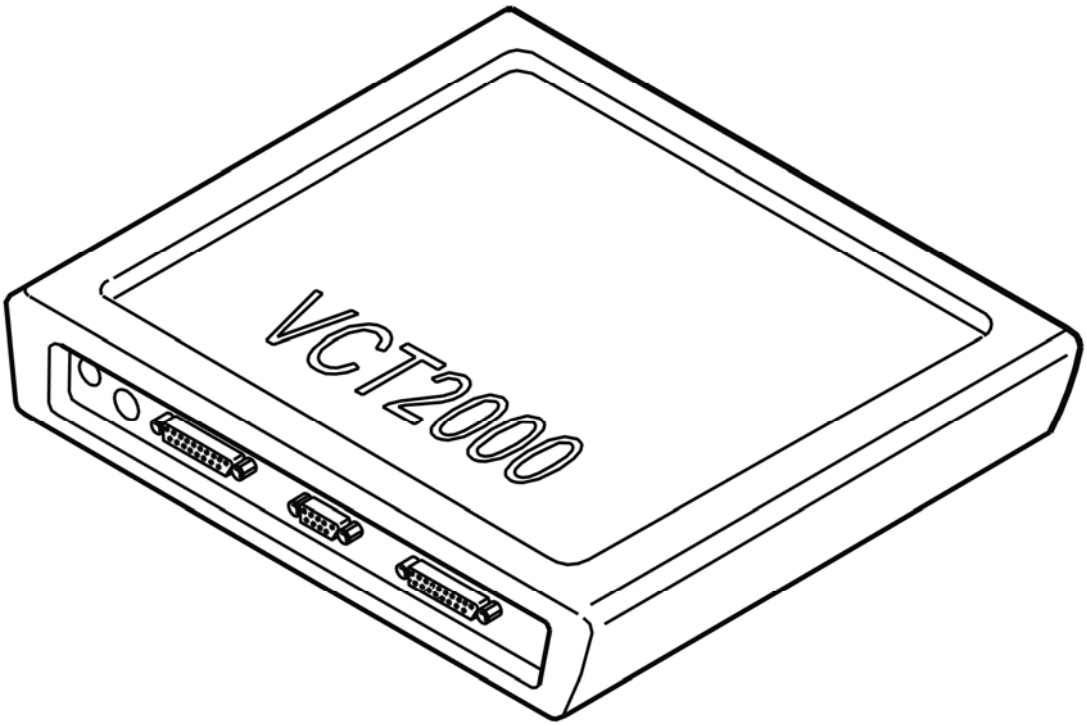

Fig. 72: Identifying VCT2000 Diagnostic Tool Symbol In VIDA
Courtesy of VOLVO CARS CORPORATION

- **Continue**

  Refer to **REPLACING THE CONTROL MODULE**

REPLACING THE CONTROL MODULE

The central electronic module (CEM) has registered an internal fault.

Replace the central electronic module (CEM).

- For -2004, see: **CENTRAL ELECTRONIC MODULE (CEM), REPLACING**
- For 2005-, see: **CENTRAL ELECTRONIC MODULE (CEM), REPLACING** .

CEM-1D08: CONTROL MODULE. INTERNAL FAULT (2005-2012)

DIAGNOSTIC TROUBLE CODE (DTC) INFORMATION CEM-1D08

Condition

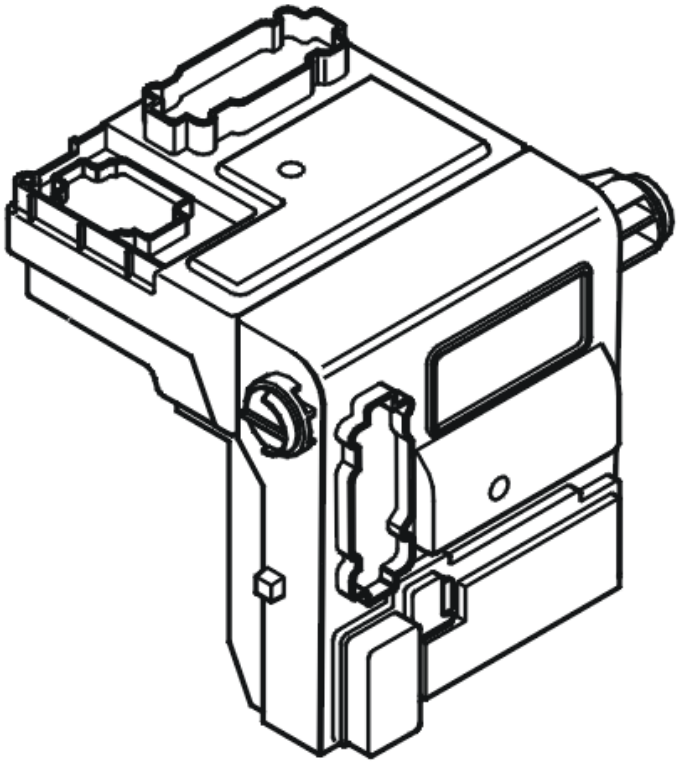

Fig. 73: Identifying Central Electronic Module (CEM)
Courtesy of VOLVO CARS CORPORATION

The diagnostic trouble code (DTC) is stored if the central electronic module (CEM) registers an internal fault.

The diagnostic trouble code (DTC) can be diagnosed 5 minutes after the ignition has been switched off.

Substitute Value

- None.

Possible Source

- Internal fault in the control module.

Fault symptom[s]

- No gauges are working
- The instrument lighting does not operate

- The turn signal lamps are not operating
- Poor performance.

INTERNAL FAULT

REPLACING THE COMPONENT

The central electronic module (CEM) has registered an internal fault.

If the fault is intermittent, it has been registered previously but is no longer present. Intermittent faults can be caused by interference at start up of the central electronic module (CEM) or may be a different type of fault which occurs on different occasions. The fault is evaluated depending on how it occurs. Replace the central electronic module (CEM) if the fault recurs.

Replace the central electronic module (CEM) if the fault is permanent.

Remedy as necessary.

Other information

- For -2004, see: **CENTRAL ELECTRONIC MODULE (CEM), REPLACING**
- For 2005-, see: **CENTRAL ELECTRONIC MODULE (CEM), REPLACING** .

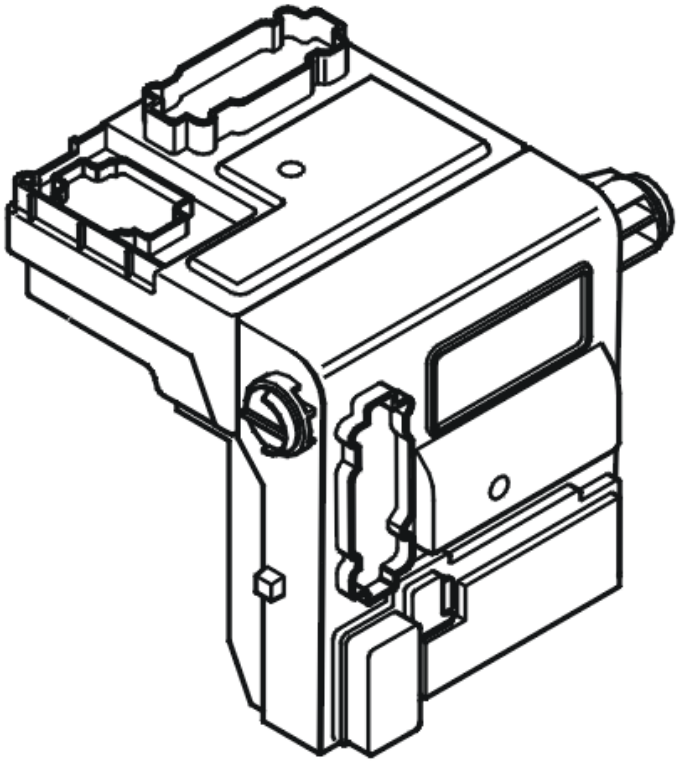

Fig. 74: Identifying Central Electronic Module (CEM)
Courtesy of VOLVO CARS CORPORATION

- **Continue**

  Refer to **INFORMATION**

INFORMATION

FAULT-TRACING INFORMATION

In case of this defect, troubleshooting is not followed by verification.

The information can be displayed again or the fault-tracing for this fault can be interrupted.

CEM-1D08: CONTROL MODULE. INTERNAL FAULT. INTERMITTENT FAULT (2003-2004)

DIAGNOSTIC TROUBLE CODE (DTC) INFORMATION

Condition

Diagnostic trouble code (DTC) CEM-1D08 is stored if the central electronic module (CEM) registers an internal fault.

Substitute Value

None

Possible Source

- Internal fault in the central electronic module (CEM).

Fault symptom[s]

- Non definable.

INTERNAL FAULT. INTERMITTENT FAULT

see **INTERNAL FAULT. INTERMITTENT FAULT**

CEM-1D08: CONTROL MODULE. INTERNAL FAULT. PERMANENT FAULT (2003-2004)

DIAGNOSTIC TROUBLE CODE (DTC) INFORMATION

see **DIAGNOSTIC TROUBLE CODE (DTC) INFORMATION**

INTERNAL FAULT. PERMANENT FAULT

CHECKING PROGRAMMING

The central electronic module (CEM) has registered an internal fault. It must be replaced.

NOTE: If possible, read off the customer parameters from the control module before it is replaced.

Use the VCT2000 (or appropriate scan tool). Make a note of the values.

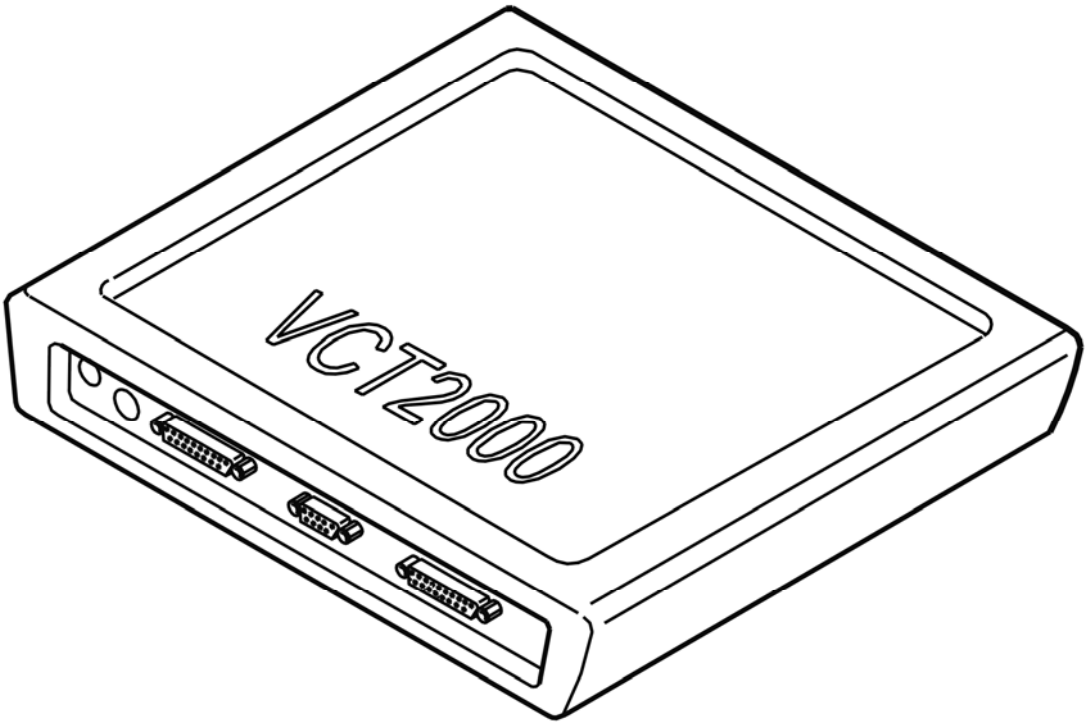

Fig. 75: Identifying VCT2000 Diagnostic Tool Symbol In VIDA
Courtesy of VOLVO CARS CORPORATION

- **Continue**

  Refer to **REPLACING THE CONTROL MODULE**

REPLACING THE CONTROL MODULE

Replace the central electronic module (CEM).

- For -2004, see: **CENTRAL ELECTRONIC MODULE (CEM), REPLACING**
- For 2005-, see: **CENTRAL ELECTRONIC MODULE (CEM), REPLACING** .

CEM-1D09: CONTROL MODULE. INTERNAL FAULT (2005-2012)

DIAGNOSTIC TROUBLE CODE (DTC) INFORMATION CEM-1D09

Condition

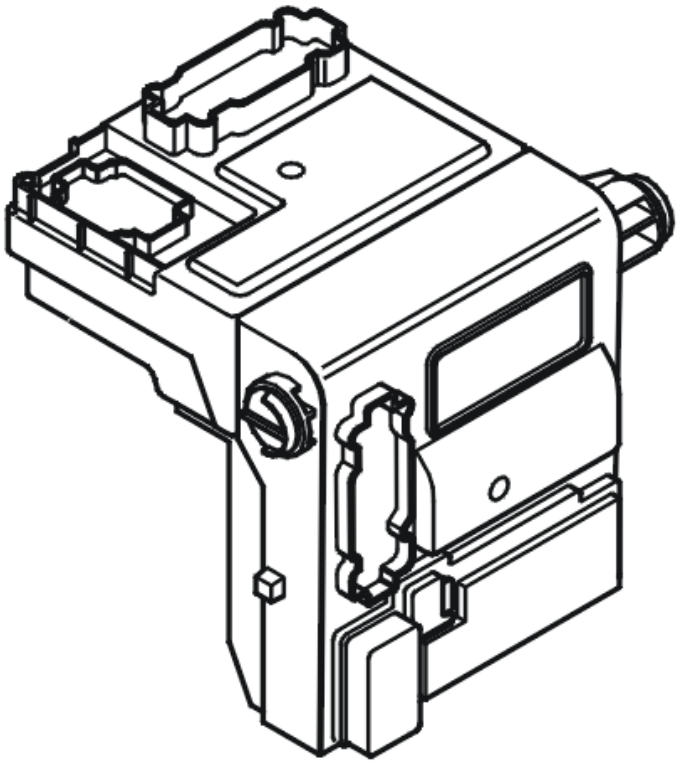

Fig. 76: Identifying Central Electronic Module (CEM)
Courtesy of VOLVO CARS CORPORATION

The diagnostic trouble code (DTC) is stored if the central electronic module (CEM) registers an internal fault.

The diagnostic trouble code (DTC) can be diagnosed for 5 minutes after the ignition has been switched off.

Substitute Value

- None.

Possible Source

- Internal fault in the control module.

Fault symptom[s]

- No gauges are working
- The instrument lighting does not operate
- The turn signal lamps are not operating
- Poor performance.

INTERNAL FAULT

REPLACING THE COMPONENT

The central electronic module (CEM) has registered an internal fault.

If the fault is intermittent, it has been registered previously but is no longer present. Intermittent faults can be caused by interference at start up of the central electronic module (CEM) or may be a different type of fault which occurs on different occasions. The fault is evaluated depending on how it occurs. Replace the central electronic module (CEM) if the fault recurs.

Replace the central electronic module (CEM) if the fault is permanent.

Remedy as necessary.

Other information

- For -2004, see: **CENTRAL ELECTRONIC MODULE (CEM), REPLACING**
- For 2005-, see: **CENTRAL ELECTRONIC MODULE (CEM), REPLACING** .

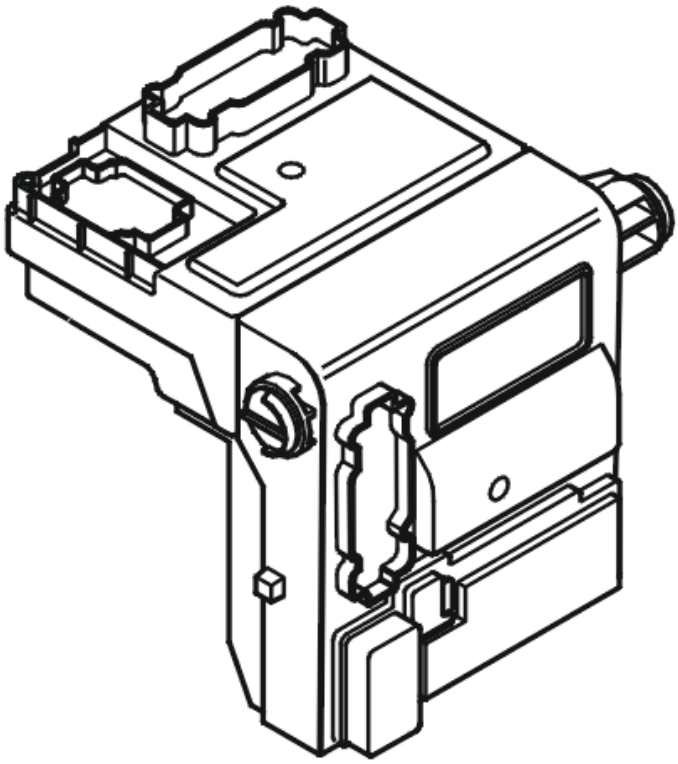

Fig. 77: Identifying Central Electronic Module (CEM)
Courtesy of VOLVO CARS CORPORATION

- **Continue**

  Refer to **INFORMATION**

INFORMATION

FAULT-TRACING INFORMATION

In case of this defect, troubleshooting is not followed by verification.

The information can be displayed again or the fault-tracing for this fault can be interrupted.

CEM-1D09: CONTROL MODULE. INTERNAL FAULT. INTERMITTENT FAULT (2003-2004)

DIAGNOSTIC TROUBLE CODE (DTC) INFORMATION

Condition

Diagnostic trouble code (DTC) CEM-1D09 is stored if the central electronic module (CEM) registers an

internal fault.

Substitute Value

None

Possible Source

- Internal fault in the central electronic module (CEM).

Fault symptom[s]

- -

INTERNAL FAULT. INTERMITTENT FAULT

see **INTERNAL FAULT. INTERMITTENT FAULT**

CEM-1D09: CONTROL MODULE. INTERNAL FAULT. PERMANENT FAULT (2003-2004)

DIAGNOSTIC TROUBLE CODE (DTC) INFORMATION

see **DIAGNOSTIC TROUBLE CODE (DTC) INFORMATION**

INTERNAL FAULT. PERMANENT FAULT

CHECKING PROGRAMMING

NOTE: **If possible, read off the customer parameters from the control module before it is replaced.**

Use the VCT2000 (or appropriate scan tool). Make a note of the values.

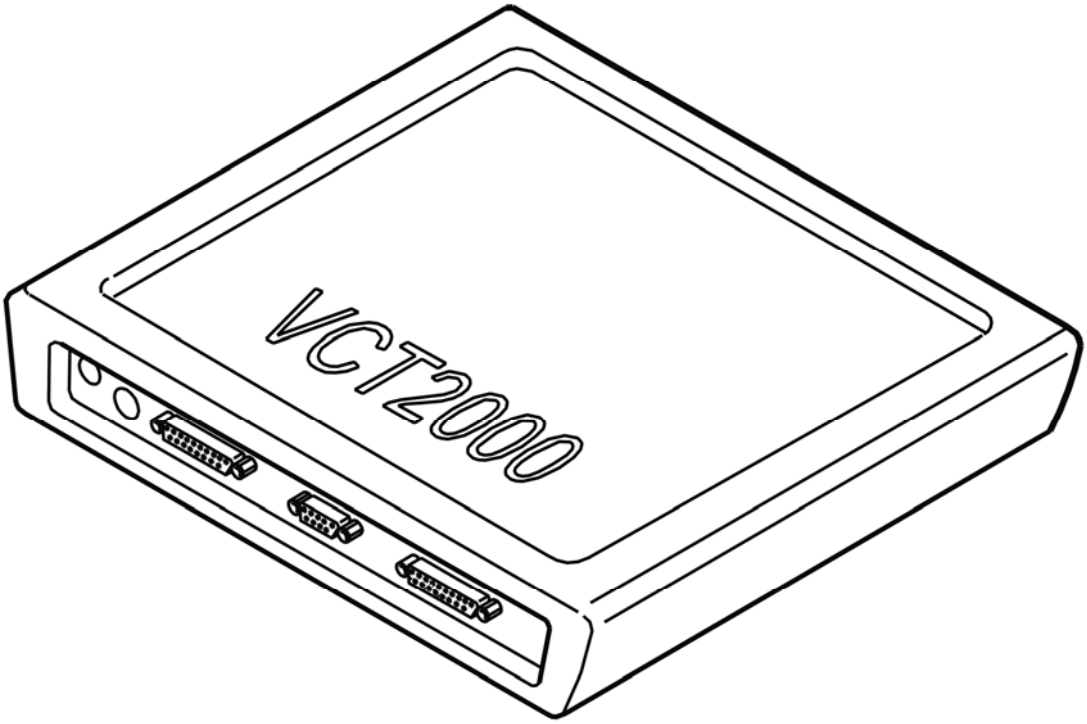

Fig. 78: Identifying VCT2000 Diagnostic Tool Symbol In VIDA
Courtesy of VOLVO CARS CORPORATION

- **Continue**

  Refer to **REPLACING THE CONTROL MODULE**

REPLACING THE CONTROL MODULE

The central electronic module (CEM) has registered an internal fault.

Replace the central electronic module (CEM).

- For -2004, see: **CENTRAL ELECTRONIC MODULE (CEM), REPLACING**
- For 2005-, see: **CENTRAL ELECTRONIC MODULE (CEM), REPLACING** .

CEM-1D0A: CONTROL MODULE. INTERNAL FAULT (2005-2012)

DIAGNOSTIC TROUBLE CODE (DTC) INFORMATION CEM-1D0A

Condition

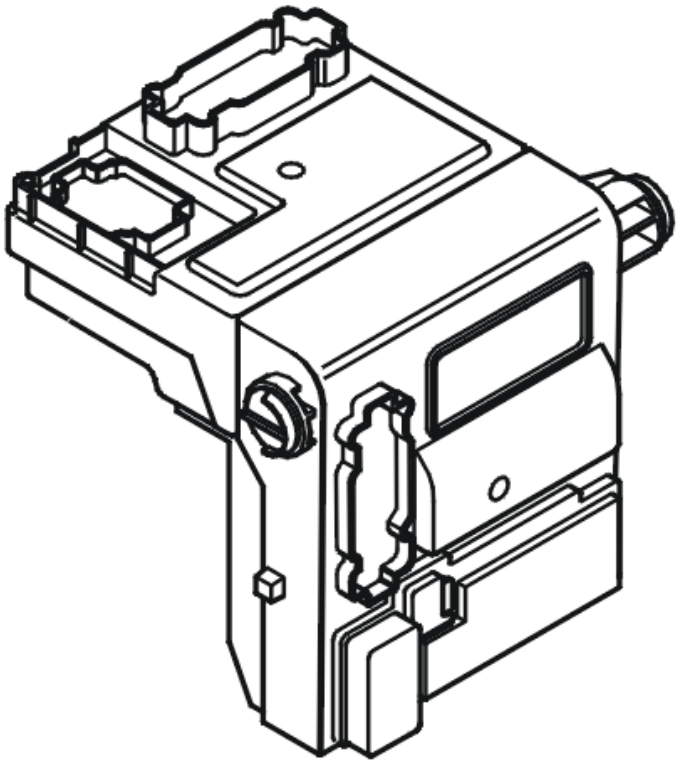

Fig. 79: Identifying Central Electronic Module (CEM)
Courtesy of VOLVO CARS CORPORATION

The diagnostic trouble code (DTC) is stored if the central electronic module (CEM) registers an internal fault.

The diagnostic trouble code (DTC) can be diagnosed 5 minutes after the ignition has been switched off.

Substitute Value

- None.

Possible Source

- Internal fault in the control module.

Fault symptom[s]

- No gauges are working
- The instrument lighting does not operate
- The turn signal lamps are not operating
- Poor performance.

INTERNAL FAULT

REPLACING THE COMPONENT

The central electronic module (CEM) has registered an internal fault.

If the fault is intermittent, it has been registered previously but is no longer present. Intermittent faults can be caused by interference at start up of the central electronic module (CEM) or may be a different type of fault which occurs on different occasions. The fault is evaluated depending on how it occurs. Replace the central electronic module (CEM) if the fault recurs.

Replace the central electronic module (CEM) if the fault is permanent.

Remedy as necessary.

Other information

- For -2004, see: **CENTRAL ELECTRONIC MODULE (CEM), REPLACING**
- For 2005-, see: **CENTRAL ELECTRONIC MODULE (CEM), REPLACING** .

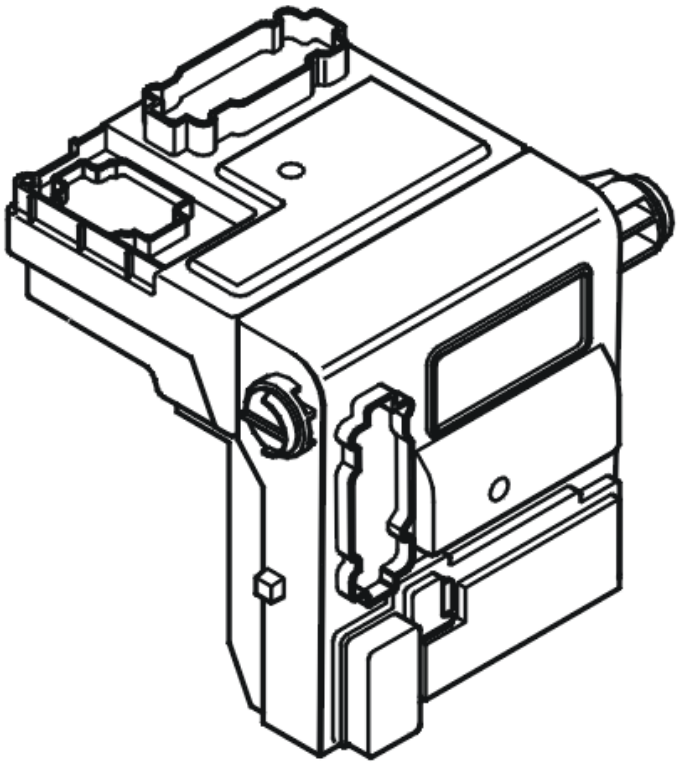

Fig. 80: Identifying Central Electronic Module (CEM)
Courtesy of VOLVO CARS CORPORATION

- **Continue**

  Refer to **INFORMATION**

INFORMATION

FAULT-TRACING INFORMATION

In case of this defect, troubleshooting is not followed by verification.

The information can be displayed again or the fault-tracing for this fault can be interrupted.

CEM-1D0A: CONTROL MODULE. INTERNAL FAULT. INTERMITTENT FAULT (2003-2004)

DIAGNOSTIC TROUBLE CODE (DTC) INFORMATION

Condition

Diagnostic trouble code (DTC) CEM-1D0A is stored if the central electronic module (CEM) registers an internal fault 5 minutes after the ignition has been switched off.

Substitute Value

None

Possible Source

- Internal fault in the central electronic module (CEM).

Fault symptom[s]

- -

INTERNAL FAULT. INTERMITTENT FAULT

see **INTERNAL FAULT. INTERMITTENT FAULT**

CEM-1D0A: CONTROL MODULE. INTERNAL FAULT. PERMANENT FAULT (2003-2004)

DIAGNOSTIC TROUBLE CODE (DTC) INFORMATION

see **DIAGNOSTIC TROUBLE CODE (DTC) INFORMATION**

INTERNAL FAULT. PERMANENT FAULT

CHECKING PROGRAMMING

NOTE: If possible, read off the customer parameters from the control module before it

is replaced.

Use the VCT2000 (or appropriate scan tool). Make a note of the values.

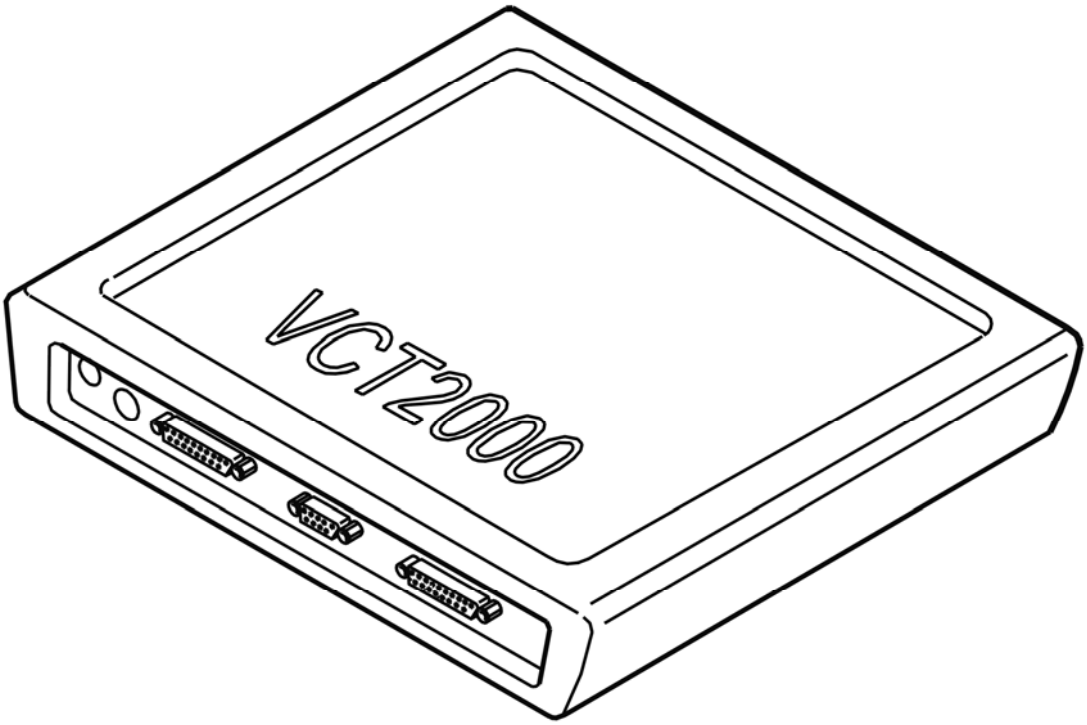

Fig. 81: Identifying VCT2000 Diagnostic Tool Symbol In VIDA
Courtesy of VOLVO CARS CORPORATION

- **Continue**

  Refer to **REPLACING THE CONTROL MODULE**

REPLACING THE CONTROL MODULE

The central electronic module (CEM) has registered an internal fault.

Replace the central electronic module (CEM).

- For -2004, see: **CENTRAL ELECTRONIC MODULE (CEM), REPLACING**
- For 2005-, see: **CENTRAL ELECTRONIC MODULE (CEM), REPLACING** .

CEM-1D0B: CONTROL MODULE. INTERNAL FAULT (2005-2012)

DIAGNOSTIC TROUBLE CODE (DTC) INFORMATION CEM-1D0B

Condition

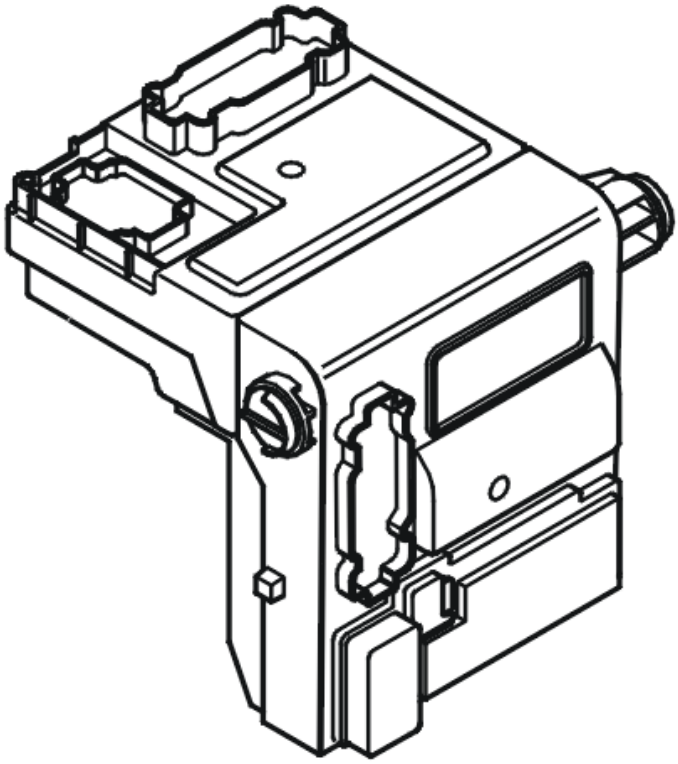

Fig. 82: Identifying Central Electronic Module (CEM)
Courtesy of VOLVO CARS CORPORATION

The diagnostic trouble code (DTC) is stored if the central electronic module (CEM) registers an internal fault.

The diagnostic trouble code (DTC) can be diagnosed for 5 minutes after the ignition has been switched off.

Substitute Value

- None.

Possible Source

- Internal fault in the control module.

Fault symptom[s]

- The clock in the information module is not working
- The parking heater does not operate.

INTERNAL FAULT

REPLACING THE COMPONENT

The central electronic module (CEM) has registered an internal fault.

If the fault is intermittent, it has been registered previously but is no longer present. Intermittent faults can be caused by interference at start up of the central electronic module (CEM) or may be a different type of fault which occurs on different occasions. The fault is evaluated depending on how it occurs. Replace the central electronic module (CEM) if the fault recurs.

Replace the central electronic module (CEM) if the fault is permanent.

Remedy as necessary.

Other information

- For -2004, see: **CENTRAL ELECTRONIC MODULE (CEM), REPLACING**
- For 2005-, see: **CENTRAL ELECTRONIC MODULE (CEM), REPLACING** .

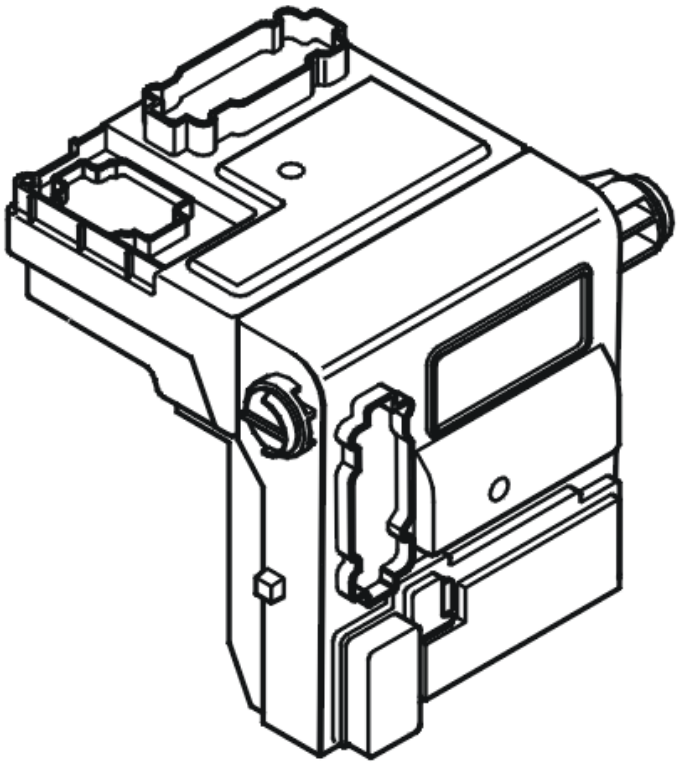

Fig. 83: Identifying Central Electronic Module (CEM)
Courtesy of VOLVO CARS CORPORATION

- **Continue**

  Refer to **INFORMATION**

INFORMATION

FAULT-TRACING INFORMATION

In case of this defect, troubleshooting is not followed by verification.

The information can be displayed again or the fault-tracing for this fault can be interrupted.

CEM-1D0C: CONTROL MODULE. INTERNAL FAULT. INTERMITTENT FAULT (2003-2004)

DIAGNOSTIC TROUBLE CODE (DTC) INFORMATION

Condition

Diagnostic trouble code (DTC) CEM-1D0C is stored if the central electronic module (CEM) registers an internal fault.

Substitute Value

None.

Possible Source

- Internal fault in the central electronic module (CEM).

Fault symptom[s]

- -

INTERNAL FAULT. INTERMITTENT FAULT

FAULT-TRACING INFORMATION

The diagnostic trouble code (DTC) indicates that the control module has previously registered an intermittent fault, but that the fault is no longer present.

CEM-1D0C: CONTROL MODULE. INTERNAL FAULT. PERMANENT FAULT (2003-2004)

DIAGNOSTIC TROUBLE CODE (DTC) INFORMATION

see **DIAGNOSTIC TROUBLE CODE (DTC) INFORMATION**

INTERNAL FAULT. PERMANENT FAULT

CHECKING PROGRAMMING

NOTE: **If possible, read off the customer parameters from the control module before it is replaced.**

Use the VCT2000 (or appropriate scan tool). Make a note of the values.

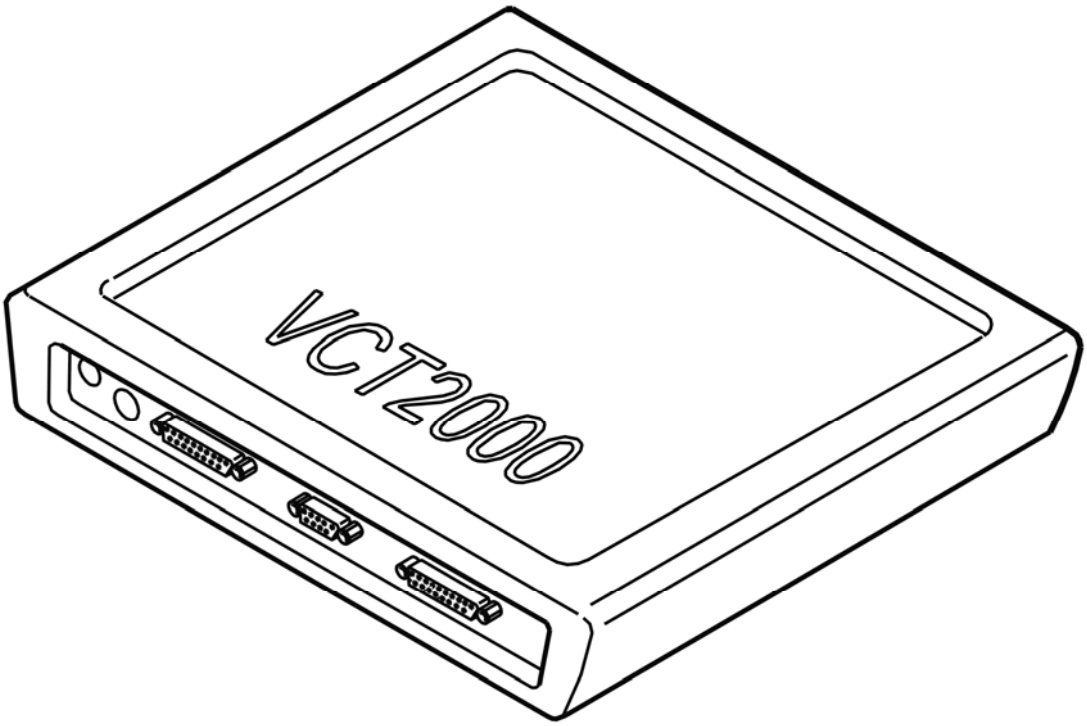

Fig. 84: Identifying VCT2000 Diagnostic Tool Symbol In VIDA
Courtesy of VOLVO CARS CORPORATION

- **Continue**

  Refer to **REPLACING THE CONTROL MODULE**

REPLACING THE CONTROL MODULE

The central electronic module (CEM) has registered an internal fault.

Replace the central electronic module (CEM).

- For -2004, see: **CENTRAL ELECTRONIC MODULE (CEM), REPLACING**
- For 2005-, see: **CENTRAL ELECTRONIC MODULE (CEM), REPLACING** .

CEM-1E04: COMMUNICATION WITH THE LAMP SWITCH MODULE. SIGNAL MISSING. INTERMITTENT FAULT (2003-2004)

DIAGNOSTIC TROUBLE CODE (DTC) INFORMATION

Condition

Diagnostic trouble code (DTC) CEM-1E04 is stored if the central electronic module (CEM) registers that communication with the light switch module is not operating within 5 seconds of the ignition being switched on.

Substitute Value

None

Possible Source

- Fault in the cable between the light switch module and the central electrical module (CEM)
- Defective communication device, lamp switch module
- Defective communication device, central electronic module (CEM)

Fault symptom[s]

- Beam height control does not function
- The light switch does not operate

SIGNAL MISSING. INTERMITTENT FAULT

FAULT-TRACING INFORMATION

The diagnostic trouble code (DTC) indicates that the control module has previously registered an intermittent fault, but that the fault is no longer present.

CEM-1E04: COMMUNICATION WITH THE LAMP SWITCH MODULE. SIGNAL MISSING. PERMANENT FAULT (2003-2004)

DIAGNOSTIC TROUBLE CODE (DTC) INFORMATION

see **DIAGNOSTIC TROUBLE CODE (DTC) INFORMATION**

SIGNAL MISSING. PERMANENT FAULT

CHECKING COMPONENTS

The diagnostic trouble code (DTC) indicates that the communication between the lamp switch module and the central electronic module (CEM) is interrupted. This may be due to a fault in the cable between the control modules or a defective communication device in one or both of the control modules.

Check the cable between central electronic module (CEM) connector terminal #18A and lamp switch module

(LSM) terminal #3. Check for an open-circuit. Check for a short-circuit to ground.

Also check that fuse 11C/23 is intact. Replace the fuse if necessary.

Other information:

- see **CHECKING WIRING AND TERMINALS** .

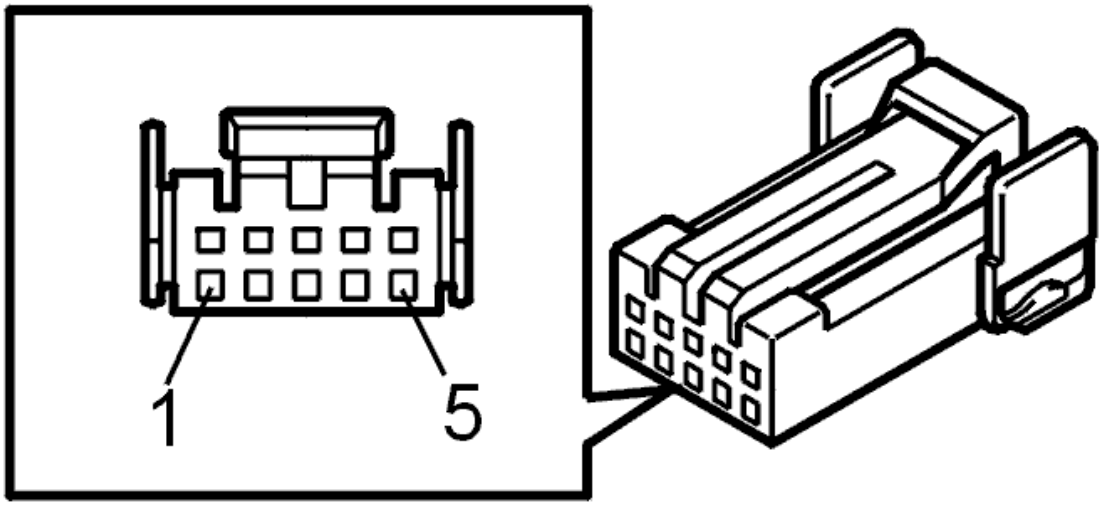

Fig. 85: Electronic Throttle Module (ETM) Connector Terminal Identification
Courtesy of VOLVO CARS CORPORATION

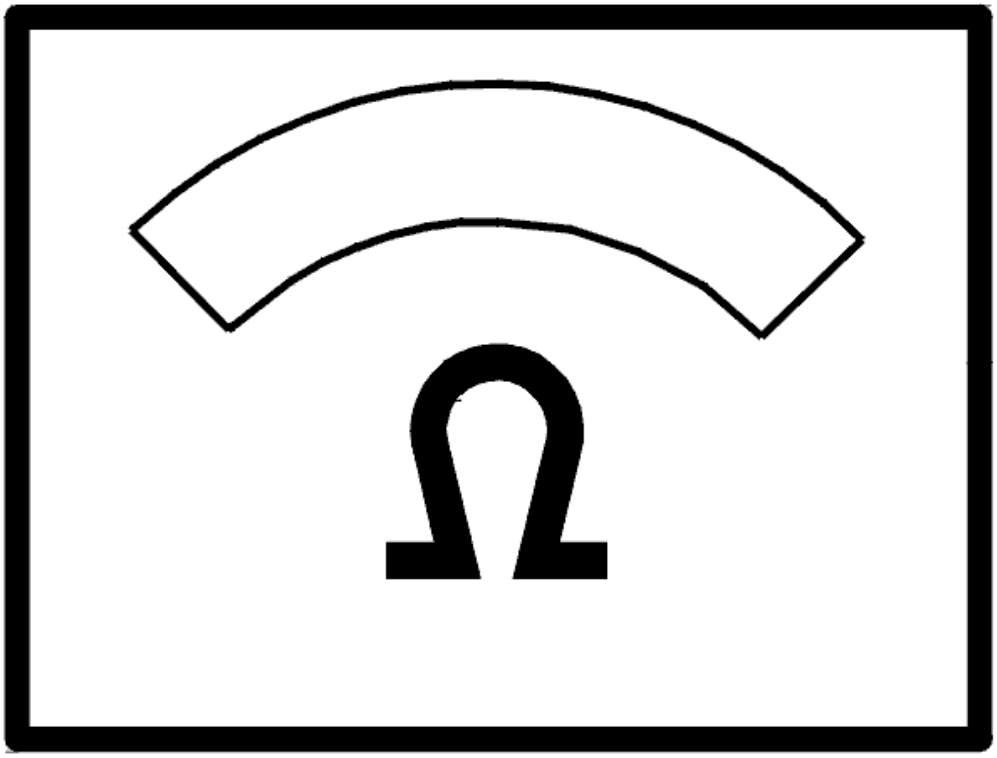

Fig. 86: Identifying Ohm Meter
Courtesy of VOLVO CARS CORPORATION

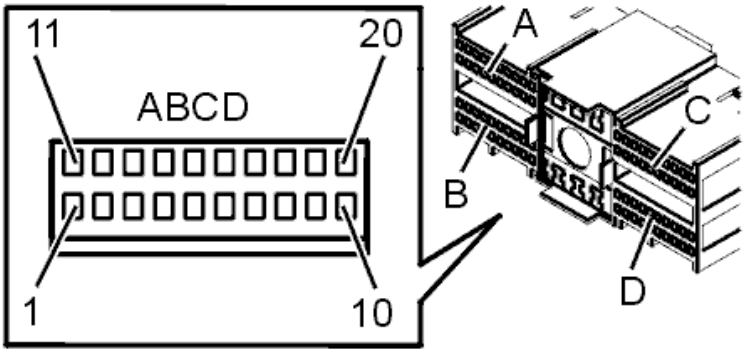

Fig. 87: Control Module Terminals (1 Of 2)
Courtesy of VOLVO CARS CORPORATION

Was a fault detected?

- **YES**

  Refer to **VERIFICATION**

- **NO**

  Refer to **REPLACING THE LAMP SWITCH MODULE**

REPLACING THE LAMP SWITCH MODULE

Try replacing the lamp switch module.

Other information:

- To access or replace the lamp switch module, see **SWITCHES LIGHTS, REPLACING** .

- **Continue**

  Refer to **VERIFICATION**

VERIFICATION

VERIFICATION

HINT: After the repair it is necessary to check that the fault has been rectified.

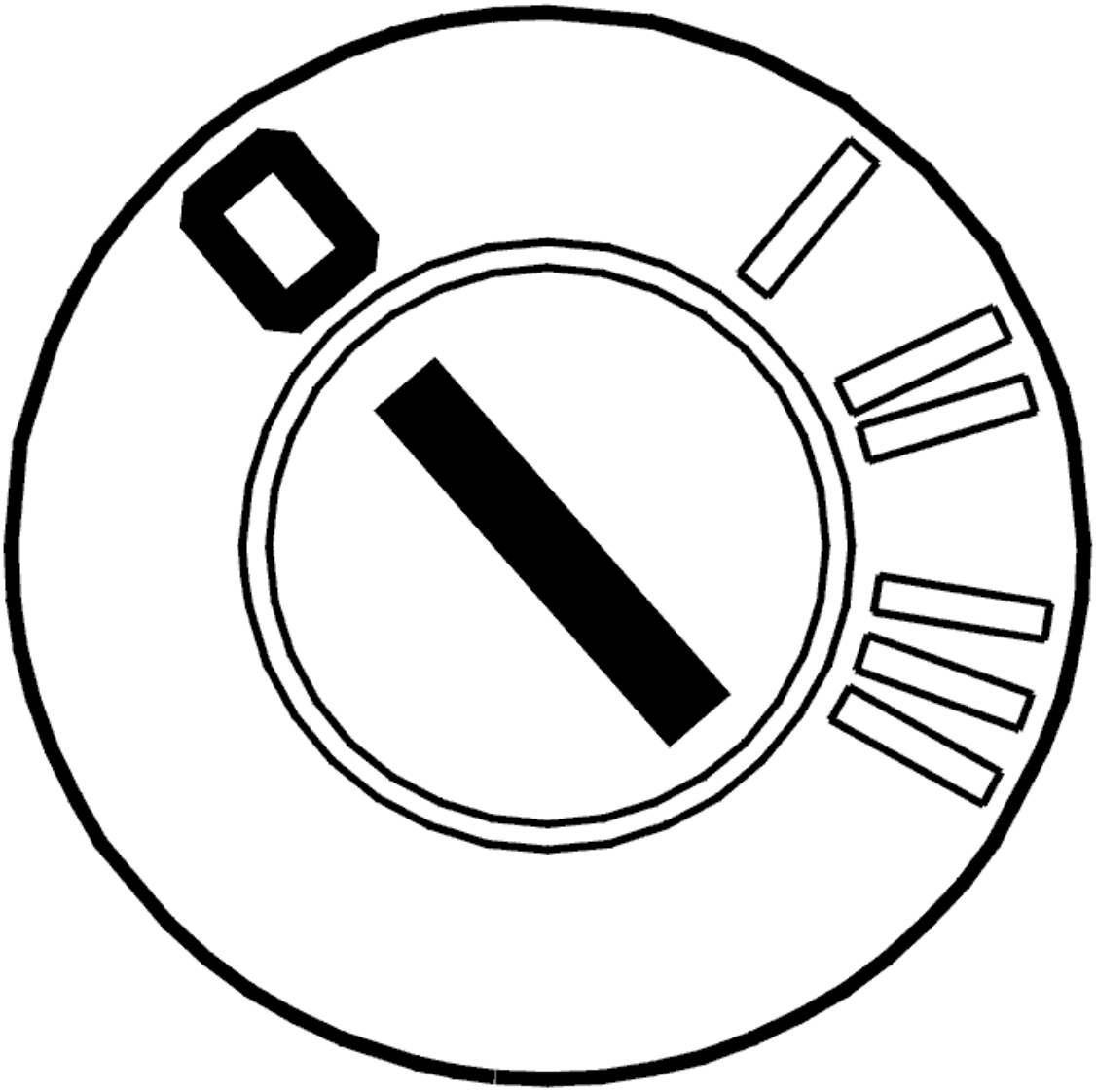

Fig. 88: Identifying Ignition OFF
Courtesy of VOLVO CARS CORPORATION

- Ignition off.
- Connect connectors, install components, etc.
- Ignition on for at least 10 seconds.

  Check that diagnostic trouble code status is showing Intermittent.

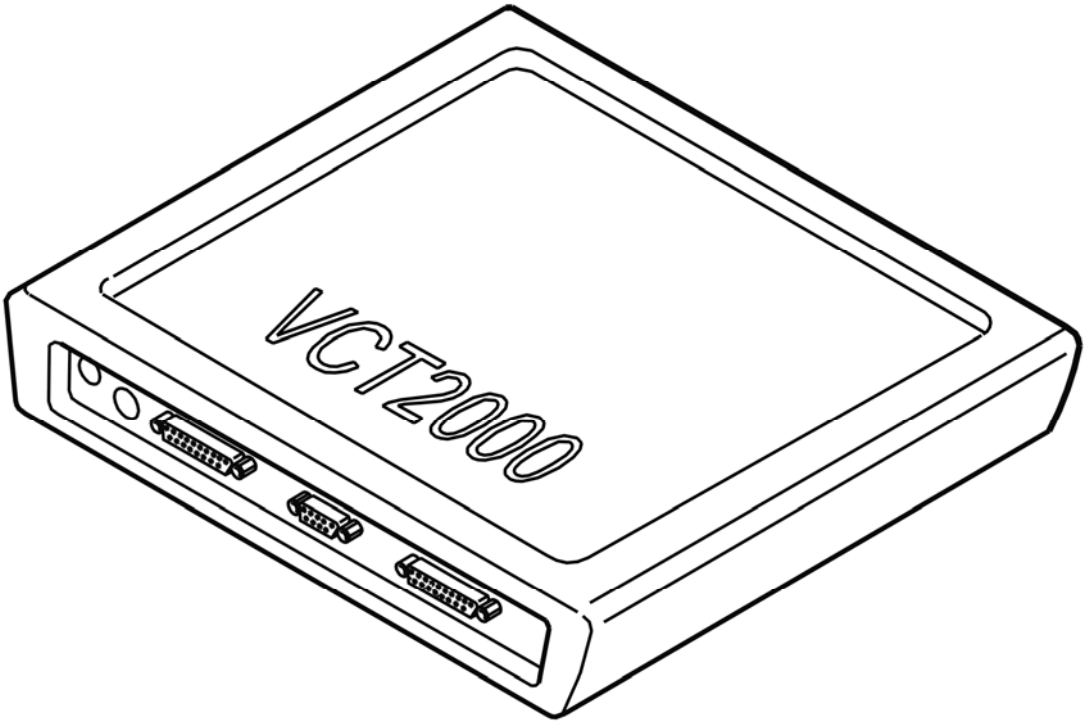

Fig. 89: Identifying VCT2000 Diagnostic Tool Symbol In VIDA
Courtesy of VOLVO CARS CORPORATION

Is the status of the diagnostic trouble code Intermittent?

- **YES**

  VERIFIED: Troubleshooting has been completed.

- **NO**

  Refer to **INFORMATION**

INFORMATION

FAULT-TRACING INFORMATION

The fault should have been detected and remedied. As this is not the case fault-tracing has failed.

Exit fault-tracing for this diagnostic trouble code (DTC) or make another attempt.

CEM-1E05: COMMUNICATION WITH THE ADDITIONAL HEATER MODULE. SIGNAL MISSING. INTERMITTENT FAULT (2003-2004)

DIAGNOSTIC TROUBLE CODE (DTC) INFORMATION

Condition

Diagnostic trouble code (DTC) CEM-1E05 is stored if the central electronic module (CEM) registers that communication with the additional heater is not operating 5 seconds after the ignition has been switched on.

Substitute Value

None

Possible Source

- Fault in the cable between the additional heater and the central electrical module (CEM)
- Defective communication device, additional heater
- Defective communication device, central electronic module (CEM)

Fault symptom[s]

- The parking heater does not operate

SIGNAL MISSING. INTERMITTENT FAULT

FAULT-TRACING INFORMATION

The diagnostic trouble code (DTC) indicates that the control module has previously registered an intermittent fault, but that the fault is no longer present.

CEM-1E05: COMMUNICATION WITH THE ADDITIONAL HEATER MODULE. SIGNAL MISSING. PERMANENT FAULT (2003-2004)

DIAGNOSTIC TROUBLE CODE (DTC) INFORMATION

see **DIAGNOSTIC TROUBLE CODE (DTC) INFORMATION**

SIGNAL MISSING. PERMANENT FAULT

CHECKING COMPONENTS

The diagnostic trouble code (DTC) indicates that the communication between the additional heater module and the central electronic module (CEM) is interrupted. This may be due to a fault in the cable between the control modules or a defective communication device in one or both of the control modules.

Check the cable between central electronic module (CEM) connector terminal #18A and additional heater terminal #6. Check for an open-circuit. Check for a short-circuit to ground.

Other information:

- see **CHECKING WIRING AND TERMINALS** .

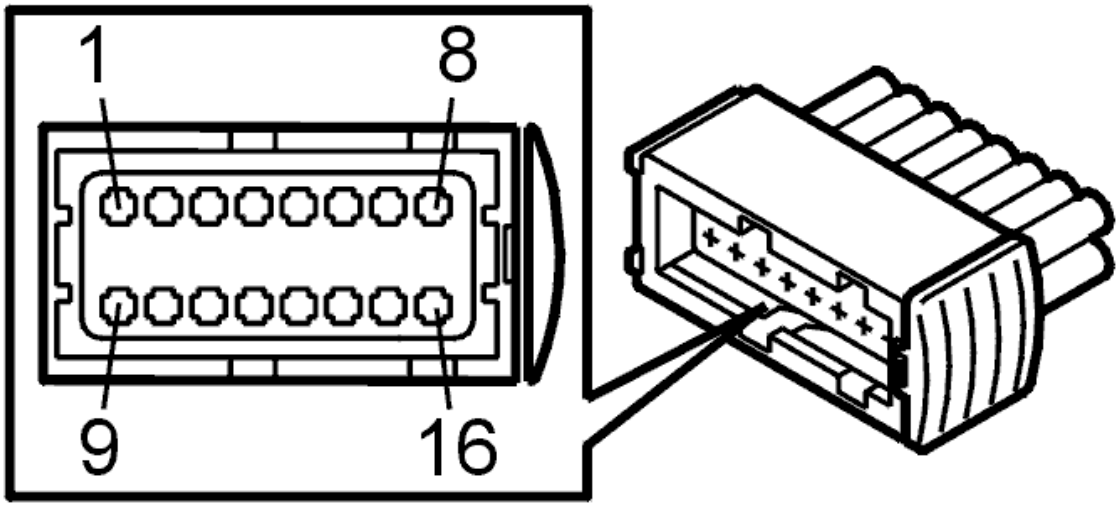

Fig. 90: Identifying Connector Terminals
Courtesy of VOLVO CARS CORPORATION

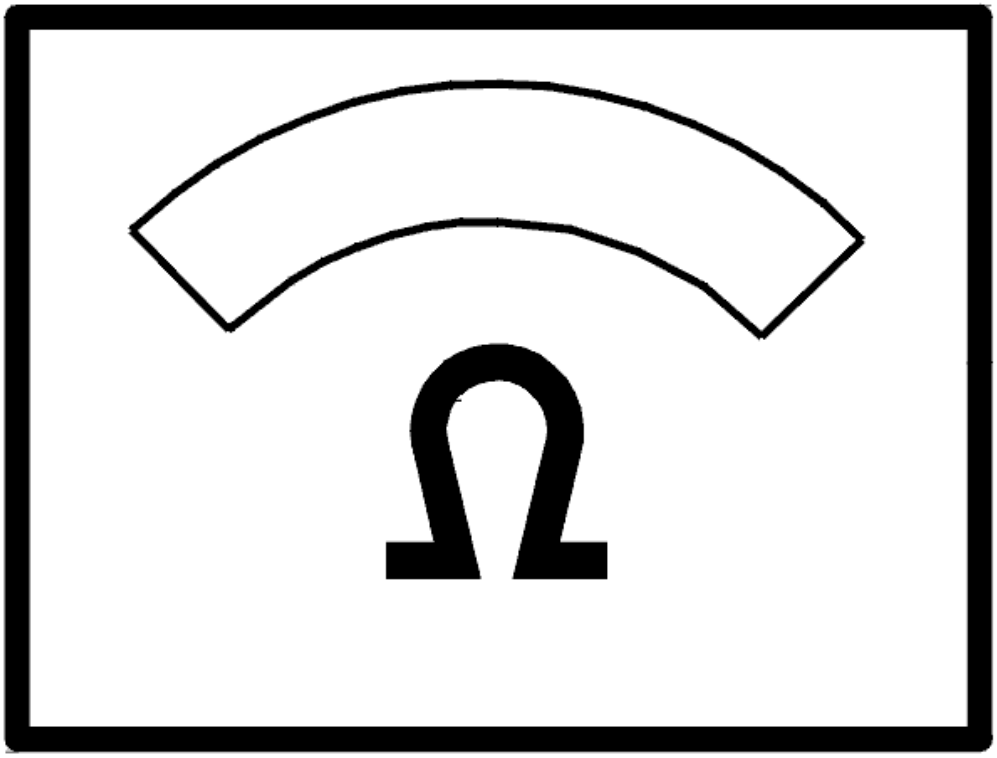

Fig. 91: Identifying Ohm Meter
Courtesy of VOLVO CARS CORPORATION

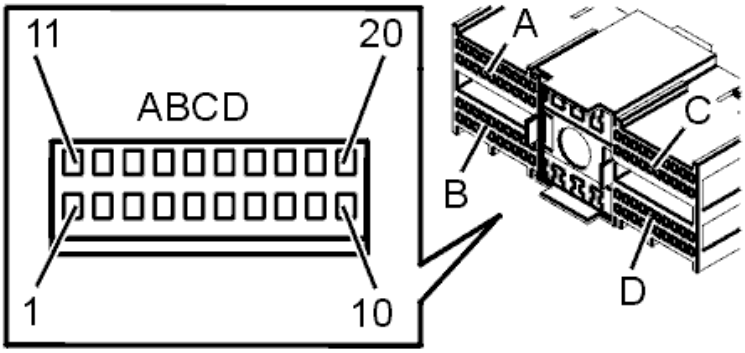

Fig. 92: Control Module Terminals (1 Of 2)
Courtesy of VOLVO CARS CORPORATION

Was a fault detected?

- **YES**

  Refer to **VERIFICATION**

- **NO**

  Refer to **REPLACING THE ADDITIONAL HEATER MODULE**

REPLACING THE ADDITIONAL HEATER MODULE

Try a new additional heater control module.

Other information:

- To access or replace the additional heater module, see **CONTROL MODULE ENGINE COOLANT HEATER, REPLACING** .

- **Continue**

Refer to **VERIFICATION**

VERIFICATION

VERIFICATION

HINT: After the repair it is necessary to check that the fault has been rectified.

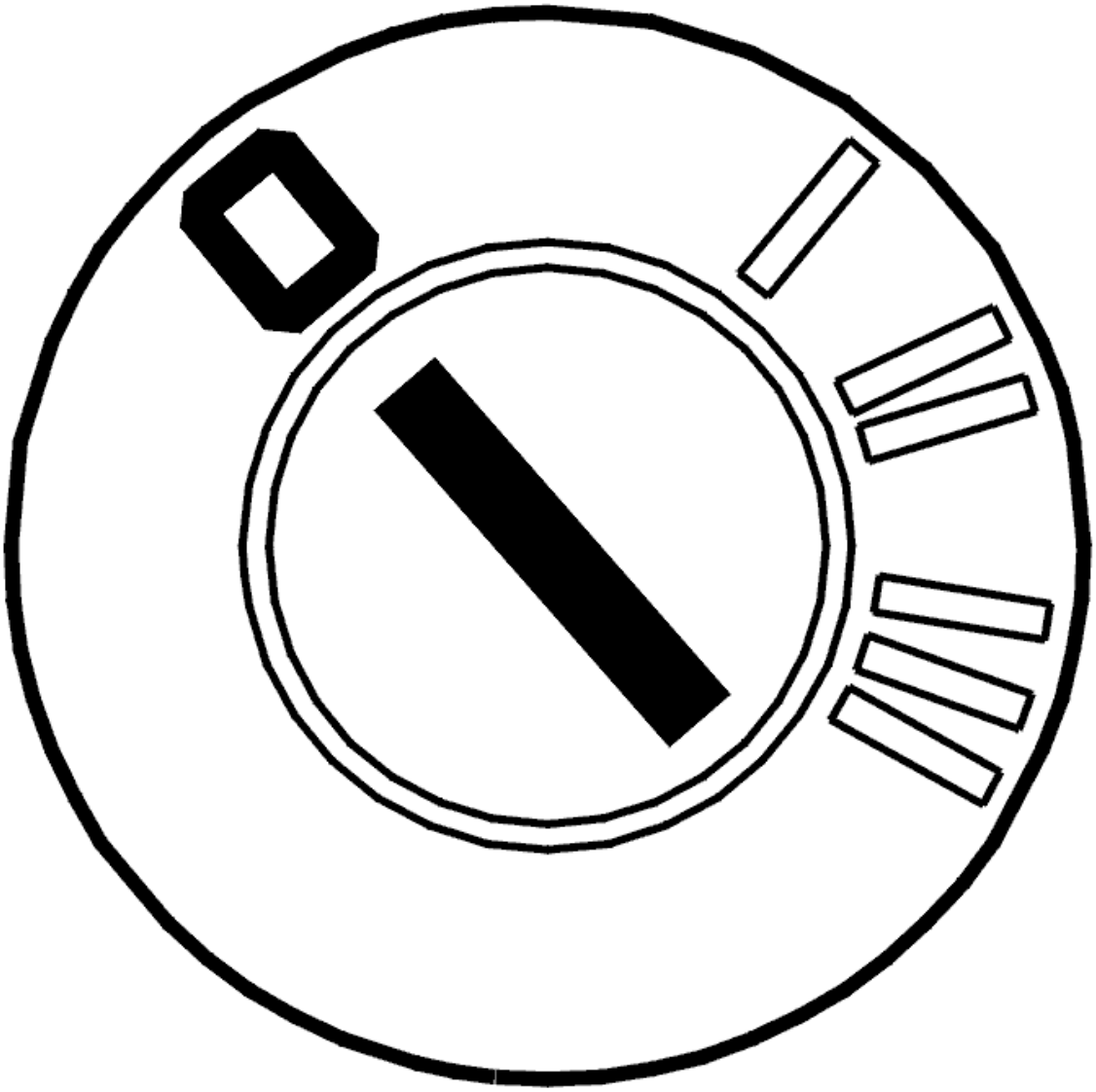

Fig. 93: Identifying Ignition OFF
Courtesy of VOLVO CARS CORPORATION

- Ignition off.
- Connect connectors, install components, etc.
- Ignition on for at least 10 seconds.

Check that diagnostic trouble code status is showing Intermittent.

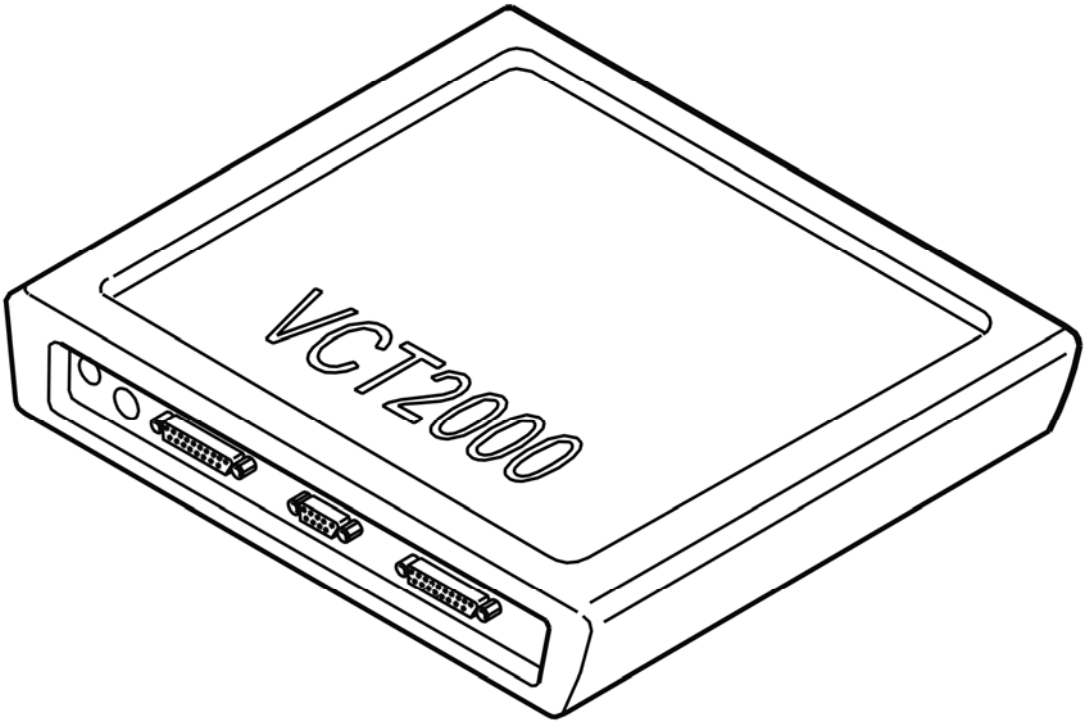

Fig. 94: Identifying VCT2000 Diagnostic Tool Symbol In VIDA
Courtesy of VOLVO CARS CORPORATION

Is the status of the diagnostic trouble code Intermittent?

- **YES**

  VERIFIED: Troubleshooting has been completed.

- **NO**

  Refer to **INFORMATION**

INFORMATION

FAULT-TRACING INFORMATION

The fault should have been detected and remedied. As this is not the case fault-tracing has failed.

Exit fault-tracing for this diagnostic trouble code (DTC) or make another attempt.

CEM-1F00: ECM, SOFTWARE. FAULTY SIGNAL (2005-2012)

DIAGNOSTIC TROUBLE CODE (DTC) INFORMATION CEM-1F00

Condition

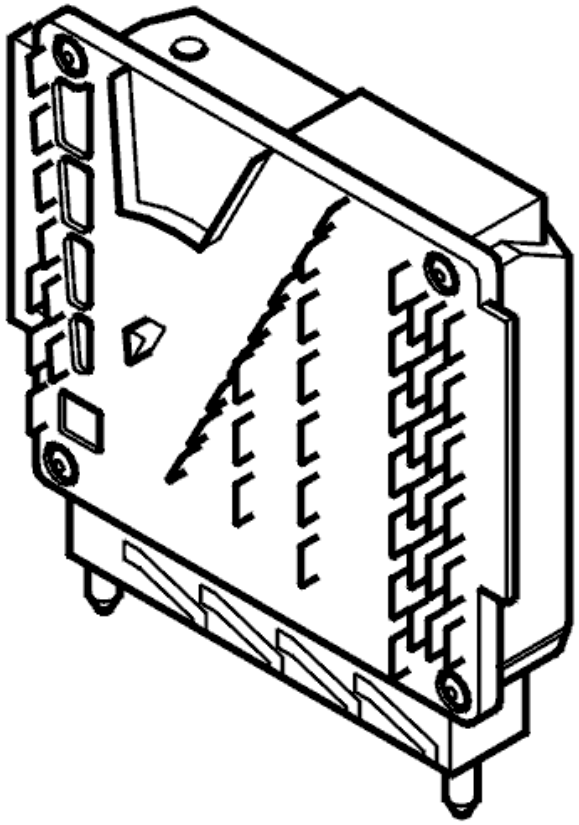

Fig. 95: Engine Control Module
Courtesy of VOLVO CARS CORPORATION

The diagnostic trouble code (DTC) is stored if the central electronic module (CEM) registers faulty or modified software in the engine control module (ECM).

Substitute Value

- None.

Possible Source

- Faulty or modified software in the engine control module (ECM).

Fault symptom[s]

- None.

FAULTY SIGNAL

CHECKING PROGRAMMING

If the fault is intermittent, it has been registered previously but is no longer present. Intermittent faults can be caused by interference at start up of the central electronic module (CEM) or may be a different type of fault which occurs on different occasions. The fault is evaluated depending on how it occurs.

NOTE: **The diagnostic trouble code (DTC) is stored if the central electronic module (CEM) registers that the software in the engine control module (ECM) is faulty or modified. It is therefore important that no steps are taken to remedy modified software in the engine control module (ECM) without first consulting the customer. Neither may software be remedied if the software has been modified by the customer, but this is not the reason for the repair work.**

- **Continue**

  Refer to **REPLACING SOFTWARE**

REPLACING SOFTWARE

New software must be downloaded to remedy faulty or modified software in the engine control module (ECM).

Remedy as necessary.

CEM-1F01: TCM, SOFTWARE. FAULTY SIGNAL (2005-2012)

DIAGNOSTIC TROUBLE CODE (DTC) INFORMATION CEM-1F01

Condition

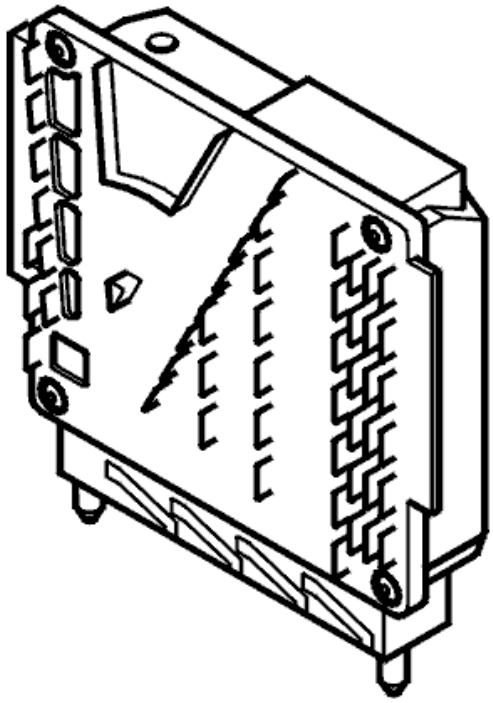

Fig. 96: Identifying Transmission Control Module
Courtesy of VOLVO CARS CORPORATION

The diagnostic trouble code (DTC) is stored if the central electronic module (CEM) registers faulty or modified software in the transmission control module (TCM).

Substitute Value

- None.

Possible Source

- Faulty or modified software in the transmission control module (TCM).

Fault symptom[s]

- None.

FAULTY SIGNAL

CHECKING PROGRAMMING

If the fault is intermittent, it has been registered previously but is no longer present. Intermittent faults can be caused by interference at start up of the central electronic module (CEM) or may be a different type of fault

which occurs on different occasions. The fault is evaluated depending on how it occurs.

NOTE: **The diagnostic trouble code (DTC) is stored if the central electronic module (CEM) registers that the software in the transmission control module (TCM) is faulty or modified. It is therefore important that no steps are taken to remedy modified software in the transmission control module (TCM) without first consulting the customer. Neither may software be remedied if the software has been modified by the customer, but this is not the reason for the repair work.**

- **Continue**

  Refer to **REPLACING SOFTWARE**

REPLACING SOFTWARE

New software must be downloaded to remedy faulty or modified software in the transmission control module (TCM).

Remedy as necessary.

CEM-2F01: SEAT POSITION SENSOR, DRIVER. SIGNAL TOO HIGH (2005-2012)

DIAGNOSTIC TROUBLE CODE (DTC) INFORMATION CEM-2F01

Condition

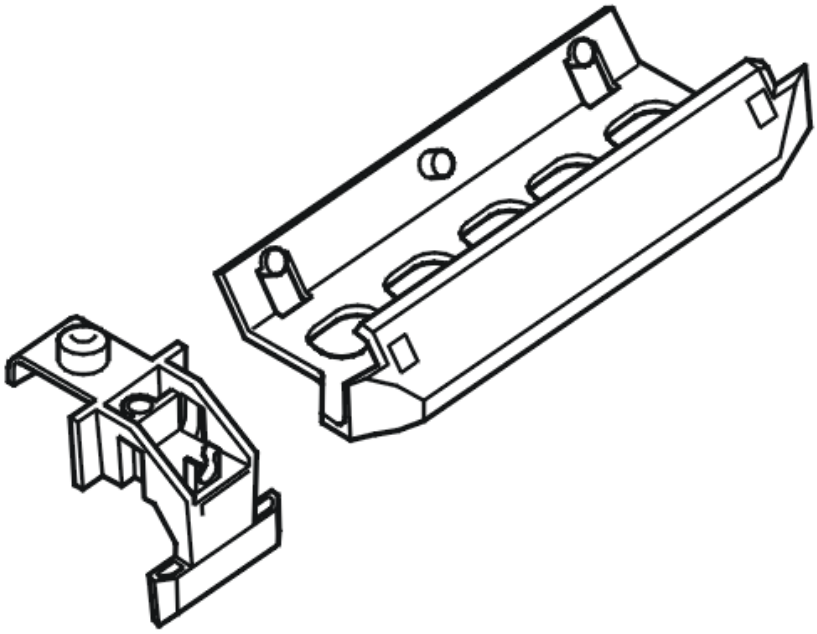

Fig. 97: Identifying Seat Position Sensor
Courtesy of VOLVO CARS CORPORATION

The central electronic module (CEM) checks the signal from the driver's seat position sensor.

The diagnostic trouble code (DTC) is stored if the control module registers that the signal in the signal cable is too high.

The diagnostic trouble code (DTC) can be diagnosed in ignition positions I, II or III.

Substitute Value

- None.

Possible Source

- Short-circuit to the power supply in the signal cable or in the connectors between the central electronic module (CEM) and the driver's seat position sensor.

Fault symptom[s]

- The information lamp is lit
- SRS warning message displayed.

SIGNAL TOO HIGH

CHECKING COMPONENTS AND WIRING

The diagnostic trouble code (DTC) is stored if the central electronic module (CEM) registers that the signal on the cable to the driver's seat position sensor is too high.

If the fault is intermittent, it has been registered previously but is no longer present. Intermittent faults can be caused by interference at start up or can be a different type of fault which occurs on different occasions. The fault is evaluated depending on how it occurs.

Check the connectors on the central electronic module (CEM) and seat position sensor. Check for contact resistance and oxidation. Check for damaged or loose connections.

Check the connectors between the central electronic module (CEM) and the seat position sensor. Check for a short-circuit to supply voltage.

Take readings between:

- Central electronic module (CEM) terminal D25 (#25) and seat position sensor terminal #1
- Central electronic module (CEM) terminal D10 (#10) and seat position sensor terminal #2.

Remedy as necessary.

Other information

- see **CONNECTING THE BREAKOUT BOX**
- -2004: **SIGNAL SPECIFICATION**
- 2005-: **SIGNAL SPECIFICATION**
- See **POWER SEAT MODULE (PSM), REPLACING** (-2004) or **POWER SEAT MODULE (PSM), REPLACING** (2005-).
- see **CHECKING WIRING AND TERMINALS**

- **Continue**

  Refer to **VERIFICATION**

VERIFICATION

VERIFICATION

HINT: After carrying out the repair, check that the fault has been remedied.

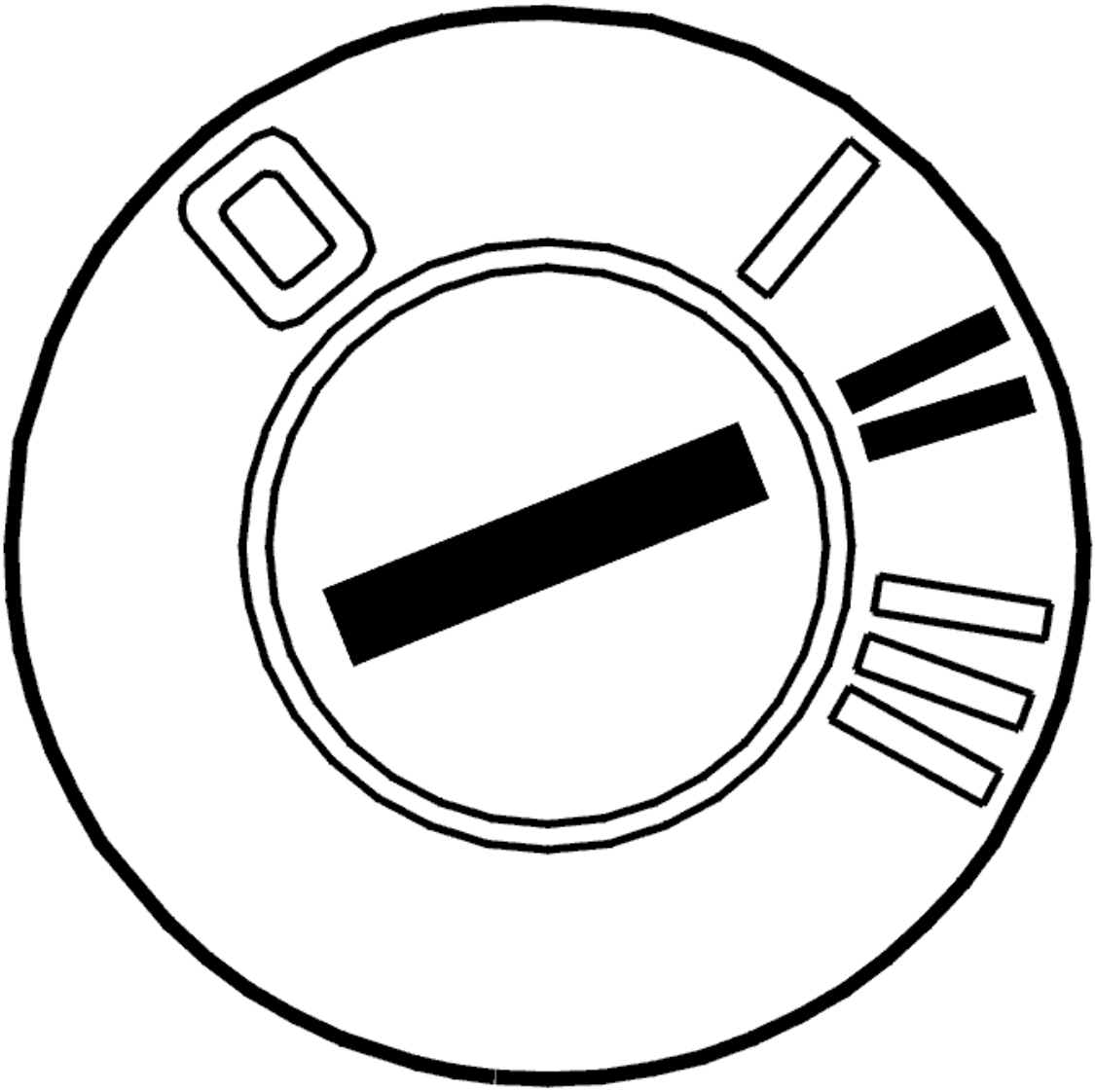

Fig. 98: Identifying Ignition ON
Courtesy of VOLVO CARS CORPORATION

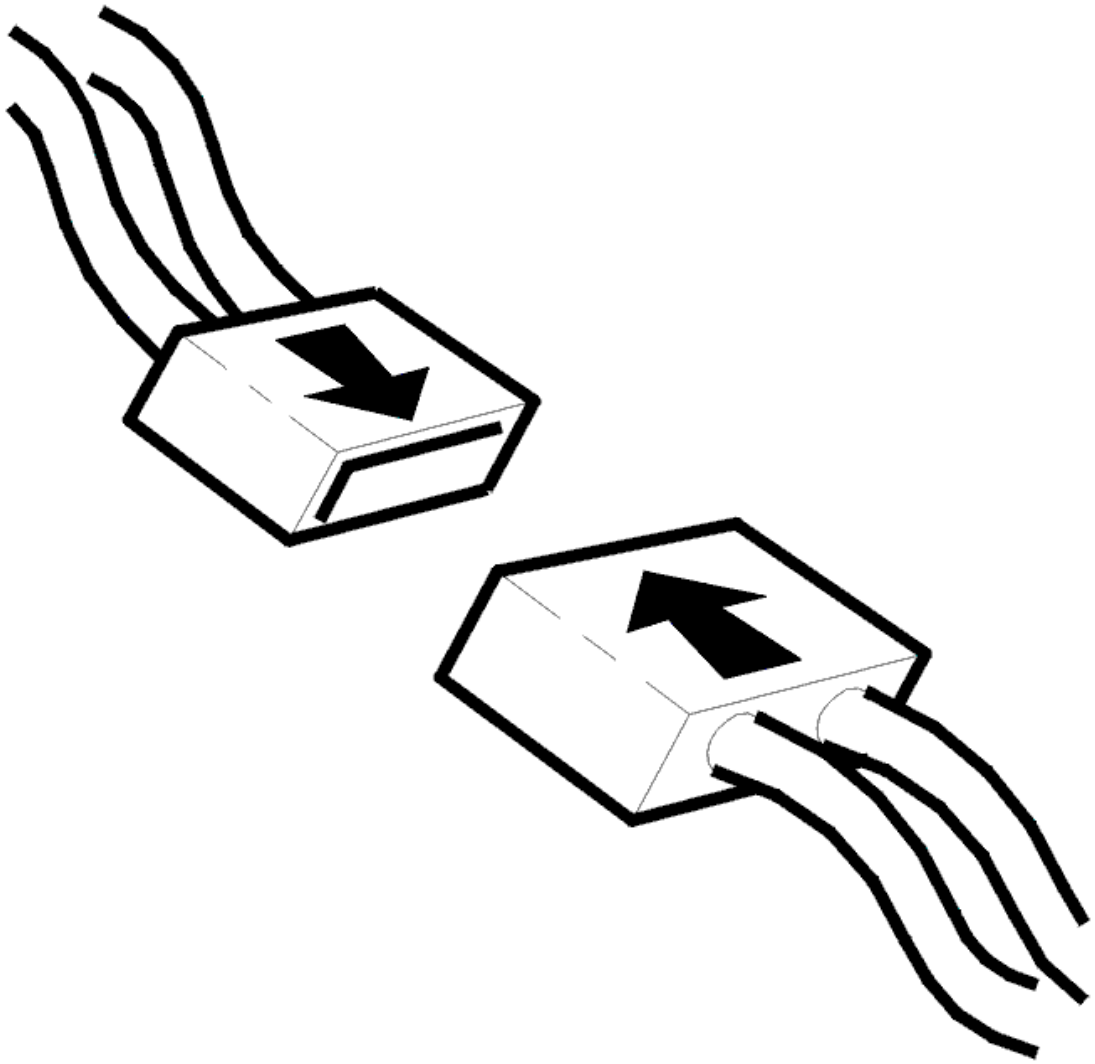

Fig. 99: Connecting Connector
Courtesy of VOLVO CARS CORPORATION

- Ignition off
- Reinstall the connectors, components etc.
- Ignition on.

Read off the position of the seat.

Move the seat forwards and backwards. Check that the value changes.

Measurement range 0-5 V.

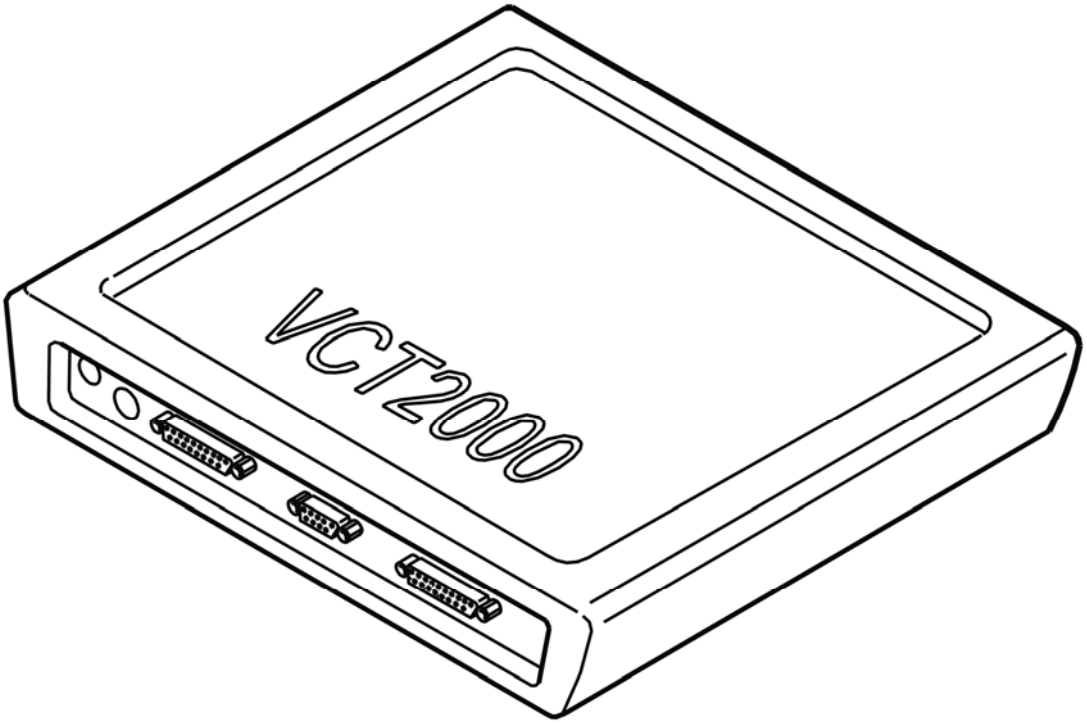

Fig. 100: Identifying VCT2000 Diagnostic Tool Symbol In VIDA
Courtesy of VOLVO CARS CORPORATION

Is the function OK?

- **YES**

  VERIFIED: Troubleshooting has been completed.

- **NO**

  Refer to **INFORMATION**

INFORMATION

FAULT-TRACING INFORMATION

The fault should have been detected and remedied. As this is not the case fault-tracing has failed.

Exit fault-tracing for this diagnostic trouble code (DTC) or make another attempt.

CEM-2F02: SEAT POSITION SENSOR, DRIVER. SIGNAL TOO LOW (2005-2012)

DIAGNOSTIC TROUBLE CODE (DTC) INFORMATION CEM-2F02

Condition

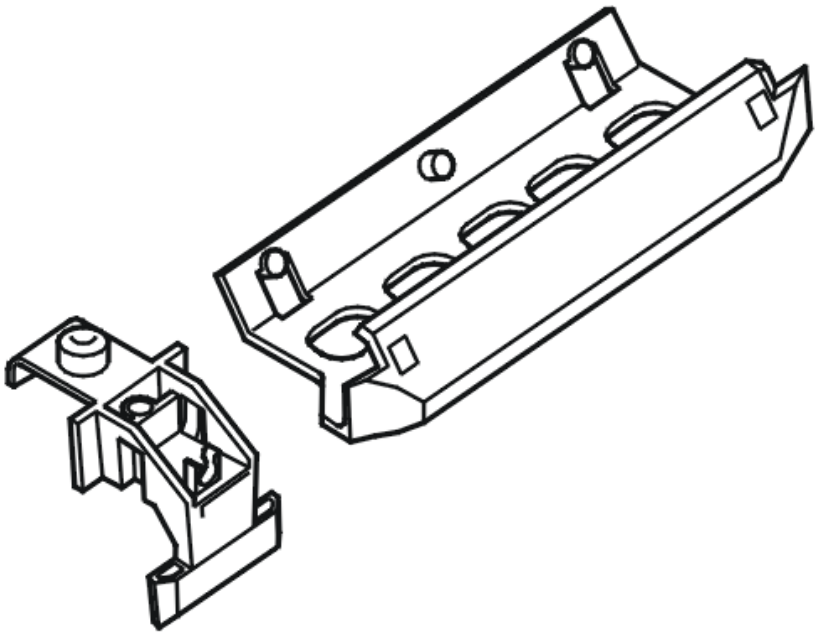

Fig. 101: Identifying Seat Position Sensor
Courtesy of VOLVO CARS CORPORATION

The central electronic module (CEM) checks the signal from the driver's seat position sensor.

The diagnostic trouble code (DTC) is stored if the control module registers that the signal in the signal cable is too low.

The diagnostic trouble code (DTC) can be diagnosed in ignition positions I, II or III.

Substitute Value

- None.

Possible Source

- Short-circuit to ground in the signal cable or in the connectors between the central electronic module (CEM) and the driver's seat position sensor.

Fault symptom[s]

- The information lamp is lit
- SRS warning message displayed.

SIGNAL TOO LOW

CHECKING COMPONENTS AND WIRING

The diagnostic trouble code (DTC) is stored if the central electronic module (CEM) registers that the signal on the cable to the driver's seat position sensor is too low.

If the fault is intermittent, it has been registered previously but is no longer present. Intermittent faults can be caused by interference at start up or can be a different type of fault which occurs on different occasions. The fault is evaluated depending on how it occurs.

Check the connectors on the central electronic module (CEM) and seat position sensor. Check for contact resistance and oxidation. Check for damaged or loose connections.

Check the connectors between the central electronic module (CEM) and the seat position sensor. Check for a short-circuit to ground.

Take readings between:

- Central electronic module (CEM) terminal D25 (#25) and seat position sensor terminal #1
- Central electronic module (CEM) terminal D10 (#10) and seat position sensor terminal #2.

Remedy as necessary.

Other information

- see **CONNECTING THE BREAKOUT BOX**
- -2004: **SIGNAL SPECIFICATION**
- 2005-: **SIGNAL SPECIFICATION**
- See **POWER SEAT MODULE (PSM), REPLACING** (-2004) or **POWER SEAT MODULE (PSM), REPLACING** (2005-).
- see **CHECKING WIRING AND TERMINALS**

- **Continue**

  Refer to **VERIFICATION**

VERIFICATION

VERIFICATION

HINT: After carrying out the repair, check that the fault has been remedied.

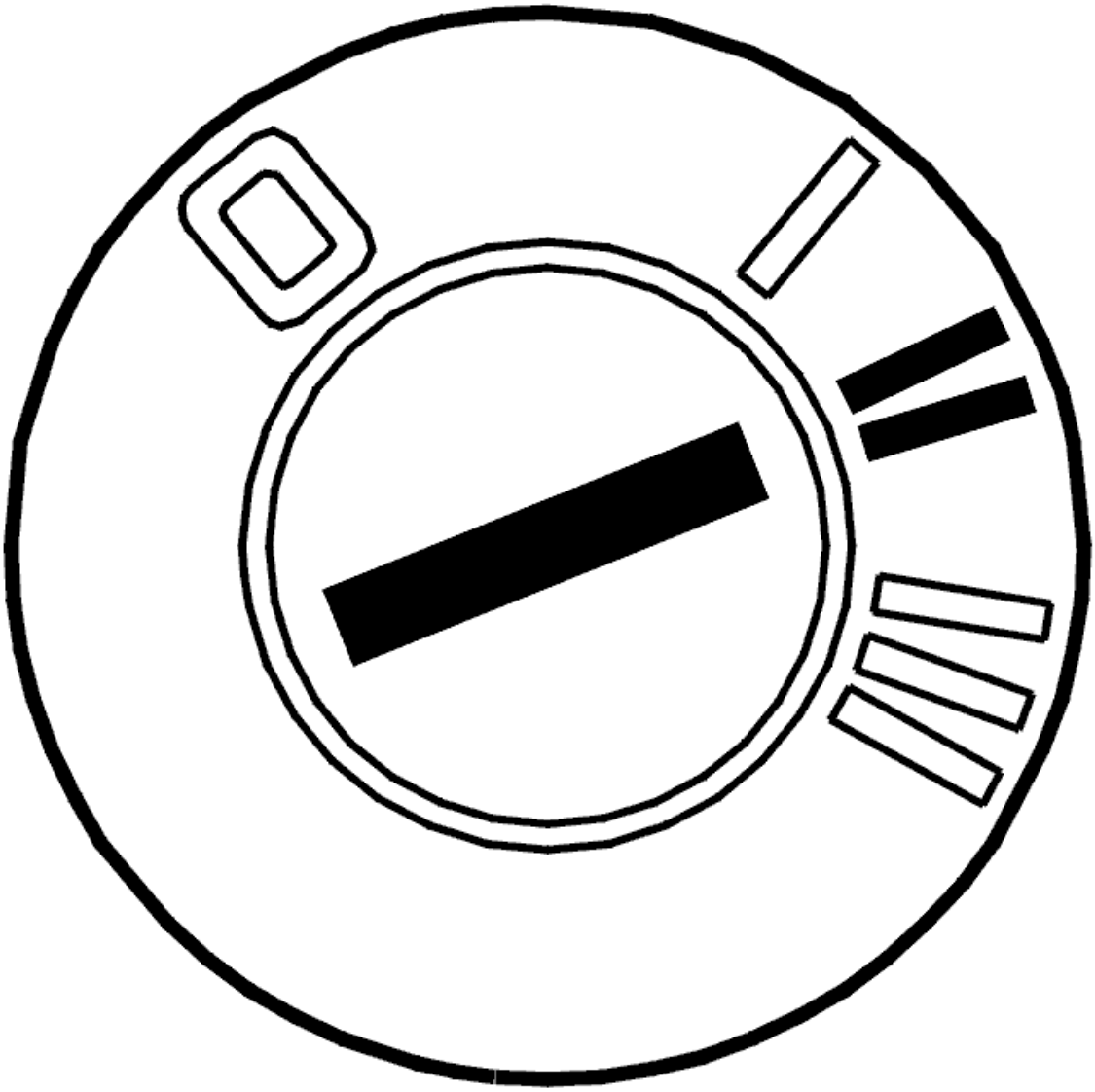

Fig. 102: Identifying Ignition ON
Courtesy of VOLVO CARS CORPORATION

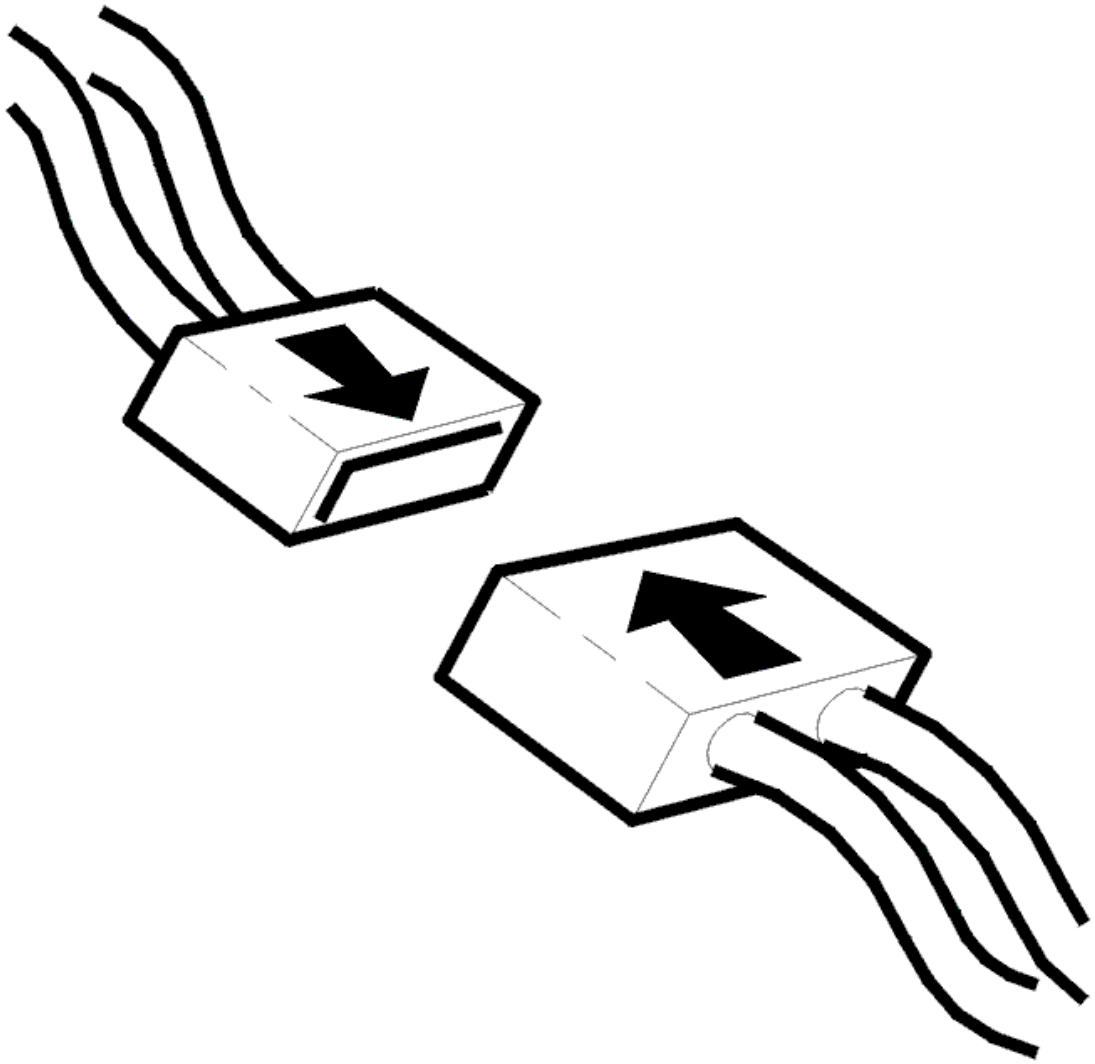

Fig. 103: Connecting Connector
Courtesy of VOLVO CARS CORPORATION

- Ignition off
- Reinstall the connectors, components etc.
- Ignition on.

Read off the position of the seat.

Move the seat forwards and backwards. Check that the value changes.

Measurement range 0-5 V.

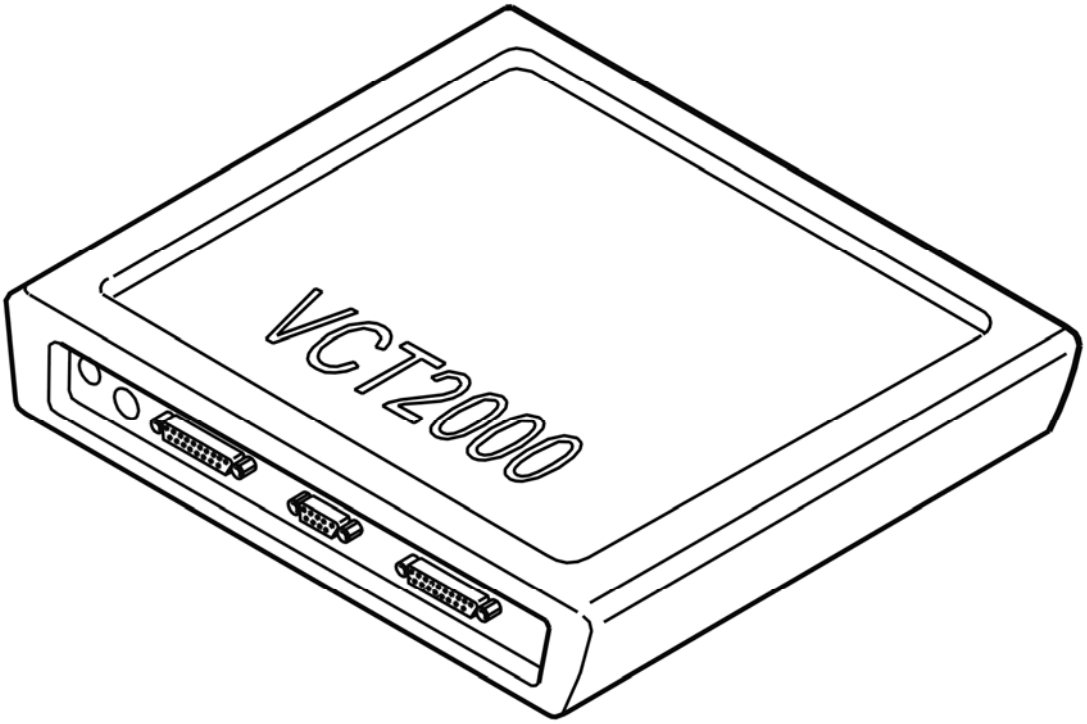

Fig. 104: Identifying VCT2000 Diagnostic Tool Symbol In VIDA
Courtesy of VOLVO CARS CORPORATION

Is the function OK?

- **YES**

  VERIFIED: Troubleshooting has been completed.

- **NO**

  Refer to **INFORMATION**

INFORMATION

FAULT-TRACING INFORMATION

The fault should have been detected and remedied. As this is not the case fault-tracing has failed.

Exit fault-tracing for this diagnostic trouble code (DTC) or make another attempt.

CEM-2F03: SEAT POSITION SENSOR, DRIVER. FAULTY SIGNAL (2005-2012)

DIAGNOSTIC TROUBLE CODE (DTC) INFORMATION CEM-2F03

Condition

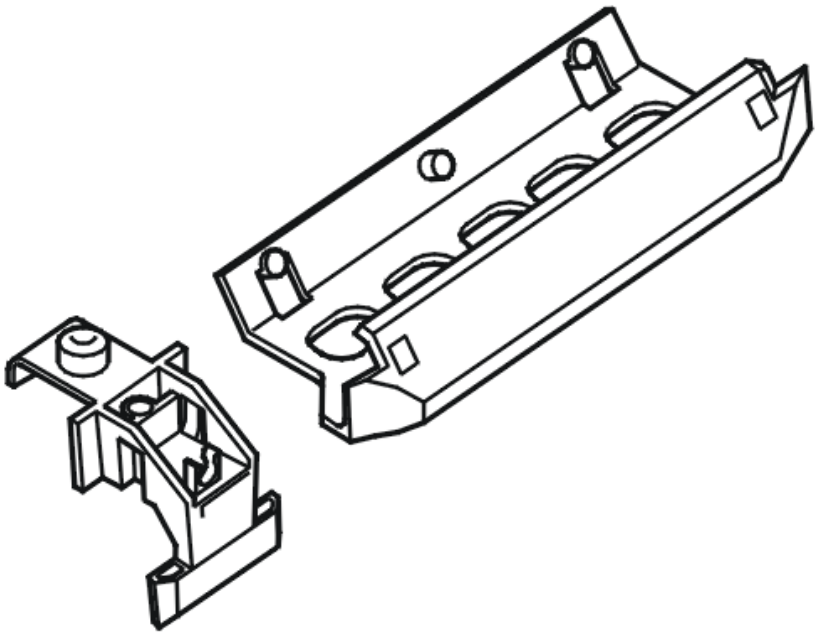

Fig. 105: Identifying Seat Position Sensor
Courtesy of VOLVO CARS CORPORATION

The central electronic module (CEM) checks the signal from the driver's seat position sensor.

The diagnostic trouble code (DTC) is stored if the control module registers a faulty signal on the signal cable.

The diagnostic trouble code (DTC) can be diagnosed in ignition positions I, II or III.

Substitute Value

- None.

Possible Source

- Open-circuit or contact resistance in the signal cable or in the connectors between the central electronic module (CEM) and the driver's seat position sensor
- Open-circuit in the driver's seat position sensor
- Short-circuit between the two signal cables connected between the central electronic module (CEM) and

the driver's seat position sensor
- Short-circuit in the driver's seat position sensor
- Damaged driver's seat position sensor, resulting in a current value outside the permitted range from the driver's seat position sensor.

Fault symptom[s]

- The information lamp is lit
- SRS warning message displayed.

FAULTY SIGNAL

CHECKING COMPONENTS AND WIRING

The diagnostic trouble code (DTC) is stored if the central electronic module (CEM) registers that the signal on the cable to the driver's seat position sensor is faulty.

If the fault is intermittent, it has been registered previously but is no longer present. Intermittent faults can be caused by interference at start up or can be a different type of fault which occurs on different occasions. The fault is evaluated depending on how it occurs.

Check the connectors on the central electronic module (CEM) and seat position sensor. Check for contact resistance and oxidation. Check for damaged or loose connections.

Check the connectors between the central electronic module (CEM) and the seat position sensor. Check for an open-circuit. Check for a short-circuit to another signal cable.

Take readings between:

- Central electronic module (CEM) terminal D25 (#25) and seat position sensor terminal #1
- Central electronic module (CEM) terminal D10 (#10) and seat position sensor terminal #2.

Remedy as necessary.

Other information

- see **CONNECTING THE BREAKOUT BOX**
- -2004: **SIGNAL SPECIFICATION**
- 2005-: **SIGNAL SPECIFICATION**
- See **POWER SEAT MODULE (PSM), REPLACING** (-2004) or **POWER SEAT MODULE (PSM), REPLACING** (2005-).
- see **CHECKING WIRING AND TERMINALS**

- **Continue**

Refer to **VERIFICATION**

VERIFICATION

VERIFICATION

HINT: After carrying out the repair, check that the fault has been remedied.

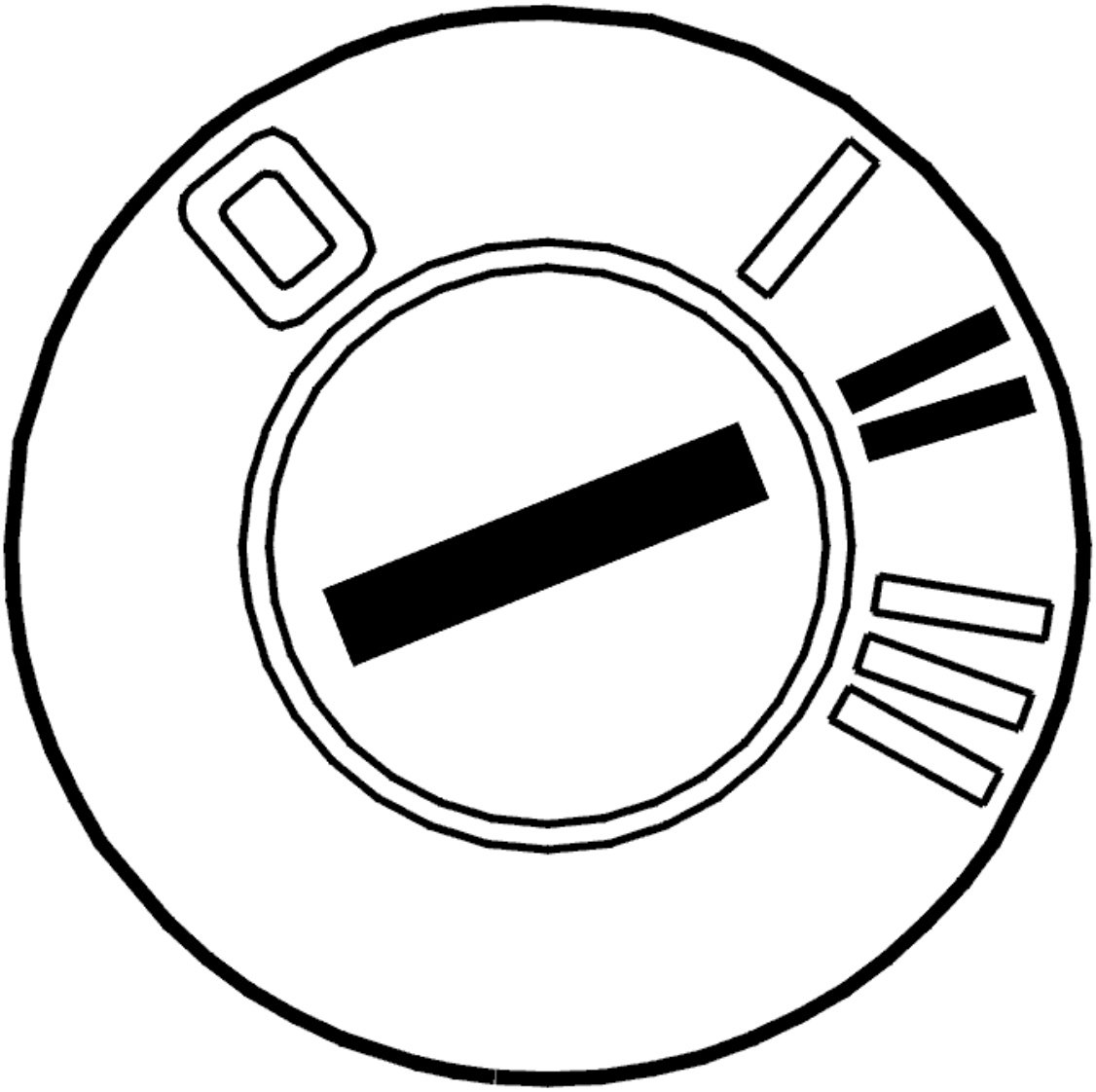

Fig. 106: Identifying Ignition ON
Courtesy of VOLVO CARS CORPORATION

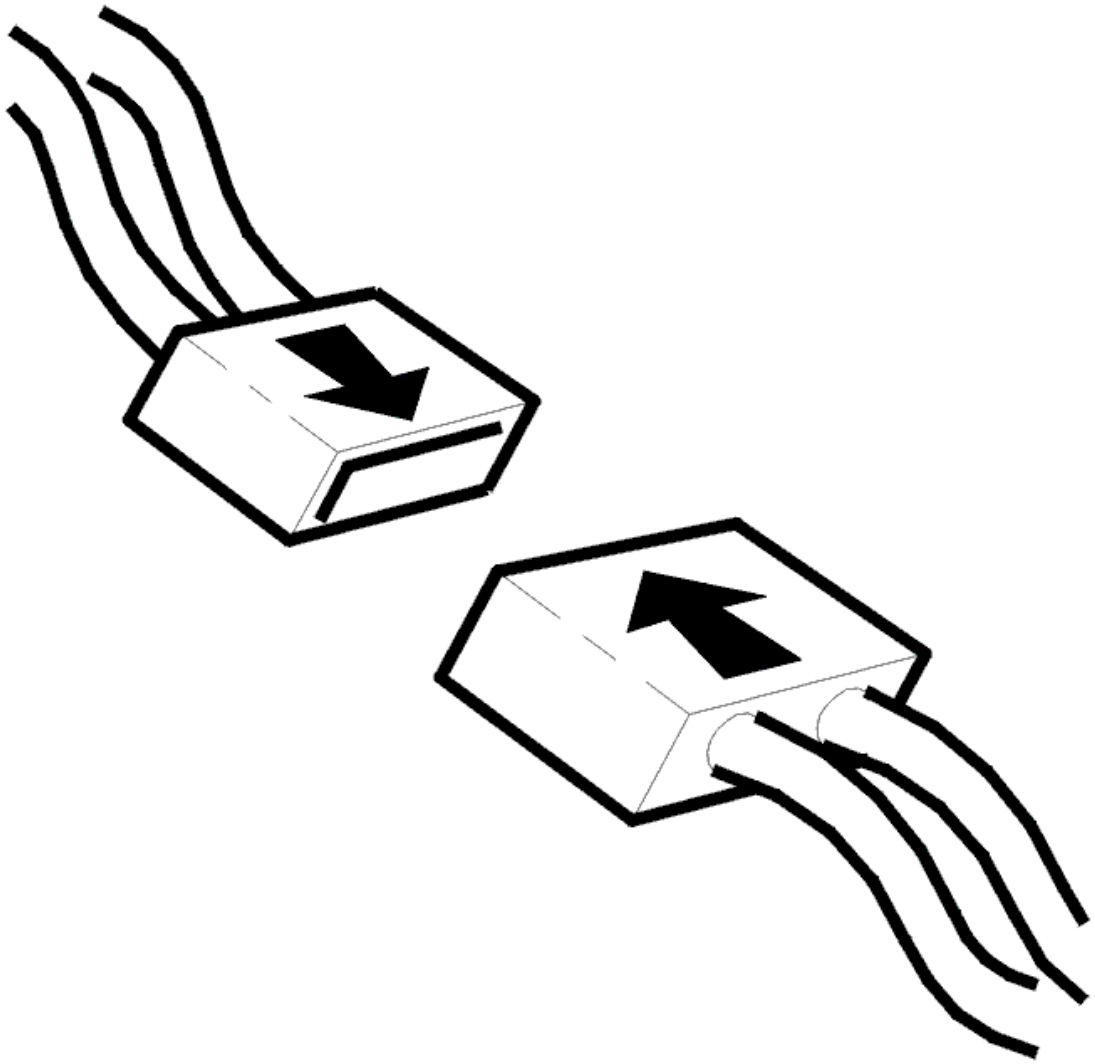

Fig. 107: Connecting Connector
Courtesy of VOLVO CARS CORPORATION

- Ignition off
- Reinstall the connectors, components etc.
- Ignition on.

  Read off the position of the seat.

  Move the seat forwards and backwards. Check that the value changes.

  Measurement range 0-5 V.

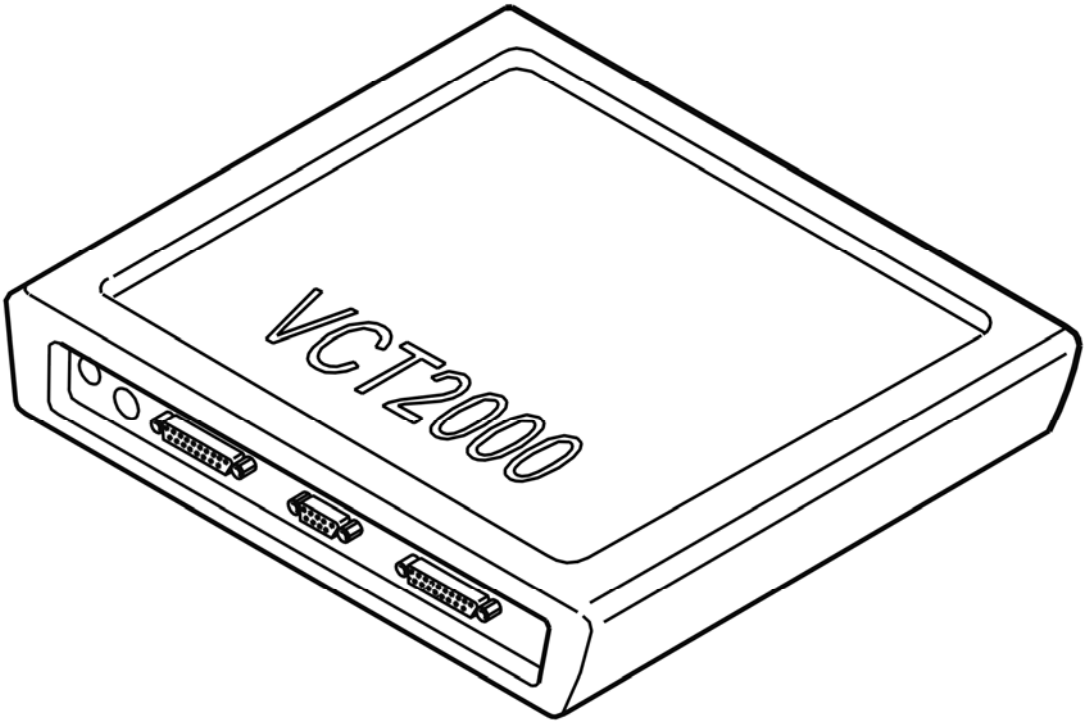

Fig. 108: Identifying VCT2000 Diagnostic Tool Symbol In VIDA
Courtesy of VOLVO CARS CORPORATION

Is the function OK?

- **YES**

  VERIFIED: Troubleshooting has been completed.

- **NO**

  Refer to **INFORMATION**

INFORMATION

FAULT-TRACING INFORMATION

The fault should have been detected and remedied. As this is not the case fault-tracing has failed.

Exit fault-tracing for this diagnostic trouble code (DTC) or make another attempt.

CEM-2F04: SEAT POSITION SENSOR, PASSENGER. SIGNAL TOO HIGH (2005-2012)

DIAGNOSTIC TROUBLE CODE (DTC) INFORMATION CEM-2F04

Condition

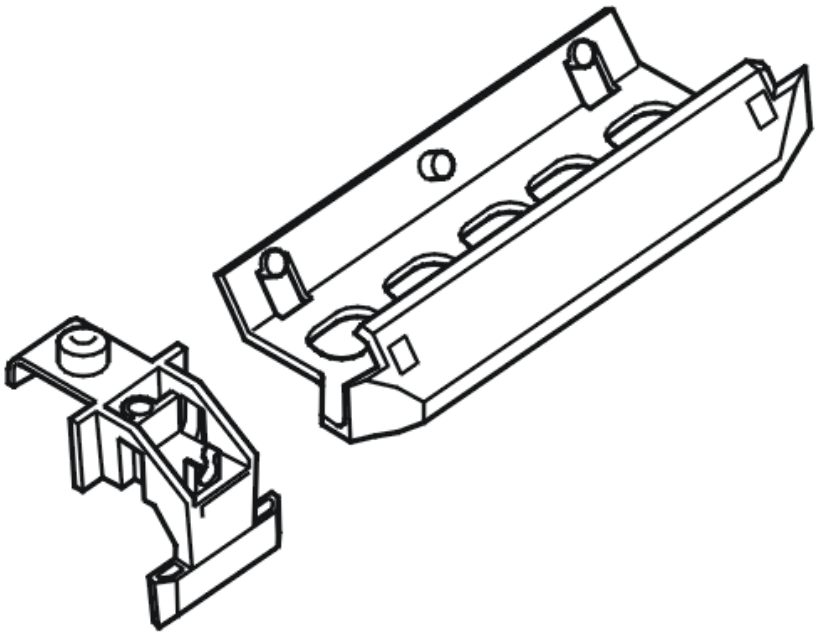

Fig. 109: Identifying Seat Position Sensor
Courtesy of VOLVO CARS CORPORATION

The central electronic module (CEM) checks the signal from the passenger seat position sensor.

The diagnostic trouble code (DTC) is stored if the control module registers that the signal in the signal cable is too high.

The diagnostic trouble code (DTC) can be diagnosed in ignition positions I, II or III.

Substitute Value

- None.

Possible Source

- Short-circuit to the power supply in the signal cable or in the connectors between the central electronic module (CEM) and the passenger seat position sensor.

Fault symptom[s]

- The information lamp is lit
- SRS warning message displayed.

SIGNAL TOO HIGH

CHECKING COMPONENTS AND WIRING

The diagnostic trouble code (DTC) is stored if the central electronic module (CEM) registers that the signal on the cable to the passenger seat position sensor is too high.

If the fault is intermittent, it has been registered previously but is no longer present. Intermittent faults can be caused by interference at start up or can be a different type of fault which occurs on different occasions. The fault is evaluated depending on how it occurs.

Check the connectors on the central electronic module (CEM) and seat position sensor. Check for contact resistance and oxidation. Check for damaged or loose connections.

Check the connectors between the central electronic module (CEM) and the seat position sensor. Check for a short-circuit to supply voltage.

Take readings between:

- Central electronic module (CEM) terminal D26 (#26) and seat position sensor terminal #1
- Central electronic module (CEM) terminal D18 (#18) and seat position sensor terminal #2.

Remedy as necessary.

Other information

- see **CONNECTING THE BREAKOUT BOX**
- -2004: **SIGNAL SPECIFICATION**
- 2005-: **SIGNAL SPECIFICATION**
- See **POWER SEAT MODULE (PSM), REPLACING** (-2004) or **POWER SEAT MODULE (PSM), REPLACING** (2005-).
- see **CHECKING WIRING AND TERMINALS**

- **Continue**

  Refer to **VERIFICATION**

VERIFICATION

VERIFICATION

HINT: After carrying out the repair, check that the fault has been remedied.

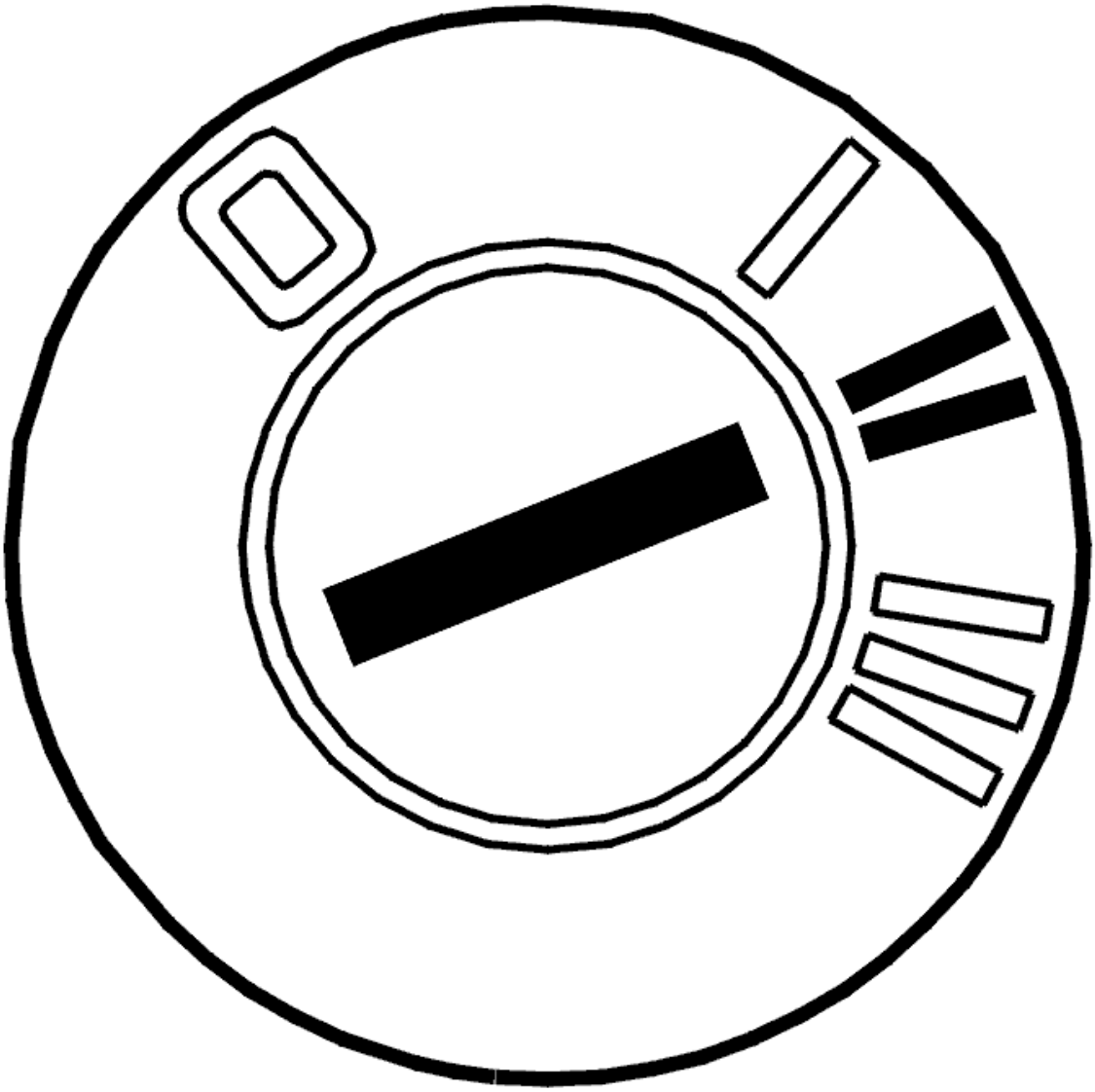

Fig. 110: Identifying Ignition ON
Courtesy of VOLVO CARS CORPORATION

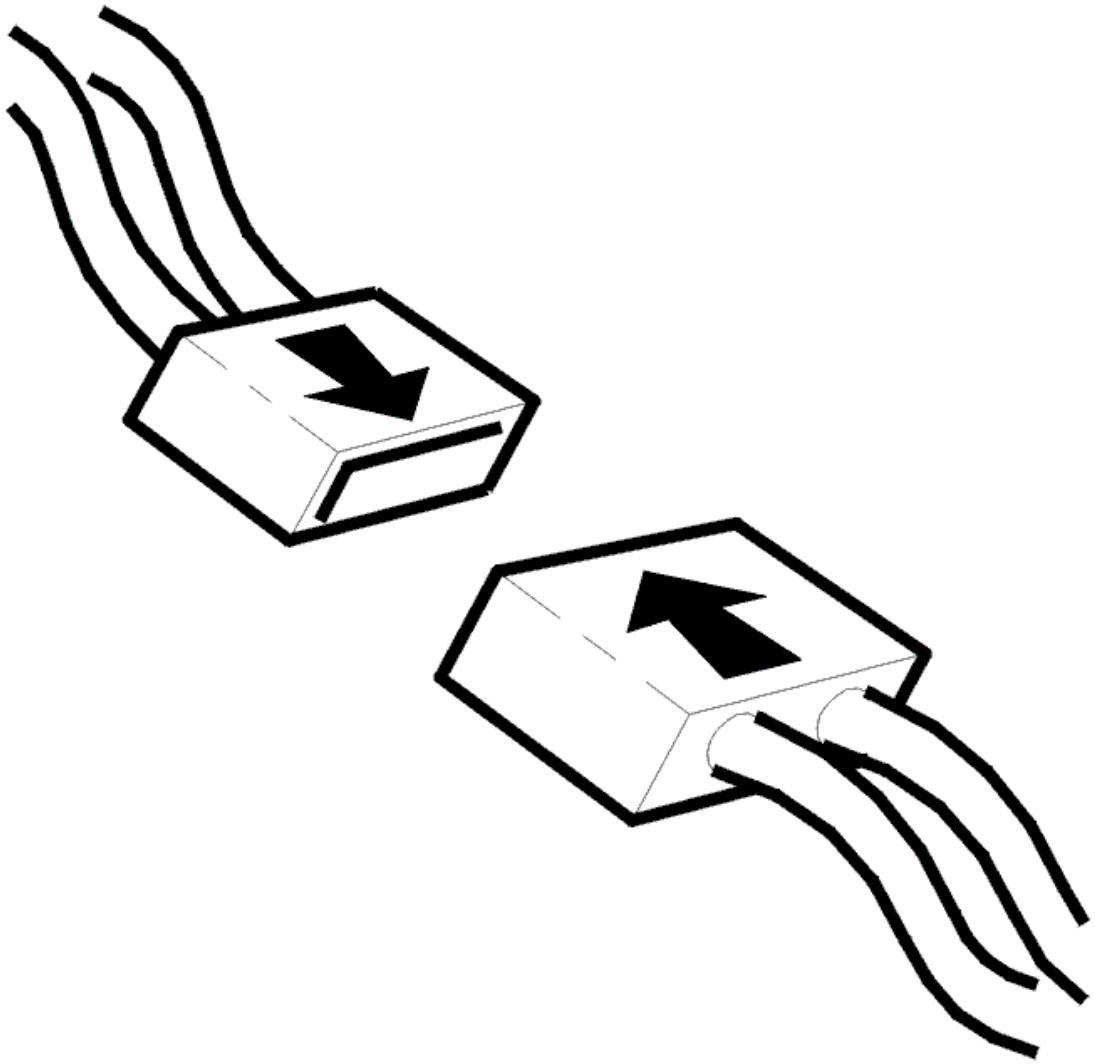

Fig. 111: Connecting Connector
Courtesy of VOLVO CARS CORPORATION

- Ignition off
- Reinstall the connectors, components etc.
- Ignition on.

Read off the position of the seat.

Move the seat forwards and backwards. Check that the value changes.

Measurement range 0-5 V.

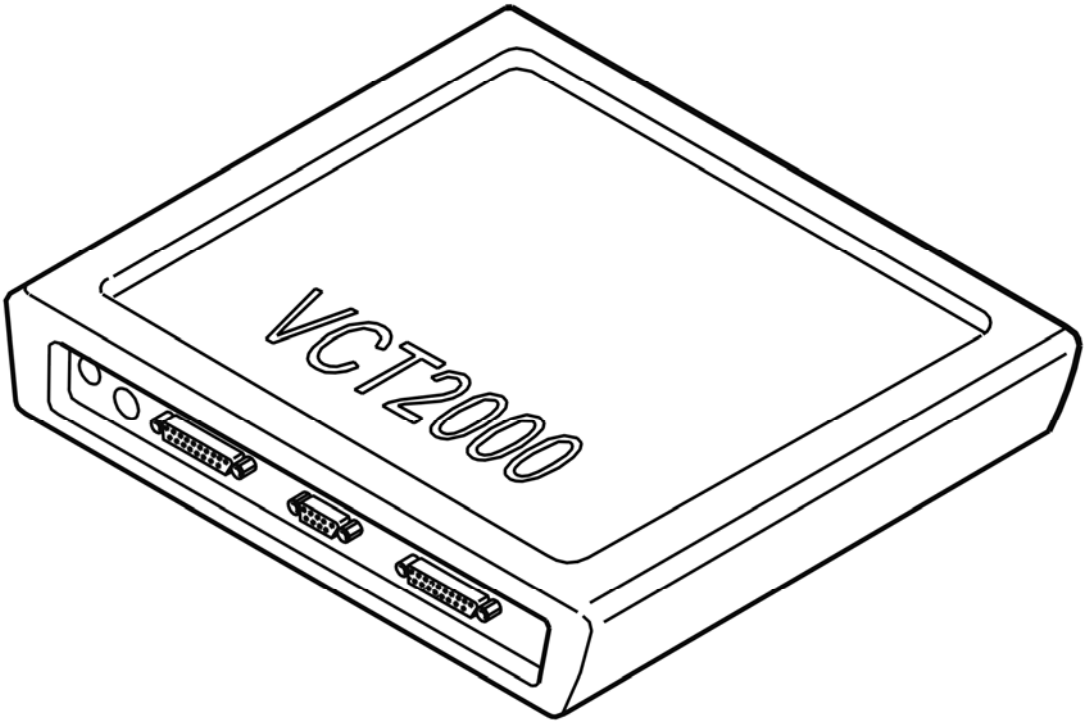

Fig. 112: Identifying VCT2000 Diagnostic Tool Symbol In VIDA
Courtesy of VOLVO CARS CORPORATION

Is the function OK?

- **YES**

  VERIFIED: Troubleshooting has been completed.

- **NO**

  Refer to **INFORMATION**

INFORMATION

FAULT-TRACING INFORMATION

The fault should have been detected and remedied. As this is not the case fault-tracing has failed.

Exit fault-tracing for this diagnostic trouble code (DTC) or make another attempt.

CEM-2F05: SEAT POSITION SENSOR, PASSENGER. SIGNAL TOO LOW (2005-2012)

DIAGNOSTIC TROUBLE CODE (DTC) INFORMATION CEM-2F05

Condition

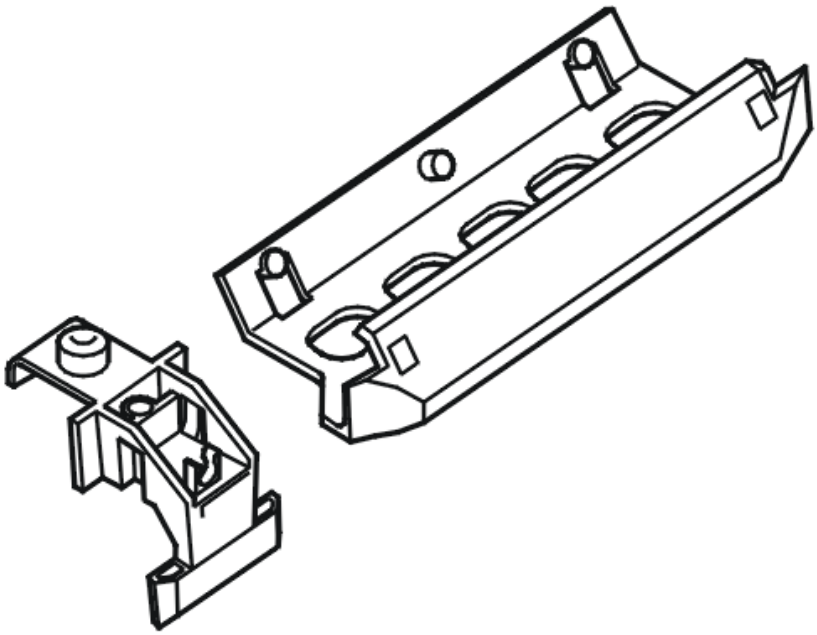

Fig. 113: Identifying Seat Position Sensor
Courtesy of VOLVO CARS CORPORATION

The central electronic module (CEM) checks the signal from the passenger seat position sensor.

The diagnostic trouble code (DTC) is stored if the control module registers that the signal in the signal cable is too low.

The diagnostic trouble code (DTC) can be diagnosed in ignition positions I, II or III.

Substitute Value

- None.

Possible Source

- Short-circuit to ground in the signal cable or in the connectors between the central electronic module (CEM) and the passenger seat position sensor.

Fault symptom[s]

- The information lamp is lit
- SRS warning message displayed.

SIGNAL TOO LOW

CHECKING COMPONENTS AND WIRING

The diagnostic trouble code (DTC) is stored if the central electronic module (CEM) registers that the signal on the cable to the passenger seat position sensor is too low.

If the fault is intermittent, it has been registered previously but is no longer present. Intermittent faults can be caused by interference at start up or can be a different type of fault which occurs on different occasions. The fault is evaluated depending on how it occurs.

Check the connectors on the central electronic module (CEM) and seat position sensor. Check for contact resistance and oxidation. Check for damaged or loose connections.

Check the connectors between the central electronic module (CEM) and the seat position sensor. Check for a short-circuit to ground.

Take readings between:

- Central electronic module (CEM) terminal D26 (#26) and seat position sensor terminal #1
- Central electronic module (CEM) terminal D18 (#18) and seat position sensor terminal #2.

Remedy as necessary.

Other information

- see **CONNECTING THE BREAKOUT BOX**
- -2004: **SIGNAL SPECIFICATION**
- 2005-: **SIGNAL SPECIFICATION**
- See **POWER SEAT MODULE (PSM), REPLACING** (-2004) or **POWER SEAT MODULE (PSM), REPLACING** (2005-).
- see **CHECKING WIRING AND TERMINALS**

- **Continue**

  Refer to **VERIFICATION**

VERIFICATION

VERIFICATION

HINT: After carrying out the repair, check that the fault has been remedied.

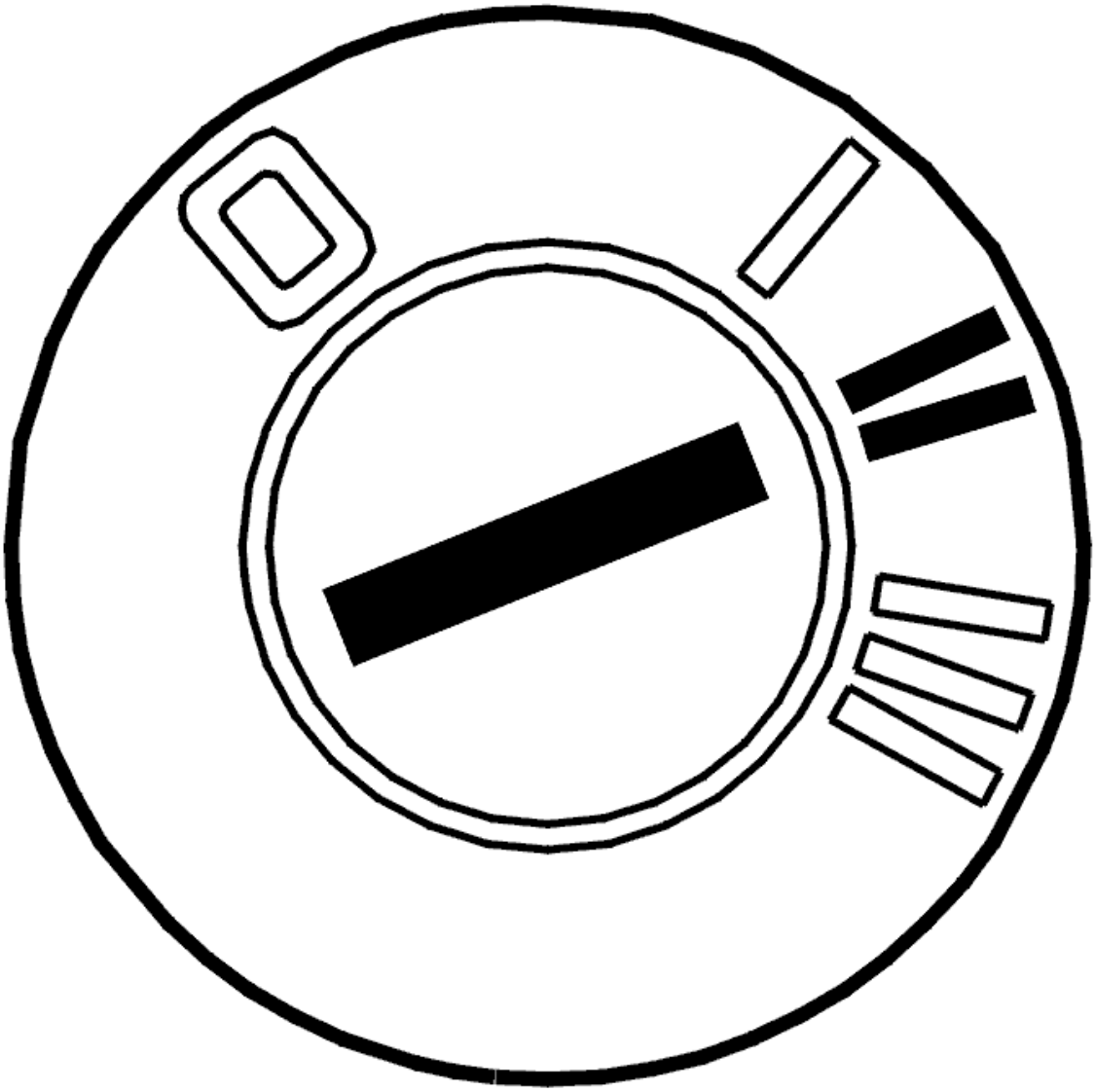

Fig. 114: Identifying Ignition ON
Courtesy of VOLVO CARS CORPORATION

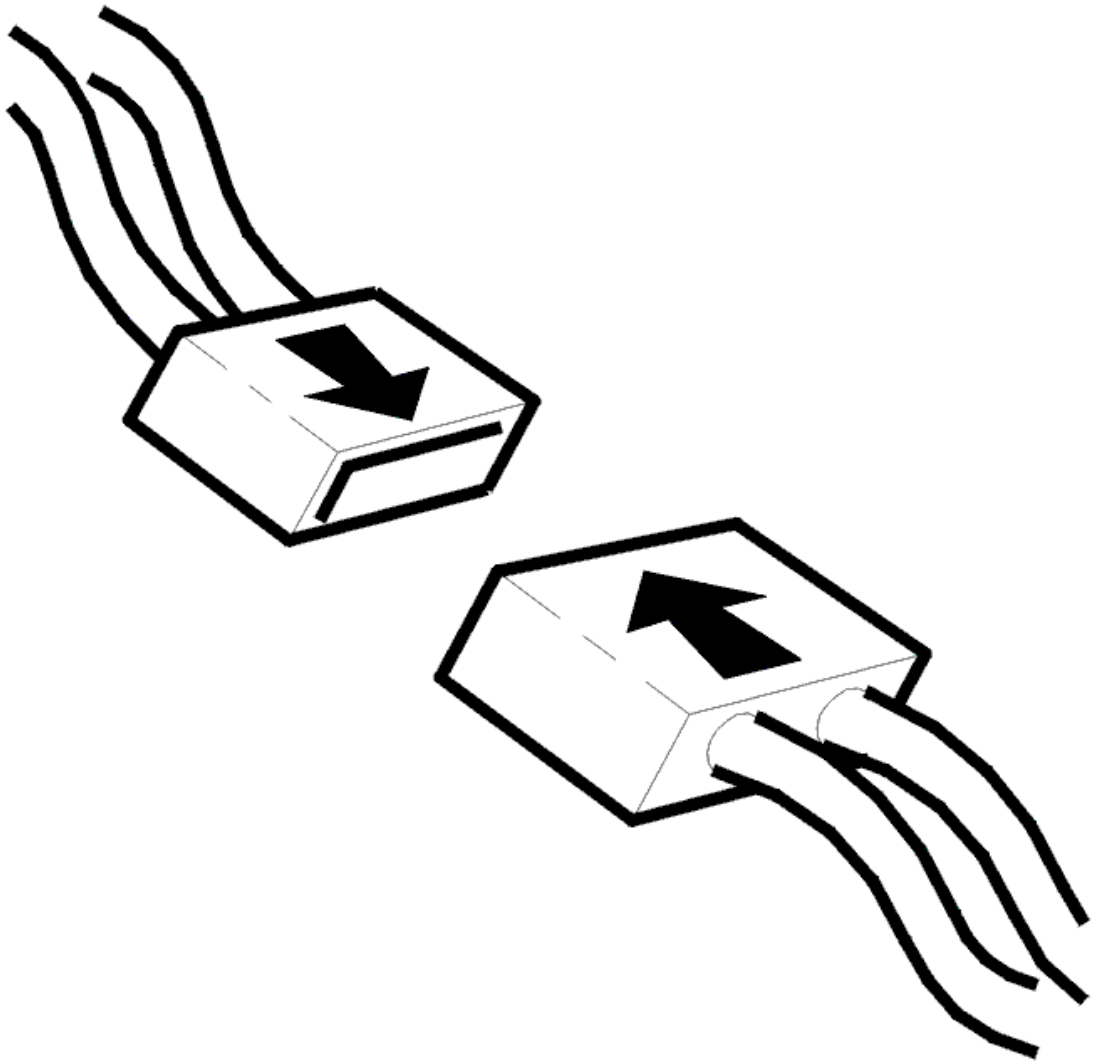

Fig. 115: Connecting Connector
Courtesy of VOLVO CARS CORPORATION

- Ignition off
- Reinstall the connectors, components etc.
- Ignition on.

Read off the position of the seat.

Move the seat forwards and backwards. Check that the value changes.

Measurement range 0-5 V.

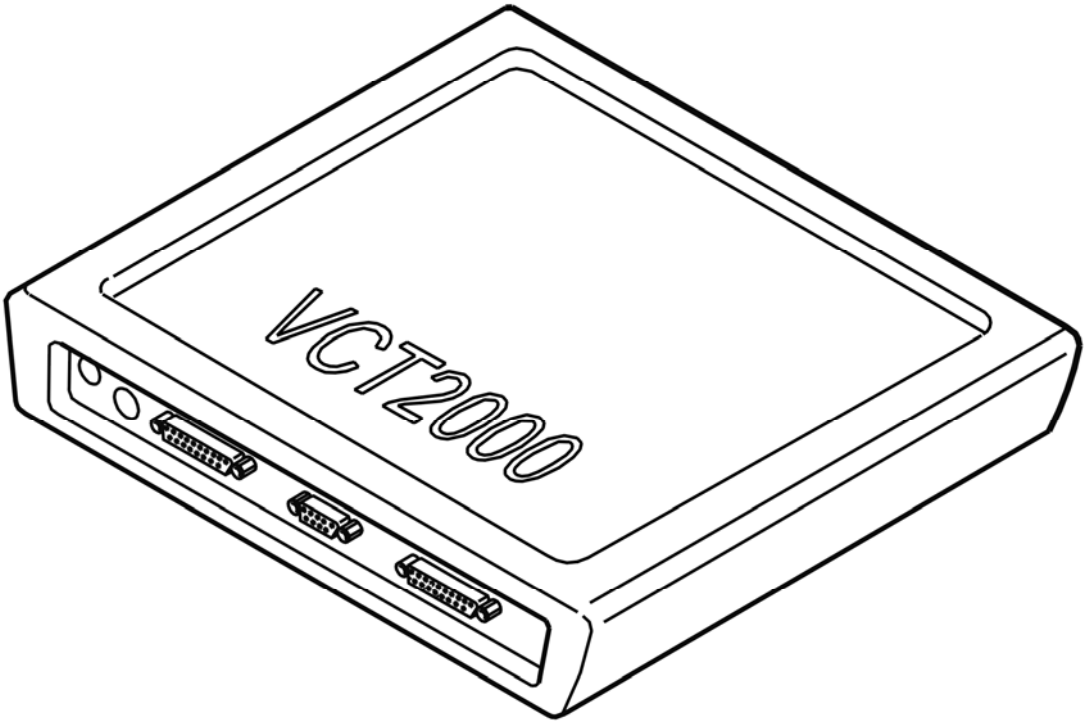

Fig. 116: Identifying VCT2000 Diagnostic Tool Symbol In VIDA
Courtesy of VOLVO CARS CORPORATION

Is the function OK?

- **YES**

  VERIFIED: Troubleshooting has been completed.

- **NO**

  Refer to **INFORMATION**

INFORMATION

FAULT-TRACING INFORMATION

The fault should have been detected and remedied. As this is not the case fault-tracing has failed.

Exit fault-tracing for this diagnostic trouble code (DTC) or make another attempt.

CEM-2F06: SEAT POSITION SENSOR, PASSENGER. FAULTY SIGNAL (2005-2012)

DIAGNOSTIC TROUBLE CODE (DTC) INFORMATION CEM-2F06

Condition

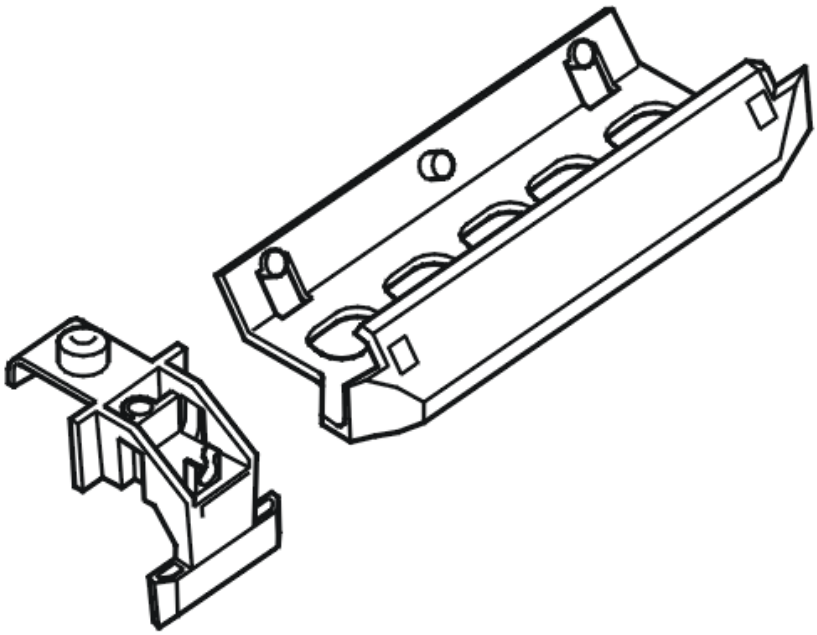

Fig. 117: Identifying Seat Position Sensor
Courtesy of VOLVO CARS CORPORATION

The central electronic module (CEM) checks the signal from the passenger seat position sensor.

The diagnostic trouble code (DTC) is stored if the control module registers a faulty signal on the signal cable.

The diagnostic trouble code (DTC) can be diagnosed in ignition positions I, II or III.

Substitute Value

- None.

Possible Source

- Open-circuit or contact resistance in the signal cable or in the connectors between the central electronic module (CEM) and the passenger seat position sensor
- Open-circuit in the passenger seat position sensor
- Short-circuit between the two signal cables connected between the central electronic module (CEM) and

the passenger seat position sensor
- Short-circuit in passenger seat position sensor
- Damaged driver's seat position sensor, resulting in a current value outside the permitted range from the passenger seat position sensor.

Fault symptom[s]

- The information lamp is lit
- SRS warning message displayed.

FAULTY SIGNAL

CHECKING COMPONENTS AND WIRING

The diagnostic trouble code (DTC) is stored if the central electronic module (CEM) registers that the signal on the cable to the passenger seat position sensor is faulty.

If the fault is intermittent, it has been registered previously but is no longer present. Intermittent faults can be caused by interference at start up or can be a different type of fault which occurs on different occasions. The fault is evaluated depending on how it occurs.

Check the connectors on the central electronic module (CEM) and seat position sensor. Check for contact resistance and oxidation. Check for damaged or loose connections.

Check the connectors between the central electronic module (CEM) and the seat position sensor. Check for an open-circuit. Check for a short-circuit to another signal cable.

Take readings between:

- Central electronic module (CEM) terminal D26 (#26) and seat position sensor terminal #1
- Central electronic module (CEM) terminal D18 (#18) and seat position sensor terminal #2.

Remedy as necessary.

Other information

- see **CONNECTING THE BREAKOUT BOX**
- -2004: **SIGNAL SPECIFICATION**
- 2005-: **SIGNAL SPECIFICATION**
- See **POWER SEAT MODULE (PSM), REPLACING** (-2004) or **POWER SEAT MODULE (PSM), REPLACING** (2005-).
- see **CHECKING WIRING AND TERMINALS**

- **Continue**

Refer to **VERIFICATION**

VERIFICATION

VERIFICATION

HINT: After carrying out the repair, check that the fault has been remedied.

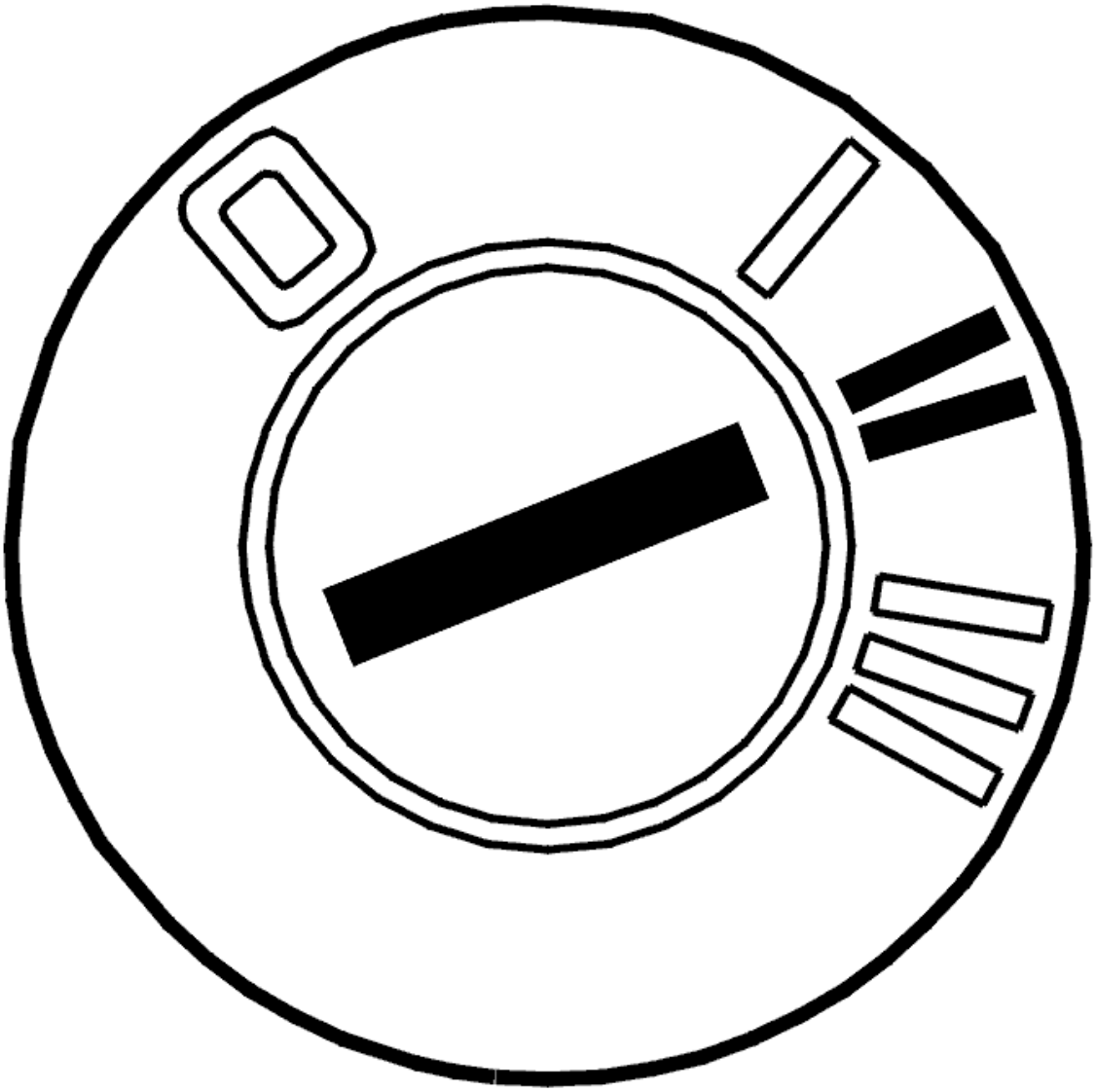

Fig. 118: Identifying Ignition ON
Courtesy of VOLVO CARS CORPORATION

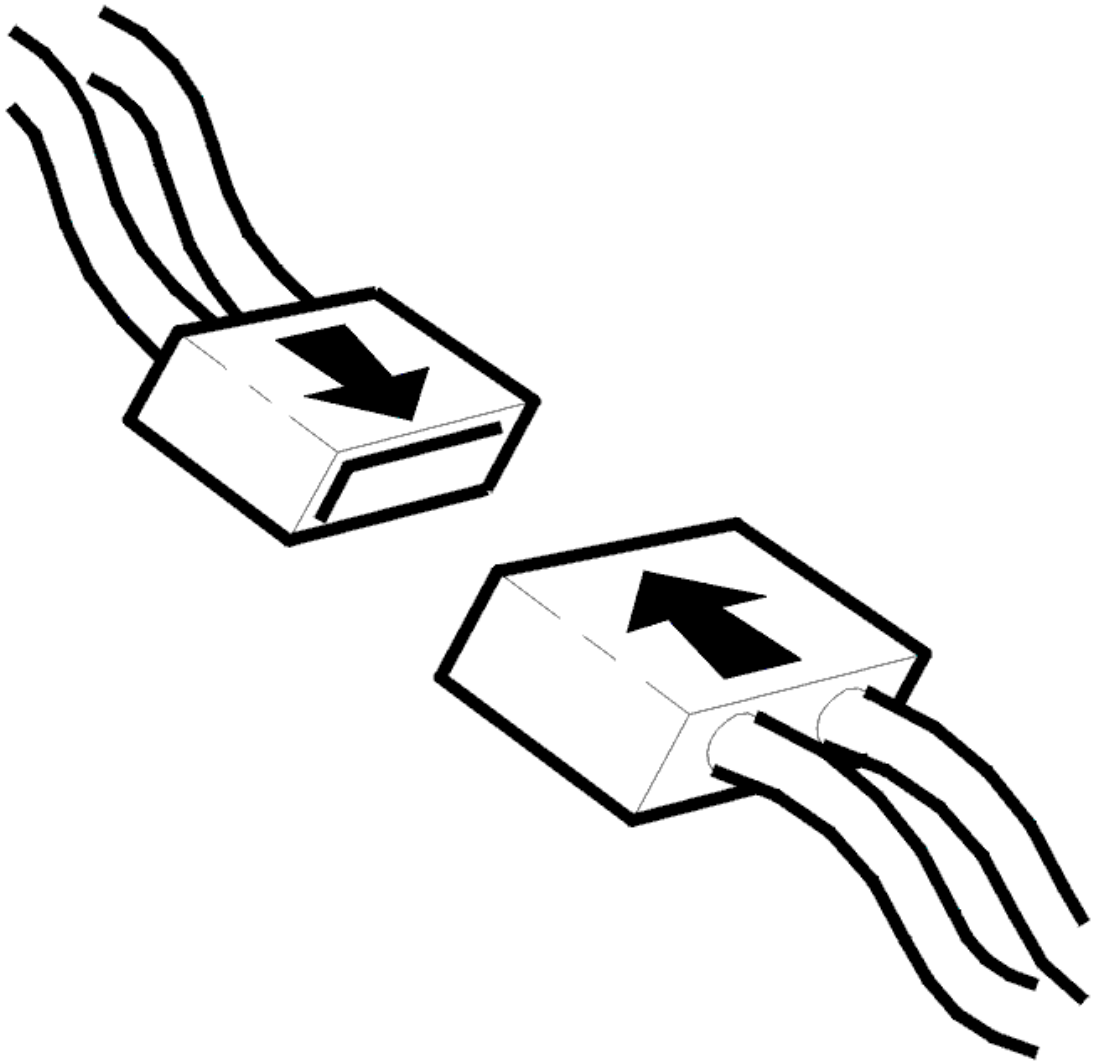

Fig. 119: Connecting Connector
Courtesy of VOLVO CARS CORPORATION

- Ignition off
- Reinstall the connectors, components etc.
- Ignition on.

Read off the position of the seat.

Move the seat forwards and backwards. Check that the value changes.

Measurement range 0-5 V.

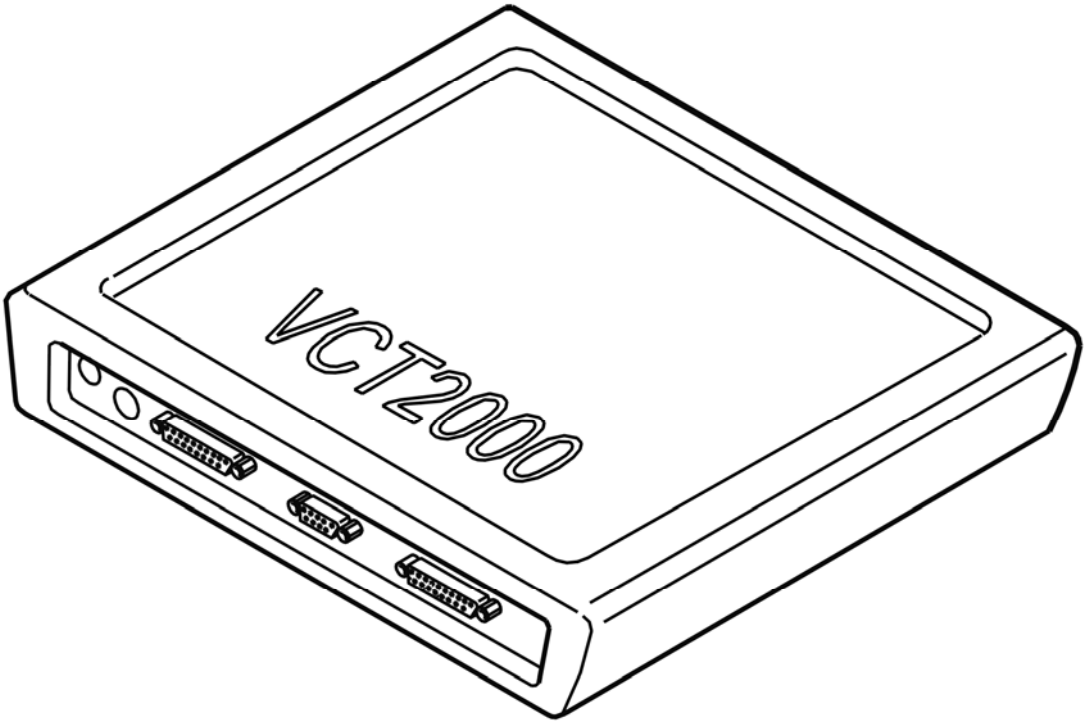

Fig. 120: Identifying VCT2000 Diagnostic Tool Symbol In VIDA
Courtesy of VOLVO CARS CORPORATION

Is the function OK?

- **YES**

  VERIFIED: Troubleshooting has been completed.

- **NO**

  Refer to **INFORMATION**

INFORMATION

FAULT-TRACING INFORMATION

The fault should have been detected and remedied. As this is not the case fault-tracing has failed.

Exit fault-tracing for this diagnostic trouble code (DTC) or make another attempt.

CEM-3A01: FUEL PUMP. SIGNAL MISSING. PERMANENT FAULT (2003-2004)

DIAGNOSTIC TROUBLE CODE (DTC) INFORMATION

Condition

Diagnostic trouble code (DTC) CEM-3A01 is stored if the control module registers that there is no fuel pump signal.

Substitute Value

None

Possible Source

- No signal from the fuel pump.

Fault symptom[s]

- Starting/Engine does not start/Engine turns

SIGNAL MISSING. PERMANENT FAULT

CHECKING THE SIGNAL CABLE

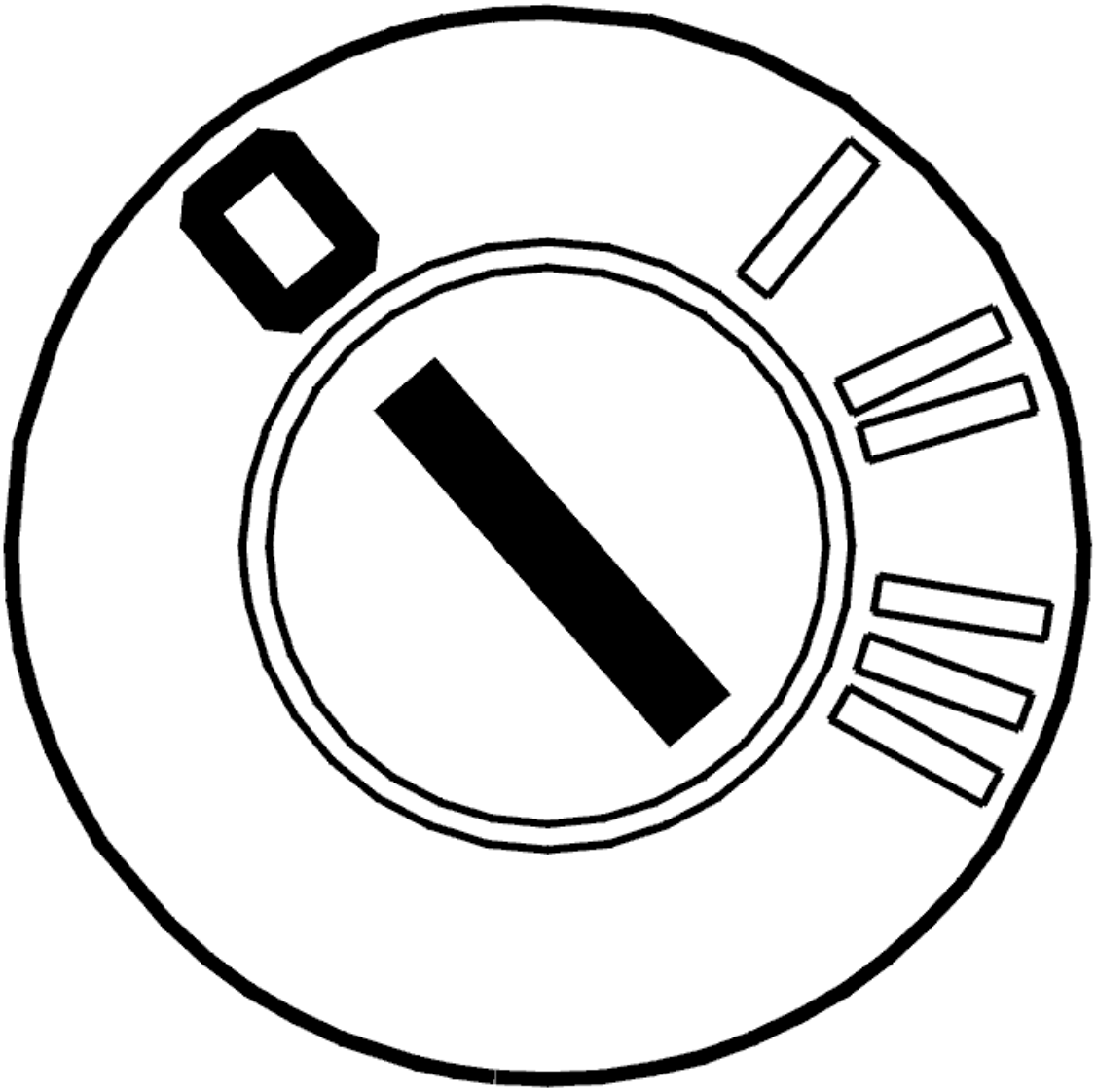

Fig. 121: Identifying Ignition OFF
Courtesy of VOLVO CARS CORPORATION

- Ignition off
- Disconnect the connector from the central electronic module (CEM)
- Disconnect connector group B from the engine control module (ECM).

  Check the signal cables between central electronic module (CEM) terminal #14B and engine control module (ECM) terminal #45B. Check for an open-circuit.

  Also check connector 54/3. Check for contact resistance and oxidation.

  Remedy as necessary.

  Other information:

- To access or replace the central electronic module (CEM) connector:
  - For -2004, see: **CENTRAL ELECTRONIC MODULE (CEM), REPLACING**
  - For 2005-, see: **CENTRAL ELECTRONIC MODULE (CEM), REPLACING** .
- To access or replace the engine control module (ECM) connector, see **ENGINE CONTROL MODULE (ECM), REPLACING**
- To connect the breakout box, see **CONNECTING THE BREAKOUT BOX**
- -2004: **SIGNAL SPECIFICATION**
- 2005-: **SIGNAL SPECIFICATION**
- see **CHECKING WIRING AND TERMINALS** .

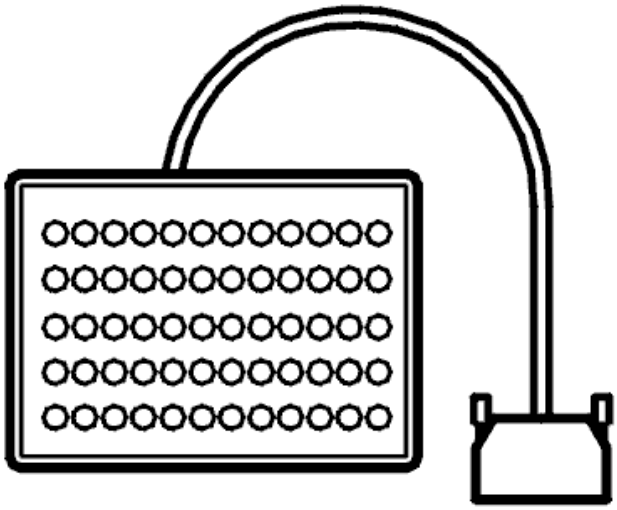

Fig. 122: Breakout Box
Courtesy of VOLVO CARS CORPORATION

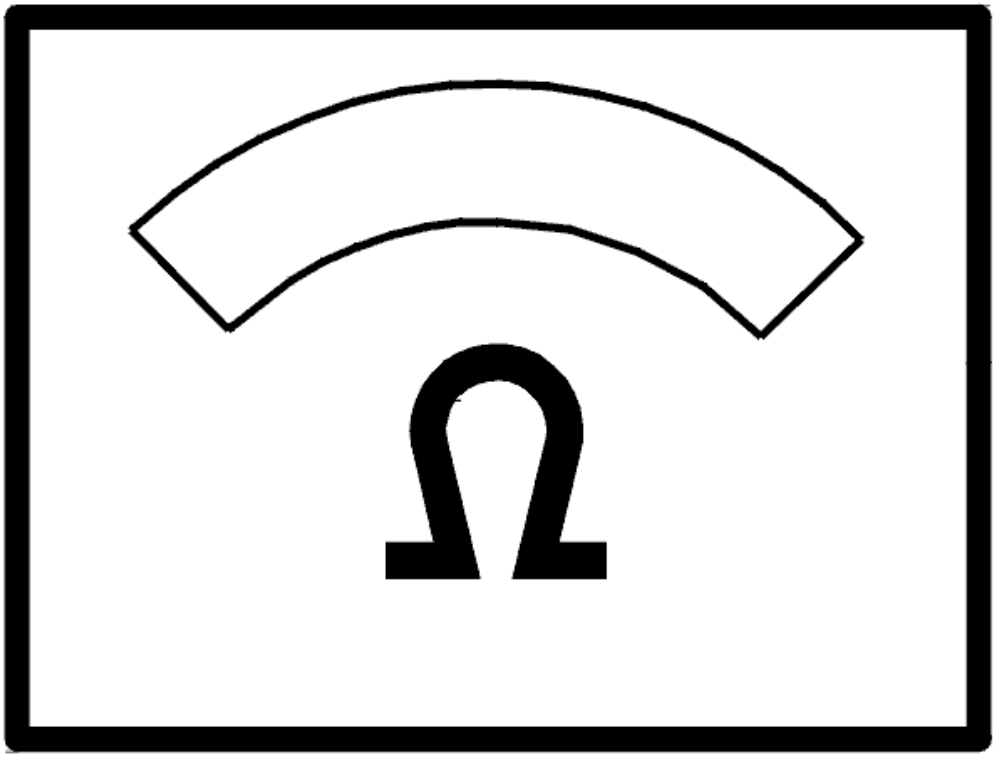

Fig. 123: Identifying Ohm Meter
Courtesy of VOLVO CARS CORPORATION

- **Continue**

  Refer to **VERIFICATION**

VERIFICATION

VERIFICATION

HINT: After the repair it is necessary to check that the fault has been rectified.

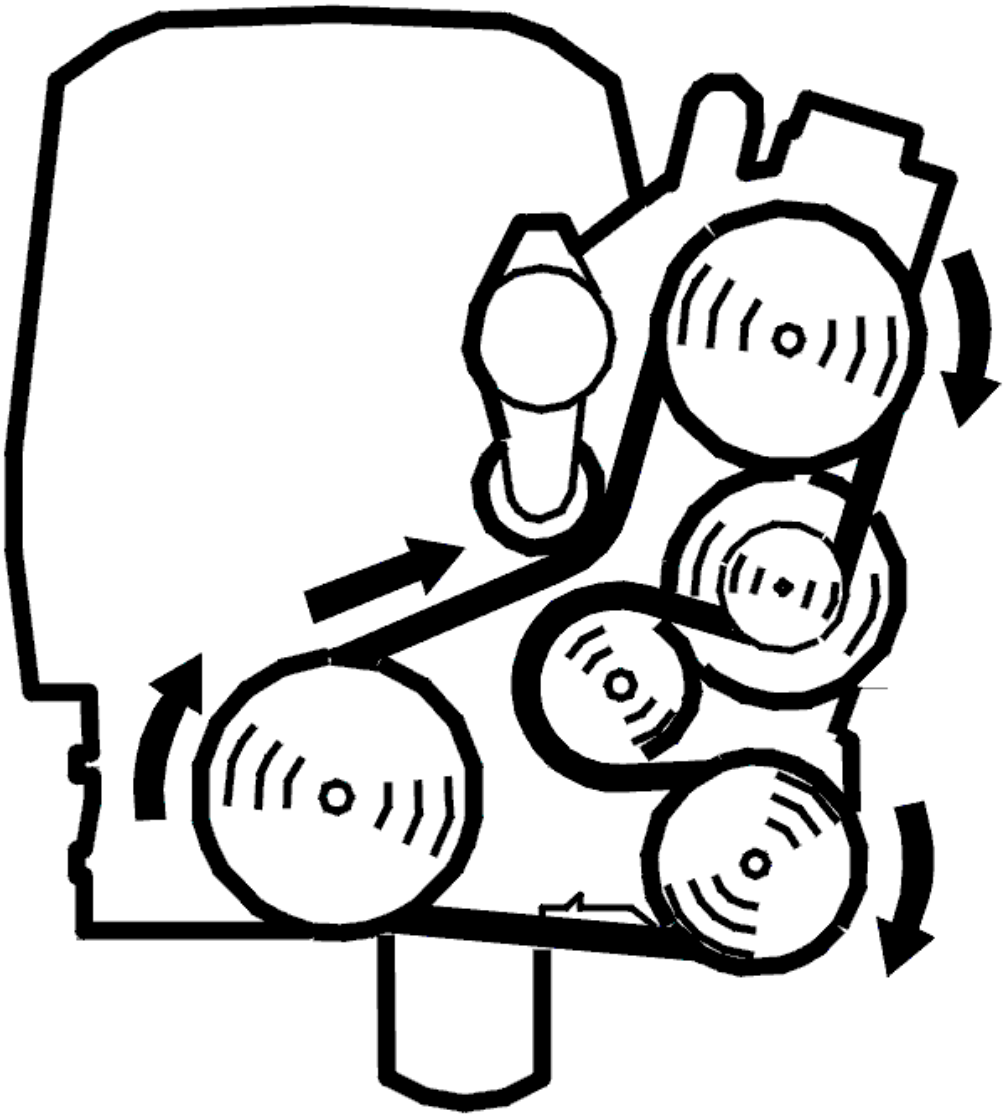

Fig. 124: Belt Routing / Engine Idling - Volvo
Courtesy of VOLVO CARS CORPORATION

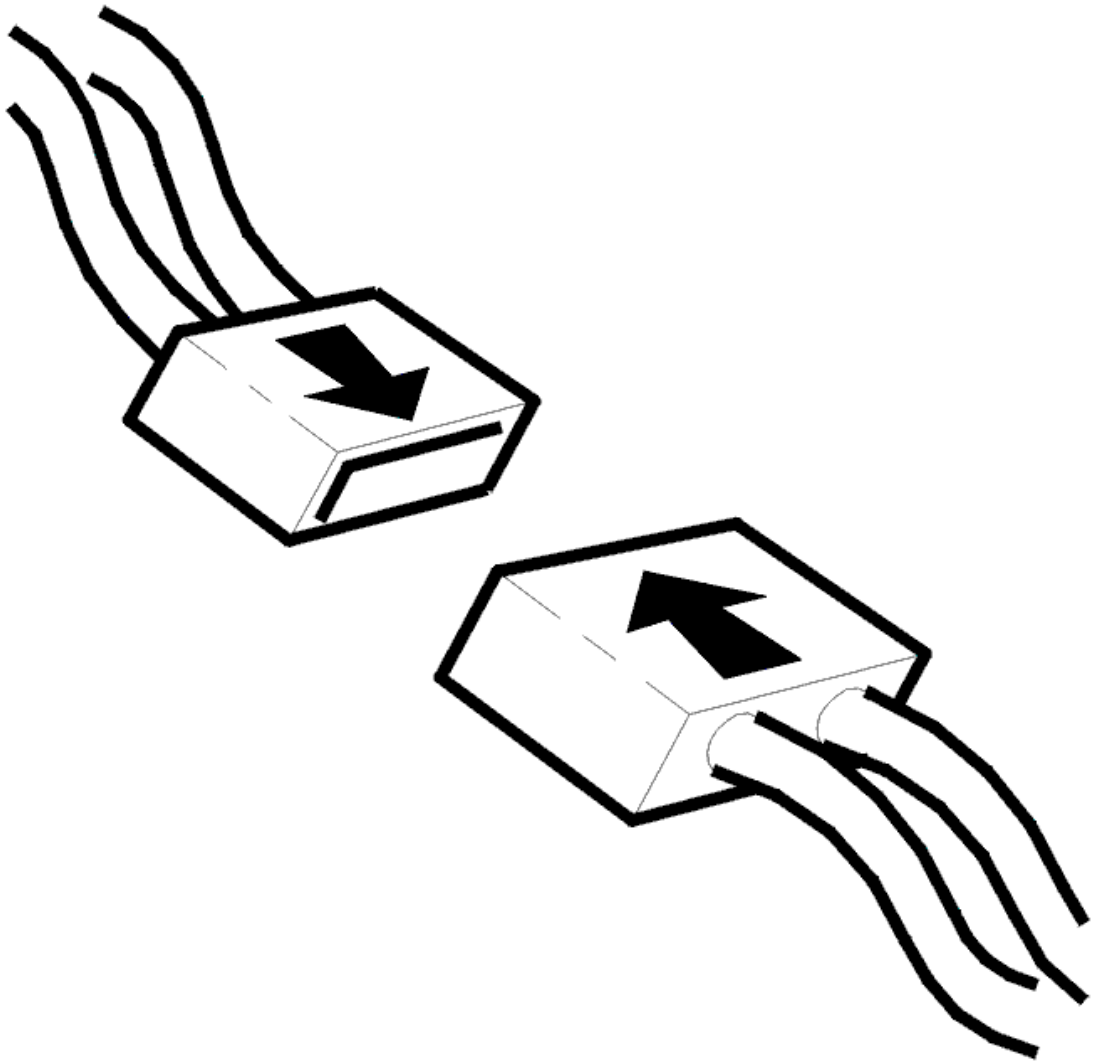

Fig. 125: Connecting Connector
Courtesy of VOLVO CARS CORPORATION

- Ignition off.
- Connect connectors, install components, etc.
- Start the engine.

  Check that diagnostic trouble code status changes from permanent to intermittent.

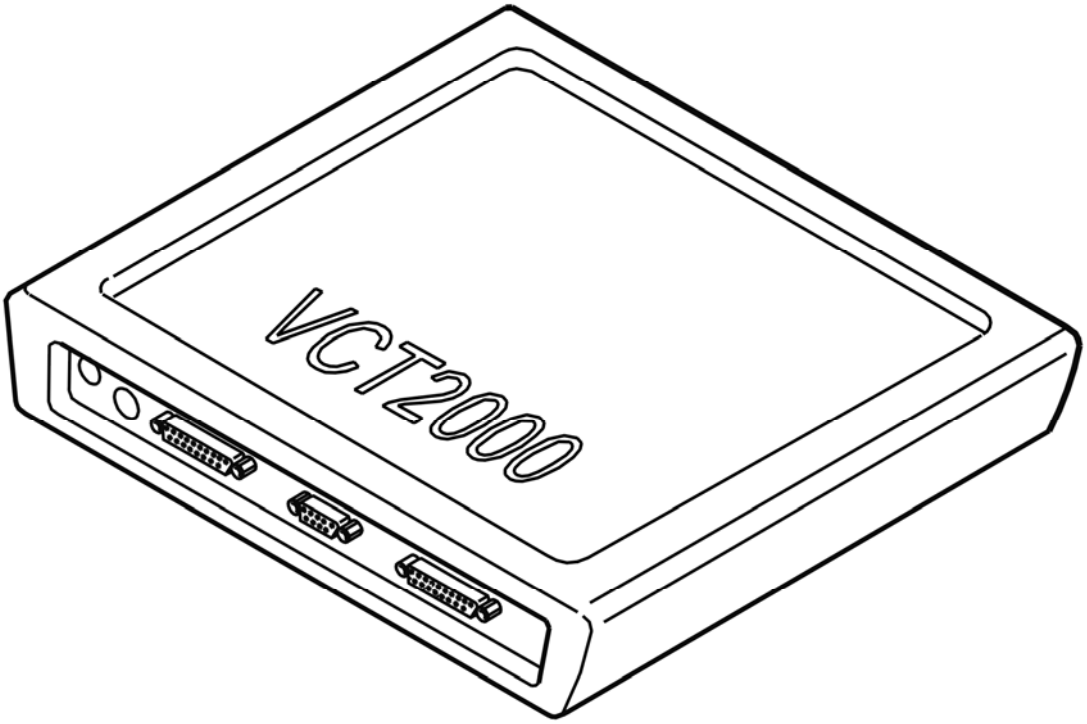

Fig. 126: Identifying VCT2000 Diagnostic Tool Symbol In VIDA
Courtesy of VOLVO CARS CORPORATION

Is the diagnostic trouble code status intermittent?

- **YES**

  VERIFIED: Troubleshooting has been completed.

- **NO**

  Refer to **INFORMATION**

INFORMATION

FAULT-TRACING INFORMATION

The fault should have been detected and remedied. As this is not the case fault-tracing has failed.

Exit fault-tracing for this diagnostic trouble code (DTC) or make another attempt.

CEM-3A02: FUEL PUMP. SIGNAL FAULTY (2003-2004)

DIAGNOSTIC TROUBLE CODE (DTC) INFORMATION

Condition

Diagnostic trouble code (DTC) CEM-3A02 is stored if the central electronic module (CEM) registers an incorrect signal in the relay coil circuit.

Substitute Value

- None.

Possible Source

- Fault in the fuel pump (FP) relay coil circuit.

Fault symptom[s]

- The engine fails to start
- Uneven idle.

FAULTY SIGNAL

CHECKING THE RELAY

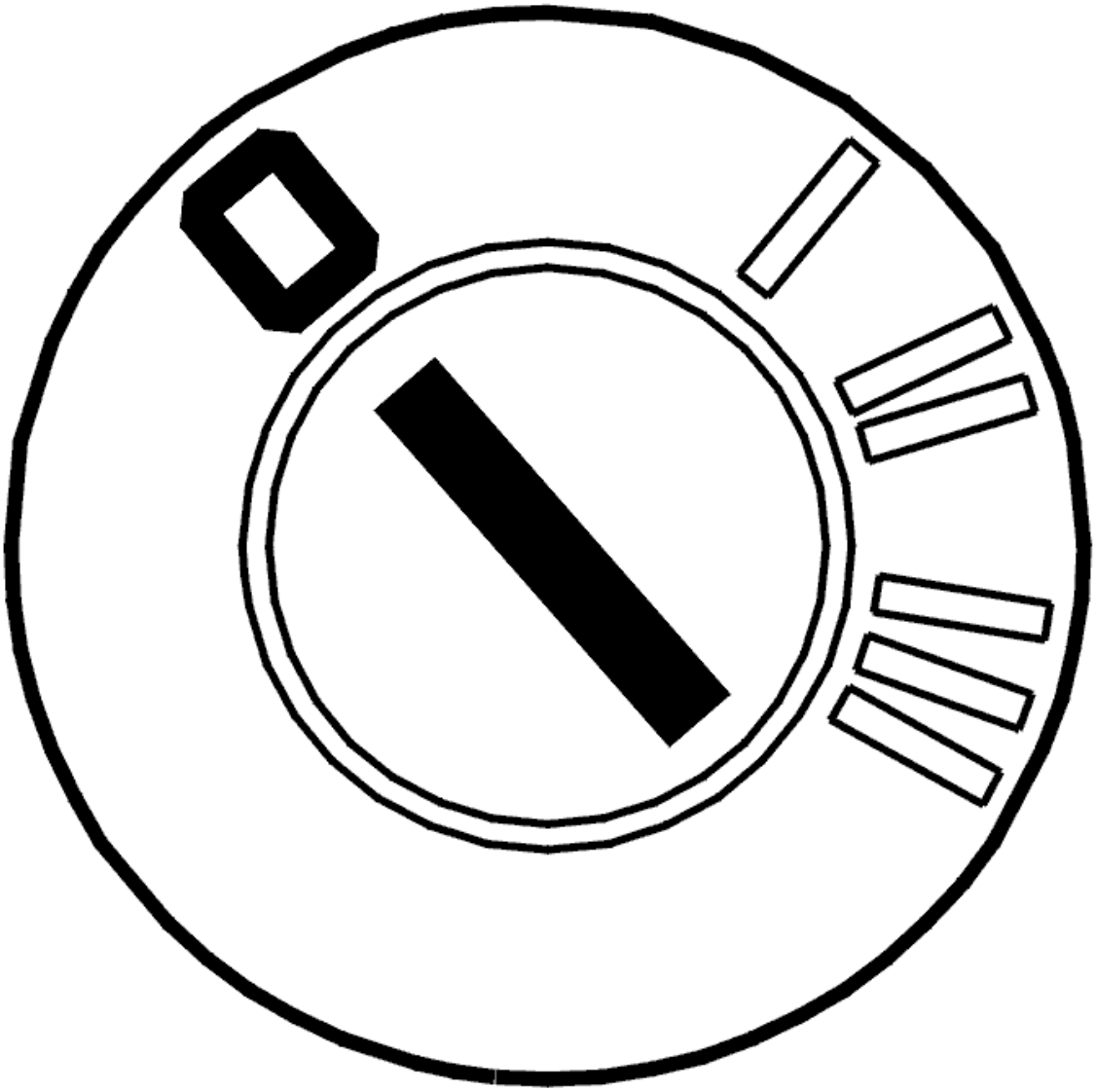

Fig. 127: Identifying Ignition OFF
Courtesy of VOLVO CARS CORPORATION

- Ignition off.

  Check that relay 2/23 is intact and correctly installed.

  Check the relay terminals.

  Remedy as necessary.

  Other information

  - To access / replace the relay:
    - For -2004, see: **CENTRAL ELECTRONIC MODULE (CEM), REPLACING**

- For 2005-, see: **CENTRAL ELECTRONIC MODULE (CEM), REPLACING** .

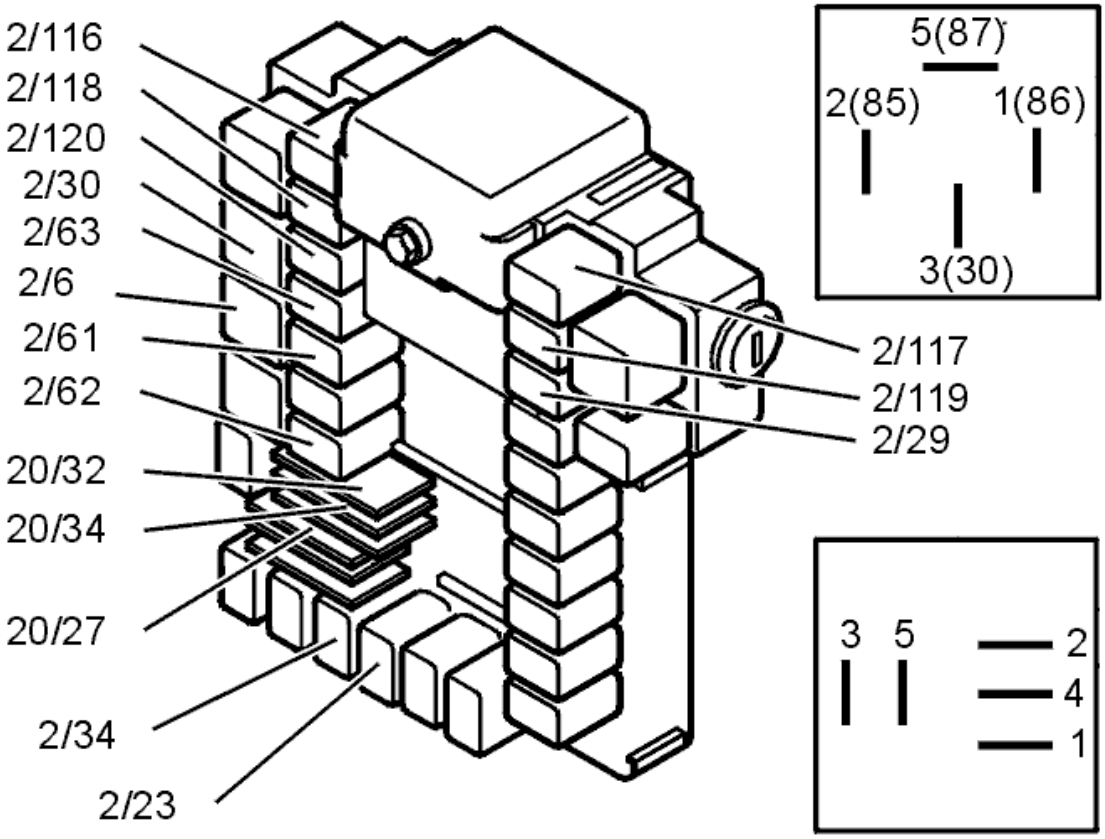

Fig. 128: Identifying Relays
Courtesy of VOLVO CARS CORPORATION

- **Continue**

  Refer to **VERIFICATION**

VERIFICATION

VERIFICATION

HINT: After the repair it is necessary to check that the fault has been rectified.

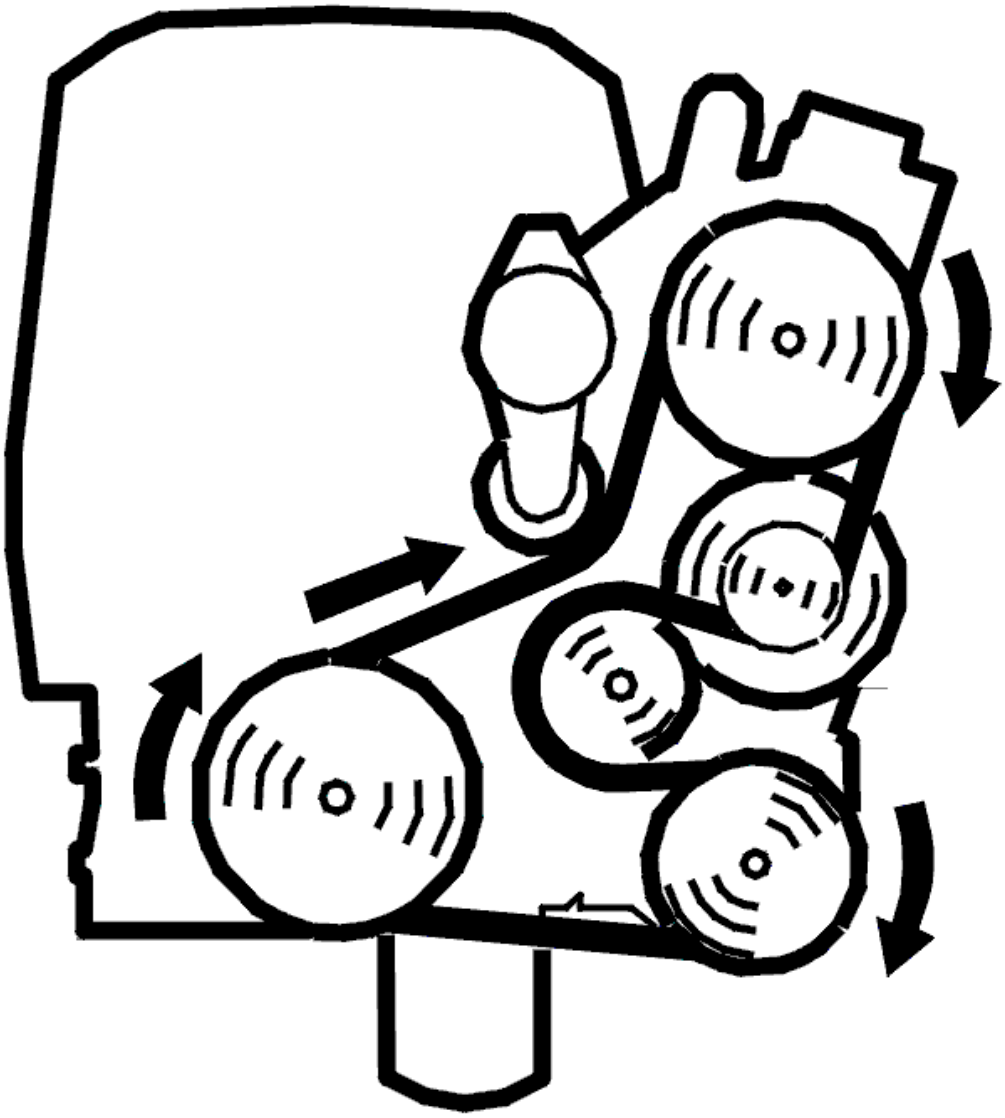

Fig. 129: Belt Routing / Engine Idling - Volvo
Courtesy of VOLVO CARS CORPORATION

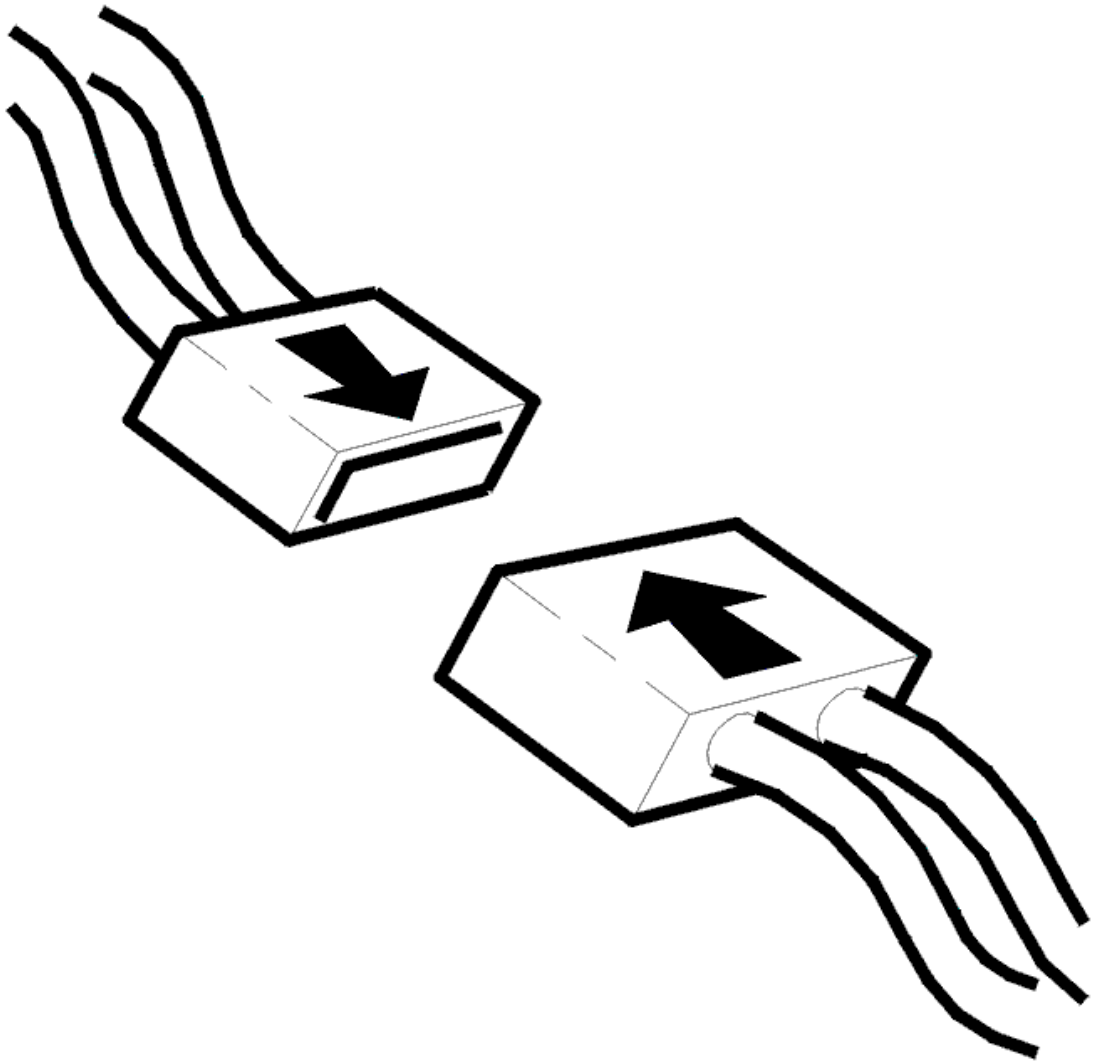

Fig. 130: Connecting Connector
Courtesy of VOLVO CARS CORPORATION

- Ignition off.
- Connect connectors, install components, etc.
- Start the engine.

  Check that diagnostic trouble code status changes from permanent to intermittent.

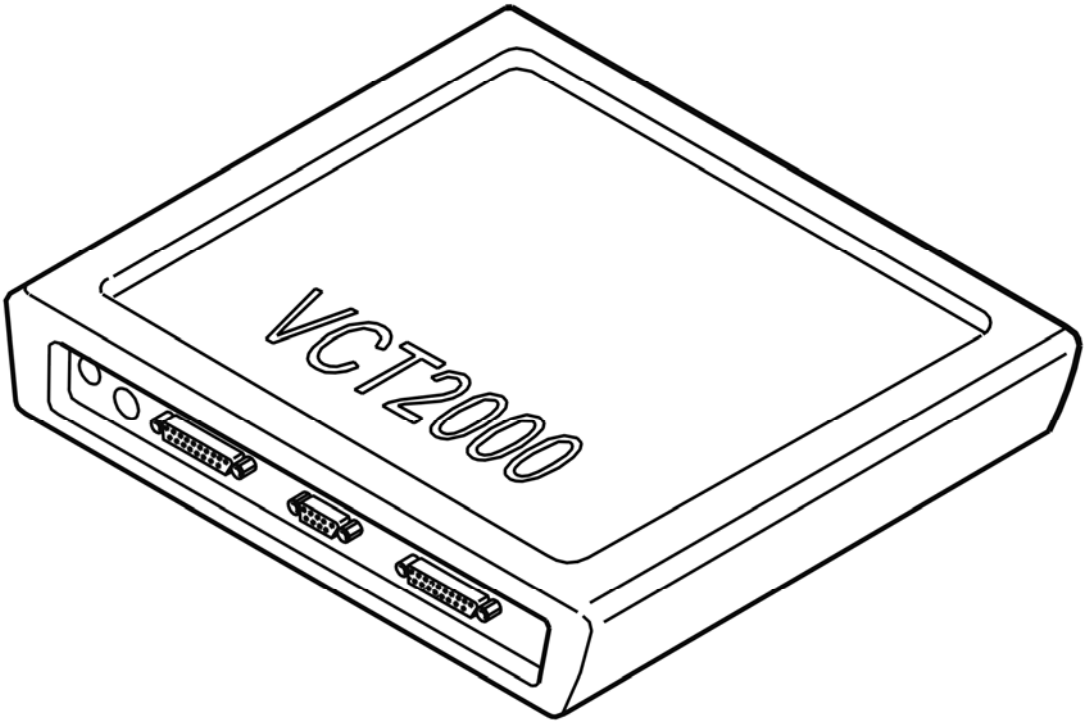

Fig. 131: Identifying VCT2000 Diagnostic Tool Symbol In VIDA
Courtesy of VOLVO CARS CORPORATION

Is the diagnostic trouble code status intermittent?

- **YES**

  VERIFIED: Troubleshooting has been completed.

- **NO**

  Refer to **INFORMATION**

INFORMATION

FAULT-TRACING INFORMATION

The fault should have been detected and remedied. As this is not the case fault-tracing has failed.

Exit fault-tracing for this diagnostic trouble code (DTC) or make another attempt.

CEM-3A03: FUEL PUMP. SIGNAL TOO LOW. INTERMITTENT FAULT (2003-2004)

DIAGNOSTIC TROUBLE CODE (DTC) INFORMATION

Condition

Diagnostic trouble code (DTC) CEM-3A03 is stored if the central electronic module (CEM) registers that the power supply to the fuel pump (FP) is missing when the fuel pump (FP) relay is activated.

Substitute Value

None

Possible Source

- Defective relay.
- Blown fuse.
- Open-circuit in the supply cable.

Fault symptom[s]

- The engine does not start.

SIGNAL TOO LOW. INTERMITTENT FAULT

INTERMITTENT FAULT

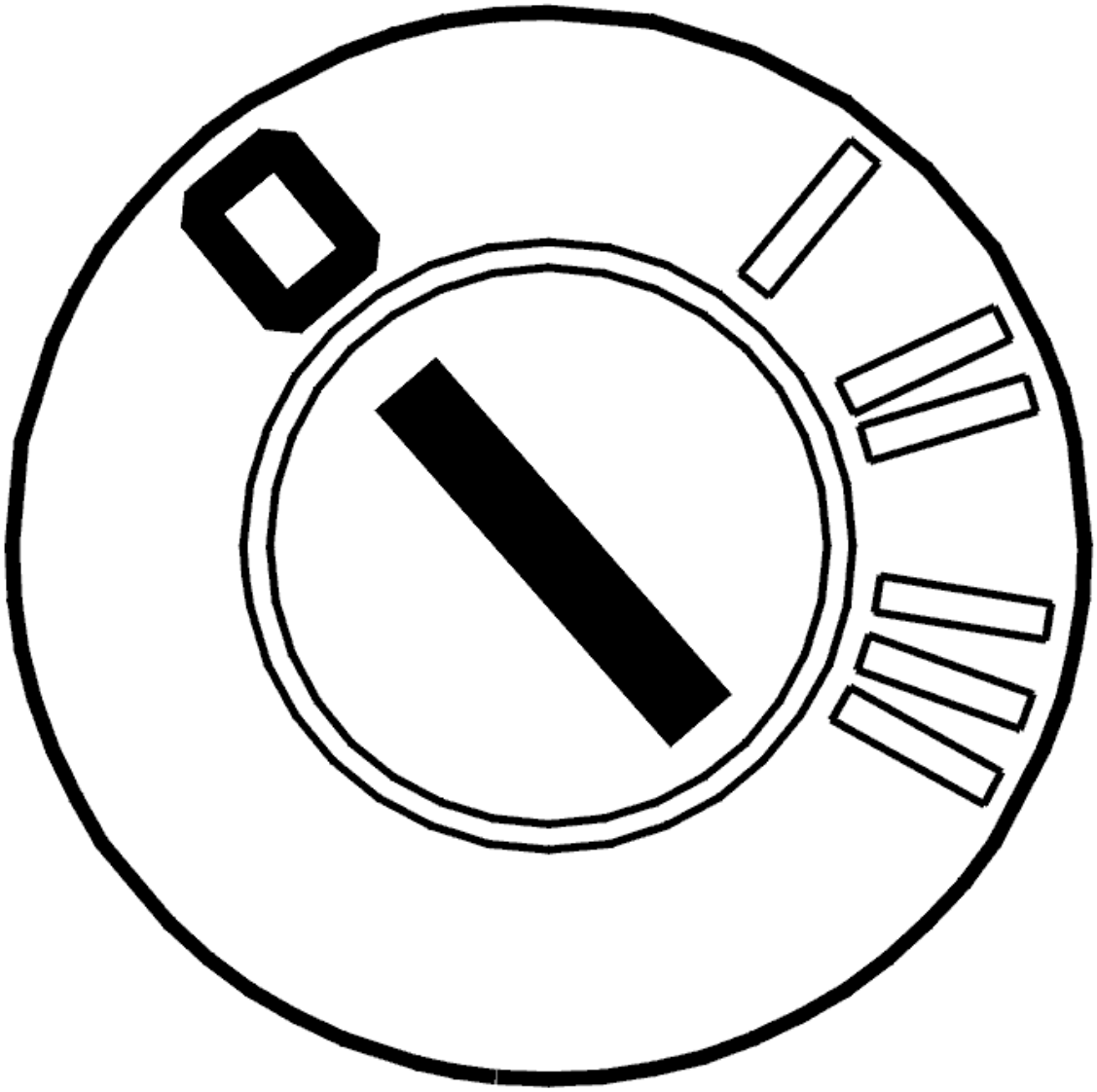

Fig. 132: Identifying Ignition OFF
Courtesy of VOLVO CARS CORPORATION

- Ignition off.

  Check the cable between fuse 11/C33 terminal #2 and fuel pump (FP) relay 2/23 terminal #3. Check for a short-circuit to ground. Check for an open-circuit. Check for contact resistance and oxidation.

  Remedy as necessary.

  Other information:

  - To access and replace the relay:
    - For -2004, see: **CENTRAL ELECTRONIC MODULE (CEM), REPLACING**
    - For 2005-, see: **CENTRAL ELECTRONIC MODULE (CEM), REPLACING** .

- -2004: **SIGNAL SPECIFICATION**
- 2005-: **SIGNAL SPECIFICATION**
- see **CHECKING WIRING AND TERMINALS** .

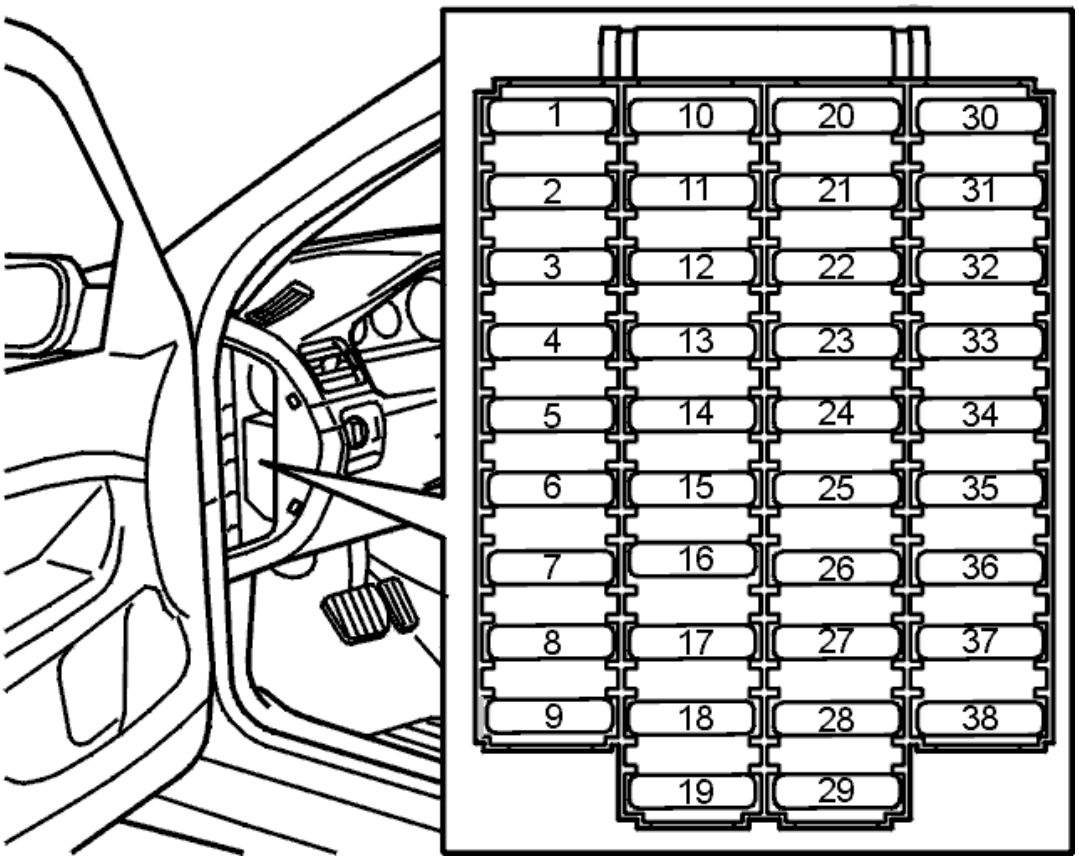

Fig. 133: Fuse Holder (Passenger Compartment)
Courtesy of VOLVO CARS CORPORATION

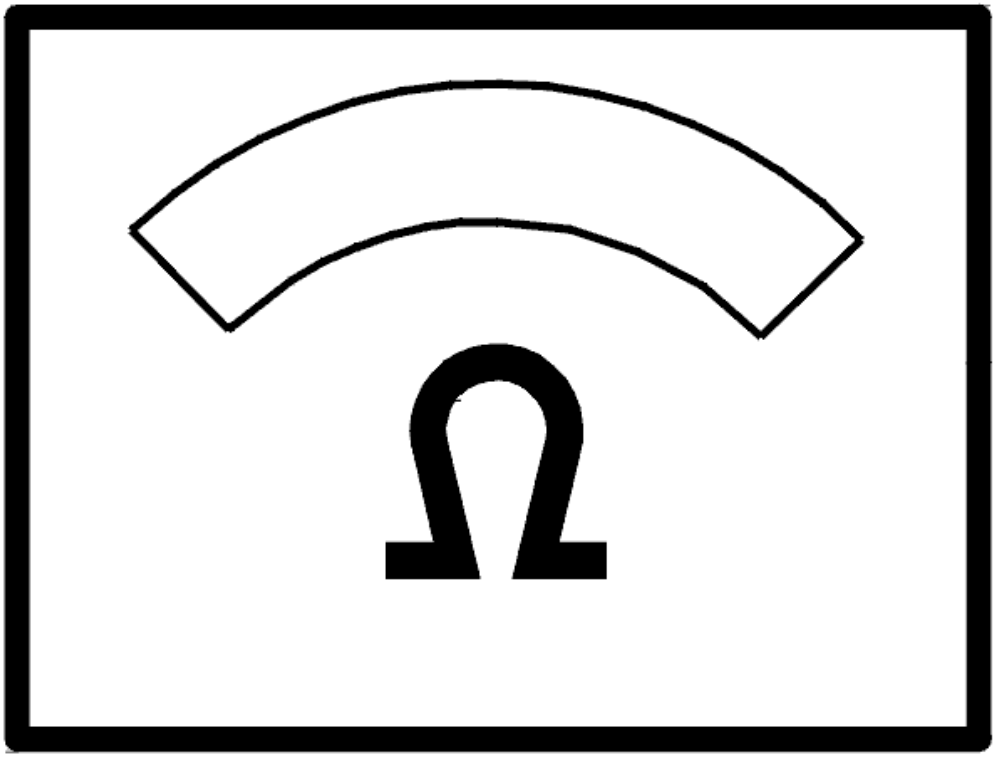

Fig. 134: Identifying Ohm Meter
Courtesy of VOLVO CARS CORPORATION

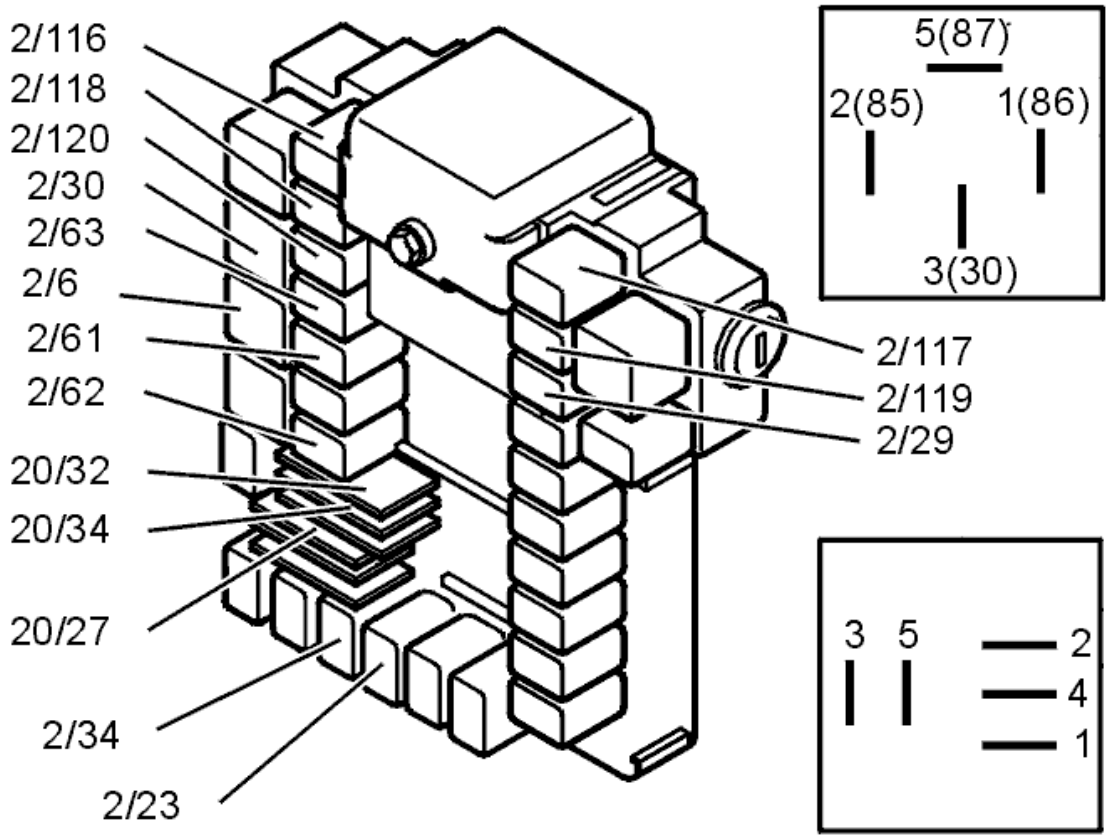

Fig. 135: Identifying Relays
Courtesy of VOLVO CARS CORPORATION

- **Continue**

  Refer to **INFORMATION**

INFORMATION

FAULT-TRACING INFORMATION

If the fault is intermittent, do not verify fault-tracing if the fault does not recur.

It is possible to view the information again, or leave fault-tracing for this diagnostic trouble code (DTC).

CEM-3A03: FUEL PUMP. SIGNAL TOO LOW. PERMANENT FAULT (2003-2004)

DIAGNOSTIC TROUBLE CODE (DTC) INFORMATION

see **DIAGNOSTIC TROUBLE CODE (DTC) INFORMATION**

SIGNAL TOO LOW. PERMANENT FAULT

CHECKING FUSE 11C/33 (15A)

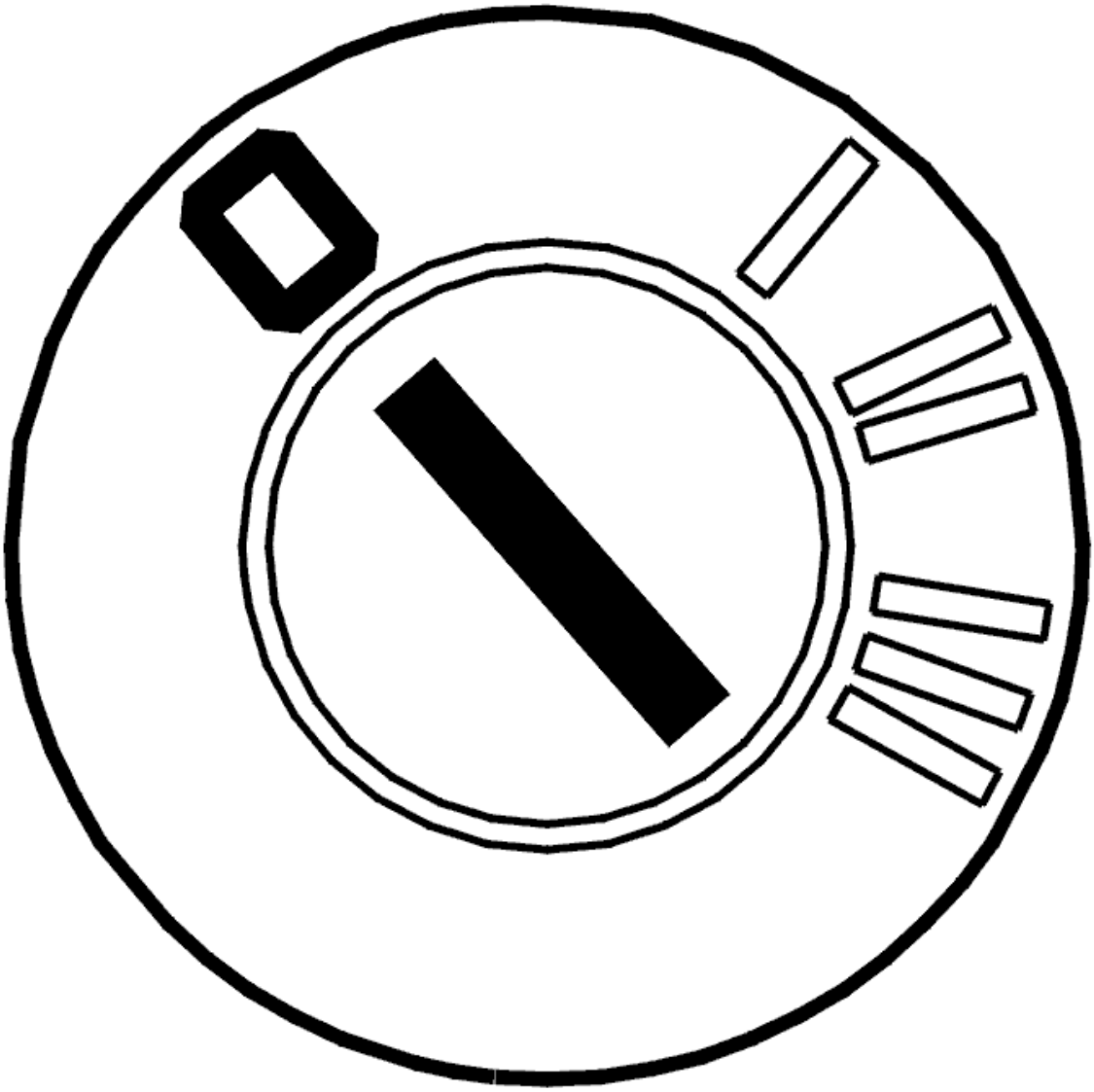

Fig. 136: Identifying Ignition OFF
Courtesy of VOLVO CARS CORPORATION

- Ignition off.

  Check that fuse 11C/33 (15A) is intact.

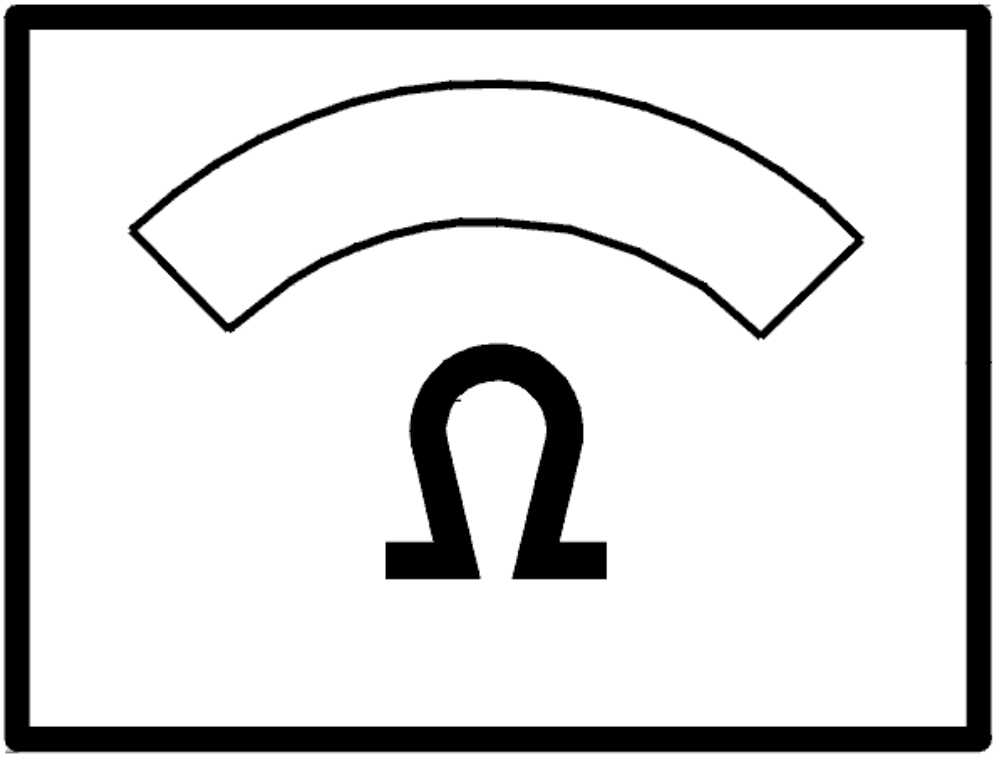

Fig. 137: Identifying Ohm Meter
Courtesy of VOLVO CARS CORPORATION

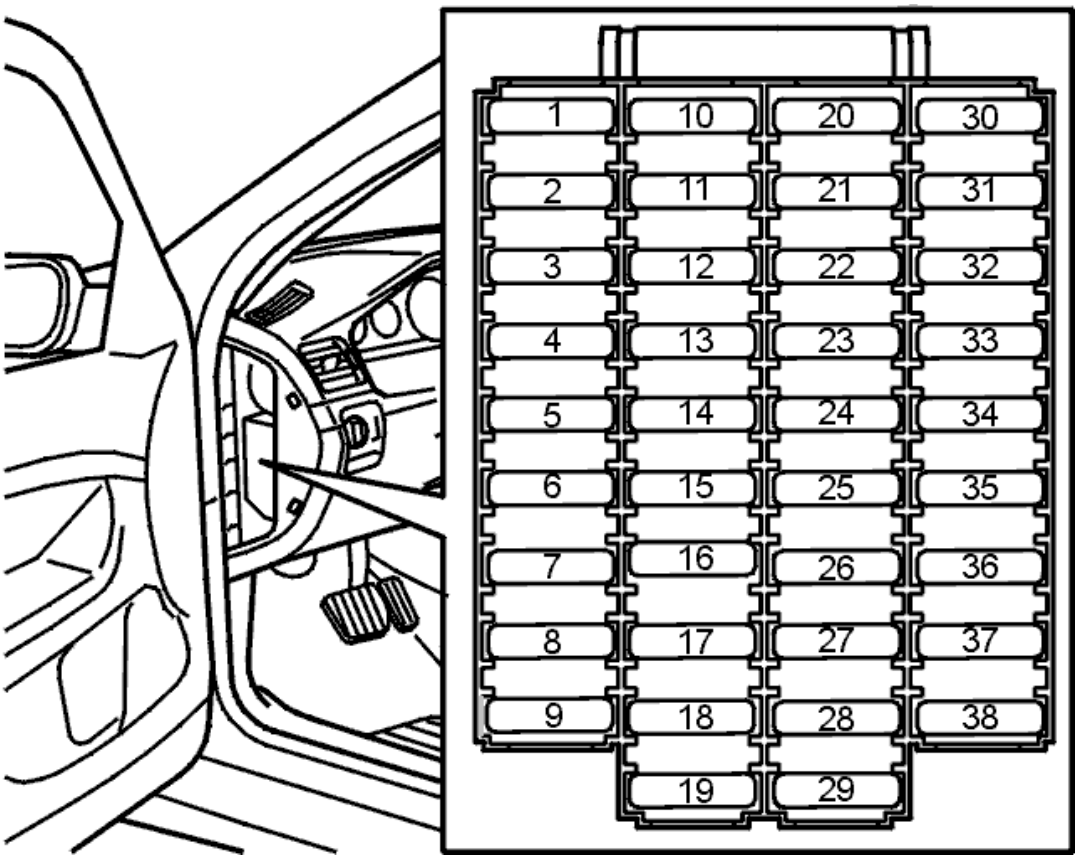

Fig. 138: Fuse Holder (Passenger Compartment)
Courtesy of VOLVO CARS CORPORATION

Is the fuse intact?

- **YES**

  Refer to **CHECKING THE SIGNAL CABLE**

- **NO**

  Refer to **CHECKING THE SIGNAL CABLE**

CHECKING THE SIGNAL CABLE

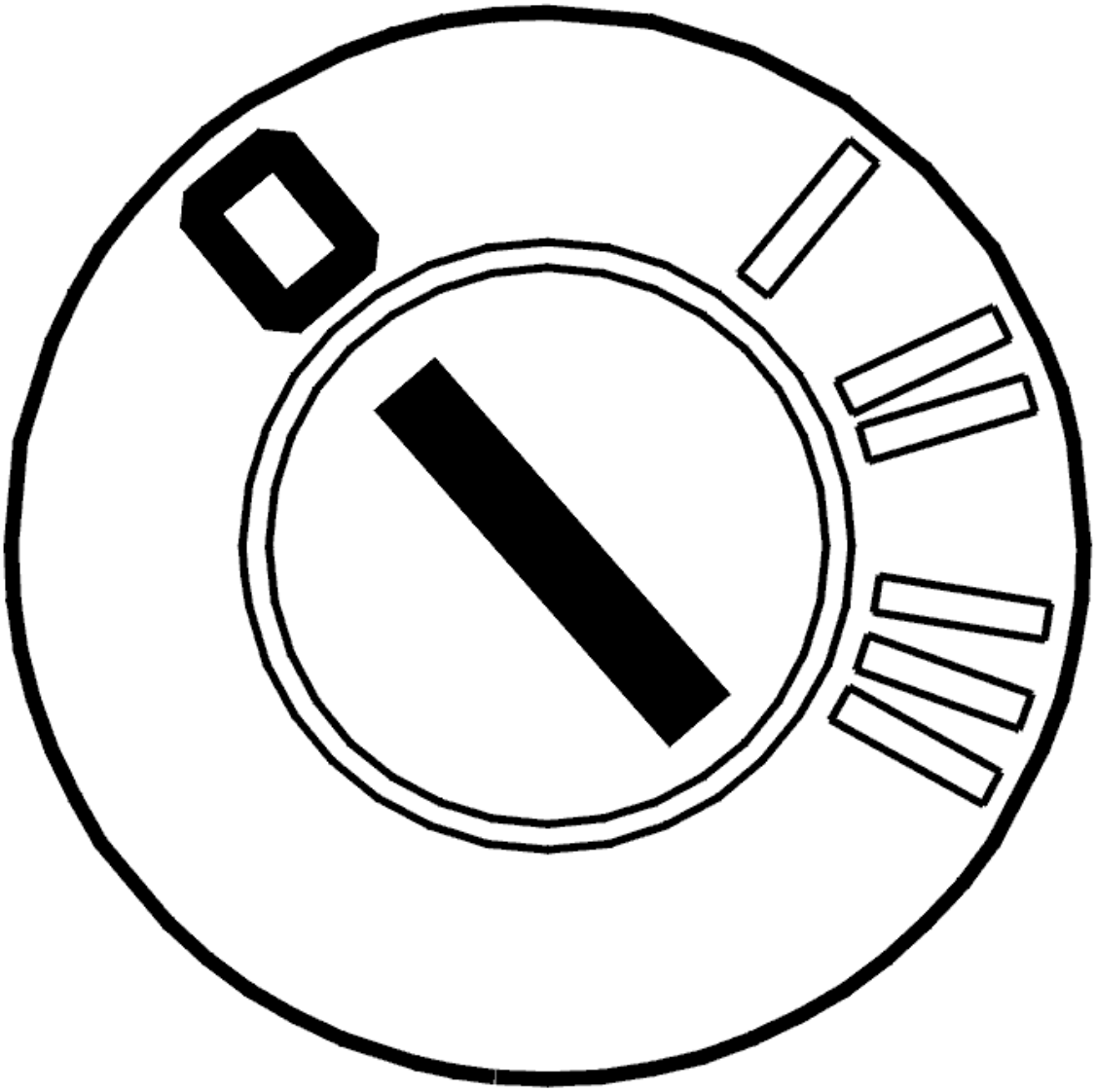

Fig. 139: Identifying Ignition OFF
Courtesy of VOLVO CARS CORPORATION

- Ignition off
- Remove fuel pump relay 2/23 from the central electronic module (CEM) base.

  Check the signal cables between fuse 11C/33 terminal #2 and fuel pump relay 2/23 terminal #3. Check for an open-circuit.

  Remedy as necessary.

  Other information:

  - To access or replace the central electronic module (CEM) connector:
    - For -2004, see: **CENTRAL ELECTRONIC MODULE (CEM), REPLACING**

- For 2005-, see: **CENTRAL ELECTRONIC MODULE (CEM), REPLACING** .
- To connect the breakout box, see **CONNECTING THE BREAKOUT BOX**
- -2004: **SIGNAL SPECIFICATION**
- 2005-: **SIGNAL SPECIFICATION**
- see **CHECKING WIRING AND TERMINALS** .

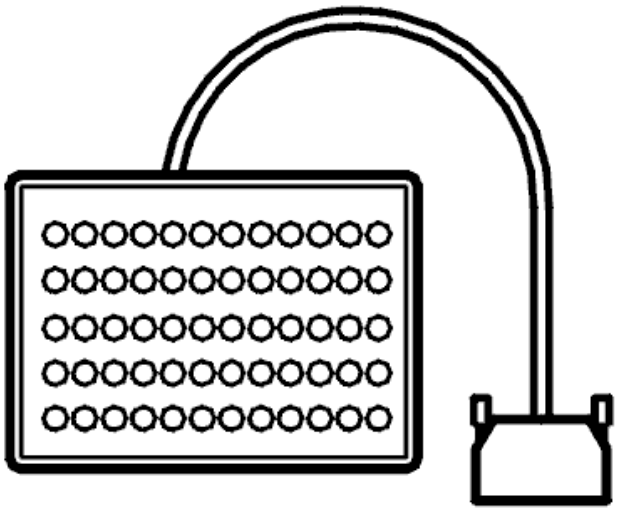

Fig. 140: Breakout Box
Courtesy of VOLVO CARS CORPORATION

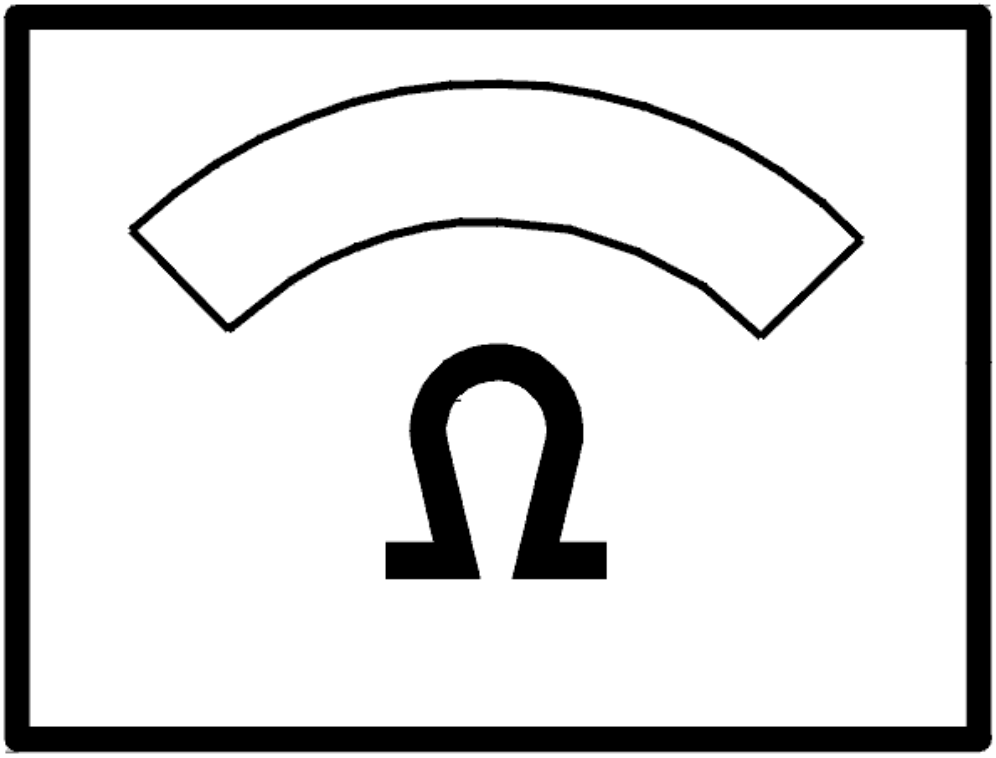

Fig. 141: Identifying Ohm Meter
Courtesy of VOLVO CARS CORPORATION

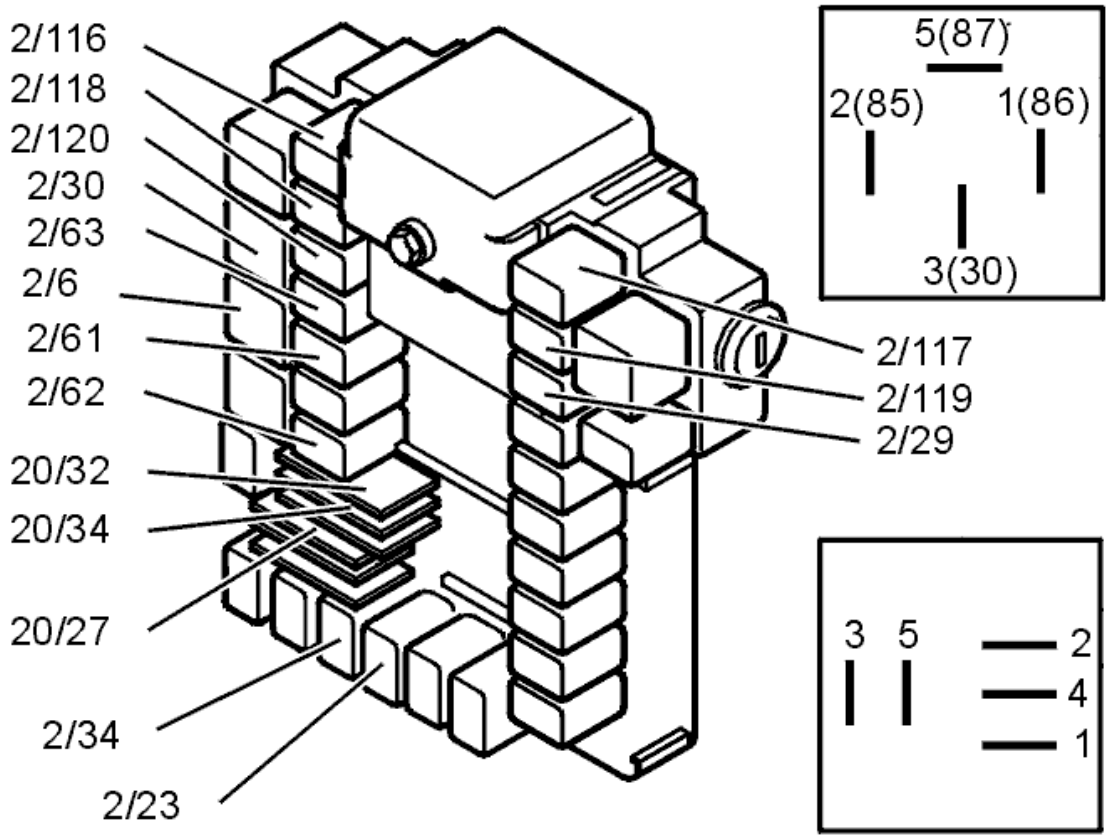

Fig. 142: Identifying Relays
Courtesy of VOLVO CARS CORPORATION

Is the signal cable OK?

- **YES**

  Refer to **REPLACING THE COMPONENT**

- **NO**

  Refer to **VERIFICATION**

CHECKING THE SIGNAL CABLE

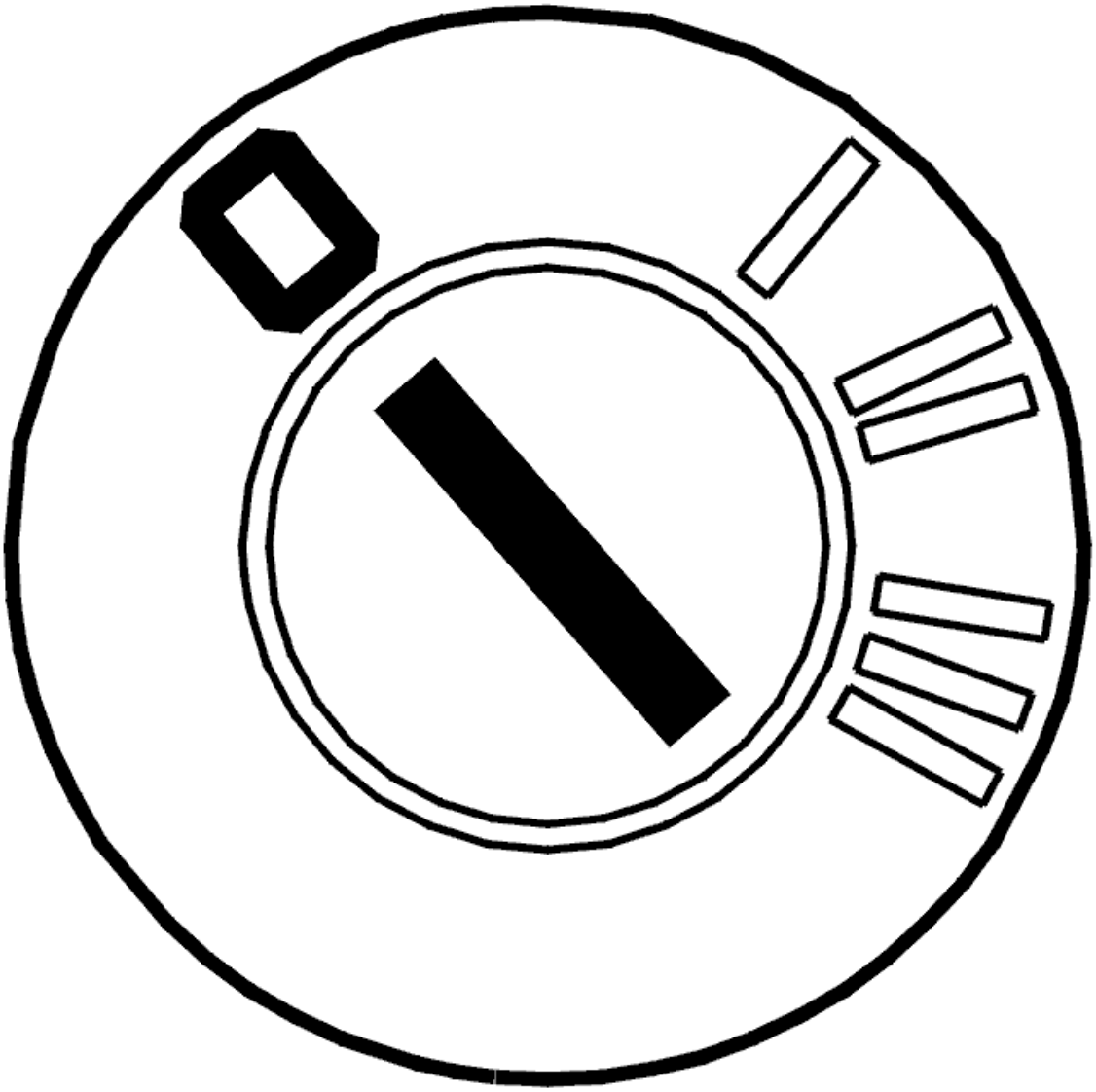

Fig. 143: Identifying Ignition OFF
Courtesy of VOLVO CARS CORPORATION

- Ignition off
- Remove fuel pump relay 2/23 from the central electronic module (CEM) base.

  Check the signal cables between fuse 11C/33 terminal #2 and fuel pump relay terminal #3. Check for a short-circuit to ground.

  Remedy as necessary.

  Other information:

  - To access or replace the central electronic module (CEM) connector:
    - For -2004, see: **CENTRAL ELECTRONIC MODULE (CEM), REPLACING**

- For 2005-, see: **CENTRAL ELECTRONIC MODULE (CEM), REPLACING** .
- To connect the breakout box, see **CONNECTING THE BREAKOUT BOX**
- -2004: **SIGNAL SPECIFICATION**
- 2005-: **SIGNAL SPECIFICATION**
- see **CHECKING WIRING AND TERMINALS** .

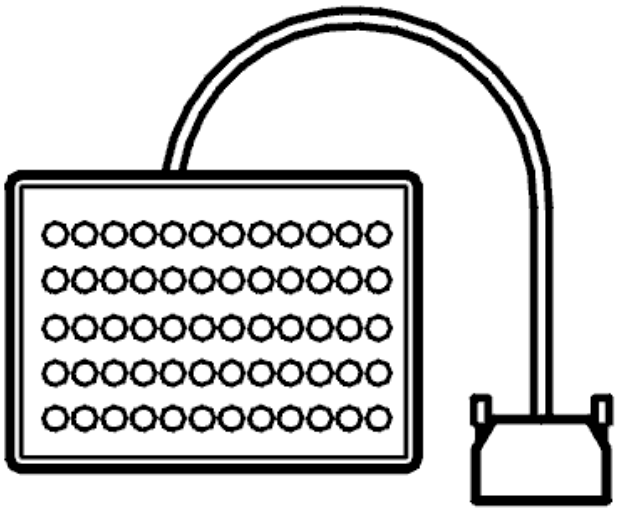

Fig. 144: Breakout Box
Courtesy of VOLVO CARS CORPORATION

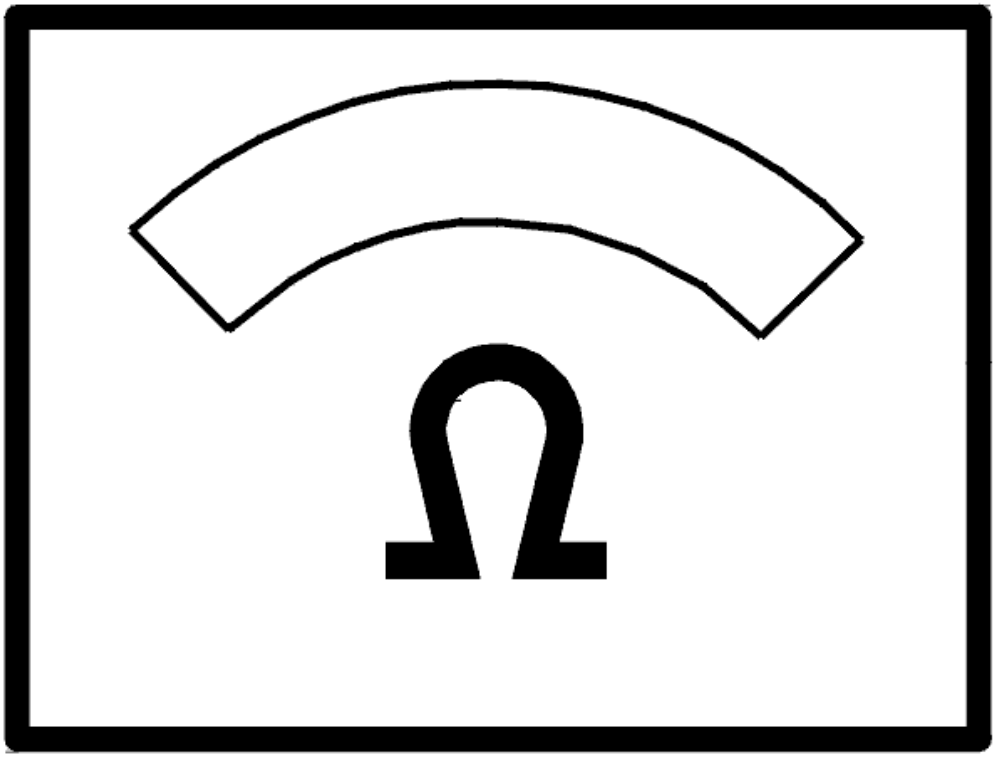

Fig. 145: Identifying Ohm Meter
Courtesy of VOLVO CARS CORPORATION

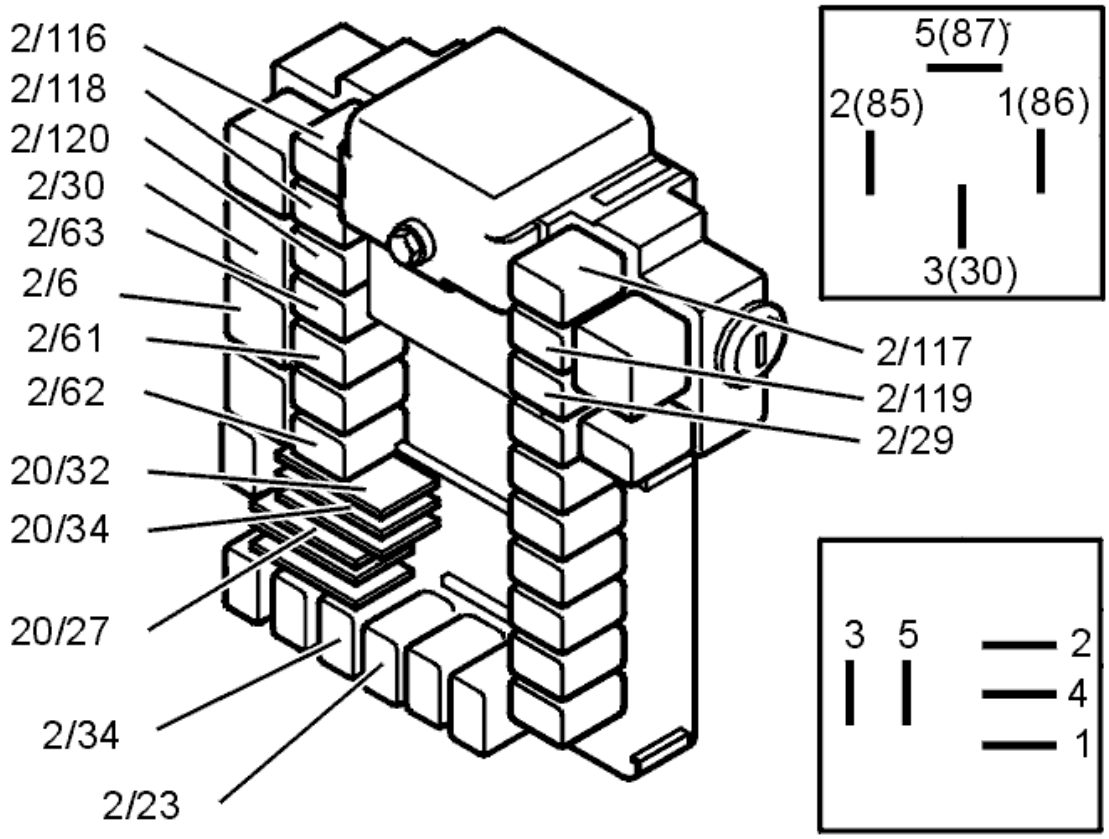

Fig. 146: Identifying Relays
Courtesy of VOLVO CARS CORPORATION

Is the signal cable OK?

- **YES**

  Refer to **REPLACING THE COMPONENT**

- **NO**

  Refer to **REPLACING THE COMPONENT**

REPLACING THE COMPONENT

Replace fuse 11/C33 (15A).

- **Continue**

  Refer to **VERIFICATION**

REPLACING THE COMPONENT

Try replacing fuel pump relay 2/23.

Other information

- To access and replace the relay:
  - For -2004, see: **CENTRAL ELECTRONIC MODULE (CEM), REPLACING**
  - For 2005-, see: **CENTRAL ELECTRONIC MODULE (CEM), REPLACING** .

- **Continue**

  Refer to **VERIFICATION**

VERIFICATION

VERIFICATION

HINT: After the repair it is necessary to check that the fault has been rectified.

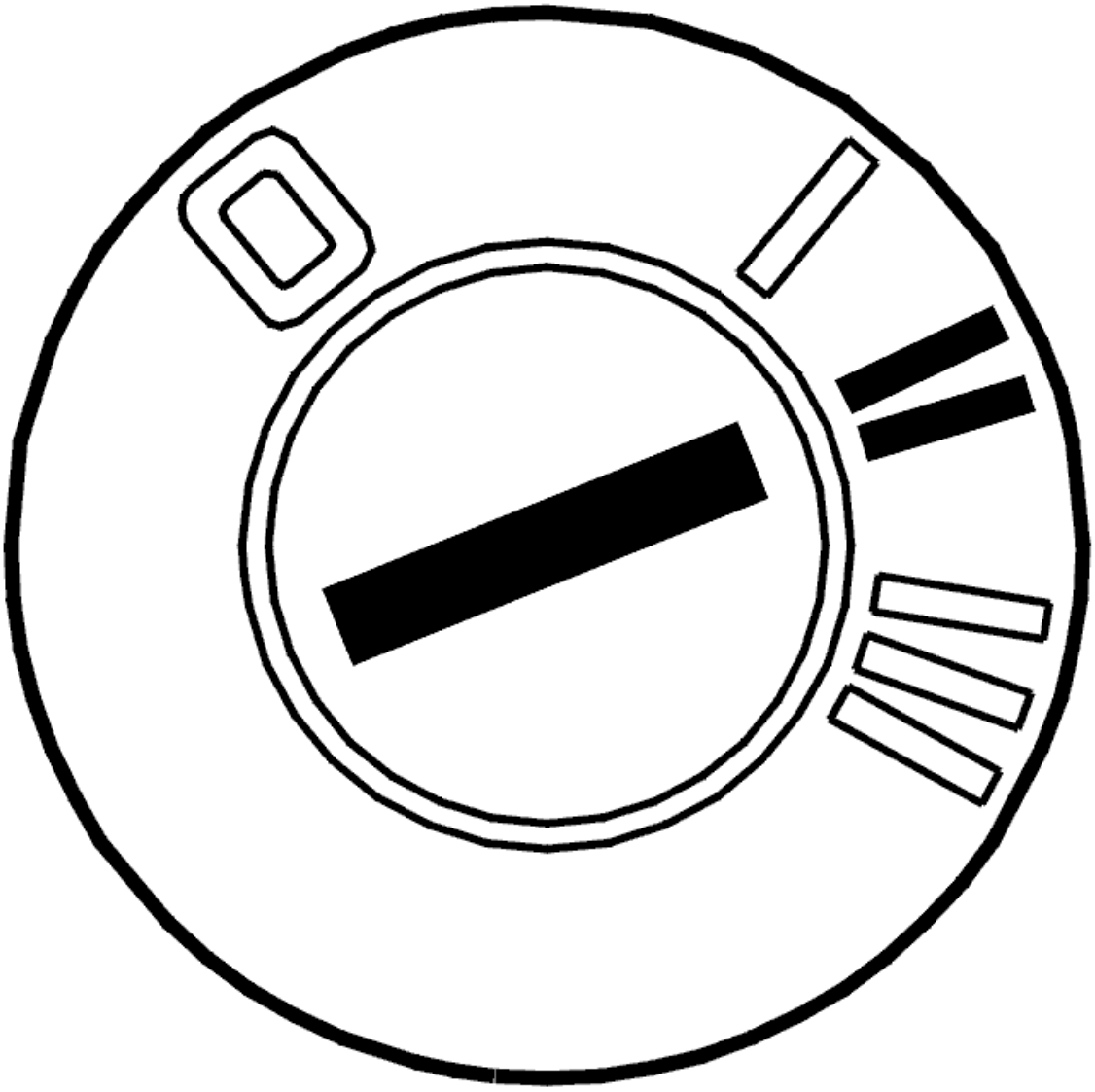

Fig. 147: Identifying Ignition ON
Courtesy of VOLVO CARS CORPORATION

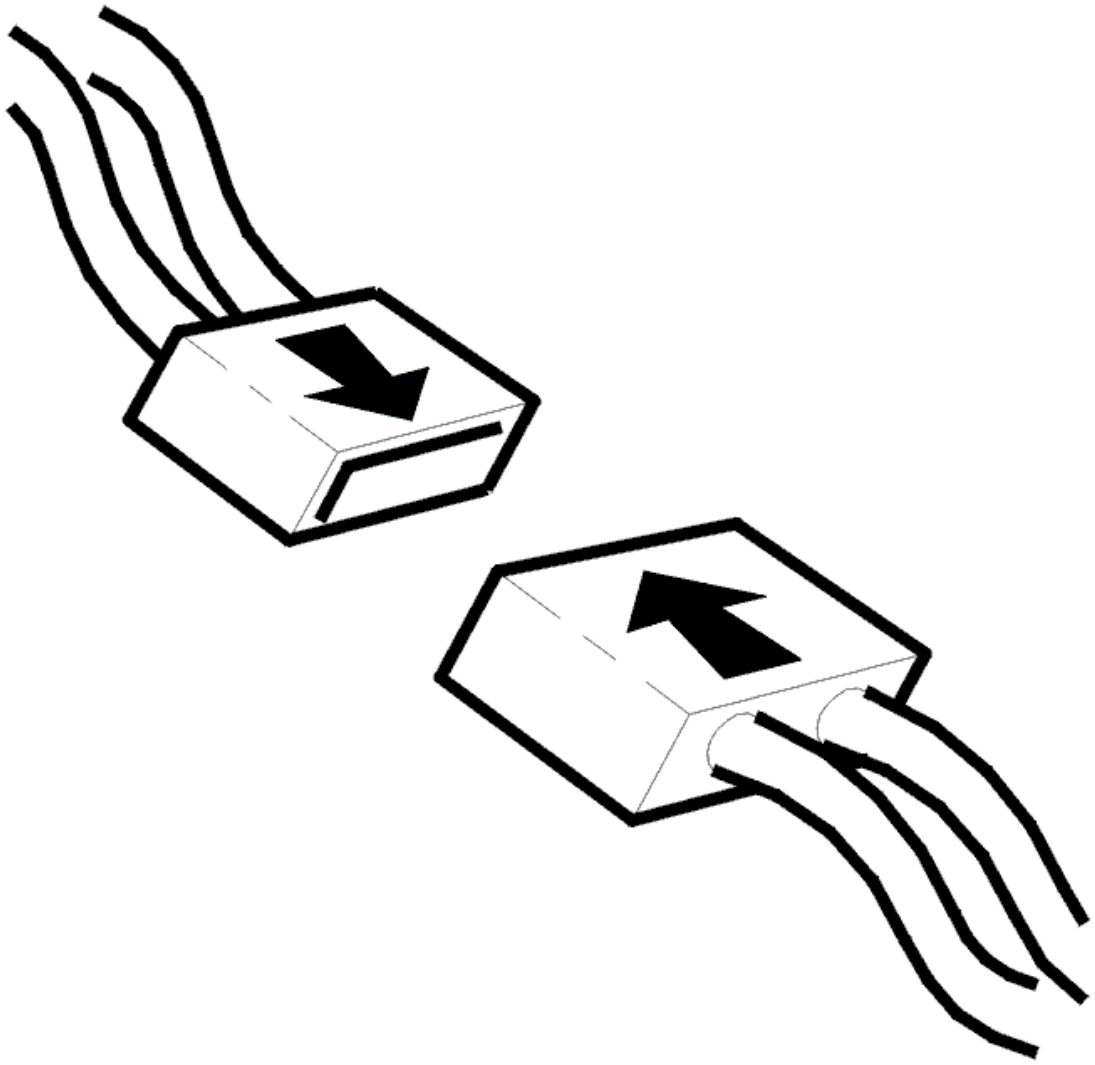

Fig. 148: Connecting Connector
Courtesy of VOLVO CARS CORPORATION

- Ignition off.
- Connect the connectors, install the components, etc.
- Ignition on.

  Check that diagnostic trouble code status changes from permanent to intermittent.

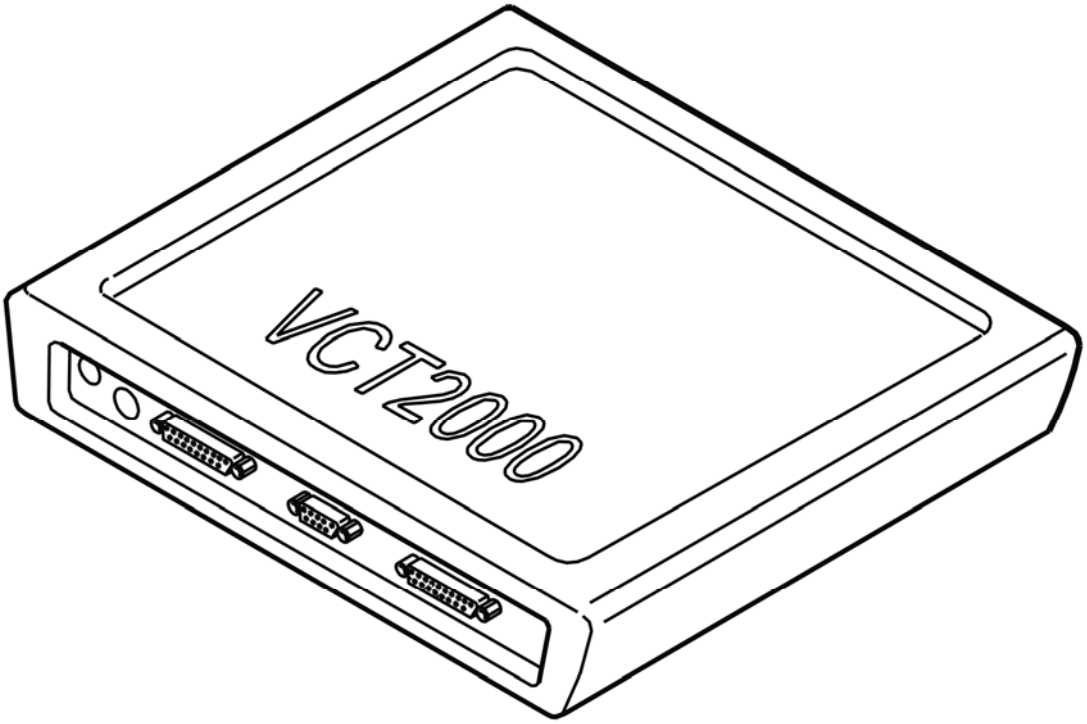

Fig. 149: Identifying VCT2000 Diagnostic Tool Symbol In VIDA
Courtesy of VOLVO CARS CORPORATION

Is the diagnostic trouble code status intermittent?

- **YES**

  VERIFIED: Troubleshooting has been completed.

- **NO**

  Refer to **INFORMATION**

INFORMATION

FAULT-TRACING INFORMATION

The fault should have been detected and remedied. As this is not the case fault-tracing has failed.

Exit fault-tracing for this diagnostic trouble code (DTC) or make another attempt.

CEM-3A04: FUEL PUMP. SIGNAL TOO HIGH. INTERMITTENT FAULT (2003-2004)

DIAGNOSTIC TROUBLE CODE (DTC) INFORMATION

Condition

Diagnostic trouble code (DTC) CEM-3A04 is stored if the central electronic module (CEM) registers that the signal is too high.

Substitute Value

None

Possible Source

- Short-circuit to positive supply.
- Defective relay.

Fault symptom[s]

- Noise from the fuel pump (FP).
- Noise from the engine compartment.

SIGNAL TOO HIGH. INTERMITTENT FAULT

INTERMITTENT FAULT

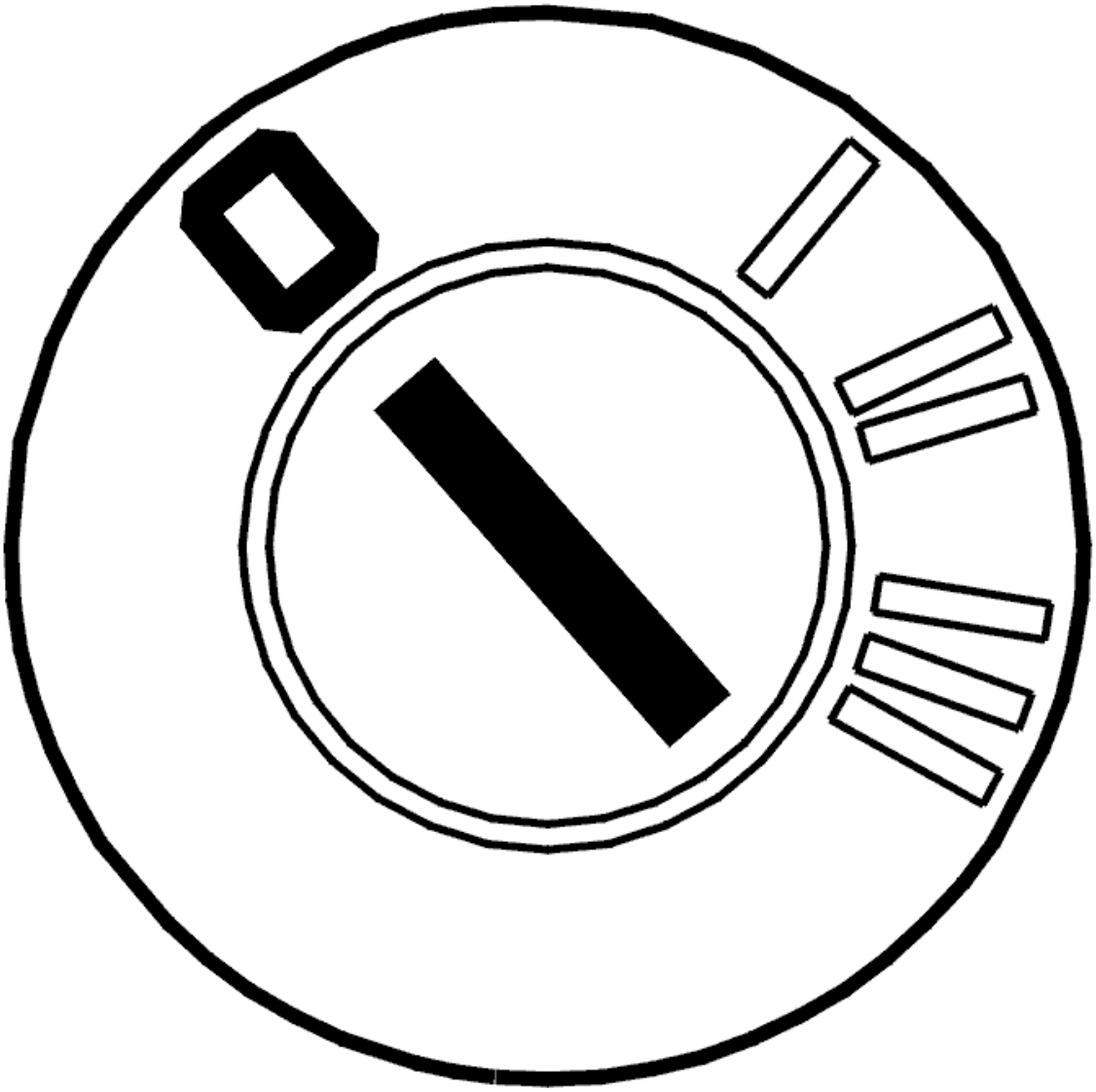

Fig. 150: Identifying Ignition OFF
Courtesy of VOLVO CARS CORPORATION

- Ignition off.

  Check the signal lead between:

  - between central electronic module (CEM) 14C and fuel pump relay 2/23 1 and fuel pump 1.

  for a short circuit to voltage supply as described in, see **SHORT-CIRCUIT TO SUPPLY VOLTAGE, INTERMITTENT FAULTS** .

  Do the necessary corrective action.

  Additional information:

- To access/replace the central electronic module (CEM):
  - For -2004, see: **CENTRAL ELECTRONIC MODULE (CEM), REPLACING**
  - For 2005-, see: **CENTRAL ELECTRONIC MODULE (CEM), REPLACING** .
- To connect a test box, see **CONNECTING THE BREAKOUT BOX**
- -2004: **SIGNAL SPECIFICATION**
- 2005-: **SIGNAL SPECIFICATION**

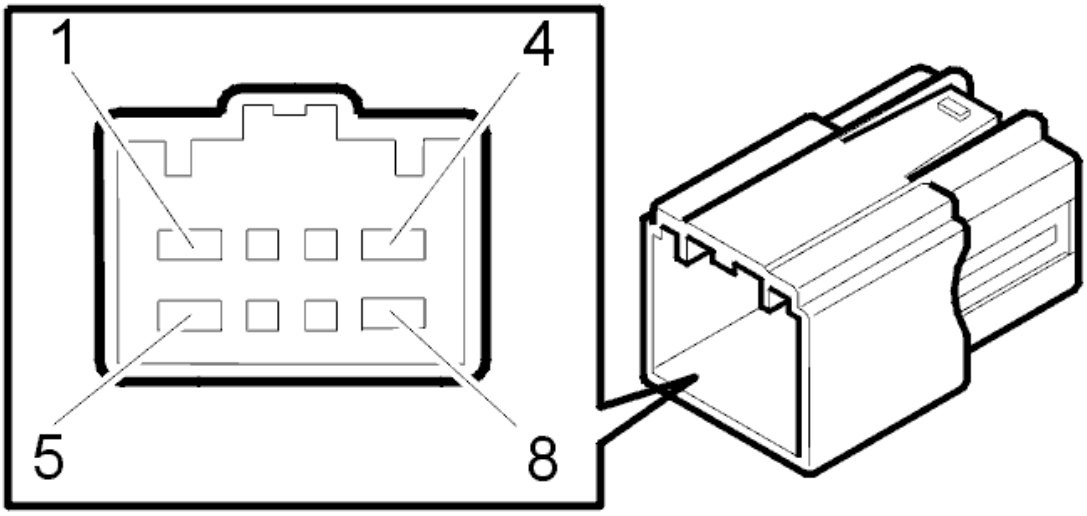

Fig. 151: Identifying Connector Terminals
Courtesy of VOLVO CARS CORPORATION

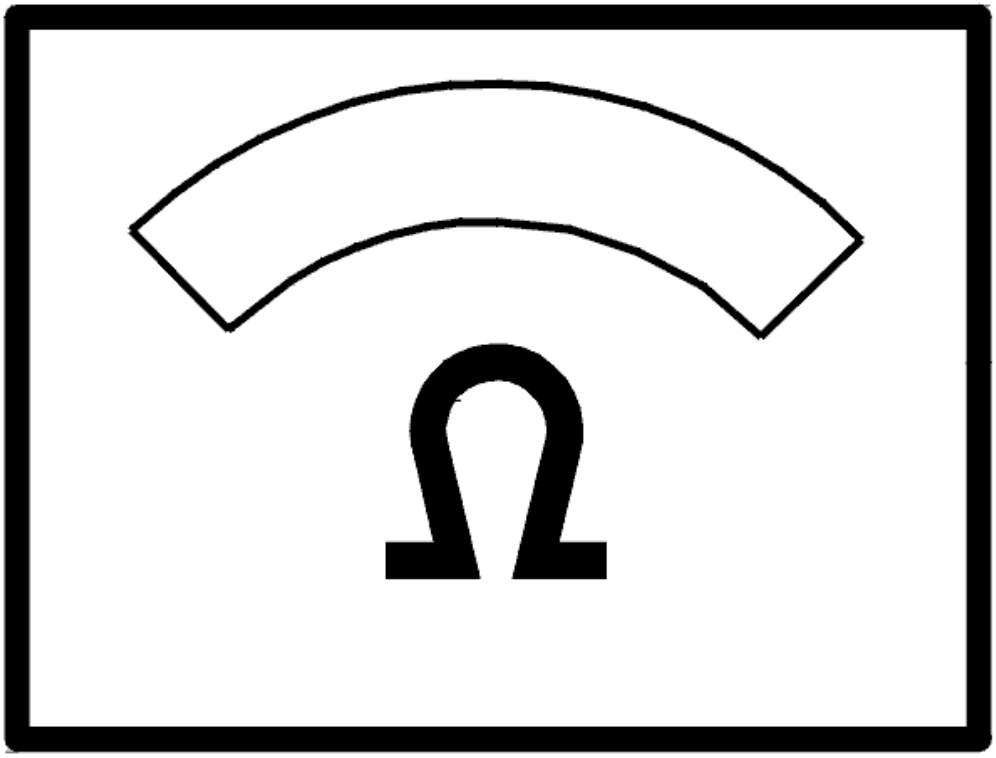

Fig. 152: Identifying Ohm Meter
Courtesy of VOLVO CARS CORPORATION

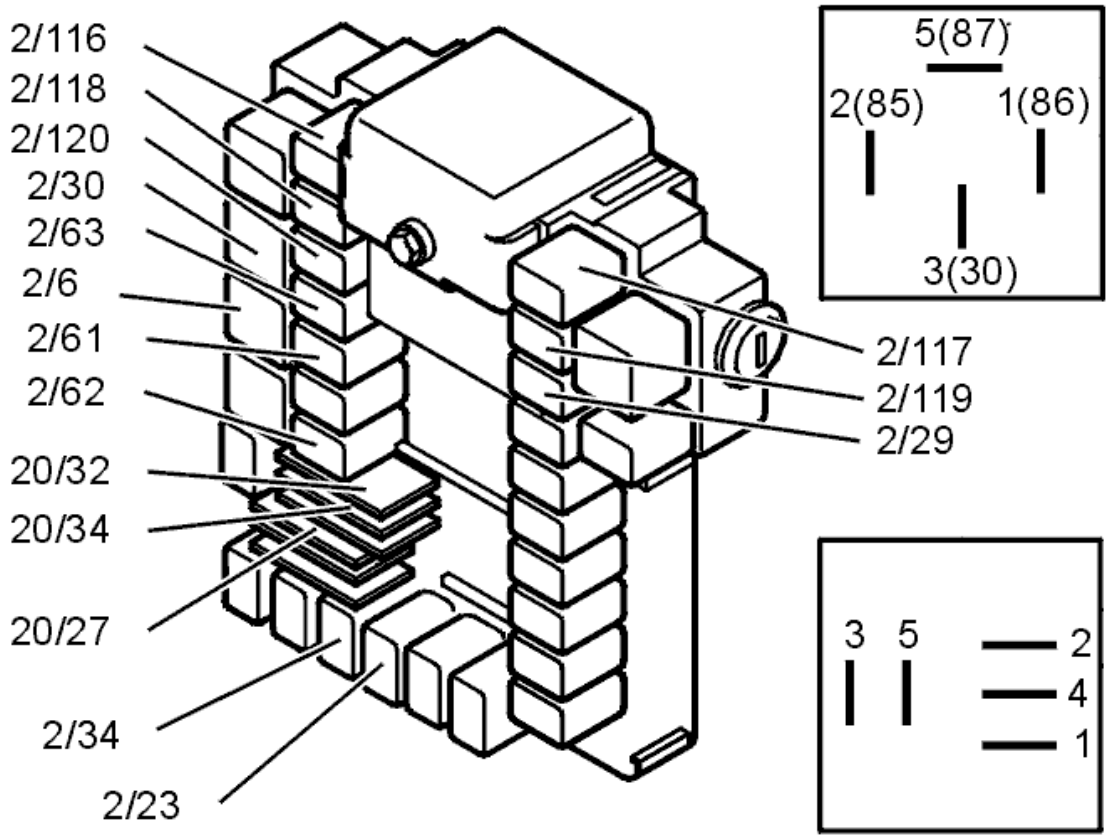

Fig. 153: Identifying Relays
Courtesy of VOLVO CARS CORPORATION

- **Continue**

  Refer to **INFORMATION**

INFORMATION

FAULT-TRACING INFORMATION

If the fault is intermittent, do not verify fault-tracing if the fault does not recur.

It is possible to view the information again, or leave fault-tracing for this diagnostic trouble code (DTC).

CEM-3A04: FUEL PUMP. SIGNAL TOO HIGH. PERMANENT FAULT (2003-2004)

DIAGNOSTIC TROUBLE CODE (DTC) INFORMATION

see **DIAGNOSTIC TROUBLE CODE (DTC) INFORMATION**

SIGNAL TOO HIGH. PERMANENT FAULT

CHECKING THE SIGNAL WIRE

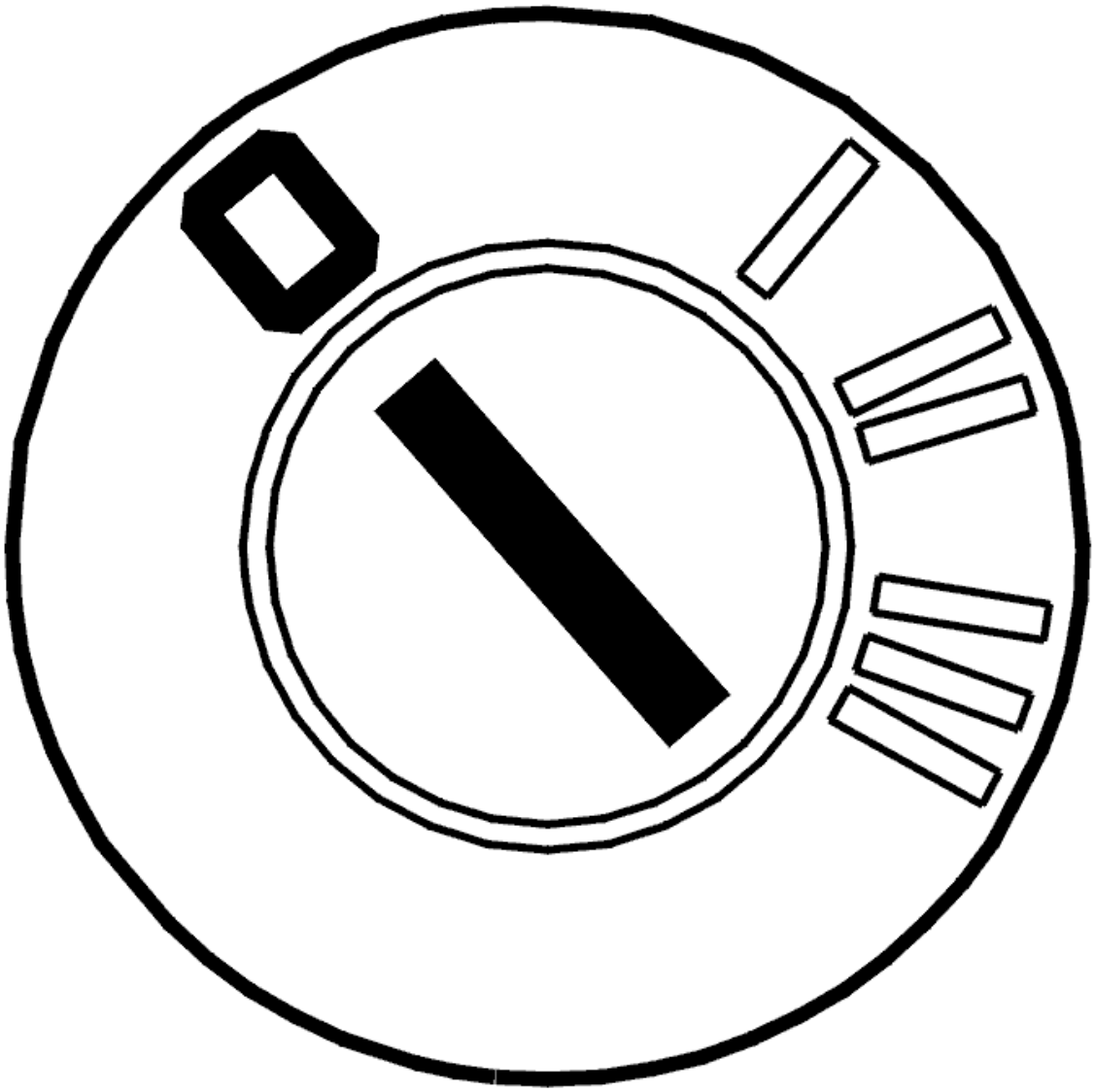

Fig. 154: Identifying Ignition OFF
Courtesy of VOLVO CARS CORPORATION

- Ignition off.
- Disconnect the connector from the central electronic module (CEM).
- Disconnect the 8 pin connector from the fuel pump.

Check the signal wires between:

- central electronic module (CEM) 14C and fuel pump relay 2/23 1 and fuel pump 1.

for a short circuit to voltage supply as described in, see **SHORT-CIRCUIT TO SUPPLY VOLTAGE. PERMANENT FAULTS** .

Do the necessary corrective action.

Additional information:

- To access/replace central electronic module (CEM) connector:
  - For -2004, see: **CENTRAL ELECTRONIC MODULE (CEM), REPLACING**
  - For 2005-, see: **CENTRAL ELECTRONIC MODULE (CEM), REPLACING** .
- To connect a test box, see **CONNECTING THE BREAKOUT BOX**
- -2004: **SIGNAL SPECIFICATION**
- 2005-: **SIGNAL SPECIFICATION**

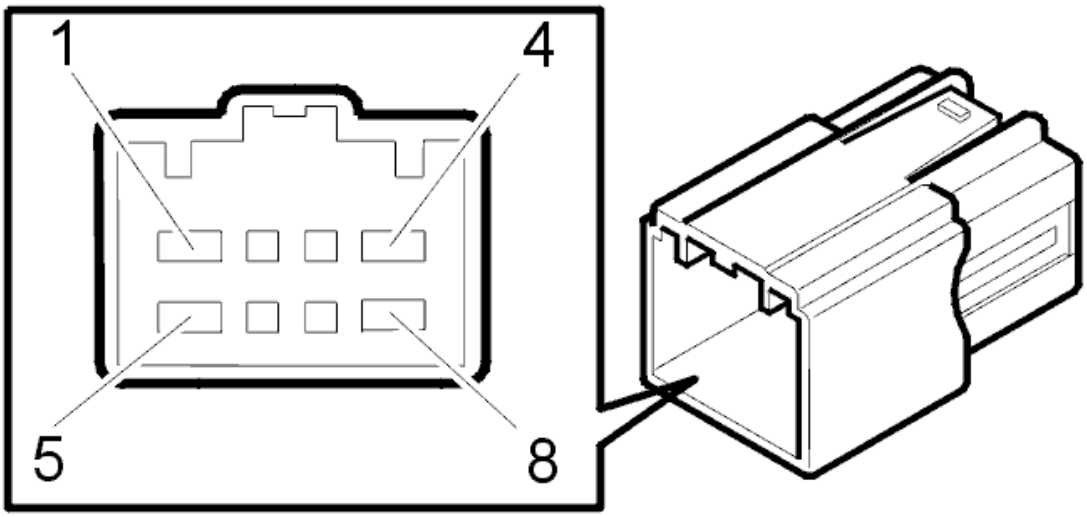

Fig. 155: Identifying Connector Terminals
Courtesy of VOLVO CARS CORPORATION

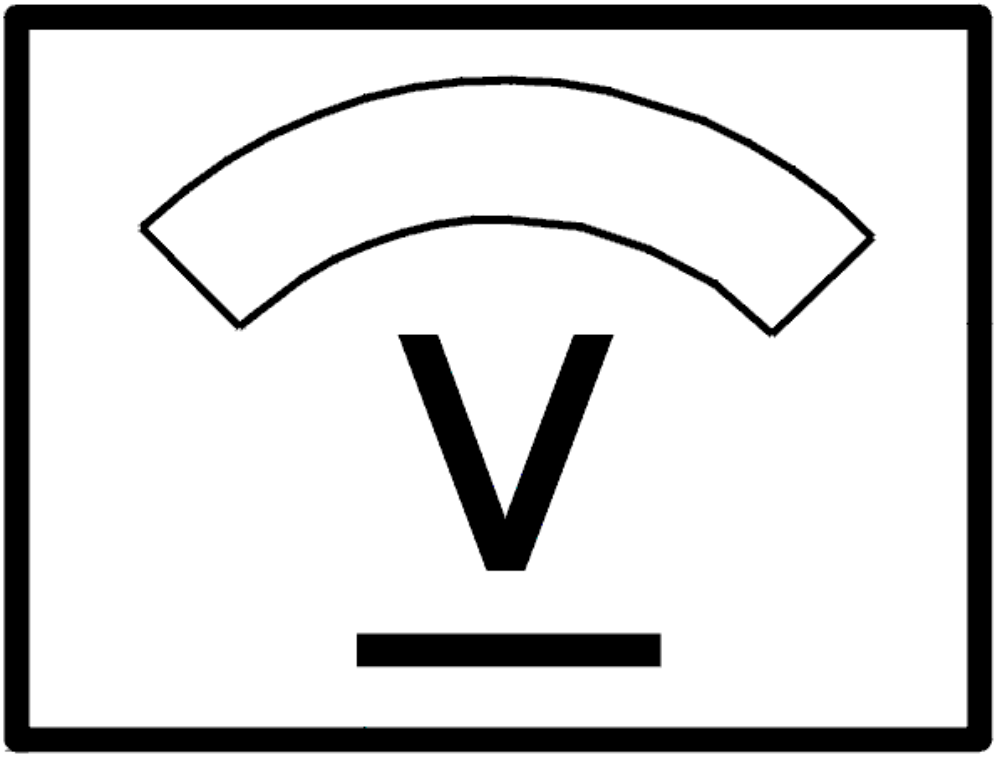

Fig. 156: Identifying Voltage Display
Courtesy of VOLVO CARS CORPORATION

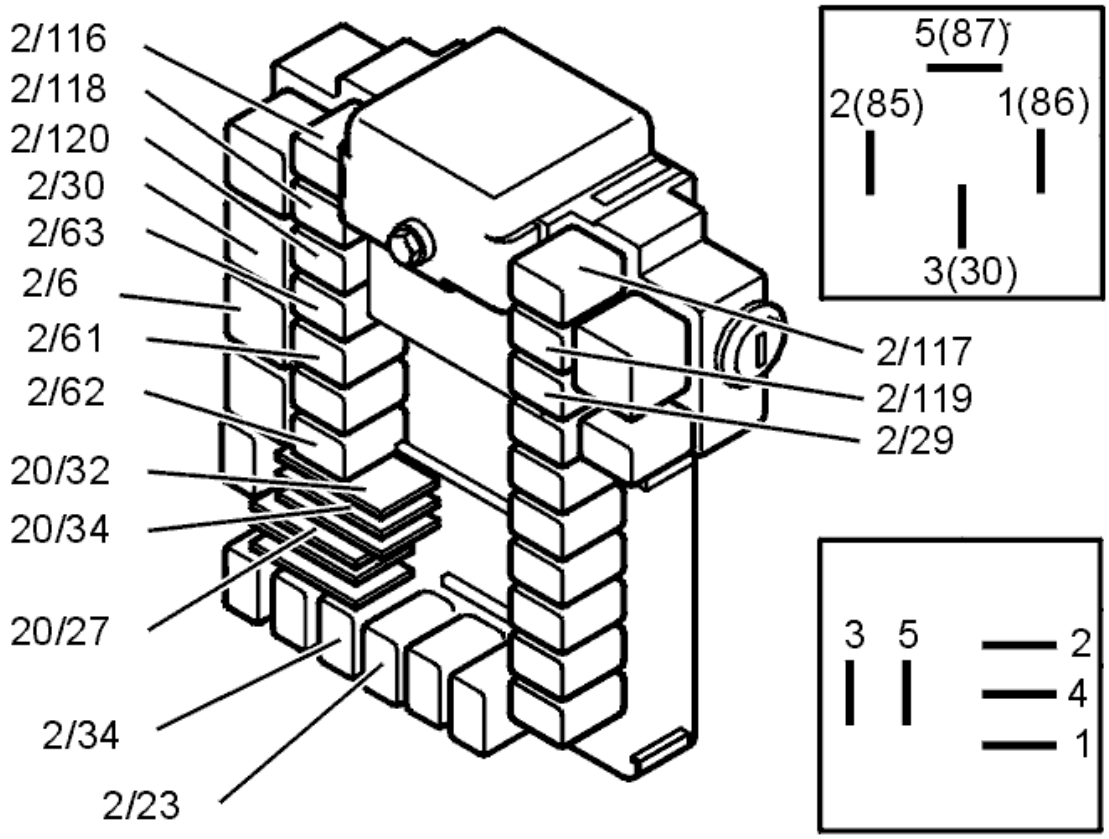

Fig. 157: Identifying Relays
Courtesy of VOLVO CARS CORPORATION

Is signal wire correct?

- **YES**

  Refer to **REPLACING THE COMPONENT**

- **NO**

  Refer to **VERIFICATION**

REPLACING THE COMPONENT

Test by replacing the fuel pump relay 2/23.

Additional information

- To access/replace relay:
  - For -2004, see: **CENTRAL ELECTRONIC MODULE (CEM), REPLACING**
  - For 2005-, see: **CENTRAL ELECTRONIC MODULE (CEM), REPLACING** .

- **Continue**

  Refer to **VERIFICATION**

VERIFICATION

VERIFICATION

HINT: After the repair it is necessary to check that the fault has been rectified.

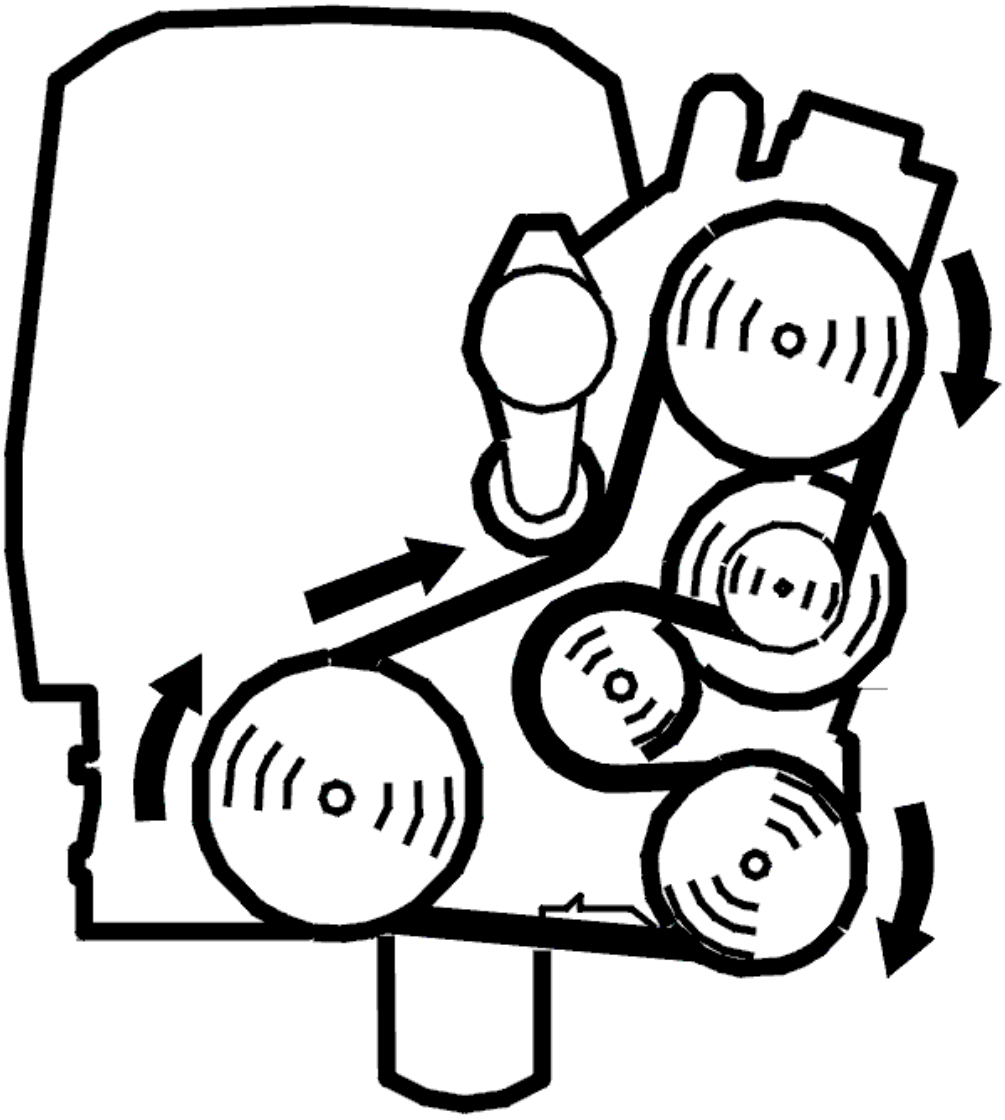

Fig. 158: Belt Routing / Engine Idling - Volvo
Courtesy of VOLVO CARS CORPORATION

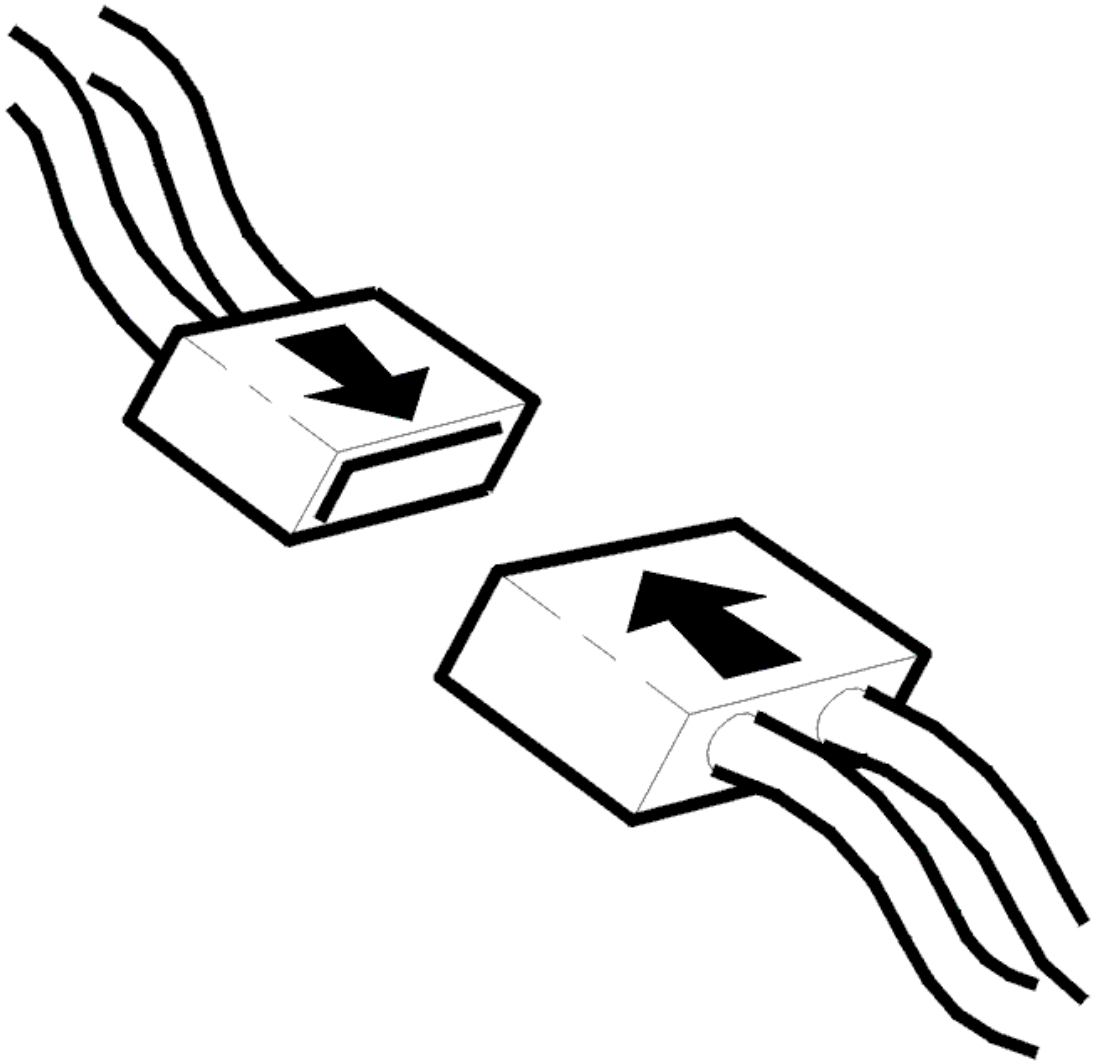

Fig. 159: Connecting Connector
Courtesy of VOLVO CARS CORPORATION

- Ignition off.
- Connect connectors, install components, etc.
- Start the engine.

  Check that diagnostic trouble code status changes from permanent to intermittent.

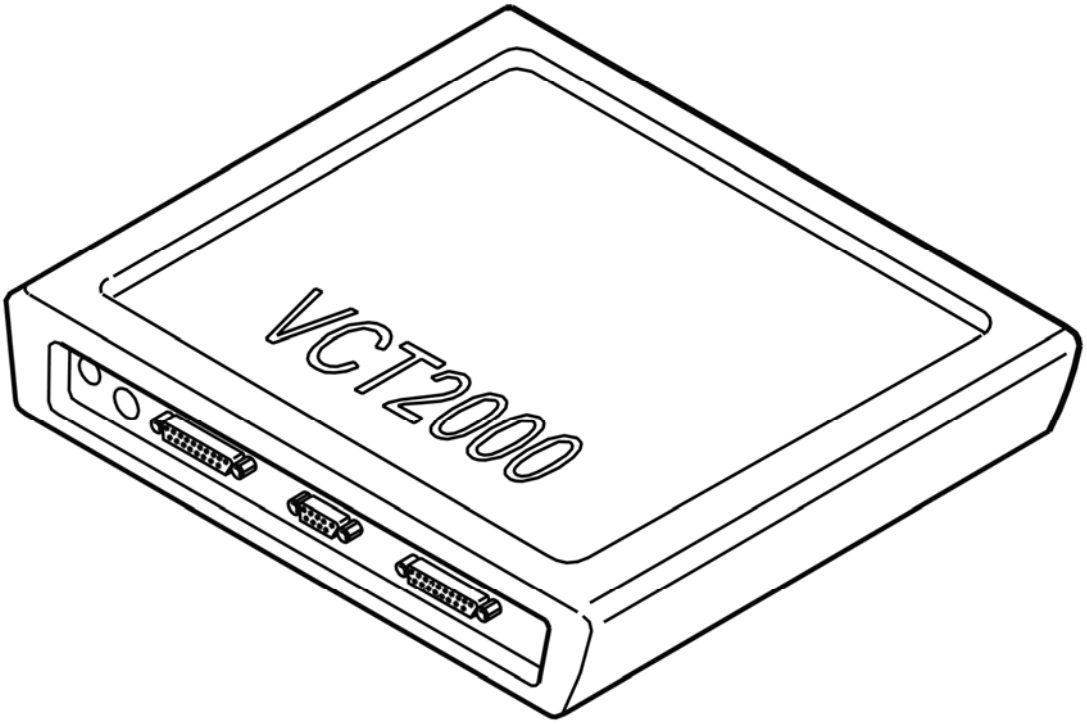

Fig. 160: Identifying VCT2000 Diagnostic Tool Symbol In VIDA
Courtesy of VOLVO CARS CORPORATION

Is the diagnostic trouble code status intermittent?

- **YES**

  VERIFIED: Troubleshooting has been completed.

- **NO**

  Refer to **INFORMATION**

INFORMATION

FAULT-TRACING INFORMATION

The fault should have been detected and remedied. As this is not the case fault-tracing has failed.

Exit fault-tracing for this diagnostic trouble code (DTC) or make another attempt.

CEM-3A05: FUEL PUMP. SIGNAL TOO LOW. INTERMITTENT FAULT (2003-2004)

DIAGNOSTIC TROUBLE CODE INFORMATION

Condition

If the central electronic module (CEM) detects a faulty signal on the relay coil circuit, diagnostic trouble code CEM-3A05 is set.

Substitute Value

- None.

Possible Source

- Fault in fuel pump relay coil circuit.

Fault symptom[s]

- The engine does not start.

SIGNAL TOO LOW. INTERMITTENT FAULT

CHECKING THE RELAY

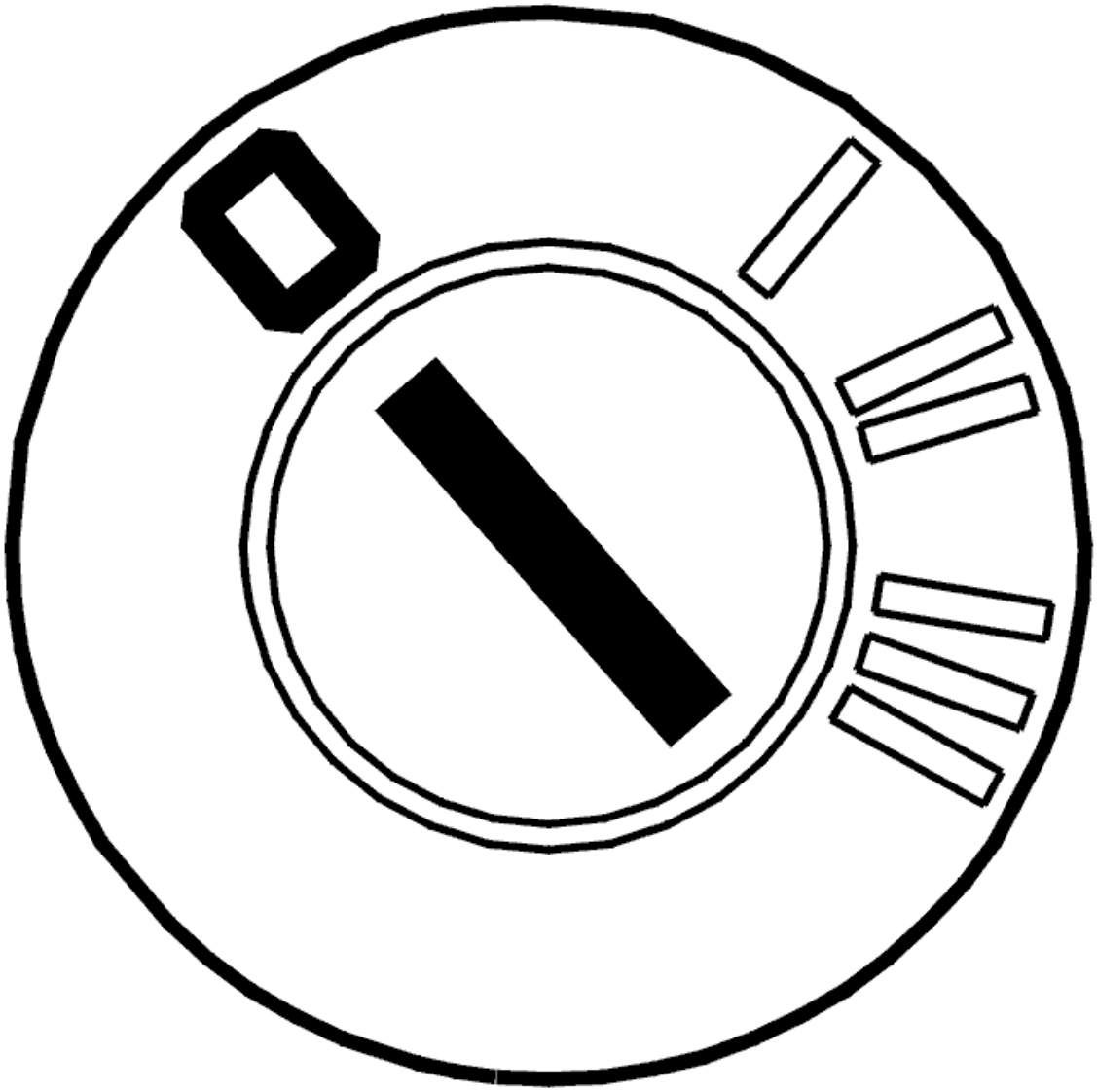

Fig. 161: Identifying Ignition OFF
Courtesy of VOLVO CARS CORPORATION

- Ignition off.

  Check that relay 2/23 is complete and fitted properly.

  Check the relay connections for contact resistance and oxidation, as described in, see **CONTACT RESISTANCE AND OXIDATION** .

  Do the necessary corrective action.

  Additional information:

  - For information on the central electronic module (CEM) connector:
    - For -2004, see: **CENTRAL ELECTRONIC MODULE (CEM), REPLACING**

- For 2005-, see: **CENTRAL ELECTRONIC MODULE (CEM), REPLACING** .

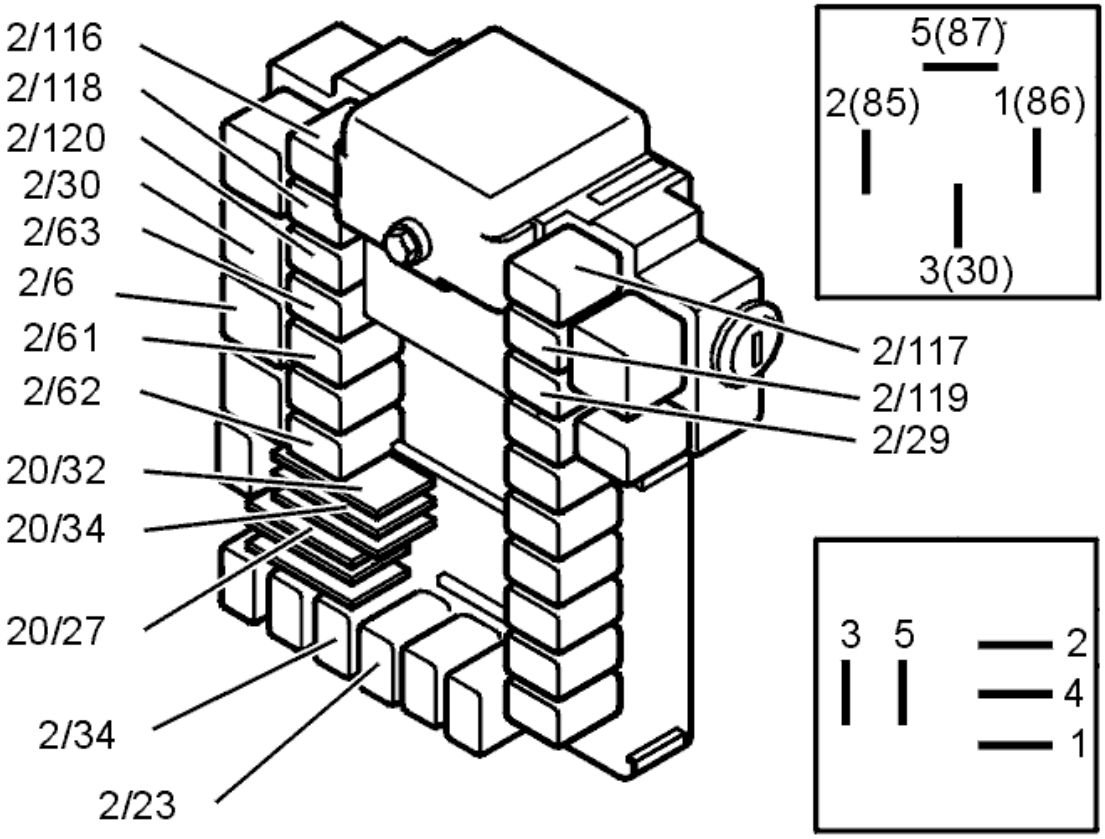

Fig. 162: Identifying Relays
Courtesy of VOLVO CARS CORPORATION

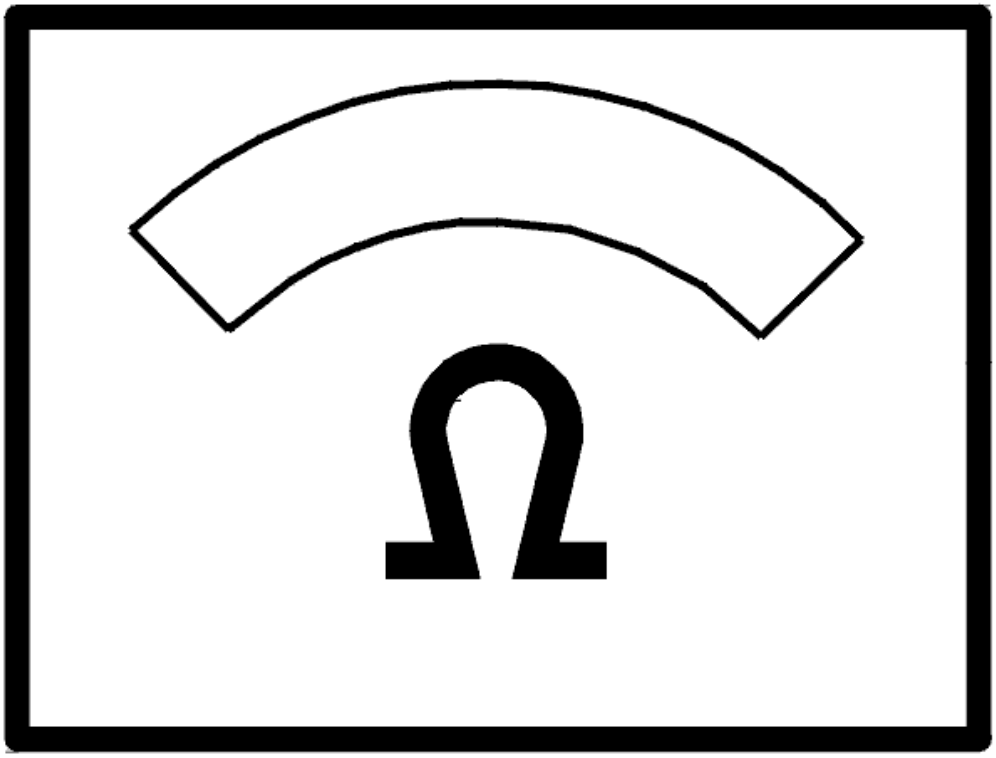

Fig. 163: Identifying Ohm Meter
Courtesy of VOLVO CARS CORPORATION

- **Continue**

  Refer to **INFORMATION**

INFORMATION

FAULT-TRACING INFORMATION

If the fault is intermittent, do not verify fault-tracing if the fault does not recur.

It is possible to view the information again, or leave fault-tracing for this diagnostic trouble code (DTC).

CEM-3A05: FUEL PUMP. SIGNAL TOO LOW. PERMANENT FAULT (2003-

2004)

DIAGNOSTIC TROUBLE CODE INFORMATION

see **DIAGNOSTIC TROUBLE CODE INFORMATION**

SIGNAL TOO LOW. PERMANENT FAULT

CHECKING THE RELAY

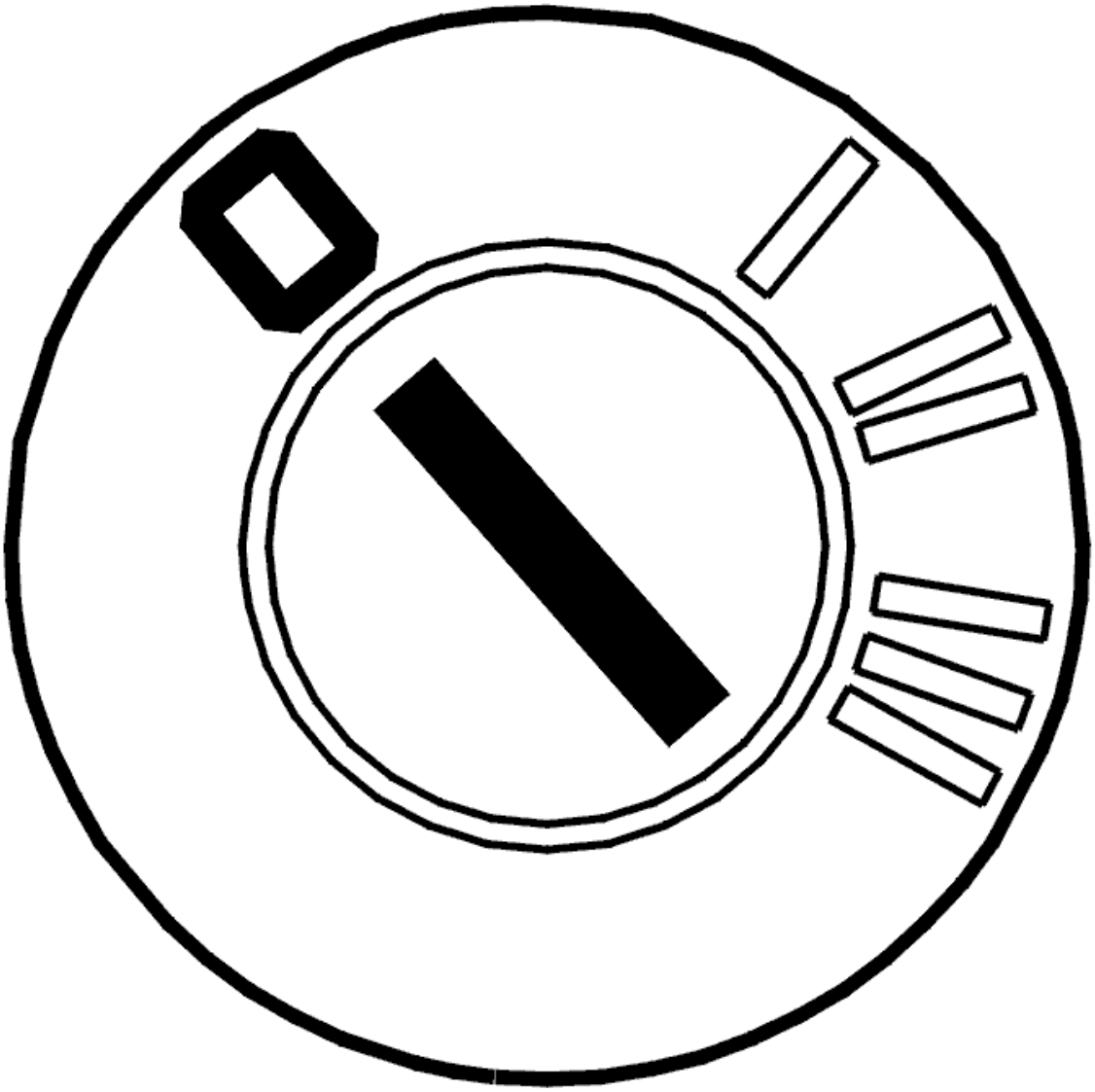

Fig. 164: Identifying Ignition OFF
Courtesy of VOLVO CARS CORPORATION

- Ignition off.

  Check that relay 2/23 is fitted properly.

Check the relay connections.

Do the necessary corrective action.

Additional information

- To access/replace relay:
  - For -2004, see: **CENTRAL ELECTRONIC MODULE (CEM), REPLACING**
  - For 2005-, see: **CENTRAL ELECTRONIC MODULE (CEM), REPLACING** .

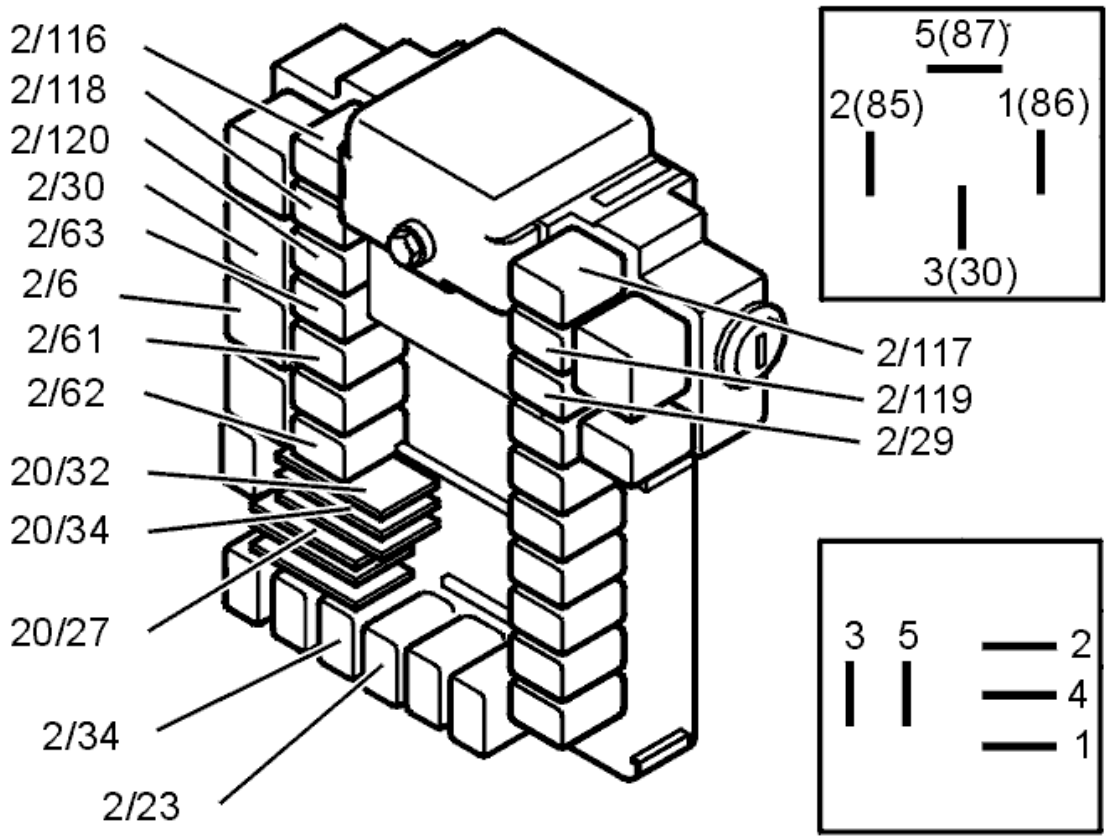

Fig. 165: Identifying Relays
Courtesy of VOLVO CARS CORPORATION

- **Continue**

Refer to **VERIFICATION**

VERIFICATION

VERIFICATION

HINT: After the repair it is necessary to check that the fault has been rectified.

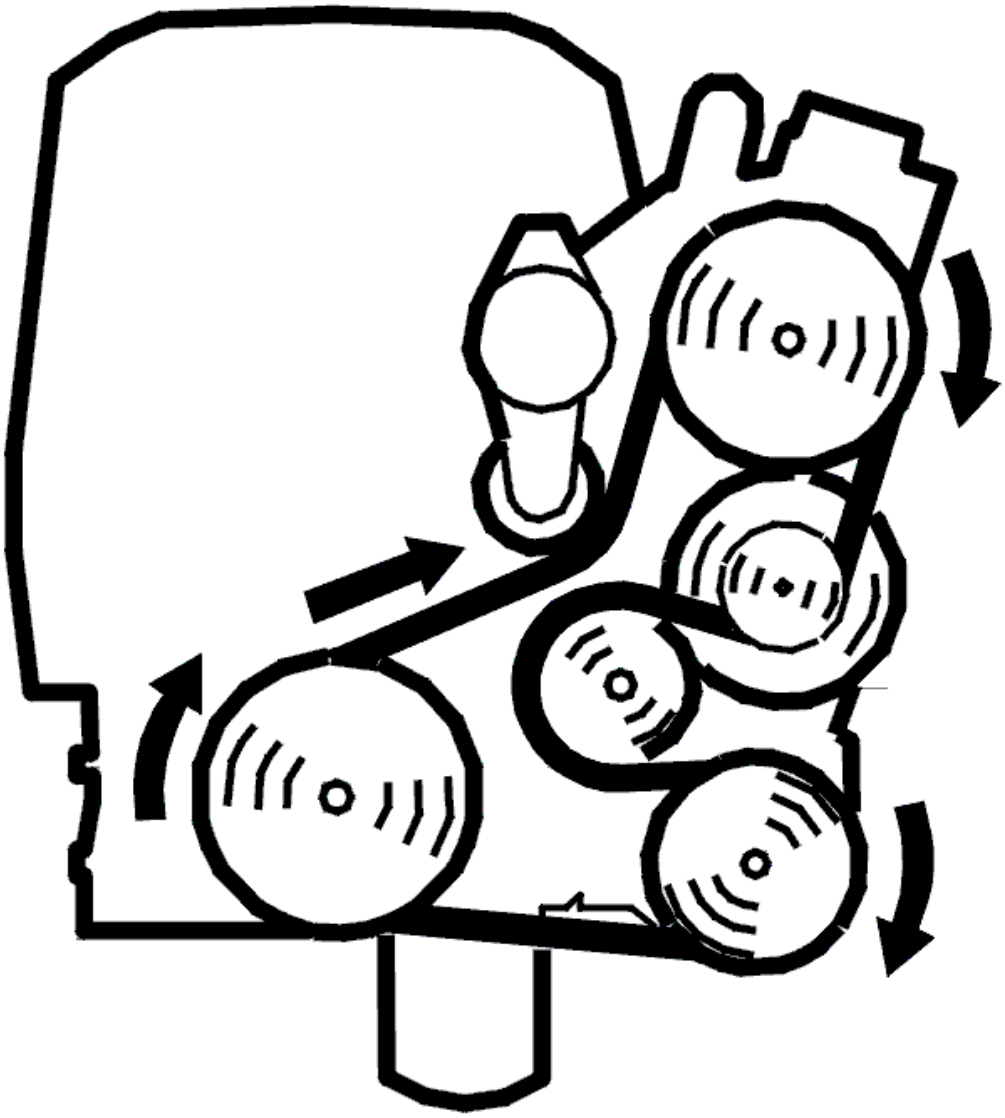

Fig. 166: Belt Routing / Engine Idling - Volvo
Courtesy of VOLVO CARS CORPORATION

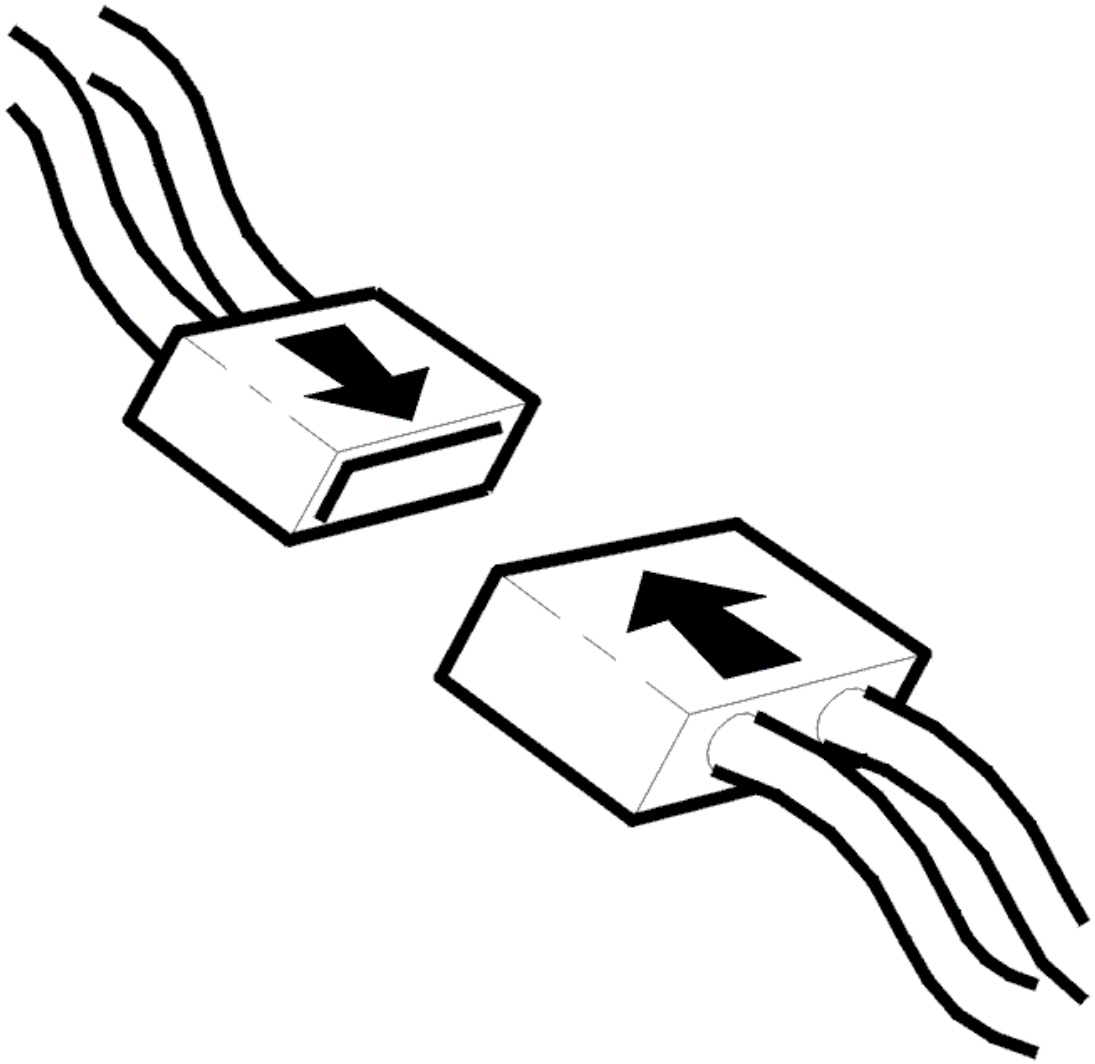

Fig. 167: Connecting Connector
Courtesy of VOLVO CARS CORPORATION

- Ignition off.
- Connect connectors, install components, etc.
- Start the engine.

  Check that diagnostic trouble code status changes from permanent to intermittent.

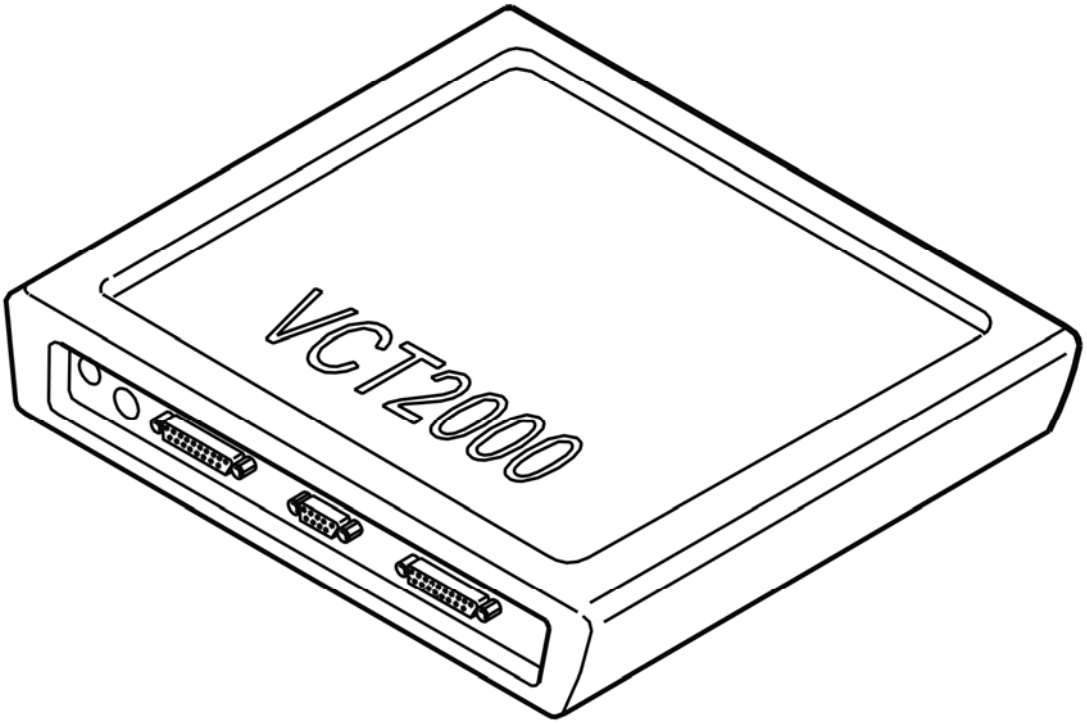

Fig. 168: Identifying VCT2000 Diagnostic Tool Symbol In VIDA
Courtesy of VOLVO CARS CORPORATION

Is the diagnostic trouble code status intermittent?

- **YES**

  VERIFIED: Troubleshooting has been completed.

- **NO**

  Refer to **INFORMATION**

INFORMATION

FAULT-TRACING INFORMATION

The fault should have been detected and remedied. As this is not the case fault-tracing has failed.

Exit fault-tracing for this diagnostic trouble code (DTC) or make another attempt.

CEM-3A07: RELAY, LEAK DIAGNOSTIC PUMP HEATING. SIGNAL TOO HIGH (2003-2004)

DIAGNOSTIC TROUBLE CODE (DTC) INFORMATION

Condition

The central electronic module checks if the output signal to the relay coil for relay 2/143 is too high.

Diagnostic trouble code (DTC) CEM-3A07 is stored in the central electronic module if it registers a short-circuit to supply voltage.

Diagnostic trouble code (DTC) CEM-3A07 can be detected when the relay is activated.

Substitute Value

- None.

Possible Source

- Defective relay.

Fault symptom[s]

-

SIGNAL TOO HIGH

CHECKING AND REPLACING THE COMPONENT

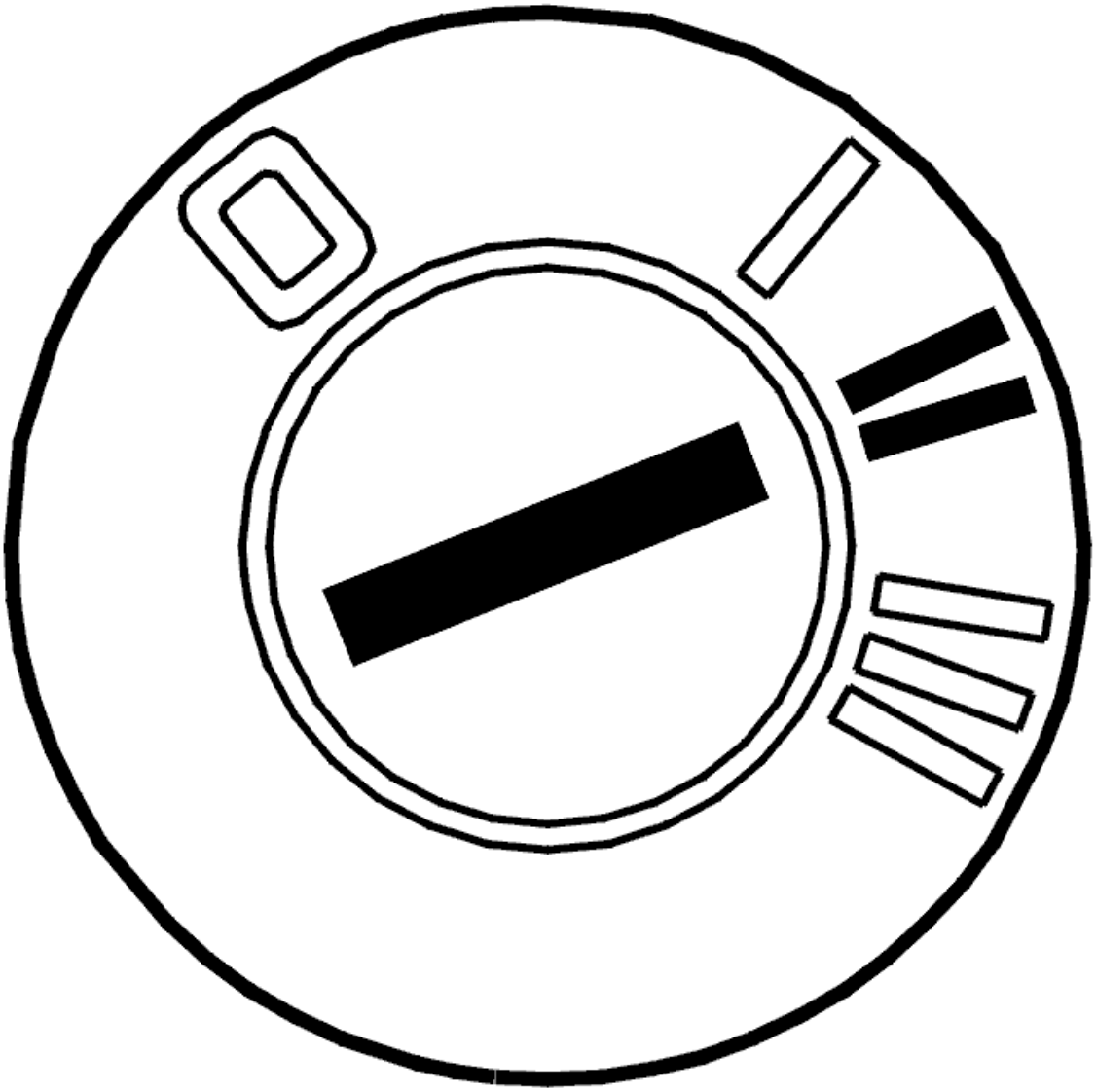

Fig. 169: Identifying Ignition ON
Courtesy of VOLVO CARS CORPORATION

- Ignition off
- Replace the relay for heating the leak diagnostic pump
- Ignition on.

  Activate the relay. The relay should click.

  If the function is OK, the cause of the fault was a defective relay (short-circuit in the relay).

  Other information

  - To access and replace the relay:
    - For -2004, see: **CENTRAL ELECTRONIC MODULE (CEM), REPLACING**

- For 2005-, see: **CENTRAL ELECTRONIC MODULE (CEM), REPLACING** .

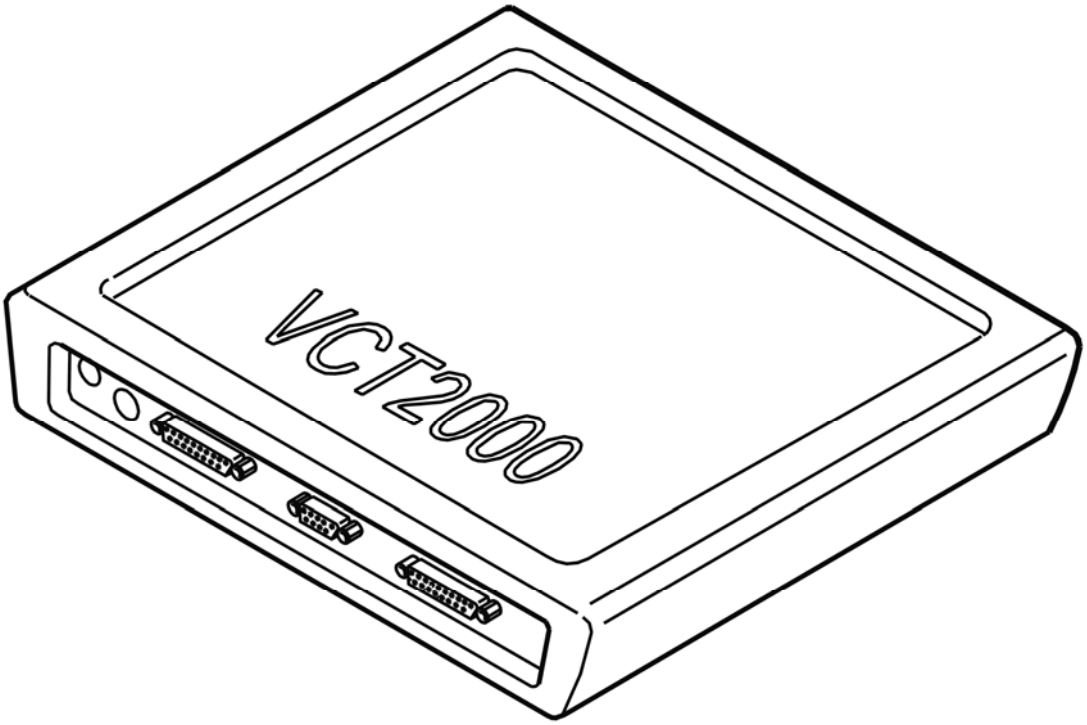

Fig. 170: Identifying VCT2000 Diagnostic Tool Symbol In VIDA
Courtesy of VOLVO CARS CORPORATION

Was the function OK?

- **YES**

  OKAY: Troubleshooting has been completed.

- **NO**

  Refer to **CHECKING THE CONTROL MODULE**

CHECKING THE CONTROL MODULE

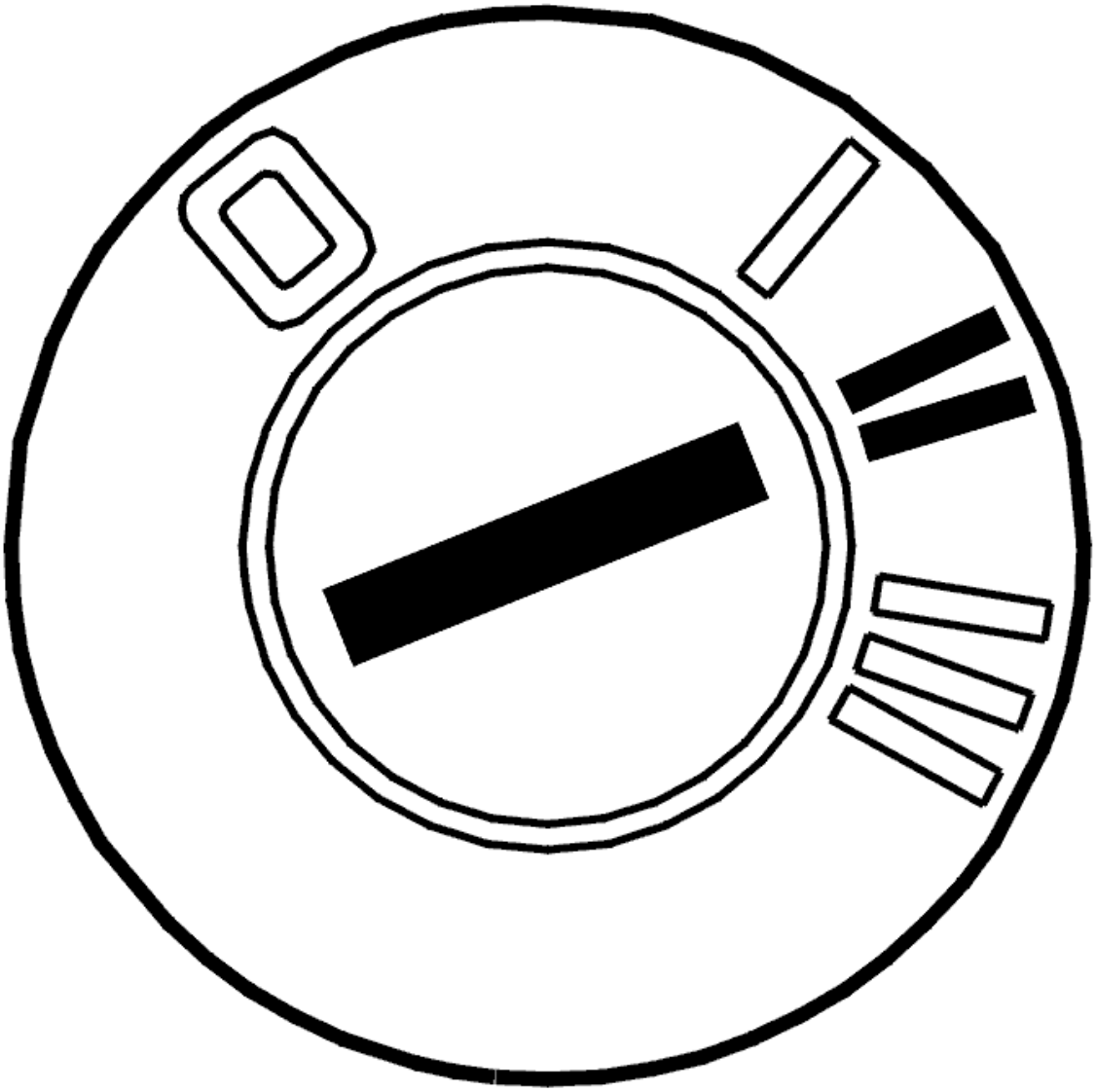

Fig. 171: Identifying Ignition ON
Courtesy of VOLVO CARS CORPORATION

- Ignition off
- Remove the relay
- Ignition on.

  Check the relay coil driver circuit for a short-circuit to supply voltage by taking a voltmeter reading at terminal #2 in the relay base.

  HINT: The voltage between terminal #2 and ground should be approximately 0 V.

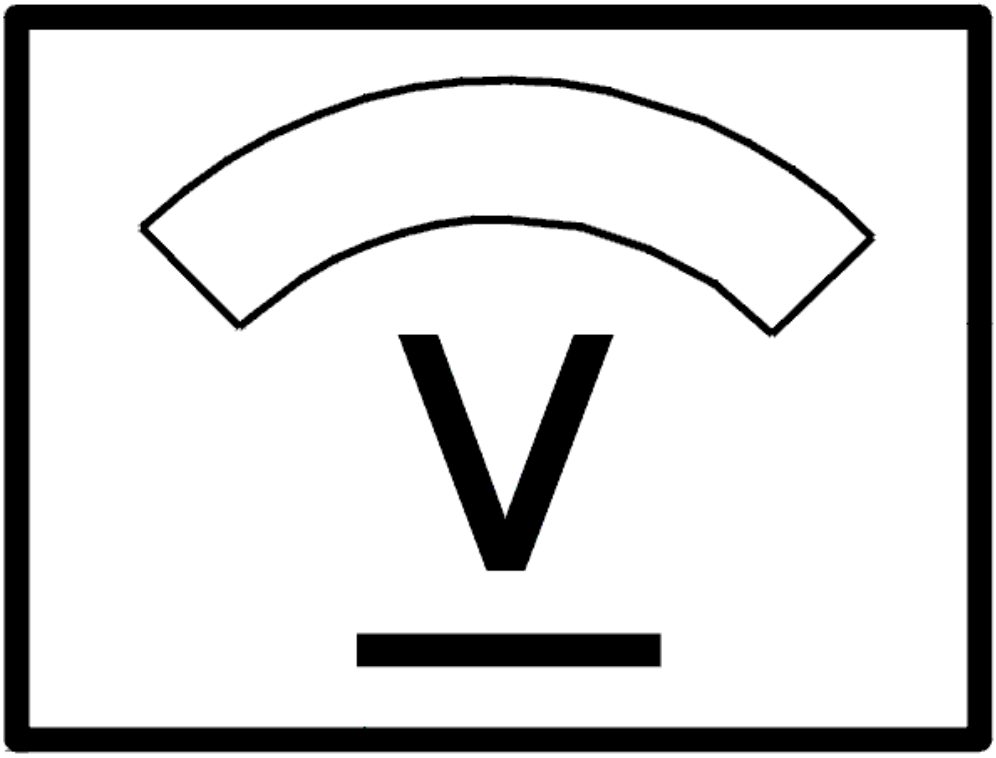

Fig. 172: Identifying Voltage Display
Courtesy of VOLVO CARS CORPORATION

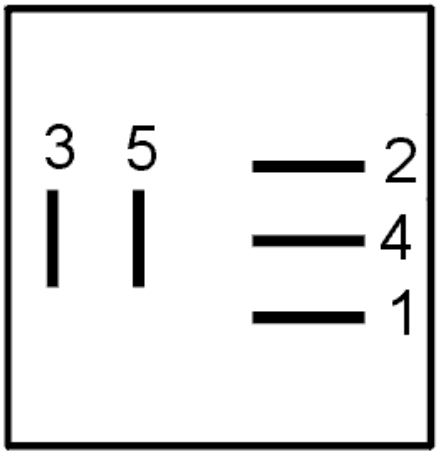

Fig. 173: Identifying Terminals
Courtesy of VOLVO CARS CORPORATION

Remedy as necessary.

Other information

- To access and replace the relay:
  - For -2004, see: **CENTRAL ELECTRONIC MODULE (CEM), REPLACING**
  - For 2005-, see: **CENTRAL ELECTRONIC MODULE (CEM), REPLACING** .
- see **CHECKING WIRING AND TERMINALS** .

- **Continue**

  Refer to **VERIFICATION**

VERIFICATION

VERIFICATION

HINT: After carrying out the repair, check that the fault has been remedied.

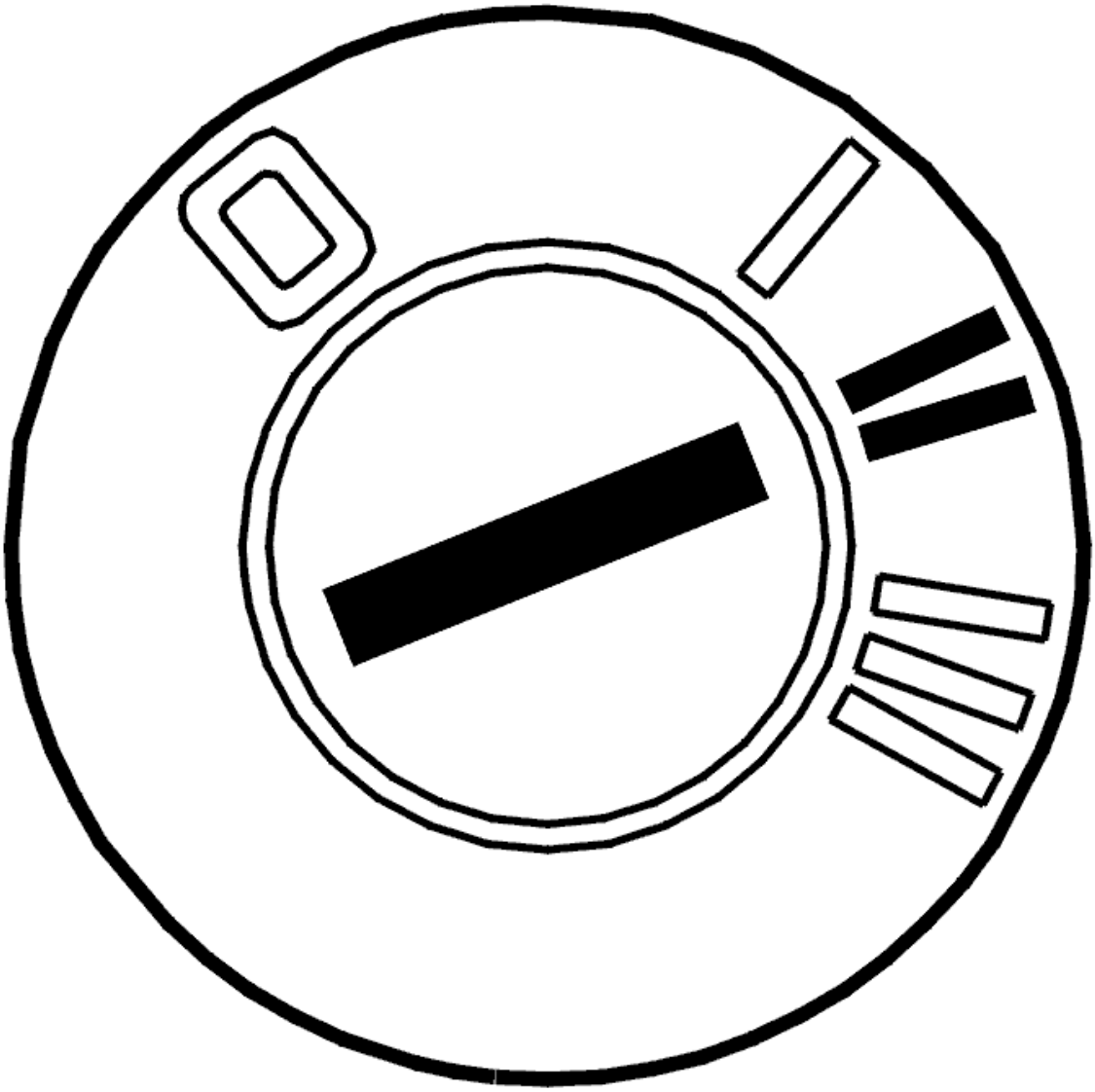

Fig. 174: Identifying Ignition ON
Courtesy of VOLVO CARS CORPORATION

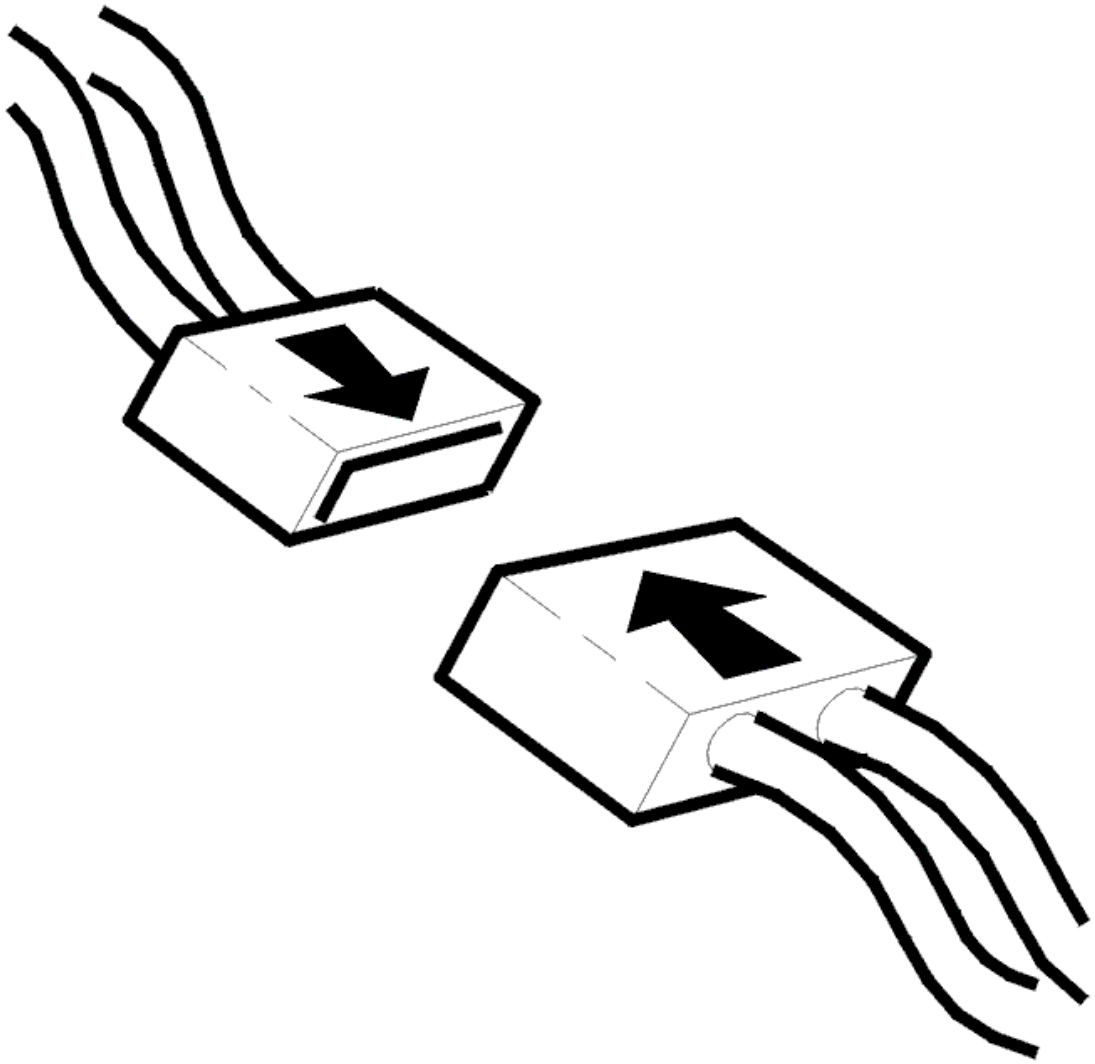

Fig. 175: Connecting Connector
Courtesy of VOLVO CARS CORPORATION

- Ignition off
- Reinstall the connectors, components etc.
- Ignition on.

  Activate and deactivate the relay. The relay must click.

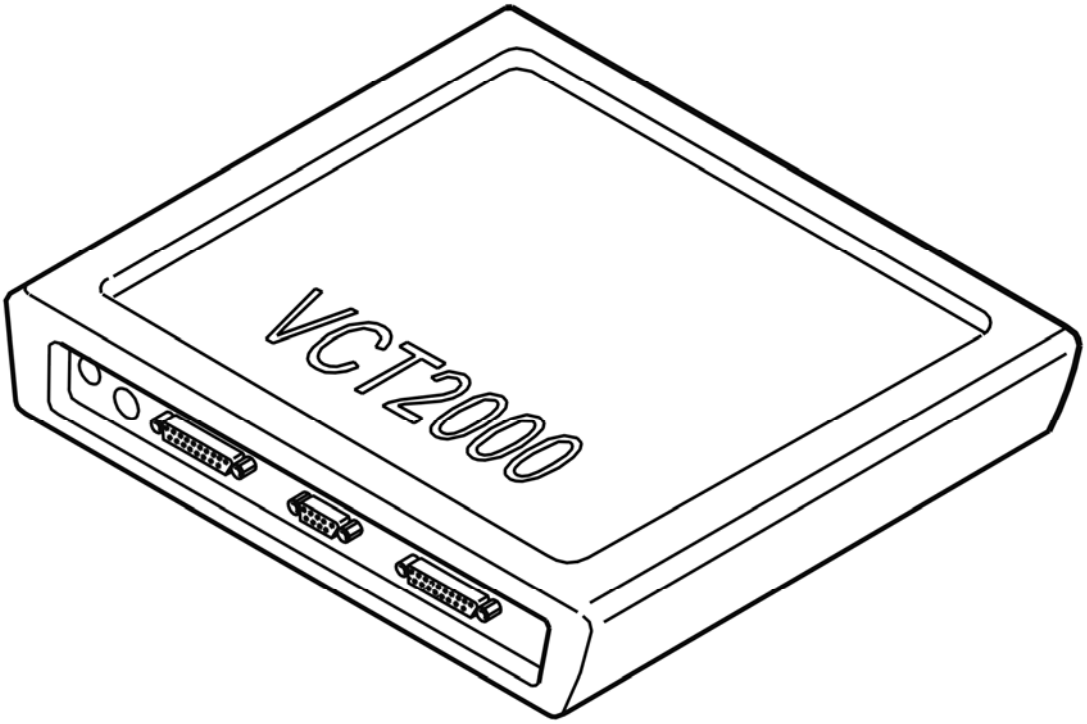

Fig. 176: Identifying VCT2000 Diagnostic Tool Symbol In VIDA
Courtesy of VOLVO CARS CORPORATION

Was the function OK?

- **YES**

  VERIFIED: Troubleshooting has been completed.

- **NO**

  Refer to **INFORMATION**

INFORMATION

FAULT-TRACING INFORMATION

The fault should have been detected and remedied. As this is not the case fault-tracing has failed.

Exit fault-tracing for this diagnostic trouble code (DTC) or make another attempt.

CEM-3A08: RELAY, LEAK DIAGNOSTIC PUMP HEATING. SIGNAL TOO LOW (2003-2004)

DIAGNOSTIC TROUBLE CODE (DTC) INFORMATION

Condition

The central electronic module checks the output signal to the relay coil for relay 2/143.

Diagnostic trouble code (DTC) CEM-3A08 is stored if the central electronic module registers that the output signal to the relay coil is missing or too low.

Diagnostic trouble code (DTC) CEM-3A08 can be detected when the relay driver is not activated.

Substitute Value

- None.

Possible Source

- Relay missing
- Defective relay
- Contact resistance in the relay base.

Fault symptom[s]

-

SIGNAL TOO LOW

CHECKING AND REPLACING THE COMPONENT

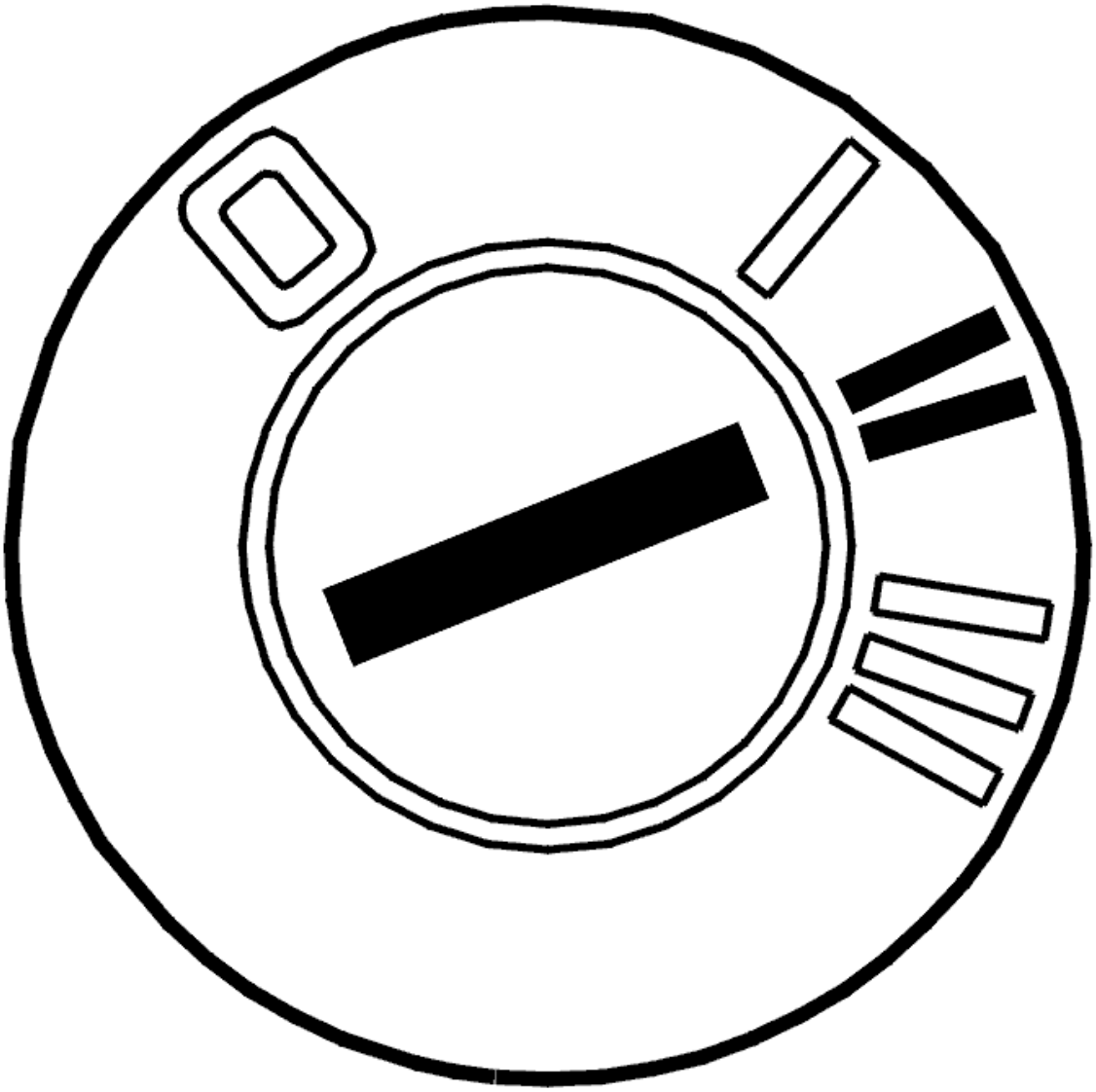

Fig. 177: Identifying Ignition ON
Courtesy of VOLVO CARS CORPORATION

- Ignition off
- Remove the relay for heating the leak diagnostic pump. Check the relay base switches. Check for contact resistance and oxidation
- Install the relay
- Ignition on.

  Activate and deactivate the relay. The relay must click.

  If the function is now OK the fault was caused by a contact fault in the relay base.

  Other information

- To access and replace the relay:
  - For -2004, see: **CENTRAL ELECTRONIC MODULE (CEM), REPLACING**
  - For 2005-, see: **CENTRAL ELECTRONIC MODULE (CEM), REPLACING** .
- see **CHECKING WIRING AND TERMINALS** .

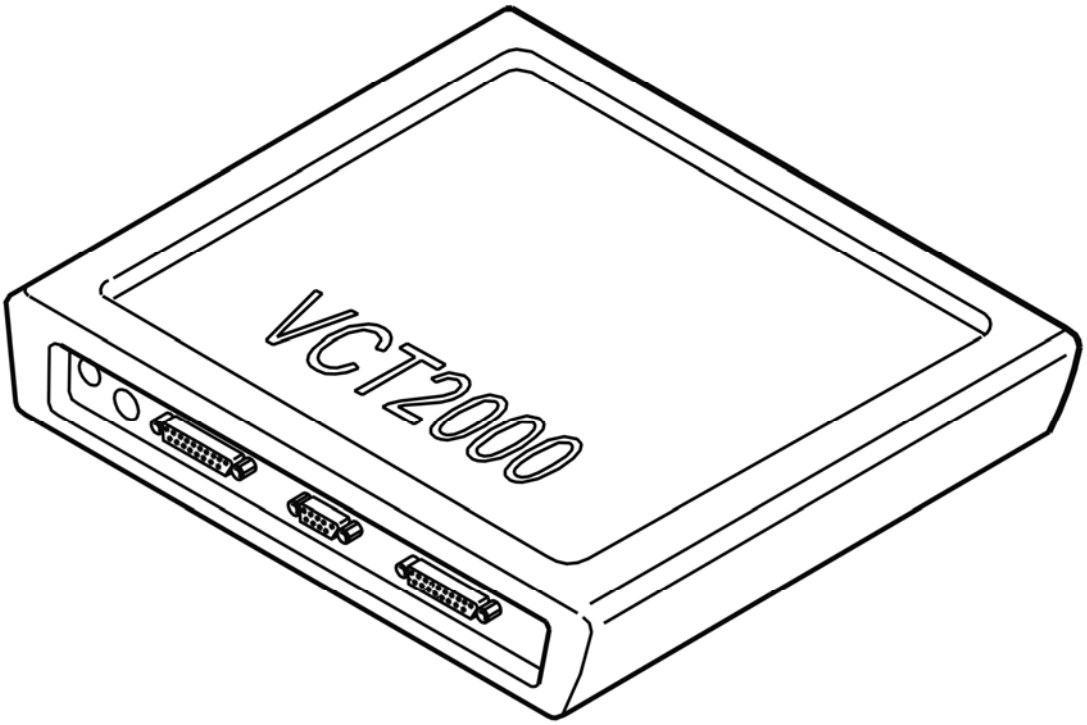

Fig. 178: Identifying VCT2000 Diagnostic Tool Symbol In VIDA
Courtesy of VOLVO CARS CORPORATION

Was the function OK?

- **YES**

  Refer to **VERIFICATION**

- **NO**

  Refer to **REPLACING THE COMPONENT**

REPLACING THE COMPONENT

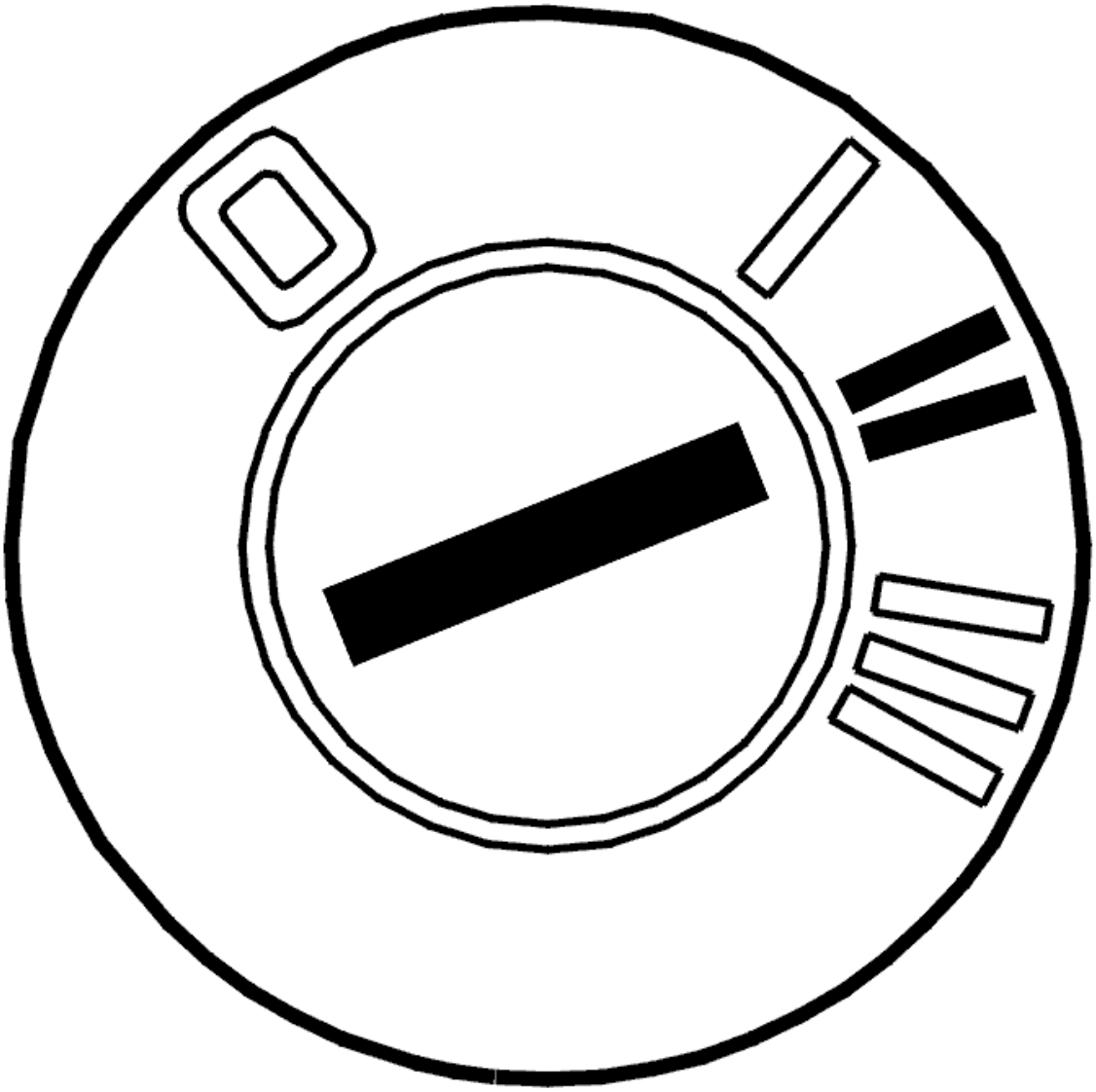

Fig. 179: Identifying Ignition ON
Courtesy of VOLVO CARS CORPORATION

- Ignition off
- Replace the relay for heating the leak diagnostic pump
- Ignition on.

  Activate and deactivate the relay. The relay must click.

  If the function is now OK, the cause of the fault was a defective relay (short-circuit to ground or an open-circuit in the relay coil).

  Other information

  - To access and replace the relay:

- For -2004, see: **CENTRAL ELECTRONIC MODULE (CEM), REPLACING**
- For 2005-, see: **CENTRAL ELECTRONIC MODULE (CEM), REPLACING** .

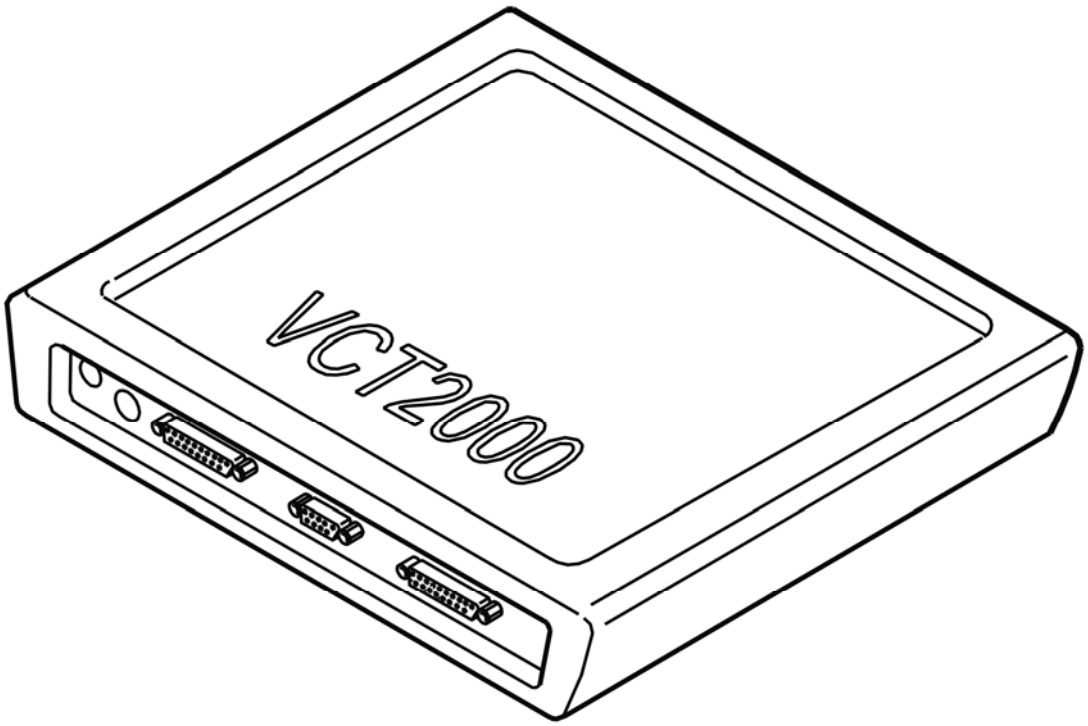

Fig. 180: Identifying VCT2000 Diagnostic Tool Symbol In VIDA
Courtesy of VOLVO CARS CORPORATION

Was the function OK?

- **YES**

  OKAY: Troubleshooting has been completed.

- **NO**

  Refer to **CHECKING THE CONTROL MODULE FOR OPEN-CIRCUITS**

CHECKING THE CONTROL MODULE FOR OPEN-CIRCUITS

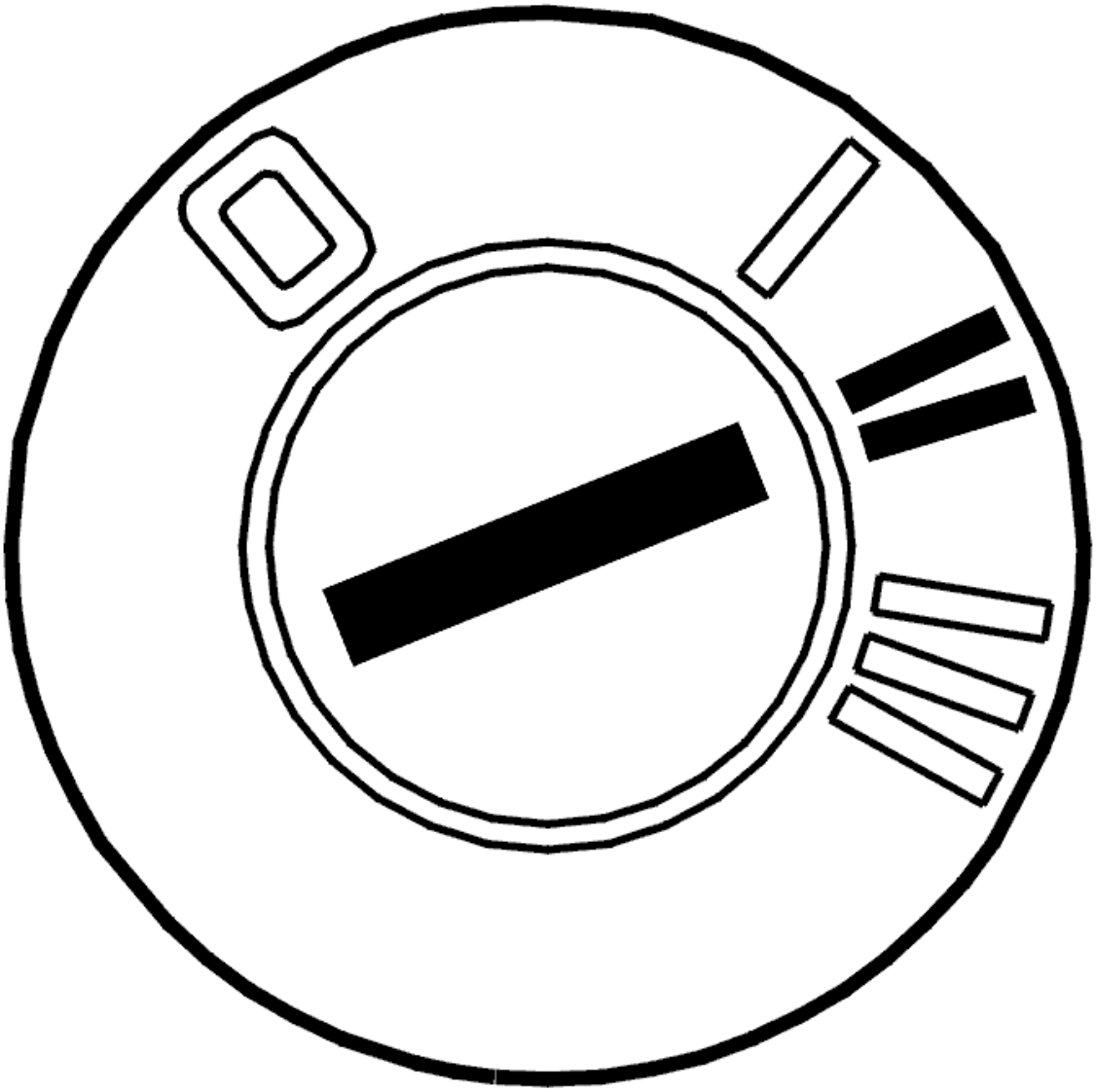

Fig. 181: Identifying Ignition ON
Courtesy of VOLVO CARS CORPORATION

- Ignition off
- Remove the relay for heating the leak diagnostic pump
- Ignition on.

Check the driver circuit for the relay coil for an open-circuit as follows: activate the relay driver. Measure the voltage between terminals #1 and #2 on the relay base.

The voltage between terminals #1 and #2 should be battery voltage.

If the value deviates excessively, check the voltage between terminal #2 and the battery and between terminal #1 and ground. Both should equal battery voltage.

HINT: Do not forget to check that the power supply to the control module is OK.

Other information

- To access and replace the relay:
  - For -2004, see: **CENTRAL ELECTRONIC MODULE (CEM), REPLACING**
  - For 2005-, see: **CENTRAL ELECTRONIC MODULE (CEM), REPLACING** .
- see **CHECKING WIRING AND TERMINALS** .

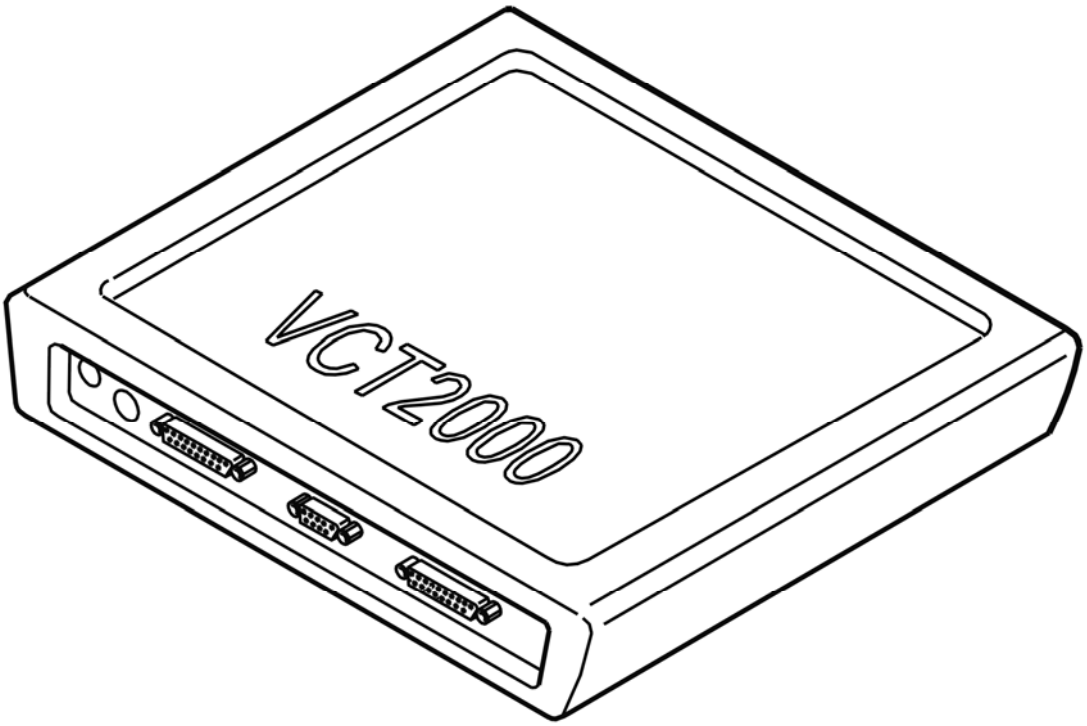

Fig. 182: Identifying VCT2000 Diagnostic Tool Symbol In VIDA
Courtesy of VOLVO CARS CORPORATION

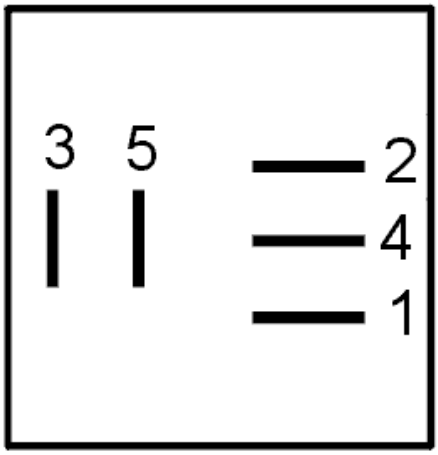

Fig. 183: Identifying Terminals
Courtesy of VOLVO CARS CORPORATION

Was a fault detected?

- **YES**

  Refer to **VERIFICATION**

- **NO**

  Refer to **CHECKING THE CONTROL MODULE FOR SHORT-CIRCUITS**

CHECKING THE CONTROL MODULE FOR SHORT-CIRCUITS

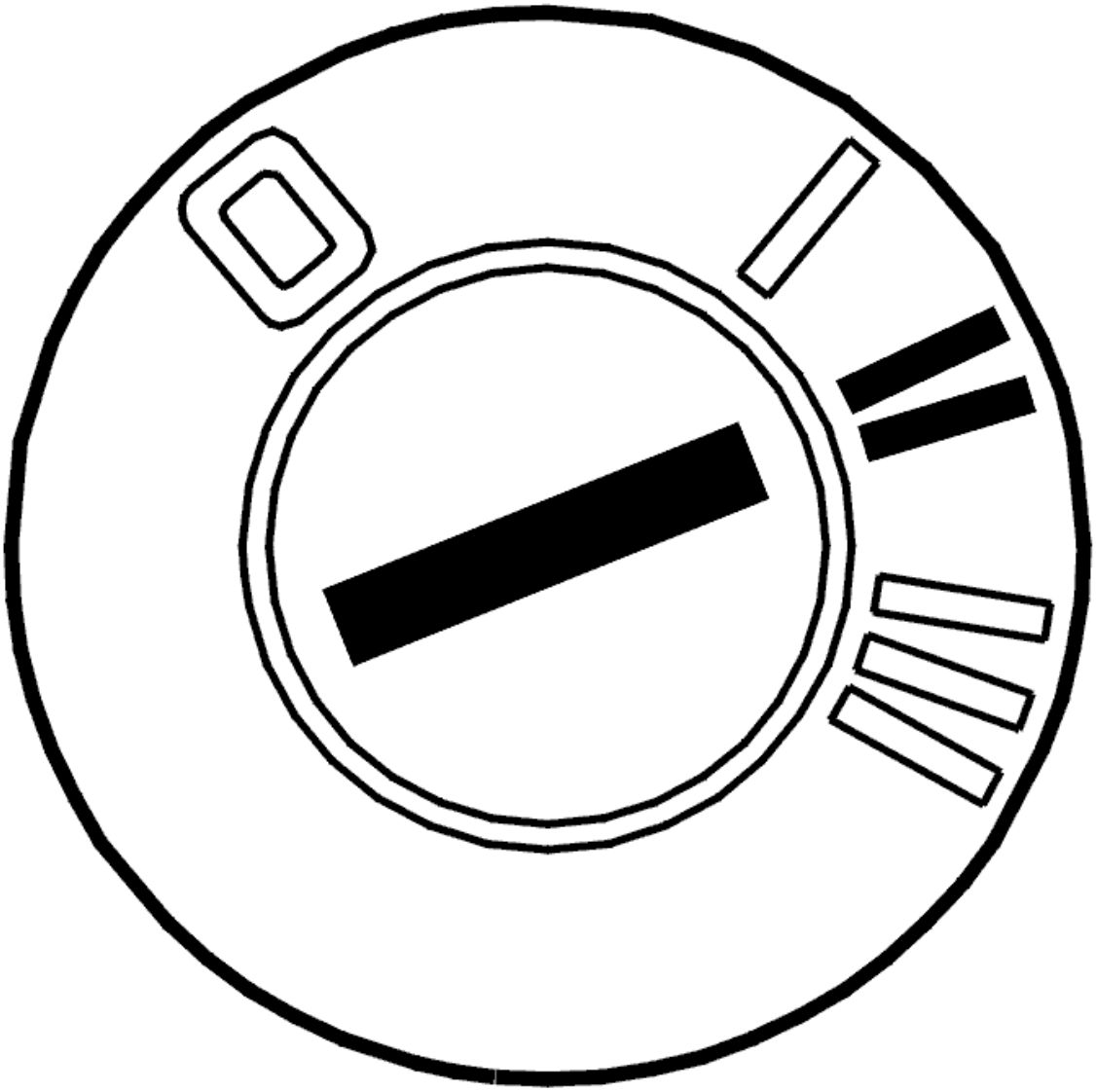

Fig. 184: Identifying Ignition ON
Courtesy of VOLVO CARS CORPORATION

- Ignition on.

  Activate the relay driver.

  Measure the resistance between terminal #2 and ground when the relay driver is inactive.

  The resistance must be low when the relay driver is inactive.

  Remedy as necessary.

  Other information

  - To access and replace the relay:

- For -2004, see: **CENTRAL ELECTRONIC MODULE (CEM), REPLACING**
- For 2005-, see: **CENTRAL ELECTRONIC MODULE (CEM), REPLACING** .

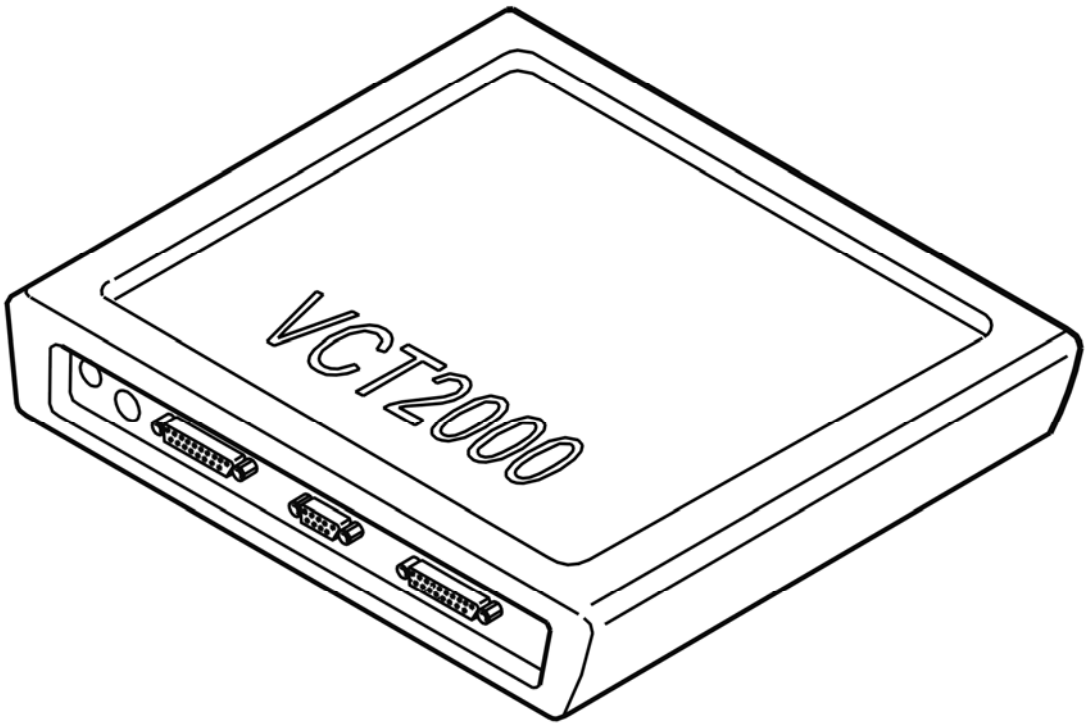

Fig. 185: Identifying VCT2000 Diagnostic Tool Symbol In VIDA
Courtesy of VOLVO CARS CORPORATION

- **Continue**

  Refer to **VERIFICATION**

VERIFICATION

VERIFICATION

HINT: After carrying out the repair, check that the fault has been remedied.

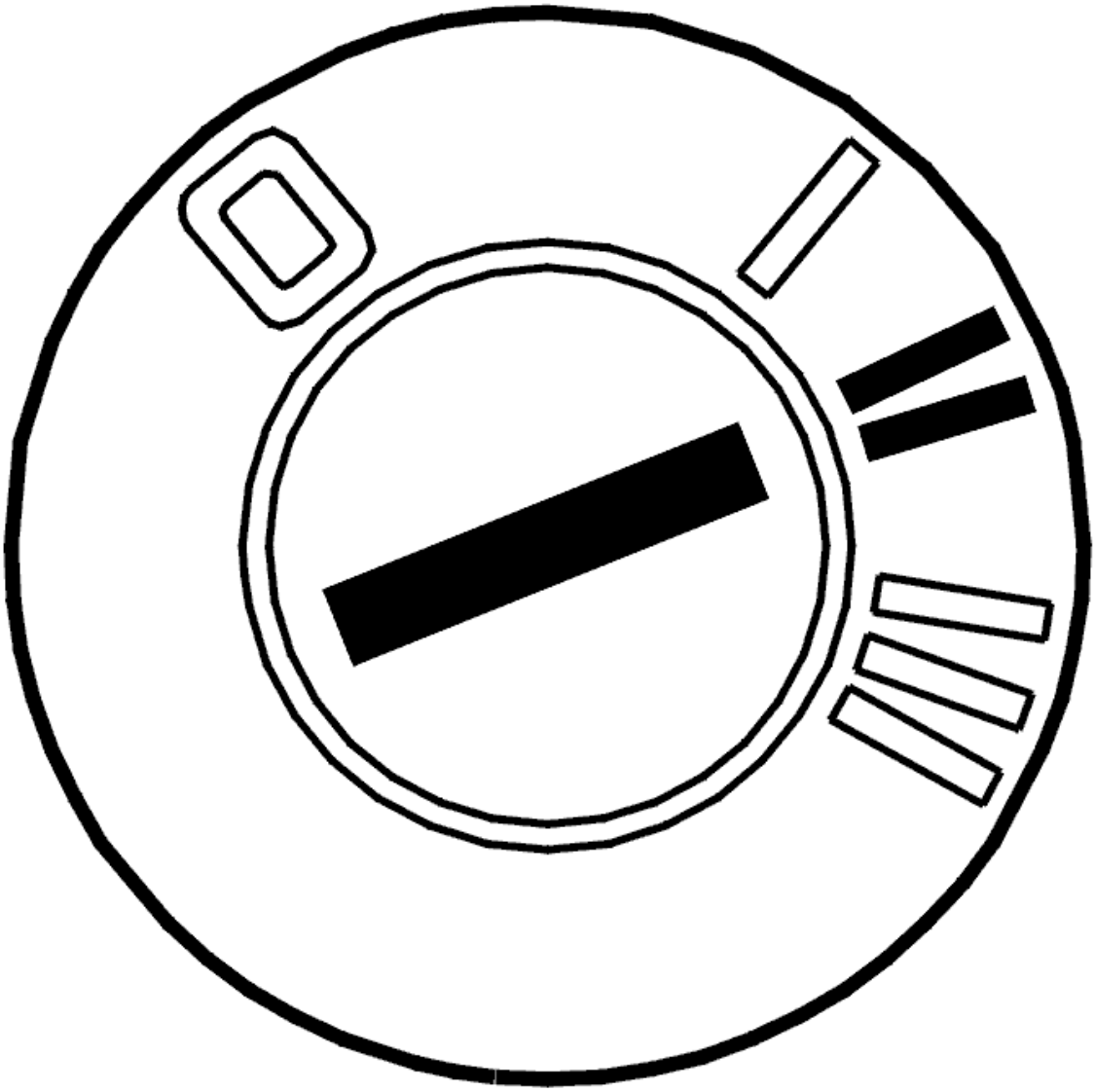

Fig. 186: Identifying Ignition ON
Courtesy of VOLVO CARS CORPORATION

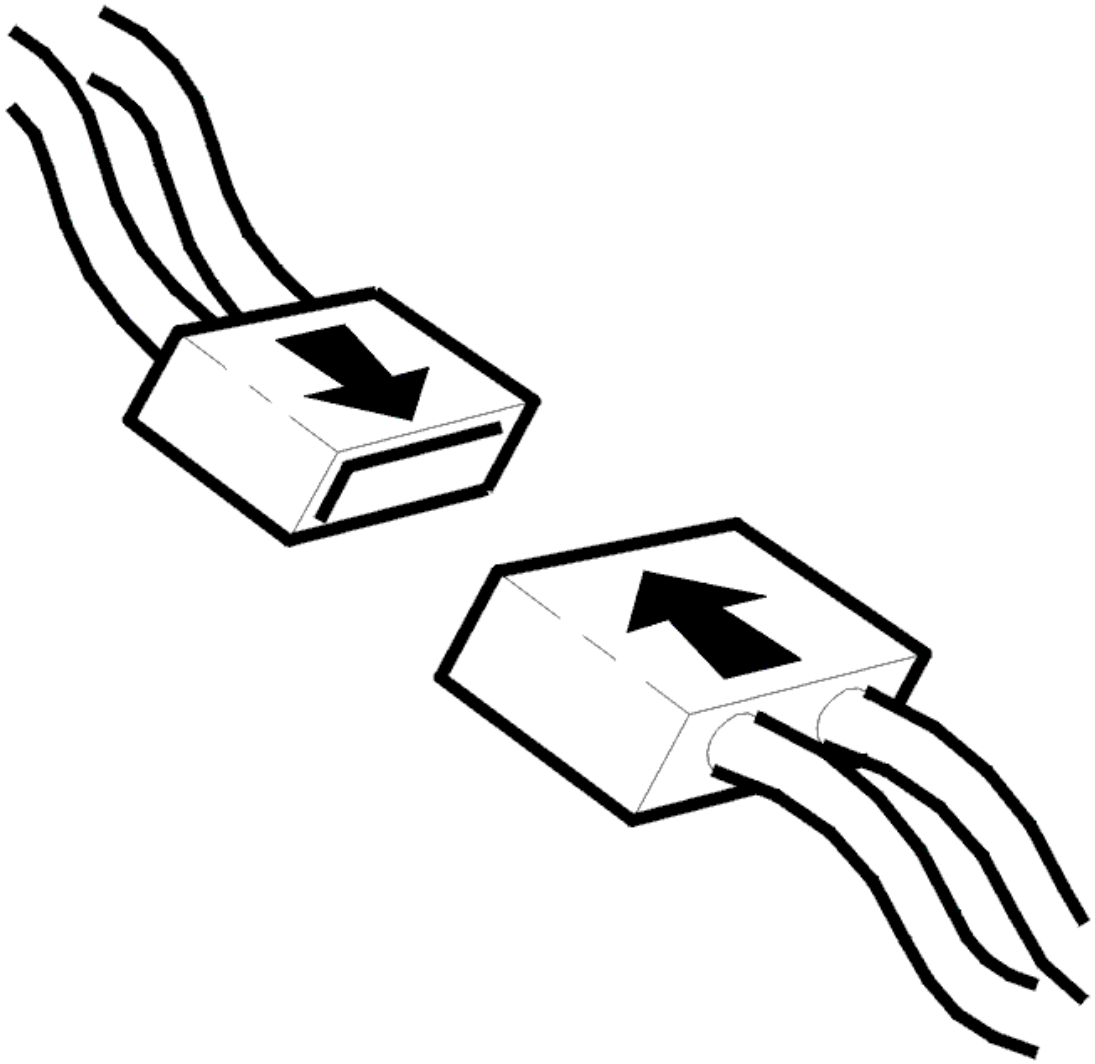

Fig. 187: Connecting Connector
Courtesy of VOLVO CARS CORPORATION

- Ignition off
- Reinstall the connectors, components etc.
- Ignition on.

  Activate and deactivate the relay. The relay must click.

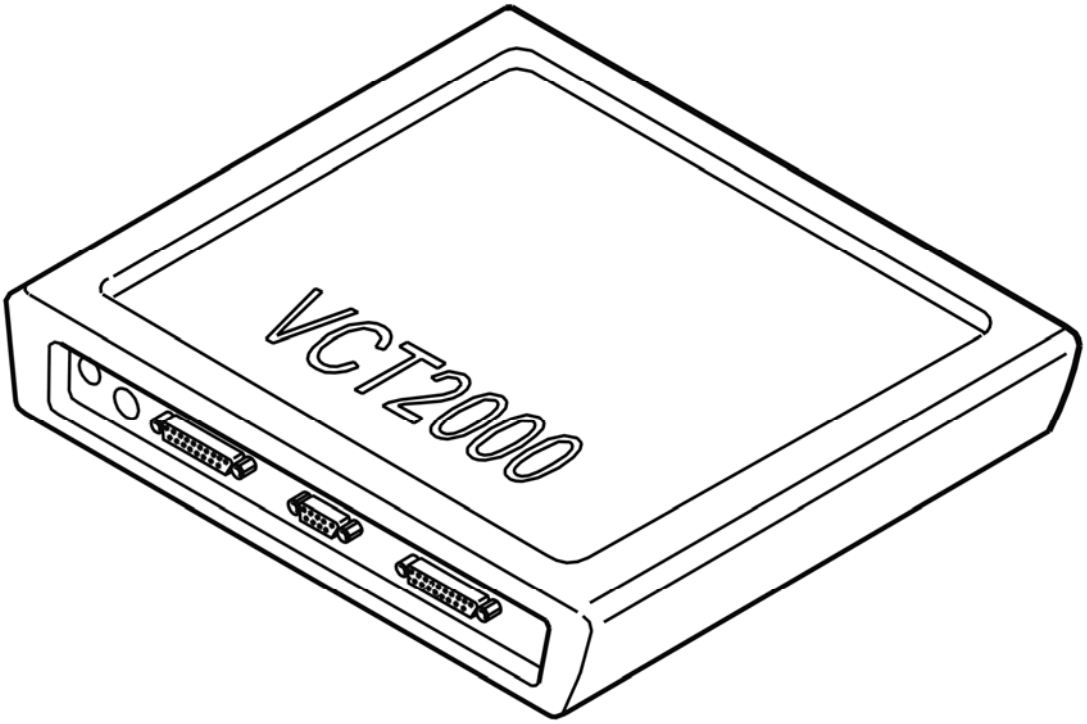

Fig. 188: Identifying VCT2000 Diagnostic Tool Symbol In VIDA
Courtesy of VOLVO CARS CORPORATION

Was the function OK?

- **YES**

  VERIFIED: Troubleshooting has been completed.

- **NO**

  Refer to **INFORMATION**

INFORMATION

FAULT-TRACING INFORMATION

The fault should have been detected and remedied. As this is not the case fault-tracing has failed.

Exit fault-tracing for this diagnostic trouble code (DTC) or make another attempt.

CEM-3F02: SHIFT LOCK SIGNAL. SIGNAL TOO HIGH (2005-2012)

DIAGNOSTIC TROUBLE CODE (DTC) INFORMATION CEM-3F02

Condition

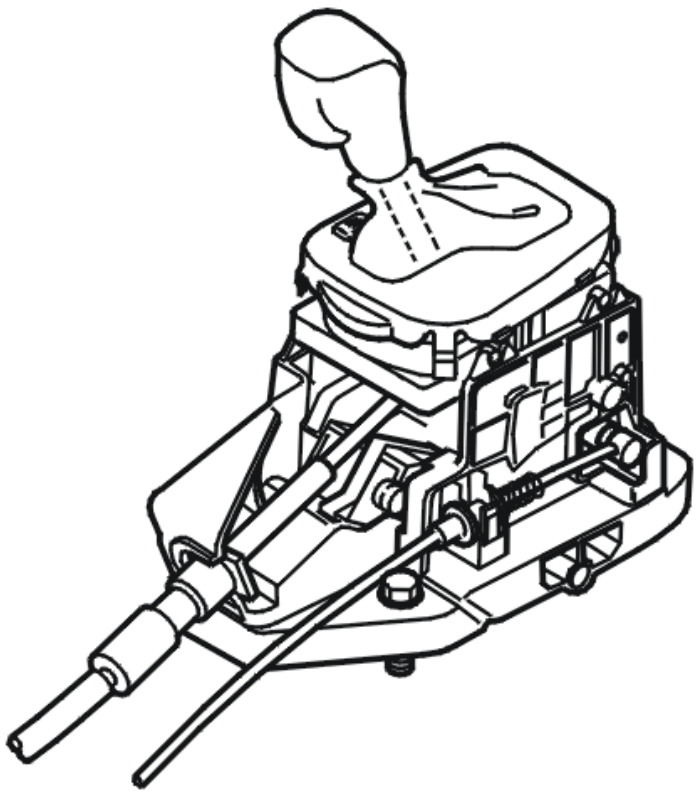

Fig. 189: Identifying Gearshift Lever And Linkage
Courtesy of VOLVO CARS CORPORATION

The central electronic module (CEM) checks the function of the shift lock.

The diagnostic trouble code (DTC) is stored if the central electronic module (CEM) registers a short-circuit to battery voltage in the output signal for shift lock.

The relay for shift lock must be activated for the diagnostic trouble code (DTC) to be stored. The diagnostic trouble code (DTC) can be diagnosed in ignition positions I and II.

Substitute Value

- If the fault has been detected in 100 ignition cycles, the output is closed permanently until the diagnostic trouble code is erased (applies from structure week 200539).

Possible Source

- Short-circuit to the positive supply in the "inhibited shifting" output signal. The relay is not activated.

Fault symptom[s]

- The starter motor does not turn
- The engine does not start.

SIGNAL TOO HIGH

CHECKING THE WIRING

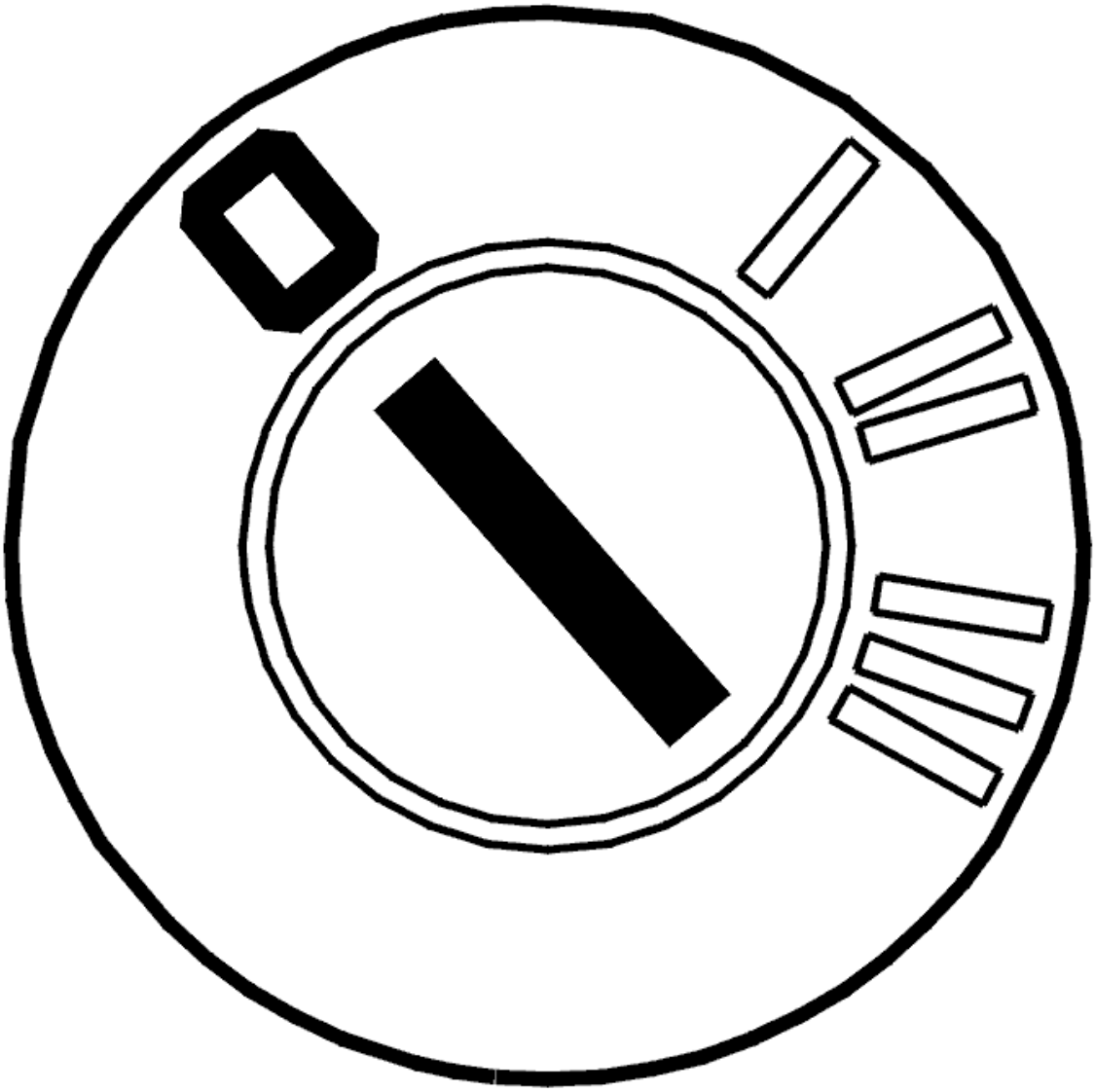

Fig. 190: Identifying Ignition OFF
Courtesy of VOLVO CARS CORPORATION

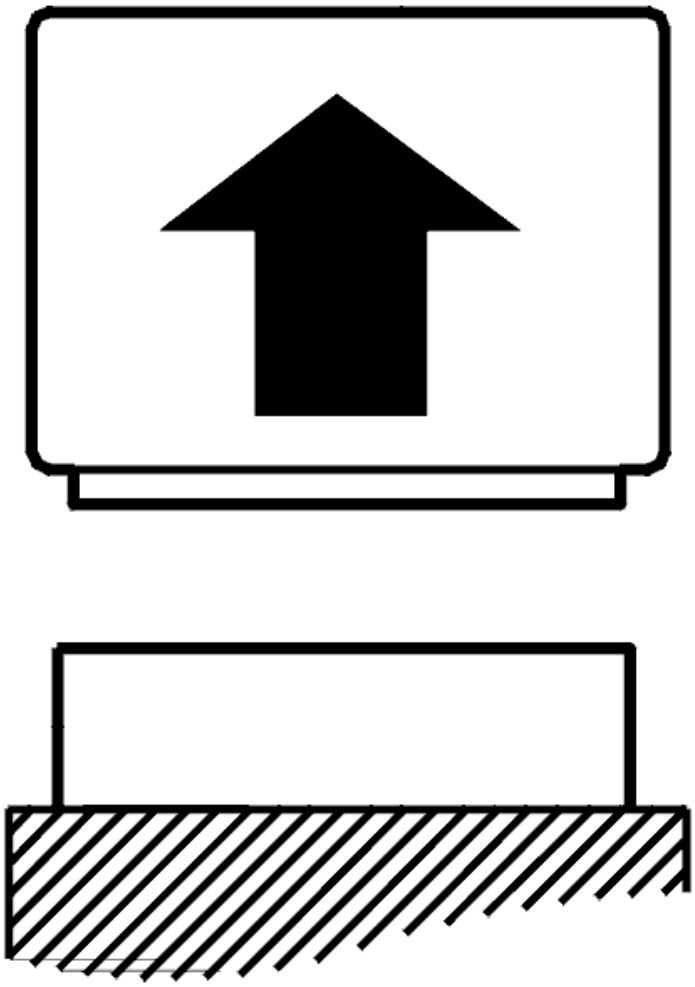

Fig. 191: Disconnecting Connector
Courtesy of VOLVO CARS CORPORATION

- Ignition off
- Disconnect central electronic module (CEM) connector D.

  Check the signal cable. Check for a short-circuit to supply voltage.

  Take readings between central electronic module (CEM) terminal #D23 (#23) and gear selector module (GSM) terminal #3.

  Remedy as necessary.

  Other information

  - see **CONNECTING THE BREAKOUT BOX**

- -2004: **SIGNAL SPECIFICATION**
- 2005-: **SIGNAL SPECIFICATION**
- see **LOCATION OF COMPONENTS**
- For AW50AWD 2003-, see **GEAR SELECTOR LEVER ASSEMBLY GEARTRONIC, REPLACING** .
- For 4T65 2003-, see **GEAR SELECTOR LEVER ASSEMBLY GEARTRONIC, REPLACING** .
- see **CHECKING WIRING AND TERMINALS**

- **Continue**

  Refer to **VERIFICATION**

VERIFICATION

VERIFICATION

HINT: After carrying out the repair, check that the fault has been remedied.

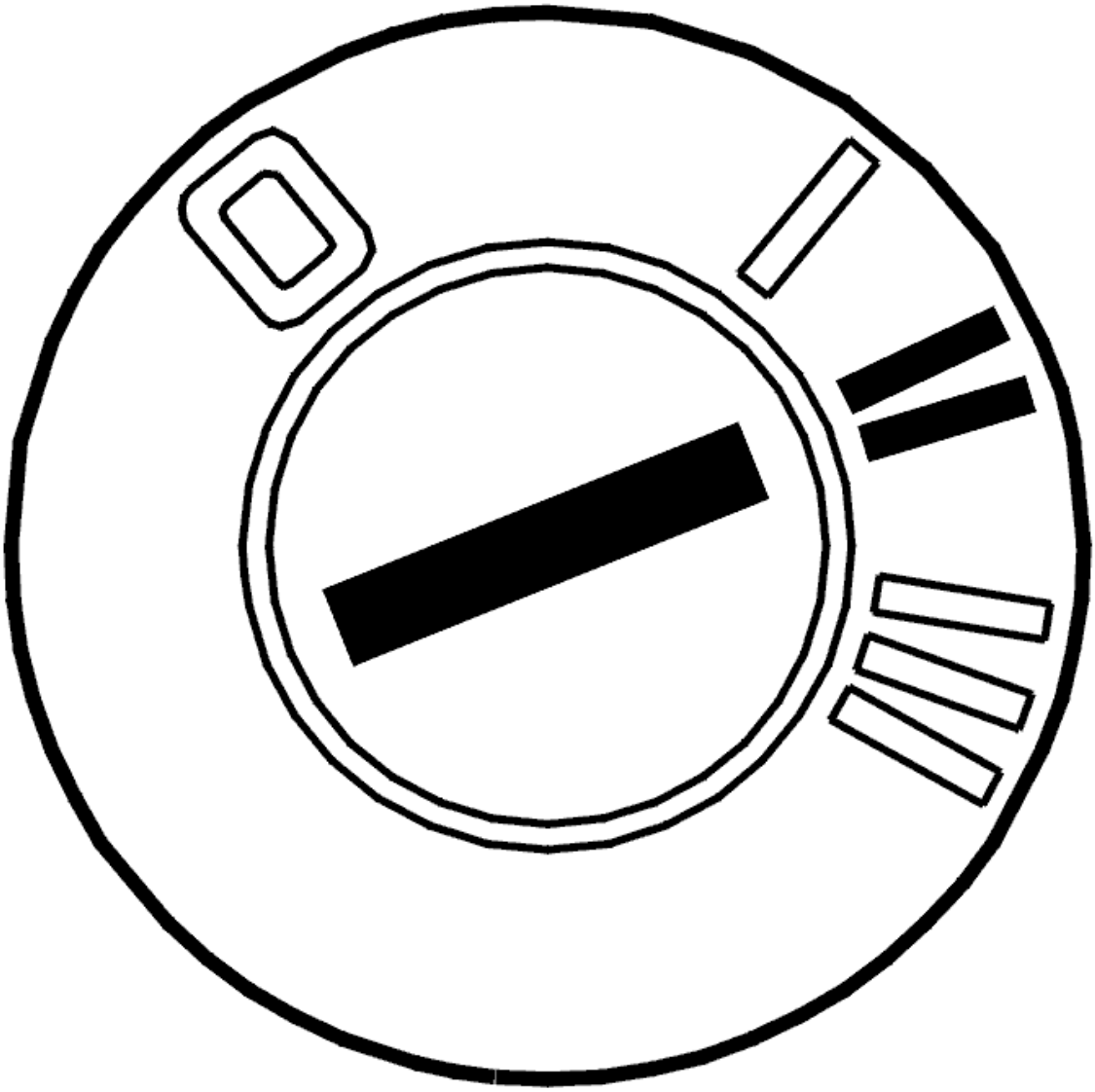

Fig. 192: Identifying Ignition ON
Courtesy of VOLVO CARS CORPORATION

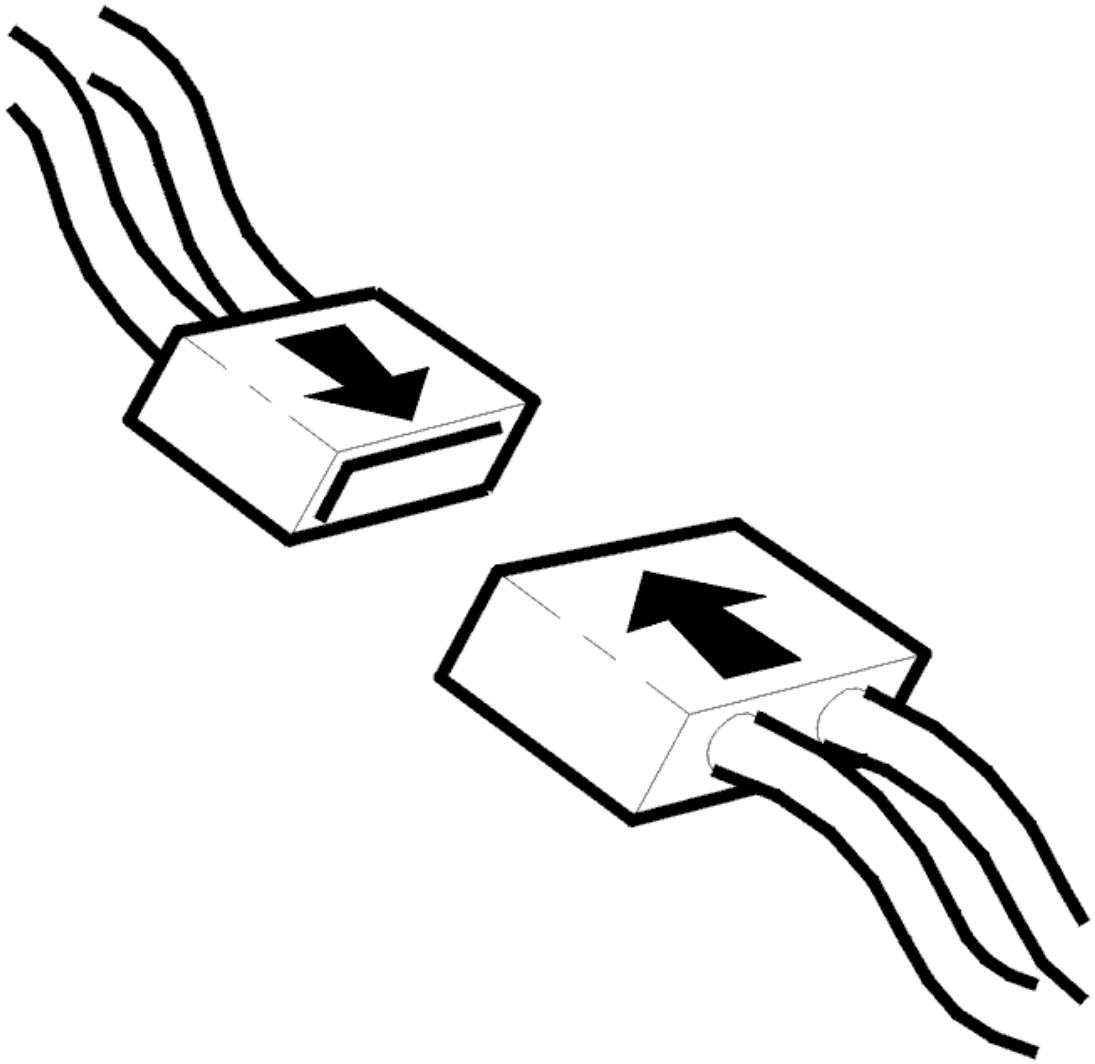

Fig. 193: Connecting Connector
Courtesy of VOLVO CARS CORPORATION

- Ignition off
- Reinstall the connectors, components etc.
- Ignition on.

  Check that the gear selector can only be moved from position P when the brake is applied.

Is shift lock working?

- **YES**

  VERIFIED: Troubleshooting has been completed.

- **NO**

  Refer to **INFORMATION**

INFORMATION

FAULT-TRACING INFORMATION

The fault should have been detected and remedied. As this is not the case fault-tracing has failed.

Exit fault-tracing for this diagnostic trouble code (DTC) or make another attempt.

CEM-3F02: SHIFT LOCK SIGNAL. SIGNAL TOO HIGH. INTERMITTENT FAULT (2003-2004)

DIAGNOSTIC TROUBLE CODE INFORMATION

Condition

If the central electronic module (CEM) detects that the "shift lock" output signal is too high, diagnostic trouble code CEM-3F02 is displayed.

Substitute Value

None

Possible Source

- Shift lock output signal short circuited to plus means that the relay is not activated.

Fault symptom[s]

- The starter motor does not work
- Engine does not start.

SIGNAL TOO HIGH. INTERMITTENT FAULT

INTERMITTENT FAULT

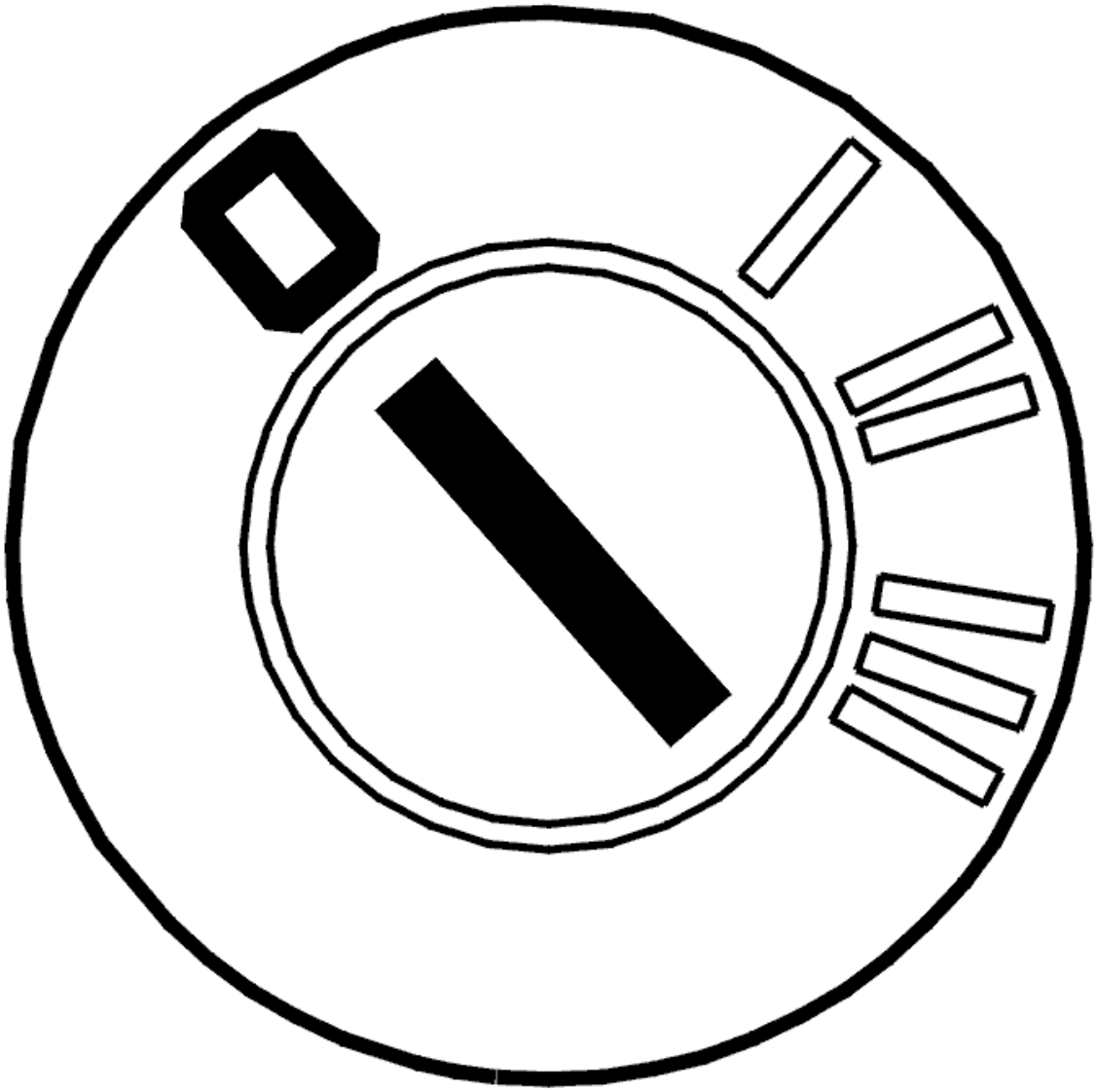

Fig. 194: Identifying Ignition OFF
Courtesy of VOLVO CARS CORPORATION

- Ignition off.

  Check the signal wire between central electronic module (CEM) 1D and automatic gearbox electronic lever module 3 for a short circuit to voltage supply as described in, see **SHORT-CIRCUIT TO SUPPLY VOLTAGE, INTERMITTENT FAULTS**

  Do the necessary corrective action.

  Additional information:

  - For central electronic module (CEM) connector:
    - For -2004, see: **CENTRAL ELECTRONIC MODULE (CEM), REPLACING**

- For 2005-, see: **CENTRAL ELECTRONIC MODULE (CEM), REPLACING** .
- To connect the test box, see **CONNECTING THE BREAKOUT BOX** .
- -2004: **SIGNAL SPECIFICATION**
- 2005-: **SIGNAL SPECIFICATION**

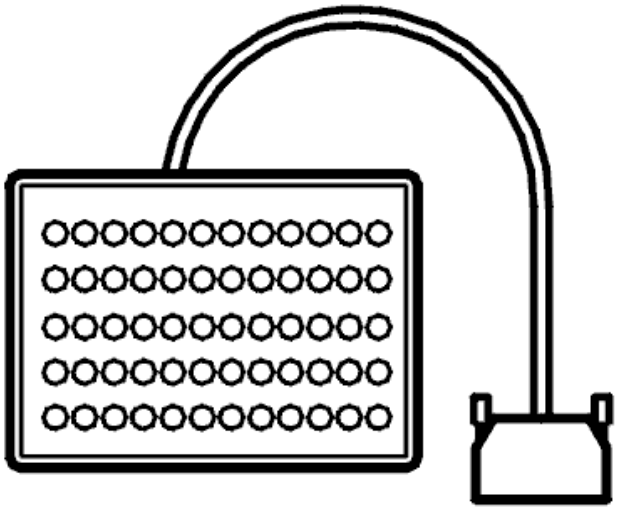

Fig. 195: Breakout Box
Courtesy of VOLVO CARS CORPORATION

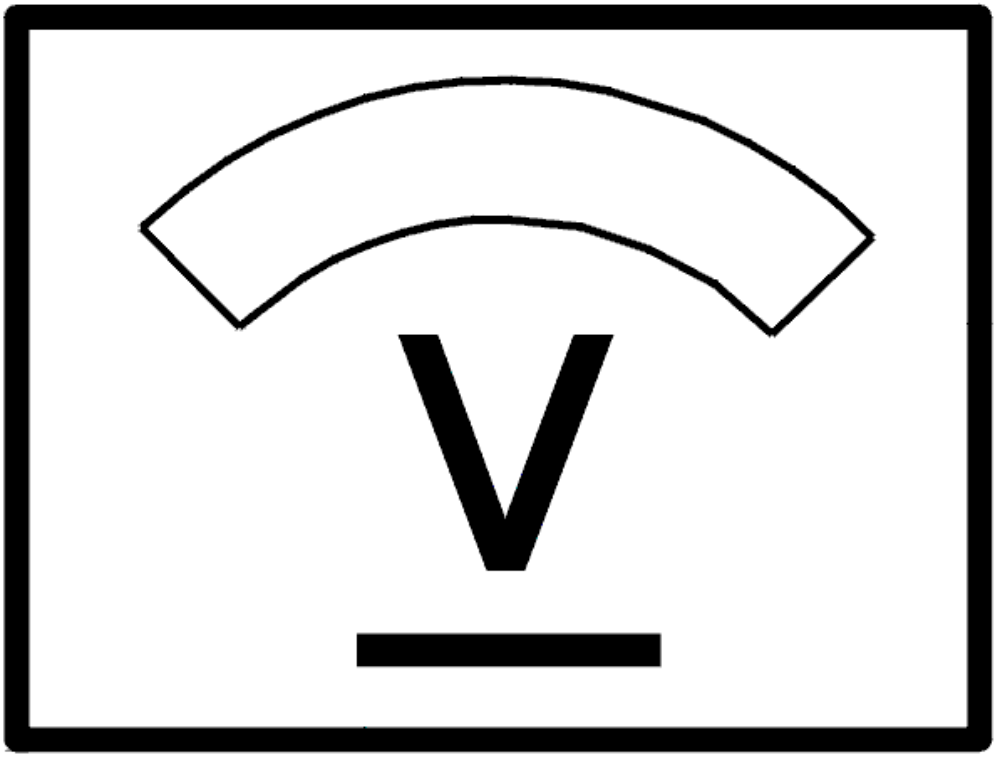

Fig. 196: Identifying Voltage Display
Courtesy of VOLVO CARS CORPORATION

- **Continue**

  Refer to **INFORMATION**

INFORMATION

FAULT-TRACING INFORMATION

If the fault is intermittent, do not verify fault-tracing if the fault does not recur.

It is possible to view the information again, or leave fault-tracing for this diagnostic trouble code (DTC).

CEM-3F02: SHIFT LOCK SIGNAL. SIGNAL TOO HIGH. PERMANENT FAULT

(2003-2004)

DIAGNOSTIC TROUBLE CODE INFORMATION

see **DIAGNOSTIC TROUBLE CODE INFORMATION**

SIGNAL TOO HIGH. PERMANENT FAULT

CHECKING THE RELAY

Check that relay 2/29 is installed correctly.

Check the relay connections.

Do the necessary corrective action.

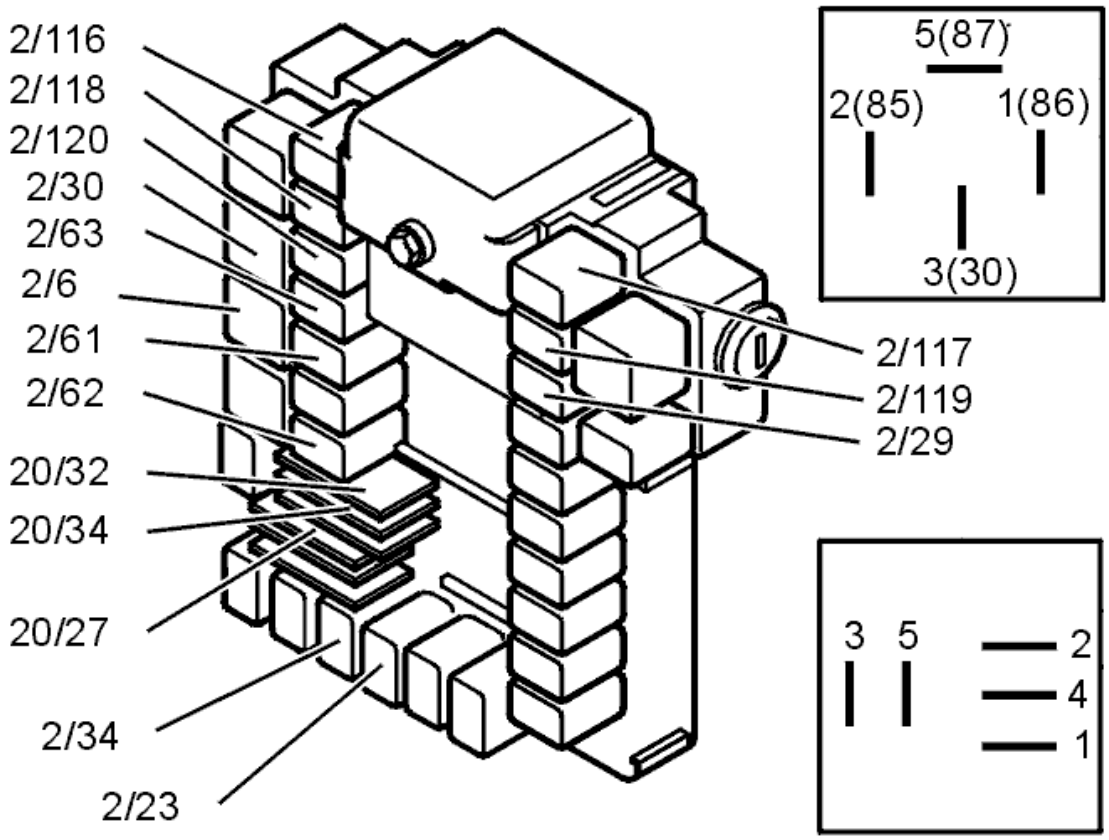

Fig. 197: Identifying Relays
Courtesy of VOLVO CARS CORPORATION

Is there a fault?

- **YES**

Refer to **VERIFICATION**

- **NO**

  Refer to **CHECKING THE SIGNAL WIRE**

CHECKING THE SIGNAL WIRE

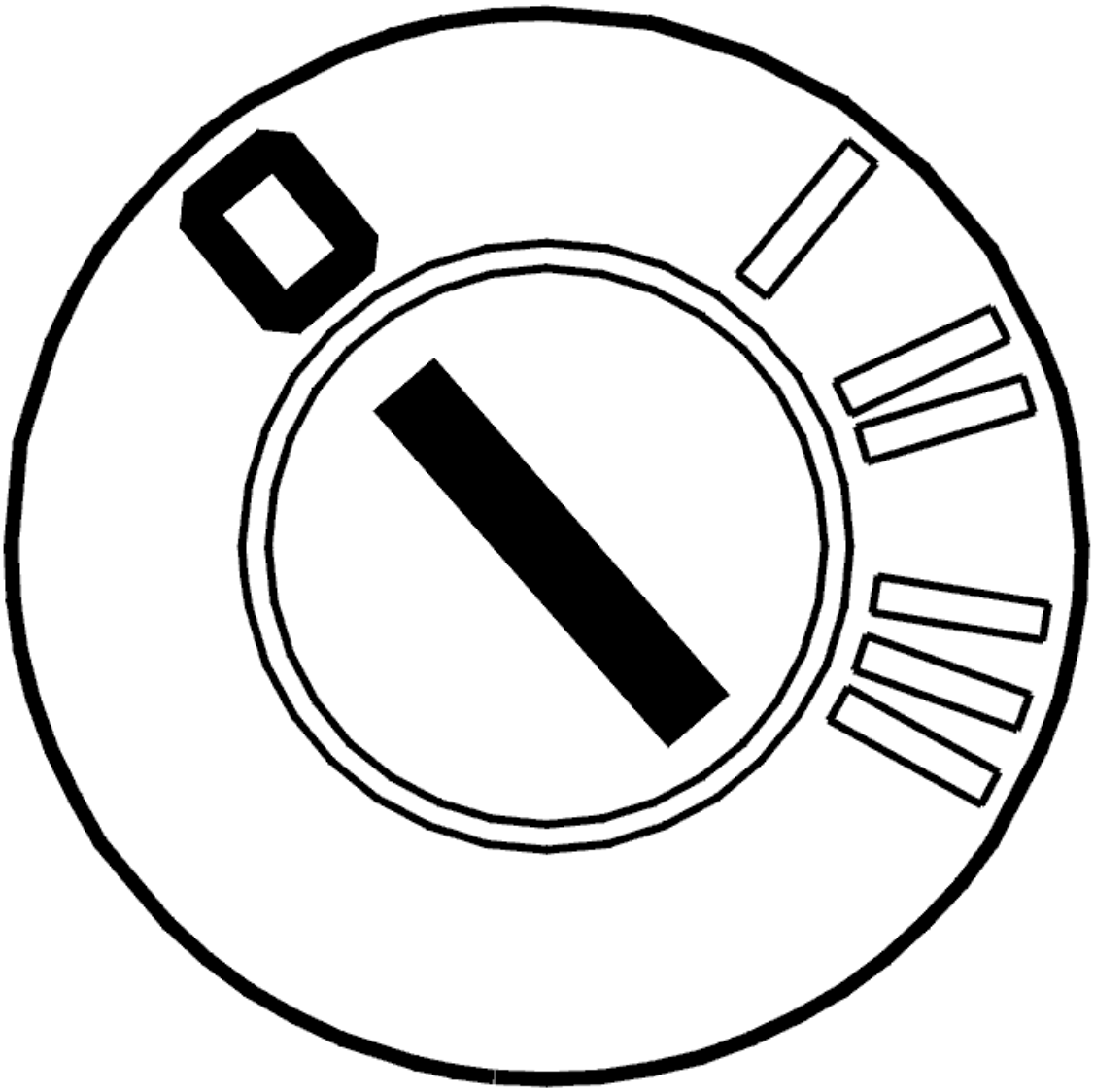

Fig. 198: Identifying Ignition OFF
Courtesy of VOLVO CARS CORPORATION

- Ignition off.
- Disconnect the 20-pin connector (group D) from the central electronic module (CEM).
- Disconnect the connector from the electronic lever module on the automatic gearbox.

Check the signal wire between central electronic module (CEM) 1D and automatic gearbox electronic lever module 3 for a short circuit to voltage supply as described in, see **SHORT-CIRCUIT TO SUPPLY VOLTAGE. PERMANENT FAULTS** .

Do the necessary corrective action.

Additional information:

- For central electronic module (CEM) connector:
  - For -2004, see: **CENTRAL ELECTRONIC MODULE (CEM), REPLACING**
  - For 2005-, see: **CENTRAL ELECTRONIC MODULE (CEM), REPLACING** .
- To connect the test box, see **CONNECTING THE BREAKOUT BOX** .
- -2004: **SIGNAL SPECIFICATION**
- 2005-: **SIGNAL SPECIFICATION**

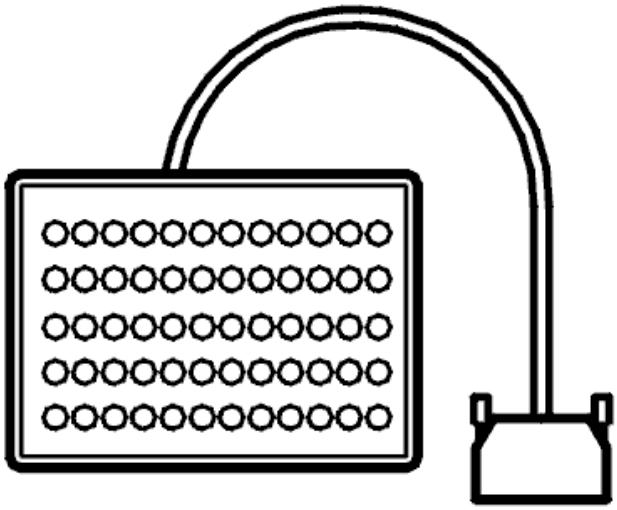

Fig. 199: Breakout Box
Courtesy of VOLVO CARS CORPORATION

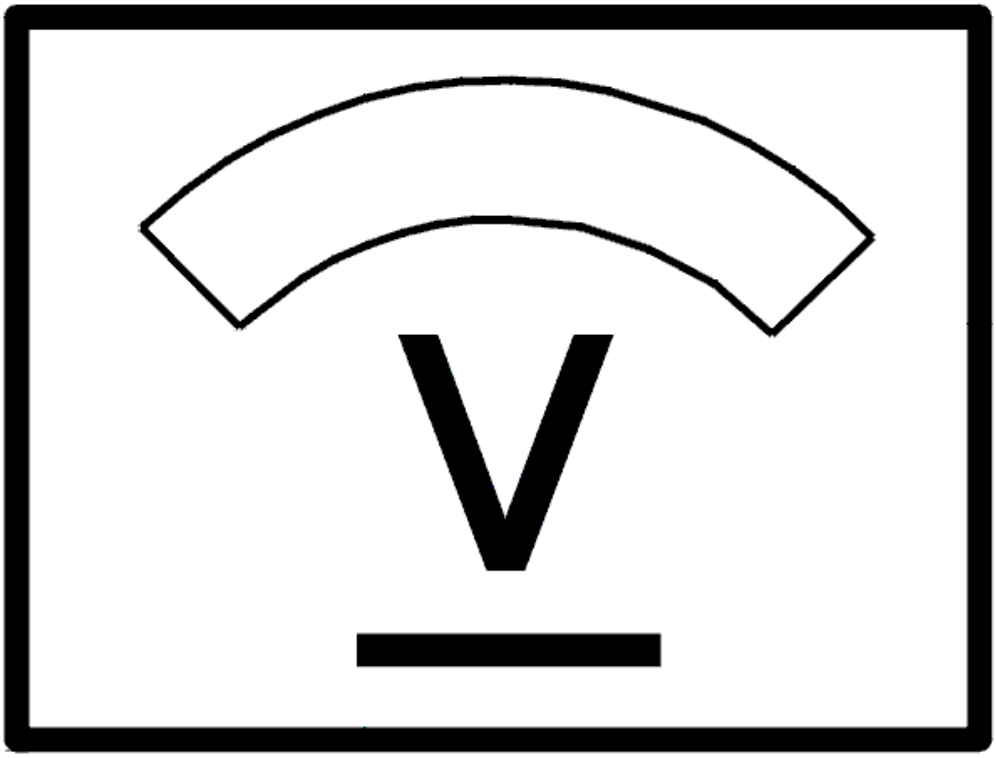

Fig. 200: Identifying Voltage Display
Courtesy of VOLVO CARS CORPORATION

Is signal wire correct?

- **YES**

  Refer to **REPLACING THE COMPONENT**

- **NO**

  Refer to **VERIFICATION**

REPLACING THE COMPONENT

Test by replacing the automatic gearbox electronic lever module.

- **Continue**

  Refer to **VERIFICATION**

VERIFICATION

VERIFICATION

HINT: After the repair it is necessary to check that the fault has been rectified.

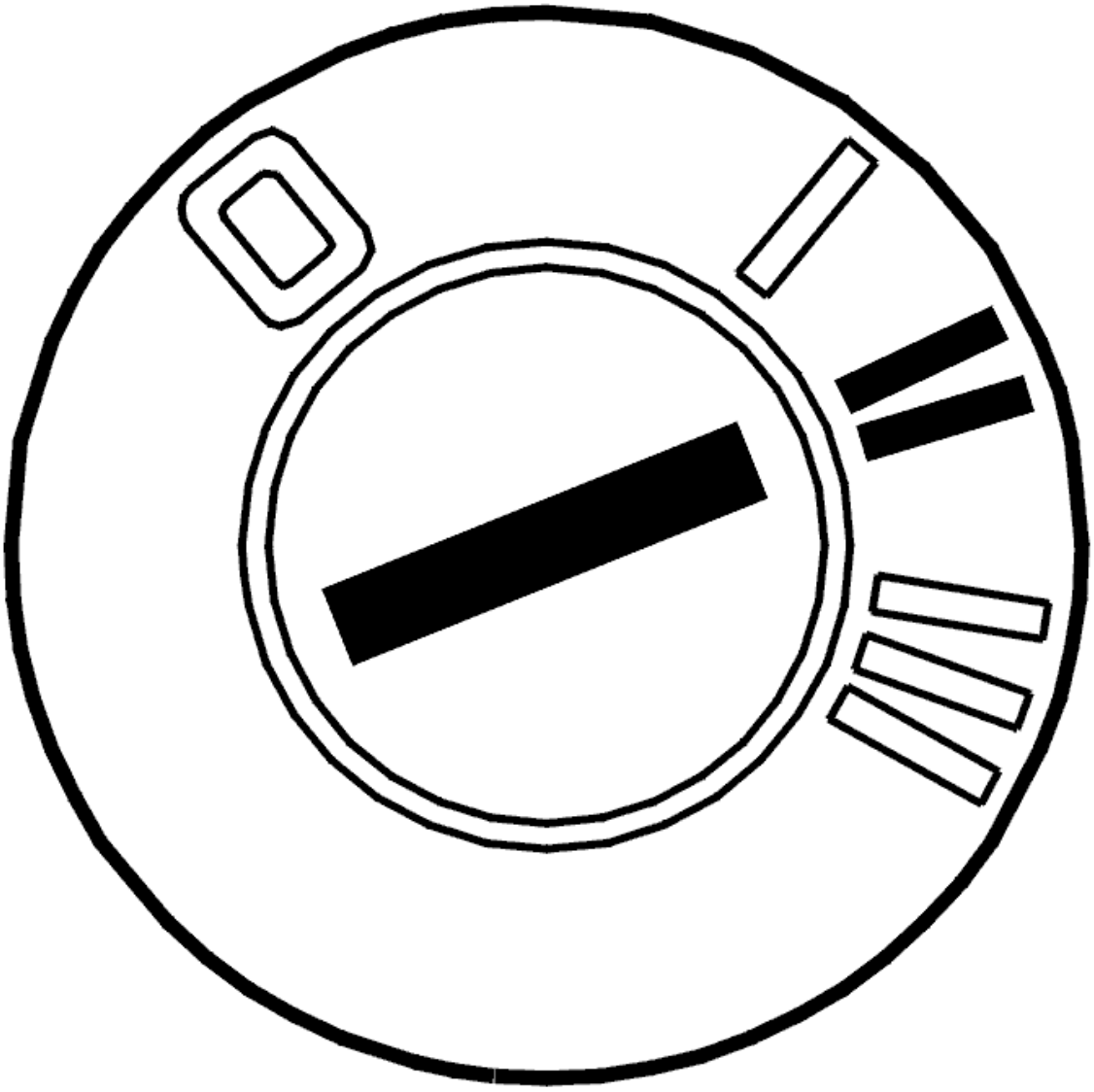

Fig. 201: Identifying Ignition ON
Courtesy of VOLVO CARS CORPORATION

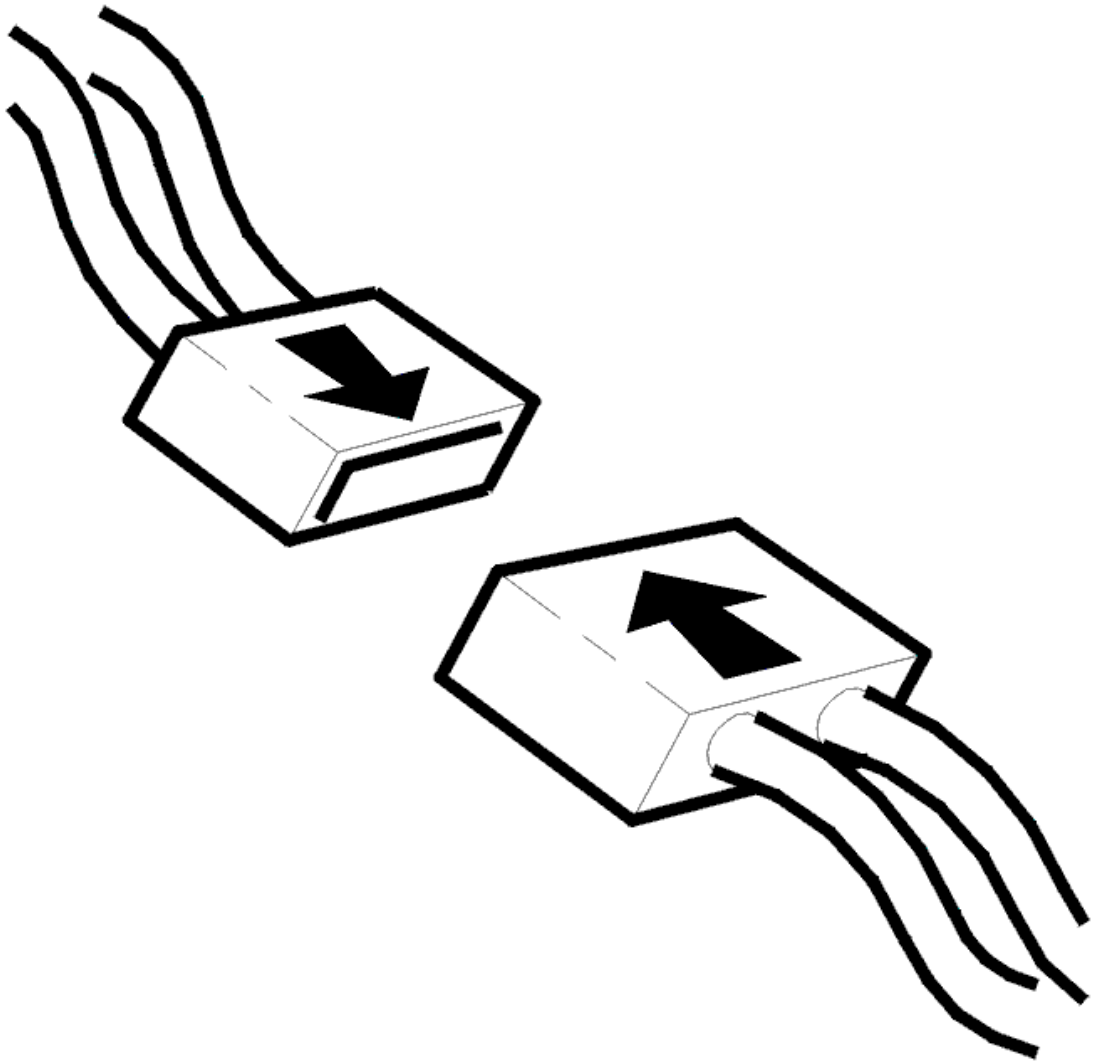

Fig. 202: Connecting Connector
Courtesy of VOLVO CARS CORPORATION

- Ignition off.
- Connect the connectors, install the components, etc.
- Ignition on.

  Check that diagnostic trouble code status changes from permanent to intermittent.

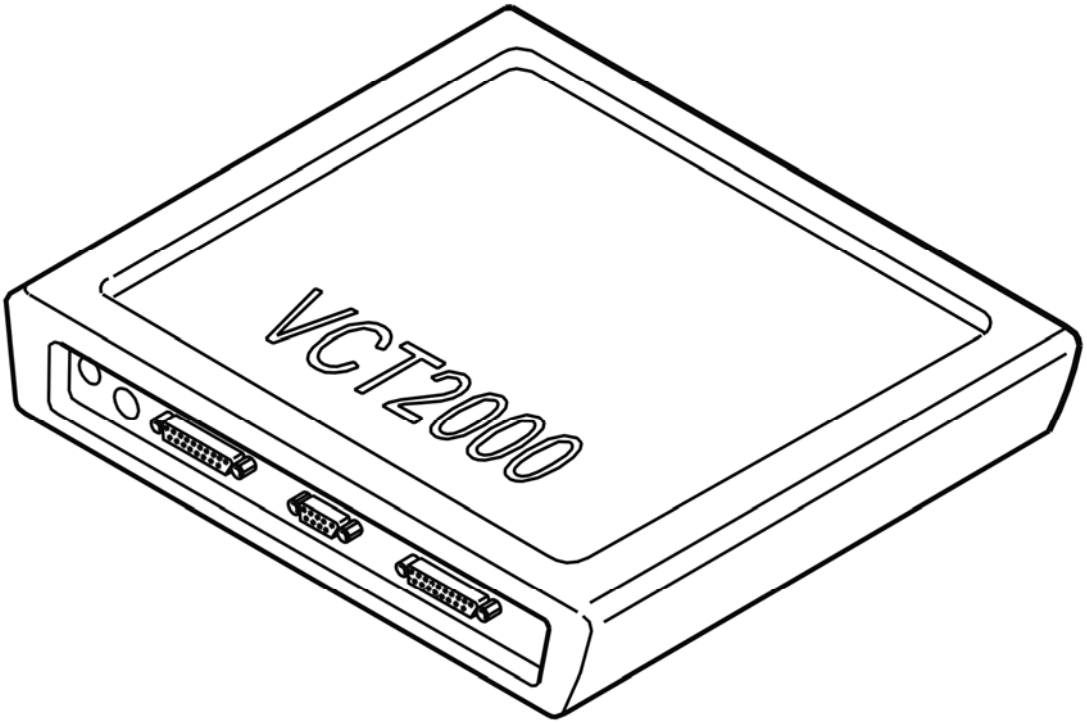

Fig. 203: Identifying VCT2000 Diagnostic Tool Symbol In VIDA
Courtesy of VOLVO CARS CORPORATION

Is the diagnostic trouble code status intermittent?

- **YES**

  VERIFIED: Troubleshooting has been completed.

- **NO**

  Refer to **INFORMATION**

INFORMATION

FAULT-TRACING INFORMATION

The fault should have been detected and remedied. As this is not the case fault-tracing has failed.

Exit fault-tracing for this diagnostic trouble code (DTC) or make another attempt.

CEM-3F03: SHIFT LOCK SIGNAL. SIGNAL MISSING. INTERMITTENT FAULT (2003-2004)

DIAGNOSTIC TROUBLE CODE INFORMATION

Condition

If the central electronic module (CEM) registers that there is no "shift lock" output signal, diagnostic trouble code CEM-3F03 is displayed.

Substitute Value

None

Possible Source

- Open circuit on "shift lock" output signal means that the relay is not activated.

Fault symptom[s]

- Starter motor does not work.

SIGNAL MISSING. INTERMITTENT FAULT

INTERMITTENT FAULT

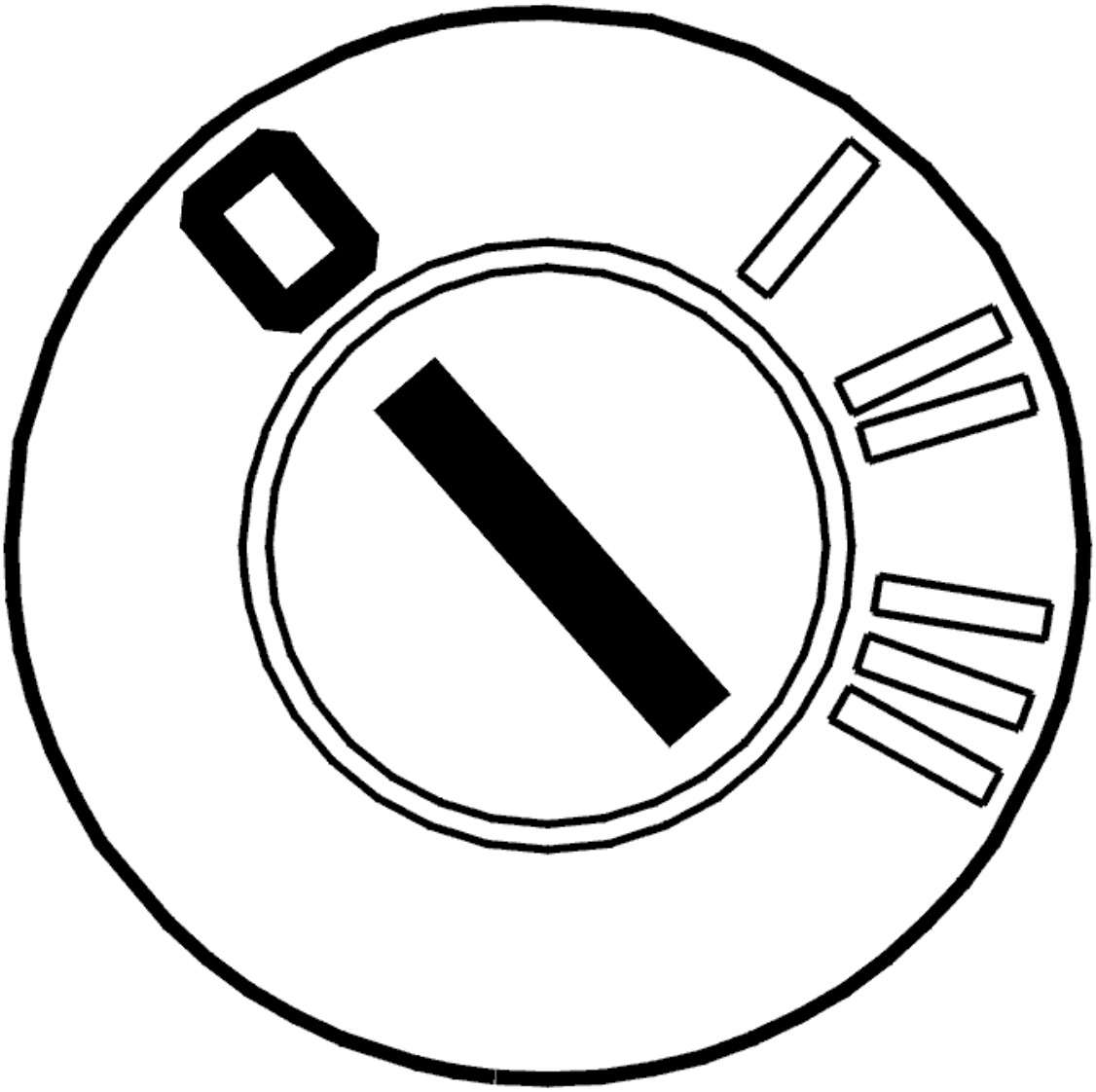

Fig. 204: Identifying Ignition OFF
Courtesy of VOLVO CARS CORPORATION

- The fault tracing only applies to automatic transmissions
- Ignition off.

  Check the signal cable between the central electronic module (CEM) terminal #1D and the gear selector assembly terminal #A3. Check for an open-circuit. Check for contact resistance and oxidation.

  Remedy as necessary.

  Other information:

  - To access or replace the central electronic module (CEM):
    - For -2004, see: **CENTRAL ELECTRONIC MODULE (CEM), REPLACING**

  - For 2005-, see: **CENTRAL ELECTRONIC MODULE (CEM), REPLACING** .
- For AW50AWD 2003-, see **GEAR SELECTOR LEVER ASSEMBLY GEARTRONIC, REPLACING** .
- For 4T65 2003-, see **GEAR SELECTOR LEVER ASSEMBLY GEARTRONIC, REPLACING** .
- To connect the breakout box, see **CONNECTING THE BREAKOUT BOX**
- -2004: **SIGNAL SPECIFICATION**
- 2005-: **SIGNAL SPECIFICATION**
- see **CHECKING WIRING AND TERMINALS** .

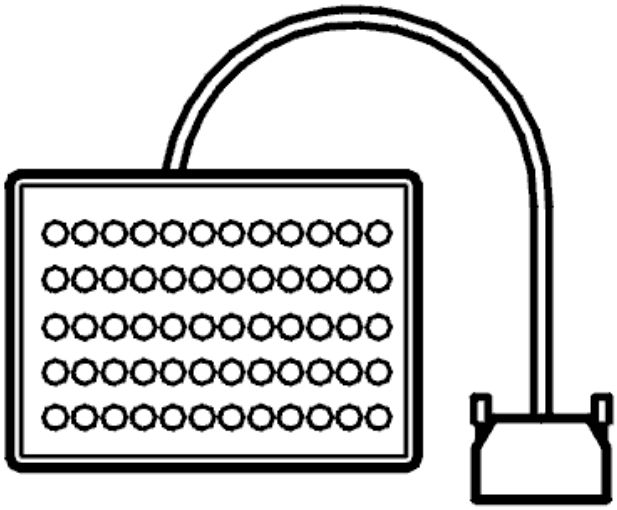

Fig. 205: Breakout Box
Courtesy of VOLVO CARS CORPORATION

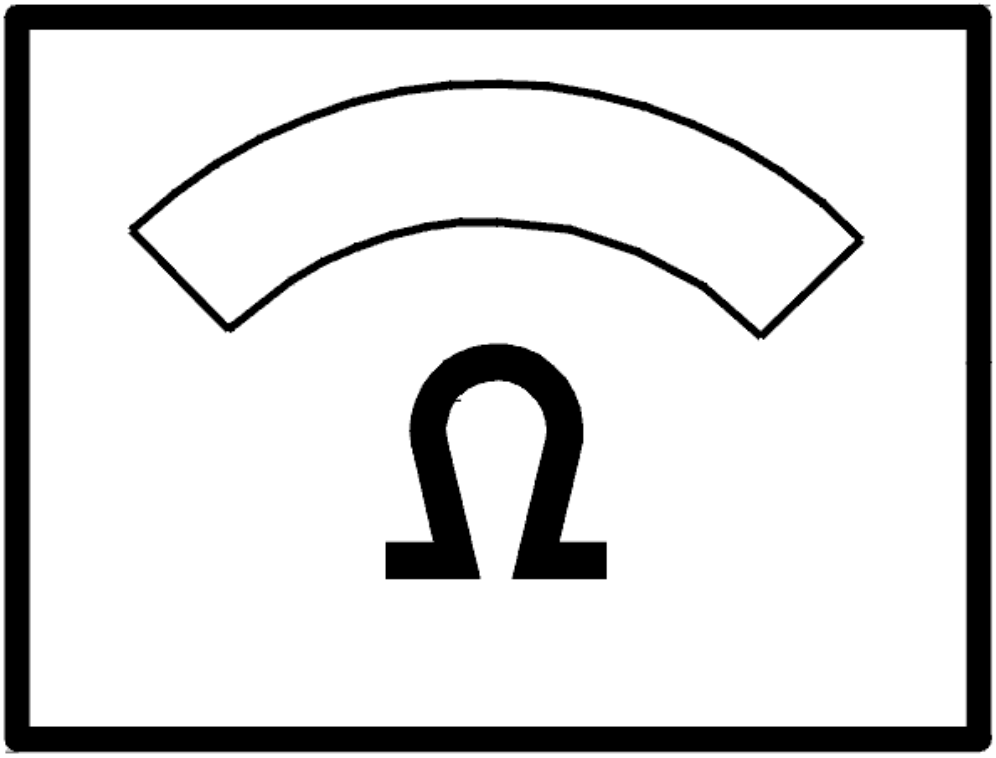

Fig. 206: Identifying Ohm Meter
Courtesy of VOLVO CARS CORPORATION

- **Continue**

  Refer to **INFORMATION**

INFORMATION

FAULT-TRACING INFORMATION

If the fault is intermittent, do not verify fault-tracing if the fault does not recur.

It is possible to view the information again, or leave fault-tracing for this diagnostic trouble code (DTC).

CEM-3F03: SHIFT LOCK SIGNAL. SIGNAL MISSING. PERMANENT FAULT

(2003-2004)

DIAGNOSTIC TROUBLE CODE INFORMATION

see **DIAGNOSTIC TROUBLE CODE INFORMATION**

SIGNAL MISSING. PERMANENT FAULT

CHECKING THE RELAY

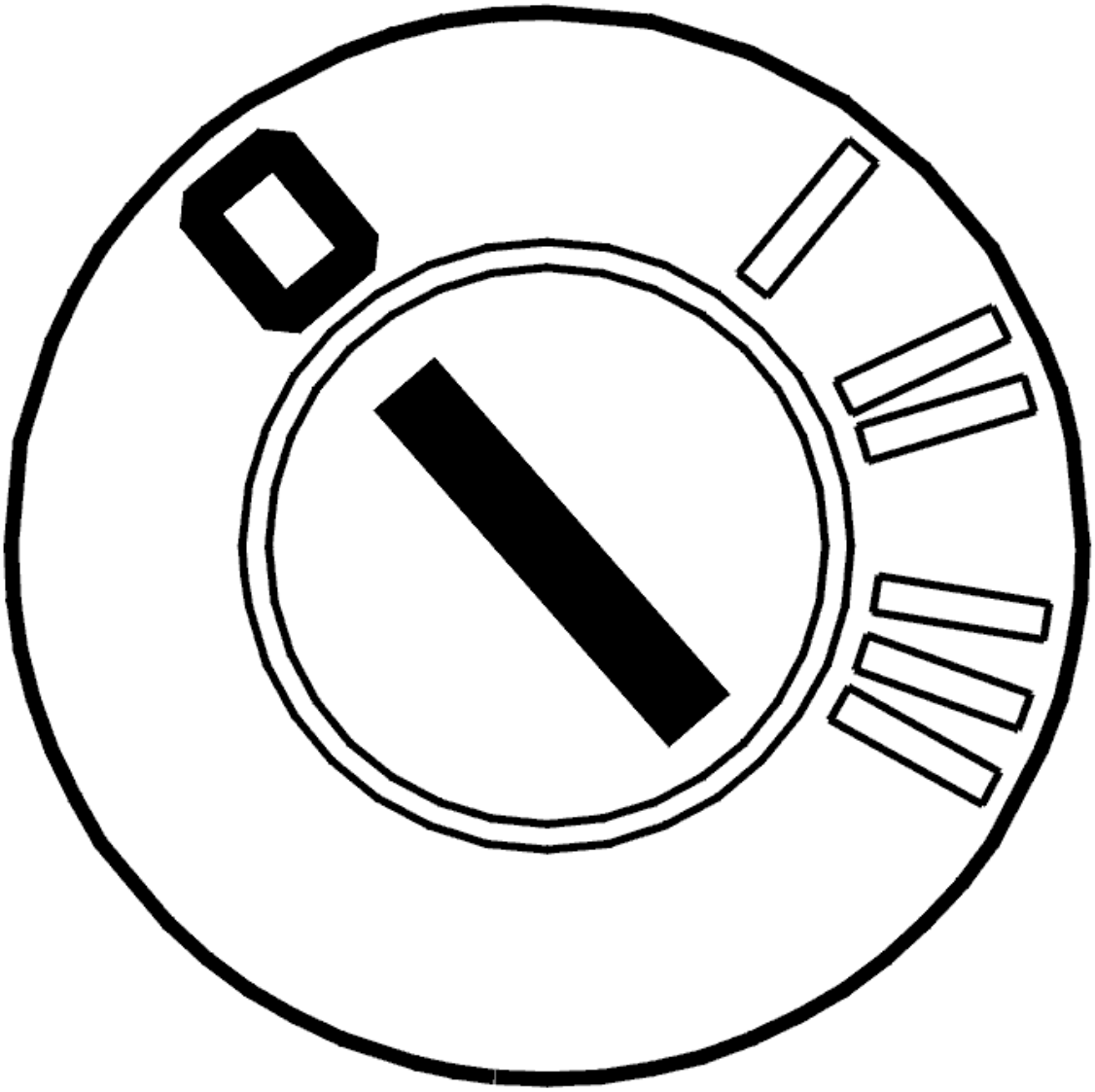

Fig. 207: Identifying Ignition OFF
Courtesy of VOLVO CARS CORPORATION

- Ignition off.

  Check that relay 2/29 is correctly installed.

Check the relay terminals.

Remedy as necessary.

Other information

- To access and replace the relay:
  - For -2004, see: **CENTRAL ELECTRONIC MODULE (CEM), REPLACING**
  - For 2005-, see: **CENTRAL ELECTRONIC MODULE (CEM), REPLACING** .

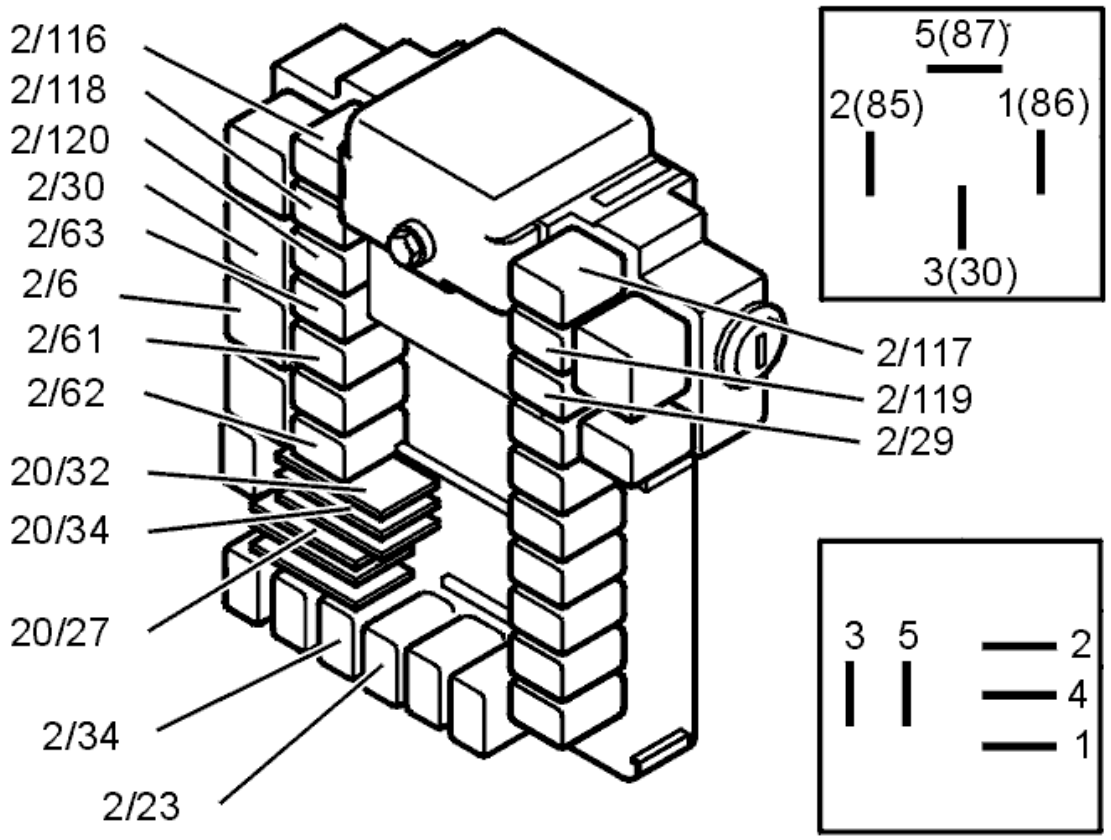

Fig. 208: Identifying Relays
Courtesy of VOLVO CARS CORPORATION

Was a fault detected?

- **YES**

  Refer to **VERIFICATION**

- **NO**

  Refer to **CHECKING THE SIGNAL CABLE**

CHECKING THE SIGNAL CABLE

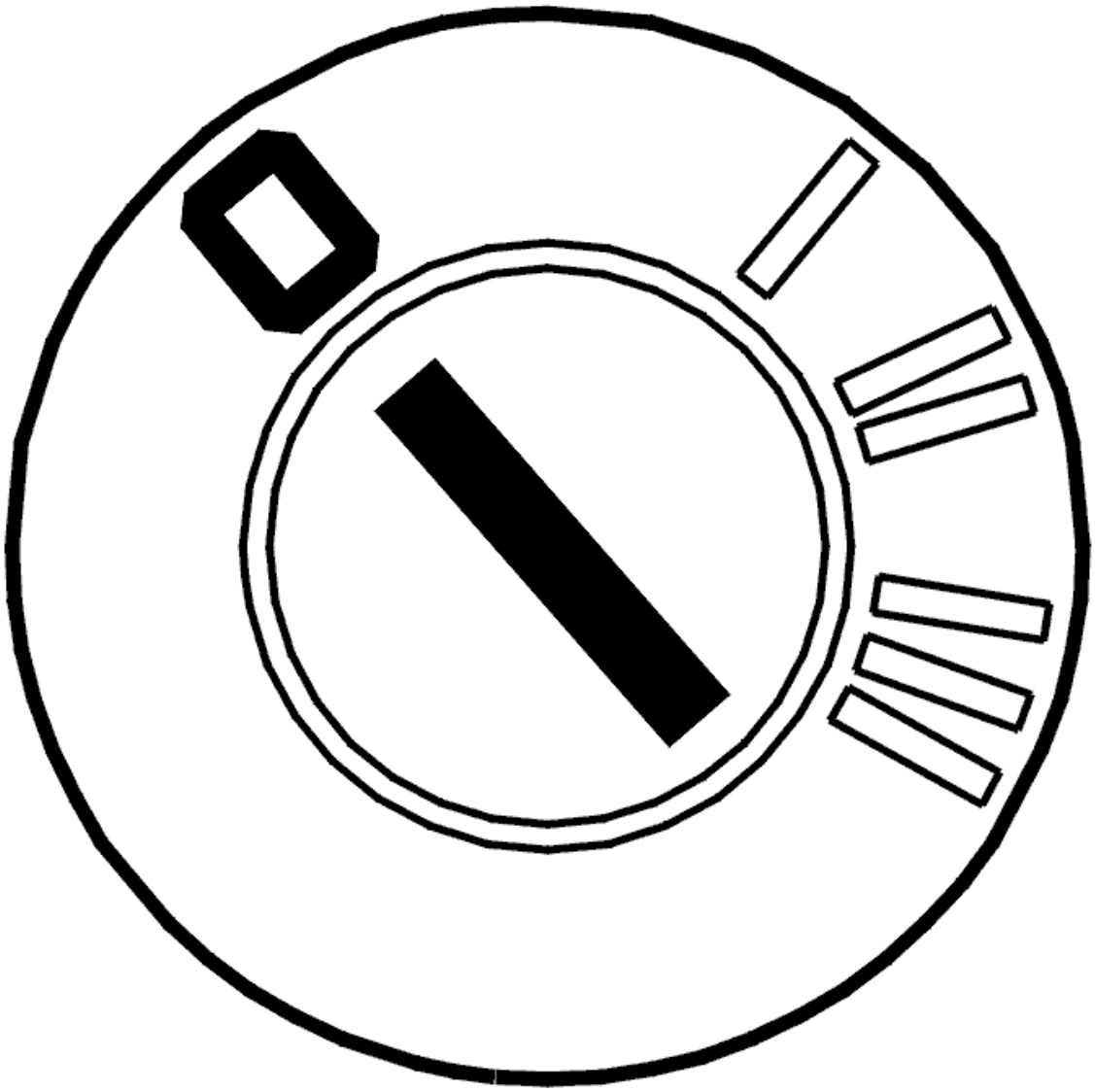

Fig. 209: Identifying Ignition OFF
Courtesy of VOLVO CARS CORPORATION

- Ignition off
- Disconnect the connector from the central electronic module (CEM)
- Disconnect the connector from the gear selector assembly.

  Check the signal cable between central electronic module (CEM) connector terminal #1D and gear selector assembly connector terminal #3. Check for an open-circuit.

  Remedy as necessary.

  Other information:

- To access or replace the central electronic module (CEM):
  - For -2004, see: **CENTRAL ELECTRONIC MODULE (CEM), REPLACING**
  - For 2005-, see: **CENTRAL ELECTRONIC MODULE (CEM), REPLACING** .
- For AW50AWD 2003-, see **GEAR SELECTOR LEVER ASSEMBLY GEARTRONIC, REPLACING** .
- For 4T65 2003-, see **GEAR SELECTOR LEVER ASSEMBLY GEARTRONIC, REPLACING** .
- To connect the breakout box, see **CONNECTING THE BREAKOUT BOX**
- -2004: **SIGNAL SPECIFICATION**
- 2005-: **SIGNAL SPECIFICATION**
- see **CHECKING WIRING AND TERMINALS** .

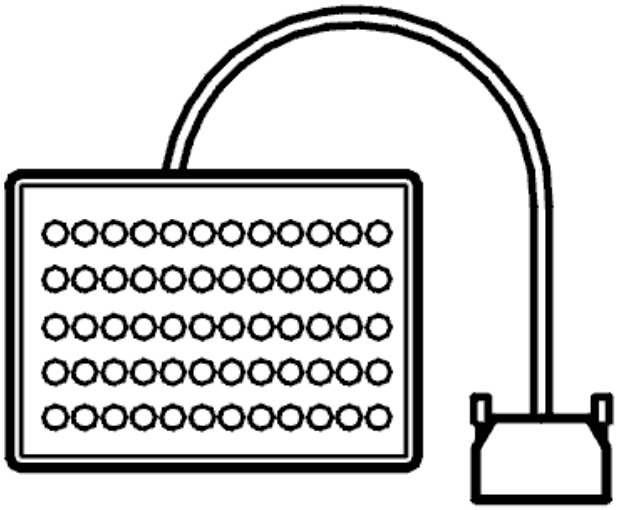

Fig. 210: Breakout Box
Courtesy of VOLVO CARS CORPORATION

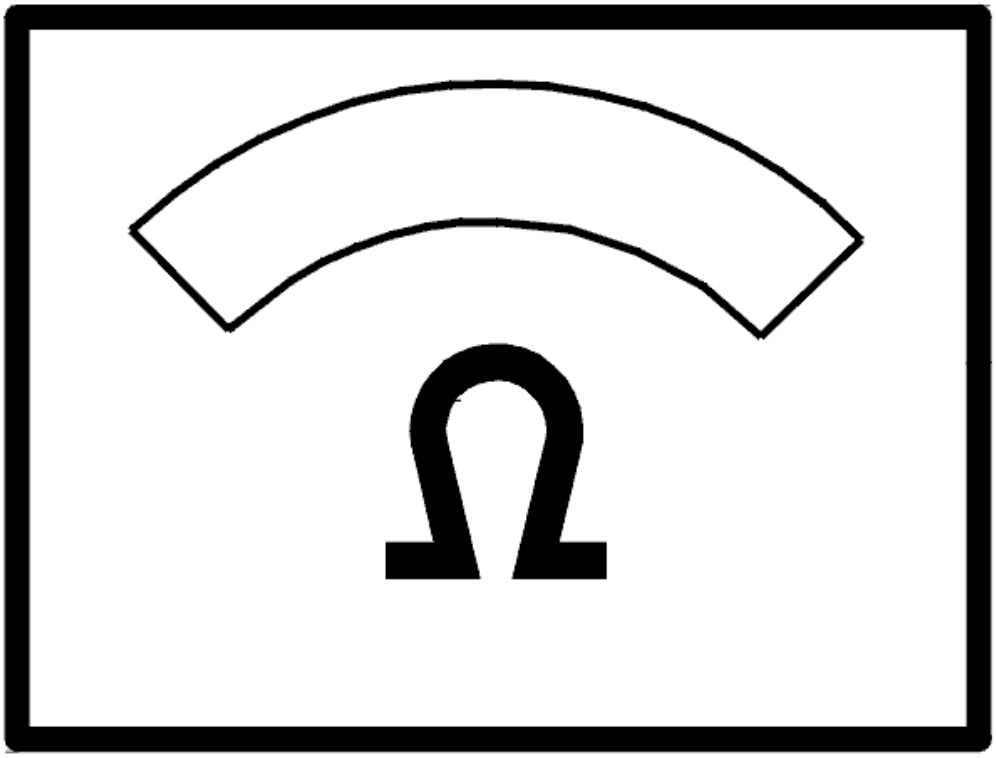

Fig. 211: Identifying Ohm Meter
Courtesy of VOLVO CARS CORPORATION

Is the signal cable OK?

- **YES**

  Refer to **REPLACING THE COMPONENT**

- **NO**

  Refer to **VERIFICATION**

REPLACING THE COMPONENT

Try a new gear selector assembly (automatic transmission) or solenoid (manual transmission).

Other information

- For AW50AWD 2003-, see **GEAR SELECTOR LEVER ASSEMBLY GEARTRONIC, REPLACING** .
- For 4T65 2003-, see **GEAR SELECTOR LEVER ASSEMBLY GEARTRONIC, REPLACING** .
- To access and replace the relay, see **SOLENOID SHIFT LOCK, REPLACE** .

- **Continue**

  Refer to **VERIFICATION**

VERIFICATION

VERIFICATION

HINT: After the repair it is necessary to check that the fault has been rectified.

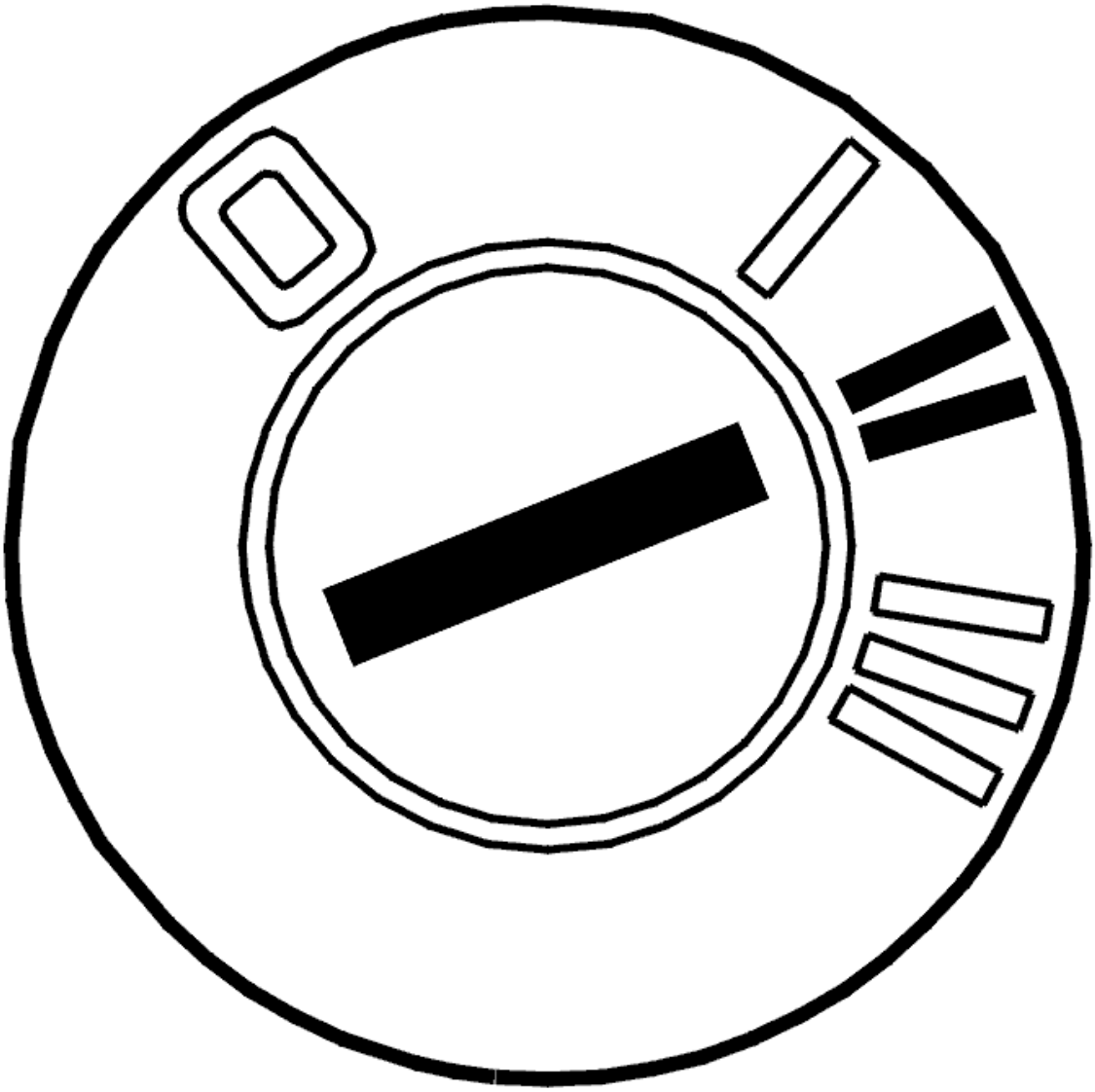

Fig. 212: Identifying Ignition ON
Courtesy of VOLVO CARS CORPORATION

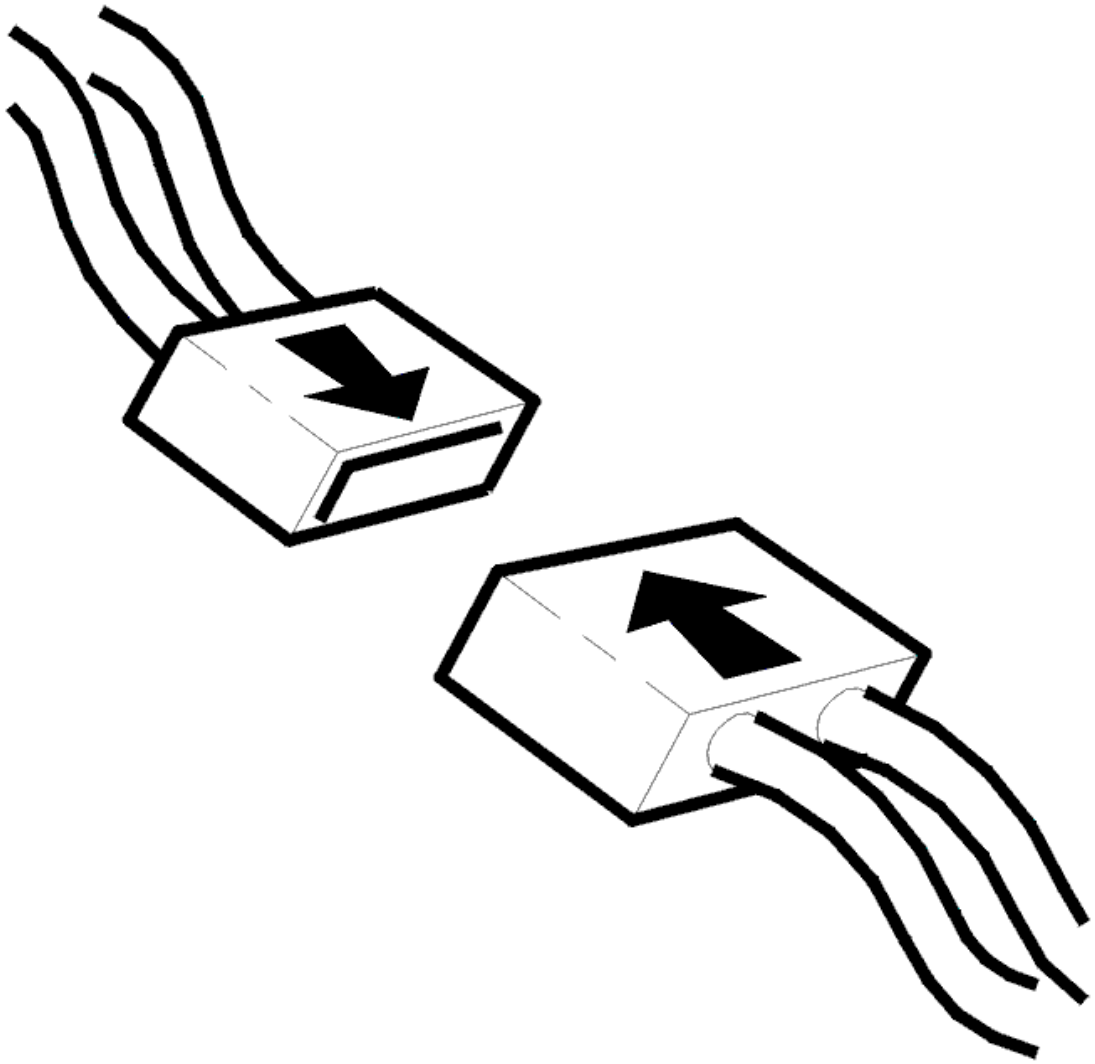

Fig. 213: Connecting Connector
Courtesy of VOLVO CARS CORPORATION

- Ignition off.
- Connect the connectors, install the components, etc.
- Ignition on.

  Check that diagnostic trouble code status changes from permanent to intermittent.

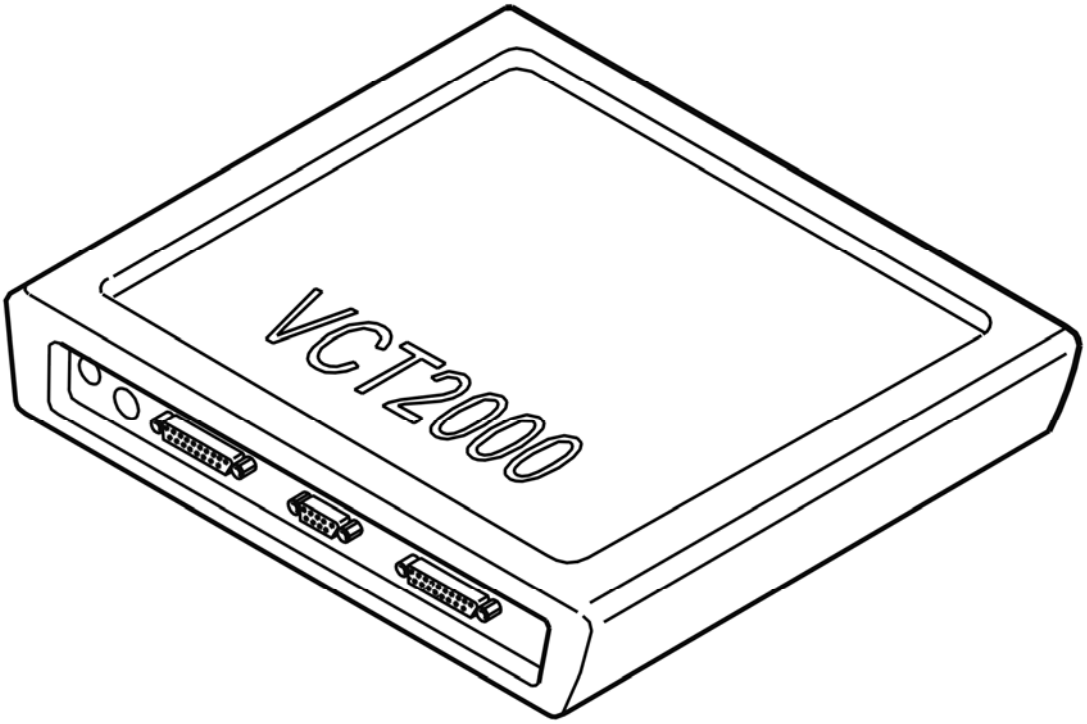

Fig. 214: Identifying VCT2000 Diagnostic Tool Symbol In VIDA
Courtesy of VOLVO CARS CORPORATION

Is the diagnostic trouble code status intermittent?

- **YES**

  VERIFIED: Troubleshooting has been completed.

- **NO**

  Refer to **INFORMATION**

INFORMATION

FAULT-TRACING INFORMATION

The fault should have been detected and remedied. As this is not the case fault-tracing has failed.

Exit fault-tracing for this diagnostic trouble code (DTC) or make another attempt.

CEM-3F03: SHIFT LOCK SIGNAL. SIGNAL TOO LOW (2005-2012)

DIAGNOSTIC TROUBLE CODE (DTC) INFORMATION CEM-3F03

Condition

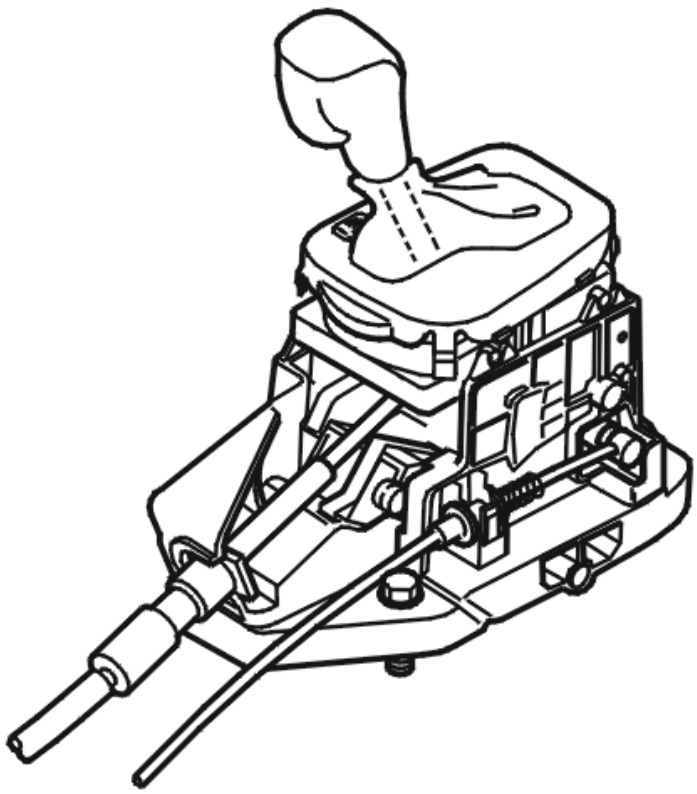

Fig. 215: Identifying Gearshift Lever And Linkage
Courtesy of VOLVO CARS CORPORATION

The central electronic module (CEM) checks the function of the shift lock.

The diagnostic trouble code (DTC) is stored if the central electronic module (CEM) detects a short-circuit to ground or an open-circuit in the output signal circuit to the shift lock.

The relay for shift lock must not be activated for the diagnostic trouble code (DTC) to be stored. The diagnostic trouble code (DTC) can be diagnosed at ignition switch position II.

Substitute Value

- None.

Possible Source

- Open-circuit in the "Inhibited shifting" output signal. The relay is not activated.

Fault symptom[s]

- The starter motor does not turn

- The engine does not start.

SIGNAL TOO LOW

CHECKING THE WIRING

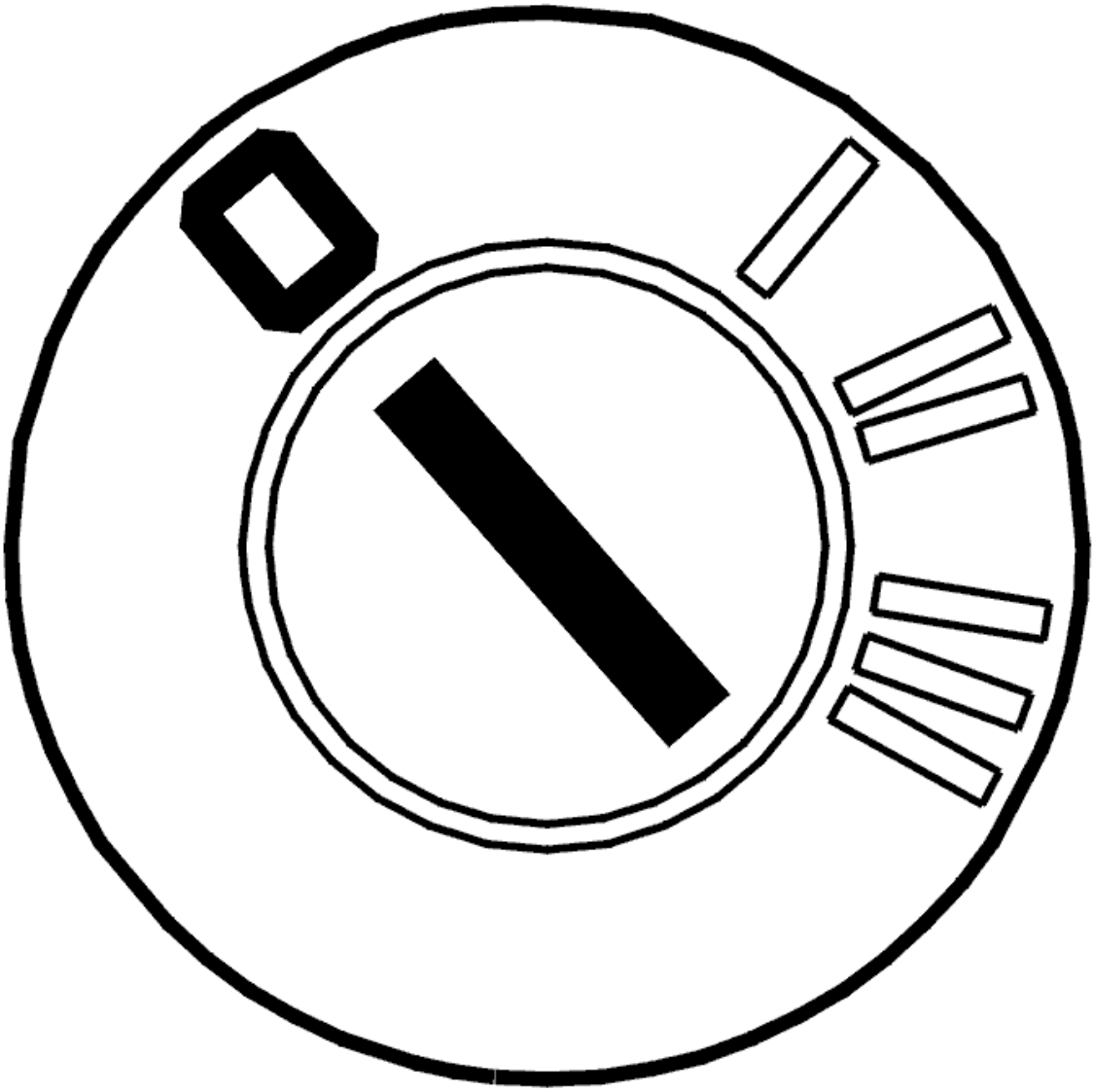

Fig. 216: Identifying Ignition OFF
Courtesy of VOLVO CARS CORPORATION

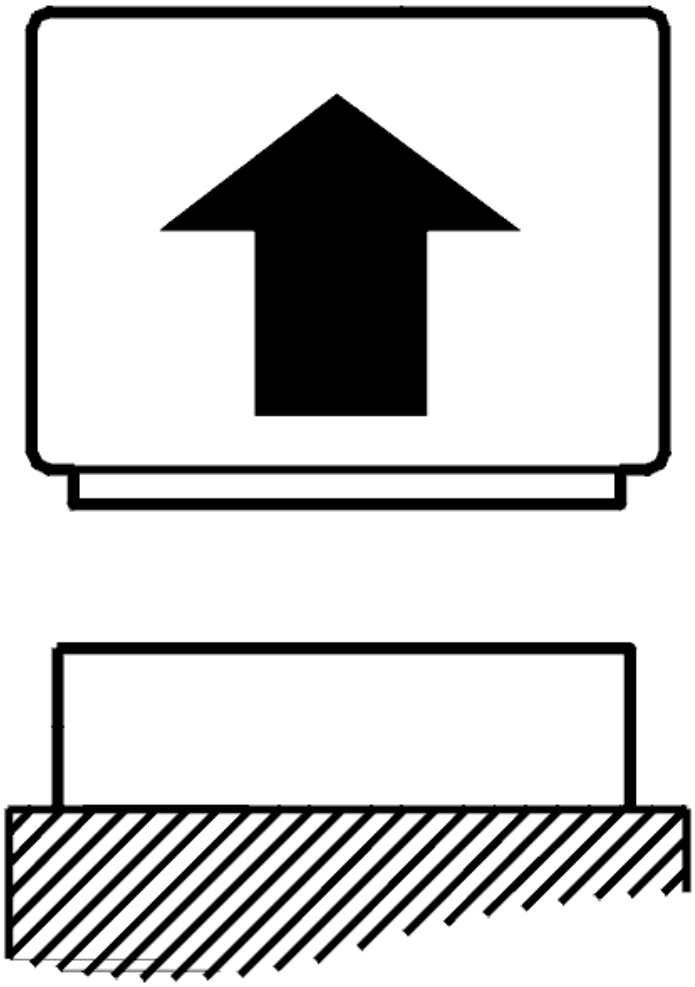

Fig. 217: Disconnecting Connector
Courtesy of VOLVO CARS CORPORATION

- Ignition off
- Disconnect central electronic module (CEM) connector D.

  Check the signal cable. Check for an open-circuit. Check for a short-circuit to ground.

  Take readings between central electronic module (CEM) terminal #D23 (#23) and gear selector module (GSM) terminal #3.

  Remedy as necessary.

  Other information

  - see **CONNECTING THE BREAKOUT BOX**

- -2004: **SIGNAL SPECIFICATION**
- 2005-: **SIGNAL SPECIFICATION**
- see **LOCATION OF COMPONENTS**
- For AW50AWD 2003-, see **GEAR SELECTOR LEVER ASSEMBLY GEARTRONIC, REPLACING** .
- For 4T65 2003-, see **GEAR SELECTOR LEVER ASSEMBLY GEARTRONIC, REPLACING** .
- see **CHECKING WIRING AND TERMINALS**

- **Continue**

  Refer to **VERIFICATION**

VERIFICATION

VERIFICATION

HINT: After carrying out the repair, check that the fault has been remedied.

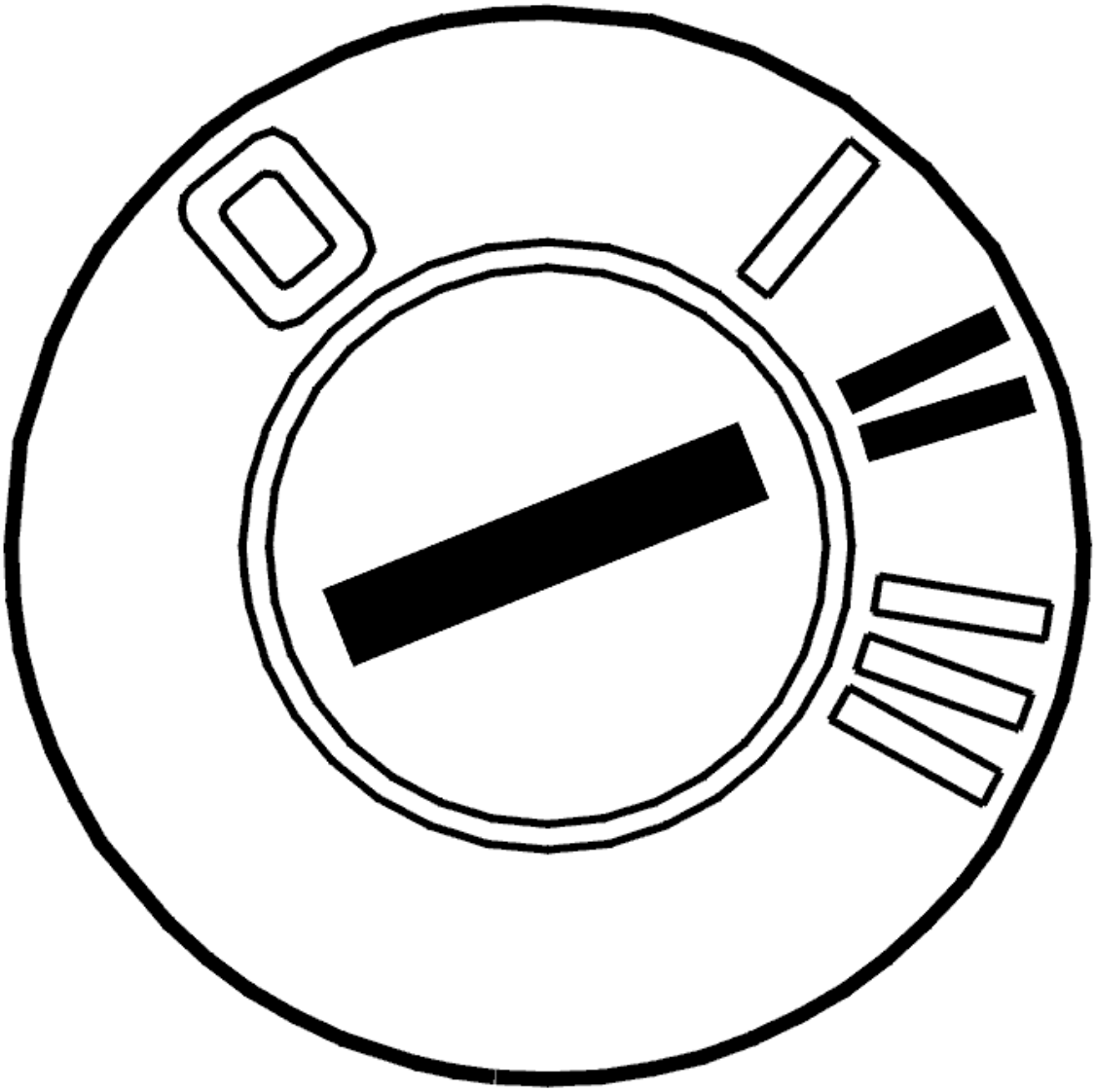

Fig. 218: Identifying Ignition ON
Courtesy of VOLVO CARS CORPORATION

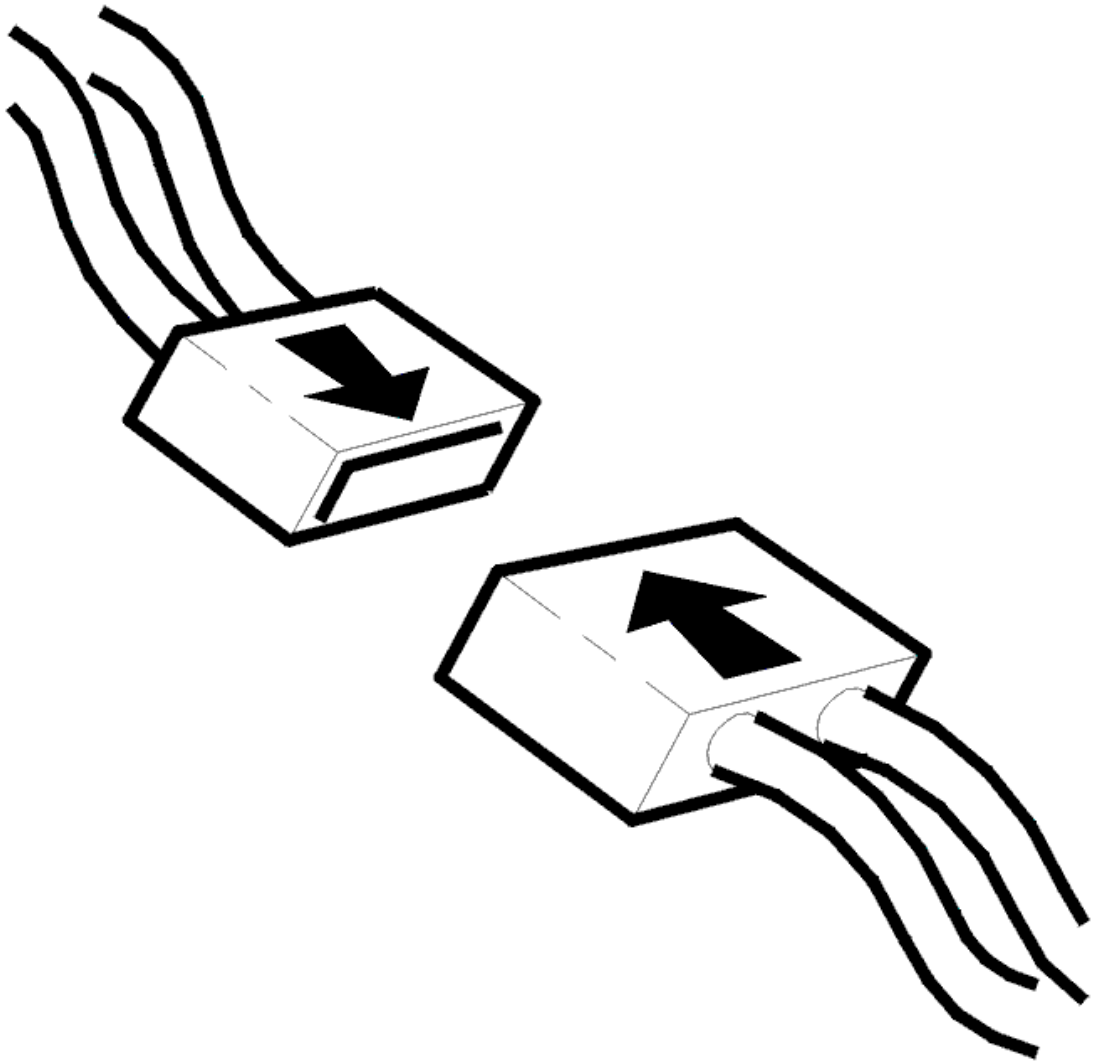

Fig. 219: Connecting Connector
Courtesy of VOLVO CARS CORPORATION

- Ignition off
- Reinstall the connectors, components etc.
- Ignition on.

  Check that the gear selector can only be moved from position P when the brake is applied.

Is shift lock working?

- **YES**

  VERIFIED: Troubleshooting has been completed.

- **NO**

  Refer to **INFORMATION**

INFORMATION

FAULT-TRACING INFORMATION

The fault should have been detected and remedied. As this is not the case fault-tracing has failed.

Exit fault-tracing for this diagnostic trouble code (DTC) or make another attempt.

CEM-3F81: IMMOBILIZER SIGNAL. SIGNAL TOO HIGH (2005-2012)

DIAGNOSTIC TROUBLE CODE (DTC) INFORMATION CEM-3F81

Condition

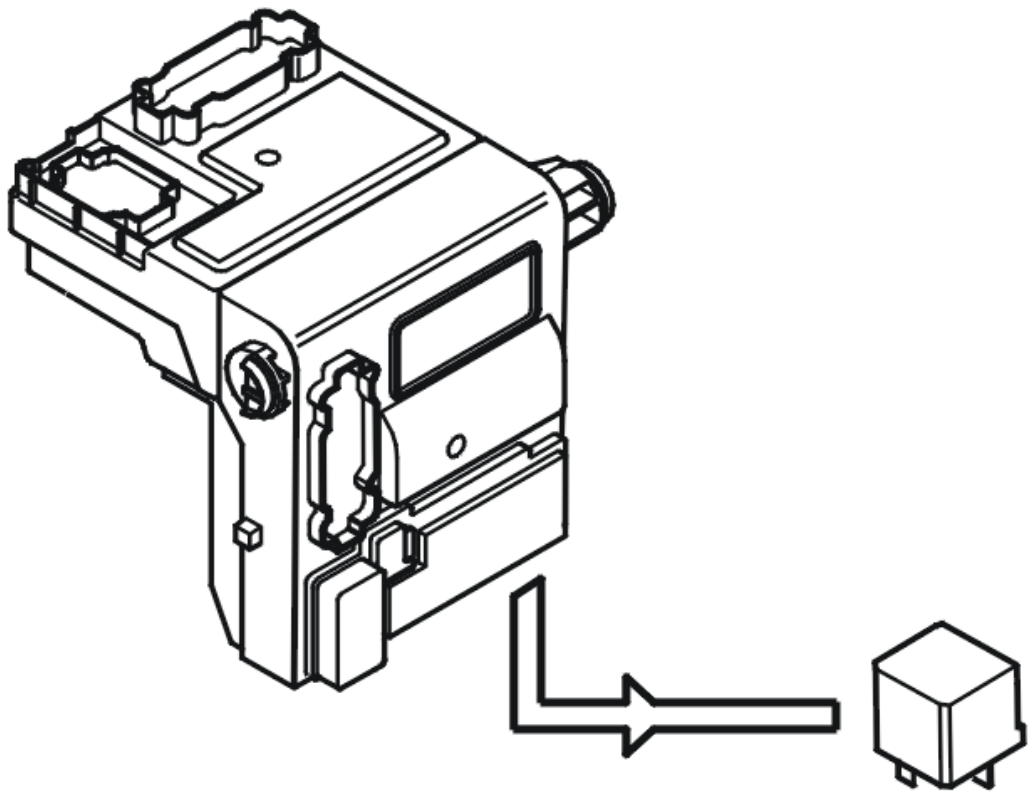

Fig. 220: Identifying Central Electronic Module (CEM) And Starter Relay
Courtesy of VOLVO CARS CORPORATION

During start attempts the central electronic module (CEM) grounds an input on the starter relay so that the starter motor can turn the engine. The control module also checks the voltage level at the output connected to

the starter relay.

The diagnostic trouble code (DTC) is stored if the central electronic module (CEM) registers a short-circuit to supply voltage in the output connected to the starter relay.

The diagnostic trouble code (DTC) can be diagnosed at ignition switch position III (start attempt).

Substitute Value

- None.

Possible Source

- Short-circuit to supply voltage in the cable between the central electronic module (CEM) and the starter relay.

Fault symptom[s]

- The starter motor does not turn.

SIGNAL TOO HIGH

CHECKING THE WIRING

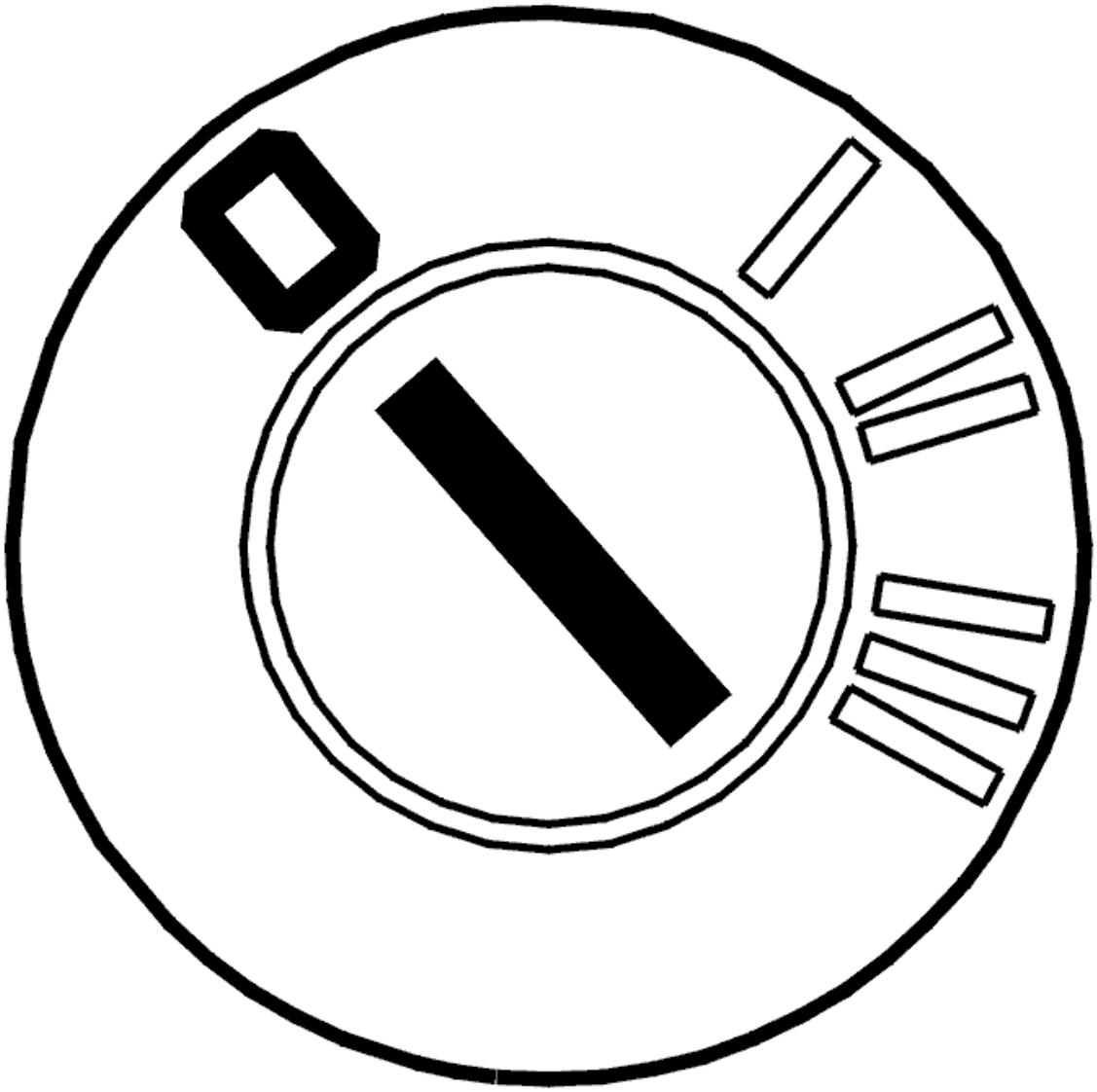

Fig. 221: Identifying Ignition OFF
Courtesy of VOLVO CARS CORPORATION

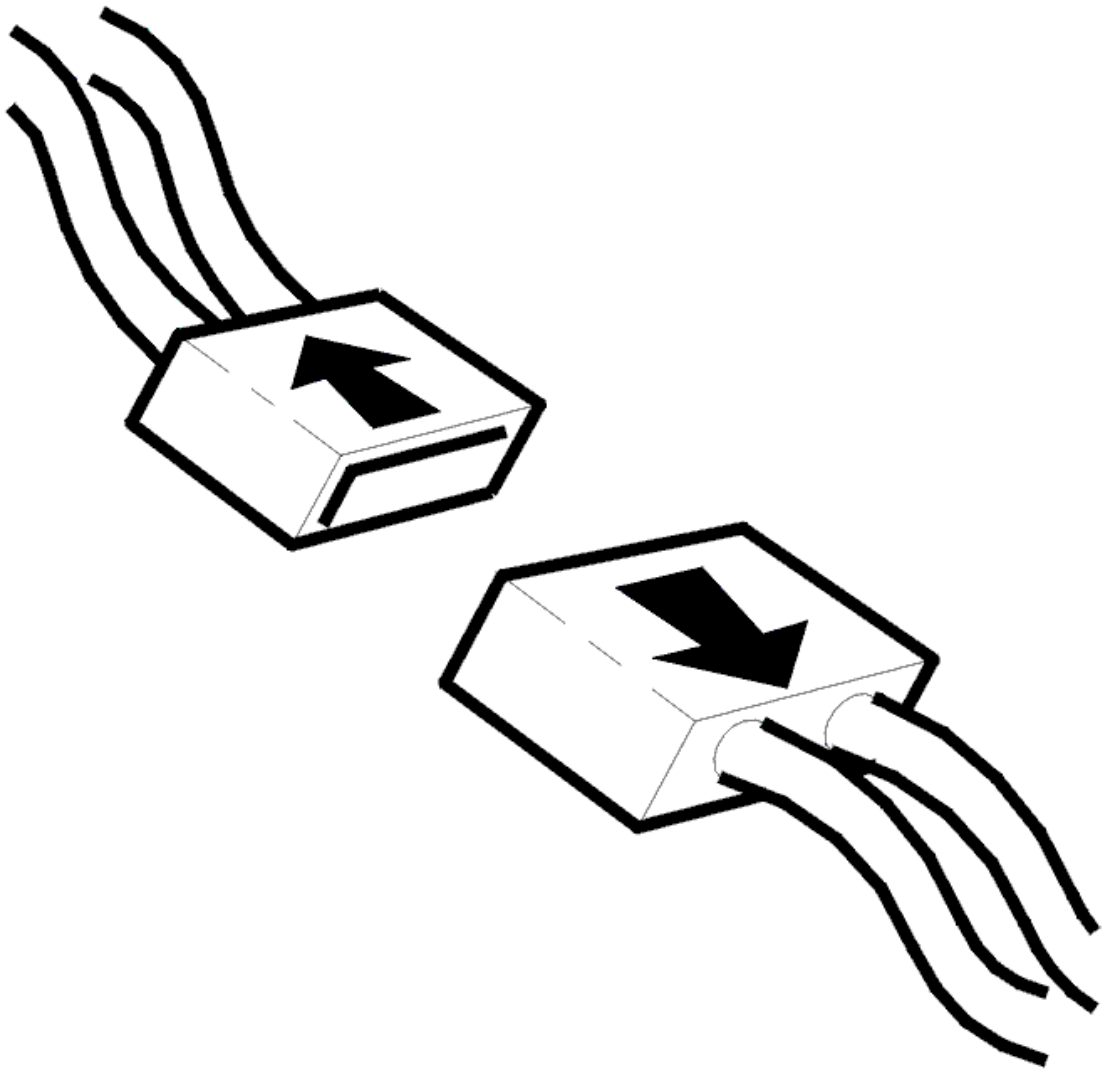

Fig. 222: Disconnecting Connector
Courtesy of VOLVO CARS CORPORATION

- Ignition off
- Disconnect central electronic module (CEM) connector C
- Disconnect starter motor relay 2/35.

  Check the cable for a short-circuit to supply voltage.

  Take readings between:

  - Central electronic module (CEM) terminal #C6 (#6) and starter motor relay 2/35 terminal #4.

  Remedy as necessary.

Other information

- see **CONNECTING THE BREAKOUT BOX**
- -2004: **SIGNAL SPECIFICATION**
- 2005-: **SIGNAL SPECIFICATION**
- see **LOCATION OF COMPONENTS**
- see **CHECKING WIRING AND TERMINALS**

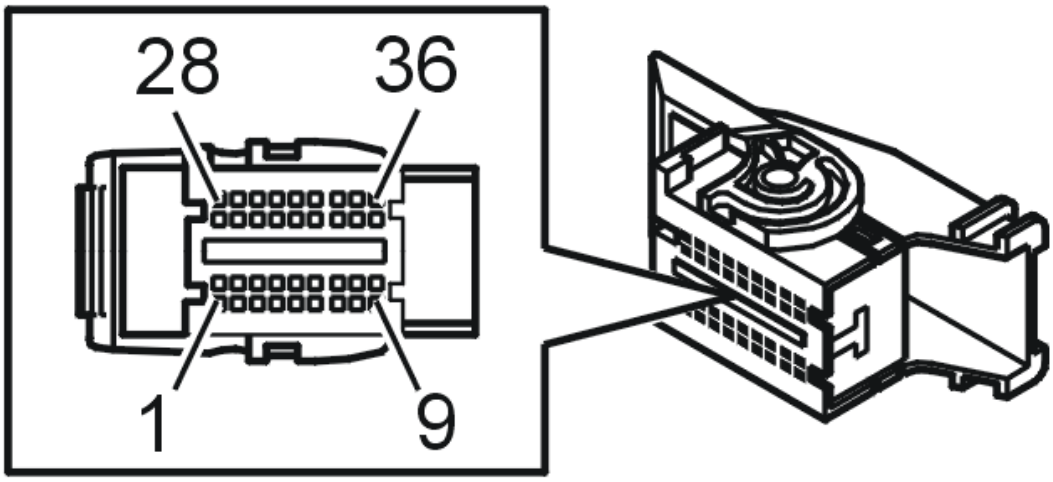

Fig. 223: Identifying Connector C
Courtesy of VOLVO CARS CORPORATION

- **Continue**

  Refer to **VERIFICATION**

VERIFICATION

VERIFICATION

HINT: After carrying out the repair, check that the fault has been remedied.

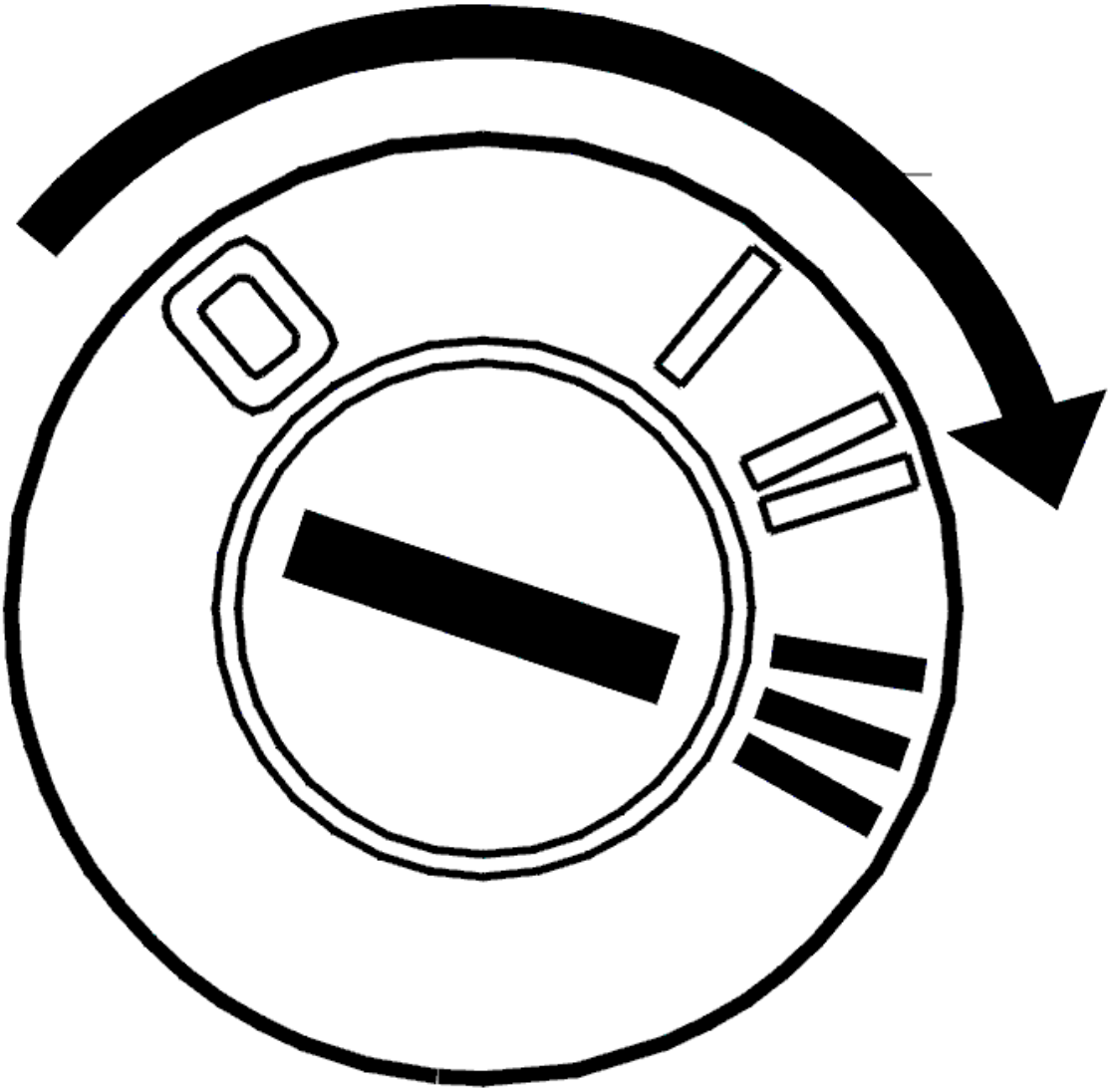

Fig. 224: Identifying Engine START Position
Courtesy of VOLVO CARS CORPORATION

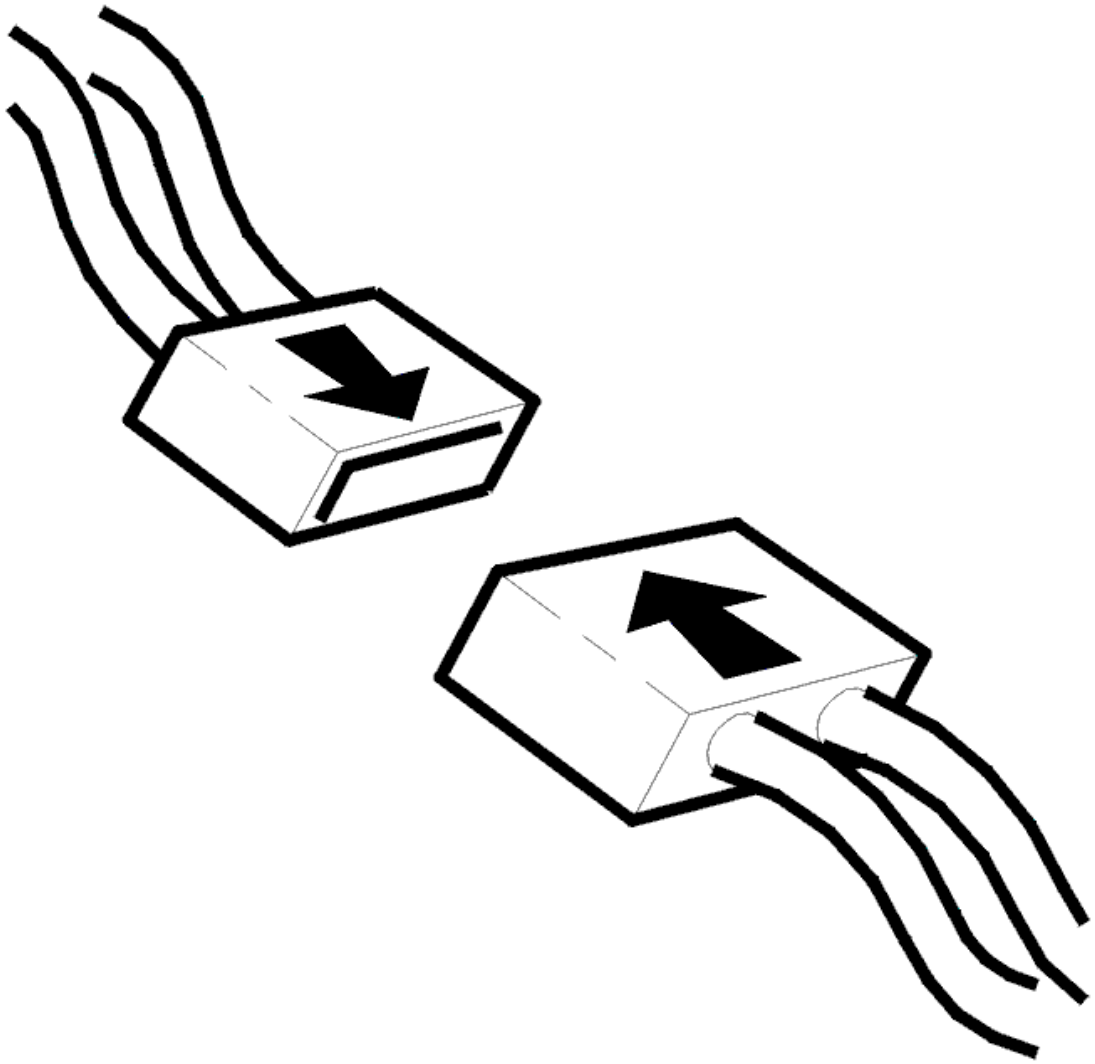

Fig. 225: Connecting Connector
Courtesy of VOLVO CARS CORPORATION

- Ignition off
- Reinstall the connectors, components etc.
- Try to start the engine.

Does the engine start?

- **YES**

  VERIFIED: Troubleshooting has been completed.

- **NO**

Refer to **INFORMATION**

INFORMATION

FAULT-TRACING INFORMATION

The fault should have been detected and remedied. As this is not the case fault-tracing has failed.

Exit fault-tracing for this diagnostic trouble code (DTC) or make another attempt.

CEM-3F81: IMMOBILIZER SIGNAL. SIGNAL TOO HIGH. INTERMITTENT FAULT (2003-2004)

DIAGNOSTIC TROUBLE CODE (DTC) INFORMATION

Condition

Diagnostic trouble code (DTC) CEM-3F81 is stored if the central electronic module (CEM) registers that the output signal from the transistor driver to the start relay is too high.

Substitute Value

None

Possible Source

- Short-circuit to positive power supply in the output signal from the transistor driver to the start relay.

Fault symptom[s]

- The engine does not start.

SIGNAL TOO HIGH. INTERMITTENT FAULT

INTERMITTENT FAULT

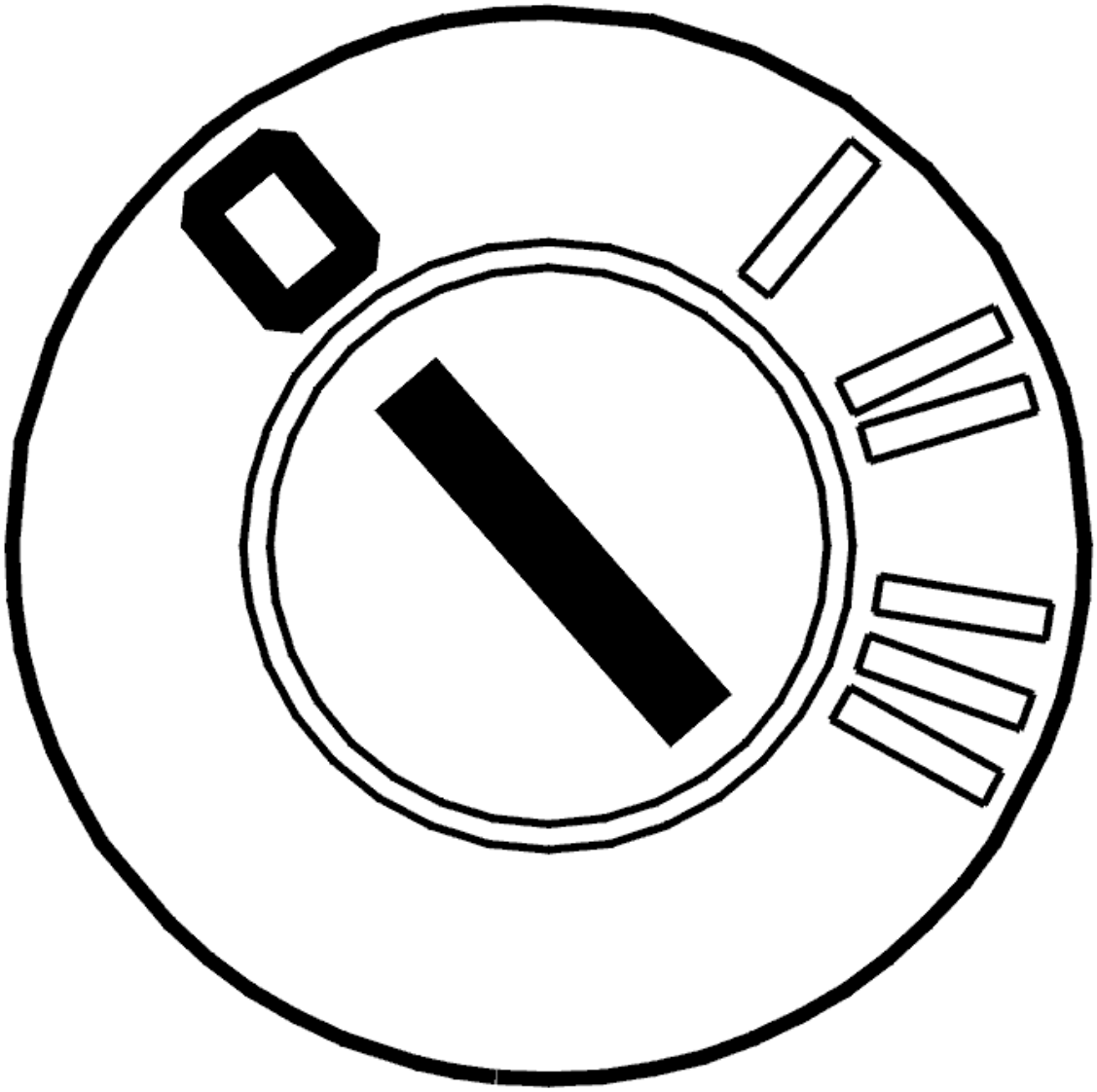

Fig. 226: Identifying Ignition OFF
Courtesy of VOLVO CARS CORPORATION

- Ignition off.

  Check the signal cable between central electronic module (CEM) terminal #3A and starter motor relay terminal #1 for a short-circuit to supply voltage according to **SHORT-CIRCUIT TO SUPPLY VOLTAGE, INTERMITTENT FAULTS** .

  Remedy as necessary.

  Other information:

  - Central electronic module (CEM) connector:
    - For -2004, see: **CENTRAL ELECTRONIC MODULE (CEM), REPLACING**

- For 2005-, see: **CENTRAL ELECTRONIC MODULE (CEM), REPLACING** .
- To connect the breakout box, see **CONNECTING THE BREAKOUT BOX** .
- -2004: **SIGNAL SPECIFICATION**
- 2005-: **SIGNAL SPECIFICATION**

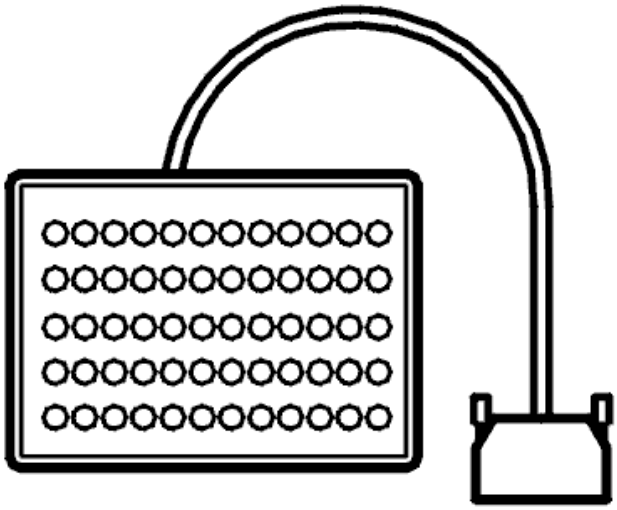

Fig. 227: Breakout Box
Courtesy of VOLVO CARS CORPORATION

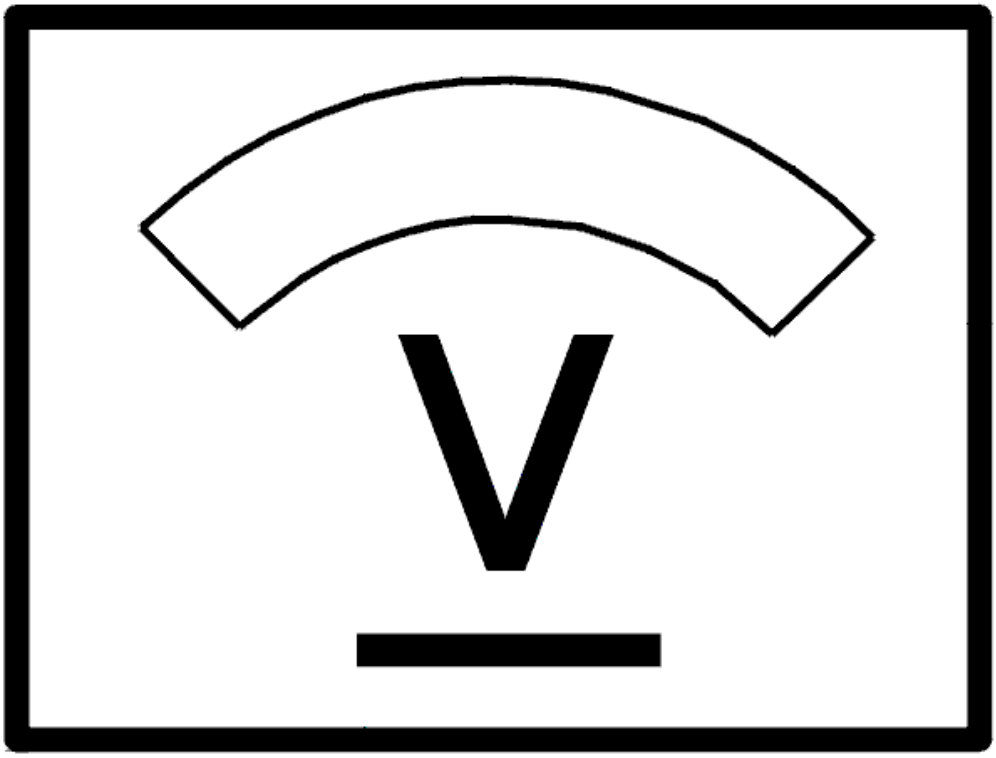

Fig. 228: Identifying Voltage Display
Courtesy of VOLVO CARS CORPORATION

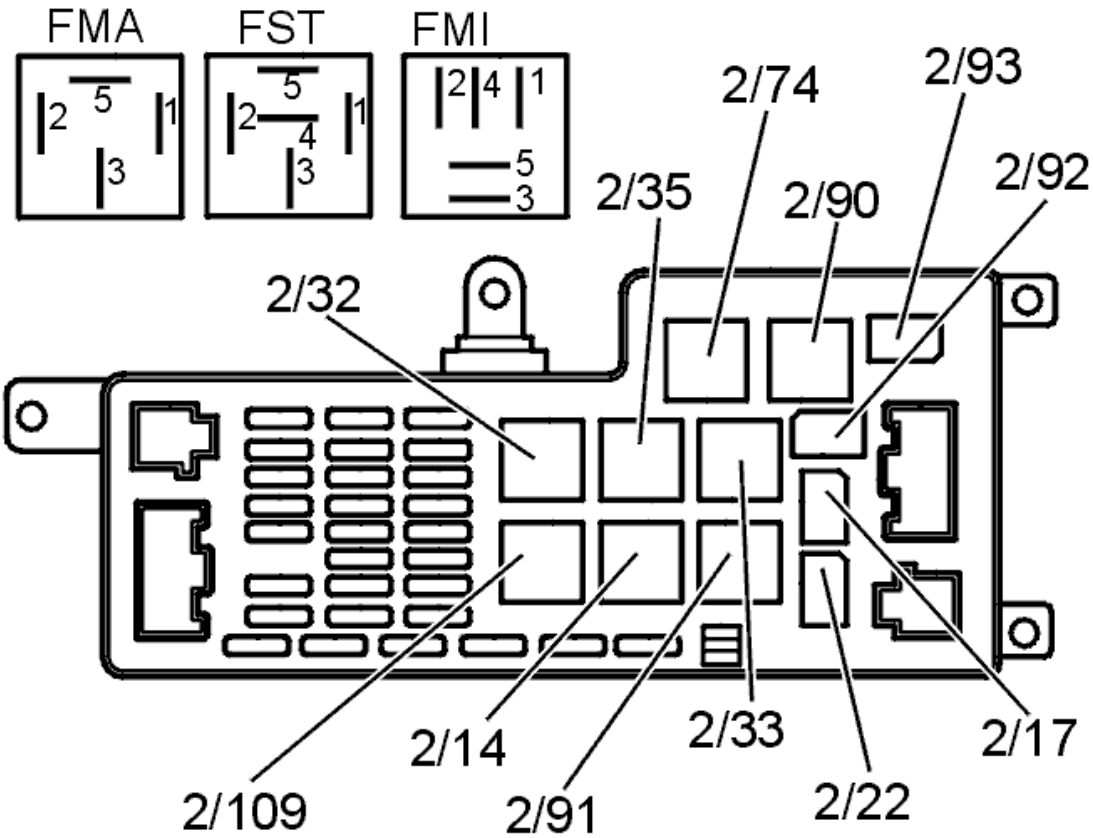

Fig. 229: Identifying Connectors
Courtesy of VOLVO CARS CORPORATION

- **Continue**

  Refer to **INFORMATION**

INFORMATION

FAULT-TRACING INFORMATION

If the fault is intermittent, do not verify fault-tracing if the fault does not recur.

It is possible to view the information again, or leave fault-tracing for this diagnostic trouble code (DTC).

CEM-3F81: IMMOBILIZER SIGNAL. SIGNAL TOO HIGH. PERMANENT FAULT (2003-2004)

DIAGNOSTIC TROUBLE CODE (DTC) INFORMATION

see **DIAGNOSTIC TROUBLE CODE (DTC) INFORMATION**

SIGNAL TOO HIGH. PERMANENT FAULT

CHECKING THE RELAY

Check that relay 2/35 is correctly installed.

Check the relay terminals.

Check the resistance of the relay coil.

Remedy as necessary.

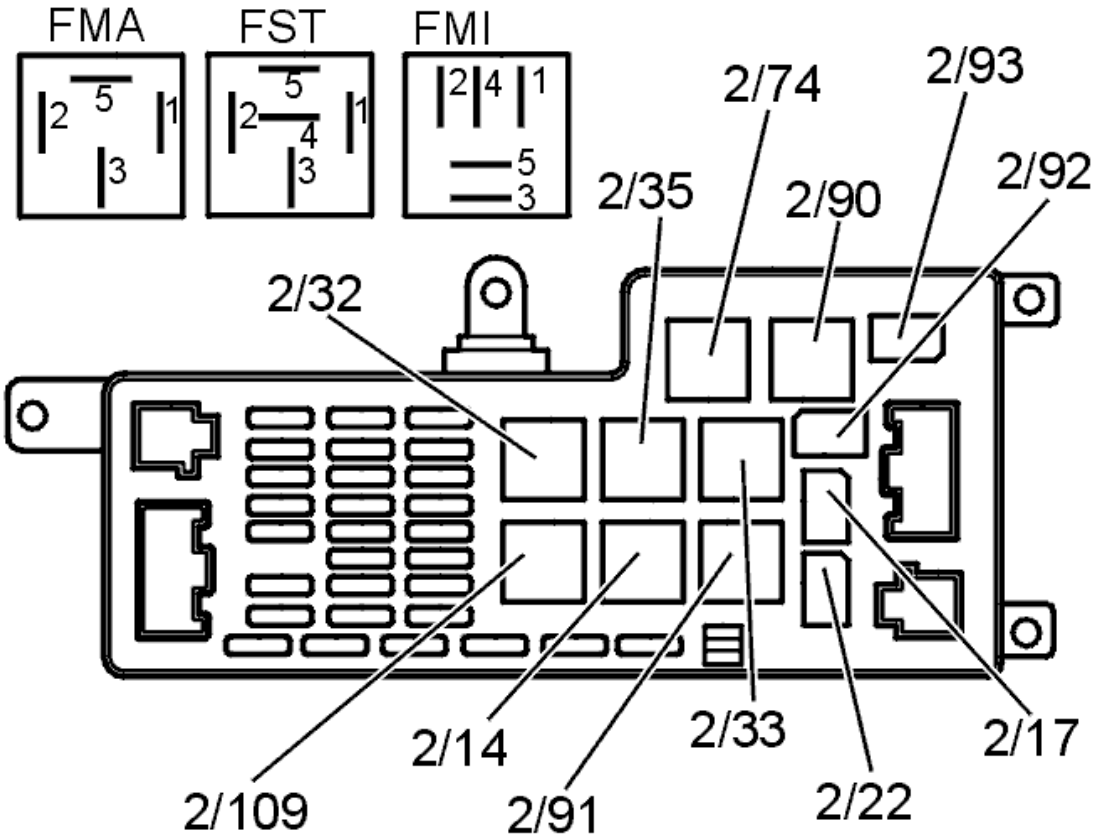

Fig. 230: Identifying Connectors
Courtesy of VOLVO CARS CORPORATION

Is there a fault?

- **YES**

  Refer to **VERIFICATION**

- **NO**

  Refer to **CHECKING THE SIGNAL CABLE**

CHECKING THE SIGNAL CABLE

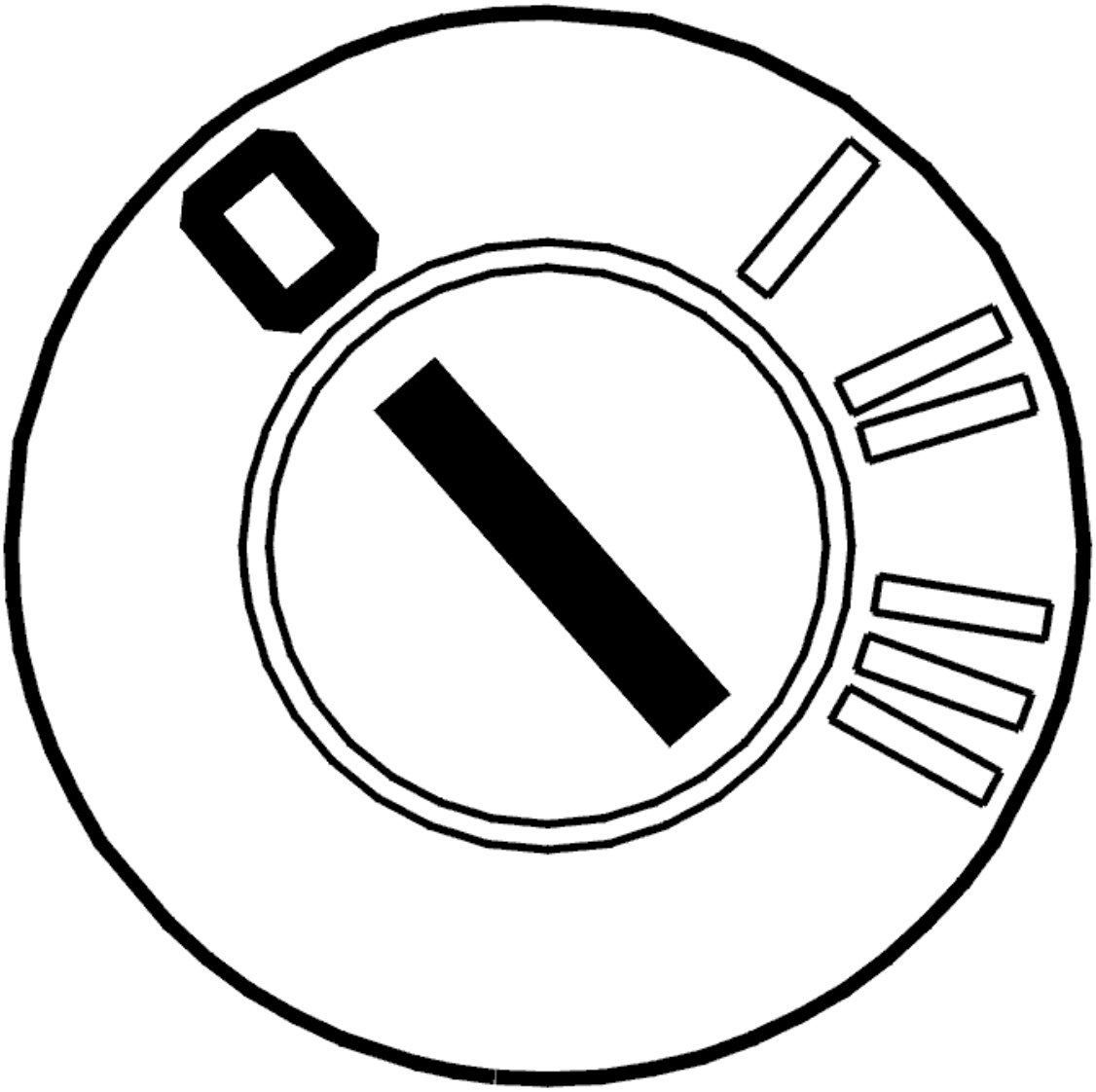

Fig. 231: Identifying Ignition OFF
Courtesy of VOLVO CARS CORPORATION

- Ignition off.
- Disconnect the 20-pin connector (group A) from the central electronic module (CEM).
- Pull out the starter motor relay.

  Check the signal cable between central electronic module (CEM) terminal #3A and starter motor relay 2/35 terminal #1 for a short-circuit to supply voltage according to **SHORT-CIRCUIT TO SUPPLY VOLTAGE. PERMANENT FAULTS** .

  Remedy as necessary.

  Other information:

- Central electronic module (CEM) connector:
  - For -2004, see: **CENTRAL ELECTRONIC MODULE (CEM), REPLACING**
  - For 2005-, see: **CENTRAL ELECTRONIC MODULE (CEM), REPLACING** .
- To connect the breakout box, see **CONNECTING THE BREAKOUT BOX** .
- -2004: **SIGNAL SPECIFICATION**
- 2005-: **SIGNAL SPECIFICATION**

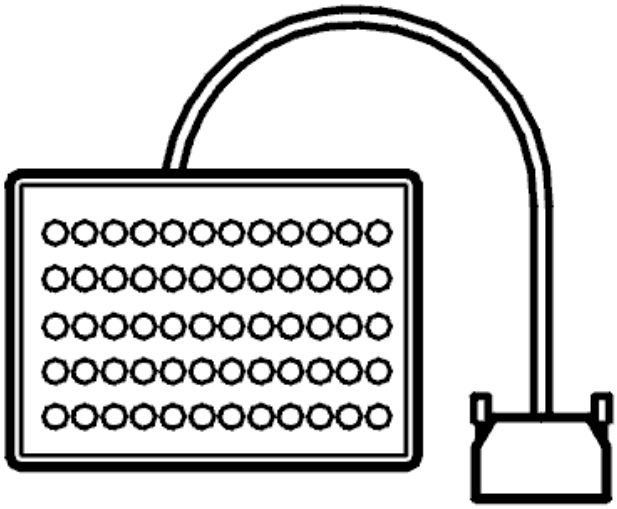

Fig. 232: Breakout Box
Courtesy of VOLVO CARS CORPORATION

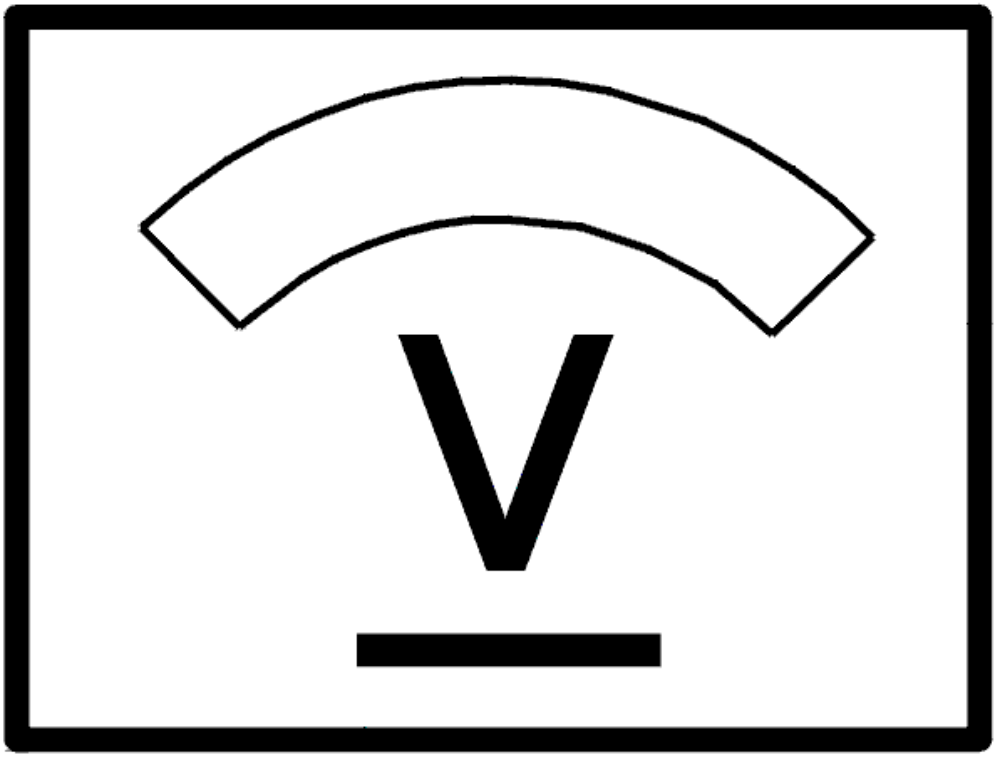

Fig. 233: Identifying Voltage Display
Courtesy of VOLVO CARS CORPORATION

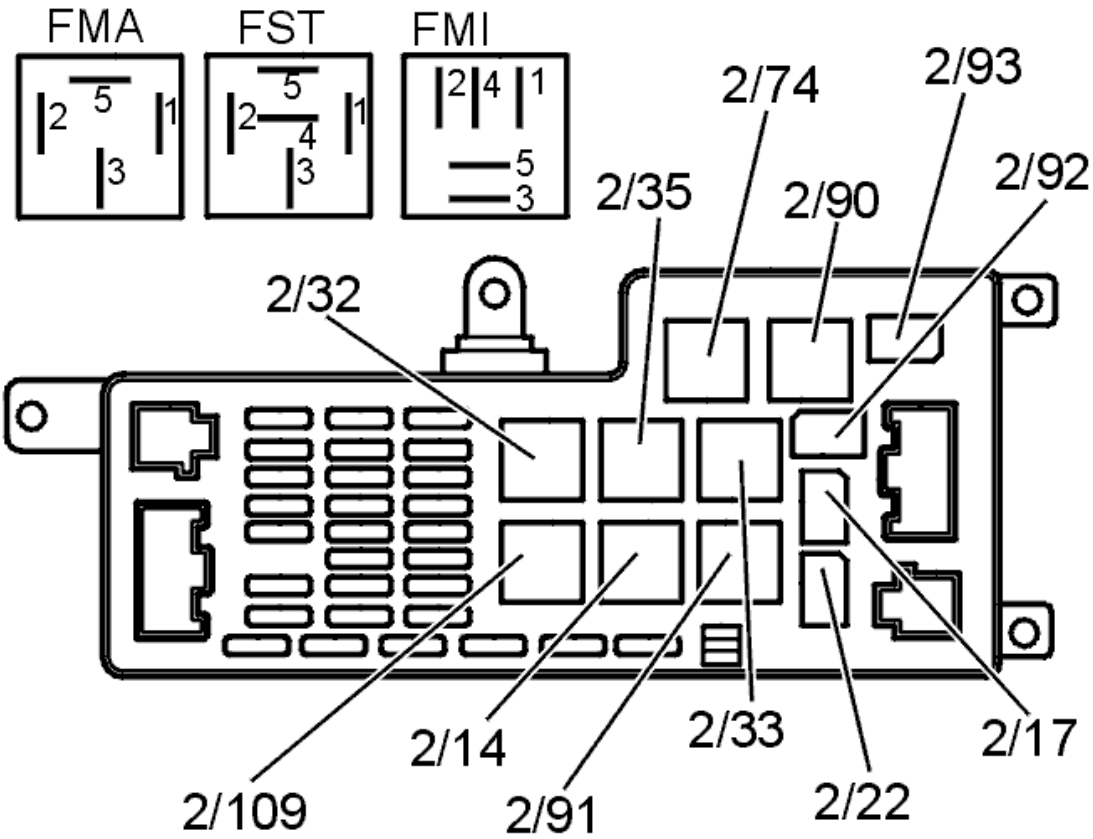

Fig. 234: Identifying Connectors
Courtesy of VOLVO CARS CORPORATION

Is the signal cable OK?

- **YES**

  Refer to **REPLACING THE COMPONENT**

- **NO**

  Refer to **VERIFICATION**

REPLACING THE COMPONENT

Try a new starter motor relay.

- **Continue**

  Refer to **VERIFICATION**

VERIFICATION

VERIFICATION

HINT: After the repair it is necessary to check that the fault has been rectified.

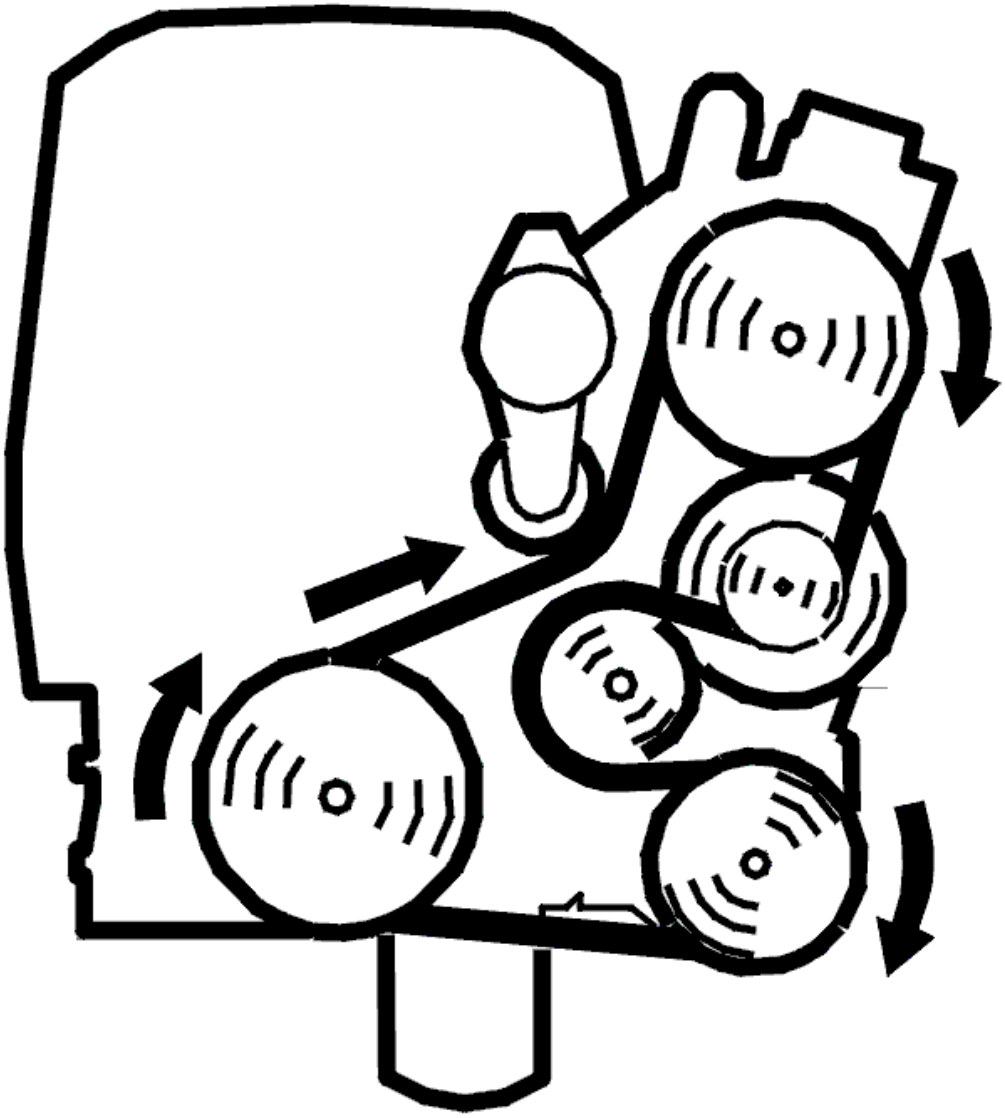

Fig. 235: Belt Routing / Engine Idling - Volvo
Courtesy of VOLVO CARS CORPORATION

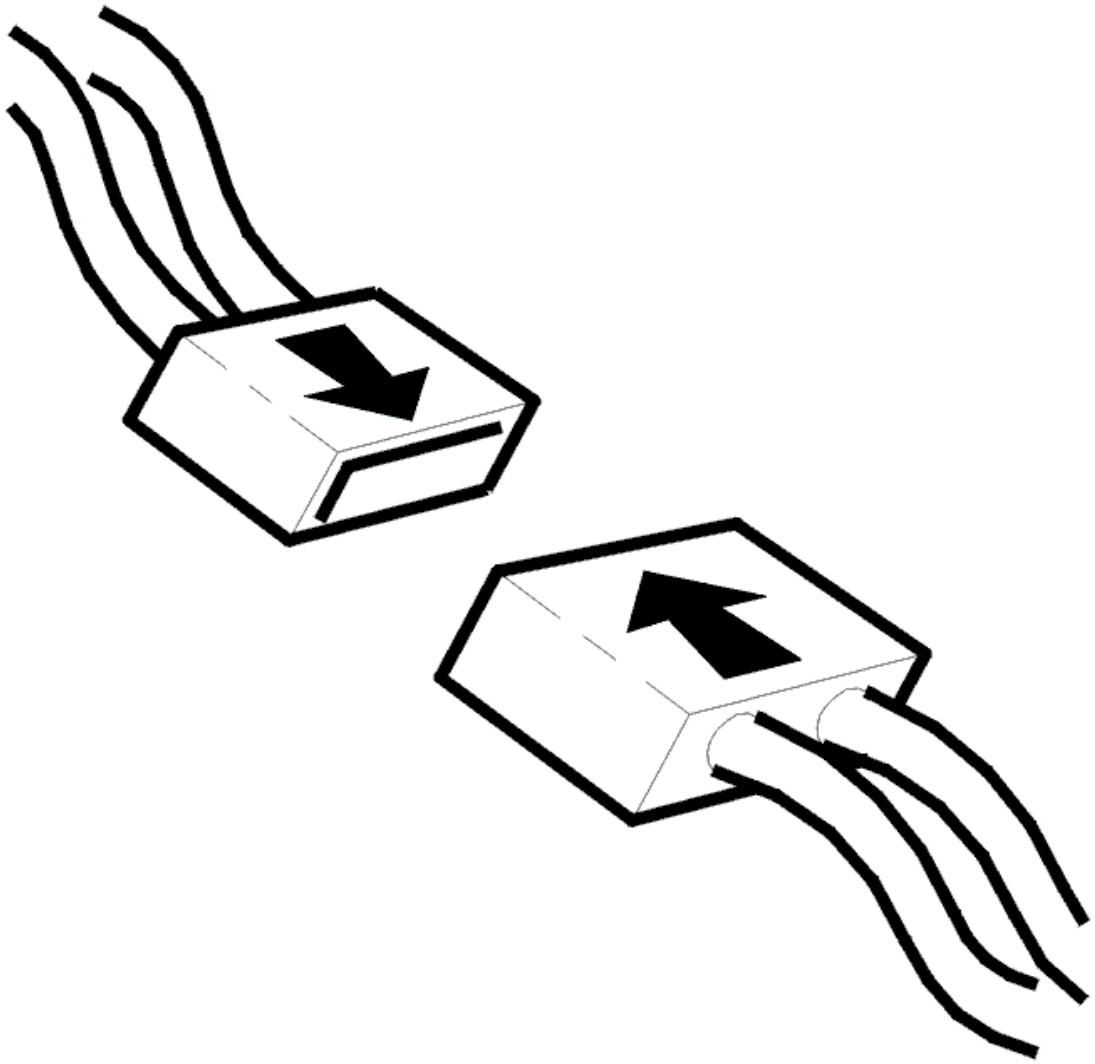

Fig. 236: Connecting Connector
Courtesy of VOLVO CARS CORPORATION

- Ignition off.
- Connect connectors, install components, etc.
- Disconnect the starter motor connector.
- Try to start the engine with the gear lever in any position other than P or N.
- Connect the starter motor connector.

  Check that diagnostic trouble code status changes from permanent to intermittent.

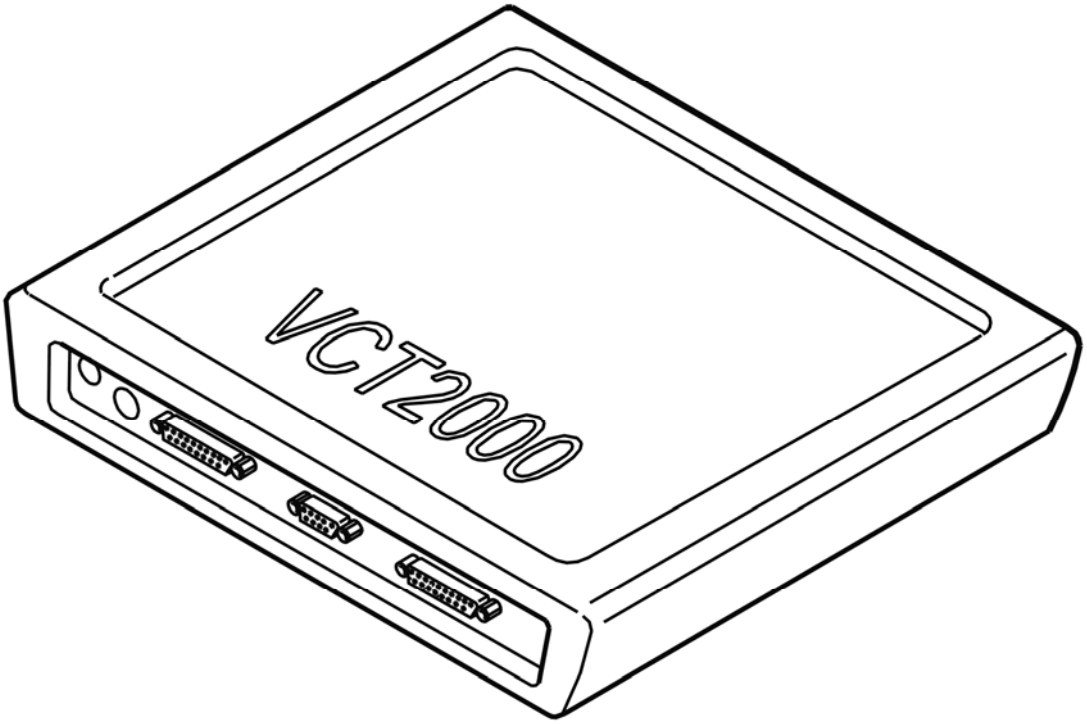

Fig. 237: Identifying VCT2000 Diagnostic Tool Symbol In VIDA
Courtesy of VOLVO CARS CORPORATION

Is the diagnostic trouble code status intermittent?

- **YES**

  VERIFIED: Troubleshooting has been completed.

- **NO**

  Refer to **INFORMATION**

INFORMATION

FAULT-TRACING INFORMATION

The fault should have been detected and remedied. As this is not the case fault-tracing has failed.

Exit fault-tracing for this diagnostic trouble code (DTC) or make another attempt.

CEM-3F82: IMMOBILIZER SIGNAL. SIGNAL TOO LOW (2005-2012)

DIAGNOSTIC TROUBLE CODE (DTC) INFORMATION CEM-3F82

Condition

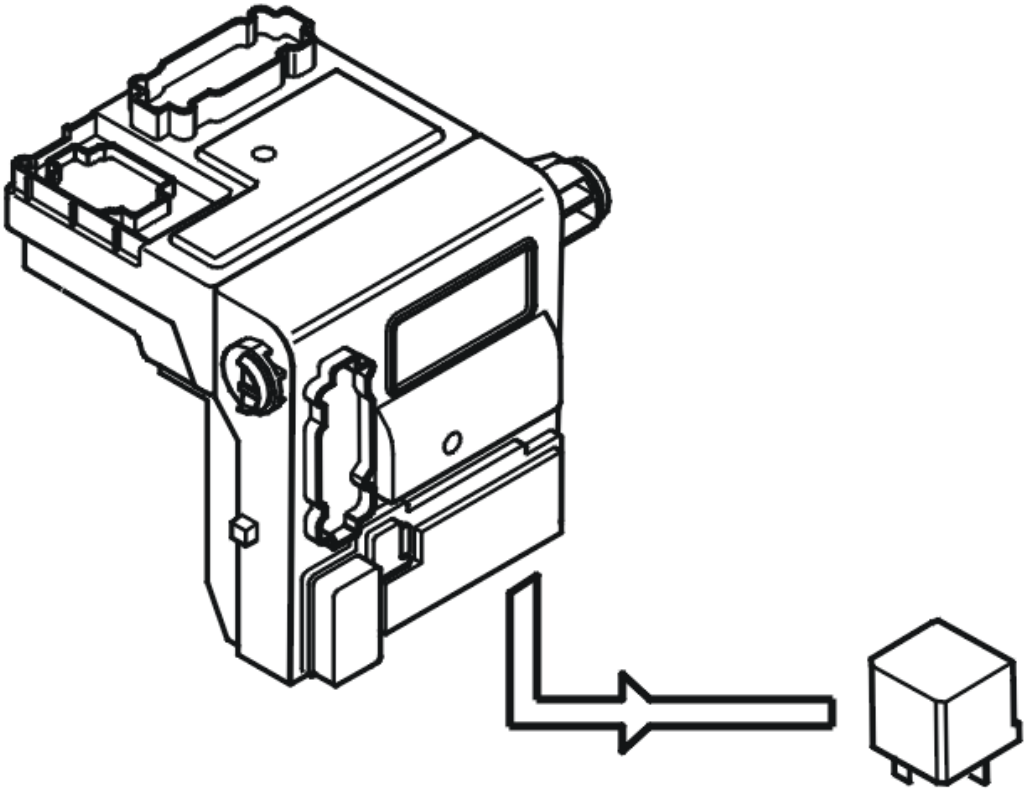

Fig. 238: Identifying Central Electronic Module (CEM) And Starter Relay
Courtesy of VOLVO CARS CORPORATION

During start attempts the central electronic module (CEM) grounds an input on the starter relay so that the starter motor can turn the engine. The control module also checks the voltage level at the output connected to the starter relay.

The diagnostic trouble code (DTC) is stored if the central electronic module (CEM) registers a short-circuit to ground in the output which is connected to the starter relay.

The diagnostic trouble code (DTC) can be diagnosed at ignition switch position III (start attempt).

Substitute Value

- None.

Possible Source

- Short-circuit to ground in the cable between the central electronic module (CEM) and the starter relay.

Fault symptom[s]

- The starter motor turns but the engine does not start.

SIGNAL TOO LOW

CHECKING THE WIRING

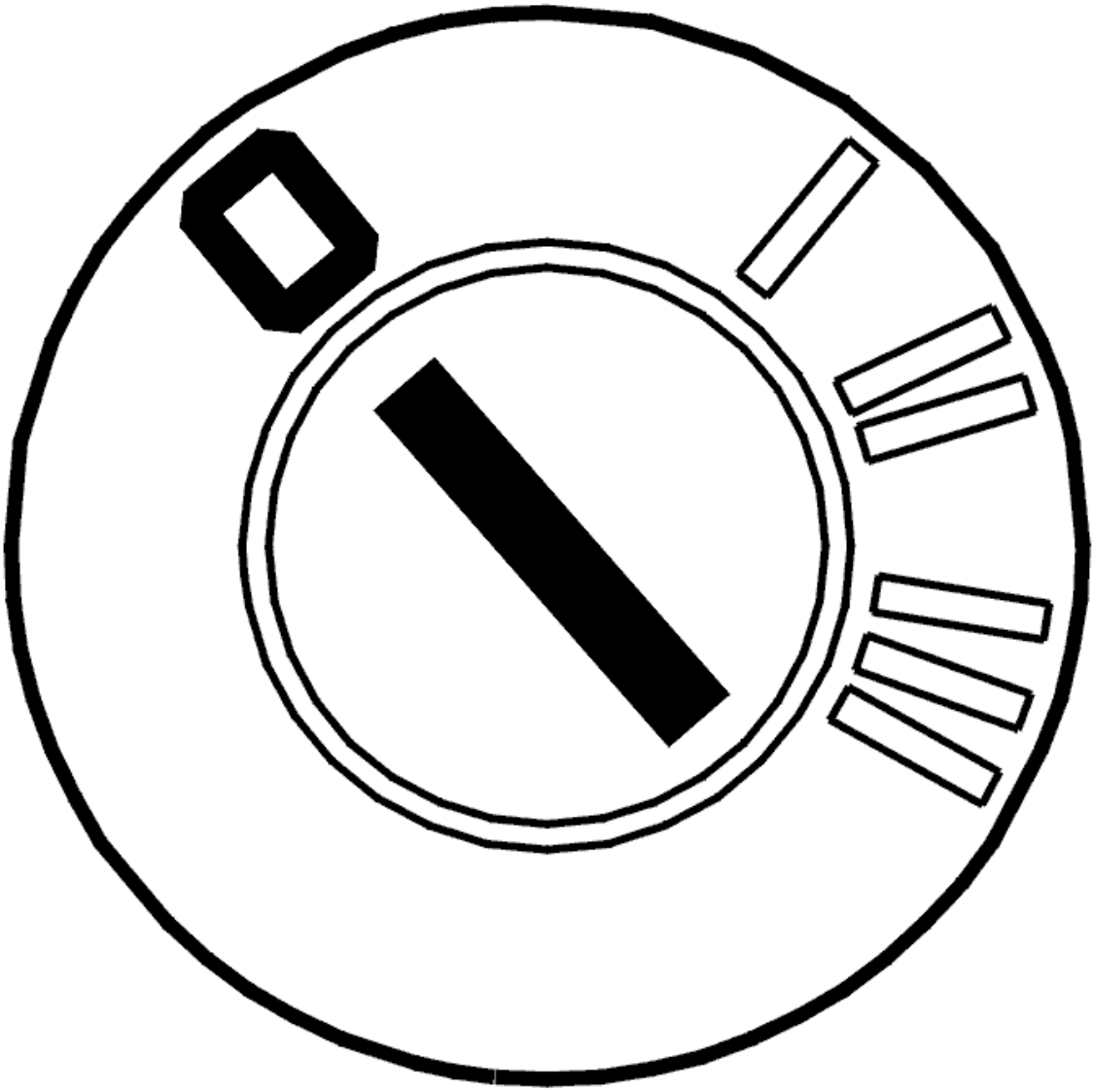

Fig. 239: Identifying Ignition OFF
Courtesy of VOLVO CARS CORPORATION

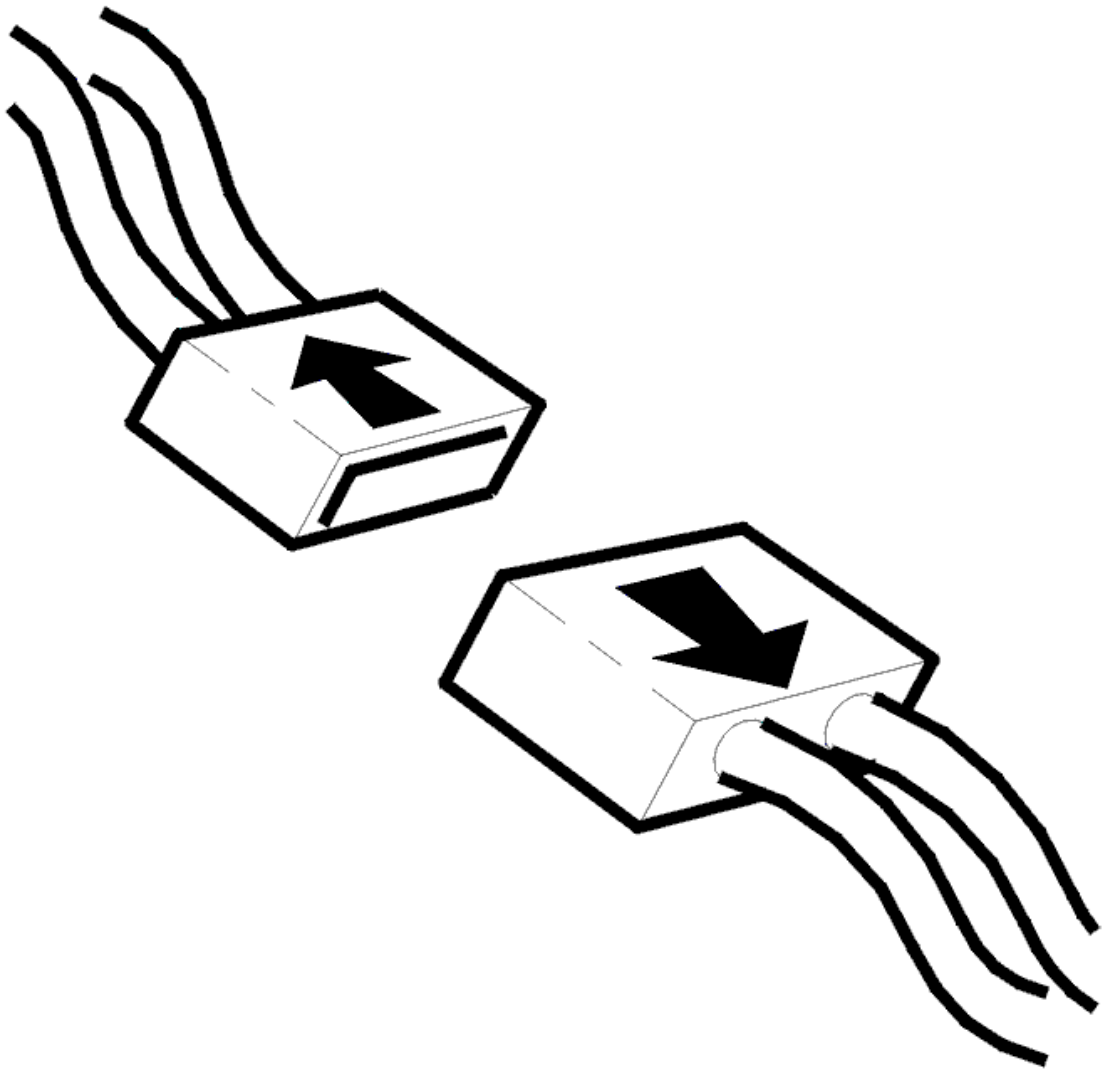

Fig. 240: Disconnecting Connector
Courtesy of VOLVO CARS CORPORATION

- Ignition off
- Disconnect central electronic module (CEM) connector C
- Disconnect starter motor relay 2/35.

  Check central electronic module (CEM) connector terminal C and the starter motor relay 2/35. Check for contact resistance. Check for oxidation. Check for damage. Check for loose connections.

  Check the cable. Check for an open-circuit. Check for a short-circuit to ground.

  Take readings between:

  - Central electronic module (CEM) terminal #C6 (#6) and starter motor relay 2/35 terminal #4.

Remedy as necessary.

Other information

- see **CONNECTING THE BREAKOUT BOX**
- -2004: **SIGNAL SPECIFICATION**
- 2005-: **SIGNAL SPECIFICATION**
- see **LOCATION OF COMPONENTS**
- see **CHECKING WIRING AND TERMINALS**

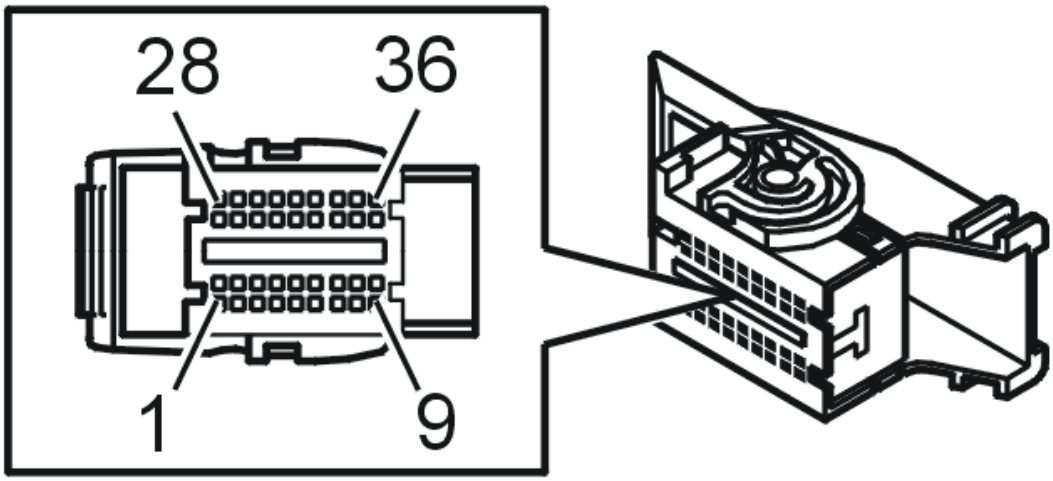

Fig. 241: Identifying Connector C
Courtesy of VOLVO CARS CORPORATION

- **Continue**

  Refer to **VERIFICATION**

VERIFICATION

VERIFICATION

HINT: After carrying out the repair, check that the fault has been remedied.

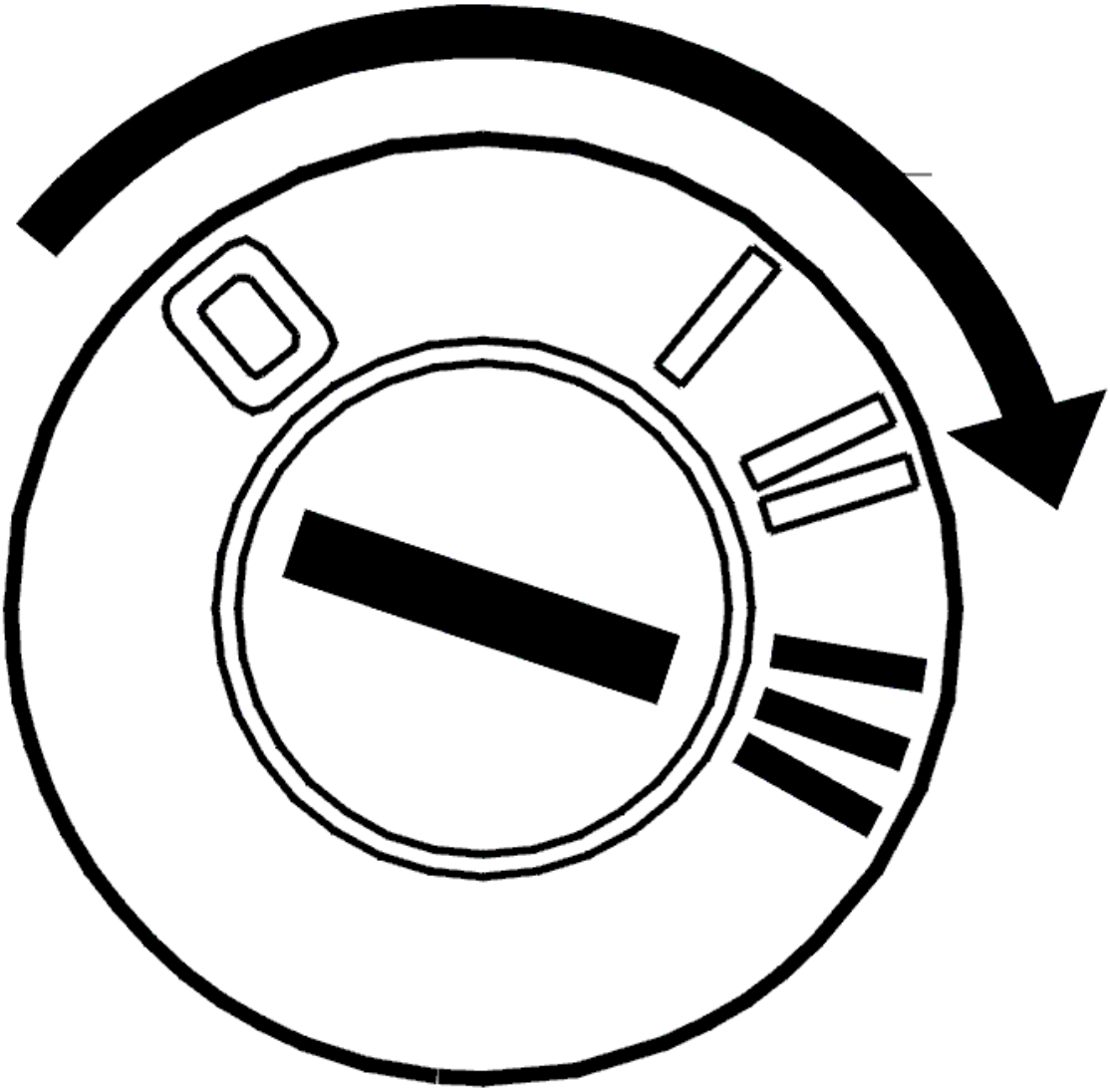

Fig. 242: Identifying Engine START Position
Courtesy of VOLVO CARS CORPORATION

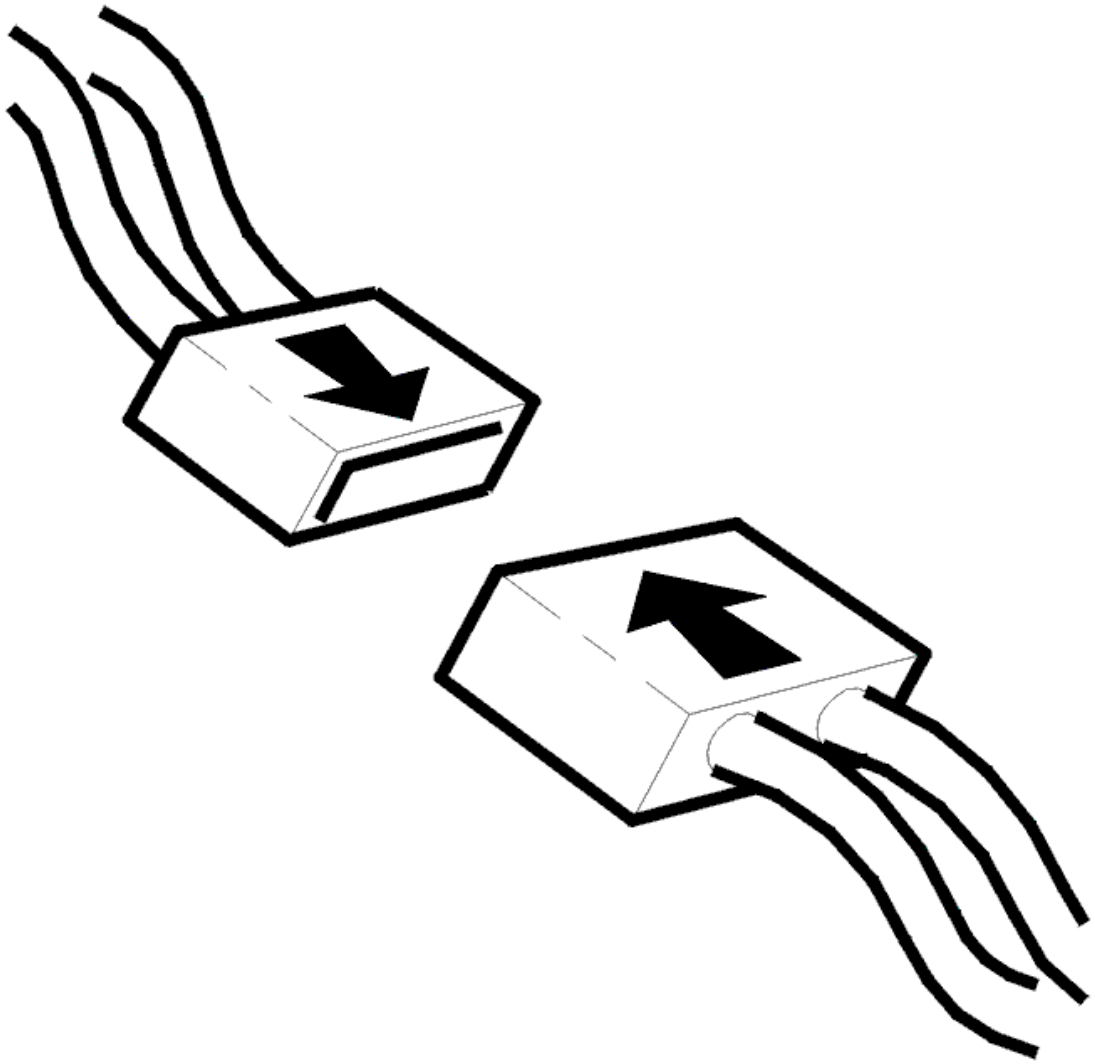

Fig. 243: Connecting Connector
Courtesy of VOLVO CARS CORPORATION

- Ignition off
- Reinstall the connectors, components etc.
- Try to start the engine.

Does the engine start?

- **YES**

  VERIFIED: Troubleshooting has been completed.

- **NO**

Refer to **INFORMATION**

INFORMATION

FAULT-TRACING INFORMATION

The fault should have been detected and remedied. As this is not the case fault-tracing has failed.

Exit fault-tracing for this diagnostic trouble code (DTC) or make another attempt.

CEM-3F82: IMMOBILIZER SIGNAL. SIGNAL TOO LOW. INTERMITTENT FAULT (2003-2004)

DIAGNOSTIC TROUBLE CODE (DTC) INFORMATION

Condition

Diagnostic trouble code (DTC) CEM-3F82 is stored if the central electronic module (CEM) registers that the signal from the transistor driver to the start relay is to low.

Substitute Value

None

Possible Source

- Short-circuit to ground in the output signal from the transistor driver to the starter relay. As a result, the starter relay is always activated when the ignition key is in position III.

Fault symptom[s]

- The gear selector lever only operates within a limited range.

SIGNAL TOO LOW. INTERMITTENT FAULT

INTERMITTENT FAULT

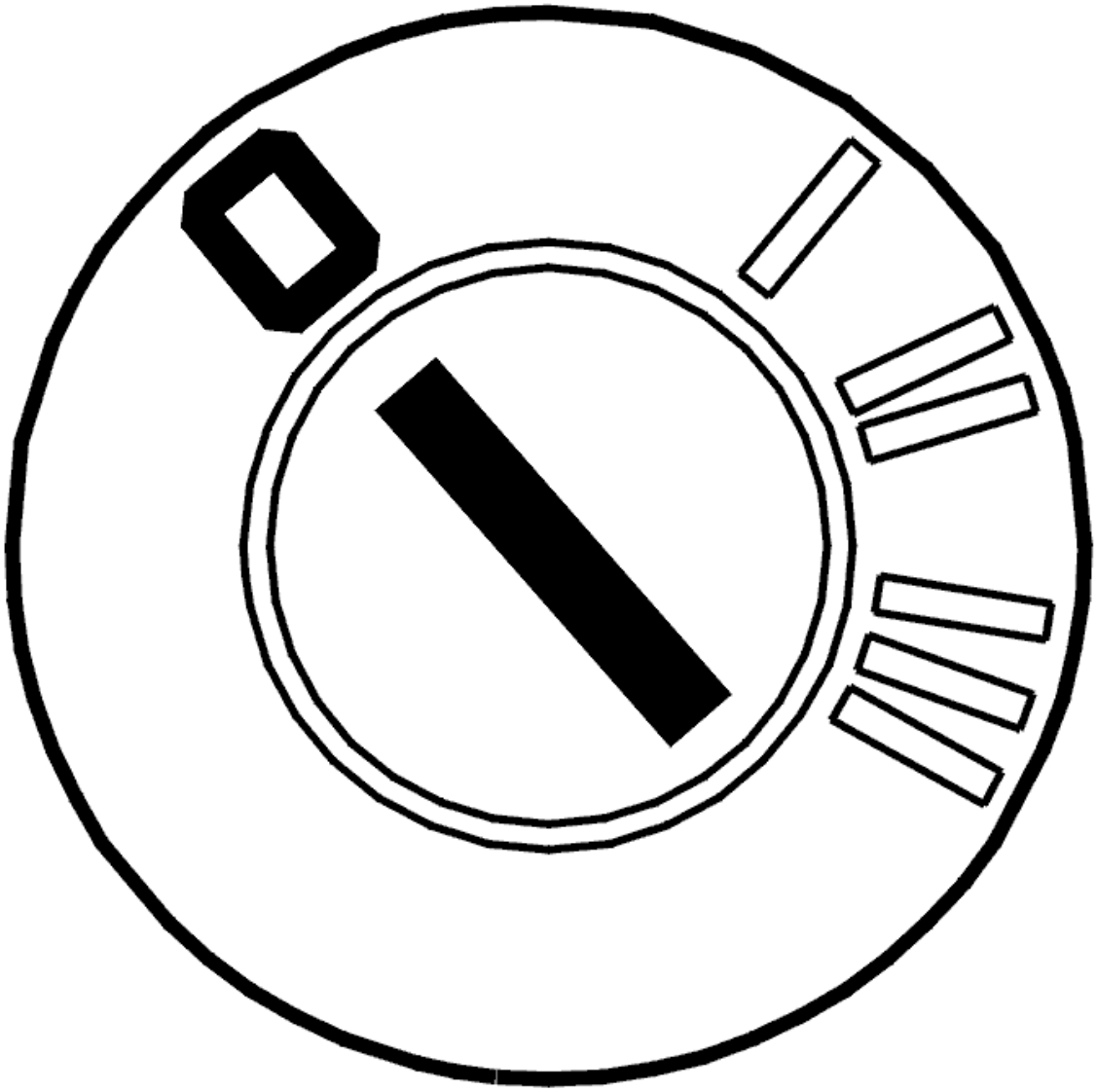

Fig. 244: Identifying Ignition OFF
Courtesy of VOLVO CARS CORPORATION

- Ignition off.

  Check the signal cable between central electronic module (CEM) terminal #3A and starter motor relay terminal #1 for a short-circuit to ground according to **SHORT-CIRCUIT TO GROUND, INTERMITTENT FAULTS** .

  Remedy as necessary.

  Other information:

  - Central electronic module (CEM) connector:
    - For -2004, see: **CENTRAL ELECTRONIC MODULE (CEM), REPLACING**

- For 2005-, see: **CENTRAL ELECTRONIC MODULE (CEM), REPLACING** .
- To connect the breakout box, see **CONNECTING THE BREAKOUT BOX** .
- -2004: **SIGNAL SPECIFICATION**
- 2005-: **SIGNAL SPECIFICATION**

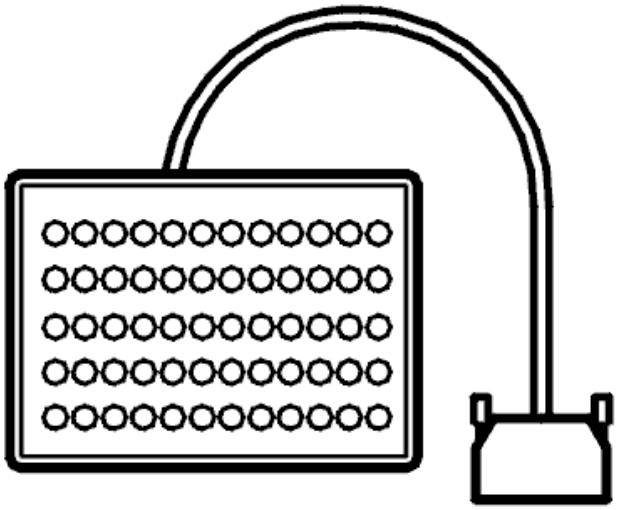

Fig. 245: Breakout Box
Courtesy of VOLVO CARS CORPORATION

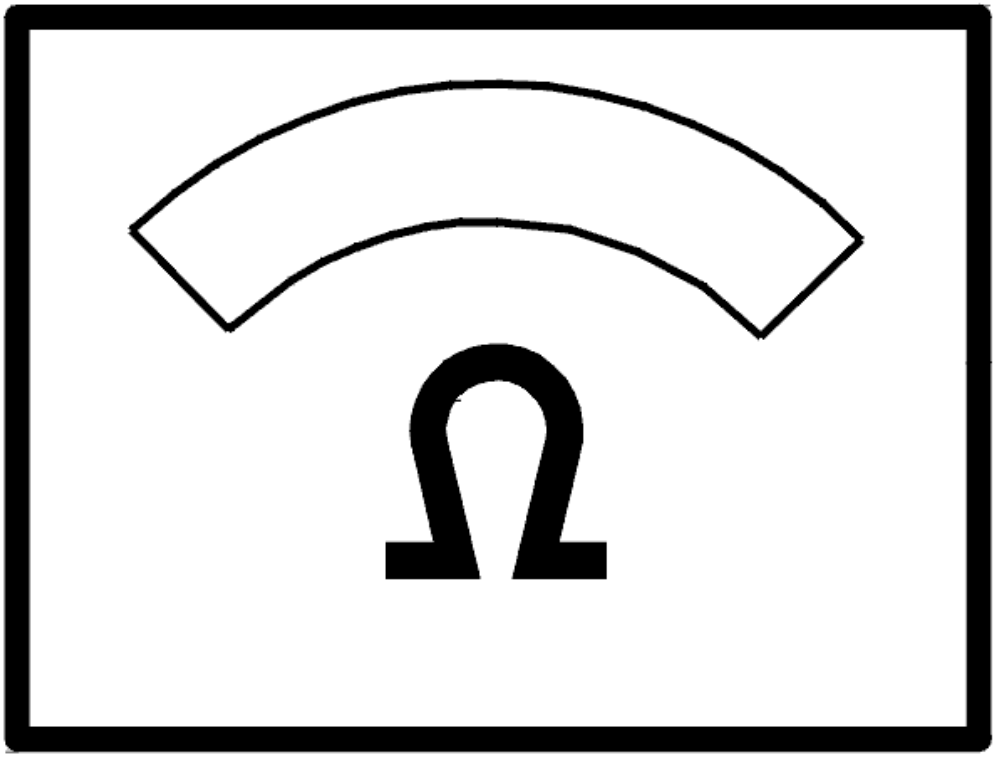

Fig. 246: Identifying Ohm Meter
Courtesy of VOLVO CARS CORPORATION

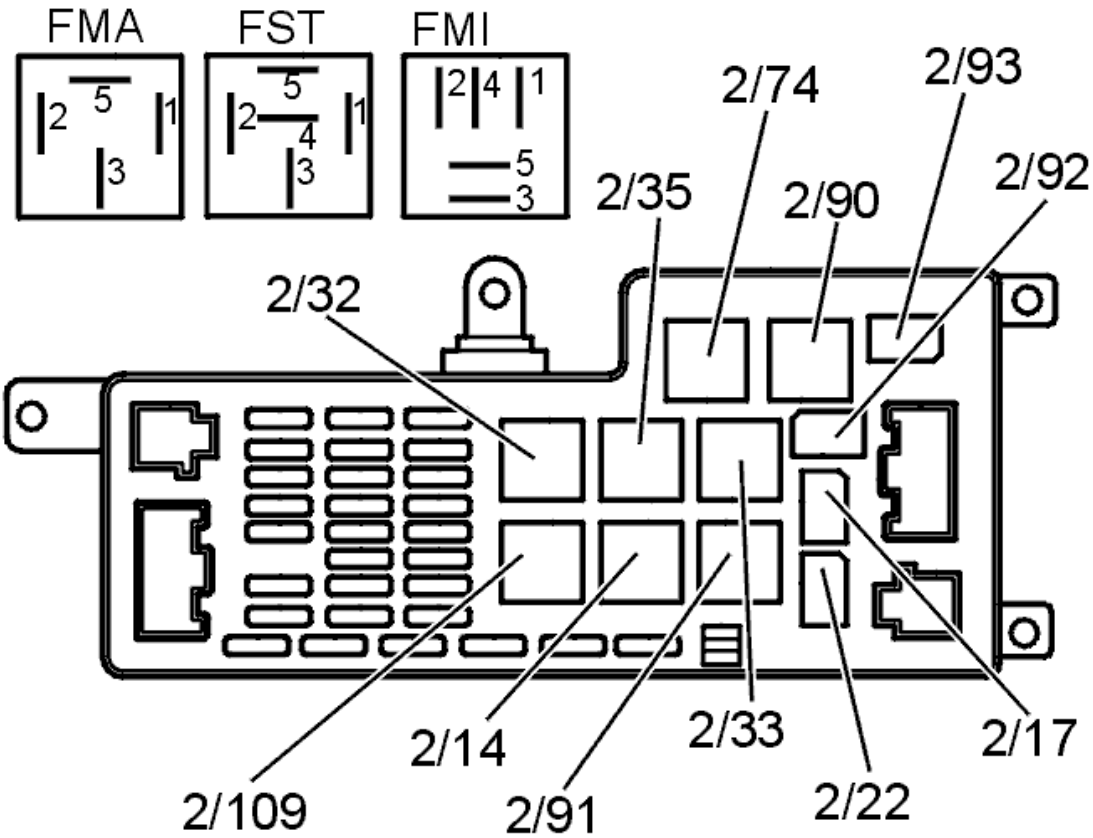

Fig. 247: Identifying Connectors
Courtesy of VOLVO CARS CORPORATION

- **Continue**

  Refer to **INFORMATION**

INFORMATION

FAULT-TRACING INFORMATION

If the fault is intermittent, do not verify fault-tracing if the fault does not recur.

It is possible to view the information again, or leave fault-tracing for this diagnostic trouble code (DTC).

CEM-3F82: IMMOBILIZER SIGNAL. SIGNAL TOO LOW. PERMANENT FAULT (2003-2004)

DIAGNOSTIC TROUBLE CODE (DTC) INFORMATION

see **DIAGNOSTIC TROUBLE CODE (DTC) INFORMATION**

SIGNAL TOO LOW. PERMANENT FAULT

CHECKING THE SIGNAL CABLE

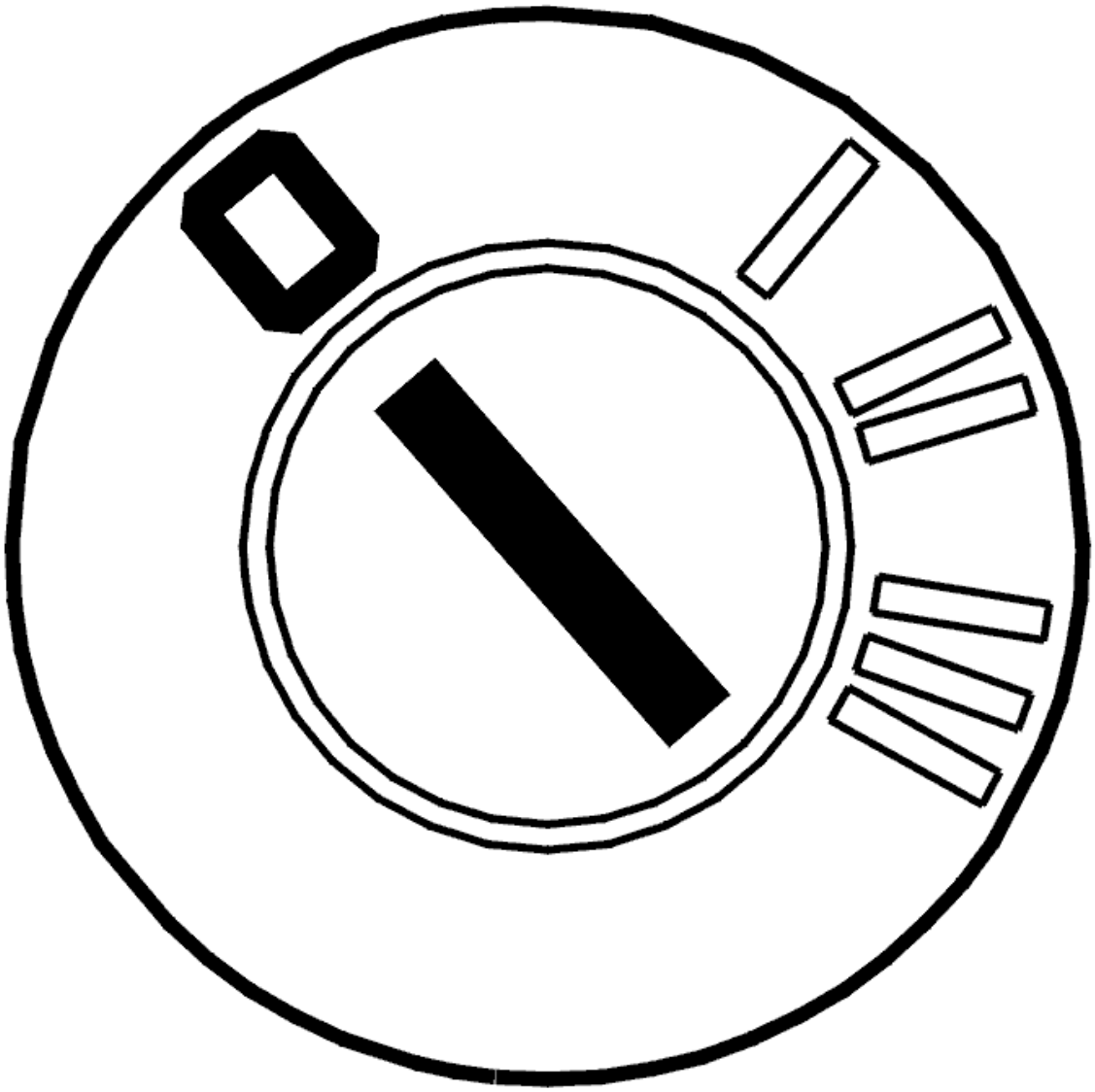

Fig. 248: Identifying Ignition OFF
Courtesy of VOLVO CARS CORPORATION

- Ignition off.
- Disconnect the 20-pin connector (group A) from the central electronic module (CEM).
- Pull the starter motor relay 2/35 out.

  Check the signal cable between central electronic module (CEM) terminal #3A and starter motor relay terminal #1 for a short-circuit to ground according to **SHORT-CIRCUIT TO GROUND, PERMANENT FAULTS** .

  Remedy as necessary.

  Other information:

- Central electronic module (CEM) connector:
  - For -2004, see: **CENTRAL ELECTRONIC MODULE (CEM), REPLACING**
  - For 2005-, see: **CENTRAL ELECTRONIC MODULE (CEM), REPLACING** .
- To connect the breakout box, see **CONNECTING THE BREAKOUT BOX** .
- -2004: **SIGNAL SPECIFICATION**
- 2005-: **SIGNAL SPECIFICATION**

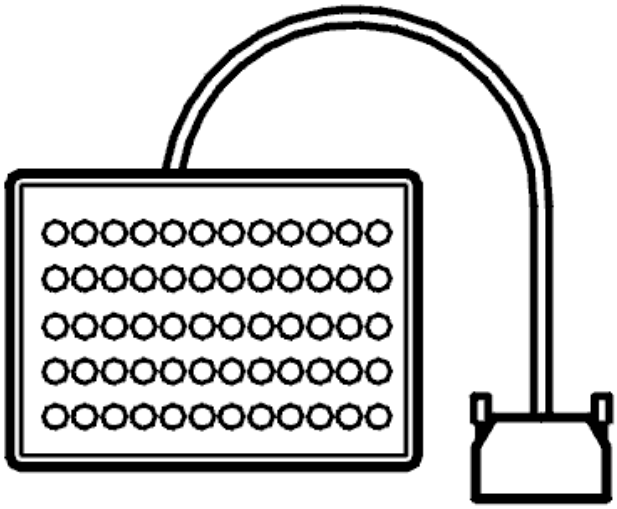

Fig. 249: Breakout Box
Courtesy of VOLVO CARS CORPORATION

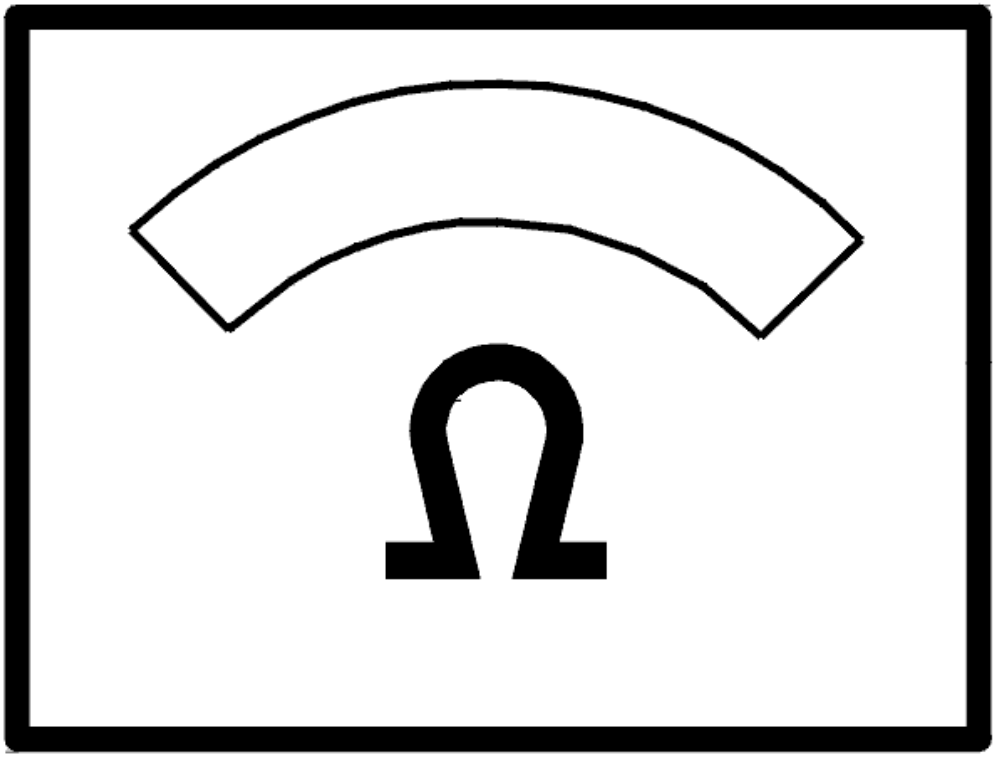

Fig. 250: Identifying Ohm Meter
Courtesy of VOLVO CARS CORPORATION

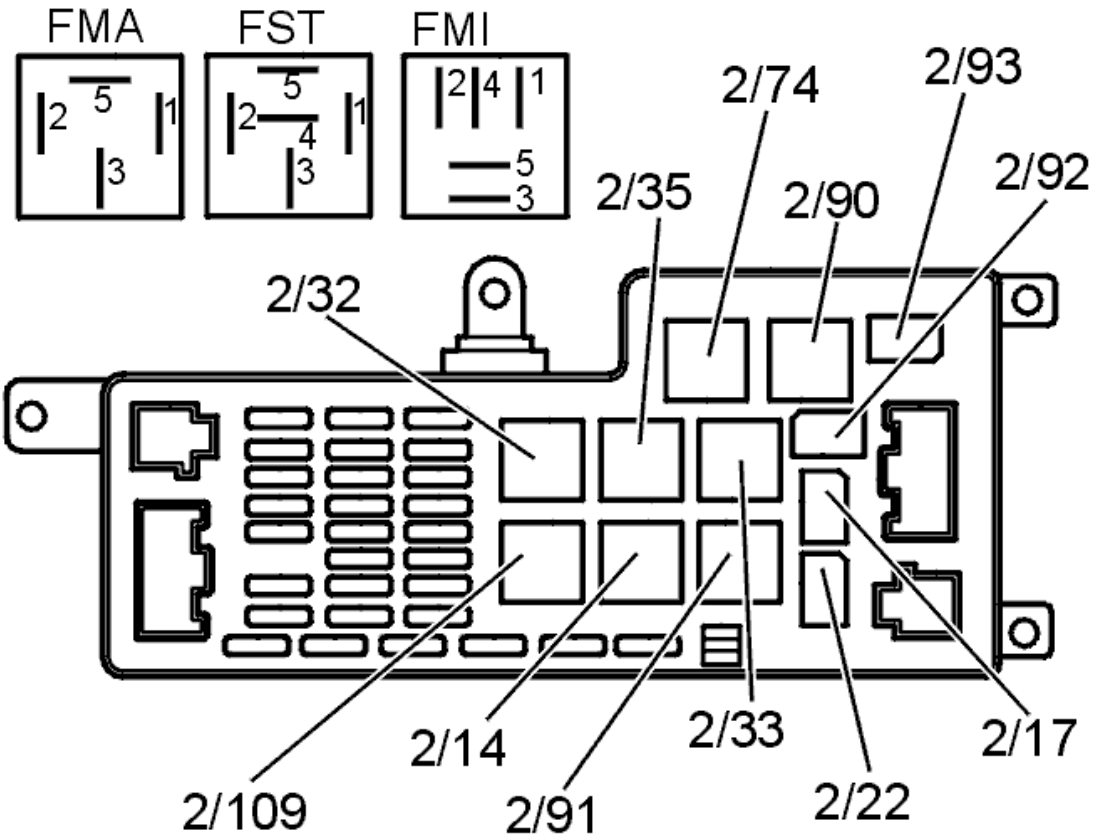

Fig. 251: Identifying Connectors
Courtesy of VOLVO CARS CORPORATION

Is the signal cable OK?

- **YES**

  Refer to **REPLACING THE COMPONENT**

- **NO**

  Refer to **VERIFICATION**

REPLACING THE COMPONENT

Try a new starter motor relay.

- **Continue**

  Refer to **VERIFICATION**

VERIFICATION

VERIFICATION

HINT: After the repair it is necessary to check that the fault has been rectified.

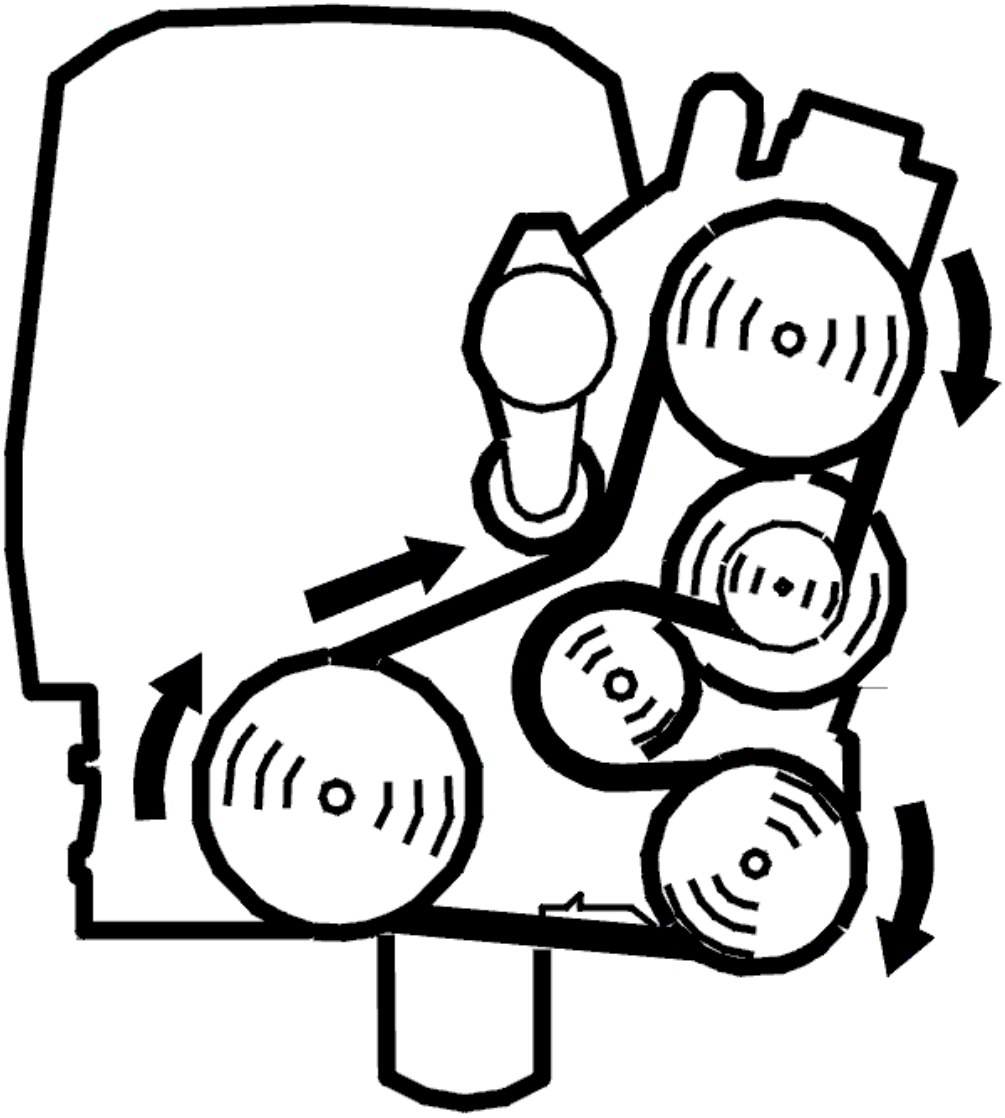

Fig. 252: Belt Routing / Engine Idling - Volvo
Courtesy of VOLVO CARS CORPORATION

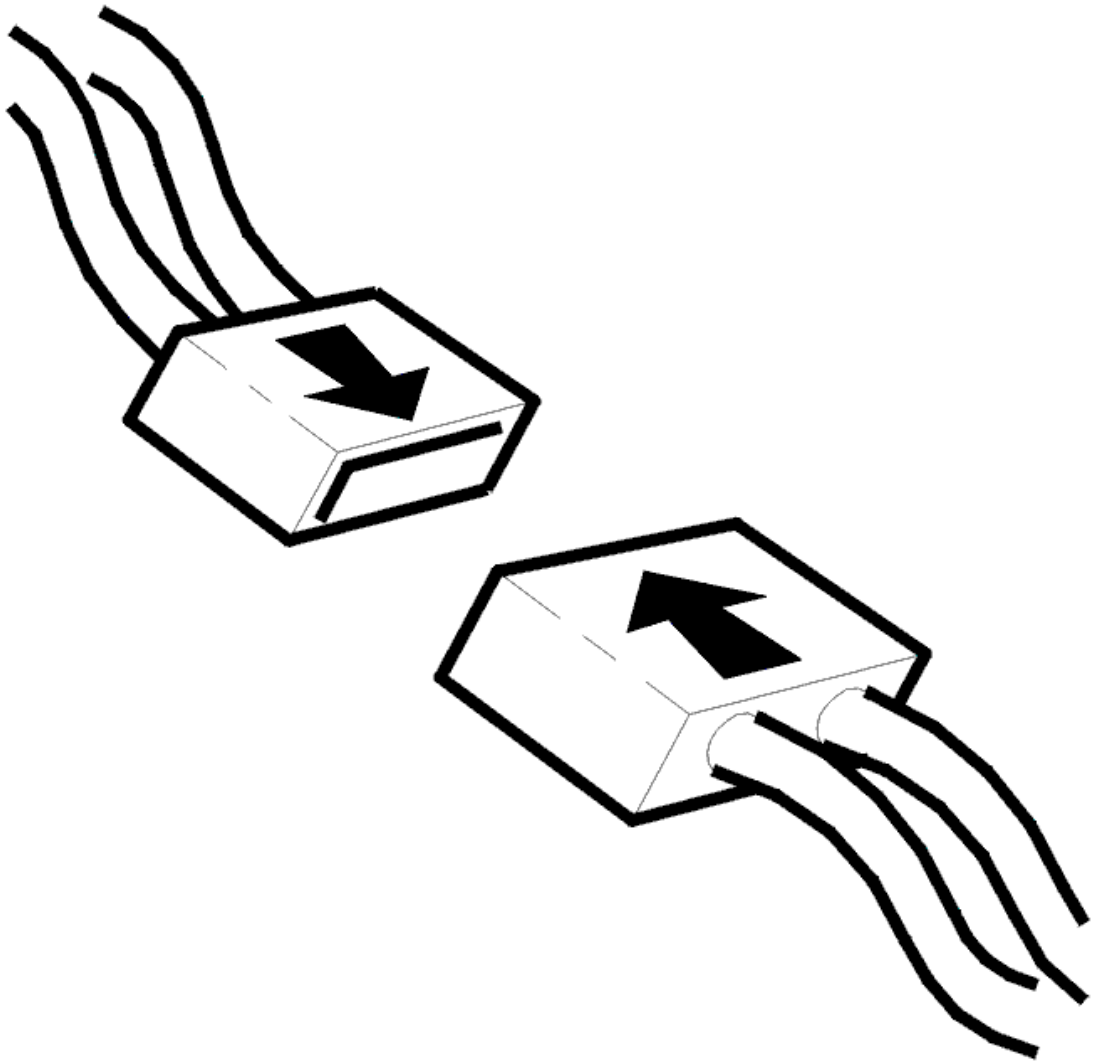

Fig. 253: Connecting Connector
Courtesy of VOLVO CARS CORPORATION

- Ignition off.
- Connect connectors, install components, etc.
- Disconnect the starter motor connector.
- Try to start the engine with the gear lever in any position other than P or N.
- Connect the starter motor connector.

  Check that diagnostic trouble code status changes from permanent to intermittent.

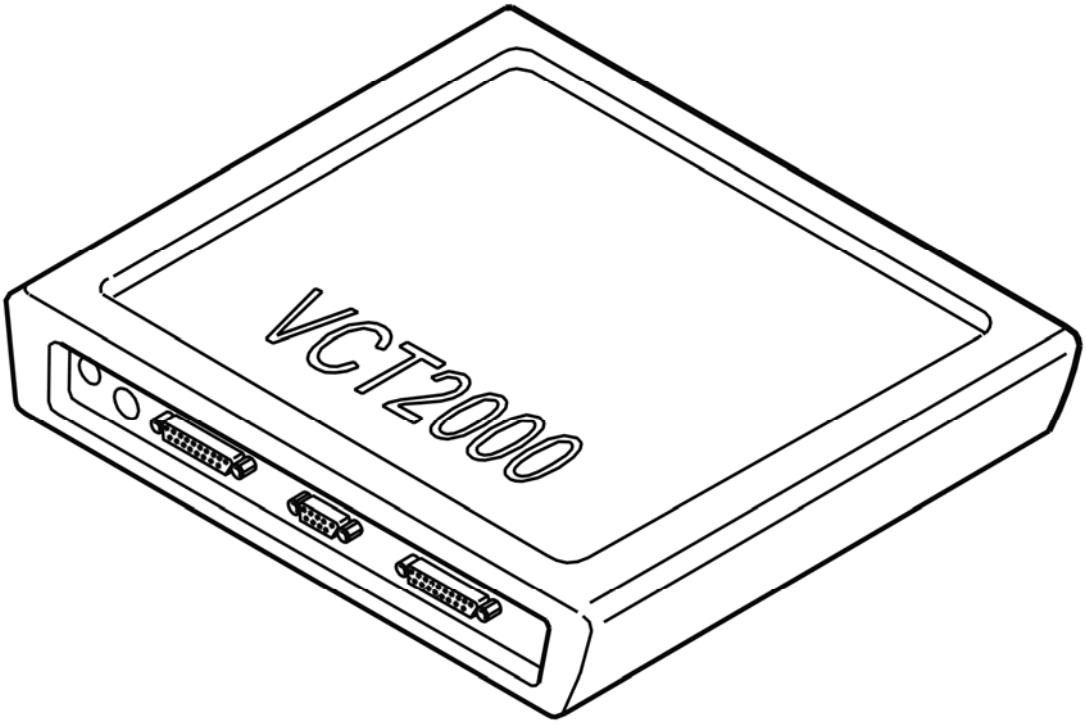

Fig. 254: Identifying VCT2000 Diagnostic Tool Symbol In VIDA
Courtesy of VOLVO CARS CORPORATION

Is the diagnostic trouble code status intermittent?

- **YES**

  VERIFIED: Troubleshooting has been completed.

- **NO**

  Refer to **INFORMATION**

INFORMATION

FAULT-TRACING INFORMATION

The fault should have been detected and remedied. As this is not the case fault-tracing has failed.

Exit fault-tracing for this diagnostic trouble code (DTC) or make another attempt.

CEM-3F83: IMMOBILIZER SIGNAL. SIGNAL TOO LOW (2005-2012)

DIAGNOSTIC TROUBLE CODE (DTC) INFORMATION CEM-3F83

Condition

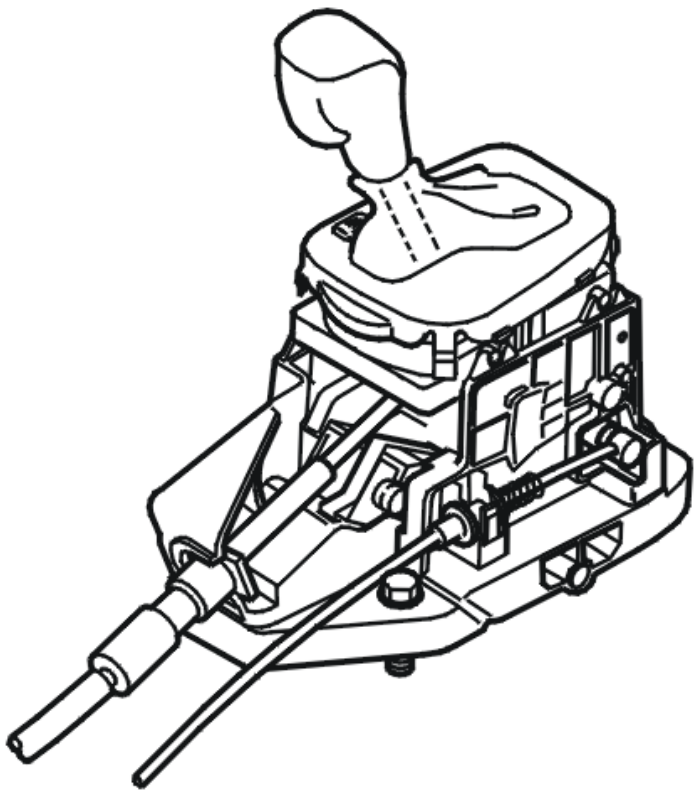

Fig. 255: Identifying Gearshift Lever And Linkage
Courtesy of VOLVO CARS CORPORATION

The central electronic module (CEM) receives information from the transmission on a hardwired cable indicating when park or neutral are engaged. The central electronic module (CEM) also receives a signal indicating the position of the gear-shift position sensor from the transmission control module (TCM) via the controller area network (CAN).

The diagnostic trouble code (DTC) is stored if the central electronic module (CEM) detects that the gear-shift selector lever is in position P or N but the position received from the transmission control module (TCM) on the controller area network (CAN) indicates a different position.

The diagnostic trouble code (DTC) can be diagnosed in ignition positions II and III.

Substitute Value

- None.

Possible Source

- Short-circuit to ground in the cable from the gear-shift position sensor.

Fault symptom[s]

- The park neutral position (PNP) switch does not function.

SIGNAL TOO LOW

CHECKING THE WIRING

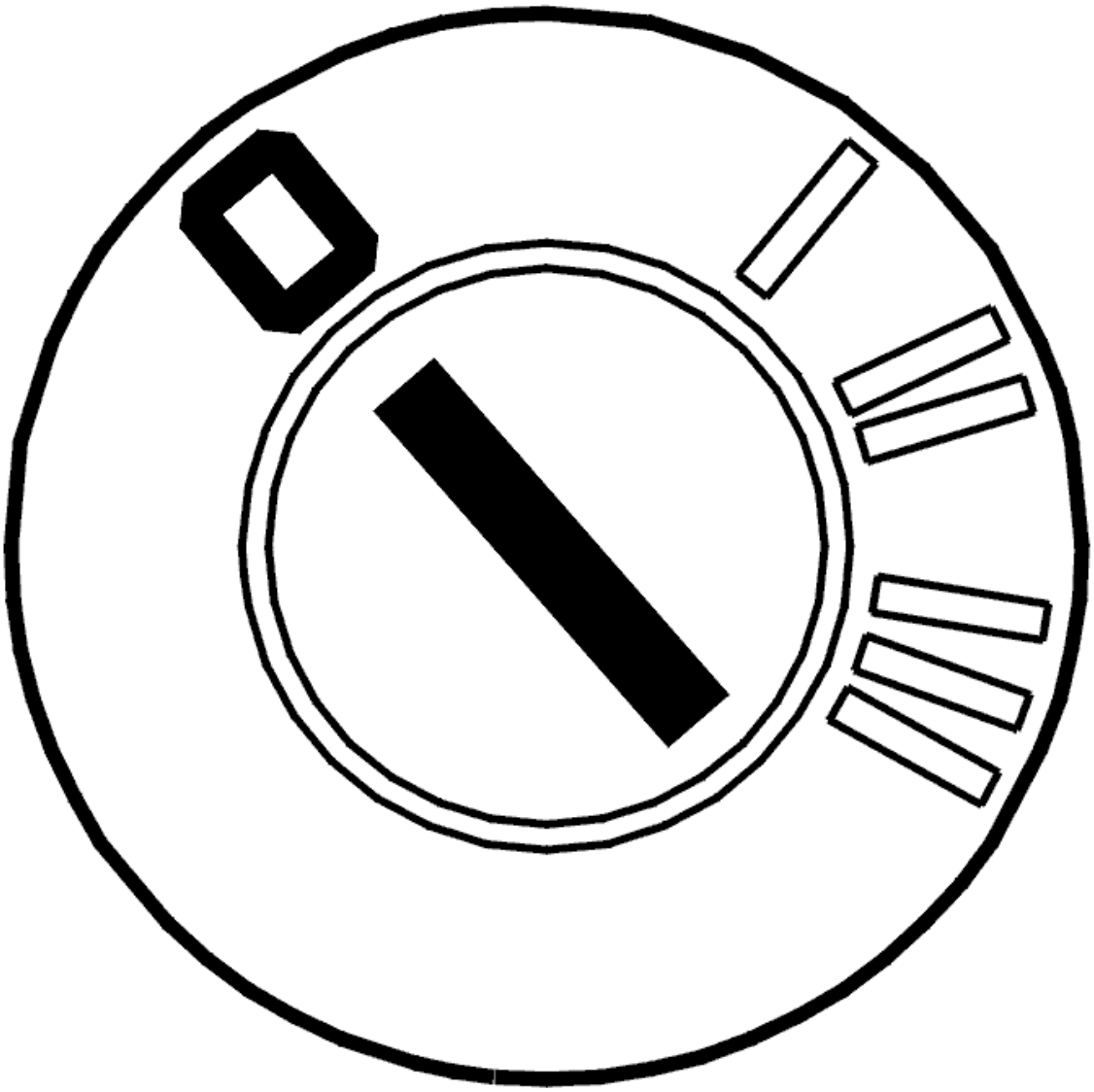

Fig. 256: Identifying Ignition OFF
Courtesy of VOLVO CARS CORPORATION

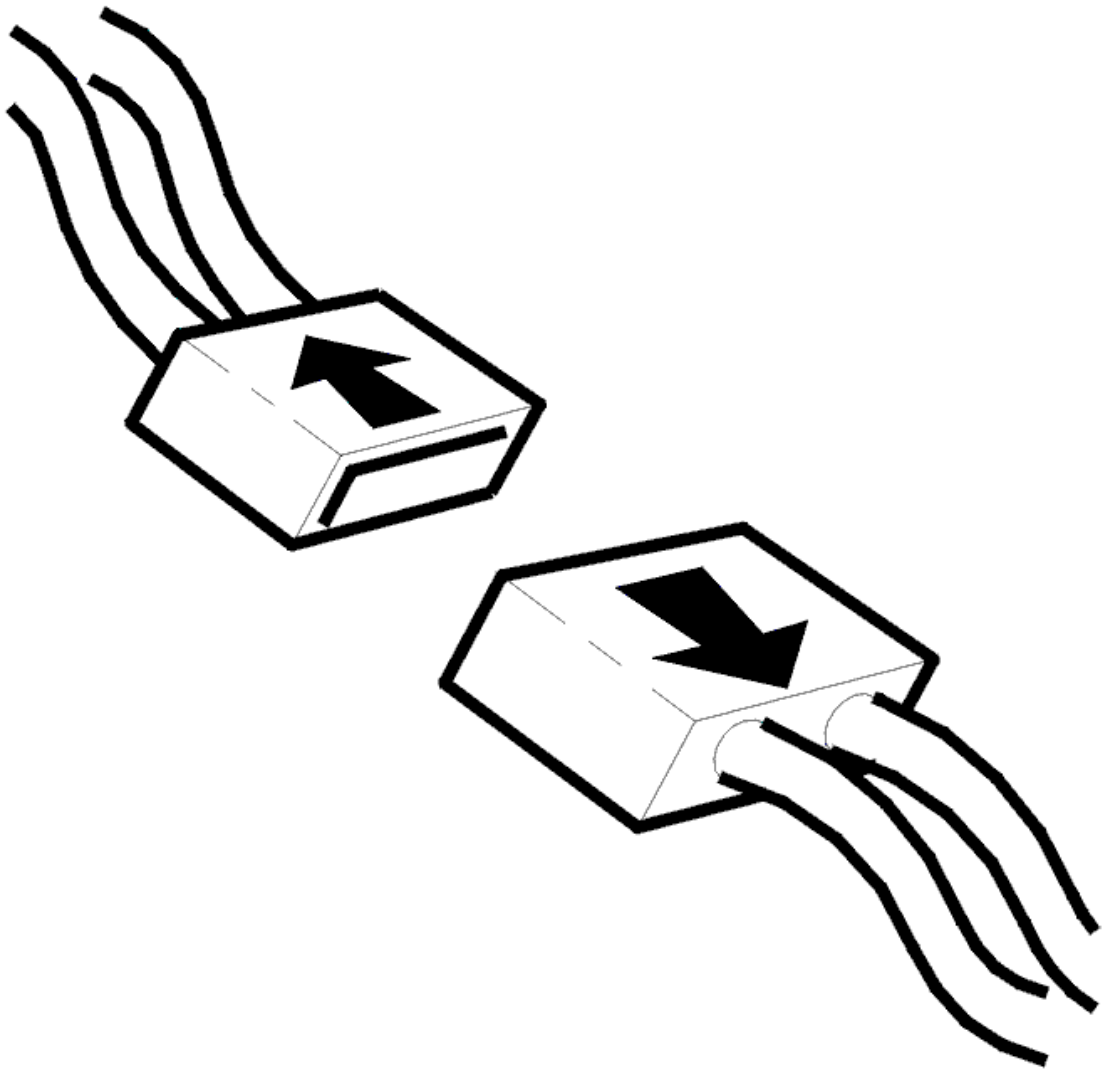

Fig. 257: Disconnecting Connector
Courtesy of VOLVO CARS CORPORATION

- Ignition off
- Disconnect central electronic module (CEM) connector C.

  Check the cable for a short-circuit to ground.

  Take readings between:

  - Central electronic module (CEM) terminal #C28 (28) and transmission control module (TCM) terminal #A44.

  Remedy as necessary.

  Other information

- see **CONNECTING THE BREAKOUT BOX**
- -2004: **SIGNAL SPECIFICATION**
- 2005-: **SIGNAL SPECIFICATION**
- see **LOCATION OF COMPONENTS**
- see **CHECKING WIRING AND TERMINALS**

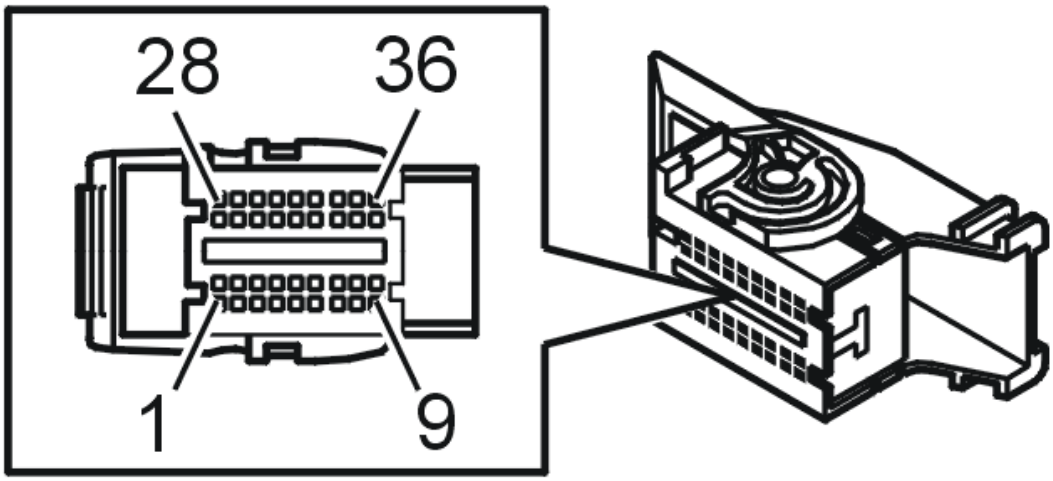

Fig. 258: Identifying Connector C
Courtesy of VOLVO CARS CORPORATION

- **Continue**

  Refer to **VERIFICATION**

VERIFICATION

VERIFICATION

HINT: After carrying out the repair, check that the fault has been remedied.

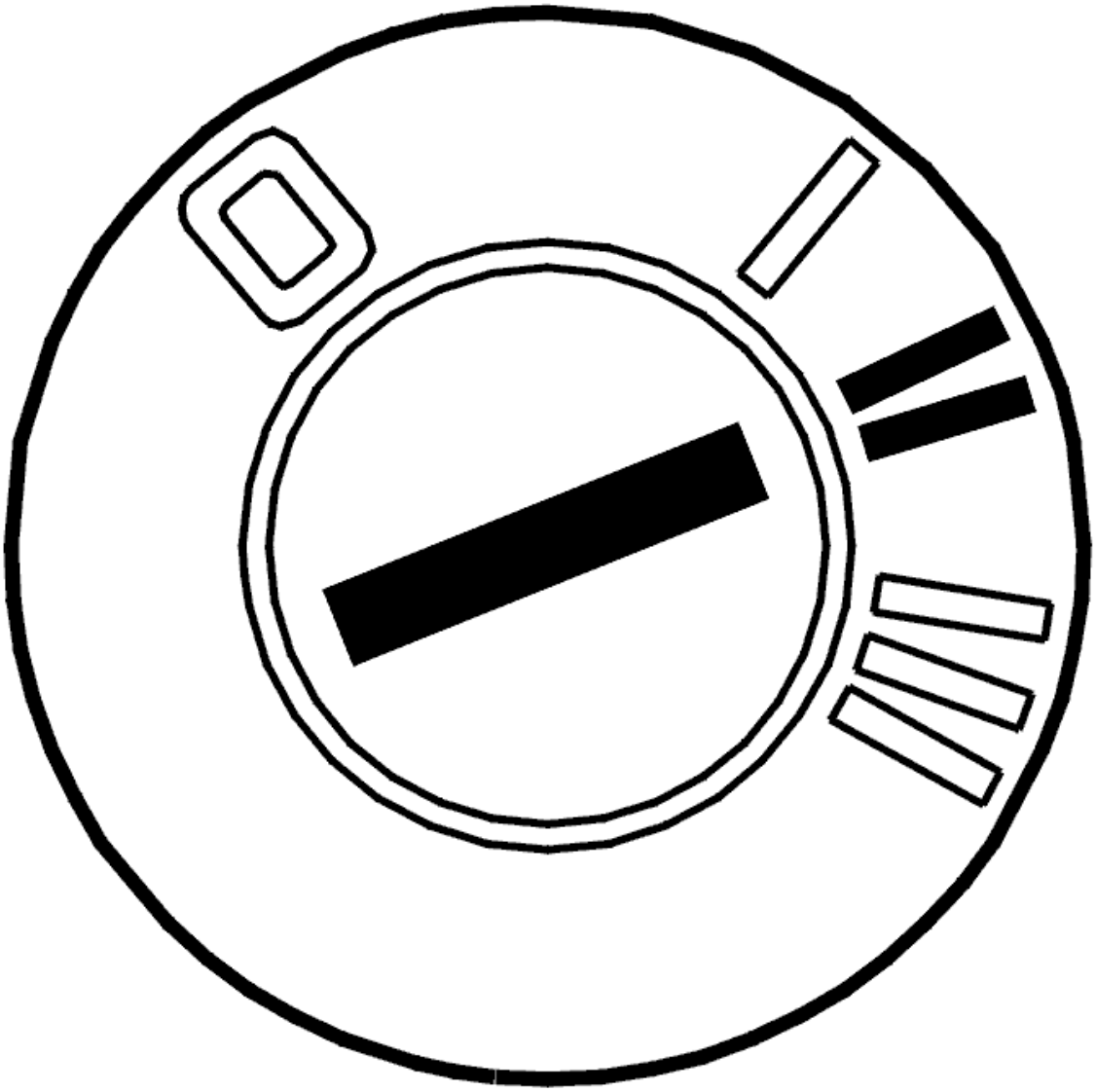

Fig. 259: Identifying Ignition ON
Courtesy of VOLVO CARS CORPORATION

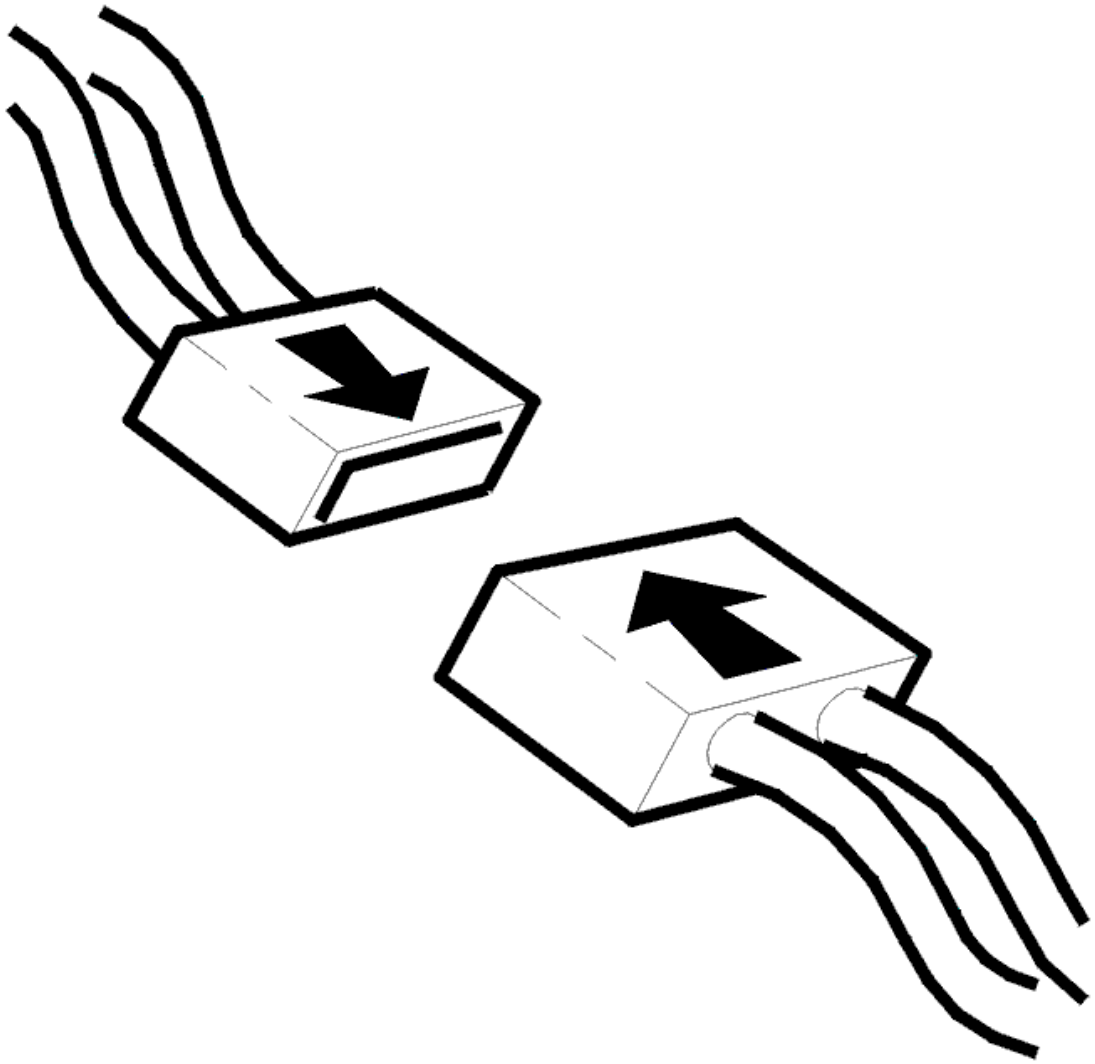

Fig. 260: Connecting Connector
Courtesy of VOLVO CARS CORPORATION

- Ignition off
- Reinstall the connectors, components etc.
- Ignition on.

Is the shift-lock working?

- **YES**

  VERIFIED: Troubleshooting has been completed.

- **NO**

Refer to **INFORMATION**

INFORMATION

FAULT-TRACING INFORMATION

The fault should have been detected and remedied. As this is not the case fault-tracing has failed.

Exit fault-tracing for this diagnostic trouble code (DTC) or make another attempt.

CEM-3F84: IMMOBILIZER SIGNAL. FAULTY SIGNAL (2005-2012)

DIAGNOSTIC TROUBLE CODE (DTC) INFORMATION CEM-3F84

Condition

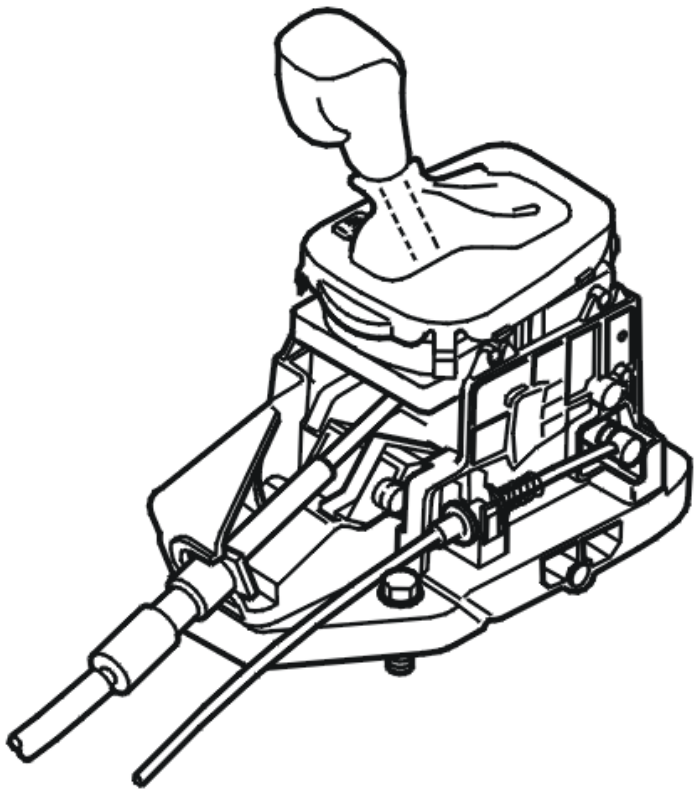

Fig. 261: Identifying Gearshift Lever And Linkage
Courtesy of VOLVO CARS CORPORATION

The central electronic module (CEM) receives information from the transmission on a hardwired cable indicating when park or neutral are engaged. This is achieved by grounding an input on the central electronic module (CEM). The central electronic module (CEM) also receives a signal indicating the position of the gear-shift position sensor from the transmission control module (TCM) via the controller area network (CAN).

The diagnostic trouble code (DTC) is stored if the central electronic module (CEM) detects that the gear-shift selector lever is not in position P or N but the position received from the transmission control module (TCM) on the controller area network (CAN) indicates that it is.

The diagnostic trouble code (DTC) can be diagnosed at ignition switch position II.

Substitute Value

- None.

Possible Source

- Open-circuit or short-circuit to supply voltage in the cable from the gear-shift position sensor.

Fault symptom[s]

- The gear selector is jammed in position P.

FAULTY SIGNAL

CHECKING THE WIRING

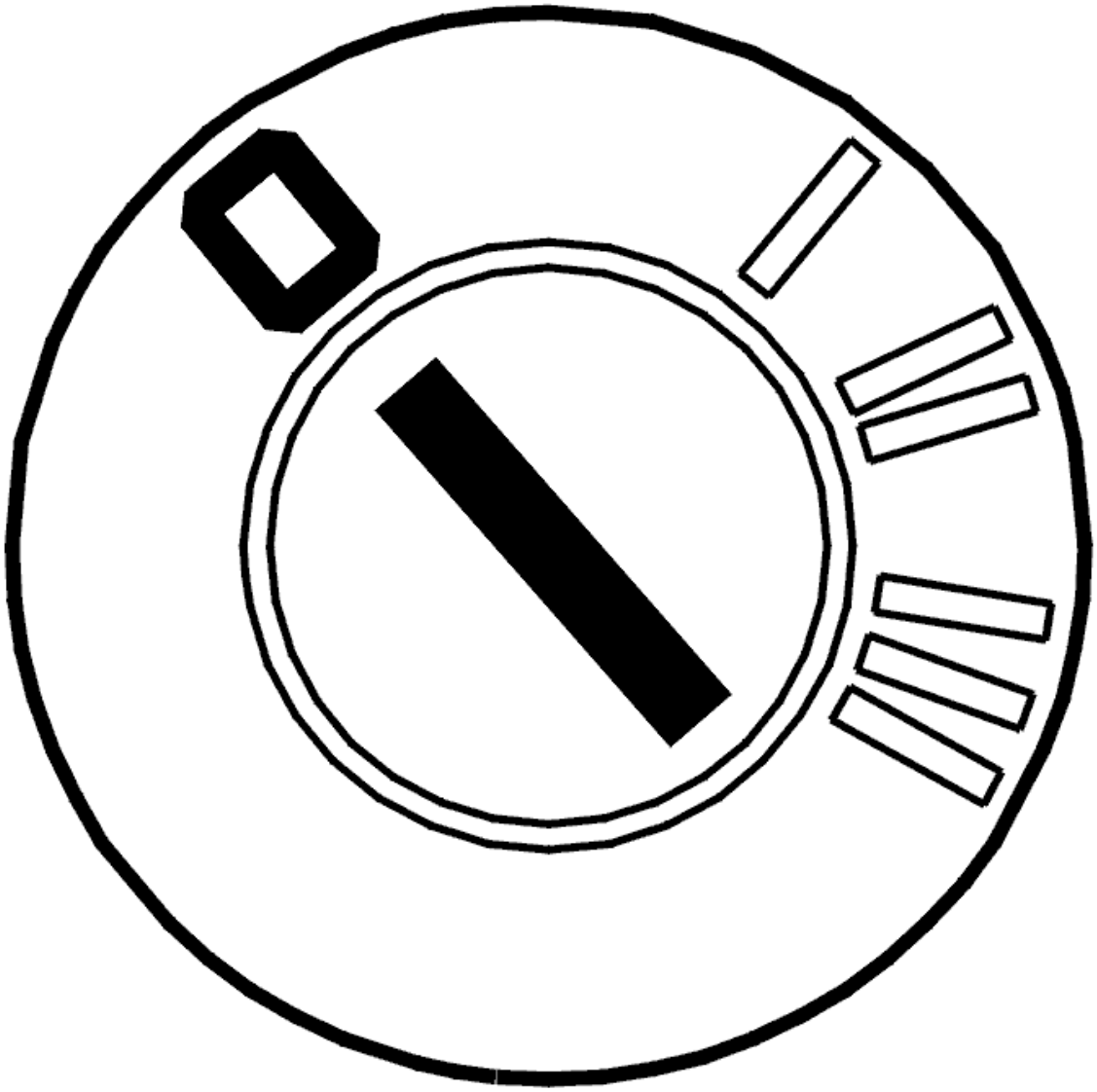

Fig. 262: Identifying Ignition OFF
Courtesy of VOLVO CARS CORPORATION

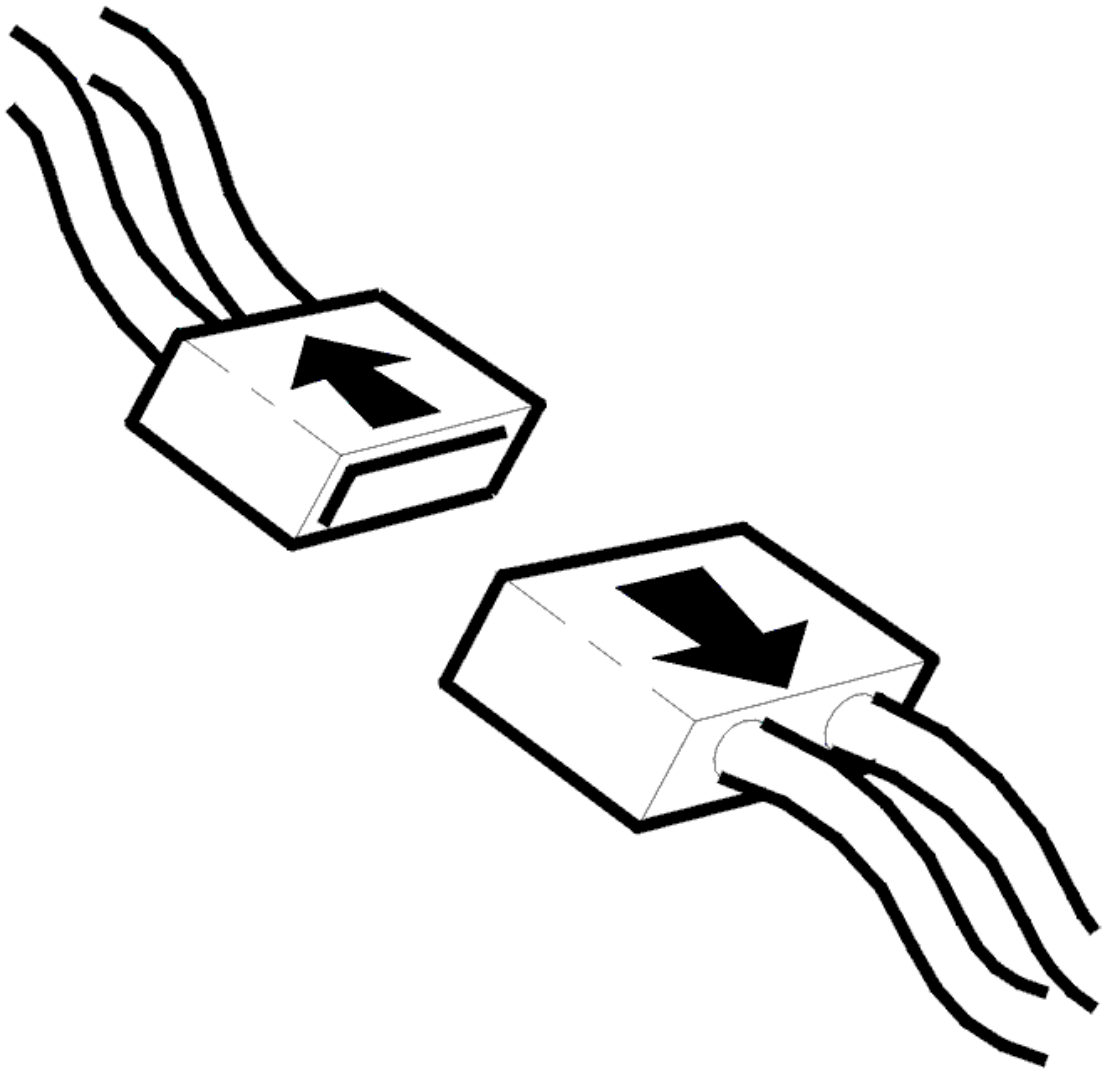

Fig. 263: Disconnecting Connector
Courtesy of VOLVO CARS CORPORATION

- Ignition off
- Disconnect central electronic module (CEM) connector C.

  Check central electronic module (CEM) connector terminal C. Check for contact resistance. Check for oxidation. Check for damaged and loose connections.

  Check the cable. Check for an open-circuit. Check for a short-circuit to the battery.

  Take readings between:

  - Central electronic module (CEM) terminal #C28 (28) and transmission control module (TCM) terminal #A44.

Remedy as necessary.

Other information

- see **SIGNAL TOO HIGH**
- -2004: **SIGNAL SPECIFICATION**
- 2005-: **SIGNAL SPECIFICATION**
- see **LOCATION OF COMPONENTS**
- see **CHECKING WIRING AND TERMINALS**

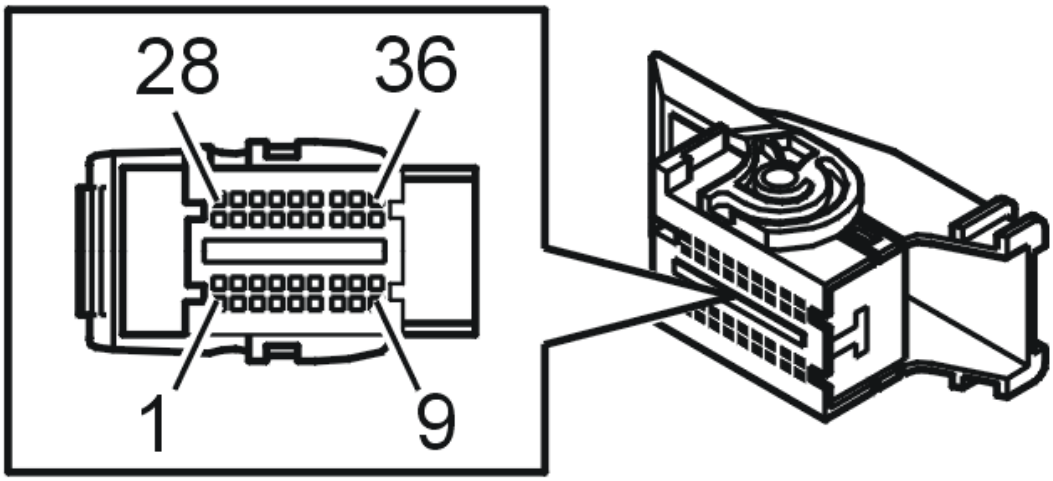

Fig. 264: Identifying Connector C
Courtesy of VOLVO CARS CORPORATION

- **Continue**

  Refer to **VERIFICATION**

VERIFICATION

VERIFICATION

HINT: After carrying out the repair, check that the fault has been remedied.

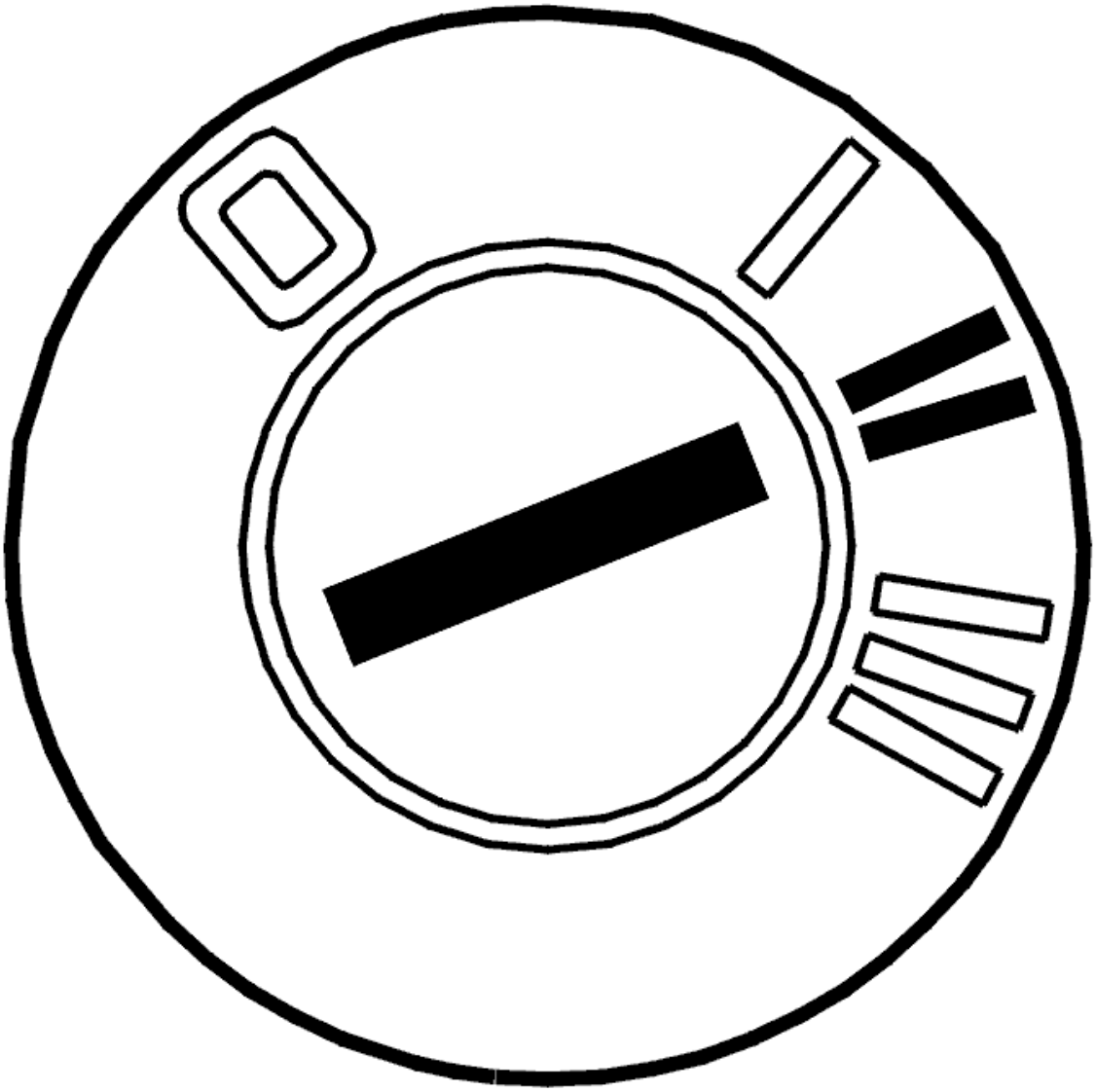

Fig. 265: Identifying Ignition ON
Courtesy of VOLVO CARS CORPORATION

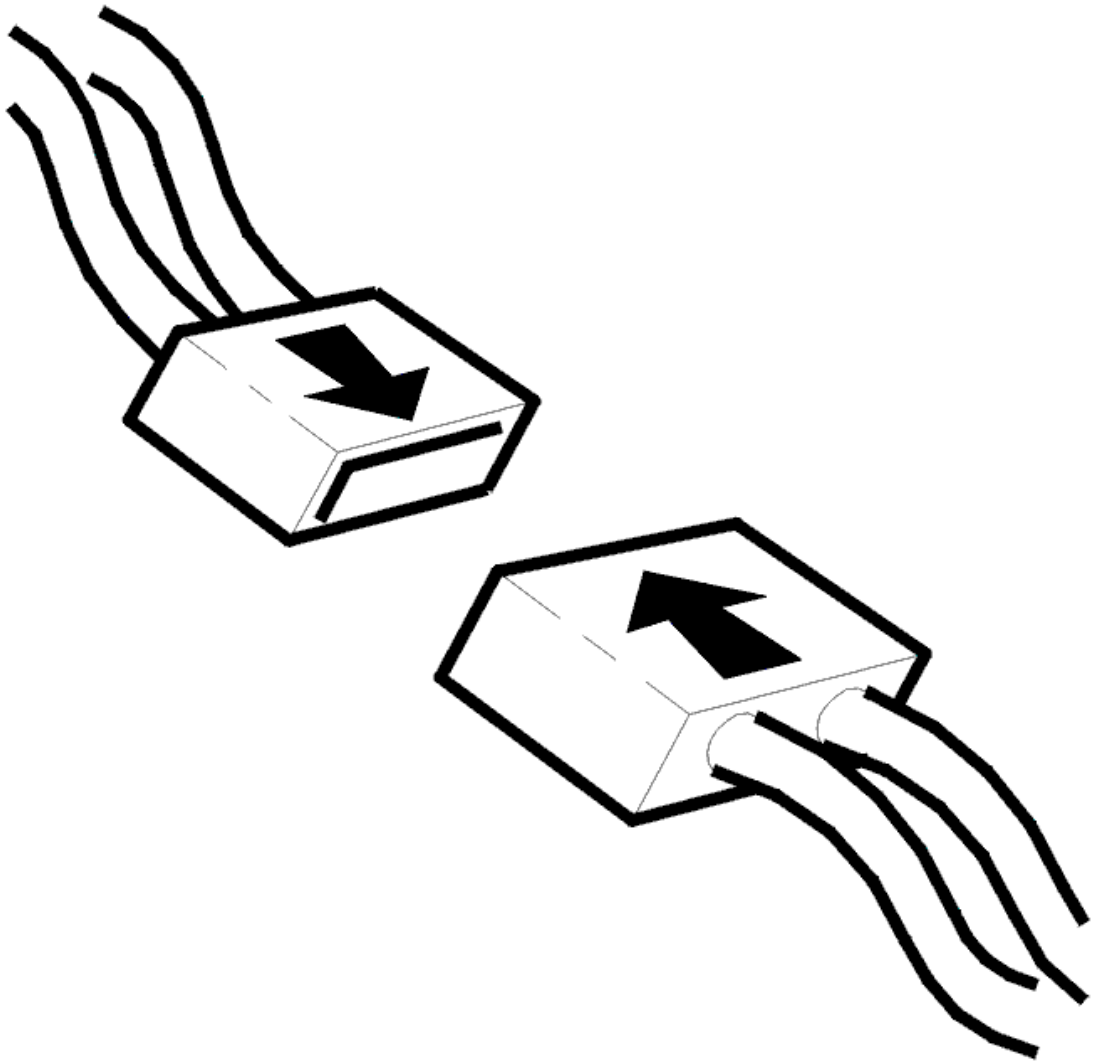

Fig. 266: Connecting Connector
Courtesy of VOLVO CARS CORPORATION

- Ignition off
- Reinstall the connectors, components etc.
- Ignition on.

Is the shift-lock working?

- **YES**

  VERIFIED: Troubleshooting has been completed.

- **NO**

Refer to **INFORMATION**

INFORMATION

FAULT-TRACING INFORMATION

The fault should have been detected and remedied. As this is not the case fault-tracing has failed.

Exit fault-tracing for this diagnostic trouble code (DTC) or make another attempt.

CEM-3F90: FUEL PUMP RELAY. OPEN-CIRCUIT OR SHORT-CIRCUIT TO GROUND (2005-2012)

DIAGNOSTIC TROUBLE CODE (DTC) INFORMATION CEM-3F90

Condition

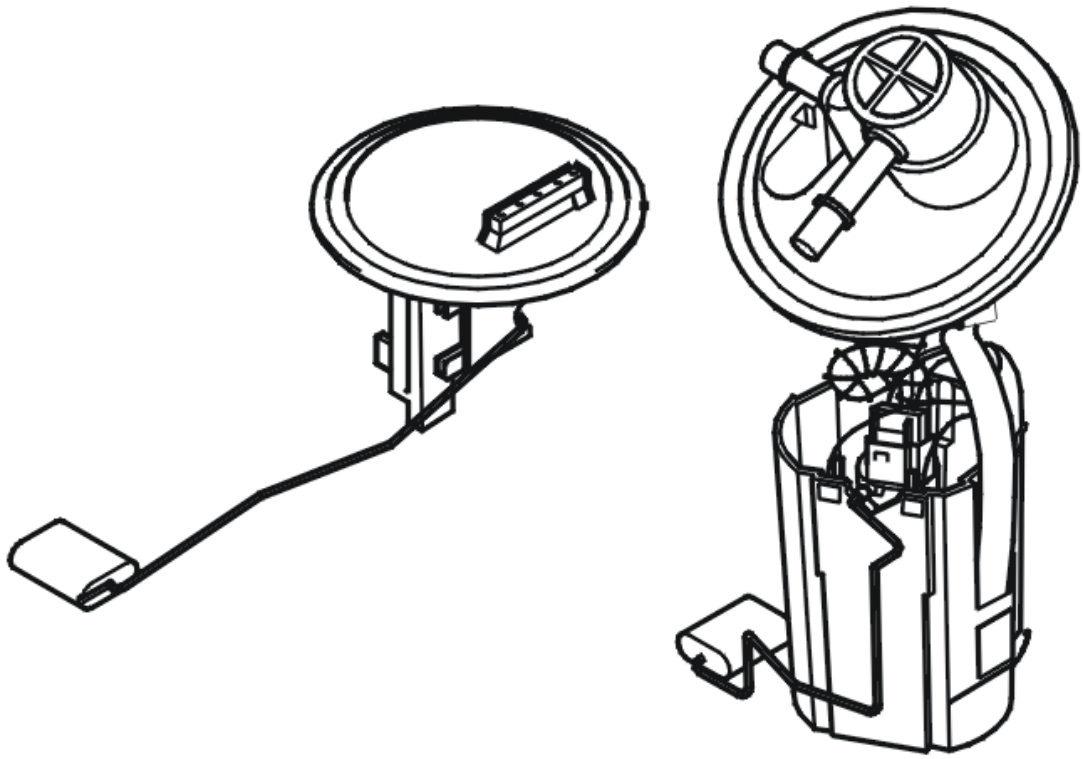

Fig. 267: Identifying Fuel Pump
Courtesy of VOLVO CARS CORPORATION

Central electronic module (CEM) checks the fuel pump relay, and activates it, when an approved check has been made by the system for Immobilizer. The fuel pump relay is located internally in the Central electronic module (CEM). The fuel pump relay sends voltage feed to the fuel pump when the relay is activated.

If Central electronic module (CEM) detects that the voltage on the output to the fuel pump is too low, the diagnostic trouble code is generated.

The diagnostic trouble code (DTC) can be diagnosed when the fuel pump is activated.

NOTE: **When troubleshooting, the fuel pump may not be supplied with voltage by an external power source without first disconnecting the connector to the Central electronic module (CEM). If the connector is not loosened and the fuel pump is supplied with voltage, this can lead to failure of an internal ground conductor in the Central electronic module (CEM). In turn, this can lead to a number of other malfunctions in the vehicle and that Central electronic module (CEM) must be replaced.**

The following applies to vehicles with fuel pump module (PEM):

Central electronic module (CEM) checks the voltage feed to the fuel pump module. The Central electronic module (CEM) activates the voltage supply to the fuel pump control module after the checks carried out by the function for the immobilizer have been approved.

If Central electronic module (CEM) detects that the voltage on the output to the fuel pump module (PEM) is too low, the diagnostic trouble code is generated.

The diagnostic trouble code (DTC) can be diagnosed when the fuel pump is activated.

Substitute Value

- None.

Possible Source

- Damaged power supply fuse.
- Open circuit on cables for voltage feed between fuse box engine compartment and Central electronic module (CEM).
- The cable for voltage feed between Central electronic module (CEM) and fuel pump module (PEM)/fuel pump is short-circuited to ground.

Fault symptom[s]

- The engine does not start.

OPEN-CIRCUIT OR SHORT-CIRCUIT TO GROUND

CHECKING THE WIRING

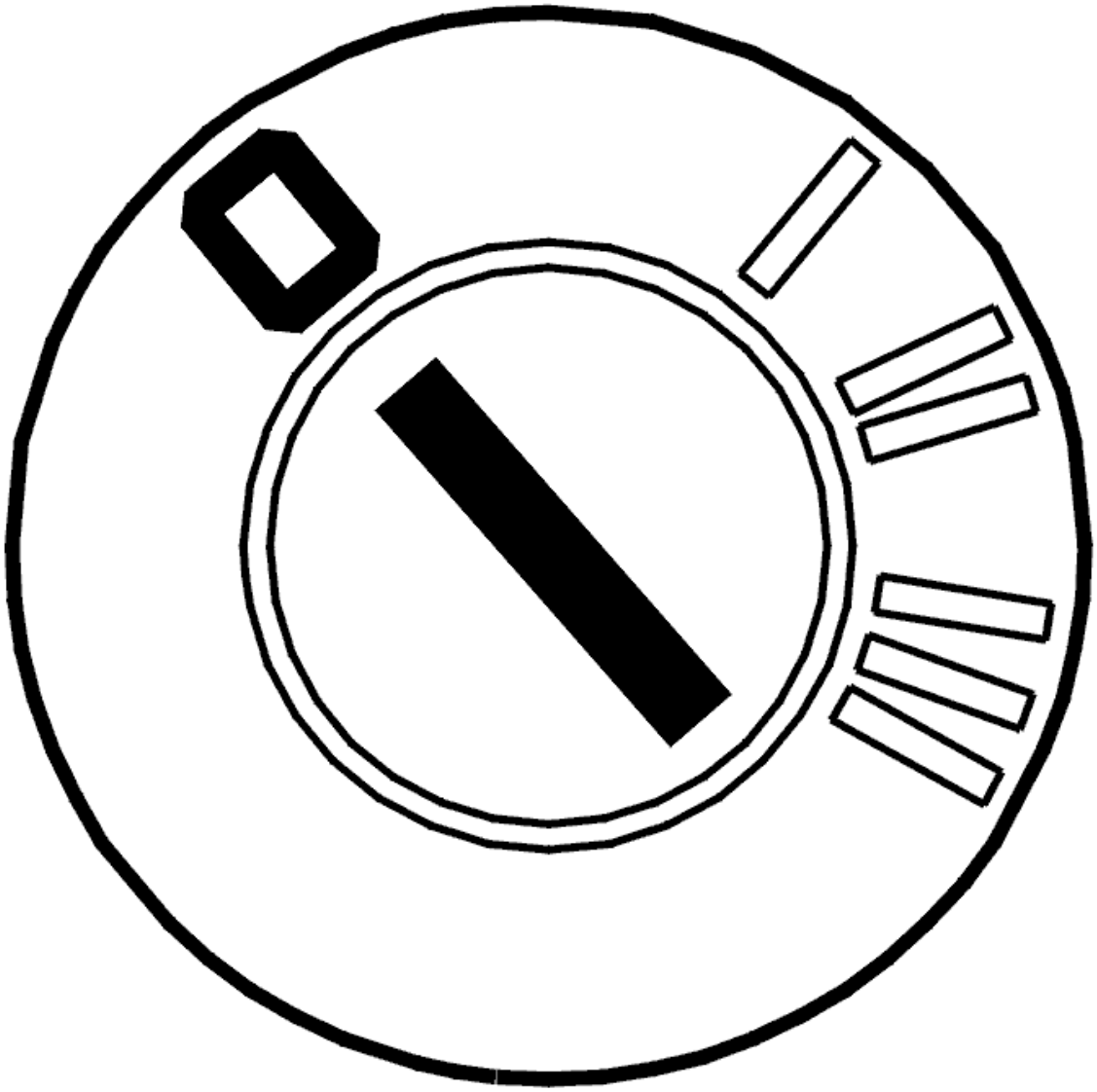

Fig. 268: Identifying Ignition OFF
Courtesy of VOLVO CARS CORPORATION

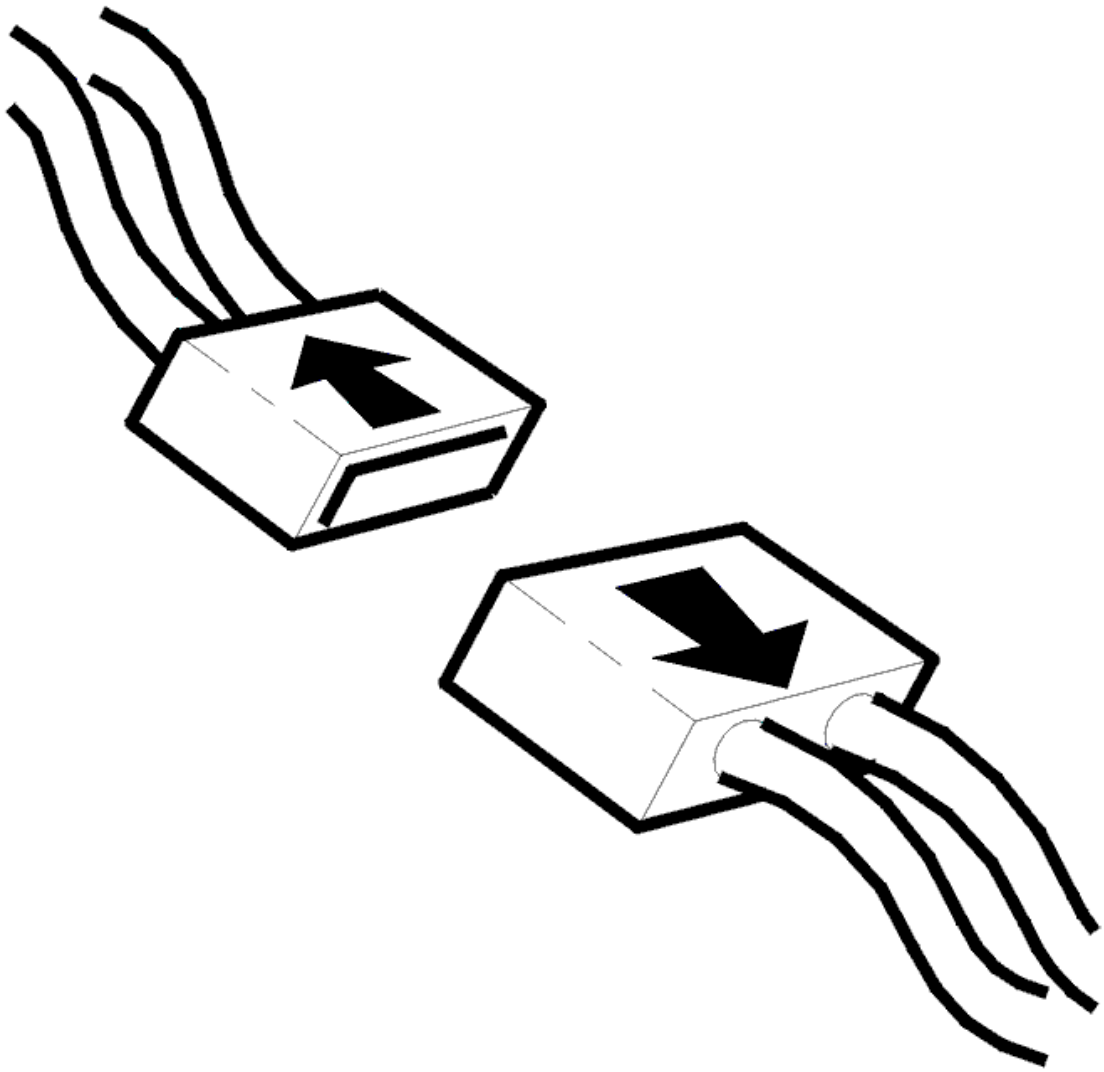

Fig. 269: Disconnecting Connector
Courtesy of VOLVO CARS CORPORATION

- Ignition off
- Check the fuse for voltage feed to fuel pump/fuel pump module.
- Disconnect central electronic module (CEM) connector A.

  Check central electronic module (CEM) connector A and the connectors for the fuel pump (FP). Check for contact resistance. Check for oxidation. Check for damaged or loose connections.

  Check the cable. Check for an open-circuit. Check for a short-circuit to ground.

  Take readings between:

  - Central electronic module (CEM) terminal #A16 (16) and fuel pump/fuel pump control module.

Remedy as necessary.

Other information

- see **CONNECTING THE BREAKOUT BOX**
- -2004: **SIGNAL SPECIFICATION**
- 2005-: **SIGNAL SPECIFICATION**
- see **LOCATION OF COMPONENTS**
- see **CHECKING WIRING AND TERMINALS**

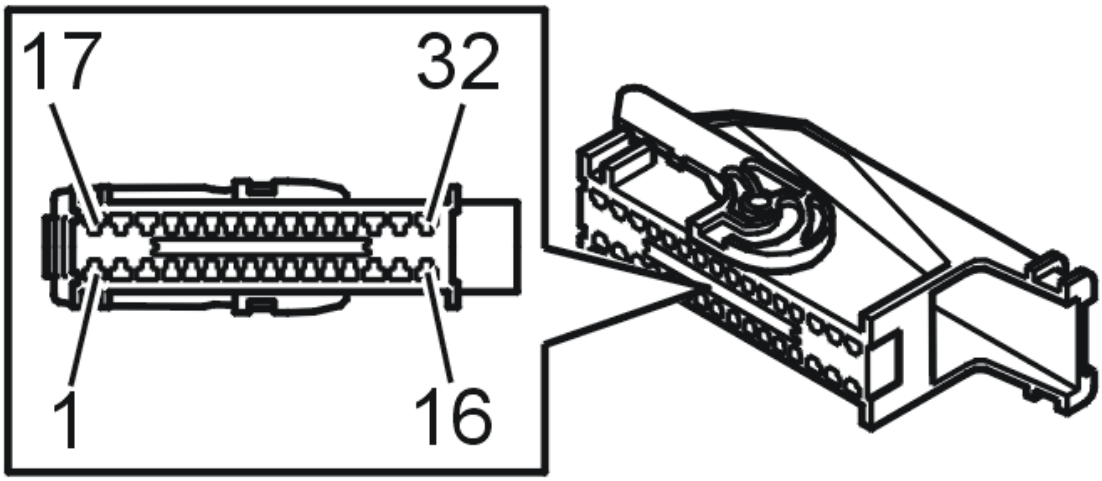

Fig. 270: Identifying Connector A
Courtesy of VOLVO CARS CORPORATION

- **Continue**

  Refer to **VERIFICATION**

VERIFICATION

VERIFICATION

HINT: After carrying out the repair, check that the fault has been remedied.

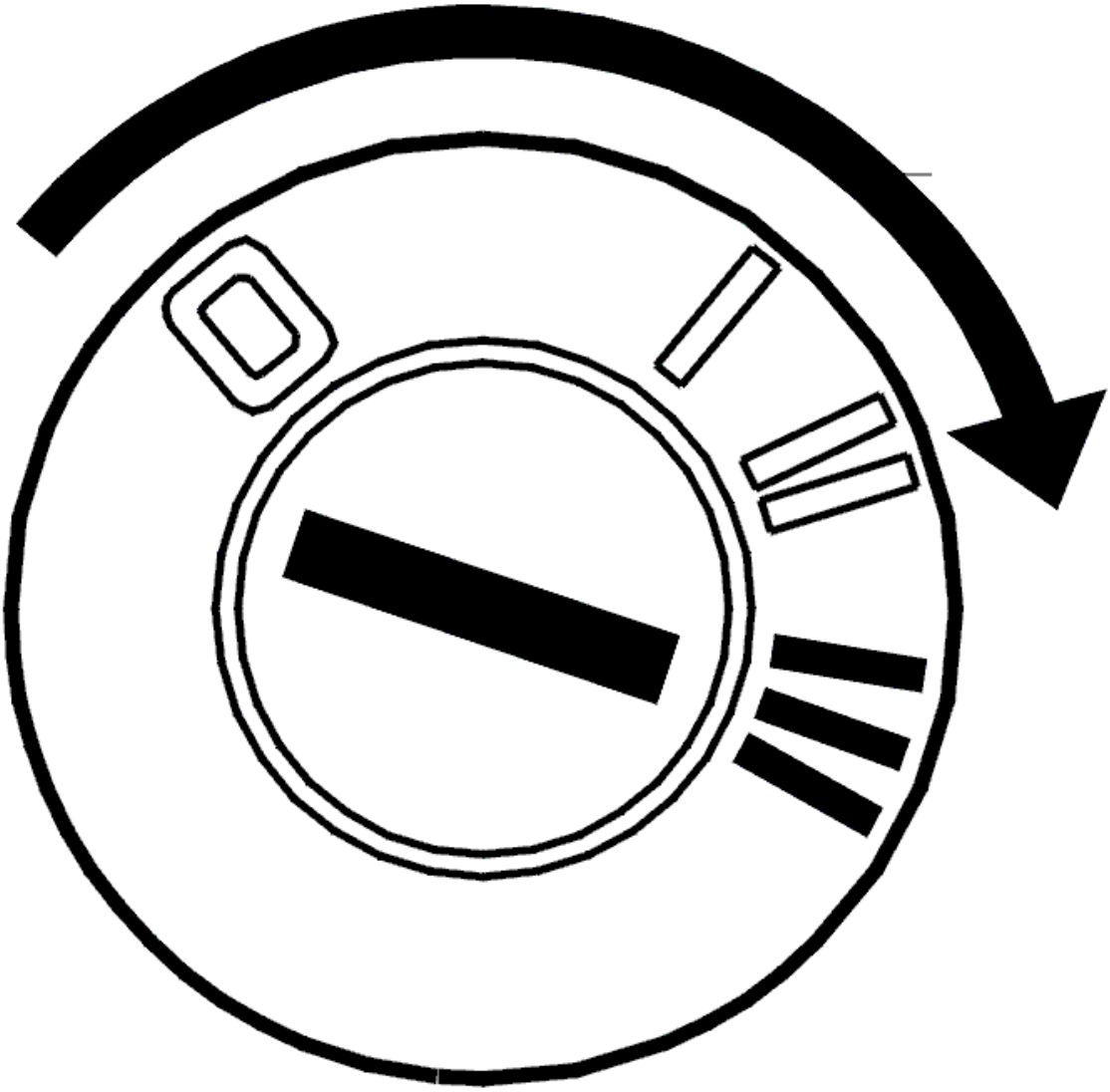

Fig. 271: Identifying Engine START Position
Courtesy of VOLVO CARS CORPORATION

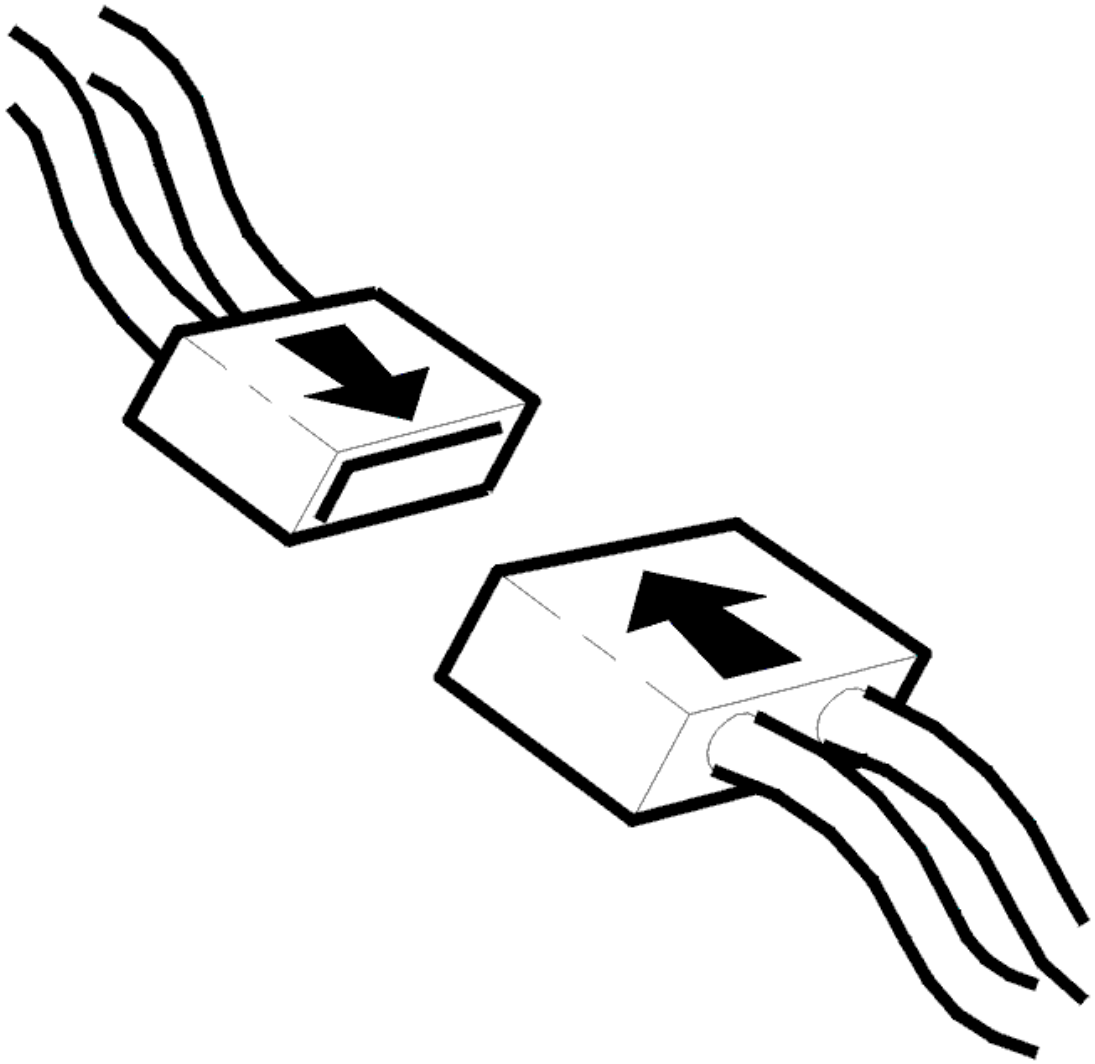

Fig. 272: Connecting Connector
Courtesy of VOLVO CARS CORPORATION

- Ignition off
- Reinstall the connectors, components etc.
- Try to start the engine.

Does the engine start?

- **YES**

  VERIFIED: Troubleshooting has been completed.

- **NO**

Refer to **INFORMATION**

INFORMATION

FAULT-TRACING INFORMATION

The fault should have been detected and remedied. As this is not the case fault-tracing has failed.

Exit fault-tracing for this diagnostic trouble code (DTC) or make another attempt.

CEM-3F91: FUEL PUMP RELAY. SHORT-CIRCUIT TO SUPPLY VOLTAGE (2005-2012)

DIAGNOSTIC TROUBLE CODE (DTC) INFORMATION CEM-3F91

Condition

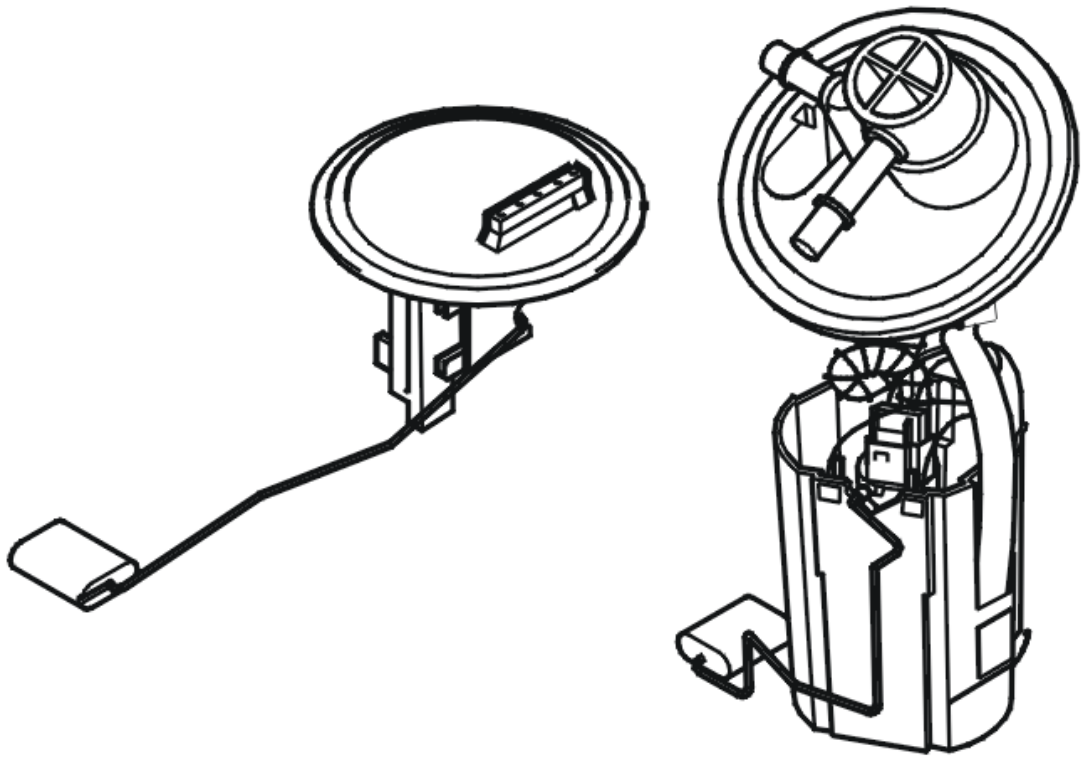

Fig. 273: Identifying Fuel Pump
Courtesy of VOLVO CARS CORPORATION

Central electronic module (CEM) checks the fuel pump relay, and activates it, when an approved check has been made by the system for Immobilizer. The fuel pump relay is located internally in the Central electronic module (CEM). The fuel pump relay sends voltage feed to the fuel pump when the relay is activated.

If Central electronic module (CEM) detects that the output to the fuel pump is short-circuited to voltage, the diagnostic trouble code is generated.

The diagnostic trouble code (DTC) can be diagnosed in ignition position II and if the fuel pump relay is activated at the same time.

NOTE: Applies to vehicles to and incl. model year 2006

- **When troubleshooting, the fuel pump may not be supplied with voltage by an external power source without first disconnecting the connector to the Central electronic module (CEM). If the connector is not loosened and the fuel pump is supplied with voltage, this can lead to failure of an internal ground conductor in the Central electronic module (CEM).**

Applies to vehicles from and incl. model year 2007

- **The case with the ground cable described above does not apply to Central electronic module (CEM) from and incl. model year 2006. This diagnostic trouble code can be generated if the cable for voltage feed to the fuel pump has an open circuit or if the fuel pump is not connected.**

The following applies to vehicles with fuel pump module (PEM):

Central electronic module (CEM) checks the voltage feed to the fuel pump module. The Central electronic module (CEM) activates the voltage supply to the fuel pump control module after the checks carried out by the function for the immobilizer have been approved. The diagnostic trouble code (DTC) is stored if the central electronic module (CEM) registers that the voltage in the signal cable is too high.

The diagnostic trouble code (DTC) can be diagnosed in ignition position II and if the relay for power supply to the fuel pump control module is not activated.

Substitute Value

- None.

Possible Source

- The cable for voltage feed to the fuel pump module is short-circuited to voltage.

NOTE: Applies to vehicles to and incl. model year 2006

If the signal cable has been short-circuited to voltage, there is a risk of failure of an internal ground conductor on one of the circuit boards in the Central electronic module (CEM). This may lead to the relay for 15-feed, on Central electronic module (CEM), not working as intended. A result of incorrect function of 15-feed may be, e. g., that diagnostic trouble codes are generated for the seat heater in front seats and also that the

communication with Brake control module (BCM) doe not work when the engine is on (BCM is not supplied with voltage when the 15-relay is not grounded). The malfunction may have different effects in different vehicles, depending on the vehicle's configuration (which units that are supplied via 15-feed), but also depends on where the ground conductor has failed.

Fault symptom[s]

- Battery discharges

SHORT-CIRCUIT TO SUPPLY VOLTAGE

CHECKING THE WIRING

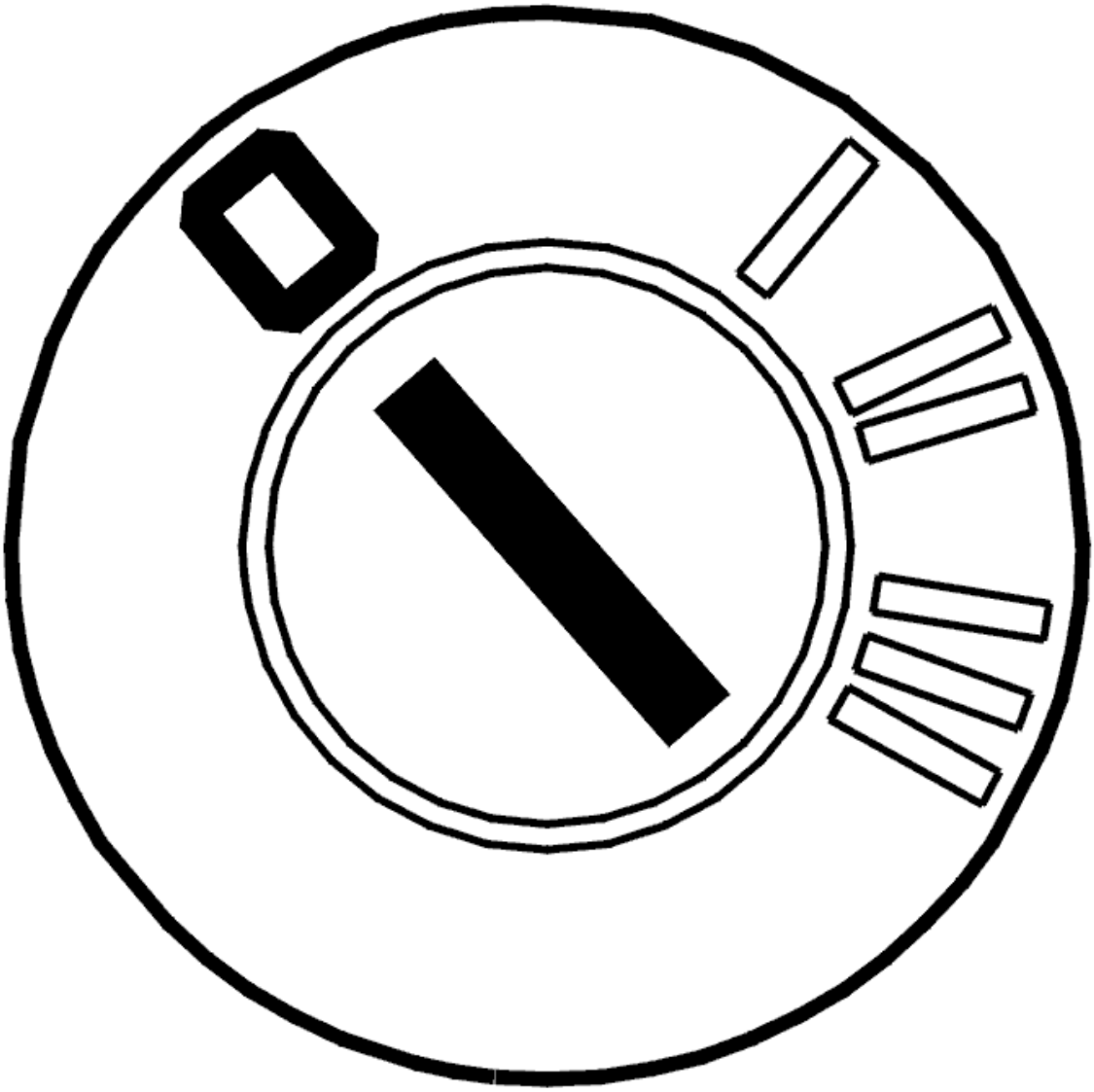

Fig. 274: Identifying Ignition OFF

Courtesy of VOLVO CARS CORPORATION

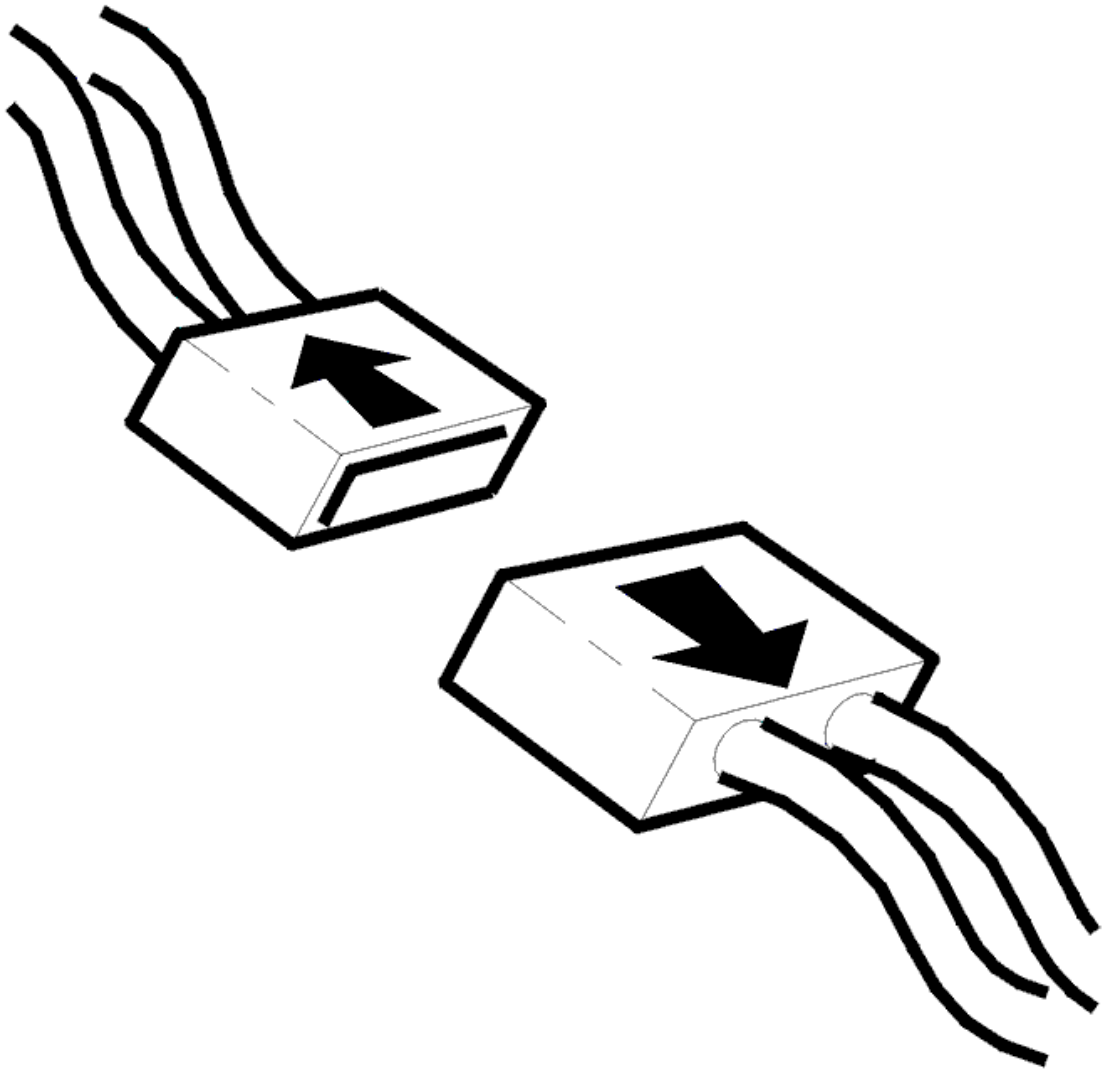

Fig. 275: Disconnecting Connector
Courtesy of VOLVO CARS CORPORATION

- Ignition off
- Disconnect central electronic module (CEM) connector A.

  Check the cable for a short-circuit to supply voltage.

  Take readings between:

  - Central electronic module (CEM) terminal #A16 (16) and fuel pump/fuel pump control module.

  Remedy as necessary.

Applies to vehicles to and incl. model year 2006

If the signal cable has been short-circuited to voltage, there is a risk of failure of an internal ground conductor on one of the circuit boards in the Central electronic module (CEM). This may lead to the relay for 15-feed, on Central electronic module (CEM), not working as intended. A result of incorrect function of 15-feed may be, e. g., that diagnostic trouble codes are generated for the seat heater in front seats and also that the communication with Brake control module (BCM) doe not work when the engine is on (BCM is not supplied with voltage when the 15-relay is not grounded). The malfunction may have different effects in different vehicles, depending on the vehicle's configuration (which units that are supplied via 15-feed), but also depends on where the ground conductor has failed.

Other information

- see **CONNECTING THE BREAKOUT BOX**
- -2004: **SIGNAL SPECIFICATION**
- 2005-: **SIGNAL SPECIFICATION**
- see **LOCATION OF COMPONENTS**
- see **CHECKING WIRING AND TERMINALS**

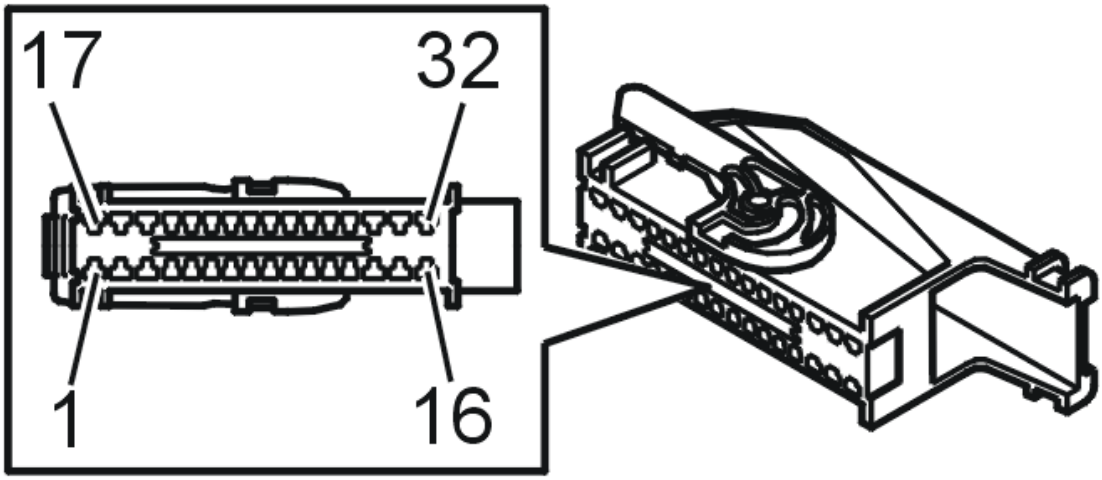

Fig. 276: Identifying Connector A
Courtesy of VOLVO CARS CORPORATION

- **Continue**

Refer to **VERIFICATION**

REPLACING THE COMPONENT

CAUTION: A short-circuit to supply voltage may mean that the central electronic module (CEM) is damaged and must be replaced.

If the fault is intermittent, it has been registered previously but is no longer present. Intermittent faults can be caused by interference at start up of the central electronic module (CEM) or may be a different type of fault which occurs on different occasions. The fault is evaluated depending on how it occurs. Replace the central electronic module (CEM) if the fault recurs.

Replace the central electronic module (CEM) if the fault is permanent.

Remedy as necessary.

Other information

- For -2004, see: **CENTRAL ELECTRONIC MODULE (CEM), REPLACING**
- For 2005-, see: **CENTRAL ELECTRONIC MODULE (CEM), REPLACING** .

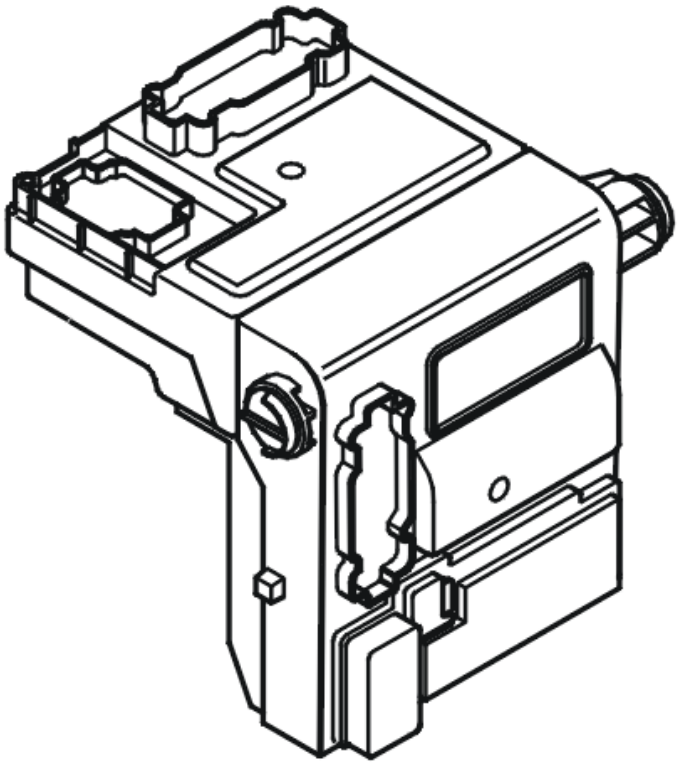

Fig. 277: Identifying Central Electronic Module (CEM)
Courtesy of VOLVO CARS CORPORATION

- **Continue**

  Refer to **INFORMATION**

VERIFICATION

VERIFICATION

HINT: After carrying out the repair, check that the fault has been remedied.

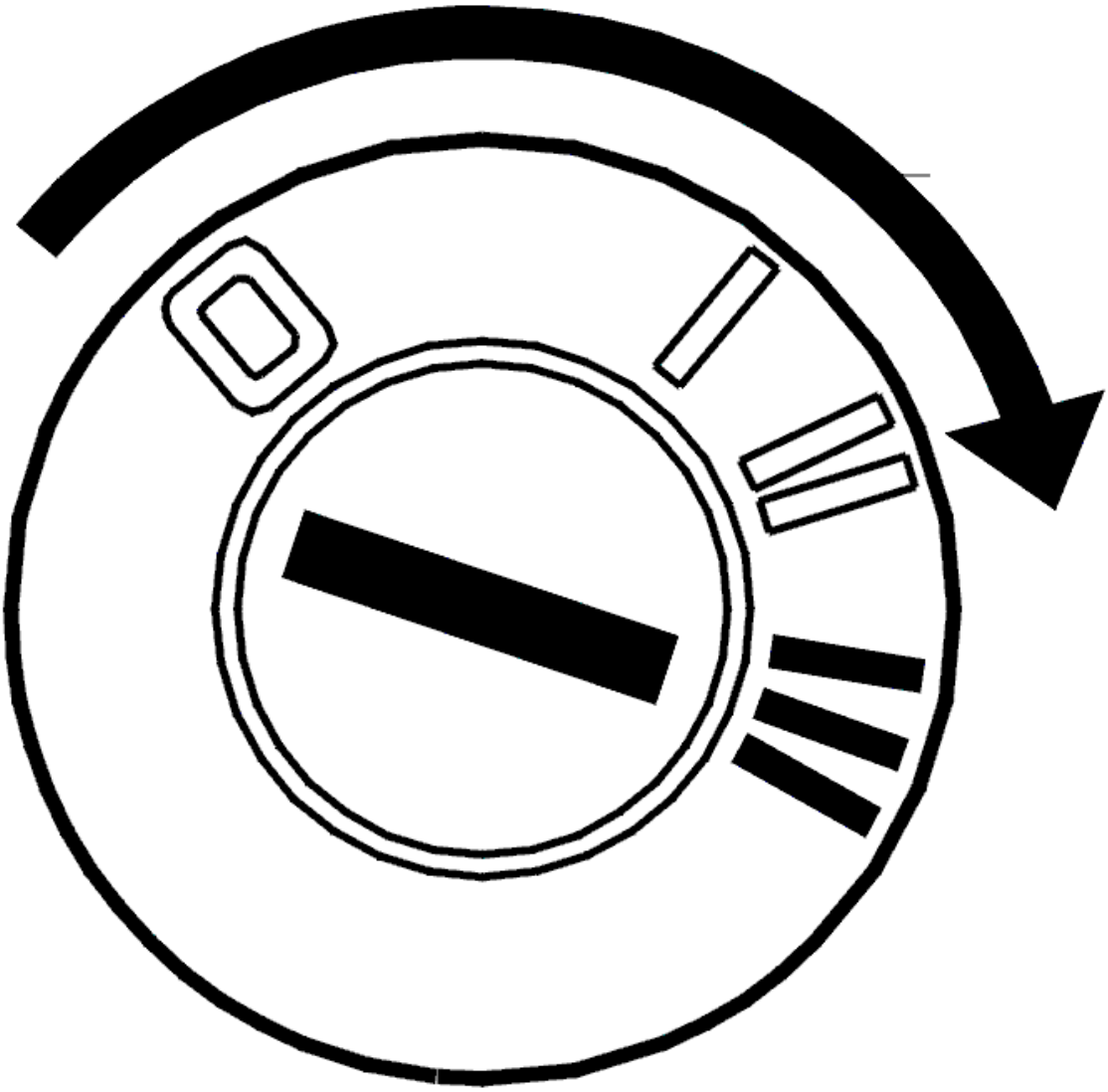

Fig. 278: Identifying Engine START Position
Courtesy of VOLVO CARS CORPORATION

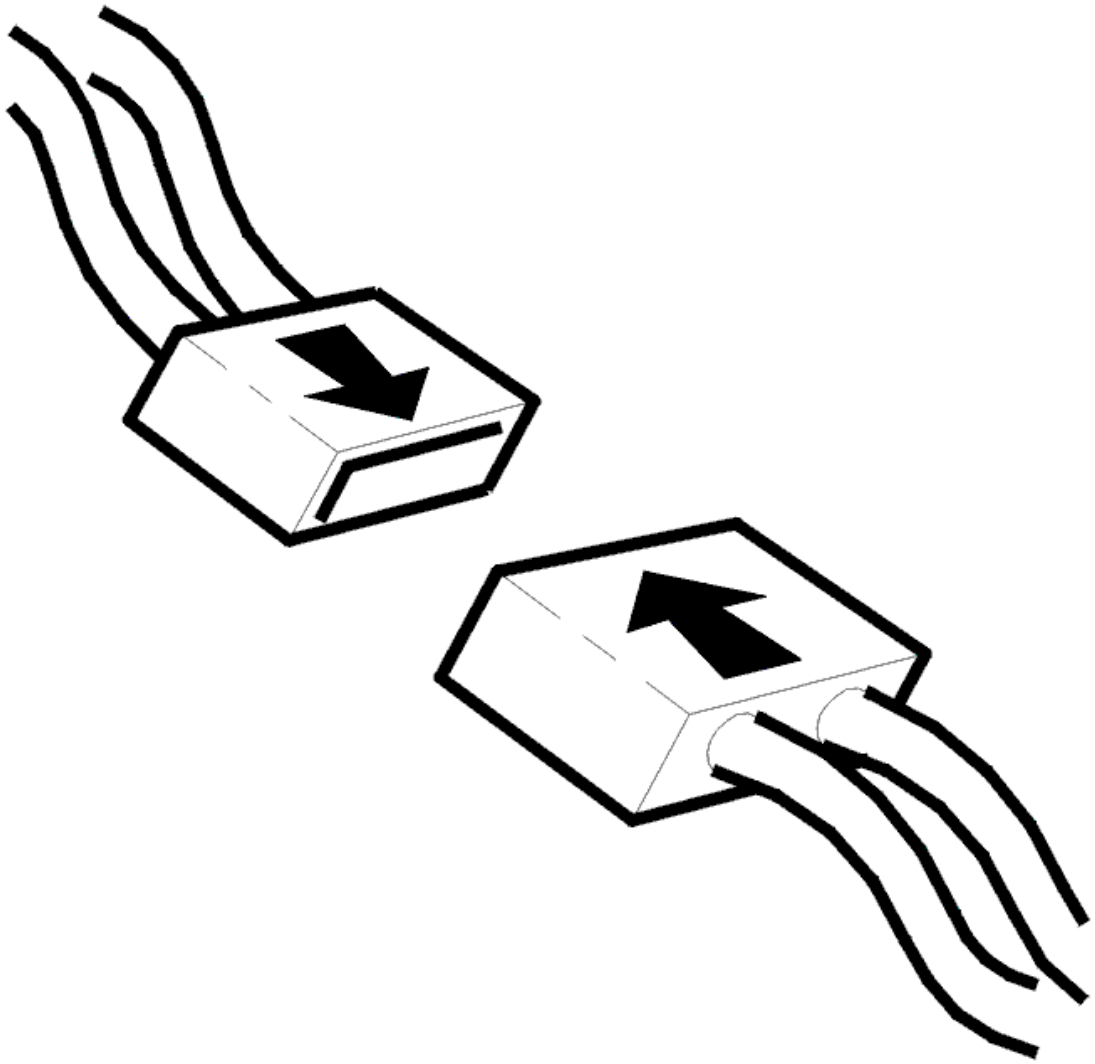

Fig. 279: Connecting Connector
Courtesy of VOLVO CARS CORPORATION

- Ignition off
- Reinstall the connectors, components etc.

  Turn on the ignition and check that the fuel pump is working normally.

Is the fuel pump (FP) working as it should?

- **YES**

  VERIFIED: Troubleshooting has been completed.

- **NO**

Refer to **REPLACING THE COMPONENT**

INFORMATION

FAULT-TRACING INFORMATION

The fault should have been detected and remedied. As this is not the case fault-tracing has failed.

Exit fault-tracing for this diagnostic trouble code (DTC) or make another attempt.

CEM-4A31: EJECTOR SENSOR. FAULTY SIGNAL (2005-2012)

DIAGNOSTIC TROUBLE CODE (DTC) INFORMATION CEM-4A31

Condition

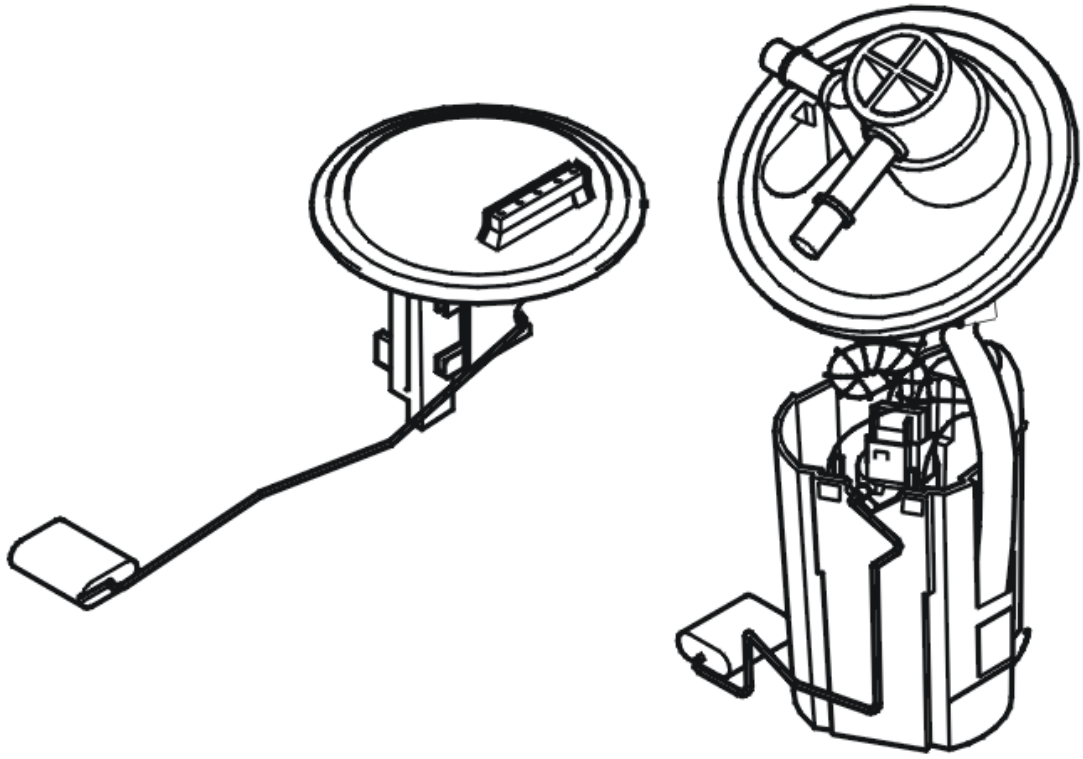

Fig. 280: Identifying Fuel Pump
Courtesy of VOLVO CARS CORPORATION

The central electronic module (CEM) continuously checks the signal from the sensor on the ejector side which indicates the level in one of the fuel tanks.

The diagnostic trouble code (DTC) is stored if the central electronic module (CEM) detects that the fuel level has not changed during the last 100 km.

The diagnostic trouble code (DTC) can be diagnosed with the ignition on and the fuel level above 2 liters.

Substitute Value

- None.

Possible Source

- The sensor on the ejector side is faulty.

Fault symptom[s]

- The trip computer displays an empty fuel tank too early.
- The fuel gauge indicates zero even though there is fuel in the tank.

FAULTY SIGNAL

CHECKING THE WIRING

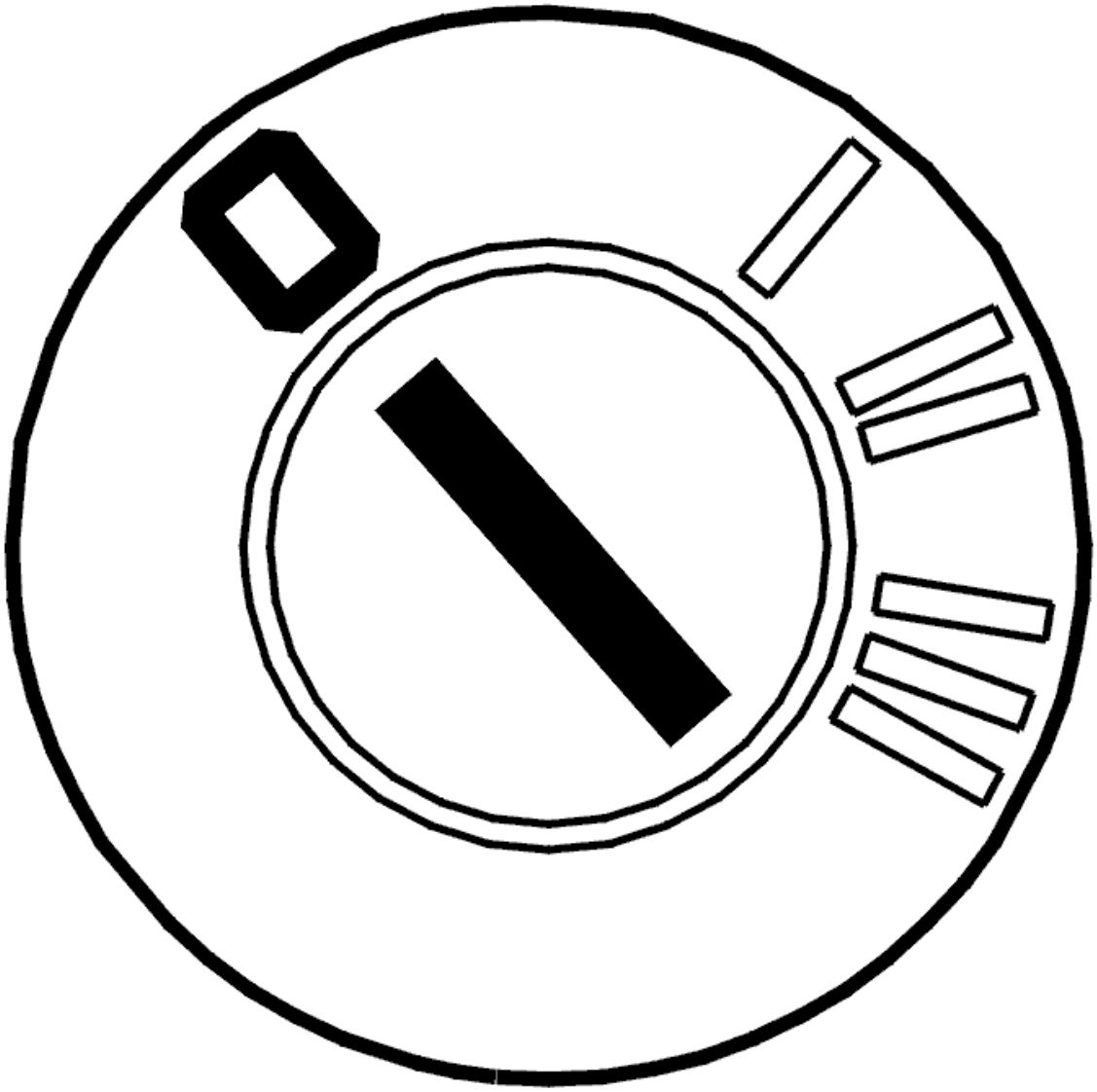

Fig. 281: Identifying Ignition OFF
Courtesy of VOLVO CARS CORPORATION

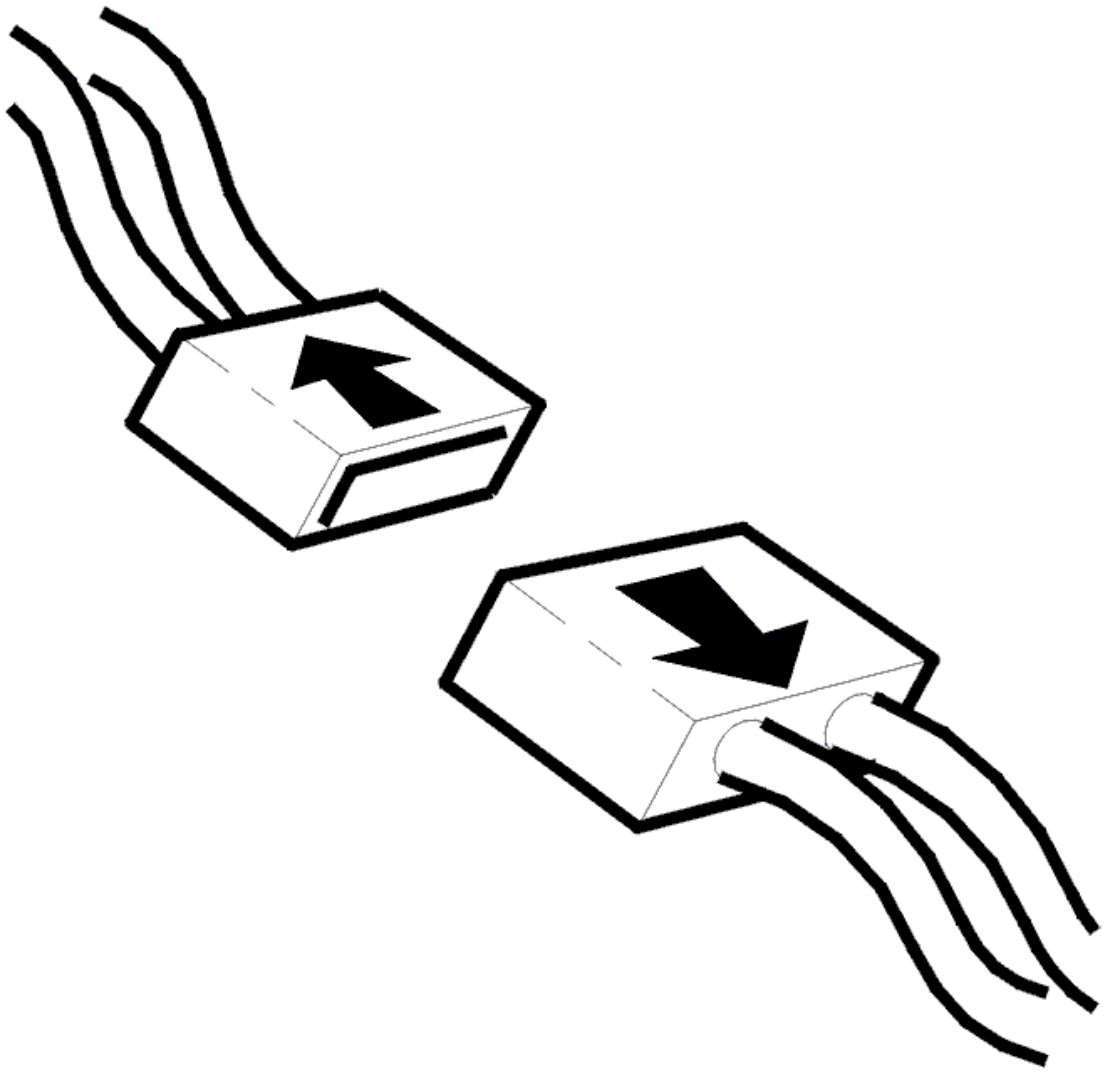

Fig. 282: Disconnecting Connector
Courtesy of VOLVO CARS CORPORATION

- Ignition off
- Disconnect central electronic module (CEM) connector D.

  Check the ground lead. Check for an open-circuit.

  Take readings between:

  - Central electronic module (CEM) terminal #D45 (45) and the fuel level sensor on the left-hand side.

  Remedy as necessary.

  Other information

- see **CONNECTING THE BREAKOUT BOX**
- -2004: **SIGNAL SPECIFICATION**
- 2005-: **SIGNAL SPECIFICATION**
- For -2004, see: **CENTRAL ELECTRONIC MODULE (CEM), REPLACING**
- For 2005-, see: **CENTRAL ELECTRONIC MODULE (CEM), REPLACING** .
- see **LEVEL SENSOR, FUEL TANK, RIGHT-HAND/FUEL TANK, REPLACING**
- see **CHECKING WIRING AND TERMINALS**

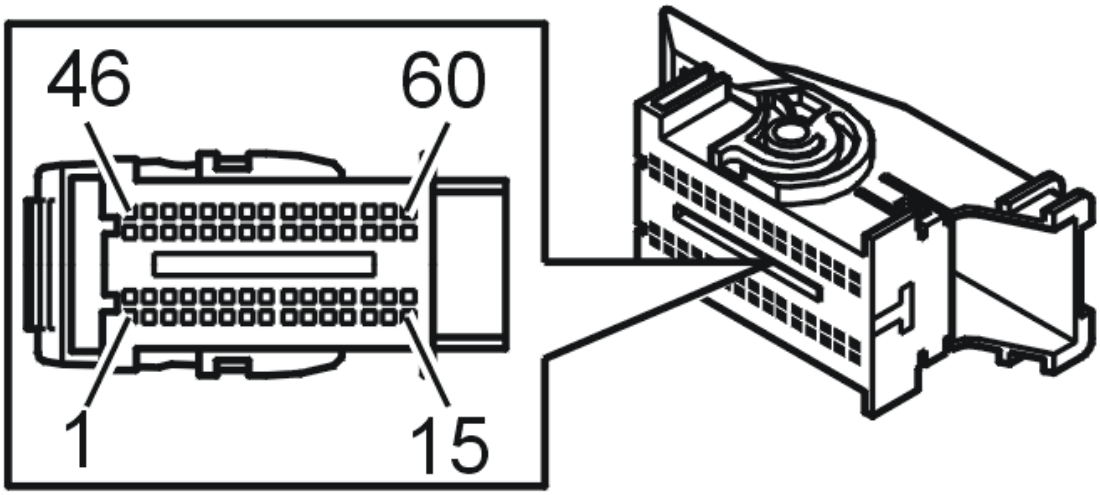

Fig. 283: Identifying Connector D
Courtesy of VOLVO CARS CORPORATION

Was a fault detected?

- **YES**

  Refer to **VERIFICATION**

- **NO**

  Refer to **REPLACING THE COMPONENT**

REPLACING THE COMPONENT

The central electronic module (CEM) has registered that the fuel level sensor on the left-hand side is faulty.

If the fault is intermittent, it has been registered previously but is no longer present. Intermittent faults can be caused by interference at start up of the central electronic module (CEM) or may be a different type of fault which occurs on different occasions. The fault is evaluated depending on how it occurs. Replace the fuel level sensor on the left-hand side if the fault recurs.

Replace the fuel level sensor on the left-hand side if there is a permanent fault.

Remedy as necessary.

Other information

- see **LEVEL SENSOR, FUEL TANK, RIGHT-HAND/FUEL TANK, REPLACING**
- **Continue**

  Refer to **VERIFICATION**

VERIFICATION

VERIFICATION

HINT: After carrying out the repair, check that the fault has been remedied.

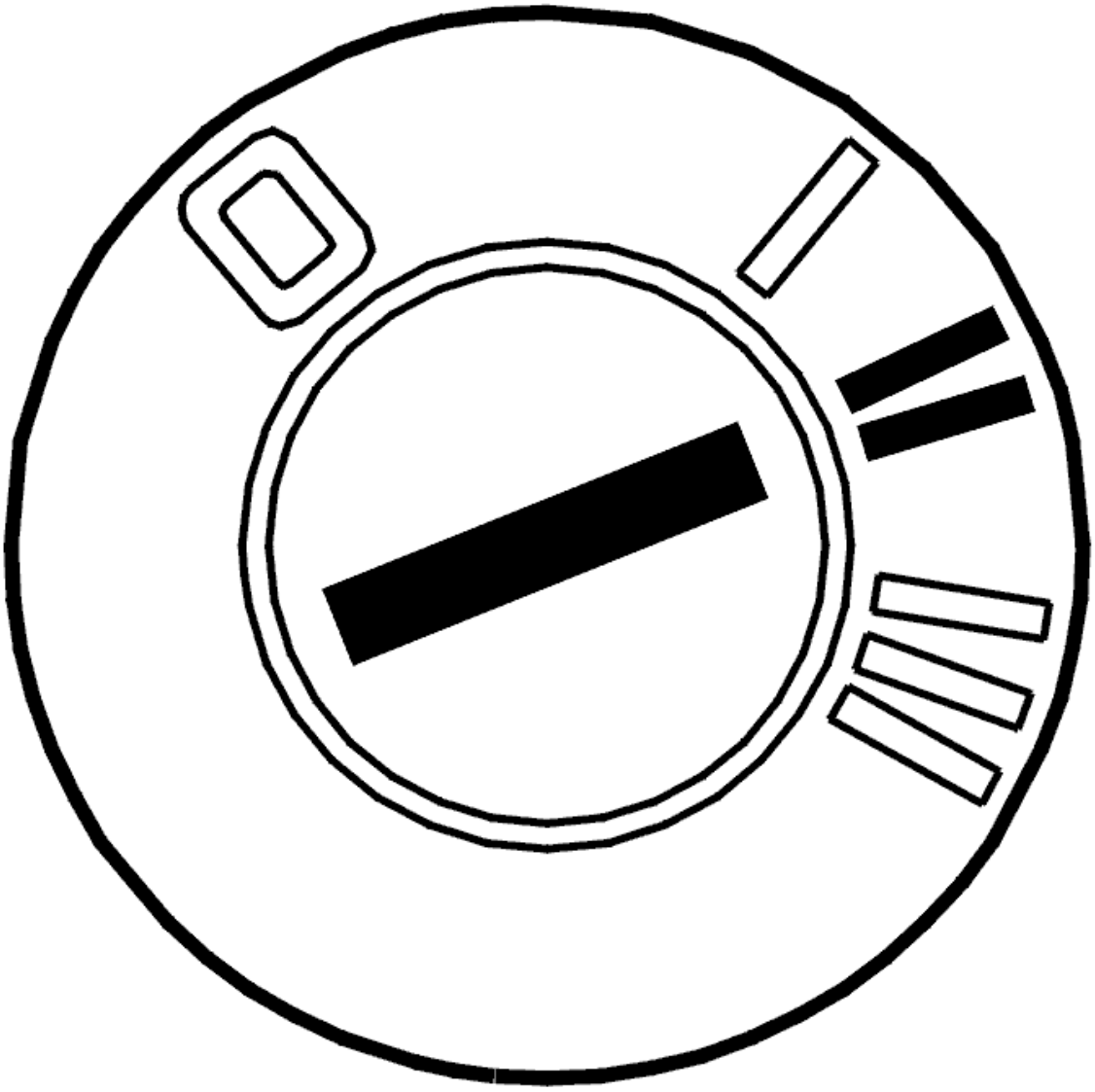

Fig. 284: Identifying Ignition ON
Courtesy of VOLVO CARS CORPORATION

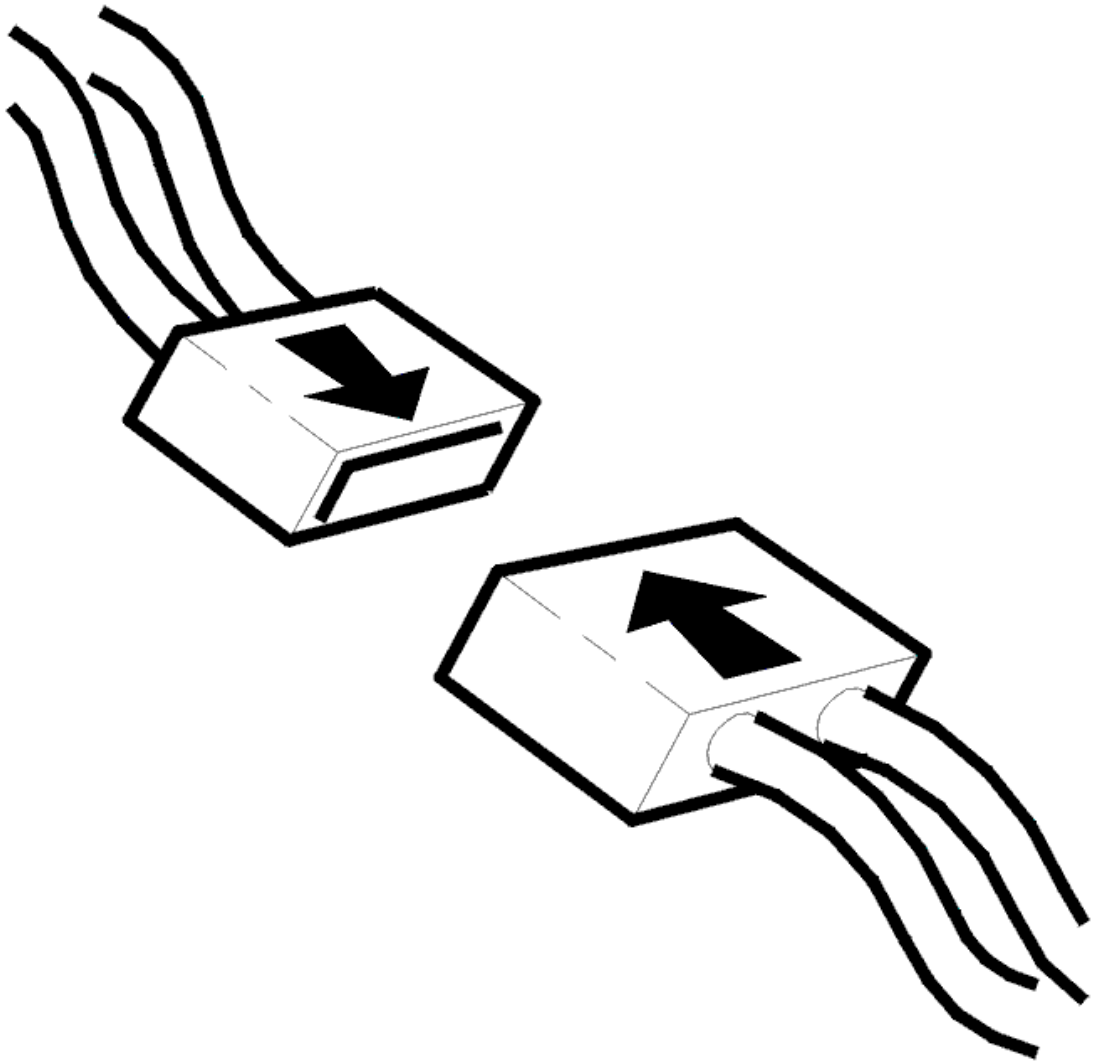

Fig. 285: Connecting Connector
Courtesy of VOLVO CARS CORPORATION

- Ignition off
- Reinstall the connectors, components etc.
- Ignition on.

  Check if the value at the fuel level gauge changes.

Is the value within its permitted range?

- **YES**

VERIFIED: Troubleshooting has been completed.

- **NO**

  Refer to **INFORMATION**

INFORMATION

FAULT-TRACING INFORMATION

The fault should have been detected and remedied. As this is not the case fault-tracing has failed.

Exit fault-tracing for this diagnostic trouble code (DTC) or make another attempt.

CEM-4A33: FUEL LEVEL SENSOR. SHORT-CIRCUIT TO SUPPLY VOLTAGE OR OPEN-CIRCUIT (2005-2012)

DIAGNOSTIC TROUBLE CODE (DTC) INFORMATION CEM-4A33

Condition

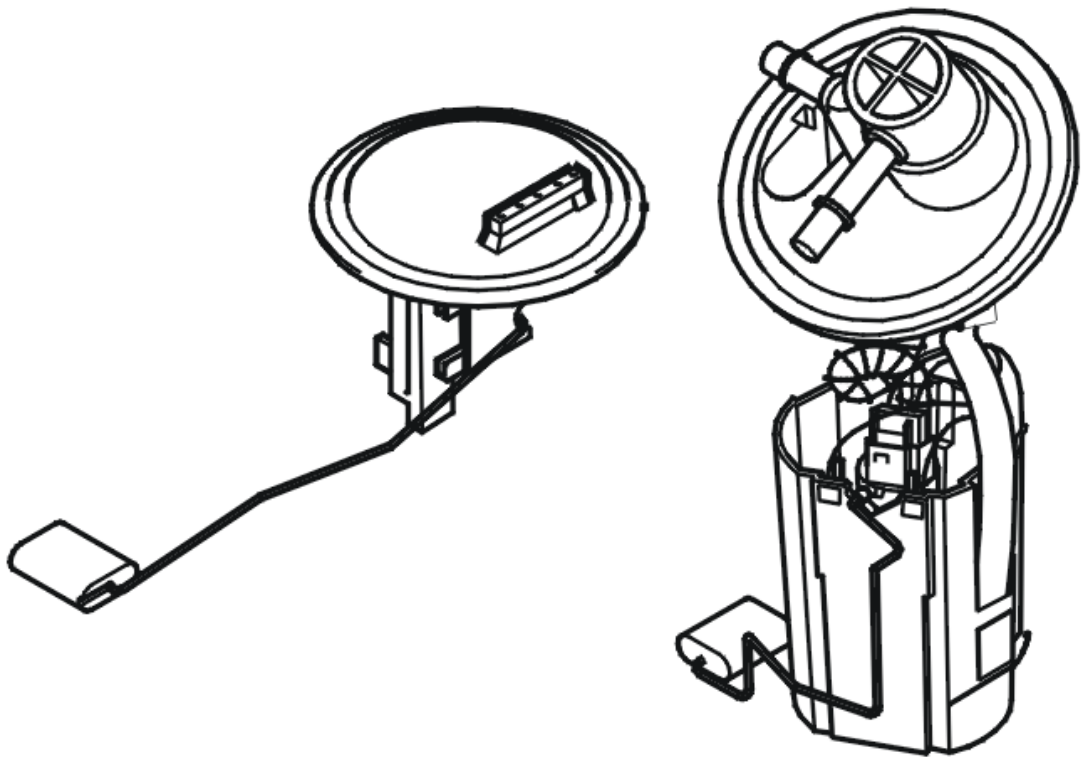

Fig. 286: Identifying Fuel Pump
Courtesy of VOLVO CARS CORPORATION

The central electronic module (CEM) continuously checks the signal from the sensor on the ejector side which indicates the level in one of the fuel tanks.

The diagnostic trouble code (DTC) is stored if the central electronic module (CEM) registers an open-circuit in the connection to the fuel level sensor on the ejector side or a short-circuit to supply voltage in the sensor.

The diagnostic trouble code (DTC) can be diagnosed when the ignition is switched on.

Substitute Value

- The fuel level is set to zero.

Possible Source

- Open-circuit in the connection to the sensor on the ejector side
- Short-circuit to supply voltage in the sensor on the ejector side.

Fault symptom[s]

- The trip computer displays an empty fuel tank too early.
- The fuel gauge indicates zero even though there is fuel in the tank.

SHORT-CIRCUIT TO SUPPLY VOLTAGE OR OPEN-CIRCUIT

CHECKING THE WIRING

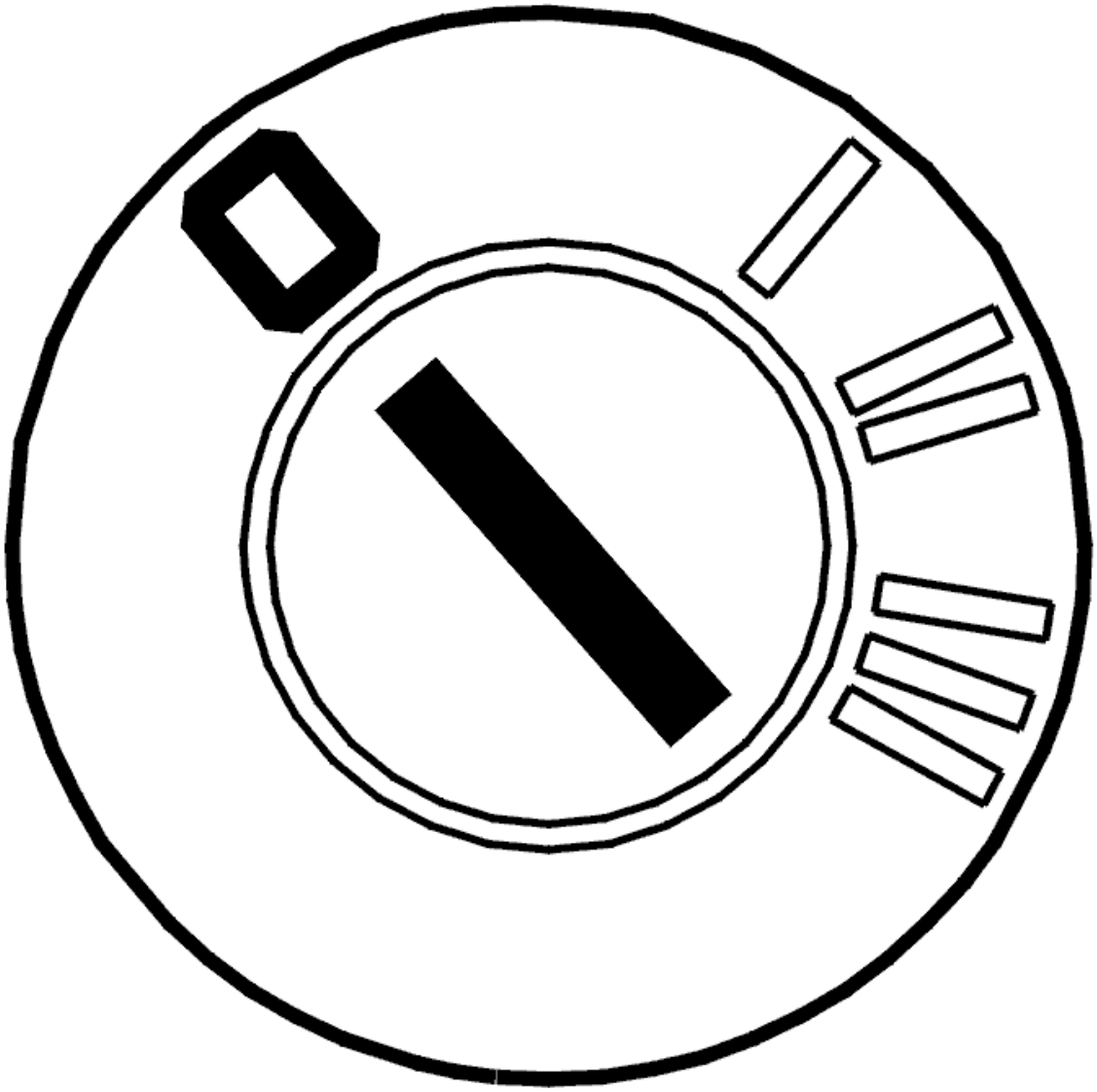

Fig. 287: Identifying Ignition OFF
Courtesy of VOLVO CARS CORPORATION

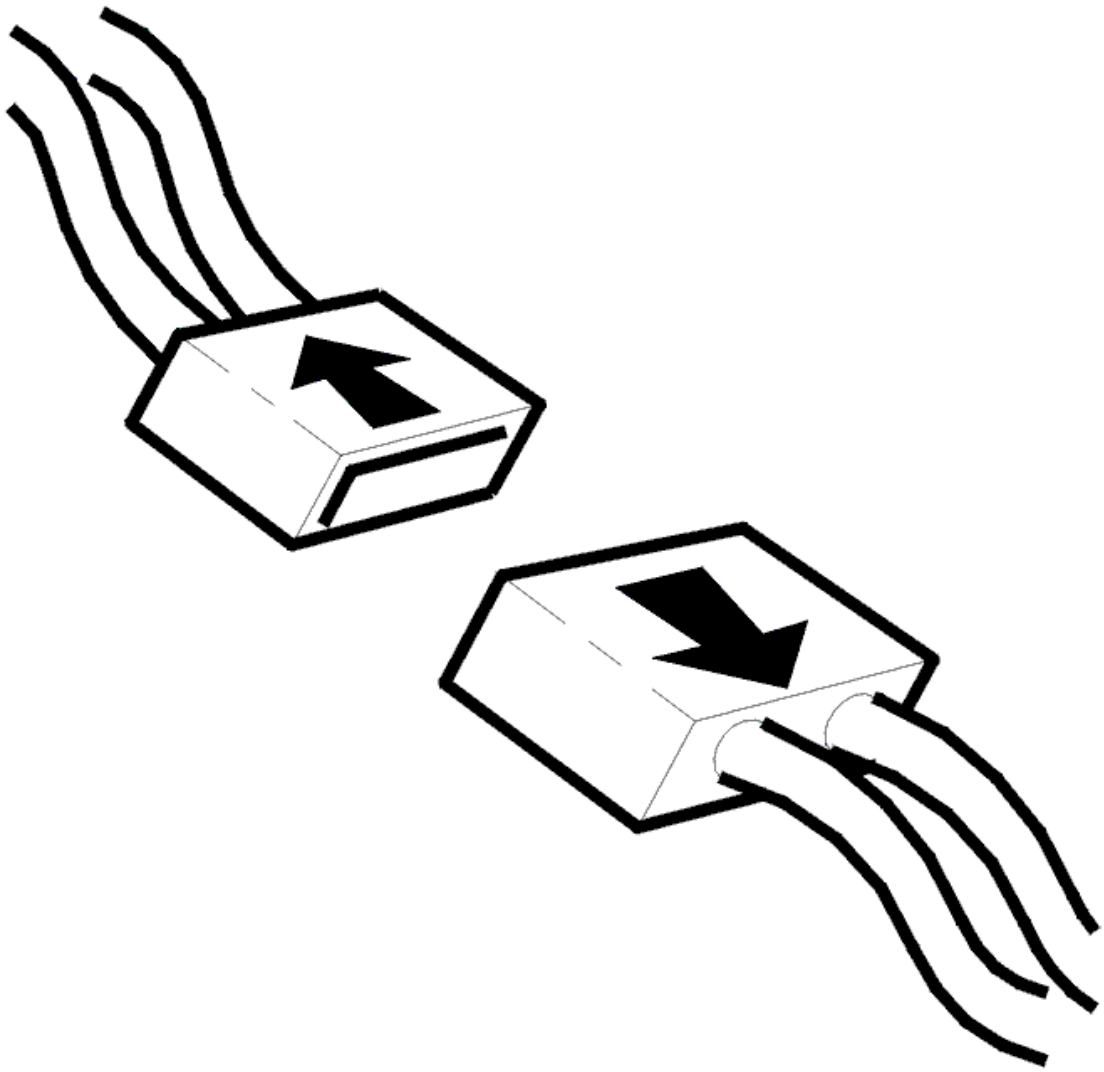

Fig. 288: Disconnecting Connector
Courtesy of VOLVO CARS CORPORATION

- Ignition off
- Disconnect central electronic module (CEM) connector D.

  Check the signal cable. Check for an open-circuit. Check for a short-circuit to supply voltage.

  Take readings between:

  - Central electronic module (CEM) terminal #D43 (43) and the fuel level sensor on the left-hand side.

  Check the ground lead if diagnostic trouble code (DTC) CEM-4A37 is also stored. Check for an open-circuit.

Take readings between:

- Central electronic module (CEM) terminal #D45 (45) and the fuel level sensor on the left-hand side.

Remedy as necessary.

Other information

- see **CONNECTING THE BREAKOUT BOX**
- -2004: **SIGNAL SPECIFICATION**
- 2005-: **SIGNAL SPECIFICATION**
- For -2004, see: **CENTRAL ELECTRONIC MODULE (CEM), REPLACING**
- For 2005-, see: **CENTRAL ELECTRONIC MODULE (CEM), REPLACING** .
- see **LEVEL SENSOR, FUEL TANK, RIGHT-HAND/FUEL TANK, REPLACING**
- see **CHECKING WIRING AND TERMINALS**

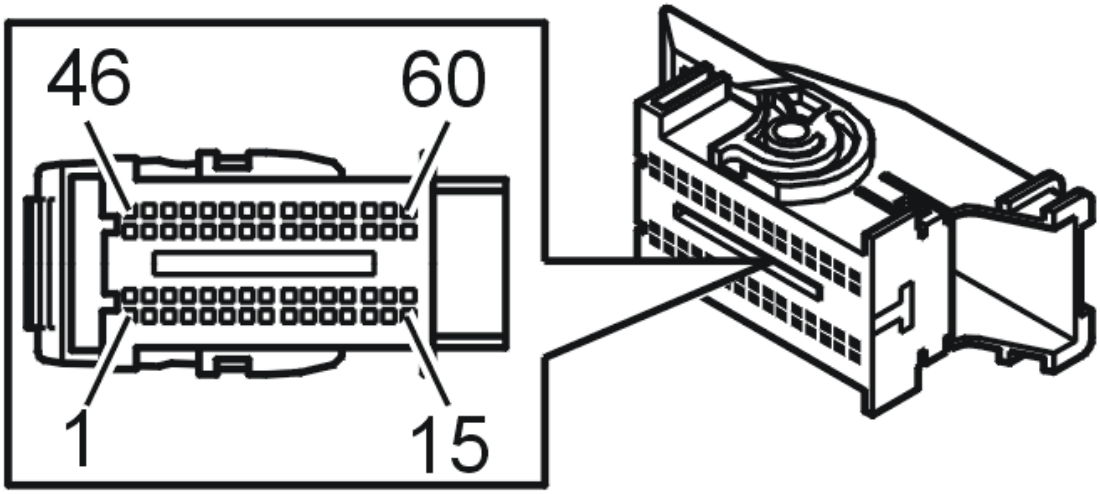

Fig. 289: Identifying Connector D
Courtesy of VOLVO CARS CORPORATION

- **Continue**

Refer to **VERIFICATION**

VERIFICATION

VERIFICATION

HINT: After carrying out the repair, check that the fault has been remedied.

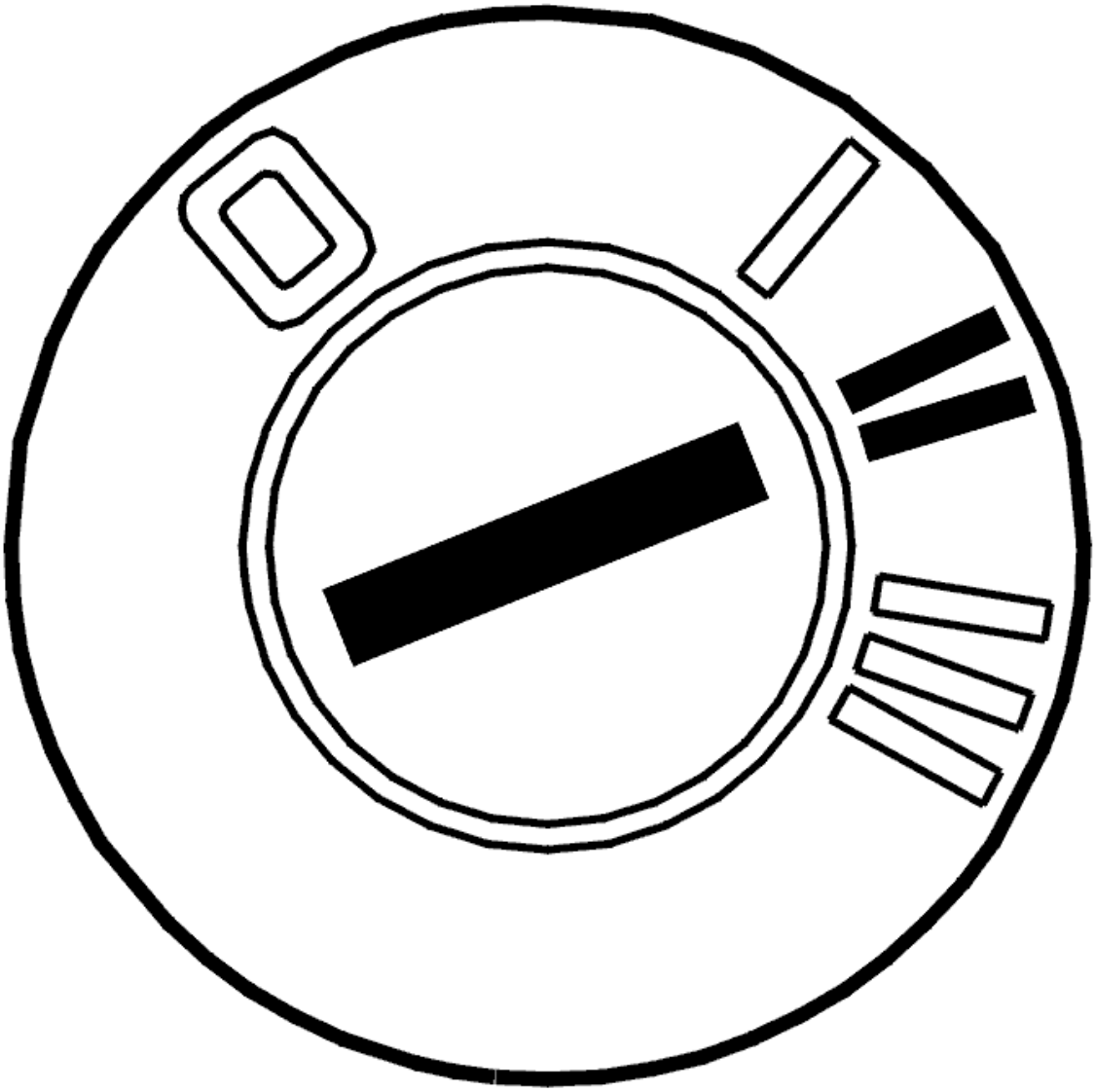

Fig. 290: Identifying Ignition ON
Courtesy of VOLVO CARS CORPORATION

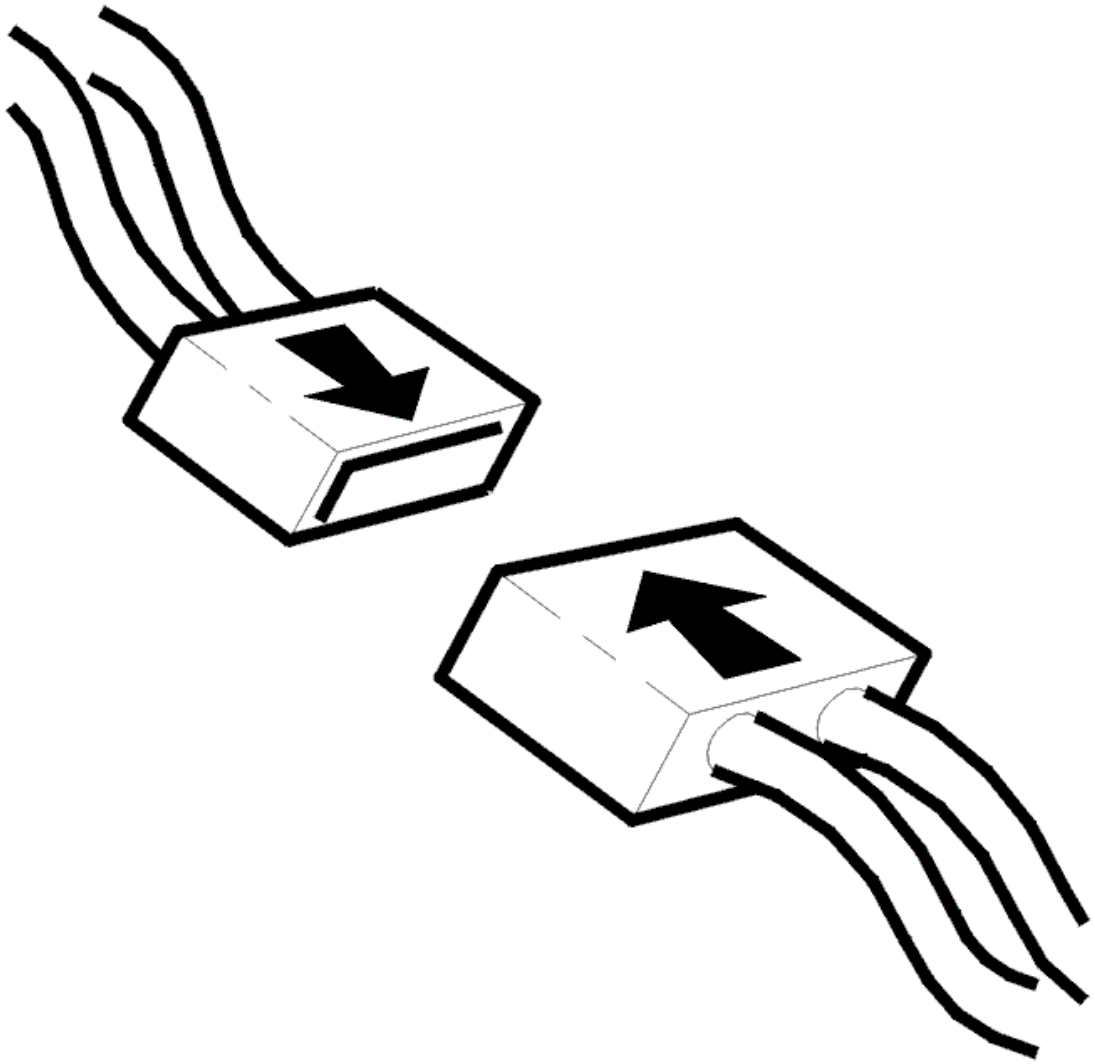

Fig. 291: Connecting Connector
Courtesy of VOLVO CARS CORPORATION

- Ignition off
- Reinstall the connectors, components etc.
- Ignition on.

  Check if the value at the fuel level gauge changes.

Is the value within its permitted range?

- **YES**

  VERIFIED: Troubleshooting has been completed.

- **NO**

  Refer to **INFORMATION**

INFORMATION

FAULT-TRACING INFORMATION

The fault should have been detected and remedied. As this is not the case fault-tracing has failed.

Exit fault-tracing for this diagnostic trouble code (DTC) or make another attempt.

CEM-4A34: FUEL LEVEL SENSOR. SHORT-CIRCUIT TO GROUND (2005-2012)

DIAGNOSTIC TROUBLE CODE (DTC) INFORMATION CEM-4A34

Condition

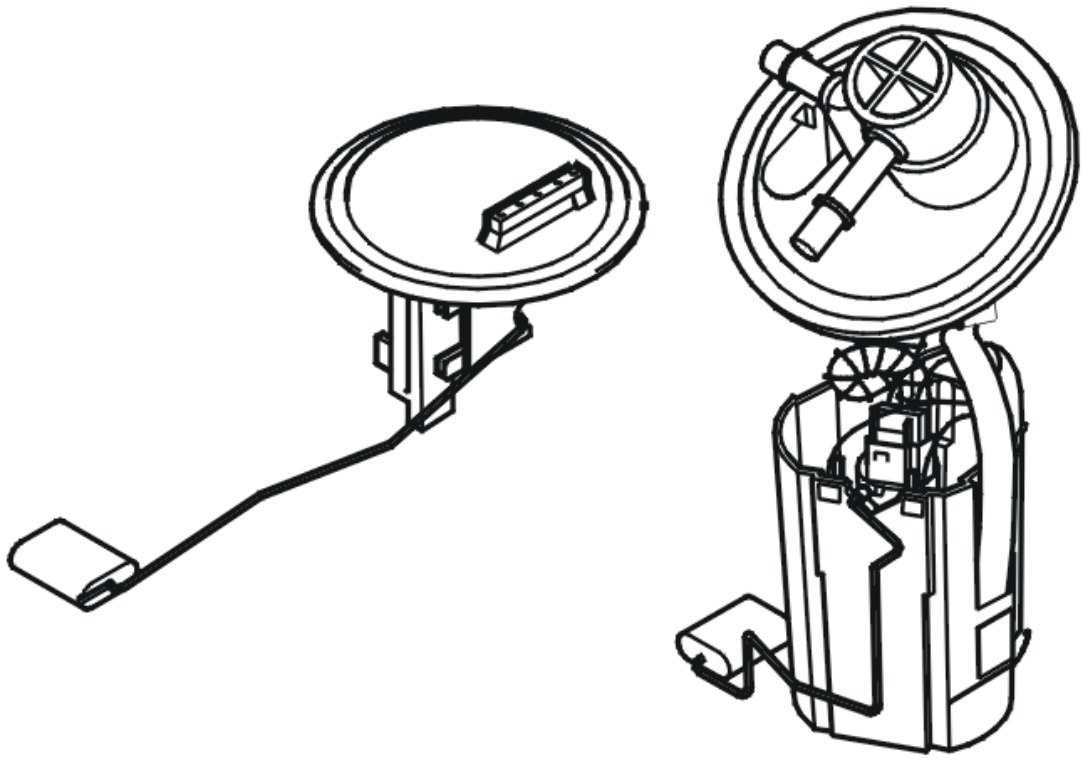

Fig. 292: Identifying Fuel Pump
Courtesy of VOLVO CARS CORPORATION

The central electronic module (CEM) continuously checks the signal from the sensor on the ejector side which

indicates the level in one of the fuel tanks.

The diagnostic trouble code (DTC) is stored if the central electronic module (CEM) registers a short-circuit to ground in the sensor.

The diagnostic trouble code (DTC) can be diagnosed when the ignition is switched on.

Substitute Value

- The fuel level is set to zero.

Possible Source

- Short-circuit to ground in the sensor on the ejector side.

Fault symptom[s]

- The trip computer displays an empty fuel tank too early.
- The fuel gauge indicates zero even though there is fuel in the tank.

SHORT-CIRCUIT TO GROUND

CHECKING THE WIRING

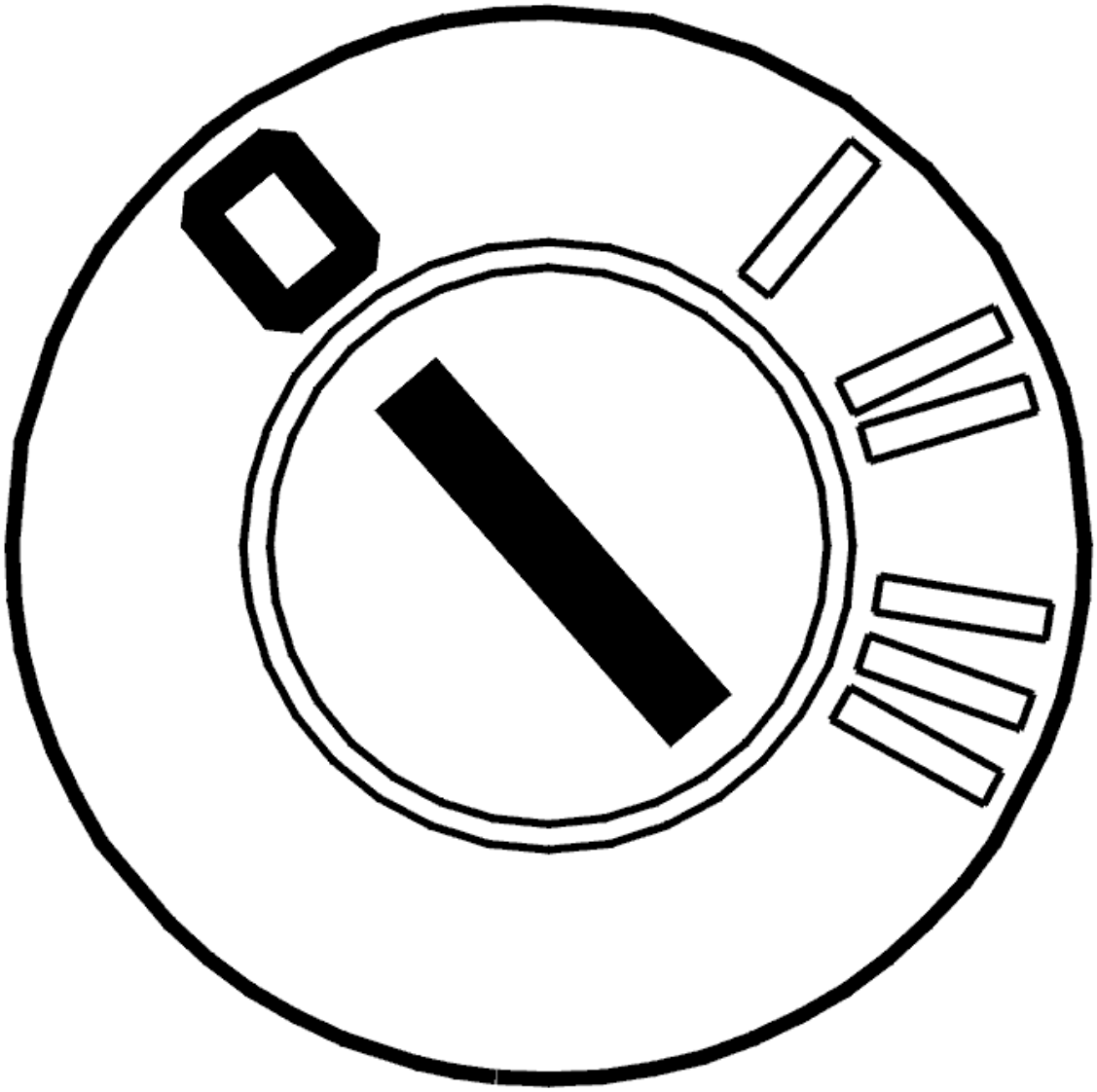

Fig. 293: Identifying Ignition OFF
Courtesy of VOLVO CARS CORPORATION

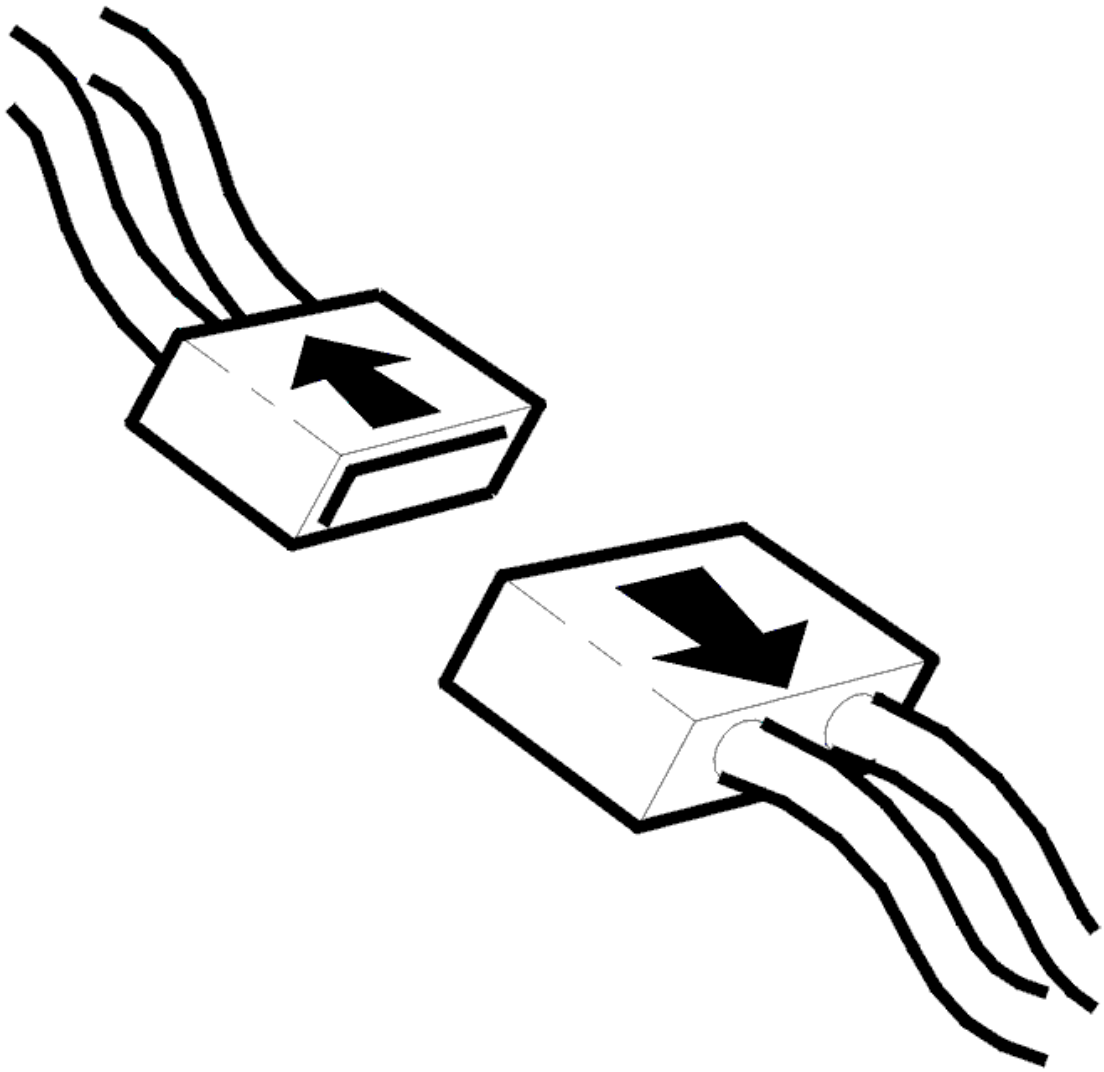

Fig. 294: Disconnecting Connector
Courtesy of VOLVO CARS CORPORATION

- Ignition off
- Disconnect central electronic module (CEM) connector D.

  Check the signal cable. Check for a short-circuit to ground.

  Take readings between:

  - Central electronic module (CEM) terminal #D43 (43) and the fuel level sensor on the left-hand side.

  Remedy as necessary.

  Other information

- see **CONNECTING THE BREAKOUT BOX**
- -2004: **SIGNAL SPECIFICATION**
- 2005-: **SIGNAL SPECIFICATION**
- For -2004, see: **CENTRAL ELECTRONIC MODULE (CEM), REPLACING**
- For 2005-, see: **CENTRAL ELECTRONIC MODULE (CEM), REPLACING** .
- see **LEVEL SENSOR, FUEL TANK, RIGHT-HAND/FUEL TANK, REPLACING**
- see **CHECKING WIRING AND TERMINALS**

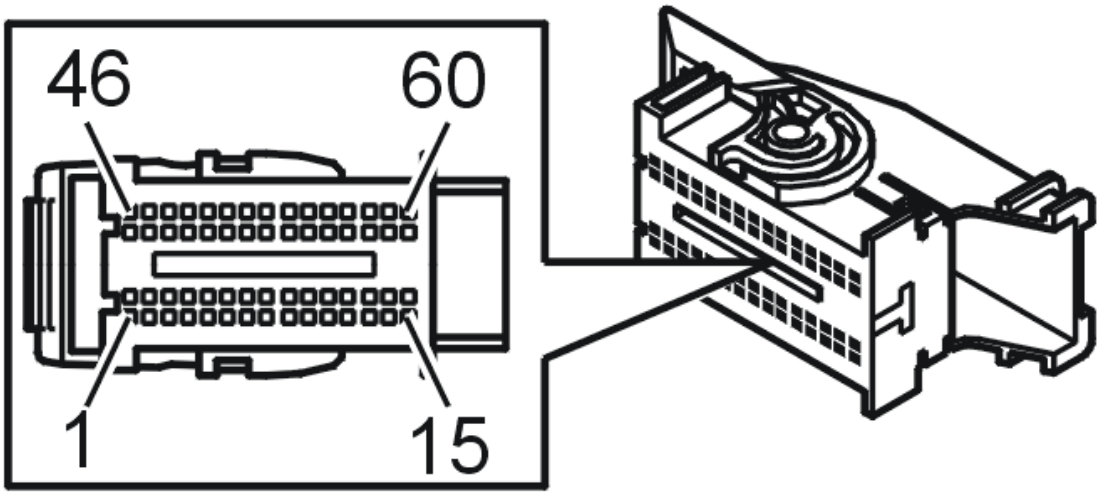

Fig. 295: Identifying Connector D
Courtesy of VOLVO CARS CORPORATION

- **Continue**

  Refer to **VERIFICATION**

VERIFICATION

VERIFICATION

HINT: After carrying out the repair, check that the fault has been remedied.

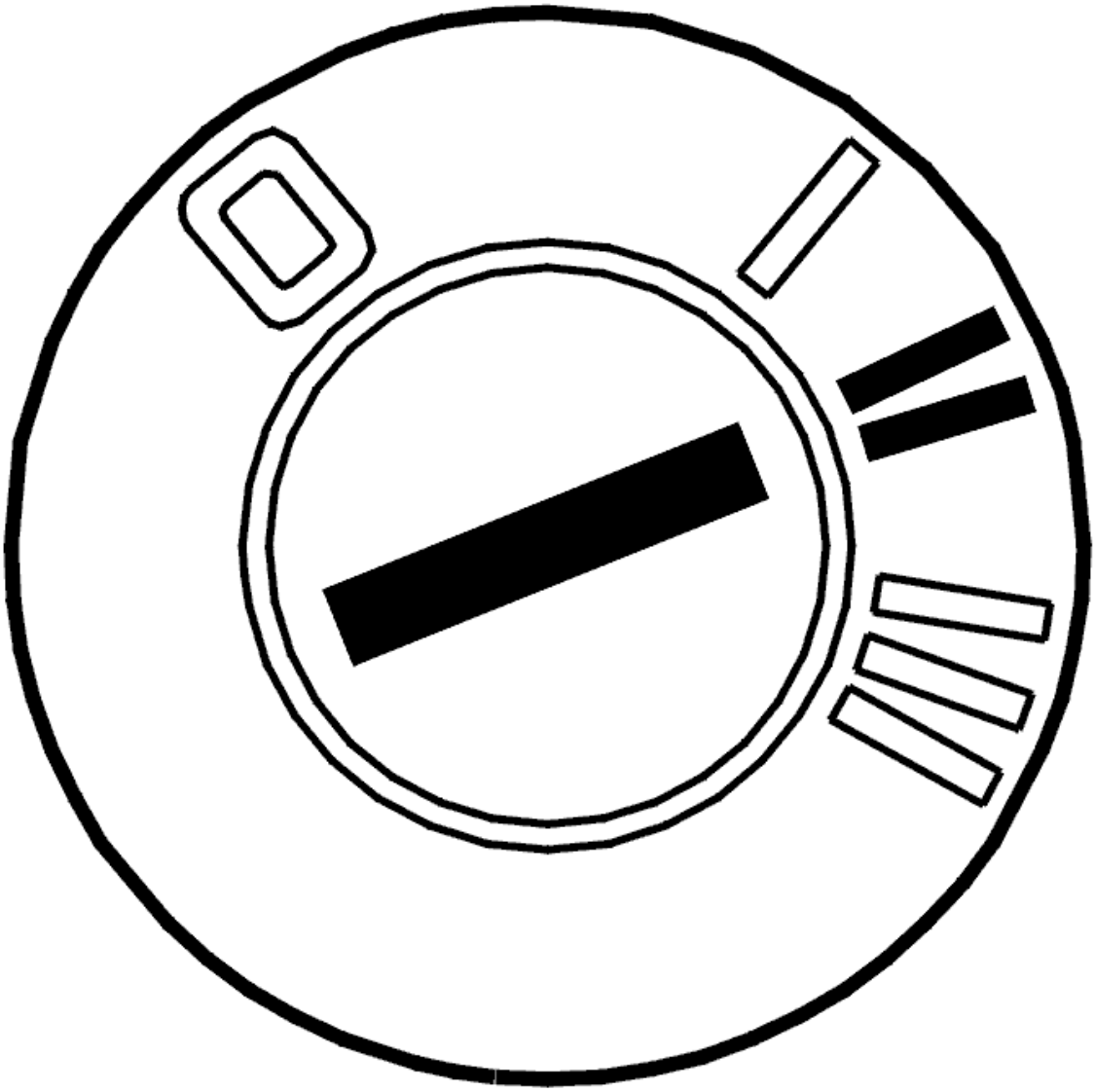

Fig. 296: Identifying Ignition ON
Courtesy of VOLVO CARS CORPORATION

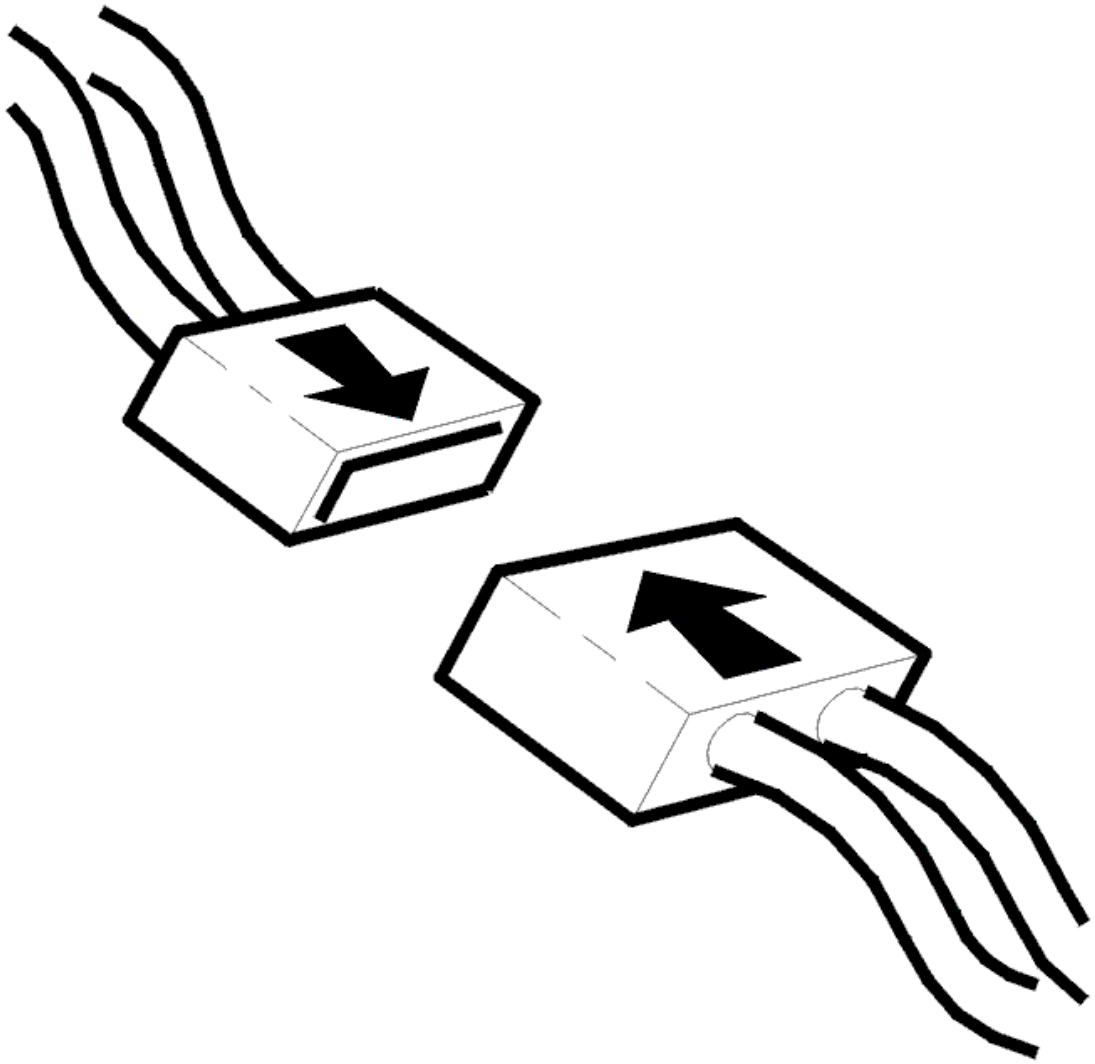

Fig. 297: Connecting Connector
Courtesy of VOLVO CARS CORPORATION

- Ignition off
- Reinstall the connectors, components etc.
- Ignition on.

  Check if the value at the fuel level gauge changes.

Is the value within its permitted range?

- **YES**

  VERIFIED: Troubleshooting has been completed.

- **NO**

  Refer to **INFORMATION**

INFORMATION

FAULT-TRACING INFORMATION

The fault should have been detected and remedied. As this is not the case fault-tracing has failed.

Exit fault-tracing for this diagnostic trouble code (DTC) or make another attempt.

CEM-4A35: FUEL LEVEL SENSOR. FAULTY SIGNAL (2005-2012)

DIAGNOSTIC TROUBLE CODE (DTC) INFORMATION CEM-4A35

Condition

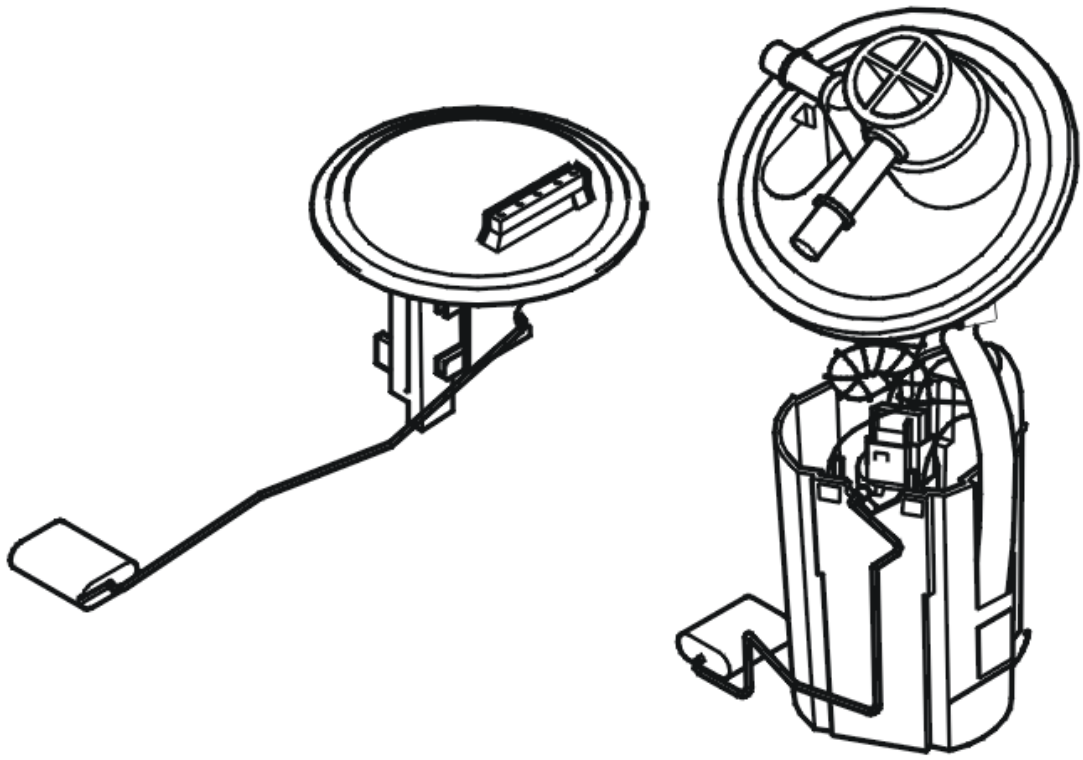

Fig. 298: Identifying Fuel Pump
Courtesy of VOLVO CARS CORPORATION

The central electronic module (CEM) continuously checks the signal from the sensor on the pump side which indicates the level in one of the fuel tanks.

The diagnostic trouble code (DTC) is stored if the central electronic module (CEM) detects that the fuel level has not changed during the last 100 km.

The diagnostic trouble code (DTC) can be diagnosed with the engine running and the fuel level above 2 liters.

Substitute Value

- The fuel level is set to zero.

Possible Source

- The sensor on the pump side is faulty.

Fault symptom[s]

- The trip computer displays an empty fuel tank too early.
- The fuel gauge indicates zero even though there is fuel in the tank.

FAULTY SIGNAL

CHECKING THE WIRING

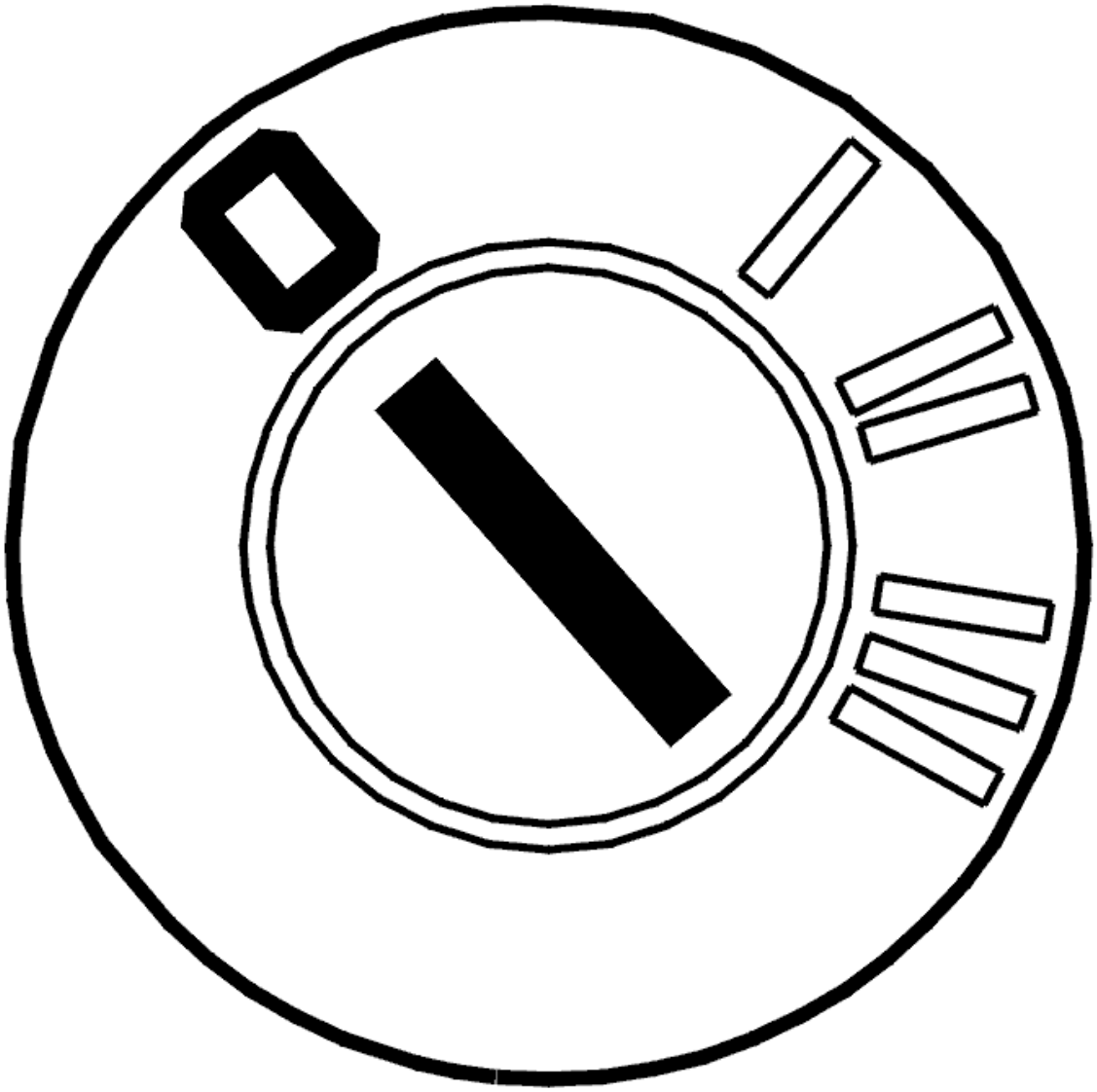

Fig. 299: Identifying Ignition OFF
Courtesy of VOLVO CARS CORPORATION

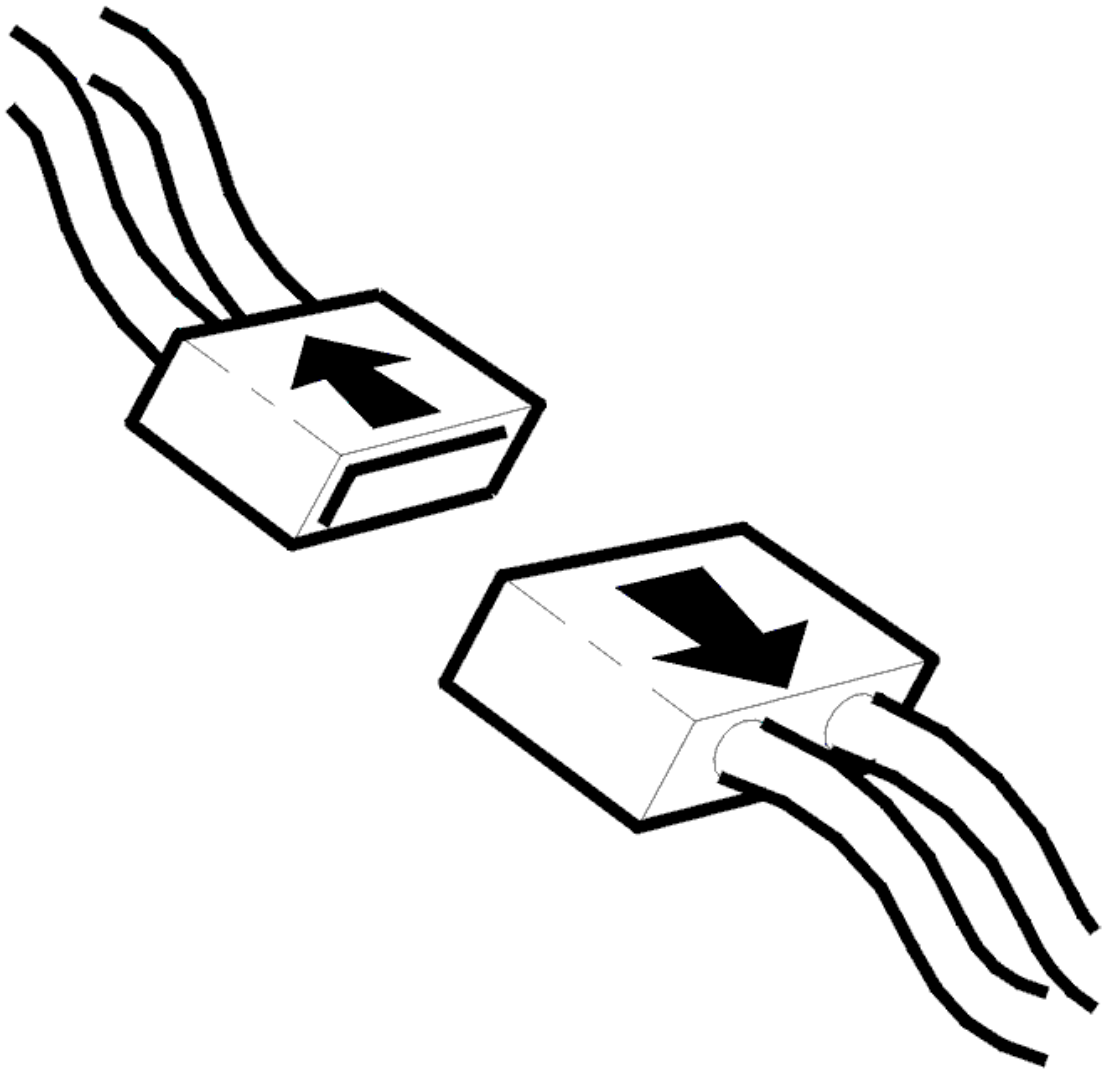

Fig. 300: Disconnecting Connector
Courtesy of VOLVO CARS CORPORATION

- Ignition off
- Disconnect central electronic module (CEM) connector D.

  Check the ground lead. Check for an open-circuit.

  Take readings between:

  - Central electronic module (CEM) terminal #D45 (45) and the fuel level sensor on the right-hand side.

  Remedy as necessary.

  Other information

- see **CONNECTING THE BREAKOUT BOX**
- -2004: **SIGNAL SPECIFICATION**
- 2005-: **SIGNAL SPECIFICATION**
- For -2004, see: **CENTRAL ELECTRONIC MODULE (CEM), REPLACING**
- For 2005-, see: **CENTRAL ELECTRONIC MODULE (CEM), REPLACING** .
- see **LEVEL SENSOR, FUEL TANK, RIGHT-HAND/FUEL TANK, REPLACING**
- see **CHECKING WIRING AND TERMINALS**

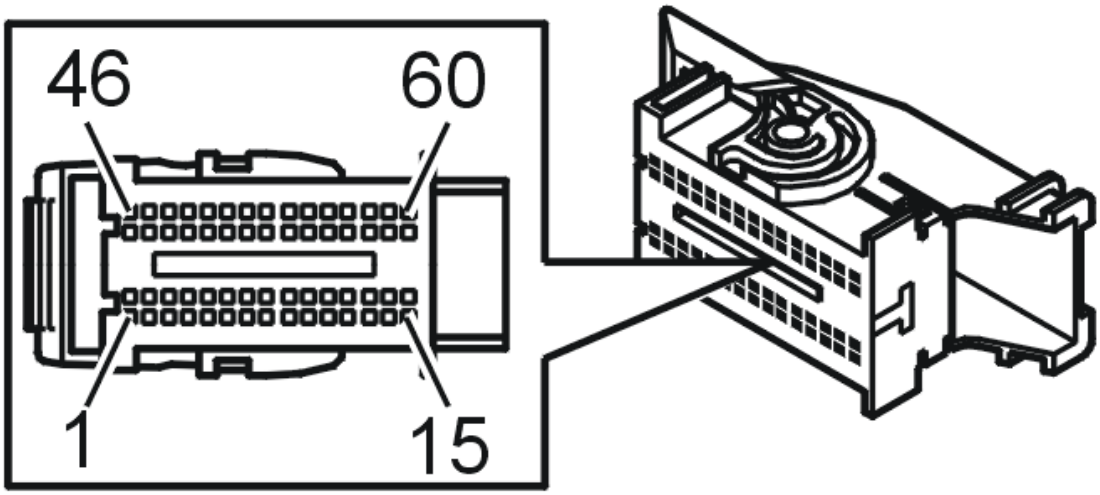

Fig. 301: Identifying Connector D
Courtesy of VOLVO CARS CORPORATION

Was a fault detected?

- **YES**

  Refer to **VERIFICATION**

- **NO**

  Refer to **REPLACING THE COMPONENT**

REPLACING THE COMPONENT

The central electronic module (CEM) has registered that the fuel level sensor on the right-hand side is faulty.

If the fault is intermittent, it has been registered previously but is no longer present. Intermittent faults can be caused by interference at start up of the central electronic module (CEM) or may be a different type of fault which occurs on different occasions. The fault is evaluated depending on how it occurs. Replace the fuel level sensor on the right-hand side if the fault recurs.

Replace the fuel level sensor on the right-hand side if there is a permanent fault.

Remedy as necessary.

Other information

- see **LEVEL SENSOR, FUEL TANK, RIGHT-HAND/FUEL TANK, REPLACING**
- **Continue**

  Refer to **VERIFICATION**

VERIFICATION

VERIFICATION

HINT: After carrying out the repair, check that the fault has been remedied.

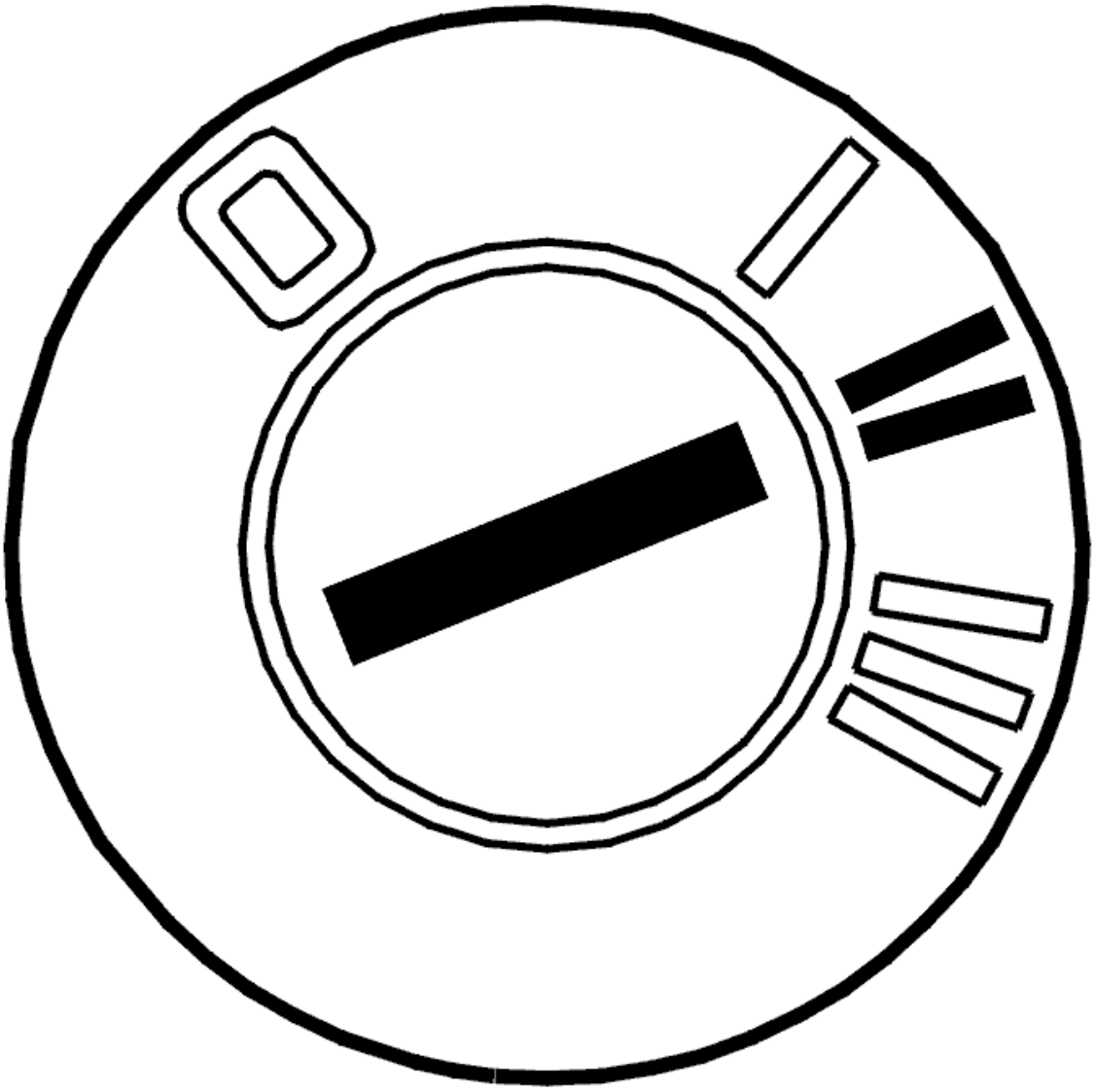

Fig. 302: Identifying Ignition ON
Courtesy of VOLVO CARS CORPORATION

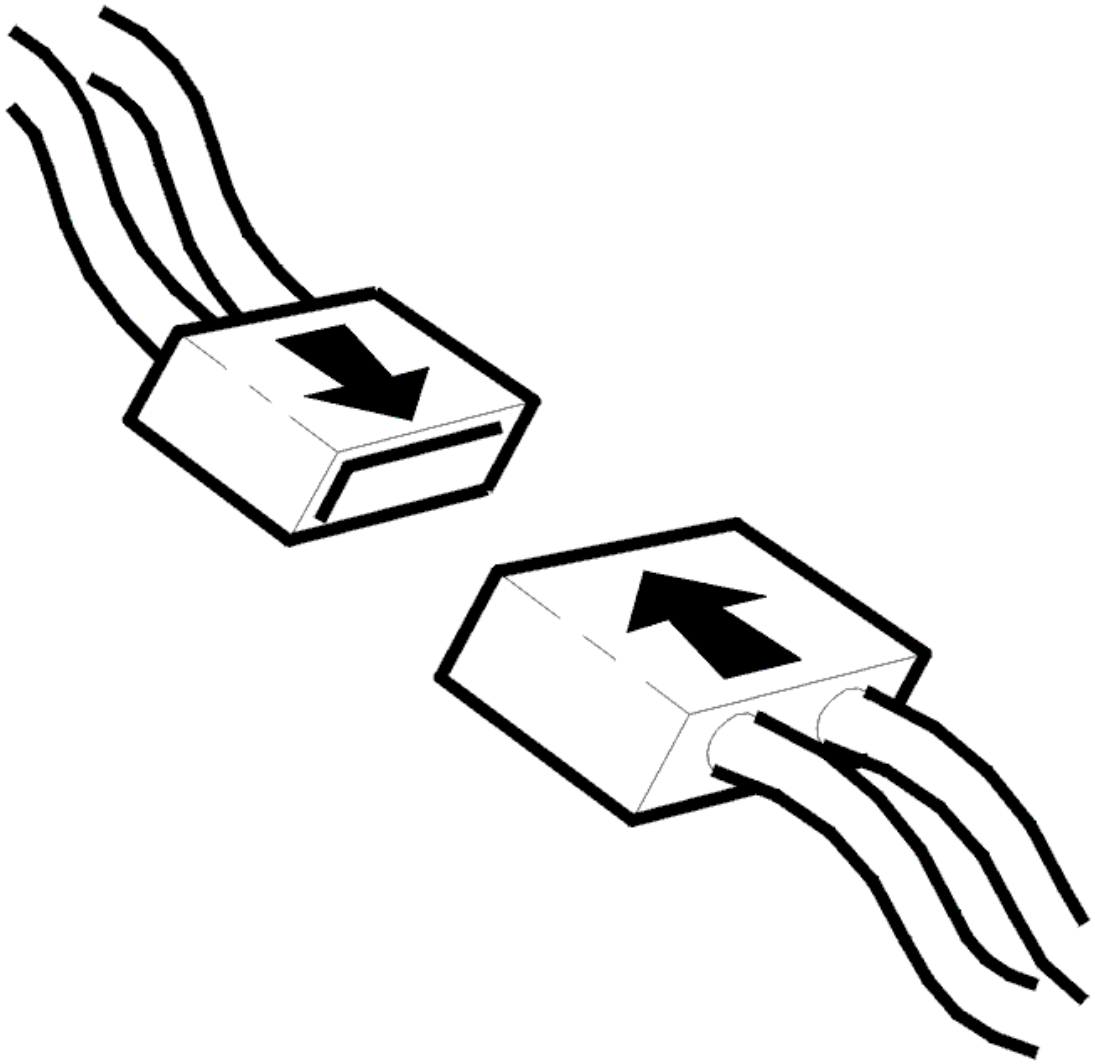

Fig. 303: Connecting Connector
Courtesy of VOLVO CARS CORPORATION

- Ignition off
- Reinstall the connectors, components etc.
- Ignition on.

  Check if the value at the fuel level gauge changes.

Is the value within its permitted range?

- **YES**

VERIFIED: Troubleshooting has been completed.

- **NO**

  Refer to **INFORMATION**

INFORMATION

FAULT-TRACING INFORMATION

The fault should have been detected and remedied. As this is not the case fault-tracing has failed.

Exit fault-tracing for this diagnostic trouble code (DTC) or make another attempt.

CEM-4A37: FUEL LEVEL SENSOR. SHORT-CIRCUIT TO SUPPLY VOLTAGE OR OPEN-CIRCUIT (2005-2012)

DIAGNOSTIC TROUBLE CODE (DTC) INFORMATION CEM-4A37

Condition

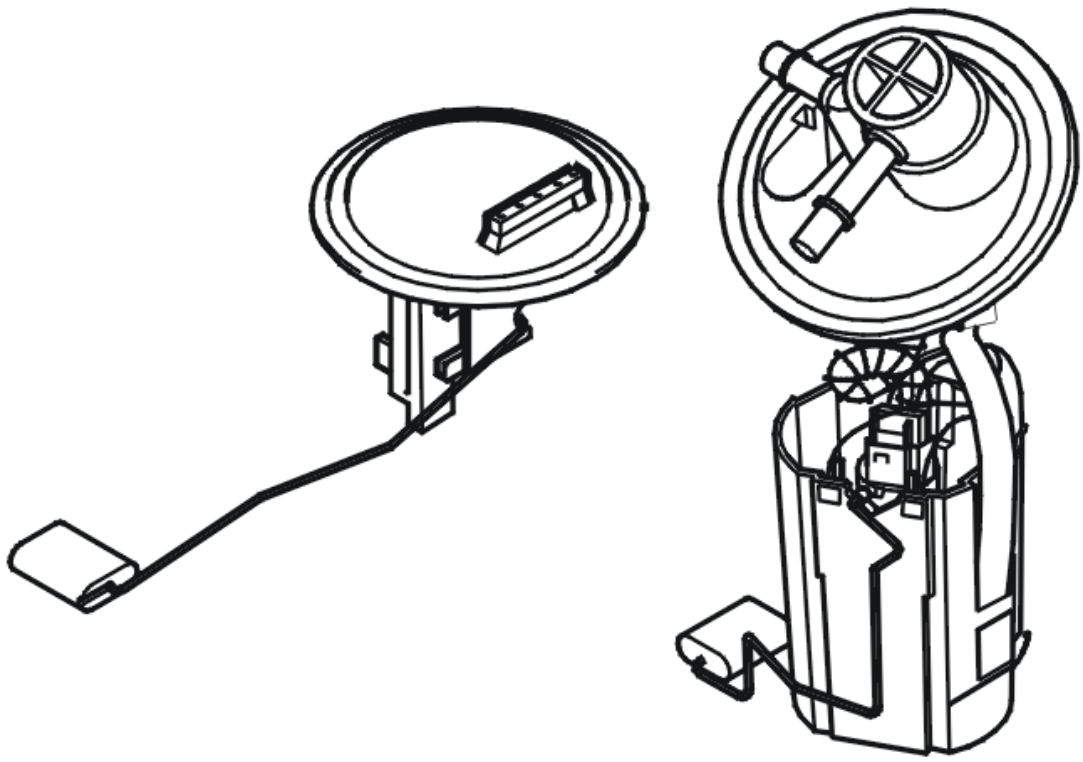

Fig. 304: Identifying Fuel Pump
Courtesy of VOLVO CARS CORPORATION

The central electronic module (CEM) continuously checks the signal from the sensor on the pump side which indicates the level in one of the fuel tanks.

The diagnostic trouble code (DTC) is stored if the central electronic module (CEM) registers an open-circuit in the connection to the sensor on the pump side in the tank or a short-circuit to supply voltage in the sensor.

The diagnostic trouble code (DTC) can be diagnosed when the ignition is switched on.

Substitute Value

- The fuel level is set to zero.

Possible Source

- Open-circuit in the connection to the fuel level sensor on the pump side
- Short-circuit to supply voltage in the sensor on the pump side.

Fault symptom[s]

- The trip computer displays an empty fuel tank too early.
- The fuel gauge indicates zero even though there is fuel in the tank.

SHORT-CIRCUIT TO SUPPLY VOLTAGE OR OPEN-CIRCUIT

CHECKING THE WIRING

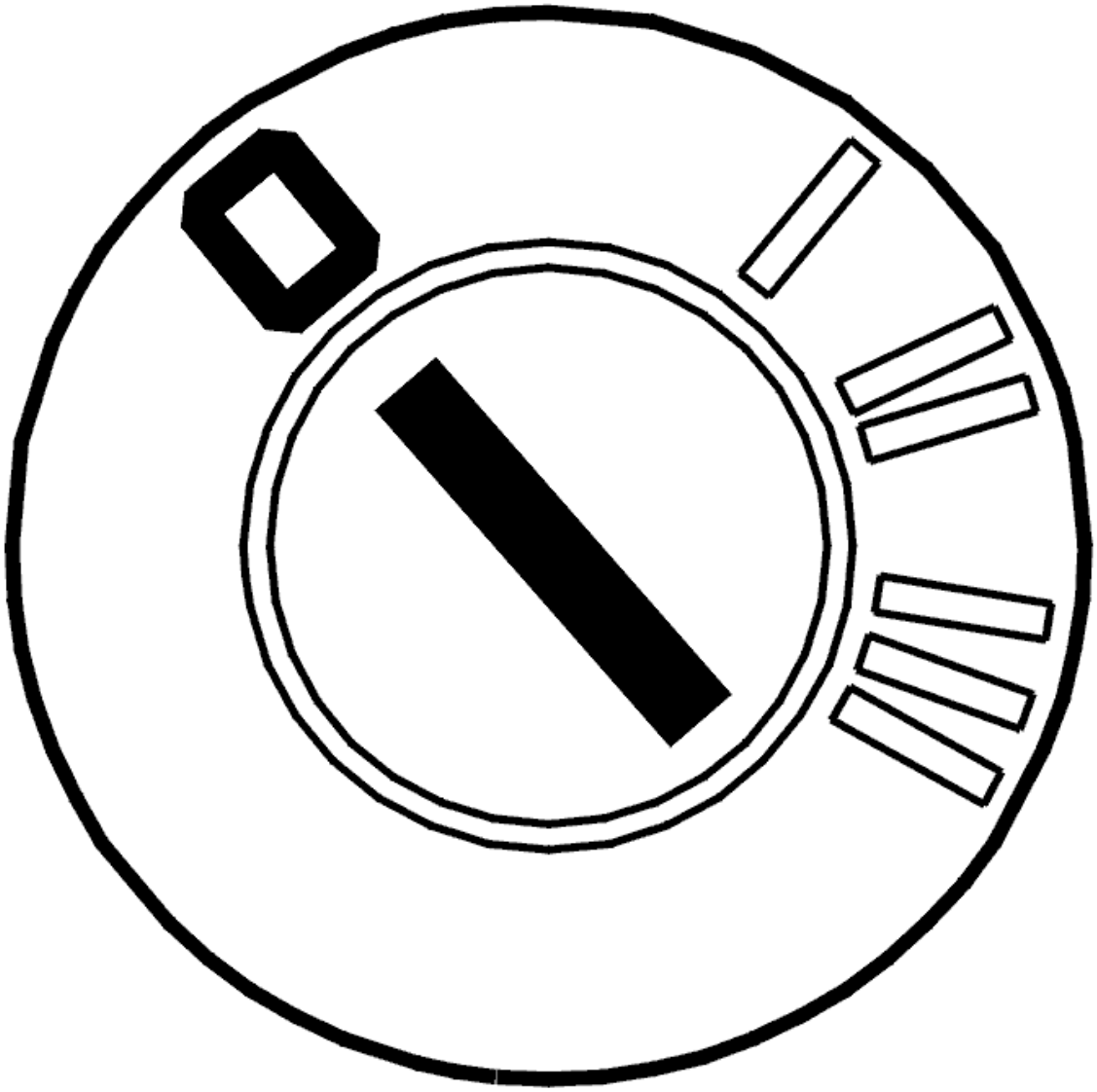

Fig. 305: Identifying Ignition OFF
Courtesy of VOLVO CARS CORPORATION

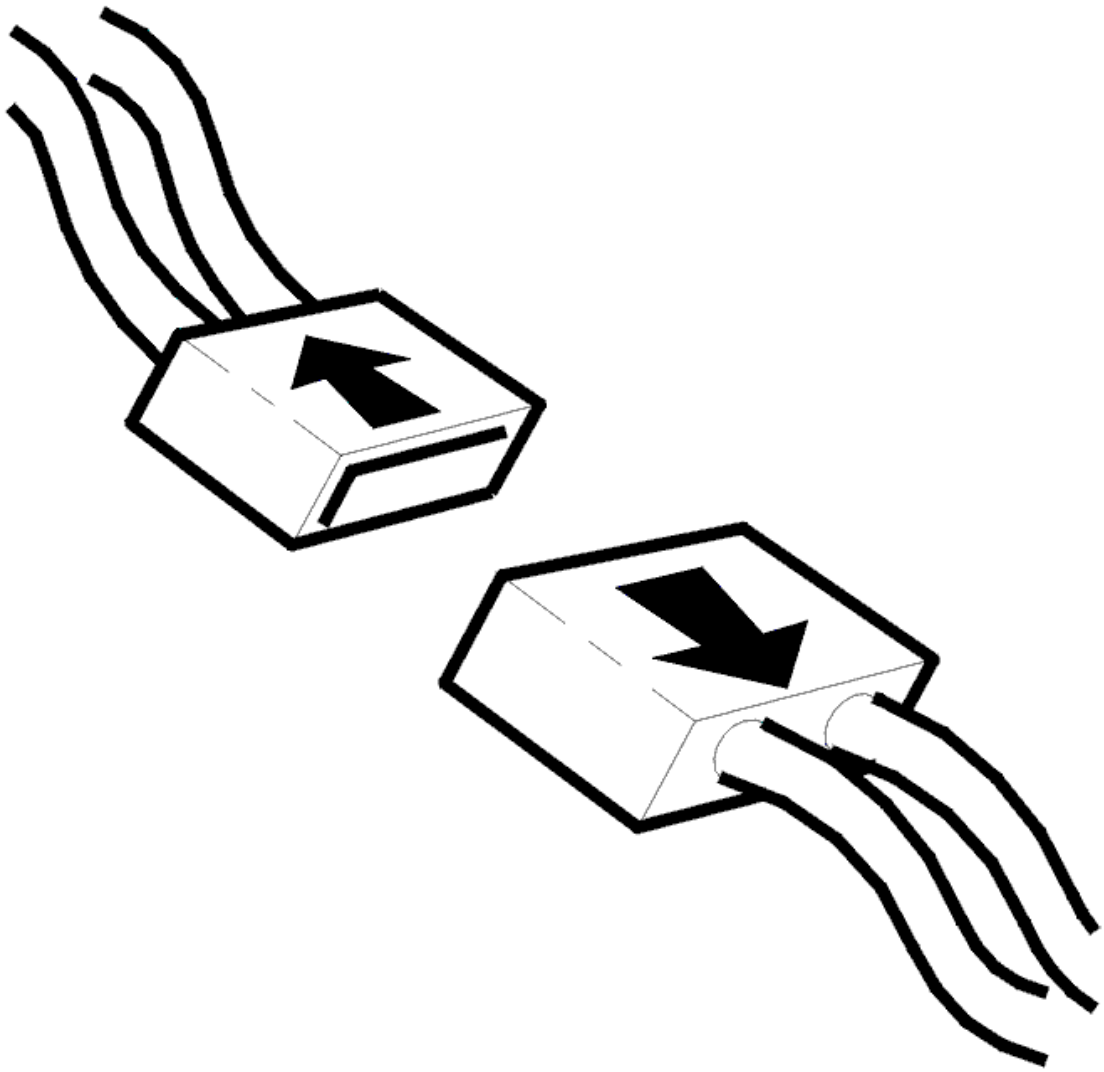

Fig. 306: Disconnecting Connector
Courtesy of VOLVO CARS CORPORATION

- Ignition off
- Disconnect central electronic module (CEM) connector D.

  Check the signal cable. Check for an open-circuit. Check for a short-circuit to supply voltage.

  Take readings between:

  - Central electronic module (CEM) terminal #D44 (44) and the fuel level sensor on the right-hand side.

  Check the ground lead if diagnostic trouble code (DTC) CEM-4A33 is also stored. Check for an open-circuit.

Take readings between:

- Central electronic module (CEM) terminal #D45 (45) and the fuel level sensor on the right-hand side.

Remedy as necessary.

Other information

- see **CONNECTING THE BREAKOUT BOX**
- -2004: **SIGNAL SPECIFICATION**
- 2005-: **SIGNAL SPECIFICATION**
- see **LOCATION OF COMPONENTS**
- see **LEVEL SENSOR, FUEL TANK, RIGHT-HAND/FUEL TANK, REPLACING**
- see **CHECKING WIRING AND TERMINALS**

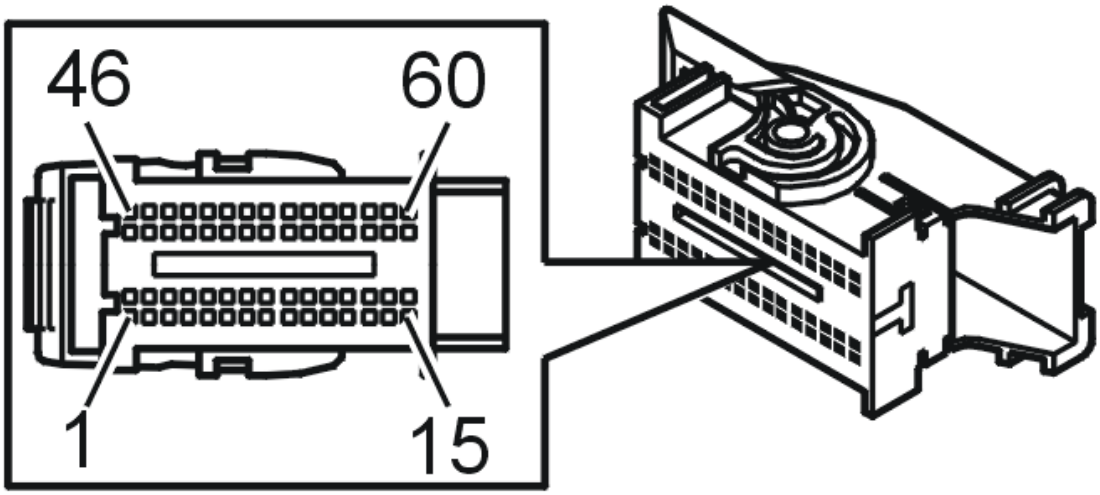

Fig. 307: Identifying Connector D
Courtesy of VOLVO CARS CORPORATION

- **Continue**

  Refer to **VERIFICATION**

VERIFICATION

VERIFICATION

HINT: After carrying out the repair, check that the fault has been remedied.

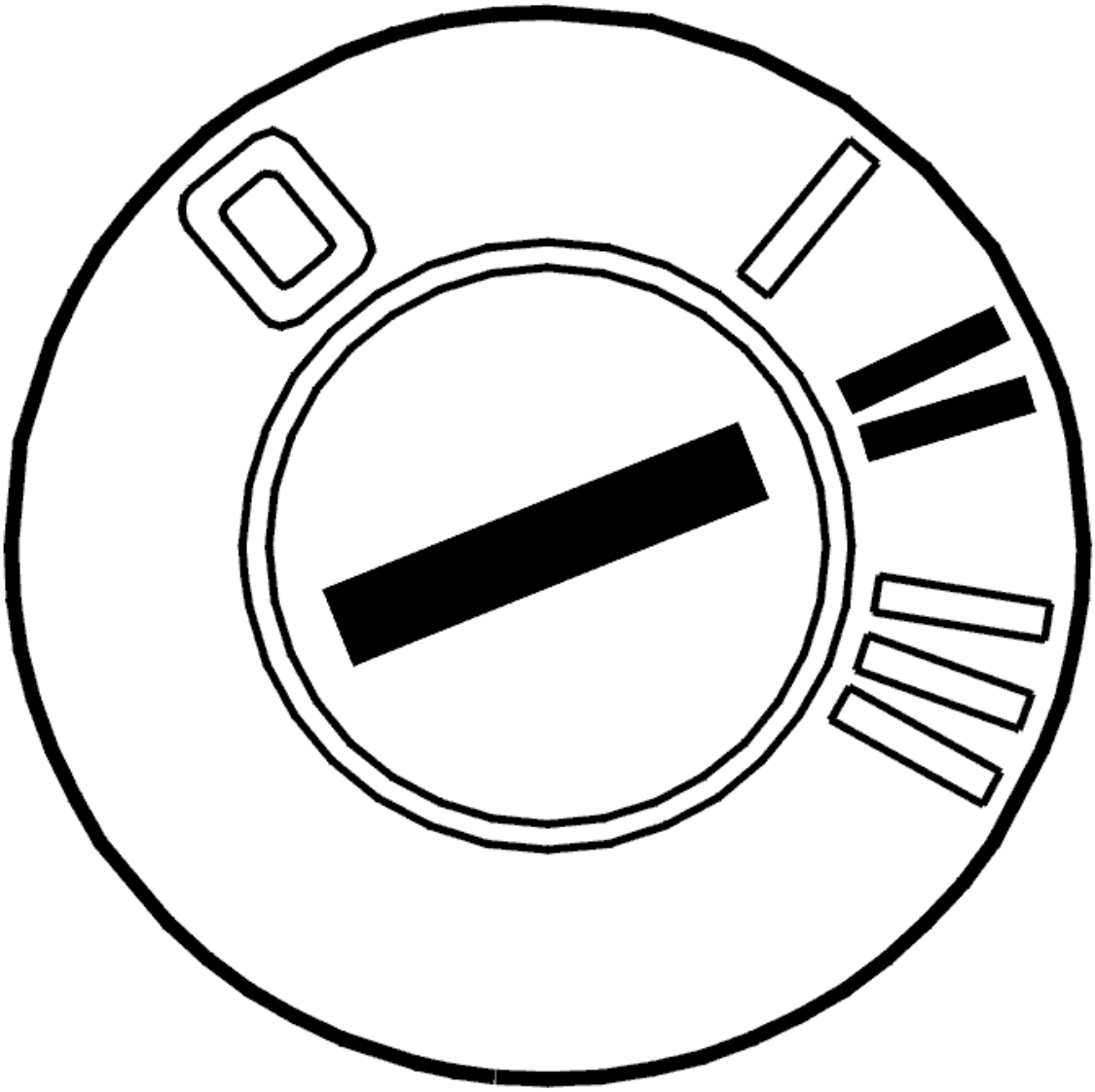

Fig. 308: Identifying Ignition ON
Courtesy of VOLVO CARS CORPORATION

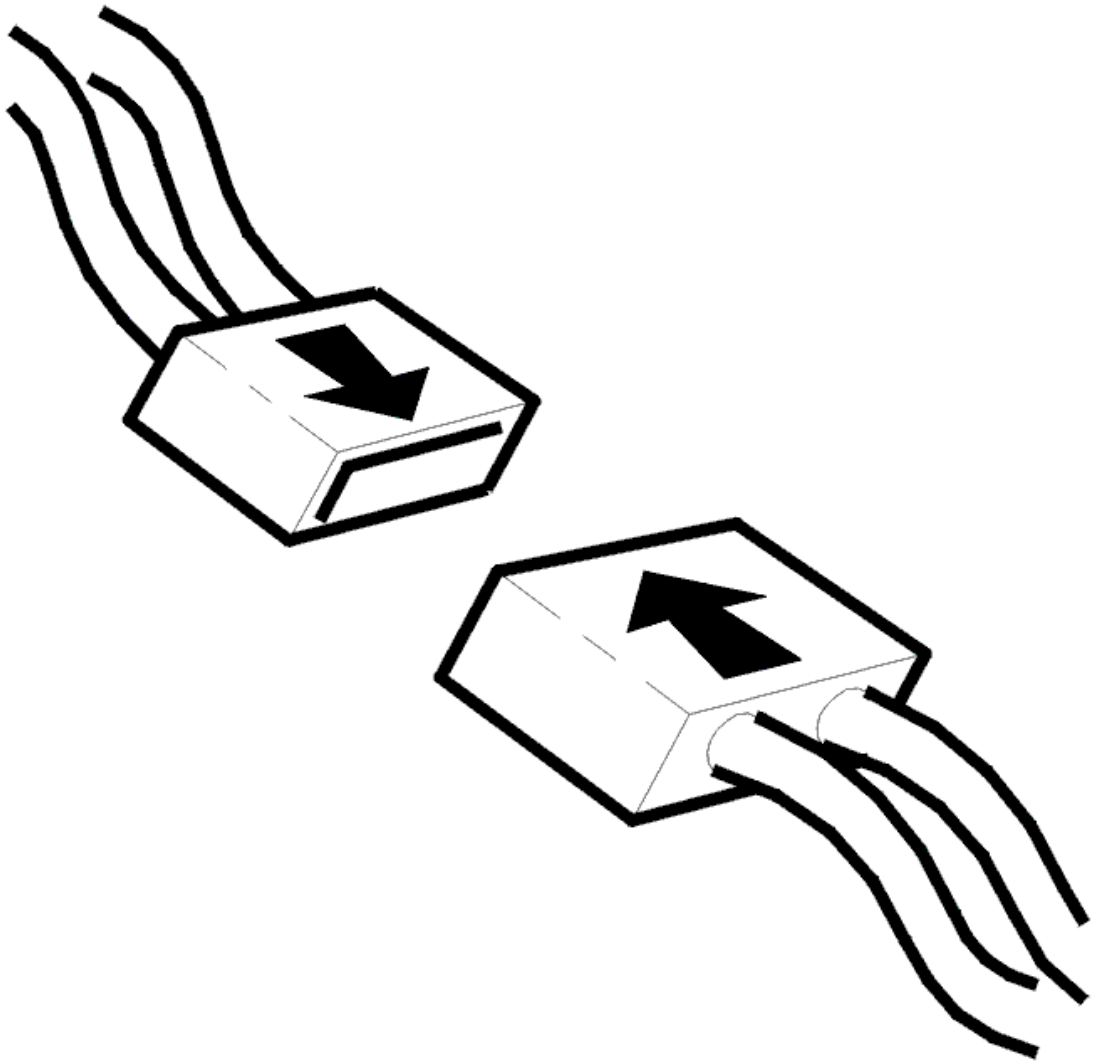

Fig. 309: Connecting Connector
Courtesy of VOLVO CARS CORPORATION

- Ignition off
- Reinstall the connectors, components etc.
- Ignition on.

  Check if the value at the fuel level gauge changes.

Is the value within its permitted range?

- **YES**

  VERIFIED: Troubleshooting has been completed.

- **NO**

  Refer to **INFORMATION**

INFORMATION

FAULT-TRACING INFORMATION

The fault should have been detected and remedied. As this is not the case fault-tracing has failed.

Exit fault-tracing for this diagnostic trouble code (DTC) or make another attempt.

CEM-4A38: FUEL LEVEL SENSOR. SHORT-CIRCUIT TO GROUND (2005-2012)

DIAGNOSTIC TROUBLE CODE (DTC) INFORMATION CEM-4A38

Condition

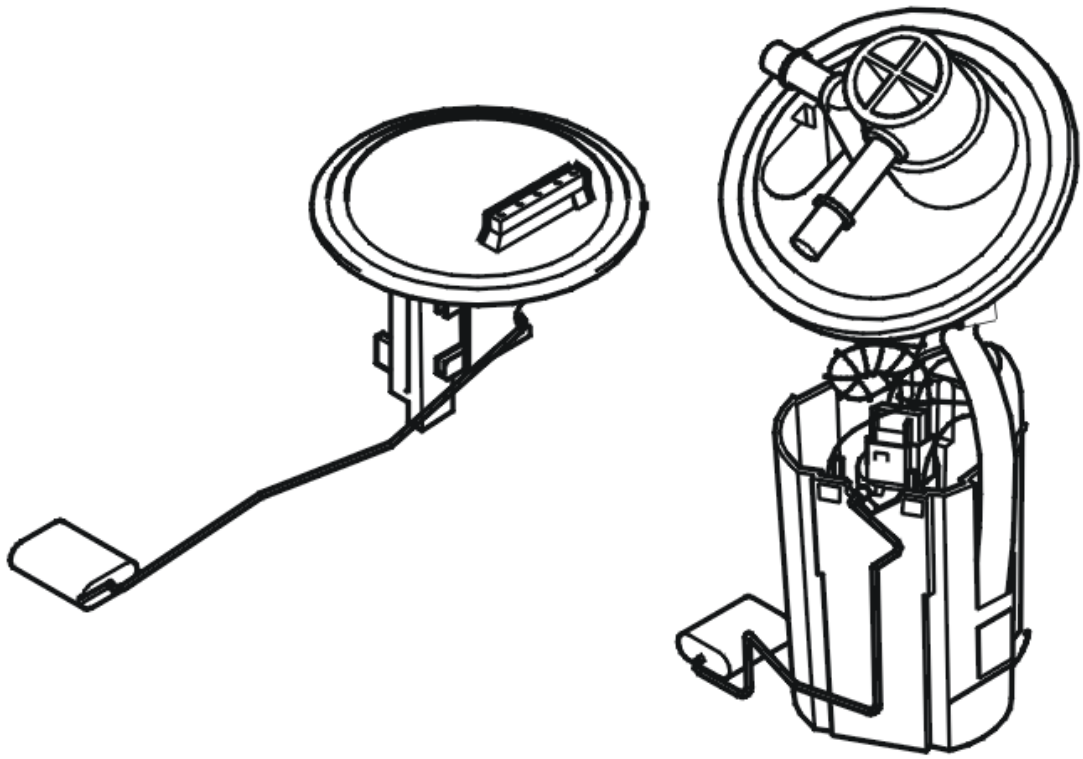

Fig. 310: Identifying Fuel Pump
Courtesy of VOLVO CARS CORPORATION

The central electronic module (CEM) continuously checks the signal from the sensor on the pump side which

indicates the level in one of the fuel tanks.

The diagnostic trouble code (DTC) is stored if the central electronic module (CEM) registers a short-circuit to ground in the sensor.

The diagnostic trouble code (DTC) can be diagnosed when the ignition is switched on.

Substitute Value

- The fuel level is set to zero.

Possible Source

- Short-circuit to ground in the sensor on the pump side.

Fault symptom[s]

- The trip computer displays an empty fuel tank too early.
- The fuel gauge indicates zero even though there is fuel in the tank.

SHORT-CIRCUIT TO GROUND

CHECKING THE WIRING

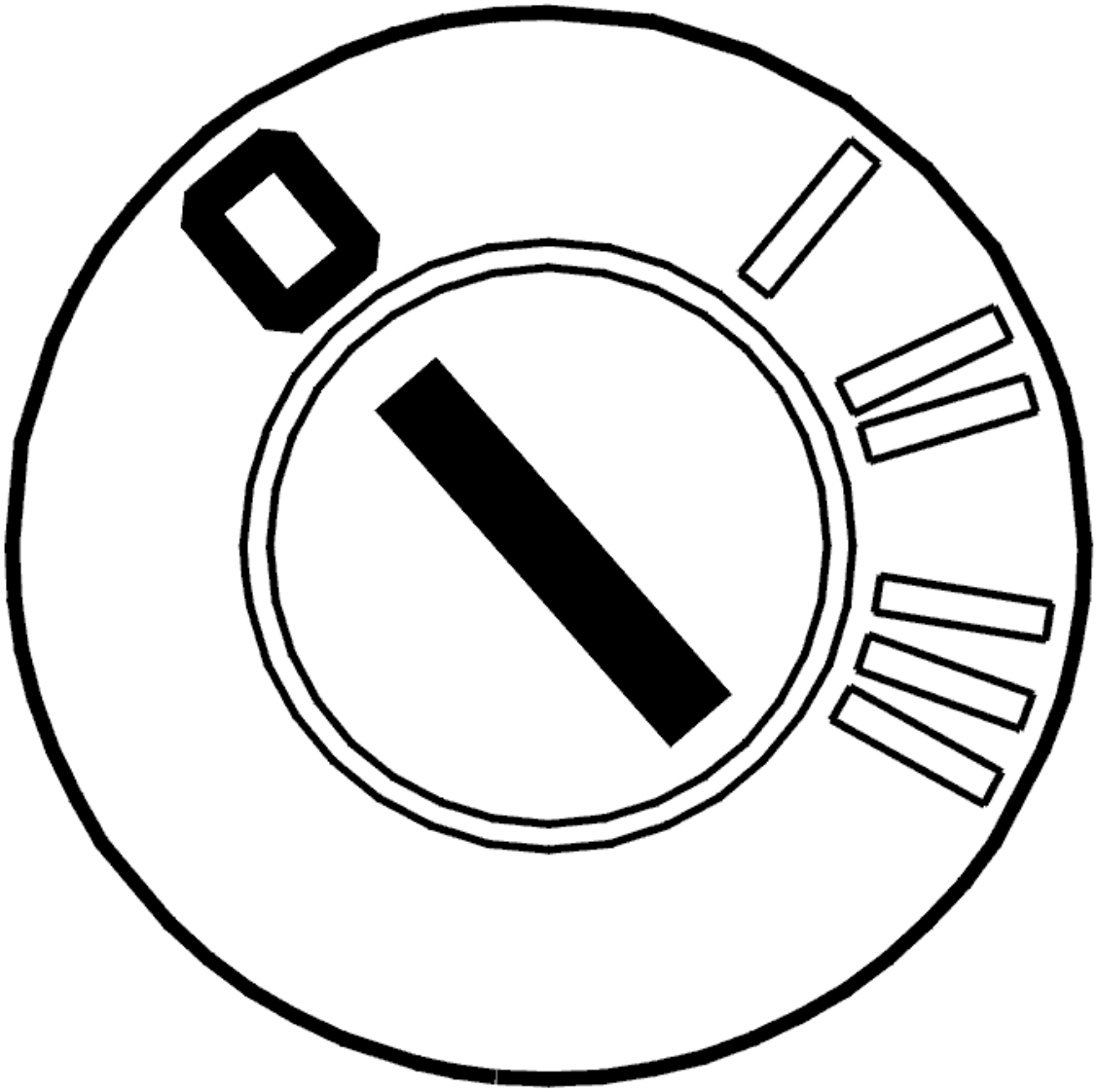

Fig. 311: Identifying Ignition OFF
Courtesy of VOLVO CARS CORPORATION

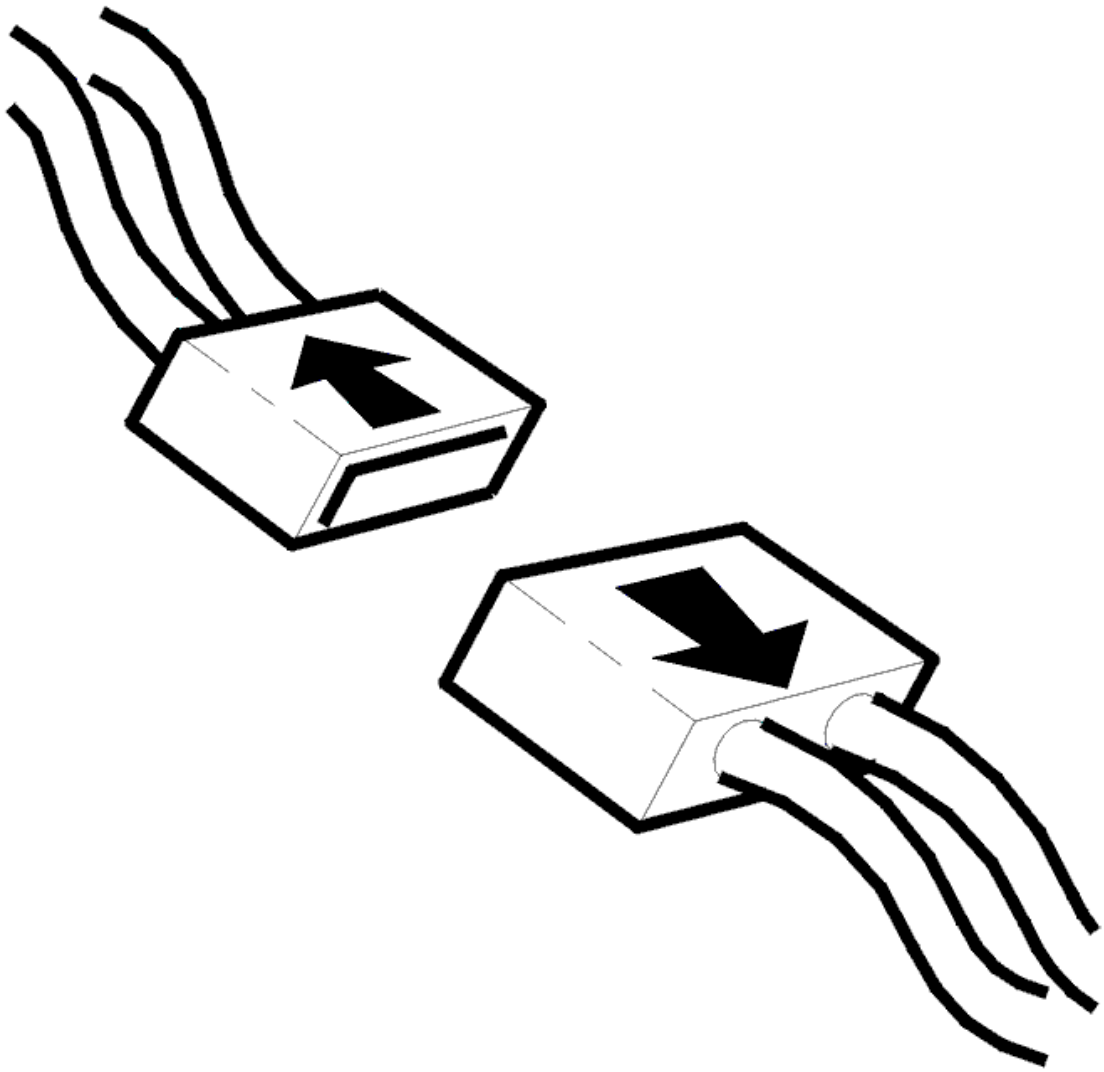

Fig. 312: Disconnecting Connector
Courtesy of VOLVO CARS CORPORATION

- Ignition off
- Disconnect central electronic module (CEM) connector D.

  Check the signal cable. Check for a short-circuit to ground.

  Take readings between:

  - Central electronic module (CEM) terminal #D44 (44) and the fuel level sensor on the right-hand side.

  Remedy as necessary.

  Other information

- see **CONNECTING THE BREAKOUT BOX**
- -2004: **SIGNAL SPECIFICATION**
- 2005-: **SIGNAL SPECIFICATION**
- For -2004, see: **CENTRAL ELECTRONIC MODULE (CEM), REPLACING**
- For 2005-, see: **CENTRAL ELECTRONIC MODULE (CEM), REPLACING** .
- see **LEVEL SENSOR, FUEL TANK, RIGHT-HAND/FUEL TANK, REPLACING**
- see **CHECKING WIRING AND TERMINALS**

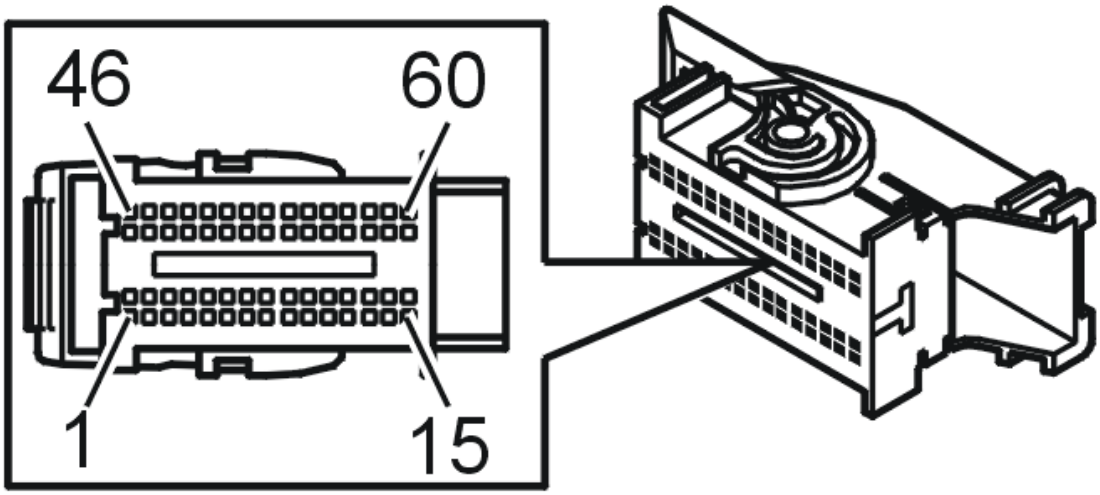

Fig. 313: Identifying Connector D
Courtesy of VOLVO CARS CORPORATION

- **Continue**

  Refer to **VERIFICATION**

VERIFICATION

VERIFICATION

HINT: After carrying out the repair, check that the fault has been remedied.

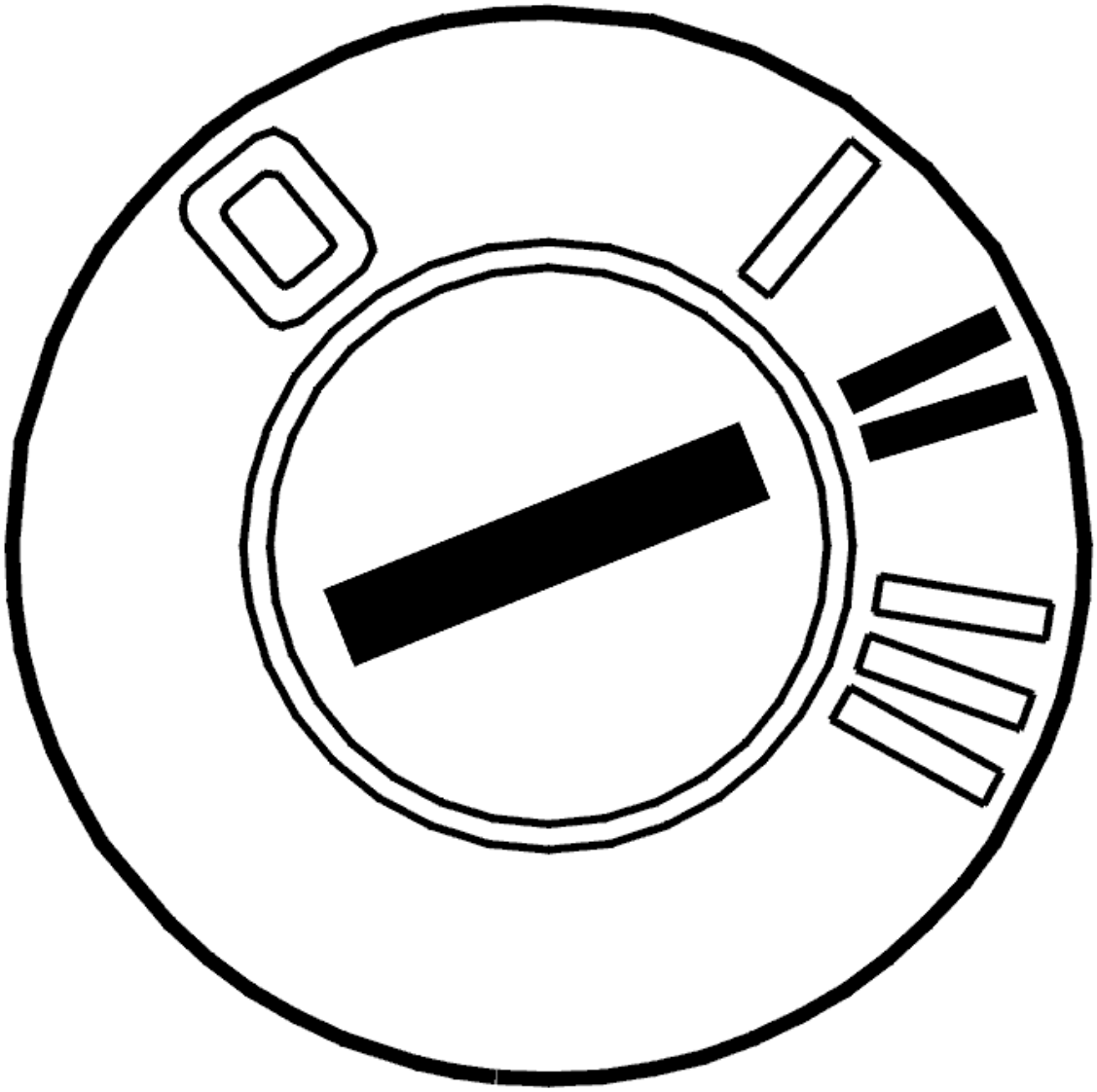

Fig. 314: Identifying Ignition ON
Courtesy of VOLVO CARS CORPORATION

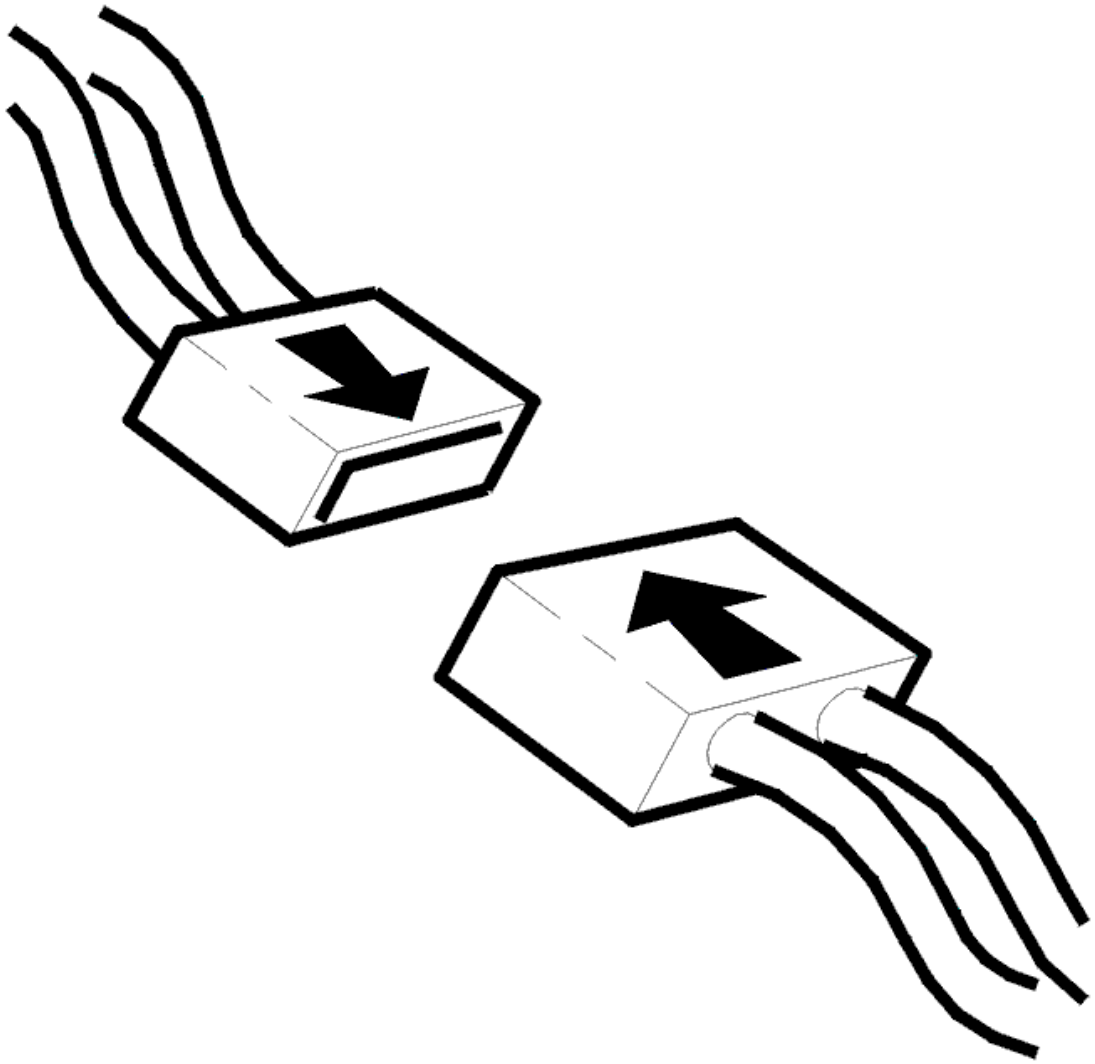

Fig. 315: Connecting Connector
Courtesy of VOLVO CARS CORPORATION

- Ignition off
- Reinstall the connectors, components etc.
- Ignition on.

  Check if the value at the fuel level gauge changes.

Is the value within its permitted range?

- **YES**

  VERIFIED: Troubleshooting has been completed.

- **NO**

  Refer to **INFORMATION**

INFORMATION

FAULT-TRACING INFORMATION

The fault should have been detected and remedied. As this is not the case fault-tracing has failed.

Exit fault-tracing for this diagnostic trouble code (DTC) or make another attempt.

CEM-4F00: RESET BUTTON. ACTIVATED TOO LONG (2005-2012)

DIAGNOSTIC TROUBLE CODE (DTC) INFORMATION CEM-4F00

Condition

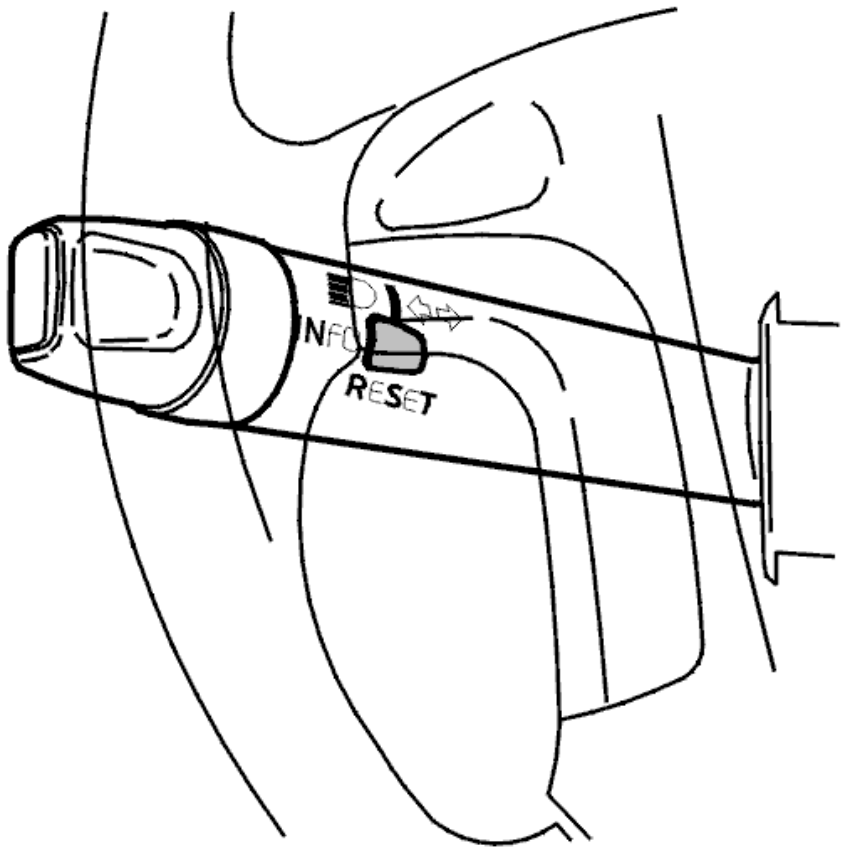

Fig. 316: Identifying Reset Button
Courtesy of VOLVO CARS CORPORATION

The diagnostic trouble code (DTC) is stored if the central electronic module (CEM) registers that the reset button on the control stalk has been active for more than 60 seconds.

The diagnostic trouble code (DTC) can be diagnosed when the ignition is switched on.

Substitute Value

- None.

Possible Source

- The reset button has been pressed in for more than 60 seconds
- The reset button has jammed in the pressed in position.

Fault symptom[s]

- The parking heater does not operate
- The reset button does not function.

ACTIVATED TOO LONG

CHECKING THE CONTROL

The diagnostic trouble code (DTC) is stored when a button or switch has been depressed for a long time.

If the fault is intermittent, it has been registered previously but is no longer present. Intermittent faults can be caused by interference at start up or can be a different type of fault which occurs on different occasions. The fault is evaluated depending on how it occurs.

Check that the button or switch does not stick in the activated position.

Remedy as necessary.

Other information

see **TURN SIGNAL SWITCH, REPLACING**

- **Continue**

  Refer to **VERIFICATION**

VERIFICATION

VERIFICATION

HINT: After carrying out the repair, check that the fault has been remedied.

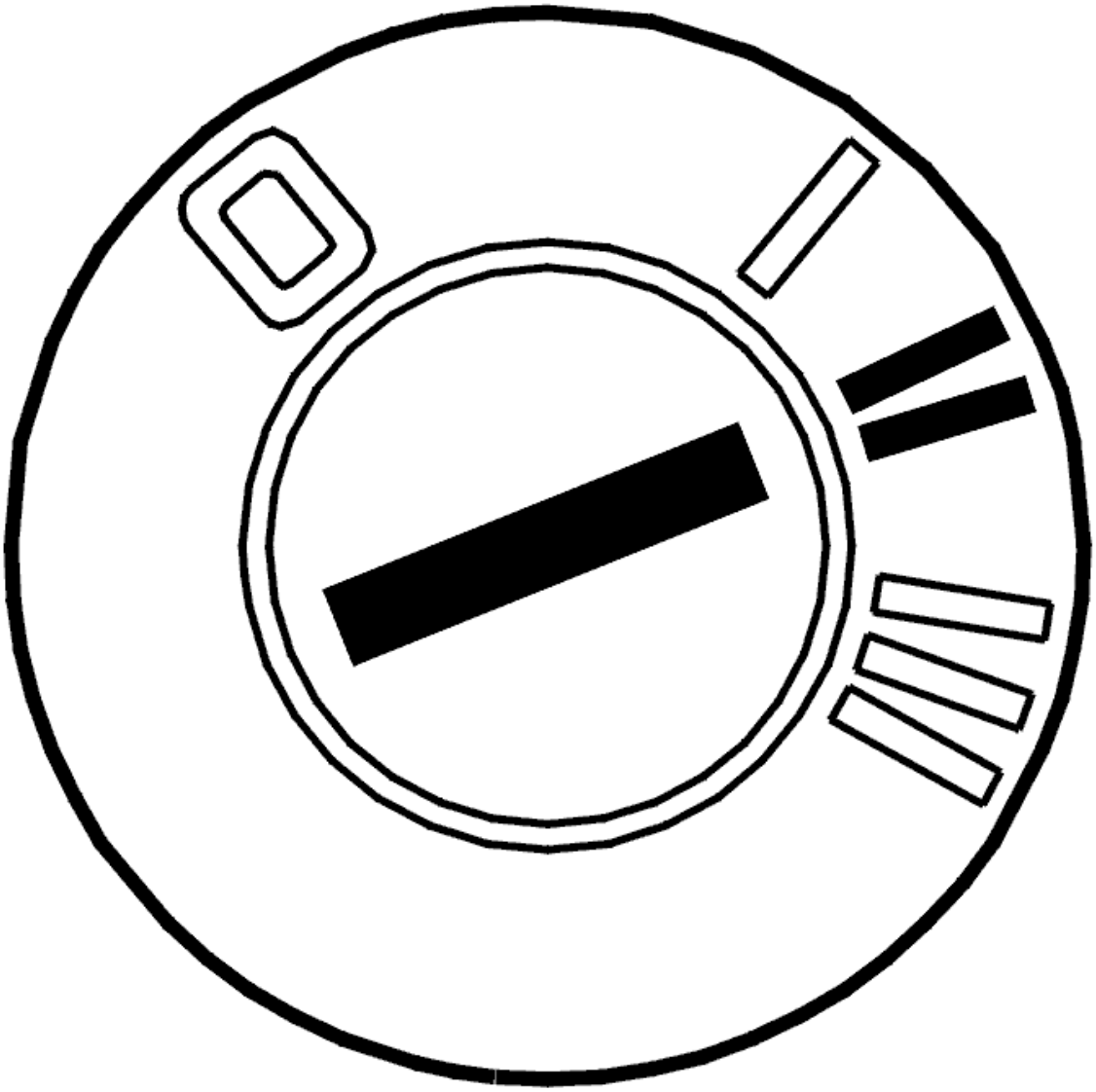

Fig. 317: Identifying Ignition ON
Courtesy of VOLVO CARS CORPORATION

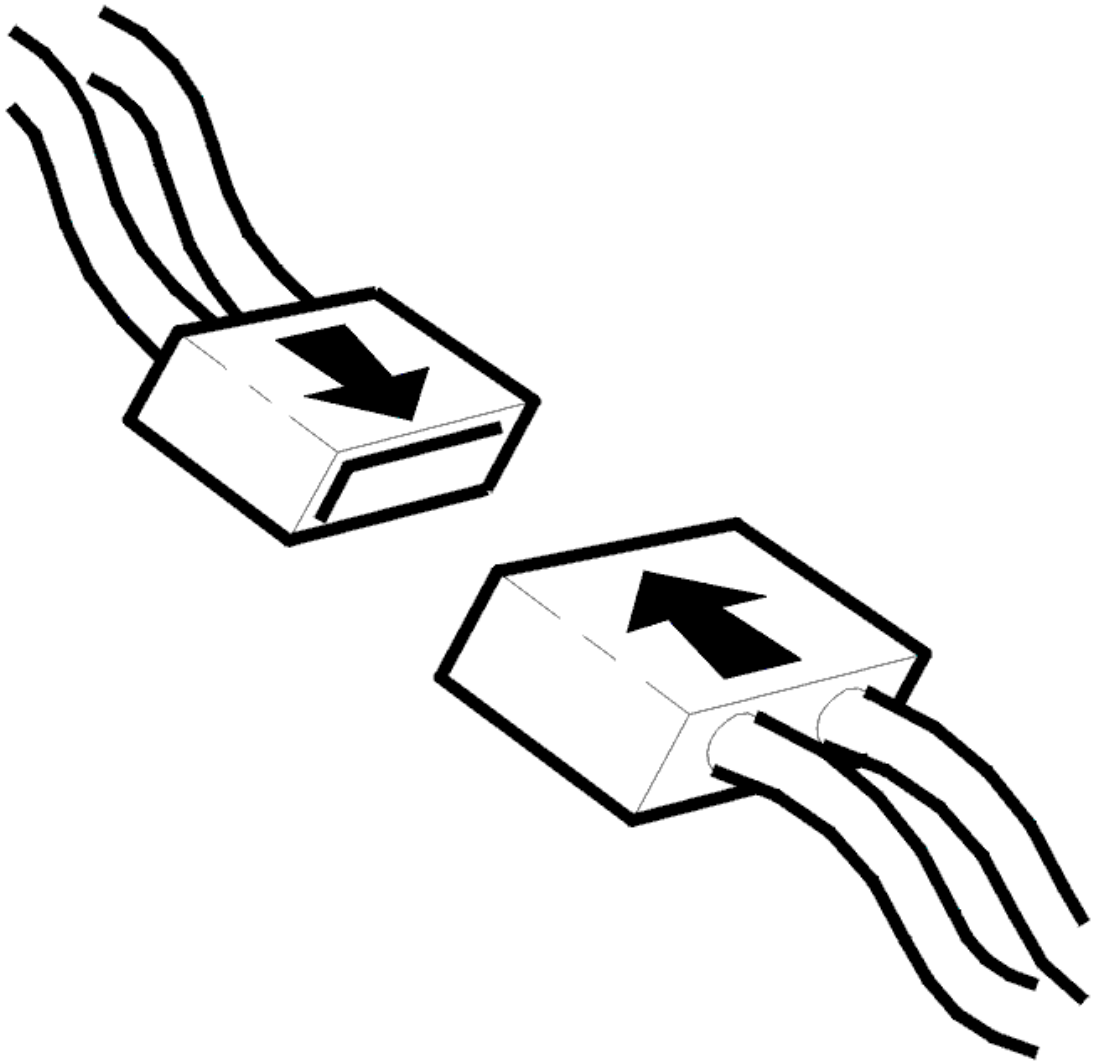

Fig. 318: Connecting Connector
Courtesy of VOLVO CARS CORPORATION

- Ignition off
- Reinstall the connectors, components etc.
- Ignition on.

  Check that all functions are working on the turn signal lamp switch.

Does the switch function?

- **YES**

  VERIFIED: Troubleshooting has been completed.

- **NO**

  Refer to **INFORMATION**

INFORMATION

FAULT-TRACING INFORMATION

The fault should have been detected and remedied. As this is not the case fault-tracing has failed.

Exit fault-tracing for this diagnostic trouble code (DTC) or make another attempt.

CEM-4F01: READ BUTTON. ACTIVATED TOO LONG (2005-2012)

DIAGNOSTIC TROUBLE CODE (DTC) INFORMATION CEM-4F01

Condition

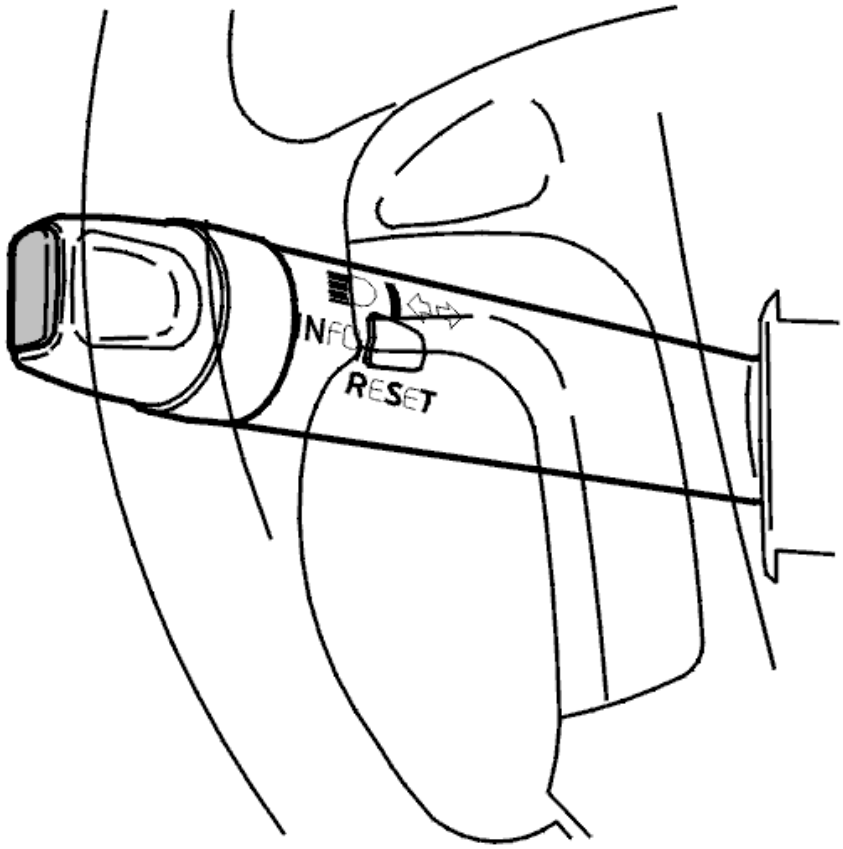

Fig. 319: Identifying Control Stalk
Courtesy of VOLVO CARS CORPORATION

The diagnostic trouble code (DTC) is stored if the central electronic module (CEM) registers that the read button on the control stalk has been active for more than 60 seconds.

The diagnostic trouble code (DTC) can be diagnosed when the ignition is switched on.

Substitute Value

- None.

Possible Source

- The read button has been pressed in for more than 60 seconds
- The read button has jammed in the pressed in position.

Fault symptom[s]

- Text messages on the driver information module (DIM) cannot be erased.

ACTIVATED TOO LONG

CHECKING THE CONTROL

The diagnostic trouble code (DTC) is stored when a button or switch has been depressed for a long time.

If the fault is intermittent, it has been registered previously but is no longer present. Intermittent faults can be caused by interference at start up or can be a different type of fault which occurs on different occasions. The fault is evaluated depending on how it occurs.

Check that the button or switch does not stick in the activated position.

Remedy as necessary.

Other information

see **TURN SIGNAL SWITCH, REPLACING**

- **Continue**

  Refer to **VERIFICATION**

VERIFICATION

VERIFICATION

HINT: After carrying out the repair, check that the fault has been remedied.

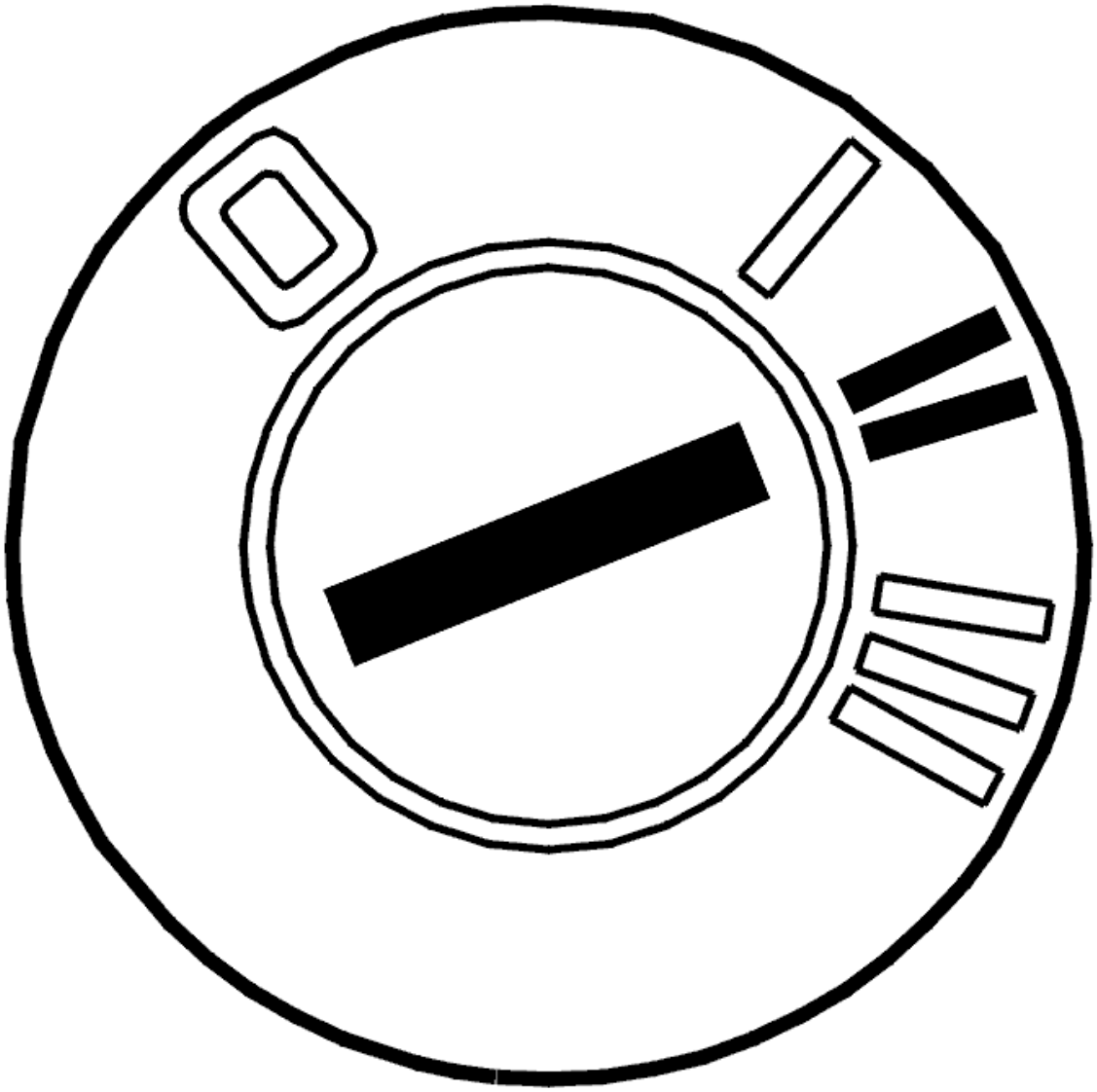

Fig. 320: Identifying Ignition ON
Courtesy of VOLVO CARS CORPORATION

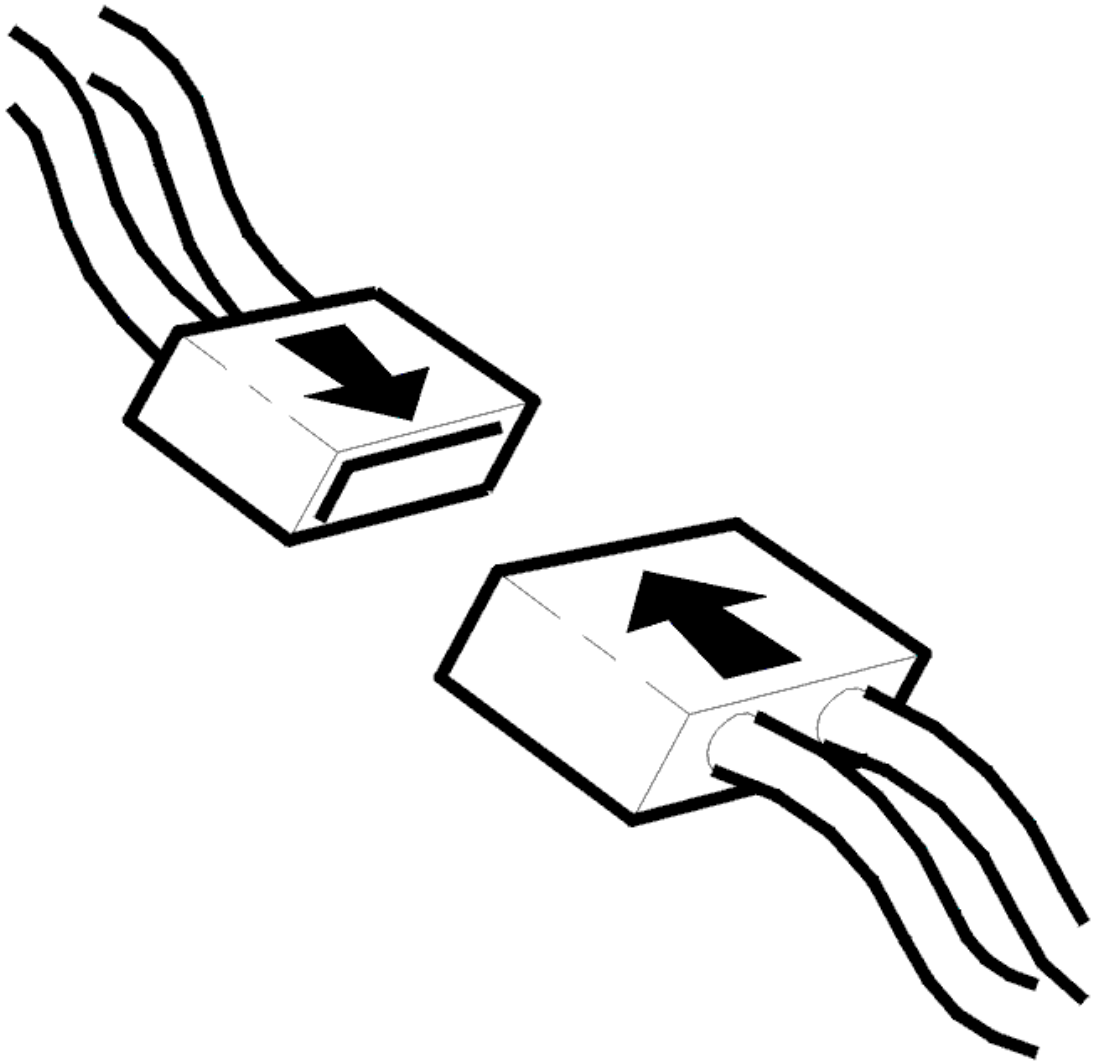

Fig. 321: Connecting Connector
Courtesy of VOLVO CARS CORPORATION

- Ignition off
- Reinstall the connectors, components etc.
- Ignition on.

  Check that all functions are working on the turn signal lamp switch.

Does the switch function?

- **YES**

  VERIFIED: Troubleshooting has been completed.

- **NO**

  Refer to **INFORMATION**

INFORMATION

FAULT-TRACING INFORMATION

The fault should have been detected and remedied. As this is not the case fault-tracing has failed.

Exit fault-tracing for this diagnostic trouble code (DTC) or make another attempt.

CEM-4F41: LIGHT EMITTING DIODE, LEFT CAMERA MODULE. SIGNAL TOO LOW (2005-2012)

DIAGNOSTIC TROUBLE CODE (DTC) INFORMATION CEM-4F41

Condition

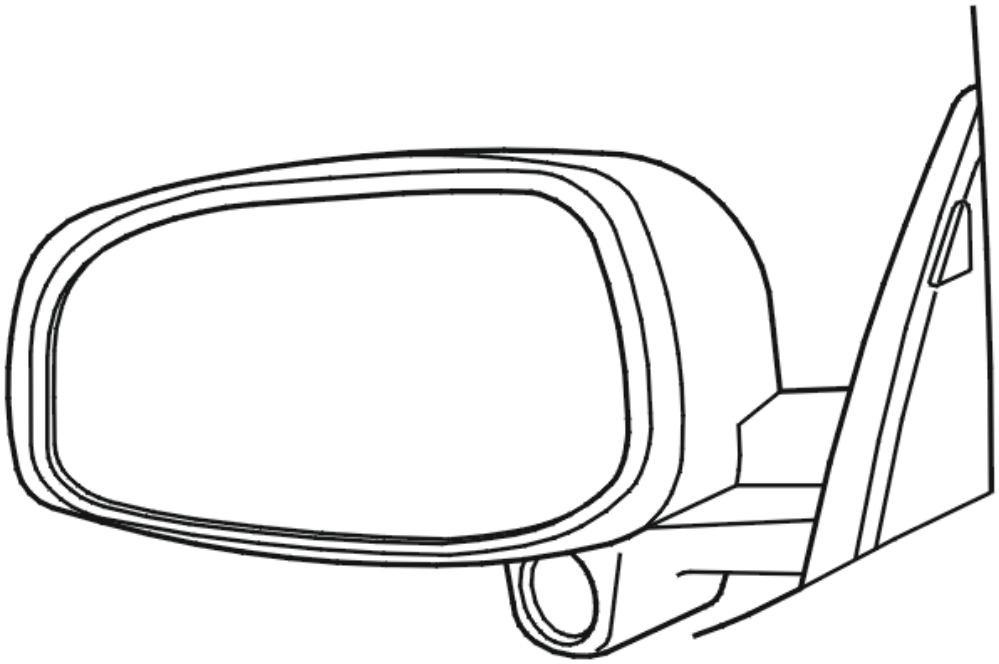

Fig. 322: Identifying Camera Module
Courtesy of VOLVO CARS CORPORATION

The central electronic module (CEM) monitors communication between the blind spot indication system (BLIS)

LEDs and camera modules.

If the central electronic module (CEM) detects that the signal from the left LED to the left camera module (LCM) is too low, a diagnostic trouble code is generated.

The diagnostic trouble code can be diagnosed when the ignition is on.

Substitute Value

- Nothing.

Possible Source

- The signal lead to the left LED is shorted to ground.

Fault symptom[s]

- The LED does not come on.

SIGNAL TOO LOW

CHECKING THE FUNCTION

The LEDs should flash three times whenever the Blind Spot Indication System (BLIS) is activated.

Switch on the ignition to check the functionality of the left LED.

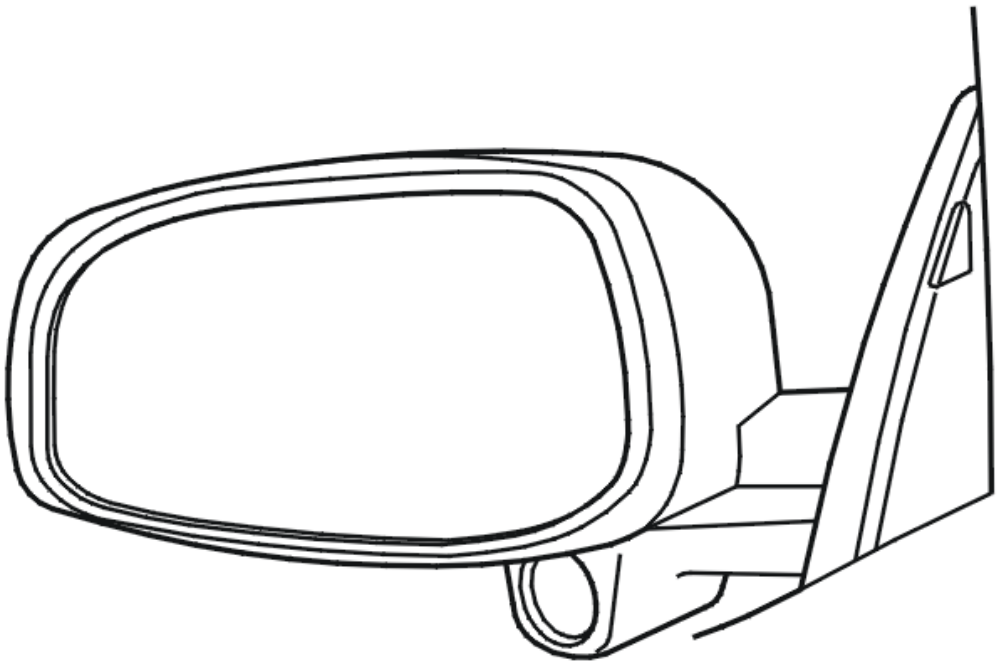

Fig. 323: Identifying Camera Module
Courtesy of VOLVO CARS CORPORATION

Did the LED flash three times?

- **YES**

  Refer to **FAULT-TRACING INFORMATION**

- **NO**

  Refer to **CHECKING THE WIRING**

CHECKING THE WIRING

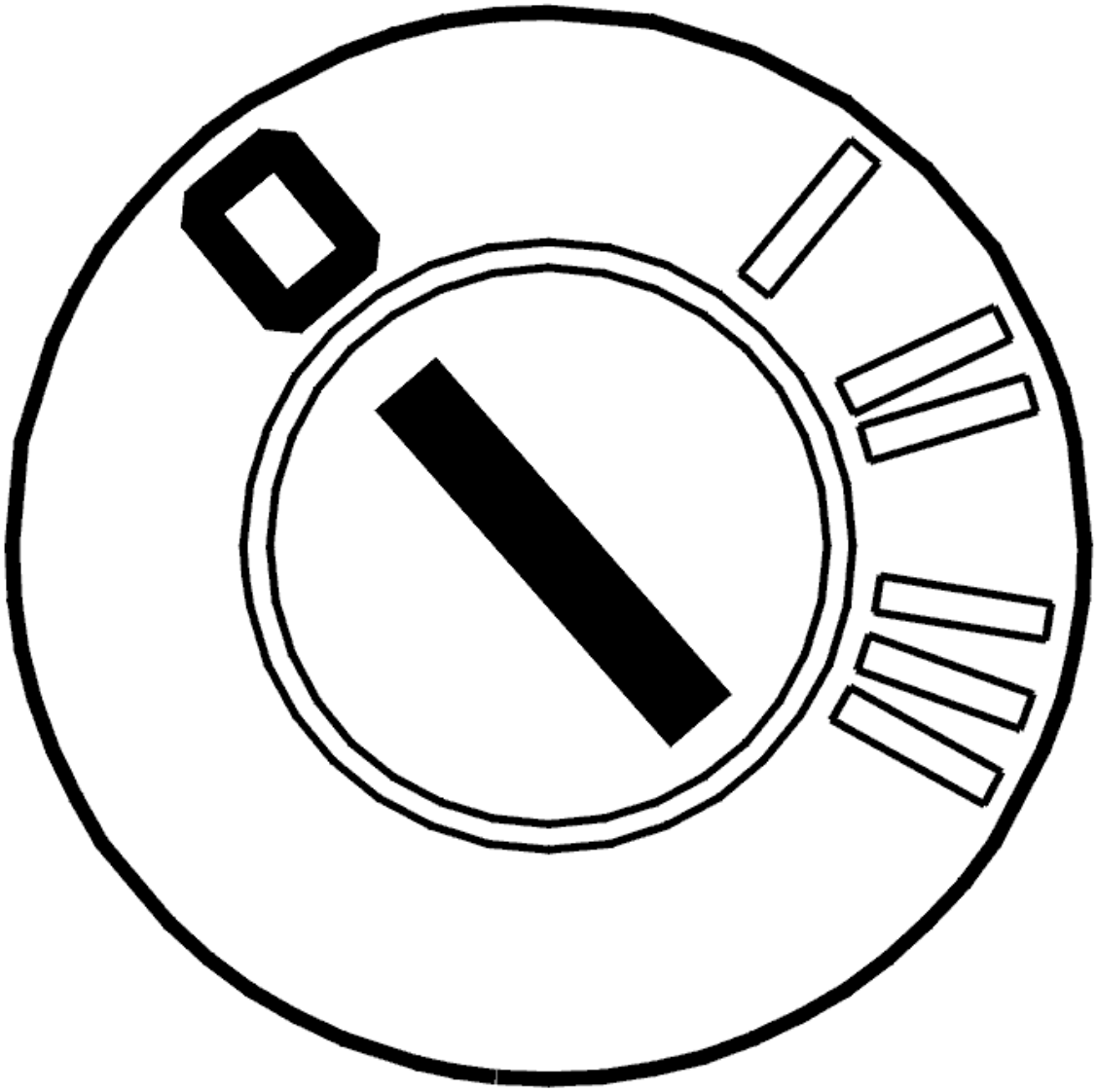

Fig. 324: Identifying Ignition OFF
Courtesy of VOLVO CARS CORPORATION

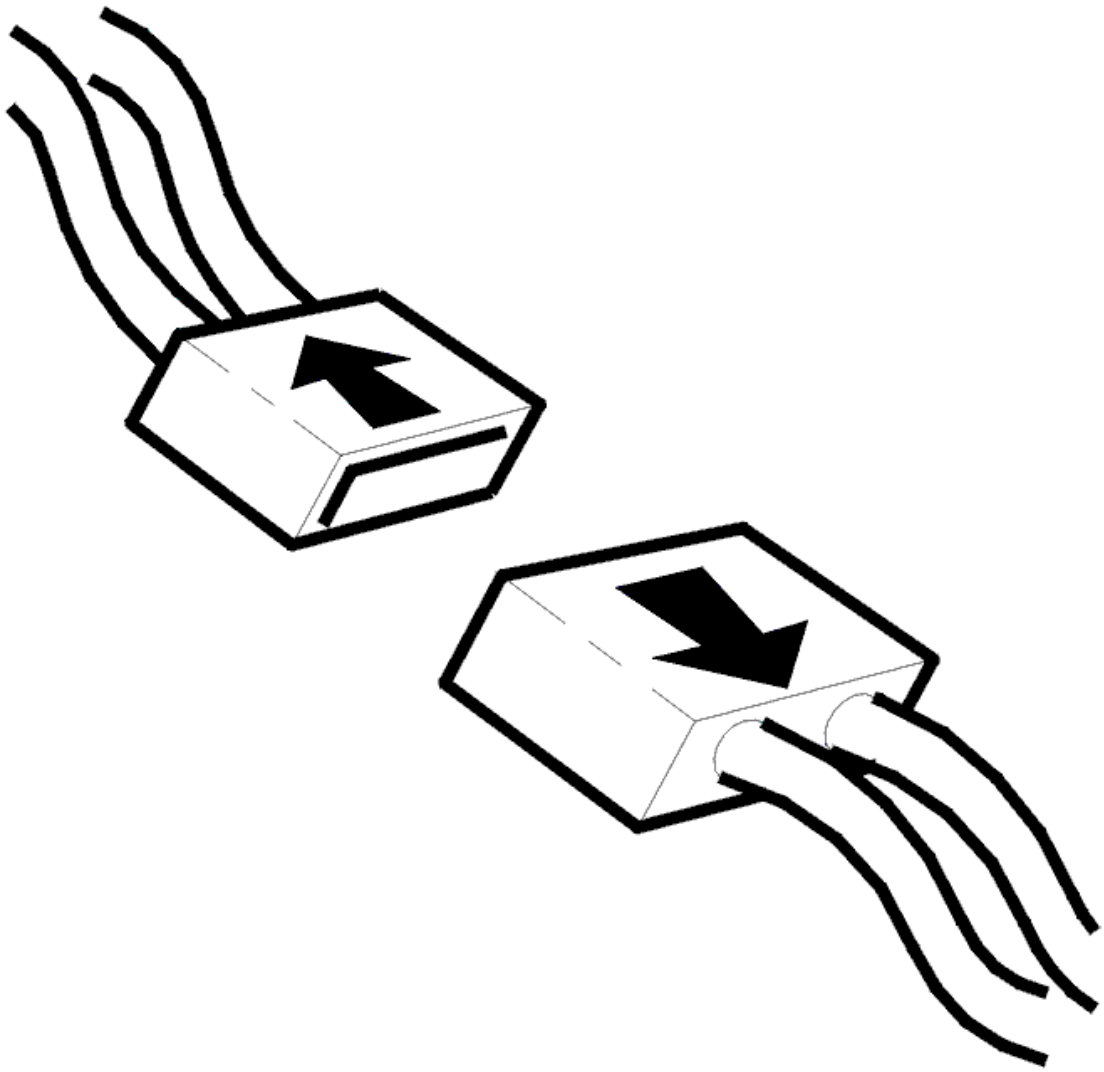

Fig. 325: Disconnecting Connector
Courtesy of VOLVO CARS CORPORATION

- Ignition off

  Unplug the LED connector and check that the LED is intact. Also check the connector for contact resistance and corrosion.

  Check the signal lead between the left camera module (LCM) and the #1 LED connector for shorting to ground.

  Remedy as necessary.

  Other information

  - -2004: **SIGNAL SPECIFICATION**

- 2005-: **SIGNAL SPECIFICATION**
- Change the light emitting diode, see: **REAR VIEW MIRROR, REPLACING**
- see **CHECKING WIRING AND TERMINALS**

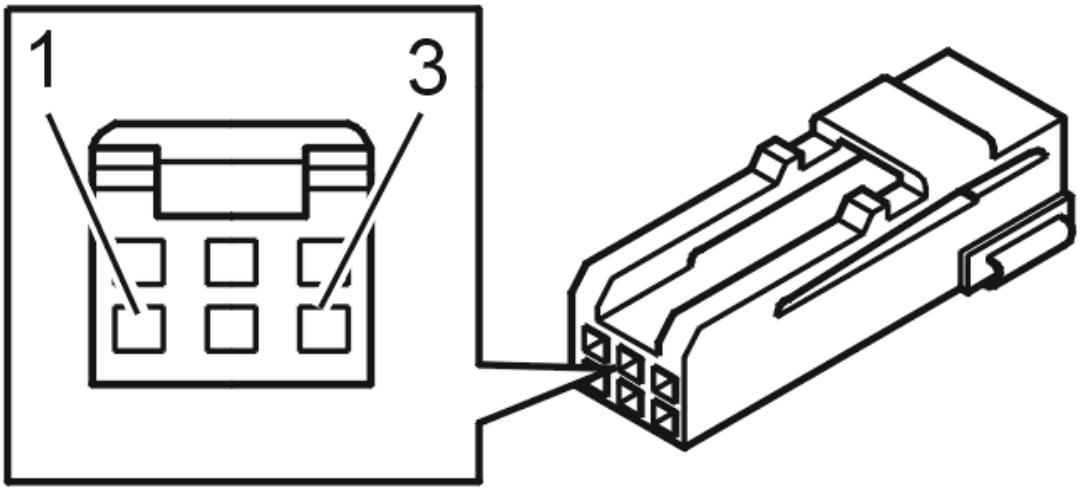

Fig. 326: Identifying Connector Terminals
Courtesy of VOLVO CARS CORPORATION

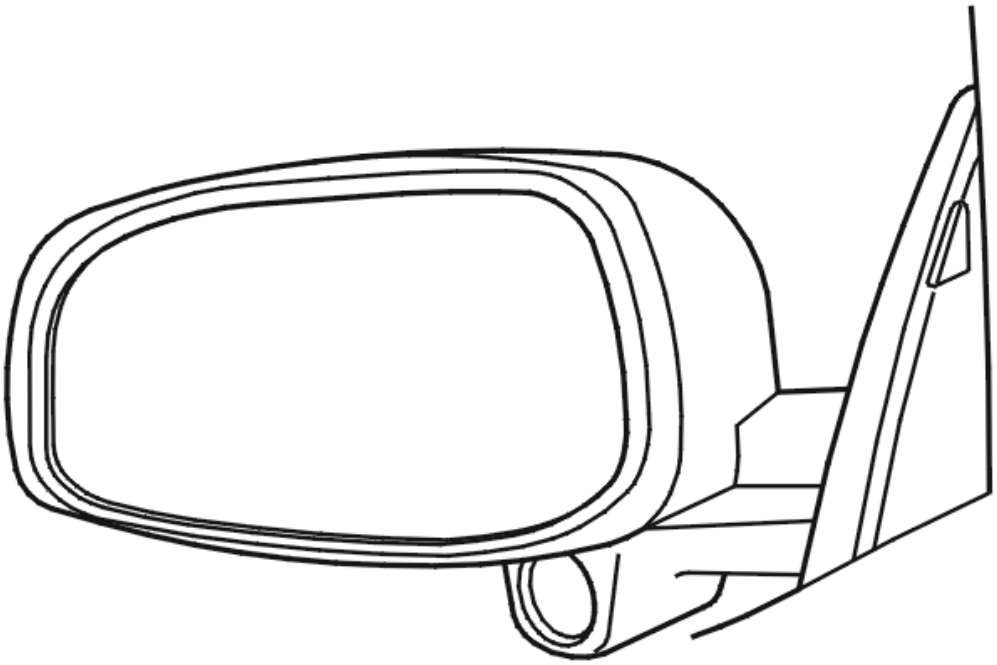

Fig. 327: Identifying Camera Module

Courtesy of VOLVO CARS CORPORATION

- **Continue**

  Refer to **VERIFICATION**

FAULT-TRACING INFORMATION

The left camera module (LCM) has previously registered a fault but the fault no longer exists. The diagnostic trouble code (DTC) was probably generated by an intermittent fault. If the fault persists, fault-tracing according to this diagnostic trouble code (DTC) should be carried out even though no fault symptom can be detected. The seriousness of the fault is determined from case to case.

You can choose between continuing fault-tracing or ending it.

Would you like to continue?

- **YES**

  Refer to **CHECKING THE WIRING**

- **NO**

  FAULT NOT FOUND: Troubleshooting has been completed.

VERIFICATION

VERIFICATION

HINT: After carrying out the repair, check that the fault has been remedied.

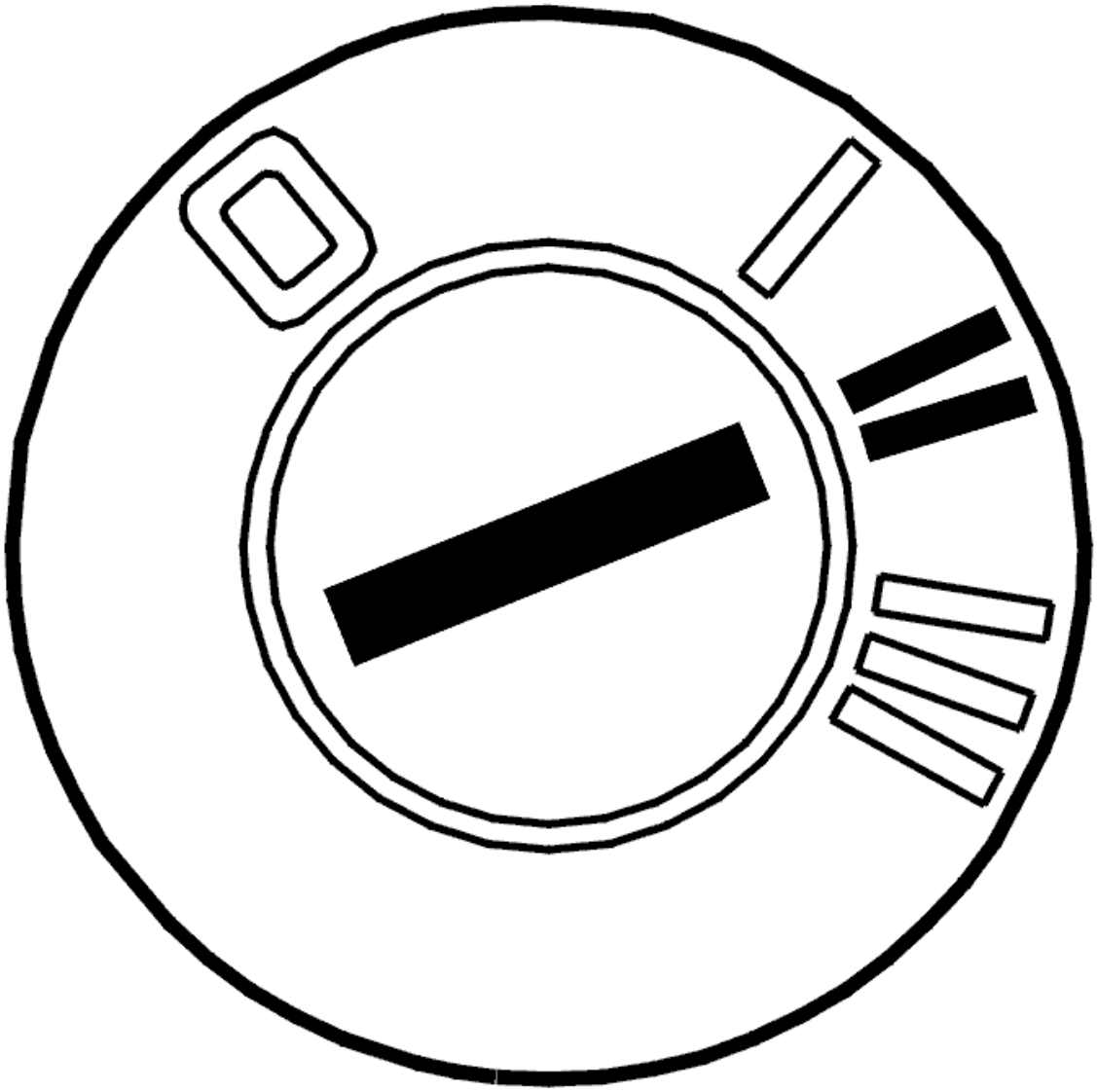

Fig. 328: Identifying Ignition ON
Courtesy of VOLVO CARS CORPORATION

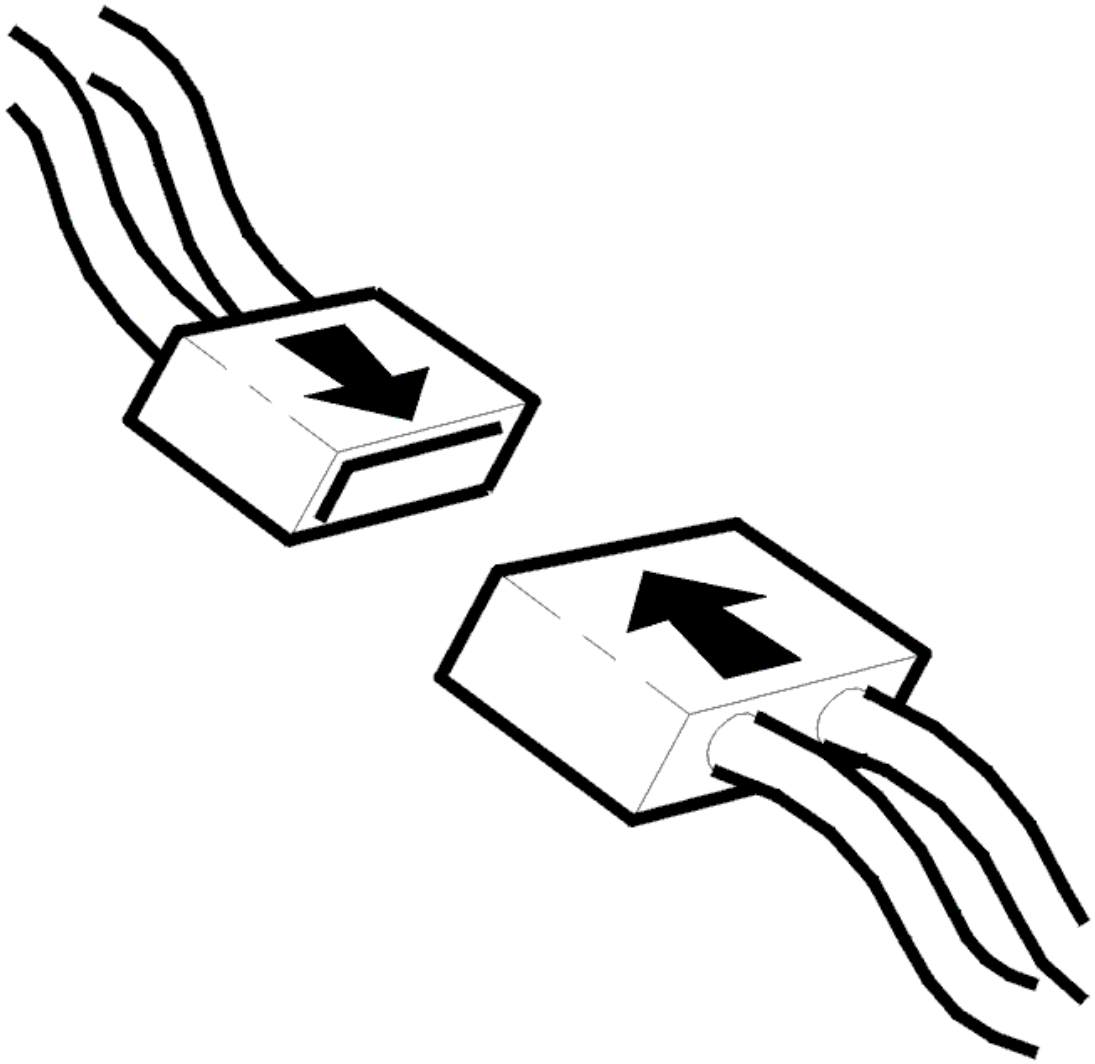

Fig. 329: Connecting Connector
Courtesy of VOLVO CARS CORPORATION

- Ignition off
- Reinstall the connectors, components etc.
- Ignition on

Did the left LED flash three times?

- **YES**

  VERIFIED: Troubleshooting has been completed.

- **NO**

Refer to **INFORMATION**

INFORMATION

FAULT-TRACING INFORMATION

The fault should have been detected and remedied. As this is not the case fault-tracing has failed.

Exit fault-tracing for this diagnostic trouble code (DTC) or make another attempt.

CEM-4F42: LIGHT EMITTING DIODE, RIGHT CAMERA MODULE. SIGNAL TOO LOW (2005-2012)

DIAGNOSTIC TROUBLE CODE (DTC) INFORMATION CEM-4F42

Condition

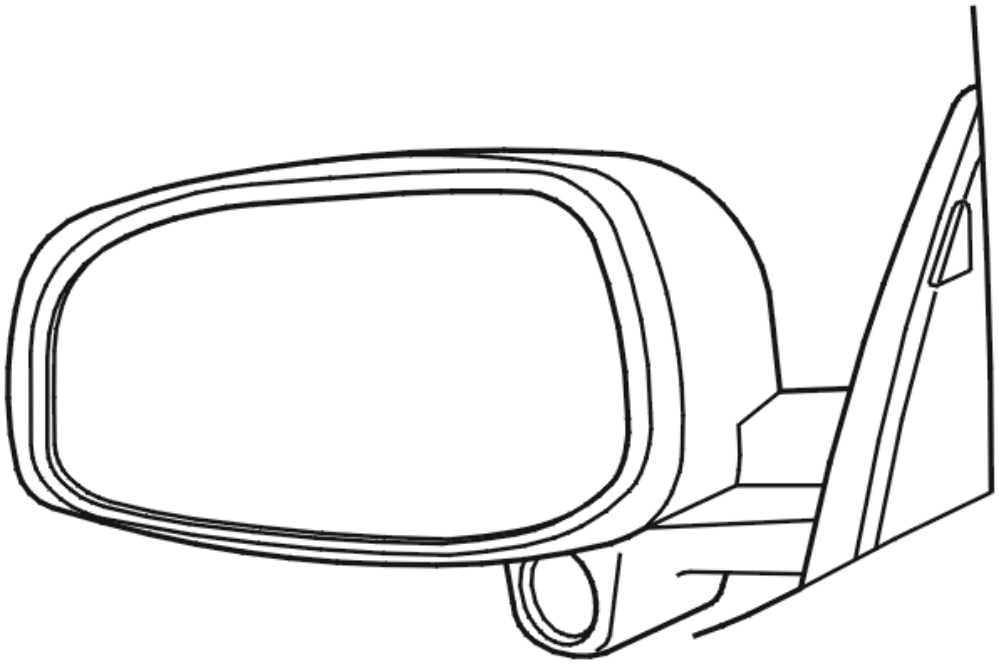

Fig. 330: Identifying Camera Module
Courtesy of VOLVO CARS CORPORATION

The central electronic module (CEM) monitors communication between the blind spot indication system (BLIS) LEDs and camera modules.

If the central electronic module (CEM) detects that the signal from the right LED to the right camera module (RCM) is too low, a diagnostic trouble code is generated.

The diagnostic trouble code can be diagnosed when the ignition is on.

Substitute Value

- Nothing.

Possible Source

- The signal lead to the right LED is shorted to ground.

Fault symptom[s]

- The LED does not come on.

SIGNAL TOO LOW

CHECKING THE FUNCTION

The LEDs should flash three times whenever the Blind Spot Indication System (BLIS) is activated.

Switch on the ignition to check the functionality of the right LED.

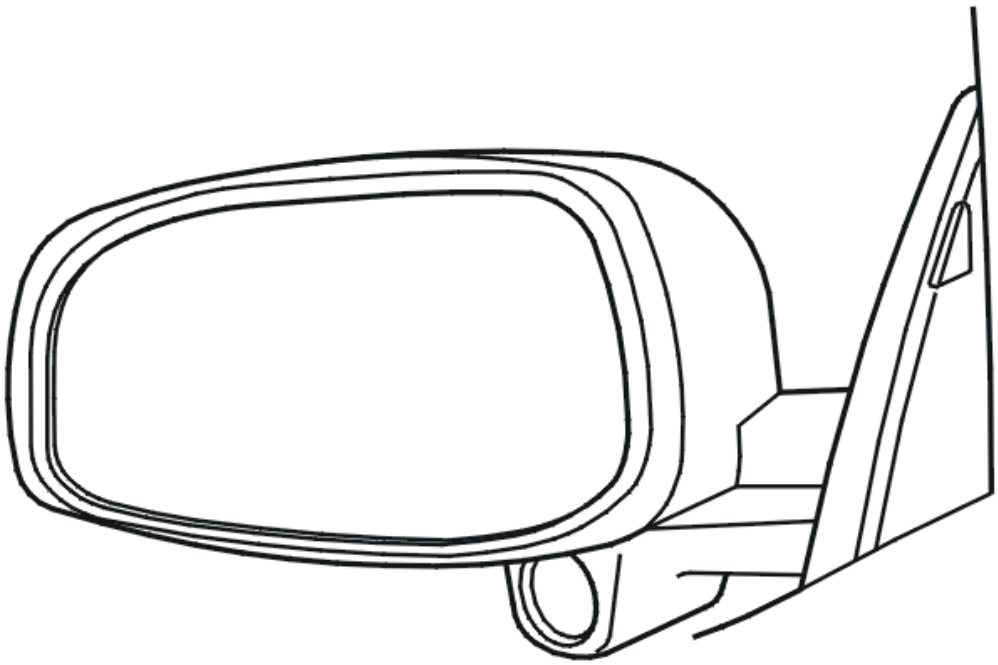

Fig. 331: Identifying Camera Module
Courtesy of VOLVO CARS CORPORATION

Did the LED flash three times?

- **YES**

  Refer to **FAULT-TRACING INFORMATION**

- **NO**

  Refer to **CHECKING THE WIRING**

CHECKING THE WIRING

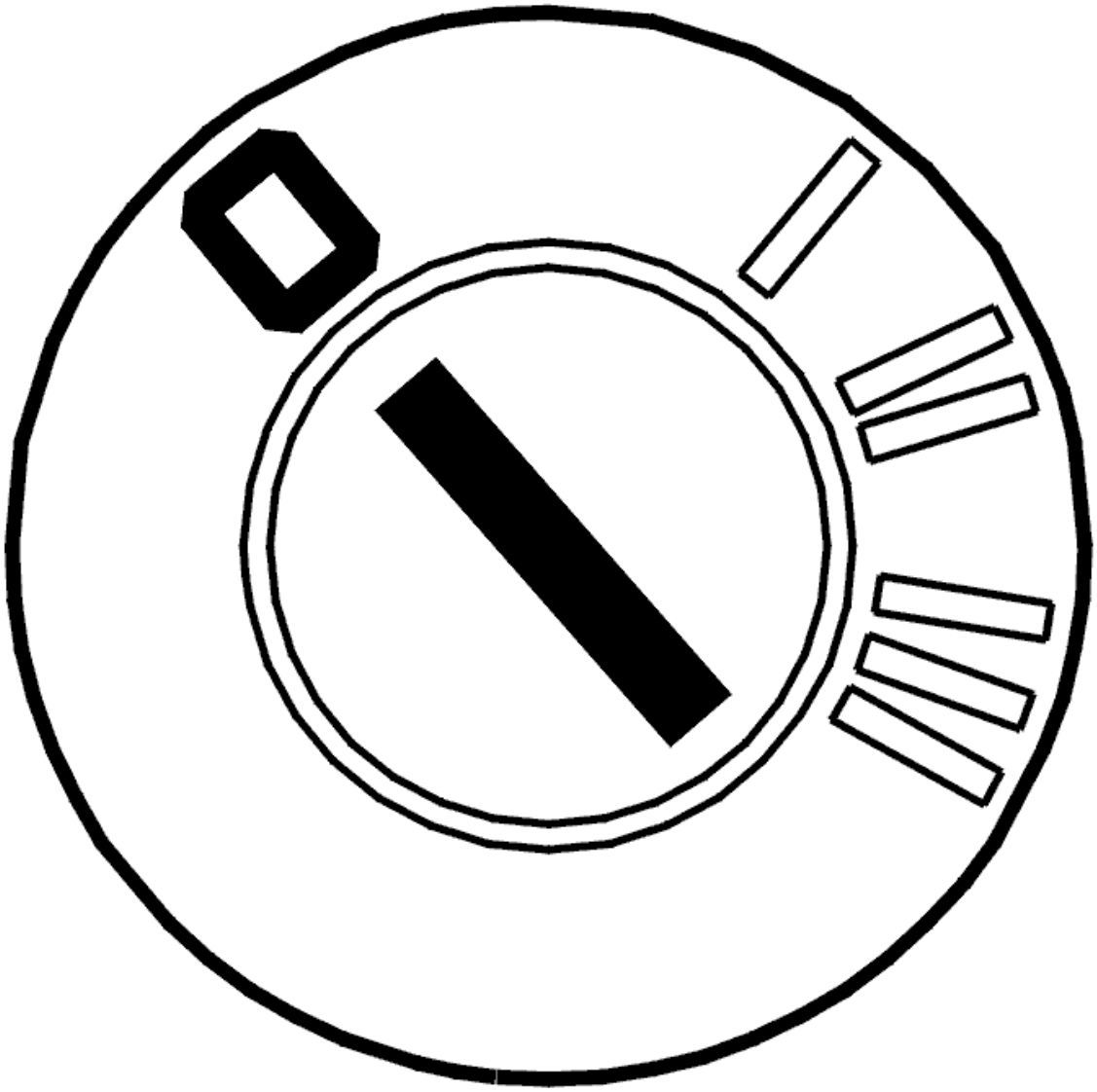

Fig. 332: Identifying Ignition OFF
Courtesy of VOLVO CARS CORPORATION

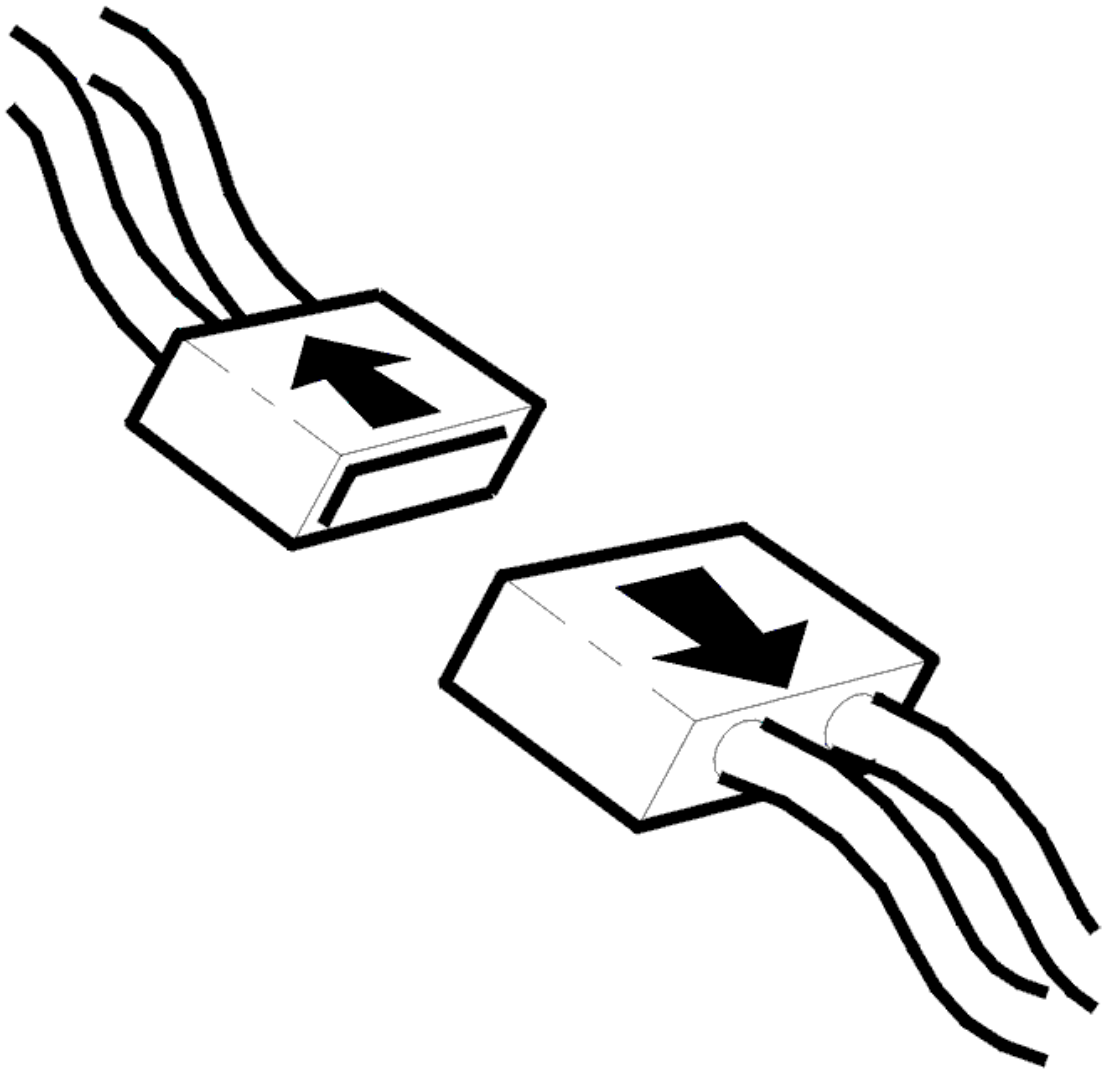

Fig. 333: Disconnecting Connector
Courtesy of VOLVO CARS CORPORATION

- Ignition off

  Unplug the LED connector and check that the LED is intact. Also check the connector for contact resistance and corrosion.

  Check the signal lead between the right camera module (RCM) and the #1 LED connector for shorting to ground.

  Remedy as necessary.

  Other information

  - -2004: **SIGNAL SPECIFICATION**

- 2005-: **SIGNAL SPECIFICATION**
- Change the light emitting diode, see: **REAR VIEW MIRROR, REPLACING**
- see **CHECKING WIRING AND TERMINALS**

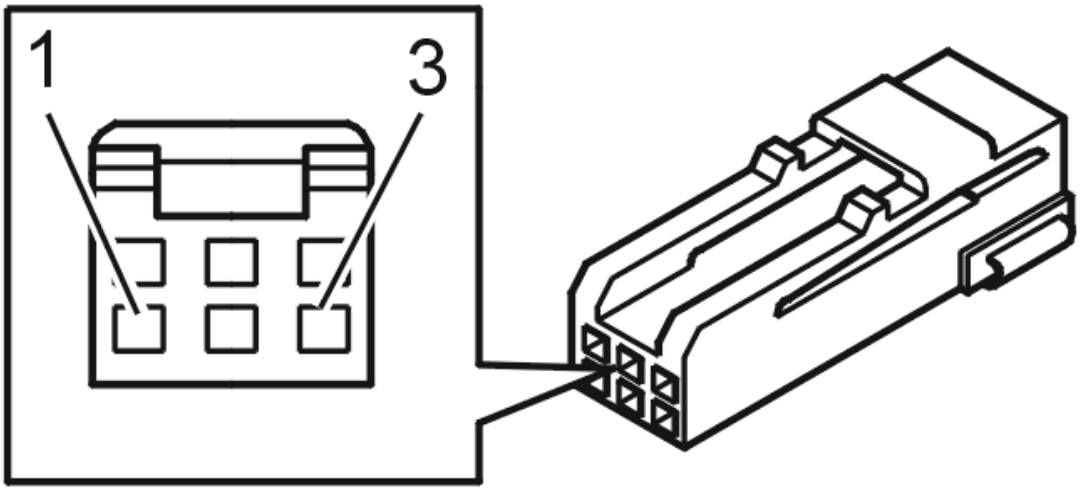

Fig. 334: Identifying Connector Terminals
Courtesy of VOLVO CARS CORPORATION

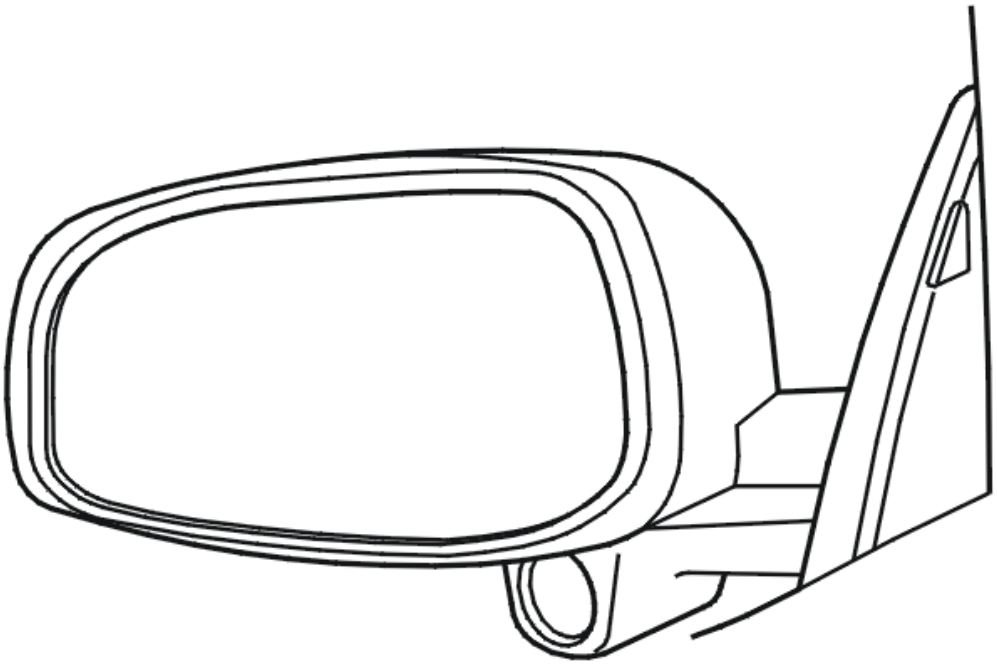

Fig. 335: Identifying Camera Module

Courtesy of VOLVO CARS CORPORATION

- **Continue**

  Refer to **VERIFICATION**

FAULT-TRACING INFORMATION

The right camera module (RCM) has previously registered a fault but the fault no longer exists. The diagnostic trouble code (DTC) was probably generated by an intermittent fault. If the fault persists, fault-tracing according to this diagnostic trouble code (DTC) should be carried out even though no fault symptom can be detected. The seriousness of the fault is determined from case to case.

You can choose between continuing fault-tracing or ending it.

Would you like to continue?

- **YES**

  Refer to **CHECKING THE WIRING**

- **NO**

  FAULT NOT FOUND: Troubleshooting has been completed.

VERIFICATION

VERIFICATION

HINT: After carrying out the repair, check that the fault has been remedied.

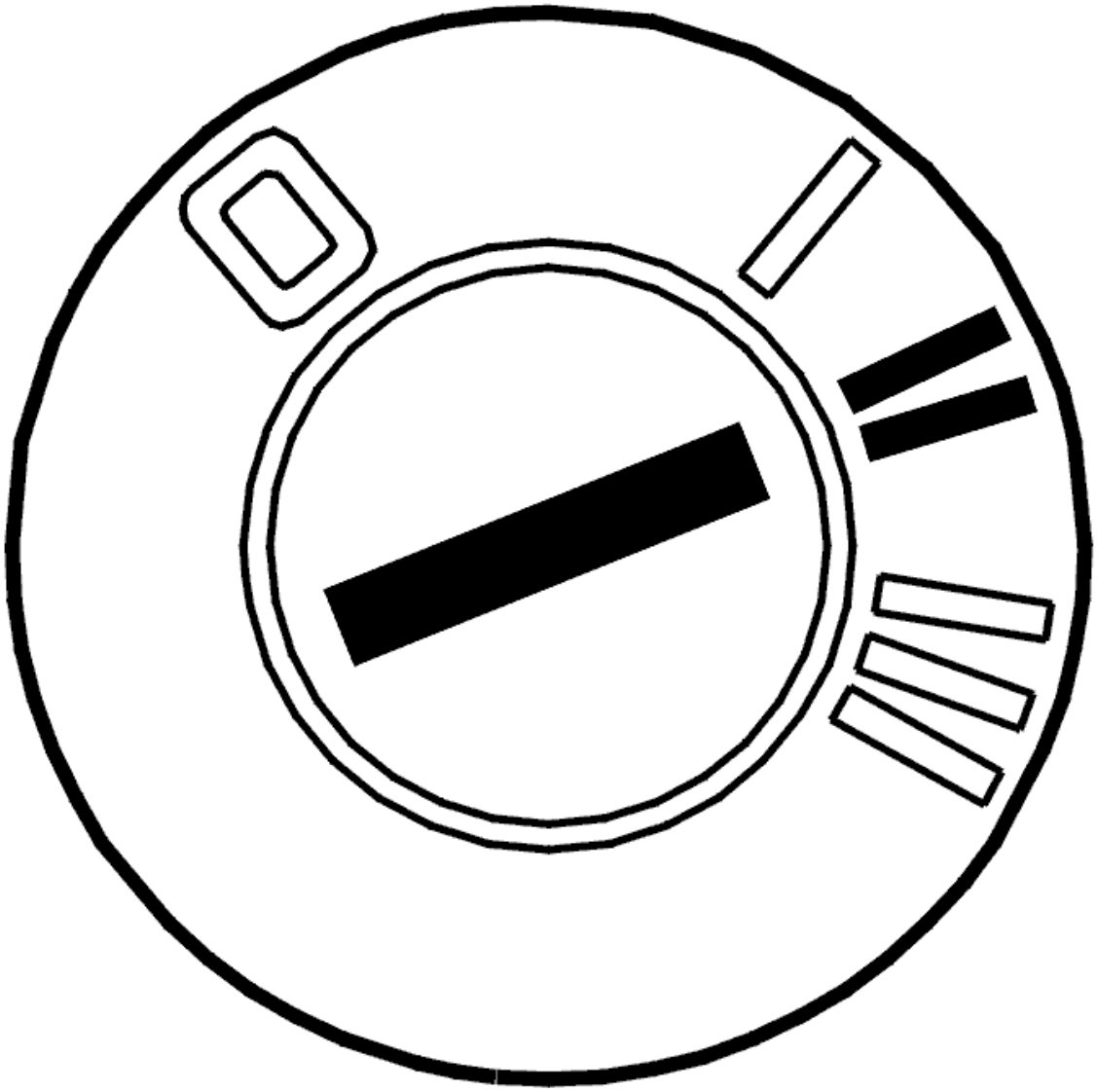

Fig. 336: Identifying Ignition ON
Courtesy of VOLVO CARS CORPORATION

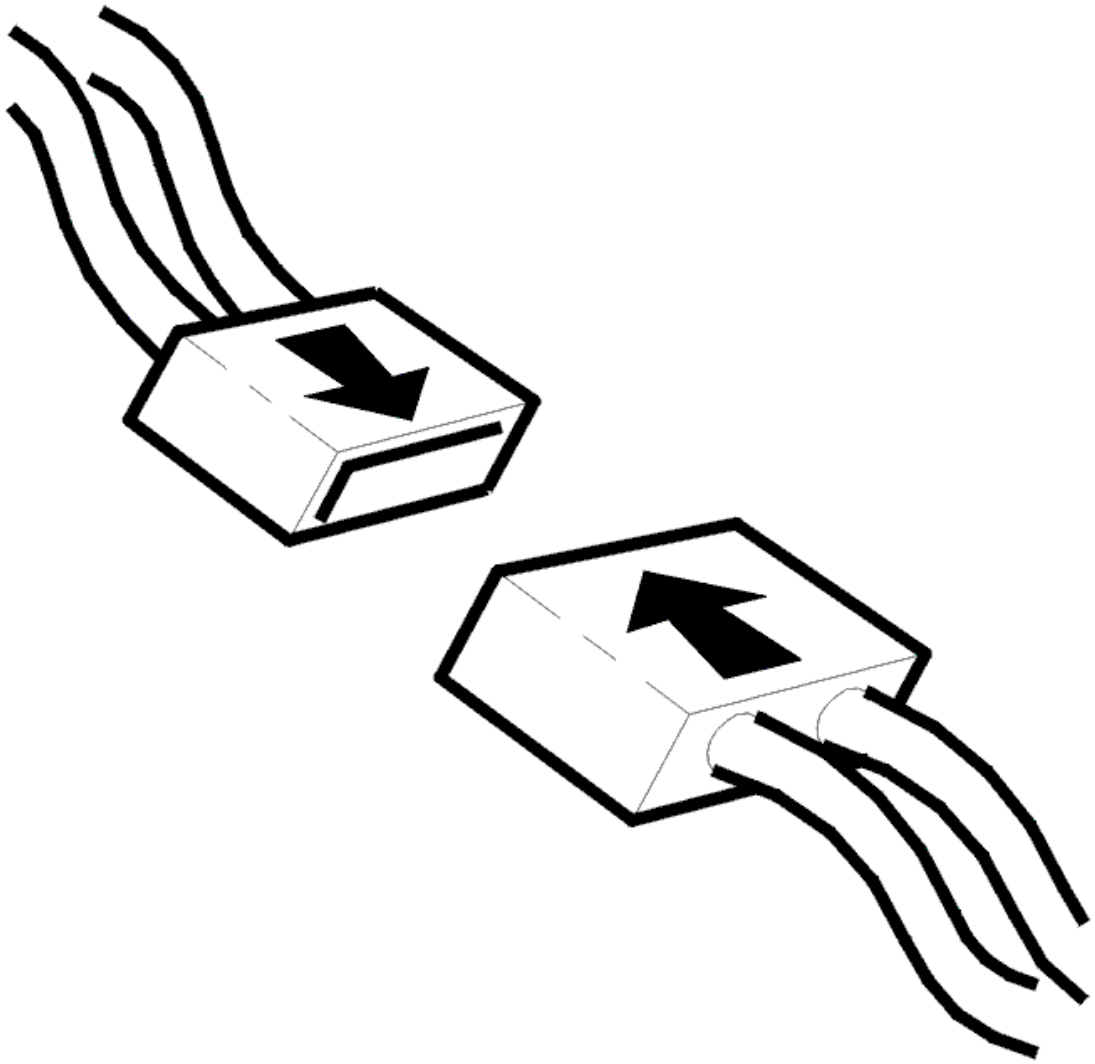

Fig. 337: Connecting Connector
Courtesy of VOLVO CARS CORPORATION

- Ignition off
- Reinstall the connectors, components etc.
- Ignition on

Did the right LED flash three times?

- **YES**

  VERIFIED: Troubleshooting has been completed.

- **NO**

Refer to **INFORMATION**

INFORMATION

FAULT-TRACING INFORMATION

The fault should have been detected and remedied. As this is not the case fault-tracing has failed.

Exit fault-tracing for this diagnostic trouble code (DTC) or make another attempt.

CEM-4F43: LIGHT EMITTING DIODE, LEFT CAMERA MODULE. SIGNAL TOO HIGH (2005-2012)

DIAGNOSTIC TROUBLE CODE (DTC) INFORMATION CEM-4F43

Condition

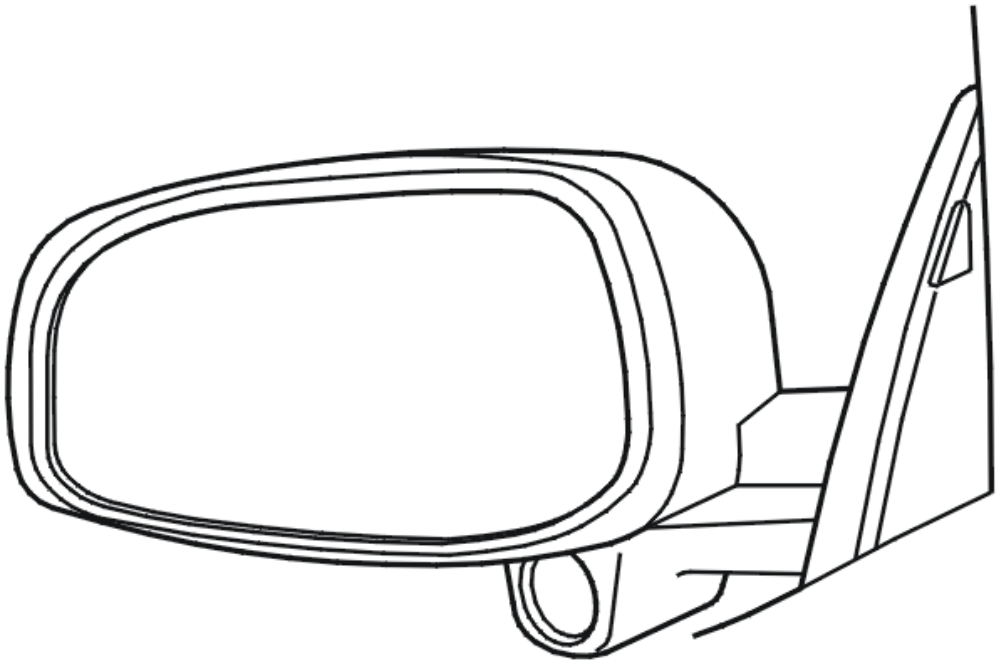

Fig. 338: Identifying Camera Module
Courtesy of VOLVO CARS CORPORATION

The central electronic module (CEM) monitors communication between the blind spot indication system (BLIS) LEDs and camera modules.

If the central electronic module (CEM) detects that the signal from the left LED to the left camera module (LCM) is too high, a diagnostic trouble code is generated.

The diagnostic trouble code can be diagnosed when the ignition is on.

Substitute Value

- Nothing.

Possible Source

- The signal lead to the left LED is shorted to supply voltage.

Fault symptom[s]

- The LED does not come on.
- Light emitting diode always on.

SIGNAL TOO HIGH

CHECKING THE FUNCTION

The LEDs should flash three times whenever the Blind Spot Indication System (BLIS) is activated.

Switch on the ignition to check the functionality of the left LED.

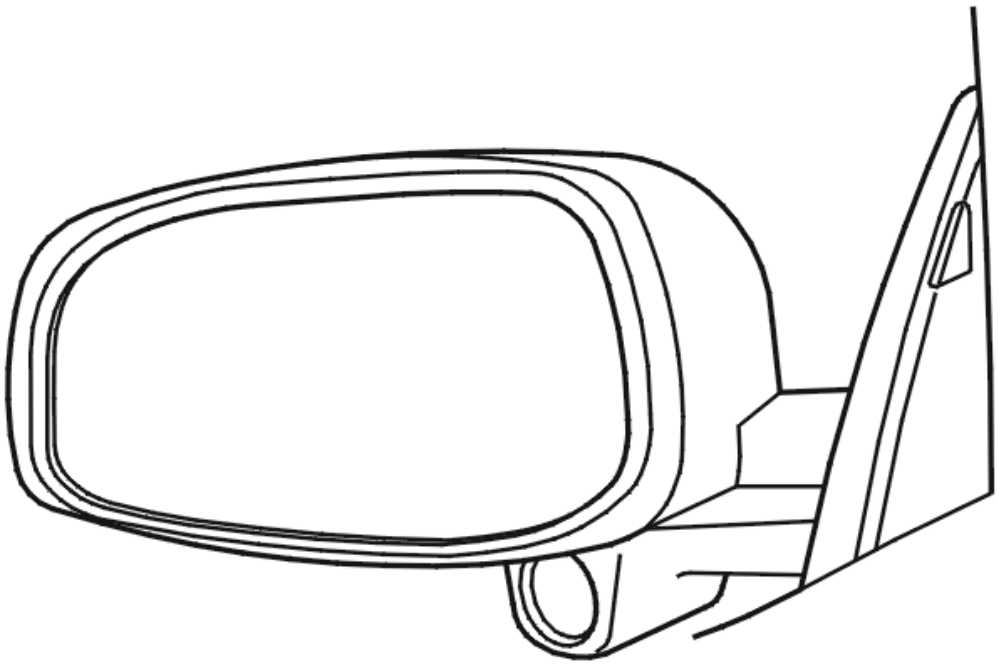

Fig. 339: Identifying Camera Module
Courtesy of VOLVO CARS CORPORATION

Did the LED flash three times?

- **YES**

  Refer to **FAULT-TRACING INFORMATION**

- **NO**

  Refer to **CHECKING THE WIRING**

CHECKING THE WIRING

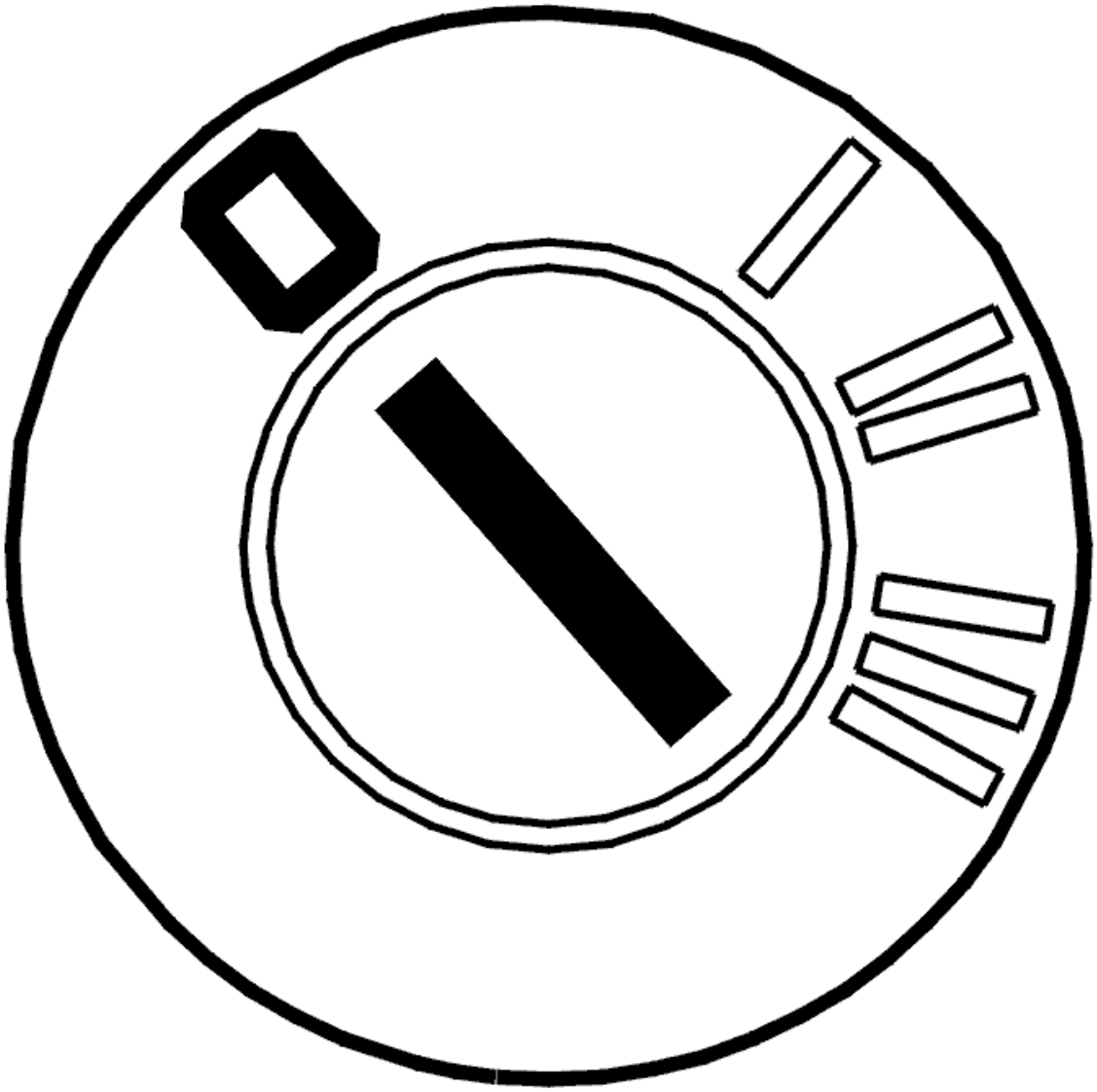

Fig. 340: Identifying Ignition OFF
Courtesy of VOLVO CARS CORPORATION

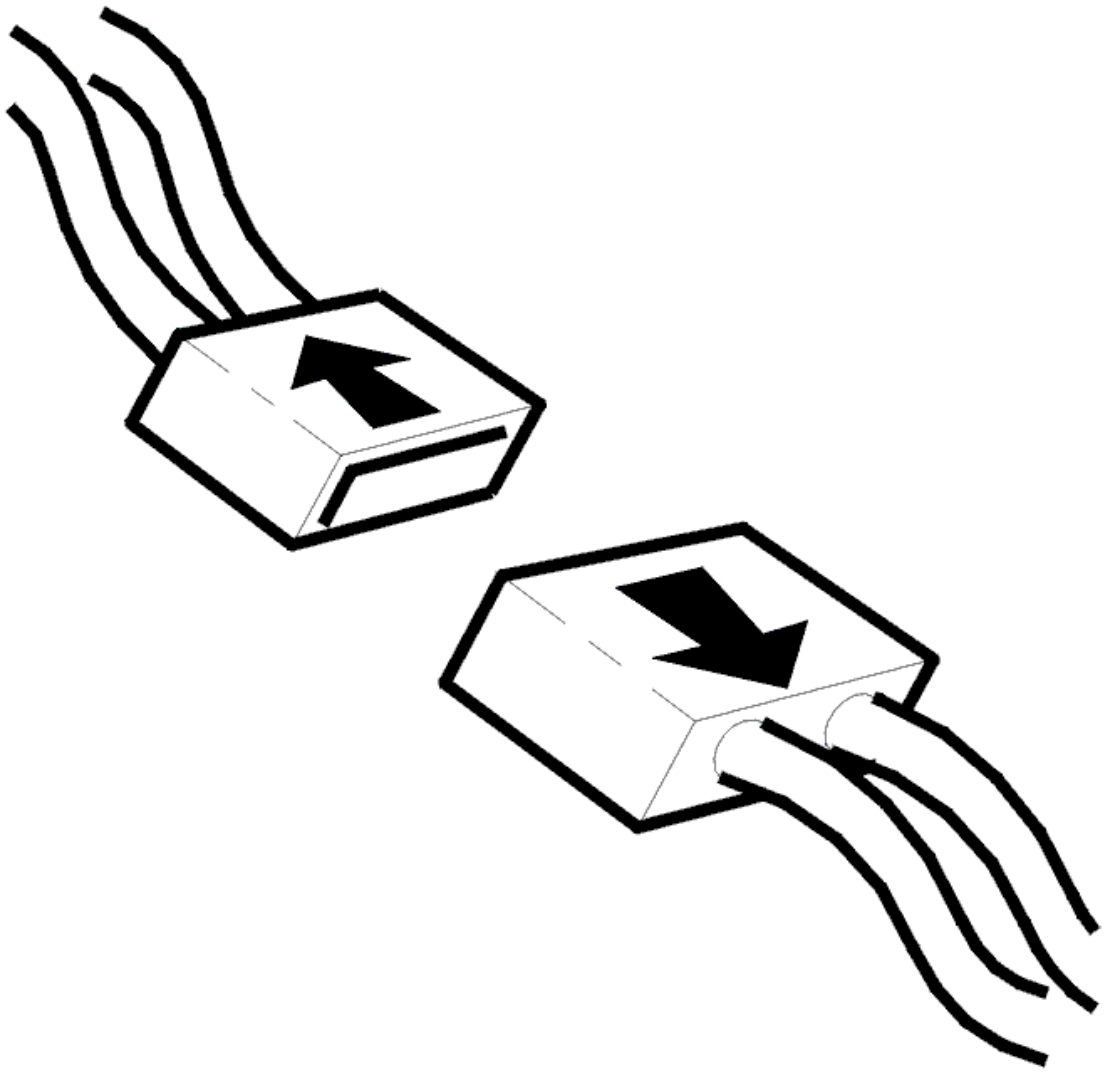

Fig. 341: Disconnecting Connector
Courtesy of VOLVO CARS CORPORATION

- Ignition off

  Unplug the LED connector and check that the LED is intact.

  Check the signal lead between the left camera module (LCM) and the #1 LED connector for shorting to a power supply.

  Check the ground cable between the left camera module (LCM) and the #3 LED connector for shorting to a power supply.

  Remedy as necessary.

  Other information

- -2004: **SIGNAL SPECIFICATION**
- 2005-: **SIGNAL SPECIFICATION**
- Change the light emitting diode, see: **REAR VIEW MIRROR, REPLACING**
- see **CHECKING WIRING AND TERMINALS**

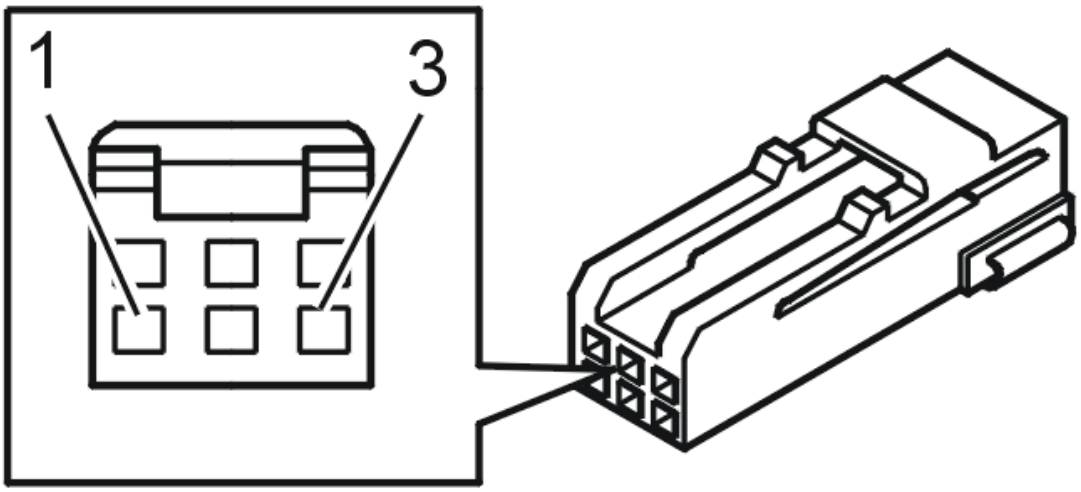

Fig. 342: Identifying Connector Terminals
Courtesy of VOLVO CARS CORPORATION

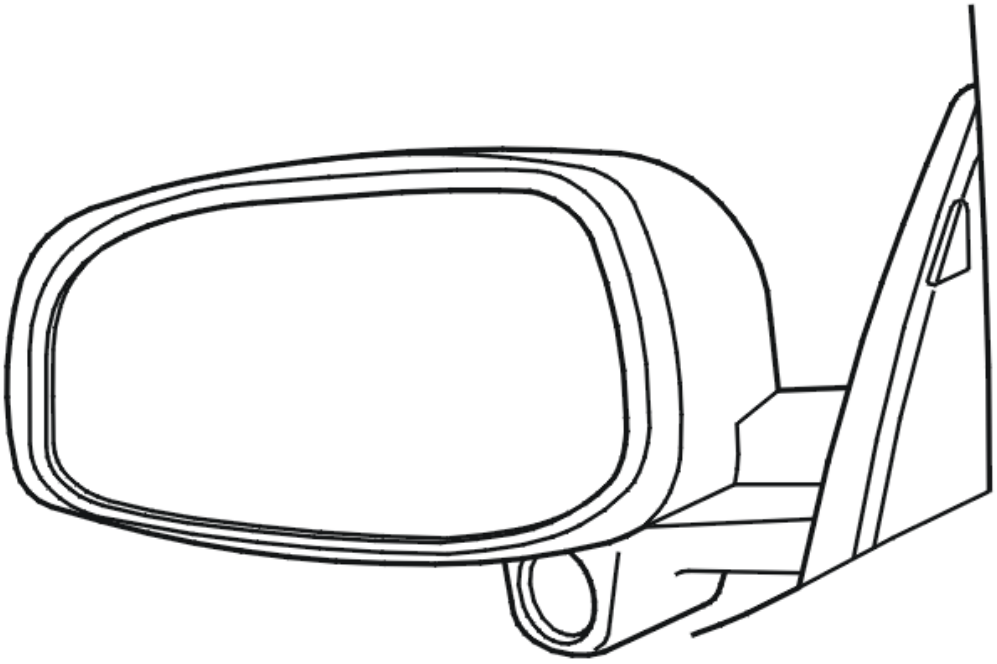

Fig. 343: Identifying Camera Module
Courtesy of VOLVO CARS CORPORATION

- **Continue**

  Refer to **VERIFICATION**

FAULT-TRACING INFORMATION

The left camera module (LCM) has previously registered a fault but the fault no longer exists. The diagnostic trouble code (DTC) was probably generated by an intermittent fault. If the fault persists, fault-tracing according to this diagnostic trouble code (DTC) should be carried out even though no fault symptom can be detected. The seriousness of the fault is determined from case to case.

You can choose between continuing fault-tracing or ending it.

Would you like to continue?

- **YES**

  Refer to **CHECKING THE WIRING**

- **NO**

  FAULT NOT FOUND: Troubleshooting has been completed.

VERIFICATION

VERIFICATION

HINT: After carrying out the repair, check that the fault has been remedied.

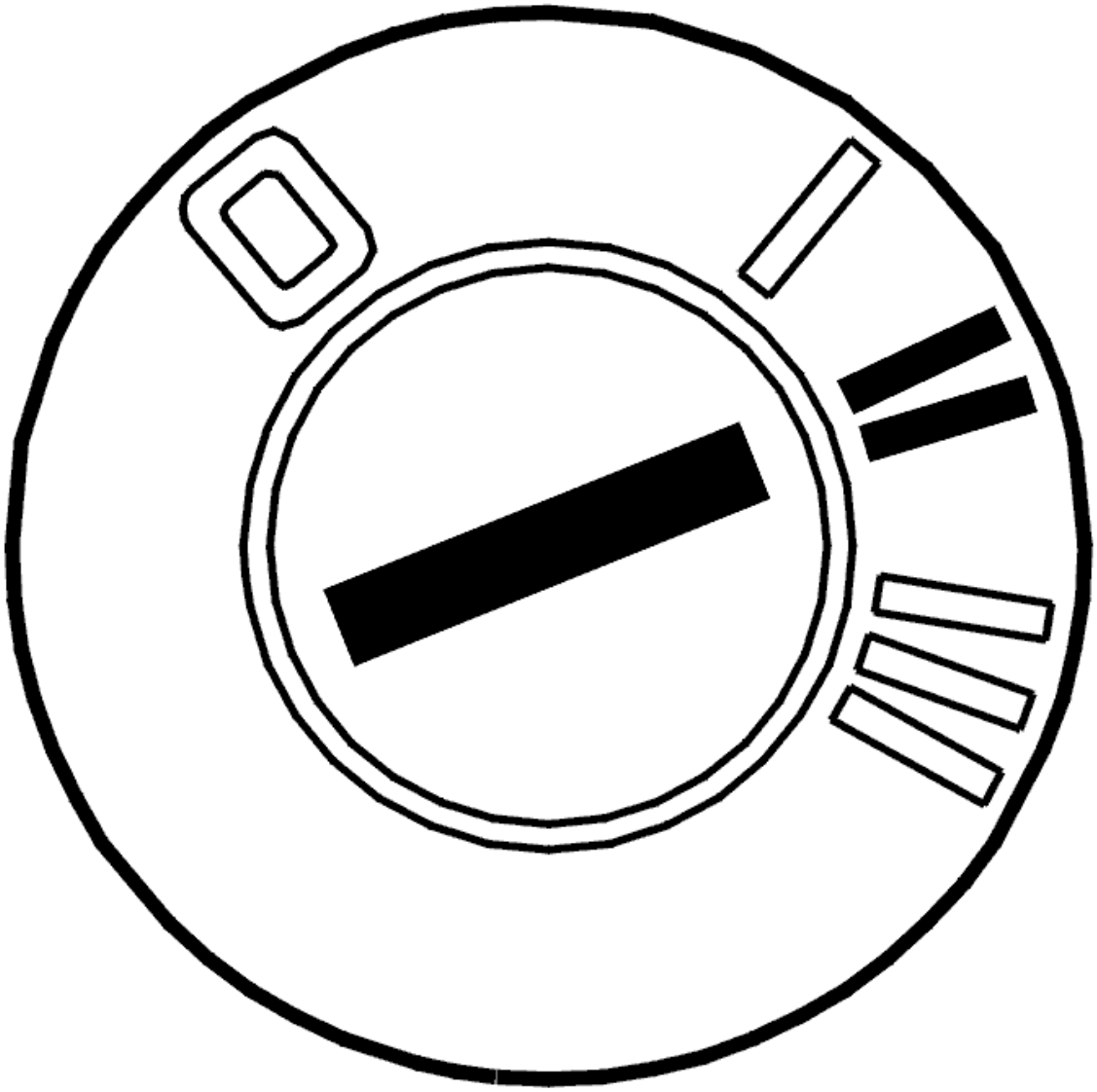

Fig. 344: Identifying Ignition ON
Courtesy of VOLVO CARS CORPORATION

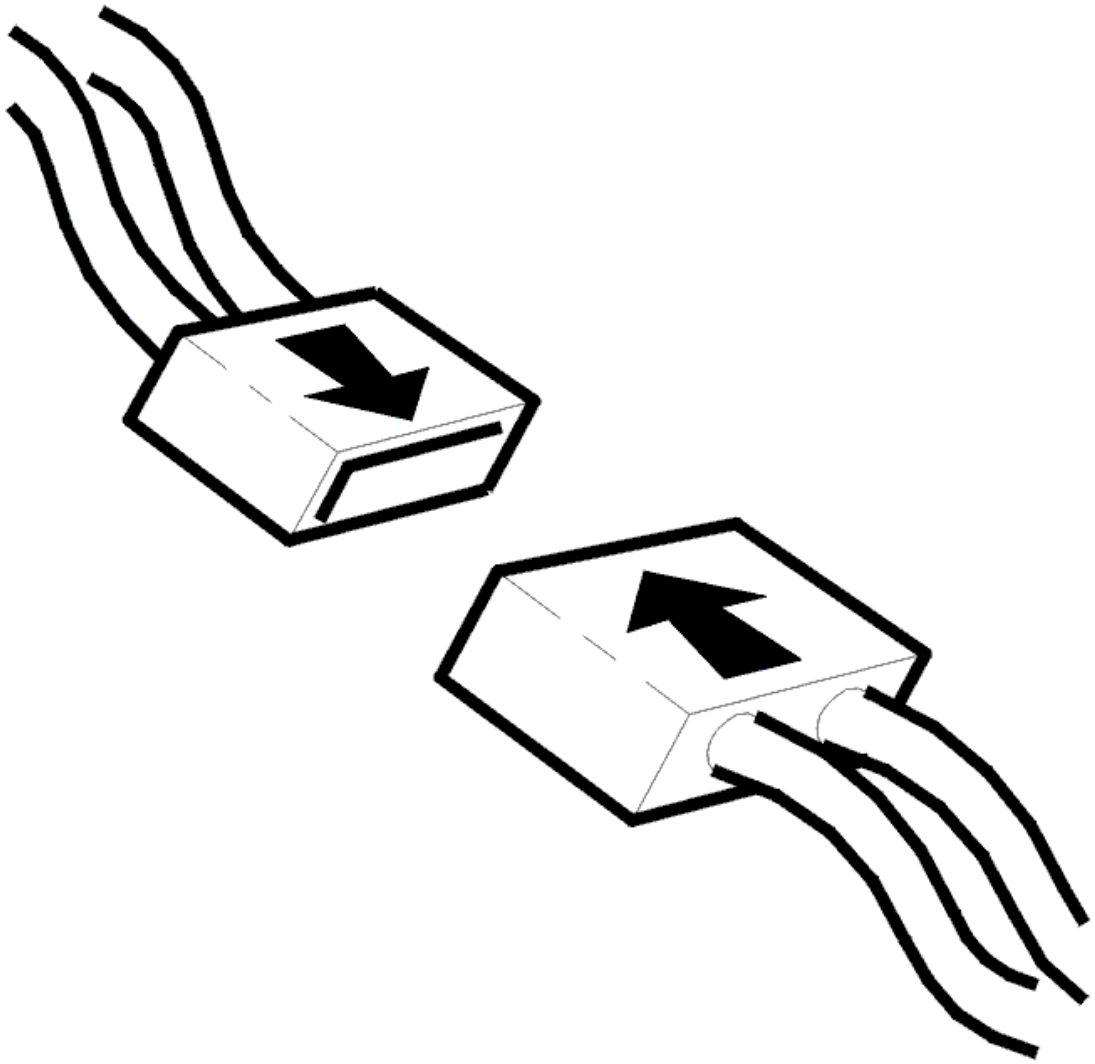

Fig. 345: Connecting Connector
Courtesy of VOLVO CARS CORPORATION

- Ignition off
- Reinstall the connectors, components etc.
- Ignition on

Did the left LED flash three times?

- **YES**

  VERIFIED: Troubleshooting has been completed.

- **NO**

Refer to **INFORMATION**

INFORMATION

FAULT-TRACING INFORMATION

The fault should have been detected and remedied. As this is not the case fault-tracing has failed.

Exit fault-tracing for this diagnostic trouble code (DTC) or make another attempt.

CEM-4F44: LIGHT EMITTING DIODE, RIGHT CAMERA MODULE. SIGNAL TOO HIGH (2005-2012)

DIAGNOSTIC TROUBLE CODE (DTC) INFORMATION CEM-4F44

Condition

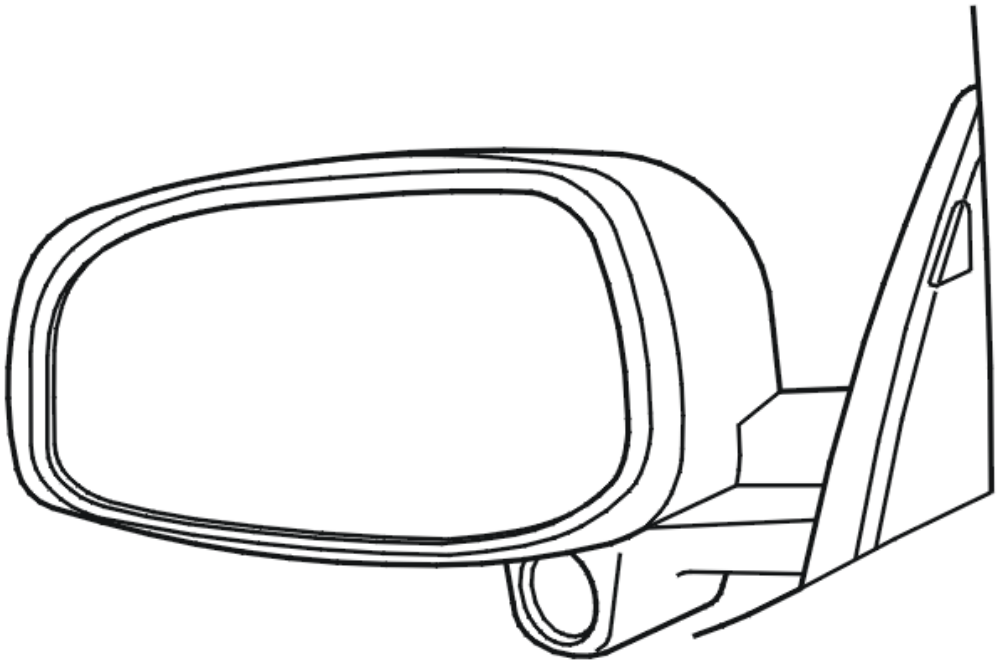

Fig. 346: Identifying Camera Module
Courtesy of VOLVO CARS CORPORATION

The central electronic module (CEM) monitors communication between the blind spot indication system (BLIS) LEDs and camera modules.

If the central electronic module (CEM) detects that the signal from the right LED to the right camera module (RCM) is too high, a diagnostic trouble code is generated.

The diagnostic trouble code can be diagnosed when the ignition is on.

Substitute Value

- Nothing.

Possible Source

- The signal lead to the right LED is shorted to supply voltage.

Fault symptom[s]

- The LED does not come on.
- Light emitting diode always on.

SIGNAL TOO HIGH

CHECKING THE FUNCTION

The LEDs should flash three times whenever the Blind Spot Indication System (BLIS) is activated.

Switch on the ignition to check the functionality of the right LED.

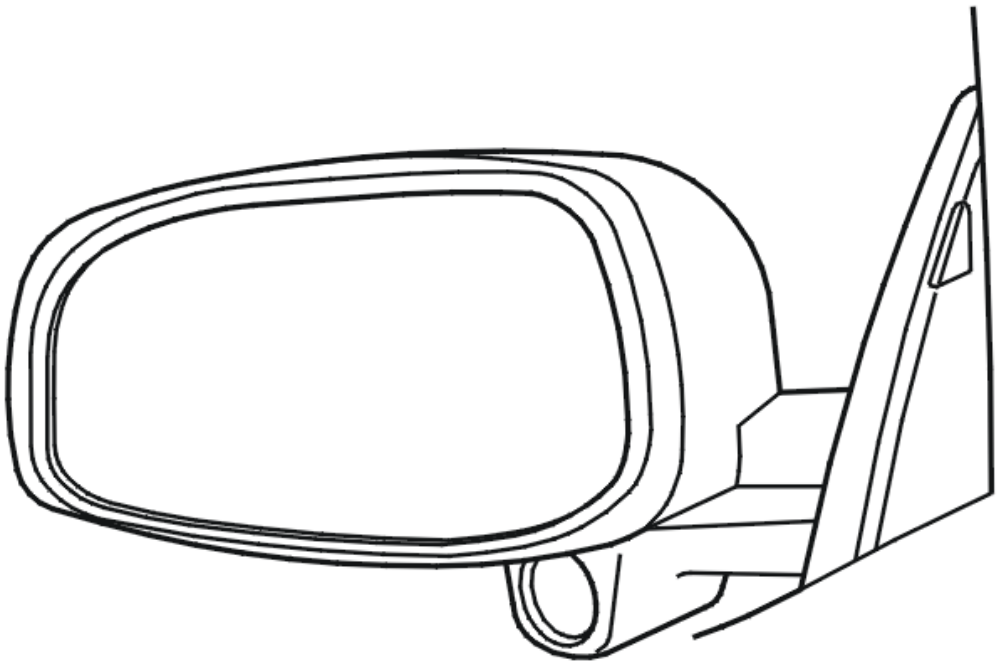

Fig. 347: Identifying Camera Module
Courtesy of VOLVO CARS CORPORATION

Did the LED flash three times?

- **YES**

  Refer to **FAULT-TRACING INFORMATION**

- **NO**

  Refer to **CHECKING THE WIRING**

CHECKING THE WIRING

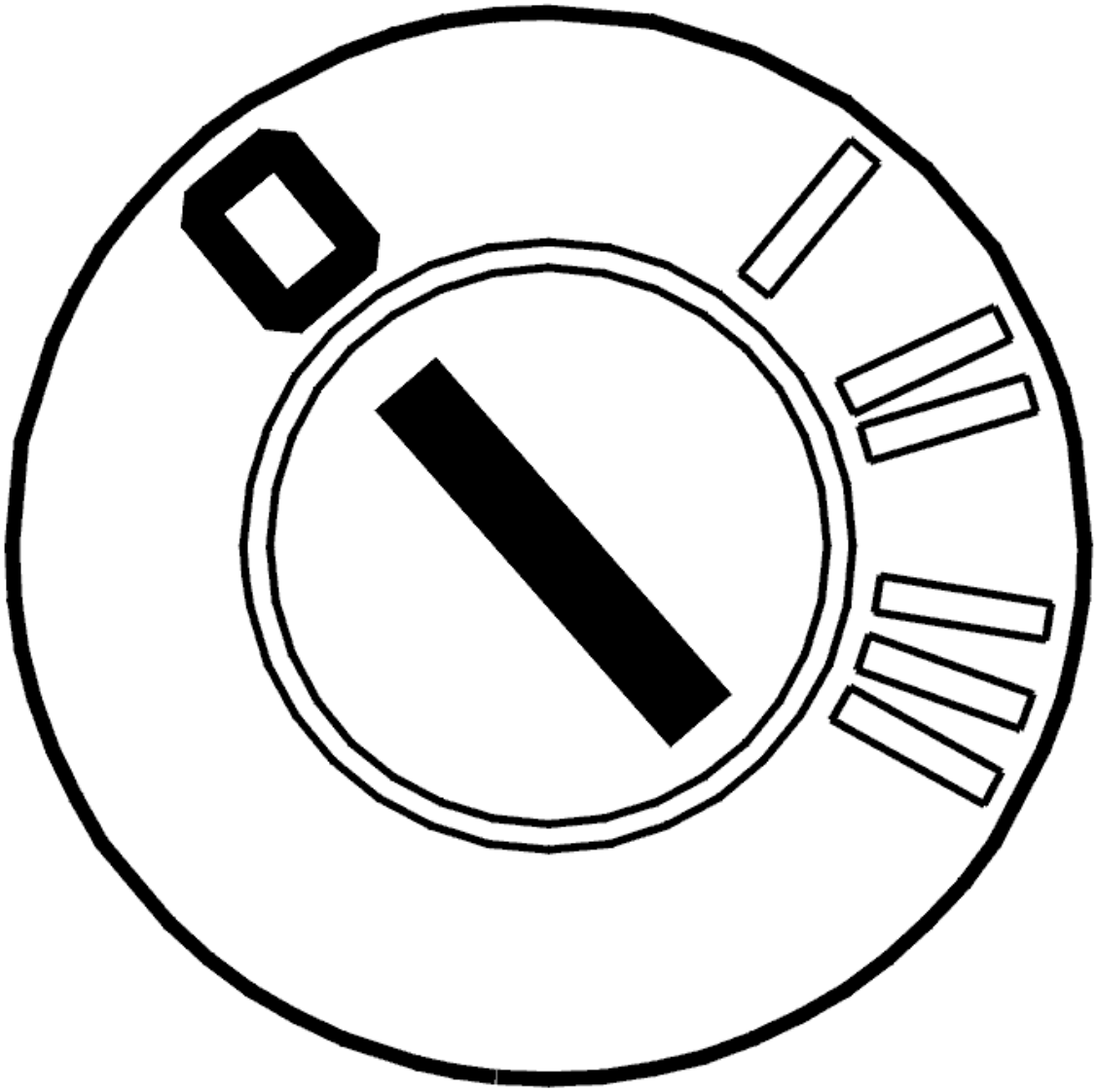

Fig. 348: Identifying Ignition OFF
Courtesy of VOLVO CARS CORPORATION

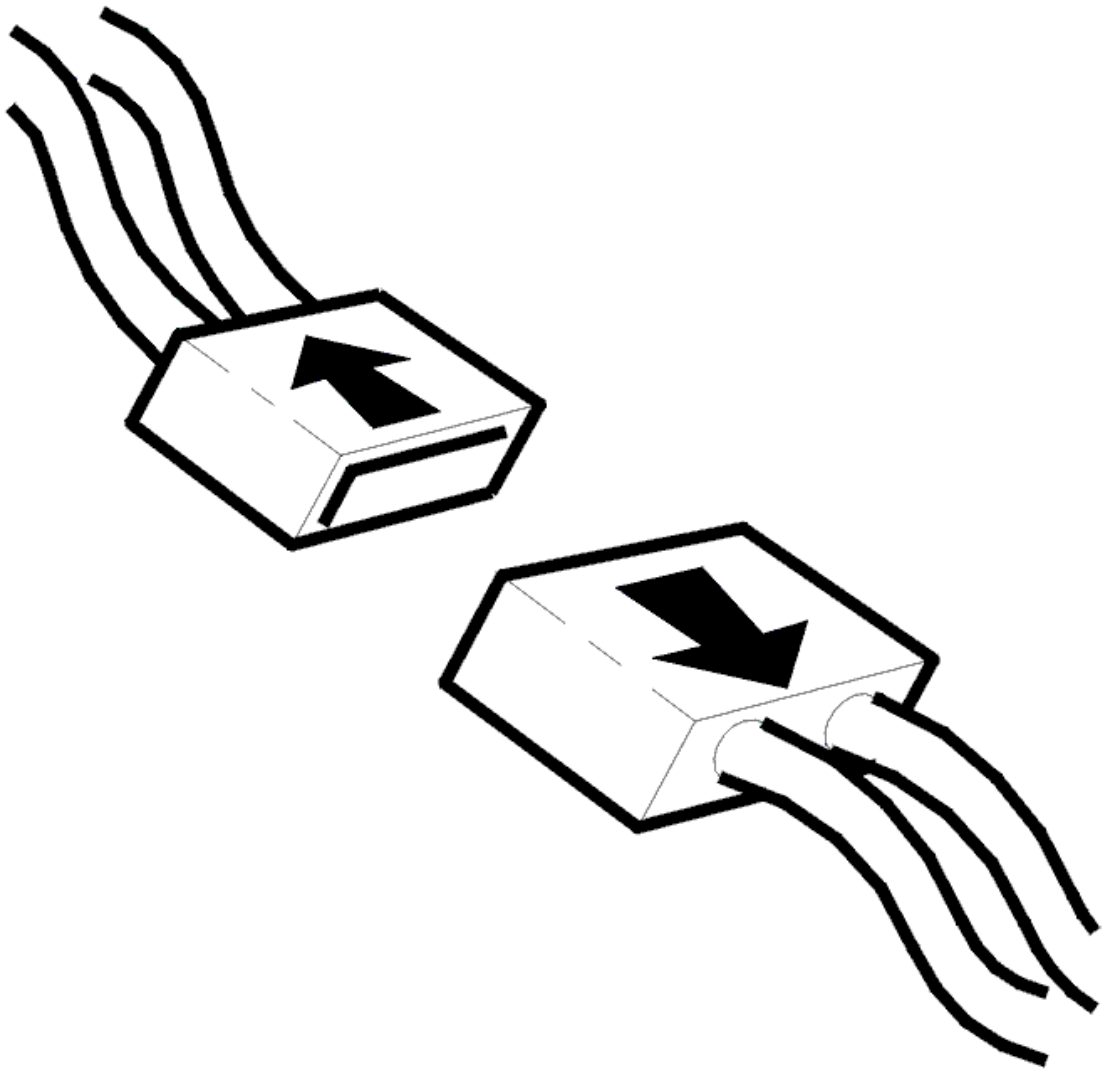

Fig. 349: Disconnecting Connector
Courtesy of VOLVO CARS CORPORATION

- Ignition off

  Unplug the LED connector and check that the LED is intact.

  Check the signal lead between the right camera module (RCM) and the #1 LED connector for shorting to a power supply.

  Check the ground cable between the right camera module (RCM) and the #3 LED connector for shorting to a power supply.

  Remedy as necessary.

  Other information

- -2004: **SIGNAL SPECIFICATION**
- 2005-: **SIGNAL SPECIFICATION**
- Change the light emitting diode, see: **REAR VIEW MIRROR, REPLACING**
- see **CHECKING WIRING AND TERMINALS**

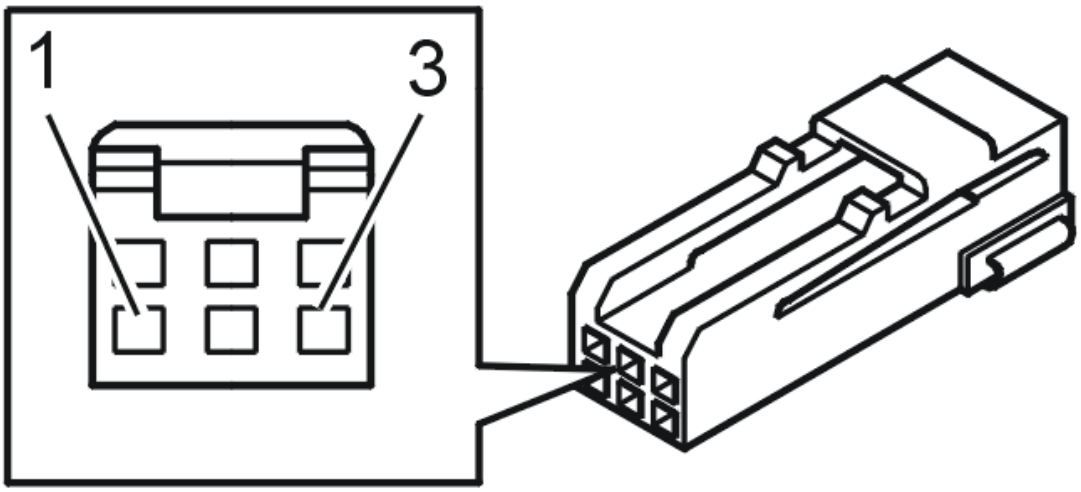

Fig. 350: Identifying Connector Terminals
Courtesy of VOLVO CARS CORPORATION

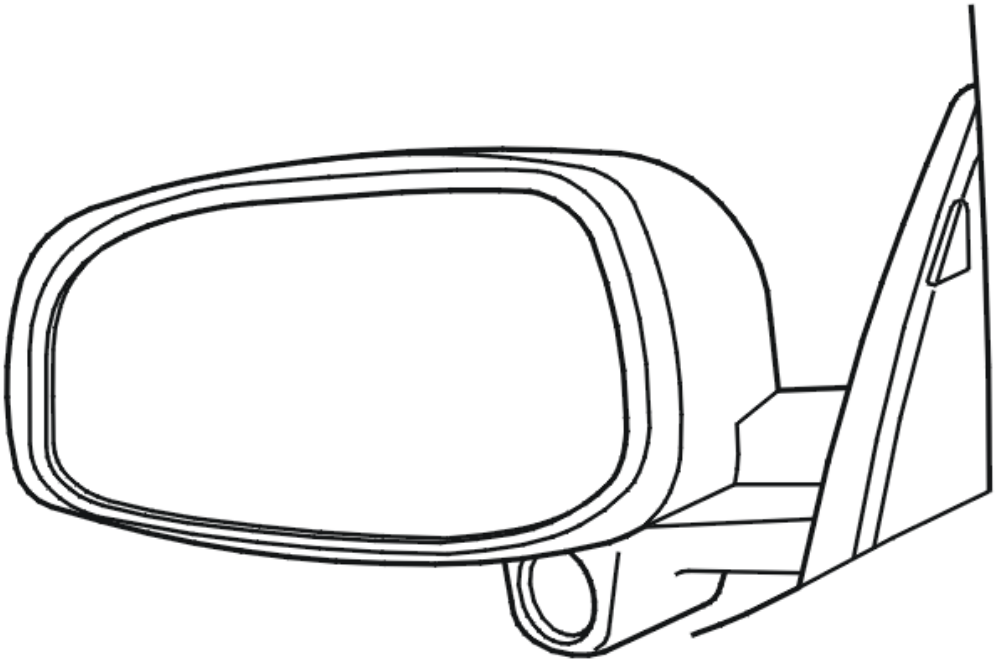

Fig. 351: Identifying Camera Module
Courtesy of VOLVO CARS CORPORATION

- **Continue**

  Refer to **VERIFICATION**

FAULT-TRACING INFORMATION

The right camera module (RCM) has previously registered a fault but the fault no longer exists. The diagnostic trouble code (DTC) was probably generated by an intermittent fault. If the fault persists, fault-tracing according to this diagnostic trouble code (DTC) should be carried out even though no fault symptom can be detected. The seriousness of the fault is determined from case to case.

You can choose between continuing fault-tracing or ending it.

Would you like to continue?

- **YES**

  Refer to **CHECKING THE WIRING**

- **NO**

  FAULT NOT FOUND: Troubleshooting has been completed.

VERIFICATION

VERIFICATION

HINT: After carrying out the repair, check that the fault has been remedied.

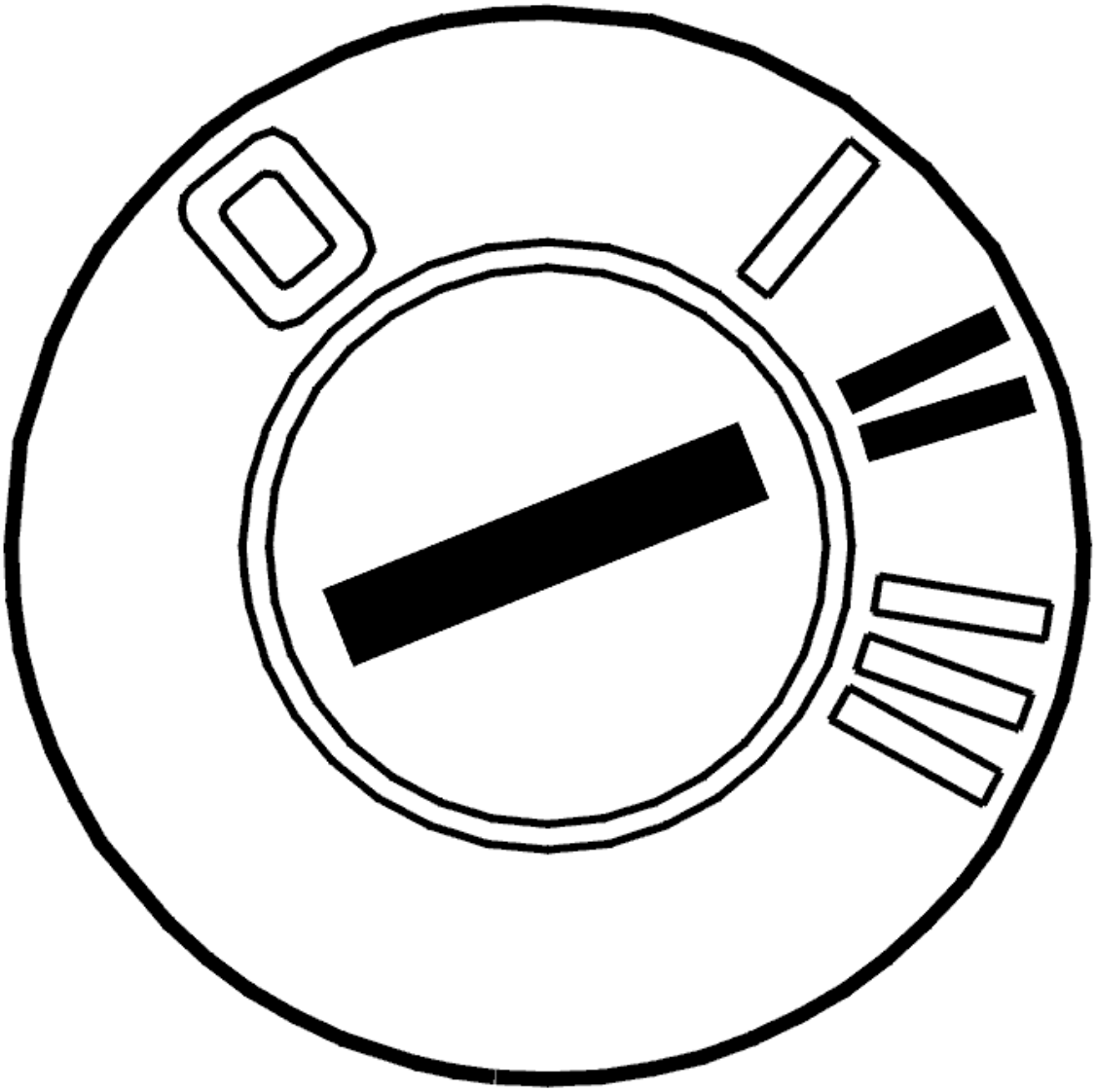

Fig. 352: Identifying Ignition ON
Courtesy of VOLVO CARS CORPORATION

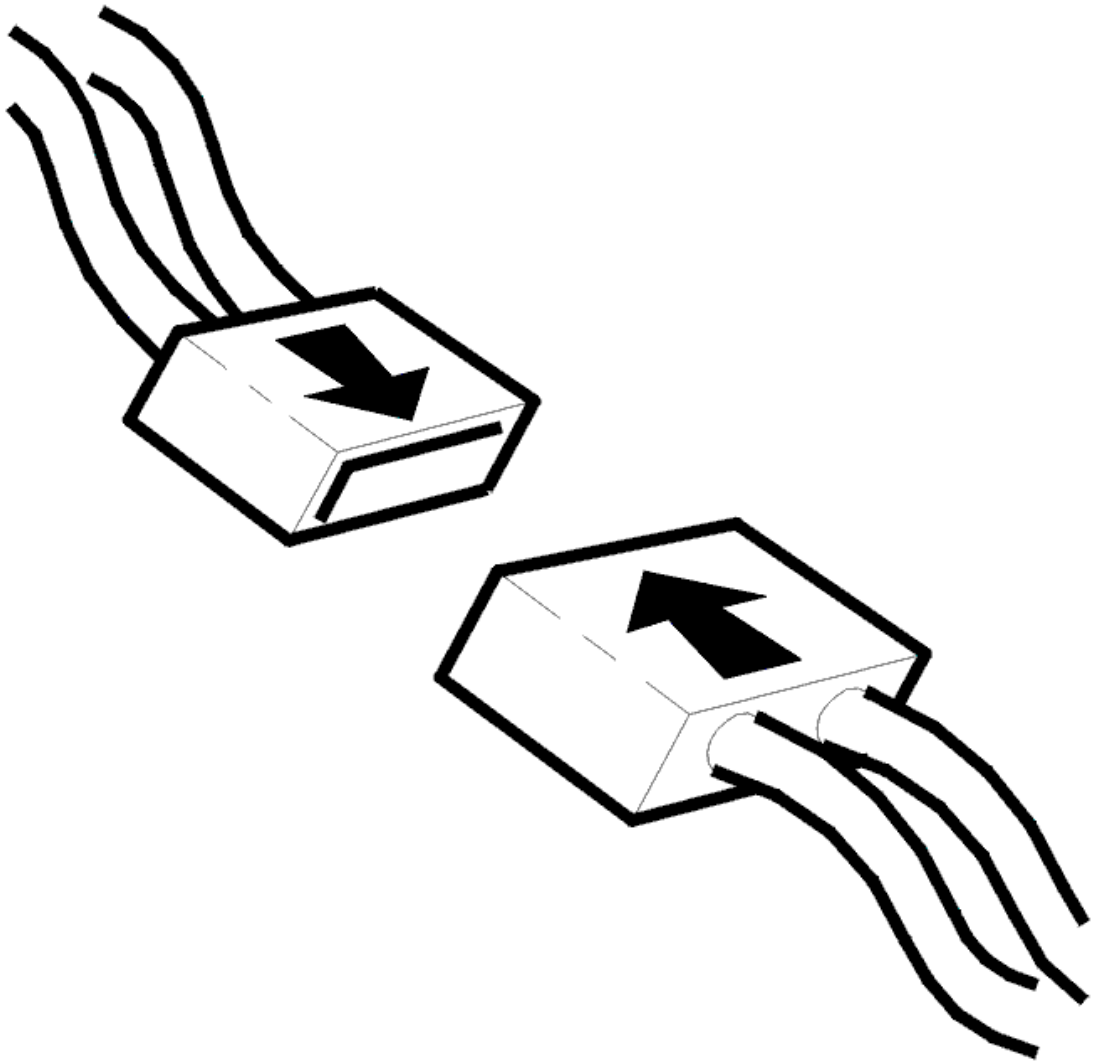

Fig. 353: Connecting Connector
Courtesy of VOLVO CARS CORPORATION

- Ignition off
- Reinstall the connectors, components etc.
- Ignition on

Did the right LED flash three times?

- **YES**

  VERIFIED: Troubleshooting has been completed.

- **NO**

Refer to **INFORMATION**

INFORMATION

FAULT-TRACING INFORMATION

The fault should have been detected and remedied. As this is not the case fault-tracing has failed.

Exit fault-tracing for this diagnostic trouble code (DTC) or make another attempt.

CEM-4F45: LIGHT EMITTING DIODE, LEFT CAMERA MODULE. NO SIGNAL (2005-2012)

DIAGNOSTIC TROUBLE CODE (DTC) INFORMATION CEM-4F45

Condition

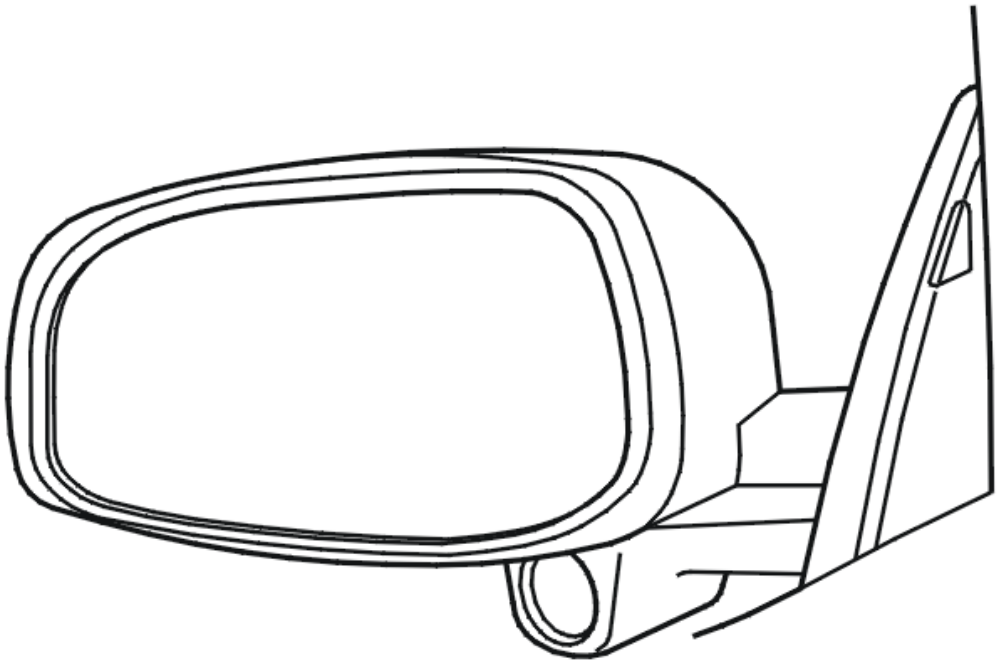

Fig. 354: Identifying Camera Module
Courtesy of VOLVO CARS CORPORATION

The central electronic module (CEM) monitors communication between the blind spot indication system (BLIS) LEDs and camera modules.

If the central electronic module (CEM) detects that the signal from the left LED to the left camera module (LCM) is absent, a diagnostic trouble code is generated.

The diagnostic trouble code can be diagnosed when the ignition is on.

Substitute Value

- Nothing.

Possible Source

- Open circuit in signal lead to left light emitting diode.
- Left light emitting diode not connected.

Fault symptom[s]

- The LED does not come on.

SIGNAL MISSING

CHECKING THE FUNCTION

The LEDs should flash three times whenever the Blind Spot Indication System (BLIS) is activated.

Switch on the ignition to check the functionality of the left LED.

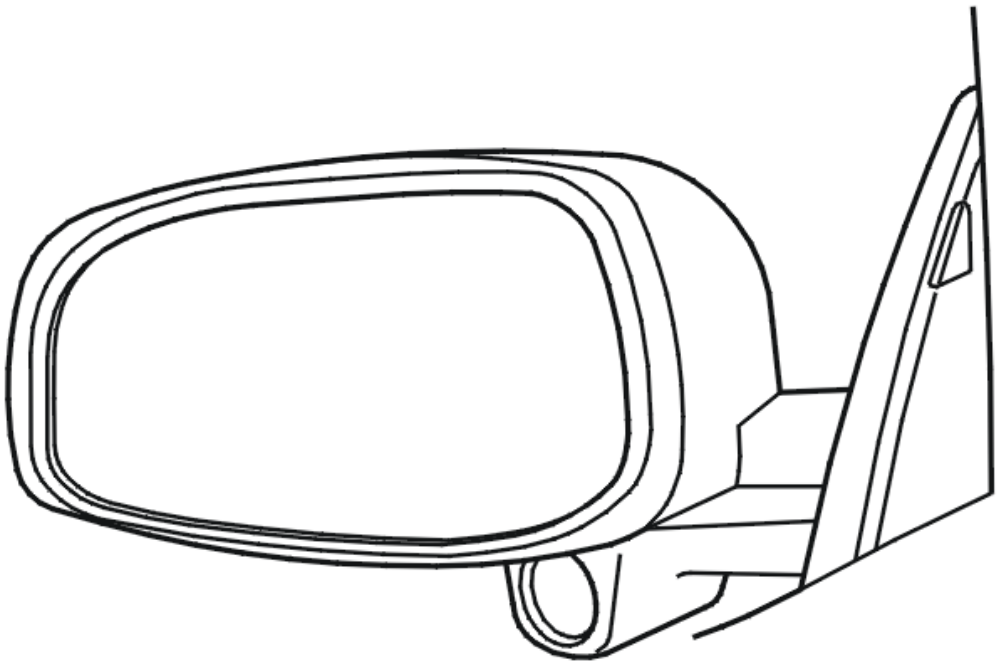

Fig. 355: Identifying Camera Module
Courtesy of VOLVO CARS CORPORATION

Did the LED flash three times?

- **YES**

  Refer to **FAULT-TRACING INFORMATION**

- **NO**

  Refer to **CHECKING THE WIRING**

CHECKING THE WIRING

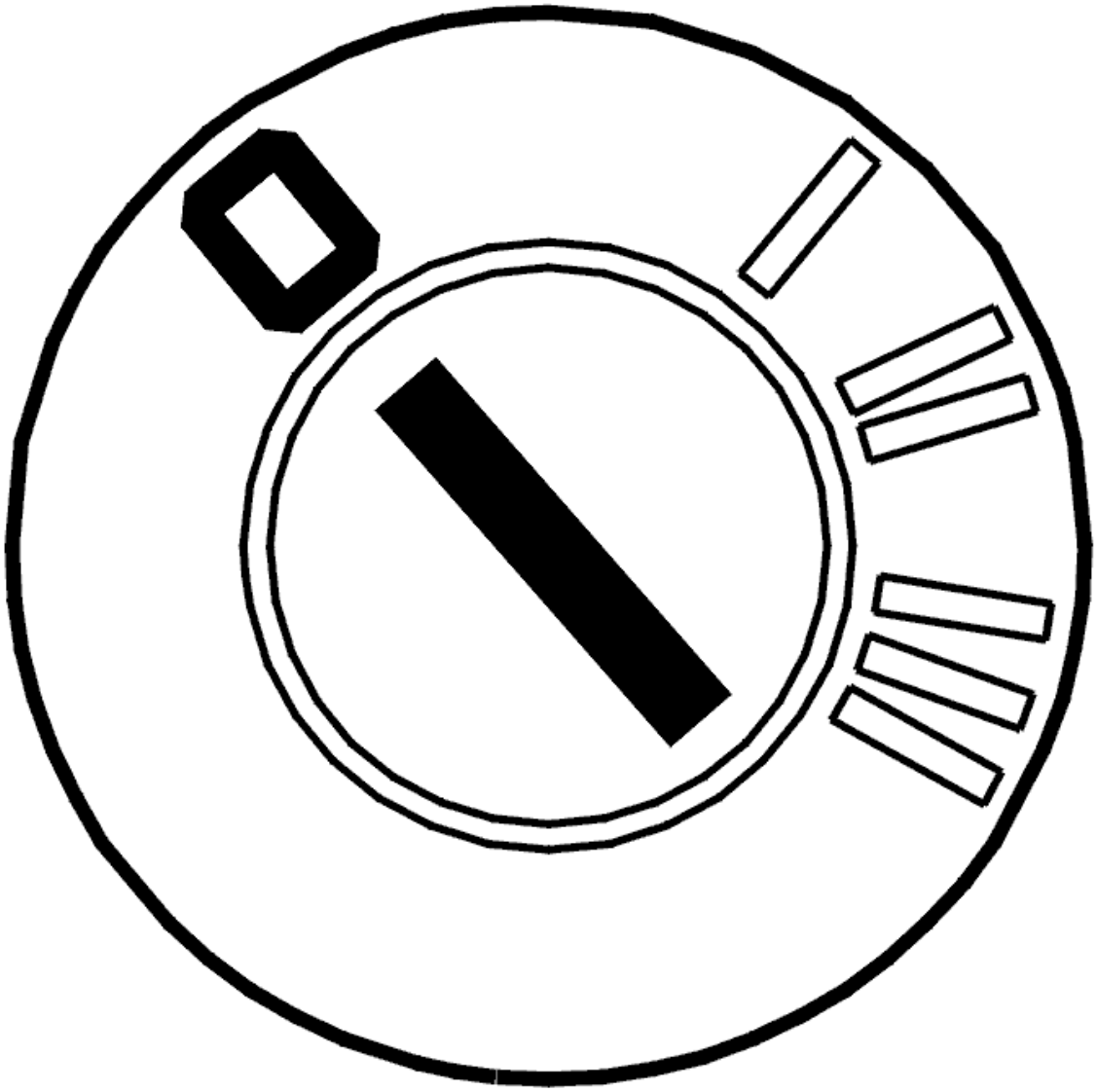

Fig. 356: Identifying Ignition OFF
Courtesy of VOLVO CARS CORPORATION

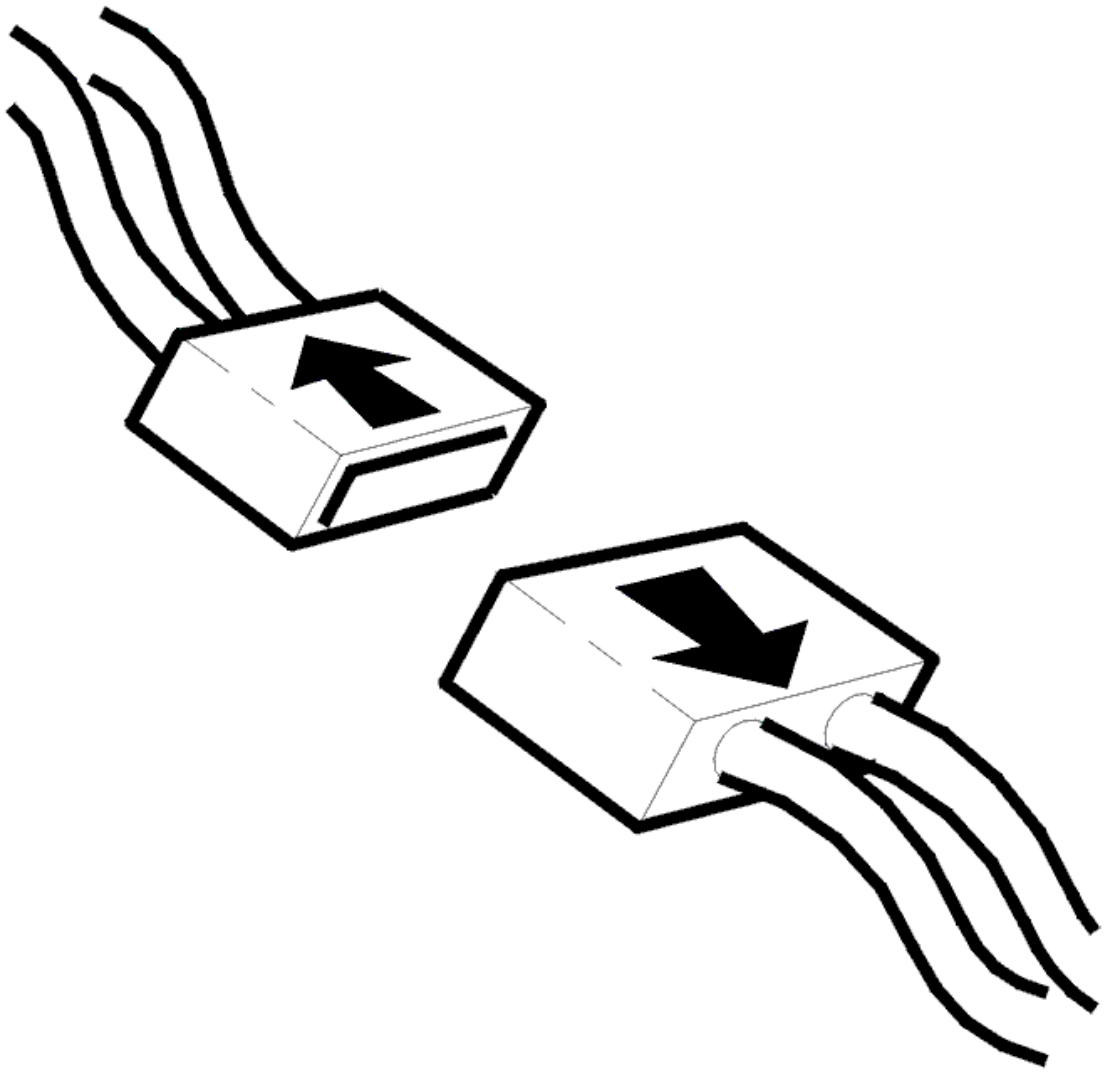

Fig. 357: Disconnecting Connector
Courtesy of VOLVO CARS CORPORATION

- Ignition off

  Unplug the LED connector and check that the LED is intact. Also check the connector for contact resistance and corrosion.

  Check the signal lead between the left camera module (LCM) and the #1 LED connector for an open circuit.

  Check the ground cable between the left camera module (LCM) and the #3 LED connector for an open circuit.

  Remedy as necessary.

Other information

- -2004: **SIGNAL SPECIFICATION**
- 2005-: **SIGNAL SPECIFICATION**
- Change the light emitting diode, see: **REAR VIEW MIRROR, REPLACING**
- see **CHECKING WIRING AND TERMINALS**

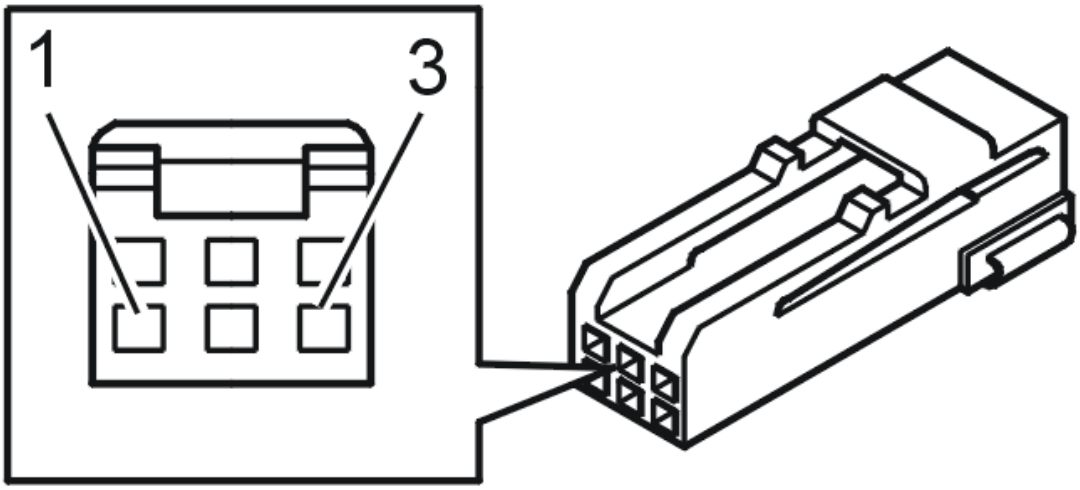

Fig. 358: Identifying Connector Terminals
Courtesy of VOLVO CARS CORPORATION

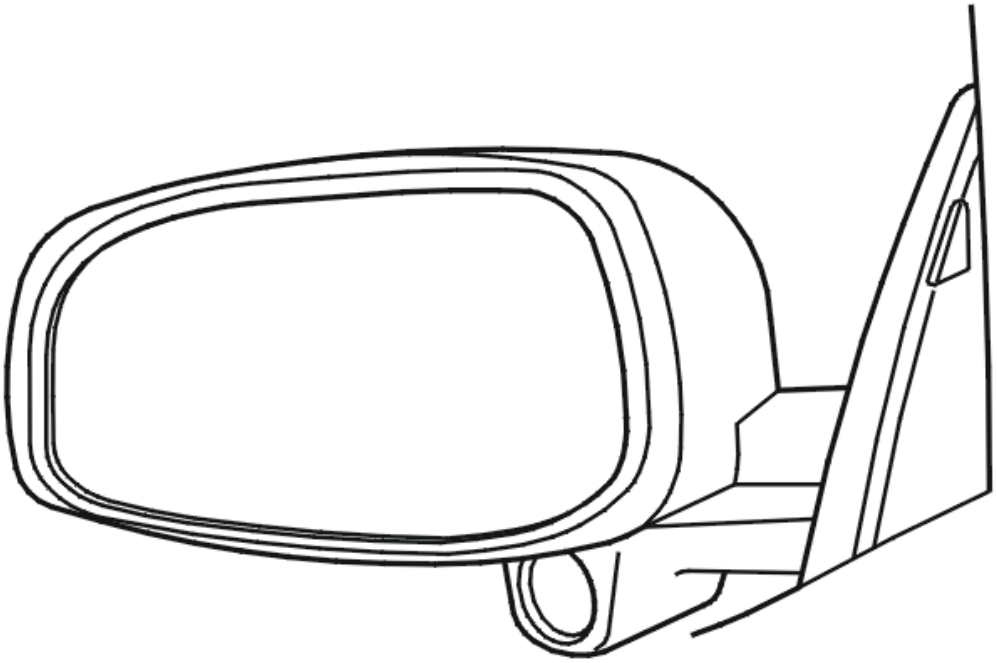

Fig. 359: Identifying Camera Module
Courtesy of VOLVO CARS CORPORATION

- **Continue**

  Refer to **VERIFICATION**

FAULT-TRACING INFORMATION

The left camera module (LCM) has previously registered a fault but the fault no longer exists. The diagnostic trouble code (DTC) was probably generated by an intermittent fault. If the fault persists, fault-tracing according to this diagnostic trouble code (DTC) should be carried out even though no fault symptom can be detected. The seriousness of the fault is determined from case to case.

You can choose between continuing fault-tracing or ending it.

Would you like to continue?

- **YES**

  Refer to **CHECKING THE WIRING**

- **NO**

FAULT NOT FOUND: Troubleshooting has been completed.

VERIFICATION

VERIFICATION

HINT: After carrying out the repair, check that the fault has been remedied.

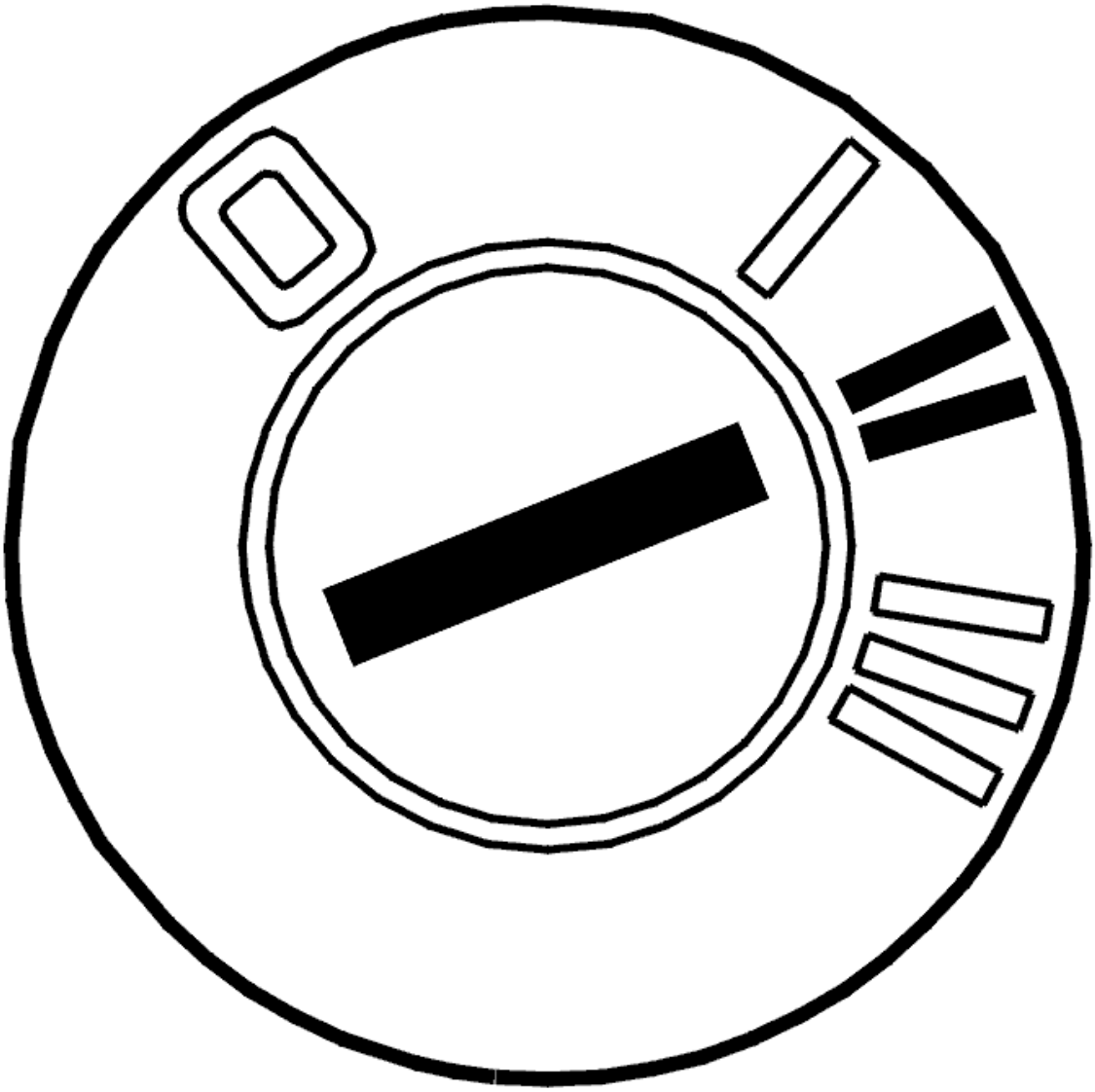

Fig. 360: Identifying Ignition ON
Courtesy of VOLVO CARS CORPORATION

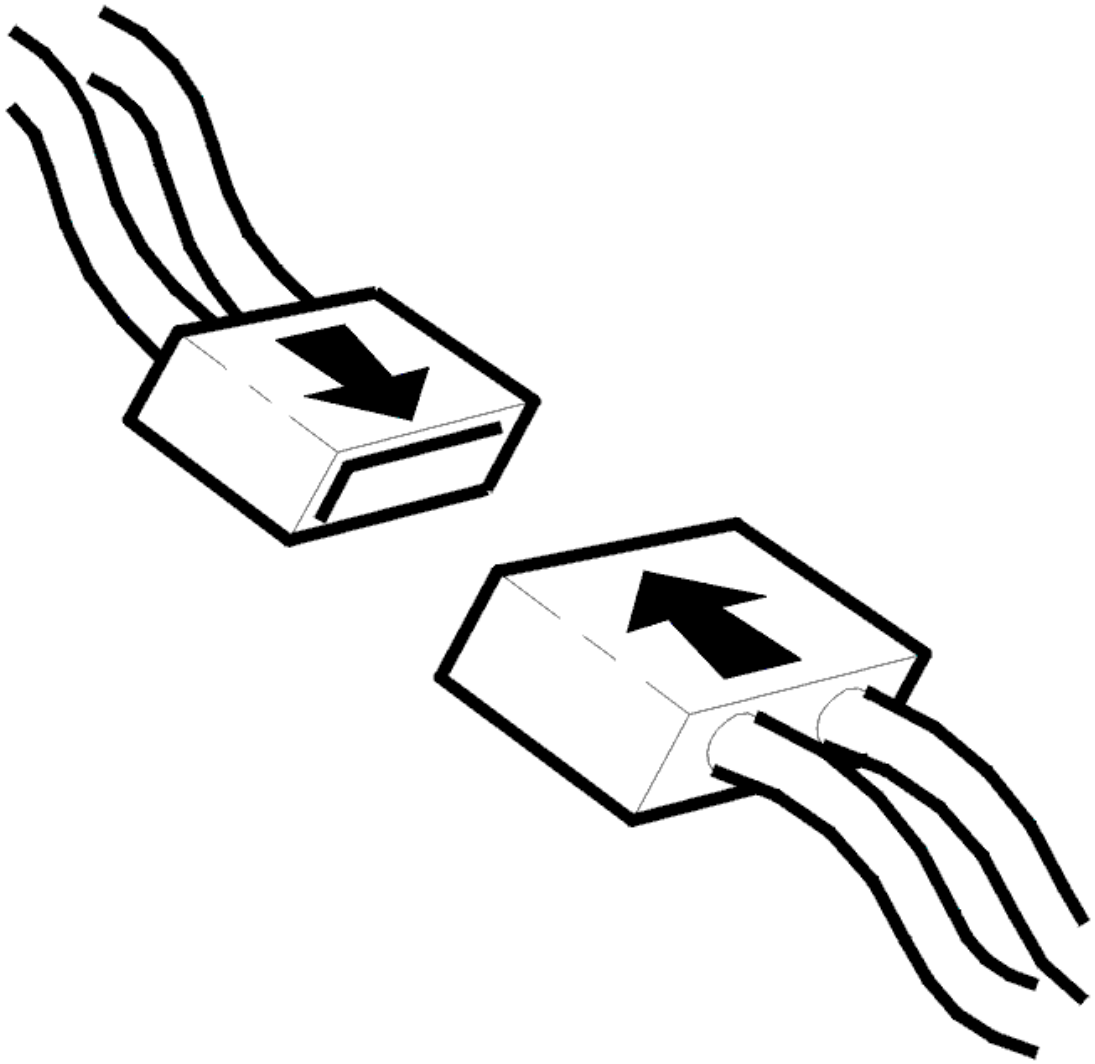

Fig. 361: Connecting Connector
Courtesy of VOLVO CARS CORPORATION

- Ignition off
- Reinstall the connectors, components etc.
- Ignition on

Did the left LED flash three times?

- **YES**

  VERIFIED: Troubleshooting has been completed.

- **NO**

Refer to **INFORMATION**

INFORMATION

FAULT-TRACING INFORMATION

The fault should have been detected and remedied. As this is not the case fault-tracing has failed.

Exit fault-tracing for this diagnostic trouble code (DTC) or make another attempt.

CEM-4F46: LIGHT EMITTING DIODE, RIGHT CAMERA MODULE. NO SIGNAL (2005-2012)

DIAGNOSTIC TROUBLE CODE (DTC) INFORMATION CEM-4F46

Condition

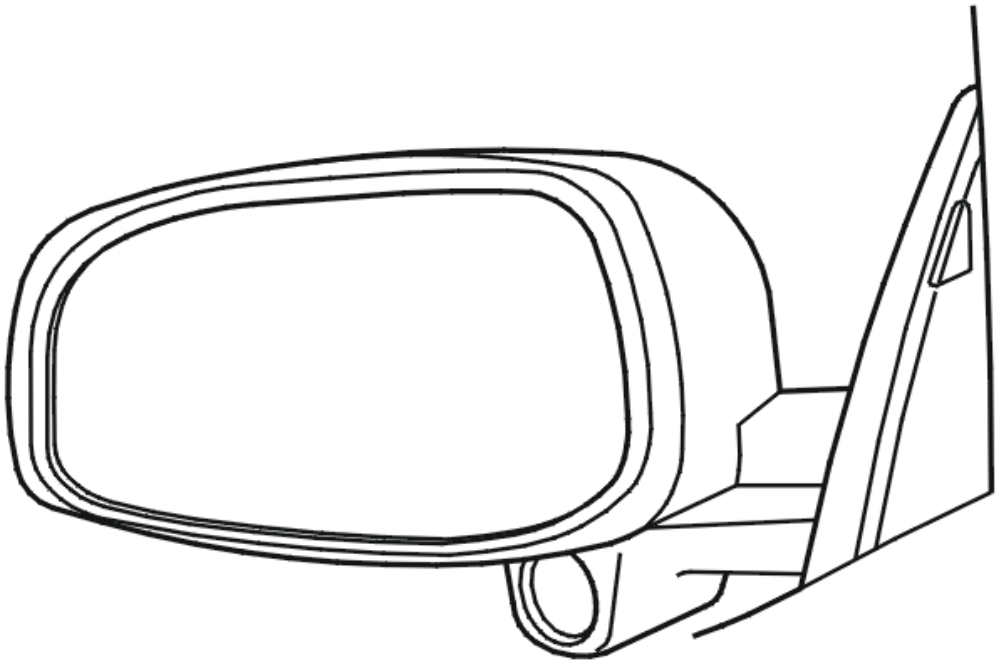

Fig. 362: Identifying Camera Module
Courtesy of VOLVO CARS CORPORATION

The central electronic module (CEM) monitors communication between the blind spot indication system (BLIS) LEDs and camera modules.

If the central electronic module (CEM) detects that the signal from the right LED to the right camera module (RCM) is absent, a diagnostic trouble code is generated.

The diagnostic trouble code can be diagnosed when the ignition is on.

Substitute Value

- Nothing.

Possible Source

- Open circuit in signal lead to right light emitting diode.
- Right light emitting diode not connected.

Fault symptom[s]

- The LED does not come on.

SIGNAL MISSING

CHECKING THE FUNCTION

The LEDs should flash three times whenever the Blind Spot Indication System (BLIS) is activated.

Switch on the ignition to check the functionality of the right LED.

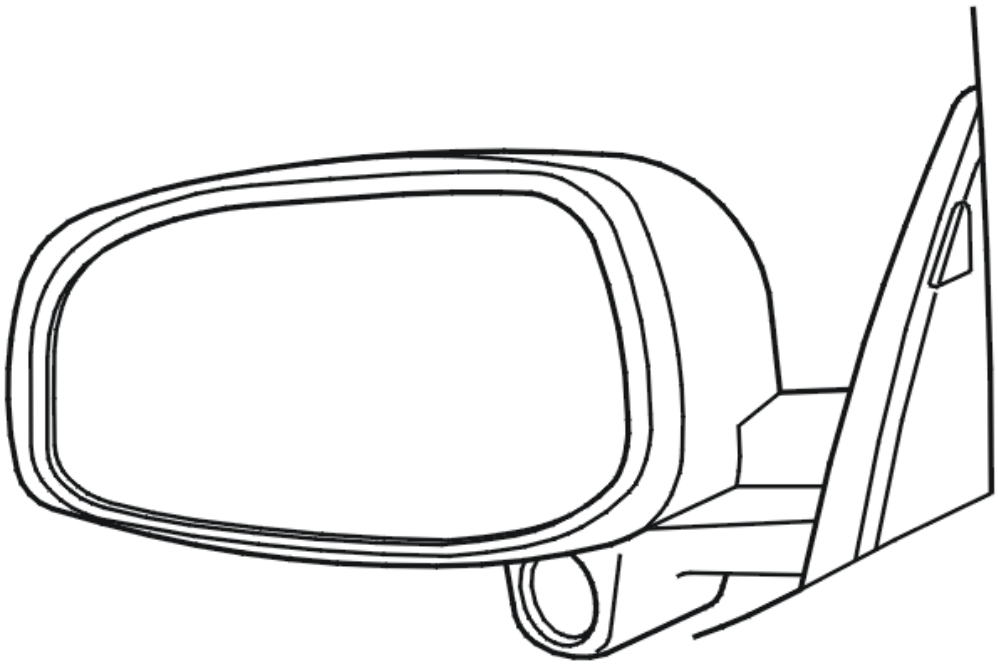

Fig. 363: Identifying Camera Module
Courtesy of VOLVO CARS CORPORATION

Did the LED flash three times?

- **YES**

  Refer to **FAULT-TRACING INFORMATION**

- **NO**

  Refer to **CHECKING THE WIRING**

CHECKING THE WIRING

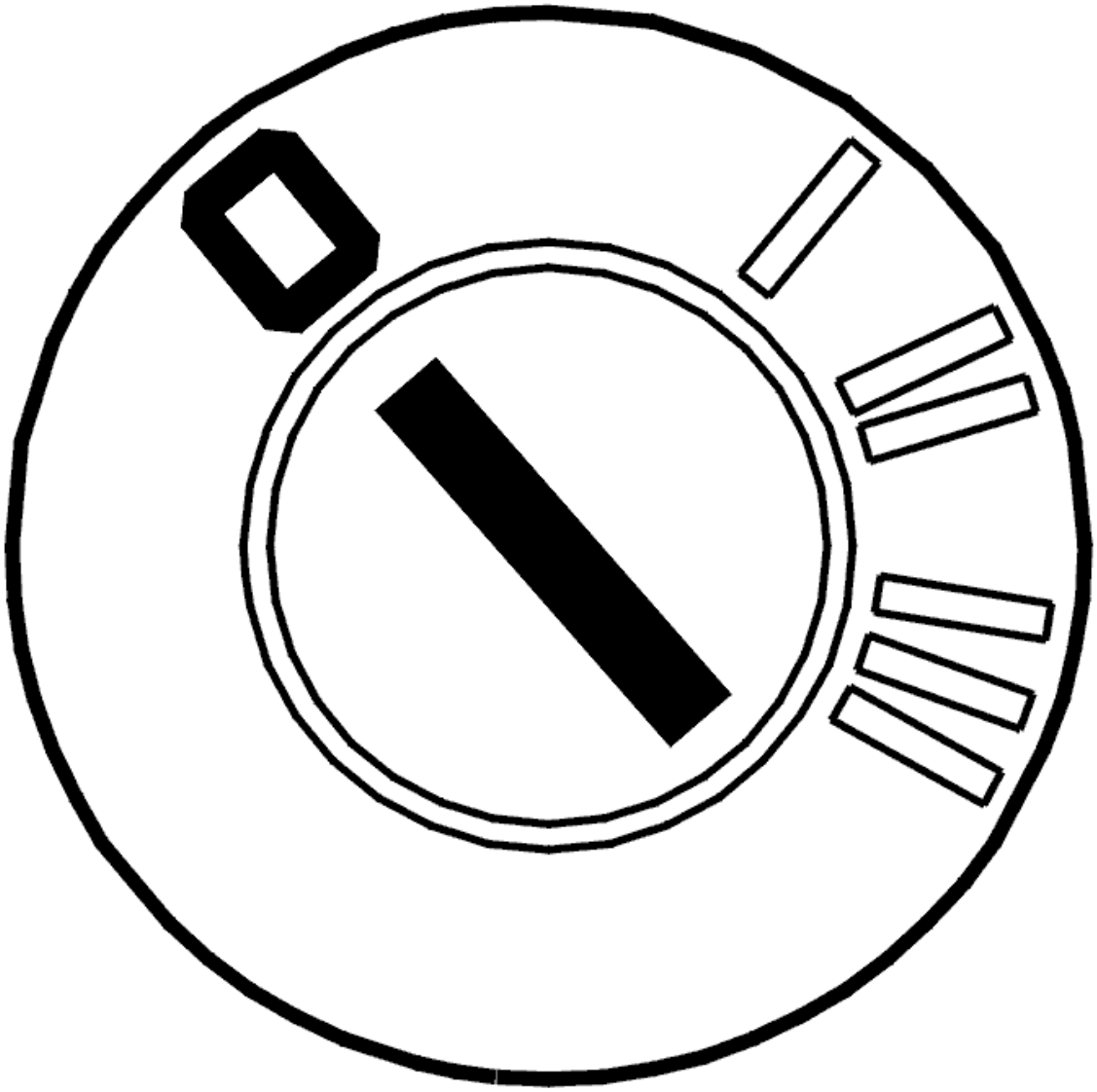

Fig. 364: Identifying Ignition OFF
Courtesy of VOLVO CARS CORPORATION

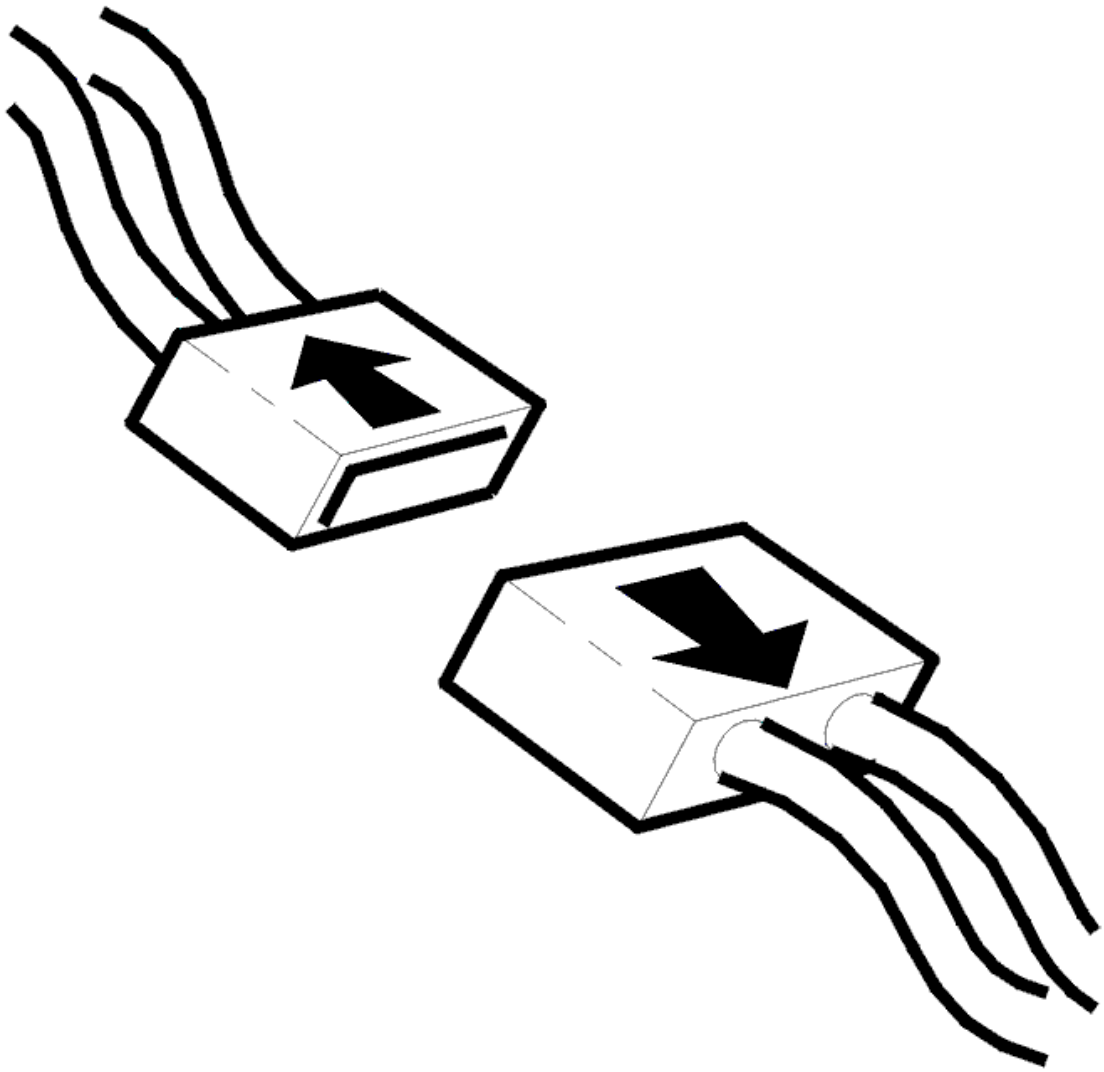

Fig. 365: Disconnecting Connector
Courtesy of VOLVO CARS CORPORATION

- Ignition off

  Unplug the LED connector and check that the LED is intact. Also check the connector for contact resistance and corrosion.

  Check the signal lead between the right camera module (RCM) and the #1 LED connector for an open circuit.

  Check the ground cable between the right camera module (RCM) and the #3 LED connector for an open circuit.

  Remedy as necessary.

Other information

- -2004: **SIGNAL SPECIFICATION**
- 2005-: **SIGNAL SPECIFICATION**
- Change the light emitting diode, see:**REAR VIEW MIRROR, REPLACING**
- see **CHECKING WIRING AND TERMINALS**

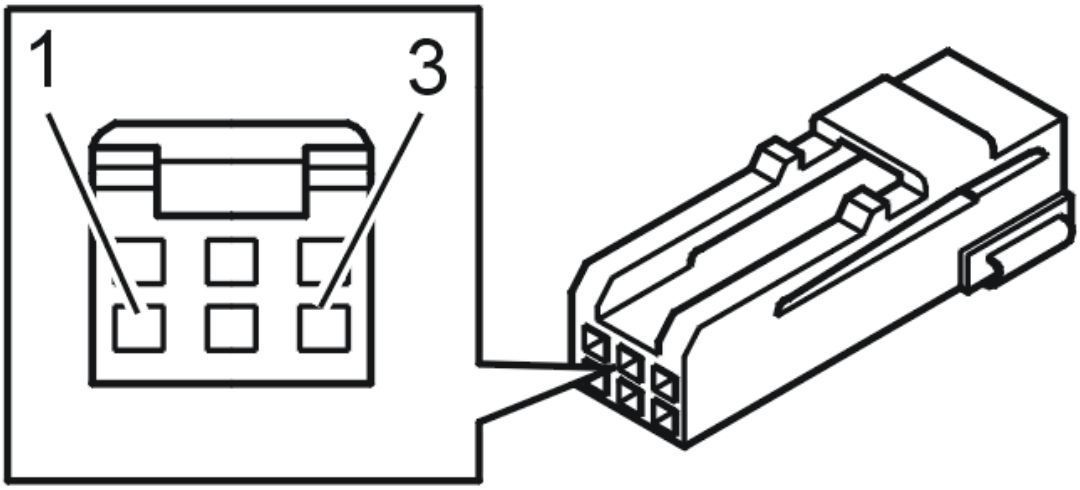

Fig. 366: Identifying Connector Terminals
Courtesy of VOLVO CARS CORPORATION

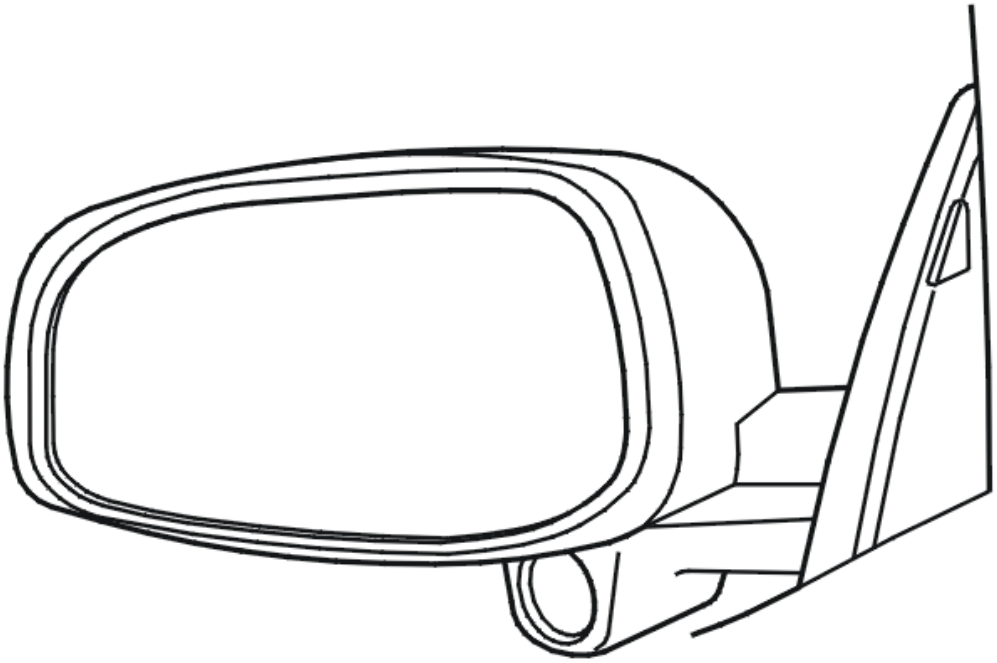

Fig. 367: Identifying Camera Module
Courtesy of VOLVO CARS CORPORATION

- **Continue**

  Refer to **VERIFICATION**

FAULT-TRACING INFORMATION

The right camera module (RCM) has previously registered a fault but the fault no longer exists. The diagnostic trouble code (DTC) was probably generated by an intermittent fault. If the fault persists, fault-tracing according to this diagnostic trouble code (DTC) should be carried out even though no fault symptom can be detected. The seriousness of the fault is determined from case to case.

You can choose between continuing fault-tracing or ending it.

Would you like to continue?

- **YES**

  Refer to **CHECKING THE WIRING**

- **NO**

FAULT NOT FOUND: Troubleshooting has been completed.

VERIFICATION

VERIFICATION

HINT: After carrying out the repair, check that the fault has been remedied.

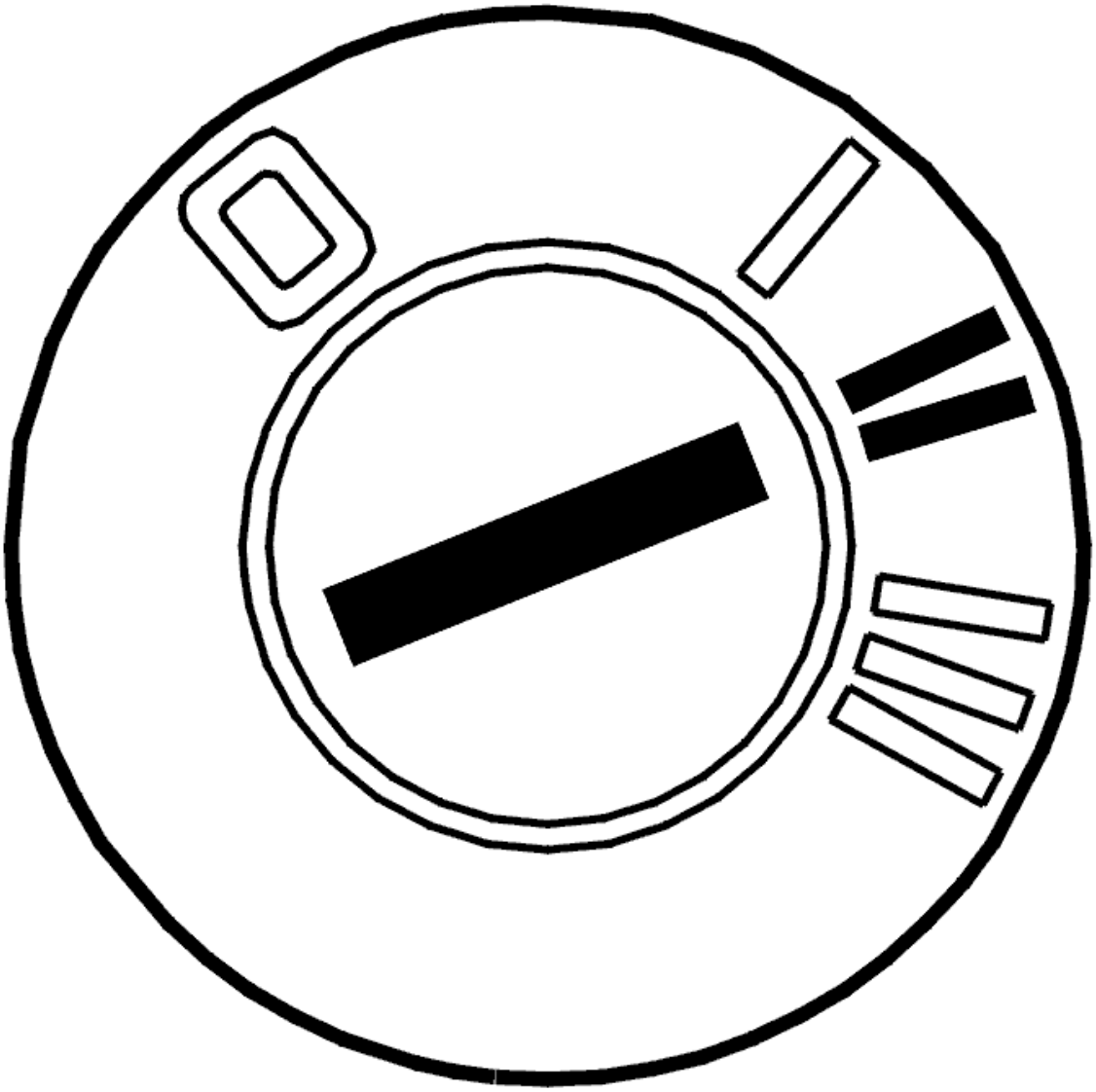

Fig. 368: Identifying Ignition ON
Courtesy of VOLVO CARS CORPORATION

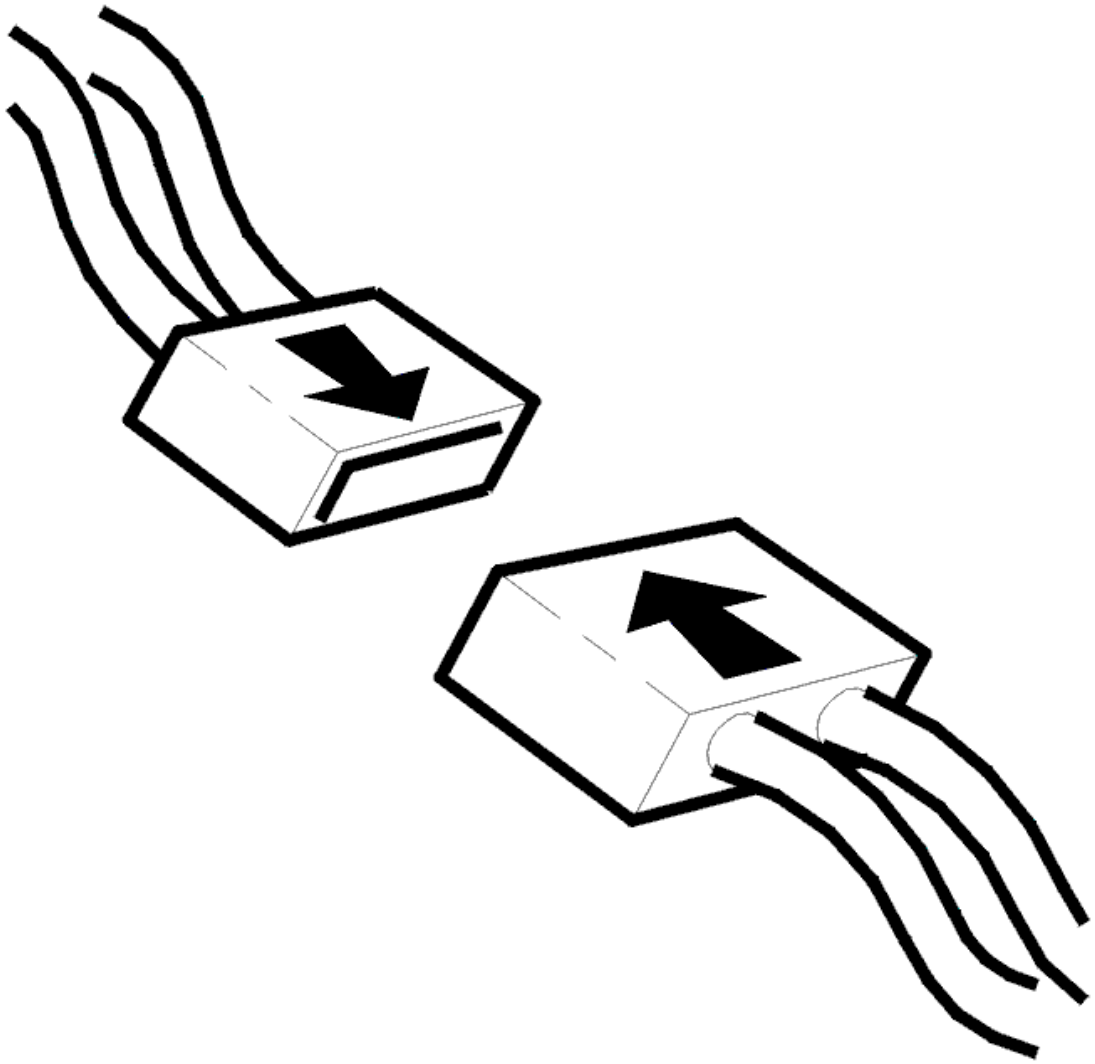

Fig. 369: Connecting Connector
Courtesy of VOLVO CARS CORPORATION

- Ignition off
- Reinstall the connectors, components etc.
- Ignition on

Did the right LED flash three times?

- **YES**

  VERIFIED: Troubleshooting has been completed.

- **NO**

Refer to **INFORMATION**

INFORMATION

FAULT-TRACING INFORMATION

The fault should have been detected and remedied. As this is not the case fault-tracing has failed.

Exit fault-tracing for this diagnostic trouble code (DTC) or make another attempt.

CEM-4F47: LEFT CAMERA MODULE. INTERNAL FAULT (2005-2012)

DIAGNOSTIC TROUBLE CODE (DTC) INFORMATION CEM-4F47

Condition

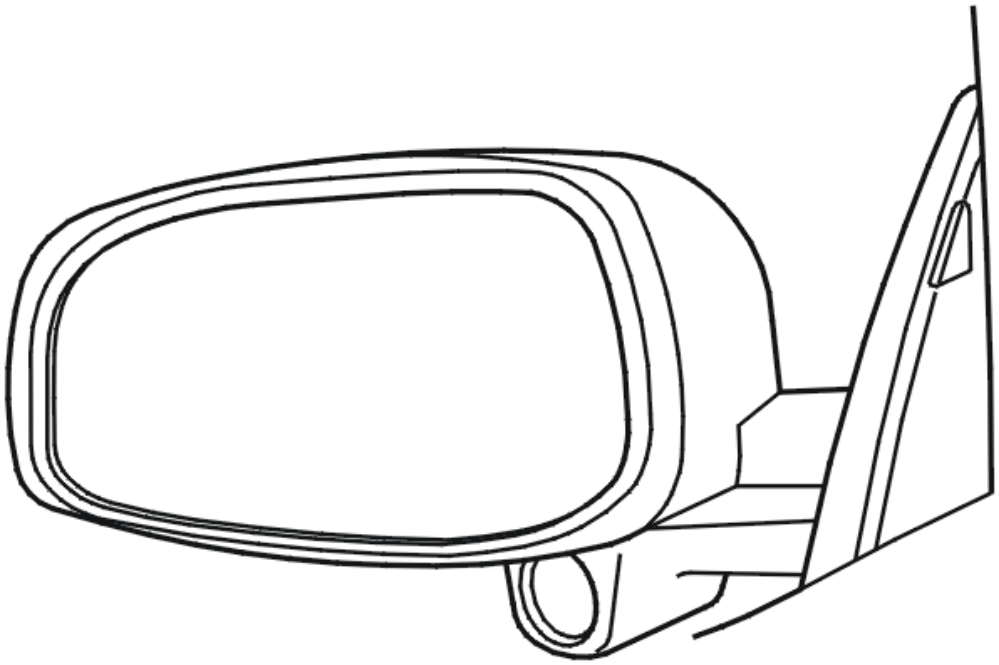

Fig. 370: Identifying Camera Module
Courtesy of VOLVO CARS CORPORATION

The central electronic module (CEM) controls communication with the blind spot indication system (BLIS) camera modules.

If the central electronic module (CEM) detects an internal fault on the left camera module (LCM) a diagnostic trouble code is generated.

The diagnostic trouble code can be diagnosed when the ignition is on.

Substitute Value

- Nothing.

Possible Source

- Dirty lens.
- Loose connection or oxidation in signal connections to Left Camera Module (LCM).
- Internal fault in left camera module (LCM).

Fault symptom[s]

- The LED does not come on.
- LED flashing rapidly.

INTERNAL FAULT

REPLACING THE COMPONENT

A diagnostic trouble code will be generated if the central electronic module (CEM) detects an internal fault in the left camera module (LCM).

If the fault is intermittent it will have been registered earlier but no longer exists. Intermittent faults could be due to interference on starting up or to another type of fault than recurs at different times. The seriousness of the fault is determined from case to case.

Remedy as necessary.

Other information

- Change the left camera module (LCM), see: **REAR VIEW MIRROR, REPLACING**

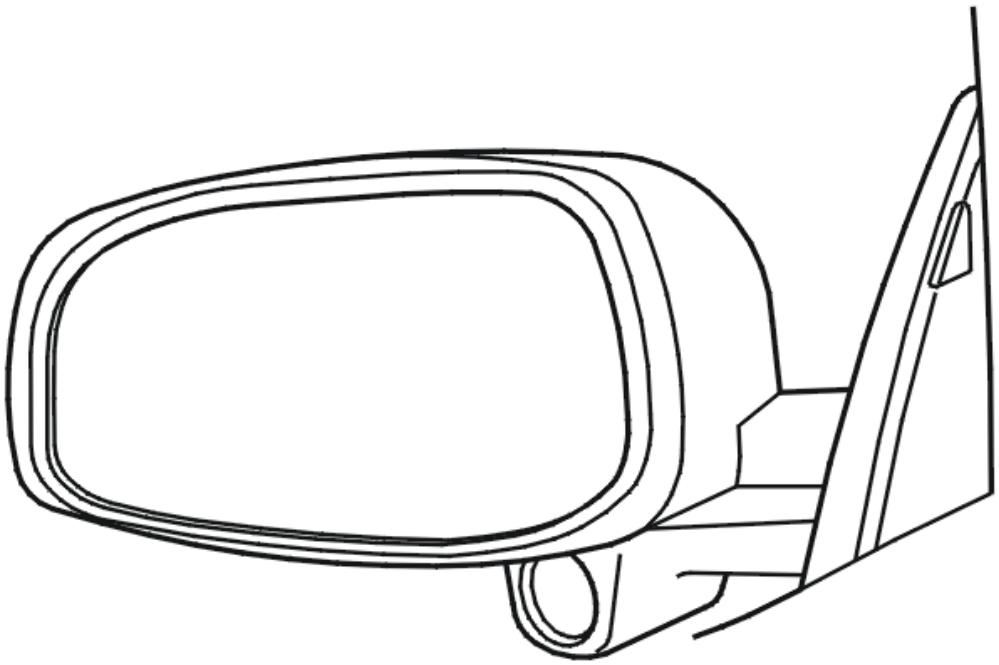

Fig. 371: Identifying Camera Module
Courtesy of VOLVO CARS CORPORATION

- **Continue**

  Refer to **INFORMATION**

INFORMATION

FAULT-TRACING INFORMATION

In case of this defect, troubleshooting is not followed by verification.

The information can be displayed again or the fault-tracing for this fault can be interrupted.

CEM-4F48: RIGHT CAMERA MODULE (RCM). INTERNAL FAULT (2005-2012)

DIAGNOSTIC TROUBLE CODE (DTC) INFORMATION CEM-4F48

Condition

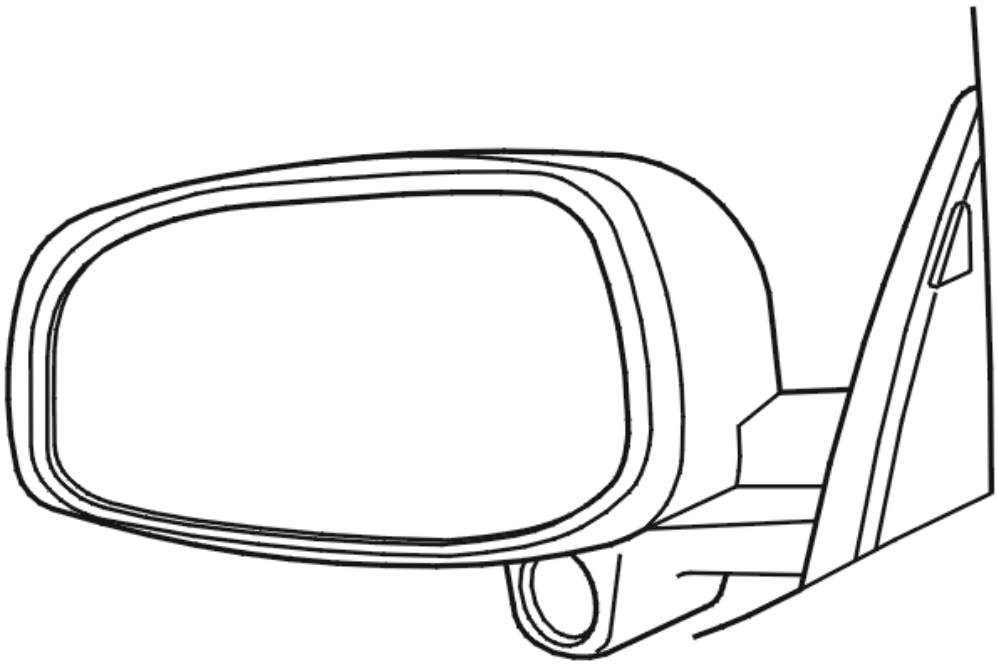

Fig. 372: Identifying Camera Module
Courtesy of VOLVO CARS CORPORATION

The central electronic module (CEM) controls communication with the blind spot indication system (BLIS) camera modules.

A diagnostic trouble code will be generated if the central electronic module (CEM) detects an internal fault in the right camera module (RCM).

The diagnostic trouble code can be diagnosed when the ignition is on.

Substitute Value

- Nothing.

Possible Source

- Dirty lens.
- Loose connection or oxidation in signal connections to Right Camera Module (RCM).
- Internal fault in right camera module (RCM).

Fault symptom[s]

- The LED does not come on.
- LED flashing rapidly.

INTERNAL FAULT

REPLACING THE COMPONENT

A diagnostic trouble code will be generated if the central electronic module (CEM) detects an internal fault in the right camera module (RCM).

If the fault is intermittent it will have been registered earlier but no longer exists. Intermittent faults could be due to interference on starting up or to another type of fault than recurs at different times. The seriousness of the fault is determined from case to case.

Remedy as necessary.

Other information

- Change the right camera module (RCM), see:**REAR VIEW MIRROR, REPLACING**

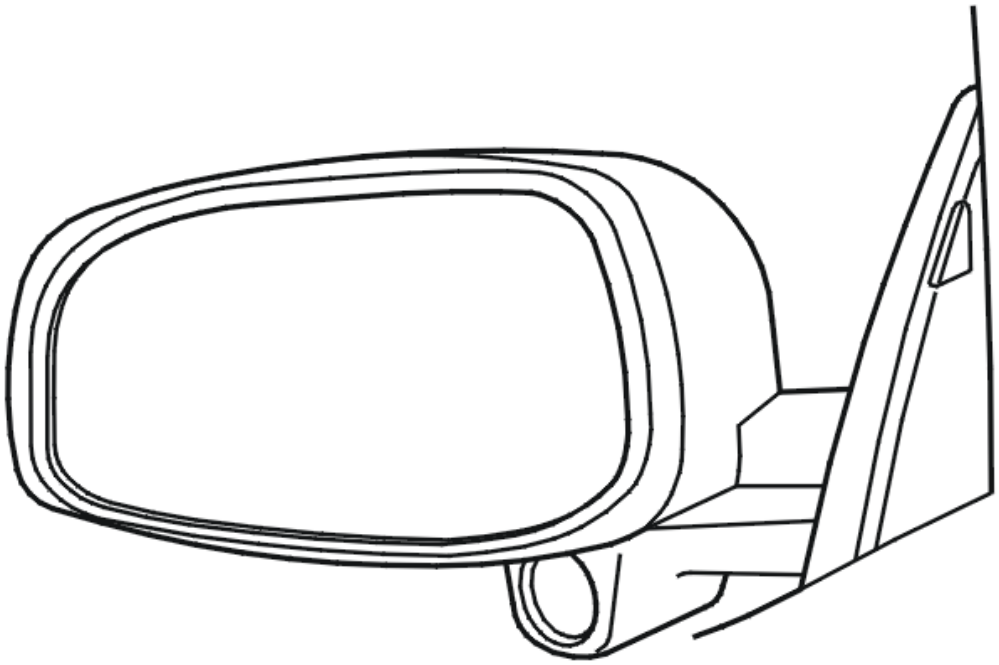

Fig. 373: Identifying Camera Module
Courtesy of VOLVO CARS CORPORATION

- **Continue**

  Refer to **INFORMATION**

INFORMATION

FAULT-TRACING INFORMATION

In case of this defect, troubleshooting is not followed by verification.

The information can be displayed again or the fault-tracing for this fault can be interrupted.

CEM-4F90: SEAT BELT REMINDER. SIGNAL TOO HIGH (2005-2012)

DIAGNOSTIC TROUBLE CODE (DTC) INFORMATION CEM-4F90

Condition

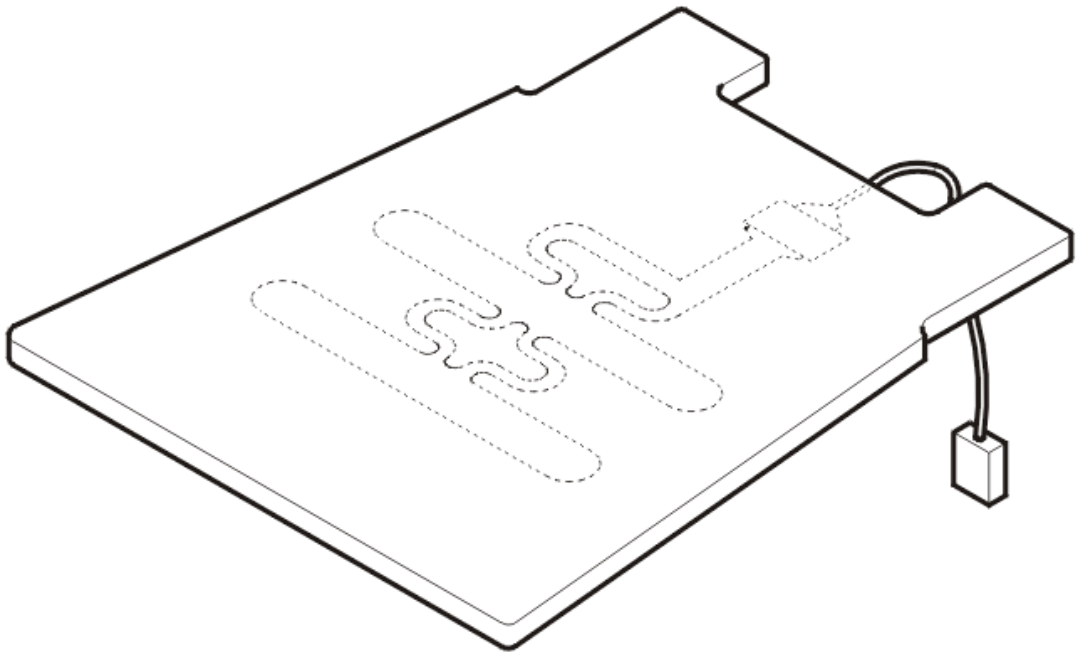

Fig. 374: Identifying Sensor For Seat Belt Reminder
Courtesy of VOLVO CARS CORPORATION

The central electronic module (CEM) checks the signal from the sensor for the seat belt reminder in the passenger seat.

The diagnostic trouble code (DTC) is stored if the central electronic module (CEM) registers that the signal from the sensor is too high.

The diagnostic trouble code (DTC) can be diagnosed with the ignition on and the battery voltage above 9 V.

Substitute Value

- None.

Possible Source

- Short-circuit to supply voltage in the signal cable
- Damaged sensor, seat belt reminder.

Fault symptom[s]

- General warning lamp lit.

SIGNAL TOO HIGH

CHECKING COMPONENTS AND WIRING

Check the connectors on the central electronic module (CEM) and the sensor for the seat belt reminder. Check for contract resistance and oxidation. Check for damage or loose connections.

Check the connectors between the central electronic module (CEM) and the sensor for the seat belt reminder. Check for a short-circuit to supply voltage.

Take readings between:

- Central electronic module (CEM) terminal D27 (#27) and seat belt reminder sensor terminal #1
- Central electronic module (CEM) terminal D28 (#28) and seat belt reminder sensor terminal #2.

Check the seat belt reminder sensor. Measure the resistance between terminals #1 and #2 in the sensor connector.

HINT: The resistance should be above 50 kohms with no passengers and below 50 kohms with passengers.

Remedy as necessary.

Other information

- see **CONNECTING THE BREAKOUT BOX**
- -2004: **SIGNAL SPECIFICATION**
- 2005-: **SIGNAL SPECIFICATION**

- See **HEATER PAD BACKREST AND CUSHION, REPLACING** (-2004) or **HEATER PAD BACKREST AND CUSHION, REPLACING** (2005-).
- see **CHECKING WIRING AND TERMINALS**
- **Continue**

  Refer to **VERIFICATION**

VERIFICATION

VERIFICATION

HINT: After carrying out the repair, check that the fault has been remedied.

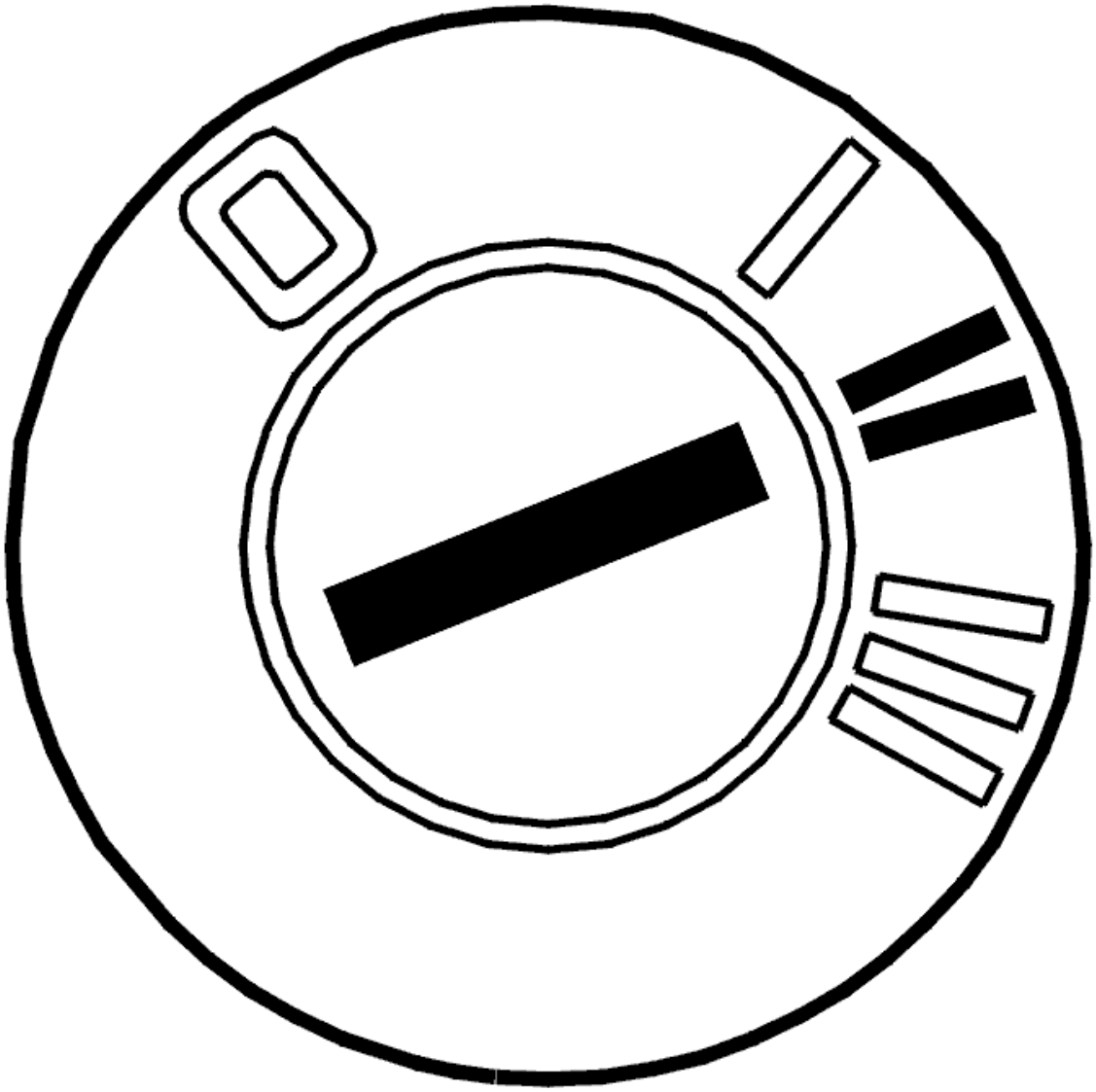

Fig. 375: Identifying Ignition ON
Courtesy of VOLVO CARS CORPORATION

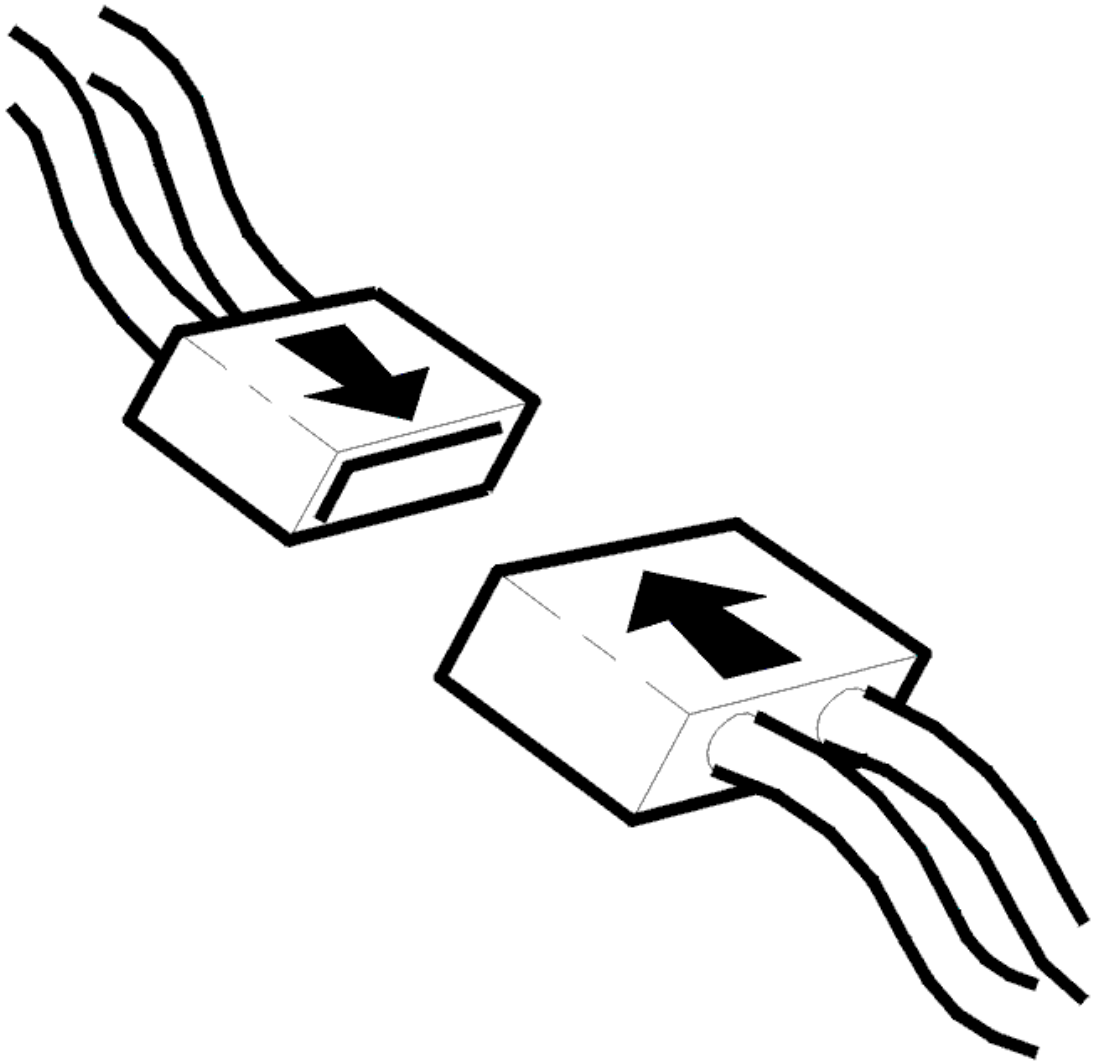

Fig. 376: Connecting Connector
Courtesy of VOLVO CARS CORPORATION

- Ignition off
- Reinstall the connectors, components etc.
- Ignition on.

  Read off the status of the seat belt reminder sensor. Check that the sensor changes status with and without a passenger in the passenger seat.

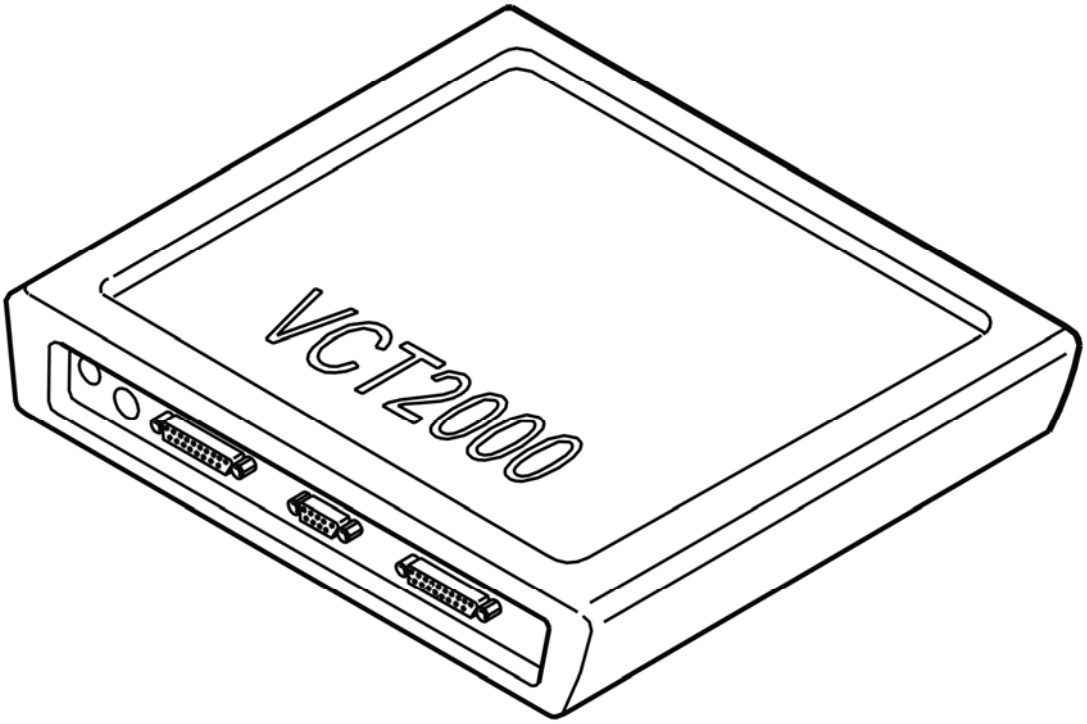

Fig. 377: Identifying VCT2000 Diagnostic Tool Symbol In VIDA
Courtesy of VOLVO CARS CORPORATION

Does the status of the seat belt reminder sensor change with and without a passenger?

- **YES**

  VERIFIED: Troubleshooting has been completed.

- **NO**

  Refer to **INFORMATION**

INFORMATION

FAULT-TRACING INFORMATION

The fault should have been detected and remedied. As this is not the case fault-tracing has failed.

Exit fault-tracing for this diagnostic trouble code (DTC) or make another attempt.

CEM-4F91: SEAT BELT REMINDER. SIGNAL TOO LOW (2005-2012)

DIAGNOSTIC TROUBLE CODE (DTC) INFORMATION CEM-4F91

Condition

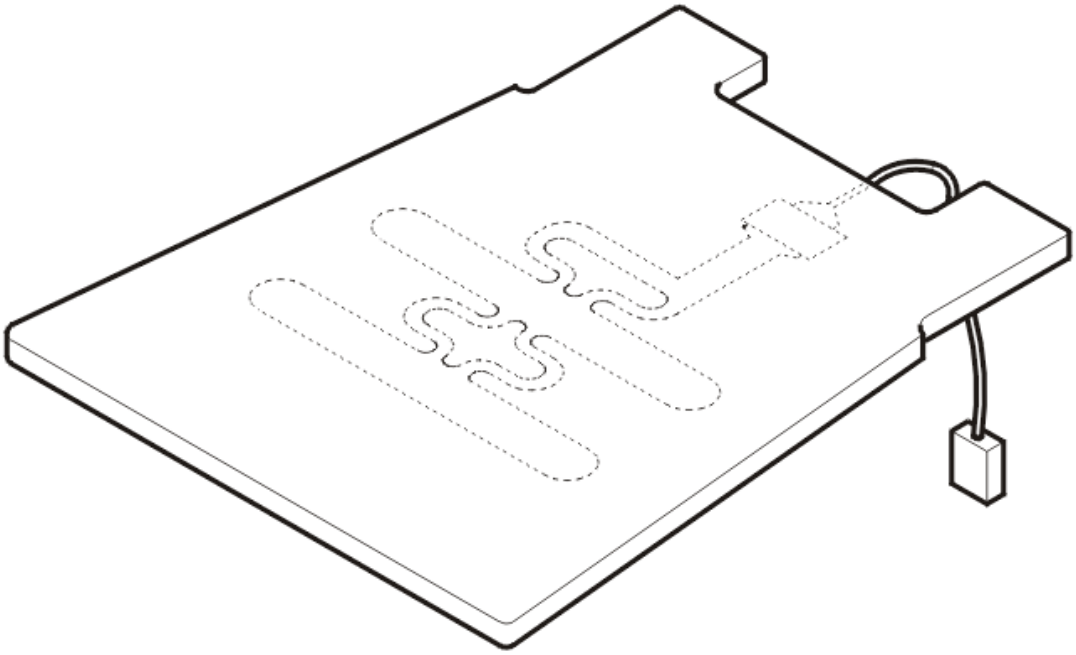

Fig. 378: Identifying Sensor For Seat Belt Reminder
Courtesy of VOLVO CARS CORPORATION

The central electronic module (CEM) checks the signal from the sensor for the seat belt reminder in the passenger seat.

The diagnostic trouble code (DTC) is stored if the central electronic module (CEM) registers that the signal from the sensor is too low.

The diagnostic trouble code (DTC) can be diagnosed with the ignition on and the battery voltage above 9 V.

Substitute Value

- None.

Possible Source

- Short-circuit to ground in the signal cable
- Damaged sensor, seat belt reminder.

Fault symptom[s]

- General warning lamp lit.

SIGNAL TOO LOW

CHECKING COMPONENTS AND WIRING

Check the connectors on the central electronic module (CEM) and the sensor for the seat belt reminder. Check for contract resistance and oxidation. Check for damage or loose connections.

Check the connectors between the central electronic module (CEM) and the sensor for the seat belt reminder. Check for a short-circuit to ground.

Take readings between:

- Central electronic module (CEM) terminal D27 (#27) and seat belt reminder sensor terminal #1
- Central electronic module (CEM) terminal D28 (#28) and seat belt reminder sensor terminal #2.

Check the seat belt reminder sensor. Measure the resistance between terminals #1 and #2 in the sensor connector.

HINT: The resistance should be above 50 kohms with no passengers and below 50 kohms with passengers.

Remedy as necessary.

Other information

- see **CONNECTING THE BREAKOUT BOX**
- -2004: **SIGNAL SPECIFICATION**
- 2005-: **SIGNAL SPECIFICATION**
- See **HEATER PAD BACKREST AND CUSHION, REPLACING** (-2004) or **HEATER PAD BACKREST AND CUSHION, REPLACING** (2005-).
- see **CHECKING WIRING AND TERMINALS**

- **Continue**

  Refer to **VERIFICATION**

VERIFICATION

VERIFICATION

HINT: After carrying out the repair, check that the fault has been remedied.

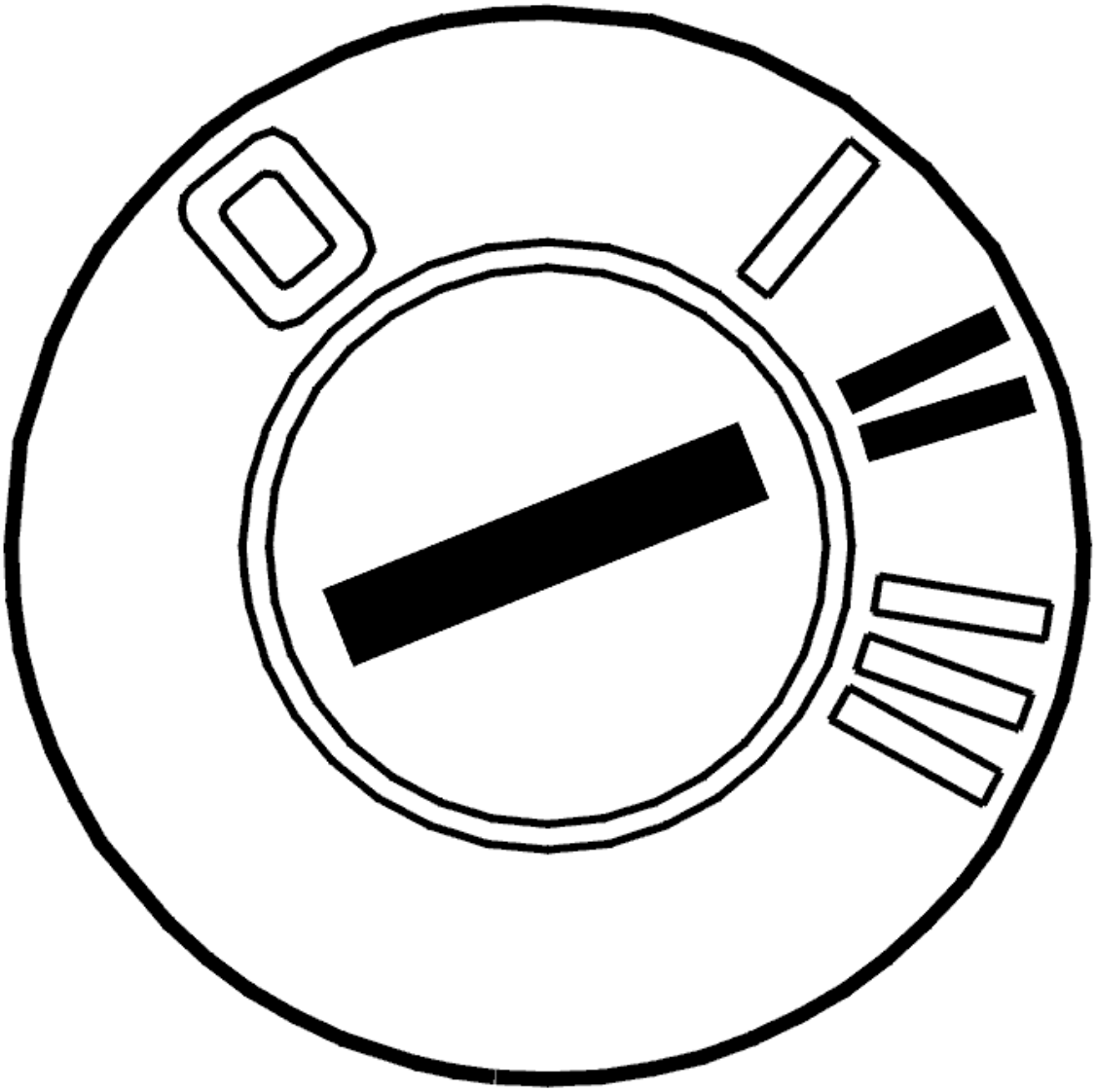

Fig. 379: Identifying Ignition ON
Courtesy of VOLVO CARS CORPORATION

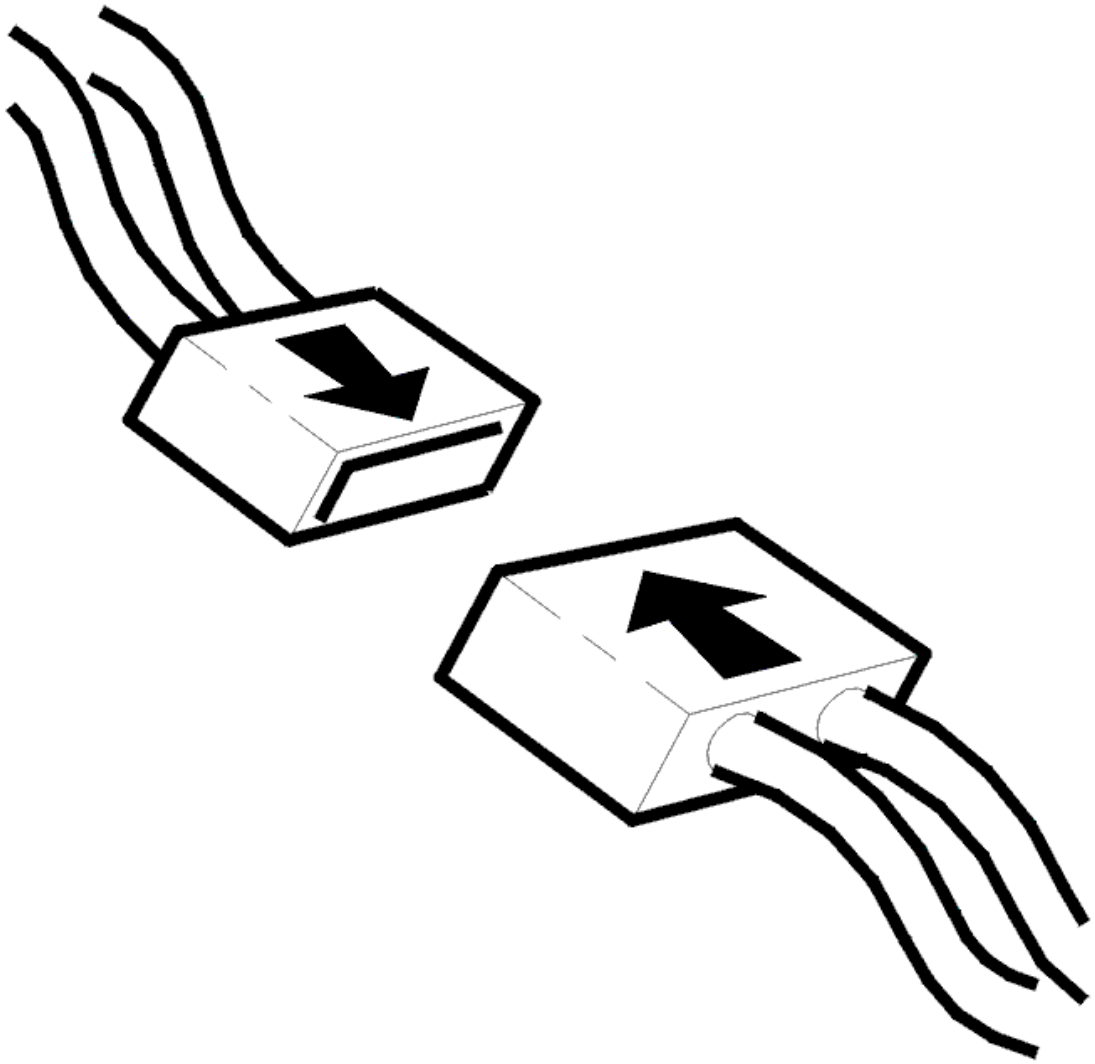

Fig. 380: Connecting Connector
Courtesy of VOLVO CARS CORPORATION

- Ignition off
- Reinstall the connectors, components etc.
- Ignition on.

  Read off the status of the seat belt reminder sensor. Check that the sensor changes status with and without a passenger in the passenger seat.

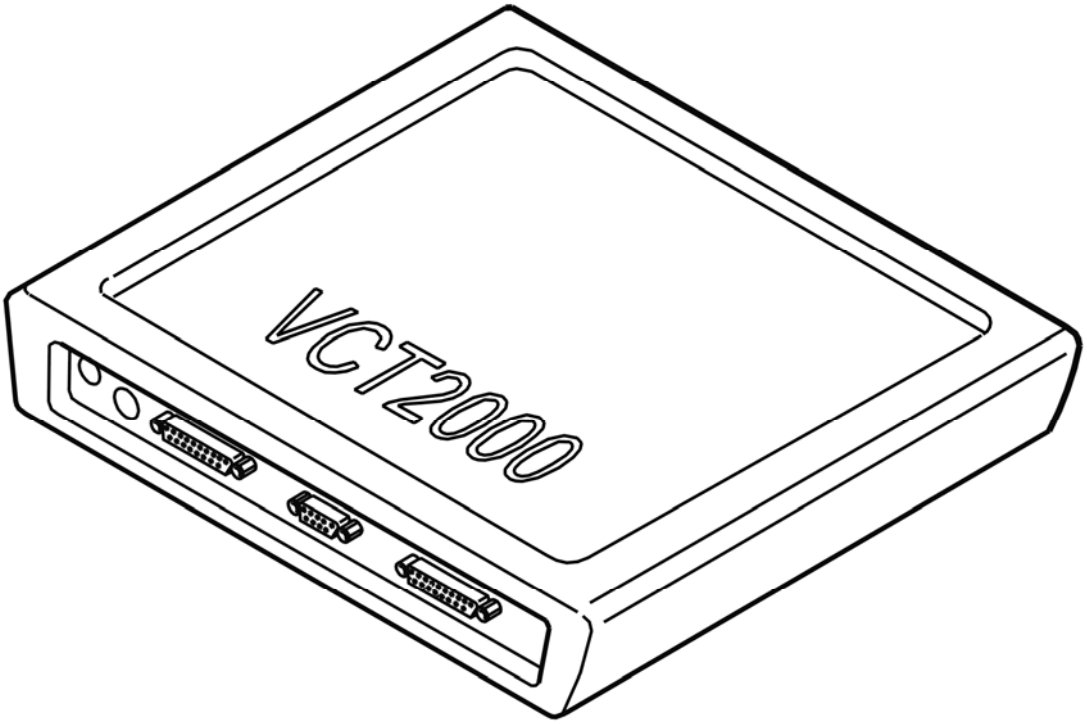

Fig. 381: Identifying VCT2000 Diagnostic Tool Symbol In VIDA
Courtesy of VOLVO CARS CORPORATION

Does the status of the seat belt reminder sensor change with and without a passenger?

- **YES**

  VERIFIED: Troubleshooting has been completed.

- **NO**

  Refer to **INFORMATION**

INFORMATION

FAULT-TRACING INFORMATION

The fault should have been detected and remedied. As this is not the case fault-tracing has failed.

Exit fault-tracing for this diagnostic trouble code (DTC) or make another attempt.

CEM-4F92: SEAT BELT REMINDER. SIGNAL MISSING (2005-2012)

DIAGNOSTIC TROUBLE CODE (DTC) INFORMATION CEM-4F92

Condition

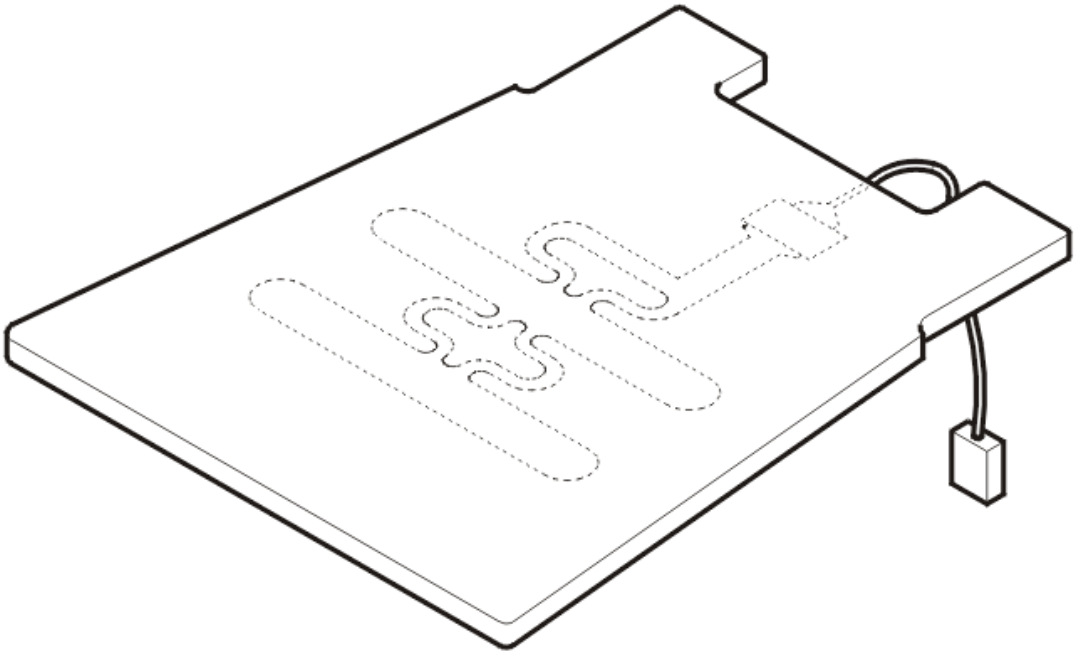

Fig. 382: Identifying Sensor For Seat Belt Reminder
Courtesy of VOLVO CARS CORPORATION

The central electronic module (CEM) checks the signal from the sensor for the seat belt reminder in the passenger seat.

The diagnostic trouble code (DTC) is stored if the central electronic module (CEM) registers that the signal from the sensor is missing.

The diagnostic trouble code (DTC) can be diagnosed with the ignition on and the battery voltage above 9 V.

Substitute Value

- None.

Possible Source

- Open-circuit in the signal cable.

Fault symptom[s]

- General warning lamp lit.

SIGNAL MISSING

CHECKING COMPONENTS AND WIRING

Check the connectors on the central electronic module (CEM) and the sensor for the seat belt reminder. Check for contract resistance and oxidation. Check for damage or loose connections.

Check the connectors between the central electronic module (CEM) and the sensor for the seat belt reminder. Check for an open-circuit.

Take readings between:

- Central electronic module (CEM) terminal D27 (#27) and seat belt reminder sensor terminal #1
- Central electronic module (CEM) terminal D28 (#28) and seat belt reminder sensor terminal #2.

Check the seat belt reminder sensor. Measure the resistance between terminals #1 and #2 in the sensor connector.

HINT: The resistance should be above 50 kohms with no passengers and below 50 kohms with passengers.

Remedy as necessary.

Other information

- see **CONNECTING THE BREAKOUT BOX**
- -2004: **SIGNAL SPECIFICATION**
- 2005-: **SIGNAL SPECIFICATION**
- See **HEATER PAD BACKREST AND CUSHION, REPLACING** (-2004) or **HEATER PAD BACKREST AND CUSHION, REPLACING** (2005-).
- see **CHECKING WIRING AND TERMINALS**

- **Continue**

  Refer to **VERIFICATION**

VERIFICATION

VERIFICATION

HINT: After carrying out the repair, check that the fault has been remedied.

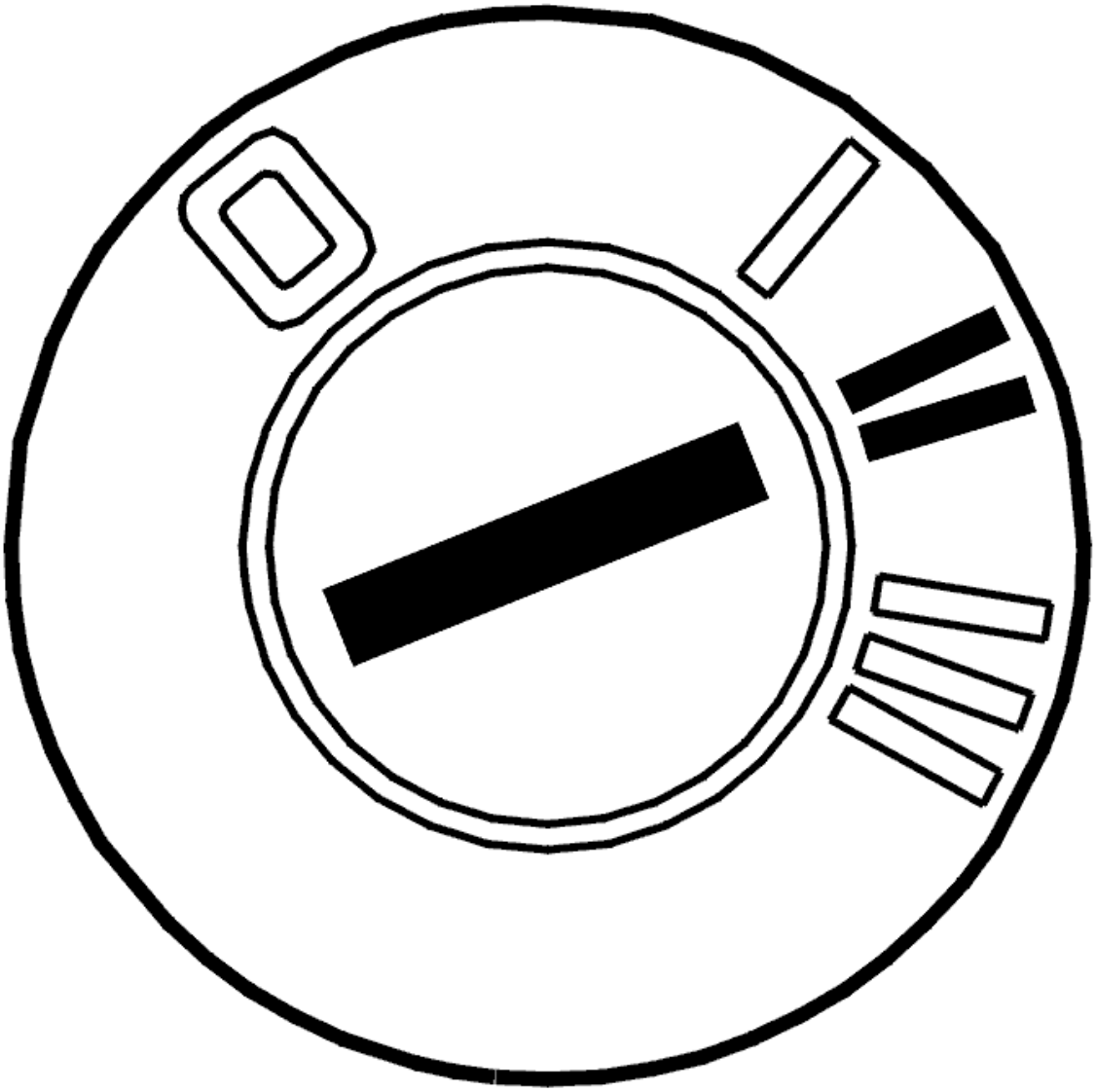

Fig. 383: Identifying Ignition ON
Courtesy of VOLVO CARS CORPORATION

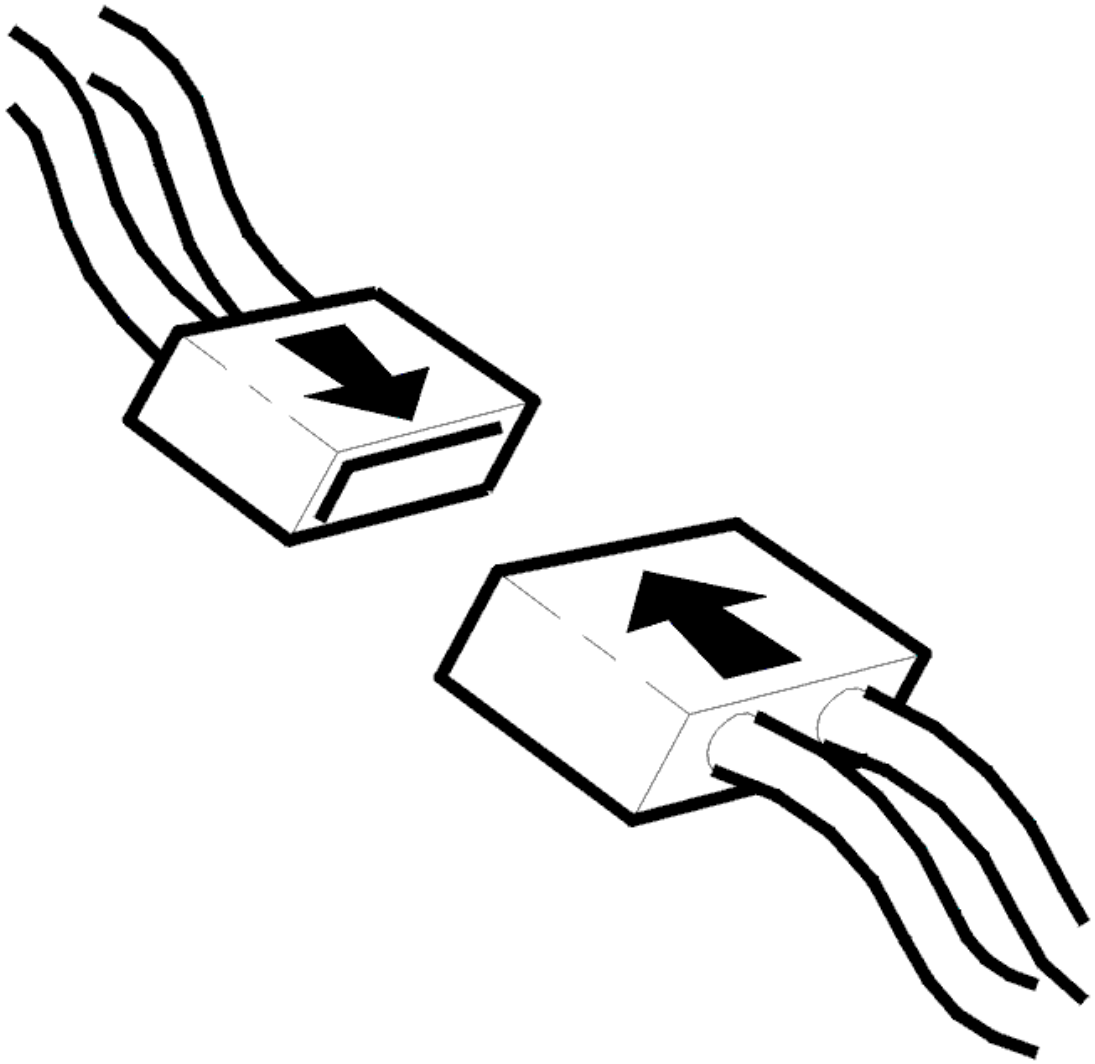

Fig. 384: Connecting Connector
Courtesy of VOLVO CARS CORPORATION

- Ignition off
- Reinstall the connectors, components etc.
- Ignition on.

  Read off the status of the seat belt reminder sensor. Check that the sensor changes status with and without a passenger in the passenger seat.

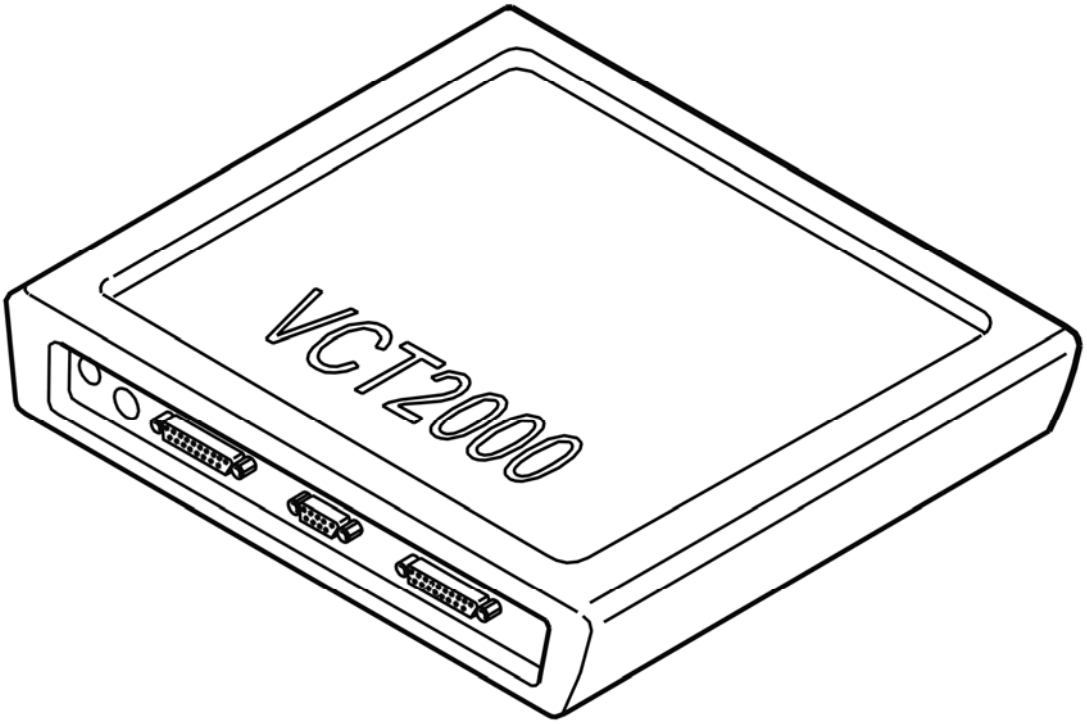

Fig. 385: Identifying VCT2000 Diagnostic Tool Symbol In VIDA
Courtesy of VOLVO CARS CORPORATION

Does the status of the seat belt reminder sensor change with and without a passenger?

- **YES**

  VERIFIED: Troubleshooting has been completed.

- **NO**

  Refer to **INFORMATION**

INFORMATION

FAULT-TRACING INFORMATION

The fault should have been detected and remedied. As this is not the case fault-tracing has failed.

Exit fault-tracing for this diagnostic trouble code (DTC) or make another attempt.

CEM-4F93: SEAT BELT REMINDER. FAULTY SIGNAL (2005-2012)

DIAGNOSTIC TROUBLE CODE (DTC) INFORMATION CEM-4F93

Condition

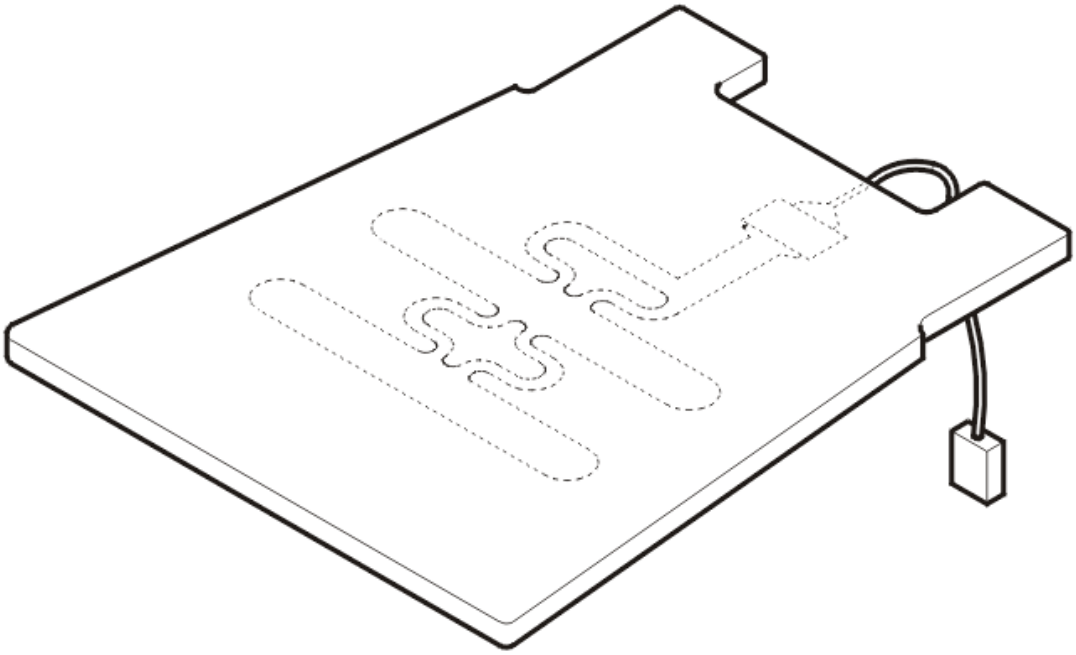

Fig. 386: Identifying Sensor For Seat Belt Reminder
Courtesy of VOLVO CARS CORPORATION

The central electronic module (CEM) checks the signal from the sensor for the seat belt reminder in the passenger seat.

The diagnostic trouble code (DTC) is stored if the central electronic module (CEM) registers that the signal from the sensor is faulty.

The diagnostic trouble code (DTC) can be diagnosed with the ignition on and the battery voltage above 9 V.

Substitute Value

- None.

Possible Source

- Short-circuit between the signal cables
- Damaged sensor, seat belt reminder.

Fault symptom[s]

- General warning lamp lit.

FAULTY SIGNAL

CHECKING COMPONENTS AND WIRING

Check the connectors on the central electronic module (CEM) and the sensor for the seat belt reminder. Check for contract resistance and oxidation. Check for damage or loose connections.

Check the signal cables between central electronic module (CEM) terminals D27 (#27) and D28 (#28) with the seat belt reminder sensor disconnected by measuring the resistance. Check for a short-circuit to each other. The resistance must be infinite.

Check the seat belt reminder sensor. Measure the resistance between terminals #1 and #2 in the sensor connector.

HINT: The resistance should be above 50 kohms with no passengers and below 50 kohms with passengers.

Remedy as necessary.

Other information

- see **CONNECTING THE BREAKOUT BOX**
- -2004: **SIGNAL SPECIFICATION**
- 2005-: **SIGNAL SPECIFICATION**
- See **HEATER PAD BACKREST AND CUSHION, REPLACING** (-2004) or **HEATER PAD BACKREST AND CUSHION, REPLACING** (2005-).
- see **CHECKING WIRING AND TERMINALS**

- **Continue**

  Refer to **VERIFICATION**

VERIFICATION

VERIFICATION

HINT: After carrying out the repair, check that the fault has been remedied.

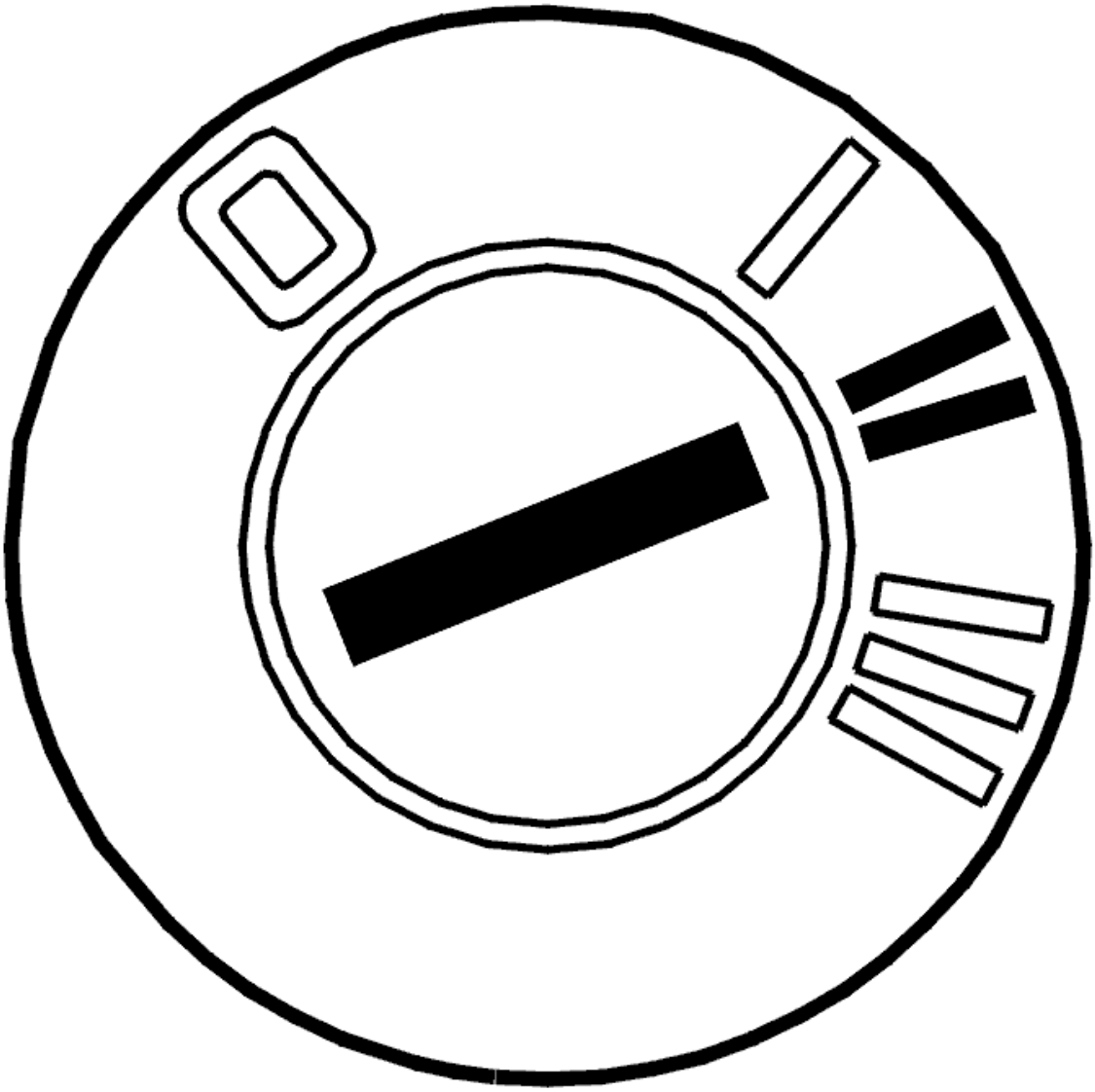

Fig. 387: Identifying Ignition ON
Courtesy of VOLVO CARS CORPORATION

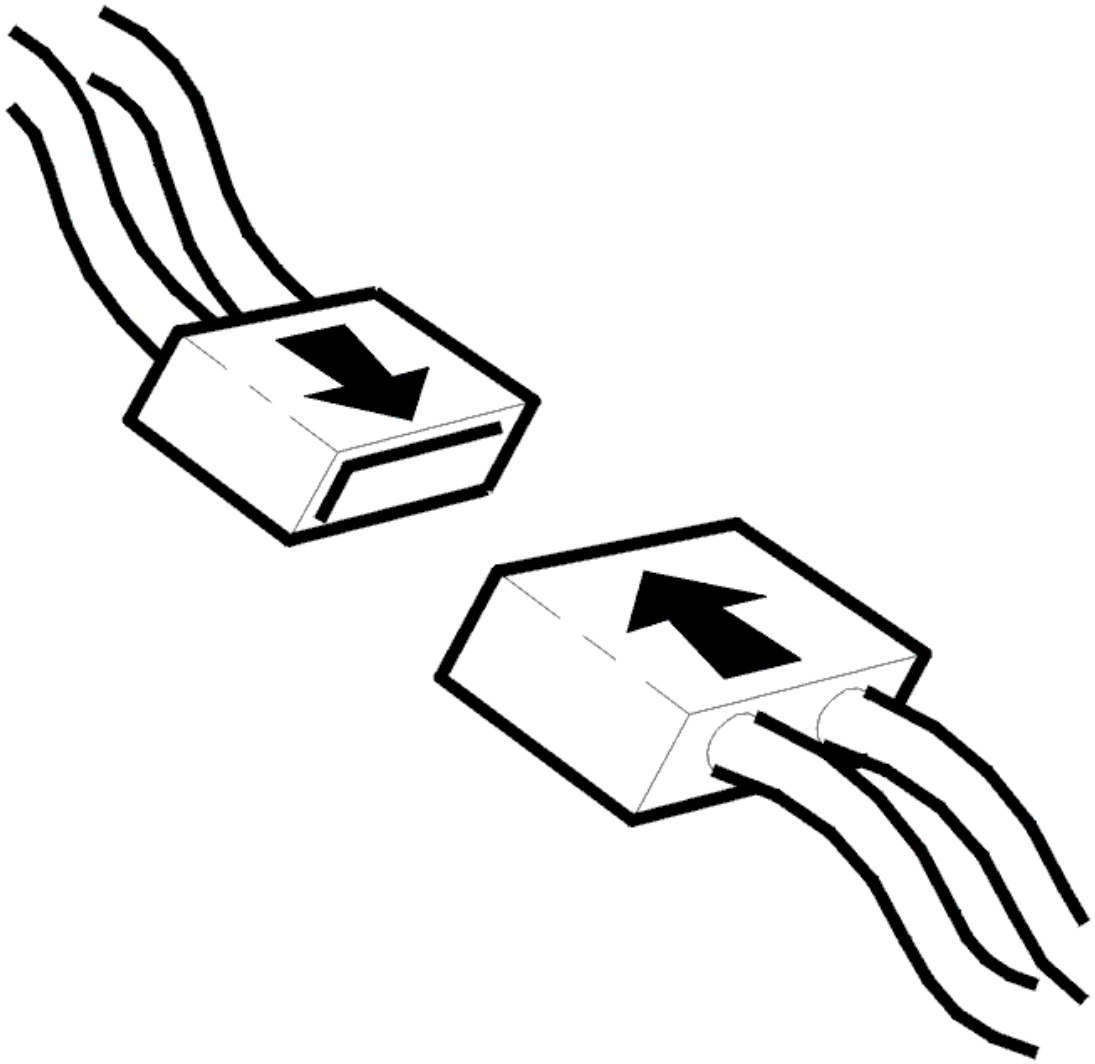

Fig. 388: Connecting Connector
Courtesy of VOLVO CARS CORPORATION

- Ignition off
- Reinstall the connectors, components etc.
- Ignition on.

  Read off the status of the seat belt reminder sensor. Check that the sensor changes status with and without a passenger in the passenger seat.

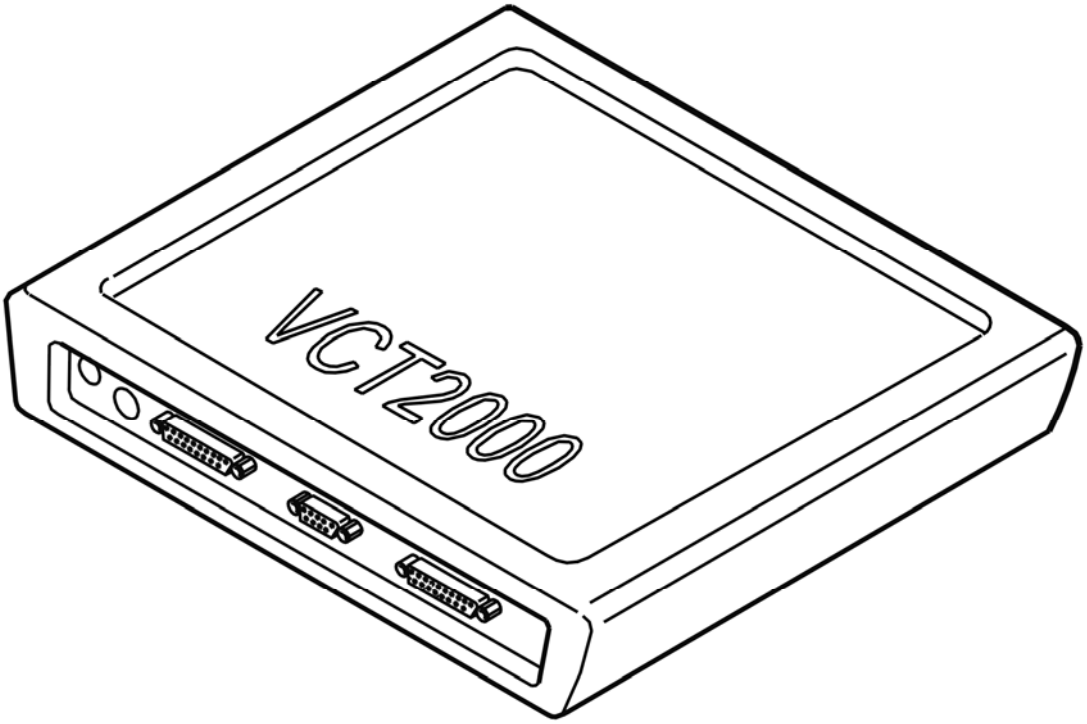

Fig. 389: Identifying VCT2000 Diagnostic Tool Symbol In VIDA
Courtesy of VOLVO CARS CORPORATION

Does the status of the seat belt reminder sensor change with and without a passenger?

- **YES**

  VERIFIED: Troubleshooting has been completed.

- **NO**

  Refer to **INFORMATION**

INFORMATION

FAULT-TRACING INFORMATION

The fault should have been detected and remedied. As this is not the case fault-tracing has failed.

Exit fault-tracing for this diagnostic trouble code (DTC) or make another attempt.

CEM-5A00: SUN SENSOR. SIGNAL TOO HIGH (2005-2012)

DIAGNOSTIC TROUBLE CODE (DTC) INFORMATION CEM-5A00

Condition

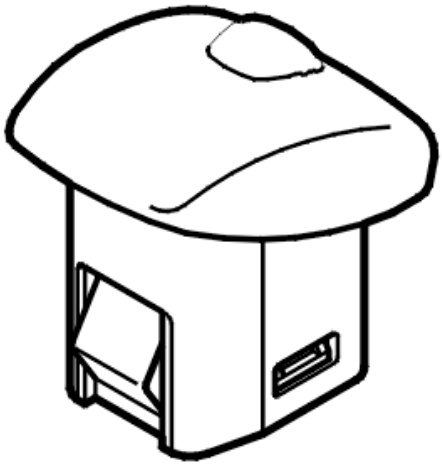

Fig. 390: Identifying Twilight Sensor
Courtesy of VOLVO CARS CORPORATION

The central electronic module (CEM) checks the signal from the sun sensor.

The diagnostic trouble code (DTC) is stored if the central electronic module (CEM) registers that the signal from the sensor is too high.

The diagnostic trouble code (DTC) can be diagnosed when the ignition is switched on.

Substitute Value

- The control module adopts a substitute value corresponding to approximately 20% (200 W/m^2) of maximum solar heat.

Possible Source

- Short-circuit to supply voltage in the signal cable between the control module and the sun sensor
- Damaged sun sensor.

Fault symptom[s]

- The passenger compartment temperature does not drop when the sun intensity is high.

SIGNAL TOO HIGH

CHECKING THE COMPONENT

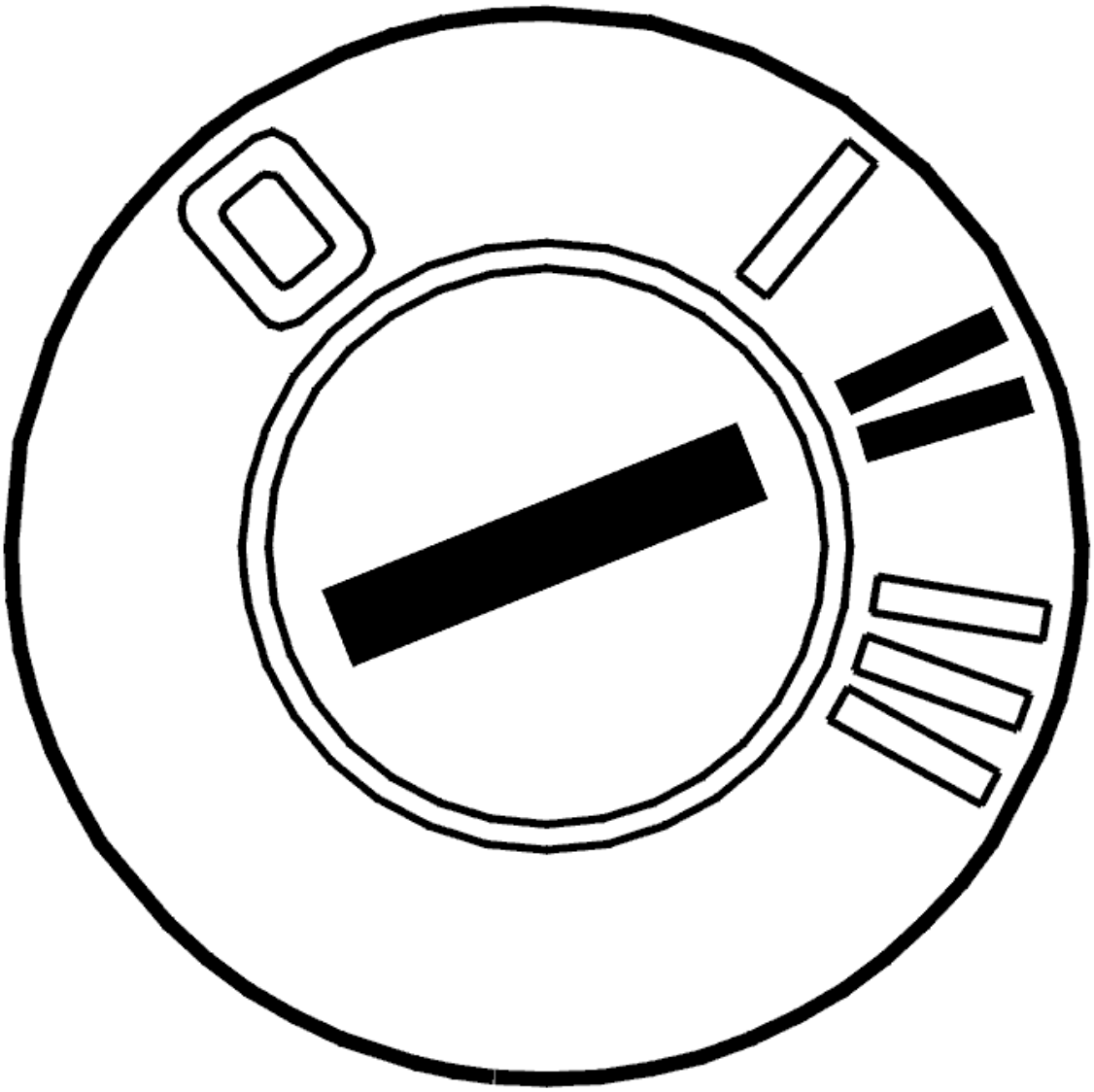

Fig. 391: Identifying Ignition ON
Courtesy of VOLVO CARS CORPORATION

- Ignition on.

  Check the sun sensor signal by varying the intensity of the light that it detects.

  Cover the sun sensor with your hand to obtain the minimum signal, approximately 0.5 volts.

  Then direct a strong light source (for example a flashlight) at the sun sensor from close range to increase

the signal.

HINT: If the signal from the sun sensor is constantly above 4.85 volts, there is either an open-circuit in the cable or the sun sensor is defective.

NOTE: The illustration only shows the method. The appearance of the sun sensor can vary between different models.

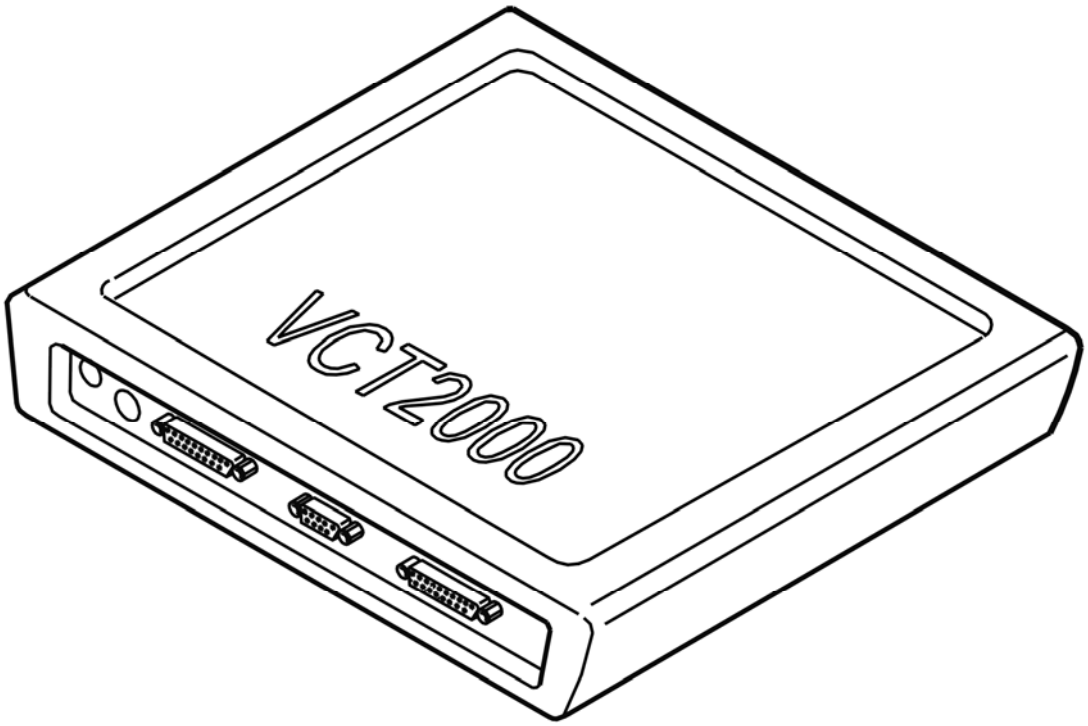

Fig. 392: Identifying VCT2000 Diagnostic Tool Symbol In VIDA
Courtesy of VOLVO CARS CORPORATION

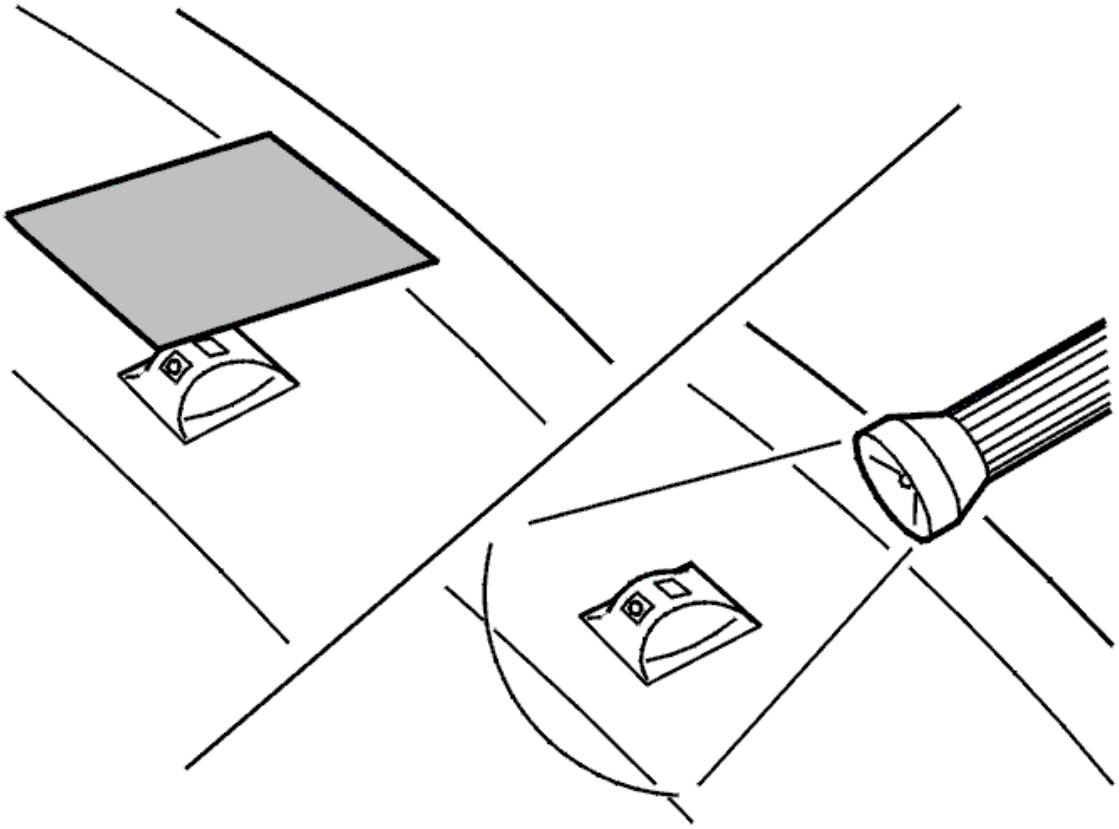

Fig. 393: Identifying Sun Sensor
Courtesy of VOLVO CARS CORPORATION

- **Continue**

  Refer to **CHECKING THE WIRING**

CHECKING THE WIRING

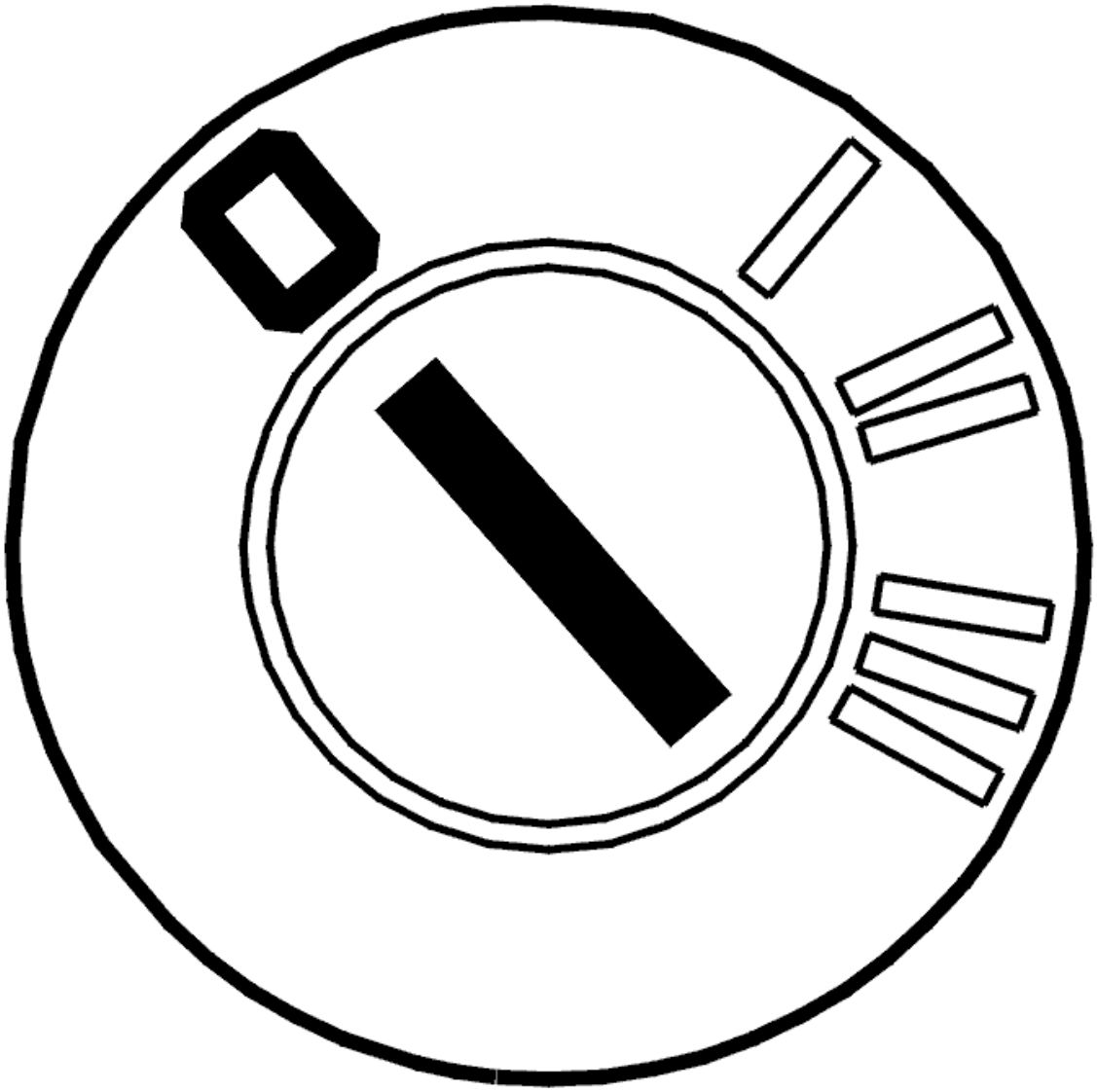

Fig. 394: Identifying Ignition OFF
Courtesy of VOLVO CARS CORPORATION

- Ignition off.

  Check the signal cable between the central electronic module (CEM) and the sun sensor. Check for an open-circuit. Check for a short-circuit to supply voltage.

  Take readings between:

  - Central electronic module (CEM) terminal #D30 (#30) and sun sensor terminal #1
  - Central electronic module (CEM) terminal #D42 (#42) and sun sensor terminal #5.

  Remedy as necessary.

  Other information

- see **CONNECTING THE BREAKOUT BOX**
- -2004: **SIGNAL SPECIFICATION**
- 2005-: **SIGNAL SPECIFICATION**
- see **SUN SENSOR / ALARM LED, REPLACING**
- For -2004, see: **CENTRAL ELECTRONIC MODULE (CEM), REPLACING**
- For 2005-, see: **CENTRAL ELECTRONIC MODULE (CEM), REPLACING** .
- see **CHECKING WIRING AND TERMINALS**

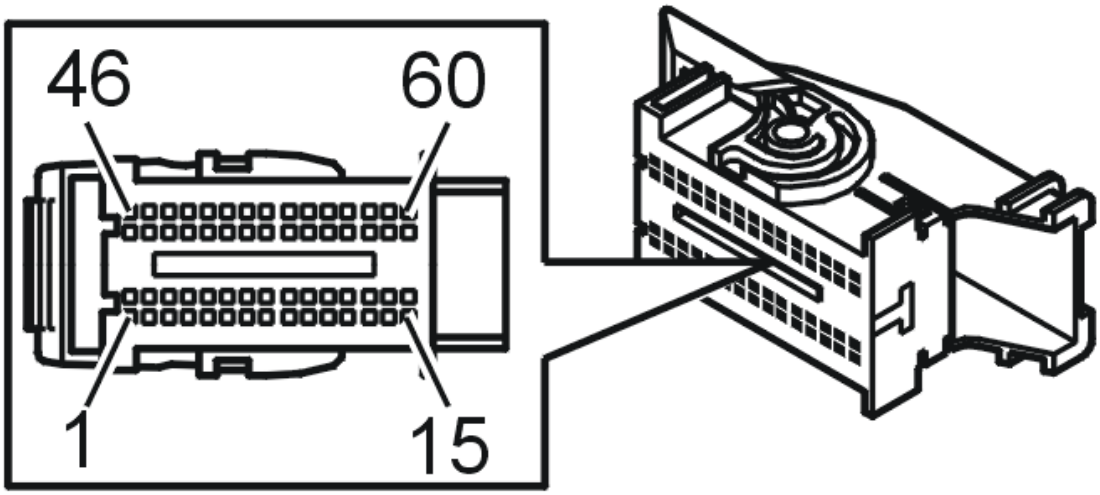

Fig. 395: Identifying Connector D
Courtesy of VOLVO CARS CORPORATION

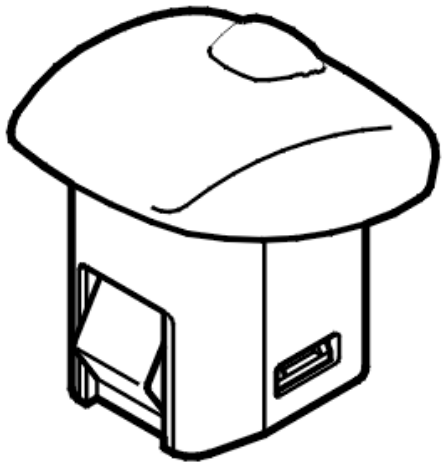

Fig. 396: Identifying Twilight Sensor
Courtesy of VOLVO CARS CORPORATION

- **Continue**

  Refer to **VERIFICATION**

VERIFICATION

VERIFICATION

HINT: After carrying out the repair, check that the fault has been remedied.

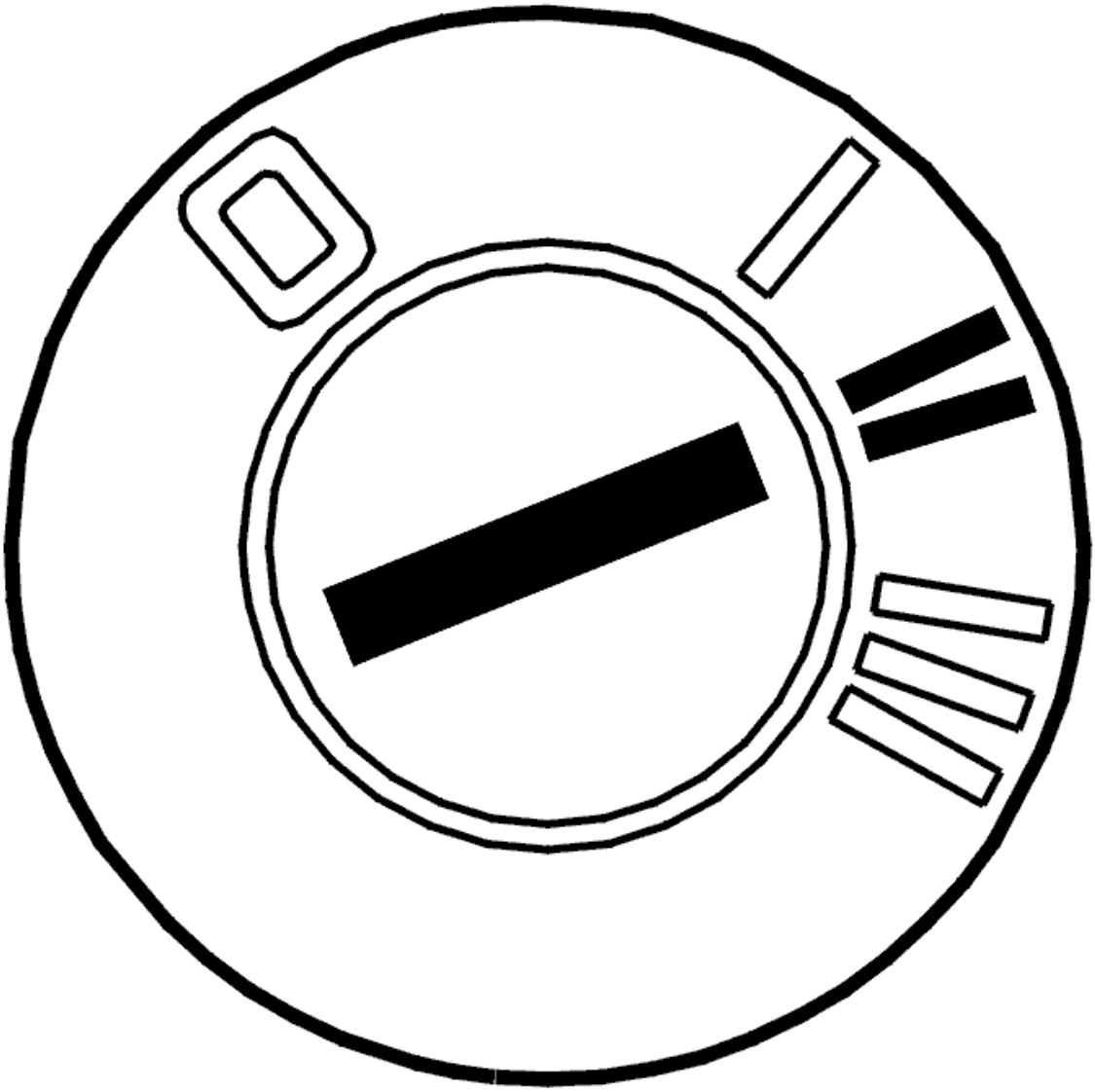

Fig. 397: Identifying Ignition ON
Courtesy of VOLVO CARS CORPORATION

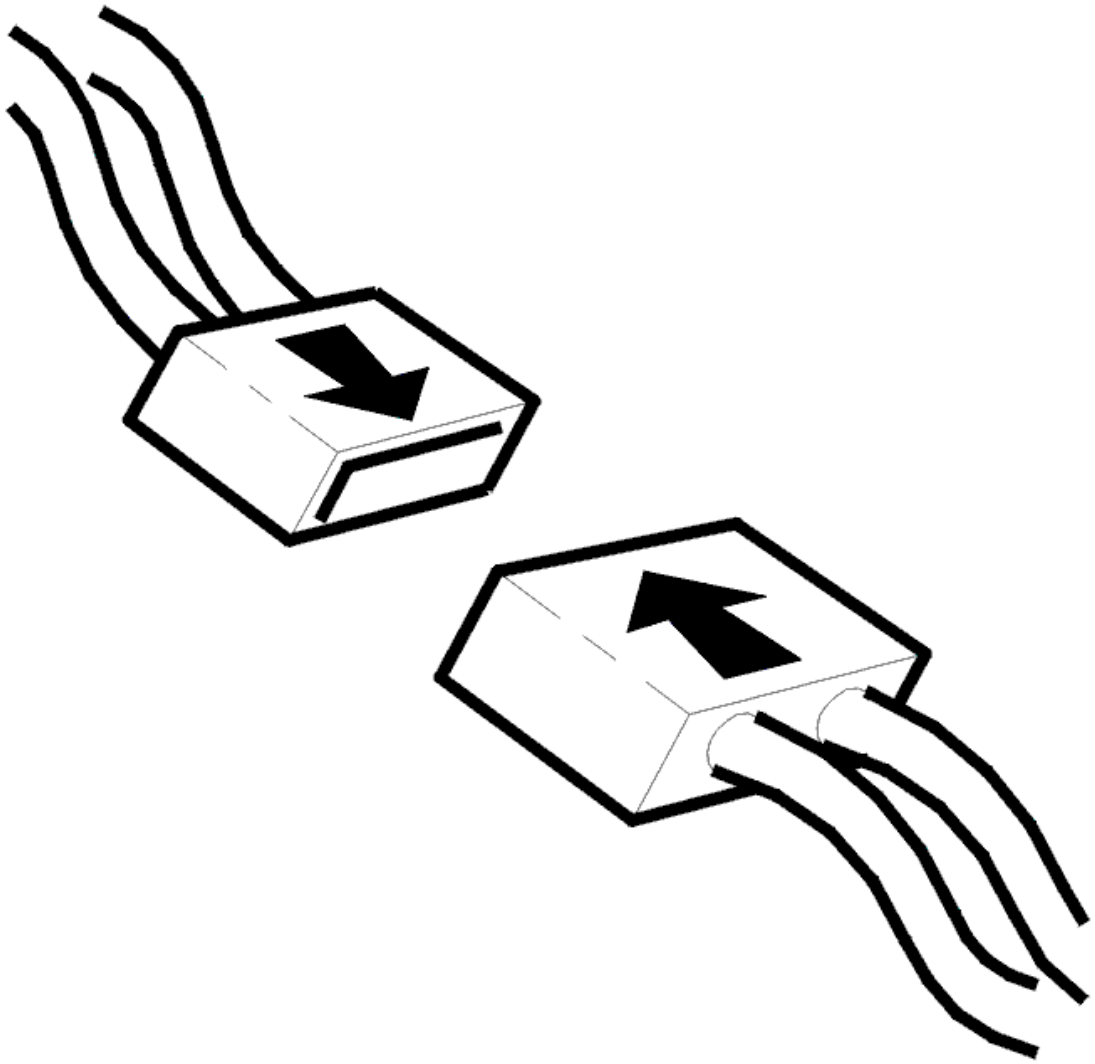

Fig. 398: Connecting Connector
Courtesy of VOLVO CARS CORPORATION

- Ignition off
- Reinstall the connectors, components etc.
- Ignition on.

  Check the signal from the sun sensor by varying the light intensity at the sun sensor. Cover the sun sensor with your hand to obtain a minimal signal. Then direct a strong light source (for example a flashlight) at the sun sensor from close range to obtain a maximum signal.

  The value must vary between approximately 0.5 and 4.85 V.

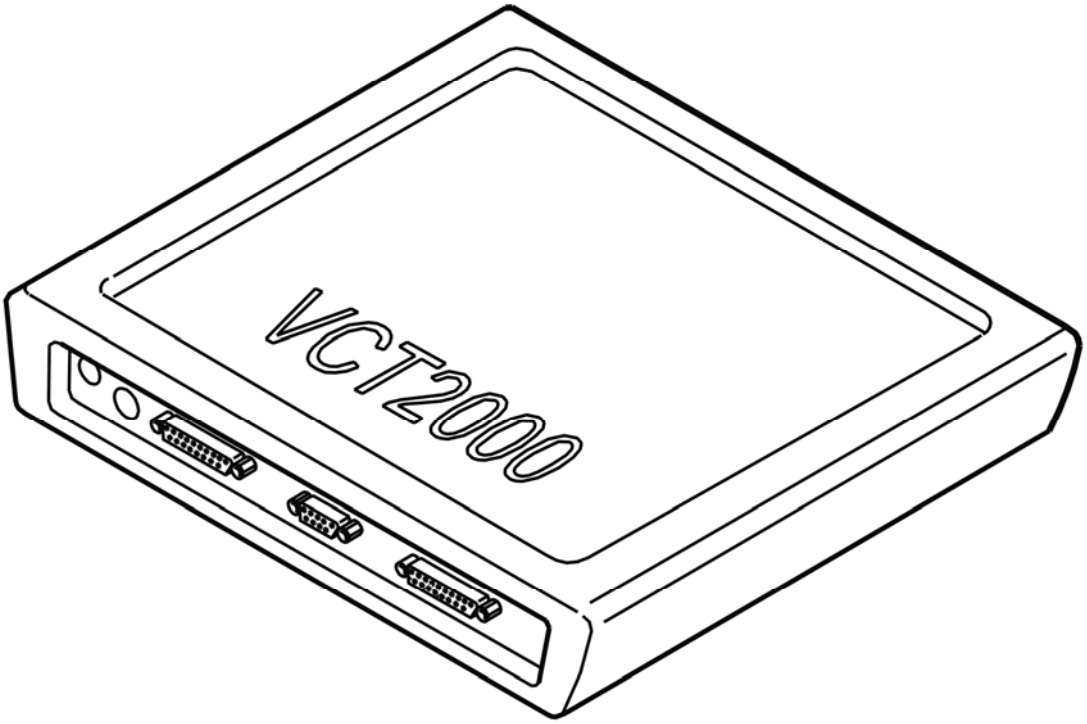

Fig. 399: Identifying VCT2000 Diagnostic Tool Symbol In VIDA
Courtesy of VOLVO CARS CORPORATION

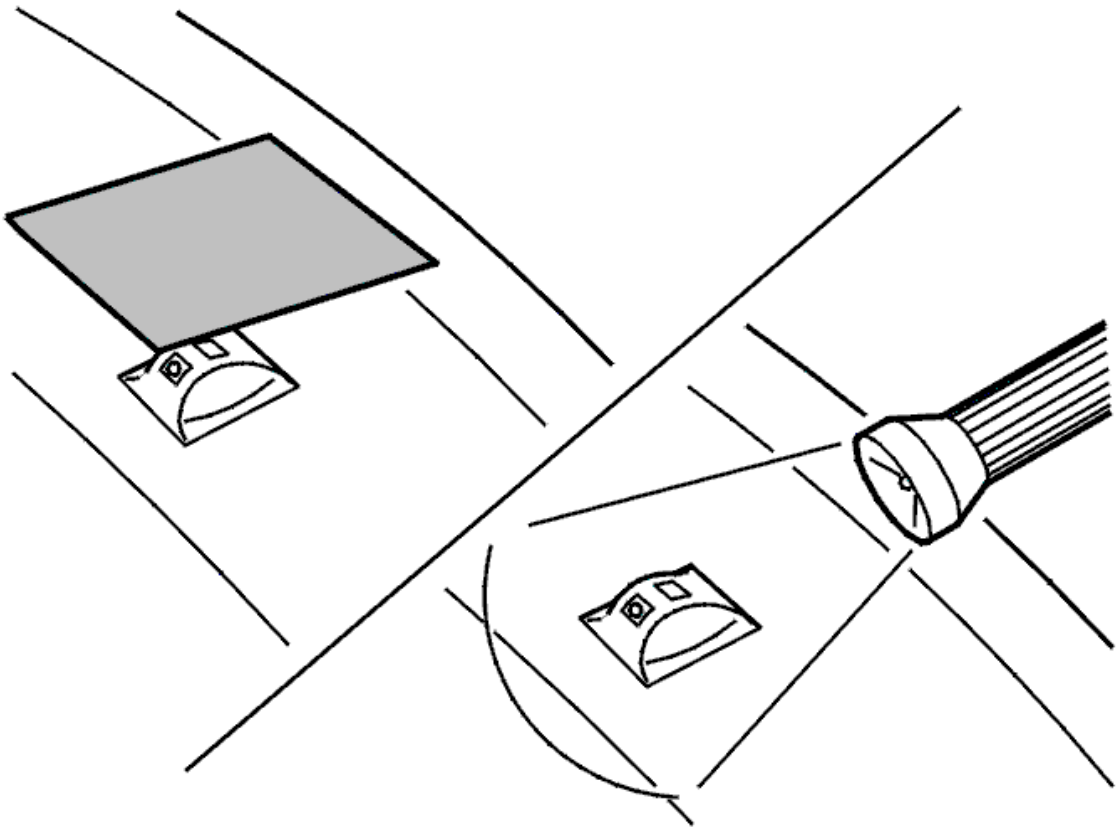

Fig. 400: Identifying Sun Sensor
Courtesy of VOLVO CARS CORPORATION

Is the function OK?

- **YES**

  VERIFIED: Troubleshooting has been completed.

- **NO**

  Refer to **INFORMATION**

INFORMATION

FAULT-TRACING INFORMATION

The fault should have been detected and remedied. As this is not the case fault-tracing has failed.

Exit fault-tracing for this diagnostic trouble code (DTC) or make another attempt.

CEM-5A01: SUN SENSOR. SIGNAL TOO LOW (2005-2012)

DIAGNOSTIC TROUBLE CODE (DTC) INFORMATION CEM-5A01

Condition

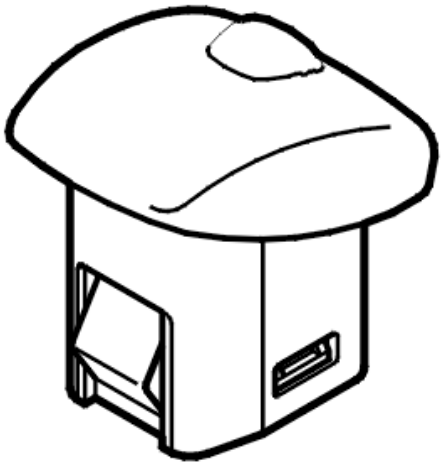

Fig. 401: Identifying Twilight Sensor
Courtesy of VOLVO CARS CORPORATION

The central electronic module (CEM) checks the signal from the sun sensor.

The diagnostic trouble code (DTC) is stored if the central electronic module (CEM) registers that the signal from the sensor is too low.

The diagnostic trouble code (DTC) can be diagnosed when the ignition is switched on.

Substitute Value

- The control module adopts a substitute value corresponding to approximately 20% (200 W/m^2) of maximum solar heat.

Possible Source

- Short-circuit to ground in the signal cable between the control module and the sun sensor
- Damaged sun sensor.

Fault symptom[s]

- The passenger compartment temperature does not drop when the sun intensity is high.

SIGNAL TOO LOW

CHECKING THE COMPONENT

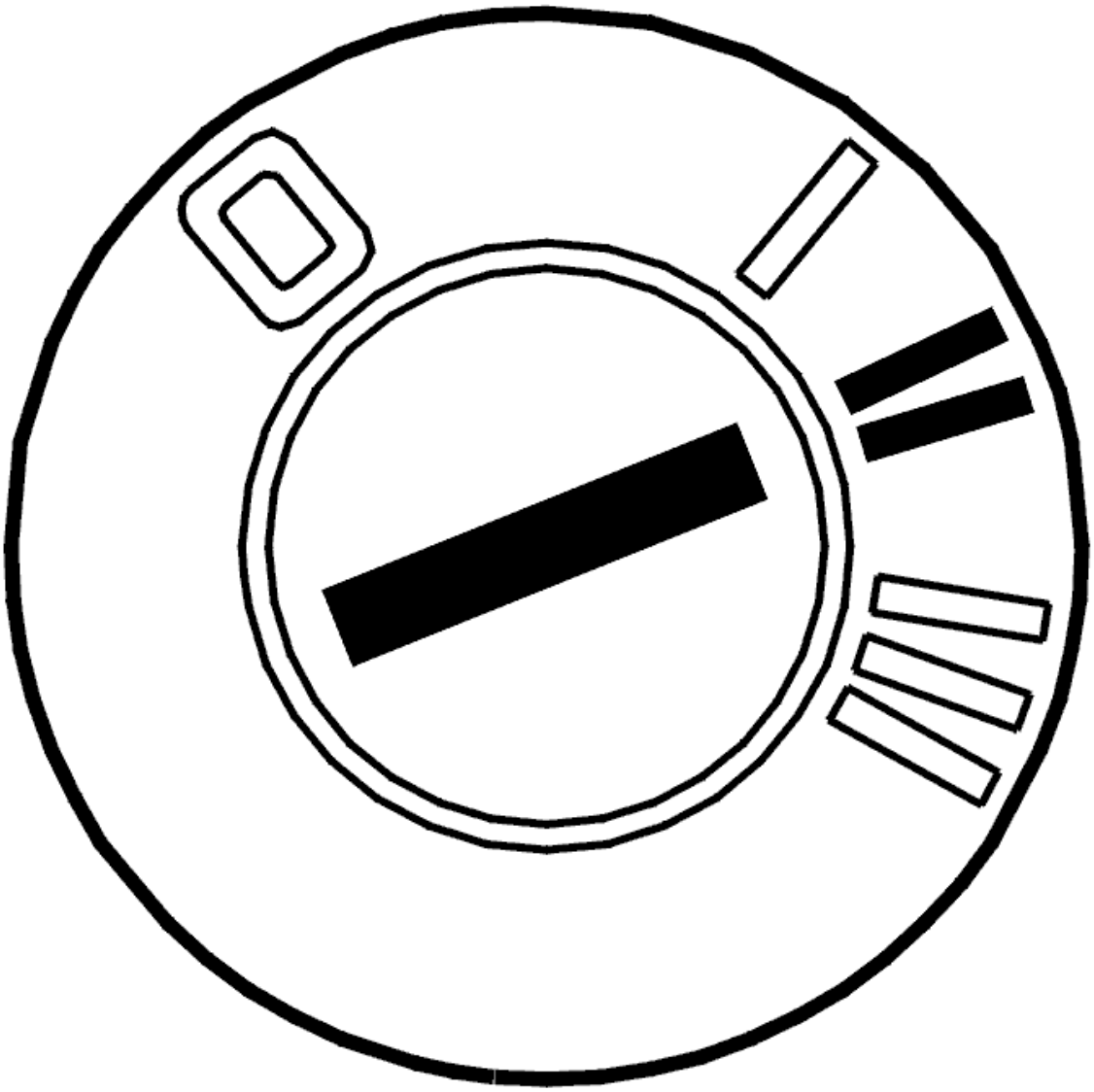

Fig. 402: Identifying Ignition ON
Courtesy of VOLVO CARS CORPORATION

- Ignition on.

  If the fault is intermittent, it has been registered previously but is no longer present. Intermittent faults can be caused by interference at start up of the central electronic module (CEM) or may be a different type of fault which occurs on different occasions. The fault is evaluated depending on how it occurs.

  Vary the light intensity. Read off the signal from the sun sensor.

Cover the sun sensor with your hand to obtain the minimum signal, approximately 0.5 volts.

Then direct a strong light source (for example a flashlight) at the sun sensor from close range to increase the signal.

HINT: The value must vary between approximately 0.5 and 4.85 V.

NOTE: The illustration only shows the method. The appearance of the sun sensor can vary between different models.

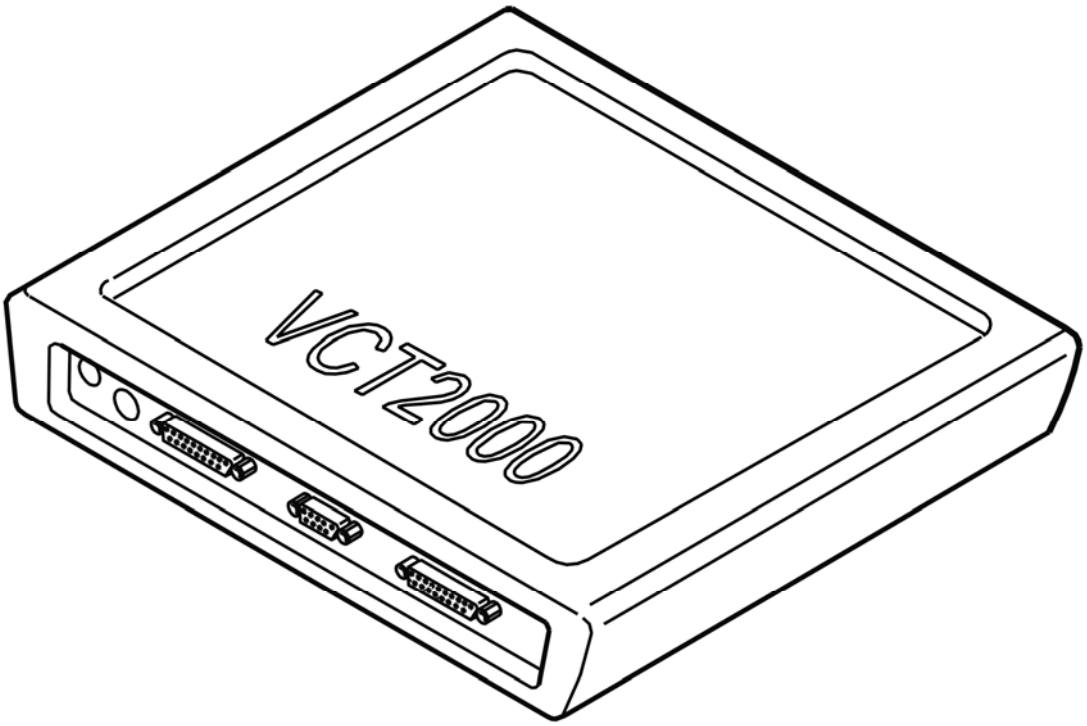

Fig. 403: Identifying VCT2000 Diagnostic Tool Symbol In VIDA
Courtesy of VOLVO CARS CORPORATION

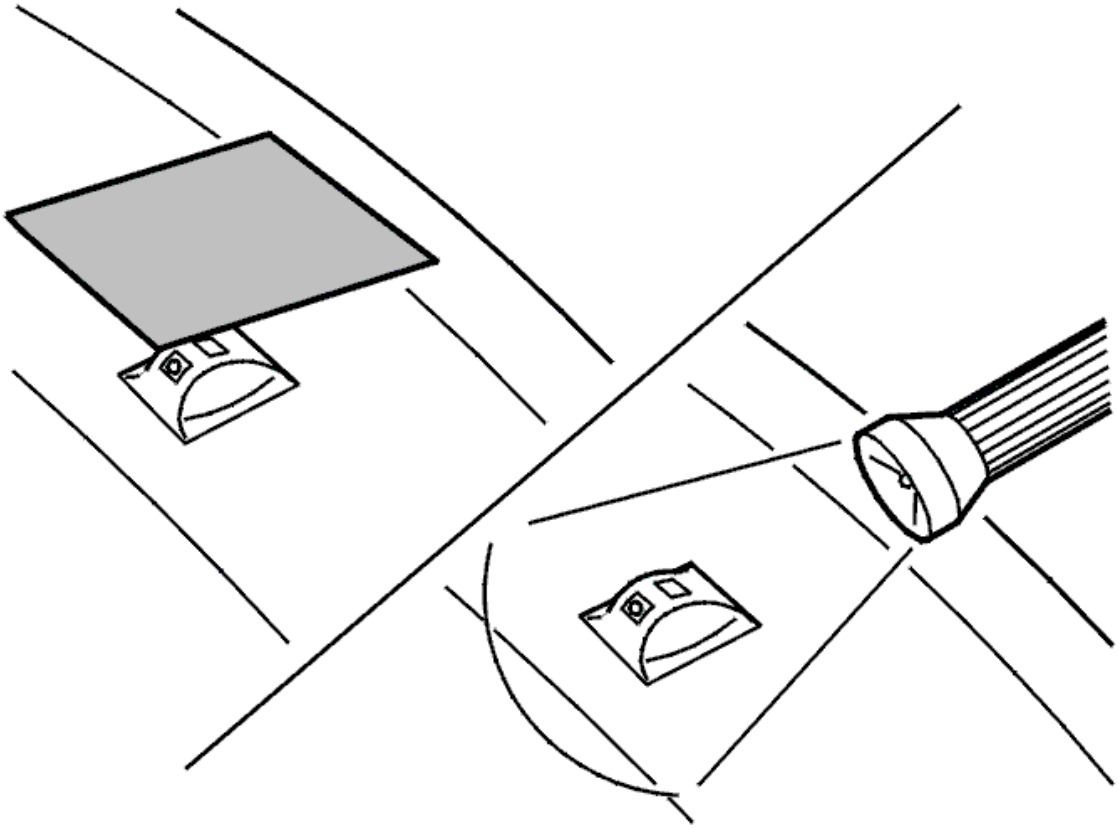

Fig. 404: Identifying Sun Sensor
Courtesy of VOLVO CARS CORPORATION

Is the function OK?

- **YES**

  OKAY: Troubleshooting has been completed.

- **NO**

  Refer to **CHECKING THE WIRING**

CHECKING THE WIRING

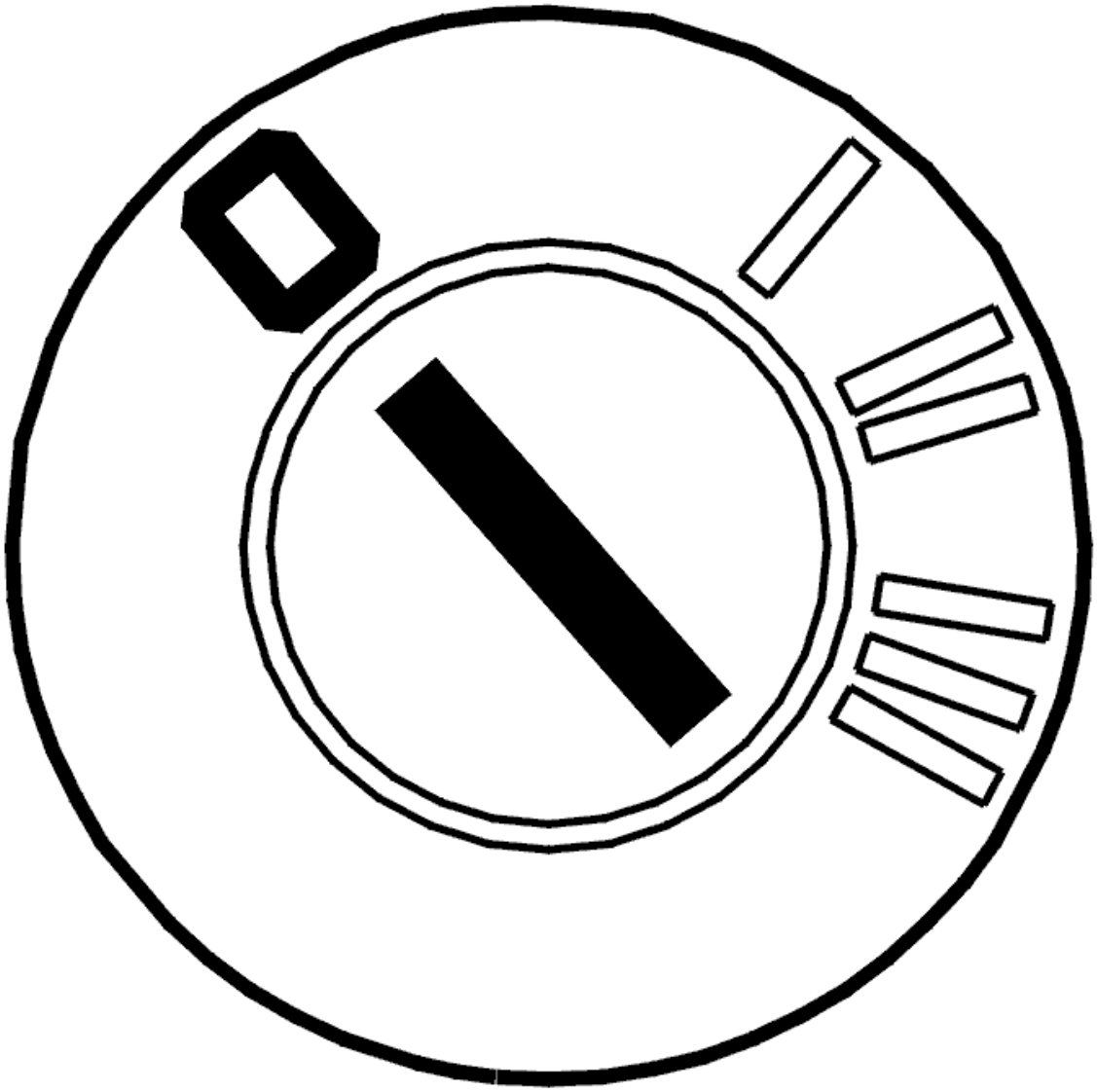

Fig. 405: Identifying Ignition OFF
Courtesy of VOLVO CARS CORPORATION

- Ignition off.

  Check the wiring between the central electronic module (CEM) and sun sensor. Check for contract resistance and oxidation. Check for damage.

  Check the wiring between the central electronic module (CEM) and the sun sensor. Check for a short-circuit to ground.

  Take readings between:

  - Central electronic module (CEM) terminal #D30 (#30) and sun sensor terminal #1
  - Central electronic module (CEM) terminal #D42 (#42) and sun sensor terminal #5.

Replace the sun sensor if no fault is found in the wiring.

Remedy as necessary.

Other information

- see **CONNECTING THE BREAKOUT BOX**
- -2004: **SIGNAL SPECIFICATION**
- 2005-: **SIGNAL SPECIFICATION**
- see **SUN SENSOR / ALARM LED, REPLACING**
- For -2004, see: **CENTRAL ELECTRONIC MODULE (CEM), REPLACING**
- For 2005-, see: **CENTRAL ELECTRONIC MODULE (CEM), REPLACING** .
- see **CHECKING WIRING AND TERMINALS**

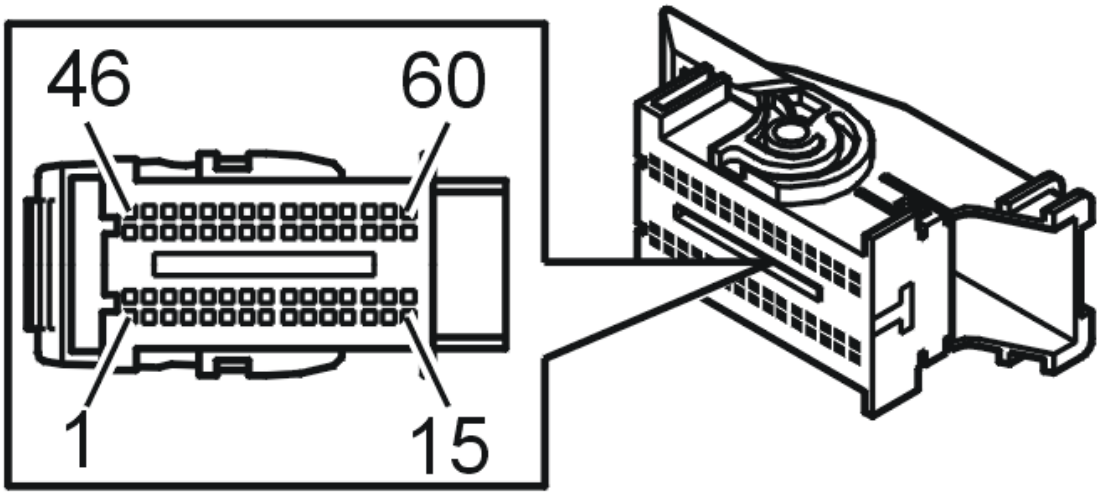

Fig. 406: Identifying Connector D
Courtesy of VOLVO CARS CORPORATION

- **Continue**

Refer to **VERIFICATION**

VERIFICATION

VERIFICATION

HINT: After carrying out the repair, check that the fault has been remedied.

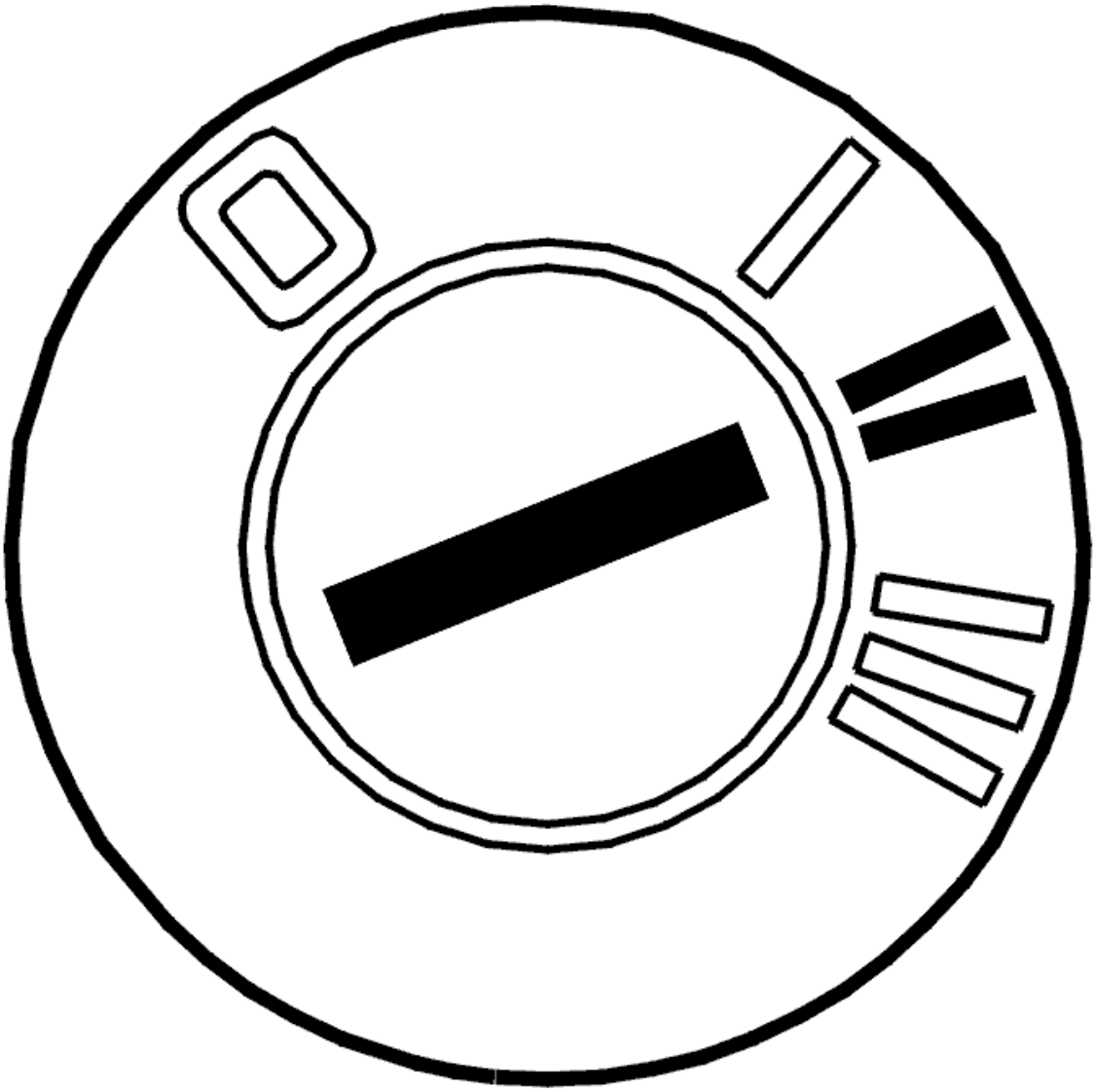

Fig. 407: Identifying Ignition ON
Courtesy of VOLVO CARS CORPORATION

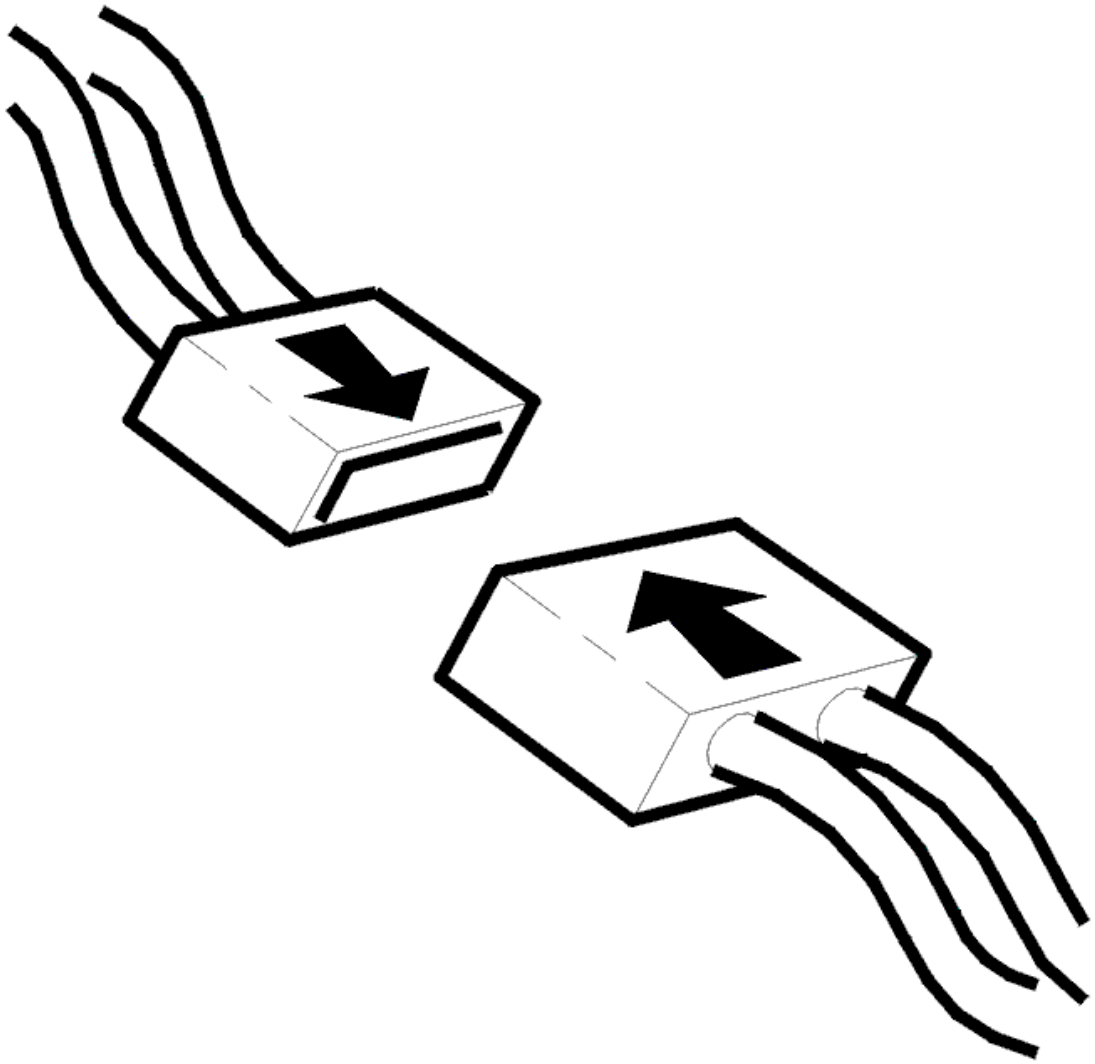

Fig. 408: Connecting Connector
Courtesy of VOLVO CARS CORPORATION

- Ignition off
- Reinstall the connectors, components etc.
- Ignition on.

  Check the signal from the sun sensor by varying the light intensity at the sun sensor. Cover the sun sensor with your hand to obtain a minimal signal. Then direct a strong light source (for example a flashlight) at the sun sensor from close range to obtain a maximum signal.

  The value must vary between approximately 0.5 and 4.85 V.

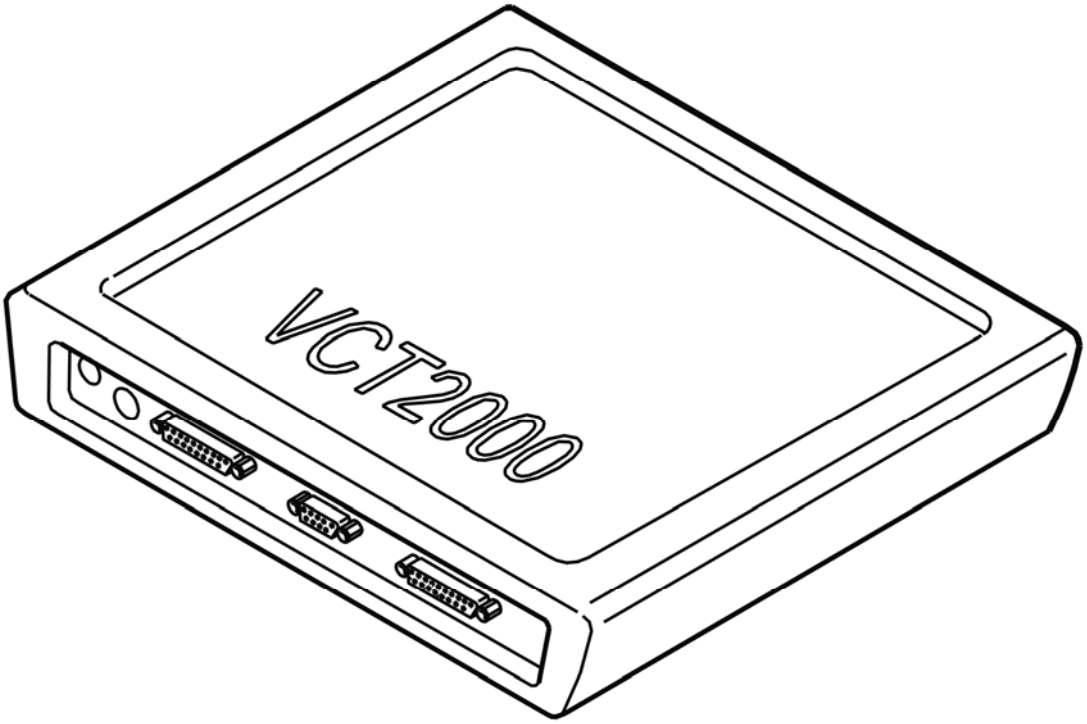

Fig. 409: Identifying VCT2000 Diagnostic Tool Symbol In VIDA
Courtesy of VOLVO CARS CORPORATION

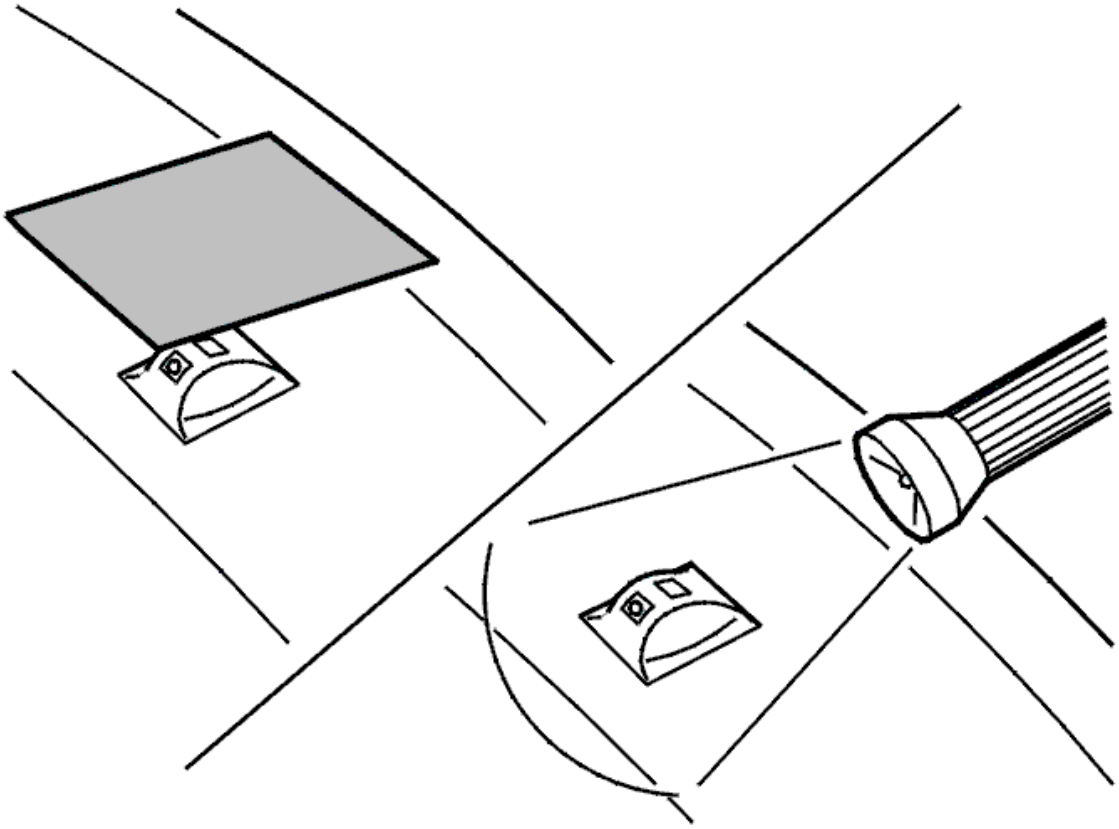

Fig. 410: Identifying Sun Sensor
Courtesy of VOLVO CARS CORPORATION

Is the function OK?

- **YES**

  VERIFIED: Troubleshooting has been completed.

- **NO**

  Refer to **INFORMATION**

INFORMATION

FAULT-TRACING INFORMATION

The fault should have been detected and remedied. As this is not the case fault-tracing has failed.

Exit fault-tracing for this diagnostic trouble code (DTC) or make another attempt.

CEM-5B01: LH HEATING ELEMENT. SIGNAL FAULTY. INTERMITTENT FAULT (2003-2004)

DIAGNOSTIC TROUBLE CODE (DTC) INFORMATION

Condition

The central electronic module (CEM) communicates with the left-hand seat heating module (SHM).

The diagnostic trouble code (DTC) is stored if the central electronic module (CEM) receives information from the left-hand seat heating module (SHM) registering a fault in the heater pad.

The voltage in the central electronic module (CEM) must exceed 10.5 V for at least 1.5 seconds in order for the diagnostic trouble code (DTC) to be detected.

The diagnostic trouble code (DTC) can be diagnosed at key position II.

Substitute Value

- None.

Possible Source

- Defective seat heater pad in the left-hand seat.

Fault symptom[s]

- The front seat heating does not function.

FAULTY SIGNAL. INTERMITTENT FAULT

CHECKING FOR CONTACT RESISTANCE AND OXIDATION

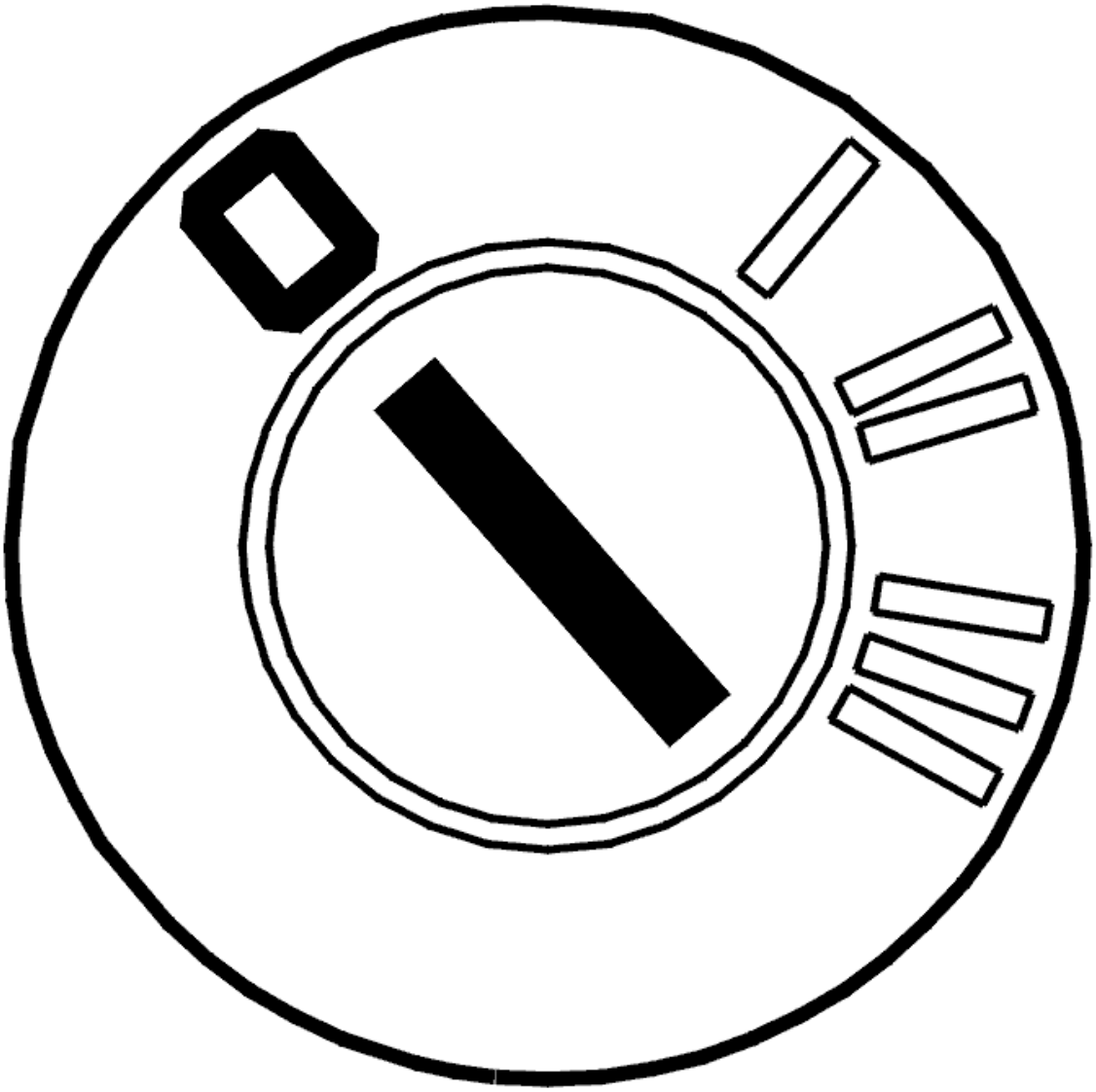

Fig. 411: Identifying Ignition OFF
Courtesy of VOLVO CARS CORPORATION

- Ignition off.

  Disconnect the connectors from the left-hand seat heating module (SHM). Check all connectors. Check for contact resistance and oxidation.

  Remedy as necessary.

  Other information

  - see **CHECKING WIRING AND TERMINALS**

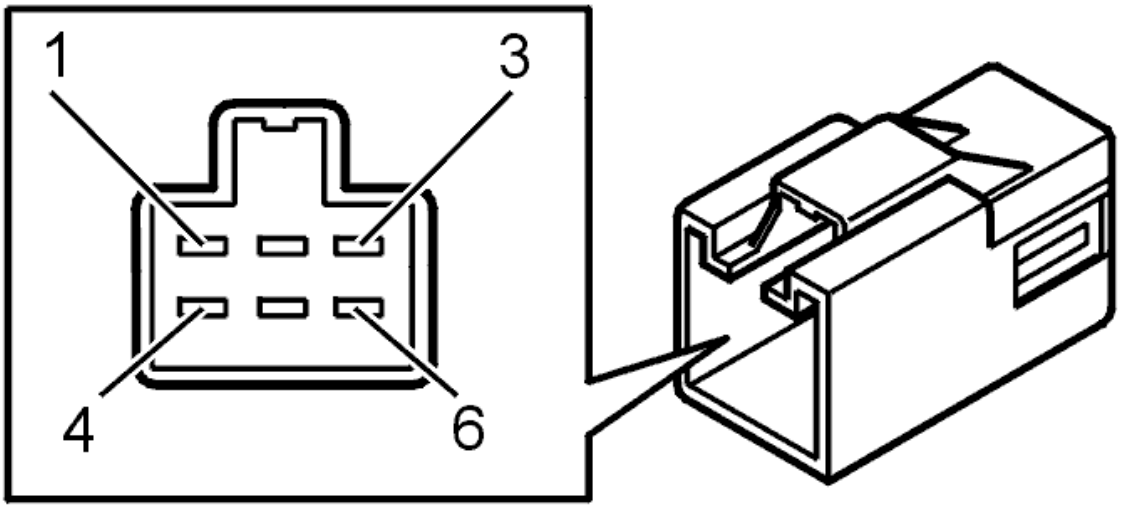

Fig. 412: Identifying Connector Terminals
Courtesy of VOLVO CARS CORPORATION

Was a fault detected?

- **YES**

  Refer to **INFORMATION**

- **NO**

  Refer to **REPLACING THE COMPONENT**

REPLACING THE COMPONENT

If there is an internal fault in the heater pad, it must be replaced.

Replacing the left seat heater pad:

- See **HEATER PAD BACKREST AND CUSHION, REPLACING** (-2004) or **HEATER PAD BACKREST AND CUSHION, REPLACING** (2005-).

- **Continue**

  Refer to **INFORMATION**

INFORMATION

FAULT-TRACING INFORMATION

If the fault is intermittent, do not verify fault-tracing if the fault does not recur.

It is possible to view the information again, or leave fault-tracing for this diagnostic trouble code (DTC).

CEM-5B01: LH HEATING ELEMENT. SIGNAL FAULTY. PERMANENT FAULT (2003-2004)

DIAGNOSTIC TROUBLE CODE (DTC) INFORMATION

see **DIAGNOSTIC TROUBLE CODE (DTC) INFORMATION**

FAULTY SIGNAL. PERMANENT FAULT

CHECKING FOR CONTACT RESISTANCE AND OXIDATION

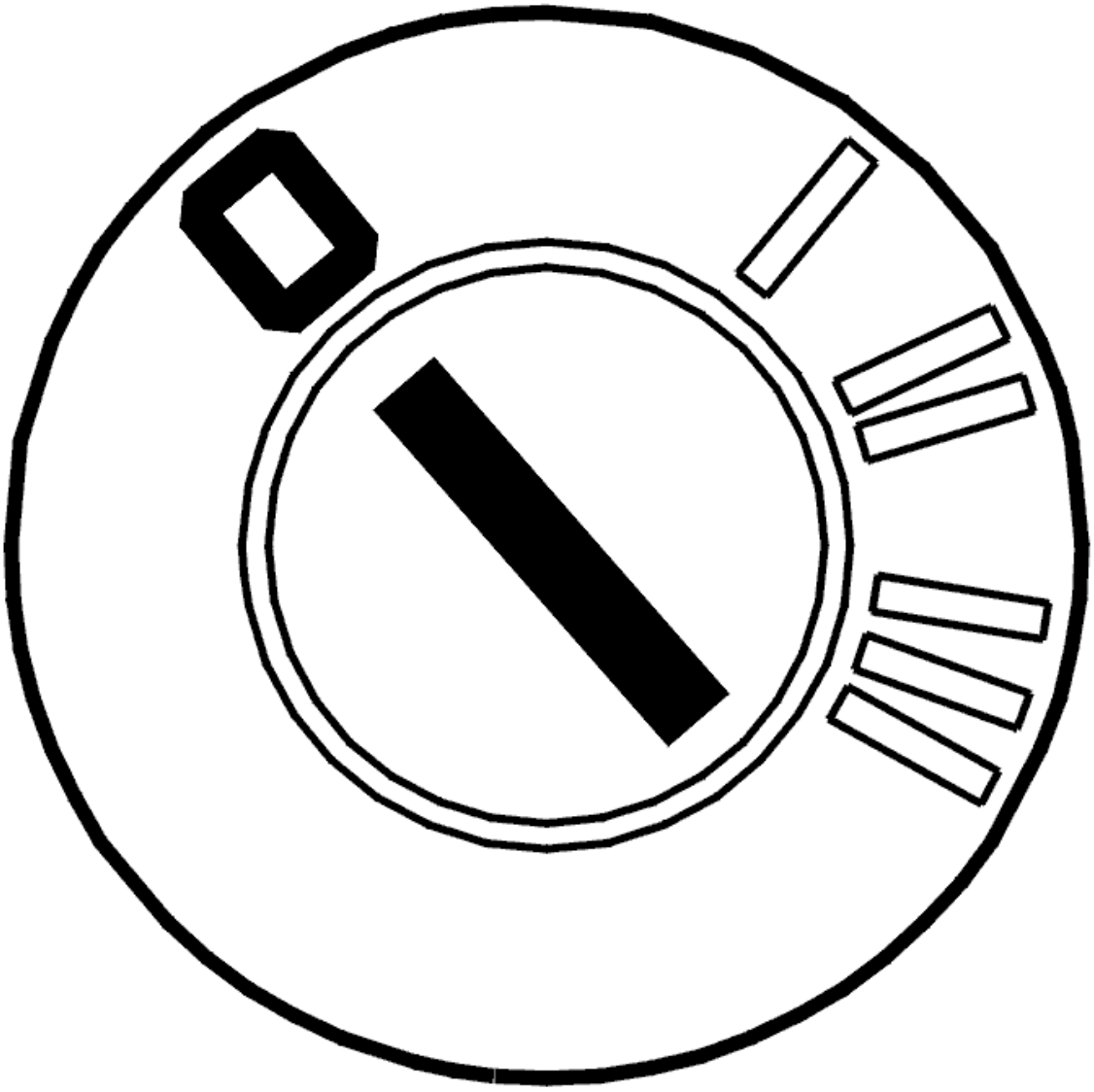

Fig. 413: Identifying Ignition OFF
Courtesy of VOLVO CARS CORPORATION

- Ignition off.

Disconnect the connectors from the left-hand seat heating module (SHM). Check all connectors. Check for contact resistance and oxidation.

Remedy as necessary.

Other information

- see **CHECKING WIRING AND TERMINALS**

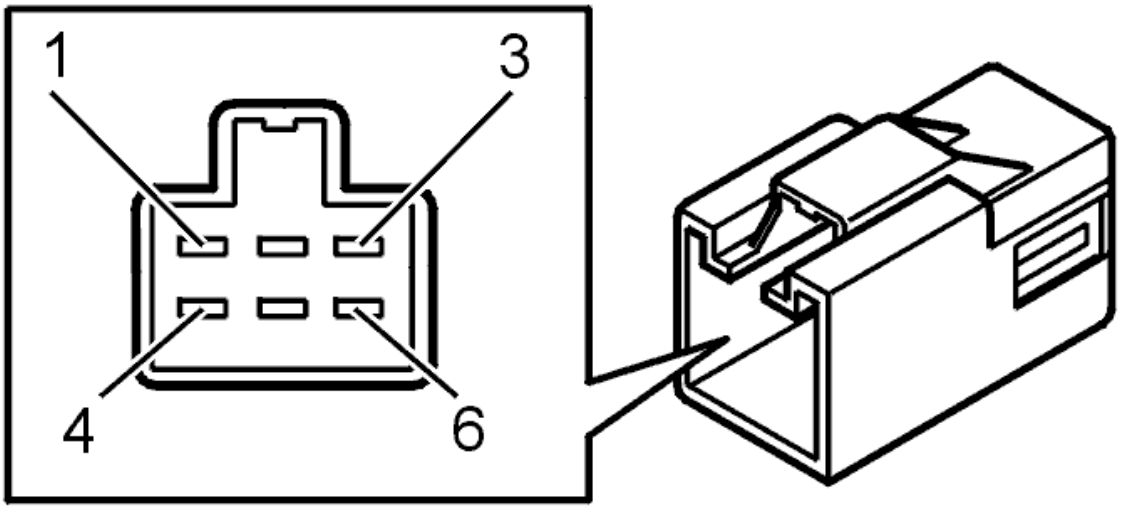

Fig. 414: Identifying Connector Terminals
Courtesy of VOLVO CARS CORPORATION

Was a fault detected?

- **YES**

  Refer to **VERIFICATION**

- **NO**

  Refer to **REPLACING THE COMPONENT**

REPLACING THE COMPONENT

Replacing the left seat heater pad:

- See **HEATER PAD BACKREST AND CUSHION, REPLACING** (-2004) or **HEATER PAD BACKREST AND CUSHION, REPLACING** (2005-).

- **Continue**

  Refer to **VERIFICATION**

VERIFICATION

VERIFICATION

HINT: After carrying out the repair, check that the fault has been remedied.

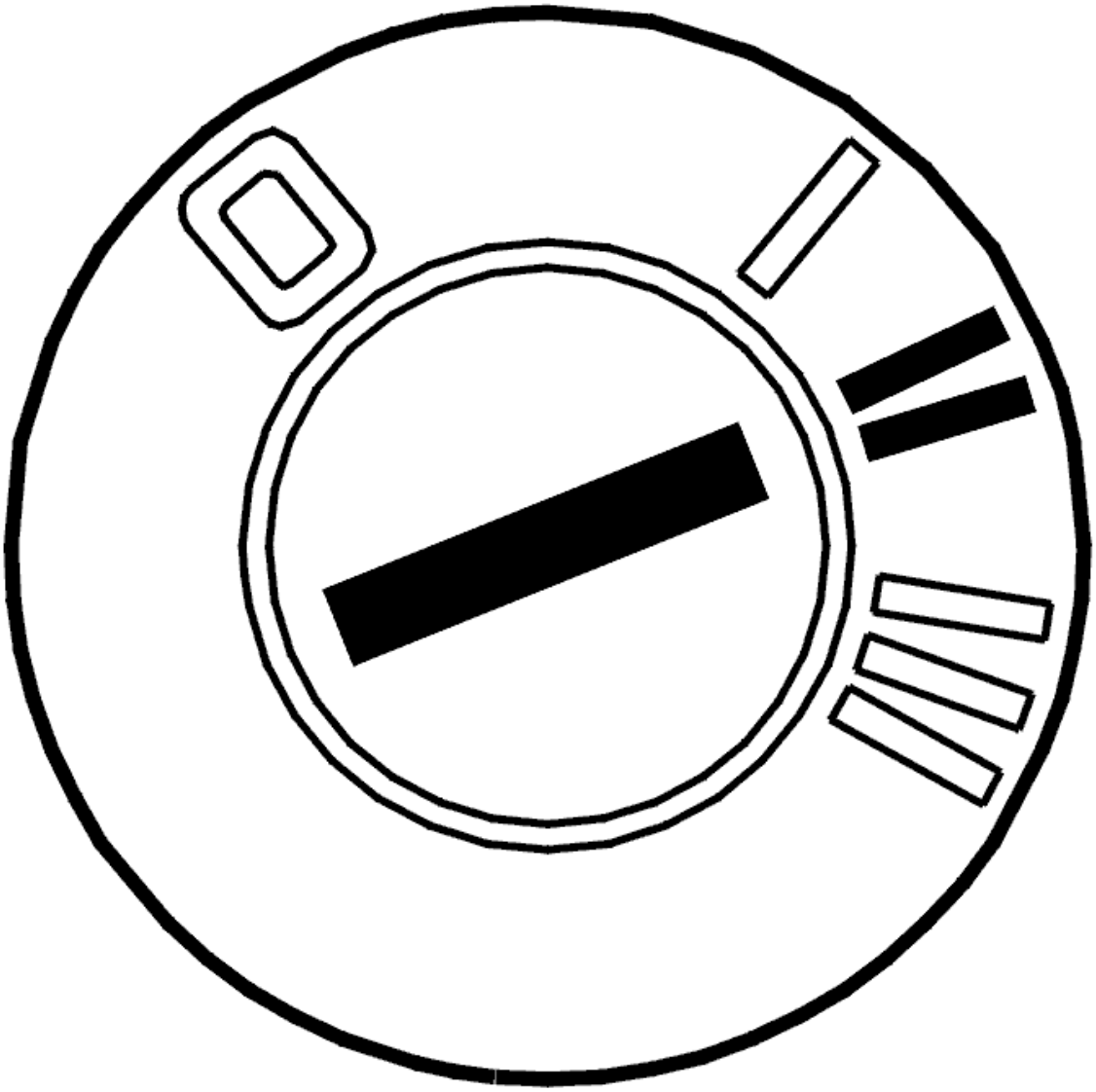

Fig. 415: Identifying Ignition ON
Courtesy of VOLVO CARS CORPORATION

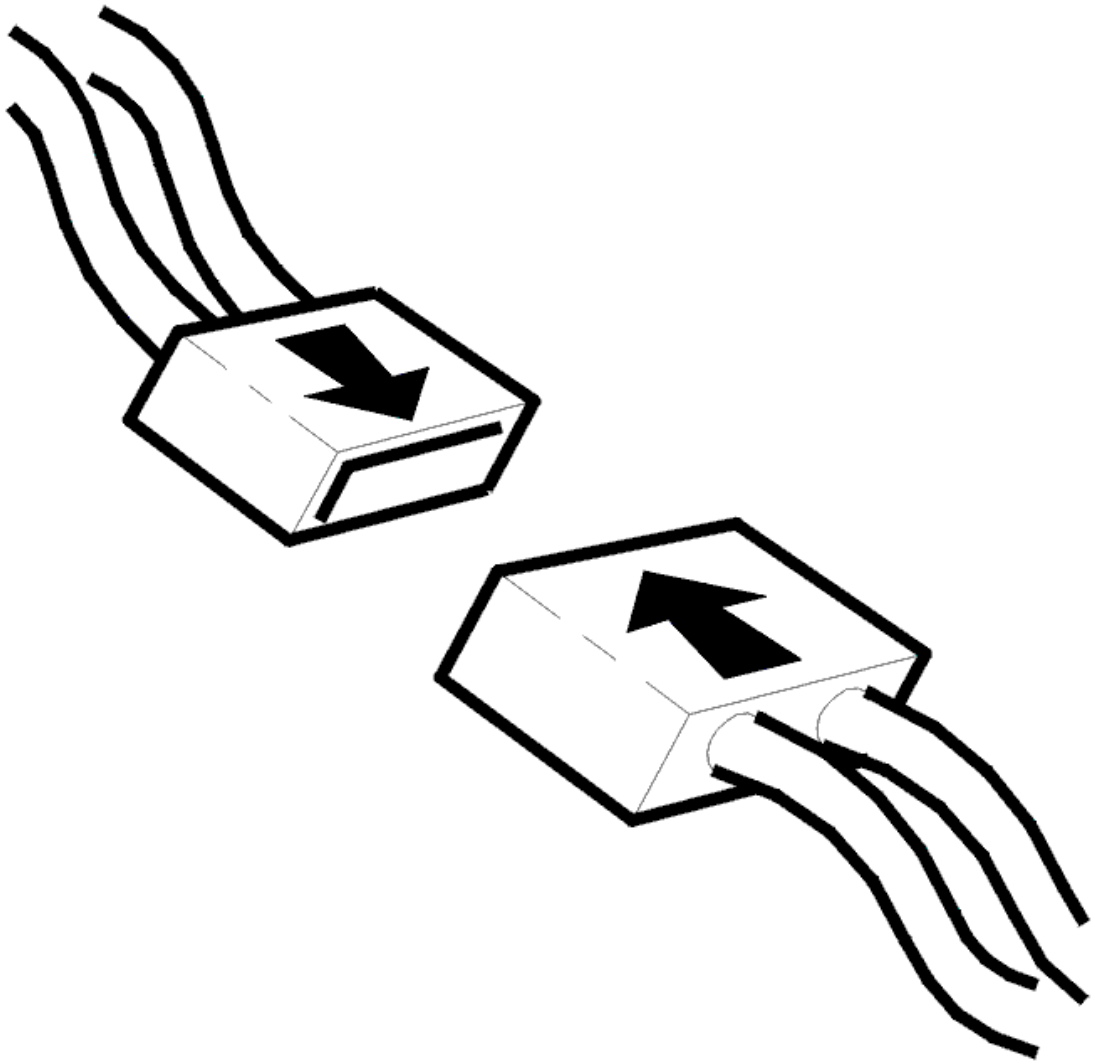

Fig. 416: Connecting Connector
Courtesy of VOLVO CARS CORPORATION

- Ignition off.
- Reinstall the connectors, components etc.
- Ignition on.

  Set the seat heating for full.

Was the function OK?

- **YES**

  VERIFIED: Troubleshooting has been completed.

- **NO**

  Refer to **INFORMATION**

INFORMATION

FAULT-TRACING INFORMATION

The fault should have been detected and remedied. As this is not the case fault-tracing has failed.

Exit fault-tracing for this diagnostic trouble code (DTC) or make another attempt.

ELECTRICAL

Cables And Fuses - Diagnostic Trouble Codes and Associated Procedures

CEM-5F46: GLOW PLUGS. FAULTY SIGNAL (2005-2012)

DIAGNOSTIC TROUBLE CODE (DTC) INFORMATION CEM-5F46

Condition

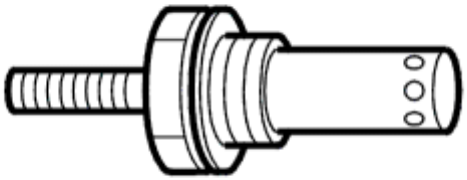

Fig. 1: Identifying Glow Plug
Courtesy of VOLVO CARS CORPORATION

The central electronic module (CEM) checks the communication with the combustion preheater module (CPM).

The diagnostic trouble code (DTC) is stored if the central electronic module (CEM) registers a short-circuit to ground in the power supply from the combustion preheater module (CPM) to the glow plug or that there is no power at all.

The diagnostic trouble code (DTC) can be diagnosed when the heater is activated.

Substitute Value

- None.

Possible Source

- Damaged glow plug.
- Contact resistance in the control module connectors
- Contact resistance in the glow plug connection.
- Short-circuit to ground in the signal cable
- Short-circuit to supply voltage in the signal cable

- Open-circuit in the signal cable

Fault symptom[s]

- Poor heating in the passenger compartment.

FAULTY SIGNAL

CHECKING THE FUNCTION OF THE GLOW PLUG

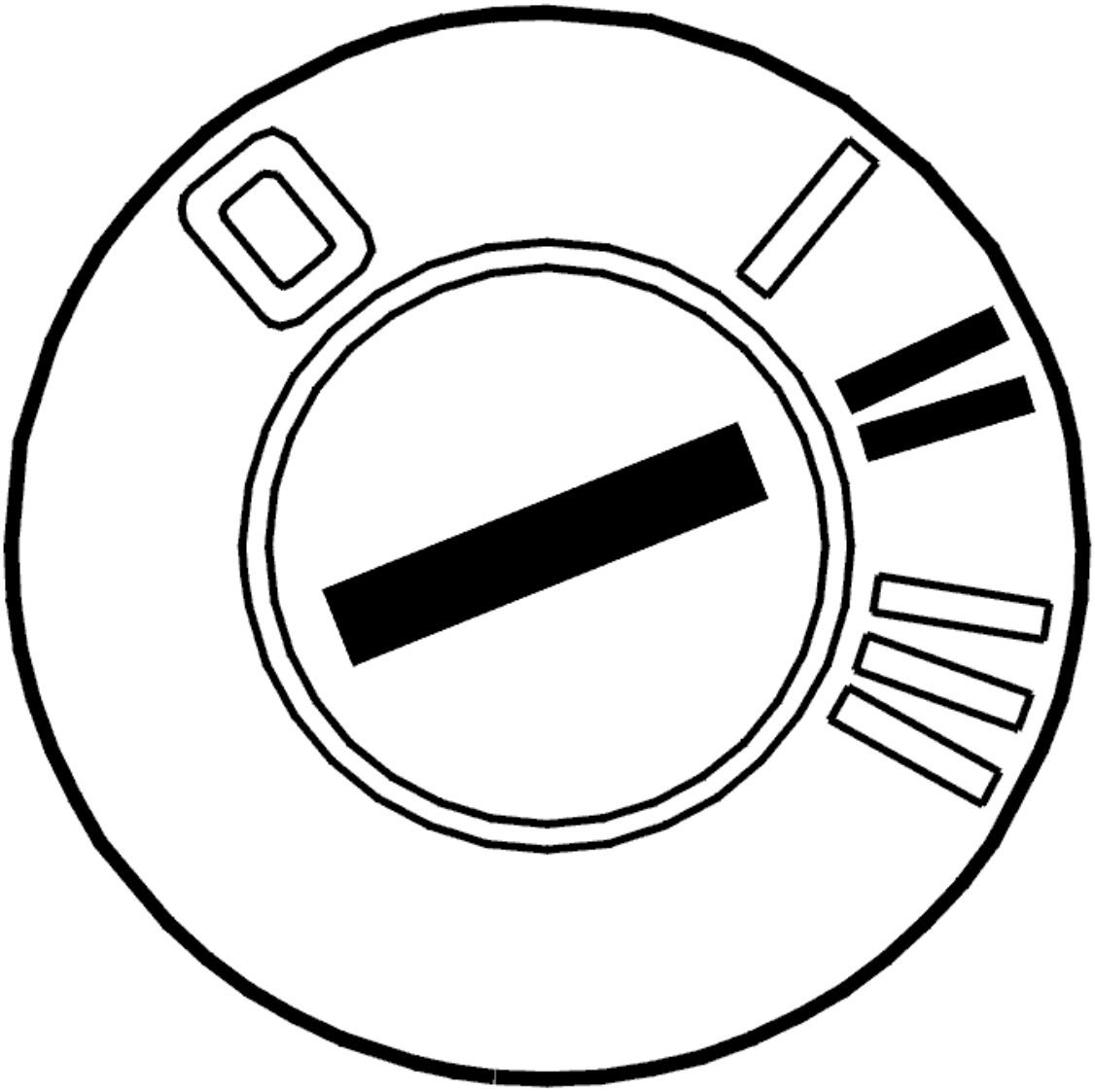

Fig. 2: Identifying Ignition ON
Courtesy of VOLVO CARS CORPORATION

- Ignition on.

NOTE: It is important that only the ignition is on in order for the heater to start.

- Activate the heater.

Check the heater function.

Other information

- see **ENGINE COOLANT HEATER, TEST RUNNING**

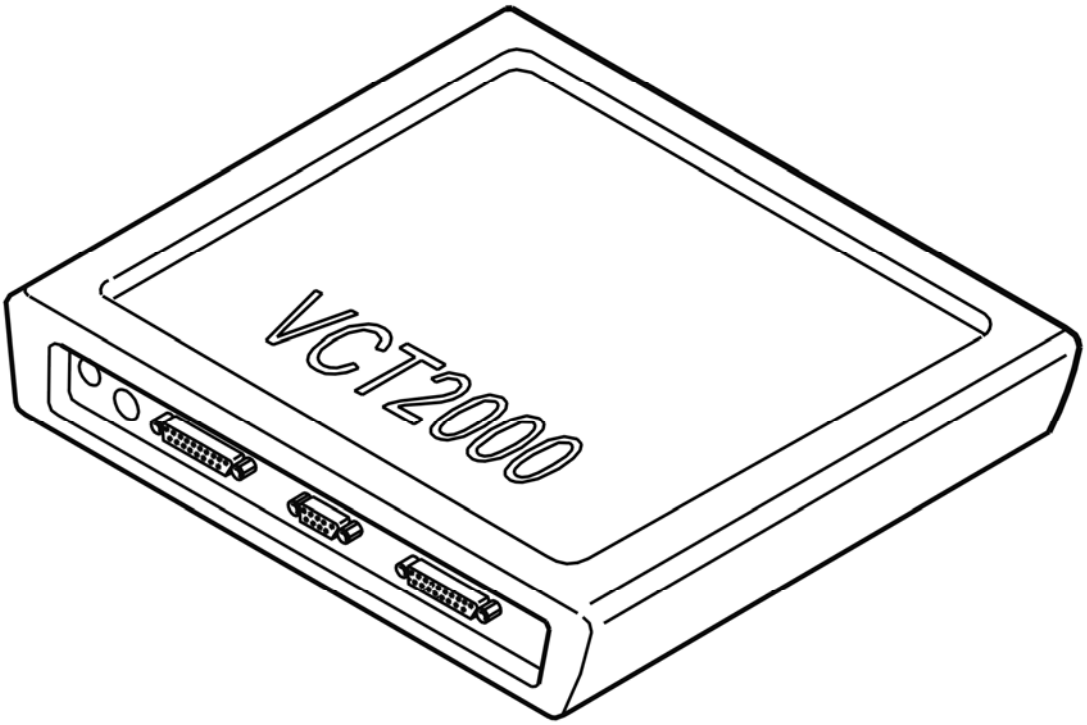

Fig. 3: Identifying VCT2000 Diagnostic Tool Symbol In VIDA
Courtesy of VOLVO CARS CORPORATION

Is the heater working?

- **YES**

  Refer to **CHECKING COMPONENTS AND WIRING**

- **NO**

  Refer to **CHECKING COMPONENTS AND WIRING**

CHECKING COMPONENTS AND WIRING

Check the electrical terminal for the glow plug and the combustion preheater module (CPM) connector. Check for contact resistance and oxidation. Check for damage in particular.

Check the cable between combustion preheater module (CPM) terminal #1 and the glow plug terminal. Check for an open-circuit. Check for a short-circuit to ground. Check for a short-circuit to supply voltage.

Replace the glow plug if no fault is found in the cable.

Remedy as necessary.

Other information

- see **CONNECTING THE BREAKOUT BOX**
- see **SIGNAL SPECIFICATION**
- see **GLOW PLUG ENGINE COOLANT HEATER, REPLACING**
- see **CHECKING WIRING AND TERMINALS**

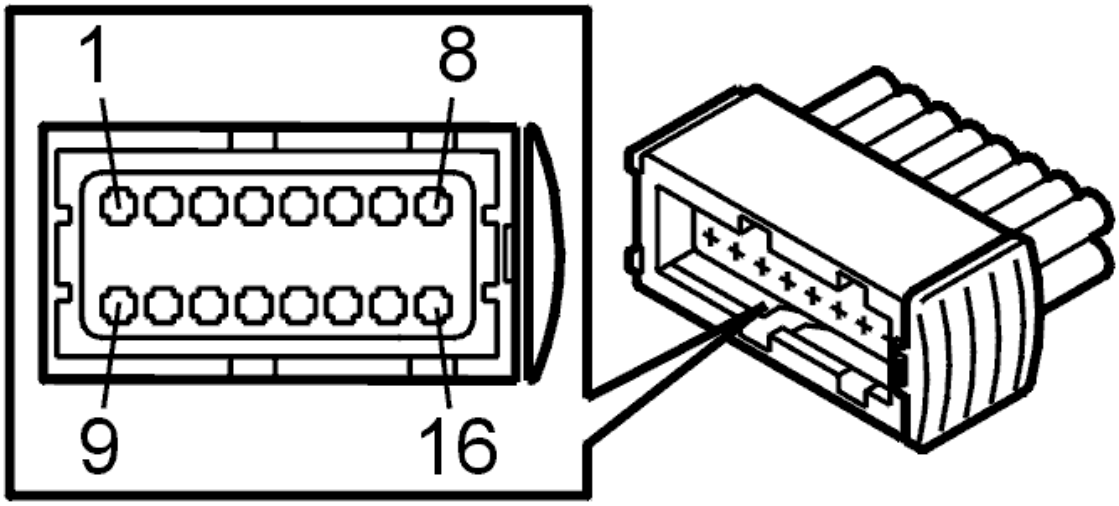

Fig. 4: Identifying Connector Terminals
Courtesy of VOLVO CARS CORPORATION

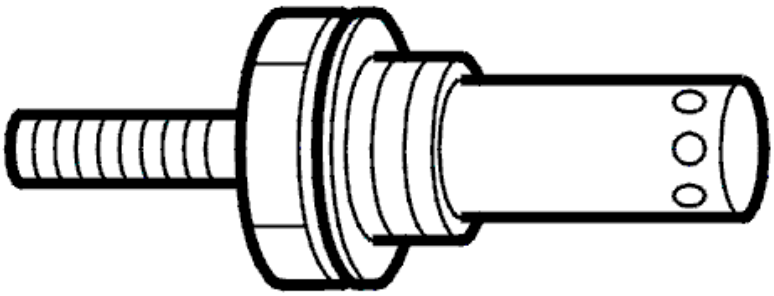

Fig. 5: Identifying Glow Plug
Courtesy of VOLVO CARS CORPORATION

- **Continue**

  Refer to **VERIFICATION**

CHECKING COMPONENTS AND WIRING

Check the electrical terminal for the glow plug and the combustion preheater module (CPM) connector. Check for contact resistance and oxidation. Check for loose connections.

Check the cable between combustion preheater module (CPM) terminal #1 and the glow plug terminal. Check for an intermittent open-circuit. Check for an intermittent short-circuit to ground. Check for an intermittent short-circuit to supply voltage.

Remedy as necessary.

Other information

- see **CONNECTING THE BREAKOUT BOX**
- see **SIGNAL SPECIFICATION**
- see **GLOW PLUG ENGINE COOLANT HEATER, REPLACING**

- see **CHECKING WIRING AND TERMINALS**

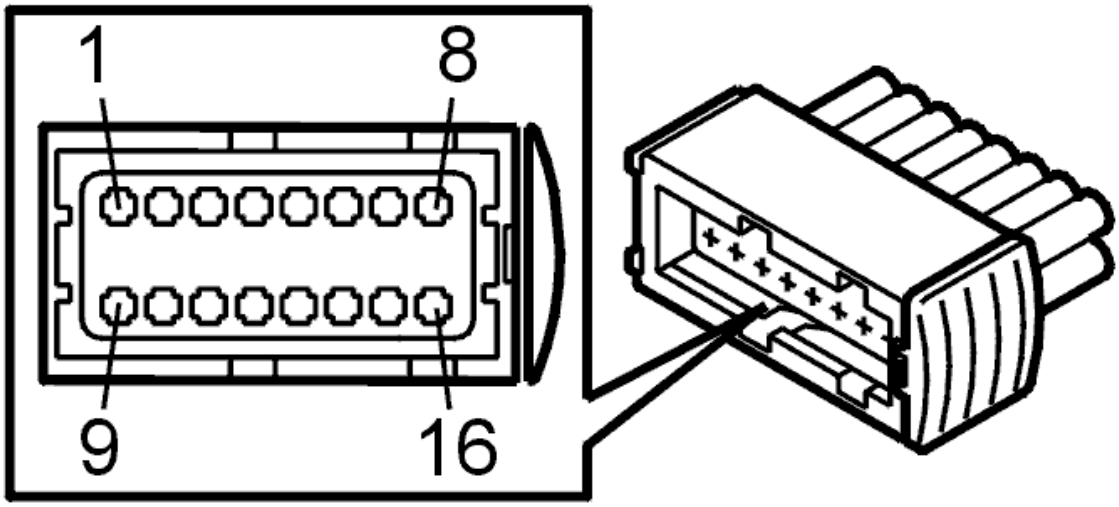

Fig. 6: Identifying Connector Terminals
Courtesy of VOLVO CARS CORPORATION

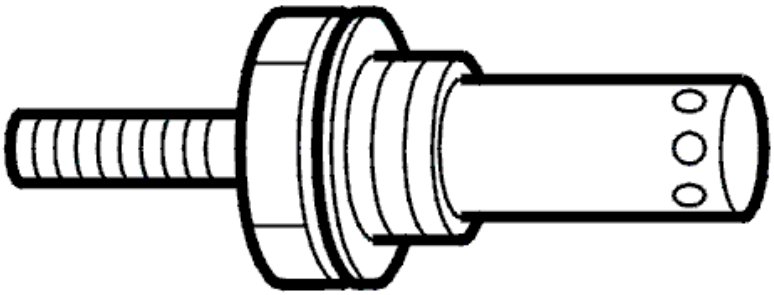

Fig. 7: Identifying Glow Plug
Courtesy of VOLVO CARS CORPORATION

- **Continue**

Refer to **VERIFICATION**

VERIFICATION

VERIFICATION

HINT: After carrying out the repair, check that the fault has been remedied.

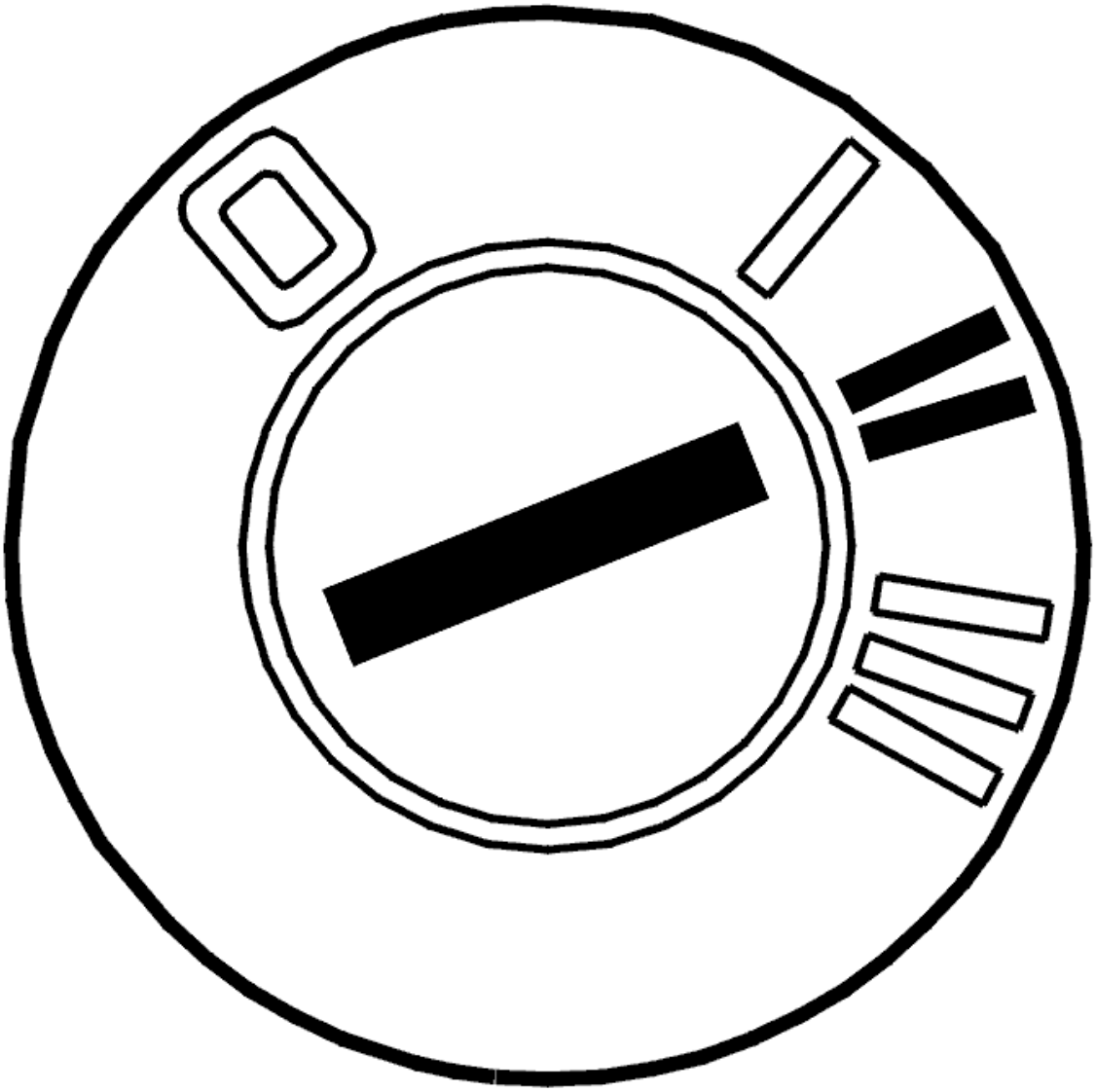

Fig. 8: Identifying Ignition ON
Courtesy of VOLVO CARS CORPORATION

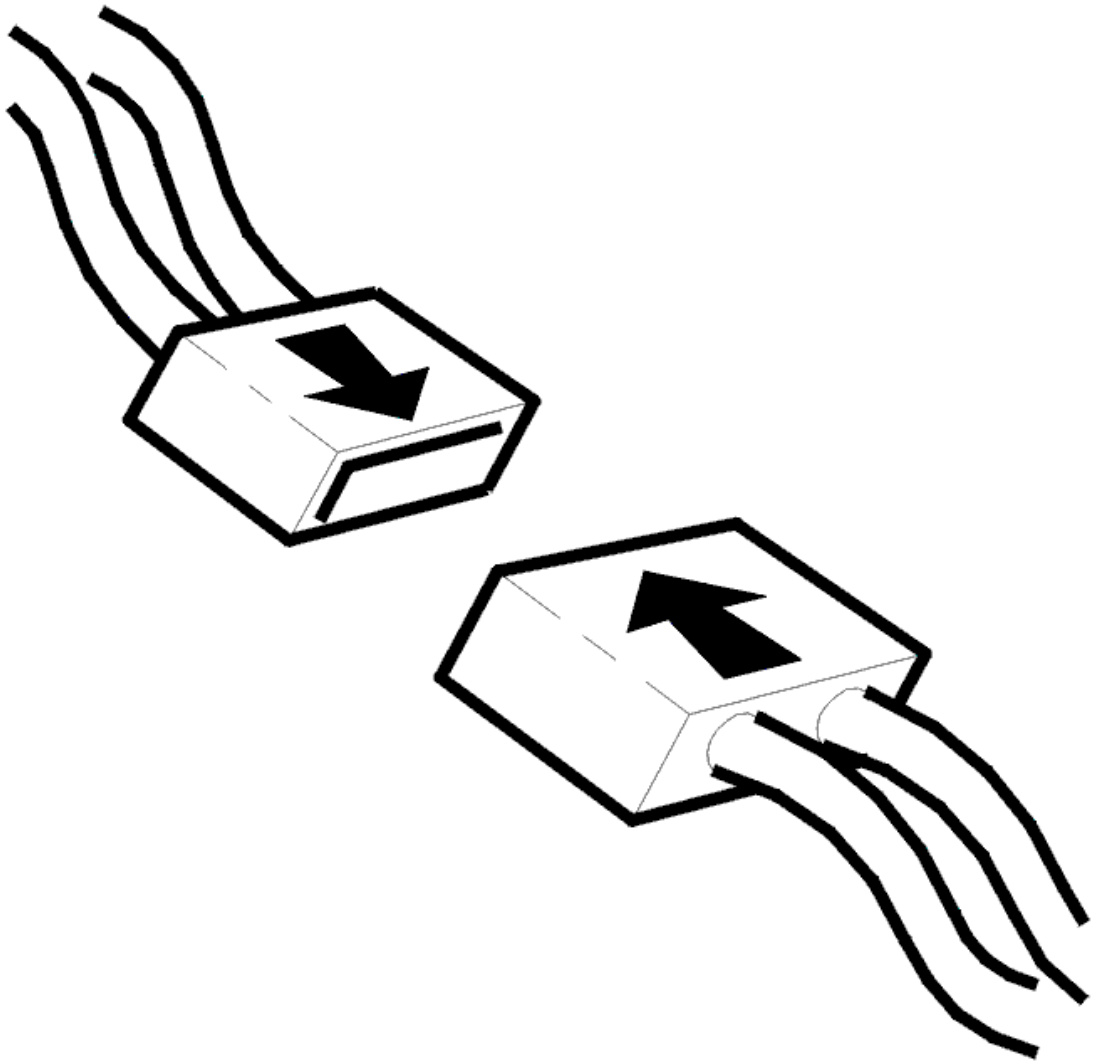

Fig. 9: Connecting Connector
Courtesy of VOLVO CARS CORPORATION

- Ignition off
- Reinstall the connectors, components etc.
- Ignition on
- Read off the engine coolant temperature.

NOTE: It is important that only the ignition is on in order for the heater to start.

- Activate the heater.

HINT: After repair, the voltage of the flame sensor can be checked. The voltage must be a maximum of 1.0 V.

Check the heater function.

CAUTION: In order for to enable start of the heater itself, the battery voltage must be normal, coolant temperature must be lower than +96 °C and the heater's after-run/stop sequence must be finished. There must also be enough fuel in the tank.

CAUTION: If the heater or other components are not activated, try closing down the activation window and then starting the activation again using the VCT2000 (or appropriate scan tool).

Other information:

- see **ENGINE COOLANT HEATER, TEST RUNNING** .

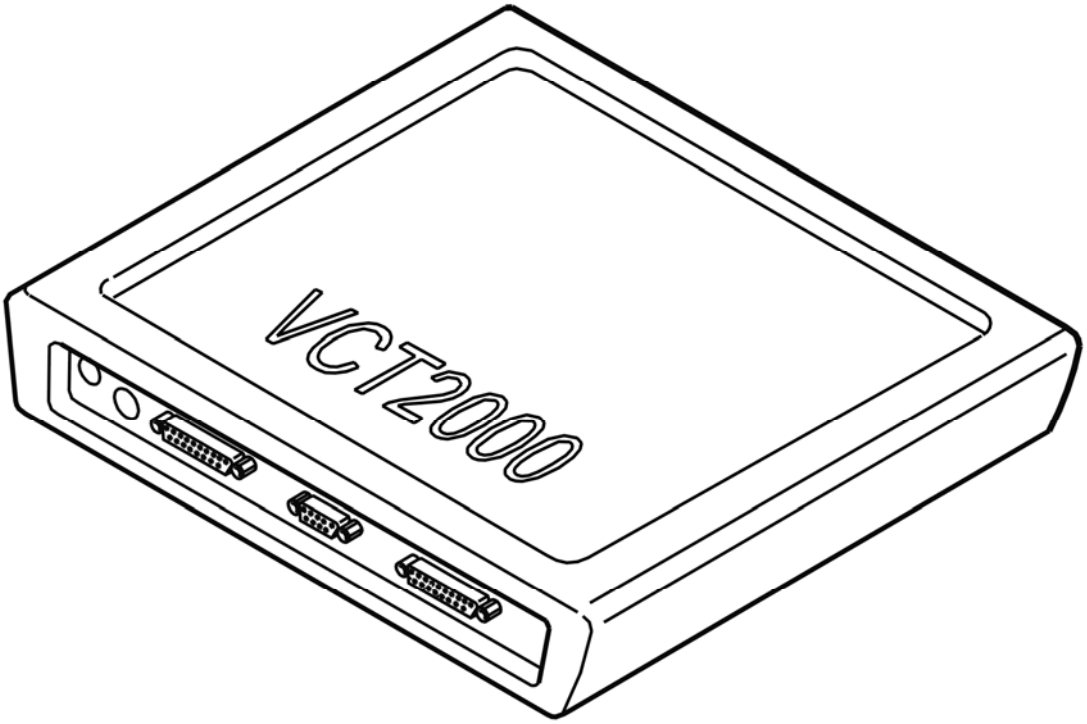

Fig. 10: Identifying VCT2000 Diagnostic Tool Symbol In VIDA
Courtesy of VOLVO CARS CORPORATION

Is the heater working?

- **YES**

VERIFIED: Troubleshooting has been completed.

- **NO**

  Refer to **INFORMATION**

INFORMATION

FAULT-TRACING INFORMATION

The fault should have been detected and remedied. As this is not the case fault-tracing has failed.

Exit fault-tracing for this diagnostic trouble code (DTC) or make another attempt.

CEM-5F47: CONTROL MODULE POWER SUPPLY. SIGNAL TOO HIGH (2005-2012)

DIAGNOSTIC TROUBLE CODE (DTC) INFORMATION CEM-5F47

Condition

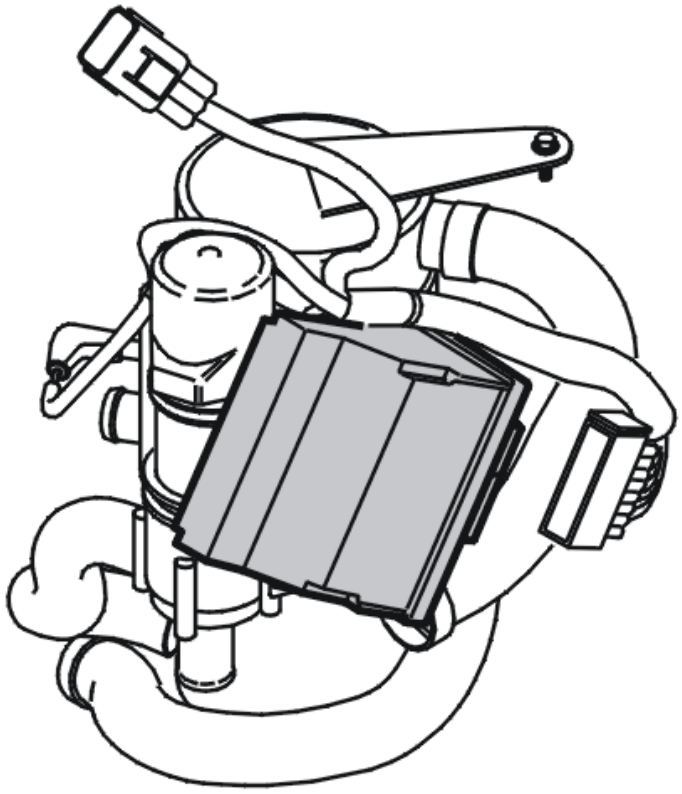

Fig. 11: Additional Heater And Parking Heater
Courtesy of VOLVO CARS CORPORATION

The central electronic module (CEM) checks the communication with the combustion preheater module (CPM).

The diagnostic trouble code (DTC) is stored if the central electronic module (CEM) registers that the power supply to the combustion preheater module (CPM) exceeds 16 V.

The diagnostic trouble code (DTC) can be diagnosed when the heater is activated.

Substitute Value

- None.

Possible Source

- A battery charger or starter unit with incorrect charge voltage is connected
- Damaged generator (GEN).

Fault symptom[s]

- Poor heating in the passenger compartment.
- Starting/Engine does not start/Unsure when/at all times
- Warning lights and chimes/Generator warning indication/no indication
- Alternator and charge regulator/Power supply problems

SIGNAL TOO HIGH

CHECKING CHARGE VOLTAGE

HINT: It is important that the correct voltage is set when the battery charger or start unit is connected to the battery.

HINT: Charging with too high a voltage can cause a diagnostic trouble code (DTC) to be stored.

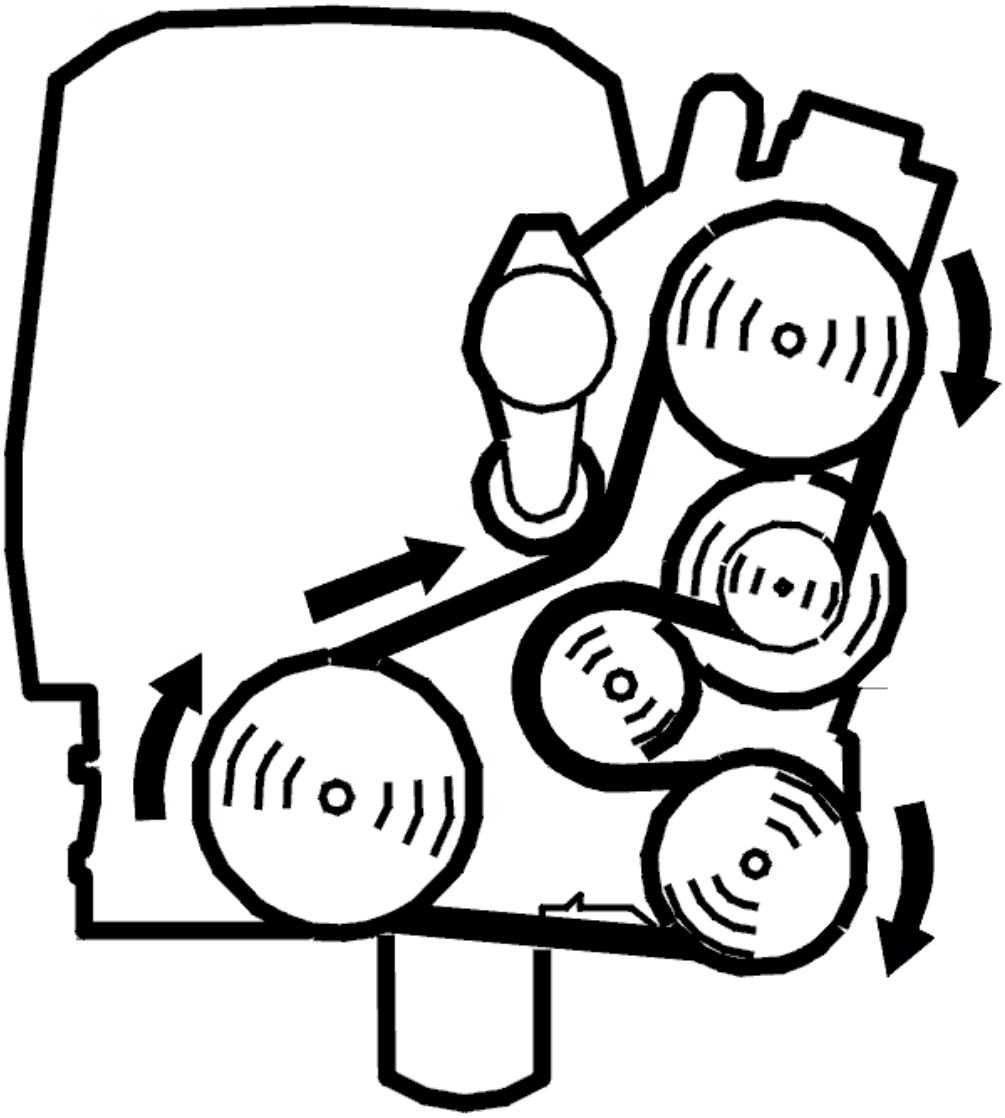

Fig. 12: Belt Routing / Engine Idling - Volvo
Courtesy of VOLVO CARS CORPORATION

- Engine running
- Connect a voltmeter between the battery terminals.

  The battery voltage must be less than 16 V.

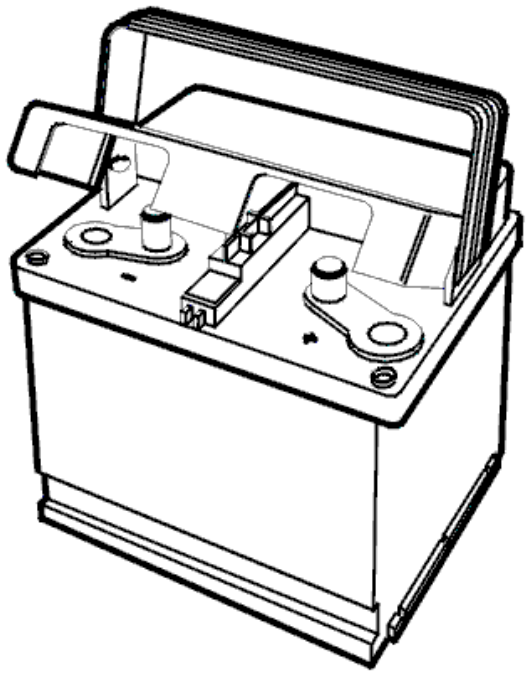

Fig. 13: Identifying Battery
Courtesy of VOLVO CARS CORPORATION

Is the battery voltage OK?

- **YES**

  Refer to **INTERMITTENT FAULT**

- **NO**

  Refer to **CHECKING THE CHARGING SYSTEM**

CHECKING THE CHARGING SYSTEM

Check the charging system for excessive charge voltage. See relevant information.

- **Continue**

  Refer to **INFORMATION**

INTERMITTENT FAULT

The combustion preheater module (CPM) has previously registered too high a voltage. This may have been caused by the connection of a battery charger with incorrect voltage to the battery, or by an intermittent fault in the charging regulator.

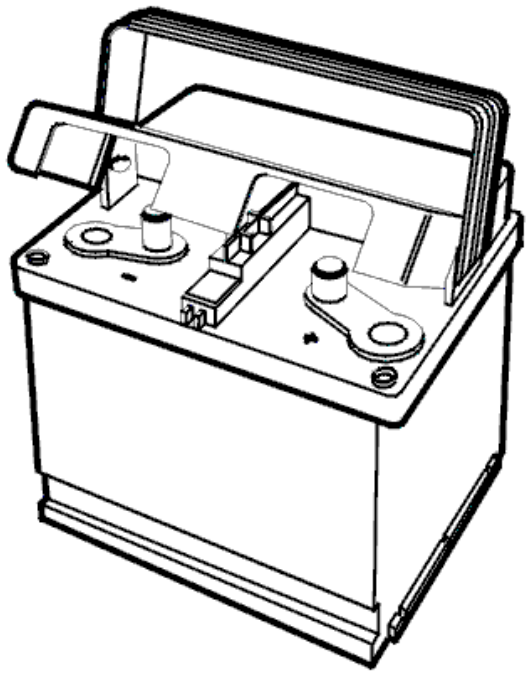

Fig. 14: Identifying Battery
Courtesy of VOLVO CARS CORPORATION

- **Continue**

  Refer to **INFORMATION**

INFORMATION

FAULT-TRACING INFORMATION

In case of this defect, troubleshooting is not followed by verification.

The information can be displayed again or the fault-tracing for this fault can be interrupted.

CEM-5F47: CONTROL UNIT POWER SUPPLY. SIGNAL TOO HIGH (2003-2004)

DIAGNOSTIC TROUBLE CODE INFORMATION

Condition

If voltage supply to the control unit exceeds 16 V diagnostic trouble code CEM-5F47 will be set.

Substitute Value

- None.

Possible Source

- Defective alternator.
- Battery charger or starter unit connected with faulty incorrect charge voltage.

Fault symptom[s]

- Poor interior heating.

SIGNAL TOO HIGH

CHECKING CHARGE VOLTAGE

HINT: When a battery charger or a starter unit has been connected to the battery it is important to check that the proper voltage has been set.

HINT: Charging with too high a voltage can cause a diagnostic trouble code to be set.

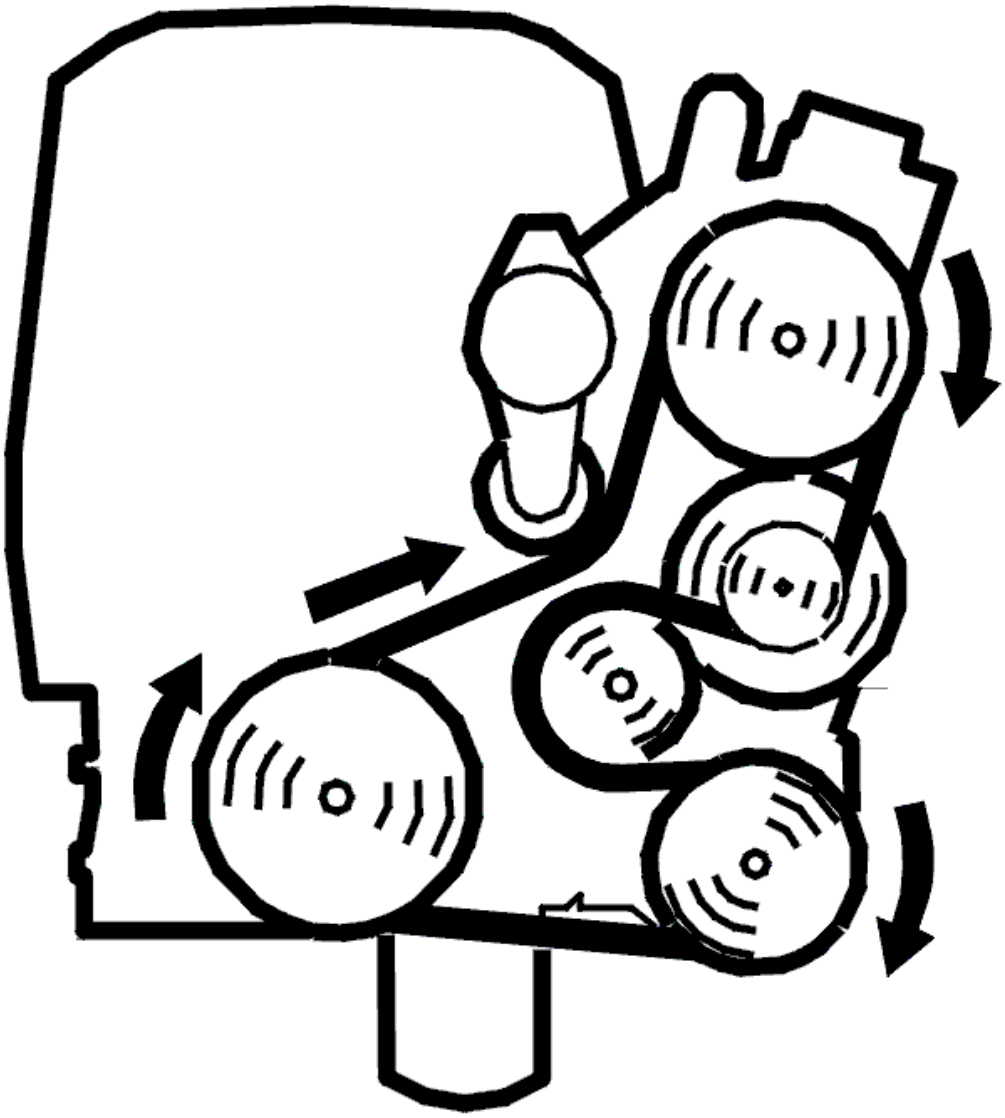

Fig. 15: Belt Routing / Engine Idling - Volvo
Courtesy of VOLVO CARS CORPORATION

- Engine running.
- Connect a voltmeter between the battery poles.

  The battery voltage must be below 16 V.

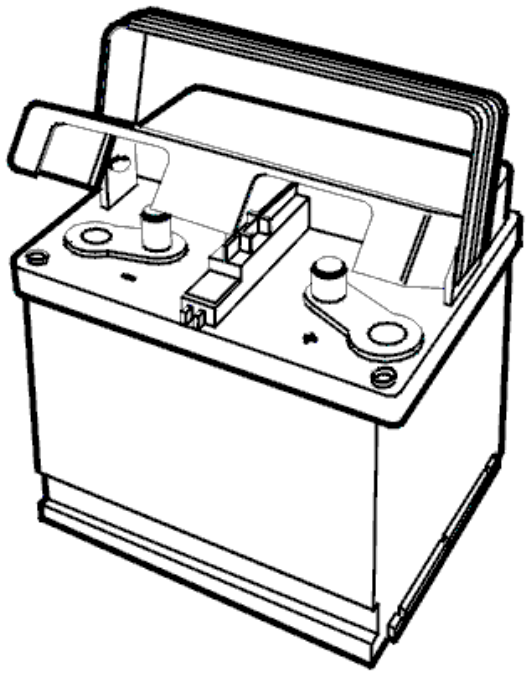

Fig. 16: Identifying Battery
Courtesy of VOLVO CARS CORPORATION

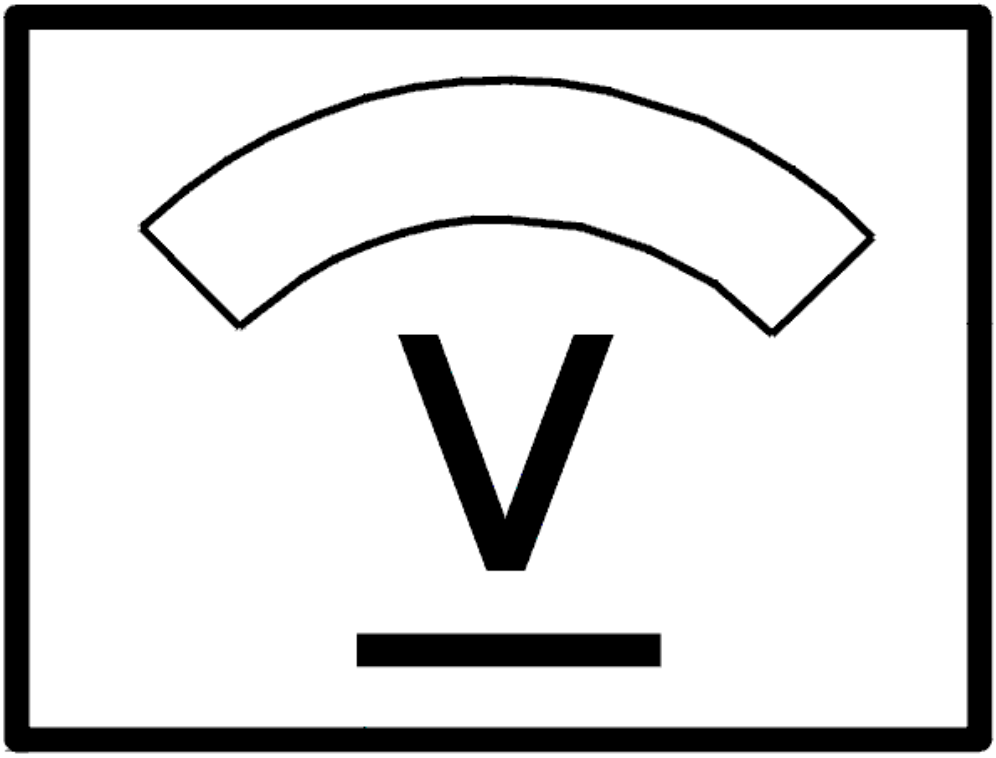

Fig. 17: Identifying Voltage Display
Courtesy of VOLVO CARS CORPORATION

Is battery voltage OK?

- **YES**

  Refer to **INTERMITTENT FAULT**

- **NO**

  Refer to **CHECKING THE CHARGING SYSTEM**

CHECKING THE CHARGING SYSTEM

Check the charging system for too high a charge voltage, see the relevant information.

- **Continue**

  Refer to **INFORMATION**

INTERMITTENT FAULT

The control unit registered too high a voltage on an earlier occasion. This could be because a battery charger with wrong voltage has been connected to the battery or there is an intermittent fault in the charge regulator.

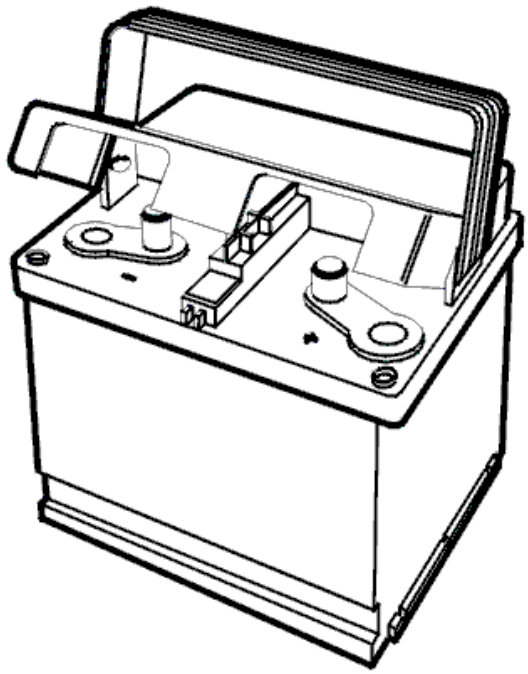

Fig. 18: Identifying Battery
Courtesy of VOLVO CARS CORPORATION

- **Continue**

  Refer to **INFORMATION**

INFORMATION

FAULT-TRACING INFORMATION

In case of this defect, troubleshooting is not followed by verification.

The information can be displayed again or the fault-tracing for this fault can be interrupted.

CEM-5F4C: POWER SUPPLY. SIGNAL TOO LOW (2005-2012)

DIAGNOSTIC TROUBLE CODE (DTC) INFORMATION CEM-5F4C

Condition

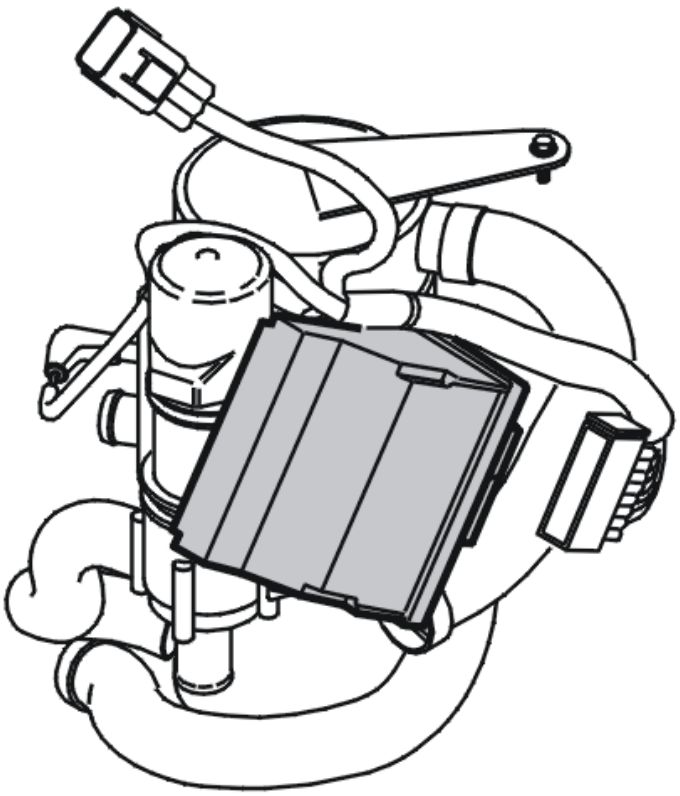

Fig. 19: Additional Heater And Parking Heater
Courtesy of VOLVO CARS CORPORATION

The central electronic module (CEM) checks the communication with the combustion preheater module (CPM).

The diagnostic trouble code (DTC) is stored if the central electronic module (CEM) registers that the power supply to the combustion preheater module (CPM) is below 10.5 V.

The diagnostic trouble code (DTC) can be diagnosed when the heater is activated.

Substitute Value

- None.

Possible Source

- Poor battery
- Contact resistance in the control module terminals
- Damaged generator (GEN).

Fault symptom[s]

- Poor heating in the passenger compartment.
- Starting/Engine does not start/Unsure when/at all times
- Warning lights and chimes/Generator warning indication/no indication
- Alternator and charge regulator/Power supply problems

SIGNAL TOO LOW

CHECKING THE SUPPLY

Check the power supply to combustion preheater module (CPM) terminal #9. Check for contact resistance and oxidation. Check for loose connections. Also check the fuse in the engine compartment. Voltage should be 12 V.

Check the cable between terminal #1 on the Ext-X relay (2/29) and terminal #15 on the combustion preheater module (CPM). Check for contact resistance and oxidation. Check for loose connections. Check the relay, the power supply to the relay and the passenger compartment fuse.

If no fault is found, the fault may have been intermittent.

Remedy as necessary.

Other information

- see **CHECKING WIRING AND TERMINALS**

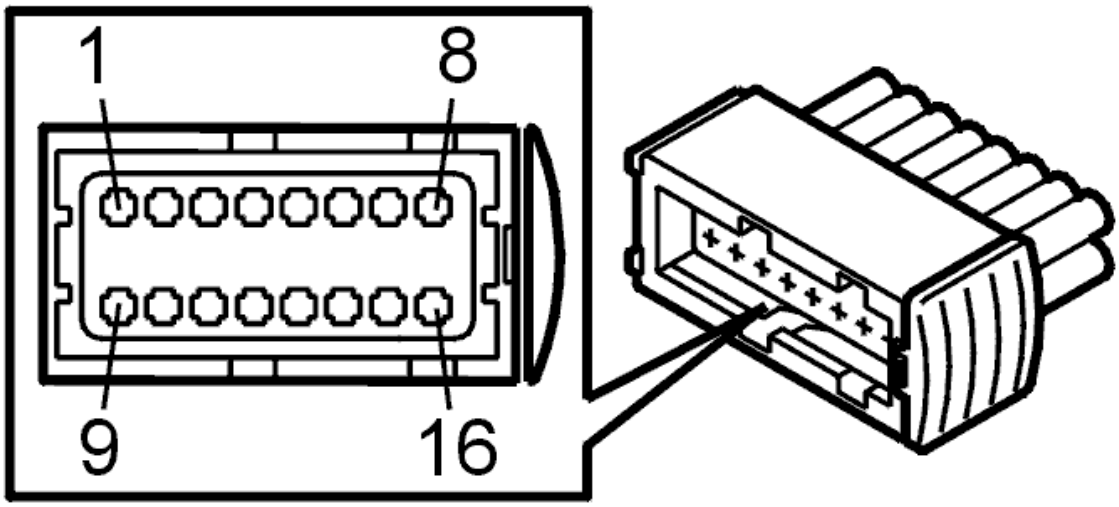

Fig. 20: Identifying Connector Terminals
Courtesy of VOLVO CARS CORPORATION

- **Continue**

  Refer to **VERIFICATION**

VERIFICATION

VERIFICATION

HINT: After carrying out the repair, check that the fault has been remedied.

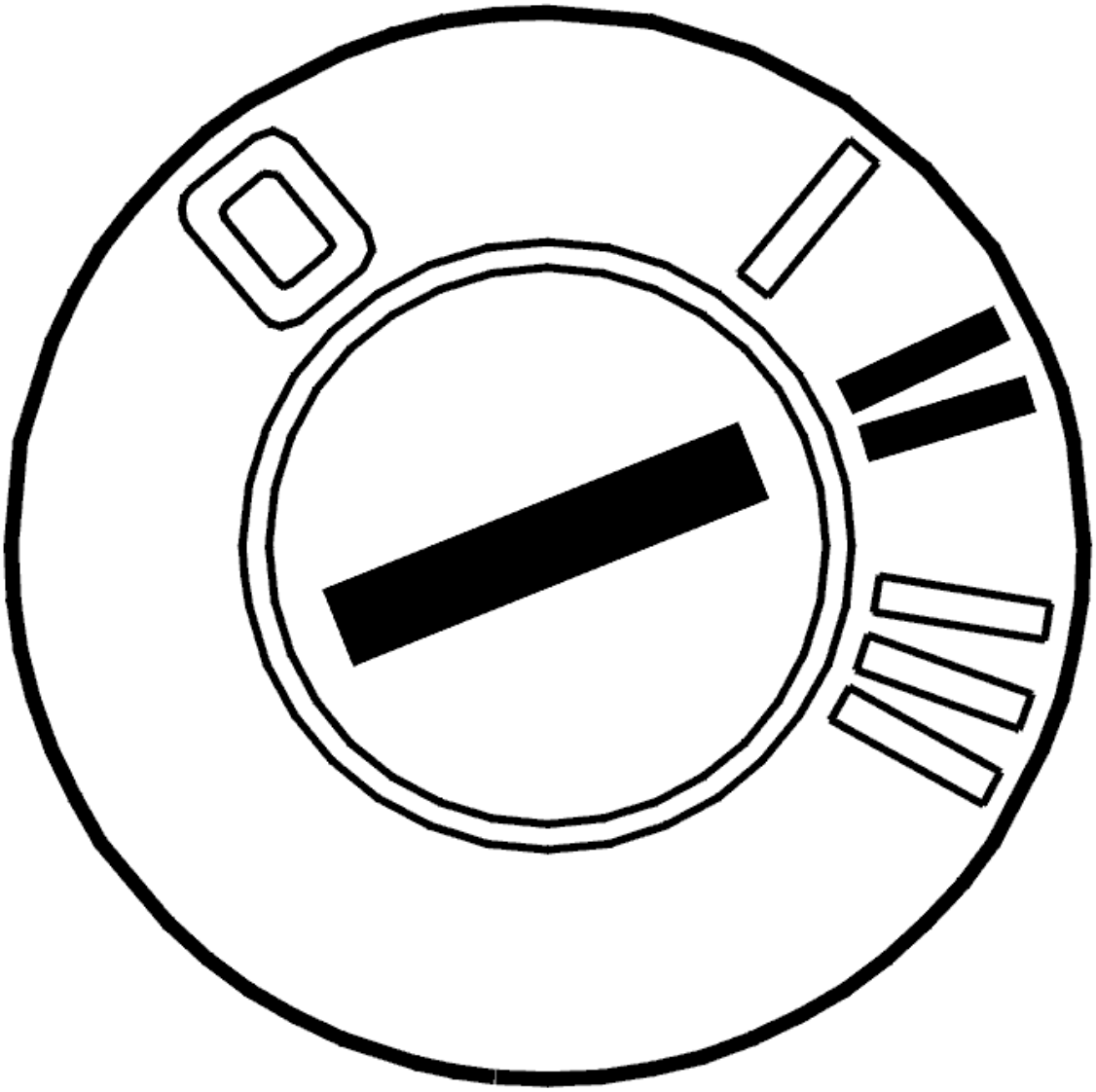

Fig. 21: Identifying Ignition ON
Courtesy of VOLVO CARS CORPORATION

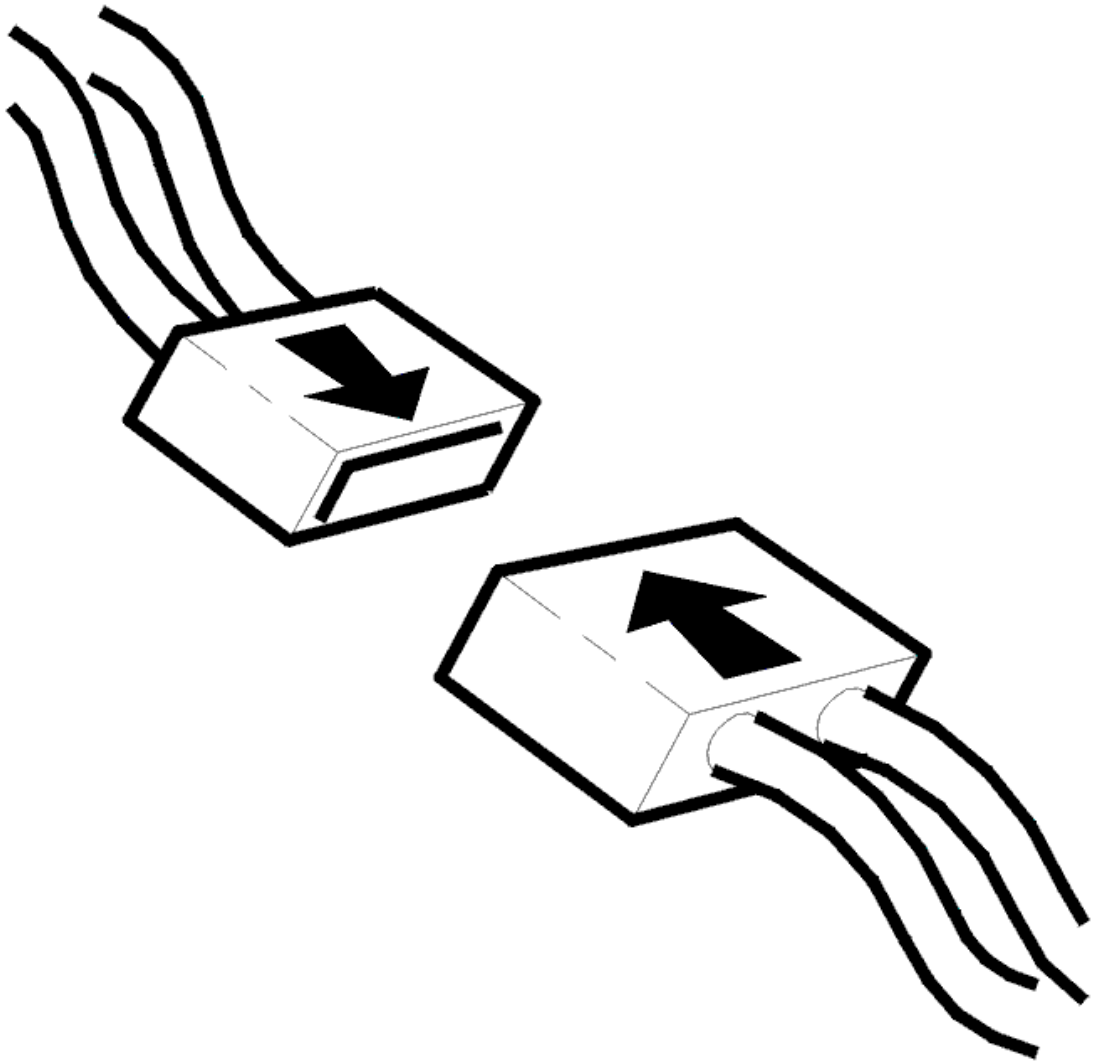

Fig. 22: Connecting Connector
Courtesy of VOLVO CARS CORPORATION

- Ignition off
- Reinstall the connectors, components etc.
- Ignition on.

  Activate the combustion preheater module (CPM).

  Check that the engine coolant heater is activated.

Is the engine coolant heater working?

- **YES**

VERIFIED: Troubleshooting has been completed.

- **NO**

  Refer to **INFORMATION**

INFORMATION

FAULT-TRACING INFORMATION

The fault should have been detected and remedied. As this is not the case fault-tracing has failed.

Exit fault-tracing for this diagnostic trouble code (DTC) or make another attempt.

CEM-5F4C: UNDERVOLTAGE. SIGNAL TOO LOW (B5254T2; B6294T; 2003-2004)

DIAGNOSTIC TROUBLE CODE INFORMATION

Condition

If the control unit indicates that voltage falls below 10.5 V, diagnostic trouble code CEM-5F4C will be stored.

Substitute Value

- None.

Possible Source

- Weak battery.
- Damaged generator (GEN).
- Contact resistance in the control unit connectors.

Fault symptom[s]

- Poor interior heating.

SIGNAL TOO LOW

CHECKING THE POWER SUPPLY

Check the supply to Combustion Preheater Module (CPM) #9 for contact resistance and oxidation as described in, see **CONTACT RESISTANCE AND OXIDATION** , or a loose connection as described in **LOOSE CONNECTIONS (TERMINALS)** . Also check fuse 9 in the engine compartment. The voltage should be 12 V.

Check the cable between #1 on the Ext-X relay (2/29) and #15 on the Combustion Preheater Module (CPM) for

contact resistance and oxidation as described in, see **CONTACT RESISTANCE AND OXIDATION** , or for a loose connection as described in **LOOSE CONNECTIONS (TERMINALS)** . Also check the relay, the supply to the relay and passenger compartment fuse 24.

If no fault has been found, the fault may have been intermittent.

Do the necessary corrective action.

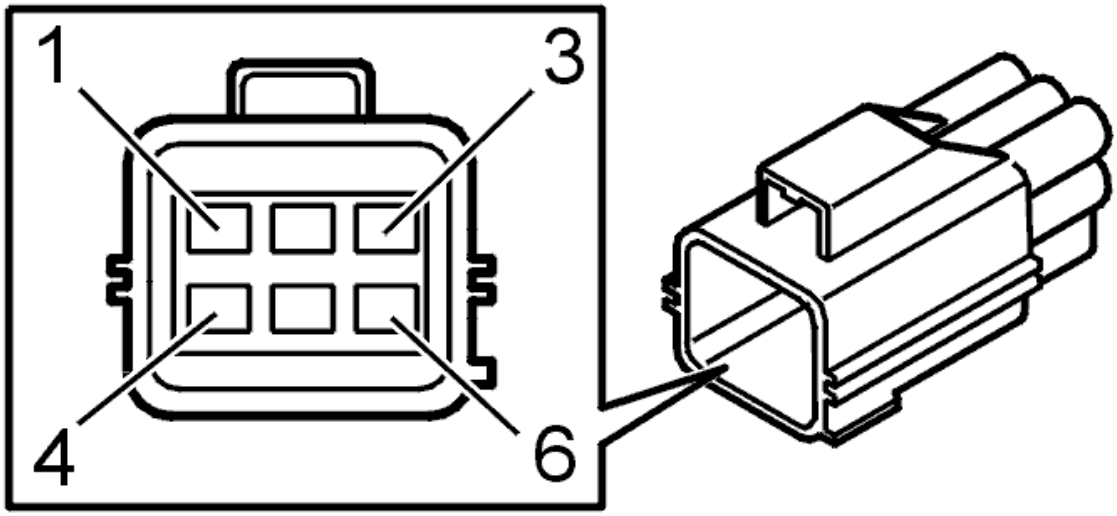

Fig. 23: Identifying Connector Terminals
Courtesy of VOLVO CARS CORPORATION

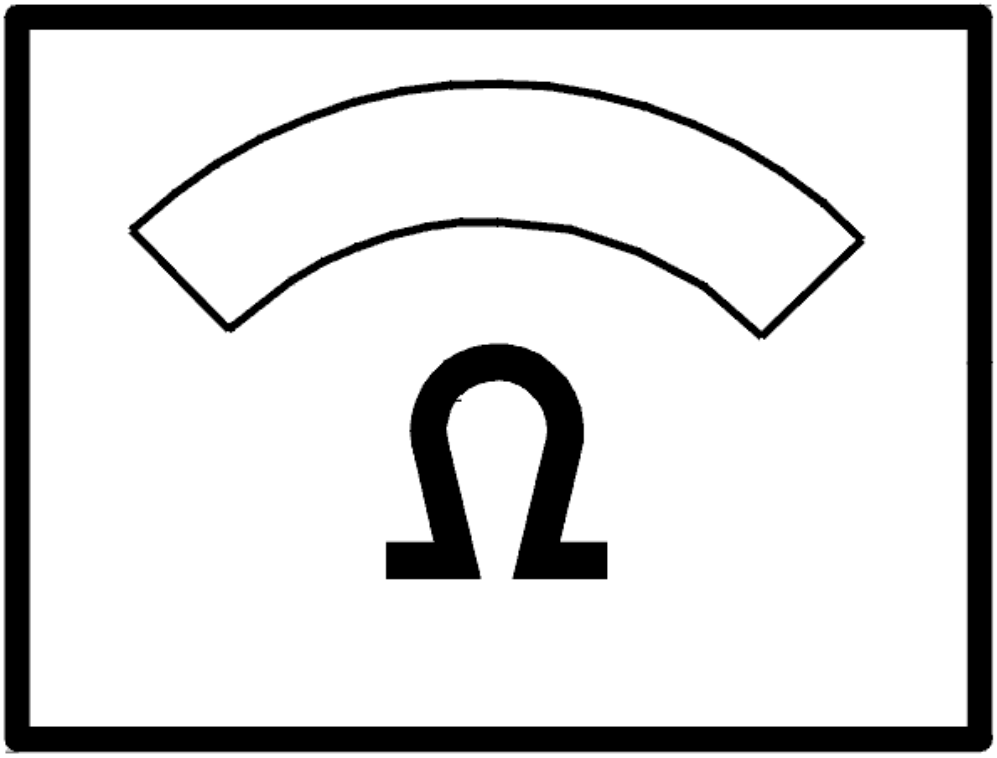

Fig. 24: Identifying Ohm Meter
Courtesy of VOLVO CARS CORPORATION

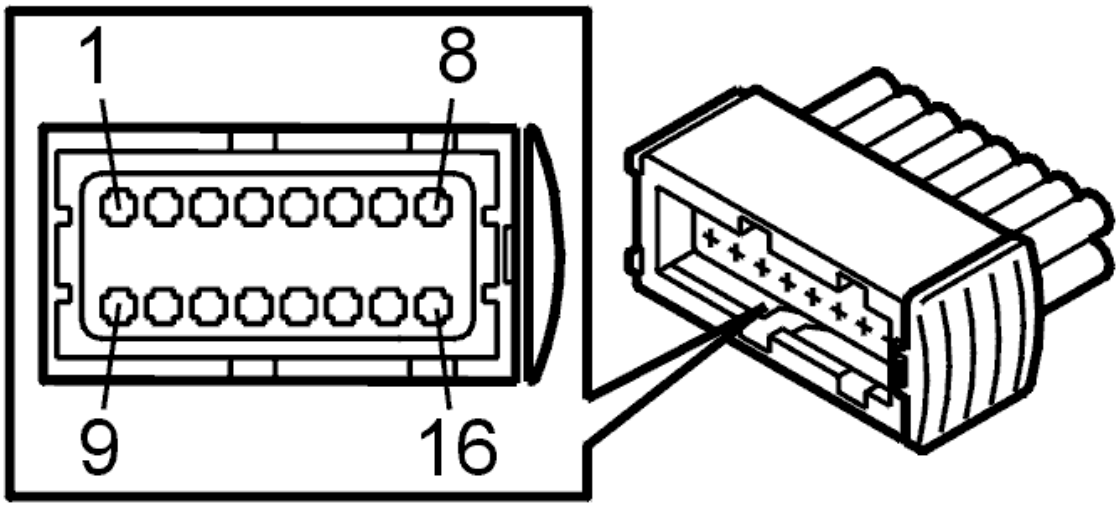

Fig. 25: Identifying Connector Terminals
Courtesy of VOLVO CARS CORPORATION

- **Continue**

  Refer to **VERIFICATION**

VERIFICATION

VERIFICATION

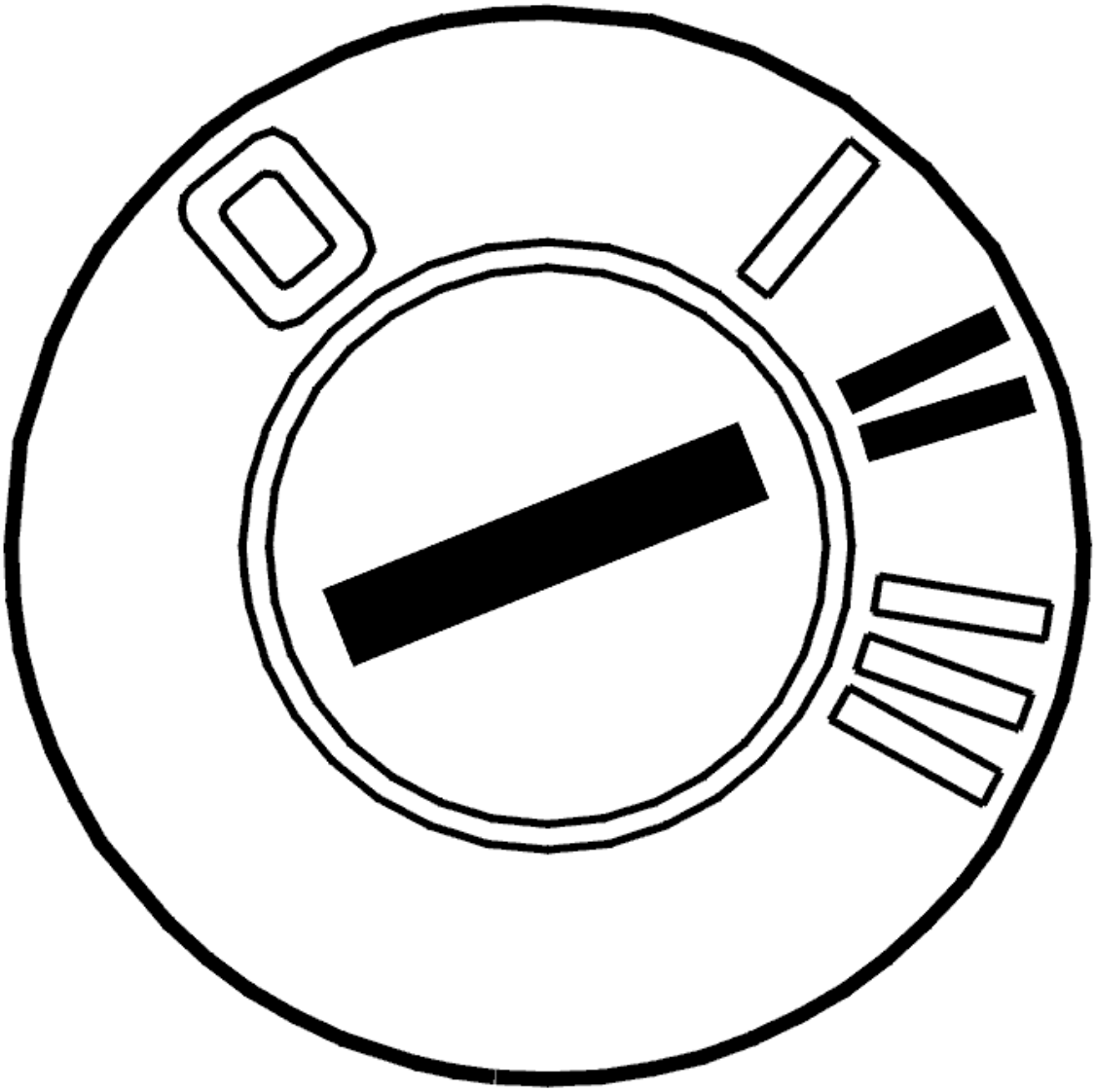

Fig. 26: Identifying Ignition ON
Courtesy of VOLVO CARS CORPORATION

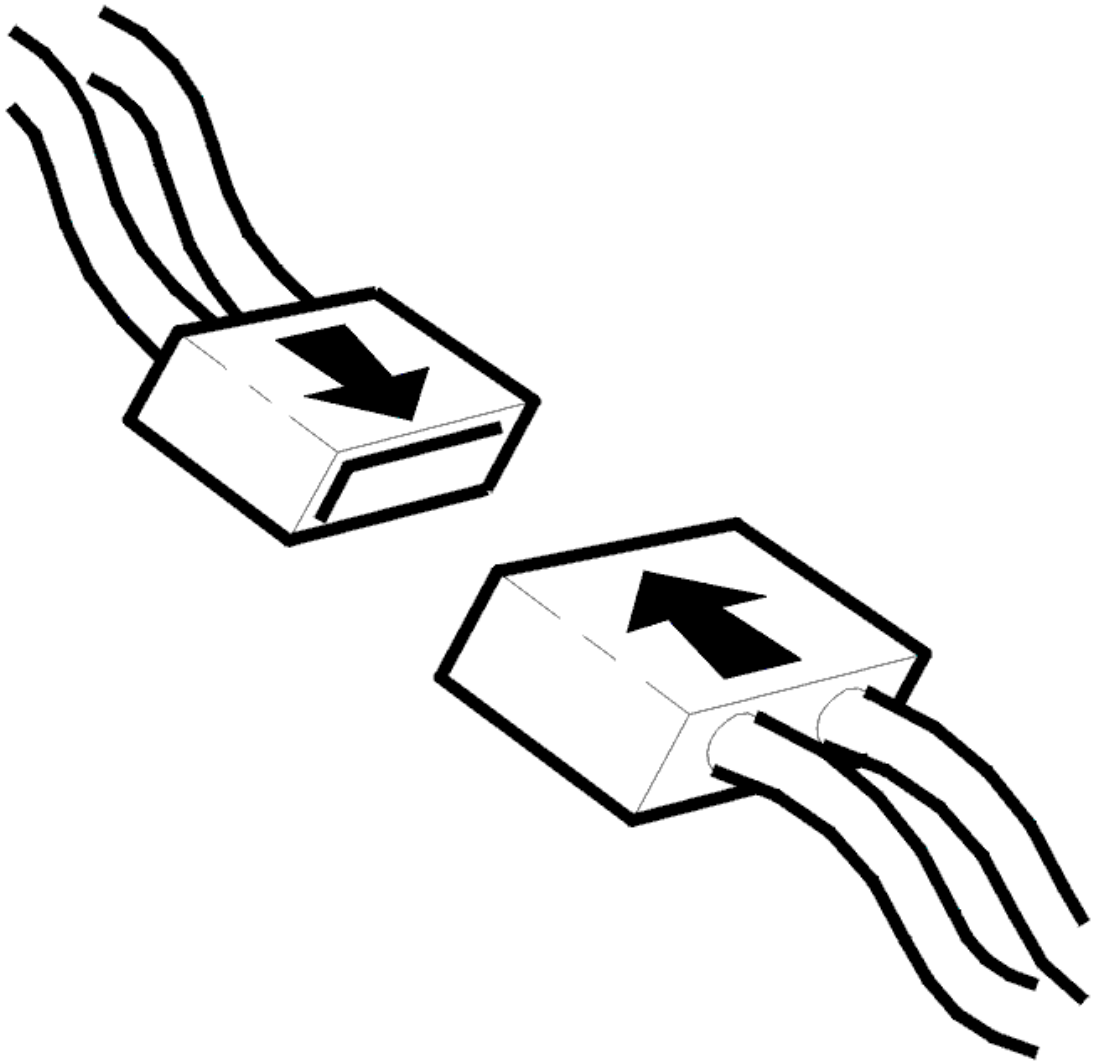

Fig. 27: Connecting Connector
Courtesy of VOLVO CARS CORPORATION

- Ignition off.
- Connect connector, install components etc.
- Ignition on.

NOTE: It is important that only the ignition is on for the heater to start up.

- Activate the heater.

  A buzzing sound should be heard from the heater.

  Check the function of the heater as described in, see **ENGINE COOLANT HEATER, TEST RUNNING** .

Additional information:

- For a description of the parameters, see **DESCRIPTION OF PARAMETERS** .
- For a description of activations, see **ACTIVATING COMPONENTS/FUNCTIONS** .

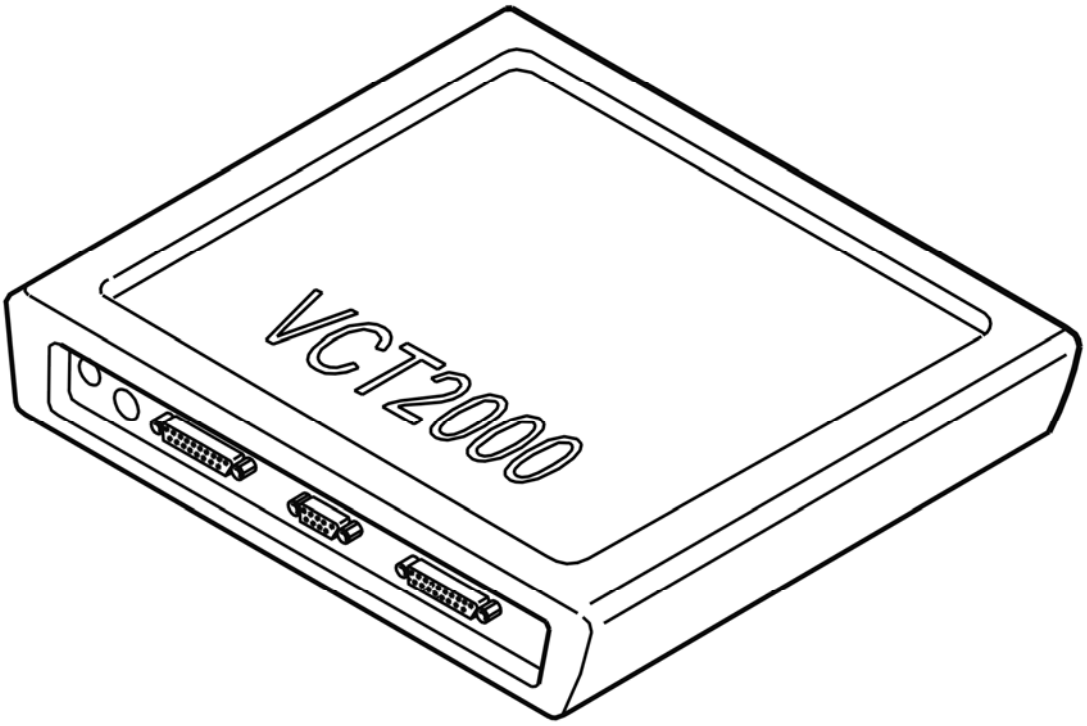

Fig. 28: Identifying VCT2000 Diagnostic Tool Symbol In VIDA
Courtesy of VOLVO CARS CORPORATION

Does the heater work?

- **YES**

  VERIFIED: Troubleshooting has been completed.

- **NO**

  Refer to **INFORMATION**

INFORMATION

FAULT-TRACING INFORMATION

The fault should have been detected and remedied. As this is not the case fault-tracing has failed.

Exit fault-tracing for this diagnostic trouble code (DTC) or make another attempt.

CEM-5F4D: DIAGNOSTIC SYSTEM. TOO LONG (B5254T2; B6294T; 2003-2004)

DIAGNOSTIC TROUBLE CODE INFORMATION

Condition

If the control unit loses contact with the CEM control unit when the heater is in operation, diagnostic trouble code CEM-5F4D will be stored.

Substitute Value

- None.

Possible Source

- Contact resistance in the terminals.
- Open-circuit in the communication cable.
- Short-circuit to ground in the communication cable.
- Short-circuit to supply voltage in the communication cable.

Fault symptom[s]

- Poor interior heating.

TOO-LONG: TIME

CHECKING COMMUNICATION

Check whether the communication is working. Read off the control module P/N using VIDA (Volvo scan tool).

Check if the fault is limited to the Combustion Preheater Module (CPM) or if several nodes have communication problems. If the problem is limited to contact with the auxiliary heater, the fault has been located.

If the communication works and the P/N can be read off, the fault is intermittent.

Remedy as necessary.

- **Continue**

  Refer to **CHECKING COMMUNICATION**

CHECKING COMMUNICATION

Check the cable between Combustion Preheater Module (CPM) #6 and Central Electronic Module (CEM) #18A for a loose connection as described in, see **LOOSE CONNECTIONS (TERMINALS)** and short-circuit to ground, **SHORT-CIRCUIT TO GROUND, PERMANENT FAULTS** .

HINT: All communication between the additional heater and the central electronic module (CEM) is via this cable.

Also check the connectors.

Remedy as necessary.

Other information:

- To access the control module / connect the breakout box, see **CONNECTING THE BREAKOUT BOX** .
- For information about additional heater module signals, see **SIGNAL SPECIFICATION** .
- -2004: **SIGNAL SPECIFICATION**
- 2005-: **SIGNAL SPECIFICATION**

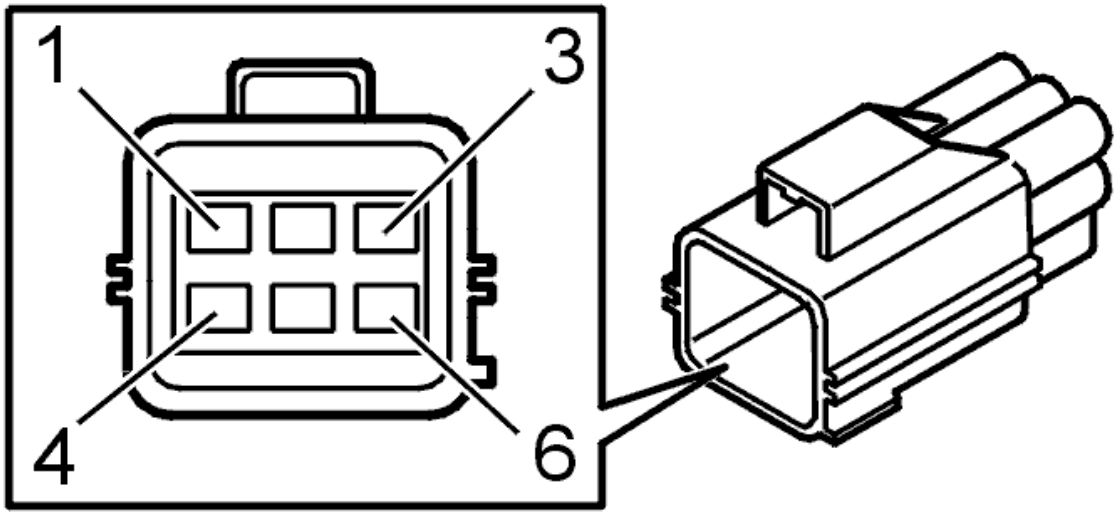

Fig. 29: Identifying Connector Terminals
Courtesy of VOLVO CARS CORPORATION

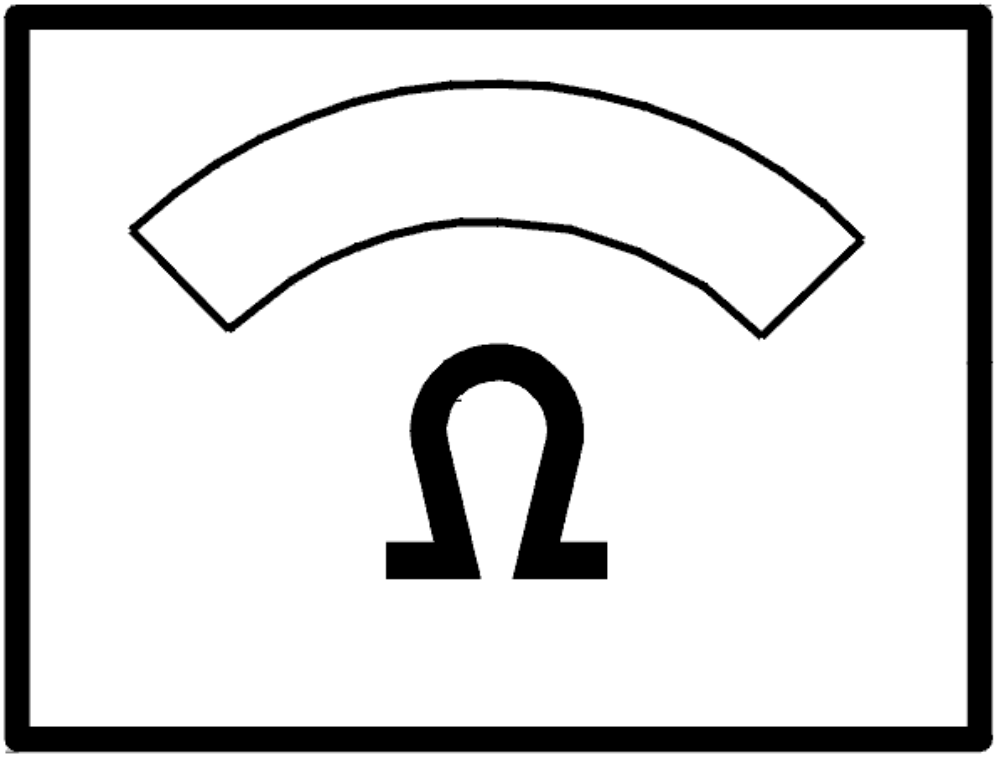

Fig. 30: Identifying Ohm Meter
Courtesy of VOLVO CARS CORPORATION

- **Continue**

  Refer to **VERIFICATION**

VERIFICATION

VERIFICATION

HINT: After the repair it is necessary to check that the fault has been rectified.

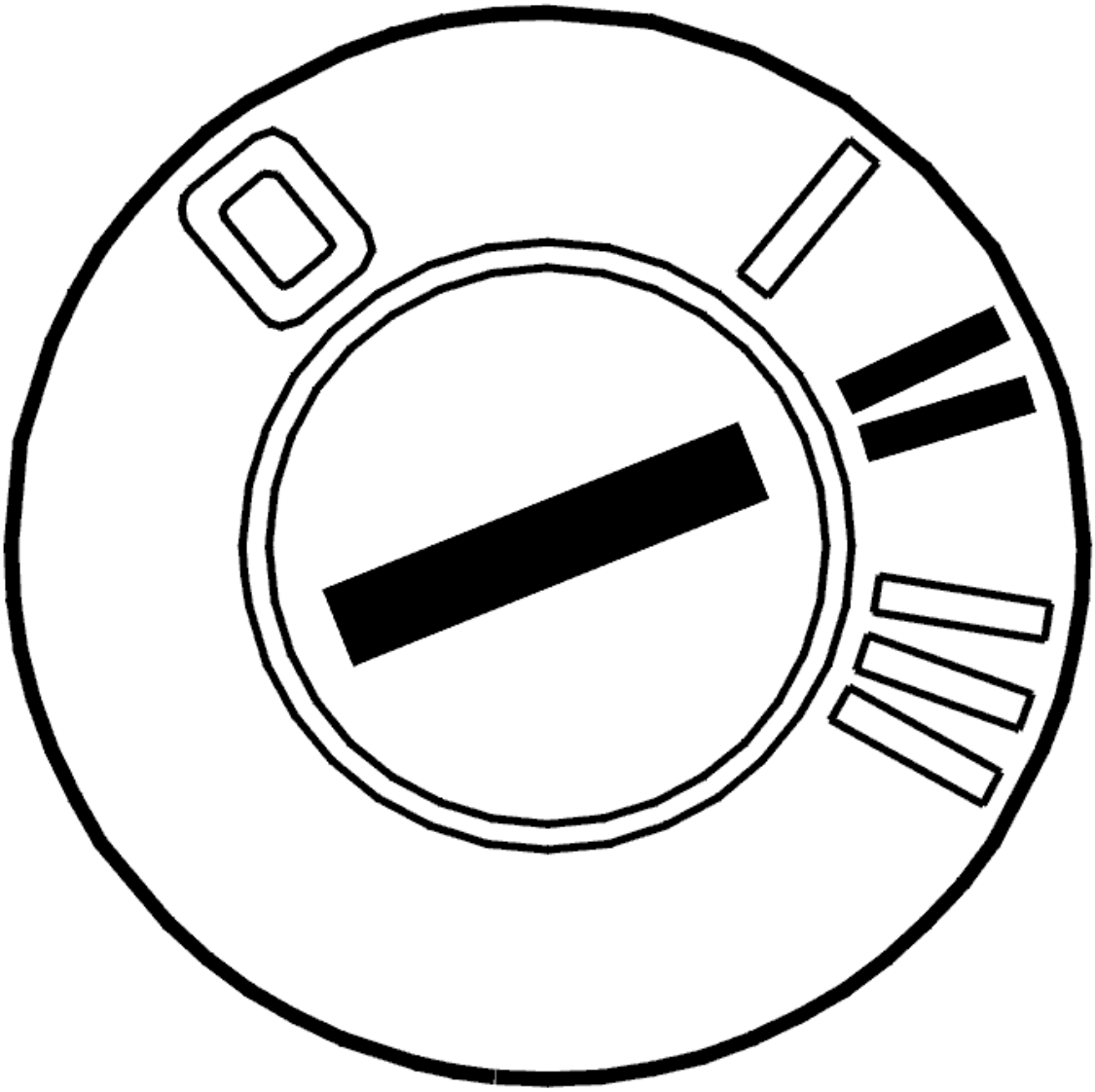

Fig. 31: Identifying Ignition ON
Courtesy of VOLVO CARS CORPORATION

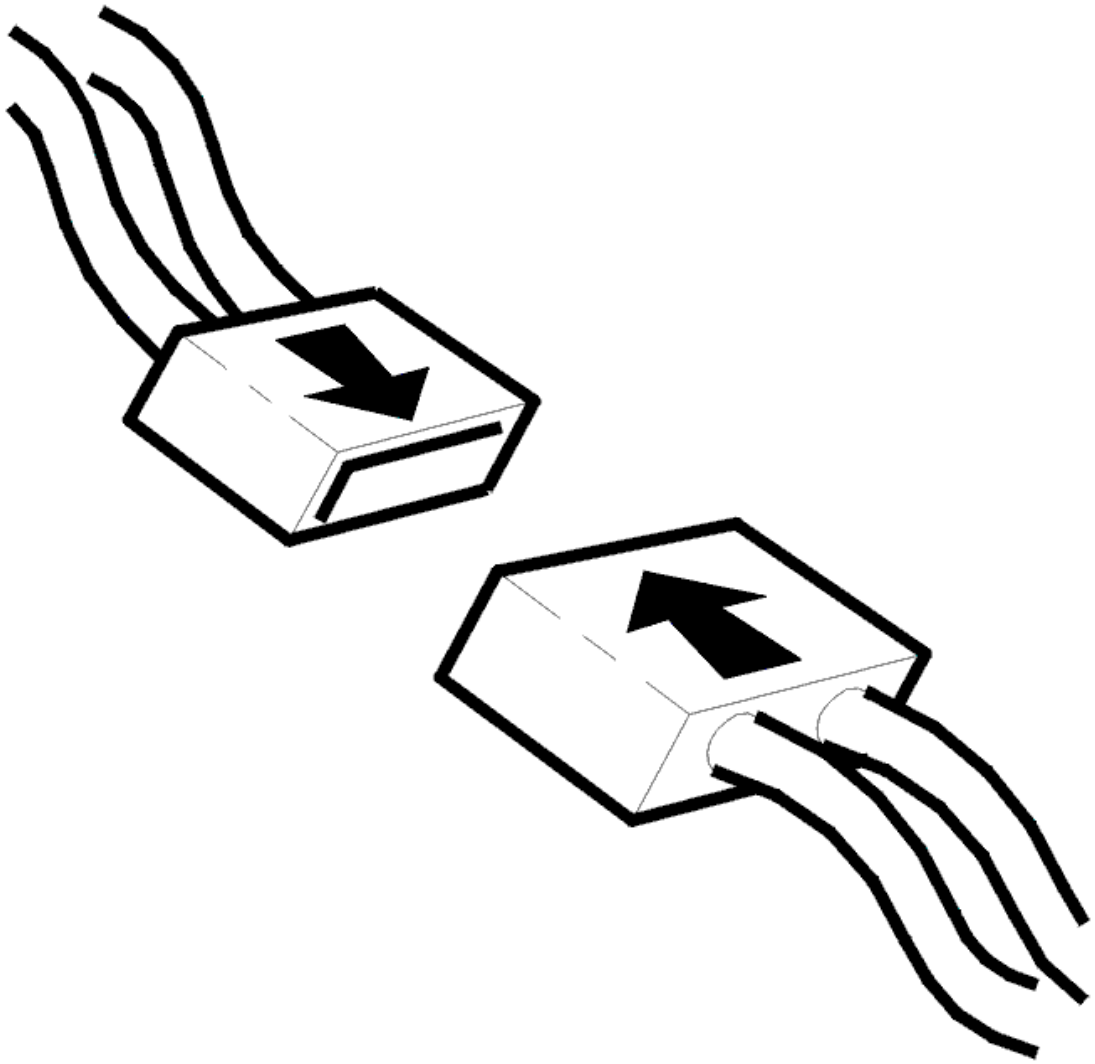

Fig. 32: Connecting Connector
Courtesy of VOLVO CARS CORPORATION

- Ignition off.
- Connect connector, install components etc.
- Ignition on.

NOTE: It is important that only the ignition is on for the heater to start up.

- Activate the heater.

  A buzzing sound should be heard from the heater.

  Check the function of the heater as described in, see **ENGINE COOLANT HEATER, TEST RUNNING** .

Additional information:

- For a description of the parameters, see **DESCRIPTION OF PARAMETERS** .
- For a description of activations, see **ACTIVATING COMPONENTS/FUNCTIONS** .

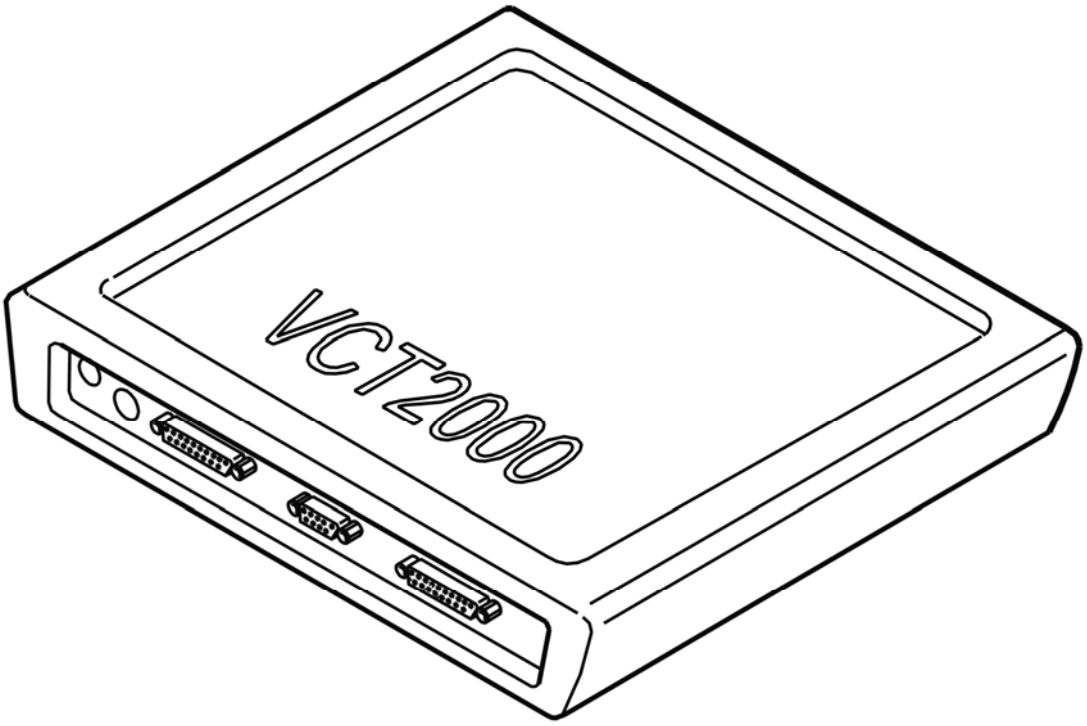

Fig. 33: Identifying VCT2000 Diagnostic Tool Symbol In VIDA
Courtesy of VOLVO CARS CORPORATION

Does the heater work?

- **YES**

  VERIFIED: Troubleshooting has been completed.

- **NO**

  Refer to **INFORMATION**

INFORMATION

FAULT-TRACING INFORMATION

The fault should have been detected and remedied. As this is not the case fault-tracing has failed.

Exit fault-tracing for this diagnostic trouble code (DTC) or make another attempt.

CEM-5F4D: ON-BOARD DIAGNOSTIC (OBD) SYSTEM. TOO LONG TIME (2005-2012)

DIAGNOSTIC TROUBLE CODE (DTC) INFORMATION CEM-5F4D

Condition

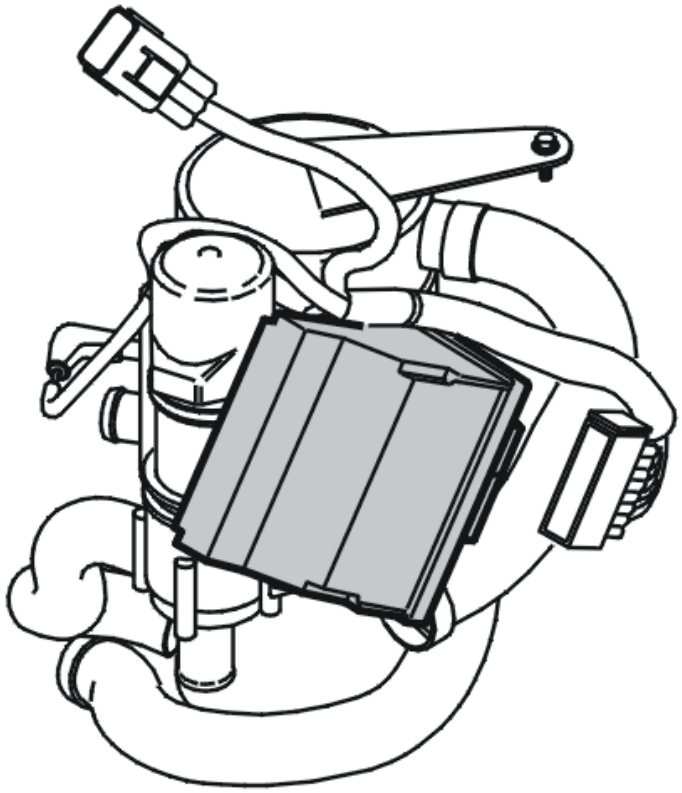

Fig. 34: Additional Heater And Parking Heater
Courtesy of VOLVO CARS CORPORATION

The central electronic module (CEM) checks the communication with the combustion preheater module (CPM).

The diagnostic trouble code (DTC) is stored if the central electronic module (CEM) registers that the internal diagnostics in the combustion preheater module (CPM) do not respond within a certain time.

The diagnostic trouble code (DTC) can be diagnosed when the heater is activated.

Substitute Value

- None.

Possible Source

- Contact resistance in the terminals.
- Open-circuit in the communication cable.
- Short-circuit to ground in the communication cable.
- Short-circuit to supply voltage in the communication cable.

Fault symptom[s]

- Poor heating in the passenger compartment.
- Parking heater/Does not work

TOO-LONG: TIME

CHECKING COMMUNICATION

Check whether the communication is working. Read off the combustion preheater module (CPM) P/N using VIDA (Volvo scan tool).

Test whether the fault is only limited to the combustion preheater module (CPM) or if there are communication faults with other nodes as well. The fault has been localized if the only problem is in establishing contact with the combustion preheater module (CPM).

If the communication works and the P/N can be read off, the fault is intermittent.

- **Continue**

  Refer to **CHECKING COMMUNICATION**

CHECKING COMMUNICATION

Check the cable between combustion preheater module (CPM) terminal #6 and central electronic module (CEM) terminal #C32. Check for a short-circuit to ground. Check for loose connections.

HINT: All communication between the combustion preheater module (CPM) and the central electronic module (CEM) is via this cable.

Also check the connectors.

Remedy as necessary.

Other information

- see **CONNECTING THE BREAKOUT BOX**
- Combustion preheater module (CPM): **SIGNAL SPECIFICATION**
- Central electronic module (CEM):

- -2004: **SIGNAL SPECIFICATION**
- 2005-: **SIGNAL SPECIFICATION**
- see **CHECKING WIRING AND TERMINALS**

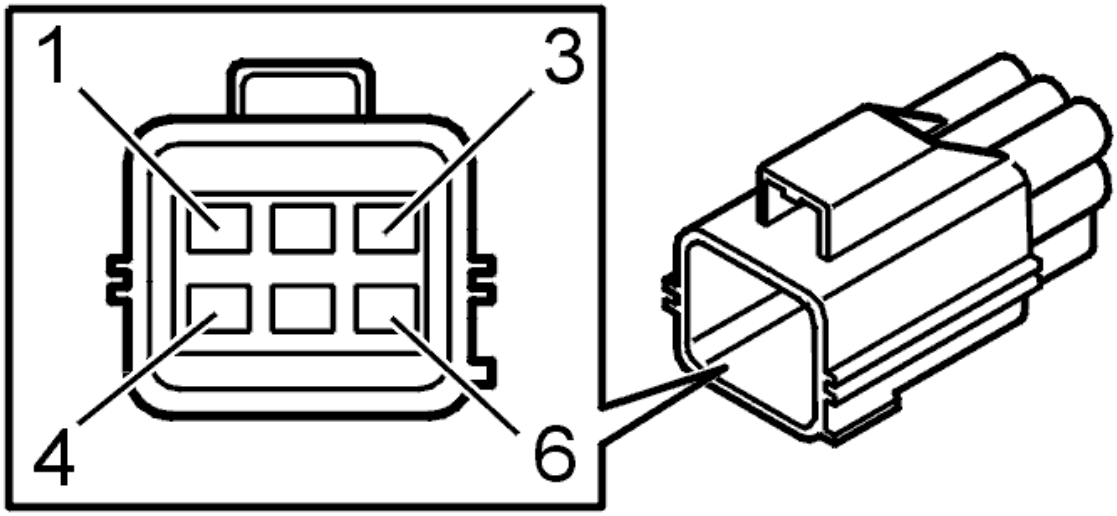

Fig. 35: Identifying Connector Terminals
Courtesy of VOLVO CARS CORPORATION

- **Continue**

  Refer to **VERIFICATION**

VERIFICATION

VERIFICATION

HINT: After carrying out the repair, check that the fault has been remedied.

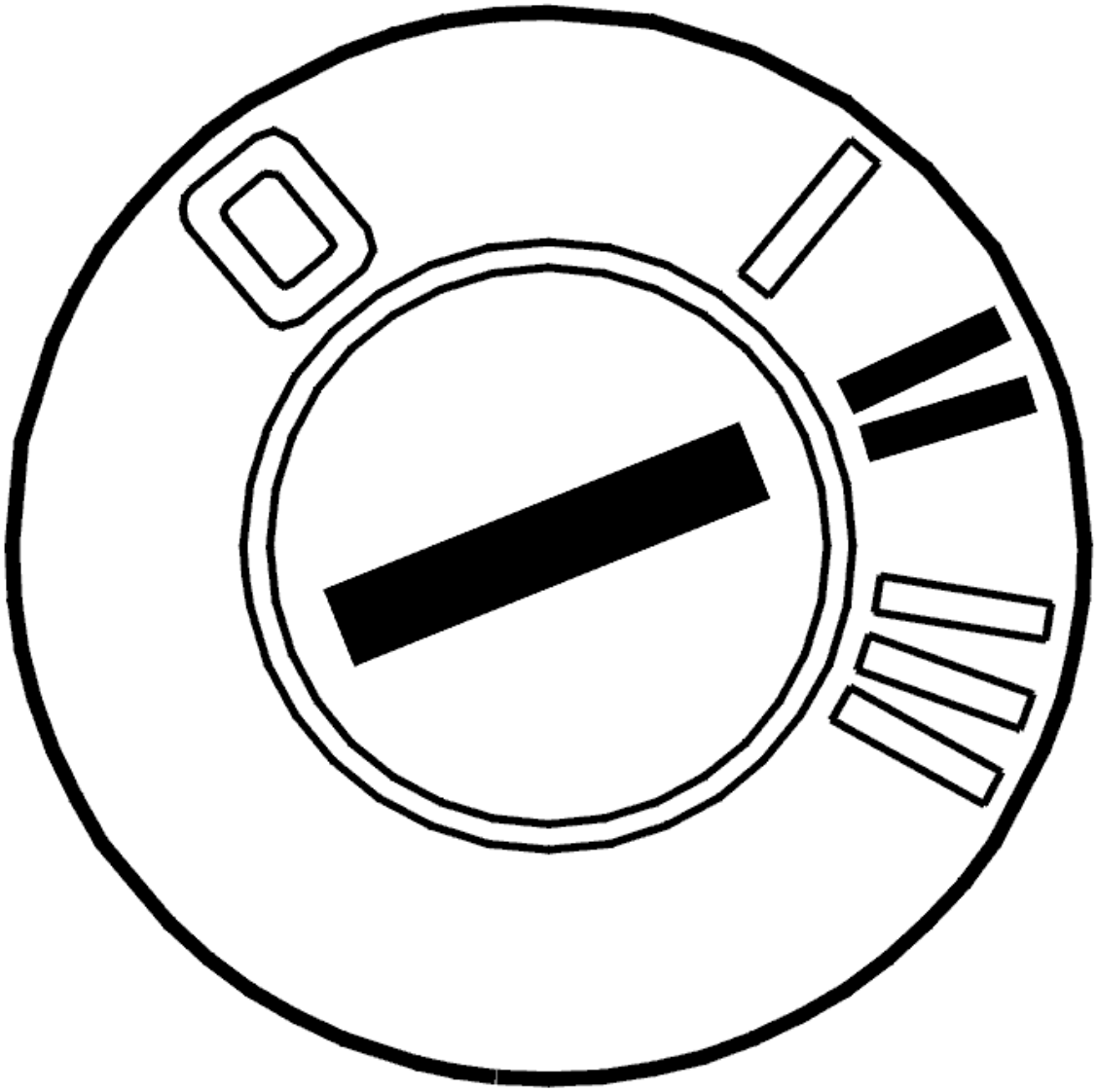

Fig. 36: Identifying Ignition ON
Courtesy of VOLVO CARS CORPORATION

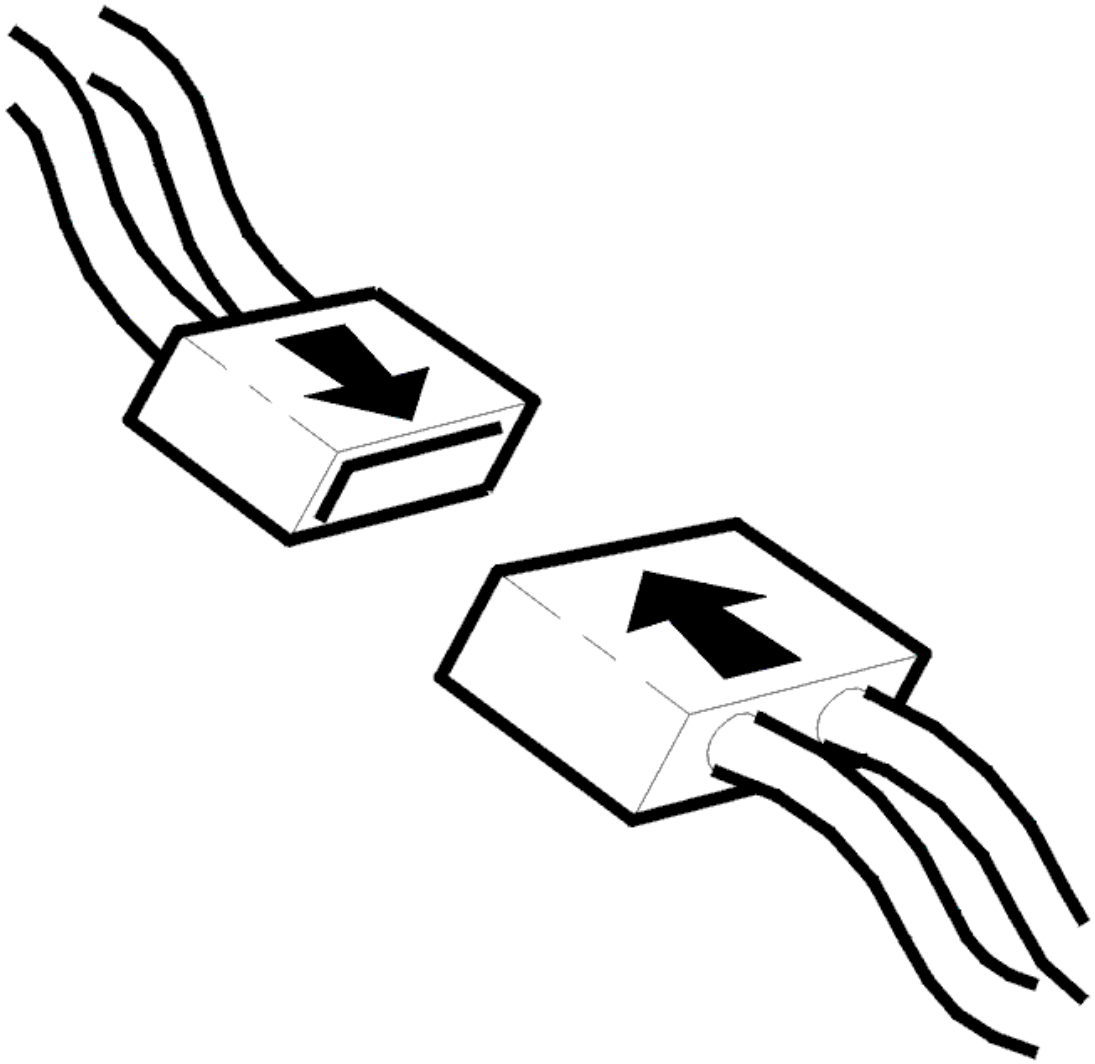

Fig. 37: Connecting Connector
Courtesy of VOLVO CARS CORPORATION

- Ignition off
- Reinstall the connectors, components etc.
- Ignition on.

  Activate the combustion preheater module (CPM).

  Check that the engine coolant heater is activated.

Is the engine coolant heater working?

- **YES**

VERIFIED: Troubleshooting has been completed.

- **NO**

  Refer to **INFORMATION**

INFORMATION

FAULT-TRACING INFORMATION

The fault should have been detected and remedied. As this is not the case fault-tracing has failed.

Exit fault-tracing for this diagnostic trouble code (DTC) or make another attempt.

CEM-5F4F: START ATTEMPT. TOO MANY UNSUCCESSFUL ATTEMPTS (2005-2012)

DIAGNOSTIC TROUBLE CODE (DTC) INFORMATION CEM-5F4F

Condition

Fig. 38: Identifying Parking Heater
Courtesy of VOLVO CARS CORPORATION

The central electronic module (CEM) checks the function and status parking heater.

During activation, the heater tries to start. If the heater does not start, it will try again a few times.

The diagnostic trouble code (DTC) is stored if the central electronic module (CEM) receives a signal from the heater indicating that it has tried to start but failed.

The diagnostic trouble code (DTC) can be diagnosed when the heater is activated.

Substitute Value

- The heater is not activated.

Possible Source

- Fault in the fuel supply to the parking heater
- Flame sensor clogged with soot
- Blocked combustion air intake
- Contact resistance in the control module connectors
- Open-circuit or short-circuit to supply voltage in the control signal cable for the flame sensor
- Flame sensor not functioning.
- Fault in the power supply for the parking heater

Fault symptom[s]

- Poor heating in the passenger compartment.
- Parking heater/Does not work

TOO-MANY: UNSUCCESSFUL ATTEMPTS

CHECKING THE QUANTITY OF FUEL AND VOLTAGE

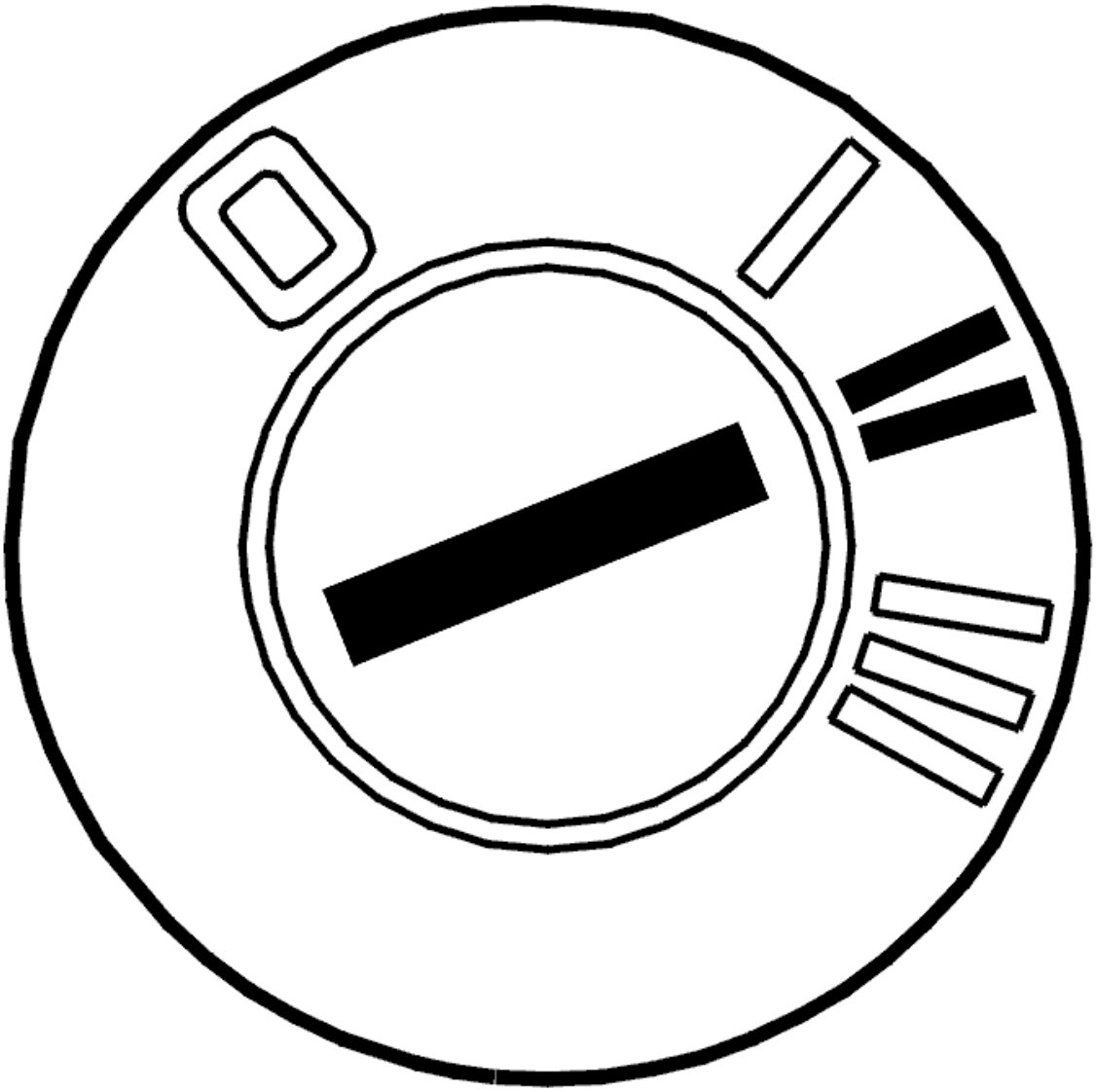

Fig. 39: Identifying Ignition ON
Courtesy of VOLVO CARS CORPORATION

- **HINT: A transparent hose can be used to check if fuel supply to the parking heater works.**

  If the quantity of fuel in the fuel tank is below 6 liters the heater is not permitted to start. If the battery voltage is poor the heater is not permitted to start. The combustion preheater module (CPM) interprets 3 or more failed start attempts as a fault in the heater. The heater cannot then be started until the diagnostic trouble codes (DTCs) have been erased

- Ignition on.

  NOTE: The heater must be switched off when reading off

  Read off the values.

The fuel level status must be OK and the voltage to the heater must be normal.

Other information:

- Combustion preheater module (CPM): **DESCRIPTION OF PARAMETERS**

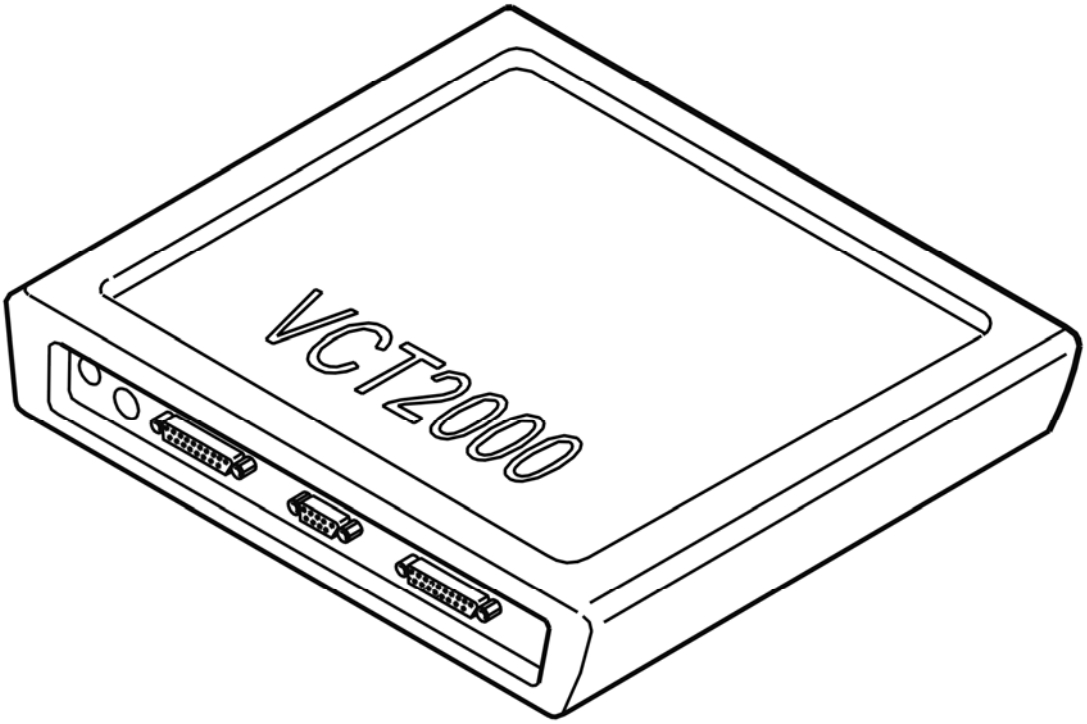

Fig. 40: Identifying VCT2000 Diagnostic Tool Symbol In VIDA
Courtesy of VOLVO CARS CORPORATION

Was a fault detected?

- **YES**

  Refer to **VERIFICATION**

- **NO**

  Refer to **CHECKING FUEL LINES**

CHECKING FUEL LINES

WARNING: **Use protective gloves and protective goggles due to the risk of fuel spillage.**

- Release the heater and fuel lines.

  Check the fuel lines between the connection point to the fuel injection system and heater via the fuel pump (FP). Check for damage and leakage.

  Check the fuel lines for blockages.

  Other

  - see **FUEL-POWERED PREHEATER, CHECKING**
  - see **ENGINE COOLANT HEATER, REPLACING**

Was a fault detected?

- **YES**

  Refer to **VERIFICATION**

- **NO**

  Refer to **CHECKING COMPONENTS**

CHECKING COMPONENTS

WARNING: **Use protective gloves and protective goggles due to the risk of fuel spillage.**

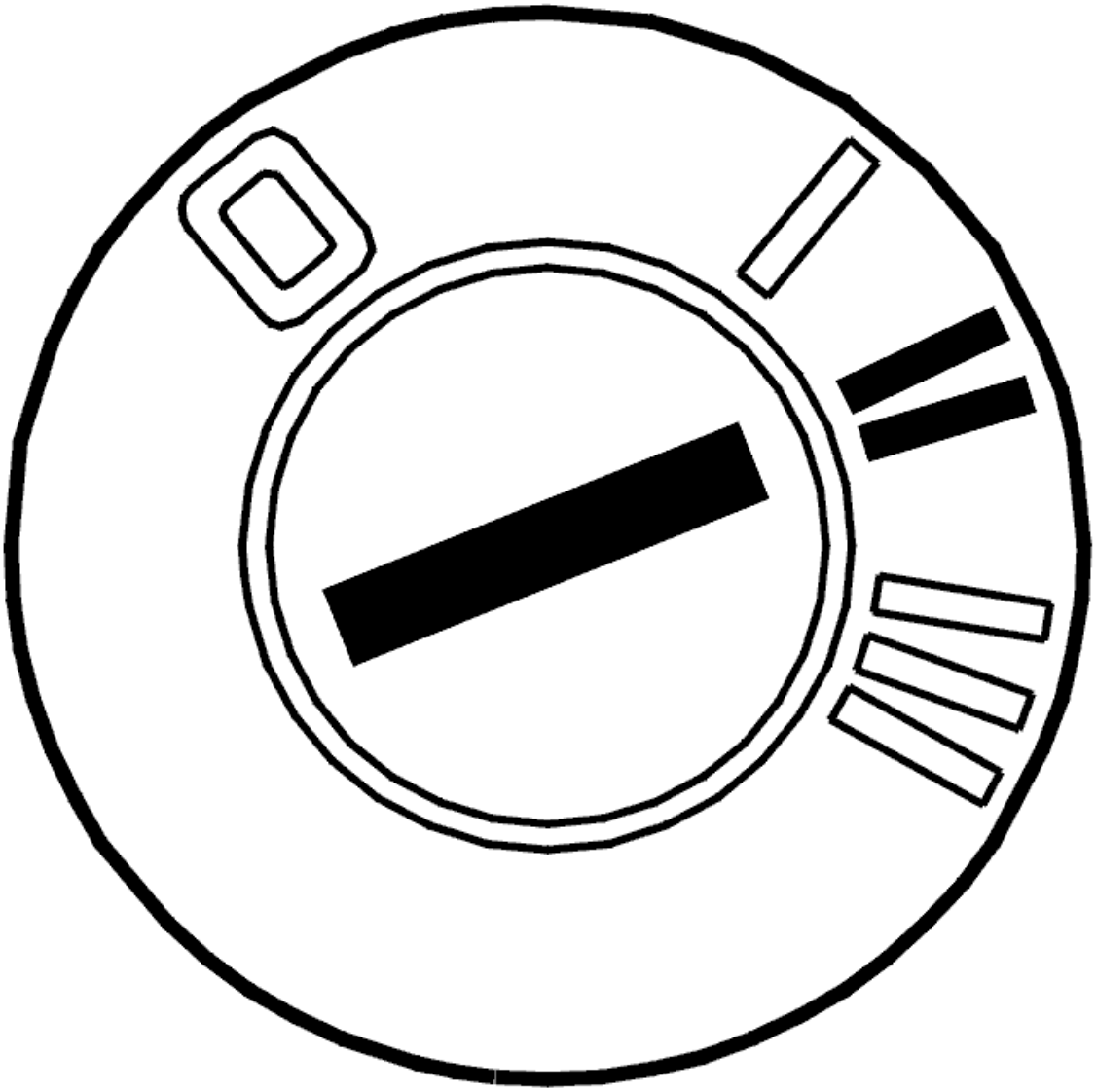

Fig. 41: Identifying Ignition ON
Courtesy of VOLVO CARS CORPORATION

- Ignition on.

  NOTE: It is important that only the ignition is on in order for the heater to start.

- Activate the heater.

  A buzzing sound must be heard from the heater

  Check whether the fuel pump is operating. The pump should make a ticking sound.

  Replace the fuel pump (FP) if it is not working. See: **FUEL PUMP AUXILIARY HEATER, REPLACING**

Other information:

- see **DESCRIPTION OF PARAMETERS**
- see **ACTIVATING COMPONENTS/FUNCTIONS**
- see **FUEL-POWERED PREHEATER, CHECKING**

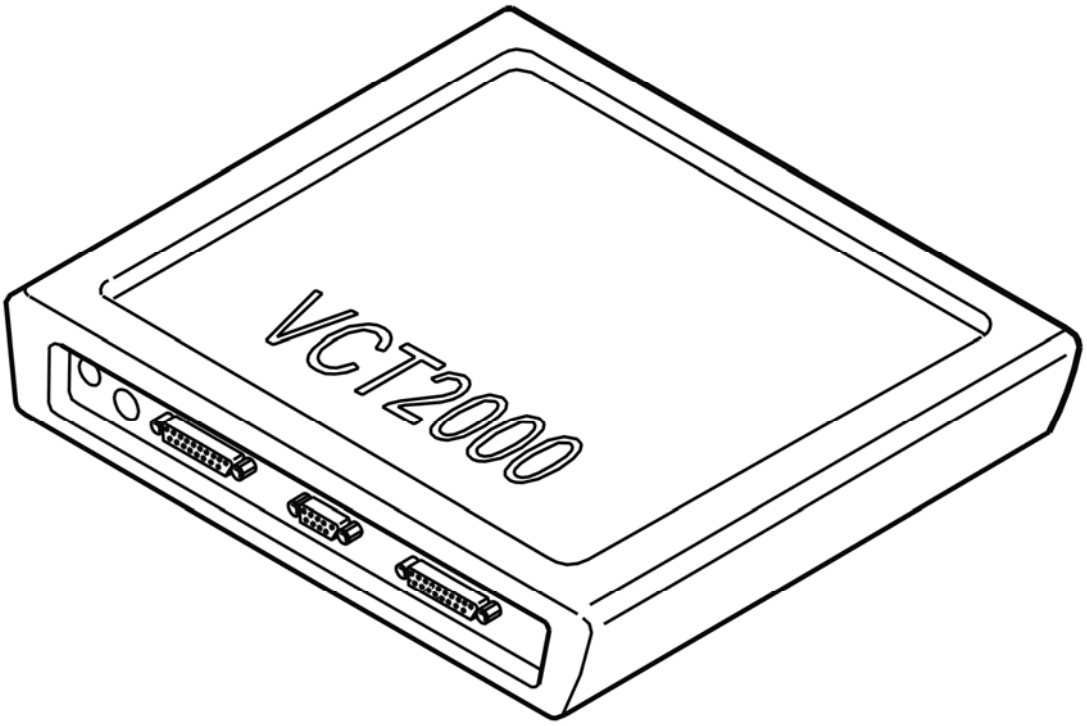

Fig. 42: Identifying VCT2000 Diagnostic Tool Symbol In VIDA
Courtesy of VOLVO CARS CORPORATION

Did the heater operate?

- **YES**

  Refer to **CHECKING THE NOZZLE PIPE**

- **NO**

  Refer to **VERIFICATION**

CHECKING THE NOZZLE PIPE

- see **FUEL INJECTION NOZZLE / FAN MOTOR / PRESSURE EQUALIZER, REPLACING**

Check that the nozzle pipe is OK and that it is not blocked.

Remedy as necessary.

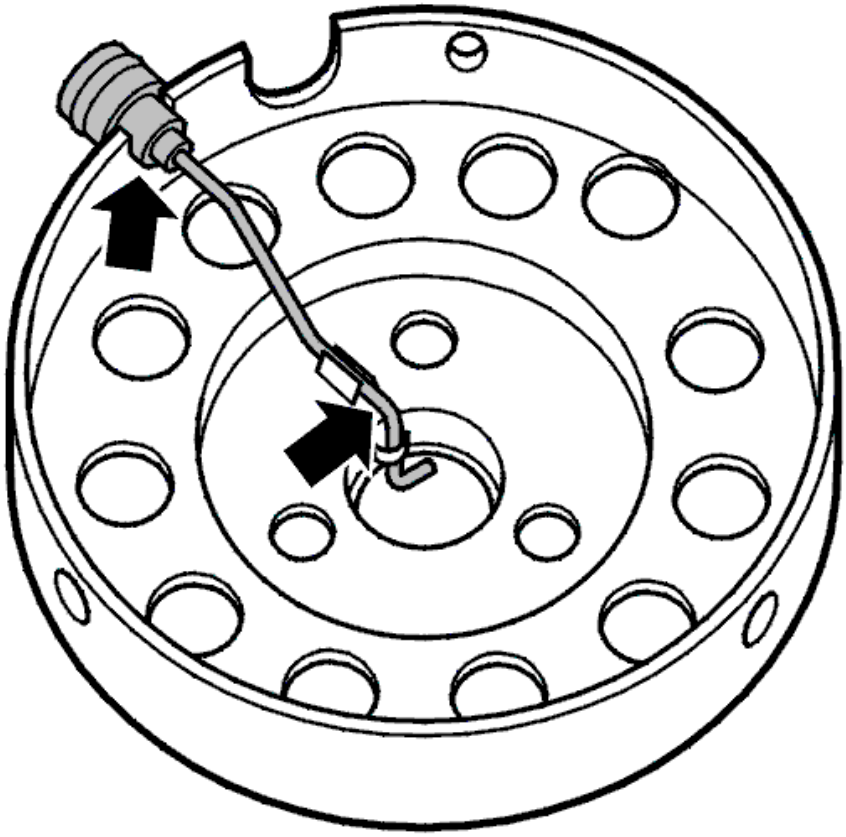

Fig. 43: Identifying Nozzle Pipe Installation Position
Courtesy of VOLVO CARS CORPORATION

Was a fault detected?

- **YES**

  Refer to **VERIFICATION**

- **NO**

  Refer to **CHECKING THE COMBUSTION AIR FLOW**

CHECKING THE COMBUSTION AIR FLOW

Check for free air flow through the heater (that the air intake and exhaust are not blocked).

Remedy as necessary.

Was a fault detected?

- **YES**

  Refer to **VERIFICATION**

- **NO**

  Refer to **CHECKING THE FLAME SENSOR**

CHECKING THE FLAME SENSOR

Check that the flame sensor is not clogged with soot.

Remedy as necessary.

Other information:

- see **OVERHEAT PROTECTION THERMOSTAT / FLAME SENSOR / ENGINE COOLANT TEMPERATURE SENSOR, REPLACING**

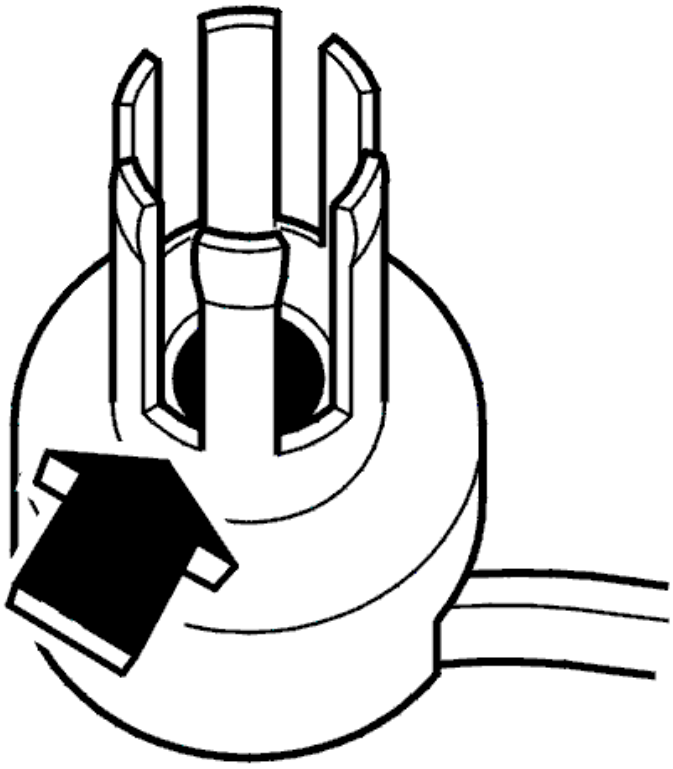

Fig. 44: Identifying Flame Sensor
Courtesy of VOLVO CARS CORPORATION

Was a fault detected?

- **YES**

  Refer to **VERIFICATION**

- **NO**

  Refer to **CHECKING COMPONENTS AND WIRING**

CHECKING COMPONENTS AND WIRING

Check the cable between combustion preheater module (CPM) terminal #4 and the ground terminal for the flame sensor. Check for an open-circuit.

HINT: It is difficult to differentiate between the flame sensor cables so take readings between control module terminal #4 and both flame sensor cables.

Check the cable between combustion preheater module (CPM) terminal #8 and the positive cable for the flame sensor. Check for an open-circuit. Check for a short-circuit to supply voltage.

HINT: It is difficult to differentiate between the cables to the flame sensor. Take readings on the cables one at a time and, see if a relevant value was obtained from either of them.

If no fault is found in the connectors or cables, try a new flame sensor.

Remedy as necessary.

Other information:

- see **CONNECTING THE BREAKOUT BOX**
- see **OVERHEAT PROTECTION THERMOSTAT / FLAME SENSOR / ENGINE COOLANT TEMPERATURE SENSOR, REPLACING**
- For other values: **SIGNAL SPECIFICATION**
- see **CHECKING WIRING AND TERMINALS**

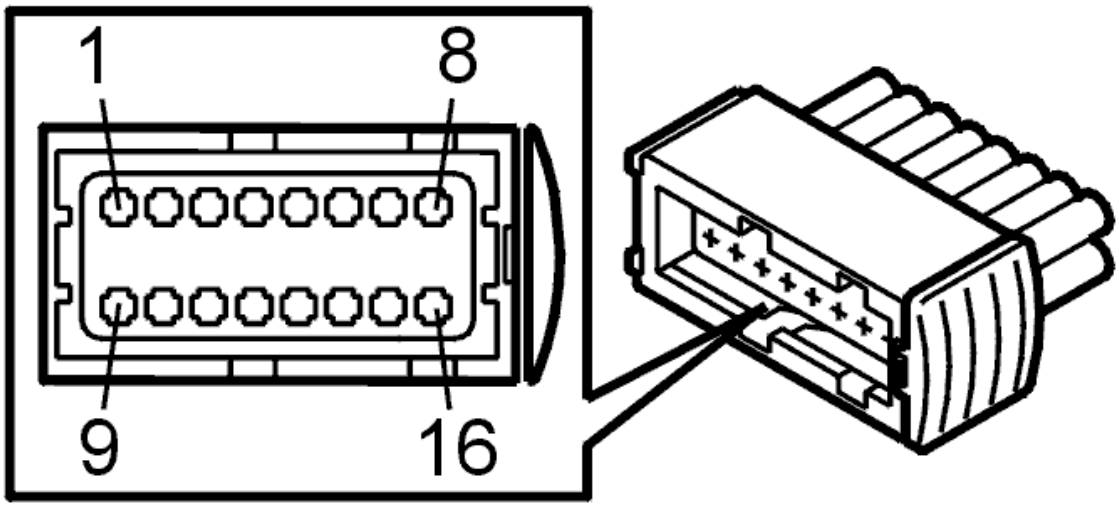

Fig. 45: Identifying Connector Terminals
Courtesy of VOLVO CARS CORPORATION

- **Continue**

  Refer to **VERIFICATION**

VERIFICATION

VERIFICATION

HINT: After carrying out the repair, check that the fault has been remedied.

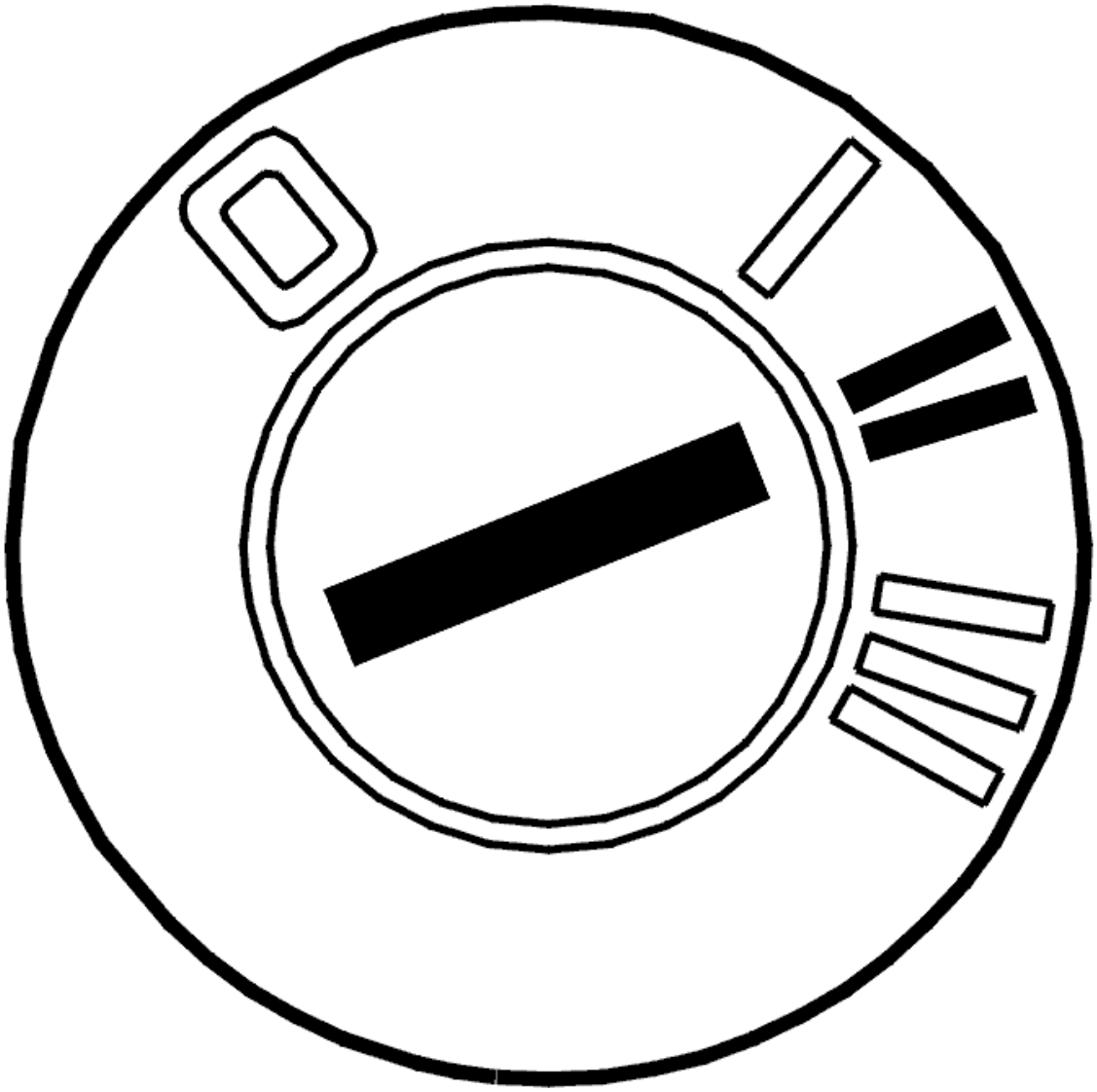

Fig. 46: Identifying Ignition ON
Courtesy of VOLVO CARS CORPORATION

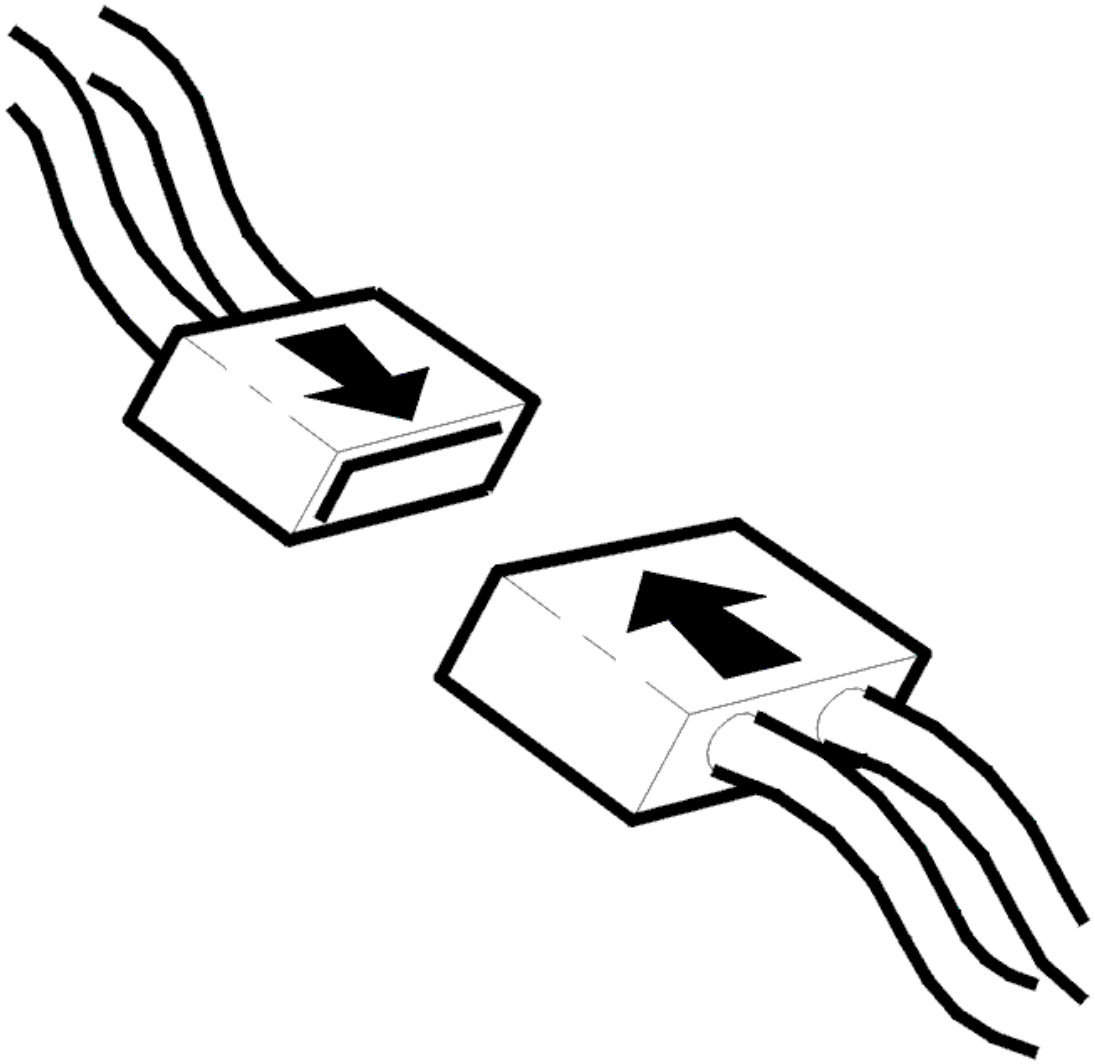

Fig. 47: Connecting Connector
Courtesy of VOLVO CARS CORPORATION

- Ignition off
- Reinstall the connectors, components etc.
- Ignition on.

Erase diagnostic trouble codes (DTCs).

NOTE: **Diagnostic trouble codes (DTCs) must be erased to start the heater. Before erasing diagnostic trouble codes (DTCs) all indicated faults must be corrected.**

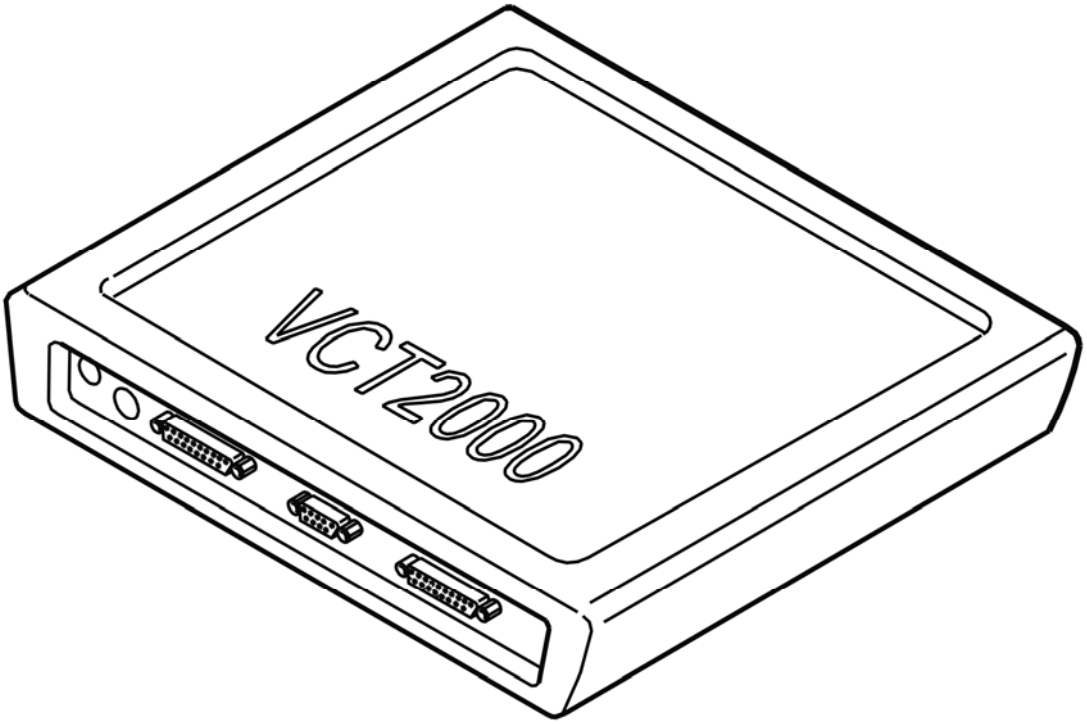

Fig. 48: Identifying VCT2000 Diagnostic Tool Symbol In VIDA
Courtesy of VOLVO CARS CORPORATION

- **Continue**

  Refer to **VERIFICATION, CONTINUED**

VERIFICATION, CONTINUED

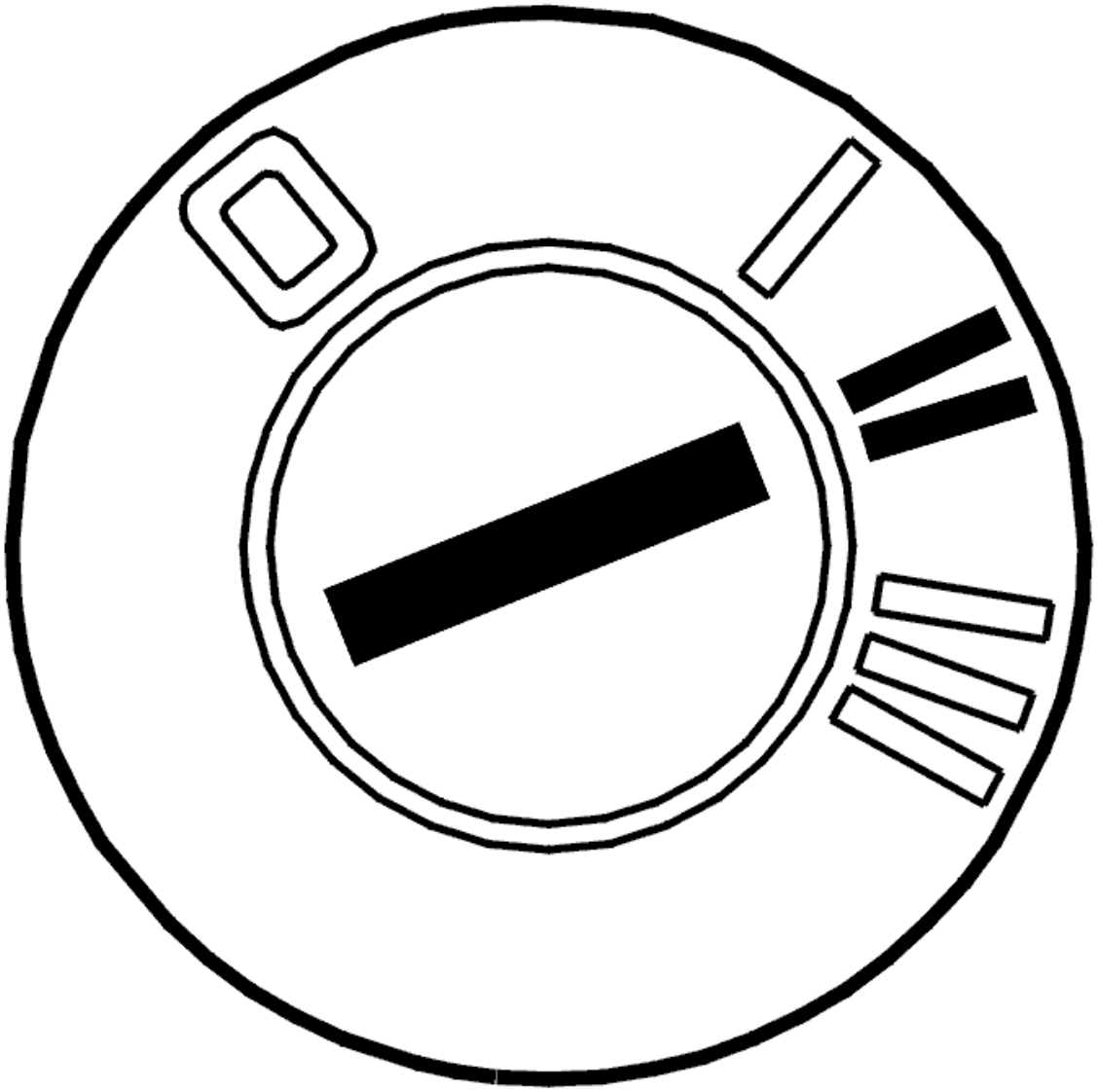

Fig. 49: Identifying Ignition ON
Courtesy of VOLVO CARS CORPORATION

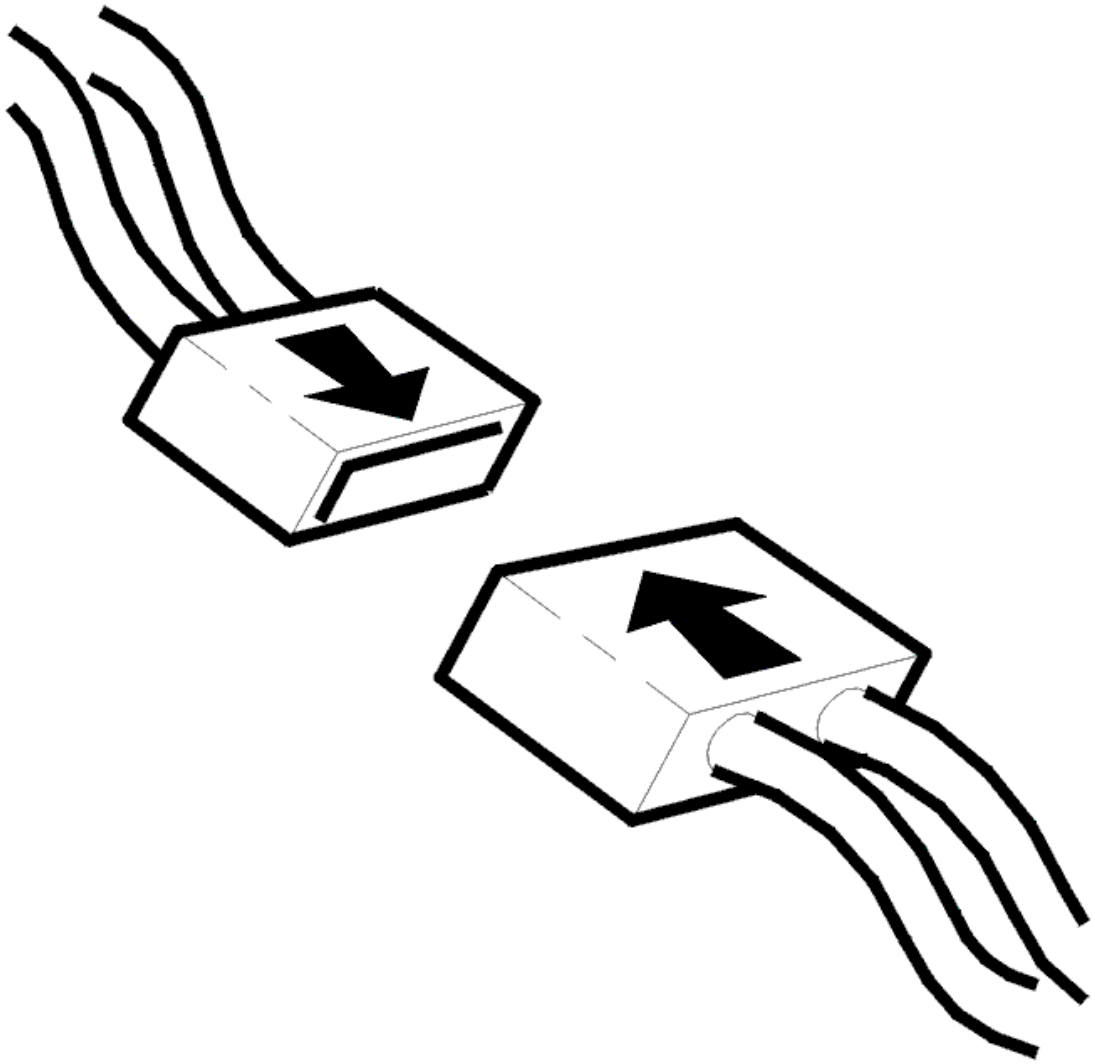

Fig. 50: Connecting Connector
Courtesy of VOLVO CARS CORPORATION

- Ignition off
- Reinstall the connectors, components etc.
- Ignition on.

NOTE: **It is important that only the ignition is on in order for the heater to start.**

- Activate the heater.

  A buzzing sound should be heard from the heater.

  HINT: After repair, the voltage of the flame sensor can be checked. The voltage should be a maximum of 1.0 V.

Check the function of the heater. See **ENGINE COOLANT HEATER, TEST RUNNING** .

Other information:

- For a description of parameters, see **DESCRIPTION OF PARAMETERS**
- For a description of activations, see **ACTIVATING COMPONENTS/FUNCTIONS** .

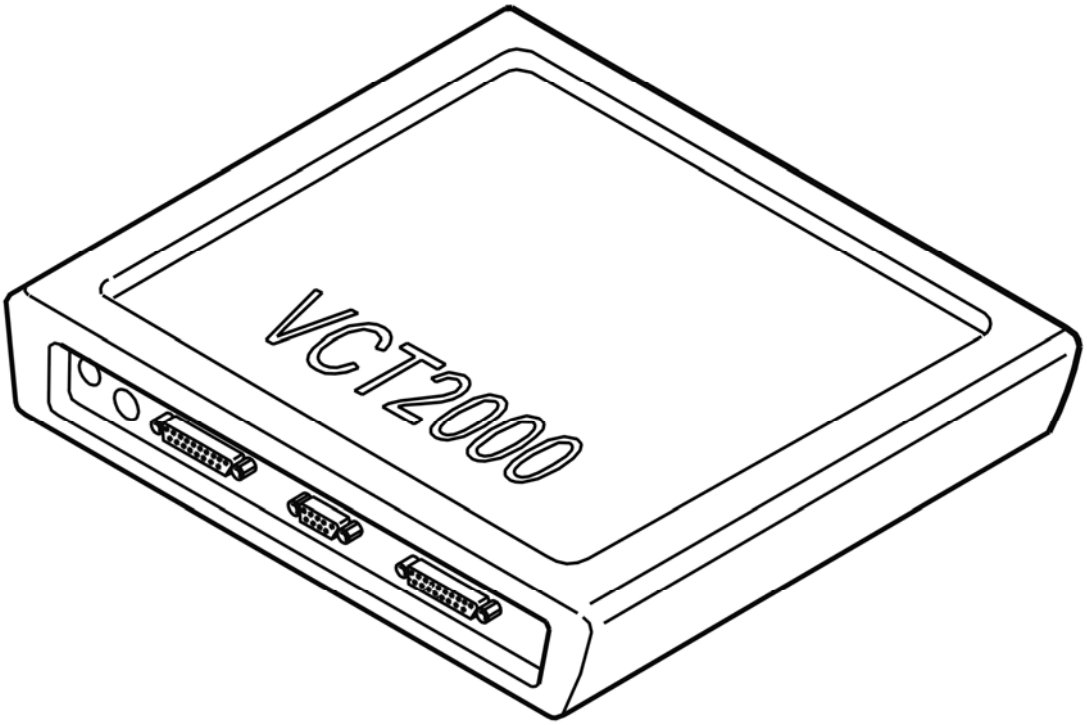

Fig. 51: Identifying VCT2000 Diagnostic Tool Symbol In VIDA
Courtesy of VOLVO CARS CORPORATION

Does the heater operate?

- **YES**

  VERIFIED: Troubleshooting has been completed.

- **NO**

  Refer to **INFORMATION**

INFORMATION

FAULT-TRACING INFORMATION

The fault should have been detected and remedied. As this is not the case fault-tracing has failed.

Exit fault-tracing for this diagnostic trouble code (DTC) or make another attempt.

CEM-5F4F: START ATTEMPT. TOO MANY UNSUCCESSFUL ATTEMPTS (B5254T2; B6294T; 2003-2004)

DIAGNOSTIC TROUBLE CODE INFORMATION

Condition

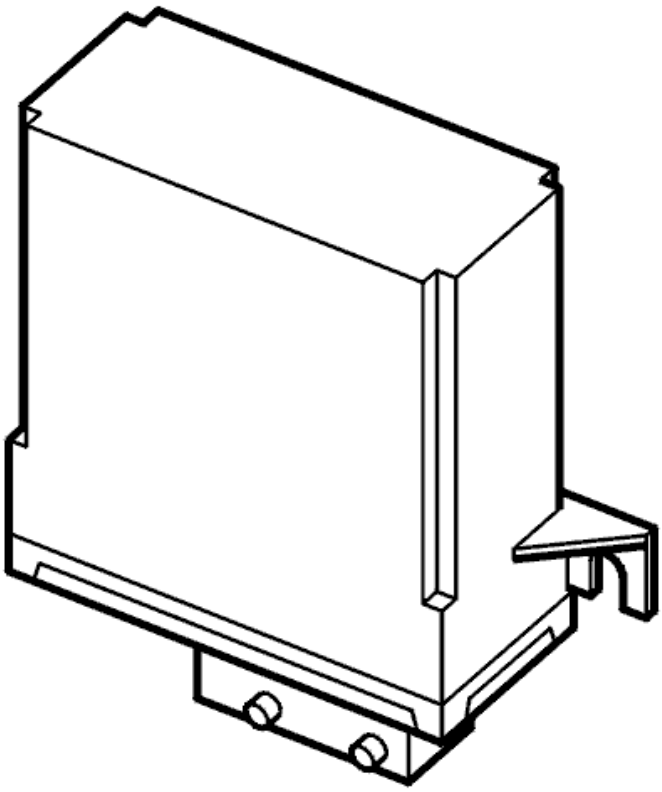

Fig. 52: Additional Heater And Parking Heater (Combustion Preheater Module)
Courtesy of VOLVO CARS CORPORATION

If the control unit indicates that a start attempt has failed, diagnostic trouble code CEM-5F4F will be stored.

Substitute Value

- The heater is not activated.

Possible Source

- No fuel feed.

- Flame indicator covered with soot.
- Blocked combustion air flow.
- Contact resistance in control unit connector.
- Open circuit or short circuit to voltage supply on the control signal wire of the flame indicator.
- Damaged flame sensor.

Fault symptom[s]

- Poor interior heating.

TOO-MANY: UNSUCCESSFUL ATTEMPTS

CHECKING QUANTITY OF FUEL AND VOLTAGE

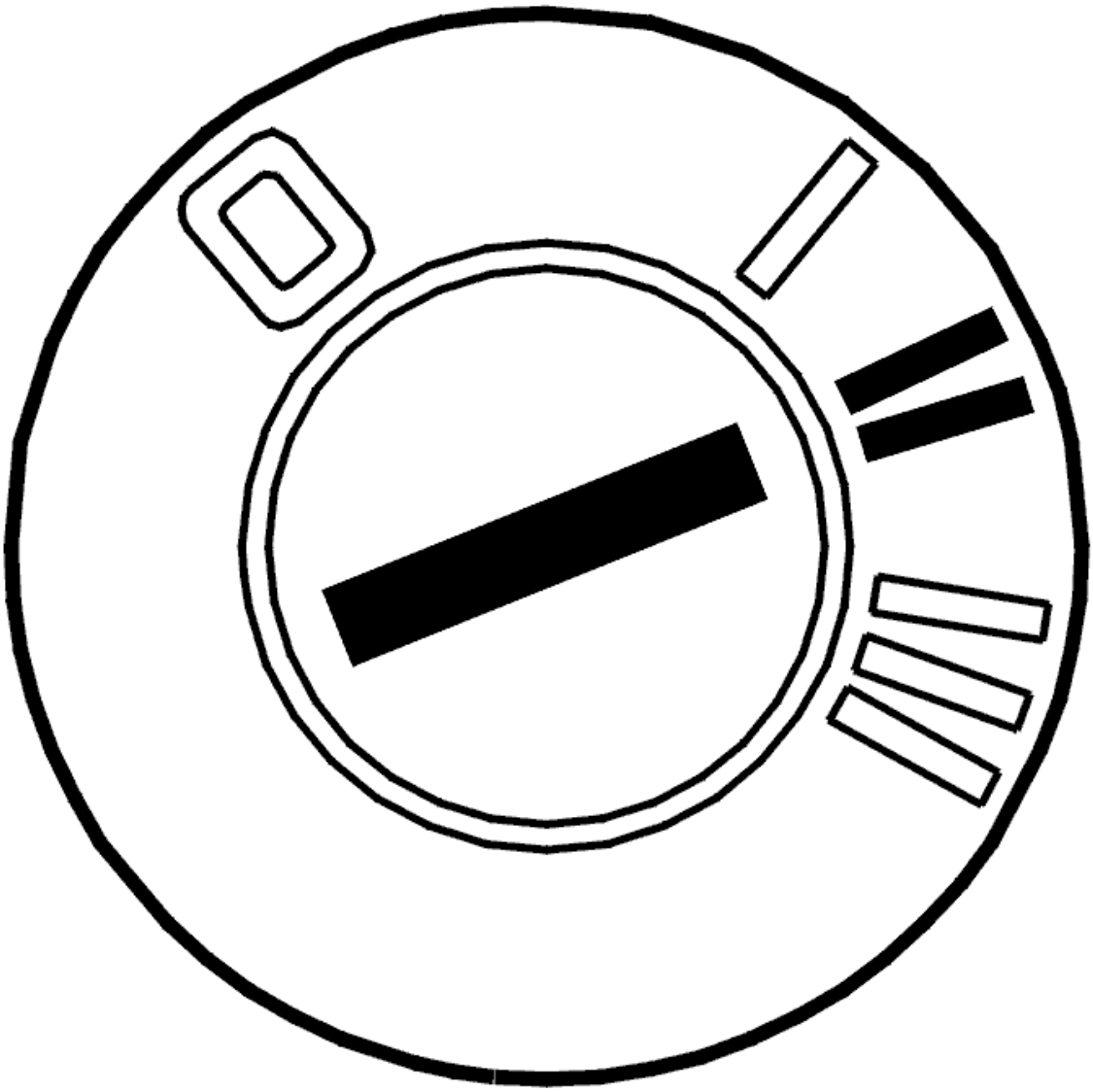

Fig. 53: Identifying Ignition ON

Courtesy of VOLVO CARS CORPORATION

- If the quantity of fuel in the fuel tank is below 6 liters the heater is not permitted to start. If the battery voltage is poor the heater is not permitted to start. The control module interprets 3 or more failed start attempts as a fault in the heater. The heater cannot then be started until the diagnostic trouble codes (DTCs) have been erased
- Ignition on.

NOTE: The heater must be switched off when reading off

Read off the values.

The fuel level status must be OK and the voltage to the heater must be normal.

Other information:

- For a description of parameters, see **DESCRIPTION OF PARAMETERS** .

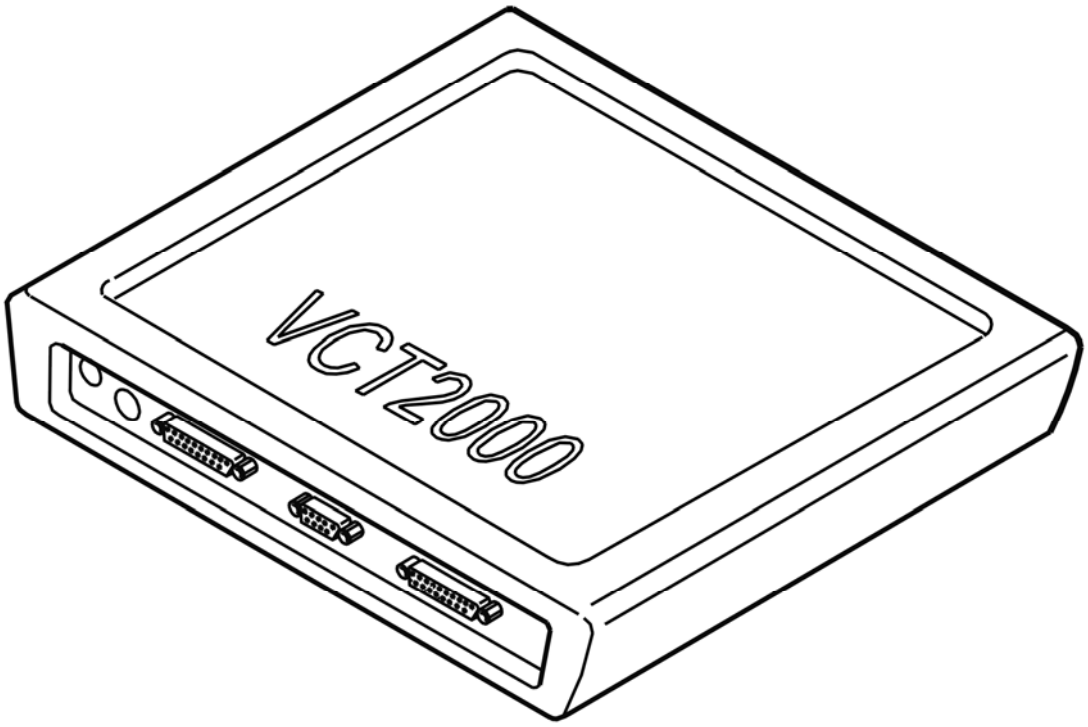

Fig. 54: Identifying VCT2000 Diagnostic Tool Symbol In VIDA
Courtesy of VOLVO CARS CORPORATION

Was a fault detected?

- **YES**

  Refer to **VERIFICATION**

- **NO**

  Refer to **CHECKING THE FUEL LINES**

CHECKING THE FUEL LINES

> WARNING: **Use protective gloves and protective goggles due to the risk of fuel spillage.**

- To expose the heater and access the fuel lines, see **ENGINE COOLANT HEATER, REPLACING** .

  Check the fuel lines for damage and leaks between their connection point to the engine fuel system and the heater via the fuel pump (FP).

  Check the fuel lines for blockages.

Was a fault detected?

- **YES**

  Refer to **VERIFICATION**

- **NO**

  Refer to **CHECKING COMPONENTS**

CHECKING COMPONENTS

> WARNING: **Use protective gloves and protective goggles due to the risk of fuel spillage.**

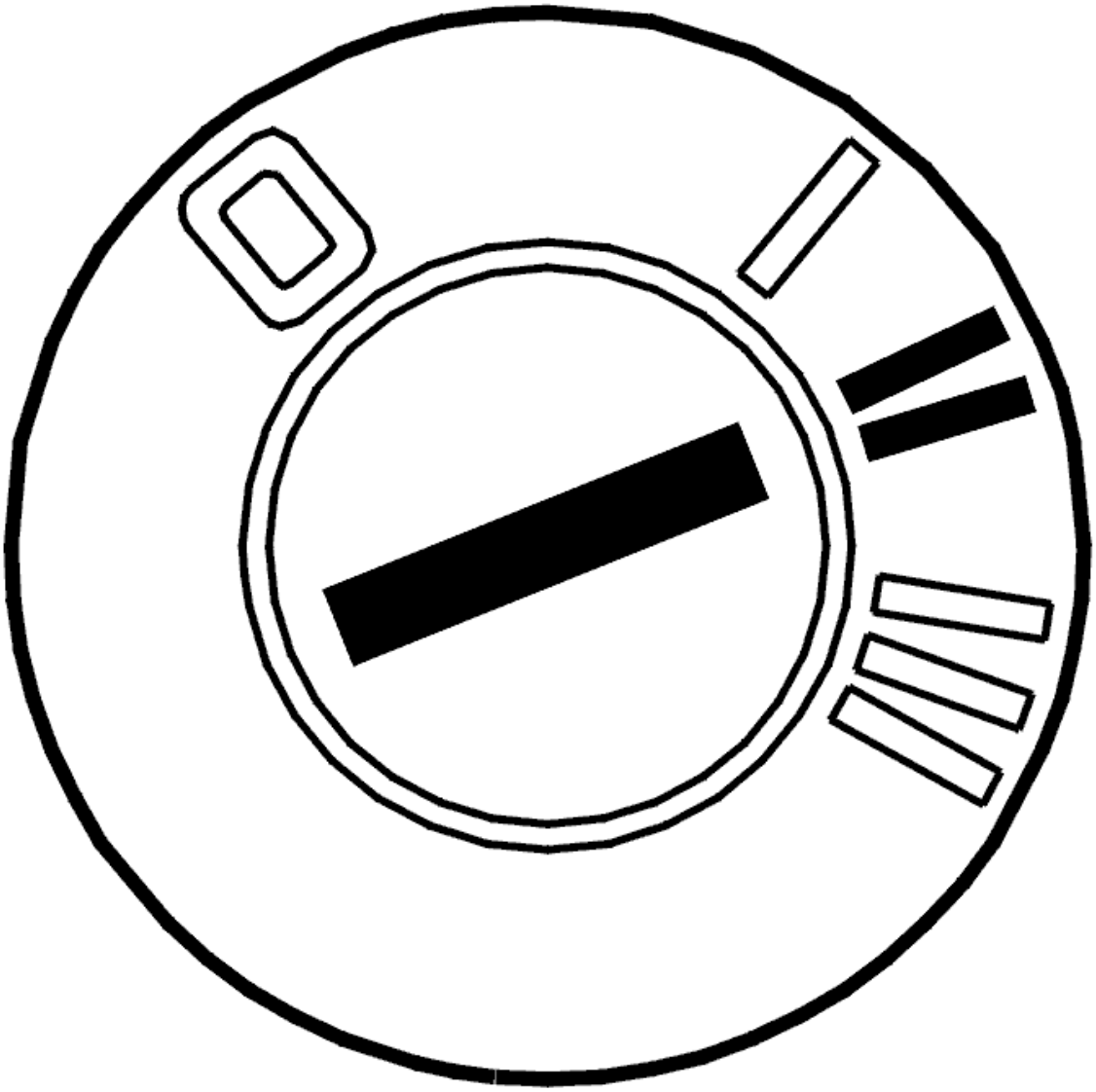

Fig. 55: Identifying Ignition ON
Courtesy of VOLVO CARS CORPORATION

- Ignition on.

  NOTE: It is important that only the ignition is on in order for the heater to start.

- Activate the heater.

  A buzzing sound must be heard from the heater

  Check whether the fuel pump is operating. The pump should make a ticking sound.

  If the pump does not operate replace the fuel pump according to **FUEL PUMP AUXILIARY HEATER, REPLACING** .

Other information:

- For a description of parameters, see **DESCRIPTION OF PARAMETERS**
- For a description of activations, see **ACTIVATING COMPONENTS/FUNCTIONS** .

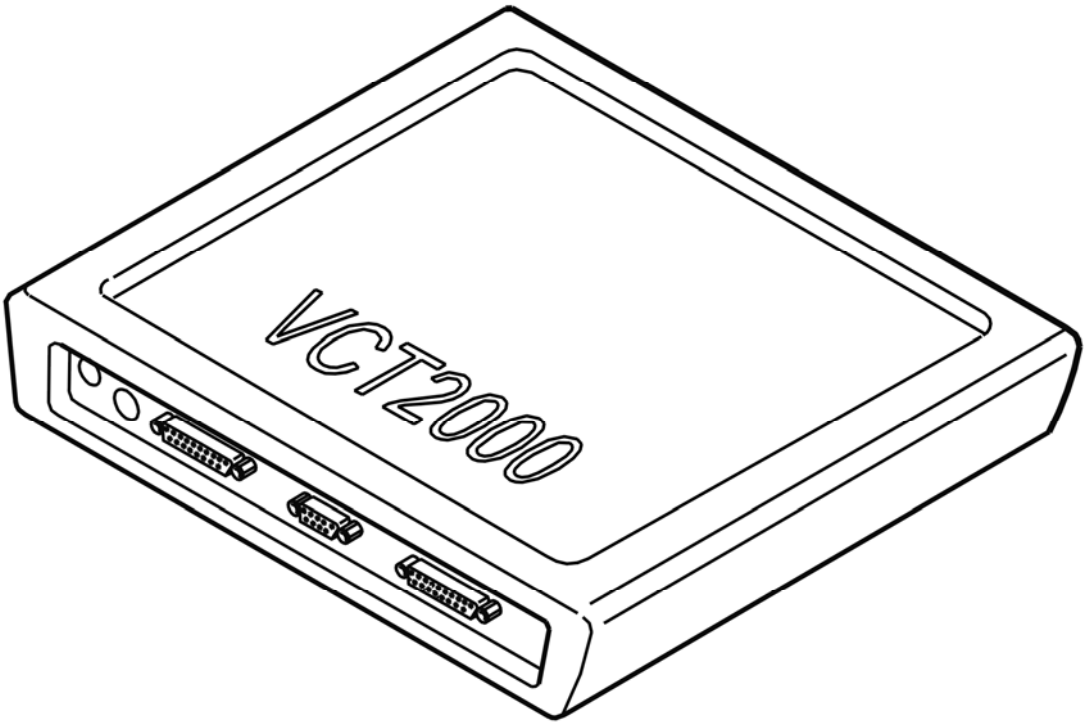

Fig. 56: Identifying VCT2000 Diagnostic Tool Symbol In VIDA
Courtesy of VOLVO CARS CORPORATION

Did the heater operate?

- **YES**

  Refer to **CHECKING THE NOZZLE PIPE**

- **NO**

  Refer to **VERIFICATION**

CHECKING THE NOZZLE PIPE

- Remove the heater. See **ENGINE COOLANT HEATER, REPLACING**
- Disconnect the nozzle pipe according to **FUEL INJECTION NOZZLE / FAN MOTOR / PRESSURE EQUALIZER, REPLACING** .

Check that the nozzle pipe is OK and that it is not blocked.

Remedy as necessary.

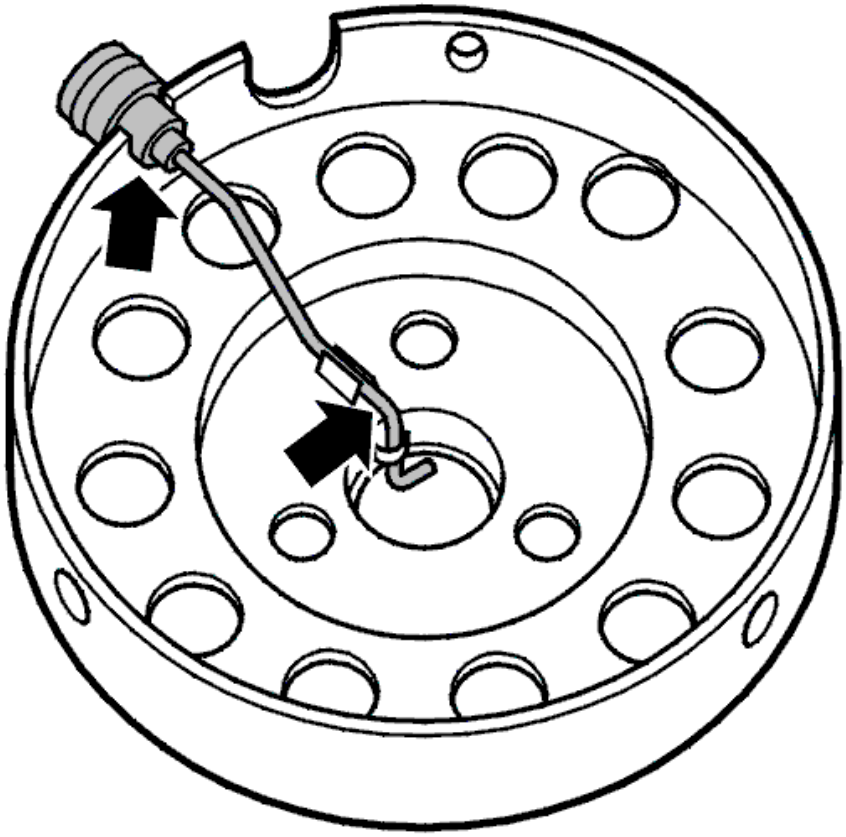

Fig. 57: Identifying Nozzle Pipe Installation Position
Courtesy of VOLVO CARS CORPORATION

Was a fault detected?

- **YES**

  Refer to **VERIFICATION**

- **NO**

  Refer to **CHECKING THE INTAKE AIR FLOW**

CHECKING THE INTAKE AIR FLOW

- Remove the heater. See **ENGINE COOLANT HEATER, REPLACING** .

  Check that the air flow through the heater is free (that the air intake and exhaust are not blocked).

  Remedy as necessary.

Was a fault detected?

- **YES**

  Refer to **VERIFICATION**

- **NO**

  Refer to **CHECKING THE FLAME SENSOR**

CHECKING THE FLAME SENSOR

Check that the flame sensor is not clogged with soot.

Remedy as necessary.

Other information:

- To access or replace the flame sensor, see **OVERHEAT PROTECTION THERMOSTAT / FLAME SENSOR / ENGINE COOLANT TEMPERATURE SENSOR, REPLACING** .

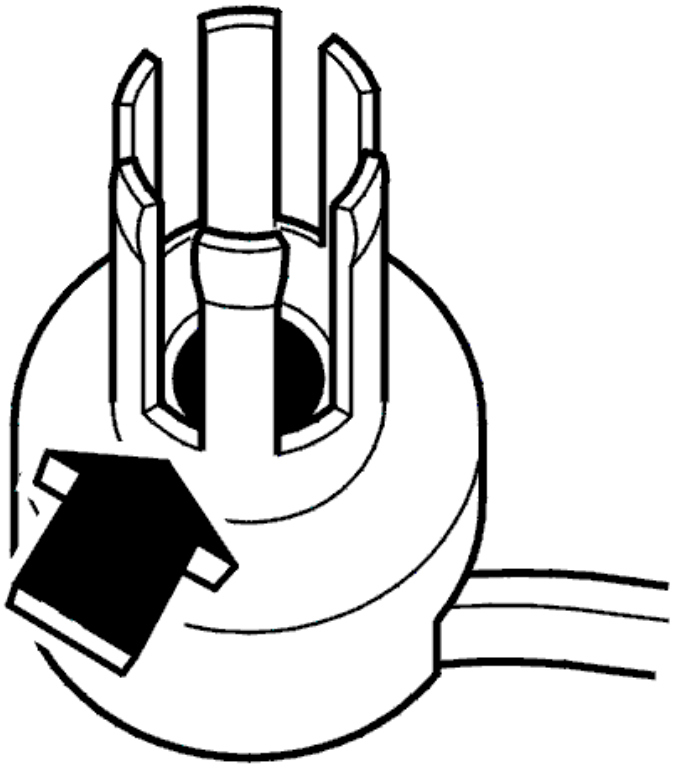

Fig. 58: Identifying Flame Sensor
Courtesy of VOLVO CARS CORPORATION

Was a fault detected?

- **YES**

  Refer to **VERIFICATION**

- **NO**

  Refer to **CHECKING COMPONENTS AND WIRING**

CHECKING COMPONENTS AND WIRING

Check the cable between control module terminal #4 and the ground terminal for the flame sensor. Check for an open-circuit.

HINT: It is difficult to differentiate between the flame sensor cables so take readings between control module terminal #4 and both flame sensor cables.

Check the cable between control module terminal #8 and the positive terminal for the flame sensor. Check for an open-circuit. Check for a short-circuit to supply voltage.

HINT: It is difficult to differentiate between the cables to the flame sensor. Take readings on the cables one at a time and, see if a relevant value was obtained from either of them.

If no fault is found in the connectors or cables, try a new flame sensor.

Remedy as necessary.

Other information:

- To access the control module or connect the breakout box, see **CONNECTING THE BREAKOUT BOX**
- To access or replace the flame sensor, see **OVERHEAT PROTECTION THERMOSTAT / FLAME SENSOR / ENGINE COOLANT TEMPERATURE SENSOR, REPLACING**
- For other values, see **SIGNAL SPECIFICATION**
- see **CHECKING WIRING AND TERMINALS** .

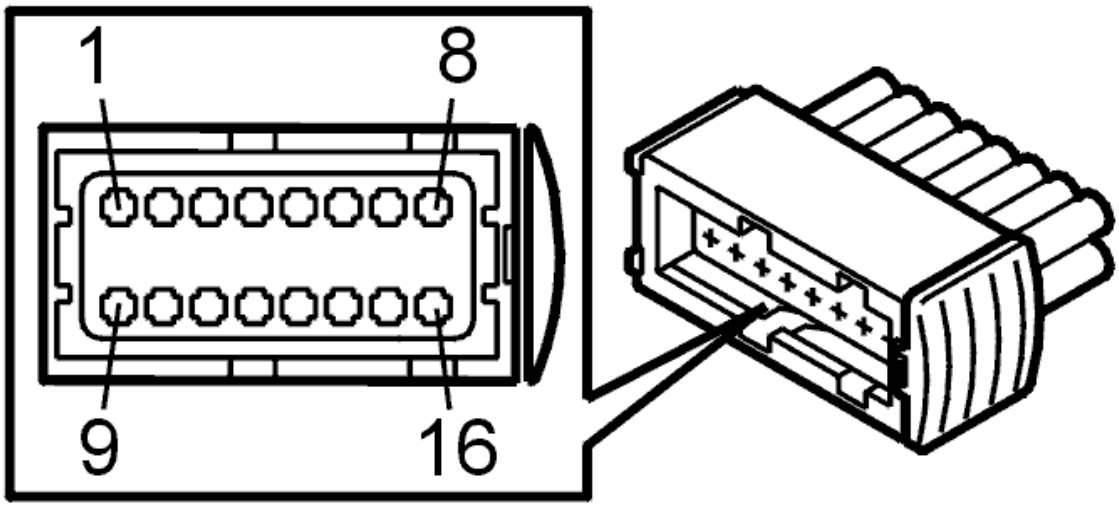

Fig. 59: Identifying Connector Terminals
Courtesy of VOLVO CARS CORPORATION

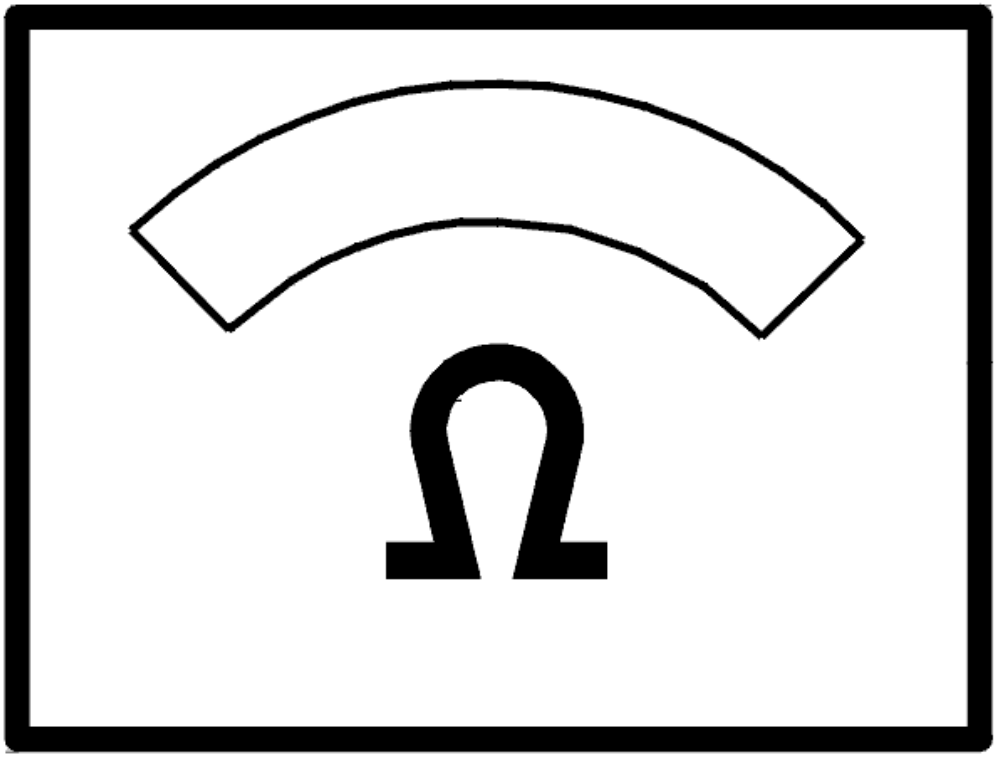

Fig. 60: Identifying Ohm Meter
Courtesy of VOLVO CARS CORPORATION

- **Continue**

  Refer to **VERIFICATION**

VERIFICATION

VERIFICATION

HINT: After carrying out the repair, check that the fault has been remedied.

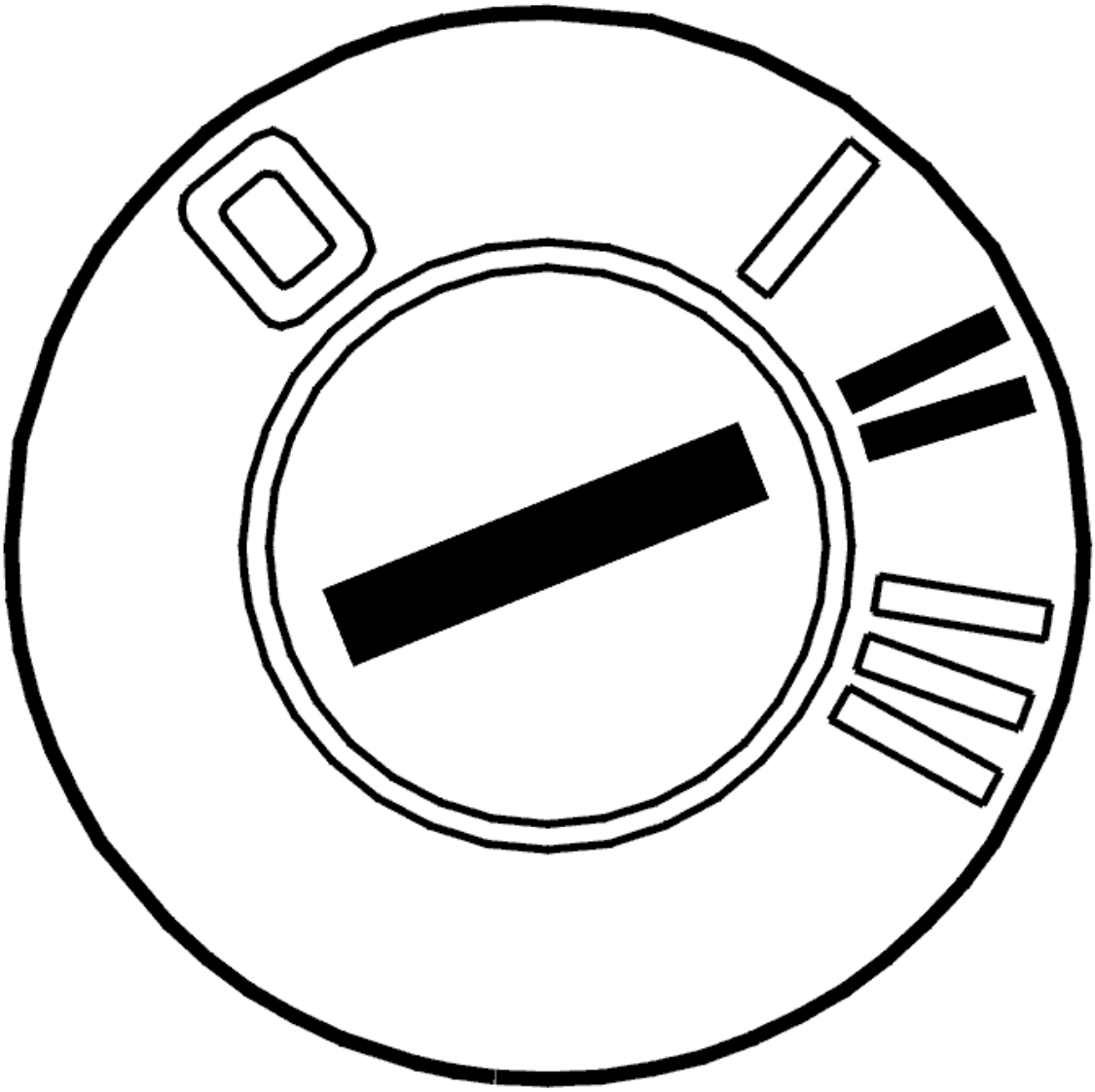

Fig. 61: Identifying Ignition ON
Courtesy of VOLVO CARS CORPORATION

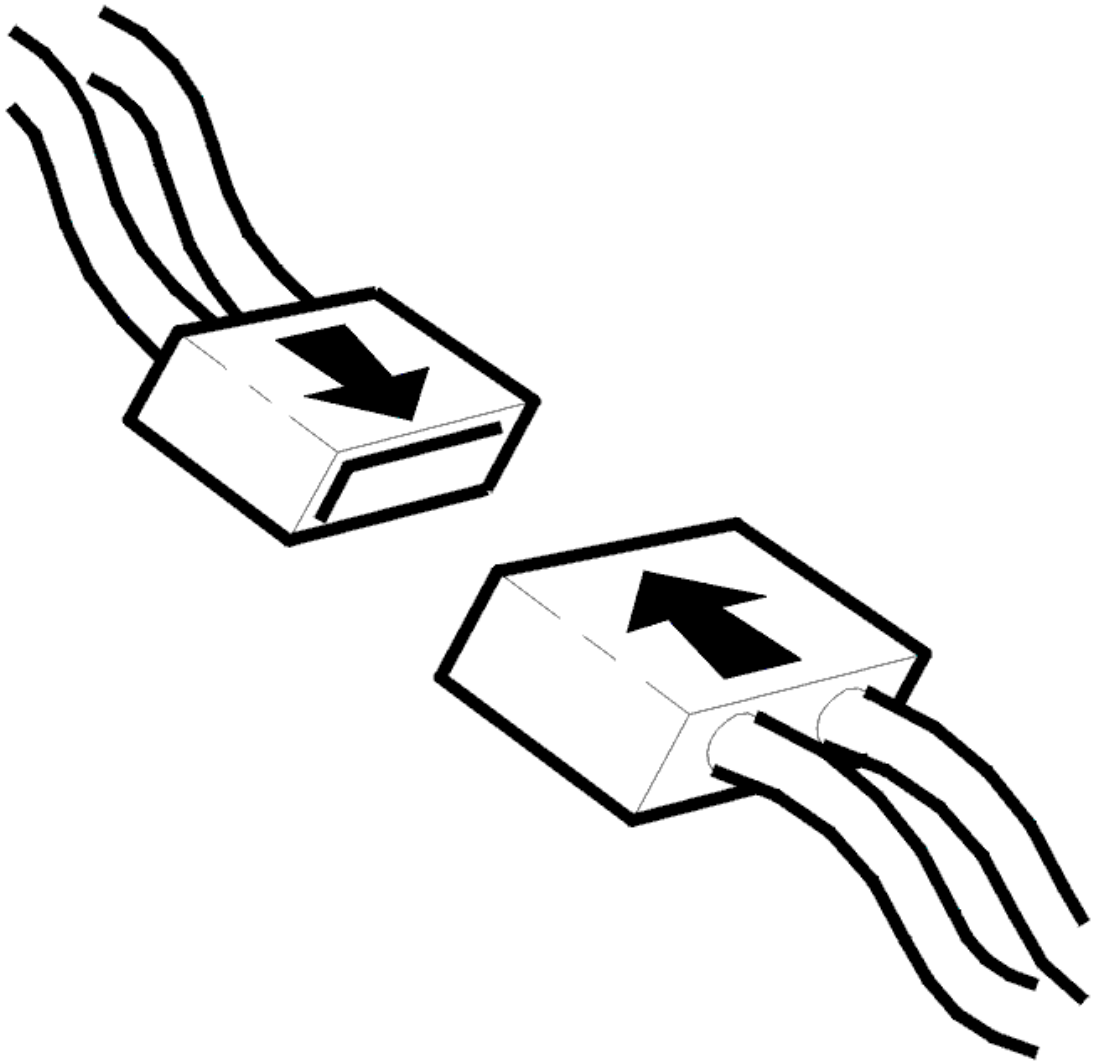

Fig. 62: Connecting Connector
Courtesy of VOLVO CARS CORPORATION

- Ignition off
- Reinstall the connectors, components etc.
- Ignition on.

Erase diagnostic trouble codes (DTCs).

NOTE: **Diagnostic trouble codes (DTCs) must be erased to start the heater. Before erasing diagnostic trouble codes (DTCs) all indicated faults must be corrected.**

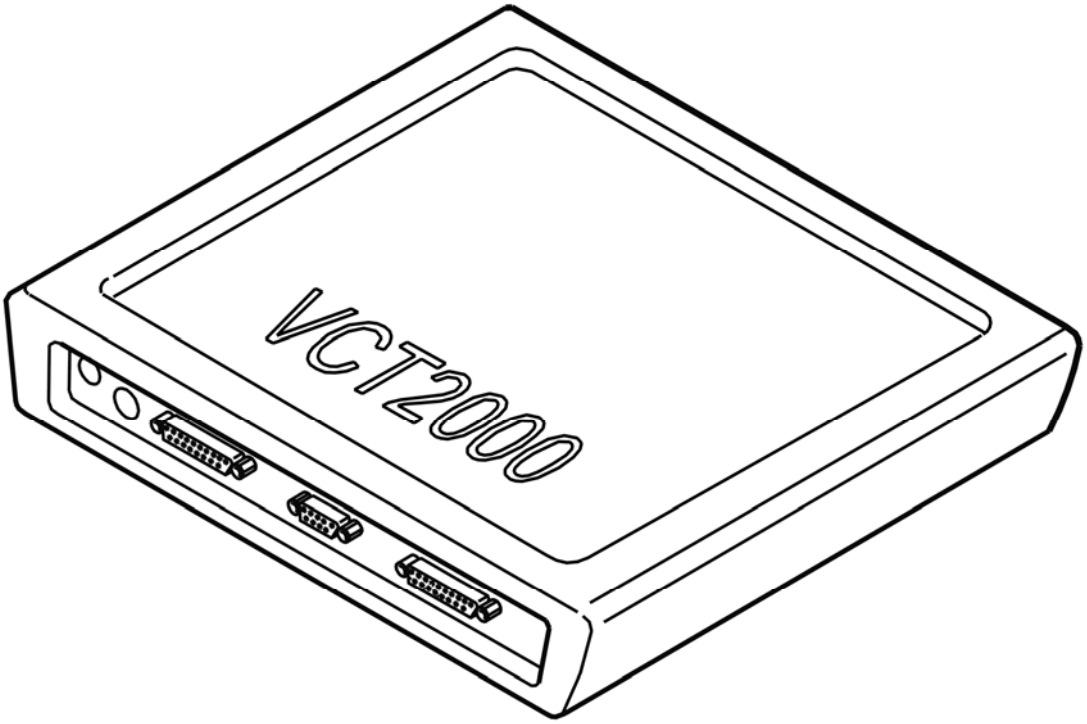

Fig. 63: Identifying VCT2000 Diagnostic Tool Symbol In VIDA
Courtesy of VOLVO CARS CORPORATION

- **Continue**

  Refer to **VERIFICATION, CONTINUED**

VERIFICATION, CONTINUED

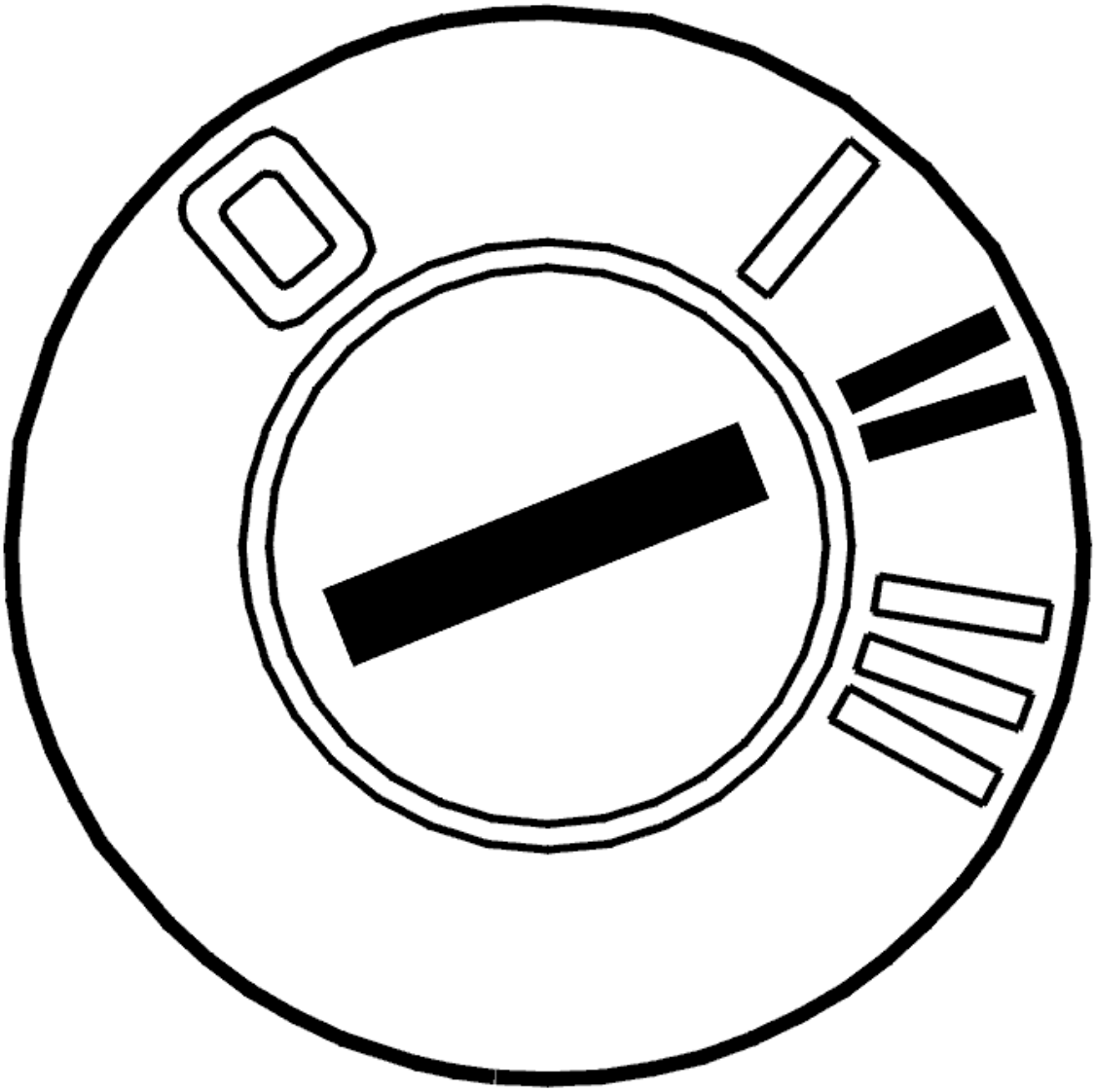

Fig. 64: Identifying Ignition ON
Courtesy of VOLVO CARS CORPORATION

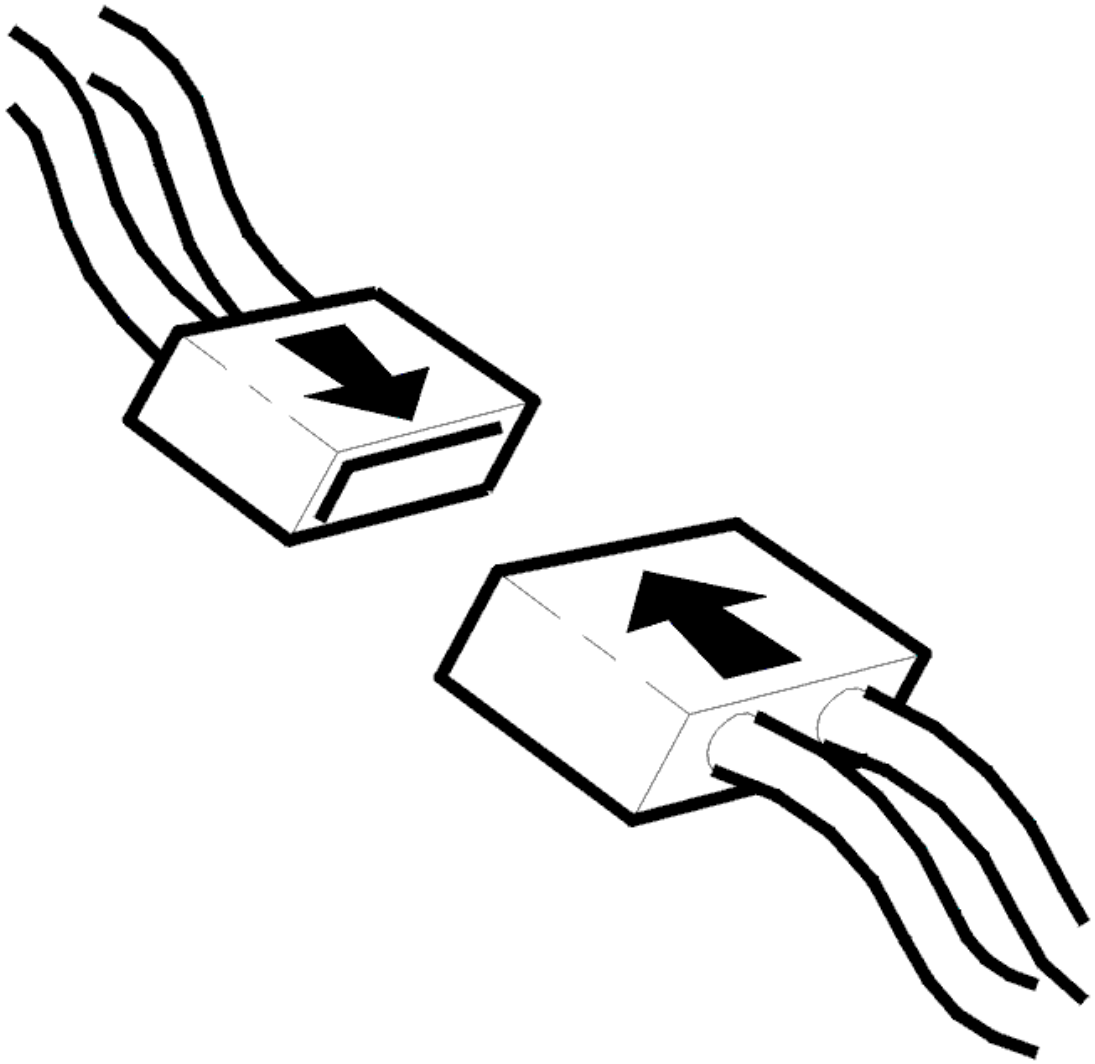

Fig. 65: Connecting Connector
Courtesy of VOLVO CARS CORPORATION

- Ignition off
- Reinstall the connectors, components etc.
- Ignition on.

NOTE: It is important that only the ignition is on in order for the heater to start.

- Activate the heater.

  A buzzing sound should be heard from the heater.

  HINT: After repair, the voltage of the flame sensor can be checked. The voltage should be a maximum of 1.0 V.

Check the function of the heater. See **ENGINE COOLANT HEATER, TEST RUNNING** .

Other information:

- For a description of parameters, see **DESCRIPTION OF PARAMETERS**
- For a description of activations, see **ACTIVATING COMPONENTS/FUNCTIONS** .

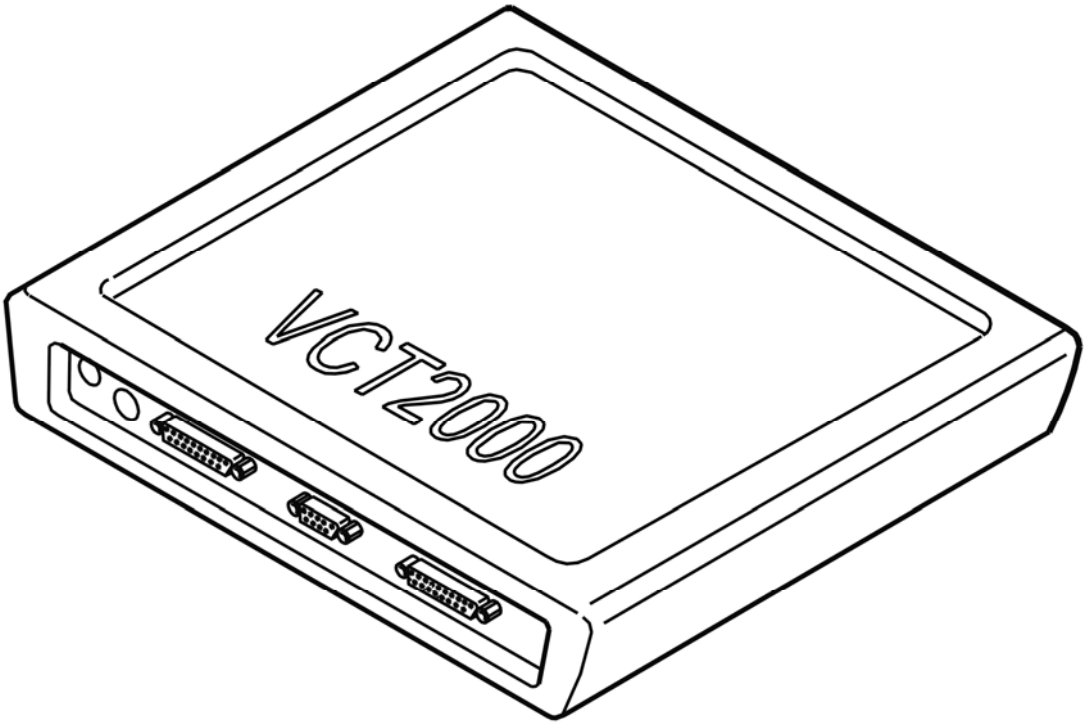

Fig. 66: Identifying VCT2000 Diagnostic Tool Symbol In VIDA
Courtesy of VOLVO CARS CORPORATION

Does the heater operate?

- **YES**

  VERIFIED: Troubleshooting has been completed.

- **NO**

  Refer to **INFORMATION**

INFORMATION

FAULT-TRACING INFORMATION

The fault should have been detected and remedied. As this is not the case fault-tracing has failed.

Exit fault-tracing for this diagnostic trouble code (DTC) or make another attempt.

CEM-5F50: OVERHEAT PROTECTION THERMOSTAT. SIGNAL TOO HIGH (2005-2012)

DIAGNOSTIC TROUBLE CODE (DTC) INFORMATION CEM-5F50

Condition

Fig. 67: Identifying Parking Heater
Courtesy of VOLVO CARS CORPORATION

The central electronic module (CEM) checks the communication with the combustion preheater module (CPM).

If Central electronic module (CEM) registers non-allowed high temperature of the coolant, the diagnostic trouble code is generated.

The diagnostic trouble code (DTC) can be diagnosed when the heater is activated.

Substitute Value

- None.

Possible Source

- Air in the cooling system
- The cooling system is blocked
- Damaged water pump.
- Damaged overheat protection thermostat

- Damaged engine coolant temperature (ECT) sensor.

Fault symptom[s]

- Poor heating in the passenger compartment.

SIGNAL TOO HIGH

CHECKING THE WATER FLOW

HINT: The overheating thermostat cuts out at 120 °C.

Check if the lines to and from the heater are blocked, or if the heater is damaged causing the through flow to be restricted in some way.

Remedy as necessary.

Was a fault detected?

- **YES**

  Refer to **VERIFICATION**

- **NO**

  Refer to **CHECKING THE ENGINE COOLANT TEMPERATURE SENSOR**

CHECKING THE ENGINE COOLANT TEMPERATURE SENSOR

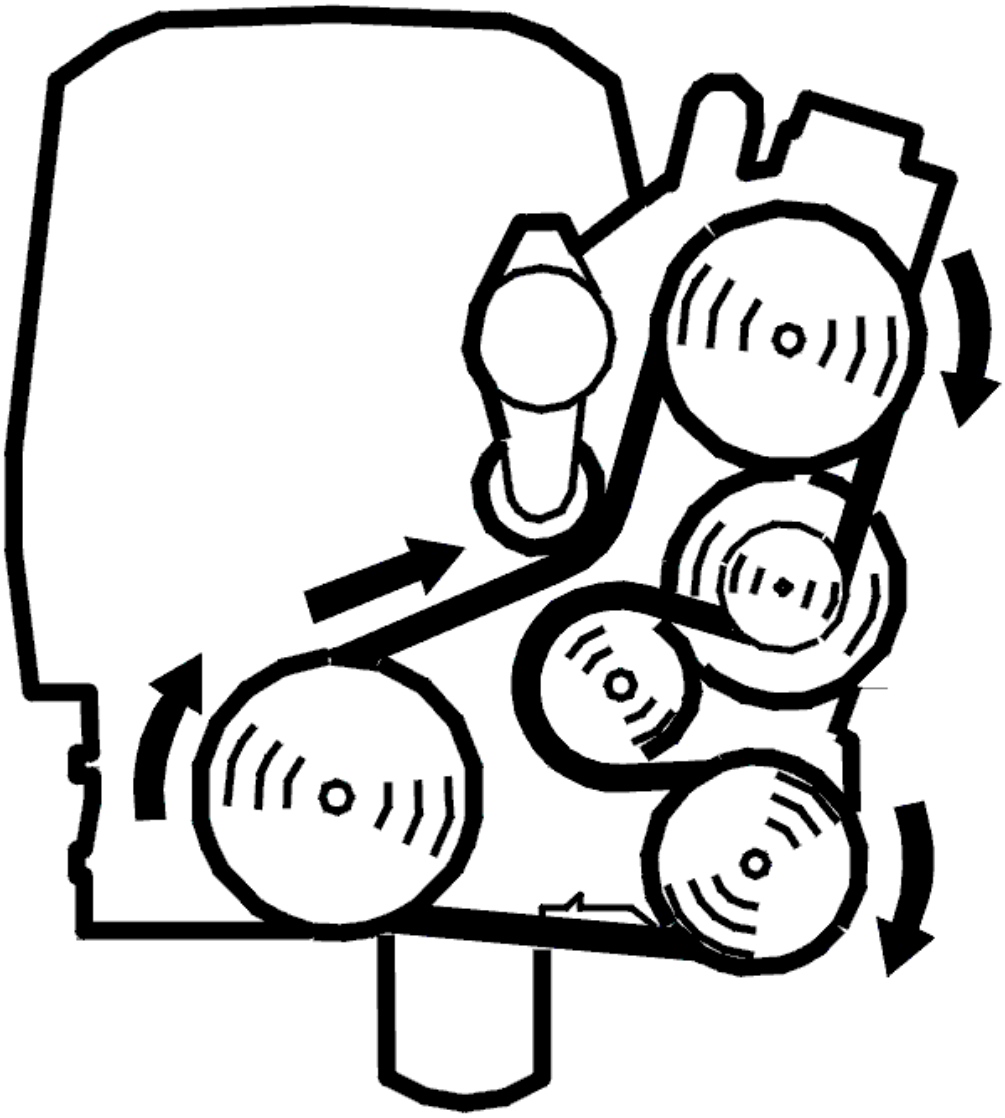

Fig. 68: Belt Routing / Engine Idling - Volvo
Courtesy of VOLVO CARS CORPORATION

- Start the engine
- Read off the coolant temperature in the heater.

  Check that the engine coolant temperature (ECT) reading is correct. Compare with the actual coolant temperature of the engine.

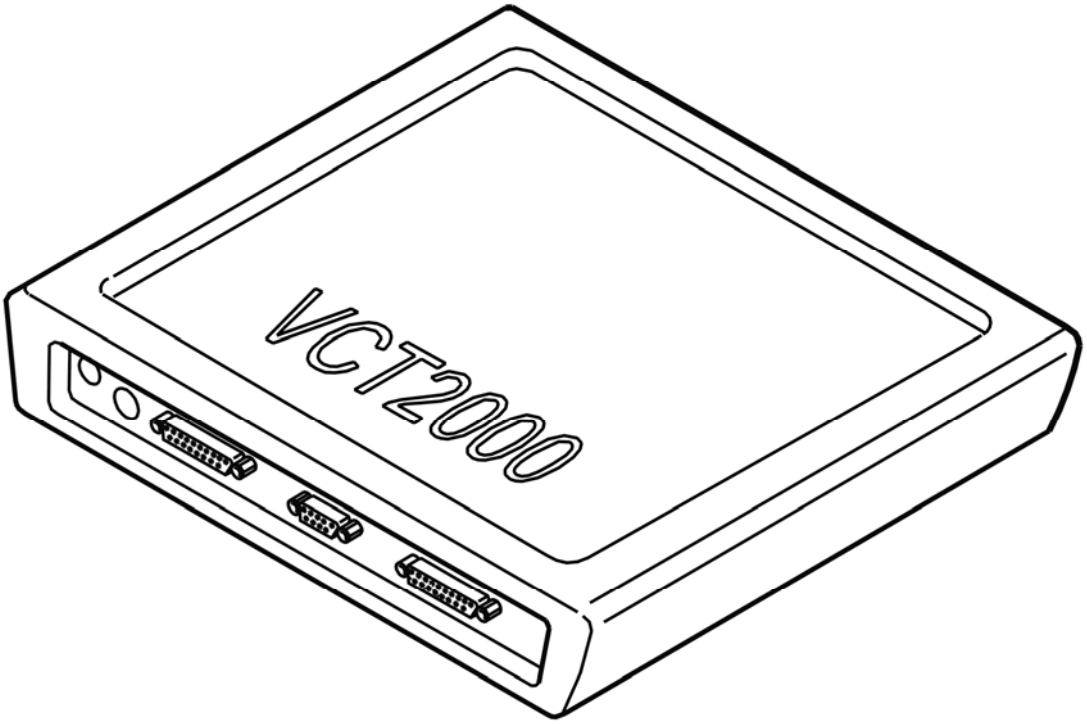

Fig. 69: Identifying VCT2000 Diagnostic Tool Symbol In VIDA
Courtesy of VOLVO CARS CORPORATION

Is the temperature reading OK?

- **YES**

  Refer to **CHECKING COMPONENTS AND WIRING**

- **NO**

  Refer to **CHECKING COMPONENTS AND WIRING**

CHECKING COMPONENTS AND WIRING

Check the resistance of the engine coolant temperature sensor.

Remedy as necessary.

Other information:

- see **SIGNAL SPECIFICATION**
- see **COMPONENTS RESISTANCE VALUES**

- see **OVERHEAT PROTECTION THERMOSTAT / FLAME SENSOR / ENGINE COOLANT TEMPERATURE SENSOR, REPLACING**

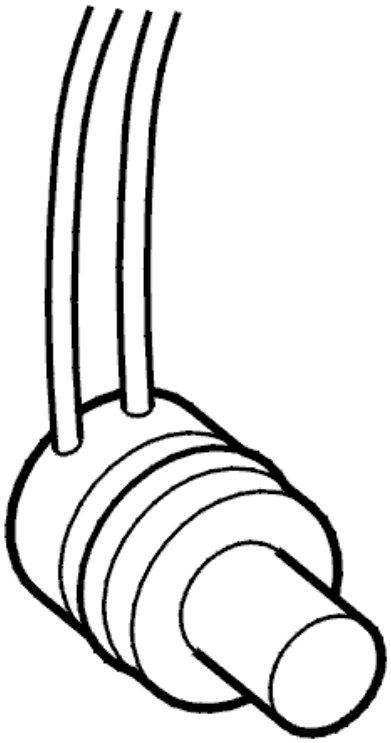

Fig. 70: Identifying Engine Coolant Temperature Sensor
Courtesy of VOLVO CARS CORPORATION

- **Continue**

  Refer to **VERIFICATION**

CHECKING COMPONENTS AND WIRING

Check the fuel pump (FP) and combustion preheater module (CPM) connectors. Check for contact resistance and oxidation.

Check the cable between combustion preheater module (CPM) terminal #13 and fuel pump terminal 1. Check for an intermittent open-circuit.

Check the cable between combustion preheater module (CPM) terminal #11 and fuel pump terminal 2. Check for an intermittent open-circuit.

NOTE: Diagnostic trouble code (DTC) CEM-5F3B and/or diagnostic trouble code (DTC) CEM-5F3D may also be stored if there is a fault in the power cable.

Remedy as necessary.

Other information:

- see **CONNECTING THE BREAKOUT BOX**
- see **FUEL PUMP AUXILIARY HEATER, REPLACING**
- see **OVERHEAT PROTECTION THERMOSTAT / FLAME SENSOR / ENGINE COOLANT TEMPERATURE SENSOR, REPLACING**
- see **CHECKING WIRING AND TERMINALS**

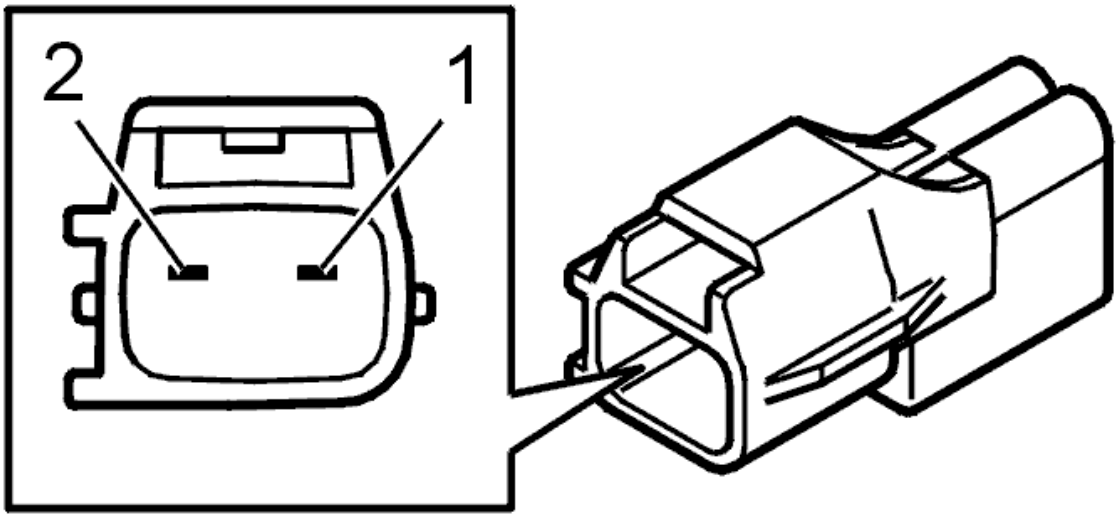

Fig. 71: Identifying Fuel Pump Connector Terminals
Courtesy of VOLVO CARS CORPORATION

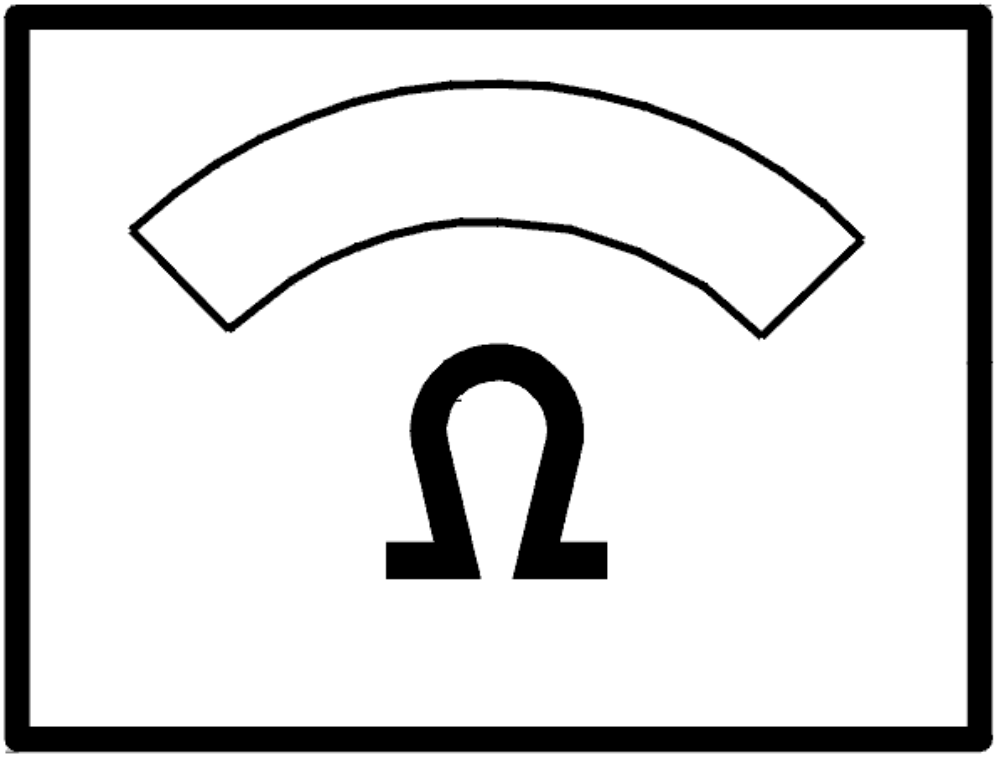

Fig. 72: Identifying Ohm Meter
Courtesy of VOLVO CARS CORPORATION

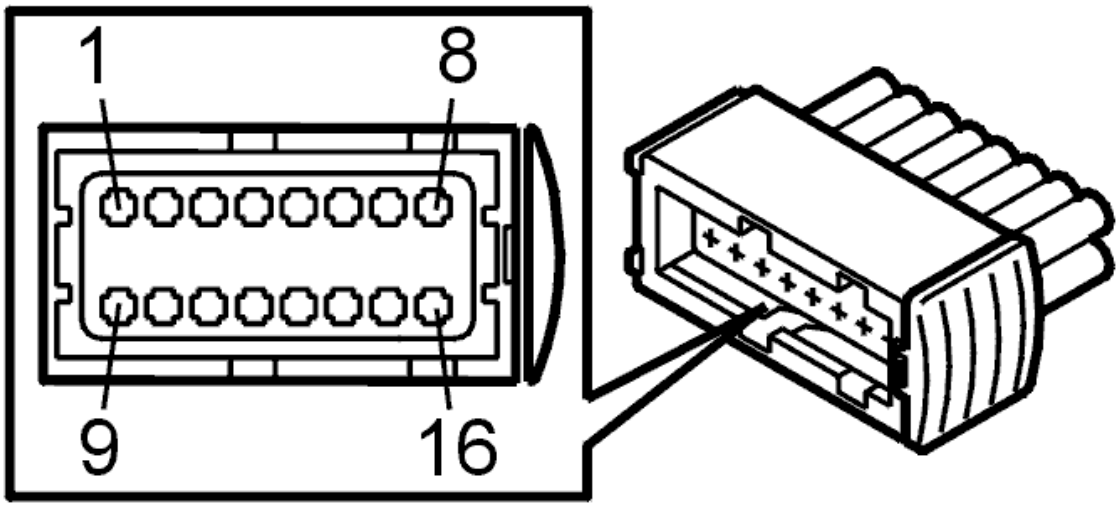

Fig. 73: Identifying Connector Terminals
Courtesy of VOLVO CARS CORPORATION

- **Continue**

  Refer to **VERIFICATION**

VERIFICATION

VERIFICATION

HINT: After carrying out the repair, check that the fault has been remedied.

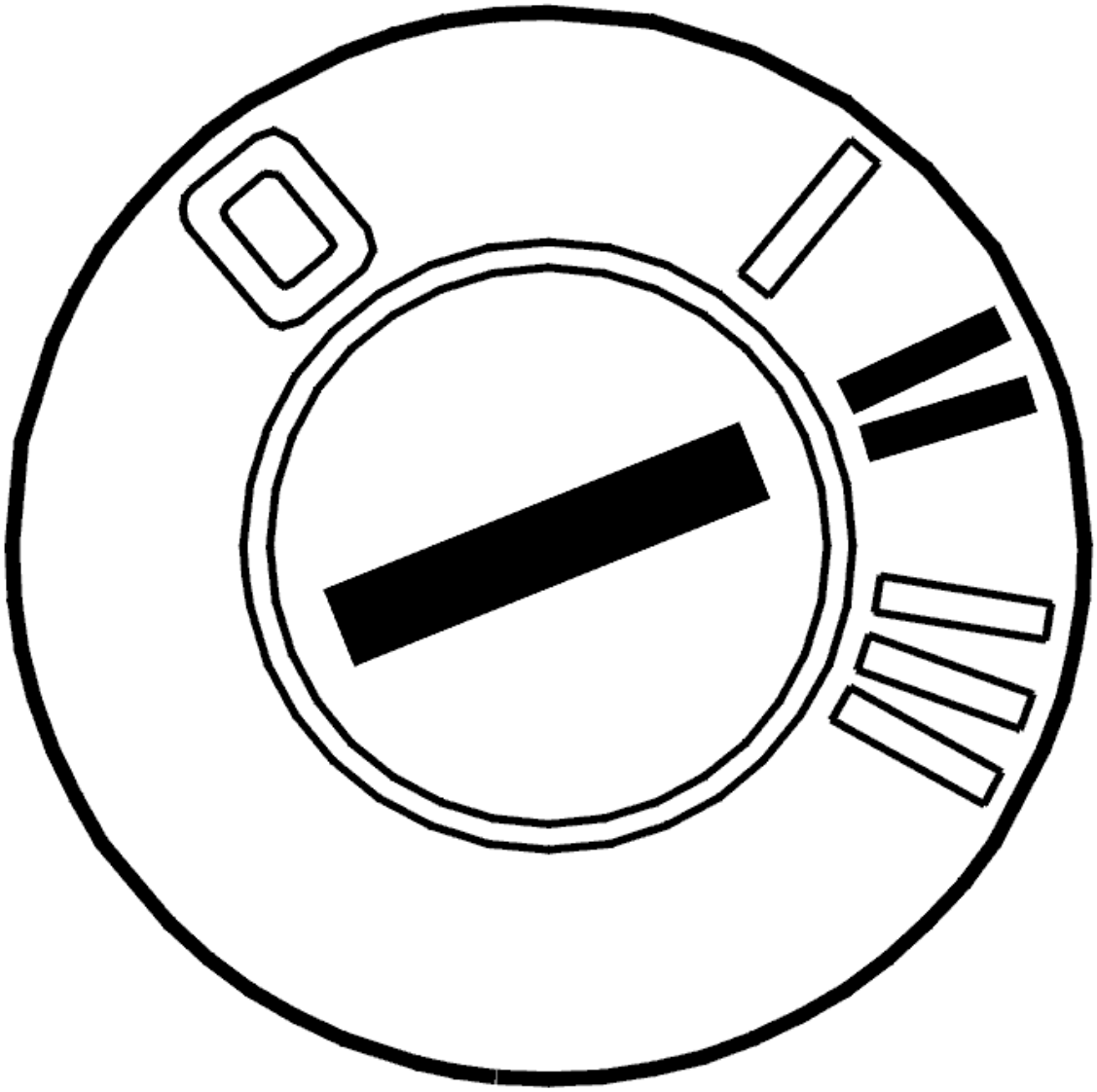

Fig. 74: Identifying Ignition ON
Courtesy of VOLVO CARS CORPORATION

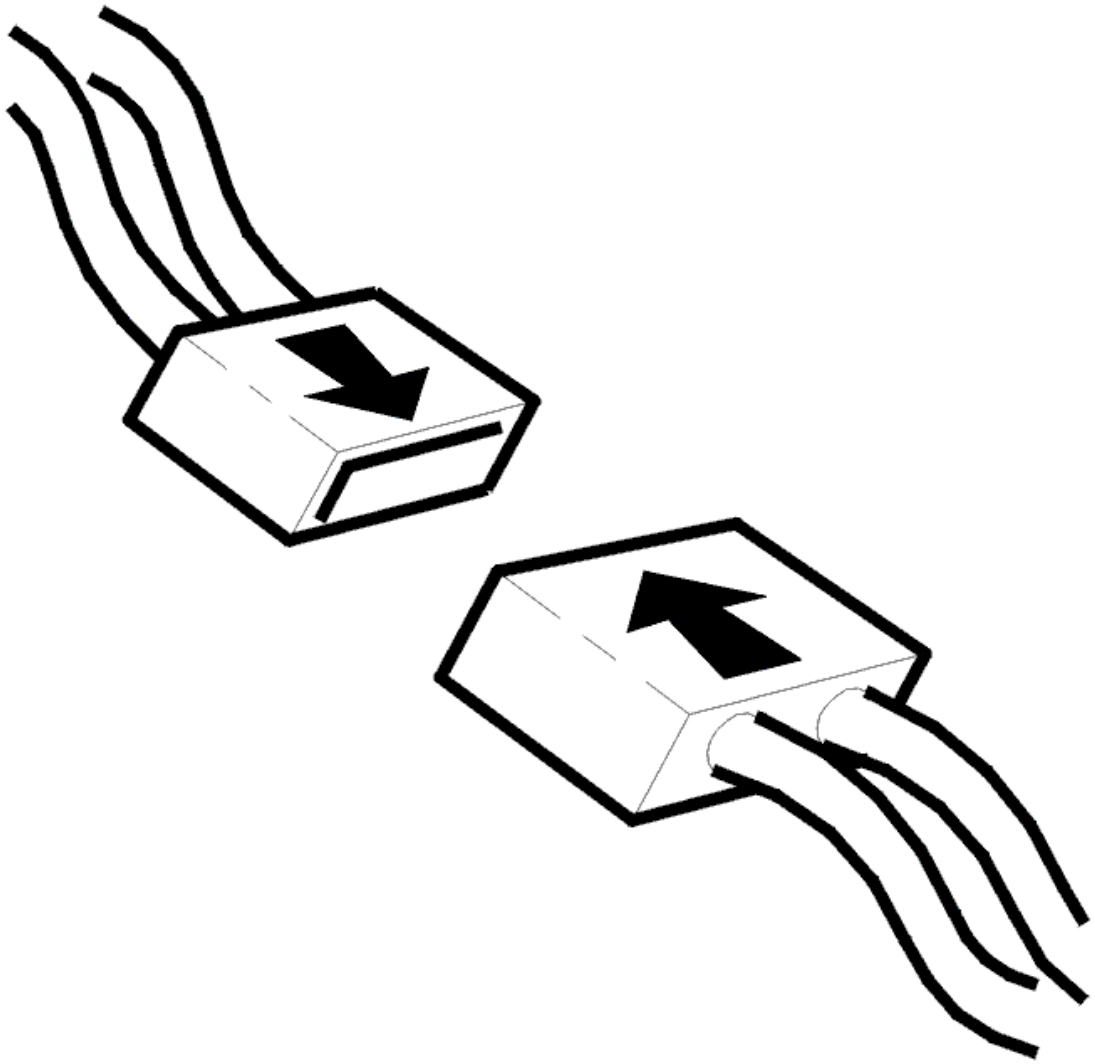

Fig. 75: Connecting Connector
Courtesy of VOLVO CARS CORPORATION

- Ignition off
- Reinstall the connectors, components etc.
- Ignition on
- Read off the engine coolant temperature.

NOTE: It is important that only the ignition is on in order for the heater to start.

- Activate the heater.

HINT: After repair, the voltage of the flame sensor can be checked. The voltage must be a maximum of 1.0 V.

Check the heater function.

CAUTION: In order for to enable start of the heater itself, the battery voltage must be normal, coolant temperature must be lower than +96 °C and the heater's after-run/stop sequence must be finished. There must also be enough fuel in the tank.

CAUTION: If the heater or other components are not activated, try closing down the activation window and then starting the activation again using the VCT2000 (or appropriate scan tool).

Other information:

- see **ENGINE COOLANT HEATER, TEST RUNNING** .

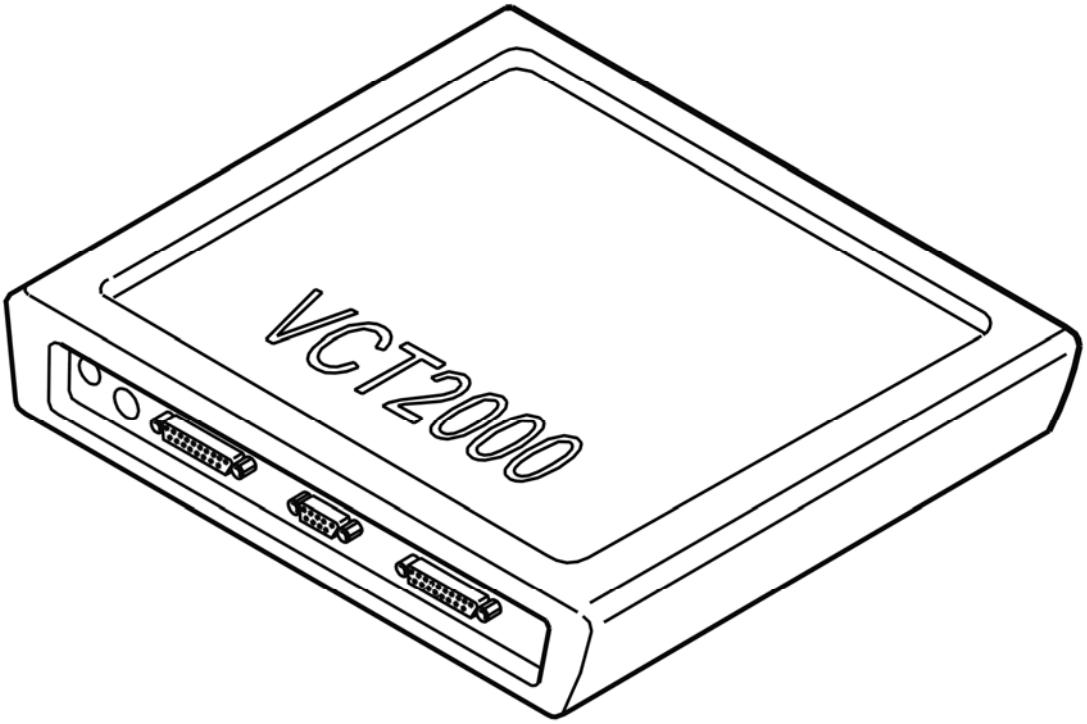

Fig. 76: Identifying VCT2000 Diagnostic Tool Symbol In VIDA
Courtesy of VOLVO CARS CORPORATION

Is the heater working?

- **YES**

VERIFIED: Troubleshooting has been completed.

- **NO**

  Refer to **INFORMATION**

INFORMATION

FAULT-TRACING INFORMATION

The fault should have been detected and remedied. As this is not the case fault-tracing has failed.

Exit fault-tracing for this diagnostic trouble code (DTC) or make another attempt.

CEM-5F50: OVERHEAT THERMOSTAT. SIGNAL TOO HIGH (B5254T2; B6294T; 2003-2004)

DIAGNOSTIC TROUBLE CODE INFORMATION

Condition

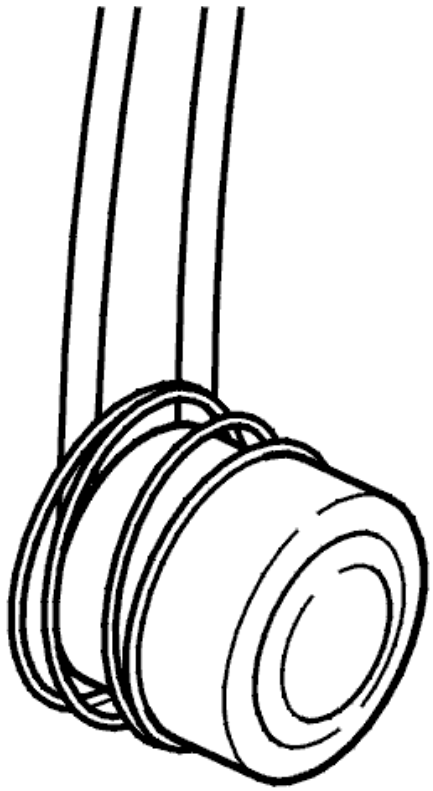

Fig. 77: Identifying Overheat Protection Thermostat
Courtesy of VOLVO CARS CORPORATION

If the overheat thermostat trips, the control unit will interpret this as a fault and will store diagnostic trouble

code CEM-5F50.

Substitute Value

- None.

Possible Source

- Air in the cooling system.
- Cooling system blocked.
- Damaged water pump.
- Damaged overheat protection thermostat.
- Damaged engine coolant temperature (ECT) sensor.

Fault symptom[s]

- Poor interior heating.

SIGNAL TOO HIGH

CHECKING THE WATER FLOW

Check if the lines to and from the heater are blocked, or if the heater is damaged causing the through flow to be restricted in some way.

Remedy as necessary.

Was a fault detected?

- **YES**

  Refer to **VERIFICATION**

- **NO**

  Refer to **CHECKING THE ENGINE COOLANT TEMPERATURE SENSOR**

CHECKING THE ENGINE COOLANT TEMPERATURE SENSOR

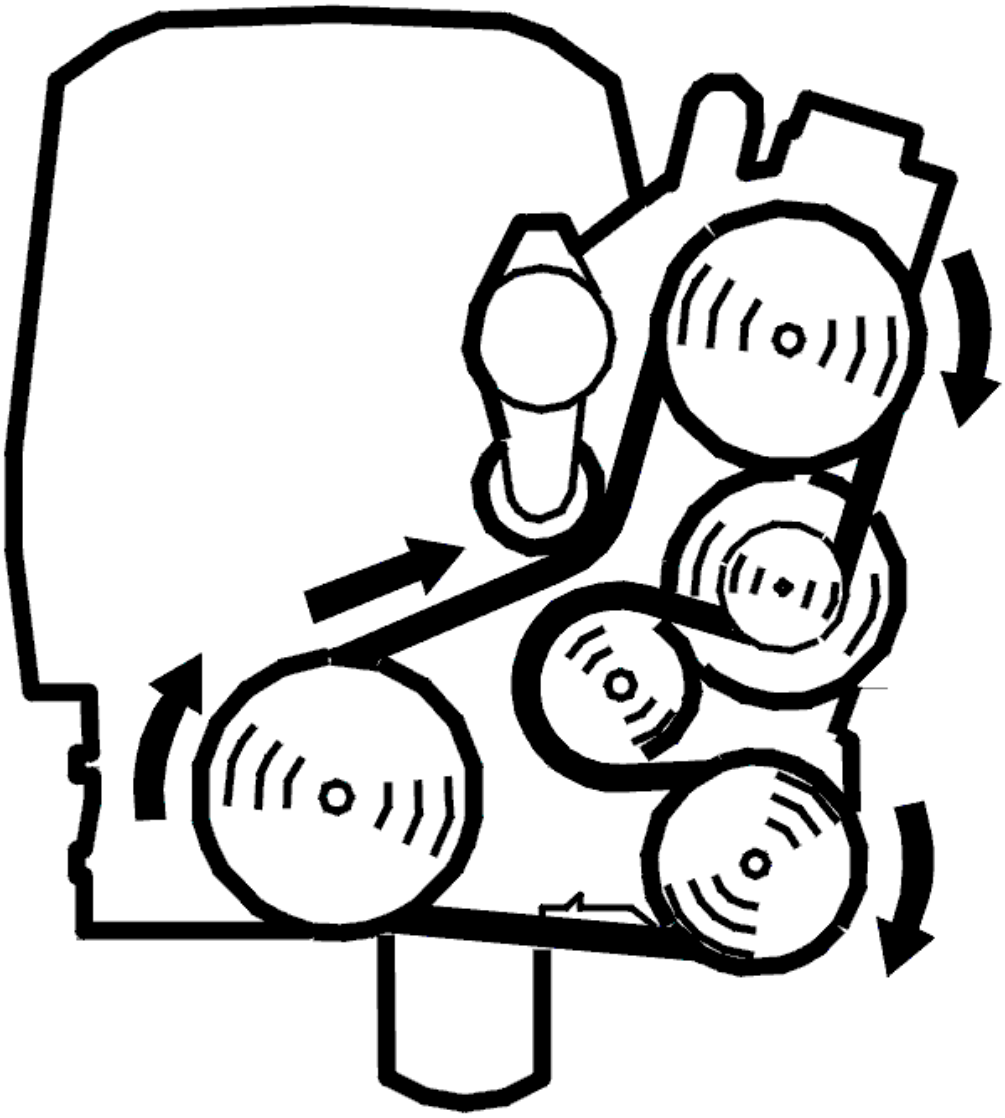

Fig. 78: Belt Routing / Engine Idling - Volvo
Courtesy of VOLVO CARS CORPORATION

- Start the engine
- Read off the coolant temperature in the heater.

  Check that the engine coolant temperature (ECT) reading is correct. Compare with the actual coolant temperature of the engine.

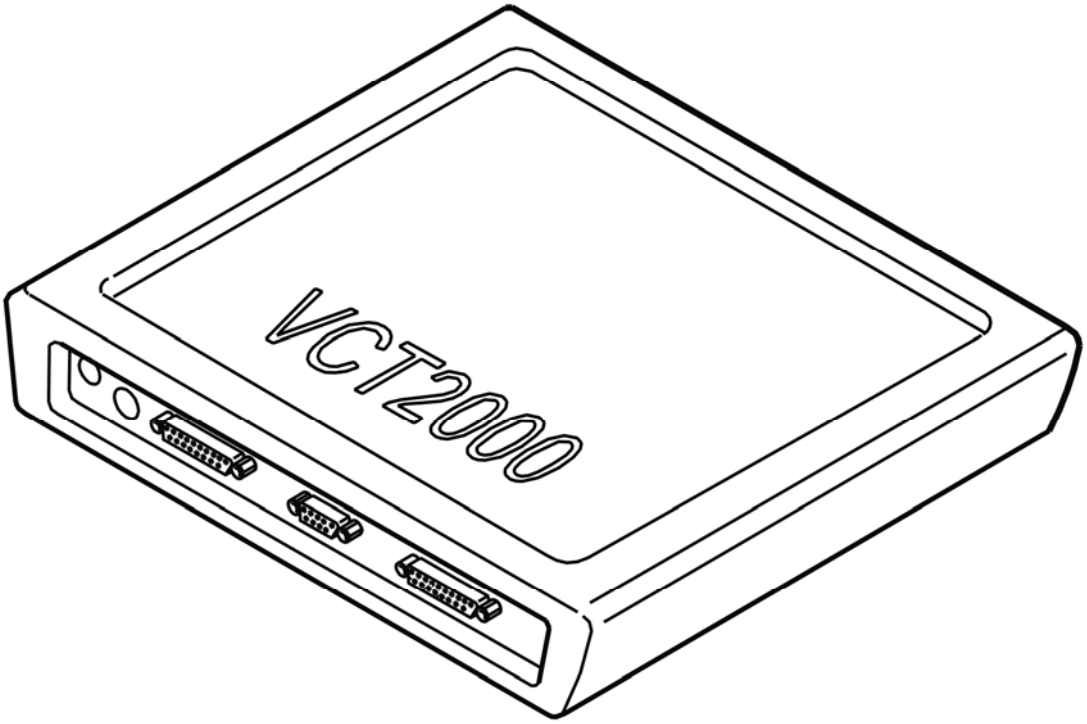

Fig. 79: Identifying VCT2000 Diagnostic Tool Symbol In VIDA
Courtesy of VOLVO CARS CORPORATION

Is the temperature reading OK?

- **YES**

  Refer to **CHECKING COMPONENTS AND WIRING**

- **NO**

  Refer to **CHECKING COMPONENTS AND WIRING**

CHECKING COMPONENTS AND WIRING

Check the resistance of the engine coolant temperature sensor. For the resistance values, see **COMPONENTS RESISTANCE VALUES** .

Remedy as necessary.

Other information:

- To access or replace the engine coolant temperature sensor, see **OVERHEAT PROTECTION THERMOSTAT / FLAME SENSOR / ENGINE COOLANT TEMPERATURE SENSOR,**

REPLACING

- For other values, see **SIGNAL SPECIFICATION** .

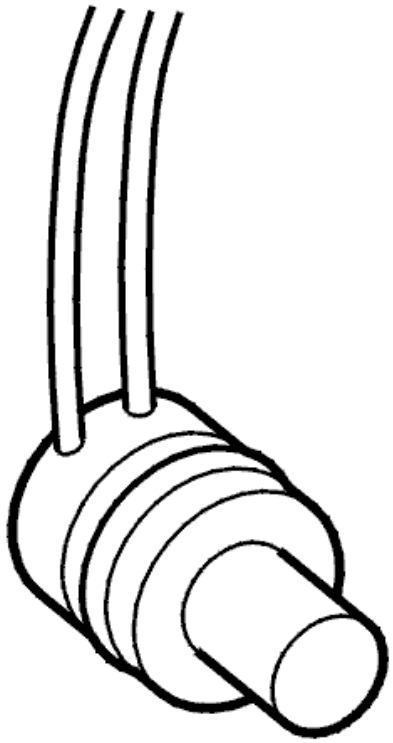

Fig. 80: Identifying Engine Coolant Temperature Sensor
Courtesy of VOLVO CARS CORPORATION

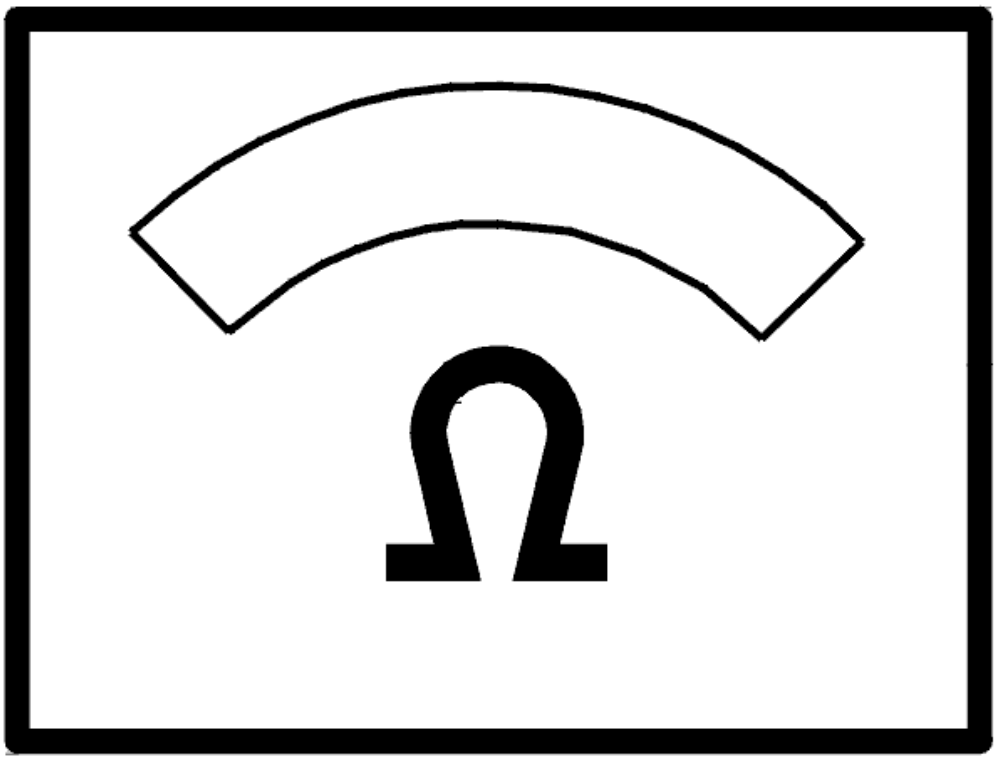

Fig. 81: Identifying Ohm Meter
Courtesy of VOLVO CARS CORPORATION

- **Continue**

  Refer to **VERIFICATION**

CHECKING COMPONENTS AND WIRING

Check the fuel pump (FP) and the control module connectors. Check for contact resistance and oxidation.

Check the cable between control module terminal #13 and fuel pump (FP) terminal 1. Check for an intermittent open-circuit.

Check the cable between control module terminal #11 and fuel pump (FP) terminal 2. Check for an intermittent open-circuit.

NOTE: **Diagnostic trouble code (DTC) CEM-5F3B Water pump, signal and / or diagnostic trouble code (DTC) CEM-5F3D Combustion fan, signal may be stored in the event of a fault in the power cable.**

Remedy as necessary.

Other information:

- To access the control module or connect the breakout box, see **CONNECTING THE BREAKOUT BOX**
- To access or replace the fuel pump (FP), see **FUEL PUMP AUXILIARY HEATER, REPLACING**
- To access or replace the overheat protection thermostat, see **OVERHEAT PROTECTION THERMOSTAT / FLAME SENSOR / ENGINE COOLANT TEMPERATURE SENSOR, REPLACING**
- see **CHECKING WIRING AND TERMINALS**

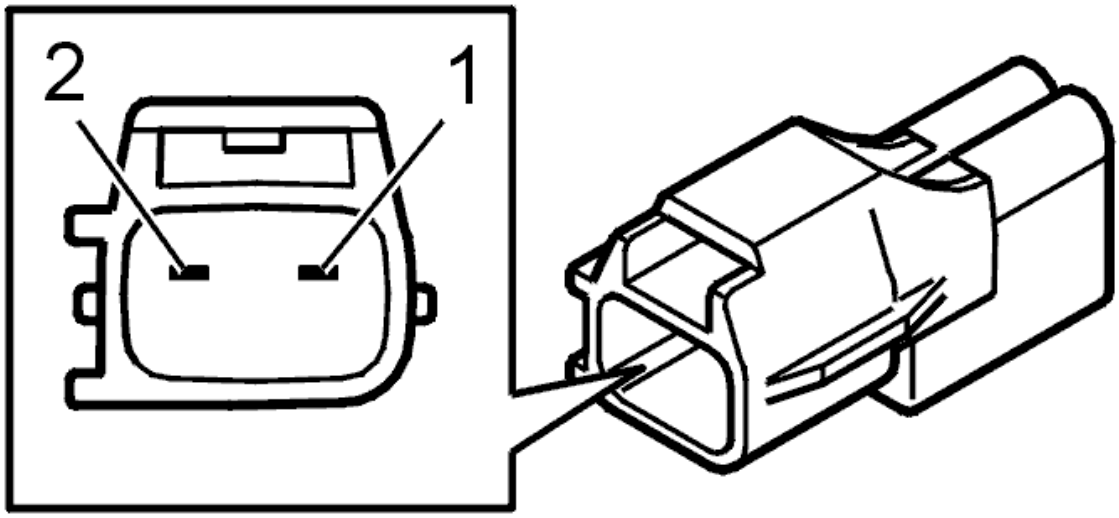

Fig. 82: Identifying Fuel Pump Connector Terminals
Courtesy of VOLVO CARS CORPORATION

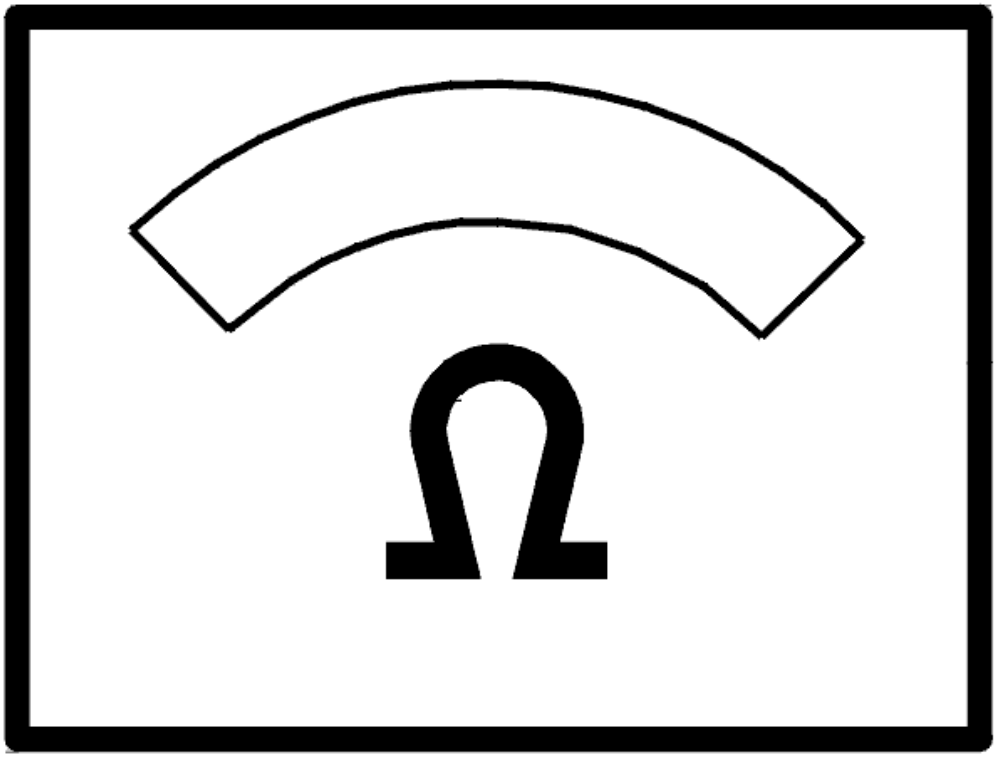

Fig. 83: Identifying Ohm Meter
Courtesy of VOLVO CARS CORPORATION

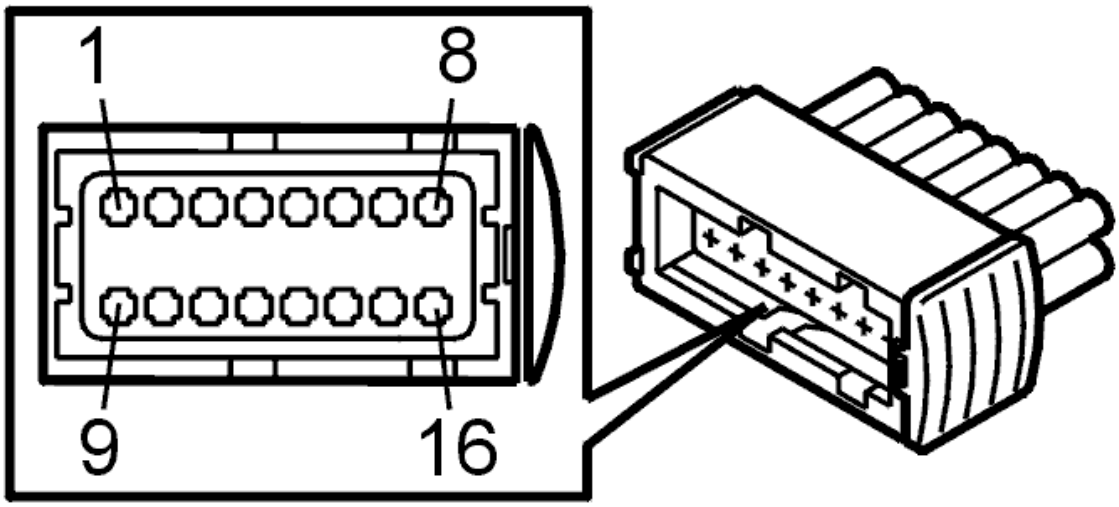

Fig. 84: Identifying Connector Terminals
Courtesy of VOLVO CARS CORPORATION

- **Continue**

  Refer to **VERIFICATION**

VERIFICATION

VERIFICATION

HINT: After the repair it is necessary to check that the fault has been rectified.

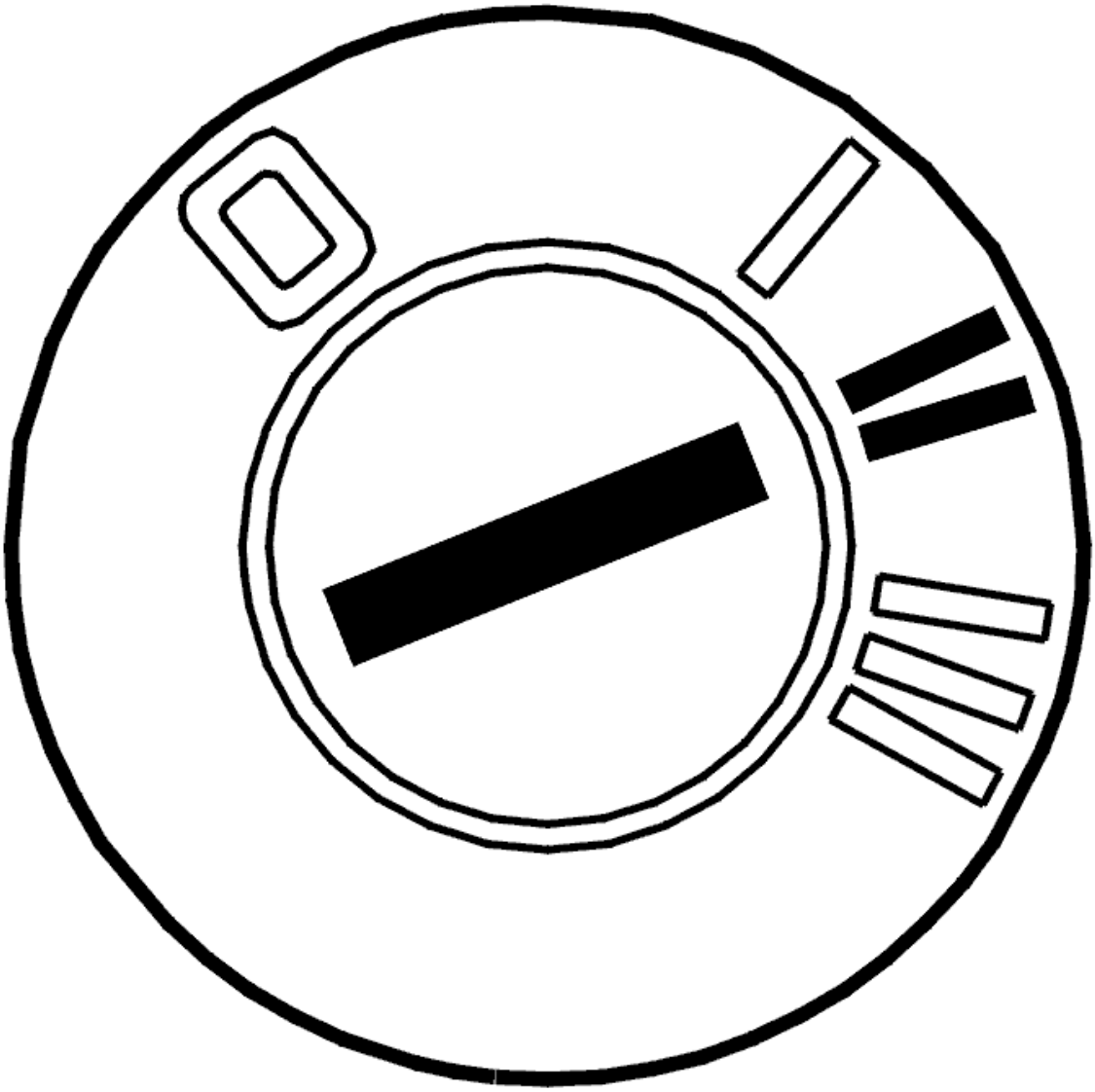

Fig. 85: Identifying Ignition ON
Courtesy of VOLVO CARS CORPORATION

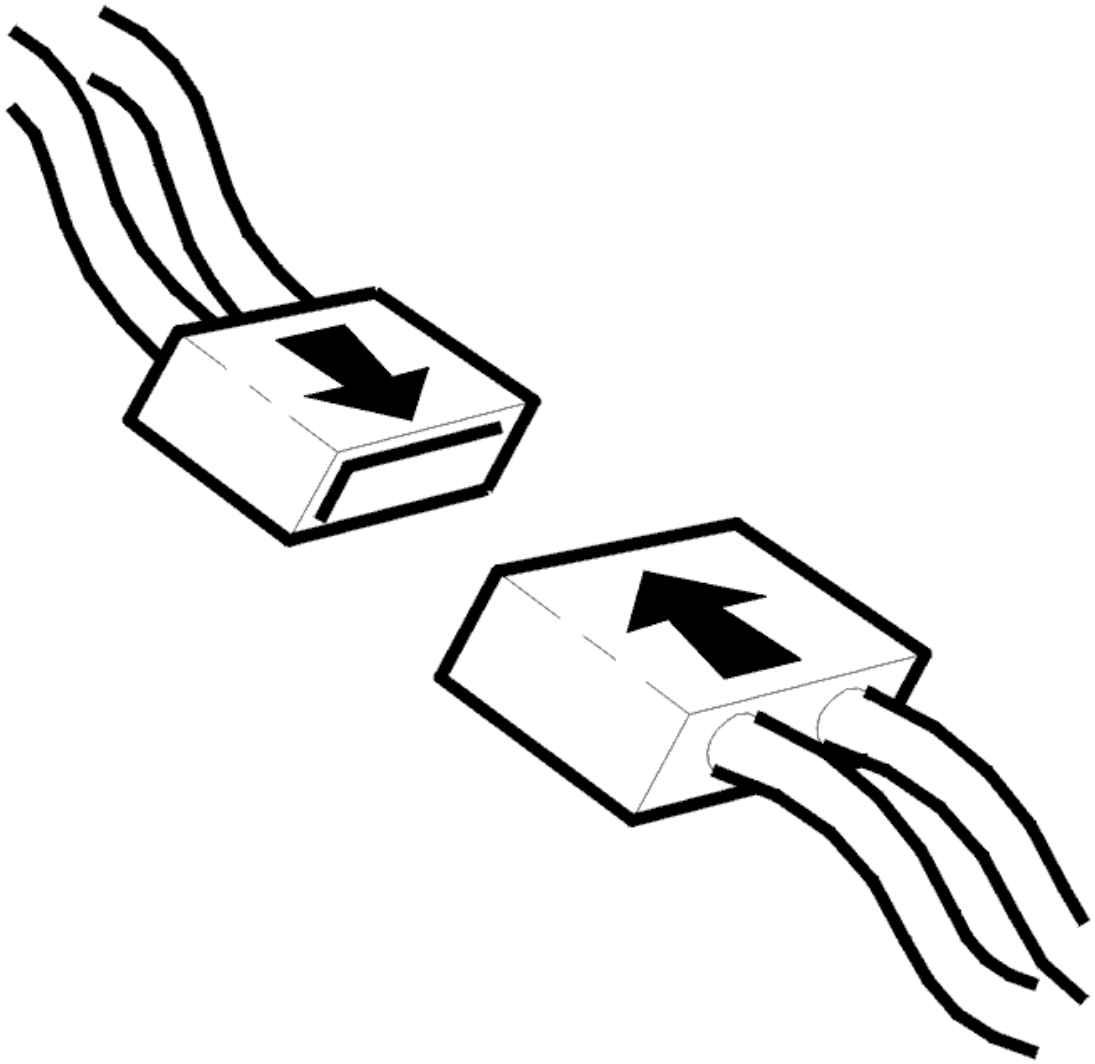

Fig. 86: Connecting Connector
Courtesy of VOLVO CARS CORPORATION

- Ignition off.
- Connect connector, install components etc.
- Ignition on.

NOTE: **It is important that only the ignition is on for the heater to start up.**

- Activate the heater.

  A buzzing sound should be heard from the heater.

  Check the function of the heater as described in, see **ENGINE COOLANT HEATER, TEST RUNNING** .

Additional information:

- For a description of the parameters, see **DESCRIPTION OF PARAMETERS** .
- For a description of activations, see **ACTIVATING COMPONENTS/FUNCTIONS** .

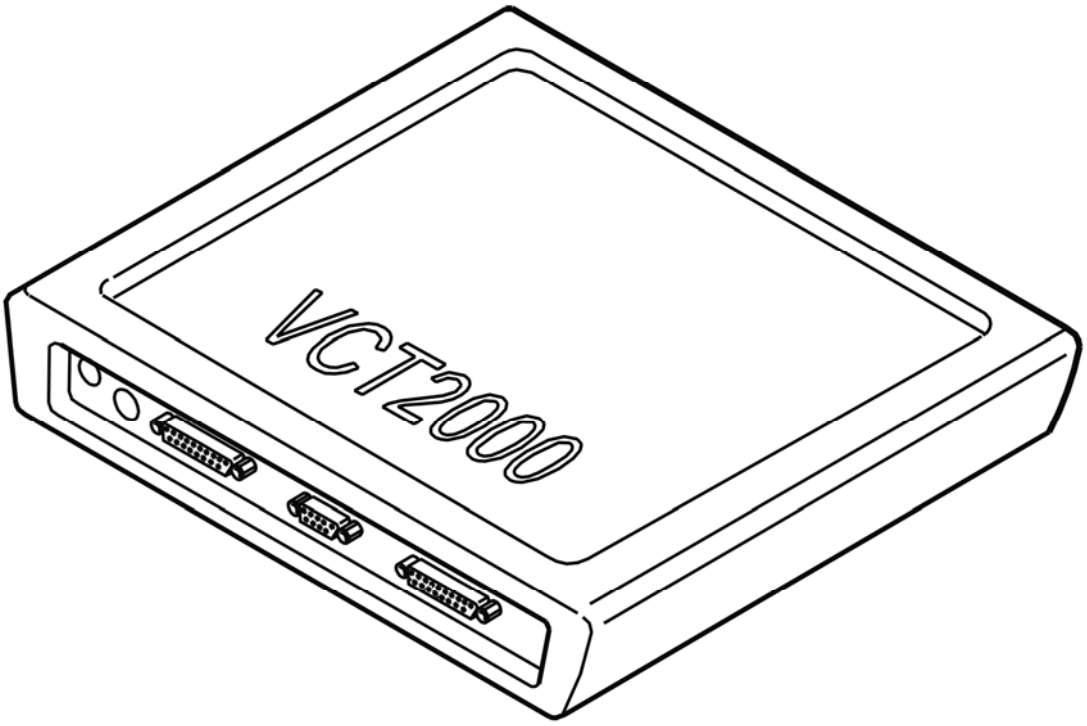

Fig. 87: Identifying VCT2000 Diagnostic Tool Symbol In VIDA
Courtesy of VOLVO CARS CORPORATION

Does the heater work?

- **YES**

  VERIFIED: Troubleshooting has been completed.

- **NO**

  Refer to **INFORMATION**

INFORMATION

FAULT-TRACING INFORMATION

The fault should have been detected and remedied. As this is not the case fault-tracing has failed.

Exit fault-tracing for this diagnostic trouble code (DTC) or make another attempt.

CEM-6A01: REAR LEFT DOOR UNLOCKED. SIGNAL TOO HIGH. INTERMITTENT FAULT (2003-2004)

DIAGNOSTIC TROUBLE CODE INFORMATION

Condition

If the central electronic module (CEM) detects a high signal from the lock position sensor 15 seconds after locking, diagnostic trouble code CEM-6A01 is displayed.

Possible Source

- The lock has stuck in unlocked position
- Open circuit in lock position sensor signal wire
- Lock position sensor signal wire short circuited to voltage supply
- Relay fault
- Open circuit on relay supply/defective fuse
- Fault in locking motor circuit
- Fault in rear electronic module (REM).

Fault symptom[s]

- A door does not lock / open.

SIGNAL TOO HIGH. INTERMITTENT FAULT

CHECKING THE COMPONENT

Check that the lock has not stuck by using the lock button on the inside of the door. Check that the lock unit is correctly installed.

Was a fault detected?

- **YES**

  OKAY: Troubleshooting has been completed.

- **NO**

  Refer to **CHECKING THE WIRING AND SWITCHES**

CHECKING THE WIRING AND SWITCHES

Check the switches at the central electronic module and lock unit. Check for contact resistance and oxidation.

Check the signal cable for the lock position sensor between the central electronic module connector terminal #B13 and lock unit connector terminal #5. Check for an open-circuit.

Check the signal cable for the lock position sensor between the central electronic module connector terminal #B13 and lock unit connector terminal #5. Check for an intermittent short-circuit to supply voltage.

NOTE: Diagnostic trouble code (DTC) REM-6A01 or REM-6A03 may also be stored if this fault occurs. Use the VCT2000 (or appropriate scan) tool to read diagnostic trouble codes (DTCs).

Other information:

- To access and replace the lock module:
  - Diver's side door module, see **DRIVER DOOR MODULE (DDM), REPLACING**
  - Passenger side door module, see **PASSENGER DOOR MODULE (PDM), REPLACING** .
- For -2004, see: **CENTRAL ELECTRONIC MODULE (CEM), REPLACING**
- For 2005-, see: **CENTRAL ELECTRONIC MODULE (CEM), REPLACING** .
- To connect the breakout box, see **CONNECTING THE BREAKOUT BOX**
- -2004: **SIGNAL SPECIFICATION**
- 2005-: **SIGNAL SPECIFICATION**
- see **CHECKING WIRING AND TERMINALS. INTERMITTENT FAULTS** .

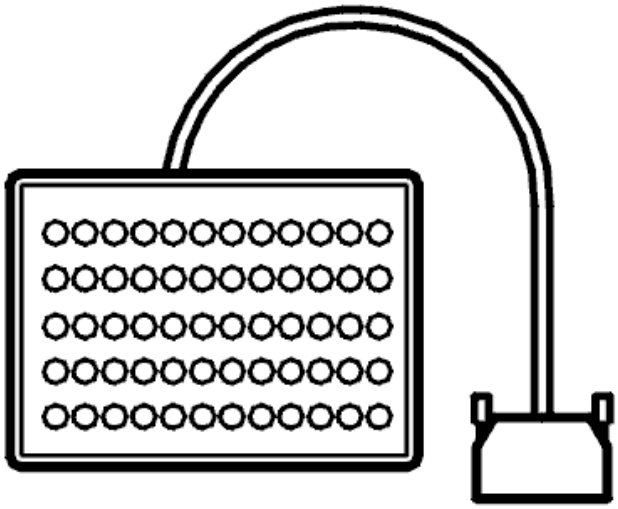

Fig. 88: Breakout Box
Courtesy of VOLVO CARS CORPORATION

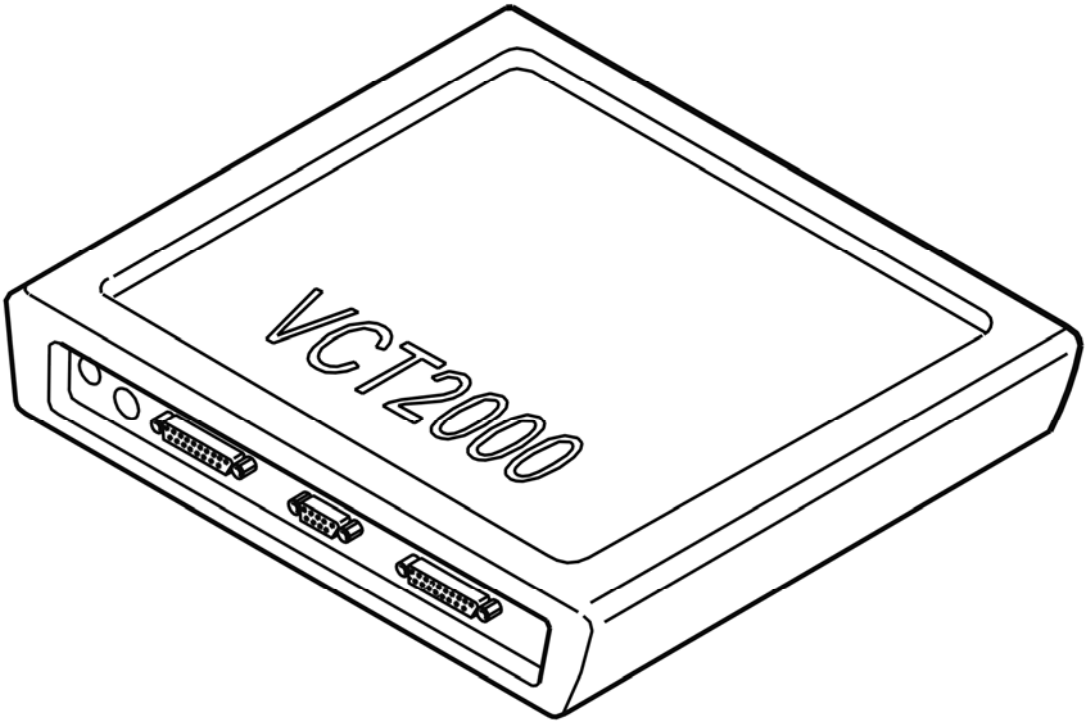

Fig. 89: Identifying VCT2000 Diagnostic Tool Symbol In VIDA
Courtesy of VOLVO CARS CORPORATION

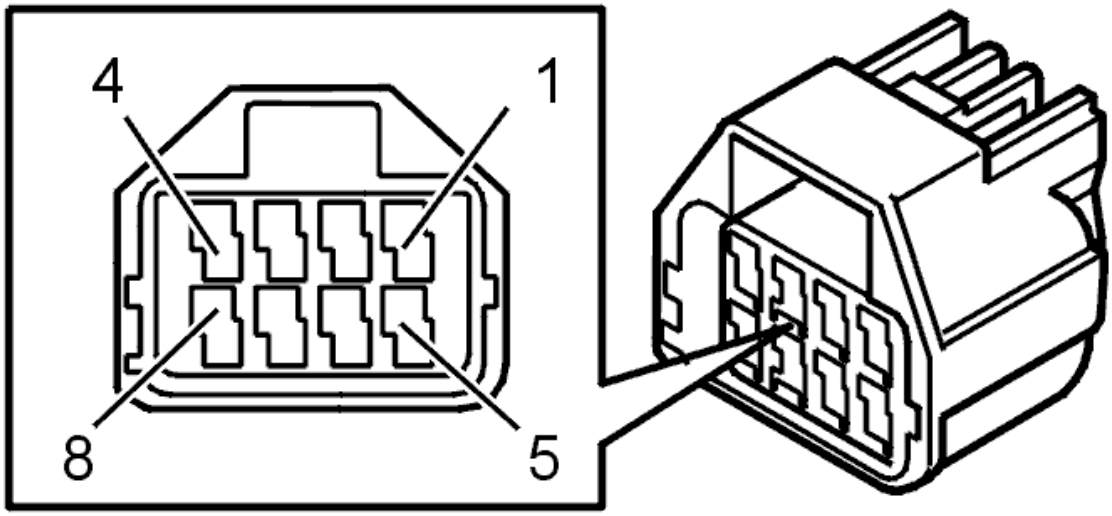

Fig. 90: Identifying Connector Terminals
Courtesy of VOLVO CARS CORPORATION

Were any diagnostic trouble codes (DTCs) stored?

- **YES**

OKAY: Troubleshooting has been completed.

- **NO**

  Refer to **CHECKING THE DOOR LOCKING FUNCTION**

CHECKING THE DOOR LOCKING FUNCTION

QUESTION

Which door has the problem?

1. Driver door.

   Refer to **CHECKING THE DRIVER DOOR**

2. Passenger door.

   Refer to **CHECKING THE PASSENGER DOOR**

3. Rear left door.

   Refer to **CHECKING THE REAR LEFT DOOR**

4. Rear right door.

   Refer to **CHECKING THE REAR RIGHT DOOR**

CHECKING THE DRIVER DOOR

CHECK

Is the passenger door lock not working?

- **YES**

  Refer to **CHECKING THE FUSE**

- **NO**

  Refer to **CHECK**

CHECKING THE FUSE

Remove the fuse 11C/27 in cargo compartment fuse box.

Check that fuse is intact and check for contact resistance and oxidation as described in, see **CONTACT RESISTANCE AND OXIDATION** .

Additional information

- To access relay/fuse box in the cargo compartment:
  - For -2004, see: **RELAY/FUSE BOX CARGO COMPARTMENT/REAR ELECTRONIC MODULE (REM), REPLACING**
  - For 2005-, see: **REAR ELECTRONIC MODULE (REM), REPLACING** .

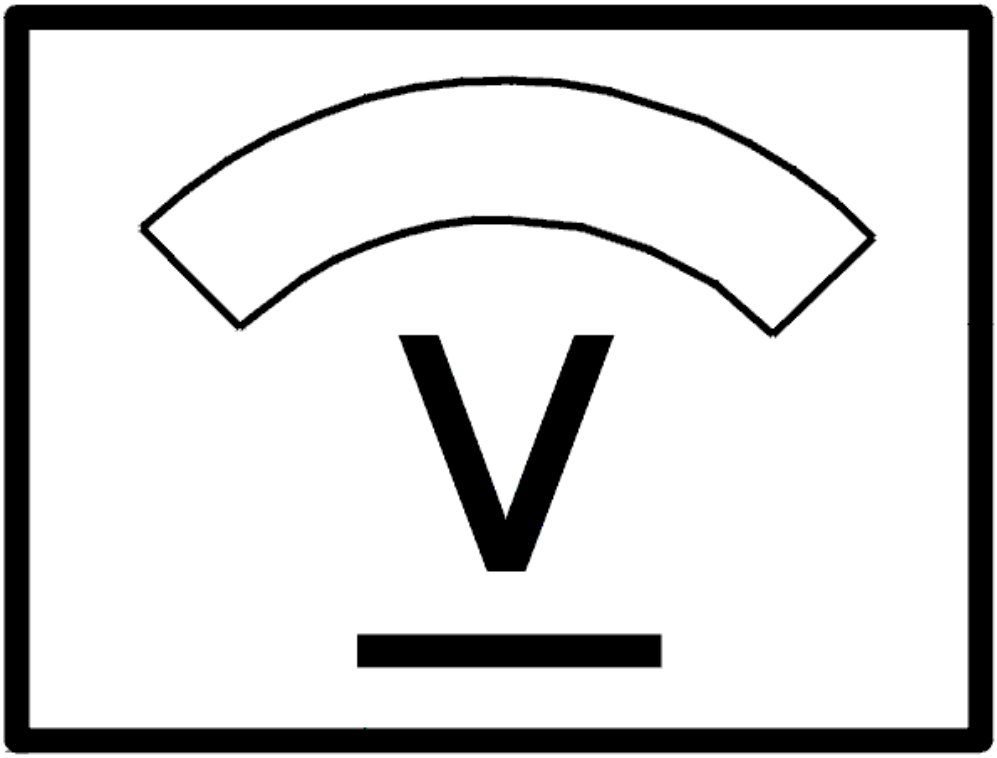

Fig. 91: Identifying Voltage Display
Courtesy of VOLVO CARS CORPORATION

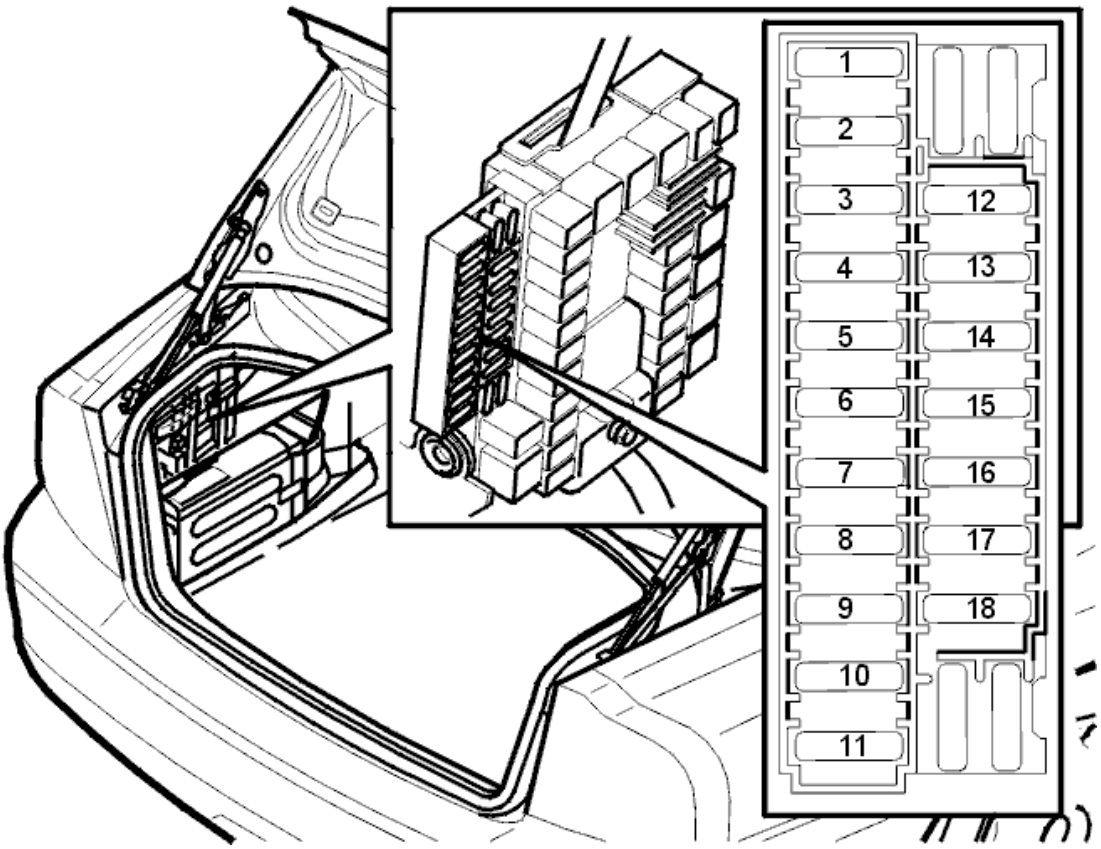

Fig. 92: Fuse Holder (Cargo Compartment)
Courtesy of VOLVO CARS CORPORATION

Is the fuse intact?

- **YES**

  Refer to **CHECKING FOR AN OPEN CIRCUIT**

- **NO**

  Refer to **CHECKING FOR A SHORT CIRCUIT**

CHECK

1. Window lift works on that particular door

   Refer to **CHECKING THE LOCKING MOTOR WIRES**

2. Window lift does not work on that particular door.

   Refer to **CHECKING THE FUSE**

CHECKING THE FUSE

Remove the fuse 11C/35 in cargo compartment fuse box.

Check that fuse is intact and check for contact resistance and oxidation as described in, see **CONTACT RESISTANCE AND OXIDATION** .

Additional information

- To access relay/fuse box in the cargo compartment:
  - For -2004, see: **RELAY/FUSE BOX CARGO COMPARTMENT/REAR ELECTRONIC MODULE (REM), REPLACING**
  - For 2005-, see: **REAR ELECTRONIC MODULE (REM), REPLACING** .

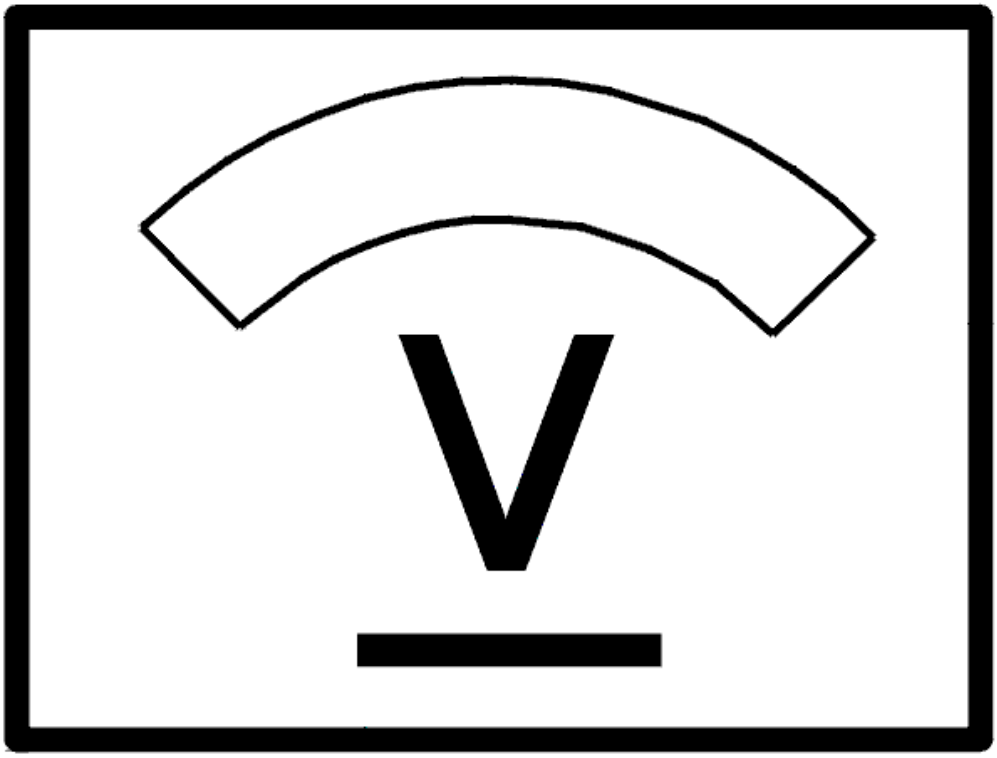

Fig. 93: Identifying Voltage Display
Courtesy of VOLVO CARS CORPORATION

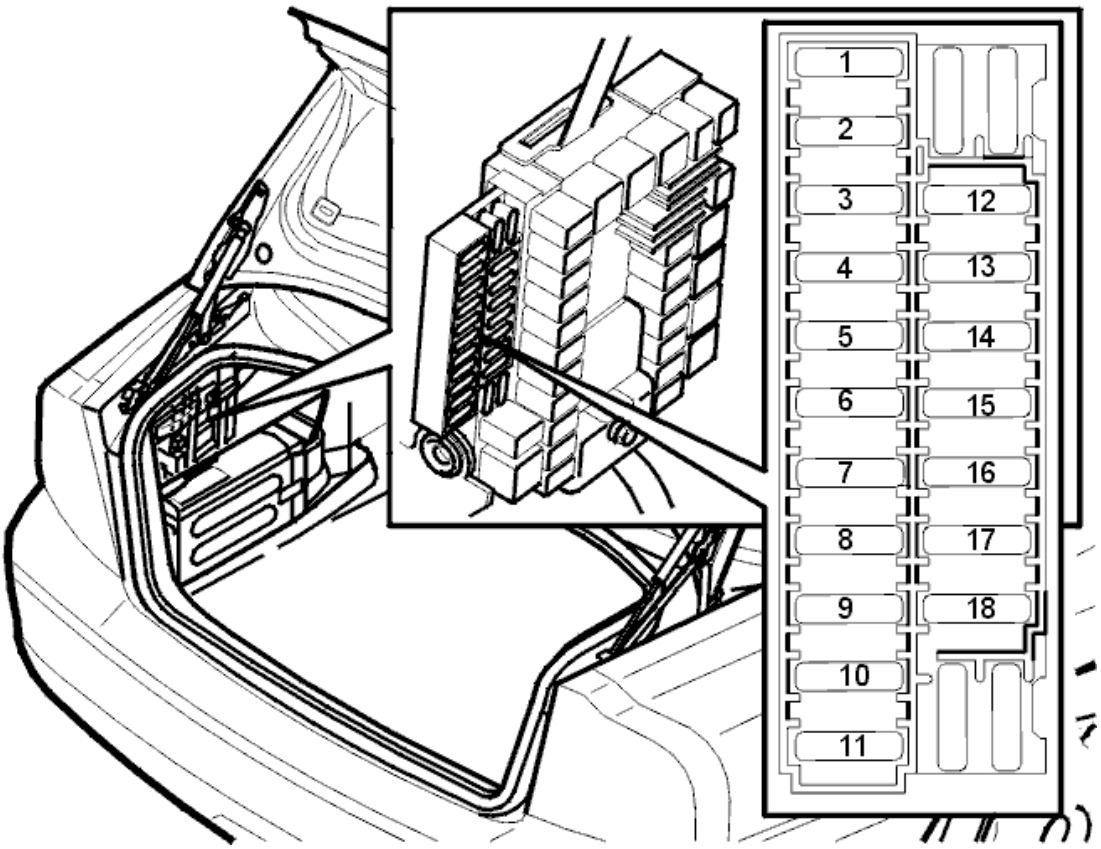

Fig. 94: Fuse Holder (Cargo Compartment)
Courtesy of VOLVO CARS CORPORATION

Is the fuse intact?

- **YES**

  Refer to **CHECKING THE VOLTAGE**

- **NO**

  Refer to **CHECKING FOR A SHORT CIRCUIT**

CHECKING FOR AN OPEN CIRCUIT

Check door control unit connector B7 for contact resistance and oxidation as described in, see **CONTACT RESISTANCE AND OXIDATION** .

Trouble-shoot the wire between fuse holder secondary side (left) and door control unit connector B7 for an open circuit as described in, see **OPEN-CIRCUIT, PERMANENT FAULTS** .

If a fault is detected, check in particular the intermediate connector in the cable harness (1/control unit) for contact resistance and oxidation as described in, see **CONTACT RESISTANCE AND OXIDATION** .

If there is an open circuit the fault should be between the fuse and the common junction point 53/427.

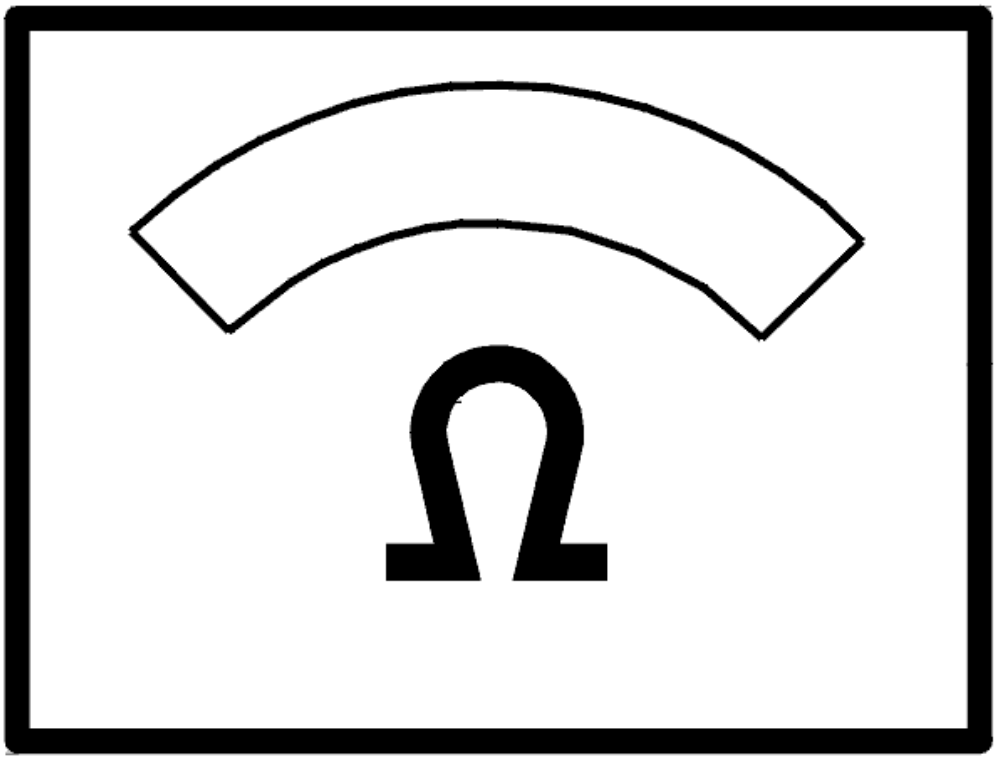

Fig. 95: Identifying Ohm Meter
Courtesy of VOLVO CARS CORPORATION

CHECKING FOR A SHORT CIRCUIT

Check the resistance between the fuse holder secondary side (left) and ground.

The ohmmeter should display infinite resistance.

NOTE: If the value is correct the fault could be intermittent.

Switch to trouble-shooting intermittent short circuits to ground as described in, see **SHORT-CIRCUIT TO GROUND, INTERMITTENT FAULTS** .

If the ohmmeter indicates a fault (short circuit), trouble-shoot the wires between the fuse and door control unit connector B7 for a short circuit to ground as described in, see **SHORT-CIRCUIT TO GROUND, PERMANENT FAULTS** .

The fault should be between the fuse and the common junction point 53/427.

Replace fuse.

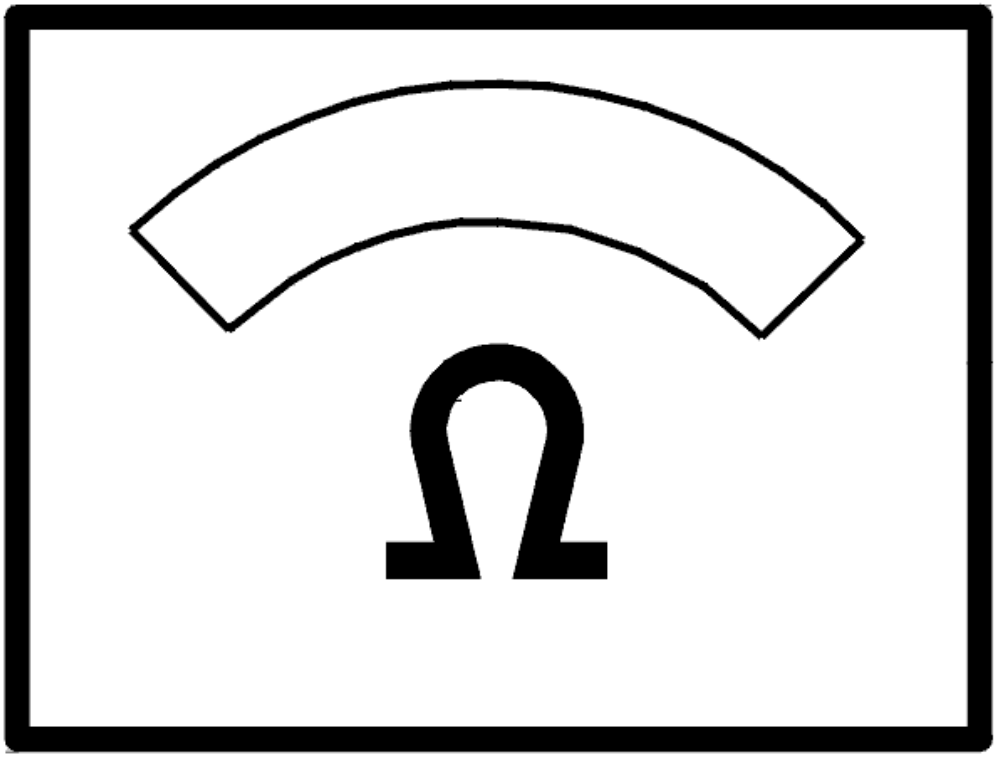

Fig. 96: Identifying Ohm Meter
Courtesy of VOLVO CARS CORPORATION

CHECKING THE VOLTAGE

Check the voltage in the door control unit connector B12.

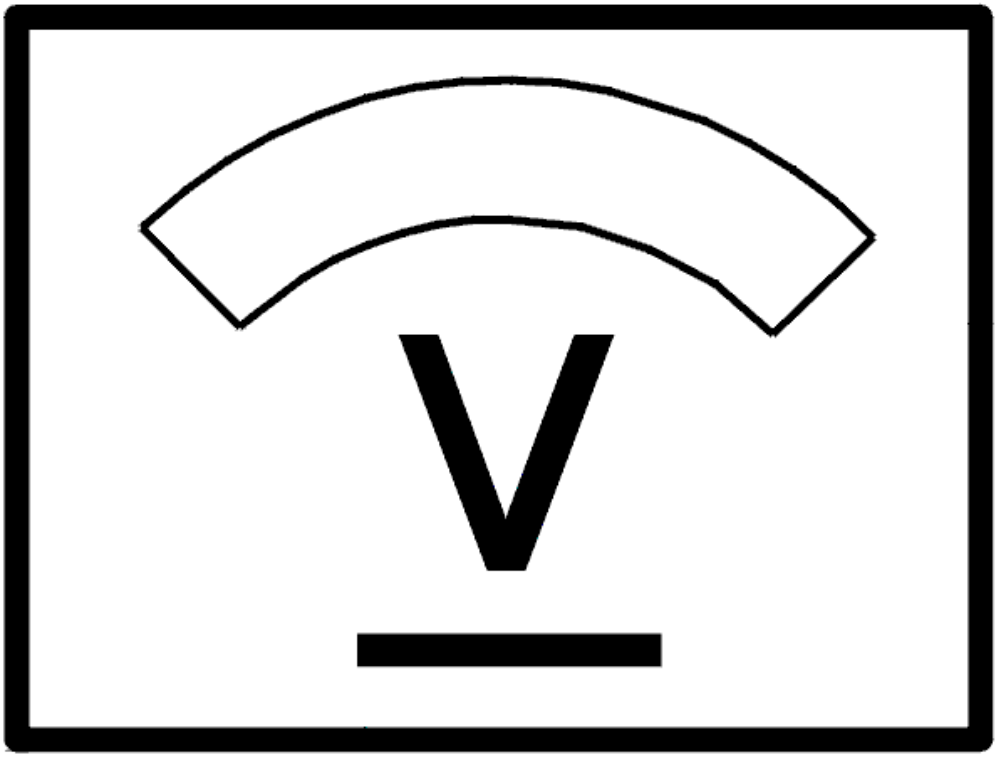

Fig. 97: Identifying Voltage Display
Courtesy of VOLVO CARS CORPORATION

Does the voltmeter show the battery voltage?

- **YES**

  Refer to **CHECKING THE LOCKING MOTOR WIRES**

- **NO**

  Refer to **CHECKING FOR AN OPEN CIRCUIT**

CHECKING FOR AN OPEN CIRCUIT

Check door control unit connector B12 for contact resistance and oxidation as described in, see **CONTACT**

RESISTANCE AND OXIDATION .

Trouble-shoot the wire between fuse holder secondary side (left) and door control unit connector B12 for an open circuit as described in, see **OPEN-CIRCUIT, PERMANENT FAULTS** .

If a fault is detected, check in particular the intermediate connector in the cable harness (1) for contact resistance and oxidation as described in, see **CONTACT RESISTANCE AND OXIDATION** .

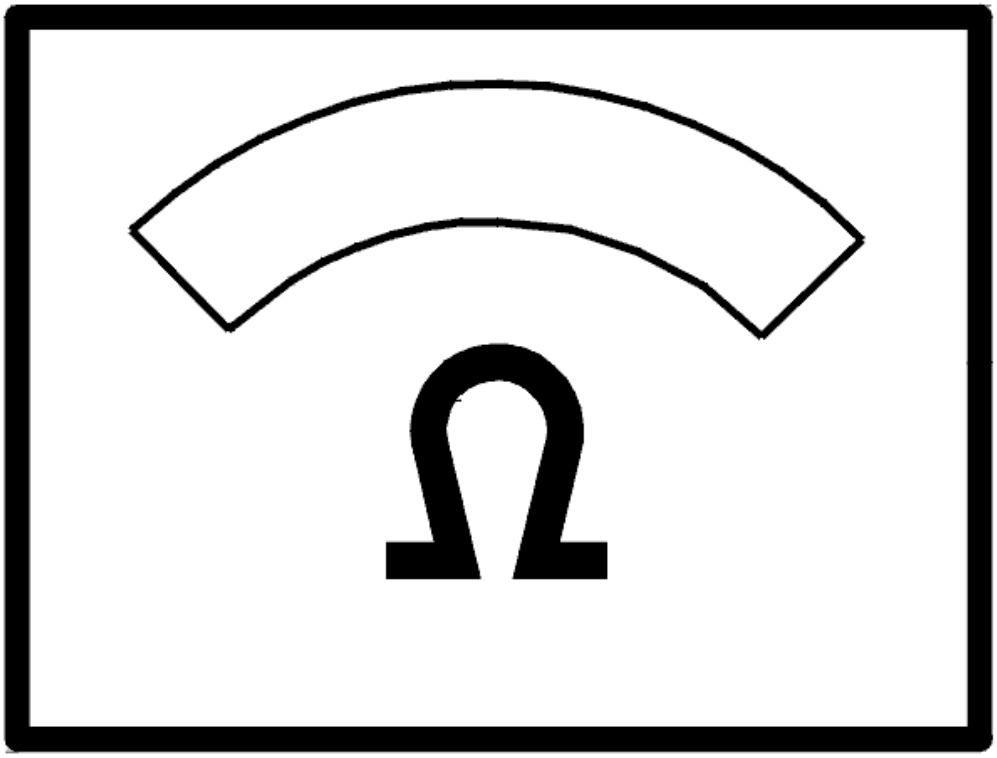

Fig. 98: Identifying Ohm Meter
Courtesy of VOLVO CARS CORPORATION

CHECKING FOR A SHORT CIRCUIT

Check the resistance between the fuse holder secondary side (left) and ground.

The ohmmeter should display infinite resistance.

NOTE: If the value is correct the fault could be intermittent.

Switch to trouble-shooting intermittent short circuits to ground as described in, see **SHORT-CIRCUIT TO GROUND, INTERMITTENT FAULTS** .

If the ohmmeter indicates a fault (short circuit), trouble-shoot the wires between the fuse and door control unit connector B12 for a short circuit to ground as described in, see **SHORT-CIRCUIT TO GROUND, PERMANENT FAULTS** .

Replace fuse.

Additional information

- To access relay/fuse box in the cargo compartment:
  - For -2004, see: **RELAY/FUSE BOX CARGO COMPARTMENT/REAR ELECTRONIC MODULE (REM), REPLACING**
  - For 2005-, see: **REAR ELECTRONIC MODULE (REM), REPLACING** .

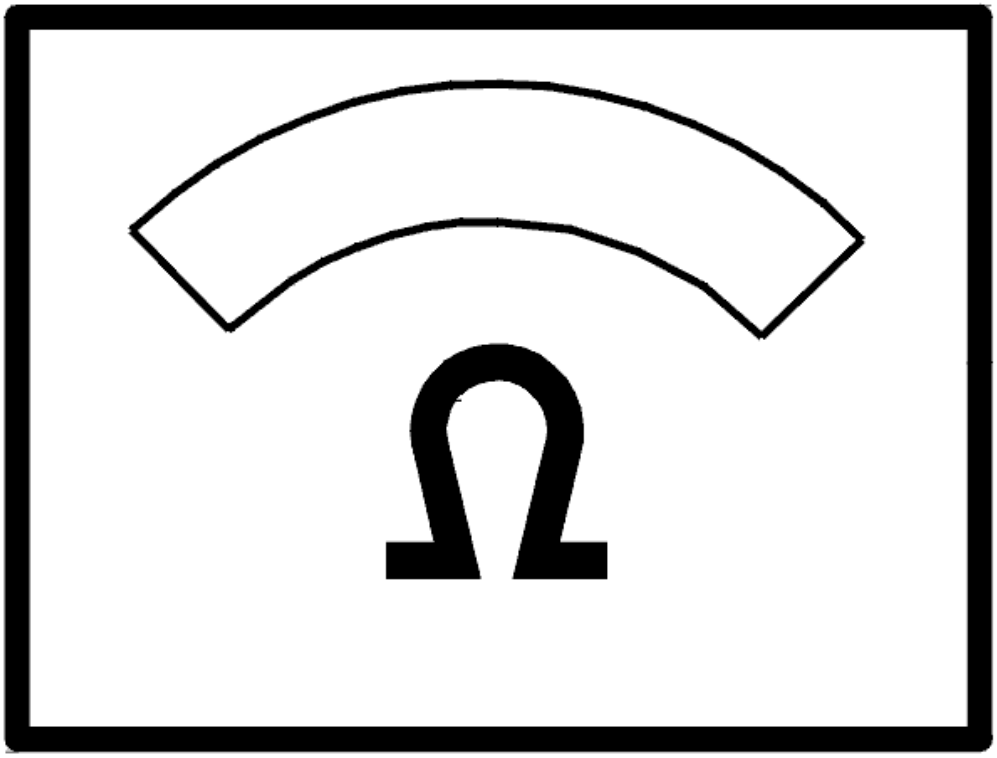

Fig. 99: Identifying Ohm Meter
Courtesy of VOLVO CARS CORPORATION

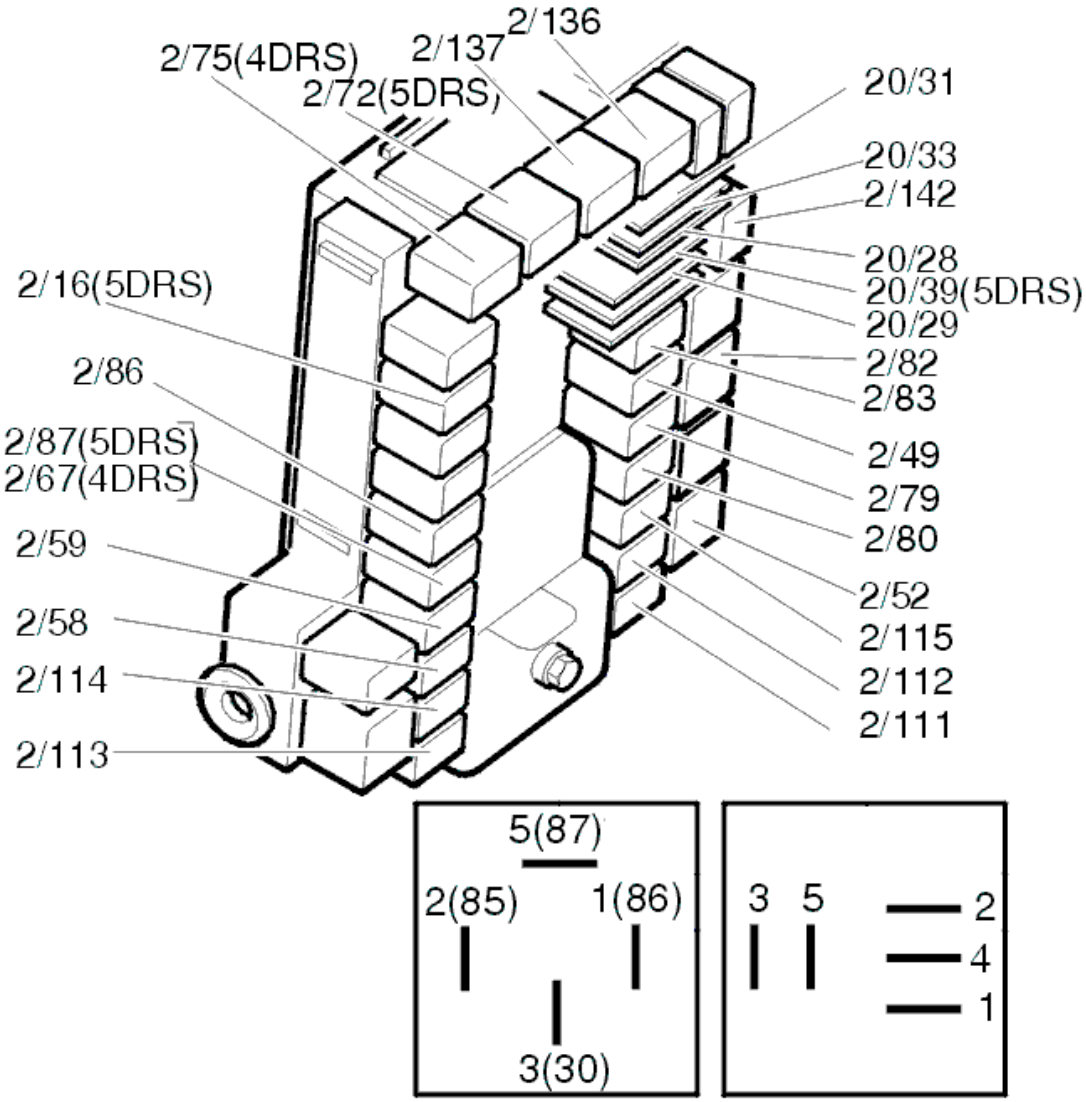

Fig. 100: Identifying Relays
Courtesy of VOLVO CARS CORPORATION

CHECKING THE LOCKING MOTOR WIRES

Check door control unit and lock unit connectors for contact resistance and oxidation as described in, see **CONTACT RESISTANCE AND OXIDATION** .

Trouble-shoot the wire between door control unit connector B2 and lock unit connector 8 for an open circuit as described in, see **OPEN-CIRCUIT, PERMANENT FAULTS** .

Trouble-shoot the wire between door control unit connector B6 and lock unit connector 7 for an open circuit as described in, see **OPEN-CIRCUIT, PERMANENT FAULTS** .

Additional information

- To access/replace rear electronic module (REM):
  - For -2004, see: **RELAY/FUSE BOX CARGO COMPARTMENT/REAR ELECTRONIC MODULE (REM), REPLACING**
  - For 2005-, see: **REAR ELECTRONIC MODULE (REM), REPLACING** .

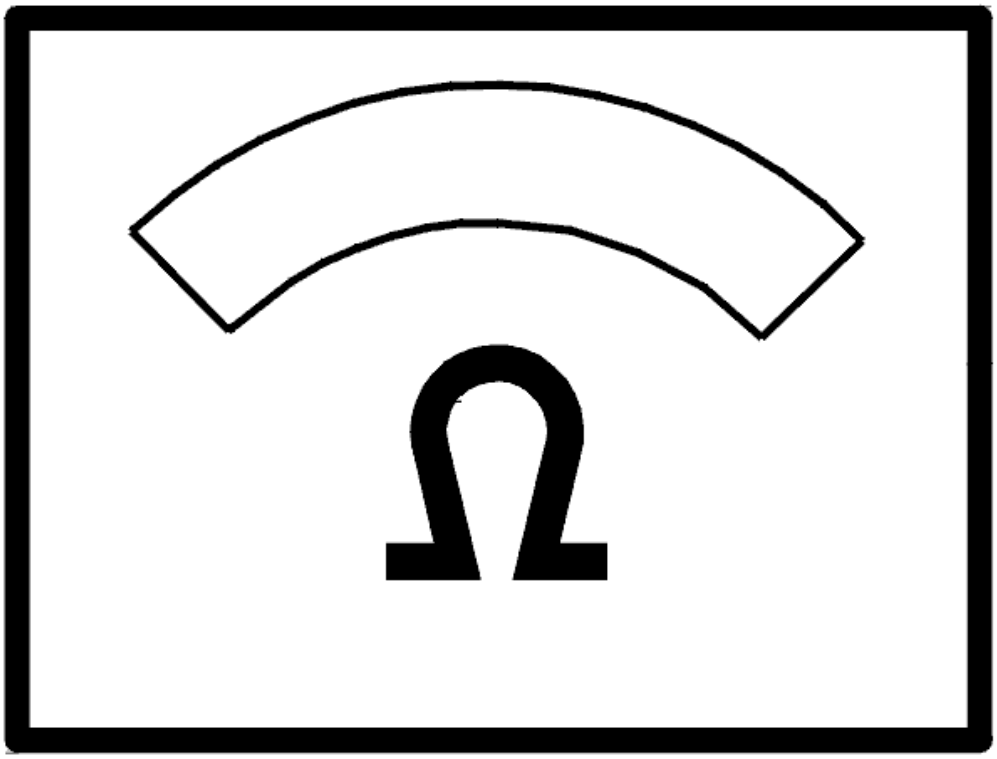

Fig. 101: Identifying Ohm Meter
Courtesy of VOLVO CARS CORPORATION

Is there a fault?

- **YES**

  OKAY: Troubleshooting has been completed.

- **NO**

Refer to **REPLACING THE COMPONENT**

REPLACING THE COMPONENT

Replace lock unit as described in, see **REPLACING THE SWITCH FOR THE LOCK UNIT / CARGO COMPARTMENT LIGHTING** .

Is there a fault?

- **YES**

  OKAY: Troubleshooting has been completed.

- **NO**

  Refer to **REPLACING THE COMPONENT**

REPLACING THE COMPONENT

Replace control unit.

- For -2004, see: **RELAY/FUSE BOX CARGO COMPARTMENT/REAR ELECTRONIC MODULE (REM), REPLACING**
- For 2005-, see: **REAR ELECTRONIC MODULE (REM), REPLACING** .

CHECKING THE PASSENGER DOOR

CHECK

Is the driver door lock not working?

- **YES**

  Refer to **CHECKING THE FUSE**

- **NO**

  Refer to **CHECK**

CHECKING THE FUSE

Remove the fuse 11C/27 in cargo compartment fuse box.

Check that fuse is intact and check for contact resistance and oxidation as described in, see **CONTACT RESISTANCE AND OXIDATION** .

Additional information

- To access relay/fuse box in the cargo compartment:
  - For -2004, see: **RELAY/FUSE BOX CARGO COMPARTMENT/REAR ELECTRONIC MODULE (REM), REPLACING**
  - For 2005-, see: **REAR ELECTRONIC MODULE (REM), REPLACING** .

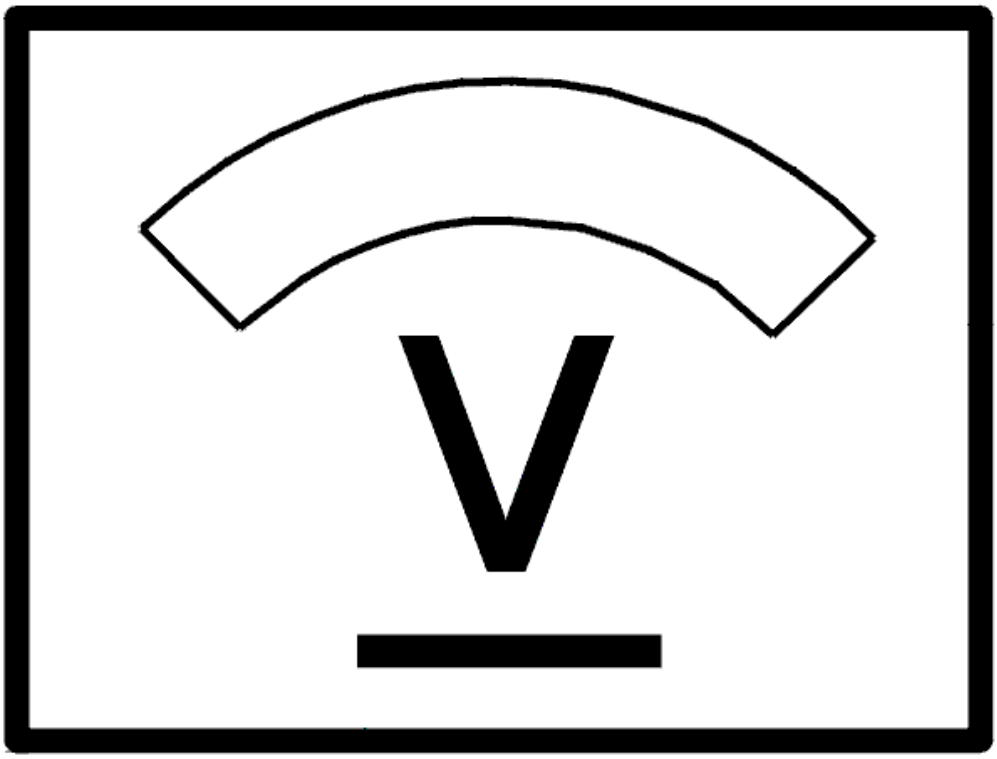

Fig. 102: Identifying Voltage Display
Courtesy of VOLVO CARS CORPORATION

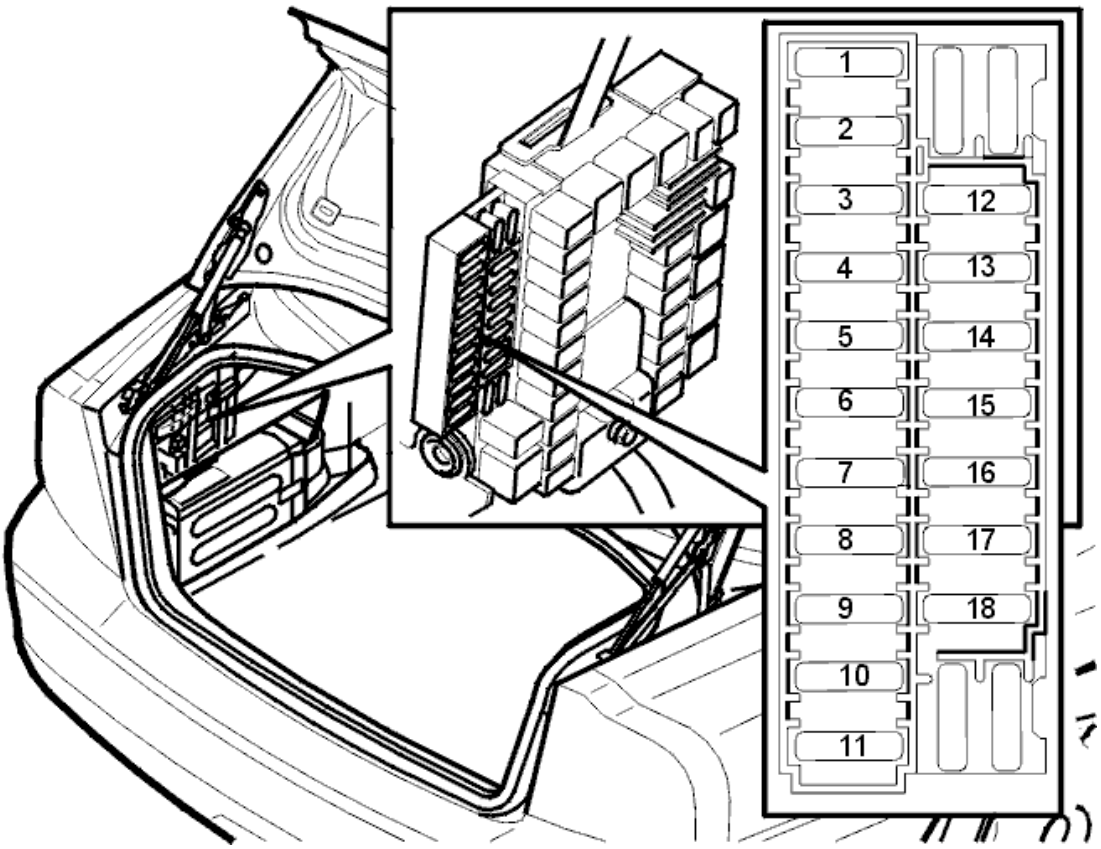

Fig. 103: Fuse Holder (Cargo Compartment)
Courtesy of VOLVO CARS CORPORATION

Is the fuse intact?

- **YES**

  Refer to **CHECKING FOR AN OPEN CIRCUIT**

- **NO**

  Refer to **CHECKING FOR A SHORT CIRCUIT**

CHECK

1. Window lift works on that particular door

   Refer to **CHECKING THE LOCKING MOTOR WIRES**

2. Window lift does not work on that particular door.

   Refer to **CHECKING THE FUSE**

CHECKING THE FUSE

Remove the fuse 11C/36 in cargo compartment fuse box.

Check that fuse is intact and check for contact resistance and oxidation as described in, see **CONTACT RESISTANCE AND OXIDATION** .

Additional information

- To access relay/fuse box in the cargo compartment:
  - For -2004, see: **RELAY/FUSE BOX CARGO COMPARTMENT/REAR ELECTRONIC MODULE (REM), REPLACING**
  - For 2005-, see: **REAR ELECTRONIC MODULE (REM), REPLACING** .

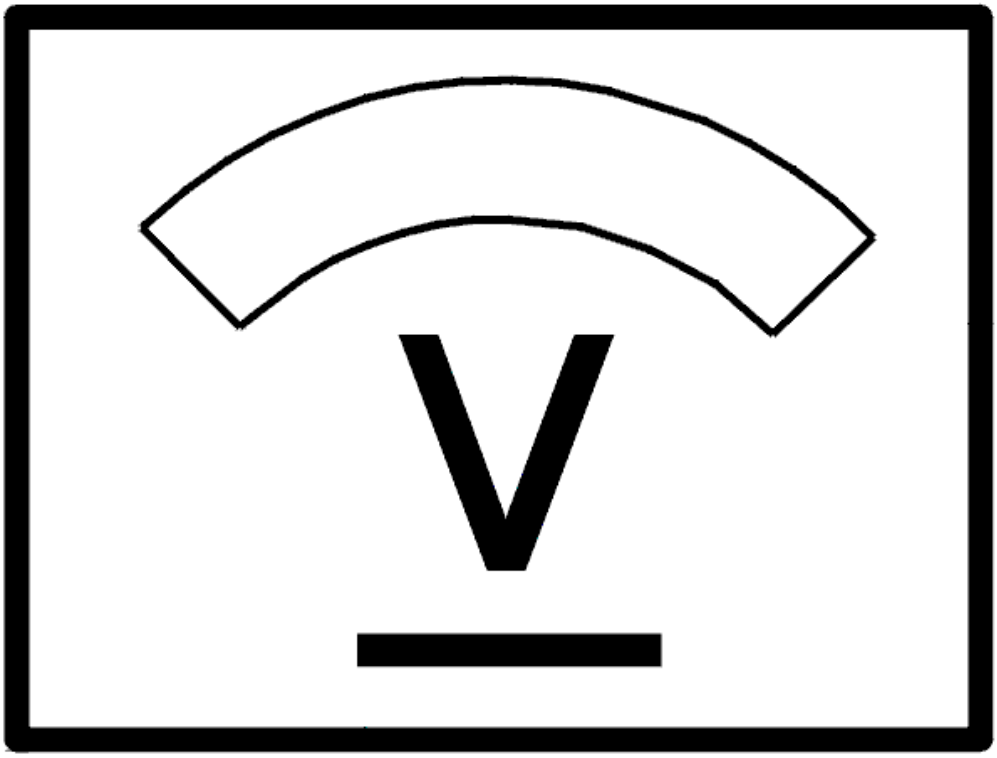

Fig. 104: Identifying Voltage Display
Courtesy of VOLVO CARS CORPORATION

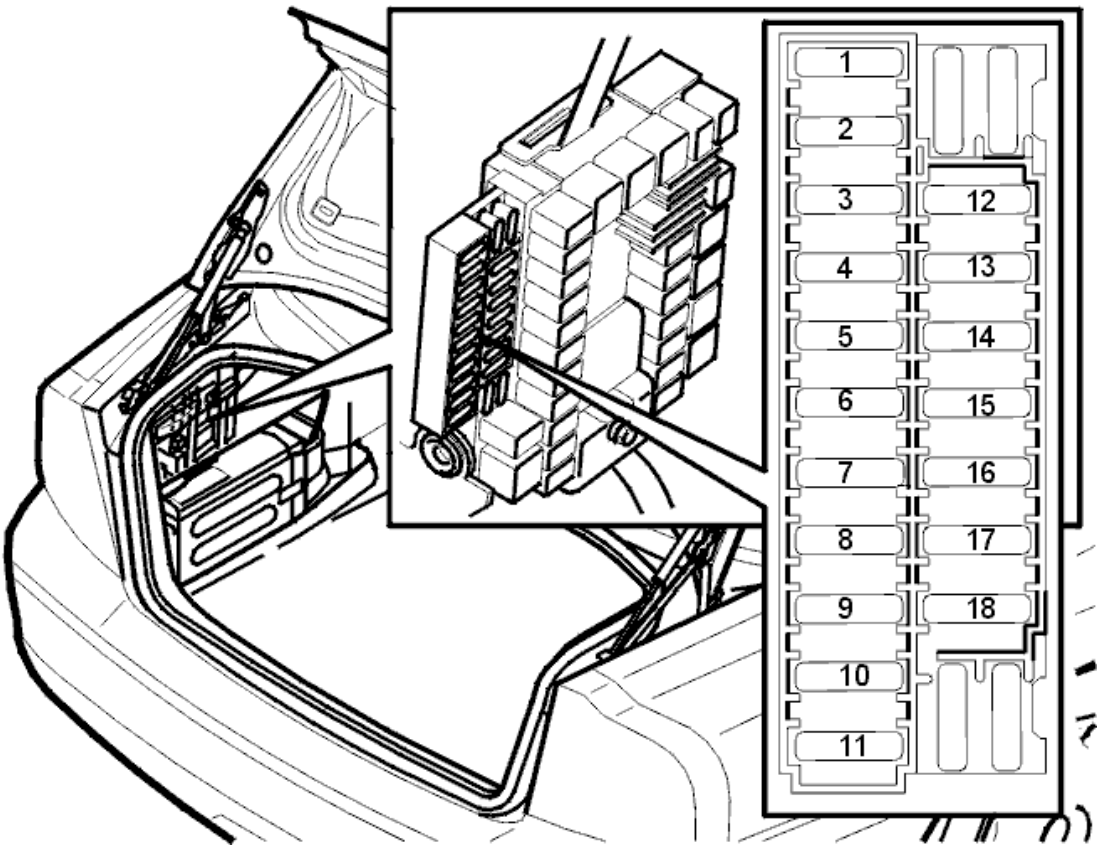

Fig. 105: Fuse Holder (Cargo Compartment)
Courtesy of VOLVO CARS CORPORATION

Is the fuse intact?

- **YES**

  Refer to **CHECKING THE VOLTAGE**

- **NO**

  Refer to **CHECKING FOR A SHORT CIRCUIT**

CHECKING FOR AN OPEN CIRCUIT

Check door control unit connector B7 for contact resistance and oxidation as described in, see **CONTACT RESISTANCE AND OXIDATION** .

Trouble-shoot the wire between fuse holder secondary side (left) and door control unit connector B7 for an open circuit as described in, see **OPEN-CIRCUIT, PERMANENT FAULTS** .

If a fault is detected, check in particular the intermediate connector in the cable harness (1/control unit) for contact resistance and oxidation as described in, see **CONTACT RESISTANCE AND OXIDATION** .

If there is an open circuit the fault should be between the fuse and the common junction point 53/427.

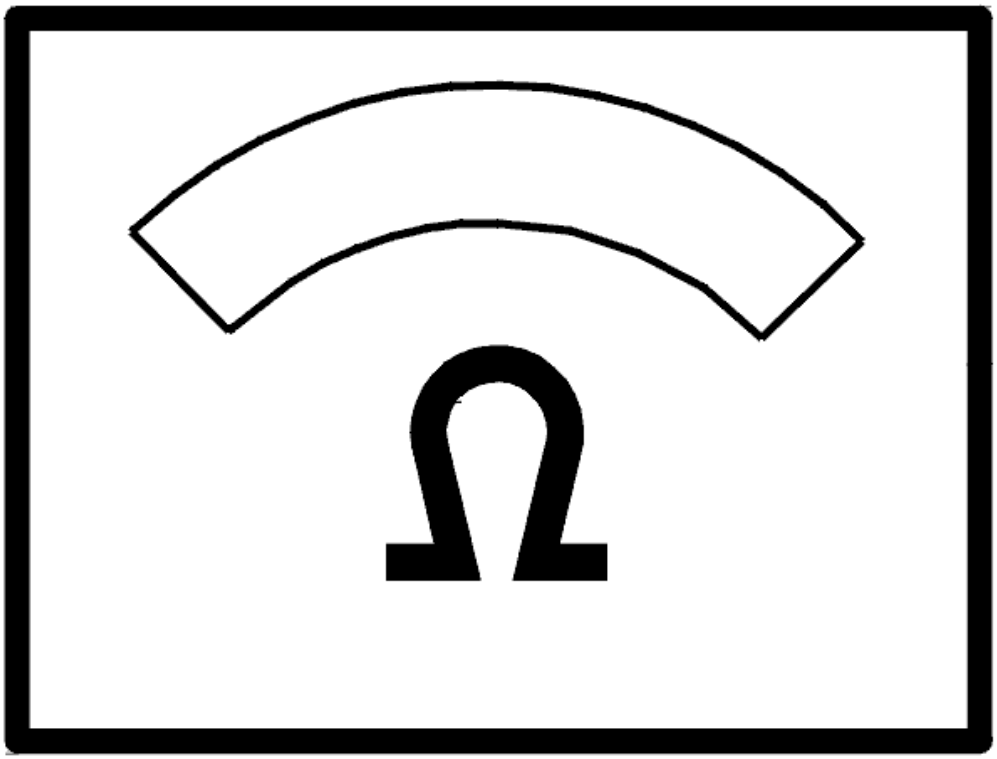

Fig. 106: Identifying Ohm Meter
Courtesy of VOLVO CARS CORPORATION

CHECKING FOR A SHORT CIRCUIT

Check the resistance between the fuse holder secondary side (left) and ground.

The ohmmeter should display infinite resistance.

NOTE: If the value is correct the fault could be intermittent.

Switch to trouble-shooting intermittent short circuits to ground as described in, see **SHORT-CIRCUIT TO GROUND, INTERMITTENT FAULTS** .

If the ohmmeter indicates a fault (short circuit), trouble-shoot the wires between the fuse and door control unit connector B7 for a short circuit to ground as described in, see **SHORT-CIRCUIT TO GROUND, PERMANENT FAULTS** .

The fault should be between the fuse and the common junction point 53/427.

Replace fuse.

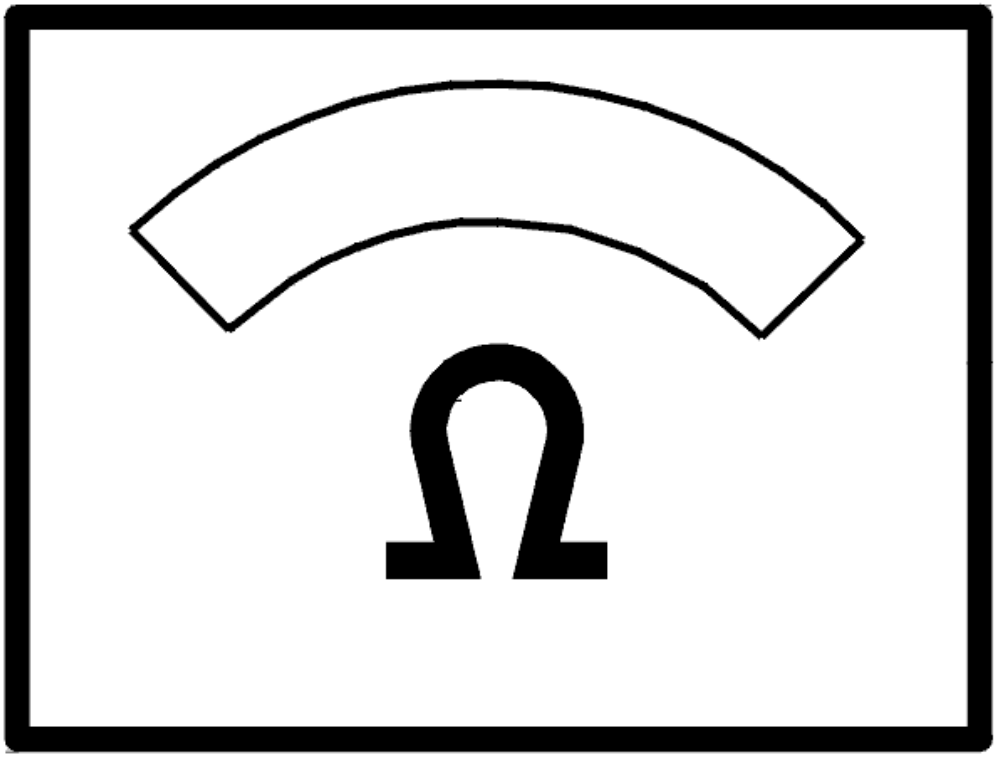

Fig. 107: Identifying Ohm Meter
Courtesy of VOLVO CARS CORPORATION

CHECKING THE VOLTAGE

Check the voltage in the door control unit connector B12.

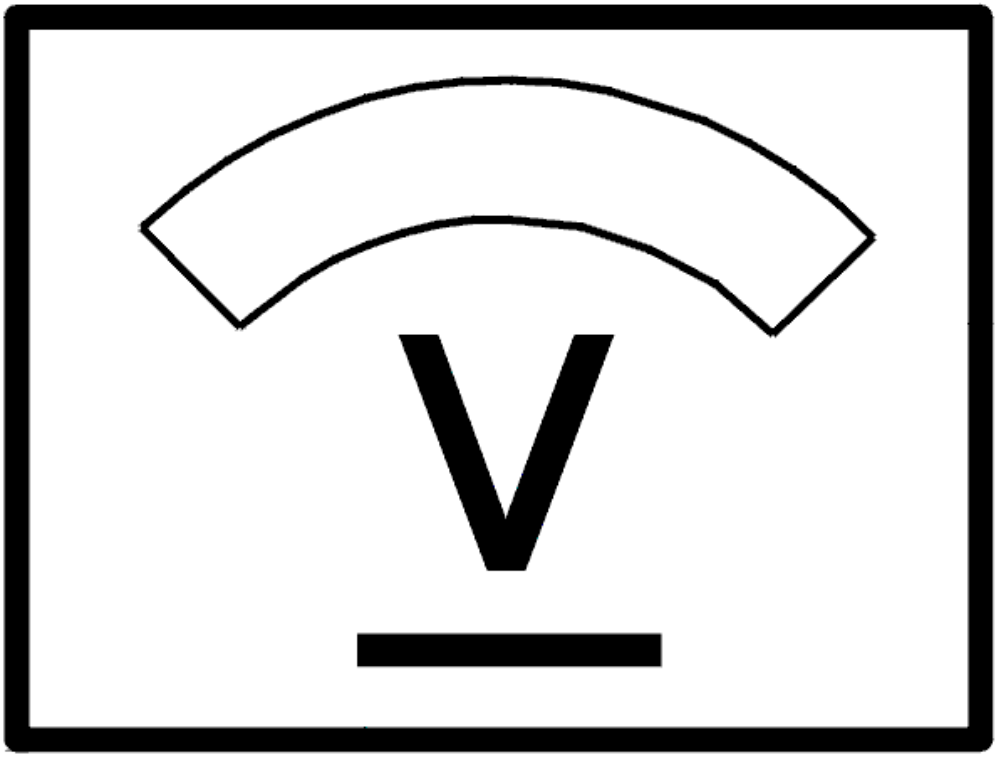

Fig. 108: Identifying Voltage Display
Courtesy of VOLVO CARS CORPORATION

Does the voltmeter show the battery voltage?

- **YES**

  Refer to **CHECKING THE LOCKING MOTOR WIRES**

- **NO**

  Refer to **CHECKING FOR AN OPEN CIRCUIT**

CHECKING FOR AN OPEN CIRCUIT

Check door control unit connector B12 for contact resistance and oxidation as described in, see **CONTACT**

RESISTANCE AND OXIDATION .

Trouble-shoot the wire between fuse holder secondary side (left) and door control unit connector B12 for an open circuit as described in, see **OPEN-CIRCUIT, PERMANENT FAULTS** .

If a fault is detected, check in particular the intermediate connector in the cable harness (1) for contact resistance and oxidation as described in, see **CONTACT RESISTANCE AND OXIDATION** .

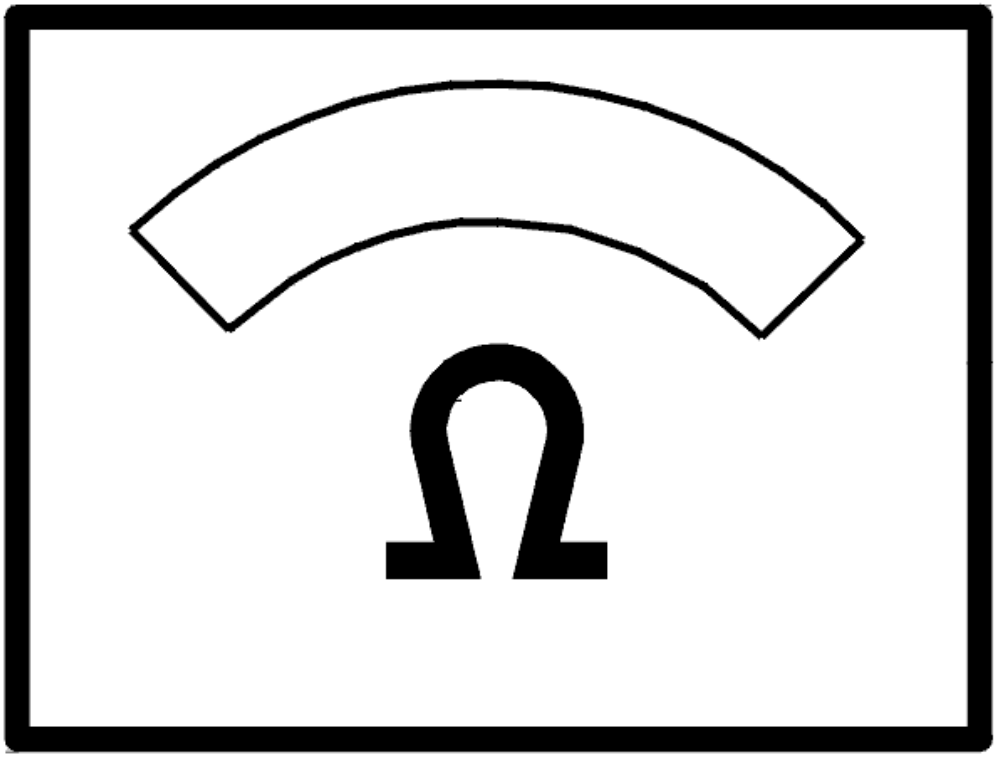

Fig. 109: Identifying Ohm Meter
Courtesy of VOLVO CARS CORPORATION

CHECKING FOR A SHORT CIRCUIT

Check the resistance between the fuse holder secondary side (left) and ground.

The ohmmeter should display infinite resistance.

NOTE: If the value is correct the fault could be intermittent.

Switch to trouble-shooting intermittent short circuits to ground as described in, see **SHORT-CIRCUIT TO GROUND, INTERMITTENT FAULTS** .

If the ohmmeter indicates a fault (short circuit), trouble-shoot the wires between the fuse and door control unit connector B12 for a short circuit to ground as described in, see **SHORT-CIRCUIT TO GROUND, PERMANENT FAULTS** .

Replace fuse.

Additional information

- To access relay/fuse box in the cargo compartment:
  - For -2004, see: **RELAY/FUSE BOX CARGO COMPARTMENT/REAR ELECTRONIC MODULE (REM), REPLACING**
  - For 2005-, see: **REAR ELECTRONIC MODULE (REM), REPLACING** .

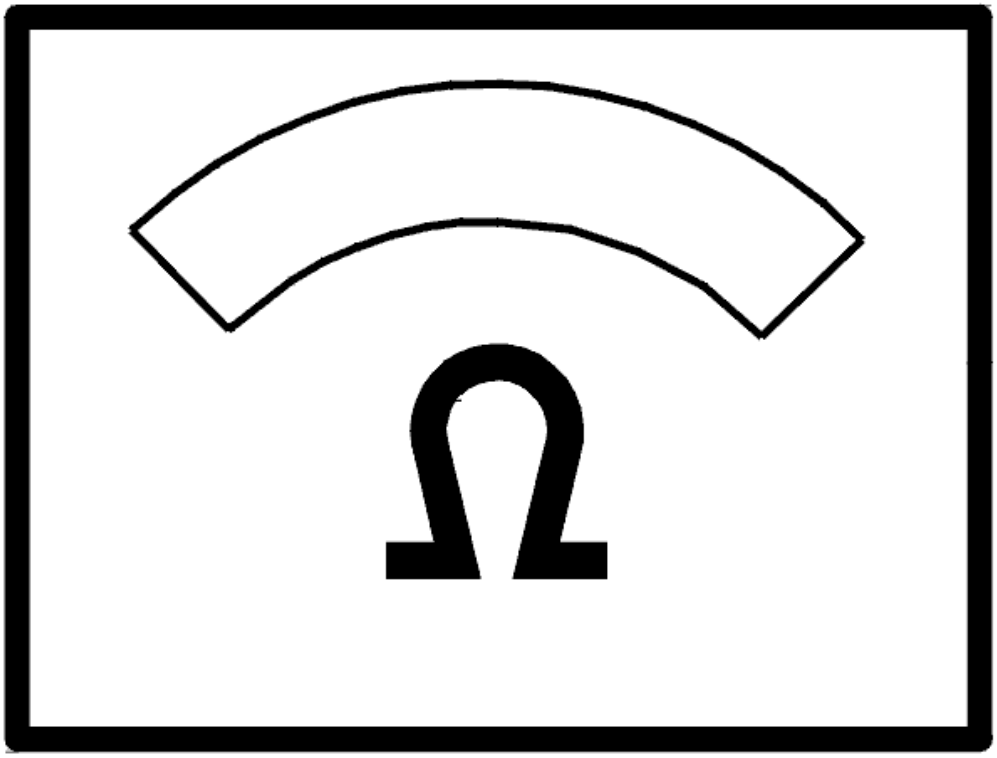

Fig. 110: Identifying Ohm Meter
Courtesy of VOLVO CARS CORPORATION

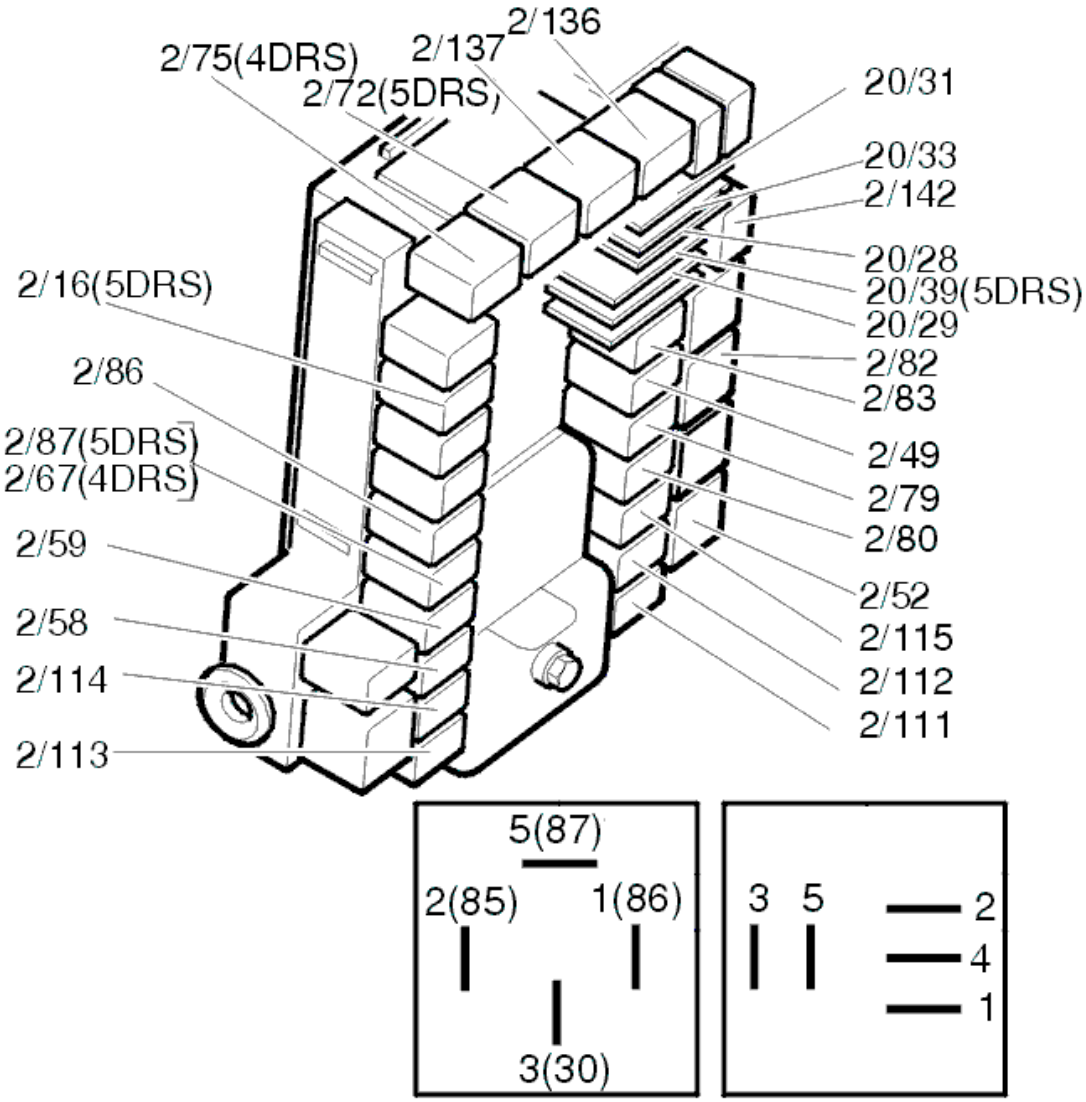

Fig. 111: Identifying Relays
Courtesy of VOLVO CARS CORPORATION

CHECKING THE LOCKING MOTOR WIRES

Check door control unit and lock unit connectors for contact resistance and oxidation as described in, see **CONTACT RESISTANCE AND OXIDATION** .

Trouble-shoot the wire between door control unit connector B2 and lock unit connector 8 for an open circuit as described in, see **OPEN-CIRCUIT, PERMANENT FAULTS** .

Trouble-shoot the wire between door control unit connector B6 and lock unit connector 7 for an open circuit as described in, see **OPEN-CIRCUIT, PERMANENT FAULTS** .

Additional information

- To access/replace rear electronic module (REM):
  - For -2004, see: **RELAY/FUSE BOX CARGO COMPARTMENT/REAR ELECTRONIC MODULE (REM), REPLACING**
  - For 2005-, see: **REAR ELECTRONIC MODULE (REM), REPLACING** .

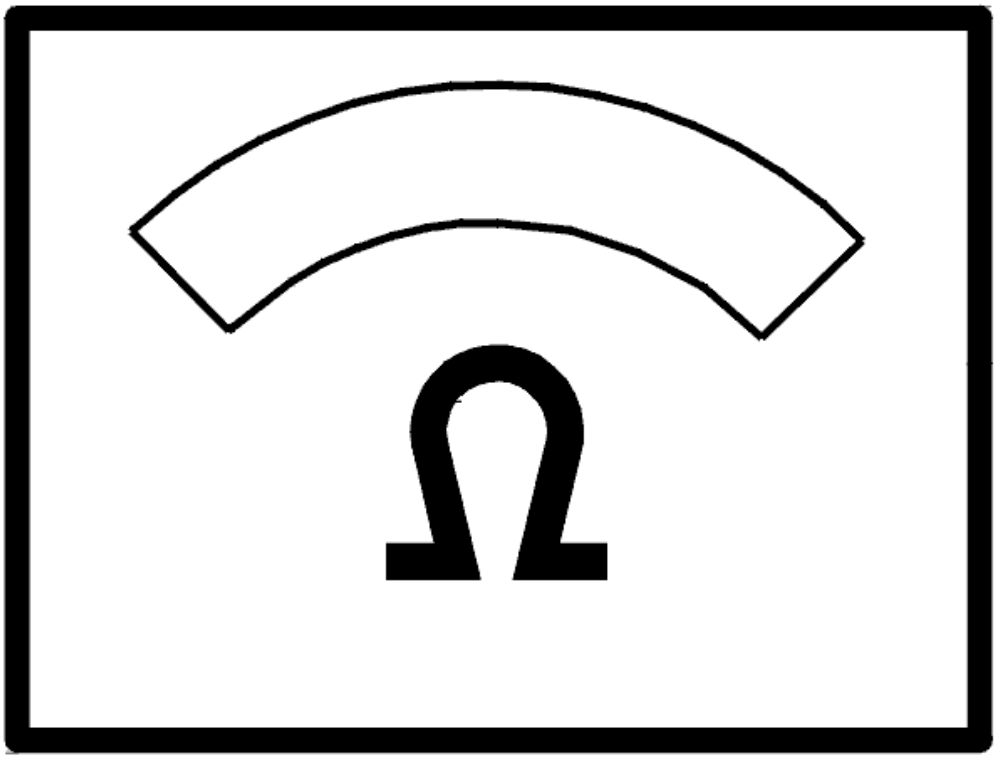

Fig. 112: Identifying Ohm Meter
Courtesy of VOLVO CARS CORPORATION

Is there a fault?

- **YES**

  OKAY: Troubleshooting has been completed.

- **NO**

Refer to **REPLACING THE COMPONENT**

REPLACING THE COMPONENT

Replace lock unit as described in, see **REPLACING THE SWITCH FOR THE LOCK UNIT / CARGO COMPARTMENT LIGHTING** .

Is there a fault?

- **YES**

  OKAY: Troubleshooting has been completed.

- **NO**

  Refer to **REPLACING THE COMPONENT**

REPLACING THE COMPONENT

Replace control unit.

- For -2004, see: **RELAY/FUSE BOX CARGO COMPARTMENT/REAR ELECTRONIC MODULE (REM), REPLACING**
- For 2005-, see: **REAR ELECTRONIC MODULE (REM), REPLACING** .

CHECKING THE REAR LEFT DOOR

CHECK

Is the lock to the other rear door not working?

- **YES**

  Refer to **CHECKING THE FUSE**

- **NO**

  Refer to **REPLACING THE COMPONENT**

REPLACING THE COMPONENT

Replace the relays for locking (2/111) and unlocking (2/112) in the cargo compartment relay/fuse box. At the same time check relay socket contacts for contact resistance and oxidation as described in, see **CONTACT RESISTANCE AND OXIDATION** .

Additional information

- To access relay/fuse box in the cargo compartment:

- For -2004, see: **RELAY/FUSE BOX CARGO COMPARTMENT/REAR ELECTRONIC MODULE (REM), REPLACING**
- For 2005-, see: **REAR ELECTRONIC MODULE (REM), REPLACING** .

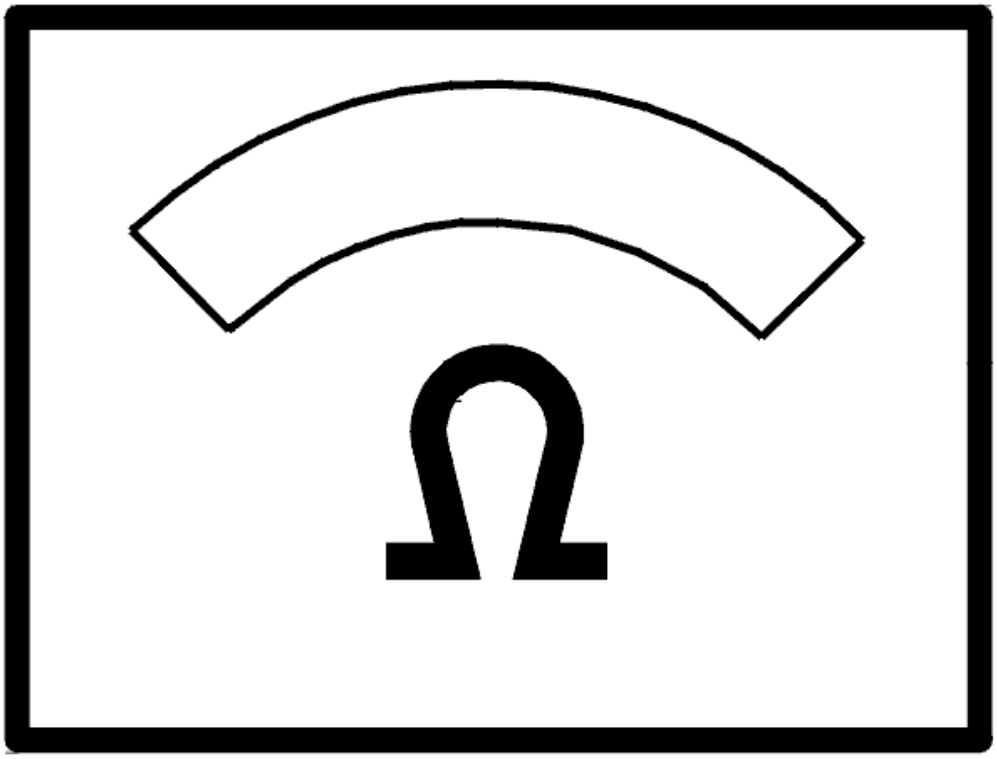

Fig. 113: Identifying Ohm Meter
Courtesy of VOLVO CARS CORPORATION

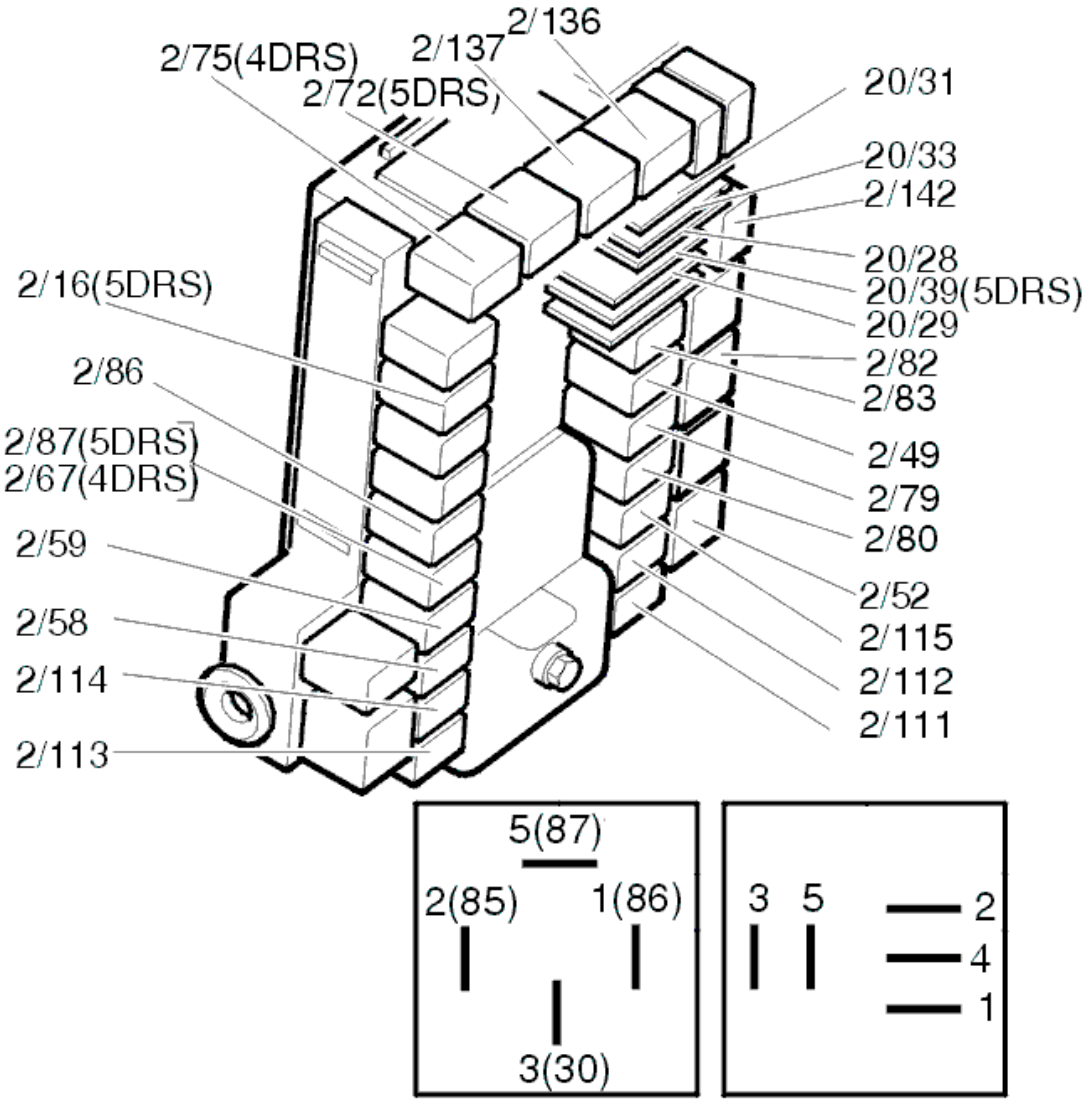

Fig. 114: Identifying Relays
Courtesy of VOLVO CARS CORPORATION

Is there a fault?

- **YES**

  OKAY: Troubleshooting has been completed.

- **NO**

  Refer to **CIRCUIT TEST**

CIRCUIT TEST

The fault is caused by an open circuit in one of the relay circuits or in the lock unit. To find out which circuit

contains the fault:

Disconnect the lock unit connector.

Check the contacts for contact resistance and oxidation as described in, see **CONTACT RESISTANCE AND OXIDATION** .

Check resistance between 4 and 6 on cable connector.

Additional information

- To access/replace the lock unit, see **LOCK MECHANISM REAR SIDE DOOR, REPLACING** .

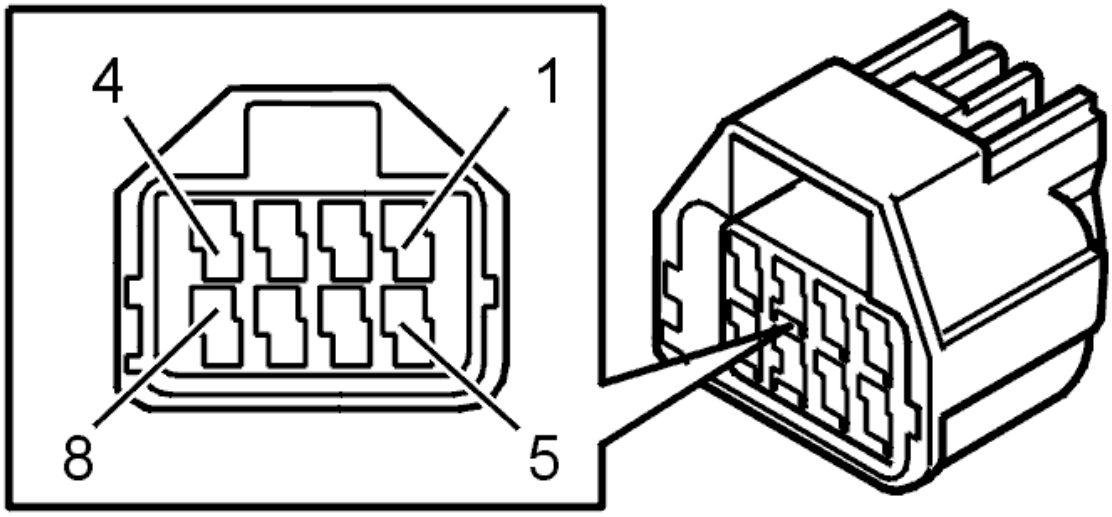

Fig. 115: Identifying Connector Terminals
Courtesy of VOLVO CARS CORPORATION

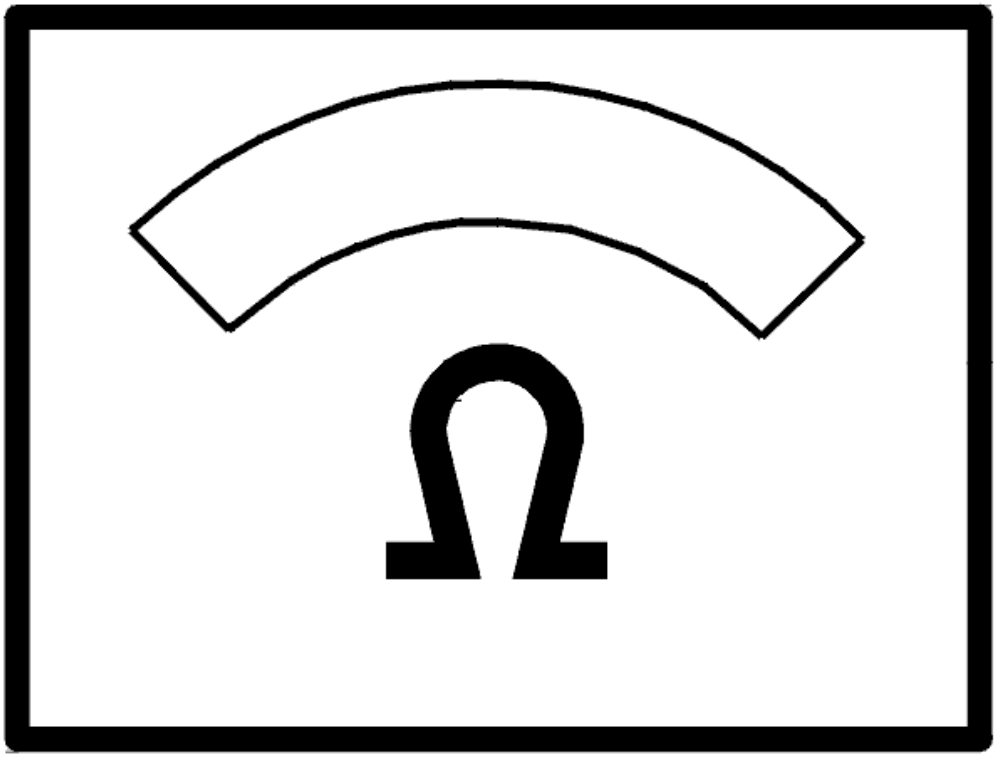

Fig. 116: Identifying Ohm Meter
Courtesy of VOLVO CARS CORPORATION

The ohmmeter should display 0 ohm.

- **OK**

  Refer to **CHECKING THE COMPONENTS**

- **NOT OK**

  Refer to **CIRCUIT TEST, CONTINUED**

CIRCUIT TEST, CONTINUED

Check the resistance between 4 and ground and between 6 and ground on the cable connector.

The ohmmeter should display 0 ohm.

1. The ohmmeter shows a fault between 4 and ground

   Refer to **CHECKING THE UNLOCKING RELAY CIRCUIT**

2. The ohmmeter shows a fault between 6 and ground.

   Refer to **CHECKING THE LOCKING RELAY CIRCUIT**

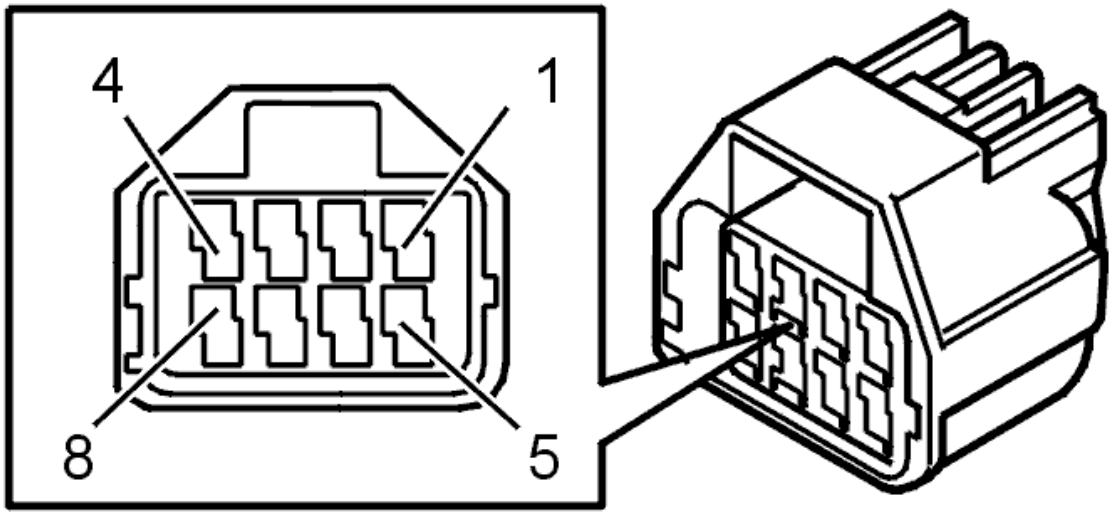

Fig. 117: Identifying Connector Terminals
Courtesy of VOLVO CARS CORPORATION

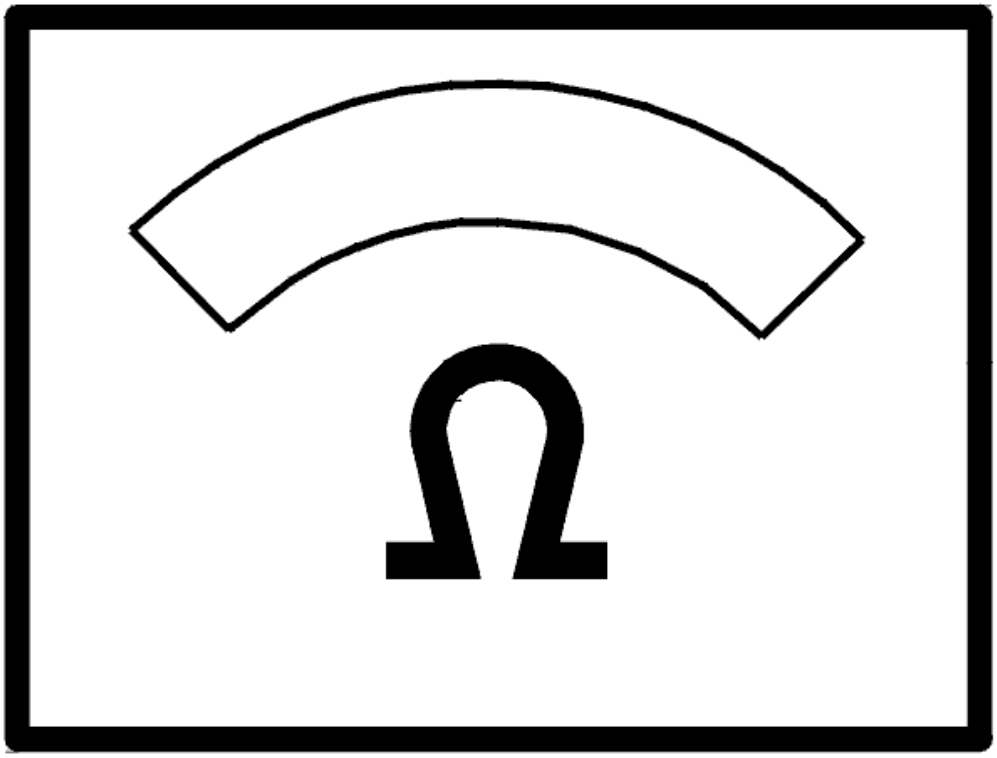

Fig. 118: Identifying Ohm Meter
Courtesy of VOLVO CARS CORPORATION

CHECKING THE LOCKING RELAY CIRCUIT

Remove the locking relay (2/111).

Check the wire between 4 in the cable connector and 3 in the relay socket for an open circuit as described in, see **OPEN-CIRCUIT, PERMANENT FAULTS** .

If a fault is detected, check in particular the intermediate connector in the cable harness (2) for contact resistance and oxidation as described in, see **CONTACT RESISTANCE AND OXIDATION** .

Do the necessary corrective action.

If no fault is found, check the resistance between 4 in the relay socket and ground.

The ohmmeter should display 0 ohm.

If the resistance deviates, replace the rear electronic module (REM).

Additional information

- To access/replace rear electronic module (REM):
  - For -2004, see: **RELAY/FUSE BOX CARGO COMPARTMENT/REAR ELECTRONIC MODULE (REM), REPLACING**
  - For 2005-, see: **REAR ELECTRONIC MODULE (REM), REPLACING** .

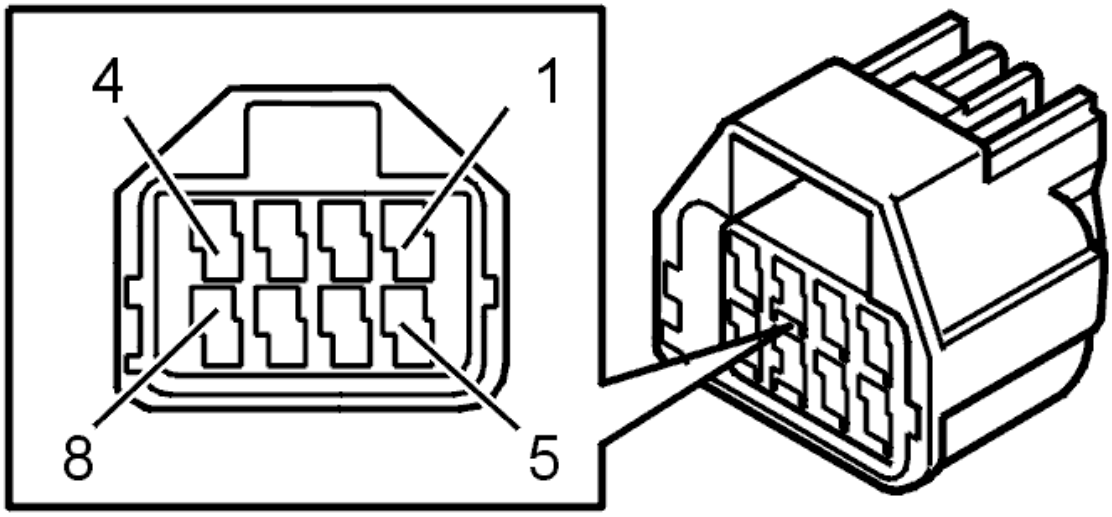

Fig. 119: Identifying Connector Terminals
Courtesy of VOLVO CARS CORPORATION

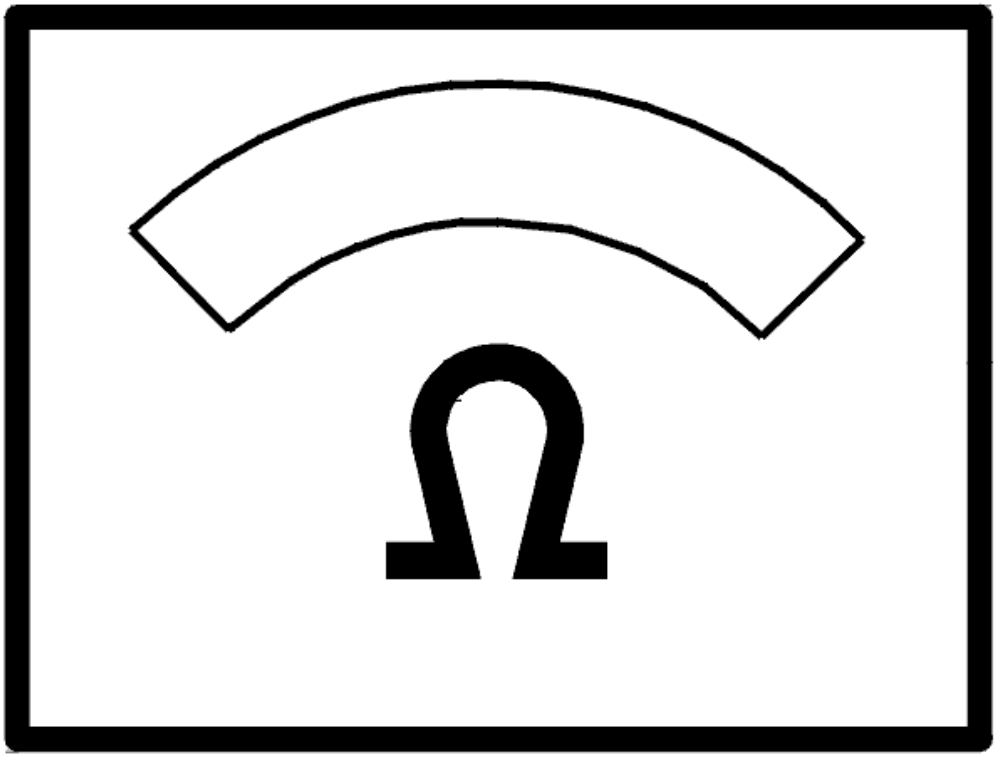

Fig. 120: Identifying Ohm Meter
Courtesy of VOLVO CARS CORPORATION

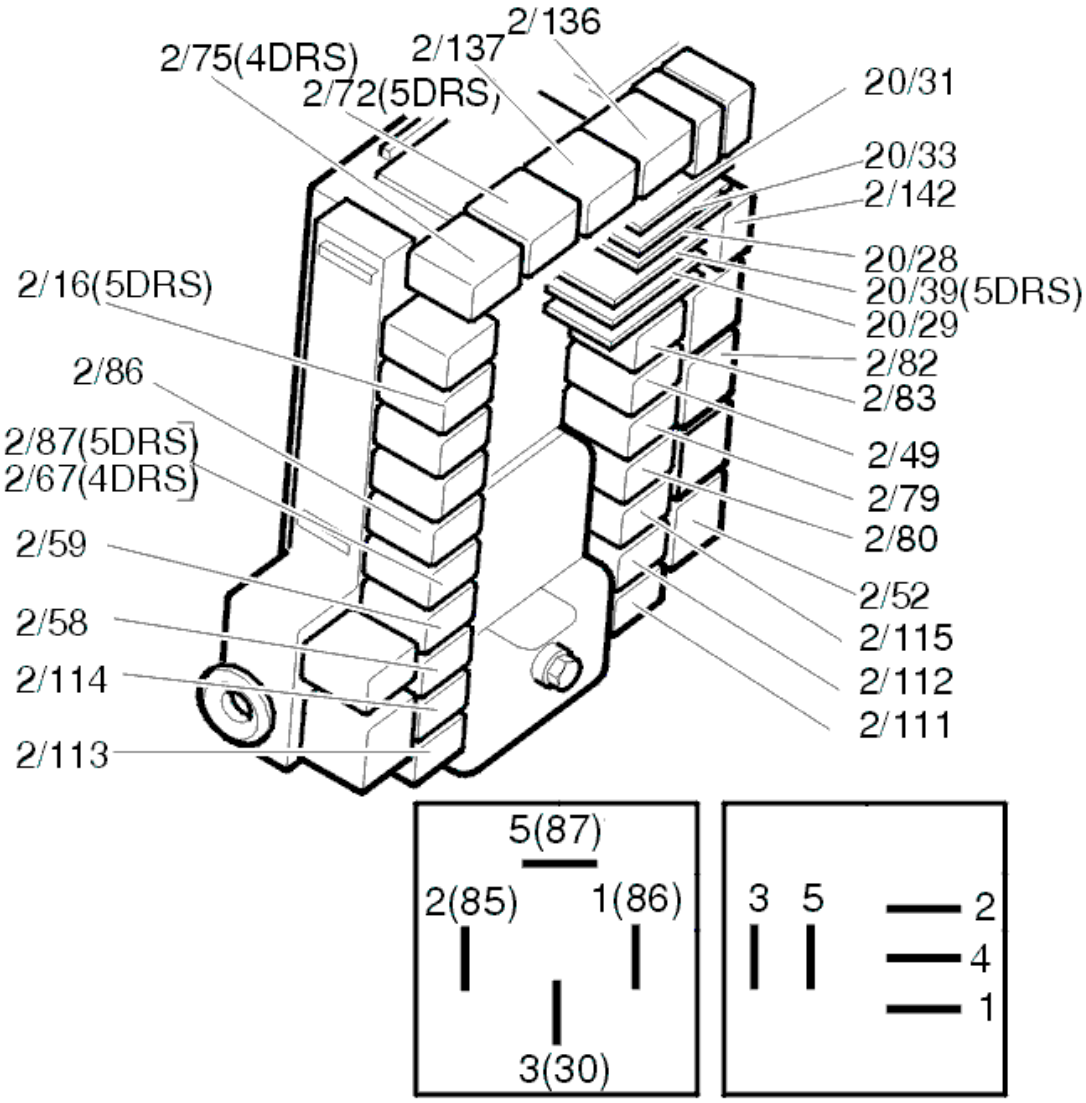

Fig. 121: Identifying Relays
Courtesy of VOLVO CARS CORPORATION

CHECKING THE UNLOCKING RELAY CIRCUIT

Remove the unlocking relay (2/112).

Check the wire between 6 in the cable connector and 3 in the relay socket for an open circuit as described in, see **OPEN-CIRCUIT, PERMANENT FAULTS** .

If a fault is detected, check in particular the intermediate connector in the cable harness (2) for contact resistance and oxidation as described in, see **CONTACT RESISTANCE AND OXIDATION** .

Do the necessary corrective action.

If no fault is found, check the resistance between 4 in the relay socket and ground.

The ohmmeter should display 0 ohm.

If the resistance deviates, replace the rear electronic module (REM).

Additional information

- To access/replace rear electronic module (REM):
  - For -2004, see: **RELAY/FUSE BOX CARGO COMPARTMENT/REAR ELECTRONIC MODULE (REM), REPLACING**
  - For 2005-, see: **REAR ELECTRONIC MODULE (REM), REPLACING** .

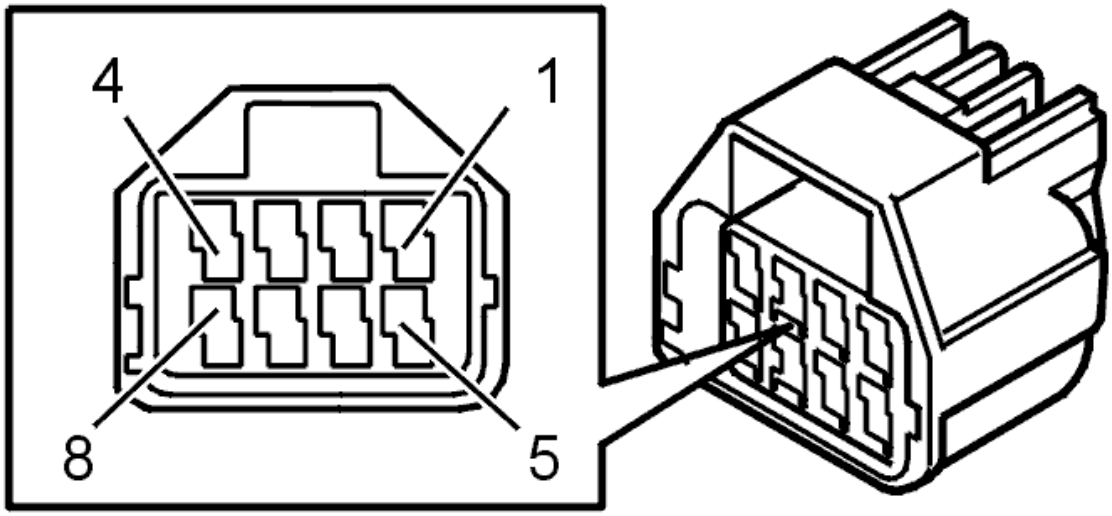

Fig. 122: Identifying Connector Terminals
Courtesy of VOLVO CARS CORPORATION

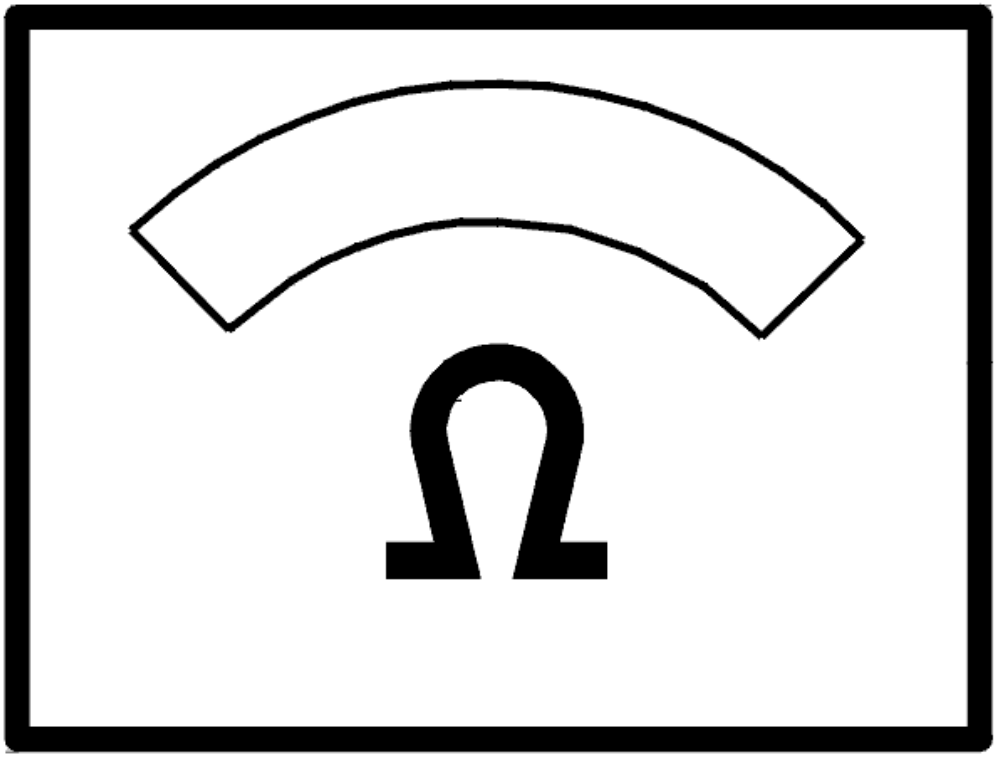

Fig. 123: Identifying Ohm Meter
Courtesy of VOLVO CARS CORPORATION

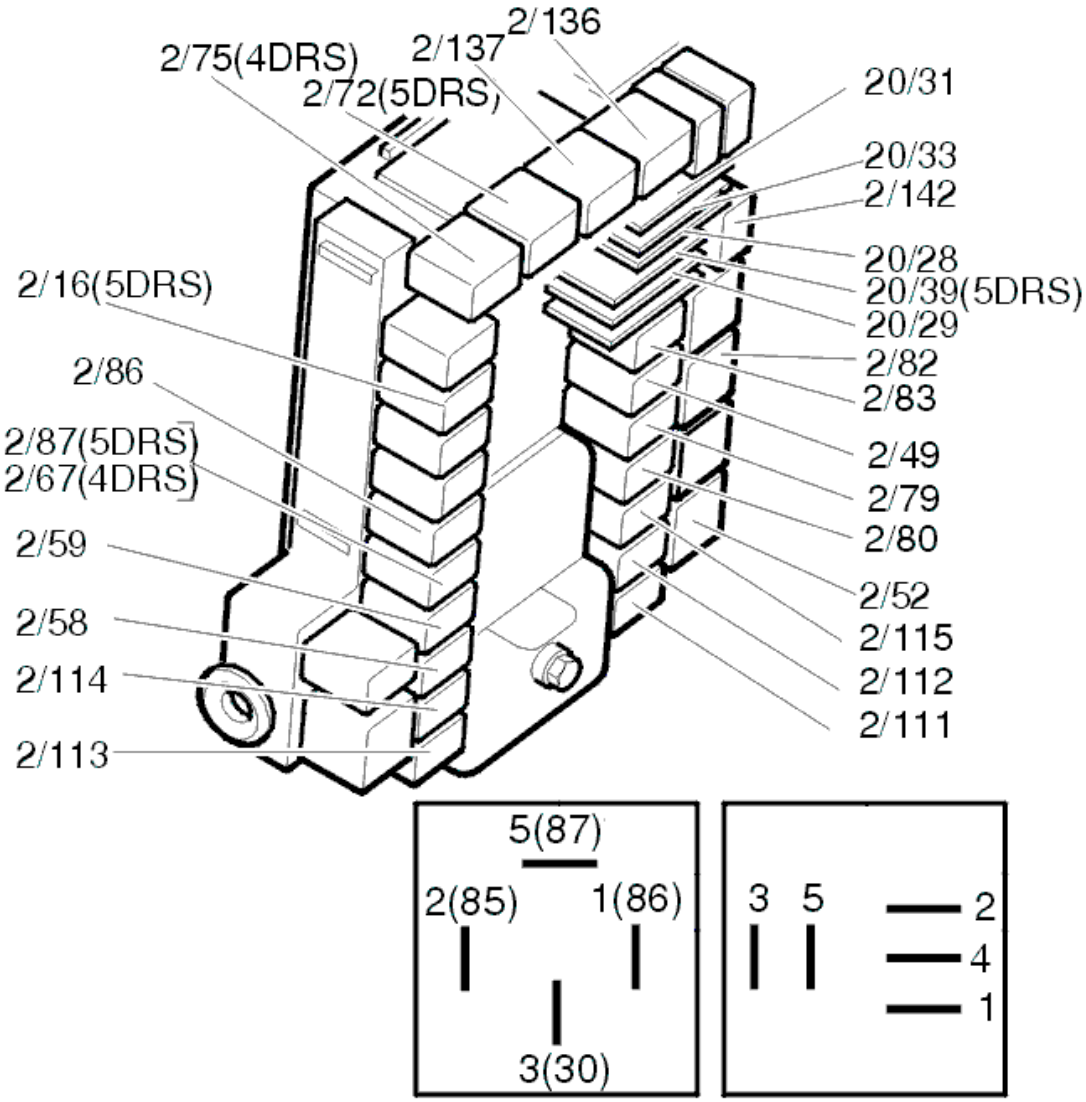

Fig. 124: Identifying Relays
Courtesy of VOLVO CARS CORPORATION

CHECKING THE COMPONENTS

Check the resistance between pin 4 and 6 in the lock unit chassis contact.

The ohmmeter should display 5 ohm.

If the resistance deviates, replace the lock unit.

Additional information

- To access/replace rear electronic module (REM):
  - For -2004, see: **RELAY/FUSE BOX CARGO COMPARTMENT/REAR ELECTRONIC MODULE (REM), REPLACING**

- For 2005-, see: **REAR ELECTRONIC MODULE (REM), REPLACING** .
- To access/replace the lock unit, see **LOCK MECHANISM REAR SIDE DOOR, REPLACING**
- For information on signals and additional values, see **SIGNAL SPECIFICATION** .

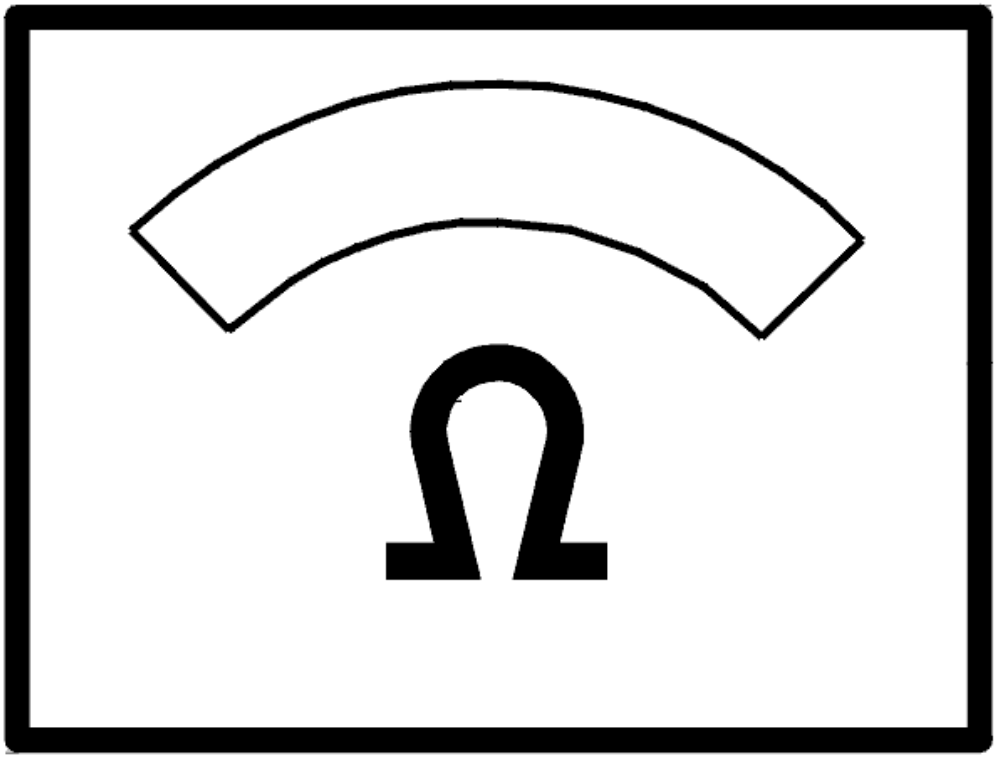

Fig. 125: Identifying Ohm Meter
Courtesy of VOLVO CARS CORPORATION

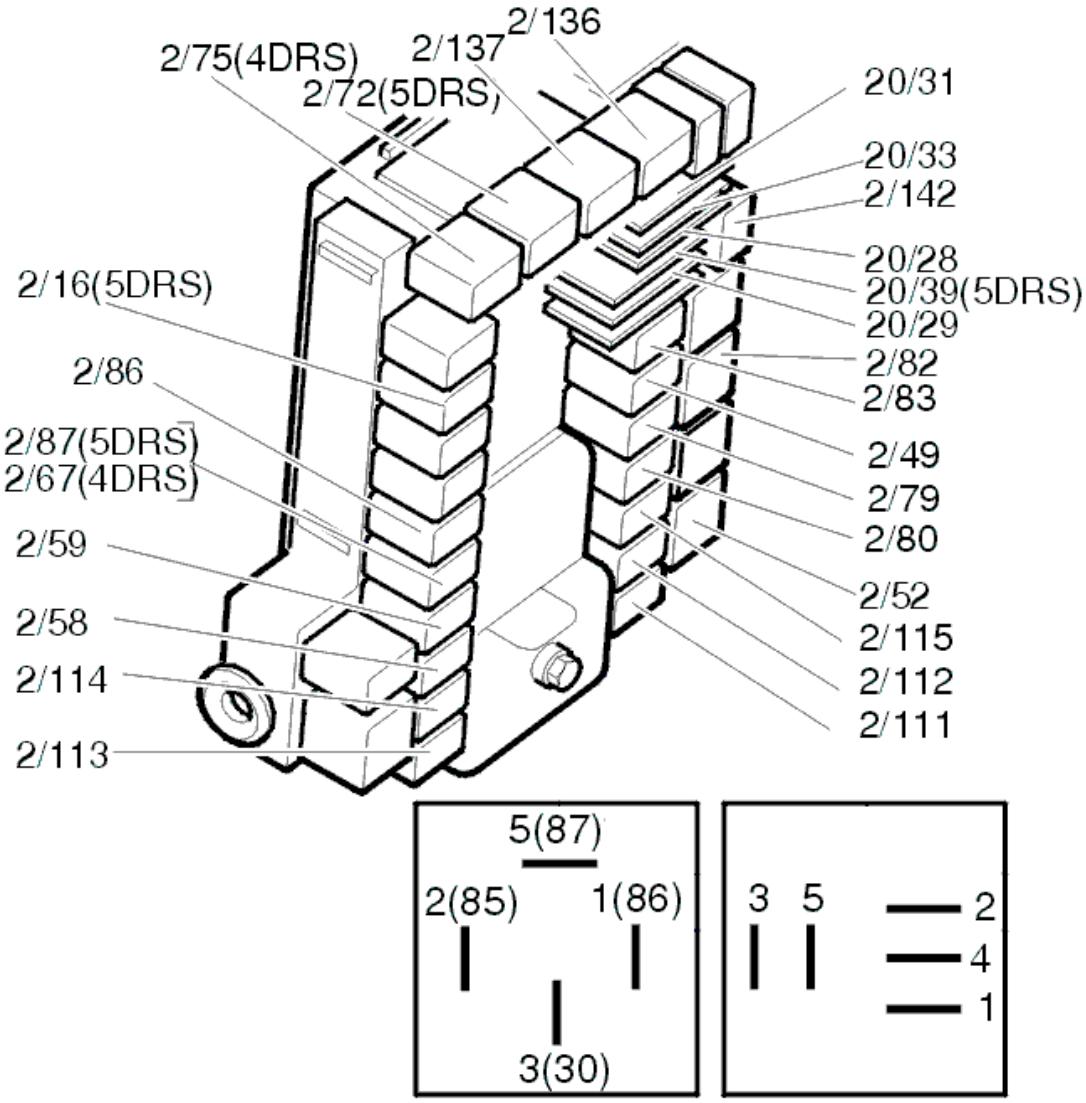

Fig. 126: Identifying Relays
Courtesy of VOLVO CARS CORPORATION

Is there a fault?

- **YES**

  OKAY: Troubleshooting has been completed.

- **NO**

  Refer to **CHECKING THE RELAY SUPPLY**

CHECKING THE RELAY SUPPLY

Remove the locking relay (2/111).

Measure the voltage between 5 in the relay socket and ground.

The voltmeter should display battery voltage.

HINT: If the value is OK but the fault still remains, connect the contacts to the lock module and link between 3 and 5 in the relay socket to force-feed the lock motor while continuing to test.

Additional information

- To access/replace rear electronic module (REM):
  - For -2004, see: **RELAY/FUSE BOX CARGO COMPARTMENT/REAR ELECTRONIC MODULE (REM), REPLACING**
  - For 2005-, see: **REAR ELECTRONIC MODULE (REM), REPLACING** .

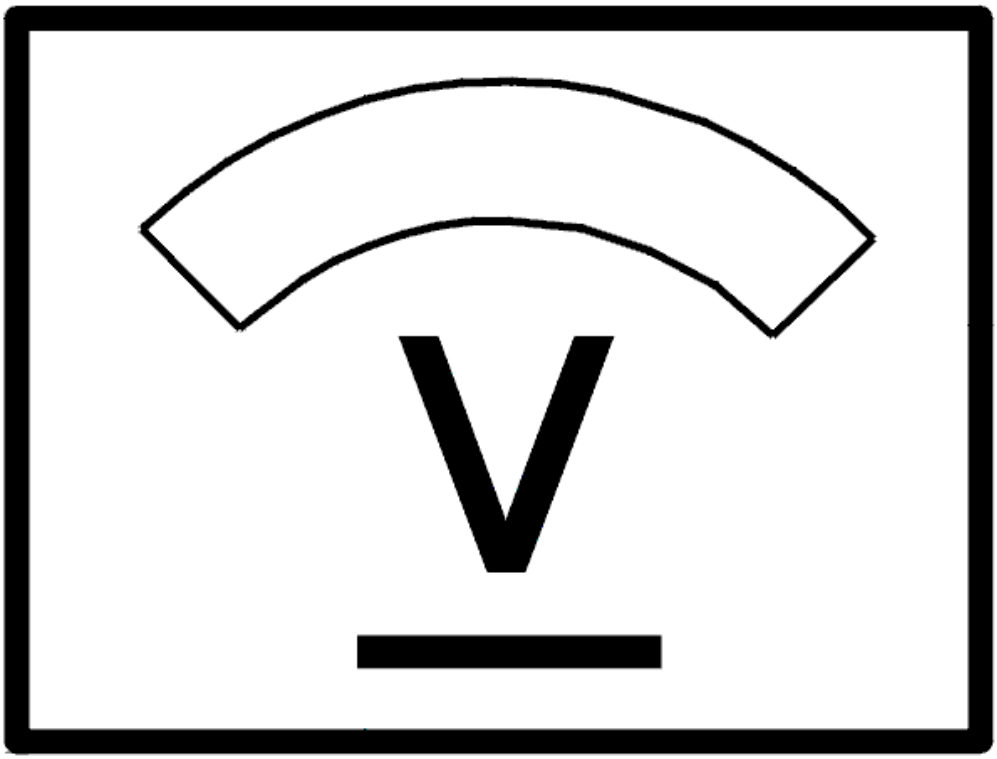

Fig. 127: Identifying Voltage Display

Courtesy of VOLVO CARS CORPORATION

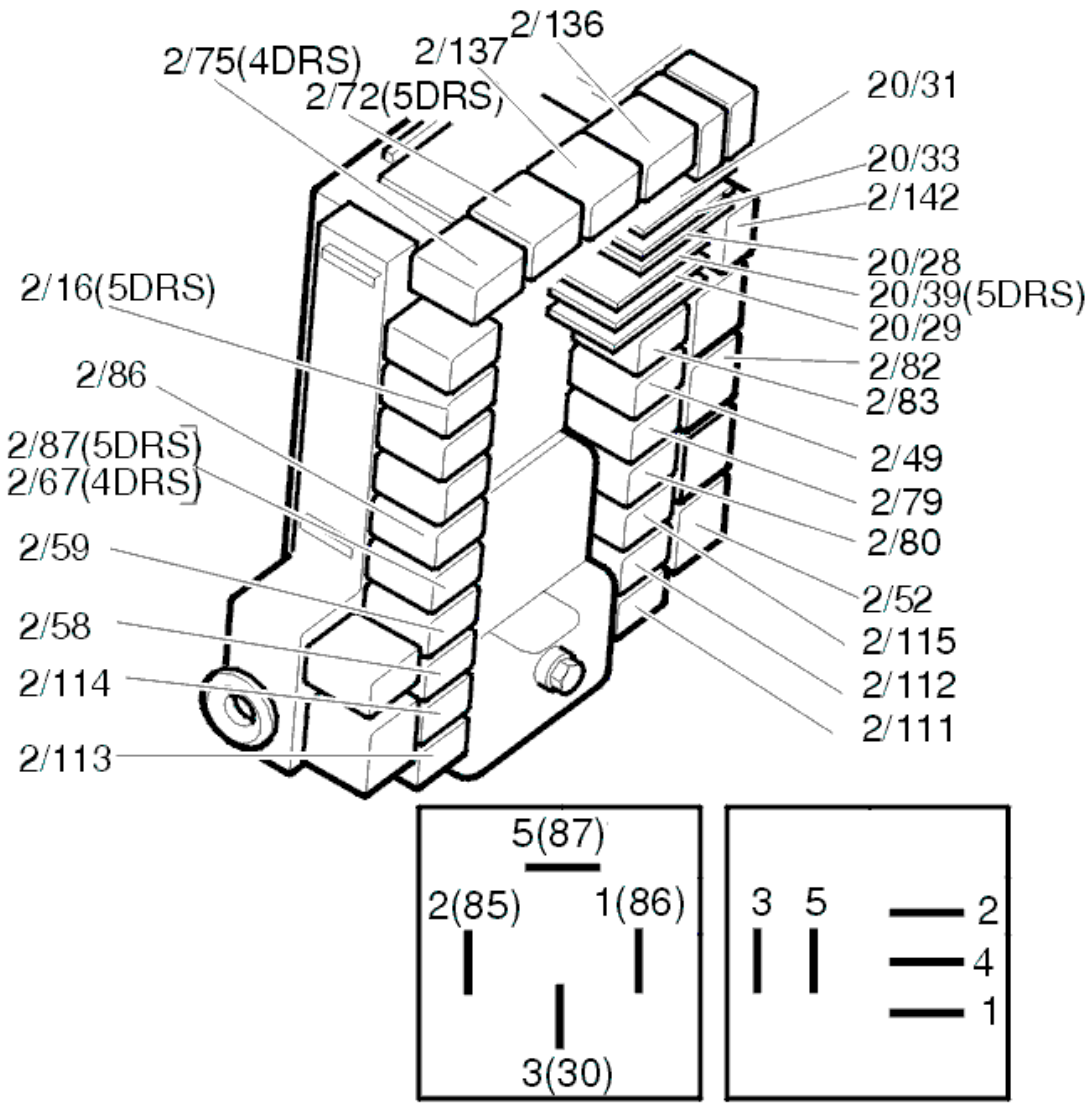

Fig. 128: Identifying Relays
Courtesy of VOLVO CARS CORPORATION

Does the voltmeter show the battery voltage?

- **YES**

  OKAY: Troubleshooting has been completed.

- **NO**

  Refer to **CHECKING THE FUSE**

CHECKING THE FUSE

Remove the fuse 11D/8 in cargo compartment fuse box.

Check that fuse 11D/8 is intact and check for contact resistance and oxidation as described in, see **CONTACT RESISTANCE AND OXIDATION** .

Additional information

- To access/replace rear electronic module (REM):
  - For -2004, see: **RELAY/FUSE BOX CARGO COMPARTMENT/REAR ELECTRONIC MODULE (REM), REPLACING**
  - For 2005-, see: **REAR ELECTRONIC MODULE (REM), REPLACING** .

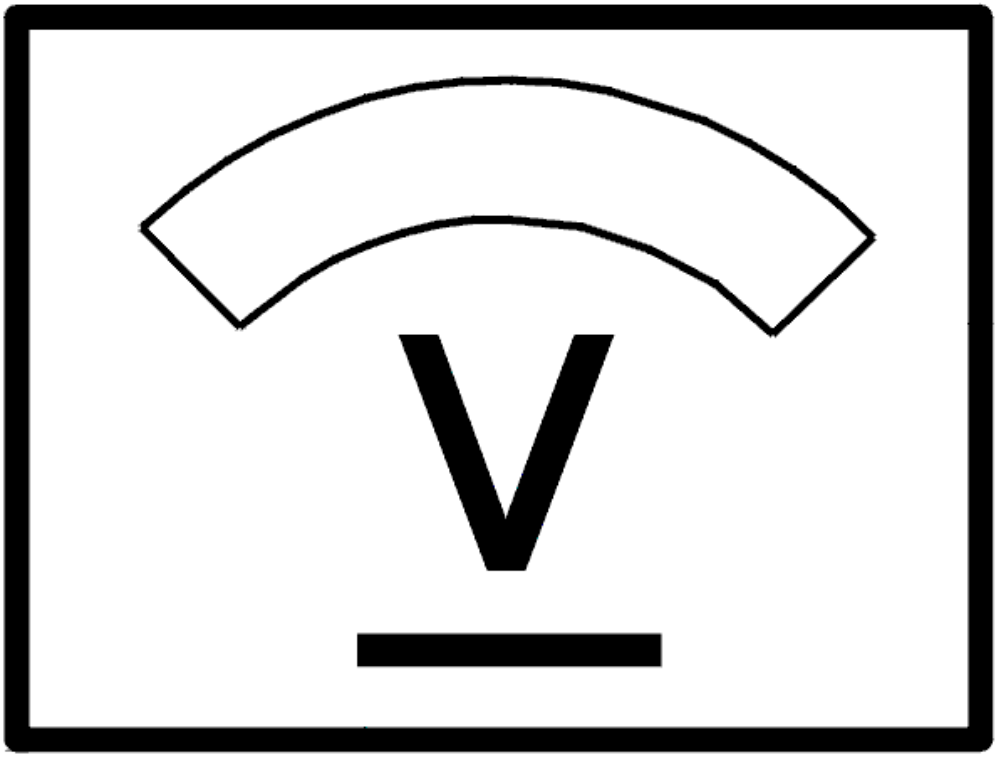

Fig. 129: Identifying Voltage Display
Courtesy of VOLVO CARS CORPORATION

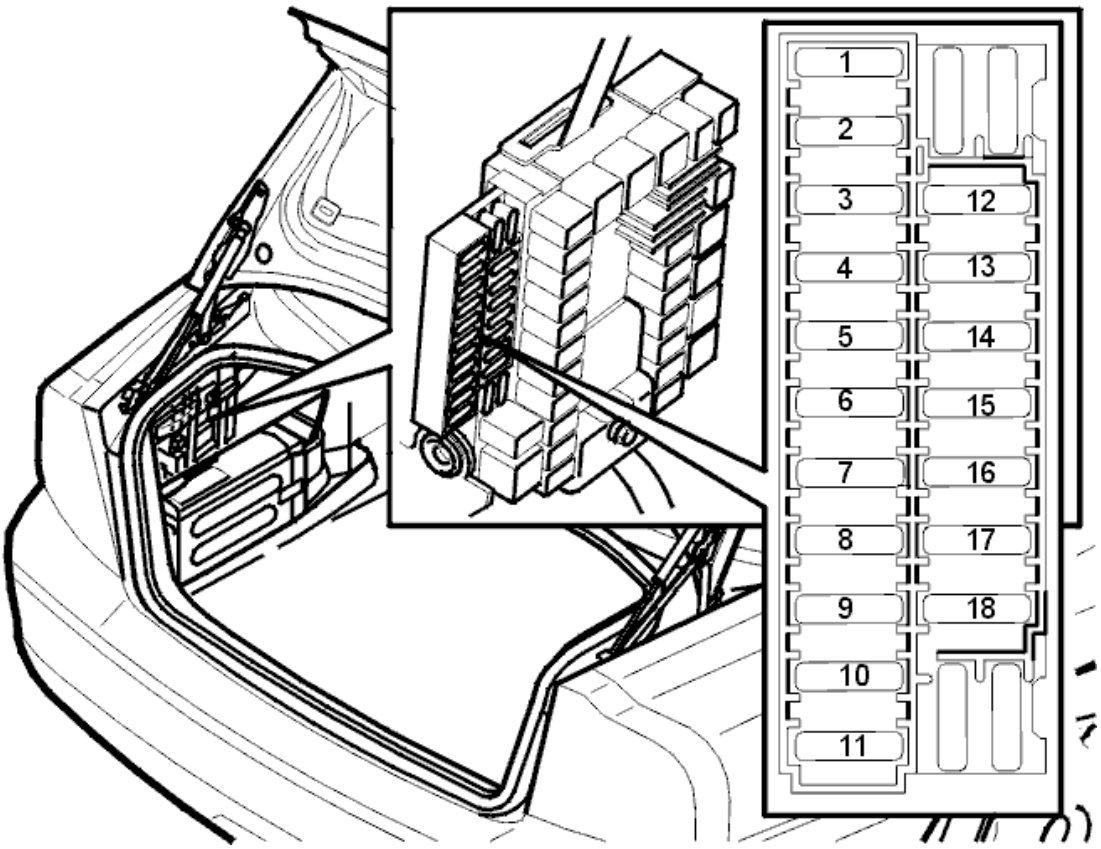

Fig. 130: Fuse Holder (Cargo Compartment)
Courtesy of VOLVO CARS CORPORATION

Is the fuse intact?

- **YES**

  Refer to **CHECKING FOR AN OPEN CIRCUIT**

- **NO**

  Refer to **CHECKING FOR A SHORT CIRCUIT**

CHECKING FOR AN OPEN CIRCUIT

Remove relay 2/111 in the rear electronic module (REM) and trouble-shoot the wire between the fuse holder secondary side (left) and 5 in the relay socket for an open circuit as described in, see **OPEN-CIRCUIT, PERMANENT FAULTS** .

Additional information

- To access/replace rear electronic module (REM):
  - For -2004, see: **RELAY/FUSE BOX CARGO COMPARTMENT/REAR ELECTRONIC MODULE (REM), REPLACING**

- For 2005-, see: **REAR ELECTRONIC MODULE (REM), REPLACING** .

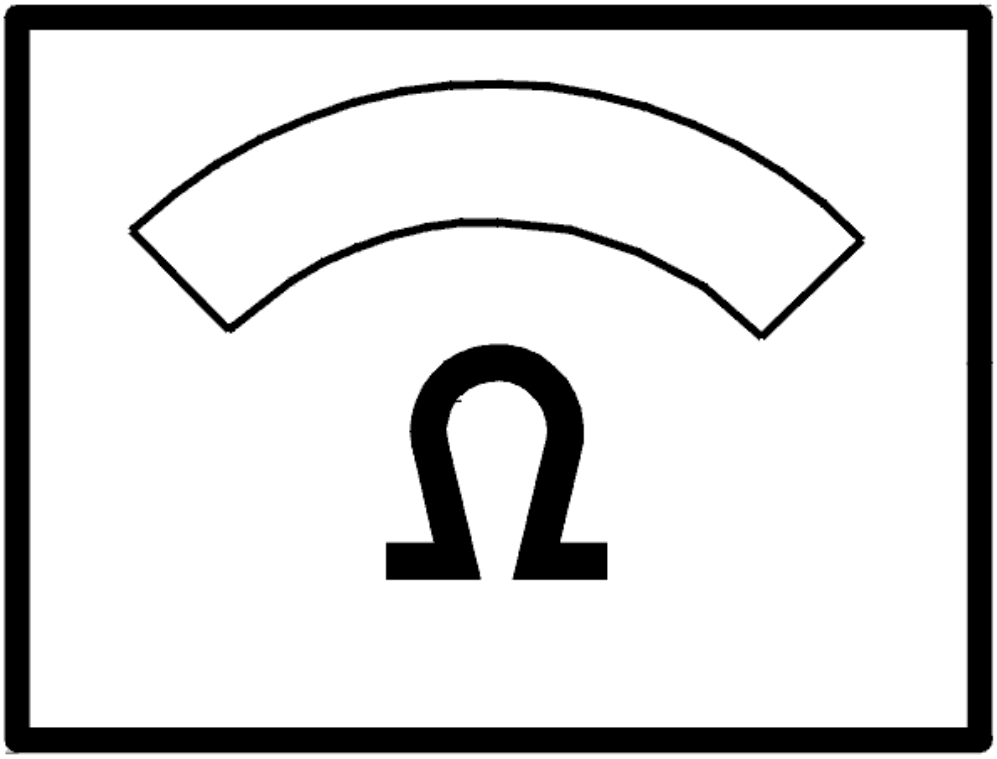

Fig. 131: Identifying Ohm Meter
Courtesy of VOLVO CARS CORPORATION

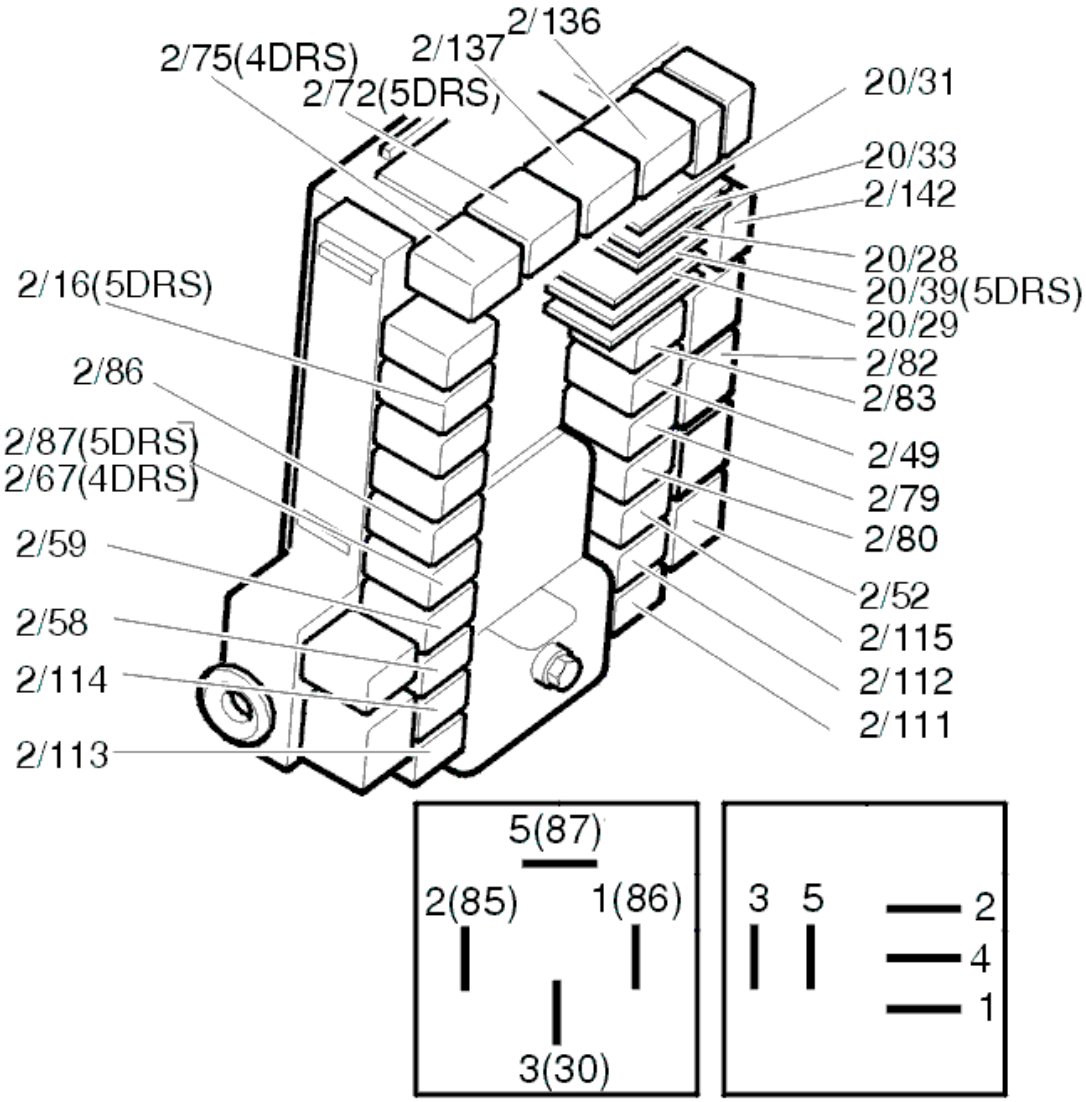

Fig. 132: Identifying Relays
Courtesy of VOLVO CARS CORPORATION

CHECKING FOR A SHORT CIRCUIT

Check the resistance between the fuse holder secondary side (left) and ground.

The ohmmeter should display infinite resistance.

If the value is correct, replace the fuse.

If the value deviates, trouble-shoot all the relay circuits involved for a short circuit to ground as described in, see **SHORT-CIRCUIT TO GROUND, PERMANENT FAULTS** .

HINT: Replace fuse.

HINT: If the fuse works straight away the fault is a short circuit on the relay supply wire.

HINT: If the fuse works when activating each relay the short circuit is on the component supply wire

HINT: The relay circuits involved belong to relays 2/111, 2/112, 2/113, 2/114, 2/115, 2/56, 2/59 and 2/67.

Additional information

- To access/replace rear electronic module (REM):
  - For -2004, see: **RELAY/FUSE BOX CARGO COMPARTMENT/REAR ELECTRONIC MODULE (REM), REPLACING**
  - For 2005-, see: **REAR ELECTRONIC MODULE (REM), REPLACING** .

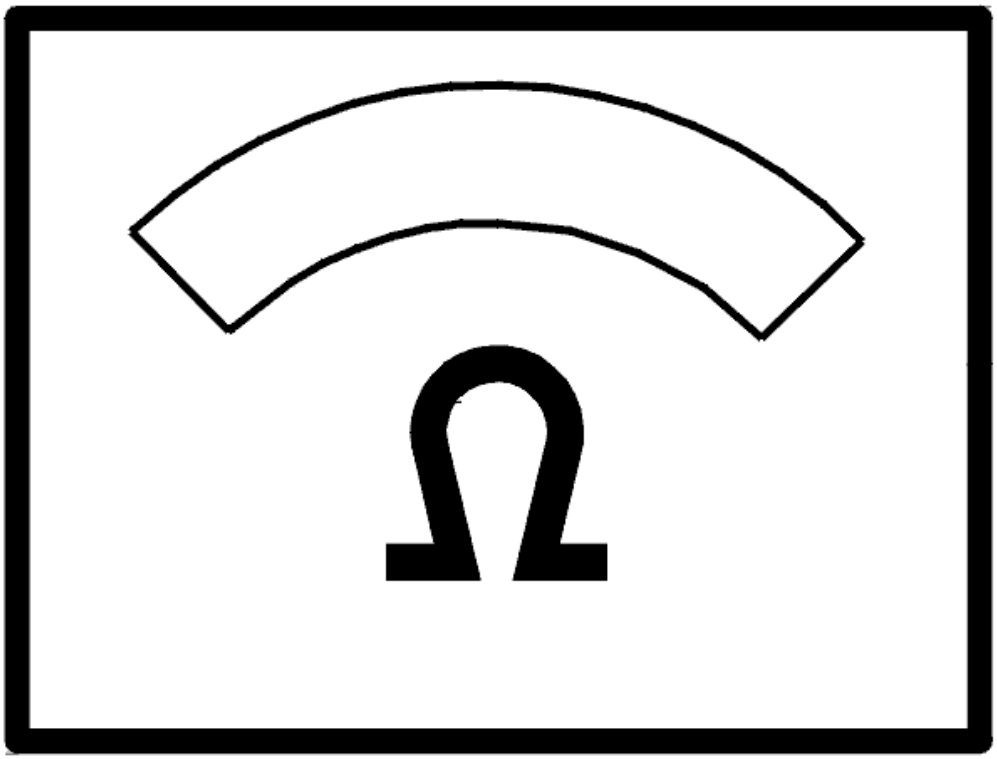

Fig. 133: Identifying Ohm Meter
Courtesy of VOLVO CARS CORPORATION

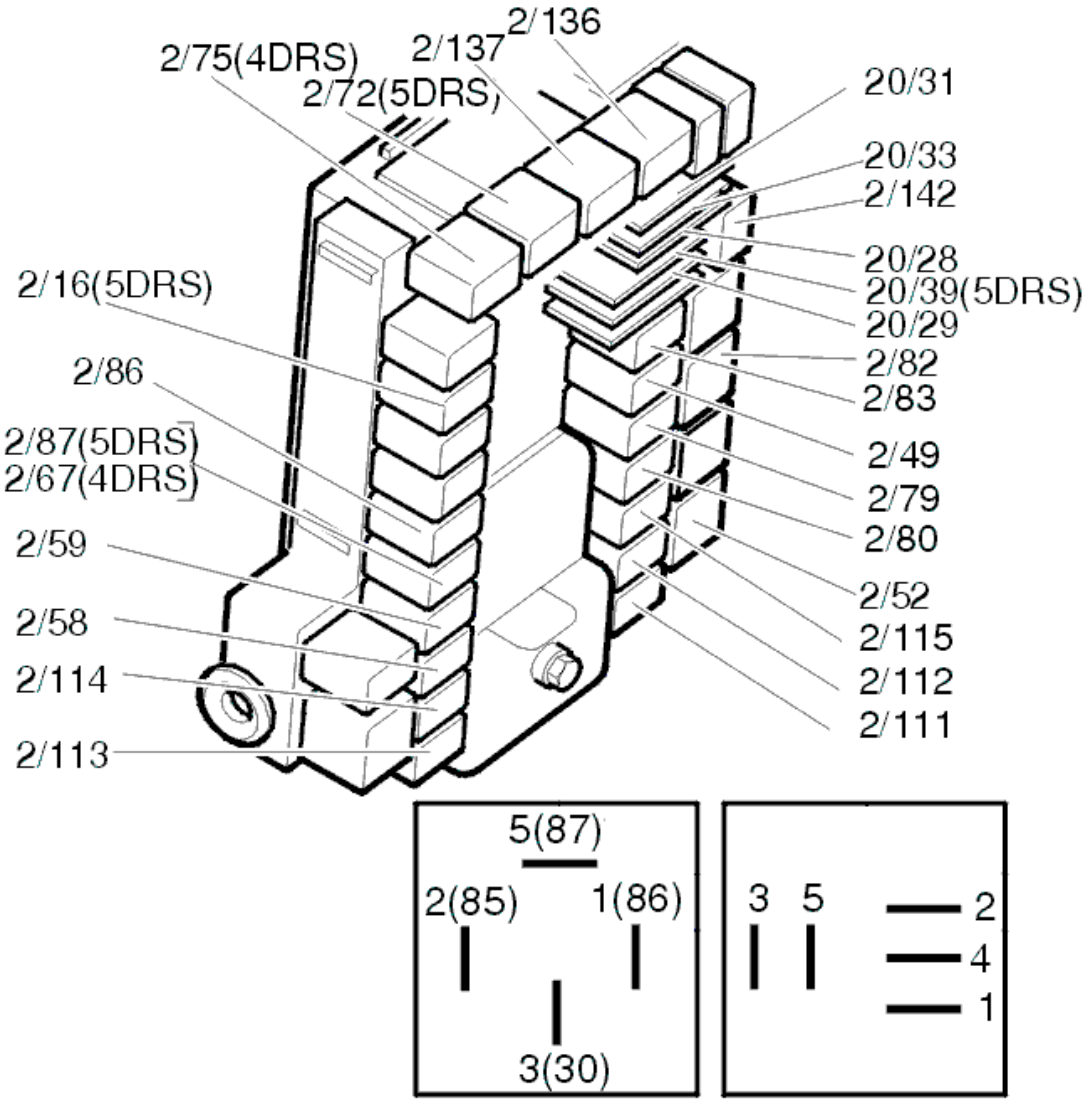

Fig. 134: Identifying Relays
Courtesy of VOLVO CARS CORPORATION

CHECKING THE REAR RIGHT DOOR

CHECK

Is the lock to the other rear door not working?

- **YES**

  Refer to **CHECKING THE FUSE**

- **NO**

  Refer to **REPLACING THE COMPONENT**

REPLACING THE COMPONENT

Replace the relays for locking (2/113) and unlocking (2/114) in the cargo compartment relay/fuse box. At the same time check relay socket contacts for contact resistance and oxidation as described in, see **CONTACT RESISTANCE AND OXIDATION** .

Additional information

- To access relay/fuse box in the cargo compartment:
  - For -2004, see: **RELAY/FUSE BOX CARGO COMPARTMENT/REAR ELECTRONIC MODULE (REM), REPLACING**
  - For 2005-, see: **REAR ELECTRONIC MODULE (REM), REPLACING** .

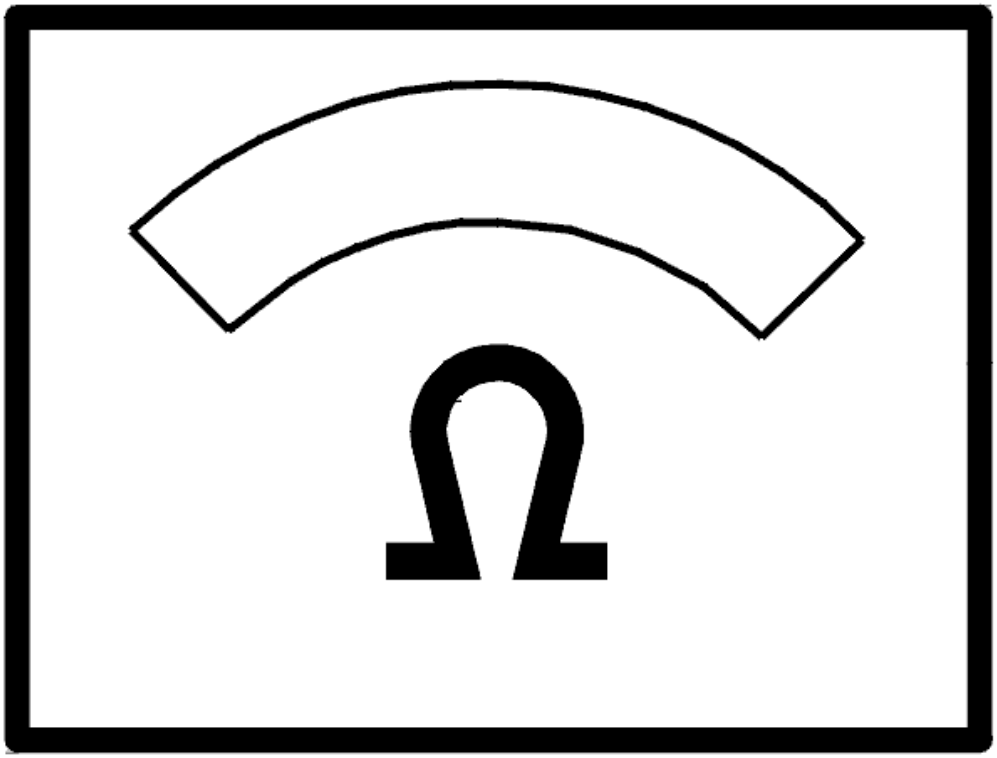

Fig. 135: Identifying Ohm Meter
Courtesy of VOLVO CARS CORPORATION

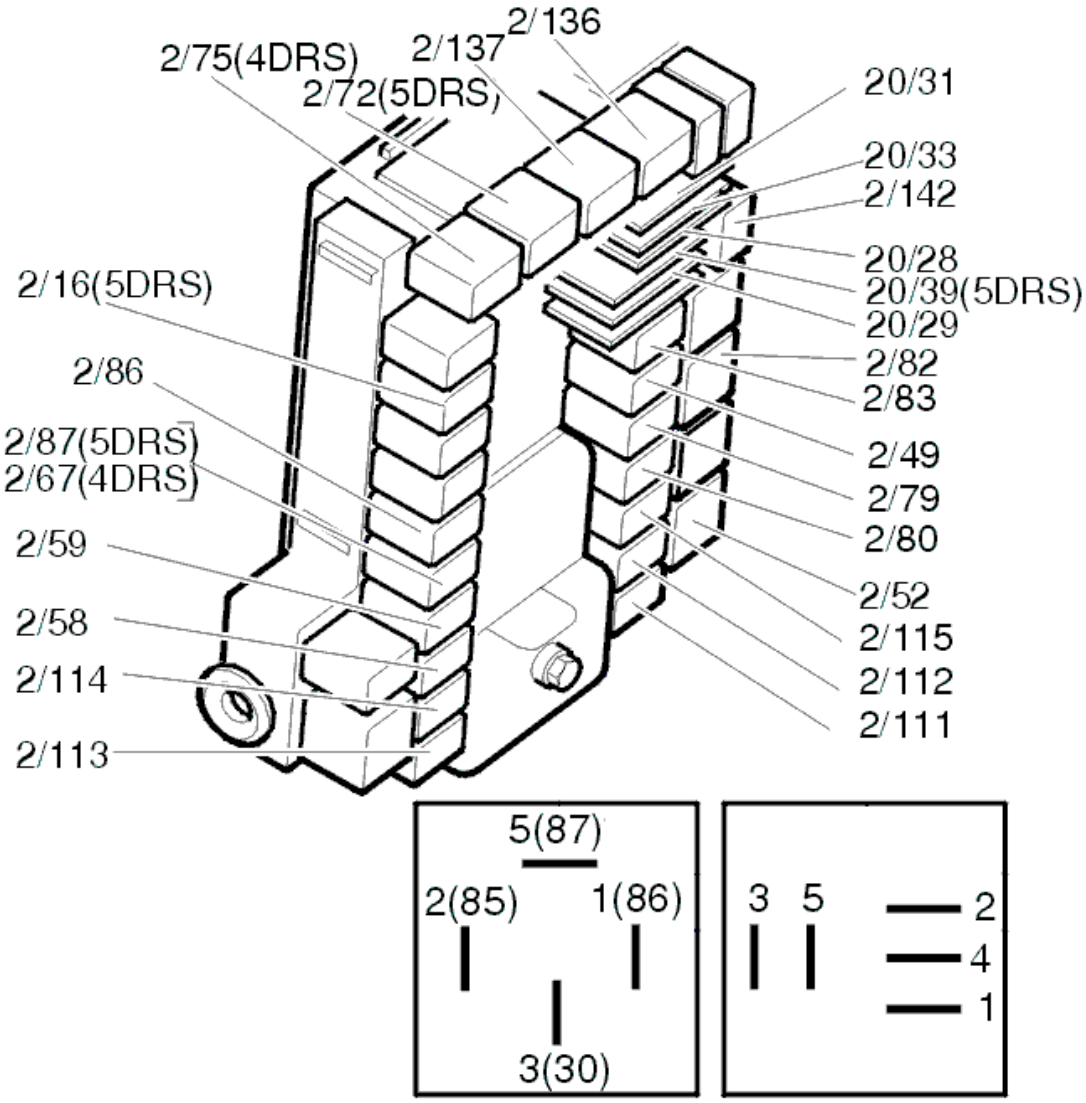

Fig. 136: Identifying Relays
Courtesy of VOLVO CARS CORPORATION

Is there a fault?

- **YES**

  OKAY: Troubleshooting has been completed.

- **NO**

  Refer to **CIRCUIT TEST**

CIRCUIT TEST

The fault is caused by an open circuit in one of the relay circuits or in the lock unit. To find out which circuit

contains the fault:

Disconnect the lock unit connector.

Check the contacts for contact resistance and oxidation as described in, see **CONTACT RESISTANCE AND OXIDATION** .

Check resistance between 4 and 6 on cable connector.

Additional information

- To access/replace the lock unit, see **LOCK MECHANISM REAR SIDE DOOR, REPLACING** .

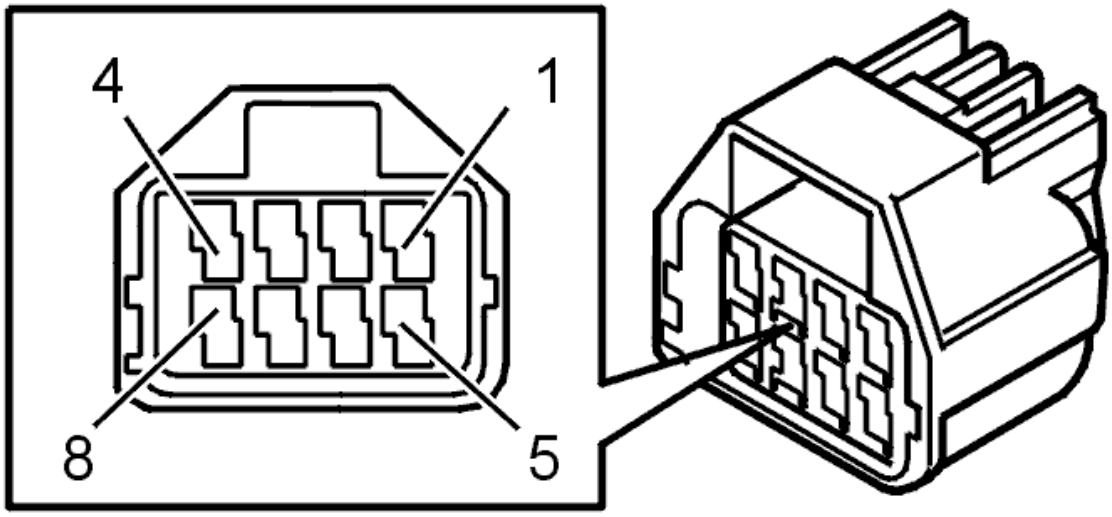

Fig. 137: Identifying Connector Terminals
Courtesy of VOLVO CARS CORPORATION

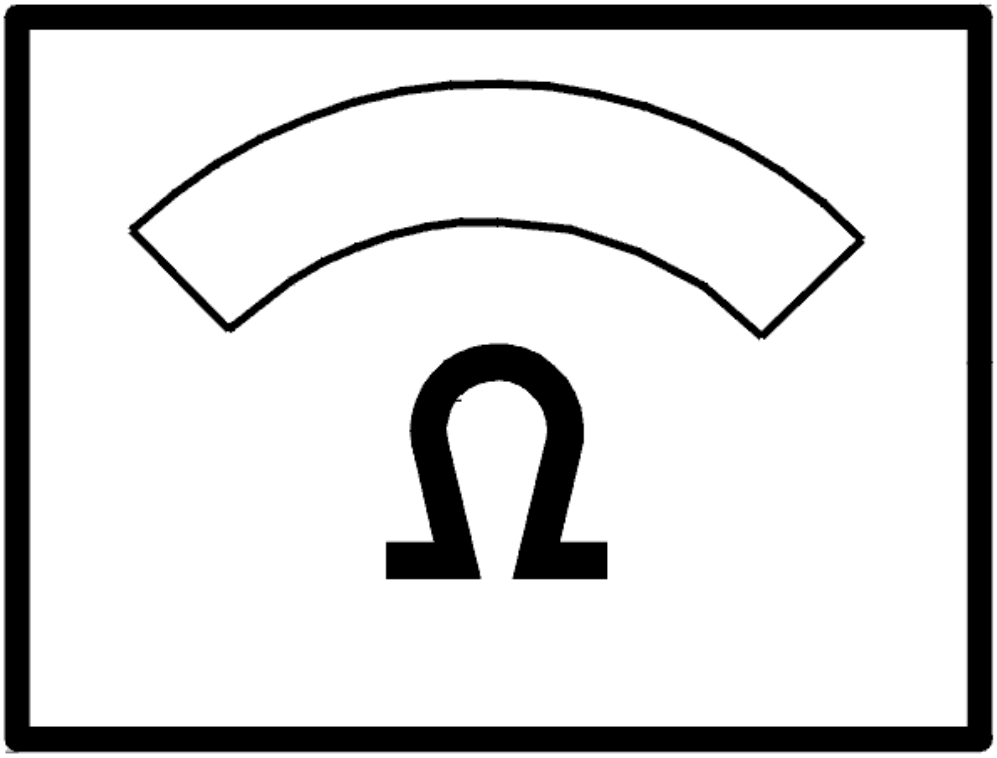

Fig. 138: Identifying Ohm Meter
Courtesy of VOLVO CARS CORPORATION

The ohmmeter should display 0 ohm.

- **OK**

  Refer to **CHECKING THE COMPONENTS**

- **NOT OK**

  Refer to **CIRCUIT TEST, CONTINUED**

CIRCUIT TEST, CONTINUED

Check the resistance between 4 and ground and between 6 and ground on the cable connector.

The ohmmeter should display 0 ohm.

1. The ohmmeter shows a fault between 4 and ground

   Refer to **CHECKING THE UNLOCKING RELAY CIRCUIT**

2. The ohmmeter shows a fault between 6 and ground.

   Refer to **CHECKING THE LOCKING RELAY CIRCUIT**

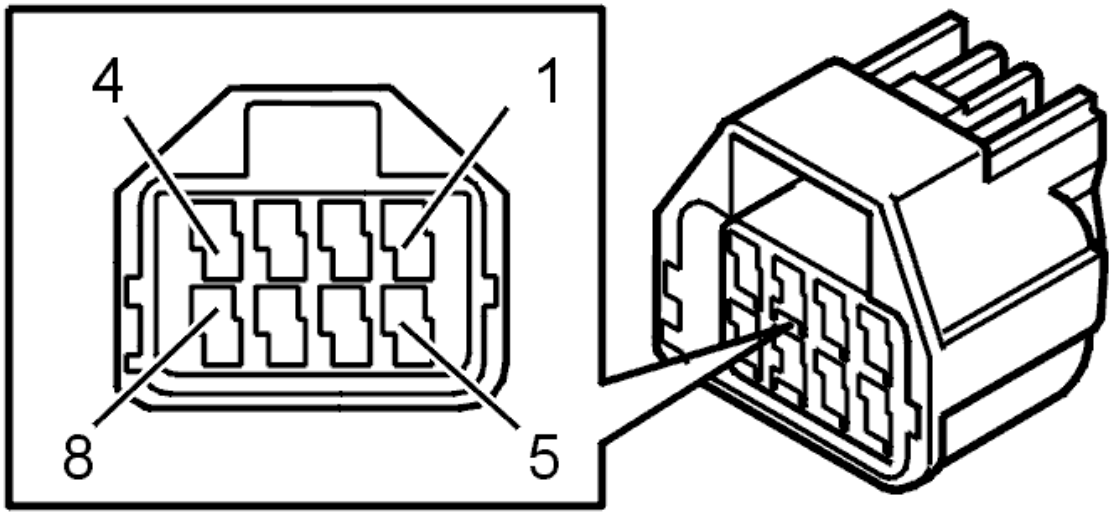

Fig. 139: Identifying Connector Terminals
Courtesy of VOLVO CARS CORPORATION

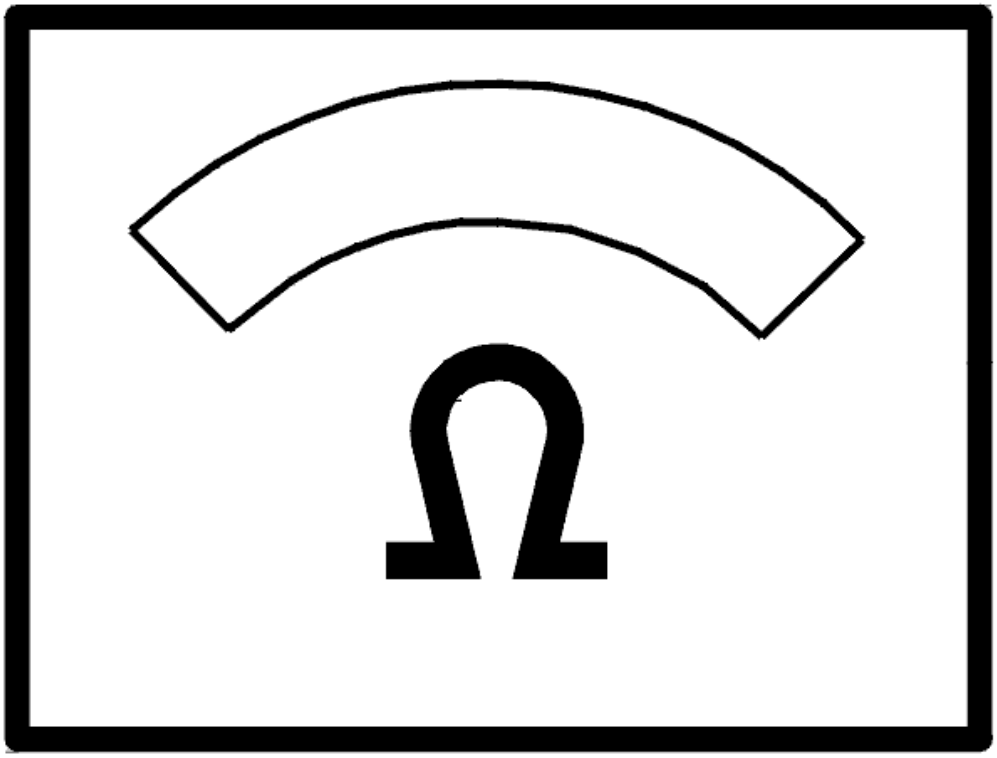

Fig. 140: Identifying Ohm Meter
Courtesy of VOLVO CARS CORPORATION

CHECKING THE LOCKING RELAY CIRCUIT

Remove the locking relay (2/113).

Check the wire between 4 in the cable connector and 3 in the relay socket for an open circuit as described in, see **OPEN-CIRCUIT, PERMANENT FAULTS** .

If a fault is detected, check in particular the intermediate connector in the cable harness (2) for contact resistance and oxidation as described in, see **CONTACT RESISTANCE AND OXIDATION** .

Do the necessary corrective action.

If no fault is found, check the resistance between 4 in the relay socket and ground.

The ohmmeter should display 0 ohm.

If the resistance deviates, replace the rear electronic module (REM).

Additional information

- To access/replace rear electronic module (REM):
  - For -2004, see: **RELAY/FUSE BOX CARGO COMPARTMENT/REAR ELECTRONIC MODULE (REM), REPLACING**
  - For 2005-, see: **REAR ELECTRONIC MODULE (REM), REPLACING** .

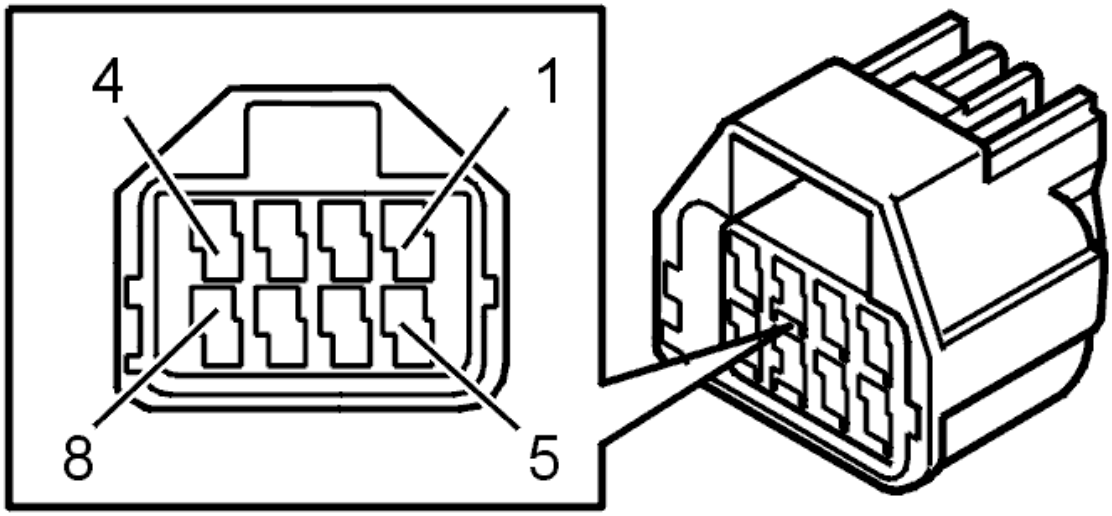

Fig. 141: Identifying Connector Terminals
Courtesy of VOLVO CARS CORPORATION

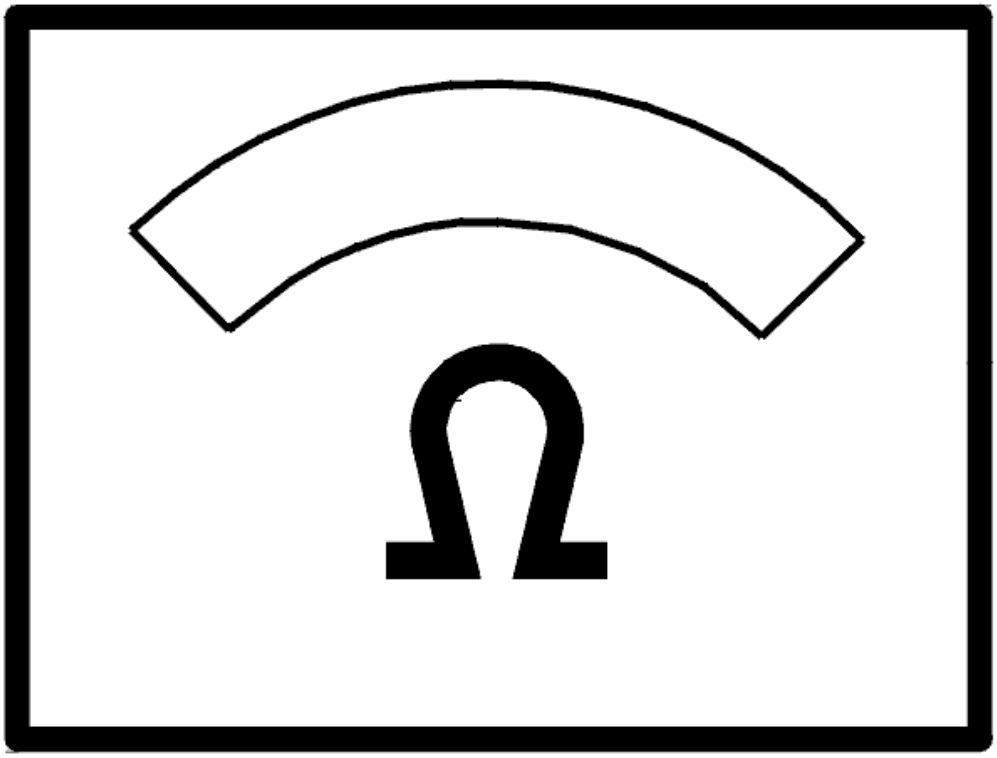

Fig. 142: Identifying Ohm Meter
Courtesy of VOLVO CARS CORPORATION

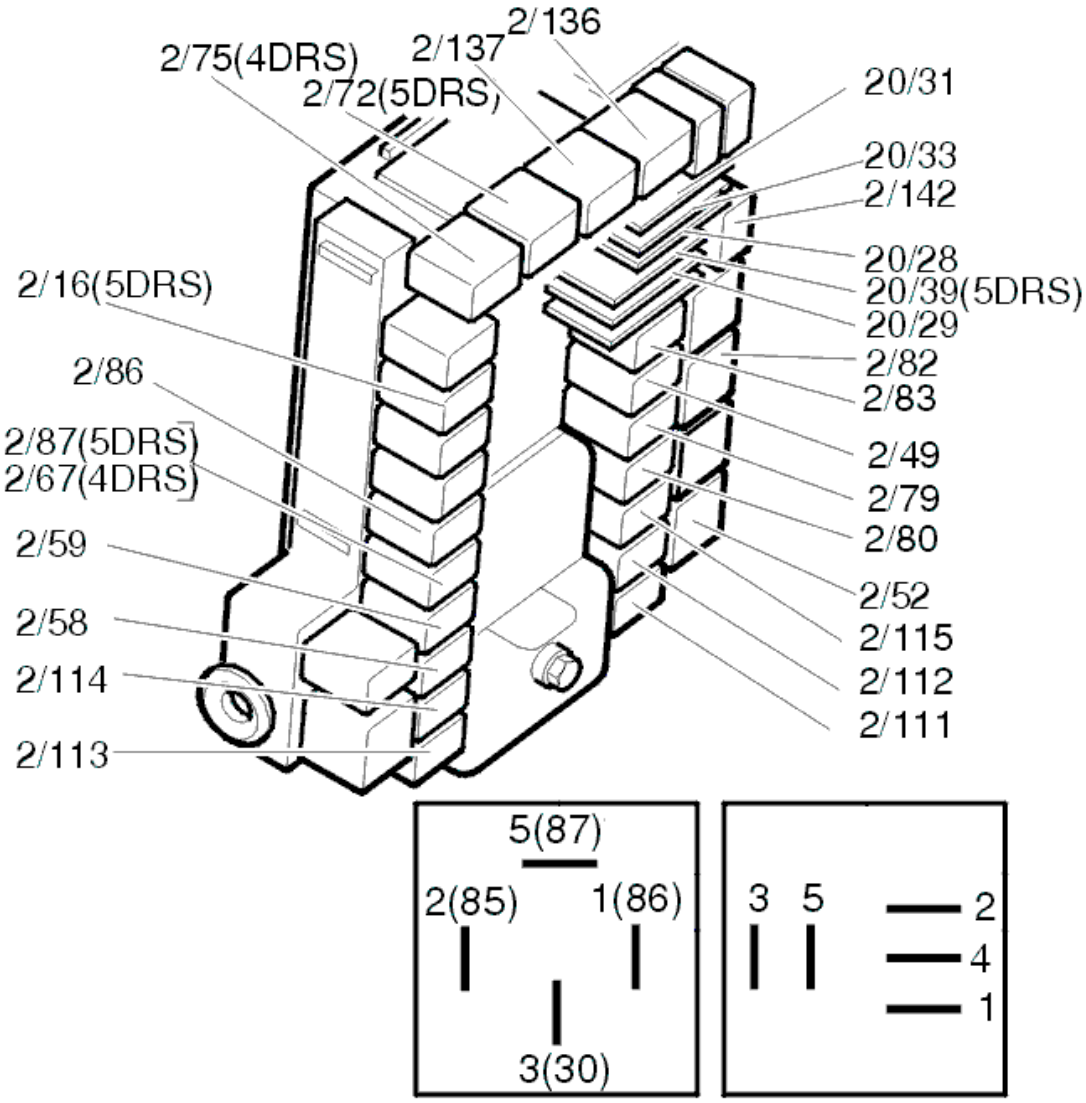

Fig. 143: Identifying Relays
Courtesy of VOLVO CARS CORPORATION

CHECKING THE UNLOCKING RELAY CIRCUIT

Remove the unlocking relay (2/114).

Check the wire between 6 in the cable connector and 3 in the relay socket for an open circuit as described in, see **OPEN-CIRCUIT, PERMANENT FAULTS** .

If a fault is detected, check in particular the intermediate connector in the cable harness (2) for contact resistance and oxidation as described in, see **CONTACT RESISTANCE AND OXIDATION** .

Do the necessary corrective action.

If no fault is found, check the resistance between 4 in the relay socket and ground.

The ohmmeter should display 0 ohm.

If the resistance deviates, replace the rear electronic module (REM).

Additional information

- To access/replace rear electronic module (REM):
  - For -2004, see: **RELAY/FUSE BOX CARGO COMPARTMENT/REAR ELECTRONIC MODULE (REM), REPLACING**
  - For 2005-, see: **REAR ELECTRONIC MODULE (REM), REPLACING** .

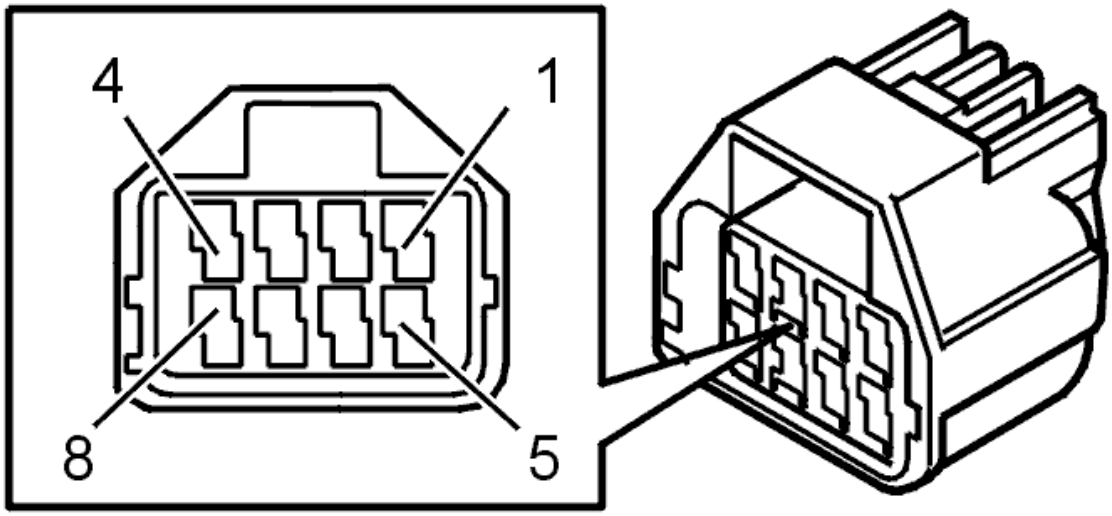

Fig. 144: Identifying Connector Terminals
Courtesy of VOLVO CARS CORPORATION

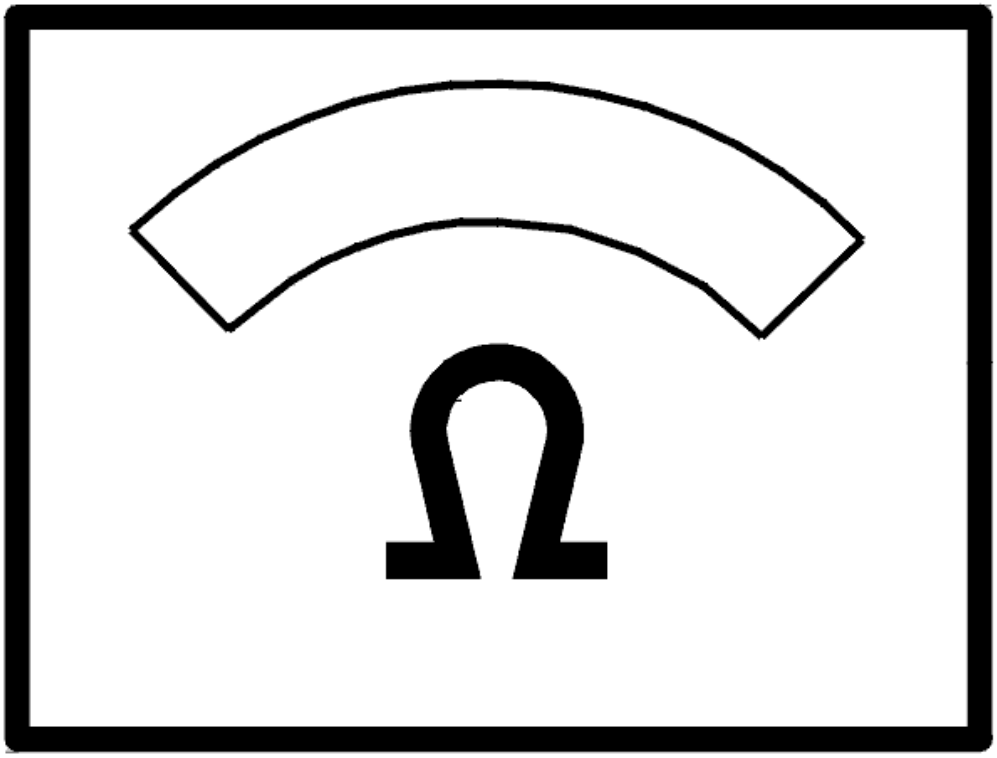

Fig. 145: Identifying Ohm Meter
Courtesy of VOLVO CARS CORPORATION

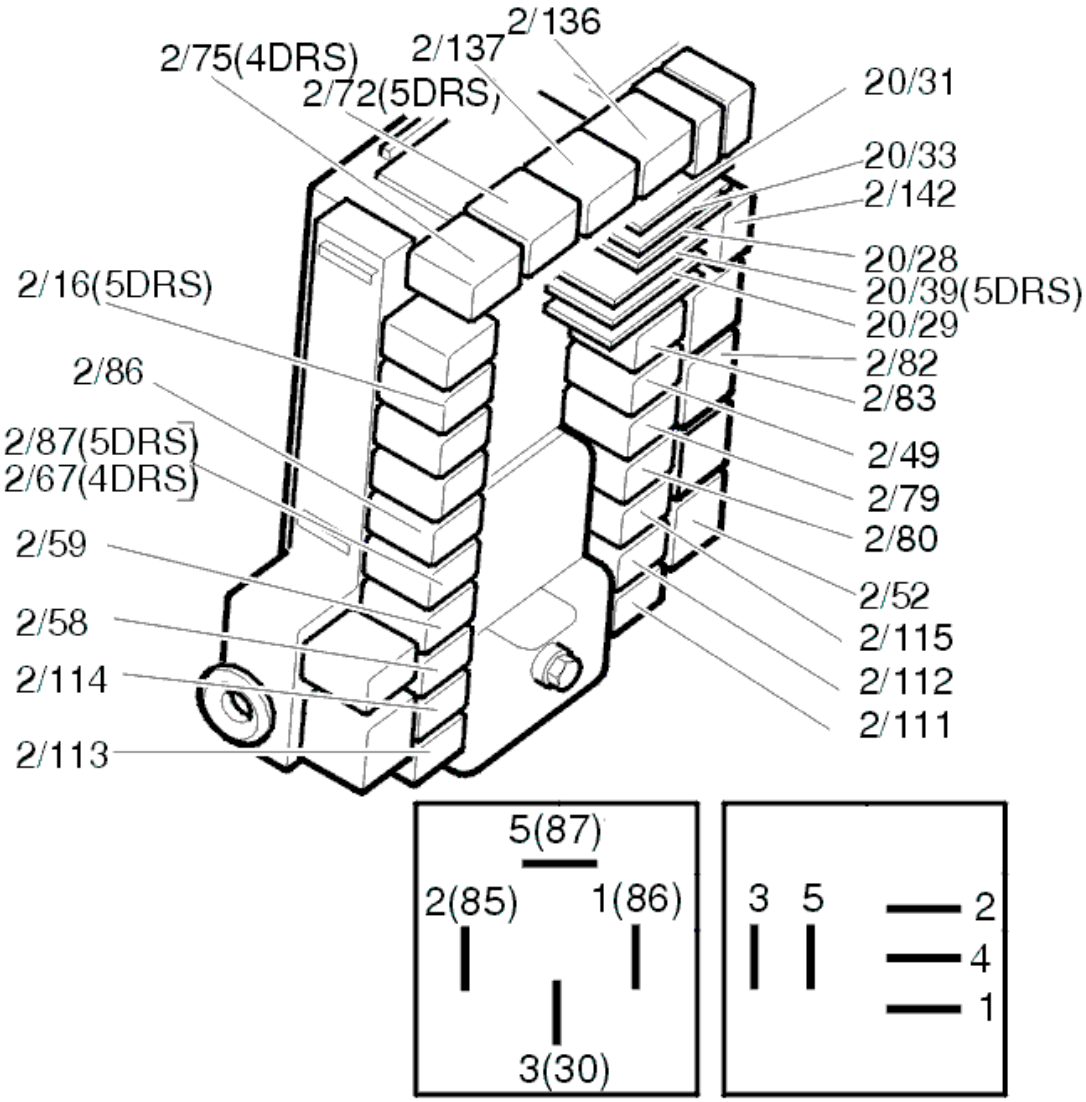

Fig. 146: Identifying Relays
Courtesy of VOLVO CARS CORPORATION

CHECKING THE COMPONENTS

Check the resistance between pin 4 and 6 in the lock unit chassis contact.

The ohmmeter should display 5 ohm.

If the resistance deviates, replace the lock unit.

Additional information

- To access/replace rear electronic module (REM):
  - For -2004, see: **RELAY/FUSE BOX CARGO COMPARTMENT/REAR ELECTRONIC MODULE (REM), REPLACING**

- For 2005-, see: **REAR ELECTRONIC MODULE (REM), REPLACING** .
- To access/replace the lock unit, see **LOCK MECHANISM REAR SIDE DOOR, REPLACING**
- For information on signals and additional values, see **SIGNAL SPECIFICATION** .

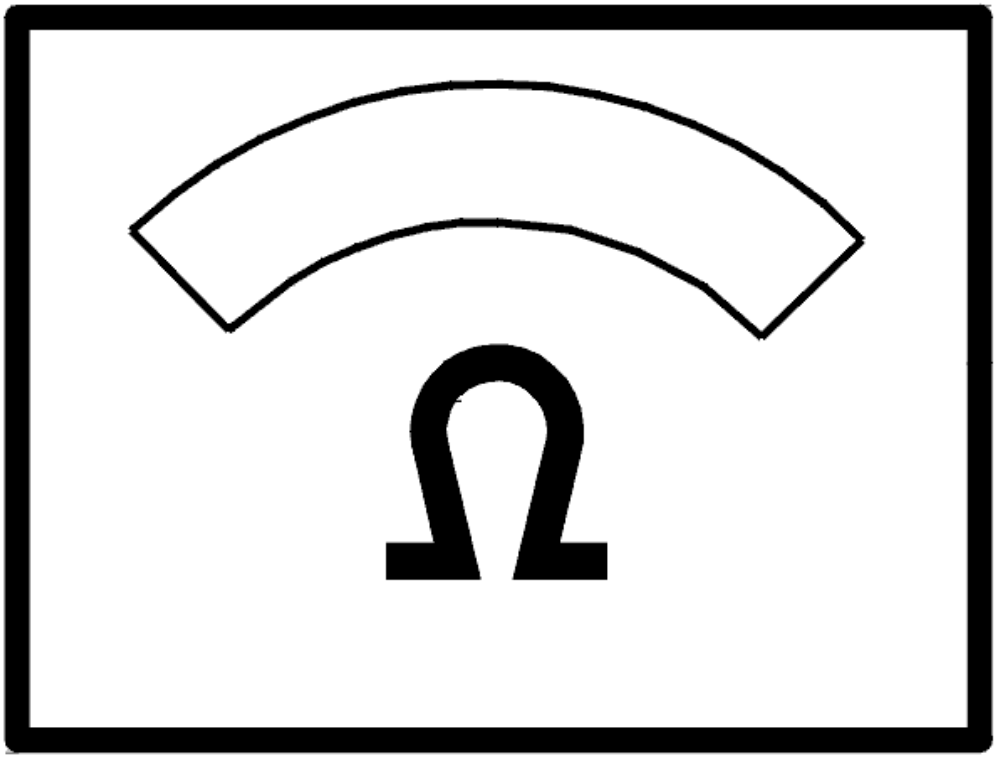

Fig. 147: Identifying Ohm Meter
Courtesy of VOLVO CARS CORPORATION

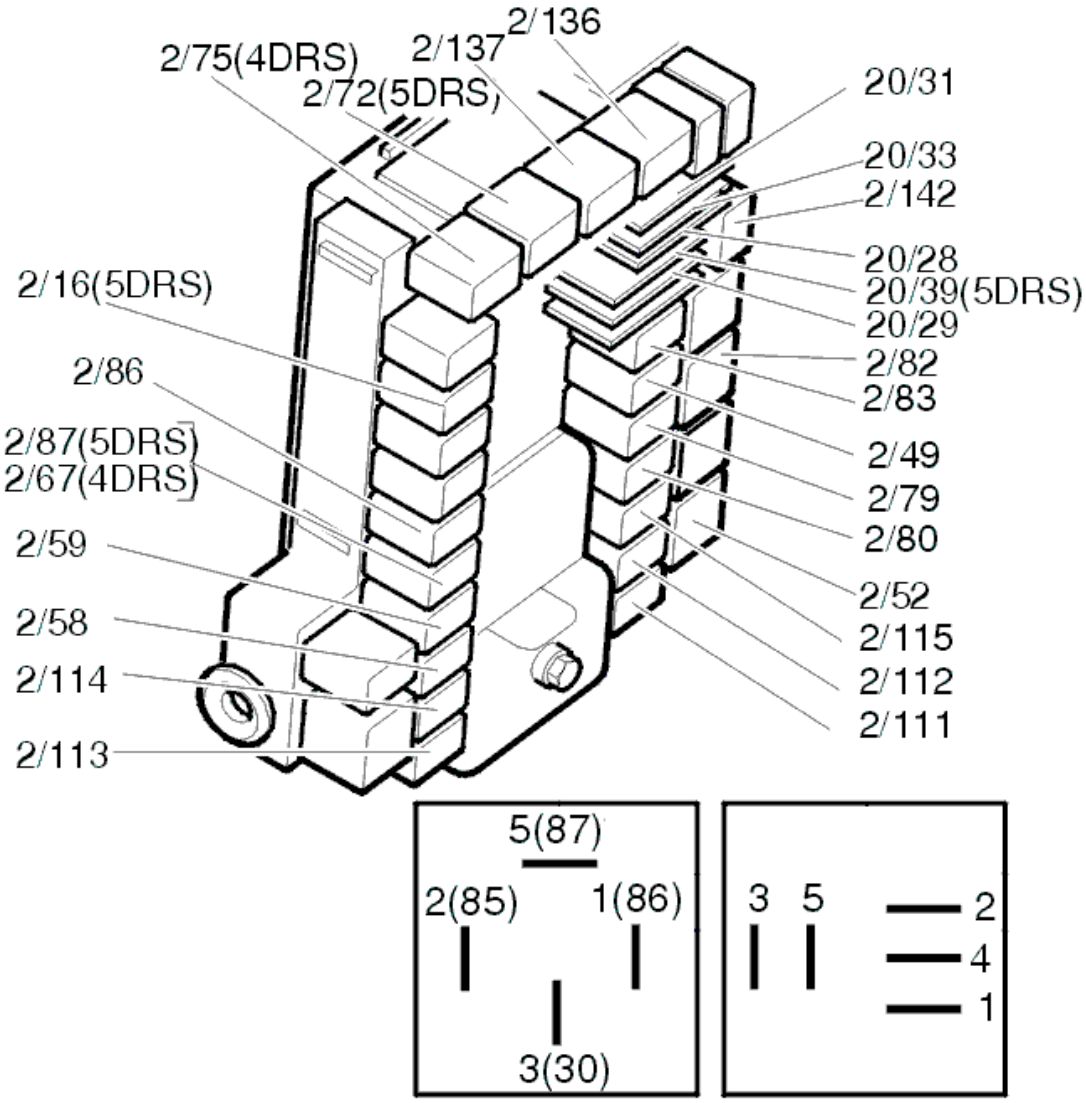

Fig. 148: Identifying Relays
Courtesy of VOLVO CARS CORPORATION

Is there a fault?

- **YES**

  OKAY: Troubleshooting has been completed.

- **NO**

  Refer to **CHECKING THE RELAY SUPPLY**

CHECKING THE RELAY SUPPLY

Remove the locking relay (2/113).

Measure the voltage between 5 in the relay socket and ground.

The voltmeter should display battery voltage.

HINT: If the value is OK but the fault still remains, connect the contacts to the lock module and link between 3 and 5 in the relay socket to force-feed the lock motor while continuing to test.

Additional information

- To access relay/fuse box in the cargo compartment:
  - For -2004, see: **RELAY/FUSE BOX CARGO COMPARTMENT/REAR ELECTRONIC MODULE (REM), REPLACING**
  - For 2005-, see: **REAR ELECTRONIC MODULE (REM), REPLACING** .

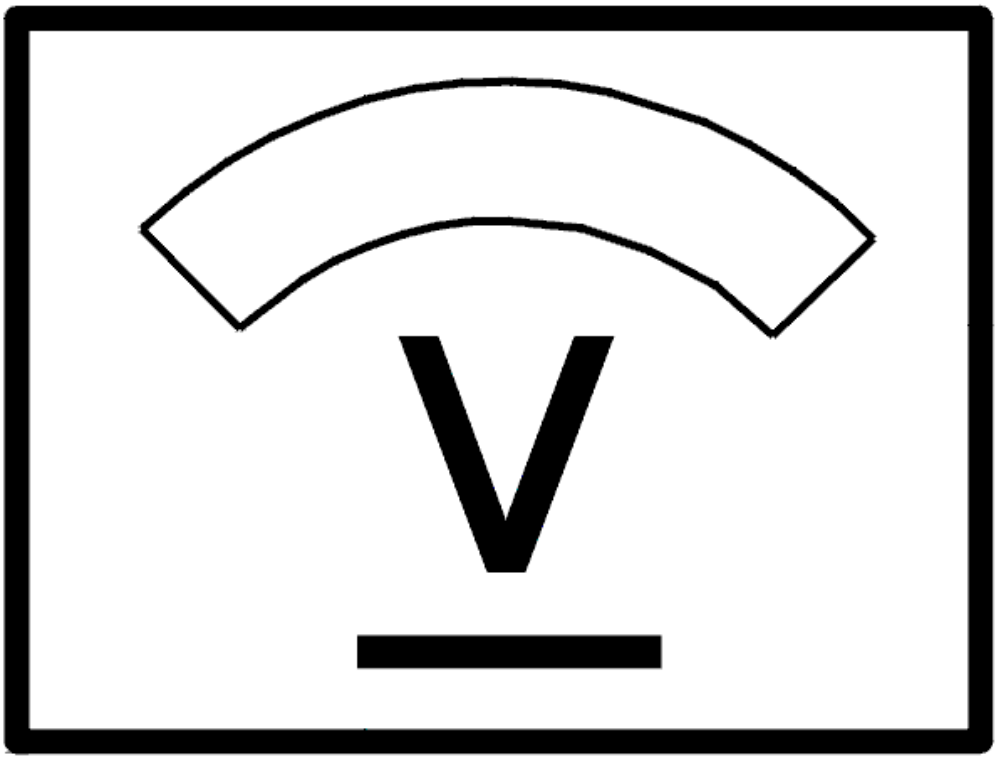

Fig. 149: Identifying Voltage Display

Courtesy of VOLVO CARS CORPORATION

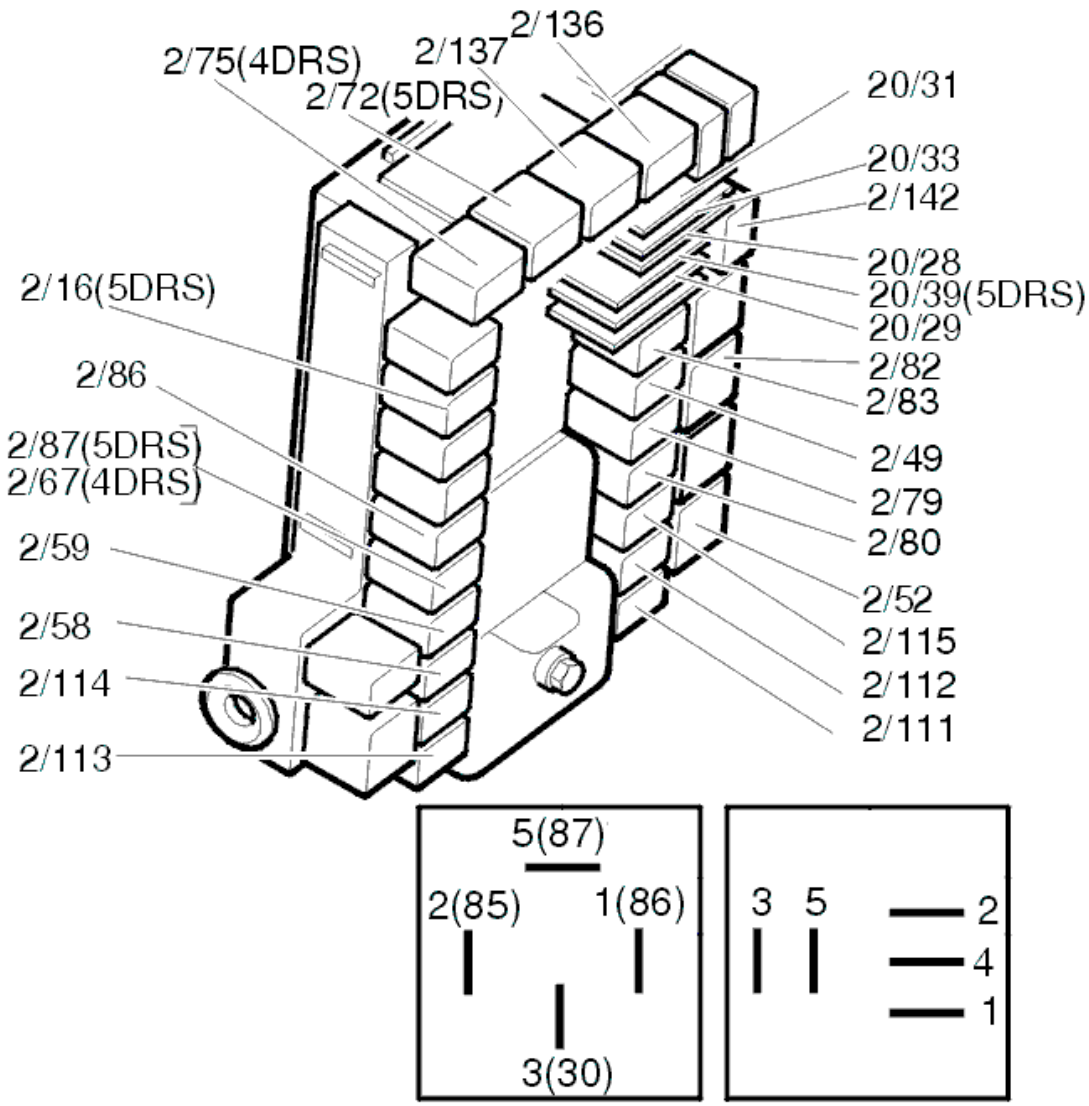

Fig. 150: Identifying Relays
Courtesy of VOLVO CARS CORPORATION

Does the voltmeter show the battery voltage?

- **YES**

  OKAY: Troubleshooting has been completed.

- **NO**

  Refer to **CHECKING THE FUSE**

CHECKING THE FUSE

Remove the fuse 11D/8 in cargo compartment fuse box.

Check that fuse 11D/8 is intact and check for contact resistance and oxidation as described in, see **CONTACT RESISTANCE AND OXIDATION** .

Additional information

- To access relay/fuse box in the cargo compartment:
  - For -2004, see: **RELAY/FUSE BOX CARGO COMPARTMENT/REAR ELECTRONIC MODULE (REM), REPLACING**
  - For 2005-, see: **REAR ELECTRONIC MODULE (REM), REPLACING** .

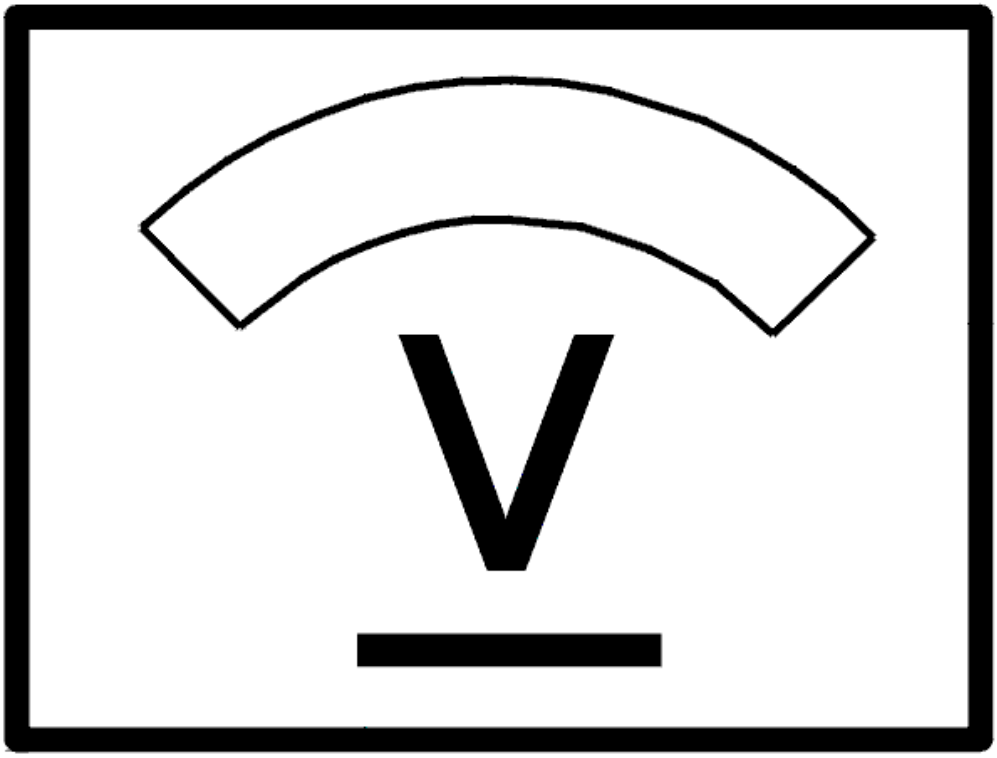

Fig. 151: Identifying Voltage Display
Courtesy of VOLVO CARS CORPORATION

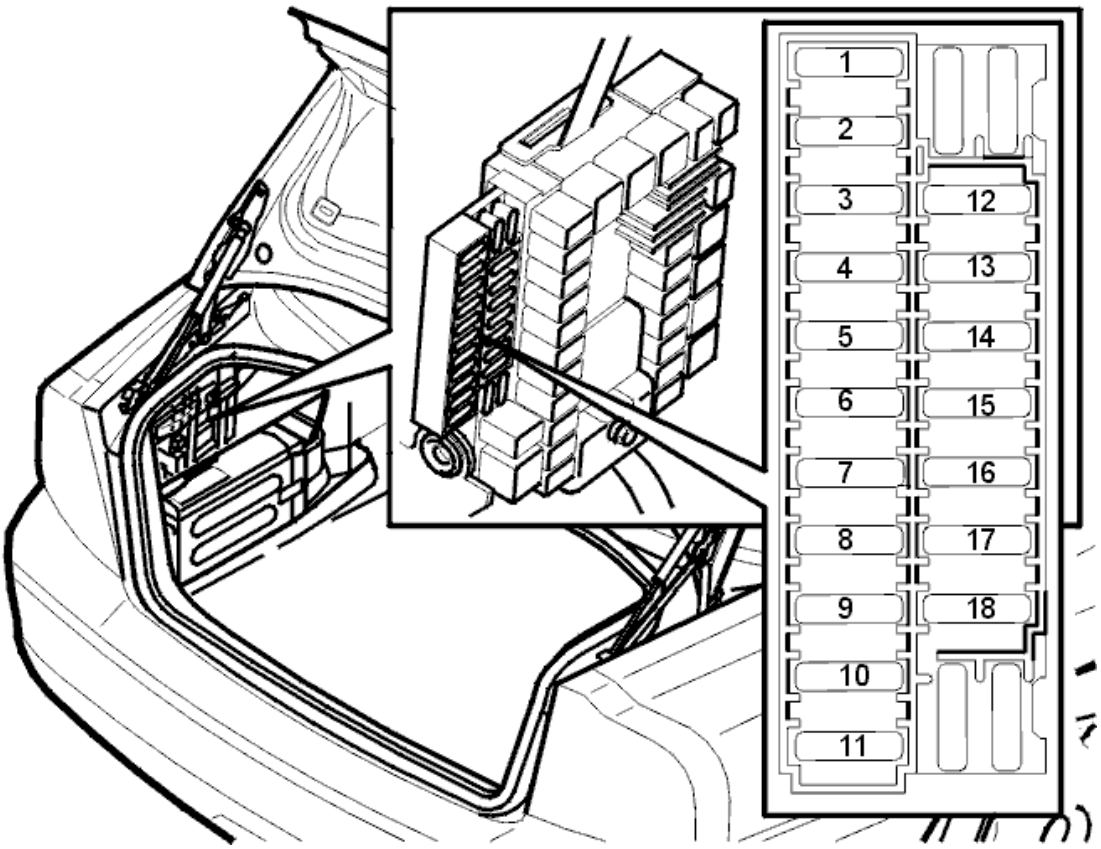

Fig. 152: Fuse Holder (Cargo Compartment)
Courtesy of VOLVO CARS CORPORATION

Is the fuse intact?

- **YES**

  Refer to **CHECKING FOR AN OPEN CIRCUIT**

- **NO**

  Refer to **CHECKING FOR A SHORT CIRCUIT**

CHECKING FOR AN OPEN CIRCUIT

Remove relay 2/113 in the cargo compartment relay/fuse box and trouble-shoot the wire between the fuse holder secondary side (left) and 5 in the relay socket for an open circuit as described in, see **OPEN-CIRCUIT, PERMANENT FAULTS** .

Additional information

- To access relay/fuse box in the cargo compartment:
  - For -2004, see: **RELAY/FUSE BOX CARGO COMPARTMENT/REAR ELECTRONIC MODULE (REM), REPLACING**

- For 2005-, see: **REAR ELECTRONIC MODULE (REM), REPLACING** .

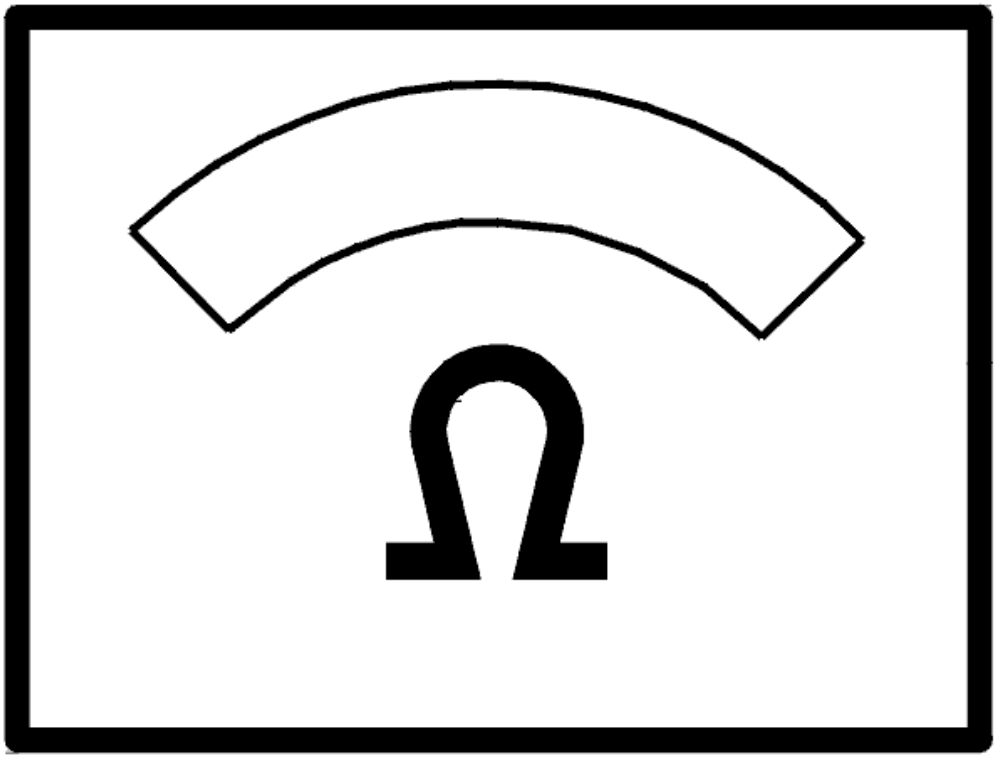

Fig. 153: Identifying Ohm Meter
Courtesy of VOLVO CARS CORPORATION

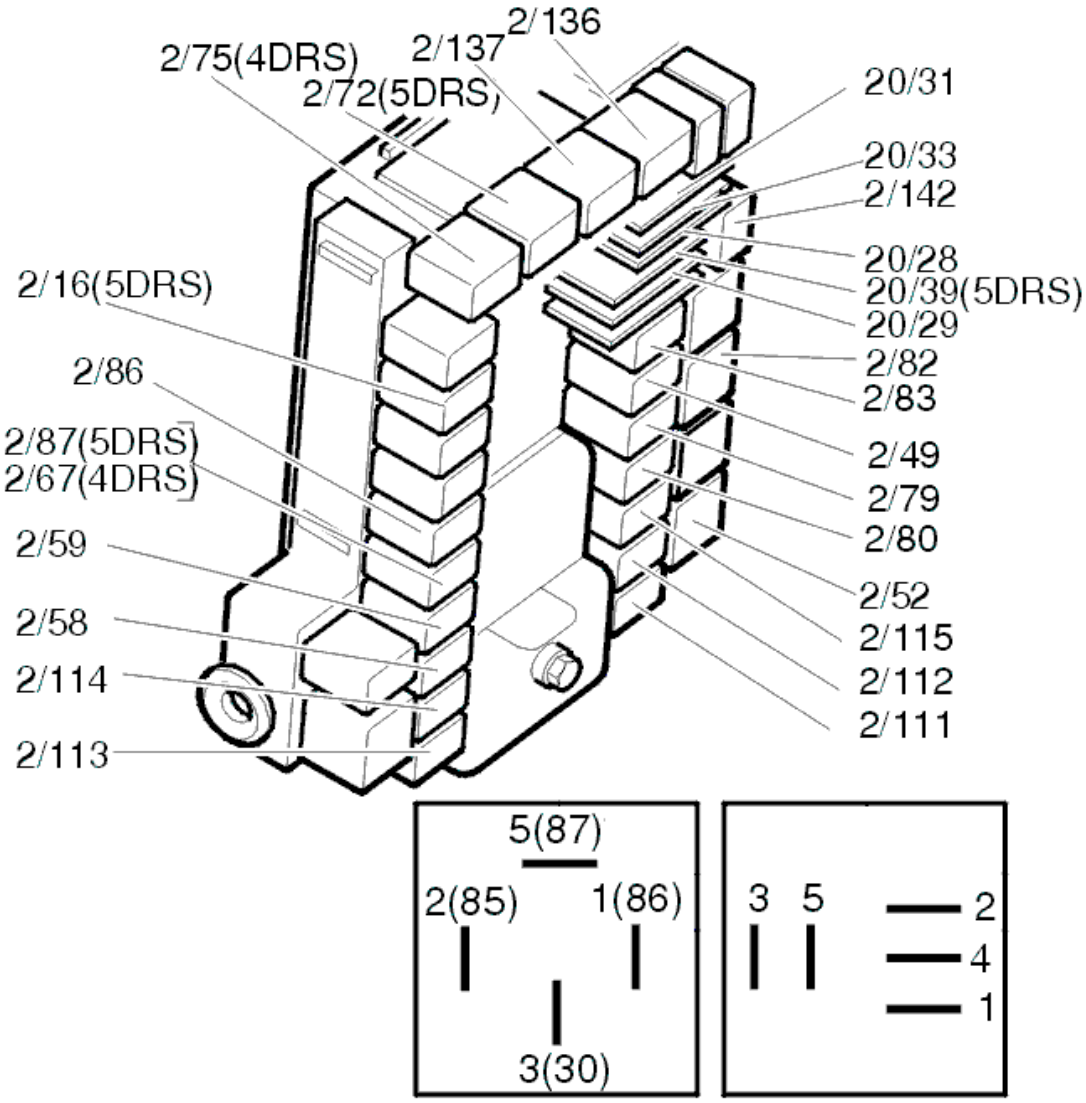

Fig. 154: Identifying Relays
Courtesy of VOLVO CARS CORPORATION

CHECKING FOR A SHORT CIRCUIT

Check the resistance between the fuse holder secondary side (left) and ground.

The ohmmeter should display infinite resistance.

If the value is correct, replace the fuse.

If the value deviates, trouble-shoot all the relay circuits involved for a short circuit to ground as described in, see **SHORT-CIRCUIT TO GROUND, PERMANENT FAULTS** .

NOTE: If the value is correct the fault could be intermittent.

HINT: Replace fuse.

HINT: If the fuse works straight away the fault is a short circuit on the relay supply wire.

HINT: If the fuse works when activating each relay the short circuit is on the component supply wire

HINT: The relay circuits involved belong to relays 2/111, 2/112, 2/113, 2/114, 2/115, 2/56, 2/59 and 2/67.

Additional information

- To access relay/fuse box in the cargo compartment:
  - For -2004, see: **RELAY/FUSE BOX CARGO COMPARTMENT/REAR ELECTRONIC MODULE (REM), REPLACING**
  - For 2005-, see: **REAR ELECTRONIC MODULE (REM), REPLACING** .

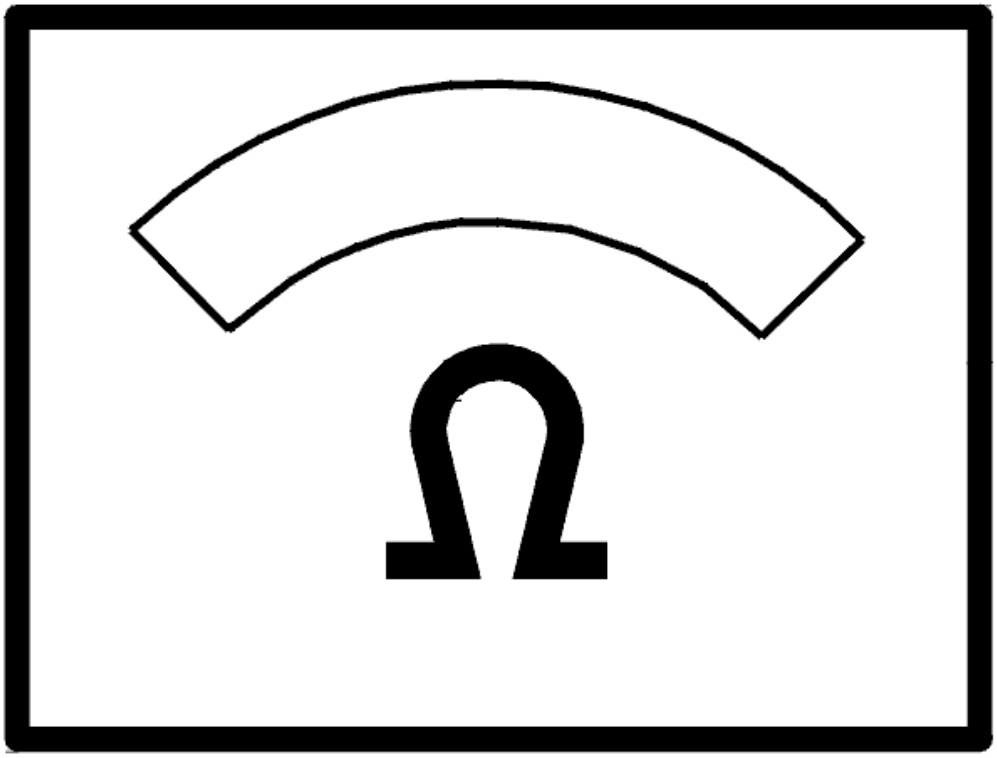

Fig. 155: Identifying Ohm Meter
Courtesy of VOLVO CARS CORPORATION

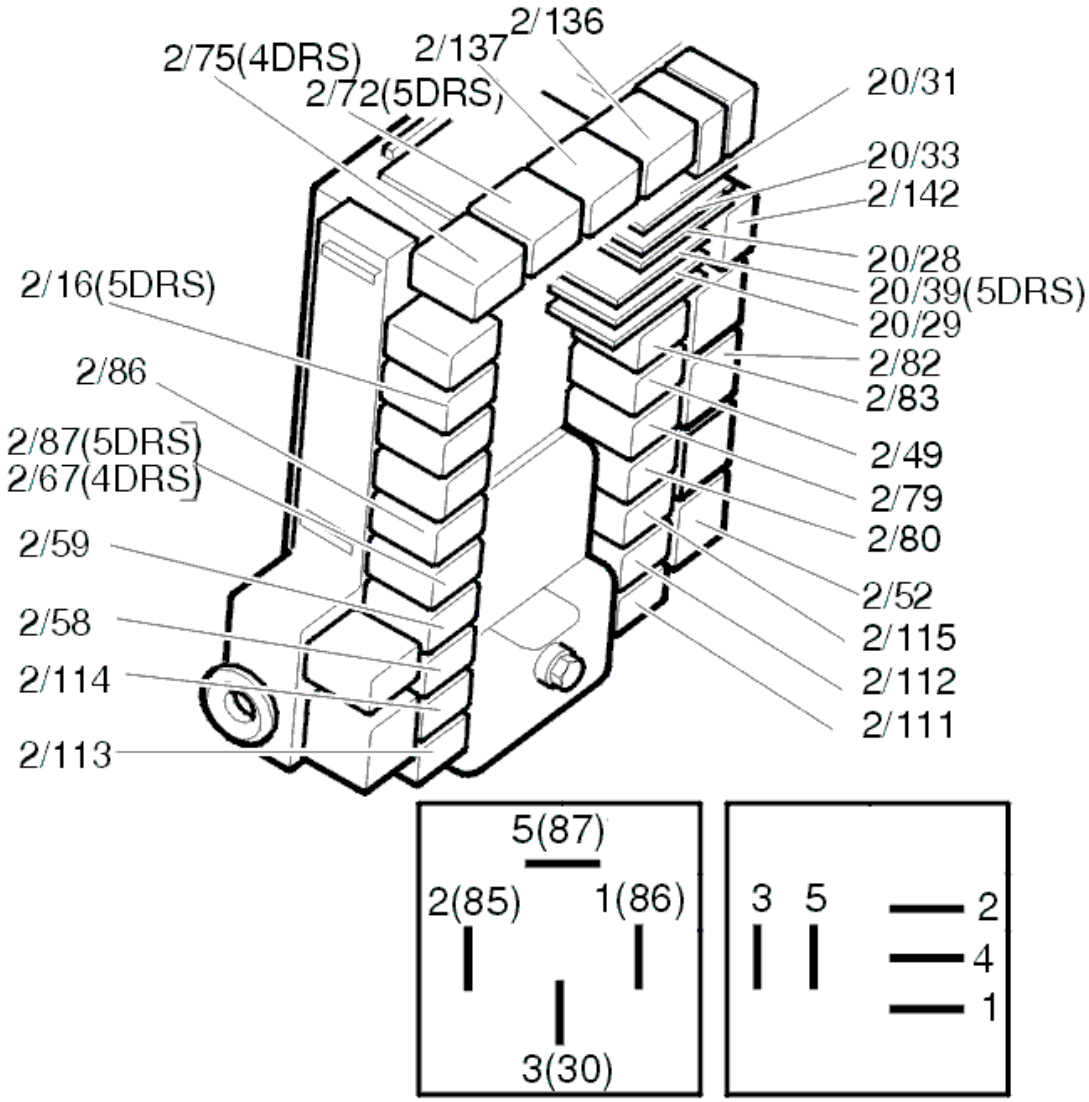

Fig. 156: Identifying Relays
Courtesy of VOLVO CARS CORPORATION

CEM-6A01: REAR LEFT DOOR UNLOCKED. SIGNAL TOO HIGH. PERMANENT FAULT (2003-2004)

DIAGNOSTIC TROUBLE CODE INFORMATION

see **DIAGNOSTIC TROUBLE CODE INFORMATION**

SIGNAL TOO HIGH. PERMANENT FAULT

CHECKING THE COMPONENT

Check that the lock has not stuck by using the lock button on the inside of the door. Check that the lock unit is correctly installed.

Was a fault detected?

- **YES**

  Refer to **VERIFICATION**

- **NO**

  Refer to **CHECKING THE WIRING AND SWITCHES**

CHECKING THE WIRING AND SWITCHES

Check the switches at the central electronic module and lock unit. Check for contact resistance and oxidation.

Check the signal cable for the lock position sensor between the central electronic module connector terminal #B13 and lock unit connector terminal #5. Check for an open-circuit.

Check the signal cable for the lock position sensor between the central electronic module connector terminal #B13 and lock unit connector terminal #5. Check for a short-circuit to supply voltage.

NOTE: **Diagnostic trouble code (DTC) REM-6A01 or REM-6A03 may also be stored if this fault occurs. Use the VCT2000 (or appropriate scan) tool to read diagnostic trouble codes (DTCs).**

Other information:

- To access and replace the lock module:
  - Diver's side door module, see **DRIVER DOOR MODULE (DDM), REPLACING**
  - Passenger side door module, see **PASSENGER DOOR MODULE (PDM), REPLACING** .
- For -2004, see: **CENTRAL ELECTRONIC MODULE (CEM), REPLACING**
- For 2005-, see: **CENTRAL ELECTRONIC MODULE (CEM), REPLACING** .
- To connect the breakout box, see **CONNECTING THE BREAKOUT BOX**
- -2004: **SIGNAL SPECIFICATION**
- 2005-: **SIGNAL SPECIFICATION**
- see **CHECKING WIRING AND TERMINALS. PERMANENT FAULT** .

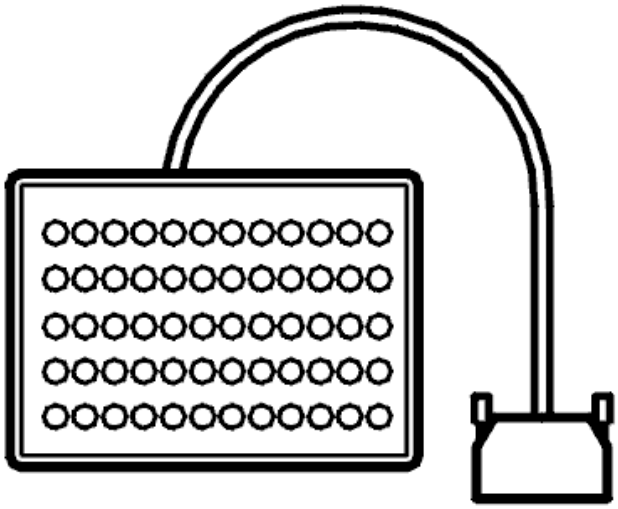

Fig. 157: Breakout Box
Courtesy of VOLVO CARS CORPORATION

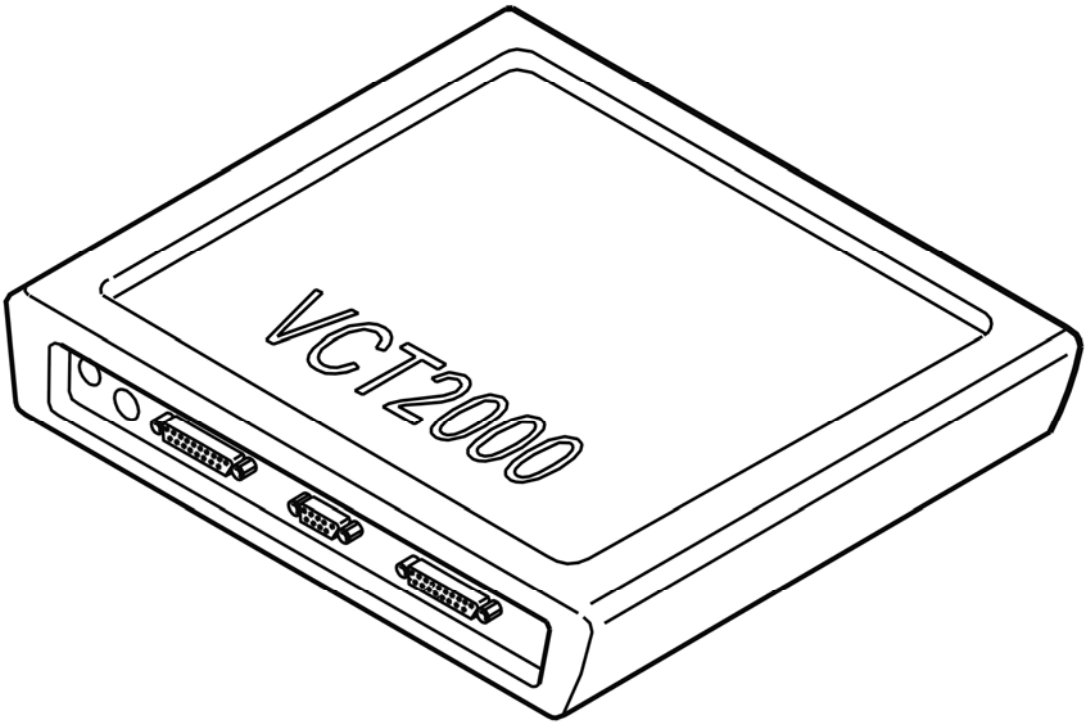

Fig. 158: Identifying VCT2000 Diagnostic Tool Symbol In VIDA
Courtesy of VOLVO CARS CORPORATION

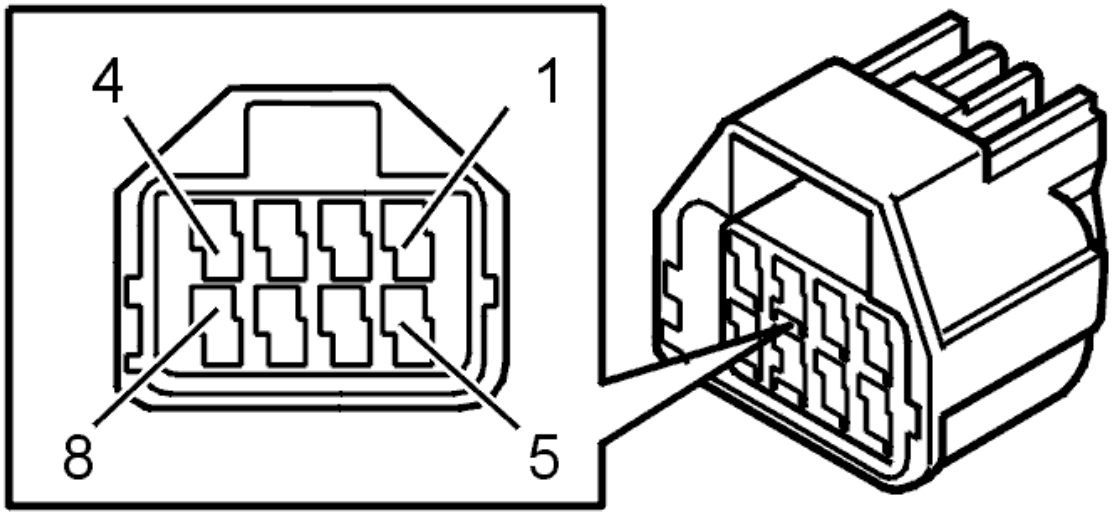

Fig. 159: Identifying Connector Terminals
Courtesy of VOLVO CARS CORPORATION

Were any diagnostic trouble codes (DTCs) stored?

- **YES**

  Refer to **VERIFICATION**

- **NO**

  Refer to **CHECKING THE DOOR LOCKING FUNCTION**

CHECKING THE DOOR LOCKING FUNCTION

QUESTION

Which door has the problem?

1. Driver door.

   Refer to **CHECKING THE DRIVER DOOR**

2. Passenger door.

   Refer to **CHECKING THE PASSENGER DOOR**

3. Rear left door.

   Refer to **CHECKING THE REAR LEFT DOOR**

4. Rear right door.

Refer to **CHECKING THE REAR RIGHT DOOR**

CHECKING THE DRIVER DOOR

CHECK

Is the passenger door lock not working?

- **YES**

  Refer to **CHECKING THE FUSE**

- **NO**

  Refer to **CHECK**

CHECKING THE FUSE

Remove the fuse 11C/27 in cargo compartment fuse box.

Check that fuse is intact and check for contact resistance and oxidation as described in, see **CONTACT RESISTANCE AND OXIDATION** .

Additional information

- To access relay/fuse box in the cargo compartment:
  - For -2004, see: **RELAY/FUSE BOX CARGO COMPARTMENT/REAR ELECTRONIC MODULE (REM), REPLACING**
  - For 2005-, see: **REAR ELECTRONIC MODULE (REM), REPLACING** .

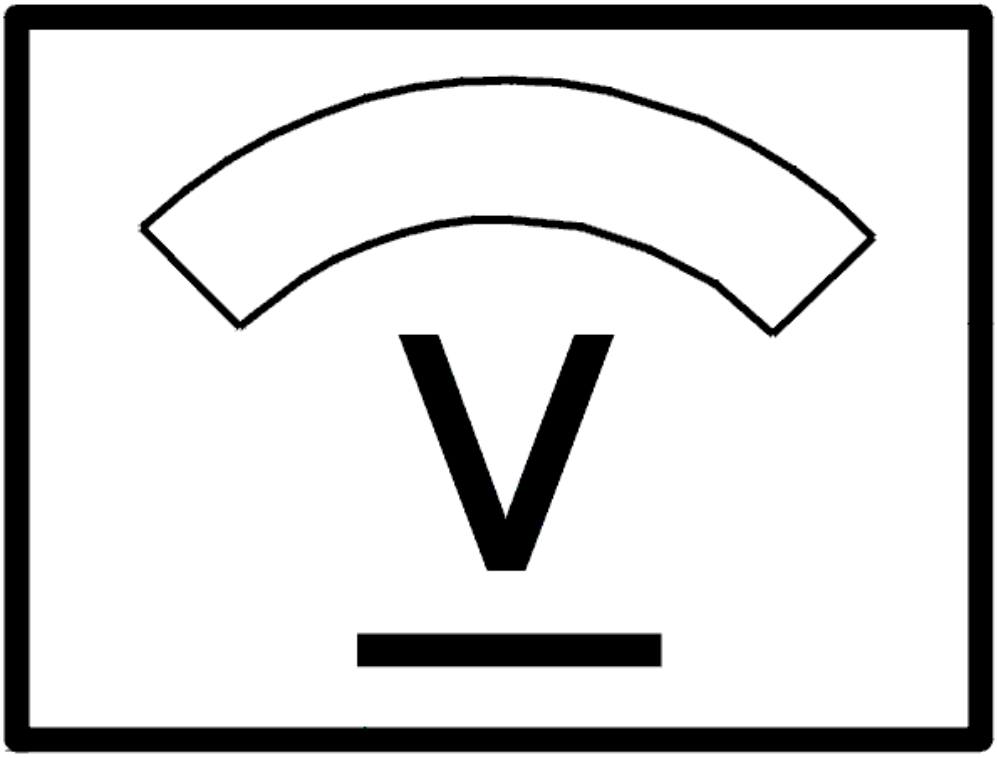

Fig. 160: Identifying Voltage Display
Courtesy of VOLVO CARS CORPORATION

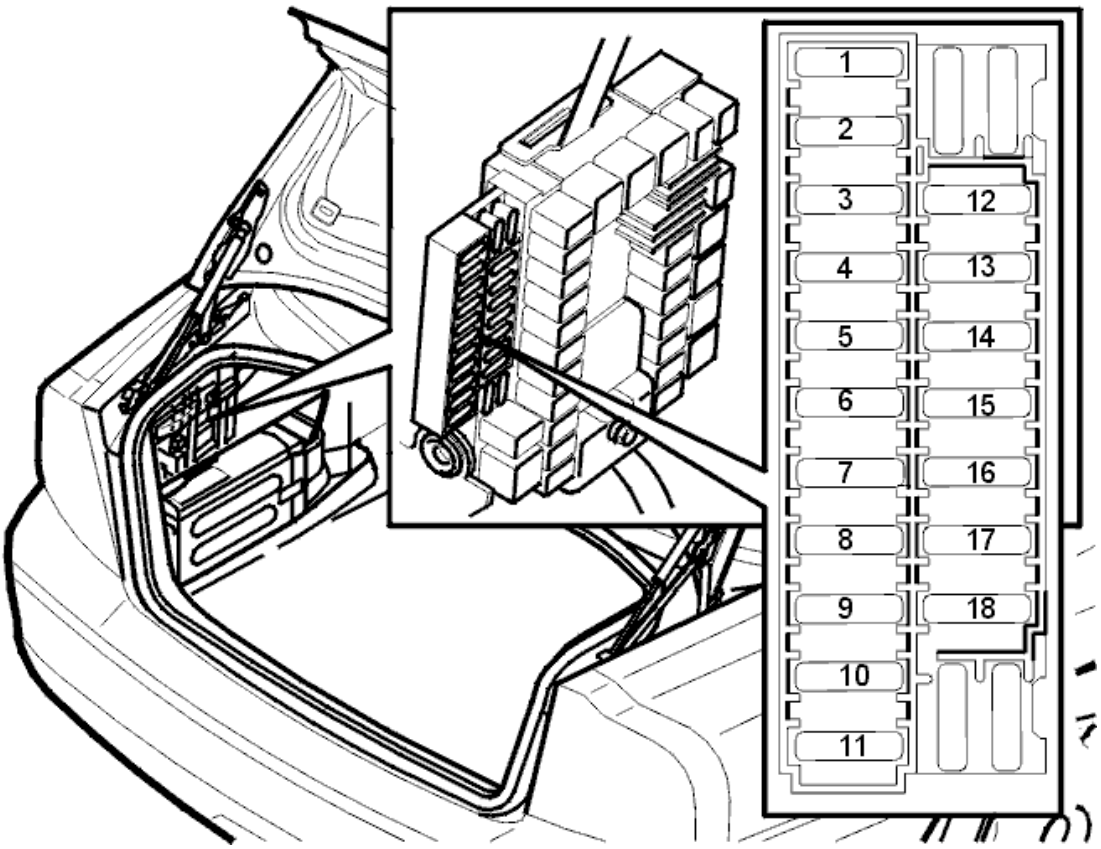

Fig. 161: Fuse Holder (Cargo Compartment)
Courtesy of VOLVO CARS CORPORATION

Is the fuse intact?

- **YES**

  Refer to **CHECKING FOR AN OPEN CIRCUIT**

- **NO**

  Refer to **CHECKING FOR A SHORT CIRCUIT**

CHECK

1. Window lift works on that particular door

   Refer to **CHECKING THE LOCKING MOTOR WIRES**

2. Window lift does not work on that particular door.

   Refer to **CHECKING THE FUSE**

CHECKING THE FUSE

Remove the fuse 11C/35 in cargo compartment fuse box.

Check that fuse is intact and check for contact resistance and oxidation as described in, see **CONTACT RESISTANCE AND OXIDATION** .

Additional information

- To access relay/fuse box in the cargo compartment:
  - For -2004, see: **RELAY/FUSE BOX CARGO COMPARTMENT/REAR ELECTRONIC MODULE (REM), REPLACING**
  - For 2005-, see: **REAR ELECTRONIC MODULE (REM), REPLACING** .

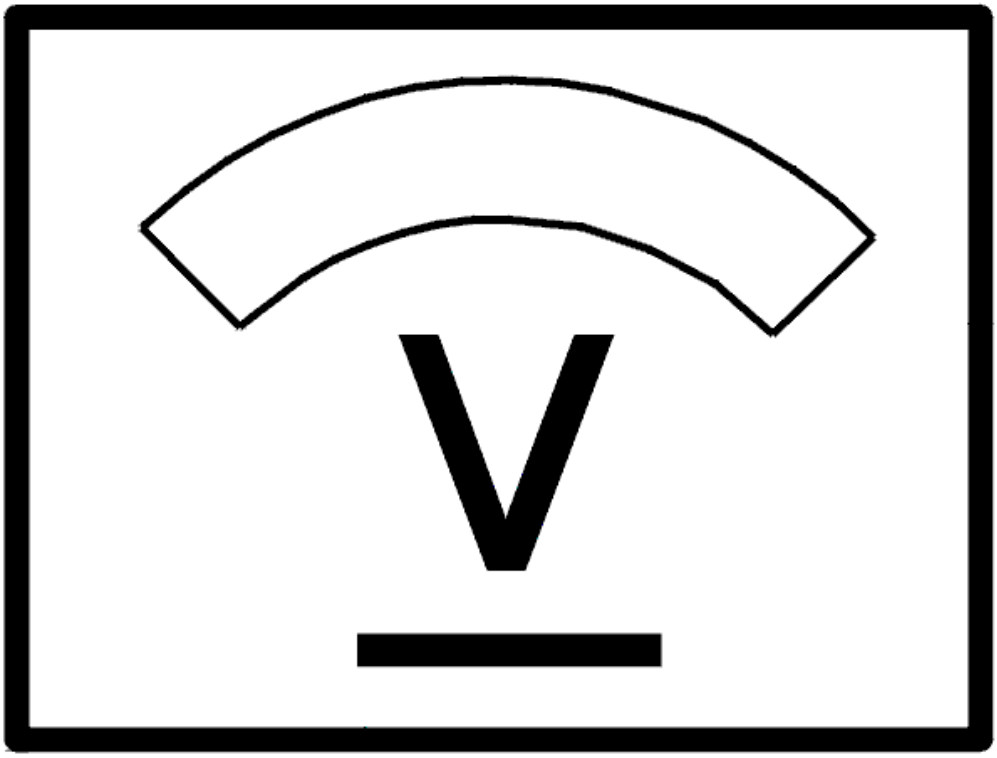

Fig. 162: Identifying Voltage Display
Courtesy of VOLVO CARS CORPORATION

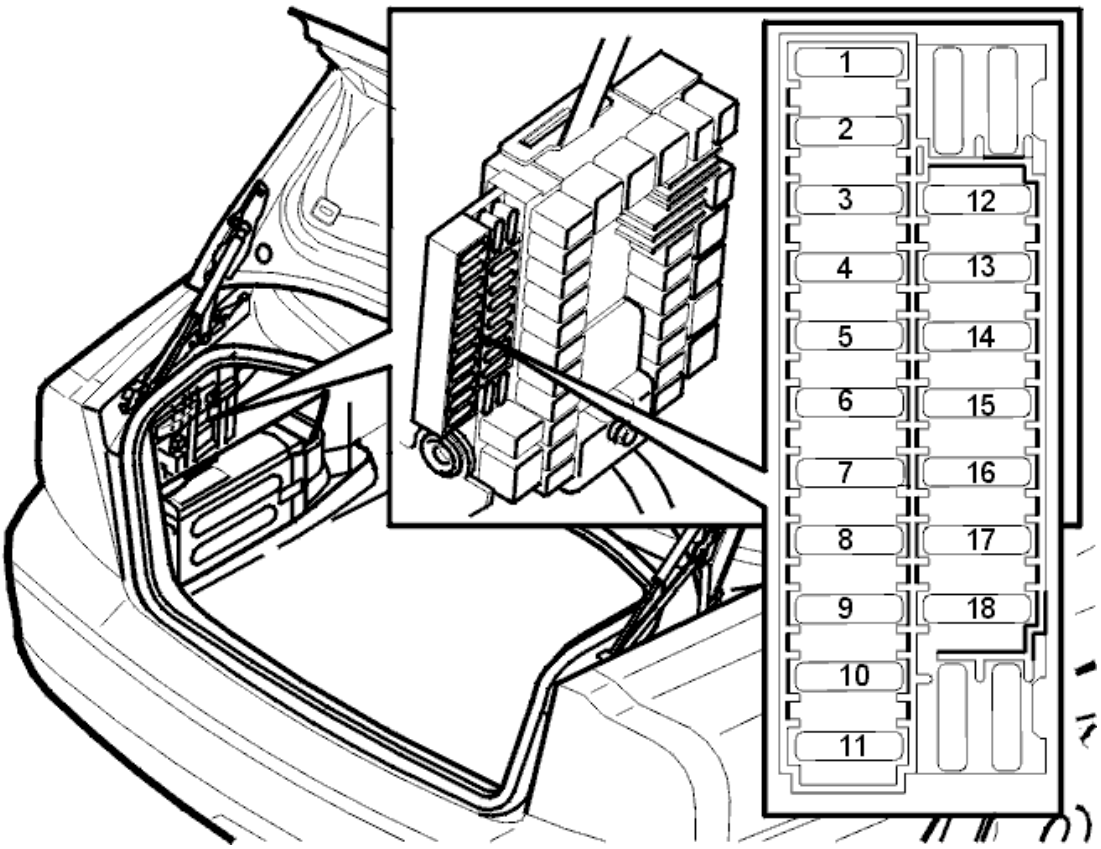

Fig. 163: Fuse Holder (Cargo Compartment)
Courtesy of VOLVO CARS CORPORATION

Is the fuse intact?

- **YES**

  Refer to **CHECKING THE VOLTAGE**

- **NO**

  Refer to **CHECKING FOR A SHORT CIRCUIT**

CHECKING FOR AN OPEN CIRCUIT

Check door control unit connector B7 for contact resistance and oxidation as described in, see **CONTACT RESISTANCE AND OXIDATION** .

Trouble-shoot the wire between fuse holder secondary side (left) and door control unit connector B7 for an open circuit as described in, see **OPEN-CIRCUIT, PERMANENT FAULTS** .

If a fault is detected, check in particular the intermediate connector in the cable harness (1/control unit) for contact resistance and oxidation as described in, see **CONTACT RESISTANCE AND OXIDATION** .

If there is an open circuit the fault should be between the fuse and the common junction point 53/427.

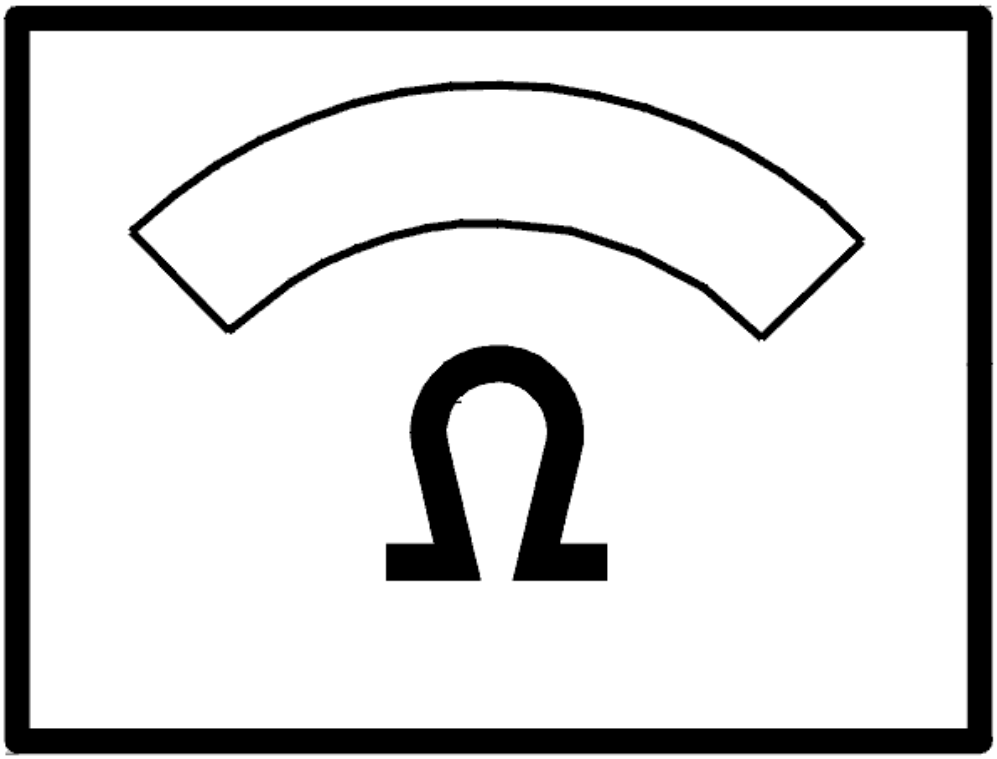

Fig. 164: Identifying Ohm Meter
Courtesy of VOLVO CARS CORPORATION

CHECKING FOR A SHORT CIRCUIT

Check the resistance between the fuse holder secondary side (left) and ground.

The ohmmeter should display infinite resistance.

NOTE: If the value is correct the fault could be intermittent.

Switch to trouble-shooting intermittent short circuits to ground as described in, see **SHORT-CIRCUIT TO GROUND, INTERMITTENT FAULTS** .

If the ohmmeter indicates a fault (short circuit), trouble-shoot the wires between the fuse and door control unit connector B7 for a short circuit to ground as described in, see **SHORT-CIRCUIT TO GROUND, PERMANENT FAULTS** .

The fault should be between the fuse and the common junction point 53/427.

Replace fuse.

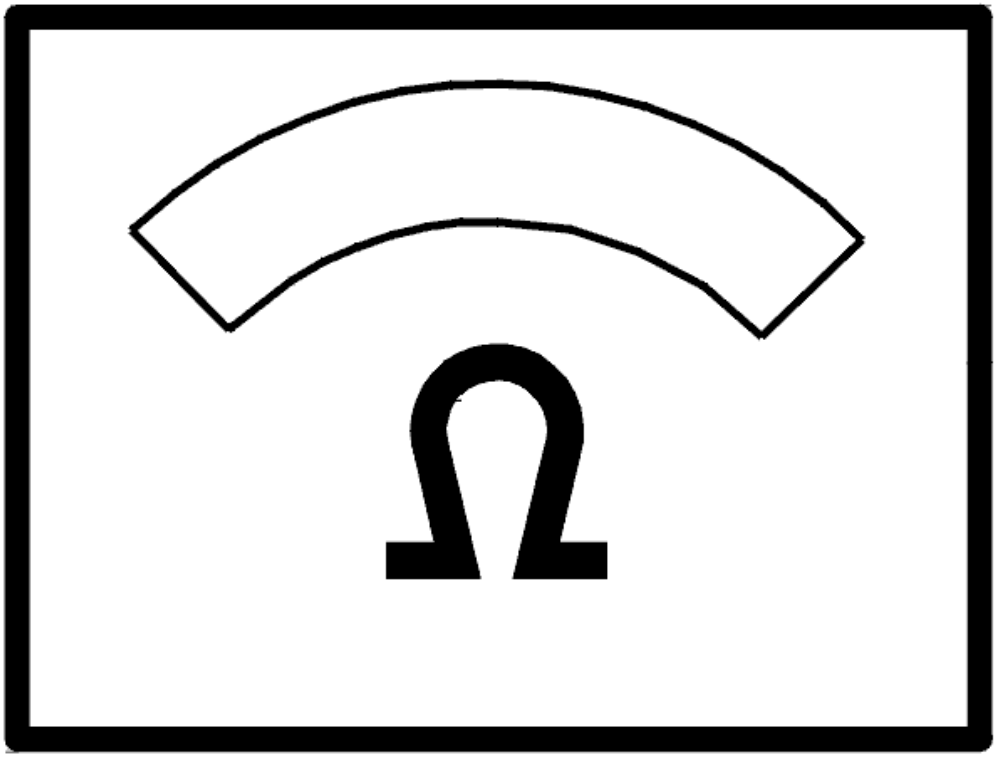

Fig. 165: Identifying Ohm Meter
Courtesy of VOLVO CARS CORPORATION

CHECKING THE VOLTAGE

Check the voltage in the door control unit connector B12.

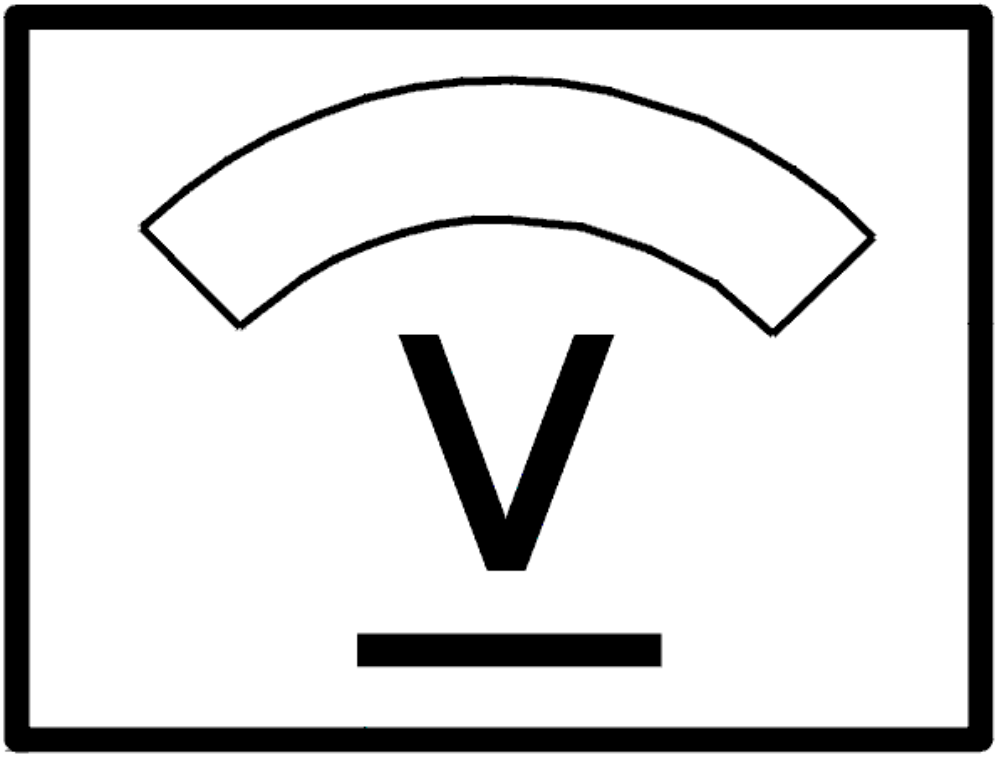

Fig. 166: Identifying Voltage Display
Courtesy of VOLVO CARS CORPORATION

Does the voltmeter show the battery voltage?

- **YES**

  Refer to **CHECKING THE LOCKING MOTOR WIRES**

- **NO**

  Refer to **CHECKING FOR AN OPEN CIRCUIT**

CHECKING FOR AN OPEN CIRCUIT

Check door control unit connector B12 for contact resistance and oxidation as described in, see **CONTACT**

RESISTANCE AND OXIDATION .

Trouble-shoot the wire between fuse holder secondary side (left) and door control unit connector B12 for an open circuit as described in, see **OPEN-CIRCUIT, PERMANENT FAULTS** .

If a fault is detected, check in particular the intermediate connector in the cable harness (1) for contact resistance and oxidation as described in, see **CONTACT RESISTANCE AND OXIDATION** .

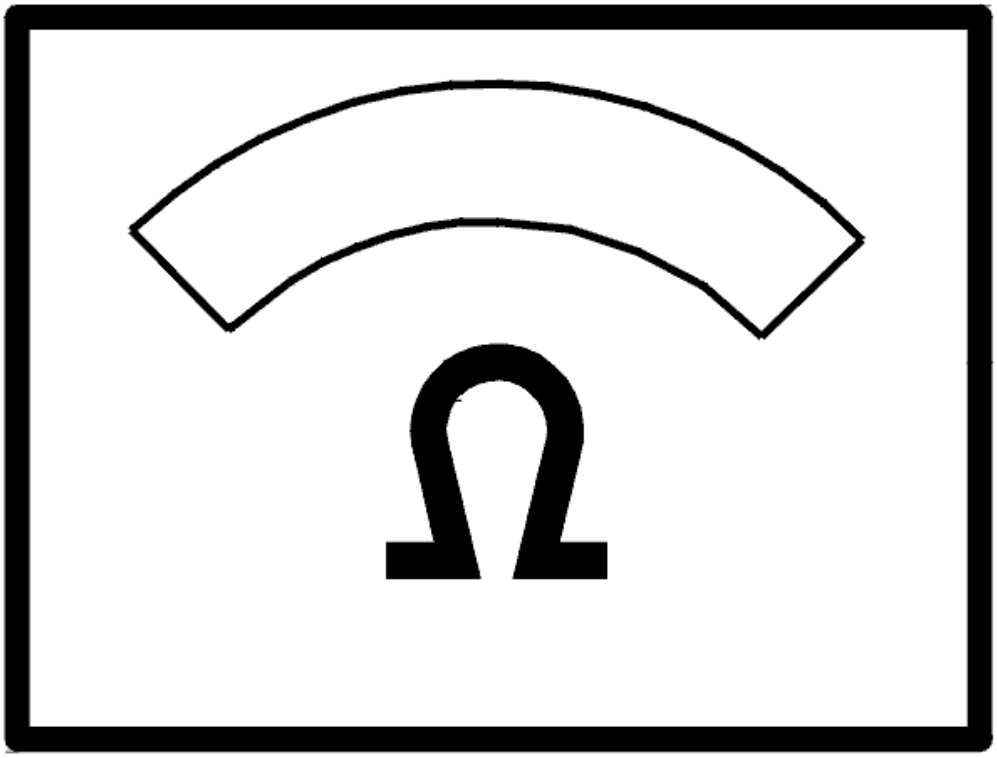

Fig. 167: Identifying Ohm Meter
Courtesy of VOLVO CARS CORPORATION

CHECKING FOR A SHORT CIRCUIT

Check the resistance between the fuse holder secondary side (left) and ground.

The ohmmeter should display infinite resistance.

NOTE: If the value is correct the fault could be intermittent.

Switch to trouble-shooting intermittent short circuits to ground as described in, see **SHORT-CIRCUIT TO GROUND, INTERMITTENT FAULTS** .

If the ohmmeter indicates a fault (short circuit), trouble-shoot the wires between the fuse and door control unit connector B12 for a short circuit to ground as described in, see **SHORT-CIRCUIT TO GROUND, PERMANENT FAULTS** .

Replace fuse.

Additional information

- To access relay/fuse box in the cargo compartment:
  - For -2004, see: **RELAY/FUSE BOX CARGO COMPARTMENT/REAR ELECTRONIC MODULE (REM), REPLACING**
  - For 2005-, see: **REAR ELECTRONIC MODULE (REM), REPLACING** .

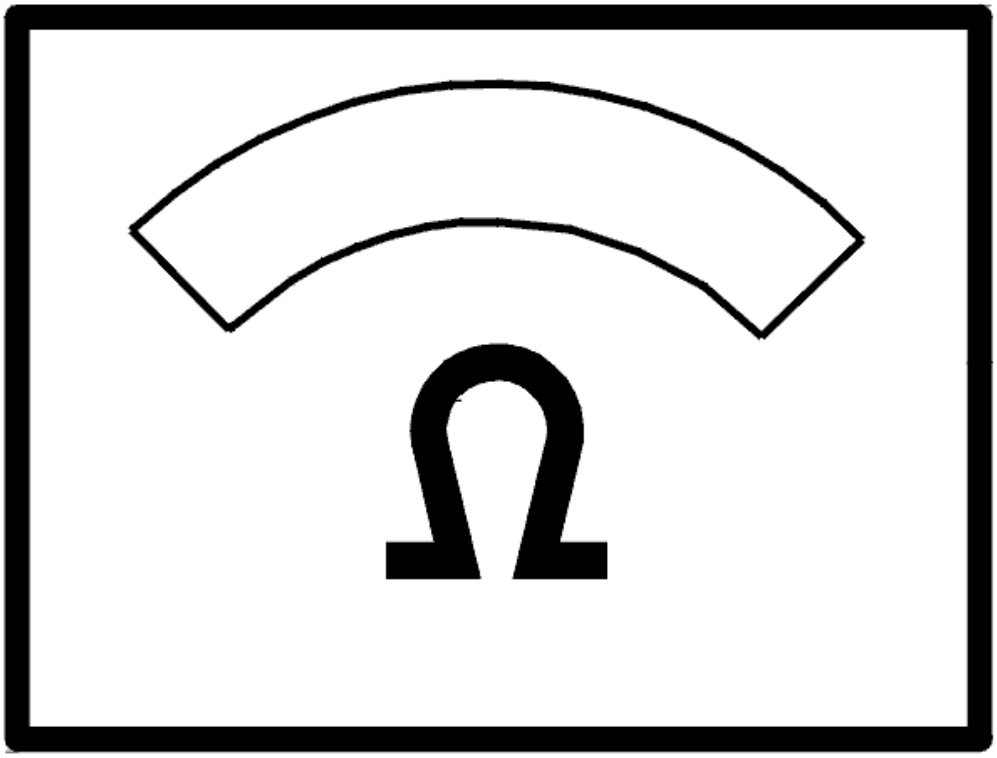

Fig. 168: Identifying Ohm Meter
Courtesy of VOLVO CARS CORPORATION

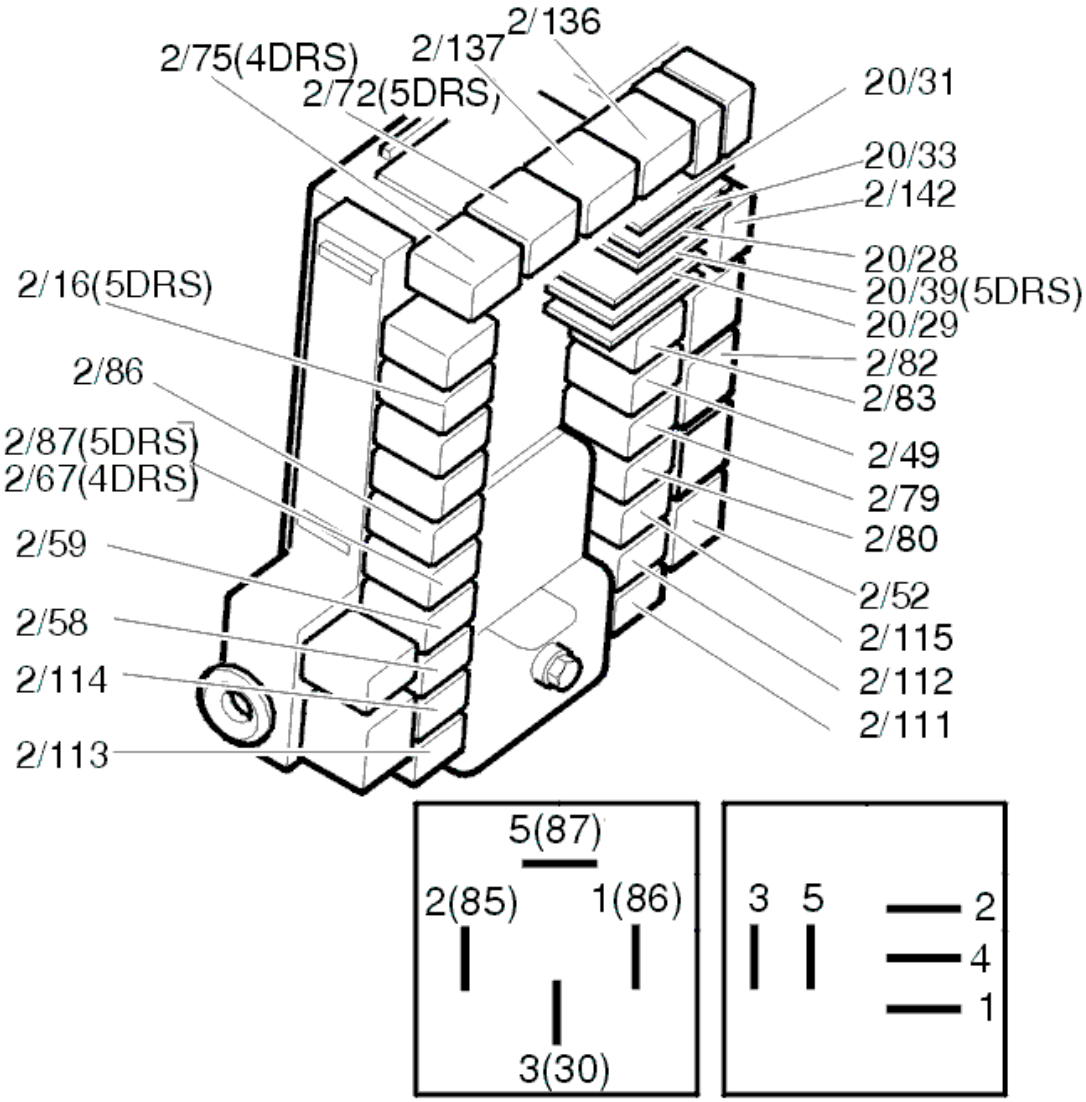

Fig. 169: Identifying Relays
Courtesy of VOLVO CARS CORPORATION

CHECKING THE LOCKING MOTOR WIRES

Check door control unit and lock unit connectors for contact resistance and oxidation as described in, see **CONTACT RESISTANCE AND OXIDATION** .

Trouble-shoot the wire between door control unit connector B2 and lock unit connector 8 for an open circuit as described in, see **OPEN-CIRCUIT, PERMANENT FAULTS** .

Trouble-shoot the wire between door control unit connector B6 and lock unit connector 7 for an open circuit as described in, see **OPEN-CIRCUIT, PERMANENT FAULTS** .

Additional information

- To access/replace rear electronic module (REM):
  - For -2004, see: **RELAY/FUSE BOX CARGO COMPARTMENT/REAR ELECTRONIC MODULE (REM), REPLACING**
  - For 2005-, see: **REAR ELECTRONIC MODULE (REM), REPLACING** .

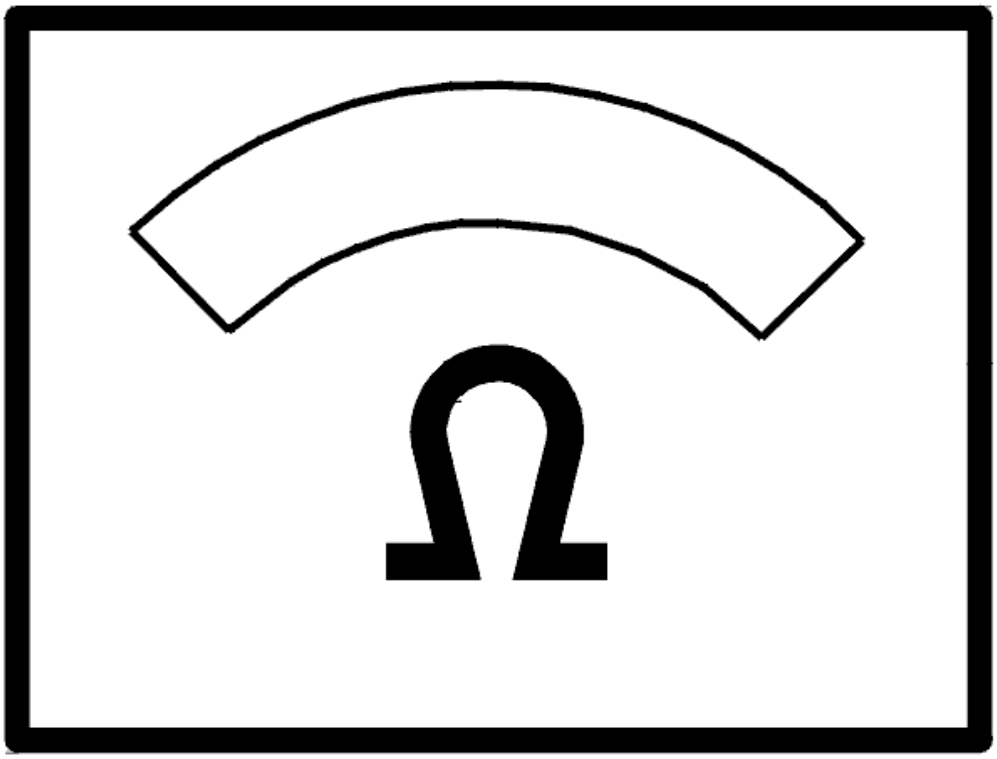

Fig. 170: Identifying Ohm Meter
Courtesy of VOLVO CARS CORPORATION

Is there a fault?

- **YES**

  OKAY: Troubleshooting has been completed.

- **NO**

Refer to **REPLACING THE COMPONENT**

REPLACING THE COMPONENT

Replace lock unit as described in, see **REPLACING THE SWITCH FOR THE LOCK UNIT / CARGO COMPARTMENT LIGHTING** .

Is there a fault?

- **YES**

  OKAY: Troubleshooting has been completed.

- **NO**

  Refer to **REPLACING THE COMPONENT**

REPLACING THE COMPONENT

Replace control unit.

- For -2004, see: **RELAY/FUSE BOX CARGO COMPARTMENT/REAR ELECTRONIC MODULE (REM), REPLACING**
- For 2005-, see: **REAR ELECTRONIC MODULE (REM), REPLACING** .

CHECKING THE PASSENGER DOOR

CHECK

Is the driver door lock not working?

- **YES**

  Refer to **CHECKING THE FUSE**

- **NO**

  Refer to **CHECK**

CHECKING THE FUSE

Remove the fuse 11C/27 in cargo compartment fuse box.

Check that fuse is intact and check for contact resistance and oxidation as described in, see **CONTACT RESISTANCE AND OXIDATION** .

Additional information

- To access relay/fuse box in the cargo compartment:
  - For -2004, see: **RELAY/FUSE BOX CARGO COMPARTMENT/REAR ELECTRONIC MODULE (REM), REPLACING**
  - For 2005-, see: **REAR ELECTRONIC MODULE (REM), REPLACING** .

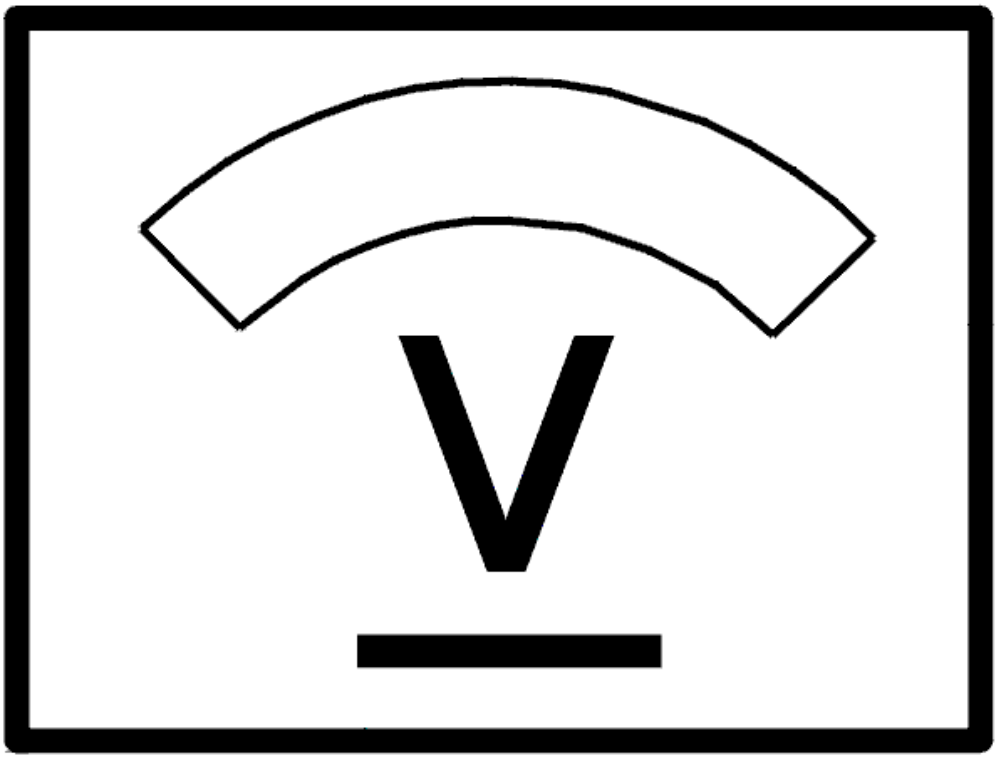

Fig. 171: Identifying Voltage Display
Courtesy of VOLVO CARS CORPORATION

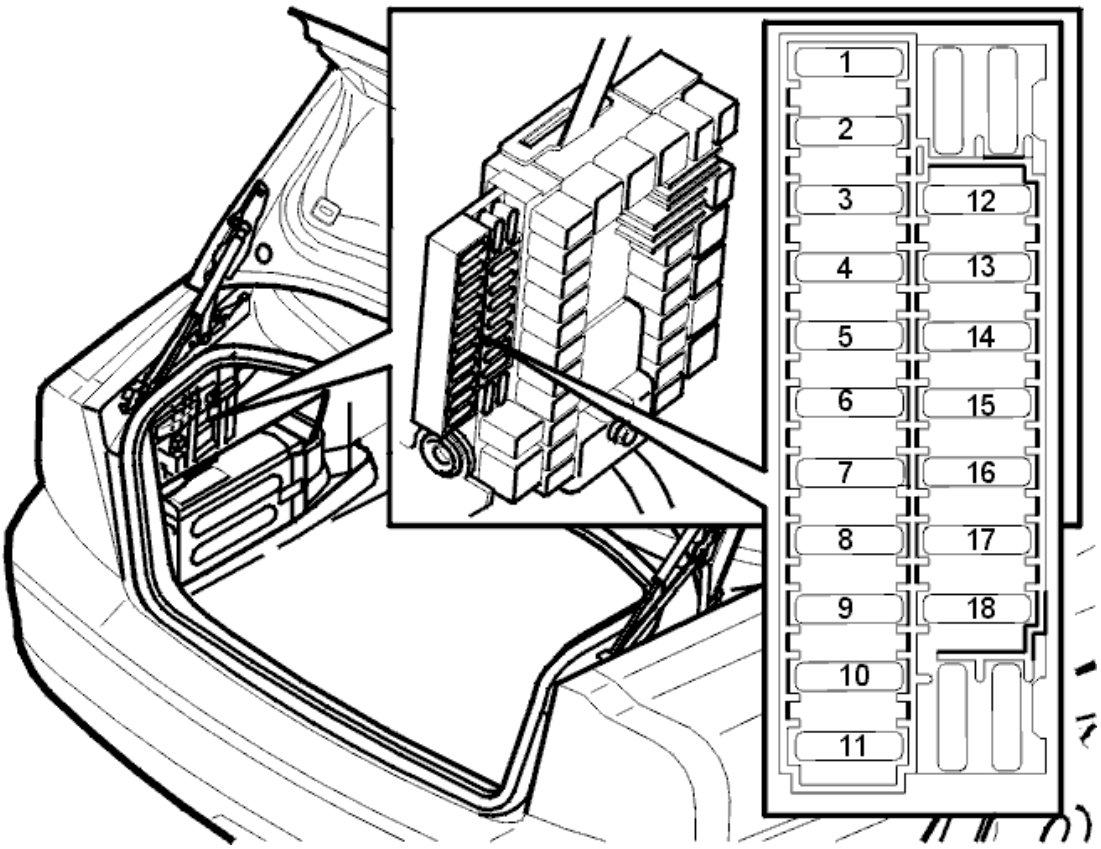

Fig. 172: Fuse Holder (Cargo Compartment)
Courtesy of VOLVO CARS CORPORATION

Is the fuse intact?

- **YES**

  Refer to **CHECKING FOR AN OPEN CIRCUIT**

- **NO**

  Refer to **CHECKING FOR A SHORT CIRCUIT**

CHECK

1. Window lift works on that particular door

   Refer to **CHECKING THE LOCKING MOTOR WIRES**

2. Window lift does not work on that particular door.

   Refer to **CHECKING THE FUSE**

CHECKING THE FUSE

Remove the fuse 11C/35 in cargo compartment fuse box.

Check that fuse is intact and check for contact resistance and oxidation as described in, see **CONTACT RESISTANCE AND OXIDATION** .

Additional information

- To access relay/fuse box in the cargo compartment:
  - For -2004, see: **RELAY/FUSE BOX CARGO COMPARTMENT/REAR ELECTRONIC MODULE (REM), REPLACING**
  - For 2005-, see: **REAR ELECTRONIC MODULE (REM), REPLACING** .

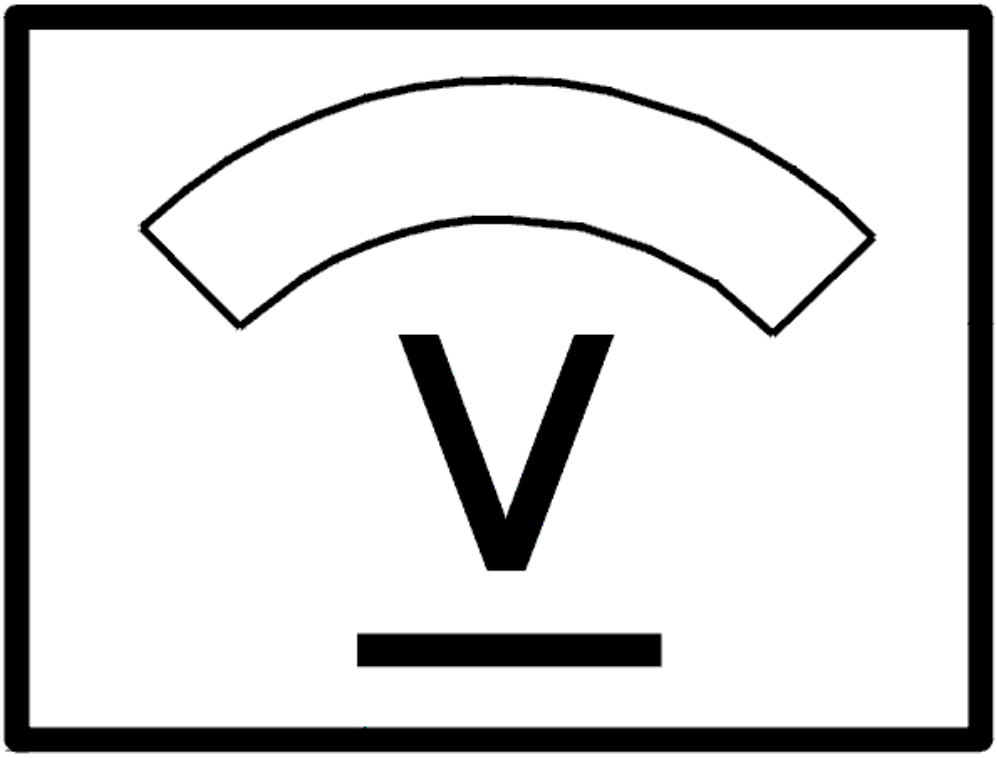

Fig. 173: Identifying Voltage Display
Courtesy of VOLVO CARS CORPORATION

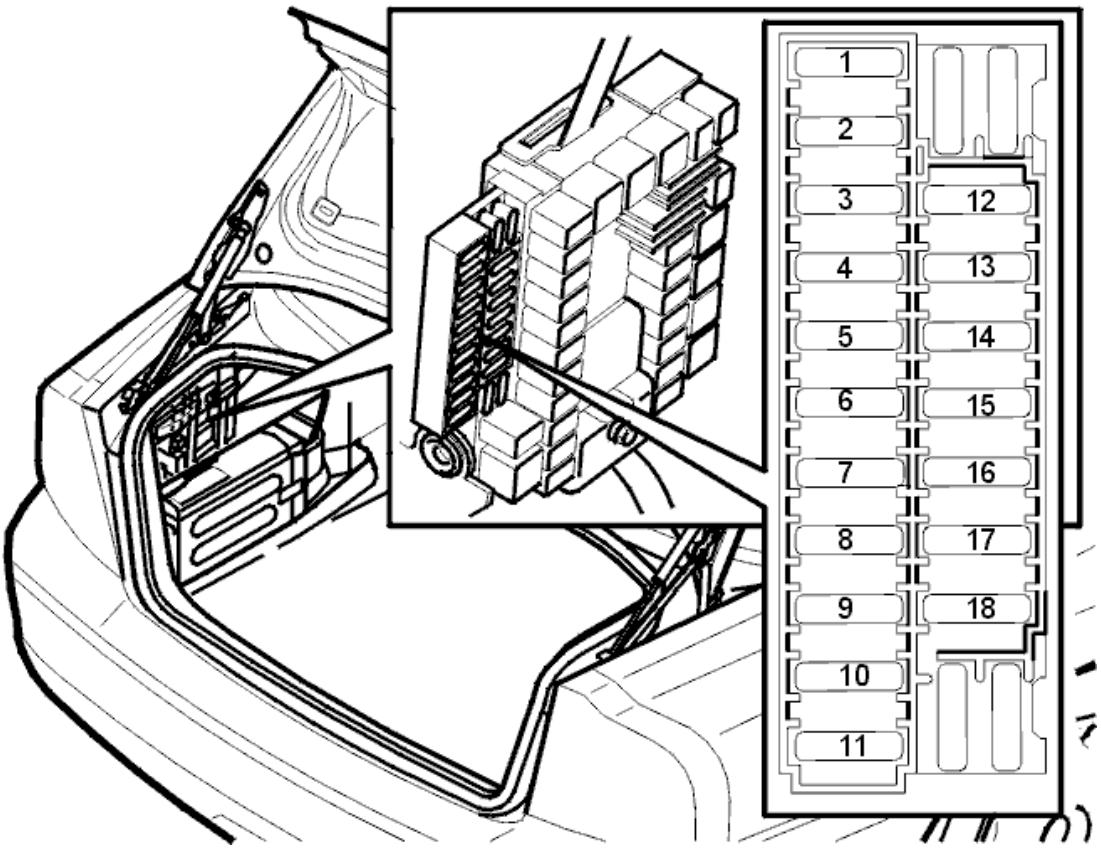

Fig. 174: Fuse Holder (Cargo Compartment)
Courtesy of VOLVO CARS CORPORATION

Is the fuse intact?

- **YES**

  Refer to **CHECKING THE VOLTAGE**

- **NO**

  Refer to **CHECKING FOR A SHORT CIRCUIT**

CHECKING THE FUSE

Remove the fuse 11C/36 in cargo compartment fuse box.

Check that fuse is intact and check for contact resistance and oxidation as described in, see **CONTACT RESISTANCE AND OXIDATION** .

Additional information

- To access relay/fuse box in the cargo compartment:
  - For -2004, see: **RELAY/FUSE BOX CARGO COMPARTMENT/REAR ELECTRONIC**

MODULE (REM), REPLACING

- For 2005-, see: **REAR ELECTRONIC MODULE (REM), REPLACING** .

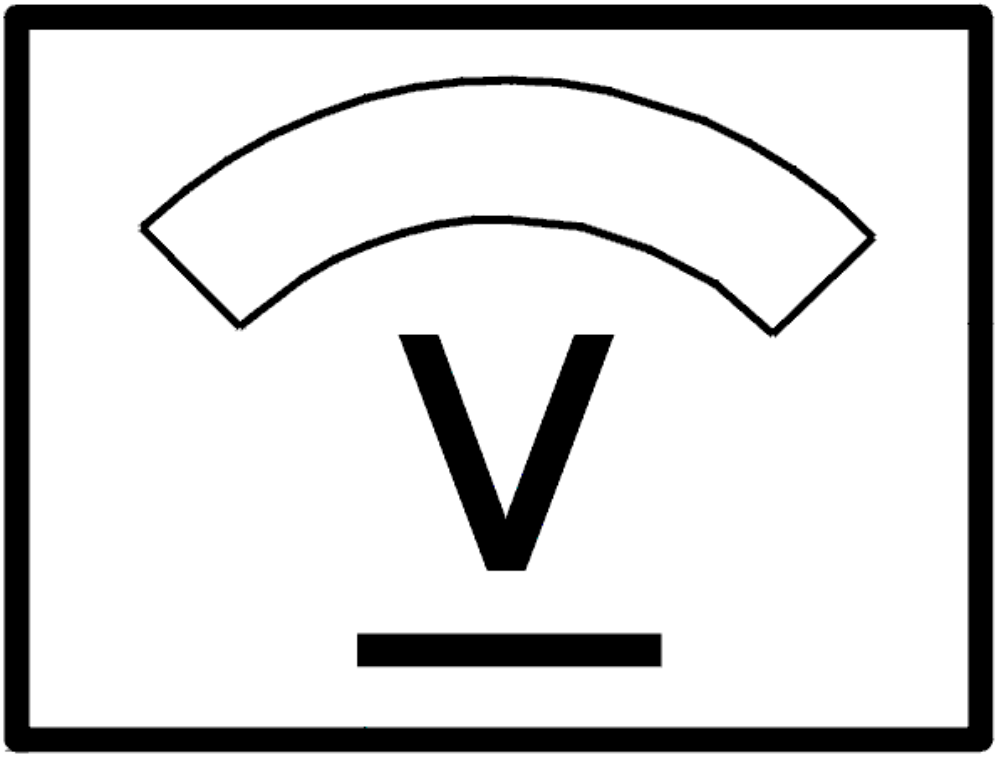

Fig. 175: Identifying Voltage Display
Courtesy of VOLVO CARS CORPORATION

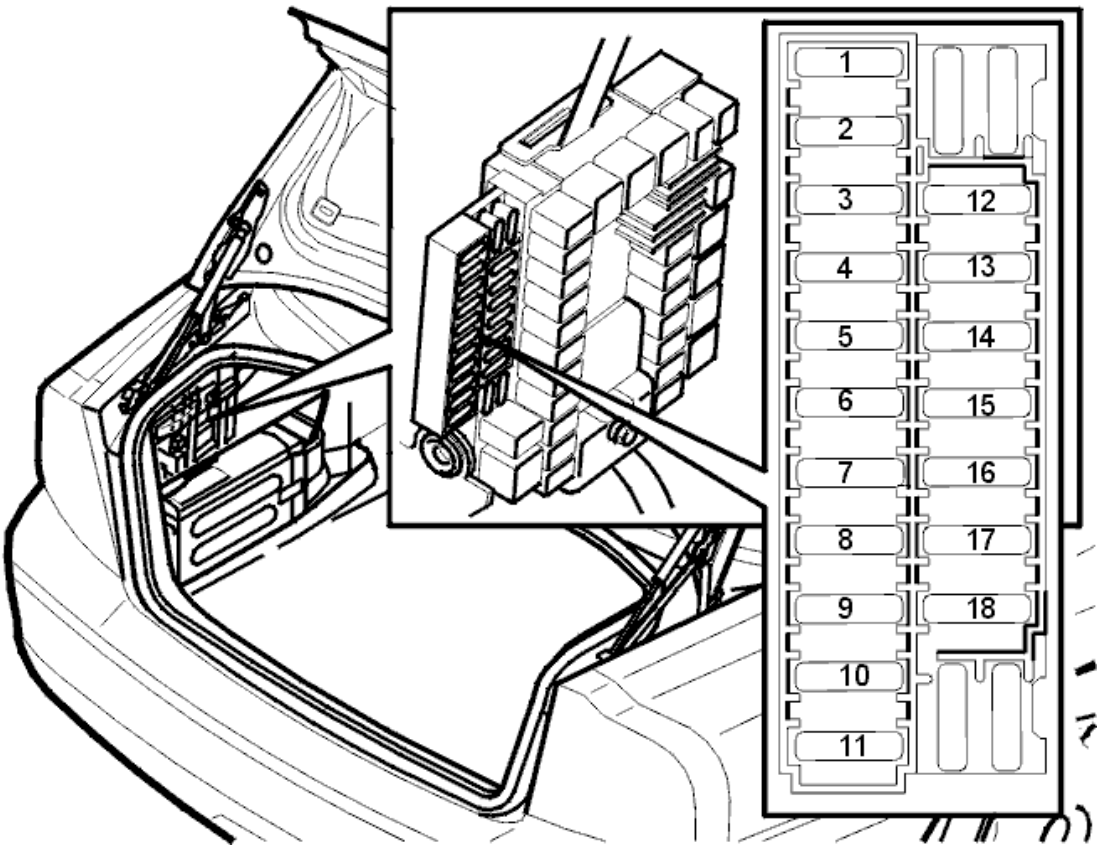

Fig. 176: Fuse Holder (Cargo Compartment)
Courtesy of VOLVO CARS CORPORATION

Is the fuse intact?

- **YES**

  Refer to **CHECKING THE VOLTAGE**

- **NO**

  Refer to **CHECKING FOR A SHORT CIRCUIT**

CHECKING FOR AN OPEN CIRCUIT

Check door control unit connector B7 for contact resistance and oxidation as described in, see **CONTACT RESISTANCE AND OXIDATION** .

Trouble-shoot the wire between fuse holder secondary side (left) and door control unit connector B7 for an open circuit as described in, see **OPEN-CIRCUIT, PERMANENT FAULTS** .

If a fault is detected, check in particular the intermediate connector in the cable harness (1/control unit) for contact resistance and oxidation as described in, see **CONTACT RESISTANCE AND OXIDATION** .

If there is an open circuit the fault should be between the fuse and the common junction point 53/427.

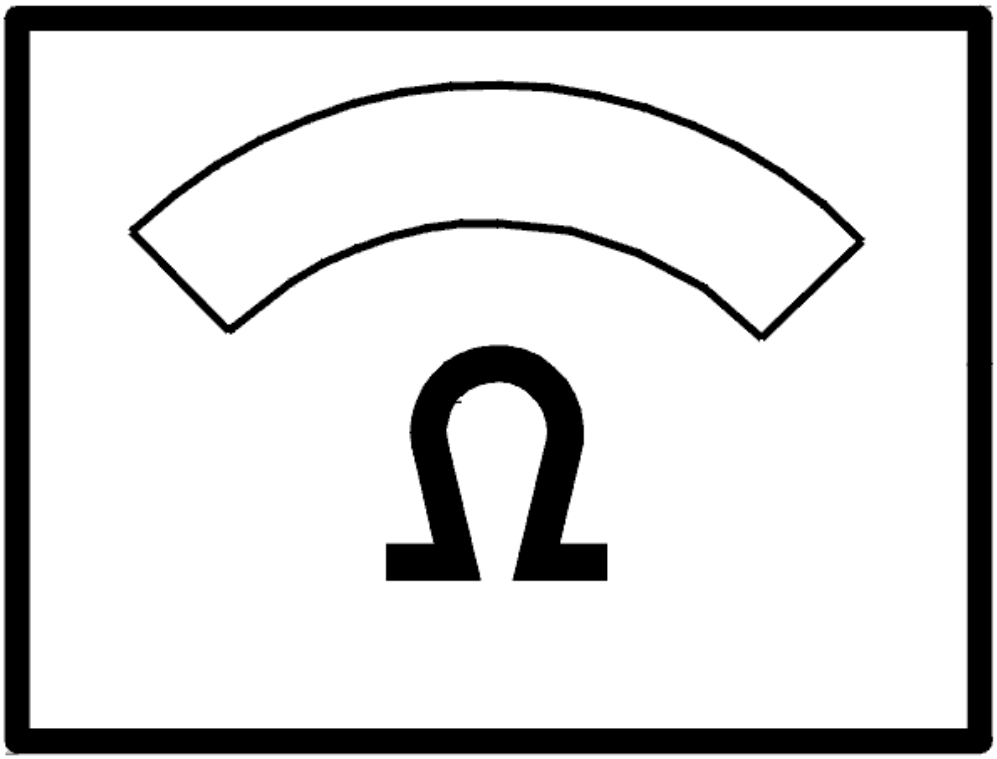

Fig. 177: Identifying Ohm Meter
Courtesy of VOLVO CARS CORPORATION

CHECKING FOR A SHORT CIRCUIT

Check the resistance between the fuse holder secondary side (left) and ground.

The ohmmeter should display infinite resistance.

NOTE: If the value is correct the fault could be intermittent.

Switch to trouble-shooting intermittent short circuits to ground as described in, see **SHORT-CIRCUIT TO GROUND, INTERMITTENT FAULTS** .

If the ohmmeter indicates a fault (short circuit), trouble-shoot the wires between the fuse and door control unit connector B7 for a short circuit to ground as described in, see **SHORT-CIRCUIT TO GROUND, PERMANENT FAULTS** .

The fault should be between the fuse and the common junction point 53/427.

Replace fuse.

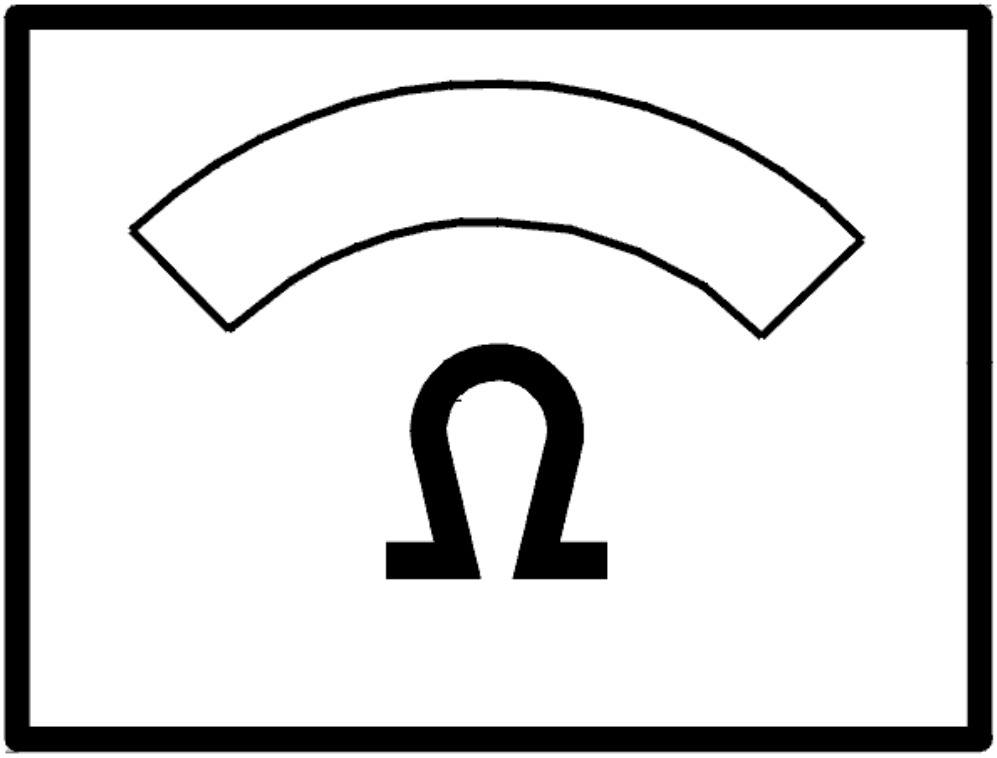

Fig. 178: Identifying Ohm Meter
Courtesy of VOLVO CARS CORPORATION

CHECKING THE VOLTAGE

Check the voltage in the door control unit connector B12.

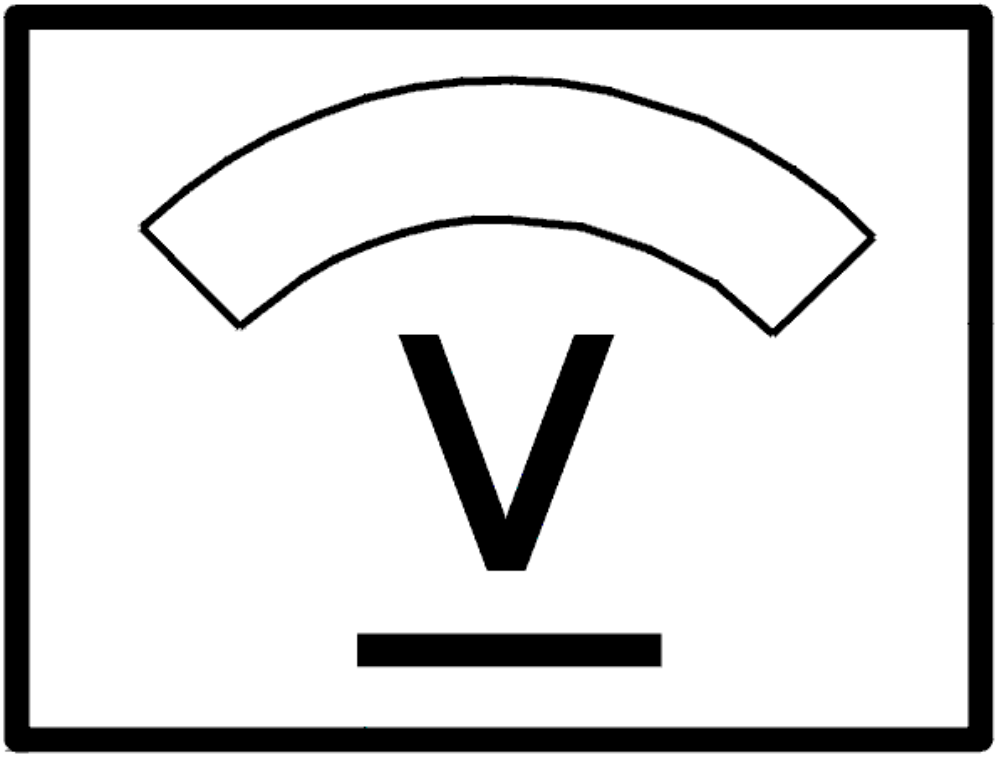

Fig. 179: Identifying Voltage Display
Courtesy of VOLVO CARS CORPORATION

Does the voltmeter show the battery voltage?

- **YES**

  Refer to **CHECKING THE LOCKING MOTOR WIRES**

- **NO**

  Refer to **CHECKING FOR AN OPEN CIRCUIT**

CHECKING FOR AN OPEN CIRCUIT

Check door control unit connector B12 for contact resistance and oxidation as described in, see **CONTACT**

RESISTANCE AND OXIDATION .

Trouble-shoot the wire between fuse holder secondary side (left) and door control unit connector B12 for an open circuit as described in, see **OPEN-CIRCUIT, PERMANENT FAULTS** .

If a fault is detected, check in particular the intermediate connector in the cable harness (1) for contact resistance and oxidation as described in, see **CONTACT RESISTANCE AND OXIDATION** .

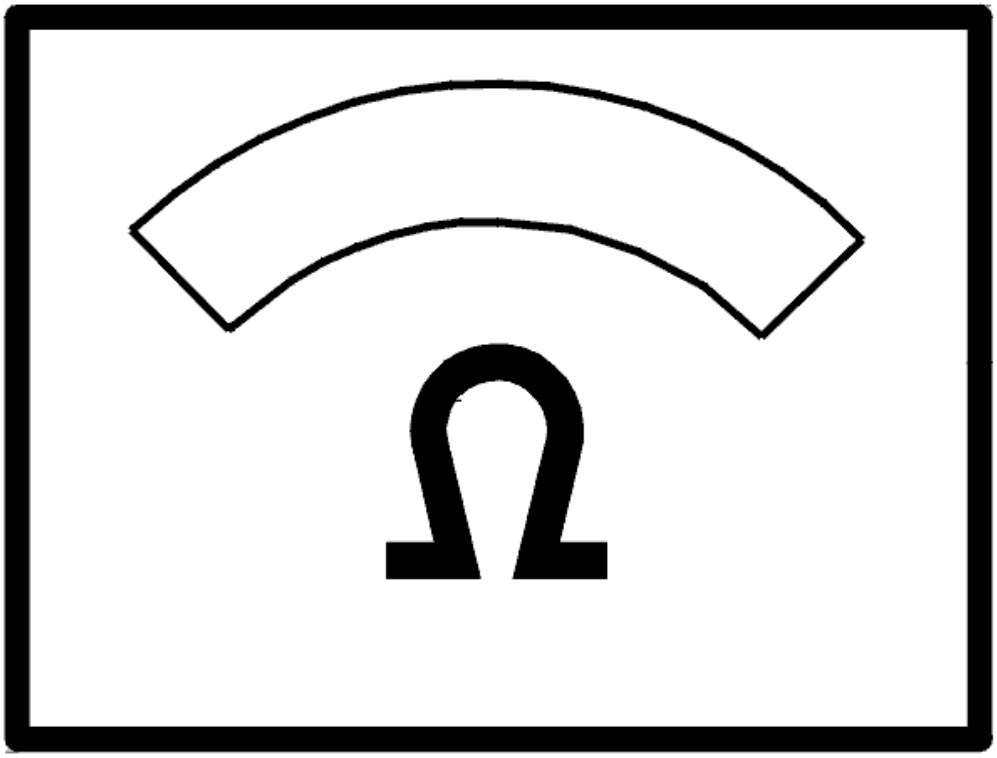

Fig. 180: Identifying Ohm Meter
Courtesy of VOLVO CARS CORPORATION

CHECKING FOR A SHORT CIRCUIT

Check the resistance between the fuse holder secondary side (left) and ground.

The ohmmeter should display infinite resistance.

NOTE: If the value is correct the fault could be intermittent.

Switch to trouble-shooting intermittent short circuits to ground as described in, see **SHORT-CIRCUIT TO GROUND, INTERMITTENT FAULTS** .

If the ohmmeter indicates a fault (short circuit), trouble-shoot the wires between the fuse and door control unit connector B12 for a short circuit to ground as described in, see **SHORT-CIRCUIT TO GROUND, PERMANENT FAULTS** .

Replace fuse.

Additional information

- To access relay/fuse box in the cargo compartment:
  - For -2004, see: **RELAY/FUSE BOX CARGO COMPARTMENT/REAR ELECTRONIC MODULE (REM), REPLACING**
  - For 2005-, see: **REAR ELECTRONIC MODULE (REM), REPLACING** .

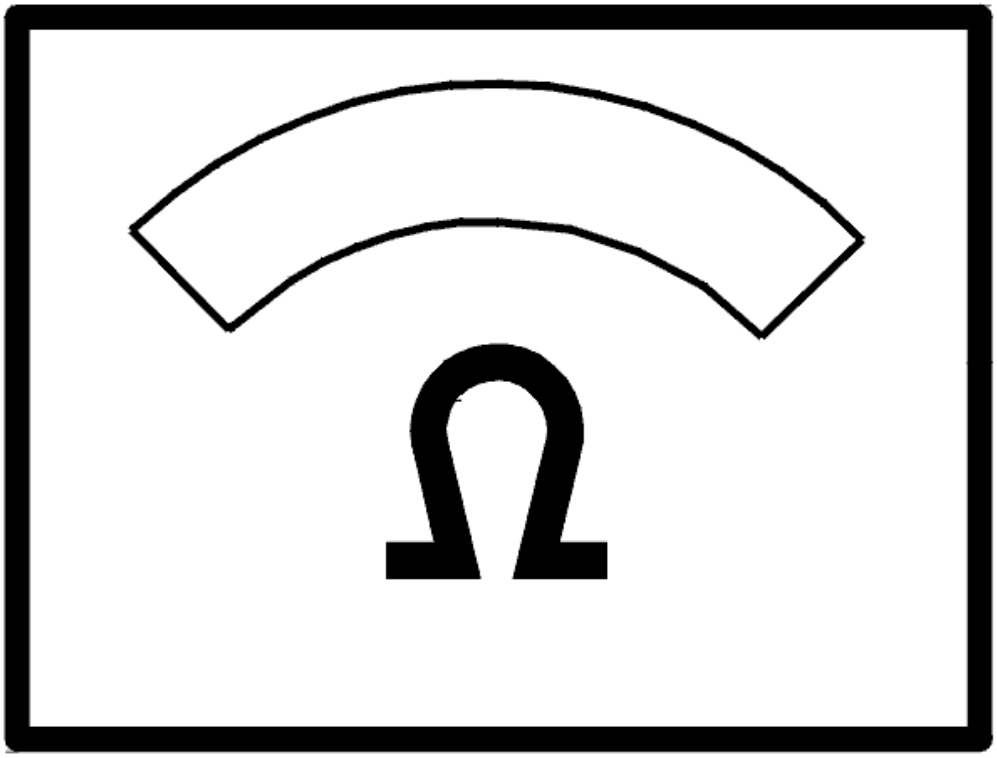

Fig. 181: Identifying Ohm Meter
Courtesy of VOLVO CARS CORPORATION

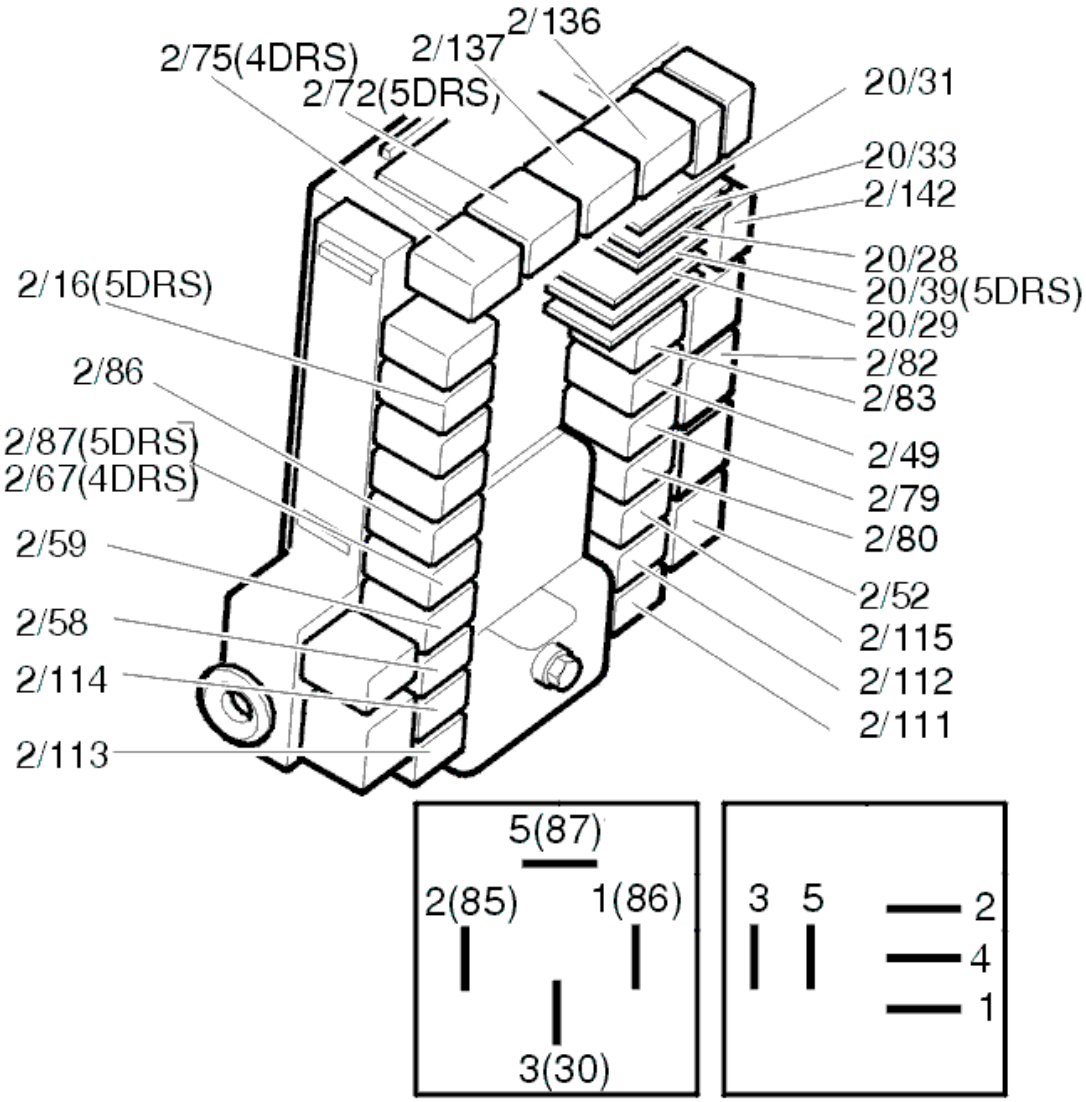

Fig. 182: Identifying Relays
Courtesy of VOLVO CARS CORPORATION

CHECKING THE LOCKING MOTOR WIRES

Check door control unit and lock unit connectors for contact resistance and oxidation as described in, see **CONTACT RESISTANCE AND OXIDATION** .

Trouble-shoot the wire between door control unit connector B2 and lock unit connector 8 for an open circuit as described in, see **OPEN-CIRCUIT, PERMANENT FAULTS** .

Trouble-shoot the wire between door control unit connector B6 and lock unit connector 7 for an open circuit as described in, see **OPEN-CIRCUIT, PERMANENT FAULTS** .

Additional information

- To access/replace rear electronic module (REM):
  - For -2004, see: **RELAY/FUSE BOX CARGO COMPARTMENT/REAR ELECTRONIC MODULE (REM), REPLACING**
  - For 2005-, see: **REAR ELECTRONIC MODULE (REM), REPLACING** .

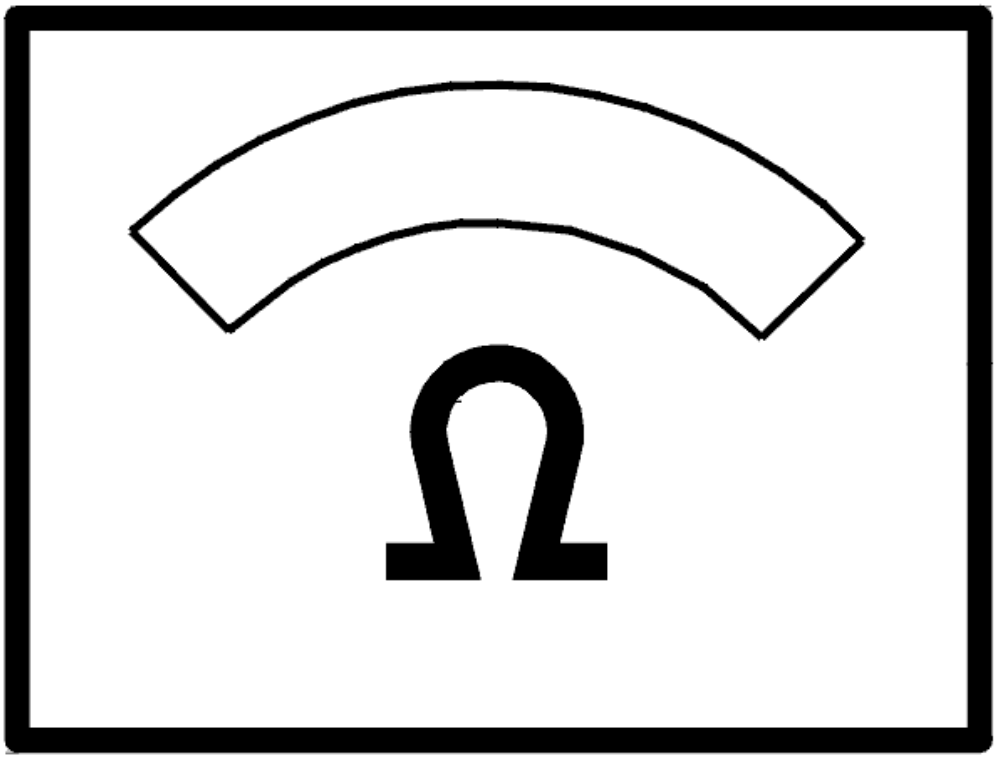

Fig. 183: Identifying Ohm Meter
Courtesy of VOLVO CARS CORPORATION

Is there a fault?

- **YES**

  OKAY: Troubleshooting has been completed.

- **NO**

Refer to **REPLACING THE COMPONENT**

REPLACING THE COMPONENT

Replace lock unit as described in, see **REPLACING THE SWITCH FOR THE LOCK UNIT / CARGO COMPARTMENT LIGHTING** .

Is there a fault?

- **YES**

  OKAY: Troubleshooting has been completed.

- **NO**

  Refer to **REPLACING THE COMPONENT**

REPLACING THE COMPONENT

Replace control unit.

- For -2004, see: **RELAY/FUSE BOX CARGO COMPARTMENT/REAR ELECTRONIC MODULE (REM), REPLACING**
- For 2005-, see: **REAR ELECTRONIC MODULE (REM), REPLACING** .

CHECKING THE REAR LEFT DOOR

CHECK

Is the lock to the other rear door not working?

- **YES**

  Refer to **CHECKING THE FUSE**

- **NO**

  Refer to **REPLACING THE COMPONENT**

REPLACING THE COMPONENT

Replace the relays for locking (2/111) and unlocking (2/112) in the cargo compartment relay/fuse box. At the same time check relay socket contacts for contact resistance and oxidation as described in, see **CONTACT RESISTANCE AND OXIDATION** .

Additional information

- To access relay/fuse box in the cargo compartment:

- For -2004, see: **RELAY/FUSE BOX CARGO COMPARTMENT/REAR ELECTRONIC MODULE (REM), REPLACING**
- For 2005-, see: **REAR ELECTRONIC MODULE (REM), REPLACING** .

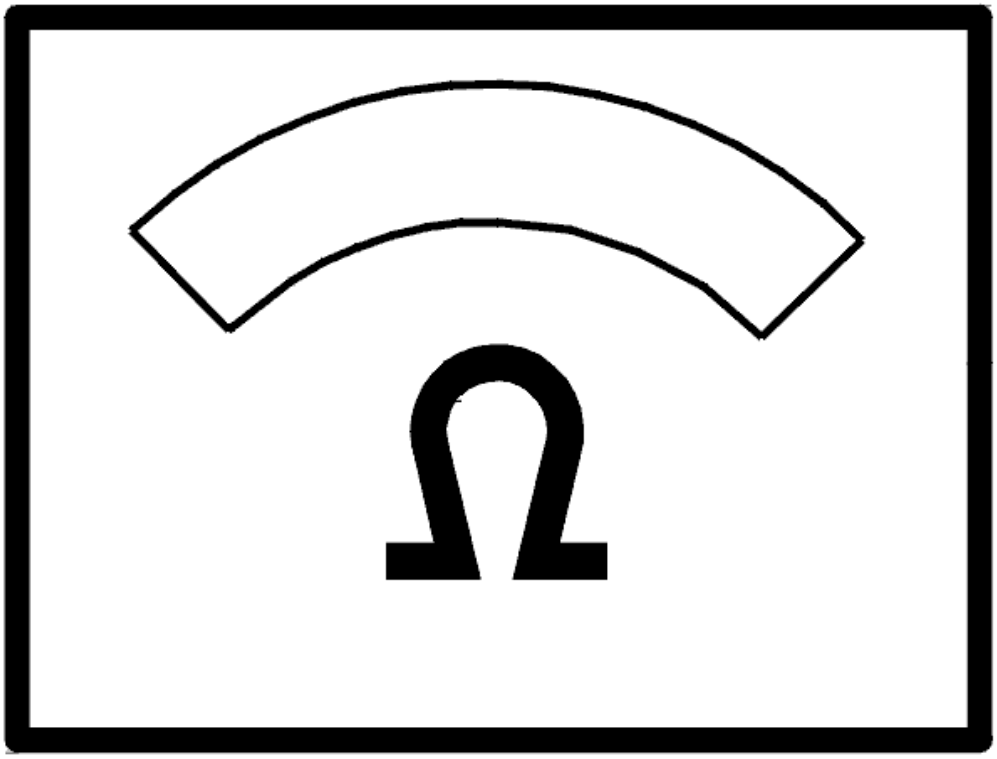

Fig. 184: Identifying Ohm Meter
Courtesy of VOLVO CARS CORPORATION

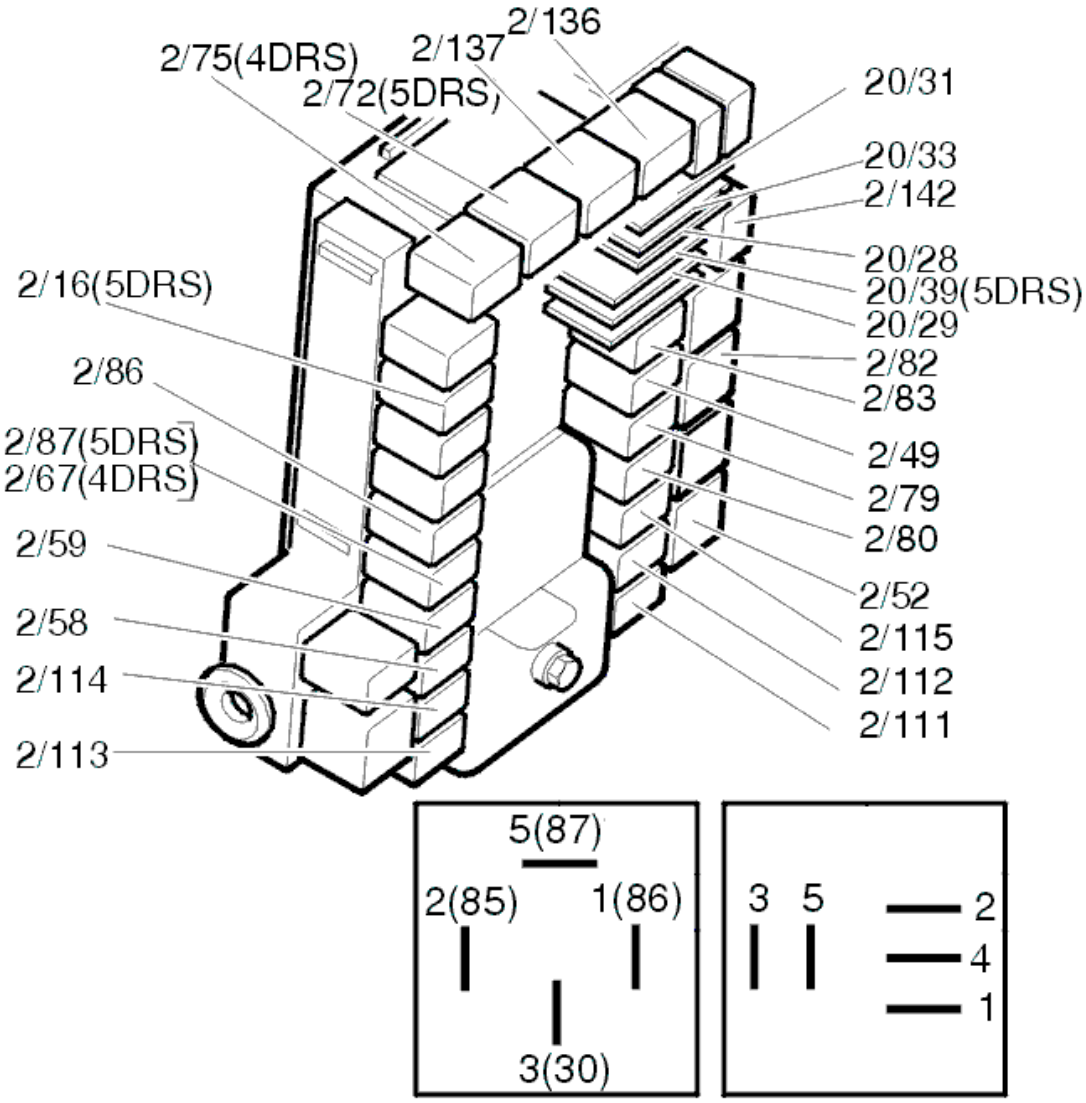

Fig. 185: Identifying Relays
Courtesy of VOLVO CARS CORPORATION

Is there a fault?

- **YES**

  OKAY: Troubleshooting has been completed.

- **NO**

  Refer to **CIRCUIT TEST**

CIRCUIT TEST

The fault is caused by an open circuit in one of the relay circuits or in the lock unit. To find out which circuit

contains the fault:

Disconnect the lock unit connector.

Check the contacts for contact resistance and oxidation as described in, see **CONTACT RESISTANCE AND OXIDATION** .

Check resistance between 4 and 6 on cable connector.

Additional information

- To access/replace the lock unit, see **LOCK MECHANISM REAR SIDE DOOR, REPLACING** .

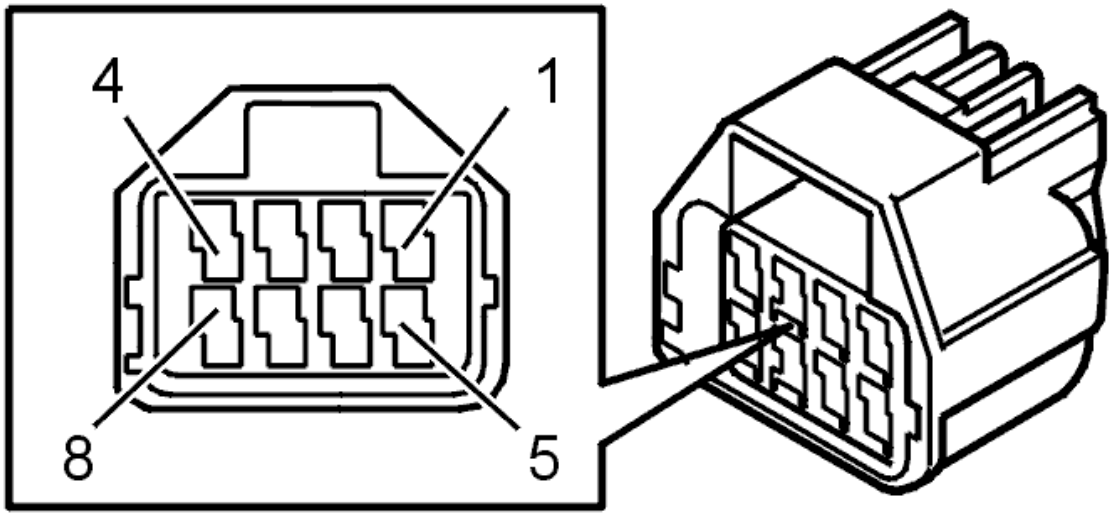

Fig. 186: Identifying Connector Terminals
Courtesy of VOLVO CARS CORPORATION

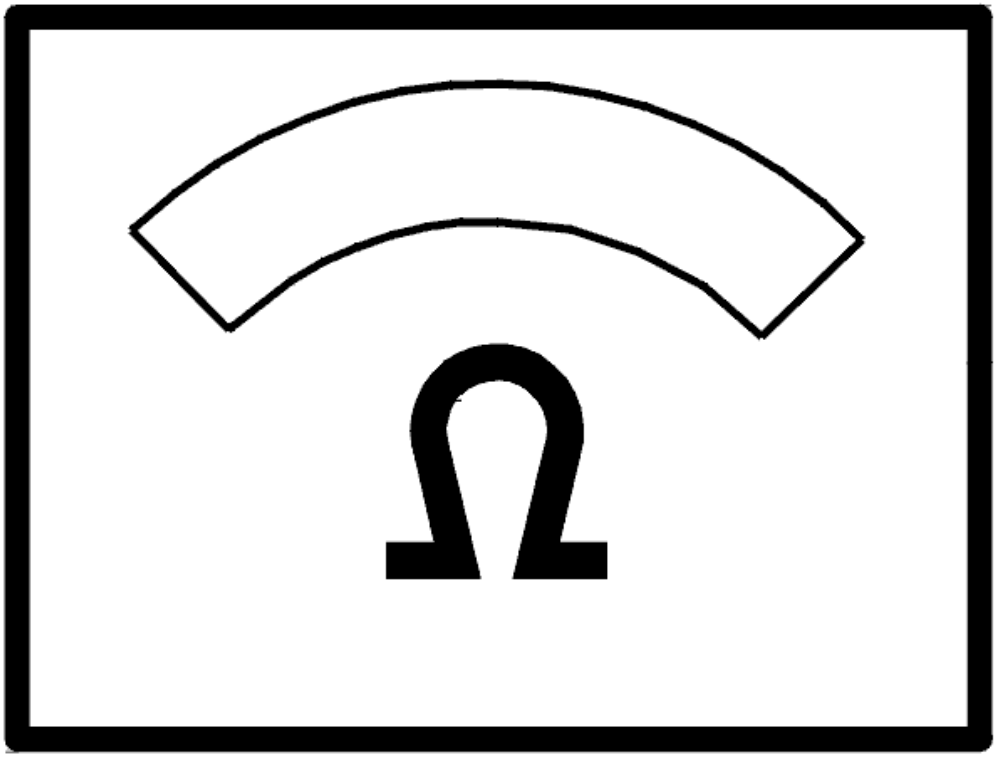

Fig. 187: Identifying Ohm Meter
Courtesy of VOLVO CARS CORPORATION

The ohmmeter should display 0 ohm.

- **OK**

  Refer to **CHECKING THE COMPONENTS**

- **NOT OK**

  Refer to **CIRCUIT TEST, CONTINUED**

CIRCUIT TEST, CONTINUED

Check the resistance between 4 and ground and between 6 and ground on the cable connector.

The ohmmeter should display 0 ohm.

1. The ohmmeter shows a fault between 4 and ground

   Refer to **CHECKING THE UNLOCKING RELAY CIRCUIT**

2. The ohmmeter shows a fault between 6 and ground.

   Refer to **CHECKING THE LOCKING RELAY CIRCUIT**

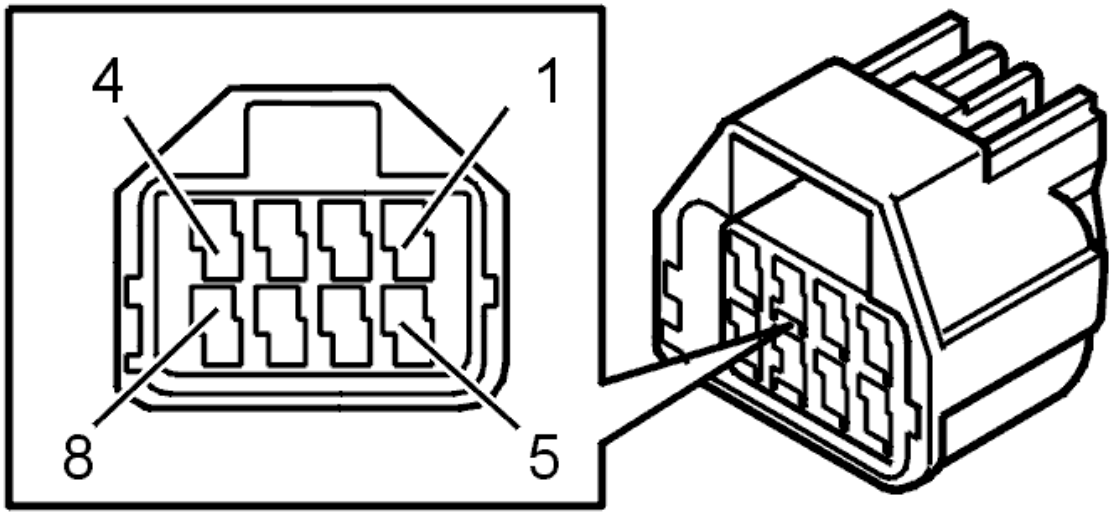

Fig. 188: Identifying Connector Terminals
Courtesy of VOLVO CARS CORPORATION

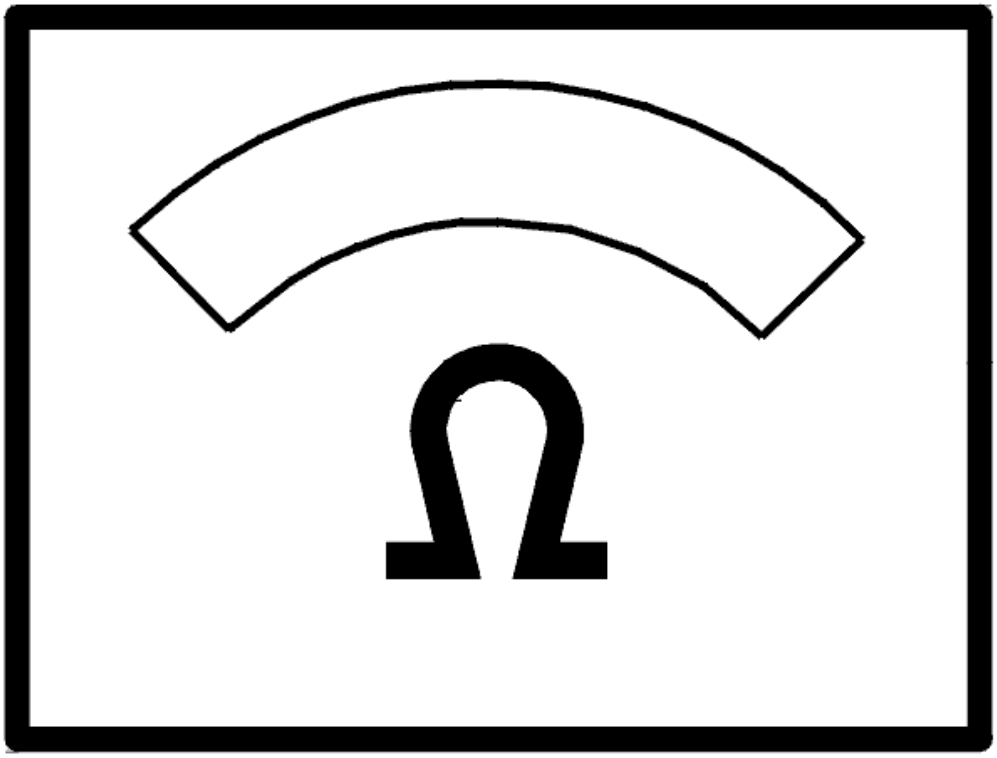

Fig. 189: Identifying Ohm Meter
Courtesy of VOLVO CARS CORPORATION

CHECKING THE LOCKING RELAY CIRCUIT

Remove the locking relay (2/111).

Check the wire between 4 in the cable connector and 3 in the relay socket for an open circuit as described in, see **OPEN-CIRCUIT, PERMANENT FAULTS** .

If a fault is detected, check in particular the intermediate connector in the cable harness (2) for contact resistance and oxidation as described in, see **CONTACT RESISTANCE AND OXIDATION** .

Do the necessary corrective action.

If no fault is found, check the resistance between 4 in the relay socket and ground.

The ohmmeter should display 0 ohm.

If the resistance deviates, replace the rear electronic module (REM).

Additional information

- To access/replace rear electronic module (REM):
  - For -2004, see: **RELAY/FUSE BOX CARGO COMPARTMENT/REAR ELECTRONIC MODULE (REM), REPLACING**
  - For 2005-, see: **REAR ELECTRONIC MODULE (REM), REPLACING** .

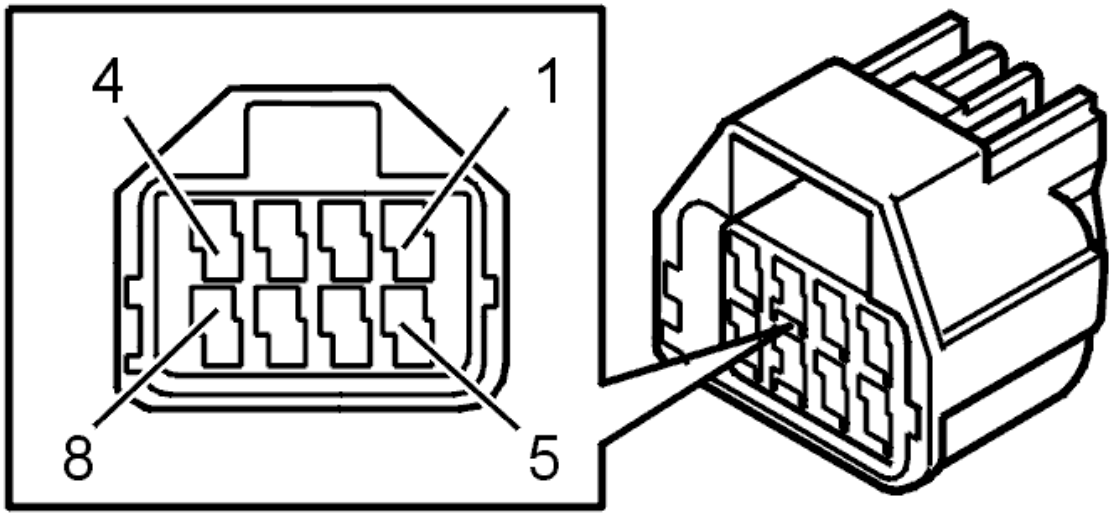

Fig. 190: Identifying Connector Terminals
Courtesy of VOLVO CARS CORPORATION

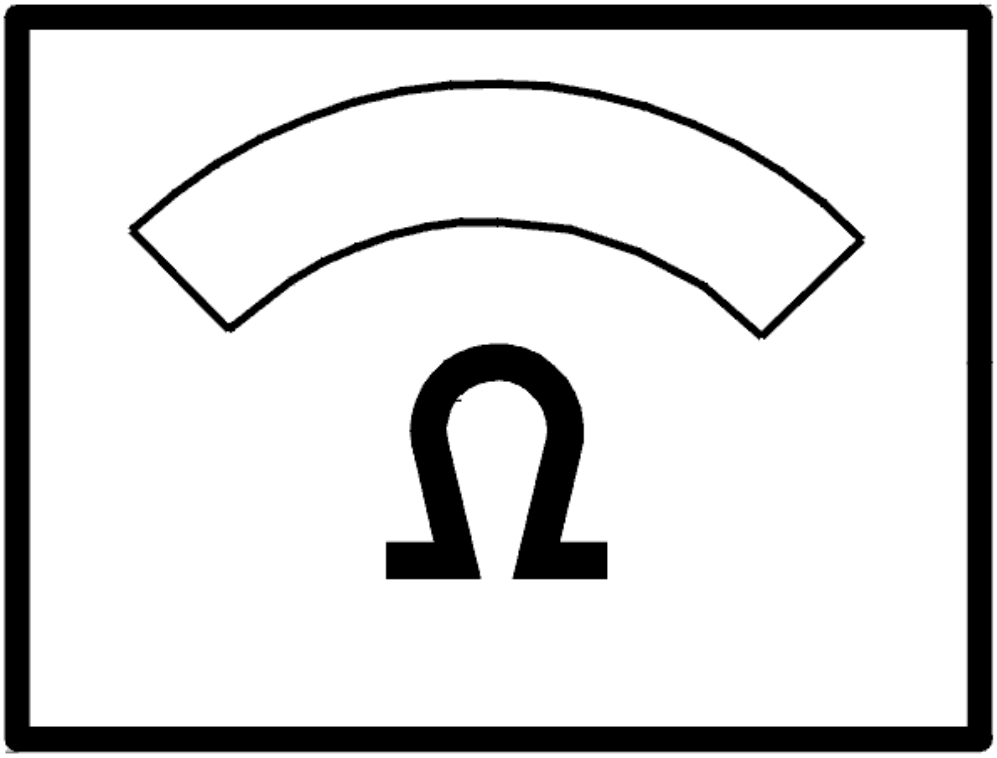

Fig. 191: Identifying Ohm Meter
Courtesy of VOLVO CARS CORPORATION

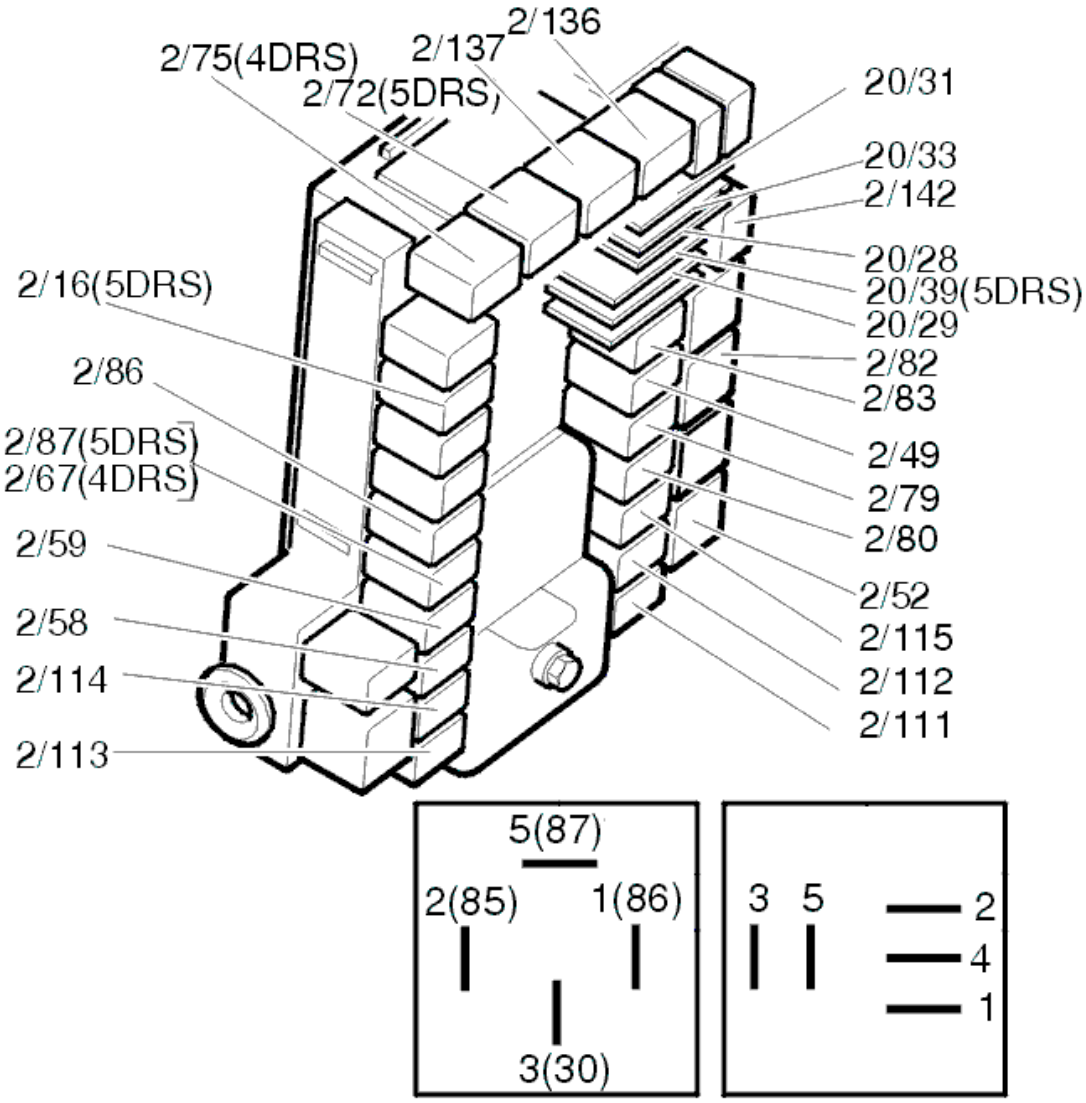

Fig. 192: Identifying Relays
Courtesy of VOLVO CARS CORPORATION

CHECKING THE UNLOCKING RELAY CIRCUIT

Remove the unlocking relay (2/112).

Check the wire between 6 in the cable connector and 3 in the relay socket for an open circuit as described in, see **OPEN-CIRCUIT, PERMANENT FAULTS** .

If a fault is detected, check in particular the intermediate connector in the cable harness (2) for contact resistance and oxidation as described in, see **CONTACT RESISTANCE AND OXIDATION** .

Do the necessary corrective action.

If no fault is found, check the resistance between 4 in the relay socket and ground.

The ohmmeter should display 0 ohm.

If the resistance deviates, replace the rear electronic module (REM).

Additional information

- To access/replace rear electronic module (REM):
  - For -2004, see: **RELAY/FUSE BOX CARGO COMPARTMENT/REAR ELECTRONIC MODULE (REM), REPLACING**
  - For 2005-, see: **REAR ELECTRONIC MODULE (REM), REPLACING** .

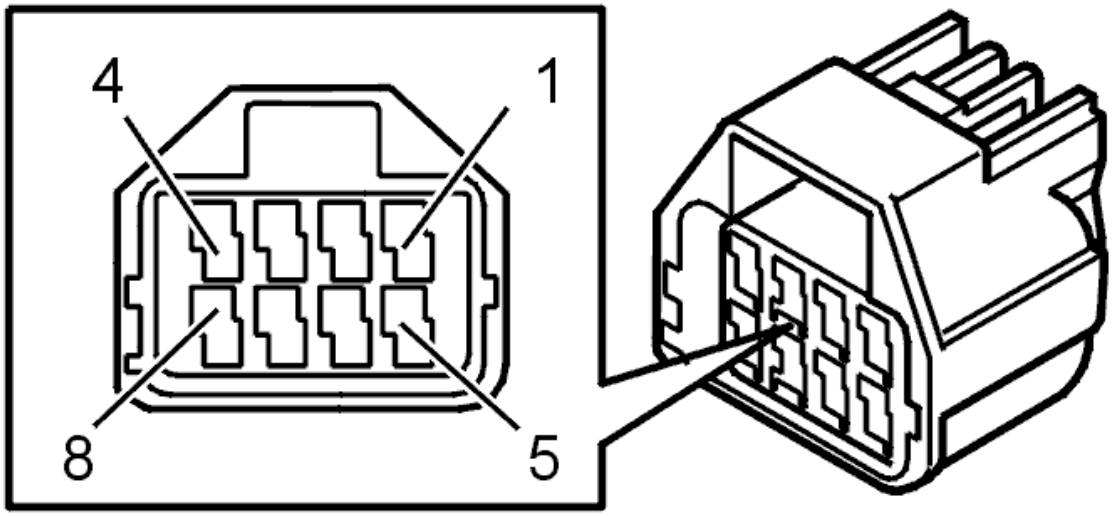

Fig. 193: Identifying Connector Terminals
Courtesy of VOLVO CARS CORPORATION

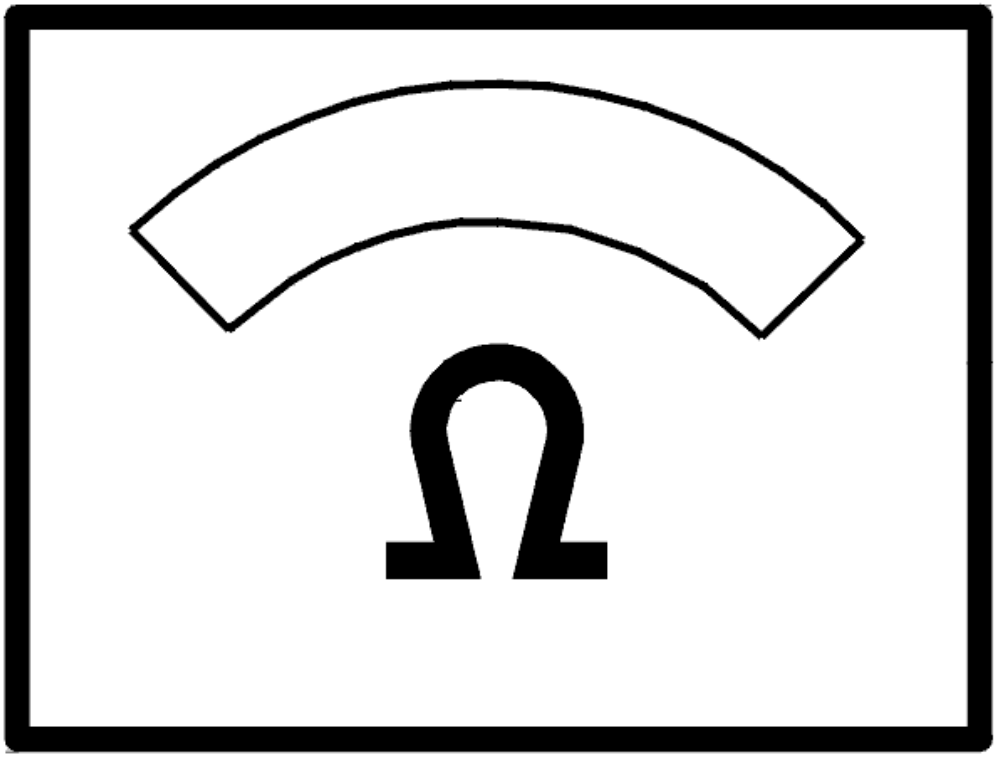

Fig. 194: Identifying Ohm Meter
Courtesy of VOLVO CARS CORPORATION

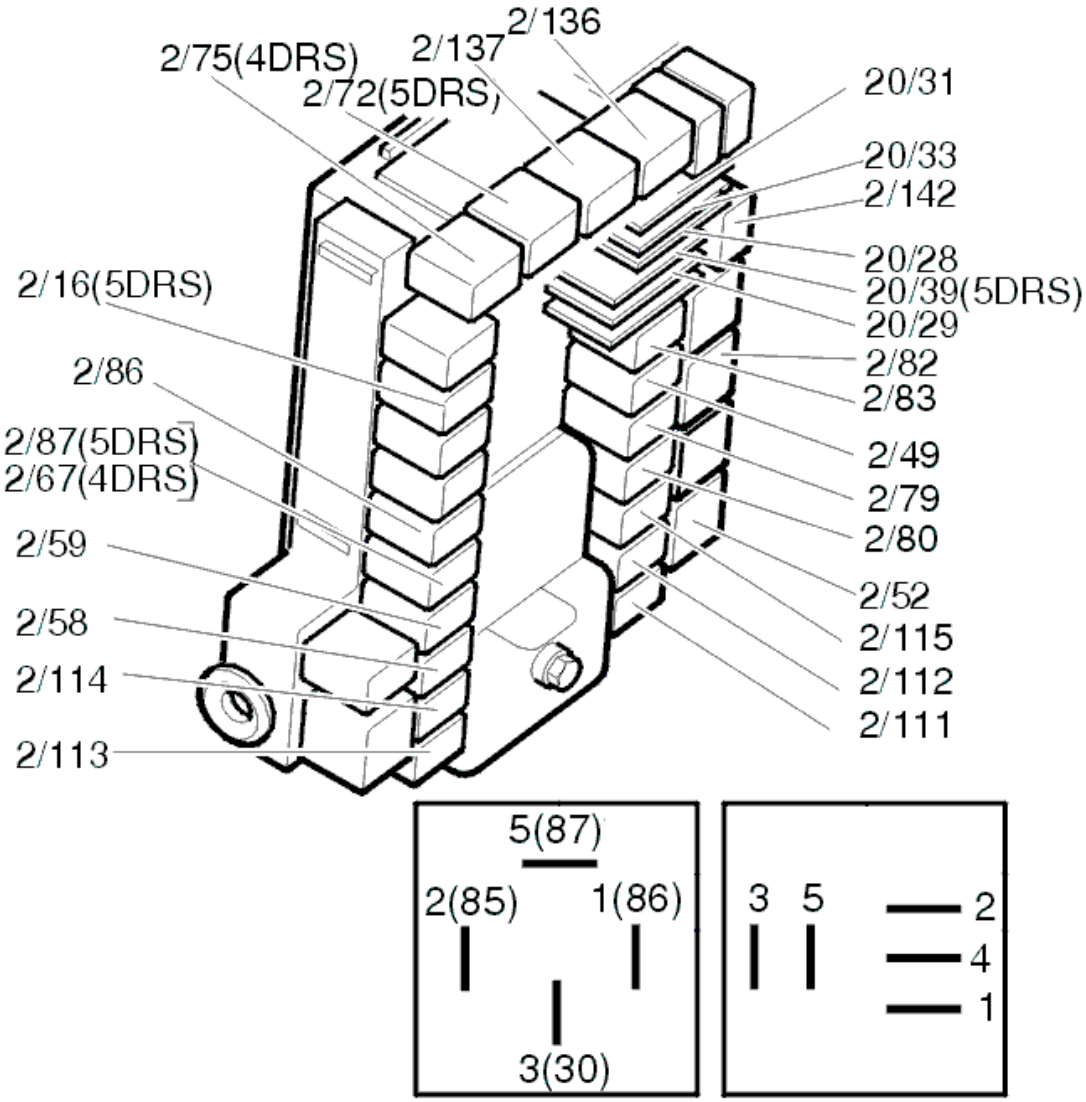

Fig. 195: Identifying Relays
Courtesy of VOLVO CARS CORPORATION

CHECKING THE COMPONENTS

Check the resistance between pin 4 and 6 in the lock unit chassis contact.

The ohmmeter should display 5 ohm.

If the resistance deviates, replace the lock unit.

Additional information

- To access the rear electronic module (REM):
  - For -2004, see: **RELAY/FUSE BOX CARGO COMPARTMENT/REAR ELECTRONIC MODULE (REM), REPLACING**

- For 2005-, see: **REAR ELECTRONIC MODULE (REM), REPLACING** .
- To access/replace the lock unit, see **LOCK MECHANISM REAR SIDE DOOR, REPLACING**
- For information on signals and additional values, see **SIGNAL SPECIFICATION** .

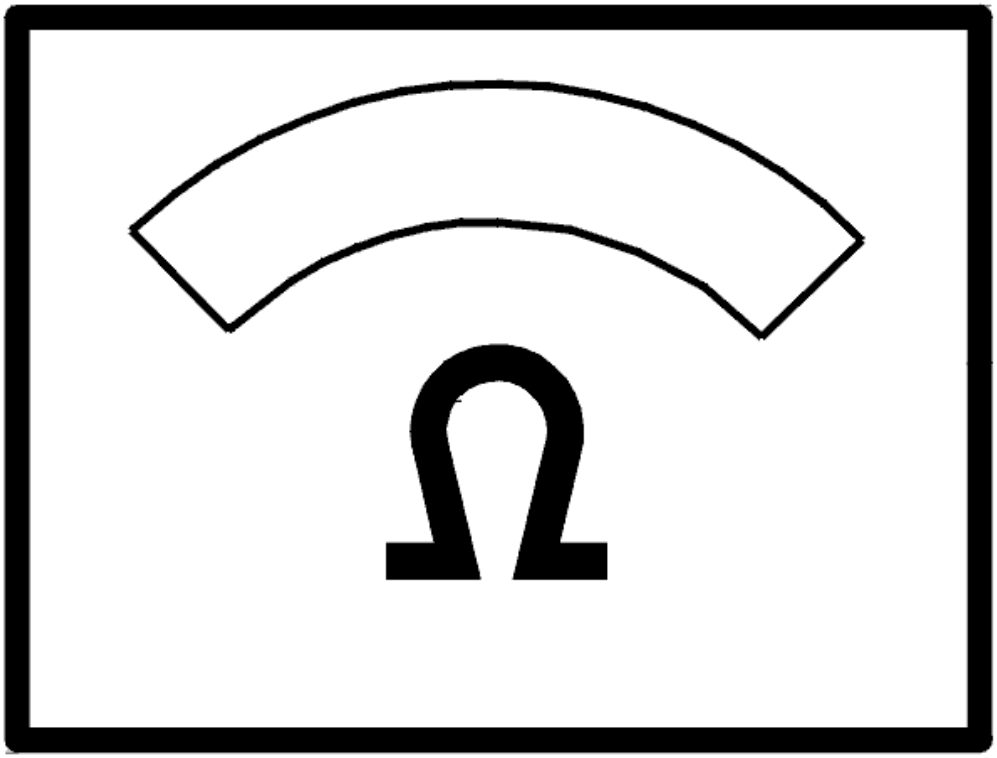

Fig. 196: Identifying Ohm Meter
Courtesy of VOLVO CARS CORPORATION

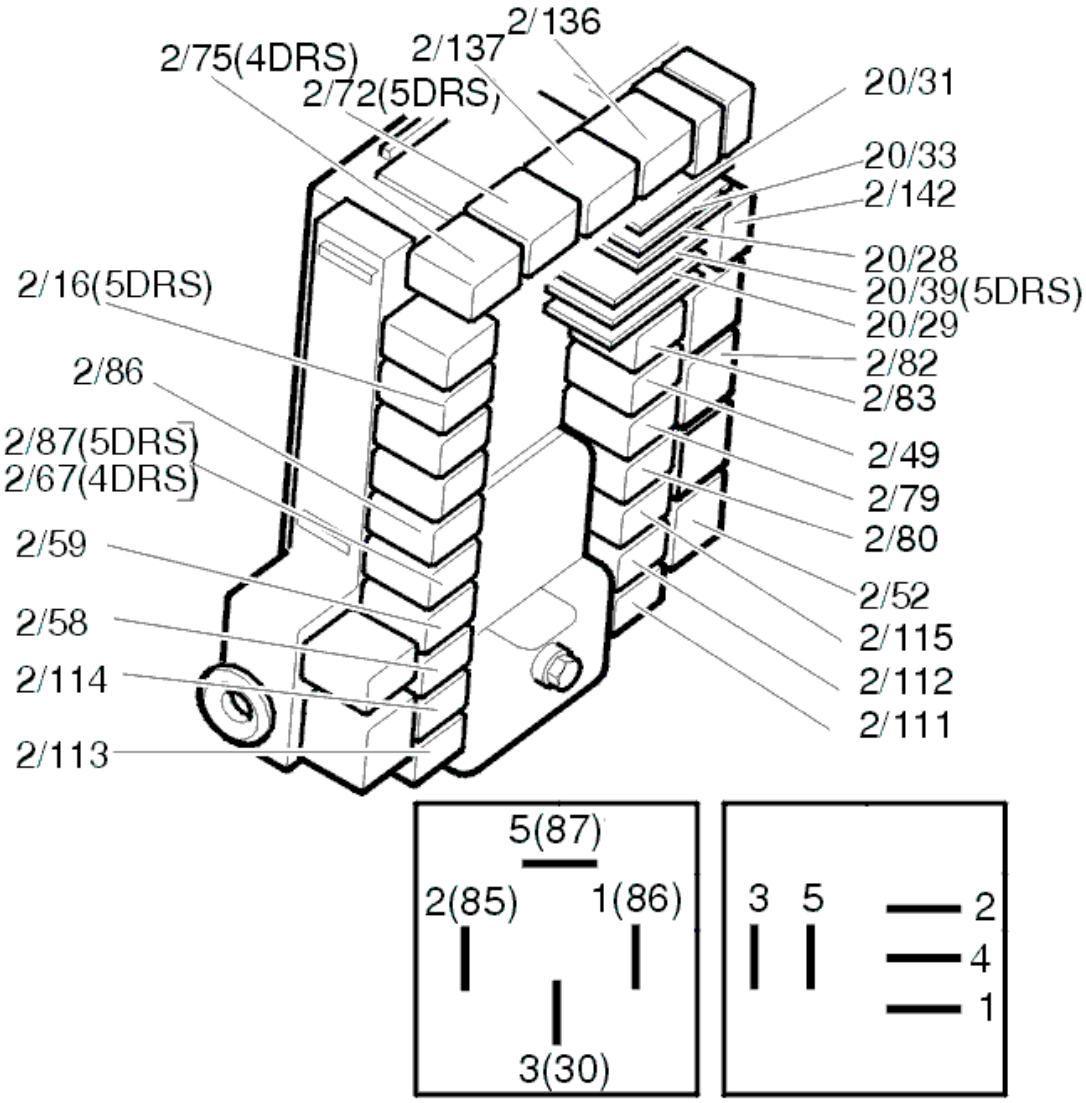

Fig. 197: Identifying Relays
Courtesy of VOLVO CARS CORPORATION

Is there a fault?

- **YES**

  OKAY: Troubleshooting has been completed.

- **NO**

  Refer to **CHECKING THE RELAY SUPPLY**

CHECKING THE RELAY SUPPLY

Remove the locking relay (2/111).

Measure the voltage between 5 in the relay socket and ground.

The voltmeter should display battery voltage.

HINT: If the value is OK but the fault still remains, connect the contacts to the lock module and link between 3 and 5 in the relay socket to force-feed the lock motor while continuing to test.

Additional information

- To access the rear electronic module (REM):
  - For -2004, see: **RELAY/FUSE BOX CARGO COMPARTMENT/REAR ELECTRONIC MODULE (REM), REPLACING**
  - For 2005-, see: **REAR ELECTRONIC MODULE (REM), REPLACING** .

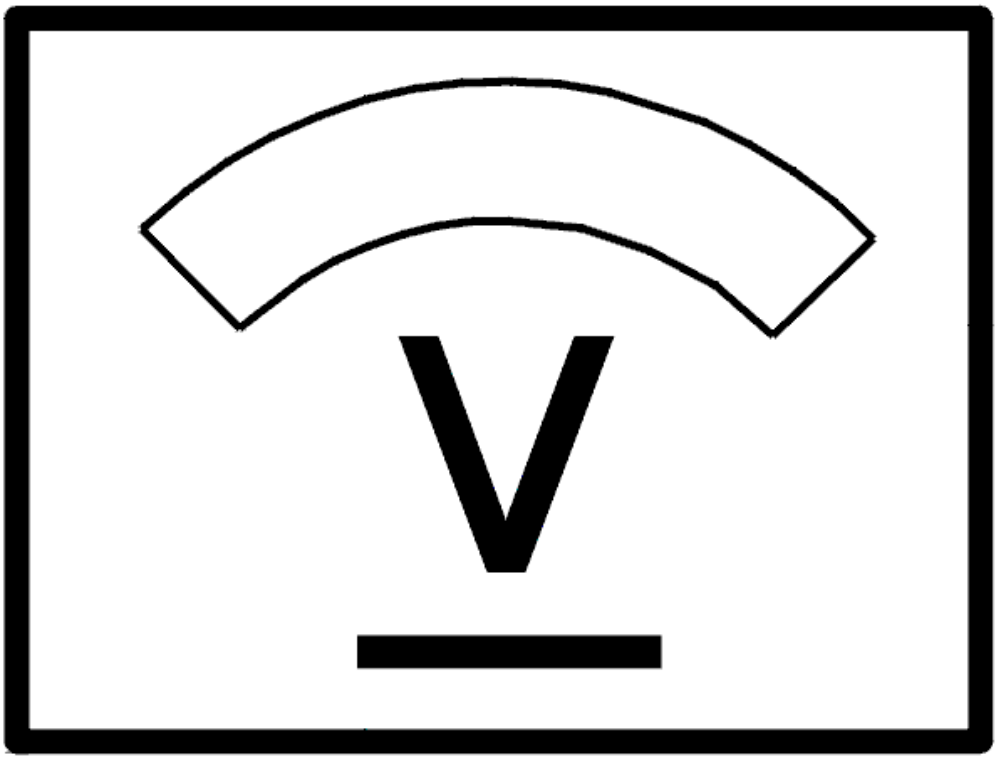

Fig. 198: Identifying Voltage Display

Courtesy of VOLVO CARS CORPORATION

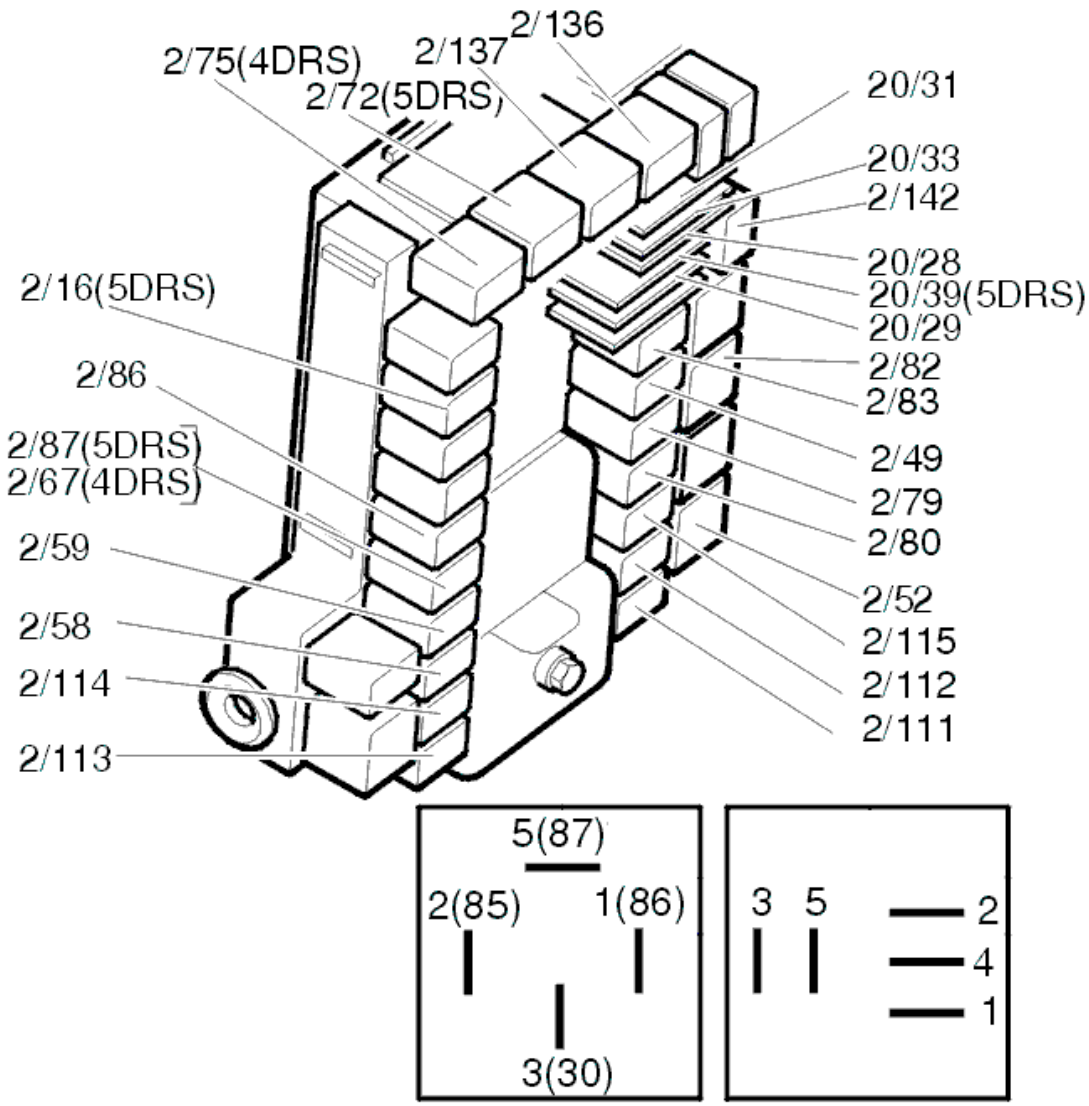

Fig. 199: Identifying Relays
Courtesy of VOLVO CARS CORPORATION

Does the voltmeter show the battery voltage?

- **YES**

  OKAY: Troubleshooting has been completed.

- **NO**

  Refer to **CHECKING THE FUSE**

CHECKING THE FUSE

Remove the fuse 11D/8 in cargo compartment fuse box.

Check that fuse 11D/8 is intact and check for contact resistance and oxidation as described in, see **CONTACT RESISTANCE AND OXIDATION** .

Additional information

- To access the rear electronic module (REM):
  - For -2004, see: **RELAY/FUSE BOX CARGO COMPARTMENT/REAR ELECTRONIC MODULE (REM), REPLACING**
  - For 2005-, see: **REAR ELECTRONIC MODULE (REM), REPLACING** .

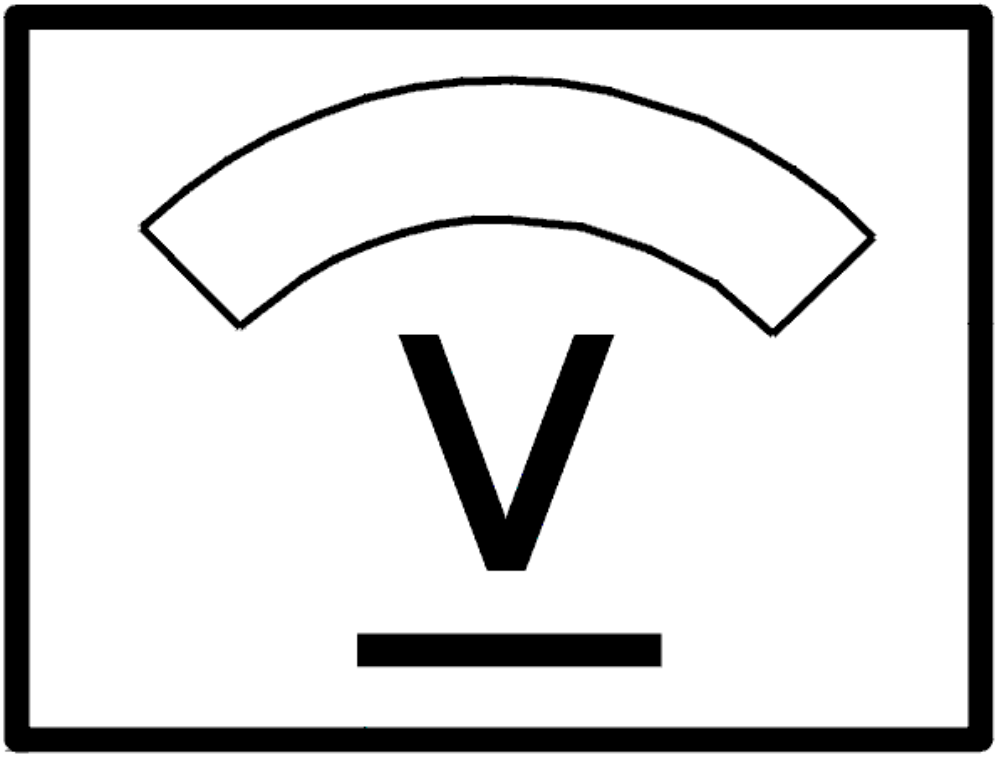

Fig. 200: Identifying Voltage Display
Courtesy of VOLVO CARS CORPORATION

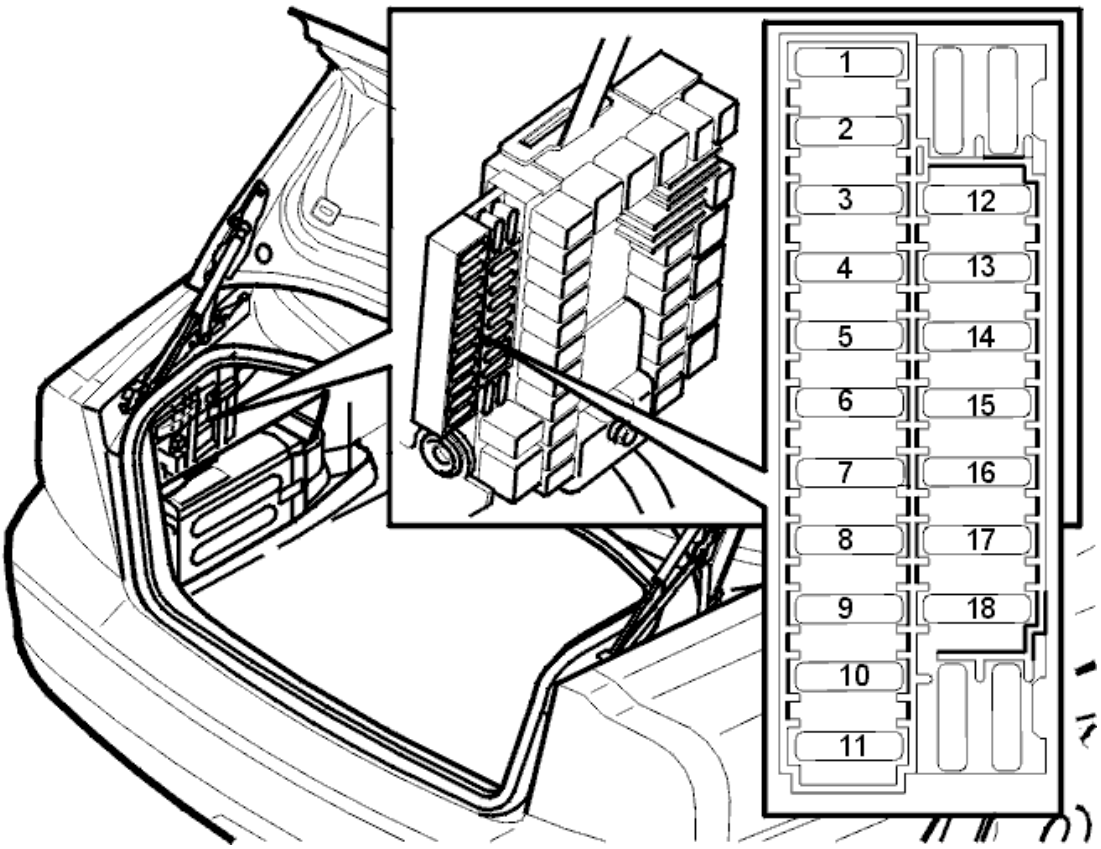

Fig. 201: Fuse Holder (Cargo Compartment)
Courtesy of VOLVO CARS CORPORATION

Is the fuse intact?

- **YES**

  Refer to **CHECKING FOR AN OPEN CIRCUIT**

- **NO**

  Refer to **CHECKING FOR A SHORT CIRCUIT**

CHECKING FOR AN OPEN CIRCUIT

Remove relay 2/111 in the rear electronic module (REM) and trouble-shoot the wire between the fuse holder secondary side (left) and 5 in the relay socket for an open circuit as described in, see **OPEN-CIRCUIT, PERMANENT FAULTS** .

Additional information

- To access the rear electronic module (REM):
  - For -2004, see: **RELAY/FUSE BOX CARGO COMPARTMENT/REAR ELECTRONIC MODULE (REM), REPLACING**

- For 2005-, see: **REAR ELECTRONIC MODULE (REM), REPLACING** .

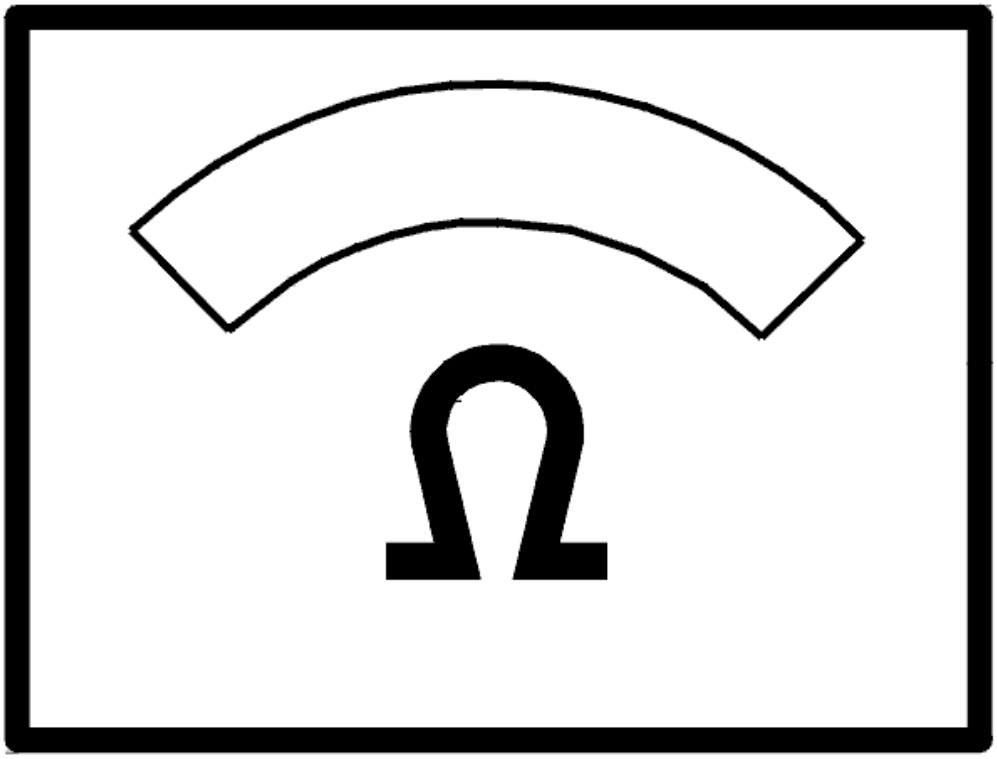

Fig. 202: Identifying Ohm Meter
Courtesy of VOLVO CARS CORPORATION

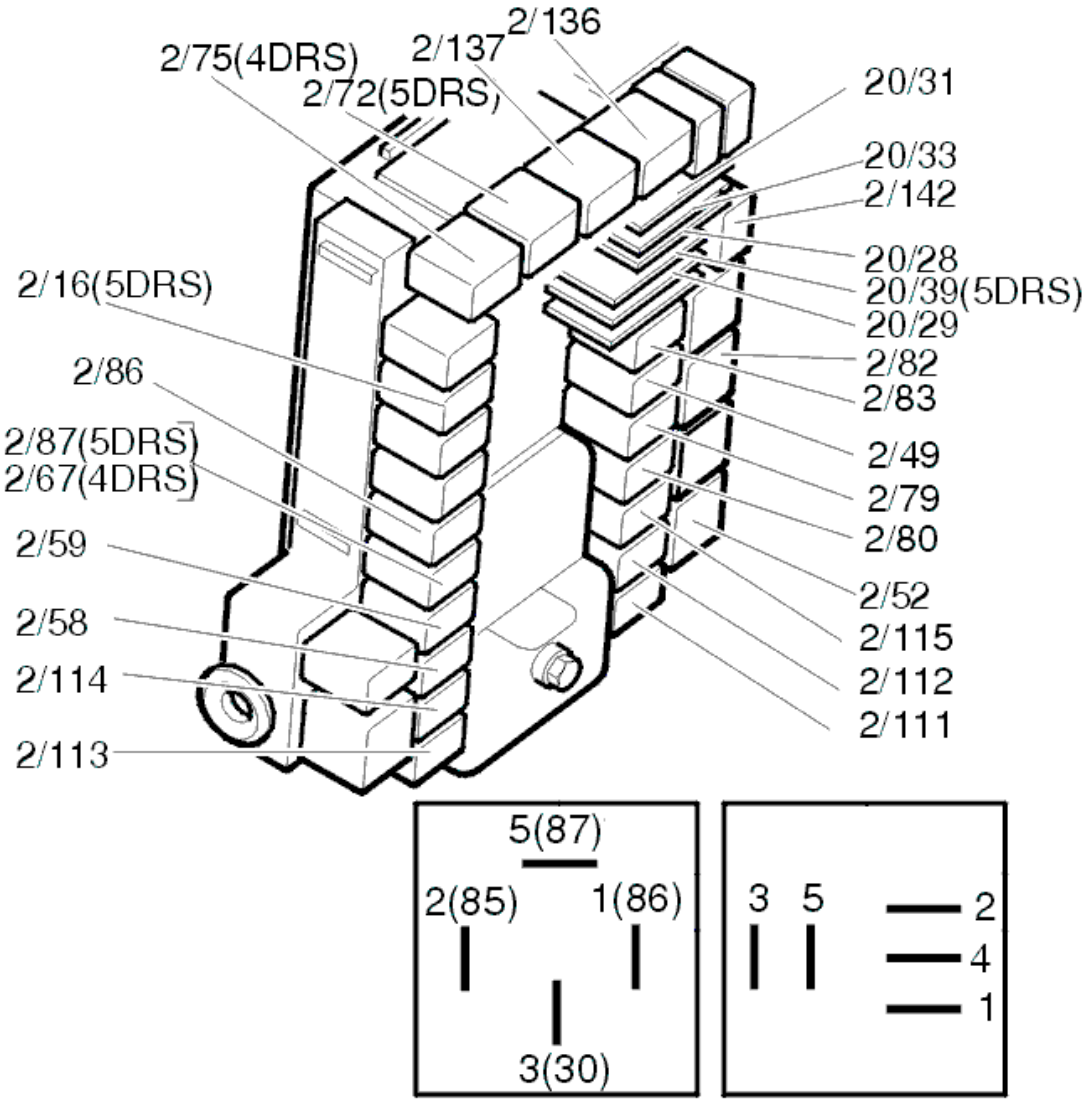

Fig. 203: Identifying Relays
Courtesy of VOLVO CARS CORPORATION

CHECKING FOR A SHORT CIRCUIT

Check the resistance between the fuse holder secondary side (left) and ground.

The ohmmeter should display infinite resistance.

If the value is correct, replace the fuse.

If the value deviates, trouble-shoot all the relay circuits involved for a short circuit to ground as described in, see **SHORT-CIRCUIT TO GROUND, PERMANENT FAULTS** .

HINT: Replace fuse.

HINT: If the fuse works straight away the fault is a short circuit on the relay supply wire.

HINT: If the fuse works when activating each relay the short circuit is on the component supply wire

HINT: The relay circuits involved belong to relays 2/111, 2/112, 2/113, 2/114, 2/115, 2/56, 2/59 and 2/67.

Additional information

- To access the rear electronic module (REM):
  - For -2004, see: **RELAY/FUSE BOX CARGO COMPARTMENT/REAR ELECTRONIC MODULE (REM), REPLACING**
  - For 2005-, see: **REAR ELECTRONIC MODULE (REM), REPLACING** .

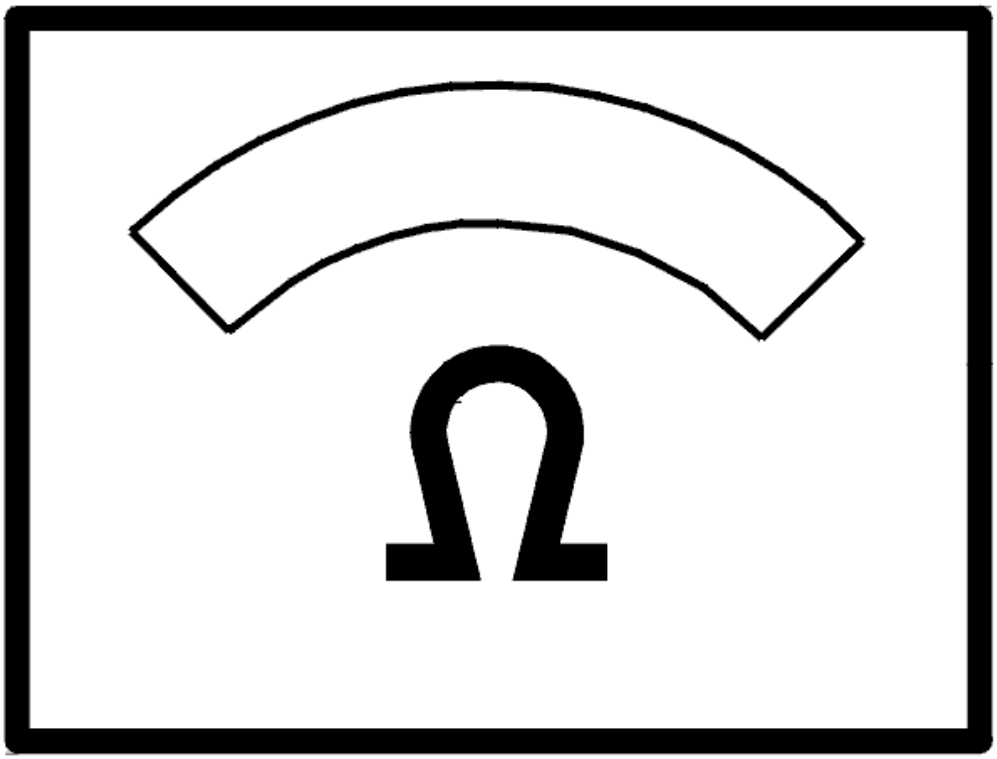

Fig. 204: Identifying Ohm Meter
Courtesy of VOLVO CARS CORPORATION

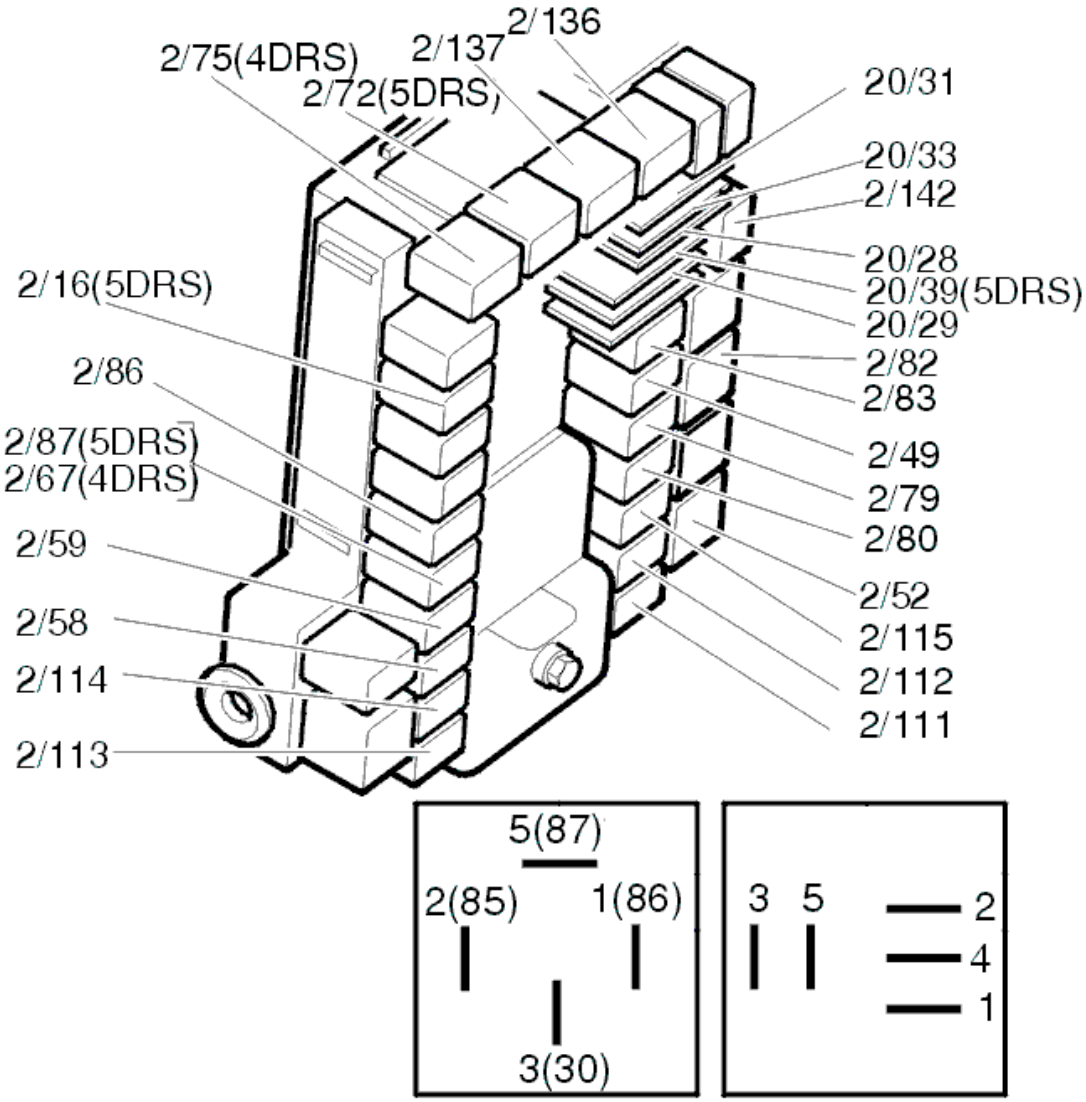

Fig. 205: Identifying Relays
Courtesy of VOLVO CARS CORPORATION

CHECKING THE REAR RIGHT DOOR

CHECK

Is the lock to the other rear door not working?

- **YES**

  Refer to **CHECKING THE FUSE**

- **NO**

  Refer to **REPLACING THE COMPONENT**

REPLACING THE COMPONENT

Replace the relays for locking (2/113) and unlocking (2/114) in the cargo compartment relay/fuse box. At the same time check relay socket contacts for contact resistance and oxidation as described in, see **CONTACT RESISTANCE AND OXIDATION** .

Additional information

- To access relay/fuse box in the cargo compartment:
  - For -2004, see: **RELAY/FUSE BOX CARGO COMPARTMENT/REAR ELECTRONIC MODULE (REM), REPLACING**
  - For 2005-, see: **REAR ELECTRONIC MODULE (REM), REPLACING** .

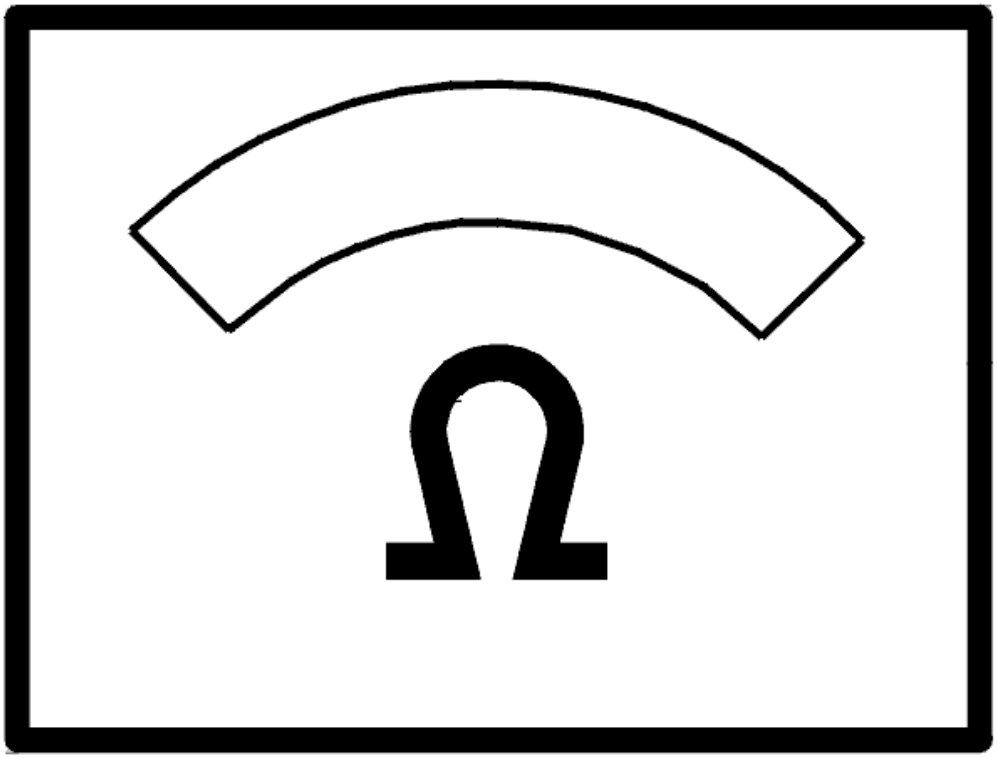

Fig. 206: Identifying Ohm Meter
Courtesy of VOLVO CARS CORPORATION

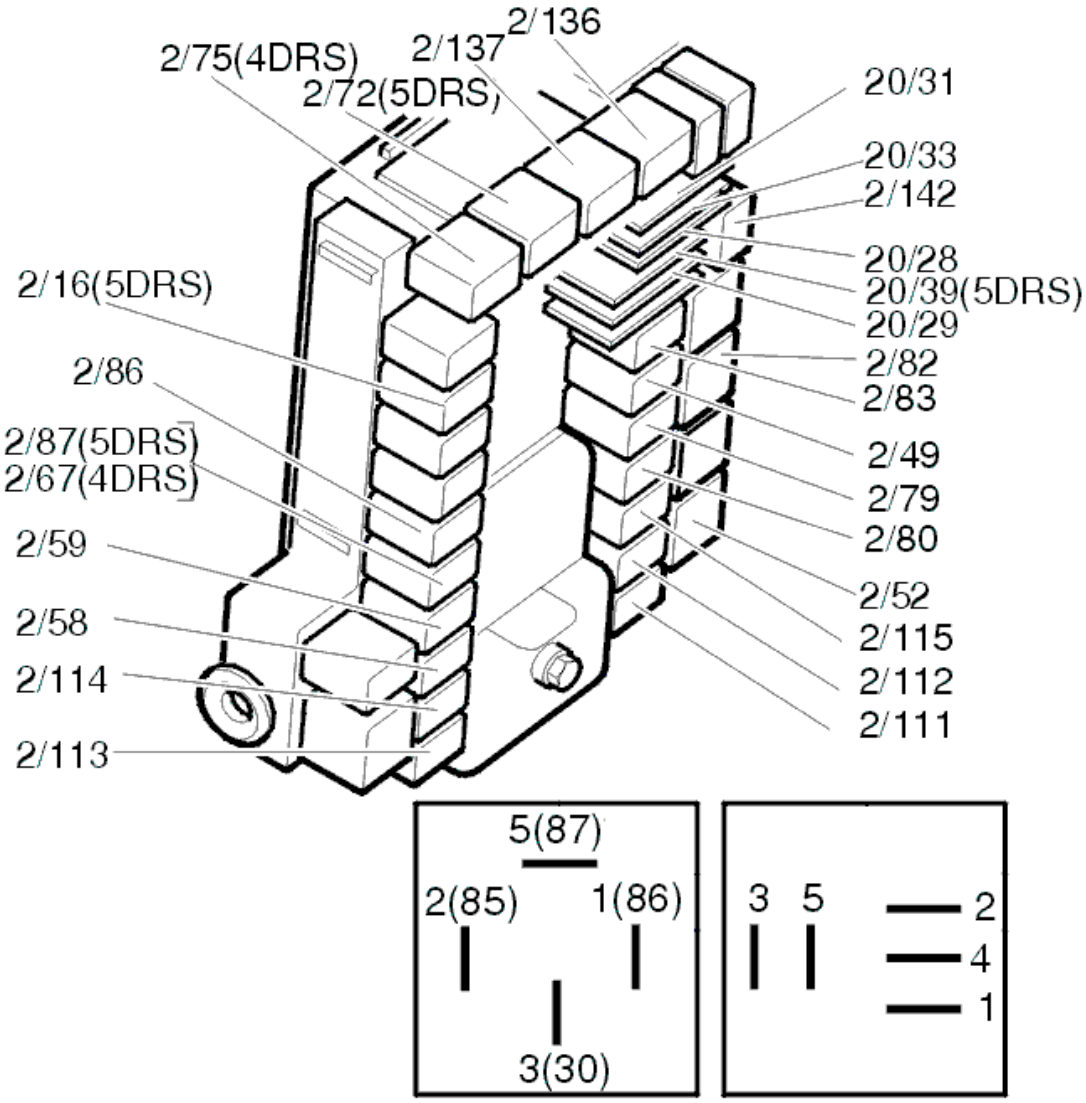

Fig. 207: Identifying Relays
Courtesy of VOLVO CARS CORPORATION

Is there a fault?

- **YES**

  OKAY: Troubleshooting has been completed.

- **NO**

  Refer to **CIRCUIT TEST**

CIRCUIT TEST

The fault is caused by an open circuit in one of the relay circuits or in the lock unit. To find out which circuit

contains the fault:

Disconnect the lock unit connector.

Check the contacts for contact resistance and oxidation as described in, see **CONTACT RESISTANCE AND OXIDATION** .

Check resistance between 4 and 6 on cable connector.

Additional information

- To access/replace the lock unit, see **LOCK MECHANISM REAR SIDE DOOR, REPLACING** .

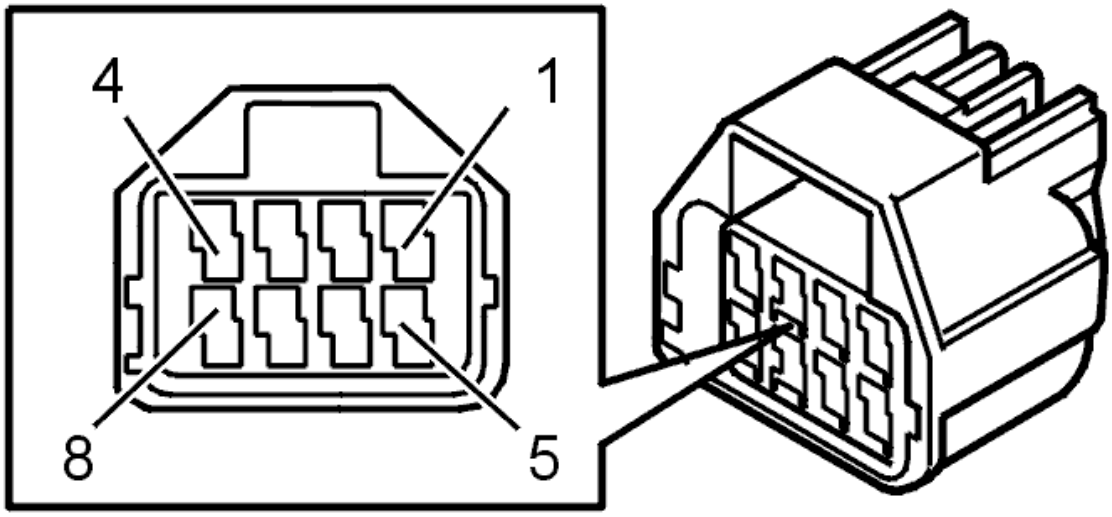

Fig. 208: Identifying Connector Terminals
Courtesy of VOLVO CARS CORPORATION

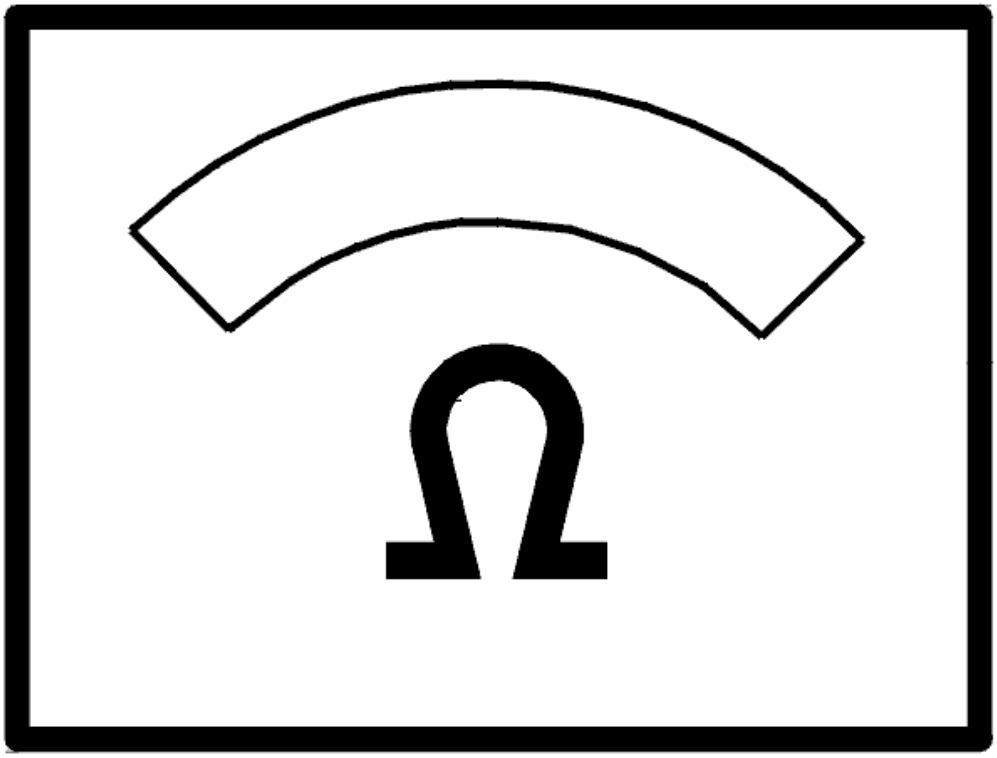

Fig. 209: Identifying Ohm Meter
Courtesy of VOLVO CARS CORPORATION

The ohmmeter should display 0 ohm.

- **OK**

  Refer to **CHECKING THE COMPONENTS**

- **NOT OK**

  Refer to **CIRCUIT TEST, CONTINUED**

CIRCUIT TEST, CONTINUED

Check the resistance between 4 and ground and between 6 and ground on the cable connector.

The ohmmeter should display 0 ohm.

1. The ohmmeter shows a fault between 4 and ground

   Refer to **CHECKING THE UNLOCKING RELAY CIRCUIT**

2. The ohmmeter shows a fault between 6 and ground.

   Refer to **CHECKING THE LOCKING RELAY CIRCUIT**

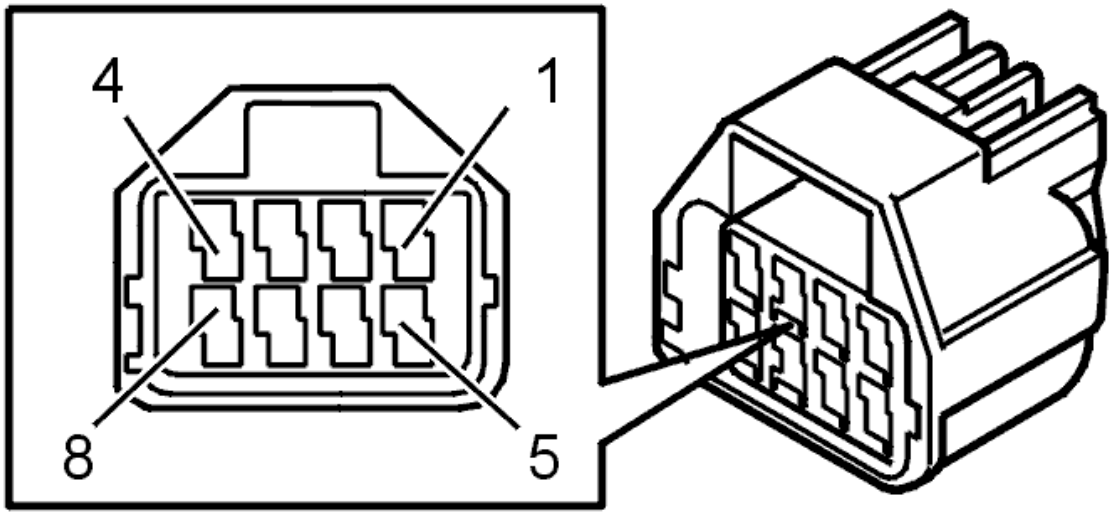

Fig. 210: Identifying Connector Terminals
Courtesy of VOLVO CARS CORPORATION

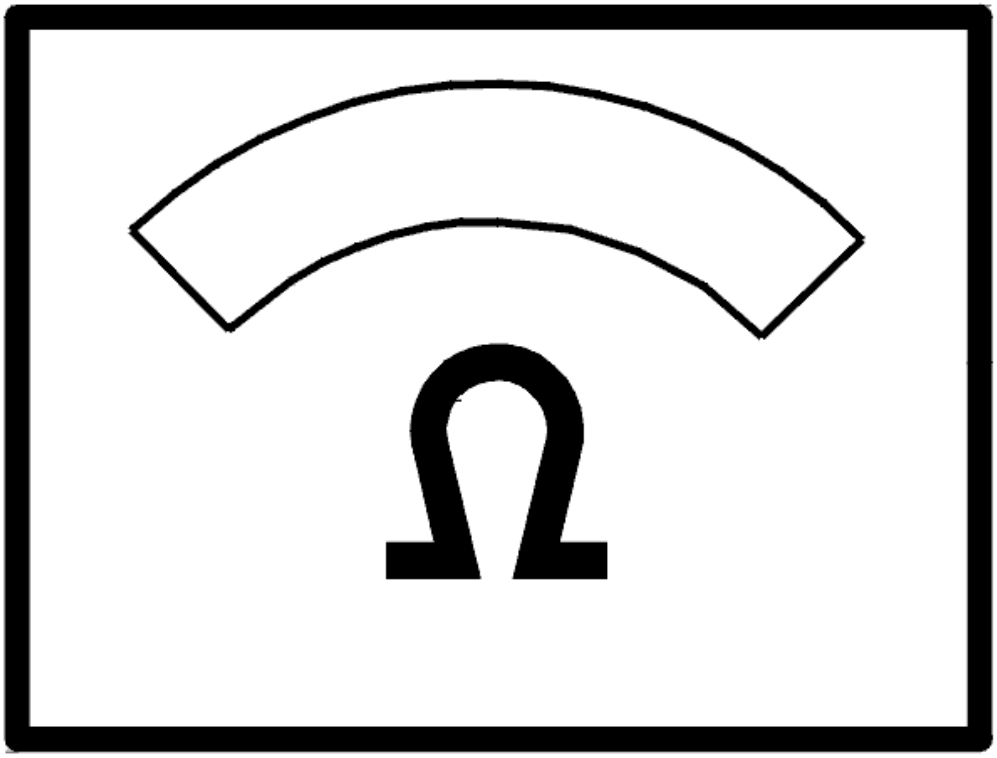

Fig. 211: Identifying Ohm Meter
Courtesy of VOLVO CARS CORPORATION

CHECKING THE LOCKING RELAY CIRCUIT

Remove the locking relay (2/113).

Check the wire between 4 in the cable connector and 3 in the relay socket for an open circuit as described in, see **OPEN-CIRCUIT, PERMANENT FAULTS** .

If a fault is detected, check in particular the intermediate connector in the cable harness (2) for contact resistance and oxidation as described in, see **CONTACT RESISTANCE AND OXIDATION** .

Do the necessary corrective action.

If no fault is found, check the resistance between 4 in the relay socket and ground.

The ohmmeter should display 0 ohm.

If the resistance deviates, replace the rear electronic module (REM).

Additional information

- To access/replace the rear electronic module (REM):
  - For -2004, see: **RELAY/FUSE BOX CARGO COMPARTMENT/REAR ELECTRONIC MODULE (REM), REPLACING**
  - For 2005-, see: **REAR ELECTRONIC MODULE (REM), REPLACING** .

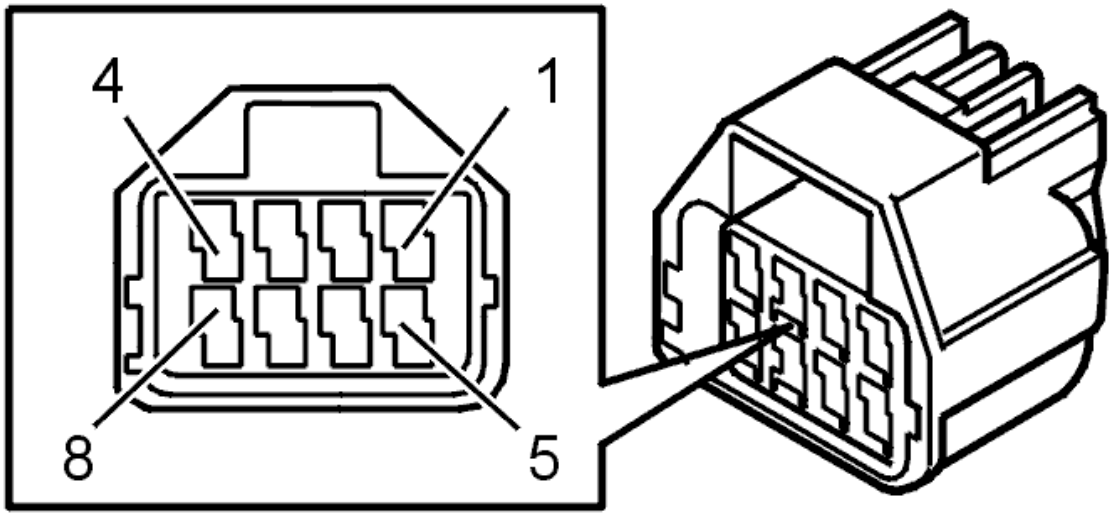

Fig. 212: Identifying Connector Terminals
Courtesy of VOLVO CARS CORPORATION

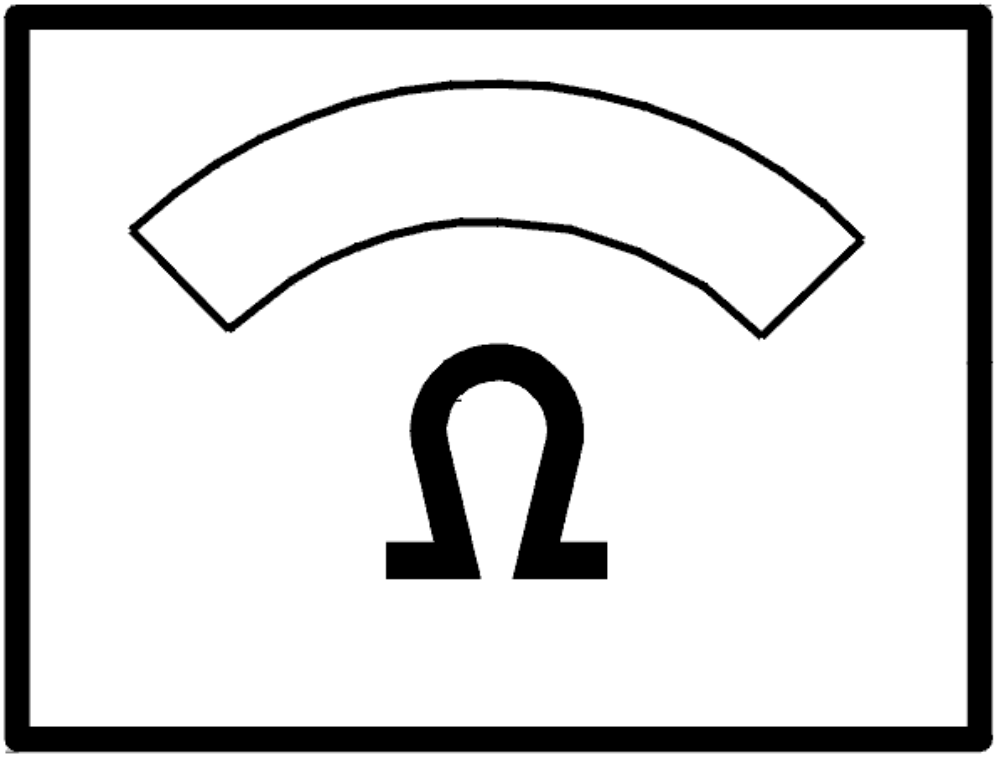

Fig. 213: Identifying Ohm Meter
Courtesy of VOLVO CARS CORPORATION

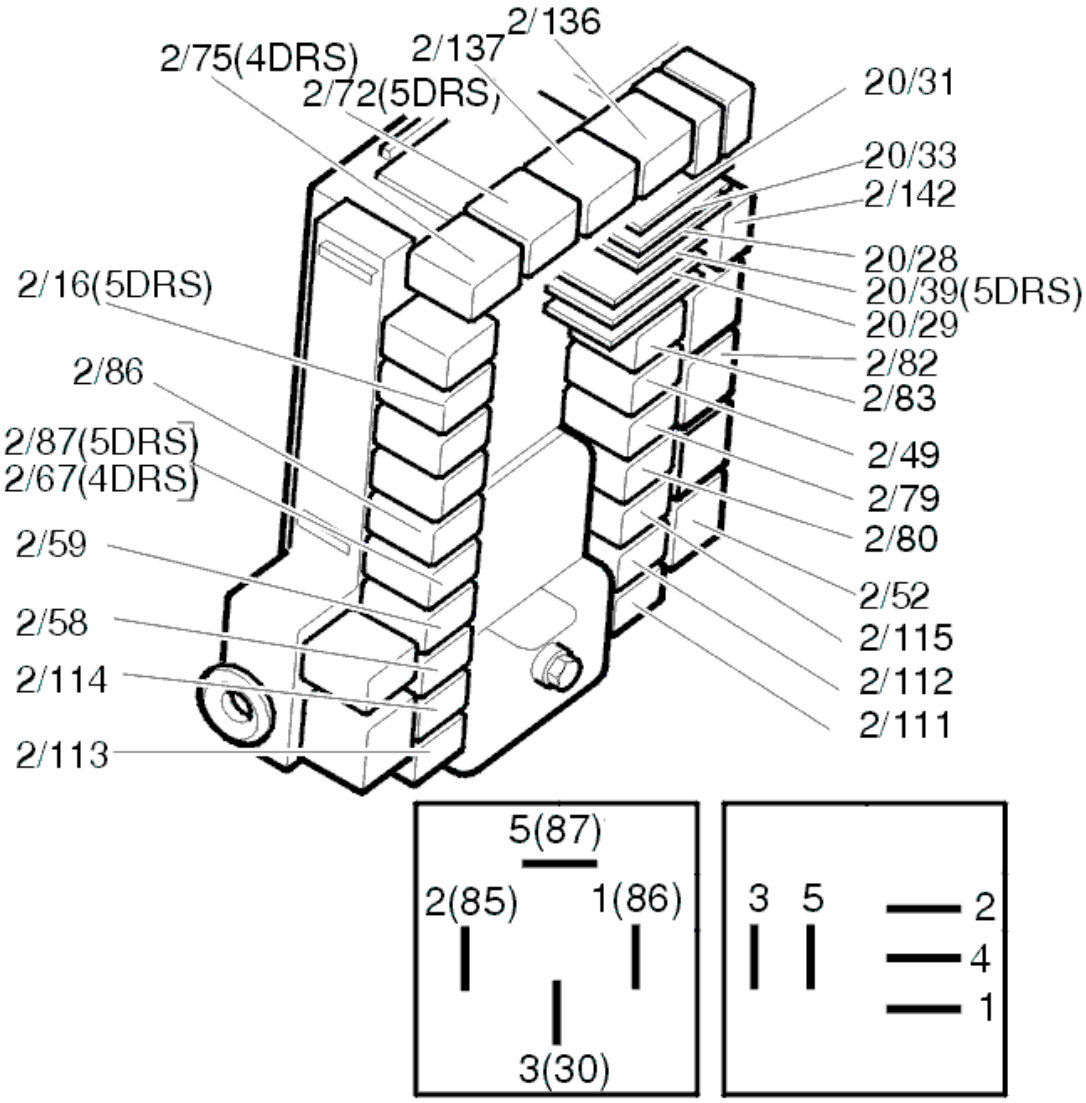

Fig. 214: Identifying Relays
Courtesy of VOLVO CARS CORPORATION

CHECKING THE UNLOCKING RELAY CIRCUIT

Remove the unlocking relay (2/114).

Check the wire between 6 in the cable connector and 3 in the relay socket for an open circuit as described in, see **OPEN-CIRCUIT, PERMANENT FAULTS** .

If a fault is detected, check in particular the intermediate connector in the cable harness (2) for contact resistance and oxidation as described in, see **CONTACT RESISTANCE AND OXIDATION** .

Do the necessary corrective action.

If no fault is found, check the resistance between 4 in the relay socket and ground.

The ohmmeter should display 0 ohm.

If the resistance deviates, replace the rear electronic module (REM).

Additional information

- To access/replace the rear electronic module (REM):
  - For -2004, see: **RELAY/FUSE BOX CARGO COMPARTMENT/REAR ELECTRONIC MODULE (REM), REPLACING**
  - For 2005-, see: **REAR ELECTRONIC MODULE (REM), REPLACING** .

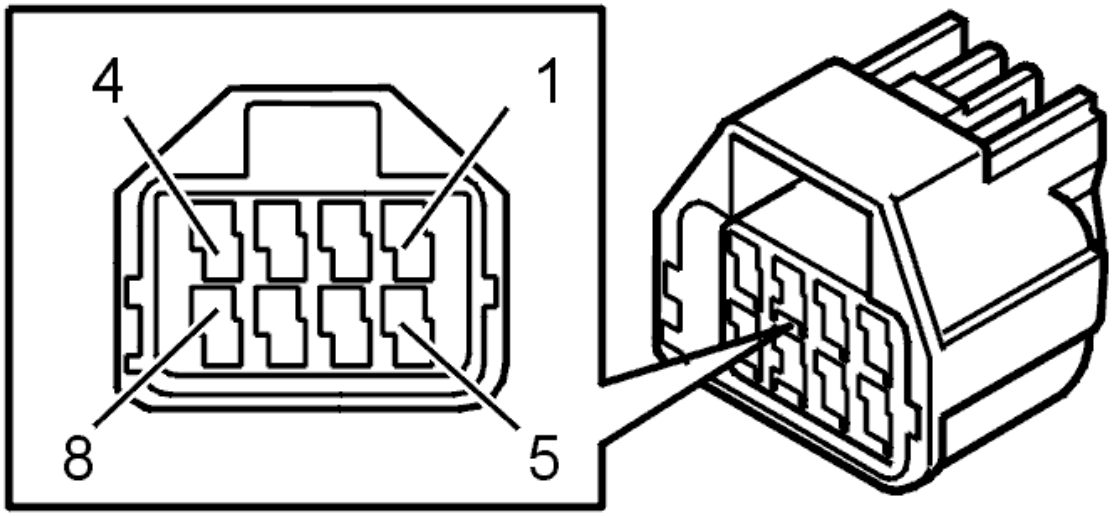

Fig. 215: Identifying Connector Terminals
Courtesy of VOLVO CARS CORPORATION

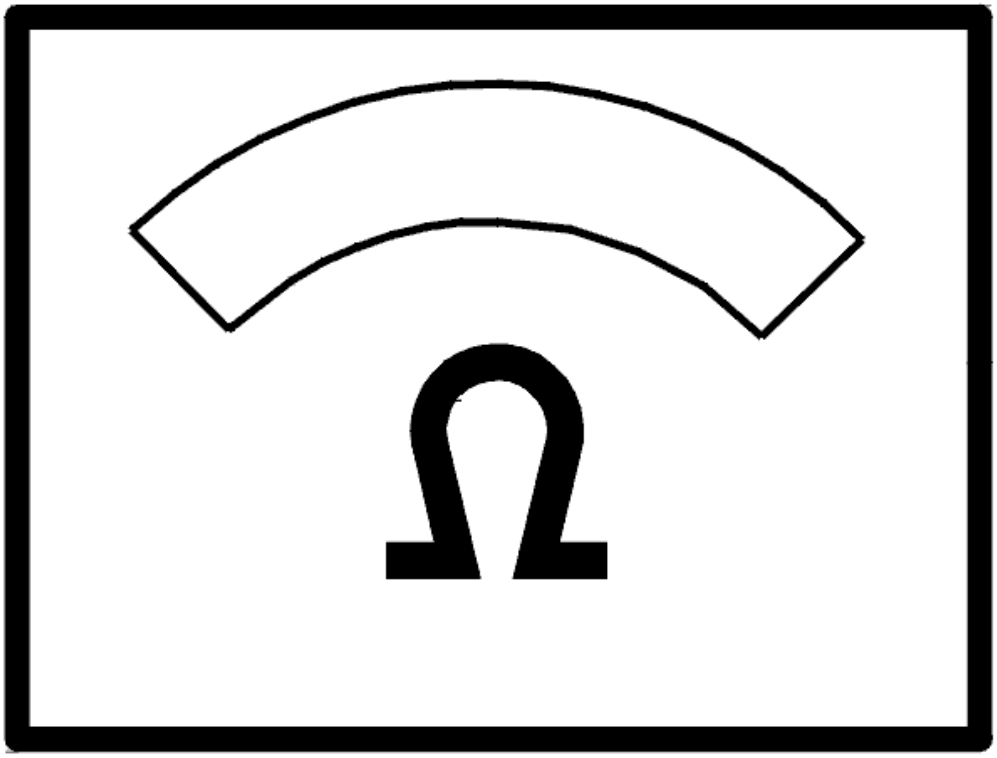

Fig. 216: Identifying Ohm Meter
Courtesy of VOLVO CARS CORPORATION

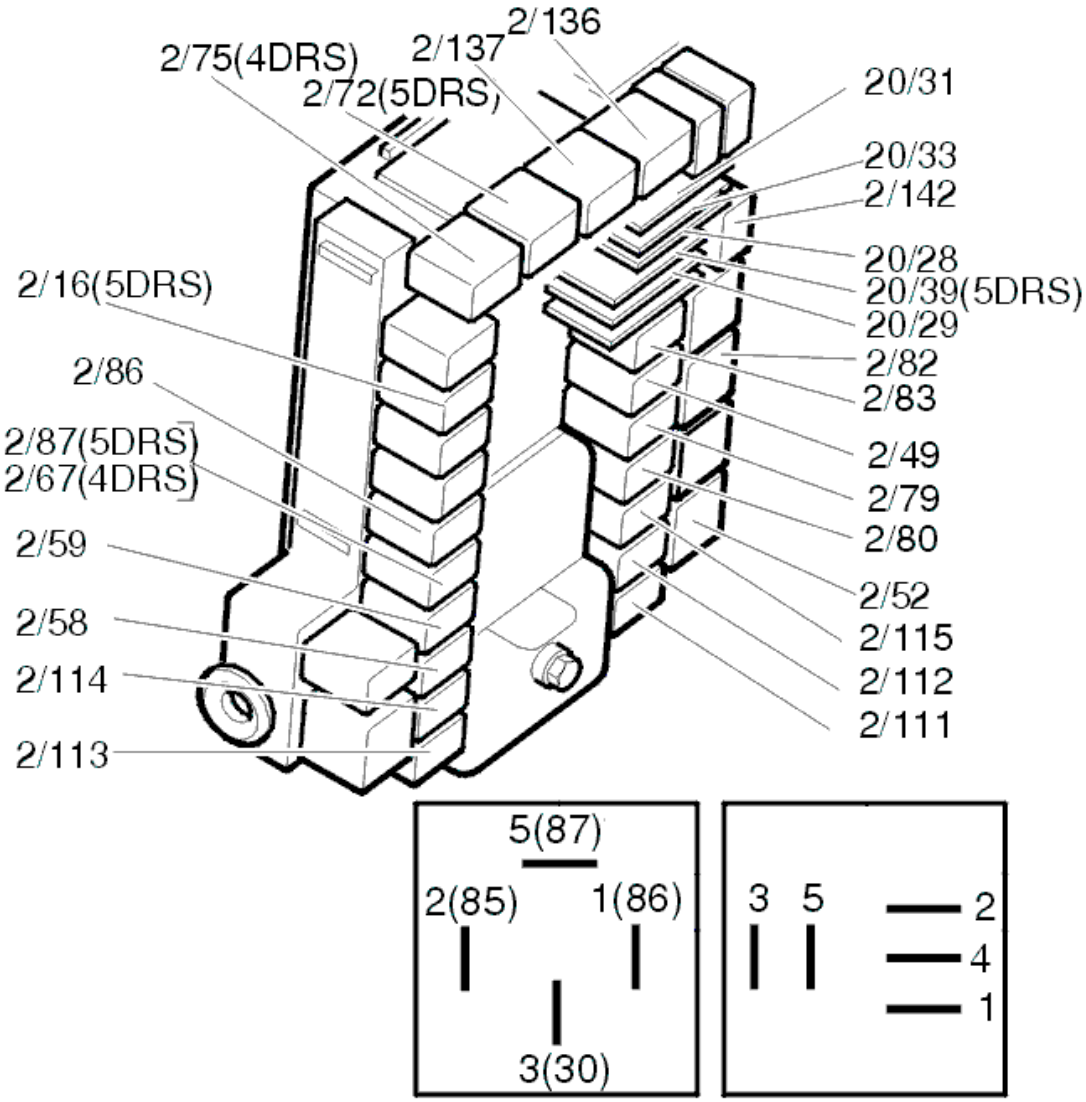

Fig. 217: Identifying Relays
Courtesy of VOLVO CARS CORPORATION

CHECKING THE COMPONENTS

Check the resistance between pin 4 and 6 in the lock unit chassis contact.

The ohmmeter should display 5 ohm.

If the resistance deviates, replace the lock unit.

Additional information

- To access the rear electronic module (REM):
  - For -2004, see: **RELAY/FUSE BOX CARGO COMPARTMENT/REAR ELECTRONIC MODULE (REM), REPLACING**

- For 2005-, see: **REAR ELECTRONIC MODULE (REM), REPLACING** .
- To access/replace the lock unit, see **LOCK MECHANISM REAR SIDE DOOR, REPLACING**
- For information on signals and additional values, see **SIGNAL SPECIFICATION** .

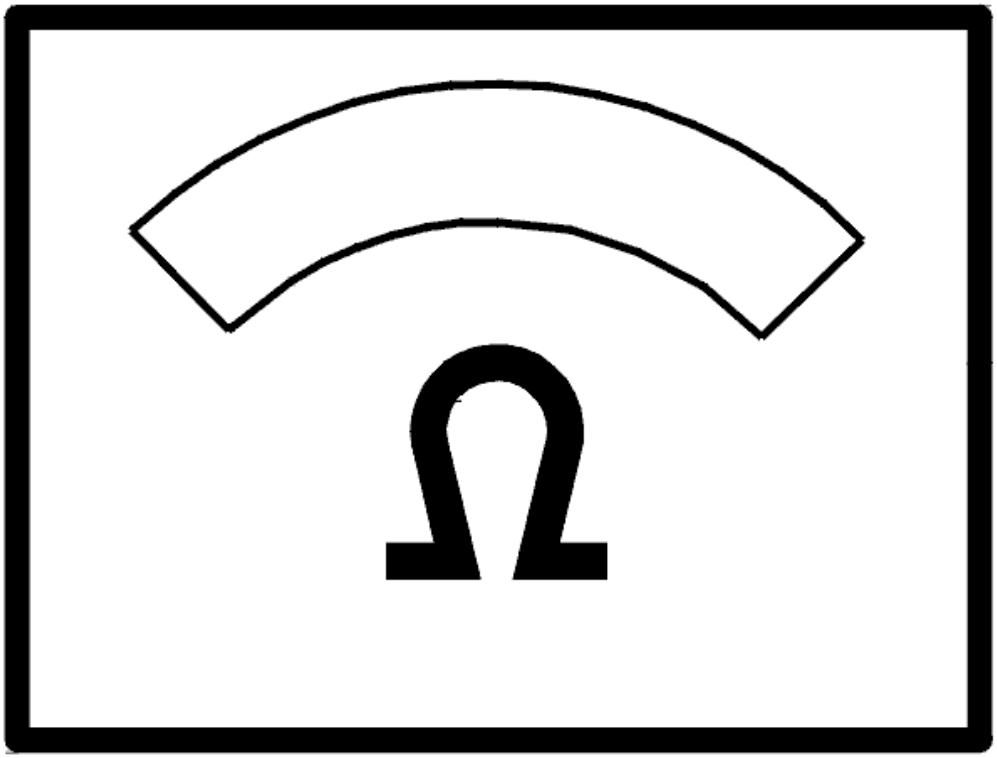

Fig. 218: Identifying Ohm Meter
Courtesy of VOLVO CARS CORPORATION

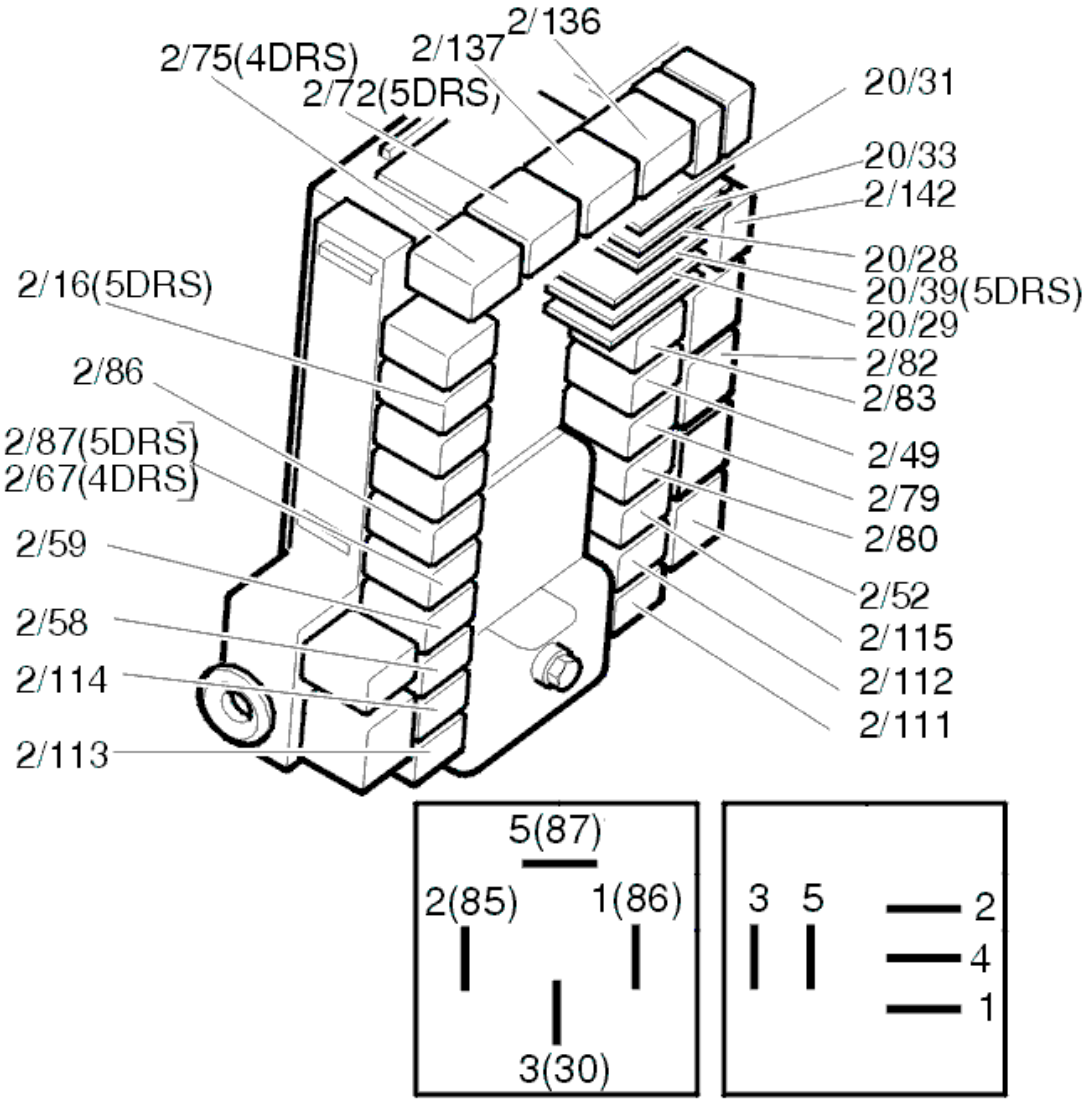

Fig. 219: Identifying Relays
Courtesy of VOLVO CARS CORPORATION

Is there a fault?

- **YES**

  OKAY: Troubleshooting has been completed.

- **NO**

  Refer to **CHECKING THE RELAY SUPPLY**

CHECKING THE RELAY SUPPLY

Remove the locking relay (2/113).

Measure the voltage between 5 in the relay socket and ground.

The voltmeter should display battery voltage.

HINT: If the value is OK but the fault still remains, connect the contacts to the lock module and link between 3 and 5 in the relay socket to force-feed the lock motor while continuing to test.

Additional information

- To access relay/fuse box in the cargo compartment:
  - For -2004, see: **RELAY/FUSE BOX CARGO COMPARTMENT/REAR ELECTRONIC MODULE (REM), REPLACING**
  - For 2005-, see: **REAR ELECTRONIC MODULE (REM), REPLACING** .

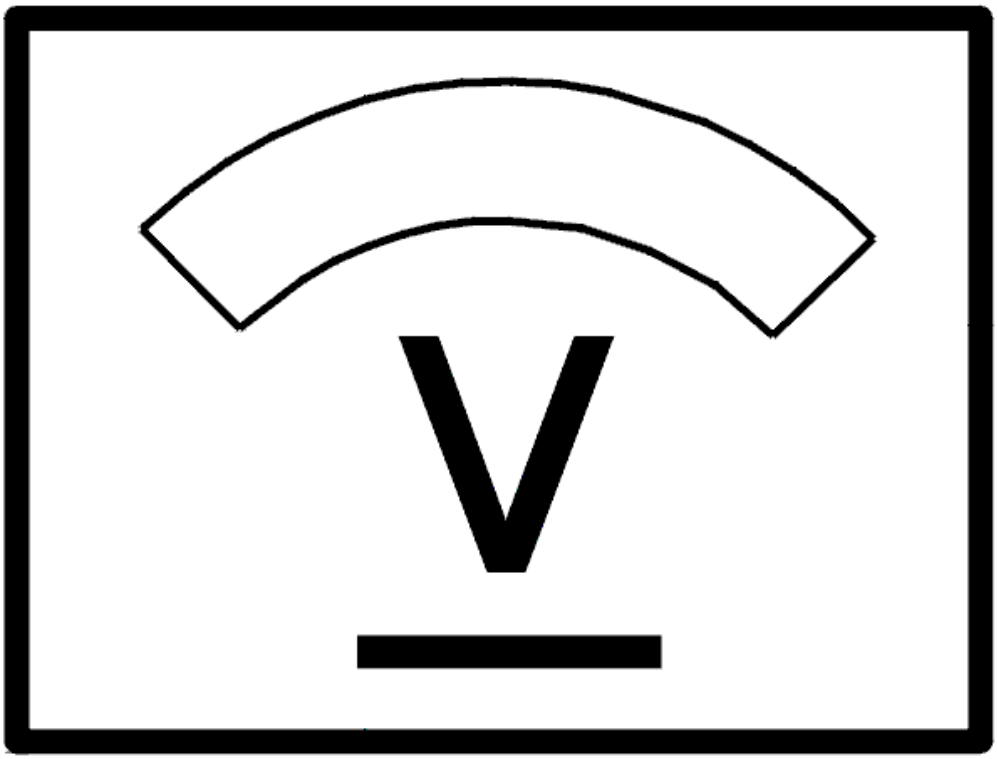

Fig. 220: Identifying Voltage Display

Courtesy of VOLVO CARS CORPORATION

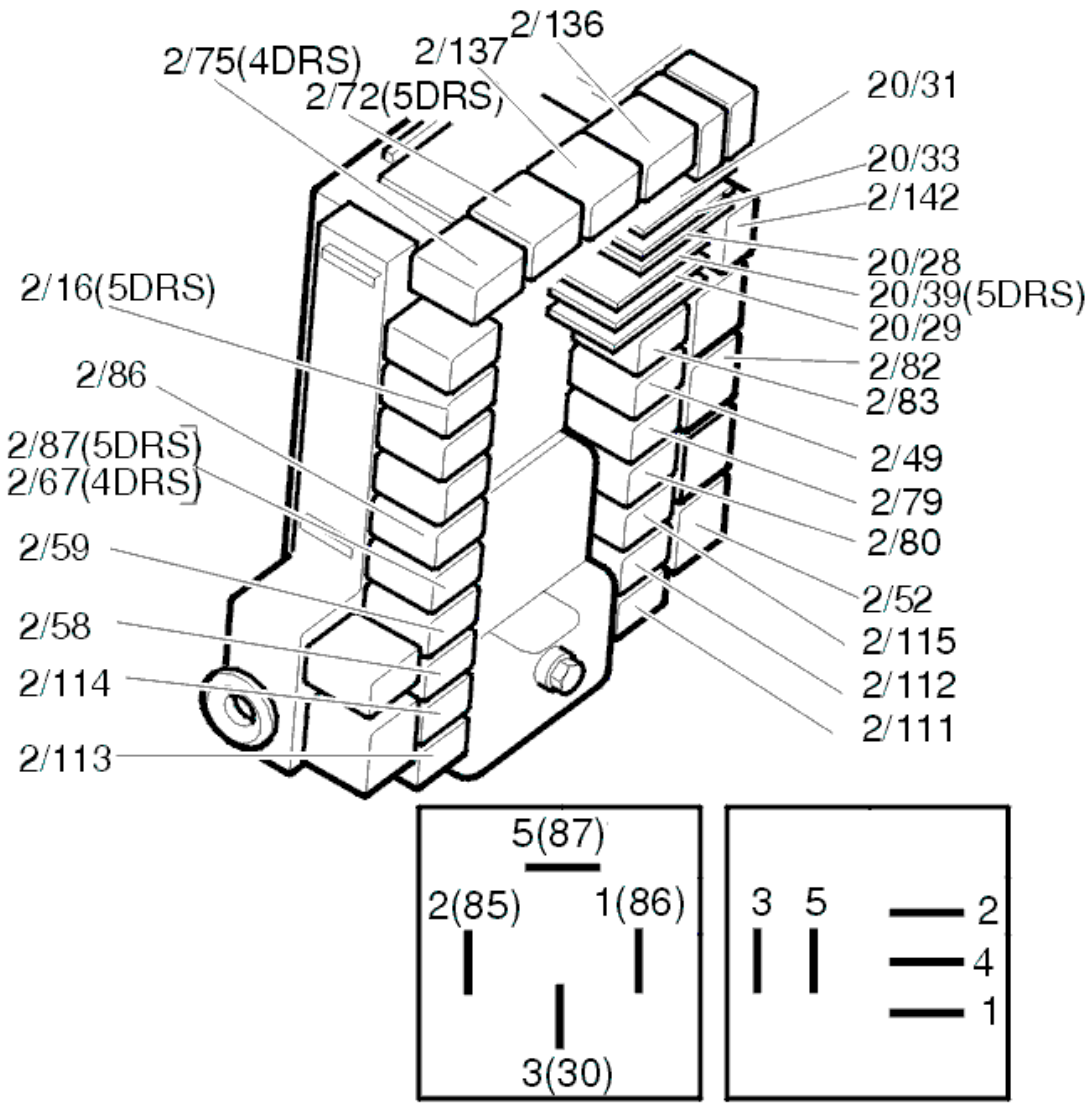

Fig. 221: Identifying Relays
Courtesy of VOLVO CARS CORPORATION

Does the voltmeter show the battery voltage?

- **YES**

  OKAY: Troubleshooting has been completed.

- **NO**

  Refer to **CHECKING THE FUSE**

CHECKING THE FUSE

Remove the fuse 11D/8 in cargo compartment fuse box.

Check that fuse 11D/8 is intact and check for contact resistance and oxidation as described in, see **CONTACT RESISTANCE AND OXIDATION** .

Additional information

- To access relay/fuse box in the cargo compartment:
  - For -2004, see: **RELAY/FUSE BOX CARGO COMPARTMENT/REAR ELECTRONIC MODULE (REM), REPLACING**
  - For 2005-, see: **REAR ELECTRONIC MODULE (REM), REPLACING** .

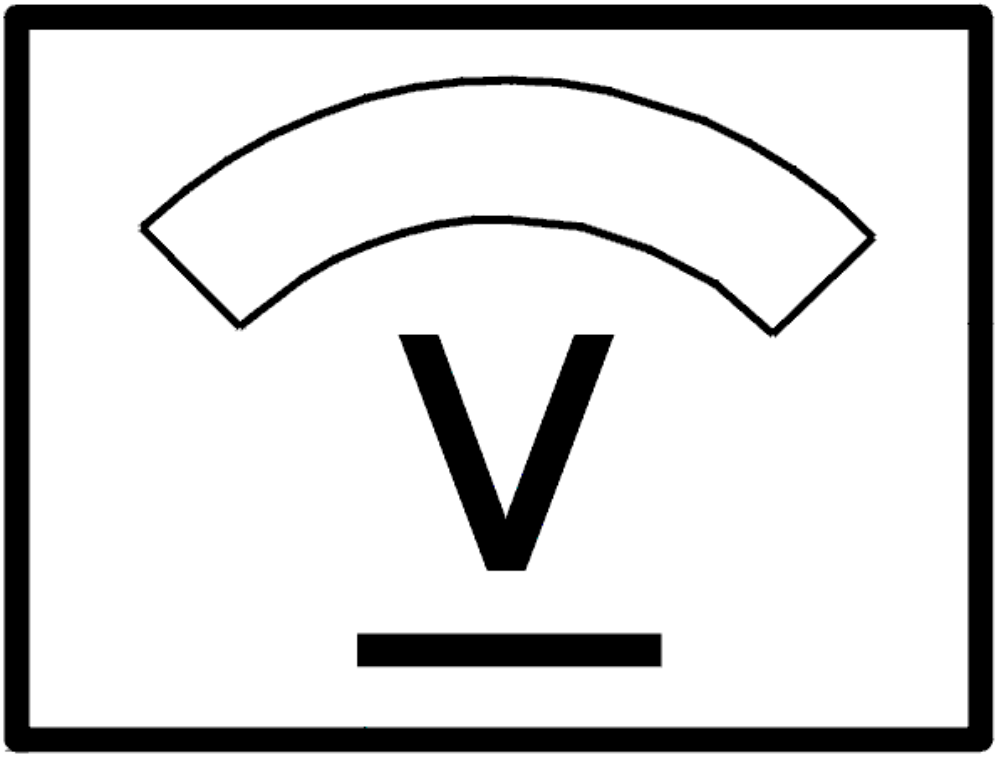

Fig. 222: Identifying Voltage Display
Courtesy of VOLVO CARS CORPORATION

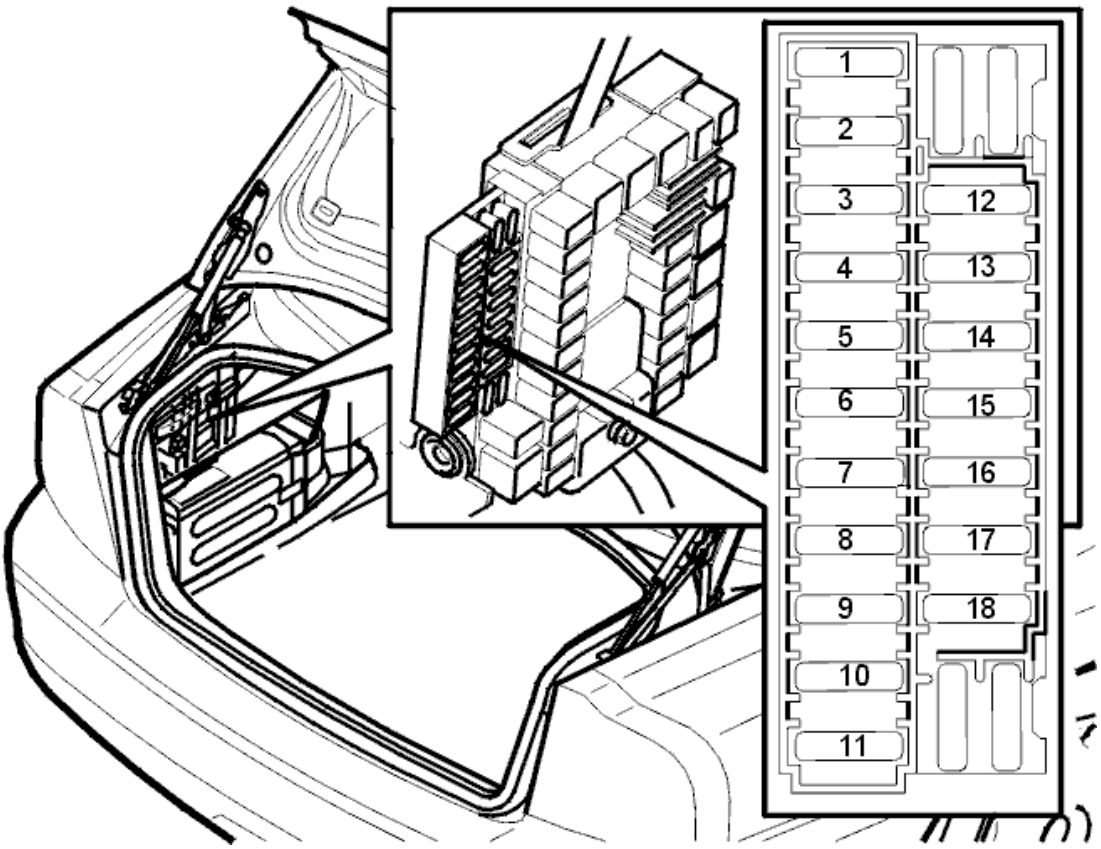

Fig. 223: Fuse Holder (Cargo Compartment)
Courtesy of VOLVO CARS CORPORATION

Is the fuse intact?

- **YES**

  Refer to **CHECKING FOR AN OPEN CIRCUIT**

- **NO**

  Refer to **CHECKING FOR A SHORT CIRCUIT**

CHECKING FOR AN OPEN CIRCUIT

Remove relay 2/113 in the cargo compartment relay/fuse box and trouble-shoot the wire between the fuse holder secondary side (left) and 5 in the relay socket for an open circuit as described in, see **OPEN-CIRCUIT, PERMANENT FAULTS** .

Additional information

- To access relay/fuse box in the cargo compartment:
  - For -2004, see: **RELAY/FUSE BOX CARGO COMPARTMENT/REAR ELECTRONIC MODULE (REM), REPLACING**

- For 2005-, see: **REAR ELECTRONIC MODULE (REM), REPLACING** .

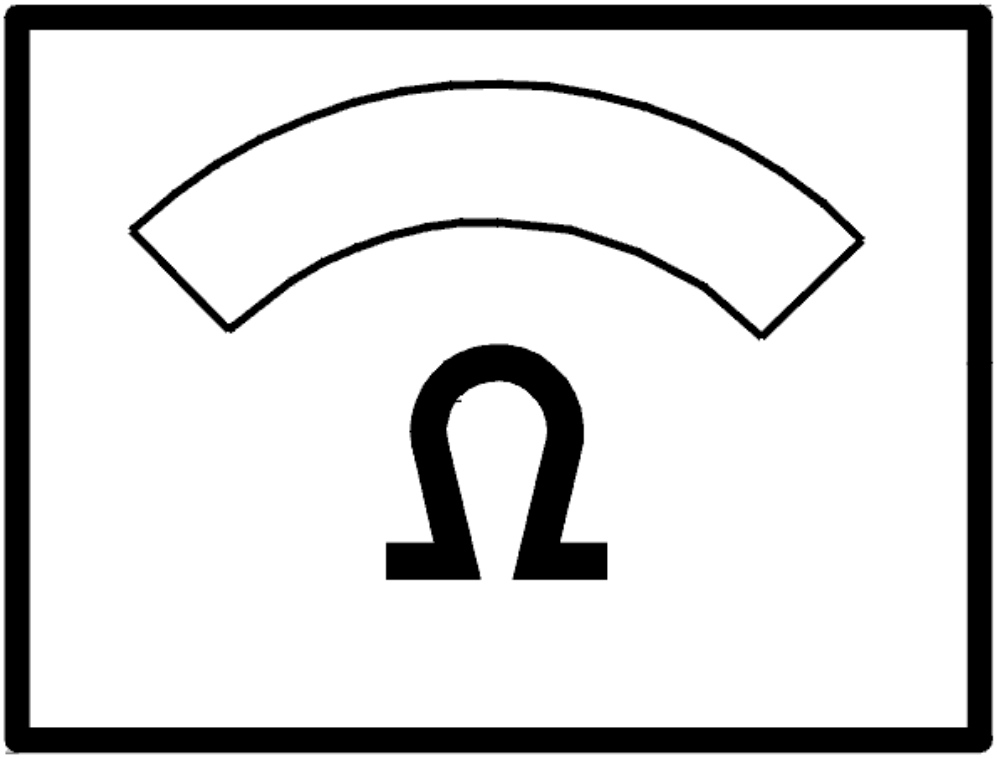

Fig. 224: Identifying Ohm Meter
Courtesy of VOLVO CARS CORPORATION

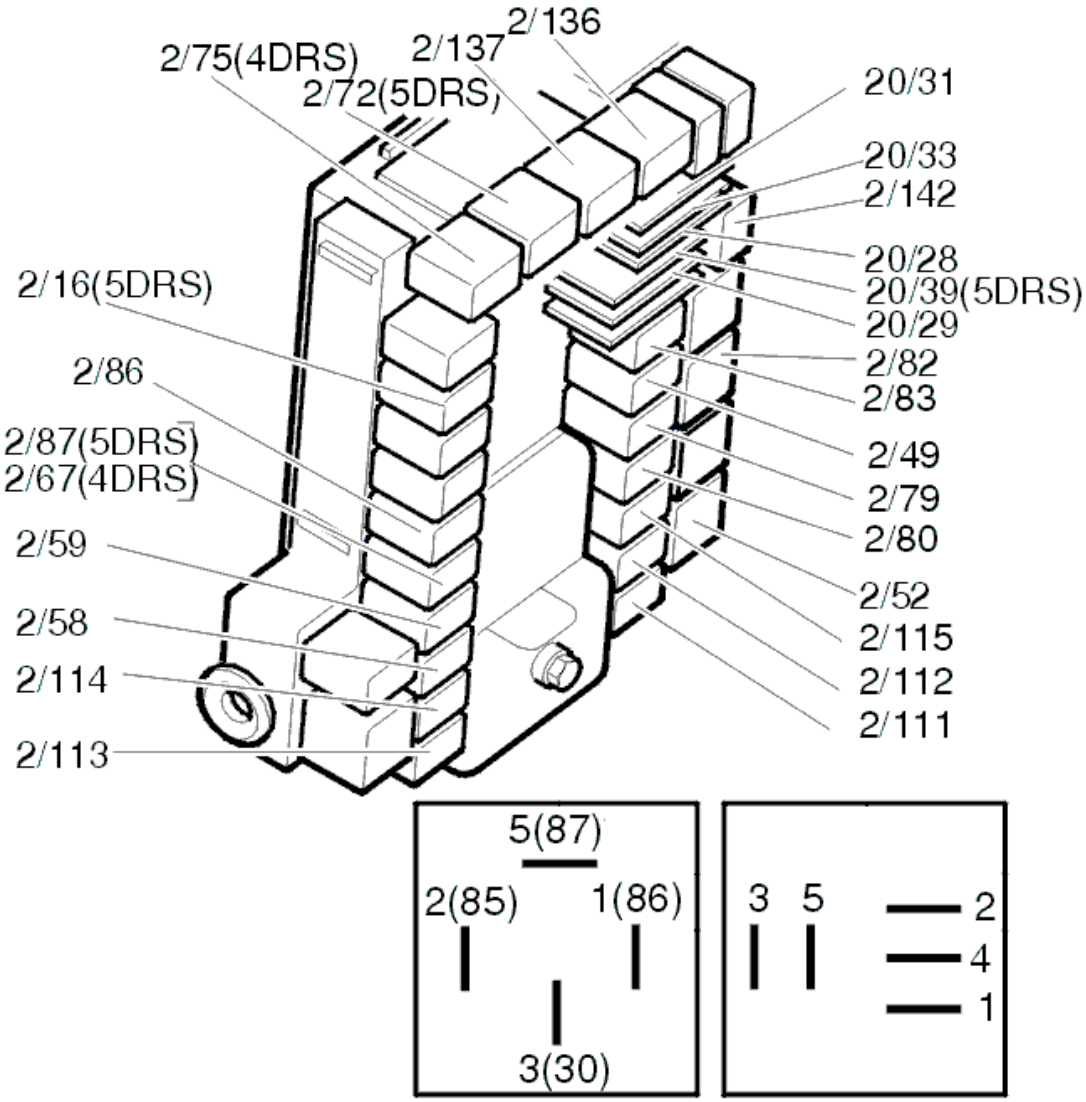

Fig. 225: Identifying Relays
Courtesy of VOLVO CARS CORPORATION

CHECKING FOR A SHORT CIRCUIT

Check the resistance between the fuse holder secondary side (left) and ground.

The ohmmeter should display infinite resistance.

If the value is correct, replace the fuse.

If the value deviates, trouble-shoot all the relay circuits involved for a short circuit to ground as described in, see **SHORT-CIRCUIT TO GROUND, PERMANENT FAULTS** .

NOTE: If the value is correct the fault could be intermittent.

HINT: Replace fuse.

HINT: If the fuse works straight away the fault is a short circuit on the relay supply wire.

HINT: If the fuse works when activating each relay the short circuit is on the component supply wire

HINT: The relay circuits involved belong to relays 2/111, 2/112, 2/113, 2/114, 2/115, 2/56, 2/59 and 2/67.

Additional information

- To access relay/fuse box in the cargo compartment:
  - For -2004, see: **RELAY/FUSE BOX CARGO COMPARTMENT/REAR ELECTRONIC MODULE (REM), REPLACING**
  - For 2005-, see: **REAR ELECTRONIC MODULE (REM), REPLACING** .

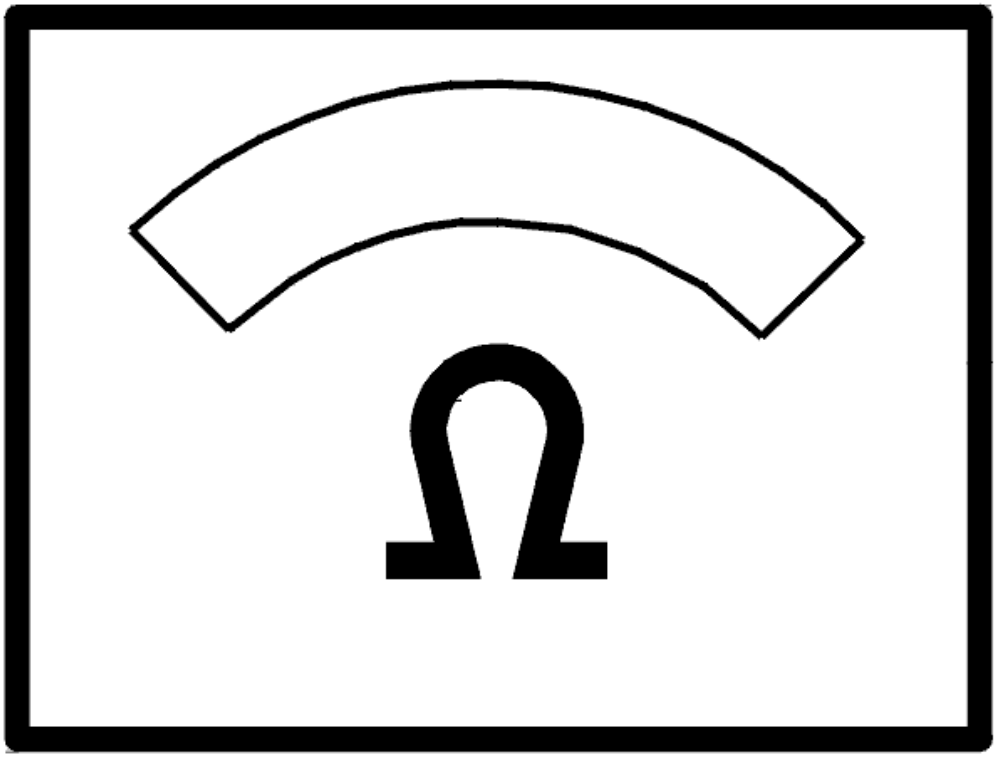

Fig. 226: Identifying Ohm Meter
Courtesy of VOLVO CARS CORPORATION

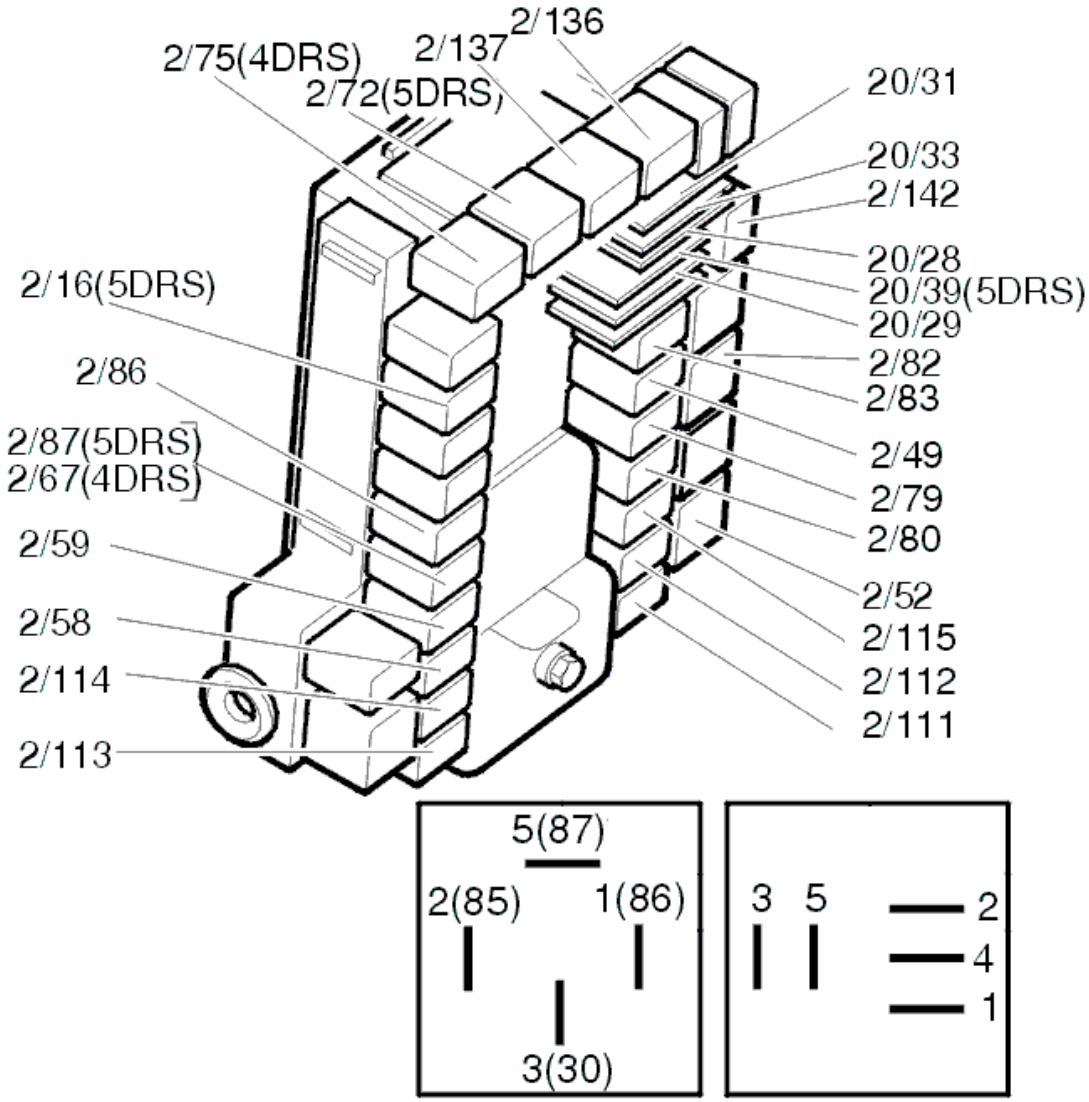

Fig. 227: Identifying Relays
Courtesy of VOLVO CARS CORPORATION

VERIFICATION

VERIFICATION

HINT: After the repair it is necessary to check that the fault has been rectified.

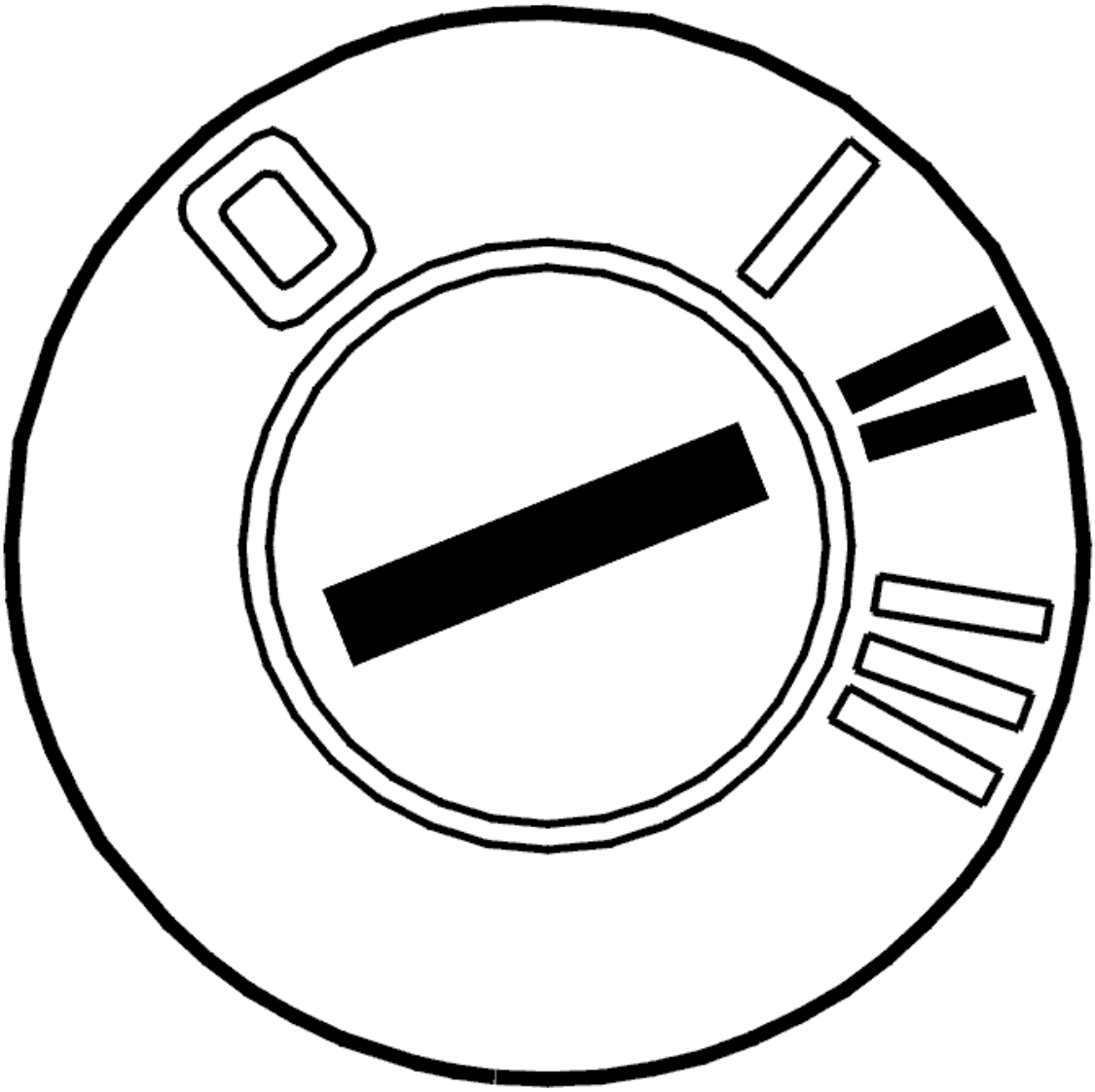

Fig. 228: Identifying Ignition ON
Courtesy of VOLVO CARS CORPORATION

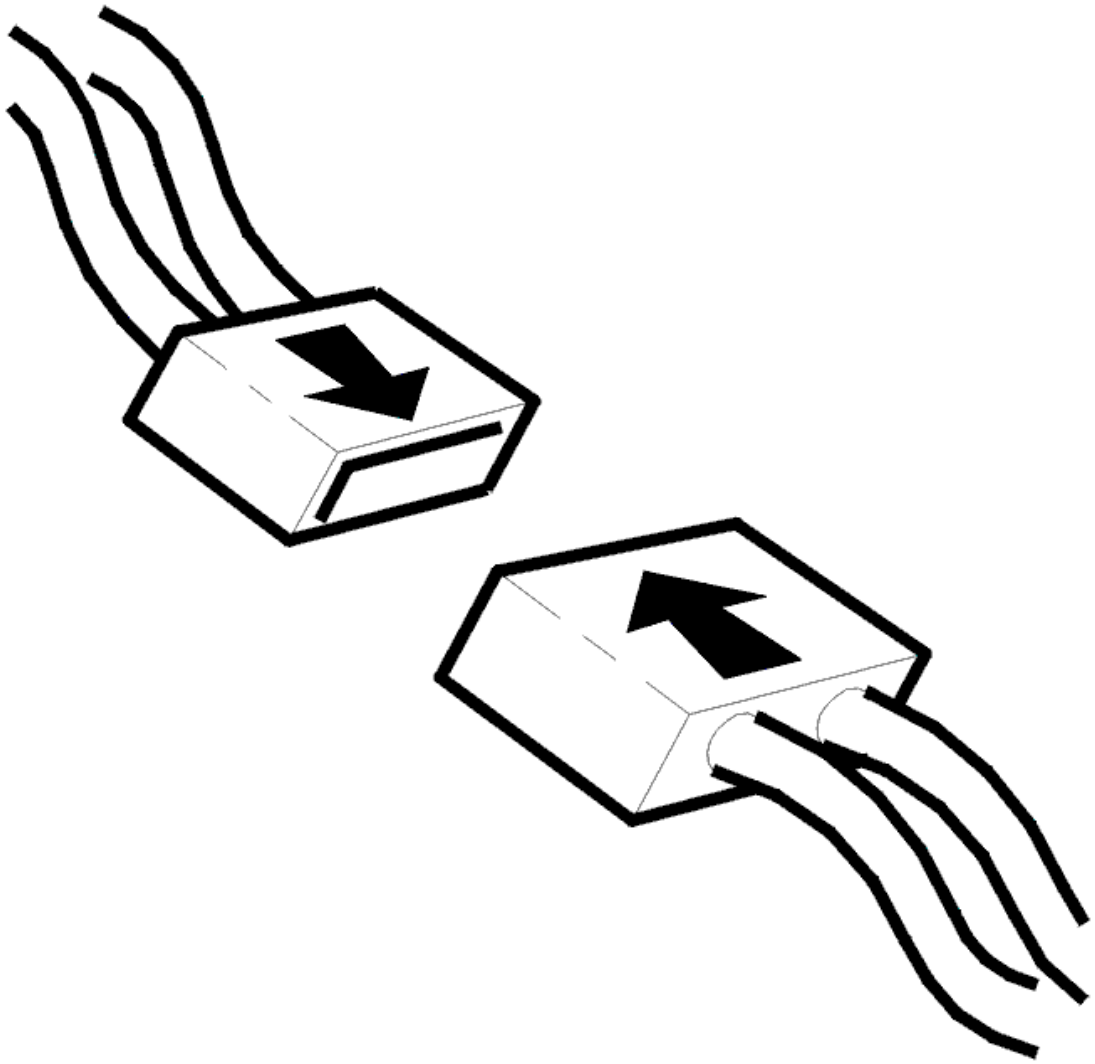

Fig. 229: Connecting Connector
Courtesy of VOLVO CARS CORPORATION

- Ignition off.
- Connect the connectors, install the components, etc.
- Ignition on.

  Lock by remote control and check that the text displays LOCKED.

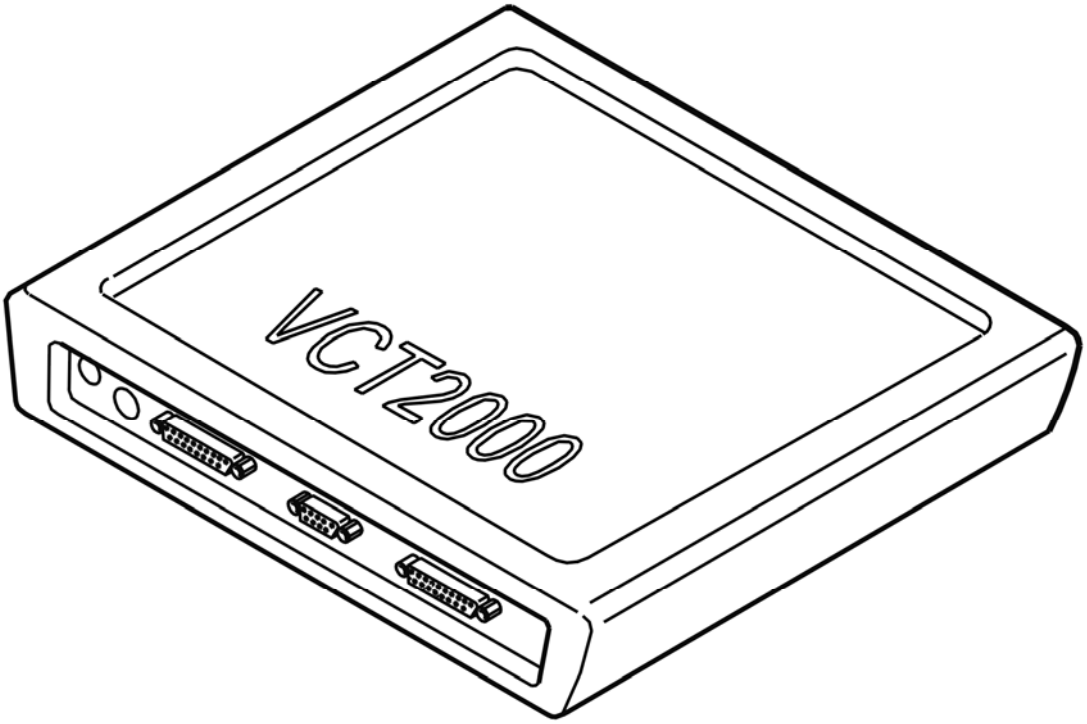

Fig. 230: Identifying VCT2000 Diagnostic Tool Symbol In VIDA
Courtesy of VOLVO CARS CORPORATION

Does the text display LOCKED?

- **YES**

  VERIFIED: Troubleshooting has been completed.

- **NO**

  Refer to **INFORMATION**

INFORMATION

FAULT-TRACING INFORMATION

The fault should have been detected and remedied. As this is not the case fault-tracing has failed.

Exit fault-tracing for this diagnostic trouble code (DTC) or make another attempt.

CEM-6A02: REAR RIGHT DOOR UNLOCKED. SIGNAL TOO HIGH. INTERMITTENT FAULT (2003-2004)

DIAGNOSTIC TROUBLE CODE INFORMATION

Condition

If the central electronic module (CEM) detects a high signal from the lock position sensor 15 seconds after locking, diagnostic trouble code CEM-6A02 is displayed

Possible Source

- The lock has stuck in unlocked position
- Open circuit in lock sensor signal wire
- Lock position sensor signal wire short circuited to voltage supply
- Relay fault
- Open circuit on relay supply/defective fuse
- Fault in locking motor circuit
- Fault in rear electronic module (REM).

Fault symptom[s]

- A door does not lock / open.

SIGNAL TOO HIGH. INTERMITTENT FAULT

CHECKING THE COMPONENT

Check that the lock has not stuck by using the lock button on the inside of the door. Check that the lock unit is correctly installed.

Was a fault detected?

- **YES**

  OKAY: Troubleshooting has been completed.

- **NO**

  Refer to **CHECKING THE WIRING AND SWITCHES**

CHECKING THE WIRING AND SWITCHES

Check the switches at the central electronic module and lock unit. Check for contact resistance and oxidation.

Check the signal cable for the lock position sensor between the central electronic module connector terminal #C3 and lock module connector terminal #5. Check for an open-circuit.

Check the signal cable for the lock position sensor between the central electronic module connector terminal

#C3 and lock unit connector terminal #5. Check for an intermittent short-circuit to supply voltage.

NOTE: **Diagnostic trouble code (DTC) REM-6A09 or REM-6A0B may also be stored if this fault occurs. Use the VCT2000 (or appropriate scan) tool to read diagnostic trouble codes (DTCs).**

Other information:

- To access and replace the lock module:
  - Diver's side door module, see **DRIVER DOOR MODULE (DDM), REPLACING**
  - Passenger side door module, see **PASSENGER DOOR MODULE (PDM), REPLACING** .
- For -2004, see: **CENTRAL ELECTRONIC MODULE (CEM), REPLACING**
- For 2005-, see: **CENTRAL ELECTRONIC MODULE (CEM), REPLACING** .
- To connect the breakout box, see **CONNECTING THE BREAKOUT BOX**
- -2004: **SIGNAL SPECIFICATION**
- 2005-: **SIGNAL SPECIFICATION**
- see **CHECKING WIRING AND TERMINALS. INTERMITTENT FAULTS** .

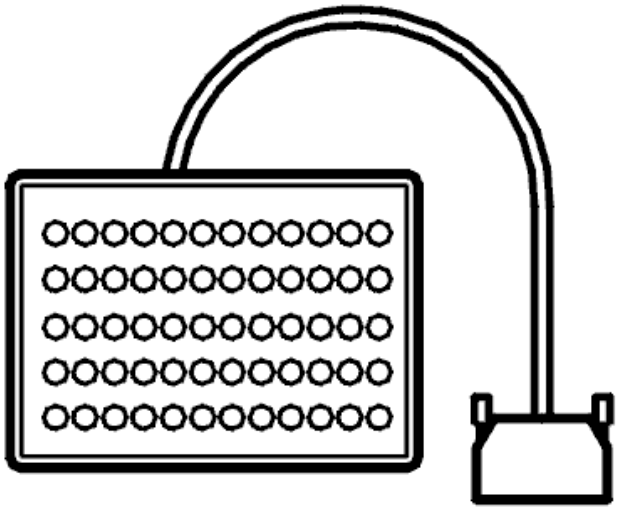

Fig. 231: Breakout Box
Courtesy of VOLVO CARS CORPORATION

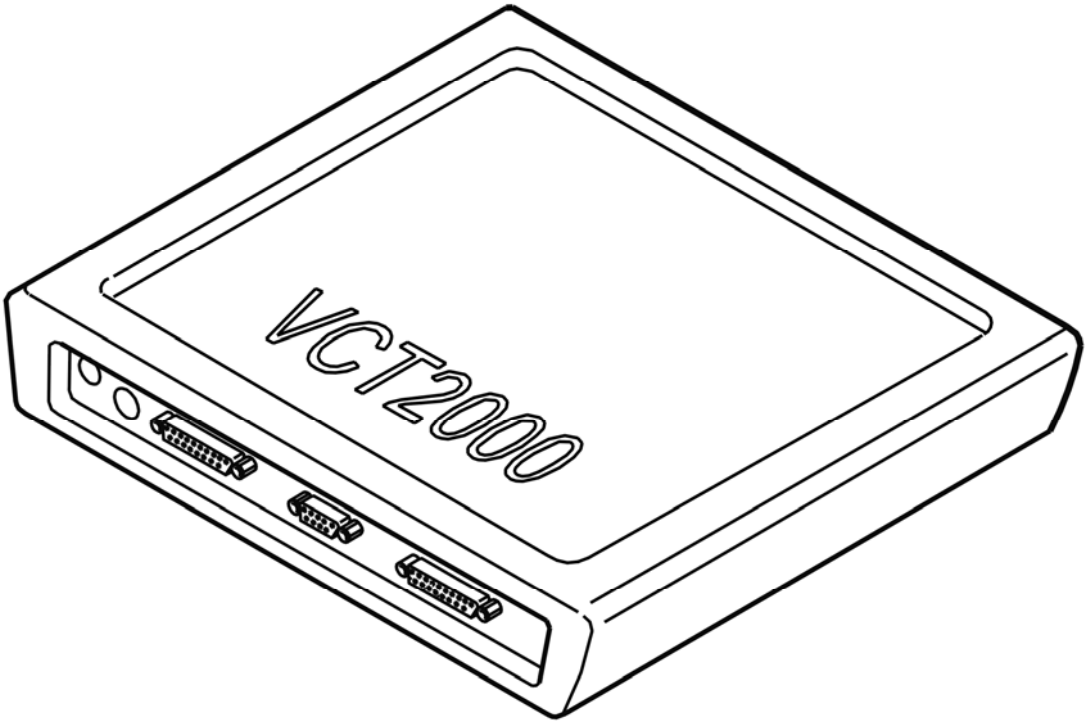

Fig. 232: Identifying VCT2000 Diagnostic Tool Symbol In VIDA
Courtesy of VOLVO CARS CORPORATION

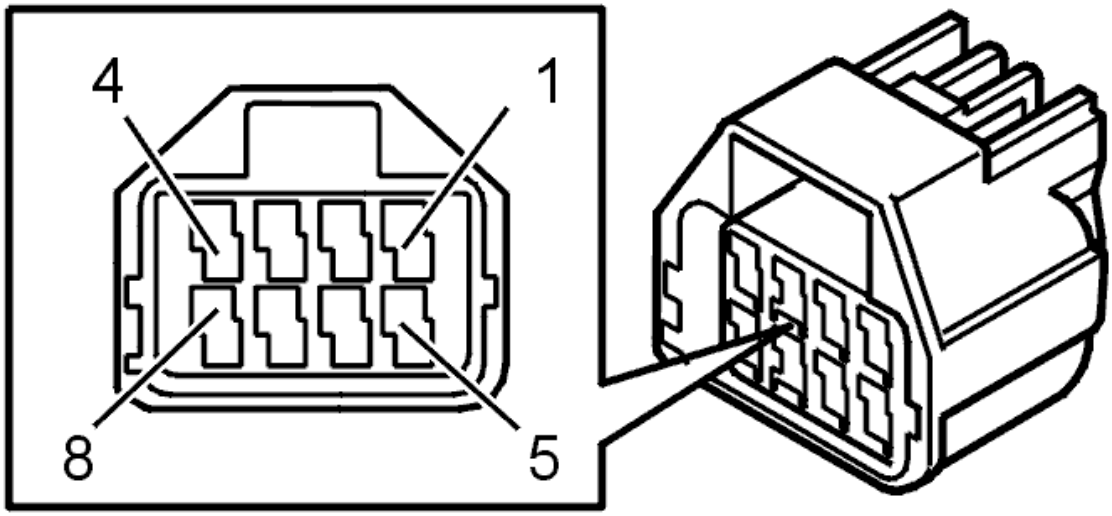

Fig. 233: Identifying Connector Terminals
Courtesy of VOLVO CARS CORPORATION

Were any diagnostic trouble codes (DTCs) stored?

- **YES**

OKAY: Troubleshooting has been completed.

- **NO**

  Refer to **CHECKING THE DOOR LOCKING FUNCTION**

CHECKING THE DOOR LOCKING FUNCTION

QUESTION

Which door has the problem?

1. Driver door.

   Refer to **CHECKING THE DRIVER DOOR**

2. Passenger door.

   Refer to **CHECKING THE PASSENGER DOOR**

3. Rear left door.

   Refer to **CHECKING THE REAR LEFT DOOR**

4. Rear right door.

   Refer to **CHECKING THE REAR RIGHT DOOR**

CHECKING THE DRIVER DOOR

CHECK

Is the passenger door lock not working?

- **YES**

  Refer to **CHECKING THE FUSE**

- **NO**

  Refer to **CHECK**

CHECKING THE FUSE

Remove the fuse 11C/27 in cargo compartment fuse box.

Check that fuse is intact and check for contact resistance and oxidation as described in, see **CONTACT RESISTANCE AND OXIDATION** .

Additional information

- To access relay/fuse box in the cargo compartment:
  - For -2004, see: **RELAY/FUSE BOX CARGO COMPARTMENT/REAR ELECTRONIC MODULE (REM), REPLACING**
  - For 2005-, see: **REAR ELECTRONIC MODULE (REM), REPLACING** .

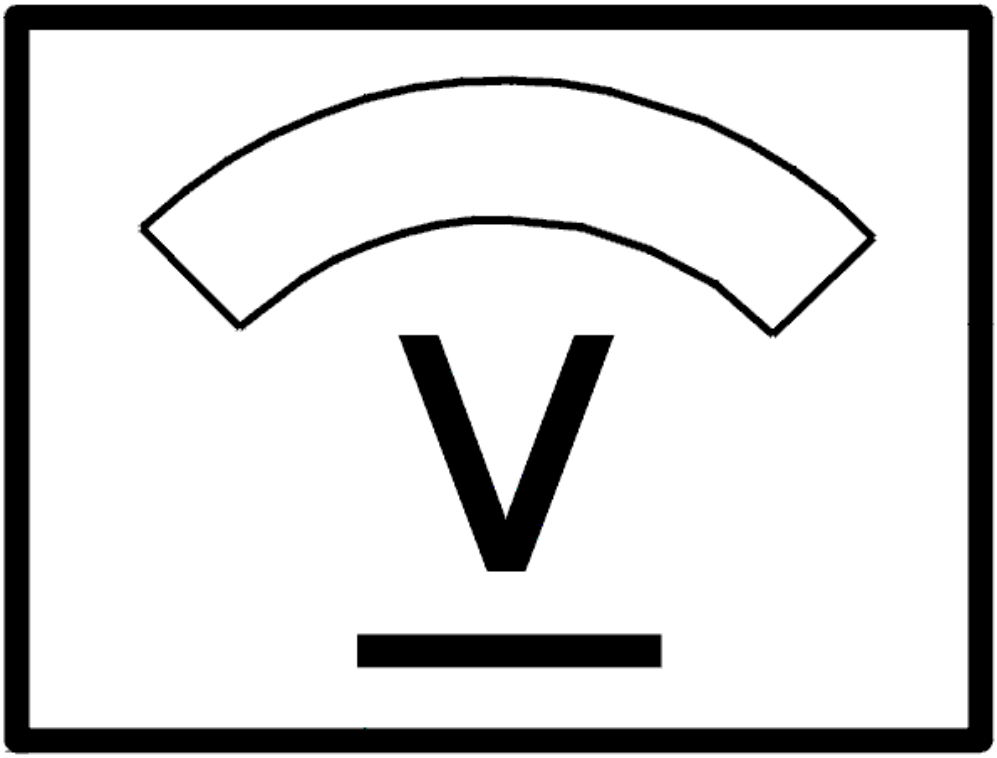

Fig. 234: Identifying Voltage Display
Courtesy of VOLVO CARS CORPORATION

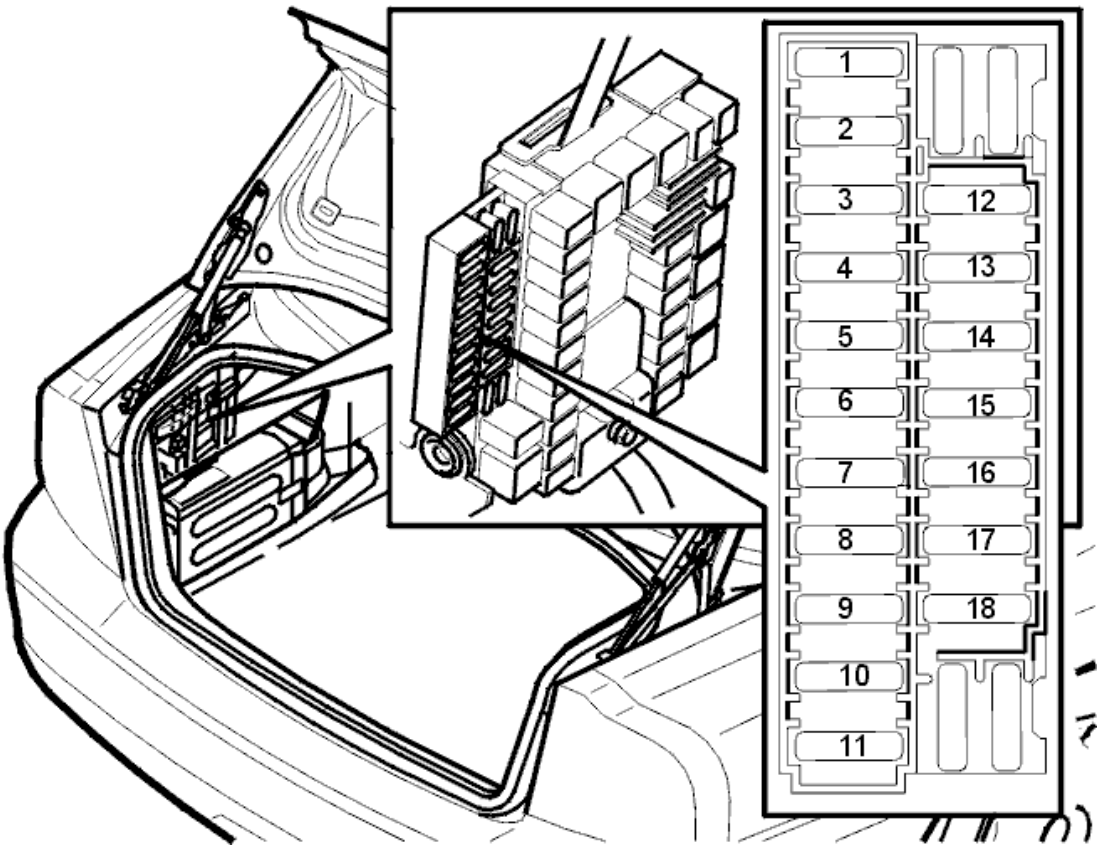

Fig. 235: Fuse Holder (Cargo Compartment)
Courtesy of VOLVO CARS CORPORATION

Is the fuse intact?

- **YES**

  Refer to **CHECKING FOR AN OPEN CIRCUIT**

- **NO**

  Refer to **CHECKING FOR A SHORT CIRCUIT**

CHECK

1. Window lift works on that particular door

   Refer to **CHECKING THE LOCKING MOTOR WIRES**

2. Window lift does not work on that particular door.

   Refer to **CHECKING THE FUSE**

CHECKING THE FUSE

Remove the fuse 11C/35 in cargo compartment fuse box.

Check that fuse is intact and check for contact resistance and oxidation as described in, see **CONTACT RESISTANCE AND OXIDATION** .

Additional information

- To access relay/fuse box in the cargo compartment:
  - For -2004, see: **RELAY/FUSE BOX CARGO COMPARTMENT/REAR ELECTRONIC MODULE (REM), REPLACING**
  - For 2005-, see: **REAR ELECTRONIC MODULE (REM), REPLACING** .

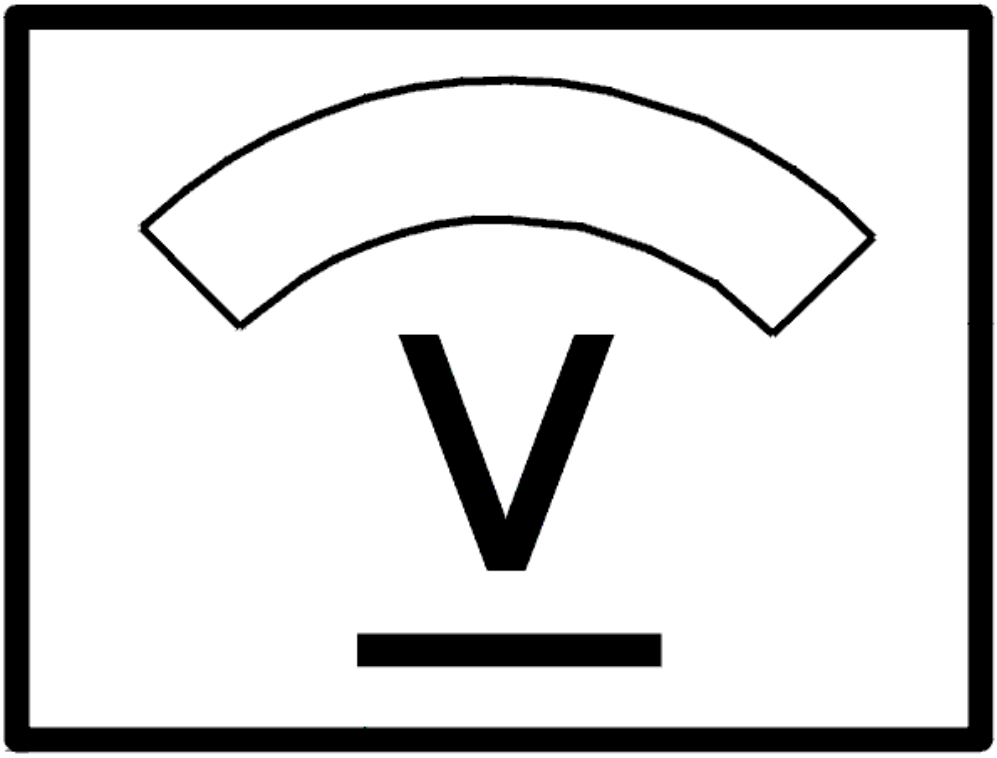

Fig. 236: Identifying Voltage Display
Courtesy of VOLVO CARS CORPORATION

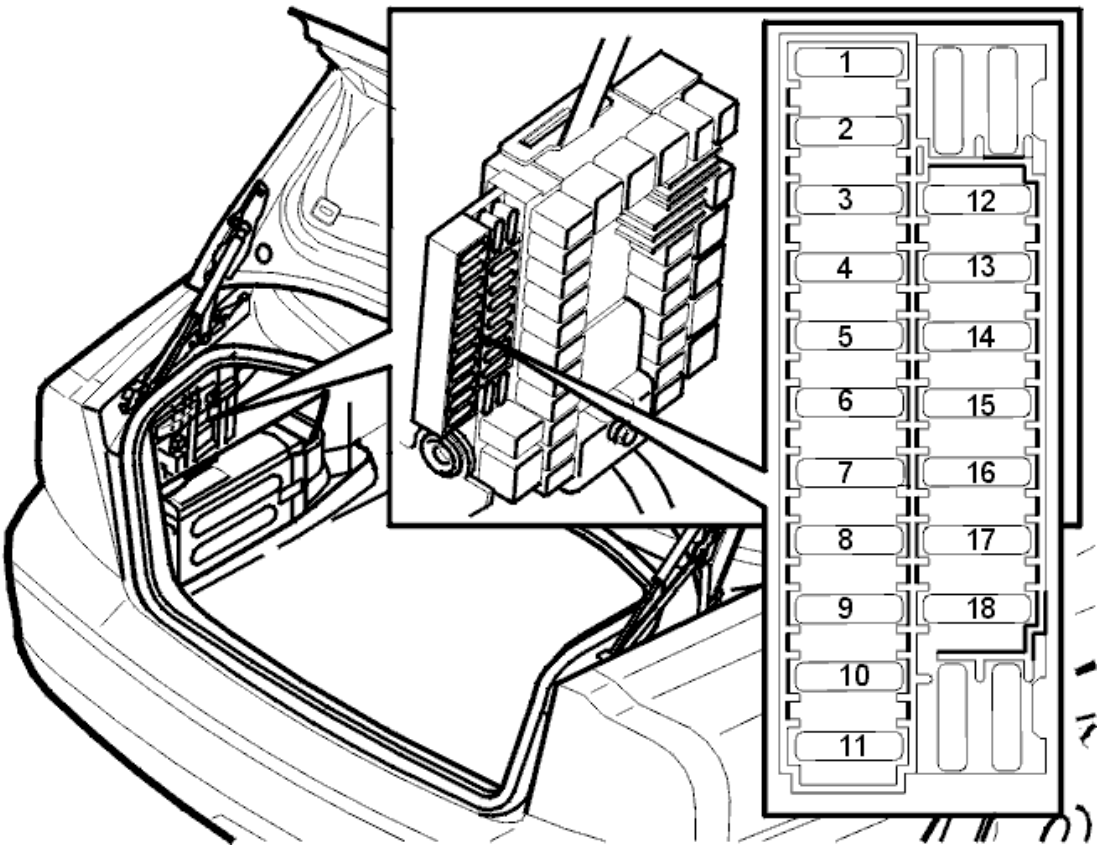

Fig. 237: Fuse Holder (Cargo Compartment)
Courtesy of VOLVO CARS CORPORATION

Is the fuse intact?

- **YES**

  Refer to **CHECKING THE VOLTAGE**

- **NO**

  Refer to **CHECKING FOR A SHORT CIRCUIT**

CHECKING FOR AN OPEN CIRCUIT

Check door control unit connector B7 for contact resistance and oxidation as described in, see **CONTACT RESISTANCE AND OXIDATION** .

Trouble-shoot the wire between fuse holder secondary side (left) and door control unit connector B7 for an open circuit as described in, see **OPEN-CIRCUIT, PERMANENT FAULTS** .

If a fault is detected, check in particular the intermediate connector in the cable harness (1/control unit) for contact resistance and oxidation as described in, see **CONTACT RESISTANCE AND OXIDATION** .

If there is an open circuit the fault should be between the fuse and the common junction point 53/427.

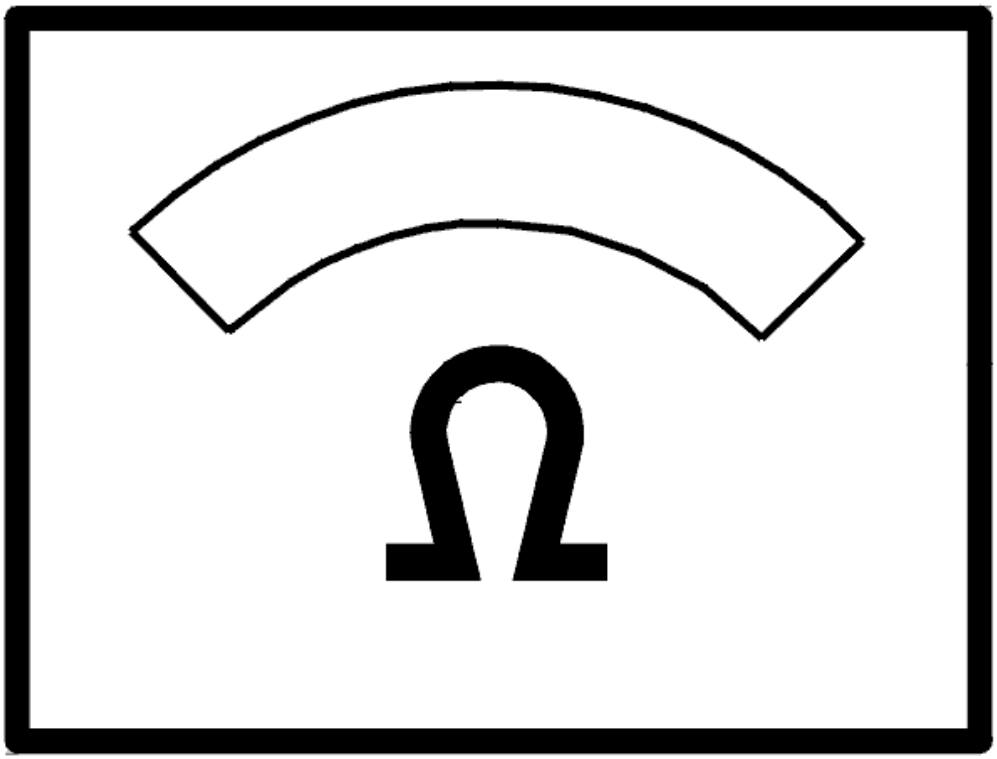

Fig. 238: Identifying Ohm Meter
Courtesy of VOLVO CARS CORPORATION

CHECKING FOR A SHORT CIRCUIT

Check the resistance between the fuse holder secondary side (left) and ground.

The ohmmeter should display infinite resistance.

NOTE: If the value is correct the fault could be intermittent.

Switch to trouble-shooting intermittent short circuits to ground as described in, see **SHORT-CIRCUIT TO GROUND, INTERMITTENT FAULTS** .

If the ohmmeter indicates a fault (short circuit), trouble-shoot the wires between the fuse and door control unit connector B7 for a short circuit to ground as described in, see **SHORT-CIRCUIT TO GROUND, PERMANENT FAULTS** .

The fault should be between the fuse and the common junction point 53/427.

Replace fuse.

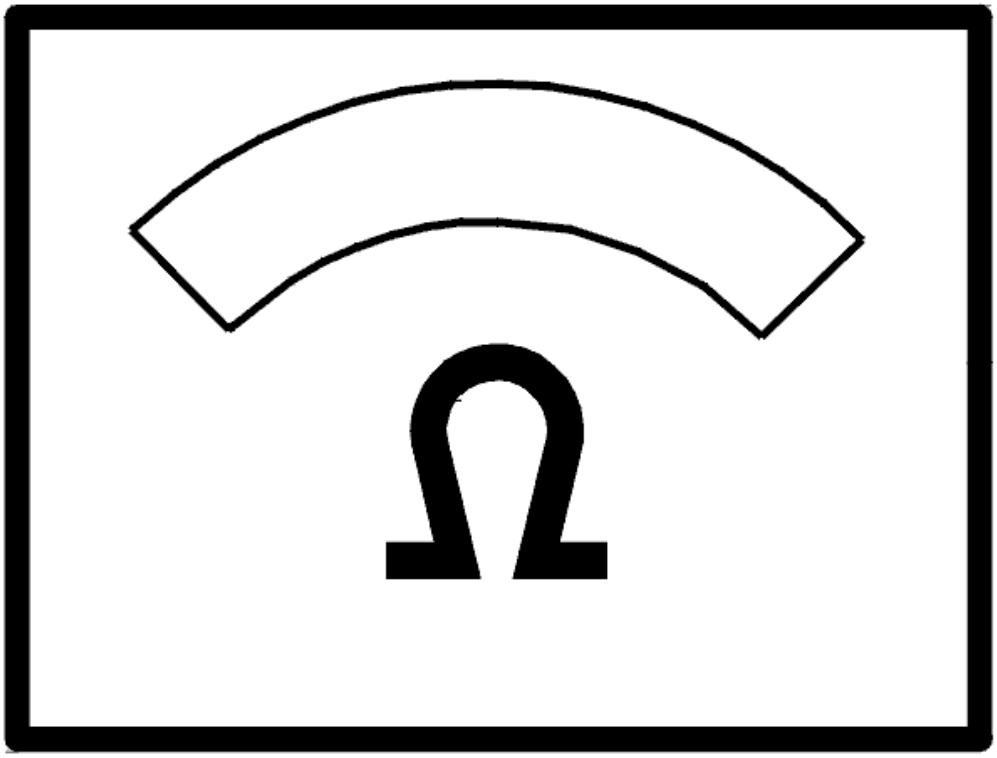

Fig. 239: Identifying Ohm Meter
Courtesy of VOLVO CARS CORPORATION

CHECKING THE VOLTAGE

Check the voltage in the door control unit connector B12.

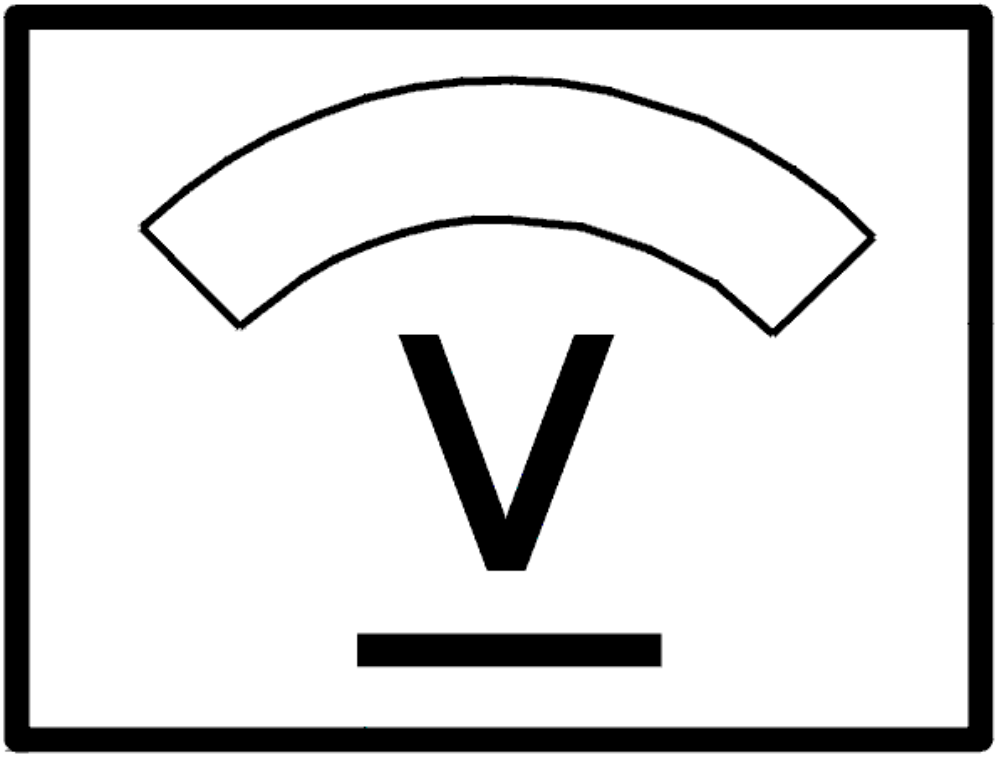

Fig. 240: Identifying Voltage Display
Courtesy of VOLVO CARS CORPORATION

Does the voltmeter show the battery voltage?

- **YES**

  Refer to **CHECKING THE LOCKING MOTOR WIRES**

- **NO**

  Refer to **CHECKING FOR AN OPEN CIRCUIT**

CHECKING FOR AN OPEN CIRCUIT

Check door control unit connector B12 for contact resistance and oxidation as described in, see **CONTACT**

RESISTANCE AND OXIDATION .

Trouble-shoot the wire between fuse holder secondary side (left) and door control unit connector B12 for an open circuit as described in, see **OPEN-CIRCUIT, PERMANENT FAULTS** .

If a fault is detected, check in particular the intermediate connector in the cable harness (1) for contact resistance and oxidation as described in, see **CONTACT RESISTANCE AND OXIDATION** .

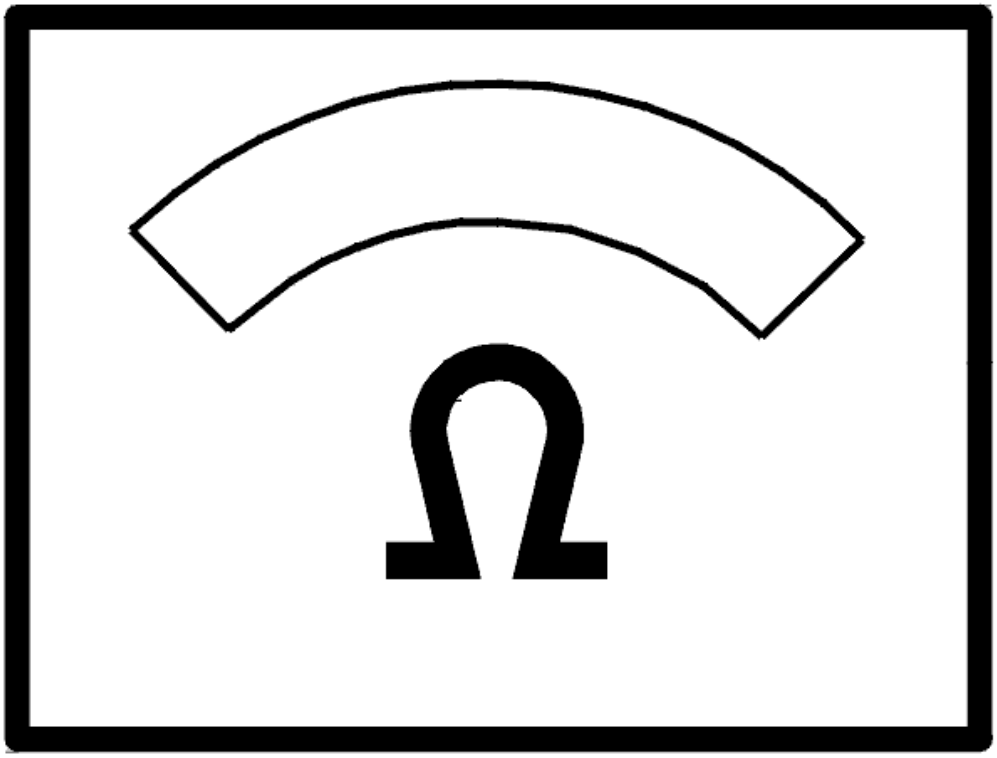

Fig. 241: Identifying Ohm Meter
Courtesy of VOLVO CARS CORPORATION

CHECKING FOR A SHORT CIRCUIT

Check the resistance between the fuse holder secondary side (left) and ground.

The ohmmeter should display infinite resistance.

NOTE: If the value is correct the fault could be intermittent.

Switch to trouble-shooting intermittent short circuits to ground as described in, see **SHORT-CIRCUIT TO GROUND, INTERMITTENT FAULTS** .

If the ohmmeter indicates a fault (short circuit), trouble-shoot the wires between the fuse and door control unit connector B12 for a short circuit to ground as described in, see **SHORT-CIRCUIT TO GROUND, PERMANENT FAULTS** .

Replace fuse.

Additional information

- To access relay/fuse box in the cargo compartment:
  - For -2004, see: **RELAY/FUSE BOX CARGO COMPARTMENT/REAR ELECTRONIC MODULE (REM), REPLACING**
  - For 2005-, see: **REAR ELECTRONIC MODULE (REM), REPLACING** .

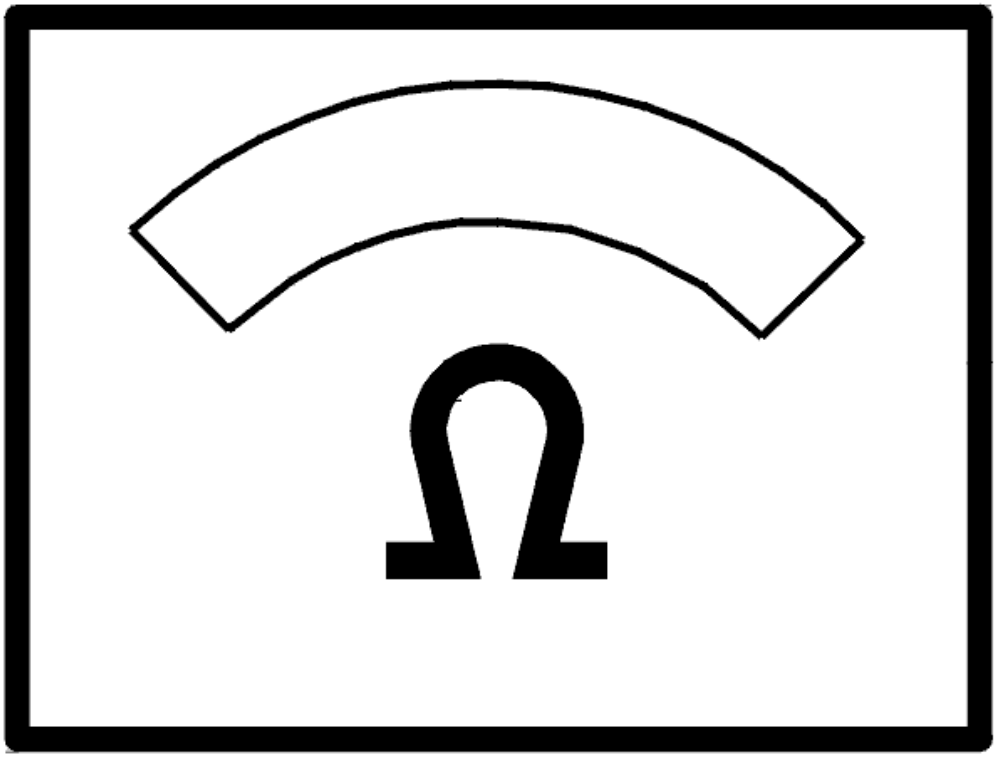

Fig. 242: Identifying Ohm Meter
Courtesy of VOLVO CARS CORPORATION

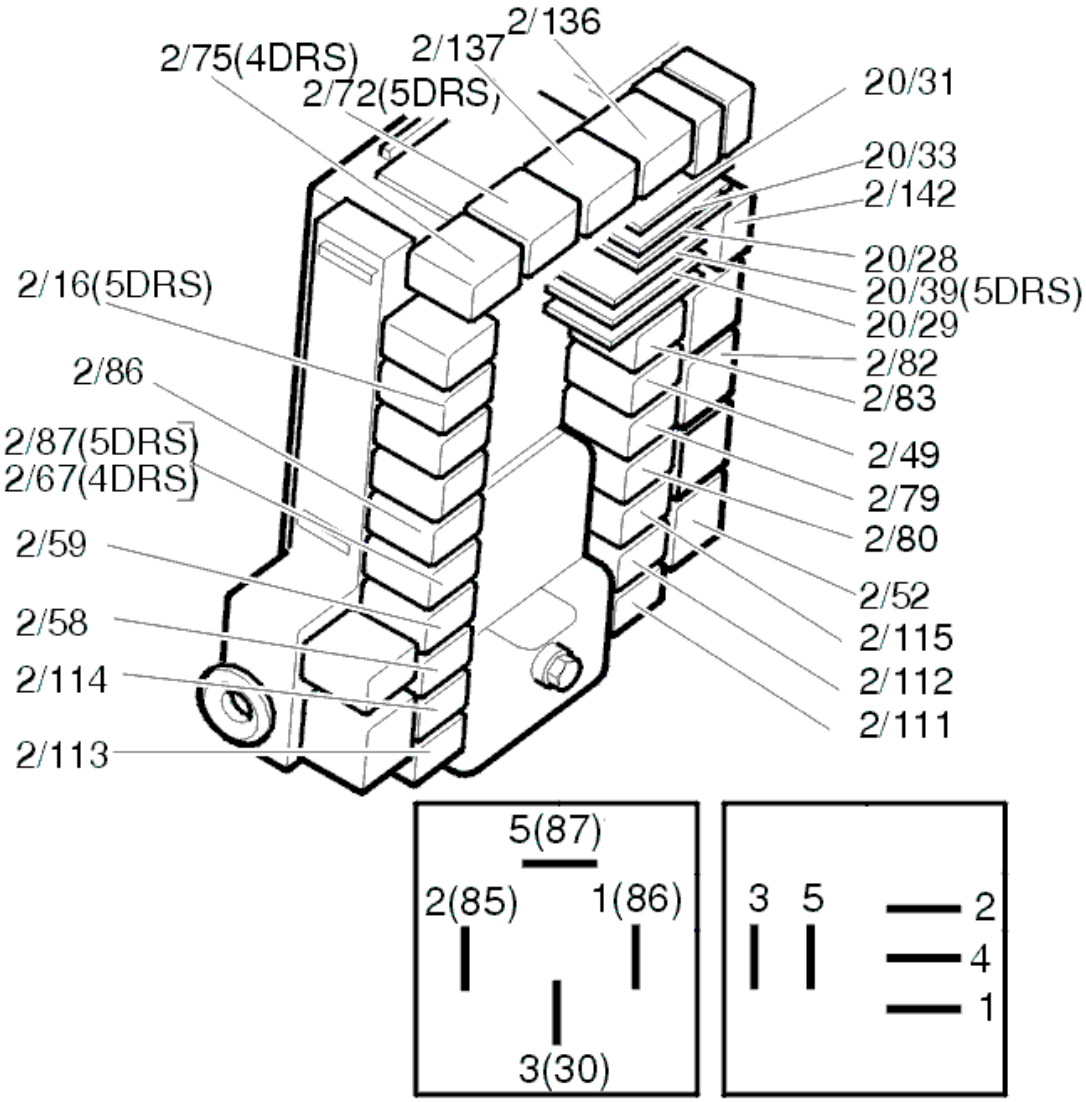

Fig. 243: Identifying Relays
Courtesy of VOLVO CARS CORPORATION

CHECKING THE LOCKING MOTOR WIRES

Check door control unit and lock unit connectors for contact resistance and oxidation as described in, see **CONTACT RESISTANCE AND OXIDATION** .

Trouble-shoot the wire between door control unit connector B2 and lock unit connector 8 for an open circuit as described in, see **OPEN-CIRCUIT, PERMANENT FAULTS** .

Trouble-shoot the wire between door control unit connector B6 and lock unit connector 7 for an open circuit as described in, see **OPEN-CIRCUIT, PERMANENT FAULTS** .

Additional information

- To access/replace the rear electronic module (REM):
  - For -2004, see: **RELAY/FUSE BOX CARGO COMPARTMENT/REAR ELECTRONIC MODULE (REM), REPLACING**
  - For 2005-, see: **REAR ELECTRONIC MODULE (REM), REPLACING** .

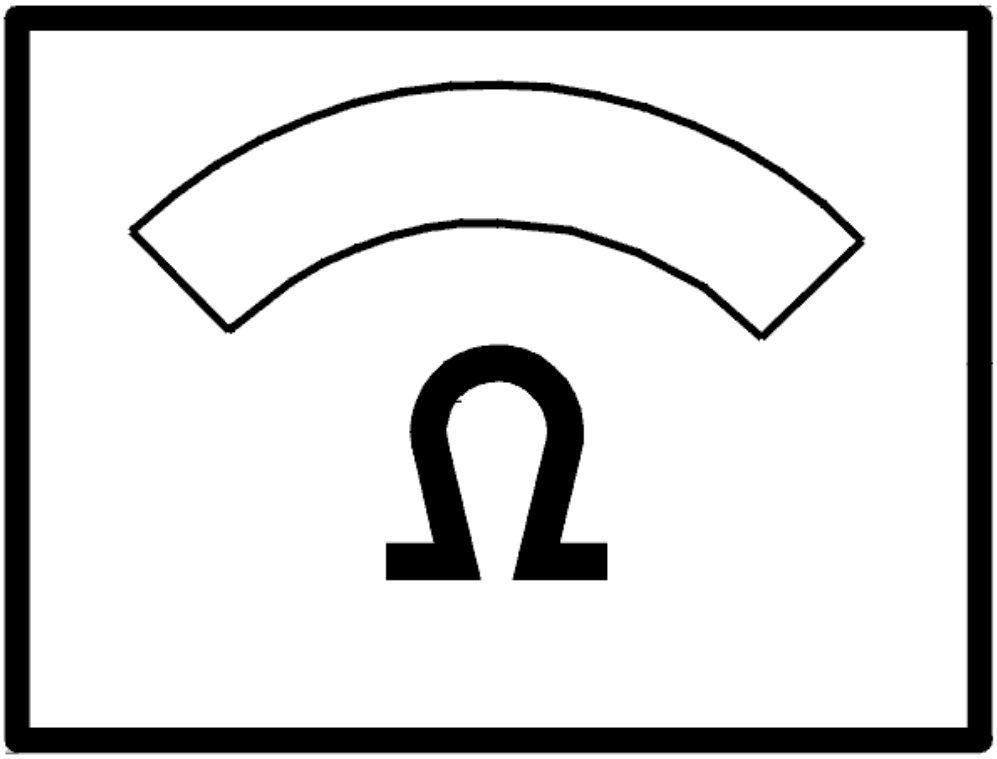

Fig. 244: Identifying Ohm Meter
Courtesy of VOLVO CARS CORPORATION

Is there a fault?

- **YES**

  OKAY: Troubleshooting has been completed.

- **NO**

Refer to **REPLACING THE COMPONENT**

REPLACING THE COMPONENT

Replace lock unit as described in, see **REPLACING THE SWITCH FOR THE LOCK UNIT / CARGO COMPARTMENT LIGHTING** .

Is there a fault?

- **YES**

  OKAY: Troubleshooting has been completed.

- **NO**

  Refer to **REPLACING THE COMPONENT**

REPLACING THE COMPONENT

Replace control unit.

- For -2004, see: **RELAY/FUSE BOX CARGO COMPARTMENT/REAR ELECTRONIC MODULE (REM), REPLACING**
- For 2005-, see: **REAR ELECTRONIC MODULE (REM), REPLACING** .

CHECKING THE PASSENGER DOOR

CHECK

Is the driver door lock not working?

- **YES**

  Refer to **CHECKING THE FUSE**

- **NO**

  Refer to **CHECK**

CHECKING THE FUSE

Remove the fuse 11C/27 in cargo compartment fuse box.

Check that fuse is intact and check for contact resistance and oxidation as described in, see **CONTACT RESISTANCE AND OXIDATION** .

Additional information

- To access relay/fuse box in the cargo compartment:
  - For -2004, see: **RELAY/FUSE BOX CARGO COMPARTMENT/REAR ELECTRONIC MODULE (REM), REPLACING**
  - For 2005-, see: **REAR ELECTRONIC MODULE (REM), REPLACING** .

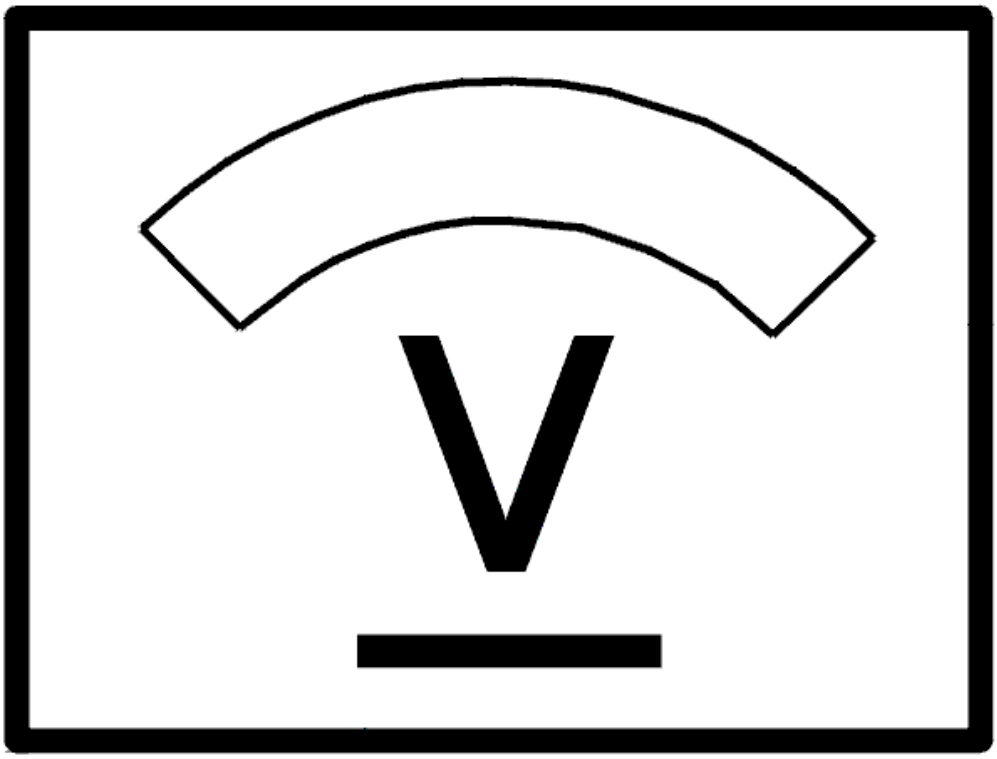

Fig. 245: Identifying Voltage Display
Courtesy of VOLVO CARS CORPORATION

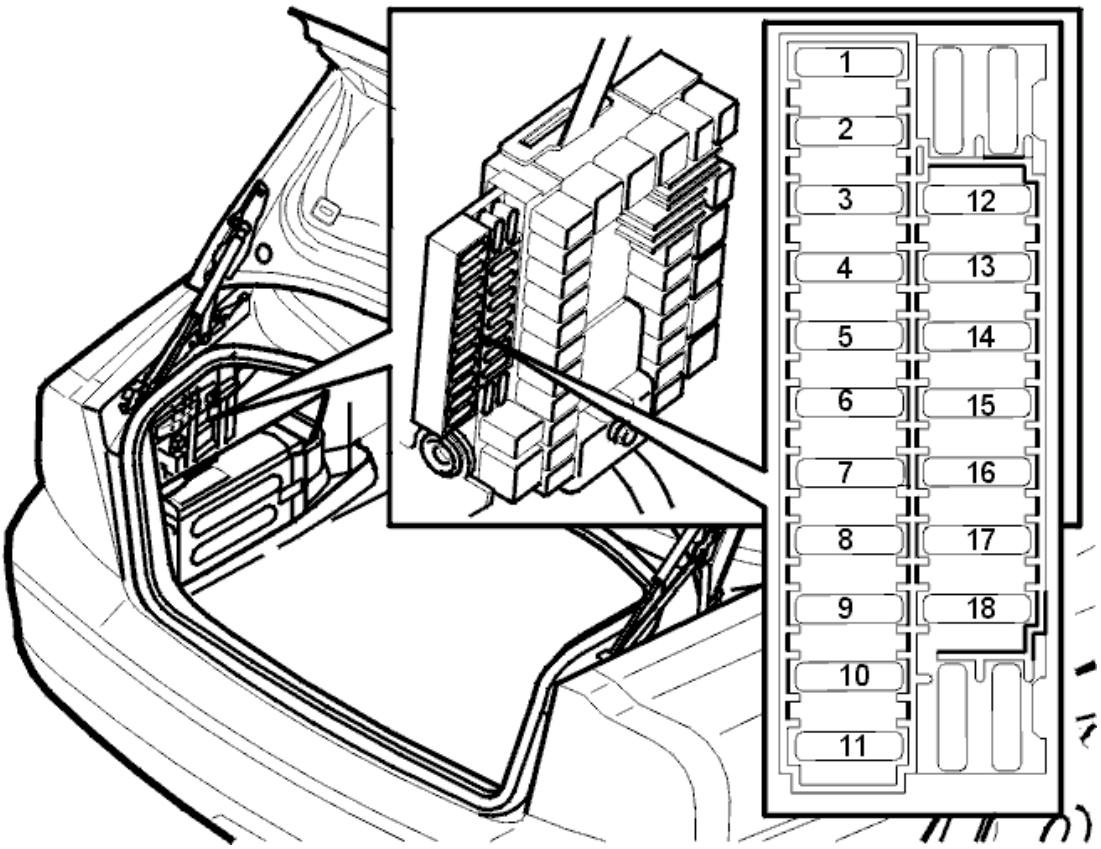

Fig. 246: Fuse Holder (Cargo Compartment)
Courtesy of VOLVO CARS CORPORATION

Is the fuse intact?

- **YES**

  Refer to **CHECKING FOR AN OPEN CIRCUIT**

- **NO**

  Refer to **CHECKING FOR A SHORT CIRCUIT**

CHECK

1. Window lift works on that particular door

   Refer to **CHECKING THE LOCKING MOTOR WIRES**

2. Window lift does not work on that particular door.

   Refer to **CHECKING THE FUSE**

CHECKING THE FUSE

Remove the fuse 11C/36 in cargo compartment fuse box.

Check that fuse is intact and check for contact resistance and oxidation as described in, see **CONTACT RESISTANCE AND OXIDATION** .

Additional information

- To access relay/fuse box in the cargo compartment:
  - For -2004, see: **RELAY/FUSE BOX CARGO COMPARTMENT/REAR ELECTRONIC MODULE (REM), REPLACING**
  - For 2005-, see: **REAR ELECTRONIC MODULE (REM), REPLACING** .

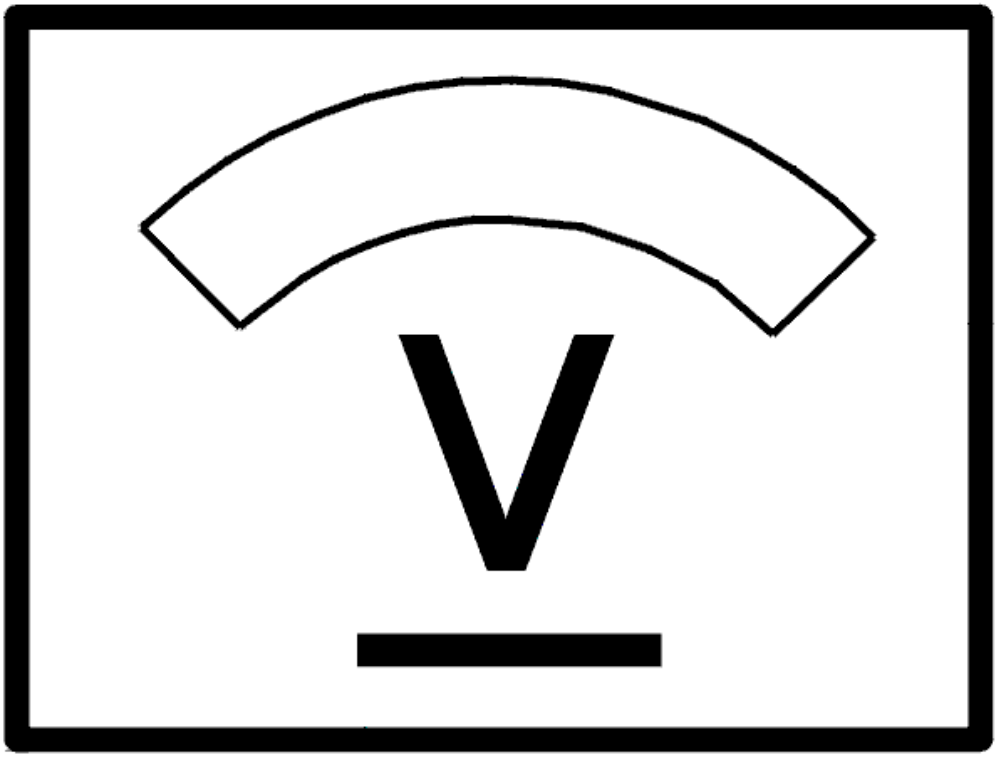

Fig. 247: Identifying Voltage Display
Courtesy of VOLVO CARS CORPORATION

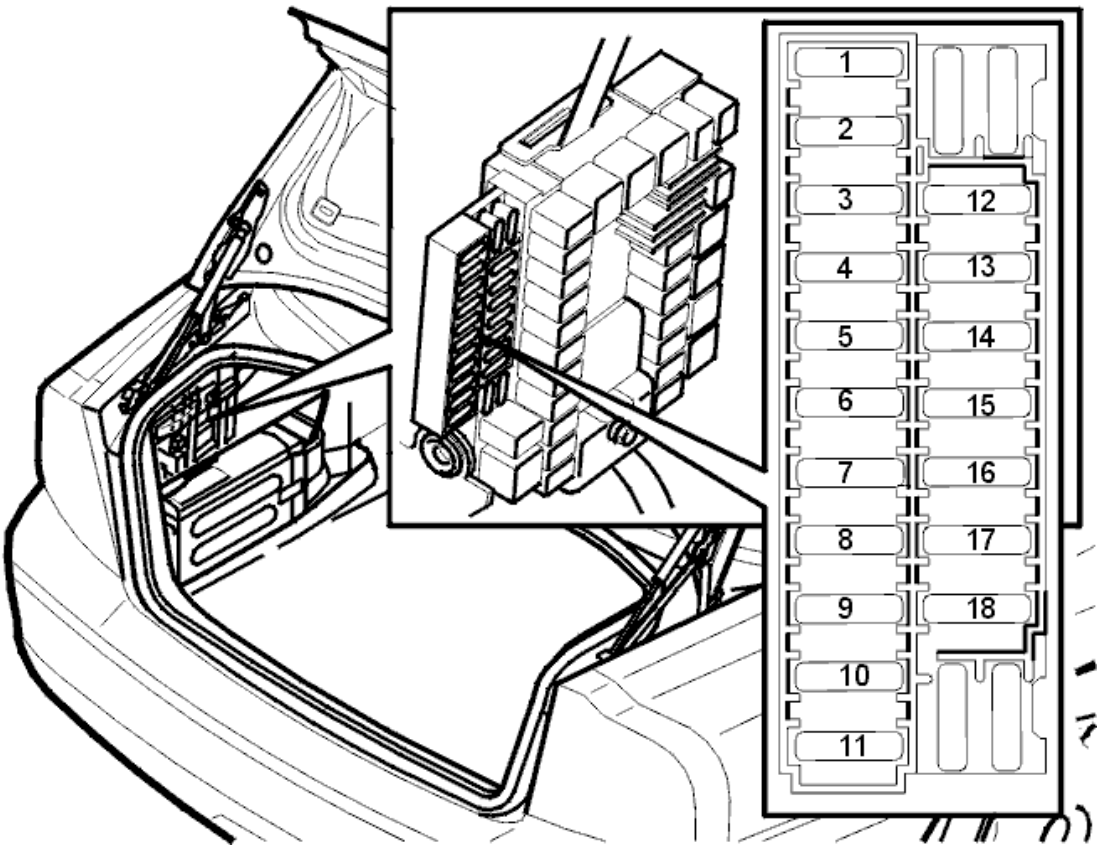

Fig. 248: Fuse Holder (Cargo Compartment)
Courtesy of VOLVO CARS CORPORATION

Is the fuse intact?

- **YES**

  Refer to **CHECKING THE VOLTAGE**

- **NO**

  Refer to **CHECKING FOR A SHORT CIRCUIT**

CHECKING FOR AN OPEN CIRCUIT

Check door control unit connector B7 for contact resistance and oxidation as described in, see **CONTACT RESISTANCE AND OXIDATION** .

Trouble-shoot the wire between fuse holder secondary side (left) and door control unit connector B7 for an open circuit as described in, see **OPEN-CIRCUIT, PERMANENT FAULTS** .

If a fault is detected, check in particular the intermediate connector in the cable harness (1/control unit) for contact resistance and oxidation as described in, see **CONTACT RESISTANCE AND OXIDATION** .

If there is an open circuit the fault should be between the fuse and the common junction point 53/427.

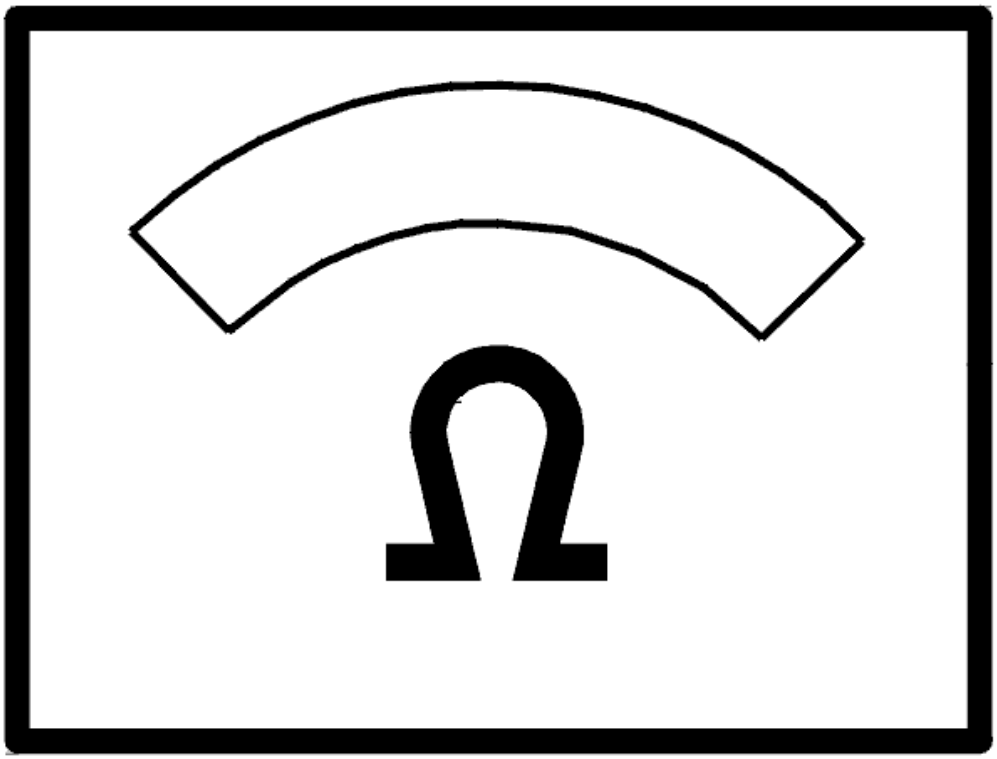

Fig. 249: Identifying Ohm Meter
Courtesy of VOLVO CARS CORPORATION

CHECKING FOR A SHORT CIRCUIT

Check the resistance between the fuse holder secondary side (left) and ground.

The ohmmeter should display infinite resistance.

NOTE: If the value is correct the fault could be intermittent.

Switch to trouble-shooting intermittent short circuits to ground as described in, see **SHORT-CIRCUIT TO GROUND, INTERMITTENT FAULTS** .

If the ohmmeter indicates a fault (short circuit), trouble-shoot the wires between the fuse and door control unit connector B7 for a short circuit to ground as described in, see **SHORT-CIRCUIT TO GROUND, PERMANENT FAULTS** .

The fault should be between the fuse and the common junction point 53/427.

Replace fuse.

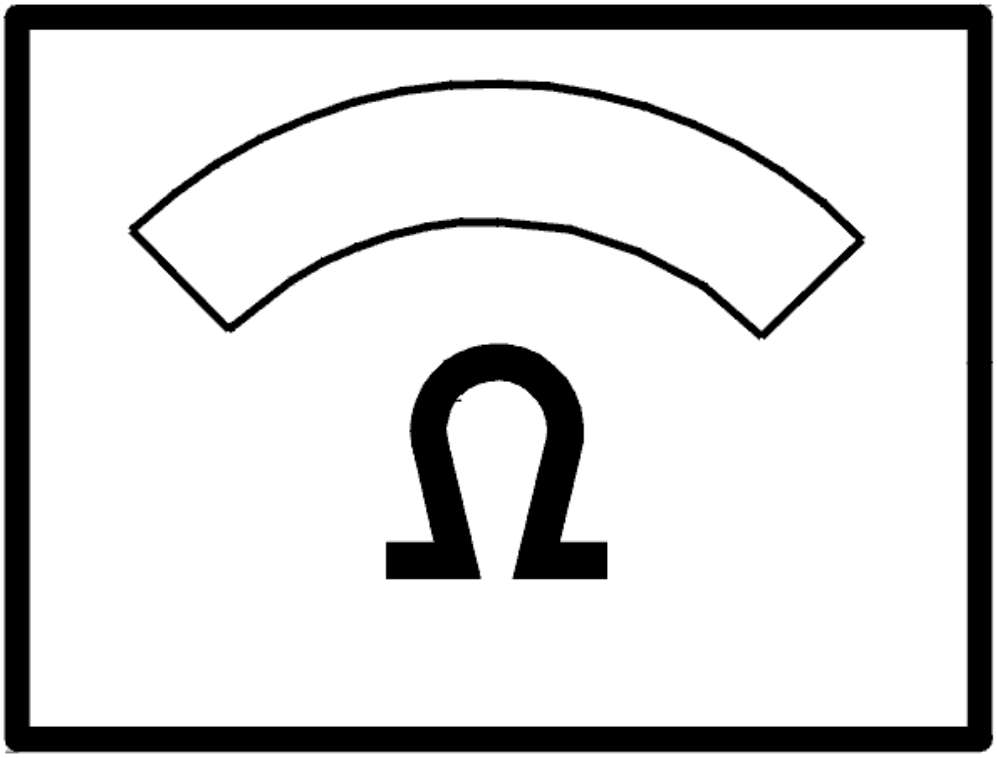

Fig. 250: Identifying Ohm Meter
Courtesy of VOLVO CARS CORPORATION

CHECKING THE VOLTAGE

Check the voltage in the door control unit connector B12.

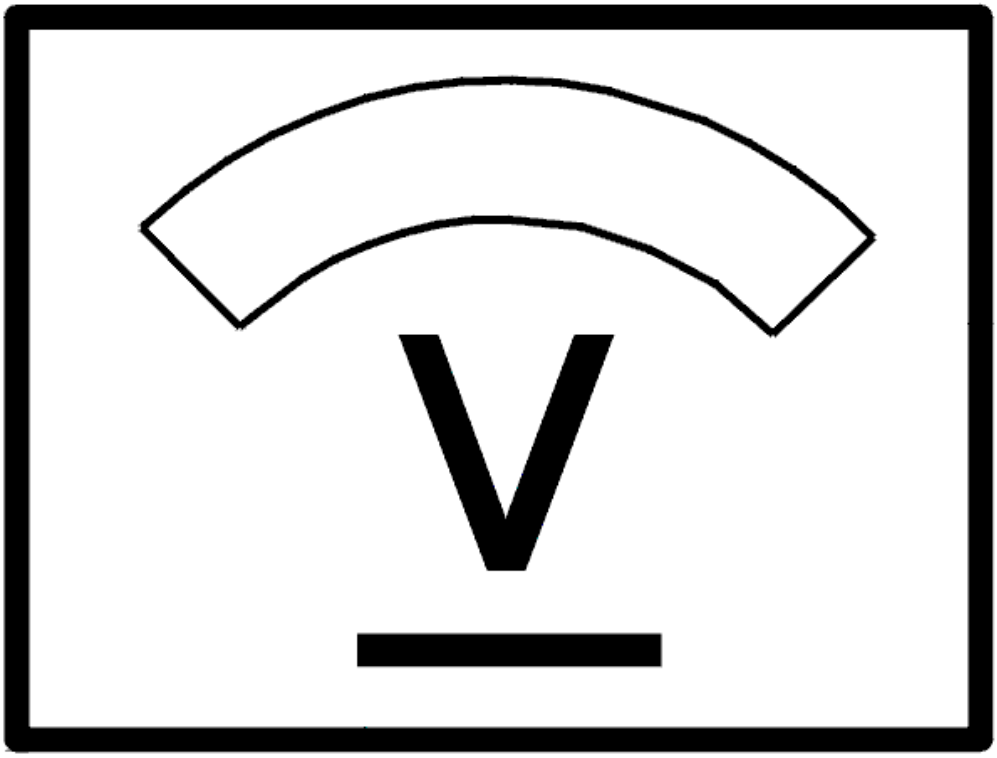

Fig. 251: Identifying Voltage Display
Courtesy of VOLVO CARS CORPORATION

Does the voltmeter show the battery voltage?

- **YES**

  Refer to **CHECKING THE LOCKING MOTOR WIRES**

- **NO**

  Refer to **CHECKING FOR AN OPEN CIRCUIT**

CHECKING FOR AN OPEN CIRCUIT

Check door control unit connector B12 for contact resistance and oxidation as described in, see **CONTACT**

RESISTANCE AND OXIDATION .

Trouble-shoot the wire between fuse holder secondary side (left) and door control unit connector B12 for an open circuit as described in, see **OPEN-CIRCUIT, PERMANENT FAULTS** .

If a fault is detected, check in particular the intermediate connector in the cable harness (1) for contact resistance and oxidation as described in, see **CONTACT RESISTANCE AND OXIDATION** .

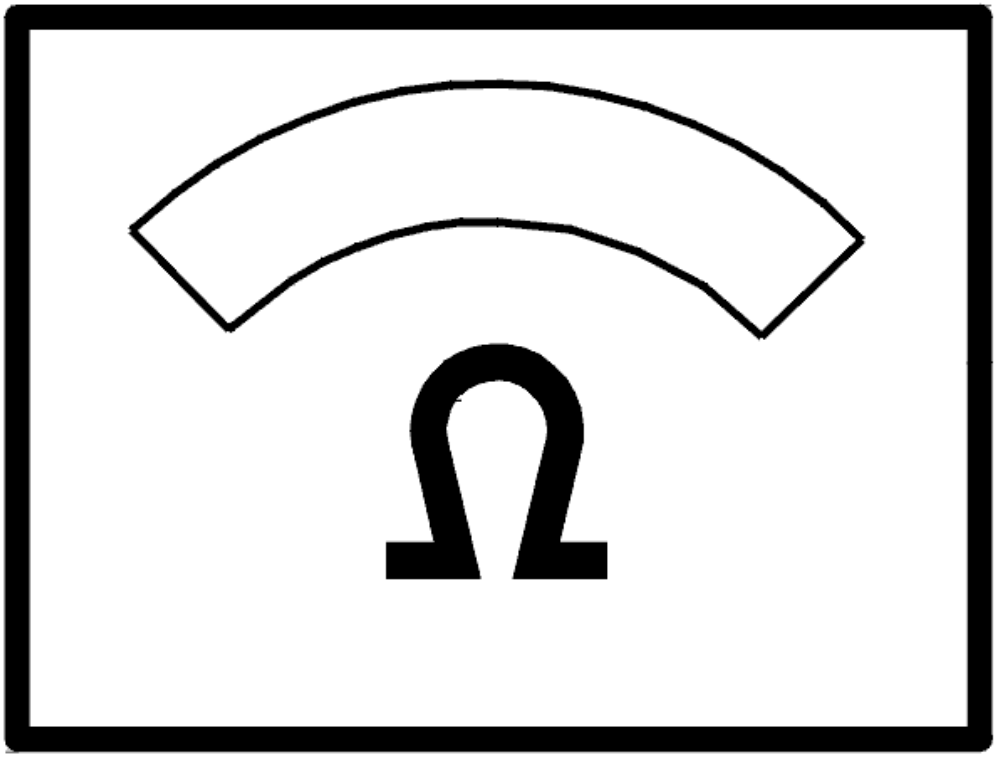

Fig. 252: Identifying Ohm Meter
Courtesy of VOLVO CARS CORPORATION

CHECKING FOR A SHORT CIRCUIT

Check the resistance between the fuse holder secondary side (left) and ground.

The ohmmeter should display infinite resistance.

NOTE: If the value is correct the fault could be intermittent.

Switch to trouble-shooting intermittent short circuits to ground as described in, see **SHORT-CIRCUIT TO GROUND, INTERMITTENT FAULTS** .

If the ohmmeter indicates a fault (short circuit), trouble-shoot the wires between the fuse and door control unit connector B12 for a short circuit to ground as described in, see **SHORT-CIRCUIT TO GROUND, PERMANENT FAULTS** .

Replace fuse.

Additional information

- To access relay/fuse box in the cargo compartment:
  - For -2004, see: **RELAY/FUSE BOX CARGO COMPARTMENT/REAR ELECTRONIC MODULE (REM), REPLACING**
  - For 2005-, see: **REAR ELECTRONIC MODULE (REM), REPLACING** .

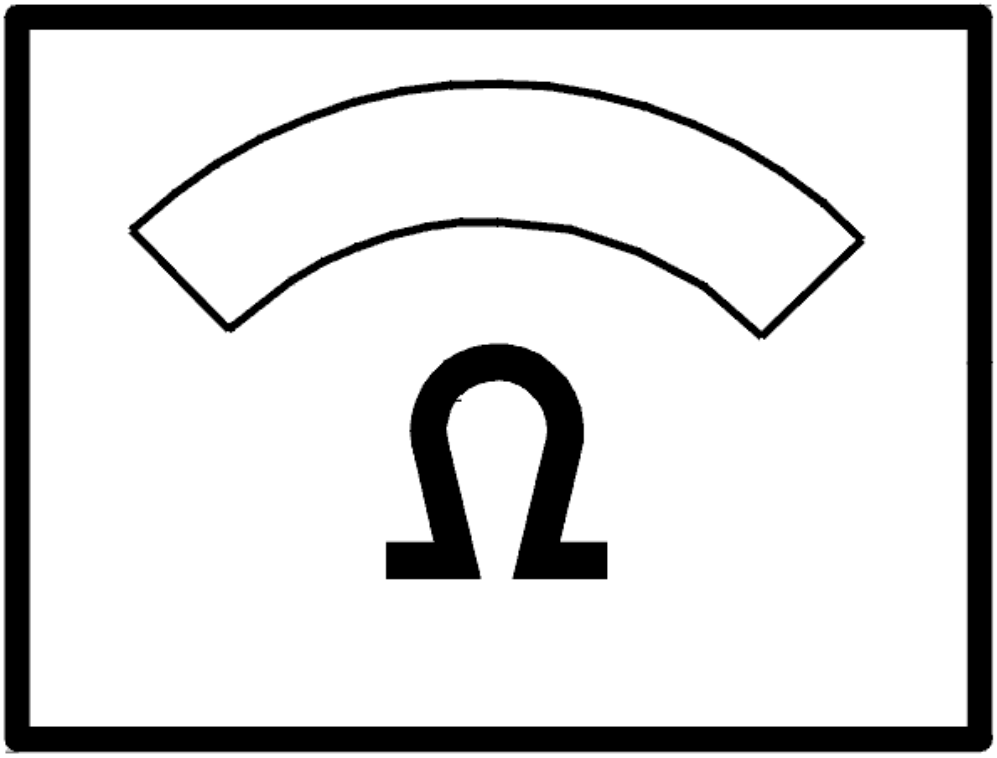

Fig. 253: Identifying Ohm Meter
Courtesy of VOLVO CARS CORPORATION

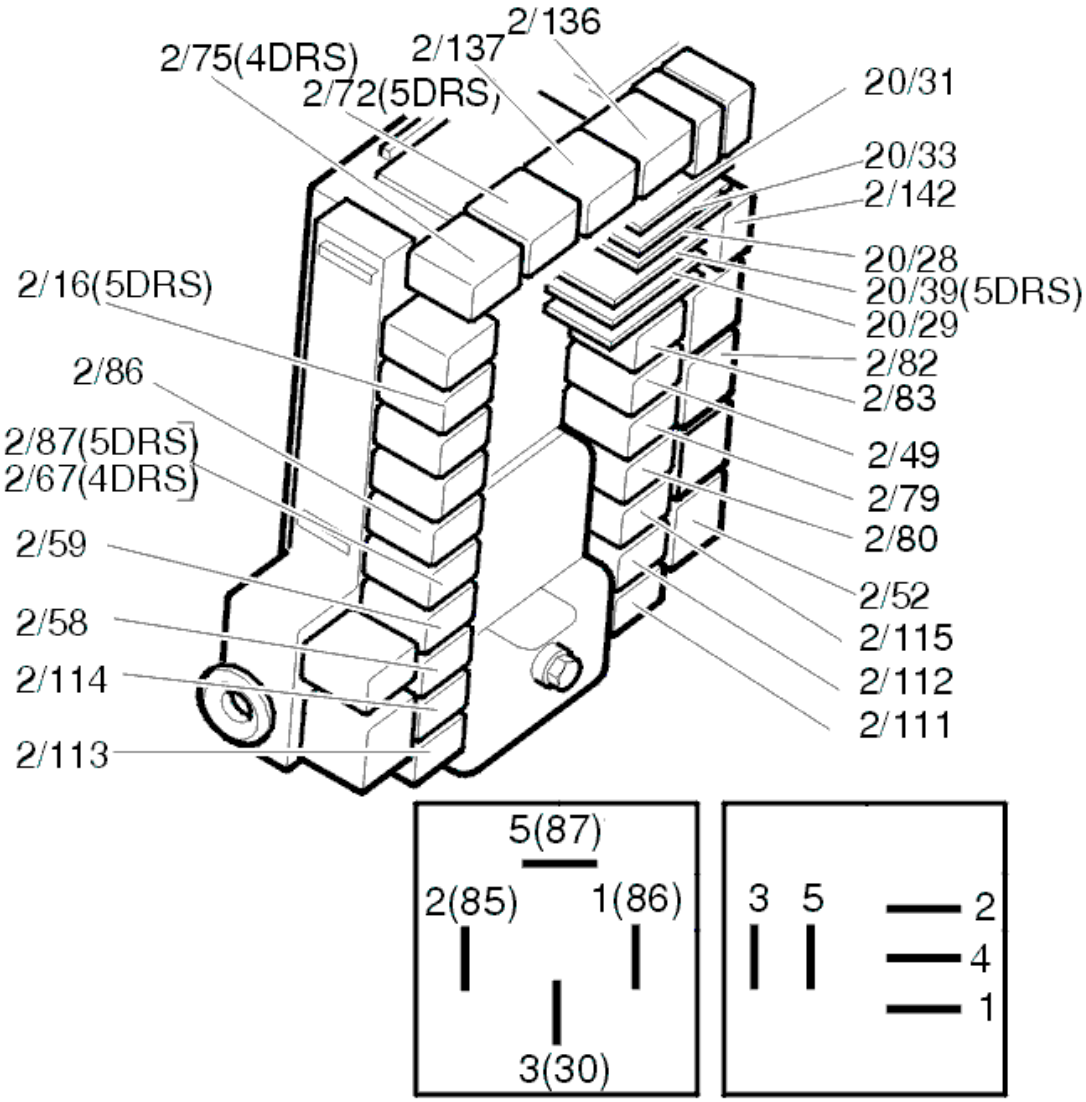

Fig. 254: Identifying Relays
Courtesy of VOLVO CARS CORPORATION

CHECKING THE LOCKING MOTOR WIRES

Check door control unit and lock unit connectors for contact resistance and oxidation as described in, see **CONTACT RESISTANCE AND OXIDATION** .

Trouble-shoot the wire between door control unit connector B2 and lock unit connector 8 for an open circuit as described in, see **OPEN-CIRCUIT, PERMANENT FAULTS** .

Trouble-shoot the wire between door control unit connector B6 and lock unit connector 7 for an open circuit as described in, see **OPEN-CIRCUIT, PERMANENT FAULTS** .

Additional information

- To access/replace the rear electronic module (REM):
  - For -2004, see: **RELAY/FUSE BOX CARGO COMPARTMENT/REAR ELECTRONIC MODULE (REM), REPLACING**
  - For 2005-, see: **REAR ELECTRONIC MODULE (REM), REPLACING** .

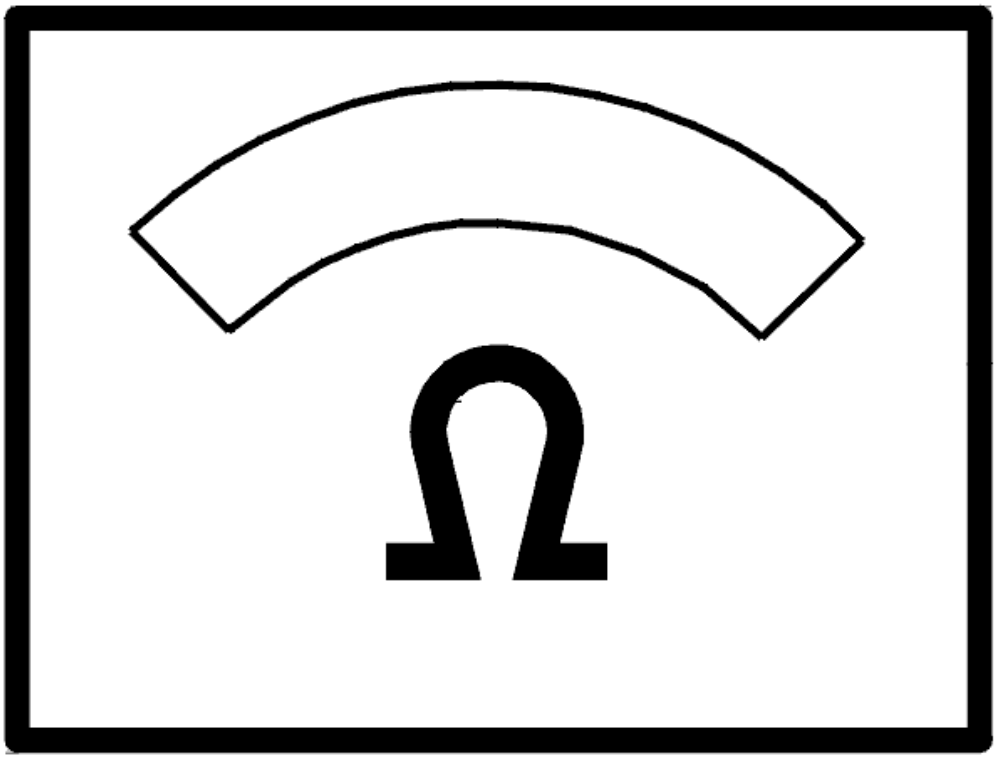

Fig. 255: Identifying Ohm Meter
Courtesy of VOLVO CARS CORPORATION

Is there a fault?

- **YES**

  OKAY: Troubleshooting has been completed.

- **NO**

Refer to **REPLACING THE COMPONENT**

REPLACING THE COMPONENT

Replace lock unit as described in, see **REPLACING THE SWITCH FOR THE LOCK UNIT / CARGO COMPARTMENT LIGHTING** .

Is there a fault?

- **YES**

  OKAY: Troubleshooting has been completed.

- **NO**

  Refer to **REPLACING THE COMPONENT**

REPLACING THE COMPONENT

Replace control unit.

- For -2004, see: **RELAY/FUSE BOX CARGO COMPARTMENT/REAR ELECTRONIC MODULE (REM), REPLACING**
- For 2005-, see: **REAR ELECTRONIC MODULE (REM), REPLACING** .

CHECKING THE REAR LEFT DOOR

CHECK

Is the lock to the other rear door not working?

- **YES**

  Refer to **CHECKING THE FUSE**

- **NO**

  Refer to **REPLACING THE COMPONENT**

REPLACING THE COMPONENT

Replace the relays for locking (2/111) and unlocking (2/112) in the cargo compartment relay/fuse box. At the same time check relay socket contacts for contact resistance and oxidation as described in, see **CONTACT RESISTANCE AND OXIDATION** .

Additional information

- To access relay/fuse box in the cargo compartment:

- For -2004, see: **RELAY/FUSE BOX CARGO COMPARTMENT/REAR ELECTRONIC MODULE (REM), REPLACING**
- For 2005-, see: **REAR ELECTRONIC MODULE (REM), REPLACING** .

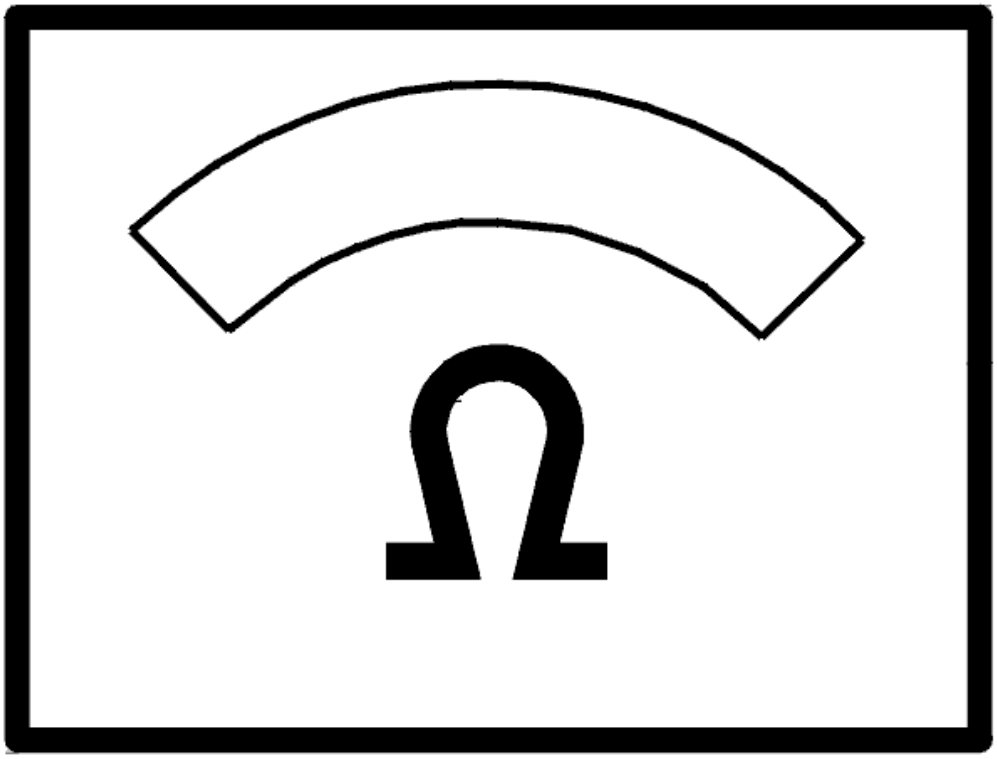

Fig. 256: Identifying Ohm Meter
Courtesy of VOLVO CARS CORPORATION

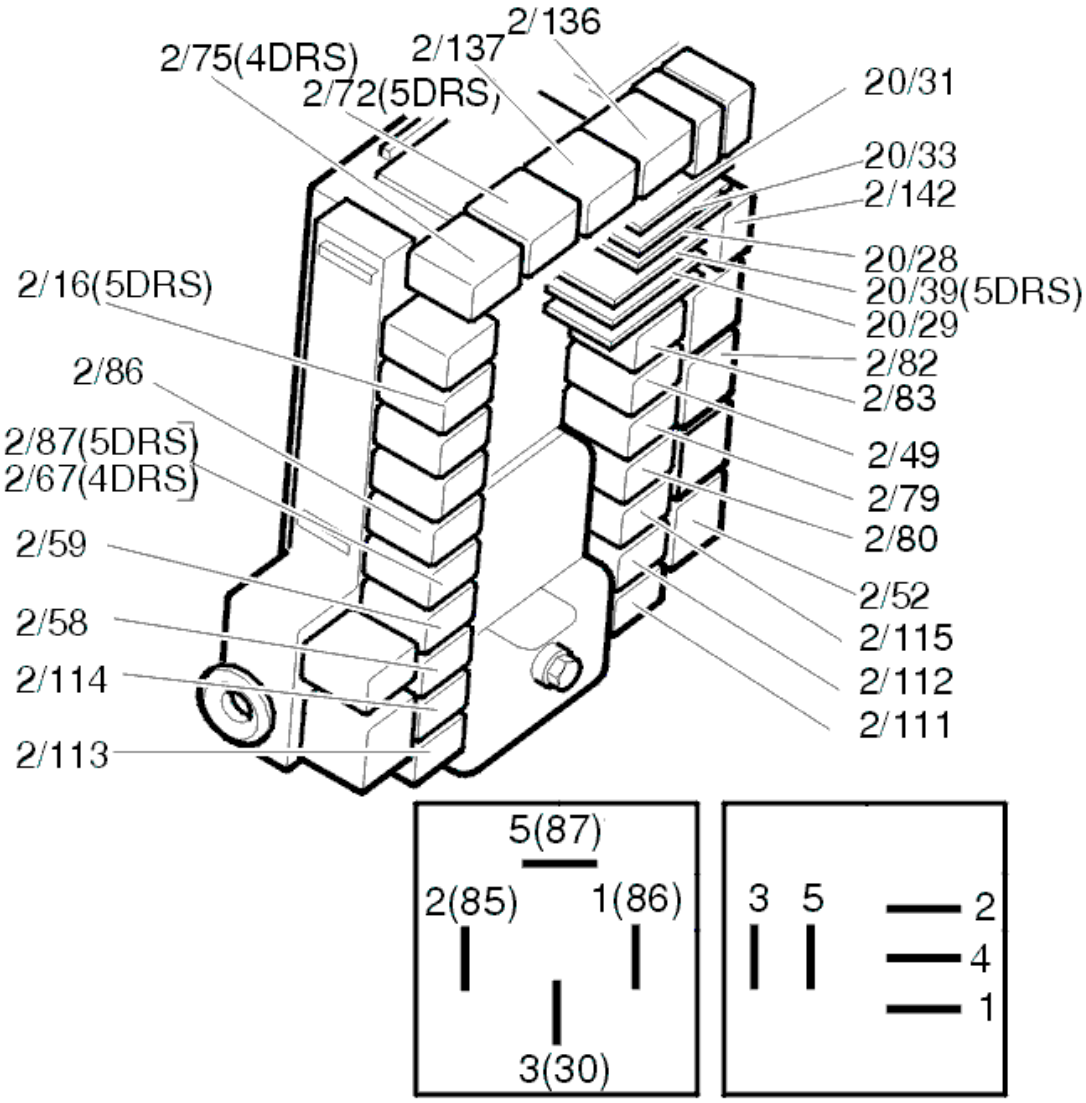

Fig. 257: Identifying Relays
Courtesy of VOLVO CARS CORPORATION

Is there a fault?

- **YES**

  OKAY: Troubleshooting has been completed.

- **NO**

  Refer to **CIRCUIT TEST**

CIRCUIT TEST

The fault is caused by an open circuit in one of the relay circuits or in the lock unit. To find out which circuit

contains the fault:

Disconnect the lock unit connector.

Check the contacts for contact resistance and oxidation as described in, see **CONTACT RESISTANCE AND OXIDATION** .

Check resistance between 4 and 6 on cable connector.

Additional information

- To access/replace the lock unit, see **LOCK MECHANISM REAR SIDE DOOR, REPLACING** .

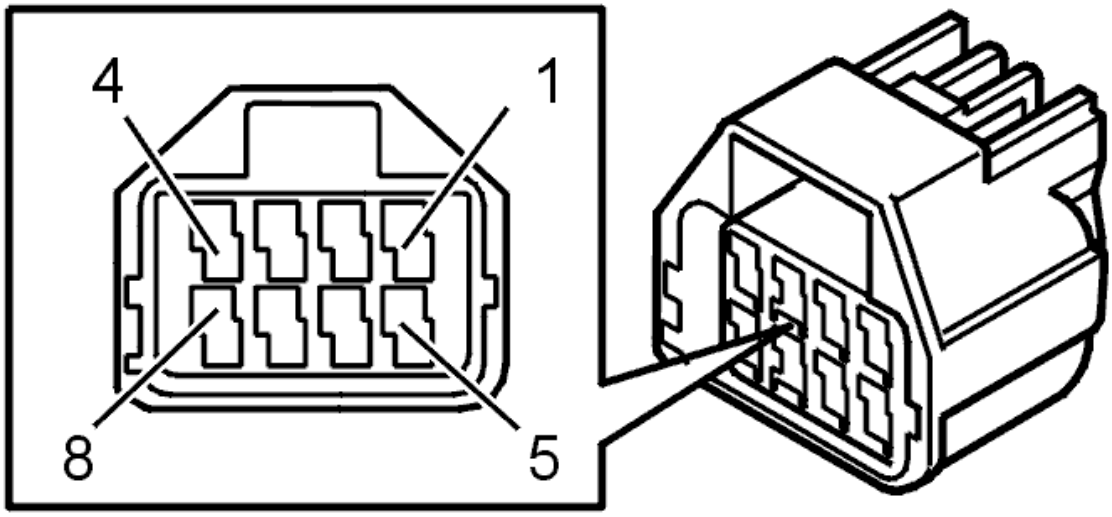

Fig. 258: Identifying Connector Terminals
Courtesy of VOLVO CARS CORPORATION

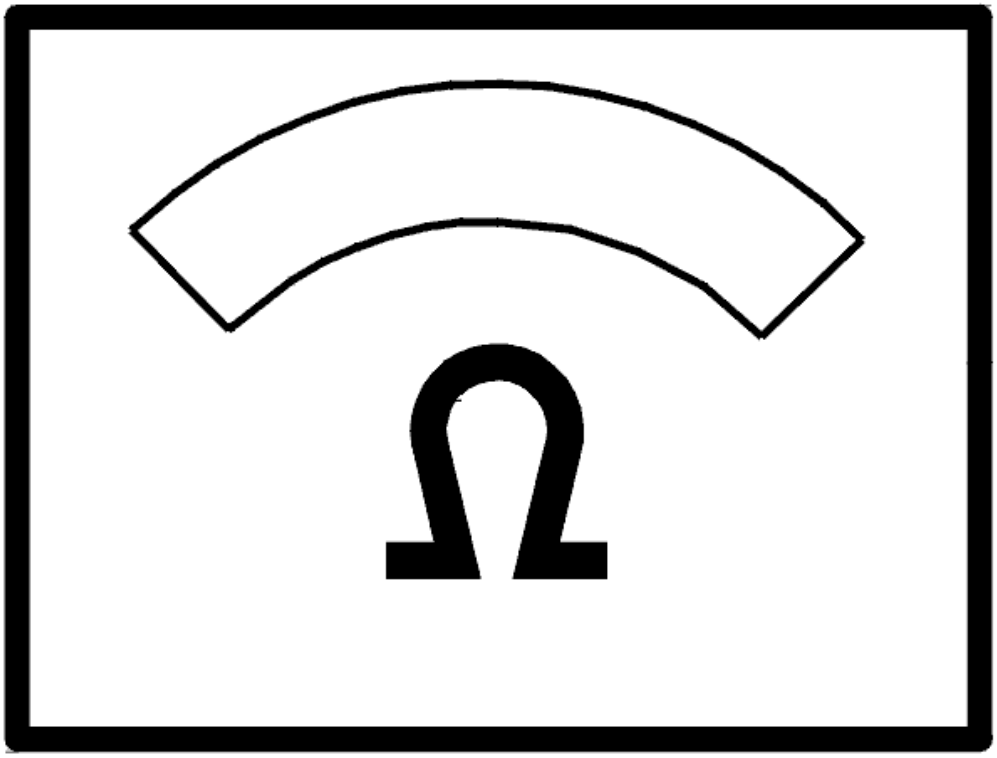

Fig. 259: Identifying Ohm Meter
Courtesy of VOLVO CARS CORPORATION

The ohmmeter should display 0 ohm.

- **OK**

  Refer to **CHECKING THE COMPONENTS**

- **NOT OK**

  Refer to **CIRCUIT TEST, CONTINUED**

CIRCUIT TEST, CONTINUED

Check the resistance between 4 and ground and between 6 and ground on the cable connector.

The ohmmeter should display 0 ohm.

1. The ohmmeter shows a fault between 4 and ground

   Refer to **CHECKING THE UNLOCKING RELAY CIRCUIT**

2. The ohmmeter shows a fault between 6 and ground.

   Refer to **CHECKING THE LOCKING RELAY CIRCUIT**

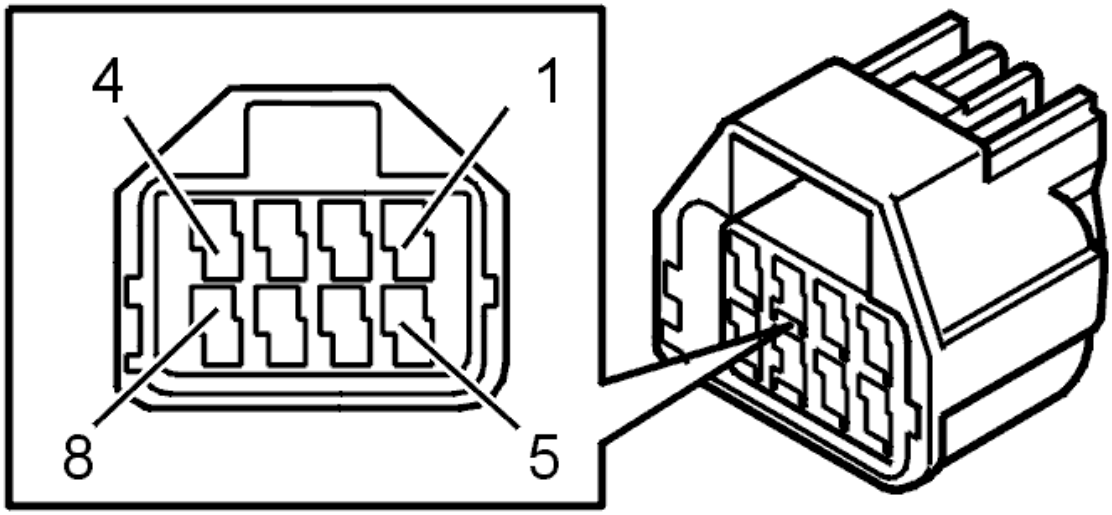

Fig. 260: Identifying Connector Terminals
Courtesy of VOLVO CARS CORPORATION

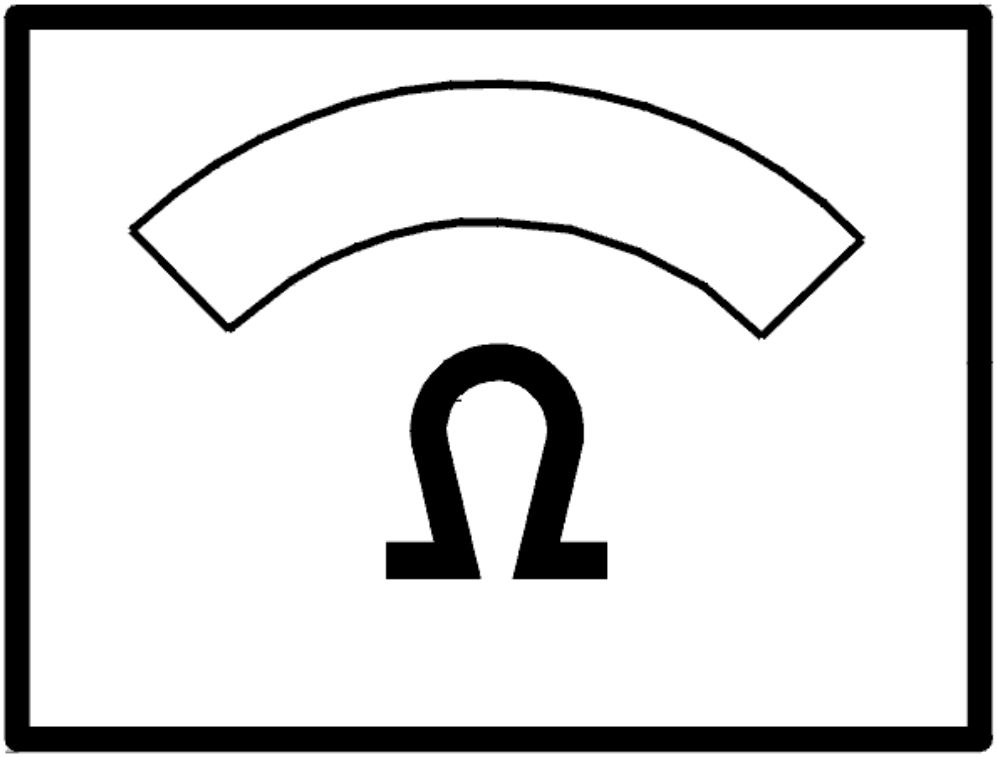

Fig. 261: Identifying Ohm Meter
Courtesy of VOLVO CARS CORPORATION

CHECKING THE LOCKING RELAY CIRCUIT

Remove the locking relay (2/111).

Check the wire between 4 in the cable connector and 3 in the relay socket for an open circuit as described in, see **OPEN-CIRCUIT, PERMANENT FAULTS** .

If a fault is detected, check in particular the intermediate connector in the cable harness (2) for contact resistance and oxidation as described in, see **CONTACT RESISTANCE AND OXIDATION** .

Do the necessary corrective action.

If no fault is found, check the resistance between 4 in the relay socket and ground.

The ohmmeter should display 0 ohm.

If the resistance deviates, replace the rear electronic module (REM).

Additional information

- To access/replace the rear electronic module (REM):
  - For -2004, see: **RELAY/FUSE BOX CARGO COMPARTMENT/REAR ELECTRONIC MODULE (REM), REPLACING**
  - For 2005-, see: **REAR ELECTRONIC MODULE (REM), REPLACING** .

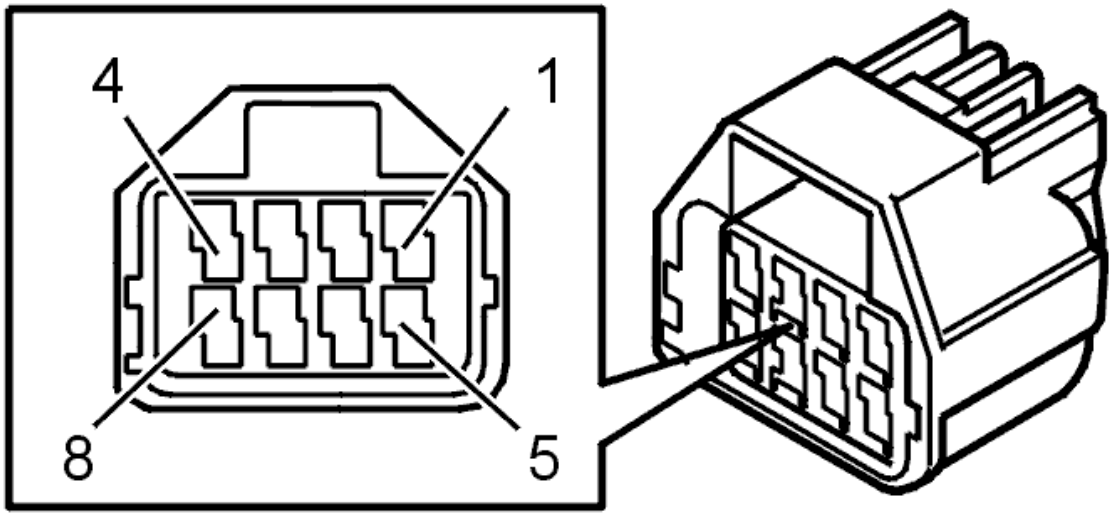

Fig. 262: Identifying Connector Terminals
Courtesy of VOLVO CARS CORPORATION

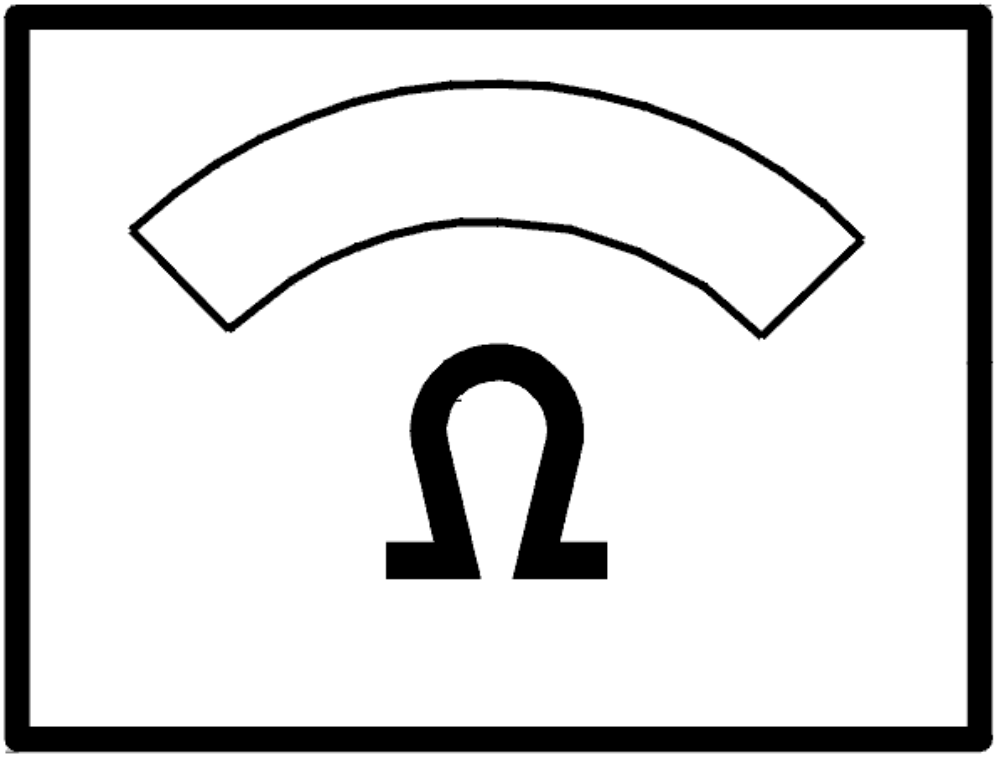

Fig. 263: Identifying Ohm Meter
Courtesy of VOLVO CARS CORPORATION

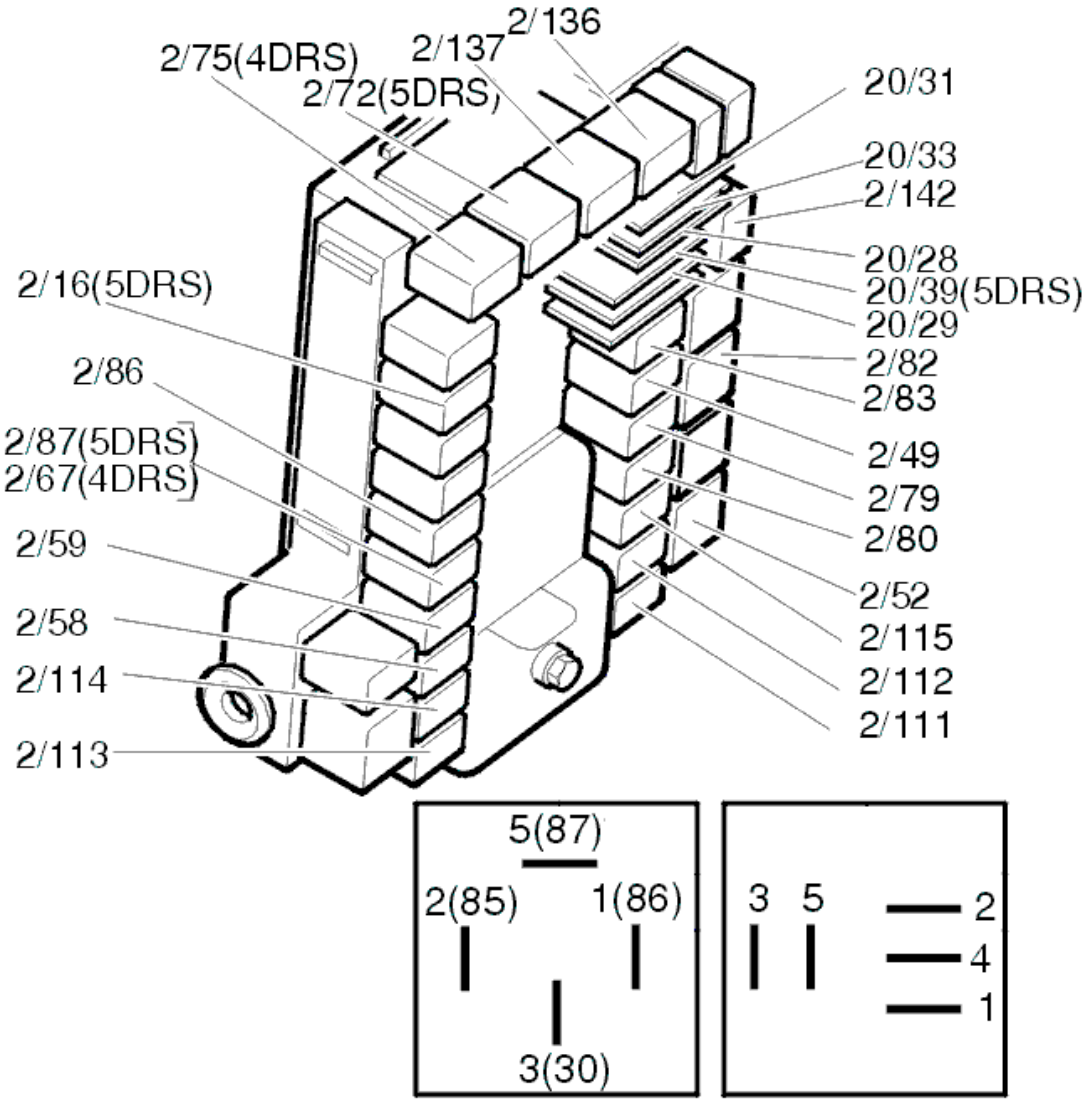

Fig. 264: Identifying Relays
Courtesy of VOLVO CARS CORPORATION

CHECKING THE UNLOCKING RELAY CIRCUIT

Remove the unlocking relay (2/112).

Check the wire between 6 in the cable connector and 3 in the relay socket for an open circuit as described in, see **OPEN-CIRCUIT, PERMANENT FAULTS** .

If a fault is detected, check in particular the intermediate connector in the cable harness (2) for contact resistance and oxidation as described in, see **CONTACT RESISTANCE AND OXIDATION** .

Do the necessary corrective action.

If no fault is found, check the resistance between 4 in the relay socket and ground.

The ohmmeter should display 0 ohm.

If the resistance deviates, replace the rear electronic module (REM).

Additional information

- To access/replace the rear electronic module (REM):
  - For -2004, see: **RELAY/FUSE BOX CARGO COMPARTMENT/REAR ELECTRONIC MODULE (REM), REPLACING**
  - For 2005-, see: **REAR ELECTRONIC MODULE (REM), REPLACING** .

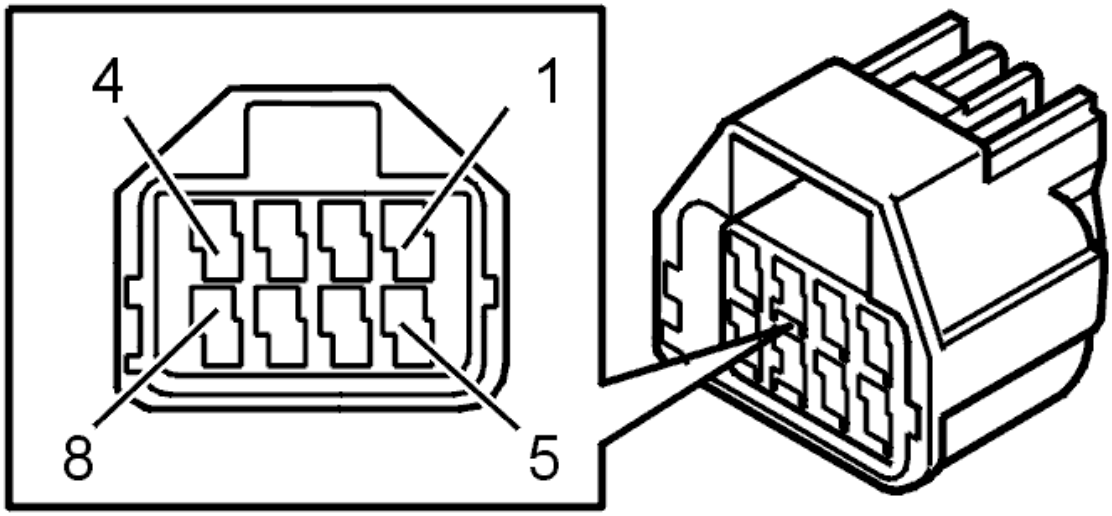

Fig. 265: Identifying Connector Terminals
Courtesy of VOLVO CARS CORPORATION

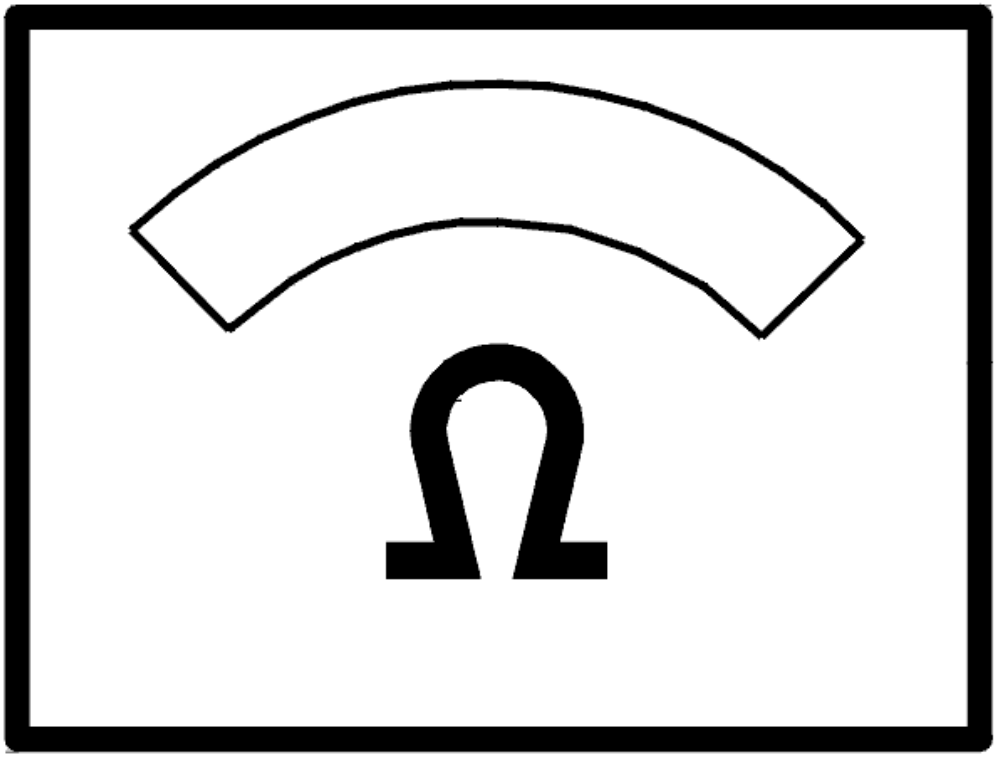

Fig. 266: Identifying Ohm Meter
Courtesy of VOLVO CARS CORPORATION

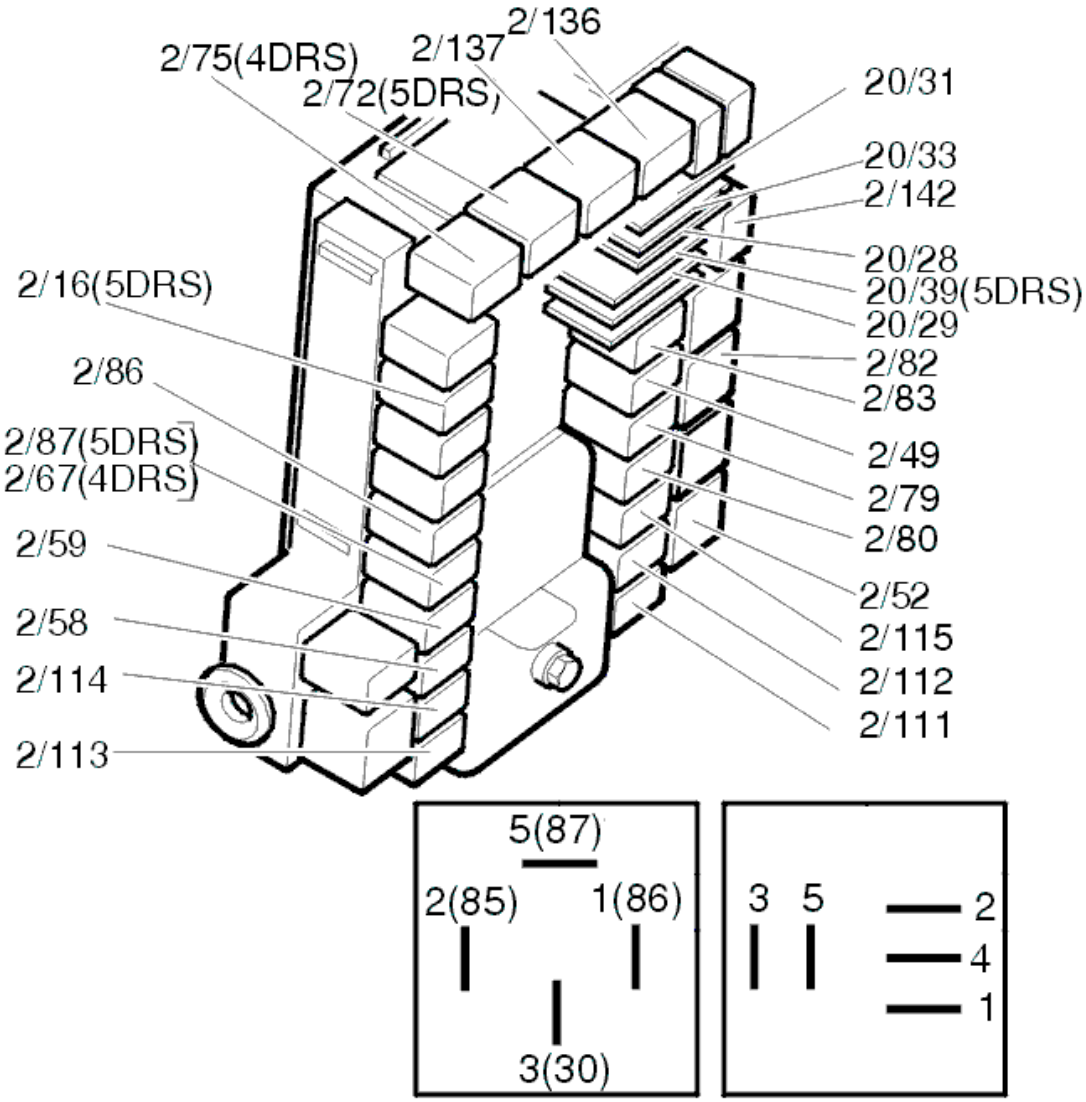

Fig. 267: Identifying Relays
Courtesy of VOLVO CARS CORPORATION

CHECKING THE COMPONENTS

Check the resistance between pin 4 and 6 in the lock unit chassis contact.

The ohmmeter should display 5 ohm.

If the resistance deviates, replace the lock unit.

Additional information

- To access the rear electronic module (REM):
  - For -2004, see: **RELAY/FUSE BOX CARGO COMPARTMENT/REAR ELECTRONIC MODULE (REM), REPLACING**

- For 2005-, see: **REAR ELECTRONIC MODULE (REM), REPLACING** .
- To access/replace the lock unit, see **LOCK MECHANISM REAR SIDE DOOR, REPLACING**
- For information on signals and additional values, see **SIGNAL SPECIFICATION** .

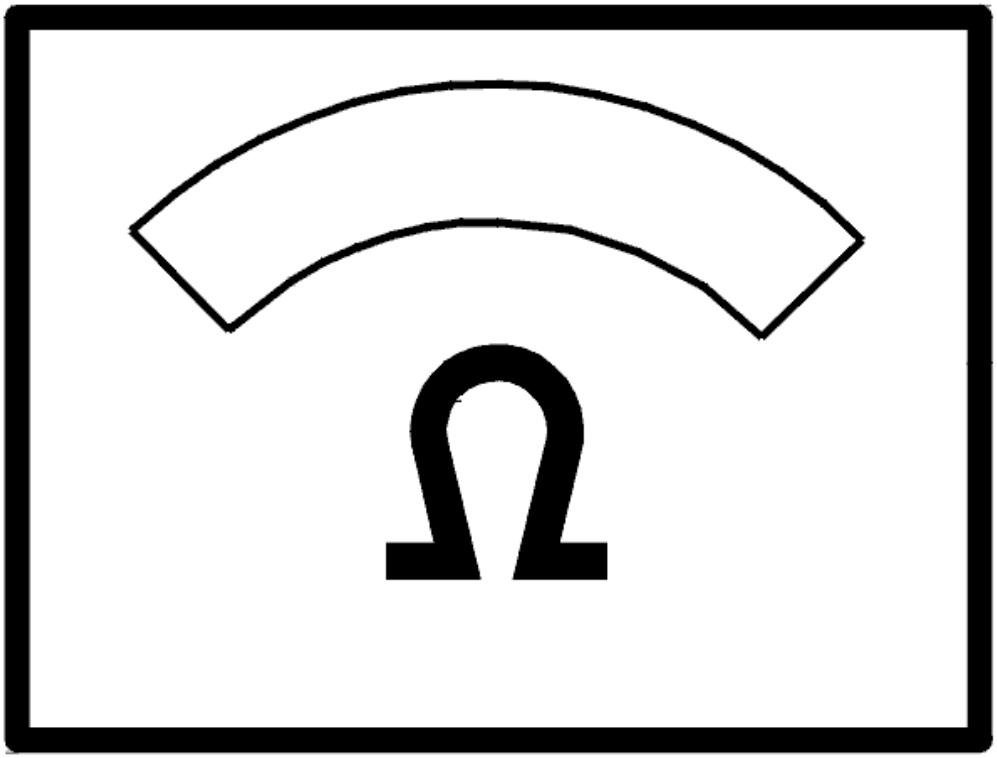

Fig. 268: Identifying Ohm Meter
Courtesy of VOLVO CARS CORPORATION

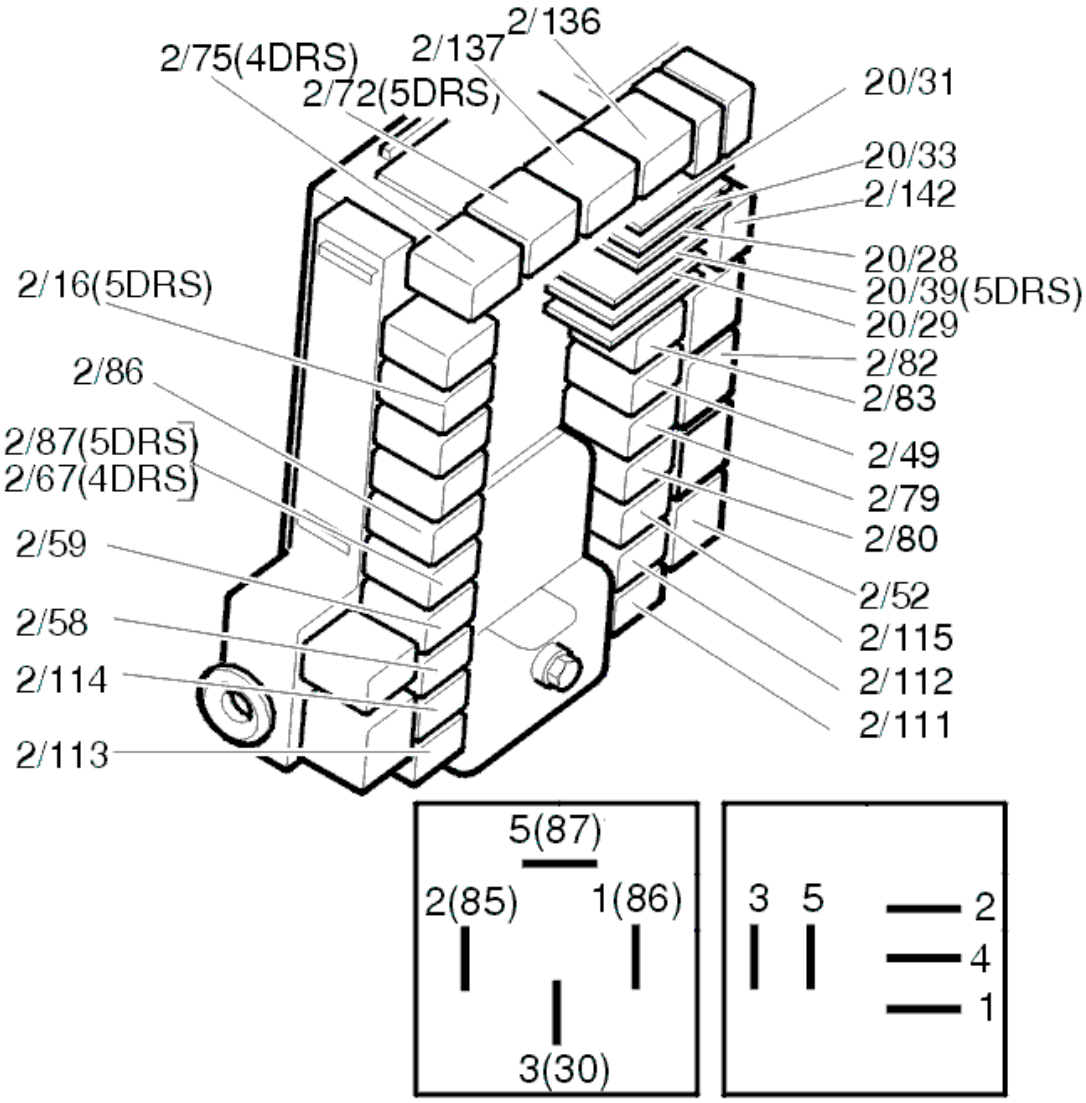

Fig. 269: Identifying Relays
Courtesy of VOLVO CARS CORPORATION

Is there a fault?

- **YES**

  OKAY: Troubleshooting has been completed.

- **NO**

  Refer to **CHECKING THE RELAY SUPPLY**

CHECKING THE RELAY SUPPLY

Remove the locking relay (2/111).

Measure the voltage between 5 in the relay socket and ground.

The voltmeter should display battery voltage.

HINT: If the value is OK but the fault still remains, connect the contacts to the lock module and link between 3 and 5 in the relay socket to force-feed the lock motor while continuing to test.

Additional information

- To access the rear electronic module (REM):
  - For -2004, see: **RELAY/FUSE BOX CARGO COMPARTMENT/REAR ELECTRONIC MODULE (REM), REPLACING**
  - For 2005-, see: **REAR ELECTRONIC MODULE (REM), REPLACING** .

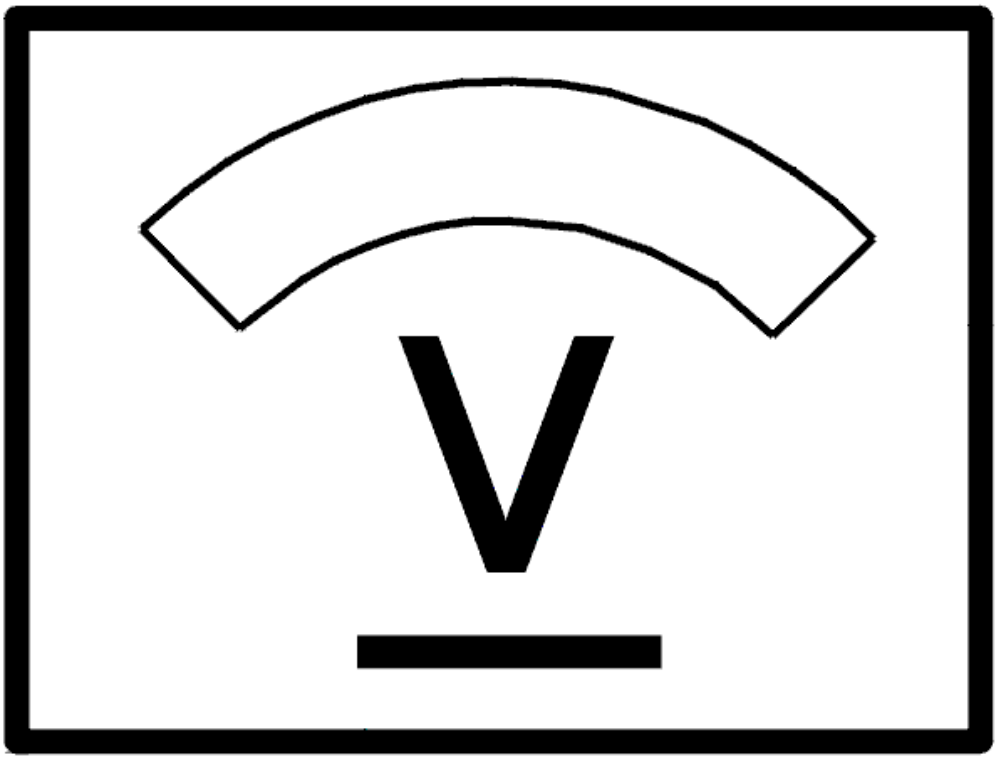

Fig. 270: Identifying Voltage Display

Courtesy of VOLVO CARS CORPORATION

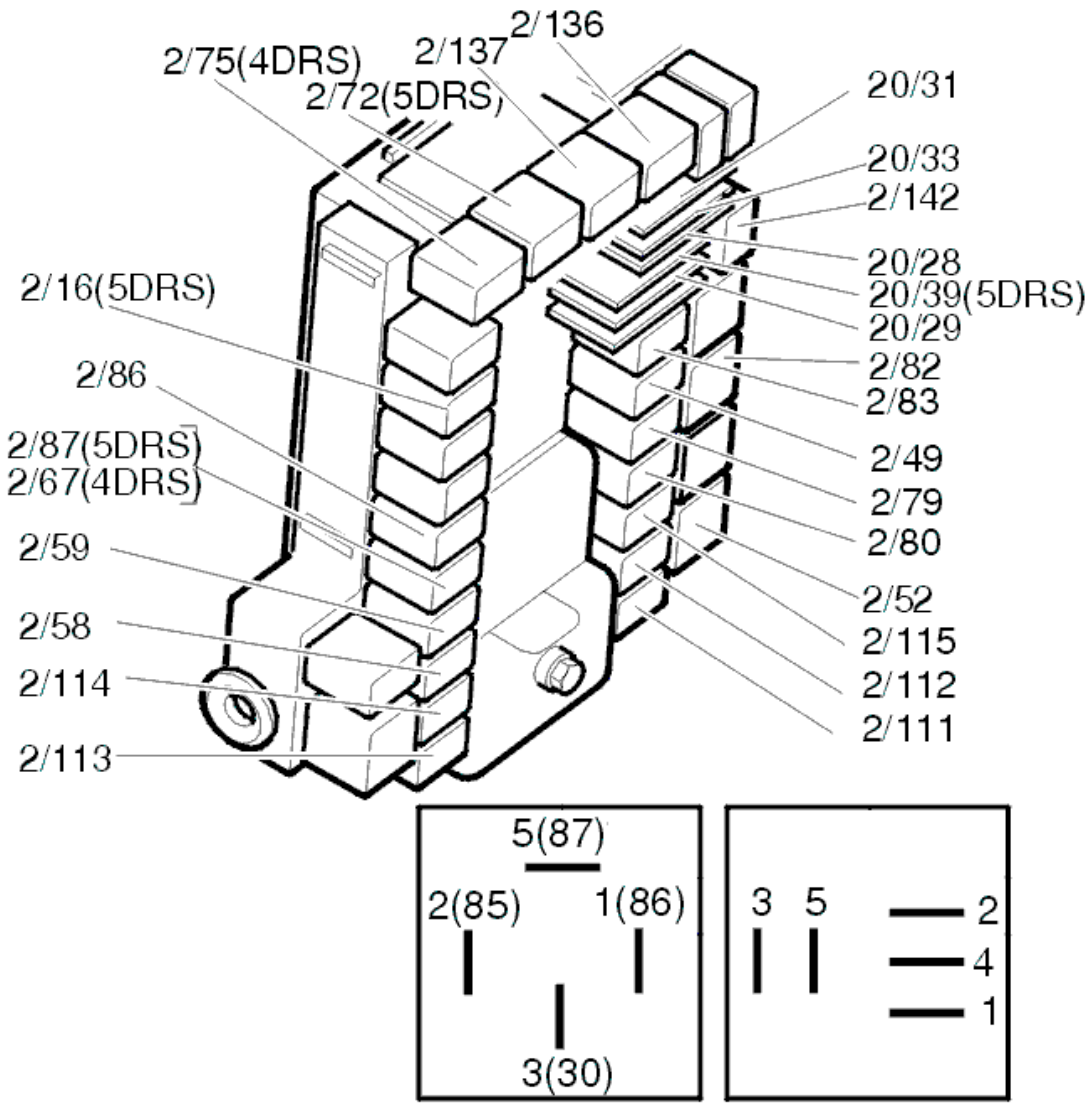

Fig. 271: Identifying Relays
Courtesy of VOLVO CARS CORPORATION

Does the voltmeter show the battery voltage?

- **YES**

  OKAY: Troubleshooting has been completed.

- **NO**

  Refer to **CHECKING THE FUSE**

CHECKING THE FUSE

Remove the fuse 11D/8 in cargo compartment fuse box.

Check that fuse 11D/8 is intact and check for contact resistance and oxidation as described in, see **CONTACT RESISTANCE AND OXIDATION** .

Additional information

- To access the rear electronic module (REM):
  - For -2004, see: **RELAY/FUSE BOX CARGO COMPARTMENT/REAR ELECTRONIC MODULE (REM), REPLACING**
  - For 2005-, see: **REAR ELECTRONIC MODULE (REM), REPLACING** .

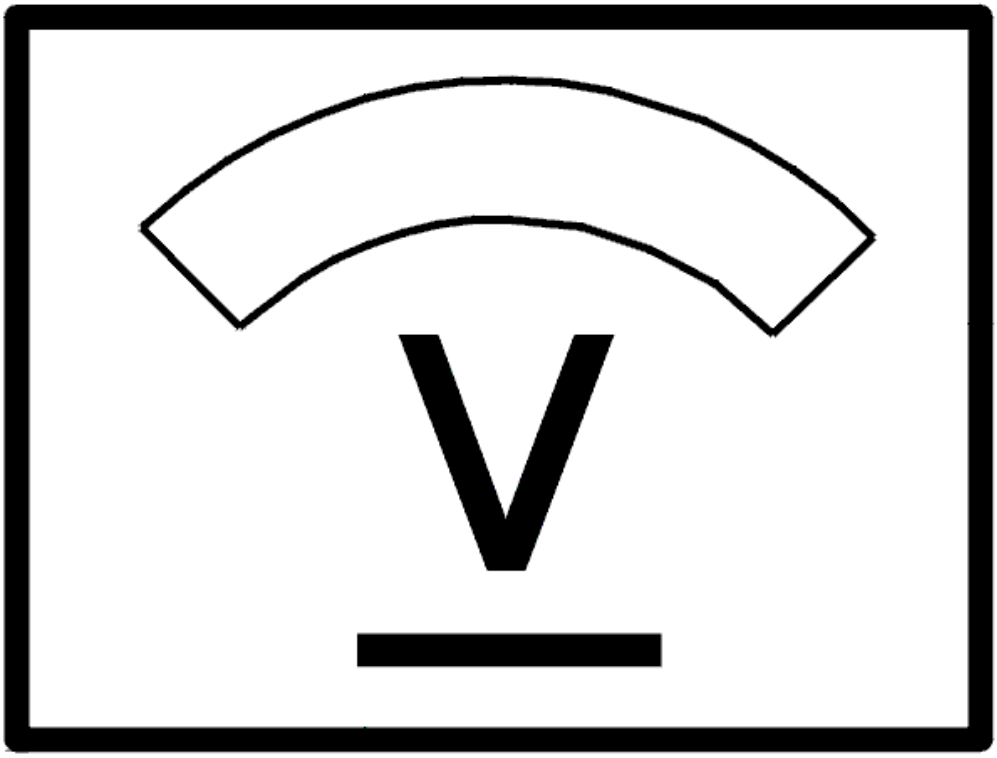

Fig. 272: Identifying Voltage Display
Courtesy of VOLVO CARS CORPORATION

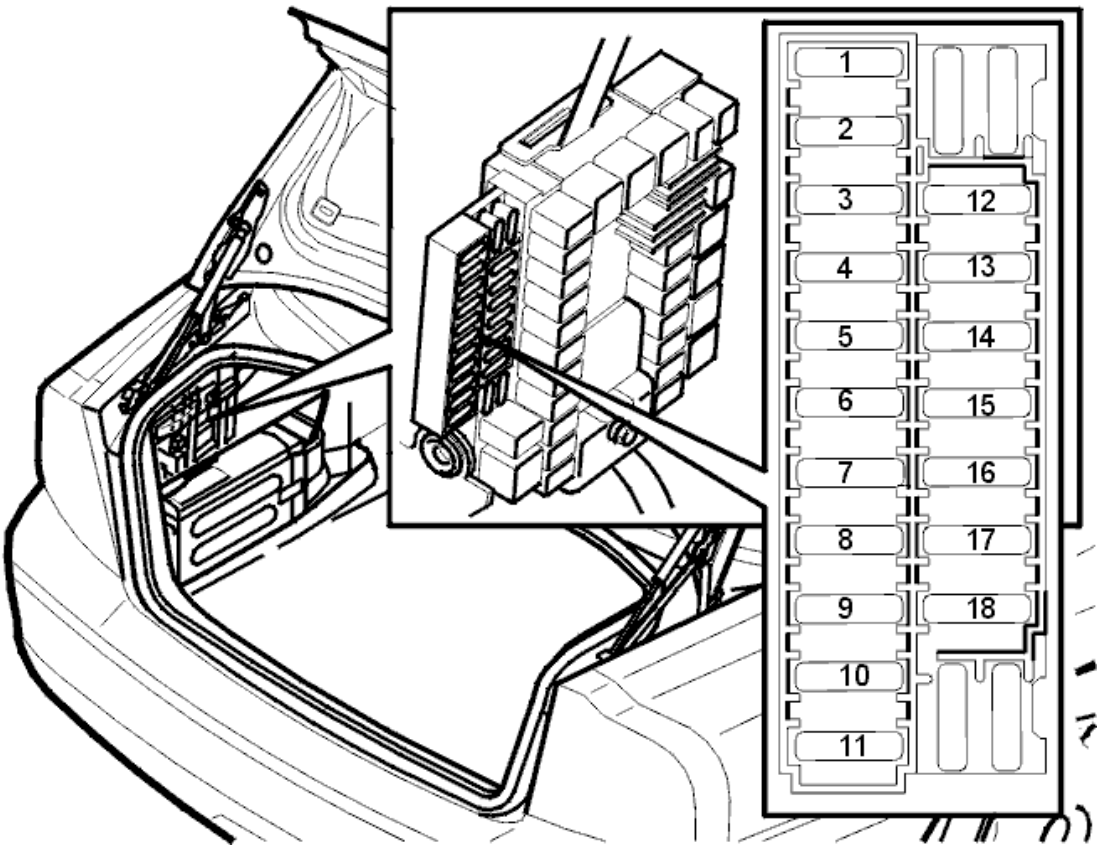

Fig. 273: Fuse Holder (Cargo Compartment)
Courtesy of VOLVO CARS CORPORATION

Is the fuse intact?

- **YES**

  Refer to **CHECKING FOR AN OPEN CIRCUIT**

- **NO**

  Refer to **CHECKING FOR A SHORT CIRCUIT**

CHECKING FOR AN OPEN CIRCUIT

Remove relay 2/111 in the rear electronic module (REM) and trouble-shoot the wire between the fuse holder secondary side (left) and 5 in the relay socket for an open circuit as described in, see **OPEN-CIRCUIT, PERMANENT FAULTS** .

Additional information

- To access the rear electronic module (REM):
  - For -2004, see: **RELAY/FUSE BOX CARGO COMPARTMENT/REAR ELECTRONIC MODULE (REM), REPLACING**

- For 2005-, see: **REAR ELECTRONIC MODULE (REM), REPLACING** .

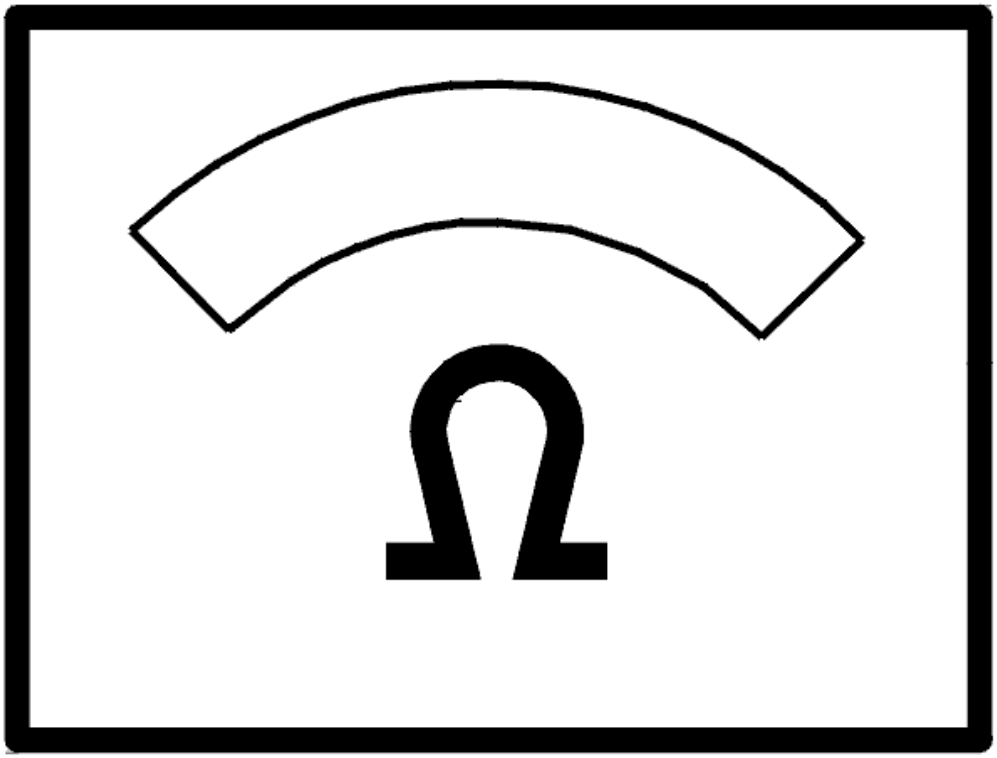

Fig. 274: Identifying Ohm Meter
Courtesy of VOLVO CARS CORPORATION

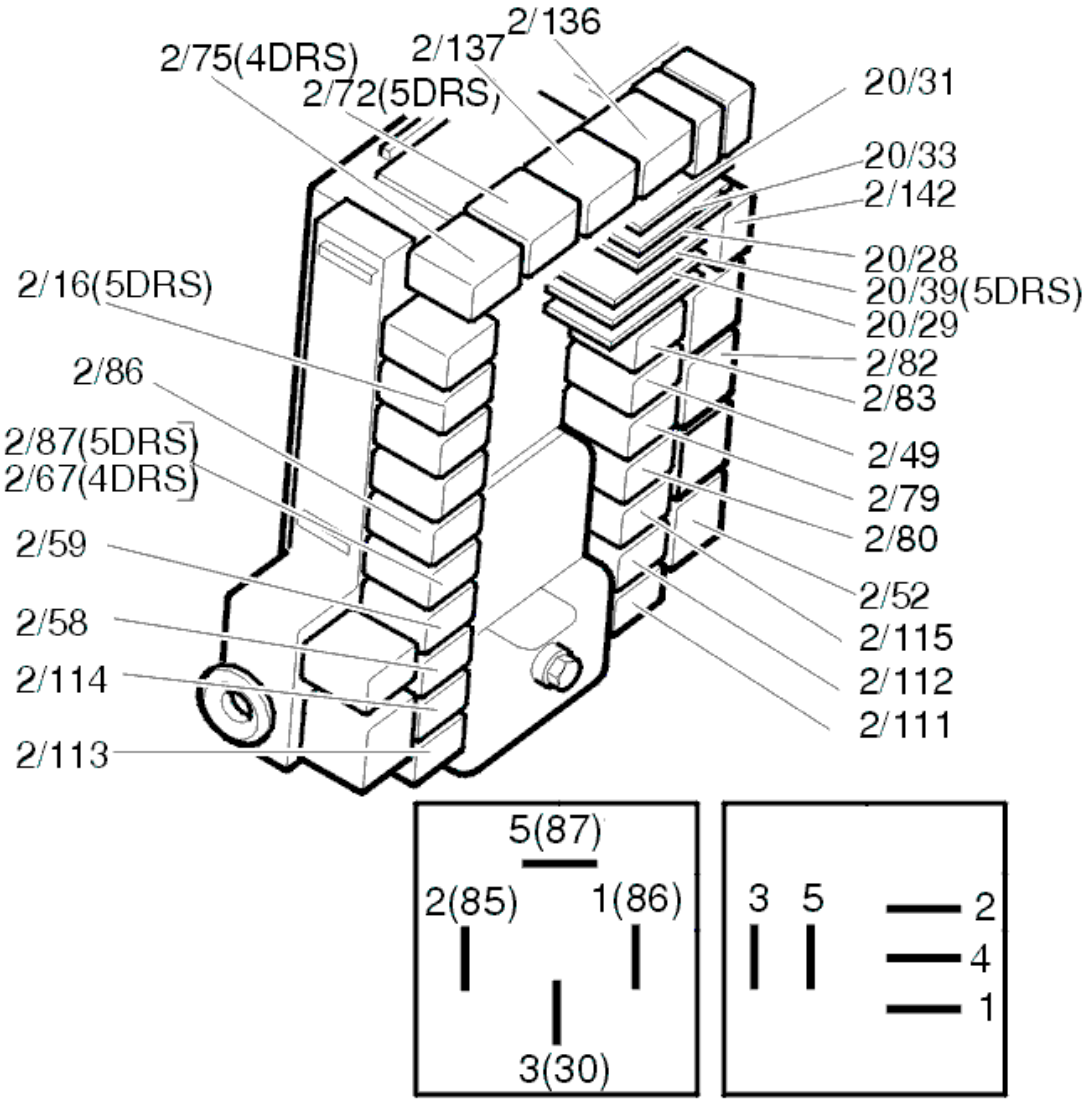

Fig. 275: Identifying Relays
Courtesy of VOLVO CARS CORPORATION

CHECKING FOR A SHORT CIRCUIT

Check the resistance between the fuse holder secondary side (left) and ground.

The ohmmeter should display infinite resistance.

If the value is correct, replace the fuse.

If the value deviates, trouble-shoot all the relay circuits involved for a short circuit to ground as described in, see **SHORT-CIRCUIT TO GROUND, PERMANENT FAULTS** .

HINT: Replace fuse.

HINT: If the fuse works straight away the fault is a short circuit on the relay supply wire.

HINT: If the fuse works when activating each relay the short circuit is on the component supply wire

HINT: The relay circuits involved belong to relays 2/111, 2/112, 2/113, 2/114, 2/115, 2/56, 2/59 and 2/67.

Additional information

- To access the rear electronic module (REM):
  - For -2004, see: **RELAY/FUSE BOX CARGO COMPARTMENT/REAR ELECTRONIC MODULE (REM), REPLACING**
  - For 2005-, see: **REAR ELECTRONIC MODULE (REM), REPLACING** .

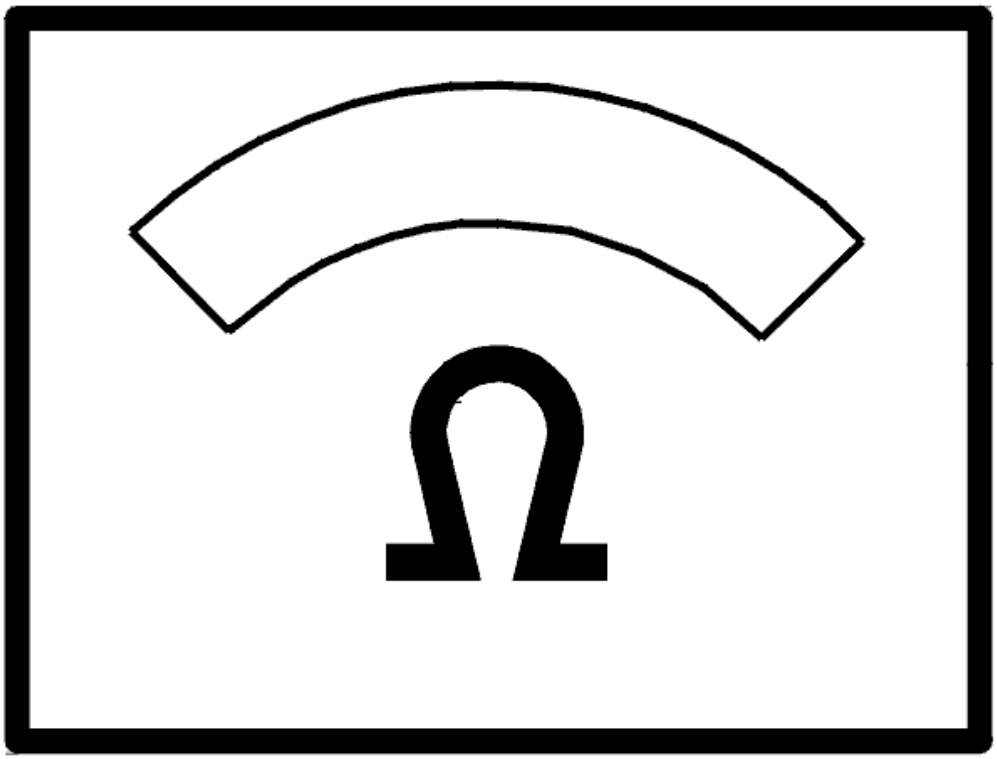

Fig. 276: Identifying Ohm Meter
Courtesy of VOLVO CARS CORPORATION

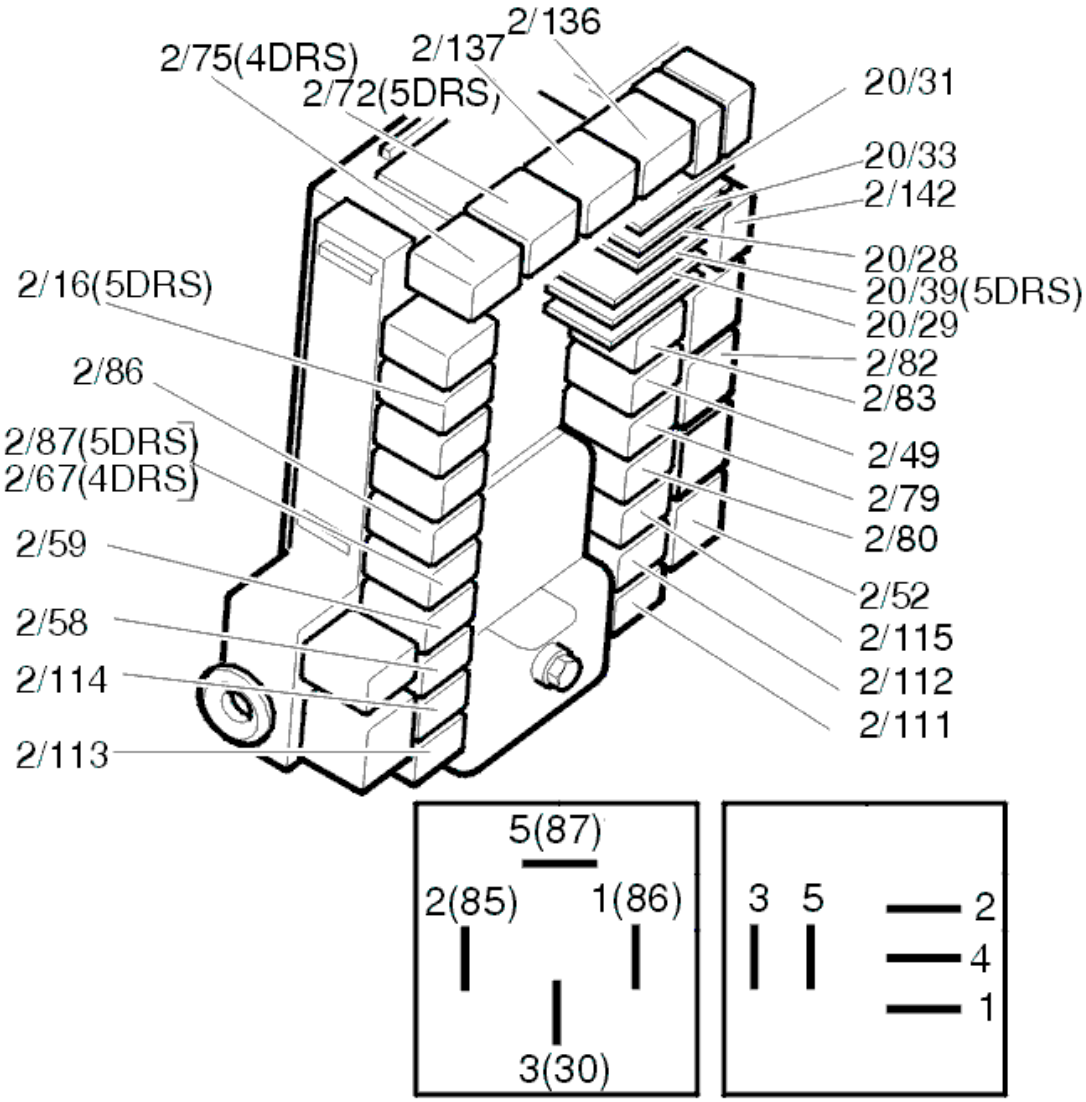

Fig. 277: Identifying Relays
Courtesy of VOLVO CARS CORPORATION

CHECKING THE REAR RIGHT DOOR

CHECK

Is the lock to the other rear door not working?

- **YES**

  Refer to **CHECKING THE FUSE**

- **NO**

  Refer to **REPLACING THE COMPONENT**

REPLACING THE COMPONENT

Replace the relays for locking (2/113) and unlocking (2/114) in the cargo compartment relay/fuse box. At the same time check relay socket contacts for contact resistance and oxidation as described in, see **CONTACT RESISTANCE AND OXIDATION** .

Additional information

- To access relay/fuse box in the cargo compartment:
  - For -2004, see: **RELAY/FUSE BOX CARGO COMPARTMENT/REAR ELECTRONIC MODULE (REM), REPLACING**
  - For 2005-, see: **REAR ELECTRONIC MODULE (REM), REPLACING** .

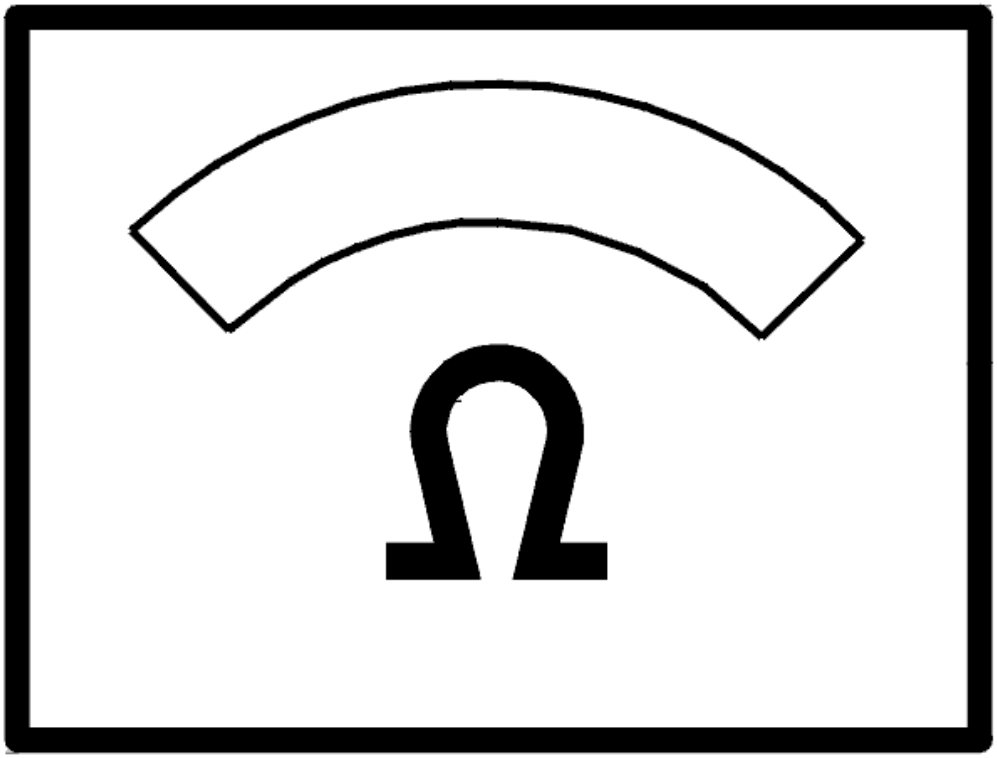

Fig. 278: Identifying Ohm Meter
Courtesy of VOLVO CARS CORPORATION

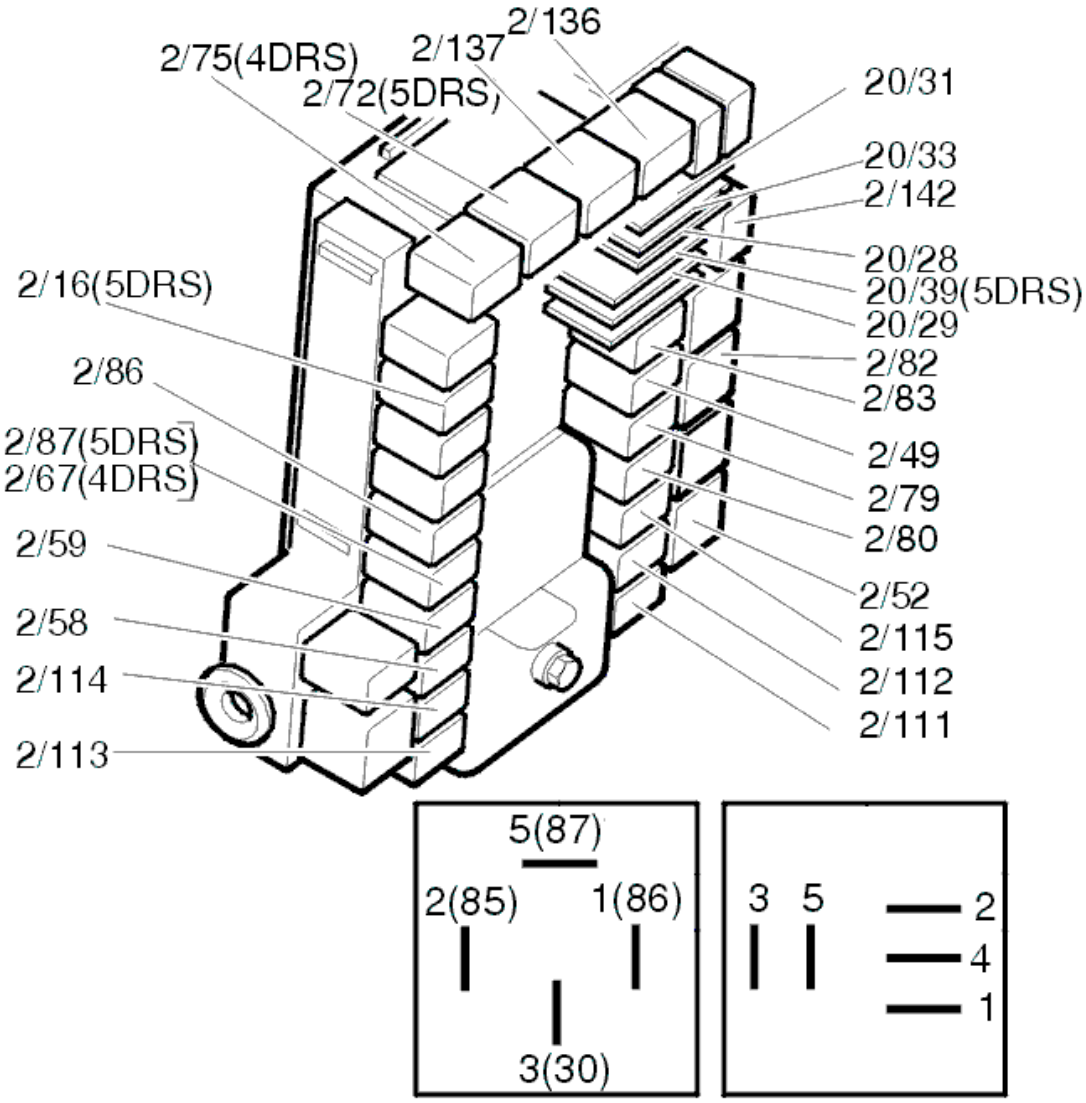

Fig. 279: Identifying Relays
Courtesy of VOLVO CARS CORPORATION

Is there a fault?

- **YES**

  OKAY: Troubleshooting has been completed.

- **NO**

  Refer to **CIRCUIT TEST**

CIRCUIT TEST

The fault is caused by an open circuit in one of the relay circuits or in the lock unit. To find out which circuit

contains the fault:

Disconnect the lock unit connector.

Check the contacts for contact resistance and oxidation as described in, see **CONTACT RESISTANCE AND OXIDATION** .

Check resistance between 4 and 6 on cable connector.

Additional information

- To access/replace the lock unit, see **LOCK MECHANISM REAR SIDE DOOR, REPLACING** .

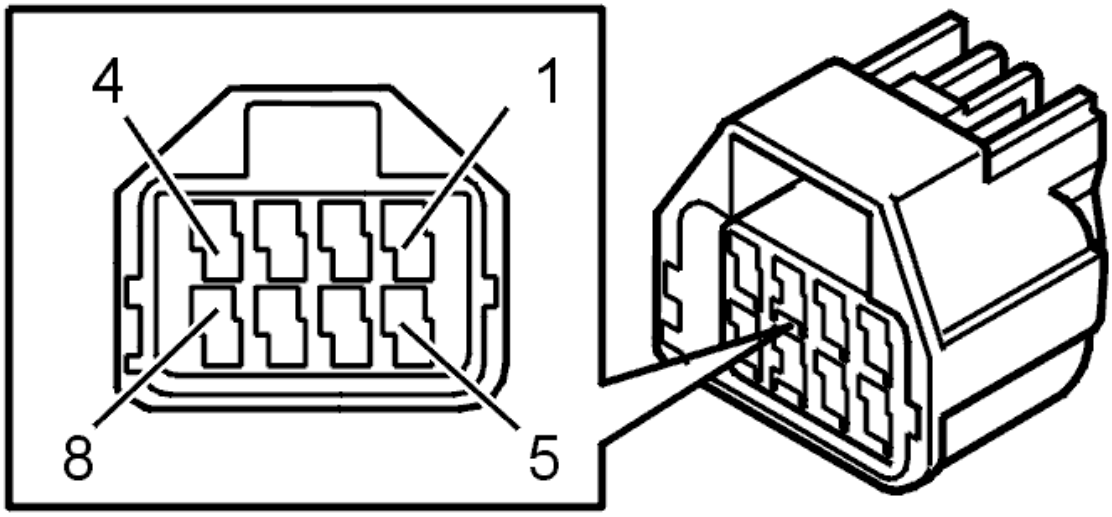

Fig. 280: Identifying Connector Terminals
Courtesy of VOLVO CARS CORPORATION

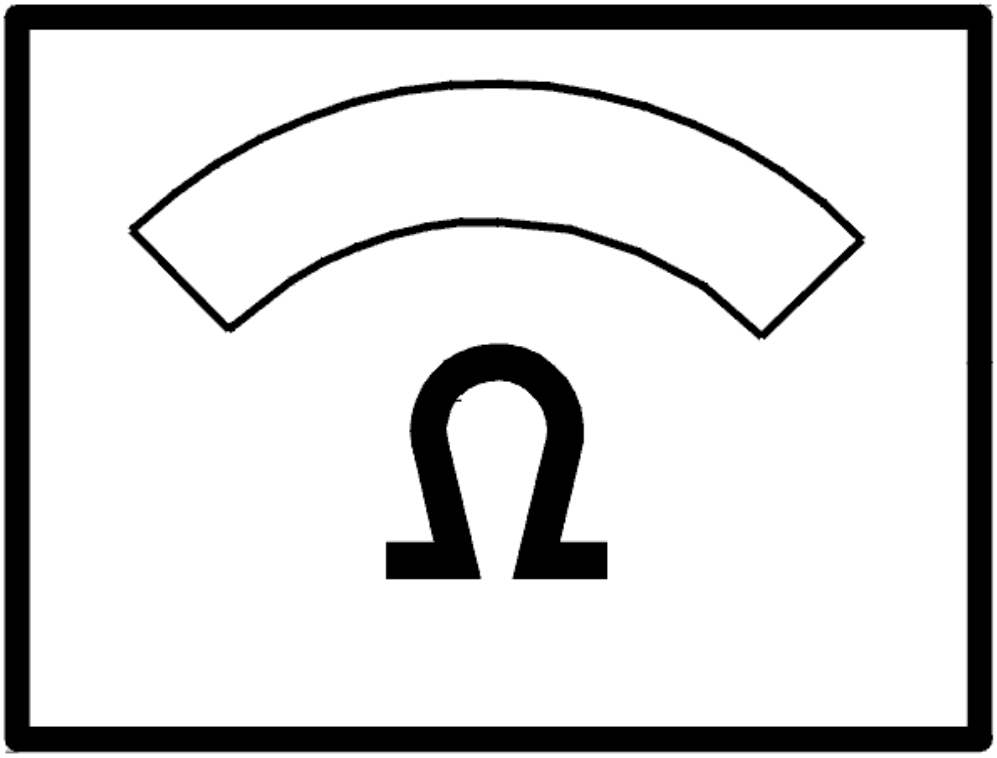

Fig. 281: Identifying Ohm Meter
Courtesy of VOLVO CARS CORPORATION

The ohmmeter should display 0 ohm.

- **OK**

  Refer to **CHECKING THE COMPONENTS**

- **NOT OK**

  Refer to **CIRCUIT TEST, CONTINUED**

CIRCUIT TEST, CONTINUED

Check the resistance between 4 and ground and between 6 and ground on the cable connector.

The ohmmeter should display 0 ohm.

1. The ohmmeter shows a fault between 4 and ground

   Refer to **CHECKING THE UNLOCKING RELAY CIRCUIT**

2. The ohmmeter shows a fault between 6 and ground.

   Refer to **CHECKING THE LOCKING RELAY CIRCUIT**

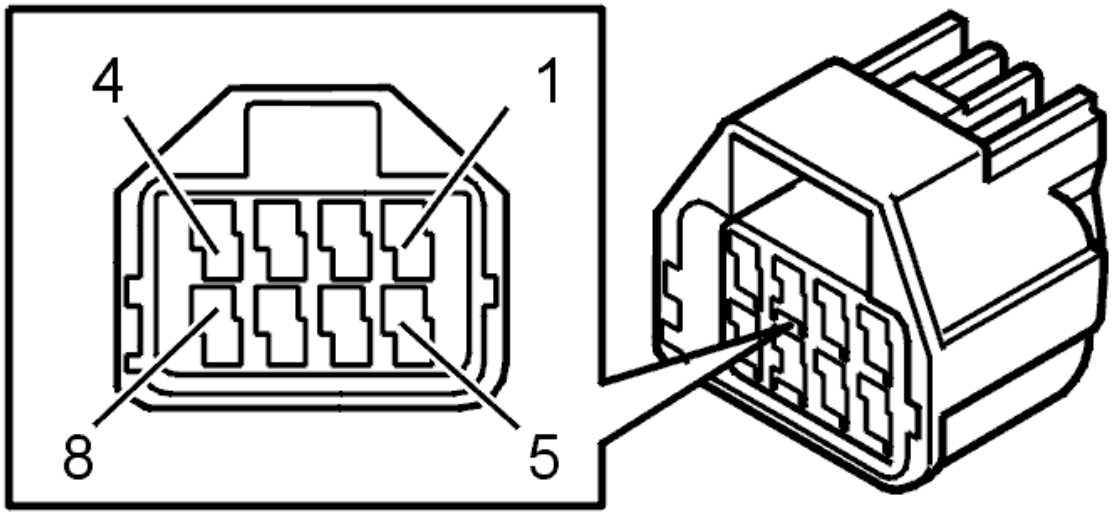

Fig. 282: Identifying Connector Terminals
Courtesy of VOLVO CARS CORPORATION

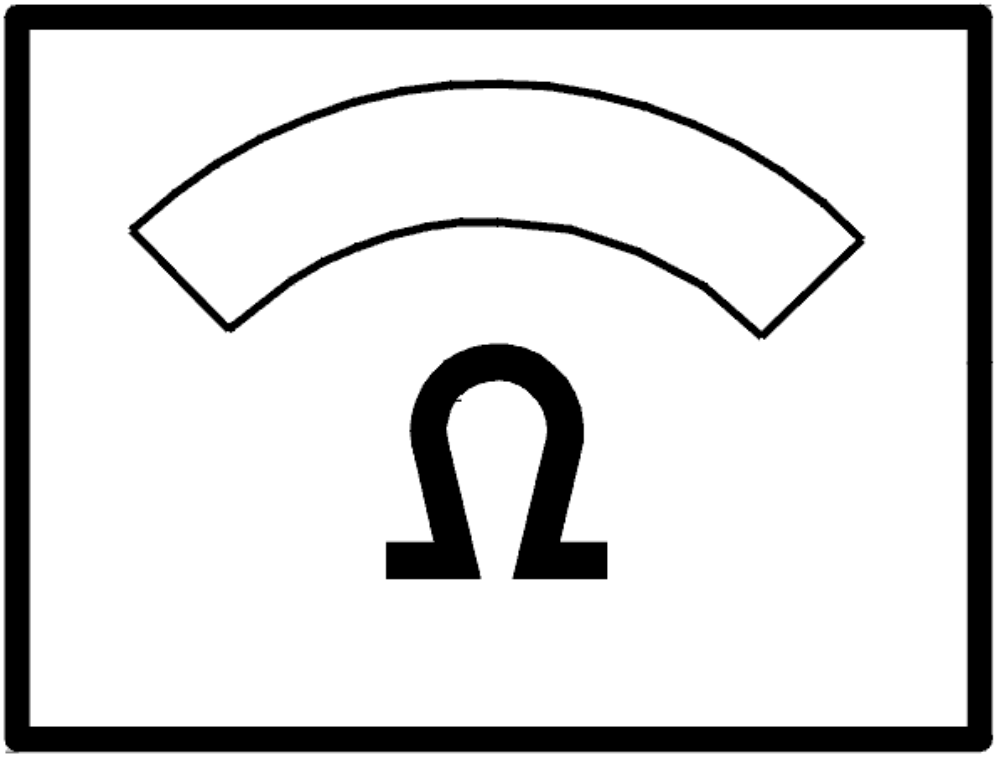

Fig. 283: Identifying Ohm Meter
Courtesy of VOLVO CARS CORPORATION

CHECKING THE LOCKING RELAY CIRCUIT

Remove the locking relay (2/113).

Check the wire between 4 in the cable connector and 3 in the relay socket for an open circuit as described in, see **OPEN-CIRCUIT, PERMANENT FAULTS** .

If a fault is detected, check in particular the intermediate connector in the cable harness (2) for contact resistance and oxidation as described in, see **CONTACT RESISTANCE AND OXIDATION** .

Do the necessary corrective action.

If no fault is found, check the resistance between 4 in the relay socket and ground.

The ohmmeter should display 0 ohm.

If the resistance deviates, replace the rear electronic module (REM).

Additional information

- To access/replace the rear electronic module (REM):
  - For -2004, see: **RELAY/FUSE BOX CARGO COMPARTMENT/REAR ELECTRONIC MODULE (REM), REPLACING**
  - For 2005-, see: **REAR ELECTRONIC MODULE (REM), REPLACING** .

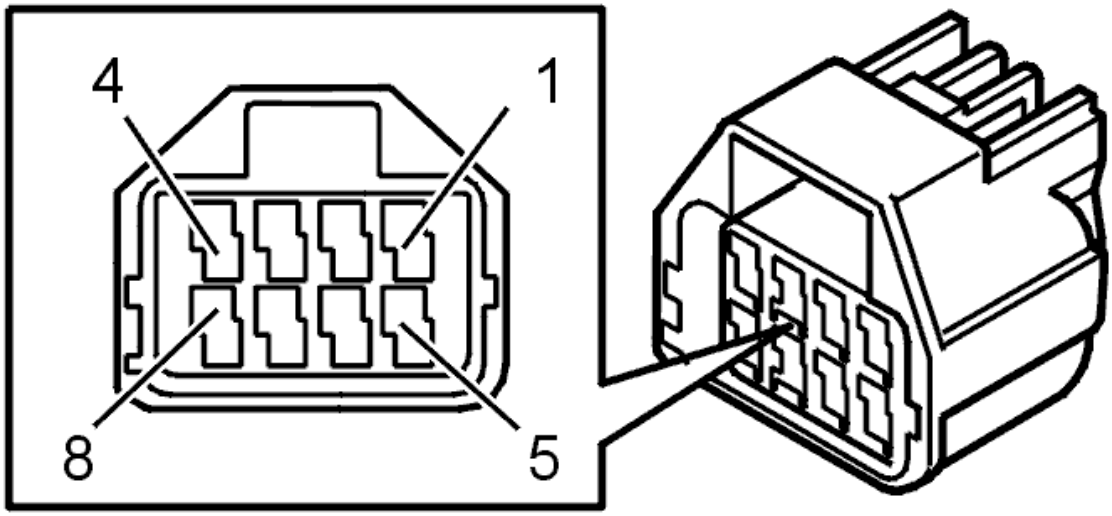

Fig. 284: Identifying Connector Terminals
Courtesy of VOLVO CARS CORPORATION

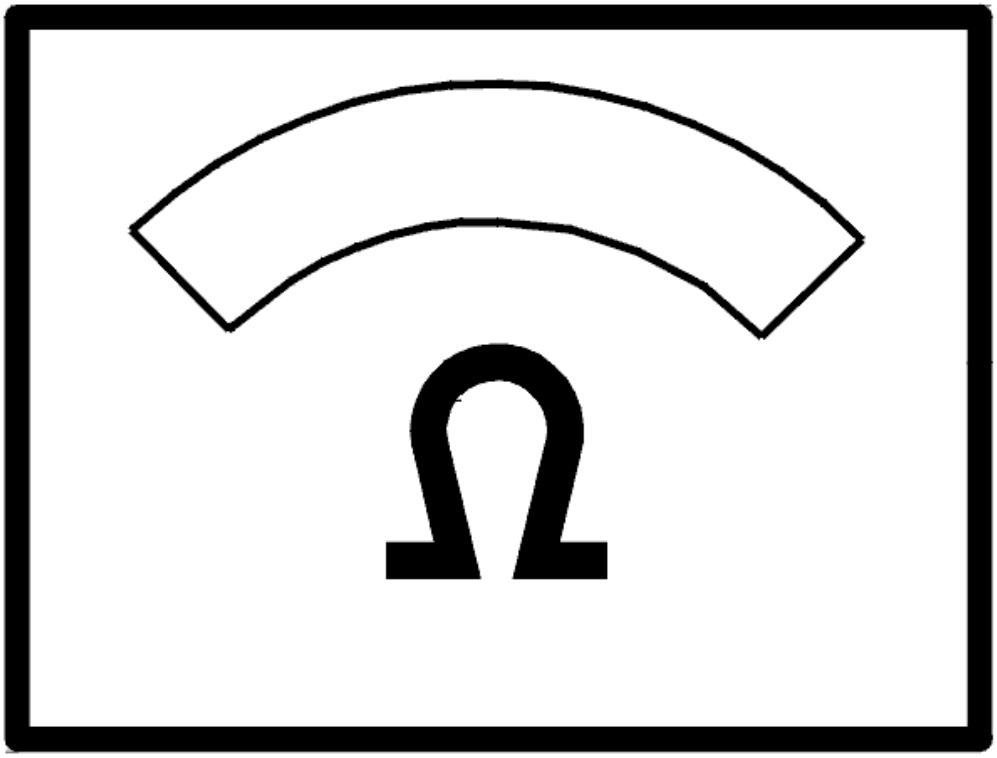

Fig. 285: Identifying Ohm Meter
Courtesy of VOLVO CARS CORPORATION

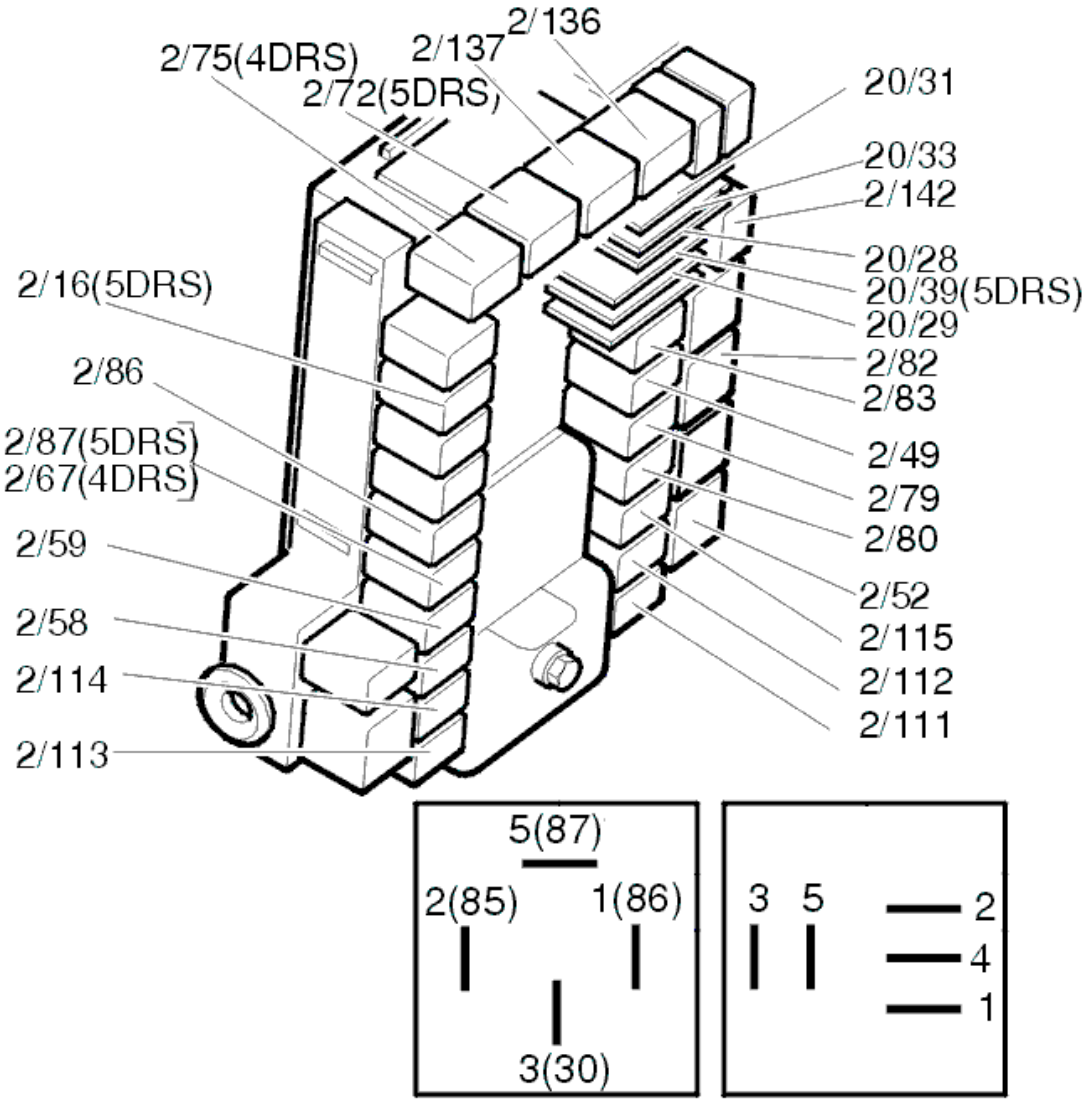

Fig. 286: Identifying Relays
Courtesy of VOLVO CARS CORPORATION

CHECKING THE UNLOCKING RELAY CIRCUIT

Remove the unlocking relay (2/114).

Check the wire between 6 in the cable connector and 3 in the relay socket for an open circuit as described in, see **OPEN-CIRCUIT, PERMANENT FAULTS** .

If a fault is detected, check in particular the intermediate connector in the cable harness (2) for contact resistance and oxidation as described in, see **CONTACT RESISTANCE AND OXIDATION** .

Do the necessary corrective action.

If no fault is found, check the resistance between 4 in the relay socket and ground.

The ohmmeter should display 0 ohm.

If the resistance deviates, replace the rear electronic module (REM).

Additional information

- To access/replace the rear electronic module (REM):
  - For -2004, see: **RELAY/FUSE BOX CARGO COMPARTMENT/REAR ELECTRONIC MODULE (REM), REPLACING**
  - For 2005-, see: **REAR ELECTRONIC MODULE (REM), REPLACING** .

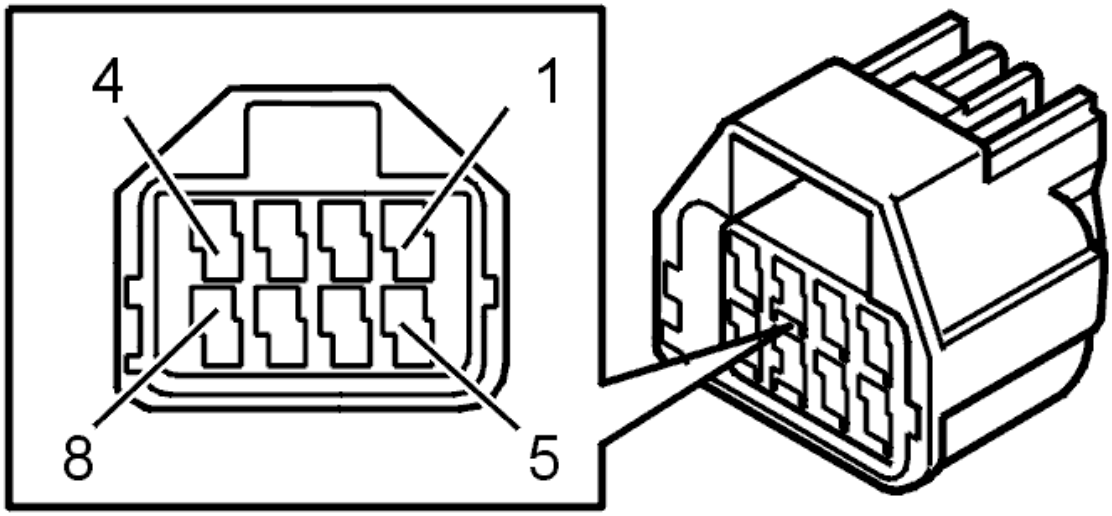

Fig. 287: Identifying Connector Terminals
Courtesy of VOLVO CARS CORPORATION

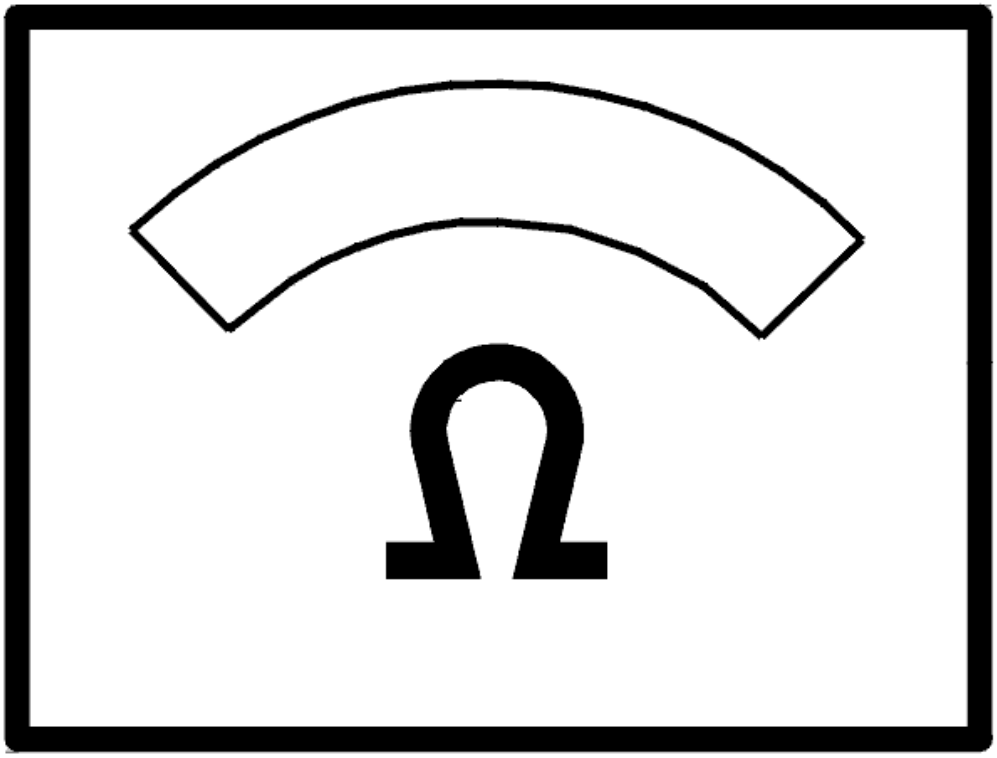

Fig. 288: Identifying Ohm Meter
Courtesy of VOLVO CARS CORPORATION

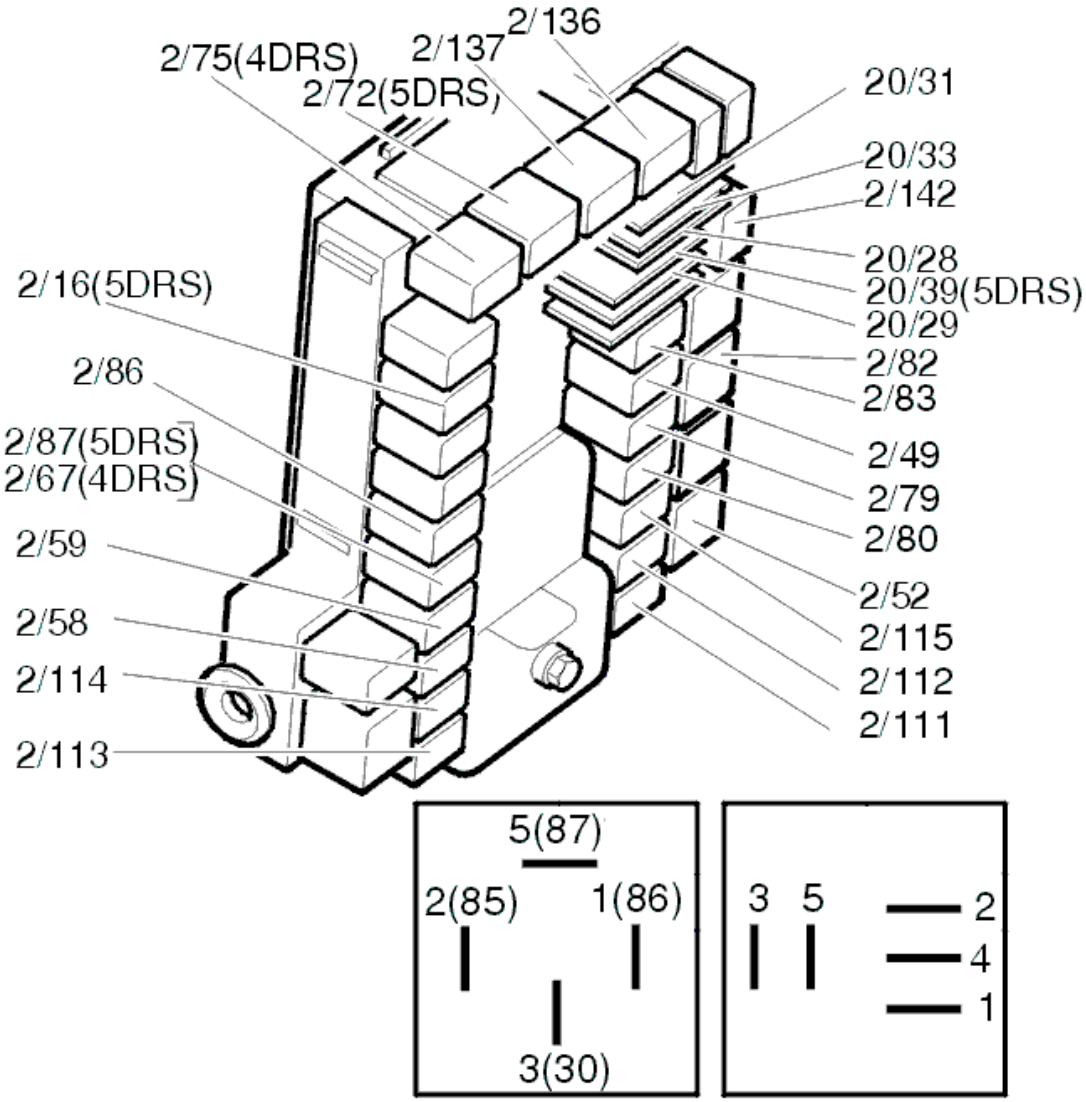

Fig. 289: Identifying Relays
Courtesy of VOLVO CARS CORPORATION

CHECKING THE COMPONENTS

Check the resistance between pin 4 and 6 in the lock unit chassis contact.

The ohmmeter should display 5 ohm.

If the resistance deviates, replace the lock unit.

Additional information

- To access the rear electronic module (REM):
  - For -2004, see: **RELAY/FUSE BOX CARGO COMPARTMENT/REAR ELECTRONIC MODULE (REM), REPLACING**

- For 2005-, see: **REAR ELECTRONIC MODULE (REM), REPLACING** .
- To access/replace the lock unit, see **LOCK MECHANISM REAR SIDE DOOR, REPLACING**
- For information on signals and additional values, see **SIGNAL SPECIFICATION** .

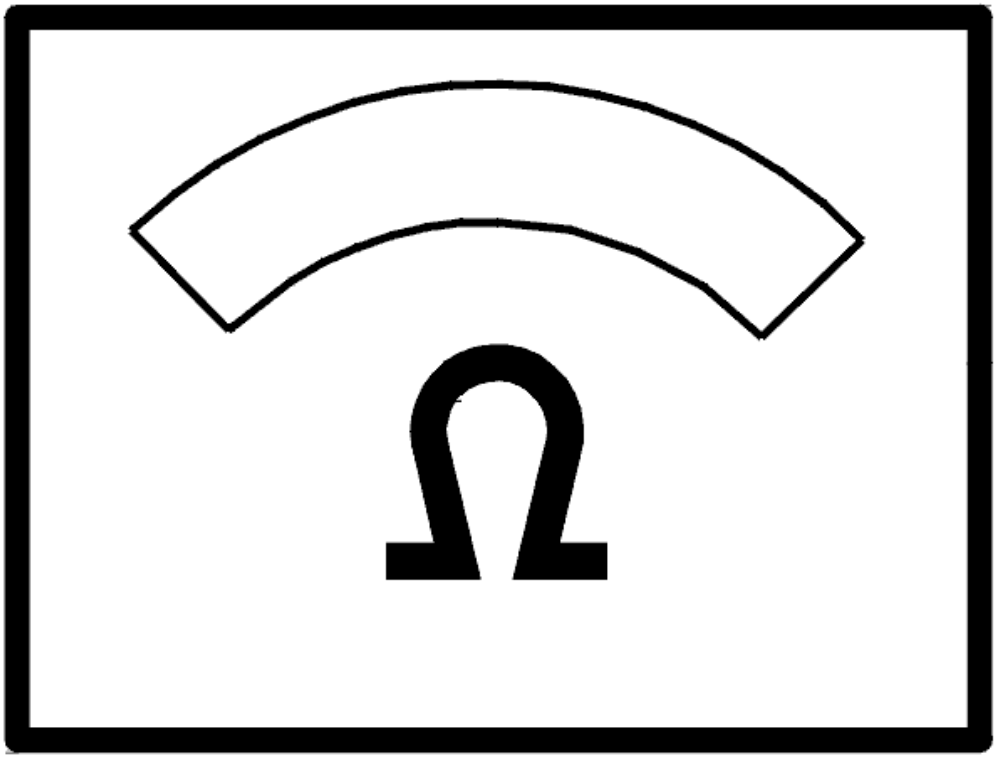

Fig. 290: Identifying Ohm Meter
Courtesy of VOLVO CARS CORPORATION

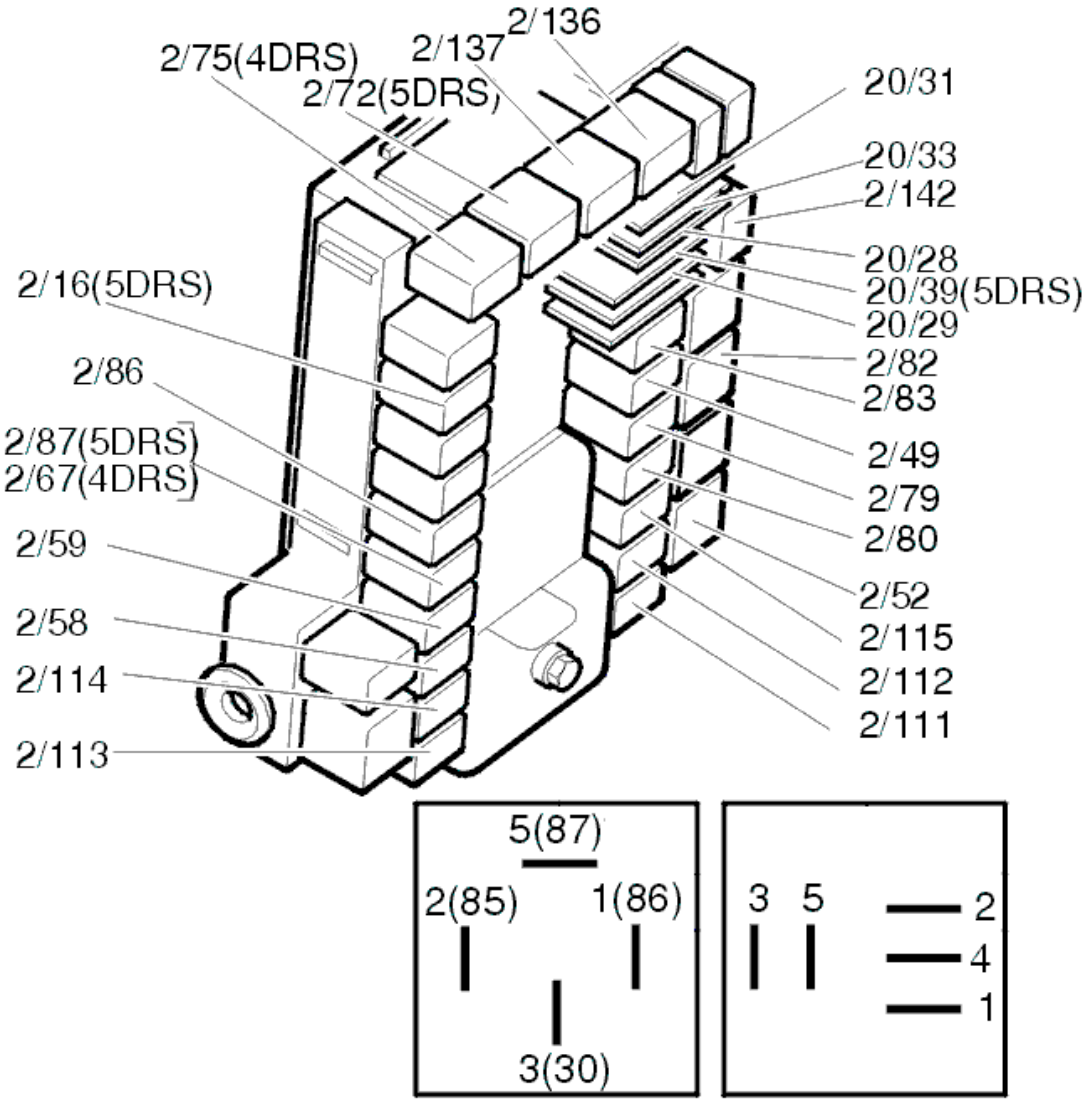

Fig. 291: Identifying Relays
Courtesy of VOLVO CARS CORPORATION

Is there a fault?

- **YES**

  OKAY: Troubleshooting has been completed.

- **NO**

  Refer to **CHECKING THE RELAY SUPPLY**

CHECKING THE RELAY SUPPLY

Remove the locking relay (2/113).

Measure the voltage between 5 in the relay socket and ground.

The voltmeter should display battery voltage.

HINT: If the value is OK but the fault still remains, connect the contacts to the lock module and link between 3 and 5 in the relay socket to force-feed the lock motor while continuing to test.

Additional information

- To access relay/fuse box in the cargo compartment:
  - For -2004, see: **RELAY/FUSE BOX CARGO COMPARTMENT/REAR ELECTRONIC MODULE (REM), REPLACING**
  - For 2005-, see: **REAR ELECTRONIC MODULE (REM), REPLACING** .

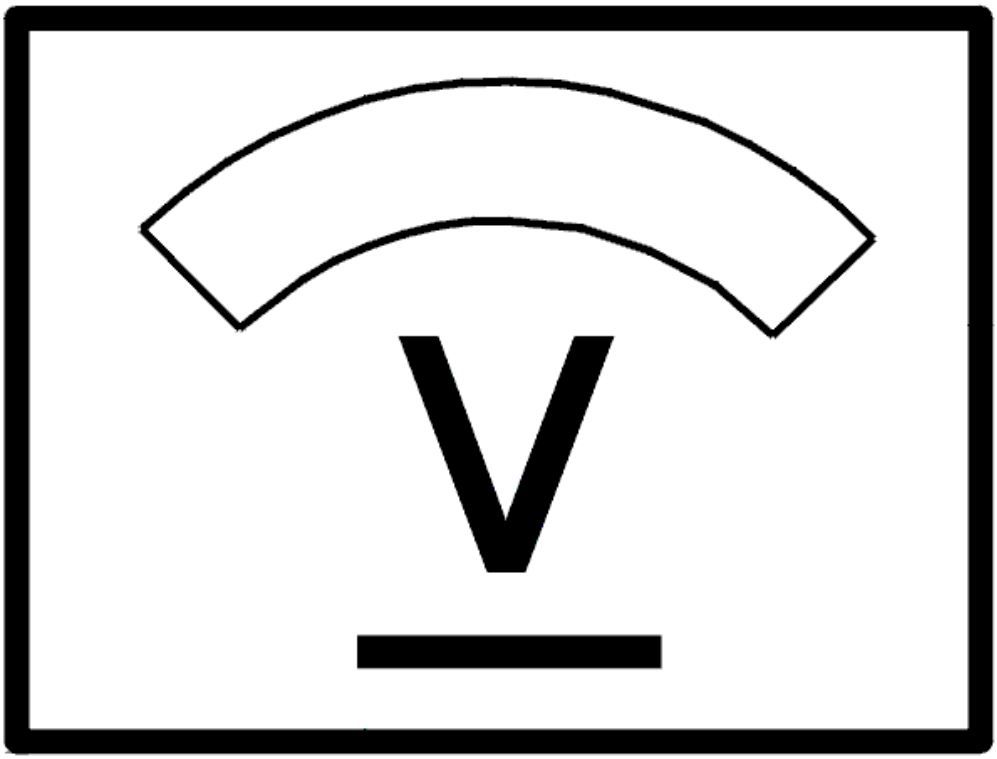

Fig. 292: Identifying Voltage Display

Courtesy of VOLVO CARS CORPORATION

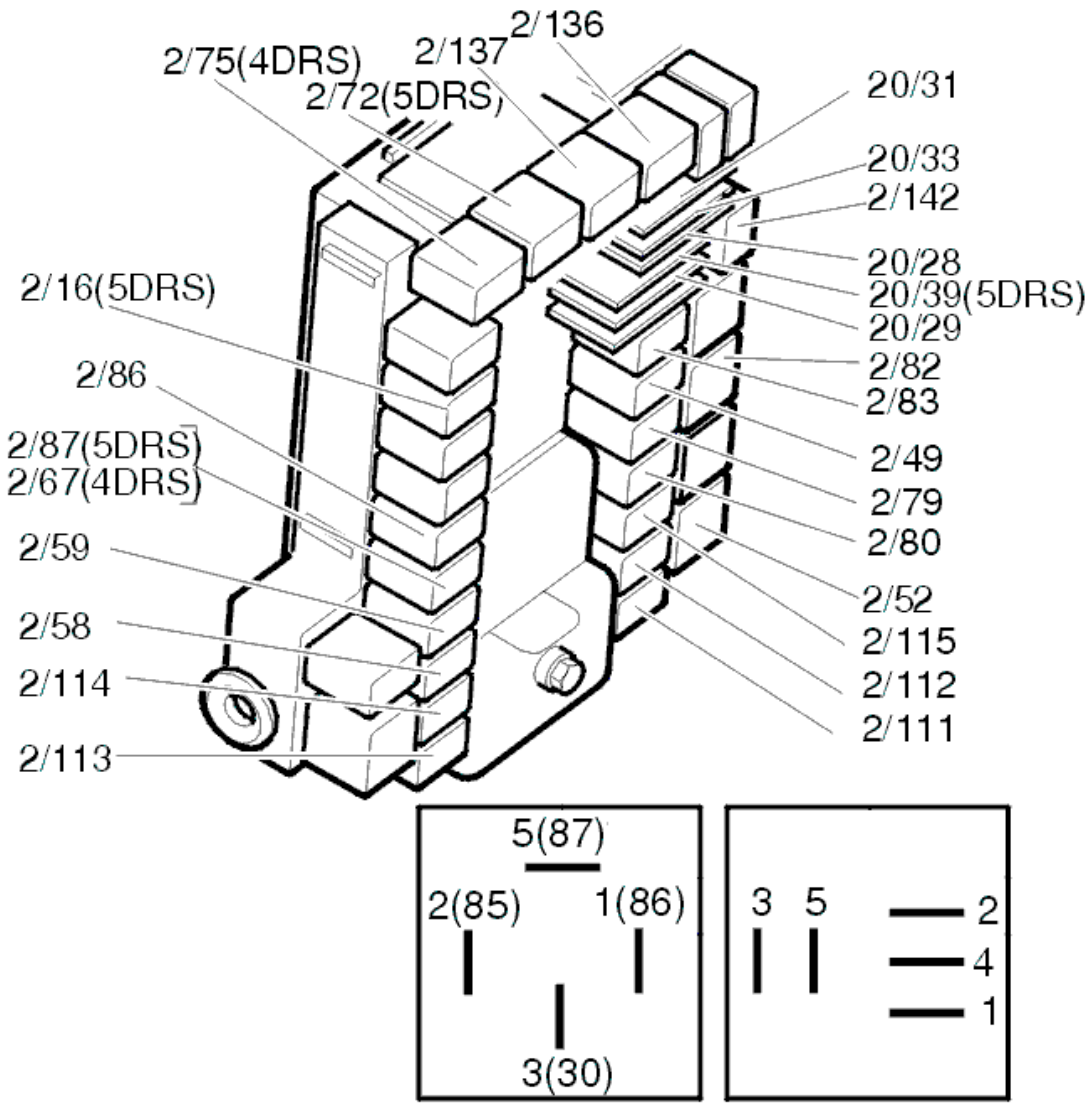

Fig. 293: Identifying Relays
Courtesy of VOLVO CARS CORPORATION

Does the voltmeter show the battery voltage?

- **YES**

  OKAY: Troubleshooting has been completed.

- **NO**

  Refer to **CHECKING THE FUSE**

CHECKING THE FUSE

Remove the fuse 11D/8 in cargo compartment fuse box.

Check that fuse 11D/8 is intact and check for contact resistance and oxidation as described in, see **CONTACT RESISTANCE AND OXIDATION** .

Additional information

- To access relay/fuse box in the cargo compartment:
  - For -2004, see: **RELAY/FUSE BOX CARGO COMPARTMENT/REAR ELECTRONIC MODULE (REM), REPLACING**
  - For 2005-, see: **REAR ELECTRONIC MODULE (REM), REPLACING** .

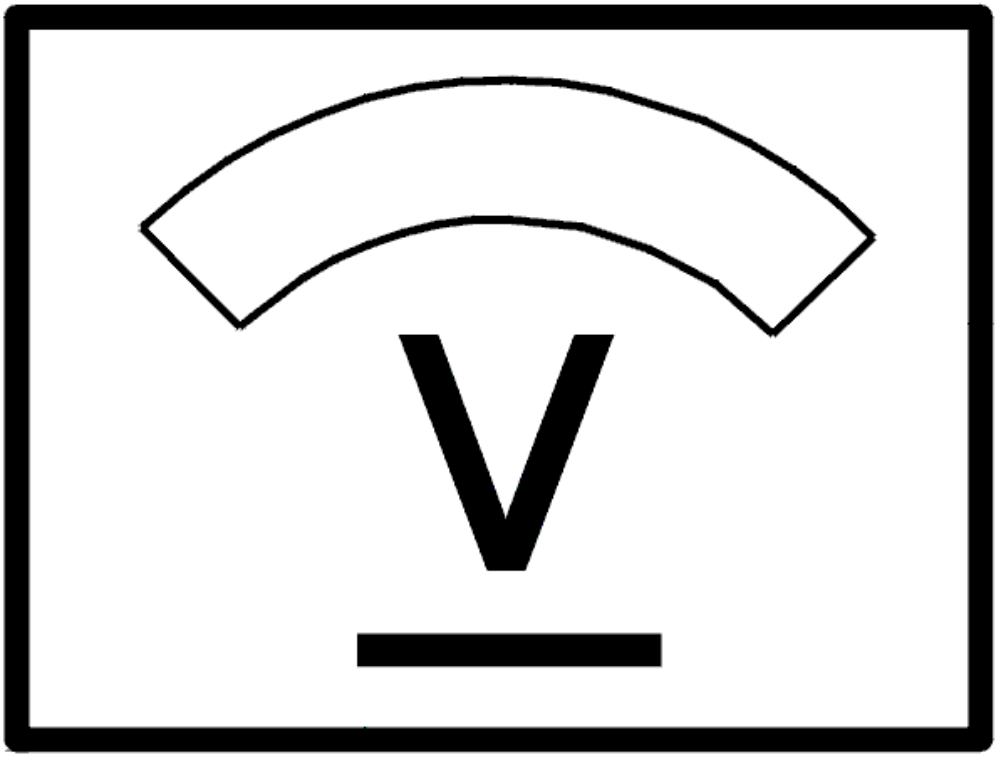

Fig. 294: Identifying Voltage Display
Courtesy of VOLVO CARS CORPORATION

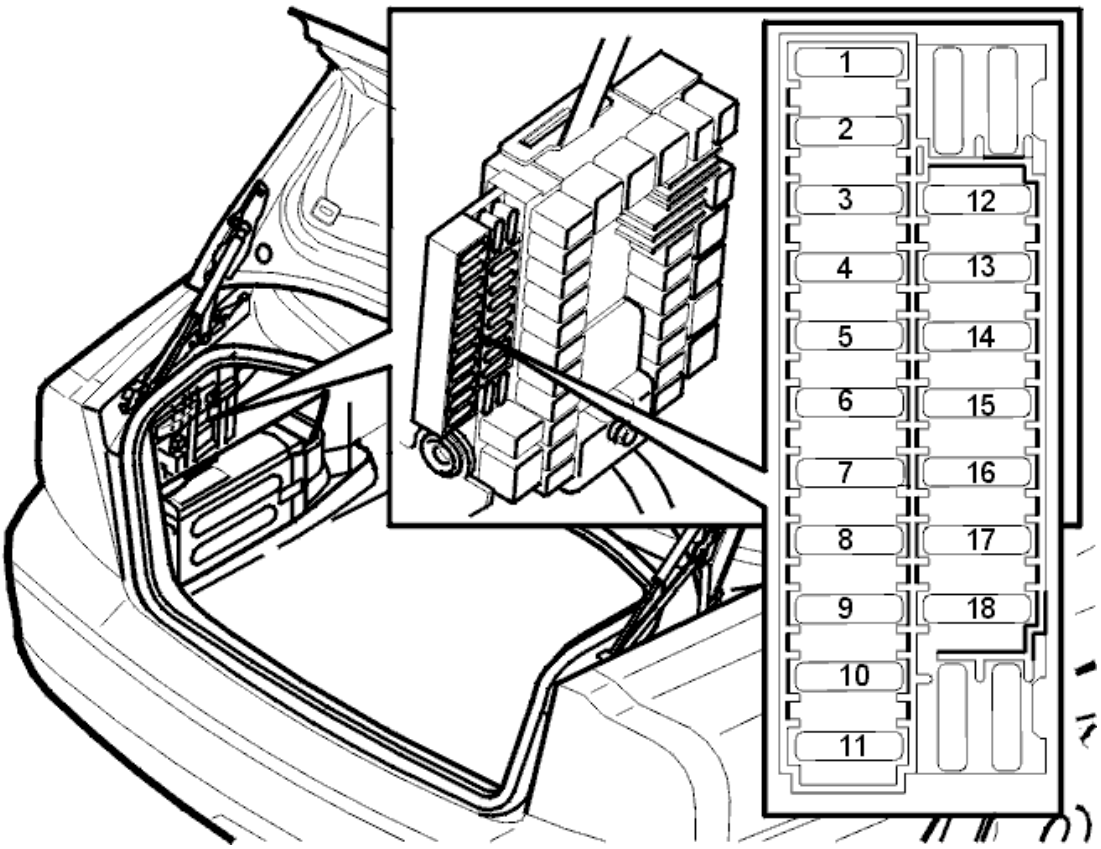

Fig. 295: Fuse Holder (Cargo Compartment)
Courtesy of VOLVO CARS CORPORATION

Is the fuse intact?

- **YES**

  Refer to **CHECKING FOR AN OPEN CIRCUIT**

- **NO**

  Refer to **CHECKING FOR A SHORT CIRCUIT**

CHECKING FOR AN OPEN CIRCUIT

Remove relay 2/113 in the cargo compartment relay/fuse box and trouble-shoot the wire between the fuse holder secondary side (left) and 5 in the relay socket for an open circuit as described in, see **OPEN-CIRCUIT, PERMANENT FAULTS** .

Additional information

- To access relay/fuse box in the cargo compartment:
  - For -2004, see: **RELAY/FUSE BOX CARGO COMPARTMENT/REAR ELECTRONIC MODULE (REM), REPLACING**

- For 2005-, see: **REAR ELECTRONIC MODULE (REM), REPLACING** .

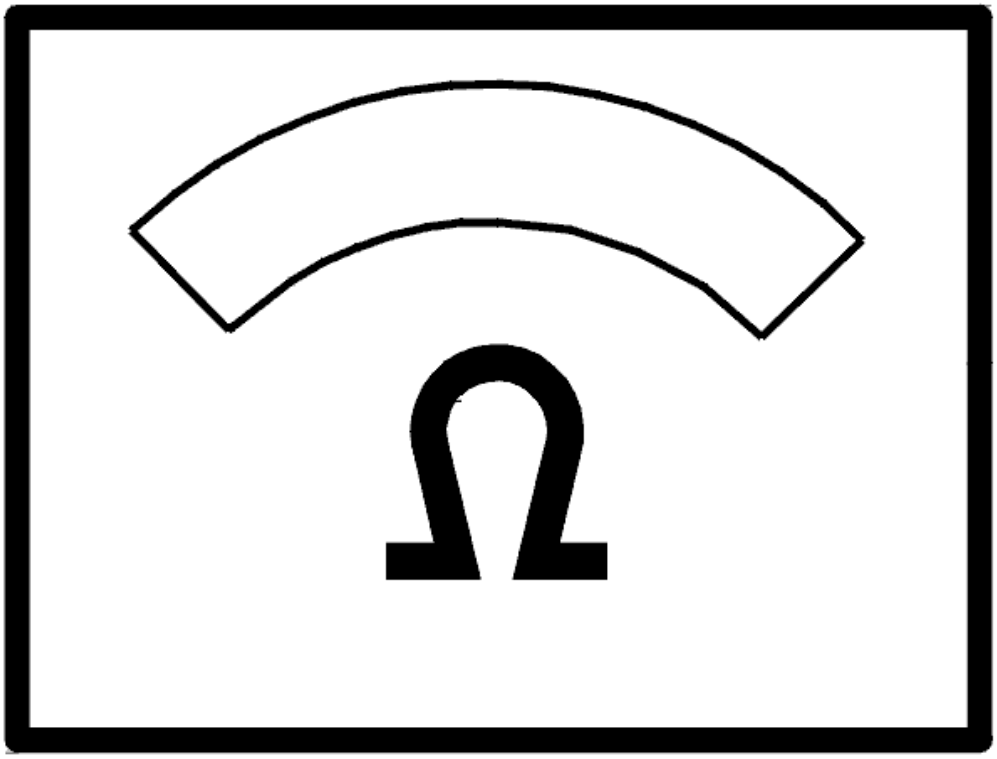

Fig. 296: Identifying Ohm Meter
Courtesy of VOLVO CARS CORPORATION

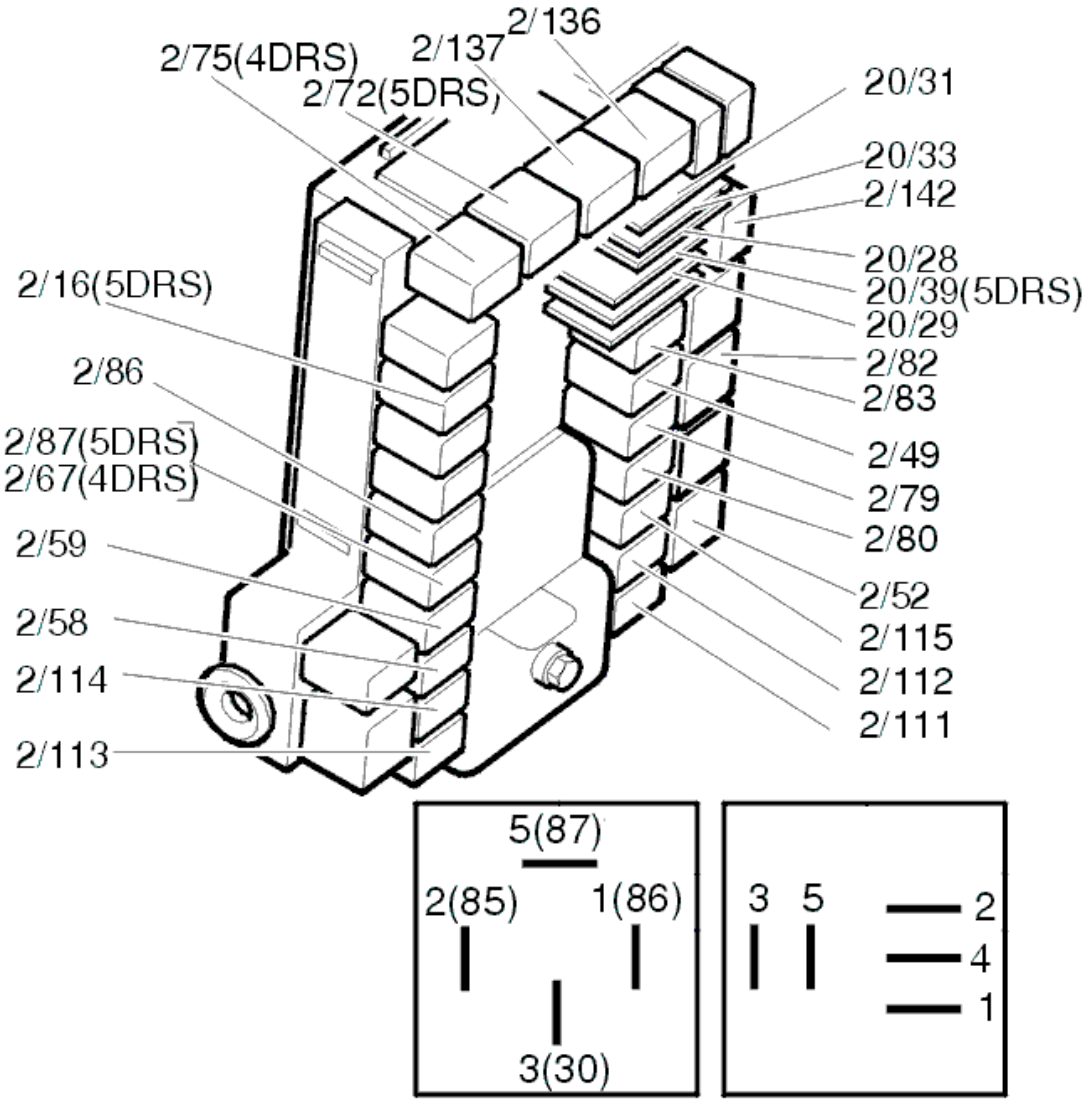

Fig. 297: Identifying Relays
Courtesy of VOLVO CARS CORPORATION

CHECKING FOR A SHORT CIRCUIT

Check the resistance between the fuse holder secondary side (left) and ground.

The ohmmeter should display infinite resistance.

If the value is correct, replace the fuse.

If the value deviates, trouble-shoot all the relay circuits involved for a short circuit to ground as described in, see **SHORT-CIRCUIT TO GROUND, PERMANENT FAULTS** .

NOTE: If the value is correct the fault could be intermittent.

HINT: Replace fuse.

HINT: If the fuse works straight away the fault is a short circuit on the relay supply wire.

HINT: If the fuse works when activating each relay the short circuit is on the component supply wire

HINT: The relay circuits involved belong to relays 2/111, 2/112, 2/113, 2/114, 2/115, 2/56, 2/59 and 2/67.

Additional information

- To access relay/fuse box in the cargo compartment:
  - For -2004, see: **RELAY/FUSE BOX CARGO COMPARTMENT/REAR ELECTRONIC MODULE (REM), REPLACING**
  - For 2005-, see: **REAR ELECTRONIC MODULE (REM), REPLACING** .

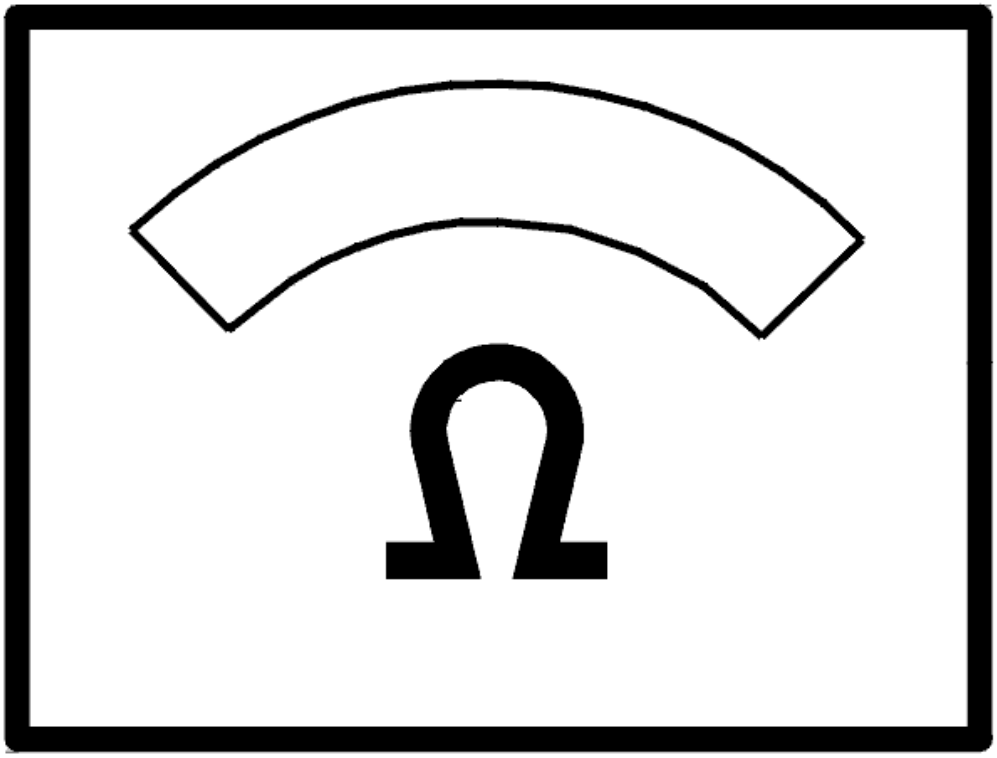

Fig. 298: Identifying Ohm Meter
Courtesy of VOLVO CARS CORPORATION

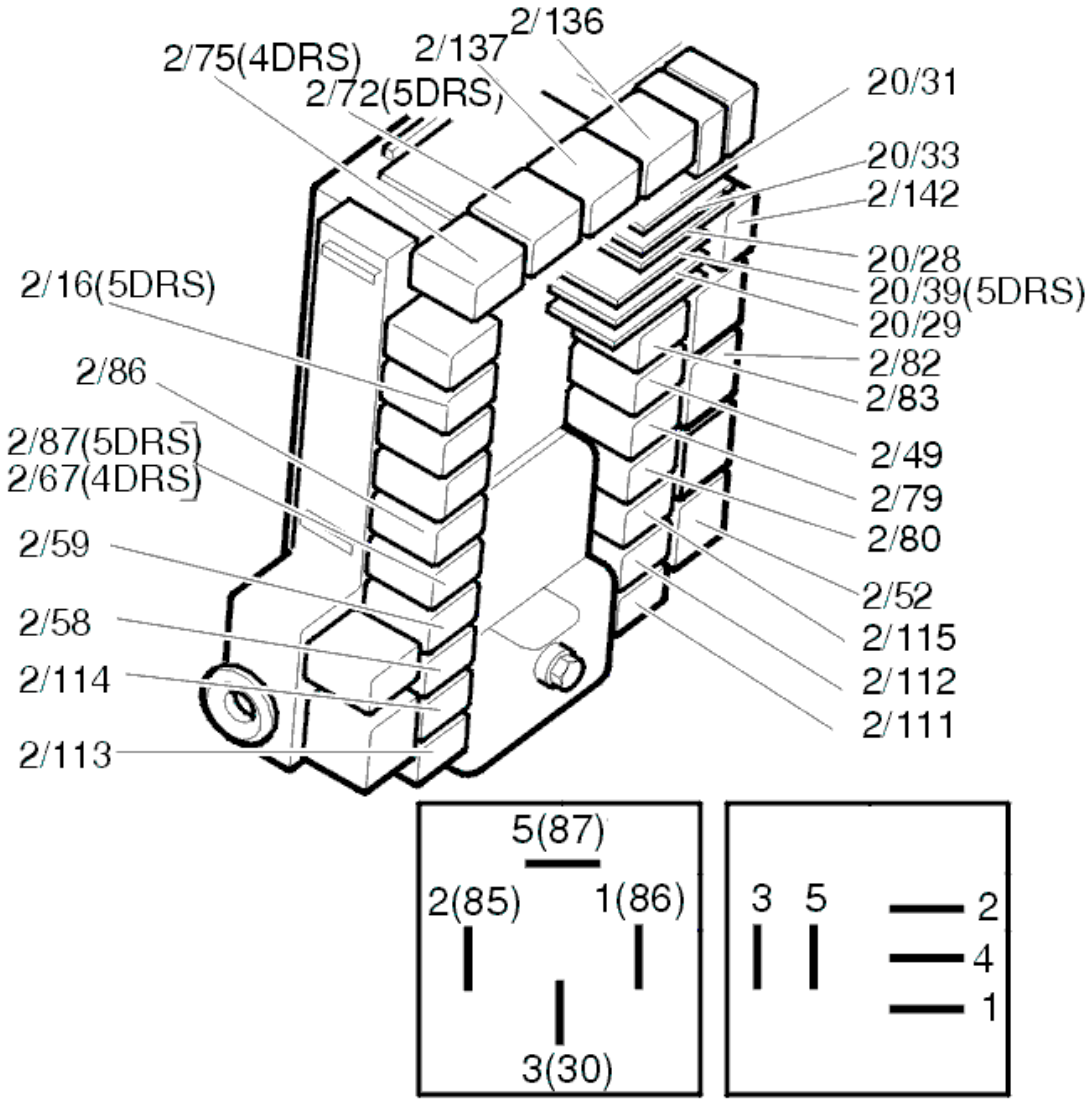

Fig. 299: Identifying Relays
Courtesy of VOLVO CARS CORPORATION

CEM-6A02: REAR RIGHT DOOR UNLOCKED. SIGNAL TOO HIGH. PERMANENT FAULT (2003-2004)

DIAGNOSTIC TROUBLE CODE INFORMATION

see **DIAGNOSTIC TROUBLE CODE INFORMATION**

SIGNAL TOO HIGH. PERMANENT FAULT

CHECKING THE COMPONENT

Check that the lock has not stuck by using the lock button on the inside of the door. Check that the lock unit is correctly installed.

Was a fault detected?

- **YES**

  Refer to **VERIFICATION**

- **NO**

  Refer to **CHECKING THE WIRING AND SWITCHES**

CHECKING THE WIRING AND SWITCHES

Check the switches at the central electronic module and lock unit. Check for contact resistance and oxidation.

Check the signal cable for the lock position sensor between the central electronic module connector terminal #C3 and lock unit connector terminal #5. Check for an open-circuit.

Check the signal cable for the lock position sensor between the central electronic module connector terminal #C3 and lock unit connector terminal #5. Check for a short-circuit to supply voltage.

NOTE: **Diagnostic trouble code (DTC) REM-6A09 or REM-6A0B may also be stored if this fault occurs. Use the VCT2000 (or appropriate scan) tool to read diagnostic trouble codes (DTCs).**

Other information:

- To access and replace the lock module:
  - Diver's side door module, see **DRIVER DOOR MODULE (DDM), REPLACING**
  - Passenger side door module, see **PASSENGER DOOR MODULE (PDM), REPLACING** .
- For -2004, see: **CENTRAL ELECTRONIC MODULE (CEM), REPLACING**
- For 2005-, see: **CENTRAL ELECTRONIC MODULE (CEM), REPLACING** .
- To connect the breakout box, see **CONNECTING THE BREAKOUT BOX**
- -2004: **SIGNAL SPECIFICATION**
- 2005-: **SIGNAL SPECIFICATION**
- see **CHECKING WIRING AND TERMINALS. PERMANENT FAULT** .

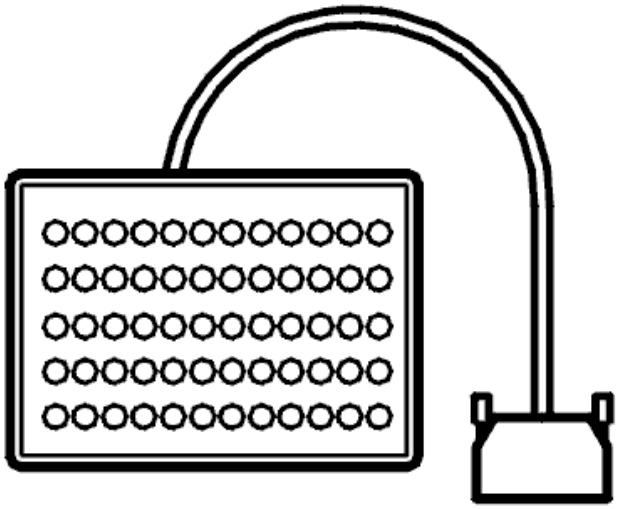

Fig. 300: Breakout Box
Courtesy of VOLVO CARS CORPORATION

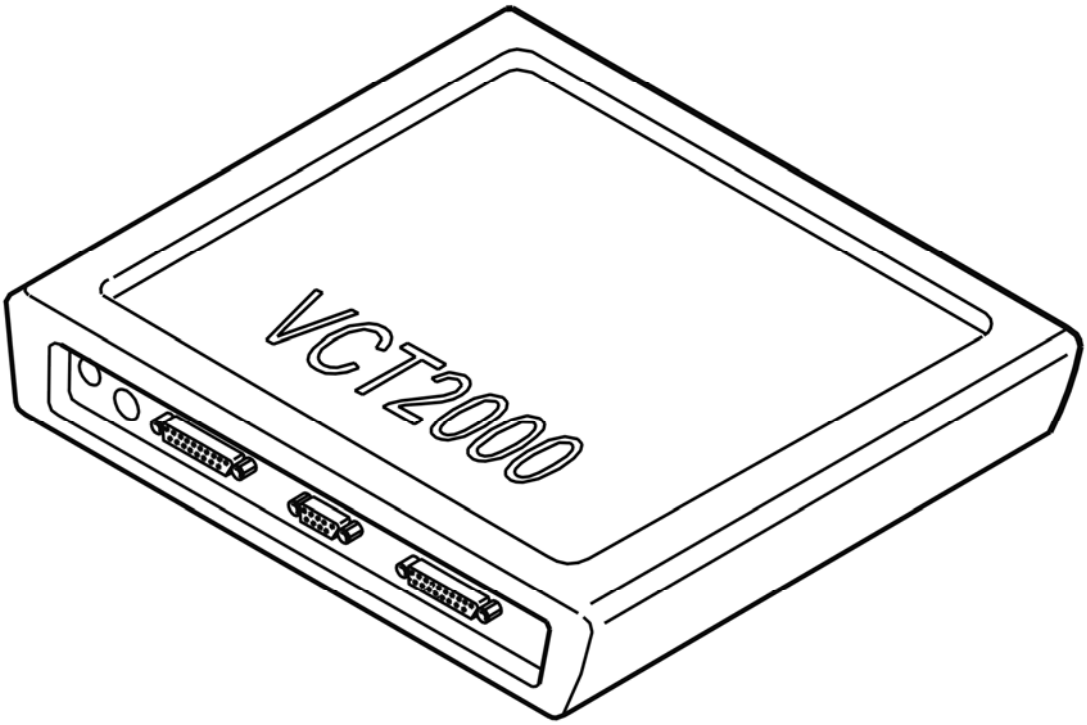

Fig. 301: Identifying VCT2000 Diagnostic Tool Symbol In VIDA
Courtesy of VOLVO CARS CORPORATION

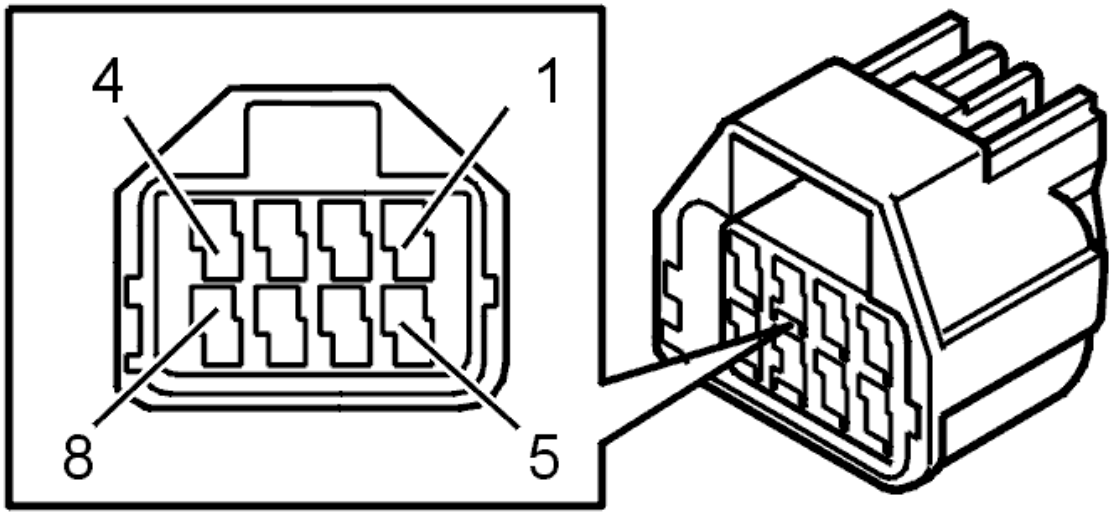

Fig. 302: Identifying Connector Terminals
Courtesy of VOLVO CARS CORPORATION

Were any diagnostic trouble codes (DTCs) stored?

- **YES**

  Refer to **VERIFICATION**

- **NO**

  Refer to **CHECKING THE DOOR LOCKING FUNCTION**

CHECKING THE DOOR LOCKING FUNCTION

QUESTION

Which door has the problem?

1. Driver door.

   Refer to **CHECKING THE DRIVER DOOR**

2. Passenger door.

   Refer to **CHECKING THE PASSENGER DOOR**

3. Rear left door.

   Refer to **CHECKING THE REAR LEFT DOOR**

4. Rear right door.

Refer to **CHECKING THE REAR RIGHT DOOR**

CHECKING THE DRIVER DOOR

CHECK

Is the passenger door lock not working?

- **YES**

  Refer to **CHECKING THE FUSE**

- **NO**

  Refer to **CHECK**

CHECKING THE FUSE

Remove the fuse 11C/27 in cargo compartment fuse box.

Check that fuse is intact and check for contact resistance and oxidation as described in, see **CONTACT RESISTANCE AND OXIDATION** .

Additional information

- To access relay/fuse box in the cargo compartment:
  - For -2004, see: **RELAY/FUSE BOX CARGO COMPARTMENT/REAR ELECTRONIC MODULE (REM), REPLACING**
  - For 2005-, see: **REAR ELECTRONIC MODULE (REM), REPLACING** .

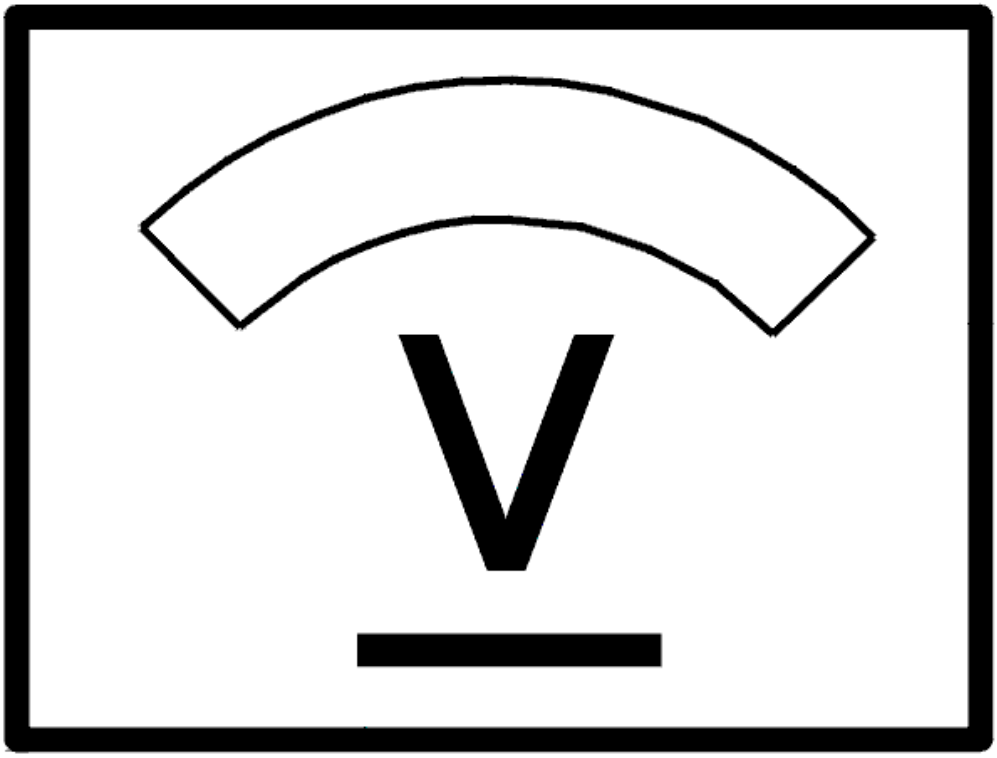

Fig. 303: Identifying Voltage Display
Courtesy of VOLVO CARS CORPORATION

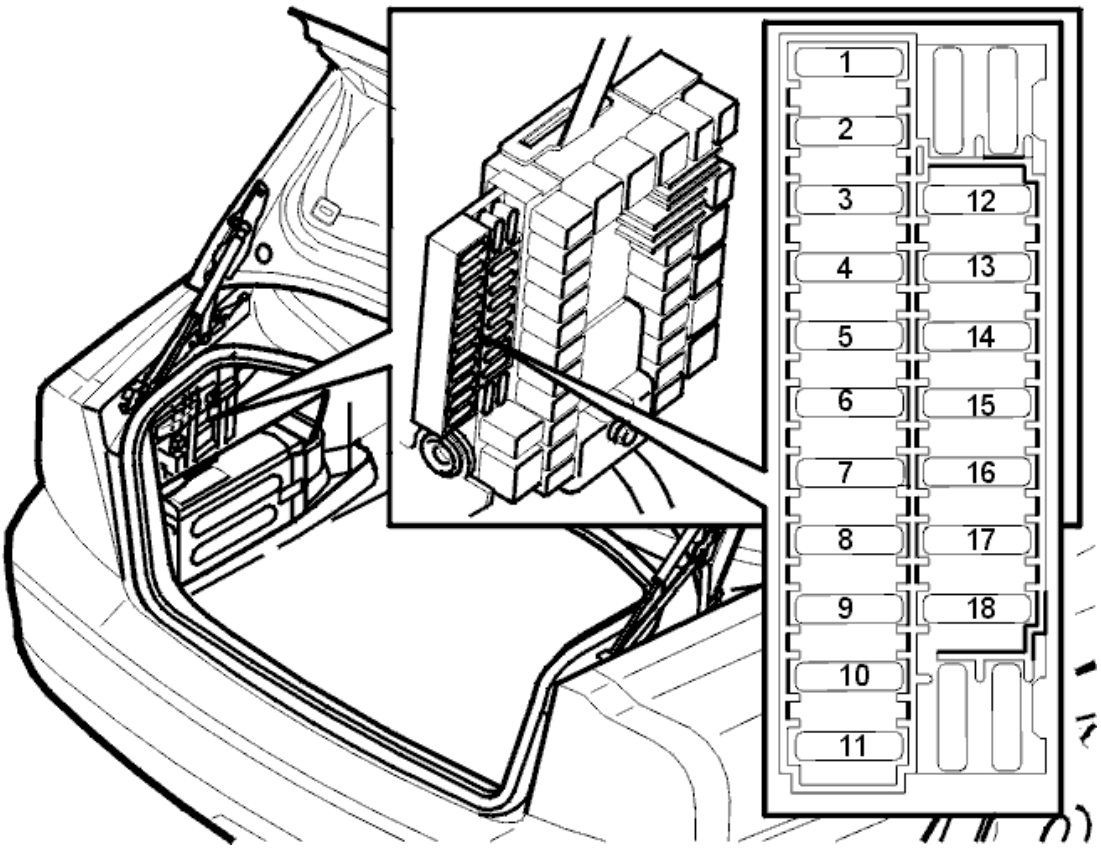

Fig. 304: Fuse Holder (Cargo Compartment)
Courtesy of VOLVO CARS CORPORATION

Is the fuse intact?

- **YES**

  Refer to **CHECKING FOR AN OPEN CIRCUIT**

- **NO**

  Refer to **CHECKING FOR A SHORT CIRCUIT**

CHECK

1. Window lift works on that particular door

   Refer to **CHECKING THE LOCKING MOTOR WIRES**

2. Window lift does not work on that particular door.

   Refer to **CHECKING THE FUSE**

CHECKING THE FUSE

Remove the fuse 11C/35 in cargo compartment fuse box.

Check that fuse is intact and check for contact resistance and oxidation as described in, see **CONTACT RESISTANCE AND OXIDATION** .

Additional information

- To access relay/fuse box in the cargo compartment:
  - For -2004, see: **RELAY/FUSE BOX CARGO COMPARTMENT/REAR ELECTRONIC MODULE (REM), REPLACING**
  - For 2005-, see: **REAR ELECTRONIC MODULE (REM), REPLACING** .

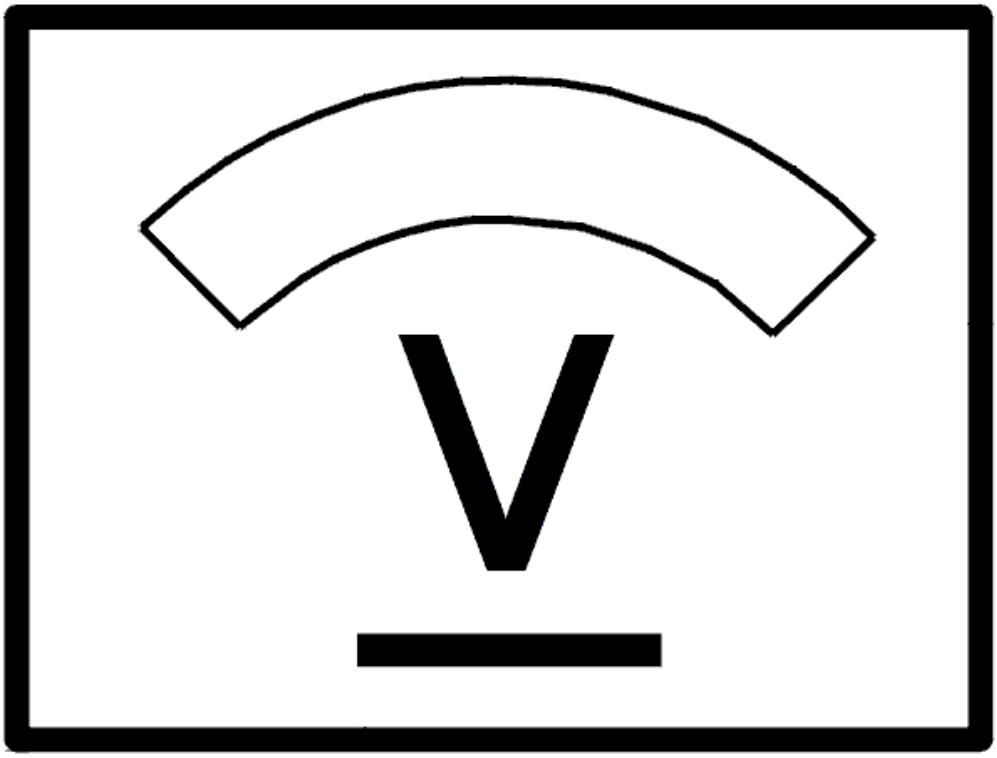

Fig. 305: Identifying Voltage Display
Courtesy of VOLVO CARS CORPORATION

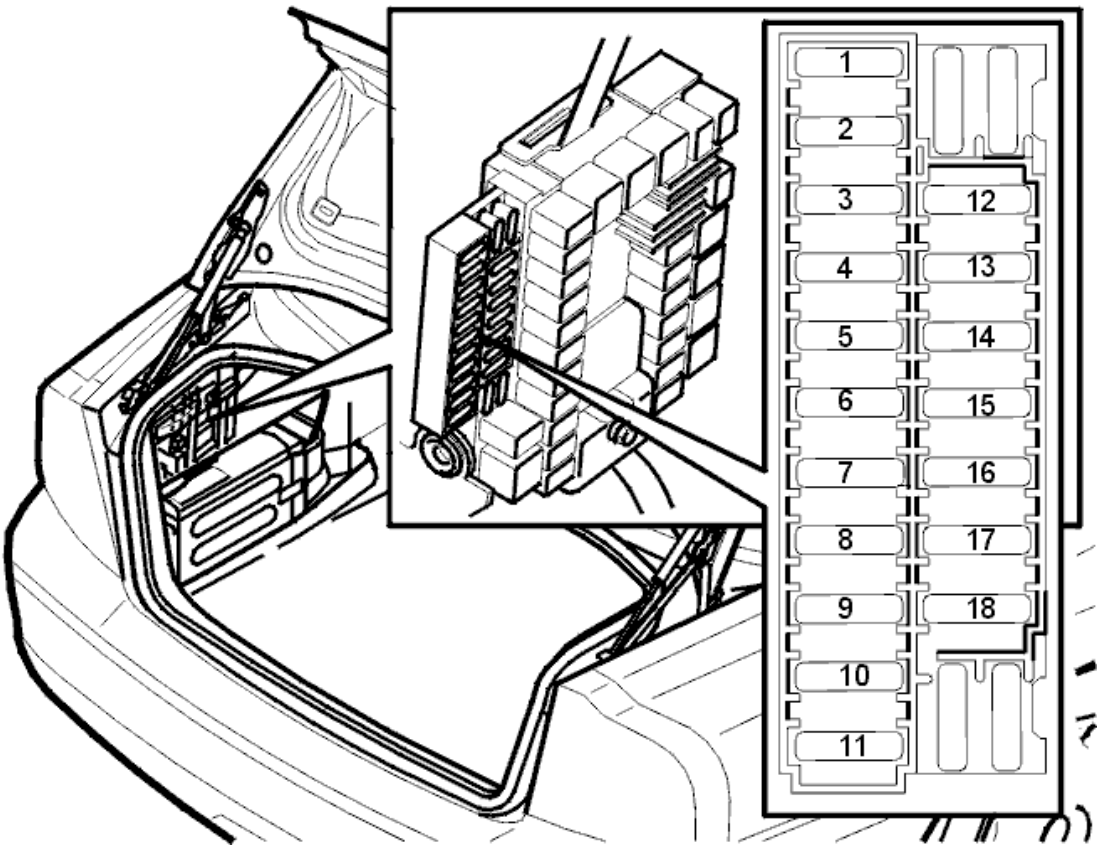

Fig. 306: Fuse Holder (Cargo Compartment)
Courtesy of VOLVO CARS CORPORATION

Is the fuse intact?

- **YES**

  Refer to **CHECKING THE VOLTAGE**

- **NO**

  Refer to **CHECKING FOR A SHORT CIRCUIT**

CHECKING FOR AN OPEN CIRCUIT

Check door control unit connector B7 for contact resistance and oxidation as described in, see **CONTACT RESISTANCE AND OXIDATION** .

Trouble-shoot the wire between fuse holder secondary side (left) and door control unit connector B7 for an open circuit as described in, see **OPEN-CIRCUIT, PERMANENT FAULTS** .

If a fault is detected, check in particular the intermediate connector in the cable harness (1/control unit) for contact resistance and oxidation as described in, see **CONTACT RESISTANCE AND OXIDATION** .

If there is an open circuit the fault should be between the fuse and the common junction point 53/427.

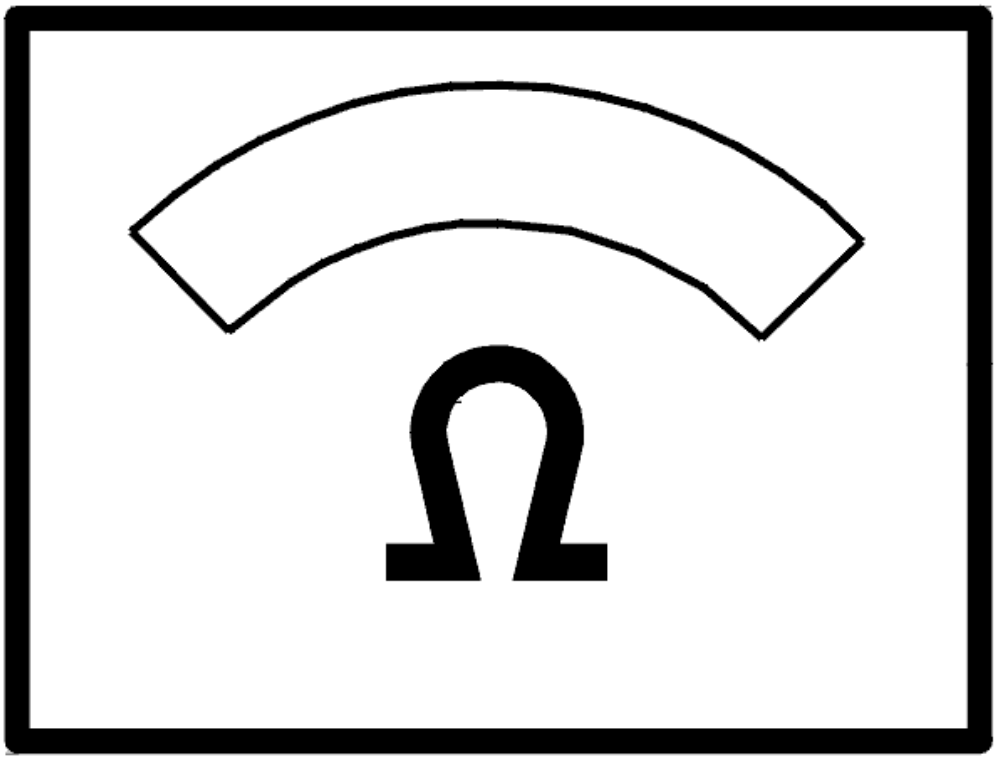

Fig. 307: Identifying Ohm Meter
Courtesy of VOLVO CARS CORPORATION

CHECKING FOR A SHORT CIRCUIT

Check the resistance between the fuse holder secondary side (left) and ground.

The ohmmeter should display infinite resistance.

NOTE: If the value is correct the fault could be intermittent.

Switch to trouble-shooting intermittent short circuits to ground as described in, see **SHORT-CIRCUIT TO GROUND, INTERMITTENT FAULTS** .

If the ohmmeter indicates a fault (short circuit), trouble-shoot the wires between the fuse and door control unit connector B7 for a short circuit to ground as described in, see **SHORT-CIRCUIT TO GROUND, PERMANENT FAULTS** .

The fault should be between the fuse and the common junction point 53/427.

Replace fuse.

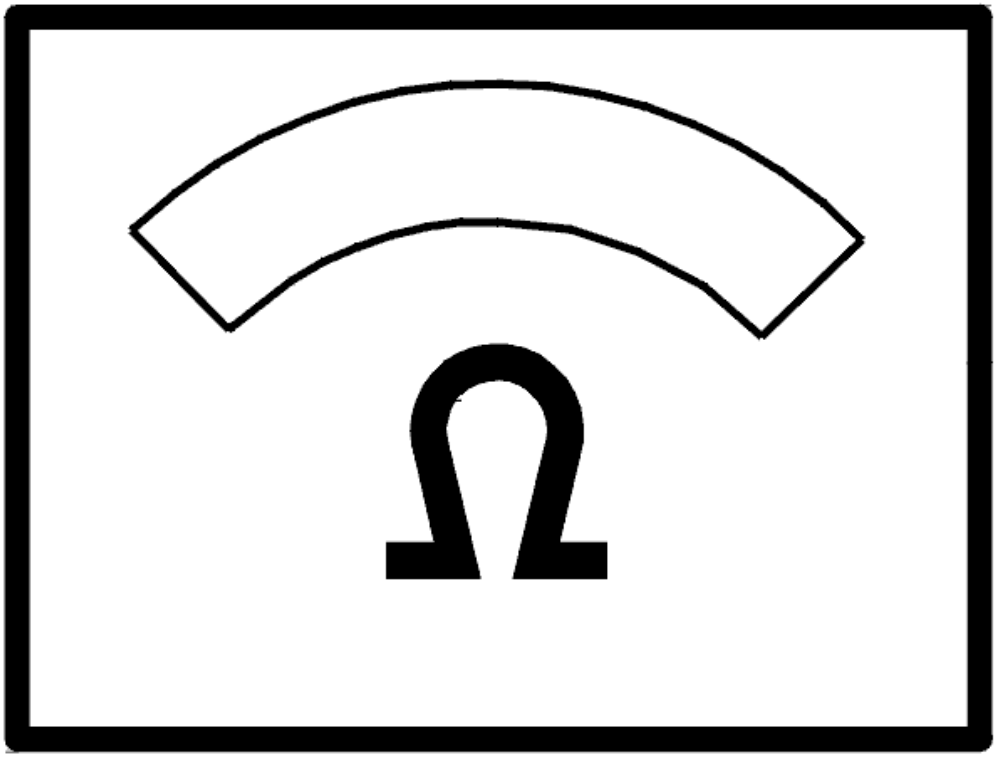

Fig. 308: Identifying Ohm Meter
Courtesy of VOLVO CARS CORPORATION

CHECKING THE VOLTAGE

Check the voltage in the door control unit connector B12.

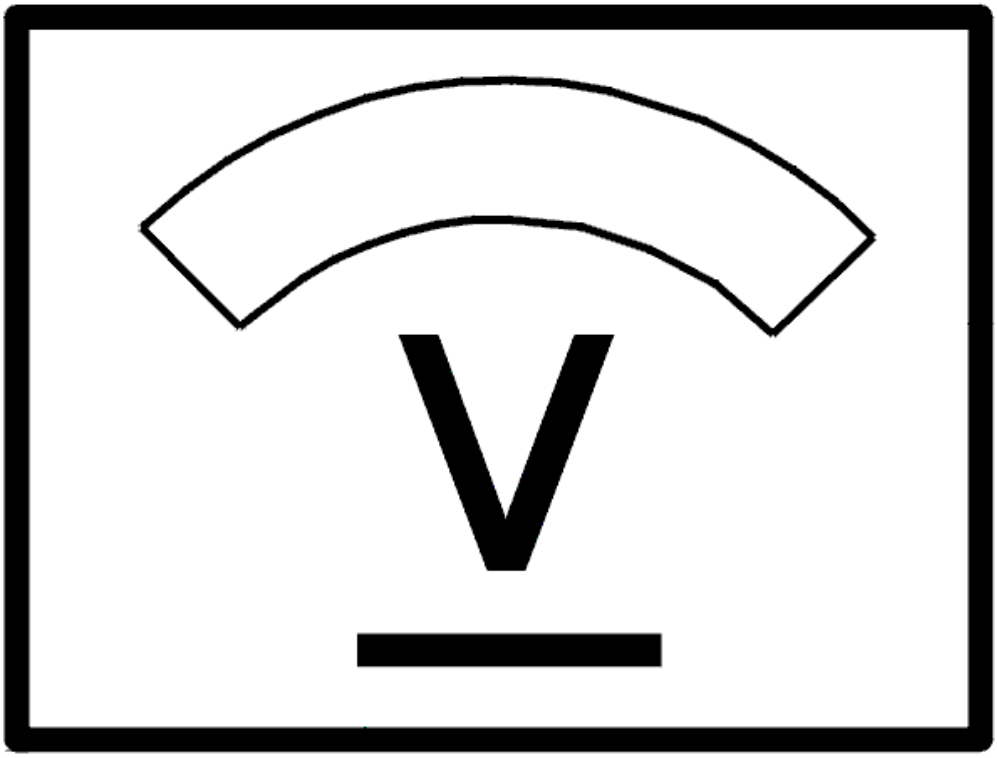

Fig. 309: Identifying Voltage Display
Courtesy of VOLVO CARS CORPORATION

Does the voltmeter show the battery voltage?

- **YES**

  Refer to **CHECKING THE LOCKING MOTOR WIRES**

- **NO**

  Refer to **CHECKING FOR AN OPEN CIRCUIT**

CHECKING FOR AN OPEN CIRCUIT

Check door control unit connector B12 for contact resistance and oxidation as described in, see **CONTACT**

RESISTANCE AND OXIDATION .

Trouble-shoot the wire between fuse holder secondary side (left) and door control unit connector B12 for an open circuit as described in, see **OPEN-CIRCUIT, PERMANENT FAULTS** .

If a fault is detected, check in particular the intermediate connector in the cable harness (1) for contact resistance and oxidation as described in, see **CONTACT RESISTANCE AND OXIDATION** .

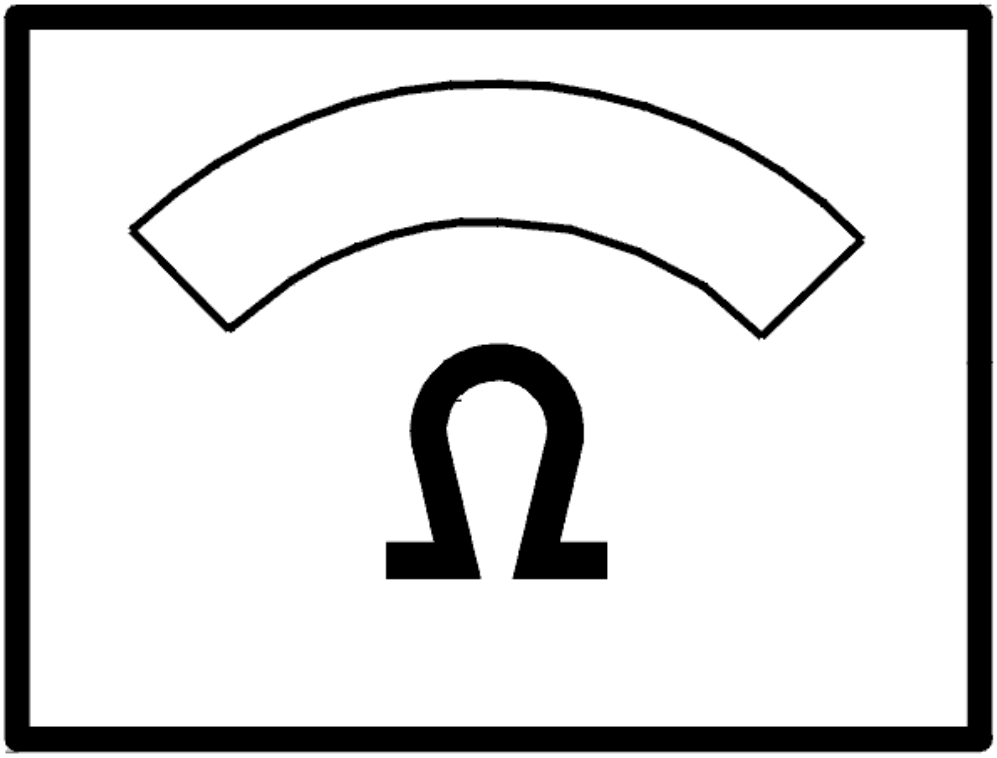

Fig. 310: Identifying Ohm Meter
Courtesy of VOLVO CARS CORPORATION

CHECKING FOR A SHORT CIRCUIT

Check the resistance between the fuse holder secondary side (left) and ground.

The ohmmeter should display infinite resistance.

NOTE: If the value is correct the fault could be intermittent.

Switch to trouble-shooting intermittent short circuits to ground as described in, see **SHORT-CIRCUIT TO GROUND, INTERMITTENT FAULTS** .

If the ohmmeter indicates a fault (short circuit), trouble-shoot the wires between the fuse and door control unit connector B12 for a short circuit to ground as described in, see **SHORT-CIRCUIT TO GROUND, PERMANENT FAULTS** .

Replace fuse.

Additional information

- To access relay/fuse box in the cargo compartment:
  - For -2004, see: **RELAY/FUSE BOX CARGO COMPARTMENT/REAR ELECTRONIC MODULE (REM), REPLACING**
  - For 2005-, see: **REAR ELECTRONIC MODULE (REM), REPLACING** .

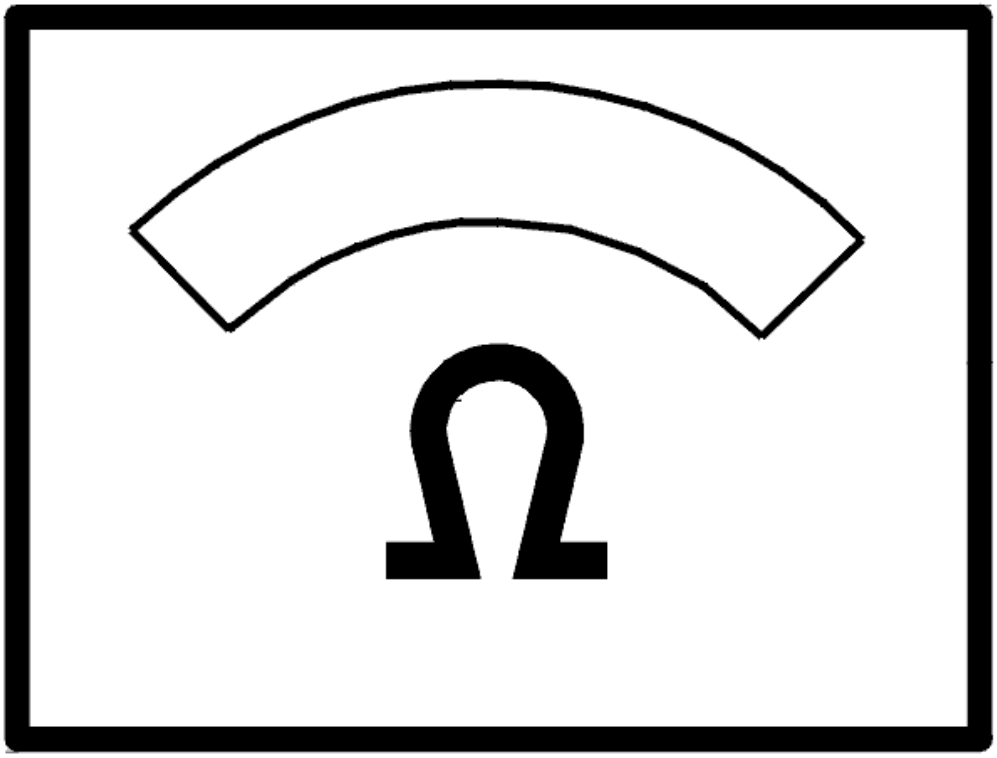

Fig. 311: Identifying Ohm Meter
Courtesy of VOLVO CARS CORPORATION

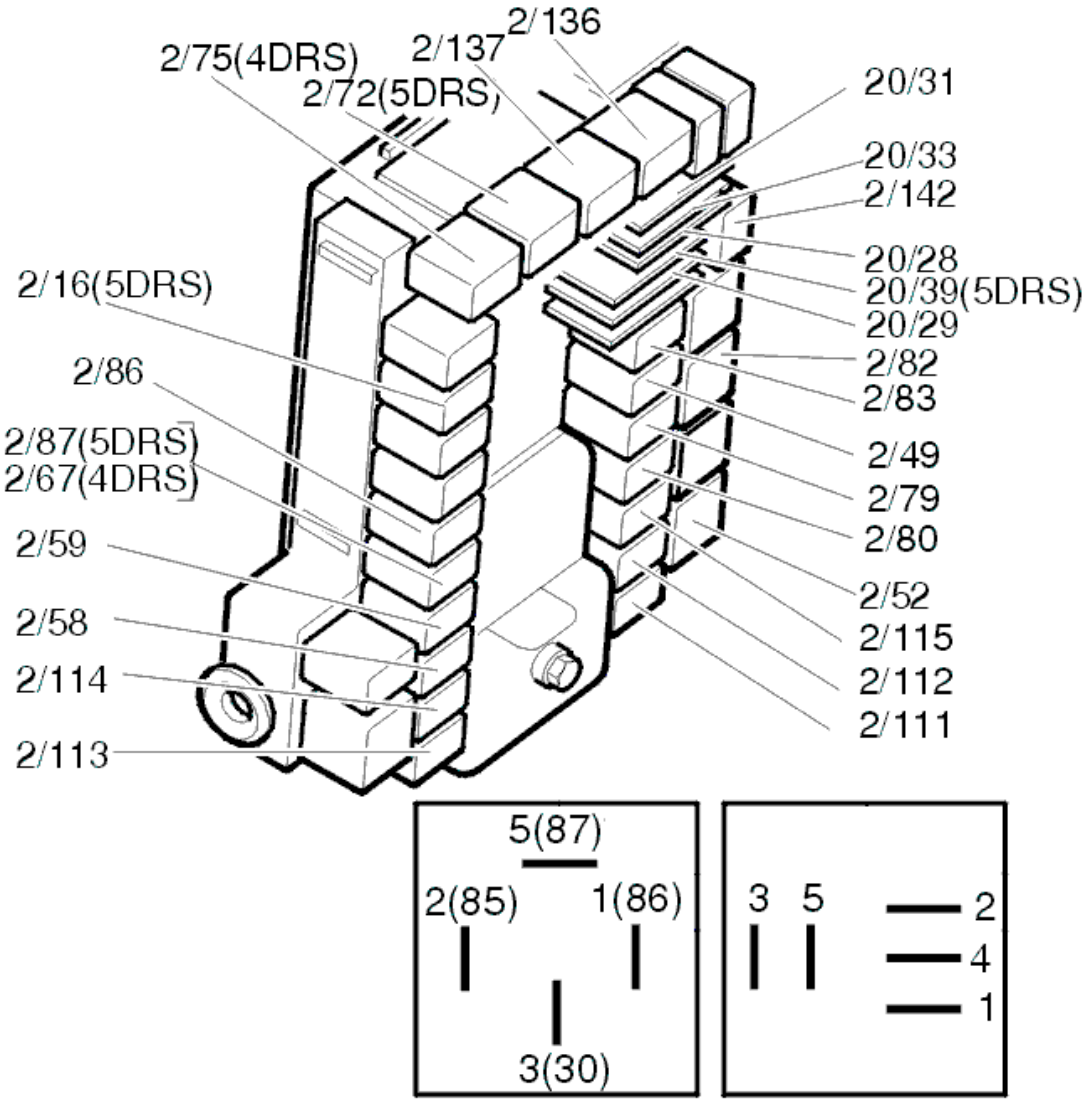

Fig. 312: Identifying Relays
Courtesy of VOLVO CARS CORPORATION

CHECKING THE LOCKING MOTOR WIRES

Check door control unit and lock unit connectors for contact resistance and oxidation as described in, see **CONTACT RESISTANCE AND OXIDATION** .

Trouble-shoot the wire between door control unit connector B2 and lock unit connector 8 for an open circuit as described in, see **OPEN-CIRCUIT, PERMANENT FAULTS** .

Trouble-shoot the wire between door control unit connector B6 and lock unit connector 7 for an open circuit as described in, see **OPEN-CIRCUIT, PERMANENT FAULTS** .

Additional information

- To access/replace the rear electronic module (REM):
  - For -2004, see: **RELAY/FUSE BOX CARGO COMPARTMENT/REAR ELECTRONIC MODULE (REM), REPLACING**
  - For 2005-, see: **REAR ELECTRONIC MODULE (REM), REPLACING** .

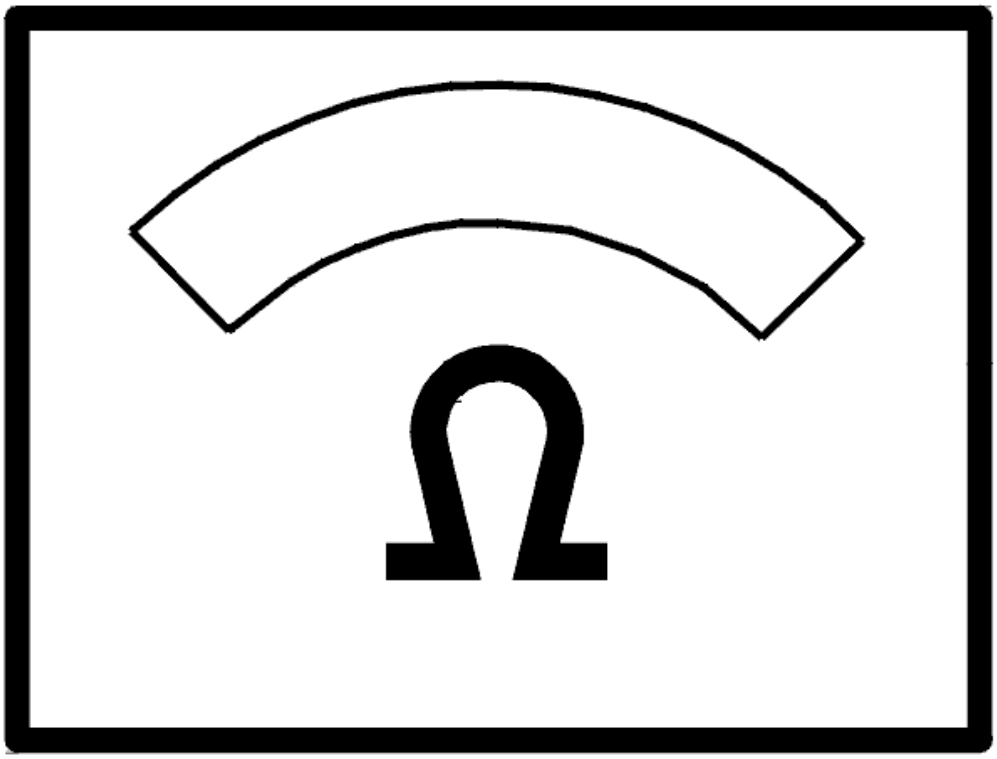

Fig. 313: Identifying Ohm Meter
Courtesy of VOLVO CARS CORPORATION

Is there a fault?

- **YES**

  OKAY: Troubleshooting has been completed.

- **NO**

Refer to **REPLACING THE COMPONENT**

REPLACING THE COMPONENT

Replace lock unit as described in, see **REPLACING THE SWITCH FOR THE LOCK UNIT / CARGO COMPARTMENT LIGHTING** .

Is there a fault?

- **YES**

  OKAY: Troubleshooting has been completed.

- **NO**

  Refer to **REPLACING THE COMPONENT**

REPLACING THE COMPONENT

Replace control unit.

- For -2004, see: **RELAY/FUSE BOX CARGO COMPARTMENT/REAR ELECTRONIC MODULE (REM), REPLACING**
- For 2005-, see: **REAR ELECTRONIC MODULE (REM), REPLACING** .

CHECKING THE PASSENGER DOOR

CHECK

Is the driver door lock not working?

- **YES**

  Refer to **CHECKING THE FUSE**

- **NO**

  Refer to **CHECK**

CHECKING THE FUSE

Remove the fuse 11C/27 in cargo compartment fuse box.

Check that fuse is intact and check for contact resistance and oxidation as described in, see **CONTACT RESISTANCE AND OXIDATION** .

Additional information

- To access relay/fuse box in the cargo compartment:
  - For -2004, see: **RELAY/FUSE BOX CARGO COMPARTMENT/REAR ELECTRONIC MODULE (REM), REPLACING**
  - For 2005-, see: **REAR ELECTRONIC MODULE (REM), REPLACING** .

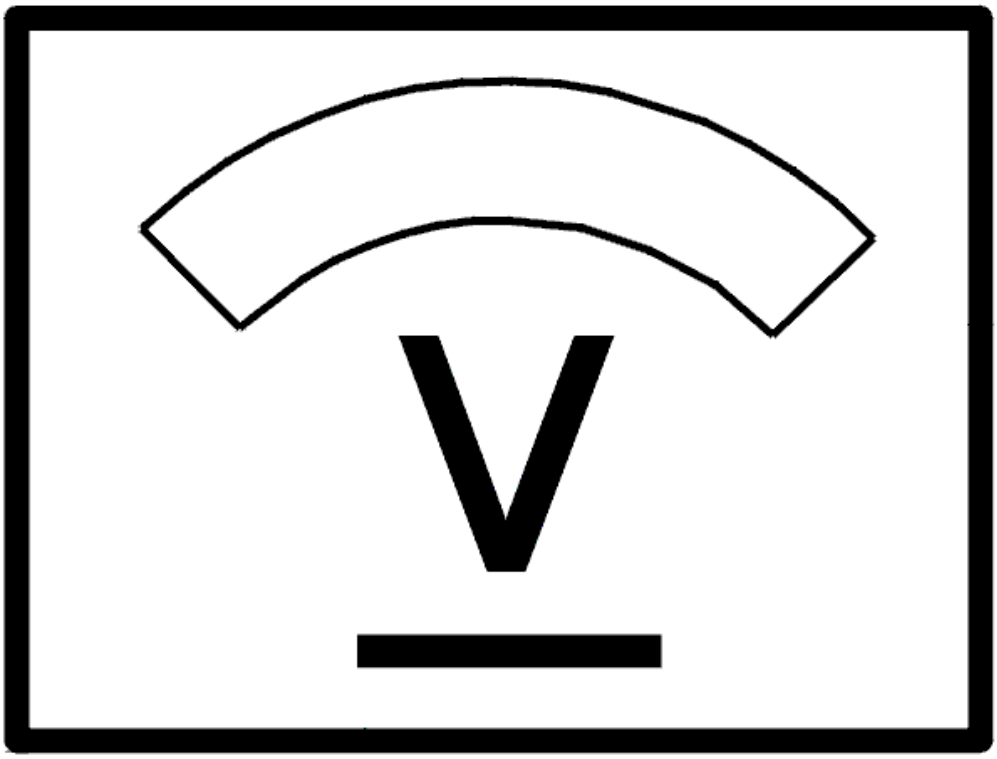

Fig. 314: Identifying Voltage Display
Courtesy of VOLVO CARS CORPORATION

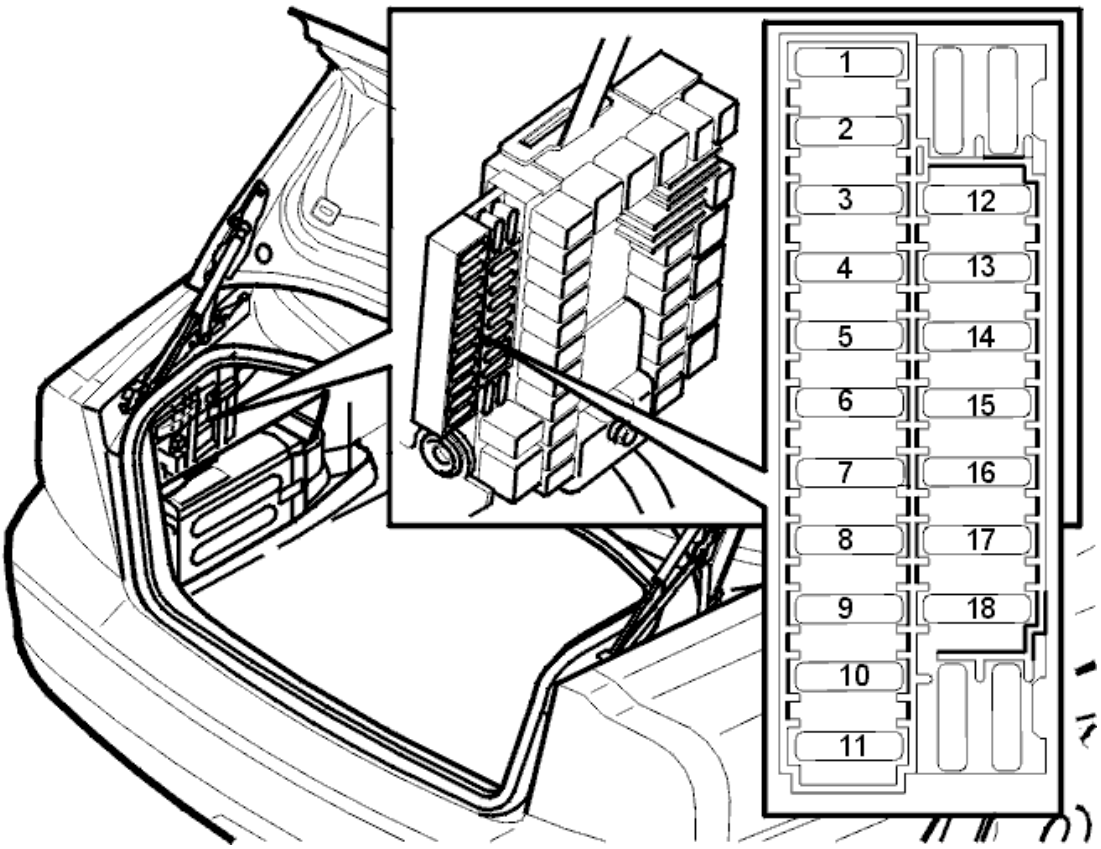

Fig. 315: Fuse Holder (Cargo Compartment)
Courtesy of VOLVO CARS CORPORATION

Is the fuse intact?

- **YES**

  Refer to **CHECKING FOR AN OPEN CIRCUIT**

- **NO**

  Refer to **CHECKING FOR A SHORT CIRCUIT**

CHECK

1. Window lift works on that particular door

   Refer to **CHECKING THE LOCKING MOTOR WIRES**

2. Window lift does not work on that particular door.

   Refer to **CHECKING THE FUSE**

CHECKING THE FUSE

Remove the fuse 11C/36 in cargo compartment fuse box.

Check that fuse is intact and check for contact resistance and oxidation as described in, see **CONTACT RESISTANCE AND OXIDATION** .

Additional information

- To access relay/fuse box in the cargo compartment:
  - For -2004, see: **RELAY/FUSE BOX CARGO COMPARTMENT/REAR ELECTRONIC MODULE (REM), REPLACING**
  - For 2005-, see: **REAR ELECTRONIC MODULE (REM), REPLACING** .

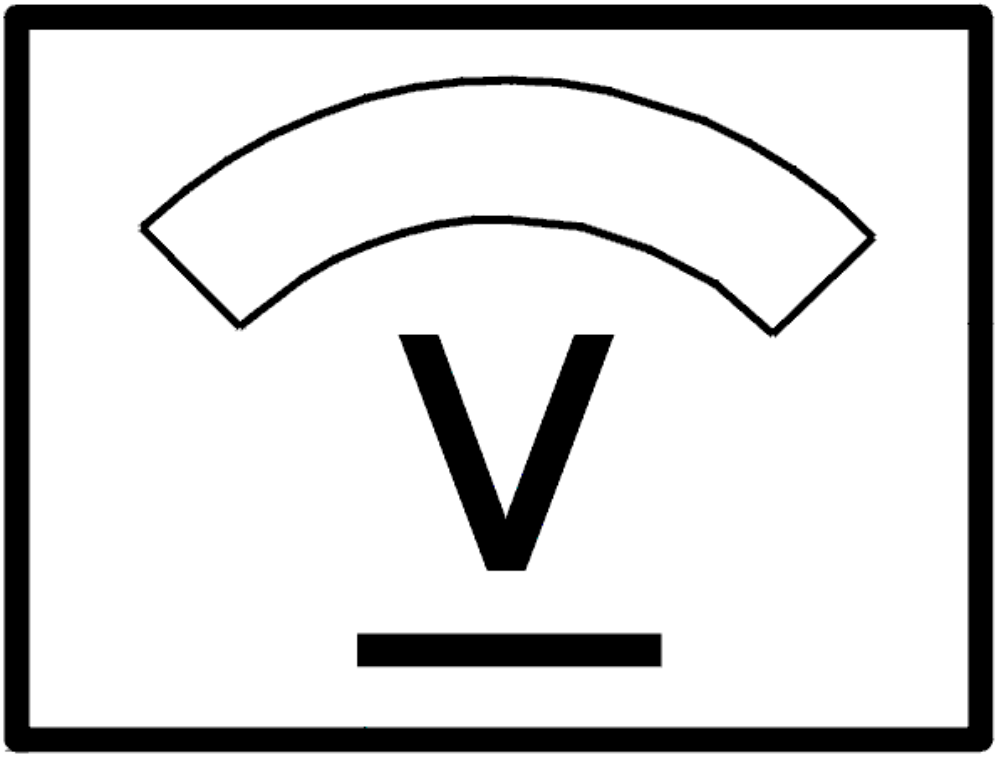

Fig. 316: Identifying Voltage Display
Courtesy of VOLVO CARS CORPORATION

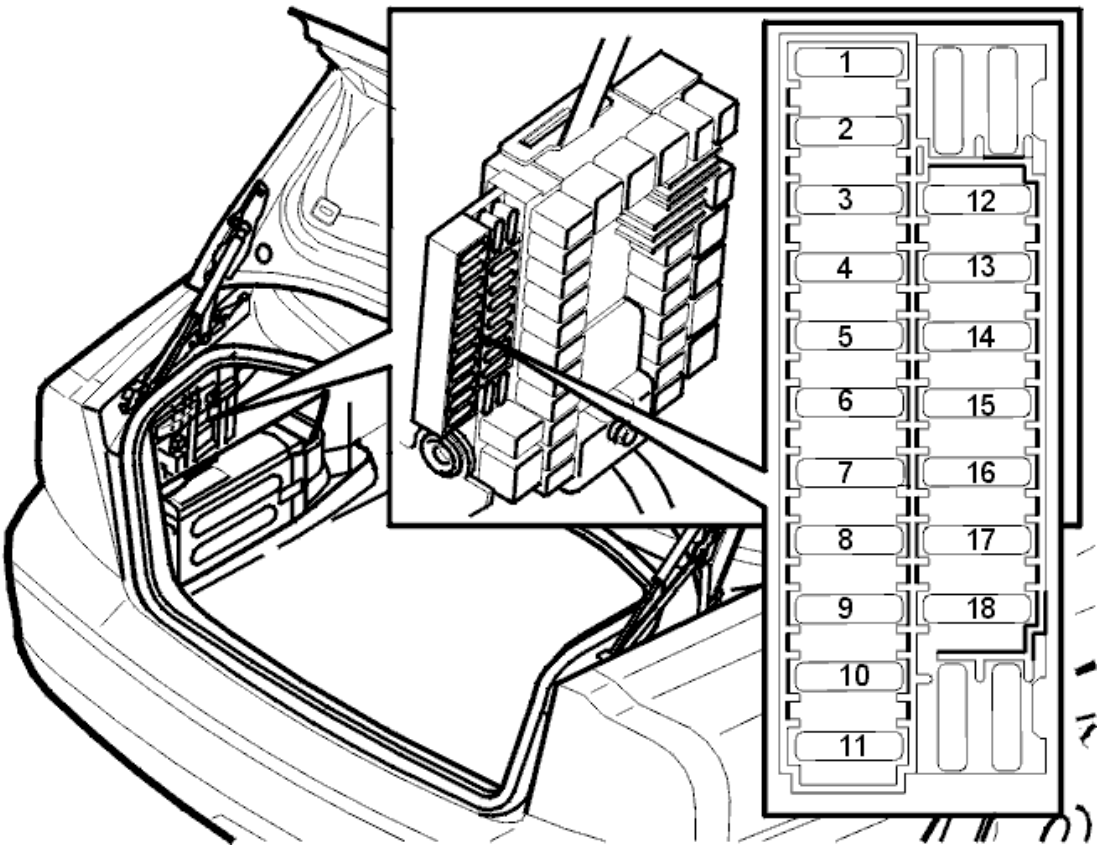

Fig. 317: Fuse Holder (Cargo Compartment)
Courtesy of VOLVO CARS CORPORATION

Is the fuse intact?

- **YES**

  Refer to **CHECKING THE VOLTAGE**

- **NO**

  Refer to **CHECKING FOR A SHORT CIRCUIT**

CHECKING FOR AN OPEN CIRCUIT

Check door control unit connector B7 for contact resistance and oxidation as described in, see **CONTACT RESISTANCE AND OXIDATION** .

Trouble-shoot the wire between fuse holder secondary side (left) and door control unit connector B7 for an open circuit as described in, see **OPEN-CIRCUIT, PERMANENT FAULTS** .

If a fault is detected, check in particular the intermediate connector in the cable harness (1/control unit) for contact resistance and oxidation as described in, see **CONTACT RESISTANCE AND OXIDATION** .

If there is an open circuit the fault should be between the fuse and the common junction point 53/427.

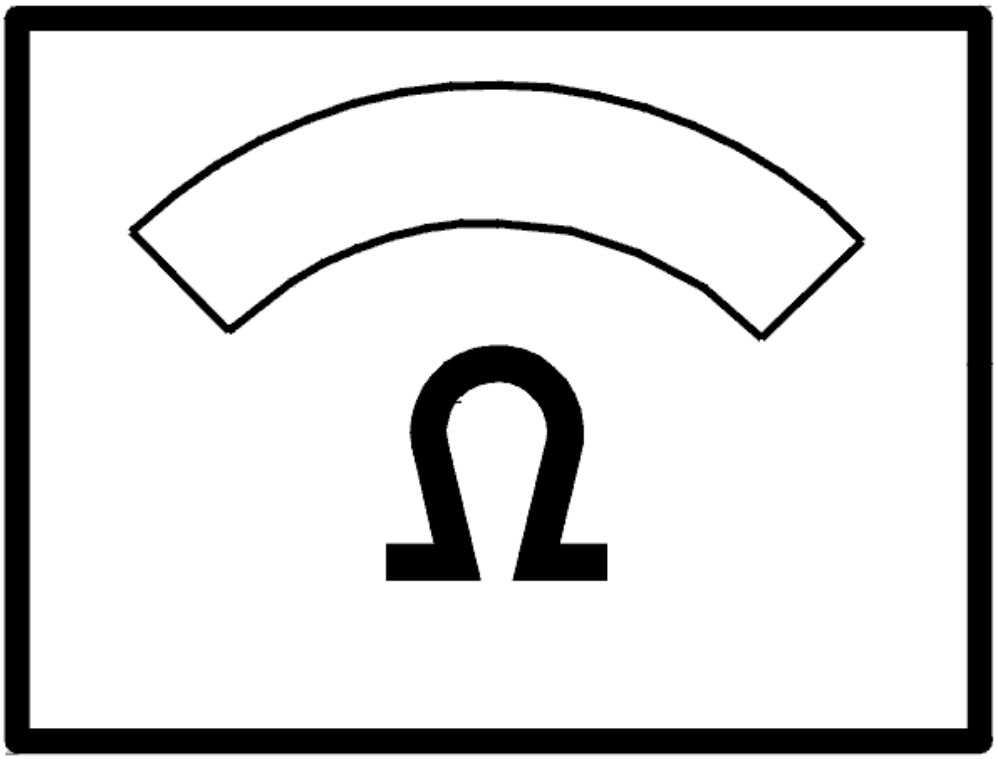

Fig. 318: Identifying Ohm Meter
Courtesy of VOLVO CARS CORPORATION

CHECKING FOR A SHORT CIRCUIT

Check the resistance between the fuse holder secondary side (left) and ground.

The ohmmeter should display infinite resistance.

NOTE: If the value is correct the fault could be intermittent.

Switch to trouble-shooting intermittent short circuits to ground as described in, see **SHORT-CIRCUIT TO GROUND, INTERMITTENT FAULTS** .

If the ohmmeter indicates a fault (short circuit), trouble-shoot the wires between the fuse and door control unit connector B7 for a short circuit to ground as described in, see **SHORT-CIRCUIT TO GROUND, PERMANENT FAULTS** .

The fault should be between the fuse and the common junction point 53/427.

Replace fuse.

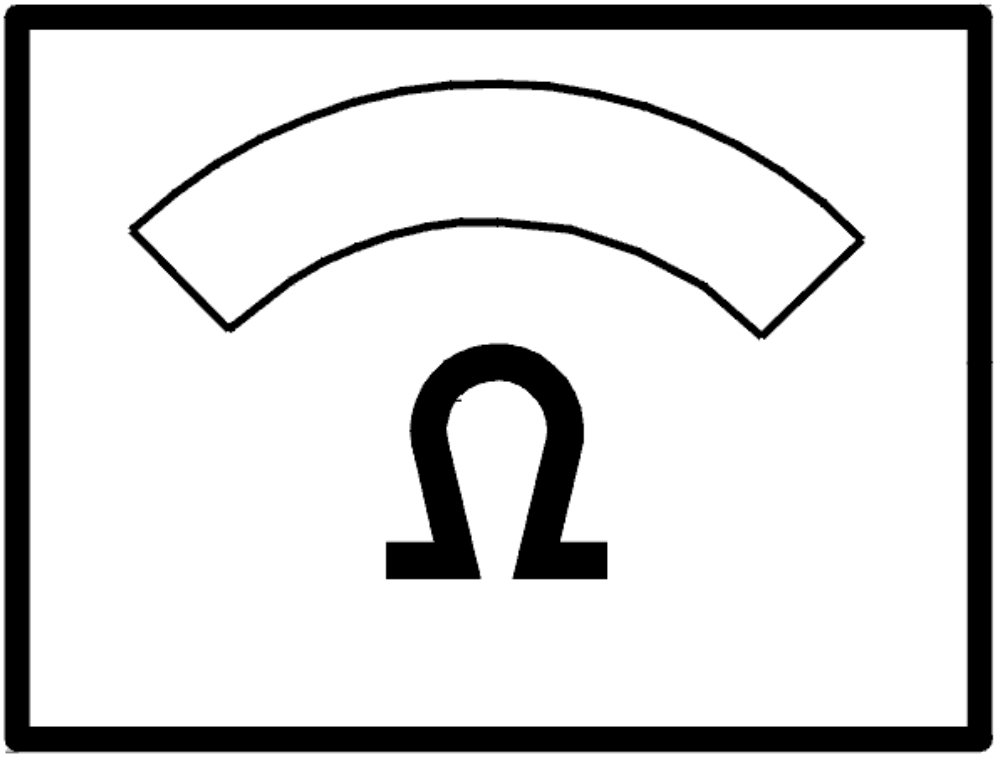

Fig. 319: Identifying Ohm Meter
Courtesy of VOLVO CARS CORPORATION

CHECKING THE VOLTAGE

Check the voltage in the door control unit connector B12.

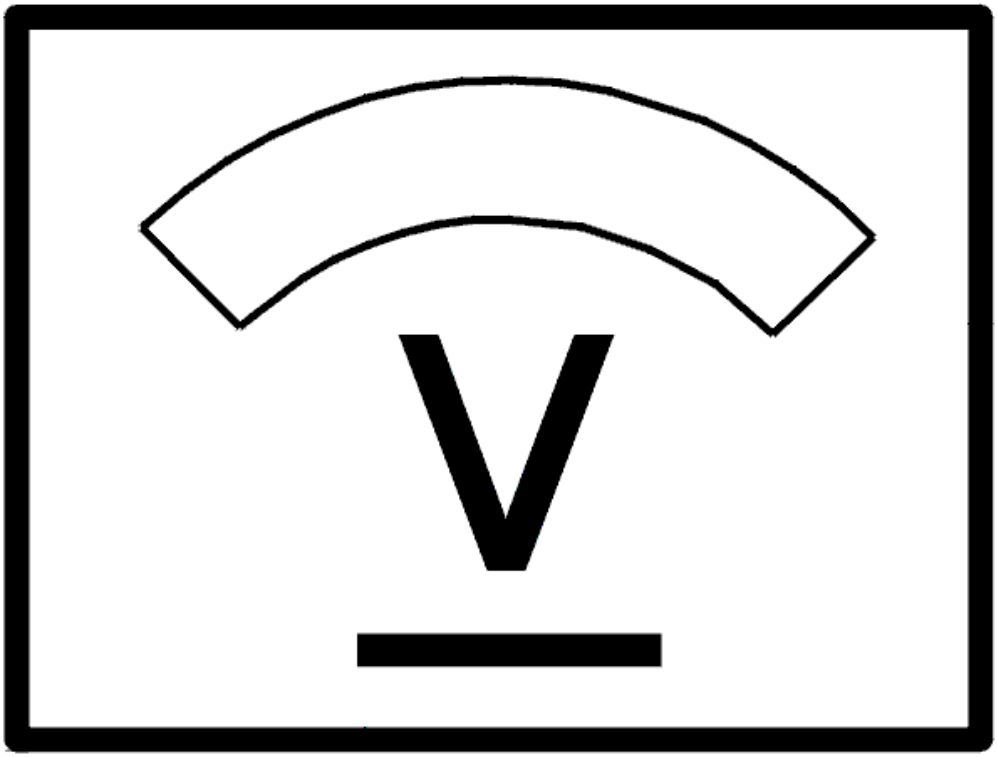

Fig. 320: Identifying Voltage Display
Courtesy of VOLVO CARS CORPORATION

Does the voltmeter show the battery voltage?

- **YES**

  Refer to **CHECKING THE LOCKING MOTOR WIRES**

- **NO**

  Refer to **CHECKING FOR AN OPEN CIRCUIT**

CHECKING FOR AN OPEN CIRCUIT

Check door control unit connector B12 for contact resistance and oxidation as described in, see **CONTACT**

RESISTANCE AND OXIDATION .

Trouble-shoot the wire between fuse holder secondary side (left) and door control unit connector B12 for an open circuit as described in, see **OPEN-CIRCUIT, PERMANENT FAULTS** .

If a fault is detected, check in particular the intermediate connector in the cable harness (1) for contact resistance and oxidation as described in, see **CONTACT RESISTANCE AND OXIDATION** .

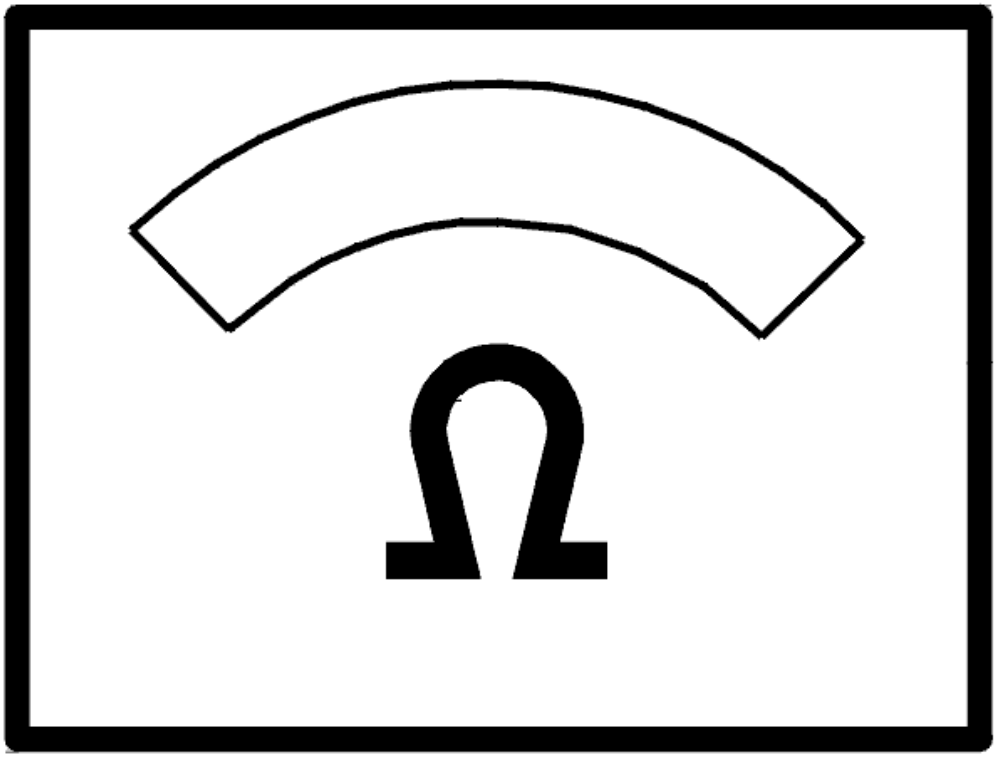

Fig. 321: Identifying Ohm Meter
Courtesy of VOLVO CARS CORPORATION

CHECKING FOR A SHORT CIRCUIT

Check the resistance between the fuse holder secondary side (left) and ground.

The ohmmeter should display infinite resistance.

NOTE: If the value is correct the fault could be intermittent.

Switch to trouble-shooting intermittent short circuits to ground as described in, see **SHORT-CIRCUIT TO GROUND, INTERMITTENT FAULTS** .

If the ohmmeter indicates a fault (short circuit), trouble-shoot the wires between the fuse and door control unit connector B12 for a short circuit to ground as described in, see **SHORT-CIRCUIT TO GROUND, PERMANENT FAULTS** .

Replace fuse.

Additional information

- To access relay/fuse box in the cargo compartment:
  - For -2004, see: **RELAY/FUSE BOX CARGO COMPARTMENT/REAR ELECTRONIC MODULE (REM), REPLACING**
  - For 2005-, see: **REAR ELECTRONIC MODULE (REM), REPLACING** .

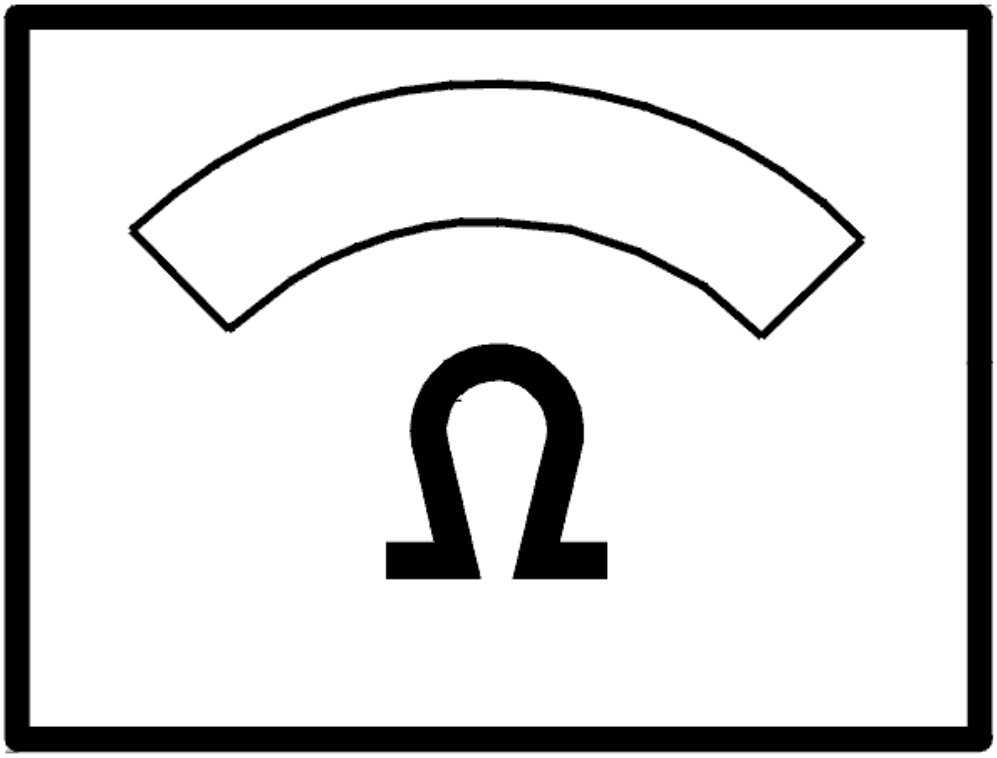

Fig. 322: Identifying Ohm Meter
Courtesy of VOLVO CARS CORPORATION

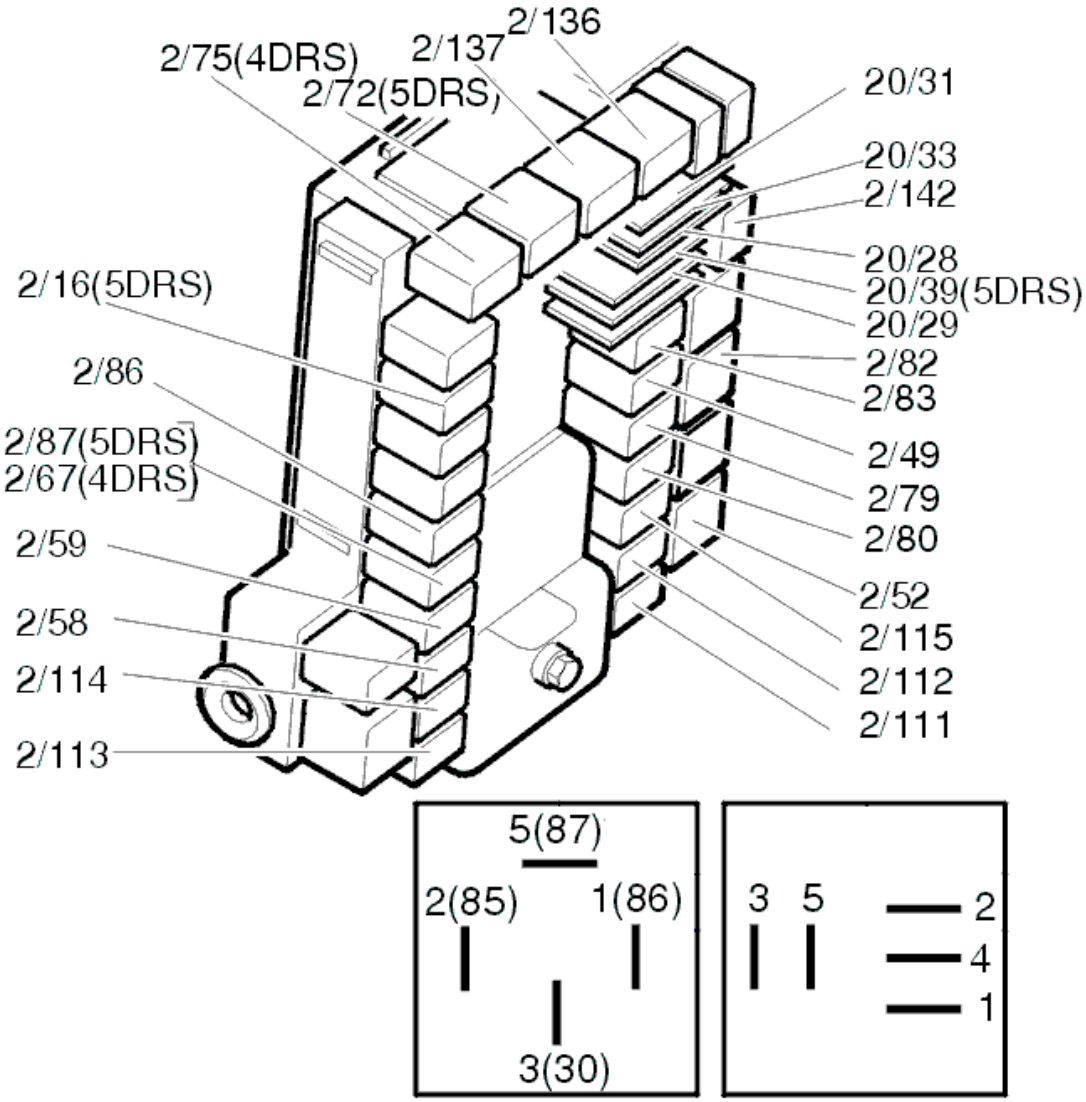

Fig. 323: Identifying Relays
Courtesy of VOLVO CARS CORPORATION

CHECKING THE LOCKING MOTOR WIRES

Check door control unit and lock unit connectors for contact resistance and oxidation as described in, see **CONTACT RESISTANCE AND OXIDATION** .

Trouble-shoot the wire between door control unit connector B2 and lock unit connector 8 for an open circuit as described in, see **OPEN-CIRCUIT, PERMANENT FAULTS** .

Trouble-shoot the wire between door control unit connector B6 and lock unit connector 7 for an open circuit as described in, see **OPEN-CIRCUIT, PERMANENT FAULTS** .

Additional information

- To access/replace the rear electronic module (REM):
  - For -2004, see: **RELAY/FUSE BOX CARGO COMPARTMENT/REAR ELECTRONIC MODULE (REM), REPLACING**
  - For 2005-, see: **REAR ELECTRONIC MODULE (REM), REPLACING** .

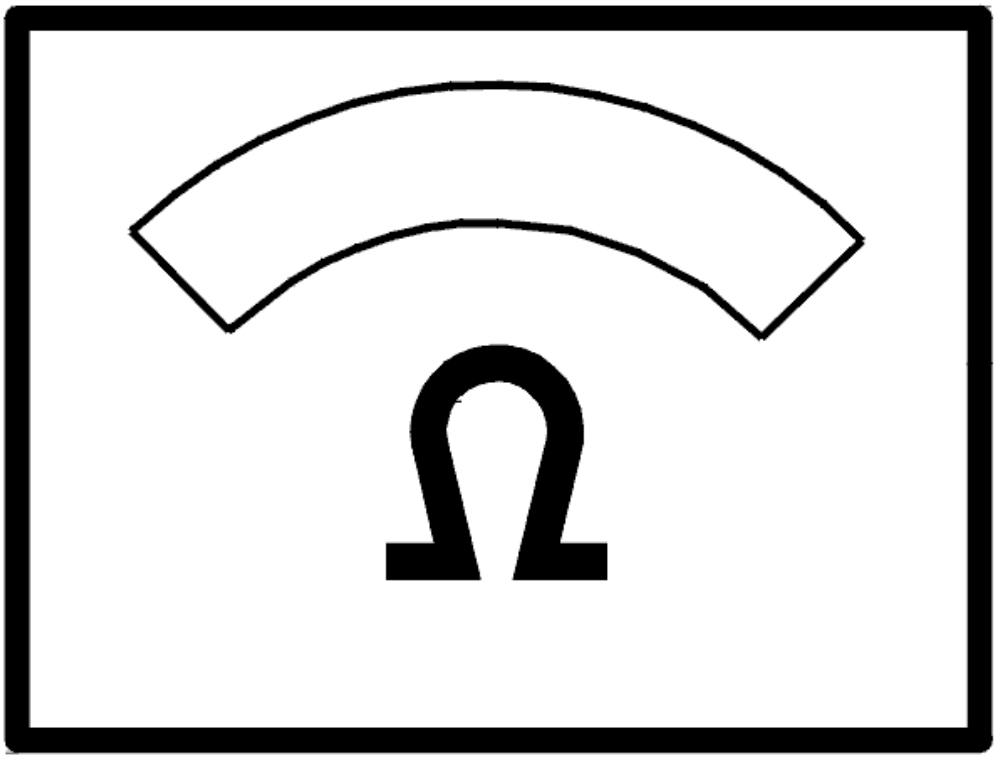

Fig. 324: Identifying Ohm Meter
Courtesy of VOLVO CARS CORPORATION

Is there a fault?

- **YES**

  OKAY: Troubleshooting has been completed.

- **NO**

Refer to **REPLACING THE COMPONENT**

REPLACING THE COMPONENT

Replace lock unit as described in, see **REPLACING THE SWITCH FOR THE LOCK UNIT / CARGO COMPARTMENT LIGHTING** .

Is there a fault?

- **YES**

  OKAY: Troubleshooting has been completed.

- **NO**

  Refer to **REPLACING THE COMPONENT**

REPLACING THE COMPONENT

Replace control unit.

- For -2004, see: **RELAY/FUSE BOX CARGO COMPARTMENT/REAR ELECTRONIC MODULE (REM), REPLACING**
- For 2005-, see: **REAR ELECTRONIC MODULE (REM), REPLACING** .

CHECKING THE REAR LEFT DOOR

CHECK

Is the lock to the other rear door not working?

- **YES**

  Refer to **CHECKING THE FUSE**

- **NO**

  Refer to **REPLACING THE COMPONENT**

REPLACING THE COMPONENT

Replace the relays for locking (2/111) and unlocking (2/112) in the cargo compartment relay/fuse box. At the same time check relay socket contacts for contact resistance and oxidation as described in, see **CONTACT RESISTANCE AND OXIDATION** .

Additional information

- To access relay/fuse box in the cargo compartment:

- For -2004, see: **RELAY/FUSE BOX CARGO COMPARTMENT/REAR ELECTRONIC MODULE (REM), REPLACING**
- For 2005-, see: **REAR ELECTRONIC MODULE (REM), REPLACING** .

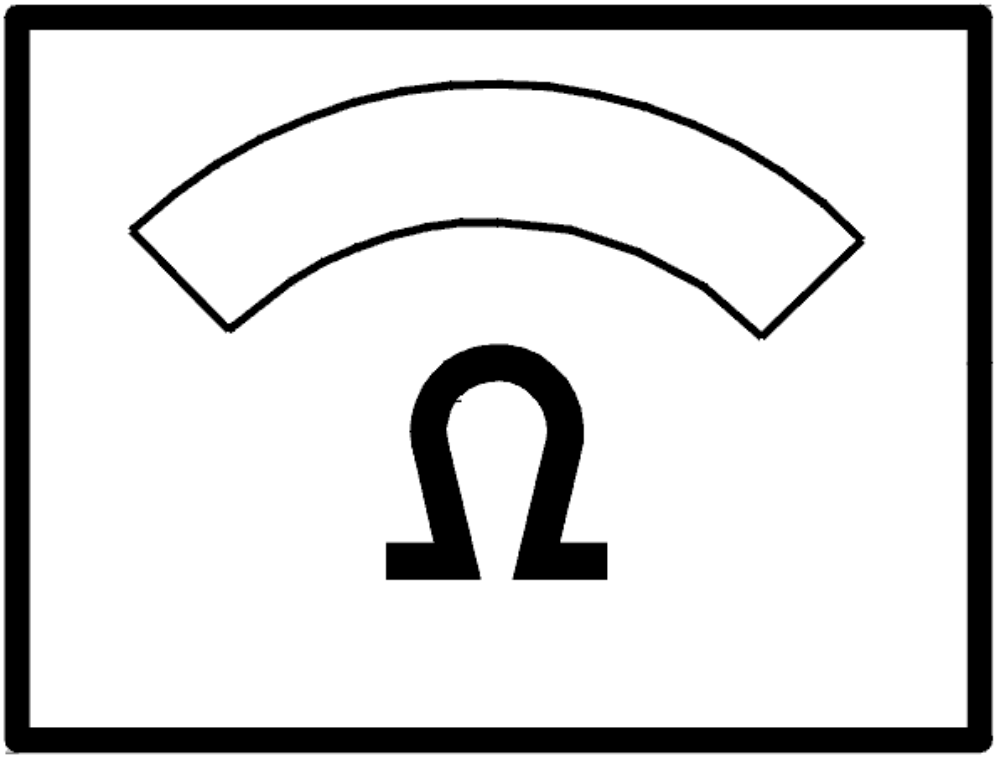

Fig. 325: Identifying Ohm Meter
Courtesy of VOLVO CARS CORPORATION

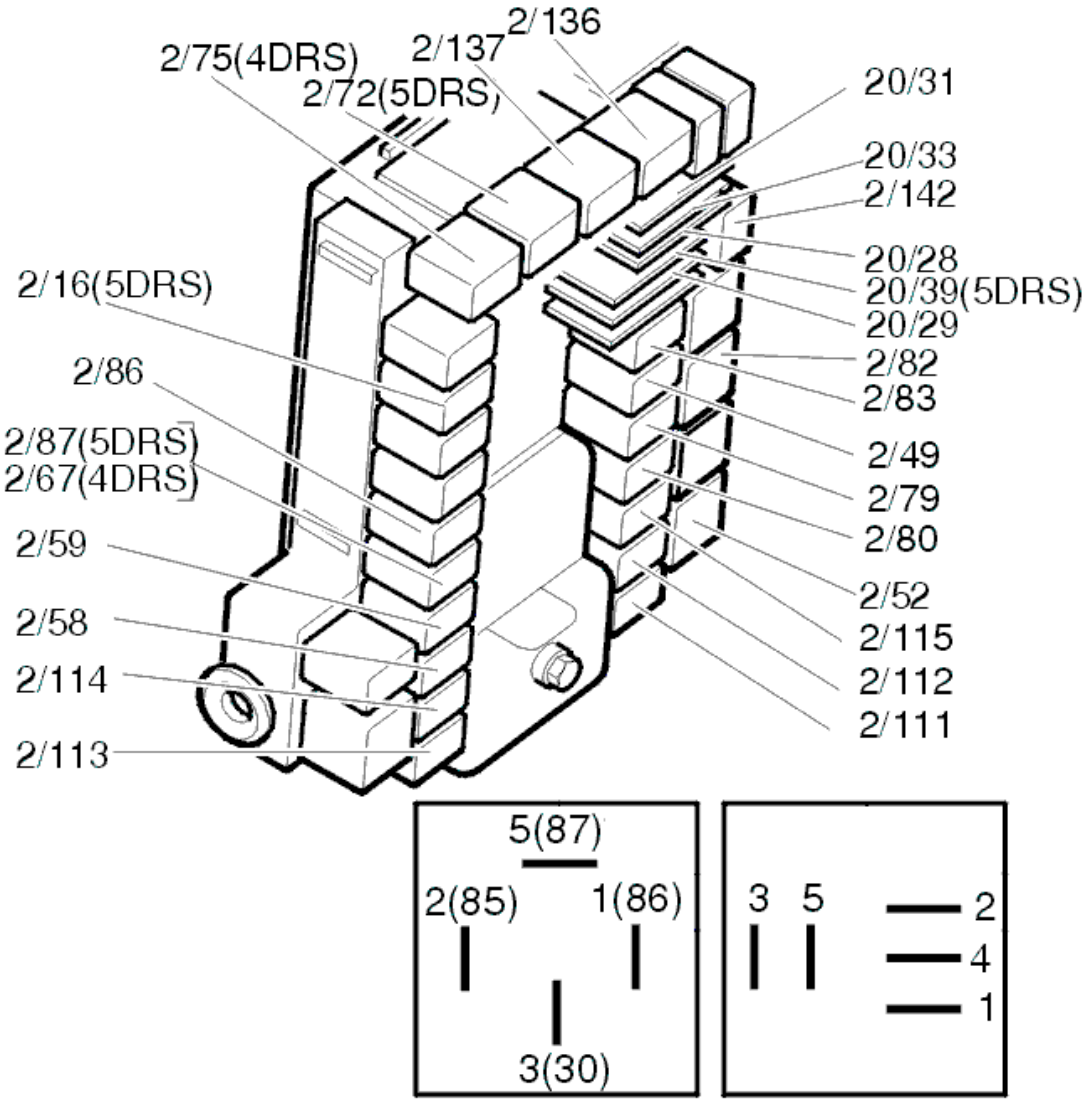

Fig. 326: Identifying Relays
Courtesy of VOLVO CARS CORPORATION

Is there a fault?

- **YES**

  OKAY: Troubleshooting has been completed.

- **NO**

  Refer to **CIRCUIT TEST**

CIRCUIT TEST

The fault is caused by an open circuit in one of the relay circuits or in the lock unit. To find out which circuit

contains the fault:

Disconnect the lock unit connector.

Check the contacts for contact resistance and oxidation as described in, see **CONTACT RESISTANCE AND OXIDATION** .

Check resistance between 4 and 6 on cable connector.

Additional information

- To access/replace the lock unit, see **LOCK MECHANISM REAR SIDE DOOR, REPLACING** .

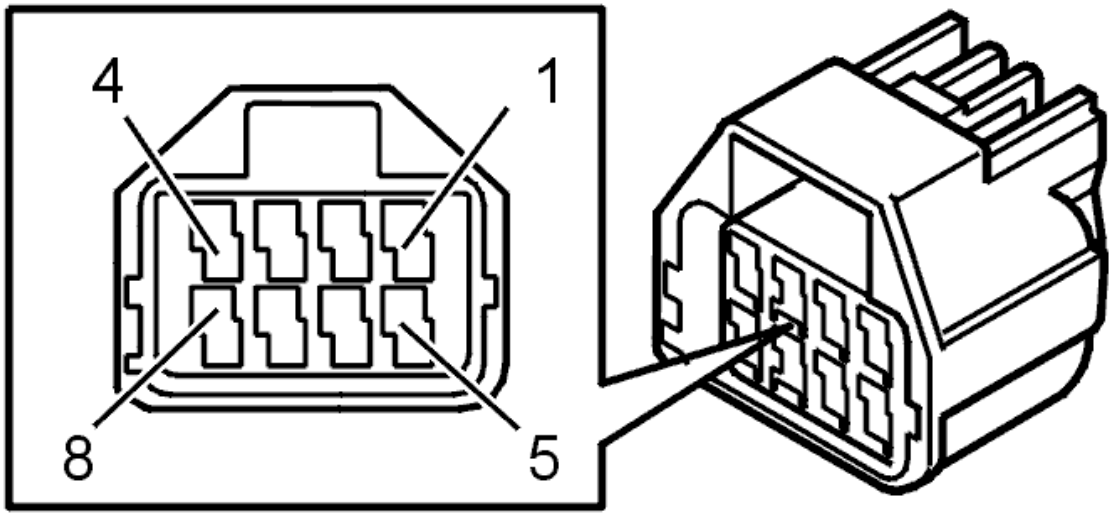

Fig. 327: Identifying Connector Terminals
Courtesy of VOLVO CARS CORPORATION

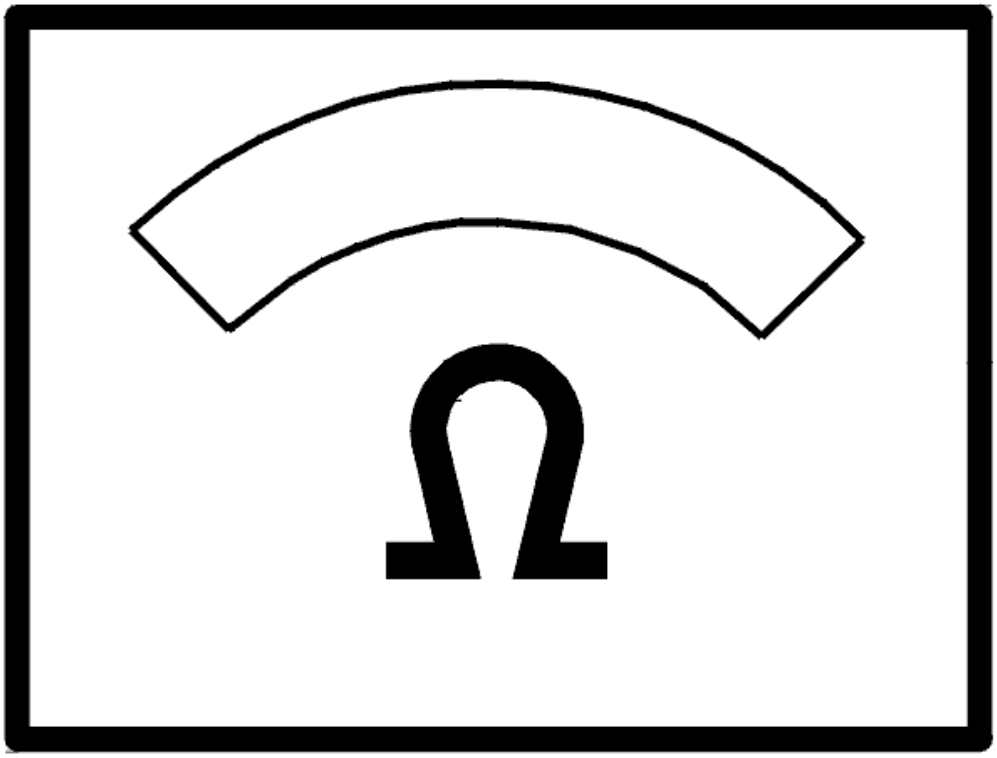

Fig. 328: Identifying Ohm Meter
Courtesy of VOLVO CARS CORPORATION

The ohmmeter should display 0 ohm.

- **OK**

  Refer to **CHECKING THE COMPONENTS**

- **NOT OK**

  Refer to **CIRCUIT TEST, CONTINUED**

CIRCUIT TEST, CONTINUED

Check the resistance between 4 and ground and between 6 and ground on the cable connector.

The ohmmeter should display 0 ohm.

1. The ohmmeter shows a fault between 4 and ground

   Refer to **CHECKING THE UNLOCKING RELAY CIRCUIT**

2. The ohmmeter shows a fault between 6 and ground.

   Refer to **CHECKING THE LOCKING RELAY CIRCUIT**

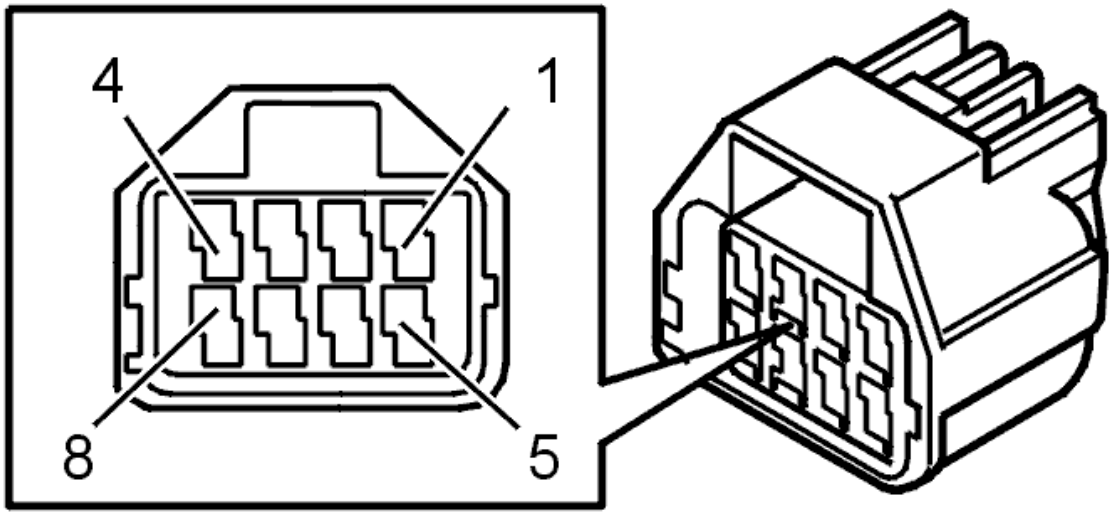

Fig. 329: Identifying Connector Terminals
Courtesy of VOLVO CARS CORPORATION

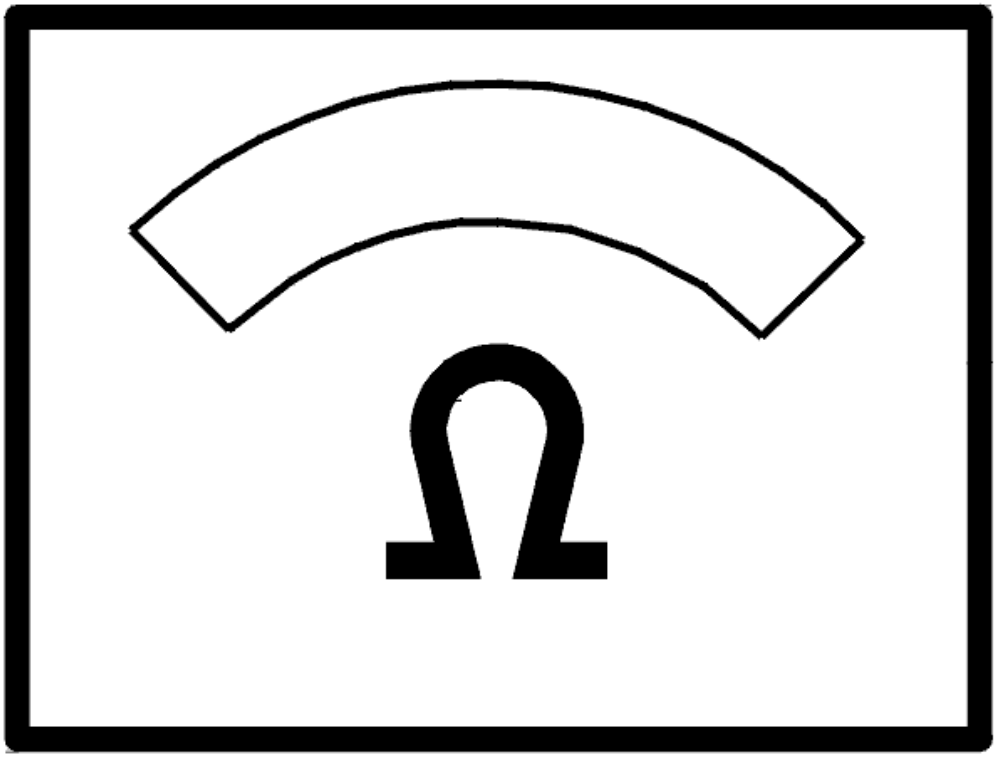

Fig. 330: Identifying Ohm Meter
Courtesy of VOLVO CARS CORPORATION

CHECKING THE LOCKING RELAY CIRCUIT

Remove the locking relay (2/111).

Check the wire between 4 in the cable connector and 3 in the relay socket for an open circuit as described in, see **OPEN-CIRCUIT, PERMANENT FAULTS** .

If a fault is detected, check in particular the intermediate connector in the cable harness (2) for contact resistance and oxidation as described in, see **CONTACT RESISTANCE AND OXIDATION** .

Do the necessary corrective action.

If no fault is found, check the resistance between 4 in the relay socket and ground.

The ohmmeter should display 0 ohm.

If the resistance deviates, replace the rear electronic module (REM).

Additional information

- To access/replace the rear electronic module (REM):
  - For -2004, see: **RELAY/FUSE BOX CARGO COMPARTMENT/REAR ELECTRONIC MODULE (REM), REPLACING**
  - For 2005-, see: **REAR ELECTRONIC MODULE (REM), REPLACING** .

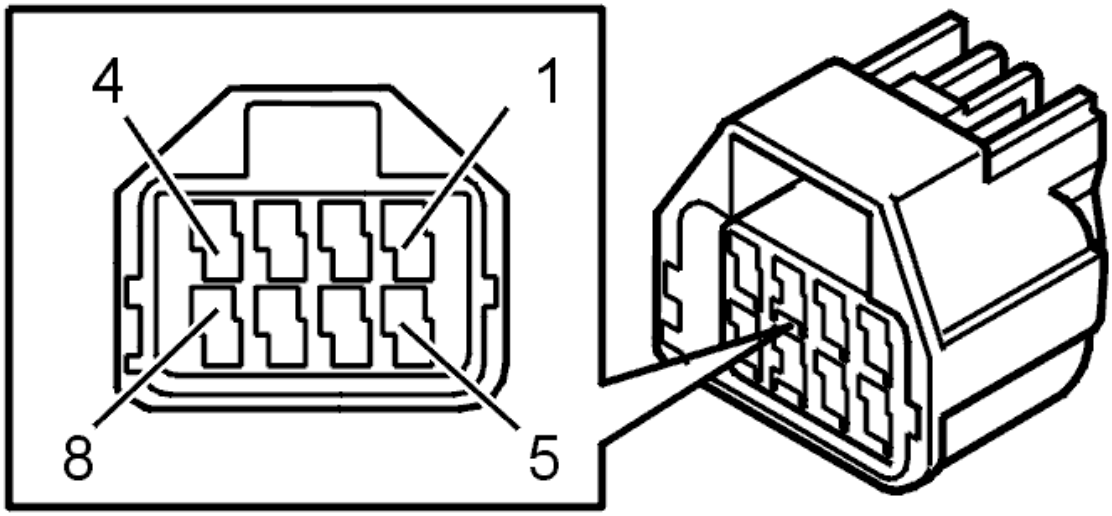

Fig. 331: Identifying Connector Terminals
Courtesy of VOLVO CARS CORPORATION

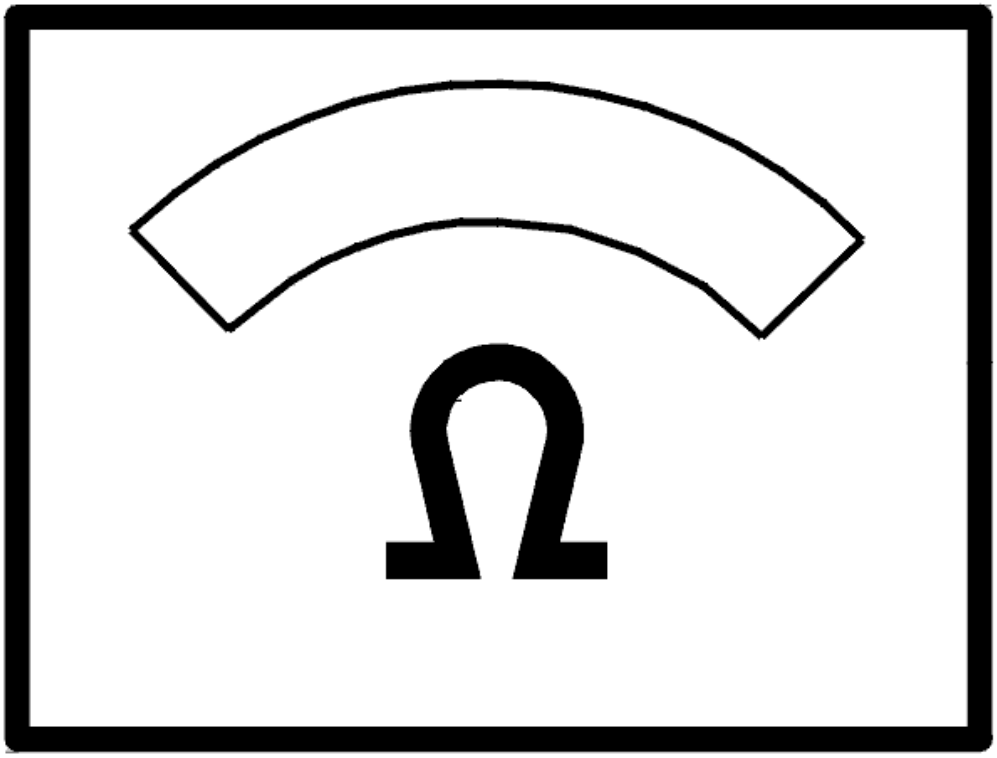

Fig. 332: Identifying Ohm Meter
Courtesy of VOLVO CARS CORPORATION

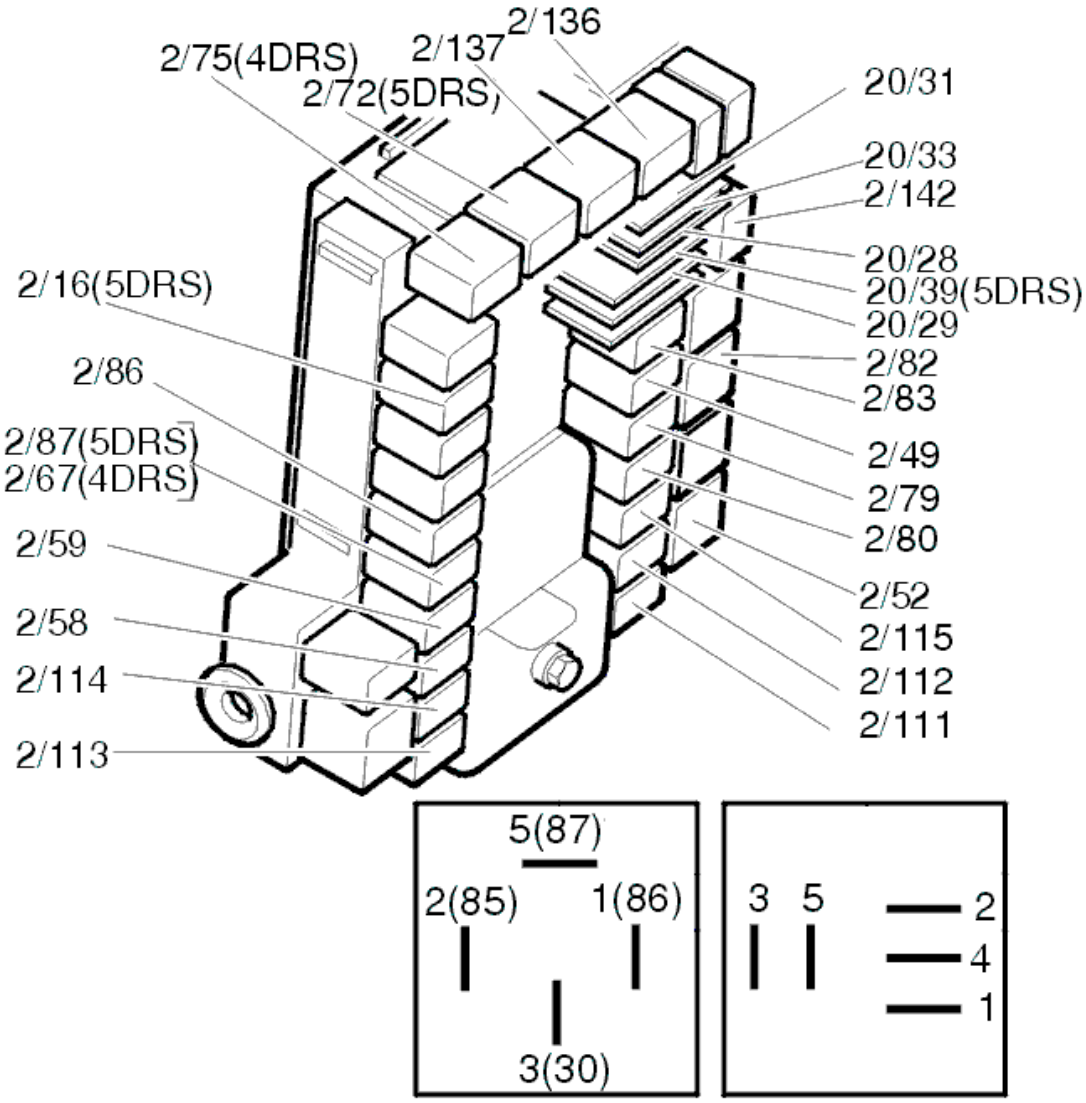

Fig. 333: Identifying Relays
Courtesy of VOLVO CARS CORPORATION

CHECKING THE UNLOCKING RELAY CIRCUIT

Remove the unlocking relay (2/112).

Check the wire between 6 in the cable connector and 3 in the relay socket for an open circuit as described in, see **OPEN-CIRCUIT, PERMANENT FAULTS** .

If a fault is detected, check in particular the intermediate connector in the cable harness (2) for contact resistance and oxidation as described in, see **CONTACT RESISTANCE AND OXIDATION** .

Do the necessary corrective action.

If no fault is found, check the resistance between 4 in the relay socket and ground.

The ohmmeter should display 0 ohm.

If the resistance deviates, replace the rear electronic module (REM).

Additional information

- To access/replace the rear electronic module (REM):
  - For -2004, see: **RELAY/FUSE BOX CARGO COMPARTMENT/REAR ELECTRONIC MODULE (REM), REPLACING**
  - For 2005-, see: **REAR ELECTRONIC MODULE (REM), REPLACING** .

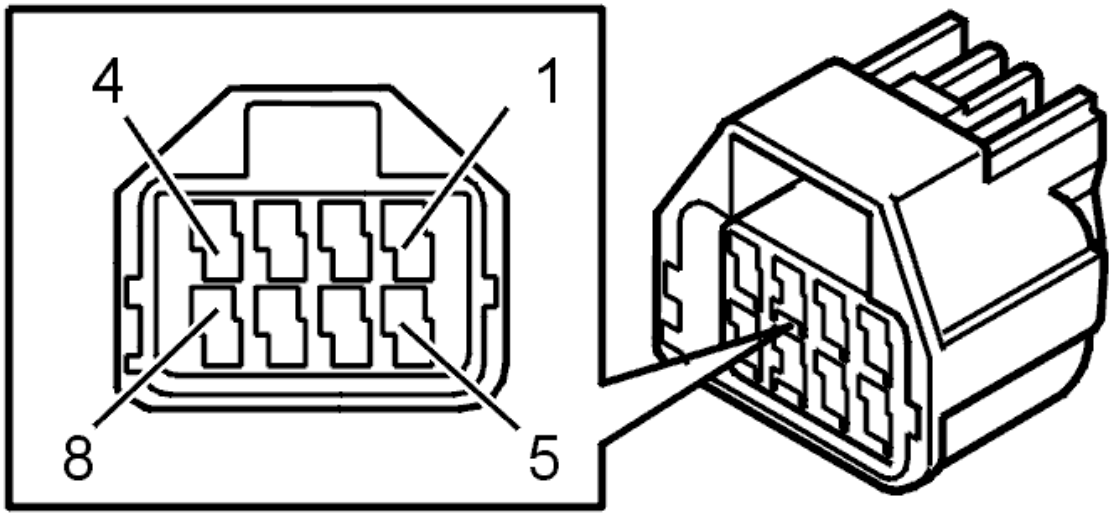

Fig. 334: Identifying Connector Terminals
Courtesy of VOLVO CARS CORPORATION

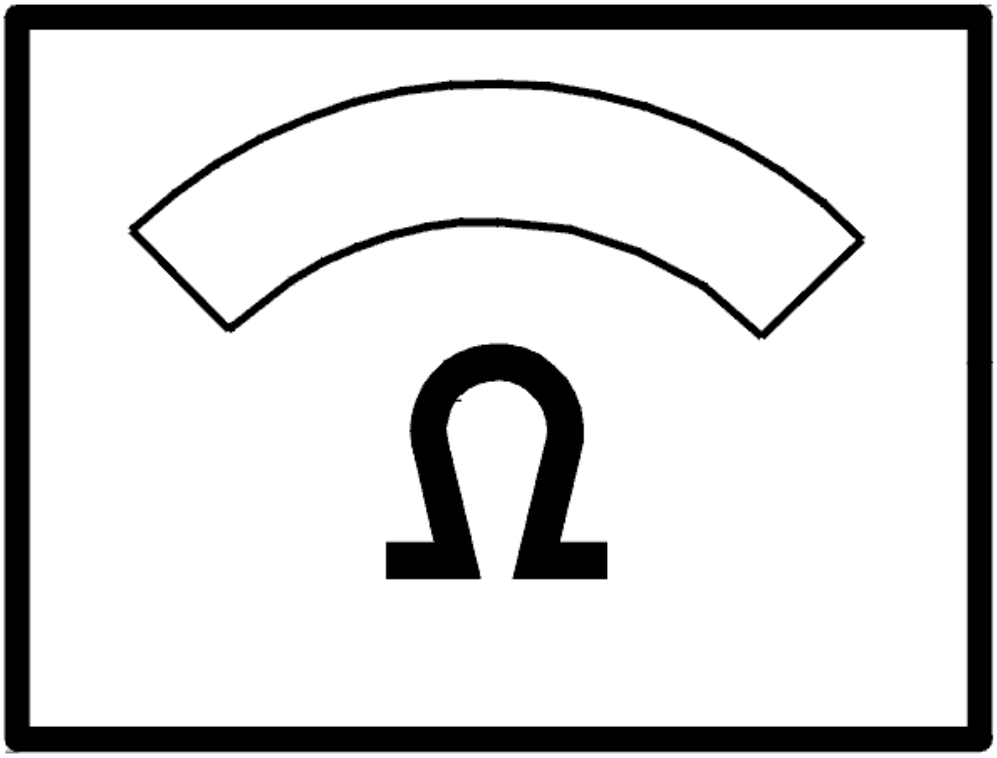

Fig. 335: Identifying Ohm Meter
Courtesy of VOLVO CARS CORPORATION

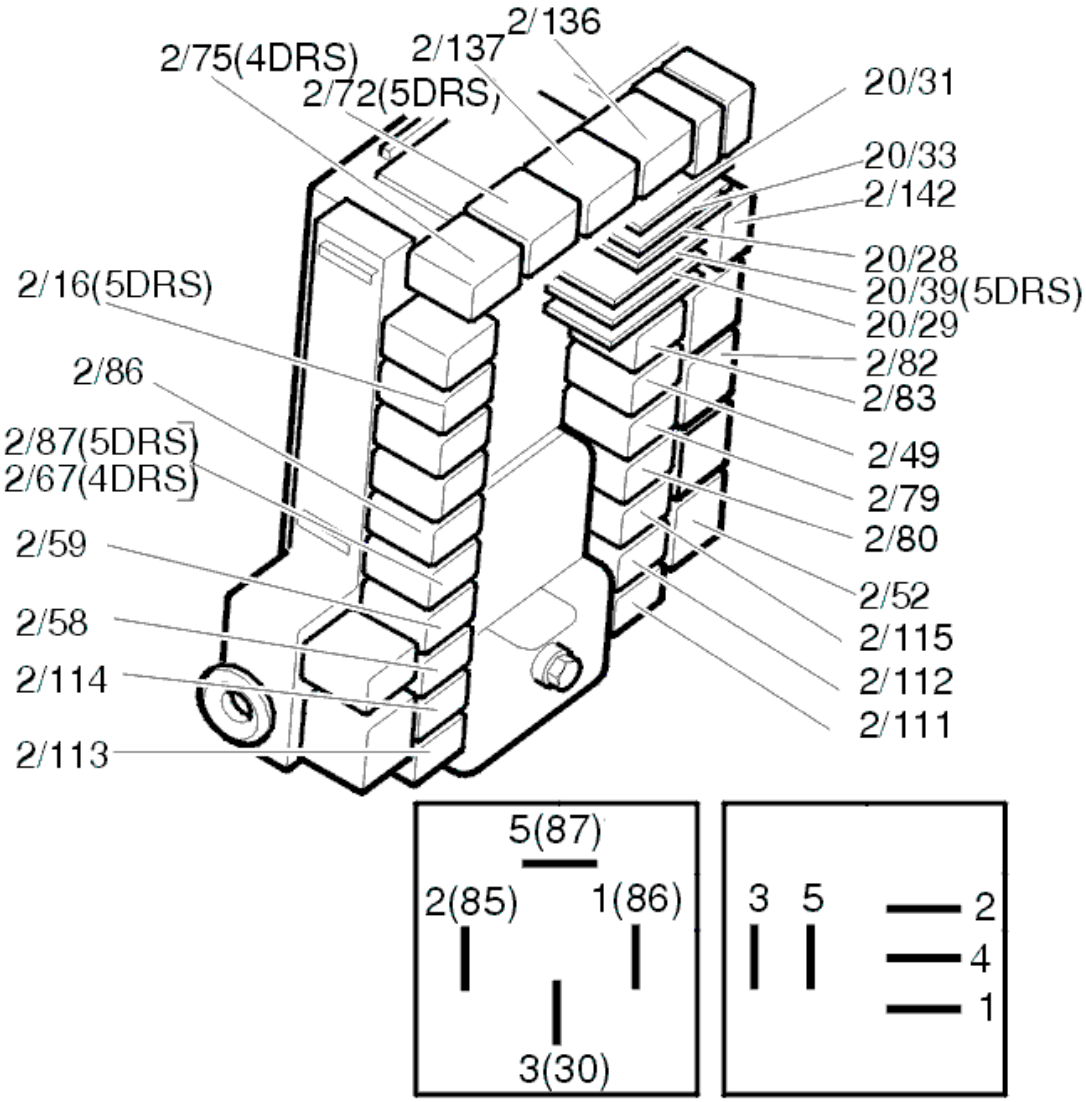

Fig. 336: Identifying Relays
Courtesy of VOLVO CARS CORPORATION

CHECKING THE COMPONENTS

Check the resistance between pin 4 and 6 in the lock unit chassis contact.

The ohmmeter should display 5 ohm.

If the resistance deviates, replace the lock unit.

Additional information

- To access the rear electronic module (REM):
  - For -2004, see: **RELAY/FUSE BOX CARGO COMPARTMENT/REAR ELECTRONIC MODULE (REM), REPLACING**

- For 2005-, see: **REAR ELECTRONIC MODULE (REM), REPLACING** .
- To access/replace the lock unit, see **LOCK MECHANISM REAR SIDE DOOR, REPLACING**
- For information on signals and additional values, see **SIGNAL SPECIFICATION** .

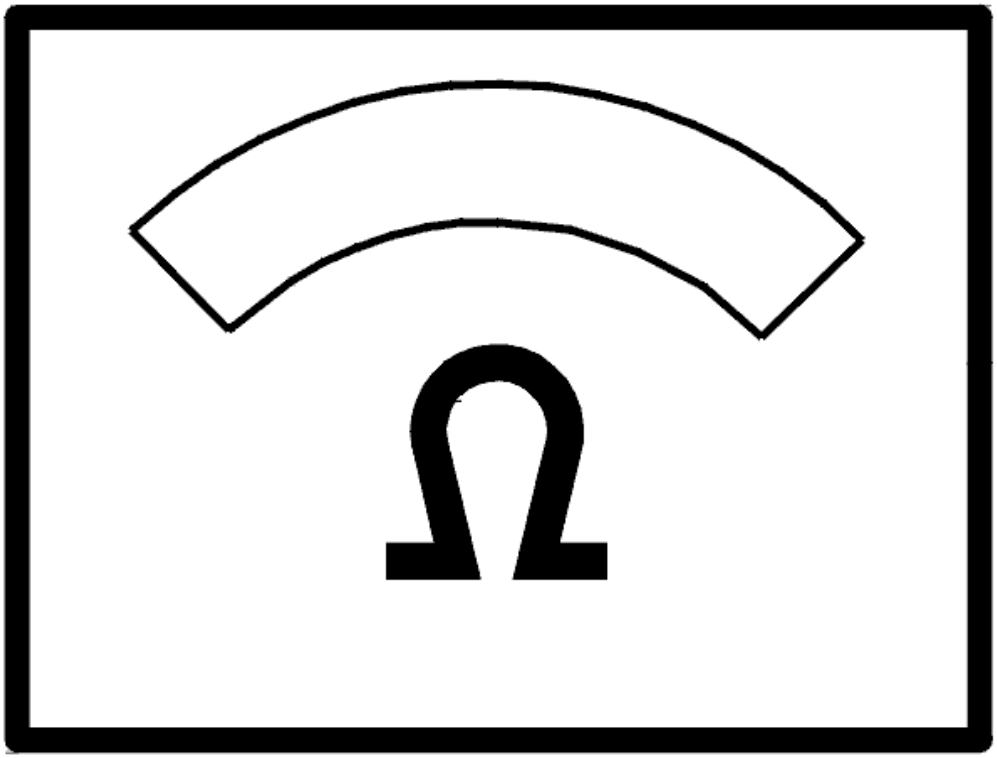

Fig. 337: Identifying Ohm Meter
Courtesy of VOLVO CARS CORPORATION

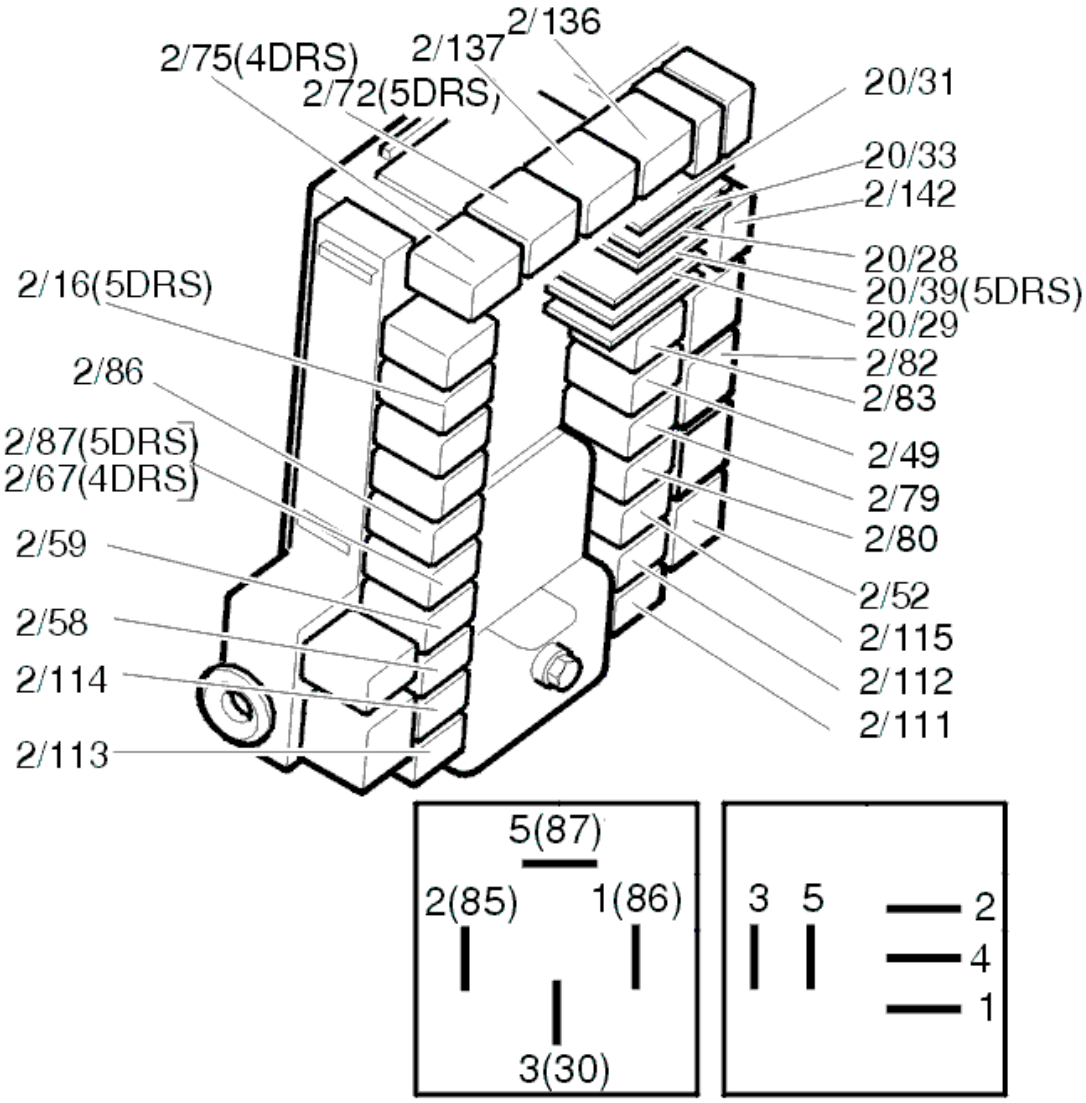

Fig. 338: Identifying Relays
Courtesy of VOLVO CARS CORPORATION

Is there a fault?

- **YES**

  OKAY: Troubleshooting has been completed.

- **NO**

  Refer to **CHECKING THE RELAY SUPPLY**

CHECKING THE RELAY SUPPLY

Remove the locking relay (2/111).

Measure the voltage between 5 in the relay socket and ground.

The voltmeter should display battery voltage.

HINT: If the value is OK but the fault still remains, connect the contacts to the lock module and link between 3 and 5 in the relay socket to force-feed the lock motor while continuing to test.

Additional information

- To access the rear electronic module (REM):
  - For -2004, see: **RELAY/FUSE BOX CARGO COMPARTMENT/REAR ELECTRONIC MODULE (REM), REPLACING**
  - For 2005-, see: **REAR ELECTRONIC MODULE (REM), REPLACING** .

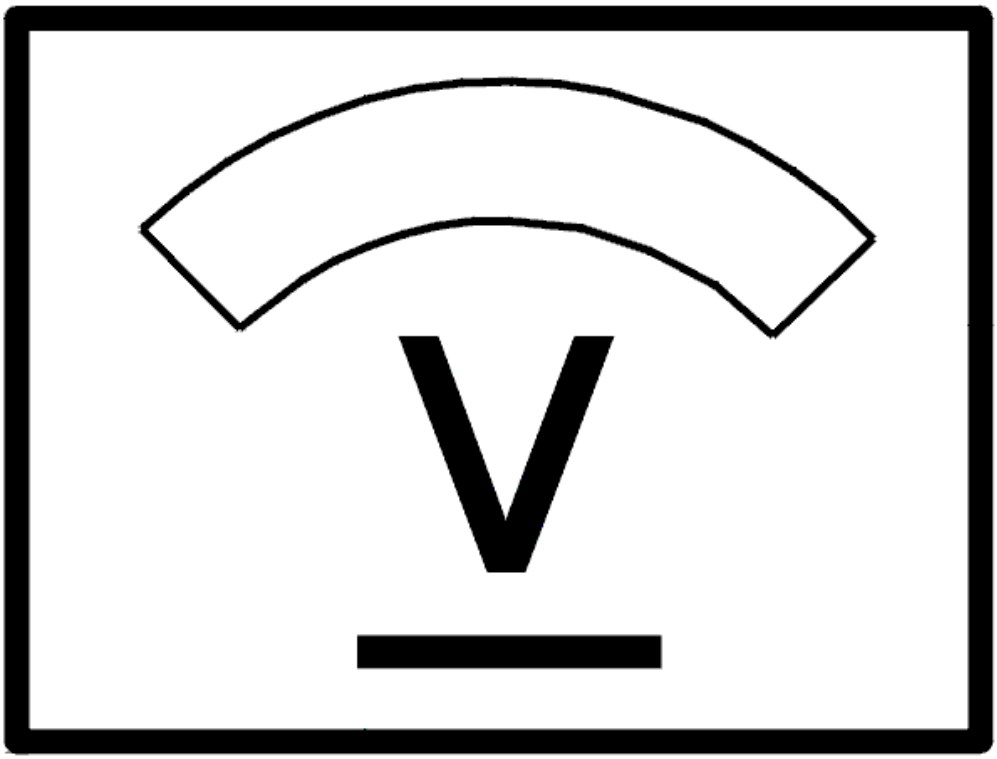

Fig. 339: Identifying Voltage Display

Courtesy of VOLVO CARS CORPORATION

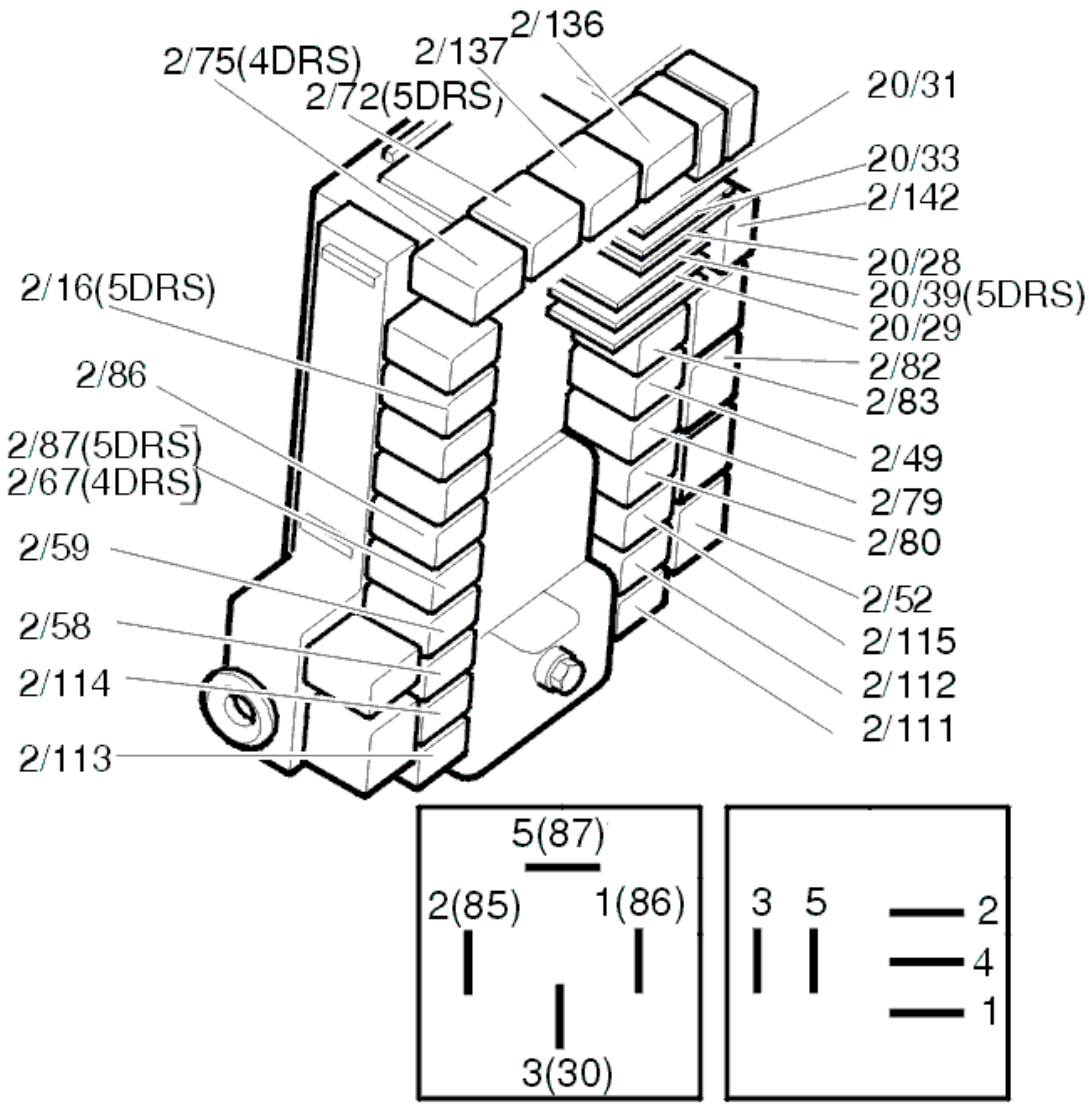

Fig. 340: Identifying Relays
Courtesy of VOLVO CARS CORPORATION

Does the voltmeter show the battery voltage?

- **YES**

  OKAY: Troubleshooting has been completed.

- **NO**

  Refer to **CHECKING THE FUSE**

CHECKING THE FUSE

Remove the fuse 11D/8 in cargo compartment fuse box.

Check that fuse 11D/8 is intact and check for contact resistance and oxidation as described in, see **CONTACT RESISTANCE AND OXIDATION** .

Additional information

- To access the rear electronic module (REM):
  - For -2004, see: **RELAY/FUSE BOX CARGO COMPARTMENT/REAR ELECTRONIC MODULE (REM), REPLACING**
  - For 2005-, see: **REAR ELECTRONIC MODULE (REM), REPLACING** .

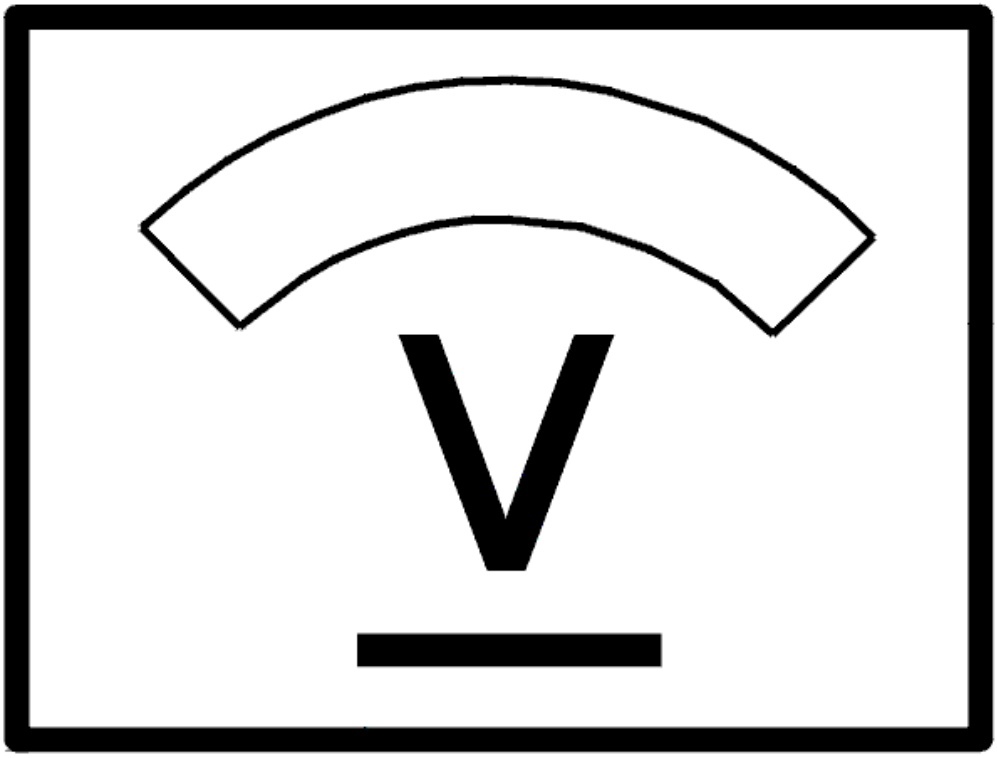

Fig. 341: Identifying Voltage Display
Courtesy of VOLVO CARS CORPORATION

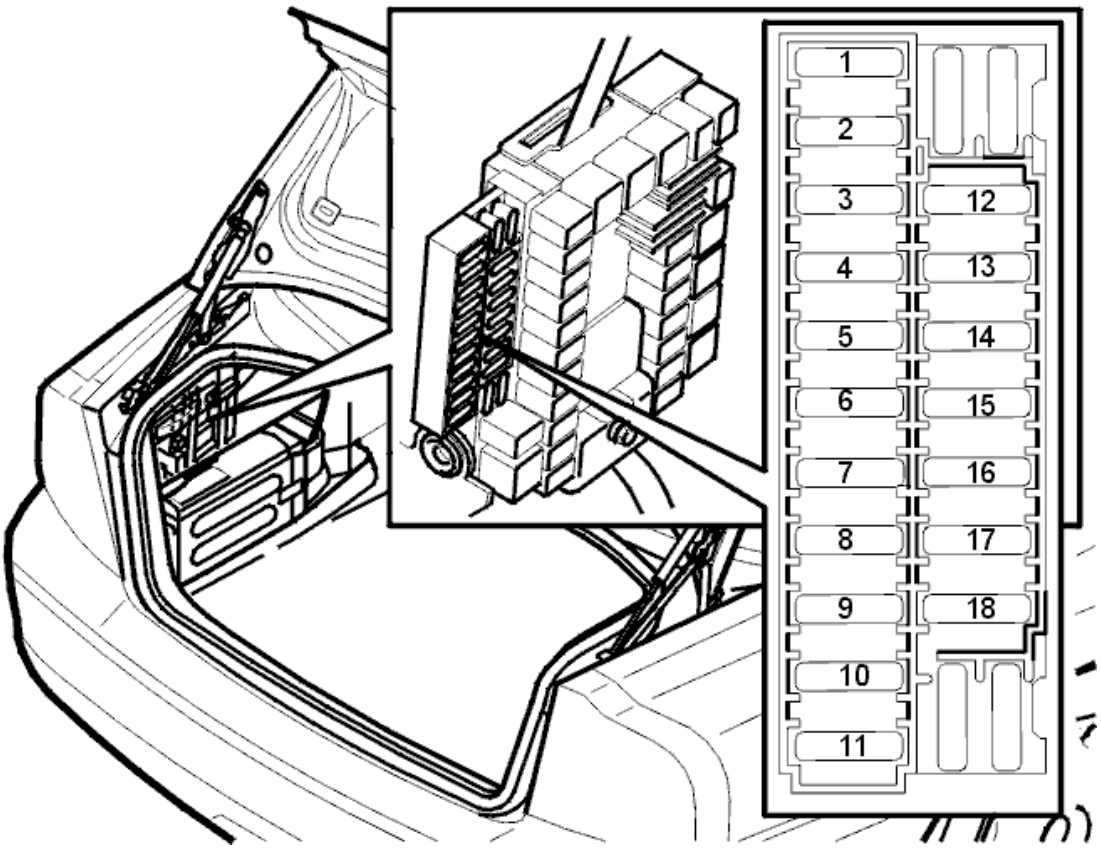

Fig. 342: Fuse Holder (Cargo Compartment)
Courtesy of VOLVO CARS CORPORATION

Is the fuse intact?

- **YES**

  Refer to **CHECKING FOR AN OPEN CIRCUIT**

- **NO**

  Refer to **CHECKING FOR A SHORT CIRCUIT**

CHECKING FOR AN OPEN CIRCUIT

Remove relay 2/111 in the rear electronic module (REM) and trouble-shoot the wire between the fuse holder secondary side (left) and 5 in the relay socket for an open circuit as described in, see **OPEN-CIRCUIT, PERMANENT FAULTS** .

Additional information

- To access the rear electronic module (REM):
  - For -2004, see: **RELAY/FUSE BOX CARGO COMPARTMENT/REAR ELECTRONIC MODULE (REM), REPLACING**

- For 2005-, see: **REAR ELECTRONIC MODULE (REM), REPLACING** .

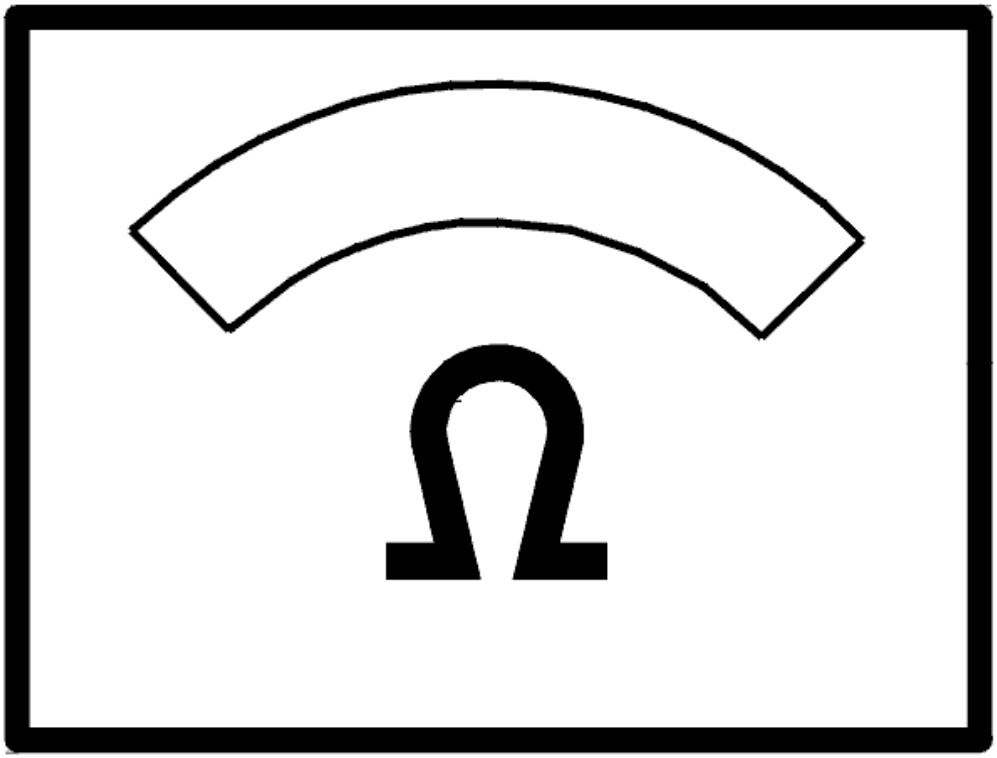

Fig. 343: Identifying Ohm Meter
Courtesy of VOLVO CARS CORPORATION

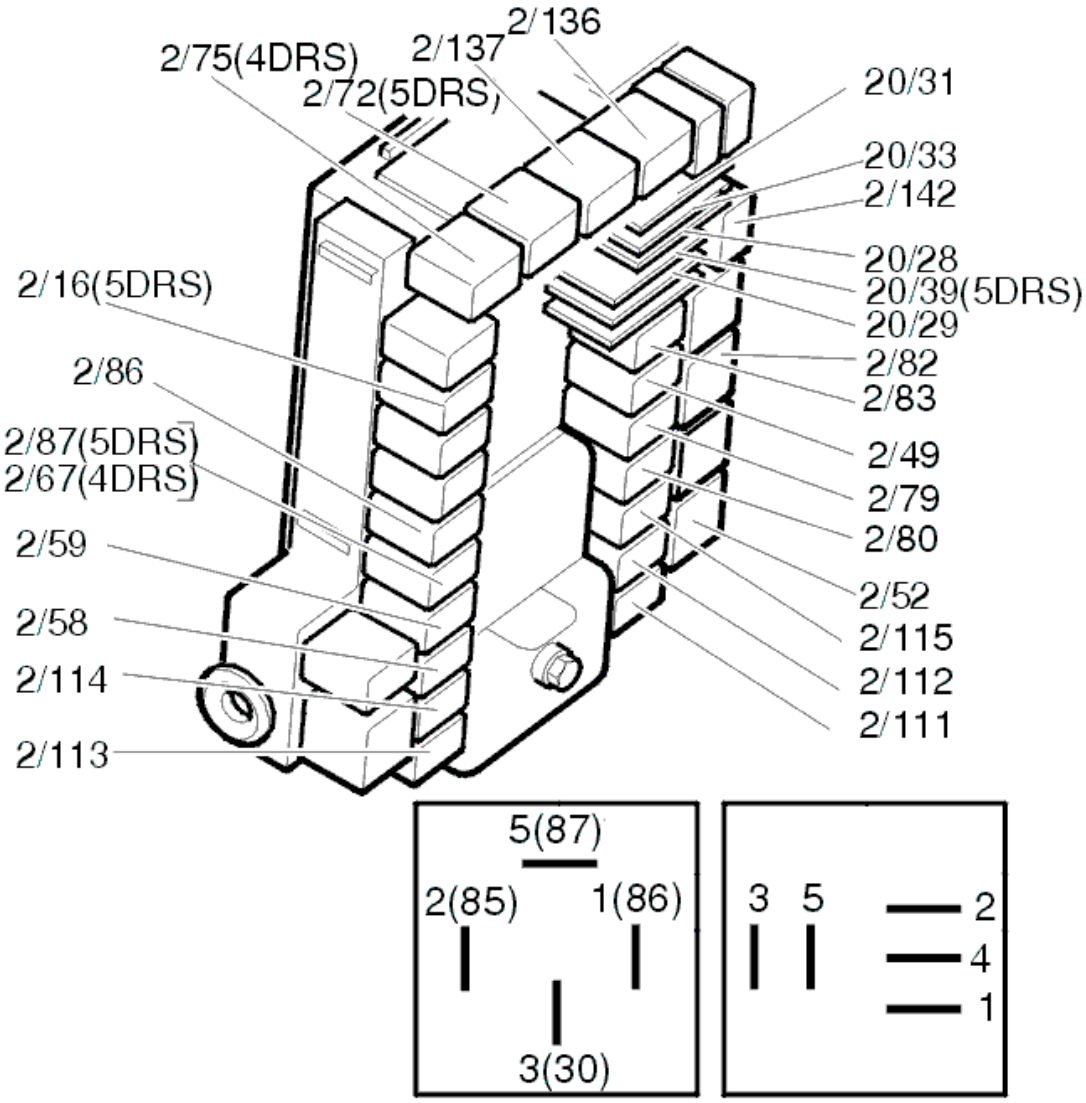

Fig. 344: Identifying Relays
Courtesy of VOLVO CARS CORPORATION

CHECKING FOR A SHORT CIRCUIT

Check the resistance between the fuse holder secondary side (left) and ground.

The ohmmeter should display infinite resistance.

If the value is correct, replace the fuse.

If the value deviates, trouble-shoot all the relay circuits involved for a short circuit to ground as described in, see **SHORT-CIRCUIT TO GROUND, PERMANENT FAULTS** .

HINT: Replace fuse.

HINT: If the fuse works straight away the fault is a short circuit on the relay supply wire.

HINT: If the fuse works when activating each relay the short circuit is on the component supply wire

HINT: The relay circuits involved belong to relays 2/111, 2/112, 2/113, 2/114, 2/115, 2/56, 2/59 and 2/67.

Additional information

- To access the rear electronic module (REM):
  - For -2004, see: **RELAY/FUSE BOX CARGO COMPARTMENT/REAR ELECTRONIC MODULE (REM), REPLACING**
  - For 2005-, see: **REAR ELECTRONIC MODULE (REM), REPLACING** .

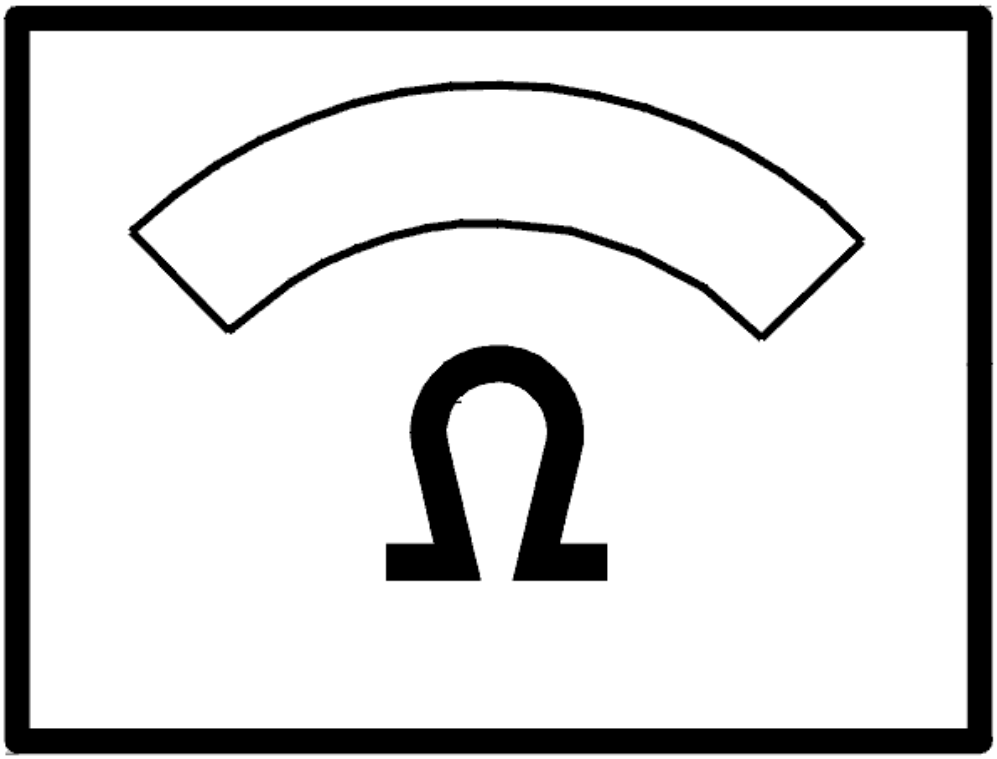

Fig. 345: Identifying Ohm Meter
Courtesy of VOLVO CARS CORPORATION

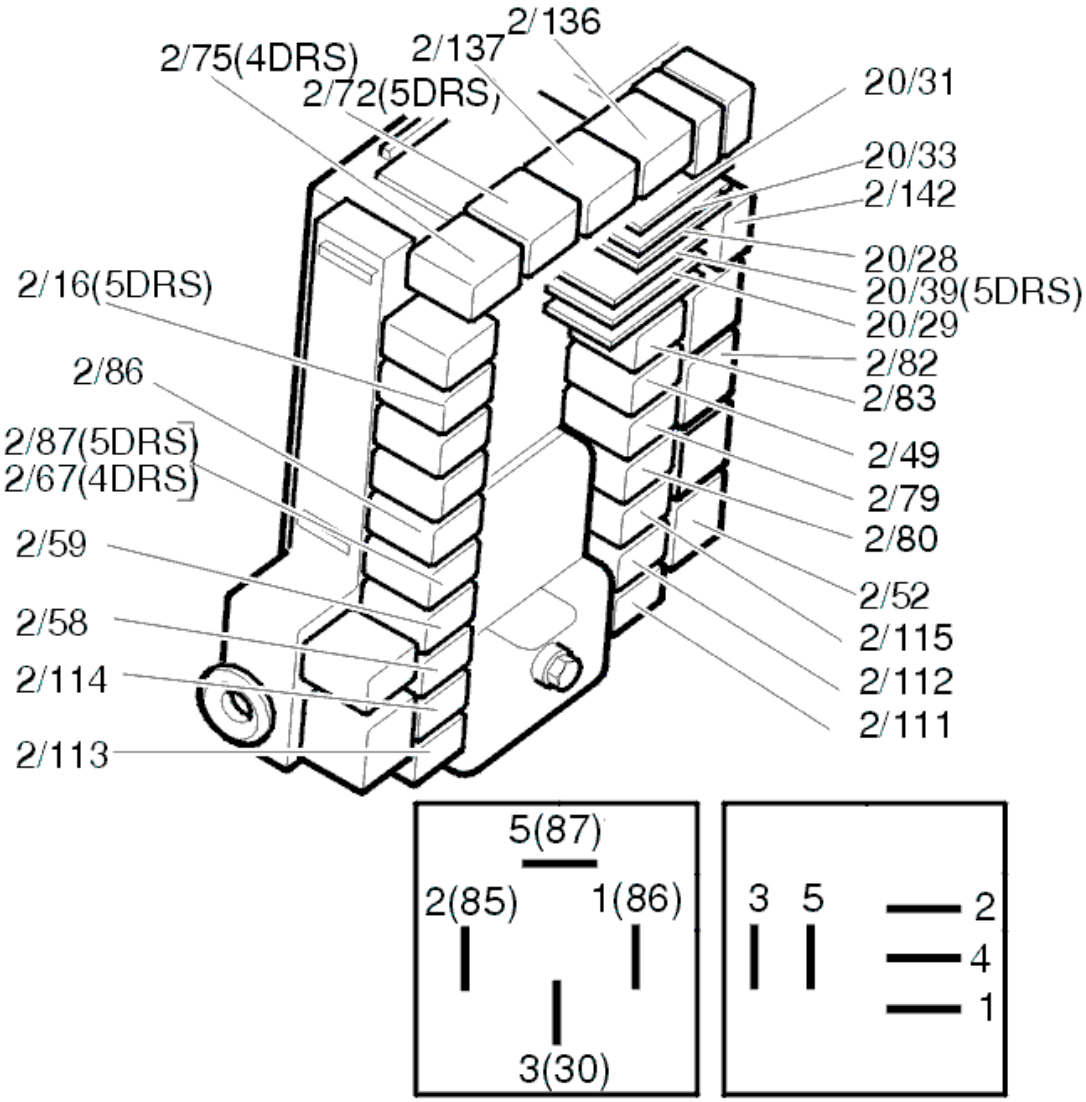

Fig. 346: Identifying Relays
Courtesy of VOLVO CARS CORPORATION

CHECKING THE REAR RIGHT DOOR

CHECK

Is the lock to the other rear door not working?

- **YES**

  Refer to **CHECKING THE FUSE**

- **NO**

  Refer to **REPLACING THE COMPONENT**

REPLACING THE COMPONENT

Replace the relays for locking (2/113) and unlocking (2/114) in the cargo compartment relay/fuse box. At the same time check relay socket contacts for contact resistance and oxidation as described in, see **CONTACT RESISTANCE AND OXIDATION** .

Additional information

- To access relay/fuse box in the cargo compartment:
  - For -2004, see: **RELAY/FUSE BOX CARGO COMPARTMENT/REAR ELECTRONIC MODULE (REM), REPLACING**
  - For 2005-, see: **REAR ELECTRONIC MODULE (REM), REPLACING** .

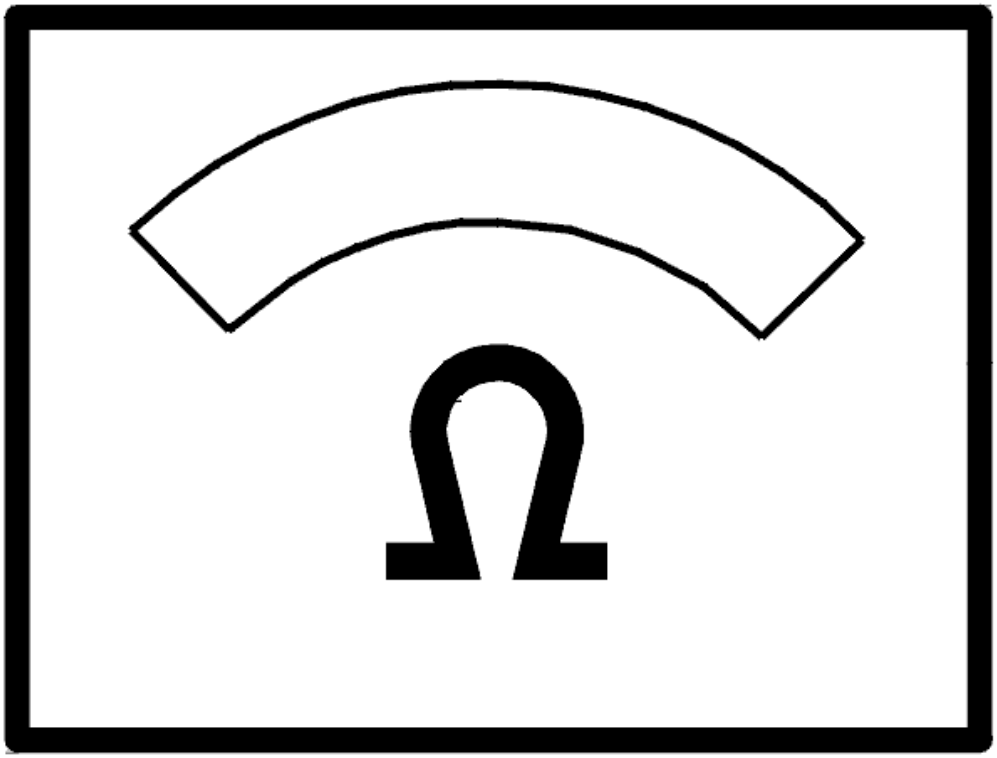

Fig. 347: Identifying Ohm Meter
Courtesy of VOLVO CARS CORPORATION

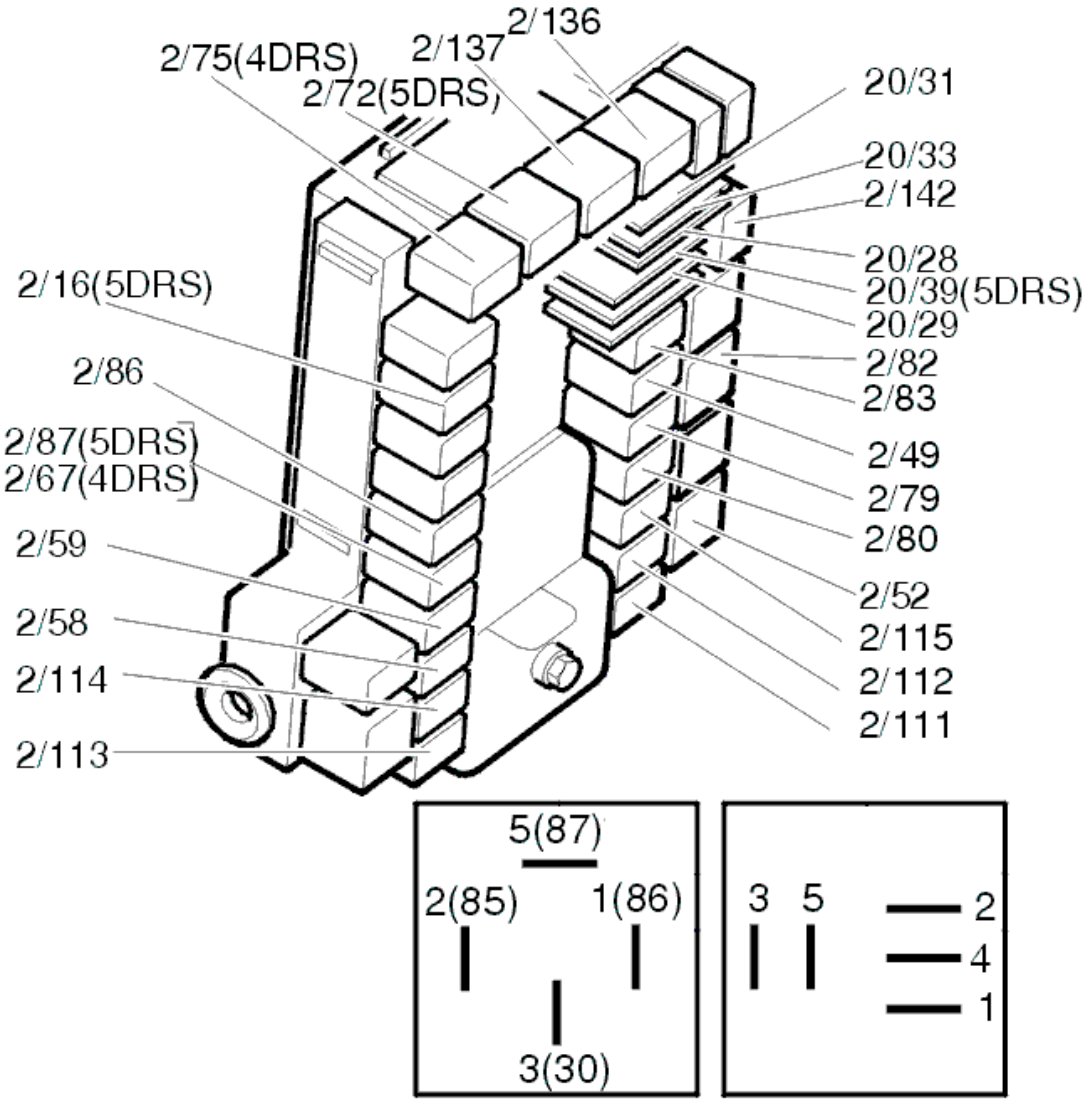

Fig. 348: Identifying Relays
Courtesy of VOLVO CARS CORPORATION

Is there a fault?

- **YES**

  OKAY: Troubleshooting has been completed.

- **NO**

  Refer to **CIRCUIT TEST**

CIRCUIT TEST

The fault is caused by an open circuit in one of the relay circuits or in the lock unit. To find out which circuit

contains the fault:

Disconnect the lock unit connector.

Check the contacts for contact resistance and oxidation as described in, see **CONTACT RESISTANCE AND OXIDATION** .

Check resistance between 4 and 6 on cable connector.

Additional information

- To access/replace the lock unit, see **LOCK MECHANISM REAR SIDE DOOR, REPLACING** .

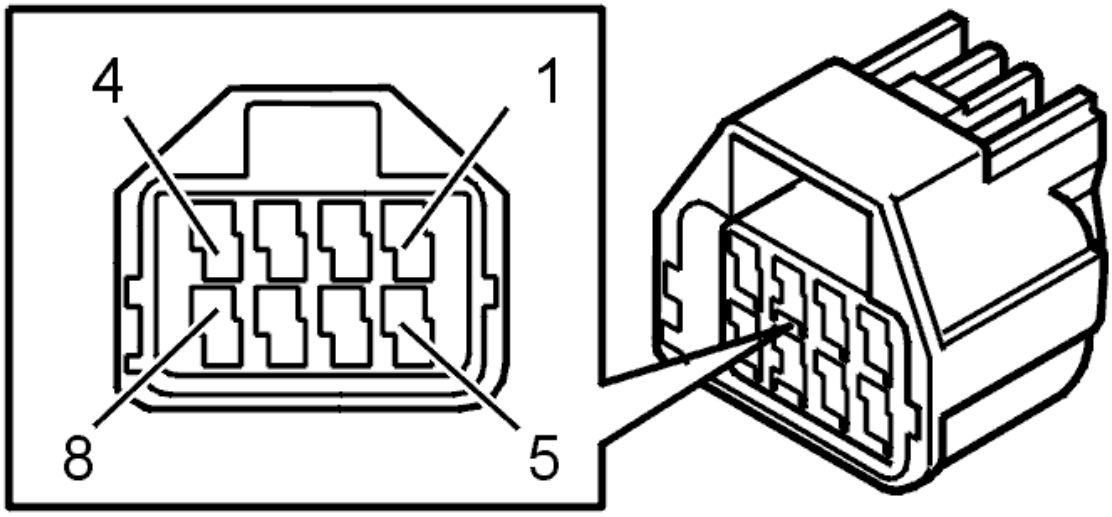

Fig. 349: Identifying Connector Terminals
Courtesy of VOLVO CARS CORPORATION

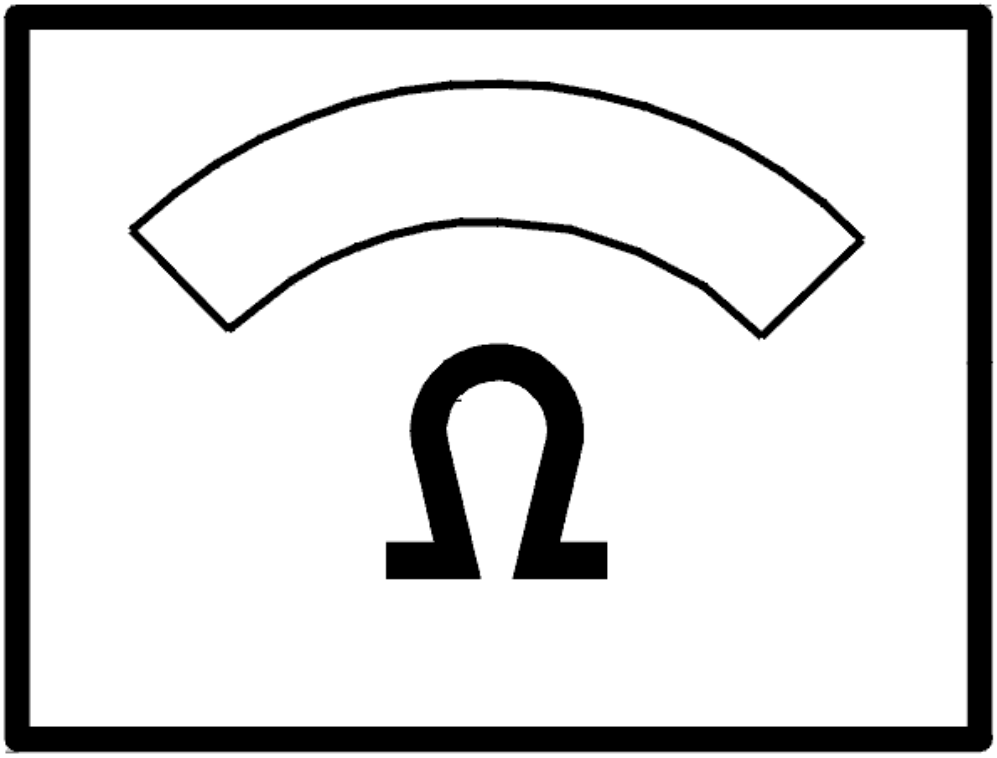

Fig. 350: Identifying Ohm Meter
Courtesy of VOLVO CARS CORPORATION

The ohmmeter should display 0 ohm.

- **OK**

  Refer to **CHECKING THE COMPONENTS**

- **NOT OK**

  Refer to **CIRCUIT TEST, CONTINUED**

CIRCUIT TEST, CONTINUED

Check the resistance between 4 and ground and between 6 and ground on the cable connector.

The ohmmeter should display 0 ohm.

1. The ohmmeter shows a fault between 4 and ground

   Refer to **CHECKING THE UNLOCKING RELAY CIRCUIT**

2. The ohmmeter shows a fault between 6 and ground.

   Refer to **CHECKING THE LOCKING RELAY CIRCUIT**

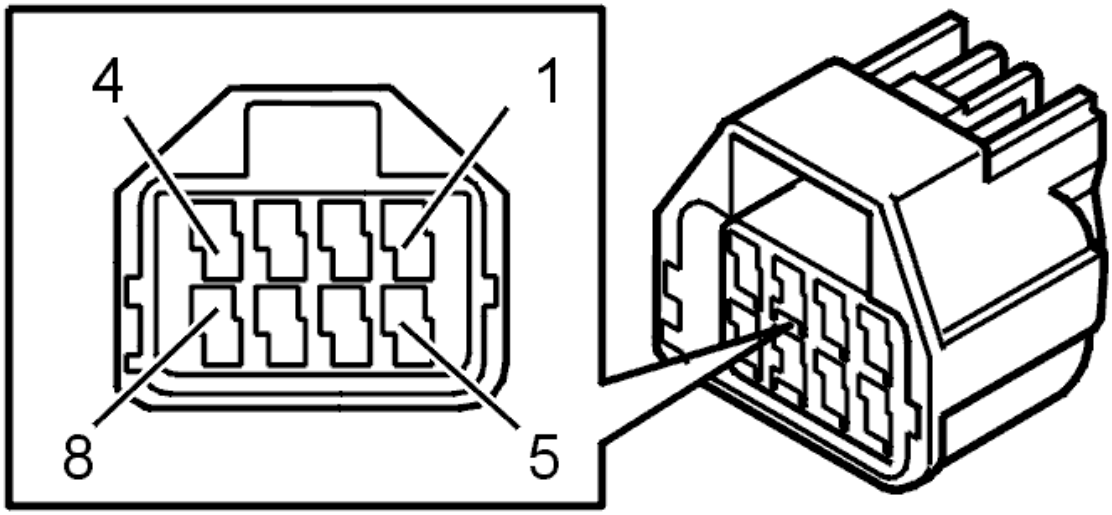

Fig. 351: Identifying Connector Terminals
Courtesy of VOLVO CARS CORPORATION

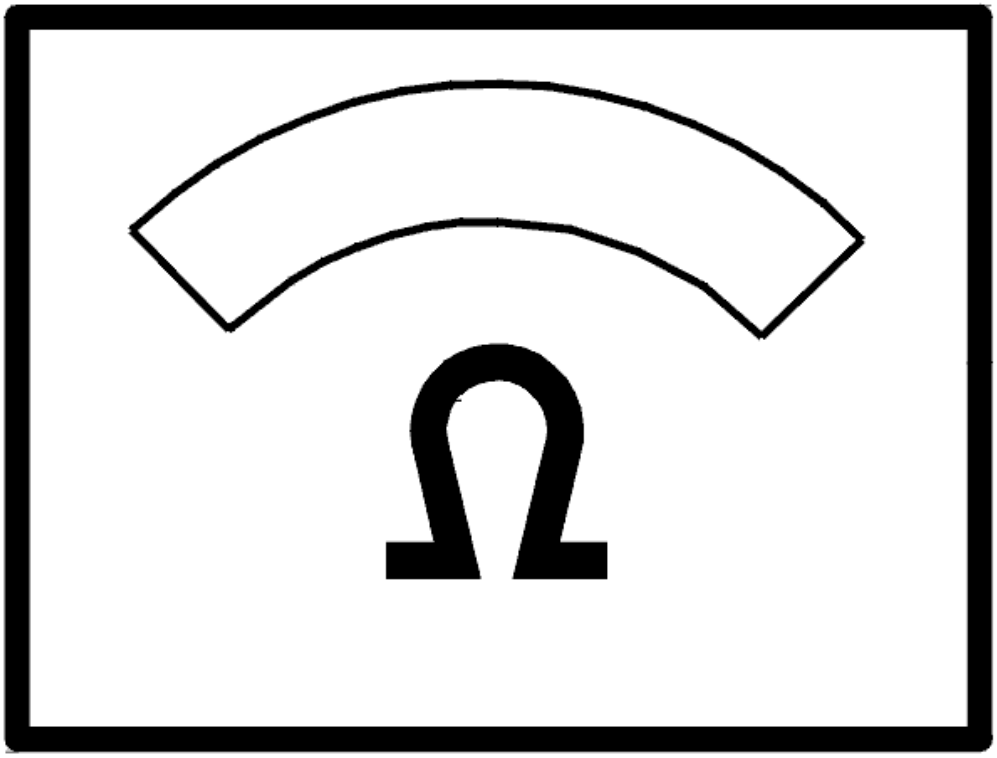

Fig. 352: Identifying Ohm Meter
Courtesy of VOLVO CARS CORPORATION

CHECKING THE LOCKING RELAY CIRCUIT

Remove the locking relay (2/113).

Check the wire between 4 in the cable connector and 3 in the relay socket for an open circuit as described in, see **OPEN-CIRCUIT, PERMANENT FAULTS** .

If a fault is detected, check in particular the intermediate connector in the cable harness (2) for contact resistance and oxidation as described in, see **CONTACT RESISTANCE AND OXIDATION** .

Do the necessary corrective action.

If no fault is found, check the resistance between 4 in the relay socket and ground.

The ohmmeter should display 0 ohm.

If the resistance deviates, replace the rear electronic module (REM).

Additional information

- To access/replace the rear electronic module (REM):
  - For -2004, see: **RELAY/FUSE BOX CARGO COMPARTMENT/REAR ELECTRONIC MODULE (REM), REPLACING**
  - For 2005-, see: **REAR ELECTRONIC MODULE (REM), REPLACING** .

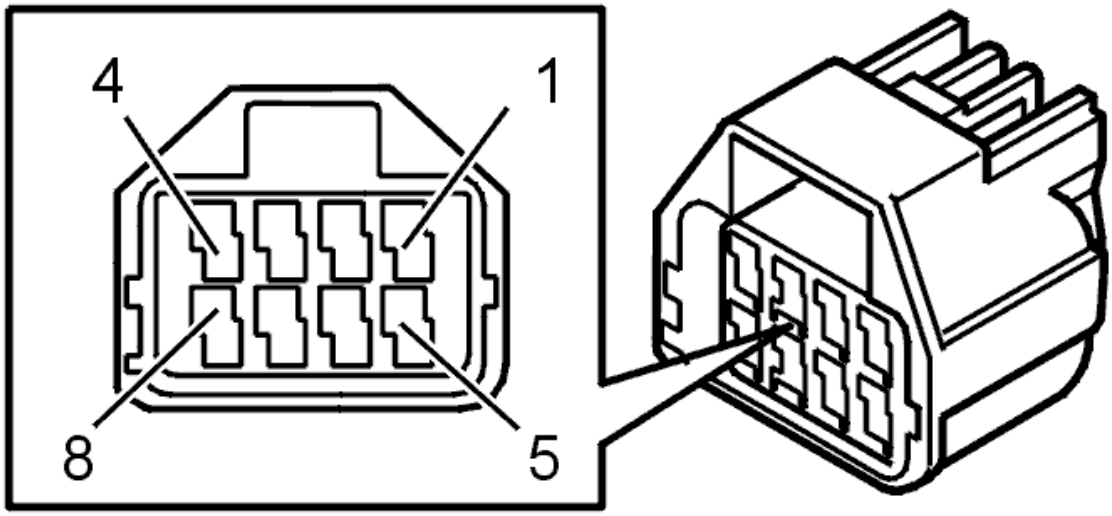

Fig. 353: Identifying Connector Terminals
Courtesy of VOLVO CARS CORPORATION

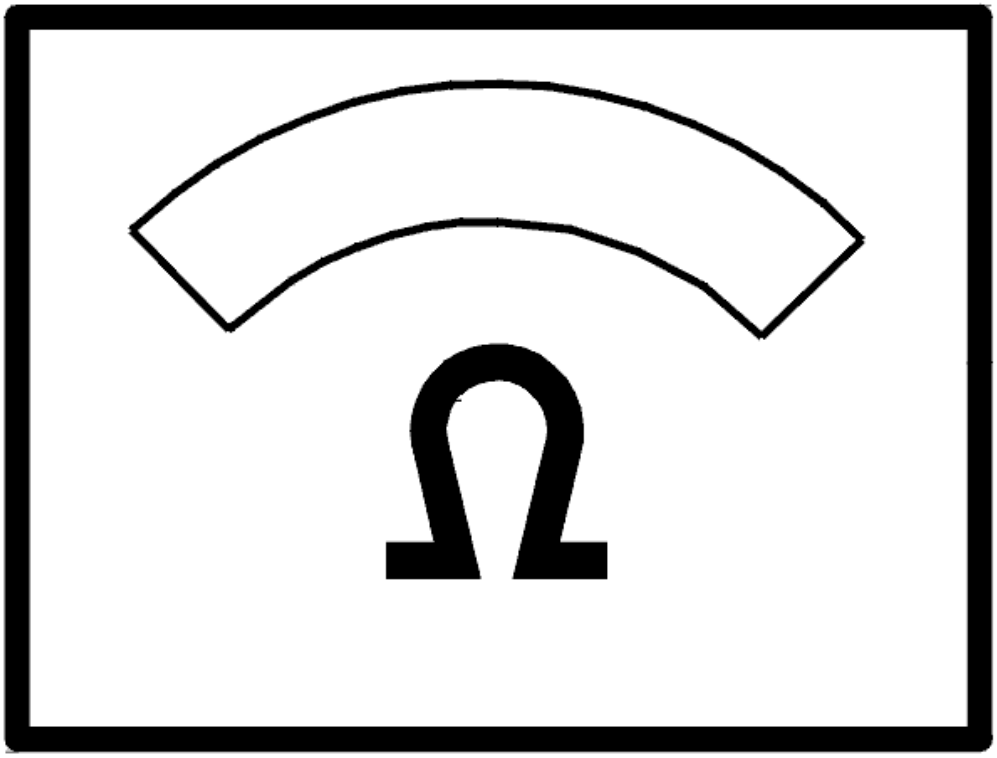

Fig. 354: Identifying Ohm Meter
Courtesy of VOLVO CARS CORPORATION

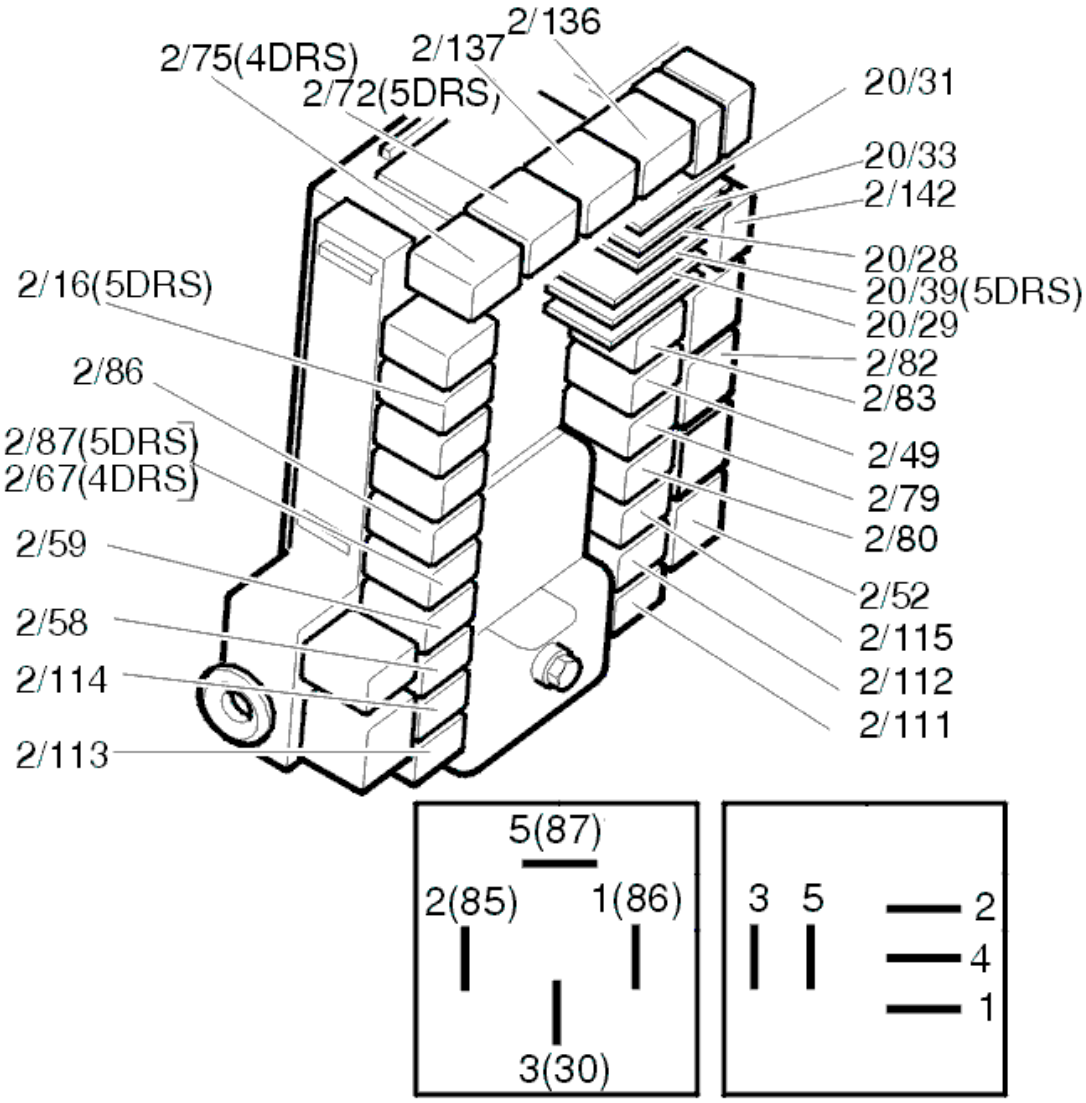

Fig. 355: Identifying Relays
Courtesy of VOLVO CARS CORPORATION

CHECKING THE UNLOCKING RELAY CIRCUIT

Remove the unlocking relay (2/114).

Check the wire between 6 in the cable connector and 3 in the relay socket for an open circuit as described in, see **OPEN-CIRCUIT, PERMANENT FAULTS** .

If a fault is detected, check in particular the intermediate connector in the cable harness (2) for contact resistance and oxidation as described in, see **CONTACT RESISTANCE AND OXIDATION** .

Do the necessary corrective action.

If no fault is found, check the resistance between 4 in the relay socket and ground.

The ohmmeter should display 0 ohm.

If the resistance deviates, replace the rear electronic module (REM).

Additional information

- To access/replace the rear electronic module (REM):
  - For -2004, see: **RELAY/FUSE BOX CARGO COMPARTMENT/REAR ELECTRONIC MODULE (REM), REPLACING**
  - For 2005-, see: **REAR ELECTRONIC MODULE (REM), REPLACING** .

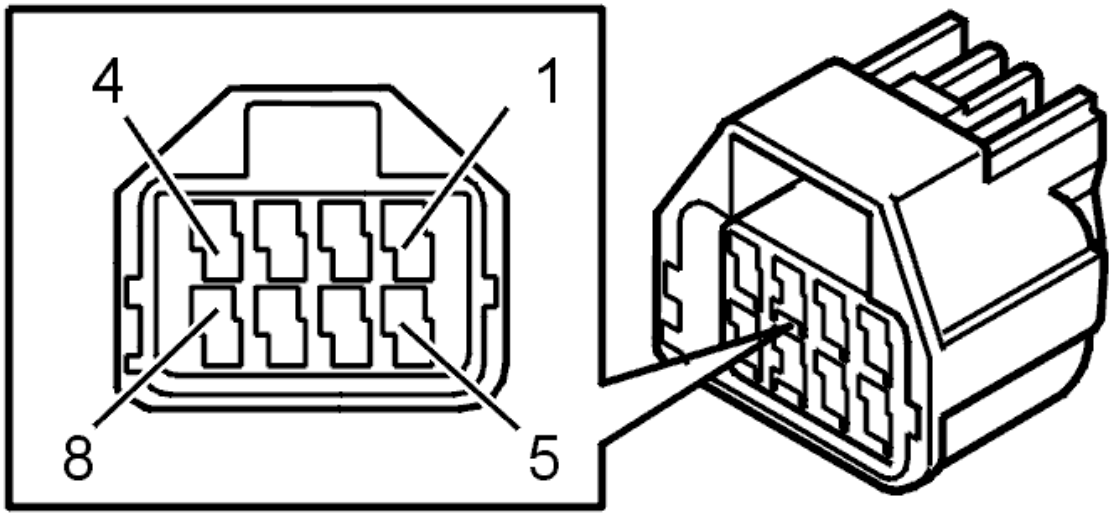

Fig. 356: Identifying Connector Terminals
Courtesy of VOLVO CARS CORPORATION

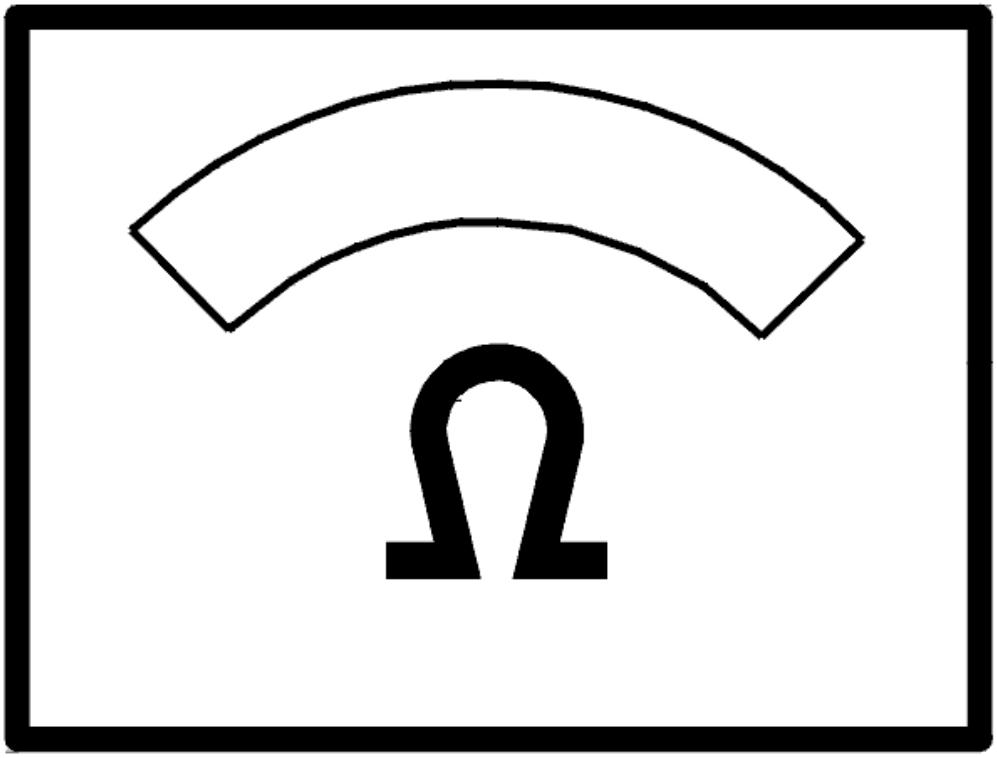

Fig. 357: Identifying Ohm Meter
Courtesy of VOLVO CARS CORPORATION

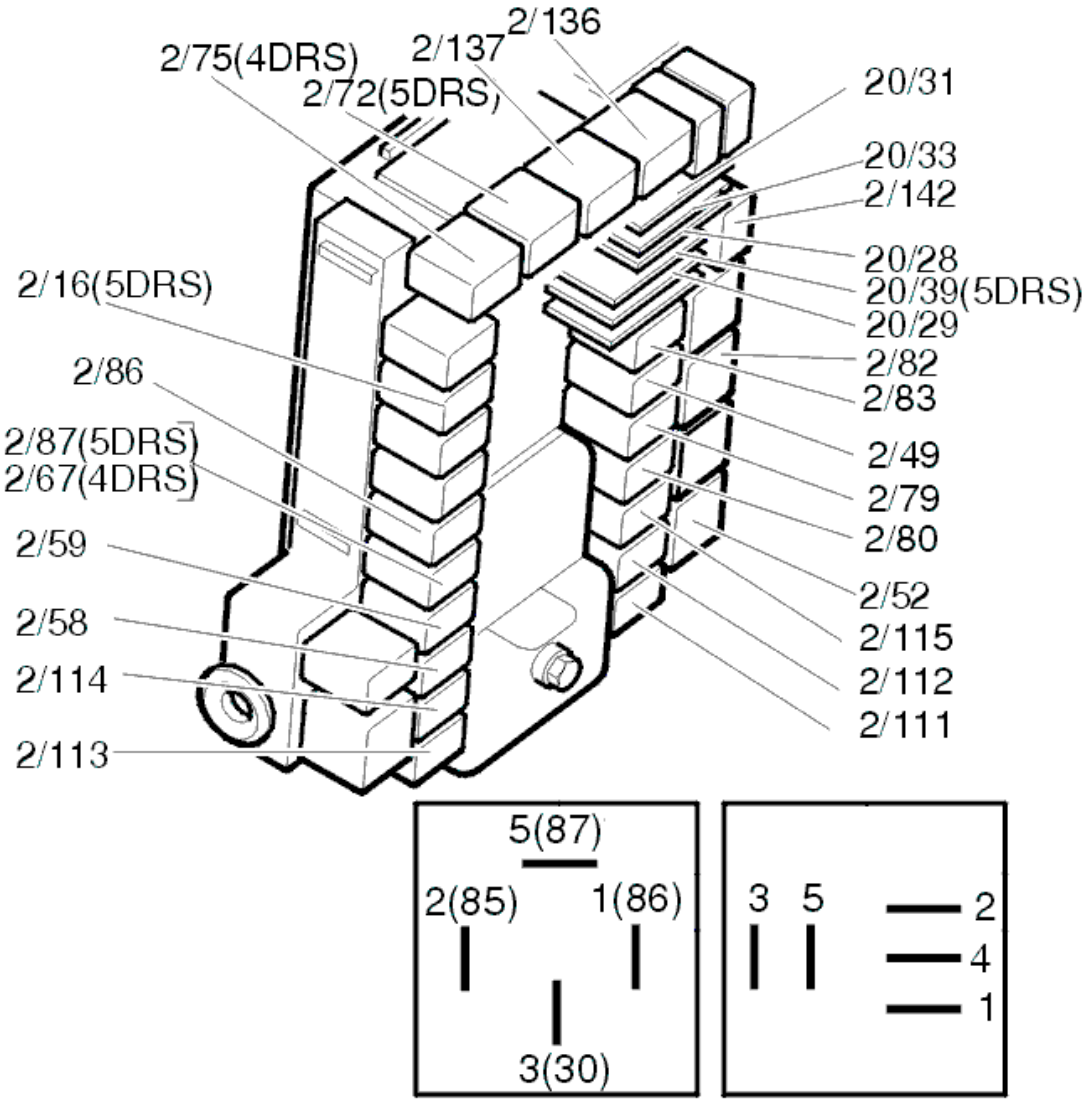

Fig. 358: Identifying Relays
Courtesy of VOLVO CARS CORPORATION

CHECKING THE COMPONENTS

Check the resistance between pin 4 and 6 in the lock unit chassis contact.

The ohmmeter should display 5 ohm.

If the resistance deviates, replace the lock unit.

Additional information

- To access the rear electronic module (REM):
  - For -2004, see: **RELAY/FUSE BOX CARGO COMPARTMENT/REAR ELECTRONIC MODULE (REM), REPLACING**

- For 2005-, see: **REAR ELECTRONIC MODULE (REM), REPLACING** .
- To access/replace the lock unit, see **LOCK MECHANISM REAR SIDE DOOR, REPLACING**
- For information on signals and additional values, see **SIGNAL SPECIFICATION** .

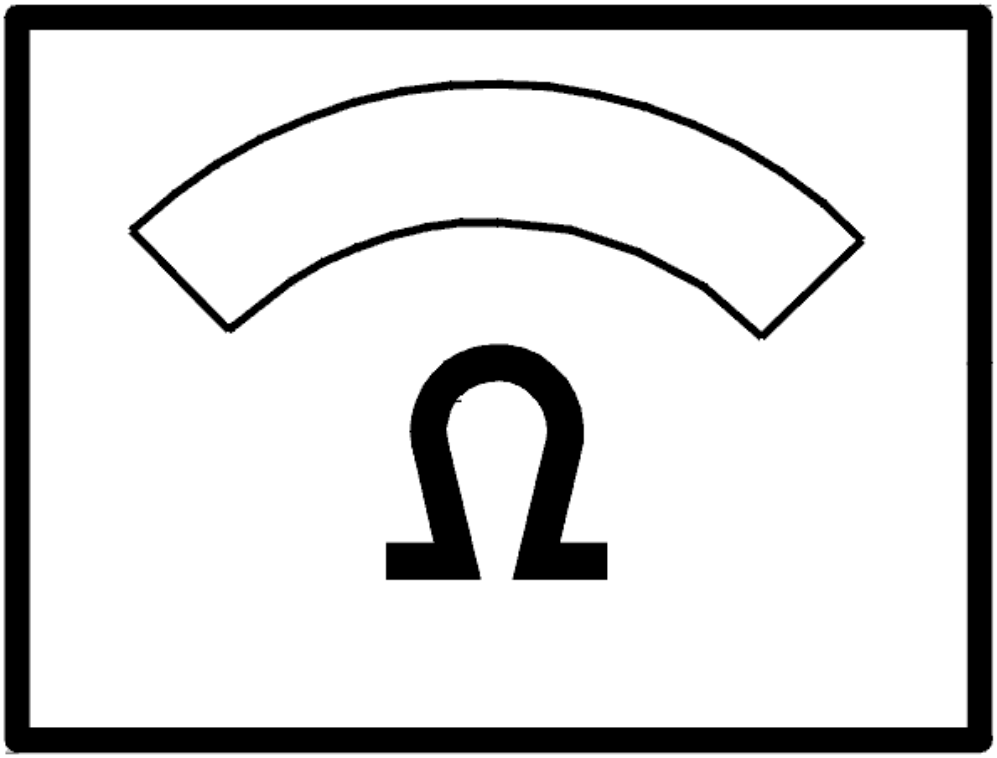

Fig. 359: Identifying Ohm Meter
Courtesy of VOLVO CARS CORPORATION

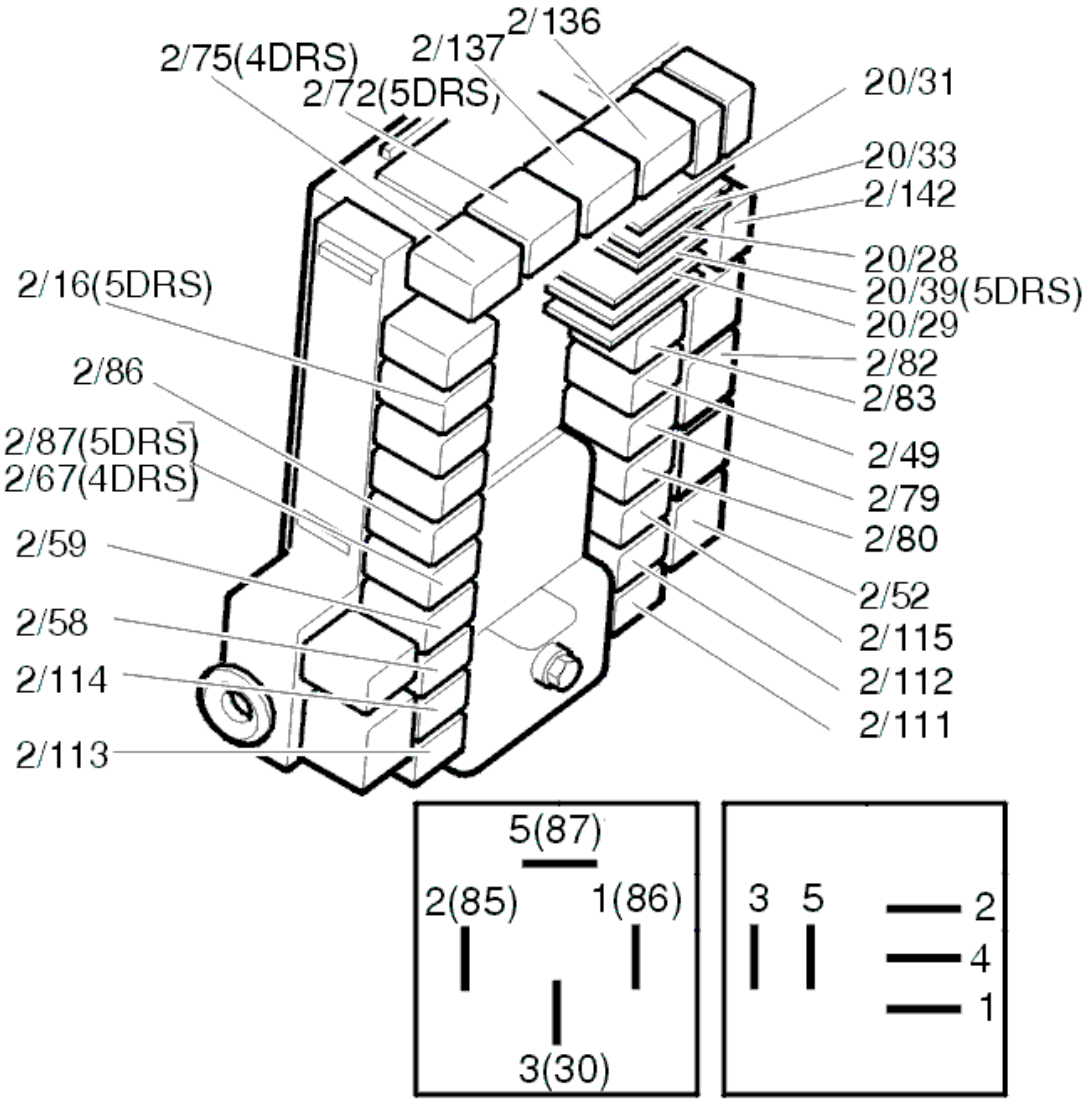

Fig. 360: Identifying Relays
Courtesy of VOLVO CARS CORPORATION

Is there a fault?

- **YES**

  OKAY: Troubleshooting has been completed.

- **NO**

  Refer to **CHECKING THE RELAY SUPPLY**

CHECKING THE RELAY SUPPLY

Remove the locking relay (2/113).

Measure the voltage between 5 in the relay socket and ground.

The voltmeter should display battery voltage.

HINT: If the value is OK but the fault still remains, connect the contacts to the lock module and link between 3 and 5 in the relay socket to force-feed the lock motor while continuing to test.

Additional information

- To access relay/fuse box in the cargo compartment:
  - For -2004, see: **RELAY/FUSE BOX CARGO COMPARTMENT/REAR ELECTRONIC MODULE (REM), REPLACING**
  - For 2005-, see: **REAR ELECTRONIC MODULE (REM), REPLACING** .

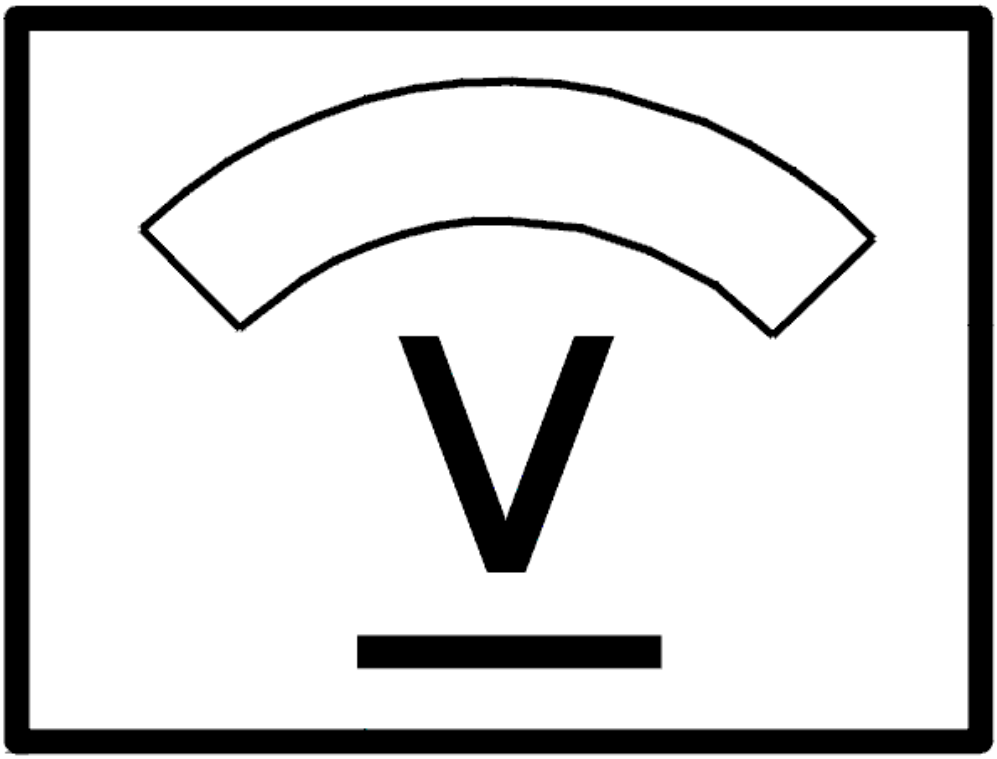

Fig. 361: Identifying Voltage Display

Courtesy of VOLVO CARS CORPORATION

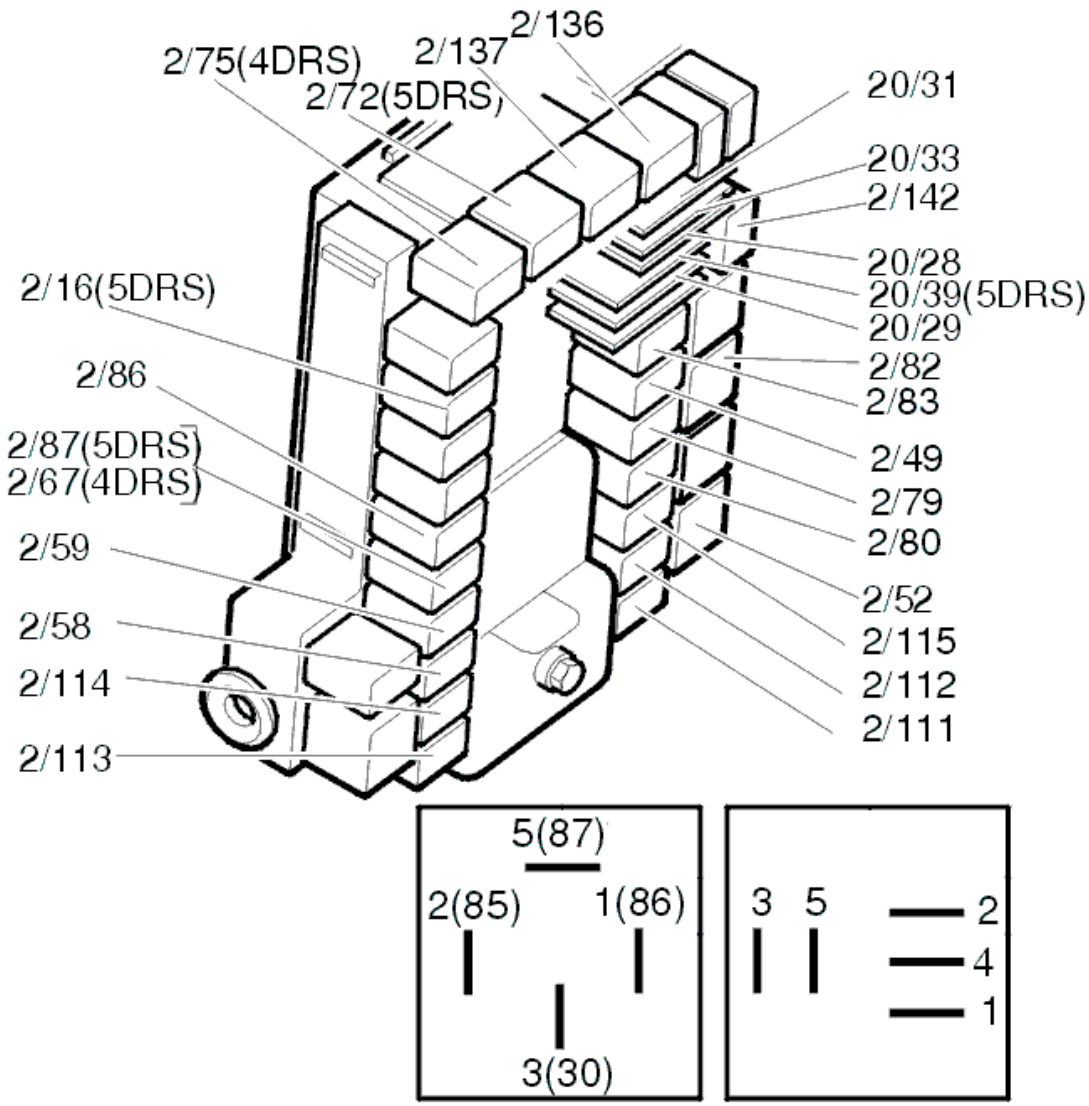

Fig. 362: Identifying Relays
Courtesy of VOLVO CARS CORPORATION

Does the voltmeter show the battery voltage?

- **YES**

  OKAY: Troubleshooting has been completed.

- **NO**

  Refer to **CHECKING THE FUSE**

CHECKING THE FUSE

Remove the fuse 11D/8 in cargo compartment fuse box.

Check that fuse 11D/8 is intact and check for contact resistance and oxidation as described in, see **CONTACT RESISTANCE AND OXIDATION** .

Additional information

- To access relay/fuse box in the cargo compartment:
  - For -2004, see: **RELAY/FUSE BOX CARGO COMPARTMENT/REAR ELECTRONIC MODULE (REM), REPLACING**
  - For 2005-, see: **REAR ELECTRONIC MODULE (REM), REPLACING** .

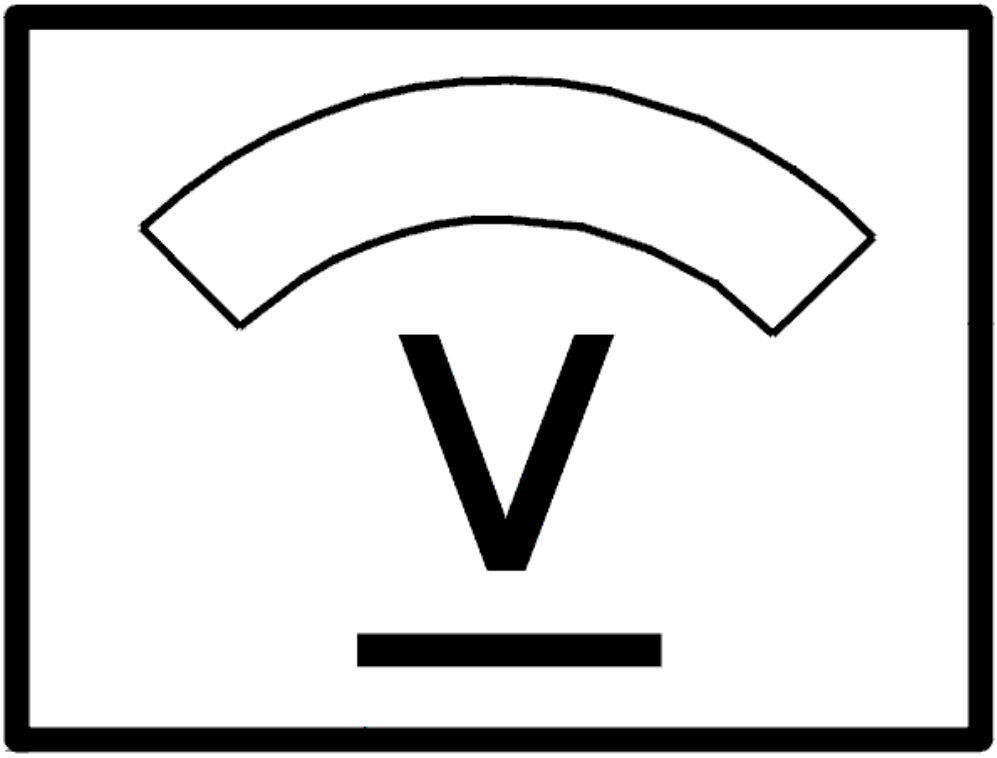

Fig. 363: Identifying Voltage Display
Courtesy of VOLVO CARS CORPORATION

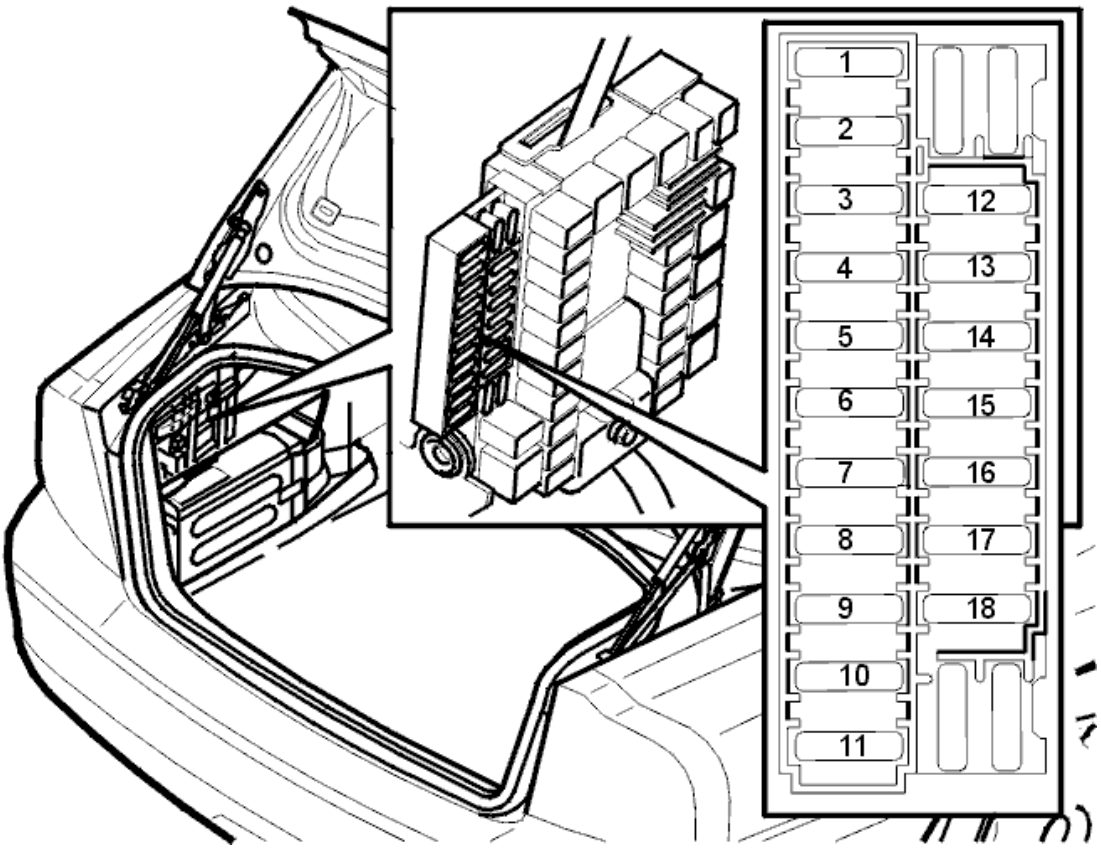

Fig. 364: Fuse Holder (Cargo Compartment)
Courtesy of VOLVO CARS CORPORATION

Is the fuse intact?

- **YES**

  Refer to **CHECKING FOR AN OPEN CIRCUIT**

- **NO**

  Refer to **CHECKING FOR A SHORT CIRCUIT**

CHECKING FOR AN OPEN CIRCUIT

Remove relay 2/113 in the cargo compartment relay/fuse box and trouble-shoot the wire between the fuse holder secondary side (left) and 5 in the relay socket for an open circuit as described in, see **OPEN-CIRCUIT, PERMANENT FAULTS** .

Additional information

- To access relay/fuse box in the cargo compartment:
  - For -2004, see: **RELAY/FUSE BOX CARGO COMPARTMENT/REAR ELECTRONIC MODULE (REM), REPLACING**

- For 2005-, see: **REAR ELECTRONIC MODULE (REM), REPLACING** .

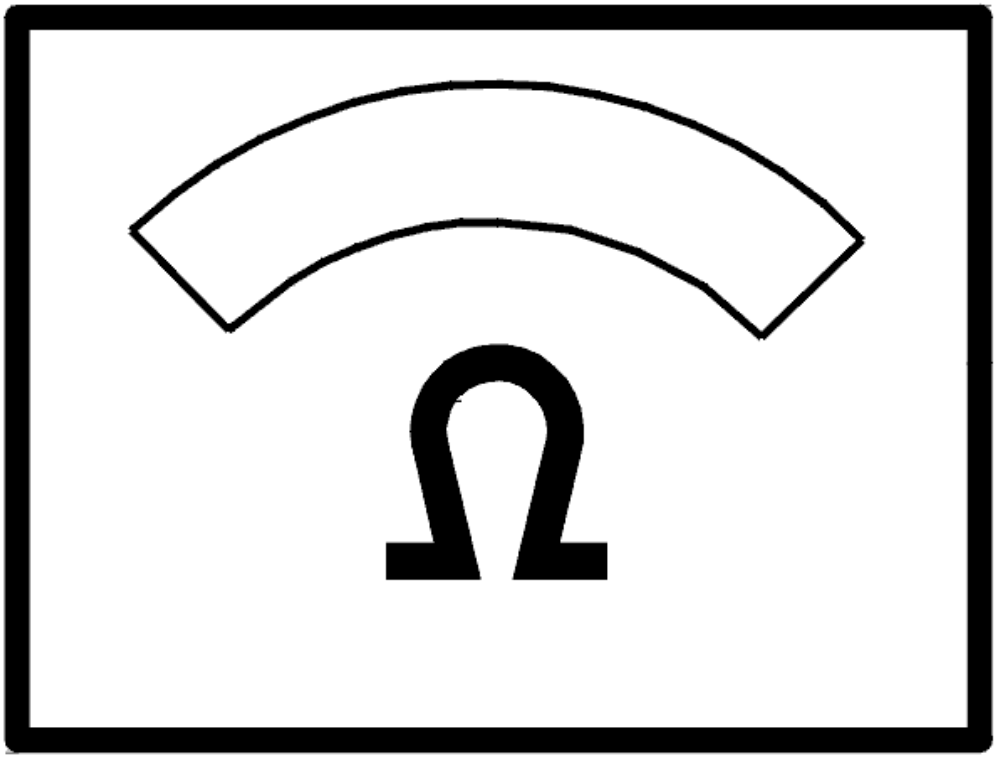

Fig. 365: Identifying Ohm Meter
Courtesy of VOLVO CARS CORPORATION

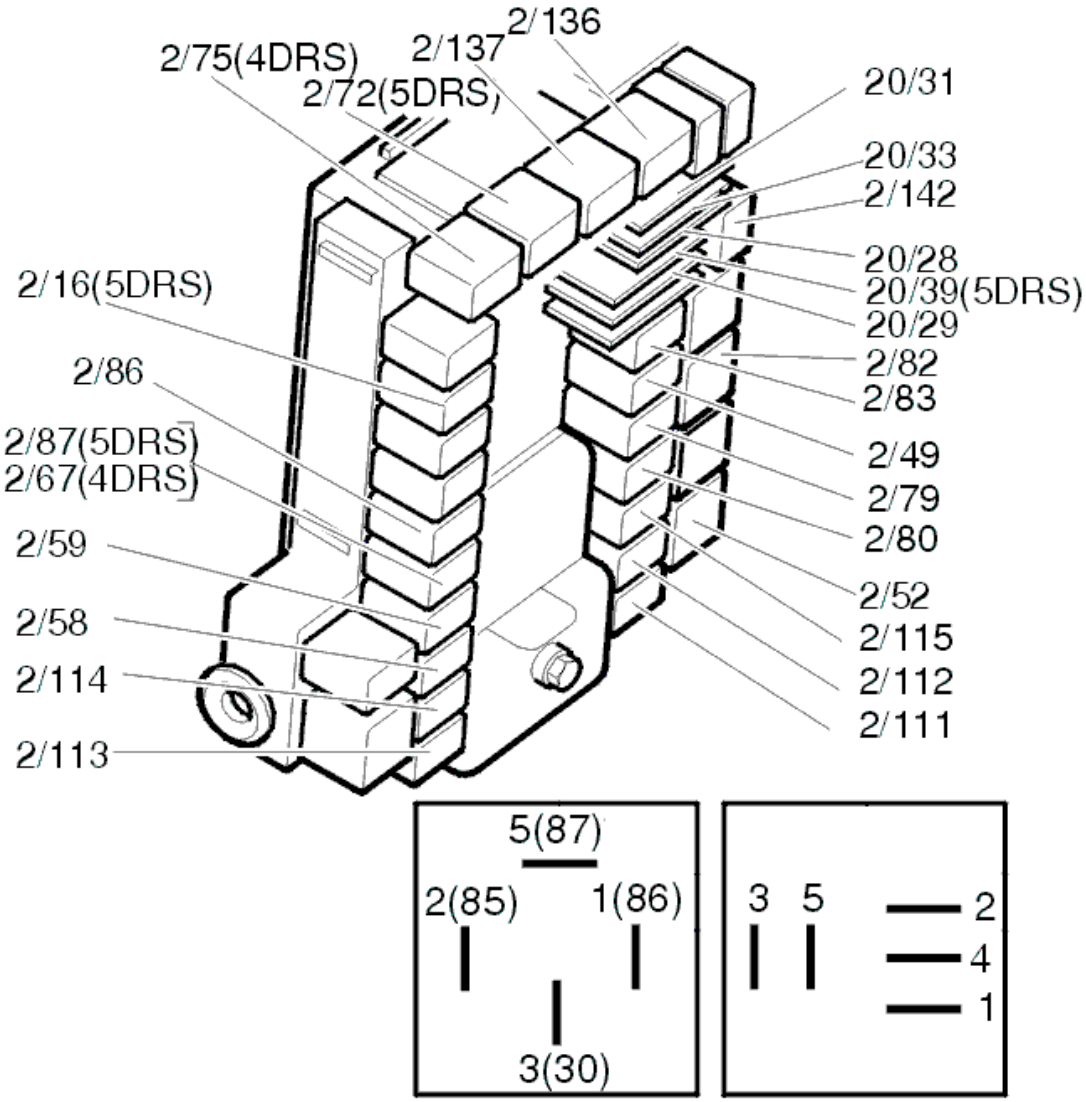

Fig. 366: Identifying Relays
Courtesy of VOLVO CARS CORPORATION

CHECKING FOR A SHORT CIRCUIT

Check the resistance between the fuse holder secondary side (left) and ground.

The ohmmeter should display infinite resistance.

If the value is correct, replace the fuse.

If the value deviates, trouble-shoot all the relay circuits involved for a short circuit to ground as described in, see **SHORT-CIRCUIT TO GROUND, PERMANENT FAULTS** .

NOTE: If the value is correct the fault could be intermittent.

HINT: Replace fuse.

HINT: If the fuse works straight away the fault is a short circuit on the relay supply wire.

HINT: If the fuse works when activating each relay the short circuit is on the component supply wire

HINT: The relay circuits involved belong to relays 2/111, 2/112, 2/113, 2/114, 2/115, 2/56, 2/59 and 2/67.

Additional information

- To access relay/fuse box in the cargo compartment:
  - For -2004, see: **RELAY/FUSE BOX CARGO COMPARTMENT/REAR ELECTRONIC MODULE (REM), REPLACING**
  - For 2005-, see: **REAR ELECTRONIC MODULE (REM), REPLACING** .

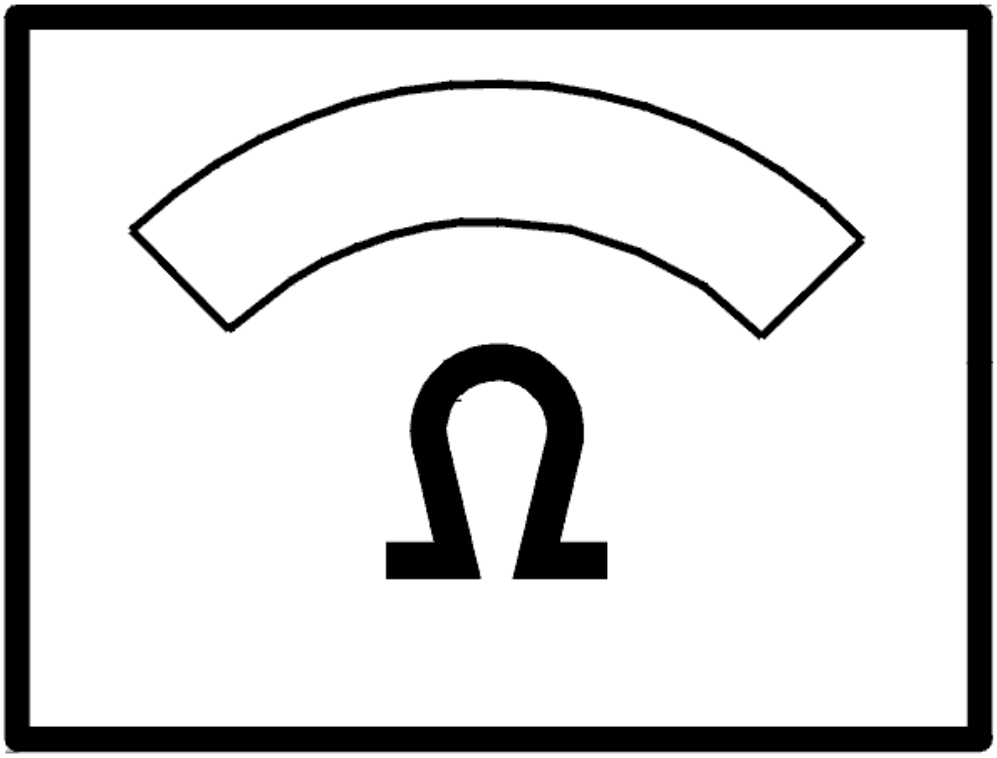

Fig. 367: Identifying Ohm Meter
Courtesy of VOLVO CARS CORPORATION

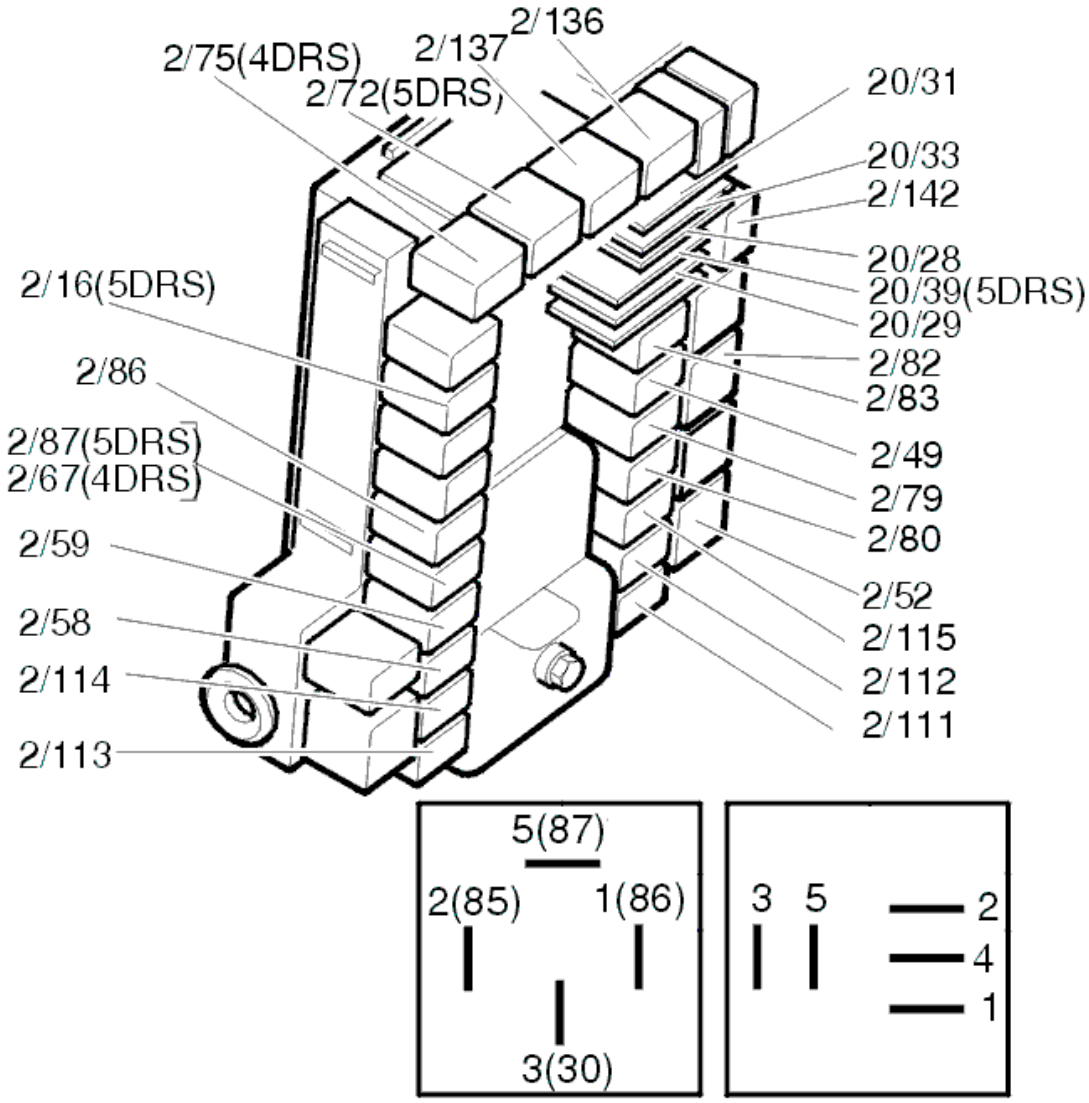

Fig. 368: Identifying Relays
Courtesy of VOLVO CARS CORPORATION

VERIFICATION

VERIFICATION

HINT: After the repair it is necessary to check that the fault has been rectified.

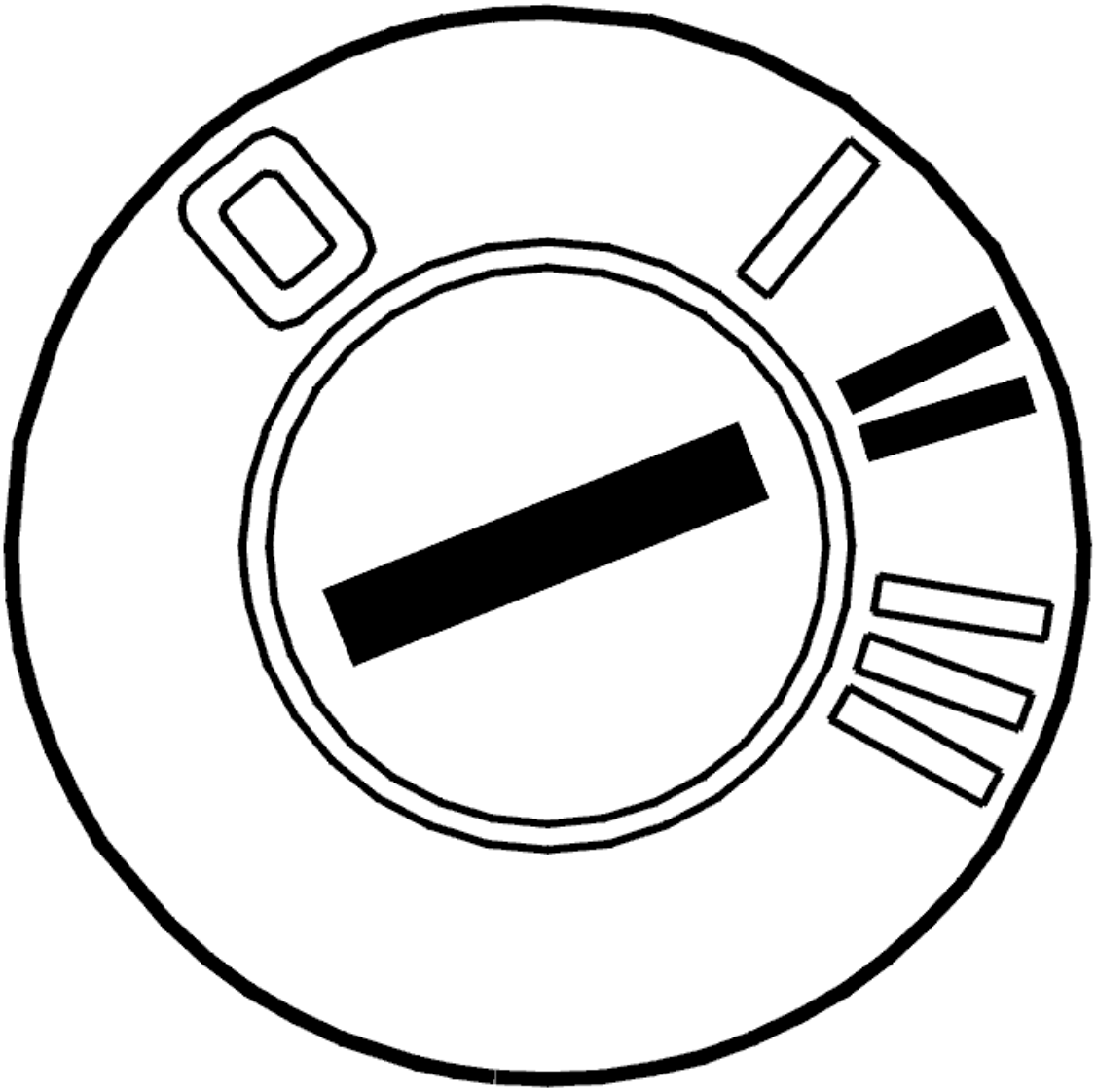

Fig. 369: Identifying Ignition ON
Courtesy of VOLVO CARS CORPORATION

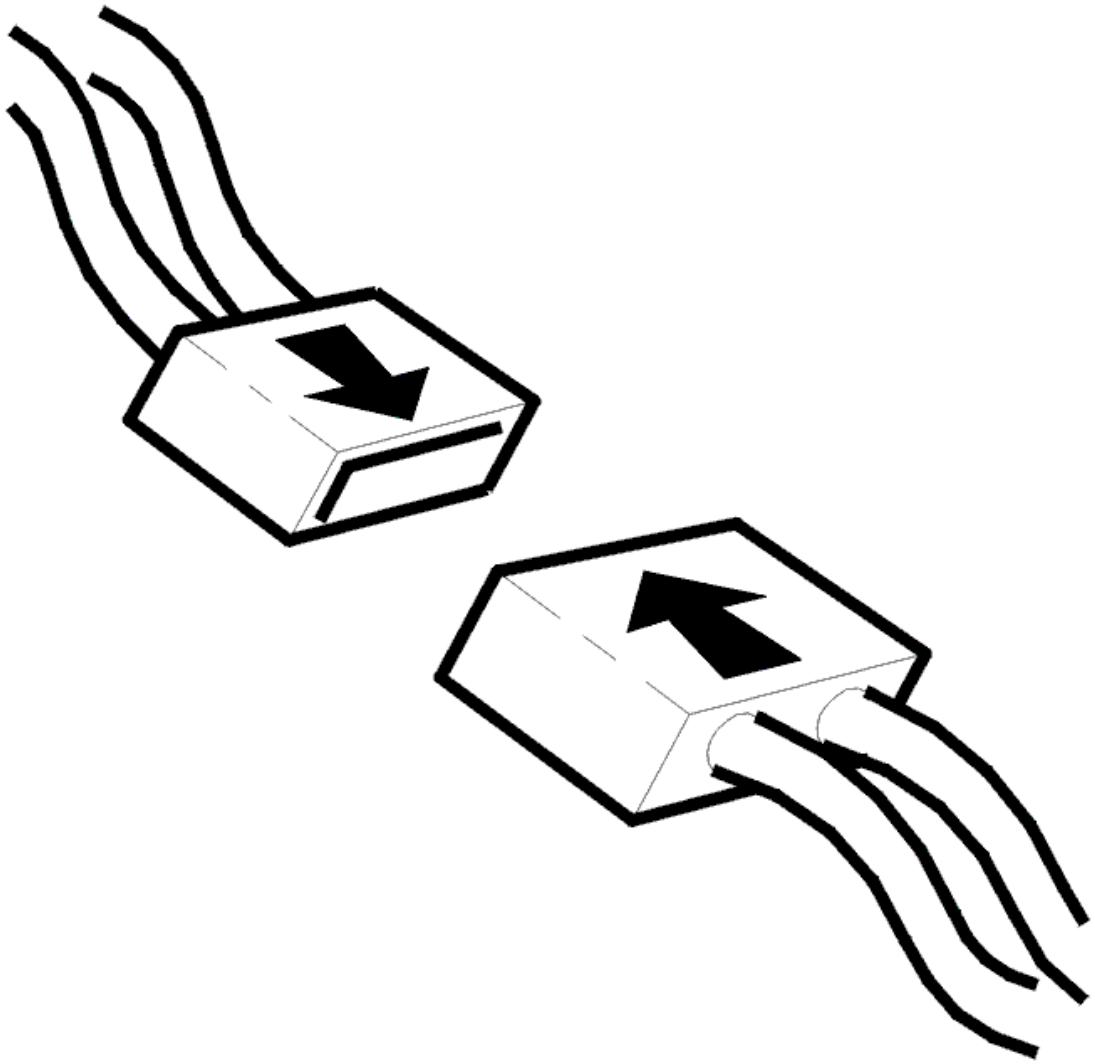

Fig. 370: Connecting Connector
Courtesy of VOLVO CARS CORPORATION

- Ignition off.
- Connect the connectors, install the components, etc.
- Ignition on.

  Lock by remote control and check that the text displays LOCKED.

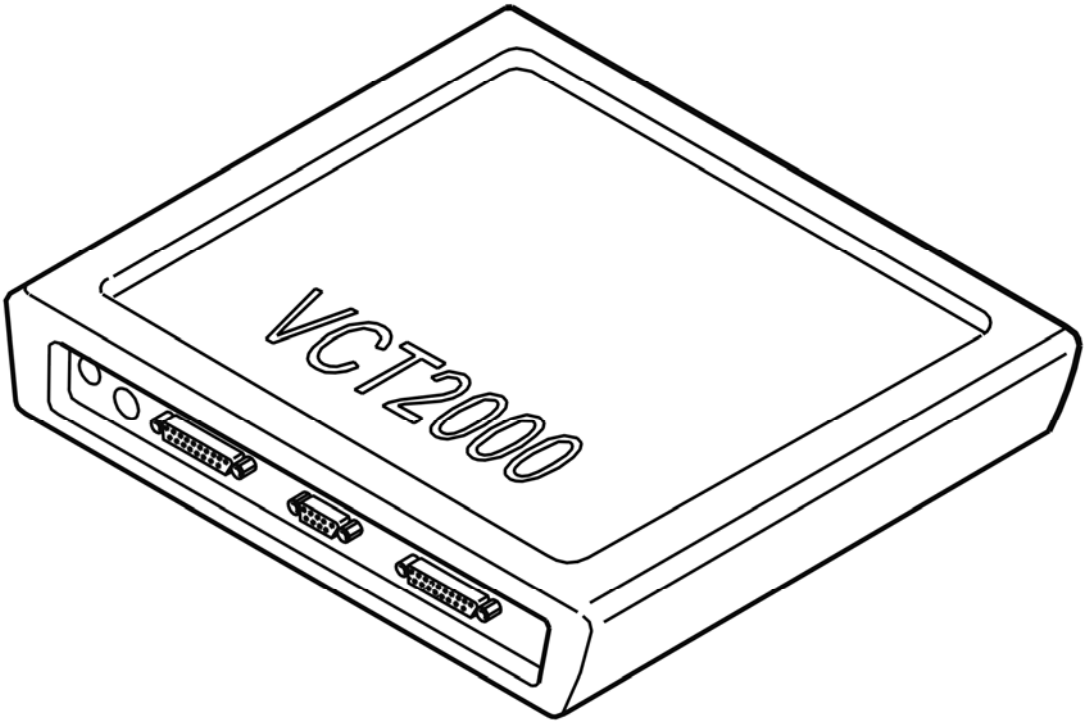

Fig. 371: Identifying VCT2000 Diagnostic Tool Symbol In VIDA
Courtesy of VOLVO CARS CORPORATION

Does the text display LOCKED?

- **YES**

  VERIFIED: Troubleshooting has been completed.

- **NO**

  Refer to **INFORMATION**

INFORMATION

FAULT-TRACING INFORMATION

The fault should have been detected and remedied. As this is not the case fault-tracing has failed.

Exit fault-tracing for this diagnostic trouble code (DTC) or make another attempt.

CEM-6A03: REAR LEFT DOOR LOCKED. SIGNAL TOO LOW. INTERMITTENT FAULT (2003-2004)

DIAGNOSTIC TROUBLE CODE (DTC) INFORMATION

Condition

Diagnostic trouble code (DTC) n CEM-6A03 is stored if the central electronic module (CEM) registers a low signal from the lock position sensor 15 seconds after unlocking.

Possible Source

- The lock has jammed in the locked position.
- Short-circuit to ground in the signal cable for the lock position sensor.
- Fault in the relay.
- Open-circuit in the relay supply / defective fuse.
- Fault in the locking motor circuit.
- Fault in the rear electronic module.

Fault symptom[s]

- Does not lock / unlock a door.

SIGNAL TOO LOW. INTERMITTENT FAULT

CHECKING THE COMPONENT

Check that the lock has not stuck by using the lock button on the inside of the door. Check that the lock unit is correctly installed.

Was a fault detected?

- **YES**

  OKAY: Troubleshooting has been completed.

- **NO**

  Refer to **CHECKING THE WIRING AND SWITCHES**

CHECKING THE WIRING AND SWITCHES

Check the signal cable for the lock position sensor between the central electronic module connector terminal #B13 and lock module connector terminal #5. Check for an open-circuit.

NOTE: **Diagnostic trouble code (DTC) REM-6A04 or REM-6A05 may also be stored if this fault occurs. Use the VCT2000 (or appropriate scan) tool to read diagnostic trouble codes (DTCs).**

Other information:

- To access and replace the lock module:
  - Diver's side door module, see **DRIVER DOOR MODULE (DDM), REPLACING**
  - Passenger side door module, see **PASSENGER DOOR MODULE (PDM), REPLACING** .
- For -2004, see: **CENTRAL ELECTRONIC MODULE (CEM), REPLACING**
- For 2005-, see: **CENTRAL ELECTRONIC MODULE (CEM), REPLACING** .
- To connect the breakout box, see **CONNECTING THE BREAKOUT BOX**
- -2004: **SIGNAL SPECIFICATION**
- 2005-: **SIGNAL SPECIFICATION**
- see **CHECKING WIRING AND TERMINALS. INTERMITTENT FAULTS** .

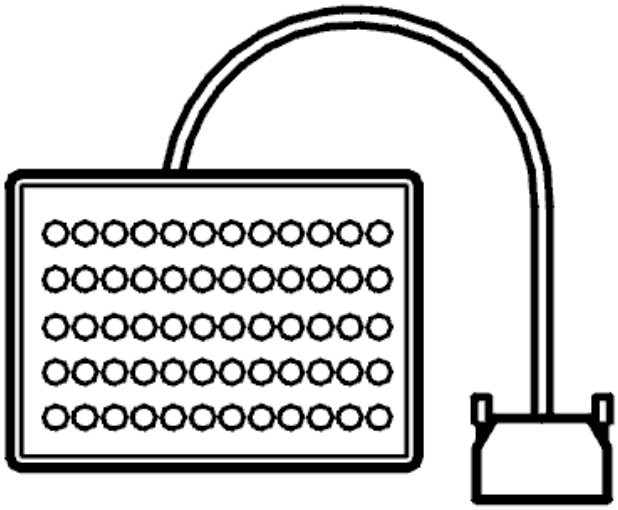

Fig. 372: Breakout Box
Courtesy of VOLVO CARS CORPORATION

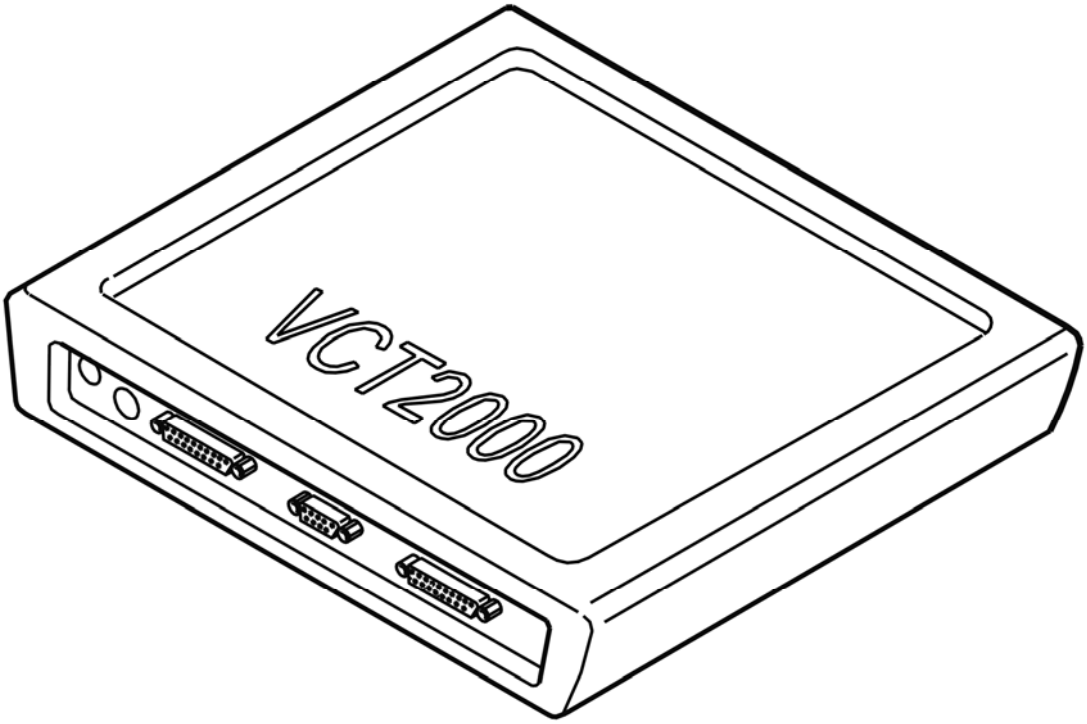

Fig. 373: Identifying VCT2000 Diagnostic Tool Symbol In VIDA
Courtesy of VOLVO CARS CORPORATION

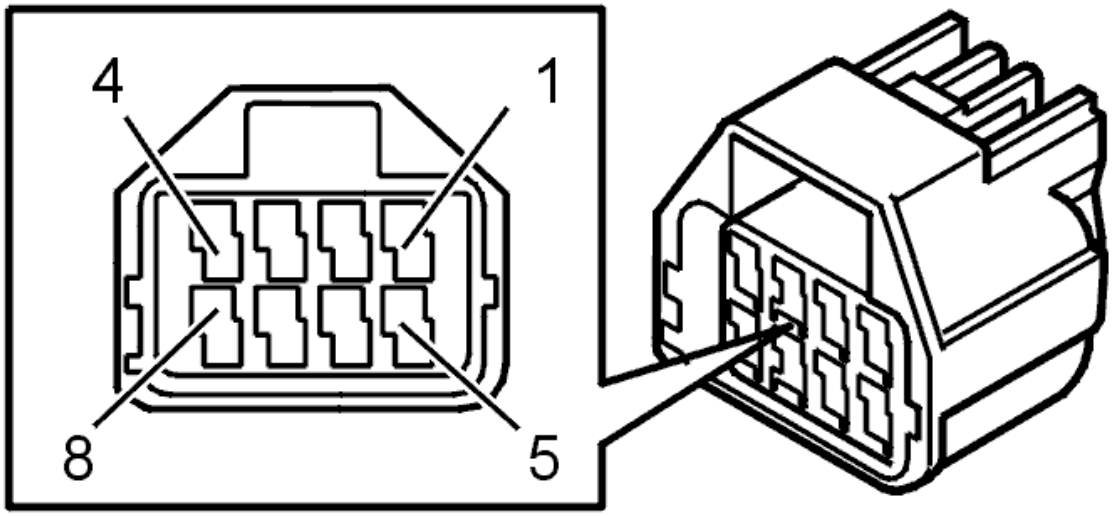

Fig. 374: Identifying Connector Terminals
Courtesy of VOLVO CARS CORPORATION

Were any diagnostic trouble codes (DTCs) stored?

- **YES**

OKAY: Troubleshooting has been completed.

- **NO**

  Refer to **CHECKING THE DOOR LOCKING FUNCTION**

CHECKING THE DOOR LOCKING FUNCTION

QUESTION

Which door has the problem?

1. Driver door.

   Refer to **CHECKING THE DRIVER DOOR**

2. Passenger door.

   Refer to **CHECKING THE PASSENGER DOOR**

3. Rear left door.

   Refer to **CHECKING THE REAR LEFT DOOR**

4. Rear right door.

   Refer to **CHECKING THE REAR RIGHT DOOR**

CHECKING THE DRIVER DOOR

CHECK

Is the passenger door lock not working?

- **YES**

  Refer to **CHECKING THE FUSE**

- **NO**

  Refer to **CHECK**

CHECKING THE FUSE

Remove the fuse 11C/27 in cargo compartment fuse box.

Check that fuse is intact and check for contact resistance and oxidation as described in, see **CONTACT RESISTANCE AND OXIDATION** .

Additional information

- To access relay/fuse box in the cargo compartment:
  - For -2004, see: **RELAY/FUSE BOX CARGO COMPARTMENT/REAR ELECTRONIC MODULE (REM), REPLACING**
  - For 2005-, see: **REAR ELECTRONIC MODULE (REM), REPLACING** .

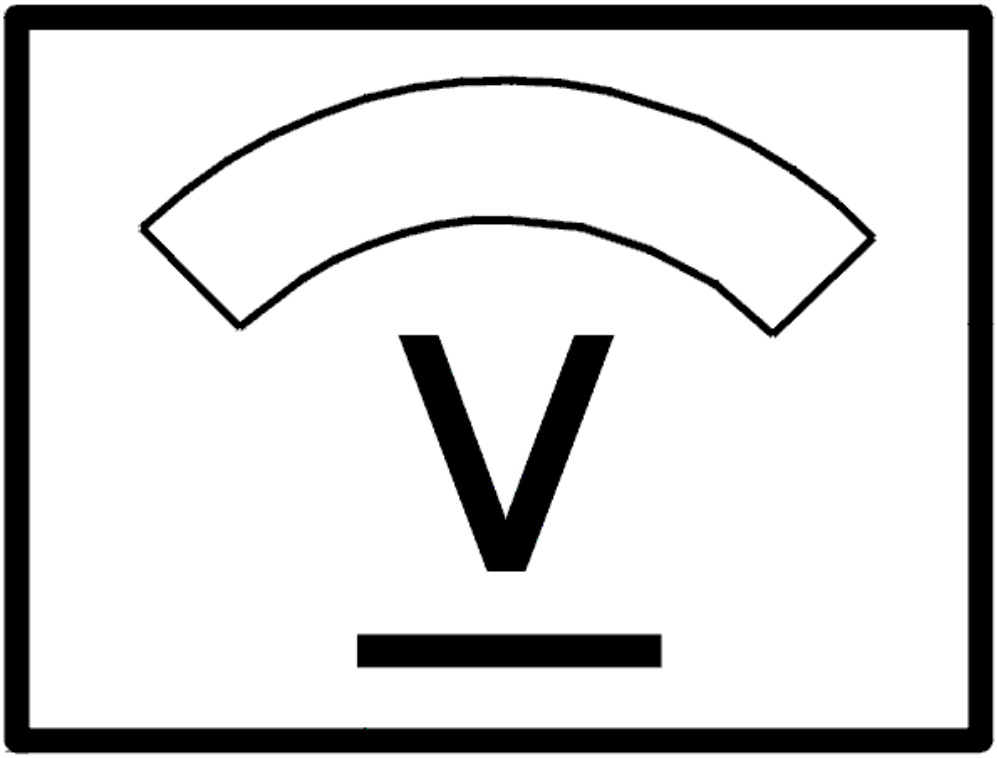

Fig. 375: Identifying Voltage Display
Courtesy of VOLVO CARS CORPORATION

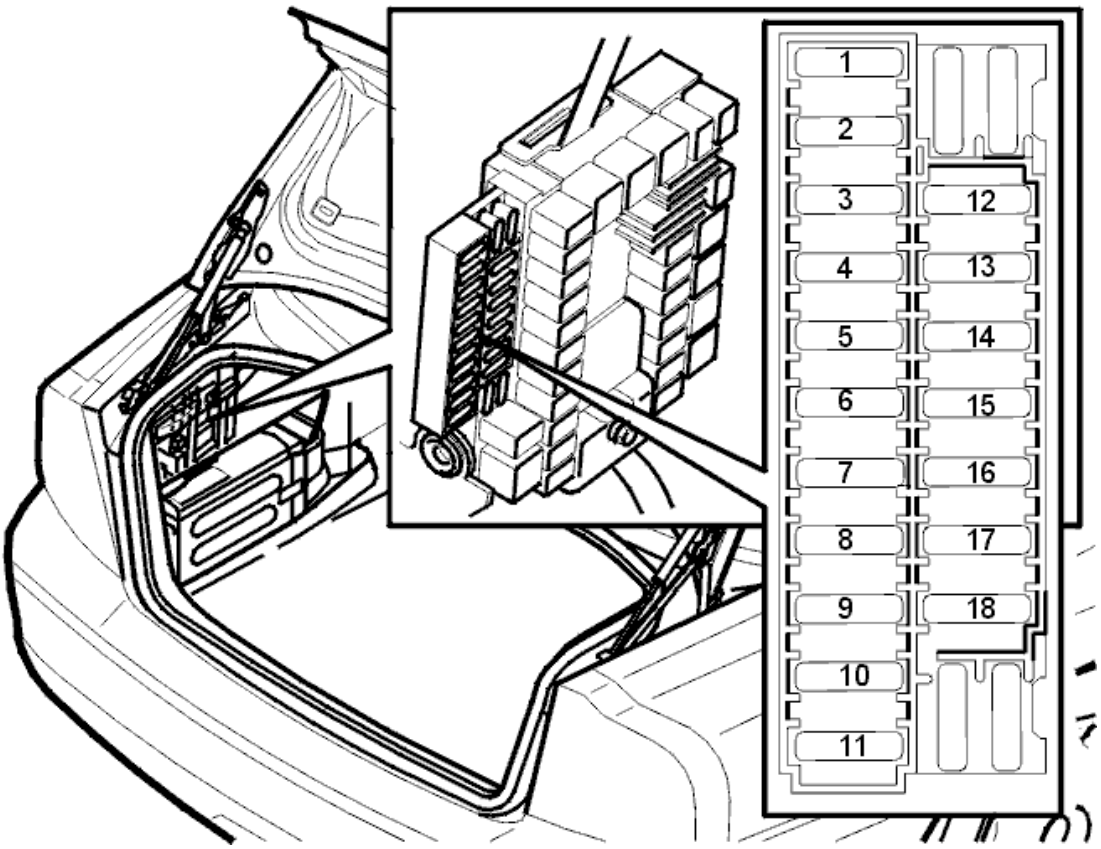

Fig. 376: Fuse Holder (Cargo Compartment)
Courtesy of VOLVO CARS CORPORATION

Is the fuse intact?

- **YES**

  Refer to **CHECKING FOR AN OPEN CIRCUIT**

- **NO**

  Refer to **CHECKING FOR A SHORT CIRCUIT**

CHECK

1. Window lift works on that particular door

   Refer to **CHECKING THE LOCKING MOTOR WIRES**

2. Window lift does not work on that particular door.

   Refer to **CHECKING THE FUSE**

CHECKING THE FUSE

Remove the fuse 11C/35 in cargo compartment fuse box.

Check that fuse is intact and check for contact resistance and oxidation as described in, see **CONTACT RESISTANCE AND OXIDATION** .

Additional information

- To access relay/fuse box in the cargo compartment:
  - For -2004, see: **RELAY/FUSE BOX CARGO COMPARTMENT/REAR ELECTRONIC MODULE (REM), REPLACING**
  - For 2005-, see: **REAR ELECTRONIC MODULE (REM), REPLACING** .

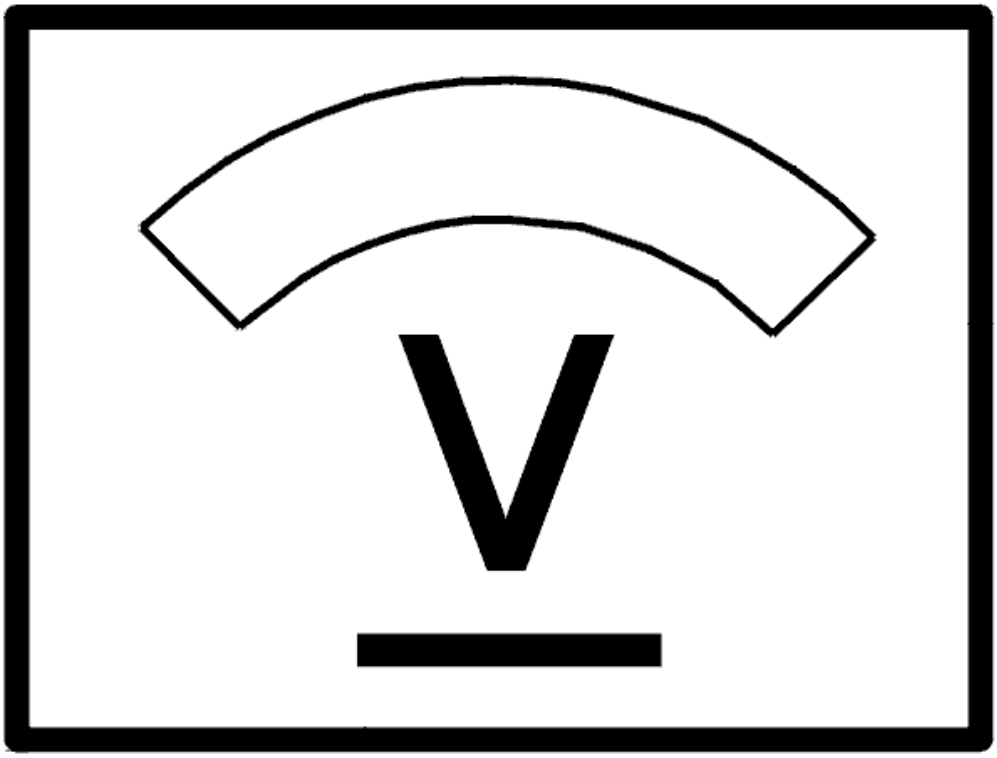

Fig. 377: Identifying Voltage Display
Courtesy of VOLVO CARS CORPORATION

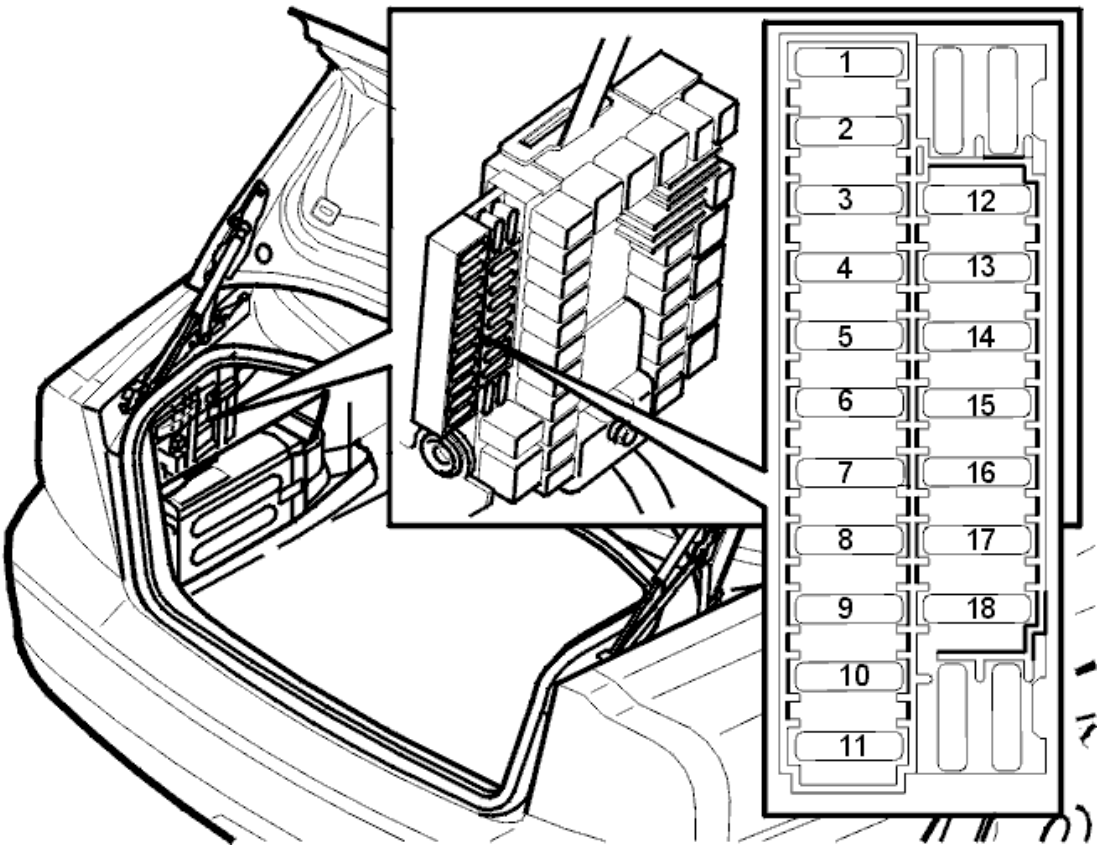

Fig. 378: Fuse Holder (Cargo Compartment)
Courtesy of VOLVO CARS CORPORATION

Is the fuse intact?

- **YES**

  Refer to **CHECKING THE VOLTAGE**

- **NO**

  Refer to **CHECKING FOR A SHORT CIRCUIT**

CHECKING FOR AN OPEN CIRCUIT

Check door control unit connector B7 for contact resistance and oxidation as described in, see **CONTACT RESISTANCE AND OXIDATION** .

Trouble-shoot the wire between fuse holder secondary side (left) and door control unit connector B7 for an open circuit as described in, see **OPEN-CIRCUIT, PERMANENT FAULTS** .

If a fault is detected, check in particular the intermediate connector in the cable harness (1/control unit) for contact resistance and oxidation as described in, see **CONTACT RESISTANCE AND OXIDATION** .

If there is an open circuit the fault should be between the fuse and the common junction point 53/427.

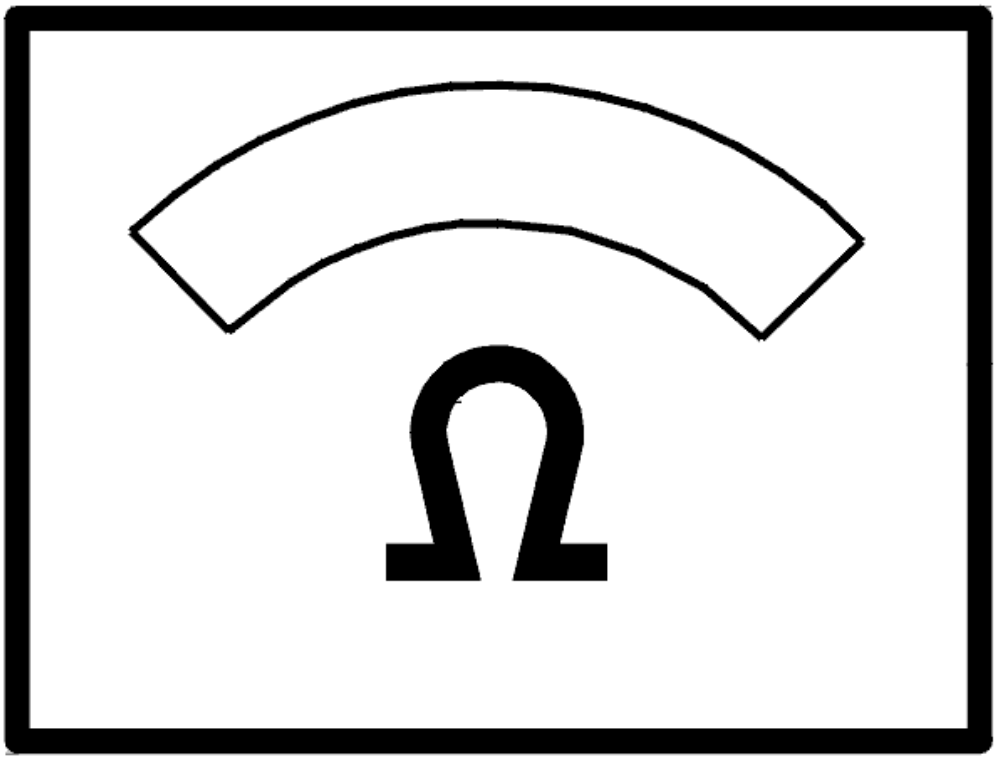

Fig. 379: Identifying Ohm Meter
Courtesy of VOLVO CARS CORPORATION

CHECKING FOR A SHORT CIRCUIT

Check the resistance between the fuse holder secondary side (left) and ground.

The ohmmeter should display infinite resistance.

NOTE: If the value is correct the fault could be intermittent.

Switch to trouble-shooting intermittent short circuits to ground as described in, see **SHORT-CIRCUIT TO GROUND, INTERMITTENT FAULTS** .

If the ohmmeter indicates a fault (short circuit), trouble-shoot the wires between the fuse and door control unit connector B7 for a short circuit to ground as described in, see **SHORT-CIRCUIT TO GROUND, PERMANENT FAULTS** .

The fault should be between the fuse and the common junction point 53/427.

Replace fuse.

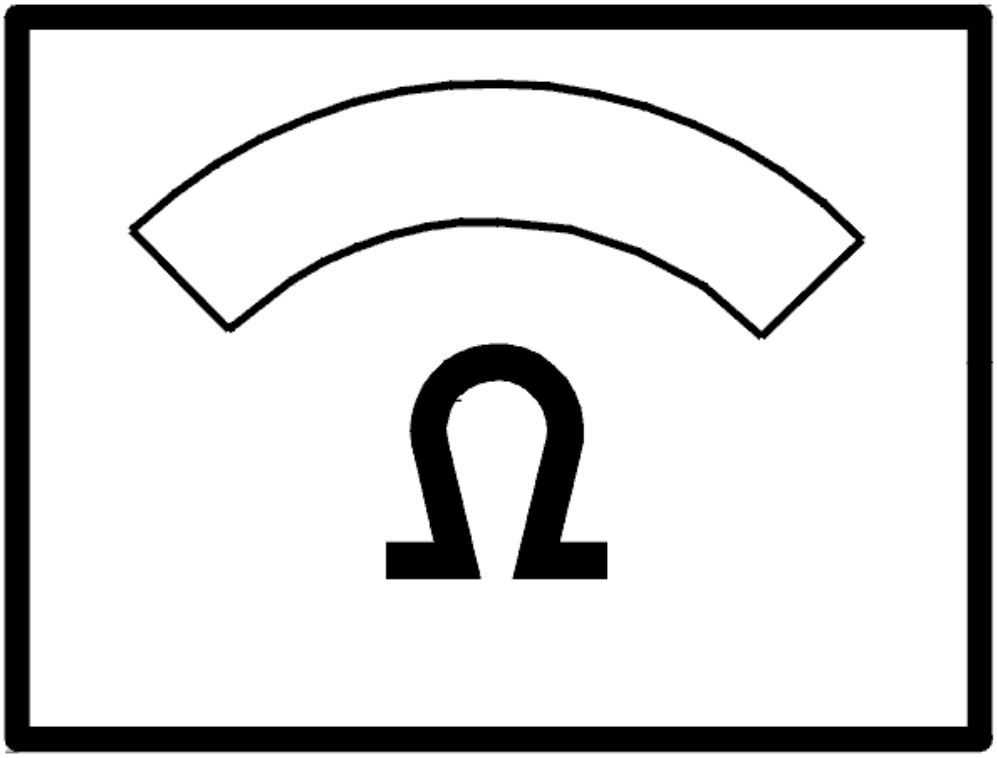

Fig. 380: Identifying Ohm Meter
Courtesy of VOLVO CARS CORPORATION

CHECKING THE VOLTAGE

Check the voltage in the door control unit connector B12.

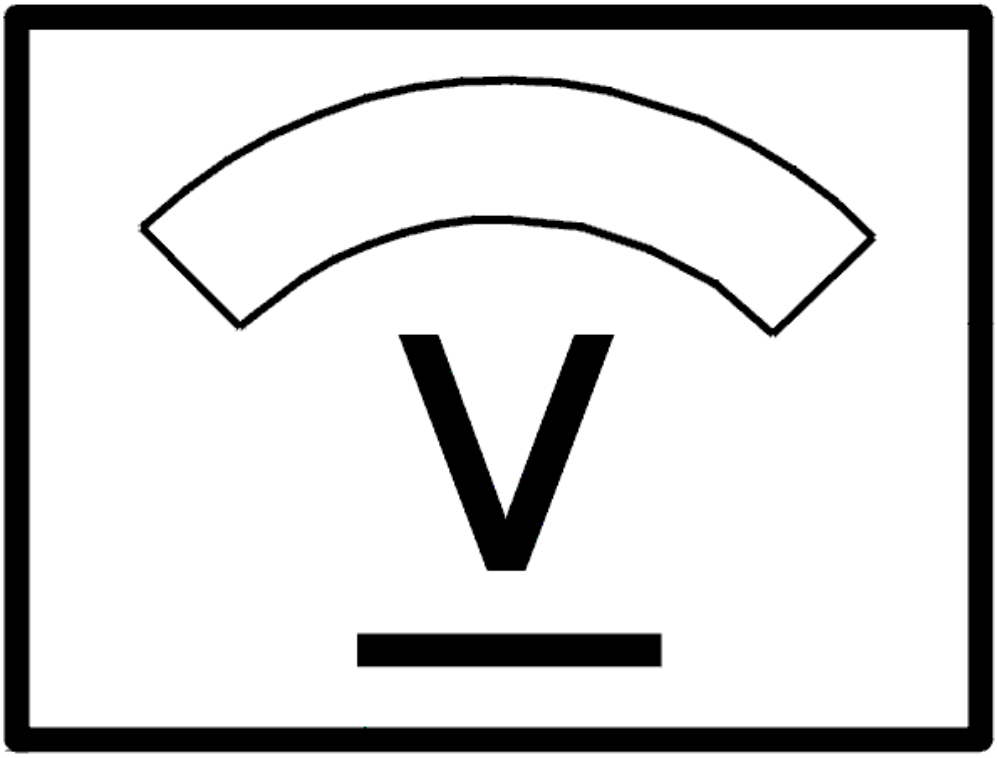

Fig. 381: Identifying Voltage Display
Courtesy of VOLVO CARS CORPORATION

Does the voltmeter show the battery voltage?

- **YES**

  Refer to **CHECKING THE LOCKING MOTOR WIRES**

- **NO**

  Refer to **CHECKING FOR AN OPEN CIRCUIT**

CHECKING FOR AN OPEN CIRCUIT

Check door control unit connector B12 for contact resistance and oxidation as described in, see **CONTACT**

RESISTANCE AND OXIDATION .

Trouble-shoot the wire between fuse holder secondary side (left) and door control unit connector B12 for an open circuit as described in, see **OPEN-CIRCUIT, PERMANENT FAULTS** .

If a fault is detected, check in particular the intermediate connector in the cable harness (1) for contact resistance and oxidation as described in, see **CONTACT RESISTANCE AND OXIDATION** .

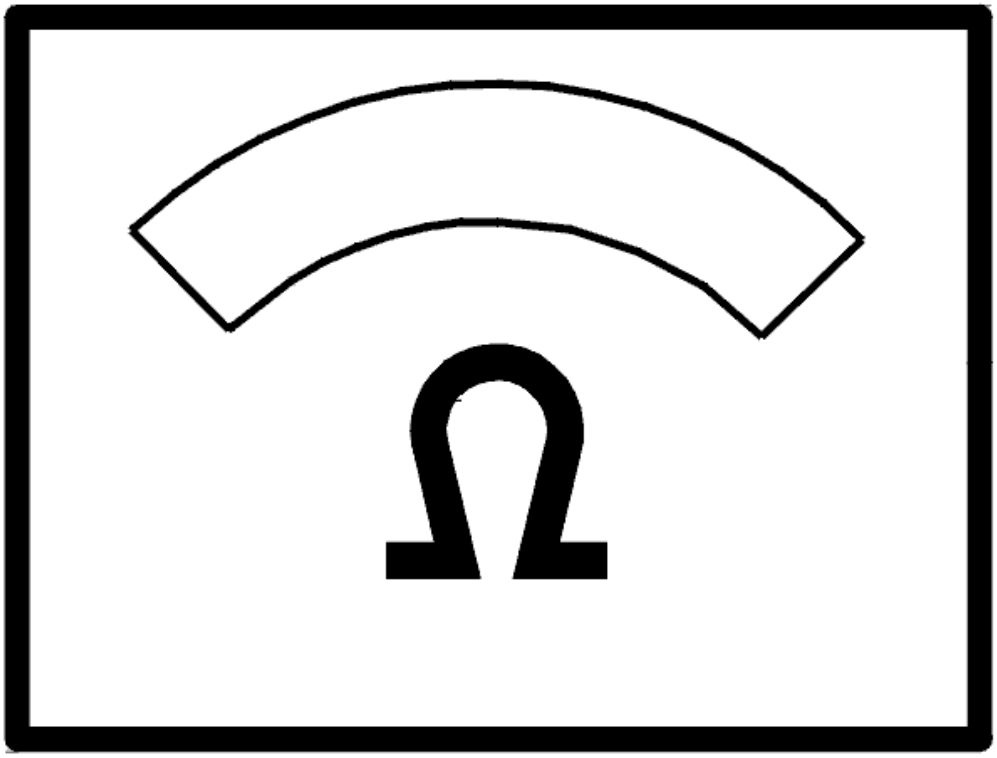

Fig. 382: Identifying Ohm Meter
Courtesy of VOLVO CARS CORPORATION

CHECKING FOR A SHORT CIRCUIT

Check the resistance between the fuse holder secondary side (left) and ground.

The ohmmeter should display infinite resistance.

NOTE: If the value is correct the fault could be intermittent.

Switch to trouble-shooting intermittent short circuits to ground as described in, see **SHORT-CIRCUIT TO GROUND, INTERMITTENT FAULTS** .

If the ohmmeter indicates a fault (short circuit), trouble-shoot the wires between the fuse and door control unit connector B12 for a short circuit to ground as described in, see **SHORT-CIRCUIT TO GROUND, PERMANENT FAULTS** .

Replace fuse.

Additional information

- To access relay/fuse box in the cargo compartment:
  - For -2004, see: **RELAY/FUSE BOX CARGO COMPARTMENT/REAR ELECTRONIC MODULE (REM), REPLACING**
  - For 2005-, see: **REAR ELECTRONIC MODULE (REM), REPLACING** .

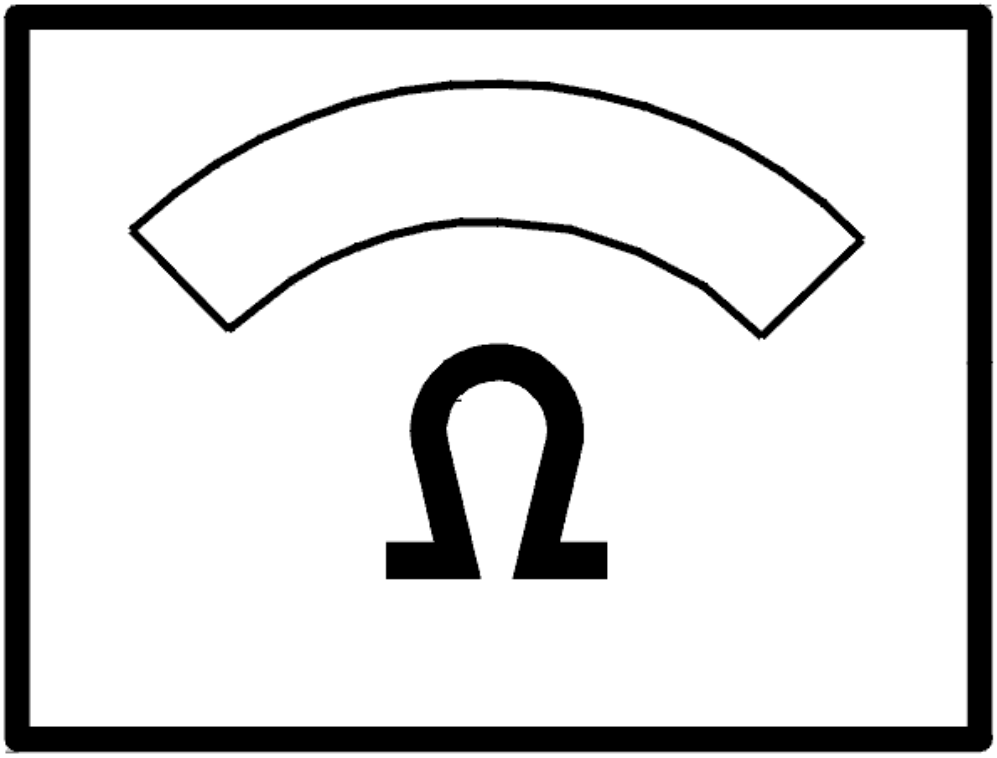

Fig. 383: Identifying Ohm Meter
Courtesy of VOLVO CARS CORPORATION

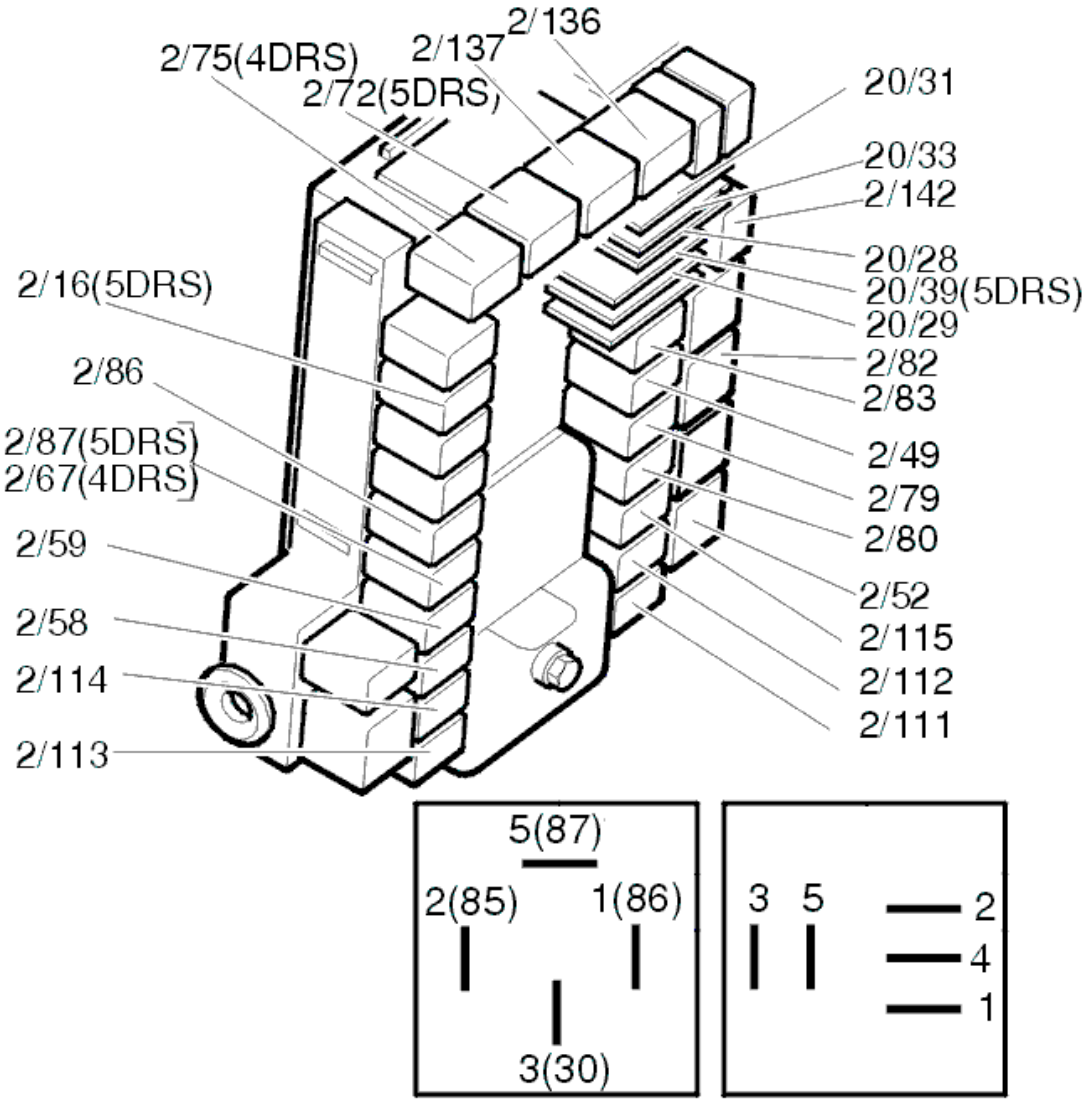

Fig. 384: Identifying Relays
Courtesy of VOLVO CARS CORPORATION

CHECKING THE LOCKING MOTOR WIRES

Check door control unit and lock unit connectors for contact resistance and oxidation as described in, see **CONTACT RESISTANCE AND OXIDATION** .

Trouble-shoot the wire between door control unit connector B2 and lock unit connector 8 for an open circuit as described in, see **OPEN-CIRCUIT, PERMANENT FAULTS** .

Trouble-shoot the wire between door control unit connector B6 and lock unit connector 7 for an open circuit as described in, see **OPEN-CIRCUIT, PERMANENT FAULTS** .

Additional information

- To access/replace the rear electronic module (REM):
  - For -2004, see: **RELAY/FUSE BOX CARGO COMPARTMENT/REAR ELECTRONIC MODULE (REM), REPLACING**
  - For 2005-, see: **REAR ELECTRONIC MODULE (REM), REPLACING** .

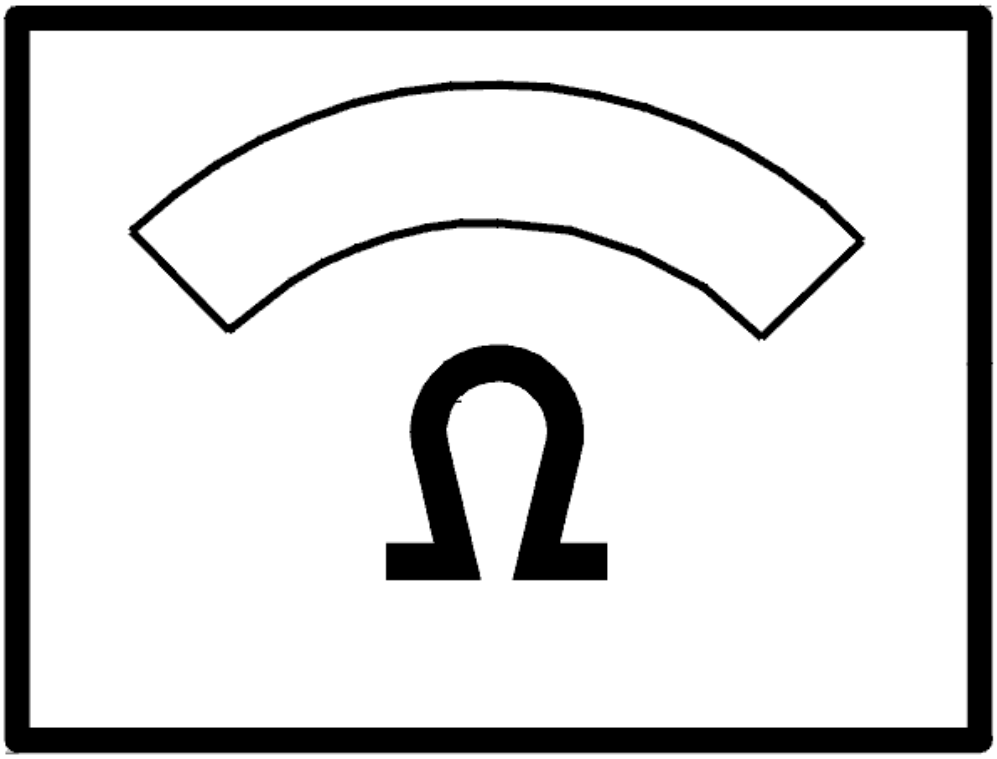

Fig. 385: Identifying Ohm Meter
Courtesy of VOLVO CARS CORPORATION

Is there a fault?

- **YES**

  OKAY: Troubleshooting has been completed.

- **NO**

Refer to **REPLACING THE COMPONENT**

REPLACING THE COMPONENT

Replace lock unit as described in, see **REPLACING THE SWITCH FOR THE LOCK UNIT / CARGO COMPARTMENT LIGHTING** .

Is there a fault?

- **YES**

  OKAY: Troubleshooting has been completed.

- **NO**

  Refer to **REPLACING THE COMPONENT**

REPLACING THE COMPONENT

Replace control unit.

- For -2004, see: **RELAY/FUSE BOX CARGO COMPARTMENT/REAR ELECTRONIC MODULE (REM), REPLACING**
- For 2005-, see: **REAR ELECTRONIC MODULE (REM), REPLACING** .

CHECKING THE PASSENGER DOOR

CHECK

Is the driver door lock not working?

- **YES**

  Refer to **CHECKING THE FUSE**

- **NO**

  Refer to **CHECK**

CHECKING THE FUSE

Remove the fuse 11C/27 in cargo compartment fuse box.

Check that fuse is intact and check for contact resistance and oxidation as described in, see **CONTACT RESISTANCE AND OXIDATION** .

Additional information

- To access relay/fuse box in the cargo compartment:
  - For -2004, see: **RELAY/FUSE BOX CARGO COMPARTMENT/REAR ELECTRONIC MODULE (REM), REPLACING**
  - For 2005-, see: **REAR ELECTRONIC MODULE (REM), REPLACING** .

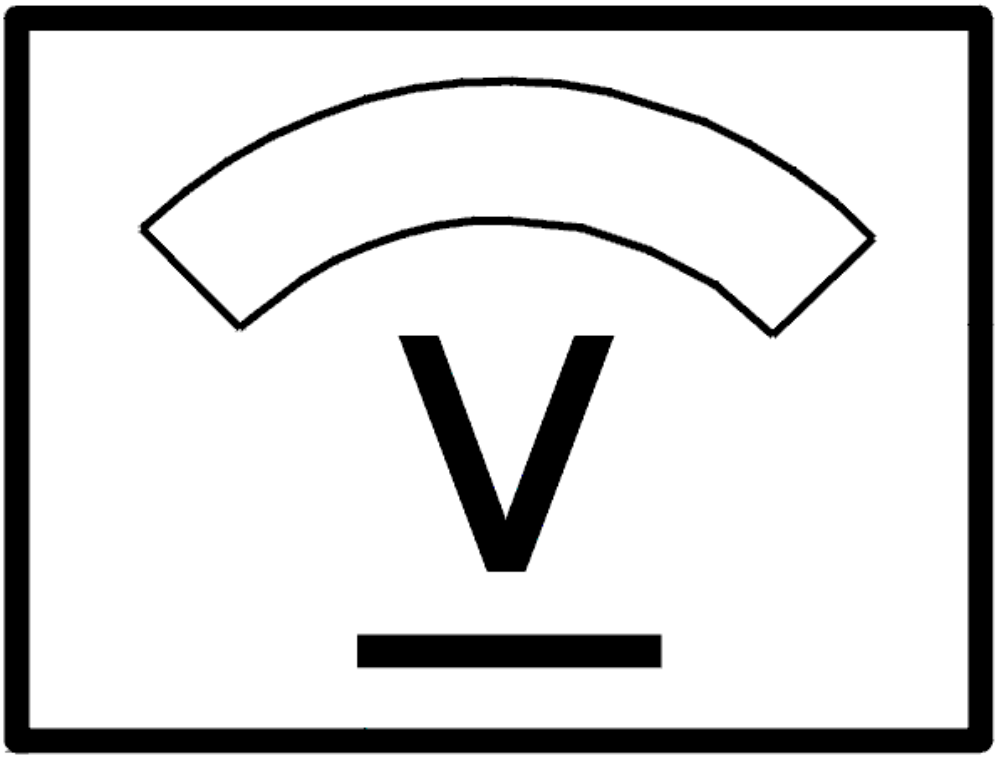

Fig. 386: Identifying Voltage Display
Courtesy of VOLVO CARS CORPORATION

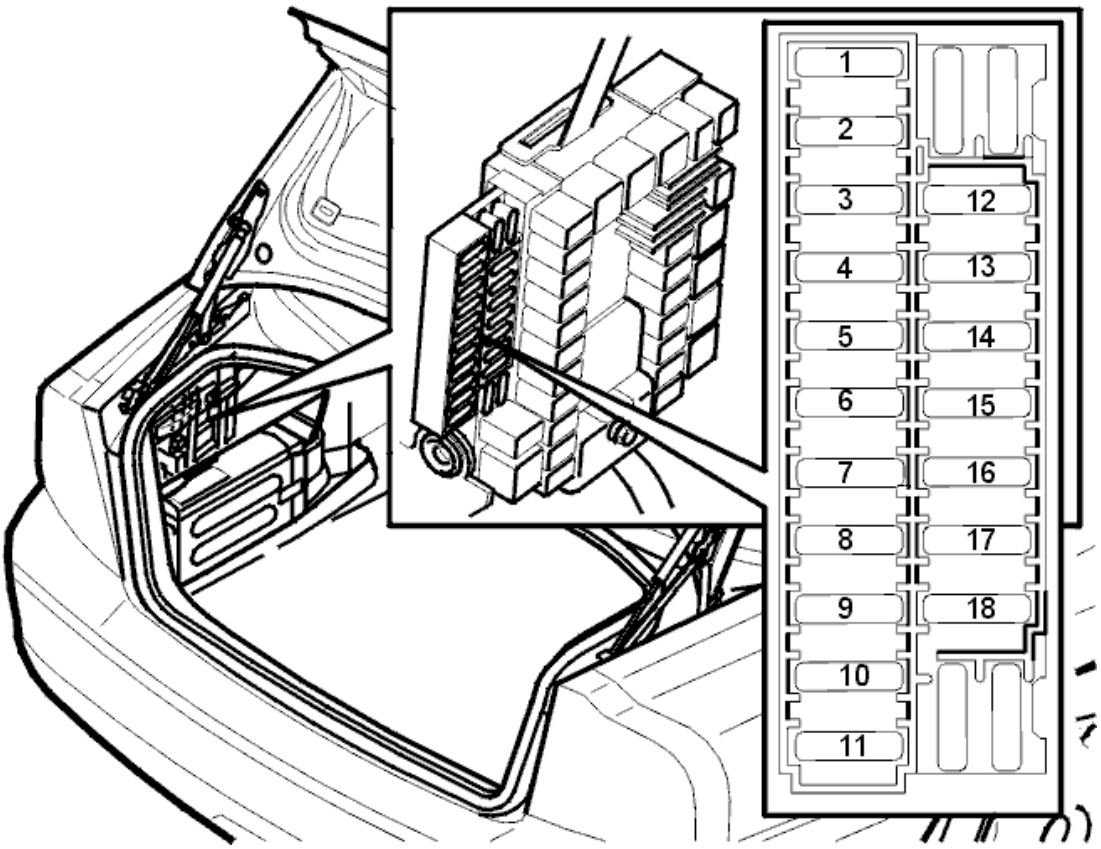

Fig. 387: Fuse Holder (Cargo Compartment)
Courtesy of VOLVO CARS CORPORATION

Is the fuse intact?

- **YES**

  Refer to **CHECKING FOR AN OPEN CIRCUIT**

- **NO**

  Refer to **CHECKING FOR A SHORT CIRCUIT**

CHECK

1. Window lift works on that particular door

   Refer to **CHECKING THE LOCKING MOTOR WIRES**

2. Window lift does not work on that particular door.

   Refer to **CHECKING THE FUSE**

CHECKING THE FUSE

Remove the fuse 11C/36 in cargo compartment fuse box.

Check that fuse is intact and check for contact resistance and oxidation as described in, see **CONTACT RESISTANCE AND OXIDATION** .

Additional information

- To access relay/fuse box in the cargo compartment:
  - For -2004, see: **RELAY/FUSE BOX CARGO COMPARTMENT/REAR ELECTRONIC MODULE (REM), REPLACING**
  - For 2005-, see: **REAR ELECTRONIC MODULE (REM), REPLACING** .

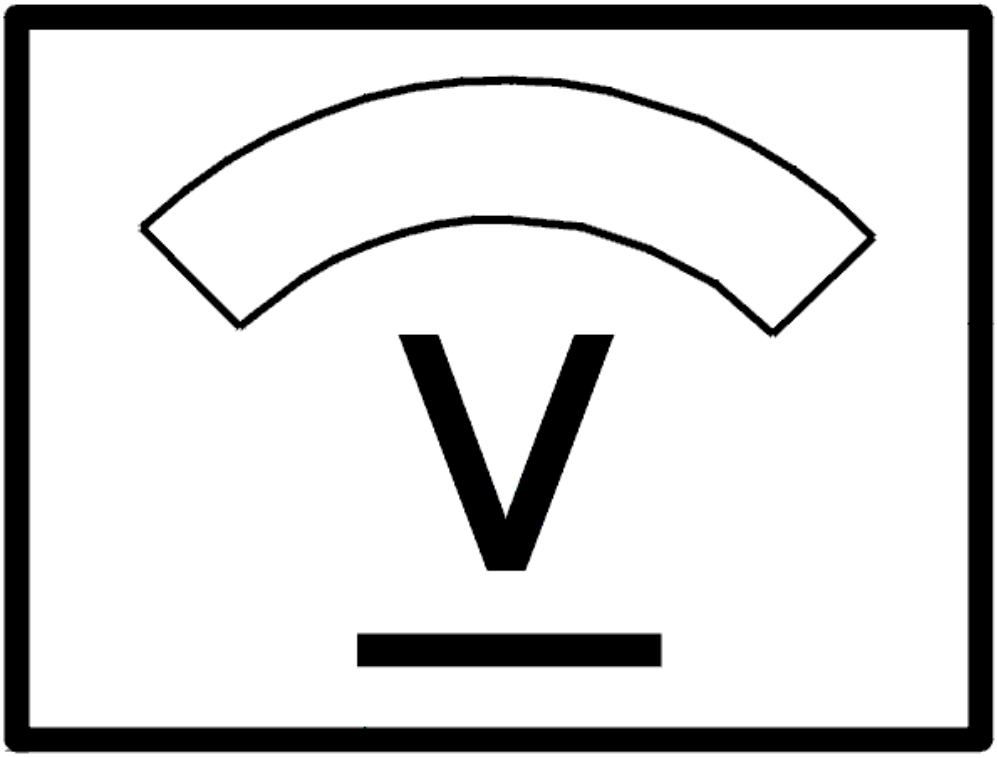

Fig. 388: Identifying Voltage Display
Courtesy of VOLVO CARS CORPORATION

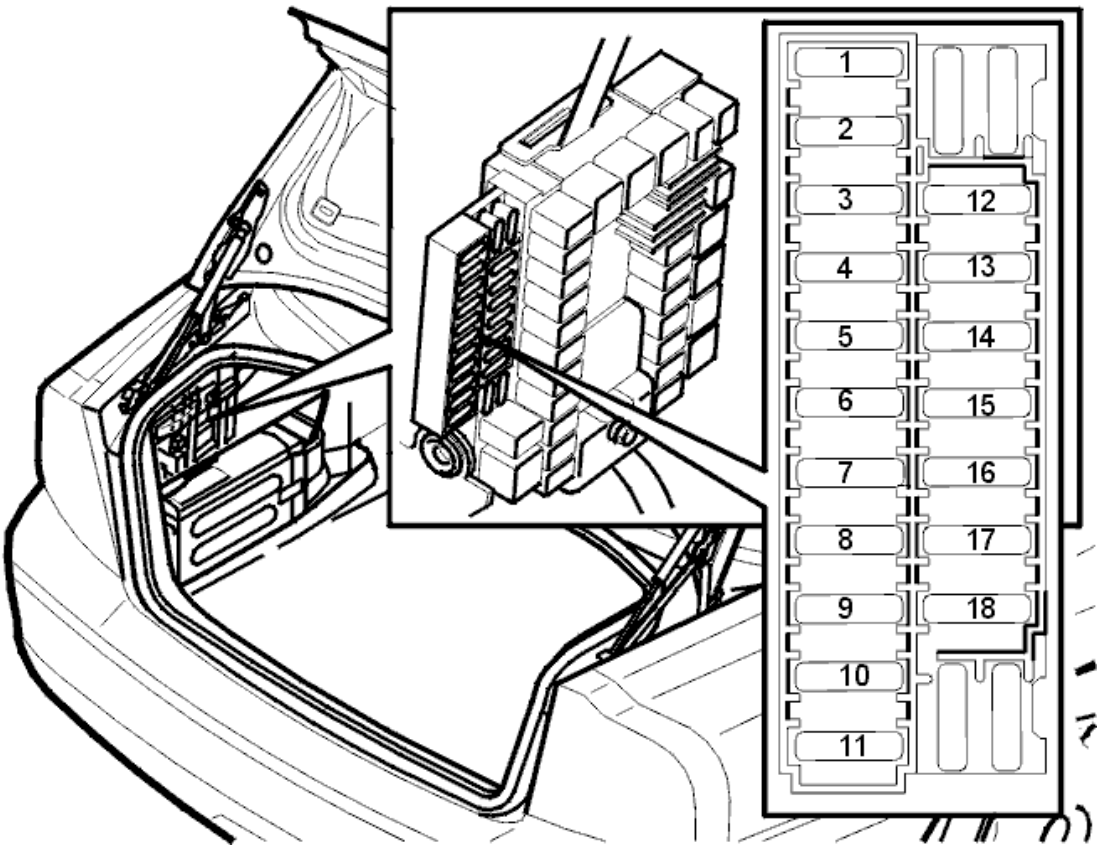

Fig. 389: Fuse Holder (Cargo Compartment)
Courtesy of VOLVO CARS CORPORATION

Is the fuse intact?

- **YES**

  Refer to **CHECKING THE VOLTAGE**

- **NO**

  Refer to **CHECKING FOR A SHORT CIRCUIT**

CHECKING FOR AN OPEN CIRCUIT

Check door control unit connector B7 for contact resistance and oxidation as described in, see **CONTACT RESISTANCE AND OXIDATION** .

Trouble-shoot the wire between fuse holder secondary side (left) and door control unit connector B7 for an open circuit as described in, see **OPEN-CIRCUIT, PERMANENT FAULTS** .

If a fault is detected, check in particular the intermediate connector in the cable harness (1/control unit) for contact resistance and oxidation as described in, see **CONTACT RESISTANCE AND OXIDATION** .

If there is an open circuit the fault should be between the fuse and the common junction point 53/427.

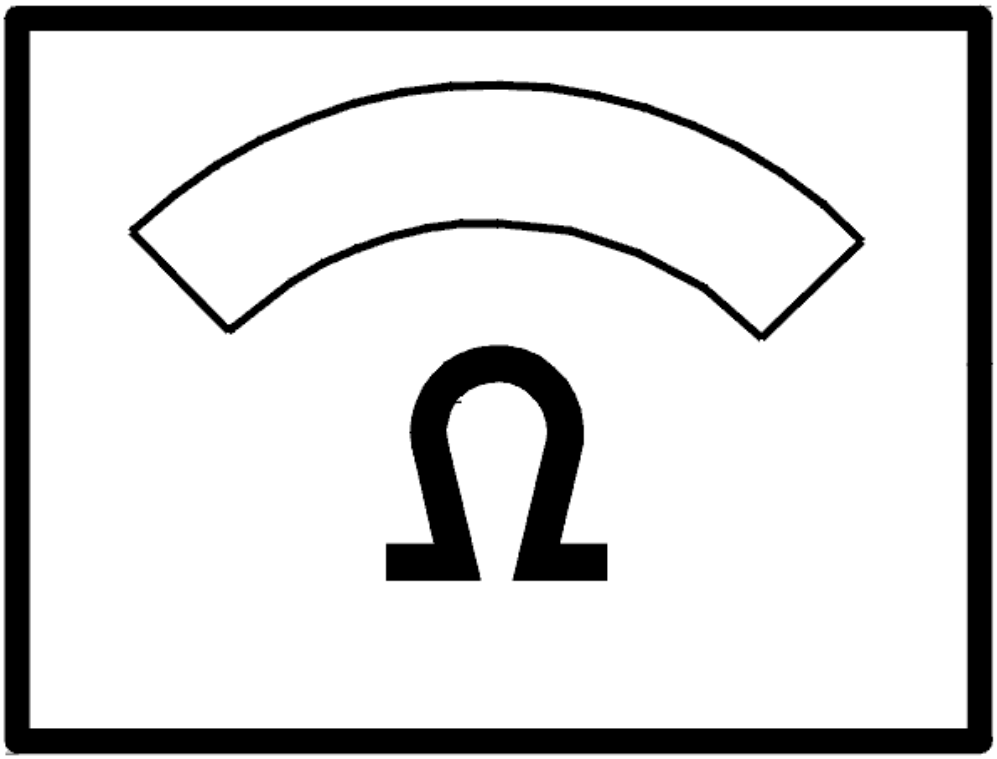

Fig. 390: Identifying Ohm Meter
Courtesy of VOLVO CARS CORPORATION

CHECKING FOR A SHORT CIRCUIT

Check the resistance between the fuse holder secondary side (left) and ground.

The ohmmeter should display infinite resistance.

NOTE: If the value is correct the fault could be intermittent.

Switch to trouble-shooting intermittent short circuits to ground as described in, see **SHORT-CIRCUIT TO GROUND, INTERMITTENT FAULTS** .

If the ohmmeter indicates a fault (short circuit), trouble-shoot the wires between the fuse and door control unit connector B7 for a short circuit to ground as described in, see **SHORT-CIRCUIT TO GROUND, PERMANENT FAULTS** .

The fault should be between the fuse and the common junction point 53/427.

Replace fuse.

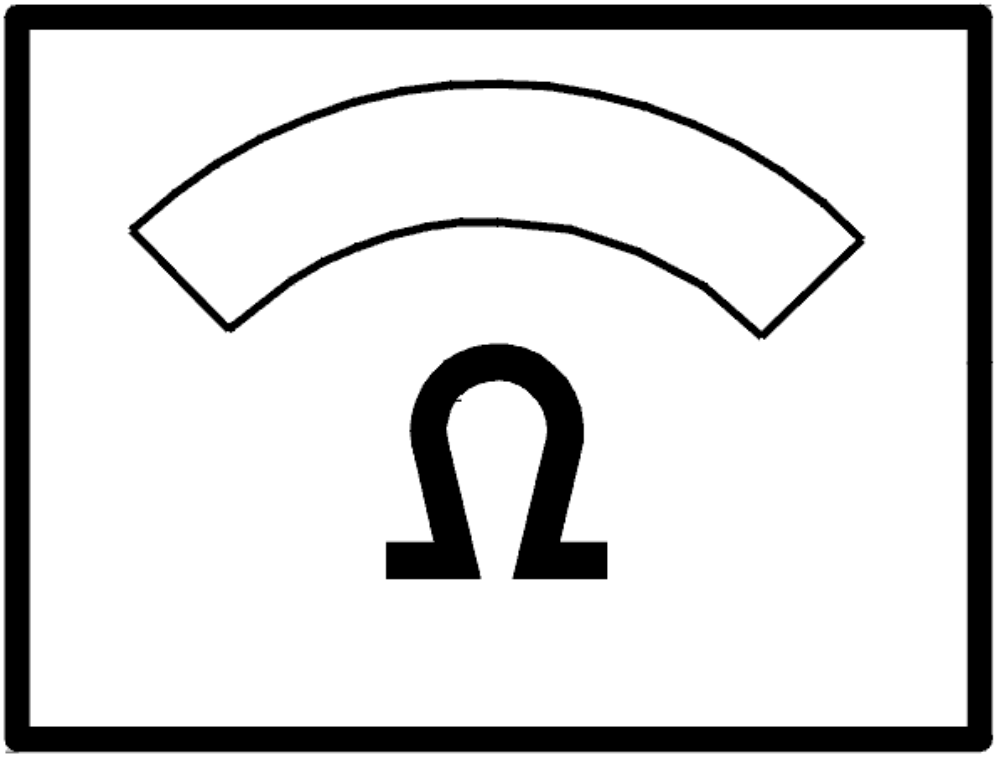

Fig. 391: Identifying Ohm Meter
Courtesy of VOLVO CARS CORPORATION

CHECKING THE VOLTAGE

Check the voltage in the door control unit connector B12.

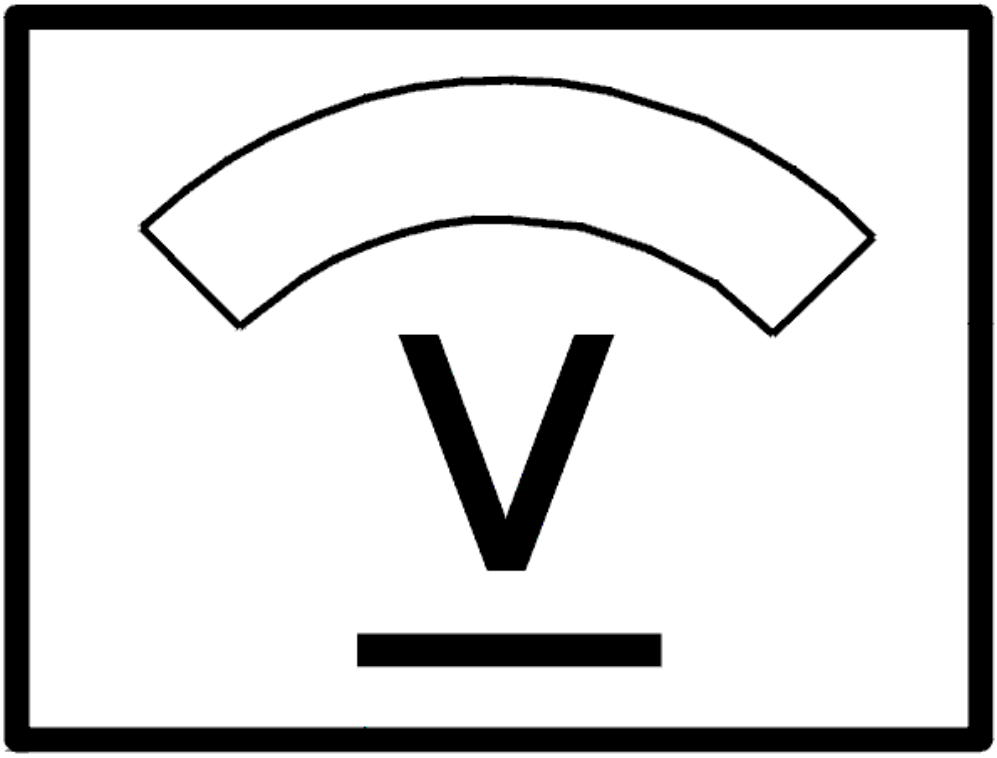

Fig. 392: Identifying Voltage Display
Courtesy of VOLVO CARS CORPORATION

Does the voltmeter show the battery voltage?

- **YES**

  Refer to **CHECKING THE LOCKING MOTOR WIRES**

- **NO**

  Refer to **CHECKING FOR AN OPEN CIRCUIT**

CHECKING FOR AN OPEN CIRCUIT

Check door control unit connector B12 for contact resistance and oxidation as described in, see **CONTACT**

RESISTANCE AND OXIDATION .

Trouble-shoot the wire between fuse holder secondary side (left) and door control unit connector B12 for an open circuit as described in, see **OPEN-CIRCUIT, PERMANENT FAULTS** .

If a fault is detected, check in particular the intermediate connector in the cable harness (1) for contact resistance and oxidation as described in, see **CONTACT RESISTANCE AND OXIDATION** .

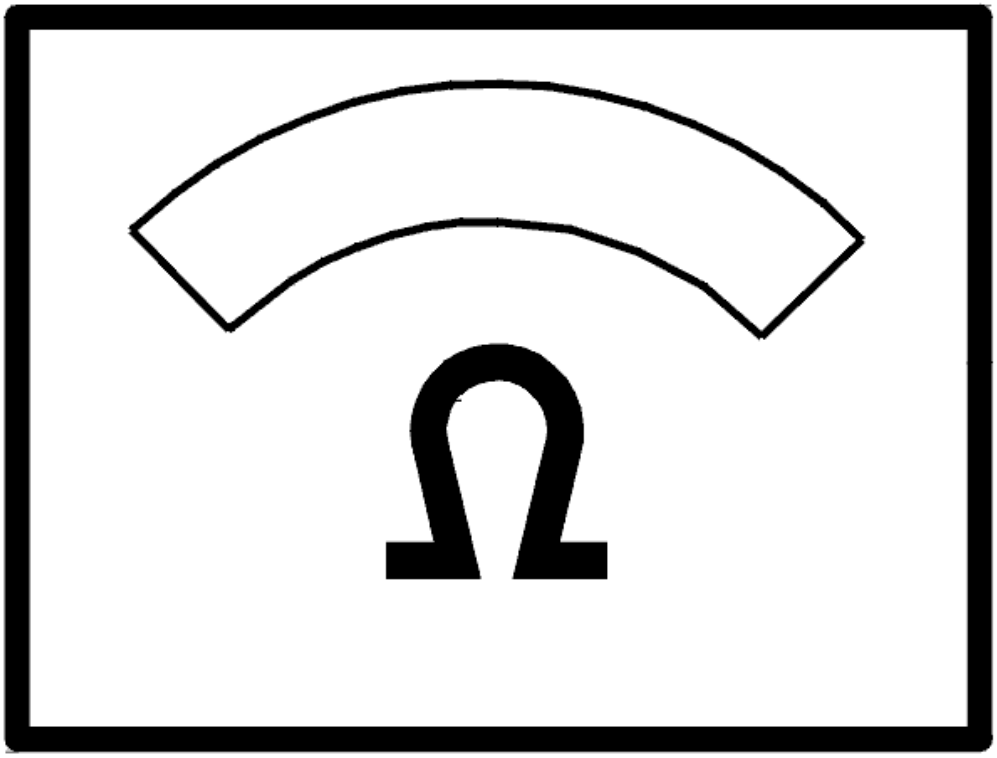

Fig. 393: Identifying Ohm Meter
Courtesy of VOLVO CARS CORPORATION

CHECKING FOR A SHORT CIRCUIT

Check the resistance between the fuse holder secondary side (left) and ground.

The ohmmeter should display infinite resistance.

NOTE: If the value is correct the fault could be intermittent.

Switch to trouble-shooting intermittent short circuits to ground as described in, see **SHORT-CIRCUIT TO GROUND, INTERMITTENT FAULTS** .

If the ohmmeter indicates a fault (short circuit), trouble-shoot the wires between the fuse and door control unit connector B12 for a short circuit to ground as described in, see **SHORT-CIRCUIT TO GROUND, PERMANENT FAULTS** .

Replace fuse.

Additional information

- To access relay/fuse box in the cargo compartment:
  - For -2004, see: **RELAY/FUSE BOX CARGO COMPARTMENT/REAR ELECTRONIC MODULE (REM), REPLACING**
  - For 2005-, see: **REAR ELECTRONIC MODULE (REM), REPLACING** .

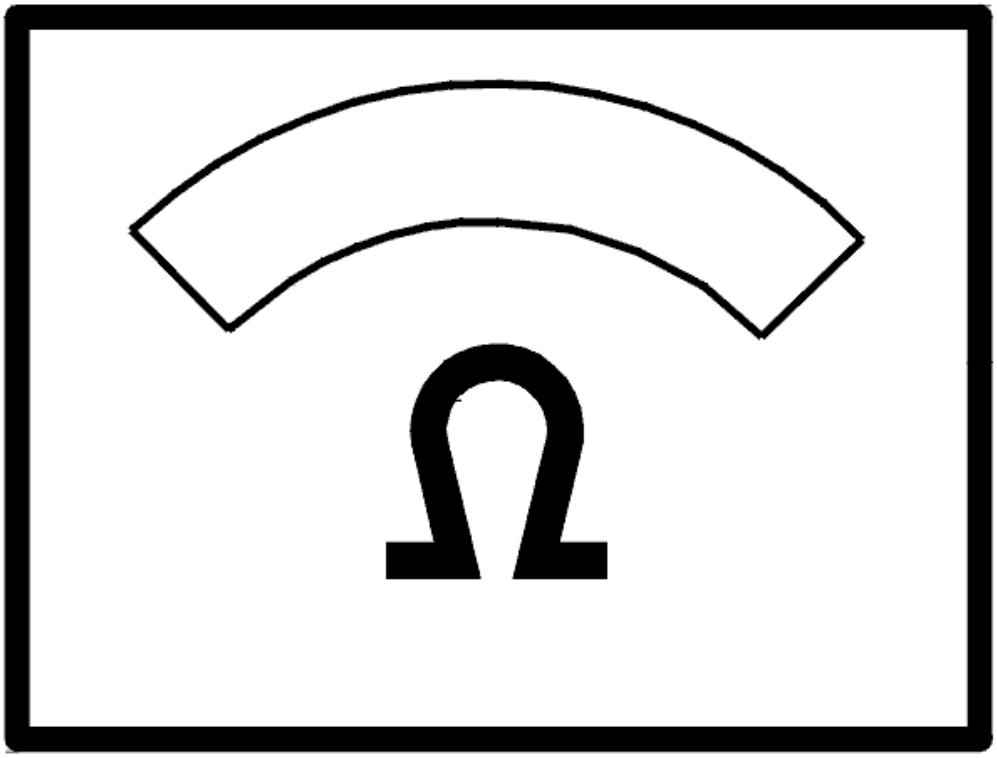

Fig. 394: Identifying Ohm Meter
Courtesy of VOLVO CARS CORPORATION

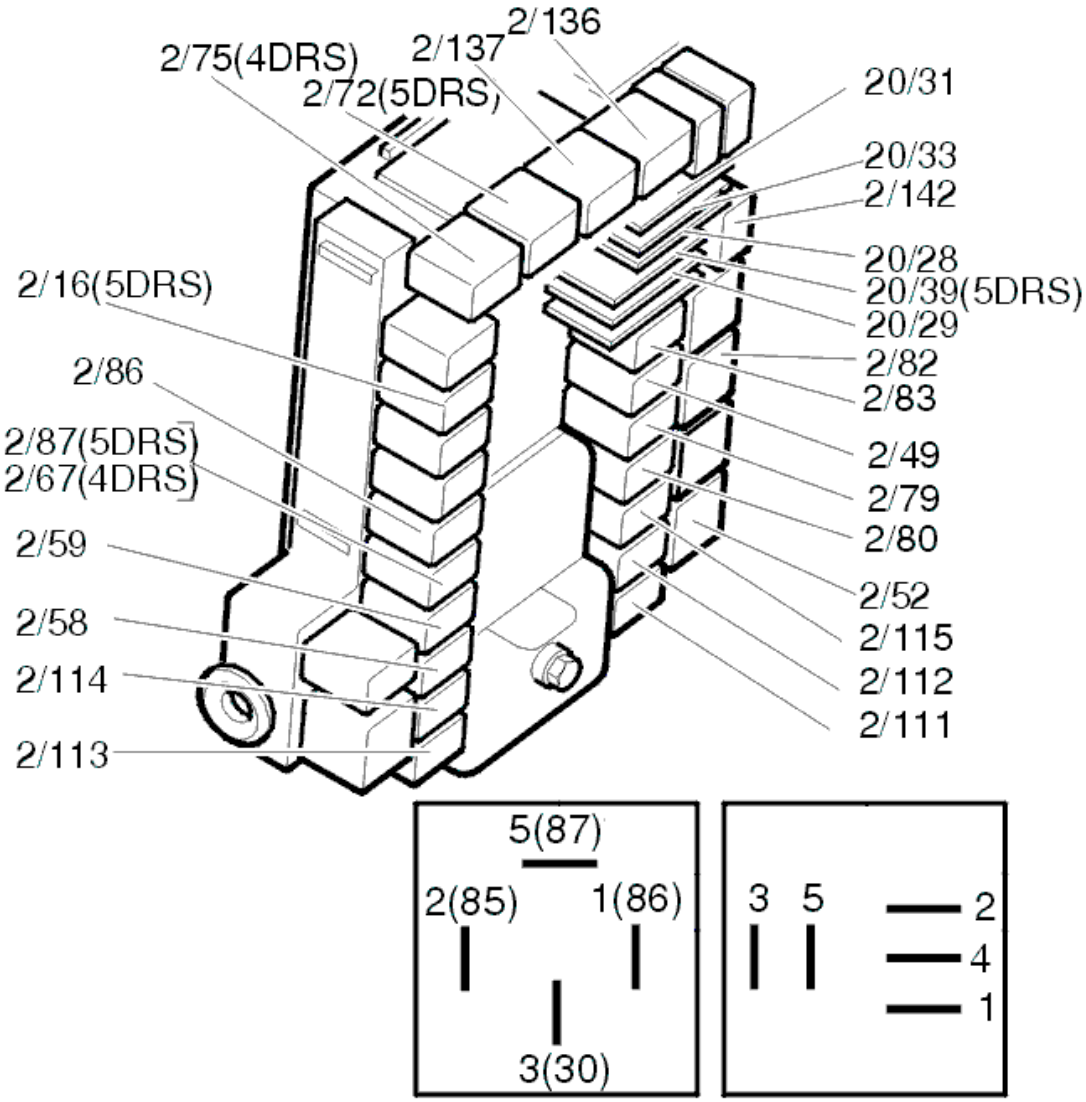

Fig. 395: Identifying Relays
Courtesy of VOLVO CARS CORPORATION

CHECKING THE LOCKING MOTOR WIRES

Check door control unit and lock unit connectors for contact resistance and oxidation as described in, see **CONTACT RESISTANCE AND OXIDATION** .

Trouble-shoot the wire between door control unit connector B2 and lock unit connector 8 for an open circuit as described in, see **OPEN-CIRCUIT, PERMANENT FAULTS** .

Trouble-shoot the wire between door control unit connector B6 and lock unit connector 7 for an open circuit as described in, see **OPEN-CIRCUIT, PERMANENT FAULTS** .

Additional information

- To access/replace the rear electronic module (REM):
  - For -2004, see: **RELAY/FUSE BOX CARGO COMPARTMENT/REAR ELECTRONIC MODULE (REM), REPLACING**
  - For 2005-, see: **REAR ELECTRONIC MODULE (REM), REPLACING** .

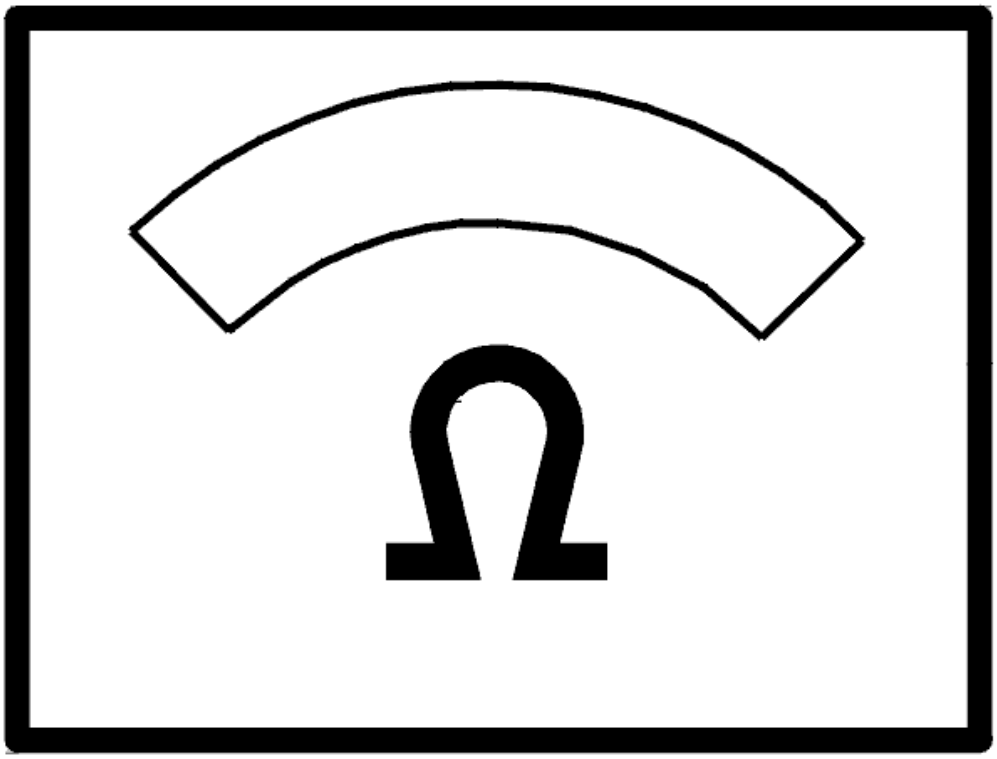

Fig. 396: Identifying Ohm Meter
Courtesy of VOLVO CARS CORPORATION

Is there a fault?

- **YES**

  OKAY: Troubleshooting has been completed.

- **NO**

Refer to **REPLACING THE COMPONENT**

REPLACING THE COMPONENT

Replace lock unit as described in, see **REPLACING THE SWITCH FOR THE LOCK UNIT / CARGO COMPARTMENT LIGHTING** .

Is there a fault?

- **YES**

  OKAY: Troubleshooting has been completed.

- **NO**

  Refer to **REPLACING THE COMPONENT**

REPLACING THE COMPONENT

Replace control unit.

- For -2004, see: **RELAY/FUSE BOX CARGO COMPARTMENT/REAR ELECTRONIC MODULE (REM), REPLACING**
- For 2005-, see: **REAR ELECTRONIC MODULE (REM), REPLACING** .

CHECKING THE REAR LEFT DOOR

CHECK

Is the lock to the other rear door not working?

- **YES**

  Refer to **CHECKING THE FUSE**

- **NO**

  Refer to **REPLACING THE COMPONENT**

REPLACING THE COMPONENT

Replace the relays for locking (2/111) and unlocking (2/112) in the cargo compartment relay/fuse box. At the same time check relay socket contacts for contact resistance and oxidation as described in, see **CONTACT RESISTANCE AND OXIDATION** .

Additional information

- To access relay/fuse box in the cargo compartment:

- For -2004, see: **RELAY/FUSE BOX CARGO COMPARTMENT/REAR ELECTRONIC MODULE (REM), REPLACING**
- For 2005-, see: **REAR ELECTRONIC MODULE (REM), REPLACING** .

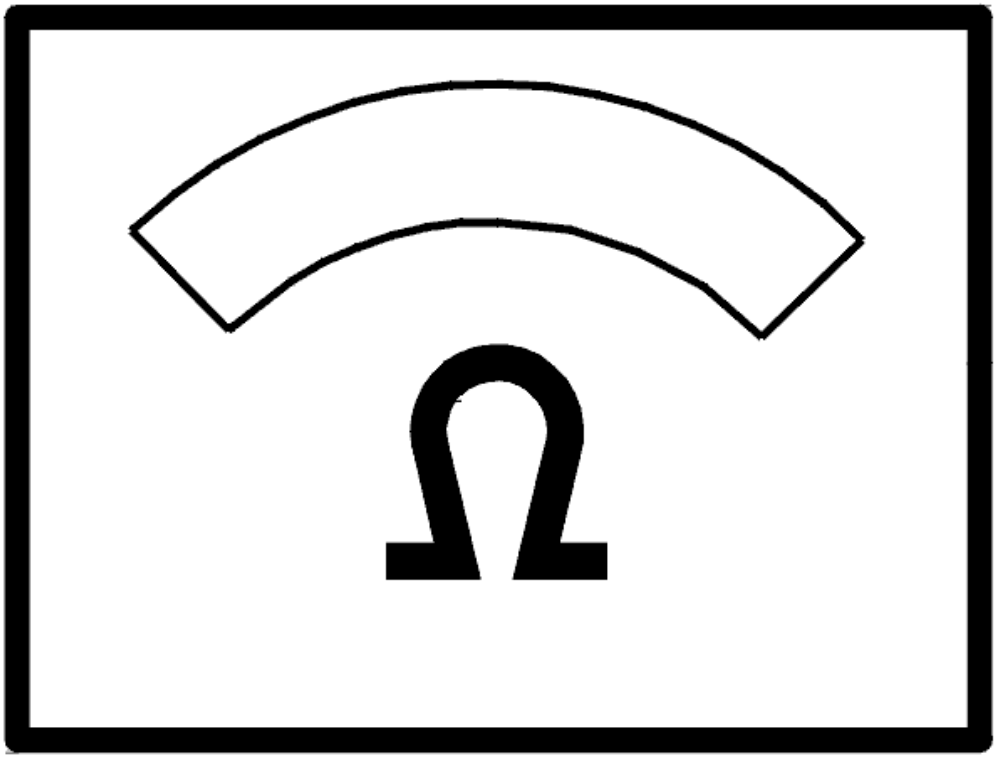

Fig. 397: Identifying Ohm Meter
Courtesy of VOLVO CARS CORPORATION

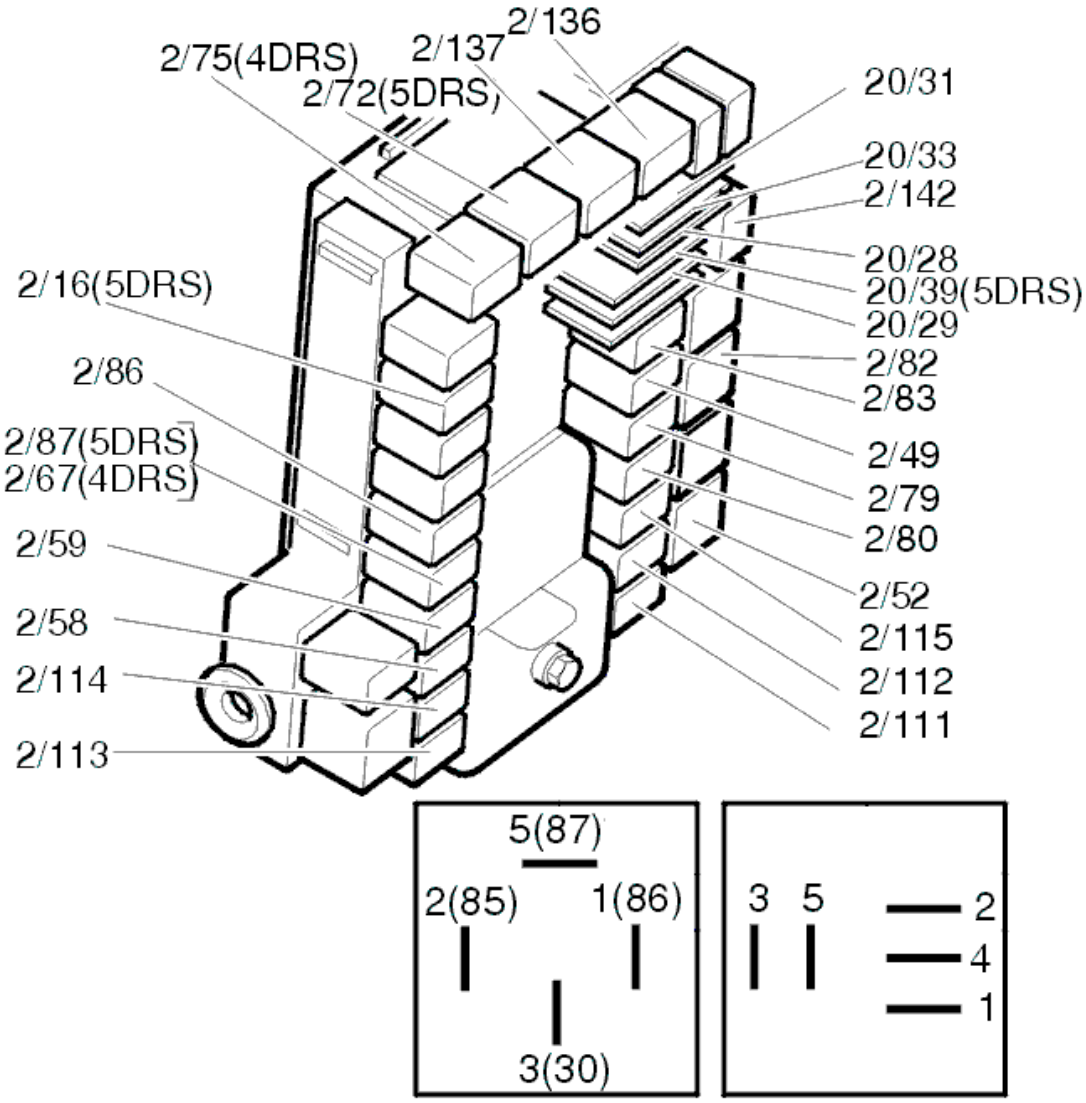

Fig. 398: Identifying Relays
Courtesy of VOLVO CARS CORPORATION

Is there a fault?

- **YES**

  OKAY: Troubleshooting has been completed.

- **NO**

  Refer to **CIRCUIT TEST**

CIRCUIT TEST

The fault is caused by an open circuit in one of the relay circuits or in the lock unit. To find out which circuit

contains the fault:

Disconnect the lock unit connector.

Check the contacts for contact resistance and oxidation as described in, see **CONTACT RESISTANCE AND OXIDATION** .

Check resistance between 4 and 6 on cable connector.

Additional information

- To access/replace the lock unit, see **LOCK MECHANISM REAR SIDE DOOR, REPLACING** .

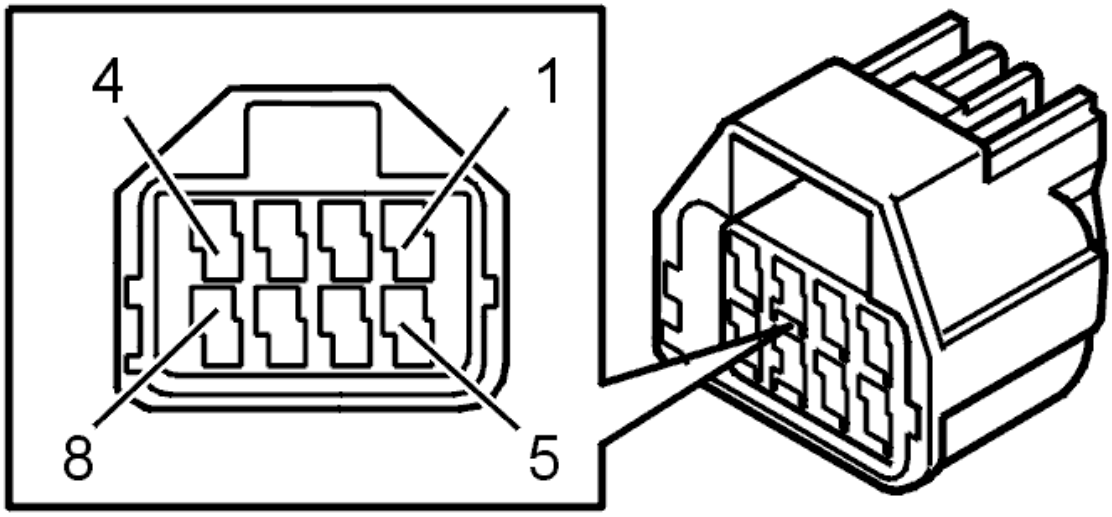

Fig. 399: Identifying Connector Terminals
Courtesy of VOLVO CARS CORPORATION

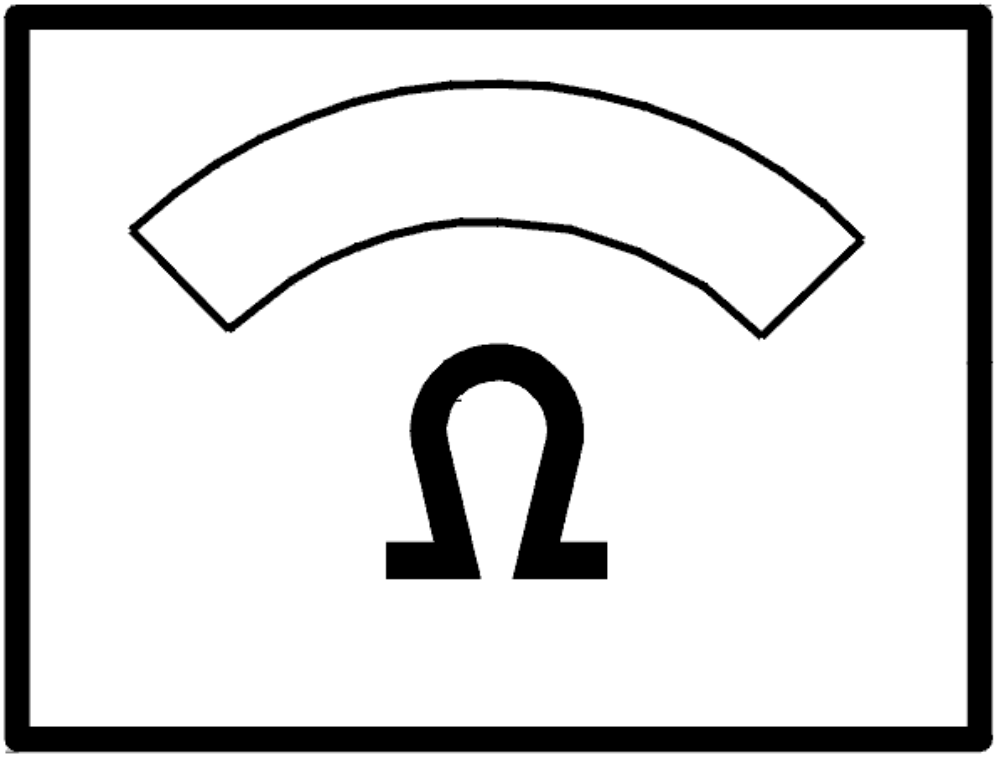

Fig. 400: Identifying Ohm Meter
Courtesy of VOLVO CARS CORPORATION

The ohmmeter should display 0 ohm.

- **OK**

  Refer to **CHECKING THE COMPONENTS**

- **NOT OK**

  Refer to **CIRCUIT TEST, CONTINUED**

CIRCUIT TEST, CONTINUED

Check the resistance between 4 and ground and between 6 and ground on the cable connector.

The ohmmeter should display 0 ohm.

1. The ohmmeter shows a fault between 4 and ground

   Refer to **CHECKING THE UNLOCKING RELAY CIRCUIT**

2. The ohmmeter shows a fault between 6 and ground.

   Refer to **CHECKING THE LOCKING RELAY CIRCUIT**

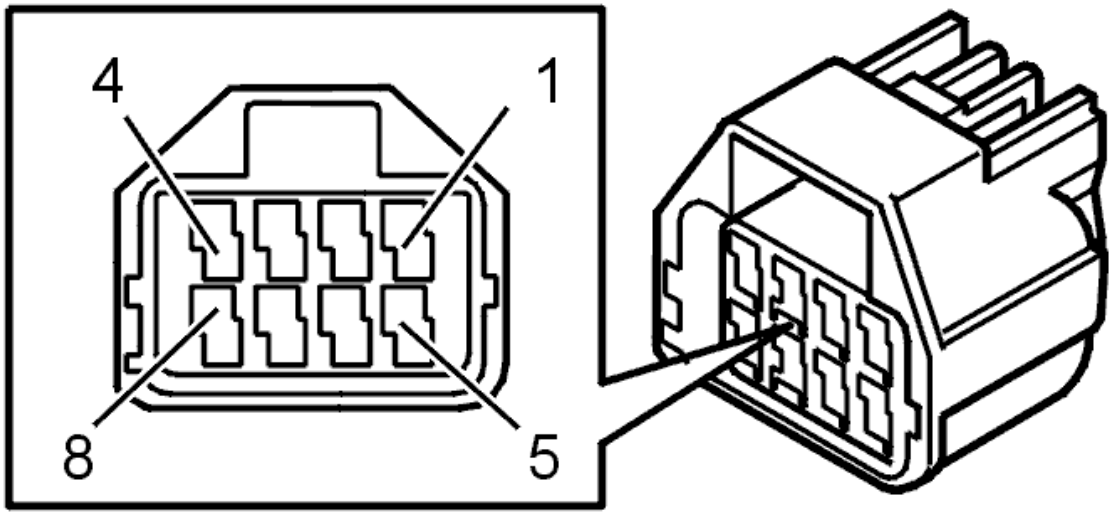

Fig. 401: Identifying Connector Terminals
Courtesy of VOLVO CARS CORPORATION

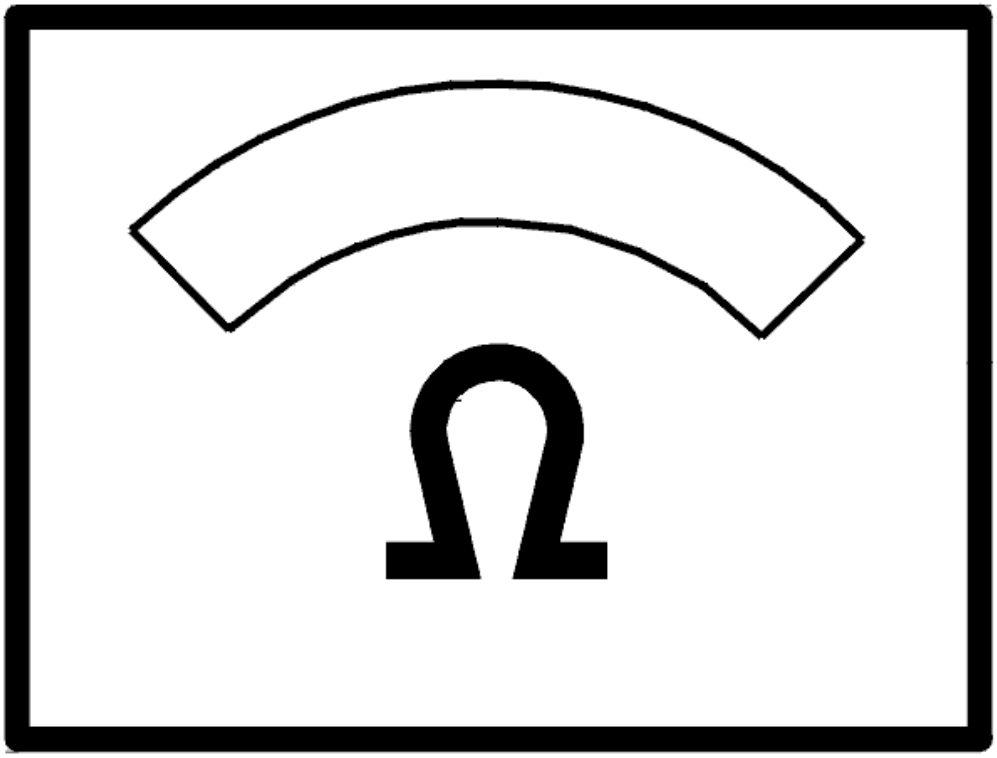

Fig. 402: Identifying Ohm Meter
Courtesy of VOLVO CARS CORPORATION

CHECKING THE LOCKING RELAY CIRCUIT

Remove the locking relay (2/111).

Check the wire between 4 in the cable connector and 3 in the relay socket for an open circuit as described in, see **OPEN-CIRCUIT, PERMANENT FAULTS** .

If a fault is detected, check in particular the intermediate connector in the cable harness (2) for contact resistance and oxidation as described in, see **CONTACT RESISTANCE AND OXIDATION** .

Do the necessary corrective action.

If no fault is found, check the resistance between 4 in the relay socket and ground.

The ohmmeter should display 0 ohm.

If the resistance deviates, replace the rear electronic module (REM).

Additional information

- To access/replace the rear electronic module (REM):
  - For -2004, see: **RELAY/FUSE BOX CARGO COMPARTMENT/REAR ELECTRONIC MODULE (REM), REPLACING**
  - For 2005-, see: **REAR ELECTRONIC MODULE (REM), REPLACING** .

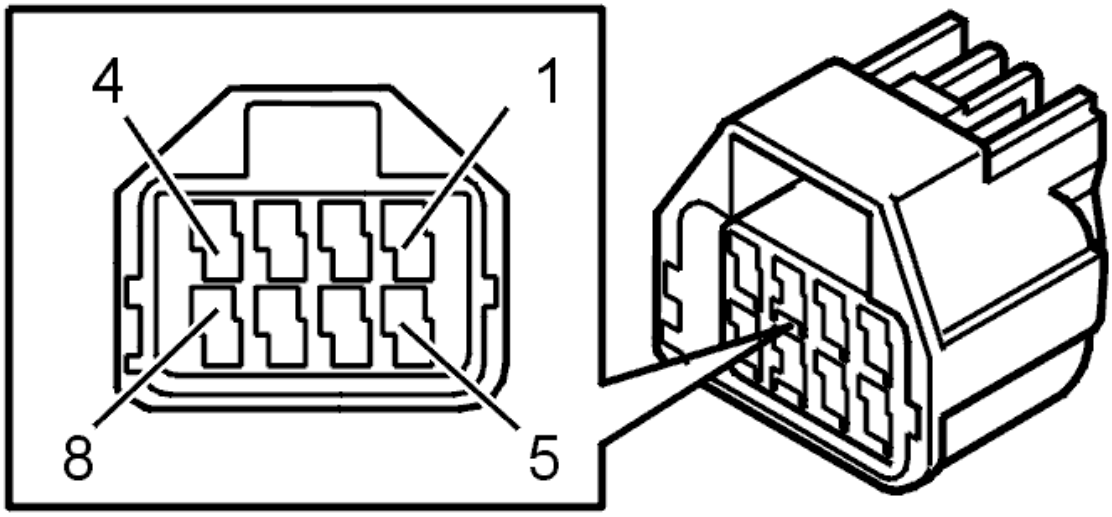

Fig. 403: Identifying Connector Terminals
Courtesy of VOLVO CARS CORPORATION

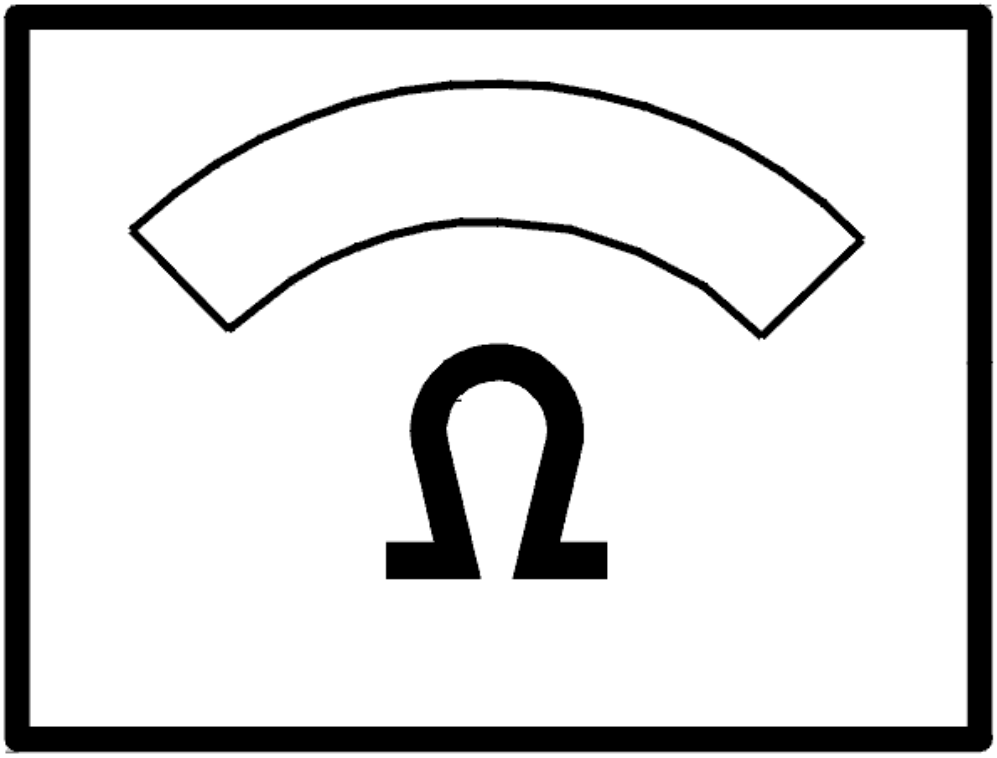

Fig. 404: Identifying Ohm Meter
Courtesy of VOLVO CARS CORPORATION

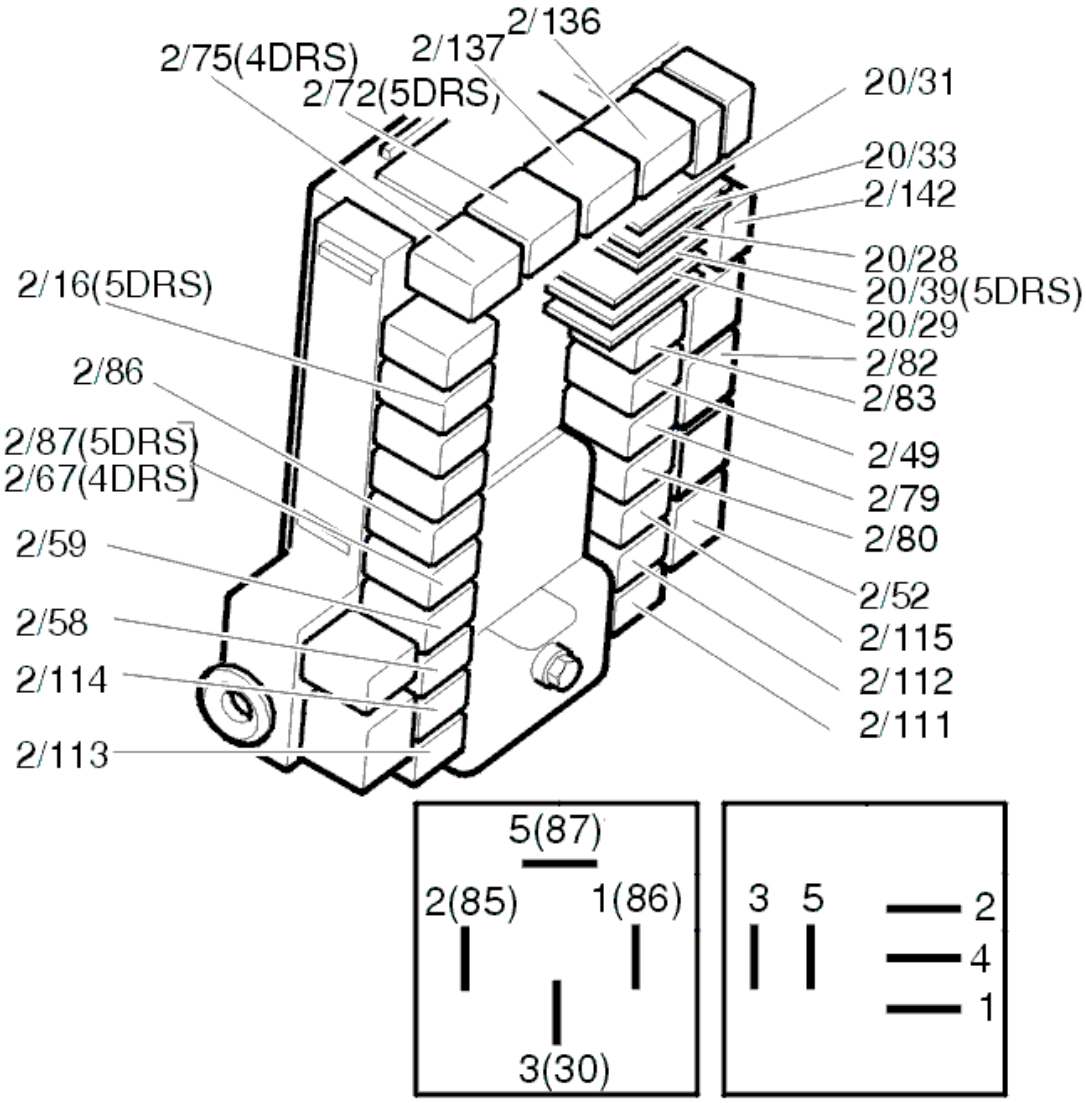

Fig. 405: Identifying Relays
Courtesy of VOLVO CARS CORPORATION

CHECKING THE UNLOCKING RELAY CIRCUIT

Remove the unlocking relay (2/112).

Check the wire between 6 in the cable connector and 3 in the relay socket for an open circuit as described in, see **OPEN-CIRCUIT, PERMANENT FAULTS** .

If a fault is detected, check in particular the intermediate connector in the cable harness (2) for contact resistance and oxidation as described in, see **CONTACT RESISTANCE AND OXIDATION** .

Do the necessary corrective action.

If no fault is found, check the resistance between 4 in the relay socket and ground.

The ohmmeter should display 0 ohm.

If the resistance deviates, replace the rear electronic module (REM).

Additional information

- To access/replace the rear electronic module (REM):
  - For -2004, see: **RELAY/FUSE BOX CARGO COMPARTMENT/REAR ELECTRONIC MODULE (REM), REPLACING**
  - For 2005-, see: **REAR ELECTRONIC MODULE (REM), REPLACING** .

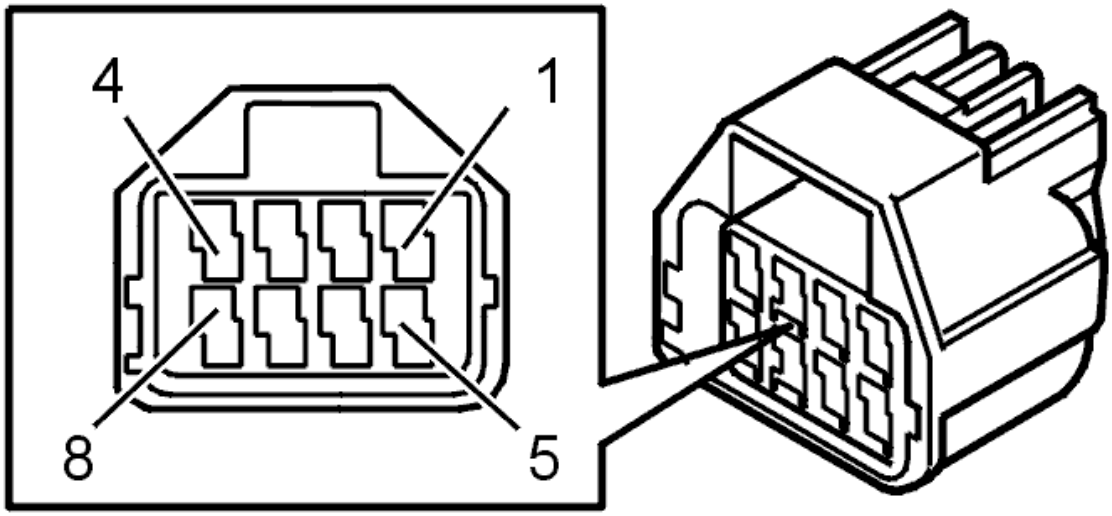

Fig. 406: Identifying Connector Terminals
Courtesy of VOLVO CARS CORPORATION

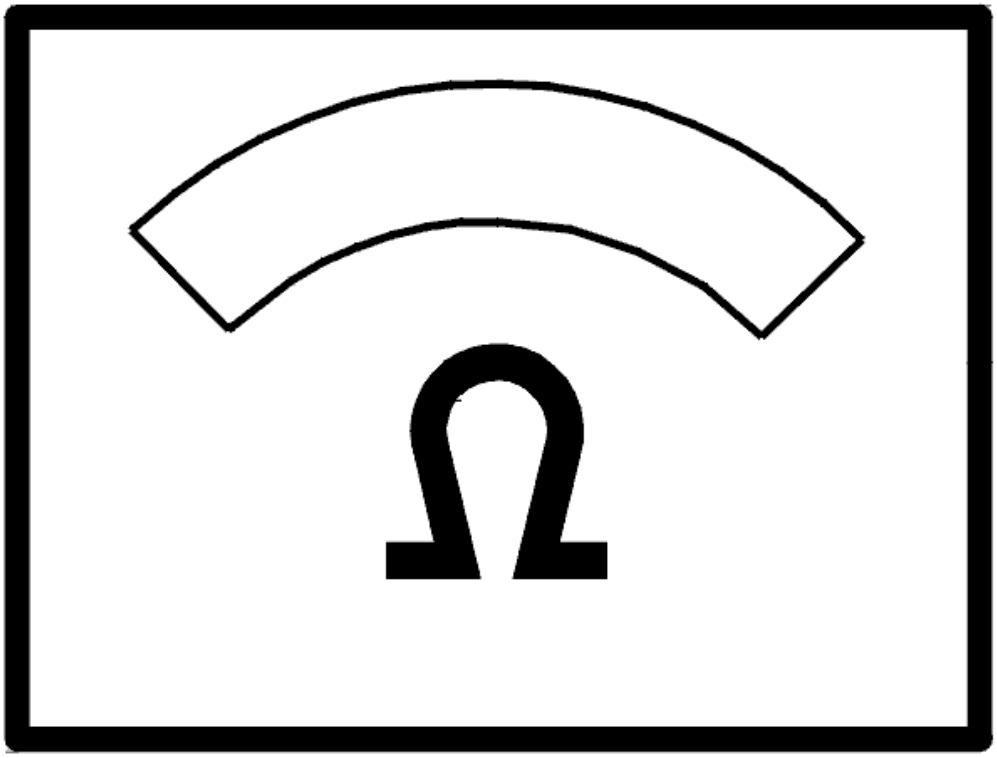

Fig. 407: Identifying Ohm Meter
Courtesy of VOLVO CARS CORPORATION

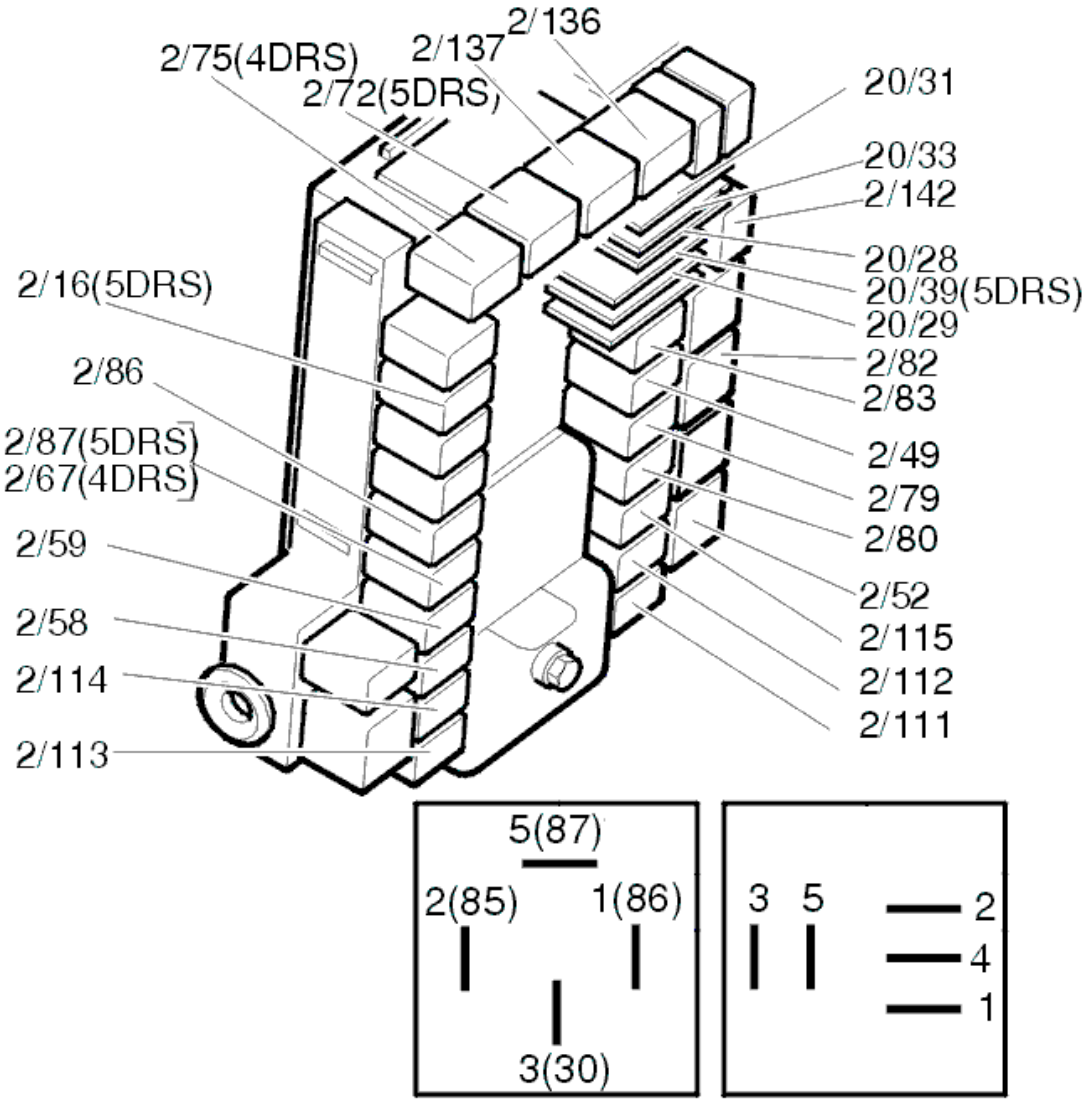

Fig. 408: Identifying Relays
Courtesy of VOLVO CARS CORPORATION

CHECKING THE COMPONENTS

Check the resistance between pin 4 and 6 in the lock unit chassis contact.

The ohmmeter should display 5 ohm.

If the resistance deviates, replace the lock unit.

Additional information

- To access the rear electronic module (REM):
  - For -2004, see: **RELAY/FUSE BOX CARGO COMPARTMENT/REAR ELECTRONIC MODULE (REM), REPLACING**

- For 2005-, see: **REAR ELECTRONIC MODULE (REM), REPLACING** .
- To access/replace the lock unit, see **LOCK MECHANISM REAR SIDE DOOR, REPLACING**
- For information on signals and additional values, see **SIGNAL SPECIFICATION** .

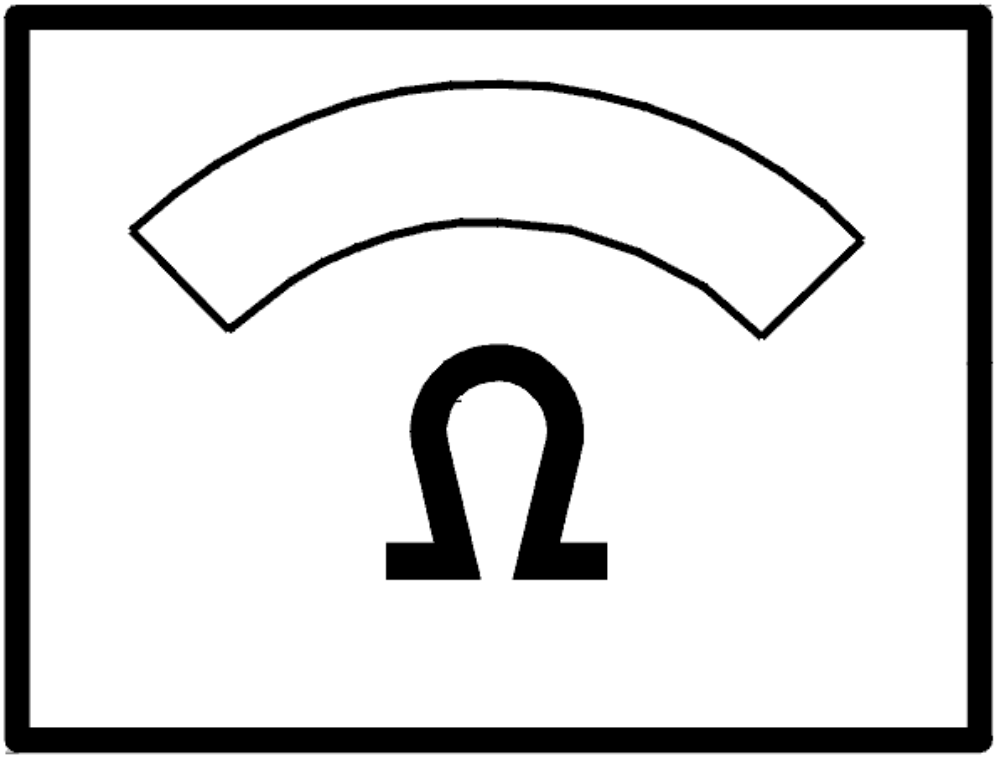

Fig. 409: Identifying Ohm Meter
Courtesy of VOLVO CARS CORPORATION

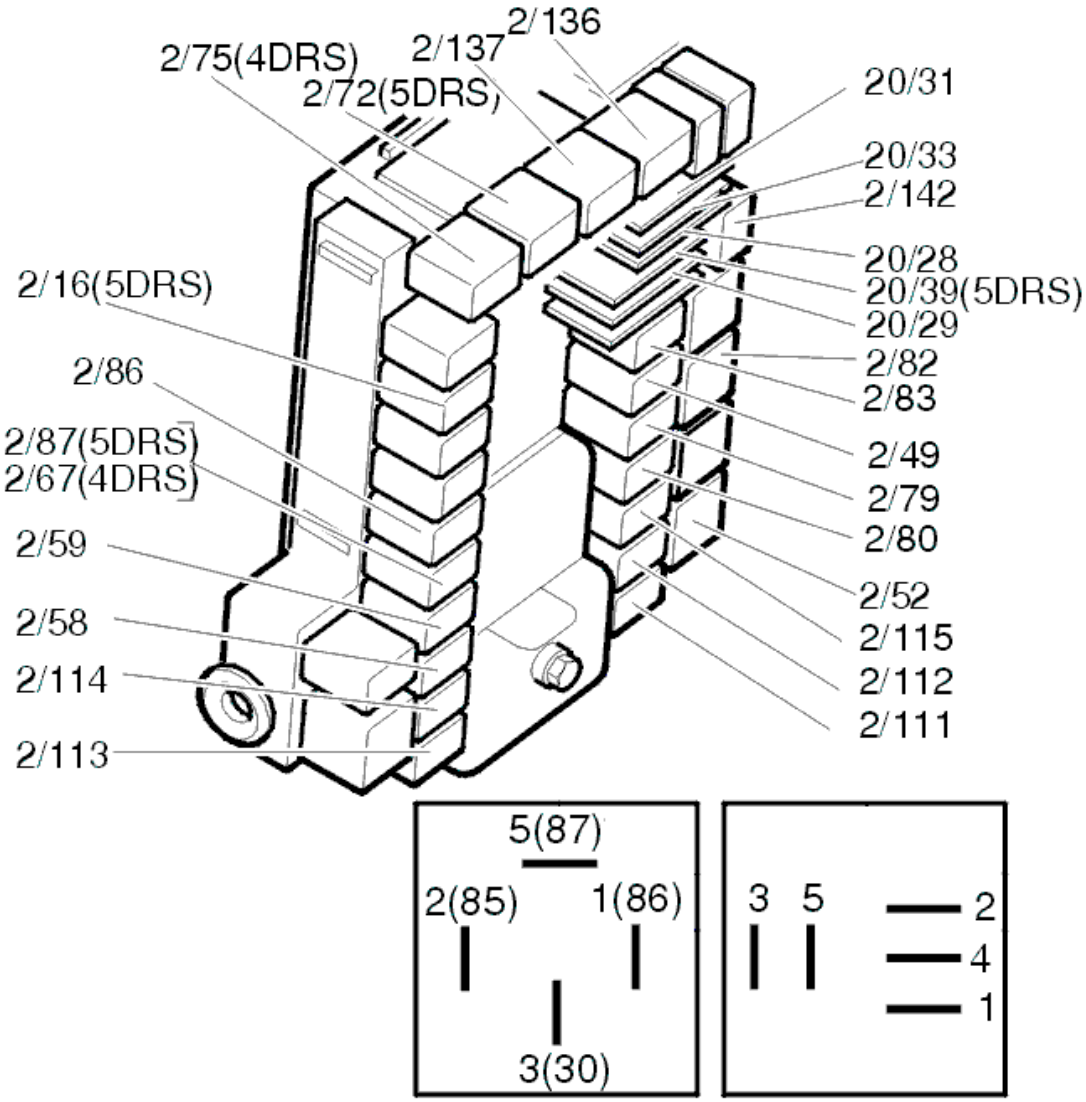

Fig. 410: Identifying Relays
Courtesy of VOLVO CARS CORPORATION

Is there a fault?

- **YES**

  OKAY: Troubleshooting has been completed.

- **NO**

  Refer to **CHECKING THE RELAY SUPPLY**

CHECKING THE RELAY SUPPLY

Remove the locking relay (2/111).

Measure the voltage between 5 in the relay socket and ground.

The voltmeter should display battery voltage.

HINT: If the value is OK but the fault still remains, connect the contacts to the lock module and link between 3 and 5 in the relay socket to force-feed the lock motor while continuing to test.

Additional information

- To access the rear electronic module (REM):
  - For -2004, see: **RELAY/FUSE BOX CARGO COMPARTMENT/REAR ELECTRONIC MODULE (REM), REPLACING**
  - For 2005-, see: **REAR ELECTRONIC MODULE (REM), REPLACING** .

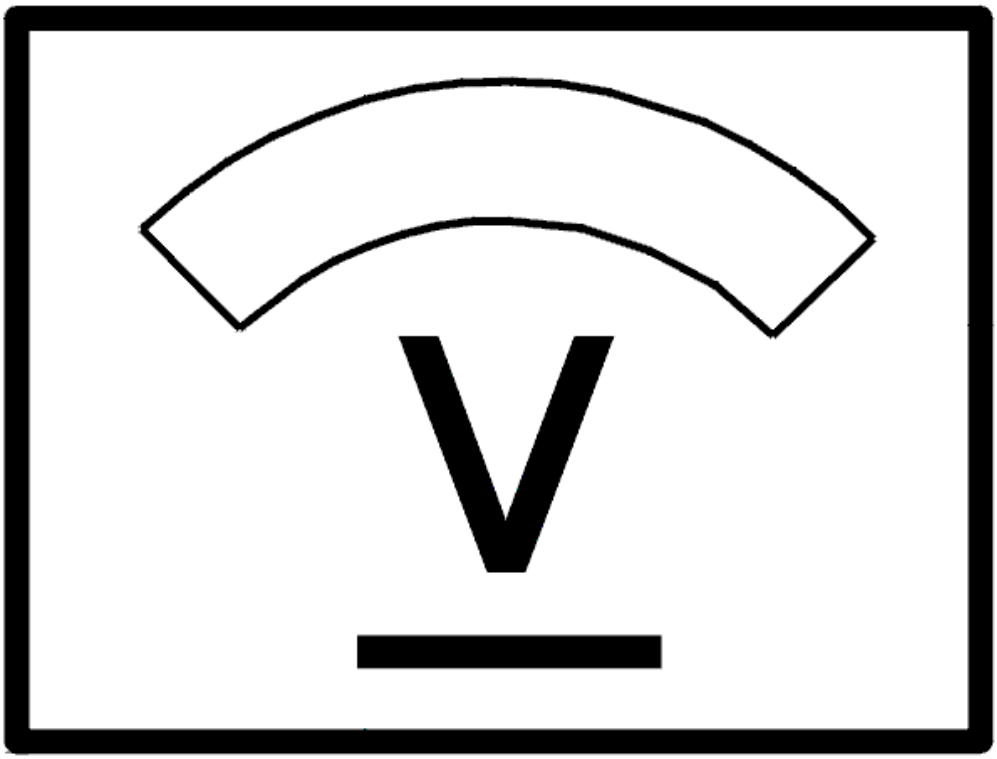

Fig. 411: Identifying Voltage Display

Courtesy of VOLVO CARS CORPORATION

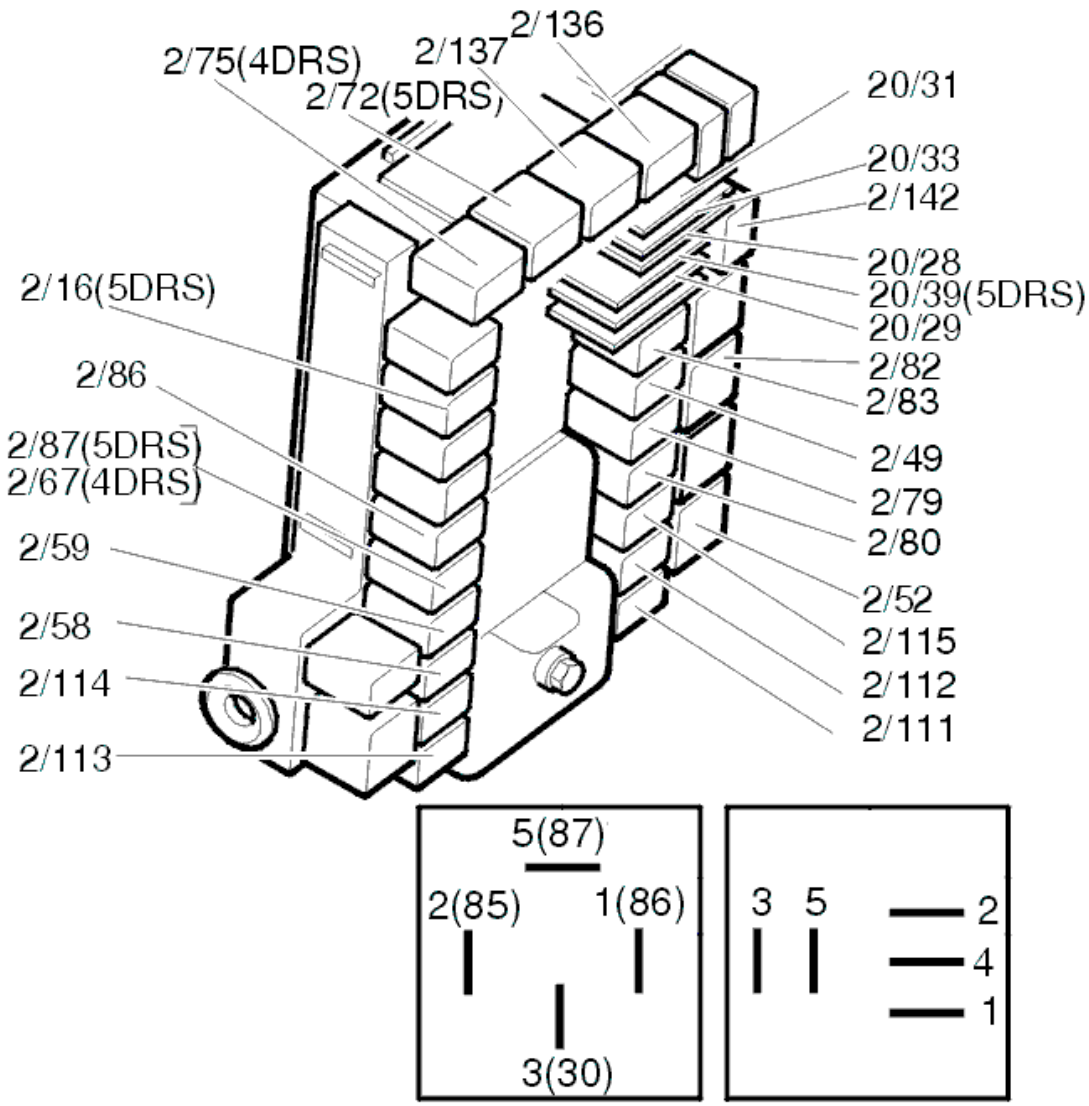

Fig. 412: Identifying Relays
Courtesy of VOLVO CARS CORPORATION

Does the voltmeter show the battery voltage?

- **YES**

  OKAY: Troubleshooting has been completed.

- **NO**

  Refer to **CHECKING THE FUSE**

CHECKING THE FUSE

Remove the fuse 11D/8 in cargo compartment fuse box.

Check that fuse 11D/8 is intact and check for contact resistance and oxidation as described in, see **CONTACT RESISTANCE AND OXIDATION** .

Additional information

- To access the rear electronic module (REM):
  - For -2004, see: **RELAY/FUSE BOX CARGO COMPARTMENT/REAR ELECTRONIC MODULE (REM), REPLACING**
  - For 2005-, see: **REAR ELECTRONIC MODULE (REM), REPLACING** .

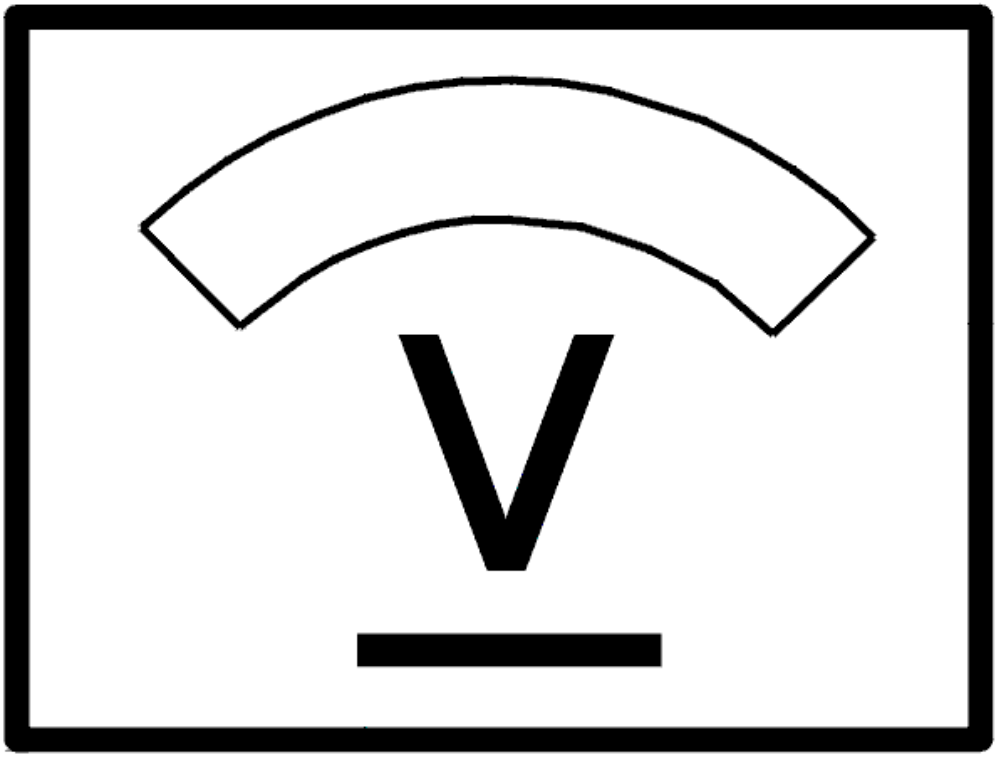

Fig. 413: Identifying Voltage Display
Courtesy of VOLVO CARS CORPORATION

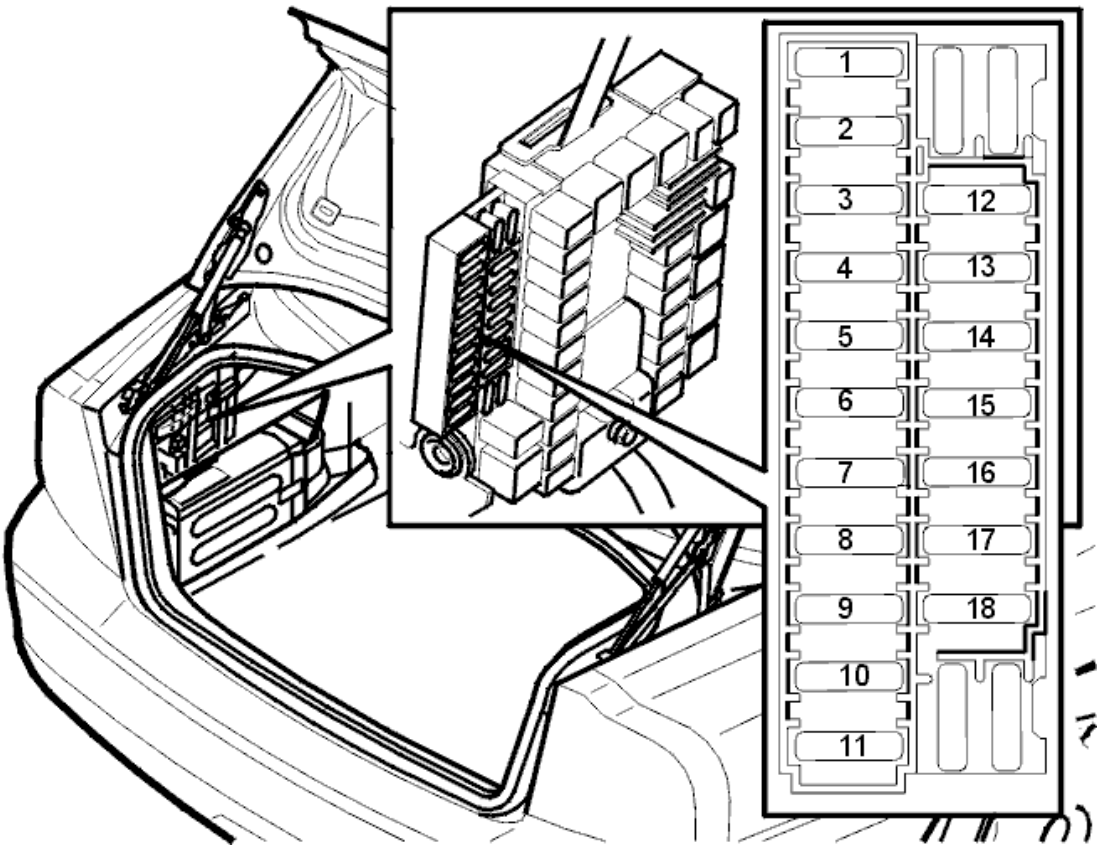

Fig. 414: Fuse Holder (Cargo Compartment)
Courtesy of VOLVO CARS CORPORATION

Is the fuse intact?

- **YES**

  Refer to **CHECKING FOR AN OPEN CIRCUIT**

- **NO**

  Refer to **CHECKING FOR A SHORT CIRCUIT**

CHECKING FOR AN OPEN CIRCUIT

Remove relay 2/111 in the rear electronic module (REM) and trouble-shoot the wire between the fuse holder secondary side (left) and 5 in the relay socket for an open circuit as described in, see **OPEN-CIRCUIT, PERMANENT FAULTS** .

Additional information

- To access the rear electronic module (REM):
  - For -2004, see: **RELAY/FUSE BOX CARGO COMPARTMENT/REAR ELECTRONIC MODULE (REM), REPLACING**

- For 2005-, see: **REAR ELECTRONIC MODULE (REM), REPLACING** .

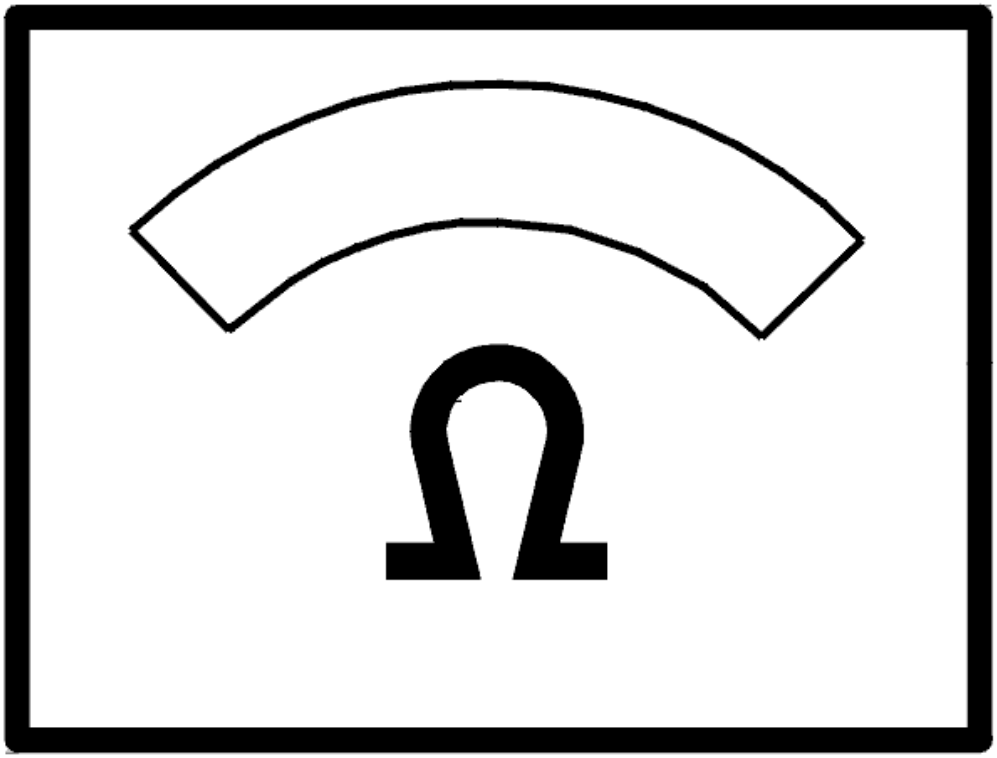

Fig. 415: Identifying Ohm Meter
Courtesy of VOLVO CARS CORPORATION

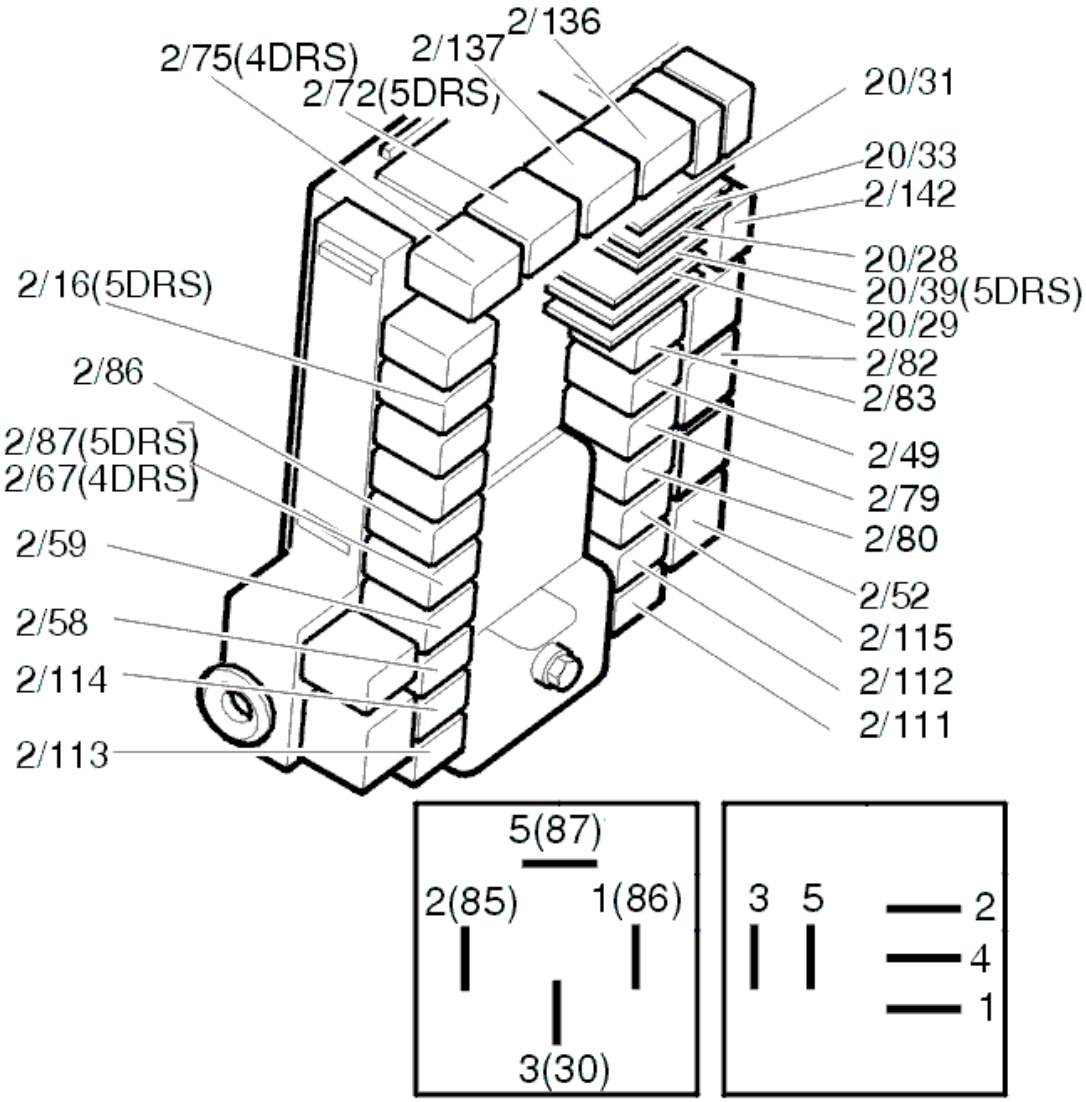

Fig. 416: Identifying Relays
Courtesy of VOLVO CARS CORPORATION

CHECKING FOR A SHORT CIRCUIT

Check the resistance between the fuse holder secondary side (left) and ground.

The ohmmeter should display infinite resistance.

If the value is correct, replace the fuse.

If the value deviates, trouble-shoot all the relay circuits involved for a short circuit to ground as described in, see **SHORT-CIRCUIT TO GROUND, PERMANENT FAULTS** .

HINT: Replace fuse.

HINT: If the fuse works straight away the fault is a short circuit on the relay supply wire.

HINT: If the fuse works when activating each relay the short circuit is on the component supply wire

HINT: The relay circuits involved belong to relays 2/111, 2/112, 2/113, 2/114, 2/115, 2/56, 2/59 and 2/67.

Additional information

- To access the rear electronic module (REM):
  - For -2004, see: **RELAY/FUSE BOX CARGO COMPARTMENT/REAR ELECTRONIC MODULE (REM), REPLACING**
  - For 2005-, see: **REAR ELECTRONIC MODULE (REM), REPLACING** .

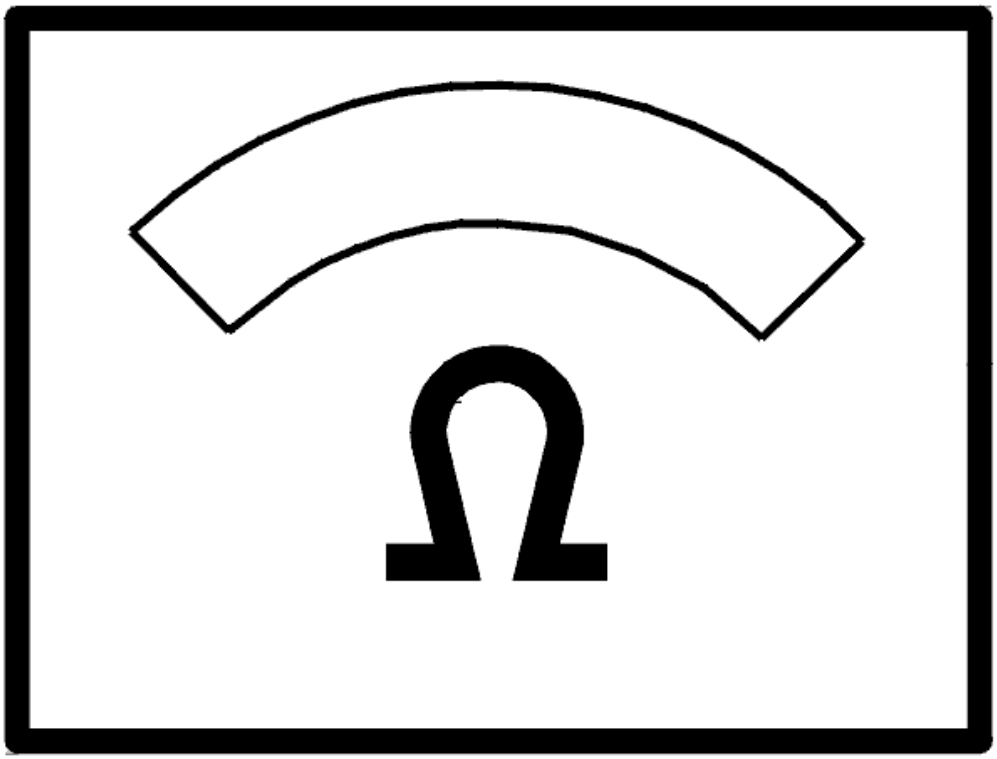

Fig. 417: Identifying Ohm Meter
Courtesy of VOLVO CARS CORPORATION

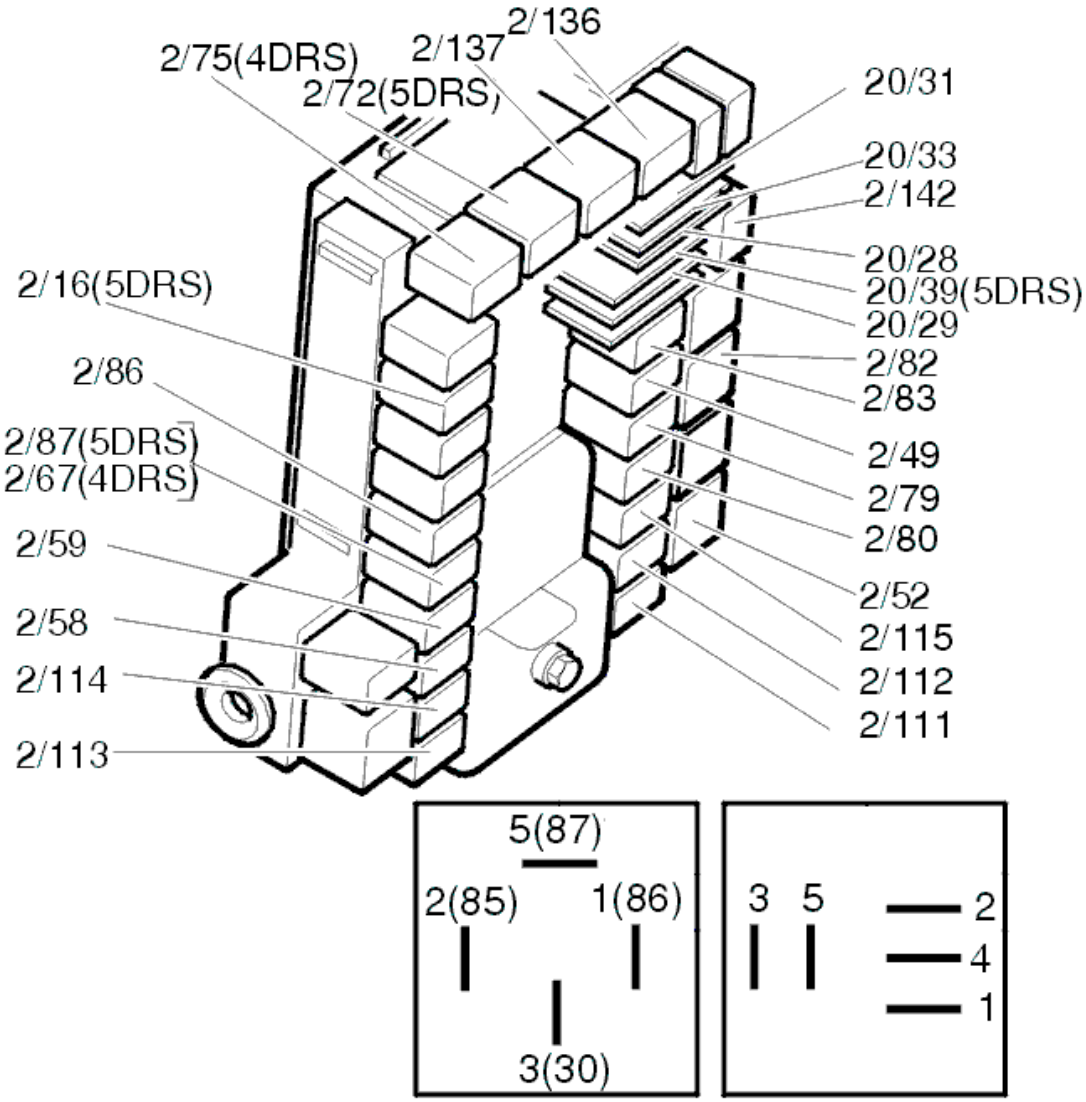

Fig. 418: Identifying Relays
Courtesy of VOLVO CARS CORPORATION

CHECKING THE REAR RIGHT DOOR

CHECK

Is the lock to the other rear door not working?

- **YES**

  Refer to **CHECKING THE FUSE**

- **NO**

  Refer to **REPLACING THE COMPONENT**

REPLACING THE COMPONENT

Replace the relays for locking (2/113) and unlocking (2/114) in the cargo compartment relay/fuse box. At the same time check relay socket contacts for contact resistance and oxidation as described in, see **CONTACT RESISTANCE AND OXIDATION** .

Additional information

- To access relay/fuse box in the cargo compartment:
  - For -2004, see: **RELAY/FUSE BOX CARGO COMPARTMENT/REAR ELECTRONIC MODULE (REM), REPLACING**
  - For 2005-, see: **REAR ELECTRONIC MODULE (REM), REPLACING** .

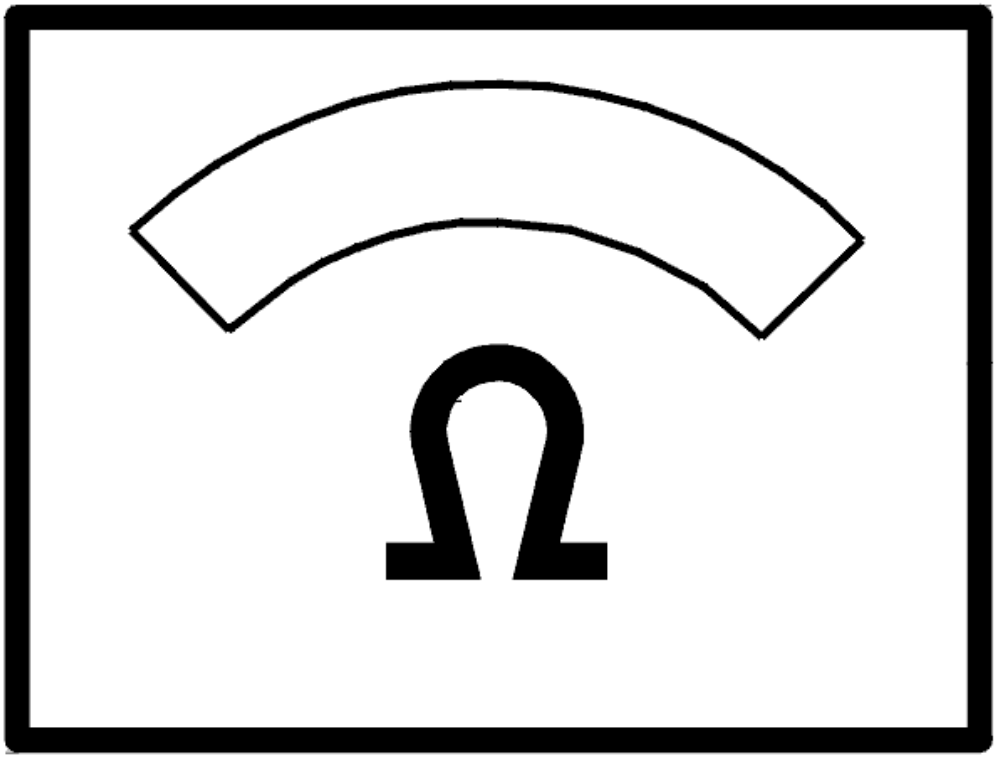

Fig. 419: Identifying Ohm Meter
Courtesy of VOLVO CARS CORPORATION

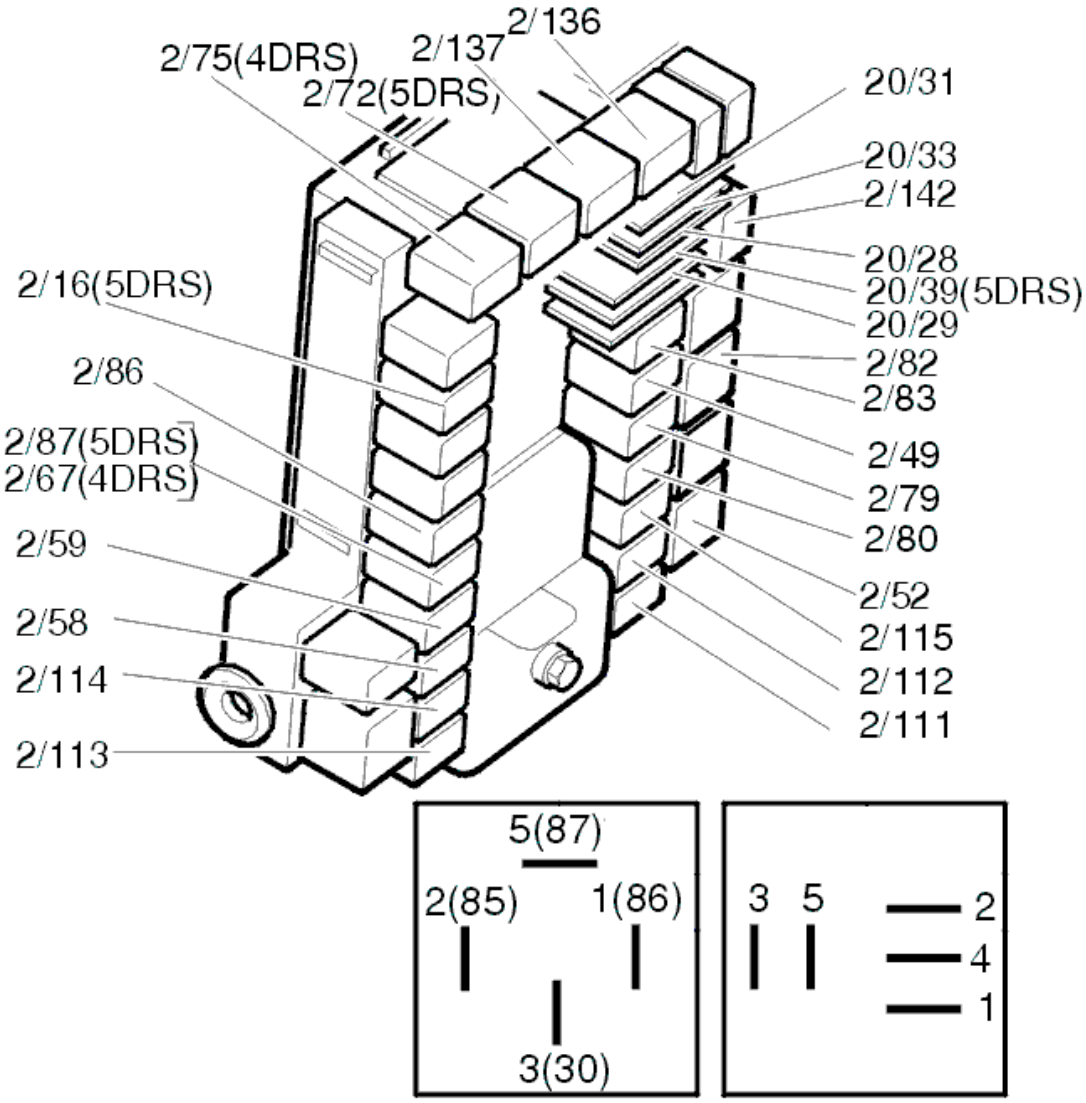

Fig. 420: Identifying Relays
Courtesy of VOLVO CARS CORPORATION

Is there a fault?

- **YES**

  OKAY: Troubleshooting has been completed.

- **NO**

  Refer to **CIRCUIT TEST**

CIRCUIT TEST

The fault is caused by an open circuit in one of the relay circuits or in the lock unit. To find out which circuit

contains the fault:

Disconnect the lock unit connector.

Check the contacts for contact resistance and oxidation as described in, see **CONTACT RESISTANCE AND OXIDATION** .

Check resistance between 4 and 6 on cable connector.

Additional information

- To access/replace the lock unit, see **LOCK MECHANISM REAR SIDE DOOR, REPLACING** .

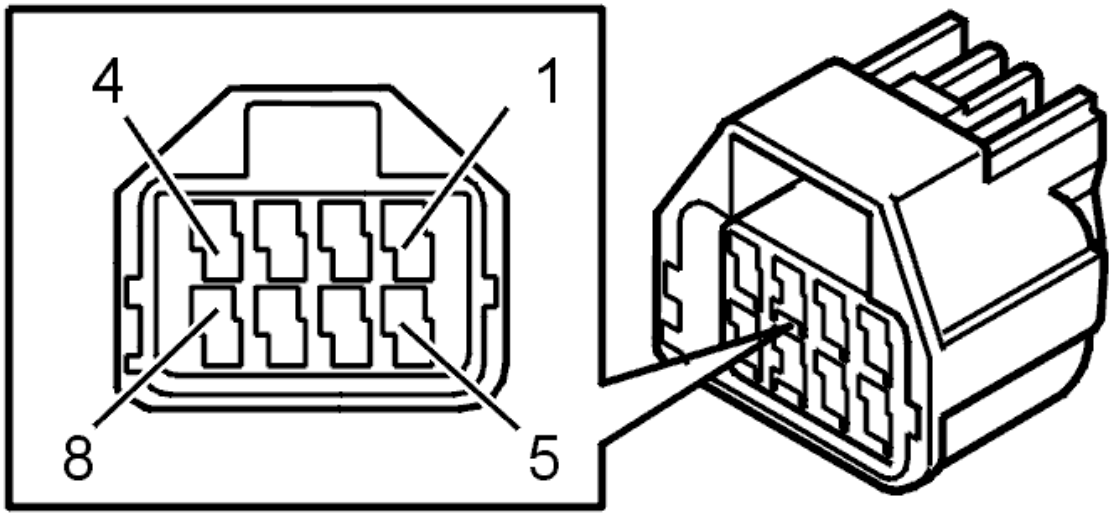

Fig. 421: Identifying Connector Terminals
Courtesy of VOLVO CARS CORPORATION

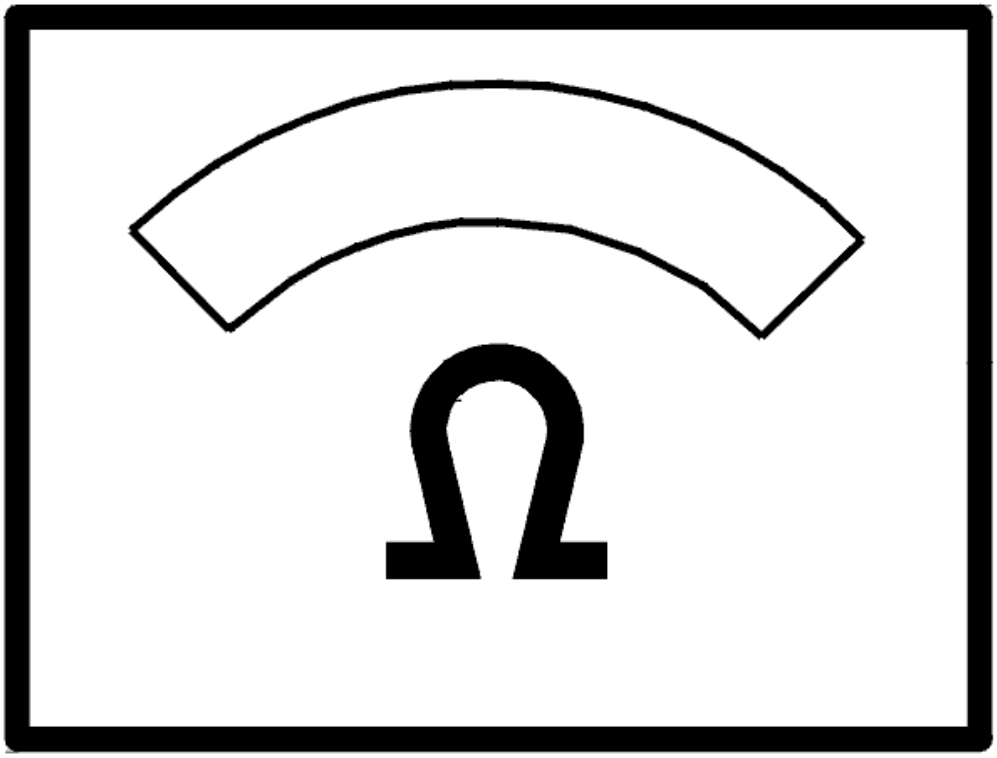

Fig. 422: Identifying Ohm Meter
Courtesy of VOLVO CARS CORPORATION

The ohmmeter should display 0 ohm.

- **OK**

  Refer to **CHECKING THE COMPONENTS**

- **NOT OK**

  Refer to **CIRCUIT TEST, CONTINUED**

CIRCUIT TEST, CONTINUED

Check the resistance between 4 and ground and between 6 and ground on the cable connector.

The ohmmeter should display 0 ohm.

1. The ohmmeter shows a fault between 4 and ground

   Refer to **CHECKING THE UNLOCKING RELAY CIRCUIT**

2. The ohmmeter shows a fault between 6 and ground.

   Refer to **CHECKING THE LOCKING RELAY CIRCUIT**

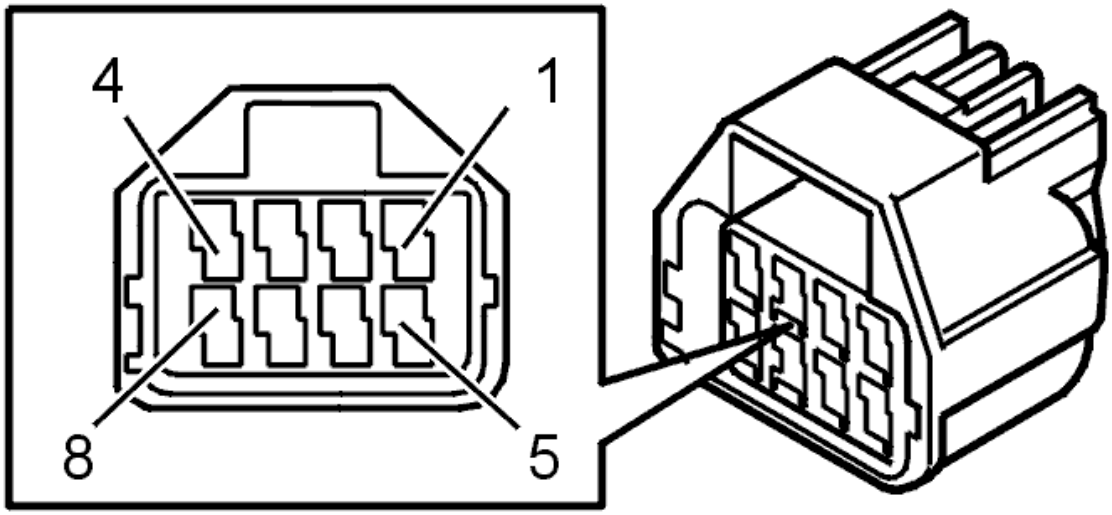

Fig. 423: Identifying Connector Terminals
Courtesy of VOLVO CARS CORPORATION

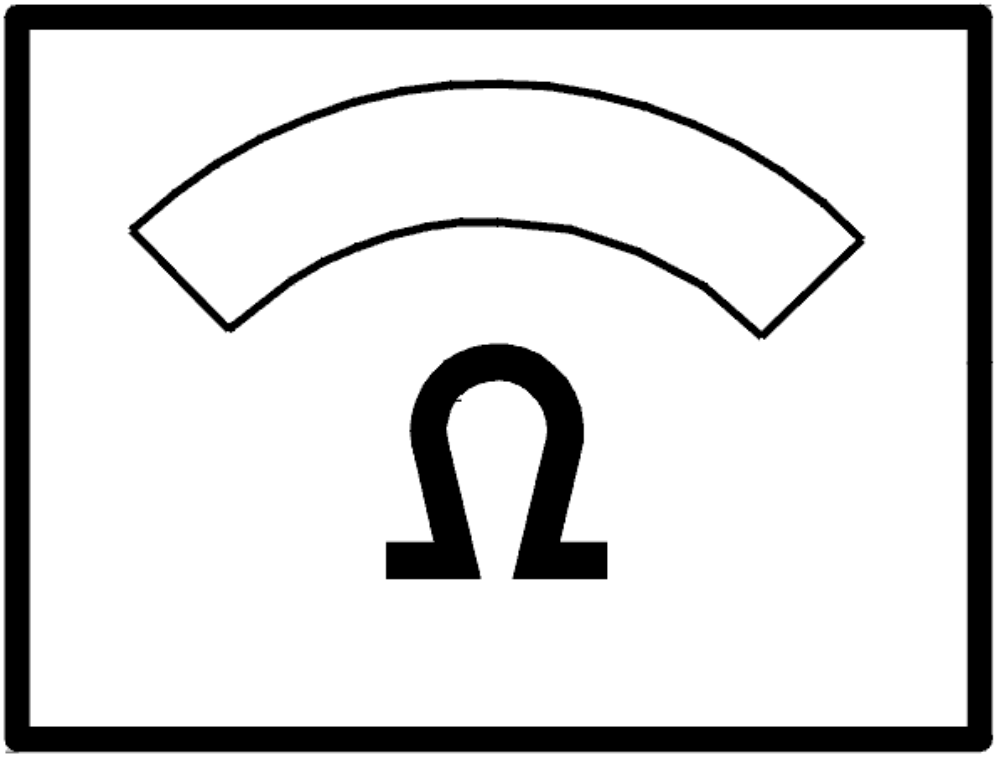

Fig. 424: Identifying Ohm Meter
Courtesy of VOLVO CARS CORPORATION

CHECKING THE LOCKING RELAY CIRCUIT

Remove the locking relay (2/113).

Check the wire between 4 in the cable connector and 3 in the relay socket for an open circuit as described in, see **OPEN-CIRCUIT, PERMANENT FAULTS** .

If a fault is detected, check in particular the intermediate connector in the cable harness (2) for contact resistance and oxidation as described in, see **CONTACT RESISTANCE AND OXIDATION** .

Do the necessary corrective action.

If no fault is found, check the resistance between 4 in the relay socket and ground.

The ohmmeter should display 0 ohm.

If the resistance deviates, replace the rear electronic module (REM).

Additional information

- To access/replace the rear electronic module (REM):
  - For -2004, see: **RELAY/FUSE BOX CARGO COMPARTMENT/REAR ELECTRONIC MODULE (REM), REPLACING**
  - For 2005-, see: **REAR ELECTRONIC MODULE (REM), REPLACING** .

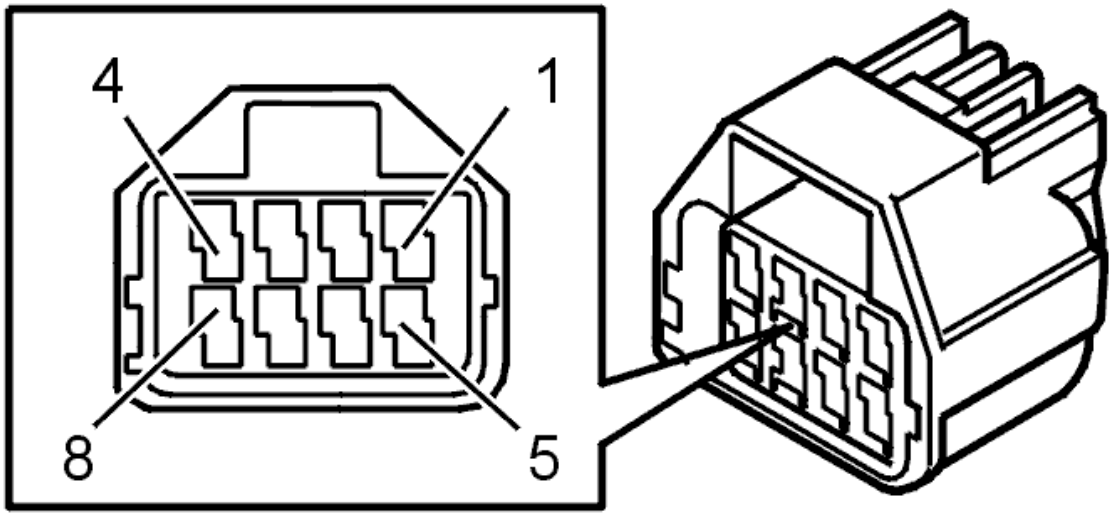

Fig. 425: Identifying Connector Terminals
Courtesy of VOLVO CARS CORPORATION

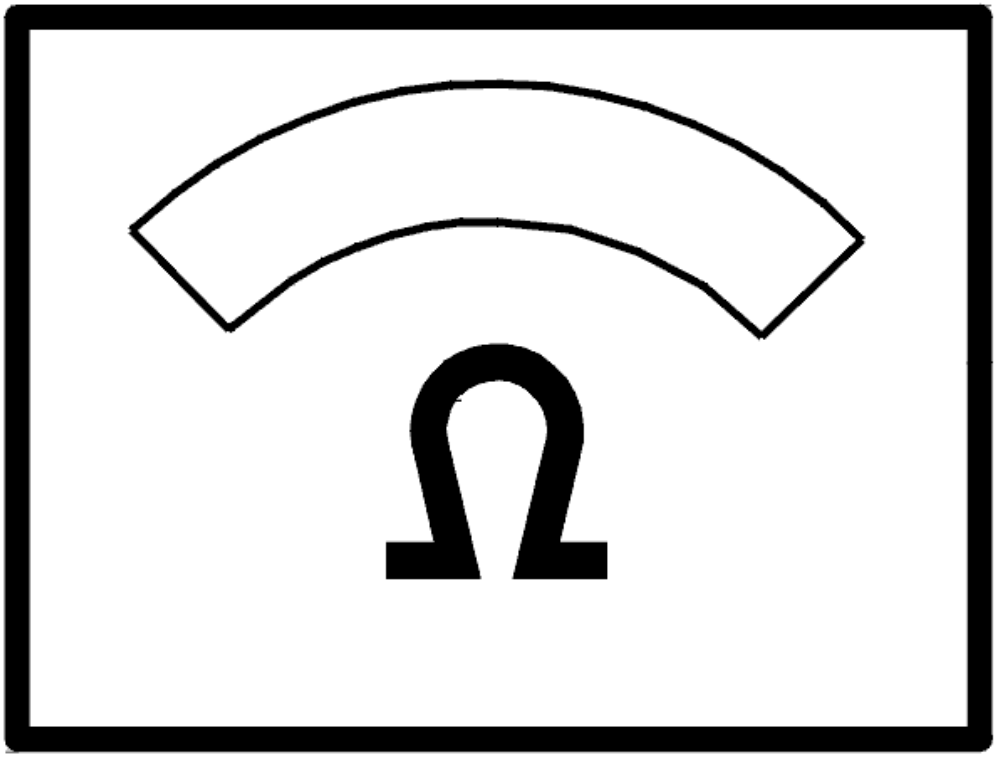

Fig. 426: Identifying Ohm Meter
Courtesy of VOLVO CARS CORPORATION

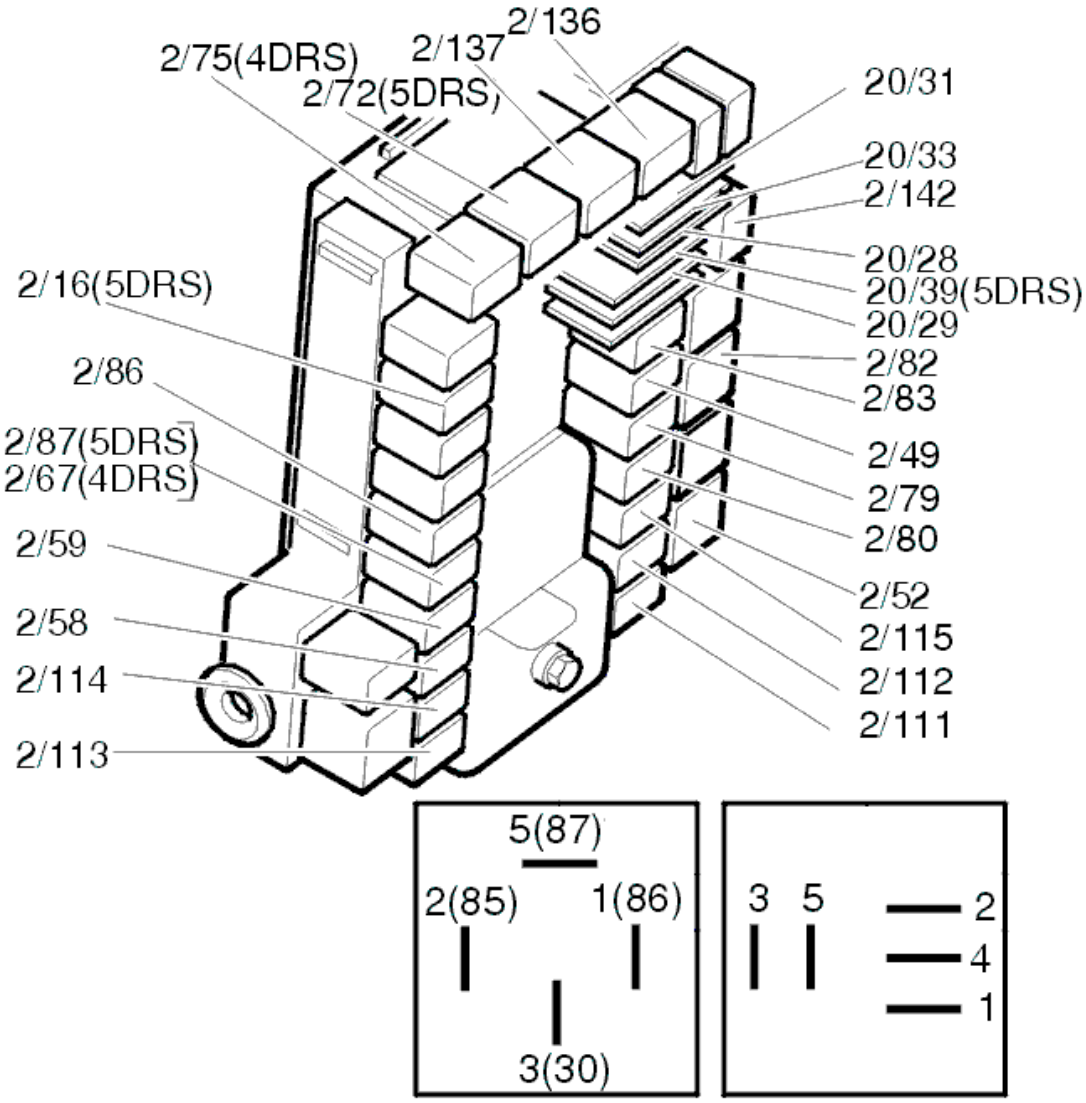

Fig. 427: Identifying Relays
Courtesy of VOLVO CARS CORPORATION

CHECKING THE UNLOCKING RELAY CIRCUIT

Remove the unlocking relay (2/114).

Check the wire between 6 in the cable connector and 3 in the relay socket for an open circuit as described in, see **OPEN-CIRCUIT, PERMANENT FAULTS** .

If a fault is detected, check in particular the intermediate connector in the cable harness (2) for contact resistance and oxidation as described in, see **CONTACT RESISTANCE AND OXIDATION** .

Do the necessary corrective action.

If no fault is found, check the resistance between 4 in the relay socket and ground.

The ohmmeter should display 0 ohm.

If the resistance deviates, replace the rear electronic module (REM).

Additional information

- To access/replace the rear electronic module (REM):
  - For -2004, see: **RELAY/FUSE BOX CARGO COMPARTMENT/REAR ELECTRONIC MODULE (REM), REPLACING**
  - For 2005-, see: **REAR ELECTRONIC MODULE (REM), REPLACING** .

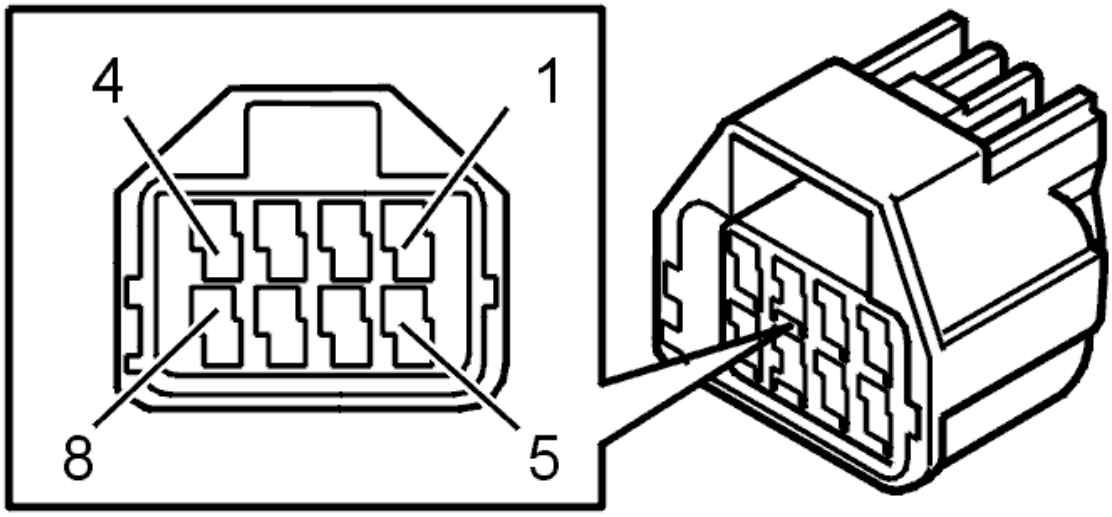

Fig. 428: Identifying Connector Terminals
Courtesy of VOLVO CARS CORPORATION

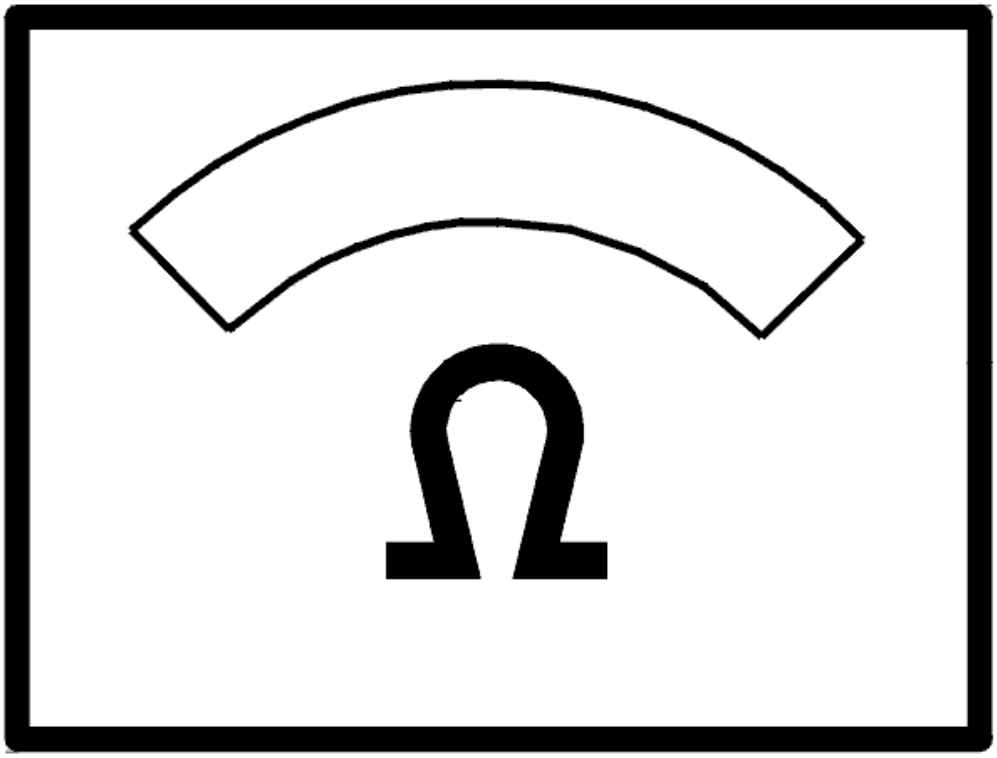

Fig. 429: Identifying Ohm Meter
Courtesy of VOLVO CARS CORPORATION

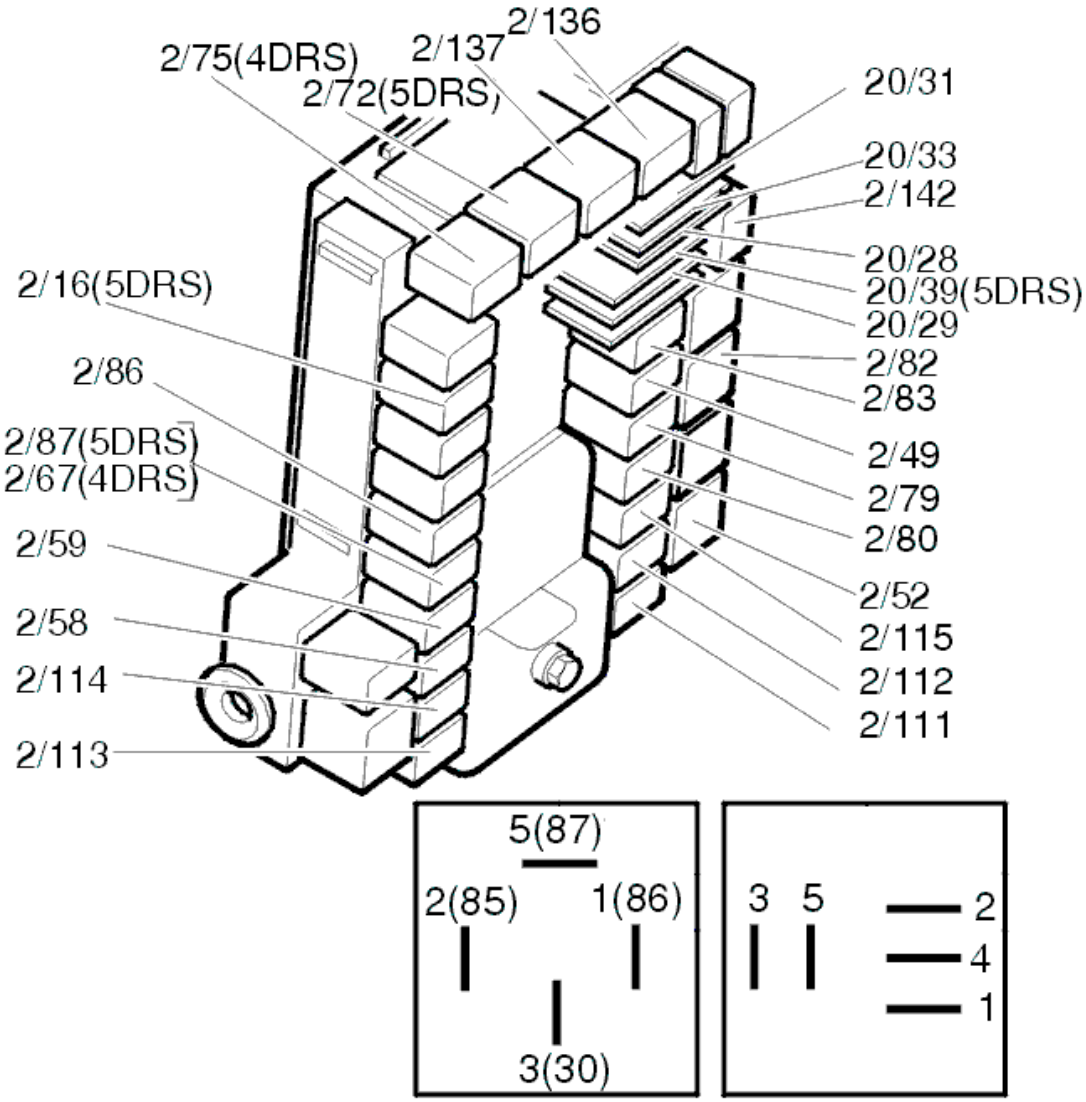

Fig. 430: Identifying Relays
Courtesy of VOLVO CARS CORPORATION

CHECKING THE COMPONENTS

Check the resistance between pin 4 and 6 in the lock unit chassis contact.

The ohmmeter should display 5 ohm.

If the resistance deviates, replace the lock unit.

Additional information

- To access the rear electronic module (REM):
  - For -2004, see: **RELAY/FUSE BOX CARGO COMPARTMENT/REAR ELECTRONIC MODULE (REM), REPLACING**

- For 2005-, see: **REAR ELECTRONIC MODULE (REM), REPLACING** .
- To access/replace the lock unit, see **LOCK MECHANISM REAR SIDE DOOR, REPLACING**
- For information on signals and additional values, see **SIGNAL SPECIFICATION** .

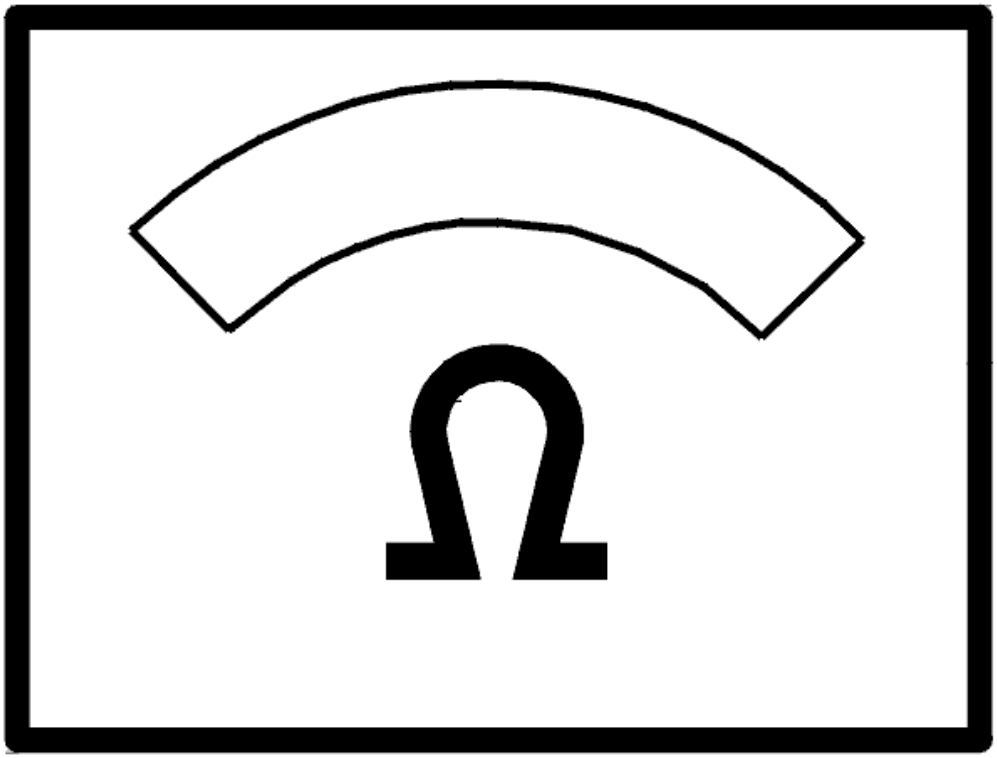

Fig. 431: Identifying Ohm Meter
Courtesy of VOLVO CARS CORPORATION

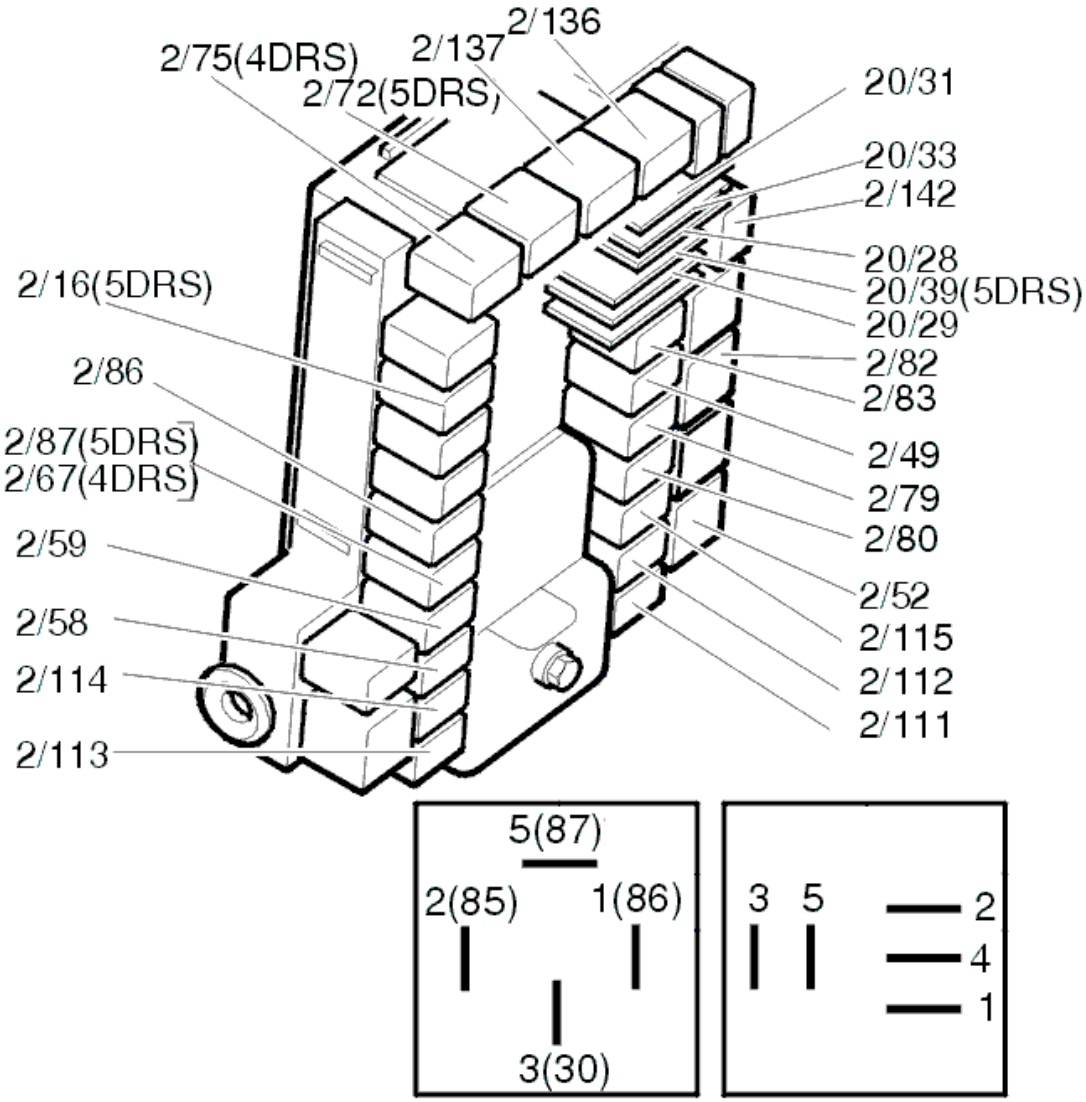

Fig. 432: Identifying Relays
Courtesy of VOLVO CARS CORPORATION

Is there a fault?

- **YES**

  OKAY: Troubleshooting has been completed.

- **NO**

  Refer to **CHECKING THE RELAY SUPPLY**

CHECKING THE RELAY SUPPLY

Remove the locking relay (2/113).

Measure the voltage between 5 in the relay socket and ground.

The voltmeter should display battery voltage.

HINT: If the value is OK but the fault still remains, connect the contacts to the lock module and link between 3 and 5 in the relay socket to force-feed the lock motor while continuing to test.

Additional information

- To access relay/fuse box in the cargo compartment:
  - For -2004, see: **RELAY/FUSE BOX CARGO COMPARTMENT/REAR ELECTRONIC MODULE (REM), REPLACING**
  - For 2005-, see: **REAR ELECTRONIC MODULE (REM), REPLACING** .

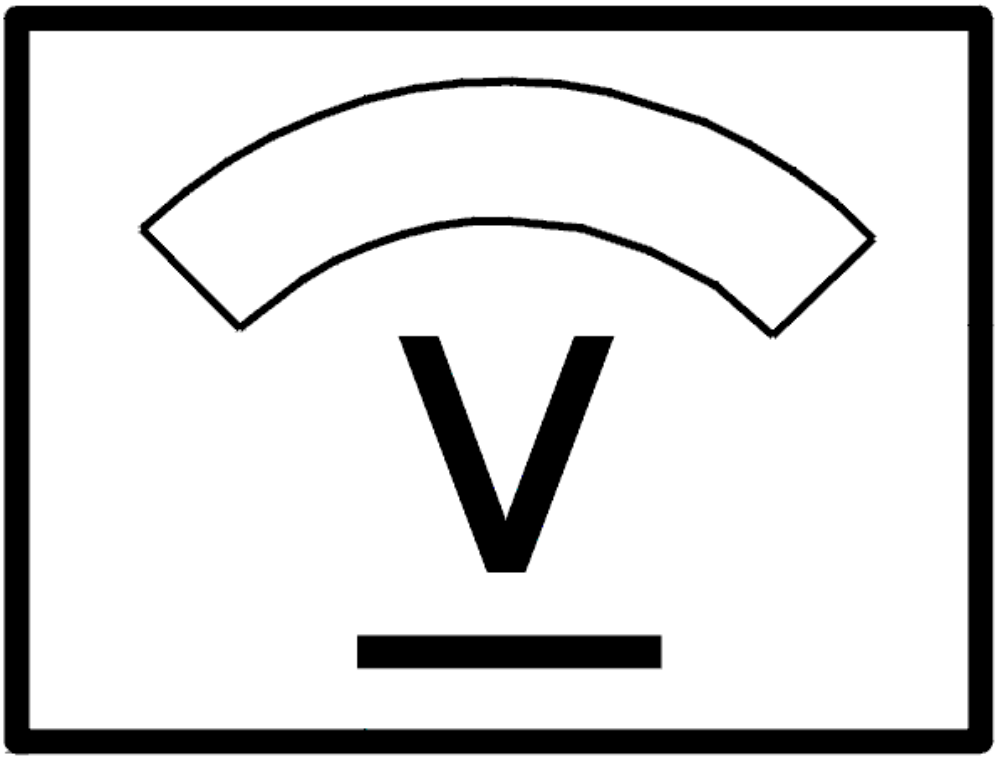

Fig. 433: Identifying Voltage Display

Courtesy of VOLVO CARS CORPORATION

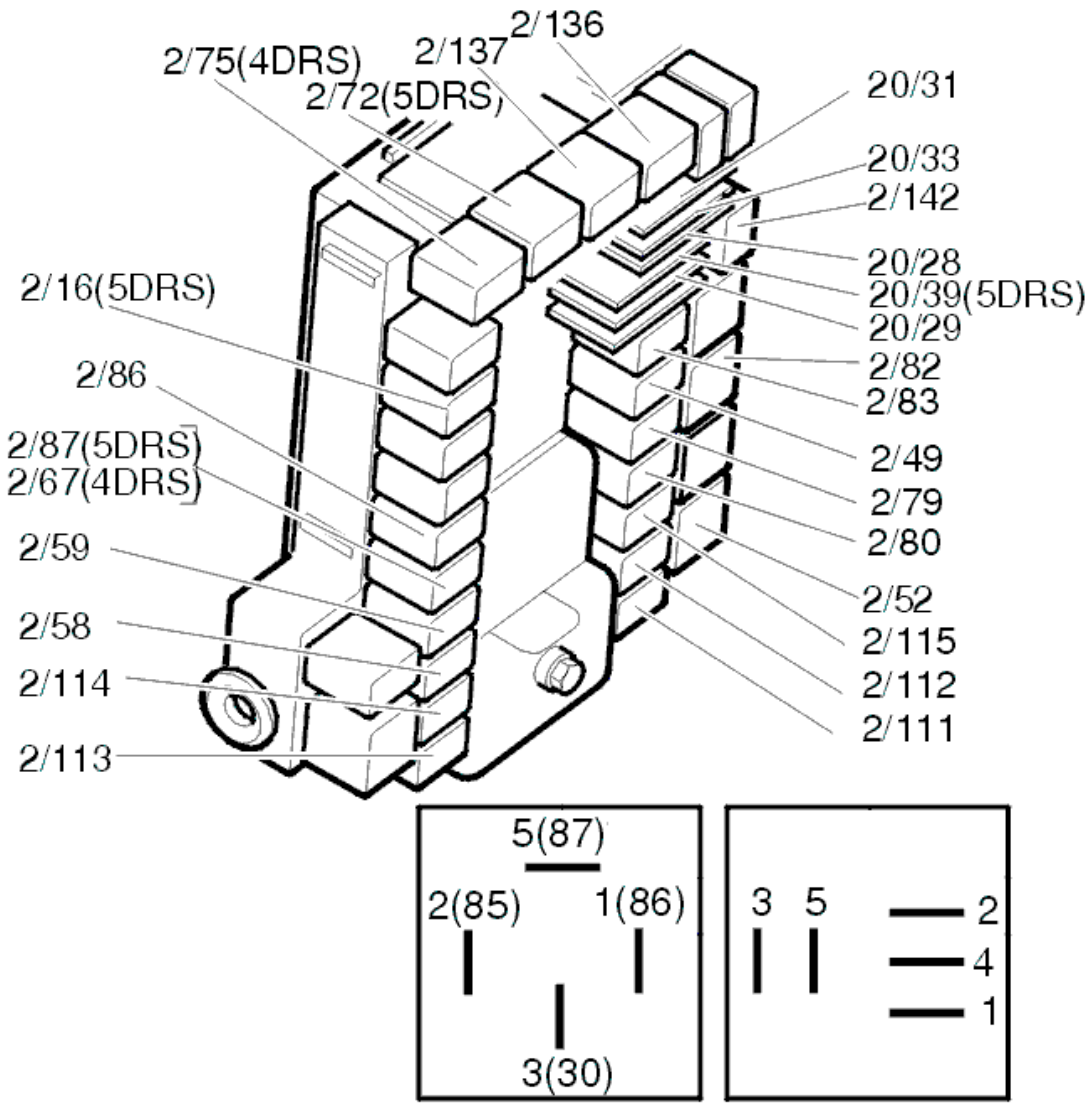

Fig. 434: Identifying Relays
Courtesy of VOLVO CARS CORPORATION

Does the voltmeter show the battery voltage?

- **YES**

  OKAY: Troubleshooting has been completed.

- **NO**

  Refer to **CHECKING THE FUSE**

CHECKING THE FUSE

Remove the fuse 11D/8 in cargo compartment fuse box.

Check that fuse 11D/8 is intact and check for contact resistance and oxidation as described in, see **CONTACT RESISTANCE AND OXIDATION** .

Additional information

- To access relay/fuse box in the cargo compartment:
  - For -2004, see: **RELAY/FUSE BOX CARGO COMPARTMENT/REAR ELECTRONIC MODULE (REM), REPLACING**
  - For 2005-, see: **REAR ELECTRONIC MODULE (REM), REPLACING** .

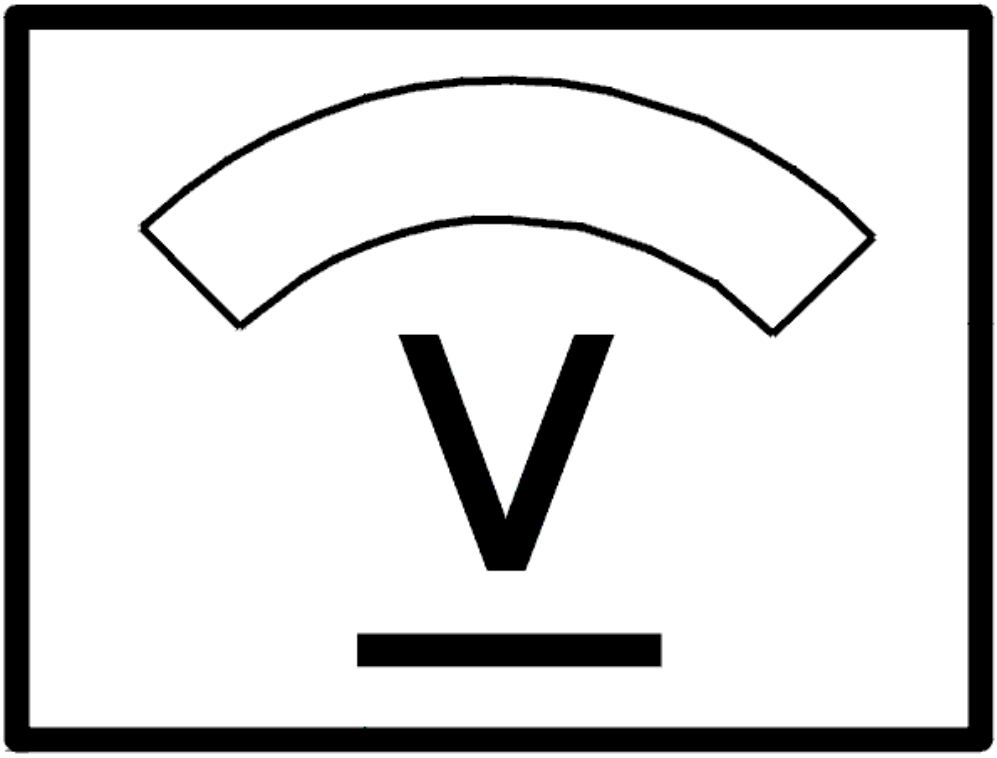

Fig. 435: Identifying Voltage Display
Courtesy of VOLVO CARS CORPORATION

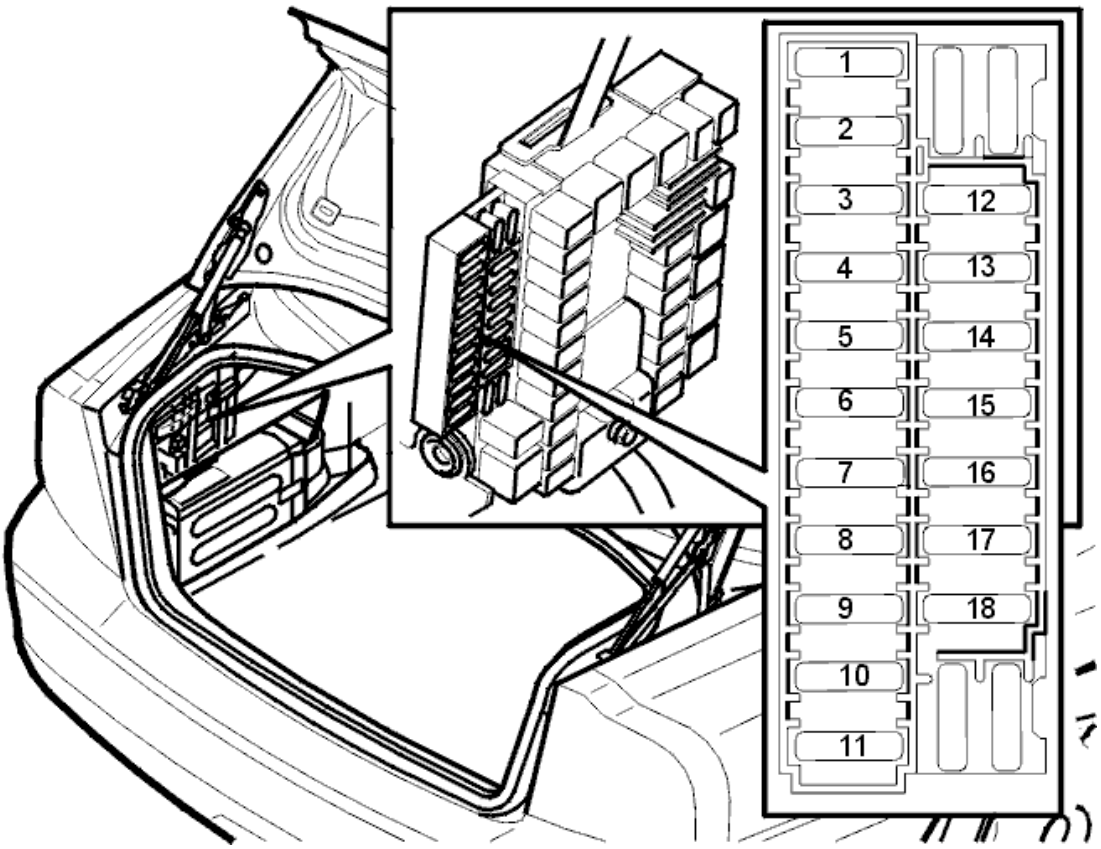

Fig. 436: Fuse Holder (Cargo Compartment)
Courtesy of VOLVO CARS CORPORATION

Is the fuse intact?

- **YES**

  Refer to **CHECKING FOR AN OPEN CIRCUIT**

- **NO**

  Refer to **CHECKING FOR A SHORT CIRCUIT**

CHECKING FOR AN OPEN CIRCUIT

Remove relay 2/113 in the cargo compartment relay/fuse box and trouble-shoot the wire between the fuse holder secondary side (left) and 5 in the relay socket for an open circuit as described in, see **OPEN-CIRCUIT, PERMANENT FAULTS** .

Additional information

- To access relay/fuse box in the cargo compartment:
  - For -2004, see: **RELAY/FUSE BOX CARGO COMPARTMENT/REAR ELECTRONIC MODULE (REM), REPLACING**

- For 2005-, see: **REAR ELECTRONIC MODULE (REM), REPLACING** .

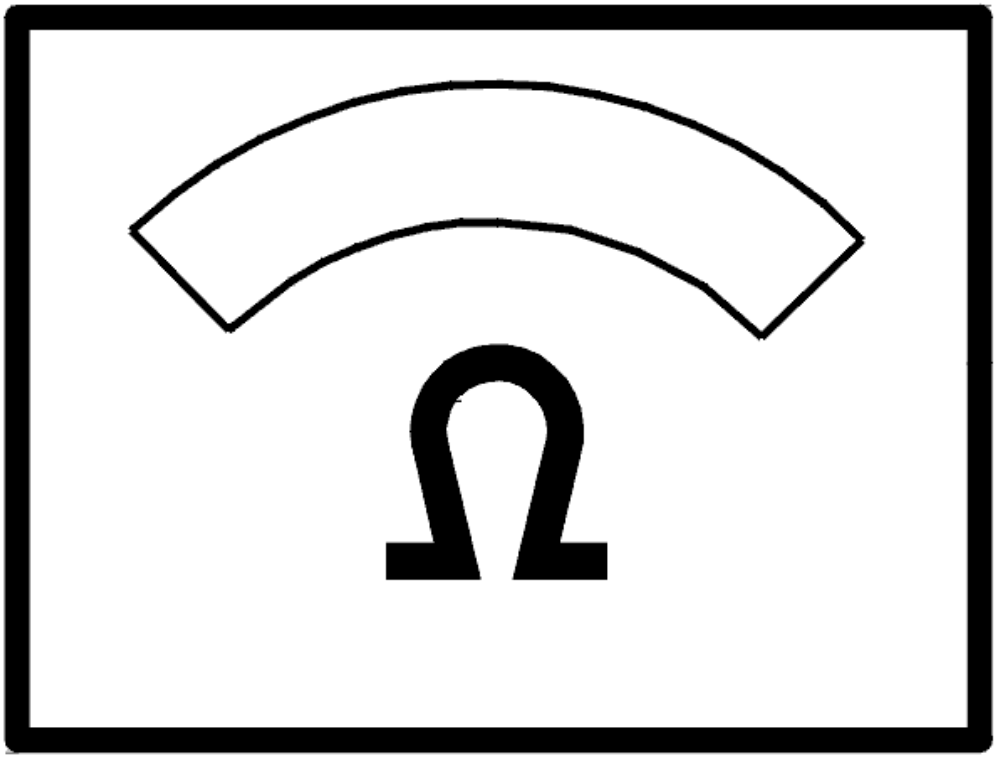

Fig. 437: Identifying Ohm Meter
Courtesy of VOLVO CARS CORPORATION

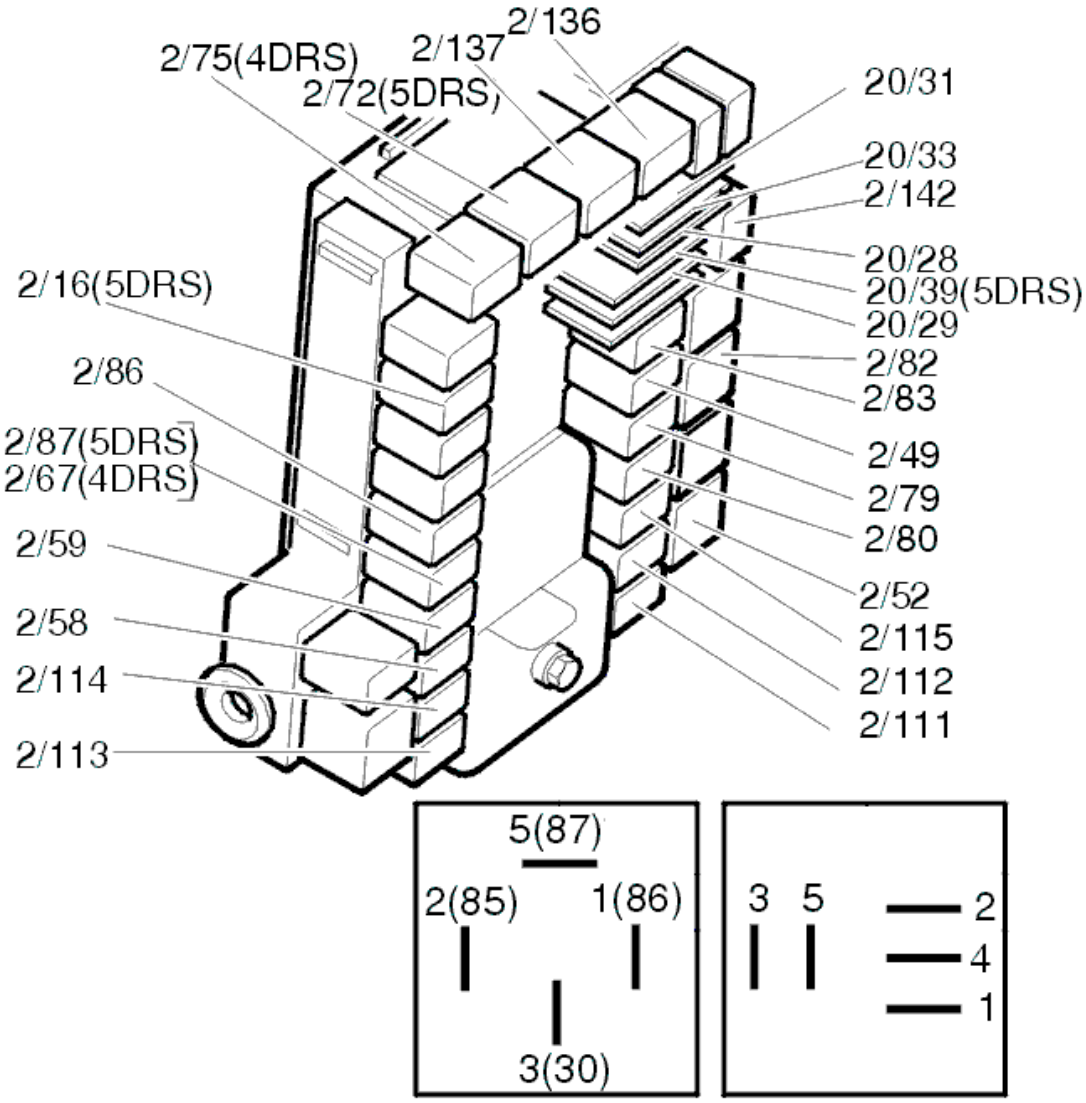

Fig. 438: Identifying Relays
Courtesy of VOLVO CARS CORPORATION

CHECKING FOR A SHORT CIRCUIT

Check the resistance between the fuse holder secondary side (left) and ground.

The ohmmeter should display infinite resistance.

If the value is correct, replace the fuse.

If the value deviates, trouble-shoot all the relay circuits involved for a short circuit to ground as described in, see **SHORT-CIRCUIT TO GROUND, PERMANENT FAULTS** .

NOTE: If the value is correct the fault could be intermittent.

HINT: Replace fuse.

HINT: If the fuse works straight away the fault is a short circuit on the relay supply wire.

HINT: If the fuse works when activating each relay the short circuit is on the component supply wire

HINT: The relay circuits involved belong to relays 2/111, 2/112, 2/113, 2/114, 2/115, 2/56, 2/59 and 2/67.

Additional information

- To access relay/fuse box in the cargo compartment:
  - For -2004, see: **RELAY/FUSE BOX CARGO COMPARTMENT/REAR ELECTRONIC MODULE (REM), REPLACING**
  - For 2005-, see: **REAR ELECTRONIC MODULE (REM), REPLACING** .

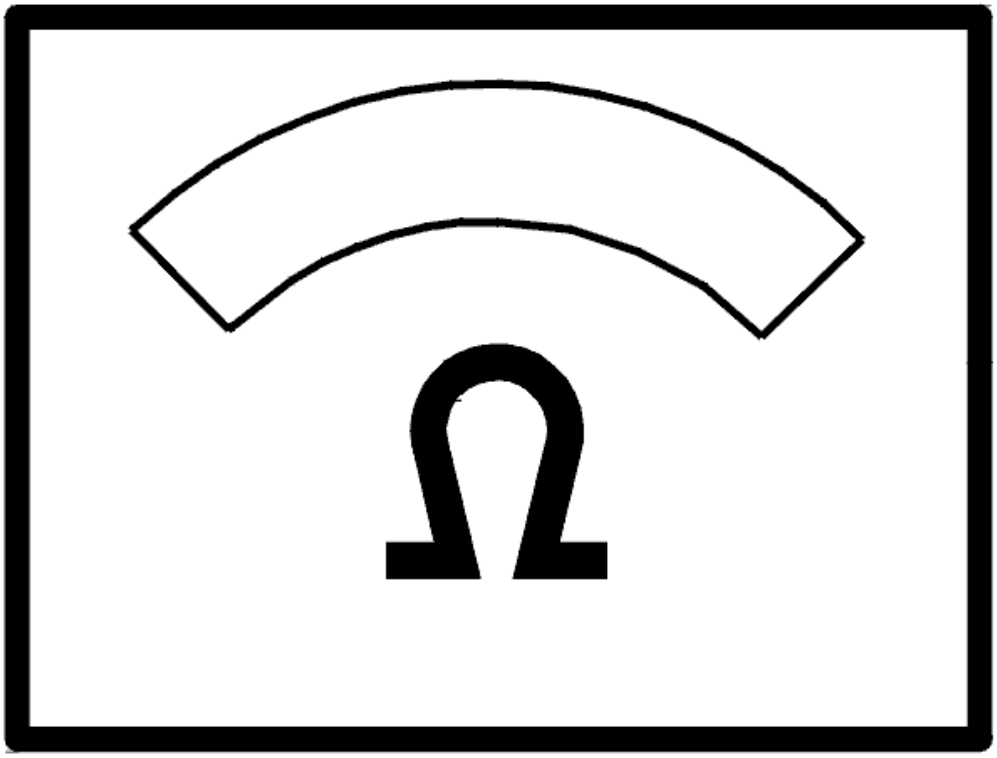

Fig. 439: Identifying Ohm Meter
Courtesy of VOLVO CARS CORPORATION

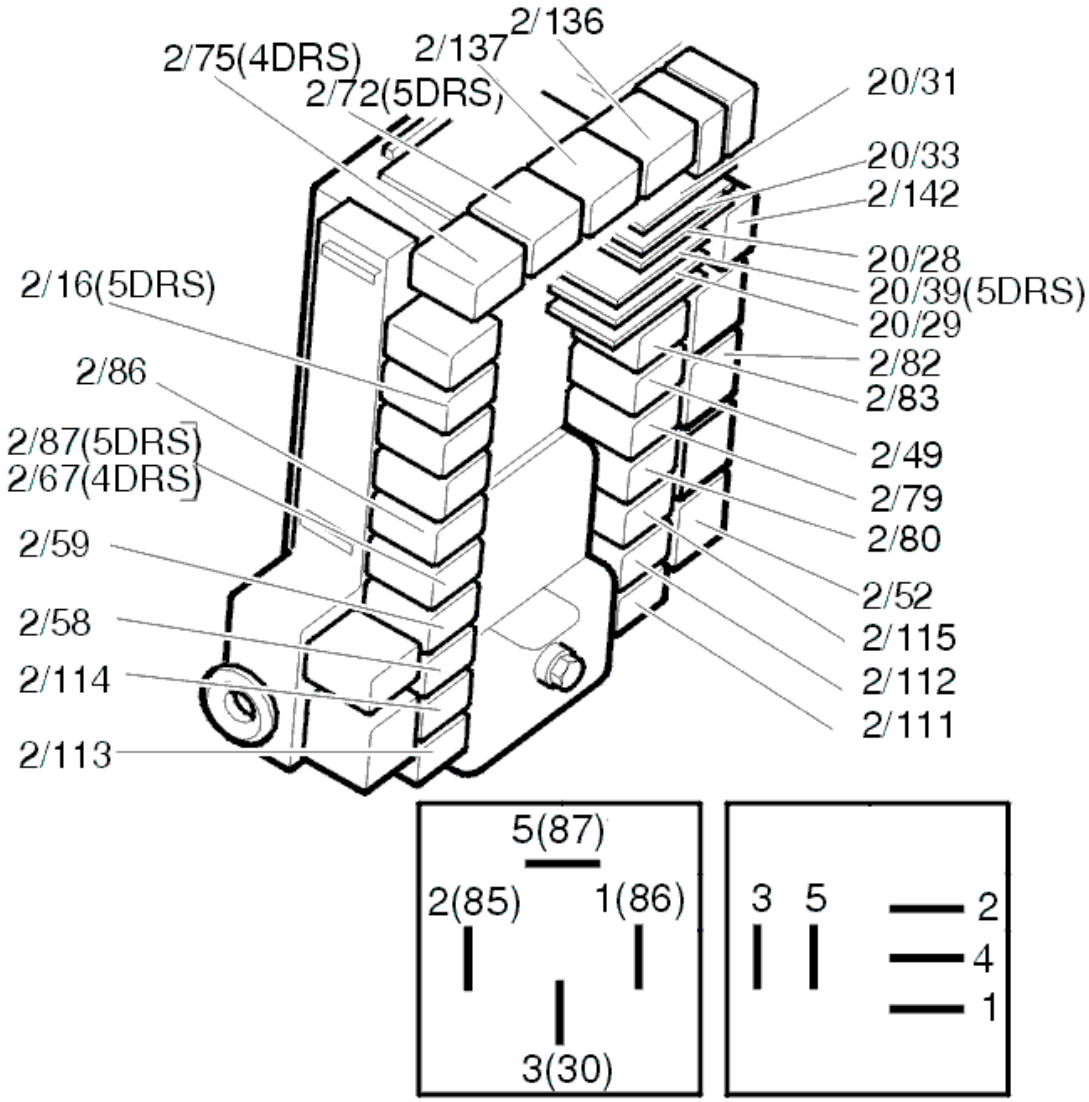

Fig. 440: Identifying Relays
Courtesy of VOLVO CARS CORPORATION

CEM-6A03: REAR LEFT DOOR LOCKED. SIGNAL TOO LOW. PERMANENT FAULT (2003-2004)

DIAGNOSTIC TROUBLE CODE (DTC) INFORMATION

see **DIAGNOSTIC TROUBLE CODE (DTC) INFORMATION**

SIGNAL TOO LOW. PERMANENT FAULT

CHECKING THE COMPONENT

Check that the lock has not stuck by using the lock button on the inside of the door. Check that the lock unit is correctly installed.

Was a fault detected?

- **YES**

  Refer to **VERIFICATION**

- **NO**

  Refer to **CHECKING THE WIRING AND SWITCHES**

CHECKING THE WIRING AND SWITCHES

Check the signal cable for the lock position sensor between the central electronic module connector terminal #B13 and lock unit connector terminal #5. Check for an open-circuit.

NOTE: **Diagnostic trouble code (DTC) REM-6A04 or REM-6A05 may also be stored if this fault occurs. Use the VCT2000 (or appropriate scan) tool to read diagnostic trouble codes (DTCs).**

Other information:

- To access and replace the lock module:
  - Diver's side door module, see **DRIVER DOOR MODULE (DDM), REPLACING**
  - Passenger side door module, see **PASSENGER DOOR MODULE (PDM), REPLACING** .
- For -2004, see: **CENTRAL ELECTRONIC MODULE (CEM), REPLACING**
- For 2005-, see: **CENTRAL ELECTRONIC MODULE (CEM), REPLACING** .
- To connect the breakout box, see **CONNECTING THE BREAKOUT BOX**
- -2004: **SIGNAL SPECIFICATION**
- 2005-: **SIGNAL SPECIFICATION**
- see **CHECKING WIRING AND TERMINALS. PERMANENT FAULT** .

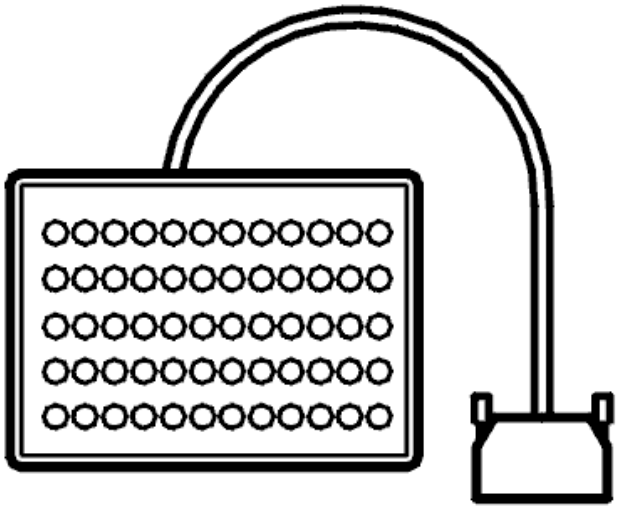

Fig. 441: Breakout Box
Courtesy of VOLVO CARS CORPORATION

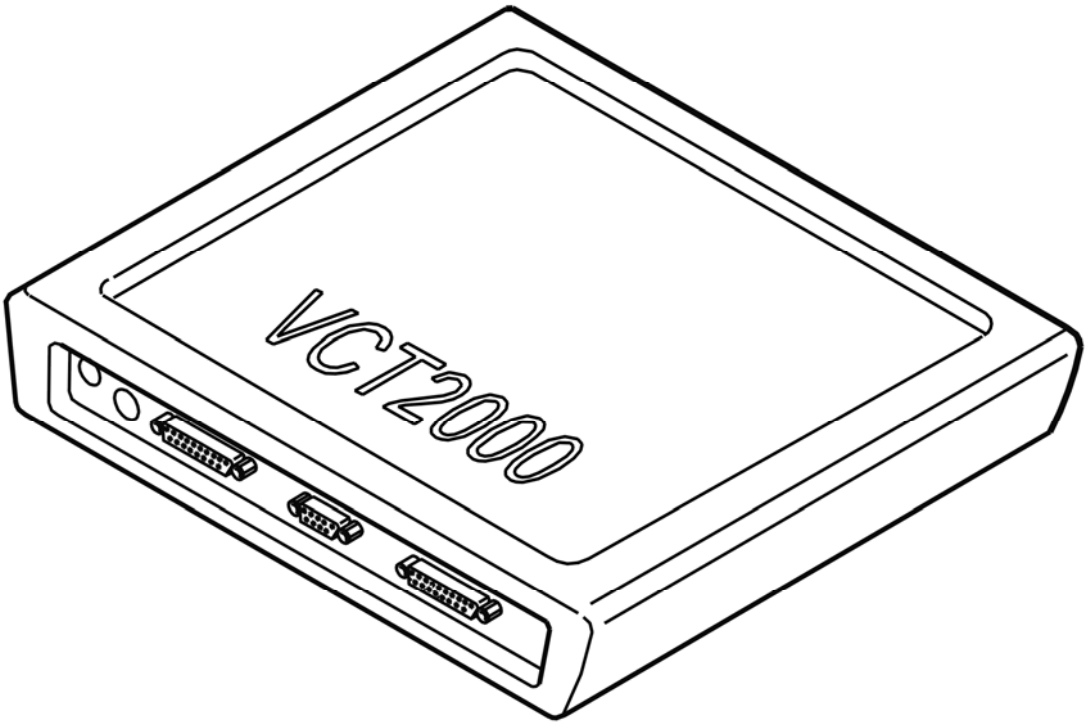

Fig. 442: Identifying VCT2000 Diagnostic Tool Symbol In VIDA
Courtesy of VOLVO CARS CORPORATION

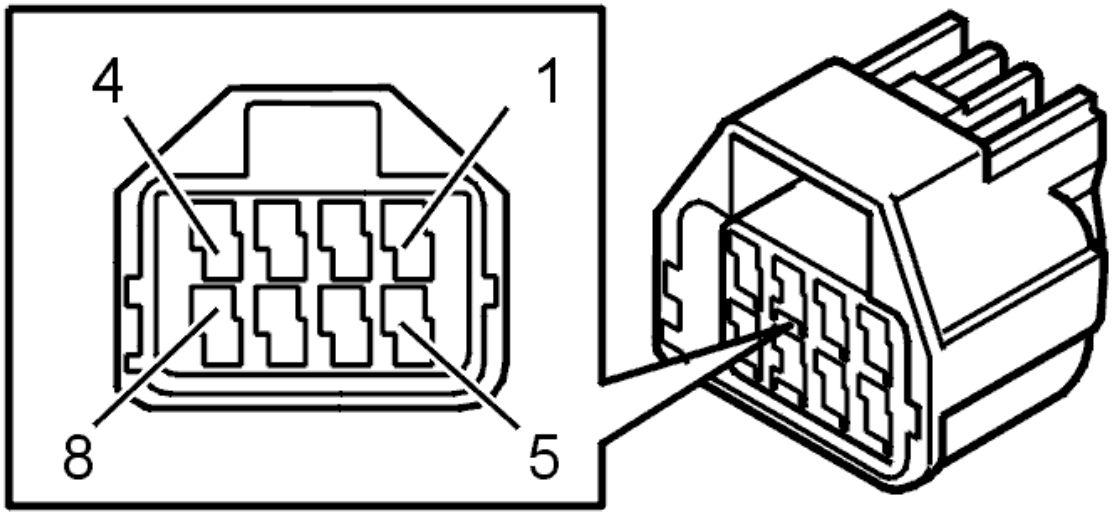

Fig. 443: Identifying Connector Terminals
Courtesy of VOLVO CARS CORPORATION

Were any diagnostic trouble codes (DTCs) stored?

- **YES**

  Refer to **VERIFICATION**

- **NO**

  Refer to **CHECKING THE DOOR LOCKING FUNCTION**

CHECKING THE DOOR LOCKING FUNCTION

QUESTION

Which door has the problem?

1. Driver door.

   Refer to **CHECKING THE DRIVER DOOR**

2. Passenger door.

   Refer to **CHECKING THE PASSENGER DOOR**

3. Rear left door.

   Refer to **CHECKING THE REAR LEFT DOOR**

4. Rear right door.

Refer to **CHECKING THE REAR RIGHT DOOR**

CHECKING THE DRIVER DOOR

CHECK

Is the passenger door lock not working?

- **YES**

  Refer to **CHECKING THE FUSE**

- **NO**

  Refer to **CHECK**

CHECKING THE FUSE

Remove the fuse 11C/27 in cargo compartment fuse box.

Check that fuse is intact and check for contact resistance and oxidation as described in, see **CONTACT RESISTANCE AND OXIDATION** .

Additional information

- To access relay/fuse box in the cargo compartment:
  - For -2004, see: **RELAY/FUSE BOX CARGO COMPARTMENT/REAR ELECTRONIC MODULE (REM), REPLACING**
  - For 2005-, see: **REAR ELECTRONIC MODULE (REM), REPLACING** .

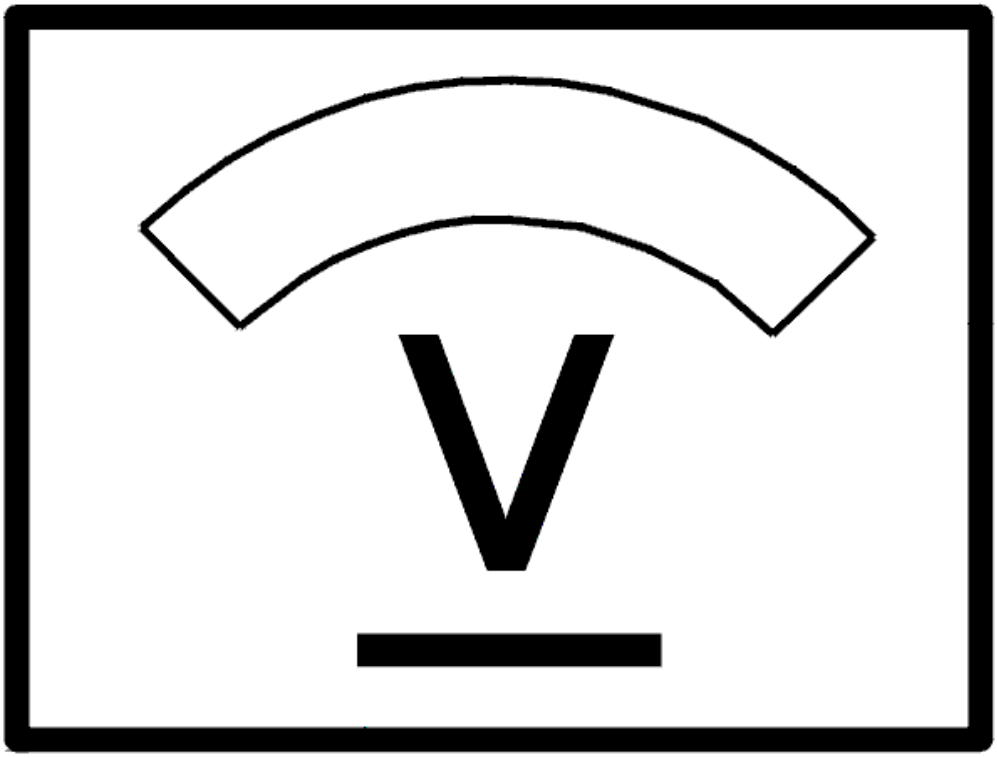

Fig. 444: Identifying Voltage Display
Courtesy of VOLVO CARS CORPORATION

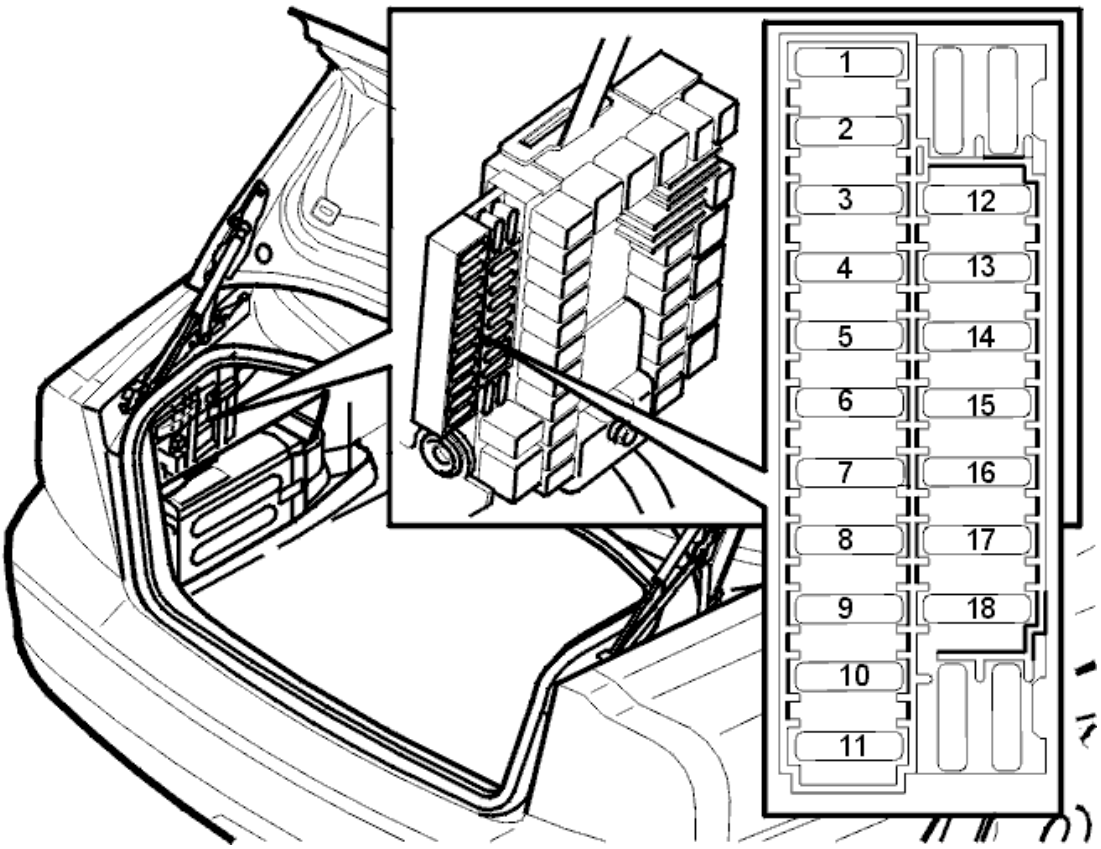

Fig. 445: Fuse Holder (Cargo Compartment)
Courtesy of VOLVO CARS CORPORATION

Is the fuse intact?

- **YES**

  Refer to **CHECKING FOR AN OPEN CIRCUIT**

- **NO**

  Refer to **CHECKING FOR A SHORT CIRCUIT**

CHECK

1. Window lift works on that particular door

   Refer to **CHECKING THE LOCKING MOTOR WIRES**

2. Window lift does not work on that particular door.

   Refer to **CHECKING THE FUSE**

CHECKING THE FUSE

Remove the fuse 11C/35 in cargo compartment fuse box.

Check that fuse is intact and check for contact resistance and oxidation as described in, see **CONTACT RESISTANCE AND OXIDATION** .

Additional information

- To access relay/fuse box in the cargo compartment:
  - For -2004, see: **RELAY/FUSE BOX CARGO COMPARTMENT/REAR ELECTRONIC MODULE (REM), REPLACING**
  - For 2005-, see: **REAR ELECTRONIC MODULE (REM), REPLACING** .

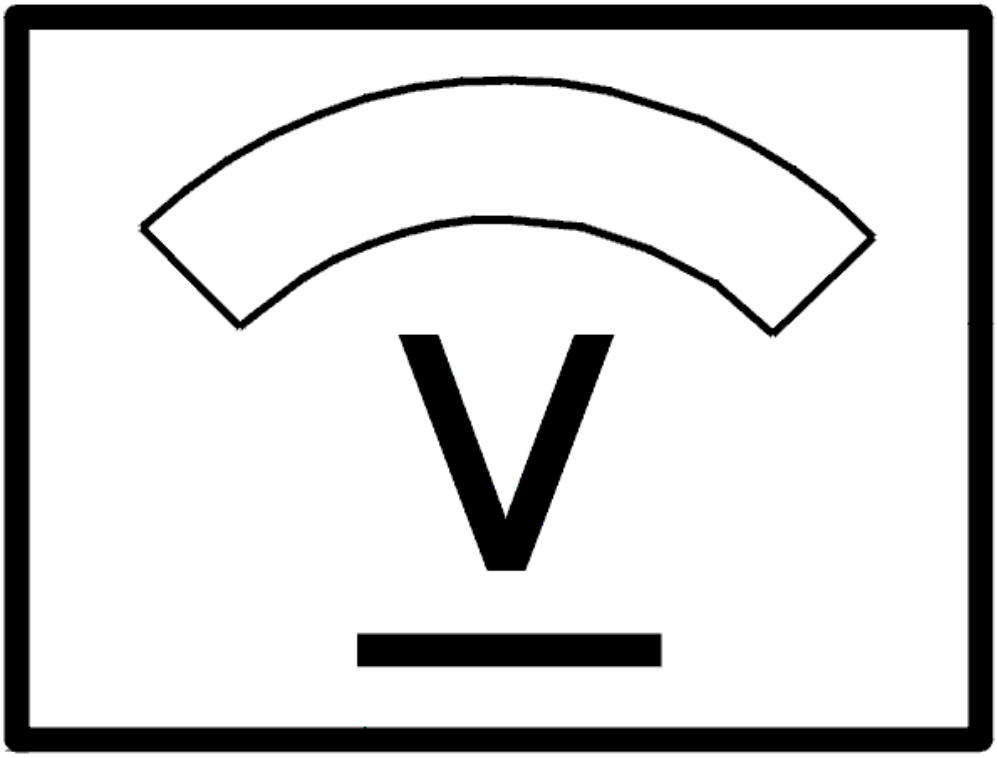

Fig. 446: Identifying Voltage Display
Courtesy of VOLVO CARS CORPORATION

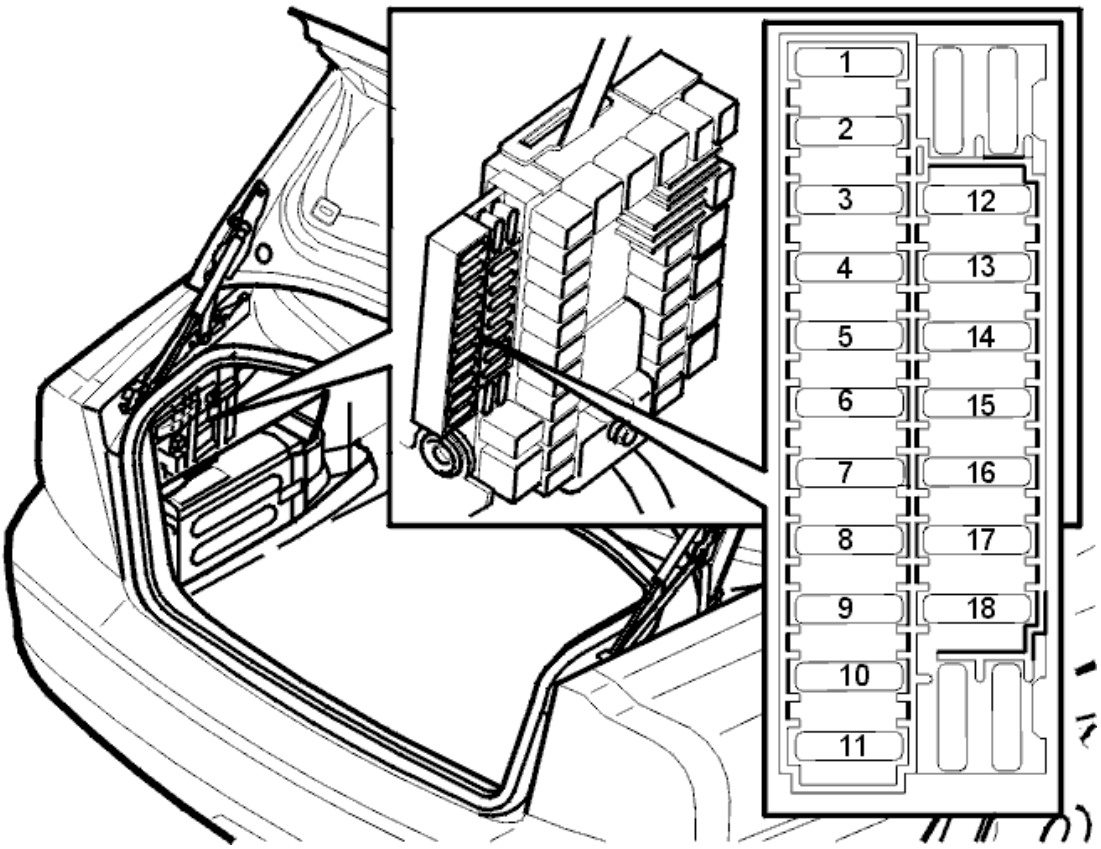

Fig. 447: Fuse Holder (Cargo Compartment)
Courtesy of VOLVO CARS CORPORATION

Is the fuse intact?

- **YES**

  Refer to **CHECKING THE VOLTAGE**

- **NO**

  Refer to **CHECKING FOR A SHORT CIRCUIT**

CHECKING FOR AN OPEN CIRCUIT

Check door control unit connector B7 for contact resistance and oxidation as described in, see **CONTACT RESISTANCE AND OXIDATION** .

Trouble-shoot the wire between fuse holder secondary side (left) and door control unit connector B7 for an open circuit as described in, see **OPEN-CIRCUIT, PERMANENT FAULTS** .

If a fault is detected, check in particular the intermediate connector in the cable harness (1/control unit) for contact resistance and oxidation as described in, see **CONTACT RESISTANCE AND OXIDATION** .

If there is an open circuit the fault should be between the fuse and the common junction point 53/427.

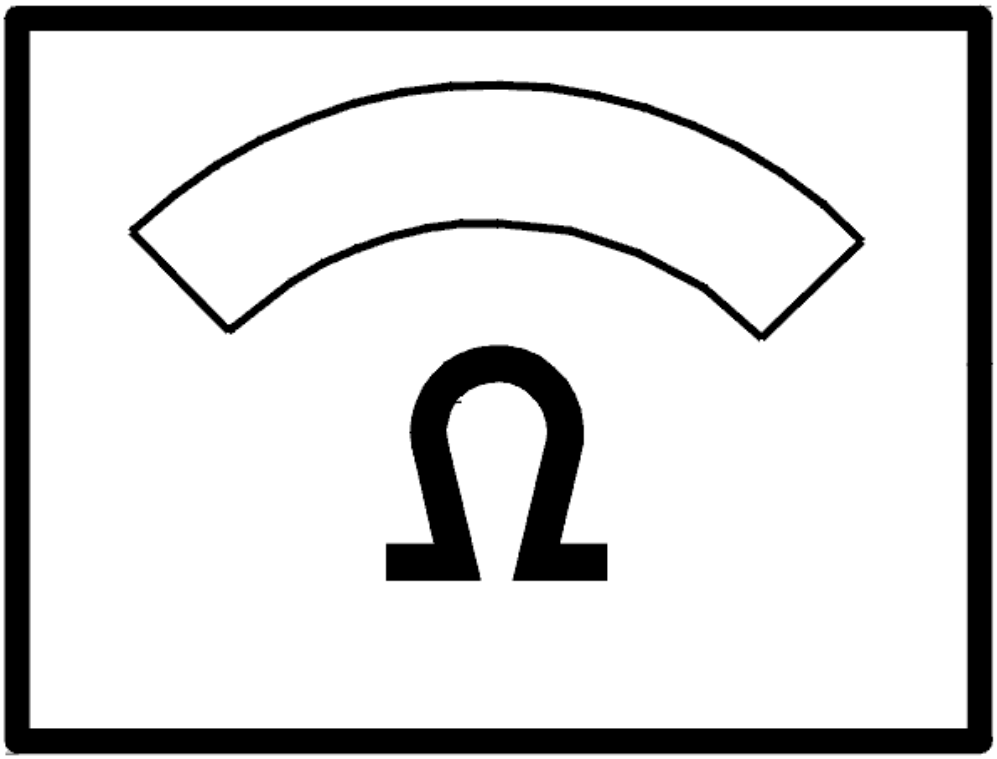

Fig. 448: Identifying Ohm Meter
Courtesy of VOLVO CARS CORPORATION

CHECKING FOR A SHORT CIRCUIT

Check the resistance between the fuse holder secondary side (left) and ground.

The ohmmeter should display infinite resistance.

NOTE: If the value is correct the fault could be intermittent.

Switch to trouble-shooting intermittent short circuits to ground as described in, see **SHORT-CIRCUIT TO GROUND, INTERMITTENT FAULTS** .

If the ohmmeter indicates a fault (short circuit), trouble-shoot the wires between the fuse and door control unit connector B7 for a short circuit to ground as described in, see **SHORT-CIRCUIT TO GROUND, PERMANENT FAULTS** .

The fault should be between the fuse and the common junction point 53/427.

Replace fuse.

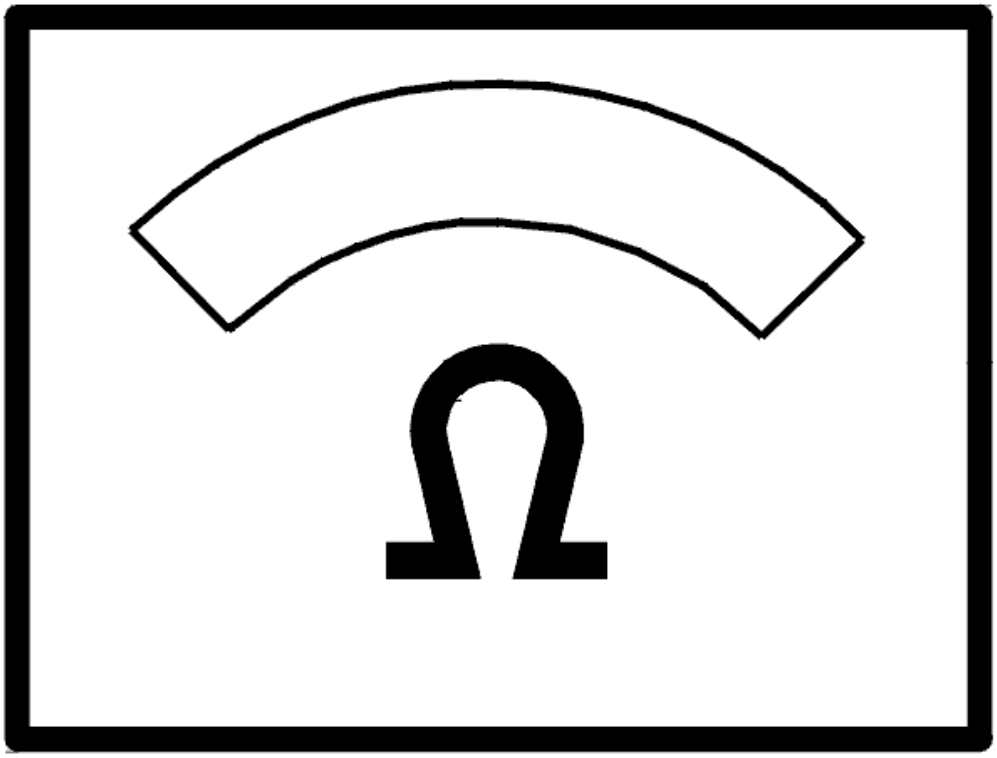

Fig. 449: Identifying Ohm Meter
Courtesy of VOLVO CARS CORPORATION

CHECKING THE VOLTAGE

Check the voltage in the door control unit connector B12.

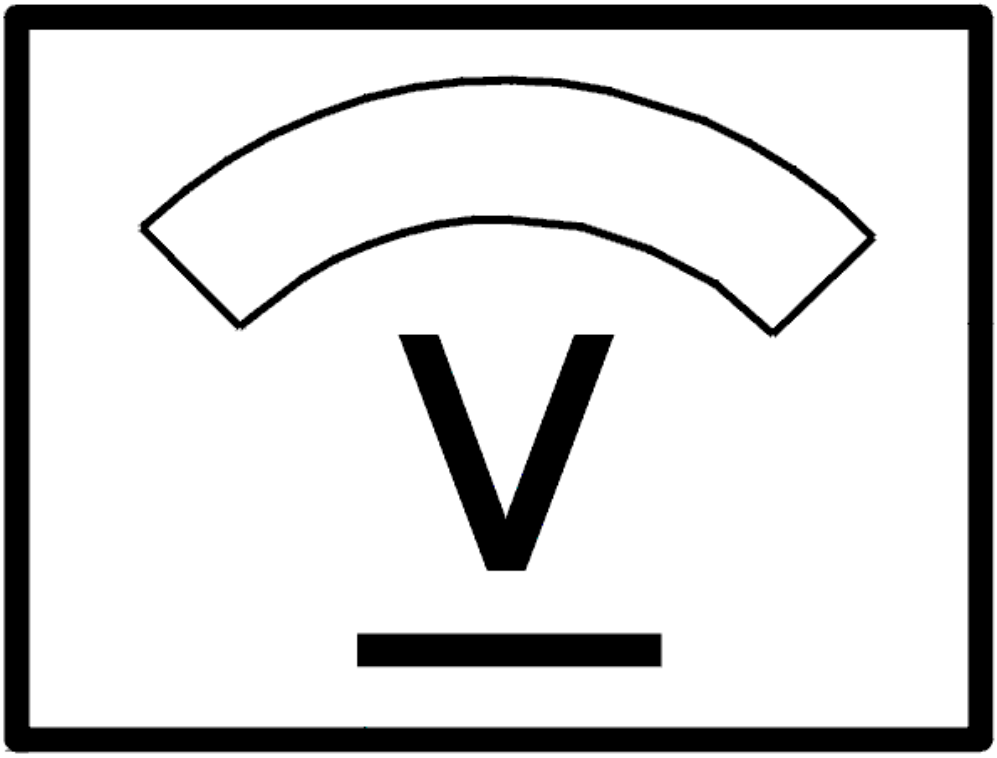

Fig. 450: Identifying Voltage Display
Courtesy of VOLVO CARS CORPORATION

Does the voltmeter show the battery voltage?

- **YES**

  Refer to **CHECKING THE LOCKING MOTOR WIRES**

- **NO**

  Refer to **CHECKING FOR AN OPEN CIRCUIT**

CHECKING FOR AN OPEN CIRCUIT

Check door control unit connector B12 for contact resistance and oxidation as described in, see **CONTACT**

RESISTANCE AND OXIDATION .

Trouble-shoot the wire between fuse holder secondary side (left) and door control unit connector B12 for an open circuit as described in, see **OPEN-CIRCUIT, PERMANENT FAULTS** .

If a fault is detected, check in particular the intermediate connector in the cable harness (1) for contact resistance and oxidation as described in, see **CONTACT RESISTANCE AND OXIDATION** .

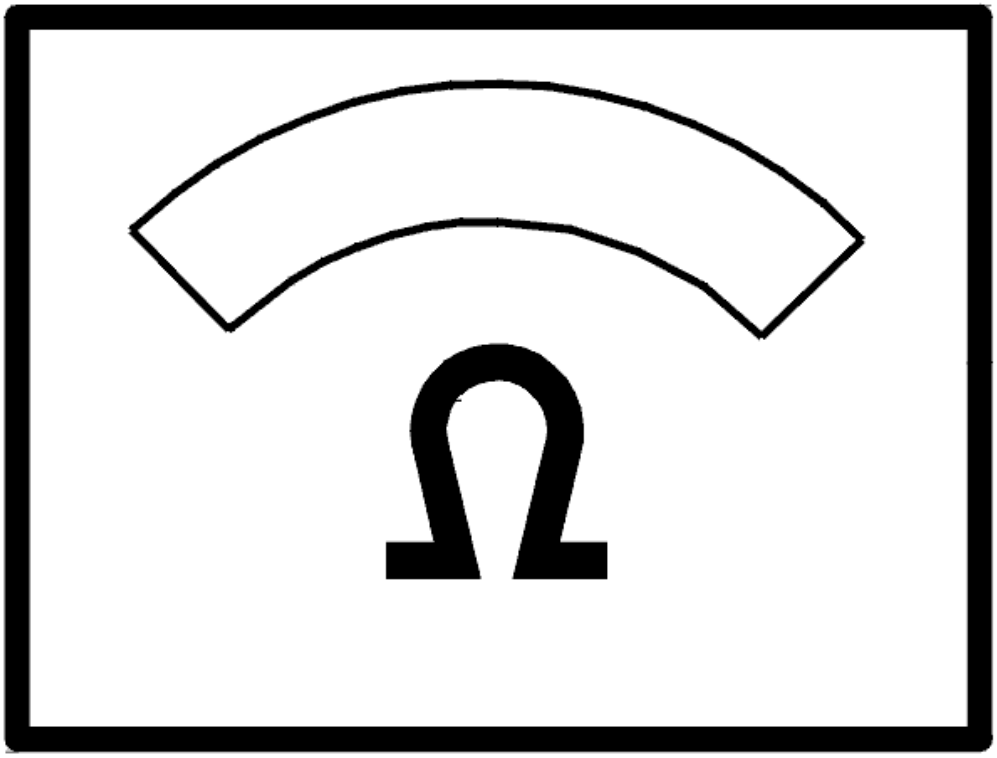

Fig. 451: Identifying Ohm Meter
Courtesy of VOLVO CARS CORPORATION

CHECKING FOR A SHORT CIRCUIT

Check the resistance between the fuse holder secondary side (left) and ground.

The ohmmeter should display infinite resistance.

NOTE: If the value is correct the fault could be intermittent.

Switch to trouble-shooting intermittent short circuits to ground as described in, see **SHORT-CIRCUIT TO GROUND, INTERMITTENT FAULTS** .

If the ohmmeter indicates a fault (short circuit), trouble-shoot the wires between the fuse and door control unit connector B12 for a short circuit to ground as described in, see **SHORT-CIRCUIT TO GROUND, PERMANENT FAULTS** .

Replace fuse.

Additional information

- To access relay/fuse box in the cargo compartment:
  - For -2004, see: **RELAY/FUSE BOX CARGO COMPARTMENT/REAR ELECTRONIC MODULE (REM), REPLACING**
  - For 2005-, see: **REAR ELECTRONIC MODULE (REM), REPLACING** .

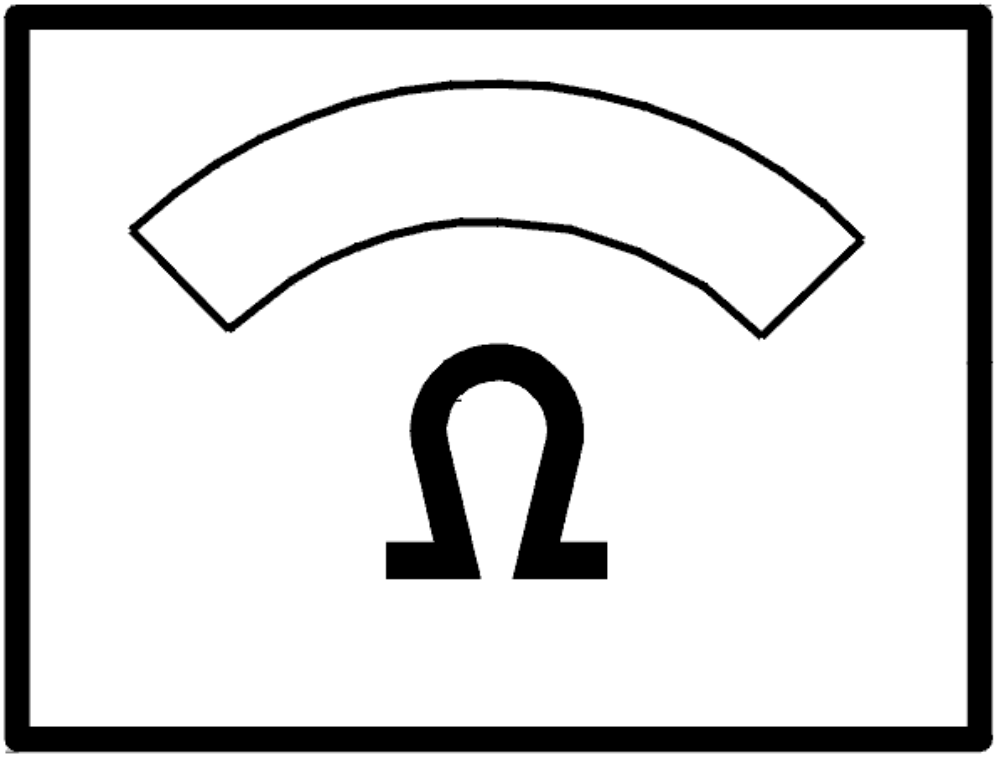

Fig. 452: Identifying Ohm Meter
Courtesy of VOLVO CARS CORPORATION

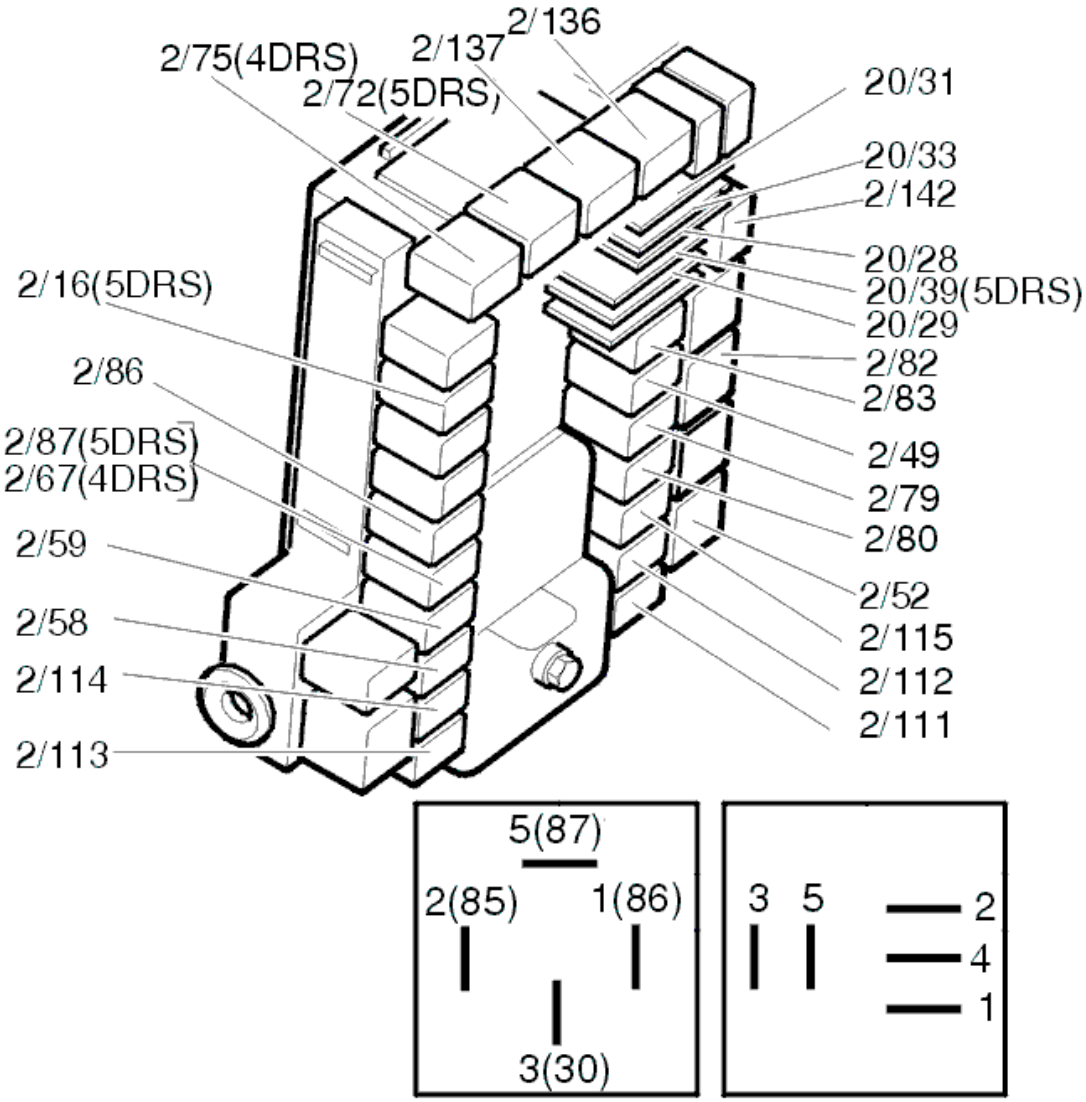

Fig. 453: Identifying Relays
Courtesy of VOLVO CARS CORPORATION

CHECKING THE LOCKING MOTOR WIRES

Check door control unit and lock unit connectors for contact resistance and oxidation as described in, see **CONTACT RESISTANCE AND OXIDATION** .

Trouble-shoot the wire between door control unit connector B2 and lock unit connector 8 for an open circuit as described in, see **OPEN-CIRCUIT, PERMANENT FAULTS** .

Trouble-shoot the wire between door control unit connector B6 and lock unit connector 7 for an open circuit as described in, see **OPEN-CIRCUIT, PERMANENT FAULTS** .

Additional information

- To access/replace the rear electronic module (REM):
  - For -2004, see: **RELAY/FUSE BOX CARGO COMPARTMENT/REAR ELECTRONIC MODULE (REM), REPLACING**
  - For 2005-, see: **REAR ELECTRONIC MODULE (REM), REPLACING** .

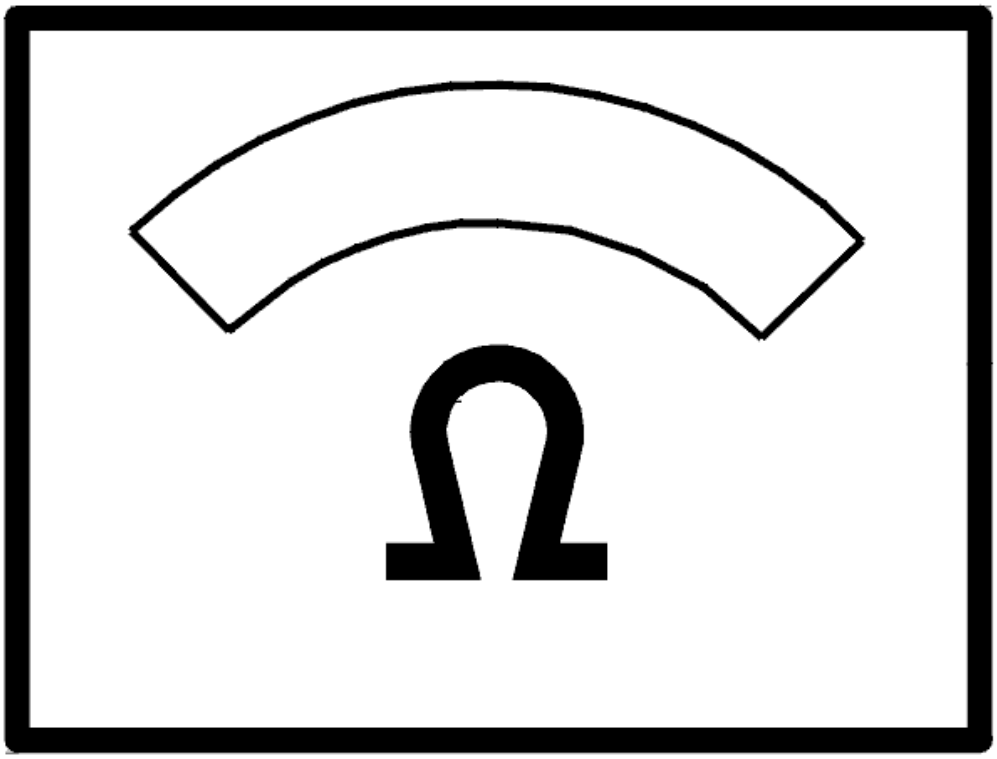

Fig. 454: Identifying Ohm Meter
Courtesy of VOLVO CARS CORPORATION

Is there a fault?

- **YES**

  OKAY: Troubleshooting has been completed.

- **NO**

Refer to **REPLACING THE COMPONENT**

REPLACING THE COMPONENT

Replace lock unit as described in, see **REPLACING THE SWITCH FOR THE LOCK UNIT / CARGO COMPARTMENT LIGHTING** .

Is there a fault?

- **YES**

  OKAY: Troubleshooting has been completed.

- **NO**

  Refer to **REPLACING THE COMPONENT**

REPLACING THE COMPONENT

Replace control unit.

- For -2004, see: **RELAY/FUSE BOX CARGO COMPARTMENT/REAR ELECTRONIC MODULE (REM), REPLACING**
- For 2005-, see: **REAR ELECTRONIC MODULE (REM), REPLACING** .

CHECKING THE PASSENGER DOOR

CHECK

Is the driver door lock not working?

- **YES**

  Refer to **CHECKING THE FUSE**

- **NO**

  Refer to **CHECK**

CHECKING THE FUSE

Remove the fuse 11C/27 in cargo compartment fuse box.

Check that fuse is intact and check for contact resistance and oxidation as described in, see **CONTACT RESISTANCE AND OXIDATION** .

Additional information

- To access relay/fuse box in the cargo compartment:
  - For -2004, see: **RELAY/FUSE BOX CARGO COMPARTMENT/REAR ELECTRONIC MODULE (REM), REPLACING**
  - For 2005-, see: **REAR ELECTRONIC MODULE (REM), REPLACING** .

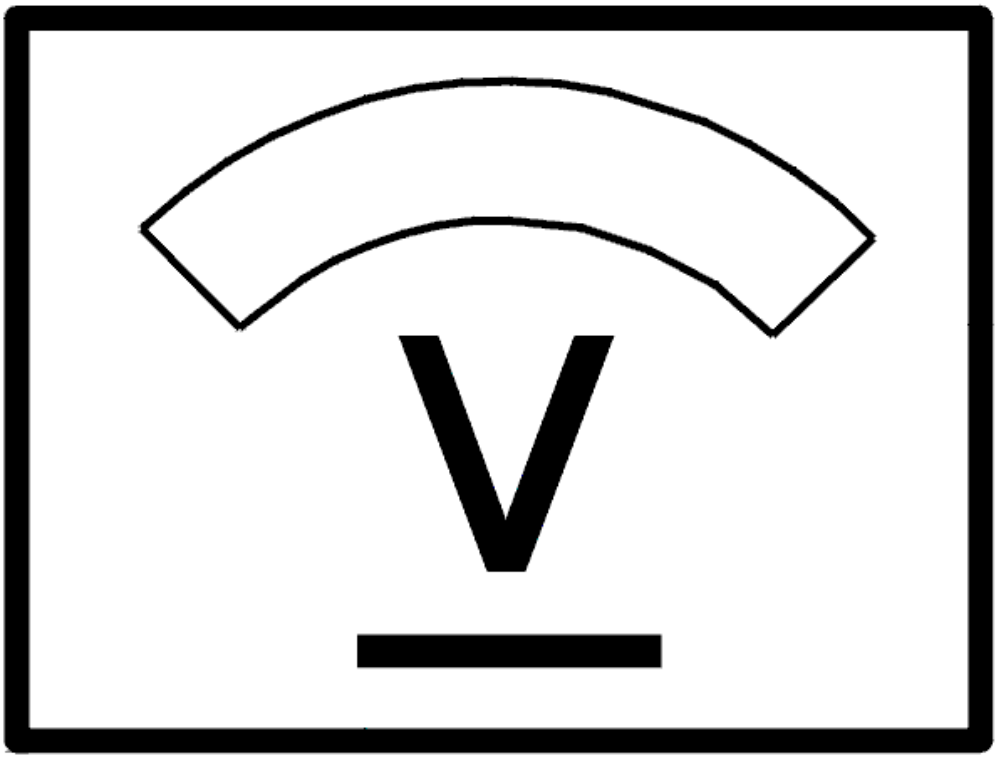

Fig. 455: Identifying Voltage Display
Courtesy of VOLVO CARS CORPORATION

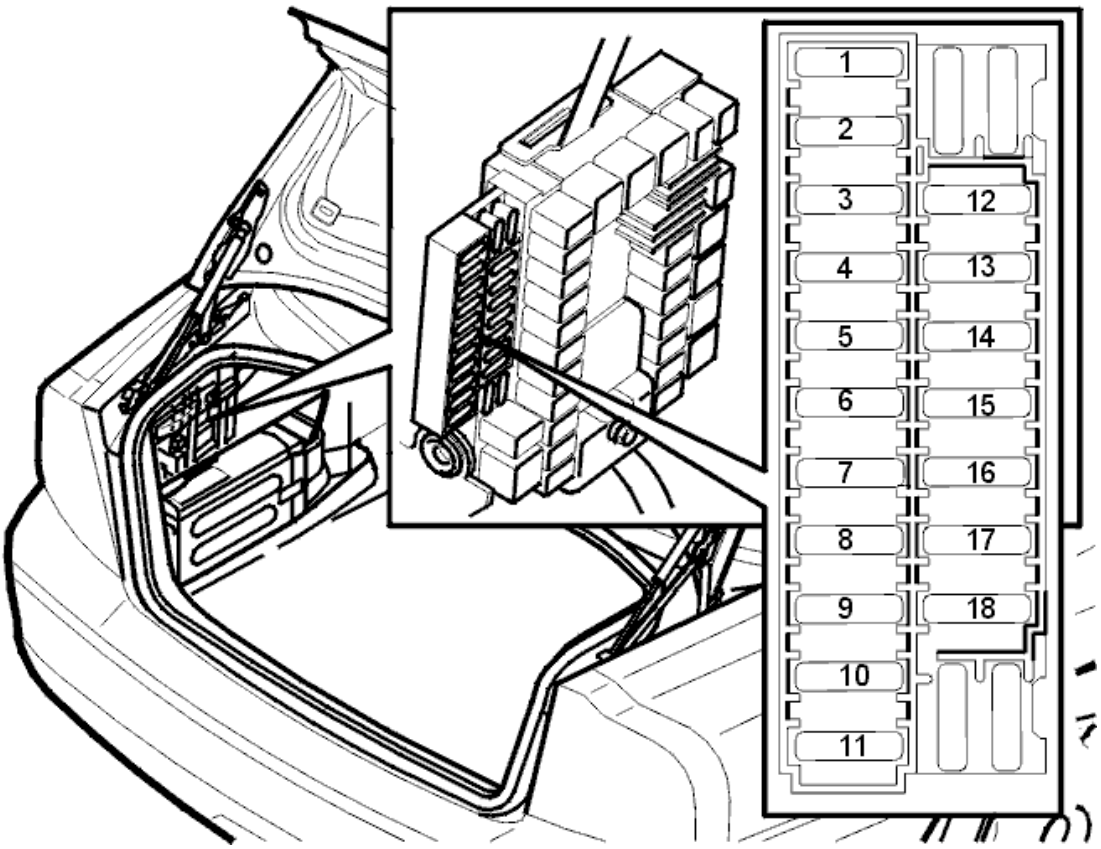

Fig. 456: Fuse Holder (Cargo Compartment)
Courtesy of VOLVO CARS CORPORATION

Is the fuse intact?

- **YES**

  Refer to **CHECKING FOR AN OPEN CIRCUIT**

- **NO**

  Refer to **CHECKING FOR A SHORT CIRCUIT**

CHECK

1. Window lift works on that particular door

   Refer to **CHECKING THE LOCKING MOTOR WIRES**

2. Window lift does not work on that particular door.

   Refer to **CHECKING THE FUSE**

CHECKING THE FUSE

Remove the fuse 11C/36 in cargo compartment fuse box.

Check that fuse is intact and check for contact resistance and oxidation as described in, see **CONTACT RESISTANCE AND OXIDATION** .

Additional information

- To access relay/fuse box in the cargo compartment:
  - For -2004, see: **RELAY/FUSE BOX CARGO COMPARTMENT/REAR ELECTRONIC MODULE (REM), REPLACING**
  - For 2005-, see: **REAR ELECTRONIC MODULE (REM), REPLACING** .

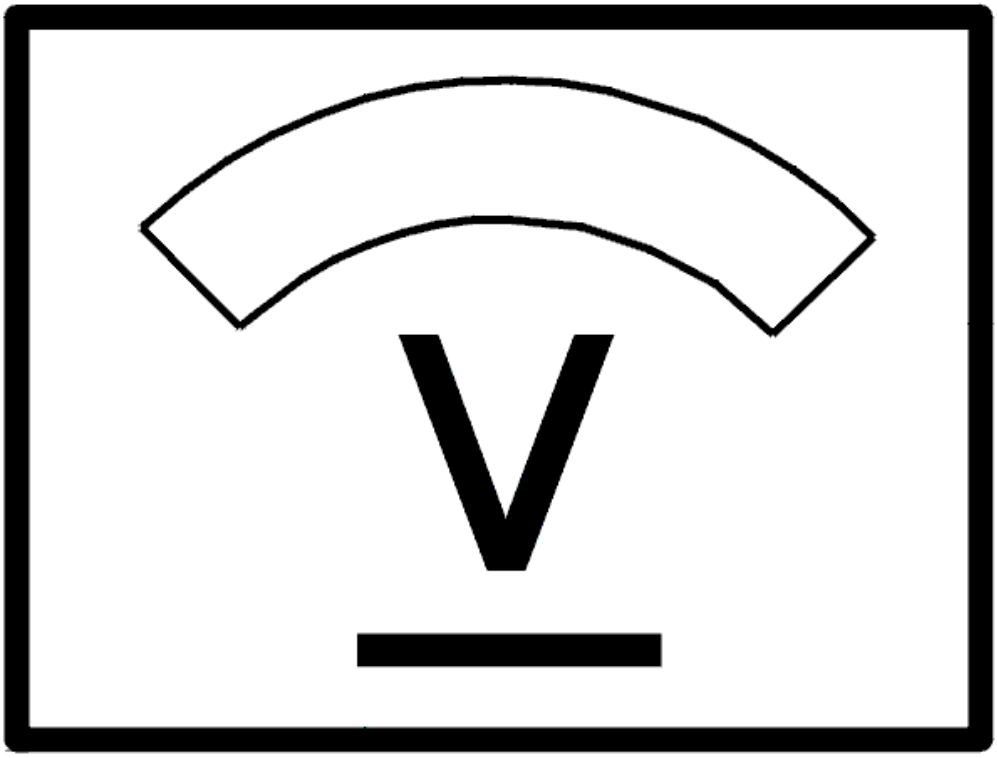

Fig. 457: Identifying Voltage Display
Courtesy of VOLVO CARS CORPORATION

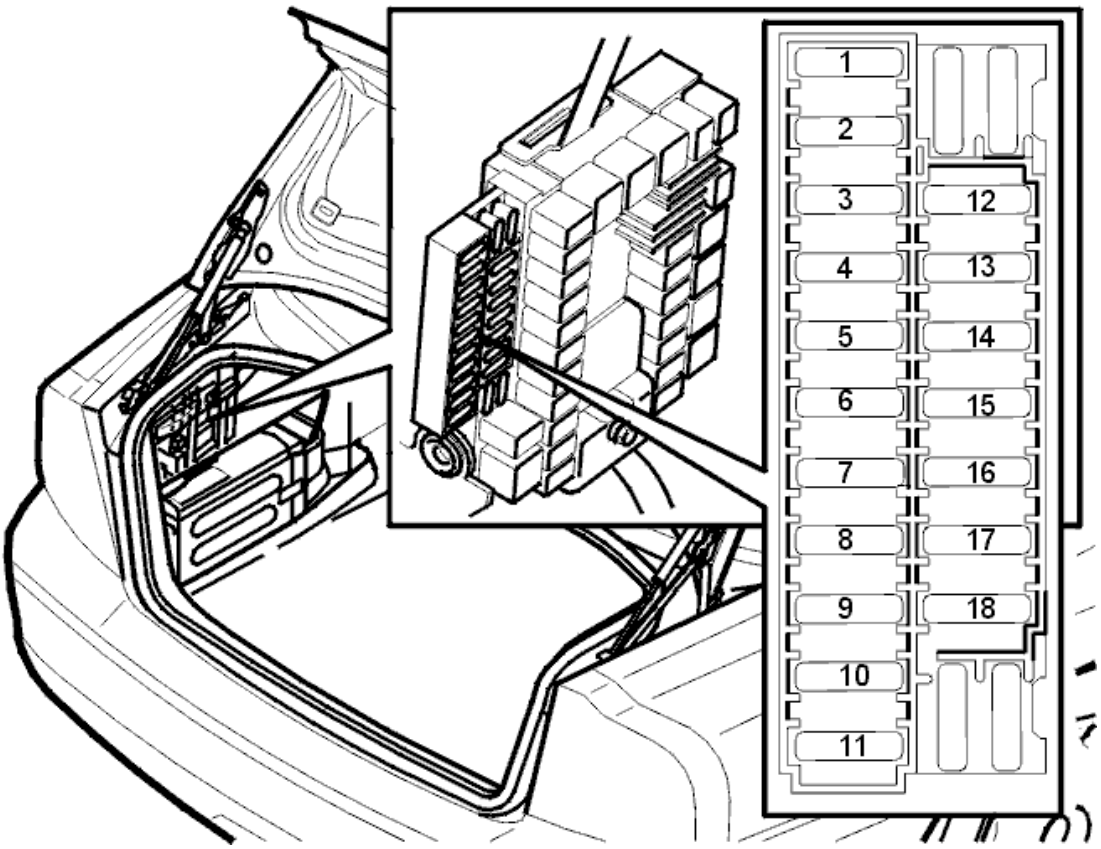

Fig. 458: Fuse Holder (Cargo Compartment)
Courtesy of VOLVO CARS CORPORATION

Is the fuse intact?

- **YES**

  Refer to **CHECKING THE VOLTAGE**

- **NO**

  Refer to **CHECKING FOR A SHORT CIRCUIT**

CHECKING FOR AN OPEN CIRCUIT

Check door control unit connector B7 for contact resistance and oxidation as described in, see **CONTACT RESISTANCE AND OXIDATION** .

Trouble-shoot the wire between fuse holder secondary side (left) and door control unit connector B7 for an open circuit as described in, see **OPEN-CIRCUIT, PERMANENT FAULTS** .

If a fault is detected, check in particular the intermediate connector in the cable harness (1/control unit) for contact resistance and oxidation as described in, see **CONTACT RESISTANCE AND OXIDATION** .

If there is an open circuit the fault should be between the fuse and the common junction point 53/427.

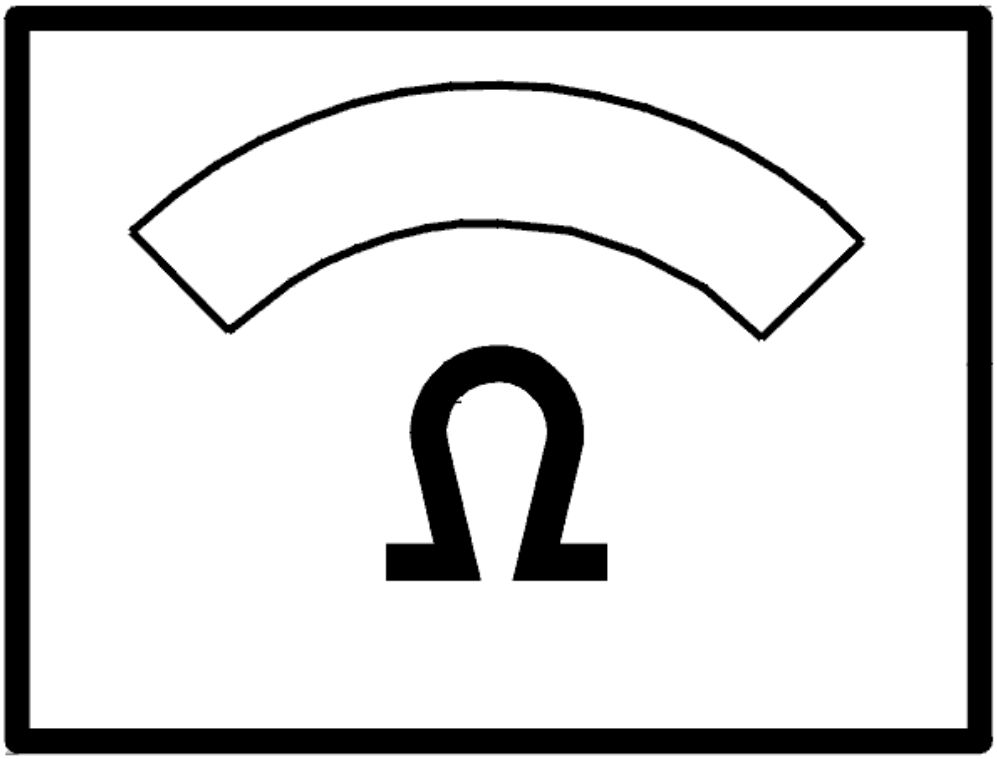

Fig. 459: Identifying Ohm Meter
Courtesy of VOLVO CARS CORPORATION

CHECKING FOR A SHORT CIRCUIT

Check the resistance between the fuse holder secondary side (left) and ground.

The ohmmeter should display infinite resistance.

NOTE: If the value is correct the fault could be intermittent.

Switch to trouble-shooting intermittent short circuits to ground as described in, see **SHORT-CIRCUIT TO GROUND, INTERMITTENT FAULTS** .

If the ohmmeter indicates a fault (short circuit), trouble-shoot the wires between the fuse and door control unit connector B7 for a short circuit to ground as described in, see **SHORT-CIRCUIT TO GROUND, PERMANENT FAULTS** .

The fault should be between the fuse and the common junction point 53/427.

Replace fuse.

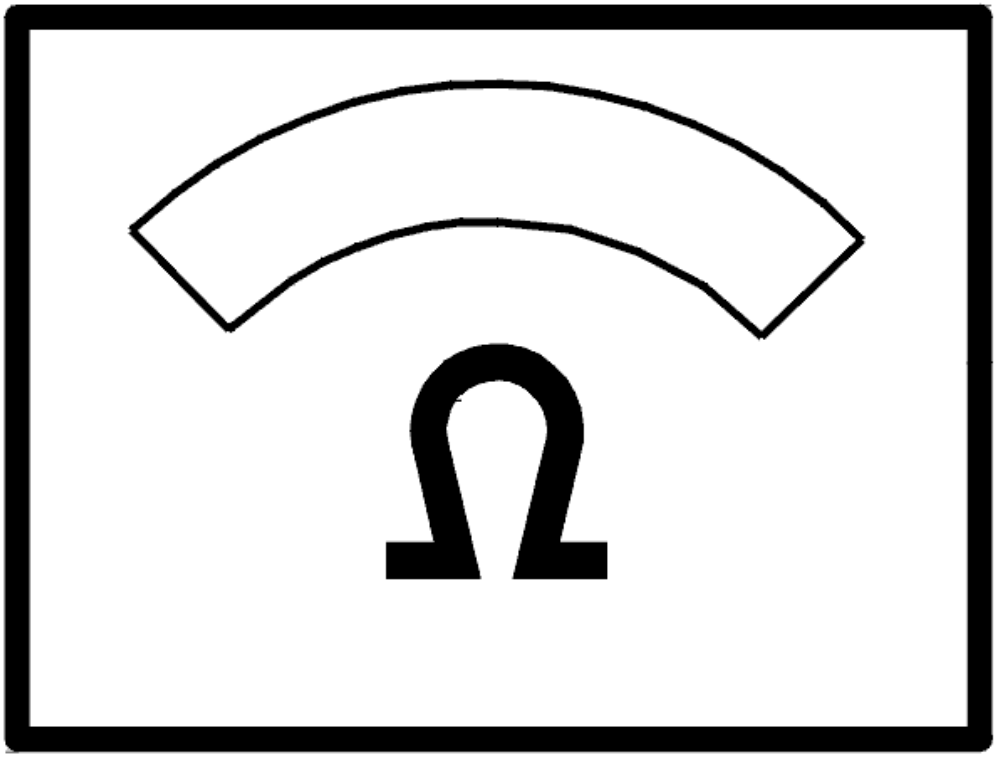

Fig. 460: Identifying Ohm Meter
Courtesy of VOLVO CARS CORPORATION

CHECKING THE VOLTAGE

Check the voltage in the door control unit connector B12.

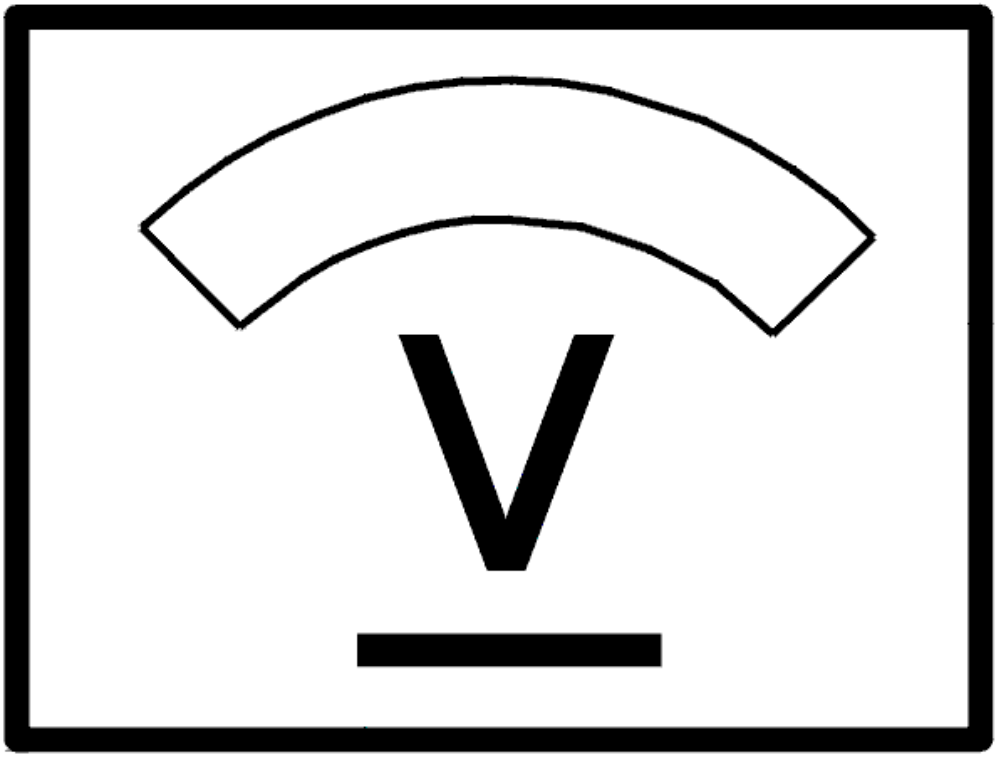

Fig. 461: Identifying Voltage Display
Courtesy of VOLVO CARS CORPORATION

Does the voltmeter show the battery voltage?

- **YES**

  Refer to **CHECKING THE LOCKING MOTOR WIRES**

- **NO**

  Refer to **CHECKING FOR AN OPEN CIRCUIT**

CHECKING FOR AN OPEN CIRCUIT

Check door control unit connector B12 for contact resistance and oxidation as described in, see **CONTACT**

RESISTANCE AND OXIDATION .

Trouble-shoot the wire between fuse holder secondary side (left) and door control unit connector B12 for an open circuit as described in, see **OPEN-CIRCUIT, PERMANENT FAULTS** .

If a fault is detected, check in particular the intermediate connector in the cable harness (1) for contact resistance and oxidation as described in, see **CONTACT RESISTANCE AND OXIDATION** .

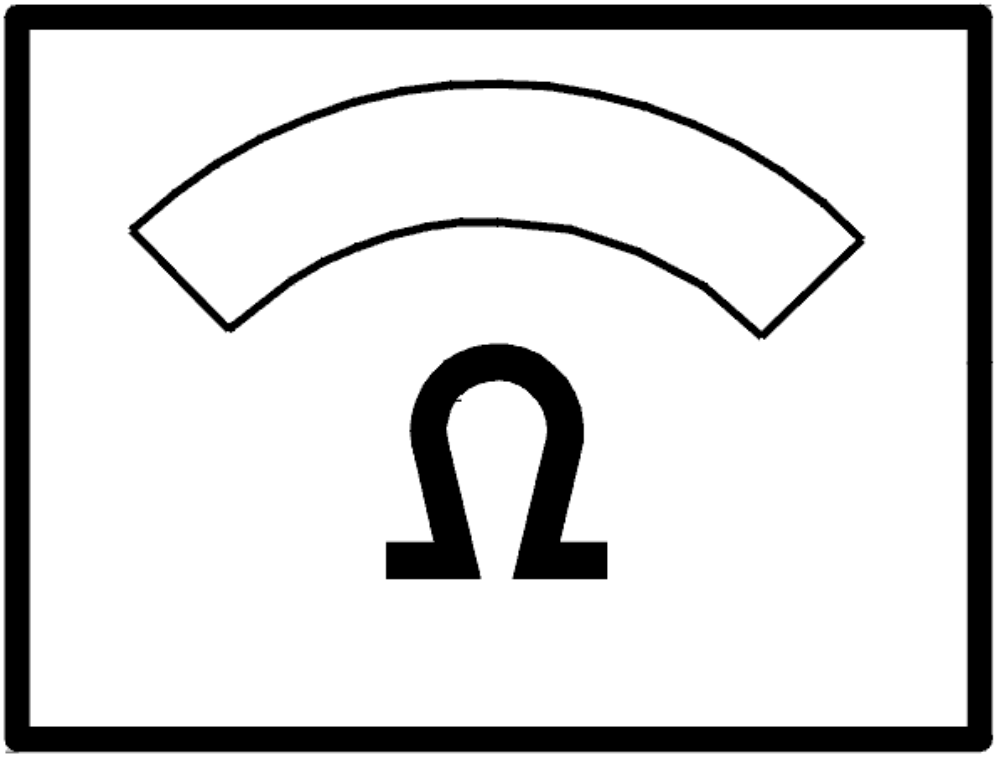

Fig. 462: Identifying Ohm Meter
Courtesy of VOLVO CARS CORPORATION

CHECKING FOR A SHORT CIRCUIT

Check the resistance between the fuse holder secondary side (left) and ground.

The ohmmeter should display infinite resistance.

NOTE: If the value is correct the fault could be intermittent.

Switch to trouble-shooting intermittent short circuits to ground as described in, see **SHORT-CIRCUIT TO GROUND, INTERMITTENT FAULTS** .

If the ohmmeter indicates a fault (short circuit), trouble-shoot the wires between the fuse and door control unit connector B12 for a short circuit to ground as described in, see **SHORT-CIRCUIT TO GROUND, PERMANENT FAULTS** .

Replace fuse.

Additional information

- To access relay/fuse box in the cargo compartment:
  - For -2004, see: **RELAY/FUSE BOX CARGO COMPARTMENT/REAR ELECTRONIC MODULE (REM), REPLACING**
  - For 2005-, see: **REAR ELECTRONIC MODULE (REM), REPLACING** .

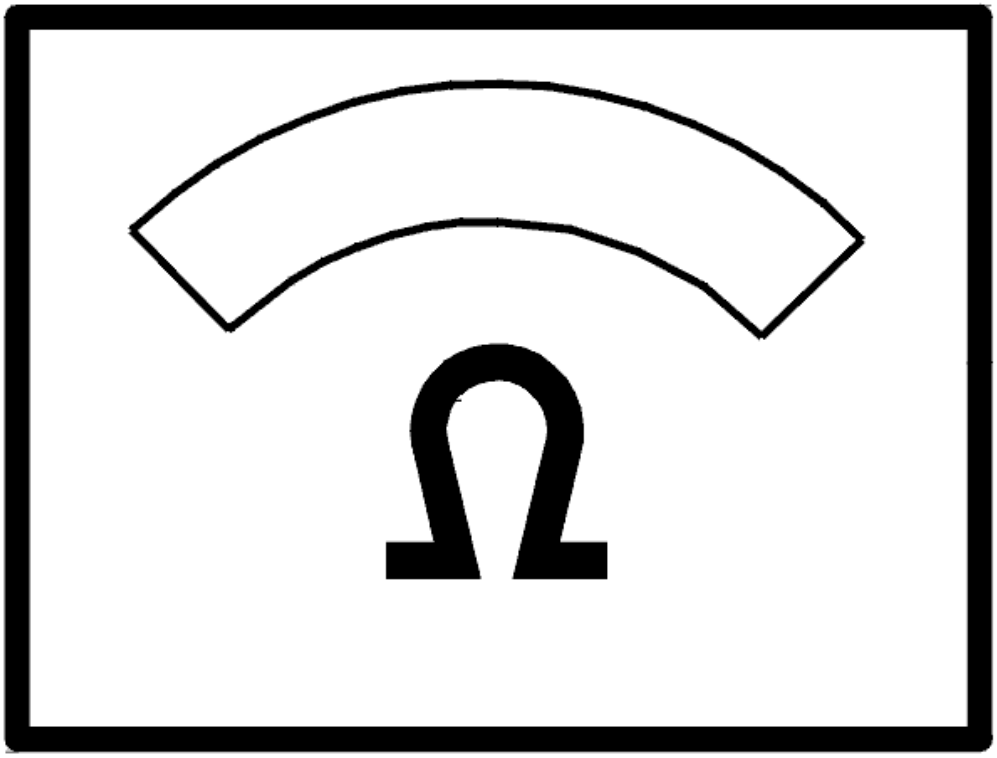

Fig. 463: Identifying Ohm Meter
Courtesy of VOLVO CARS CORPORATION

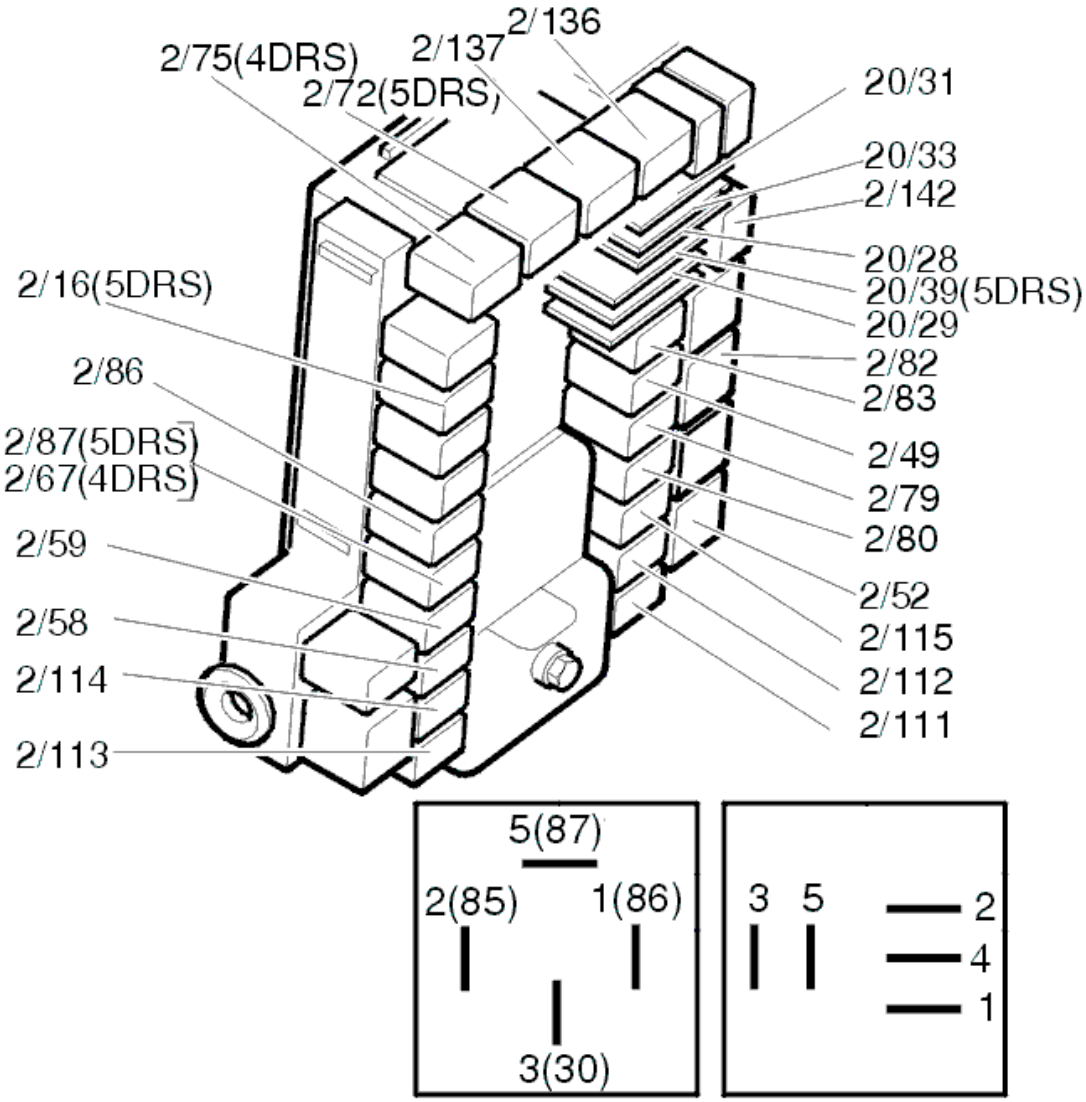

Fig. 464: Identifying Relays
Courtesy of VOLVO CARS CORPORATION

CHECKING THE LOCKING MOTOR WIRES

Check door control unit and lock unit connectors for contact resistance and oxidation as described in, see **CONTACT RESISTANCE AND OXIDATION** .

Trouble-shoot the wire between door control unit connector B2 and lock unit connector 8 for an open circuit as described in, see **OPEN-CIRCUIT, PERMANENT FAULTS** .

Trouble-shoot the wire between door control unit connector B6 and lock unit connector 7 for an open circuit as described in, see **OPEN-CIRCUIT, PERMANENT FAULTS** .

Additional information

- To access/replace the rear electronic module (REM):
  - For -2004, see: **RELAY/FUSE BOX CARGO COMPARTMENT/REAR ELECTRONIC MODULE (REM), REPLACING**
  - For 2005-, see: **REAR ELECTRONIC MODULE (REM), REPLACING** .

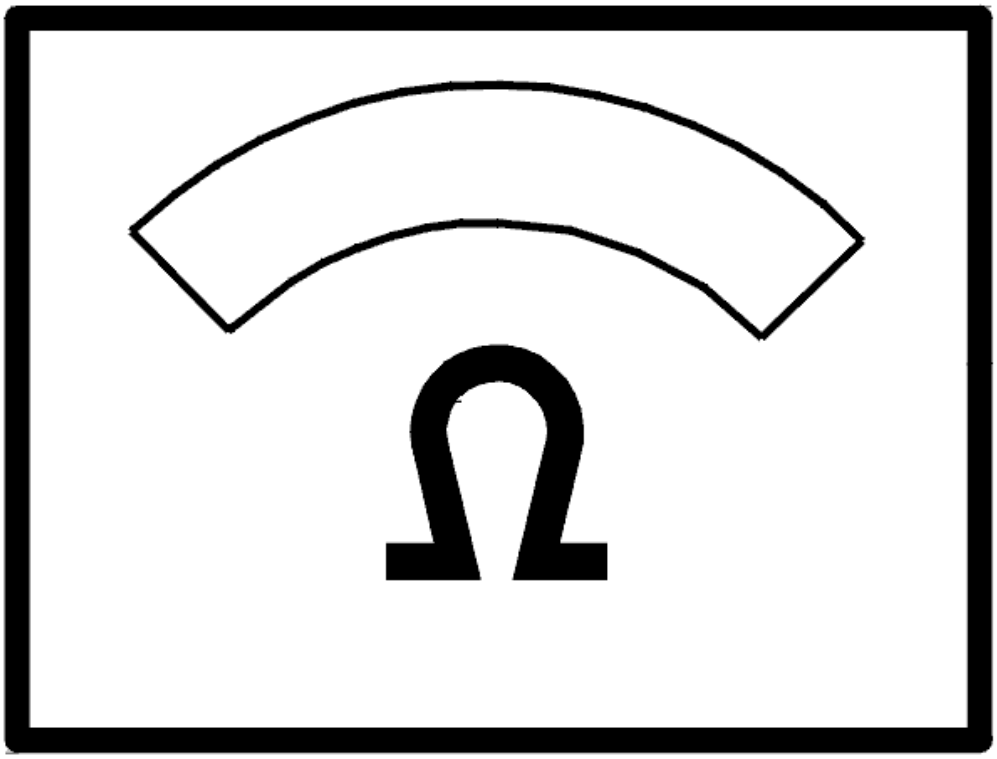

Fig. 465: Identifying Ohm Meter
Courtesy of VOLVO CARS CORPORATION

Is there a fault?

- **YES**

  OKAY: Troubleshooting has been completed.

- **NO**

Refer to **REPLACING THE COMPONENT**

REPLACING THE COMPONENT

Replace lock unit as described in, see **REPLACING THE SWITCH FOR THE LOCK UNIT / CARGO COMPARTMENT LIGHTING** .

Is there a fault?

- **YES**

  OKAY: Troubleshooting has been completed.

- **NO**

  Refer to **REPLACING THE COMPONENT**

REPLACING THE COMPONENT

Replace control unit.

- For -2004, see: **RELAY/FUSE BOX CARGO COMPARTMENT/REAR ELECTRONIC MODULE (REM), REPLACING**
- For 2005-, see: **REAR ELECTRONIC MODULE (REM), REPLACING** .

CHECKING THE REAR LEFT DOOR

CHECK

Is the lock to the other rear door not working?

- **YES**

  Refer to **CHECKING THE FUSE**

- **NO**

  Refer to **REPLACING THE COMPONENT**

REPLACING THE COMPONENT

Replace the relays for locking (2/111) and unlocking (2/112) in the cargo compartment relay/fuse box. At the same time check relay socket contacts for contact resistance and oxidation as described in, see **CONTACT RESISTANCE AND OXIDATION** .

Additional information

- To access relay/fuse box in the cargo compartment:

- For -2004, see: **RELAY/FUSE BOX CARGO COMPARTMENT/REAR ELECTRONIC MODULE (REM), REPLACING**
- For 2005-, see: **REAR ELECTRONIC MODULE (REM), REPLACING** .

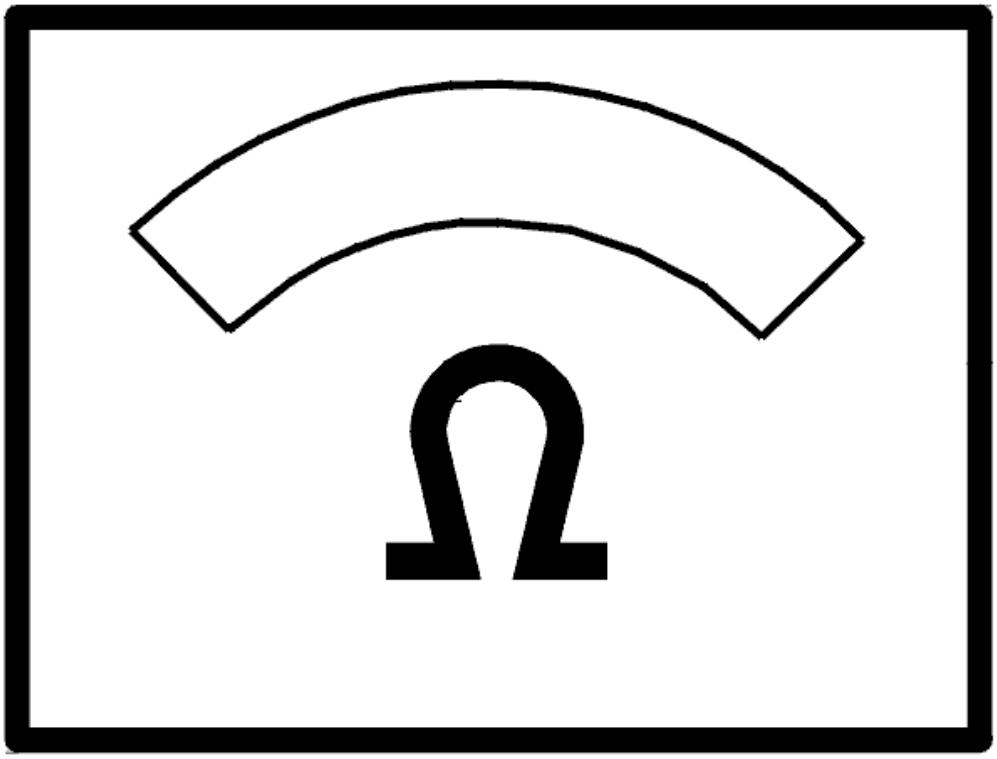

Fig. 466: Identifying Ohm Meter
Courtesy of VOLVO CARS CORPORATION

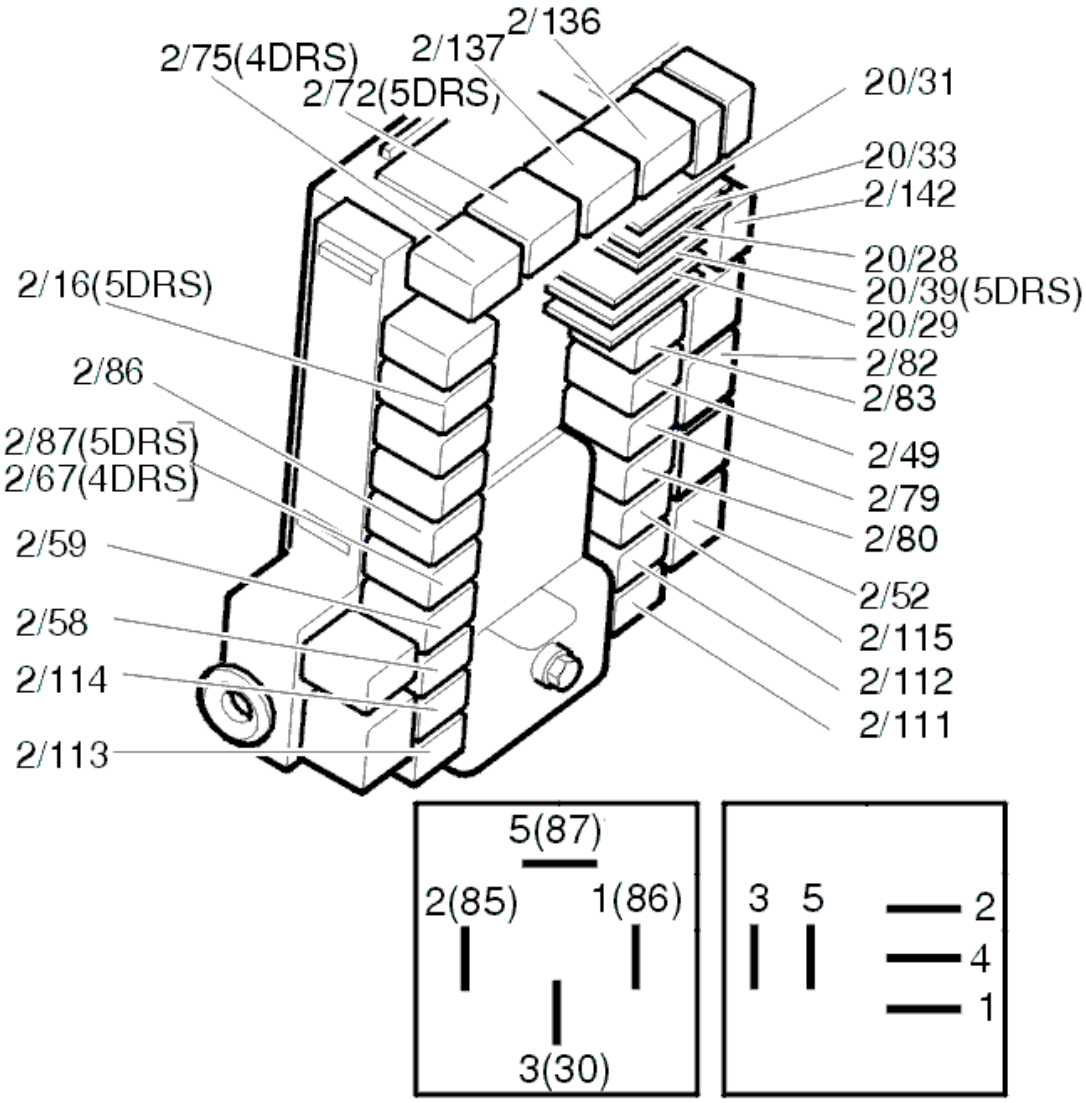

Fig. 467: Identifying Relays
Courtesy of VOLVO CARS CORPORATION

Is there a fault?

- **YES**

  OKAY: Troubleshooting has been completed.

- **NO**

  Refer to **CIRCUIT TEST**

CIRCUIT TEST

The fault is caused by an open circuit in one of the relay circuits or in the lock unit. To find out which circuit

contains the fault:

Disconnect the lock unit connector.

Check the contacts for contact resistance and oxidation as described in, see **CONTACT RESISTANCE AND OXIDATION** .

Check resistance between 4 and 6 on cable connector.

Additional information

- To access/replace the lock unit, see **LOCK MECHANISM REAR SIDE DOOR, REPLACING** .

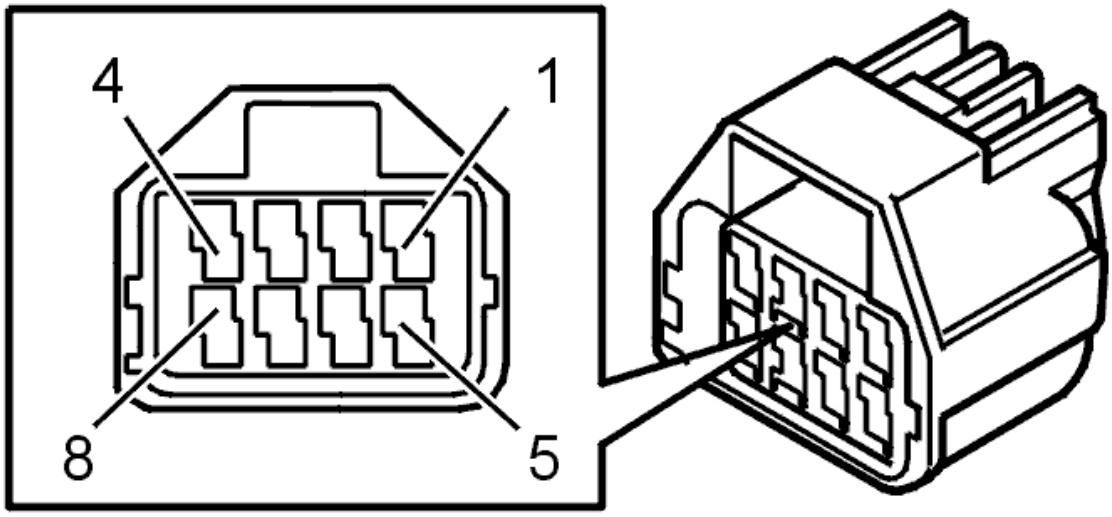

Fig. 468: Identifying Connector Terminals
Courtesy of VOLVO CARS CORPORATION

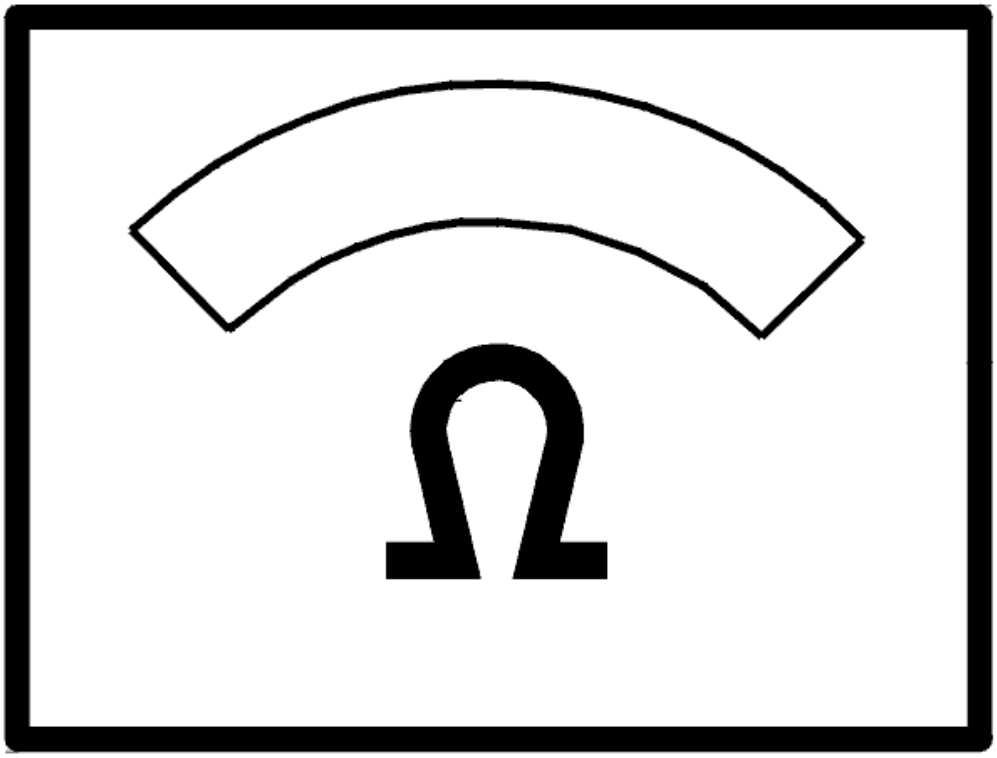

Fig. 469: Identifying Ohm Meter
Courtesy of VOLVO CARS CORPORATION

The ohmmeter should display 0 ohm.

- **OK**

  Refer to **CHECKING THE COMPONENTS**

- **NOT OK**

  Refer to **CIRCUIT TEST, CONTINUED**

CIRCUIT TEST, CONTINUED

Check the resistance between 4 and ground and between 6 and ground on the cable connector.

The ohmmeter should display 0 ohm.

1. The ohmmeter shows a fault between 4 and ground

   Refer to **CHECKING THE UNLOCKING RELAY CIRCUIT**

2. The ohmmeter shows a fault between 6 and ground.

   Refer to **CHECKING THE LOCKING RELAY CIRCUIT**

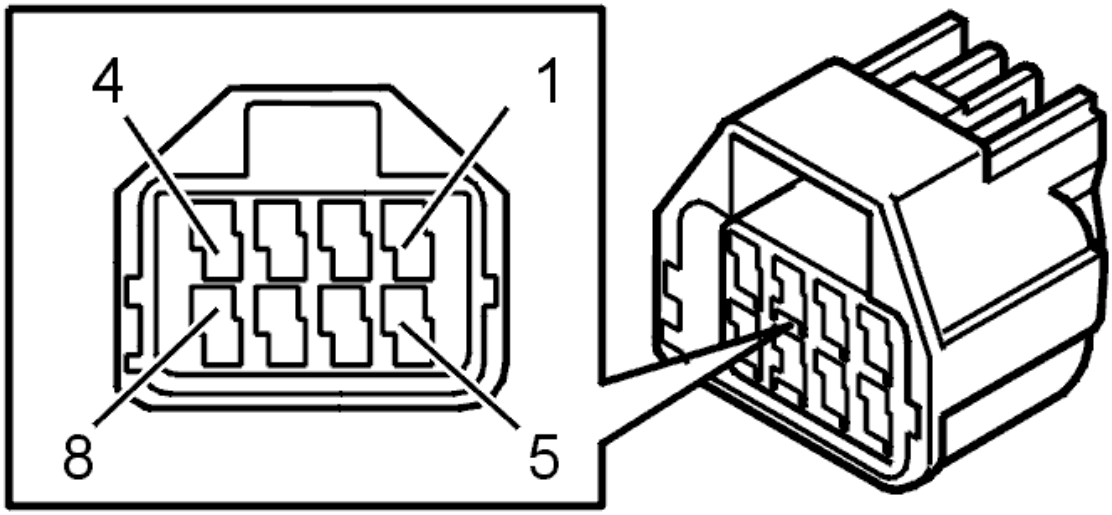

Fig. 470: Identifying Connector Terminals
Courtesy of VOLVO CARS CORPORATION

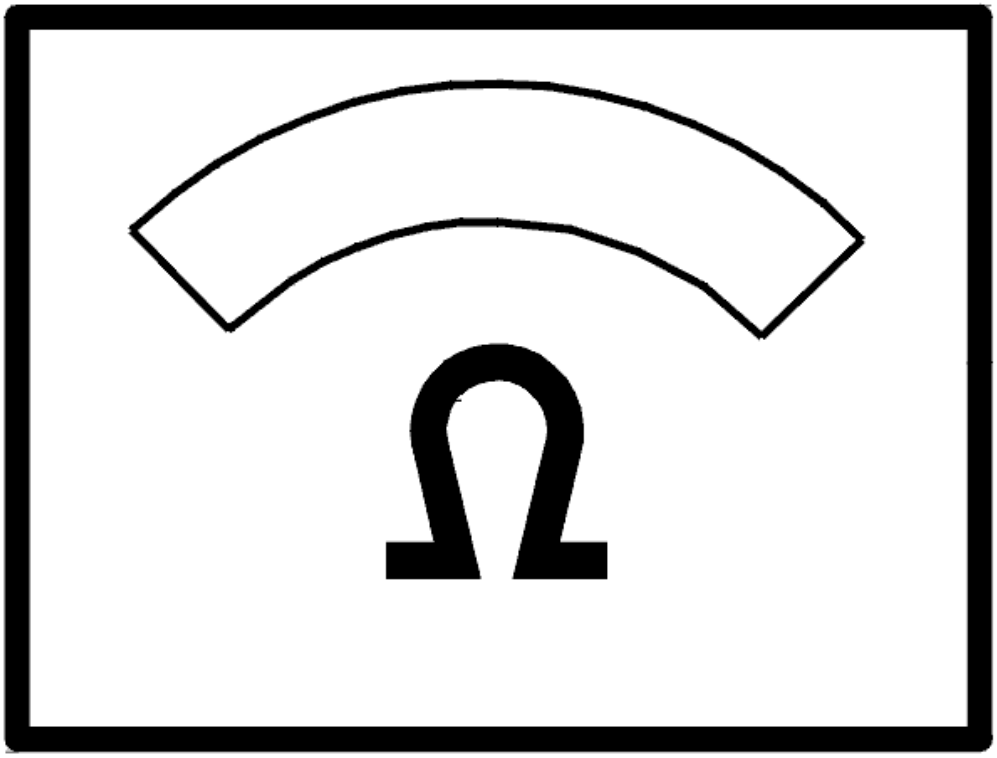

Fig. 471: Identifying Ohm Meter
Courtesy of VOLVO CARS CORPORATION

CHECKING THE LOCKING RELAY CIRCUIT

Remove the locking relay (2/111).

Check the wire between 4 in the cable connector and 3 in the relay socket for an open circuit as described in, see **OPEN-CIRCUIT, PERMANENT FAULTS** .

If a fault is detected, check in particular the intermediate connector in the cable harness (2) for contact resistance and oxidation as described in, see **CONTACT RESISTANCE AND OXIDATION** .

Do the necessary corrective action.

If no fault is found, check the resistance between 4 in the relay socket and ground.

The ohmmeter should display 0 ohm.

If the resistance deviates, replace the rear electronic module (REM).

Additional information

- To access/replace the rear electronic module (REM):
  - For -2004, see: **RELAY/FUSE BOX CARGO COMPARTMENT/REAR ELECTRONIC MODULE (REM), REPLACING**
  - For 2005-, see: **REAR ELECTRONIC MODULE (REM), REPLACING** .

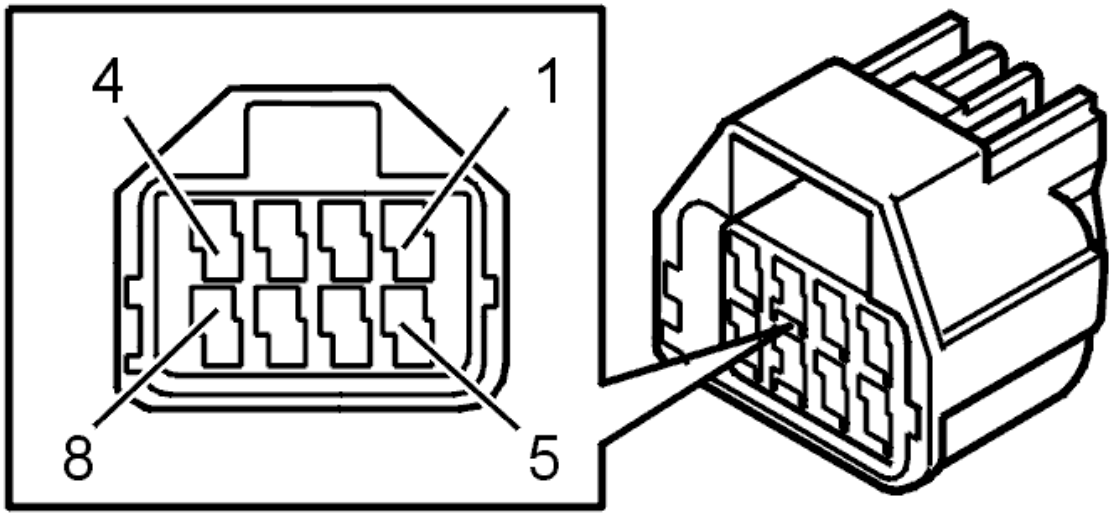

Fig. 472: Identifying Connector Terminals
Courtesy of VOLVO CARS CORPORATION

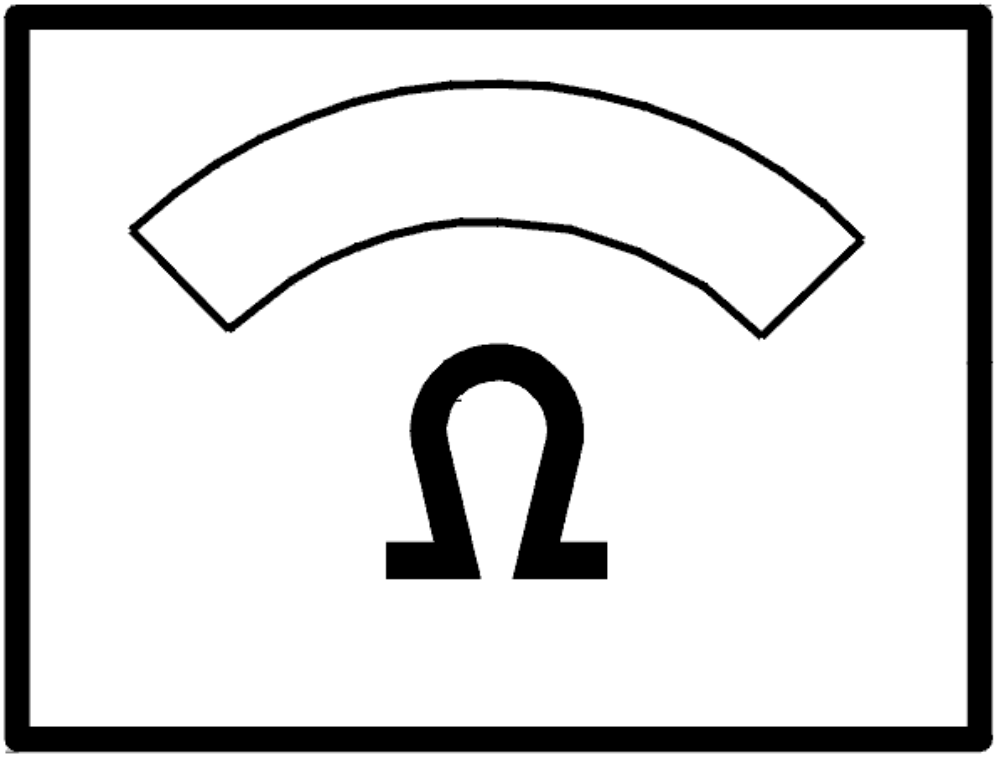

Fig. 473: Identifying Ohm Meter
Courtesy of VOLVO CARS CORPORATION

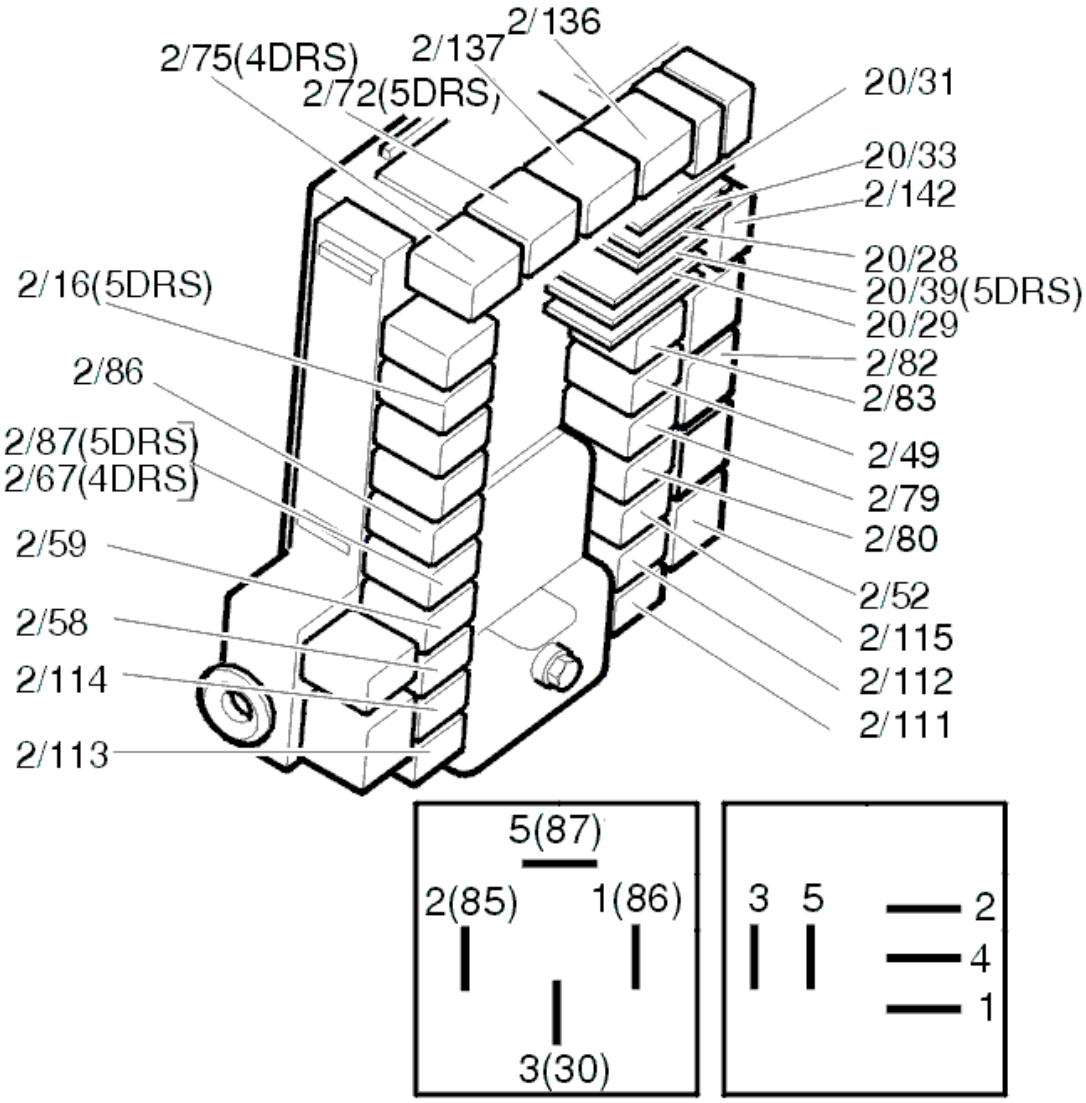

Fig. 474: Identifying Relays
Courtesy of VOLVO CARS CORPORATION

CHECKING THE UNLOCKING RELAY CIRCUIT

Remove the unlocking relay (2/112).

Check the wire between 6 in the cable connector and 3 in the relay socket for an open circuit as described in, see **OPEN-CIRCUIT, PERMANENT FAULTS** .

If a fault is detected, check in particular the intermediate connector in the cable harness (2) for contact resistance and oxidation as described in, see **CONTACT RESISTANCE AND OXIDATION** .

Do the necessary corrective action.

If no fault is found, check the resistance between 4 in the relay socket and ground.

The ohmmeter should display 0 ohm.

If the resistance deviates, replace the rear electronic module (REM).

Additional information

- To access/replace the rear electronic module (REM):
  - For -2004, see: **RELAY/FUSE BOX CARGO COMPARTMENT/REAR ELECTRONIC MODULE (REM), REPLACING**
  - For 2005-, see: **REAR ELECTRONIC MODULE (REM), REPLACING** .

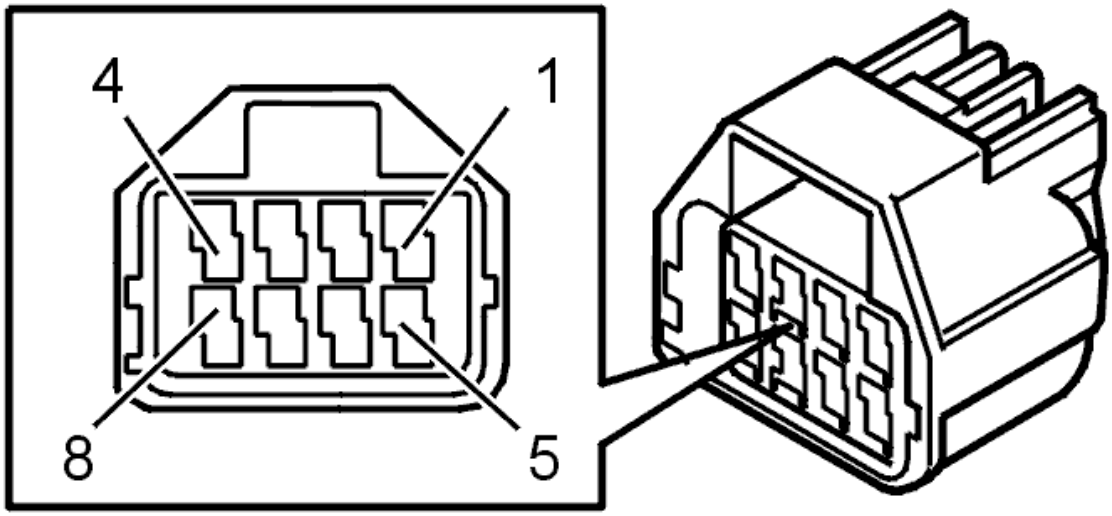

Fig. 475: Identifying Connector Terminals
Courtesy of VOLVO CARS CORPORATION

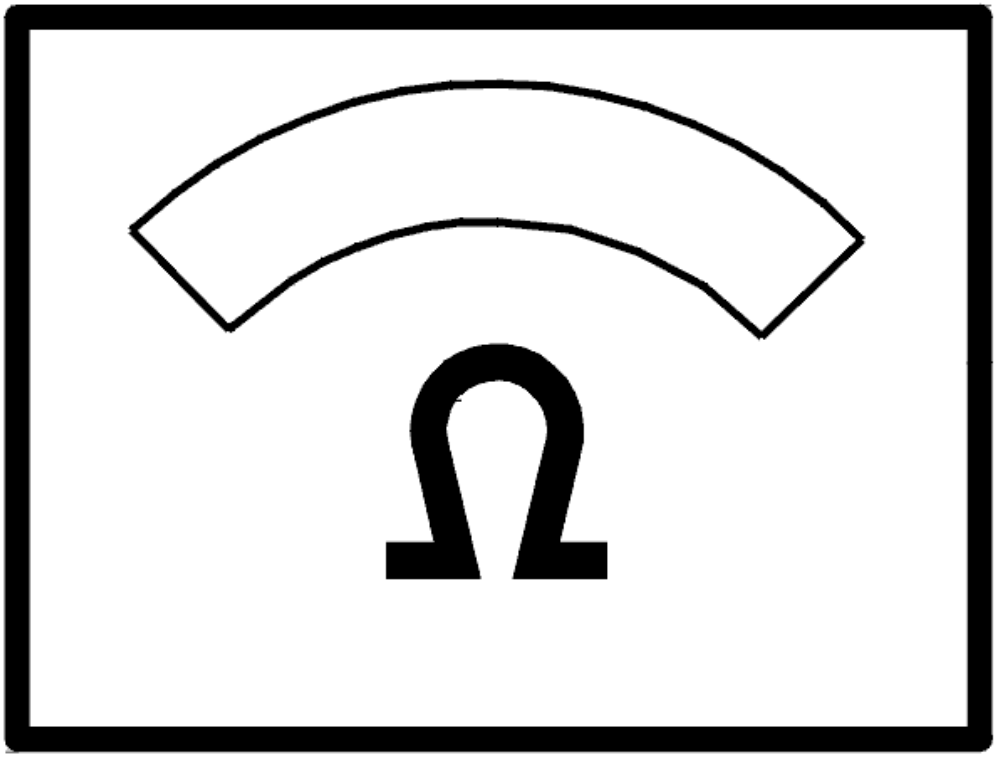

Fig. 476: Identifying Ohm Meter
Courtesy of VOLVO CARS CORPORATION

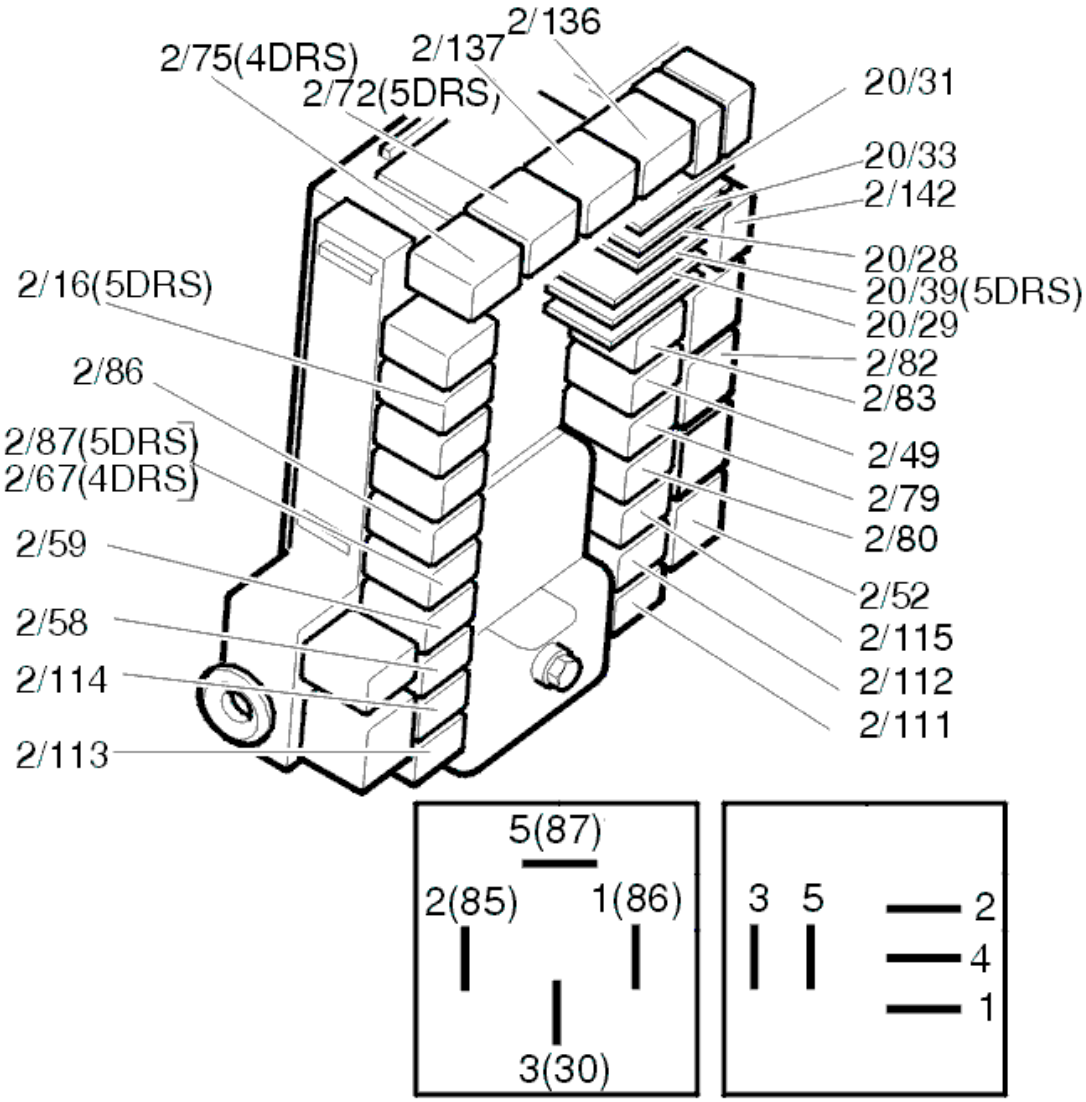

Fig. 477: Identifying Relays
Courtesy of VOLVO CARS CORPORATION

CHECKING THE COMPONENTS

Check the resistance between pin 4 and 6 in the lock unit chassis contact.

The ohmmeter should display 5 ohm.

If the resistance deviates, replace the lock unit.

Additional information

- To access the rear electronic module (REM):
  - For -2004, see: **RELAY/FUSE BOX CARGO COMPARTMENT/REAR ELECTRONIC MODULE (REM), REPLACING**

- For 2005-, see: **REAR ELECTRONIC MODULE (REM), REPLACING** .
- To access/replace the lock unit, see **LOCK MECHANISM REAR SIDE DOOR, REPLACING**
- For information on signals and additional values, see **SIGNAL SPECIFICATION** .

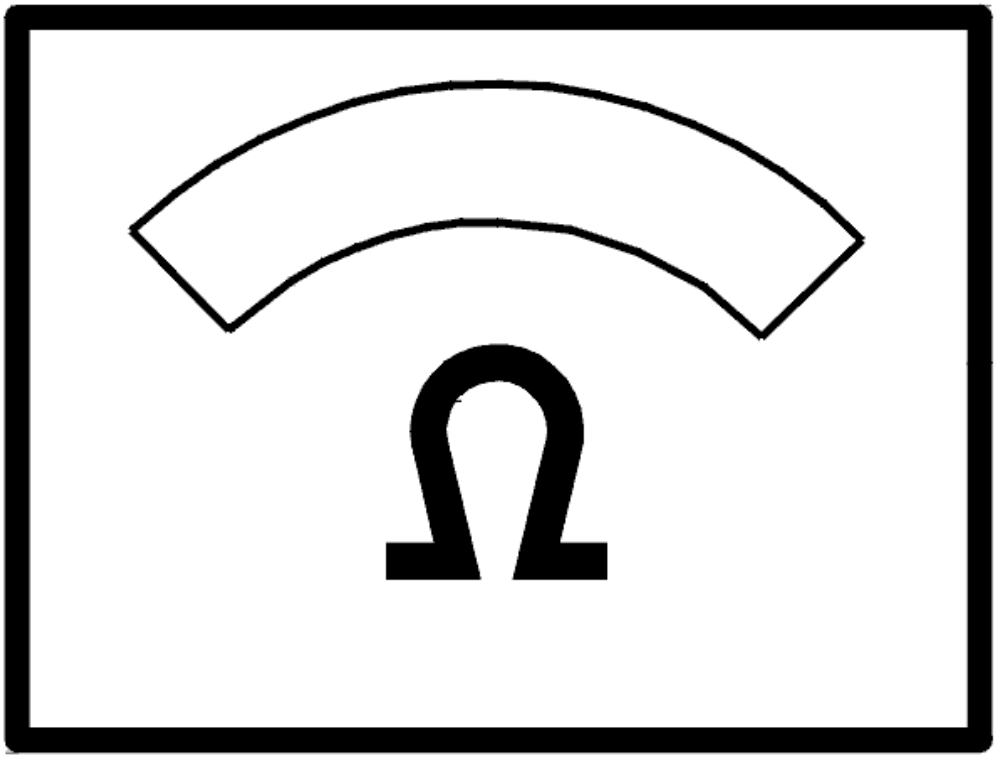

Fig. 478: Identifying Ohm Meter
Courtesy of VOLVO CARS CORPORATION

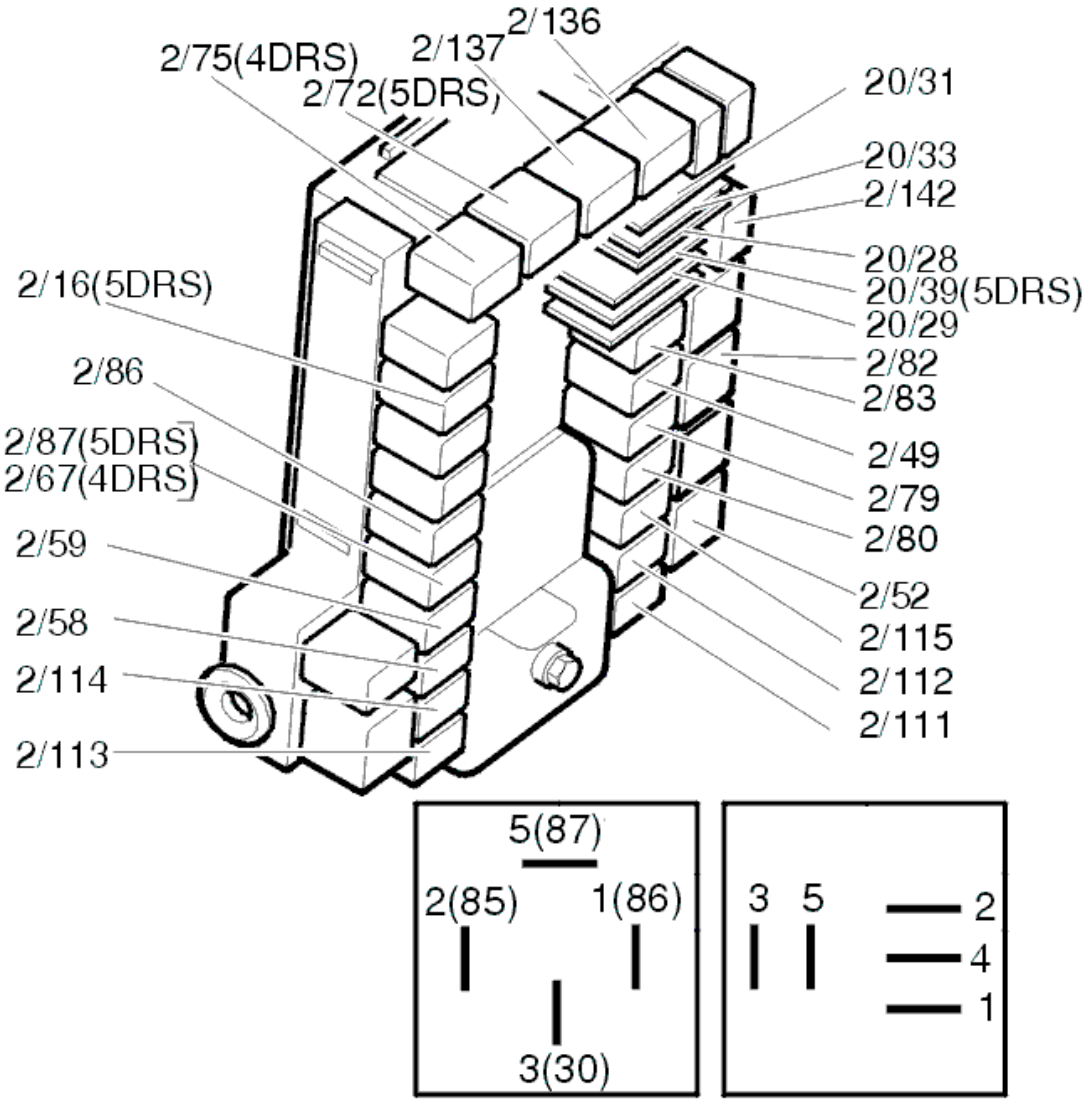

Fig. 479: Identifying Relays
Courtesy of VOLVO CARS CORPORATION

Is there a fault?

- **YES**

  OKAY: Troubleshooting has been completed.

- **NO**

  Refer to **CHECKING THE RELAY SUPPLY**

CHECKING THE RELAY SUPPLY

Remove the locking relay (2/111).

Measure the voltage between 5 in the relay socket and ground.

The voltmeter should display battery voltage.

HINT: If the value is OK but the fault still remains, connect the contacts to the lock module and link between 3 and 5 in the relay socket to force-feed the lock motor while continuing to test.

Additional information

- To access the rear electronic module (REM):
  - For -2004, see: **RELAY/FUSE BOX CARGO COMPARTMENT/REAR ELECTRONIC MODULE (REM), REPLACING**
  - For 2005-, see: **REAR ELECTRONIC MODULE (REM), REPLACING** .

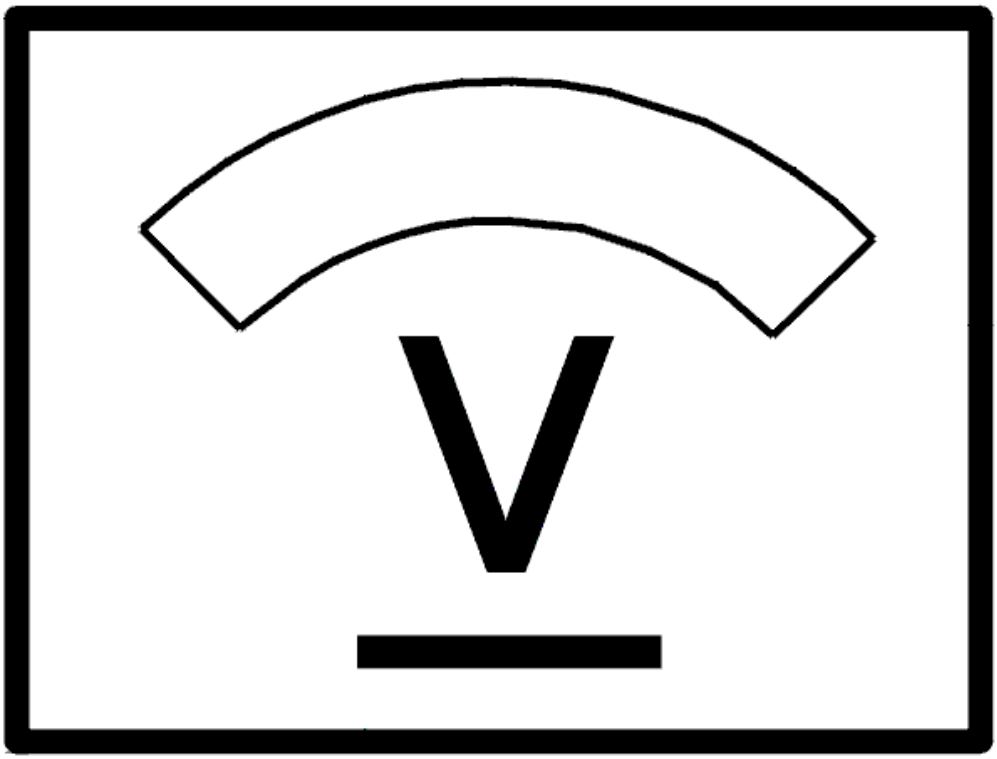

Fig. 480: Identifying Voltage Display

Courtesy of VOLVO CARS CORPORATION

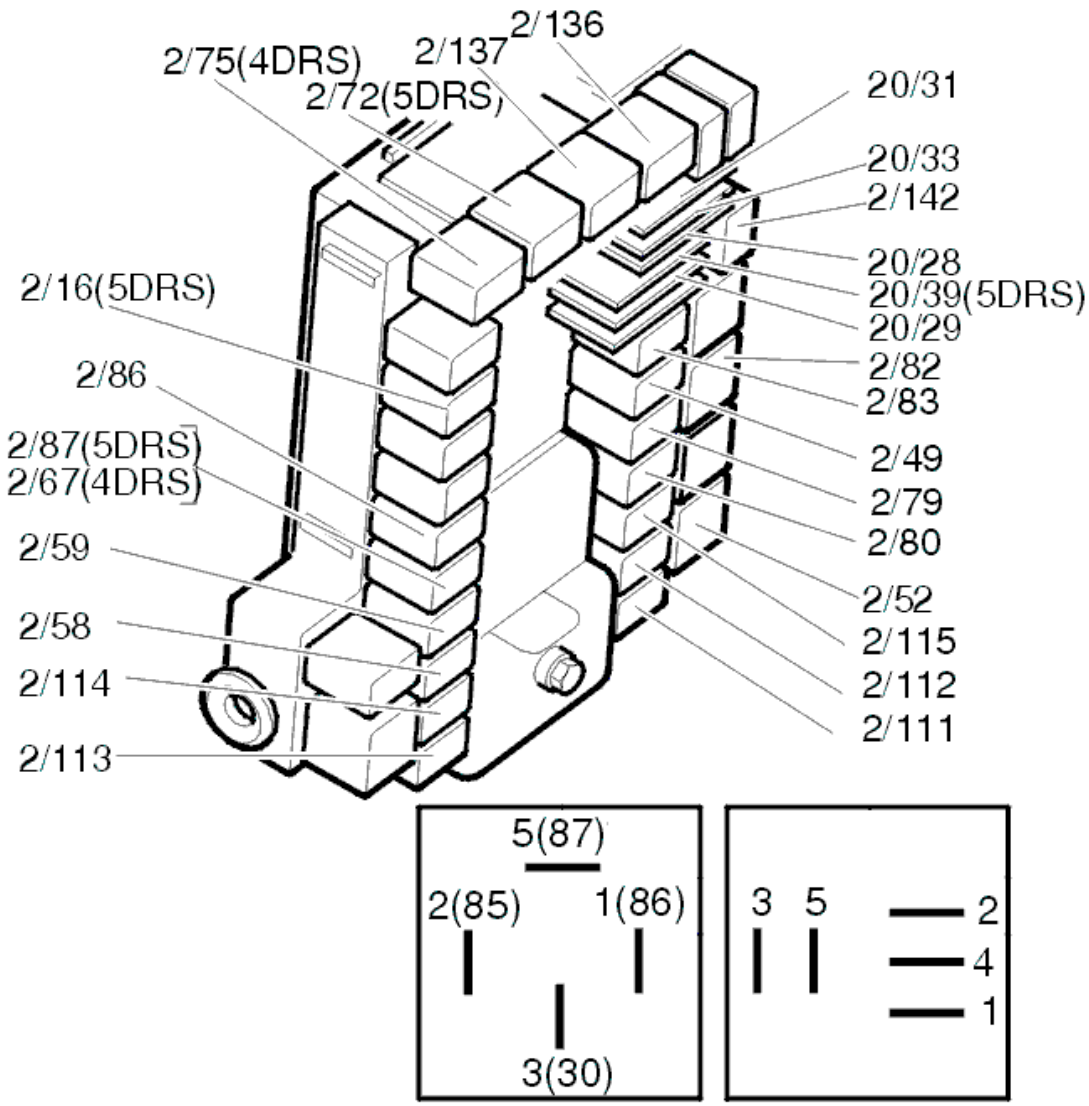

Fig. 481: Identifying Relays
Courtesy of VOLVO CARS CORPORATION

Does the voltmeter show the battery voltage?

- **YES**

  OKAY: Troubleshooting has been completed.

- **NO**

  Refer to **CHECKING THE FUSE**

CHECKING THE FUSE

Remove the fuse 11D/8 in cargo compartment fuse box.

Check that fuse 11D/8 is intact and check for contact resistance and oxidation as described in, see **CONTACT RESISTANCE AND OXIDATION** .

Additional information

- To access the rear electronic module (REM):
  - For -2004, see: **RELAY/FUSE BOX CARGO COMPARTMENT/REAR ELECTRONIC MODULE (REM), REPLACING**
  - For 2005-, see: **REAR ELECTRONIC MODULE (REM), REPLACING** .

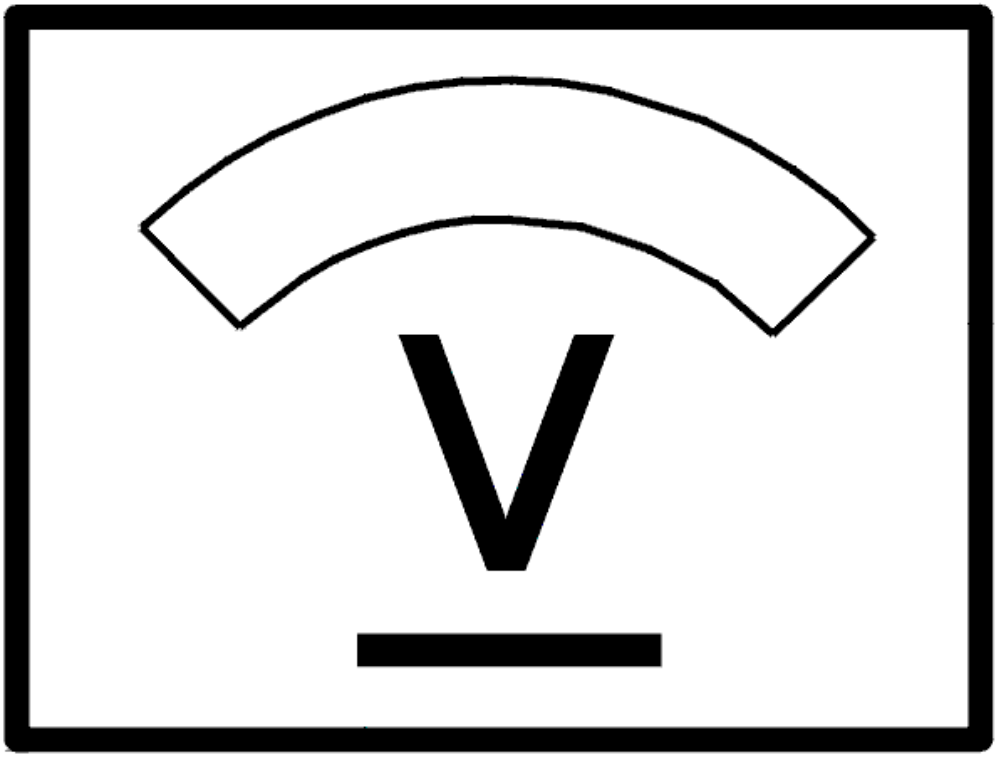

Fig. 482: Identifying Voltage Display
Courtesy of VOLVO CARS CORPORATION

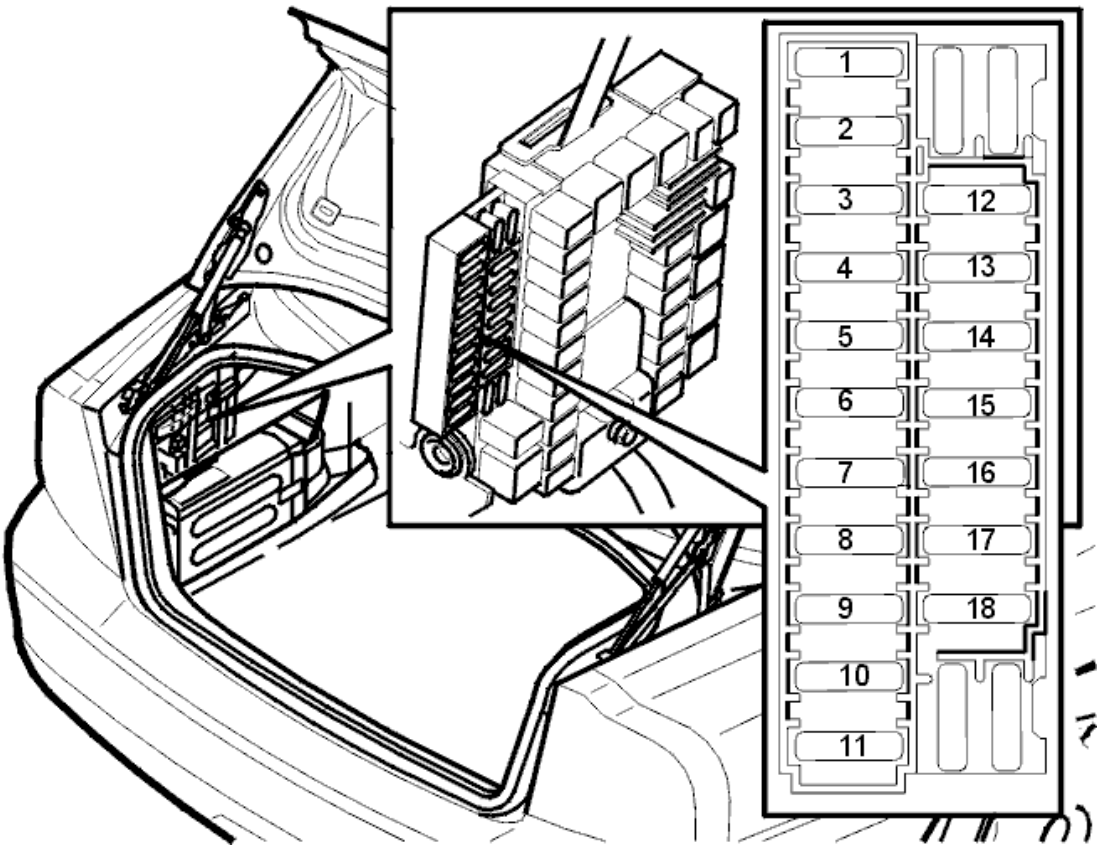

Fig. 483: Fuse Holder (Cargo Compartment)
Courtesy of VOLVO CARS CORPORATION

Is the fuse intact?

- **YES**

  Refer to **CHECKING FOR AN OPEN CIRCUIT**

- **NO**

  Refer to **CHECKING FOR A SHORT CIRCUIT**

CHECKING FOR AN OPEN CIRCUIT

Remove relay 2/111 in the rear electronic module (REM) and trouble-shoot the wire between the fuse holder secondary side (left) and 5 in the relay socket for an open circuit as described in, see **OPEN-CIRCUIT, PERMANENT FAULTS** .

Additional information

- To access the rear electronic module (REM):
  - For -2004, see: **RELAY/FUSE BOX CARGO COMPARTMENT/REAR ELECTRONIC MODULE (REM), REPLACING**

- For 2005-, see: **REAR ELECTRONIC MODULE (REM), REPLACING** .

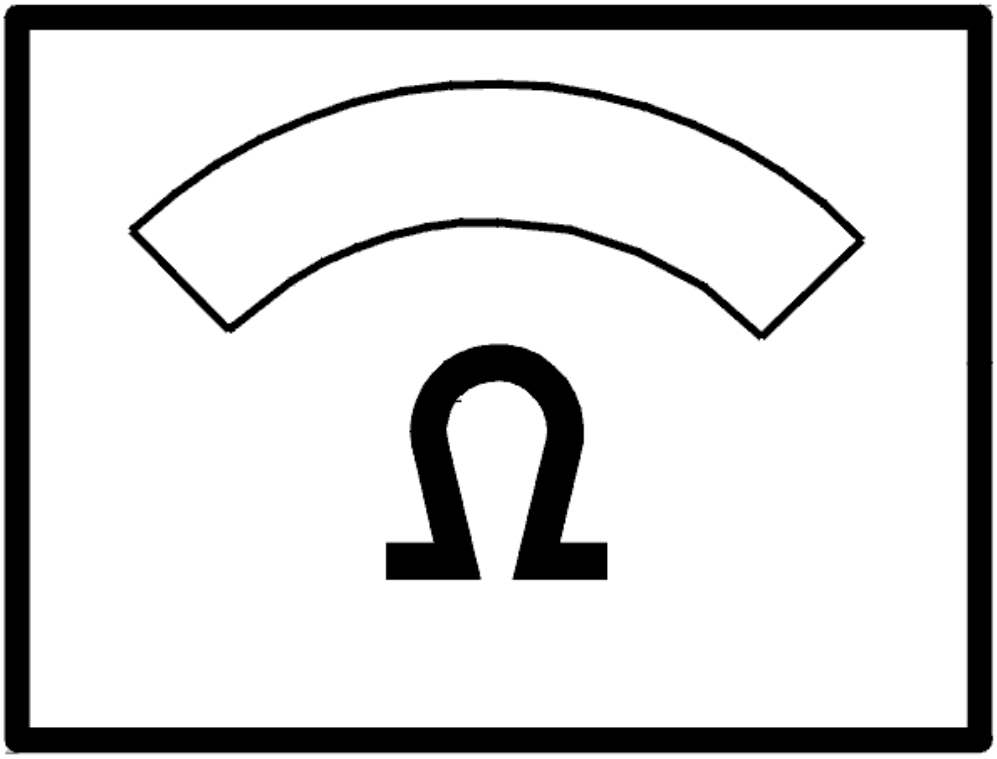

Fig. 484: Identifying Ohm Meter
Courtesy of VOLVO CARS CORPORATION

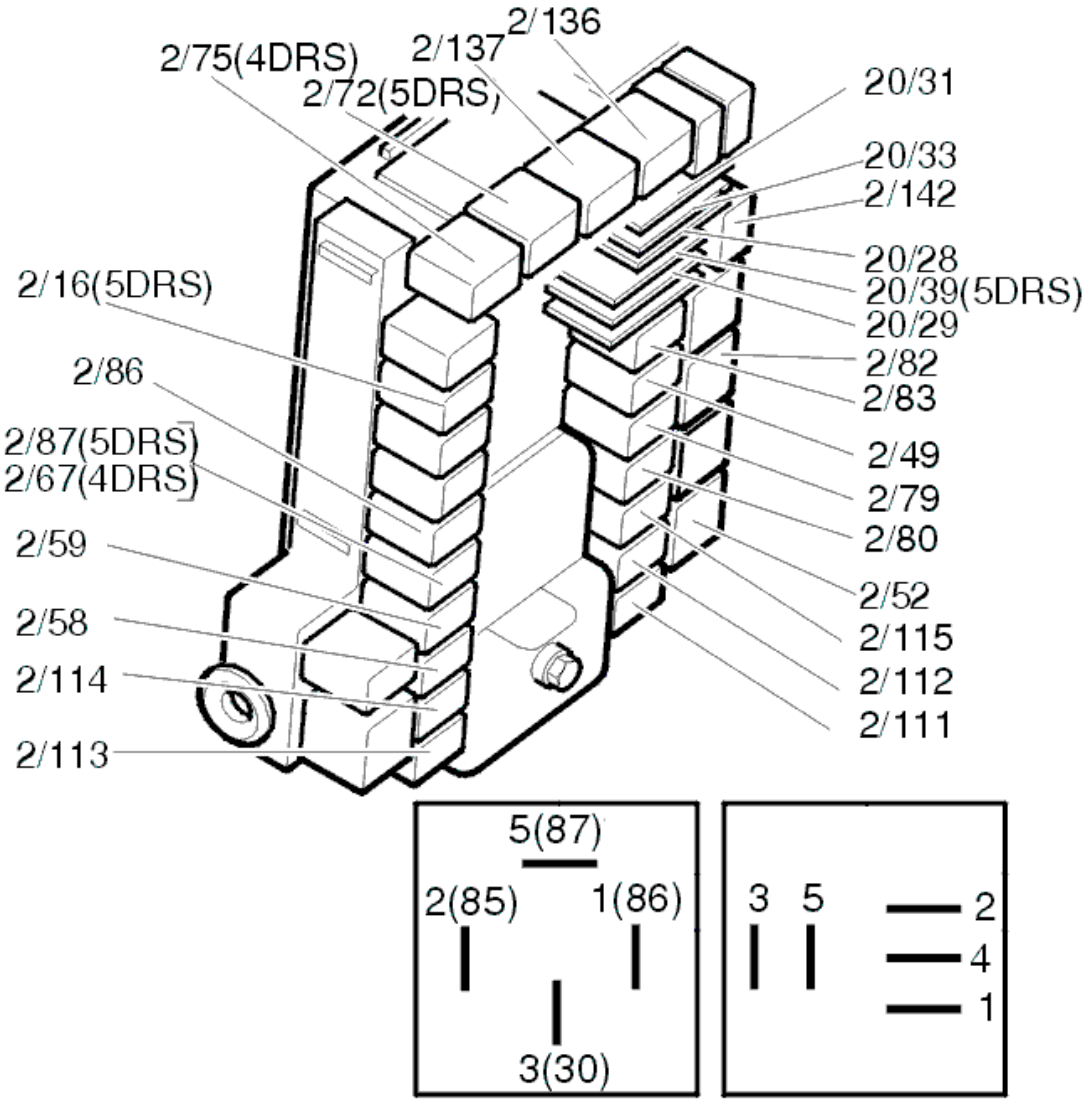

Fig. 485: Identifying Relays
Courtesy of VOLVO CARS CORPORATION

CHECKING FOR A SHORT CIRCUIT

Check the resistance between the fuse holder secondary side (left) and ground.

The ohmmeter should display infinite resistance.

If the value is correct, replace the fuse.

If the value deviates, trouble-shoot all the relay circuits involved for a short circuit to ground as described in, see **SHORT-CIRCUIT TO GROUND, PERMANENT FAULTS** .

HINT: Replace fuse.

HINT: If the fuse works straight away the fault is a short circuit on the relay supply wire.

HINT: If the fuse works when activating each relay the short circuit is on the component supply wire

HINT: The relay circuits involved belong to relays 2/111, 2/112, 2/113, 2/114, 2/115, 2/56, 2/59 and 2/67.

Additional information

- To access the rear electronic module (REM):
  - For -2004, see: **RELAY/FUSE BOX CARGO COMPARTMENT/REAR ELECTRONIC MODULE (REM), REPLACING**
  - For 2005-, see: **REAR ELECTRONIC MODULE (REM), REPLACING** .

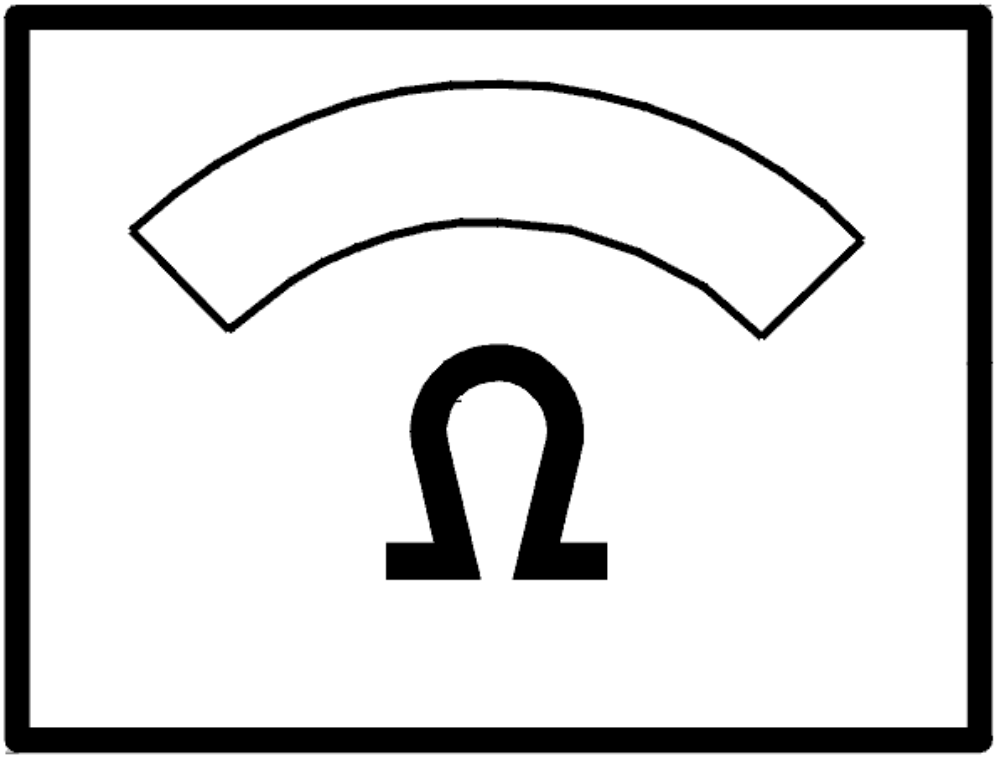

Fig. 486: Identifying Ohm Meter
Courtesy of VOLVO CARS CORPORATION

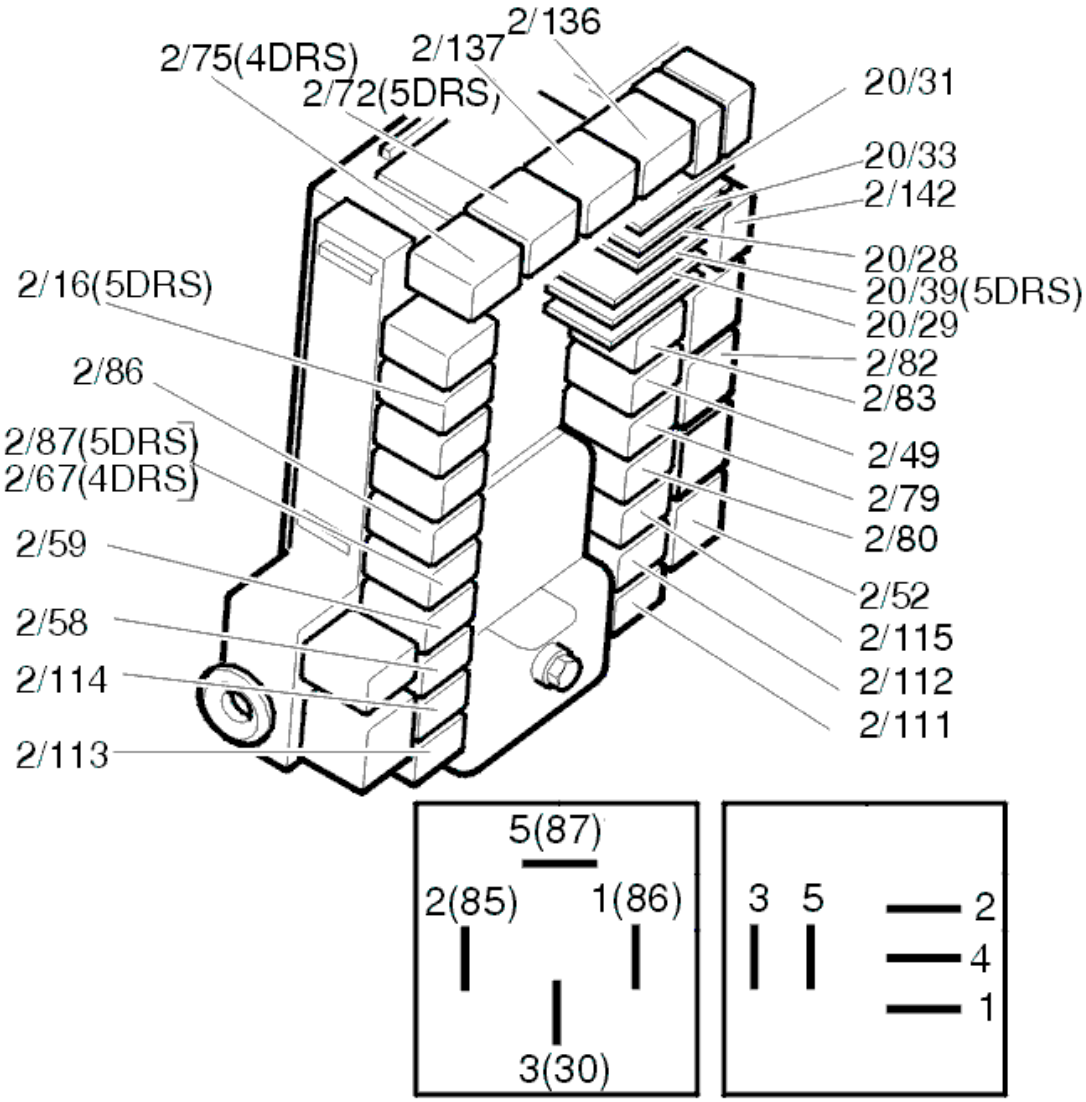

Fig. 487: Identifying Relays
Courtesy of VOLVO CARS CORPORATION

CHECKING THE REAR RIGHT DOOR

CHECK

Is the lock to the other rear door not working?

- **YES**

  Refer to **CHECKING THE FUSE**

- **NO**

  Refer to **REPLACING THE COMPONENT**

REPLACING THE COMPONENT

Replace the relays for locking (2/113) and unlocking (2/114) in the cargo compartment relay/fuse box. At the same time check relay socket contacts for contact resistance and oxidation as described in, see **CONTACT RESISTANCE AND OXIDATION** .

Additional information

- To access relay/fuse box in the cargo compartment:
  - For -2004, see: **RELAY/FUSE BOX CARGO COMPARTMENT/REAR ELECTRONIC MODULE (REM), REPLACING**
  - For 2005-, see: **REAR ELECTRONIC MODULE (REM), REPLACING** .

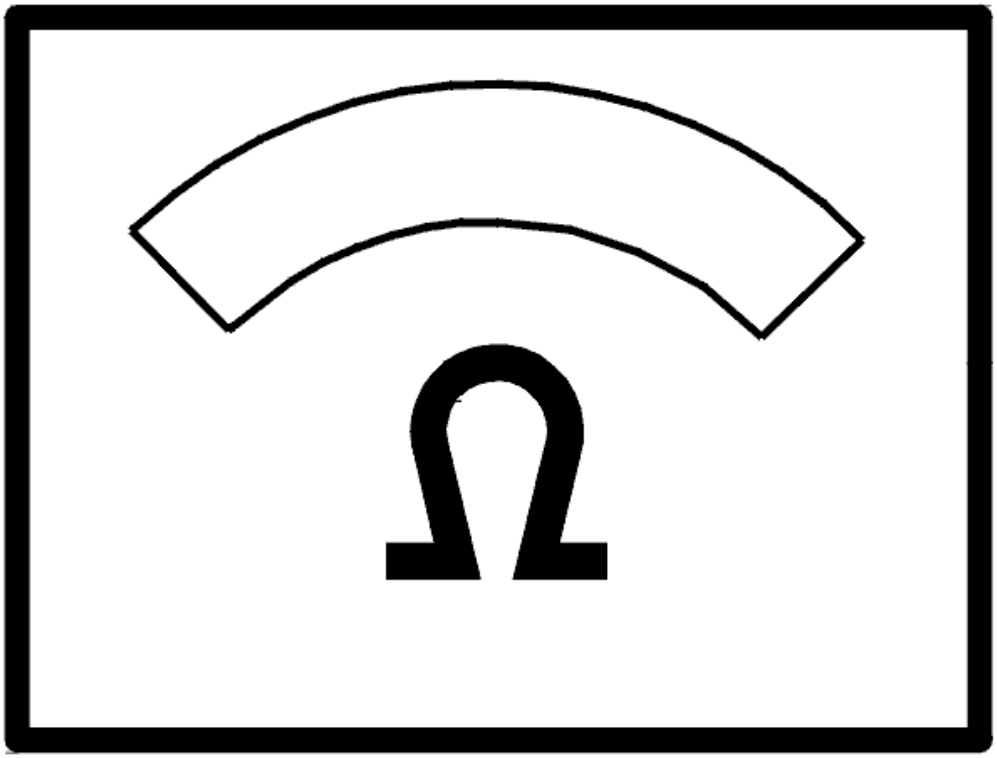

Fig. 488: Identifying Ohm Meter
Courtesy of VOLVO CARS CORPORATION

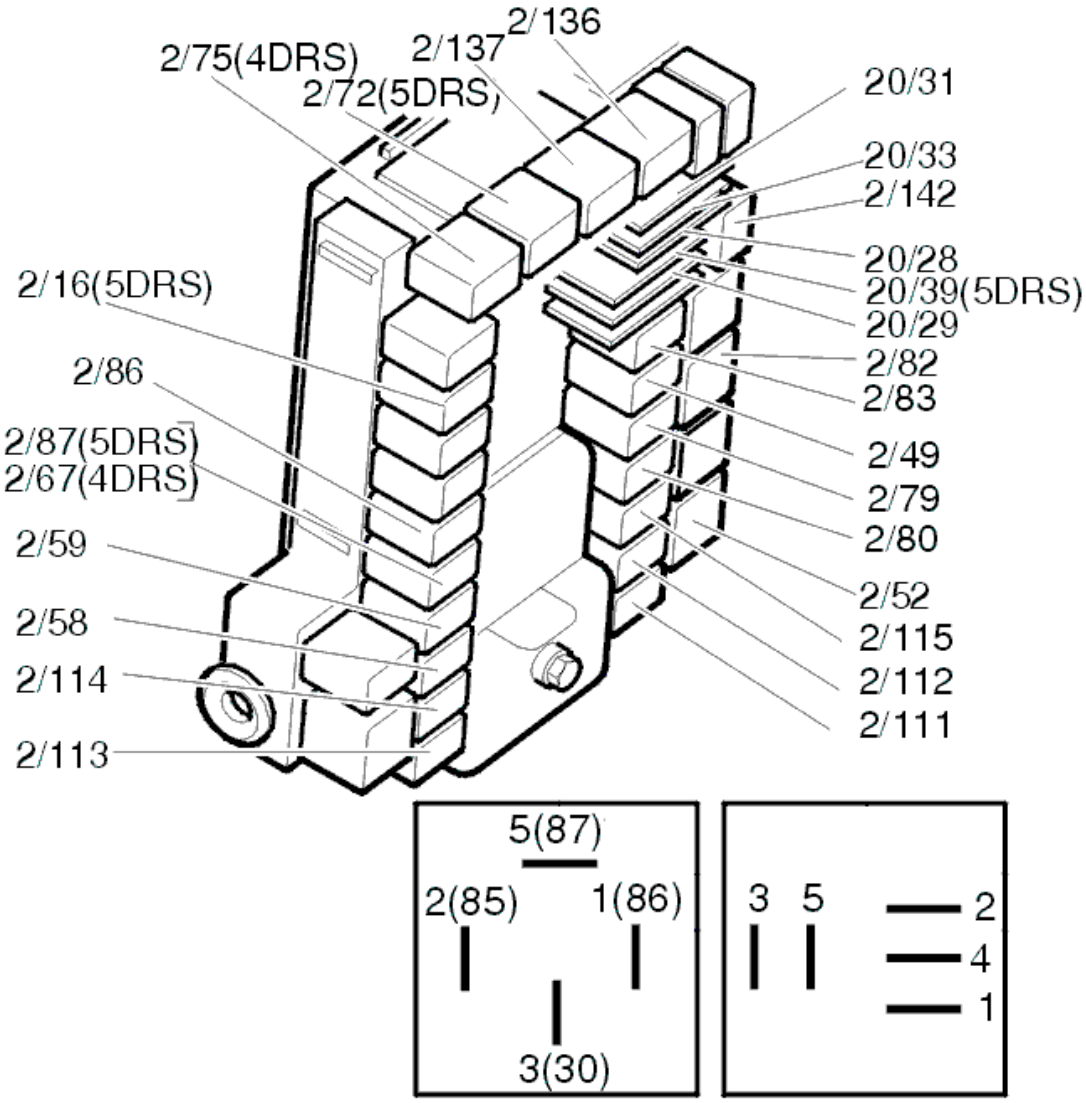

Fig. 489: Identifying Relays
Courtesy of VOLVO CARS CORPORATION

Is there a fault?

- **YES**

  OKAY: Troubleshooting has been completed.

- **NO**

  Refer to **CIRCUIT TEST**

CIRCUIT TEST

The fault is caused by an open circuit in one of the relay circuits or in the lock unit. To find out which circuit

contains the fault:

Disconnect the lock unit connector.

Check the contacts for contact resistance and oxidation as described in, see **CONTACT RESISTANCE AND OXIDATION** .

Check resistance between 4 and 6 on cable connector.

Additional information

- To access/replace the lock unit, see **LOCK MECHANISM REAR SIDE DOOR, REPLACING** .

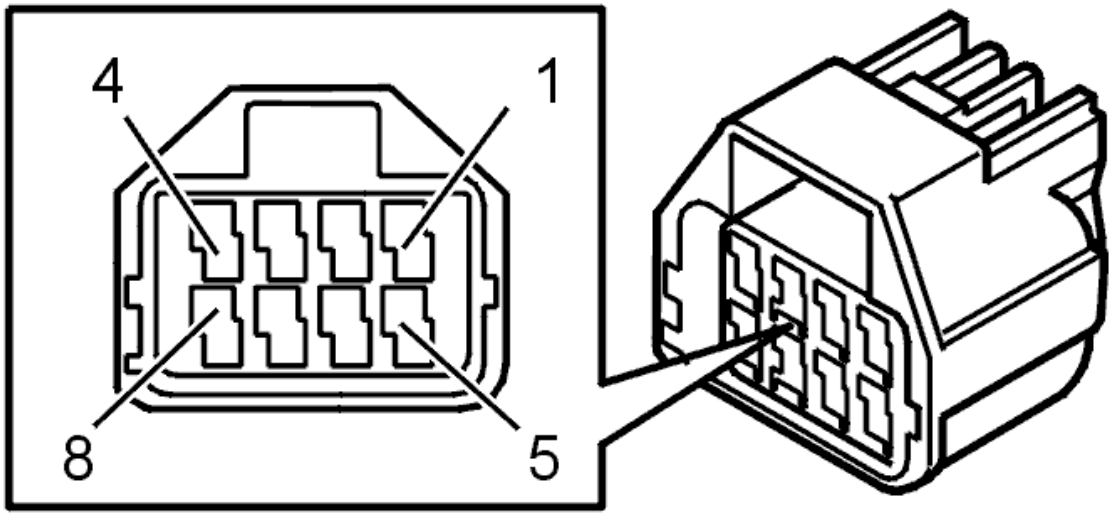

Fig. 490: Identifying Connector Terminals
Courtesy of VOLVO CARS CORPORATION

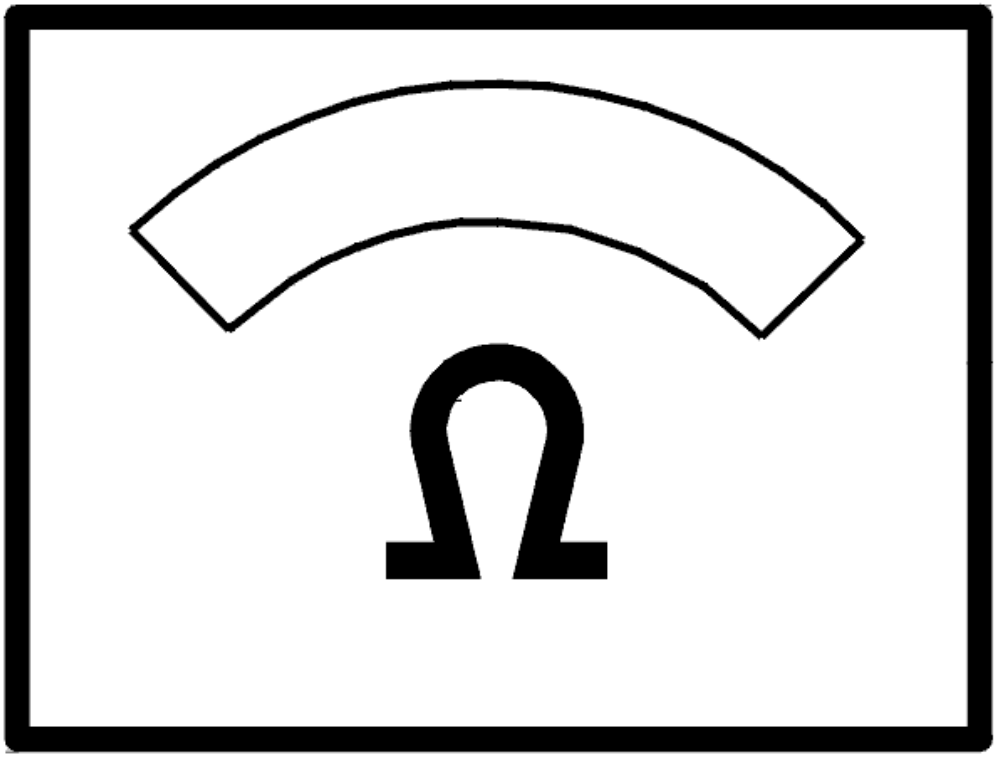

Fig. 491: Identifying Ohm Meter
Courtesy of VOLVO CARS CORPORATION

The ohmmeter should display 0 ohm.

- **OK**

  Refer to **CHECKING THE COMPONENTS**

- **NOT OK**

  Refer to **CIRCUIT TEST, CONTINUED**

CIRCUIT TEST, CONTINUED

Check the resistance between 4 and ground and between 6 and ground on the cable connector.

The ohmmeter should display 0 ohm.

1. The ohmmeter shows a fault between 4 and ground

   Refer to **CHECKING THE UNLOCKING RELAY CIRCUIT**

2. The ohmmeter shows a fault between 6 and ground.

   Refer to **CHECKING THE LOCKING RELAY CIRCUIT**

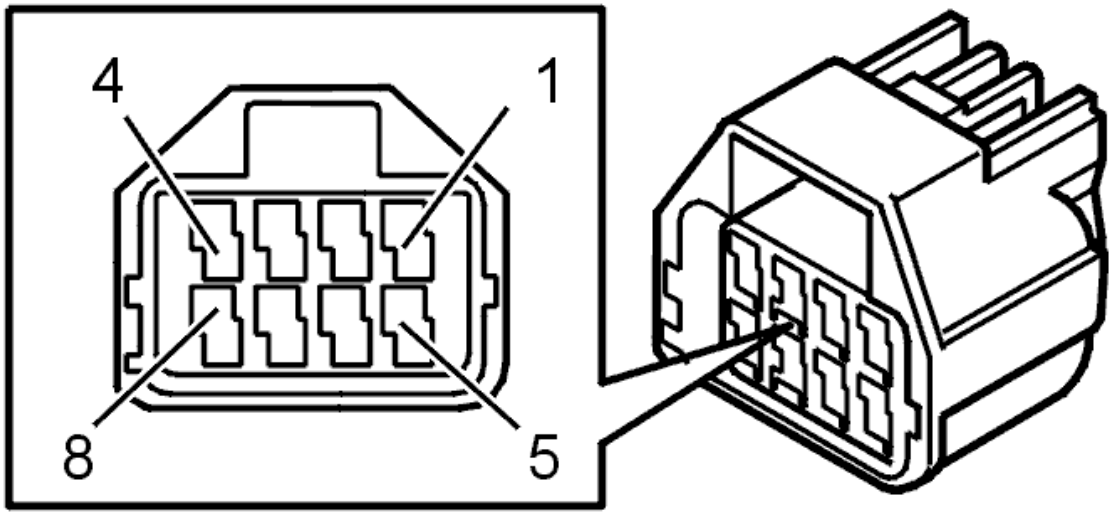

Fig. 492: Identifying Connector Terminals
Courtesy of VOLVO CARS CORPORATION

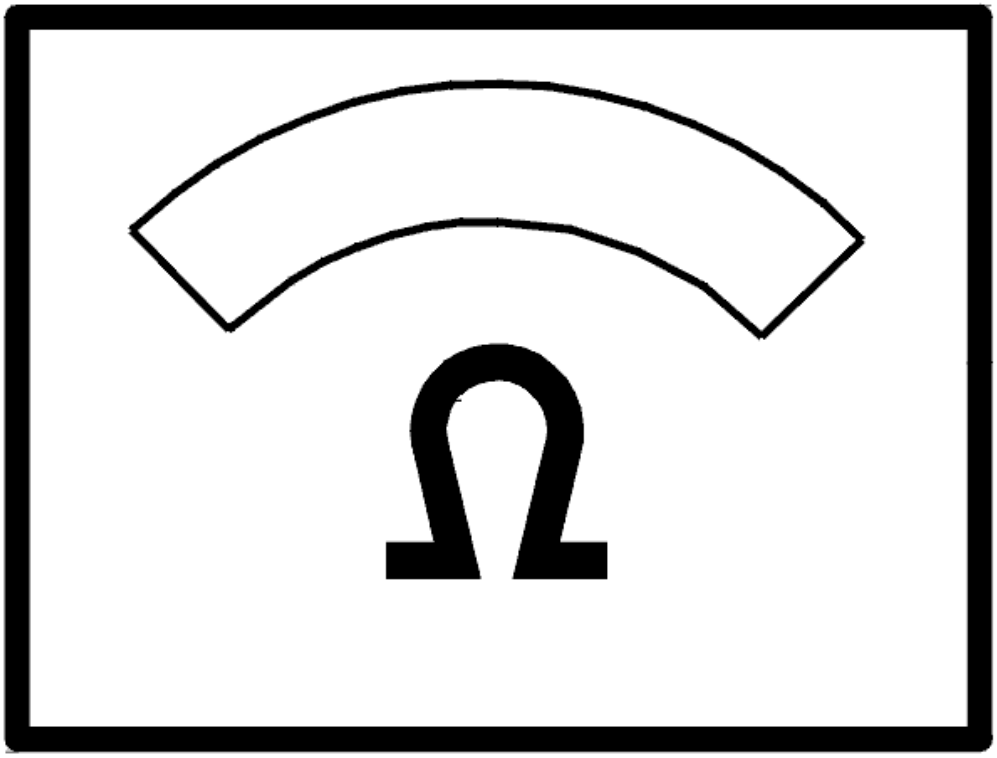

Fig. 493: Identifying Ohm Meter
Courtesy of VOLVO CARS CORPORATION

CHECKING THE LOCKING RELAY CIRCUIT

Remove the locking relay (2/113).

Check the wire between 4 in the cable connector and 3 in the relay socket for an open circuit as described in, see **OPEN-CIRCUIT, PERMANENT FAULTS** .

If a fault is detected, check in particular the intermediate connector in the cable harness (2) for contact resistance and oxidation as described in, see **CONTACT RESISTANCE AND OXIDATION** .

Do the necessary corrective action.

If no fault is found, check the resistance between 4 in the relay socket and ground.

The ohmmeter should display 0 ohm.

If the resistance deviates, replace the rear electronic module (REM).

Additional information

- To access/replace the rear electronic module (REM):
  - For -2004, see: **RELAY/FUSE BOX CARGO COMPARTMENT/REAR ELECTRONIC MODULE (REM), REPLACING**
  - For 2005-, see: **REAR ELECTRONIC MODULE (REM), REPLACING** .

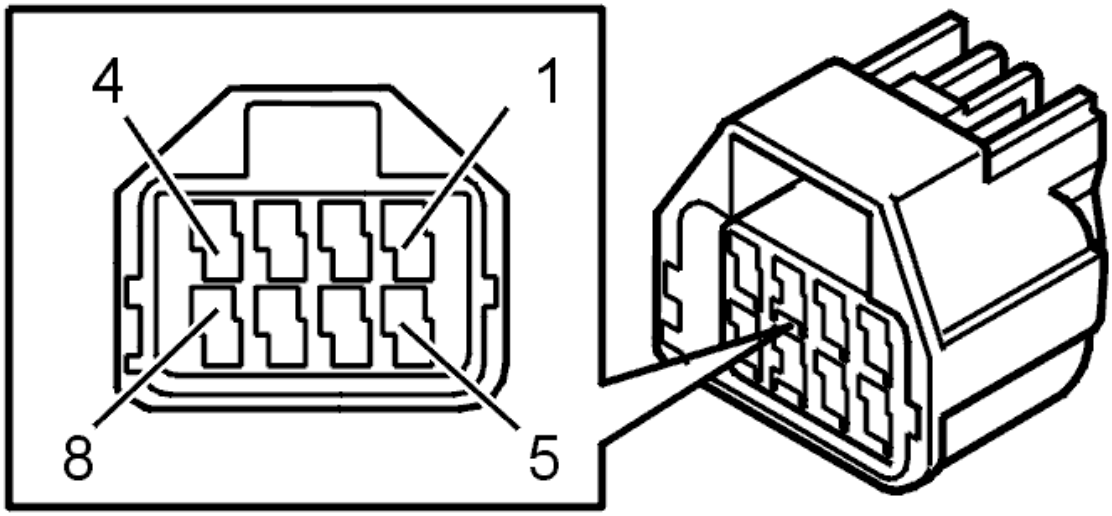

Fig. 494: Identifying Connector Terminals
Courtesy of VOLVO CARS CORPORATION

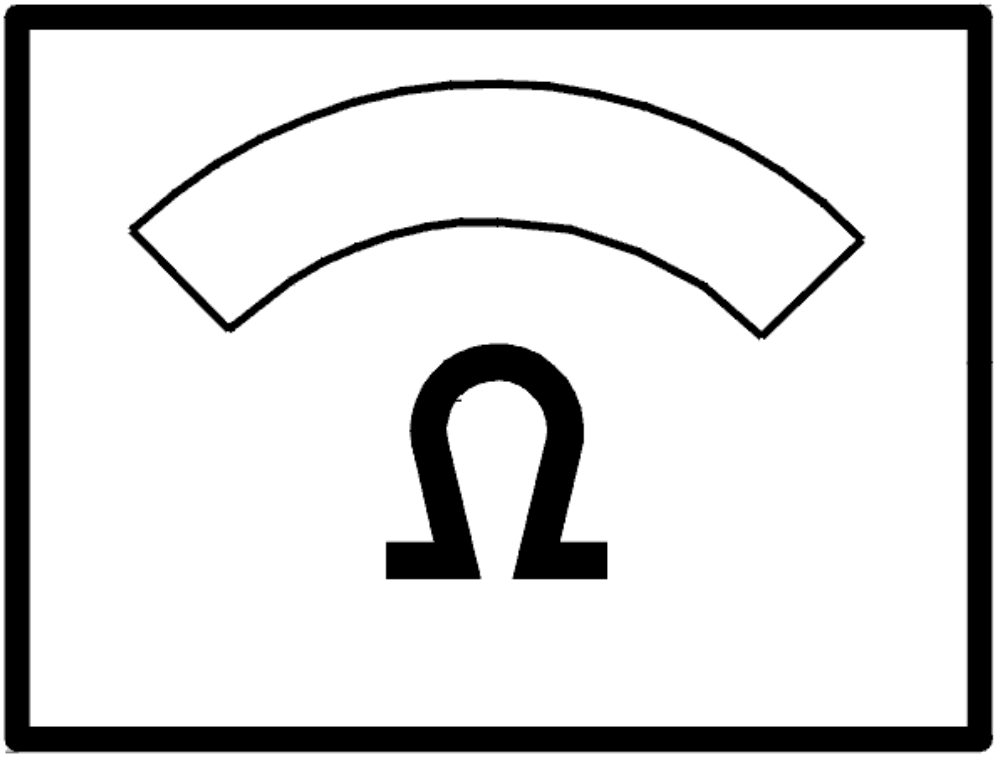

Fig. 495: Identifying Ohm Meter
Courtesy of VOLVO CARS CORPORATION

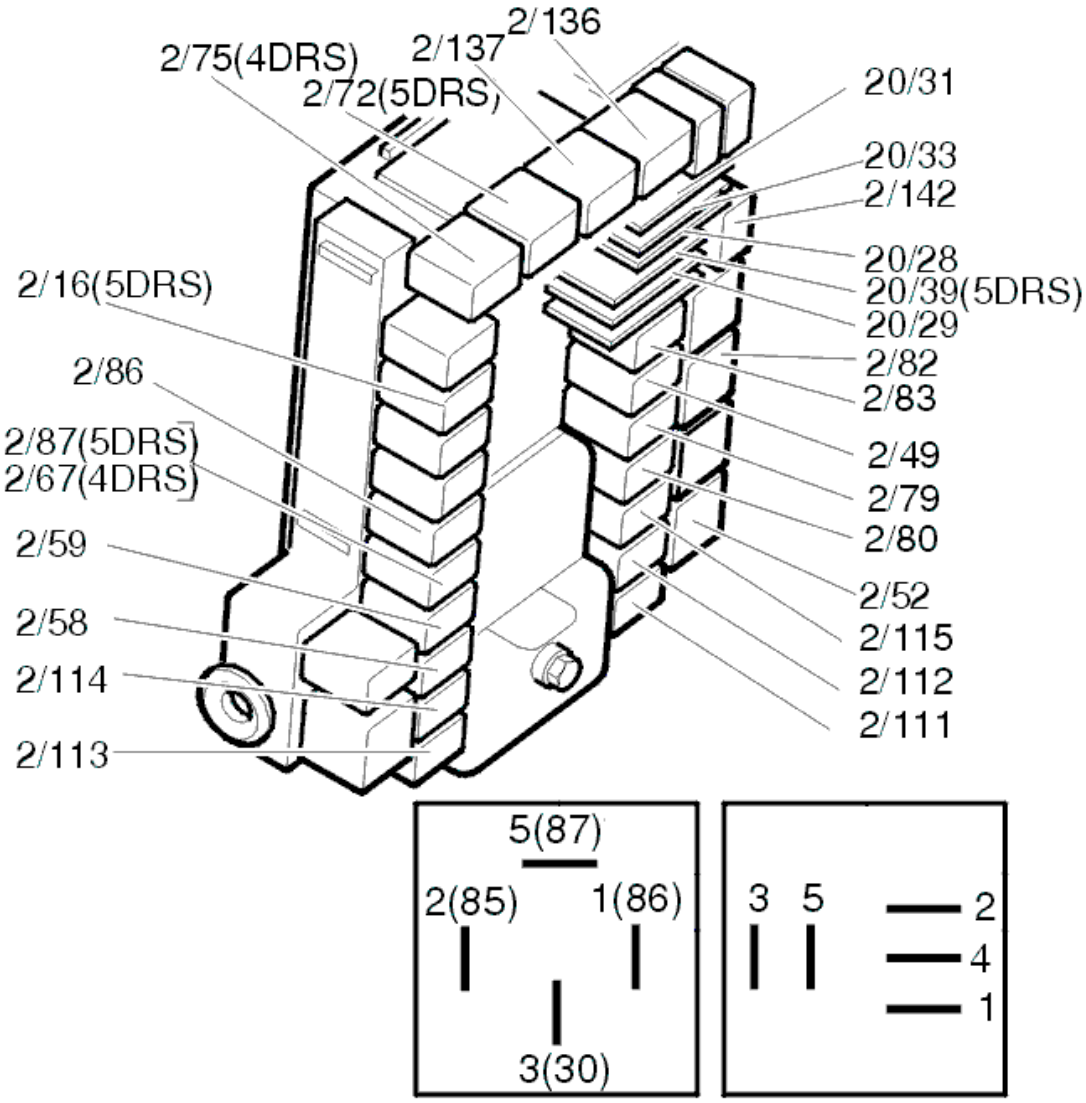

Fig. 496: Identifying Relays
Courtesy of VOLVO CARS CORPORATION

CHECKING THE UNLOCKING RELAY CIRCUIT

Remove the unlocking relay (2/114).

Check the wire between 6 in the cable connector and 3 in the relay socket for an open circuit as described in, see **OPEN-CIRCUIT, PERMANENT FAULTS** .

If a fault is detected, check in particular the intermediate connector in the cable harness (2) for contact resistance and oxidation as described in, see **CONTACT RESISTANCE AND OXIDATION** .

Do the necessary corrective action.

If no fault is found, check the resistance between 4 in the relay socket and ground.

The ohmmeter should display 0 ohm.

If the resistance deviates, replace the rear electronic module (REM).

Additional information

- To access/replace the rear electronic module (REM):
  - For -2004, see: **RELAY/FUSE BOX CARGO COMPARTMENT/REAR ELECTRONIC MODULE (REM), REPLACING**
  - For 2005-, see: **REAR ELECTRONIC MODULE (REM), REPLACING** .

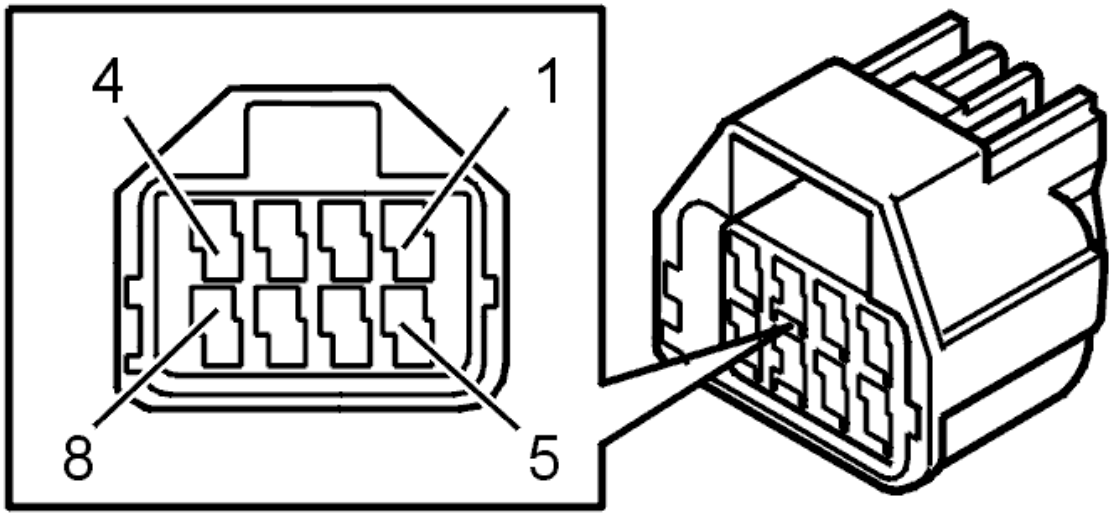

Fig. 497: Identifying Connector Terminals
Courtesy of VOLVO CARS CORPORATION

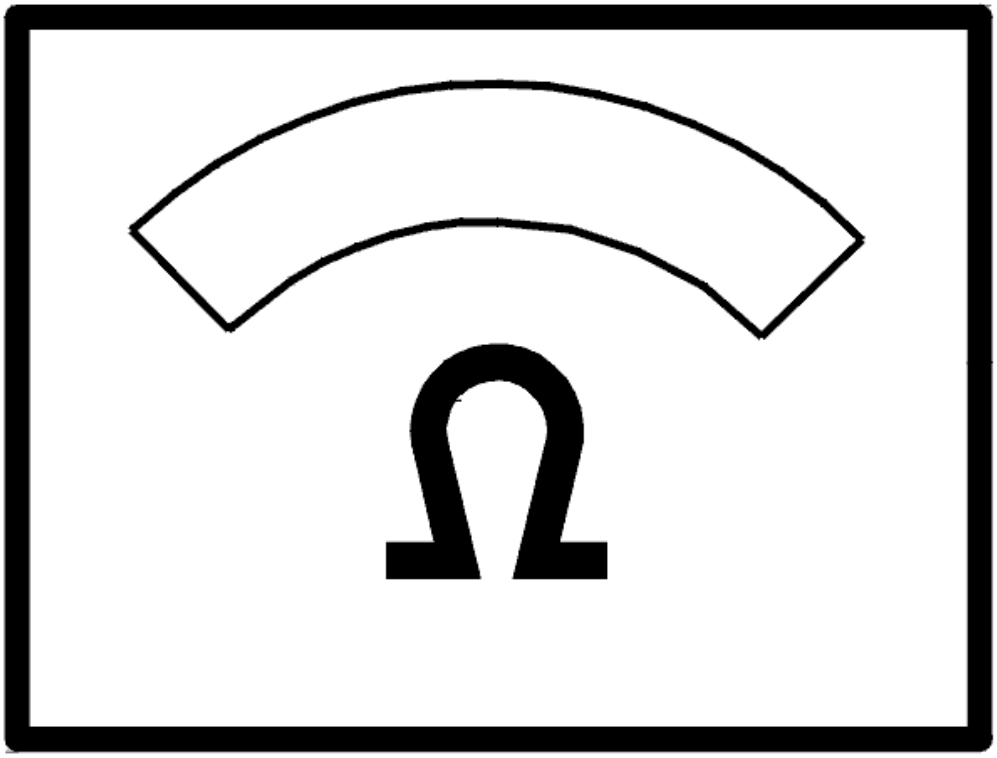

Fig. 498: Identifying Ohm Meter
Courtesy of VOLVO CARS CORPORATION

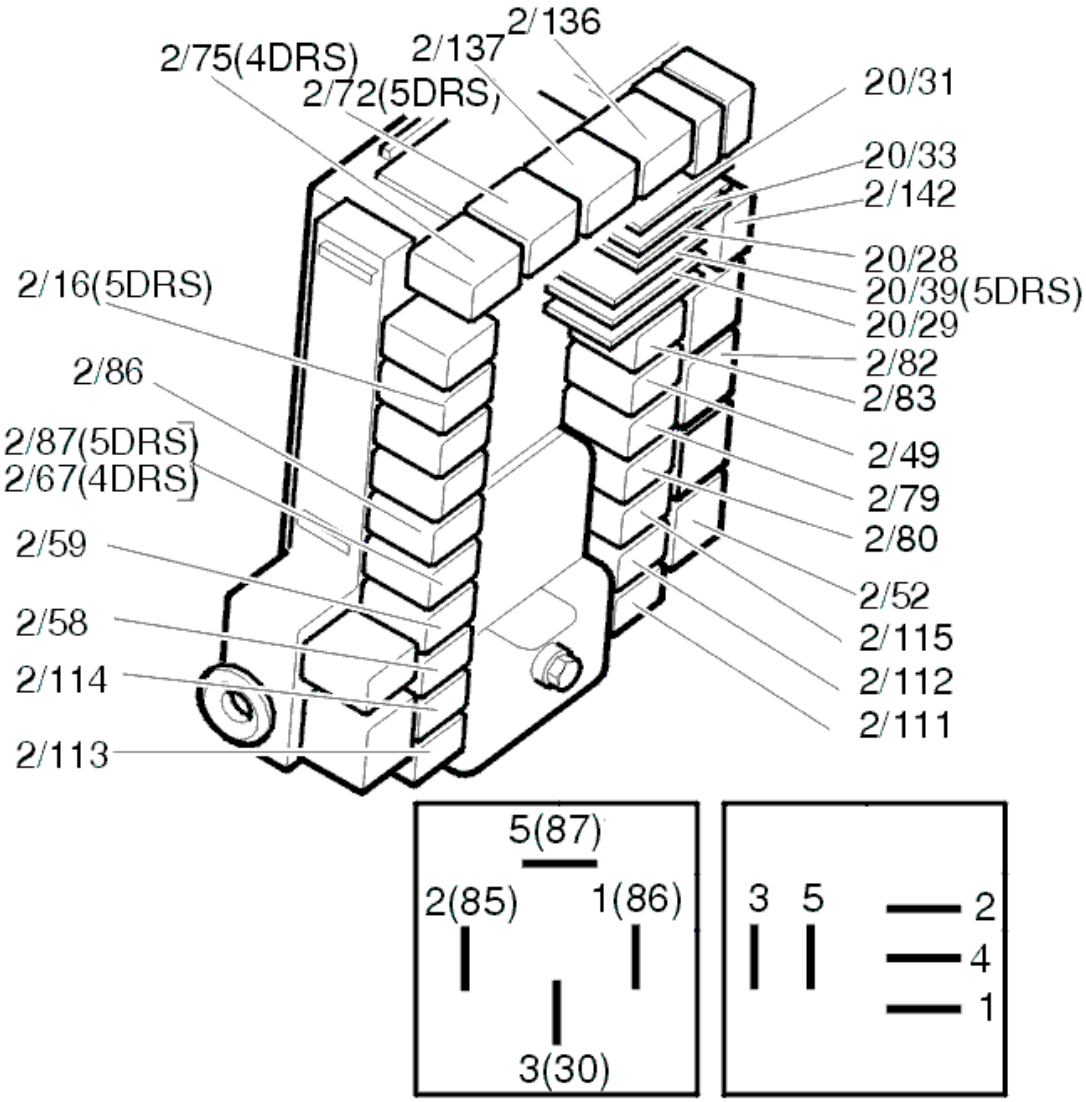

Fig. 499: Identifying Relays
Courtesy of VOLVO CARS CORPORATION

CHECKING THE COMPONENTS

Check the resistance between pin 4 and 6 in the lock unit chassis contact.

The ohmmeter should display 5 ohm.

If the resistance deviates, replace the lock unit.

Additional information

- To access the rear electronic module (REM):
  - For -2004, see: **RELAY/FUSE BOX CARGO COMPARTMENT/REAR ELECTRONIC MODULE (REM), REPLACING**

- For 2005-, see: **REAR ELECTRONIC MODULE (REM), REPLACING** .
- To access/replace the lock unit, see **LOCK MECHANISM REAR SIDE DOOR, REPLACING**
- For information on signals and additional values, see **SIGNAL SPECIFICATION** .

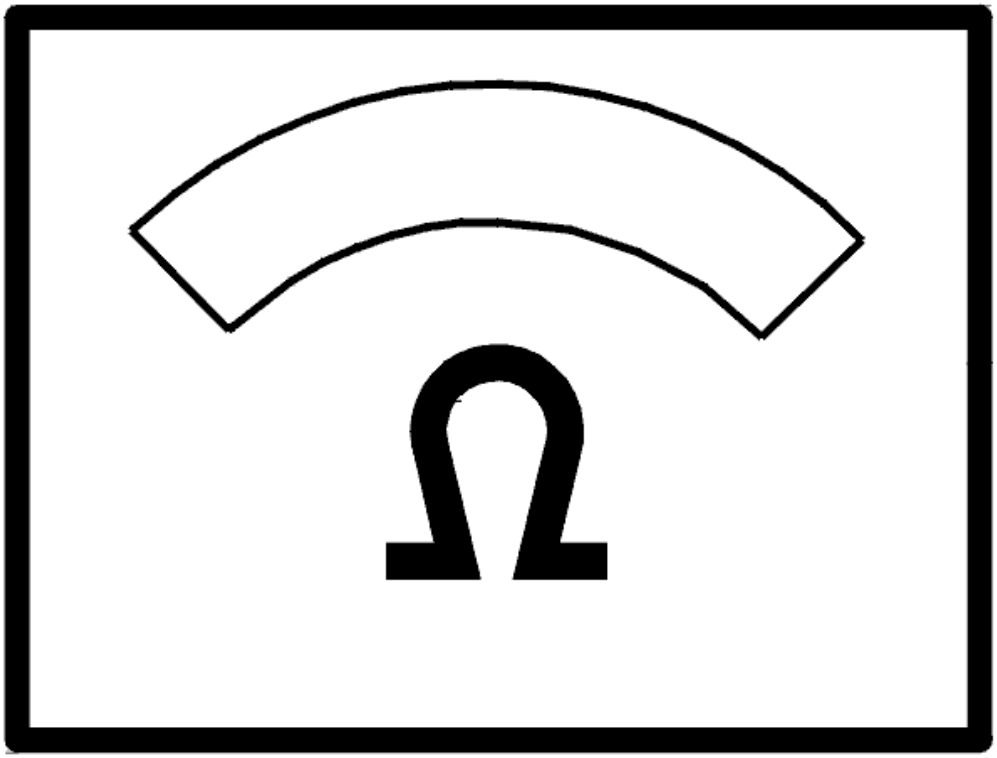

Fig. 500: Identifying Ohm Meter
Courtesy of VOLVO CARS CORPORATION

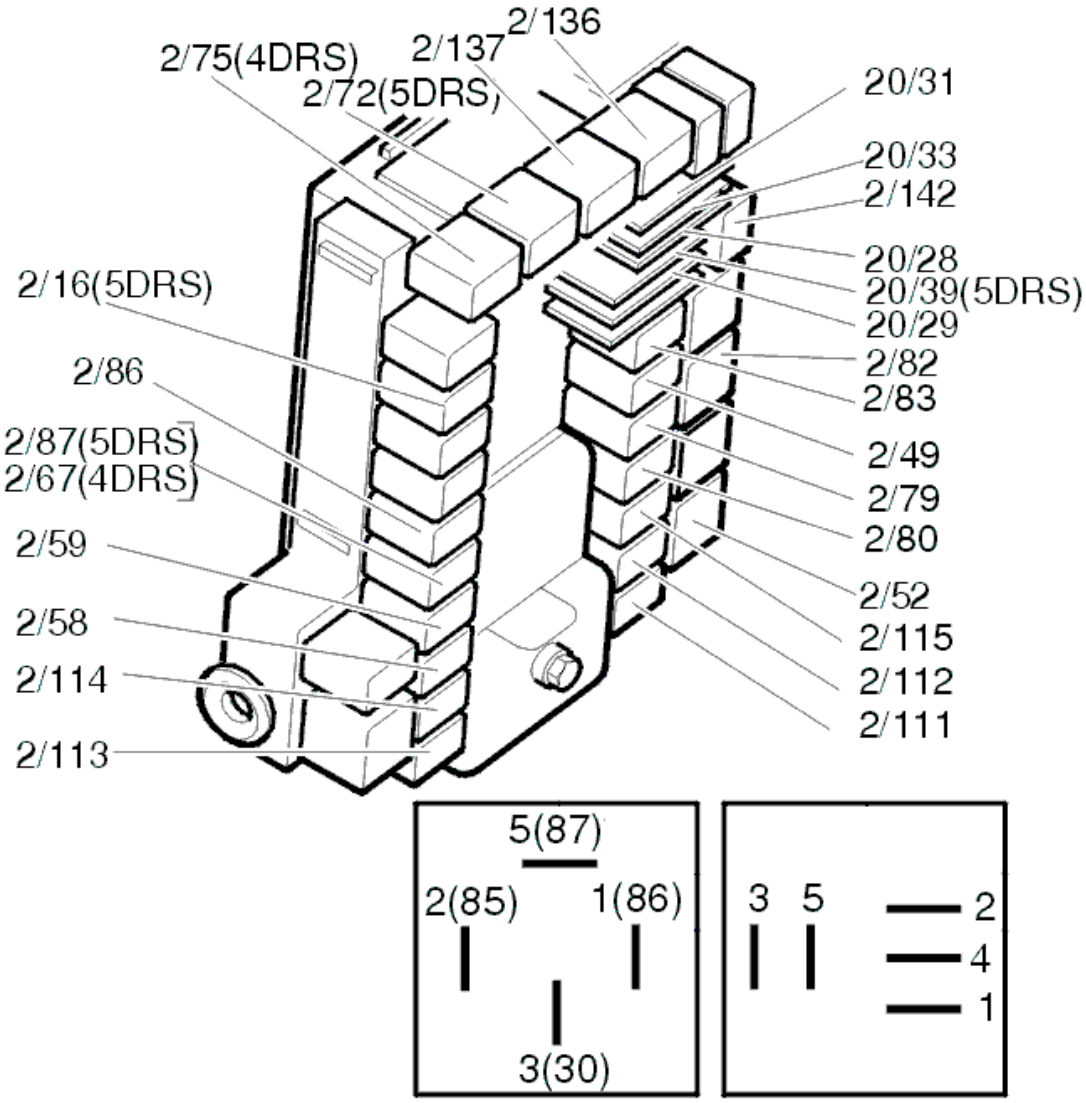

Fig. 501: Identifying Relays
Courtesy of VOLVO CARS CORPORATION

Is there a fault?

- **YES**

  OKAY: Troubleshooting has been completed.

- **NO**

  Refer to **CHECKING THE RELAY SUPPLY**

CHECKING THE RELAY SUPPLY

Remove the locking relay (2/113).

Measure the voltage between 5 in the relay socket and ground.

The voltmeter should display battery voltage.

HINT: If the value is OK but the fault still remains, connect the contacts to the lock module and link between 3 and 5 in the relay socket to force-feed the lock motor while continuing to test.

Additional information

- To access relay/fuse box in the cargo compartment:
  - For -2004, see: **RELAY/FUSE BOX CARGO COMPARTMENT/REAR ELECTRONIC MODULE (REM), REPLACING**
  - For 2005-, see: **REAR ELECTRONIC MODULE (REM), REPLACING** .

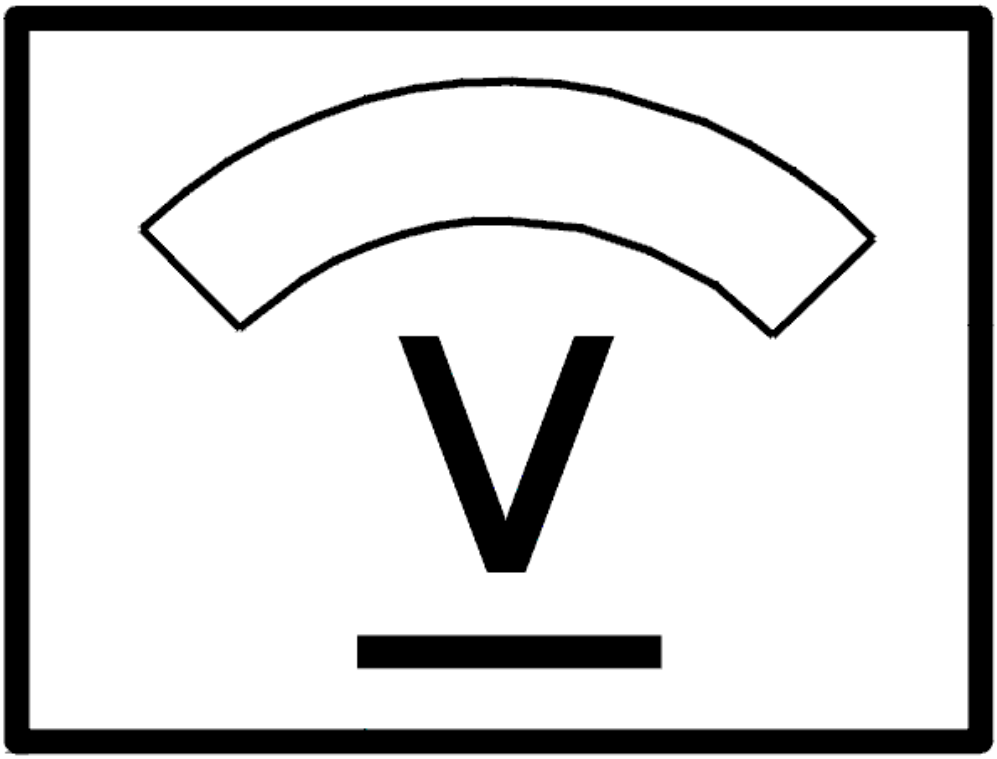

Fig. 502: Identifying Voltage Display

Courtesy of VOLVO CARS CORPORATION

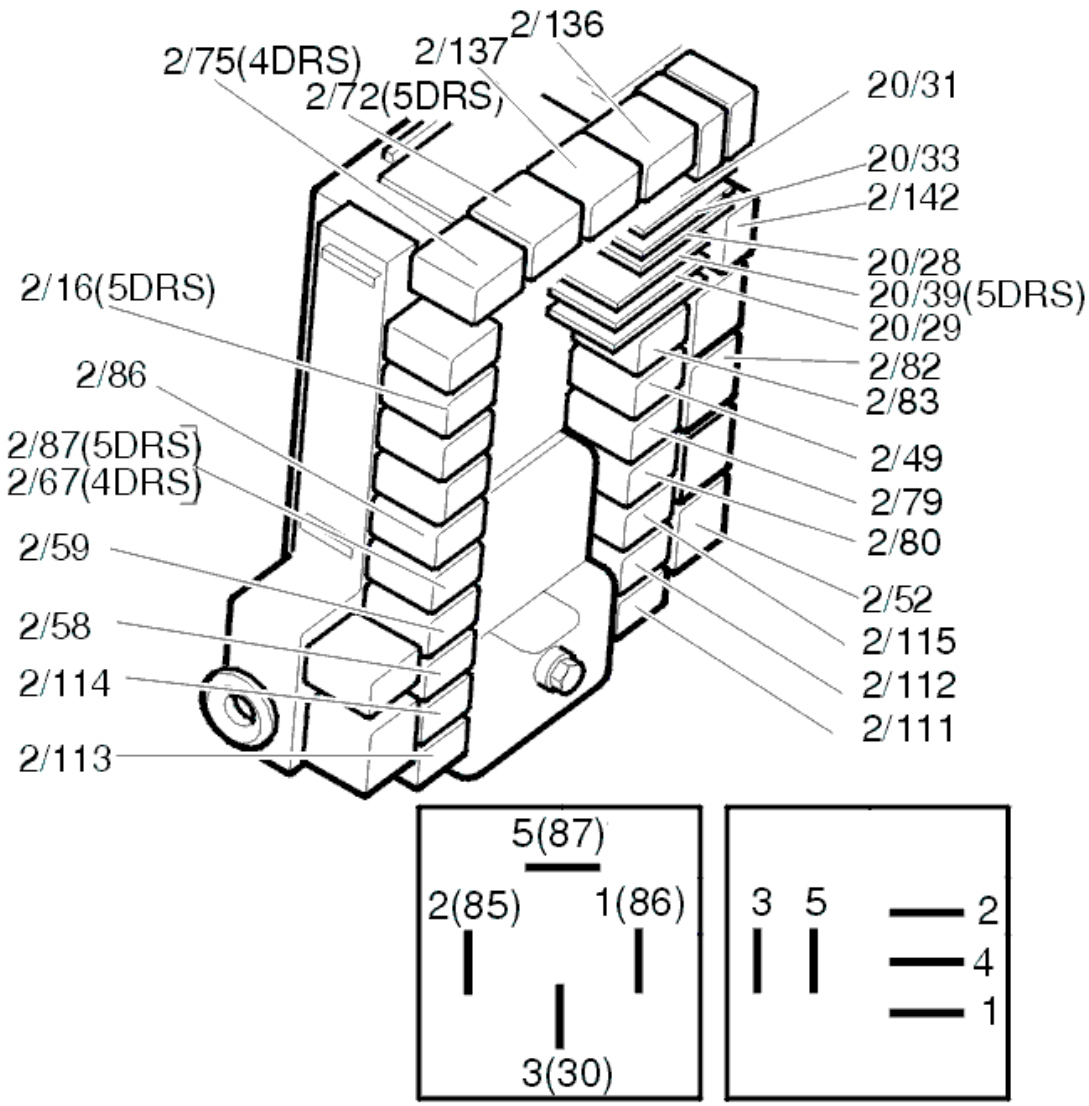

Fig. 503: Identifying Relays
Courtesy of VOLVO CARS CORPORATION

Does the voltmeter show the battery voltage?

- **YES**

  OKAY: Troubleshooting has been completed.

- **NO**

  Refer to **CHECKING THE FUSE**

CHECKING THE FUSE

Remove the fuse 11D/8 in cargo compartment fuse box.

Check that fuse 11D/8 is intact and check for contact resistance and oxidation as described in, see **CONTACT RESISTANCE AND OXIDATION** .

Additional information

- To access relay/fuse box in the cargo compartment:
  - For -2004, see: **RELAY/FUSE BOX CARGO COMPARTMENT/REAR ELECTRONIC MODULE (REM), REPLACING**
  - For 2005-, see: **REAR ELECTRONIC MODULE (REM), REPLACING** .

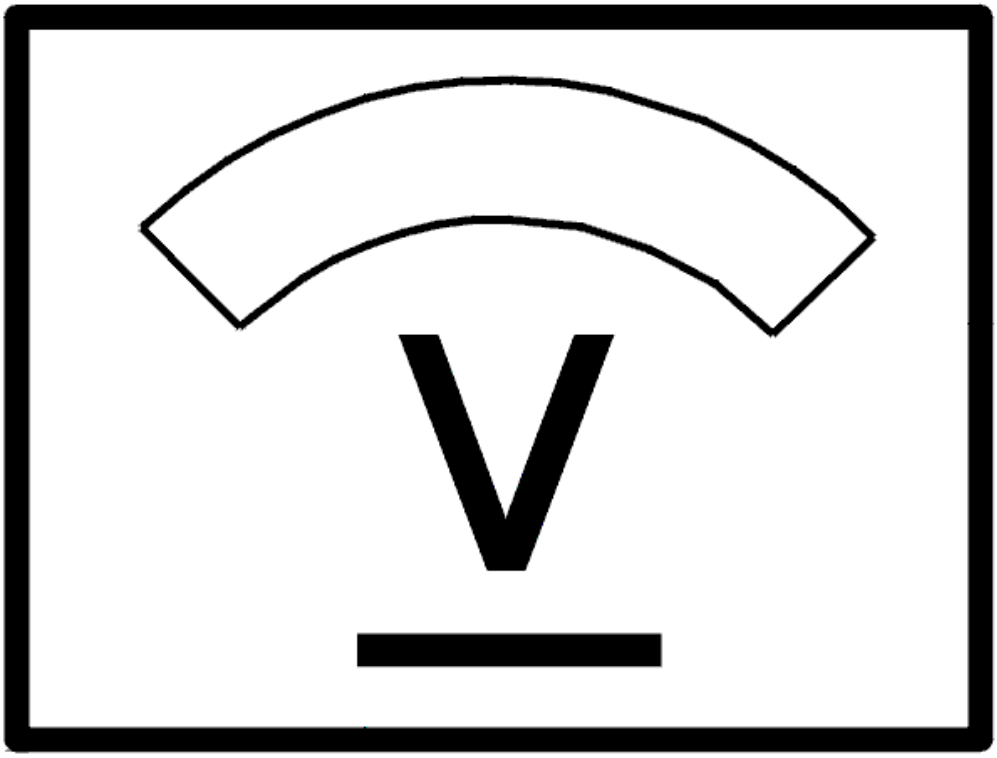

Fig. 504: Identifying Voltage Display
Courtesy of VOLVO CARS CORPORATION

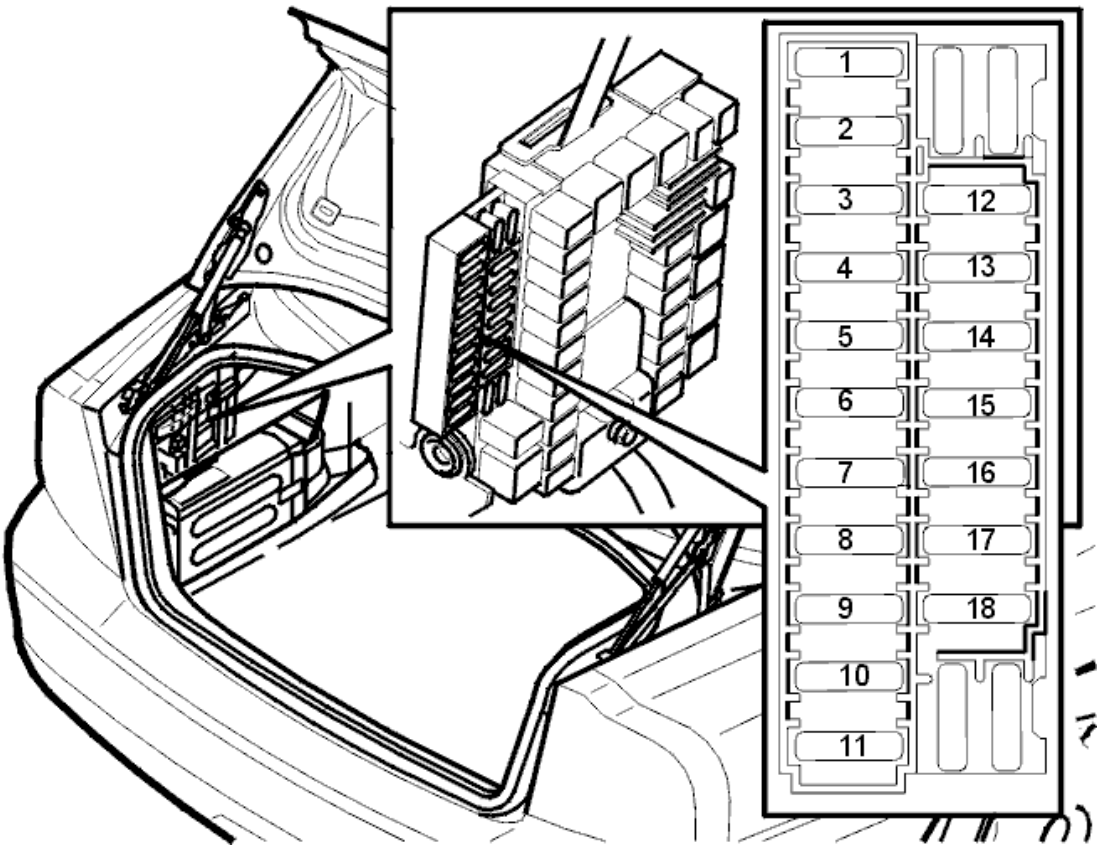

Fig. 505: Fuse Holder (Cargo Compartment)
Courtesy of VOLVO CARS CORPORATION

Is the fuse intact?

- **YES**

  Refer to **CHECKING FOR AN OPEN CIRCUIT**

- **NO**

  Refer to **CHECKING FOR A SHORT CIRCUIT**

CHECKING FOR AN OPEN CIRCUIT

Remove relay 2/113 in the cargo compartment relay/fuse box and trouble-shoot the wire between the fuse holder secondary side (left) and 5 in the relay socket for an open circuit as described in, see **OPEN-CIRCUIT, PERMANENT FAULTS** .

Additional information

- To access relay/fuse box in the cargo compartment:
  - For -2004, see: **RELAY/FUSE BOX CARGO COMPARTMENT/REAR ELECTRONIC MODULE (REM), REPLACING**

- For 2005-, see: **REAR ELECTRONIC MODULE (REM), REPLACING** .

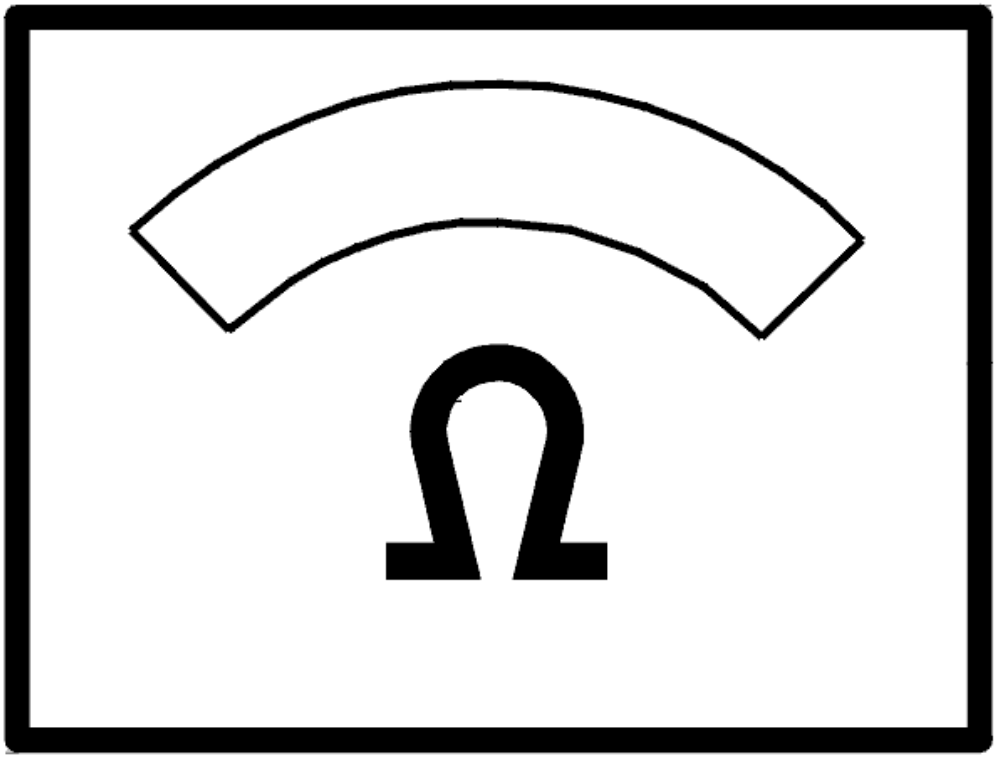

Fig. 506: Identifying Ohm Meter
Courtesy of VOLVO CARS CORPORATION

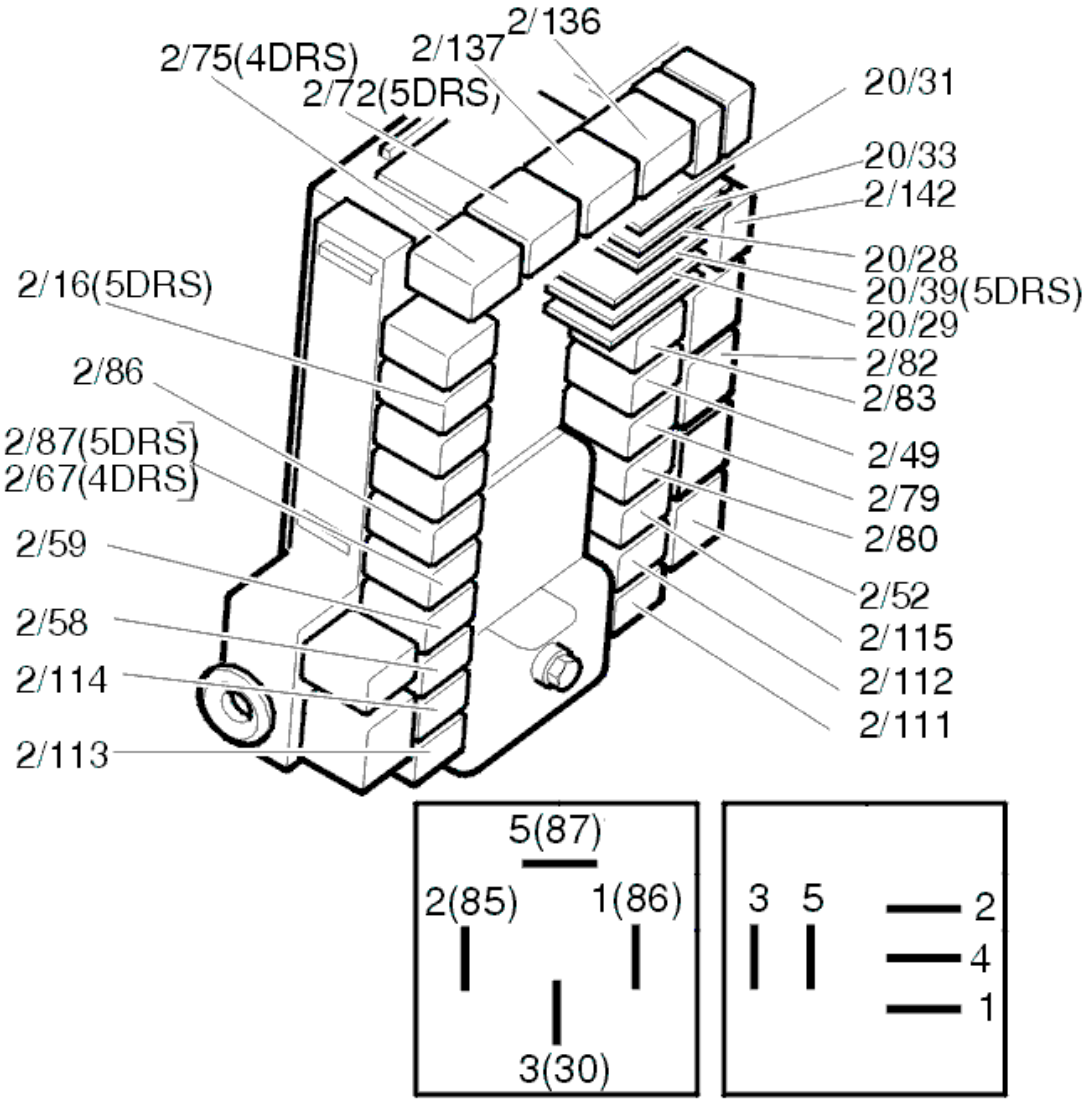

Fig. 507: Identifying Relays
Courtesy of VOLVO CARS CORPORATION

CHECKING FOR A SHORT CIRCUIT

Check the resistance between the fuse holder secondary side (left) and ground.

The ohmmeter should display infinite resistance.

If the value is correct, replace the fuse.

If the value deviates, trouble-shoot all the relay circuits involved for a short circuit to ground as described in, see **SHORT-CIRCUIT TO GROUND, PERMANENT FAULTS** .

NOTE: If the value is correct the fault could be intermittent.

HINT: Replace fuse.

HINT: If the fuse works straight away the fault is a short circuit on the relay supply wire.

HINT: If the fuse works when activating each relay the short circuit is on the component supply wire

HINT: The relay circuits involved belong to relays 2/111, 2/112, 2/113, 2/114, 2/115, 2/56, 2/59 and 2/67.

Additional information

- To access relay/fuse box in the cargo compartment:
  - For -2004, see: **RELAY/FUSE BOX CARGO COMPARTMENT/REAR ELECTRONIC MODULE (REM), REPLACING**
  - For 2005-, see: **REAR ELECTRONIC MODULE (REM), REPLACING** .

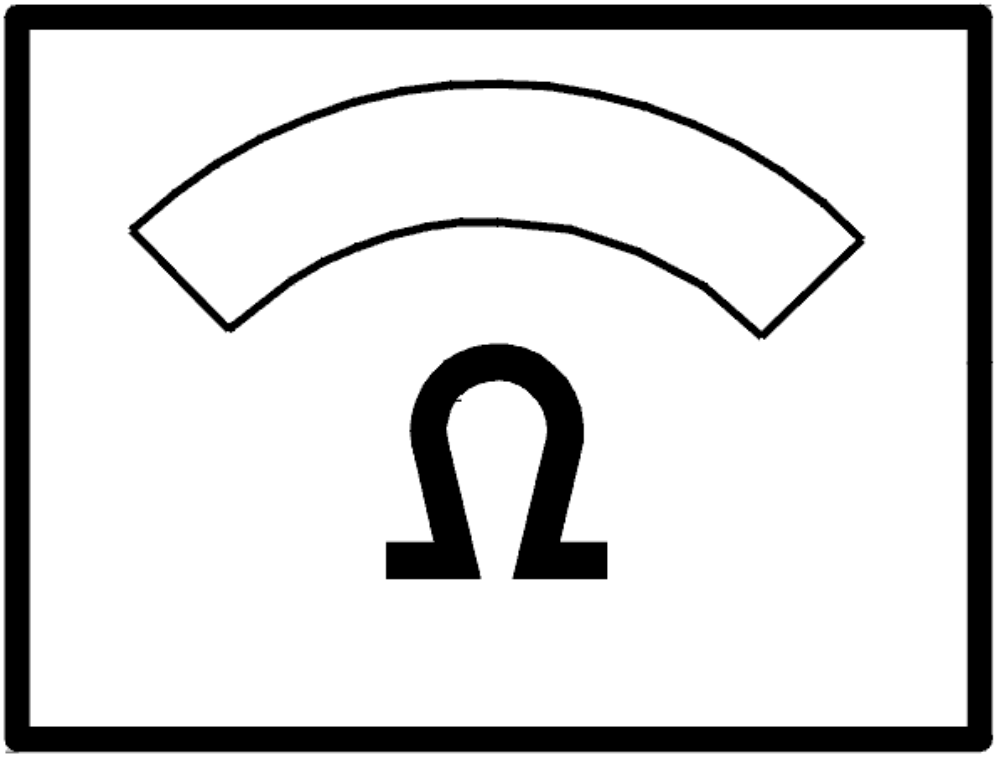

Fig. 508: Identifying Ohm Meter
Courtesy of VOLVO CARS CORPORATION

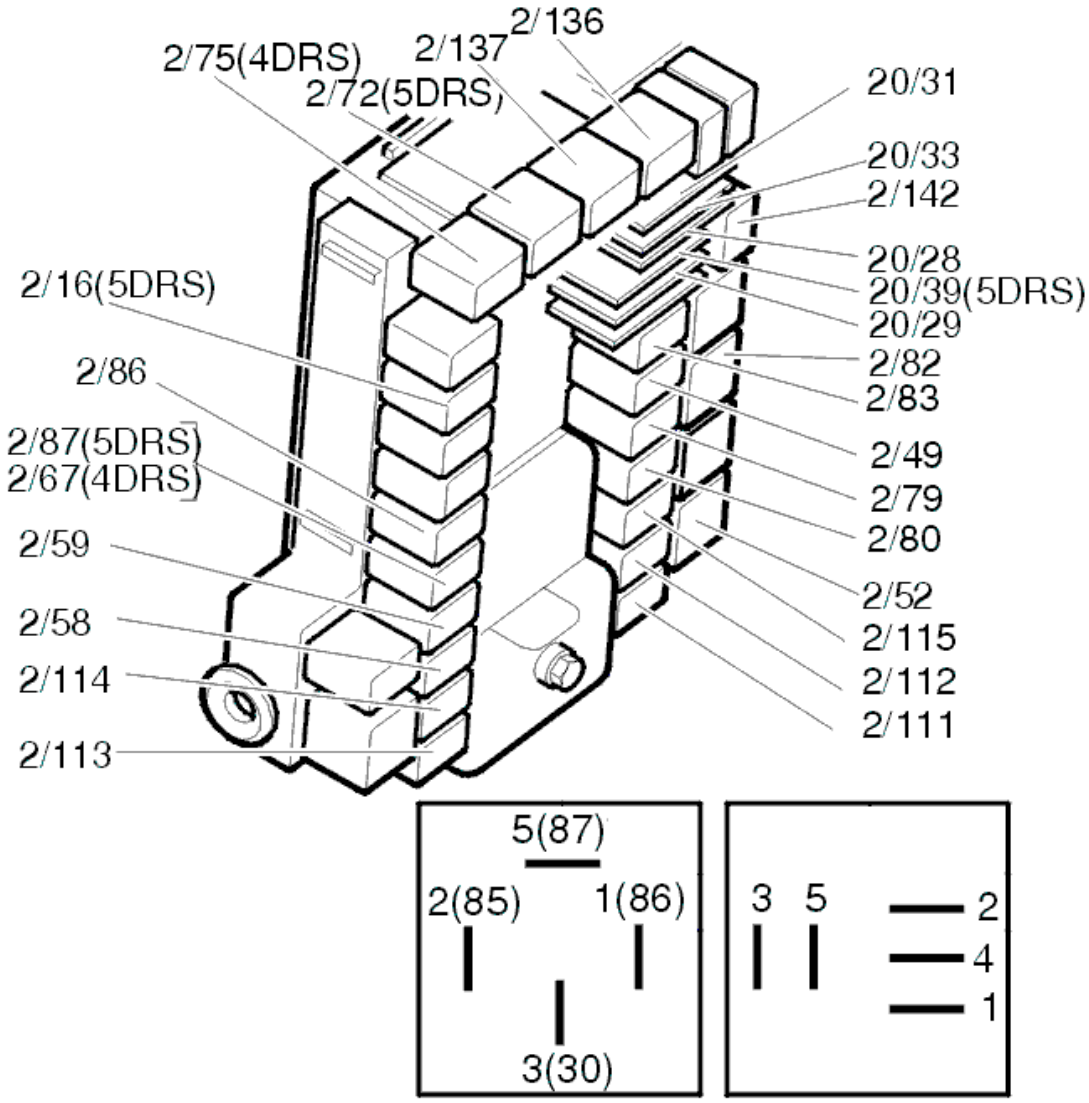

Fig. 509: Identifying Relays
Courtesy of VOLVO CARS CORPORATION

VERIFICATION

VERIFICATION

HINT: After the repair it is necessary to check that the fault has been rectified.

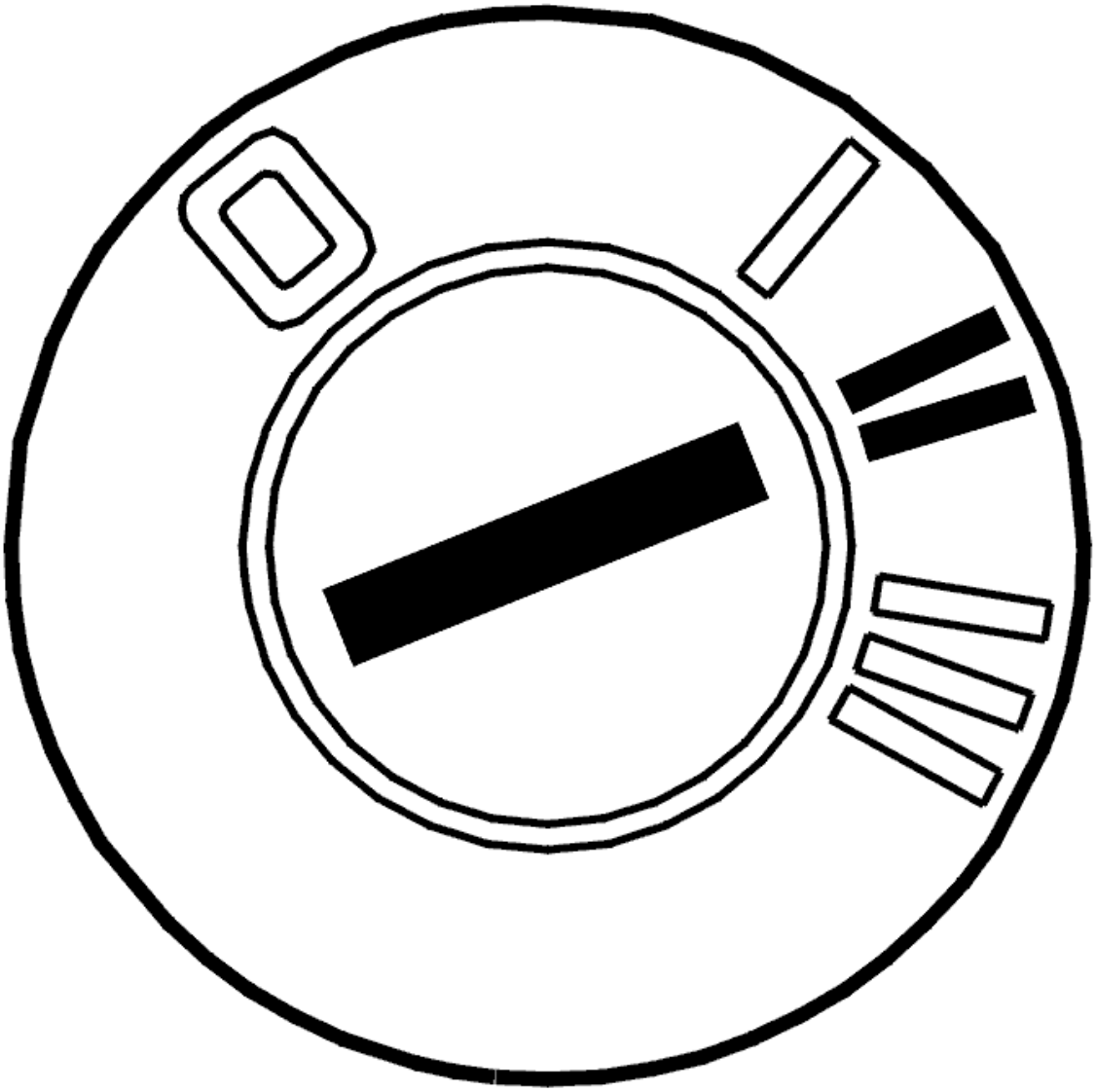

Fig. 510: Identifying Ignition ON
Courtesy of VOLVO CARS CORPORATION

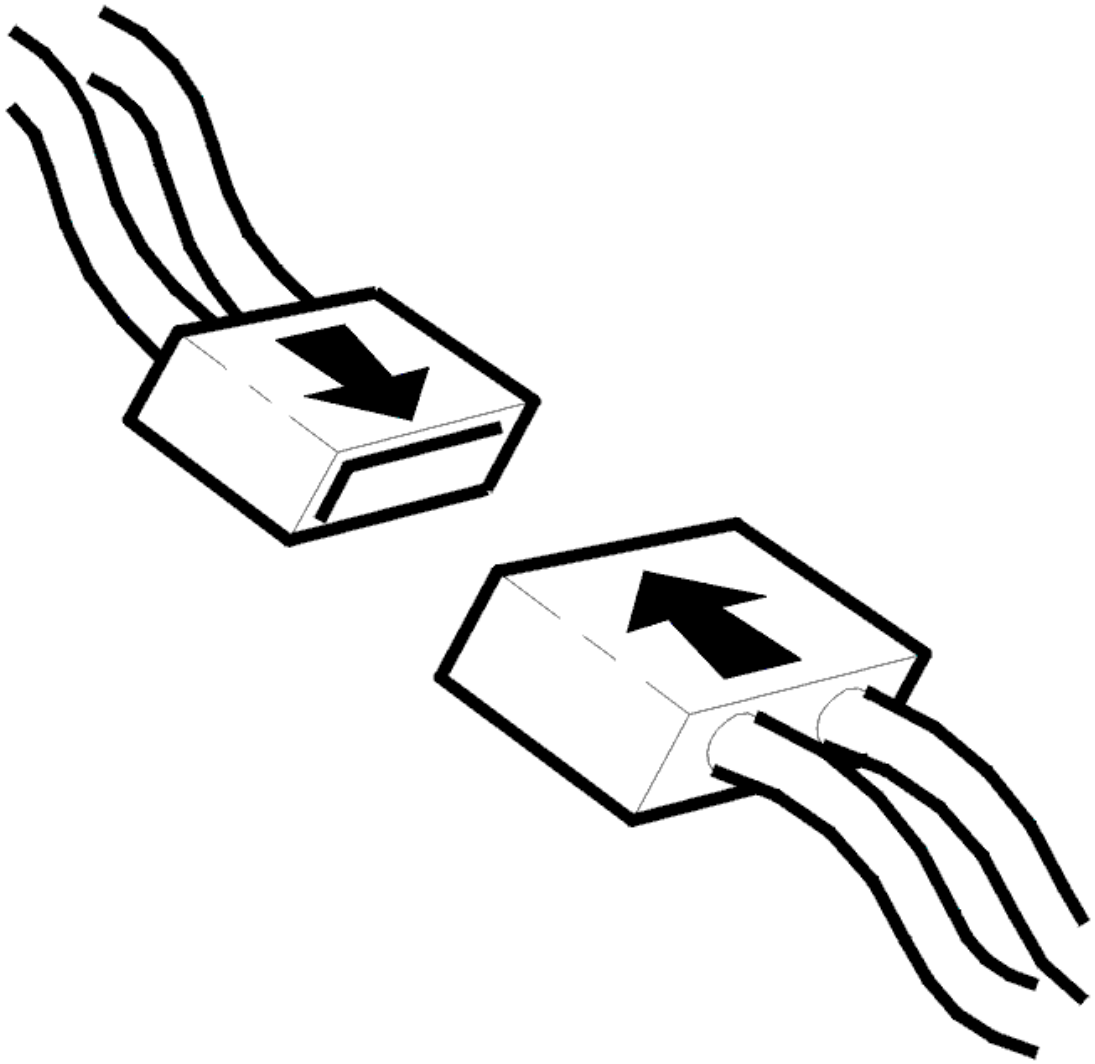

Fig. 511: Connecting Connector
Courtesy of VOLVO CARS CORPORATION

- Ignition off.
- Connect the connectors, install the components, etc.
- Ignition on.

  Lock by remote control and check that the text displays LOCKED.

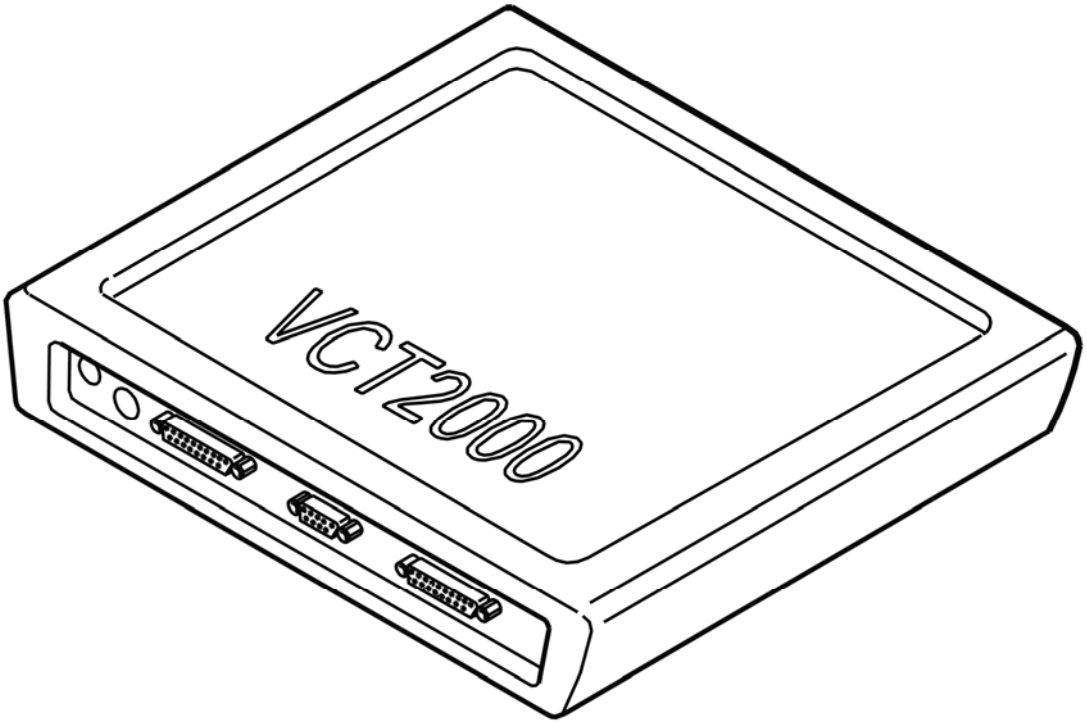

Fig. 512: Identifying VCT2000 Diagnostic Tool Symbol In VIDA
Courtesy of VOLVO CARS CORPORATION

Does the text display LOCKED?

- **YES**

  VERIFIED: Troubleshooting has been completed.

- **NO**

  Refer to **INFORMATION**

INFORMATION

FAULT-TRACING INFORMATION

The fault should have been detected and remedied. As this is not the case fault-tracing has failed.

Exit fault-tracing for this diagnostic trouble code (DTC) or make another attempt.

ELECTRICAL

Cables And Fuses - Diagnostic Trouble Codes and Associated Procedures

CEM-8F26: WINDSHIELD WIPERS. SIGNAL TOO HIGH (2006-2012)

DIAGNOSTIC TROUBLE CODE (DTC) INFORMATION CEM-8F26

Condition

The central electronic module (CEM) checks the windshield wipers.

The diagnostic trouble code (DTC) is stored if the Central electronic module (CEM) detects too high a signal on the output for the windshield wiper low/high speed relay.

The diagnostic trouble codes (DTCs) can be diagnosed when windshield wipers are activated, full speed.

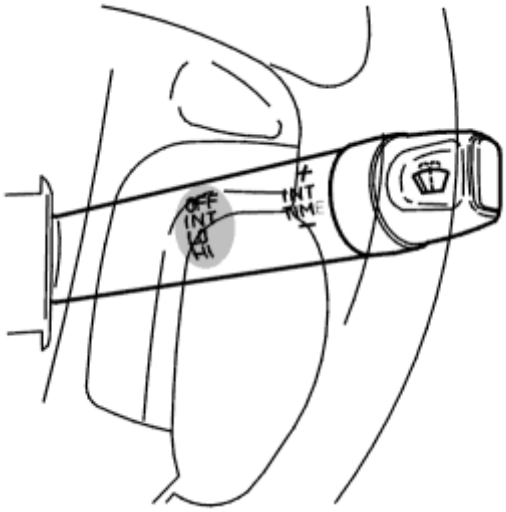

Fig. 1: Identifying Windshield Wiper Switch
Courtesy of VOLVO CARS CORPORATION

Substitute Value

- None.

Possible Source

- Short-circuit to supply voltage in the cable.

Fault symptom[s]

- Windshield wiper does not work

SIGNAL TOO HIGH

CHECKING THE CABLE

If the fault is intermittent, it has been registered previously but is no longer present. Intermittent faults can be caused by interference at start up of the central electronic module (CEM) or may be a different type of fault which occurs on different occasions. The fault is evaluated depending on how it occurs.

Checking the cable and relay

Check the cable between the central electronic module (CEM) and the windshield wiper relay low/high speed (2/90). Check for a short-circuit to supply voltage.

Take readings between:

- Central electronic module (CEM) #C3(#3) and relay, windshield wipers low/high speed (2/90) #2.

If no fault is found in the signal cable try replacing relay 2/90.

Remedy as necessary.

Other information

- see **CONNECTING THE BREAKOUT BOX**
- -2004: **SIGNAL SPECIFICATION**
- 2005-: **SIGNAL SPECIFICATION**
- see **LOCATION OF COMPONENTS**
- see **CHECKING WIRING AND TERMINALS**

- **Continue**

  Refer to **VERIFICATION**

VERIFICATION

VERIFICATION

HINT: After carrying out the repair, check that the fault has been remedied.

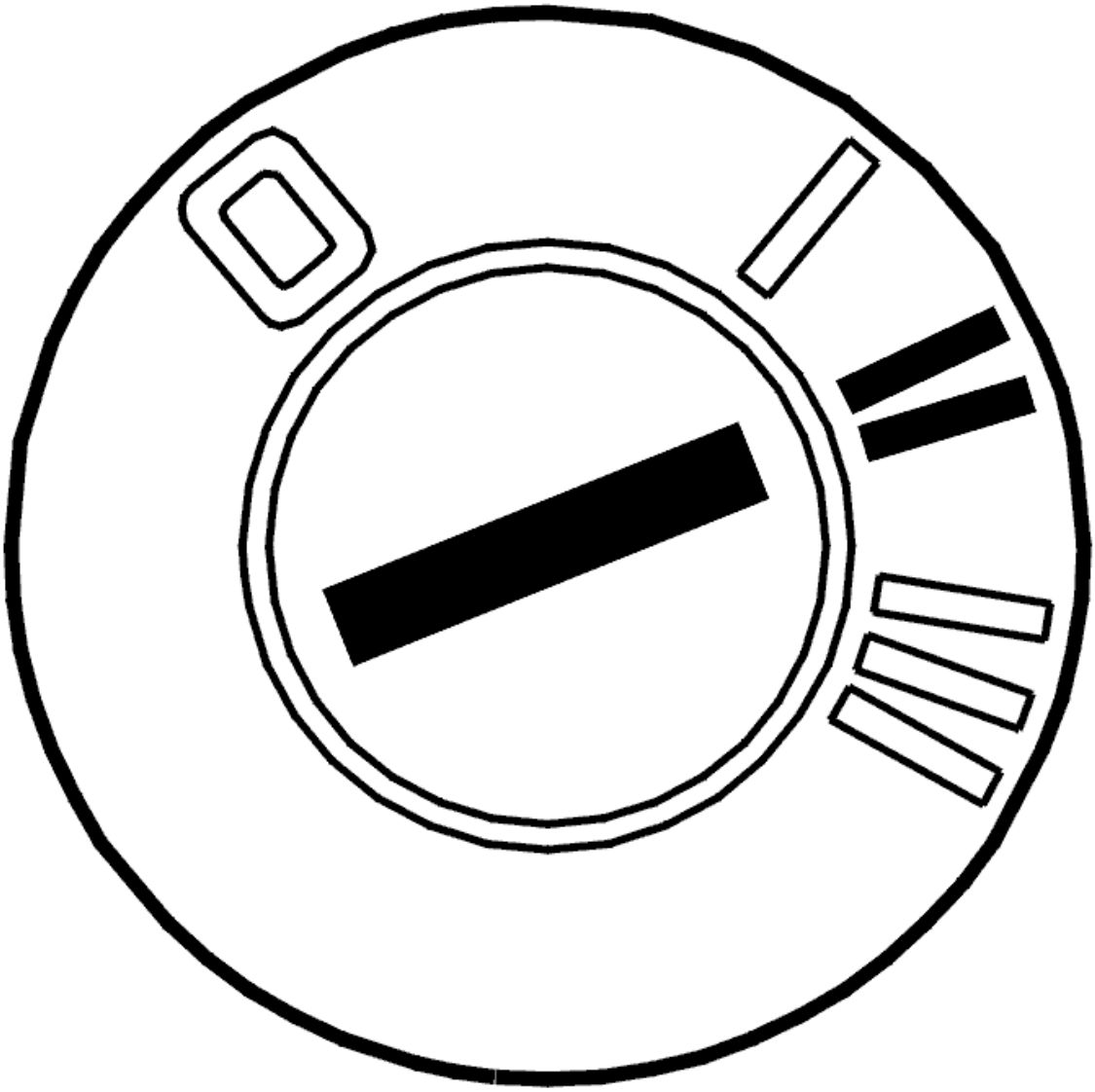

Fig. 2: Identifying Ignition ON
Courtesy of VOLVO CARS CORPORATION

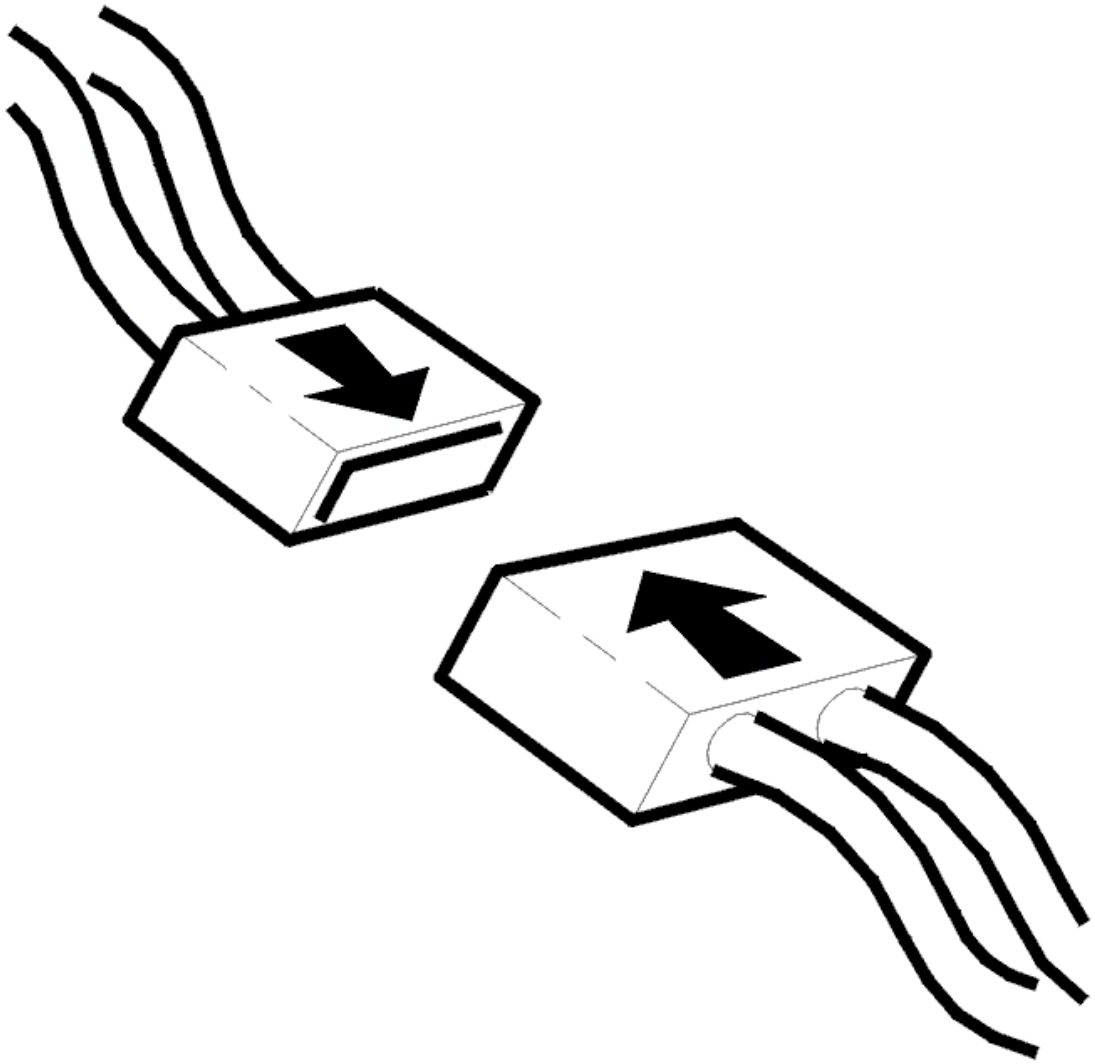

Fig. 3: Connecting Connector
Courtesy of VOLVO CARS CORPORATION

- Ignition off
- Reinstall the connectors, components etc.
- Ignition on.

  Activate the windshield wipers.

  Check that the windshield wipers work in all positions.

Are the windshield wipers working?

- **YES**

VERIFIED: Troubleshooting has been completed.

- **NO**

  Refer to **INFORMATION**

INFORMATION

FAULT-TRACING INFORMATION

The fault should have been detected and remedied. As this is not the case fault-tracing has failed.

Exit fault-tracing for this diagnostic trouble code (DTC) or make another attempt.

CEM-8F26: WINDSHIELD WIPER, HIGH SPEED RELAY. SIGNAL TOO HIGH. INTERMITTENT FAULT (2003-2004)

DIAGNOSTIC TROUBLE CODE INFORMATION

Condition

Relay must be activated to detect the diagnostic trouble code. If the control unit detects that the relay, wiper high speed, is short circuited to voltage supply, diagnostic trouble code CEM 8F26 is displayed.

Substitute Value

None.

Possible Source

- Short circuit to voltage supply.

Fault symptom[s]

- Wiper only works on lowest speed.

SIGNAL TOO HIGH. INTERMITTENT FAULT

CHECKING THE RELAY

Check that the relay is securely connected and not defective. Check for contact resistance and oxidation. Check for loose connections.

The following applies only in the event of an open-circuit in the cable:

HINT: The fault may have caused by contact resistance, oxidation or loose connections in the supply to the relay. The voltage must be 12 V at both terminals #1 and #5 for relay 2/91. For relay 2/90 the voltage

must be 12 V at terminal #1. Check fuse 11B/13 in the integrated relay/fusebox in the engine compartment in particular.

Using the table below, check the cable between the central electronic module (CEM) and the windshield wiper relay. Check for an intermittent short-circuit to supply voltage. Check for contact resistance and oxidation.

Diagnostic Trouble Code (DTC)	Control module	Relay
CEM-8F23	#13A	#2 (2/91)
CEM-8F26	#14A	#2 (2/90)

Also check the connector. Check for contact resistance and oxidation. Check for an intermittent short-circuit to supply voltage.

Other information:

- For -2004, see: **CENTRAL ELECTRONIC MODULE (CEM), REPLACING**
- For 2005-, see: **CENTRAL ELECTRONIC MODULE (CEM), REPLACING** .
- To connect the breakout box, see **CONNECTING THE BREAKOUT BOX**
- -2004: **SIGNAL SPECIFICATION**
- 2005-: **SIGNAL SPECIFICATION**

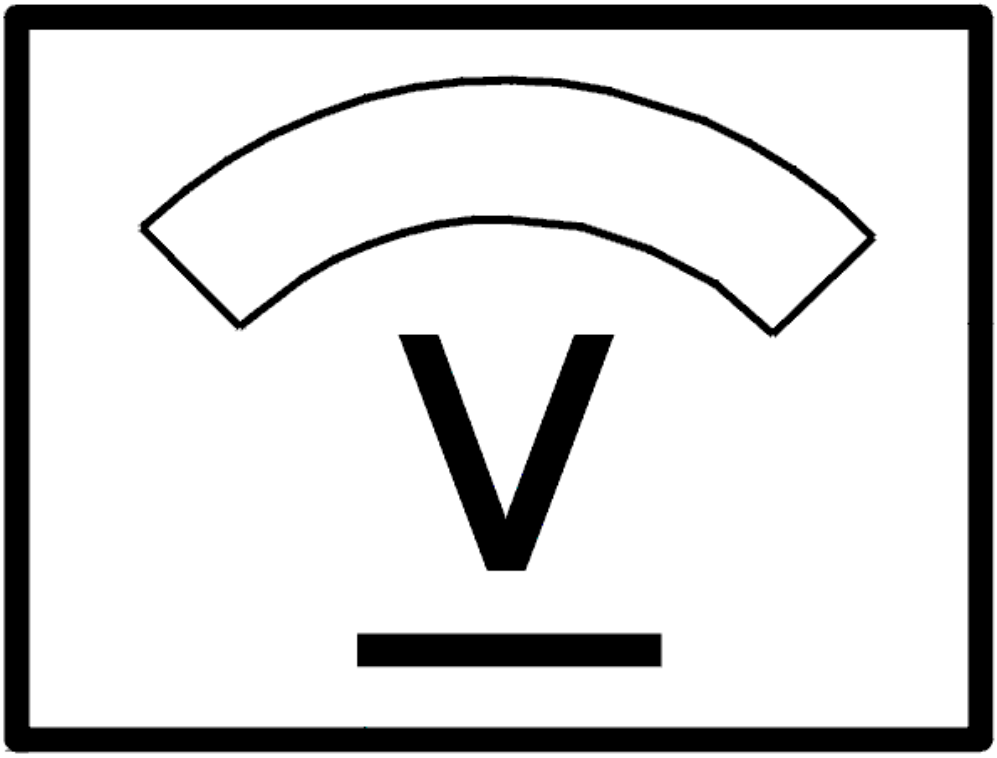

Fig. 4: Identifying Voltage Display
Courtesy of VOLVO CARS CORPORATION

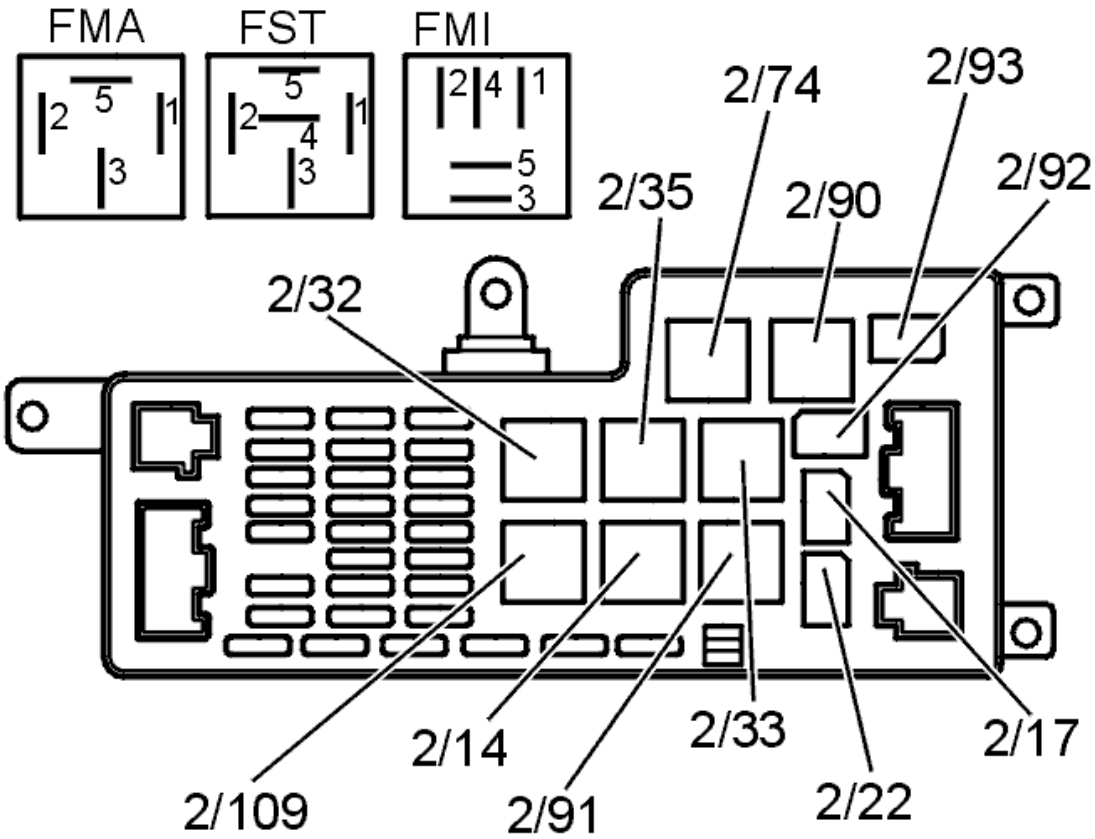

Fig. 5: Identifying Connectors
Courtesy of VOLVO CARS CORPORATION

CEM-8F26: WINDSHIELD WIPER, HIGH SPEED RELAY. SIGNAL TOO HIGH. PERMANENT FAULT (2003-2004)

DIAGNOSTIC TROUBLE CODE INFORMATION

see **DIAGNOSTIC TROUBLE CODE INFORMATION**

SIGNAL TOO HIGH. PERMANENT FAULT

CHECKING THE RELAY AND SUPPLY

Check that relay 2/90 is correctly connected. Check that the relay is not defective.

HINT: This tip applies only in the event of an open-circuit in cable.

HINT: The fault may have been caused by an open-circuit in the supply to the relay. The voltage must be 12 V at terminal #1 for relay 2/90. Check fuse 11B/13 in particular.

Remedy as necessary.

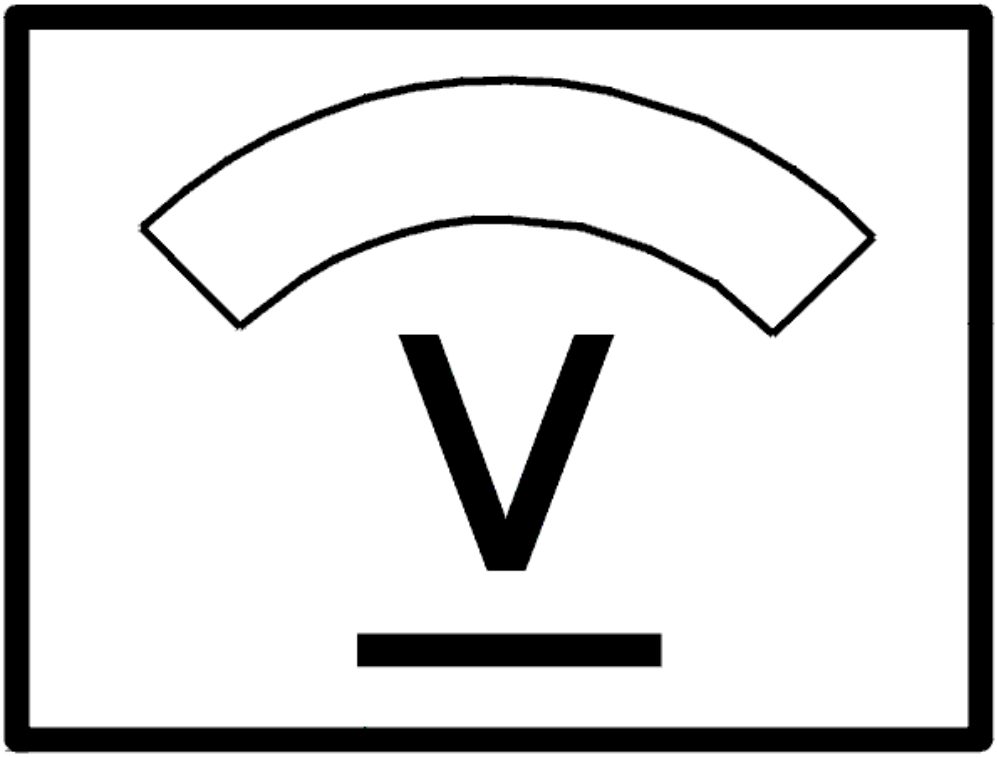

Fig. 6: Identifying Voltage Display
Courtesy of VOLVO CARS CORPORATION

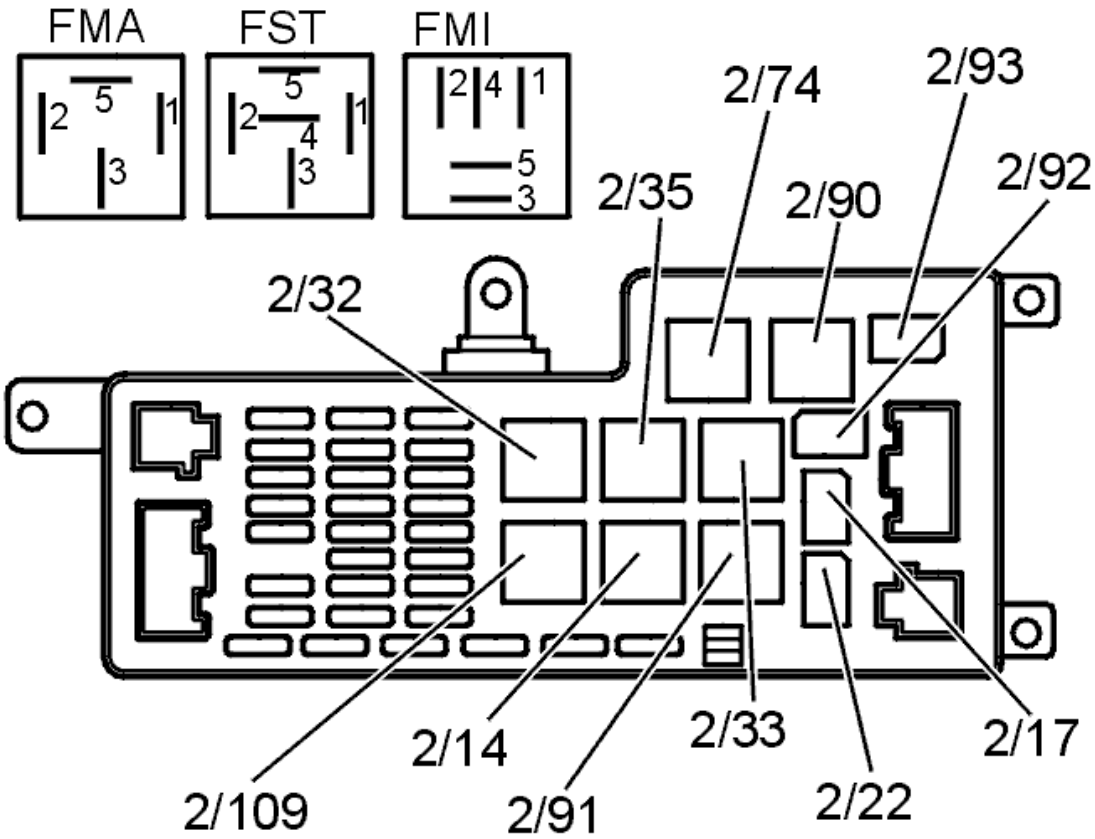

Fig. 7: Identifying Connectors
Courtesy of VOLVO CARS CORPORATION

Was a fault detected?

- **YES**

  Refer to **VERIFICATION**

- **NO**

  Refer to **CHECKING THE CABLE**

CHECKING THE CABLE

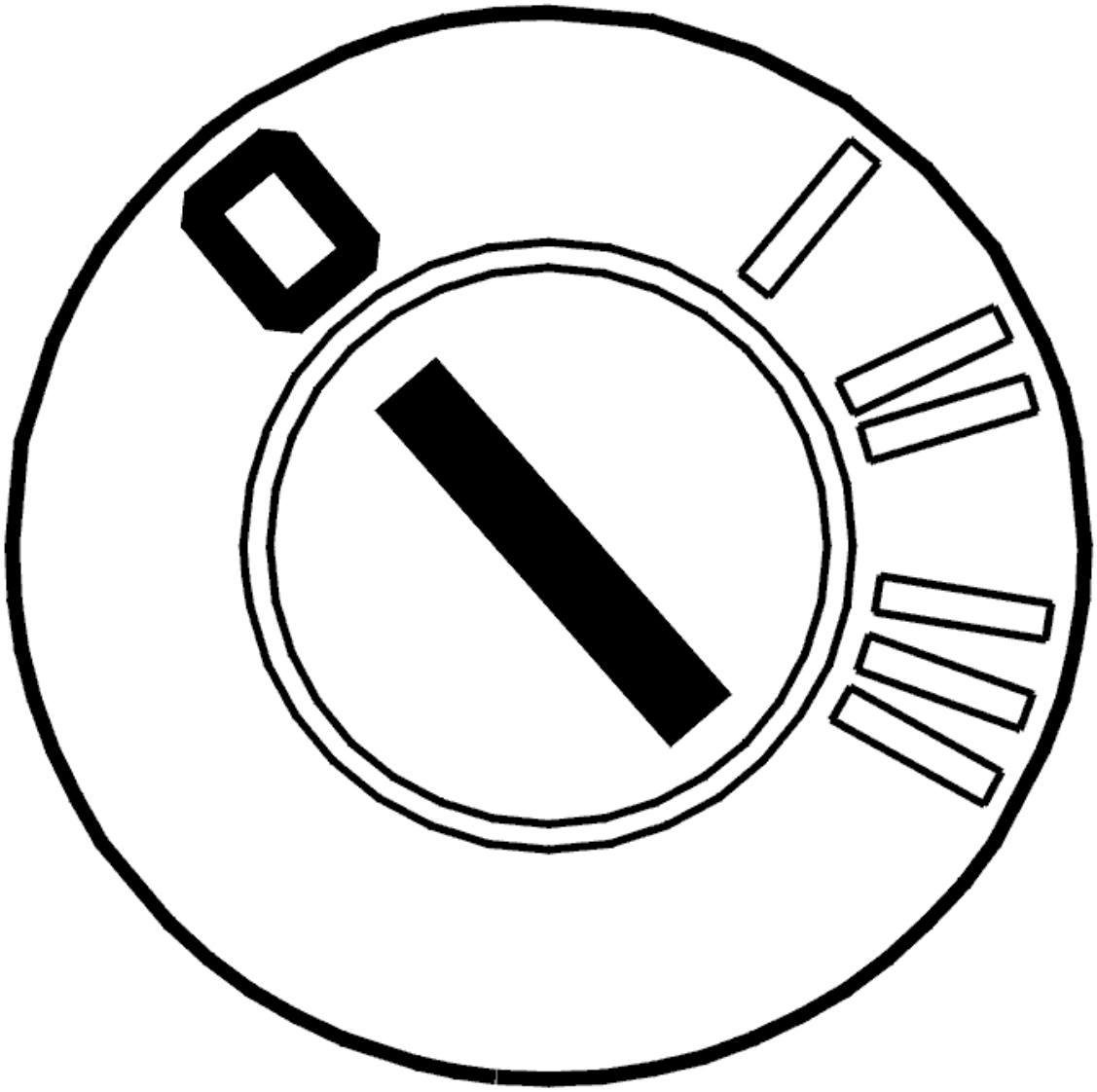

Fig. 8: Identifying Ignition OFF
Courtesy of VOLVO CARS CORPORATION

- Ignition off.

  Check the cable between central electronic module (CEM) terminal #14A and windshield wiper relay 2/90 terminal #2. Check for a short-circuit to supply voltage.

  Also check the connector. Check for a short-circuit to supply voltage.

  Remedy as necessary.

  Other information:

  - To connect the breakout box, see **CONNECTING THE BREAKOUT BOX**
  - -2004: **SIGNAL SPECIFICATION**

- 2005-: **SIGNAL SPECIFICATION**
- see **CHECKING WIRING AND TERMINALS** .

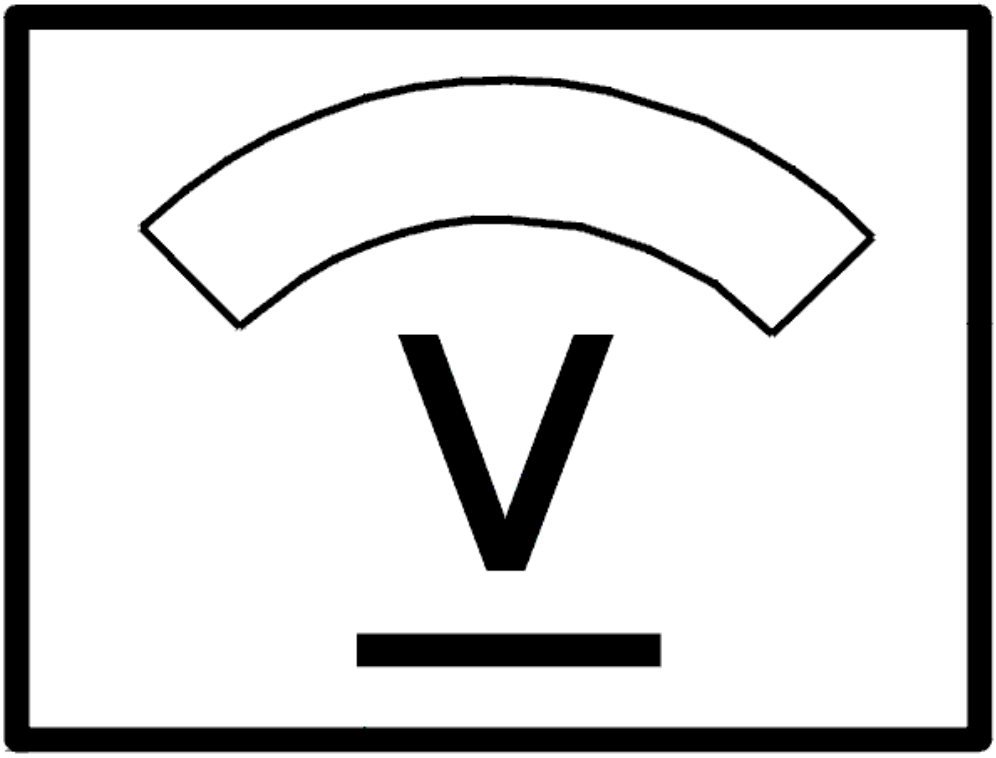

Fig. 9: Identifying Voltage Display
Courtesy of VOLVO CARS CORPORATION

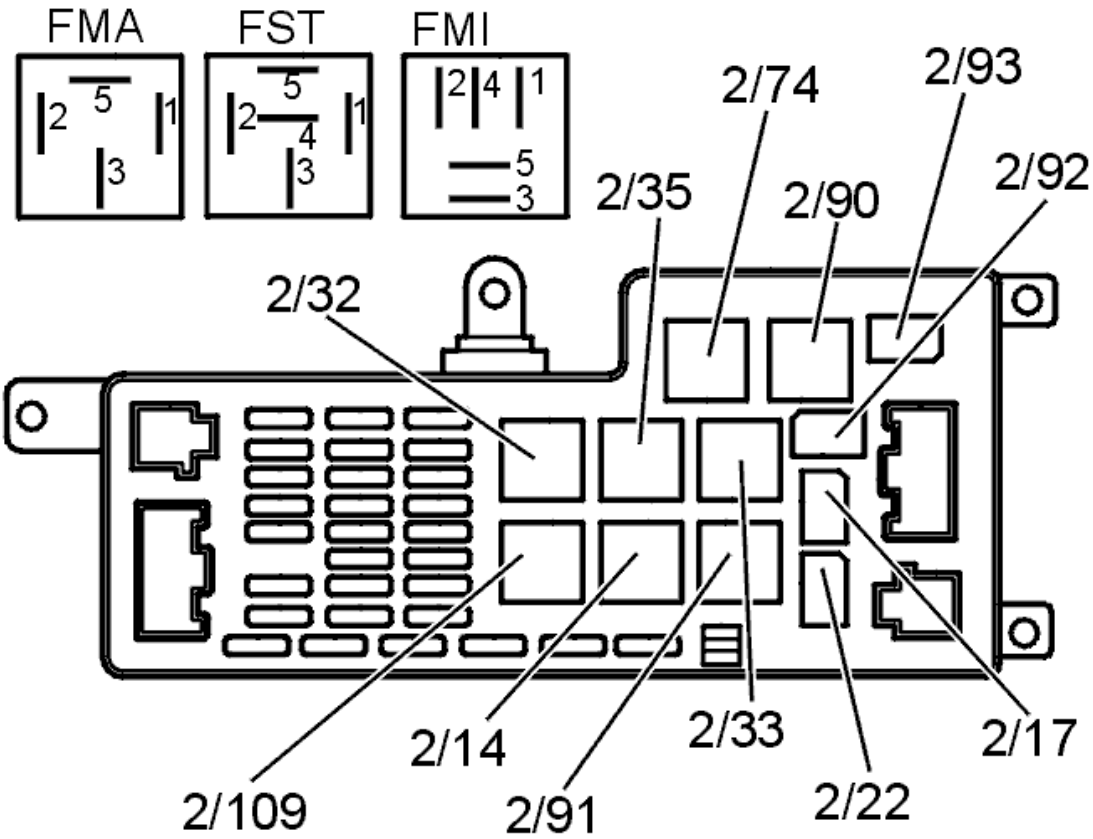

Fig. 10: Identifying Connectors
Courtesy of VOLVO CARS CORPORATION

- **Continue**

  Refer to **VERIFICATION**

VERIFICATION

VERIFICATION

HINT: After the repair it is necessary to check that the fault has been rectified.

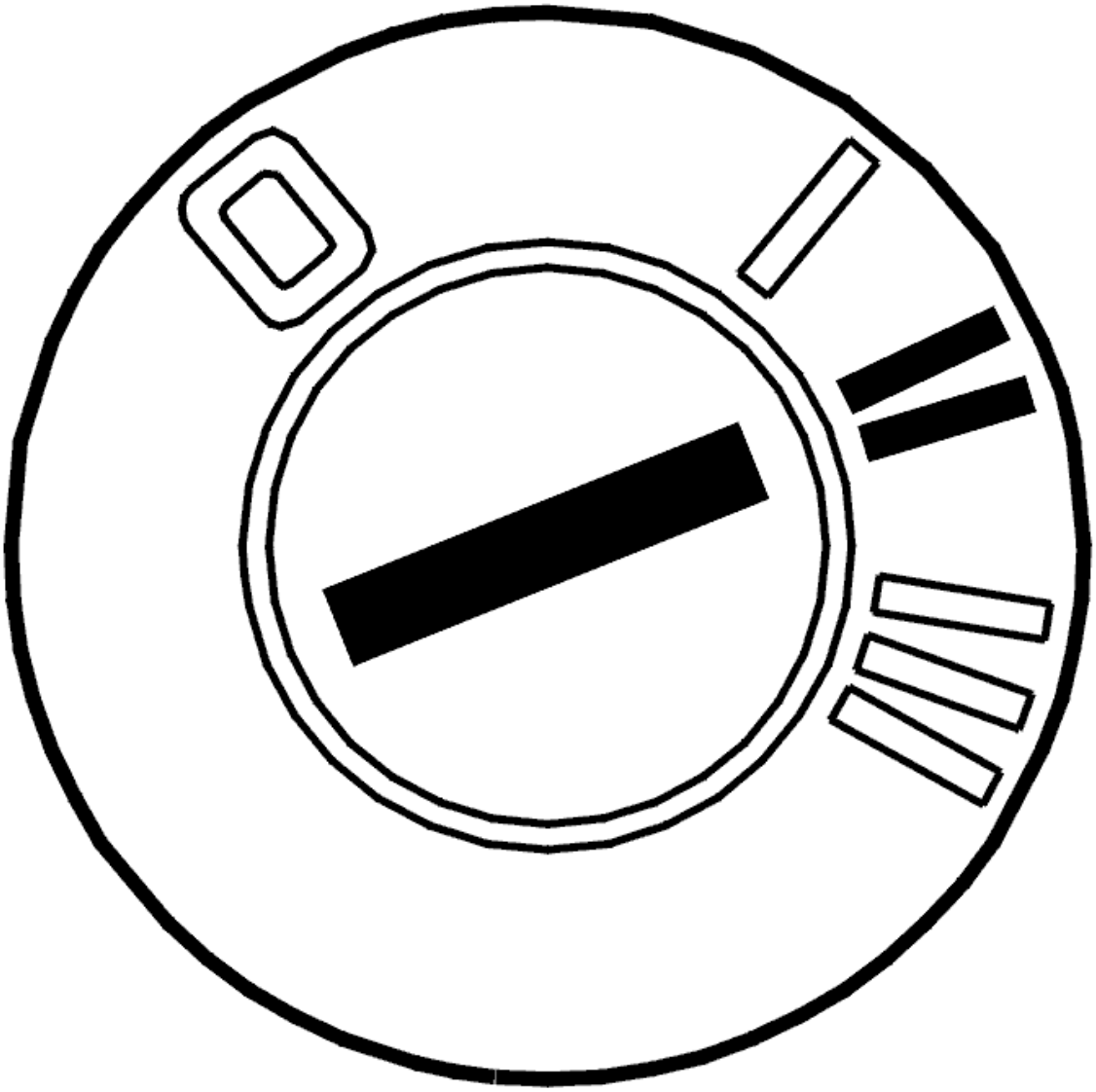

Fig. 11: Identifying Ignition ON
Courtesy of VOLVO CARS CORPORATION

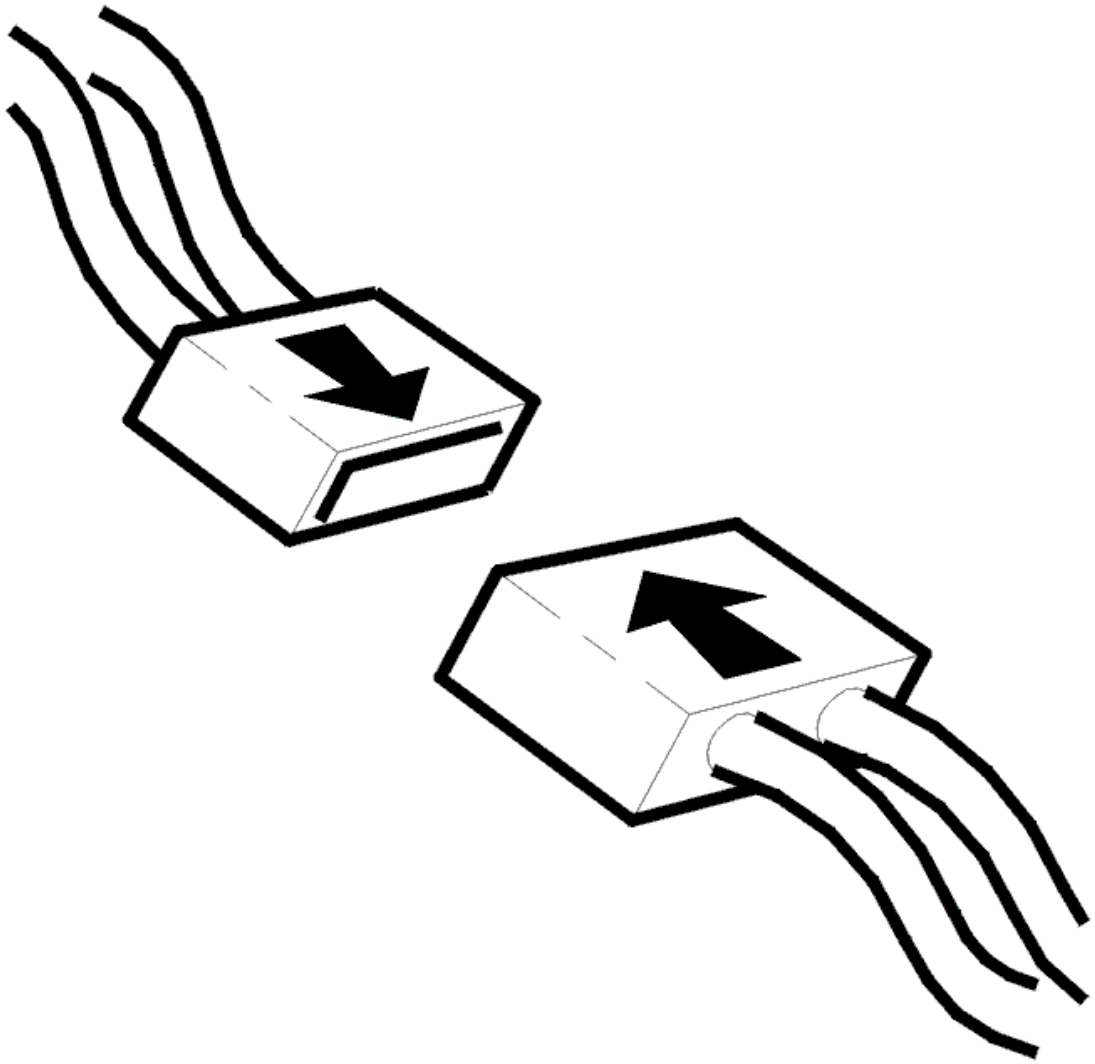

Fig. 12: Connecting Connector
Courtesy of VOLVO CARS CORPORATION

- Ignition off.
- Connect the connectors, install the components, etc.
- Ignition on.

  Activate relay.

  Listen for a click in the relay.

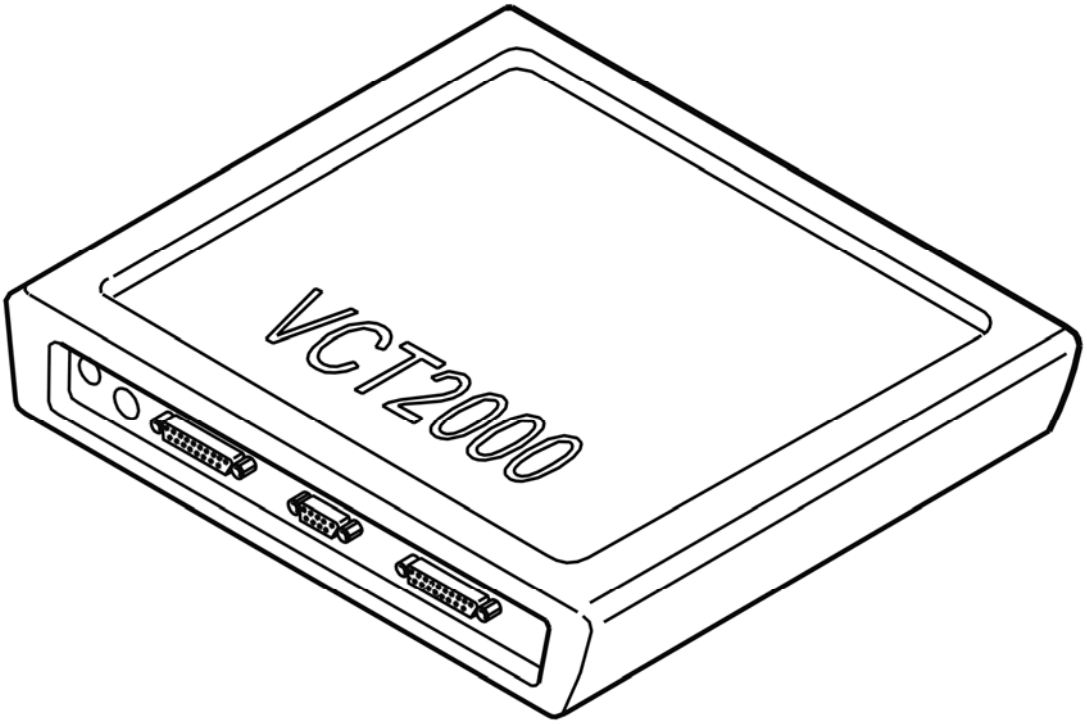

Fig. 13: Identifying VCT2000 Diagnostic Tool Symbol In VIDA
Courtesy of VOLVO CARS CORPORATION

Is the relay working correctly?

- **YES**

  VERIFIED: Troubleshooting has been completed.

- **NO**

  Refer to **INFORMATION**

INFORMATION

FAULT-TRACING INFORMATION

The fault should have been detected and remedied. As this is not the case fault-tracing has failed.

Exit fault-tracing for this diagnostic trouble code (DTC) or make another attempt.

CEM-8F28: WINDSHIELD WIPER, HIGH SPEED RELAY. SIGNAL MISSING. INTERMITTENT FAULT (2003-2004)

DIAGNOSTIC TROUBLE CODE INFORMATION

Condition

Relay should not have to be activated to display the diagnostic trouble code. If the central electronic module (CEM) detects an open circuit on the wiper high speed relay, diagnostic trouble code CEM-8F28 is displayed.

Substitute Value

None.

Possible Source

- Open circuit in signal wire
- Open circuit in power supply to the relay
- Faulty relay
- Relay is not installed.

Fault symptom[s]

- Wiper only works on lowest speed

FAULTY SIGNAL OR SIGNAL MISSING. INTERMITTENT FAULT

CHECKING THE RELAY

Check that the relay is securely connected. Check for contact resistance and oxidation. Check for loose connections.

The following applies only in the event of an open-circuit in the cable:

HINT: The fault may have caused by contact resistance, oxidation or loose connections in the supply to the relay. The voltage must be 12 V at both terminals #1 and #5 for relay 2/91. For relay 2/90 the voltage must be 12 V at terminal #1. Check fuse 11B/13 in the integrated relay/fusebox in the engine compartment in particular.

Using the table below, check the cable between the central electronic module (CEM) and the windshield wiper relay. Check for contact resistance and oxidation. Check for loose connections.

Diagnostic Trouble Code (DTC)	Control module	Relay
CEM-8F25	#13A	#2 (2/91)
CEM-8F28	#14a	#2 (2/90)

Also check the connector. Check for contact resistance and oxidation. Check for loose connections.

Other information:

- For -2004, see: **CENTRAL ELECTRONIC MODULE (CEM), REPLACING**
- For 2005-, see: **CENTRAL ELECTRONIC MODULE (CEM), REPLACING** .
- To connect the breakout box, see **CONNECTING THE BREAKOUT BOX**
- -2004: **SIGNAL SPECIFICATION**
- 2005-: **SIGNAL SPECIFICATION**
- see **CHECKING WIRING AND TERMINALS**

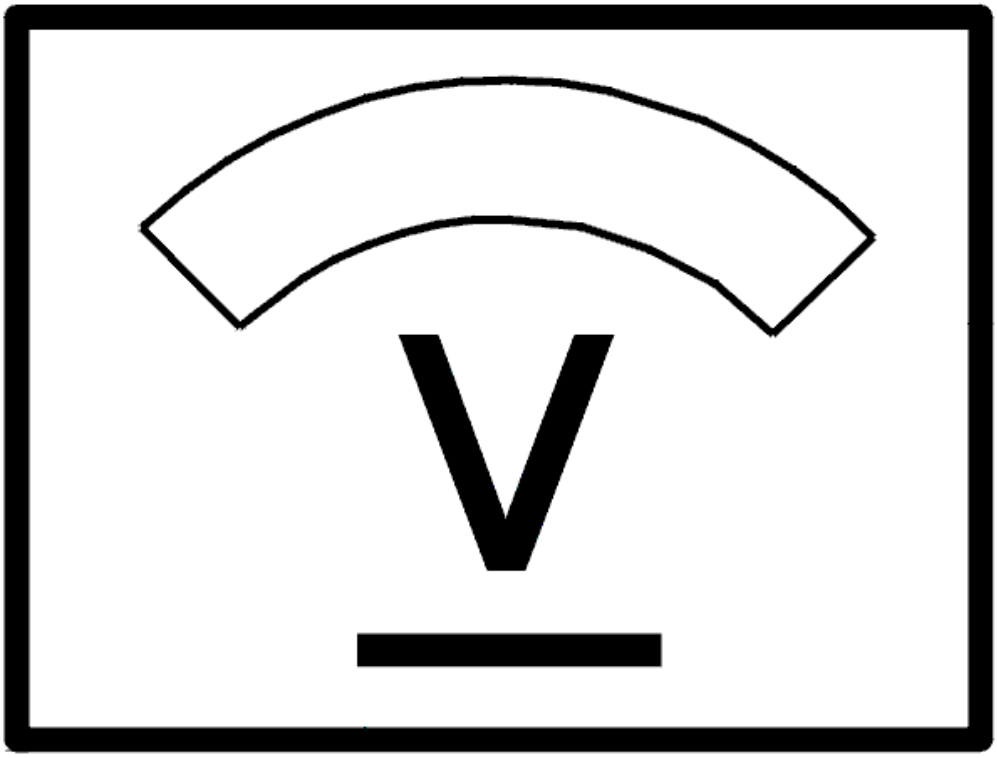

Fig. 14: Identifying Voltage Display
Courtesy of VOLVO CARS CORPORATION

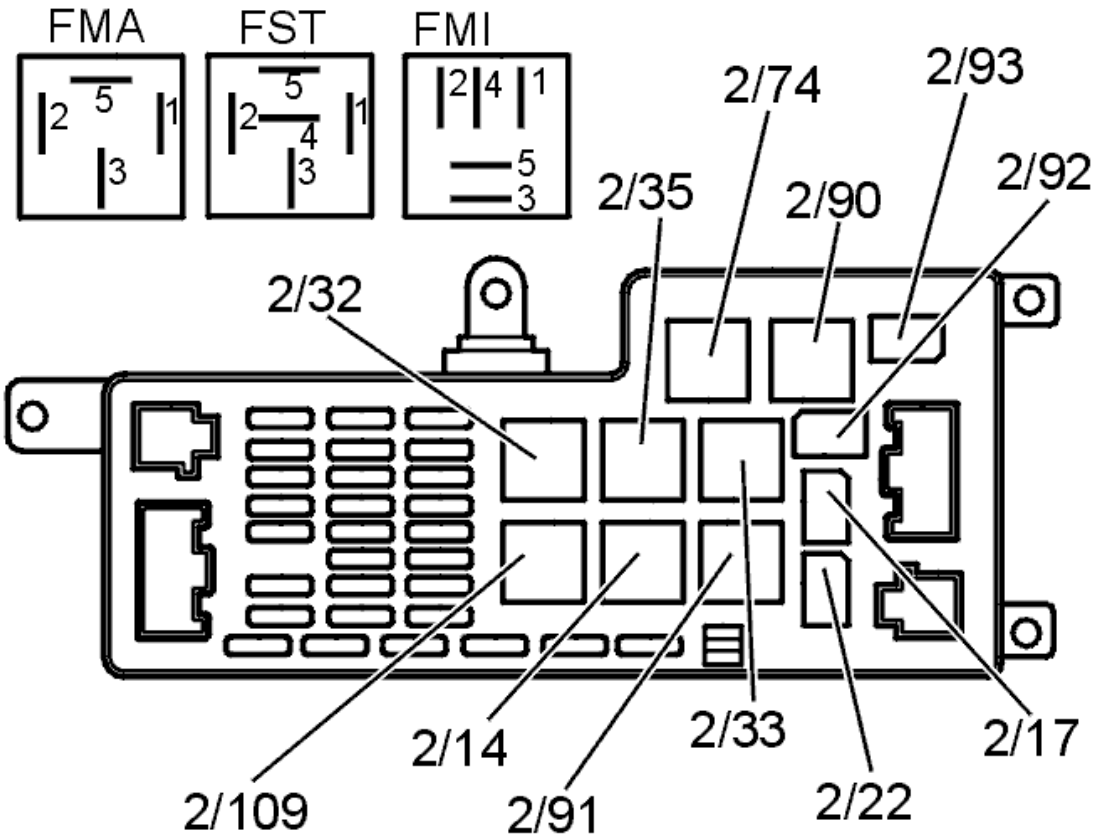

Fig. 15: Identifying Connectors
Courtesy of VOLVO CARS CORPORATION

CEM-8F28: WINDSHIELD WIPER, HIGH SPEED RELAY. SIGNAL MISSING. PERMANENT FAULT (2003-2004)

DIAGNOSTIC TROUBLE CODE INFORMATION

see **DIAGNOSTIC TROUBLE CODE INFORMATION**

SIGNAL MISSING. PERMANENT FAULT

CHECKING THE RELAY

Check that relay 2/90 is correctly connected. Check that the relay is not defective.

Remedy as necessary.

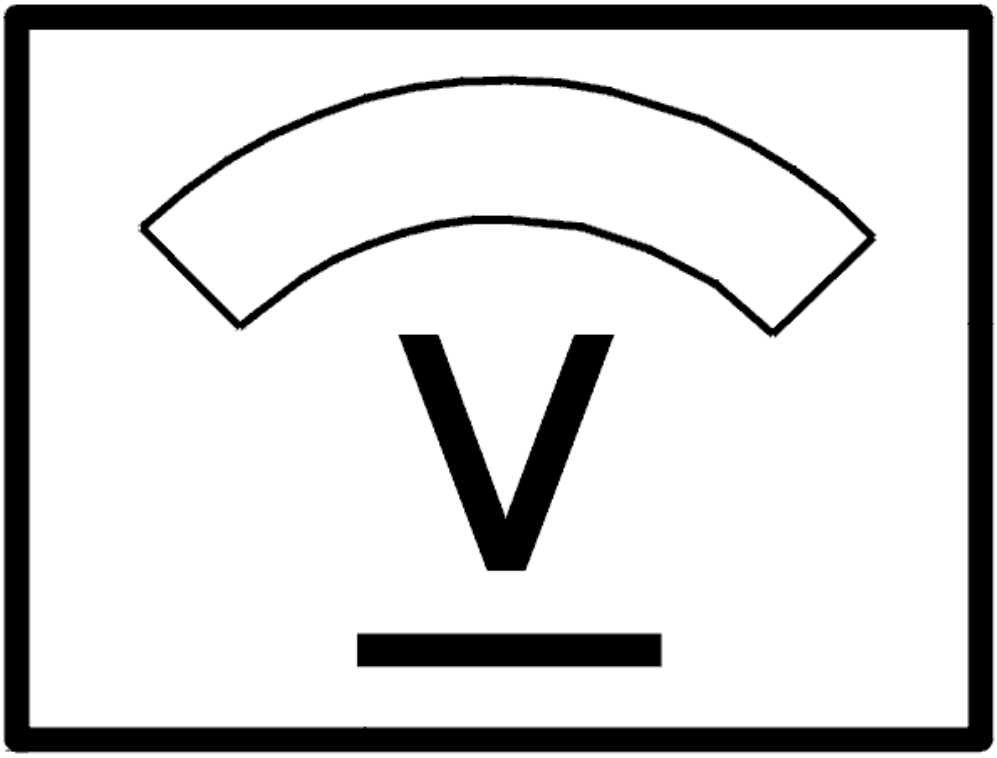

Fig. 16: Identifying Voltage Display
Courtesy of VOLVO CARS CORPORATION

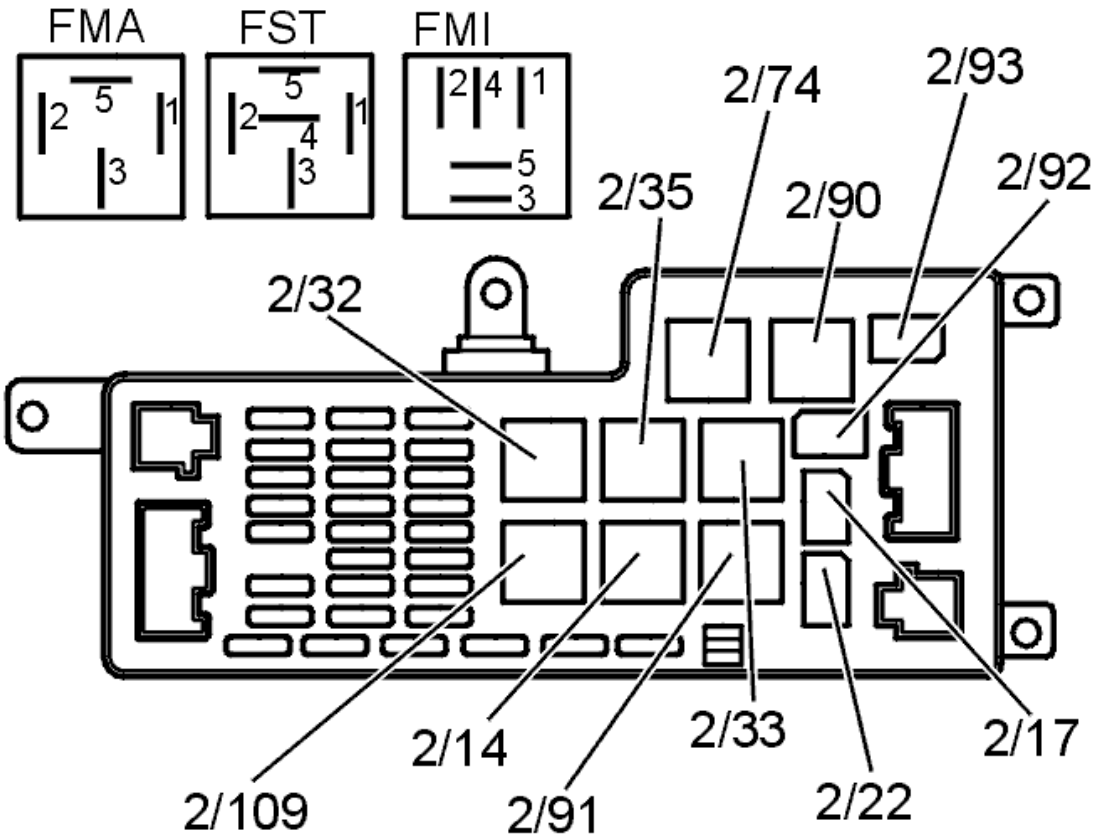

Fig. 17: Identifying Connectors
Courtesy of VOLVO CARS CORPORATION

Was a fault detected?

- **YES**

  Refer to **VERIFICATION**

- **NO**

  Refer to **CHECKING THE CABLE**

CHECKING THE CABLE

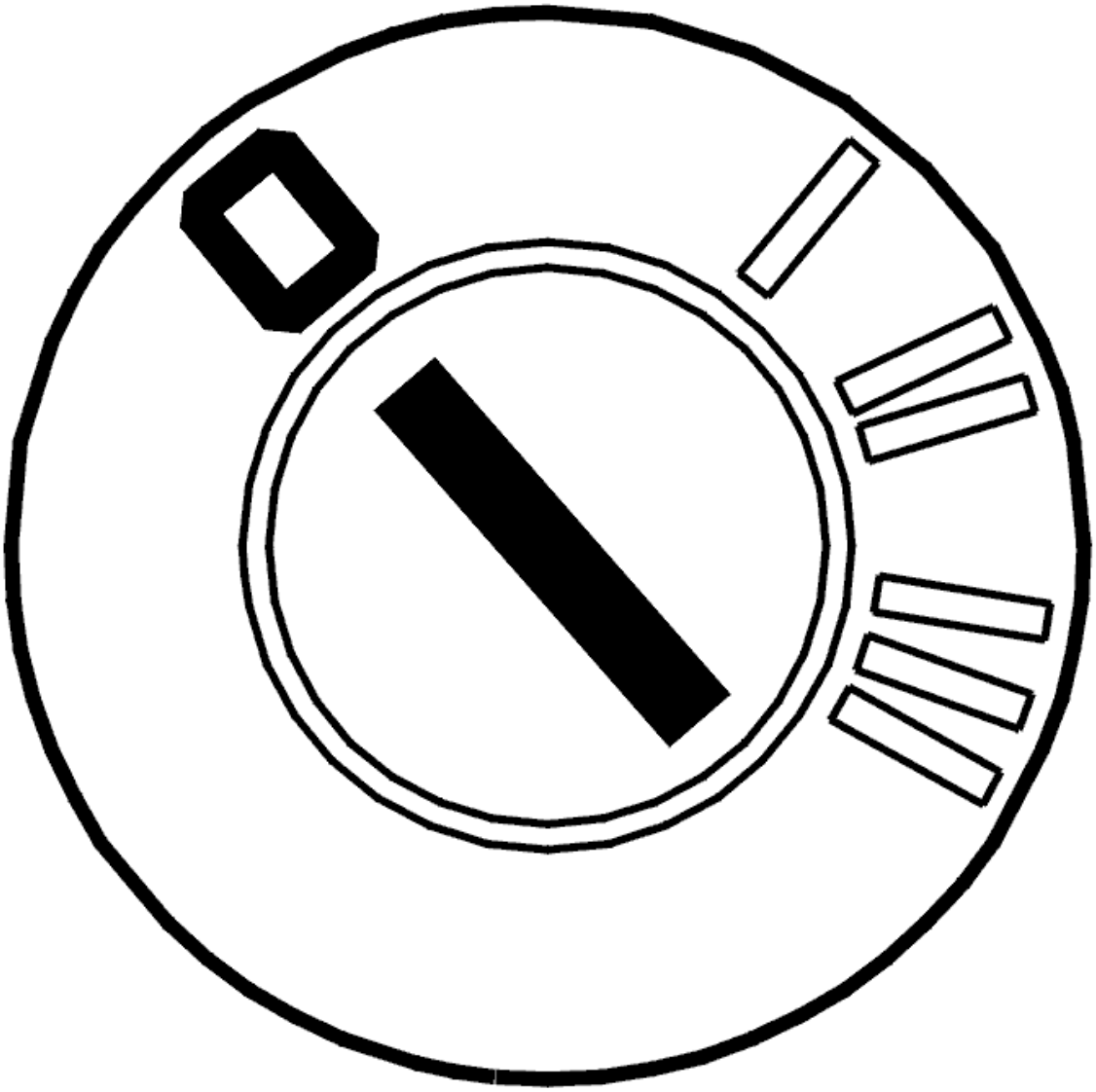

Fig. 18: Identifying Ignition OFF
Courtesy of VOLVO CARS CORPORATION

- Ignition off.

  Check the cable between central electronic module (CEM) terminal #14A and windshield wiper relay 2/90 terminal #2. Check for an open-circuit.

  Also check the connector. Check for an open-circuit.

  Remedy as necessary.

  Other information:

  - To connect the breakout box, see **CONNECTING THE BREAKOUT BOX**
  - -2004: **SIGNAL SPECIFICATION**

- 2005-: **SIGNAL SPECIFICATION**
- see **CHECKING WIRING AND TERMINALS**

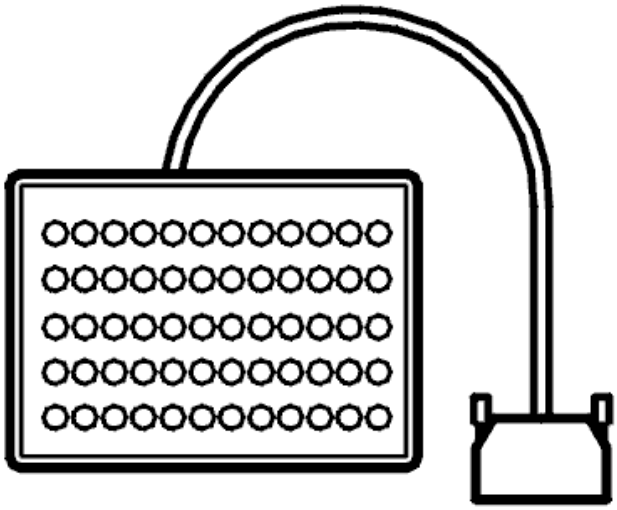

Fig. 19: Breakout Box
Courtesy of VOLVO CARS CORPORATION

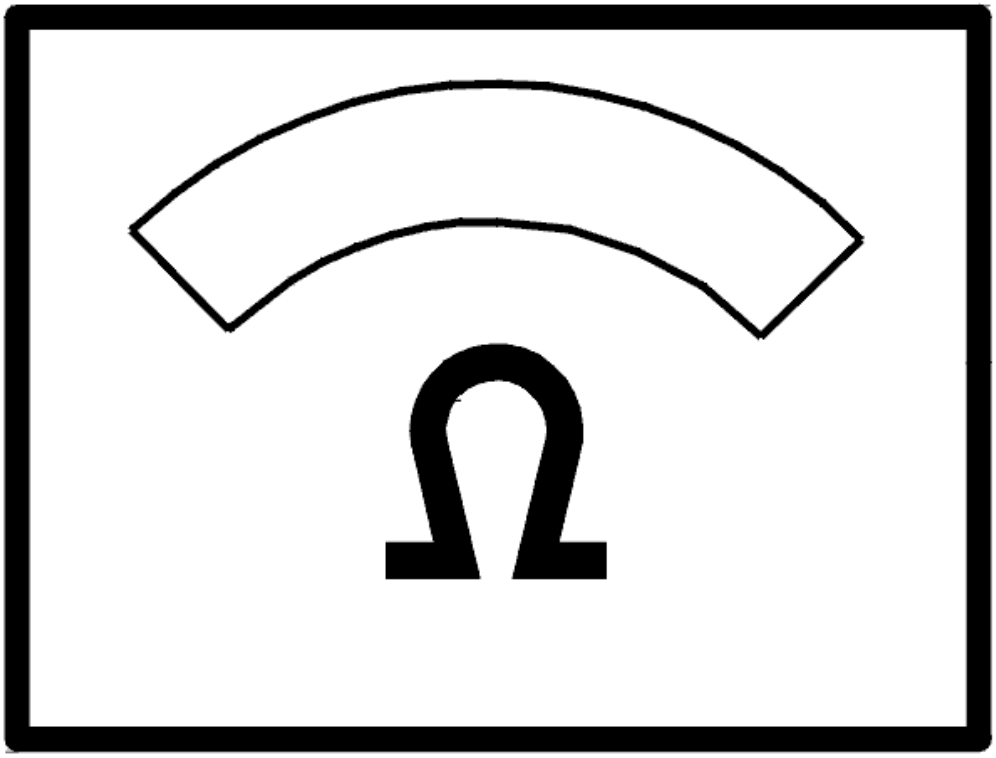

Fig. 20: Identifying Ohm Meter
Courtesy of VOLVO CARS CORPORATION

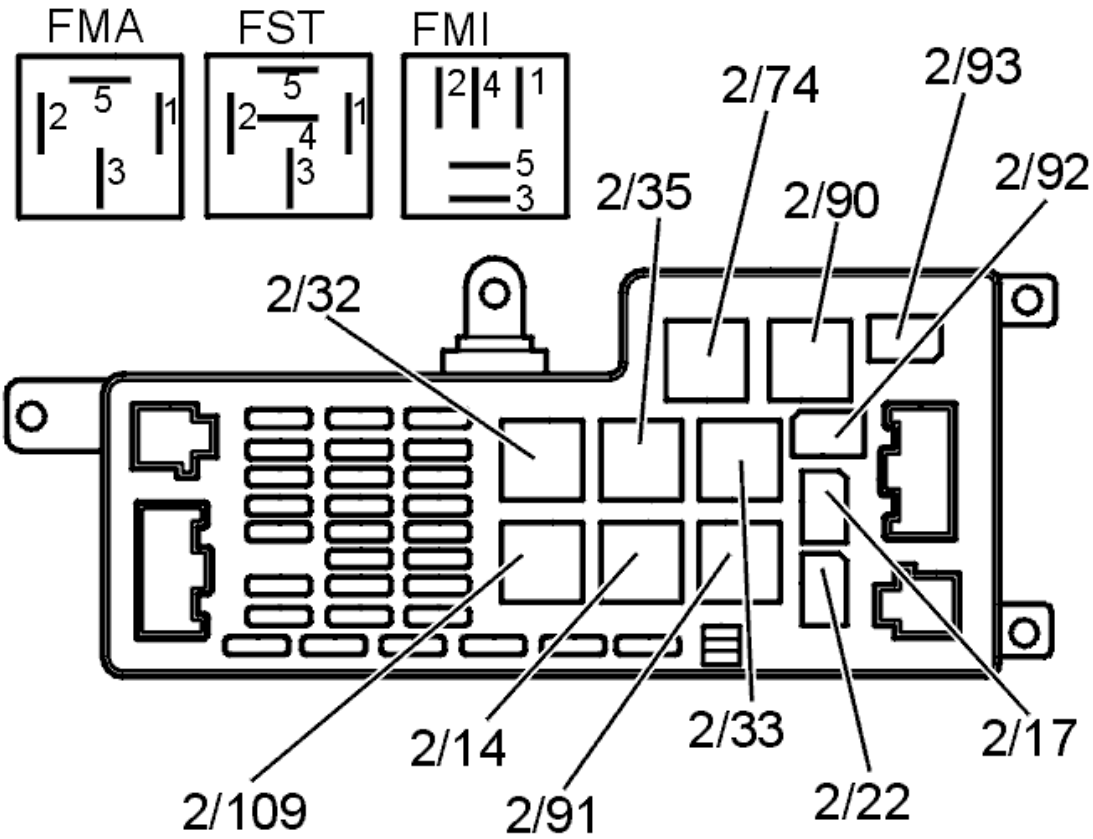

Fig. 21: Identifying Connectors
Courtesy of VOLVO CARS CORPORATION

- **Continue**

  Refer to **VERIFICATION**

VERIFICATION

VERIFICATION

HINT: After the repair it is necessary to check that the fault has been rectified.

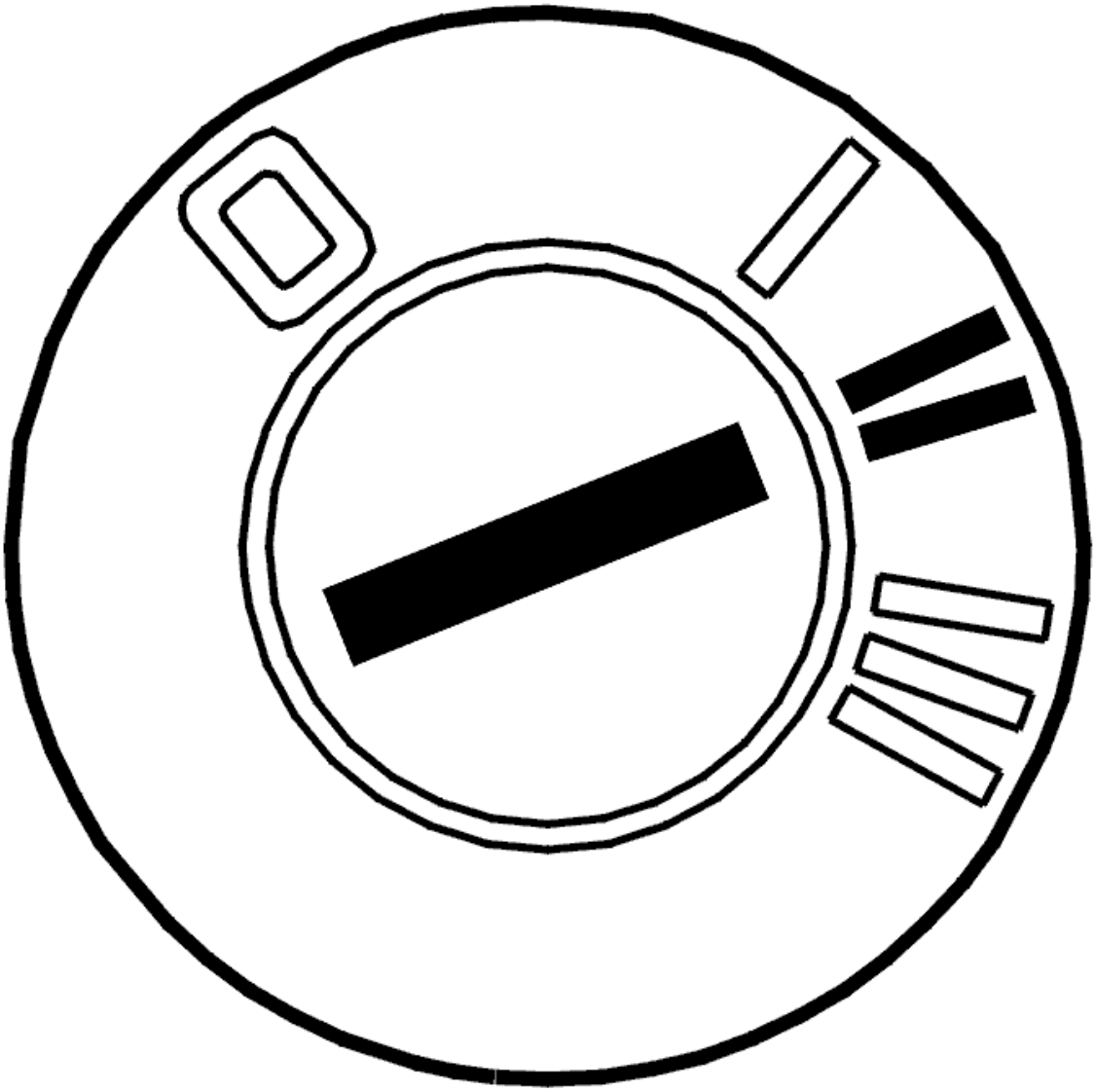

Fig. 22: Identifying Ignition ON
Courtesy of VOLVO CARS CORPORATION

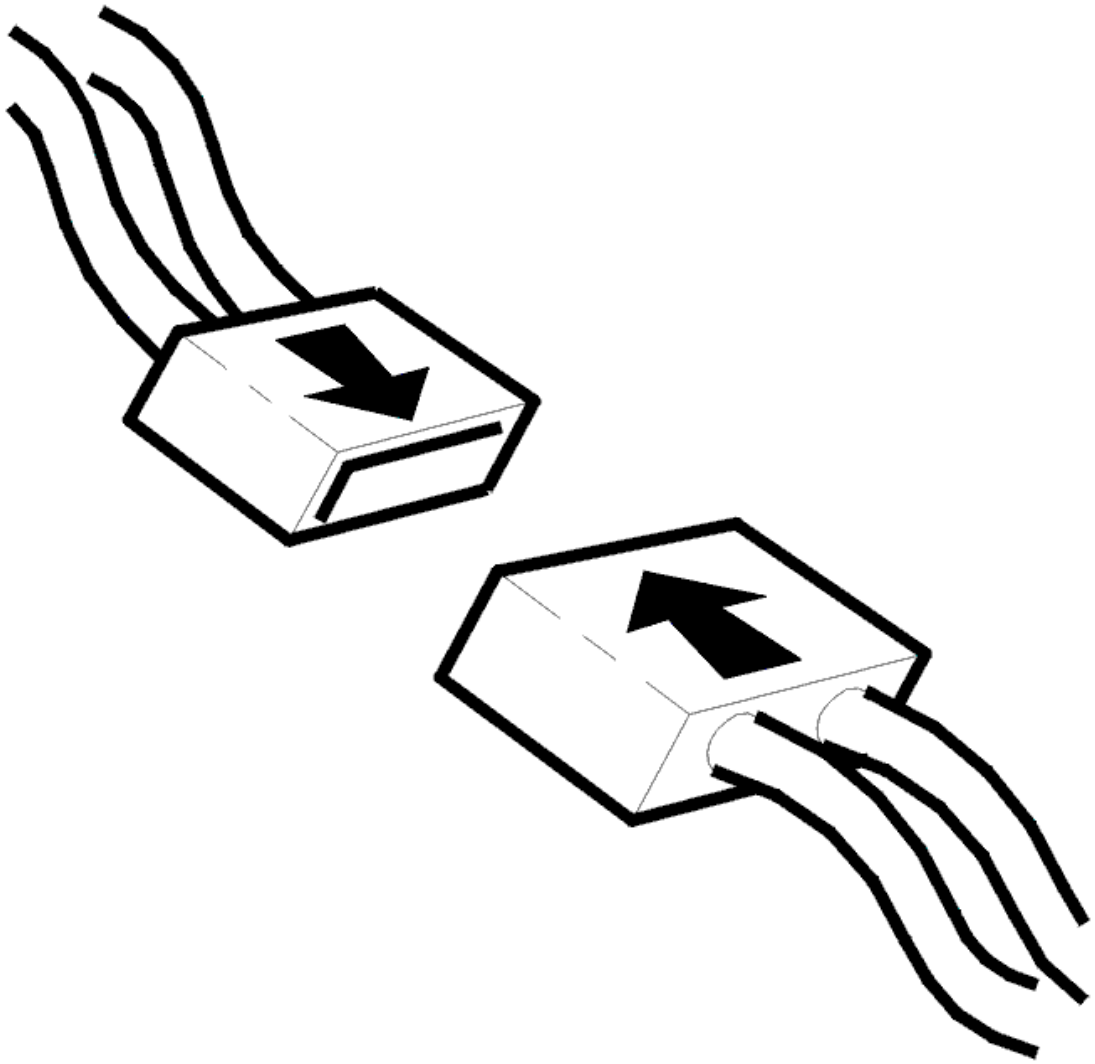

Fig. 23: Connecting Connector
Courtesy of VOLVO CARS CORPORATION

- Ignition off.
- Connect the connectors, install the components, etc.
- Ignition on.

  Activate relay.

  Listen for a click in the relay.

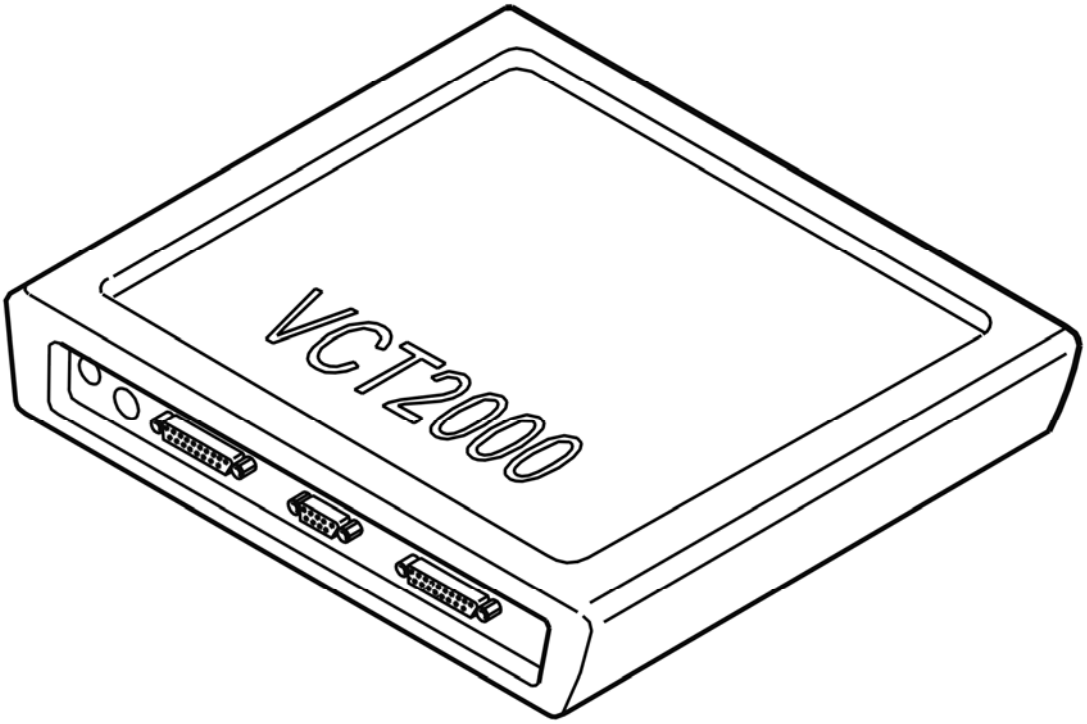

Fig. 24: Identifying VCT2000 Diagnostic Tool Symbol In VIDA
Courtesy of VOLVO CARS CORPORATION

Is the relay working correctly?

- **YES**

  VERIFIED: Troubleshooting has been completed.

- **NO**

  Refer to **INFORMATION**

INFORMATION

FAULT-TRACING INFORMATION

The fault should have been detected and remedied. As this is not the case fault-tracing has failed.

Exit fault-tracing for this diagnostic trouble code (DTC) or make another attempt.

CEM-8F29: RELAY, FRONT SCREEN WASHER MOTOR. SIGNAL TOO HIGH. INTERMITTENT FAULT (2003-2004)

DIAGNOSTIC TROUBLE CODE INFORMATION

Condition

Relay should not have to be activated to display the diagnostic trouble code. If central

electronic module (CEM) detects that the front windscreen washer motor relay is short circuited to voltage supply, diagnostic trouble code CEM 8F29 is displayed.

Substitute Value

None.

Possible Source

- Short circuit to voltage supply in the signal line.

Fault symptom[s]

- Front windscreen washer does not work

SIGNAL MISSING. INTERMITTENT FAULT

CHECKING THE RELAY

Check that the relay (2/92) is securely connected. Check for contact resistance and oxidation. Check the relay for loose connections.

The following applies only in the event of an open-circuit in the cable:

HINT: The fault may have caused by contact resistance, oxidation or loose connections in the supply to the relay. The voltage must be 12 V at both terminals #1 and #5 for relay 2/92. Check fuse 11B/13 in the integrated relay/fusebox in the engine compartment in particular.

Check the cable between central electronic module (CEM) terminal #16A and washer motor relay terminal #2 (2/92). Check for an intermittent short-circuit to supply voltage (for CEM-8F29). Check for contact resistance and oxidation. Check for loose connections (for CEM-8F2B).

Also check the connector for an intermittent short-circuit to supply voltage.

Other information:

- To connect the breakout box, see **CONNECTING THE BREAKOUT BOX**
- -2004: **SIGNAL SPECIFICATION**
- 2005-: **SIGNAL SPECIFICATION**
- see **CHECKING WIRING AND TERMINALS**

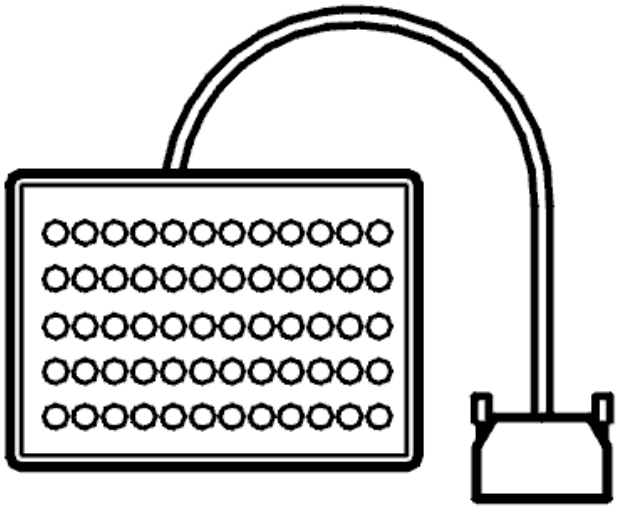

Fig. 25: Breakout Box
Courtesy of VOLVO CARS CORPORATION

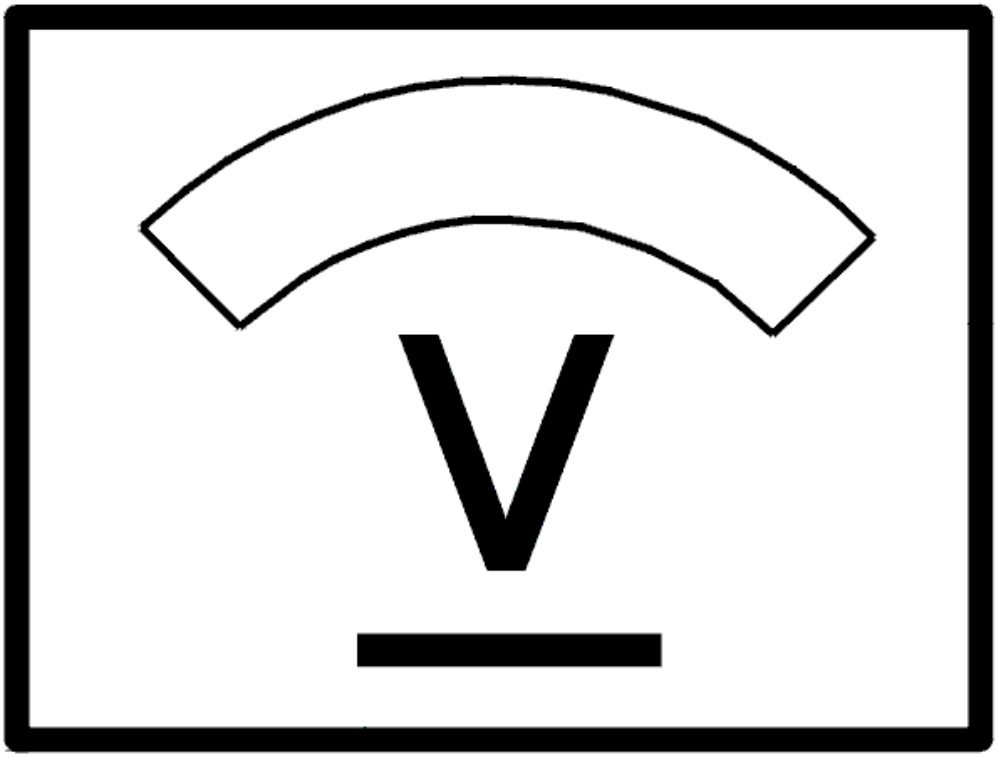

Fig. 26: Identifying Voltage Display
Courtesy of VOLVO CARS CORPORATION

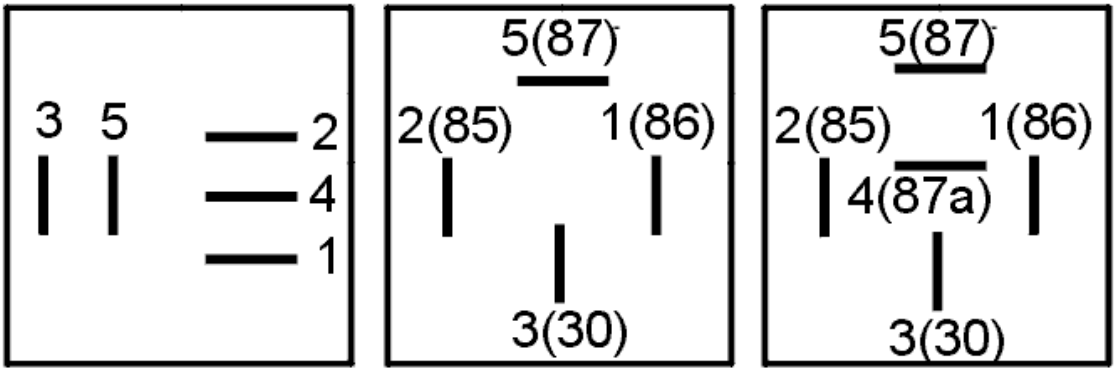

Fig. 27: Identifying Relay Terminals
Courtesy of VOLVO CARS CORPORATION

CEM-8F29: RELAY, FRONT SCREEN WASHER MOTOR. SIGNAL TOO HIGH. PERMANENT FAULT (2003-2004)

DIAGNOSTIC TROUBLE CODE INFORMATION

see **DIAGNOSTIC TROUBLE CODE INFORMATION**

SIGNAL MISSING. PERMANENT FAULT

CHECKING THE RELAY AND SUPPLY

Check that relay 2/92 is correctly connected. Check that the relay is not defective.

The following applies only to CEM-8F2B.

HINT: The fault may have been caused by an open-circuit in the supply to the relay. The voltage must be 12 V at both terminals #1 and #5 for relay 2/92. Check fuse 11B/16 in particular.

Remedy as necessary.

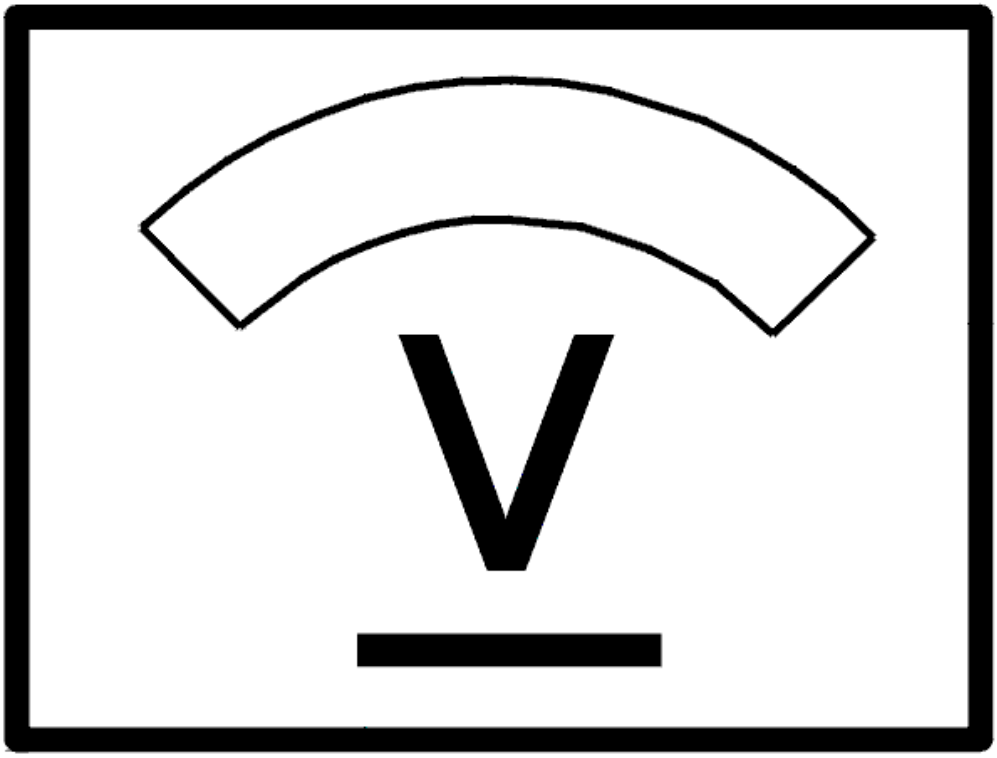

Fig. 28: Identifying Voltage Display
Courtesy of VOLVO CARS CORPORATION

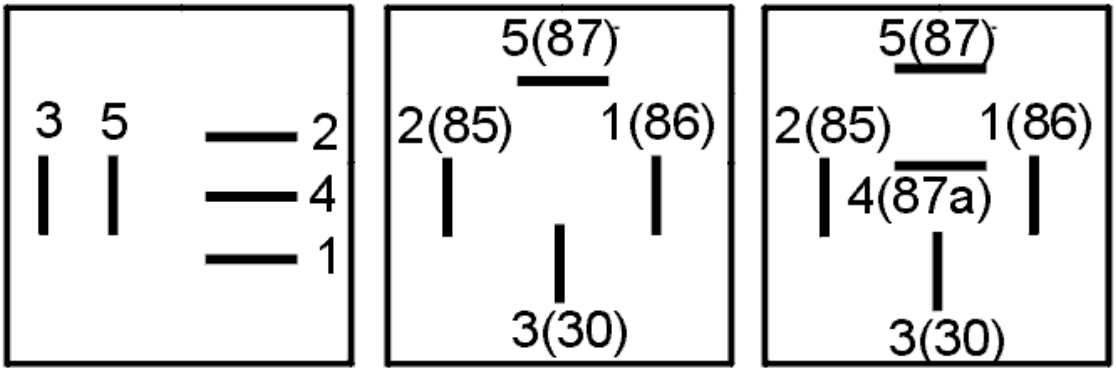

Fig. 29: Identifying Relay Terminals
Courtesy of VOLVO CARS CORPORATION

Was a fault detected?

- **YES**

  Refer to **VERIFICATION**

- **NO**

  Refer to **CHECKING THE CABLE**

CHECKING THE CABLE

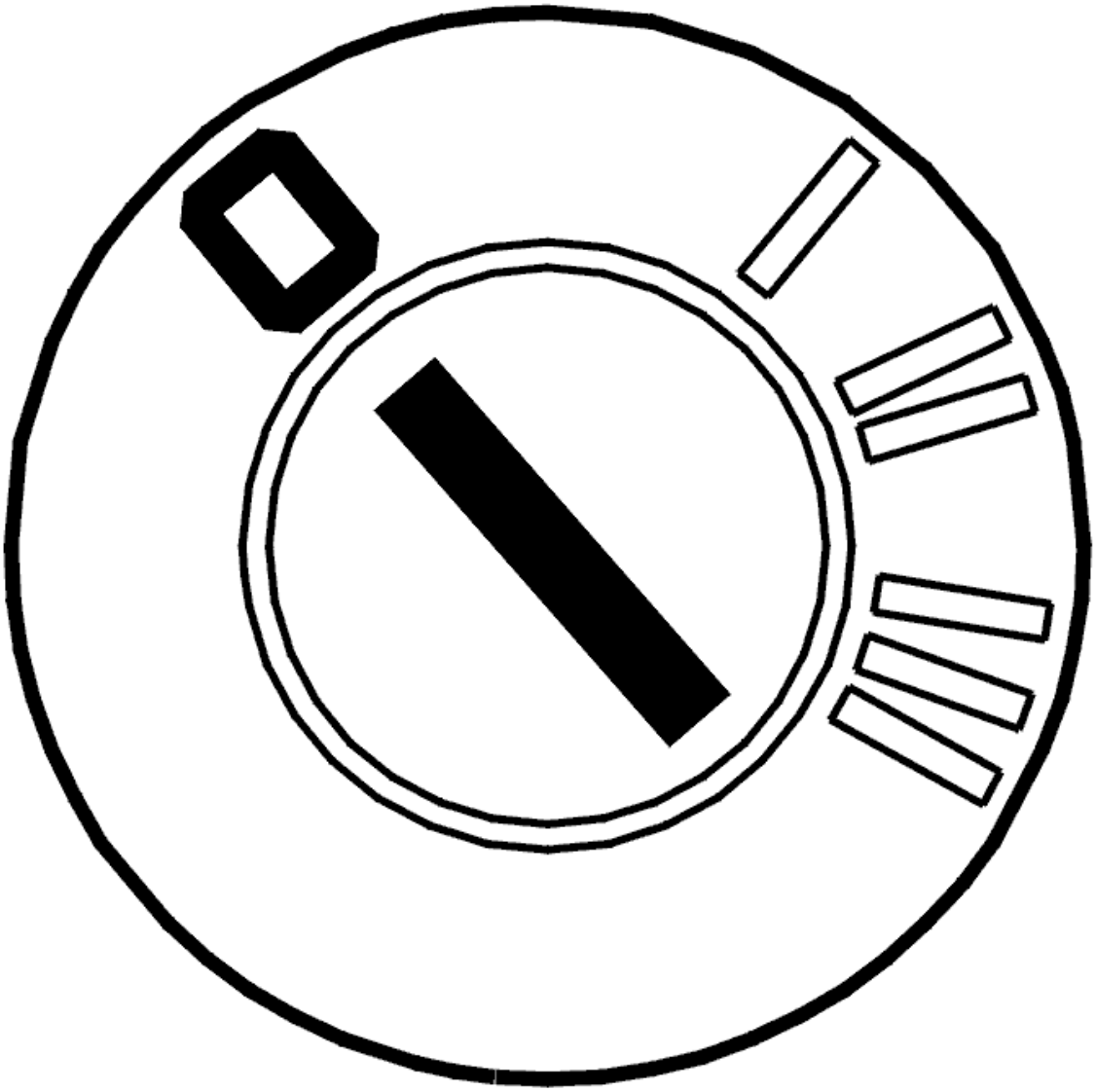

Fig. 30: Identifying Ignition OFF
Courtesy of VOLVO CARS CORPORATION

- Ignition off.

  Check the cable between central electronic module (CEM) terminal #16A and washer motor relay terminal #2 (2/92). Check for a short-circuit to supply voltage (for CEM-8F29). Check for an open-circuit.

  Also check the connector for a short-circuit to supply voltage and an open-circuit.

  Remedy as necessary.

  Other information:

  - To connect the breakout box, see **CONNECTING THE BREAKOUT BOX**

- -2004: **SIGNAL SPECIFICATION**
- 2005-: **SIGNAL SPECIFICATION**
- see **CHECKING WIRING AND TERMINALS**

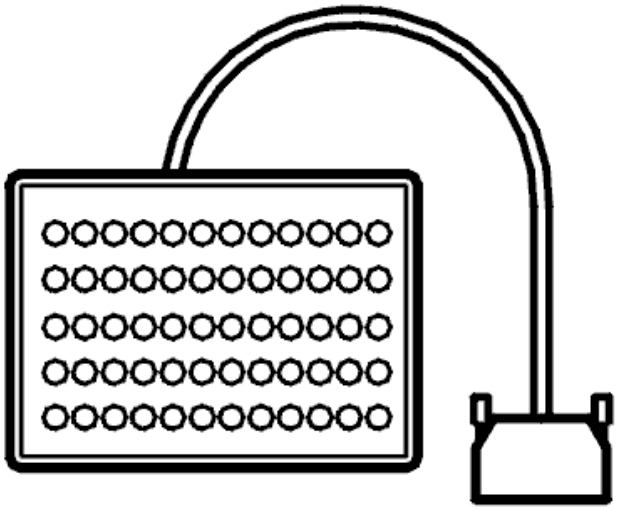

Fig. 31: Breakout Box
Courtesy of VOLVO CARS CORPORATION

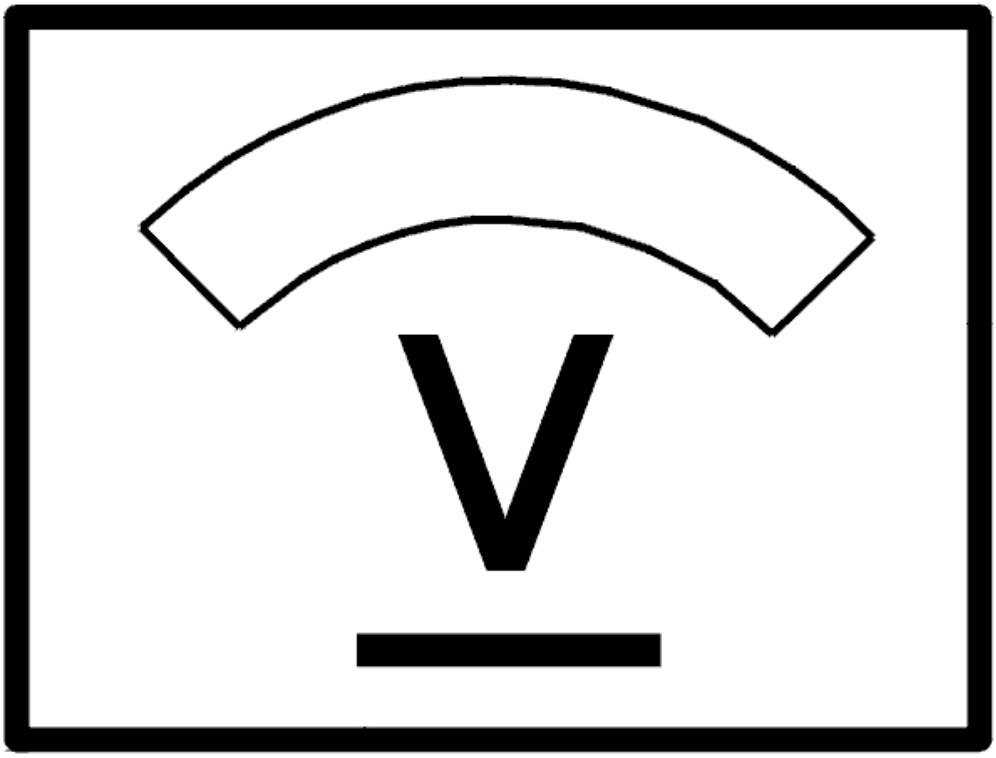

Fig. 32: Identifying Voltage Display
Courtesy of VOLVO CARS CORPORATION

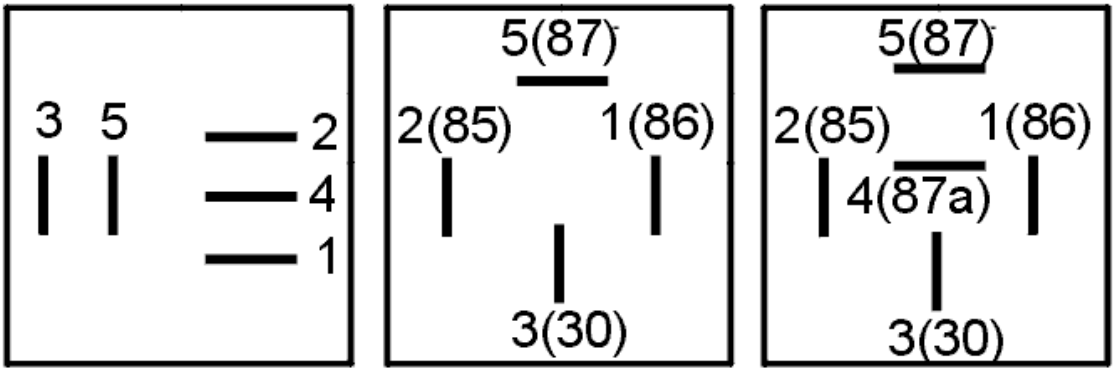

Fig. 33: Identifying Relay Terminals
Courtesy of VOLVO CARS CORPORATION

- **Continue**

  Refer to **VERIFICATION**

VERIFICATION

VERIFICATION

HINT: After carrying out the repair, check that the fault has been remedied.

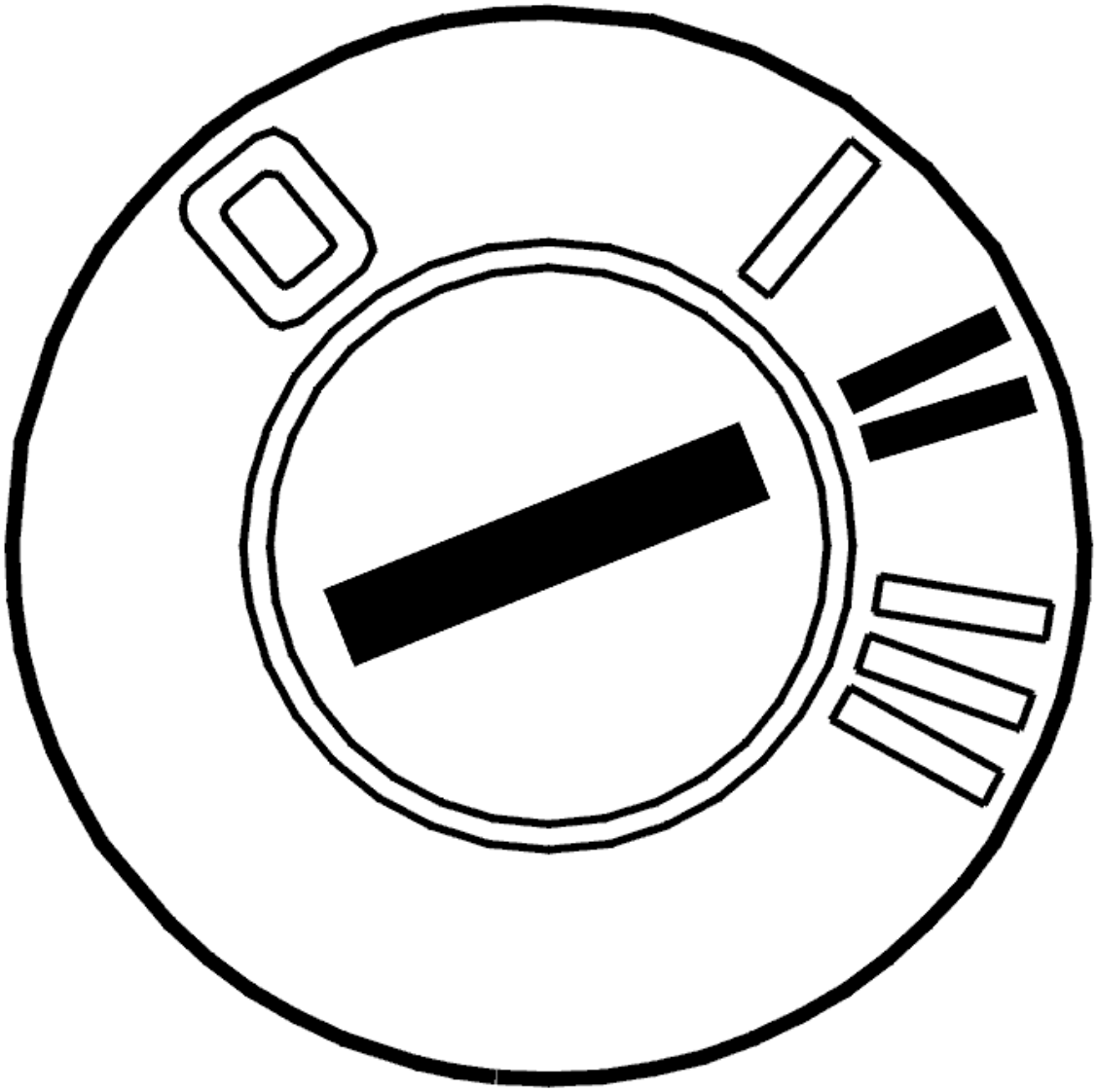

Fig. 34: Identifying Ignition ON
Courtesy of VOLVO CARS CORPORATION

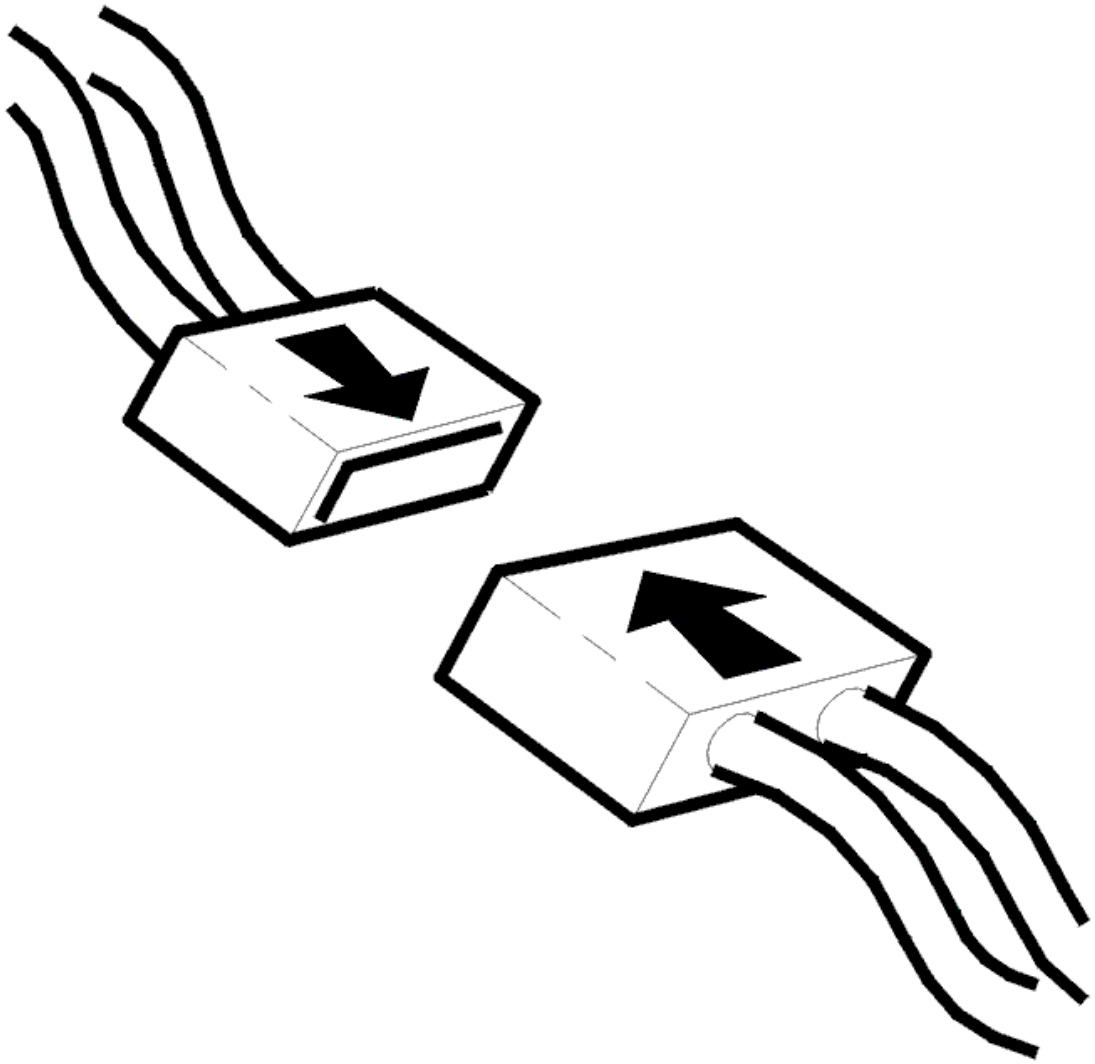

Fig. 35: Connecting Connector
Courtesy of VOLVO CARS CORPORATION

- Ignition off.
- Reinstall the connectors, components etc.
- Ignition on.

  Activate the relay.

  Listen for a click from the relay.

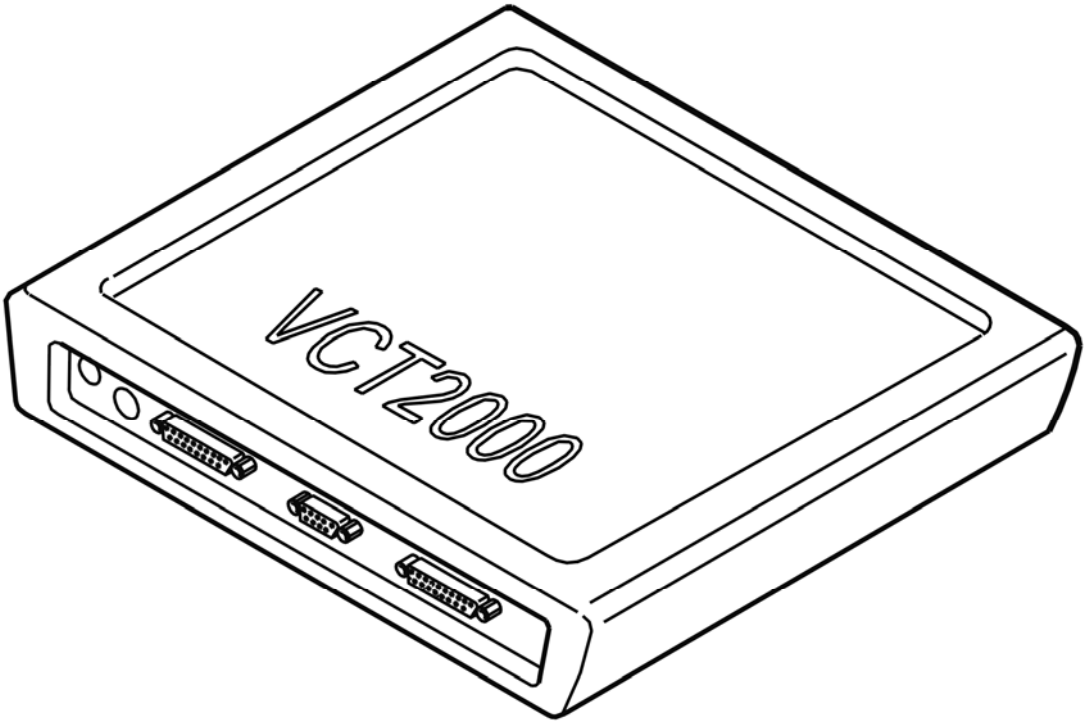

Fig. 36: Identifying VCT2000 Diagnostic Tool Symbol In VIDA
Courtesy of VOLVO CARS CORPORATION

Does the flushing work?

- **YES**

  VERIFIED: Troubleshooting has been completed.

- **NO**

  Refer to **INFORMATION**

INFORMATION

FAULT-TRACING INFORMATION

The fault should have been detected and remedied. As this is not the case fault-tracing has failed.

Exit fault-tracing for this diagnostic trouble code (DTC) or make another attempt.

CEM-8F2B: WINDSHIELD WASHER MOTOR, RELAY. SIGNAL MISSING. INTERMITTENT FAULT (2003-2004)

DIAGNOSTIC TROUBLE CODE INFORMATION

Condition

Relay should not have to be activated to display the diagnostic trouble code. If the central electronic module (CEM) detects an open circuit on the front windscreen washer motor relay, diagnostic trouble code CEM-8F2B is displayed.

Substitute Value

None.

Possible Source

- Open circuit in signal wire
- Open circuit in power supply to the relay
- Faulty relay.

Fault symptom[s]

- Front windscreen washer does not work

SIGNAL TOO HIGH OR SIGNAL MISSING. INTERMITTENT FAULT

CHECKING THE RELAY

Check that the relay (2/92) is securely connected. Check for contact resistance and oxidation. Check the relay for loose connections.

The following applies only in the event of an open-circuit in the cable:

HINT: The fault may have caused by contact resistance, oxidation or loose connections in the supply to the relay. The voltage must be 12 V at both terminals #1 and #5 for relay 2/92. Check fuse 11B/13 in the integrated relay/fusebox in the engine compartment in particular.

Check the cable between central electronic module (CEM) terminal #16A and washer motor relay terminal #2 (2/92). Check for an intermittent short-circuit to supply voltage (for CEM-8F29). Check for contact resistance and oxidation. Check for loose connections (for CEM-8F2B).

Also check the connector for an intermittent short-circuit to supply voltage.

Other information:

- To connect the breakout box, see **CONNECTING THE BREAKOUT BOX**
- -2004: **SIGNAL SPECIFICATION**
- 2005-: **SIGNAL SPECIFICATION**

- see **CHECKING WIRING AND TERMINALS**

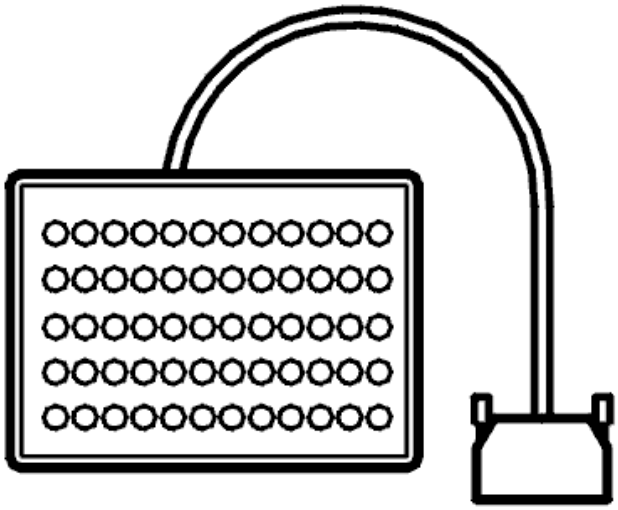

Fig. 37: Breakout Box
Courtesy of VOLVO CARS CORPORATION

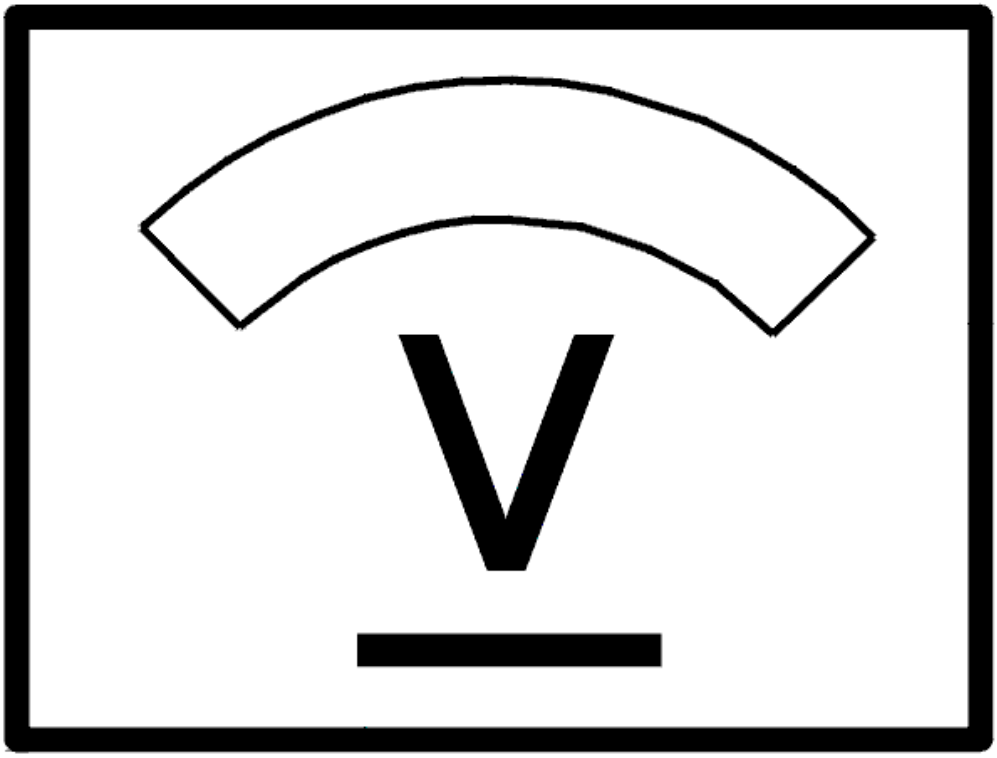

Fig. 38: Identifying Voltage Display
Courtesy of VOLVO CARS CORPORATION

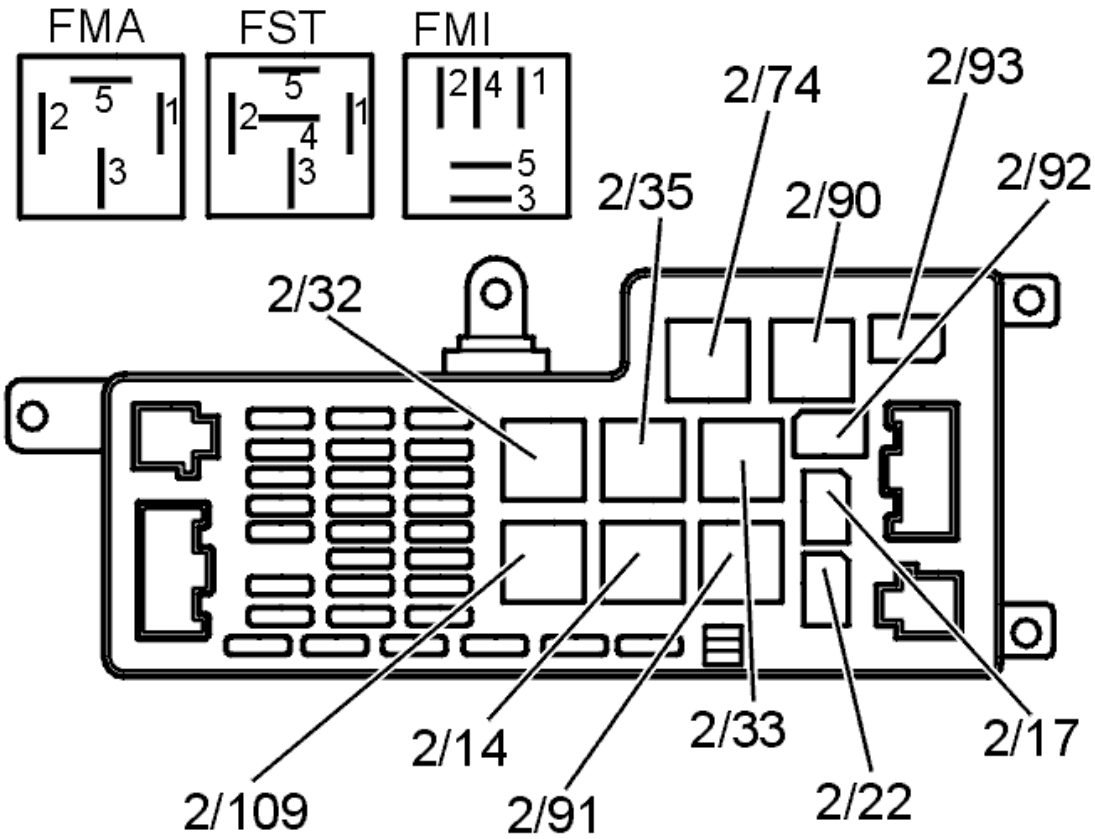

Fig. 39: Identifying Connectors
Courtesy of VOLVO CARS CORPORATION

CEM-8F2B: WINDSHIELD WASHER MOTOR, RELAY. SIGNAL MISSING. PERMANENT FAULT (2003-2004)

DIAGNOSTIC TROUBLE CODE INFORMATION

see **DIAGNOSTIC TROUBLE CODE INFORMATION**

SIGNAL TOO HIGH. PERMANENT FAULT

CHECKING THE RELAY AND SUPPLY

Check that relay 2/92 is correctly connected. Check that the relay is not defective.

The following applies only to CEM-8F2B.

HINT: The fault may have been caused by an open-circuit in the supply to the relay. The voltage must be 12 V at both terminals #1 and #5 for relay 2/92. Check fuse 11B/16 in particular.

Remedy as necessary.

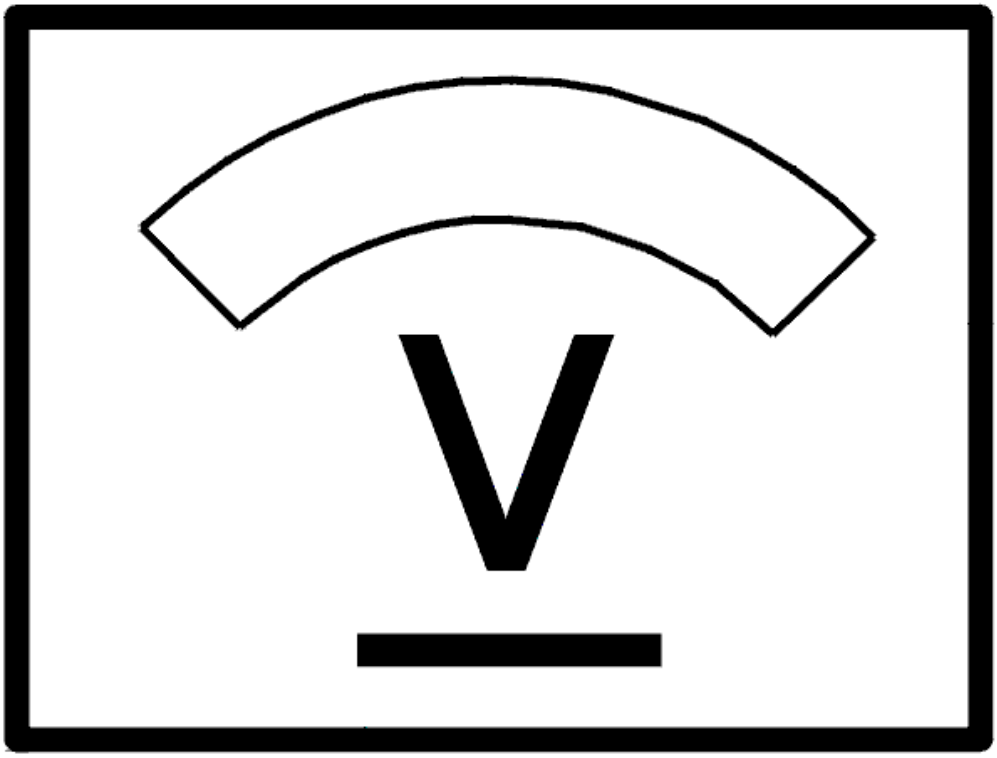

Fig. 40: Identifying Voltage Display
Courtesy of VOLVO CARS CORPORATION

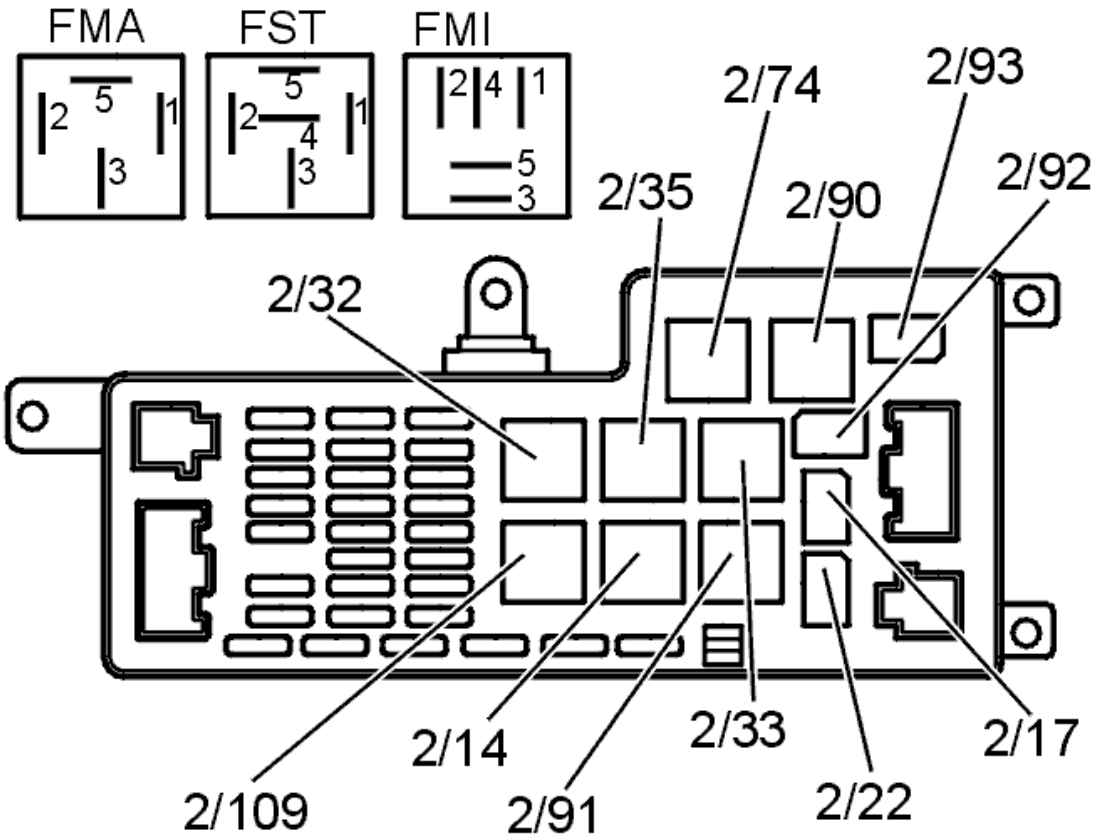

Fig. 41: Identifying Connectors
Courtesy of VOLVO CARS CORPORATION

Was a fault detected?

- **YES**

  Refer to **VERIFICATION**

- **NO**

  Refer to **CHECKING THE CABLE**

CHECKING THE CABLE

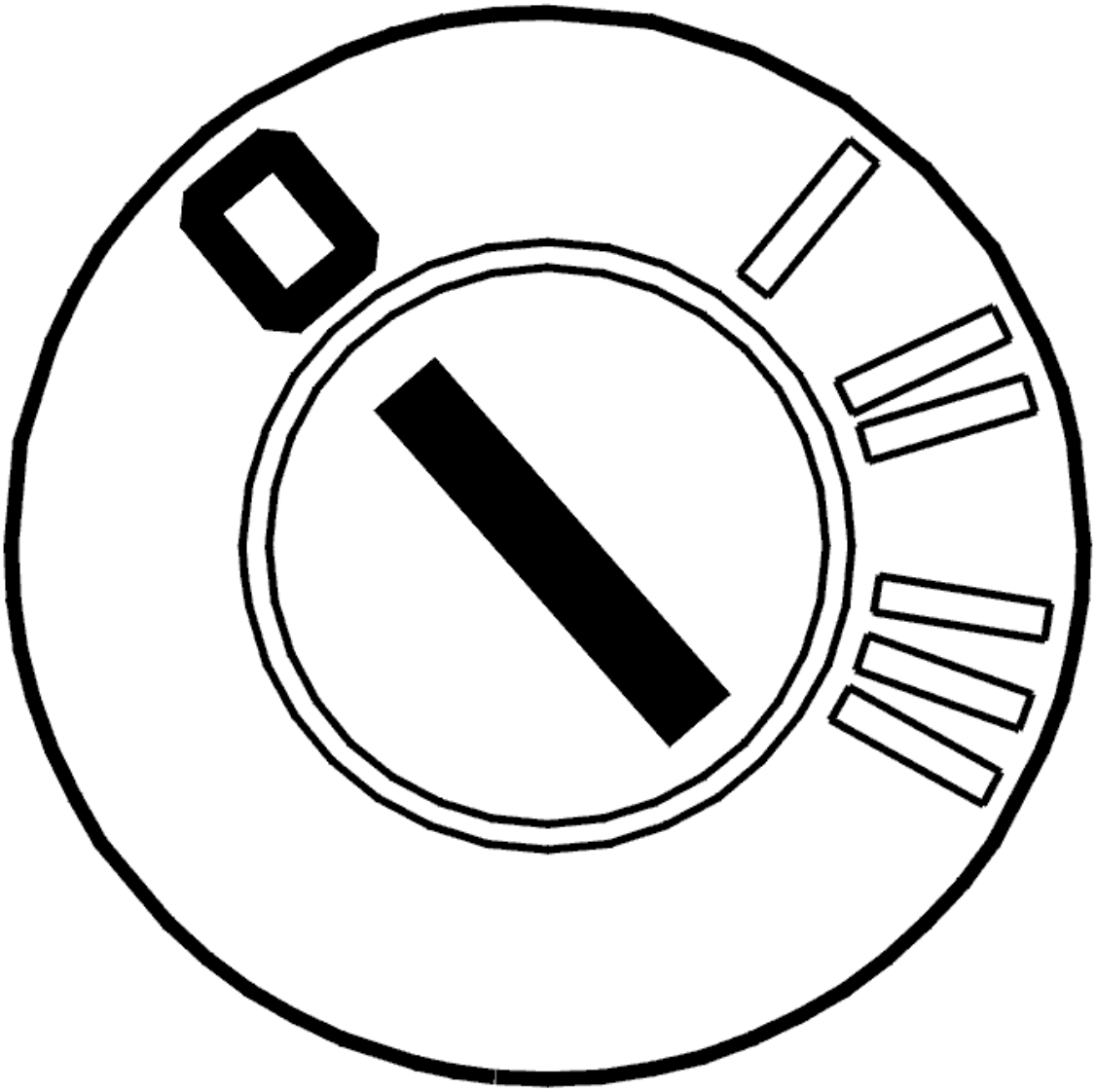

Fig. 42: Identifying Ignition OFF
Courtesy of VOLVO CARS CORPORATION

- Ignition off.

  Check the cable between central electronic module (CEM) terminal #16A and washer motor relay terminal #2 (2/92). Check for a short-circuit to supply voltage (for CEM8F29). Check for an open-circuit.

  Also check the connector for a short-circuit to supply voltage and an open-circuit.

  Remedy as necessary.

  Other information:

  - To connect the breakout box, see **CONNECTING THE BREAKOUT BOX**
  - -2004: **SIGNAL SPECIFICATION**

- 2005-: **SIGNAL SPECIFICATION**
- see **CHECKING WIRING AND TERMINALS**

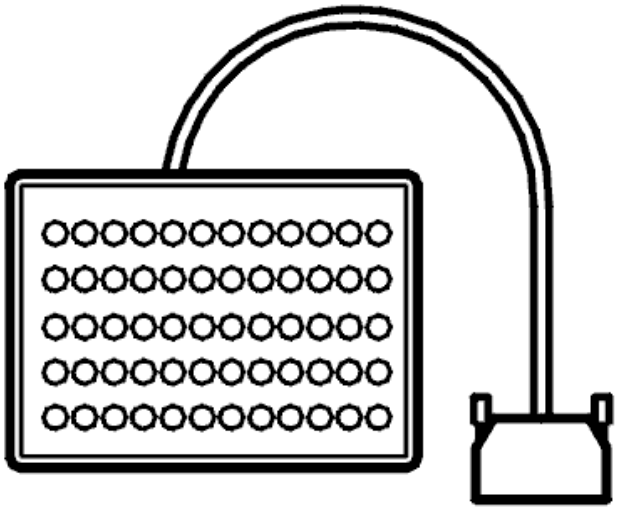

Fig. 43: Breakout Box
Courtesy of VOLVO CARS CORPORATION

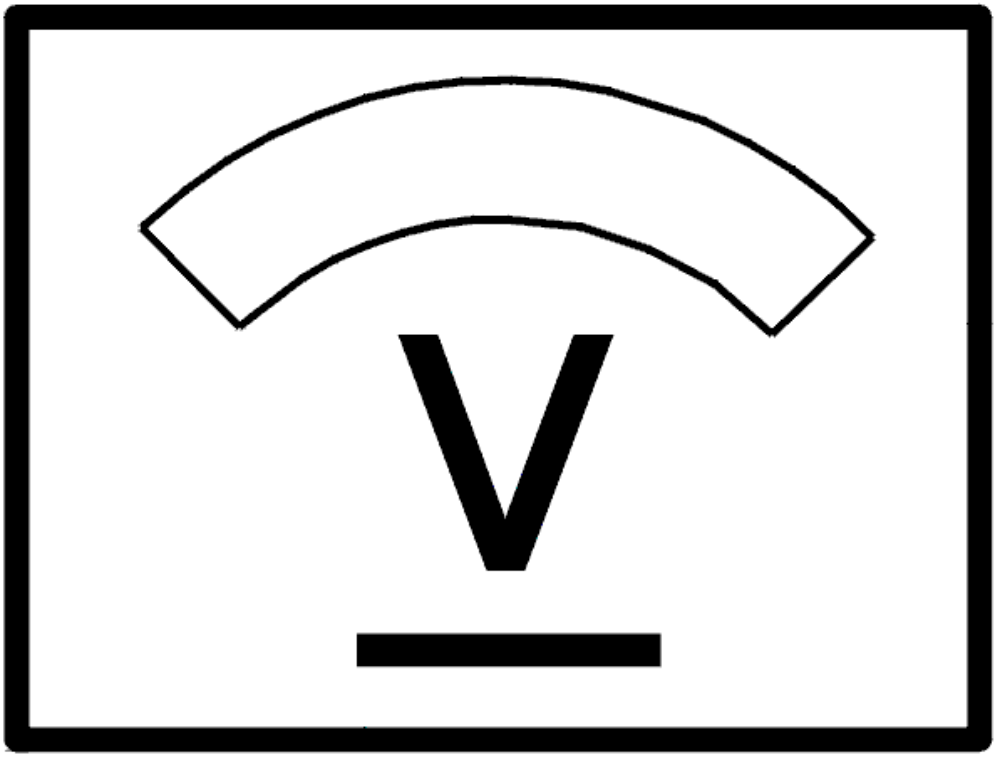

Fig. 44: Identifying Voltage Display
Courtesy of VOLVO CARS CORPORATION

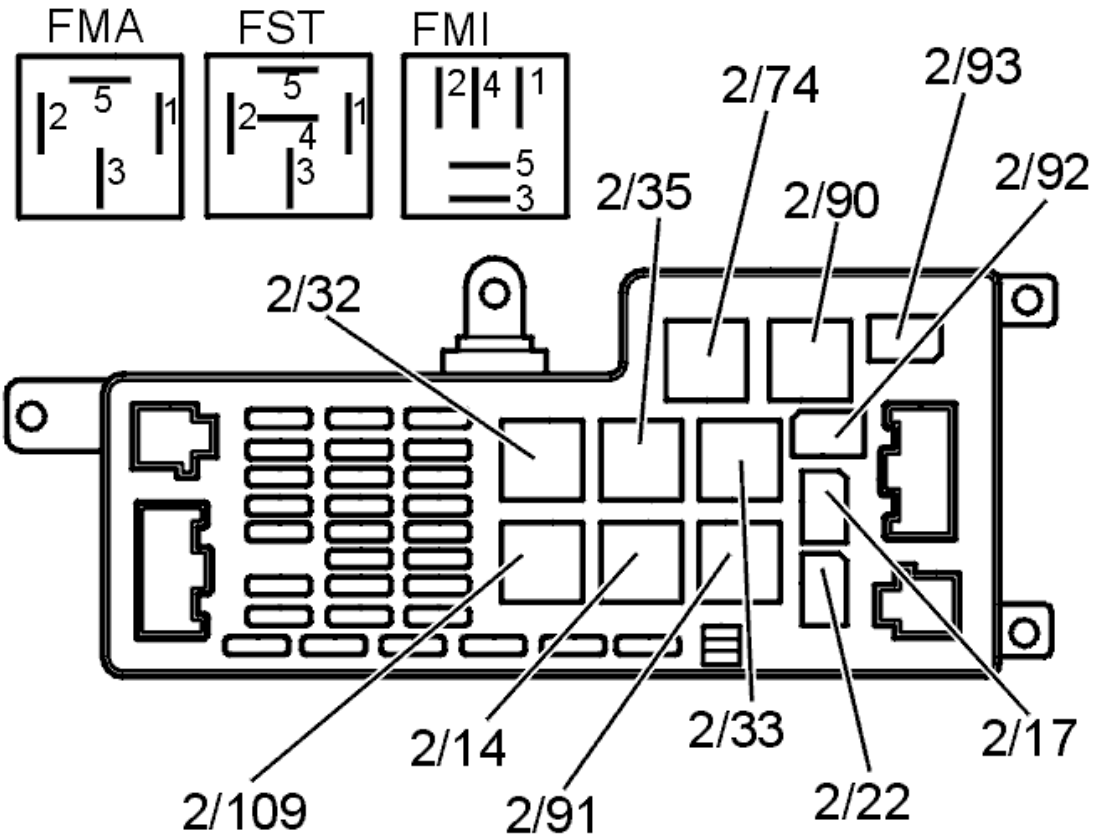

Fig. 45: Identifying Connectors
Courtesy of VOLVO CARS CORPORATION

- **Continue**

  Refer to **VERIFICATION**

VERIFICATION

VERIFICATION

HINT: After carrying out the repair, check that the fault has been remedied.

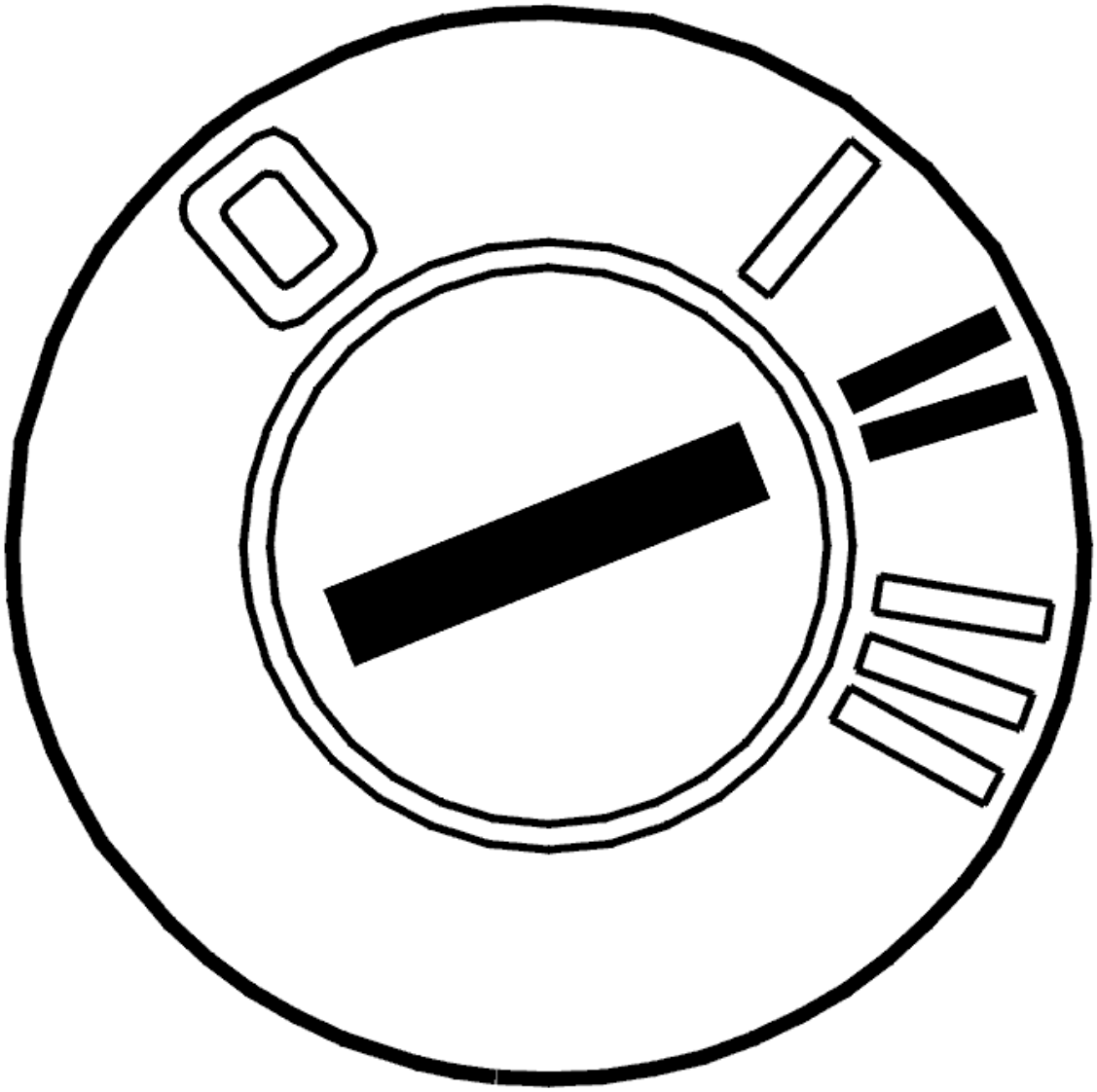

Fig. 46: Identifying Ignition ON
Courtesy of VOLVO CARS CORPORATION

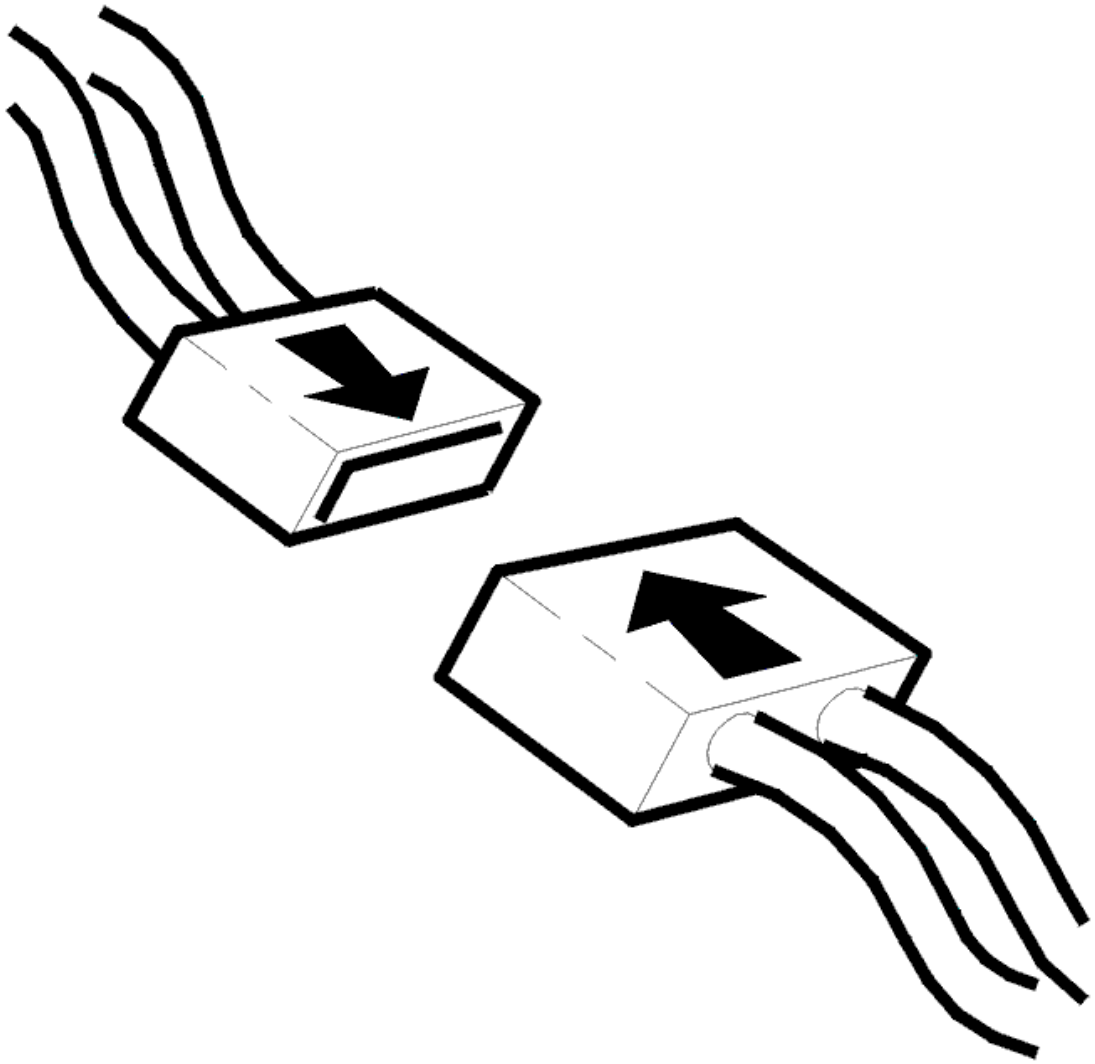

Fig. 47: Connecting Connector
Courtesy of VOLVO CARS CORPORATION

- Ignition off.
- Reinstall the connectors, components etc.
- Ignition on.

  Activate the relay.

  Listen for a click from the relay.

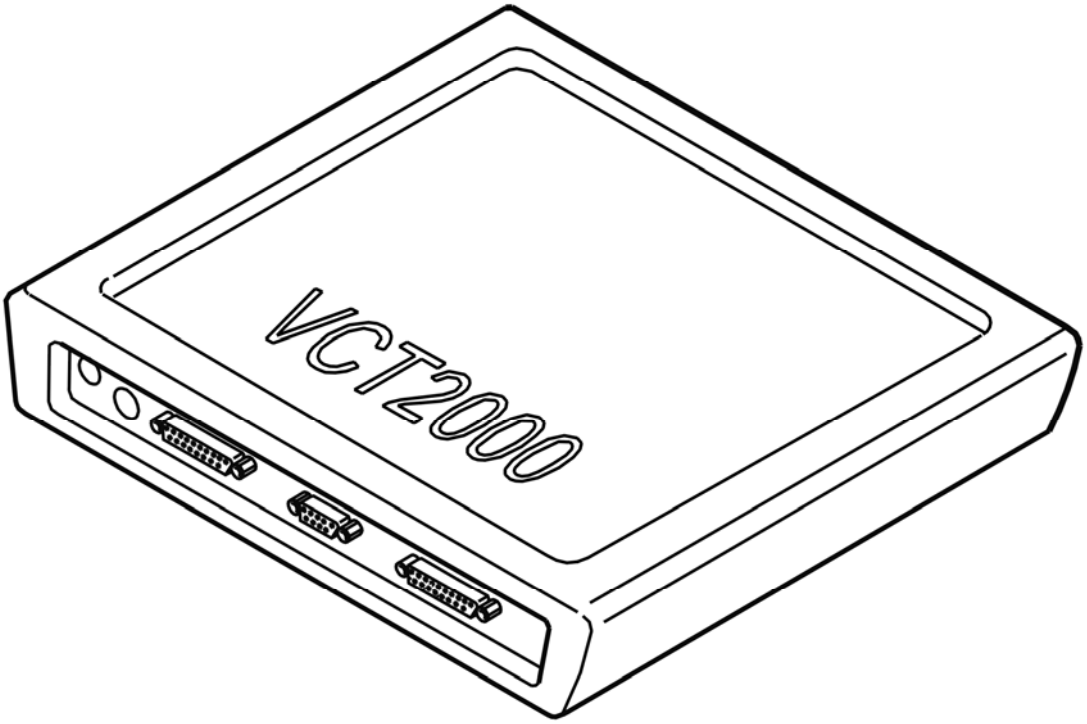

Fig. 48: Identifying VCT2000 Diagnostic Tool Symbol In VIDA
Courtesy of VOLVO CARS CORPORATION

Does the flushing work?

- **YES**

  VERIFIED: Troubleshooting has been completed.

- **NO**

  Refer to **INFORMATION**

INFORMATION

FAULT-TRACING INFORMATION

The fault should have been detected and remedied. As this is not the case fault-tracing has failed.

Exit fault-tracing for this diagnostic trouble code (DTC) or make another attempt.

CEM-8F2C: WINDSHIELD WIPER. SIGNAL TOO HIGH (2005-2012)

DIAGNOSTIC TROUBLE CODE (DTC) INFORMATION CEM-8F2C

Condition

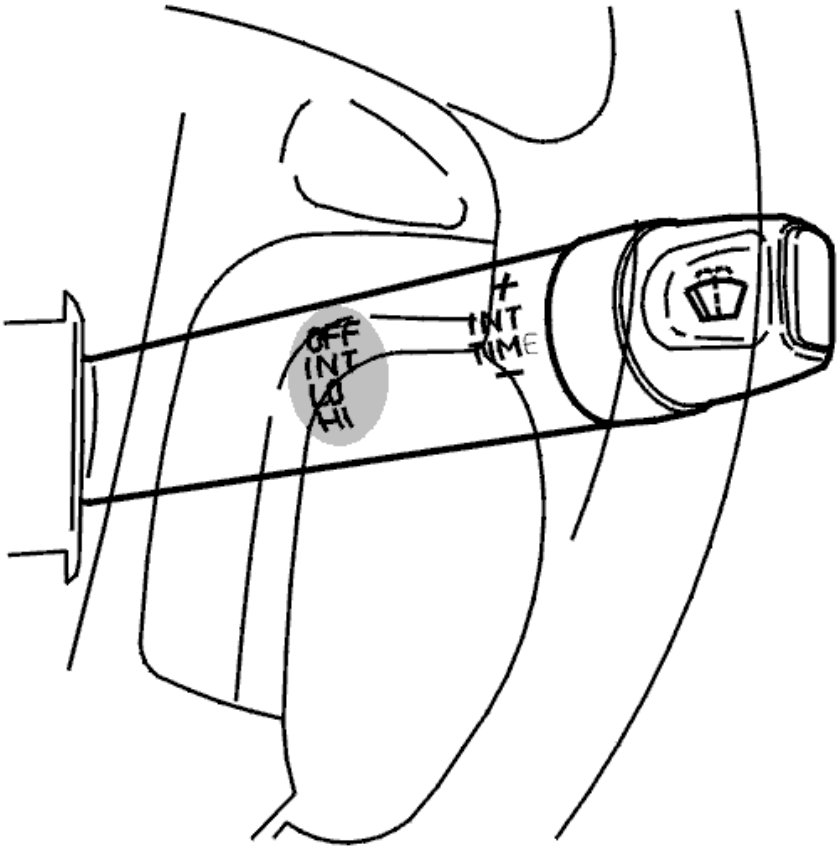

Fig. 49: Identifying Windshield Wiper Lever
Courtesy of VOLVO CARS CORPORATION

The central electronic module (CEM) checks the windshield wipers.

The diagnostic trouble code (DTC) is stored if the central electronic module (CEM) detects that the windshield wiper is in "parking position" for longer than 5 seconds and the steering wheel module (SWM) indicates that the windshield wiper should be activated.

The diagnostic trouble code (DTC) can be diagnosed when the ignition is switched on.

Substitute Value

- None.

Possible Source

- Damaged windshield wiper motor
- Short-circuit to supply voltage in the power supply cable
- Open-circuit in the power supply cable.

Fault symptom[s]

- The windshield wipers are not working
- No rain sensor function.

SIGNAL TOO HIGH

CHECKING THE CABLE

HINT: The fault could also have been caused by the windshield wipers sticking.

If the fault is intermittent, it has been registered previously but is no longer present. Intermittent faults can be caused by interference at start up of the central electronic module (CEM) or may be a different type of fault which occurs on different occasions. The fault is evaluated depending on how it occurs.

Check the cable between the central electronic module (CEM) and the windshield wiper motor (6/1). Check for a short-circuit to supply voltage. Check for an open-circuit.

Take readings between Central electronic module (CEM) terminal #C31(#31) and the windshield wiper motor (6/1) #3.

Check the cable between the central electronic module (CEM) and the rain sensor (7/149). Check for a short-circuit to supply voltage. Check for an open-circuit.

Take readings between Central electronic module (CEM) terminal #D11 (#11) and rain sensor (7/149) #4.

Also check the connectors.

If no other faults are found try a new windshield wiper motor (6/1).

Remedy as necessary.

Other information

- see **CONNECTING THE BREAKOUT BOX**
- -2004: **SIGNAL SPECIFICATION**
- 2005-: **SIGNAL SPECIFICATION**
- see **MOTOR WINDSHIELD WIPER, REPLACING**

- **Continue**

  Refer to **VERIFICATION**

VERIFICATION

VERIFICATION

HINT: After carrying out the repair, check that the fault has been remedied.

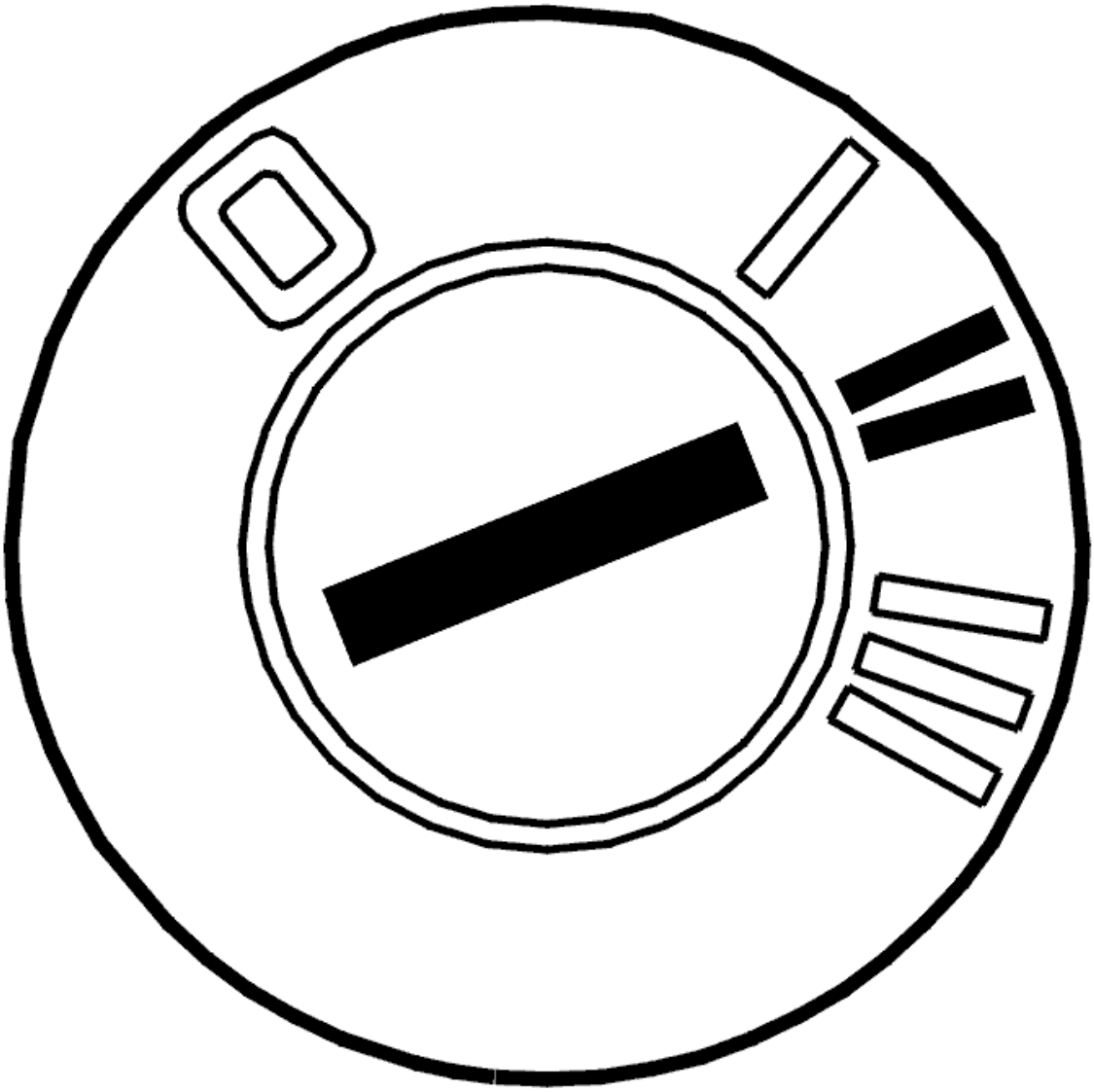

Fig. 50: Identifying Ignition ON
Courtesy of VOLVO CARS CORPORATION

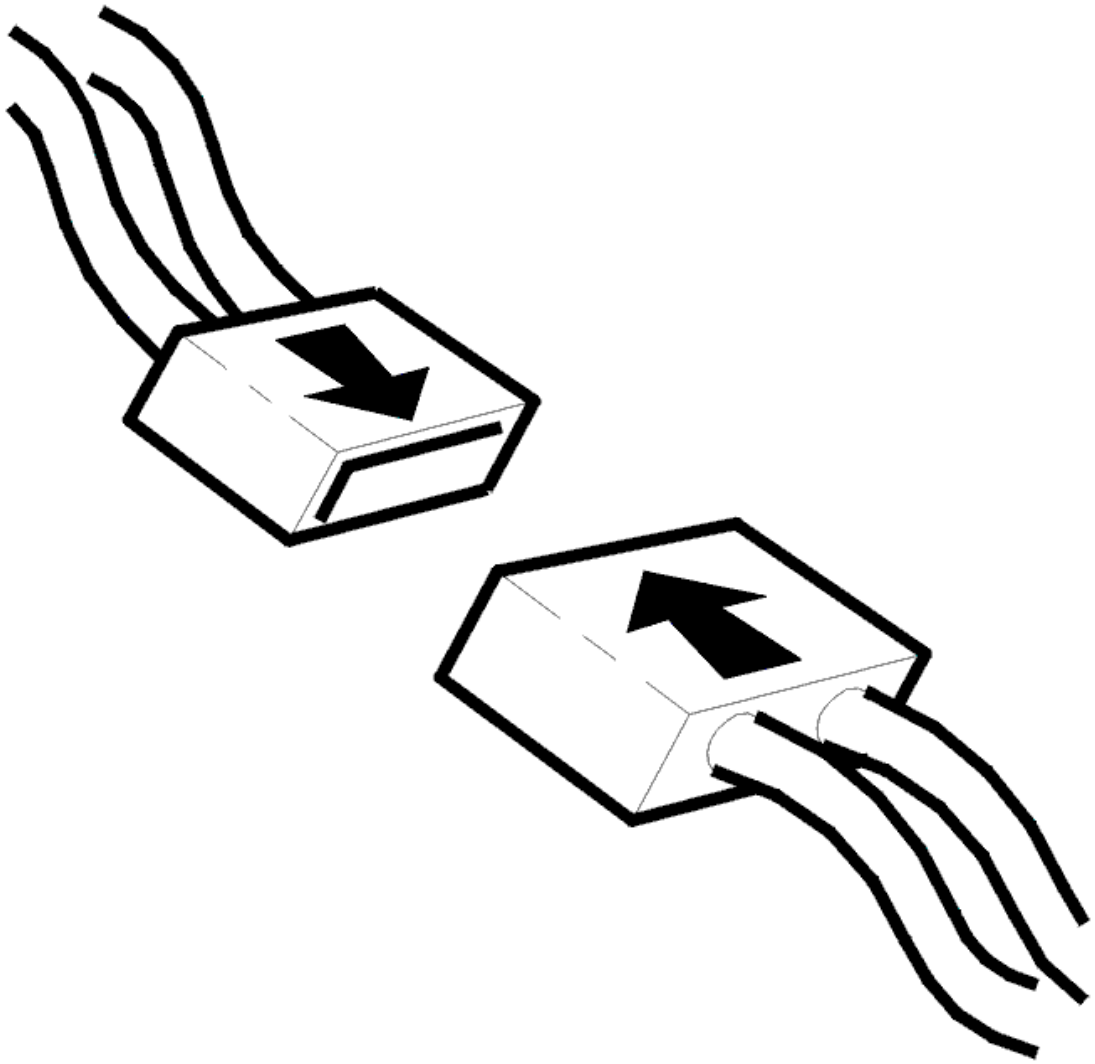

Fig. 51: Connecting Connector
Courtesy of VOLVO CARS CORPORATION

- Ignition off
- Reinstall the connectors, components etc.
- Ignition on.

  Activate the windshield wipers.

  Check that the windshield wipers work in all positions.

Are the windshield wipers working?

- **YES**

VERIFIED: Troubleshooting has been completed.

- **NO**

  Refer to **INFORMATION**

INFORMATION

FAULT-TRACING INFORMATION

The fault should have been detected and remedied. As this is not the case fault-tracing has failed.

Exit fault-tracing for this diagnostic trouble code (DTC) or make another attempt.

CEM-8F2C: WIPERS. SIGNAL TOO HIGH. INTERMITTENT FAULT (2003-2004)

DIAGNOSTIC TROUBLE CODE (DTC) INFORMATION CEM-8F2C

Condition

The diagnostic trouble code (DTC) is stored if the central electronic module (CEM) indicates that the windshield wiper is in "parking position" for longer than 5 seconds and the steering wheel module (SWM) indicates that the windshield wiper should be activated.

Possible Source

- Damaged windshield wiper motor
- Short-circuit to supply voltage in the cable
- Open-circuit in the cable.

Fault symptom[s]

- Windshield wiper motor does not operate. (The windshield wiper has become stuck on the windshield.)
- No rain sensor function.

SIGNAL TOO HIGH. INTERMITTENT FAULT

CHECKING CABLE

HINT: The fault could also have been caused by the windshield wipers sticking.

Check the cable between central electronic module (CEM) terminal #16B and windshield wiper motor (6/1) terminal #3. Check the cable between central electronic module (CEM) terminal #16B and rain sensor (7/149) terminal #4.

Check for an intermittent short-circuit to supply voltage or for intermittent contact resistance and oxidation. Check for loose connections.

Check the connector.

Remedy as necessary.

Other information

- see **CONNECTING THE BREAKOUT BOX**
- -2004: **SIGNAL SPECIFICATION**
- 2005-: **SIGNAL SPECIFICATION**
- see **CHECKING WIRING AND TERMINALS**

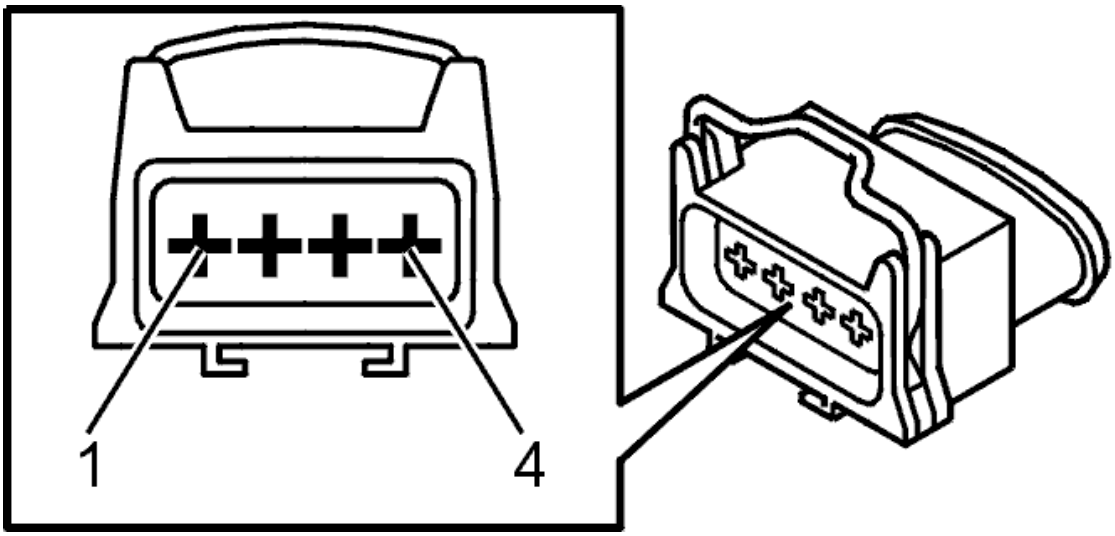

Fig. 52: Identifying Windshield Wiper Motor Terminals
Courtesy of VOLVO CARS CORPORATION

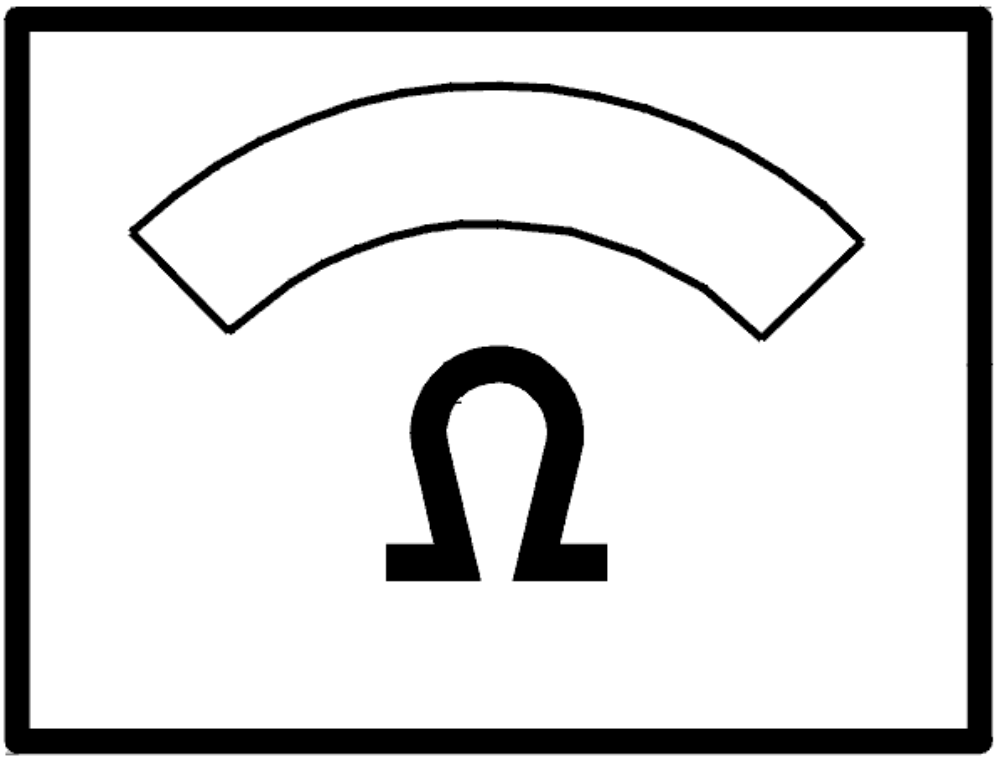

Fig. 53: Identifying Ohm Meter
Courtesy of VOLVO CARS CORPORATION

CEM-8F2C: WIPERS. SIGNAL TOO HIGH. PERMANENT FAULT (2003-2004)

DIAGNOSTIC TROUBLE CODE (DTC) INFORMATION CEM-8F2C

see **DIAGNOSTIC TROUBLE CODE (DTC) INFORMATION CEM-8F2C**

SIGNAL TOO HIGH. PERMANENT FAULT

CHECKING CABLE

HINT: The fault could also have been caused by the windshield wipers sticking.

Check the cable between the central electronic module (CEM) and the windshield wiper motor (6/1). Check for

a short-circuit to supply voltage. Check for an open-circuit.

Take readings between:

Central electronic module (CEM) terminal #16B and windshield wiper motor (6/1) terminal #3.

Check the cable between the central electronic module (CEM) and the rain sensor (7/149). Check for a short-circuit to supply voltage. Check for an open-circuit.

Take readings between:

Central electronic module (CEM) terminal #16B and rain sensor (7/149) terminal #4.

Also check the connectors.

If no other faults are found try a new windshield wiper motor (6/1).

Remedy as necessary.

Other information

- see **CONNECTING THE BREAKOUT BOX**
- -2004: **SIGNAL SPECIFICATION**
- 2005-: **SIGNAL SPECIFICATION**
- see **MOTOR WINDSHIELD WIPER, REPLACING**

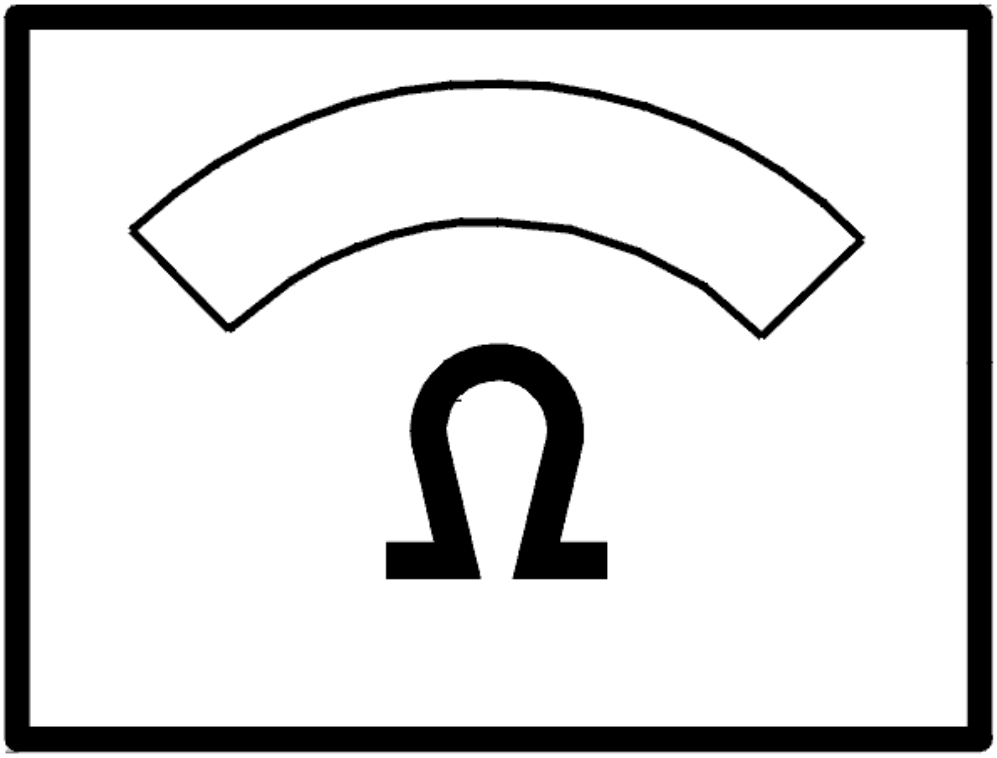

Fig. 54: Identifying Ohm Meter
Courtesy of VOLVO CARS CORPORATION

- **Continue**

  Refer to **VERIFICATION**

VERIFICATION

VERIFICATION

HINT: After the repair it is necessary to check that the fault has been rectified.

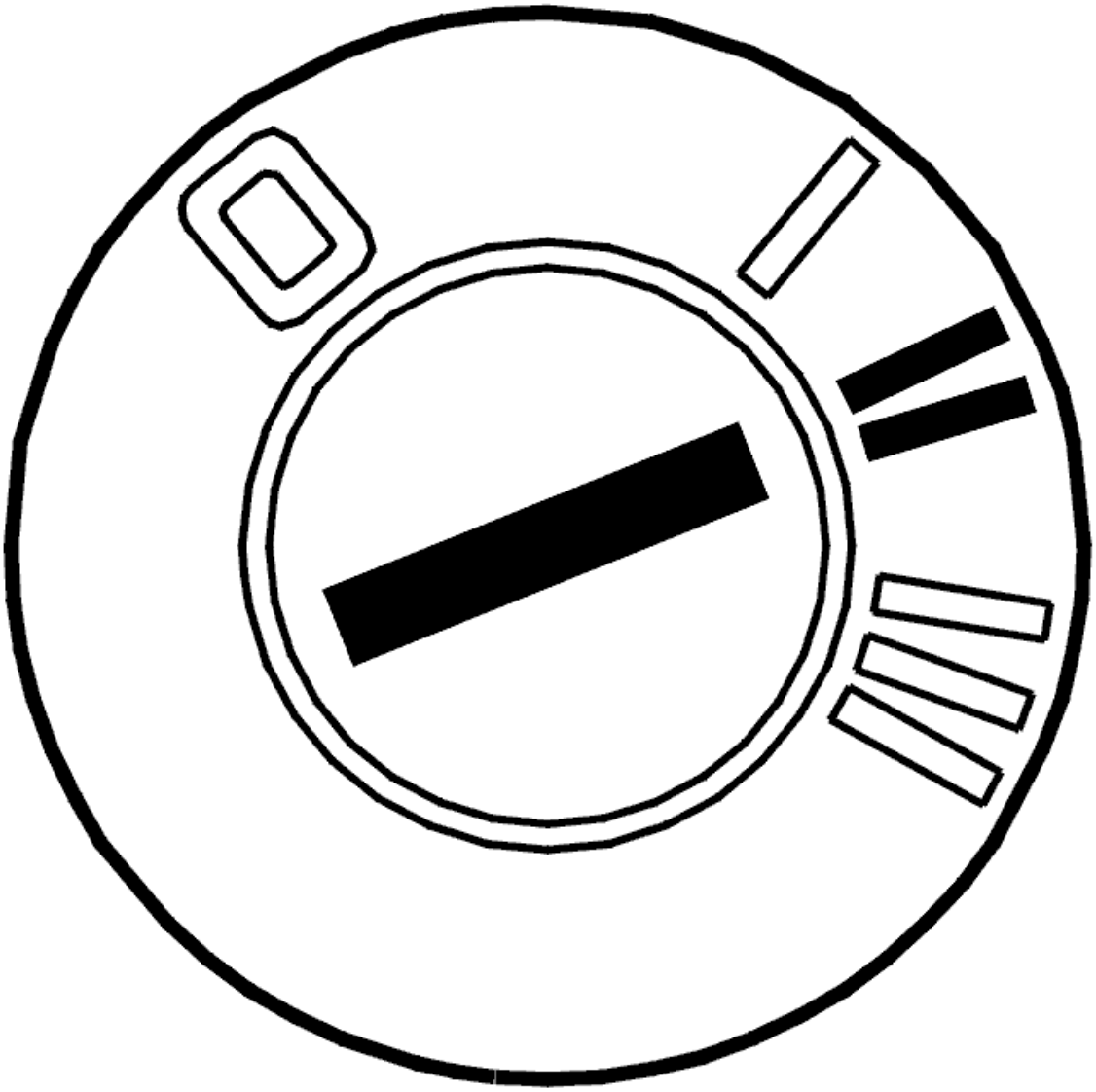

Fig. 55: Identifying Ignition ON
Courtesy of VOLVO CARS CORPORATION

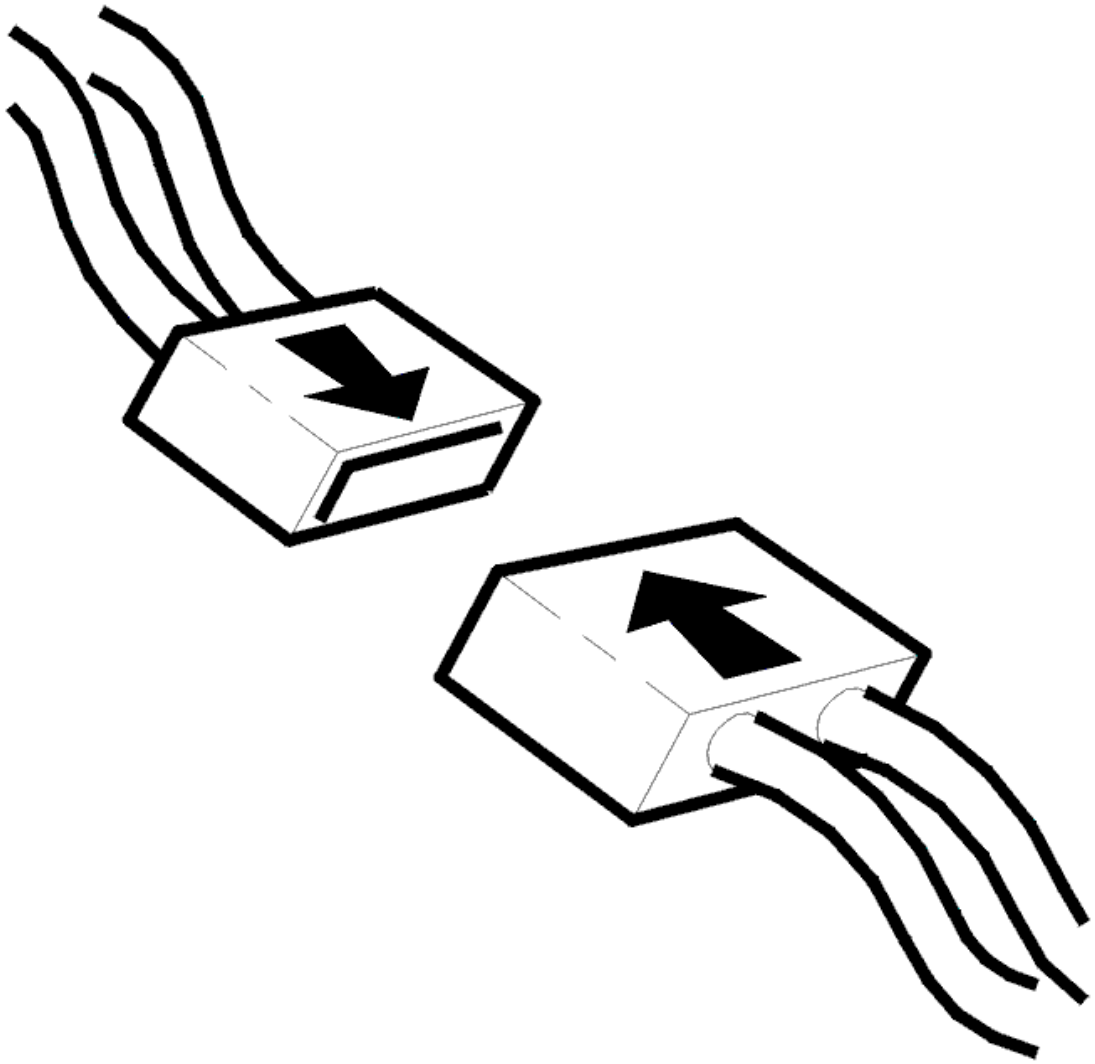

Fig. 56: Connecting Connector
Courtesy of VOLVO CARS CORPORATION

- Connect the connectors, install the components, etc.
- Ignition on.

  Activate windscreen wipers, intermittent position.

  Read the value.

  The value should alternate between the two positions "rest position" and "operating position".

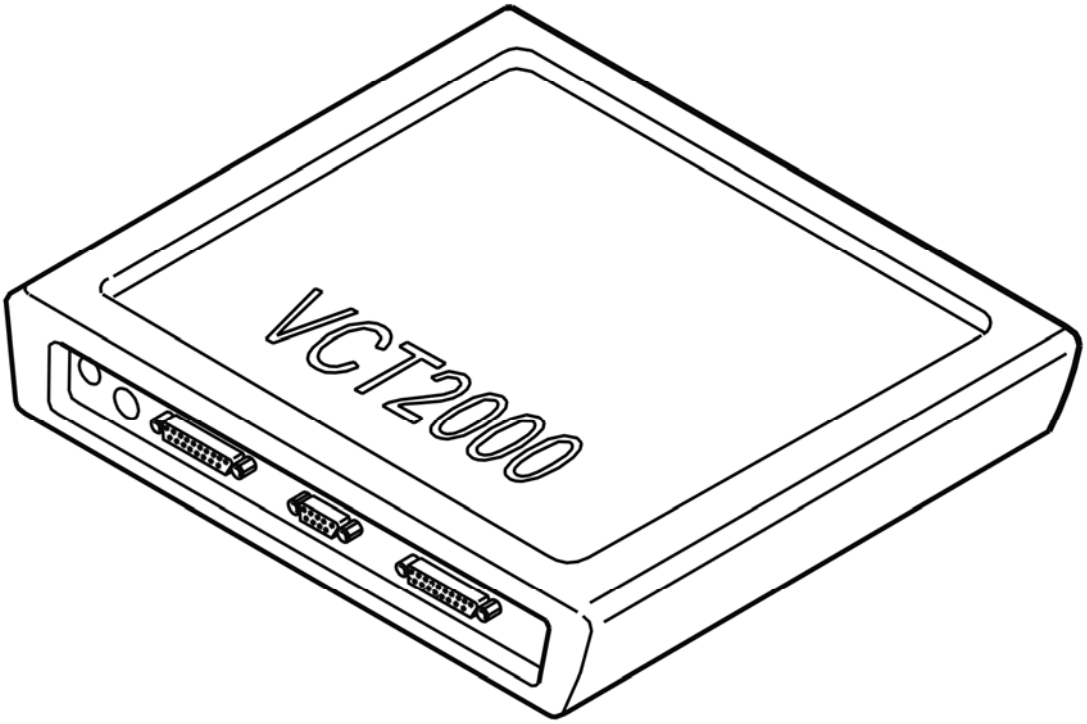

Fig. 57: Identifying VCT2000 Diagnostic Tool Symbol In VIDA
Courtesy of VOLVO CARS CORPORATION

Does it work?

- **YES**

  VERIFIED: Troubleshooting has been completed.

- **NO**

  Refer to **INFORMATION**

INFORMATION

FAULT-TRACING INFORMATION

The fault should have been detected and remedied. As this is not the case fault-tracing has failed.

Exit fault-tracing for this diagnostic trouble code (DTC) or make another attempt.

CEM-8F2D: WINDSHIELD WIPER. SIGNAL TOO LOW (2005-2012)

DIAGNOSTIC TROUBLE CODE (DTC) INFORMATION CEM-8F2D

Condition

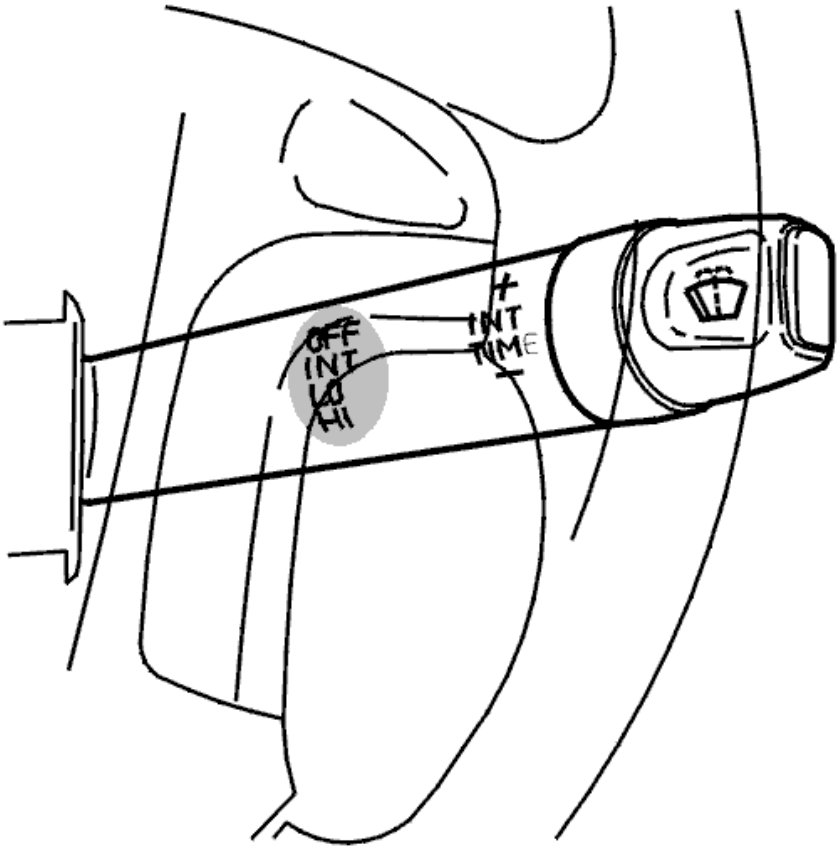

Fig. 58: Identifying Windshield Wiper Lever
Courtesy of VOLVO CARS CORPORATION

The central electronic module (CEM) checks the windshield wipers.

The diagnostic trouble code (DTC) is stored if the central electronic module (CEM) detects that the windshield wipers are deployed somewhere on the windshield for longer than 5 seconds and the steering wheel module (SWM) indicates that the windshield wipers should not be activated.

The diagnostic trouble code (DTC) can be diagnosed when the ignition is switched on.

Substitute Value

- Windshield wipers are run in low speed position for 6 seconds and then are stationary anywhere on the windshield for 6 seconds. After two repetitions the windshield wipers are stationary for one minute before the procedure is repeated.

Possible Source

- The signal line between Central electronic module (CEM) and the rain sensor is short-circuited to ground.
- The signal line between the position sensor in the wiper motor and Central electronic module (CEM) is

short-circuited to ground.
- Damaged windshield wiper motor

HINT: The signal line between Central electronic module (CEM) and the rain sensor may be trapped under the foot of the interior rearview mirror.

Fault symptom[s]

- The windshield wipers are not working
- No rain sensor function.

SIGNAL TOO LOW

CHECKING THE CABLE

HINT: The fault could also have been caused by the windshield wipers sticking.

If the fault is intermittent, it has been registered previously but is no longer present. Intermittent faults can be caused by interference at start up of the central electronic module (CEM) or may be a different type of fault which occurs on different occasions. The fault is evaluated depending on how it occurs.

Check the cable between the central electronic module (CEM) and the windshield wiper motor (6/1). Check for a short-circuit to ground.

Take readings between Central electronic module (CEM) terminal #C31(#31) and the windshield wiper motor (6/1) #3.

Check the cable between the central electronic module (CEM) and the rain sensor (7/149). Check for a short-circuit to ground.

Take readings between Central electronic module (CEM) terminal #D11 (#11) and rain sensor (7/149) #4.

Also check the connectors.

If no other faults are found try a new windshield wiper motor (6/1).

Remedy as necessary.

Other information

- see **CONNECTING THE BREAKOUT BOX**
- -2004: **SIGNAL SPECIFICATION**
- 2005-: **SIGNAL SPECIFICATION**
- see **MOTOR WINDSHIELD WIPER, REPLACING**

- **Continue**

Refer to **VERIFICATION**

VERIFICATION

VERIFICATION

HINT: After carrying out the repair, check that the fault has been remedied.

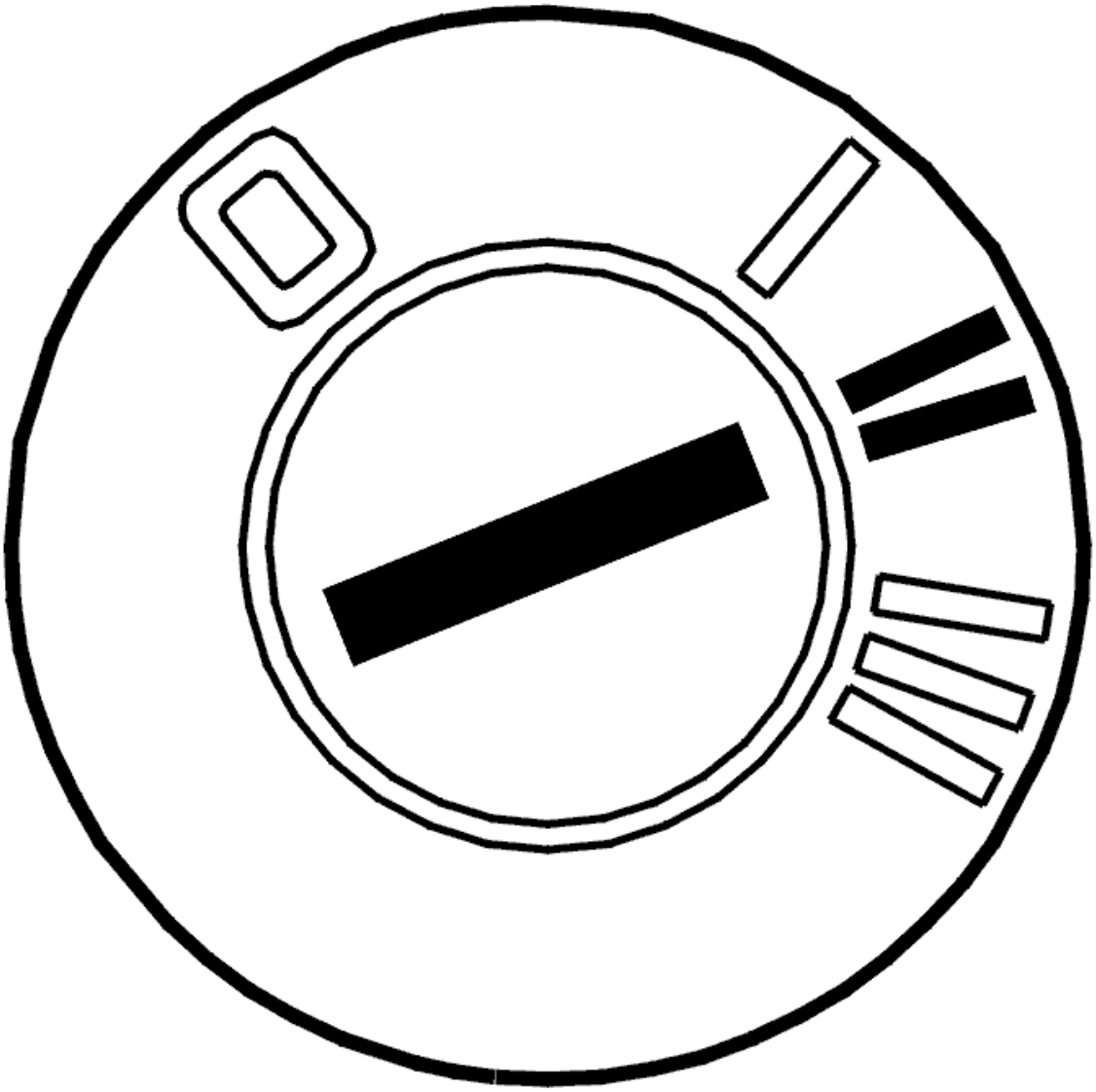

Fig. 59: Identifying Ignition ON
Courtesy of VOLVO CARS CORPORATION

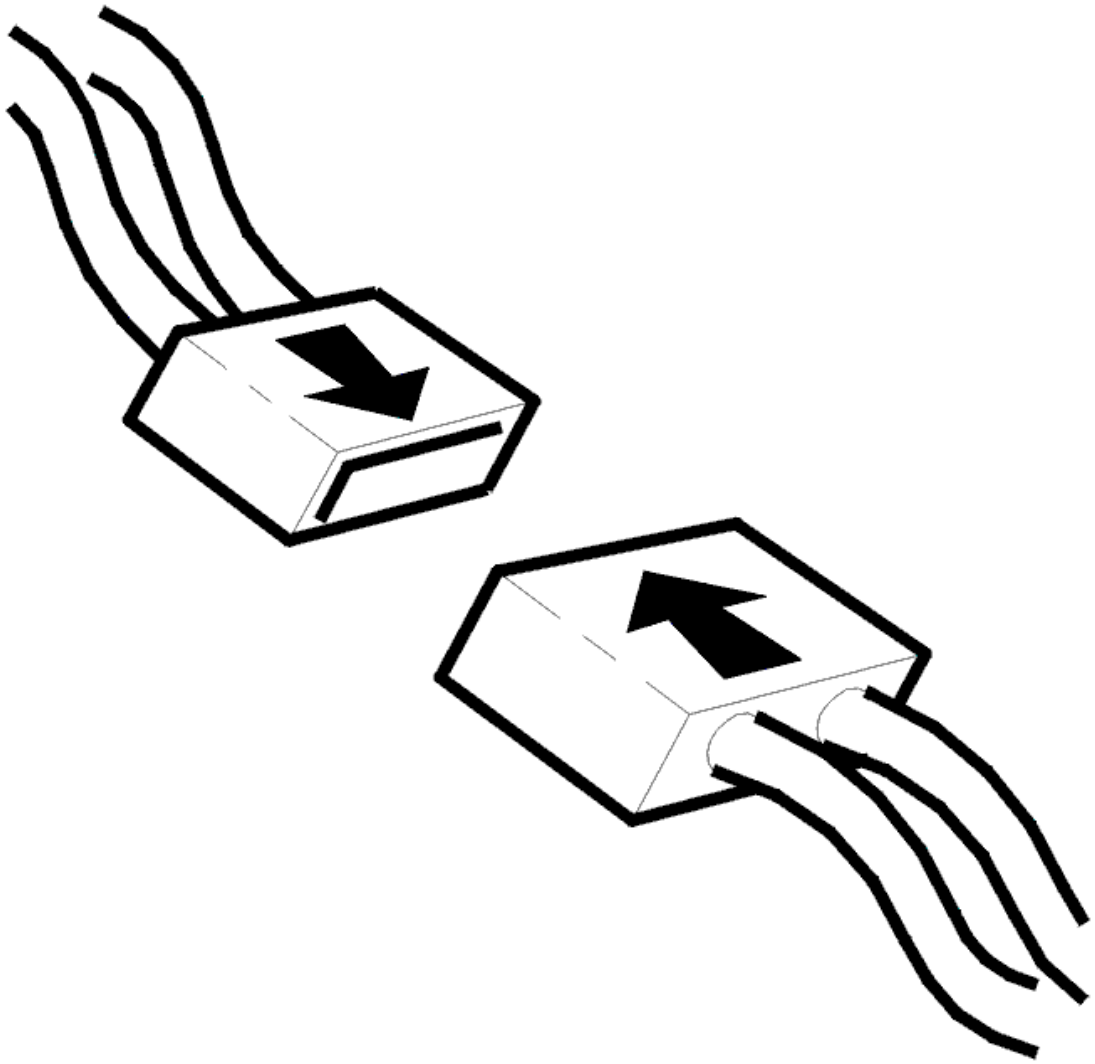

Fig. 60: Connecting Connector
Courtesy of VOLVO CARS CORPORATION

- Ignition off
- Reinstall the connectors, components etc.
- Ignition on.

  Activate the windshield wipers.

  Check that the windshield wipers work in all positions.

Are the windshield wipers working?

- **YES**

VERIFIED: Troubleshooting has been completed.

- **NO**

  Refer to **INFORMATION**

INFORMATION

FAULT-TRACING INFORMATION

The fault should have been detected and remedied. As this is not the case fault-tracing has failed.

Exit fault-tracing for this diagnostic trouble code (DTC) or make another attempt.

CEM-8F2D: WIPERS. SIGNAL TOO LOW. INTERMITTENT FAULT (2003-2004)

DIAGNOSTIC TROUBLE CODE (DTC) INFORMATION CEM-8F2D

Condition

The diagnostic trouble code (DTC) is stored if the central electronic module (CEM) indicates that the windshield wiper is somewhere on the windshield for longer than 5 seconds and the steering wheel module (SWM) indicates that the windshield wiper should not be activated.

Substitute value

- Windshield wipers are run in low speed position for 6 seconds and then are stationary anywhere on the windshield for 6 seconds. After two repetitions the windshield wipers are stationary for one minute before the procedure is repeated.

Possible Source

- The signal line between Central electronic module (CEM) and the rain sensor is short-circuited to ground.
- The signal line between the position sensor in the wiper motor and Central electronic module (CEM) is short-circuited to ground.
- Damaged windshield wiper motor

HINT: The signal line between Central electronic module (CEM) and the rain sensor may be trapped under the foot of the interior rearview mirror.

Fault symptom[s]

- Windshield wiper motor does not operate. (The windshield wiper has become stuck on the windshield.)
- No rain sensor function.

SIGNAL TOO LOW. INTERMITTENT FAULT

CHECKING CABLE

HINT: The fault could also have been caused by the windshield wipers sticking.

Check the cable between central electronic module (CEM) terminal #16B and windshield wiper motor (6/1) terminal #3. Check the cable between central electronic module (CEM) terminal #16B and rain sensor (7/149) terminal #4.

Check for an intermittent short-circuit to ground.

Check the connector.

Remedy as necessary.

Other information

- see **CONNECTING THE BREAKOUT BOX**
- -2004: **SIGNAL SPECIFICATION**
- 2005-: **SIGNAL SPECIFICATION**
- see **CHECKING WIRING AND TERMINALS**

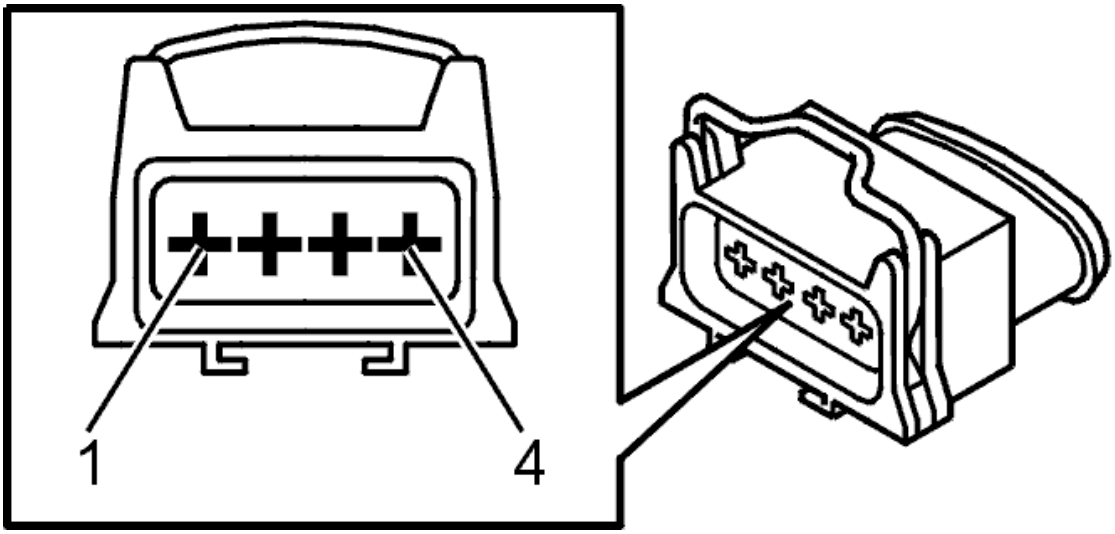

Fig. 61: Identifying Windshield Wiper Motor Terminals
Courtesy of VOLVO CARS CORPORATION

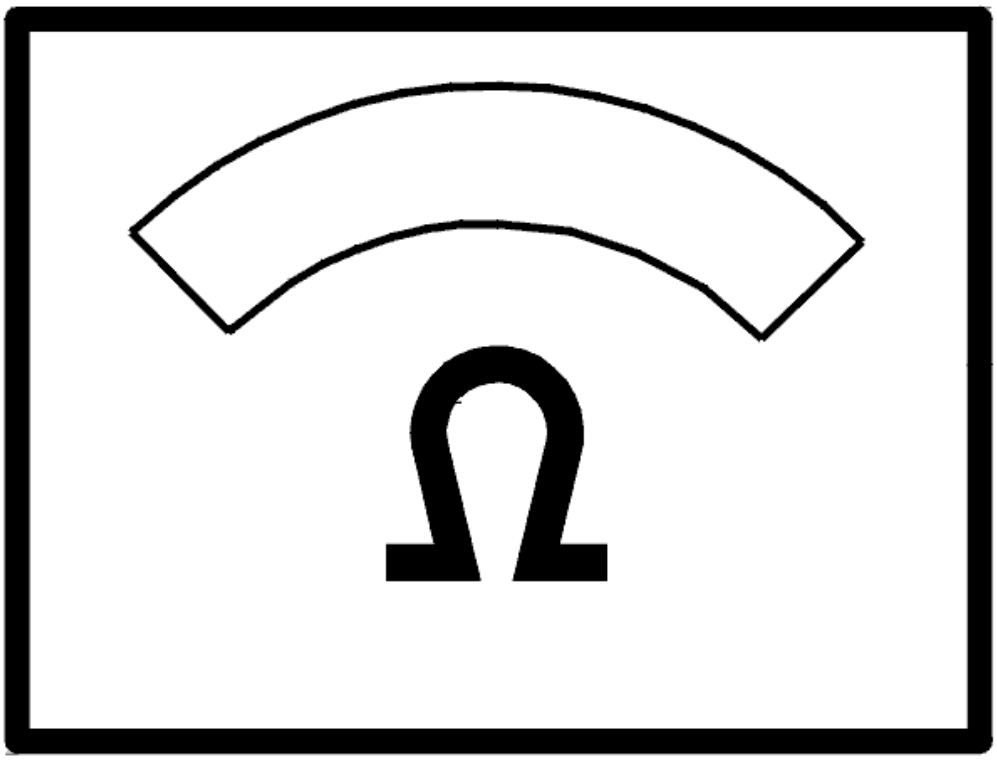

Fig. 62: Identifying Ohm Meter
Courtesy of VOLVO CARS CORPORATION

CEM-8F2D: WIPERS. SIGNAL TOO LOW. PERMANENT FAULT (2003-2004)

DIAGNOSTIC TROUBLE CODE (DTC) INFORMATION CEM-8F2D

see **DIAGNOSTIC TROUBLE CODE (DTC) INFORMATION CEM-8F2D**

SIGNAL TOO LOW. PERMANENT FAULT

CHECKING CABLE

HINT: The fault could also have been caused by the windshield wipers sticking.

Check the cable between the central electronic module (CEM) and the windshield wiper motor (6/1). Check for

a short-circuit to ground.

Take readings between:

Central electronic module (CEM) terminal #16B and windshield wiper motor (6/1) terminal #3.

Check the cable between the central electronic module (CEM) and the rain sensor (7/149). Check for a short-circuit to ground.

Take readings between:

Central electronic module (CEM) terminal #16B and rain sensor (7/149) terminal #4.

Also check the connectors.

If no other faults are found try a new windshield wiper motor (6/1).

Remedy as necessary.

Other information

- see **CONNECTING THE BREAKOUT BOX**
- -2004: **SIGNAL SPECIFICATION**
- 2005-: **SIGNAL SPECIFICATION**
- see **MOTOR WINDSHIELD WIPER, REPLACING**

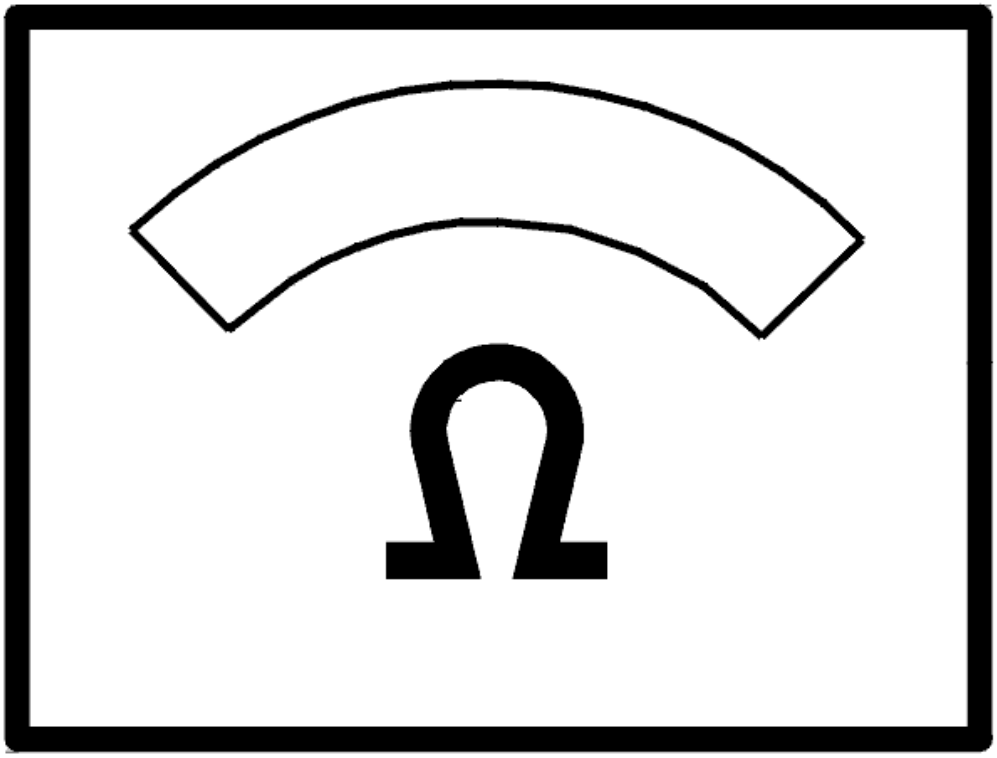

Fig. 63: Identifying Ohm Meter
Courtesy of VOLVO CARS CORPORATION

- **Continue**

  Refer to **VERIFICATION**

VERIFICATION

VERIFICATION

HINT: After the repair it is necessary to check that the fault has been rectified.

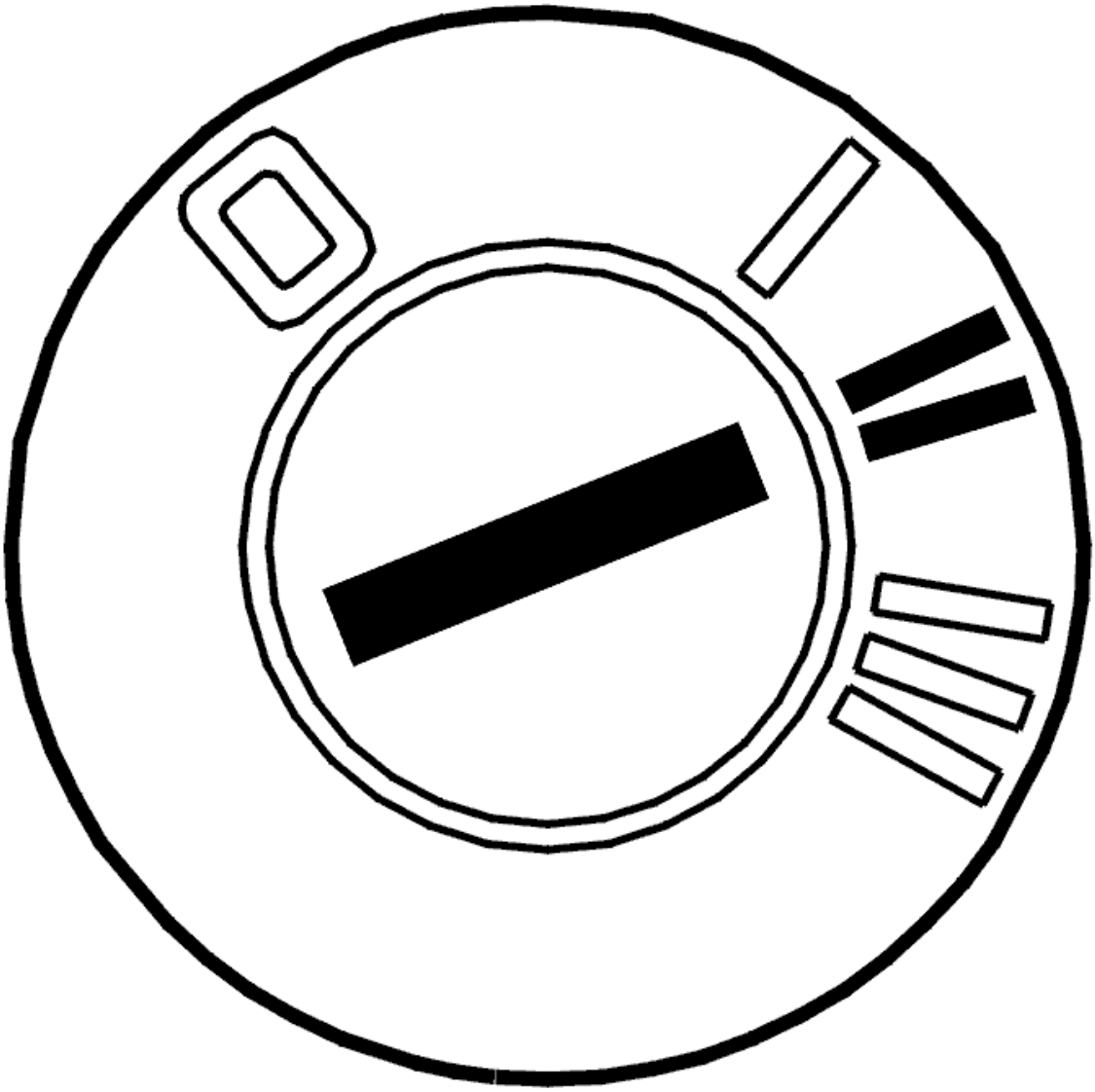

Fig. 64: Identifying Ignition ON
Courtesy of VOLVO CARS CORPORATION

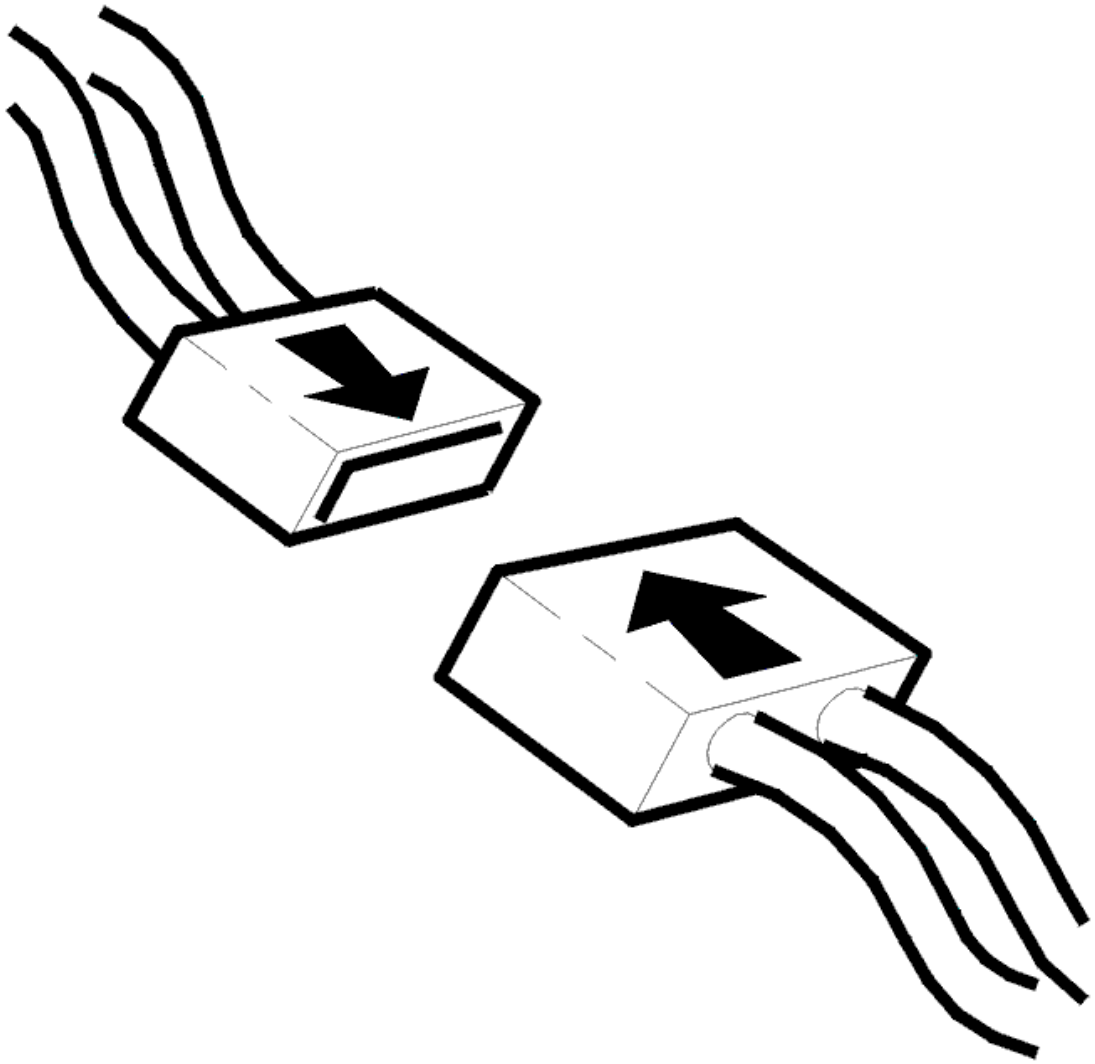

Fig. 65: Connecting Connector
Courtesy of VOLVO CARS CORPORATION

- Connect the connectors, install the components, etc.
- Ignition on.

  Activate windscreen wipers, intermittent position.

  Read the value.

  The value should alternate between the two positions "rest position" and "operating position".

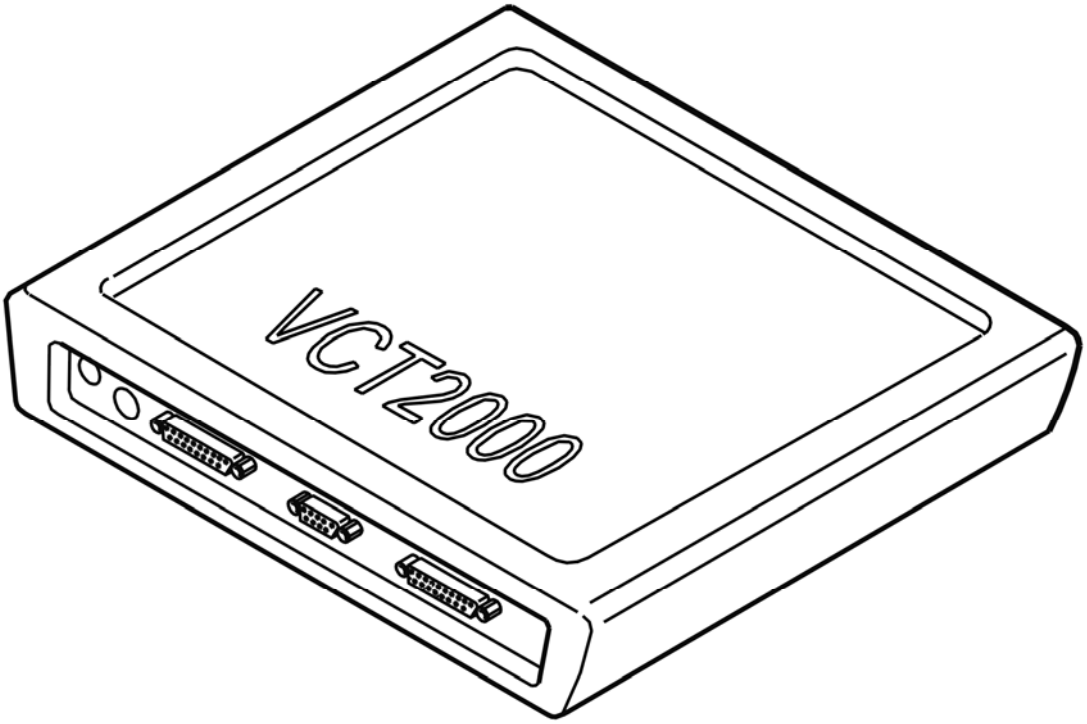

Fig. 66: Identifying VCT2000 Diagnostic Tool Symbol In VIDA
Courtesy of VOLVO CARS CORPORATION

Does it work?

- **YES**

  VERIFIED: Troubleshooting has been completed.

- **NO**

  Refer to **INFORMATION**

INFORMATION

FAULT-TRACING INFORMATION

The fault should have been detected and remedied. As this is not the case fault-tracing has failed.

Exit fault-tracing for this diagnostic trouble code (DTC) or make another attempt.

CEM-8F2E: WINDSHIELD WIPER. SIGNAL TOO LOW (2005-2012)

DIAGNOSTIC TROUBLE CODE (DTC) INFORMATION CEM-8F2E

Condition

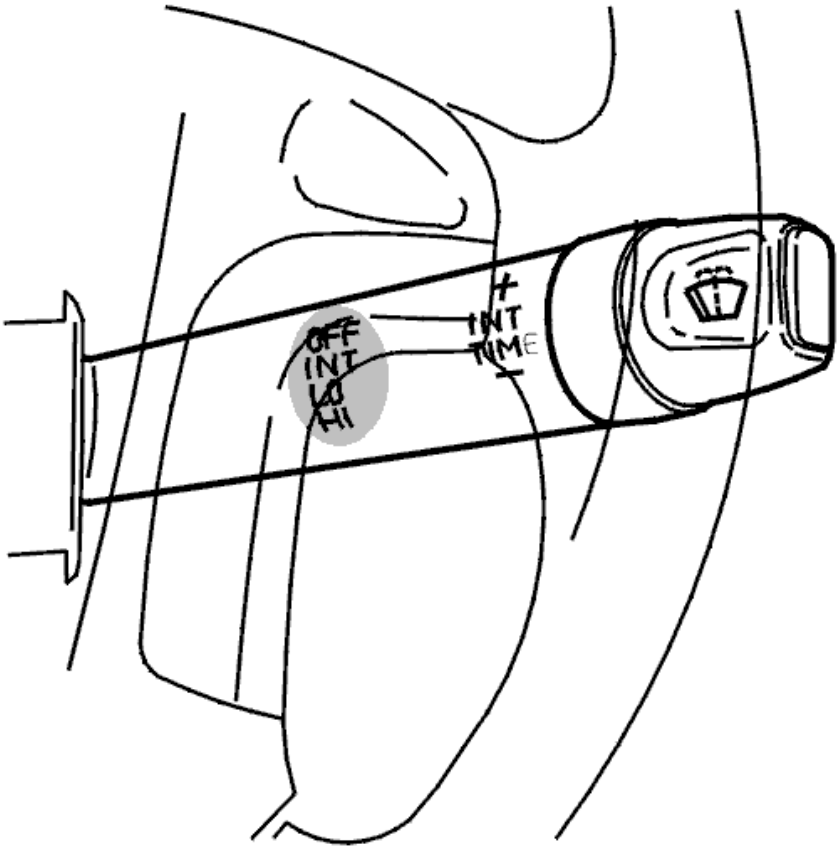

Fig. 67: Identifying Windshield Wiper Lever
Courtesy of VOLVO CARS CORPORATION

The central electronic module (CEM) checks the windshield wipers.

The diagnostic trouble code (DTC) is stored if the central electronic module (CEM) detects that the windshield wipers are deployed somewhere on the windshield for longer than 5 seconds and the steering wheel module (SWM) indicates that the windshield wipers should be activated.

The diagnostic trouble code (DTC) can be diagnosed when the ignition is switched on.

Substitute Value

- Windshield wipers are run in low speed position for 6 seconds and then are stationary anywhere on the windshield for 6 seconds. After two repetitions the windshield wipers are stationary for one minute before the procedure is repeated.

Possible Source

- The signal line between Central electronic module (CEM) and the rain sensor is short-circuited to ground.
- The signal line between the position sensor in the wiper motor and Central electronic module (CEM) is

short-circuited to ground.
- Damaged windshield wiper motor

HINT: The signal line between Central electronic module (CEM) and the rain sensor may be trapped under the foot of the interior rearview mirror.

Fault symptom[s]

- The windshield wipers are not working.

SIGNAL TOO LOW

CHECKING THE CABLE

HINT: The fault could also have been caused by the windshield wipers sticking.

If the fault is intermittent, it has been registered previously but is no longer present. Intermittent faults can be caused by interference at start up of the central electronic module (CEM) or may be a different type of fault which occurs on different occasions. The fault is evaluated depending on how it occurs.

Check the cable between the central electronic module (CEM) and the windshield wiper motor (6/1). Check for a short-circuit to ground.

Take readings between Central electronic module (CEM) terminal #C31(#31) and the windshield wiper motor (6/1) #3.

Check the cable between the central electronic module (CEM) and the rain sensor (7/149). Check for a short-circuit to ground.

Take readings between Central electronic module (CEM) terminal #D11 (#11) and rain sensor (7/149) #4.

Also check the connectors.

If no other faults are found try a new windshield wiper motor (6/1).

Remedy as necessary.

Other information

- see **CONNECTING THE BREAKOUT BOX**
- -2004: **SIGNAL SPECIFICATION**
- 2005-: **SIGNAL SPECIFICATION**
- see **MOTOR WINDSHIELD WIPER, REPLACING**

- **Continue**

Refer to **VERIFICATION**

VERIFICATION

VERIFICATION

HINT: After carrying out the repair, check that the fault has been remedied.

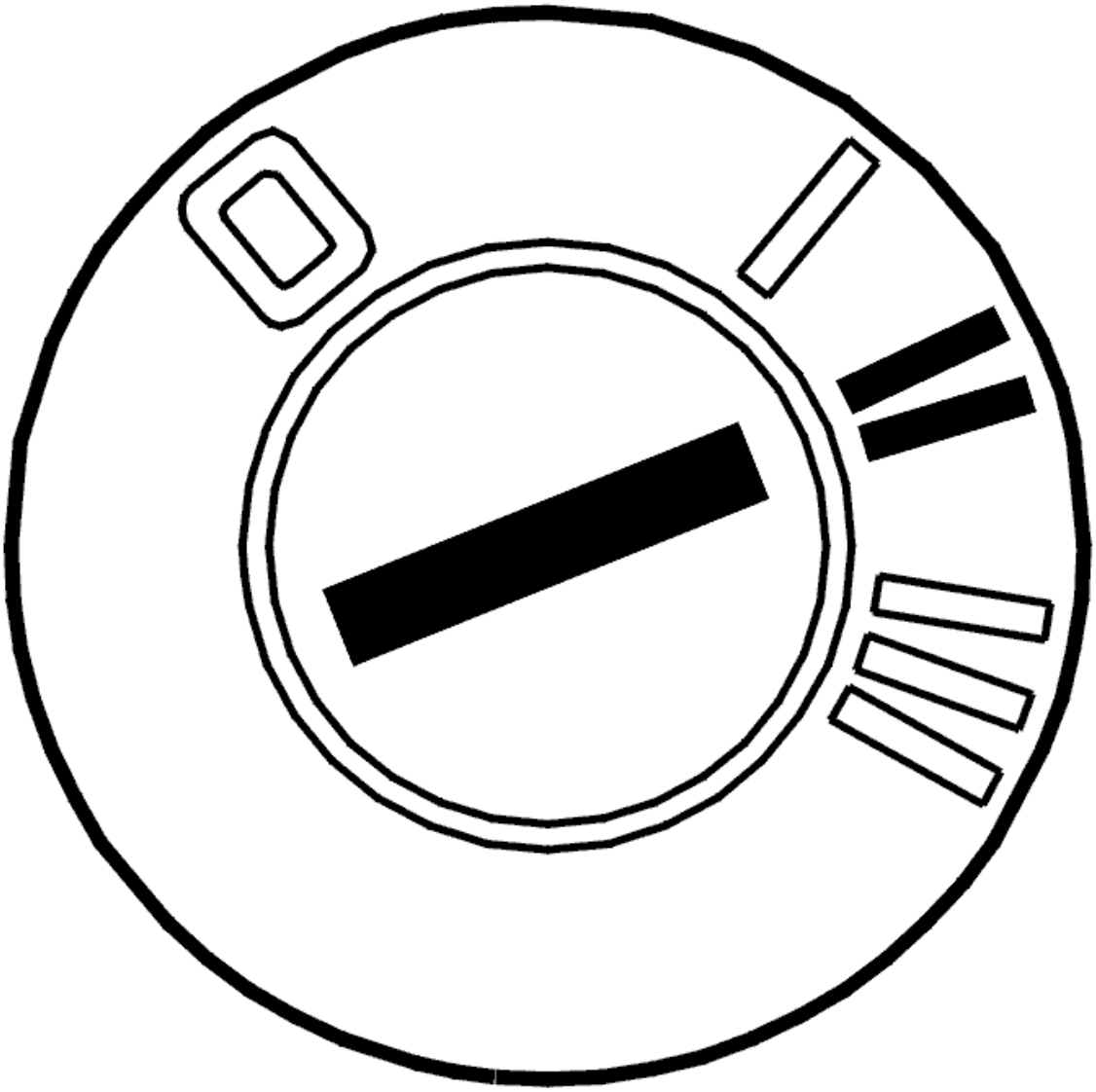

Fig. 68: Identifying Ignition ON
Courtesy of VOLVO CARS CORPORATION

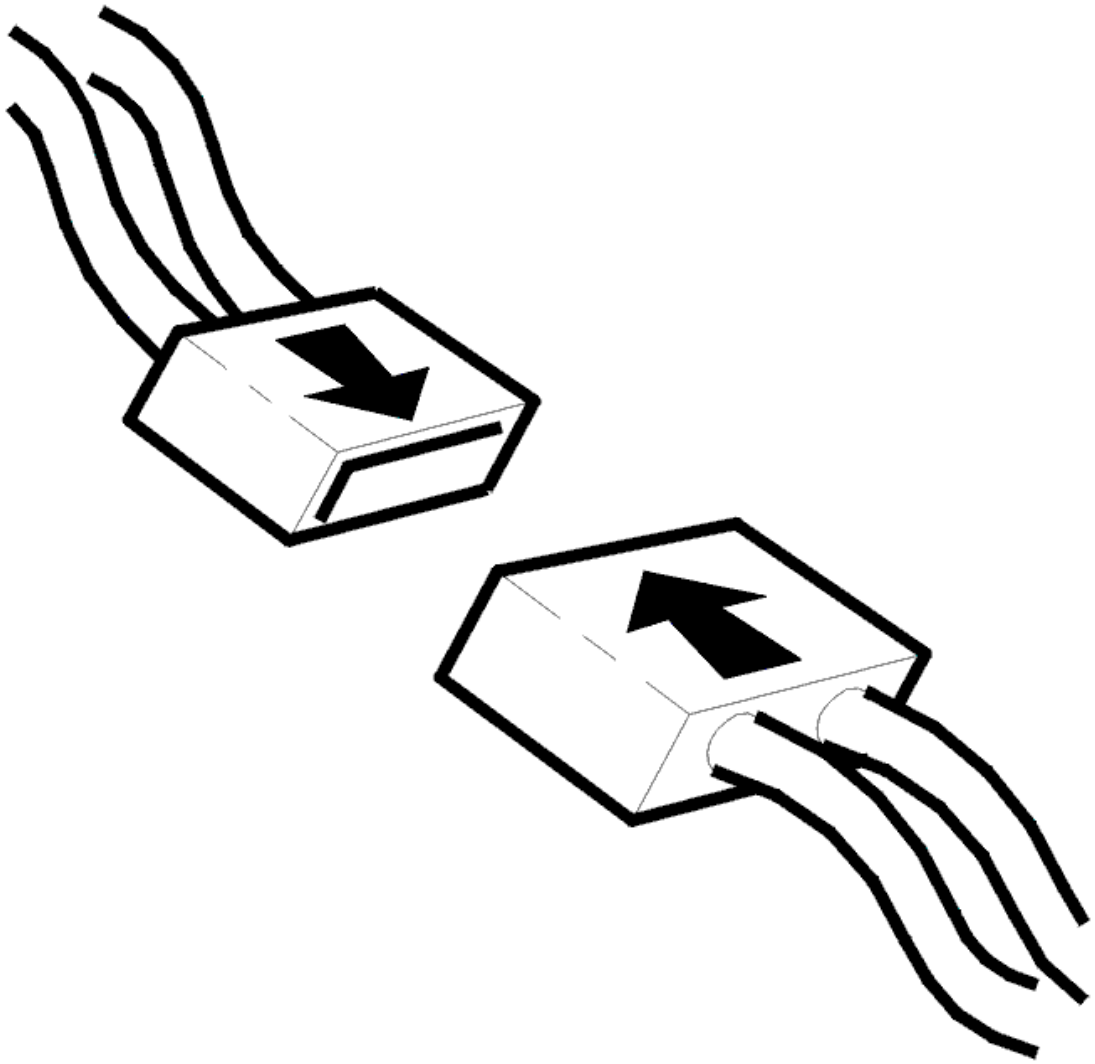

Fig. 69: Connecting Connector
Courtesy of VOLVO CARS CORPORATION

- Ignition off
- Reinstall the connectors, components etc.
- Ignition on.

  Activate the windshield wipers.

  Check that the windshield wipers work in all positions.

Are the windshield wipers working?

- **YES**

VERIFIED: Troubleshooting has been completed.

- **NO**

  Refer to **INFORMATION**

INFORMATION

FAULT-TRACING INFORMATION

The fault should have been detected and remedied. As this is not the case fault-tracing has failed.

Exit fault-tracing for this diagnostic trouble code (DTC) or make another attempt.

CEM-8F2E: WIPERS. SIGNAL TOO LOW. INTERMITTENT FAULT (2003-2004)

DIAGNOSTIC TROUBLE CODE INFORMATION

Condition

If the central electronic module (CEM) indicates that the windscreen wiper is somewhere on the windscreen for longer than 5 seconds and the steering wheel module (SWM) indicates that the windscreen wiper should be activated, diagnostic trouble code CEM 8F2E is displayed.

Substitute value

- Windshield wipers are run in low speed position for 6 seconds and then are stationary anywhere on the windshield for 6 seconds. After two repetitions the windshield wipers are stationary for one minute before the procedure is repeated.

Possible Source

- The signal line between Central electronic module (CEM) and the rain sensor is short-circuited to ground.
- The signal line between the position sensor in the wiper motor and Central electronic module (CEM) is short-circuited to ground.
- Damaged windshield wiper motor.

HINT: The signal line between Central electronic module (CEM) and the rain sensor may be trapped under the foot of the interior rearview mirror.

Fault symptom[s]

Windshield wiper/Does not work

SIGNAL TOO LOW. INTERMITTENT FAULT

see **SIGNAL TOO LOW. INTERMITTENT FAULT**

CEM-8F2E: WIPERS. SIGNAL TOO LOW. PERMANENT FAULT (2003-2004)

DIAGNOSTIC TROUBLE CODE INFORMATION

see **DIAGNOSTIC TROUBLE CODE INFORMATION**

SIGNAL TOO LOW. PERMANENT FAULT

see **SIGNAL TOO LOW. PERMANENT FAULT**

CEM-8F30: WINDSHIELD WIPER LEVER. SIGNAL MISSING (2005-2012)

DIAGNOSTIC TROUBLE CODE (DTC) INFORMATION CEM-8F30

Condition

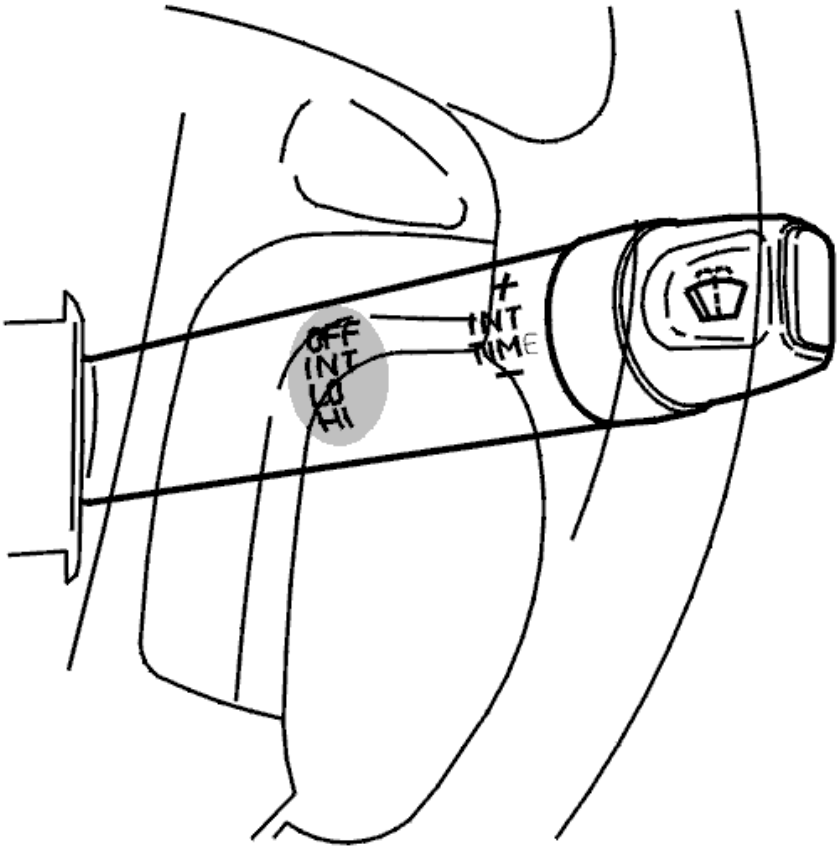

Fig. 70: Identifying Windshield Wiper Lever
Courtesy of VOLVO CARS CORPORATION

The central electronic module (CEM) checks the windshield wipers.

The diagnostic trouble code (DTC) is stored if the central electronic module (CEM) registers that the switch for single sweep and intermittent wiping are active at the same time for more than 2.5 seconds.

The diagnostic trouble code (DTC) can be diagnosed when the ignition is switched on.

Substitute Value

- The windshield wipers only operate at lowest speed.

Possible Source

- Damaged windshield wiper lever.

Fault symptom[s]

- The windshield wipers only operate at lowest speed.

FAULTY SIGNAL

REPLACING THE WINDSHIELD WIPER SWITCH

If the fault is intermittent, it has been registered previously but is no longer present. Intermittent faults can be caused by interference at start up or can be a different type of fault which occurs on different occasions. The fault is evaluated on an individual basis

If the fault is permanent, replace the windshield wiper switch because an internal fault has occurred.

Other information:

- see **WASHER / WIPER SWITCH, REPLACING**
- **Continue**

  Refer to **VERIFICATION**

VERIFICATION

VERIFICATION

HINT: After carrying out the repair, check that the fault has been remedied.

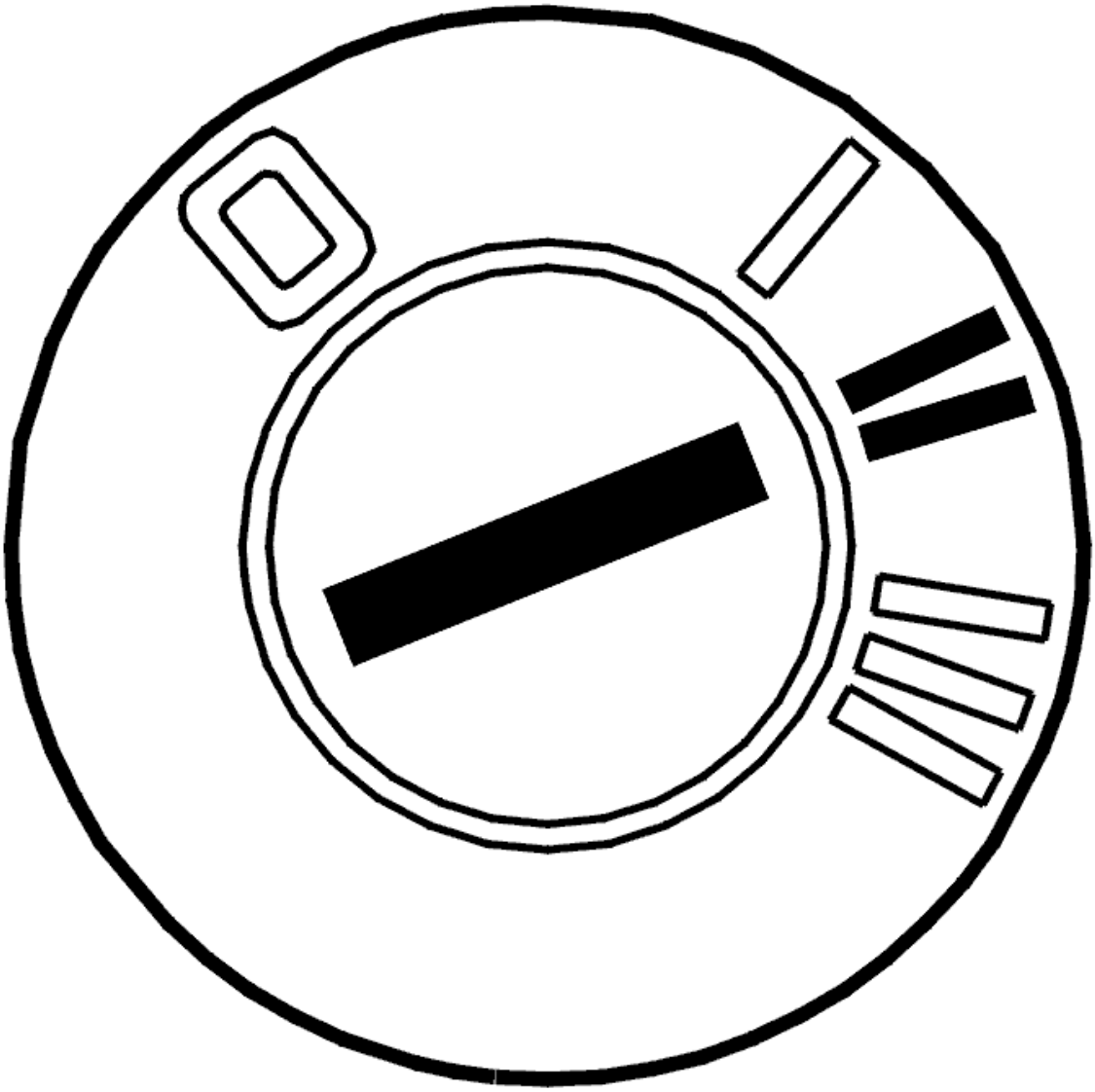

Fig. 71: Identifying Ignition ON
Courtesy of VOLVO CARS CORPORATION

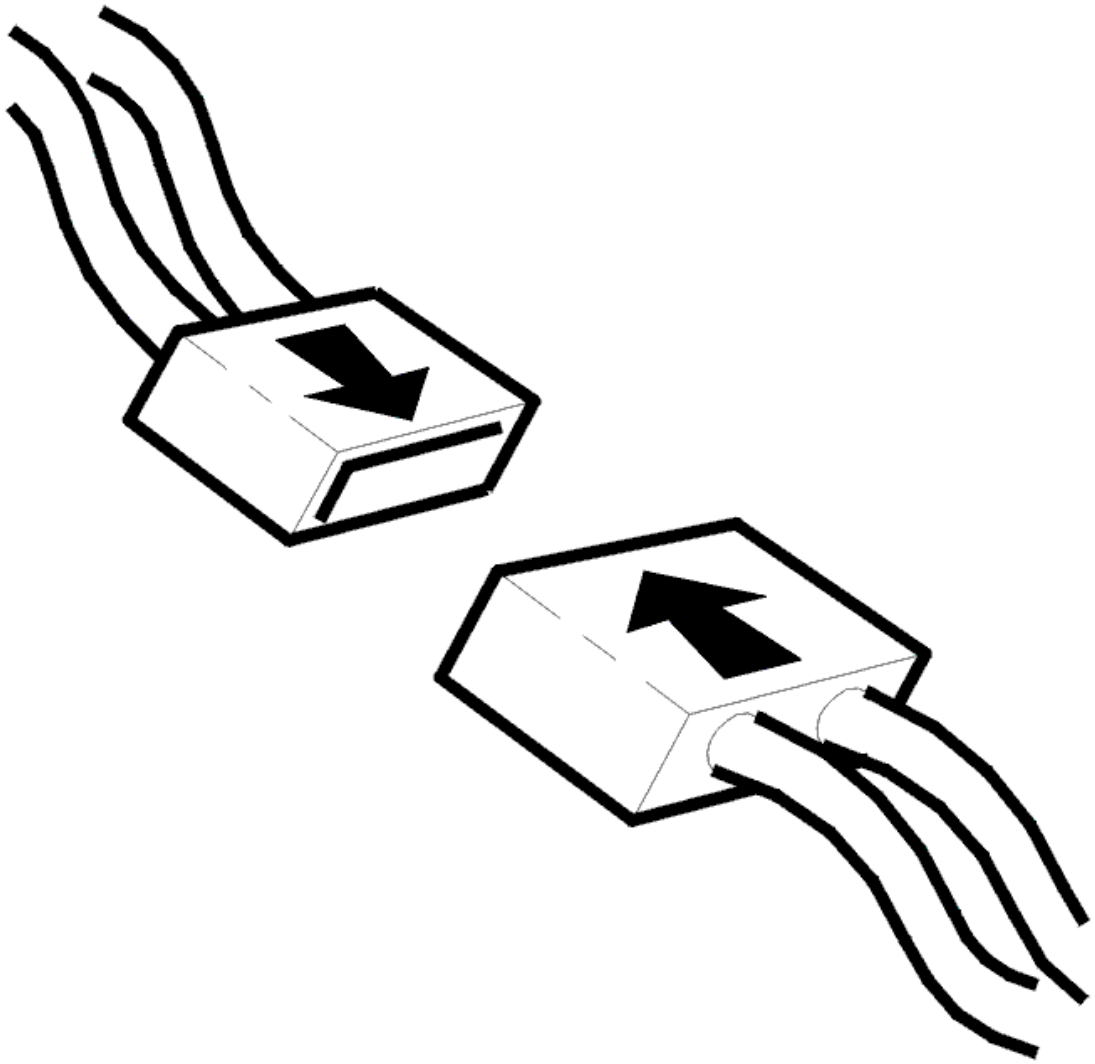

Fig. 72: Connecting Connector
Courtesy of VOLVO CARS CORPORATION

- Ignition off
- Reinstall the connectors, components etc.
- Ignition on.

  Activate the windshield wipers.

  Check that the windshield wipers work in all positions.

Are the windshield wipers working?

- **YES**

VERIFIED: Troubleshooting has been completed.

- **NO**

  Refer to **INFORMATION**

INFORMATION

FAULT-TRACING INFORMATION

The fault should have been detected and remedied. As this is not the case fault-tracing has failed.

Exit fault-tracing for this diagnostic trouble code (DTC) or make another attempt.

CEM-8F31: WINDSHIELD WIPER LEVER. FAULTY SIGNAL (2005-2012)

DIAGNOSTIC TROUBLE CODE (DTC) INFORMATION CEM-8F31

Condition

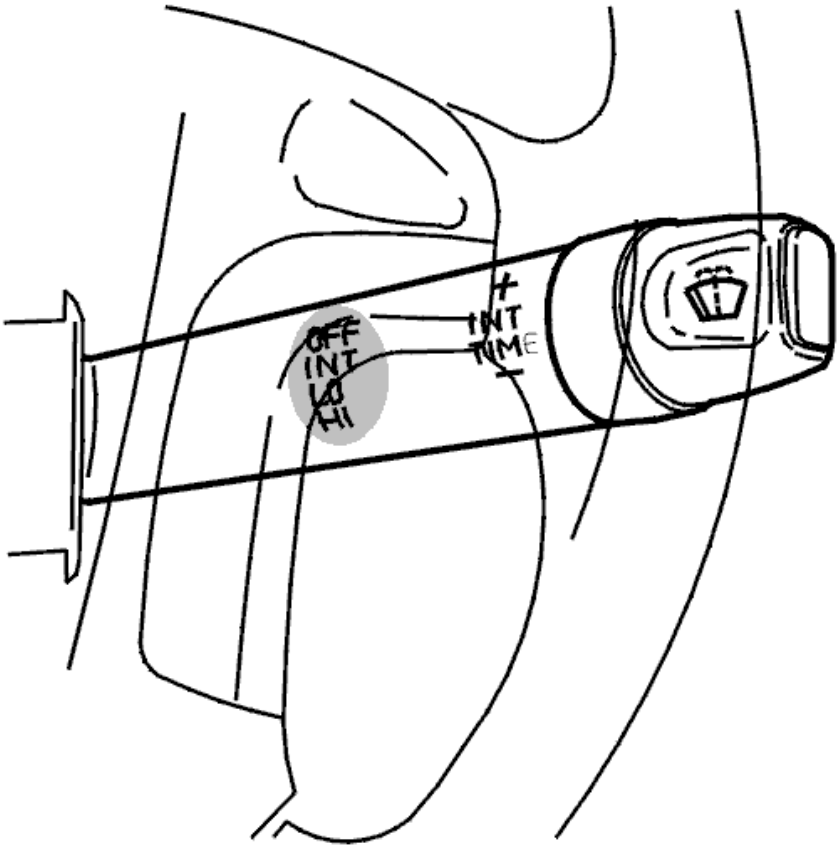

Fig. 73: Identifying Windshield Wiper Lever
Courtesy of VOLVO CARS CORPORATION

The central electronic module (CEM) checks the windshield wipers.

The diagnostic trouble code (DTC) is stored if the central electronic module (CEM) registers that the switch for single sweep and low speed wiping are active at the same time for more than 2.5 seconds.

The diagnostic trouble code (DTC) can be diagnosed when the ignition is switched on.

Substitute Value

- The windshield wipers only operate at lowest speed.

Possible Source

- Damaged windshield wiper lever.

Fault symptom[s]

- The windshield wipers only operate at lowest speed.

FAULTY SIGNAL

REPLACING THE WINDSHIELD WIPER SWITCH

If the fault is intermittent, it has been registered previously but is no longer present. Intermittent faults can be caused by interference at start up or can be a different type of fault which occurs on different occasions. The fault is evaluated depending on how it occurs.

If the fault is permanent, replace the windshield wiper switch because an internal fault has occurred.

Other information:

- see **WASHER / WIPER SWITCH, REPLACING**
- **Continue**

  Refer to **VERIFICATION**

VERIFICATION

VERIFICATION

HINT: After carrying out the repair, check that the fault has been remedied.

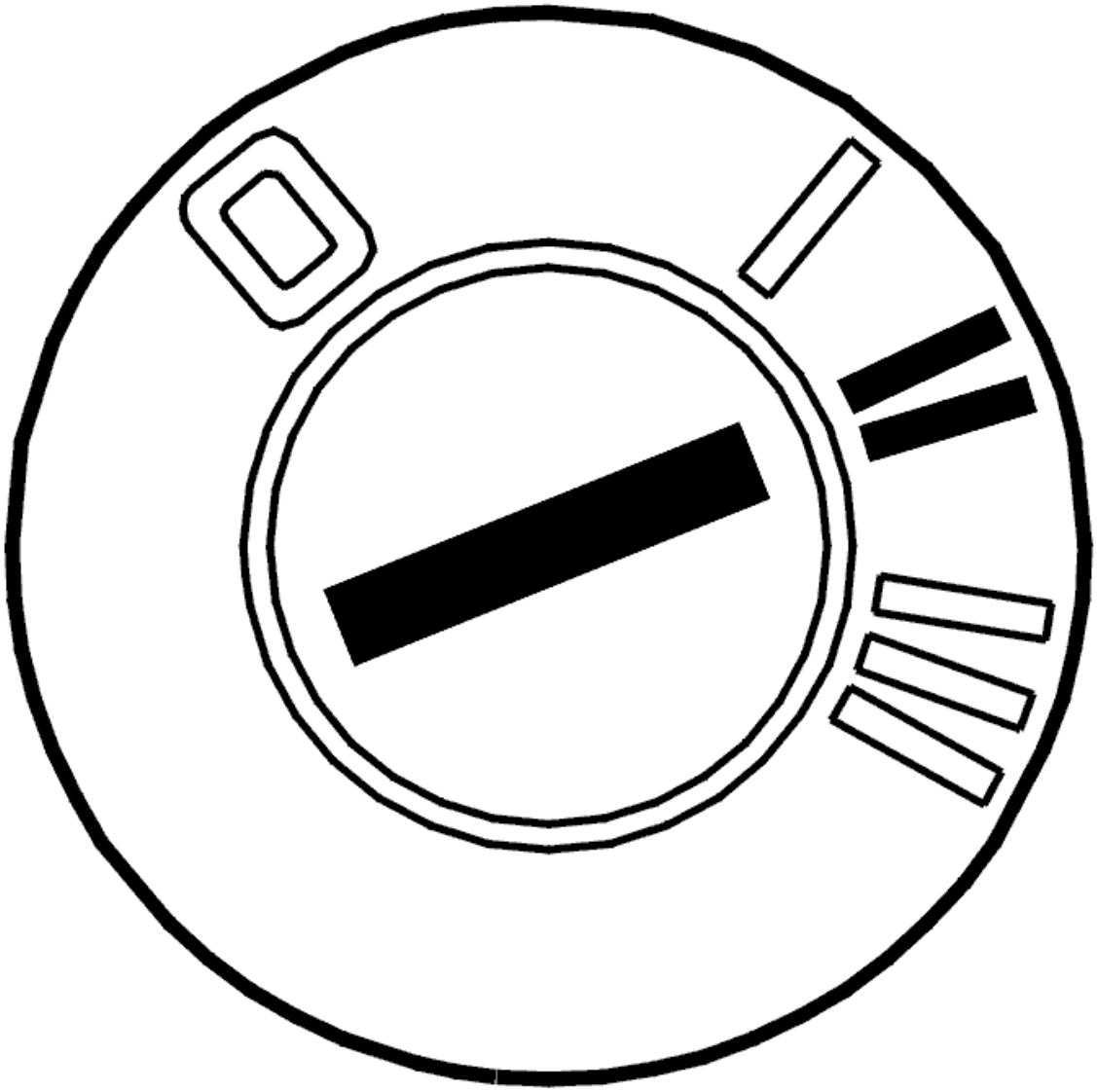

Fig. 74: Identifying Ignition ON
Courtesy of VOLVO CARS CORPORATION

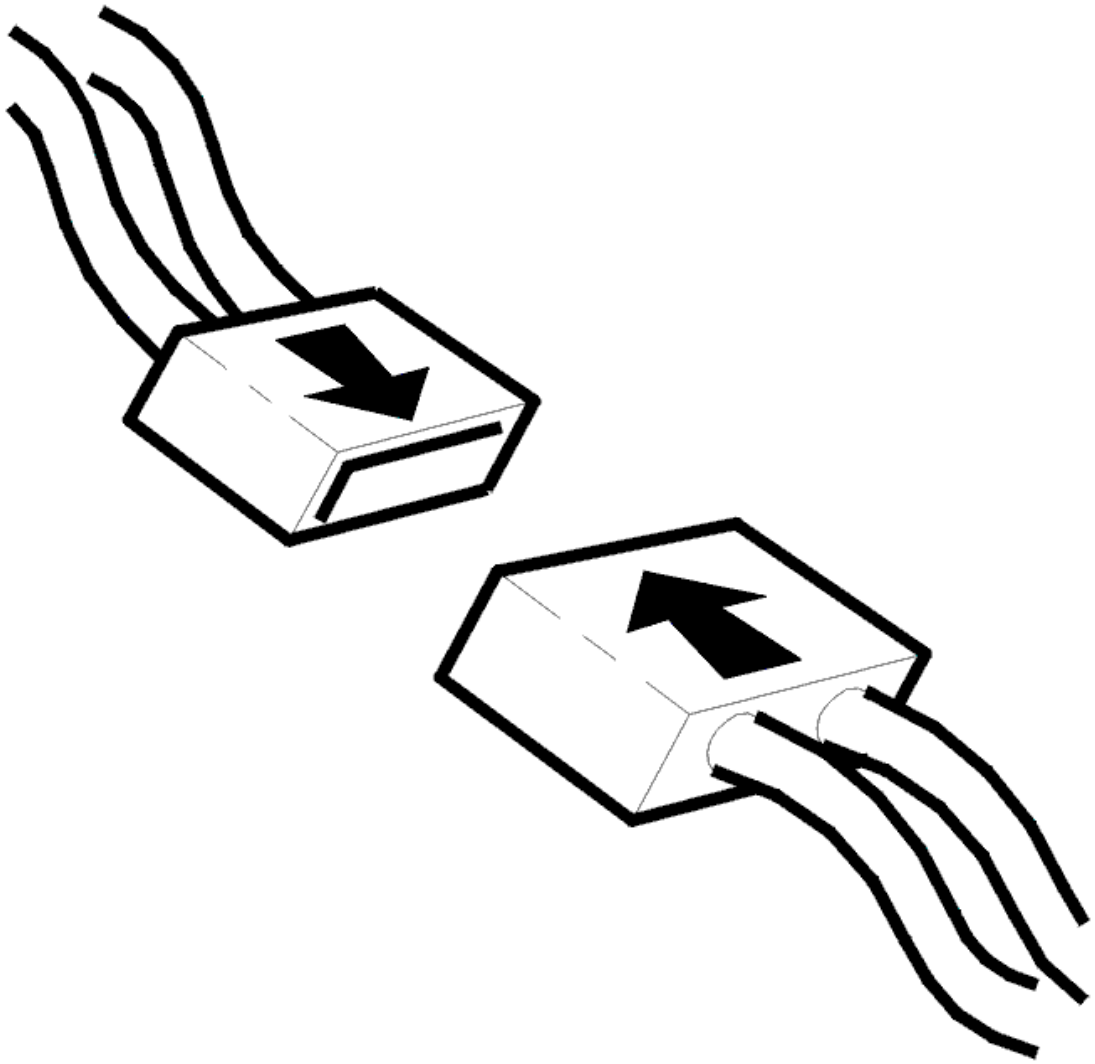

Fig. 75: Connecting Connector
Courtesy of VOLVO CARS CORPORATION

- Ignition off
- Reinstall the connectors, components etc.
- Ignition on.

  Activate the windshield wipers.

  Check that the windshield wipers work in all positions.

Are the windshield wipers working?

- **YES**

VERIFIED: Troubleshooting has been completed.

- **NO**

  Refer to **INFORMATION**

INFORMATION

FAULT-TRACING INFORMATION

The fault should have been detected and remedied. As this is not the case fault-tracing has failed.

Exit fault-tracing for this diagnostic trouble code (DTC) or make another attempt.

CEM-8F32: WINDSHIELD WIPER LEVER. FAULTY SIGNAL (2005-2012)

DIAGNOSTIC TROUBLE CODE (DTC) INFORMATION CEM-8F32

Condition

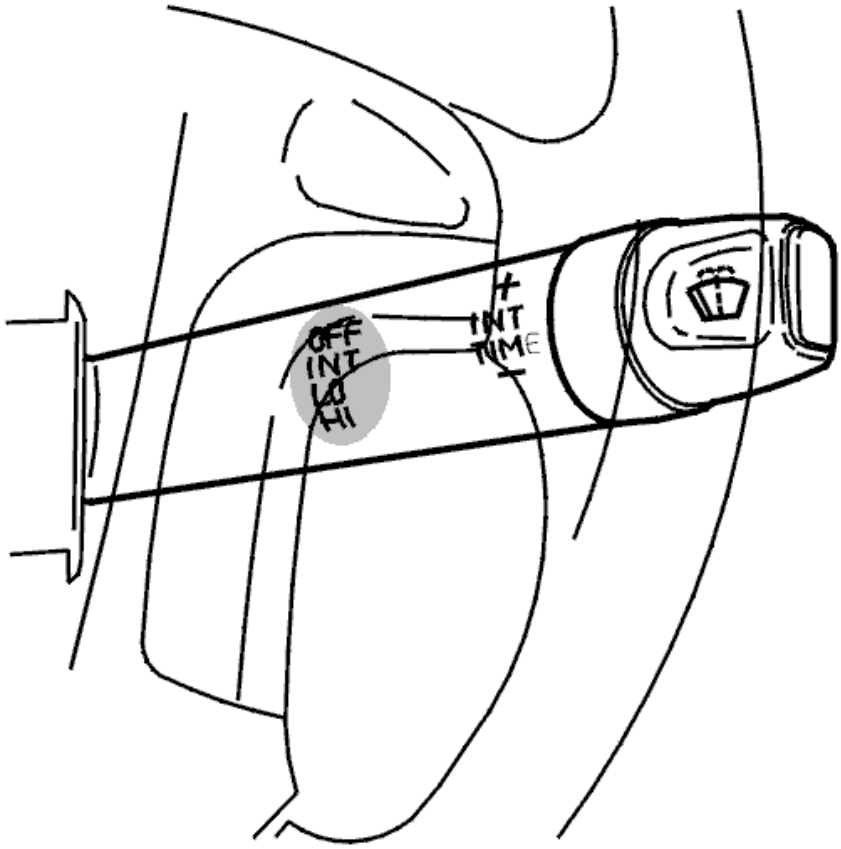

Fig. 76: Identifying Windshield Wiper Lever
Courtesy of VOLVO CARS CORPORATION

The central electronic module (CEM) checks the windshield wipers.

The diagnostic trouble code (DTC) is stored if the central electronic module (CEM) registers that the switch for single sweep and high speed wiping are active at the same time for more than 2.5 seconds.

The diagnostic trouble code (DTC) can be diagnosed when the ignition is switched on.

Substitute Value

- The windshield wipers only operate at lowest speed.

Possible Source

- Damaged windshield wiper lever.

Fault symptom[s]

- The windshield wipers only operate at lowest speed.

FAULTY SIGNAL

REPLACING THE WINDSHIELD WIPER SWITCH

If the fault is intermittent, it has been registered previously but is no longer present. Intermittent faults can be caused by interference at start up or can be a different type of fault which occurs on different occasions. The fault is evaluated depending on how it occurs.

If the fault is permanent, replace the windshield wiper switch because an internal fault has occurred.

Other information:

- see **WASHER / WIPER SWITCH, REPLACING**
- **Continue**

  Refer to **VERIFICATION**

VERIFICATION

VERIFICATION

HINT: After carrying out the repair, check that the fault has been remedied.

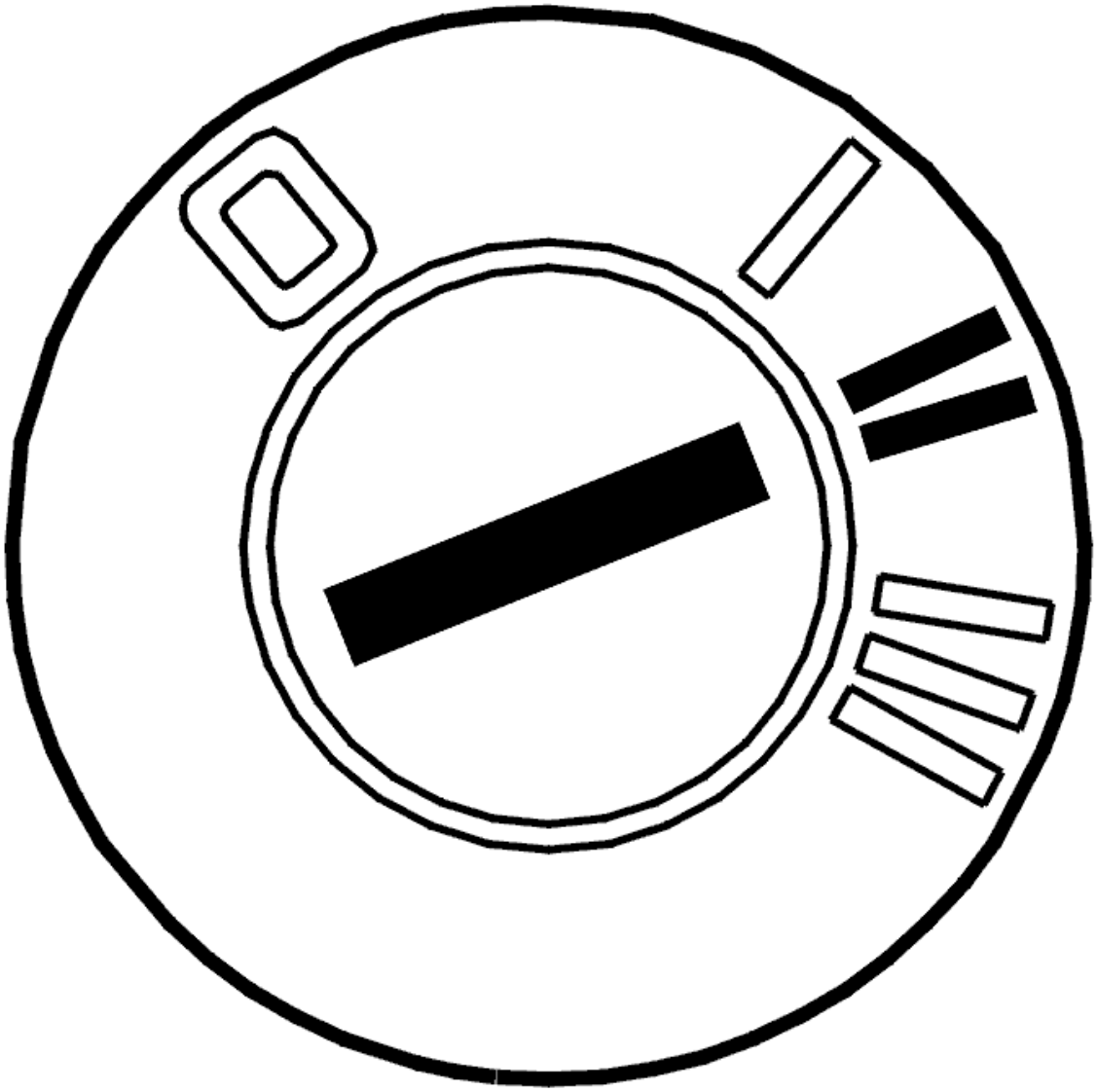

Fig. 77: Identifying Ignition ON
Courtesy of VOLVO CARS CORPORATION

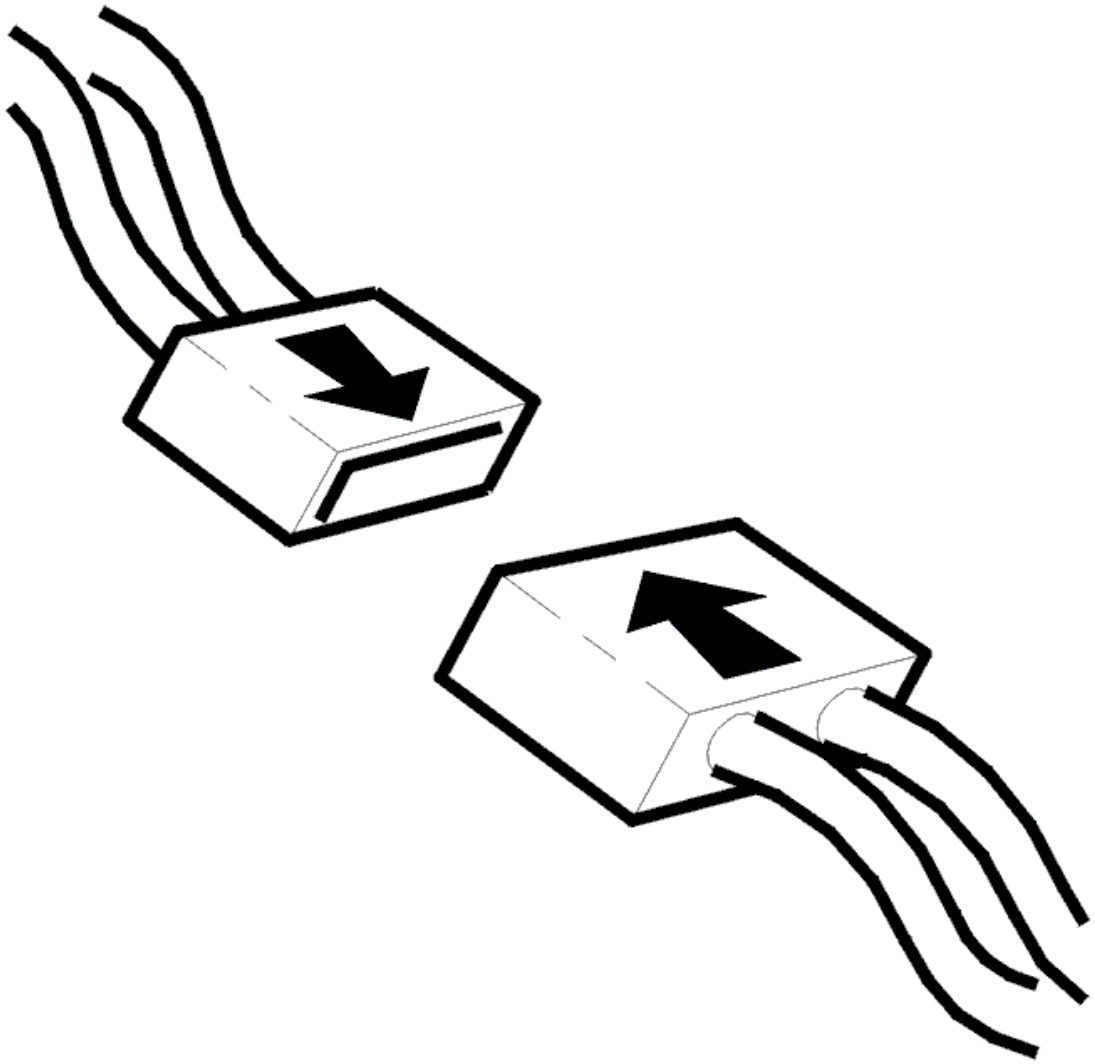

Fig. 78: Connecting Connector
Courtesy of VOLVO CARS CORPORATION

- Ignition off
- Reinstall the connectors, components etc.
- Ignition on.

  Activate the windshield wipers.

  Check that the windshield wipers work in all positions.

Are the windshield wipers working?

- **YES**

VERIFIED: Troubleshooting has been completed.

- **NO**

  Refer to **INFORMATION**

INFORMATION

FAULT-TRACING INFORMATION

The fault should have been detected and remedied. As this is not the case fault-tracing has failed.

Exit fault-tracing for this diagnostic trouble code (DTC) or make another attempt.

CEM-8F41: TAILGATE WASHER MOTOR RELAY. SIGNAL TOO HIGH (2005-2012)

DIAGNOSTIC TROUBLE CODE (DTC) INFORMATION CEM-8F41

Condition

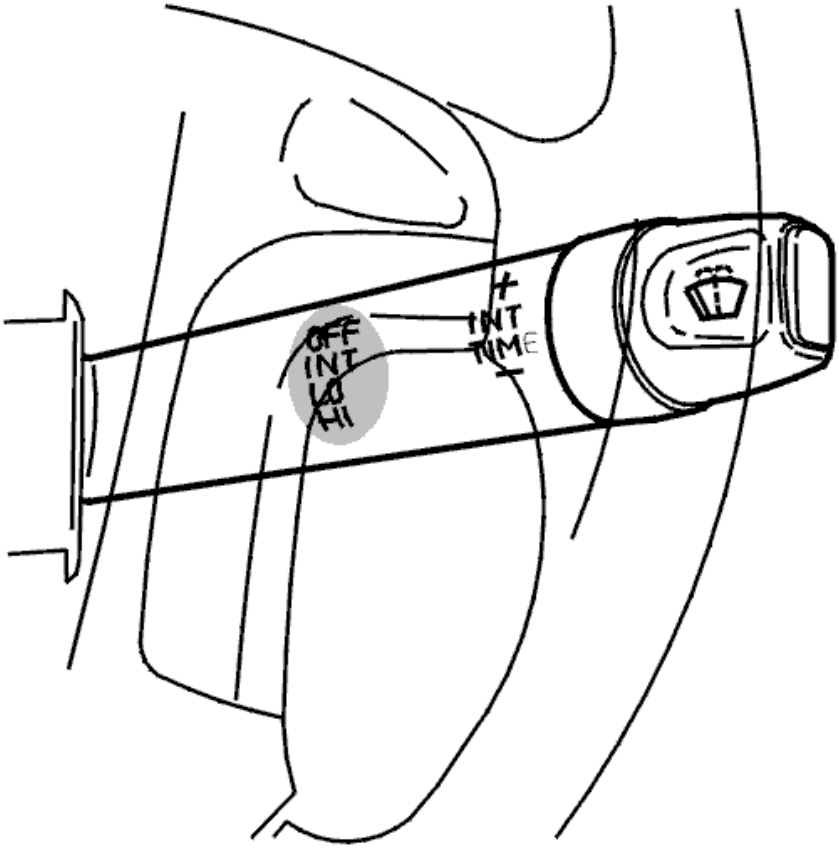

Fig. 79: Identifying Windshield Wiper Lever
Courtesy of VOLVO CARS CORPORATION

The central electronic module (CEM) checks the windshield wipers.

The diagnostic trouble code (DTC) is stored if the central electronic module (CEM) registers that the signal from the relay circuit for the rear washer motor is too high.

The diagnostic trouble code (DTC) can be diagnosed when the ignition is switched on.

Substitute Value

- None.

Possible Source

- Short-circuit to supply voltage in the relay circuit for the rear washer motor.
- Damaged fuse.

Fault symptom[s]

- Rear windshield washing does not work
- The rear windshield washer motor does not operate.

SIGNAL TOO HIGH

CHECKING THE WIRING

If the fault is intermittent, it has been registered previously but is no longer present. Intermittent faults can be caused by interference at start up or can be a different type of fault which occurs on different occasions. The fault is evaluated depending on how it occurs.

Check the fuse for the washer motor, replace if necessary.

Check the cable between the central electronic module (CEM) and the washer motor. Check for a short-circuit to supply voltage.

Take readings between:

- Central electronic module (CEM) terminal #B29 (#29) and washer motor terminal #2.

Replace the central electronic module (CEM) if no fault is found.

Other information:

- see **CONNECTING THE BREAKOUT BOX**
- -2004: **SIGNAL SPECIFICATION**
- 2005-: **SIGNAL SPECIFICATION**
- For -2004, see: **CENTRAL ELECTRONIC MODULE (CEM), REPLACING**

- For 2005-, see: **CENTRAL ELECTRONIC MODULE (CEM), REPLACING** .
- see **CHECKING WIRING AND TERMINALS**
- **Continue**

  Refer to **VERIFICATION**

VERIFICATION

VERIFICATION

HINT: After carrying out the repair, check that the fault has been remedied.

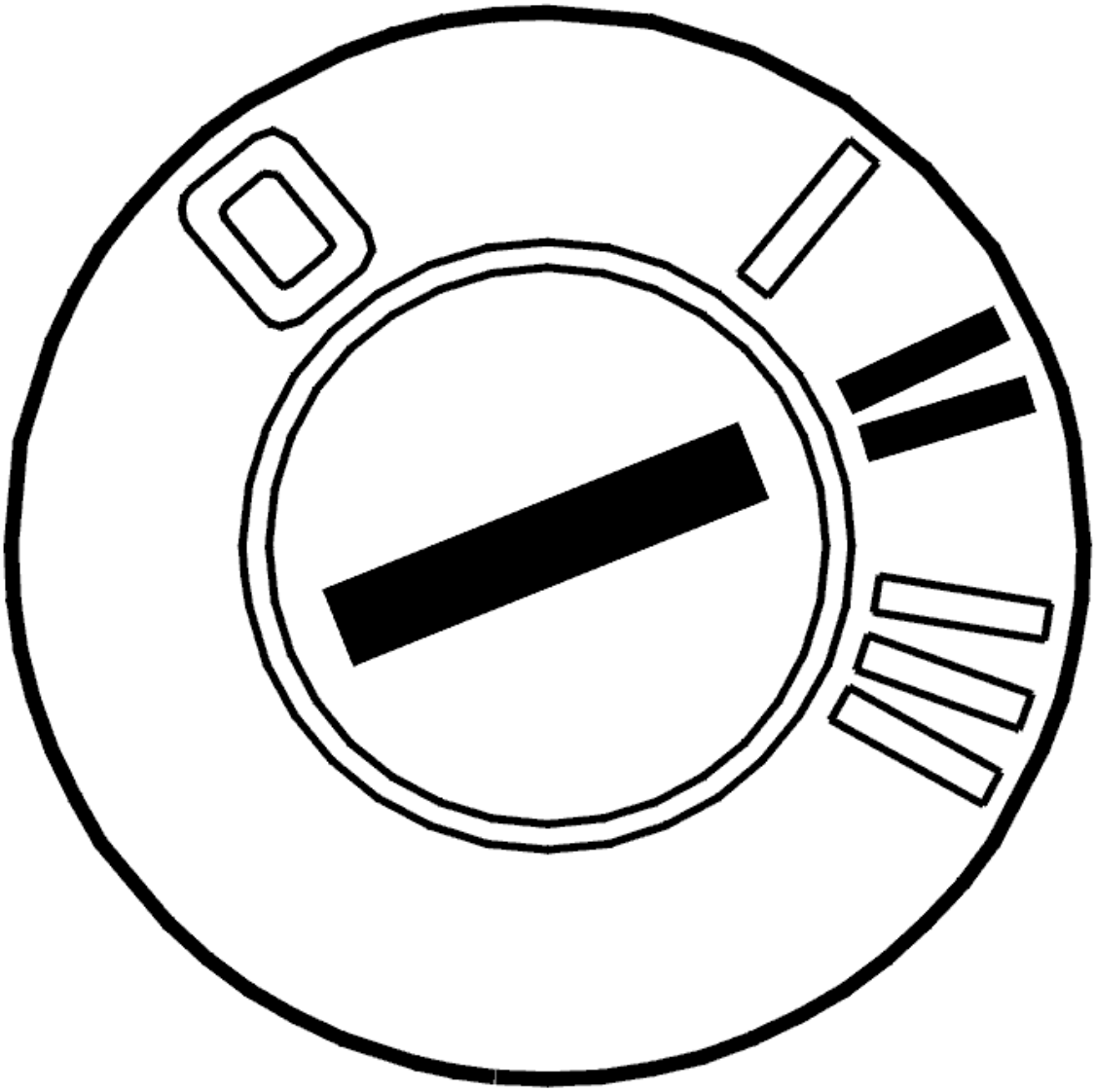

Fig. 80: Identifying Ignition ON
Courtesy of VOLVO CARS CORPORATION

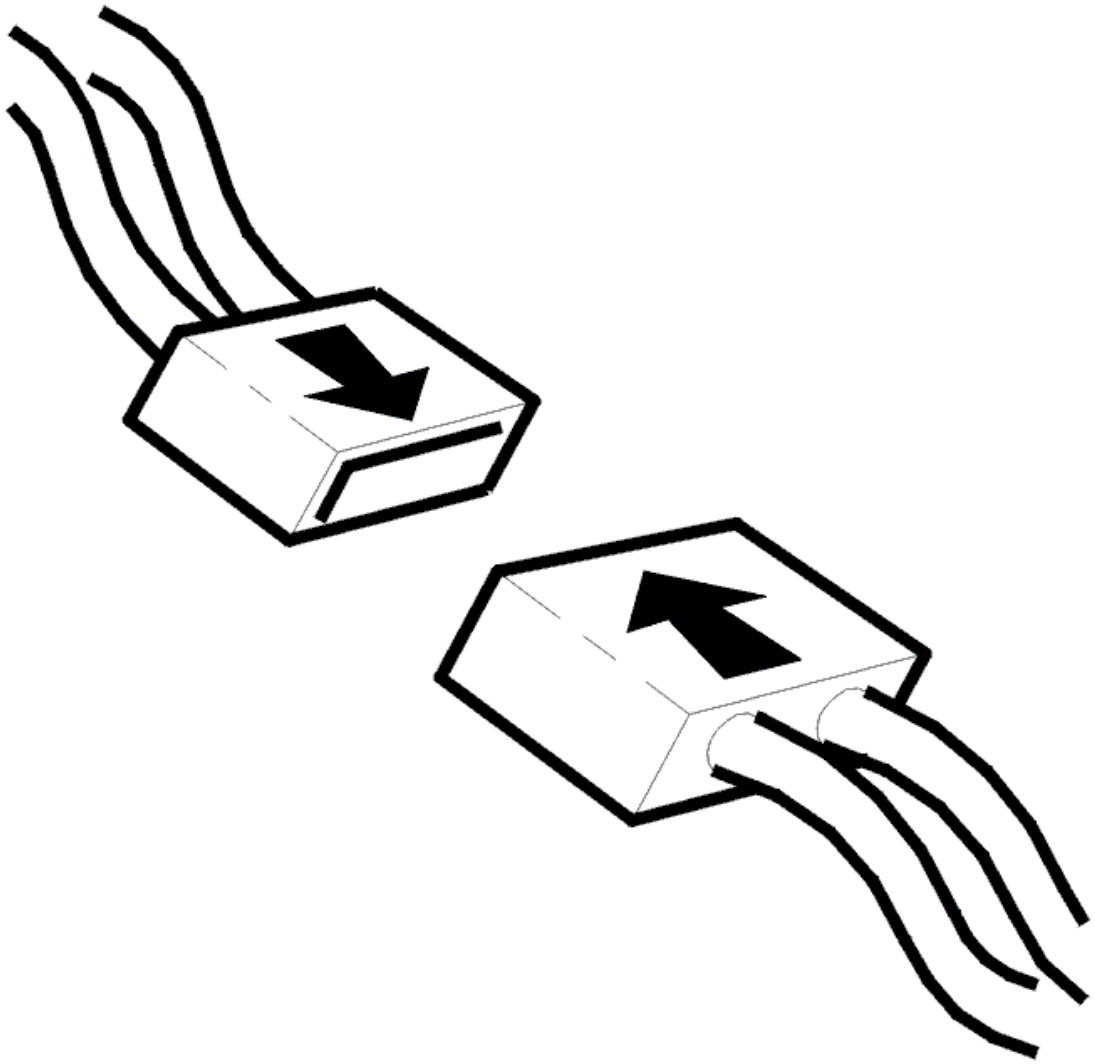

Fig. 81: Connecting Connector
Courtesy of VOLVO CARS CORPORATION

- Ignition off
- Reinstall the connectors, components etc.
- Ignition on.

  Activate the washer motor.

Is the washer working?

- **YES**

  VERIFIED: Troubleshooting has been completed.

- **NO**

  Refer to **INFORMATION**

INFORMATION

FAULT-TRACING INFORMATION

The fault should have been detected and remedied. As this is not the case fault-tracing has failed.

Exit fault-tracing for this diagnostic trouble code (DTC) or make another attempt.

CEM-8F41: TAILGATE WASHER MOTOR RELAY. SIGNAL TOO HIGH. INTERMITTENT FAULT (2003-2004)

DIAGNOSTIC TROUBLE CODE (DTC) INFORMATION

Condition

Diagnostic trouble code (DTC) CEM-8F41 is stored if the signal across the relay coil (2/93) is too high when the tailgate washer motor is activated.

Substitute Value

None.

Possible Source

- Short-circuit to supply voltage in the relay circuit.

Fault symptom[s]

- The rear windshield washer motor does not operate.

SIGNAL TOO HIGH. INTERMITTENT FAULT

CHECKING THE RELAY AND CABLE

Check that relay 2/93 is correctly connected. Check that the relay is not defective.

Check the cable between central electronic module (CEM) terminal #17A and relay base 2/93 terminal #2. Check for a short-circuit to supply voltage.

Remedy as necessary.

Other information:

- To connect the breakout box, see **CONNECTING THE BREAKOUT BOX**
- -2004: **SIGNAL SPECIFICATION**
- 2005-: **SIGNAL SPECIFICATION**
- see **CHECKING WIRING AND TERMINALS**

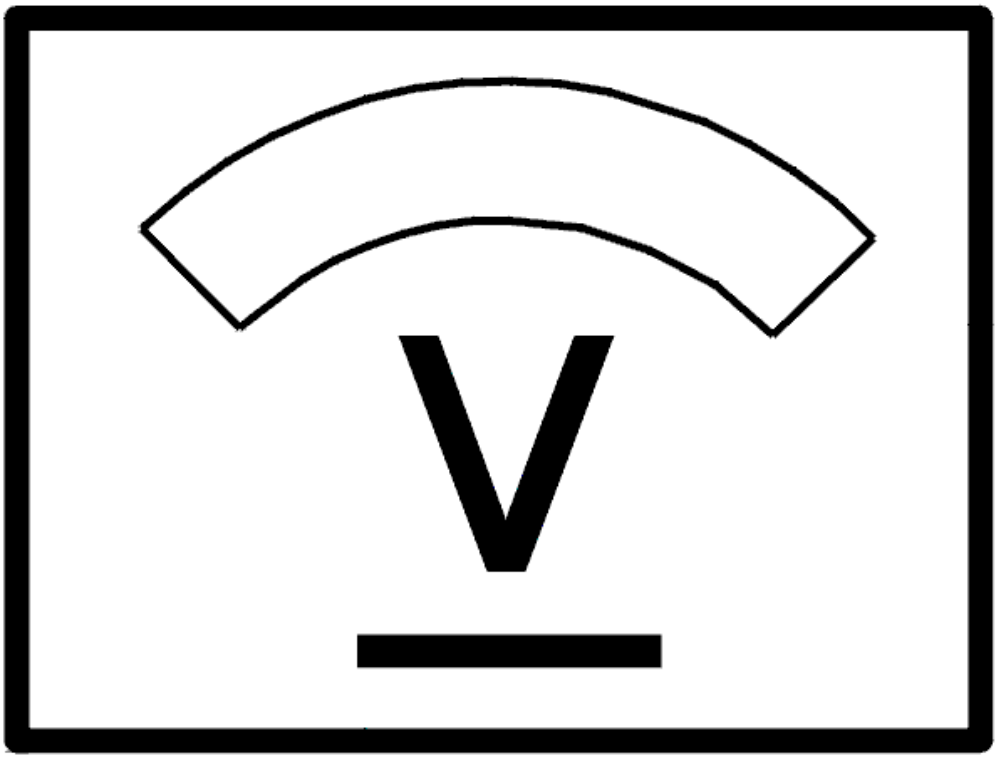

Fig. 82: Identifying Voltage Display
Courtesy of VOLVO CARS CORPORATION

- **Continue**

  Refer to **INFORMATION**

INFORMATION

FAULT-TRACING INFORMATION

If the fault is intermittent, do not verify fault-tracing if the fault does not recur.

It is possible to view the information again, or leave fault-tracing for this diagnostic trouble code (DTC).

CEM-8F41: TAILGATE WASHER MOTOR RELAY. SIGNAL TOO HIGH. PERMANENT FAULT (2003-2004)

DIAGNOSTIC TROUBLE CODE (DTC) INFORMATION

see **DIAGNOSTIC TROUBLE CODE (DTC) INFORMATION**

SIGNAL TOO HIGH. PERMANENT FAULT

CHECKING THE RELAY

Check that relay 2/93 is correctly connected. Check that the relay is not defective.

Remedy as necessary.

Was a fault detected?

- **YES**

  Refer to **VERIFICATION**

- **NO**

  Refer to **CHECKING THE CABLE**

CHECKING THE CABLE

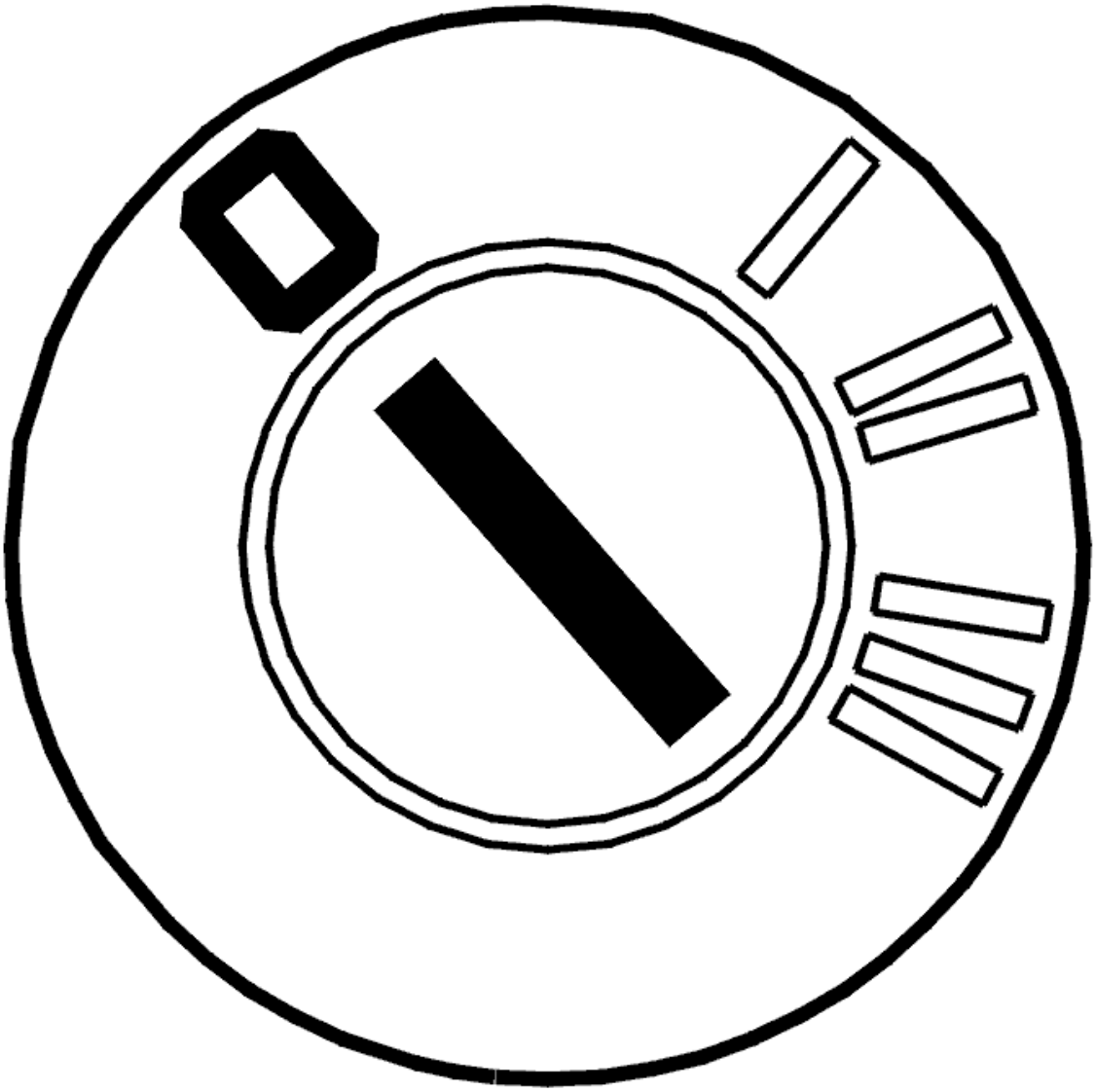

Fig. 83: Identifying Ignition OFF
Courtesy of VOLVO CARS CORPORATION

- Ignition off.

  Check the cable between central electronic module (CEM) terminal #17A and relay base 2/93 terminal #2. Check for a short-circuit to supply voltage.

  Remedy as necessary.

  Other information:

  - To connect the breakout box, see **CONNECTING THE BREAKOUT BOX**
  - -2004: **SIGNAL SPECIFICATION**
  - 2005-: **SIGNAL SPECIFICATION**

- see **CHECKING WIRING AND TERMINALS**

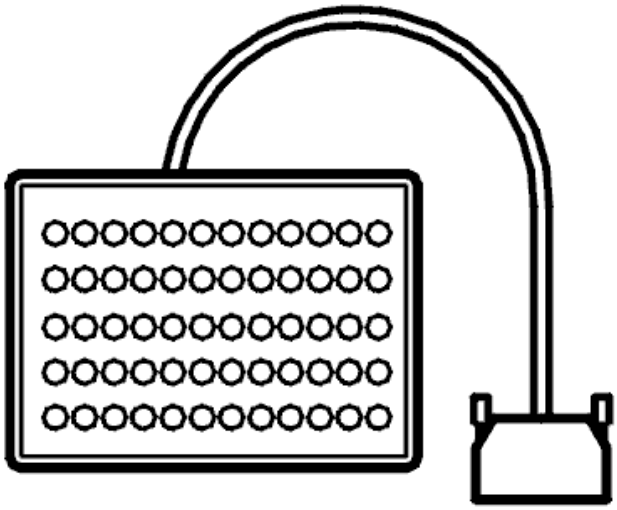

Fig. 84: Breakout Box
Courtesy of VOLVO CARS CORPORATION

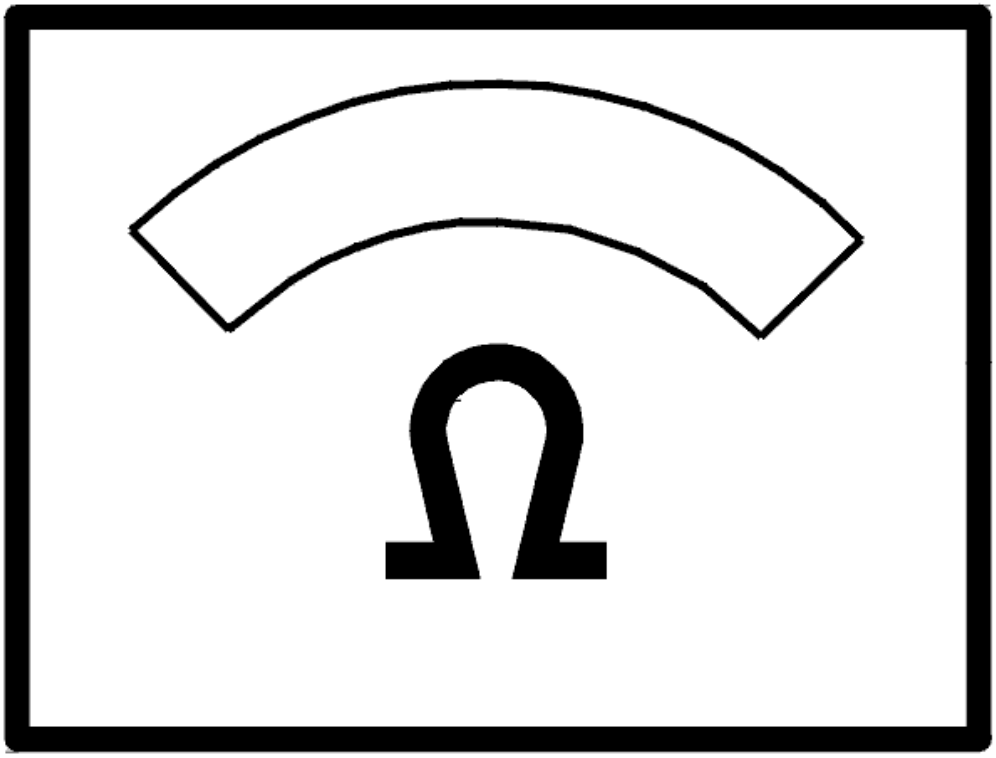

Fig. 85: Identifying Ohm Meter
Courtesy of VOLVO CARS CORPORATION

- **Continue**

  Refer to **VERIFICATION**

VERIFICATION

VERIFICATION

HINT: After carrying out the repair, check that the fault has been remedied.

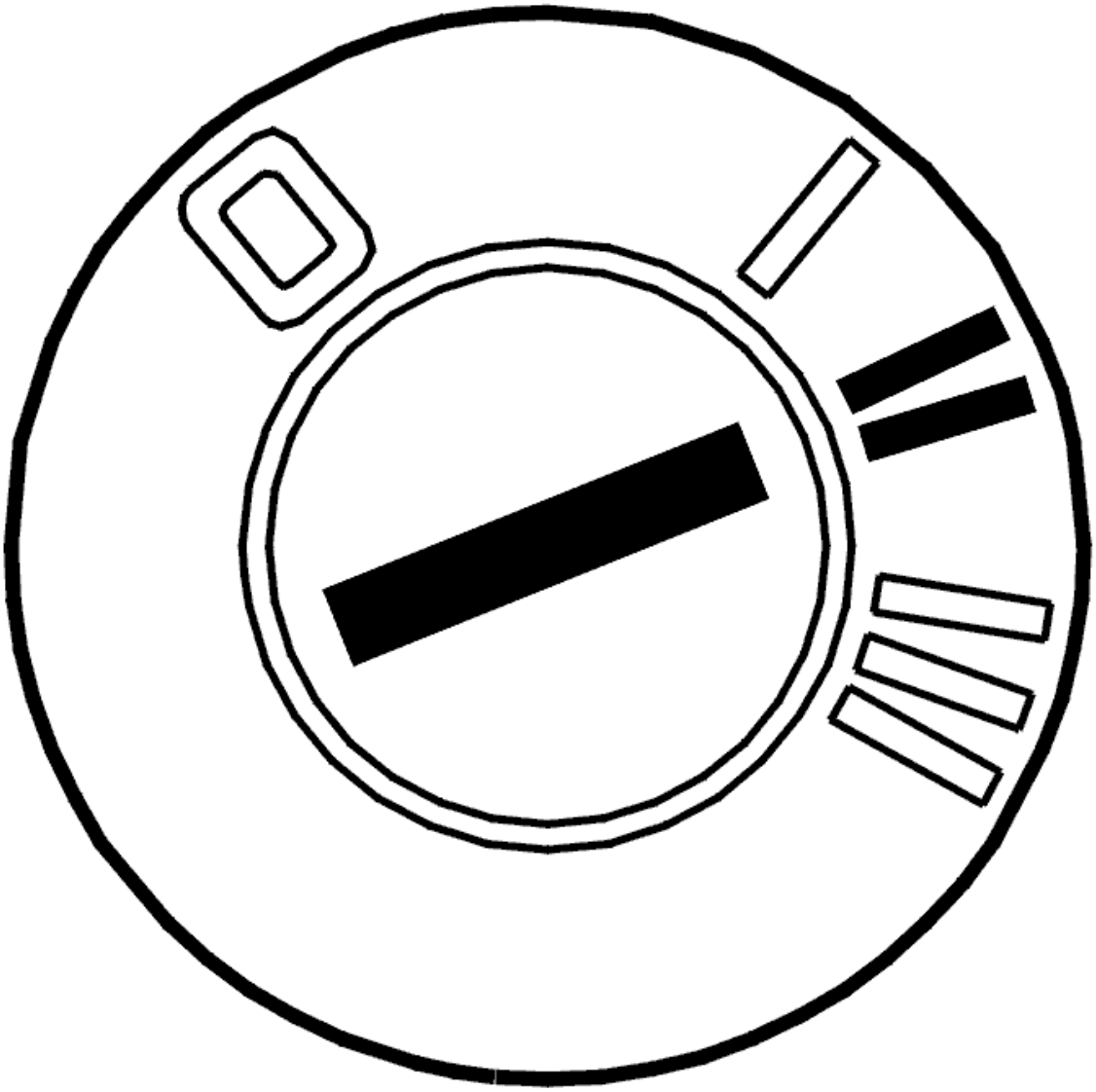

Fig. 86: Identifying Ignition ON
Courtesy of VOLVO CARS CORPORATION

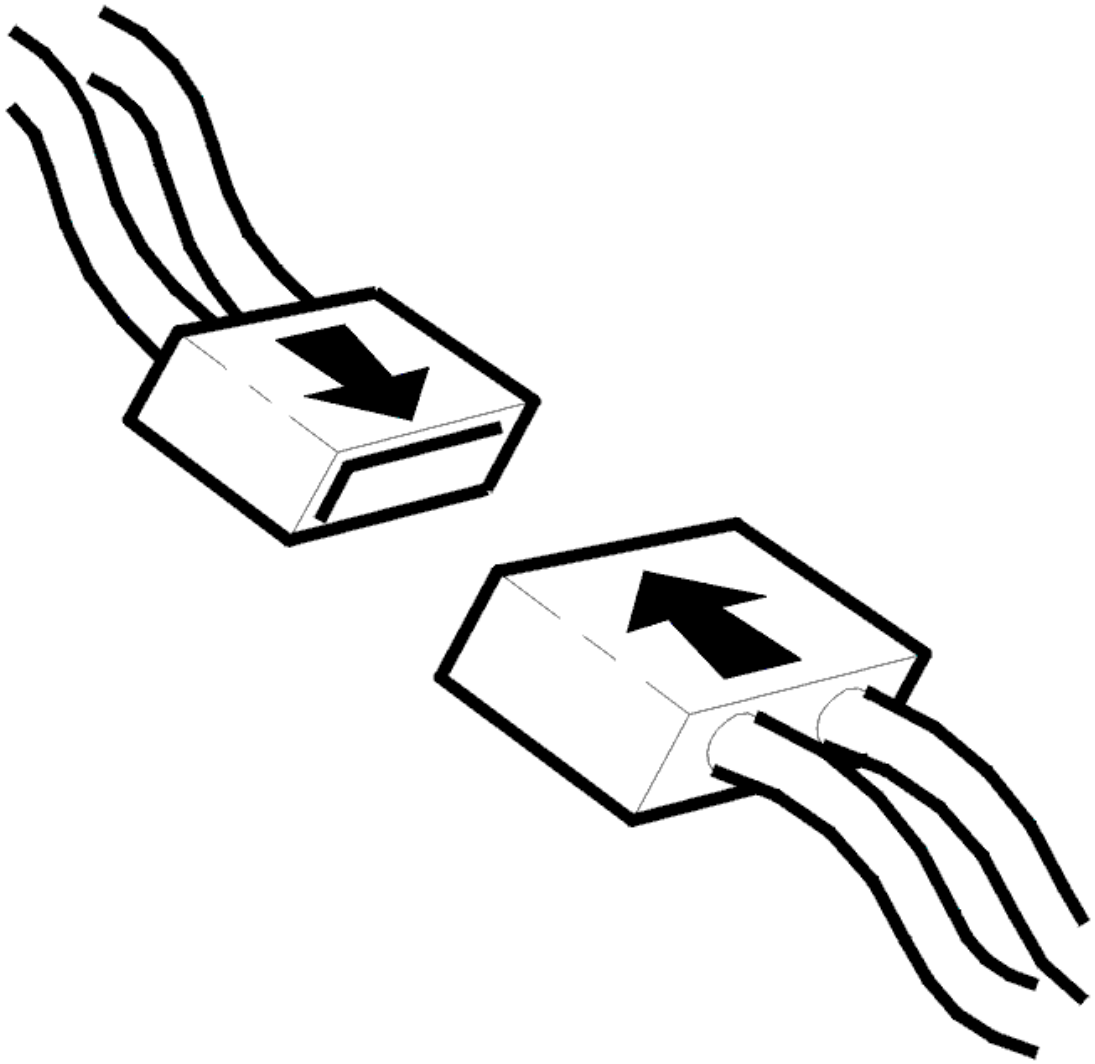

Fig. 87: Connecting Connector
Courtesy of VOLVO CARS CORPORATION

- Ignition off.
- Reinstall the connectors, components etc.
- Ignition on.

  Activate the relay.

  Listen for a click from the relay.

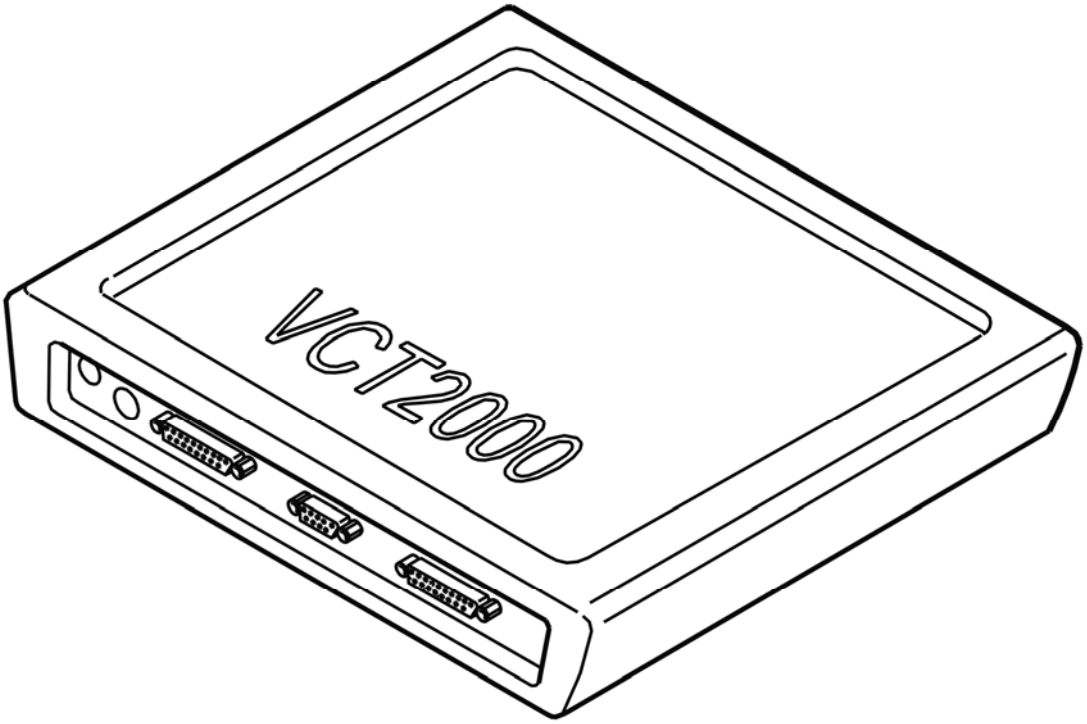

Fig. 88: Identifying VCT2000 Diagnostic Tool Symbol In VIDA
Courtesy of VOLVO CARS CORPORATION

Does the flushing work?

- **YES**

  VERIFIED: Troubleshooting has been completed.

- **NO**

  Refer to **INFORMATION**

INFORMATION

FAULT-TRACING INFORMATION

The fault should have been detected and remedied. As this is not the case fault-tracing has failed.

Exit fault-tracing for this diagnostic trouble code (DTC) or make another attempt.

CEM-8F43: TAILGATE WASHER MOTOR RELAY. SIGNAL TOO LOW (2005-2012)

DIAGNOSTIC TROUBLE CODE (DTC) INFORMATION CEM-8F43

Condition

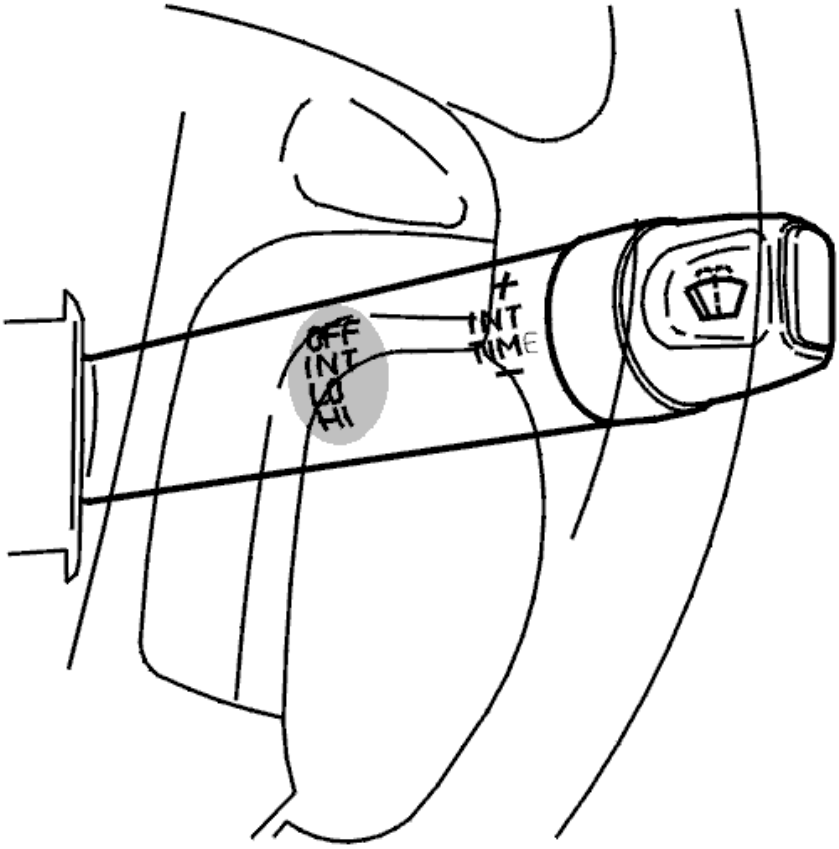

Fig. 89: Identifying Windshield Wiper Lever
Courtesy of VOLVO CARS CORPORATION

The central electronic module (CEM) checks the windshield wipers.

The diagnostic trouble code (DTC) is stored if the central electronic module (CEM) registers that the signal from the relay circuit for the rear washer motor is too low.

The diagnostic trouble code (DTC) can be diagnosed when the ignition is switched on.

Substitute Value

- None.

Possible Source

- Short-circuit to ground in the relay circuit for the rear washer motor
- Open-circuit in the relay circuit for the rear washer motor.
- Damaged fuse.

Fault symptom[s]

- Rear windshield washing does not work
- The rear windshield washer motor does not operate.

SIGNAL TOO LOW

CHECKING THE WIRING

If the fault is intermittent, it has been registered previously but is no longer present. Intermittent faults can be caused by interference at start up or can be a different type of fault which occurs on different occasions. The fault is evaluated depending on how it occurs.

Check the fuse for the washer motor, replace if necessary.

Check the cable between the central electronic module (CEM) and the washer motor. Check for an open-circuit. Check for a short-circuit to ground.

Take readings between:

- Central electronic module (CEM) terminal #B29 (#29) and washer motor terminal #2.

Replace the central electronic module (CEM) if no fault is found.

Other information:

- see **CONNECTING THE BREAKOUT BOX**
- -2004: **SIGNAL SPECIFICATION**
- 2005-: **SIGNAL SPECIFICATION**
- For -2004, see: **CENTRAL ELECTRONIC MODULE (CEM), REPLACING**
- For 2005-, see: **CENTRAL ELECTRONIC MODULE (CEM), REPLACING** .
- see **CHECKING WIRING AND TERMINALS**

- **Continue**

  Refer to **VERIFICATION**

VERIFICATION

VERIFICATION

HINT: After carrying out the repair, check that the fault has been remedied.

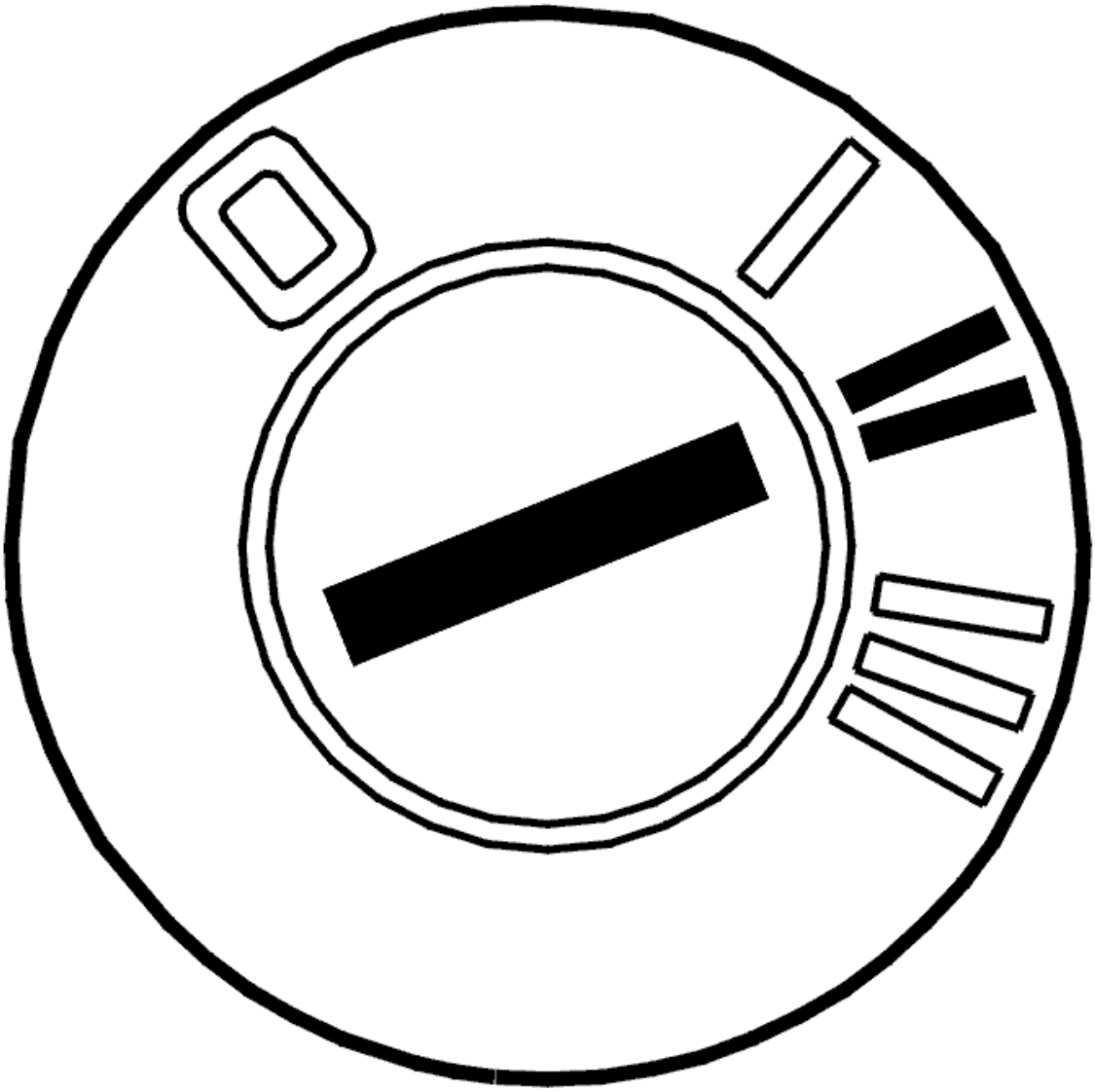

Fig. 90: Identifying Ignition ON
Courtesy of VOLVO CARS CORPORATION

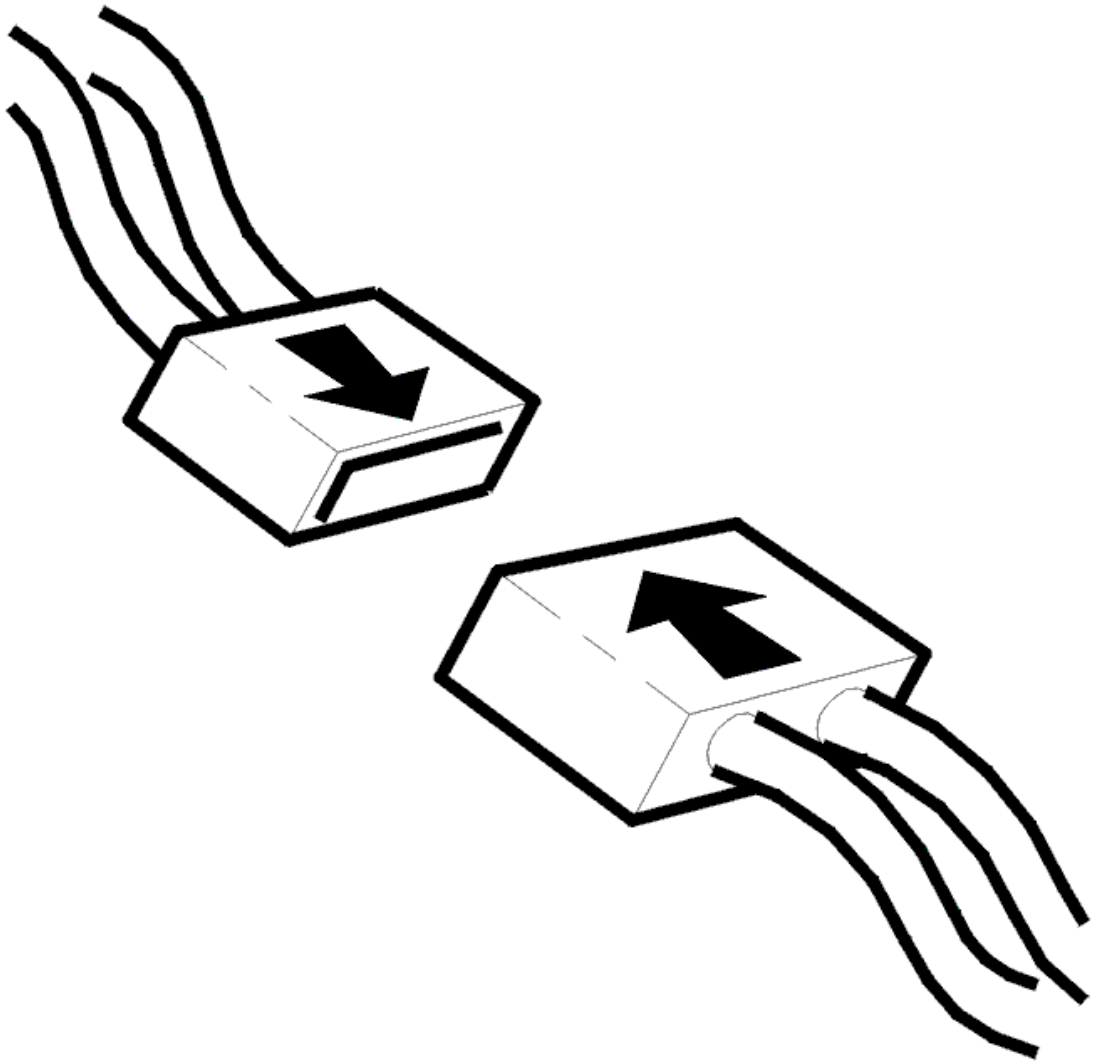

Fig. 91: Connecting Connector
Courtesy of VOLVO CARS CORPORATION

- Ignition off
- Reinstall the connectors, components etc.
- Ignition on.

  Activate the washer motor.

Is the washer working?

- **YES**

  VERIFIED: Troubleshooting has been completed.

- **NO**

  Refer to **INFORMATION**

INFORMATION

FAULT-TRACING INFORMATION

The fault should have been detected and remedied. As this is not the case fault-tracing has failed.

Exit fault-tracing for this diagnostic trouble code (DTC) or make another attempt.

CEM-8F43: TAILGATE WASHER MOTOR RELAY. SIGNAL TOO LOW. INTERMITTENT FAULT (2003-2004)

DIAGNOSTIC TROUBLE CODE (DTC) INFORMATION

Condition

Diagnostic trouble code (DTC) CEM-8F43 is stored if the signal across relay coil (2/93) is missing or too low.

Substitute Value

None.

Possible Source

- Oxidation in the relay base switches.
- The relay not installed.
- Short-circuit to ground in the relay coil.

Fault symptom[s]

- The rear windshield washer motor does not operate.

SIGNAL TOO LOW. INTERMITTENT FAULT

CHECKING THE RELAY AND CABLE

Check that relay 2/93 is correctly connected. Check that the relay is not defective.

Check fuse 11B/10.

Check the cable between fuse 11B/10 and relay base #1. Check for an open-circuit.

Check the cable between central electronic module (CEM) terminal #17A and relay base 2/93 terminal #2.

Check for an open-circuit.

Check the central electronic module (CEM) connector. Check for contact resistance and oxidation.

Remedy as necessary.

Other information:

- To connect the breakout box, see **CONNECTING THE BREAKOUT BOX**
- -2004: **SIGNAL SPECIFICATION**
- 2005-: **SIGNAL SPECIFICATION**
- see **CHECKING WIRING AND TERMINALS**

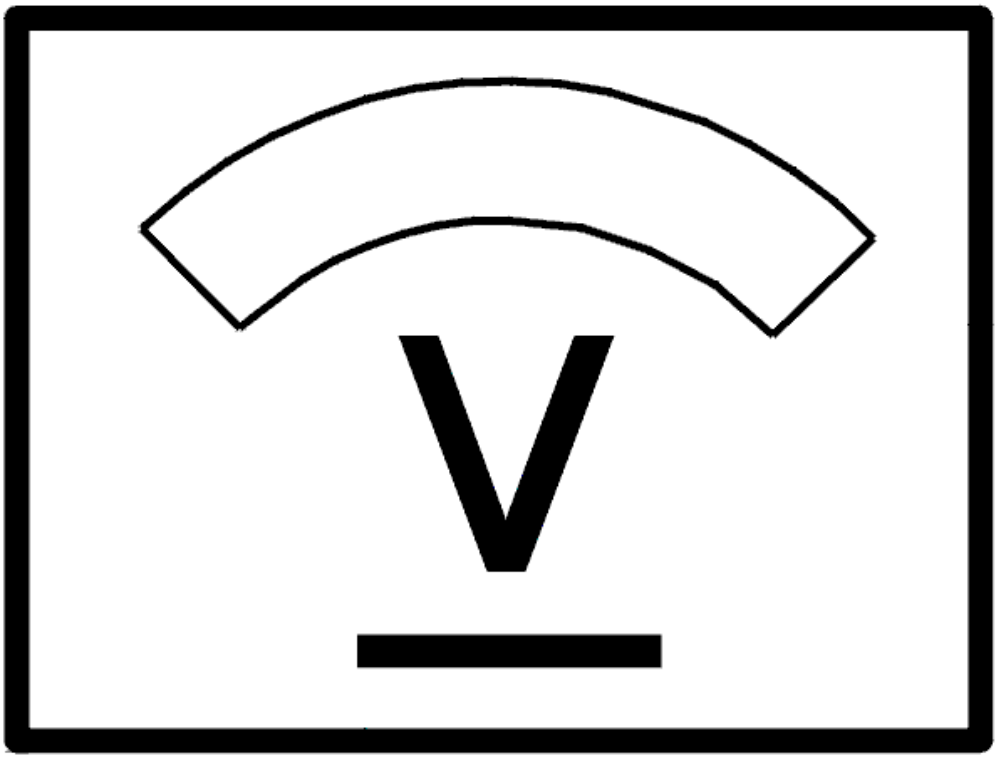

Fig. 92: Identifying Voltage Display
Courtesy of VOLVO CARS CORPORATION

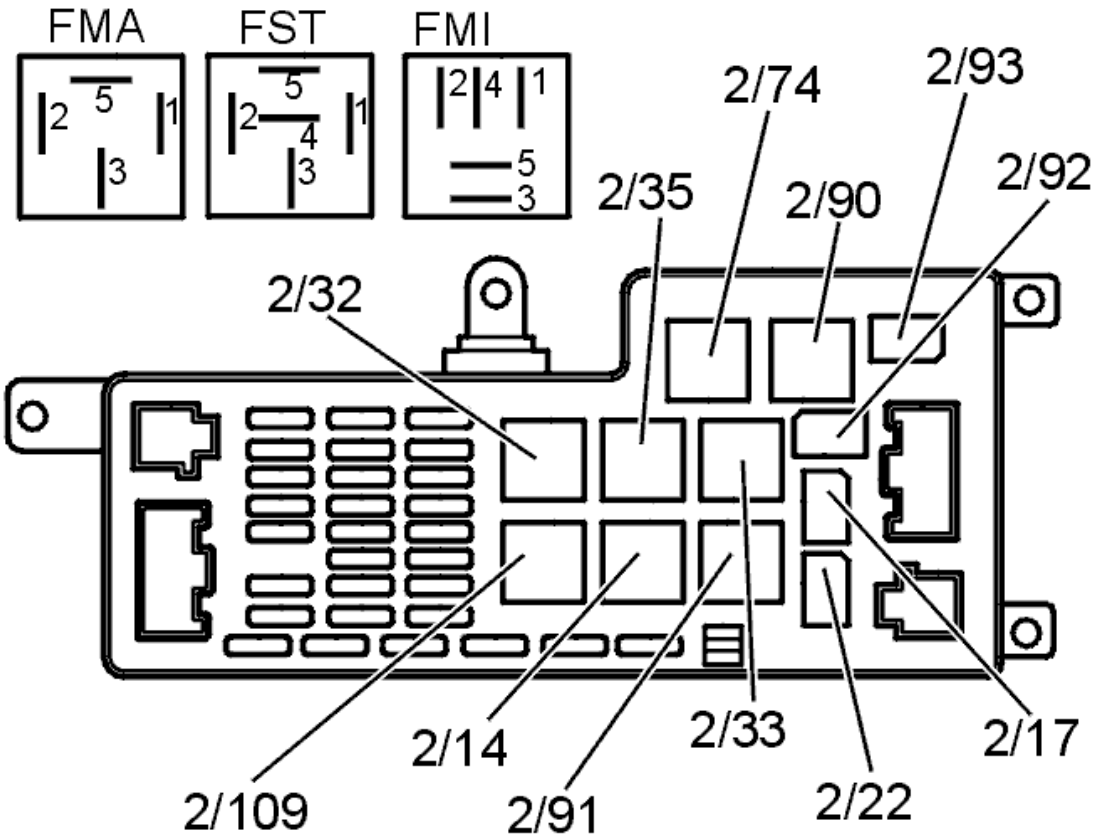

Fig. 93: Identifying Connectors
Courtesy of VOLVO CARS CORPORATION

- **Continue**

  Refer to **INFORMATION**

INFORMATION

FAULT-TRACING INFORMATION

If the fault is intermittent, do not verify fault-tracing if the fault does not recur.

It is possible to view the information again, or leave fault-tracing for this diagnostic trouble code (DTC).

CEM-8F43: TAILGATE WASHER MOTOR RELAY. SIGNAL TOO LOW. PERMANENT FAULT (2003-2004)

DIAGNOSTIC TROUBLE CODE (DTC) INFORMATION

see **DIAGNOSTIC TROUBLE CODE (DTC) INFORMATION**

SIGNAL TOO LOW. PERMANENT FAULT

CHECKING THE RELAY

Check that relay 2/93 is correctly connected. Check that the relay is not defective.

Remedy as necessary.

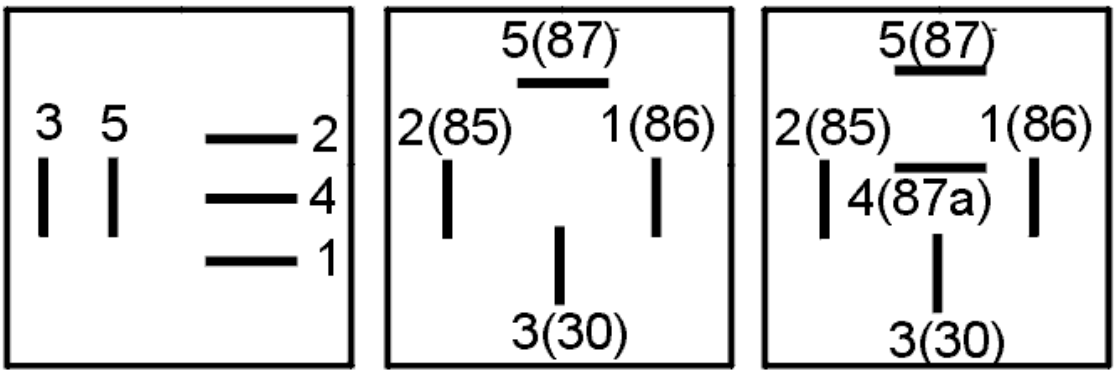

Fig. 94: Identifying Relay Terminals
Courtesy of VOLVO CARS CORPORATION

Was a fault detected?

- **YES**

  Refer to **VERIFICATION**

- **NO**

  Refer to **CHECKING THE CABLE**

CHECKING THE CABLE

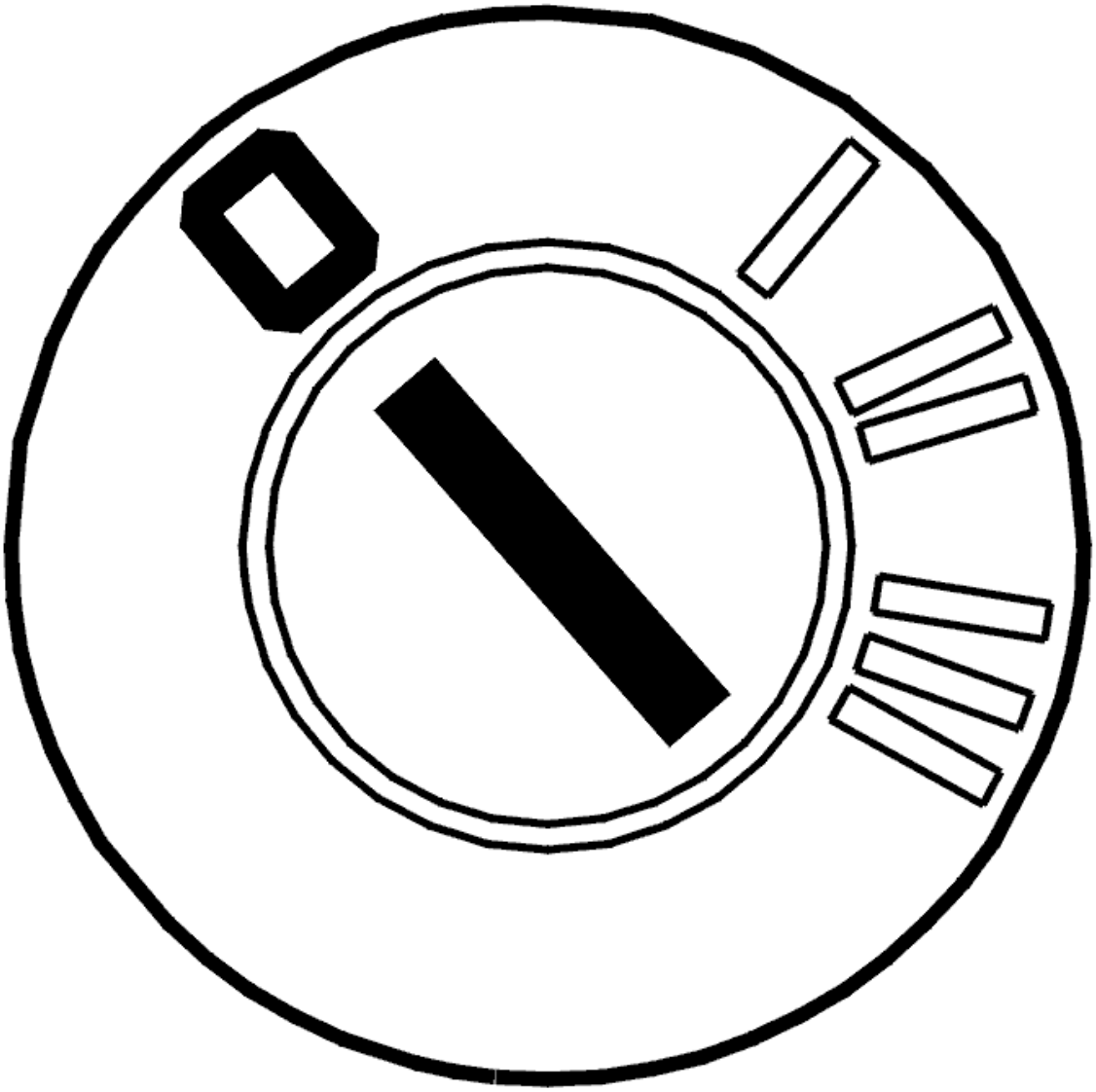

Fig. 95: Identifying Ignition OFF
Courtesy of VOLVO CARS CORPORATION

- Ignition off.

  Check fuse 11B/10.

  Check the cable between fuse 11B/10 and relay base #1. Check for an open-circuit.

  Check the cable between central electronic module (CEM) terminal #17A and relay base 2/93 terminal #2. Check for an open-circuit.

  Also check the connector. Check for an open-circuit.

  Remedy as necessary.

Other information:

- To connect the breakout box, see **CONNECTING THE BREAKOUT BOX**
- -2004: **SIGNAL SPECIFICATION**
- 2005-: **SIGNAL SPECIFICATION**
- see **CHECKING WIRING AND TERMINALS**

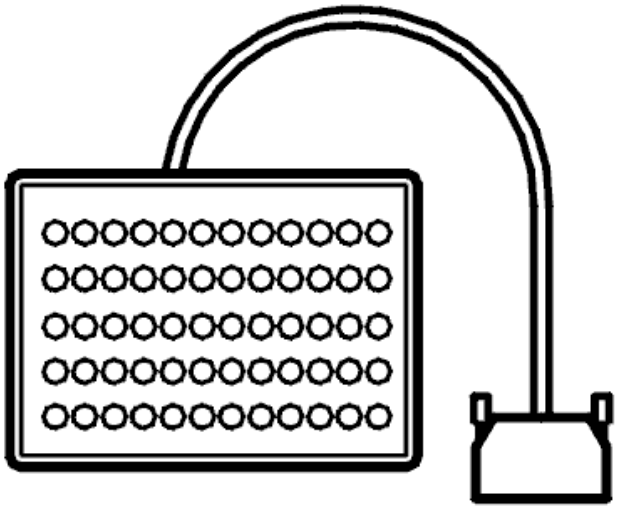

Fig. 96: Breakout Box
Courtesy of VOLVO CARS CORPORATION

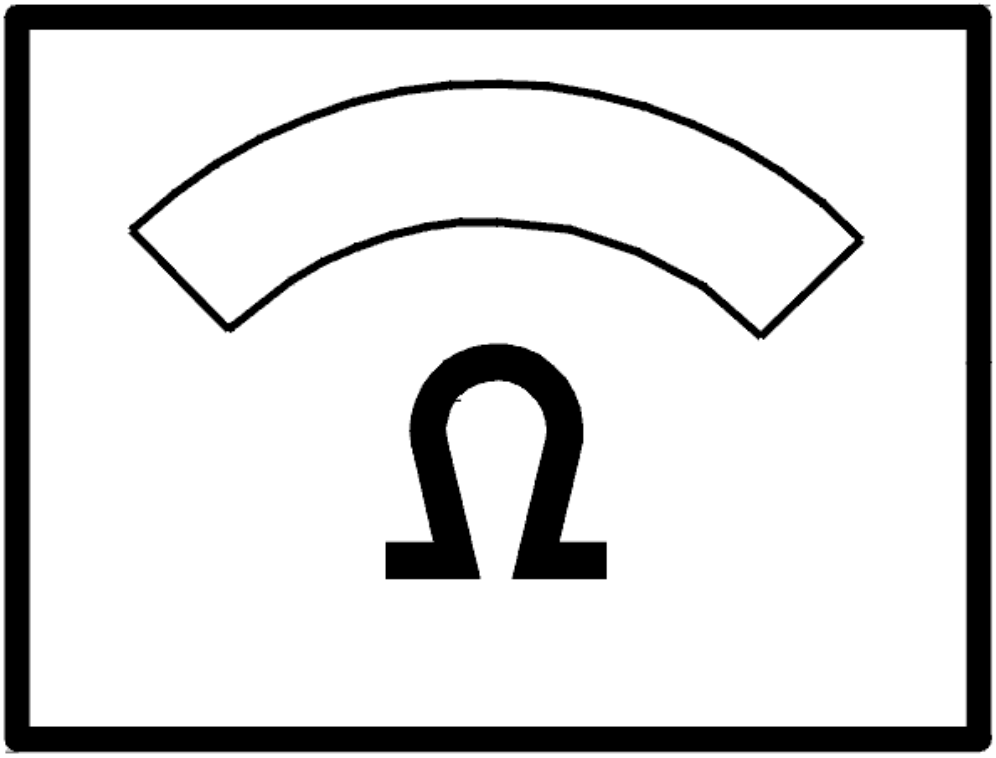

Fig. 97: Identifying Ohm Meter
Courtesy of VOLVO CARS CORPORATION

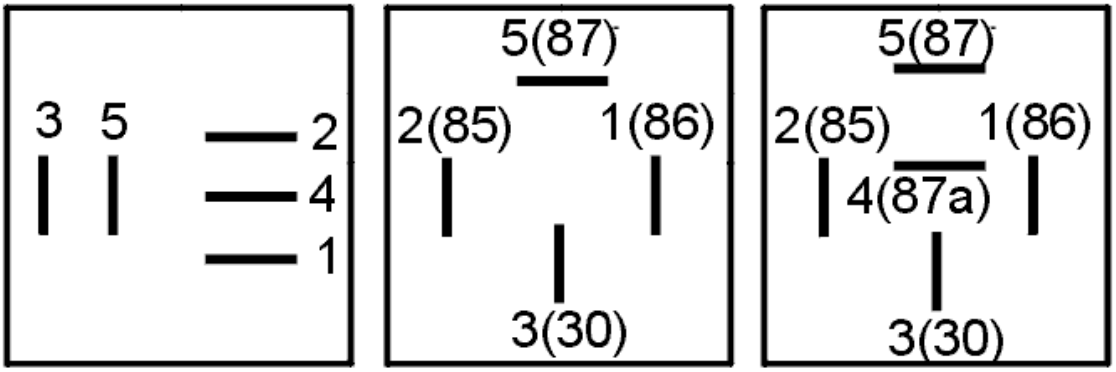

Fig. 98: Identifying Relay Terminals
Courtesy of VOLVO CARS CORPORATION

- **Continue**

  Refer to **VERIFICATION**

VERIFICATION

VERIFICATION

HINT: After carrying out the repair, check that the fault has been remedied.

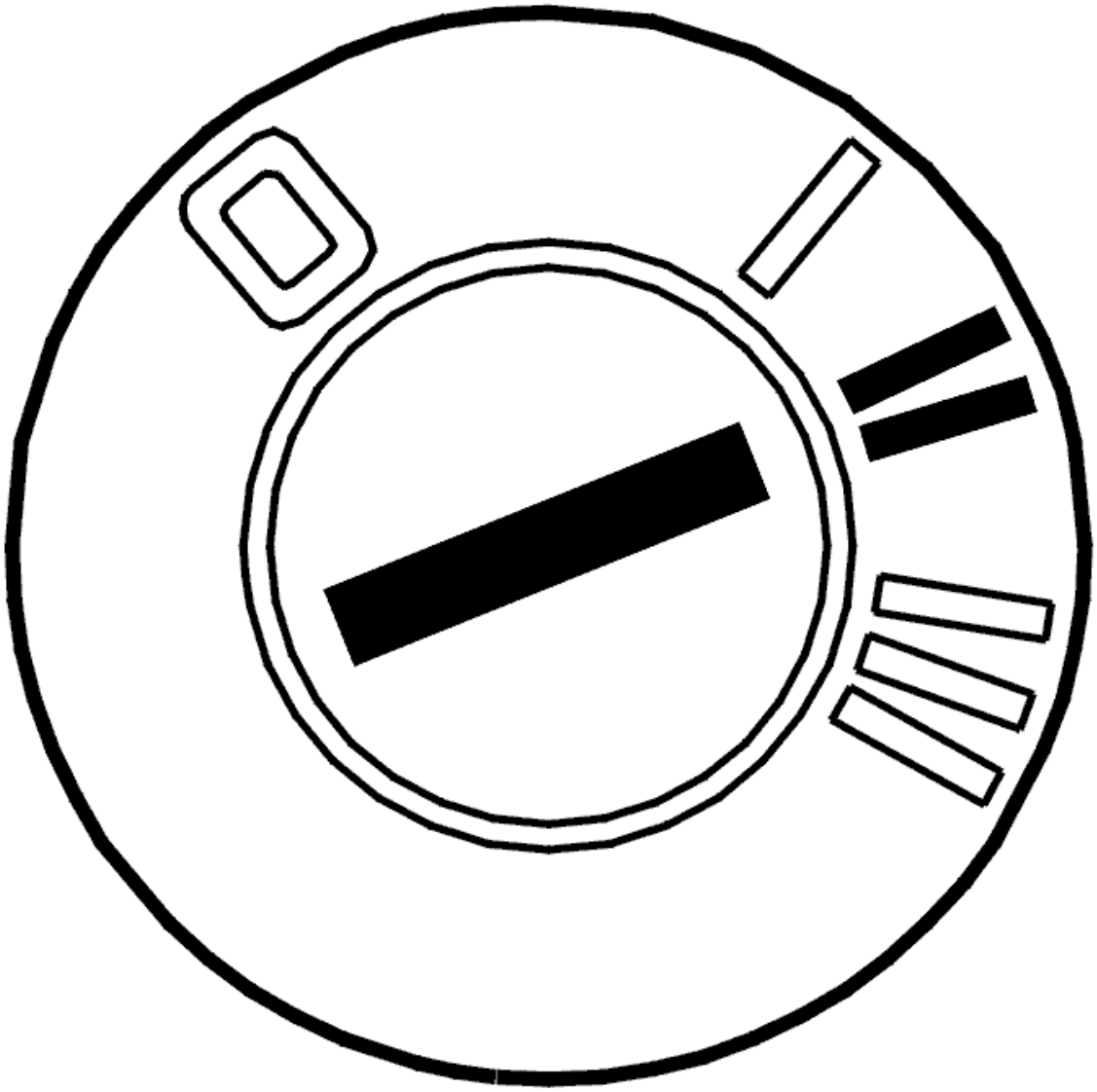

Fig. 99: Identifying Ignition ON
Courtesy of VOLVO CARS CORPORATION

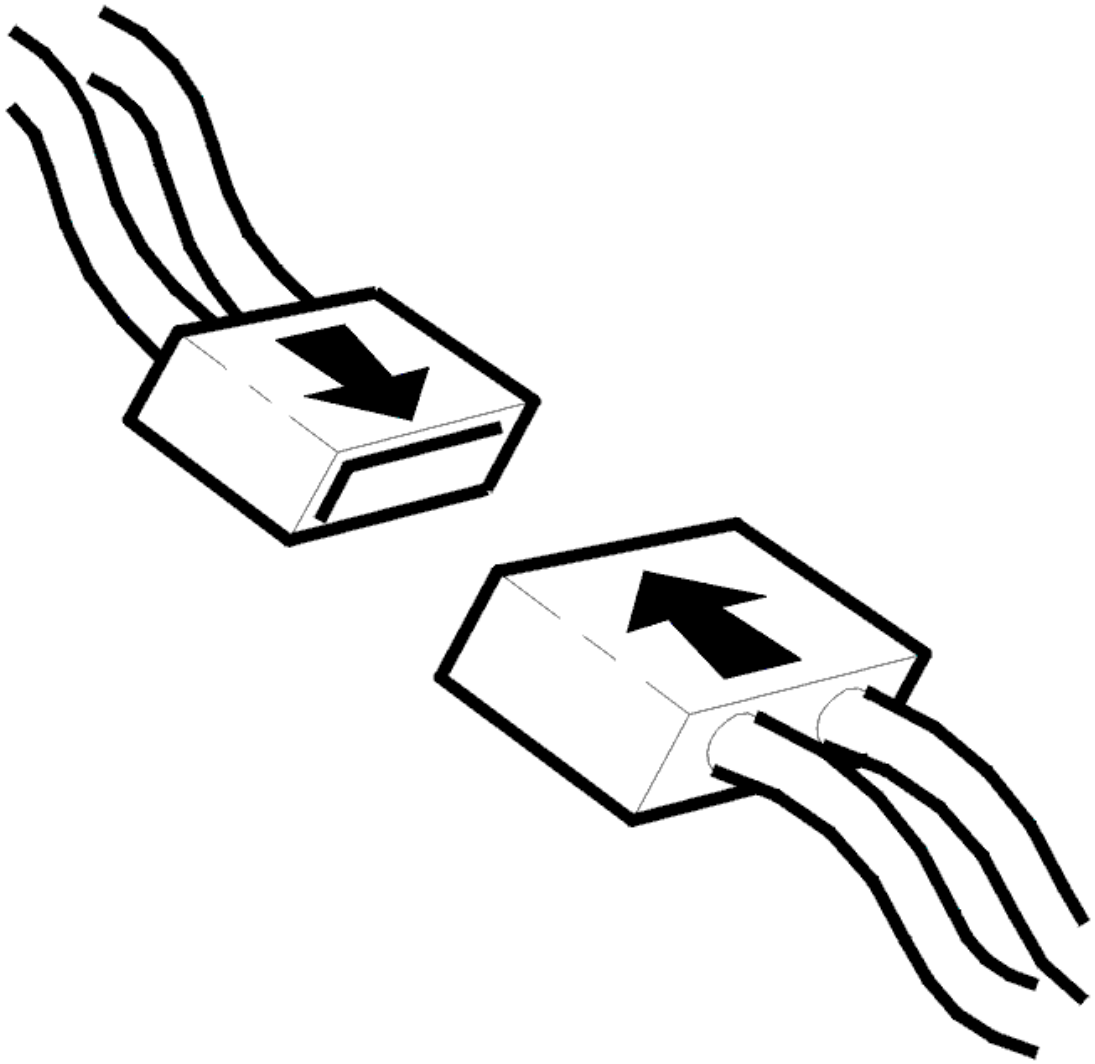

Fig. 100: Connecting Connector
Courtesy of VOLVO CARS CORPORATION

- Ignition off.
- Reinstall the connectors, components etc.
- Ignition on.

  Activate the relay.

  Listen for a click from the relay.

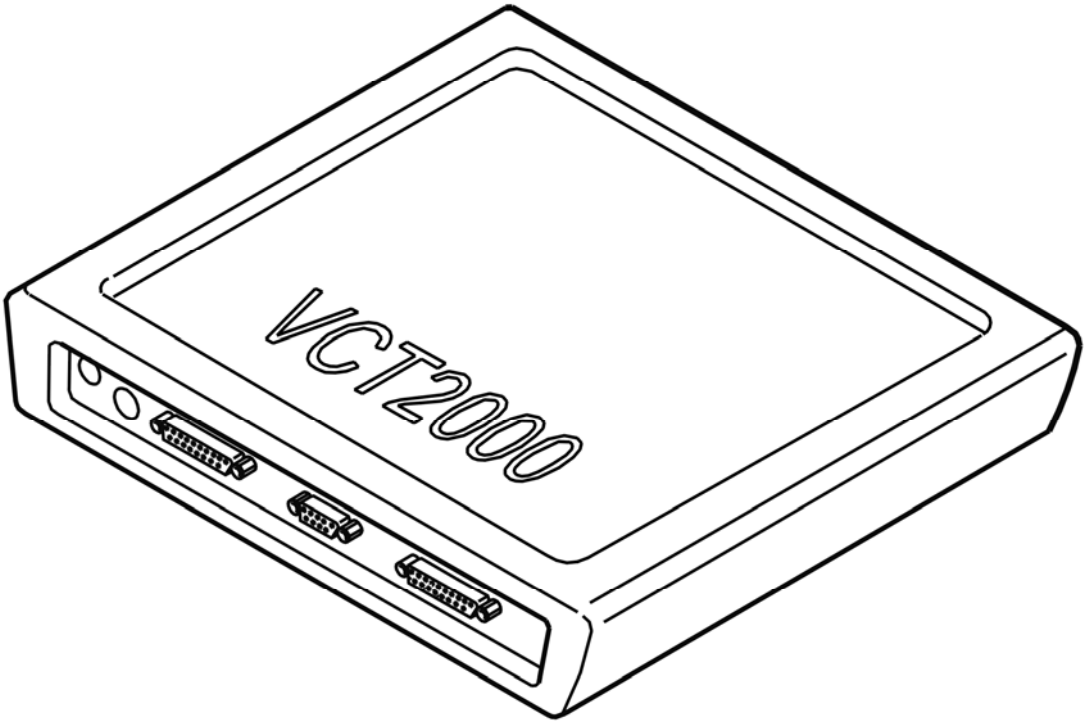

Fig. 101: Identifying VCT2000 Diagnostic Tool Symbol In VIDA
Courtesy of VOLVO CARS CORPORATION

Does the flushing work?

- **YES**

  VERIFIED: Troubleshooting has been completed.

- **NO**

  Refer to **INFORMATION**

INFORMATION

FAULT-TRACING INFORMATION

The fault should have been detected and remedied. As this is not the case fault-tracing has failed.

Exit fault-tracing for this diagnostic trouble code (DTC) or make another attempt.

CEM-8F44: WINDSHIELD WIPER LEVER. FAULTY SIGNAL (2005-2012)

DIAGNOSTIC TROUBLE CODE (DTC) INFORMATION CEM-8F44

Condition

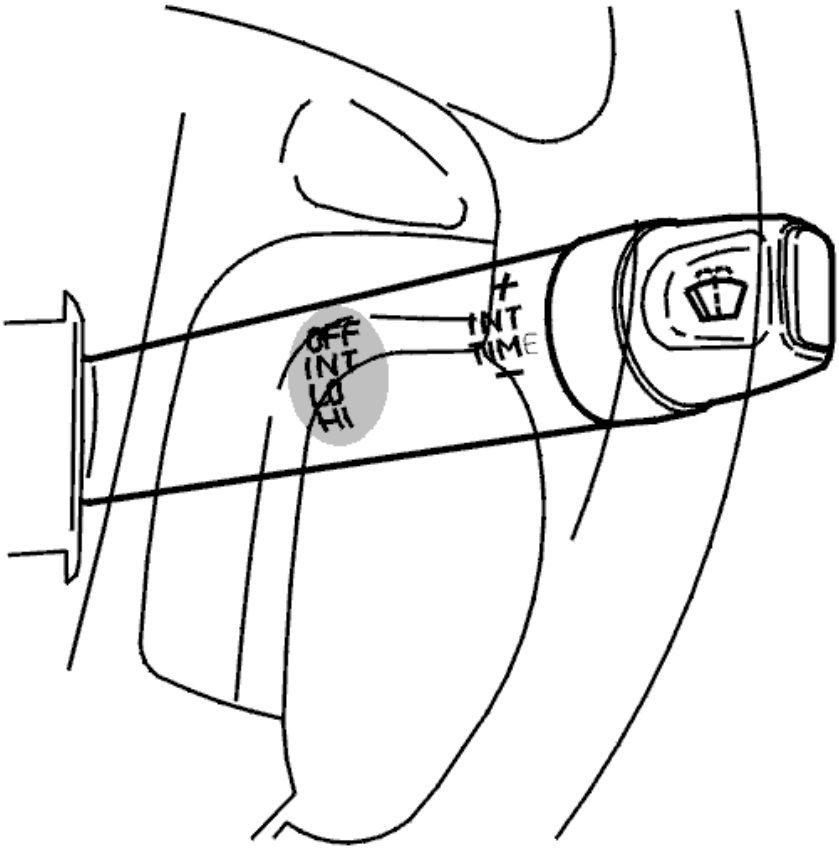

Fig. 102: Identifying Windshield Wiper Lever
Courtesy of VOLVO CARS CORPORATION

The central electronic module (CEM) checks the windshield wipers.

The diagnostic trouble code (DTC) is stored if the central electronic module (CEM) registers that the switches for the front and rear washer motors are active at the same time.

The diagnostic trouble code (DTC) can be diagnosed when the ignition is switched on.

Substitute Value

- None.

Possible Source

- Damaged windshield wiper lever.

Fault symptom[s]

- The rear windshield washer motor does not operate

- The windshield washer motor does not operate.

FAULTY SIGNAL

REPLACING THE WINDSHIELD WIPER SWITCH

If the fault is intermittent, it has been registered previously but is no longer present. Intermittent faults can be caused by interference at start up or can be a different type of fault which occurs on different occasions. The fault is evaluated depending on how it occurs.

If the fault is permanent, replace the windshield wiper switch because an internal fault has occurred.

Other information:

- see **WASHER / WIPER SWITCH, REPLACING**
- **Continue**

  Refer to **VERIFICATION**

VERIFICATION

VERIFICATION

HINT: After carrying out the repair, check that the fault has been remedied.

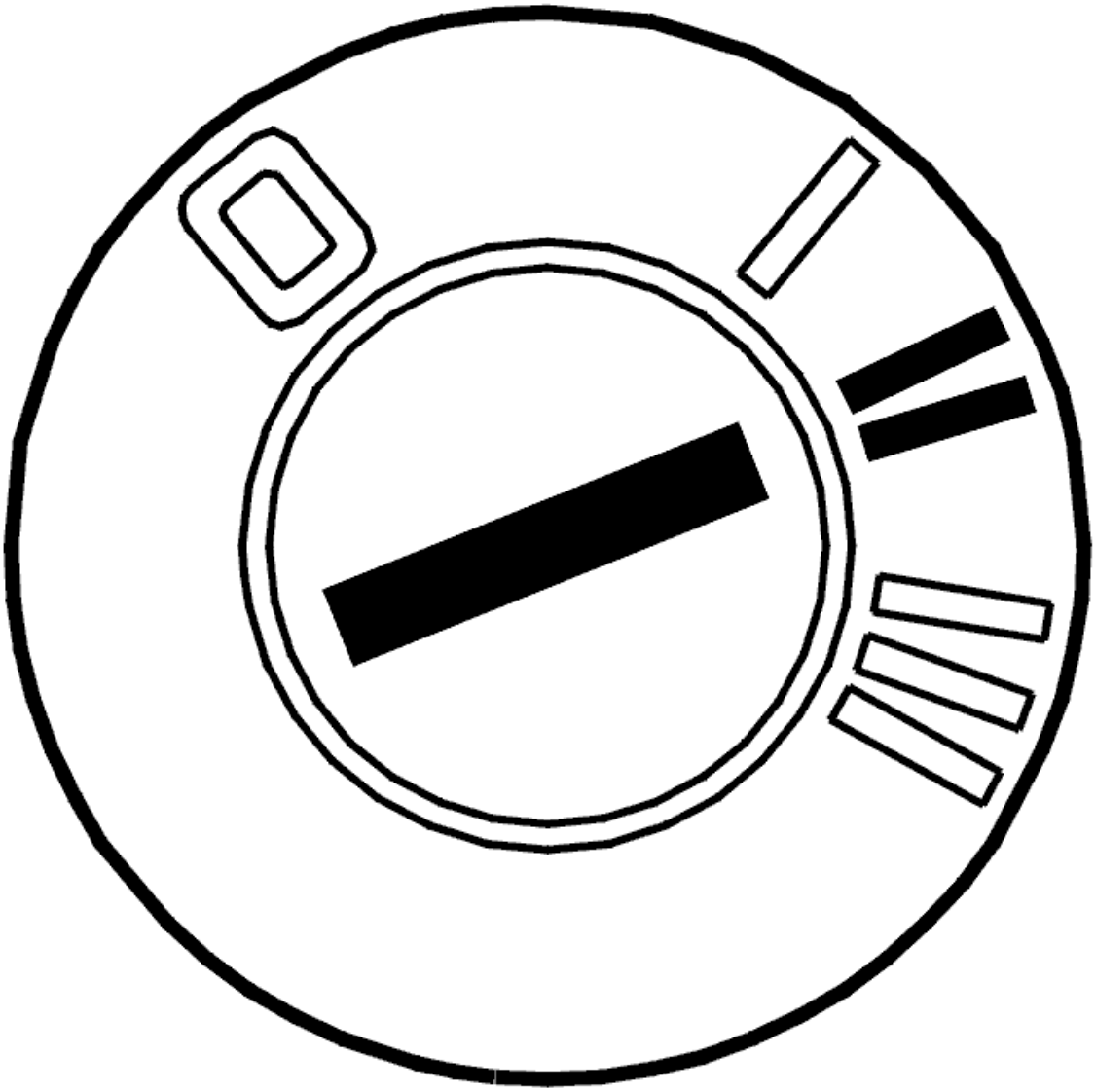

Fig. 103: Identifying Ignition ON
Courtesy of VOLVO CARS CORPORATION

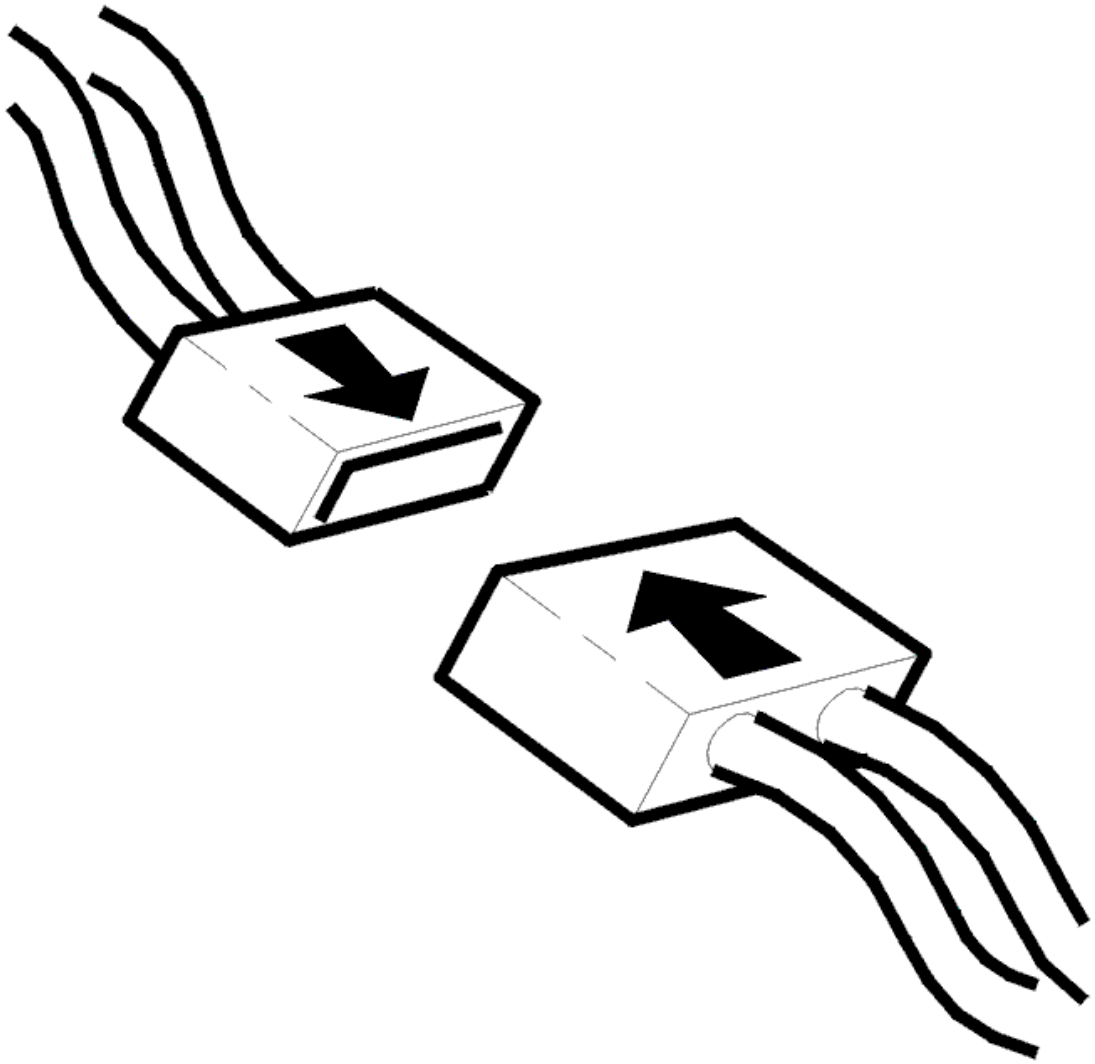

Fig. 104: Connecting Connector
Courtesy of VOLVO CARS CORPORATION

- Ignition off
- Reinstall the connectors, components etc.
- Ignition on.

  Activate the windshield wipers.

  Check that the windshield wipers work in all positions.

Are the windshield wipers working?

- **YES**

VERIFIED: Troubleshooting has been completed.

- **NO**

  Refer to **INFORMATION**

INFORMATION

FAULT-TRACING INFORMATION

The fault should have been detected and remedied. As this is not the case fault-tracing has failed.

Exit fault-tracing for this diagnostic trouble code (DTC) or make another attempt.

CEM-8F45: WINDSHIELD WIPER LEVER. FAULTY SIGNAL (2005-2012)

DIAGNOSTIC TROUBLE CODE (DTC) INFORMATION CEM-8F45

Condition

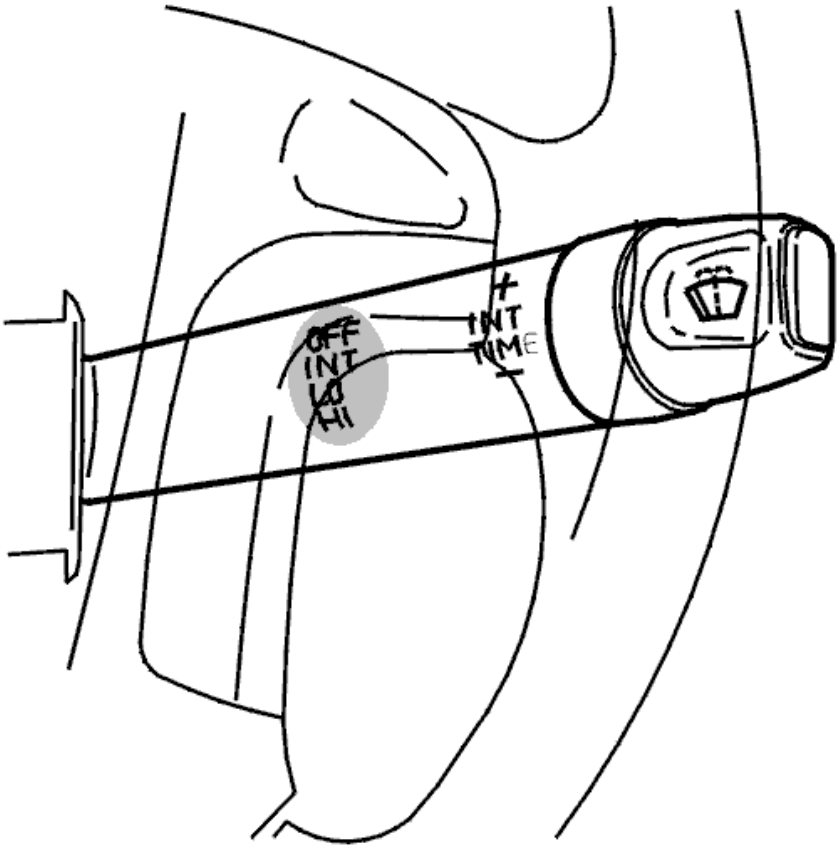

Fig. 105: Identifying Windshield Wiper Lever
Courtesy of VOLVO CARS CORPORATION

The central electronic module (CEM) checks the windshield wipers.

The diagnostic trouble code (DTC) is stored if the central electronic module (CEM) registers that the switches for the rear windshield continuous wiping and intermittent wiping are active at the same time.

The diagnostic trouble code (DTC) can be diagnosed when the ignition is switched on.

Substitute Value

- None.

Possible Source

- Damaged windshield wiper lever.

Fault symptom[s]

- The rear windshield wiper motor does not operate.

FAULTY SIGNAL

REPLACING THE WINDSHIELD WIPER SWITCH

If the fault is intermittent, it has been registered previously but is no longer present. Intermittent faults can be caused by interference at start up or can be a different type of fault which occurs on different occasions. The fault is evaluated depending on how it occurs.

If the fault is permanent, replace the windshield wiper switch because an internal fault has occurred.

Other information:

- see **WASHER / WIPER SWITCH, REPLACING**
- **Continue**

  Refer to **VERIFICATION**

VERIFICATION

VERIFICATION

HINT: After carrying out the repair, check that the fault has been remedied.

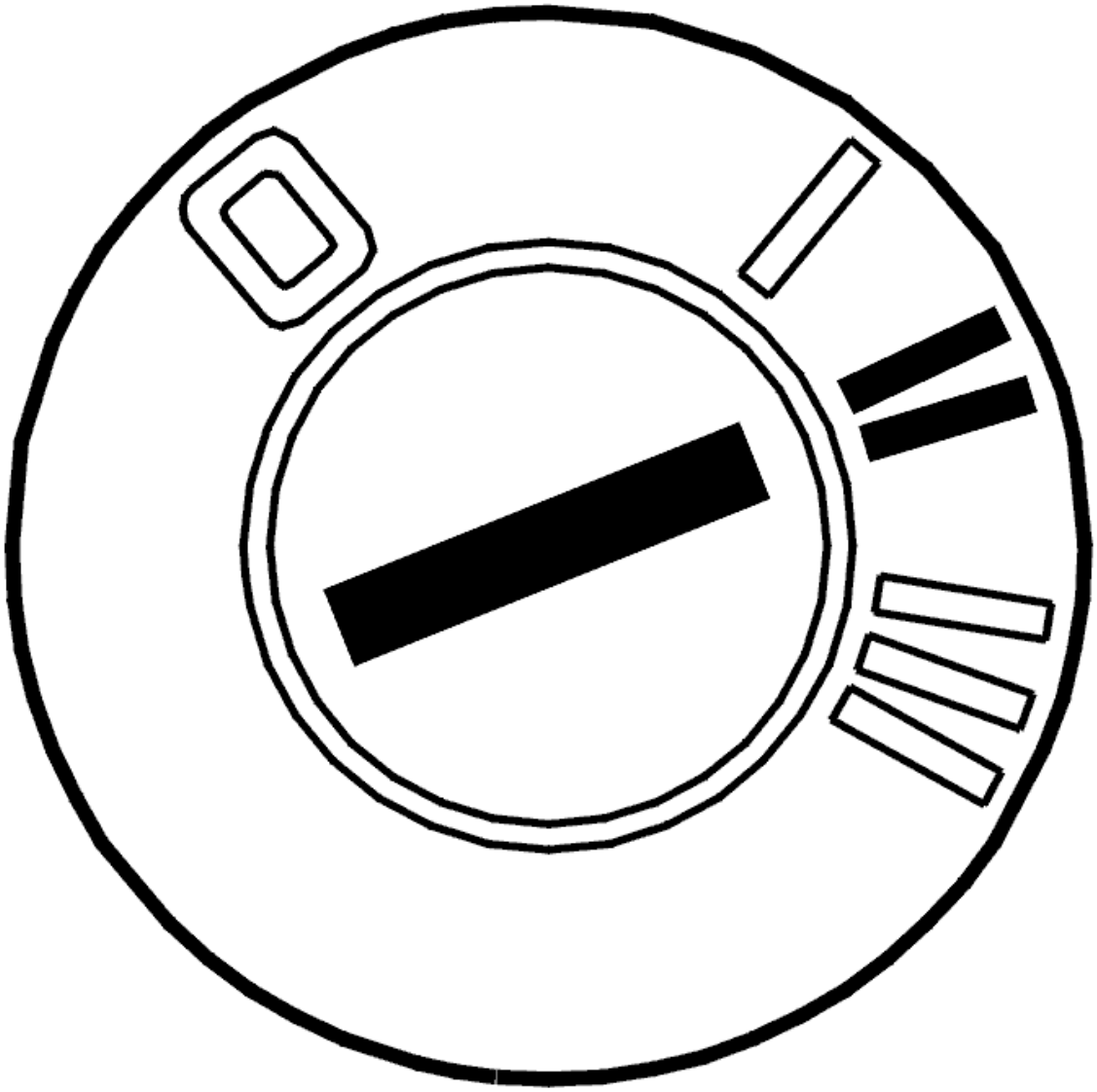

Fig. 106: Identifying Ignition ON
Courtesy of VOLVO CARS CORPORATION

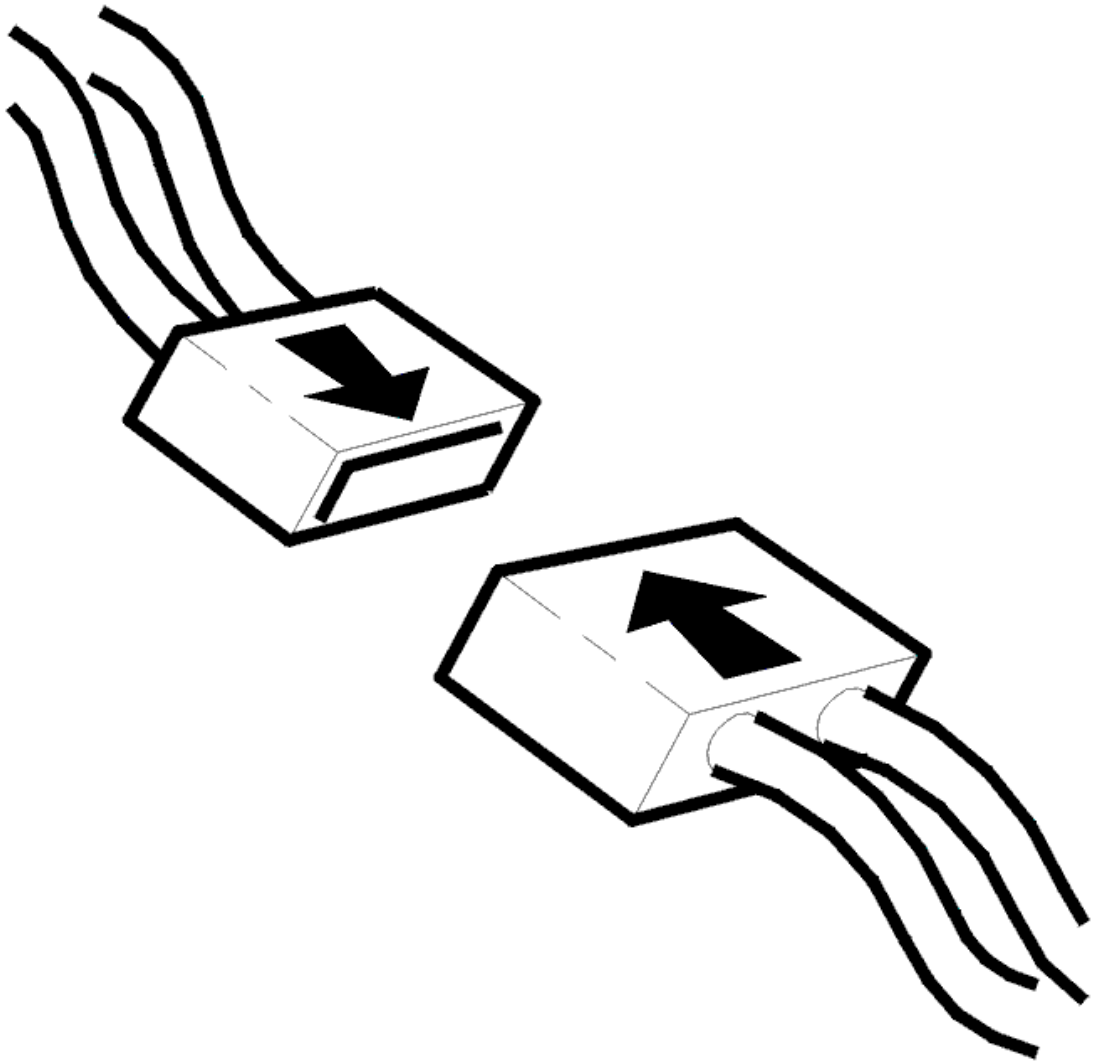

Fig. 107: Connecting Connector
Courtesy of VOLVO CARS CORPORATION

- Ignition off
- Reinstall the connectors, components etc.
- Ignition on.

  Activate the windshield wipers.

  Check that the windshield wipers work in all positions.

Are the windshield wipers working?

- **YES**

VERIFIED: Troubleshooting has been completed.

- **NO**

  Refer to **INFORMATION**

INFORMATION

FAULT-TRACING INFORMATION

The fault should have been detected and remedied. As this is not the case fault-tracing has failed.

Exit fault-tracing for this diagnostic trouble code (DTC) or make another attempt.

CEM-8F51: RELAY, HEADLAMP WASH / WIPE. SIGNAL TOO HIGH (2003-2004)

DIAGNOSTIC TROUBLE CODE (DTC) INFORMATION CEM-8F51

Condition

The central electronic module (CEM) checks the output signal to the relay coil for relay, headlamp wash / wipe.

Diagnostic trouble code (DTC) CEM-8F51 is stored if the central electronic module (CEM) registers that the output signal to the relay coil is too high.

Diagnostic trouble code (DTC) CEM-8F51 can be detected when the relay is activated.

Substitute Value

- None.

Possible Source

- Short-circuit to supply voltage in the signal cable
- Defective relay (short-circuit in the relay coil).

Fault symptom[s]

- The headlamp washer motor does not operate.

SIGNAL TOO HIGH

CHECKING THE RELAY

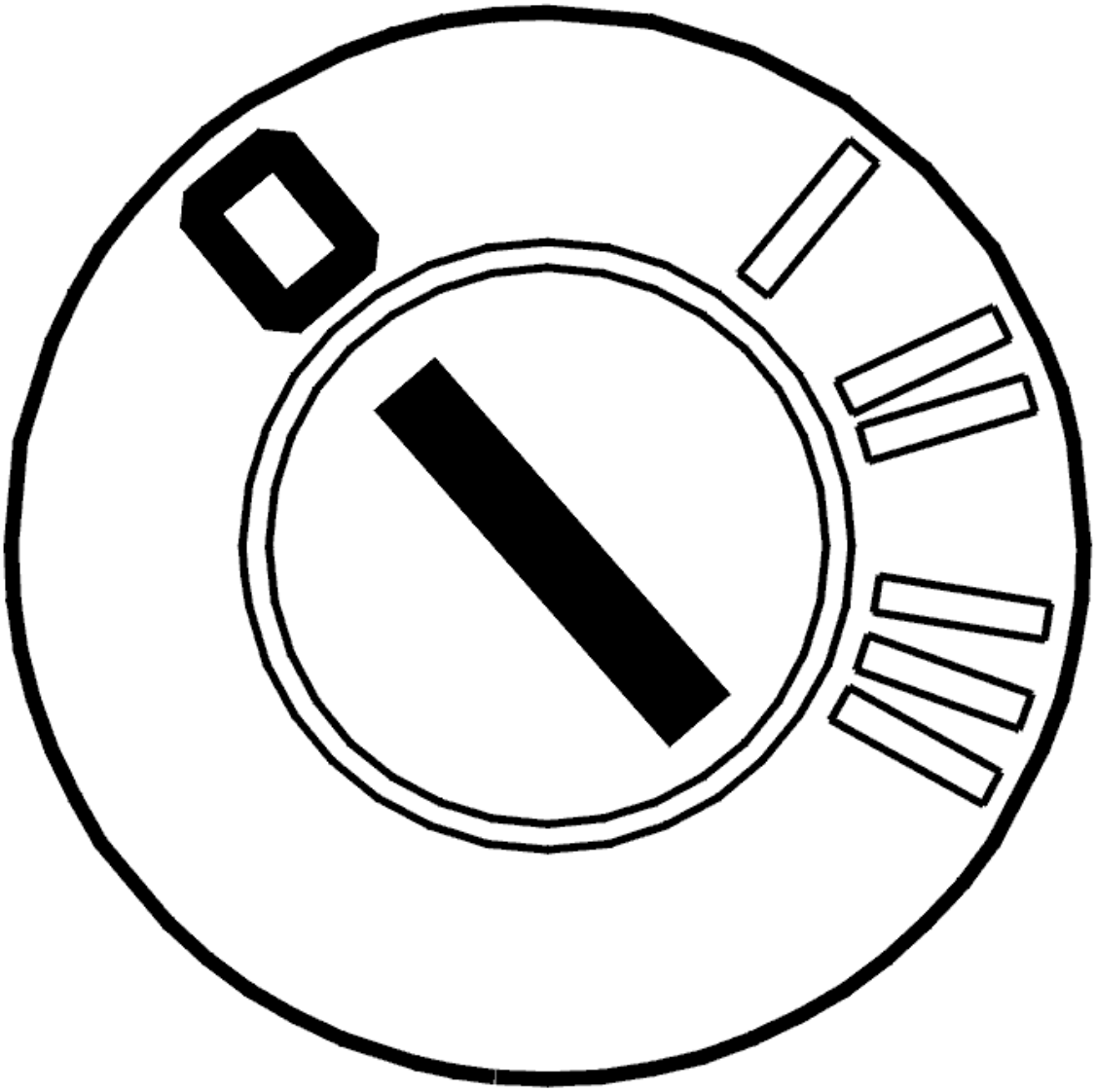

Fig. 108: Identifying Ignition OFF
Courtesy of VOLVO CARS CORPORATION

- Ignition off.

  Check that the headlamp wash / wipe relay is correctly installed. Also check the relay terminal, in particular terminal #2. Check for a short-circuit to supply voltage.

  Remedy as necessary.

  Try a new relay if no faults are found.

  Other information:

  - To connect the breakout box, see **CONNECTING THE BREAKOUT BOX**
  - For -2004, see: **CENTRAL ELECTRONIC MODULE (CEM), REPLACING**

- For 2005-, see: **CENTRAL ELECTRONIC MODULE (CEM), REPLACING** .
- see **CHECKING WIRING AND TERMINALS** .

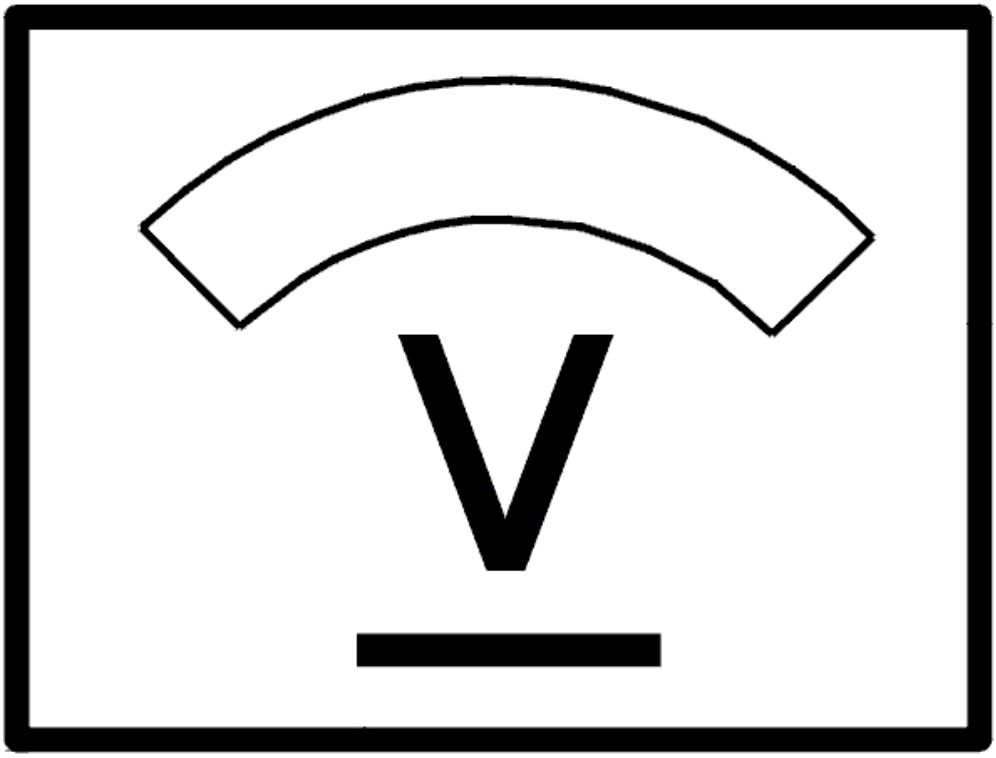

Fig. 109: Identifying Voltage Display
Courtesy of VOLVO CARS CORPORATION

- **Continue**

  Refer to **VERIFICATION**

VERIFICATION

VERIFICATION

HINT: After carrying out the repair, check that the fault has been remedied.

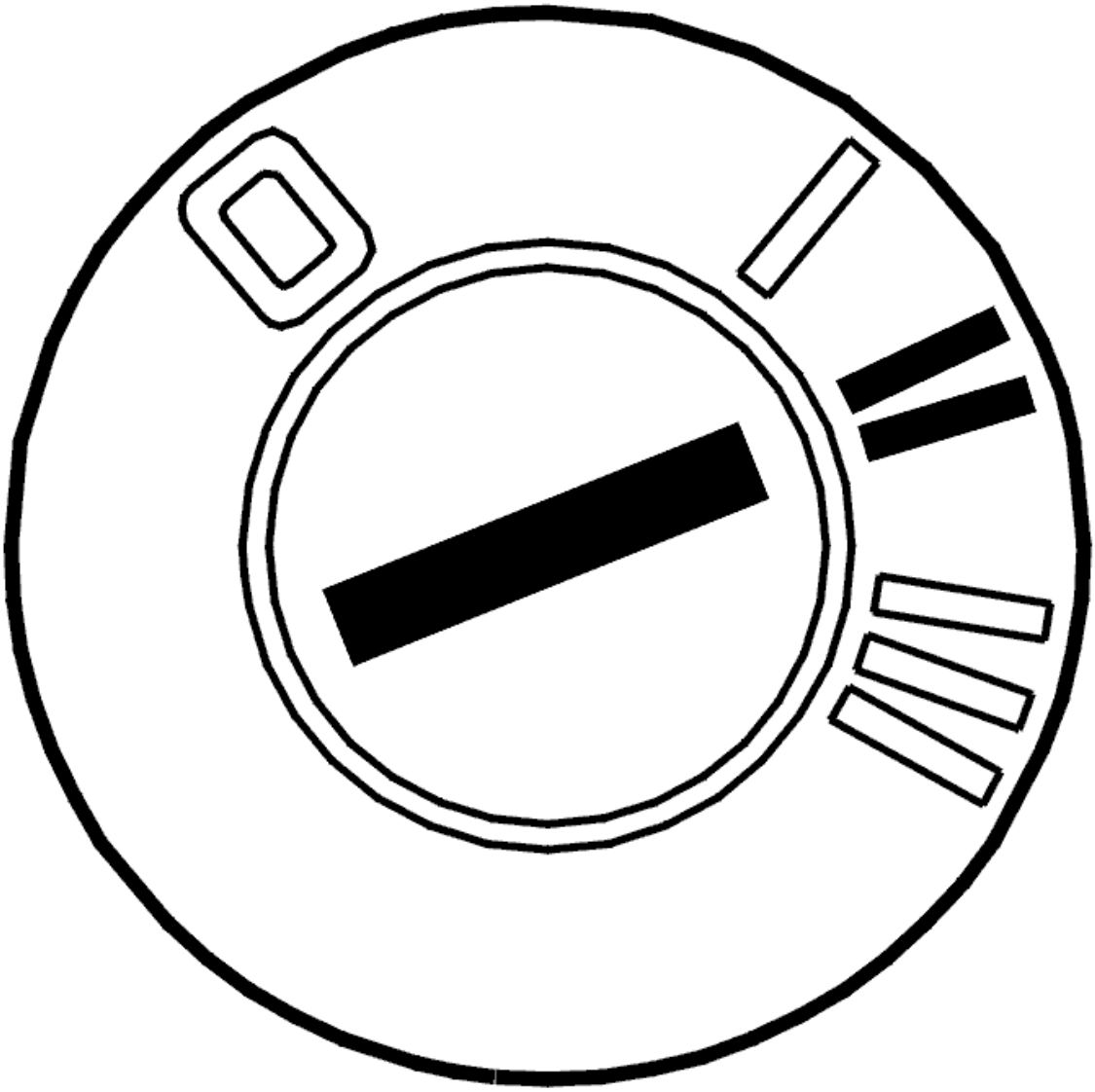

Fig. 110: Identifying Ignition ON
Courtesy of VOLVO CARS CORPORATION

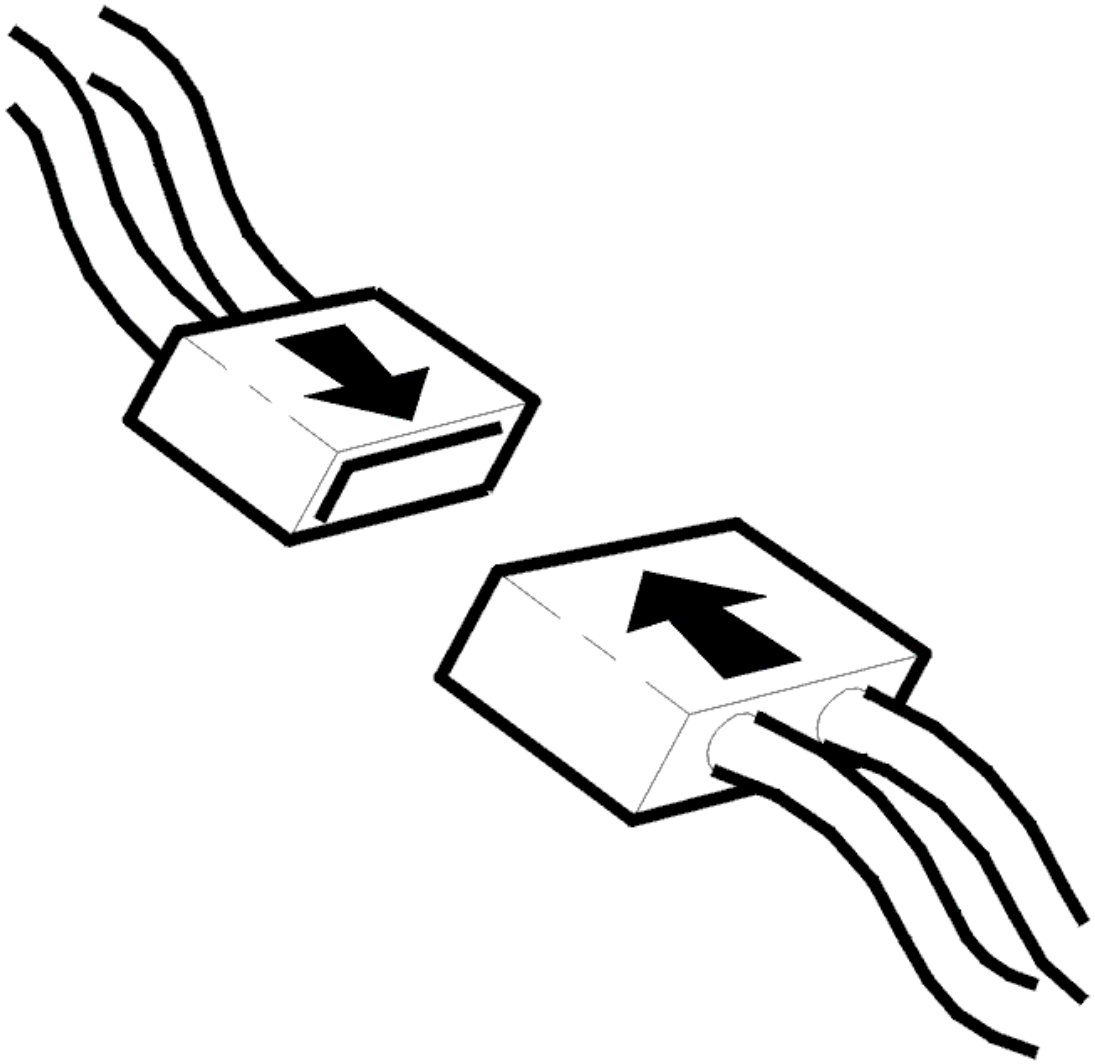

Fig. 111: Connecting Connector
Courtesy of VOLVO CARS CORPORATION

- Ignition off
- Reinstall the connectors, components etc.
- Ignition on.

  Read off the headlamp wash / wipe status using the VCT2000 (or appropriate scan tool).

  Operate headlamp wash / wipe.

  Check that the status changes to activated when headlamp wash / wipe is on and not activated when headlamp wash / wipe is switched off.

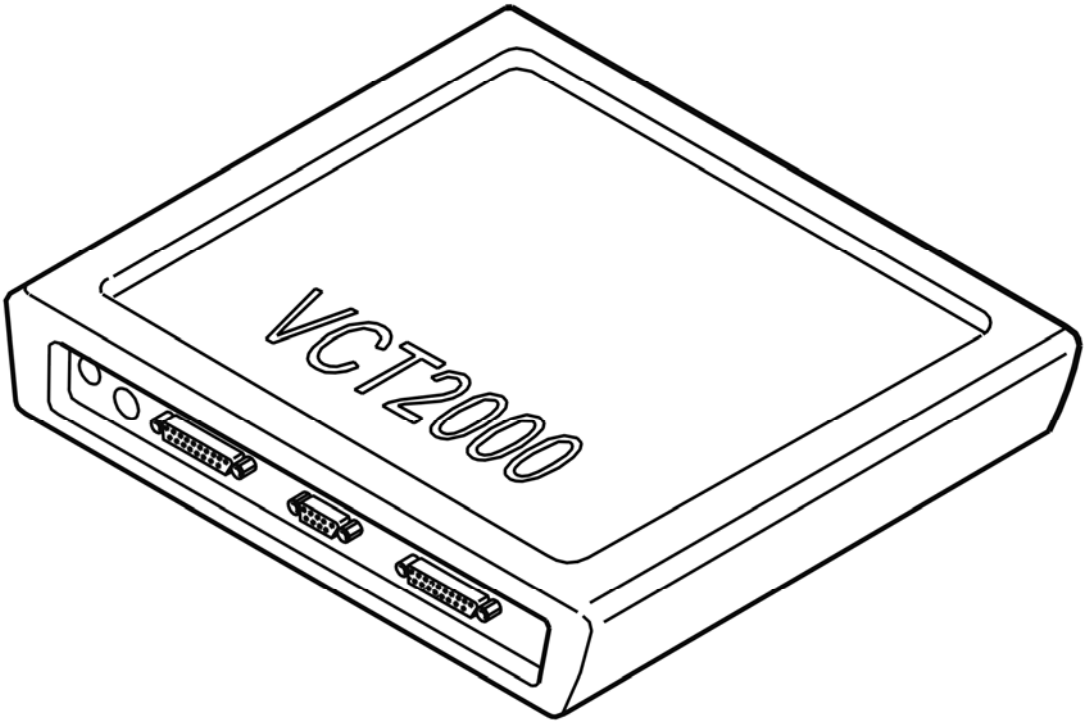

Fig. 112: Identifying VCT2000 Diagnostic Tool Symbol In VIDA
Courtesy of VOLVO CARS CORPORATION

Has the status changed?

- **YES**

  VERIFIED: Troubleshooting has been completed.

- **NO**

  Refer to **INFORMATION**

INFORMATION

FAULT-TRACING INFORMATION

The fault should have been detected and remedied. As this is not the case fault-tracing has failed.

Exit fault-tracing for this diagnostic trouble code (DTC) or make another attempt.

CEM-8F51: RELAY, HEADLAMP WASH / WIPE. SIGNAL TOO LOW (2005-2012)

DIAGNOSTIC TROUBLE CODE (DTC) INFORMATION CEM-8F51

Condition

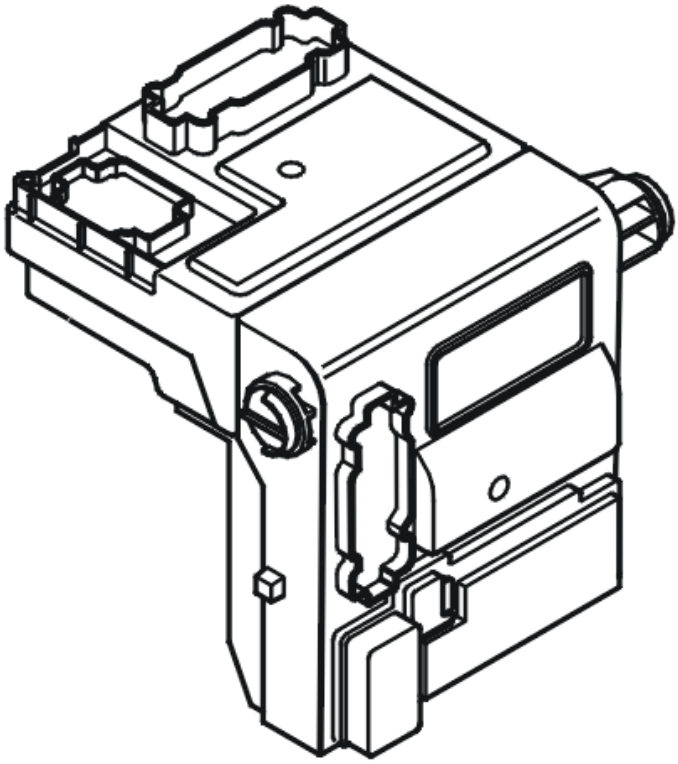

Fig. 113: Identifying Central Electronic Module (CEM)
Courtesy of VOLVO CARS CORPORATION

The central electronic module (CEM) checks the output signal to the relay coil for the headlamp wash/wipe.

The diagnostic trouble code (DTC) is stored if the central electronic module (CEM) registers that the output signal to the relay coil is too high.

The diagnostic trouble code (DTC) can be diagnosed when the ignition is switched on.

Substitute Value

- None.

Possible Source

- Short-circuit to supply voltage in the signal cable
- Damaged relay.

Fault symptom[s]

- The headlamp washer motor does not operate.

SIGNAL TOO HIGH

CHECKING THE COMPONENT

Replace relay 2/182.

Activate high-pressure cleaning by activating the windshield washer.

HINT: The washer must be activated for more than 0.3 seconds before high pressure cleaning will be activated. High-pressure cleaning is activated every fifth time the washers are activated if not more than 10 minutes have passed since the last activation.

If the function is OK, the cause of the fault was a damaged relay (short-circuit in the relay).

Was a fault detected?

- **YES**

  Refer to **VERIFICATION**

- **NO**

  Refer to **CHECKING FUSEBOX**

CHECKING FUSEBOX

Remove windshield wiper relay 2/182 from the fusebox base.

Check the relay coil driver circuit for a short-circuit to supply voltage. Take a voltmeter reading between terminal #2 and ground in the relay base.

The voltage between terminal #2 and ground must be approximately 0 V.

Remedy as necessary.

Other information

- see **CHECKING WIRING AND TERMINALS**

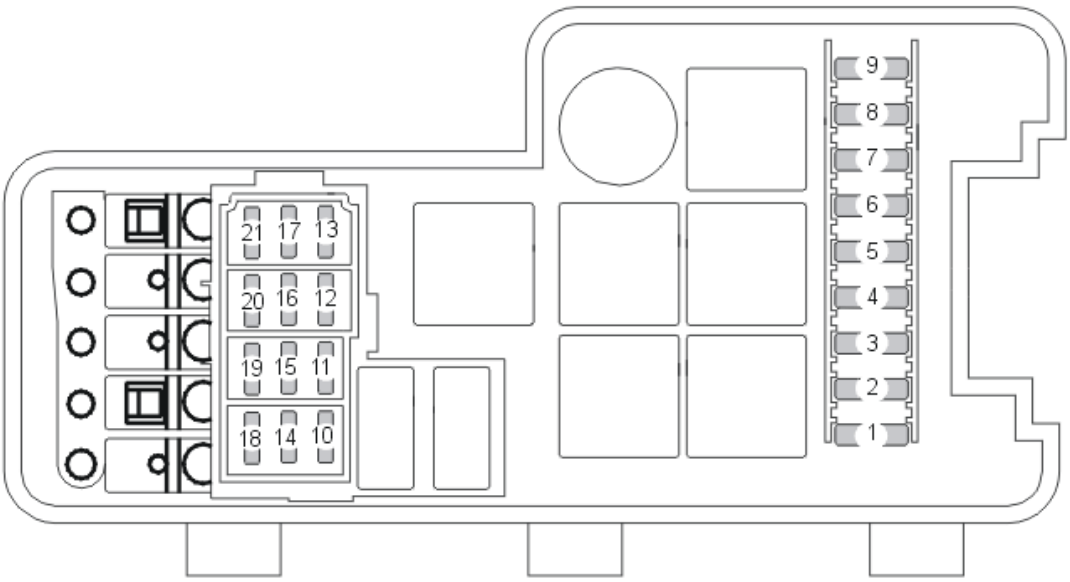

Fig. 114: Identifying Fusebox
Courtesy of VOLVO CARS CORPORATION

Was a fault detected?

- **YES**

  Refer to **VERIFICATION**

- **NO**

  Refer to **CHECKING THE WIRING**

CHECKING THE WIRING

Check the cable between windshield wiper relay base terminal #2 and central electronic module (CEM) terminal #C25. Check for a short-circuit to supply voltage.

Remedy as necessary.

Replace the fusebox if no fault is found.

Other information

- see **CHECKING WIRING AND TERMINALS**
- **Continue**

  Refer to **VERIFICATION**

VERIFICATION

VERIFICATION

HINT: After carrying out the repair, check that the fault has been remedied.

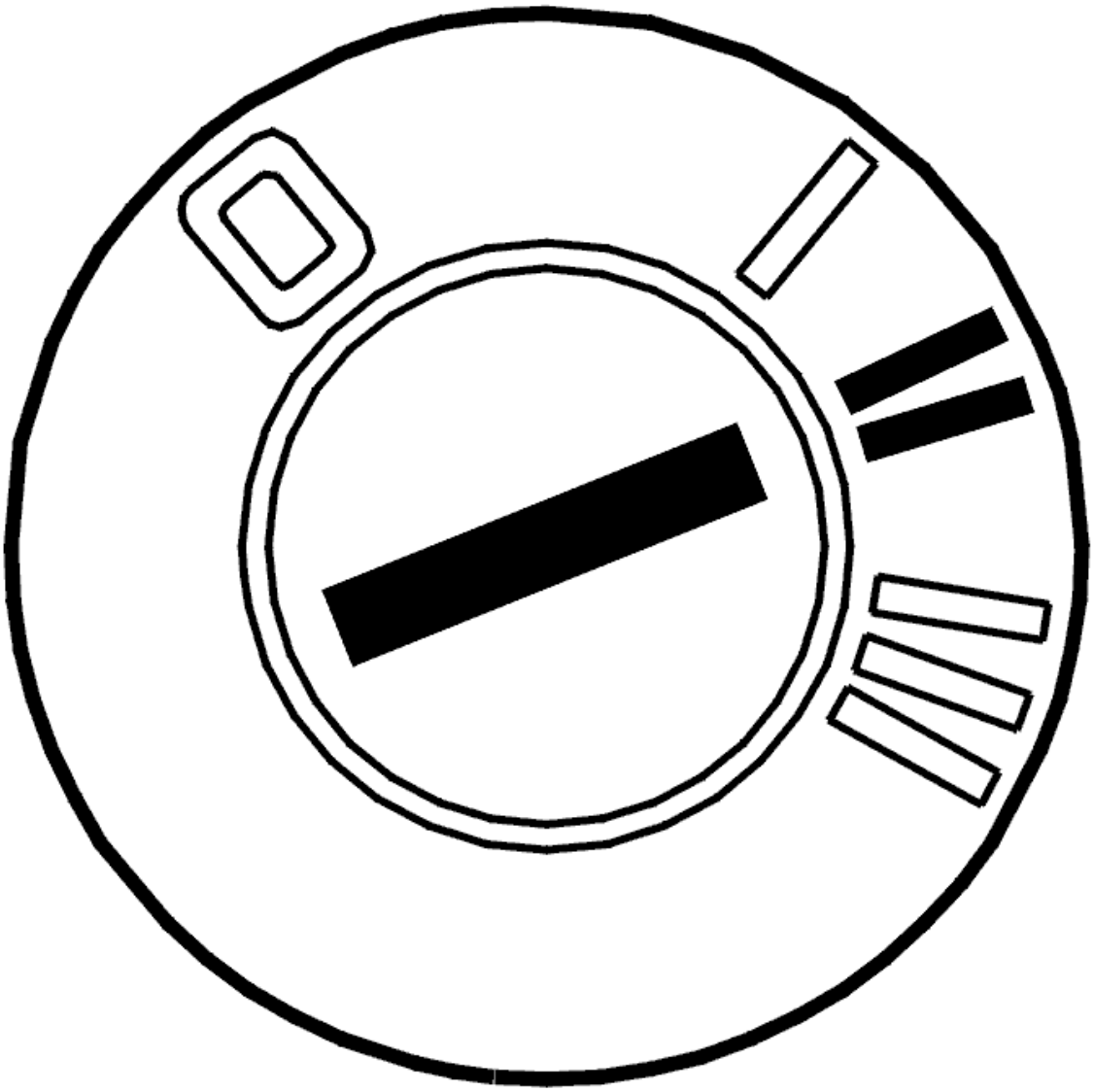

Fig. 115: Identifying Ignition ON
Courtesy of VOLVO CARS CORPORATION

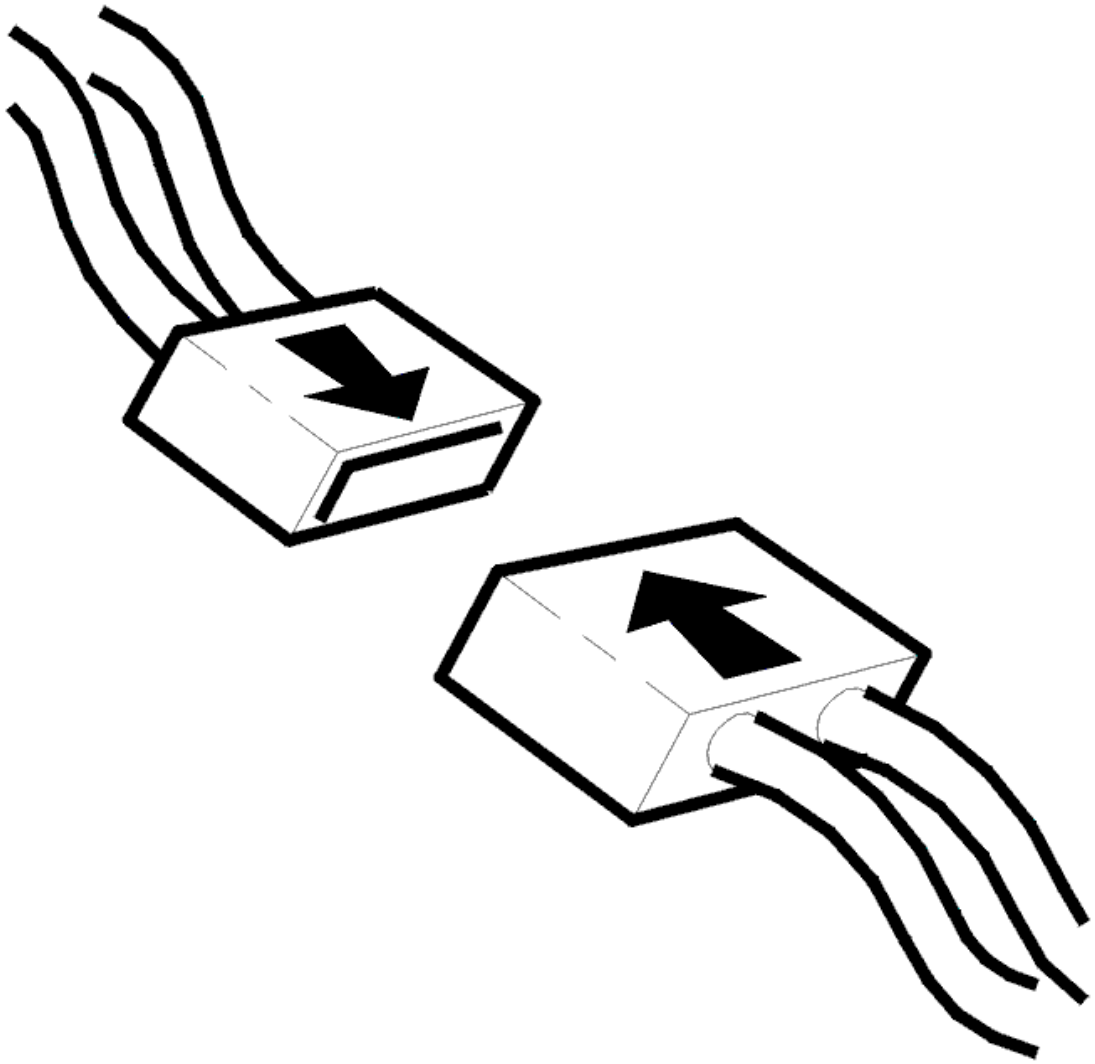

Fig. 116: Connecting Connector
Courtesy of VOLVO CARS CORPORATION

- Ignition off
- Reinstall the connectors, components etc.
- Ignition on.

  Activate high-pressure cleaning by activating the windshield washer.

  HINT: The washer must be activated for more than 0.3 seconds before high pressure cleaning will be activated. High-pressure cleaning is activated every fifth time the washers are activated if not more than 10 minutes have passed since the last activation.

Is the washer working?

- **YES**

  VERIFIED: Troubleshooting has been completed.

- **NO**

  Refer to **INFORMATION**

INFORMATION

FAULT-TRACING INFORMATION

The fault should have been detected and remedied. As this is not the case fault-tracing has failed.

Exit fault-tracing for this diagnostic trouble code (DTC) or make another attempt.

CEM-8F52: RELAY, HEADLAMP WASH / WIPE. SIGNAL TOO LOW OR SIGNAL MISSING (2003-2004)

DIAGNOSTIC TROUBLE CODE (DTC) INFORMATION CEM-8F52

Condition

The central electronic module (CEM) checks the output signal to the relay coil for relay, headlamp wash / wipe.

The diagnostic trouble code (DTC) is stored if the central electronic module (CEM) registers that the output signal to the relay coil is too low/missing.

The diagnostic trouble code (DTC) can be detected when the relay driver is not activated.

Substitute Value

- None.

Possible Source

- Fuse for washer pump blown
- Short-circuit to ground/open-circuit in the signal cable
- Relay defective/missing.

Fault symptom[s]

- The headlamp washer motor does not operate.

SIGNAL TOO LOW OR SIGNAL MISSING

CHECKING THE RELAY

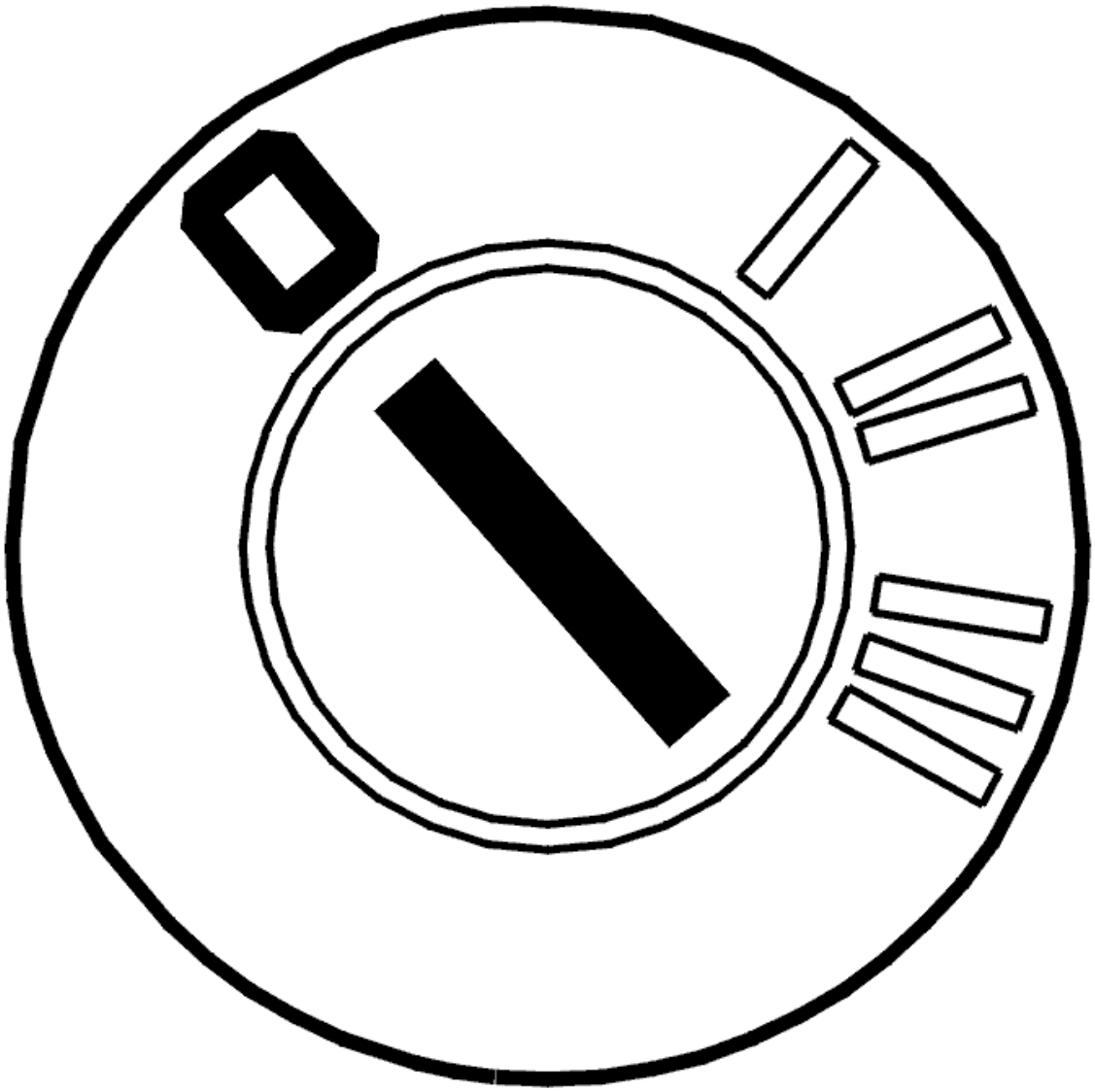

Fig. 117: Identifying Ignition OFF
Courtesy of VOLVO CARS CORPORATION

- Ignition off.

  Check that the headlamp wash / wipe relay is correctly installed. Also check the relay terminal, in particular terminal #2. Check for an open-circuit. Check for a short-circuit to ground.

  Remedy as necessary.

  Try a new relay if no faults are found.

  Other information:

- To connect the breakout box, see **CONNECTING THE BREAKOUT BOX**
- For -2004, see: **CENTRAL ELECTRONIC MODULE (CEM), REPLACING**
- For 2005-, see: **CENTRAL ELECTRONIC MODULE (CEM), REPLACING** .
- see **CHECKING WIRING AND TERMINALS** .

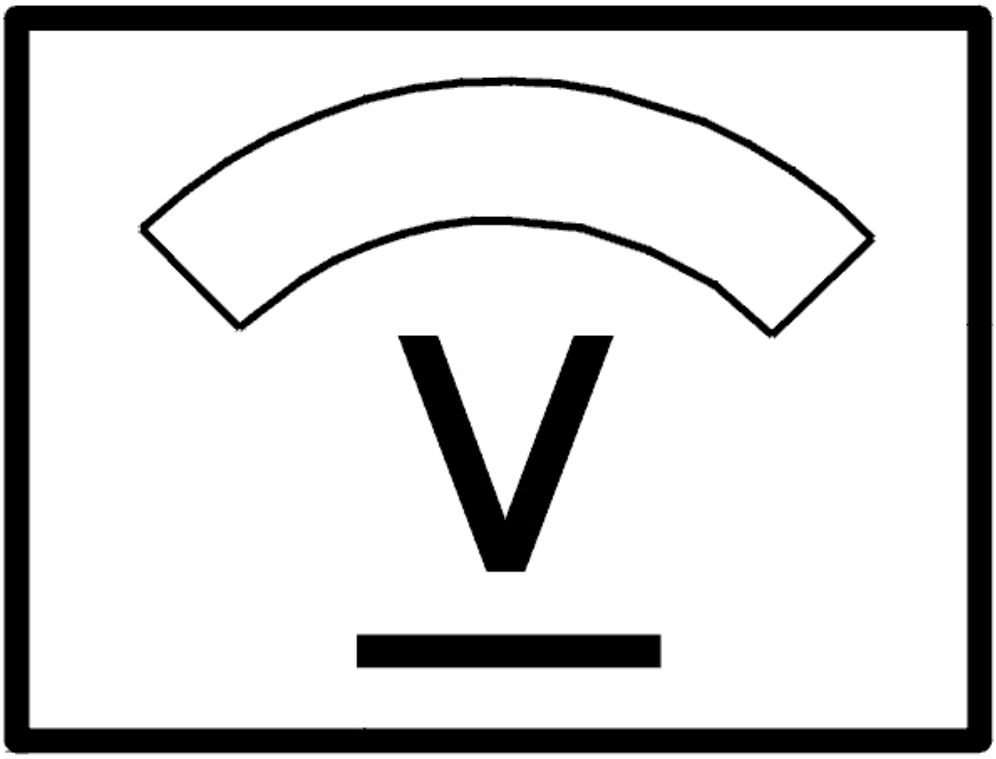

Fig. 118: Identifying Voltage Display
Courtesy of VOLVO CARS CORPORATION

- **Continue**

  Refer to **VERIFICATION**

VERIFICATION

VERIFICATION

HINT: After carrying out the repair, check that the fault has been remedied.

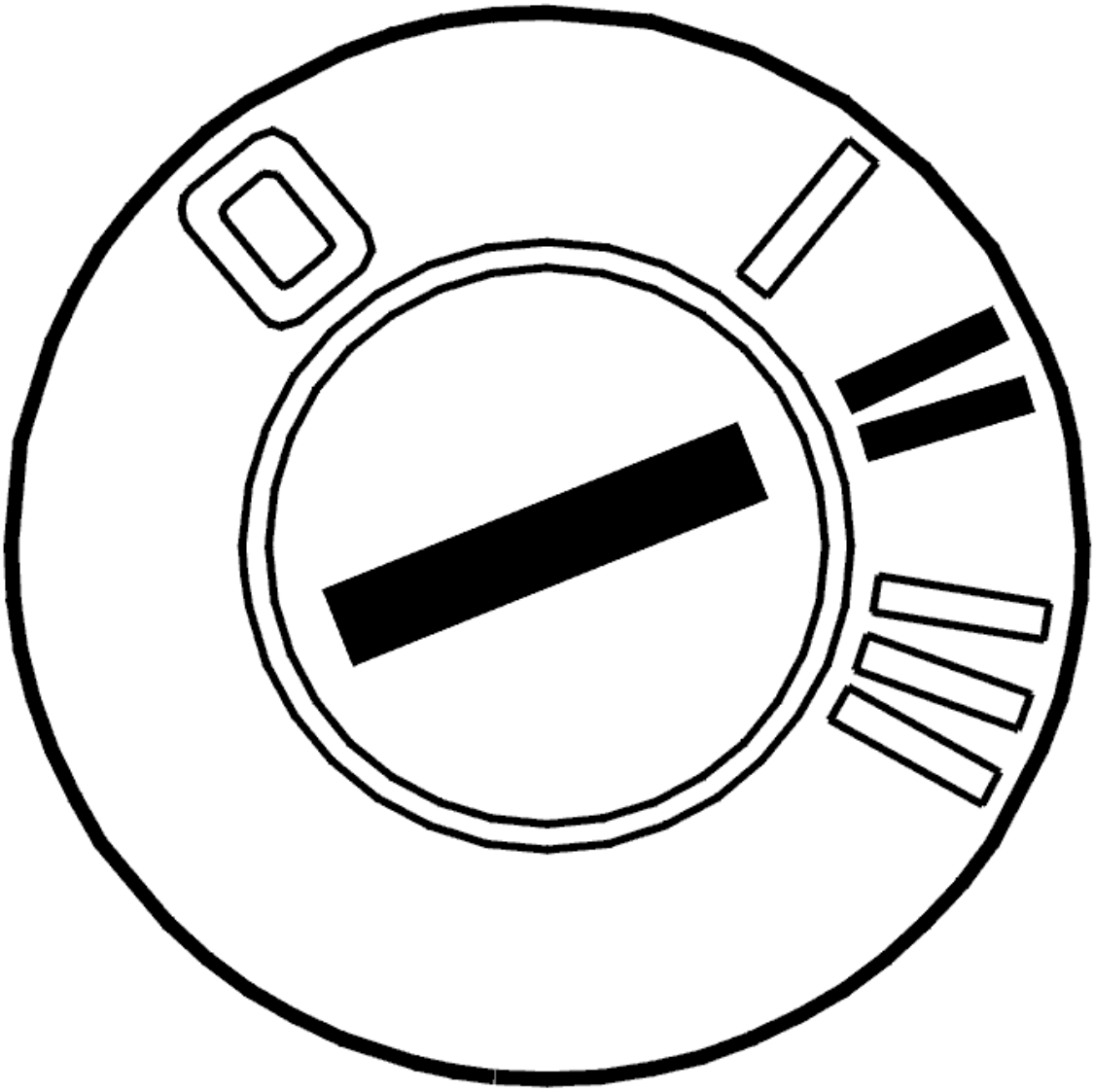

Fig. 119: Identifying Ignition ON
Courtesy of VOLVO CARS CORPORATION

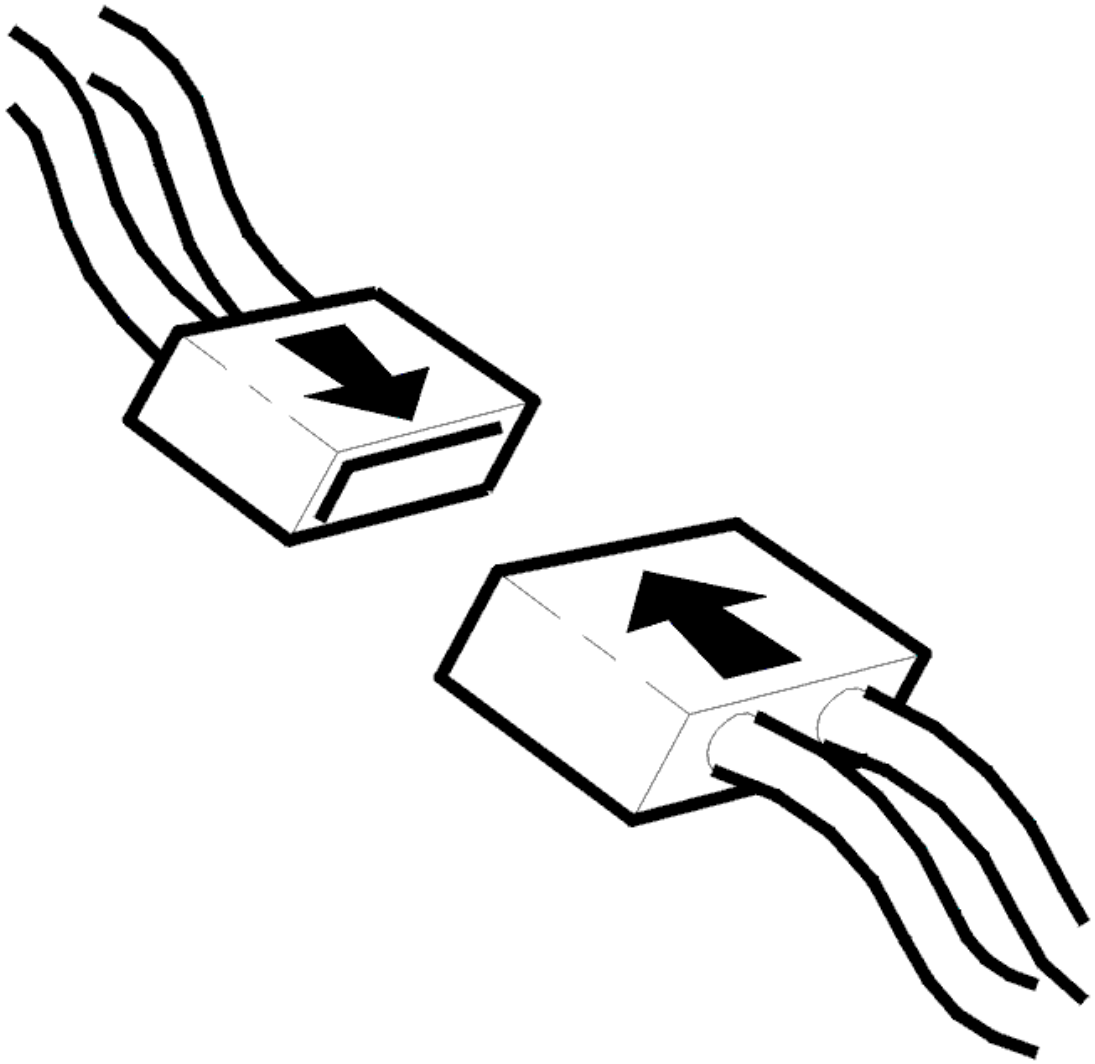

Fig. 120: Connecting Connector
Courtesy of VOLVO CARS CORPORATION

- Ignition off
- Reinstall the connectors, components etc.
- Ignition on.

  Read off the headlamp wash / wipe status using the VCT2000 (or appropriate scan tool).

  Operate headlamp wash / wipe.

  Check that the status changes to activated when headlamp wash / wipe is on and not activated when headlamp wash / wipe is switched off.

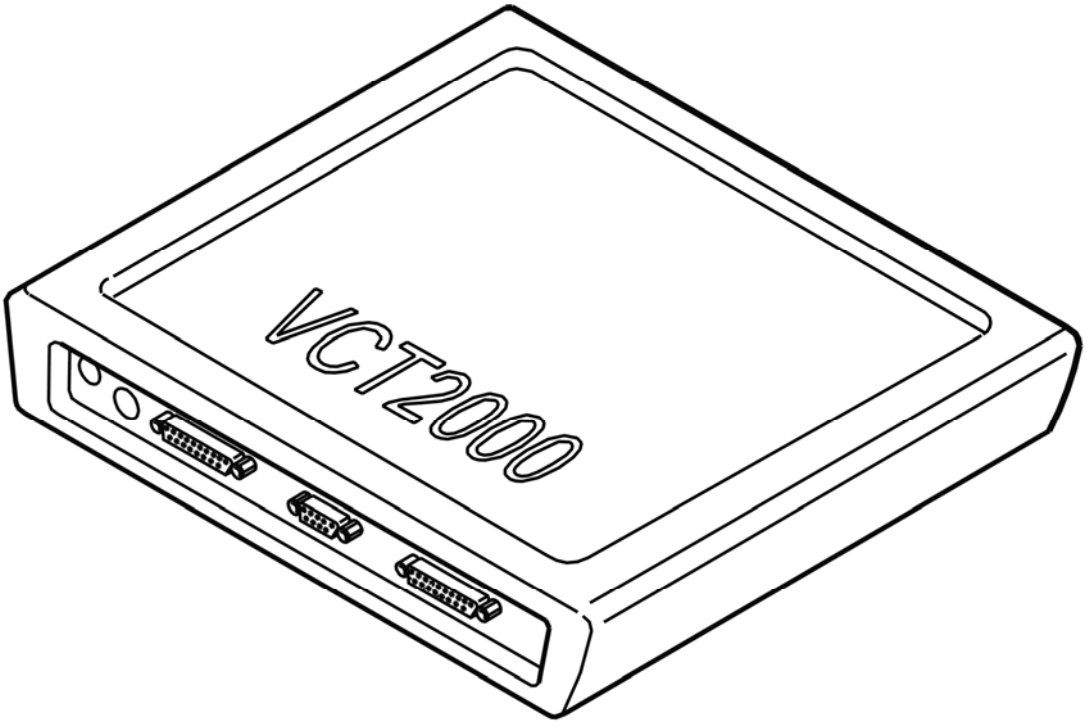

Fig. 121: Identifying VCT2000 Diagnostic Tool Symbol In VIDA
Courtesy of VOLVO CARS CORPORATION

Has the status changed?

- **YES**

  VERIFIED: Troubleshooting has been completed.

- **NO**

  Refer to **INFORMATION**

INFORMATION

FAULT-TRACING INFORMATION

The fault should have been detected and remedied. As this is not the case fault-tracing has failed.

Exit fault-tracing for this diagnostic trouble code (DTC) or make another attempt.

CEM-8F52: RELAY, HEADLAMP WASH / WIPE. SIGNAL TOO LOW OR SIGNAL MISSING (2005-2012)

DIAGNOSTIC TROUBLE CODE (DTC) INFORMATION CEM-8F52

Condition

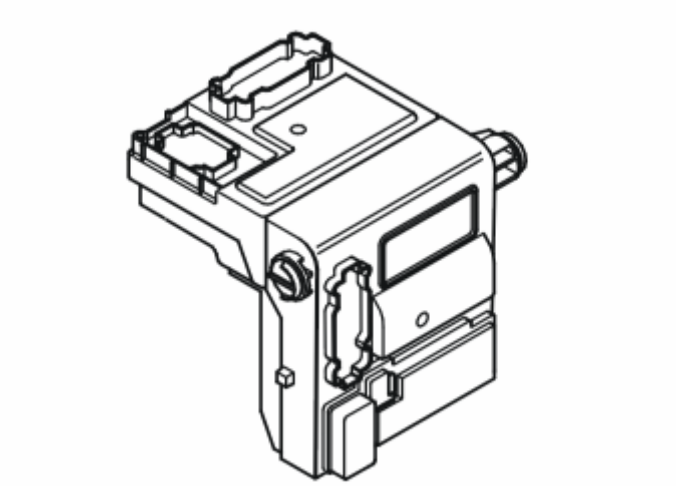

Fig. 122: Identifying Central Electronic Module (CEM)
Courtesy of VOLVO CARS CORPORATION

The Central electronic module (CEM) checks the output signal to the relay winding for headlight cleaning.

If Central electronic module (CEM) registers that the output signal to the relay winding is missing or too low, the diagnostic trouble code is generated.

The diagnostic trouble code (DTC) can be diagnosed when the ignition is switched on.

Substitute Value

- None.

Possible Source

- The washer pump's fuse has failed.
- Open-circuit or short-circuit to ground in the signal cable.
- Damaged relay.
- Short-circuiting in the pump for high-pressure washing.

Fault symptom[s]

- Headlight washer pump does not work

SIGNAL TOO LOW OR SIGNAL MISSING

CHECKING FUSES

Check that the fuse for the high-pressure washer is intact. Replace the fuse if necessary.

After changing fuse, erase trouble codes.

Activate ignition position II.

Try to activate the headlight washers with the lever.

HINT: The washer must be activated for more than 0.3 seconds for the high-pressure washer to be activated. The high-pressure washer is activated every fifth time that the washers are activated if not more than 10 minutes have passed since the last activation. Warning light for low washer fluid level may not be on.

If the trouble code does not return and the high-pressure washer works, no further action is needed.

If the fuse fails again, or if the trouble code returns, continue troubleshooting.

Do you wish to continue with fault tracing?

- **YES**

  Refer to **CHECKING THE COMPONENT**

- **NO**

  Refer to **VERIFICATION**

CHECKING THE COMPONENT

Replace relay 2/182.

Activate high-pressure washing by activating the washer for the windshield.

HINT: The washer must be activated for more than 0.3 seconds for the high-pressure washer to be activated. The high-pressure washer is activated every fifth time that the washers are activated if not more than 10 minutes have passed since the last activation.

If the function is OK, the cause of the fault was a damaged relay (short-circuit in the relay).

Do you wish to continue with fault tracing?

- **YES**

  Refer to **CHECKING HIGH-PRESSURE WASHER PUMP**

- **NO**

Refer to **VERIFICATION**

CHECKING FUSEBOX

Remove headlight washer relay (2/182) from the fuse box socket.

Check the relay winding's drive circuit for short-circuiting to voltage by measuring voltage between #2 and ground in the relay socket.

Voltage between #2 and ground shall be battery voltage.

Remedy as necessary.

Other information:

- see **CHECKING WIRING AND TERMINALS**

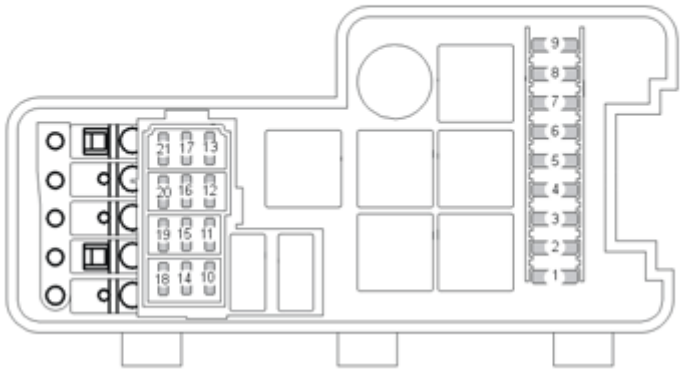

Fig. 123: Identifying Fusebox
Courtesy of VOLVO CARS CORPORATION

Do you wish to continue with fault tracing?

- **YES**

  Refer to **CHECKING THE WIRING**

- **NO**

  Refer to **VERIFICATION**

CHECKING THE WIRING

Check the cable between the headlight washer relay (2/182) #4 and central electronic module (CEM) #C25 for short circuits to ground and open circuits.

Disconnect washer pump and headlight washer relay (2/182). Check cable between connection #1 on the headlight washer relay (2/182) and ground for short-circuiting to ground.

Remedy as necessary.

Replace the fusebox if no fault is found.

Other information:

- see **CHECKING WIRING AND TERMINALS**
- **Continue**

  Refer to **VERIFICATION**

CHECKING HIGH-PRESSURE WASHER PUMP

Check that the fuse for the high-pressure washer is intact.

Disconnect the pump for high-pressure washing from its connector.

Try to activate the headlight washers with the lever.

If the fuse does not fail when the washer pump is disconnected, the cause of the trouble code being set is probably an internal short circuit in the washer pump for the headlights. Try with changing high-pressure washer pump.

If the fuse fails, even if the pump is disconnected, the pump is probably okay. Continue troubleshooting.

Do you wish to continue with fault tracing?

- **YES**

  Refer to **CHECKING FUSEBOX**

- **NO**

  Refer to **VERIFICATION**

VERIFICATION

VERIFICATION

HINT: After carrying out the repair, check that the fault has been remedied.

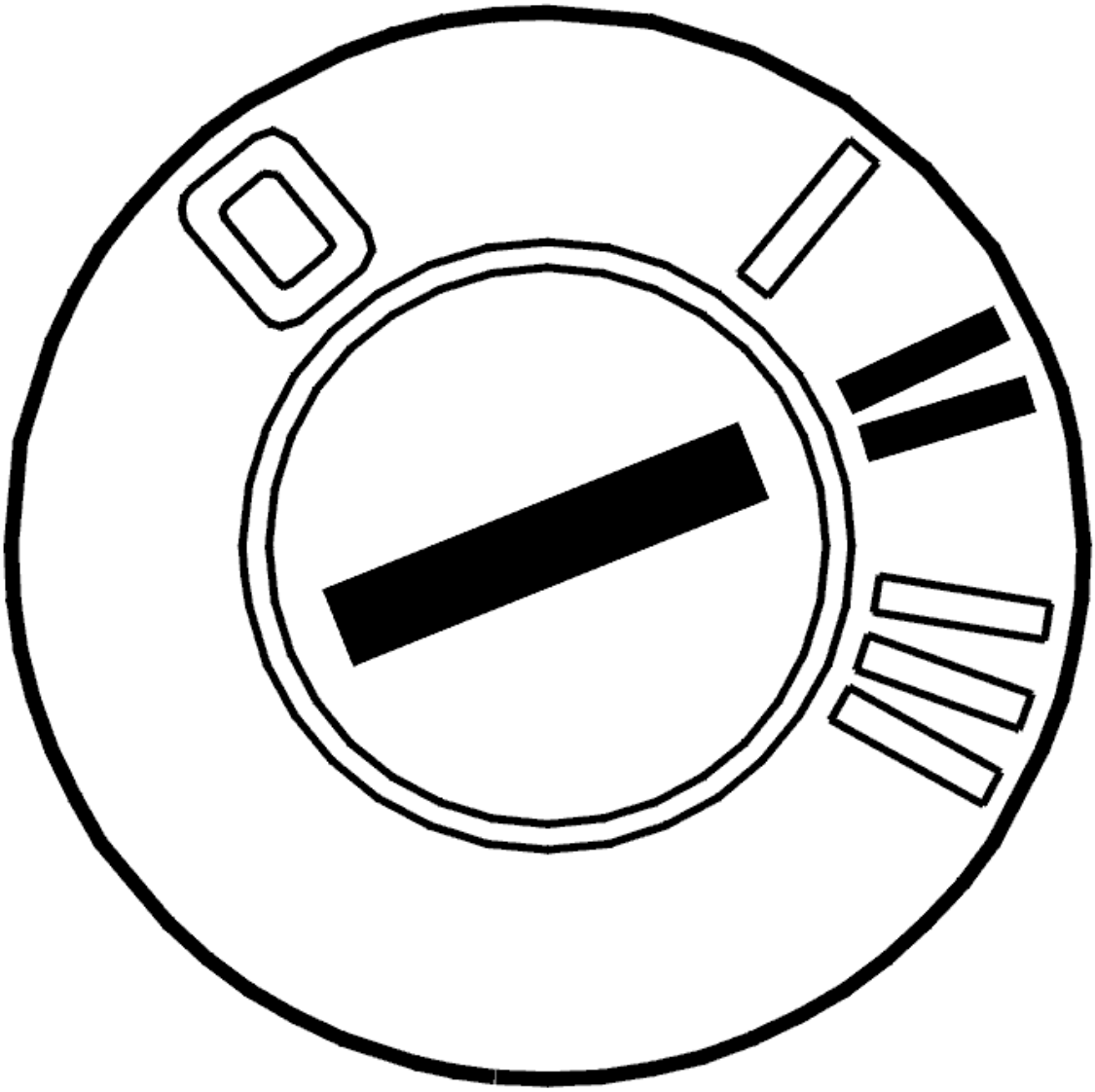

Fig. 124: Identifying Ignition ON
Courtesy of VOLVO CARS CORPORATION

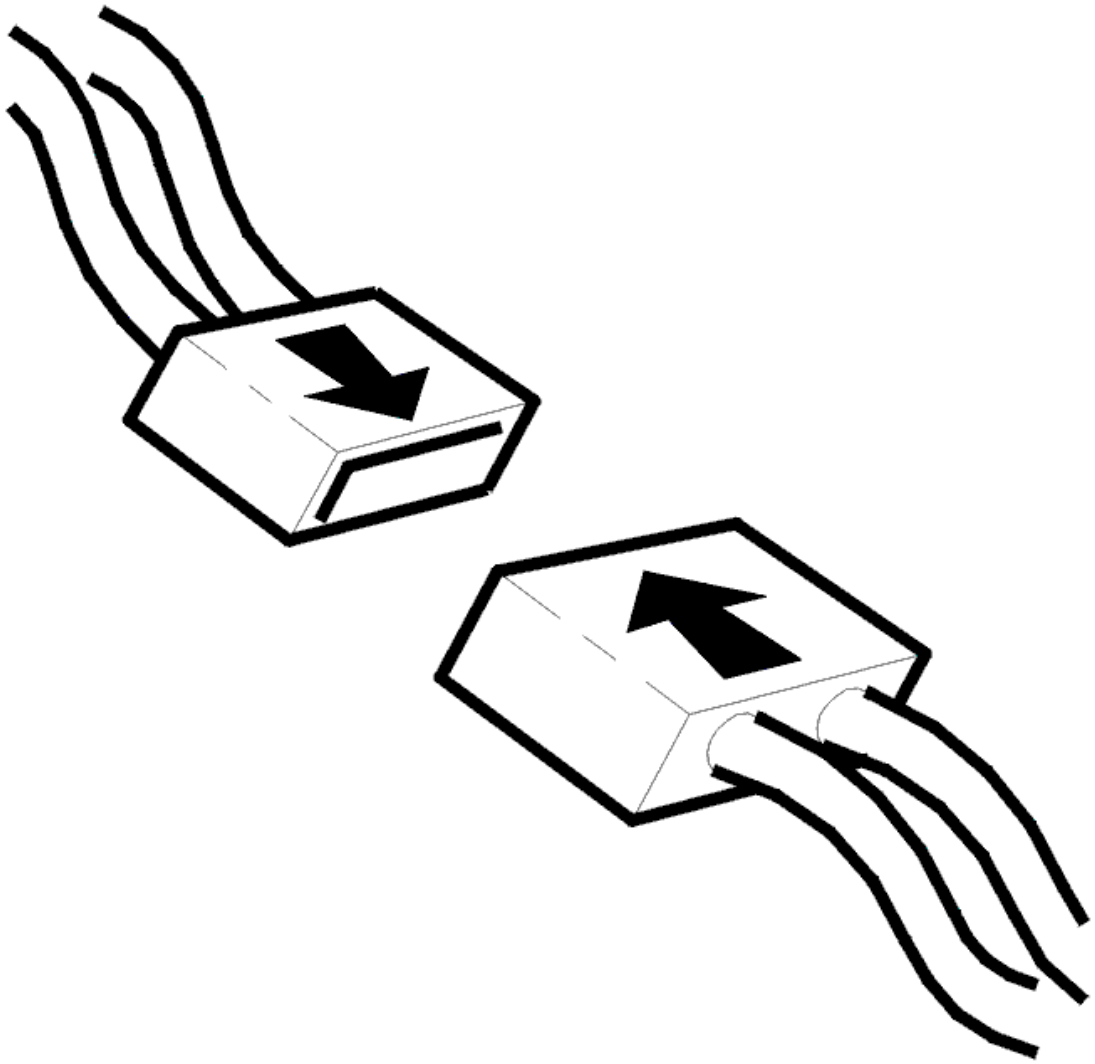

Fig. 125: Connecting Connector
Courtesy of VOLVO CARS CORPORATION

- Ignition off
- Reinstall the connectors, components etc.
- Ignition on.

  Activate high-pressure cleaning by activating the windshield washer.

  HINT: The washer must be activated for more than 0.3 seconds before high pressure cleaning will be activated. High-pressure cleaning is activated every fifth time the washers are activated if not more than 10 minutes have passed since the last activation.

Is the washer working?

- **YES**

  VERIFIED: Troubleshooting has been completed.

- **NO**

  Refer to **INFORMATION**

INFORMATION

FAULT-TRACING INFORMATION

The fault should have been detected and remedied. As this is not the case fault-tracing has failed.

Exit fault-tracing for this diagnostic trouble code (DTC) or make another attempt.

CEM-8FA1: RELAY, HORN. SIGNAL TOO HIGH. INTERMITTENT FAULT (2003-2004)

DIAGNOSTIC TROUBLE CODE INFORMATION

Condition

If the control unit registers too high a signal on relay coil (2/17) when the horn is activated, diagnostic trouble code CEM-8FA1 is set.

Substitute Value

- None.

Possible Source

- Defective relay (short circuit in relay coil).

Fault symptom[s]

- Horn does not work.

SIGNAL TOO HIGH. INTERMITTENT FAULT

CHECKING THE WIRING

Check the relay coil driver circuit for an intermittent short-circuit to supply voltage by measuring the voltage between terminal #2 in the relay base and relay 2/17.

For further information about a short-circuit to supply voltage.

HINT: The voltage between terminal #2 and ground must be approximately 0 volt.

Other information:

- see **CHECKING WIRING AND TERMINALS**

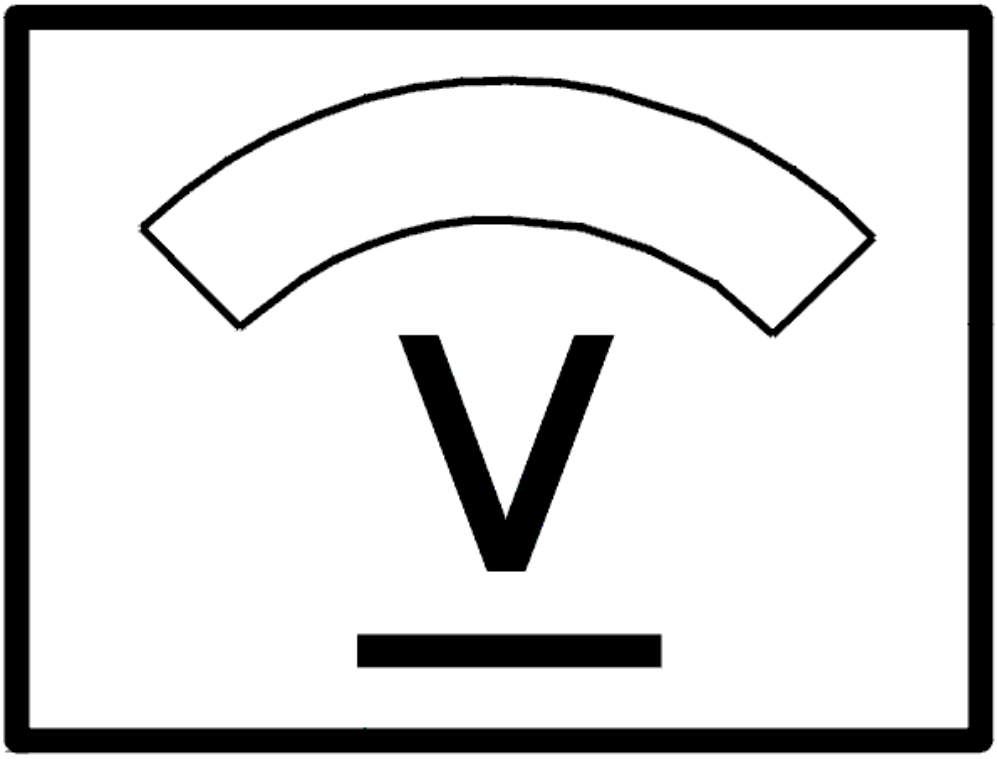

Fig. 126: Identifying Voltage Display
Courtesy of VOLVO CARS CORPORATION

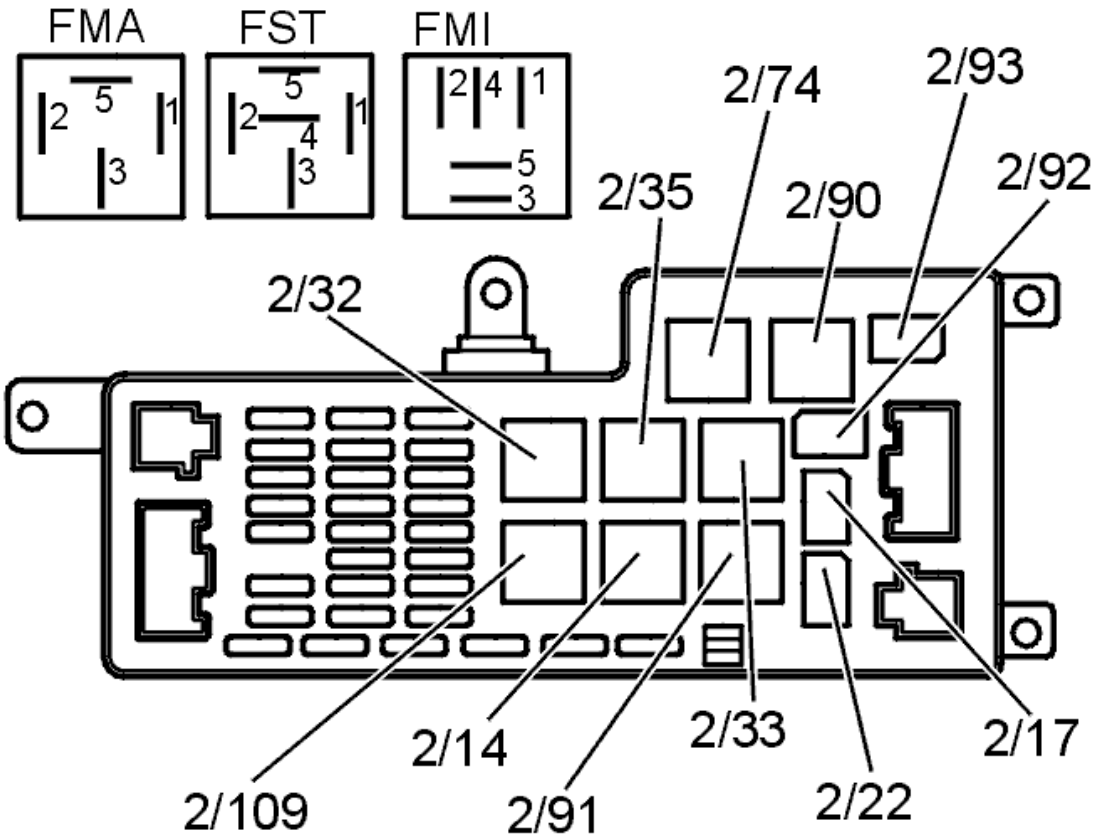

Fig. 127: Identifying Connectors
Courtesy of VOLVO CARS CORPORATION

- **Continue**

  Refer to **INFORMATION**

INFORMATION

FAULT-TRACING INFORMATION

If the fault is intermittent, do not verify fault-tracing if the fault does not recur.

It is possible to view the information again, or leave fault-tracing for this diagnostic trouble code (DTC).

CEM-8FA1: RELAY, HORN. SIGNAL TOO HIGH. PERMANENT FAULT (2003-2004)

DIAGNOSTIC TROUBLE CODE INFORMATION

see **DIAGNOSTIC TROUBLE CODE INFORMATION**

SIGNAL TOO HIGH. PERMANENT FAULT

CHECKING AND REPLACING THE COMPONENT

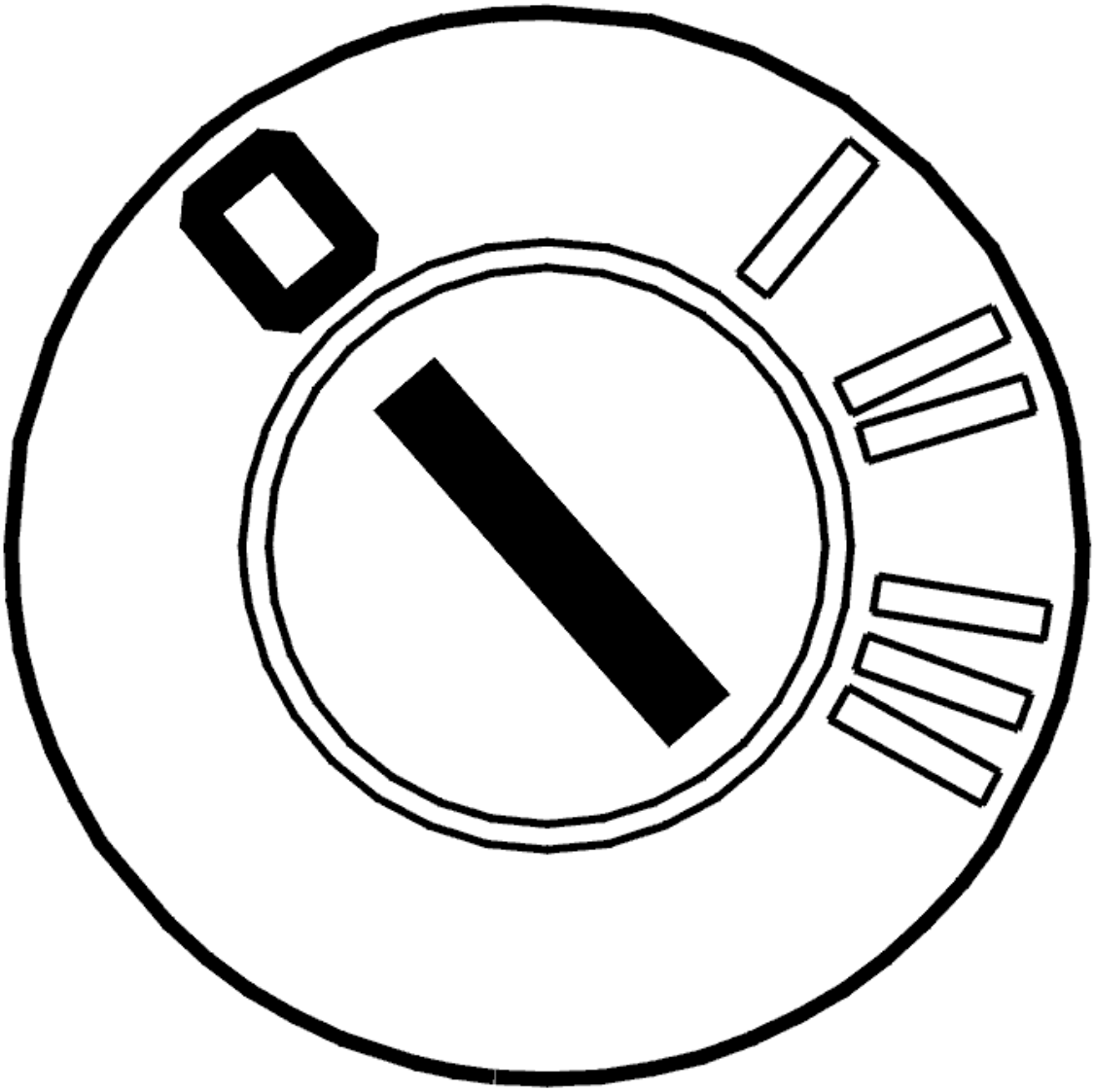

Fig. 128: Identifying Ignition OFF
Courtesy of VOLVO CARS CORPORATION

- Ignition off.

  Replace the relay, 2/17.

  Activate the relay, press the horn.

  If the function is OK, the cause of the fault was a defective relay (short-circuit in the relay).

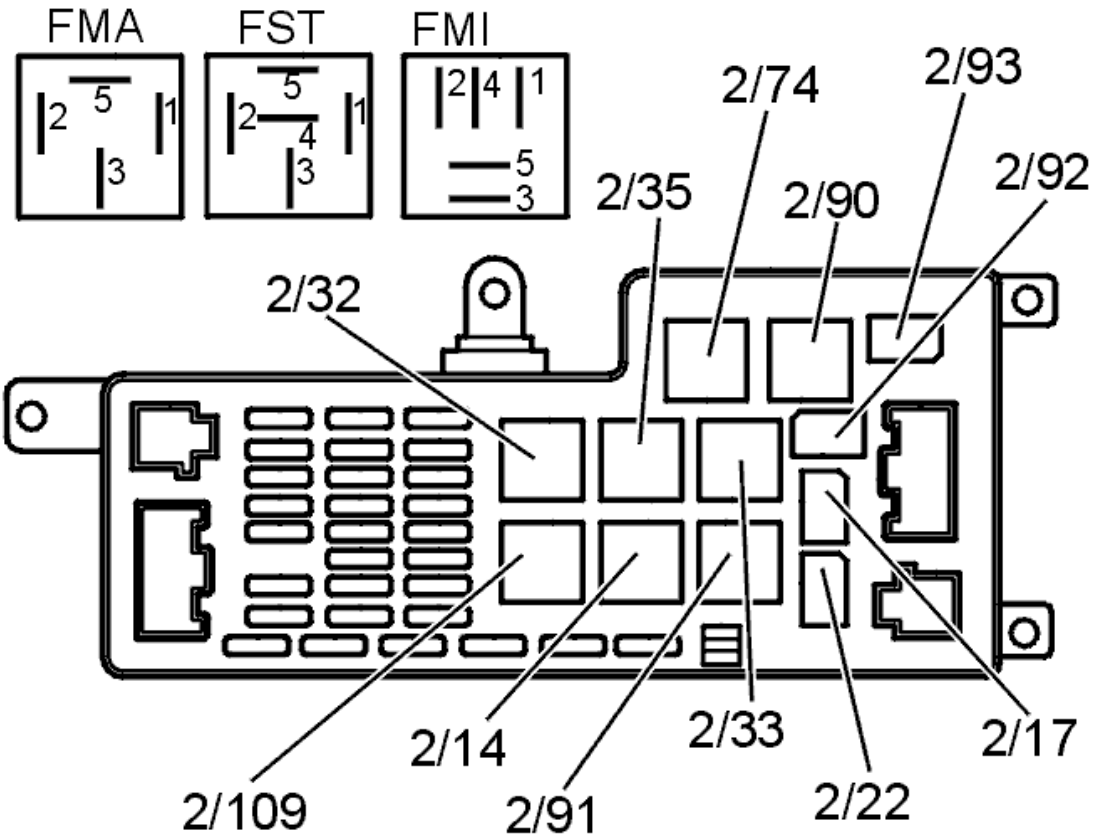

Fig. 129: Identifying Connectors
Courtesy of VOLVO CARS CORPORATION

Was the function OK?

- **YES**

  OKAY: Troubleshooting has been completed.

- **NO**

  Refer to **CHECKING THE WIRING**

CHECKING THE WIRING

Remove horn relay 2/17 from the engine compartment relay base.

Check the relay coil driver circuit for a short-circuit to supply voltage: Measure the voltage between terminal #1 in the relay base and relay 2/17.

For further information about a short-circuit to supply voltage.

HINT: The voltage between terminal #2 and ground should be approximately 0 volt.

Other information:

- For -2004, see: **CENTRAL ELECTRONIC MODULE (CEM), REPLACING**
- For 2005-, see: **CENTRAL ELECTRONIC MODULE (CEM), REPLACING** .
- see **CHECKING WIRING AND TERMINALS**

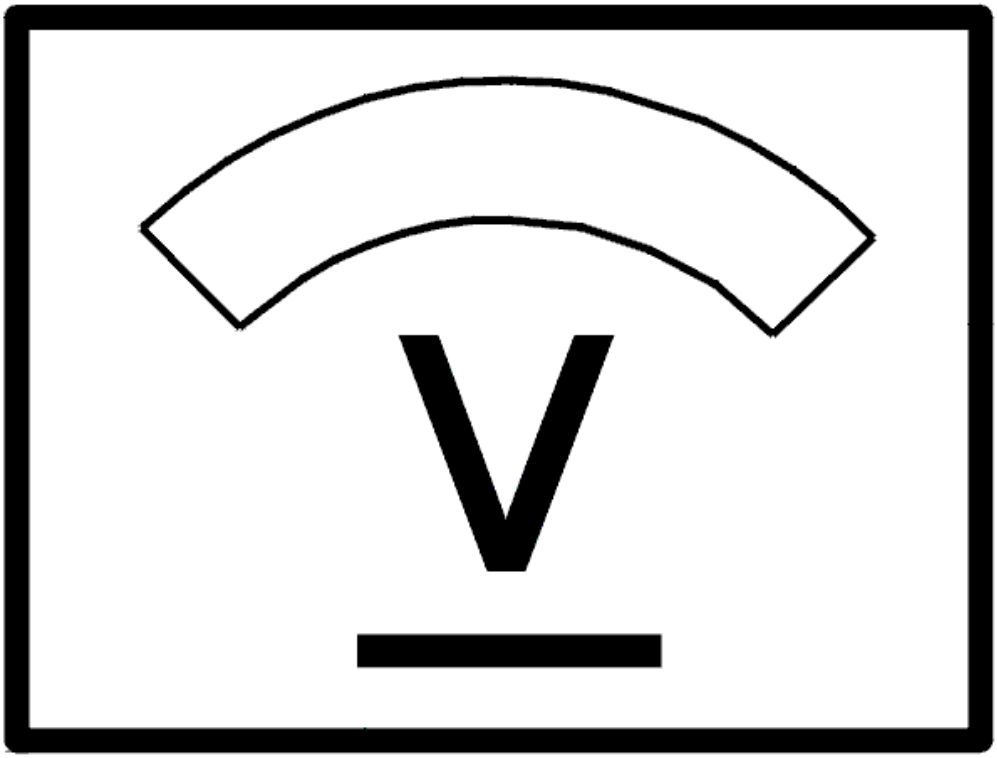

Fig. 130: Identifying Voltage Display
Courtesy of VOLVO CARS CORPORATION

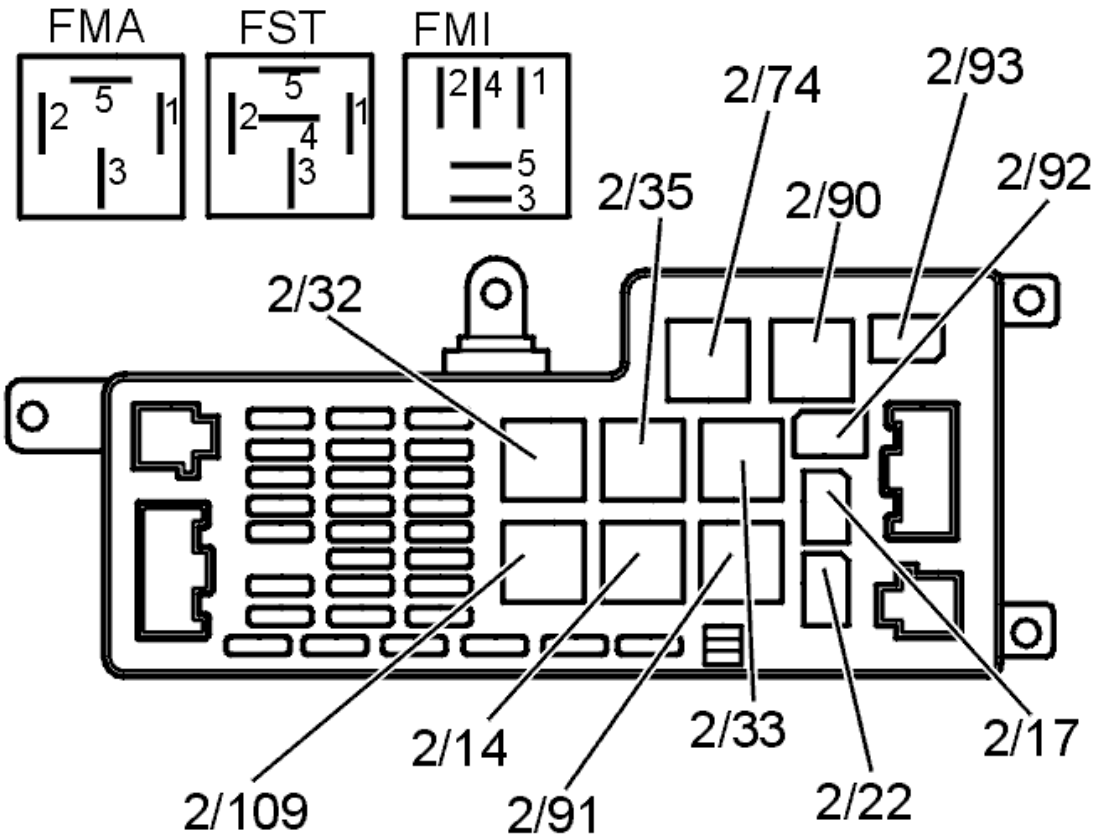

Fig. 131: Identifying Connectors
Courtesy of VOLVO CARS CORPORATION

- **Continue**

  Refer to **VERIFICATION**

VERIFICATION

VERIFICATION

HINT: After the repair it is necessary to check that the fault has been rectified.

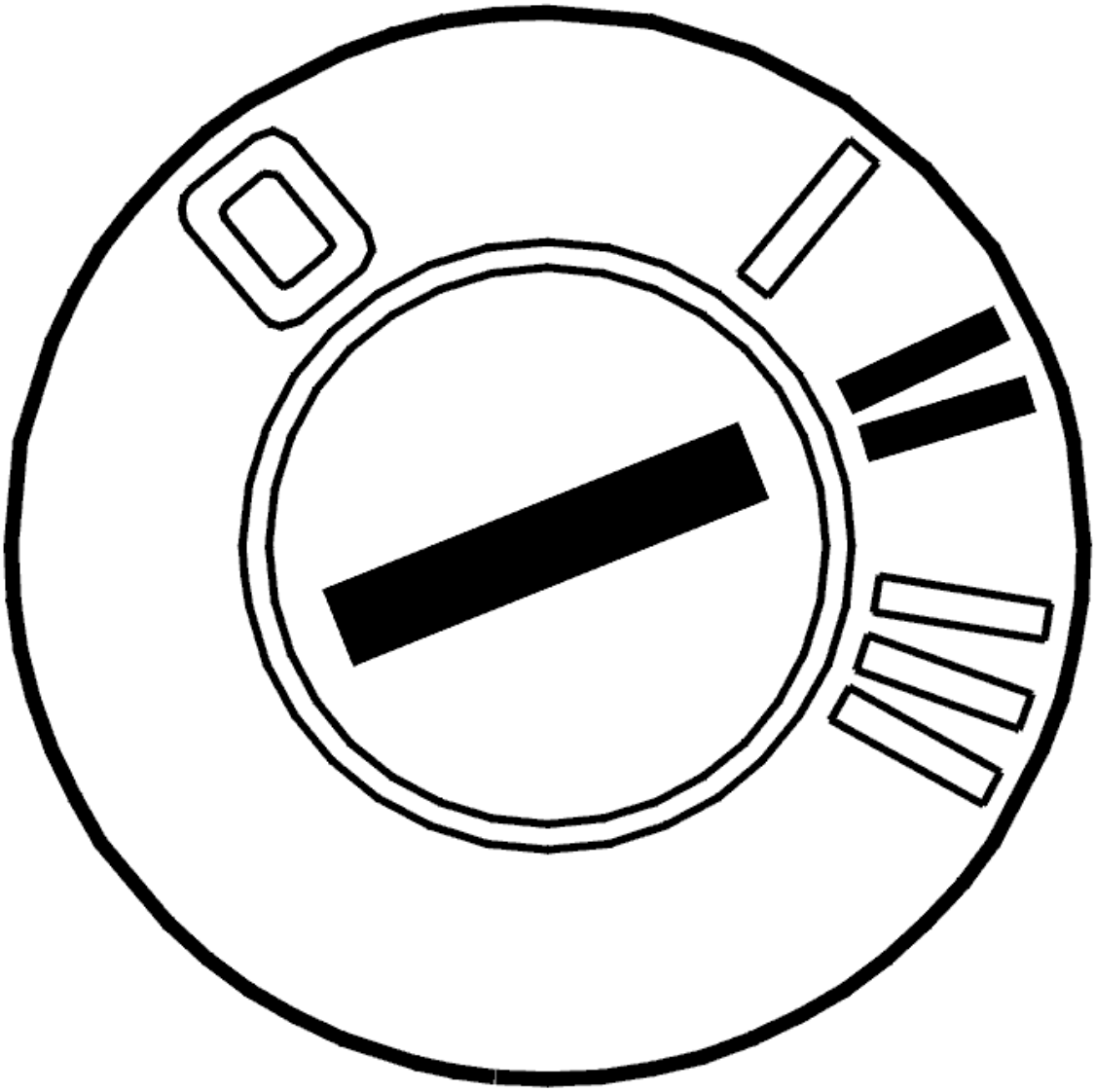

Fig. 132: Identifying Ignition ON
Courtesy of VOLVO CARS CORPORATION

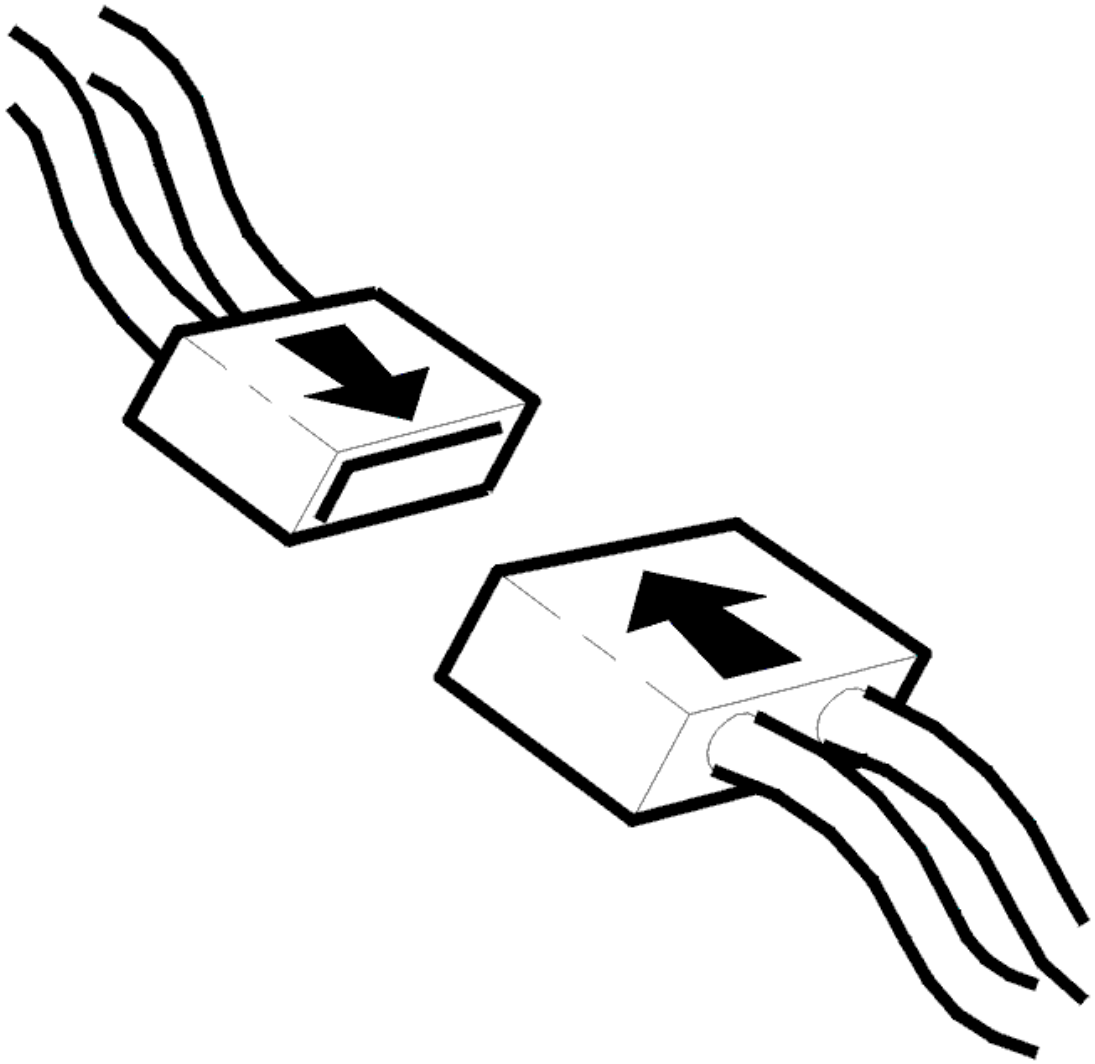

Fig. 133: Connecting Connector
Courtesy of VOLVO CARS CORPORATION

- Ignition off.
- Connect connectors, install components etc.
- Ignition on.

  Activate relay, press horn.

  If the function now operates, this means that the fault was probably caused by a short circuit in the relay driver circuit.

Does it work?

- **YES**

VERIFIED: Troubleshooting has been completed.

- **NO**

  Refer to **INFORMATION**

INFORMATION

FAULT-TRACING INFORMATION

The fault should have been detected and remedied. As this is not the case fault-tracing has failed.

Exit fault-tracing for this diagnostic trouble code (DTC) or make another attempt.

CEM-8FA3: RELAY, SIGNAL HORN. NO SIGNAL. INTERMITTENT FAULT (2003-2004)

DIAGNOSTIC TROUBLE CODE INFORMATION

Condition

If the control unit registers that the signal on the relay coil 2/17 is not present/too low when the signal horn is activated, diagnostic trouble code CEM-8FA3 is set.

Substitute Value

- None.

Possible Source

- Oxidation of relay socket contacts.
- Relay is loose or missing.
- Faulty relay, open circuit/short circuit to ground in relay coil.

Fault symptom[s]

- Horn does not work.

SIGNAL MISSING. INTERMITTENT FAULT

CHECKING THE CONTROL MODULE FOR OPEN-CIRCUITS

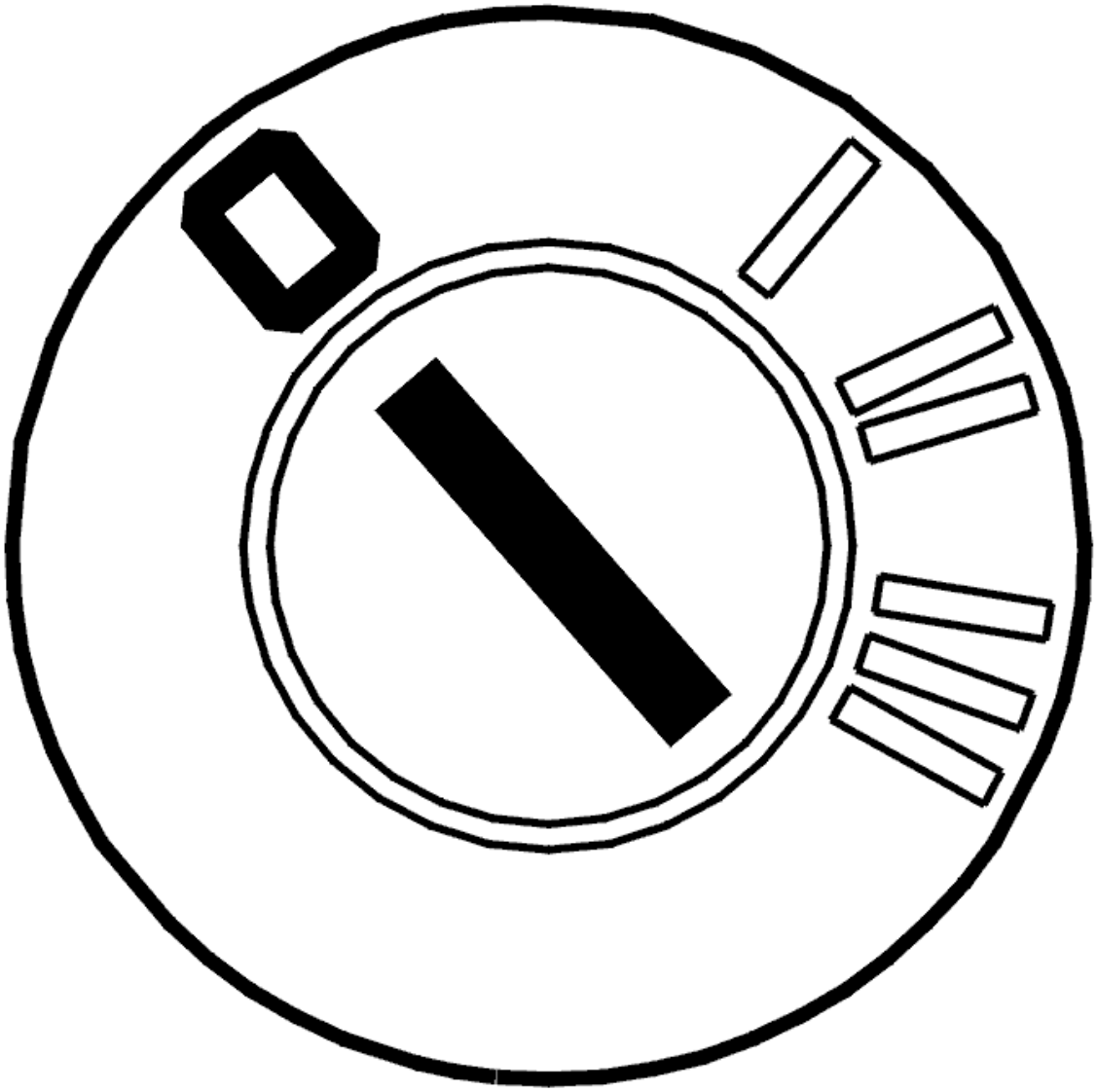

Fig. 134: Identifying Ignition OFF
Courtesy of VOLVO CARS CORPORATION

- Ignition off
- Remove relay 2/17.

Check the driver circuit for the relay coil for an intermittent open-circuit as follows:

Activate the relay driver by measuring the voltage between terminals #1 and #2 on the relay base. For further information about intermittent open-circuits.

HINT: The voltage between terminals #1 and #2 should be battery voltage.

If the value deviates excessively, check the voltage between terminal #2 and the battery and between terminal #1 and ground. Both should equal battery voltage. Check for an intermittent open-circuit. Also check the signal loop between relay terminal #2 (2/17) and central electronic module (CEM) terminal

#19A. Check for an open-circuit.

Other information:

- see **CHECKING WIRING AND TERMINALS**

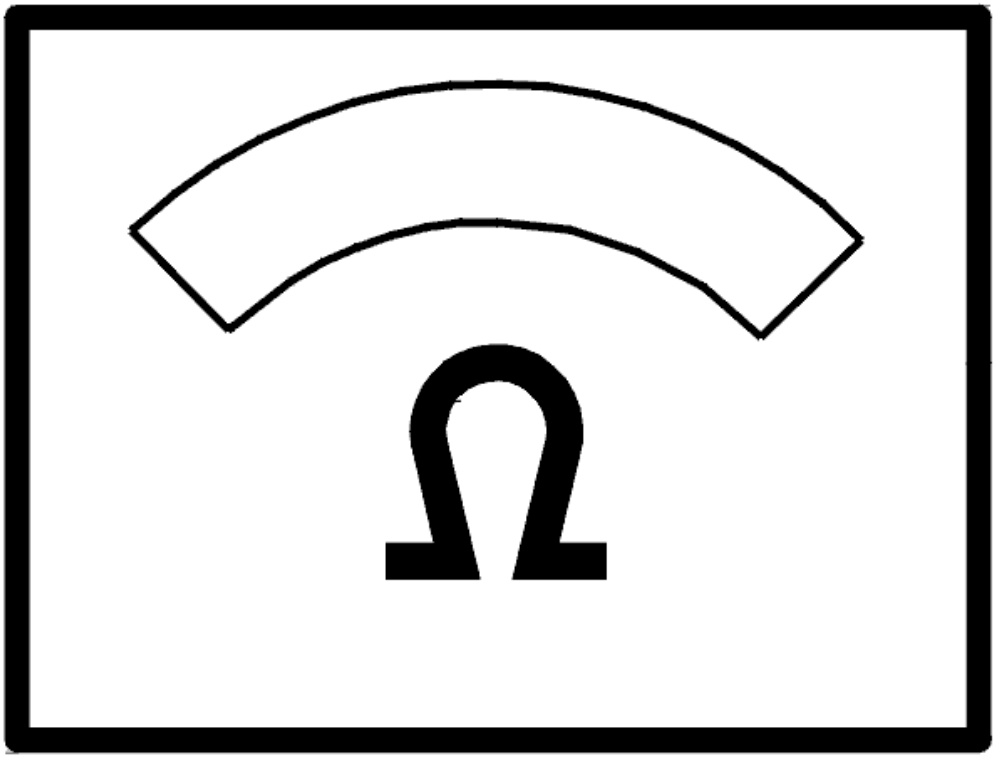

Fig. 135: Identifying Ohm Meter
Courtesy of VOLVO CARS CORPORATION

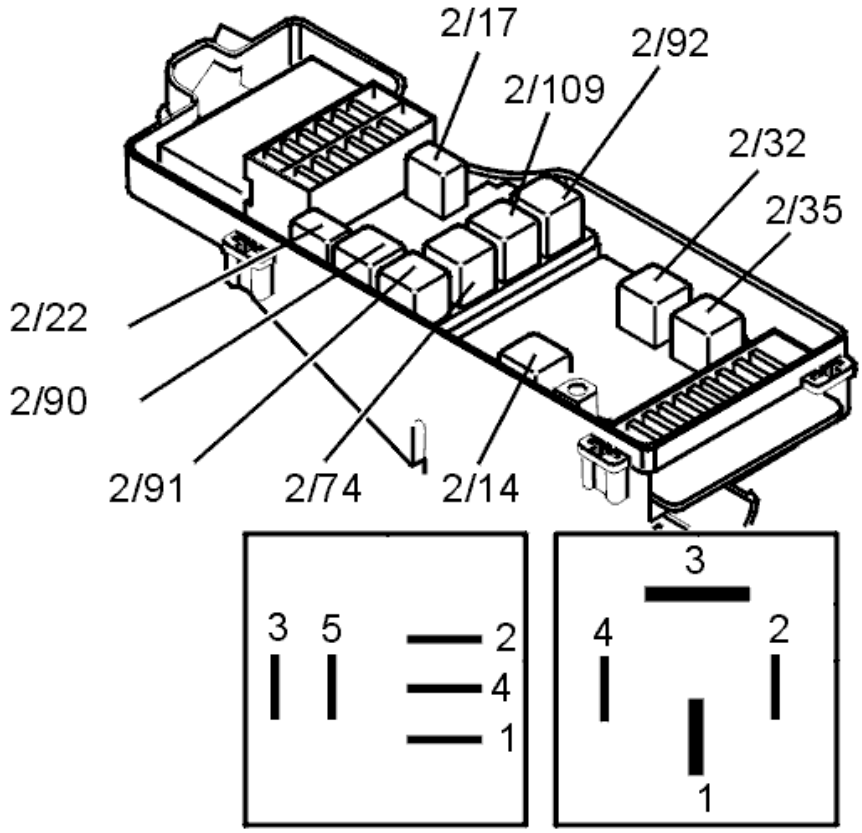

Fig. 136: Identifying Relays And Terminals
Courtesy of VOLVO CARS CORPORATION

- **Continue**

  Refer to **INFORMATION**

INFORMATION

FAULT-TRACING INFORMATION

If the fault is intermittent, do not verify fault-tracing if the fault does not recur.

It is possible to view the information again, or leave fault-tracing for this diagnostic trouble code (DTC).

CEM-8FA3: RELAY, SIGNAL HORN. NO SIGNAL. PERMANENT FAULT (2003-2004)

DIAGNOSTIC TROUBLE CODE INFORMATION

see **DIAGNOSTIC TROUBLE CODE INFORMATION**

SIGNAL MISSING. PERMANENT FAULT

CHECKING FOR CONTACT RESISTANCE / OXIDATION

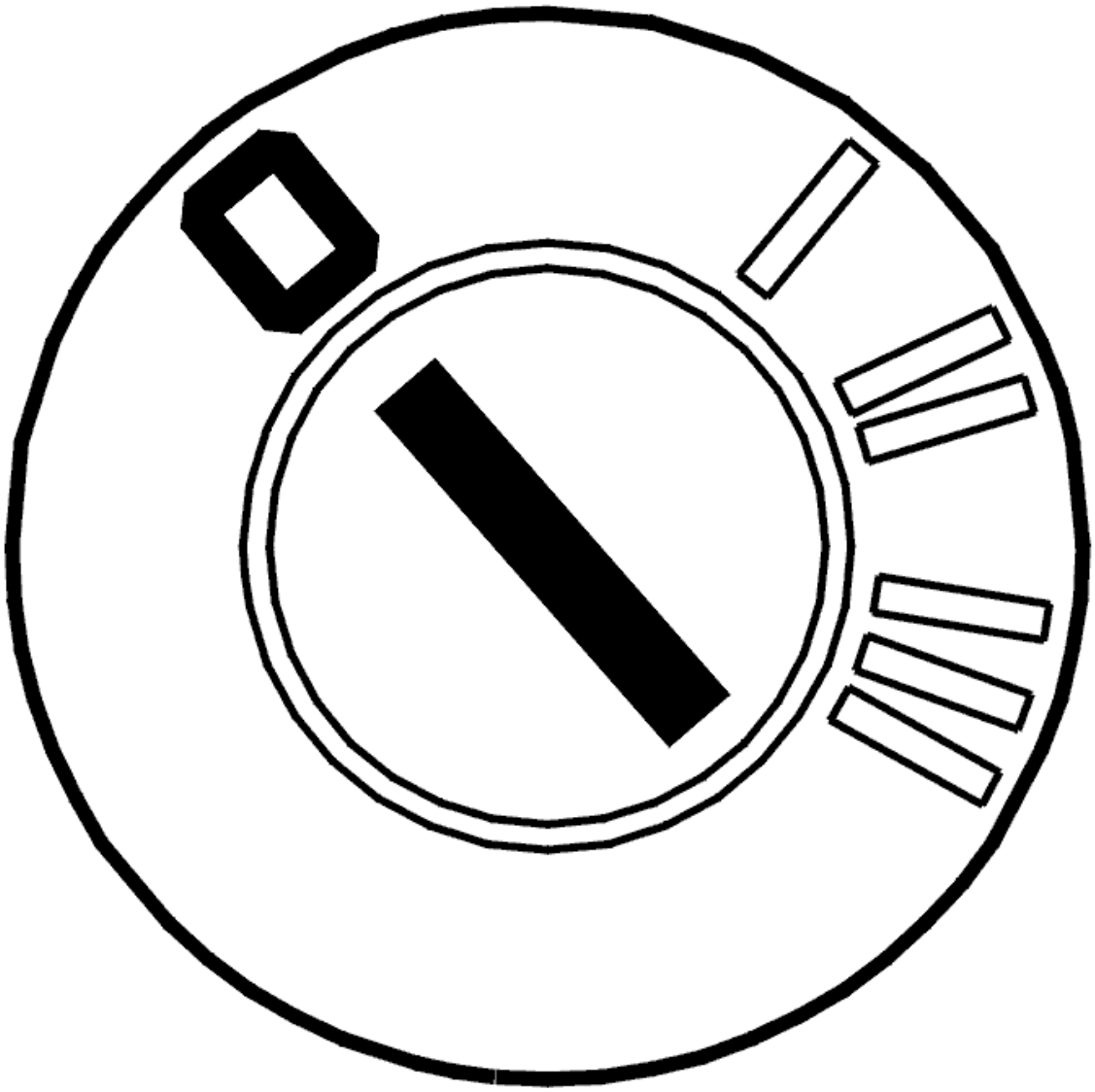

Fig. 137: Identifying Ignition OFF
Courtesy of VOLVO CARS CORPORATION

- Ignition off.

  Remove relay 2/17. Check the relay base switches. Check for contact resistance and oxidation Also check the connector (54/3). Check for contact resistance and oxidation.

  - Install the relay
  - Activate the relay, press the horn.

  If the function is now OK the fault was caused by a contact fault in the relay base.

  Other information:

- see **CHECKING WIRING AND TERMINALS** .

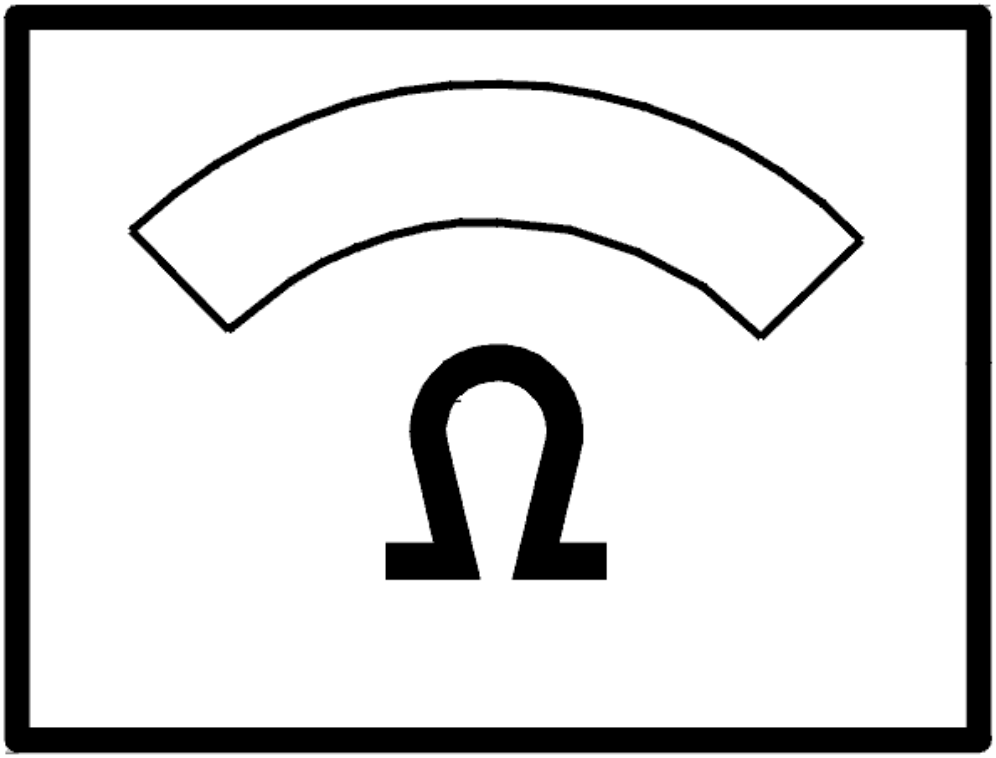

Fig. 138: Identifying Ohm Meter
Courtesy of VOLVO CARS CORPORATION

Was the function OK?

- **YES**

  Refer to **VERIFICATION**

- **NO**

  Refer to **REPLACING THE COMPONENT**

REPLACING THE COMPONENT

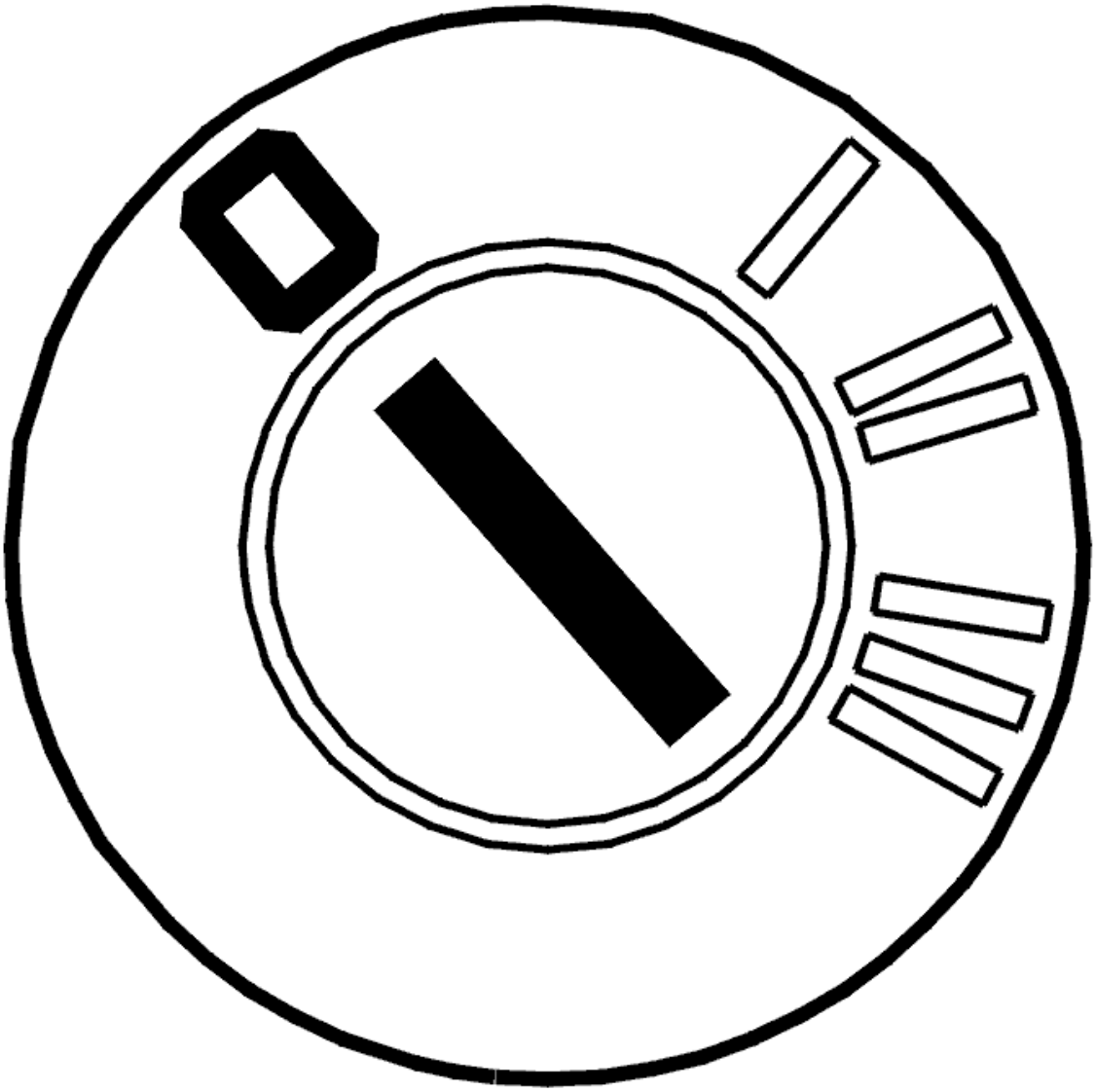

Fig. 139: Identifying Ignition OFF
Courtesy of VOLVO CARS CORPORATION

- Ignition off.
  - Replace relay 2/17
  - Activate the relay, press the horn
  - If the function is OK (the relay makes a noise), the cause of the fault was a defective relay (open-circuit or short-circuit the relay).

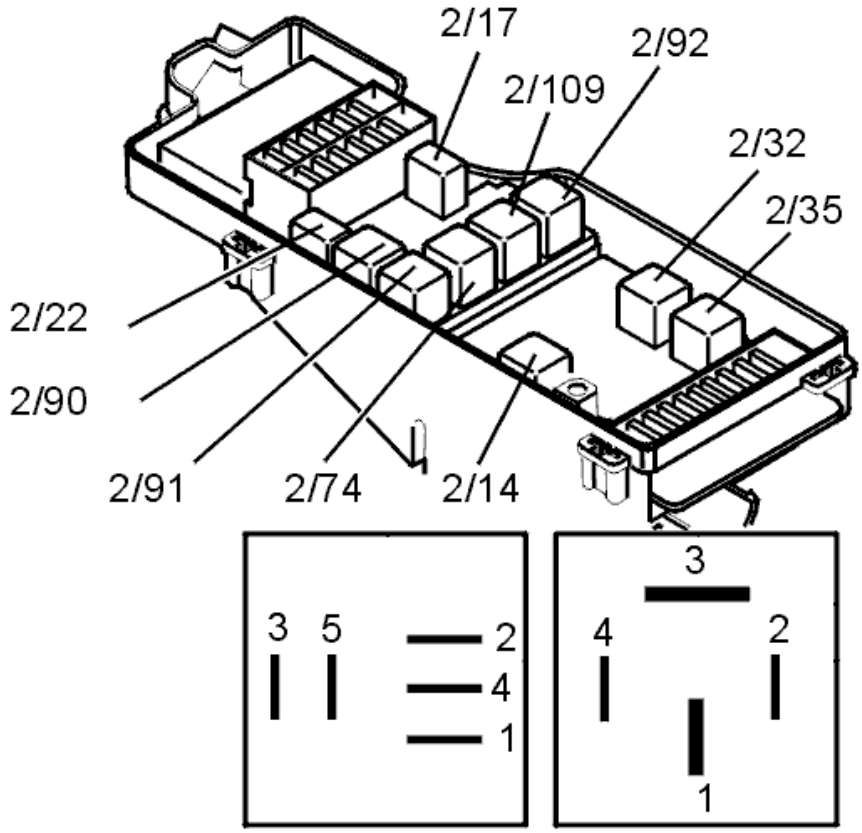

Fig. 140: Identifying Relays And Terminals
Courtesy of VOLVO CARS CORPORATION

Was the function OK?

- **YES**

  OKAY: Troubleshooting has been completed.

- **NO**

  Refer to **CHECKING FOR AN OPEN-CIRCUIT BETWEEN THE CONTROL MODULE AND THE RELAY**

CHECKING FOR AN OPEN-CIRCUIT BETWEEN THE CONTROL MODULE AND THE RELAY

- Remove relay 2/17.

Check the driver circuit for the relay coil for an open-circuit as follows:

Activate the relay driver. Measure the voltage between terminals #1 and #2 on the relay base. For further information about open-circuits.

HINT: The voltage between terminals #1 and #2 should be battery voltage. If the value deviates

markedly, check the voltage between terminal #2 and the battery and between terminal #1 and ground. Both must be the same as the battery voltage.

Also check the signal loop between relay terminal #2 (2/17) and central electronic module (CEM) terminal #19A. Check for an open-circuit.

Other information:

- see **CHECKING WIRING AND TERMINALS** .

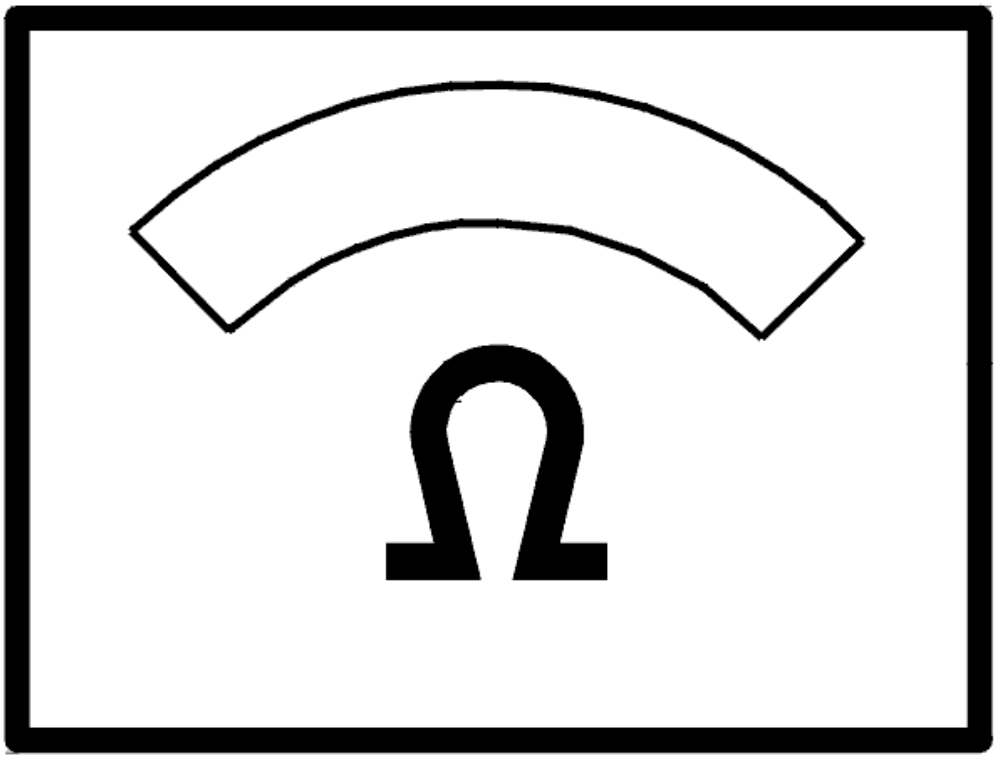

Fig. 141: Identifying Ohm Meter
Courtesy of VOLVO CARS CORPORATION

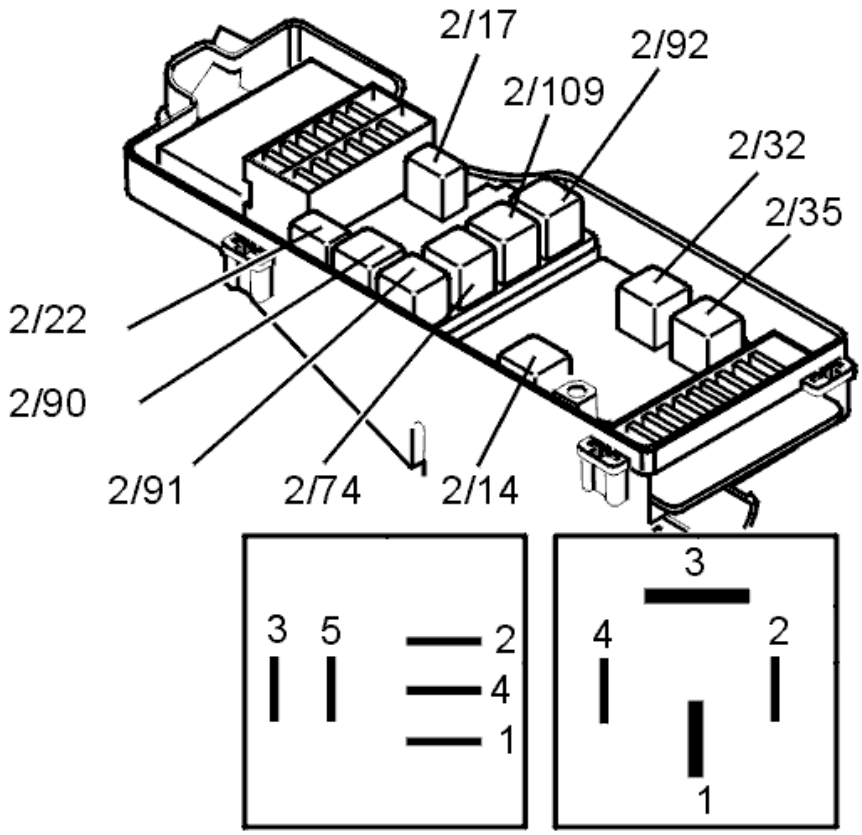

Fig. 142: Identifying Relays And Terminals
Courtesy of VOLVO CARS CORPORATION

Was a fault detected?

- **YES**

  Refer to **VERIFICATION**

- **NO**

  Refer to **CHECKING THE CONTROL MODULE FOR SHORT-CIRCUITS**

CHECKING THE CONTROL MODULE FOR SHORT-CIRCUITS

Measure the resistance between terminal #2 and ground when the relay driver is active. The resistance should be high when the relay driver is active. Replace the control module if the resistance is low.

Other information:

- For -2004, see: **CENTRAL ELECTRONIC MODULE (CEM), REPLACING**
- For 2005-, see: **CENTRAL ELECTRONIC MODULE (CEM), REPLACING** .

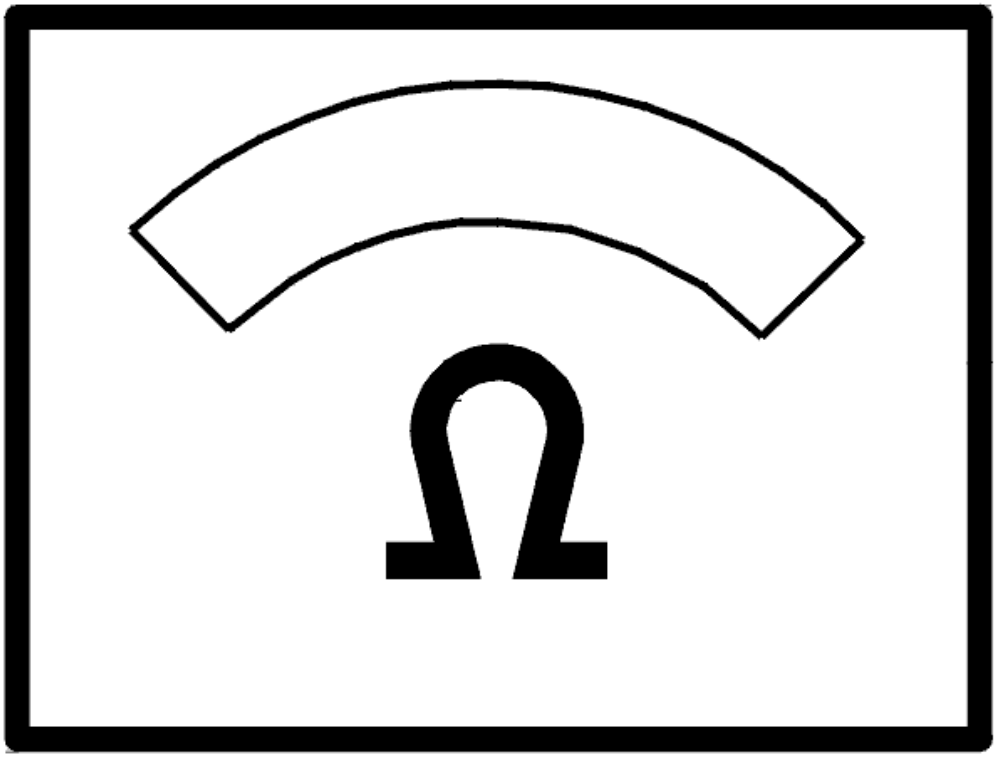

Fig. 143: Identifying Ohm Meter
Courtesy of VOLVO CARS CORPORATION

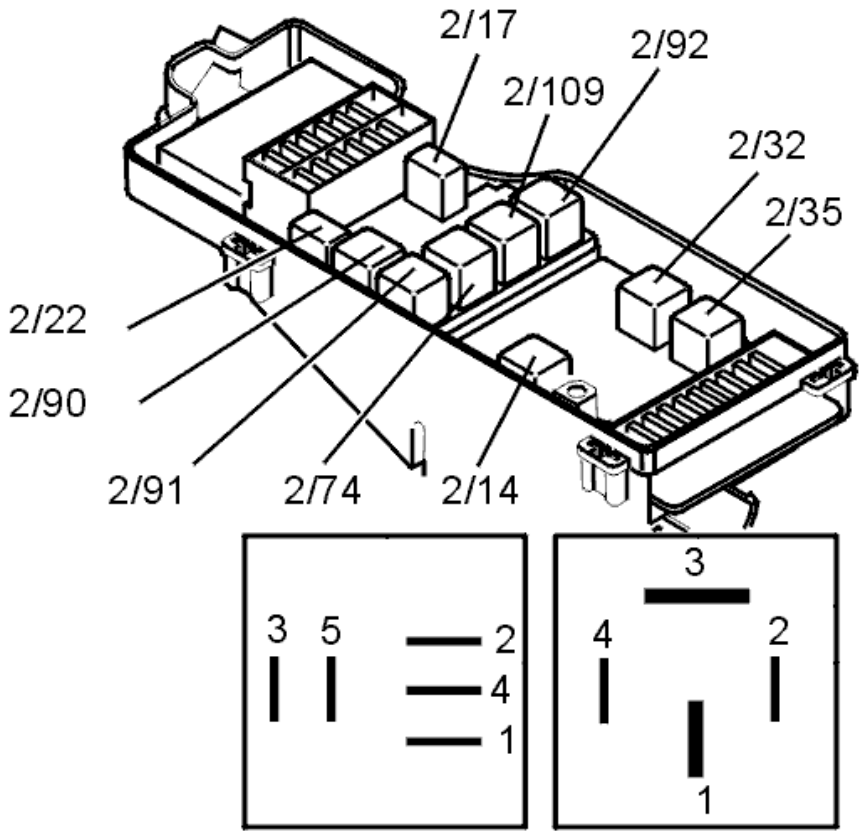

Fig. 144: Identifying Relays And Terminals
Courtesy of VOLVO CARS CORPORATION

- **Continue**

  Refer to **VERIFICATION**

VERIFICATION

VERIFICATION

HINT: After the repair it is necessary to check that the fault has been rectified.

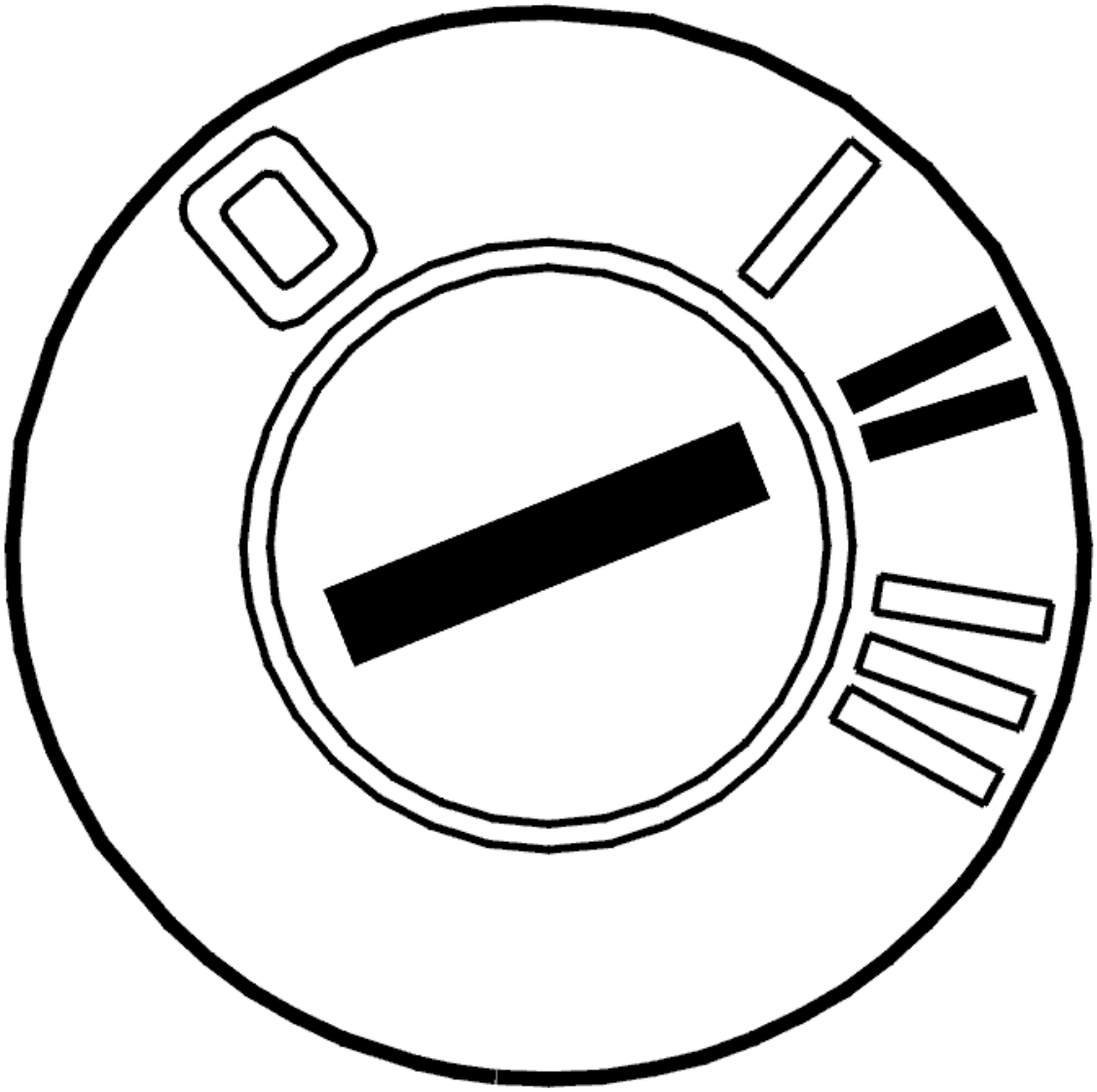

Fig. 145: Identifying Ignition ON
Courtesy of VOLVO CARS CORPORATION

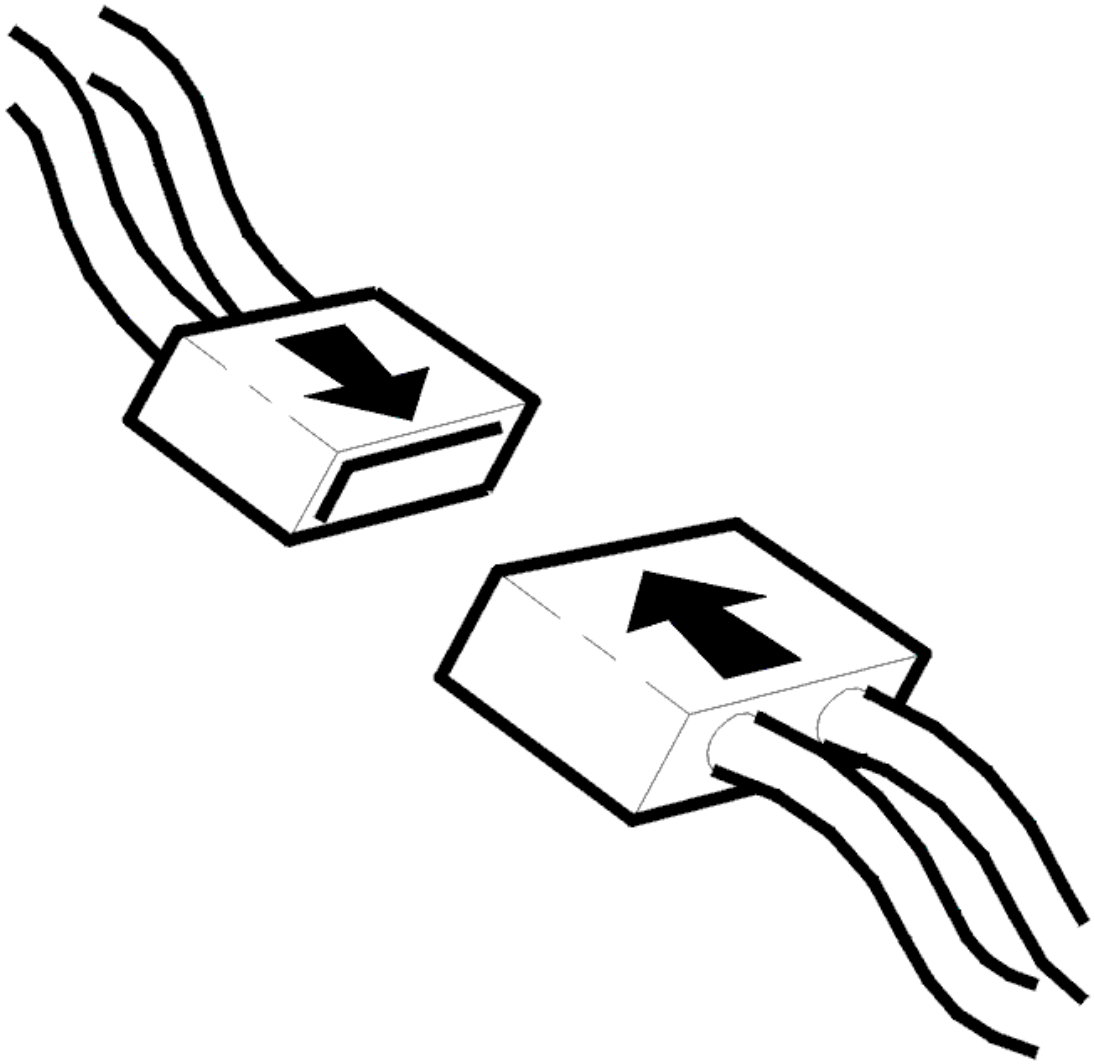

Fig. 146: Connecting Connector
Courtesy of VOLVO CARS CORPORATION

- Ignition off.
- Connect connectors, install components etc.
- Ignition on.

  Activate relay, press horn.

  If the function now operates, this means the fault was probably caused by a short circuit to ground in the relay.

Does it work?

- **YES**

VERIFIED: Troubleshooting has been completed.

- **NO**

  Refer to **INFORMATION**

INFORMATION

FAULT-TRACING INFORMATION

The fault should have been detected and remedied. As this is not the case fault-tracing has failed.

Exit fault-tracing for this diagnostic trouble code (DTC) or make another attempt.

CEM-8FD0: RELAY, AUXILIARY LAMP. SIGNAL TOO HIGH (2006-2012)

DIAGNOSTIC TROUBLE CODE (DTC) INFORMATION CEM-8FD0

Condition

The central electronic module (CEM) supplies voltage to the extra lights.

The diagnostic trouble code (DTC) is stored if the central electronic module (CEM) detects too high a signal on the control signal for the auxiliary lamp relay.

The relay for the auxiliary lamp must be activated for the diagnostic trouble code (DTC) to be stored.

Substitute Value

- If the fault has been detected in 100 ignition cycles, the output is closed permanently until the diagnostic trouble code is erased (applies from structure week 200539).

Possible Source

- Short-circuit to battery voltage in the signal cable to the auxiliary lamps relay.

Fault symptom[s]

- Auxiliary lights do not function

SIGNAL TOO HIGH

CHECKING THE CABLE

If the fault is intermittent, it has been registered previously but is no longer present. Intermittent faults can be caused by interference at start up of the central electronic module (CEM) or may be a different type of fault which occurs on different occasions. The fault is evaluated depending on how it occurs.

Checking the cable and relay

Check the cable between the central electronic module (CEM) and the auxiliary lamps relay (2/64). Check for a short-circuit to supply voltage.

Take readings between:

- Central electronic module (CEM) #C9 (#9) and relay, auxiliary lamps, (2/64) #1.

If no fault is found in the signal cable try replacing relay 2/64.

Remedy as necessary.

Other information

- see **CONNECTING THE BREAKOUT BOX**
- -2004: **SIGNAL SPECIFICATION**
- 2005-: **SIGNAL SPECIFICATION**
- see **LOCATION OF COMPONENTS**
- see **CHECKING WIRING AND TERMINALS**

- **Continue**

  Refer to **VERIFICATION**

VERIFICATION

HINT: After carrying out the repair check that the fault has been remedied.

Fig. 147: Identifying Ignition On Position
Courtesy of VOLVO CARS CORPORATION

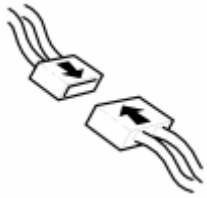

Fig. 148: Identifying Connector(s) Reinstallation
Courtesy of VOLVO CARS CORPORATION

- Ignition off.
- Reinstall the connectors, components etc.
- Ignition on.

  Activate the auxiliary lamp.

Do the auxiliary lamps work?

- **YES**

  OKAY: Troubleshooting has been completed.

- **NO**

  Refer to **INFORMATION**

INFORMATION

FAULT-TRACING INFORMATION

The fault should have been detected and remedied. As this is not the case fault-tracing has failed.

Exit fault-tracing for this diagnostic trouble code (DTC) or make another attempt.

CEM-8FF0: RAIN SENSOR BUTTON. ACTIVATED TOO LONG (2005-2012)

DIAGNOSTIC TROUBLE CODE (DTC) INFORMATION CEM-8FF0

Condition

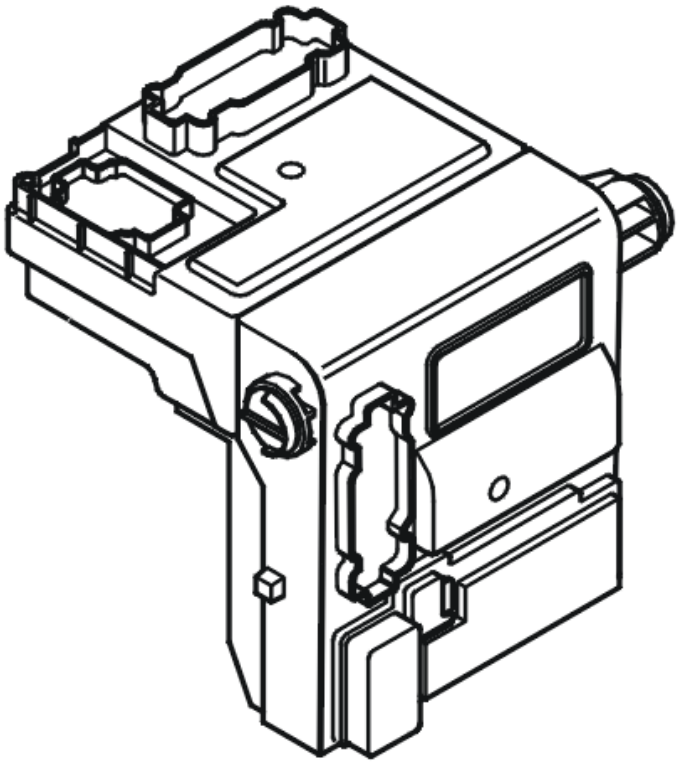

Fig. 149: Identifying Central Electronic Module (CEM)
Courtesy of VOLVO CARS CORPORATION

The central electronic module (CEM) checks the signal from the rain sensor button.

The diagnostic trouble code (DTC) is stored if the central electronic module (CEM) registers that the rain sensor button has been active for more than 1 minute.

The diagnostic trouble code (DTC) can be diagnosed when the ignition is switched on.

Substitute Value

- None.

Possible Source

- The rain sensor button has jammed in the pressed in position
- Damaged rain sensor button.

Fault symptom[s]

- No rain sensor function.

ACTIVATED TOO LONG

CHECKING THE CONTROL

The diagnostic trouble code (DTC) is stored when a button or switch has been depressed for a long time.

If the fault is intermittent, it has been registered previously but is no longer present. Intermittent faults can be caused by interference at start up or can be a different type of fault which occurs on different occasions. The fault is evaluated depending on how it occurs.

Check that the button or switch does not stick in the activated position.

Remedy as necessary.

Other information

see **WASHER / WIPER SWITCH, REPLACING**

- **Continue**

  Refer to **VERIFICATION**

VERIFICATION

VERIFICATION

HINT: After carrying out the repair, check that the fault has been remedied.

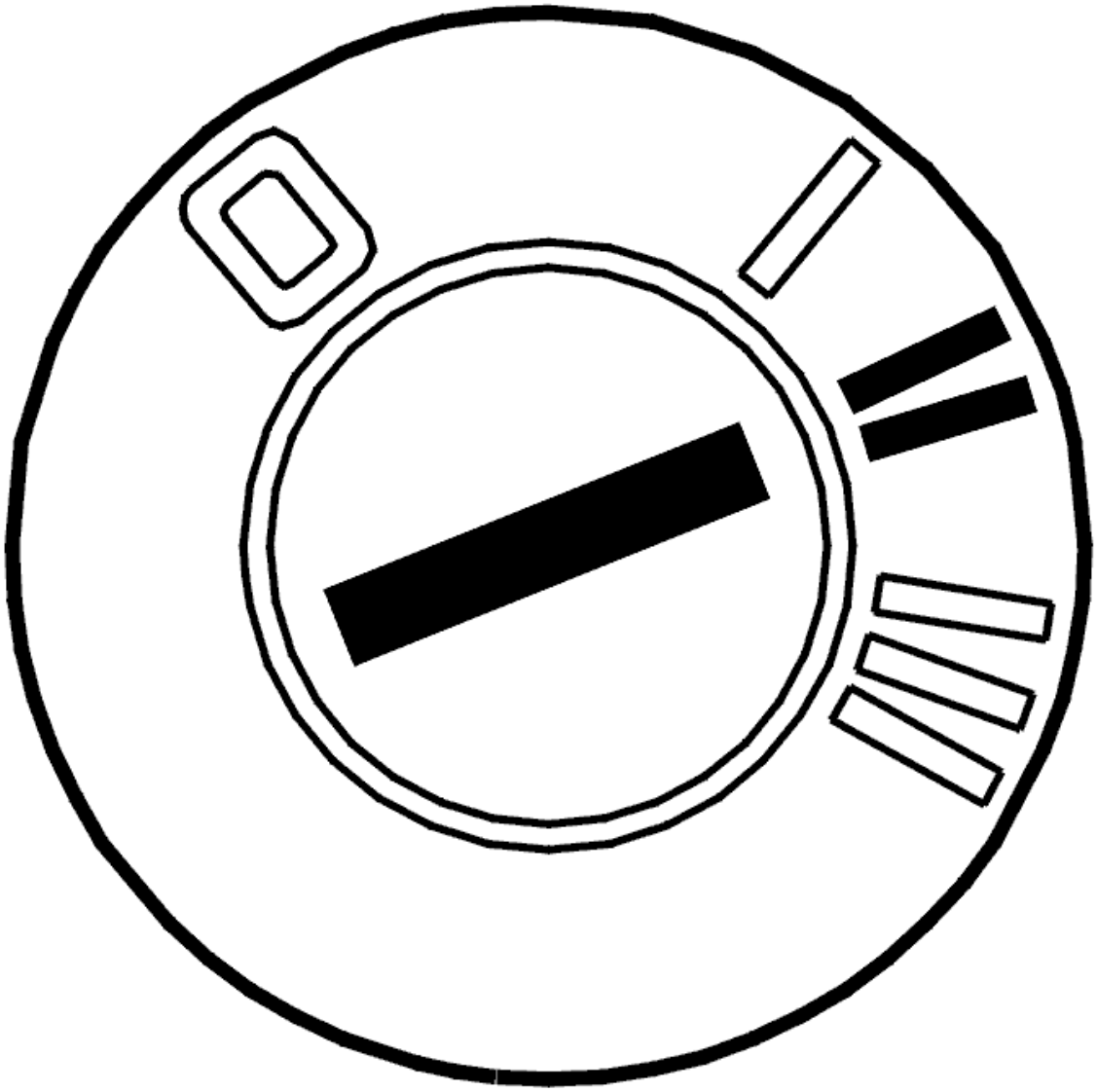

Fig. 150: Identifying Ignition ON
Courtesy of VOLVO CARS CORPORATION

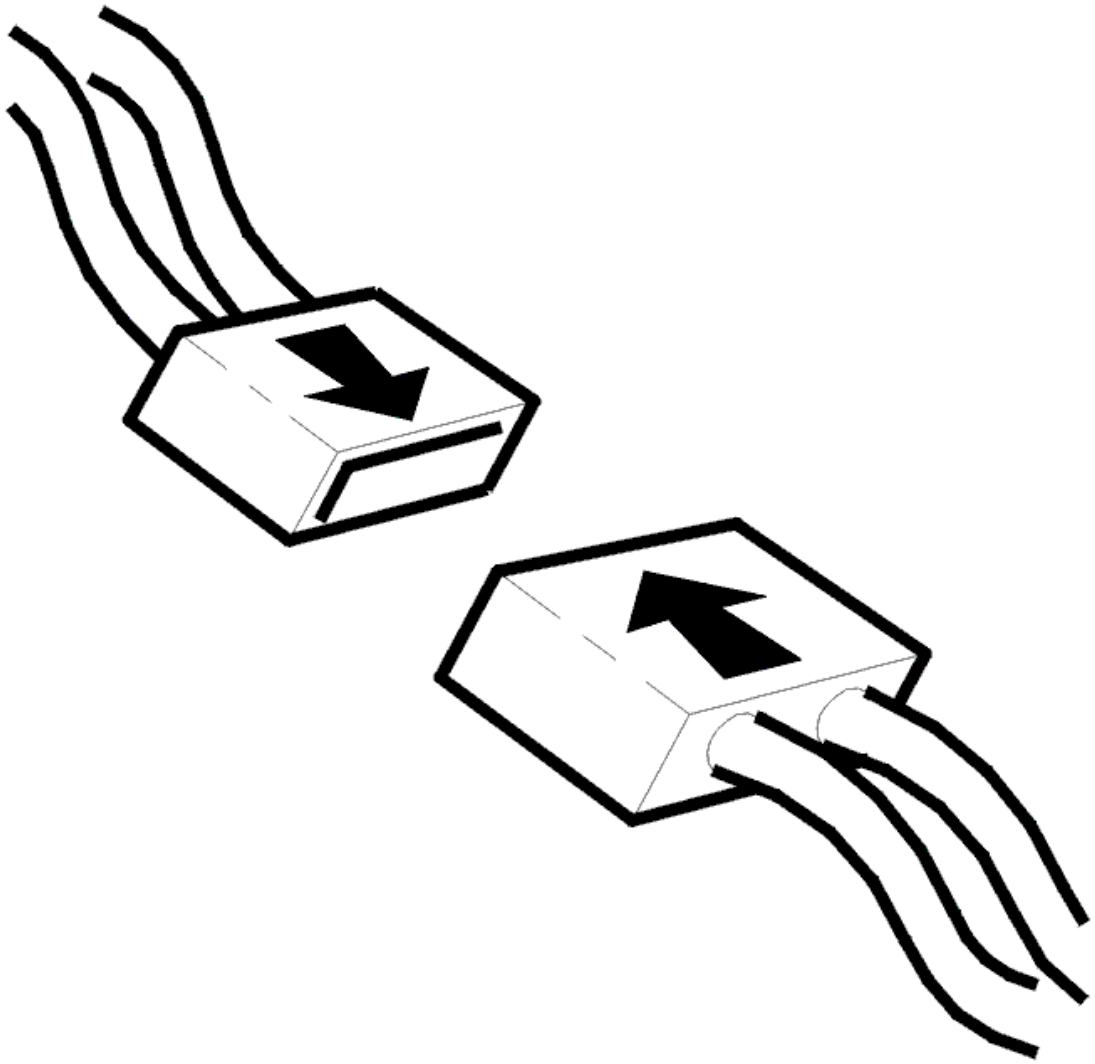

Fig. 151: Connecting Connector
Courtesy of VOLVO CARS CORPORATION

- Ignition off
- Reinstall the connectors, components etc.
- Ignition on.

Activate the rain sensor.

HINT: The wiper blades make a reference stroke to determine the cleanliness and condition of the windshield when the rain sensor is activated. The rain sensor is deactivated when the ignition is switched off. To reactivate the rain sensor with the ignition on, move the lever to position 0 and then to intermittent wiping.

Spray water on the windshield where the rain sensor is positioned.

The wiper blades must now wipe the windshield clean.

Is the rain sensor functioning?

- **YES**

  VERIFIED: Troubleshooting has been completed.

- **NO**

  Refer to **INFORMATION**

INFORMATION

FAULT-TRACING INFORMATION

The fault should have been detected and remedied. As this is not the case fault-tracing has failed.

Exit fault-tracing for this diagnostic trouble code (DTC) or make another attempt.

CEM-8FF1: LIGHT EMITTING DIODE, RAIN SENSOR BUTTON. SIGNAL TOO LOW (2005-2012)

DIAGNOSTIC TROUBLE CODE (DTC) INFORMATION CEM-8FF1

Condition

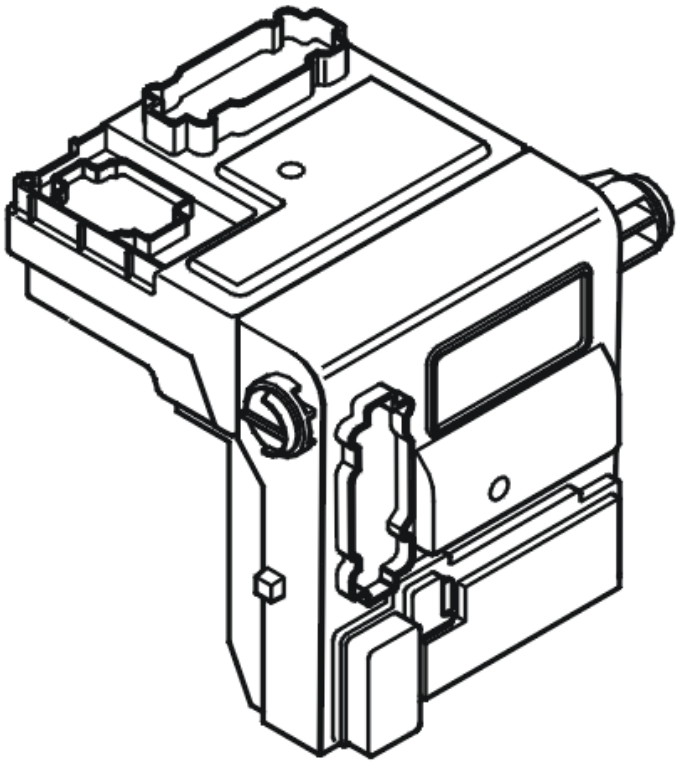

Fig. 152: Identifying Central Electronic Module (CEM)
Courtesy of VOLVO CARS CORPORATION

The central electronic module (CEM) checks the signal from the LED in the rain sensor button.

A diagnostic trouble code will be generated if the central electronic module (CEM) registers a signal from the LED in the rain sensor button that is too low.

The diagnostic trouble code can be diagnosed when the ignition is on.

Substitute Value

- Nothing.

Possible Source

- LED in rain sensor button short-circuited to ground.

Fault symptom[s]

- The LED does not come on.

SIGNAL TOO LOW

REPLACING THE COMPONENT

A diagnostic trouble code will be generated if the LED in the rain sensor button is shorted to ground.

If the fault is intermittent it will have been registered earlier but no longer exists. Intermittent faults could be due to interference on starting up or to another type of fault than recurs at different times. The seriousness of the fault is determined from case to case.

Remedy as necessary.

Other information

see **WASHER / WIPER SWITCH, REPLACING**

- **Continue**

  Refer to **VERIFICATION**

VERIFICATION

VERIFICATION

HINT: After carrying out the repair, check that the fault has been remedied.

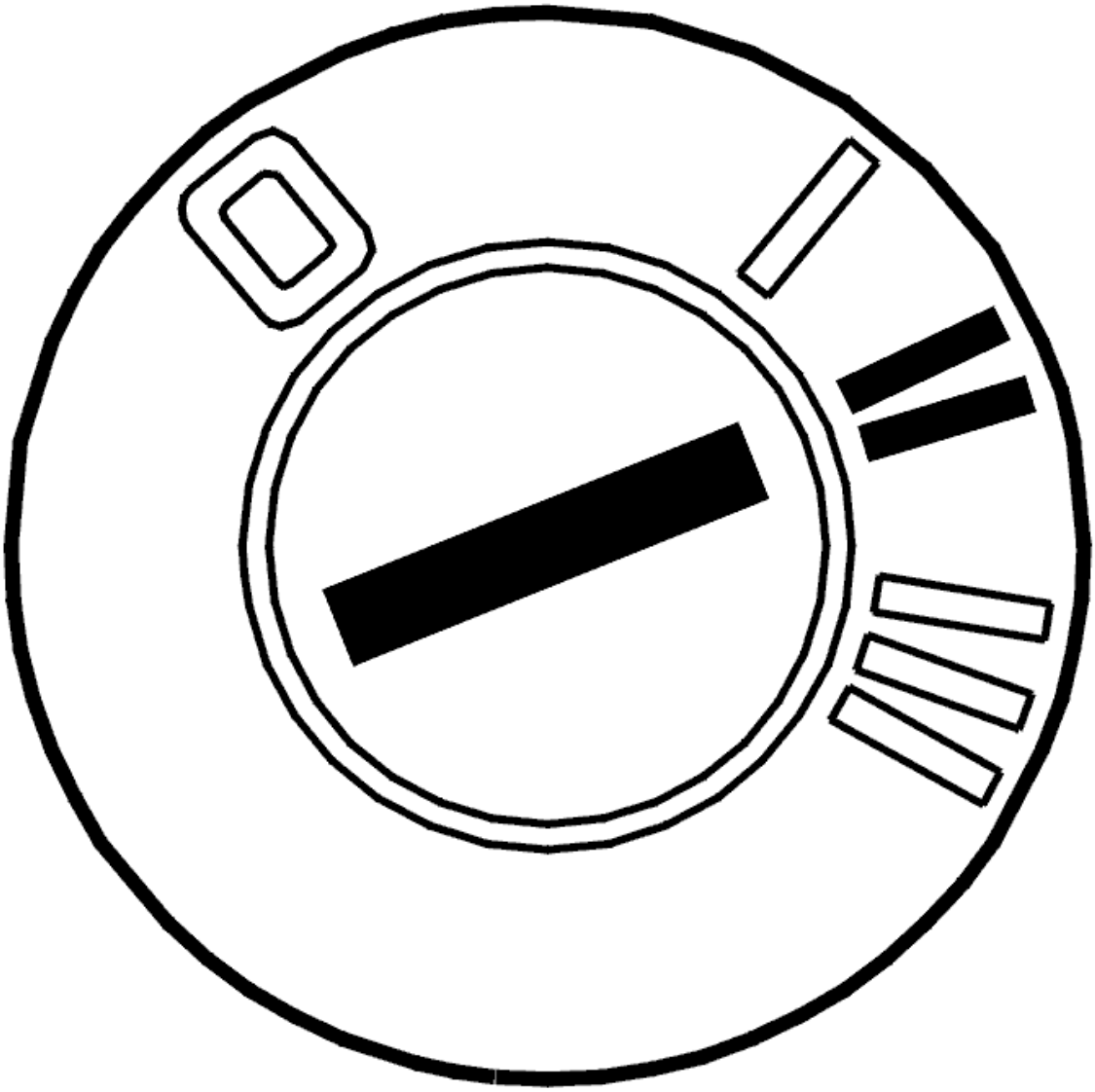

Fig. 153: Identifying Ignition ON
Courtesy of VOLVO CARS CORPORATION

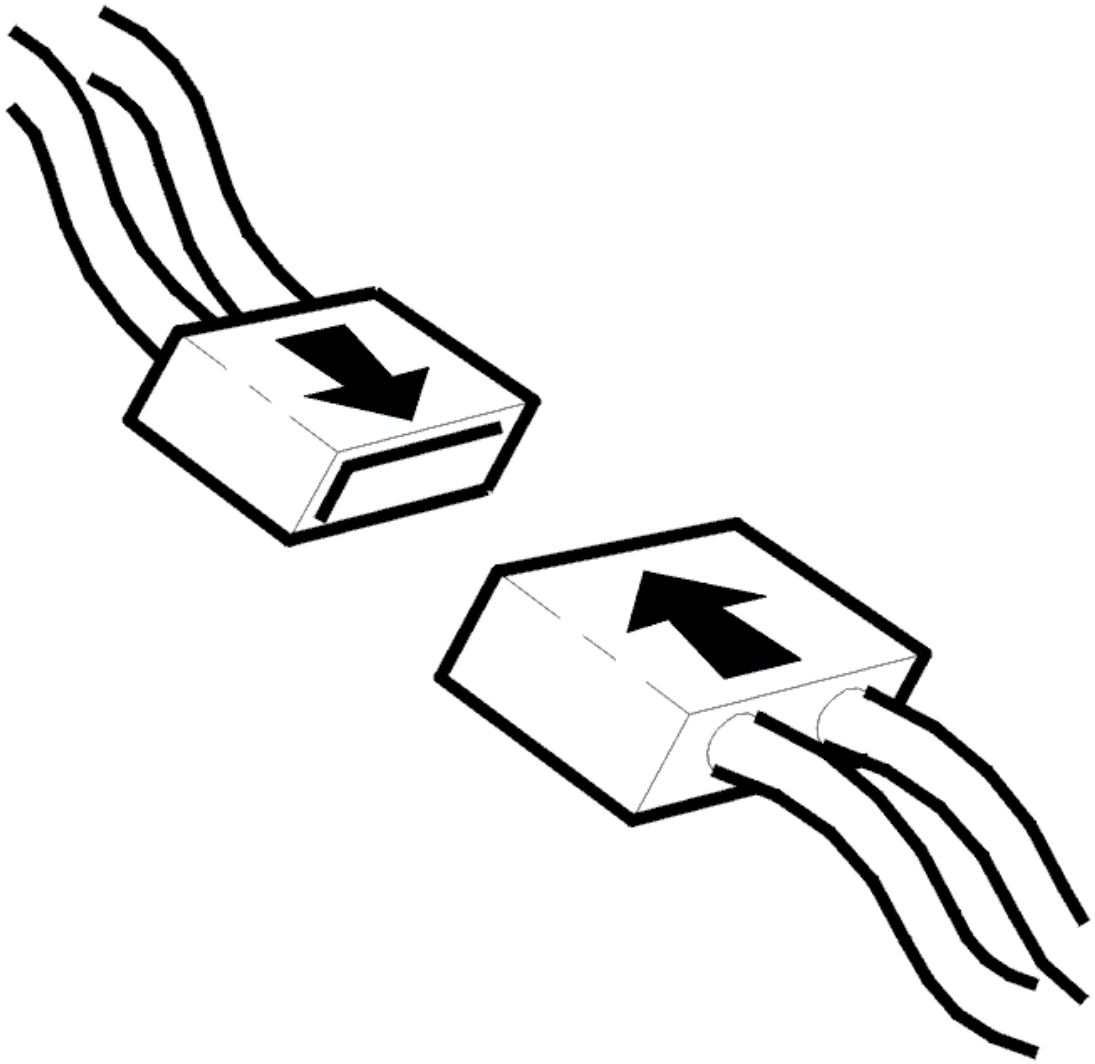

Fig. 154: Connecting Connector
Courtesy of VOLVO CARS CORPORATION

- Ignition off
- Reinstall the connectors, components etc.
- Ignition on

  Activate the rain sensor.

  HINT: When the rain sensor is activated the wiper blades perform a reference sweep to determine the cleanness/condition of the windscreen. Switching off the ignition deactivates the rain sensor. To activate the rain sensor, switch on the ignition, move the lever to position 0 and then to the intermittent wipe position.

  Check that the LED in the rain sensor button comes on.

Does the LED come on?

- **YES**

  VERIFIED: Troubleshooting has been completed.

- **NO**

  Refer to **INFORMATION**

INFORMATION

FAULT-TRACING INFORMATION

The fault should have been detected and remedied. As this is not the case fault-tracing has failed.

Exit fault-tracing for this diagnostic trouble code (DTC) or make another attempt.

CEM-9C01: GLOVE COMPARTMENT LIGHTING. SIGNAL TOO LOW (2005-2012)

DIAGNOSTIC TROUBLE CODE (DTC) INFORMATION CEM-9C01

Condition

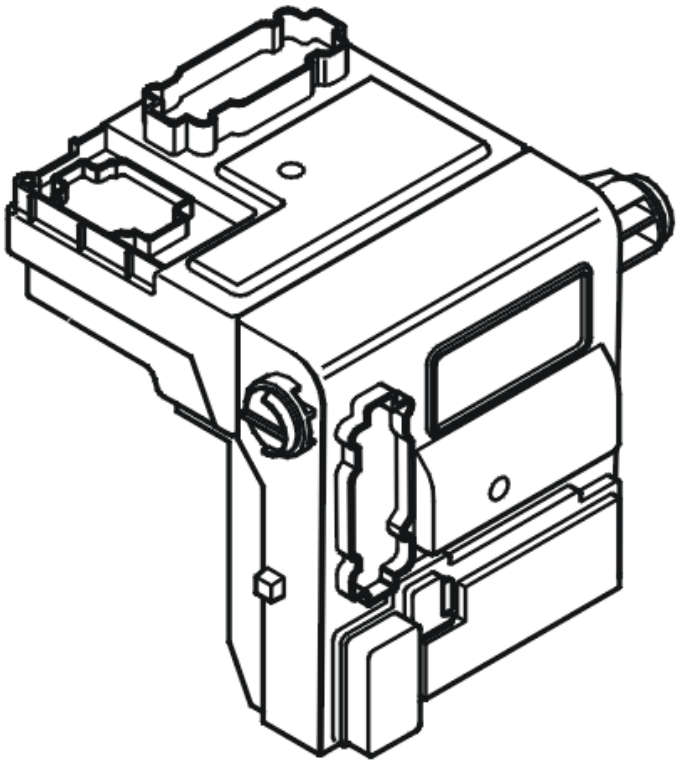

Fig. 155: Identifying Central Electronic Module (CEM)
Courtesy of VOLVO CARS CORPORATION

The central electronic module (CEM) checks the glove compartment lighting.

The diagnostic trouble code (DTC) is stored if the central electronic module (CEM) detects a short-circuit to ground in the power supply cable for the glove compartment lighting.

The diagnostic trouble code (DTC) can be diagnosed when the ignition is switched on.

Substitute Value

- If the fault has been detected in 100 ignition cycles, the output is closed permanently until the diagnostic trouble code is erased (applies from structure week 200539).

Possible Source

- Short-circuit to ground in the cable to the glove compartment lighting.

Fault symptom[s]

- The glove compartment lighting is not working.

SIGNAL TOO LOW

CHECKING THE WIRING

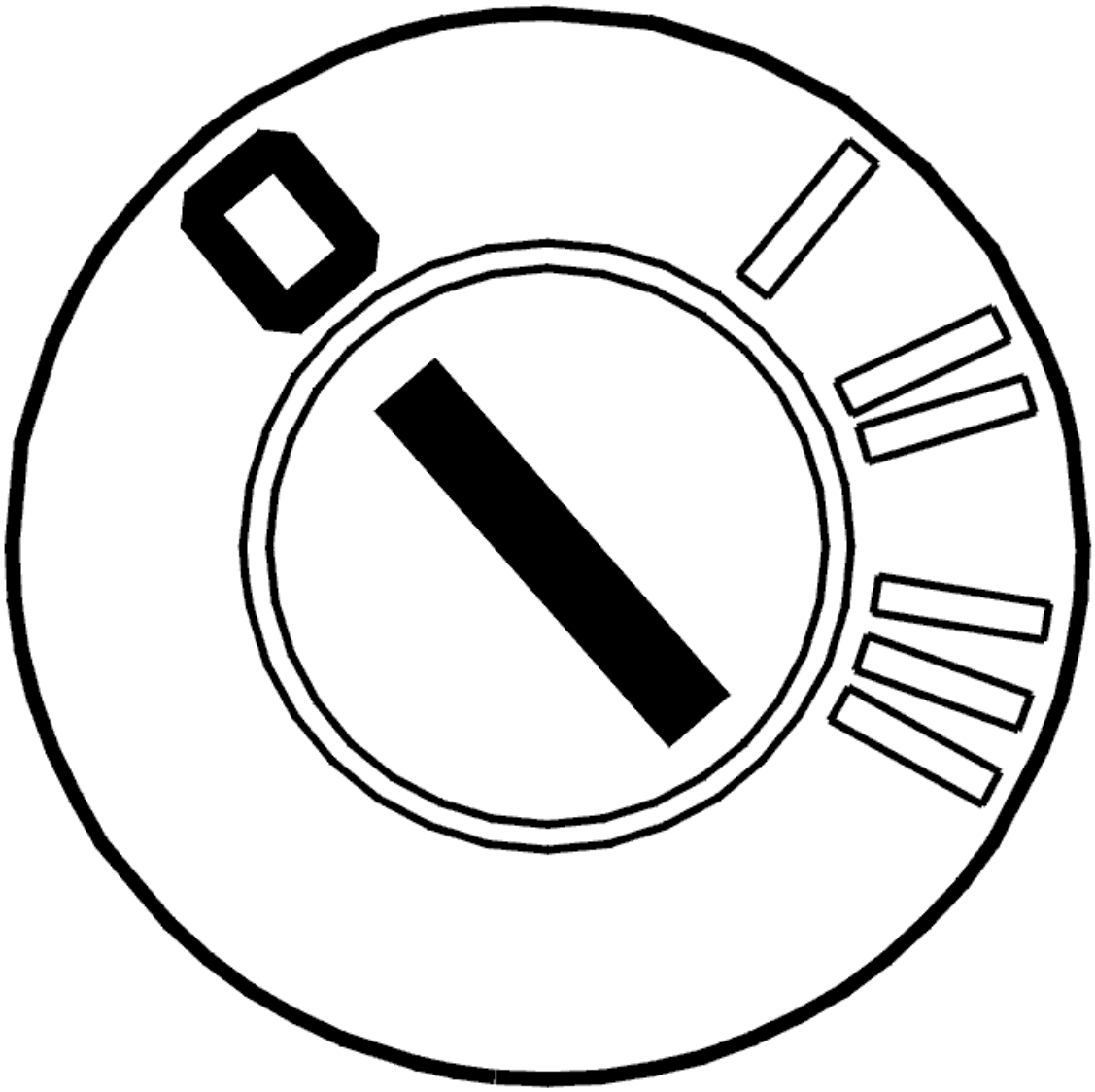

Fig. 156: Identifying Ignition OFF
Courtesy of VOLVO CARS CORPORATION

- Ignition off.

  Check the power cable for a short-circuit to ground.

  Take readings between:

  - Central electronic module (CEM) #D9 and glove compartment lighting terminal #1.

  Also check that the correct type of bulb is installed in the glove compartment lighting.

  Remedy as necessary.

Other information

- see **CONNECTING THE BREAKOUT BOX**
- -2004: **SIGNAL SPECIFICATION**
- 2005-: **SIGNAL SPECIFICATION**
- see **LOCATION OF COMPONENTS**
- see **CHECKING WIRING AND TERMINALS**

- **Continue**

  Refer to **VERIFICATION**

VERIFICATION

VERIFICATION

HINT: After carrying out the repair, check that the fault has been remedied.

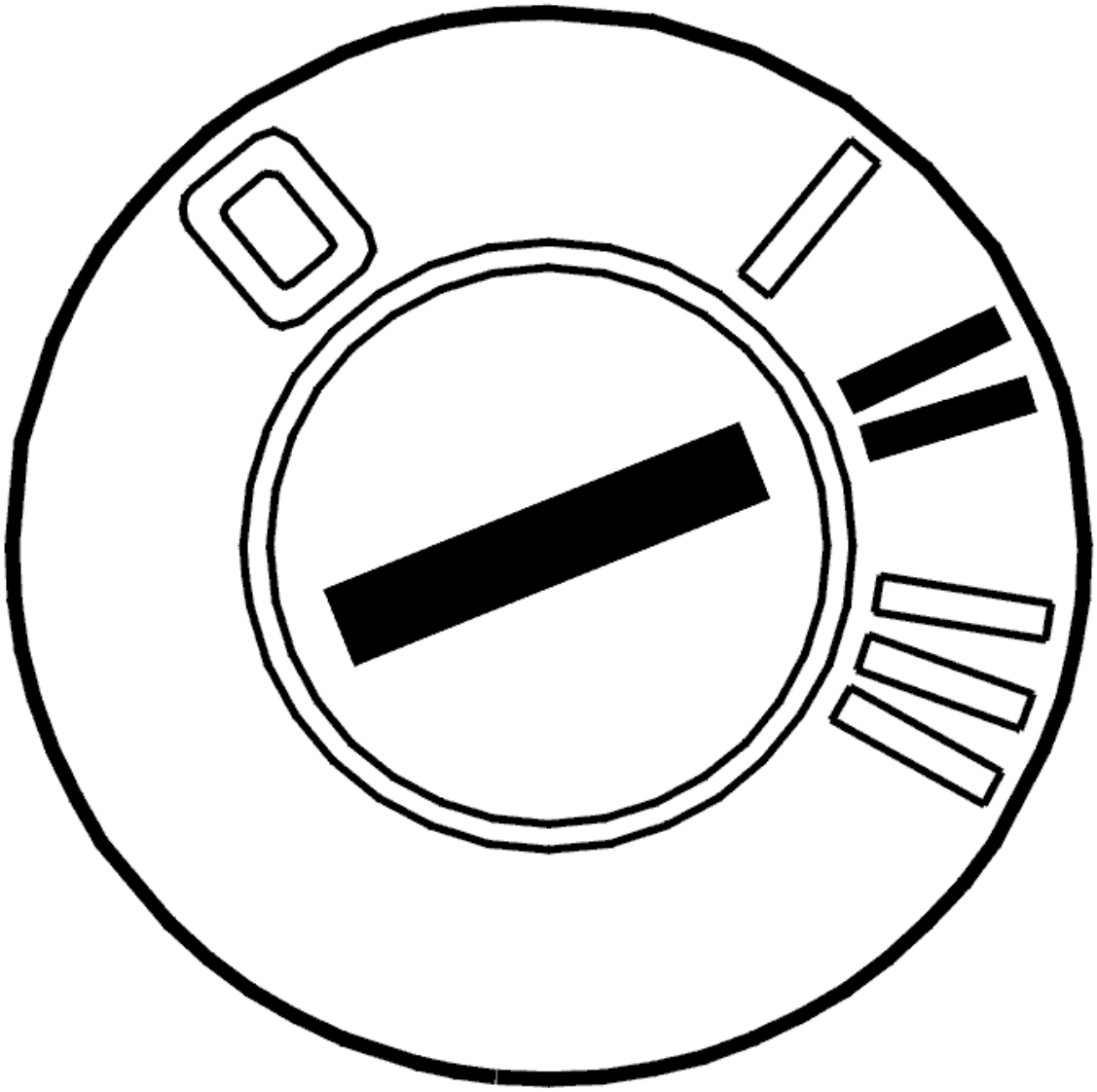

Fig. 157: Identifying Ignition ON
Courtesy of VOLVO CARS CORPORATION

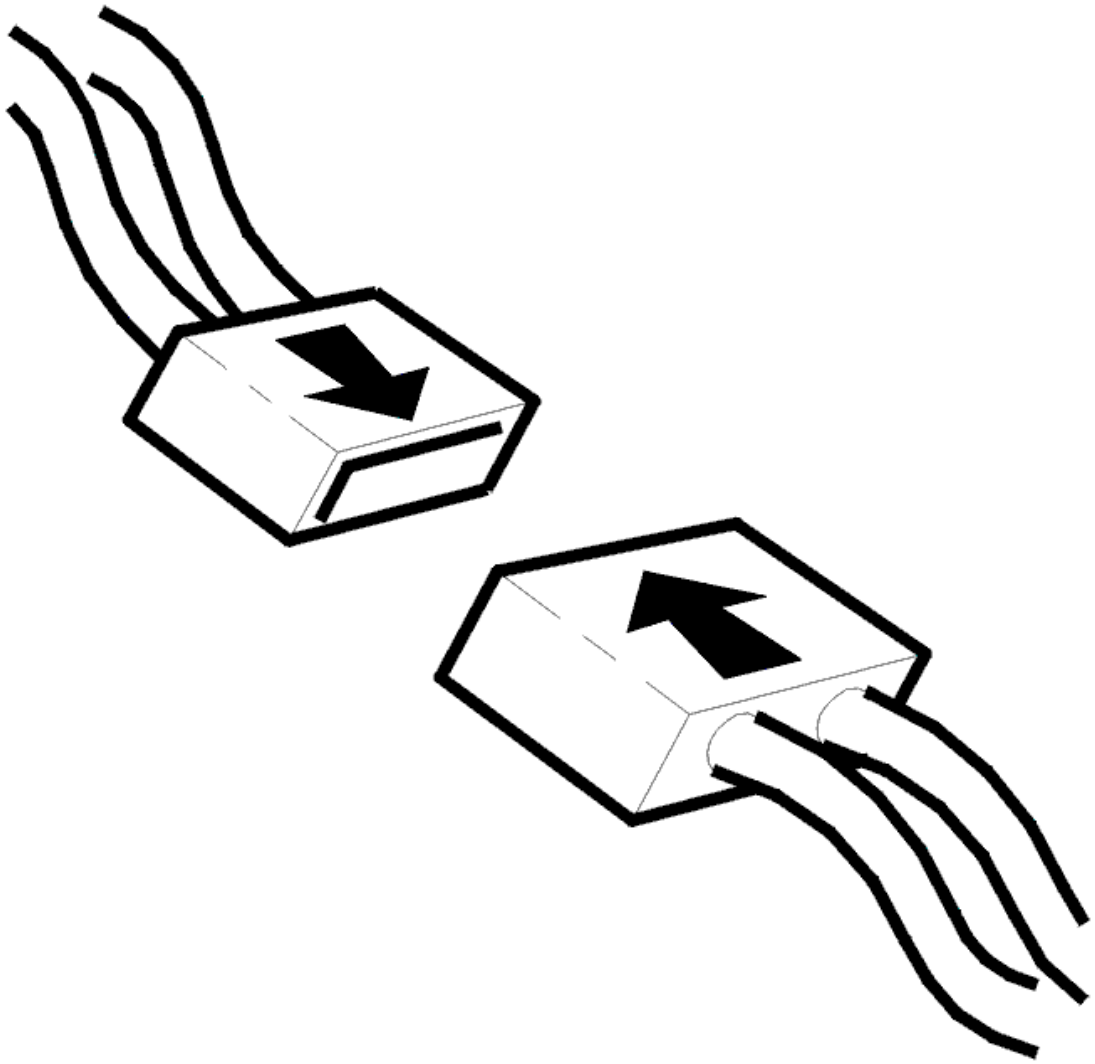

Fig. 158: Connecting Connector
Courtesy of VOLVO CARS CORPORATION

- Ignition off
- Reinstall the connectors, components etc.
- Ignition on.

  Open the glove compartment.

Does the lamp light?

- **YES**

  VERIFIED: Troubleshooting has been completed.

- **NO**

  Refer to **INFORMATION**

INFORMATION

FAULT-TRACING INFORMATION

The fault should have been detected and remedied. As this is not the case fault-tracing has failed.

Exit fault-tracing for this diagnostic trouble code (DTC) or make another attempt.

CEM-9C02: ANTENNA / LIGHT RING. SHORT-CIRCUIT TO GROUND (2005-2012)

DIAGNOSTIC TROUBLE CODE (DTC) INFORMATION CEM-9C02

Condition

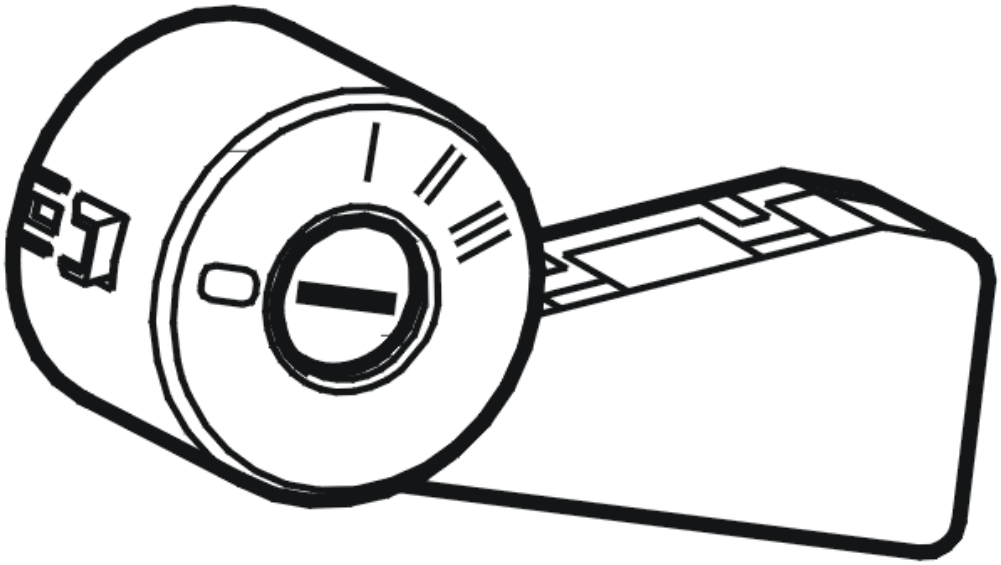

Fig. 159: Identifying Ignition Switch
Courtesy of VOLVO CARS CORPORATION

When the vehicle is unlocked, the interior lighting and the lighting around the ignition switch light up.

The diagnostic trouble code (DTC) is stored if the central electronic module (CEM) detects a short-circuit to ground in the supply cable for the lighting ring.

The diagnostic trouble code (DTC) can be diagnosed when the interior lighting is active.

Substitute Value

- If the fault has been detected in 100 ignition cycles, the output is closed permanently until the diagnostic trouble code is erased (applies from structure week 200539).

Possible Source

- Short-circuit to ground in the light ring around the ignition switch.

Fault symptom[s]

- None.

SHORT-CIRCUIT TO GROUND

CHECKING THE WIRING

HINT: The light ring for the ignition switch is deactivated 30 minutes after the vehicle is unlocked.

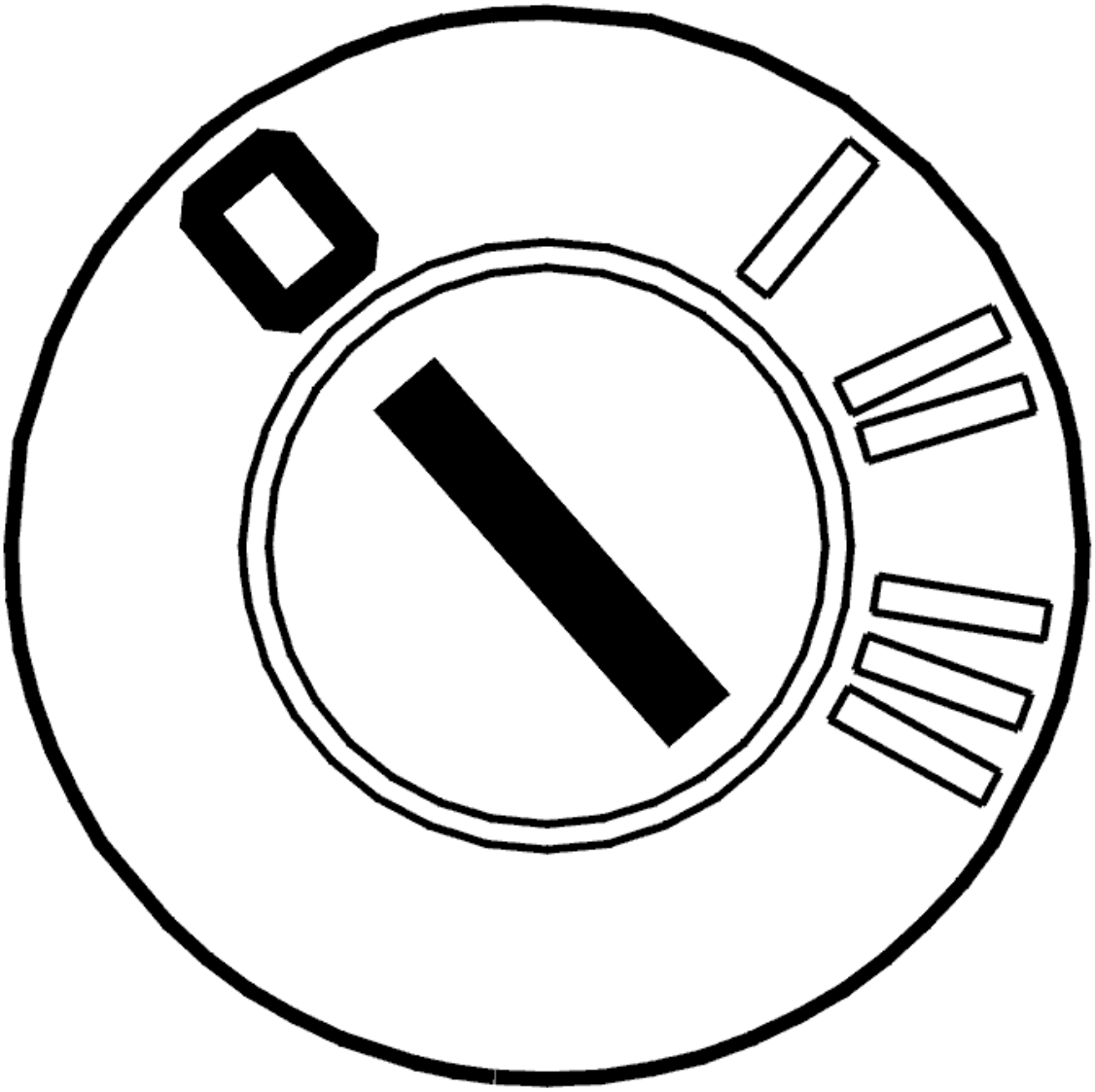

Fig. 160: Identifying Ignition OFF
Courtesy of VOLVO CARS CORPORATION

- Ignition off.

Check the power cable for a short-circuit to ground.

Take readings between:

- Central electronic module (CEM) terminal #D13 and terminal #5 on the light ring for the ignition switch.

Remedy as necessary.

Other information

- see **CONNECTING THE BREAKOUT BOX**
- -2004: **SIGNAL SPECIFICATION**
- 2005-: **SIGNAL SPECIFICATION**
- see **LOCATION OF COMPONENTS**
- see **ANTENNA UNIT, START INHIBITOR, REPLACING**
- see **CHECKING WIRING AND TERMINALS**

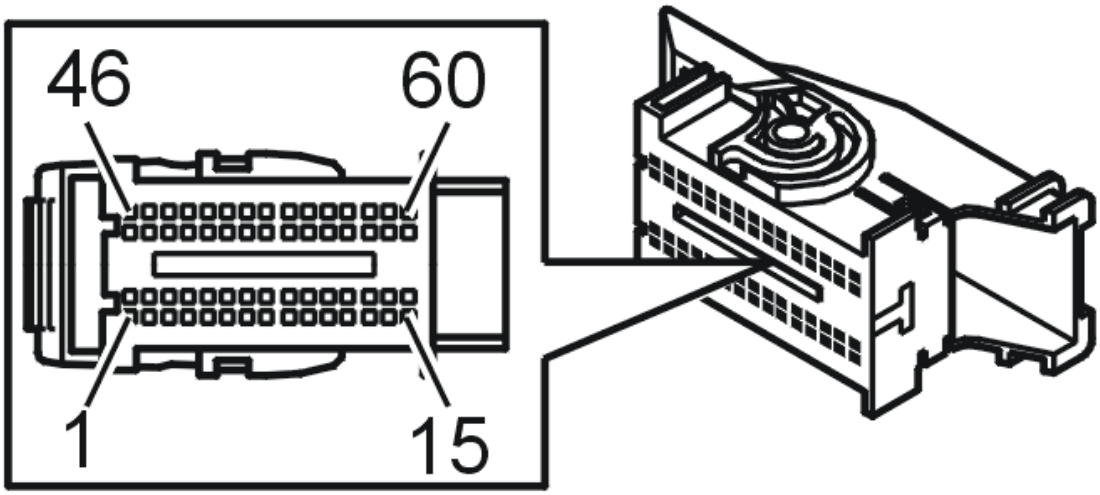

Fig. 161: Identifying Connector D
Courtesy of VOLVO CARS CORPORATION

- **Continue**

Refer to **VERIFICATION**

VERIFICATION

VERIFICATION

HINT: After carrying out the repair, check that the fault has been remedied.

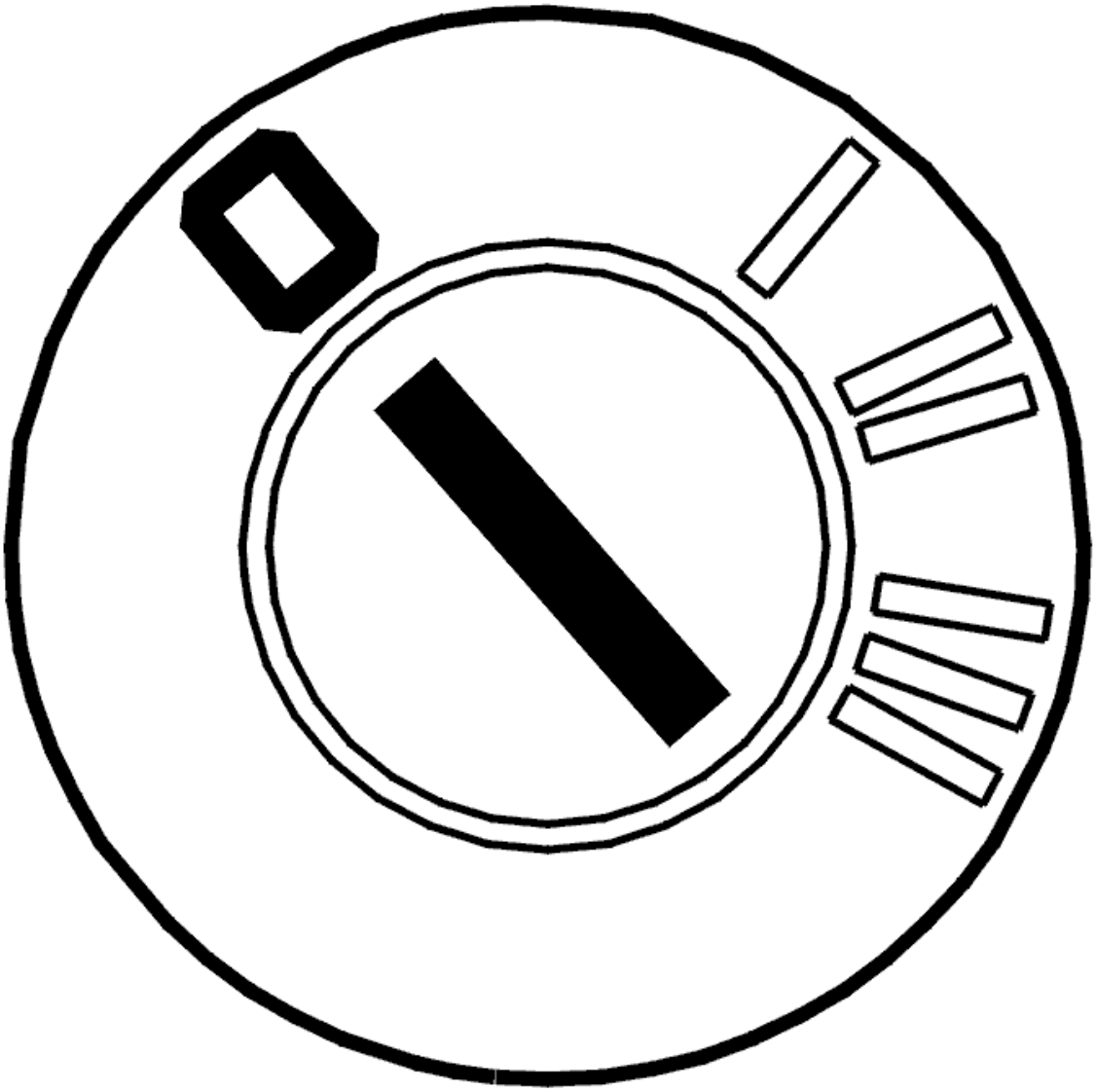

Fig. 162: Identifying Ignition OFF
Courtesy of VOLVO CARS CORPORATION

- Ignition off
- Reinstall the connectors, components etc.
- Activate the interior lighting
- Unlock the car.

Does the light ring come on?

- **YES**

  VERIFIED: Troubleshooting has been completed.

- **NO**

Refer to **INFORMATION**

INFORMATION

FAULT-TRACING INFORMATION

The fault should have been detected and remedied. As this is not the case fault-tracing has failed.

Exit fault-tracing for this diagnostic trouble code (DTC) or make another attempt.

CEM-9C03: ANTENNA / LIGHT RING. SIGNAL MISSING (2005-2012)

DIAGNOSTIC TROUBLE CODE (DTC) INFORMATION CEM-9C03

Condition

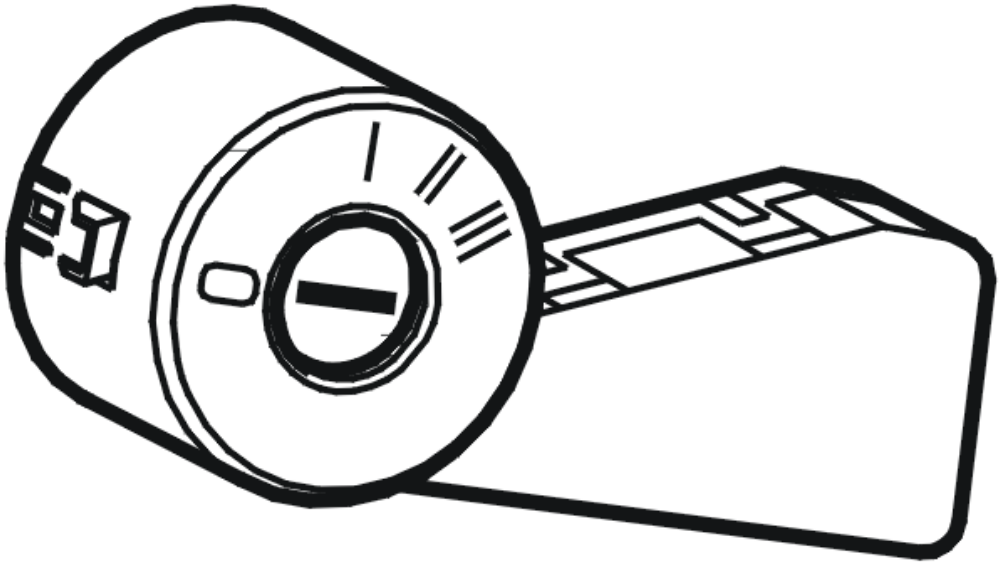

Fig. 163: Identifying Ignition Switch
Courtesy of VOLVO CARS CORPORATION

When the vehicle is unlocked, the interior lighting and the lighting around the ignition switch light up.

The diagnostic trouble code (DTC) is stored if the central electronic module (CEM) registers that the signal on the light ring is too high or that there is no signal.

The diagnostic trouble code (DTC) can be diagnosed when the interior lighting is active.

Substitute Value

- None.

Possible Source

- Open-circuit in the light ring
- Short-circuit to supply voltage in the cable for the light ring
- Damaged light ring.

Fault symptom[s]

- None.

SIGNAL MISSING

CHECKING THE WIRING

HINT: The light ring for the ignition switch is deactivated 30 minutes after the vehicle is unlocked.

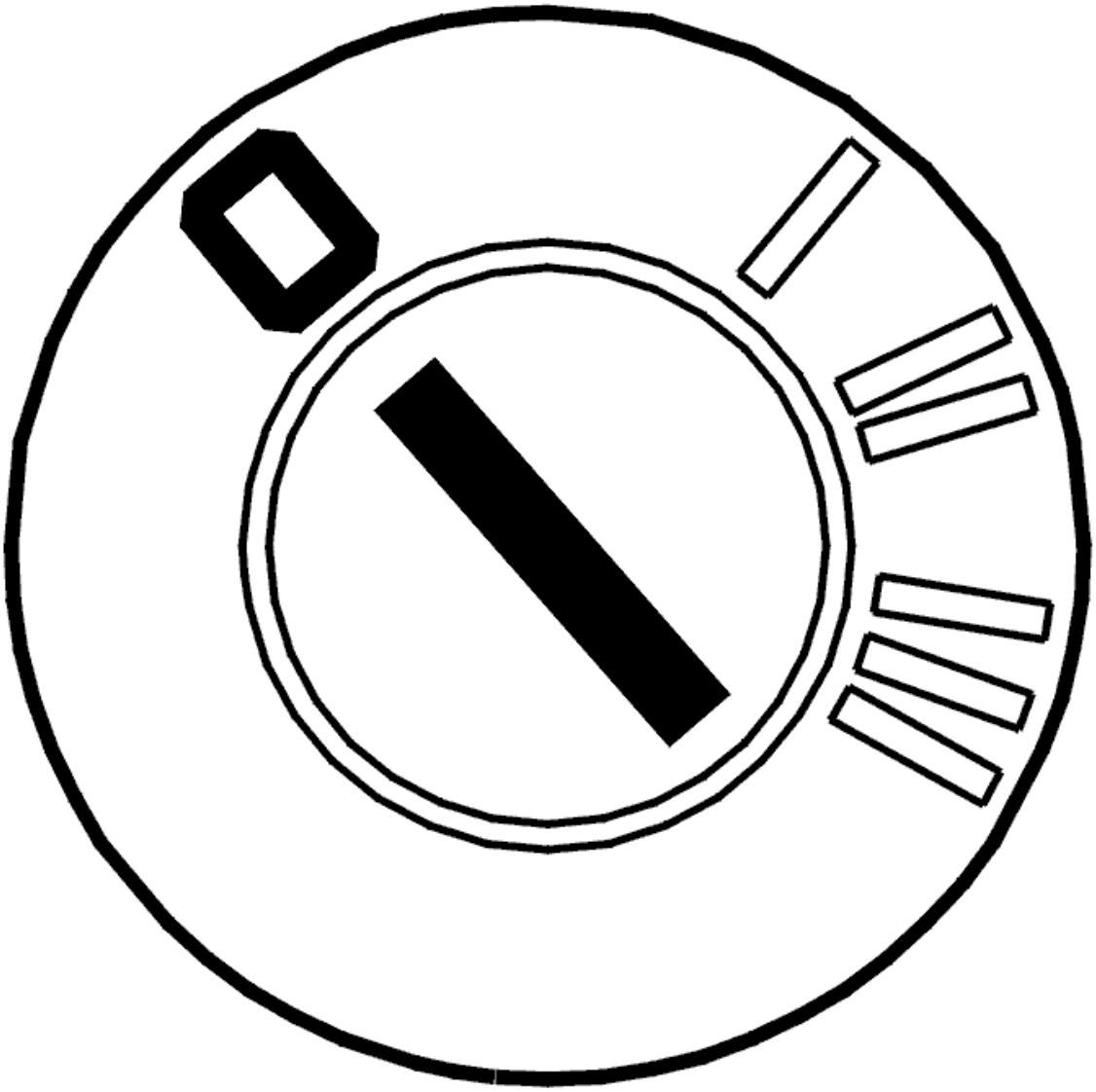

Fig. 164: Identifying Ignition OFF
Courtesy of VOLVO CARS CORPORATION

- Ignition off.

  Check the ground lead. Check for an open-circuit. Check for a short-circuit to supply voltage.

  Take readings between light ring terminal #6 and ground.

  Replace the antenna/light ring if there is no fault in the signal cable.

  Remedy as necessary.

  Other information

  - see **CONNECTING THE BREAKOUT BOX**

- -2004: **SIGNAL SPECIFICATION**
- 2005-: **SIGNAL SPECIFICATION**
- see **LOCATION OF COMPONENTS**
- see **ANTENNA UNIT, START INHIBITOR, REPLACING**
- see **CHECKING WIRING AND TERMINALS**

- **Continue**

  Refer to **VERIFICATION**

VERIFICATION

VERIFICATION

HINT: After carrying out the repair, check that the fault has been remedied.

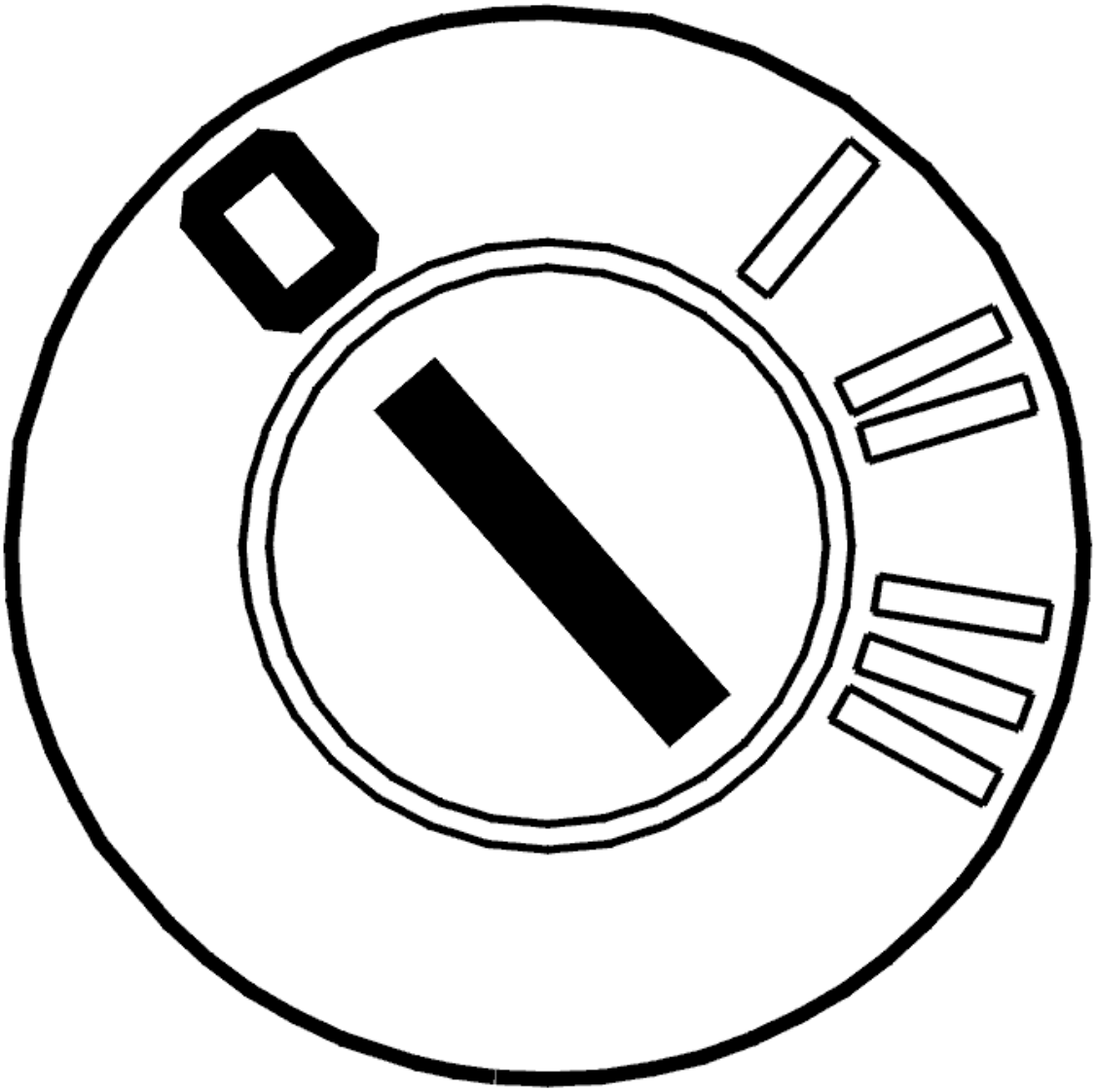

Fig. 165: Identifying Ignition OFF
Courtesy of VOLVO CARS CORPORATION

- Ignition off
- Reinstall the connectors, components etc.
- Activate the interior lighting
- Unlock the car.

Does the light ring come on?

- **YES**

  VERIFIED: Troubleshooting has been completed.

- **NO**

Refer to **INFORMATION**

INFORMATION

FAULT-TRACING INFORMATION

The fault should have been detected and remedied. As this is not the case fault-tracing has failed.

Exit fault-tracing for this diagnostic trouble code (DTC) or make another attempt.

CEM-9E01: INTERIOR LIGHTING. SIGNAL TOO LOW (2006-2012)

DIAGNOSTIC TROUBLE CODE (DTC) INFORMATION CEM-9E01

Condition

The Central electronic module (CEM) powers the courtesy lighting.

The diagnostic trouble code (DTC) is stored if the Central electronic module (CEM) detects a faulty signal on the output for the courtesy lighting.

The diagnostic trouble codes (DTCs) can be diagnosed when the courtesy lighting is lit.

Substitute Value

- If the fault has been detected in 100 ignition cycles, the output is closed permanently until the diagnostic trouble code is erased (applies from structure week 200539).

Possible Source

- Short-circuit to ground in the power supply cable.

Fault symptom[s]

- Interior light does not work

SIGNAL TOO LOW

CHECKING THE WIRING AND CONNECTORS

- Ignition off.

  Check the power supply cable. Check for short circuit to ground.

  Courtesy lighting left front

  Take readings between:

- Central electronic module (CEM) #D1 (#1) and courtesy lighting, left, front, (10/126) #2.

Courtesy lighting right front

Take readings between:

- Central electronic module (CEM) #D2 (#2) and courtesy lighting, right, front, (10/125) #2.
- Central electronic module (CEM) #D3 (#3) and courtesy lighting, left, rear, (10/122) #2.
- Central electronic module (CEM) #D4 (#4) and courtesy lighting, right, rear, (10/123) #2.

Remedy as necessary.

Other information

- see **CONNECTING THE BREAKOUT BOX**
- -2004: **SIGNAL SPECIFICATION**
- 2005-: **SIGNAL SPECIFICATION**
- see **LOCATION OF COMPONENTS**
- see **CHECKING WIRING AND TERMINALS**

- **Continue**

Refer to **VERIFICATION**

VERIFICATION

HINT: After carrying out the repair, check that the fault has been remedied.

Fig. 166: Identifying Ignition On Position
Courtesy of VOLVO CARS CORPORATION

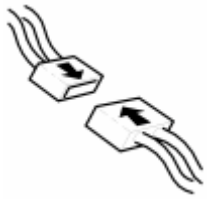

Fig. 167: Identifying Connector(s) Reinstallation
Courtesy of VOLVO CARS CORPORATION

- Ignition off.
- Reinstall the connectors, components etc.
- Ignition on.

  Check that the courtesy lighting comes on when the doors are opened.

Does the courtesy lighting function?

- **YES**

  OKAY: Troubleshooting has been completed.

- **NO**

  Refer to **INFORMATION**

INFORMATION

FAULT-TRACING INFORMATION

The fault should have been detected and remedied. As this is not the case fault-tracing has failed.

Exit fault-tracing for this diagnostic trouble code (DTC) or make another attempt.

CEM-9F20: TWILIGHT SENSOR. SHORT-CIRCUIT TO SUPPLY VOLTAGE (2005-2012)

DIAGNOSTIC TROUBLE CODE (DTC) INFORMATION CEM-9F20

Condition

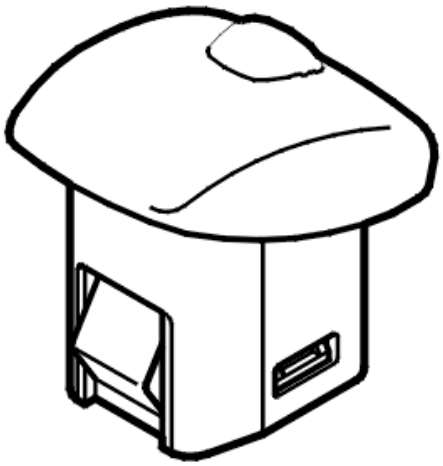

Fig. 168: Identifying Twilight Sensor
Courtesy of VOLVO CARS CORPORATION

The central electronic module (CEM) receives information about the prevailing light conditions from the twilight sensor. This information is used to determine the light intensity for symbols and the instrument lighting. Two different levels are pre-defined, one for day and one for night. The diagnostic trouble code (DTC) is stored if the central electronic module (CEM) registers a short-circuit to battery voltage in the twilight sensor circuit.

The diagnostic trouble code (DTC) can be diagnosed at ignition switch position II.

Substitute Value

- Light intensity for night is used.

Possible Source

- Short-circuit to supply voltage in the signal cable
- Damaged twilight sensor.

Fault symptom[s]

- The instrument lighting is constantly lit at full strength.

SHORT-CIRCUIT TO SUPPLY VOLTAGE

CHECKING THE WIRING

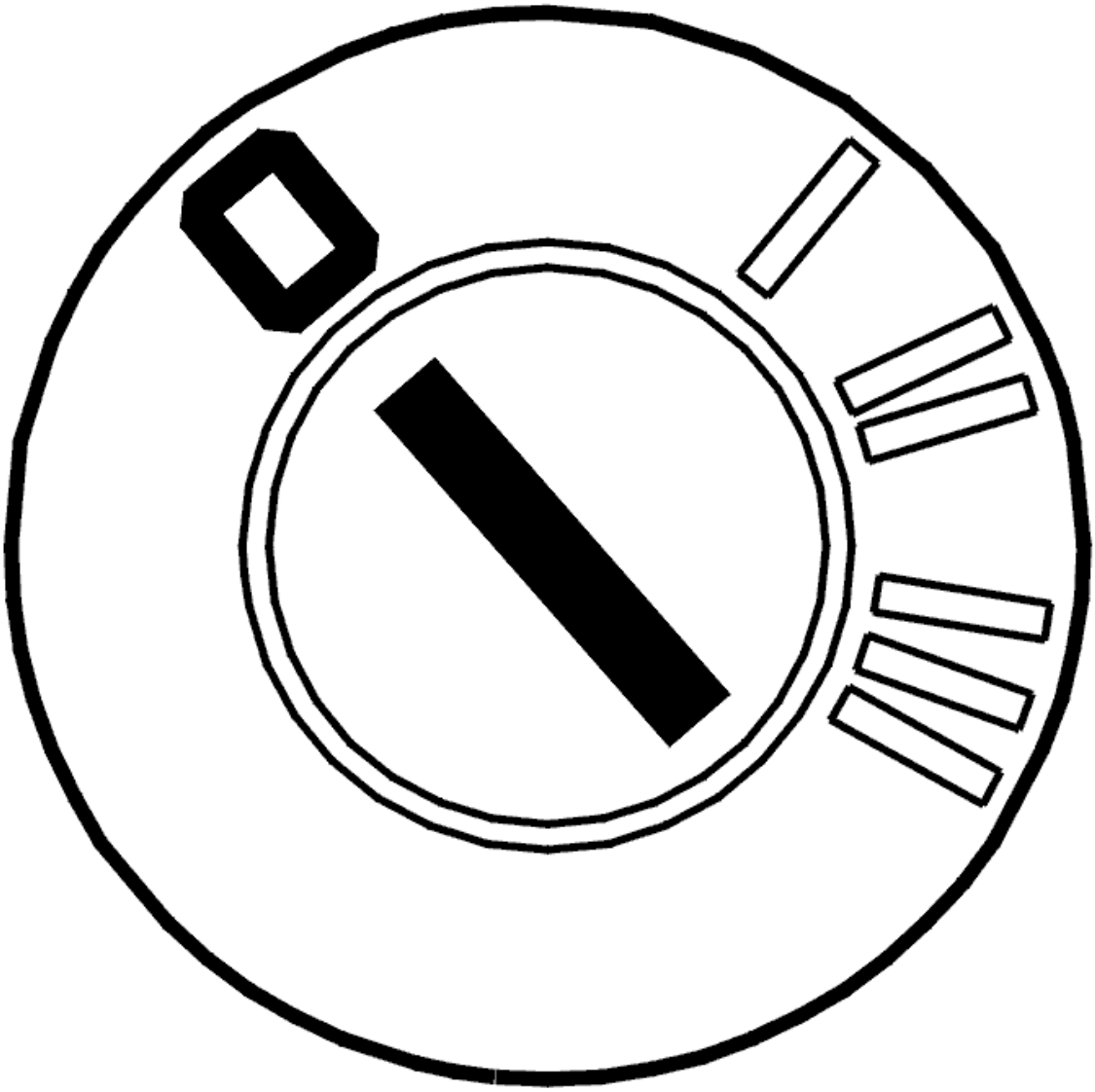

Fig. 169: Identifying Ignition OFF
Courtesy of VOLVO CARS CORPORATION

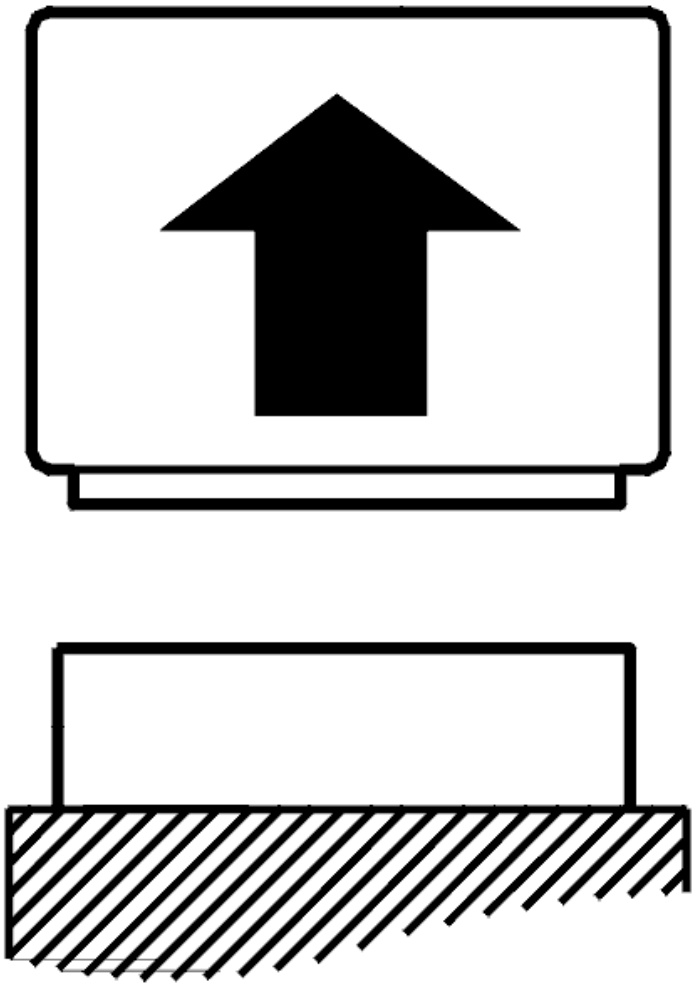

Fig. 170: Disconnecting Connector
Courtesy of VOLVO CARS CORPORATION

- Ignition off
- Disconnect central electronic module (CEM) connector D.

  Check the signal cable. Check for an open-circuit. Check for a short-circuit to supply voltage. Take readings between central electronic module (CEM) terminal #D29 (#29) and twilight sensor terminal #4.

  Try a new twilight sensor if no fault was found.

  Remedy as necessary.

  Other information

  - see **CONNECTING THE BREAKOUT BOX**

- -2004: **SIGNAL SPECIFICATION**
- 2005-: **SIGNAL SPECIFICATION**
- see **LOCATION OF COMPONENTS**
- see **SUN SENSOR / ALARM LED, REPLACING**
- see **CHECKING WIRING AND TERMINALS**

- **Continue**

  Refer to **VERIFICATION**

VERIFICATION

VERIFICATION

HINT: After carrying out the repair, check that the fault has been remedied.

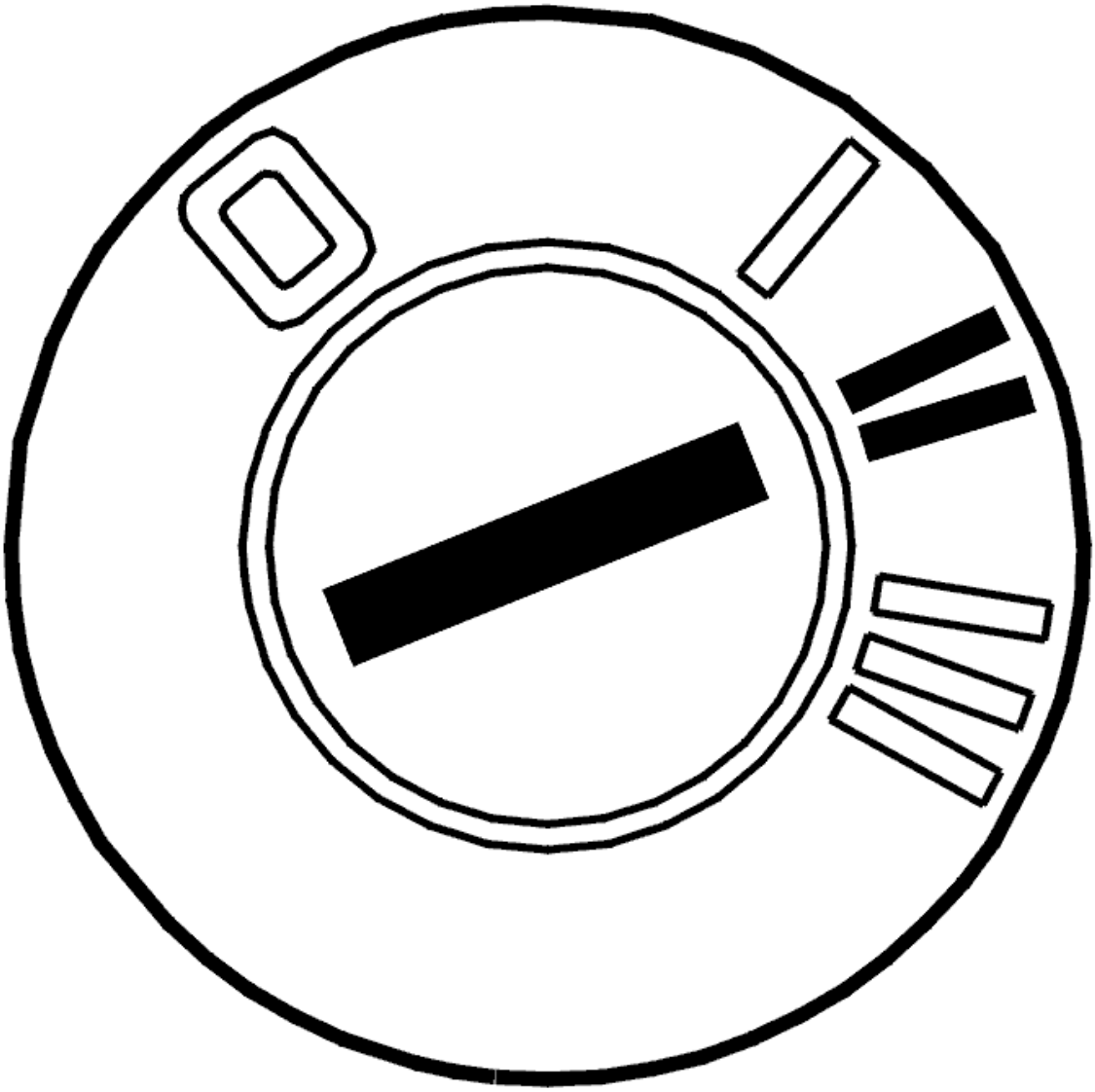

Fig. 171: Identifying Ignition ON
Courtesy of VOLVO CARS CORPORATION

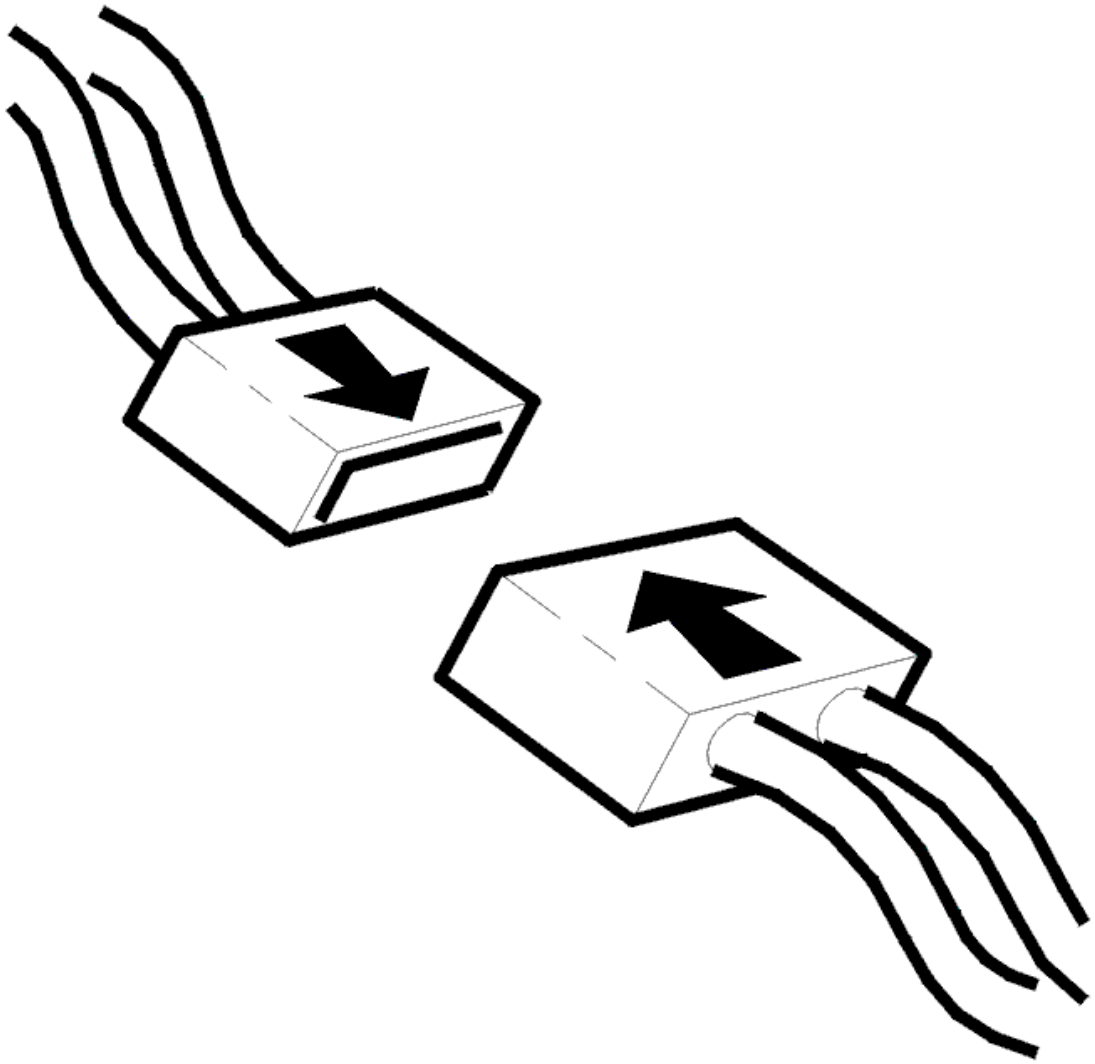

Fig. 172: Connecting Connector
Courtesy of VOLVO CARS CORPORATION

- Ignition off
- Reinstall the connectors, components etc.
- Ignition on.

Read off the voltage level at the twilight sensor using the VCT2000 (or appropriate scan tool).

Check that the value is between 2 and 4.8 V.

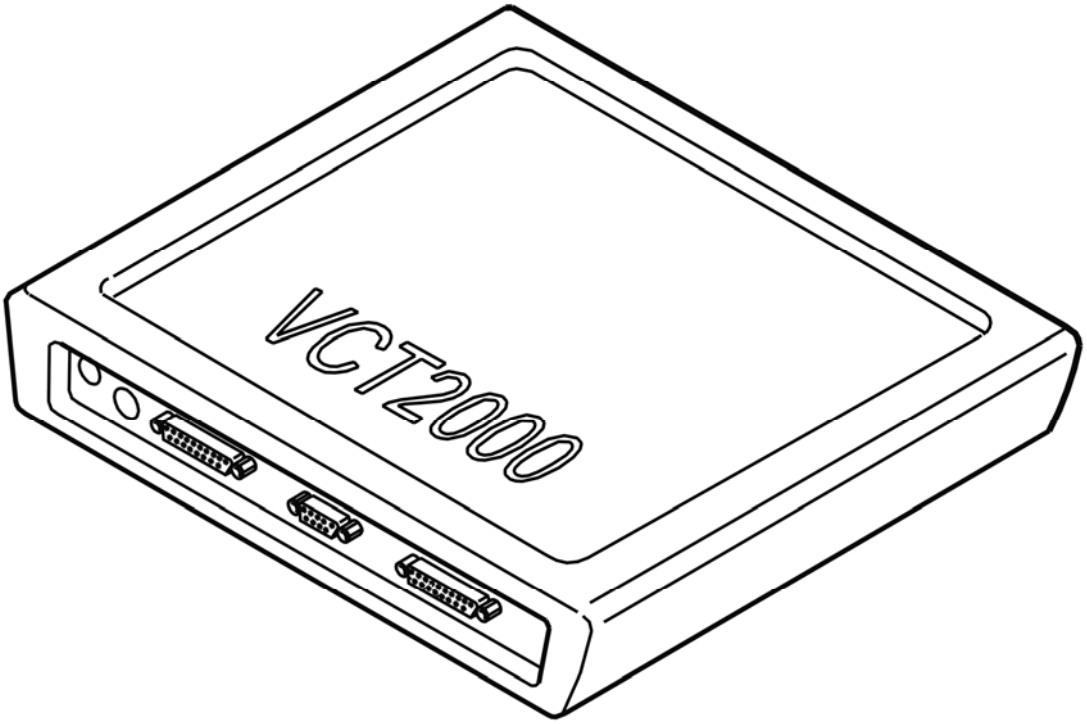

Fig. 173: Identifying VCT2000 Diagnostic Tool Symbol In VIDA
Courtesy of VOLVO CARS CORPORATION

Is the value OK?

- **YES**

  VERIFIED: Troubleshooting has been completed.

- **NO**

  Refer to **INFORMATION**

INFORMATION

FAULT-TRACING INFORMATION

The fault should have been detected and remedied. As this is not the case fault-tracing has failed.

Exit fault-tracing for this diagnostic trouble code (DTC) or make another attempt.

CEM-9F21: TWILIGHT SENSOR. SHORT-CIRCUIT TO GROUND (2005-2012)

DIAGNOSTIC TROUBLE CODE (DTC) INFORMATION CEM-9F21

Condition

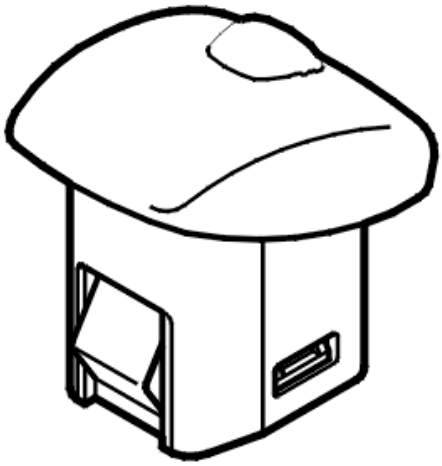

Fig. 174: Identifying Twilight Sensor
Courtesy of VOLVO CARS CORPORATION

The central electronic module (CEM) receives information about the prevailing light conditions from the twilight sensor. This information is used to determine the light intensity for symbols and the instrument lighting. Two different levels are pre-defined, one for day and one for night. The diagnostic trouble code (DTC) is stored if the central electronic module (CEM) registers a short-circuit to ground in the twilight sensor circuit.

The diagnostic trouble code (DTC) can be diagnosed at ignition switch position II.

Substitute Value

- Light intensity for night is used.

Possible Source

- Short-circuit to ground in the signal cable
- The twilight sensor does not operate.

Fault symptom[s]

- The instrument lighting is constantly lit at full strength.

SHORT-CIRCUIT TO GROUND

CHECKING THE WIRING

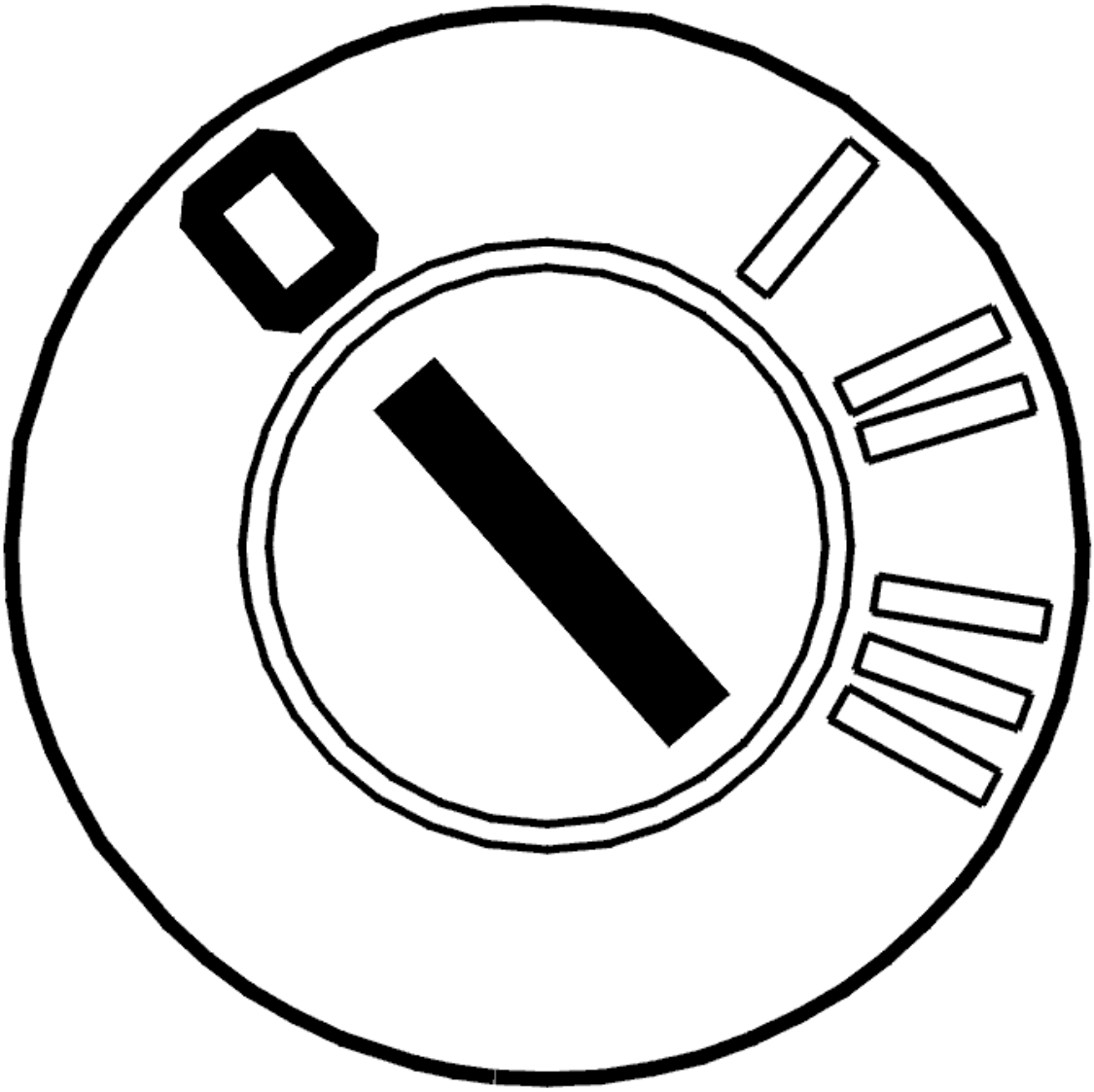

Fig. 175: Identifying Ignition OFF
Courtesy of VOLVO CARS CORPORATION

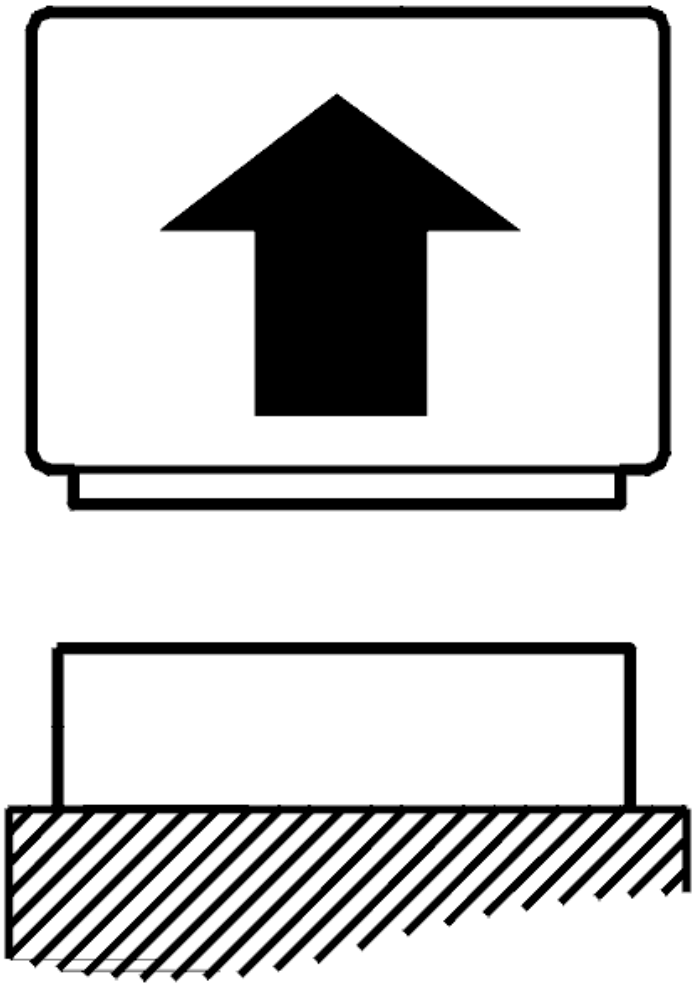

Fig. 176: Disconnecting Connector
Courtesy of VOLVO CARS CORPORATION

- Ignition off
- Disconnect central electronic module (CEM) connector D.

  Check the signal cable. Check for a short-circuit to ground. Take readings between central electronic module (CEM) terminal #D29 (#29) and twilight sensor terminal #4.

  Try a new twilight sensor if no fault was found.

  Remedy as necessary.

  Other information

  - see **CONNECTING THE BREAKOUT BOX**

- -2004: **SIGNAL SPECIFICATION**
- 2005-: **SIGNAL SPECIFICATION**
- see **LOCATION OF COMPONENTS**
- see **SUN SENSOR / ALARM LED, REPLACING**
- see **CHECKING WIRING AND TERMINALS**

- **Continue**

  Refer to **VERIFICATION**

VERIFICATION

VERIFICATION

HINT: After carrying out the repair, check that the fault has been remedied.

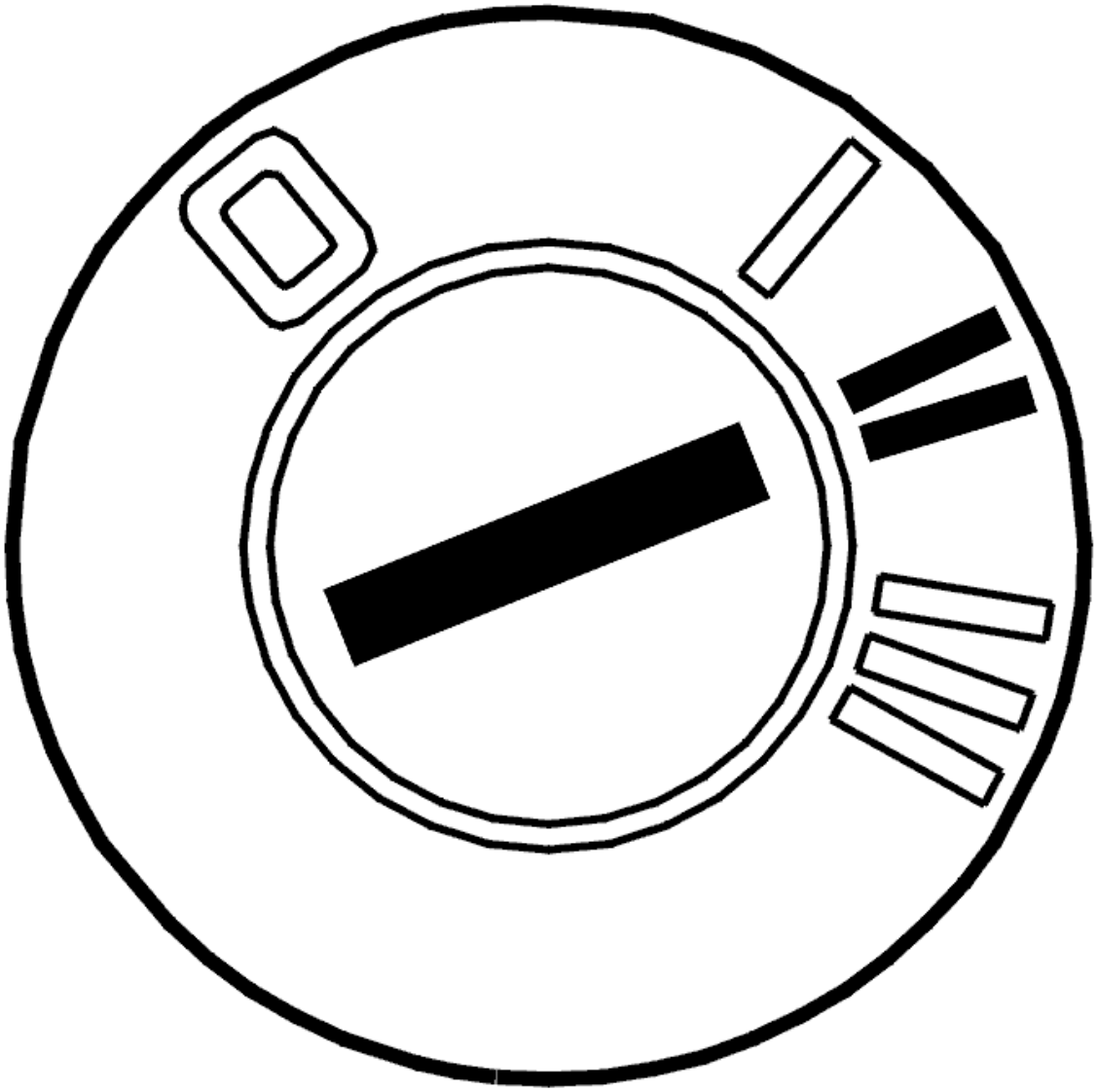

Fig. 177: Identifying Ignition ON
Courtesy of VOLVO CARS CORPORATION

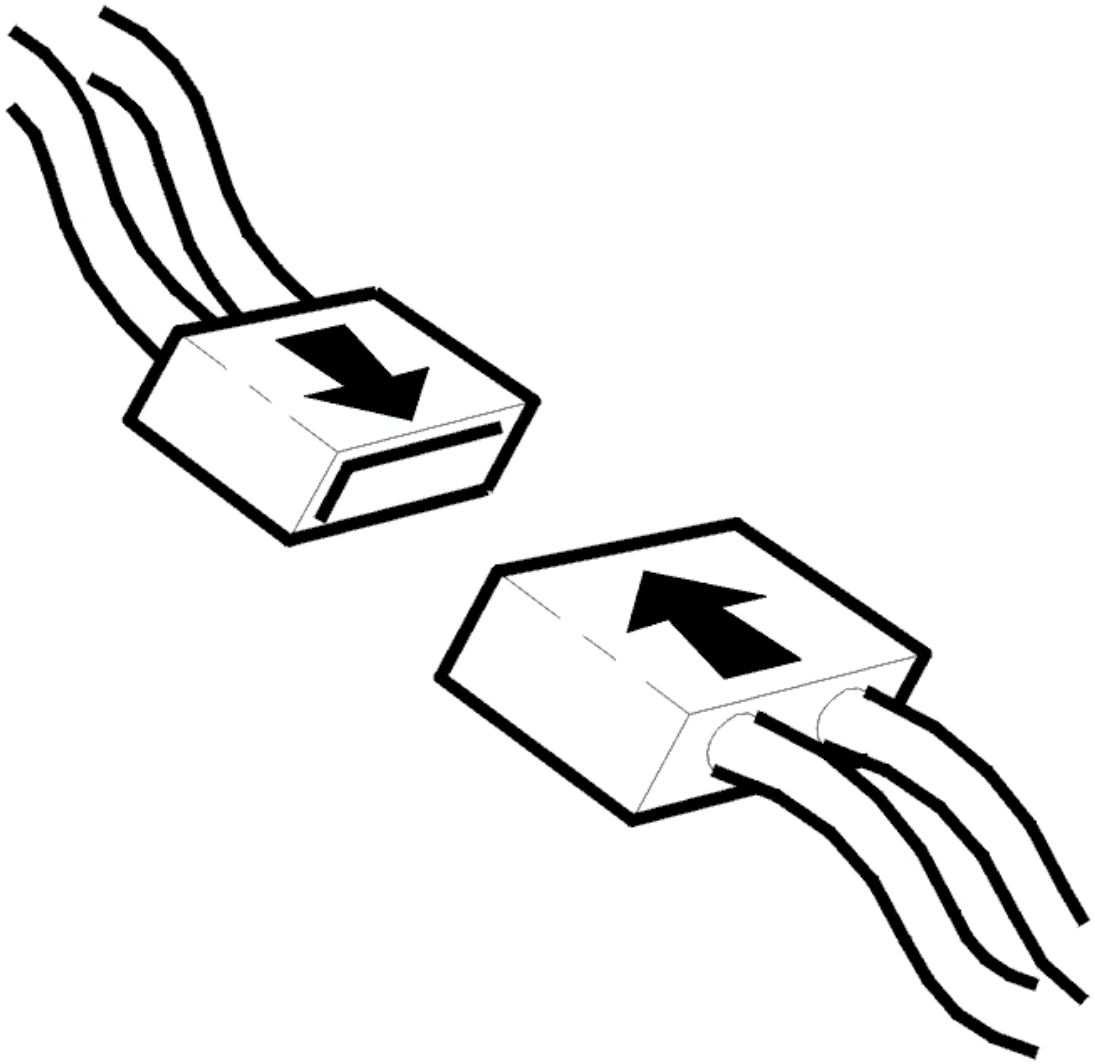

Fig. 178: Connecting Connector
Courtesy of VOLVO CARS CORPORATION

- Ignition off
- Reinstall the connectors, components etc.
- Ignition on.

Read off the voltage level at the twilight sensor using the VCT2000 (or appropriate scan tool).

Check that the value is between 2 and 4.8 V.

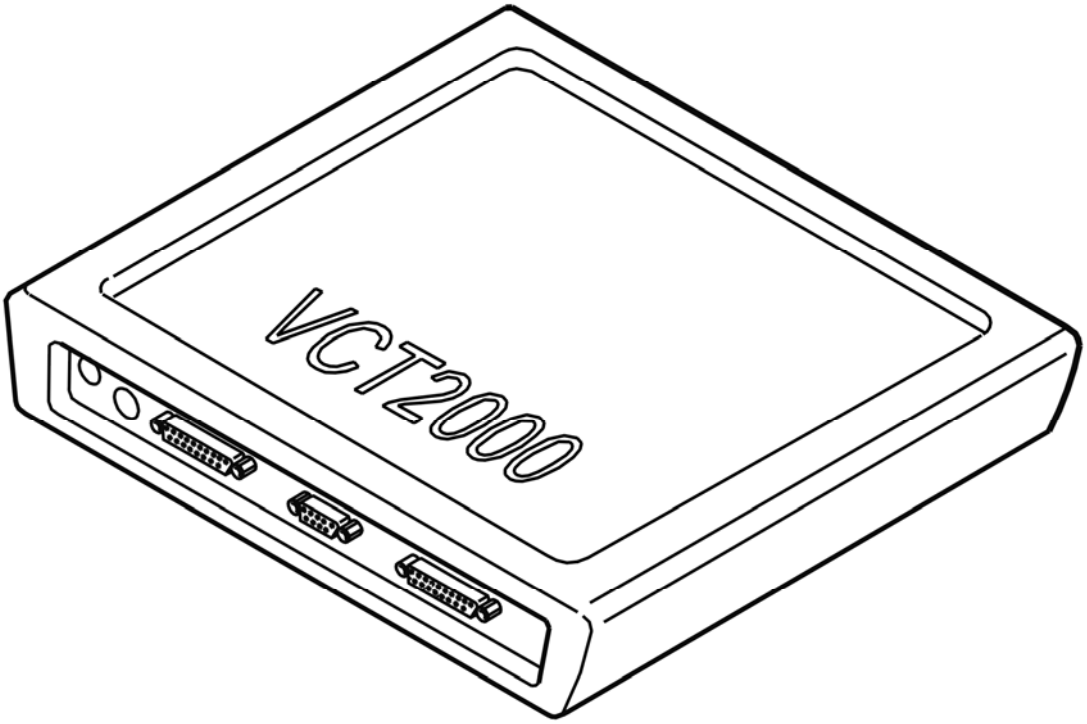

Fig. 179: Identifying VCT2000 Diagnostic Tool Symbol In VIDA
Courtesy of VOLVO CARS CORPORATION

Is the value OK?

- **YES**

  VERIFIED: Troubleshooting has been completed.

- **NO**

  Refer to **INFORMATION**

INFORMATION

FAULT-TRACING INFORMATION

The fault should have been detected and remedied. As this is not the case fault-tracing has failed.

Exit fault-tracing for this diagnostic trouble code (DTC) or make another attempt.

CEM-9F24: RHEOSTAT. SIGNAL TOO HIGH (2005-2012)

DIAGNOSTIC TROUBLE CODE (DTC) INFORMATION CEM-9F24

Condition

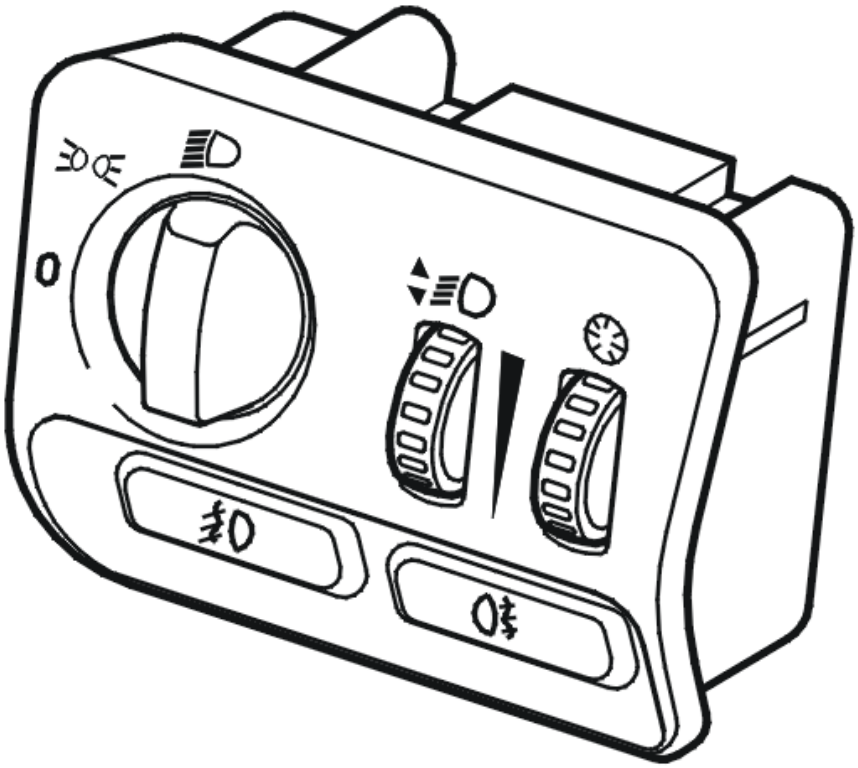

Fig. 180: Identifying Light Switch Module (LSM)
Courtesy of VOLVO CARS CORPORATION

The central electronic module (CEM) communicates with the light switch module (LSM).

The diagnostic trouble code (DTC) is stored if the central electronic module (CEM) receives information from the light switch module (LSM) indicating that the signal from the rheostat is too high.

The diagnostic trouble code (DTC) can be diagnosed at ignition switch position II.

Substitute Value

- None.

Possible Source

- Short-circuit to supply voltage in the rheostat
- Damaged light switch.

Fault symptom[s]

- The instrument lighting does not operate.

SIGNAL TOO HIGH

CHECKING THE WIRING

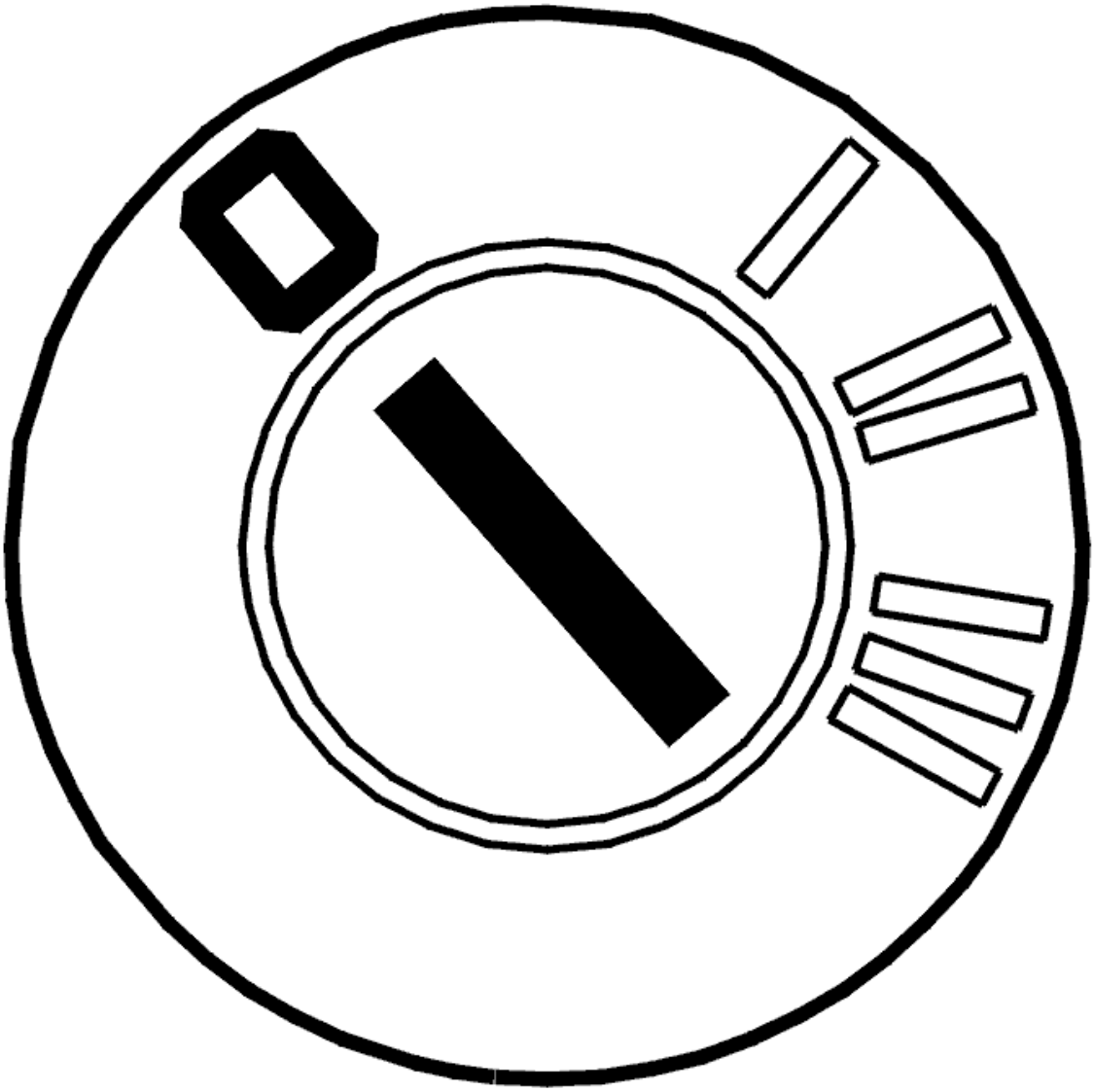

Fig. 181: Identifying Ignition OFF
Courtesy of VOLVO CARS CORPORATION

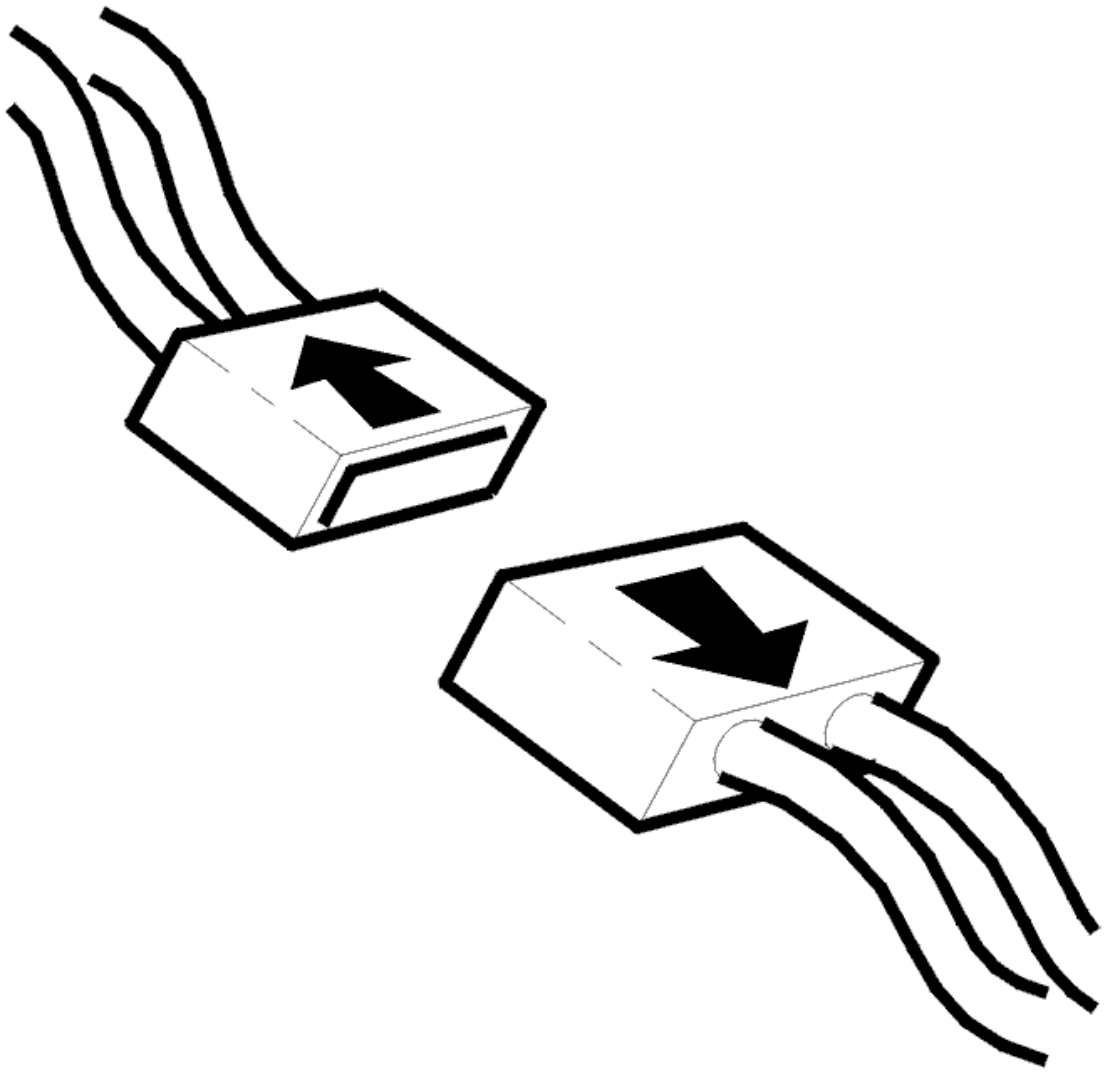

Fig. 182: Disconnecting Connector
Courtesy of VOLVO CARS CORPORATION

- Ignition off
- Disconnect central electronic module (CEM) connector D.

  Check the signal cable. Check for a short-circuit to supply voltage. Take readings between central electronic module (CEM) terminal #D41 (#D41) and light switch module (LSM) terminal #3.

  Remedy as necessary.

  Other information

  - see **CONNECTING THE BREAKOUT BOX**
  - -2004: **SIGNAL SPECIFICATION**

- 2005-: **SIGNAL SPECIFICATION**
- see **LOCATION OF COMPONENTS**
- see **SWITCHES LIGHTS, REPLACING**
- see **CHECKING WIRING AND TERMINALS**

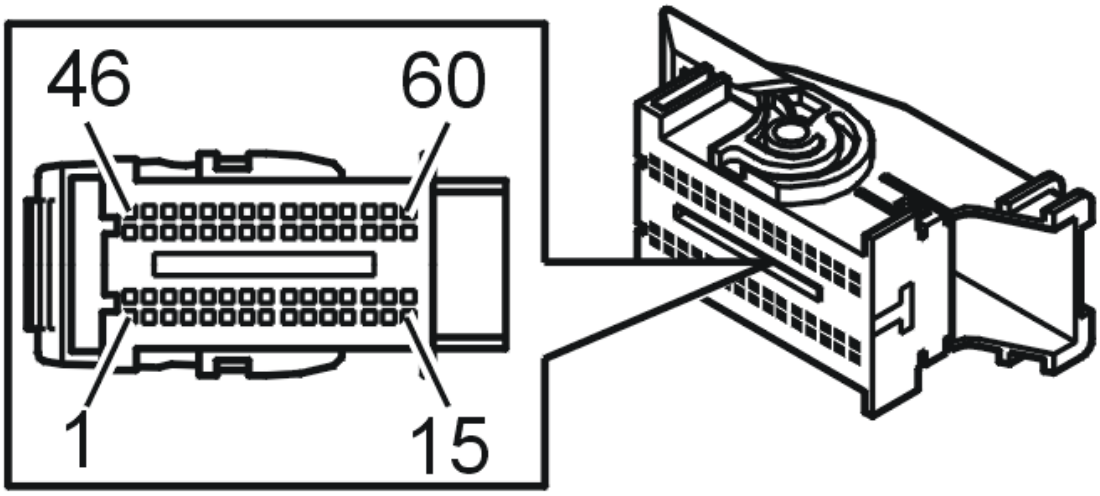

Fig. 183: Identifying Connector D
Courtesy of VOLVO CARS CORPORATION

Was a fault detected?

- **YES**

  Refer to **VERIFICATION**

- **NO**

  Refer to **REPLACING THE COMPONENT**

REPLACING THE COMPONENT

The central electronic module (CEM) has registered an internal fault in the light switch module (LSM).

If the fault is intermittent, it has been registered previously but is no longer present. Intermittent faults can be caused by interference at start up of the central electronic module (CEM) or may be a different type of fault which occurs on different occasions. The fault is evaluated depending on how it occurs. If the fault recurs, replace the light switch module (LSM).

see **SWITCHES LIGHTS, REPLACING**

Remedy as necessary.

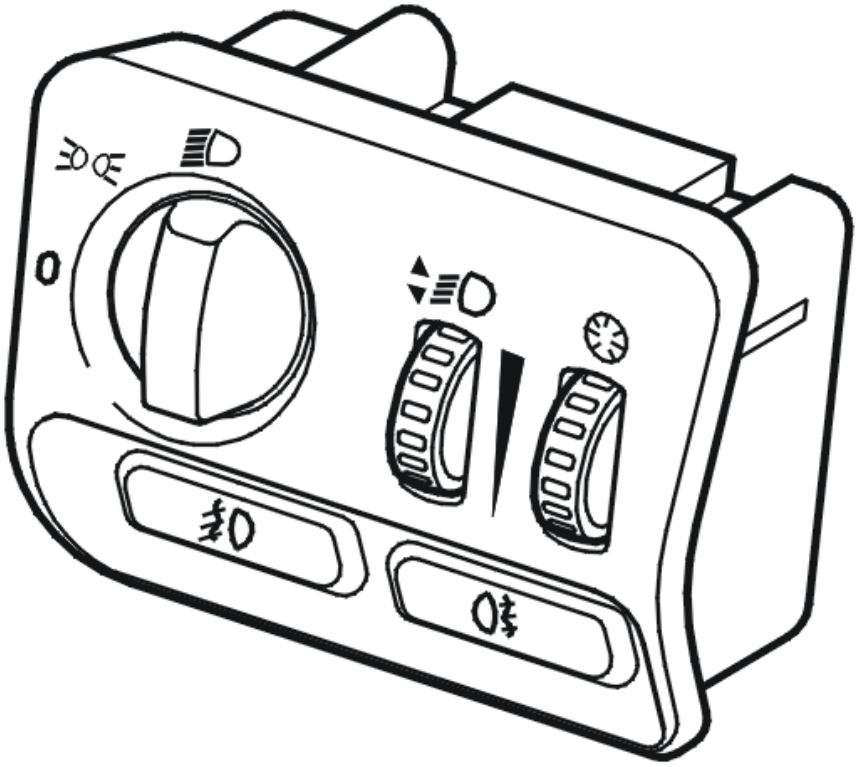

Fig. 184: Identifying Light Switch Module (LSM)
Courtesy of VOLVO CARS CORPORATION

- **Continue**

  Refer to **VERIFICATION**

VERIFICATION

VERIFICATION

HINT: After carrying out the repair, check that the fault has been remedied.

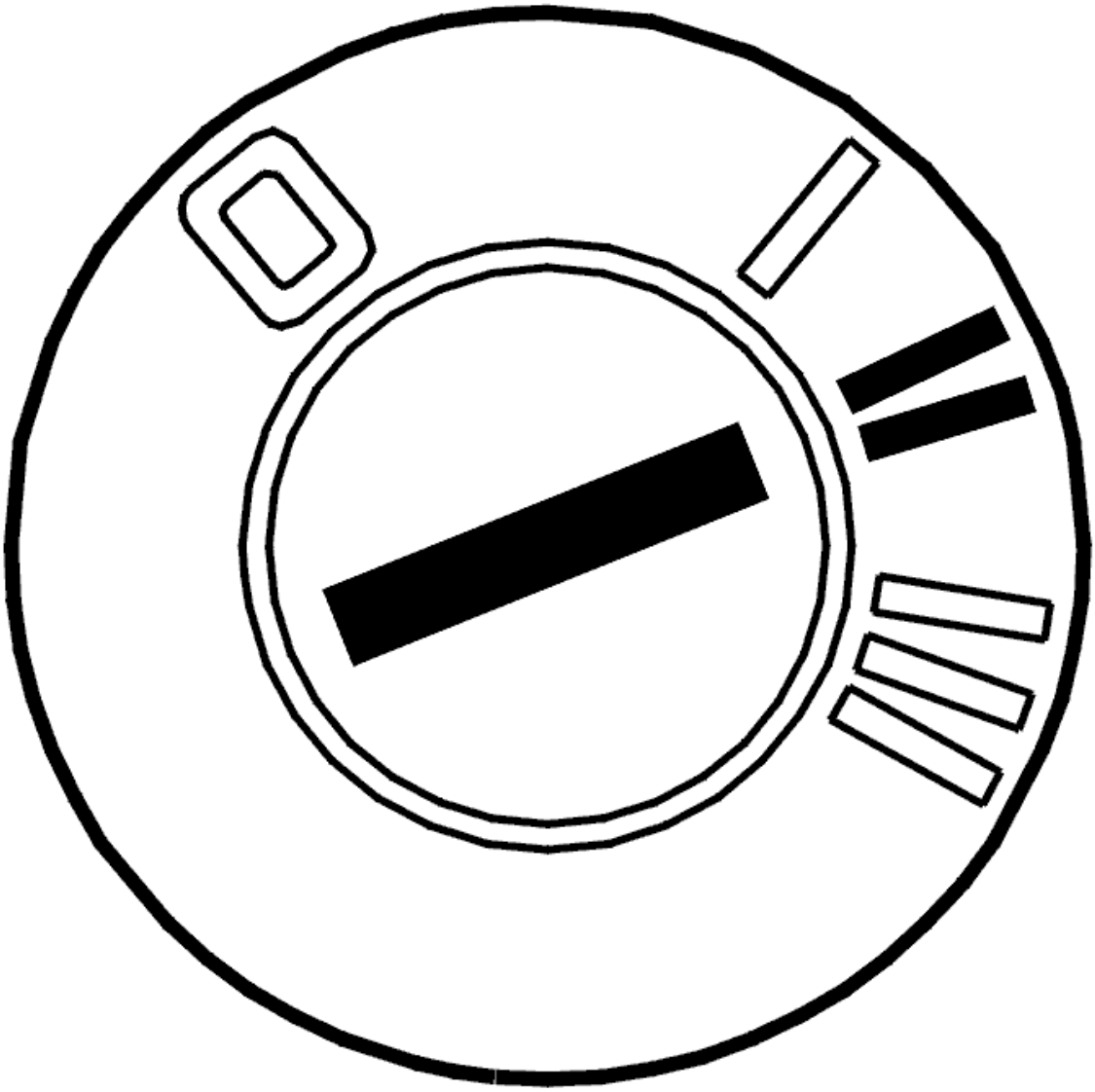

Fig. 185: Identifying Ignition ON
Courtesy of VOLVO CARS CORPORATION

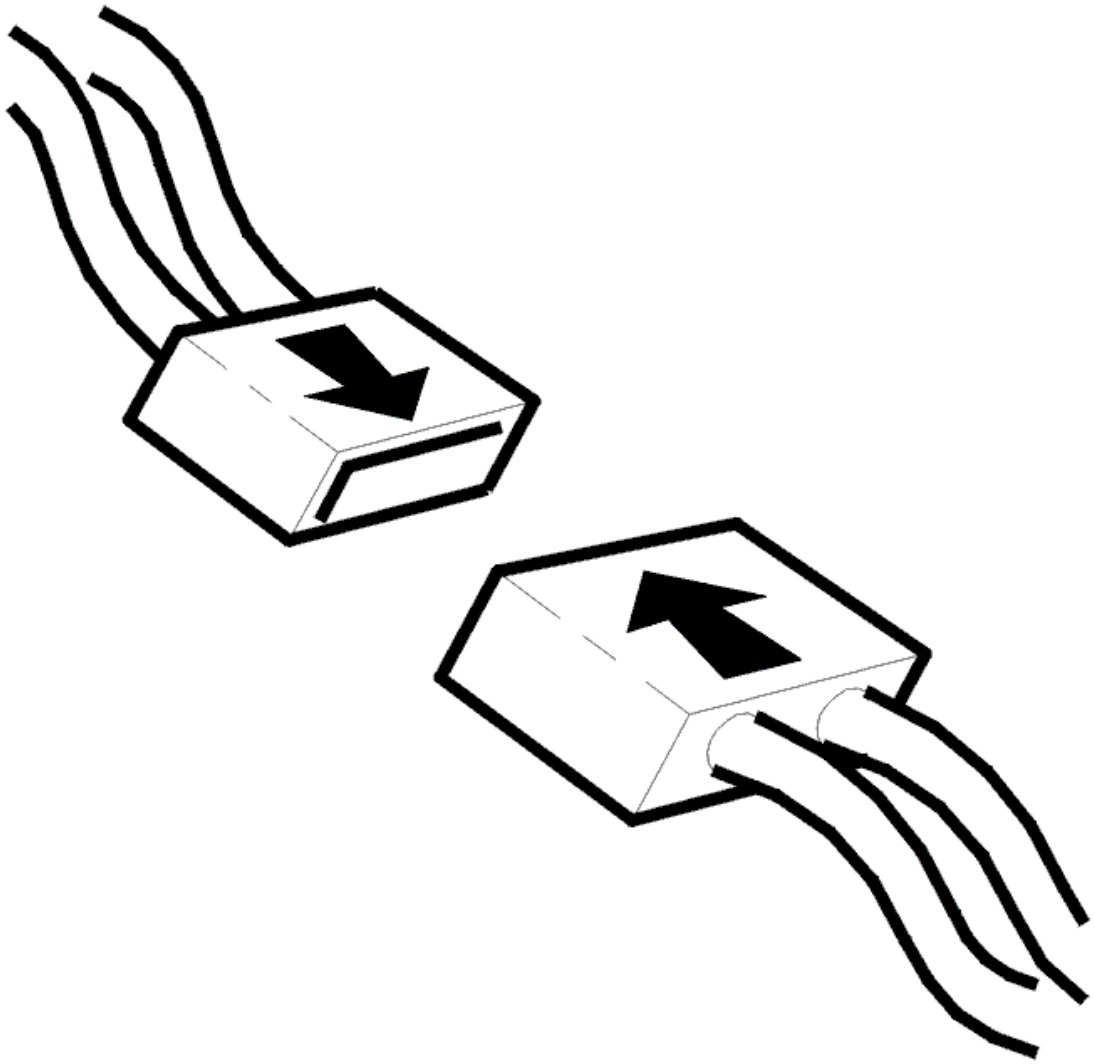

Fig. 186: Connecting Connector
Courtesy of VOLVO CARS CORPORATION

- Ignition off
- Reinstall the connectors, components etc.
- Ignition on.

  Switch between parking lamps and low beam on the light switch module (LSM).

  Check on the light switch module (LSM) that each lamp activates correctly.

Is the light switch module (LSM) working?

- **YES**

VERIFIED: Troubleshooting has been completed.

- **NO**

  Refer to **INFORMATION**

INFORMATION

FAULT-TRACING INFORMATION

The fault should have been detected and remedied. As this is not the case fault-tracing has failed.

Exit fault-tracing for this diagnostic trouble code (DTC) or make another attempt.

CEM-9F24: RHEOSTAT. SIGNAL TOO HIGH. INTERMITTENT FAULT (2003-2004)

DIAGNOSTIC TROUBLE CODE INFORMATION

Condition

If the central electronic module (CEM) detects a fault on the rheostat, diagnostic trouble code CEM-9F24 is displayed.

Substitute Value

None.

Possible Source

- Rheostat short circuited to voltage supply
- Faulty light switch.

Fault symptom[s]

- Instrument lighting does not work.

FAULT-TRACING INFORMATION

see **FAULT-TRACING INFORMATION**

CEM-9F25: RHEOSTAT. SIGNAL TOO LOW (2005-2012)

DIAGNOSTIC TROUBLE CODE (DTC) INFORMATION CEM-9F25

Condition

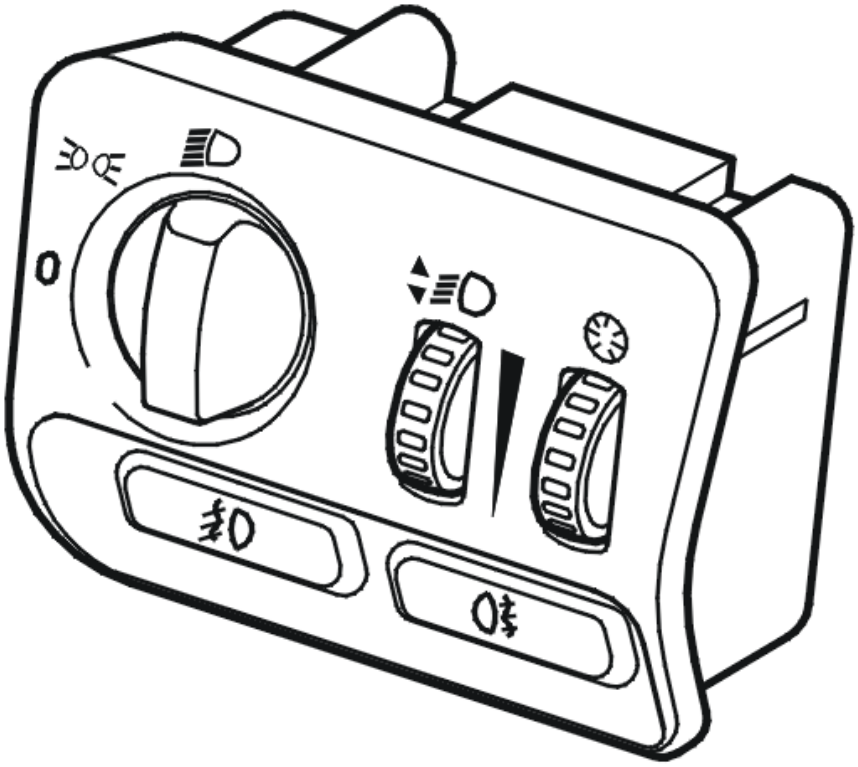

Fig. 187: Identifying Light Switch Module (LSM)
Courtesy of VOLVO CARS CORPORATION

The central electronic module (CEM) communicates with the light switch module (LSM).

The diagnostic trouble code (DTC) is stored if the central electronic module (CEM) receives information from the light switch module (LSM) indicating that the signal from the rheostat is too low.

The diagnostic trouble code (DTC) can be diagnosed at ignition switch position II.

Substitute Value

- None.

Possible Source

- Short-circuit to ground in the rheostat
- Damaged light switch.

Fault symptom[s]

- The instrument lighting does not operate.

SIGNAL TOO LOW

CHECKING THE WIRING

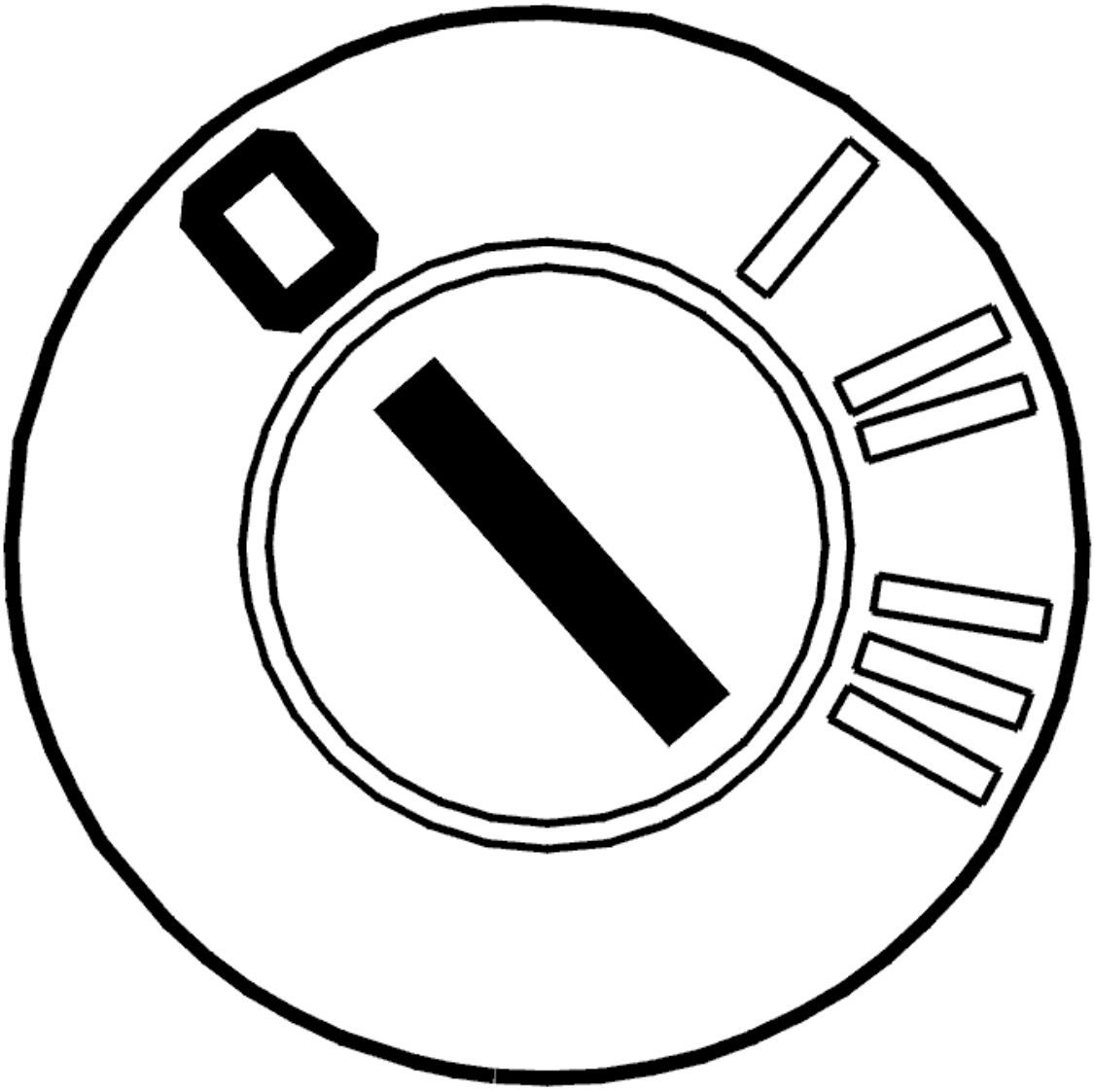

Fig. 188: Identifying Ignition OFF
Courtesy of VOLVO CARS CORPORATION

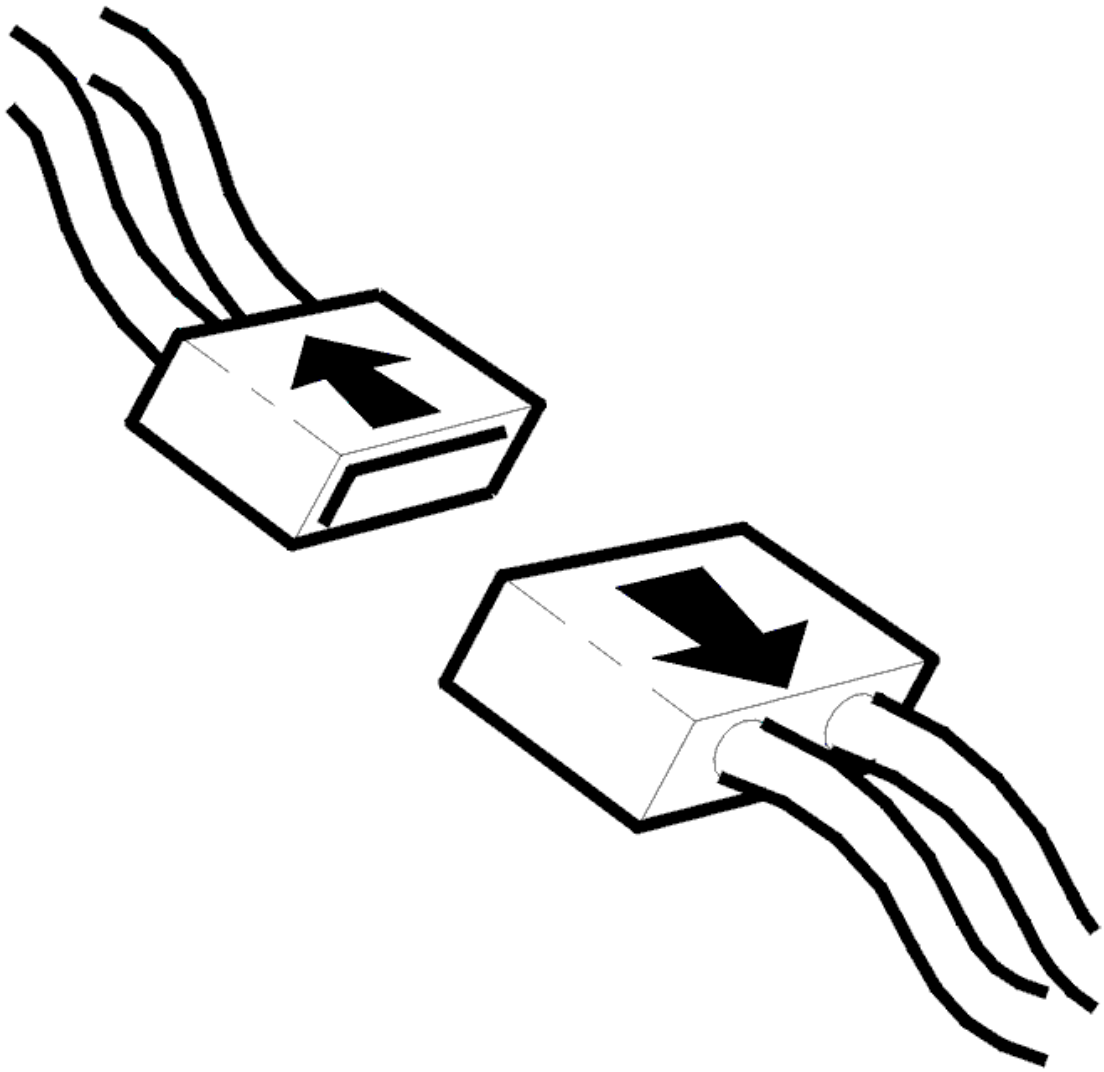

Fig. 189: Disconnecting Connector
Courtesy of VOLVO CARS CORPORATION

- Ignition off
- Disconnect central electronic module (CEM) connector D.

  Check the signal cable. Check for a short-circuit to ground. Take readings between central electronic module (CEM) terminal #D41 (#D41) and light switch module (LSM) terminal #3.

  Remedy as necessary.

  Other information

  - see **CONNECTING THE BREAKOUT BOX**
  - -2004: **SIGNAL SPECIFICATION**

- 2005-: **SIGNAL SPECIFICATION**
- see **LOCATION OF COMPONENTS**
- see **SWITCHES LIGHTS, REPLACING**
- see **CHECKING WIRING AND TERMINALS**

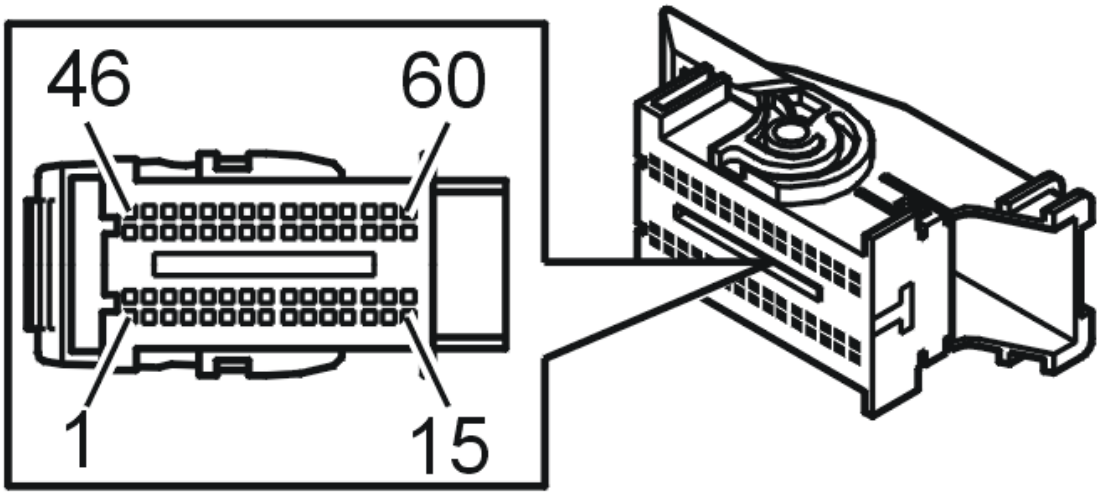

Fig. 190: Identifying Connector D
Courtesy of VOLVO CARS CORPORATION

Was a fault detected?

- **YES**

  Refer to **VERIFICATION**

- **NO**

  Refer to **REPLACING THE COMPONENT**

REPLACING THE COMPONENT

The central electronic module (CEM) has registered an internal fault in the light switch module (LSM).

If the fault is intermittent, it has been registered previously but is no longer present. Intermittent faults can be caused by interference at start up of the central electronic module (CEM) or may be a different type of fault which occurs on different occasions. The fault is evaluated depending on how it occurs. If the fault recurs, replace the light switch module (LSM).

see **SWITCHES LIGHTS, REPLACING**

Remedy as necessary.

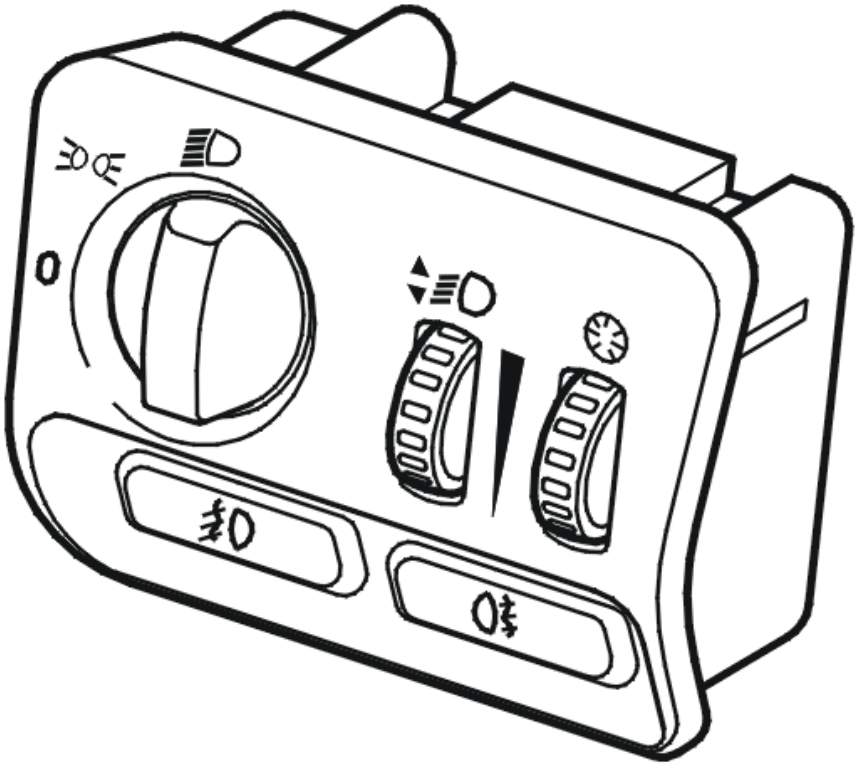

Fig. 191: Identifying Light Switch Module (LSM)
Courtesy of VOLVO CARS CORPORATION

- **Continue**

  Refer to **VERIFICATION**

VERIFICATION

VERIFICATION

HINT: After carrying out the repair, check that the fault has been remedied.

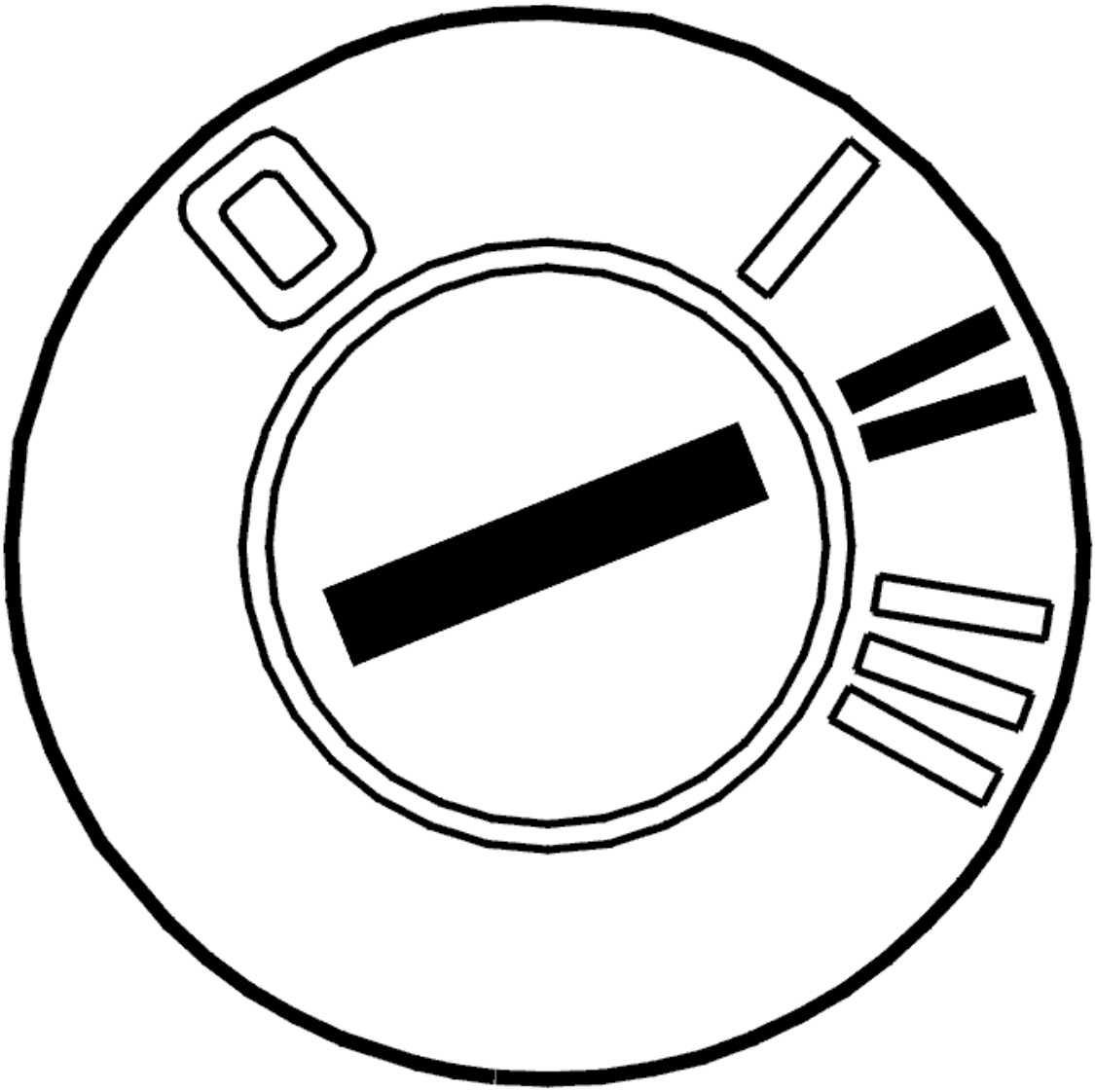

Fig. 192: Identifying Ignition ON
Courtesy of VOLVO CARS CORPORATION

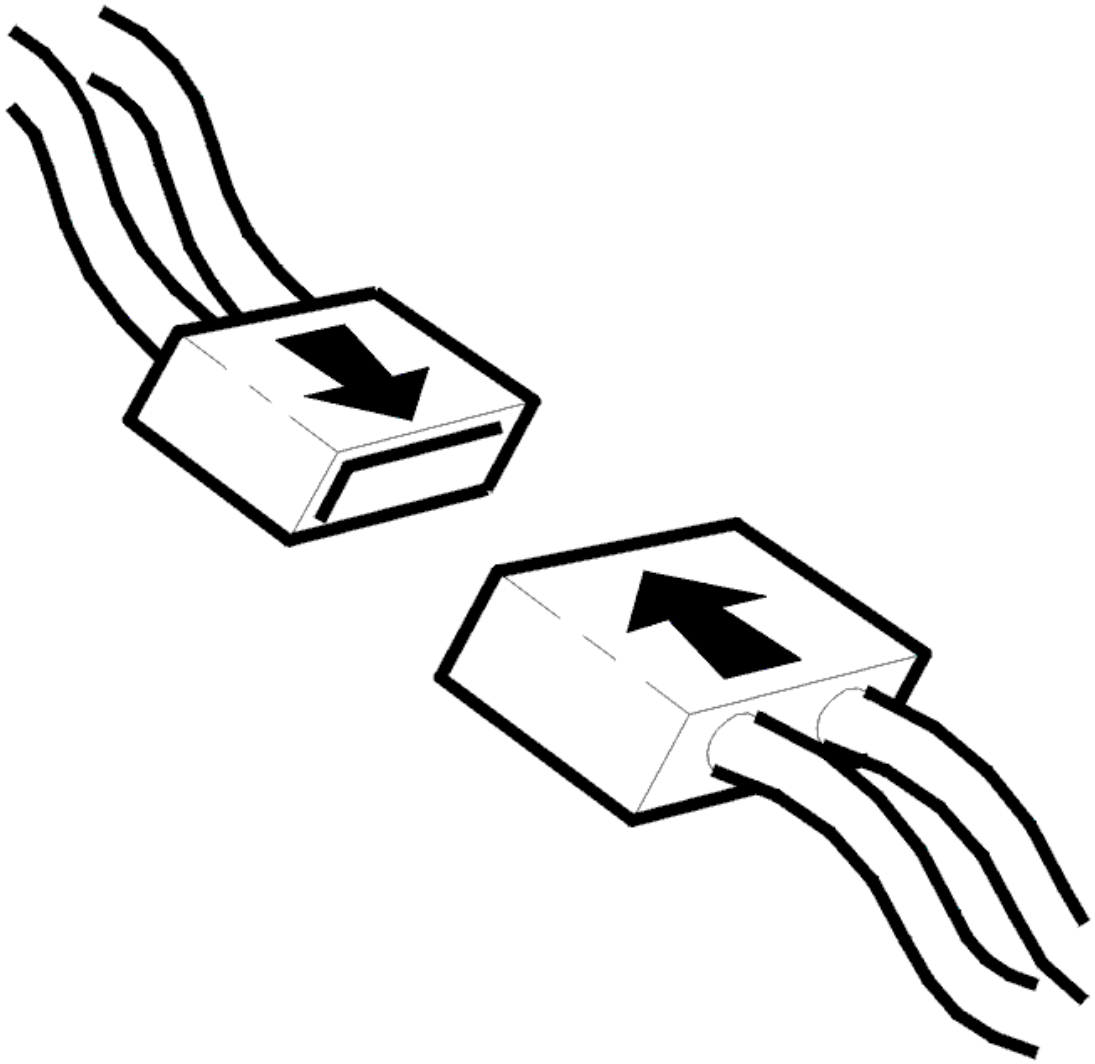

Fig. 193: Connecting Connector
Courtesy of VOLVO CARS CORPORATION

- Ignition off
- Reinstall the connectors, components etc.
- Ignition on.

  Switch between parking lamps and low beam on the light switch module (LSM).

  Check on the light switch module (LSM) that each lamp activates correctly.

Is the light switch module (LSM) working?

- **YES**

VERIFIED: Troubleshooting has been completed.

- **NO**

  Refer to **INFORMATION**

INFORMATION

FAULT-TRACING INFORMATION

The fault should have been detected and remedied. As this is not the case fault-tracing has failed.

Exit fault-tracing for this diagnostic trouble code (DTC) or make another attempt.

CEM-9F25: RHEOSTAT. SIGNAL TOO LOW. INTERMITTENT FAULT (2003-2004)

DIAGNOSTIC TROUBLE CODE INFORMATION

Condition

If the central electronic module (CEM) detects a fault on the rheostat, diagnostic trouble code CEM-9F25 is displayed.

Substitute Value

None.

Possible Source

- Rheostat short circuited to ground
- Faulty light switch.

Fault symptom[s]

- Instrument lighting does not work

FAULT-TRACING INFORMATION

see **FAULT-TRACING INFORMATION**

CEM-9F26: INTERIOR LIGHTING. SIGNAL TOO LOW (2006-2012)

DIAGNOSTIC TROUBLE CODE (DTC) INFORMATION CEM-9F26

Condition

The Central electronic module (CEM) powers the lighting in the cup holder/ashtray.

The power supply is a PWM signal (Pulse Width Modulated).

The diagnostic trouble code (DTC) is stored if the Central electronic module (CEM) registers that the circuit for the cup holder/ashtray lighting has a short-circuit to ground.

The diagnostic trouble code (DTC) can be diagnosed when the ignition is switched on.

Substitute Value

- If the fault has been detected in 100 ignition cycles, the output is closed permanently until the diagnostic trouble code is erased (applies from structure week 200539).

Possible Source

- The cables are short-circuited to each other.
- Short-circuit to ground in the power supply cable.

Fault symptom[s]

- Interior light does not work

SIGNAL TOO LOW

CHECKING THE WIRING AND TERMINALS

If the fault is intermittent, it has been registered previously but is no longer present. The fault is evaluated depending on how it occurs.

Check the cable between the central electronic module (CEM) and lighting in the cup holder/ashtray. Check for a short-circuit to ground.

Take readings between:

- Central electronic module (CEM) #D12 (#12) and the lighting in the cup holder/ashtray.

Check the connection at the LED and ensure that the cables are not short-circuited to each other.

Remedy as necessary.

Other information

- see **CONNECTING THE BREAKOUT BOX**
- -2004: **SIGNAL SPECIFICATION**
- 2005-: **SIGNAL SPECIFICATION**

- see **LOCATION OF COMPONENTS**
- see **CHECKING WIRING AND TERMINALS**

- **Continue**

  Refer to **VERIFICATION**

VERIFICATION

HINT: After carrying out the repair, check that the fault has been remedied.

Fig. 194: Identifying Ignition On Position
Courtesy of VOLVO CARS CORPORATION

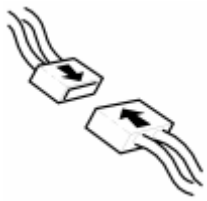

Fig. 195: Identifying Connector(s) Reinstallation
Courtesy of VOLVO CARS CORPORATION

- Ignition off.
- Reinstall the connectors, components etc.
- Ignition on.

  Check that the LED lights.

Does the LED work as it should?

- **YES**

  OKAY: Troubleshooting has been completed.

- **NO**

  Refer to **INFORMATION**

INFORMATION

FAULT-TRACING INFORMATION

The fault should have been detected and remedied. As this is not the case fault-tracing has failed.

Exit fault-tracing for this diagnostic trouble code (DTC) or make another attempt.

CEM-DD00: COMMUNICATION WITH LSM CONTROL MODULE AND CPM CONTROL MODULE. COMMUNICATION FAULT (2005-2012)

DIAGNOSTIC TROUBLE CODE (DTC) INFORMATION CEM-DD00

Condition

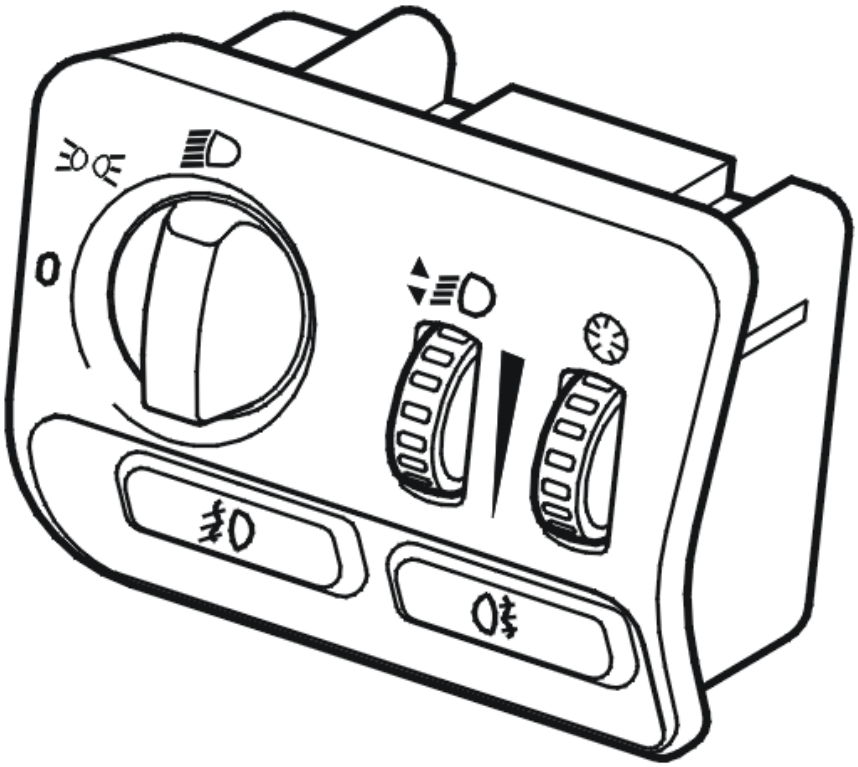

Fig. 196: Identifying Light Switch Module (LSM)
Courtesy of VOLVO CARS CORPORATION

The central electronic module (CEM) sends and receives information via a standardized serial communication system. This system is called Volcano Lite (VOLvo CAN based distributed real time Operative environment). The diagnostic trouble code (DTC) is stored if the control module registers serious interference such as blocked communication with the light switch module (LSM) or combustion preheater module (CPM).

The diagnostic trouble code (DTC) can be diagnosed when the ignition key is in position II for at least 10 seconds and with the battery voltage above 10.5 V.

NOTE: **In the event of CEM-DDxx diagnostic trouble codes (DTCs), the central electronic module (CEM) must not be replaced as the diagnostic trouble code (DTC) indicates a short-circuit in one or more conductors. The central electronic module (CEM) is the only control module that monitors the voltage level in the signal cables. The central electronic module (CEM) is therefore the only control module that can store a diagnostic trouble code (DTC) for a short-circuit in one of the cables to ground or supply voltage. Do not replace the central electronic module (CEM) in the event of this type of fault unless VIDA (Volvo scan tool) has indicated that the central electronic module (CEM) has an internal fault.**

Substitute Value

- None.

Possible Source

- Short-circuit to supply voltage in the signal cable
- Short-circuit to ground in the signal cable
- Internal fault in another control module in the same part of the network.

Fault symptom[s]

- The light switch does not operate
- Beam height control does not function
- The parking heater does not operate.

COMMUNICATION FAULT

CHECKING THE WIRING

HINT: Check connector 54/9 for oxidation even if no heater is connected.

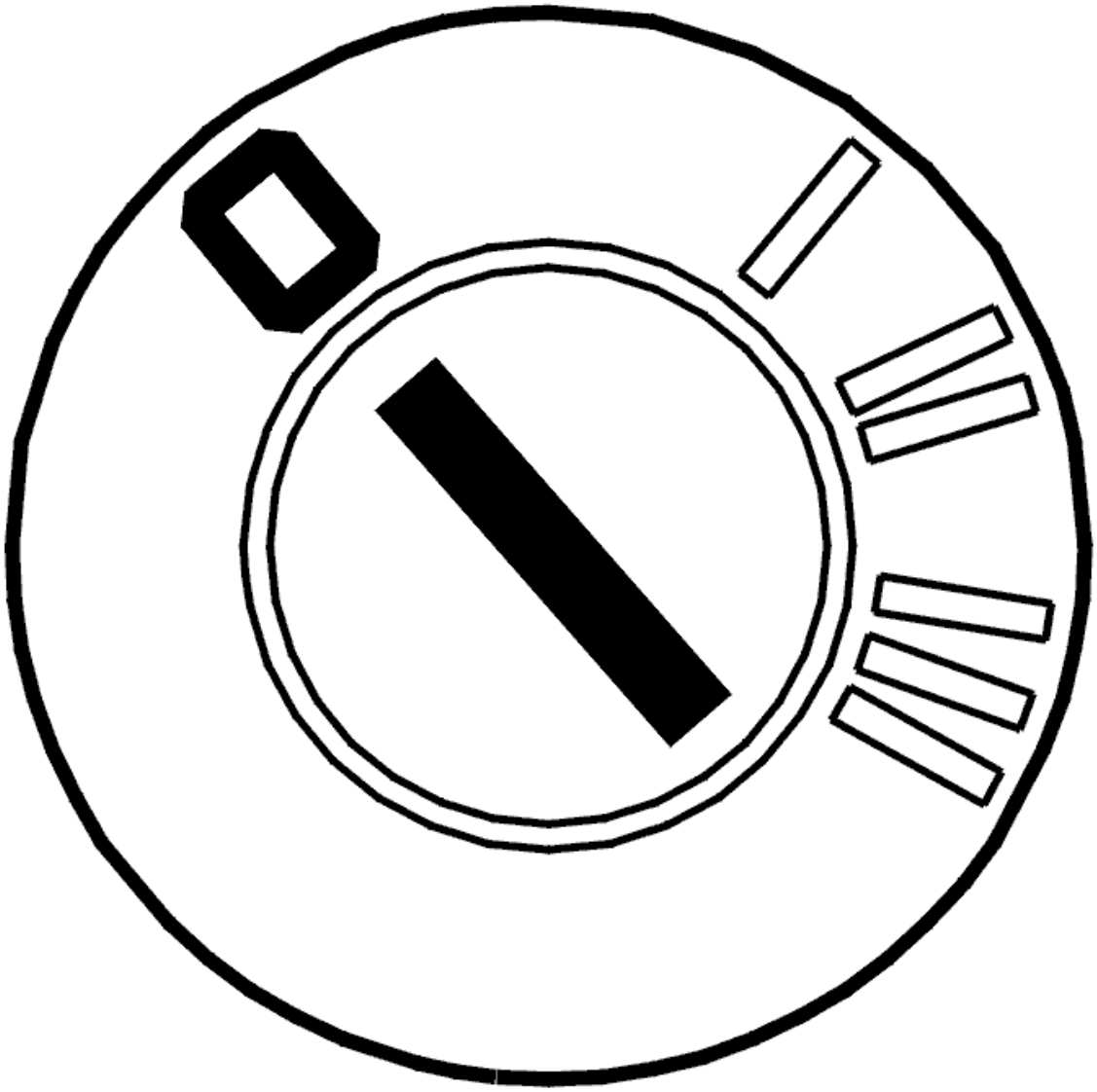

Fig. 197: Identifying Ignition OFF
Courtesy of VOLVO CARS CORPORATION

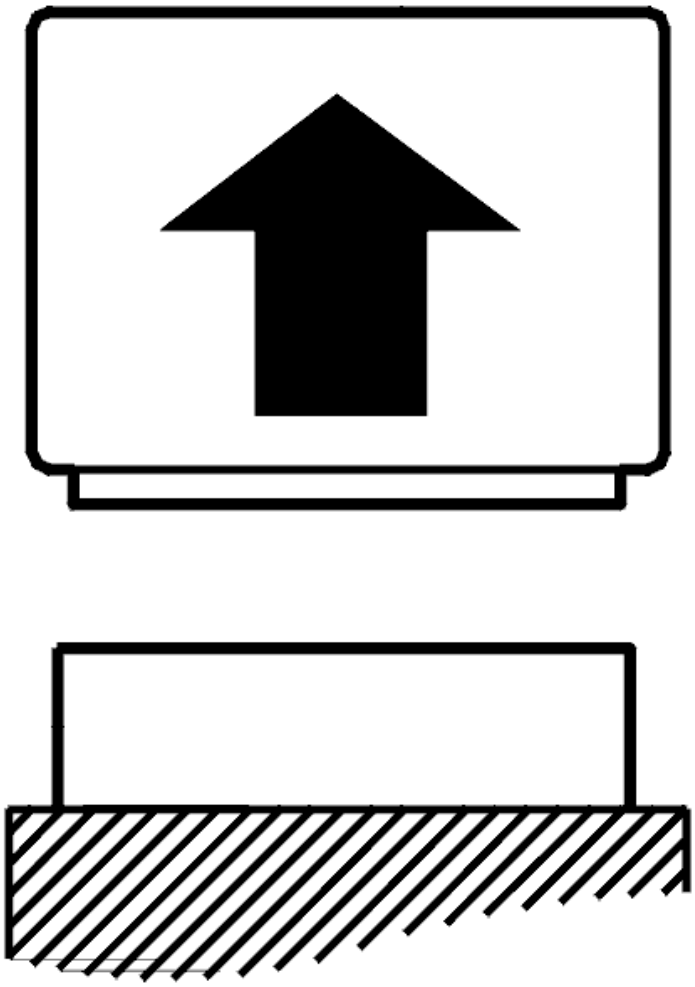

Fig. 198: Disconnecting Connector
Courtesy of VOLVO CARS CORPORATION

- Ignition off
- Disconnect connectors D and C from the central electronic module (CEM).

  The diagnostic trouble code (DTC) indicates that the communication between the light switch module (LSM), central electronic module (CEM) and combustion preheater module (CPM) is not working. This may be due to a fault in the signal cable between the control modules or a damaged communication device in one or all of the control modules.

  Check the signal cable. Check for a short-circuit to supply voltage. Check for a short-circuit to ground.

  Take readings between:

  - Central electronic module (CEM) terminal #D41 (#41) and light switch module (LSM) terminal #3

- Central electronic module (CEM) terminal #C32 (#32) and combustion preheater module (CPM) terminal #6.

Remedy as necessary.

Other information

- see **CONNECTING THE BREAKOUT BOX**
- -2004: **SIGNAL SPECIFICATION**
- 2005-: **SIGNAL SPECIFICATION**
- see **LOCATION OF COMPONENTS**
- see **SWITCHES LIGHTS, REPLACING**
- see **CONTROL MODULE ENGINE COOLANT HEATER, REPLACING**
- see **CHECKING WIRING AND TERMINALS**

Was a fault detected?

- **YES**

  Refer to **VERIFICATION**

- **NO**

  Refer to **REPLACING THE CONTROL MODULE**

REPLACING THE CONTROL MODULE

Try a new light switch module (LSM) and combustion preheater module (CPM).

Only replace one control module at a time. Check the function of each control module between each replacement.

Remedy as necessary.

Other information

- see **SWITCHES LIGHTS, REPLACING**
- see **CONTROL MODULE ENGINE COOLANT HEATER, REPLACING**

- **Continue**

  Refer to **VERIFICATION**

VERIFICATION

VERIFICATION

HINT: After carrying out the repair, check that the fault has been remedied.

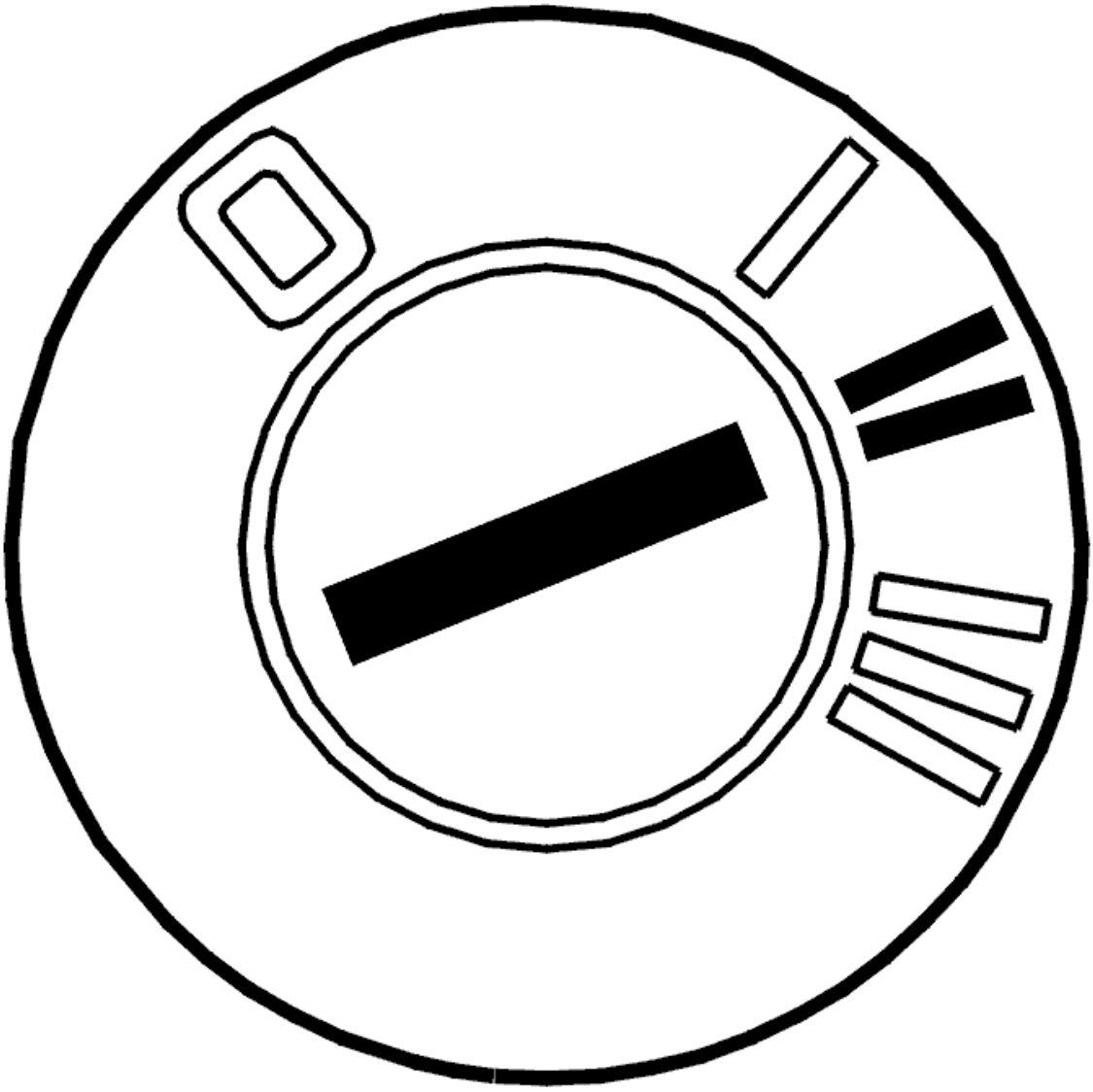

Fig. 199: Identifying Ignition ON
Courtesy of VOLVO CARS CORPORATION

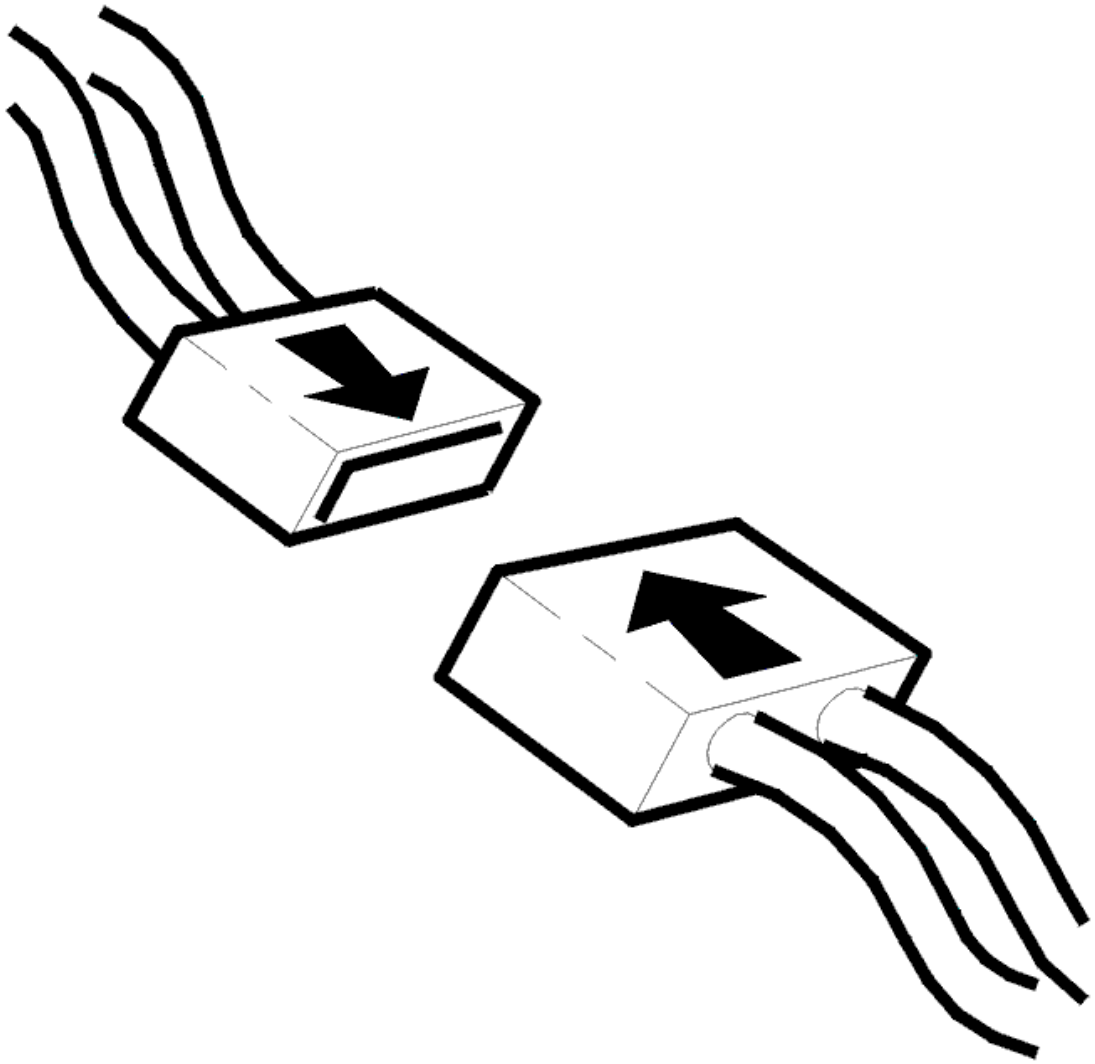

Fig. 200: Connecting Connector
Courtesy of VOLVO CARS CORPORATION

- Ignition off
- Reinstall the connectors, components etc.
- Ignition on.

Switch between parking lamps and low beam on the light switch module (LSM).

Check on the light switch module (LSM) that each lamp activates correctly.

Activate the combustion preheater module (CPM).

Check that the engine coolant heater is activated.

Are both the light switch module (LSM) and combustion preheater module (CPM) working?

- **YES**

  VERIFIED: Troubleshooting has been completed.

- **NO**

  Refer to **INFORMATION**

INFORMATION

FAULT-TRACING INFORMATION

The fault should have been detected and remedied. As this is not the case fault-tracing has failed.

Exit fault-tracing for this diagnostic trouble code (DTC) or make another attempt.

CEM-DD01: COMMUNICATION WITH LSM CONTROL MODULE AND CPM CONTROL MODULE. SHORT-CIRCUIT TO SUPPLY OR GROUND (2005-2012)

DIAGNOSTIC TROUBLE CODE (DTC) INFORMATION CEM-DD01

Condition

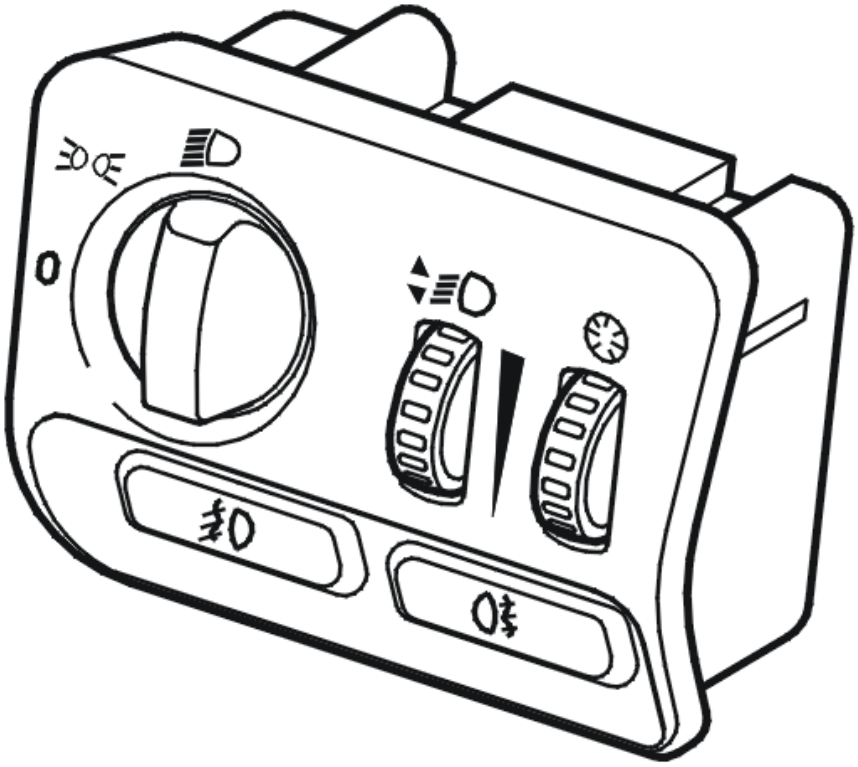

Fig. 201: Identifying Light Switch Module (LSM)
Courtesy of VOLVO CARS CORPORATION

The central electronic module (CEM) sends and receives information via a standardized serial communication system. This system is called Volcano Lite (VOLvo CAN based distributed real time Operative environment). The diagnostic trouble code (DTC) is stored if the control module registers serious interference such as blocked communication with the light switch module (LSM) or combustion preheater module (CPM).

The diagnostic trouble code (DTC) can be diagnosed when the ignition key is in position II for at least 10 seconds and with the battery voltage above 10.5 V.

NOTE: **In the event of CEM-DDxx diagnostic trouble codes (DTCs), the central electronic module (CEM) must not be replaced as the diagnostic trouble code (DTC) indicates a short-circuit in one or more conductors. The central electronic module (CEM) is the only control module that monitors the voltage level in the signal cables. The central electronic module (CEM) is therefore the only control module that can store a diagnostic trouble code (DTC) for a short-circuit in one of the cables to ground or supply voltage. Do not replace the central electronic module (CEM) in the event of this type of fault unless VIDA (Volvo scan tool) has indicated that the central electronic module (CEM) has an internal fault.**

Substitute Value

- None.

Possible Source

- Short-circuit to supply voltage in the signal cable
- Short-circuit to ground in the signal cable.

Fault symptom[s]

- The light switch does not operate
- Beam height control does not function
- The parking heater does not operate.

SIGNAL MISSING

CHECKING THE WIRING

HINT: Check connector 54/9 for oxidation even if no heater is connected.

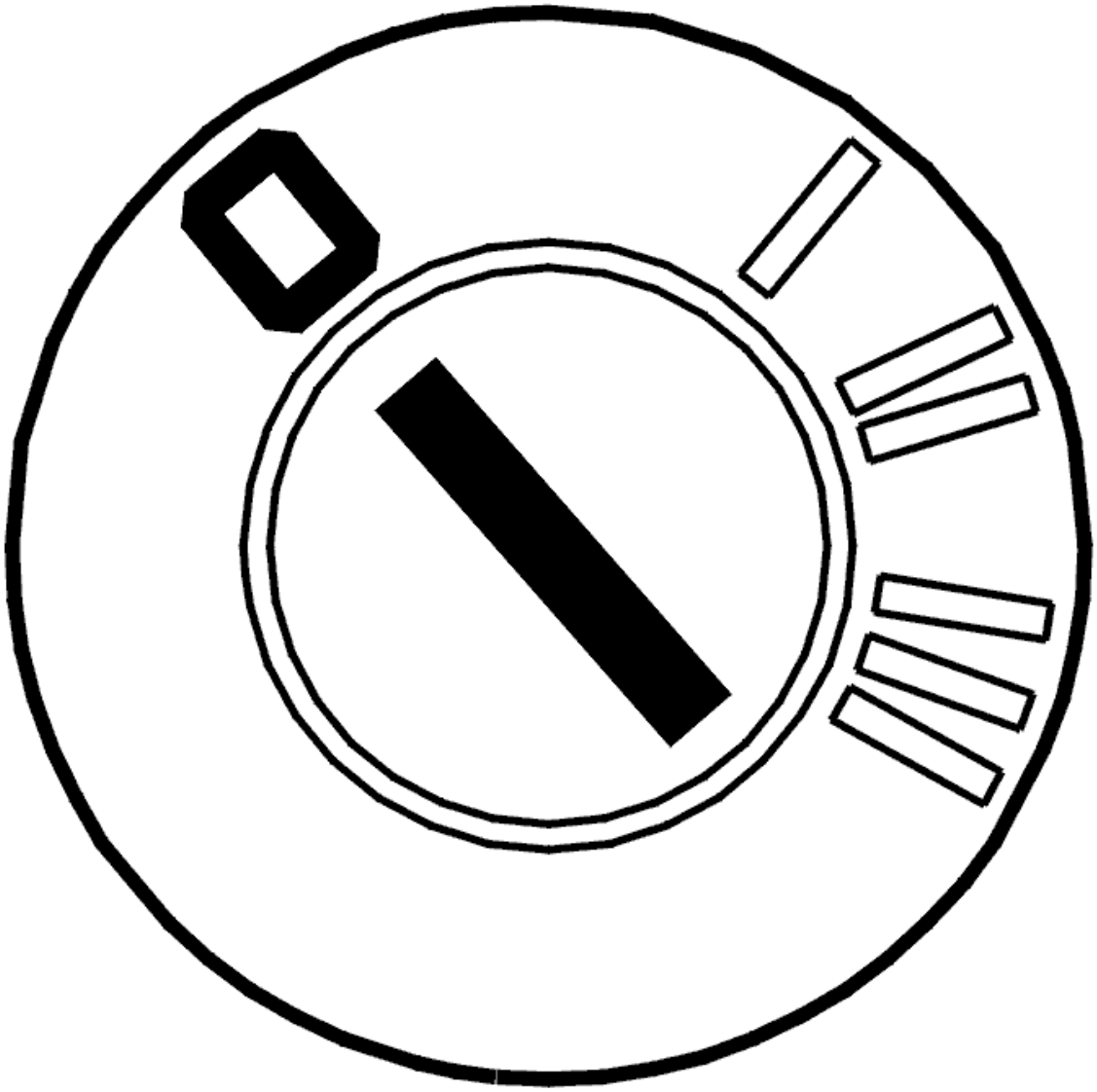

Fig. 202: Identifying Ignition OFF
Courtesy of VOLVO CARS CORPORATION

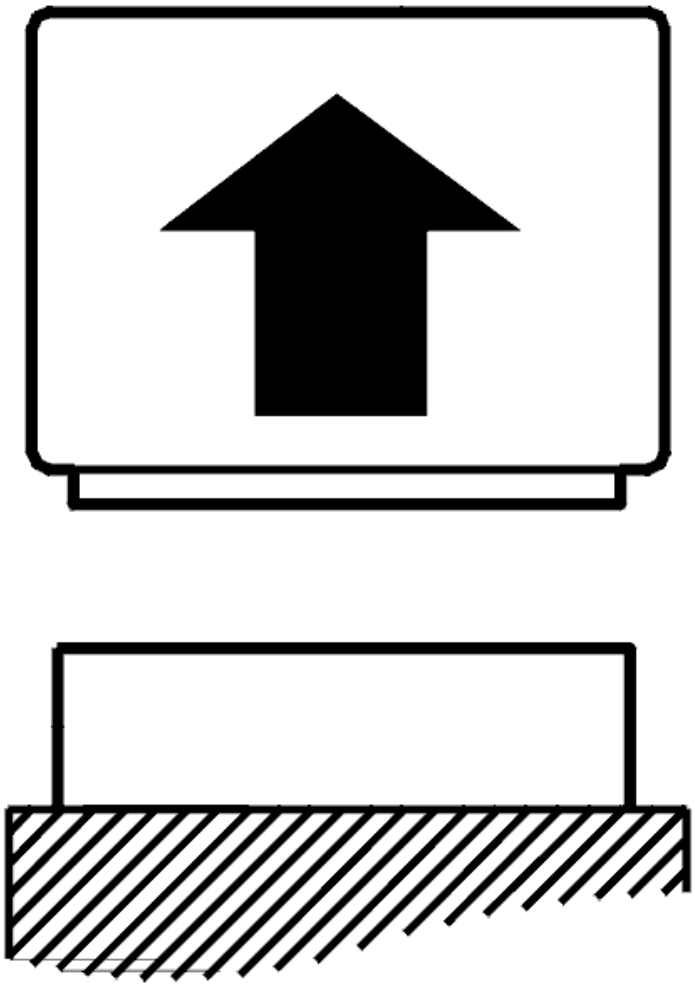

Fig. 203: Disconnecting Connector
Courtesy of VOLVO CARS CORPORATION

- Ignition off
- Disconnect connectors D and C from the central electronic module (CEM).

  The diagnostic trouble code (DTC) indicates that the communication between the light switch module (LSM), central electronic module (CEM) and combustion preheater module (CPM) is not working. This may be due to a fault in the signal cable between the control modules or a damaged communication device in one or all of the control modules.

  Check the signal cable. Check for a short-circuit to supply voltage. Check for a short-circuit to ground.

  Take readings between:

  - Central electronic module (CEM) terminal #D41 (#41) and light switch module (LSM) terminal #3

- Central electronic module (CEM) terminal #C32 (#32) and combustion preheater module (CPM) terminal #6.

Remedy as necessary.

Other information

- see **CONNECTING THE BREAKOUT BOX**
- -2004: **SIGNAL SPECIFICATION**
- 2005-: **SIGNAL SPECIFICATION**
- see **LOCATION OF COMPONENTS**
- see **SWITCHES LIGHTS, REPLACING**
- see **CONTROL MODULE ENGINE COOLANT HEATER, REPLACING**
- see **CHECKING WIRING AND TERMINALS**

Was a fault detected?

- **YES**

  Refer to **VERIFICATION**

- **NO**

  Refer to **REPLACING THE CONTROL MODULE**

REPLACING THE CONTROL MODULE

Try a new light switch module (LSM) and combustion preheater module (CPM).

Only replace one control module at a time. Check the function of each control module between each replacement.

Remedy as necessary.

Other information

- see **SWITCHES LIGHTS, REPLACING**
- see **CONTROL MODULE ENGINE COOLANT HEATER, REPLACING**

- **Continue**

  Refer to **VERIFICATION**

VERIFICATION

VERIFICATION

HINT: After carrying out the repair, check that the fault has been remedied.

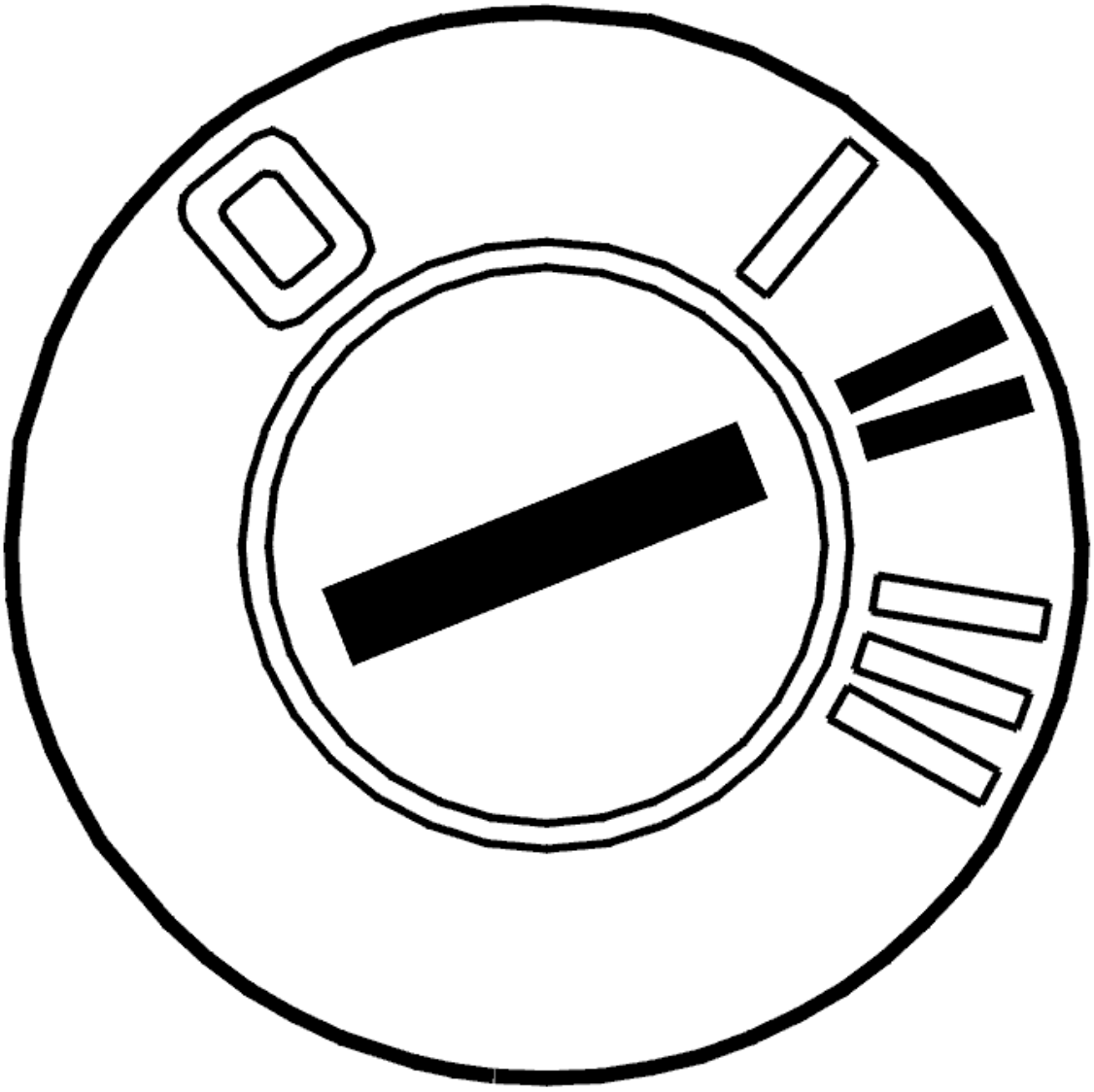

Fig. 204: Identifying Ignition ON
Courtesy of VOLVO CARS CORPORATION

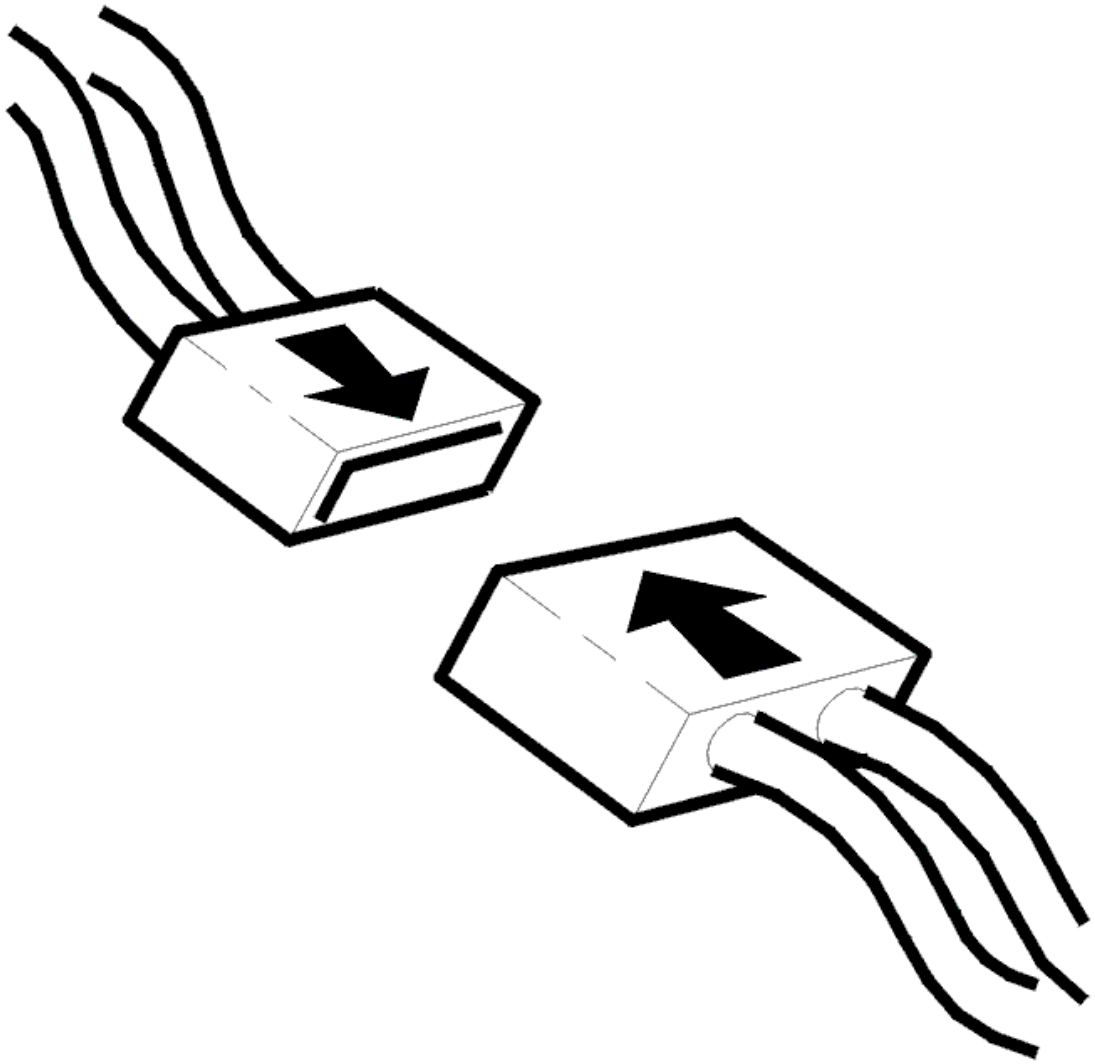

Fig. 205: Connecting Connector
Courtesy of VOLVO CARS CORPORATION

- Ignition off
- Reinstall the connectors, components etc.
- Ignition on.

Switch between parking lamps and low beam on the light switch module (LSM).

Check on the light switch module (LSM) that each lamp activates correctly.

Activate the combustion preheater module (CPM).

Check that the engine coolant heater is activated.

Are both the light switch module (LSM) and combustion preheater module (CPM) working?

- **YES**

  VERIFIED: Troubleshooting has been completed.

- **NO**

  Refer to **INFORMATION**

INFORMATION

FAULT-TRACING INFORMATION

The fault should have been detected and remedied. As this is not the case fault-tracing has failed.

Exit fault-tracing for this diagnostic trouble code (DTC) or make another attempt.

CEM-DD02: COMMUNICATION WITH LSM CONTROL MODULE AND CPM CONTROL MODULE. COMMUNICATION FAULT (2005-2012)

DIAGNOSTIC TROUBLE CODE (DTC) INFORMATION CEM-DD02

Condition

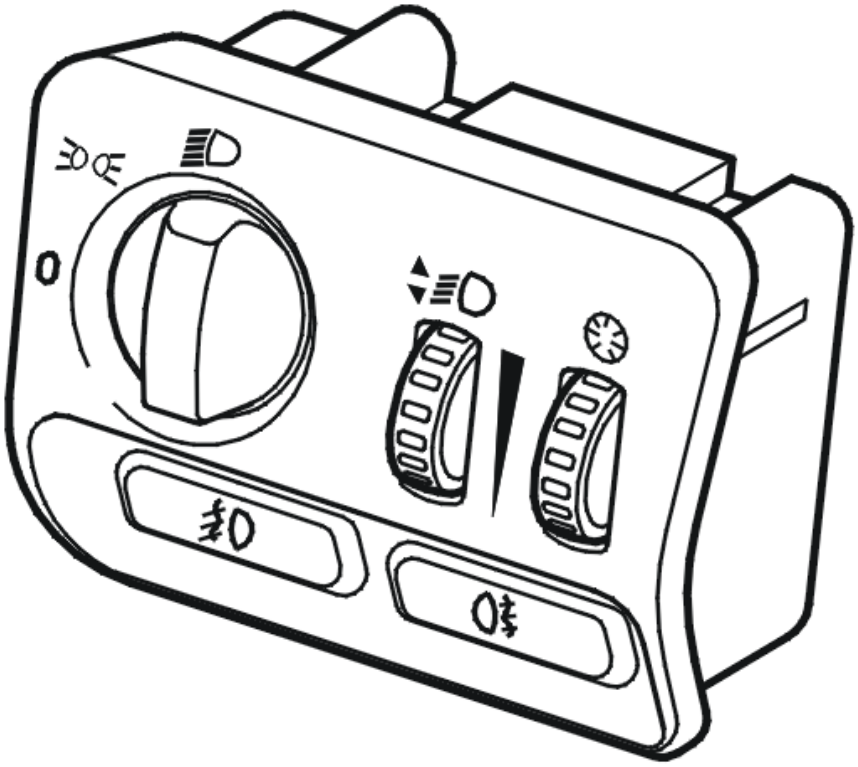

Fig. 206: Identifying Light Switch Module (LSM)
Courtesy of VOLVO CARS CORPORATION

The central electronic module (CEM) sends and receives information via a standardized serial communication system. This system is called Volcano Lite (VOLvo CAN based distributed real time Operative environment). The diagnostic trouble code (DTC) is stored if the control module registers serious interference such as blocked communication with the light switch module (LSM) or combustion preheater module (CPM).

The diagnostic trouble code (DTC) can be diagnosed when the ignition key is in position II for at least 10 seconds and the battery voltage exceeds 10.5 V.

NOTE: **In the event of CEM-DDxx diagnostic trouble codes (DTCs), the central electronic module (CEM) must not be replaced as the diagnostic trouble code (DTC) indicates a short-circuit in one or more conductors. The central electronic module (CEM) is the only control module that monitors the voltage level in the signal cables. The central electronic module (CEM) is therefore the only control module that can store a diagnostic trouble code (DTC) for a short-circuit in one of the cables to ground or supply voltage. Do not replace the central electronic module (CEM) in the event of this type of fault unless VIDA (Volvo scan tool) has indicated that the central electronic module (CEM) has an internal fault.**

Substitute Value

- None.

Possible Source

- Communication problems.
- Internal fault in another control module in the same part of the network.

Fault symptom[s]

- The light switch does not operate
- Beam height control does not function
- The parking heater does not operate.

SHORT-CIRCUIT TO GROUND

CHECKING THE WIRING

HINT: Check connector 54/9 for oxidation even if no heater is connected.

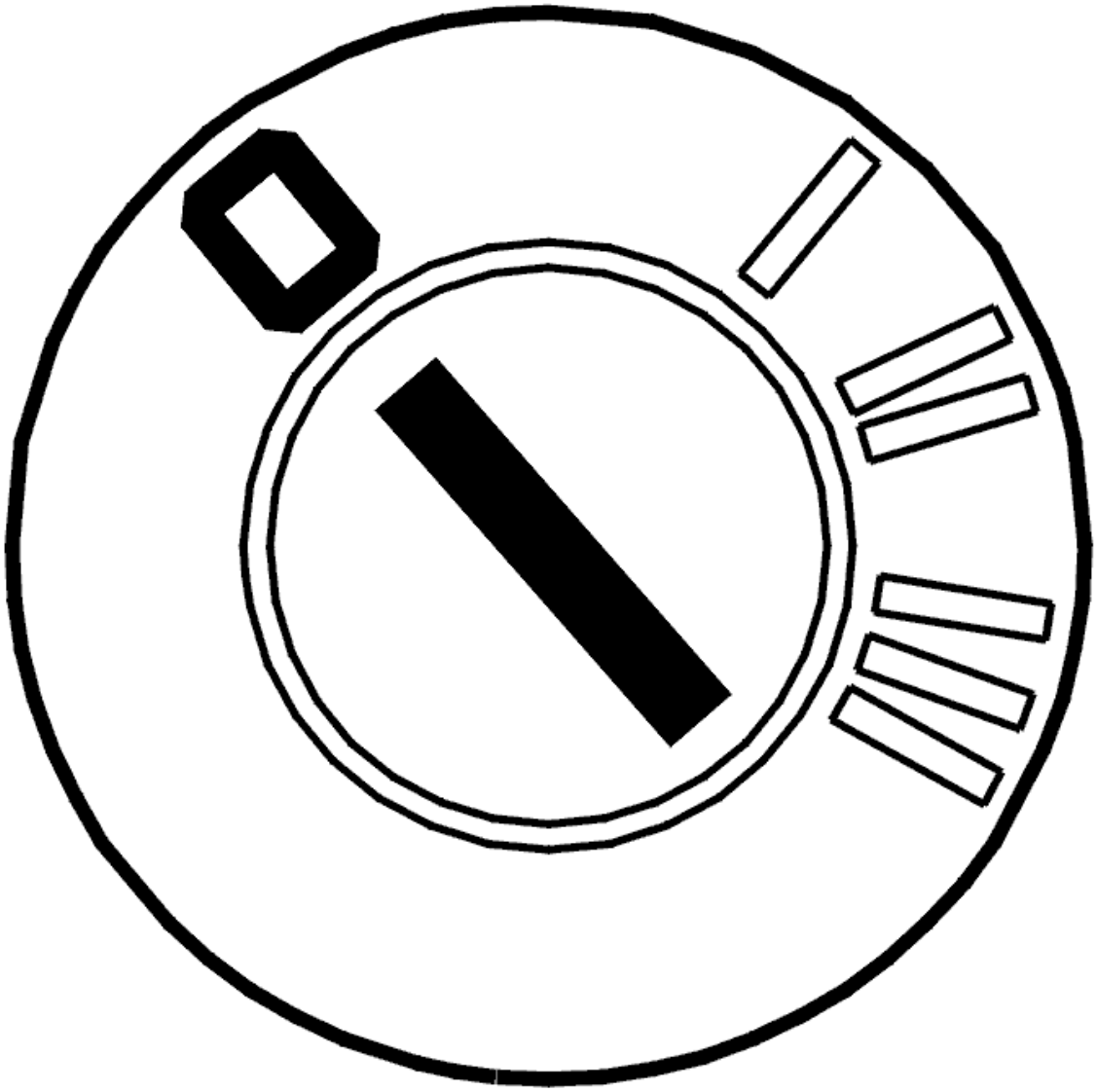

Fig. 207: Identifying Ignition OFF
Courtesy of VOLVO CARS CORPORATION

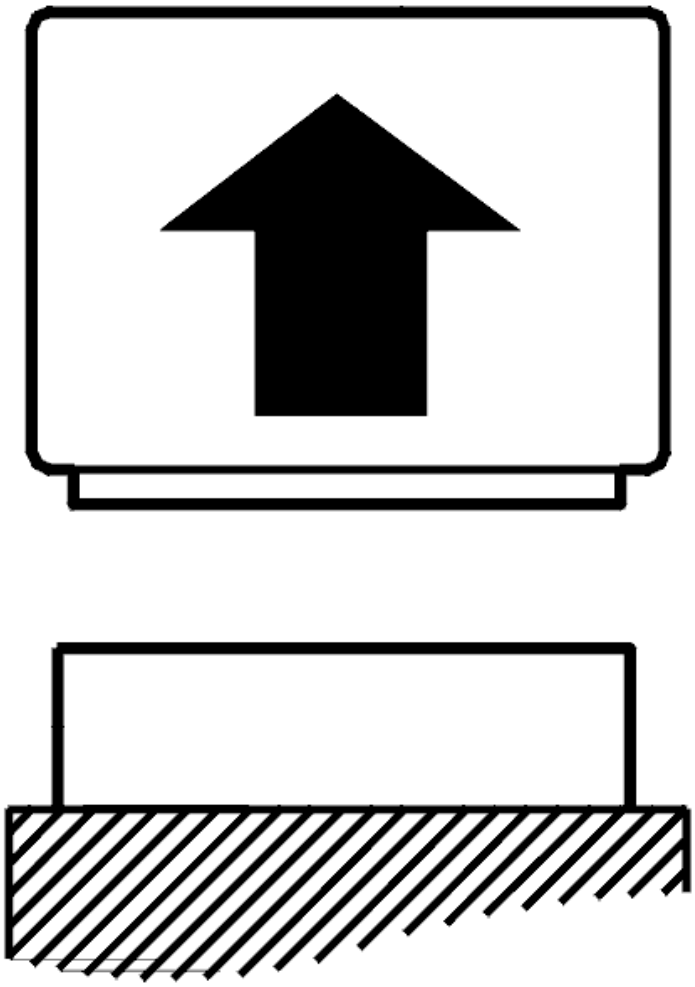

Fig. 208: Disconnecting Connector
Courtesy of VOLVO CARS CORPORATION

- Ignition off
- Disconnect connectors D and C from the central electronic module (CEM).

  The diagnostic trouble code (DTC) indicates that the communication between the light switch module (LSM), central electronic module (CEM) and combustion preheater module (CPM) is not working. This may be due to a fault in the signal cable between the control modules or a damaged communication device in one or all of the control modules.

  Check the signal cable. Check for a short-circuit to ground.

  Take readings between:

  - Central electronic module (CEM) terminal #D41 (#41) and light switch module (LSM) terminal #3

- Central electronic module (CEM) terminal #C32 (#32) and combustion preheater module (CPM) terminal #6.

Remedy as necessary.

Other information

- see **CONNECTING THE BREAKOUT BOX**
- -2004: **SIGNAL SPECIFICATION**
- 2005-: **SIGNAL SPECIFICATION**
- see **LOCATION OF COMPONENTS**
- see **SWITCHES LIGHTS, REPLACING**
- see **CONTROL MODULE ENGINE COOLANT HEATER, REPLACING**
- see **CHECKING WIRING AND TERMINALS**

Was a fault detected?

- **YES**

  Refer to **VERIFICATION**

- **NO**

  Refer to **REPLACING THE CONTROL MODULE**

REPLACING THE CONTROL MODULE

Try a new light switch module (LSM) and combustion preheater module (CPM).

Only replace one control module at a time. Check the function of each control module between each replacement.

Remedy as necessary.

Other information

- see **SWITCHES LIGHTS, REPLACING**
- see **CONTROL MODULE ENGINE COOLANT HEATER, REPLACING**

- **Continue**

  Refer to **VERIFICATION**

VERIFICATION

VERIFICATION

HINT: After carrying out the repair, check that the fault has been remedied.

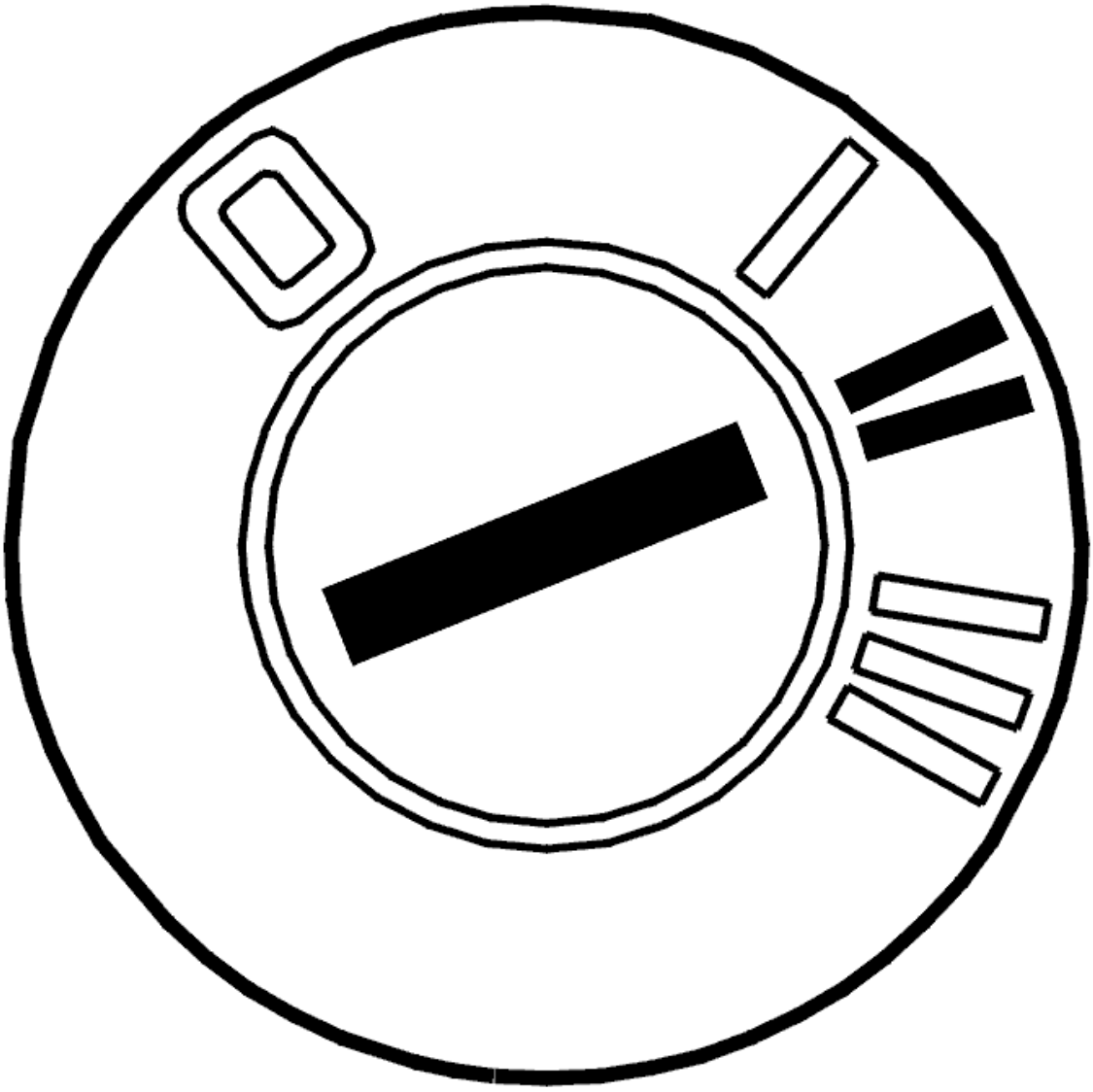

Fig. 209: Identifying Ignition ON
Courtesy of VOLVO CARS CORPORATION

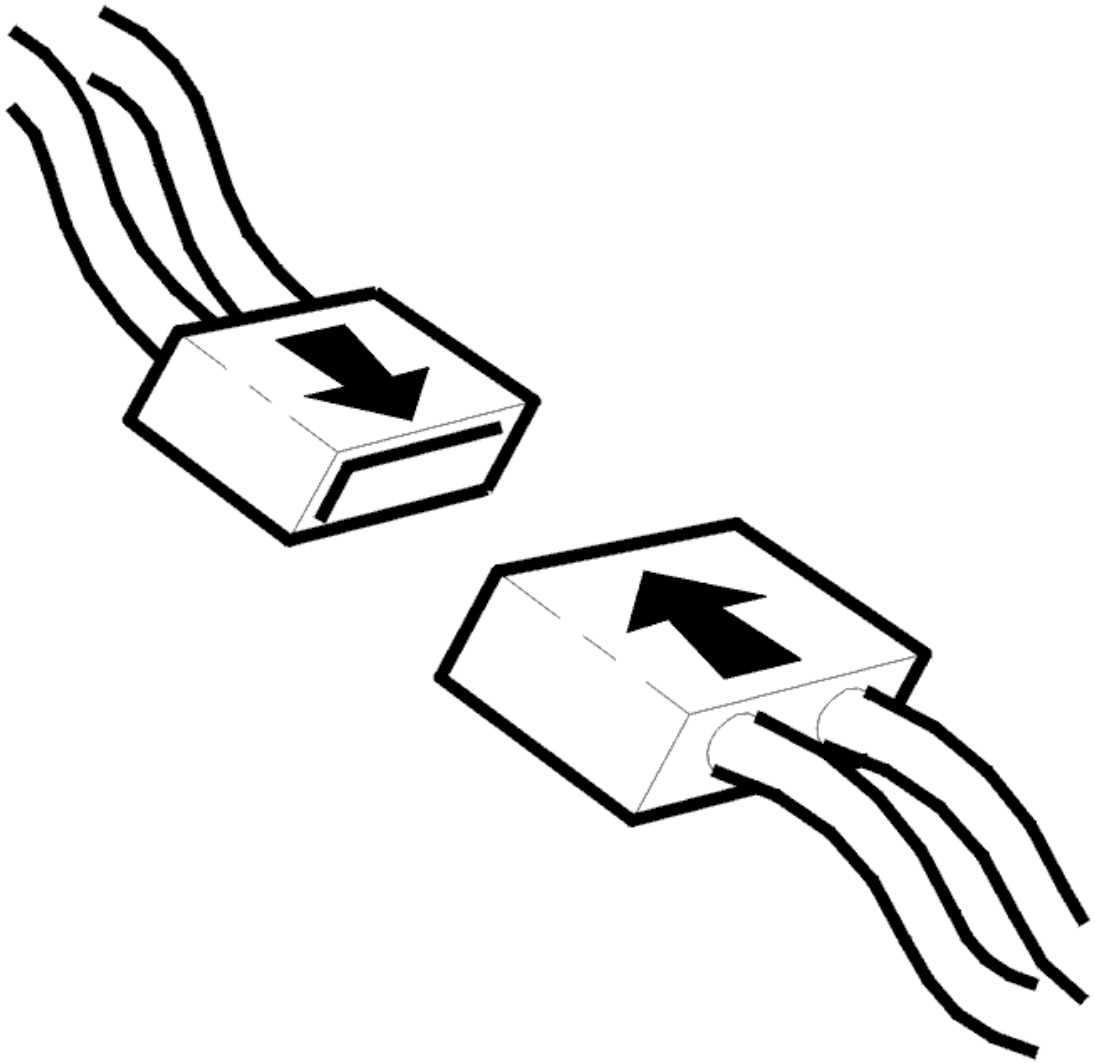

Fig. 210: Connecting Connector
Courtesy of VOLVO CARS CORPORATION

- Ignition off
- Reinstall the connectors, components etc.
- Ignition on.

Switch between parking lamps and low beam on the light switch module (LSM).

Check on the light switch module (LSM) that each lamp activates correctly.

Activate the combustion preheater module (CPM).

Check that the engine coolant heater is activated.

Are both the light switch module (LSM) and combustion preheater module (CPM) working?

- **YES**

  VERIFIED: Troubleshooting has been completed.

- **NO**

  Refer to **INFORMATION**

INFORMATION

FAULT-TRACING INFORMATION

The fault should have been detected and remedied. As this is not the case fault-tracing has failed.

Exit fault-tracing for this diagnostic trouble code (DTC) or make another attempt.

CEM-DD10: COMMUNICATION WITH THE LIGHT SWITCH MODULE (LSM). SIGNAL MISSING (2005-2012)

DIAGNOSTIC TROUBLE CODE (DTC) INFORMATION CEM-DD10

Condition

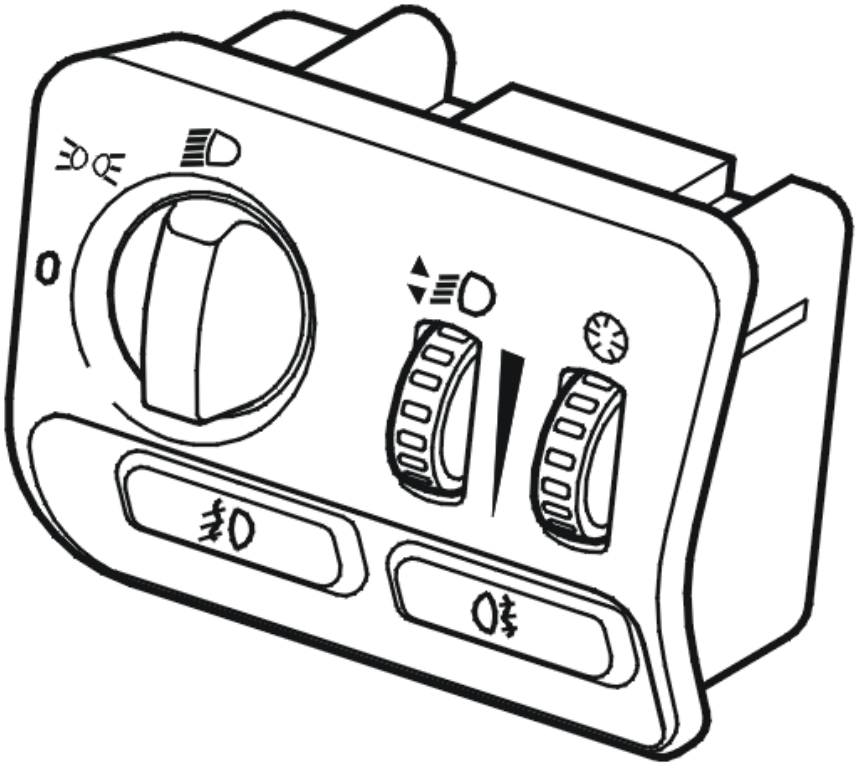

Fig. 211: Identifying Light Switch Module (LSM)
Courtesy of VOLVO CARS CORPORATION

The central electronic module (CEM) sends and receives information via a standardized serial communication system. This system is called Volcano Lite (VOLvo CAN based distributed real time Operative environment). The diagnostic trouble code (DTC) is stored if the control module registers serious interference such as blocked communication with the light switch module (LSM).

The diagnostic trouble code (DTC) can be diagnosed when the ignition key is in position II for at least 10 seconds and the battery voltage exceeds 10.5 V.

NOTE: **In the event of CEM-DDxx diagnostic trouble codes (DTCs), the central electronic module (CEM) must not be replaced as the diagnostic trouble code (DTC) indicates a short-circuit in one or more conductors. The central electronic module (CEM) is the only control module that monitors the voltage level in the signal cables. The central electronic module (CEM) is therefore the only control module that can store a diagnostic trouble code (DTC) for a short-circuit in one of the cables to ground or supply voltage. Do not replace the central electronic module (CEM) in the event of this type of fault unless VIDA (Volvo scan tool) has indicated that the central electronic module (CEM) has an internal fault.**

Substitute Value

- None.

Possible Source

- Short-circuit between signal cables
- Open-circuit in one of the signal cables
- Internal fault in another control module in the same part of the network.

Fault symptom[s]

- The light switch does not operate
- Beam height control does not function.

SIGNAL MISSING

CHECKING THE WIRING

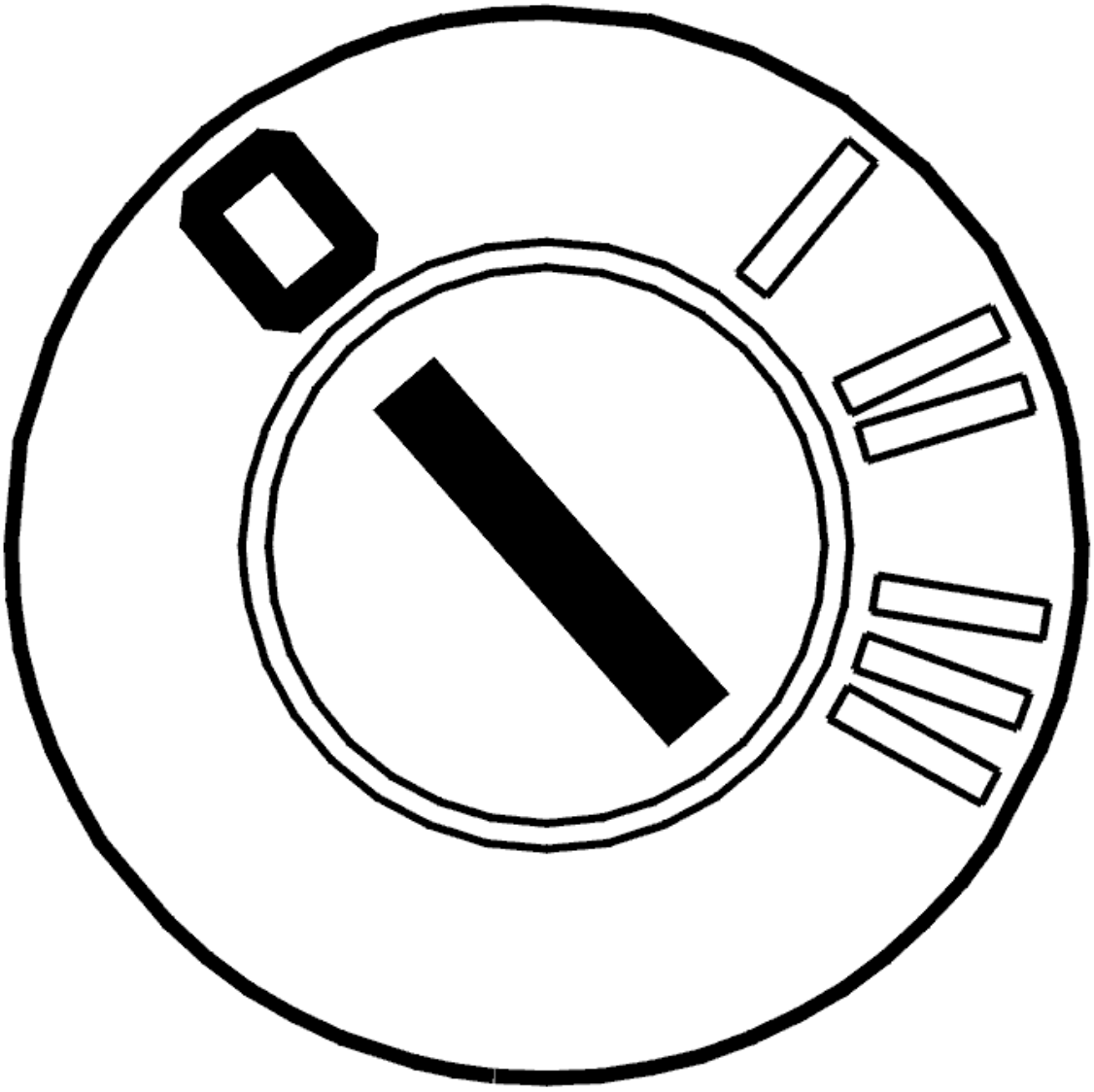

Fig. 212: Identifying Ignition OFF
Courtesy of VOLVO CARS CORPORATION

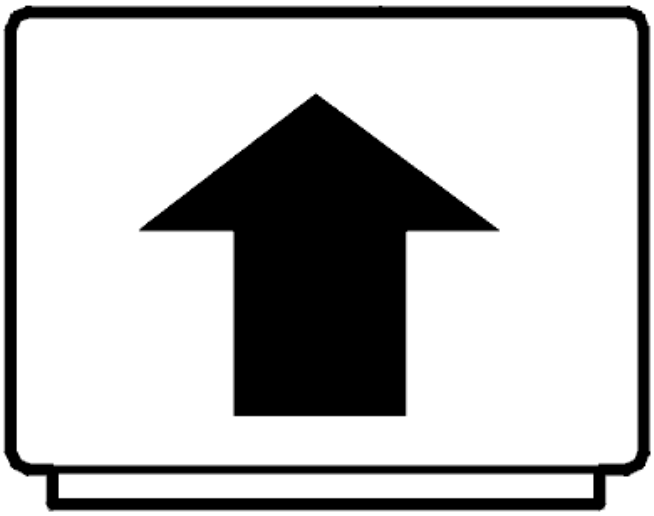

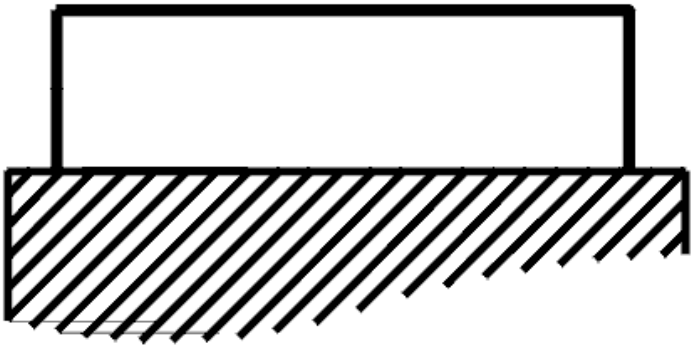

Fig. 213: Disconnecting Connector
Courtesy of VOLVO CARS CORPORATION

- Ignition off
- Disconnect central electronic module (CEM) connector D.

  The diagnostic trouble code (DTC) indicates that the communication between the light switch module (LSM) and central electronic module (CEM) is not working. This may be due to a fault in the signal cable between the control modules or a damaged communication device in one or both of the control modules.

  Check the signal cable. Check for an open-circuit. Check for a short-circuit to ground.

  Take readings between central electronic module (CEM) terminal #D41 (#41) and light switch module

(LSM) terminal #3.

Remedy as necessary.

Other information

- see **CONNECTING THE BREAKOUT BOX**
- -2004: **SIGNAL SPECIFICATION**
- 2005-: **SIGNAL SPECIFICATION**
- see **LOCATION OF COMPONENTS**
- see **SWITCHES LIGHTS, REPLACING**
- see **CHECKING WIRING AND TERMINALS**

Was a fault detected?

- **YES**

  Refer to **VERIFICATION**

- **NO**

  Refer to **REPLACING THE CONTROL MODULE**

REPLACING THE CONTROL MODULE

Try replacing the light switch module (LSM).

Remedy as necessary.

Other information

- see **SWITCHES LIGHTS, REPLACING**

- **Continue**

  Refer to **VERIFICATION**

VERIFICATION

VERIFICATION

HINT: After carrying out the repair, check that the fault has been remedied.

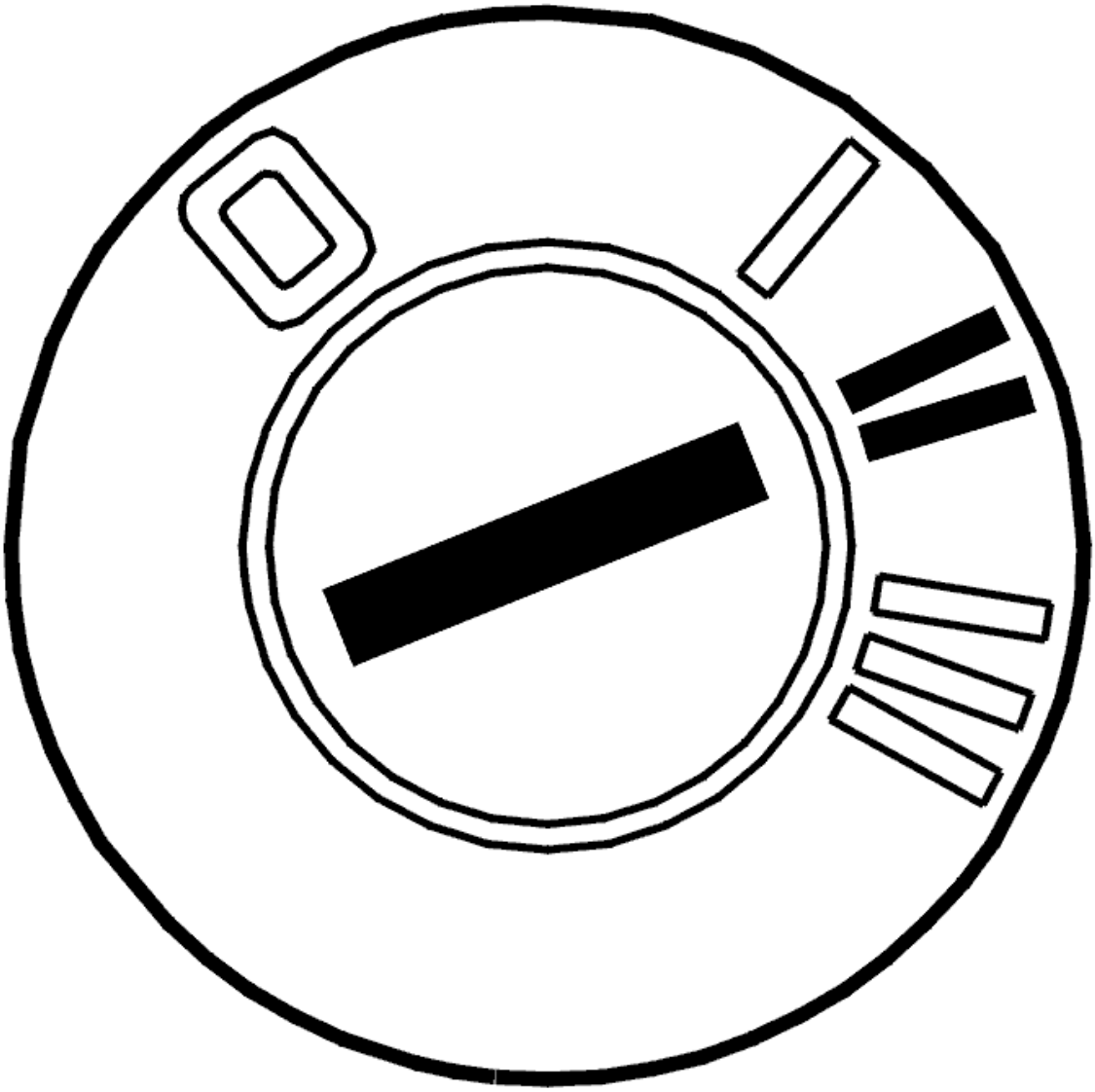

Fig. 214: Identifying Ignition ON
Courtesy of VOLVO CARS CORPORATION

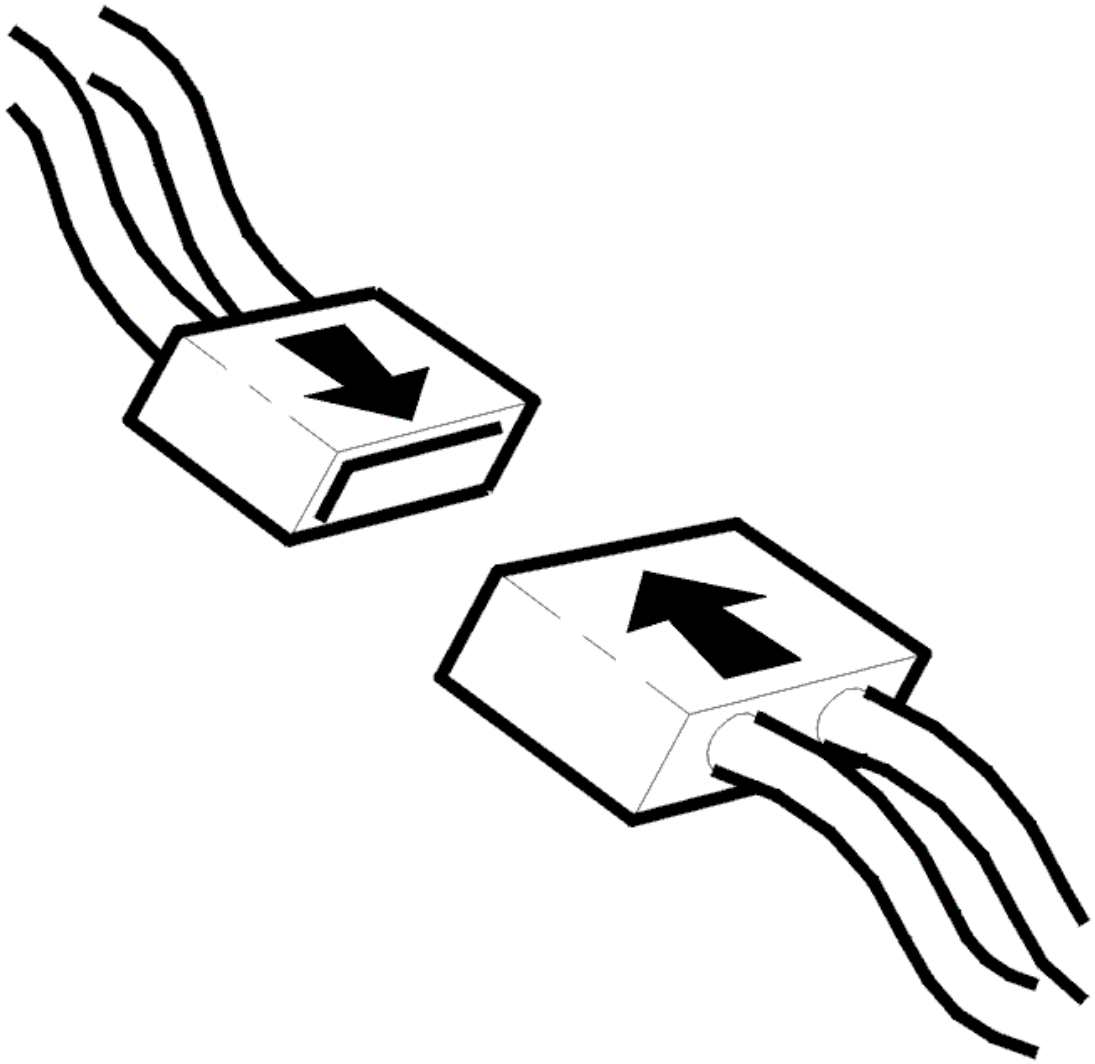

Fig. 215: Connecting Connector
Courtesy of VOLVO CARS CORPORATION

- Ignition off
- Reinstall the connectors, components etc.
- Ignition on.

  Switch between parking lamps and low beam on the light switch module (LSM).

  Check on the light switch module (LSM) that each lamp activates correctly.

Is the light switch module (LSM) working?

- **YES**

VERIFIED: Troubleshooting has been completed.

- **NO**

  Refer to **INFORMATION**

INFORMATION

FAULT-TRACING INFORMATION

The fault should have been detected and remedied. As this is not the case fault-tracing has failed.

Exit fault-tracing for this diagnostic trouble code (DTC) or make another attempt.

CEM-DD11: COMMUNICATION WITH THE COMBUSTION PREHEATER MODULE (CPM). SIGNAL MISSING (2005-2012)

DIAGNOSTIC TROUBLE CODE (DTC) INFORMATION CEM-DD11

Condition

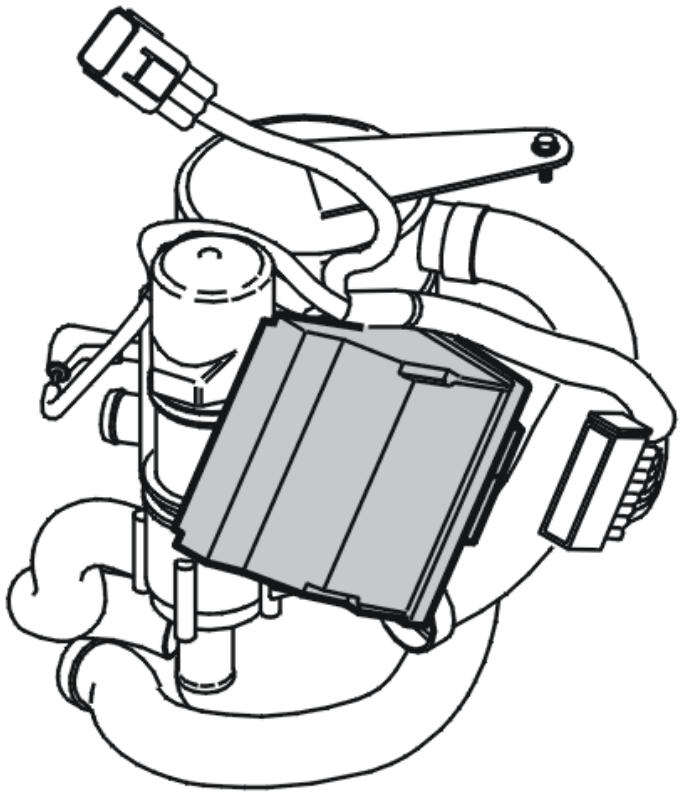

Fig. 216: Additional Heater And Parking Heater
Courtesy of VOLVO CARS CORPORATION

The central electronic module (CEM) sends and receives information via a standardized serial communication system. This system is called Volcano Lite (VOLvo CAN based distributed real time Operative environment). The diagnostic trouble code (DTC) is stored if the control module registers serious interference such as blocked communication with the combustion preheater module (CPM).

The diagnostic trouble code (DTC) can be diagnosed when the ignition key is in position I and II for at least 10 seconds and with the battery voltage above 10.5 V.

NOTE: **In the event of CEM-DDxx diagnostic trouble codes (DTCs), the central electronic module (CEM) must not be replaced as the diagnostic trouble code (DTC) indicates a short-circuit in one or more conductors. The central electronic module (CEM) is the only control module that monitors the voltage level in the signal cables. The central electronic module (CEM) is therefore the only control module that can store a diagnostic trouble code (DTC) for a short-circuit in one of the cables to ground or supply voltage. Do not replace the central electronic module (CEM) in the event of this type of fault unless VIDA (Volvo scan tool) has indicated that the central electronic module (CEM) has an internal fault.**

Substitute Value

- None.

Possible Source

- Short-circuit between signal cables
- Open-circuit in one of the signal cables
- Damaged fuse.
- Internal fault in another control module in the same part of the network.

Fault symptom[s]

- The parking heater does not operate.

SIGNAL MISSING

CHECKING FUSES

Check that the fuse for the function in question is intact.

Was a fault detected?

- **YES**

  Refer to **VERIFICATION**

- **NO**

Refer to **CHECKING THE WIRING**

CHECKING THE WIRING

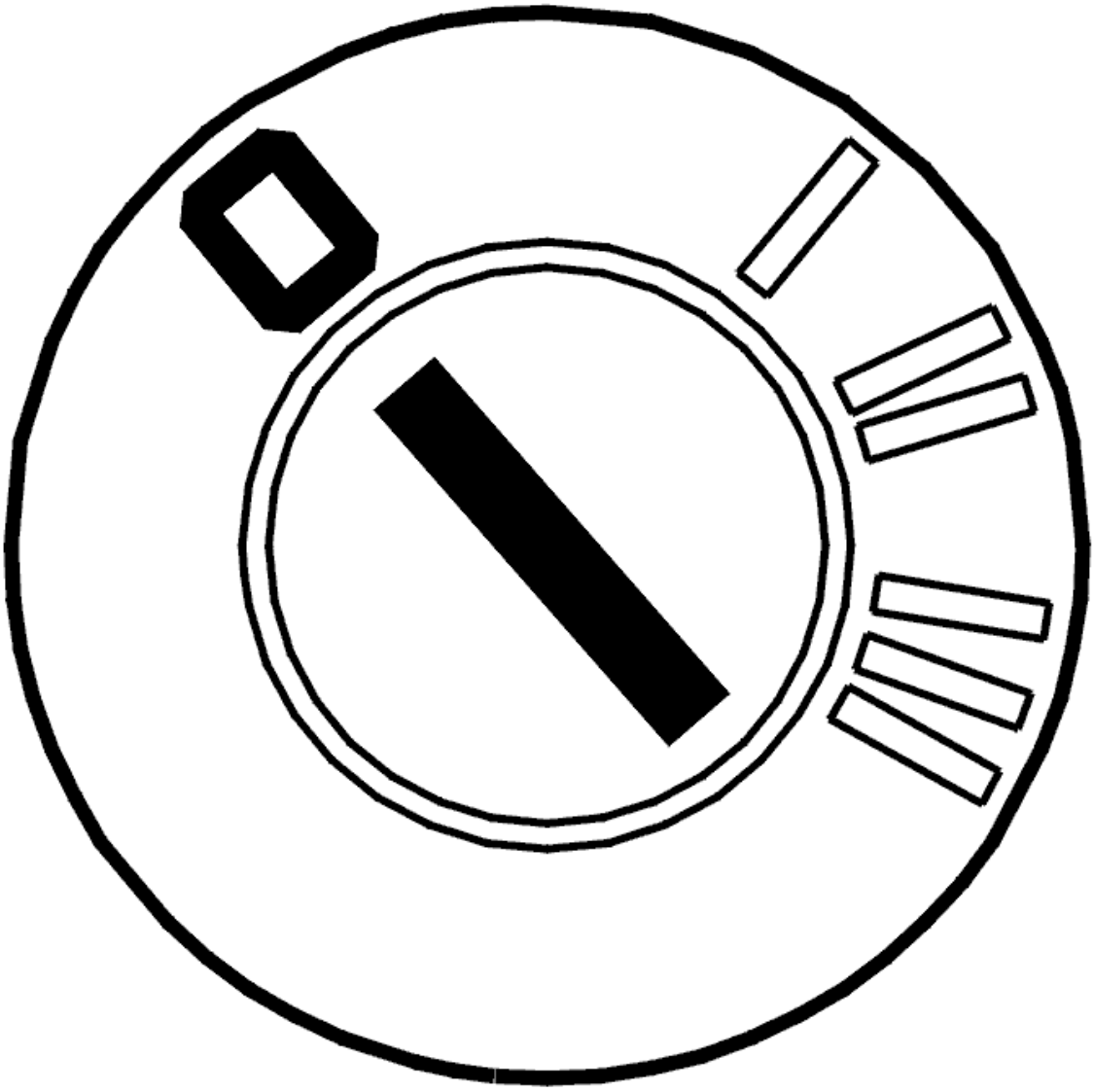

Fig. 217: Identifying Ignition OFF
Courtesy of VOLVO CARS CORPORATION

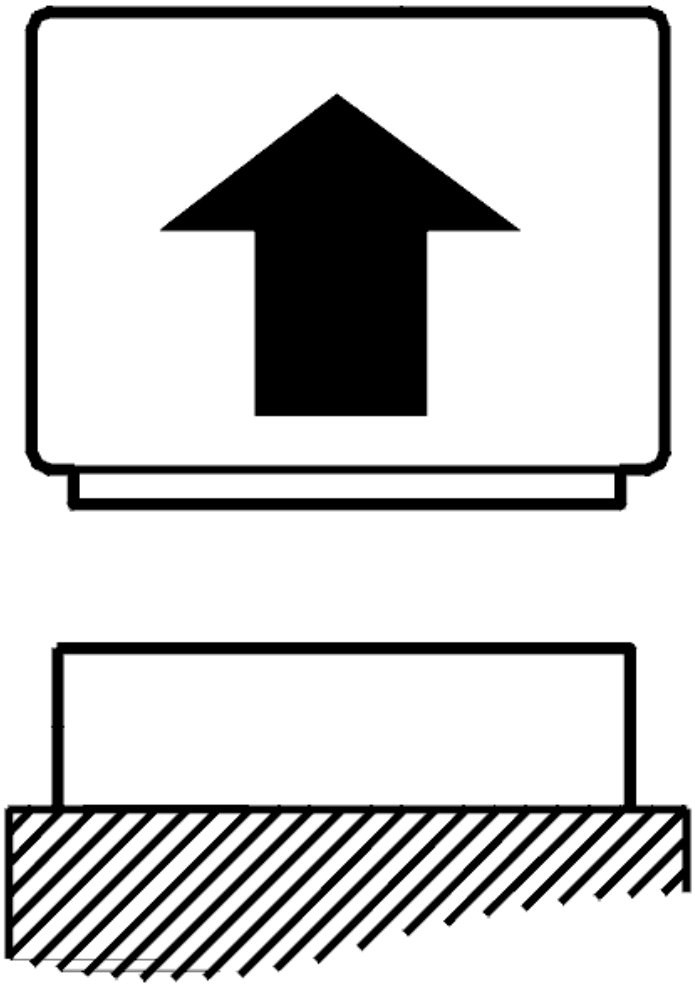

Fig. 218: Disconnecting Connector
Courtesy of VOLVO CARS CORPORATION

- Ignition off
- Disconnect central electronic module (CEM) connector C.

  The diagnostic trouble code (DTC) indicates that the communication between the combustion preheater module (CPM) and central electronic module (CEM) is not working. This may be due to a fault in the signal cable between the control modules or a damaged communication device in one or both of the control modules.

  Check the signal cable. Check for an open-circuit. Check for a short-circuit to ground.

  Take readings between central electronic module (CEM) terminal #C32 (#32) and combustion preheater module (CPM) terminal #6.

Remedy as necessary.

Other information

- see **CONNECTING THE BREAKOUT BOX**
- -2004: **SIGNAL SPECIFICATION**
- 2005-: **SIGNAL SPECIFICATION**
- see **LOCATION OF COMPONENTS**
- see **CONTROL MODULE ENGINE COOLANT HEATER, REPLACING**
- see **CHECKING WIRING AND TERMINALS**

Was a fault detected?

- **YES**

  Refer to **VERIFICATION**

- **NO**

  Refer to **REPLACING THE CONTROL MODULE**

REPLACING THE CONTROL MODULE

Try a new combustion preheater module (CPM).

Remedy as necessary.

Other information

- see **CONTROL MODULE ENGINE COOLANT HEATER, REPLACING**

- **Continue**

  Refer to **VERIFICATION**

VERIFICATION

VERIFICATION

HINT: After carrying out the repair, check that the fault has been remedied.

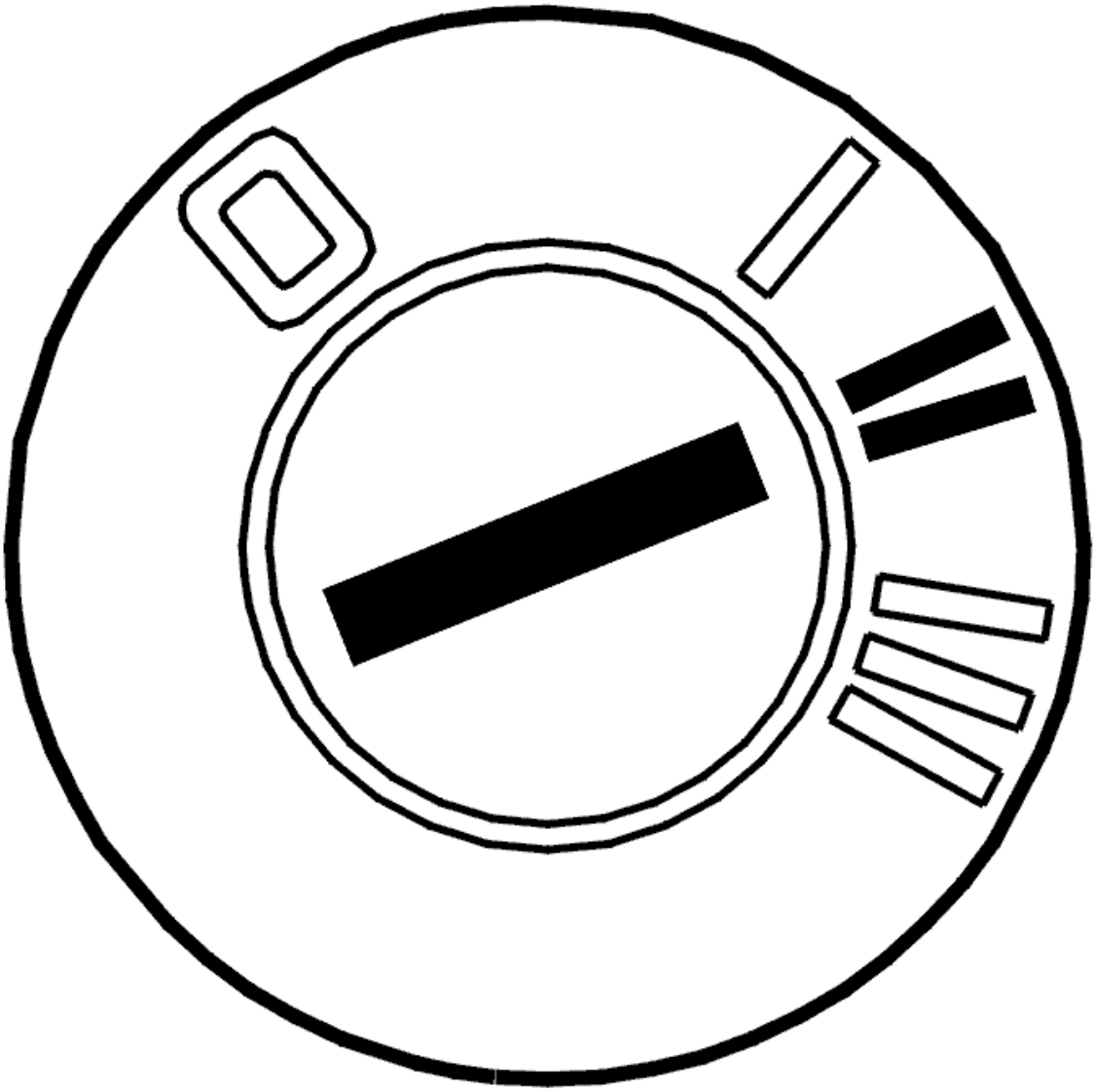

Fig. 219: Identifying Ignition ON
Courtesy of VOLVO CARS CORPORATION

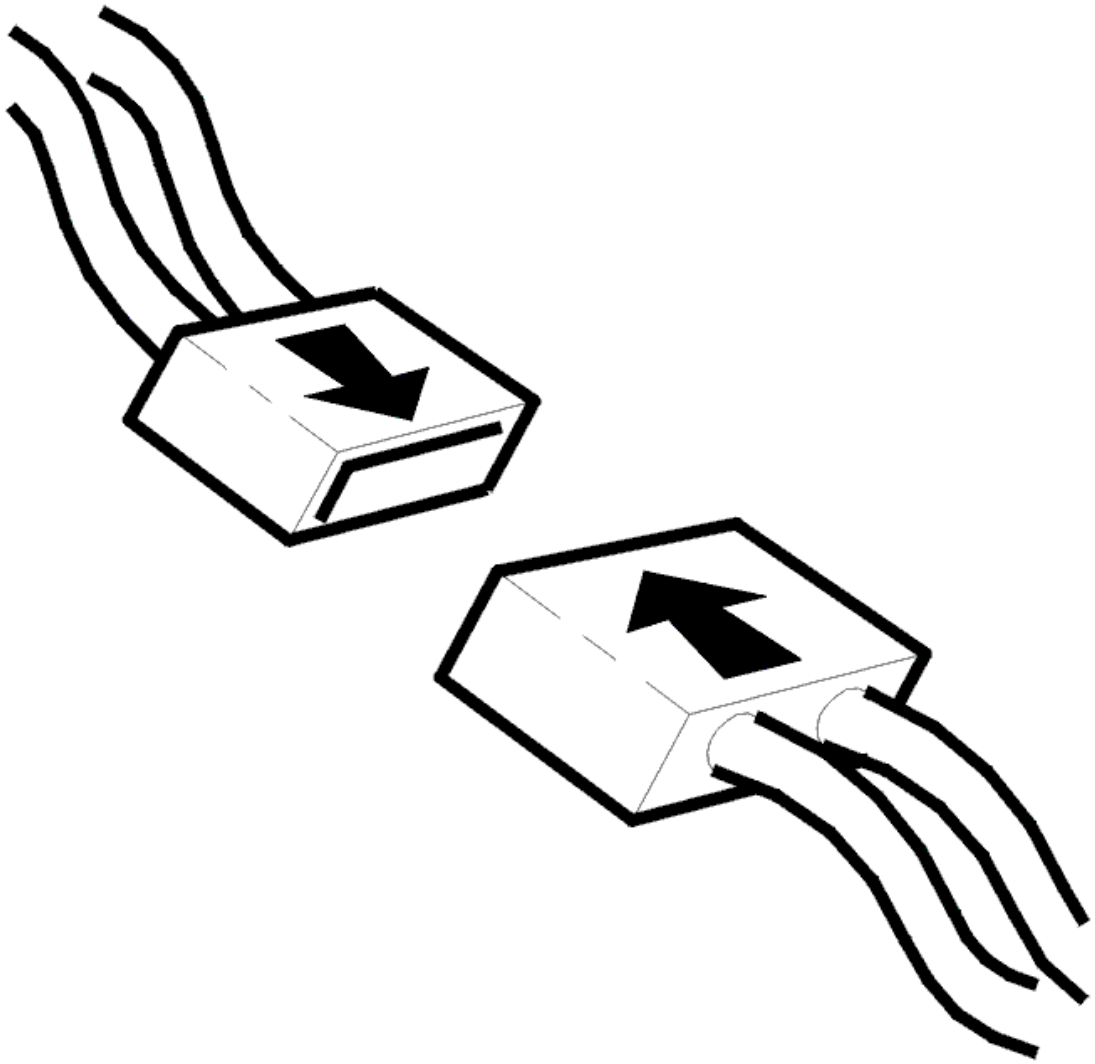

Fig. 220: Connecting Connector
Courtesy of VOLVO CARS CORPORATION

- Ignition off
- Reinstall the connectors, components etc.
- Ignition on.

  Activate the combustion preheater module (CPM).

  Check that the engine coolant heater is activated.

Is the engine coolant heater working?

- **YES**

VERIFIED: Troubleshooting has been completed.

- **NO**

  Refer to **INFORMATION**

INFORMATION

FAULT-TRACING INFORMATION

The fault should have been detected and remedied. As this is not the case fault-tracing has failed.

Exit fault-tracing for this diagnostic trouble code (DTC) or make another attempt.

CEM-DD20: LIN-BUS 2. COMMUNICATION FAULT (2005-2012)

DIAGNOSTIC TROUBLE CODE (DTC) INFORMATION CEM-DD20

Condition

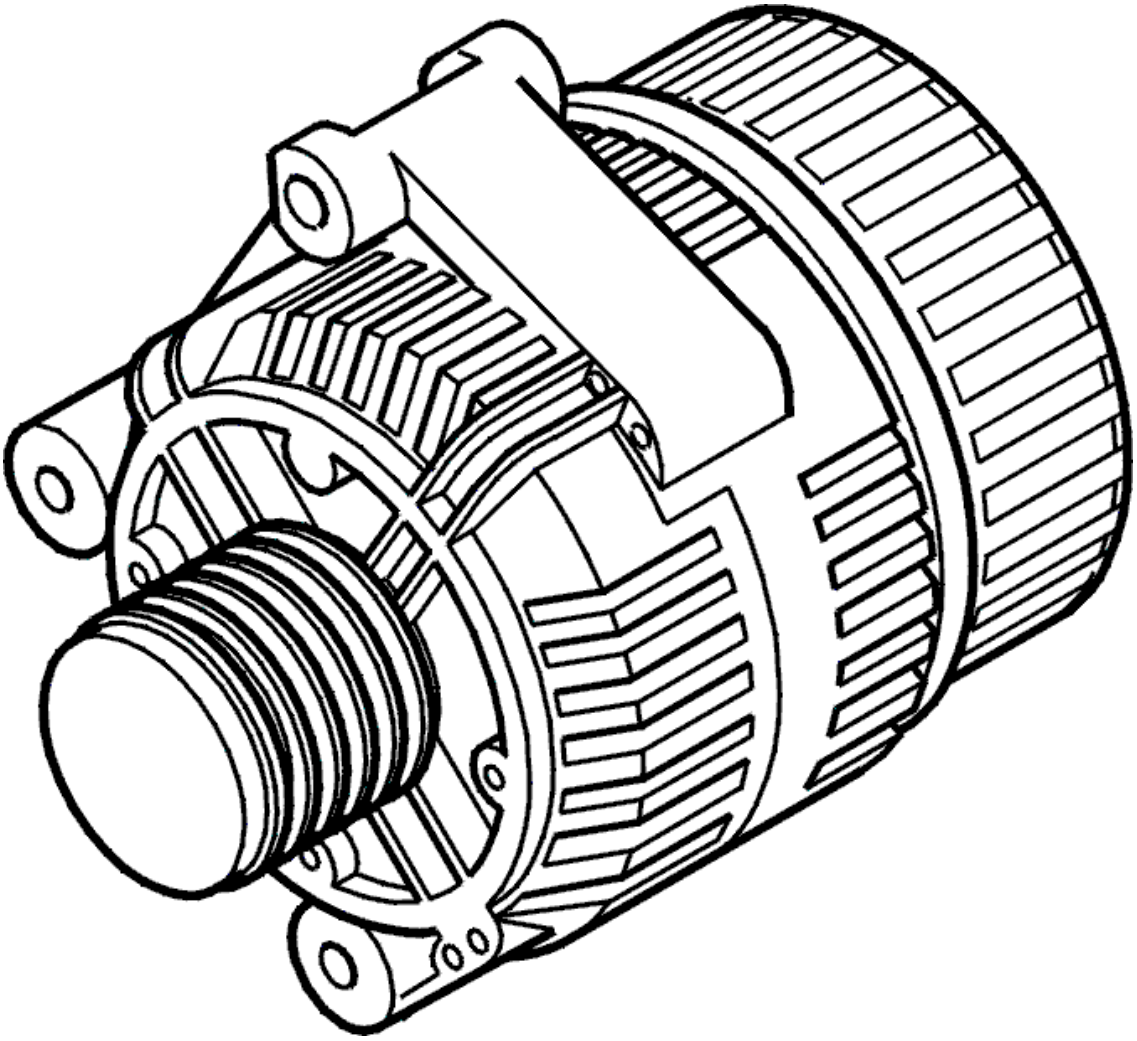

Fig. 221: Identifying Generator (GEN)
Courtesy of VOLVO CARS CORPORATION

The central electronic module (CEM) transmits and receives information via a standardized serial communication method - LIN (Local Interconnect Network). The diagnostic trouble code (DTC) is generated if the control module registers serious interference such as blocked LIN communication.

The diagnostic trouble code (DTC) can be detected when the ignition key is in position II for at least 10 seconds and with the battery voltage above 10.5 V.

Note: In the event of CEM-DDxx diagnostic trouble codes (DTCs), the central electronic module (CEM) must not be replaced as the diagnostic trouble code (DTC) indicates a short-circuit in one or more conductors in the LIN network. The central electronic module (CEM) is the only control module that monitors the voltage level in the LIN wiring. The central electronic module (CEM) is therefore the only control module that can generate diagnostic trouble codes (DTC) for a short-circuit in one of the cables to ground or supply voltage. Do not replace the central electronic module (CEM) in the event of a LIN fault unless fault-tracing has indicated that the central electronic module (CEM) has an internal fault.

Substitute Value

- None.

Possible Source

- Short-circuit between the LIN wiring
- Open-circuit in the LIN wiring
- Internal fault in another control module in the same part of the LIN network.

Fault symptom[s]

- The battery electrolyte boils when the engine is running. (Not vehicles with a V8 engine.)
- The battery discharges. (Not vehicles with a V8 engine.)
- The LED does not come on. (Only vehicles with Blind Spot Indication System, BLIS.)

COMMUNICATION FAULT

CHECKING THE WIRING

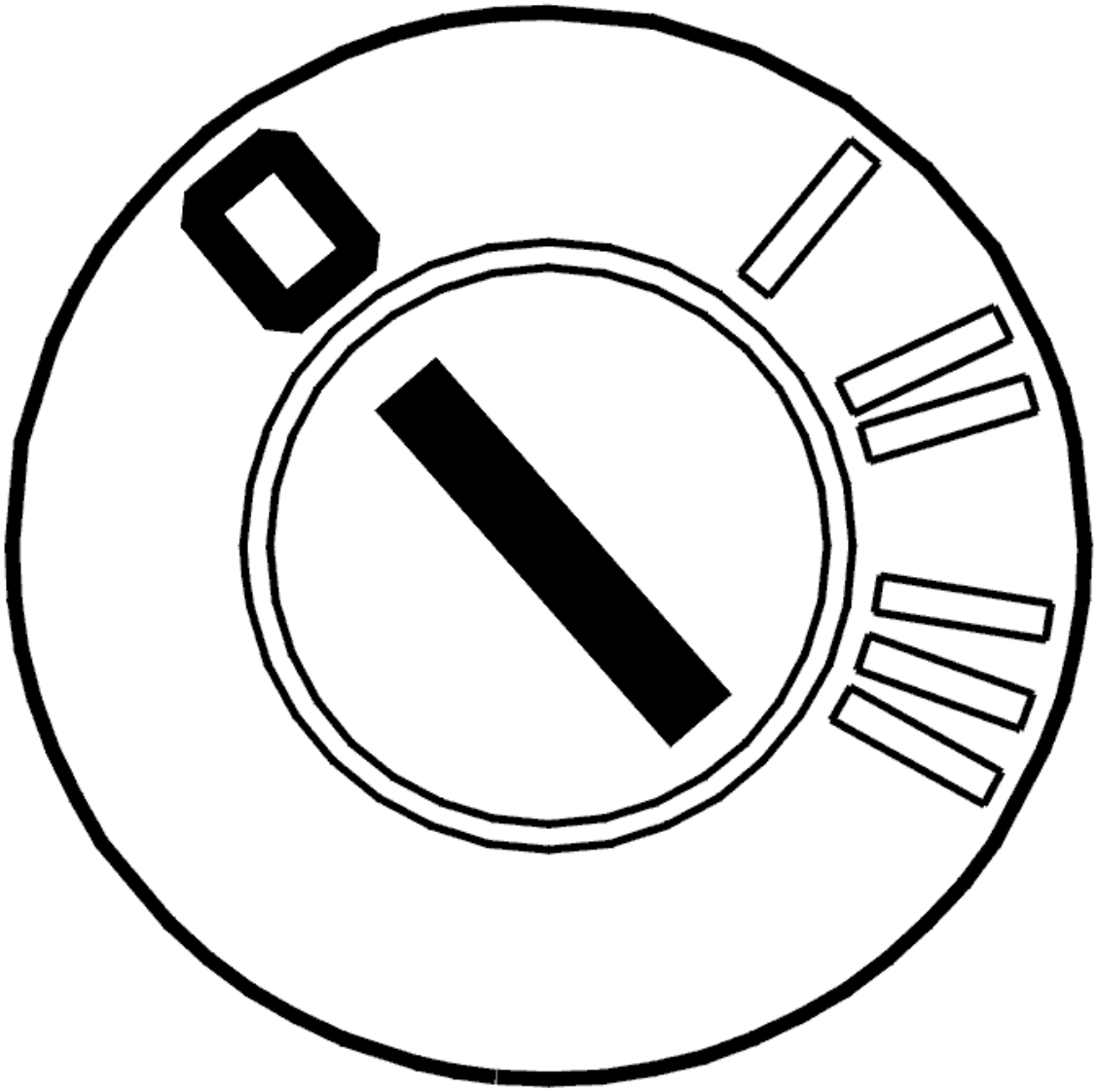

Fig. 222: Identifying Ignition OFF
Courtesy of VOLVO CARS CORPORATION

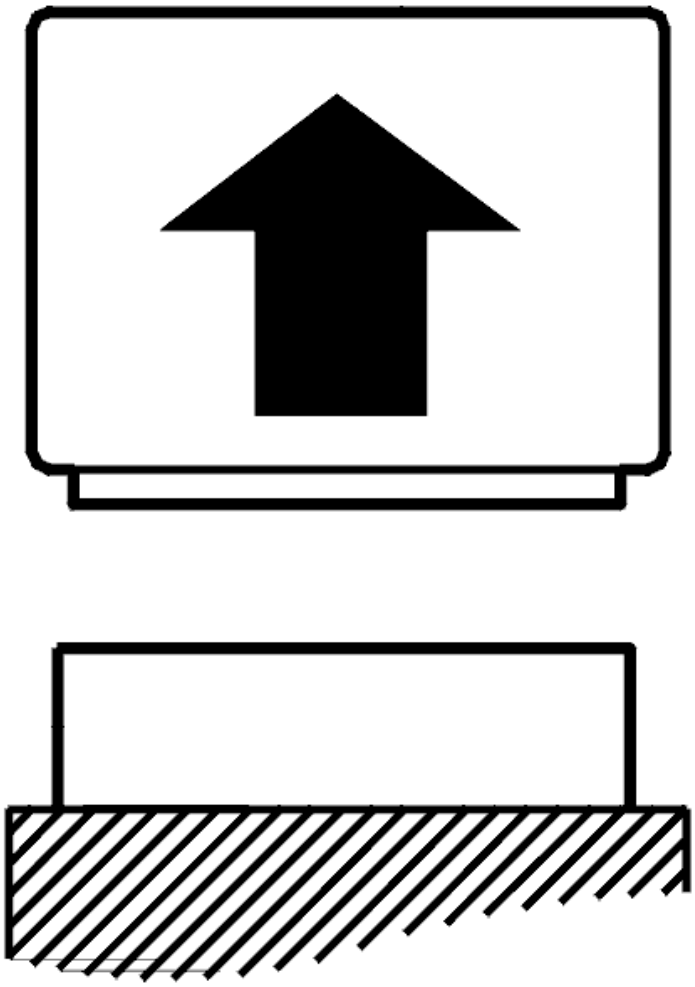

Fig. 223: Disconnecting Connector
Courtesy of VOLVO CARS CORPORATION

The diagnostic trouble code indicates that communication between the central electronic module (CEM) and the alternator control module (ACM) (not vehicles with a V8 engine), the left camera module (LCM) (optional extra) and the right camera module (RCM) (optional extra) is inoperative. This could be due to a fault in the signal lead between the control modules or a damaged communication unit in one or all of the control modules.

NOTE: **All vehicles from and including model year 2005 are equipped with a signal cable to the Left Camera Module (LCM) / Right Camera Module (RCM) even if the vehicle is not equipped with BLIS system. This means that measurements must always be carried out up to the 12-pin connector in the external doors when the diagnostic trouble code (DTC) has been detected on LIN bus 2.**

Check the signal lead between the central electronic module (CEM) and the alternator control module (ACM) for an open circuit or shorting to ground.

Take readings between:

- Central electronic module (CEM) #C16 (#16) and alternator control module (ACM) #B1.

For vehicles without the Blind Spot Indication System (BLIS)

Check the signal cable between the Central Electronic Module (CEM) and the 12-pin connector in the outer doors. Check for an open-circuit. Check for a short-circuit to ground.

Check the connector in both doors.

Take readings between:

- Central Electronic Module (CEM) D24 (#24) and the 12 pin connector in the external doors terminal #12.

For vehicles equipped with the Blind Spot Indication System (BLIS)

Check the signal lead between the central electronic module (CEM) and the left camera module (LCM) for an open circuit or shorting to ground.

Take readings between:

- Central electronic module (CEM) #D24 (#24) and left camera module (LCM) #5.

Check the signal lead between the central electronic module (CEM) and the right camera module (RCM) for an open circuit or shorting to ground.

Take readings between:

- Central electronic module (CEM) #D24 (#24) and right camera module (RCM) #5.

Also check intermediate connectors.

Remedy as necessary.

Other information

- see **CONNECTING THE BREAKOUT BOX**
- -2004: **SIGNAL SPECIFICATION**
- 2005-: **SIGNAL SPECIFICATION**
- see **LOCATION OF COMPONENTS**
- For B5xx4T, see **GENERATOR (GEN), REPLACING** .
- For B6xx4T, - 2004, see **GENERATOR (GEN), REPLACING** .
- For B6xx4T, 2005 -, see **GENERATOR (GEN), REPLACING** .
- For B8444S, 2005 -, see **GENERATOR (GEN), REPLACEMENT** .

- Change the left camera module (LCM)/right camera module (RCM), see: **REAR VIEW MIRROR, REPLACING**
- see **CHECKING WIRING AND TERMINALS**

Was a fault detected?

- **YES**

  OKAY: Troubleshooting has been completed.

- **NO**

  Refer to **CHECKING THE COMPONENT**

CHECKING THE COMPONENT

For vehicles equipped with the Blind Spot Indication System (BLIS)

The LEDs should flash three times whenever the Blind Spot Indication System (BLIS) is activated.

Switch on the ignition to check the right and left sides.

If any LED fails to flash three times on activation, try changing the control module on that side.

If both LEDs flash three times on activation, try changing the alternator control module (ACM)

For vehicles without the Blind Spot Indication System (BLIS)

Try changing the alternator control module (ACM).

Select the desired alternative:

1. Change the alternator control module (ACM).

   Refer to **REPLACING THE CONTROL MODULE**

2. Change the left camera module (LCM) / right camera module (RCM).

   Refer to **REPLACING THE CONTROL MODULE**

REPLACING THE CONTROL MODULE

Try a new alternator control module (ACM).

Remedy as necessary.

Other information

- For B5xx4T, see **GENERATOR (GEN), REPLACING** .
- For B6xx4T, - 2004, see **GENERATOR (GEN), REPLACING** .
- For B6xx4T, 2005 -, see **GENERATOR (GEN), REPLACING** .
- For B8444S, 2005 -, see **GENERATOR (GEN), REPLACEMENT** .

- **Continue**

  Refer to **VERIFICATION**

REPLACING THE CONTROL MODULE

Try changing the control module on the side where the LED failed to flash.

Remedy as necessary.

Other information

- Change the control module, see: **REAR VIEW MIRROR, REPLACING**

- **Continue**

  Refer to **VERIFICATION**

INFORMATION

FAULT-TRACING INFORMATION

The fault should have been detected and remedied. As this is not the case fault-tracing has failed.

Exit fault-tracing for this diagnostic trouble code (DTC) or make another attempt.

VERIFICATION

VERIFICATION

HINT: After carrying out the repair, check that the fault has been remedied.

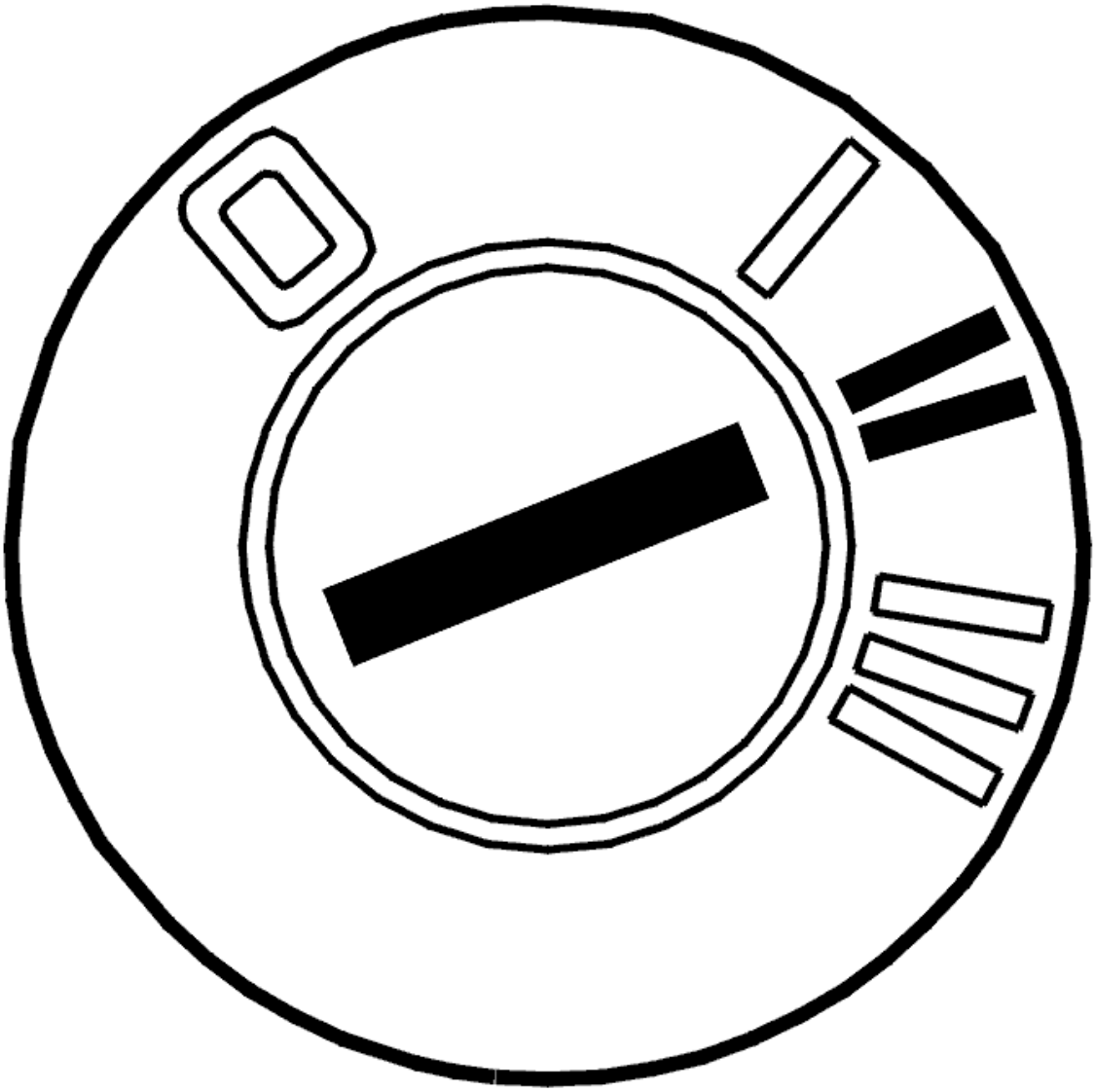

Fig. 224: Identifying Ignition ON
Courtesy of VOLVO CARS CORPORATION

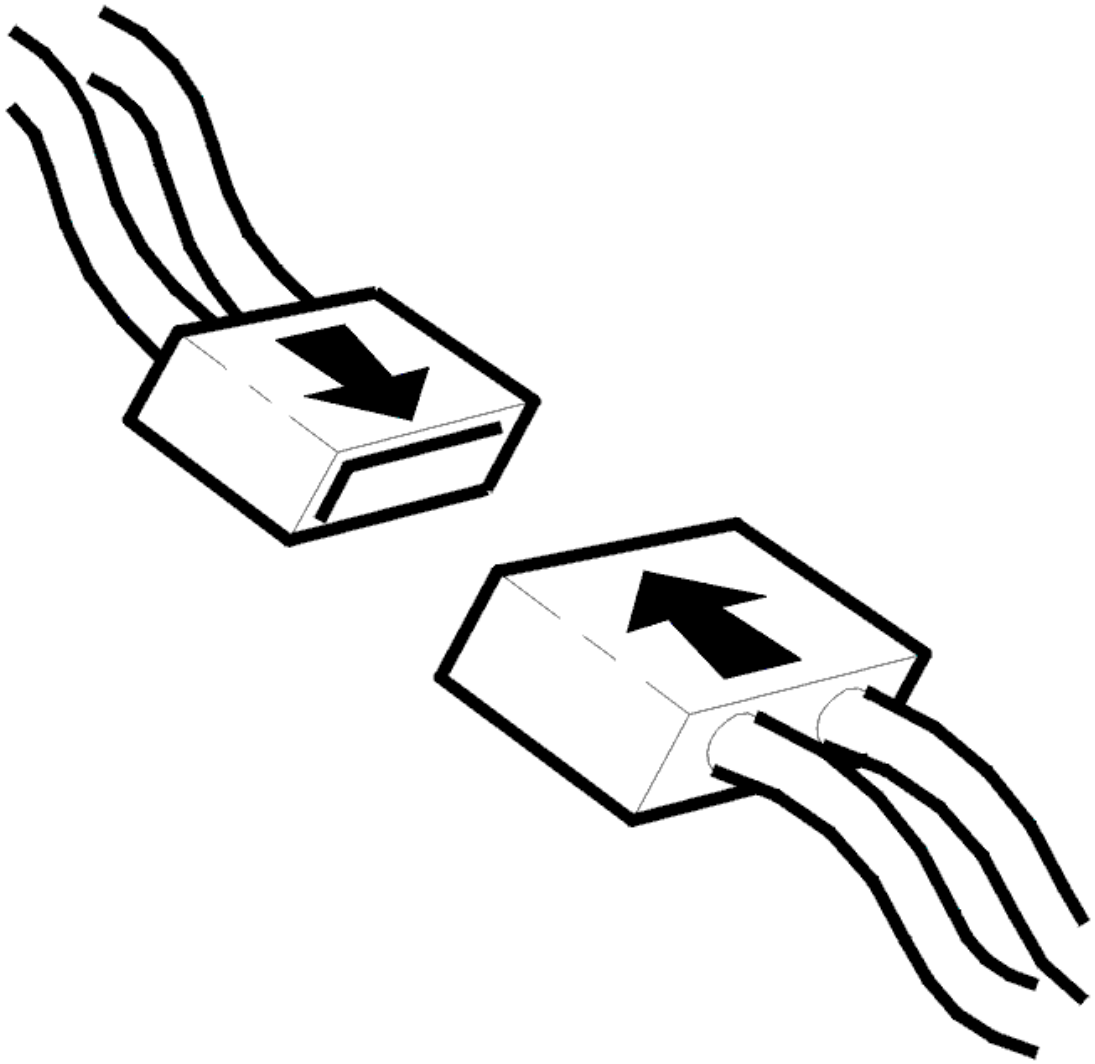

Fig. 225: Connecting Connector
Courtesy of VOLVO CARS CORPORATION

- Ignition off
- Reinstall the connectors, components etc.
- Ignition on
- Start the engine and run it to normal operating temperature.

  Use the VCT2000 (or appropriate scan tool) to read off the status of the generator (GEN).

  Check that the read out shows OK.

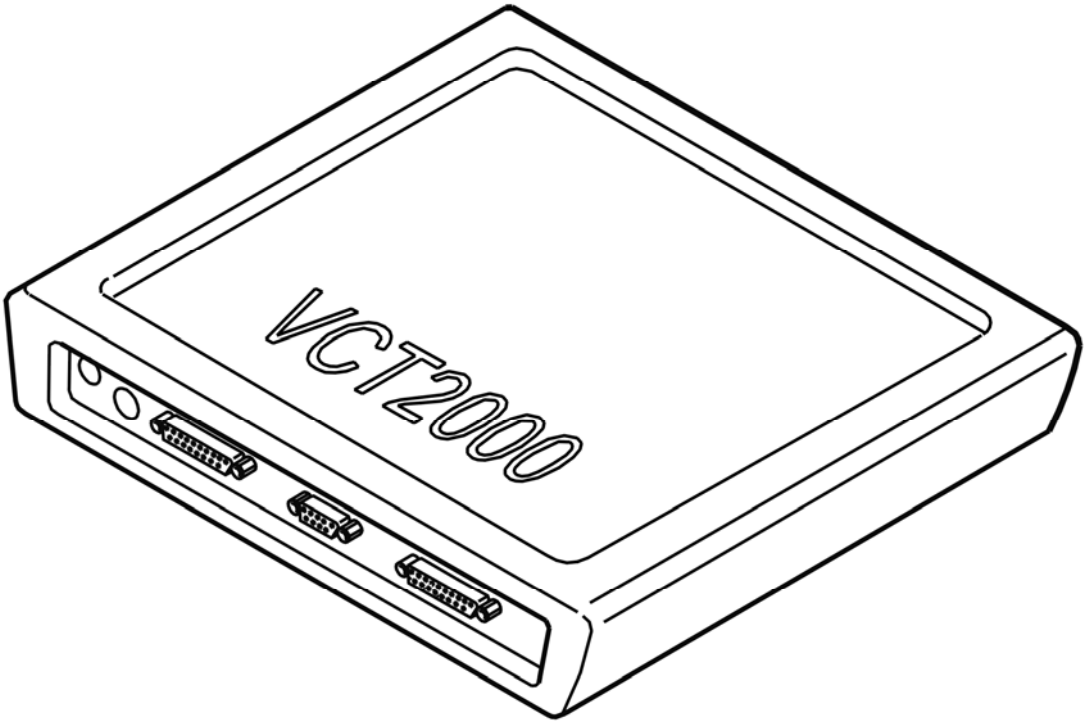

Fig. 226: Identifying VCT2000 Diagnostic Tool Symbol In VIDA
Courtesy of VOLVO CARS CORPORATION

Is the status given as OK?

- **YES**

  VERIFIED: Troubleshooting has been completed.

- **NO**

  Refer to **INFORMATION**

VERIFICATION

VERIFICATION

HINT: After carrying out the repair, check that the fault has been remedied.

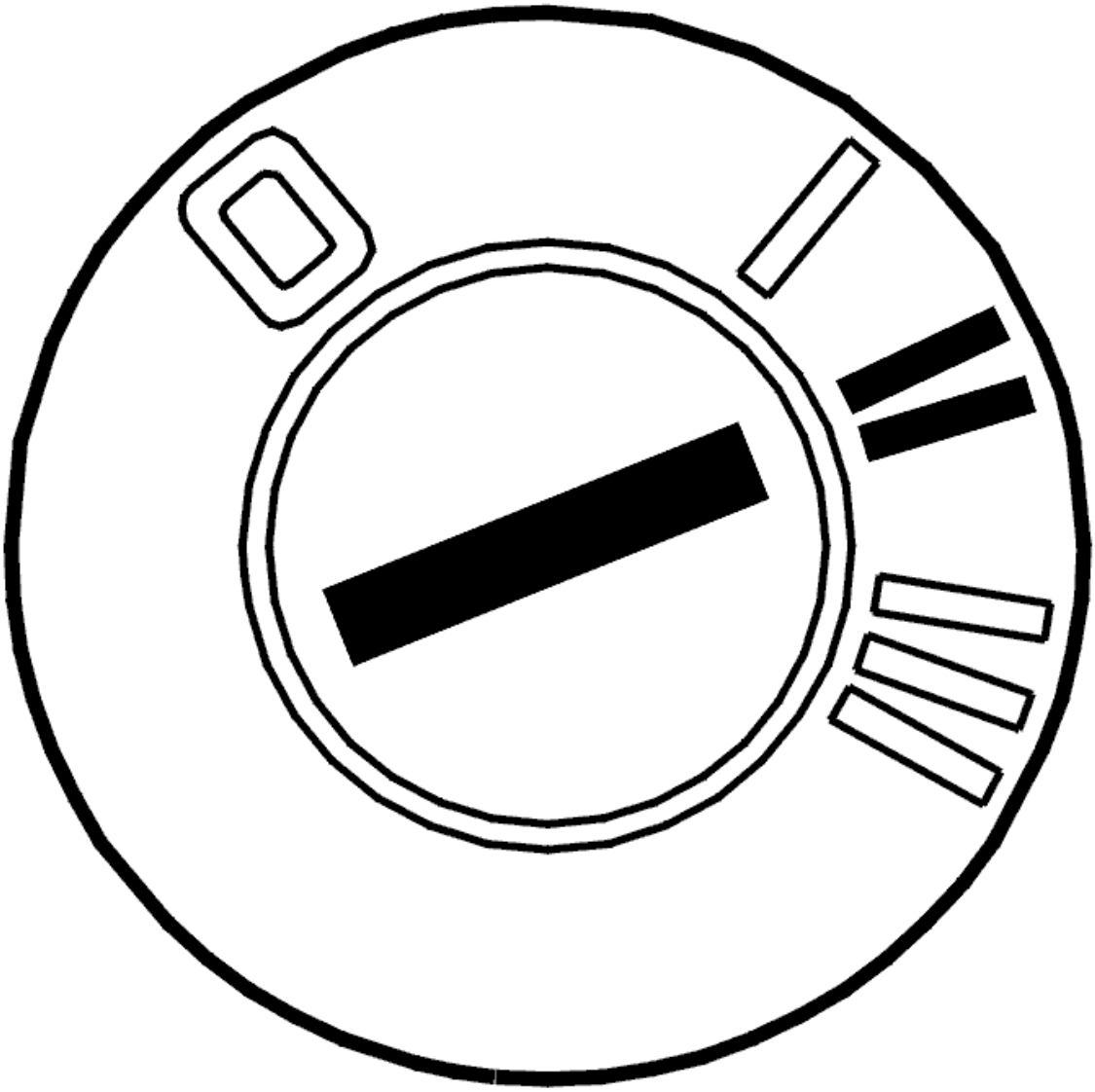

Fig. 227: Identifying Ignition ON
Courtesy of VOLVO CARS CORPORATION

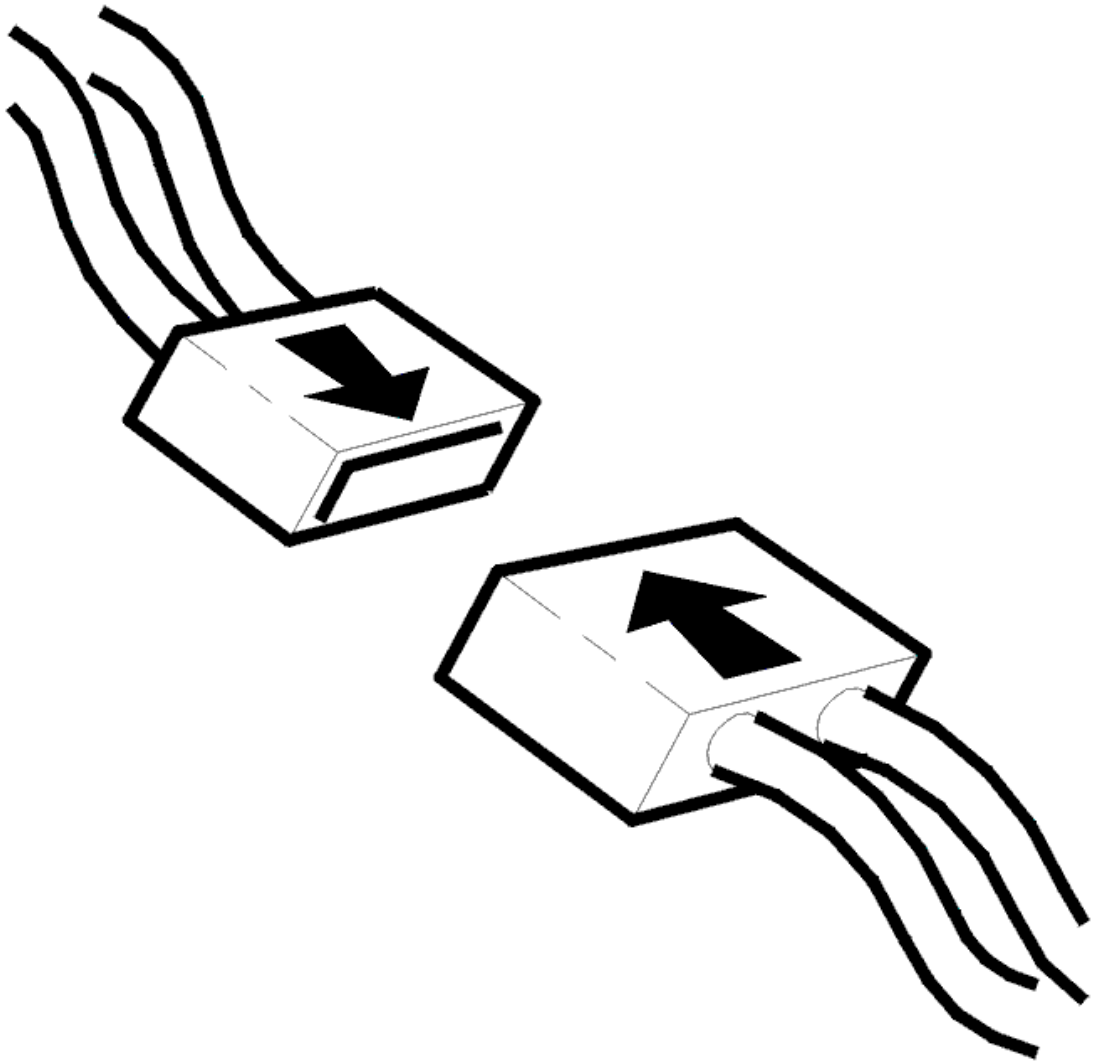

Fig. 228: Connecting Connector
Courtesy of VOLVO CARS CORPORATION

- Ignition off
- Reinstall the connectors, components etc.
- Ignition on

  Check that the light emitting diodes flash three times when the system is activated.

Did the light emitting diodes flash three times?

- **YES**

  VERIFIED: Troubleshooting has been completed.

- **NO**

  Refer to **INFORMATION**

CEM-DD21: LIN-BUS 2. NO SIGNAL (2005-2012)

DIAGNOSTIC TROUBLE CODE (DTC) INFORMATION CEM-DD21

Condition

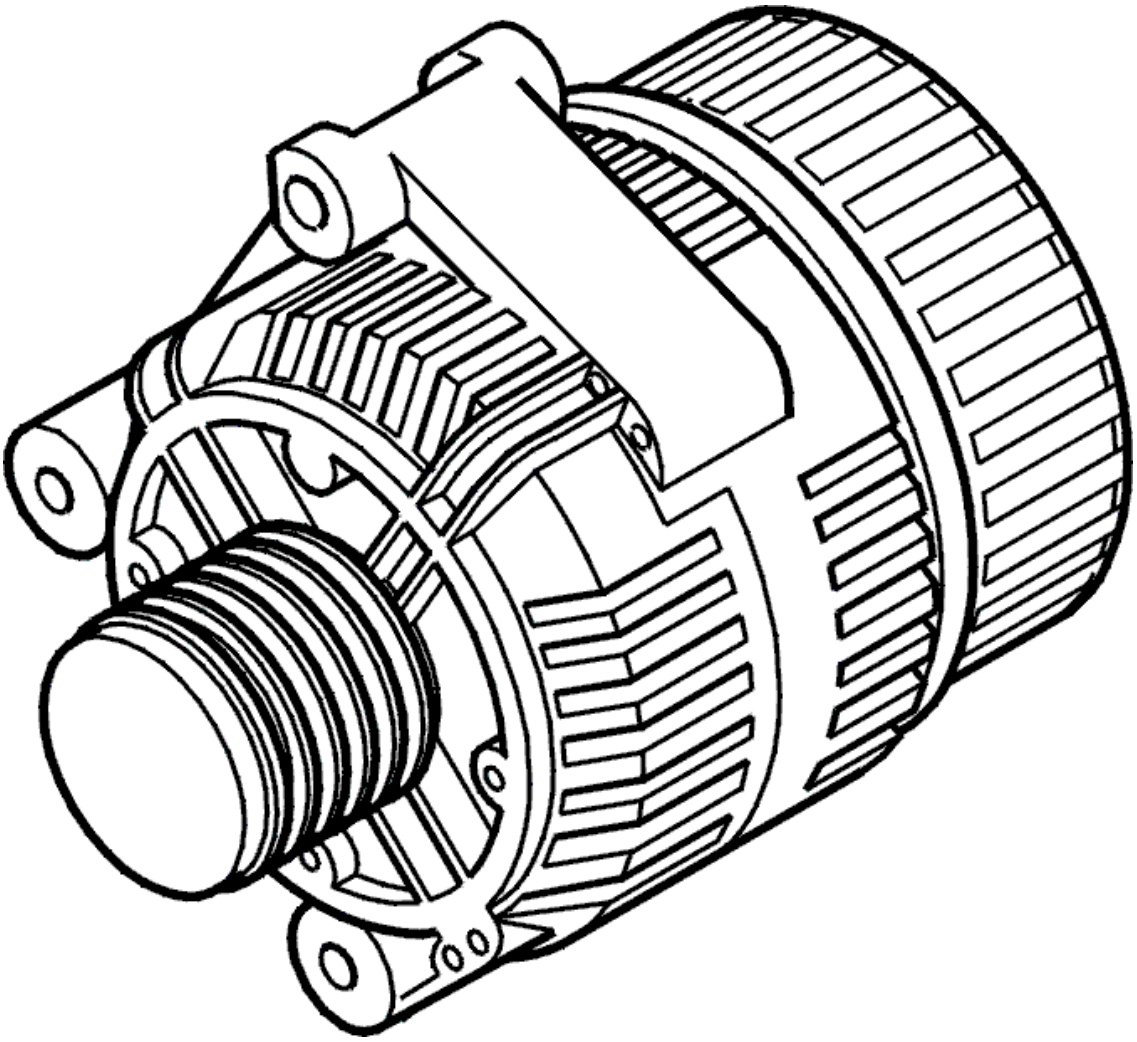

Fig. 229: Identifying Generator (GEN)
Courtesy of VOLVO CARS CORPORATION

The central electronic module (CEM) transmits and receives information via a standardized serial communication method - LIN (Local Interconnect Network). The diagnostic trouble code (DTC) is generated if the control module registers serious interference such as blocked LIN communication.

The diagnostic trouble code (DTC) can be detected when the ignition key is in position II for at least 10 seconds

and the battery voltage exceeds 10.5 V.

Note: In the event of CEM-DDxx diagnostic trouble codes (DTCs), the central electronic module (CEM) must not be replaced as the diagnostic trouble code (DTC) indicates a short-circuit in one or more conductors in the LIN network. The central electronic module (CEM) is the only control module that monitors the voltage level in the LIN wiring. The central electronic module (CEM) is therefore the only control module that can generate a diagnostic trouble code (DTC) for a short-circuit in one of the cables to ground or supply voltage. Do not replace the central electronic module (CEM) in the event of a LIN fault unless fault-tracing has indicated that the central electronic module (CEM) has an internal fault.

Substitute Value

- None.

Possible Source

- Short-circuit between the LIN wiring
- Open-circuit in the LIN wiring
- Internal fault in another control module in the same part of the LIN network.

Fault symptom[s]

- The battery electrolyte boils when the engine is running. (Not vehicles with a V8 engine.)
- The battery discharges. (Not vehicles with a V8 engine.)
- The LED does not come on. (Only vehicles with Blind Spot Indication System, BLIS.)

SIGNAL MISSING

CHECKING THE WIRING

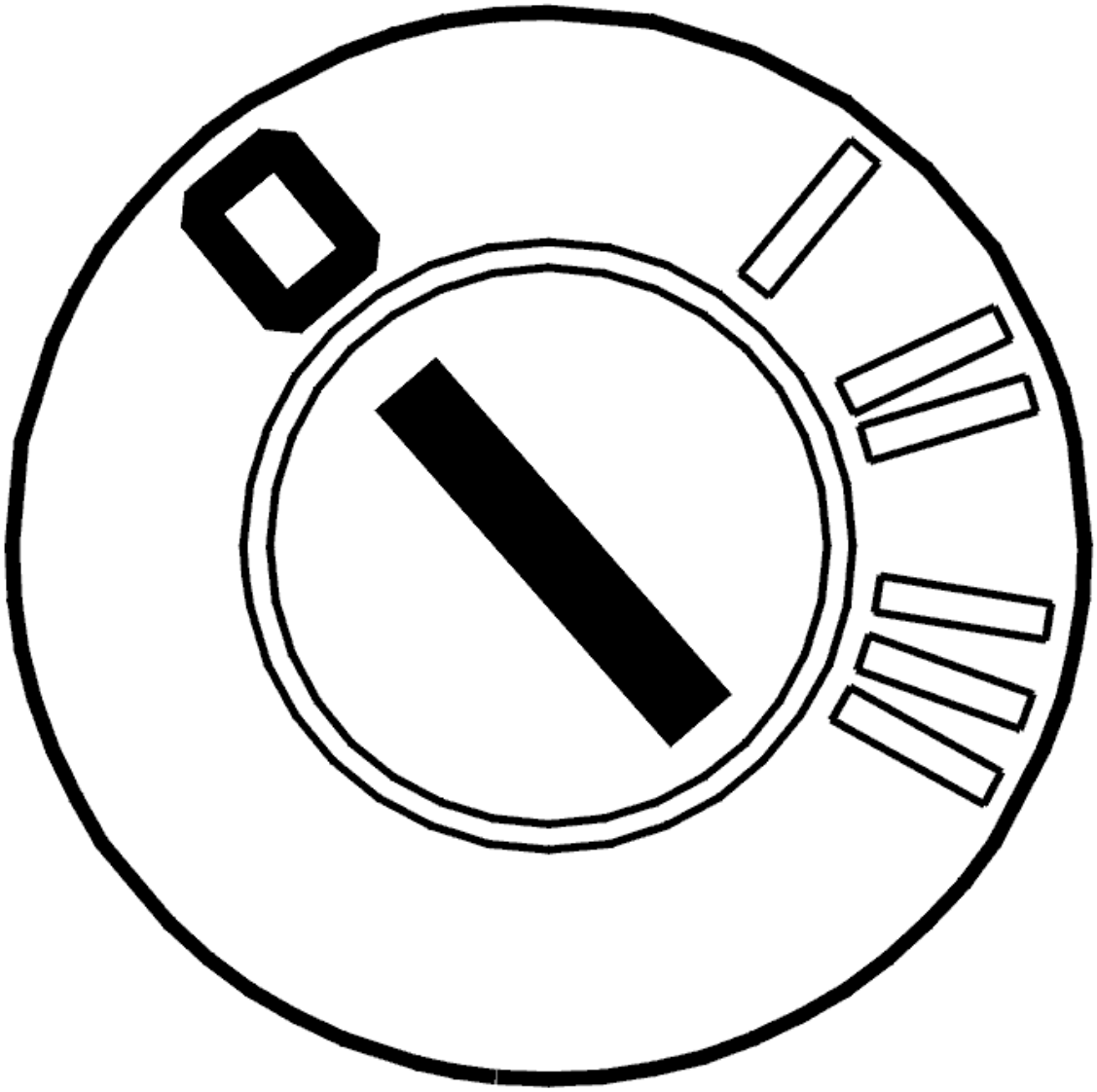

Fig. 230: Identifying Ignition OFF
Courtesy of VOLVO CARS CORPORATION

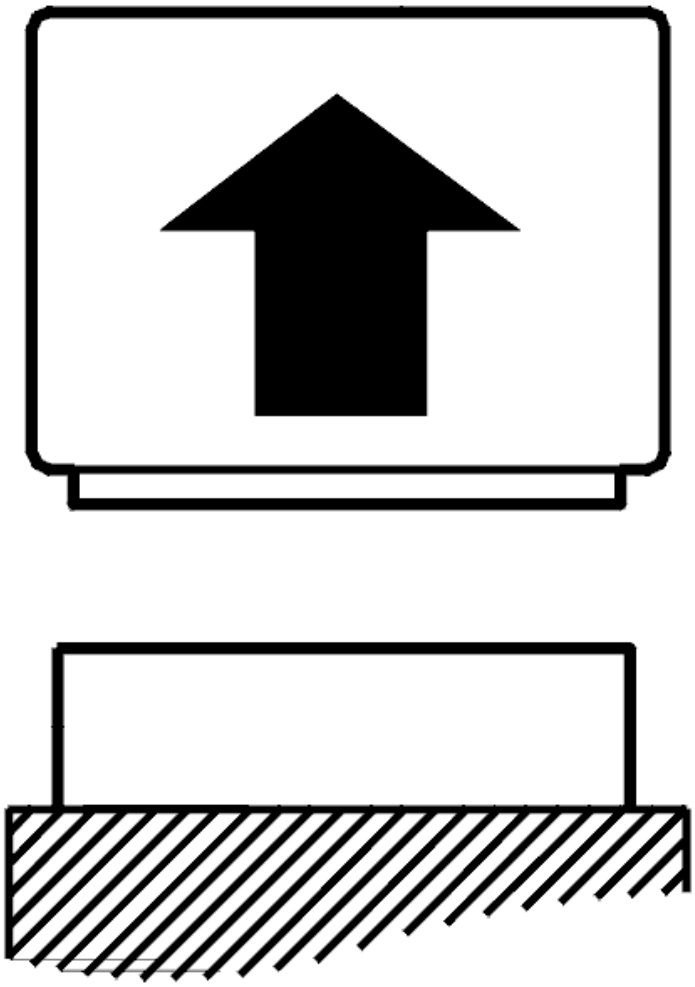

Fig. 231: Disconnecting Connector
Courtesy of VOLVO CARS CORPORATION

The diagnostic trouble code indicates that communication between the central electronic module (CEM) and the alternator control module (ACM) (not vehicles with a V8 engine), the left camera module (LCM) (optional extra) and the right camera module (RCM) (optional extra) is inoperative. This could be due to a fault in the signal lead between the control modules or a damaged communication unit in one or all of the control modules.

NOTE: **All vehicles from and including model year 2005 are equipped with a signal cable to the Left Camera Module (LCM) / Right Camera Module (RCM) even if the vehicle is not equipped with BLIS system. This means that measurements must always be carried out up to the 12-pin connector in the external doors when the diagnostic trouble code (DTC) has been detected on LIN bus 2.**

Check the signal lead between the central electronic module (CEM) and the alternator control module (ACM) for an open circuit or shorting to ground.

Take readings between:

- Central electronic module (CEM) #C16 (#16) and alternator control module (ACM) #B1.

For vehicles without the Blind Spot Indication System (BLIS)

Check the signal cable between the Central Electronic Module (CEM) and the 12-pin connector in the outer doors. Check for an open-circuit. Check for a short-circuit to ground.

Check the connector in both doors.

Take readings between:

- Central Electronic Module (CEM) D24 (#24) and the 12 pin connector in the external doors terminal #12.

For vehicles equipped with the Blind Spot Indication System (BLIS)

Check the signal lead between the central electronic module (CEM) and the left camera module (LCM) for an open circuit or shorting to ground.

Take readings between:

- Central electronic module (CEM) #D24 (#24) and left camera module (LCM) #5.

Check the signal lead between the central electronic module (CEM) and the right camera module (RCM) for an open circuit or shorting to ground.

Take readings between:

- Central electronic module (CEM) #D24 (#24) and right camera module (RCM) #5.

Also check intermediate connectors.

Remedy as necessary.

Other information

- see **CONNECTING THE BREAKOUT BOX**
- -2004: **SIGNAL SPECIFICATION**
- 2005-: **SIGNAL SPECIFICATION**
- see **LOCATION OF COMPONENTS**
- For B5xx4T, see **GENERATOR (GEN), REPLACING** .
- For B6xx4T, - 2004, see **GENERATOR (GEN), REPLACING** .
- For B6xx4T, 2005 -, see **GENERATOR (GEN), REPLACING** .
- For B8444S, 2005 -, see **GENERATOR (GEN), REPLACEMENT** .

- Change the left camera module (LCM)/right camera module (RCM), see: **REAR VIEW MIRROR, REPLACING**
- see **CHECKING WIRING AND TERMINALS**

Was a fault detected?

- **YES**

  OKAY: Troubleshooting has been completed.

- **NO**

  Refer to **CHECKING THE COMPONENT**

CHECKING THE COMPONENT

For vehicles equipped with the Blind Spot Indication System (BLIS)

The LEDs should flash three times whenever the Blind Spot Indication System (BLIS) is activated.

Switch on the ignition to check the right and left sides.

If any LED fails to flash three times on activation, try changing the control module on that side.

If both LEDs flash three times on activation, try changing the alternator control module (ACM).

For vehicles without the Blind Spot Indication System (BLIS)

Try changing the alternator control module (ACM).

Select the desired alternative:

1. Change the alternator control module (ACM).

   Refer to **REPLACING THE CONTROL MODULE**

2. Change the left camera module (LCM) / right camera module (RCM).

   Refer to **REPLACING THE CONTROL MODULE**

REPLACING THE CONTROL MODULE

Try a new alternator control module (ACM).

Remedy as necessary.

Other information

- For B5xx4T, see **GENERATOR (GEN), REPLACING** .
- For B6xx4T, - 2004, see **GENERATOR (GEN), REPLACING** .
- For B6xx4T, 2005 -, see **GENERATOR (GEN), REPLACING** .
- For B8444S, 2005 -, see **GENERATOR (GEN), REPLACEMENT** .

- **Continue**

  Refer to **VERIFICATION**

REPLACING THE CONTROL MODULE

Try changing the control module on the side where the LED failed to flash.

Remedy as necessary.

Other information

- Change the control module, see: **REAR VIEW MIRROR, REPLACING**

- **Continue**

  Refer to **VERIFICATION**

INFORMATION

FAULT-TRACING INFORMATION

The fault should have been detected and remedied. As this is not the case fault-tracing has failed.

Exit fault-tracing for this diagnostic trouble code (DTC) or make another attempt.

VERIFICATION

VERIFICATION

HINT: After carrying out the repair, check that the fault has been remedied.

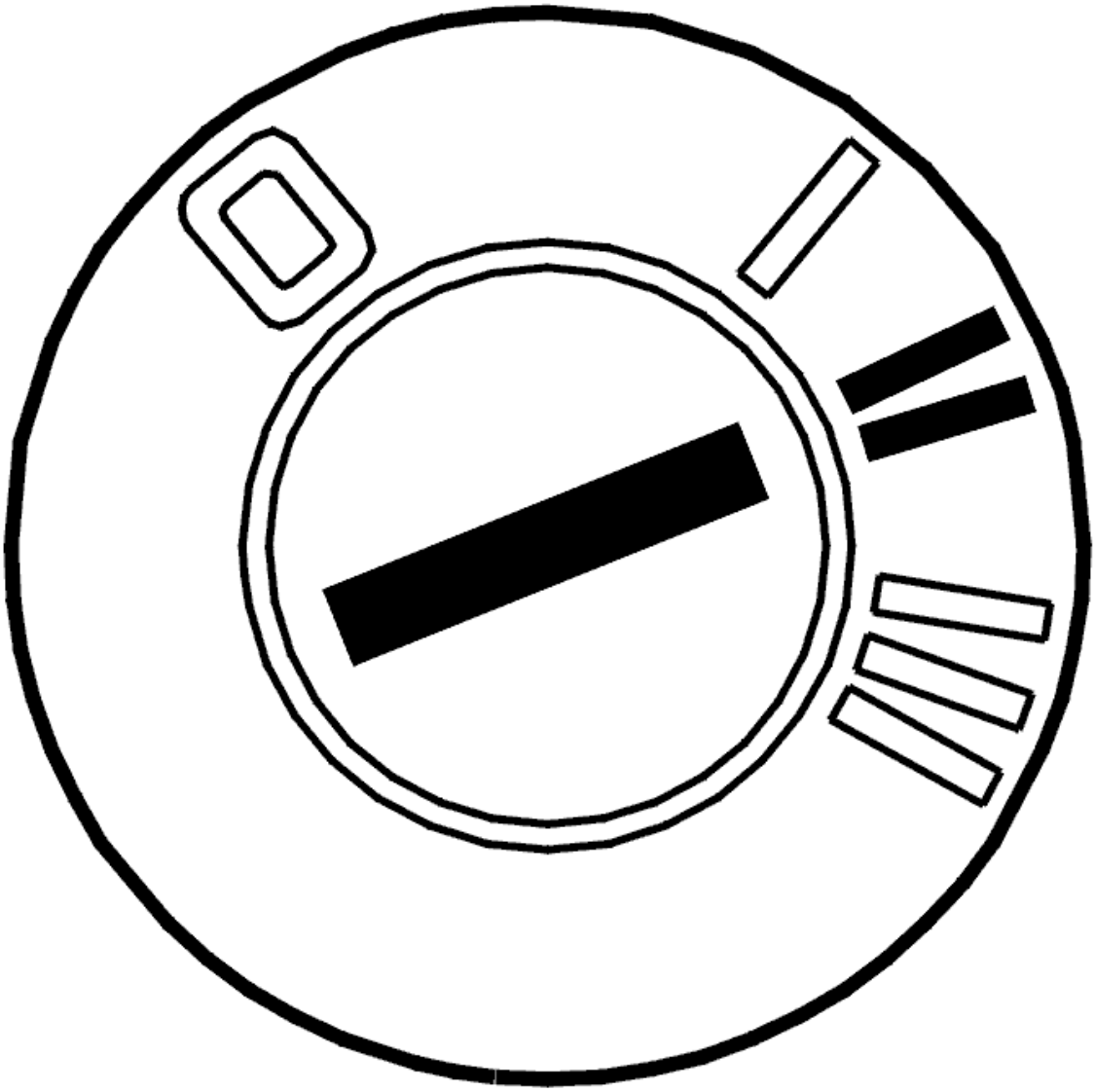

Fig. 232: Identifying Ignition ON
Courtesy of VOLVO CARS CORPORATION

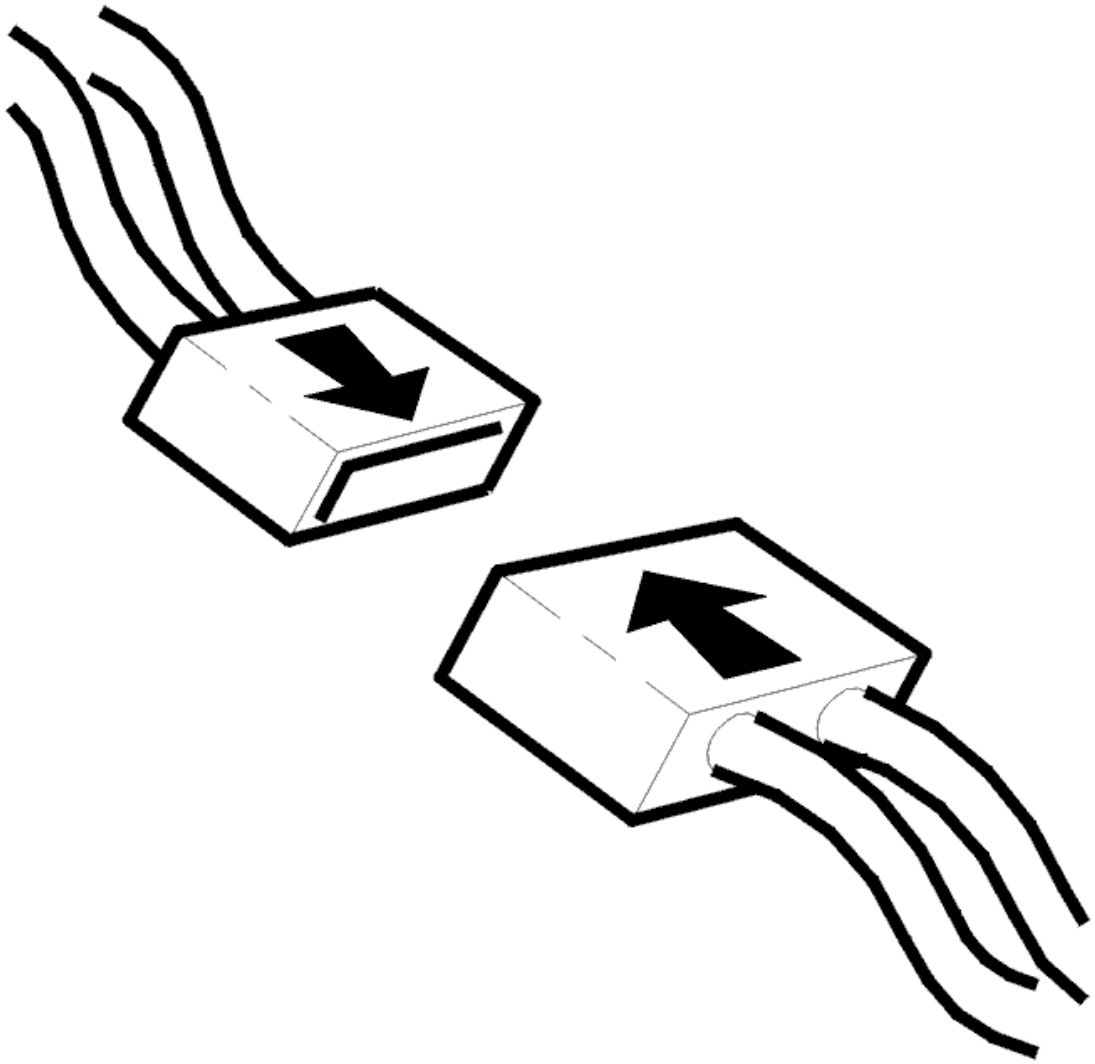

Fig. 233: Connecting Connector
Courtesy of VOLVO CARS CORPORATION

- Ignition off
- Reinstall the connectors, components etc.
- Ignition on
- Start the engine and run it to normal operating temperature.

  Use the VCT2000 (or appropriate scan tool) to read off the status of the generator (GEN).

  Check that the read out shows OK.

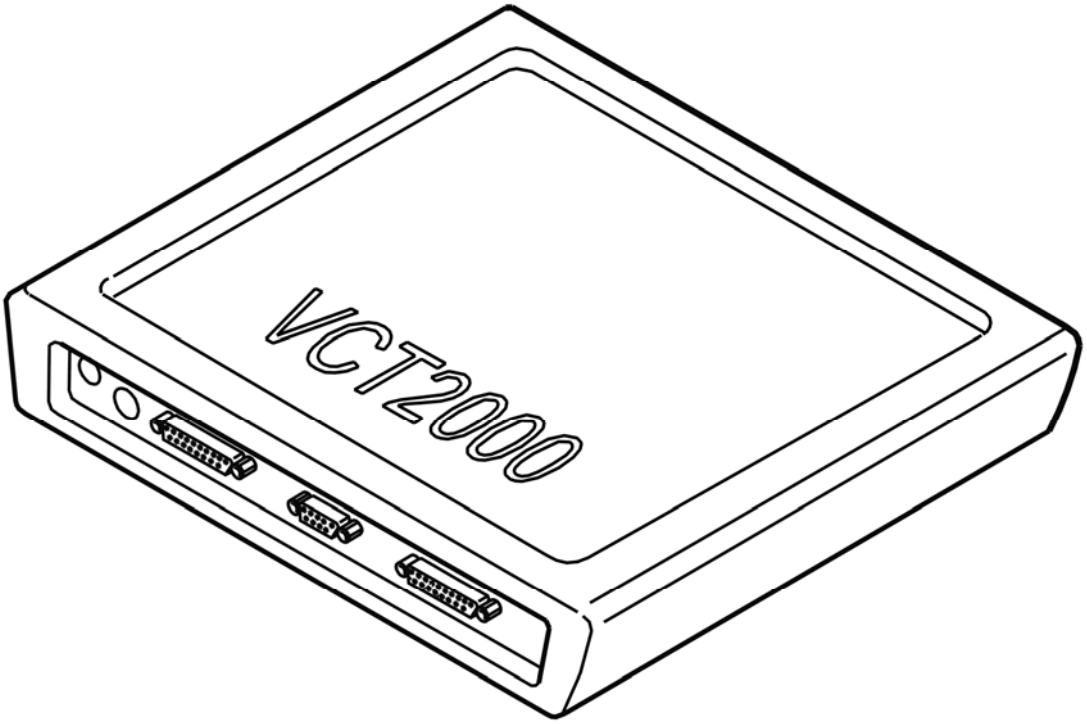

Fig. 234: Identifying VCT2000 Diagnostic Tool Symbol In VIDA
Courtesy of VOLVO CARS CORPORATION

Is the status given as OK?

- **YES**

  VERIFIED: Troubleshooting has been completed.

- **NO**

  Refer to **INFORMATION**

VERIFICATION

VERIFICATION

HINT: After carrying out the repair, check that the fault has been remedied.

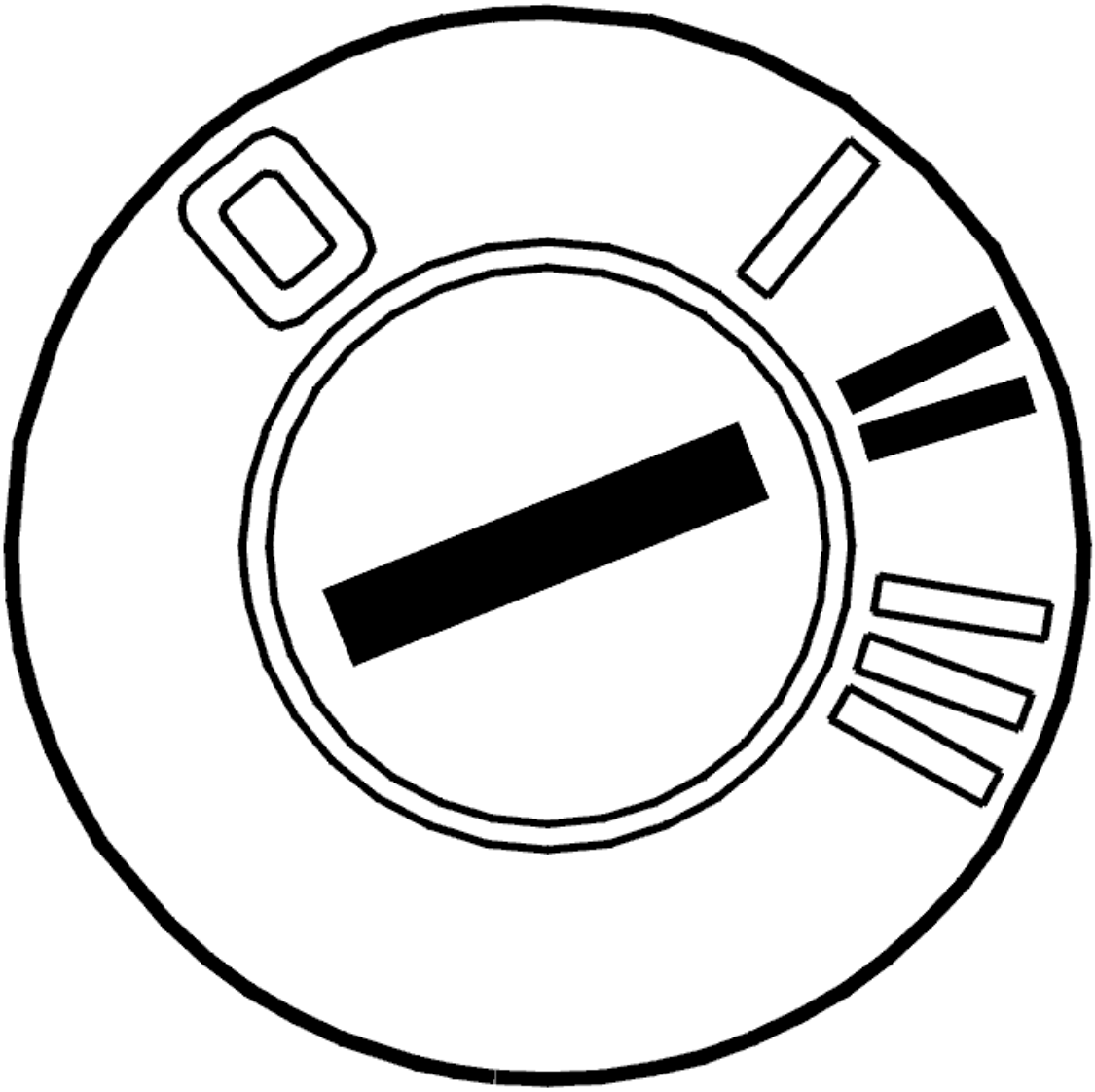

Fig. 235: Identifying Ignition ON
Courtesy of VOLVO CARS CORPORATION

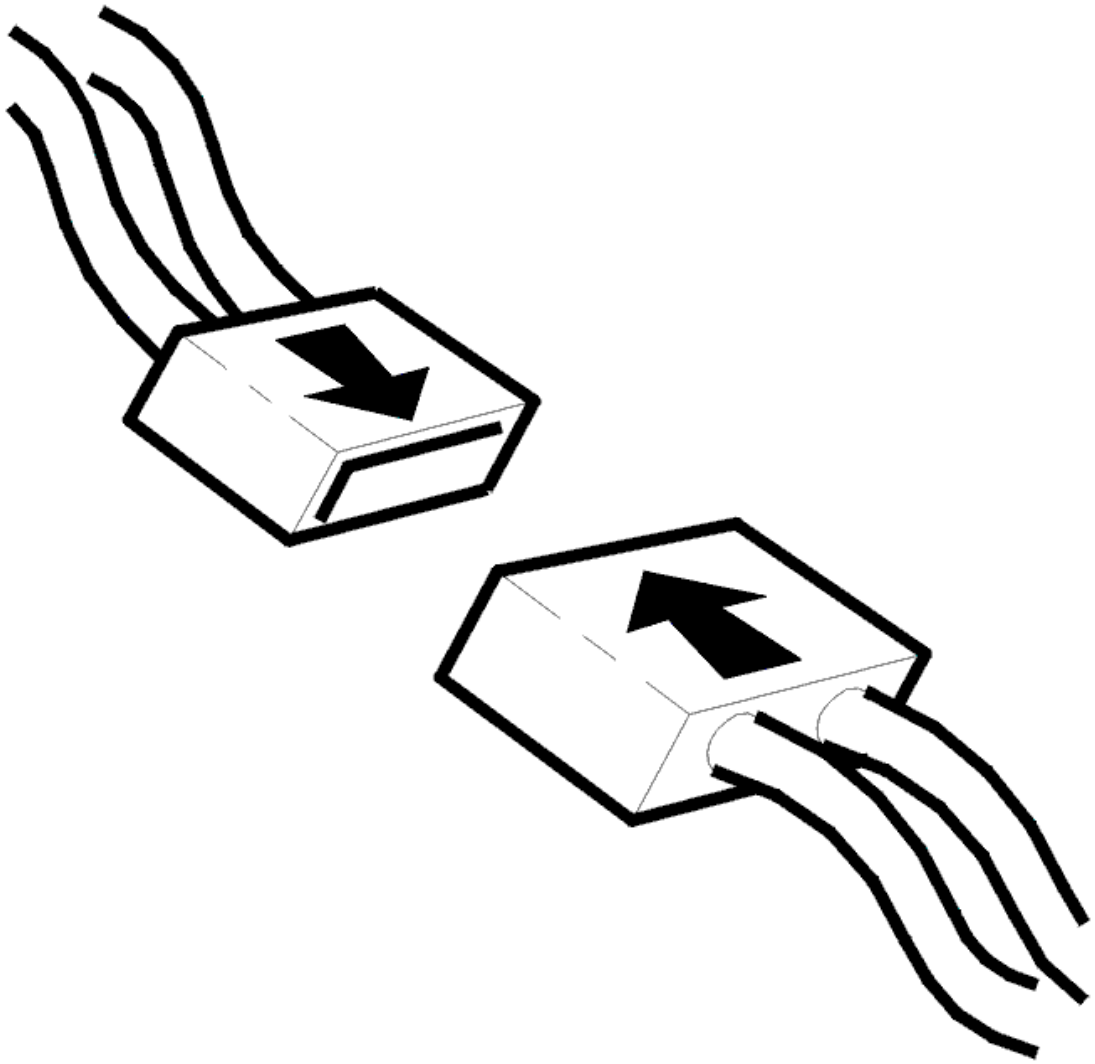

Fig. 236: Connecting Connector
Courtesy of VOLVO CARS CORPORATION

- Ignition off
- Reinstall the connectors, components etc.
- Ignition on

  Check that the light emitting diodes flash three times when the system is activated.

Did the light emitting diodes flash three times?

- **YES**

  VERIFIED: Troubleshooting has been completed.

- **NO**

  Refer to **INFORMATION**

CEM-DD22: LIN-BUS 2. COMMUNICATION FAULT (2005)

DIAGNOSTIC TROUBLE CODE (DTC) INFORMATION CEM-DD22

Condition

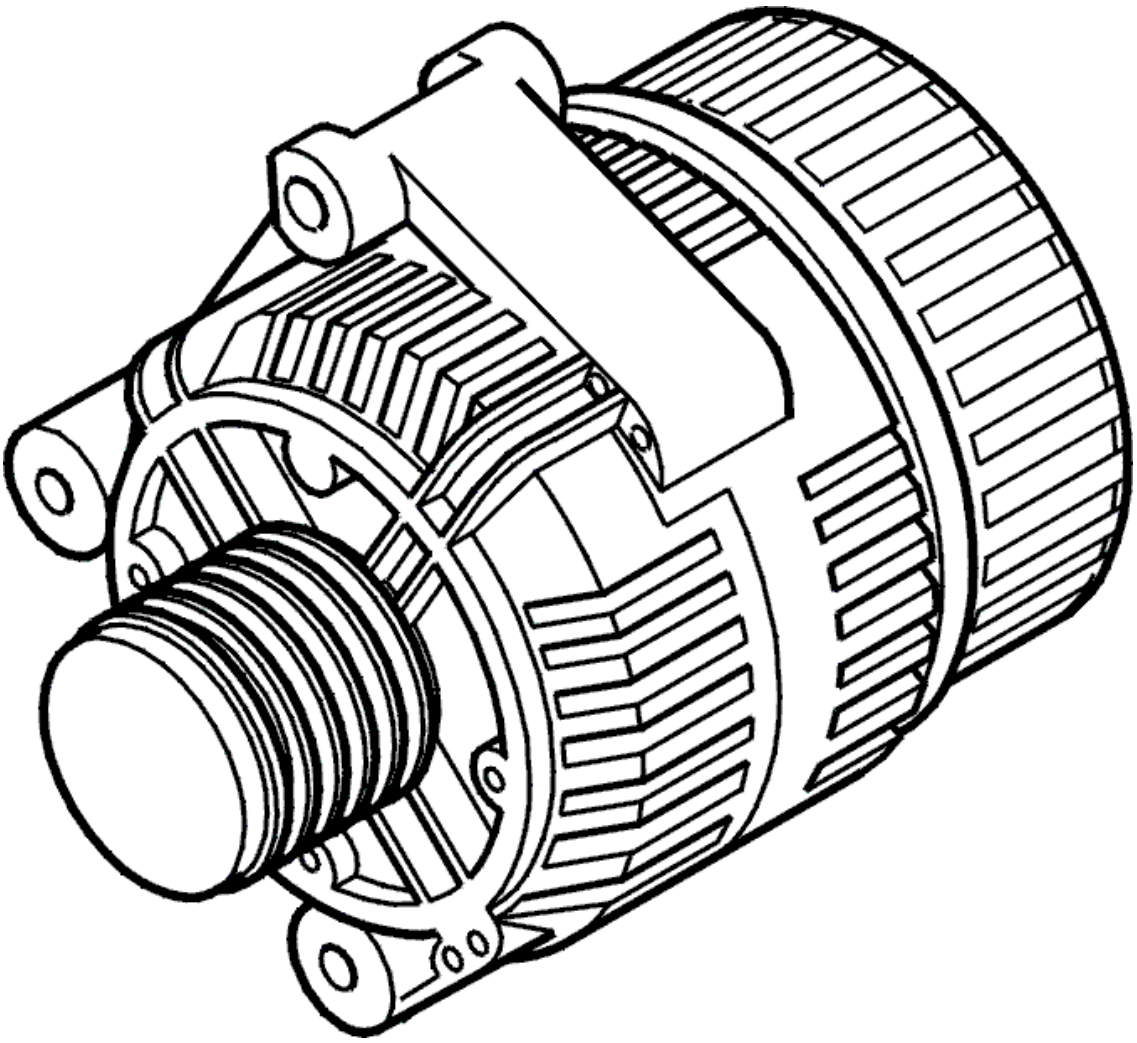

Fig. 237: Identifying Generator (GEN)
Courtesy of VOLVO CARS CORPORATION

The central electronic module (CEM) transmits and receives information via a standardized serial communication method - LIN (Local Interconnect Network). The diagnostic trouble code (DTC) is generated if the control module registers serious interference such as blocked LIN communication.

The diagnostic trouble code (DTC) can be detected when the ignition key is in position II for at least 10 seconds

and the battery voltage exceeds 10.5 V.

Note: In the event of CEM-DDxx diagnostic trouble codes (DTCs), the central electronic module (CEM) must not be replaced as the diagnostic trouble code (DTC) indicates a short-circuit in one or more conductors in the LIN network. The central electronic module (CEM) is the only control module that monitors the voltage level in the LIN wiring. The central electronic module (CEM) is therefore the only control module that can generate a diagnostic trouble code (DTC) for a short-circuit in one of the cables to ground or supply voltage. Do not replace the central electronic module (CEM) in the event of a LIN fault unless fault-tracing has indicated that the central electronic module (CEM) has an internal fault.

Substitute Value

- None.

Possible Source

- Short-circuit between the LIN wiring
- Open-circuit in the LIN wiring
- Internal fault in another control module in the same part of the LIN network.

Fault symptom[s]

- The battery electrolyte boils when the engine is running. (Not vehicles with a V8 engine.)
- The battery discharges. (Not vehicles with a V8 engine.)
- The LED does not come on. (Only vehicles with Blind Spot Indication System, BLIS.)

COMMUNICATION FAULT

CHECKING THE WIRING

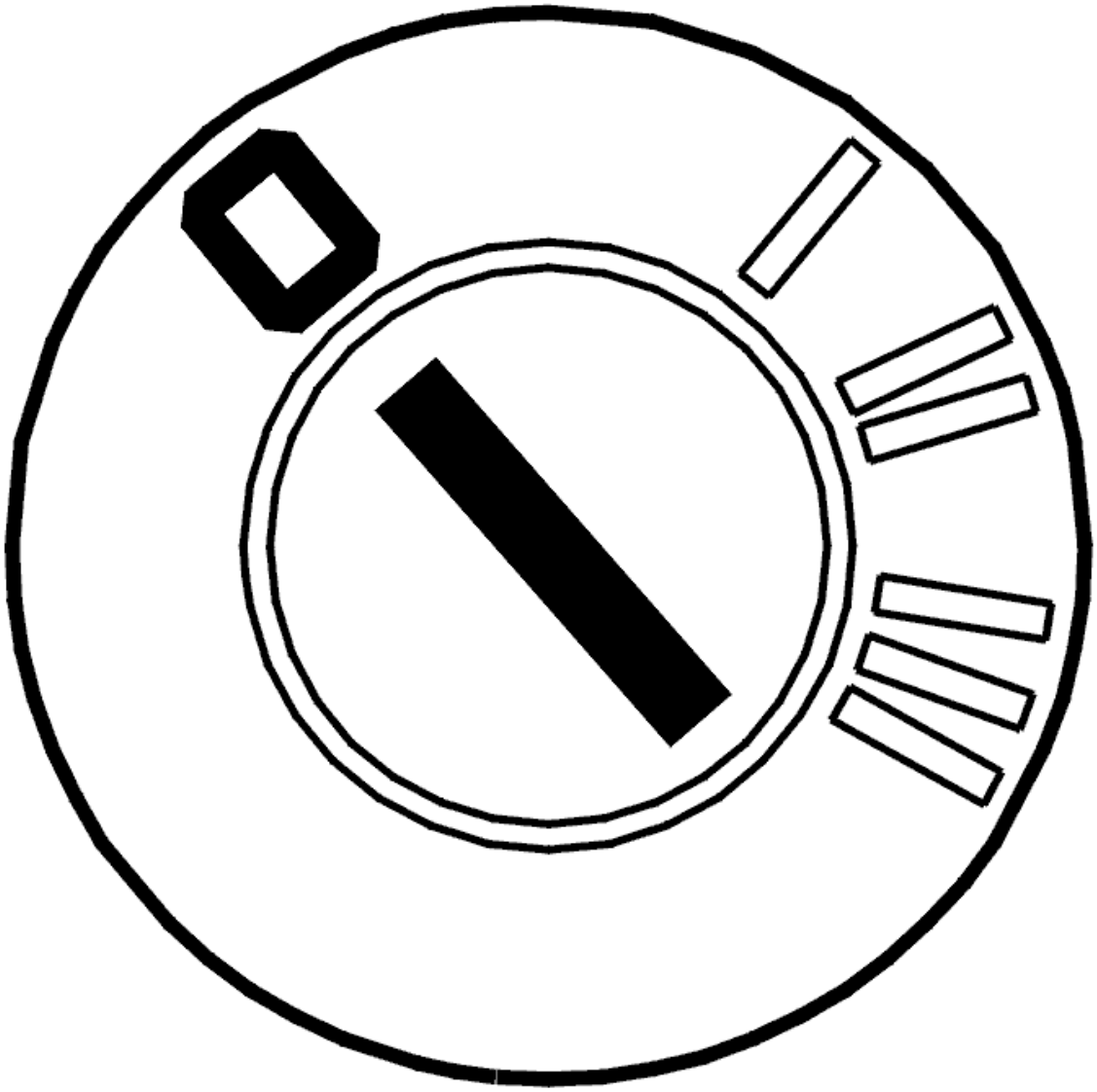

Fig. 238: Identifying Ignition OFF
Courtesy of VOLVO CARS CORPORATION

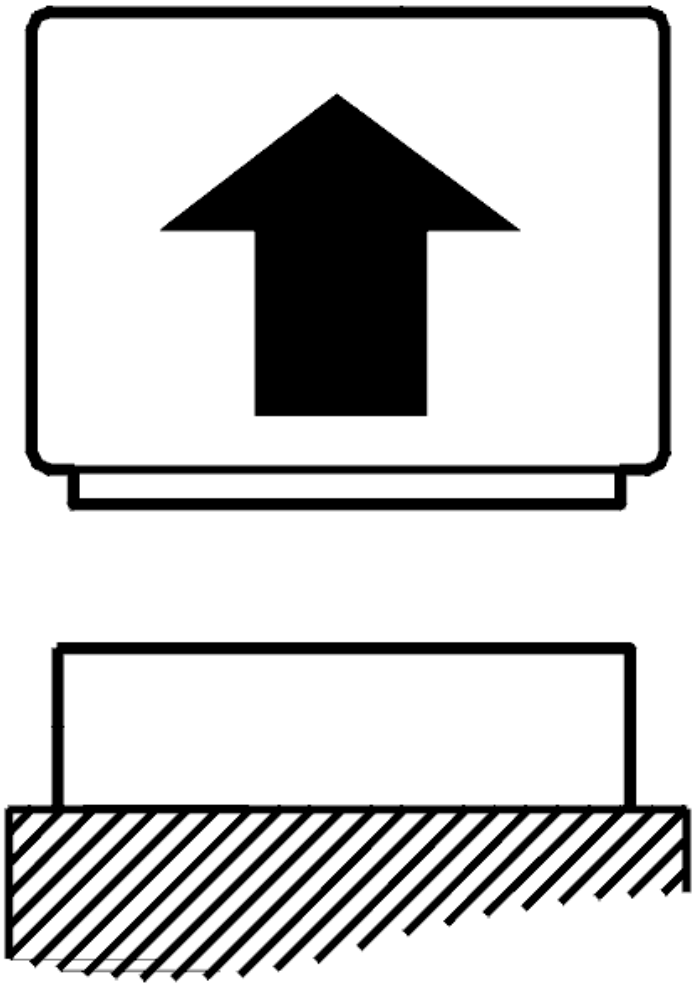

Fig. 239: Disconnecting Connector
Courtesy of VOLVO CARS CORPORATION

The diagnostic trouble code indicates that communication between the central electronic module (CEM) and the alternator control module (ACM) (not vehicles with a V8 engine), the left camera module (LCM) (optional extra) and the right camera module (RCM) (optional extra) is inoperative. This could be due to a fault in the signal lead between the control modules or a damaged communication unit in one or all of the control modules.

NOTE: **All vehicles from and including model year 2005 are equipped with a signal cable to the Left Camera Module (LCM) / Right Camera Module (RCM) even if the vehicle is not equipped with BLIS system. This means that measurements must always be carried out up to the 12-pin connector in the external doors when the diagnostic trouble code (DTC) has been detected on LIN bus 2.**

Check the signal lead between the central electronic module (CEM) and the alternator control module (ACM) for an open circuit or shorting to ground.

Measure between:

- Central electronic module (CEM) #C16 (#16) and alternator control module (ACM) #B1.

For vehicles without the Blind Spot Indication System (BLIS)

Check the signal cable between the Central Electronic Module (CEM) and the 12-pin connector in the outer doors. Check for an open-circuit. Check for a short-circuit to ground.

Check the connector in both doors.

Take readings between:

- Central Electronic Module (CEM) D24 (#24) and the 12 pin connector in the external doors terminal #12.

For vehicles equipped with the Blind Spot Indication System (BLIS)

Check the signal lead between the central electronic module (CEM) and the left camera module (LCM) for an open circuit or shorting to ground.

Measure between:

- Central electronic module (CEM) #D24 (#24) and left camera module (LCM) #5.

Check the signal lead between the central electronic module (CEM) and the right camera module (RCM) for an open circuit or shorting to ground.

Measure between:

- Central electronic module (CEM) #D24 (#24) and right camera module (RCM) #5.

Also check intermediate connectors.

Remedy as necessary.

Other information

- see **CONNECTING THE BREAKOUT BOX**
- -2004: **SIGNAL SPECIFICATION**
- 2005-: **SIGNAL SPECIFICATION**
- see **LOCATION OF COMPONENTS**
- For B5xx4T, see **GENERATOR (GEN), REPLACING** .
- For B6xx4T, - 2004, see **GENERATOR (GEN), REPLACING** .
- For B6xx4T, 2005 -, see **GENERATOR (GEN), REPLACING** .
- For B8444S, 2005 -, see **GENERATOR (GEN), REPLACEMENT** .

- Change the left camera module (LCM)/right camera module (RCM), see: **REAR VIEW MIRROR, REPLACING**
- see **CHECKING WIRING AND TERMINALS**

Was a fault detected?

- **YES**

  OKAY: Troubleshooting has been completed.

- **NO**

  Refer to **CHECKING THE COMPONENT**

CHECKING THE COMPONENT

For vehicles equipped with the Blind Spot Indication System (BLIS)

The LEDs should flash three times whenever the Blind Spot Indication System (BLIS) is activated.

Switch on the ignition to check the right and left sides.

If any LED fails to flash three times on activation, try changing the control module on that side.

If both LEDs flash three times on activation, try changing the alternator control module (ACM).

For vehicles without the Blind Spot Indication System (BLIS)

Try changing the alternator control module (ACM).

Select the desired alternative:

1. Change the alternator control module (ACM).

   Refer to **REPLACING THE CONTROL MODULE**

2. Change the left camera module (LCM) / right camera module (RCM).

   Refer to **REPLACING THE CONTROL MODULE**

REPLACING THE CONTROL MODULE

Try a new alternator control module (ACM).

Remedy as necessary.

Other information

- For B5xx4T, see **GENERATOR (GEN), REPLACING** .
- For B6xx4T, - 2004, see **GENERATOR (GEN), REPLACING** .
- For B6xx4T, 2005 -, see **GENERATOR (GEN), REPLACING** .
- For B8444S, 2005 -, see **GENERATOR (GEN), REPLACEMENT** .

- **Continue**

  Refer to **VERIFICATION**

REPLACING THE CONTROL MODULE

Try changing the control module on the side where the LED failed to flash.

Remedy as necessary.

Other information

- Change the control module, see: **REAR VIEW MIRROR, REPLACING**

- **Continue**

  Refer to **VERIFICATION**

INFORMATION

FAULT-TRACING INFORMATION

The fault should have been detected and remedied. As this is not the case fault-tracing has failed.

Exit fault-tracing for this diagnostic trouble code (DTC) or make another attempt.

VERIFICATION

VERIFICATION

HINT: After carrying out the repair, check that the fault has been remedied.

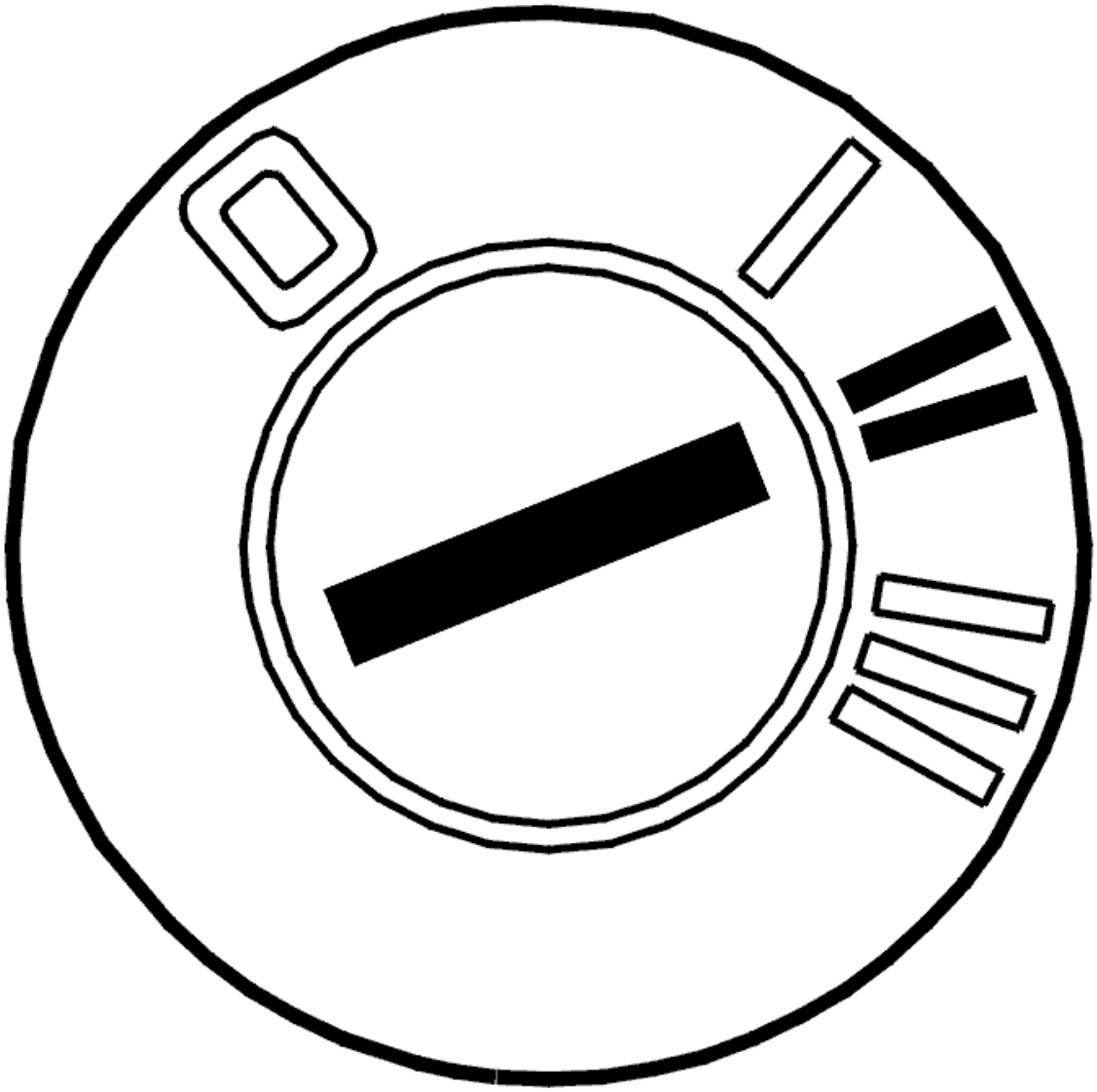

Fig. 240: Identifying Ignition ON
Courtesy of VOLVO CARS CORPORATION

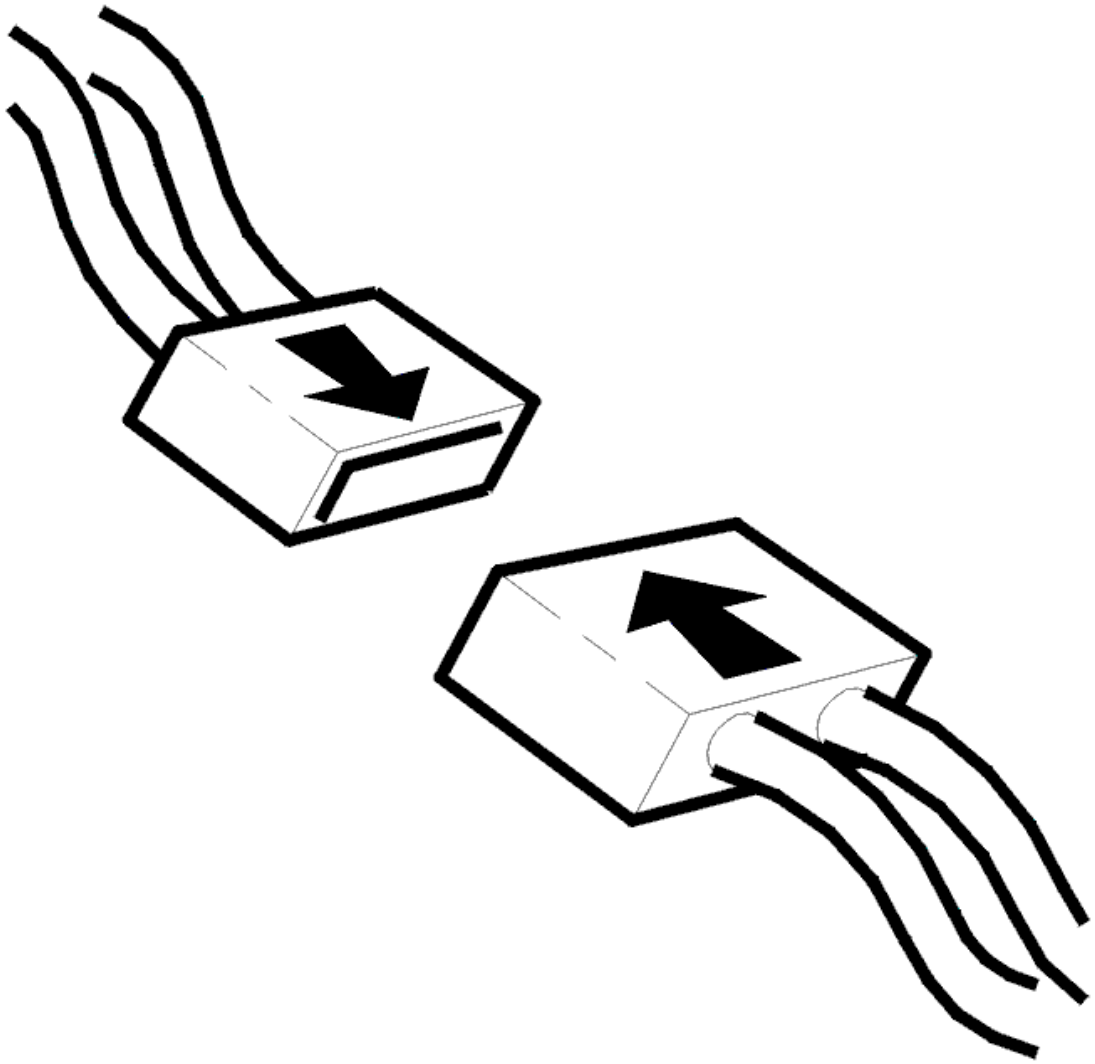

Fig. 241: Connecting Connector
Courtesy of VOLVO CARS CORPORATION

- Ignition off
- Reinstall the connectors, components etc.
- Ignition on
- Start the engine and run it to normal operating temperature.

  Use the VCT2000 (or appropriate scan tool) to read off the status of the generator (GEN).

  Check that the read out shows OK.

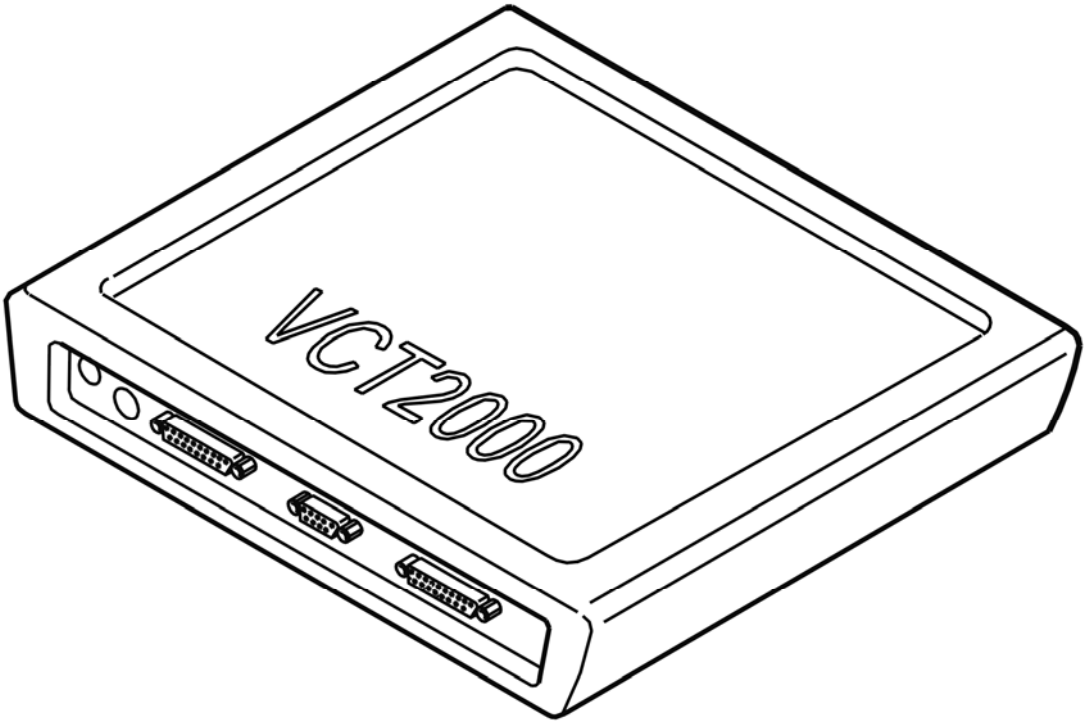

Fig. 242: Identifying VCT2000 Diagnostic Tool Symbol In VIDA
Courtesy of VOLVO CARS CORPORATION

Is the status given as OK?

- **YES**

  VERIFIED: Troubleshooting has been completed.

- **NO**

  Refer to **INFORMATION**

VERIFICATION

VERIFICATION

HINT: After carrying out the repair, check that the fault has been remedied.

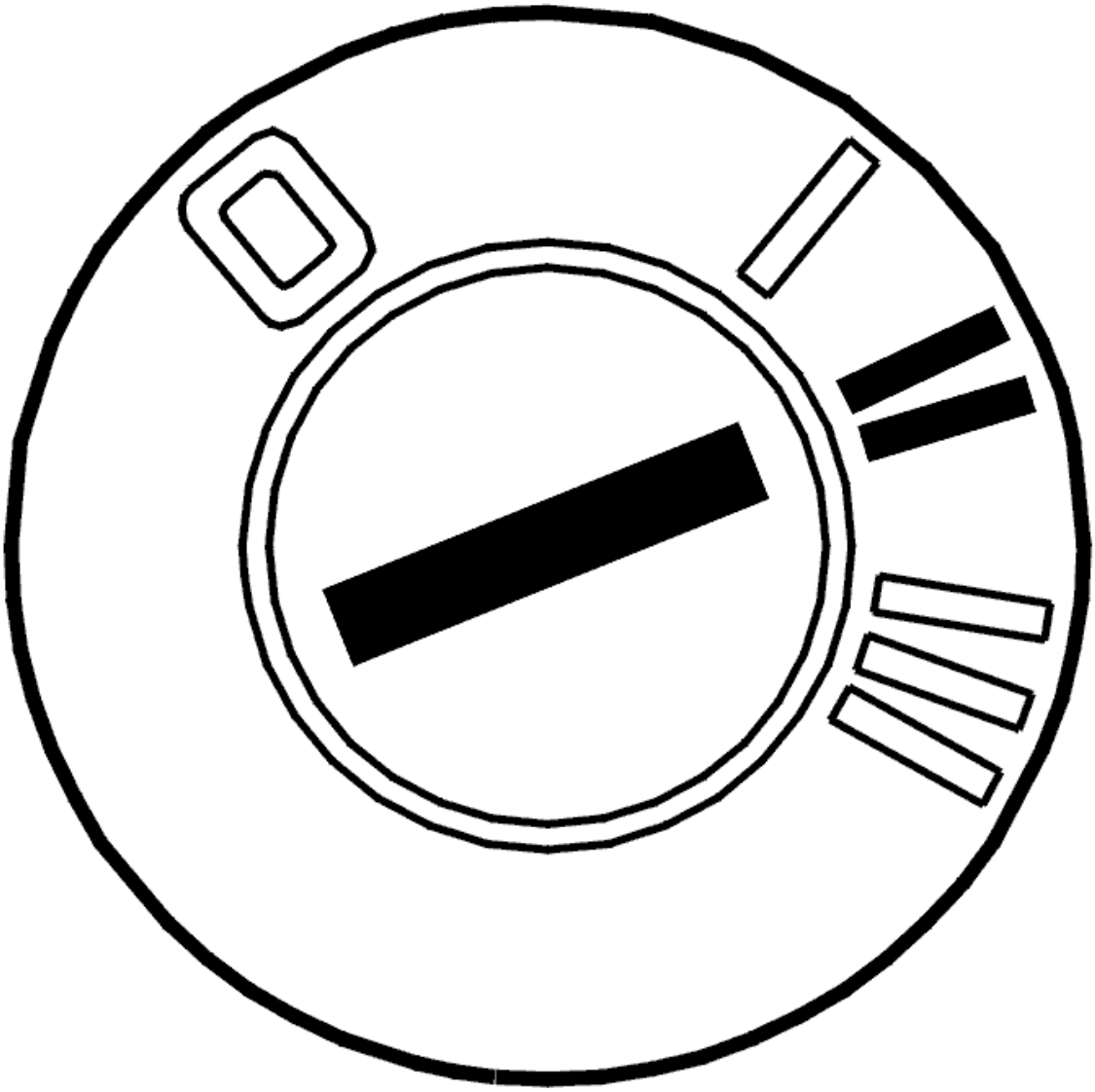

Fig. 243: Identifying Ignition ON
Courtesy of VOLVO CARS CORPORATION

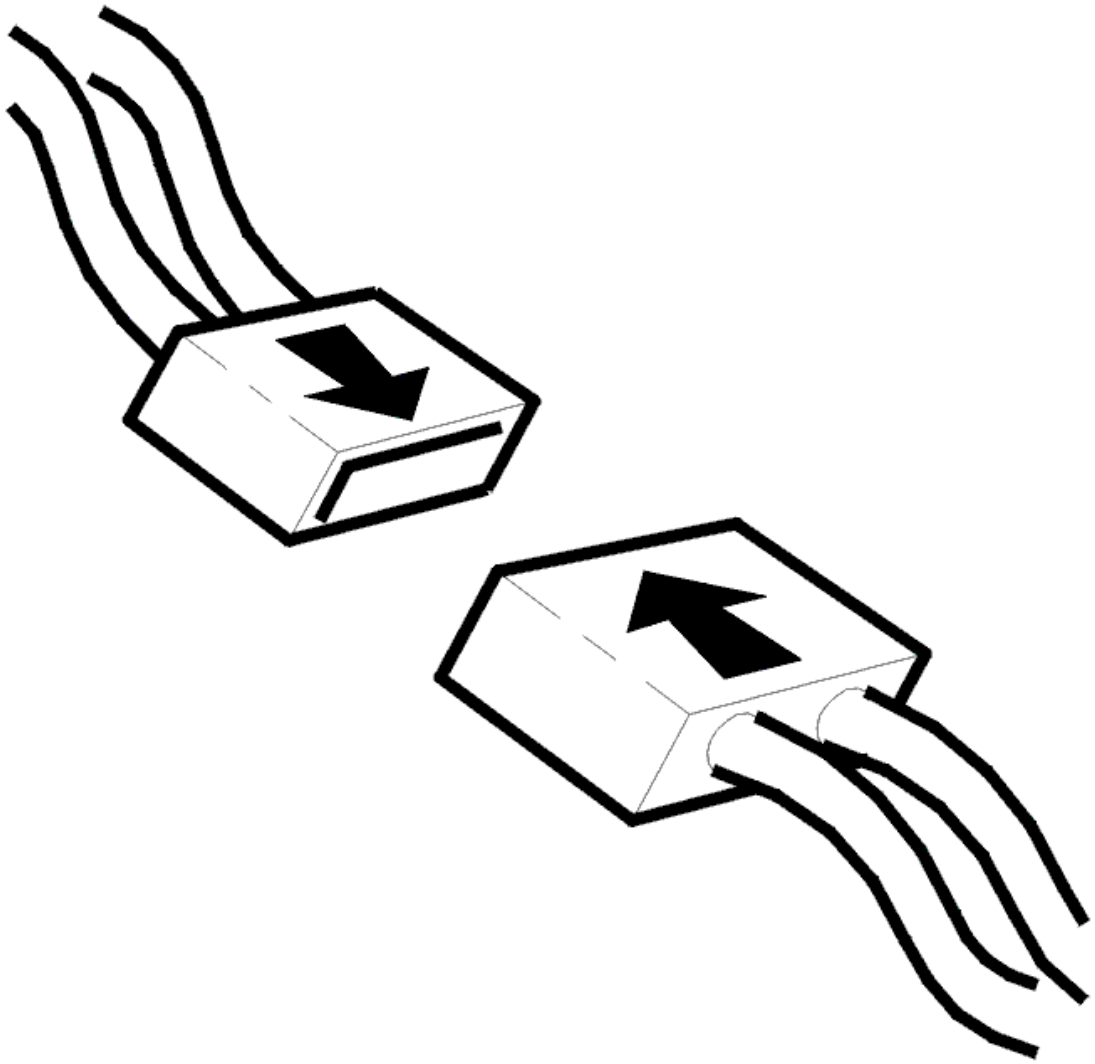

Fig. 244: Connecting Connector
Courtesy of VOLVO CARS CORPORATION

- Ignition off
- Reinstall the connectors, components etc.
- Ignition on

  Check that the light emitting diodes flash three times when the system is activated.

Did the light emitting diodes flash three times?

- **YES**

  VERIFIED: Troubleshooting has been completed.

- **NO**

  Refer to **INFORMATION**

CEM-DD30: COMMUNICATION WITH THE ALTERNATOR CONTROL MODULE (ACM). SIGNAL MISSING (2005-2012)

DIAGNOSTIC TROUBLE CODE (DTC) INFORMATION CEM-DD30

Condition

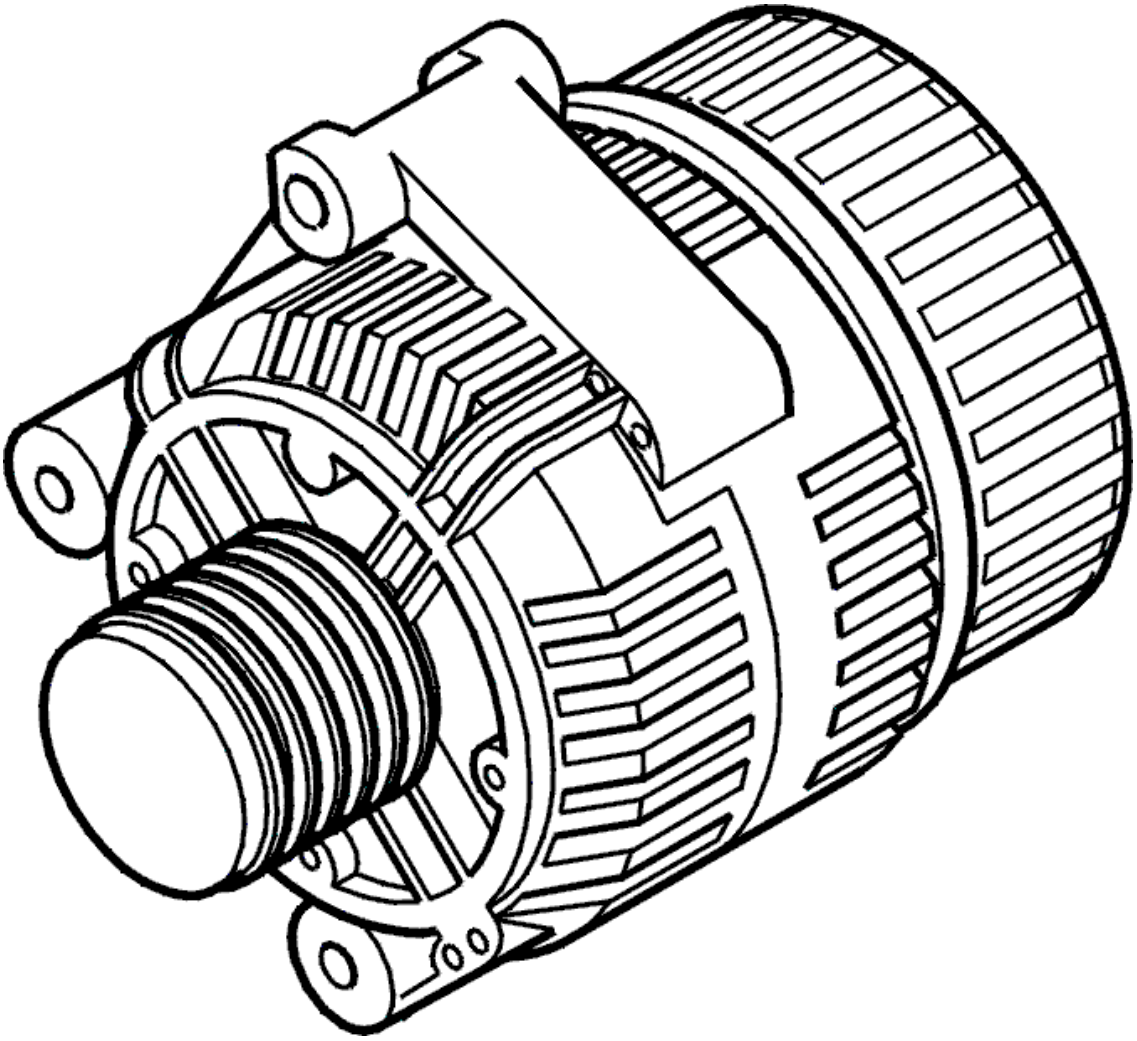

Fig. 245: Identifying Generator (GEN)
Courtesy of VOLVO CARS CORPORATION

The central electronic module (CEM) transmits and receives information via a standardized serial communication method - LIN (Local Interconnect Network). The diagnostic trouble code (DTC) is stored if the control module registers serious interference such as blocked LIN communication with the alternator control module (ACM).

The diagnostic trouble code (DTC) can be detected when the ignition key is in position II for at least 10 seconds and the battery voltage exceeds 10.5 V.

NOTE: **In the event of CEM-DDxx diagnostic trouble codes (DTCs), the central electronic module (CEM) must not be replaced as the diagnostic trouble code (DTC) indicates a short-circuit in one or more conductors in the LIN network. The central electronic module (CEM) is the only control module that monitors the voltage level in the LIN wiring. The central electronic module (CEM) is therefore the only control module that can store a diagnostic trouble code (DTC) for a short-circuit in one of the cables to ground or supply voltage. Do not replace the central electronic module (CEM) in the event of a LIN fault unless VIDA (Volvo scan tool) has indicated that the central electronic module (CEM) has an internal fault.**

Substitute Value

- None.

Possible Source

- Short-circuit between the LIN wiring
- Open-circuit in the LIN wiring
- Internal fault in another control module in the same part of the LIN network.

Fault symptom[s]

- The battery discharges.

SIGNAL MISSING

CHECKING THE WIRING

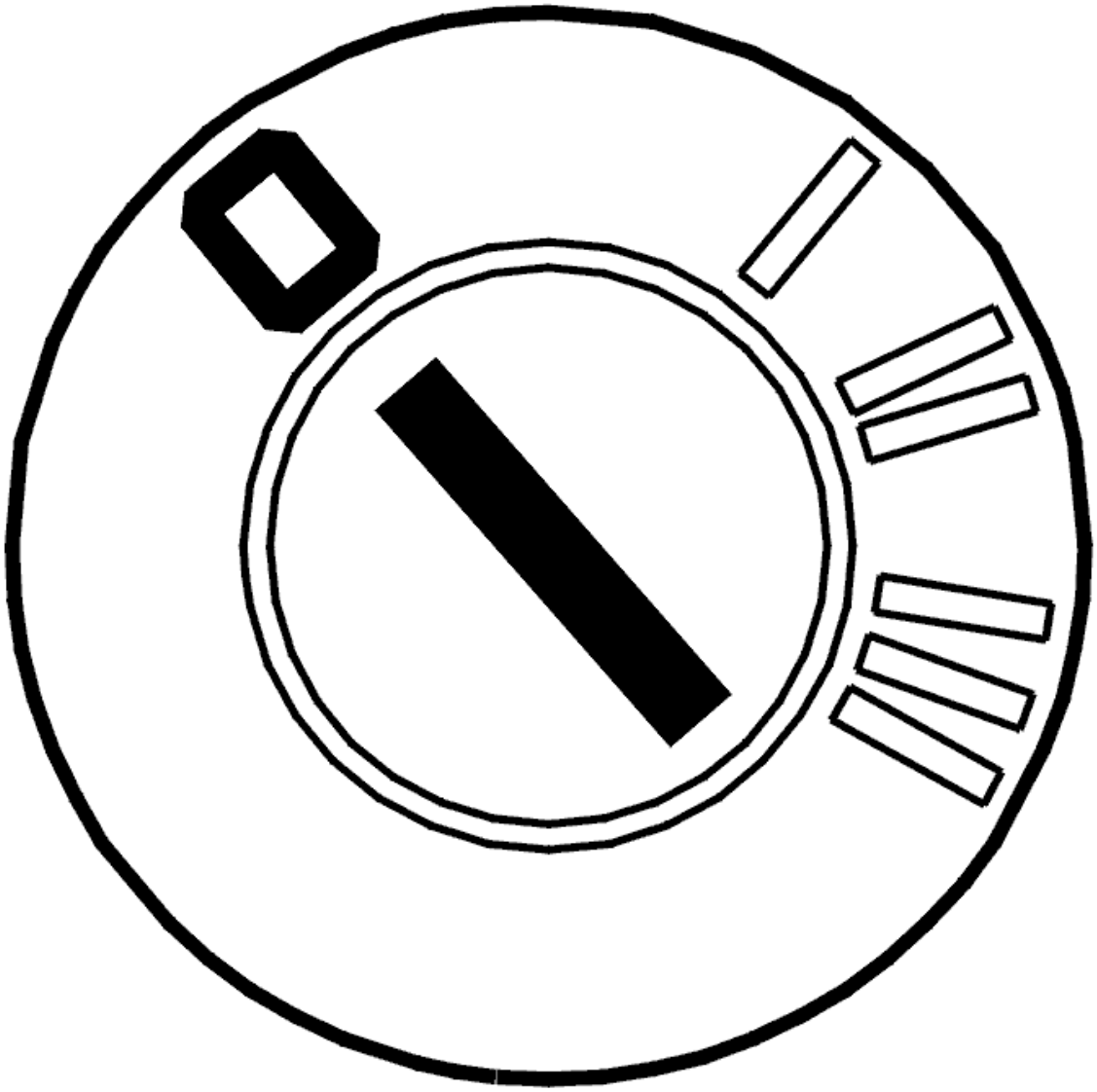

Fig. 246: Identifying Ignition OFF
Courtesy of VOLVO CARS CORPORATION

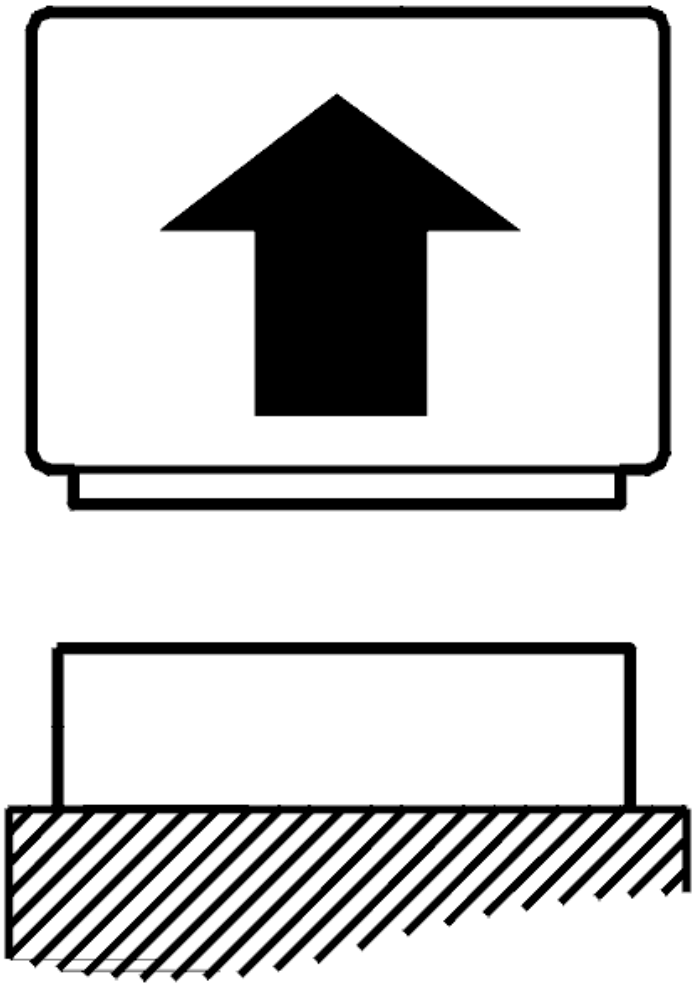

Fig. 247: Disconnecting Connector
Courtesy of VOLVO CARS CORPORATION

- Ignition off
- Disconnect central electronic module (CEM) connector C.

  The diagnostic trouble code (DTC) indicates that the communication between the alternator control module (ACM) and central electronic module (CEM) is not working. This may be due to a fault in the signal cable between the control modules or a damaged communication device in one or both of the control modules.

  Check the signal cable. Check for an open-circuit. Check for a short-circuit to ground.

  Take readings between central electronic module (CEM) terminal #C16 (#16) and alternator control module (ACM) terminal #B1.

Remedy as necessary.

Other information

- see **CONNECTING THE BREAKOUT BOX**
- -2004: **SIGNAL SPECIFICATION**
- 2005-: **SIGNAL SPECIFICATION**
- see **LOCATION OF COMPONENTS**
- For B5xx4T, see **GENERATOR (GEN), REPLACING** .
- For B6xx4T, - 2004, see **GENERATOR (GEN), REPLACING** .
- For B6xx4T, 2005 -, see **GENERATOR (GEN), REPLACING** .
- For B8444S, 2005 -, see **GENERATOR (GEN), REPLACEMENT** .
- see **CHECKING WIRING AND TERMINALS**

Was a fault detected?

- **YES**

  Refer to **VERIFICATION**

- **NO**

  Refer to **REPLACING THE CONTROL MODULE**

REPLACING THE CONTROL MODULE

Try a new alternator control module (ACM).

Remedy as necessary.

Other information

- For B5xx4T, see **GENERATOR (GEN), REPLACING** .
- For B6xx4T, - 2004, see **GENERATOR (GEN), REPLACING** .
- For B6xx4T, 2005 -, see **GENERATOR (GEN), REPLACING** .
- For B8444S, 2005 -, see **GENERATOR (GEN), REPLACEMENT** .

- **Continue**

  Refer to **VERIFICATION**

VERIFICATION

VERIFICATION

HINT: After carrying out the repair, check that the fault has been remedied.

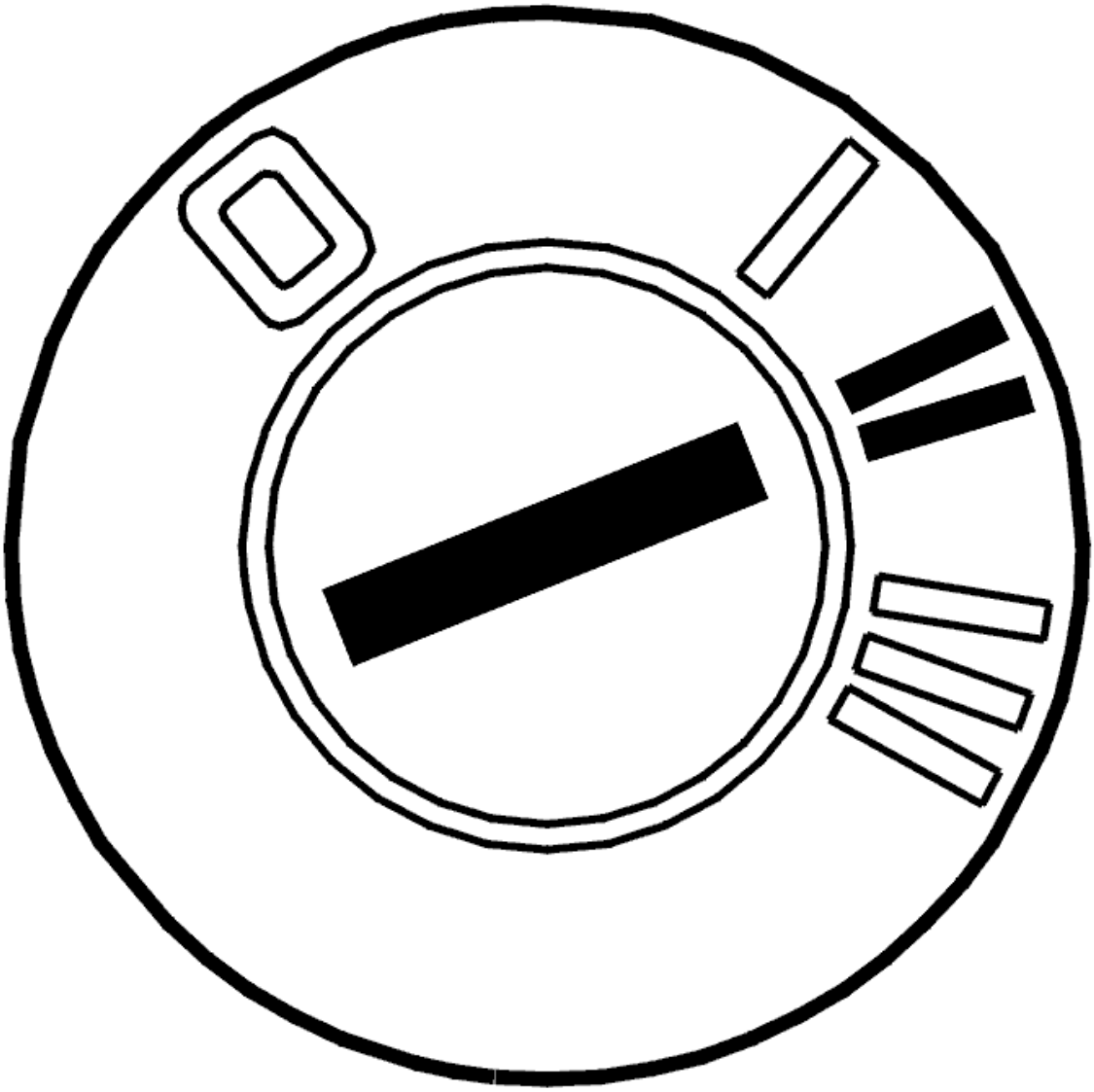

Fig. 248: Identifying Ignition ON
Courtesy of VOLVO CARS CORPORATION

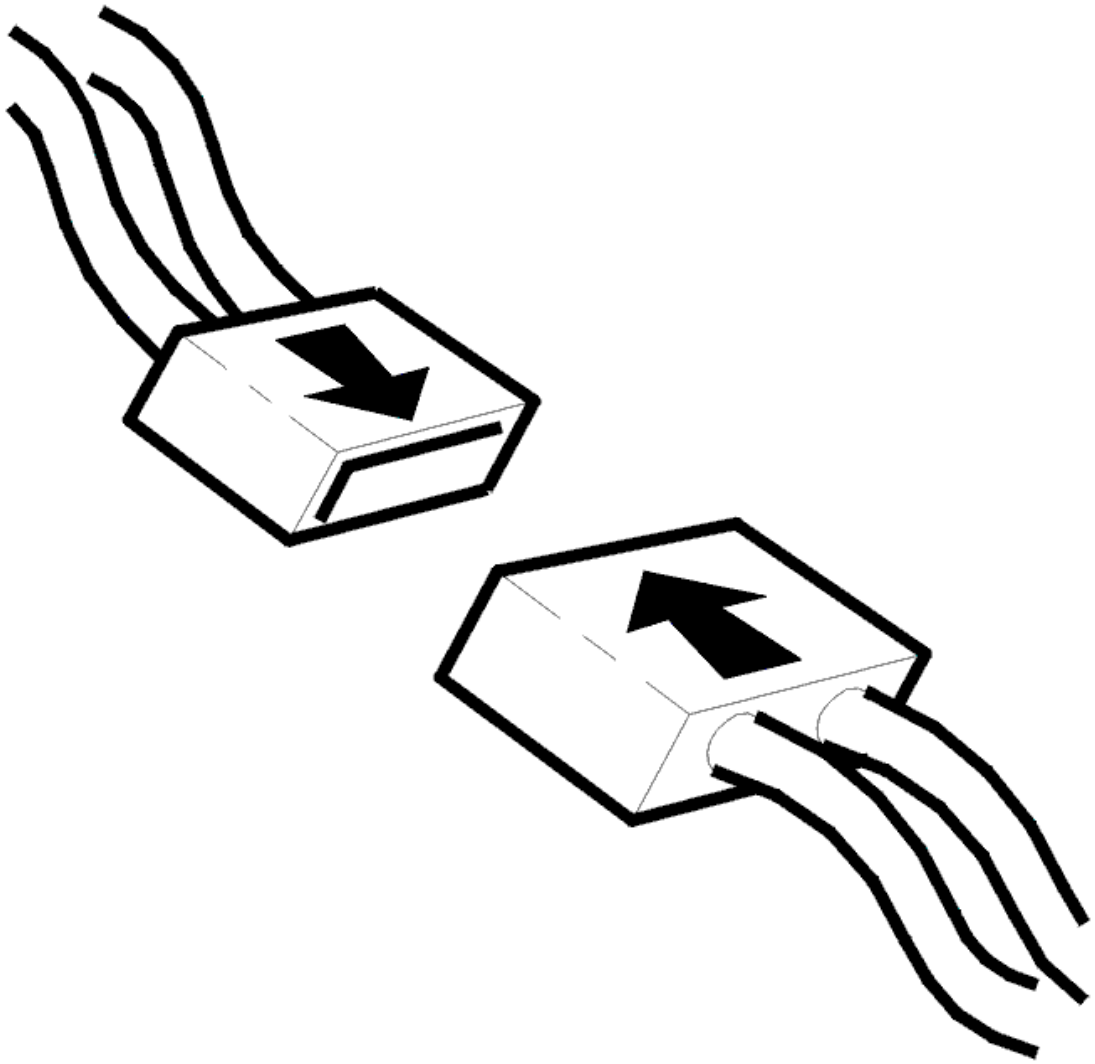

Fig. 249: Connecting Connector
Courtesy of VOLVO CARS CORPORATION

- Ignition off
- Reinstall the connectors, components etc.
- Ignition on
- Start the engine and run it to normal operating temperature.

  Use the VCT2000 (or appropriate scan tool) to read off the status of the generator (GEN).

  Check that the read out shows OK.

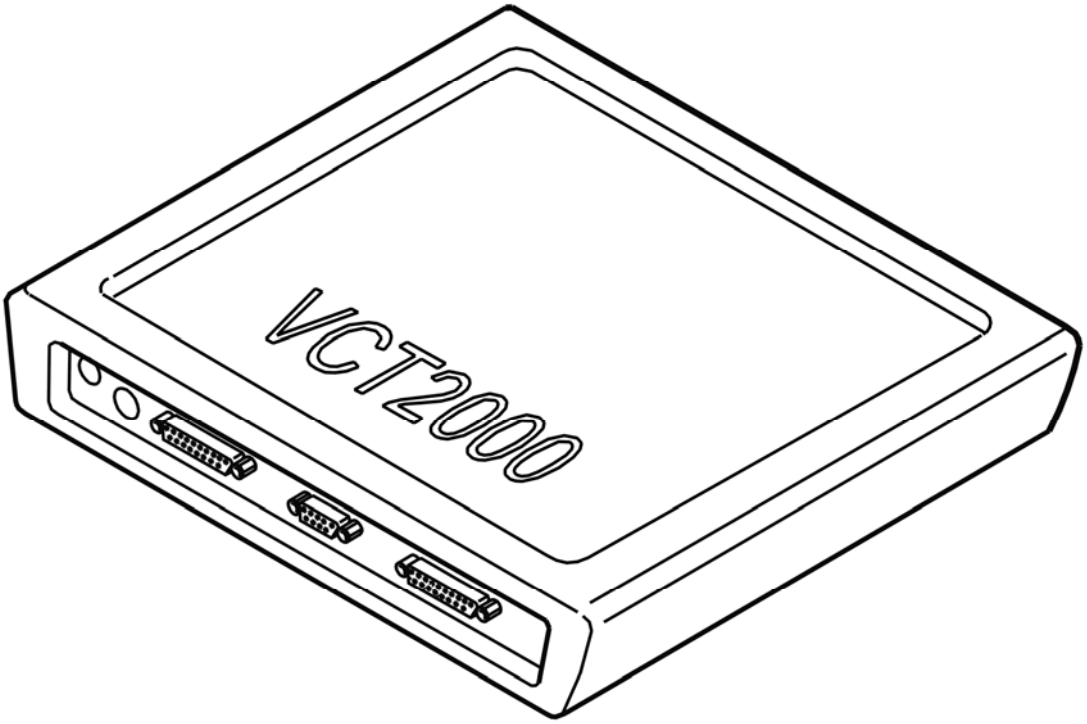

Fig. 250: Identifying VCT2000 Diagnostic Tool Symbol In VIDA
Courtesy of VOLVO CARS CORPORATION

Is the status given as OK?

- **YES**

  VERIFIED: Troubleshooting has been completed.

- **NO**

  Refer to **INFORMATION**

INFORMATION

FAULT-TRACING INFORMATION

The fault should have been detected and remedied. As this is not the case fault-tracing has failed.

Exit fault-tracing for this diagnostic trouble code (DTC) or make another attempt.

CEM-DD31: COMMUNICATION WITH LEFT CAMERA MODULE (LCM). NO SIGNAL (2005-2012)

DIAGNOSTIC TROUBLE CODE (DTC) INFORMATION CEM-DD31

Condition

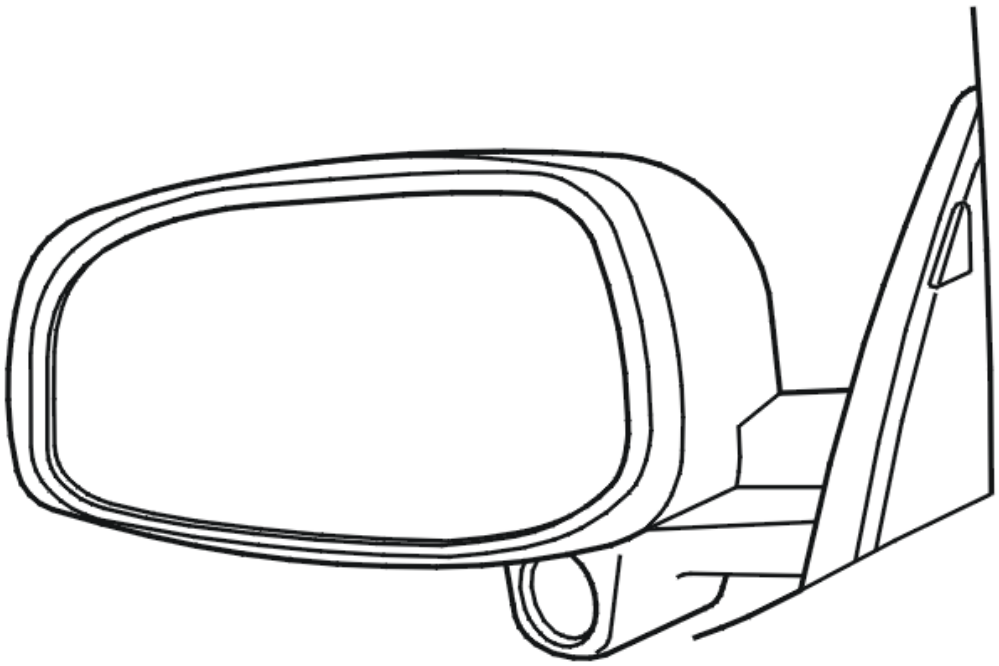

Fig. 251: Identifying Camera Module
Courtesy of VOLVO CARS CORPORATION

The central electronic module (CEM) transmits and receives information via a standardized serial communication method - LIN (Local Interconnect Network). The diagnostic trouble code (DTC) is generated if the control module registers serious interference (LIN communication blocked) with the left camera module (LCM).

The diagnostic trouble code (DTC) can be detected when the ignition switch in position II for at least 10 seconds if battery voltage is above 10.5 V.

Note: In the event of CEM-DDxx diagnostic trouble codes (DTCs), the central electronic module (CEM) must not be replaced as the diagnostic trouble code (DTC) indicates a short-circuit in one or more conductors in the LIN network. The central electronic module (CEM) is the only control module that monitors the voltage level in the LIN wiring. The central electronic module (CEM) is therefore the only control module that can generate a diagnostic trouble code (DTC) for a short-circuit in one of the cables to ground or supply voltage. Do not replace the central electronic module (CEM) in the event of a LIN fault unless fault-tracing has indicated that the central electronic module (CEM) has an internal fault.

Substitute Value

- Nothing.

Possible Source

- Short-circuit between the LIN wiring
- Open-circuit in the LIN wiring
- Internal fault in another control module in the same part of the LIN network.

Fault symptom[s]

- The LED does not come on.

SIGNAL MISSING

CHECKING THE FUNCTION

The LEDs should flash three times whenever the Blind Spot Indication System (BLIS) is activated.

Switch on the ignition to check the functionality of the left camera module (LCM).

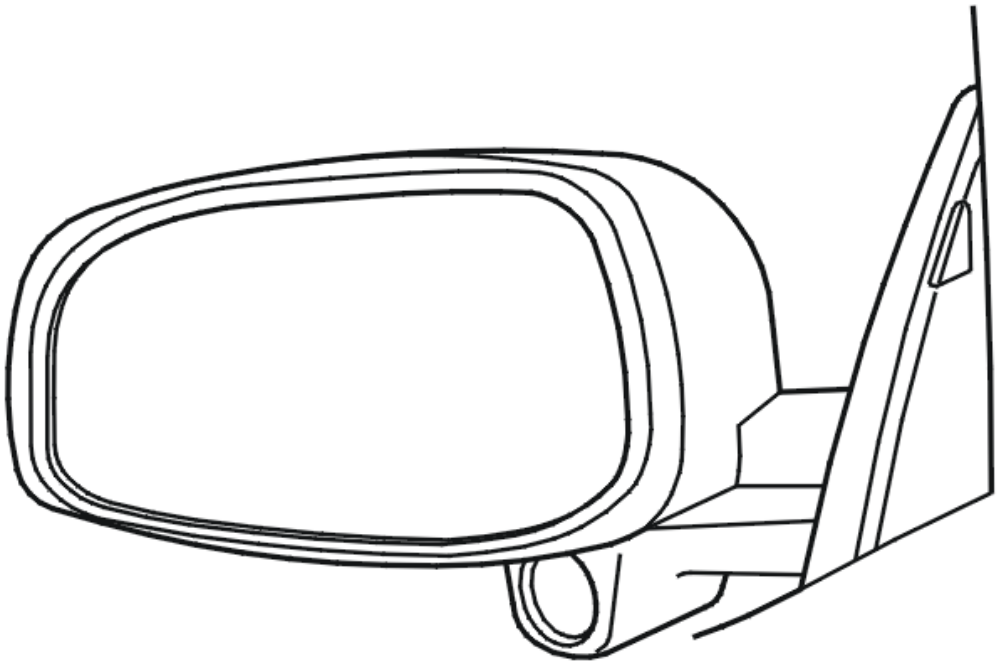

Fig. 252: Identifying Camera Module
Courtesy of VOLVO CARS CORPORATION

Did the LED flash three times?

- **YES**

  Refer to **FAULT-TRACING INFORMATION**

- **NO**

  Refer to **CHECKING THE WIRING**

CHECKING THE WIRING

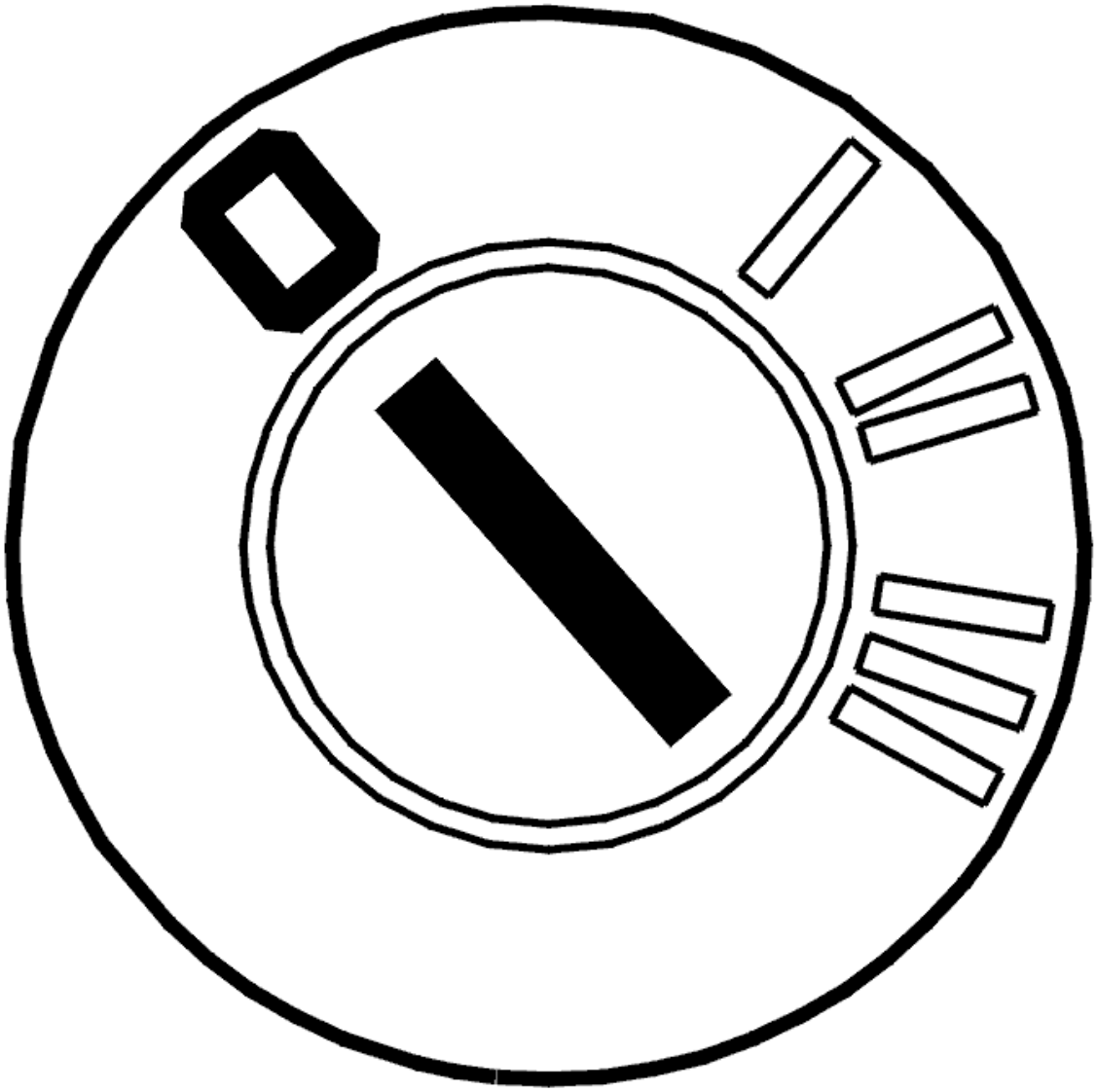

Fig. 253: Identifying Ignition OFF
Courtesy of VOLVO CARS CORPORATION

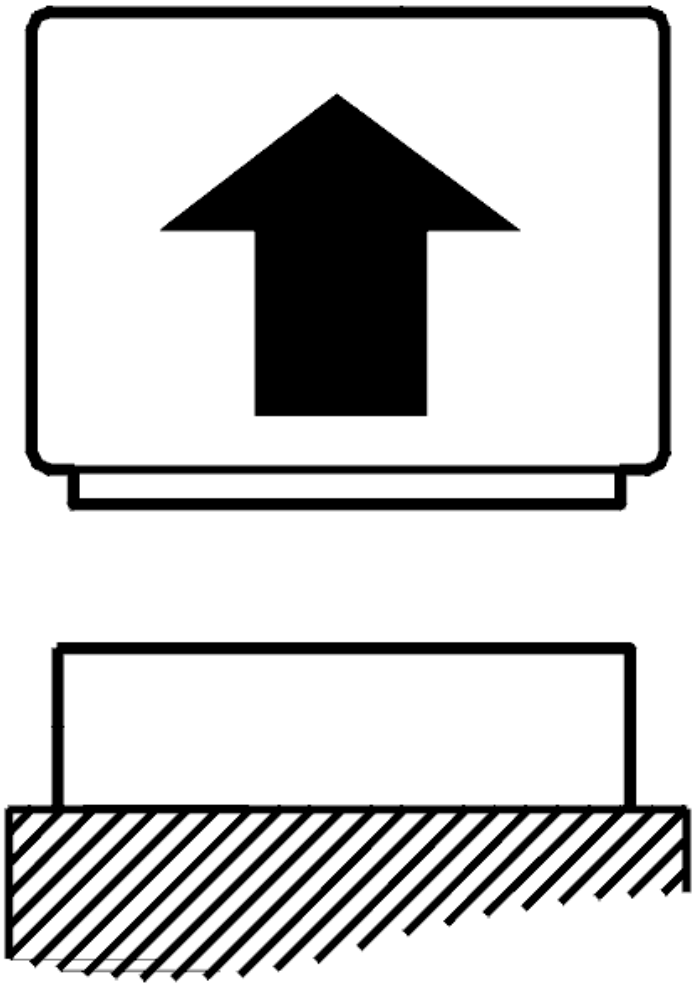

Fig. 254: Disconnecting Connector
Courtesy of VOLVO CARS CORPORATION

- Ignition off
- Unplug the central electronic module (CEM) D connector.

  The diagnostic trouble code indicates that communication between the central electronic module (CEM) and the left camera module (LCM) is inoperative. This could be due to a fault in the signal lead between the control modules or a damaged communication unit in one or all of the control modules.

  Check the signal lead between the central electronic module (CEM) and the left camera module (LCM) for an open circuit or short circuit. Also check intermediate connectors.

  Measure between:

  - Central electronic module (CEM) #D41 (41) and left camera module (LCM) #5.

Remedy as necessary.

Other information

- see **CONNECTING THE BREAKOUT BOX**
- -2004: **SIGNAL SPECIFICATION**
- 2005-: **SIGNAL SPECIFICATION**
- Change the left camera module (LCM), see: **REAR VIEW MIRROR, REPLACING**
- see **CHECKING WIRING AND TERMINALS**

Was a fault detected?

- **YES**

  Refer to **VERIFICATION**

- **NO**

  Refer to **REPLACING THE CONTROL MODULE**

REPLACING THE CONTROL MODULE

Try changing the left camera module (LCM).

Remedy as necessary.

Other information

- Change the left camera module (LCM), see: **REAR VIEW MIRROR, REPLACING**

- **Continue**

  Refer to **VERIFICATION**

FAULT-TRACING INFORMATION

The left camera module (LCM) has previously registered a fault but the fault no longer exists. The diagnostic trouble code (DTC) was probably generated by an intermittent fault. If the fault persists, fault-tracing according to this diagnostic trouble code (DTC) should be carried out even though no fault symptom can be detected. The seriousness of the fault is determined from case to case.

You can choose between continuing fault-tracing or ending it.

Would you like to continue?

- **YES**

Refer to **CHECKING THE WIRING**

- **NO**

  FAULT NOT FOUND: Troubleshooting has been completed.

VERIFICATION

VERIFICATION

HINT: After carrying out the repair, check that the fault has been remedied.

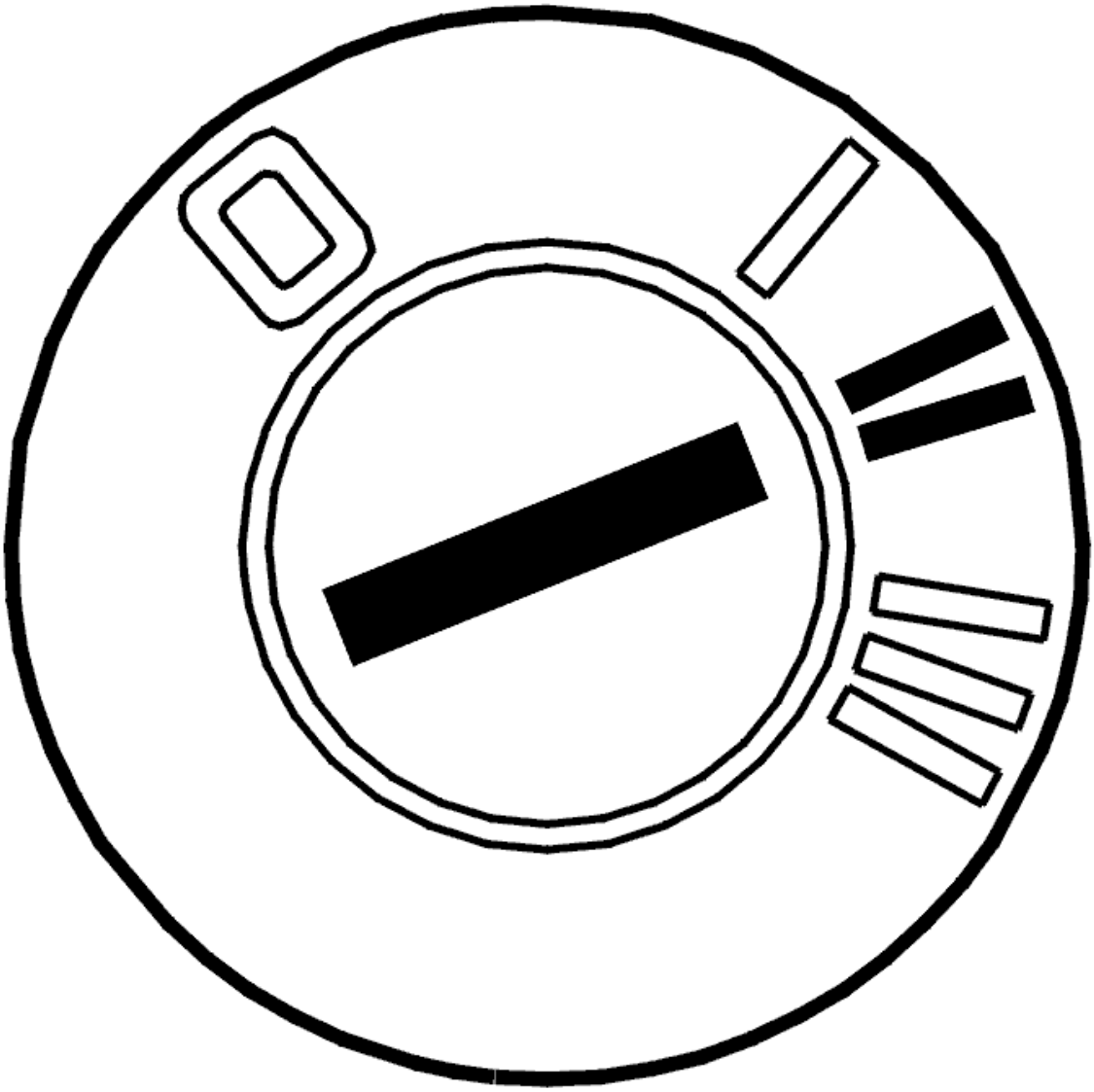

Fig. 255: Identifying Ignition ON
Courtesy of VOLVO CARS CORPORATION

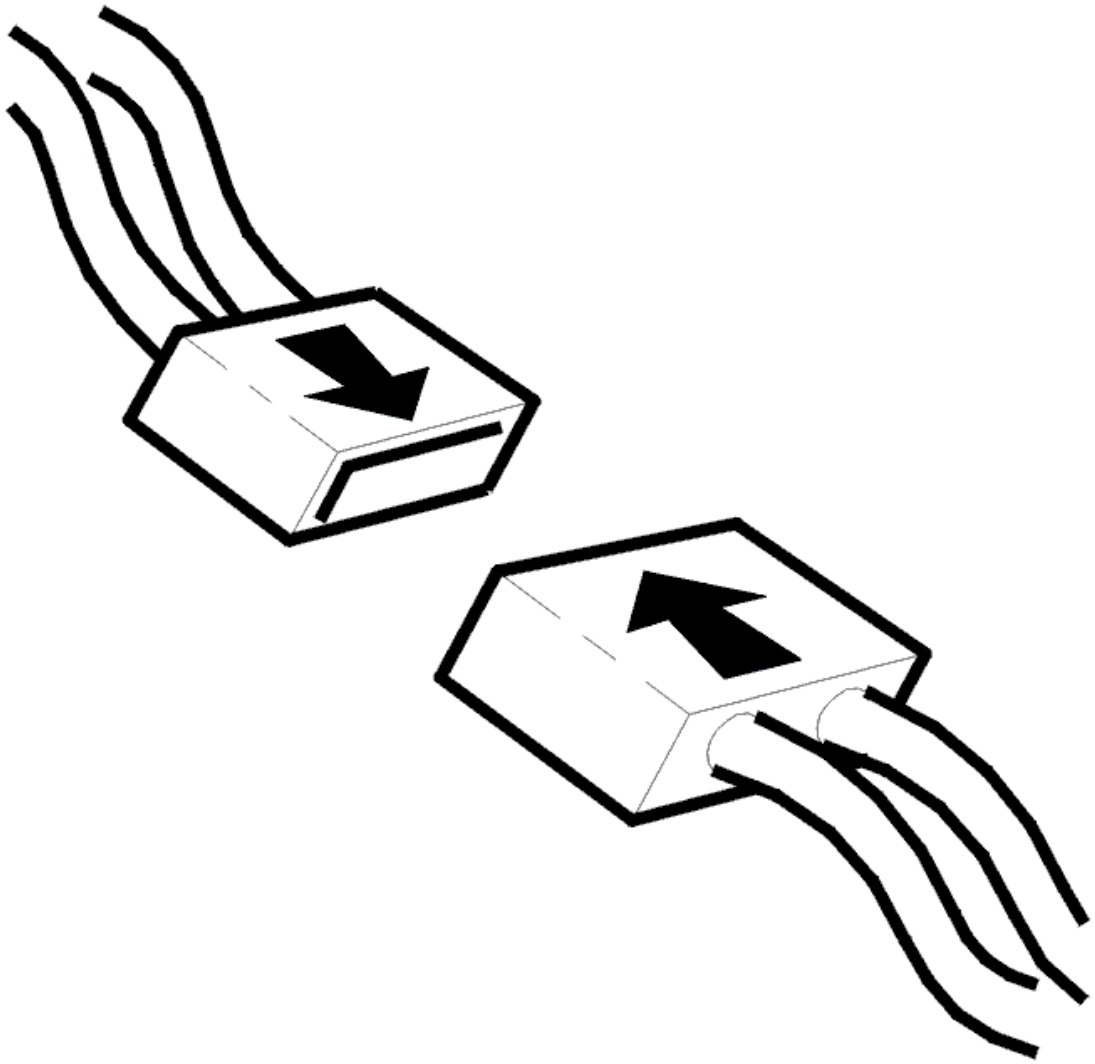

Fig. 256: Connecting Connector
Courtesy of VOLVO CARS CORPORATION

- Ignition off
- Reinstall the connectors, components etc.
- Ignition on

Did the left LED flash three times?

- **YES**

  VERIFIED: Troubleshooting has been completed.

- **NO**

Refer to **INFORMATION**

INFORMATION

FAULT-TRACING INFORMATION

The fault should have been detected and remedied. As this is not the case fault-tracing has failed.

Exit fault-tracing for this diagnostic trouble code (DTC) or make another attempt.

CEM-DD32: COMMUNICATION WITH RIGHT CAMERA MODULE (LCM). NO SIGNAL (2005-2012)

DIAGNOSTIC TROUBLE CODE (DTC) INFORMATION CEM-DD32

Condition

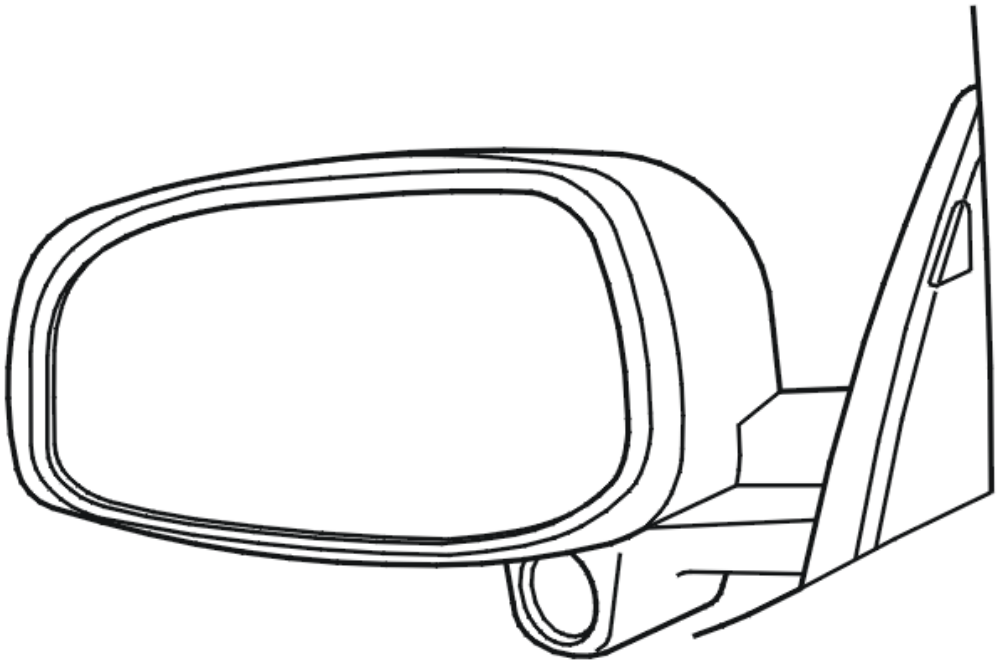

Fig. 257: Identifying Camera Module
Courtesy of VOLVO CARS CORPORATION

The central electronic module (CEM) transmits and receives information via a standardized serial communication method - LIN (Local Interconnect Network). The diagnostic trouble code (DTC) is generated if the control module registers serious interference (LIN communication blocked) with the right camera module

(LCM).

The diagnostic trouble code (DTC) can be detected when the ignition switch in position II for at least 10 seconds if battery voltage is above 10.5 V.

Note: In the event of CEM-DDxx diagnostic trouble codes (DTCs), the central electronic module (CEM) must not be replaced as the diagnostic trouble code (DTC) indicates a short-circuit in one or more conductors in the LIN network. The central electronic module (CEM) is the only control module that monitors the voltage level in the LIN wiring. The central electronic module (CEM) is therefore the only control module that can generate a diagnostic trouble code (DTC) for a short-circuit in one of the cables to ground or supply voltage. Do not replace the central electronic module (CEM) in the event of a LIN fault unless fault-tracing has indicated that the central electronic module (CEM) has an internal fault.

Substitute Value

- Nothing.

Possible Source

- Short-circuit between the LIN wiring
- Open-circuit in the LIN wiring
- Internal fault in another control module in the same part of the LIN network.

Fault symptom[s]

- The LED does not come on.

SIGNAL MISSING

CHECKING THE FUNCTION

The LEDs should flash three times whenever the Blind Spot Indication System (BLIS) is activated.

Switch on the ignition to check the functionality of the right camera module (RCM).

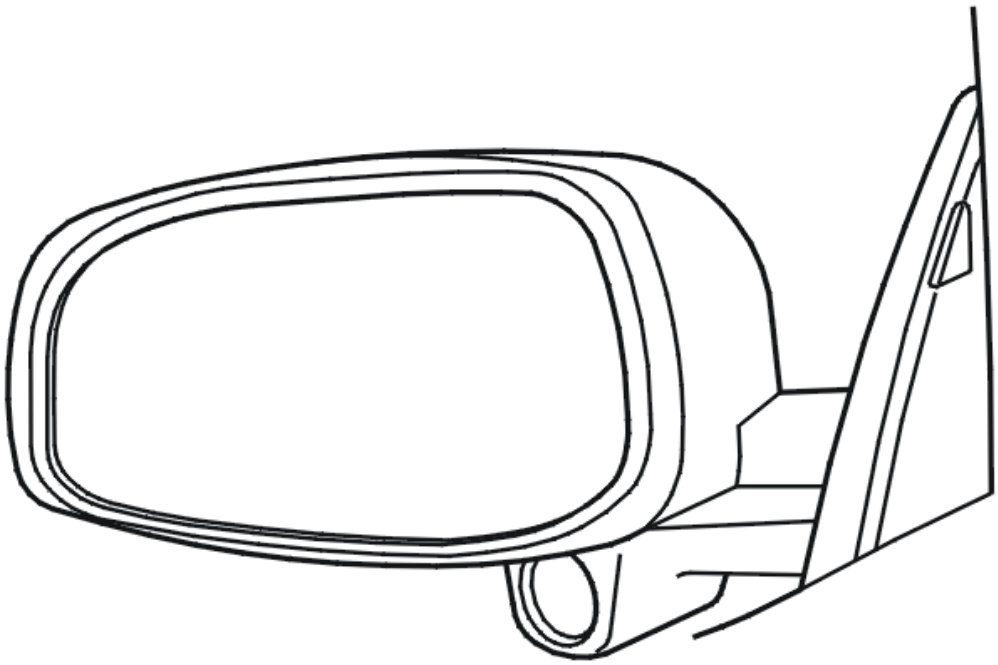

Fig. 258: Identifying Camera Module
Courtesy of VOLVO CARS CORPORATION

Did the LED flash three times?

- **YES**

  Refer to **FAULT-TRACING INFORMATION**

- **NO**

  Refer to **CHECKING THE WIRING**

CHECKING THE WIRING

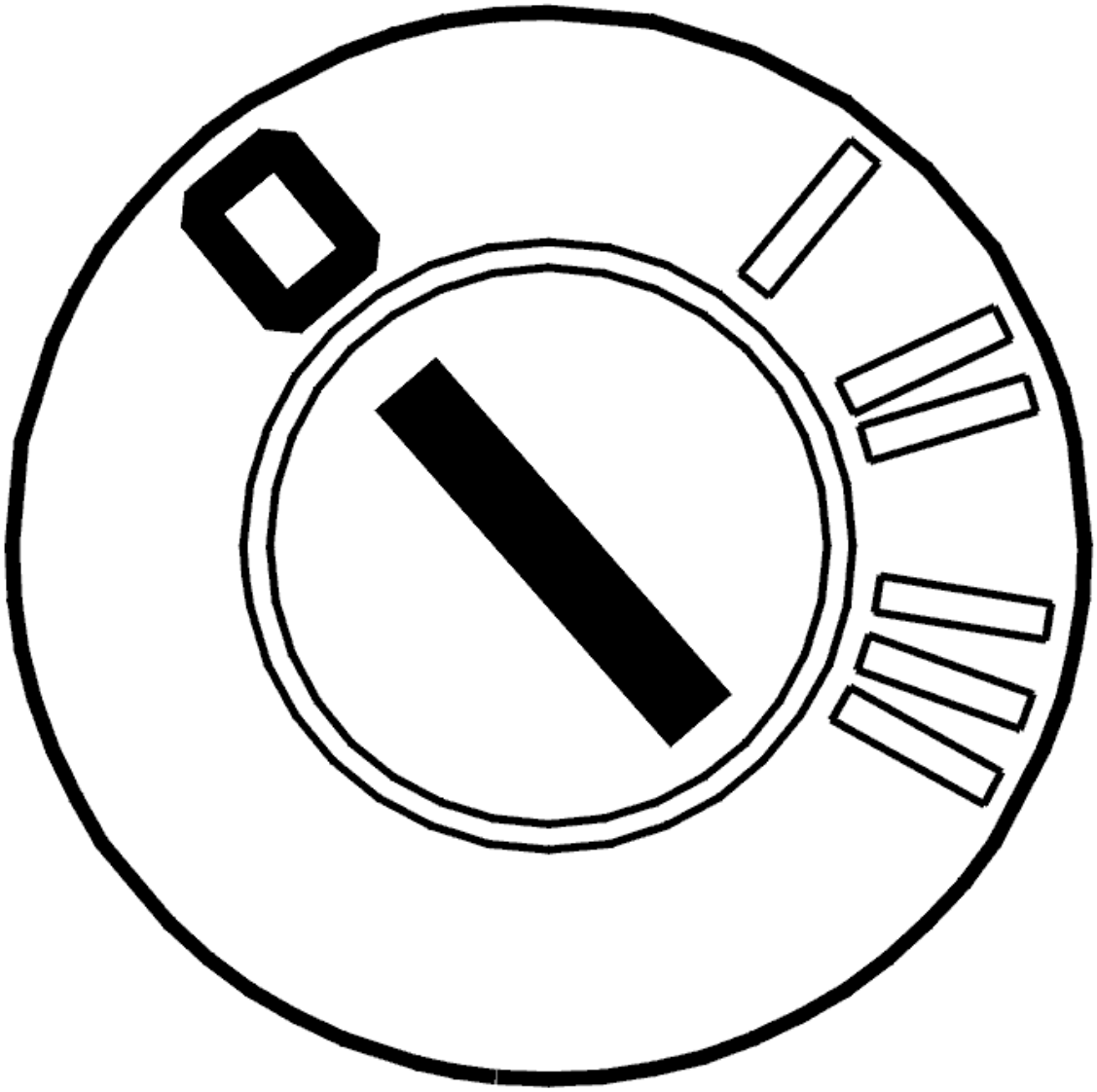

Fig. 259: Identifying Ignition OFF
Courtesy of VOLVO CARS CORPORATION

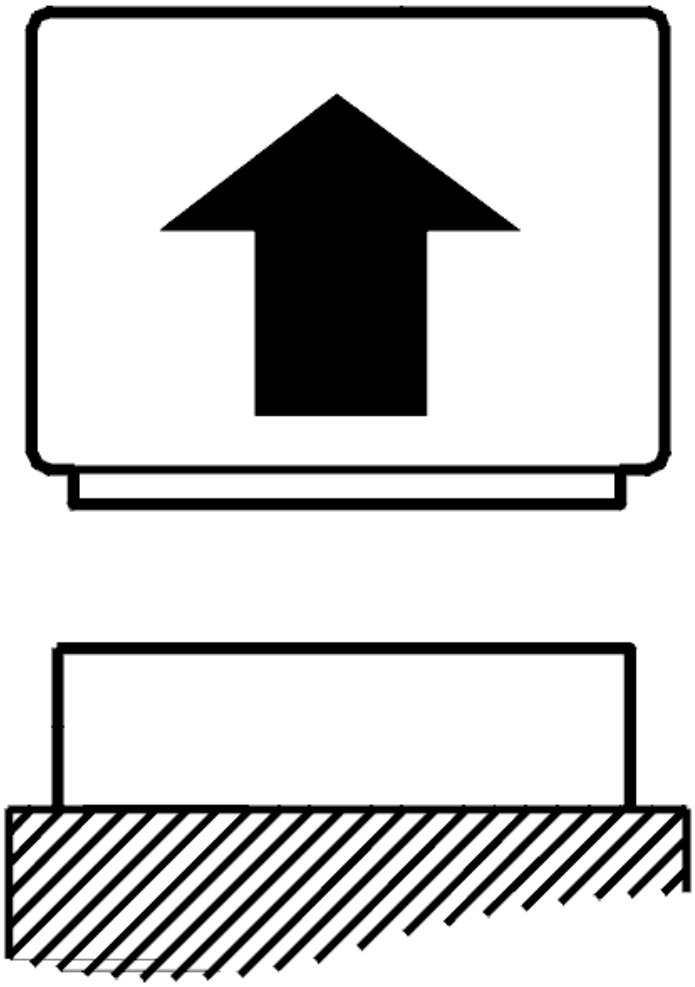

Fig. 260: Disconnecting Connector
Courtesy of VOLVO CARS CORPORATION

- Ignition off
- Unplug the central electronic module (CEM) D connector.

  The diagnostic trouble code indicates that communication between the central electronic module (CEM) and the right camera module (RCM) is inoperative. This could be due to a fault in the signal lead between the control modules or a damaged communication unit in one or all of the control modules.

  Check the signal lead between the central electronic module (CEM) and the right camera module (RCM) for an open circuit or short circuit. Also check intermediate connectors.

  Measure between:

  - Central electronic module (CEM) #D41 (#41) and right camera module (RCM) #5.

Remedy as necessary.

Other information

- see **CONNECTING THE BREAKOUT BOX**
- -2004: **SIGNAL SPECIFICATION**
- 2005-: **SIGNAL SPECIFICATION**
- Change the right camera module (RCM), see: **REAR VIEW MIRROR, REPLACING**
- see **CHECKING WIRING AND TERMINALS**

Was a fault detected?

- **YES**

  Refer to **VERIFICATION**

- **NO**

  Refer to **REPLACING THE CONTROL MODULE**

REPLACING THE CONTROL MODULE

Try changing the right camera module (RCM).

Remedy as necessary.

Other information

- Change the right camera module (RCM), see: **REAR VIEW MIRROR, REPLACING**

- **Continue**

  Refer to **VERIFICATION**

FAULT-TRACING INFORMATION

The right camera module (RCM) has previously registered a fault but the fault no longer exists. The diagnostic trouble code (DTC) was probably generated by an intermittent fault. If the fault persists, fault-tracing according to this diagnostic trouble code (DTC) should be carried out even though no fault symptom can be detected. The seriousness of the fault is determined from case to case.

You can choose between continuing fault-tracing or ending it.

Would you like to continue?

- **YES**

Refer to **CHECKING THE WIRING**

- **NO**

  FAULT NOT FOUND: Troubleshooting has been completed.

VERIFICATION

VERIFICATION

HINT: After carrying out the repair, check that the fault has been remedied.

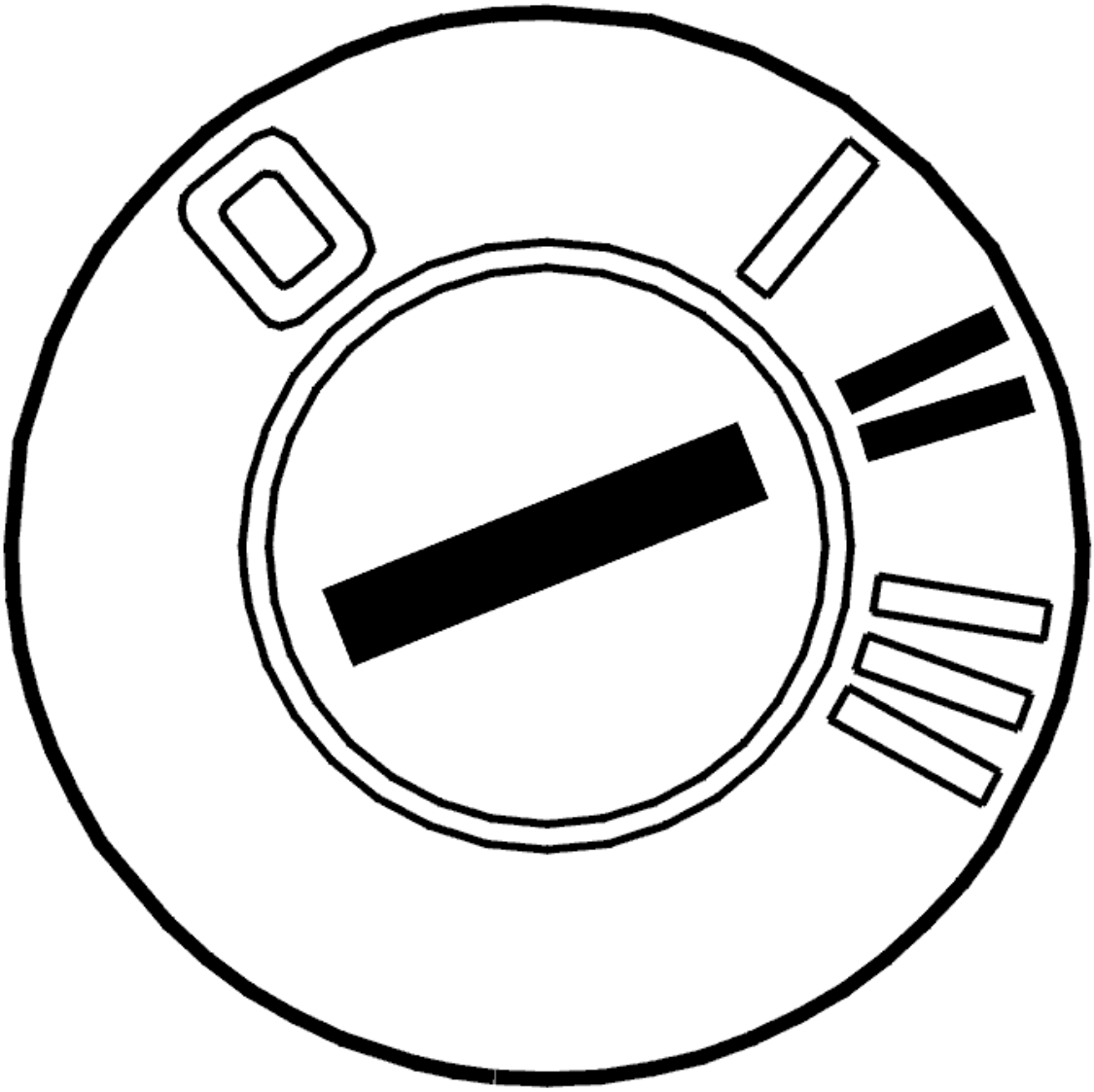

Fig. 261: Identifying Ignition ON
Courtesy of VOLVO CARS CORPORATION

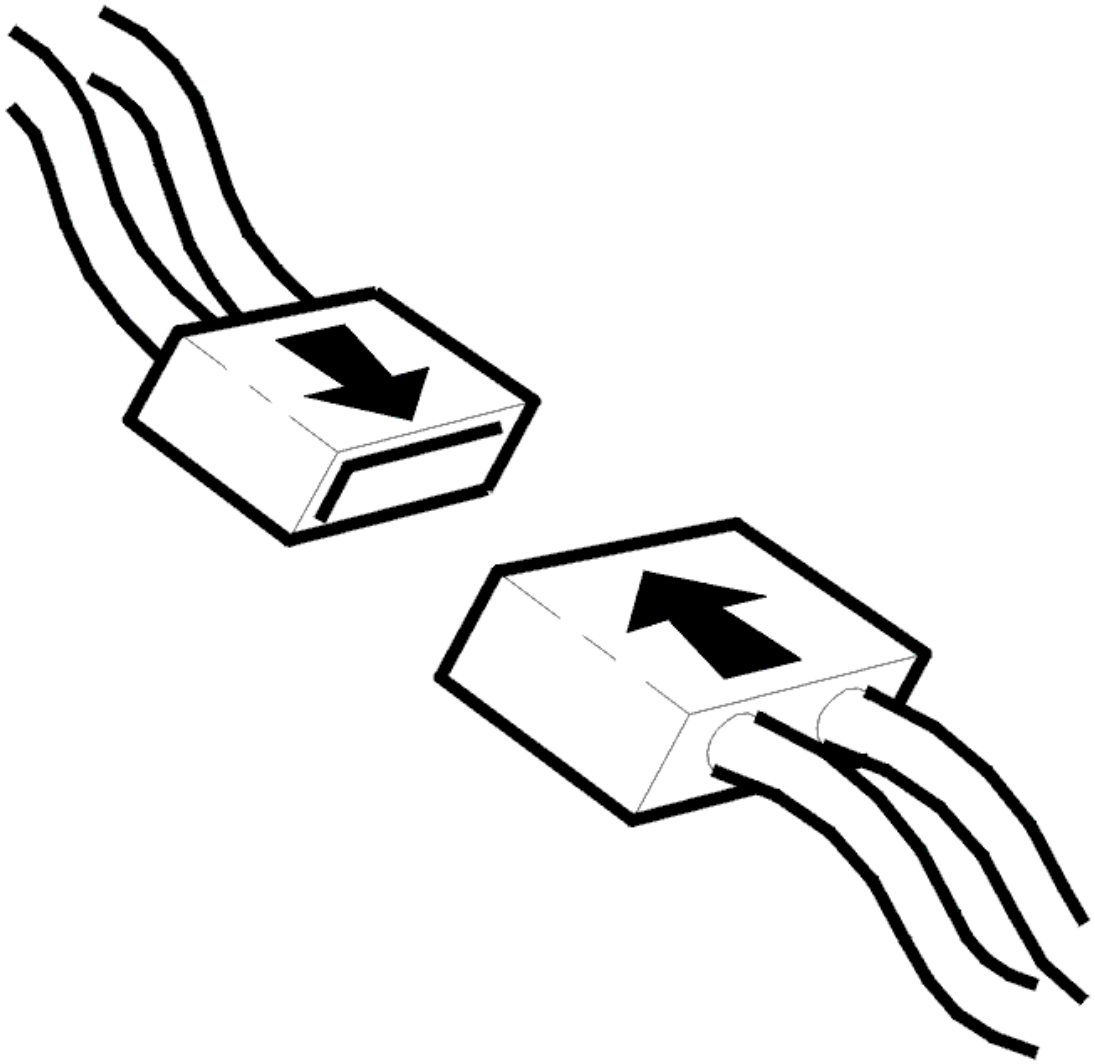

Fig. 262: Connecting Connector
Courtesy of VOLVO CARS CORPORATION

- Ignition off
- Reinstall the connectors, components etc.
- Ignition on

Did the right LED flash three times?

- **YES**

  VERIFIED: Troubleshooting has been completed.

- **NO**

Refer to **INFORMATION**

INFORMATION

FAULT-TRACING INFORMATION

The fault should have been detected and remedied. As this is not the case fault-tracing has failed.

Exit fault-tracing for this diagnostic trouble code (DTC) or make another attempt.

CEM-DD40: COMMUNICATION WITH THE STEERING WHEEL MODULE (SWM). COMMUNICATION FAULT (2005-2012)

DIAGNOSTIC TROUBLE CODE (DTC) INFORMATION CEM-DD40

Condition

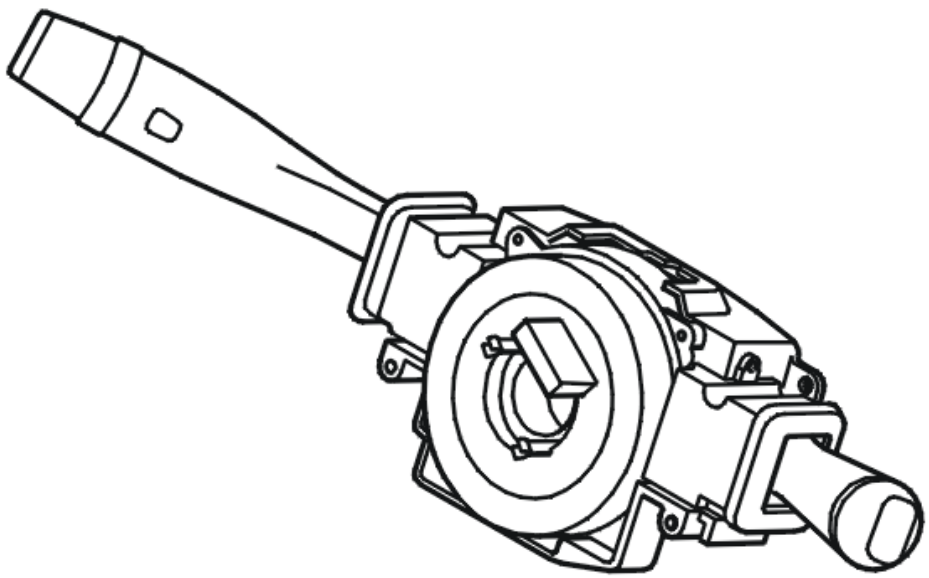

Fig. 263: Identifying Steering Wheel Control Module
Courtesy of VOLVO CARS CORPORATION

The central electronic module (CEM) transmits and receives information via a standardized serial communication method - LIN (Local Interconnect Network). The diagnostic trouble code (DTC) is stored if the control module registers serious interference such as blocked LIN communication with the steering wheel

module (SWM).

The diagnostic trouble code (DTC) can be detected when the ignition key is in position II for at least 10 seconds and the battery voltage exceeds 10.5 V.

NOTE: **In the event of CEM-DDxx diagnostic trouble codes (DTCs), the central electronic module (CEM) must not be replaced as the diagnostic trouble code (DTC) indicates a short-circuit in one or more conductors in the LIN network. The central electronic module (CEM) is the only control module that monitors the voltage level in the LIN wiring. The central electronic module (CEM) is therefore the only control module that can store a diagnostic trouble code (DTC) for a short-circuit in one of the cables to ground or supply voltage. Do not replace the central electronic module (CEM) in the event of a LIN fault unless VIDA (Volvo scan tool) has indicated that the central electronic module (CEM) has an internal fault.**

Substitute Value

- None.

Possible Source

- Short-circuit between the LIN wiring
- Open-circuit in the LIN wiring
- Internal fault in another control module in the same part of the LIN network.

Fault symptom[s]

- The windshield wipers only operate at lowest speed
- Front windshield washing does not work
- Rear windshield washing does not work
- The turn signal lamp switch does not work
- Cruise control does not work at all
- The turn signal lamps are not operating
- The radio buttons on the steering wheel do not function
- The phone buttons on the steering wheel do not work.

COMMUNICATION FAULT

CHECKING THE WIRING

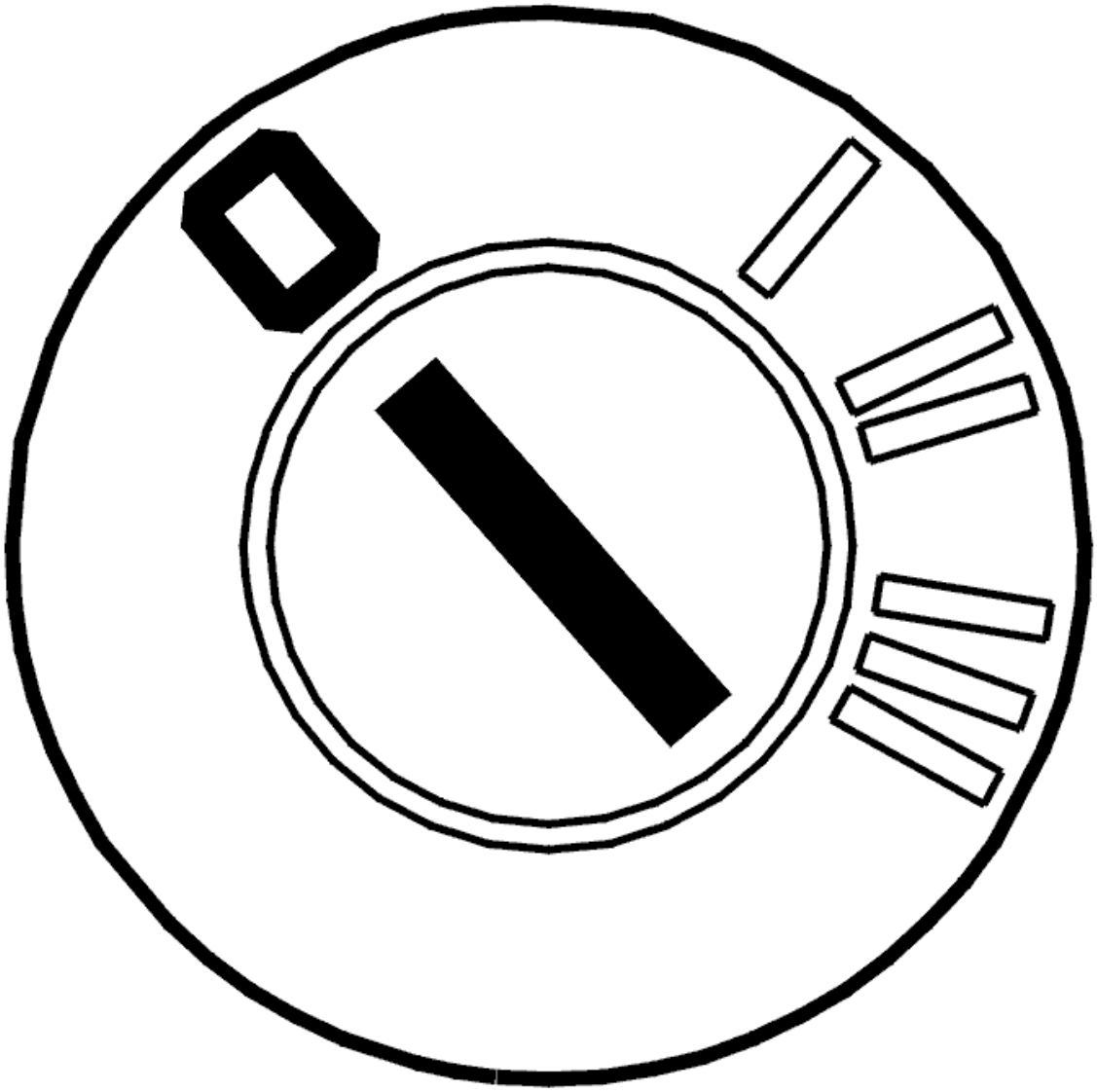

Fig. 264: Identifying Ignition OFF
Courtesy of VOLVO CARS CORPORATION

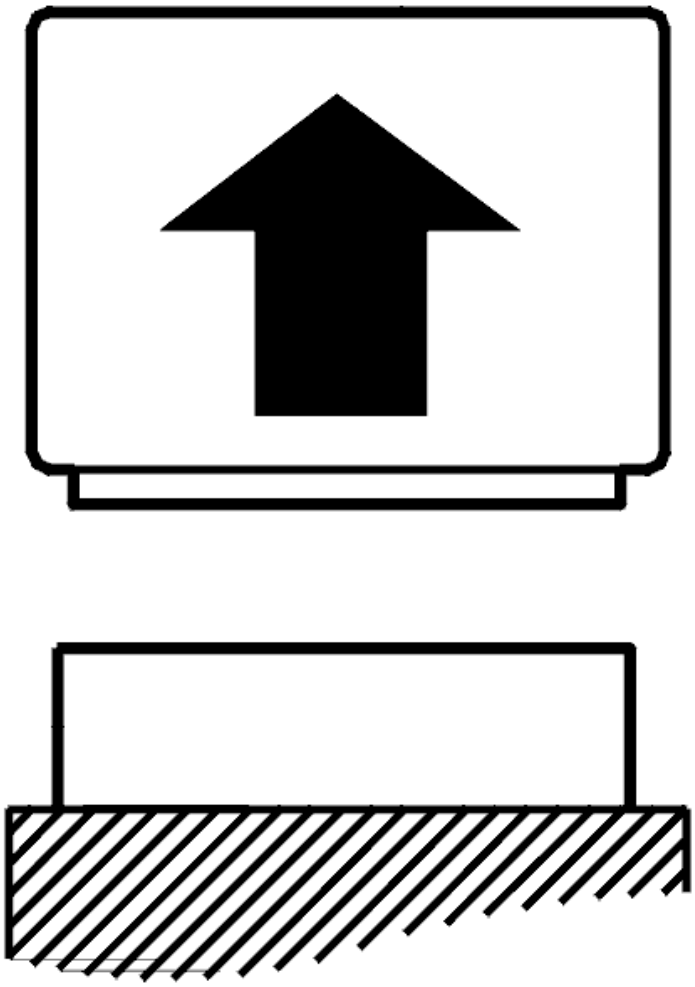

Fig. 265: Disconnecting Connector
Courtesy of VOLVO CARS CORPORATION

- Ignition off
- Disconnect central electronic module (CEM) connector D.

  The diagnostic trouble code (DTC) indicates that the communication between the steering wheel module (SWM) and central electronic module (CEM) is not working. This may be due to a fault in the signal cable between the control modules or a damaged communication device in one or both of the control modules.

  Check the signal cable. Check for an open-circuit. Check for a short-circuit to ground.

  Take readings between:

  - Central electronic module (CEM) #D58 (#58) and steering wheel module (SWM) #7.

Remedy as necessary.

Other information

- see **CONNECTING THE BREAKOUT BOX**
- -2004: **SIGNAL SPECIFICATION**
- 2005-: **SIGNAL SPECIFICATION**
- see **LOCATION OF COMPONENTS**
- see **STEERING WHEEL MODULE (SWM), REPLACING**
- see **CHECKING WIRING AND TERMINALS**

Was a fault detected?

- **YES**

  Refer to **VERIFICATION**

- **NO**

  Refer to **REPLACING THE CONTROL MODULE**

REPLACING THE CONTROL MODULE

Try replacing the steering wheel module (SWM).

Remedy as necessary.

Other information

- see **STEERING WHEEL MODULE (SWM), REPLACING**

- **Continue**

  Refer to **VERIFICATION**

VERIFICATION

VERIFICATION

HINT: After carrying out the repair, check that the fault has been remedied.

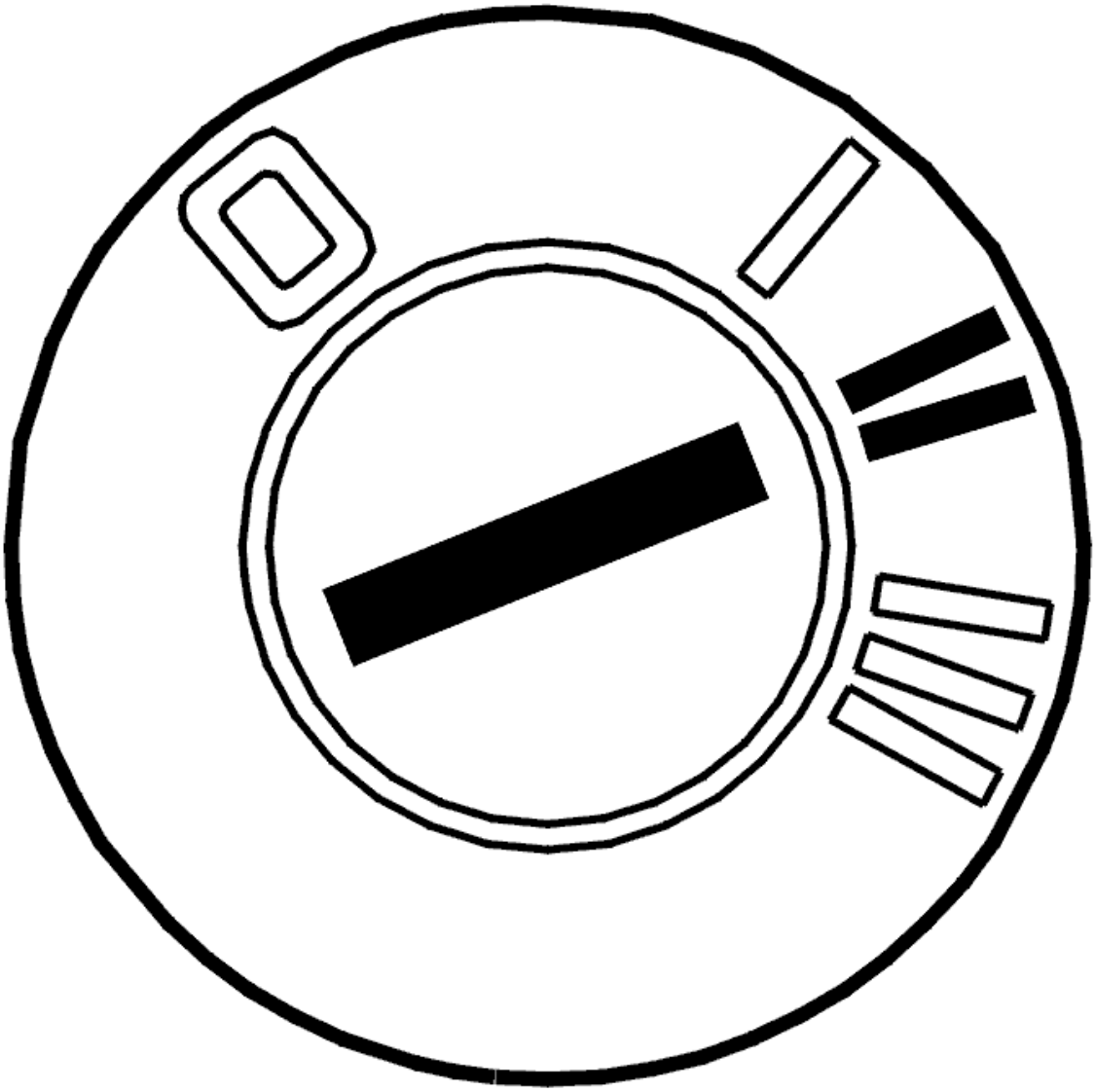

Fig. 266: Identifying Ignition ON
Courtesy of VOLVO CARS CORPORATION

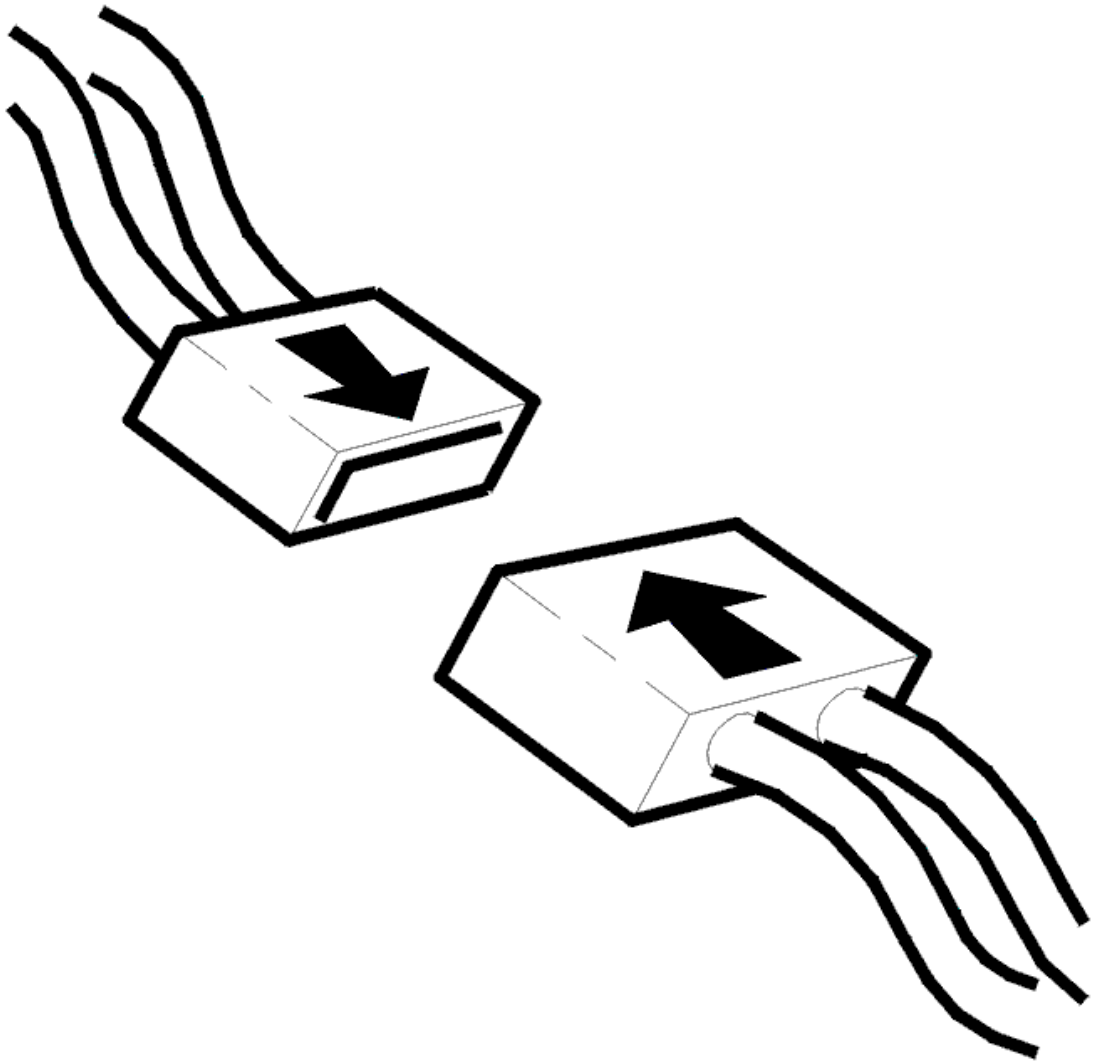

Fig. 267: Connecting Connector
Courtesy of VOLVO CARS CORPORATION

- Ignition off
- Reinstall the connectors, components etc.
- Ignition on.

  Check that the function for the relevant button or switch is OK.

Is the function OK?

- **YES**

  VERIFIED: Troubleshooting has been completed.

- **NO**

  Refer to **INFORMATION**

INFORMATION

FAULT-TRACING INFORMATION

The fault should have been detected and remedied. As this is not the case fault-tracing has failed.

Exit fault-tracing for this diagnostic trouble code (DTC) or make another attempt.

CEM-DD41: COMMUNICATION WITH THE STEERING WHEEL MODULE (SWM). SIGNAL MISSING (2005-2012)

DIAGNOSTIC TROUBLE CODE (DTC) INFORMATION CEM-DD41

Condition

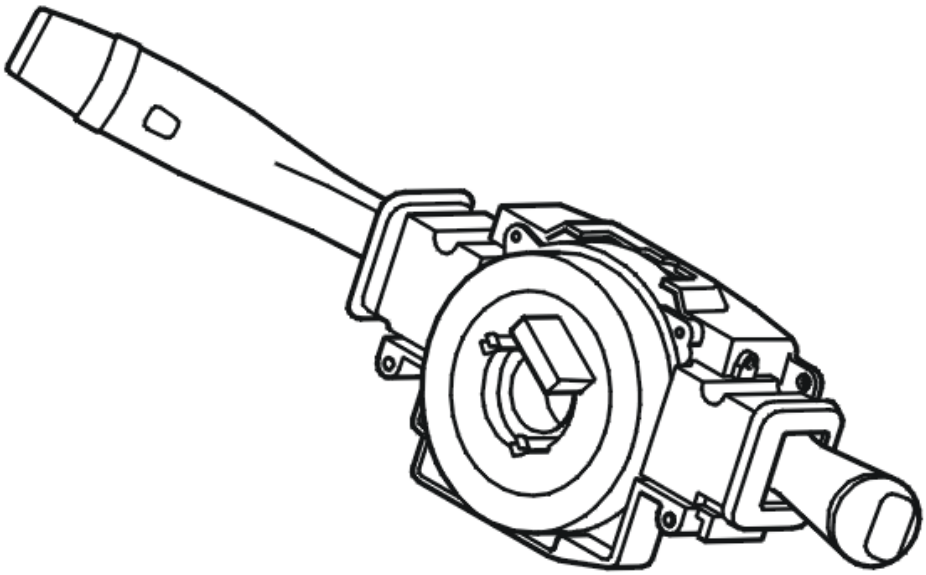

Fig. 268: Identifying Steering Wheel Control Module
Courtesy of VOLVO CARS CORPORATION

The central electronic module (CEM) transmits and receives information via a standardized serial

communication method - LIN (Local Interconnect Network). The diagnostic trouble code (DTC) is stored if the control module registers serious interference such as blocked LIN communication with the steering wheel module (SWM).

The diagnostic trouble code (DTC) can be detected when the ignition key is in position II for at least 10 seconds and the battery voltage exceeds 10.5 V.

NOTE: **In the event of CEM-DDxx diagnostic trouble codes (DTCs), the central electronic module (CEM) must not be replaced as the diagnostic trouble code (DTC) indicates a short-circuit in one or more conductors in the LIN network. The central electronic module (CEM) is the only control module that monitors the voltage level in the LIN wiring. The central electronic module (CEM) is therefore the only control module that can store a diagnostic trouble code (DTC) for a short-circuit in one of the cables to ground or supply voltage. Do not replace the central electronic module (CEM) in the event of a LIN fault unless VIDA (Volvo scan tool) has indicated that the central electronic module (CEM) has an internal fault.**

Substitute Value

- None.

Possible Source

- Short-circuit to ground in the LIN cable
- Short-circuit to supply voltage in the LIN cable.
- Internal fault in another unit in the same part of the LIN network.

Fault symptom[s]

- The windshield wipers only operate at lowest speed
- Front windshield washing does not work
- Rear windshield washing does not work
- The turn signal lamp switch does not work
- Cruise control does not work at all
- The turn signal lamps are not operating
- The radio buttons on the steering wheel do not function
- The phone buttons on the steering wheel do not work.

SIGNAL MISSING

CHECKING THE WIRING

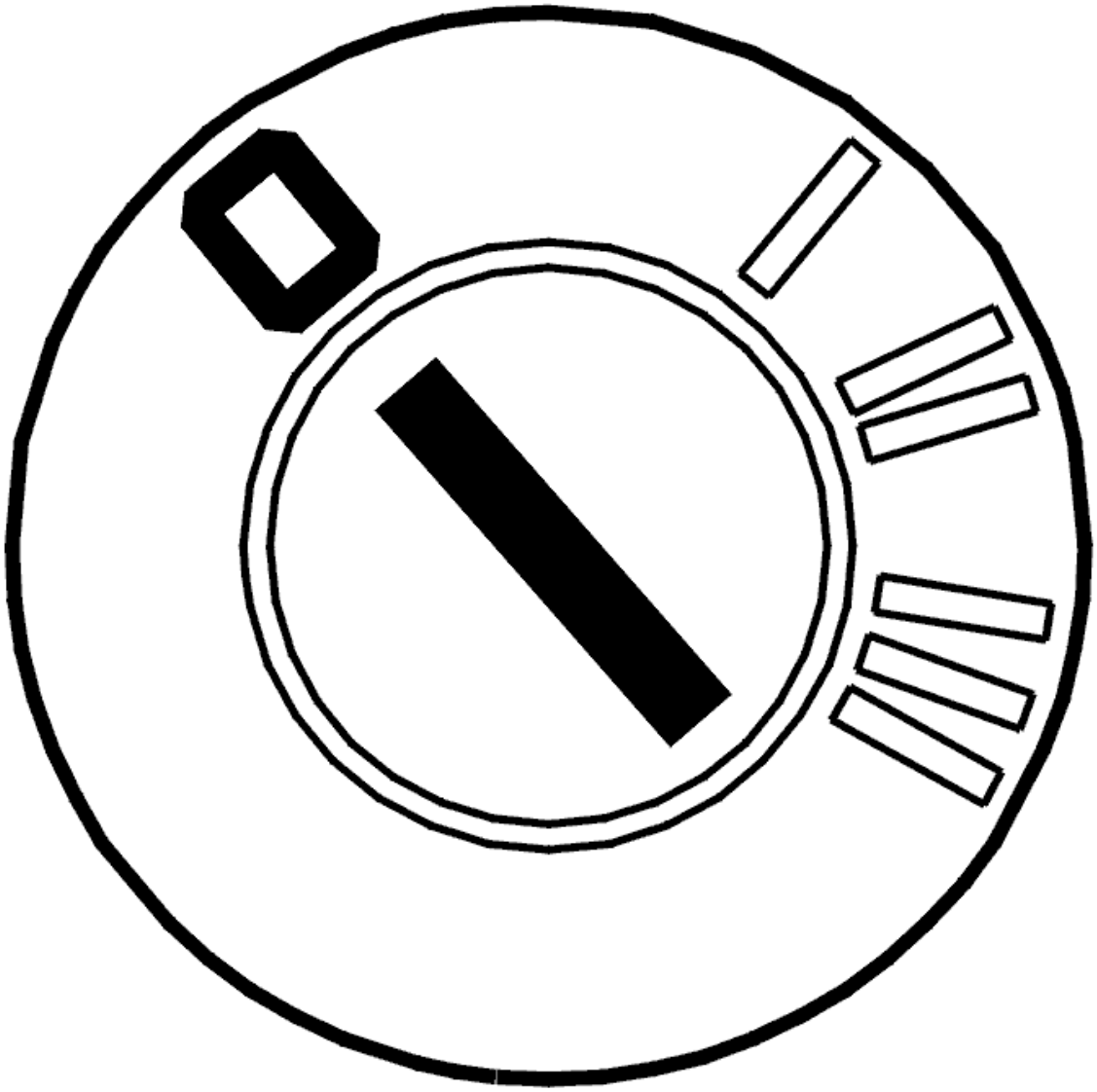

Fig. 269: Identifying Ignition OFF
Courtesy of VOLVO CARS CORPORATION

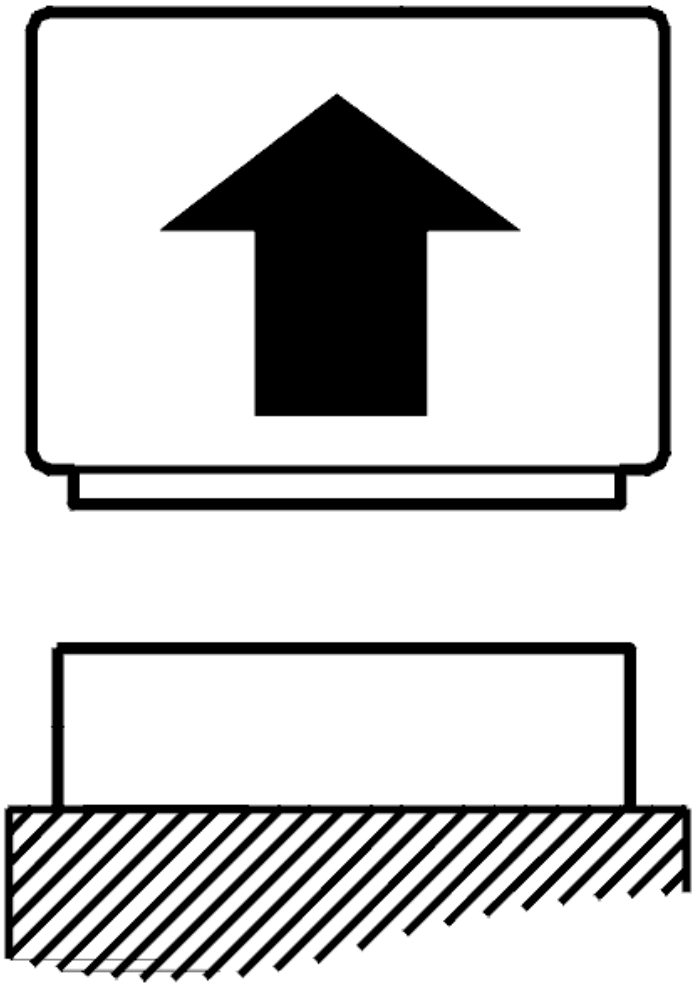

Fig. 270: Disconnecting Connector
Courtesy of VOLVO CARS CORPORATION

- Ignition off
- Disconnect central electronic module (CEM) connector D.

  The diagnostic trouble code (DTC) indicates that the communication between the steering wheel module (SWM) and central electronic module (CEM) is not working. This may be due to a fault in the signal cable between the control modules or a damaged communication device in one or both of the control modules.

  Check the signal cable. Check for a short-circuit to supply voltage. Check for a short-circuit to ground.

  Take readings between:

  - Central electronic module (CEM) #D58 (#58) and steering wheel module (SWM) #7.

Remedy as necessary.

Other information

- see **CONNECTING THE BREAKOUT BOX**
- -2004: **SIGNAL SPECIFICATION**
- 2005-: **SIGNAL SPECIFICATION**
- see **LOCATION OF COMPONENTS**
- see **STEERING WHEEL MODULE (SWM), REPLACING**
- see **CHECKING WIRING AND TERMINALS**

Was a fault detected?

- **YES**

  Refer to **VERIFICATION**

- **NO**

  Refer to **REPLACING THE CONTROL MODULE**

REPLACING THE CONTROL MODULE

Try replacing the steering wheel module (SWM).

Remedy as necessary.

Other information

- see **STEERING WHEEL MODULE (SWM), REPLACING**

- **Continue**

  Refer to **VERIFICATION**

VERIFICATION

VERIFICATION

HINT: After carrying out the repair, check that the fault has been remedied.

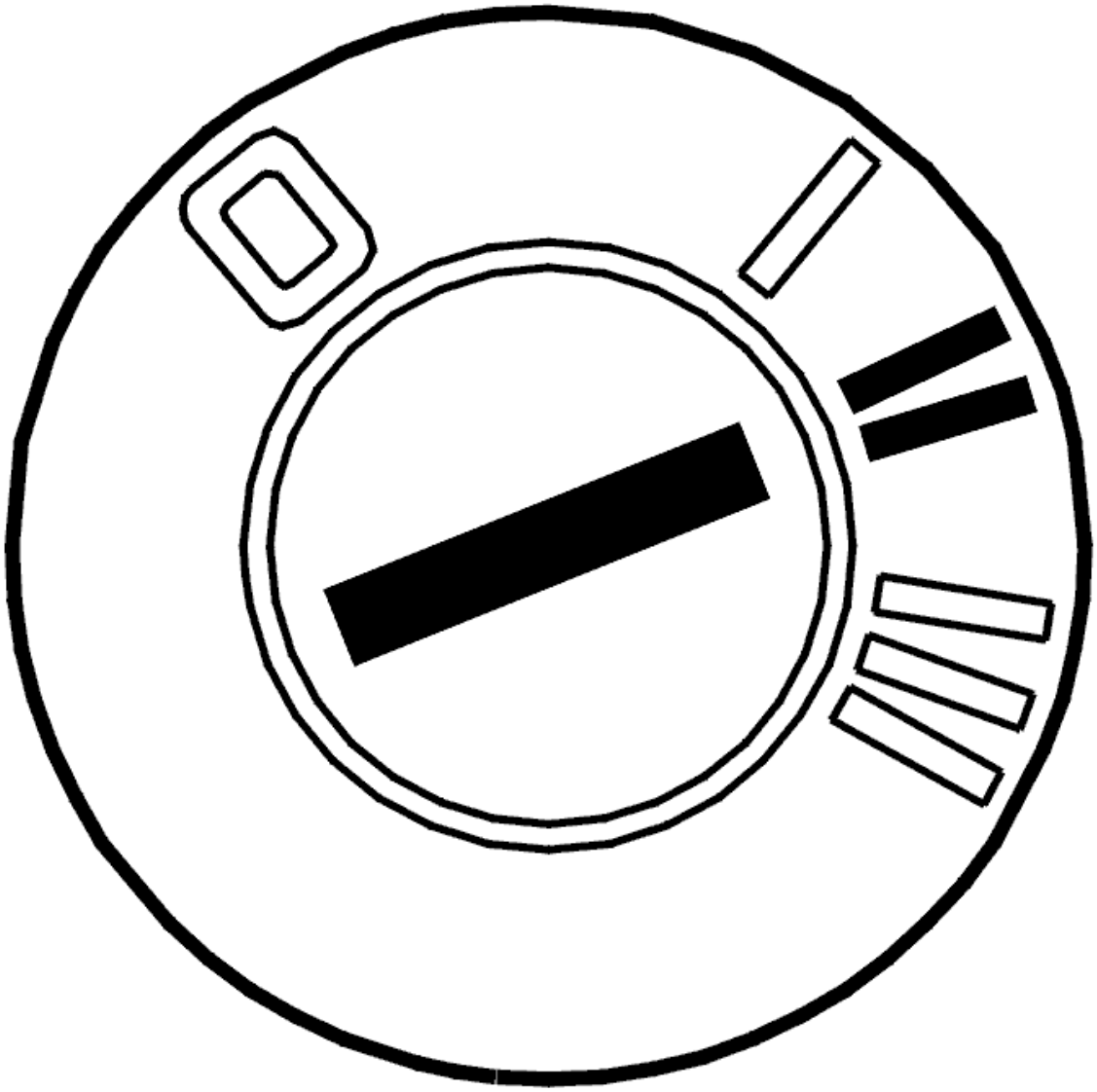

Fig. 271: Identifying Ignition ON
Courtesy of VOLVO CARS CORPORATION

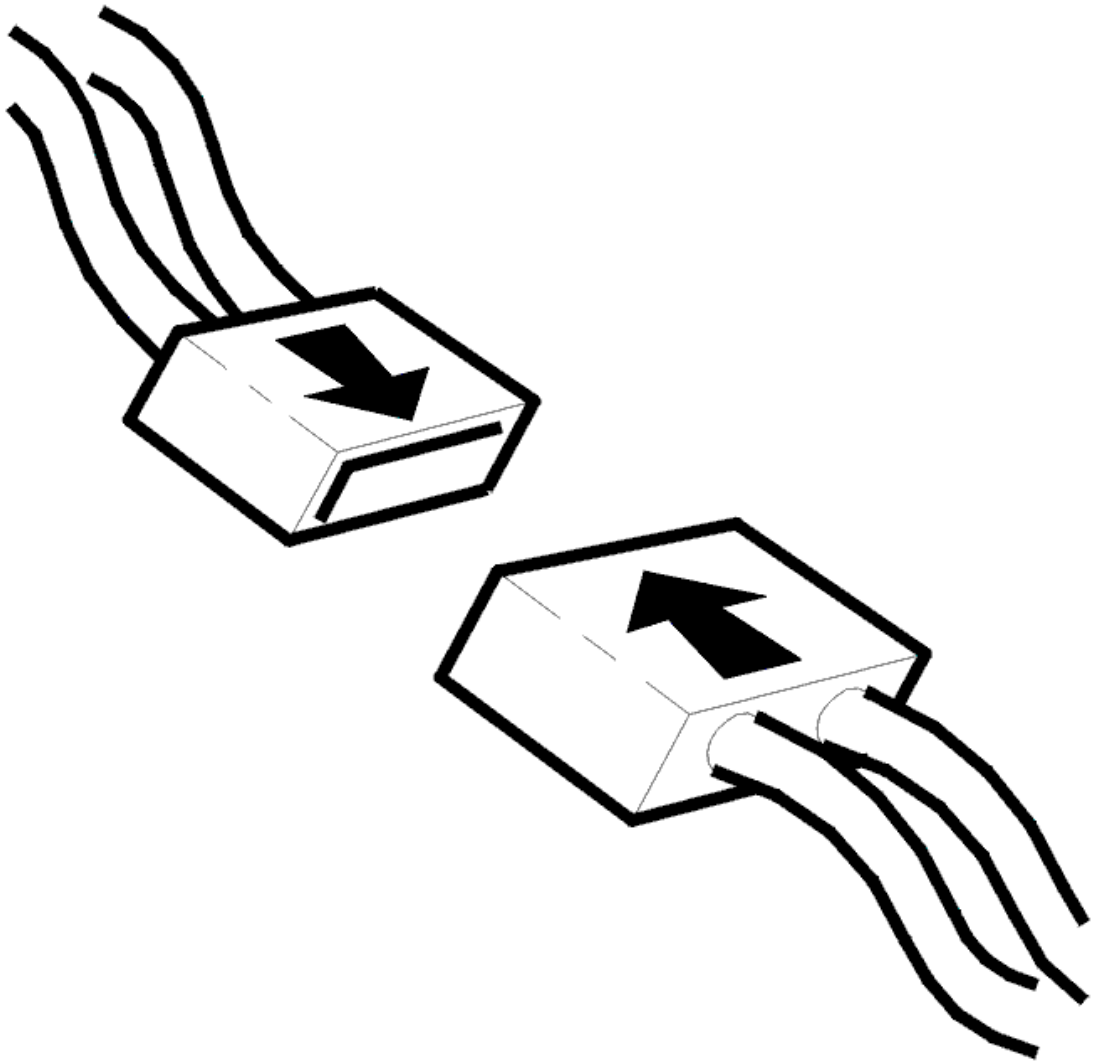

Fig. 272: Connecting Connector
Courtesy of VOLVO CARS CORPORATION

- Ignition off
- Reinstall the connectors, components etc.
- Ignition on.

  Check that the function for the relevant button or switch is OK.

Is the function OK?

- **YES**

  VERIFIED: Troubleshooting has been completed.

- **NO**

  Refer to **INFORMATION**

INFORMATION

FAULT-TRACING INFORMATION

The fault should have been detected and remedied. As this is not the case fault-tracing has failed.

Exit fault-tracing for this diagnostic trouble code (DTC) or make another attempt.

CEM-DD42: COMMUNICATION WITH THE STEERING WHEEL MODULE (SWM). COMMUNICATION FAULT (2005)

DIAGNOSTIC TROUBLE CODE (DTC) INFORMATION CEM-DD42

Condition

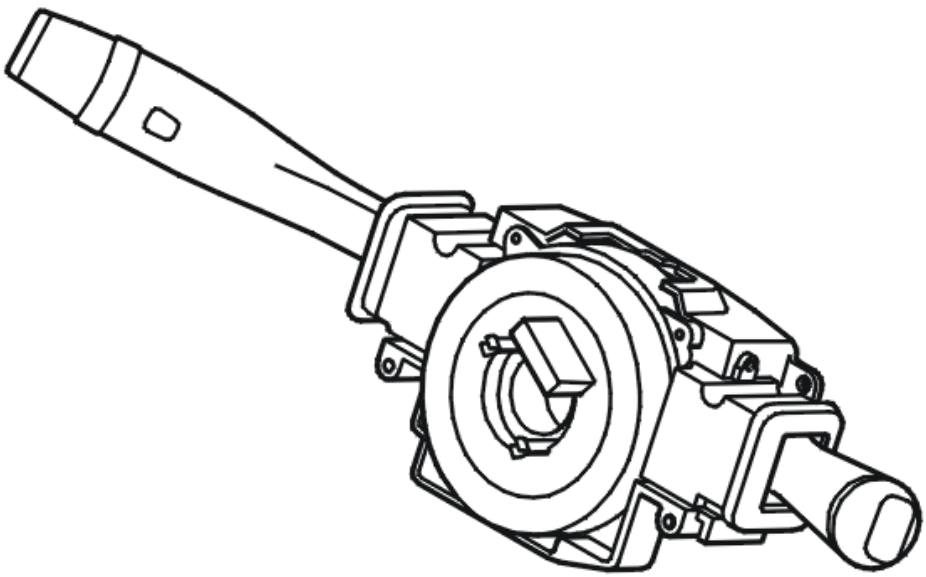

Fig. 273: Identifying Steering Wheel Control Module
Courtesy of VOLVO CARS CORPORATION

The central electronic module (CEM) transmits and receives information via a standardized serial

communication method - LIN (Local Interconnect Network). The diagnostic trouble code (DTC) is stored if the control module registers serious interference such as blocked LIN communication with the steering wheel module (SWM).

The diagnostic trouble code (DTC) can be diagnosed when the ignition key is in position II for at least 10 seconds and the battery voltage exceeds 10.5 V.

NOTE: **In the event of CEM-DDxx diagnostic trouble codes (DTCs), the central electronic module (CEM) must not be replaced as the diagnostic trouble code (DTC) indicates a short-circuit in one or more conductors in the LIN network. The central electronic module (CEM) is the only control module that monitors the voltage level in the LIN wiring. The central electronic module (CEM) is therefore the only control module that can store a diagnostic trouble code (DTC) for a short-circuit in one of the cables to ground or supply voltage. Do not replace the central electronic module (CEM) in the event of a LIN fault unless VIDA (Volvo scan tool) has indicated that the central electronic module (CEM) has an internal fault.**

Substitute Value

- None.

Possible Source

- Short-circuit between the LIN wiring
- Open-circuit in the LIN wiring
- Internal fault in another control module in the same part of the LIN network.

Fault symptom[s]

- The windshield wipers only operate at lowest speed
- Front windshield washing does not work
- Rear windshield washing does not work
- The RTI buttons on the steering wheel do not function
- The turn signal lamp switch does not work
- Cruise control does not work at all
- The turn signal lamps are not operating
- The radio buttons on the steering wheel do not function
- The phone buttons on the steering wheel do not work.

COMMUNICATION FAULT

CHECKING THE WIRING

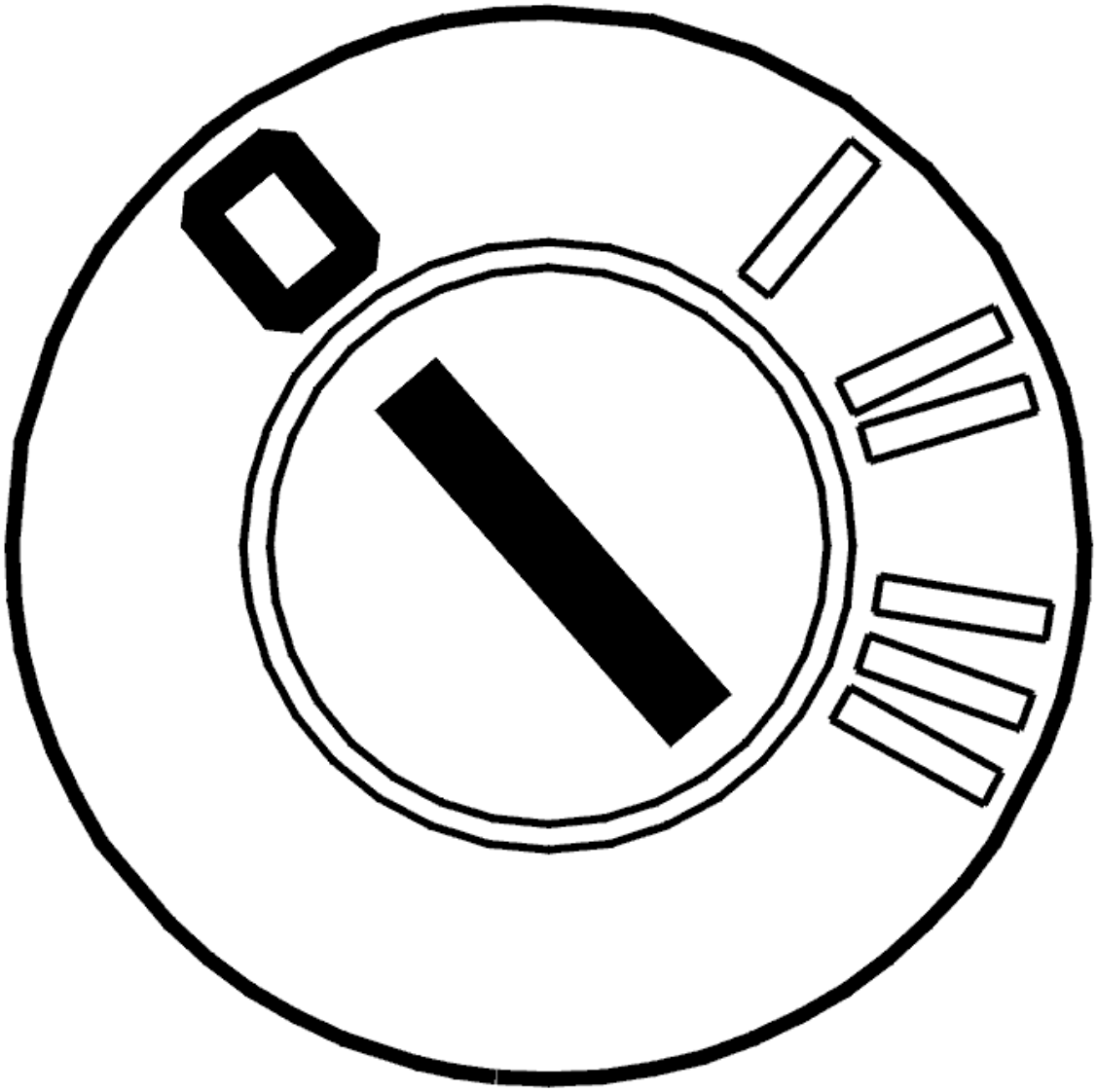

Fig. 274: Identifying Ignition OFF
Courtesy of VOLVO CARS CORPORATION

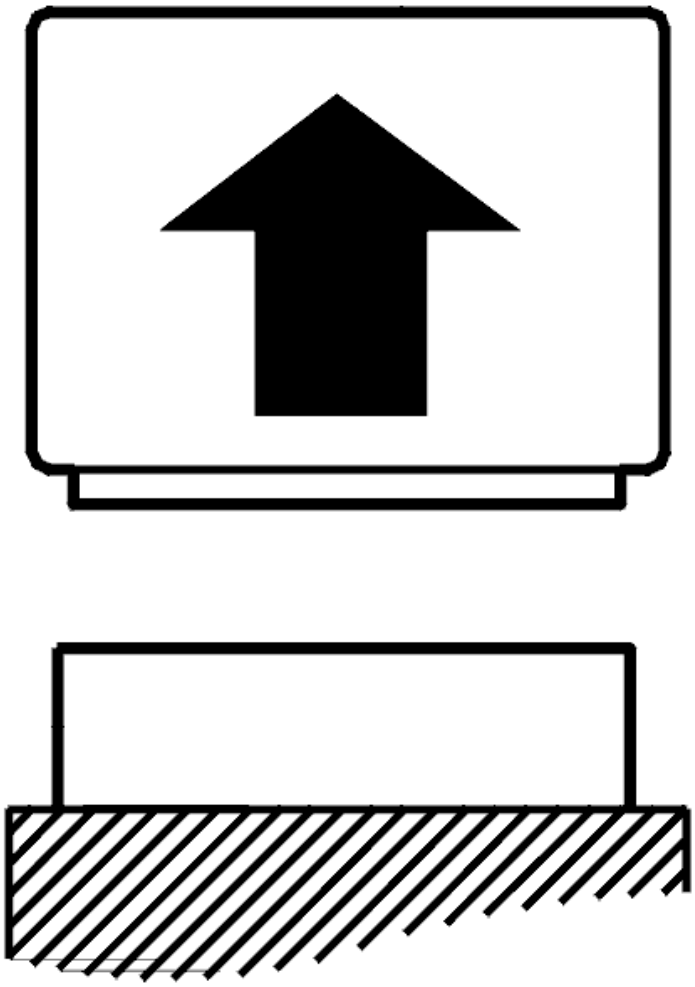

Fig. 275: Disconnecting Connector
Courtesy of VOLVO CARS CORPORATION

- Ignition off
- Disconnect central electronic module (CEM) connector D.

  The diagnostic trouble code (DTC) indicates that the communication between the steering wheel module (SWM) and central electronic module (CEM) is not working. This may be due to a fault in the signal cable between the control modules or a damaged communication device in one or both of the control modules.

  Check the signal cable. Check for an open-circuit. Check for a short-circuit to ground.

  Take readings between:

  - Central electronic module (CEM) #D58 (#58) and steering wheel module (SWM) #7.

Remedy as necessary.

Other information

- see **CONNECTING THE BREAKOUT BOX**
- -2004: **SIGNAL SPECIFICATION**
- 2005-: **SIGNAL SPECIFICATION**
- see **LOCATION OF COMPONENTS**
- see **STEERING WHEEL MODULE (SWM), REPLACING**
- see **CHECKING WIRING AND TERMINALS**

Was a fault detected?

- **YES**

  Refer to **VERIFICATION**

- **NO**

  Refer to **REPLACING THE CONTROL MODULE**

REPLACING THE CONTROL MODULE

Try replacing the steering wheel module (SWM).

Remedy as necessary.

Other information

- see **STEERING WHEEL MODULE (SWM), REPLACING**

- **Continue**

  Refer to **VERIFICATION**

VERIFICATION

VERIFICATION

HINT: After carrying out the repair, check that the fault has been remedied.

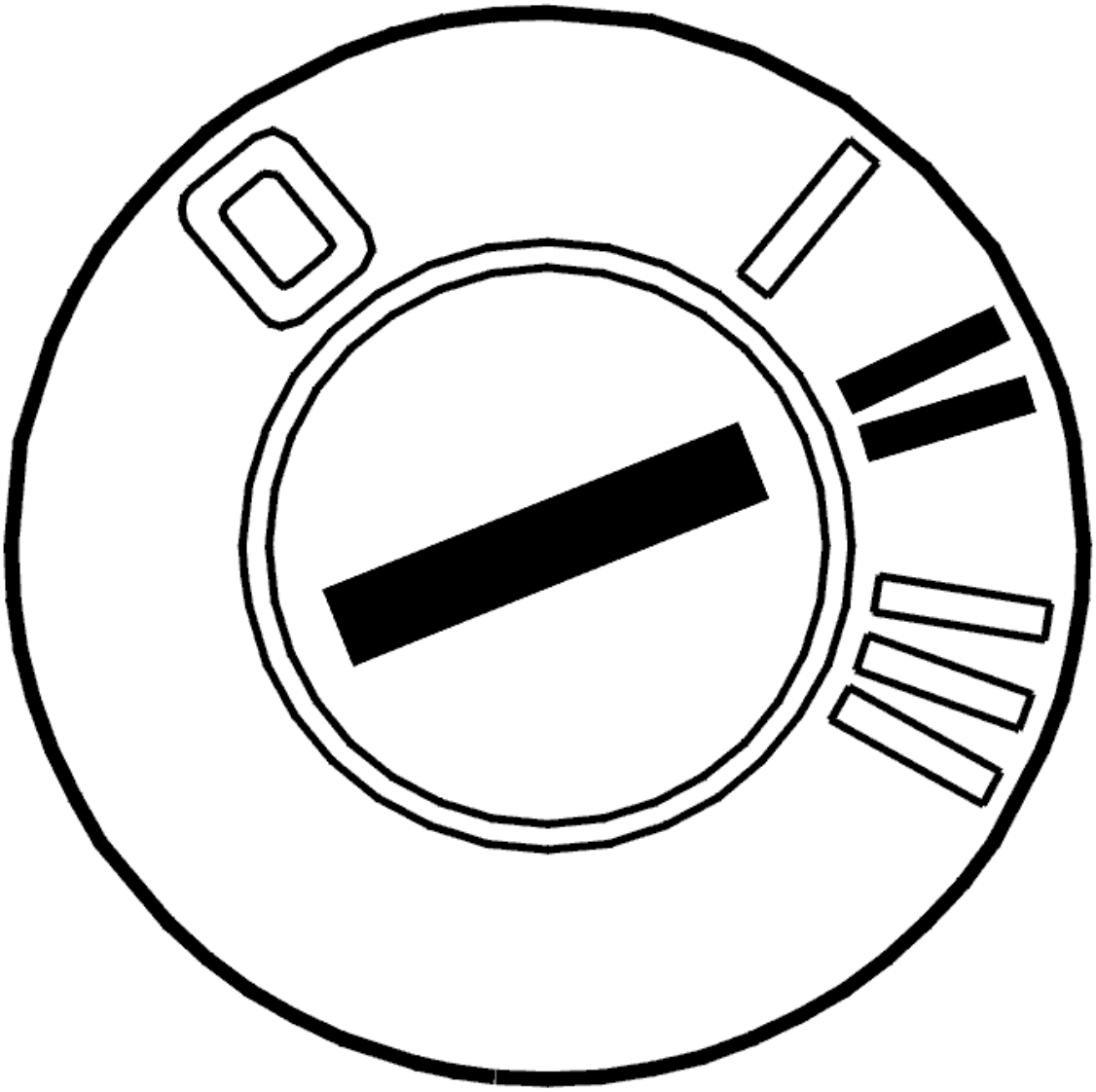

Fig. 276: Identifying Ignition ON
Courtesy of VOLVO CARS CORPORATION

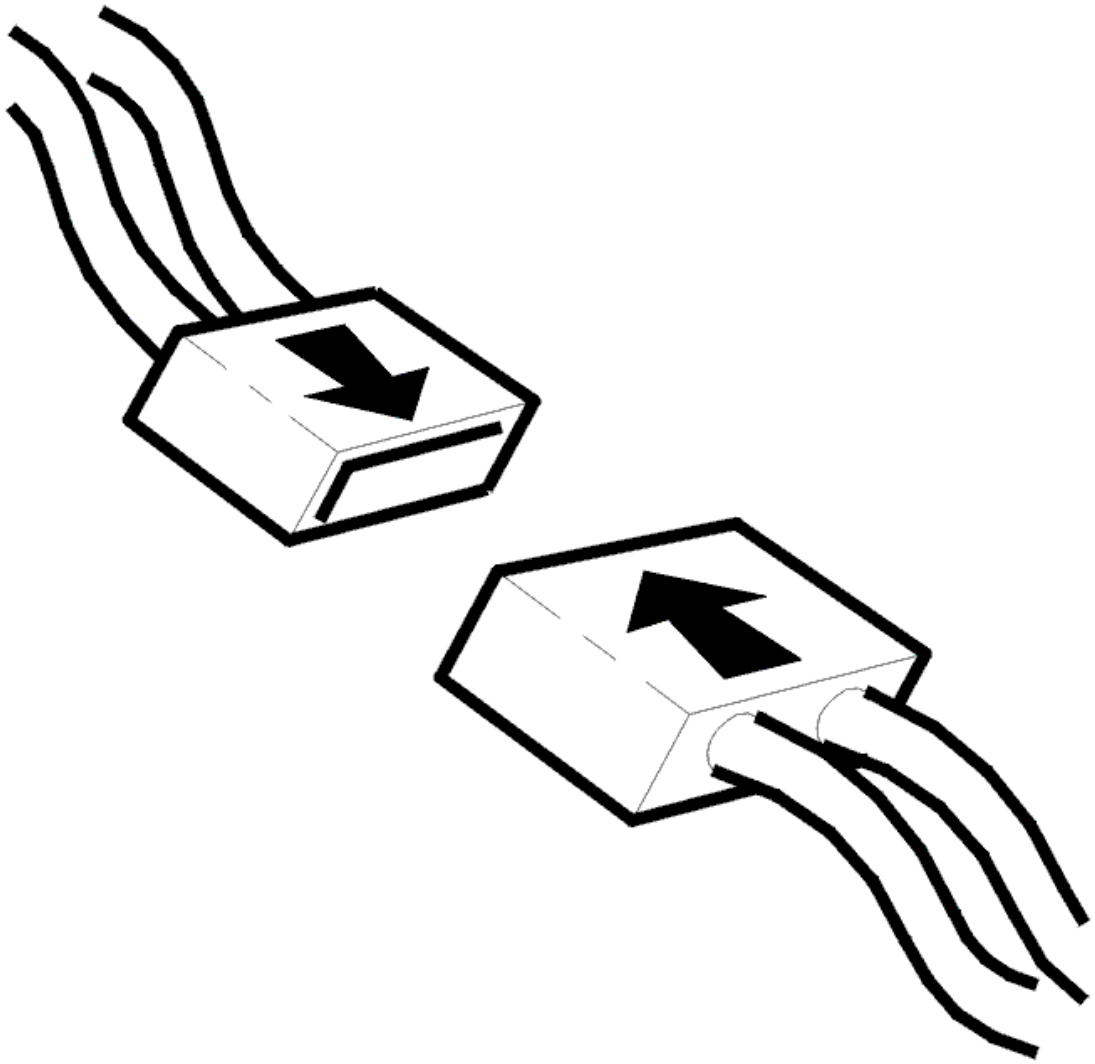

Fig. 277: Connecting Connector
Courtesy of VOLVO CARS CORPORATION

- Ignition off
- Reinstall the connectors, components etc.
- Ignition on.

  Check that the function for the relevant button or switch is OK.

Is the function OK?

- **YES**

  VERIFIED: Troubleshooting has been completed.

- **NO**

  Refer to **INFORMATION**

INFORMATION

FAULT-TRACING INFORMATION

The fault should have been detected and remedied. As this is not the case fault-tracing has failed.

Exit fault-tracing for this diagnostic trouble code (DTC) or make another attempt.

CEM-DD50: COMMUNICATION WITH THE STEERING WHEEL MODULE (SWM). SIGNAL MISSING (2005-2012)

DIAGNOSTIC TROUBLE CODE (DTC) INFORMATION CEM-DD50

Condition

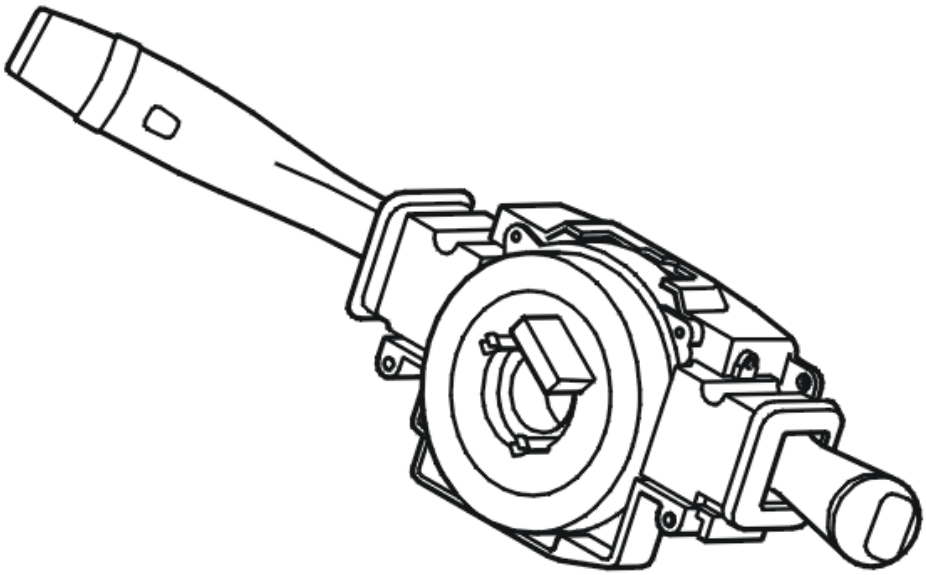

Fig. 278: Identifying Steering Wheel Control Module
Courtesy of VOLVO CARS CORPORATION

The central electronic module (CEM) transmits and receives information via a standardized serial

communication method - LIN (Local Interconnect Network). The diagnostic trouble code (DTC) is stored if the control module registers serious interference such as blocked LIN communication with the steering wheel module (SWM).

The diagnostic trouble code (DTC) can be detected when the ignition key is in position II for at least 10 seconds and the battery voltage exceeds 10.5 V.

NOTE: **In the event of CEM-DDxx diagnostic trouble codes (DTCs), the central electronic module (CEM) must not be replaced as the diagnostic trouble code (DTC) indicates a short-circuit in one or more conductors in the LIN network. The central electronic module (CEM) is the only control module that monitors the voltage level in the LIN wiring. The central electronic module (CEM) is therefore the only control module that can store a diagnostic trouble code (DTC) for a short-circuit in one of the cables to ground or supply voltage. Do not replace the central electronic module (CEM) in the event of a LIN fault unless VIDA (Volvo scan tool) has indicated that the central electronic module (CEM) has an internal fault.**

Substitute Value

- None.

Possible Source

- Short-circuit between the LIN wiring
- Open-circuit in the LIN wiring
- Internal fault in another control module in the same part of the LIN network.

Fault symptom[s]

- The windshield wipers are not working
- Front windshield washing does not work
- Rear windshield washing does not work
- The turn signal lamp switch does not work
- Cruise control does not work at all
- The turn signal lamps are not operating
- The radio buttons on the steering wheel do not function
- The phone buttons on the steering wheel do not work.

SIGNAL MISSING

CHECKING THE WIRING

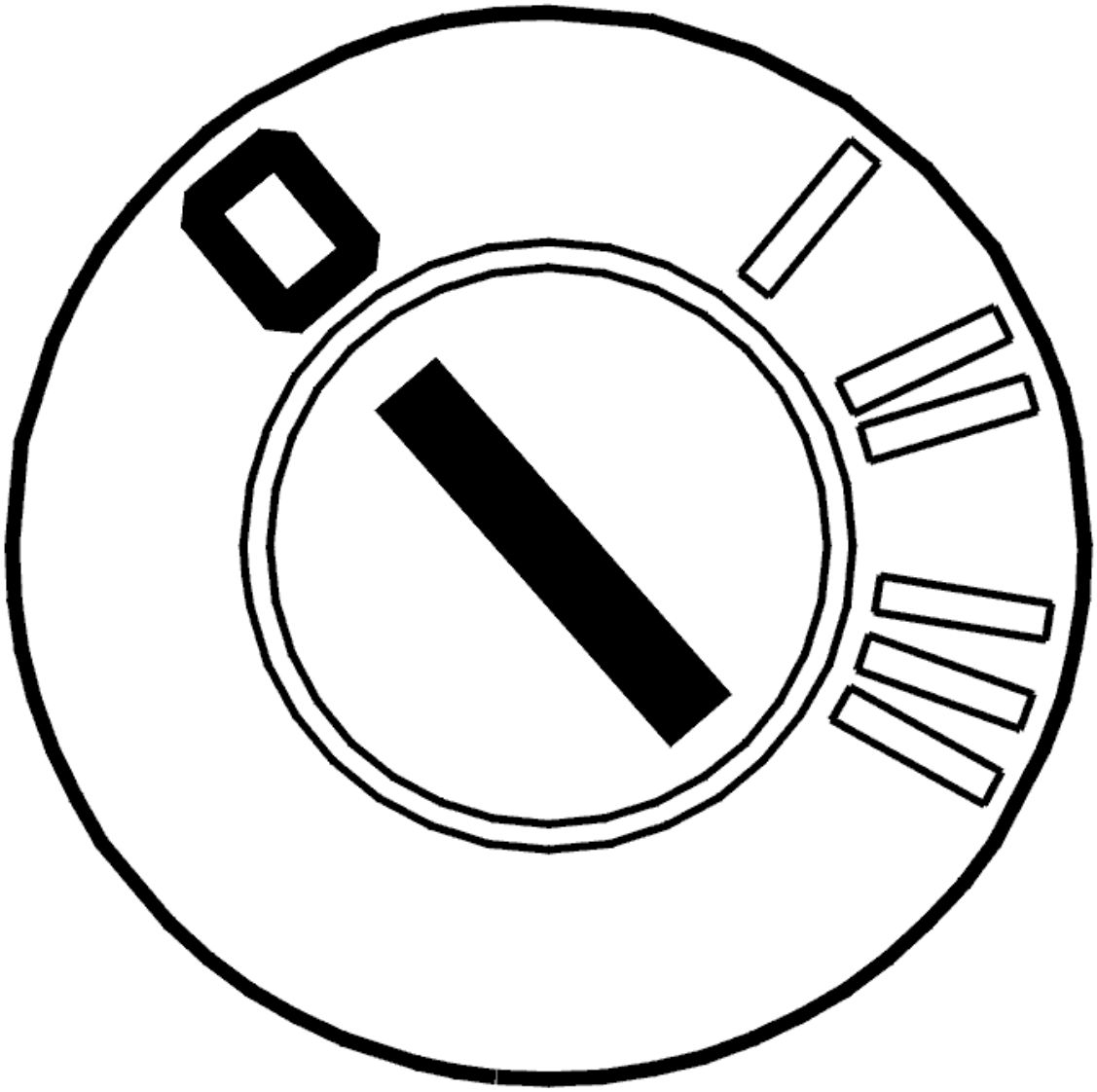

Fig. 279: Identifying Ignition OFF
Courtesy of VOLVO CARS CORPORATION

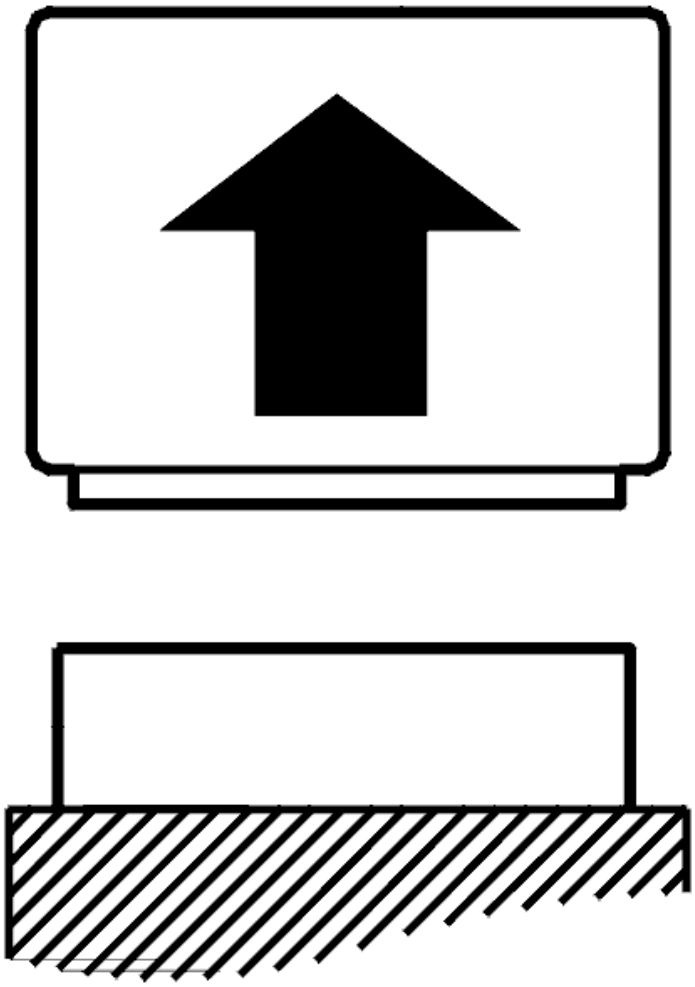

Fig. 280: Disconnecting Connector
Courtesy of VOLVO CARS CORPORATION

- Ignition off
- Disconnect central electronic module (CEM) connector D.

  The diagnostic trouble code (DTC) indicates that the communication between the steering wheel module (SWM) and central electronic module (CEM) is not working. This may be due to a fault in the signal cable between the control modules or a damaged communication device in one or both of the control modules.

  Check the signal cable. Check for an open-circuit. Check for a short-circuit to ground.

  Take readings between:

  - Central electronic module (CEM) #D58 (#58) and steering wheel module (SWM) #7.

Remedy as necessary.

Other information

- see **CONNECTING THE BREAKOUT BOX**
- -2004: **SIGNAL SPECIFICATION**
- 2005-: **SIGNAL SPECIFICATION**
- see **LOCATION OF COMPONENTS**
- see **STEERING WHEEL MODULE (SWM), REPLACING**
- see **CHECKING WIRING AND TERMINALS**

Was a fault detected?

- **YES**

  Refer to **VERIFICATION**

- **NO**

  Refer to **REPLACING THE CONTROL MODULE**

REPLACING THE CONTROL MODULE

Try replacing the steering wheel module (SWM).

Remedy as necessary.

Other information

- see **STEERING WHEEL MODULE (SWM), REPLACING**

- **Continue**

  Refer to **VERIFICATION**

VERIFICATION

VERIFICATION

HINT: After carrying out the repair, check that the fault has been remedied.

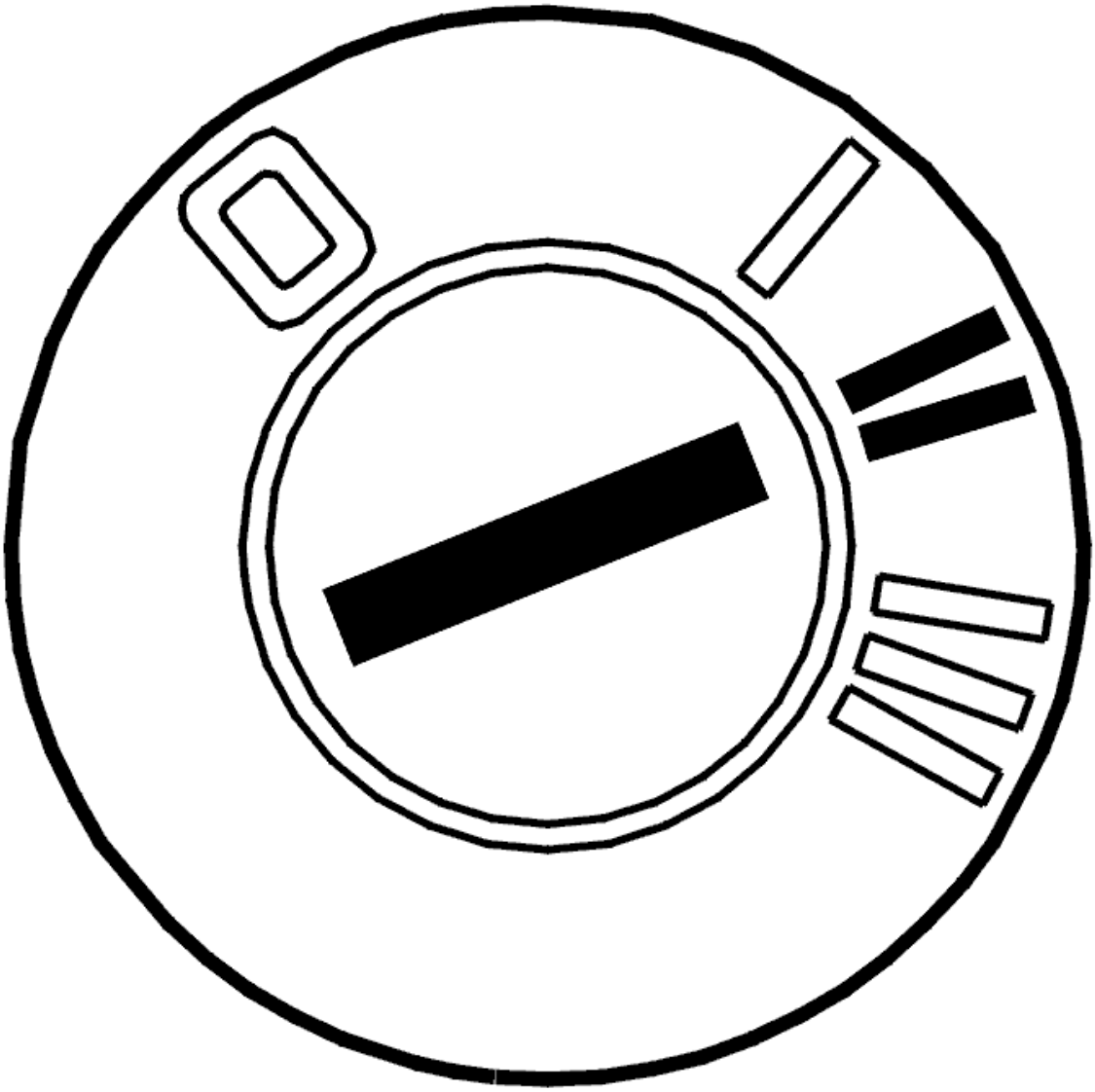

Fig. 281: Identifying Ignition ON
Courtesy of VOLVO CARS CORPORATION

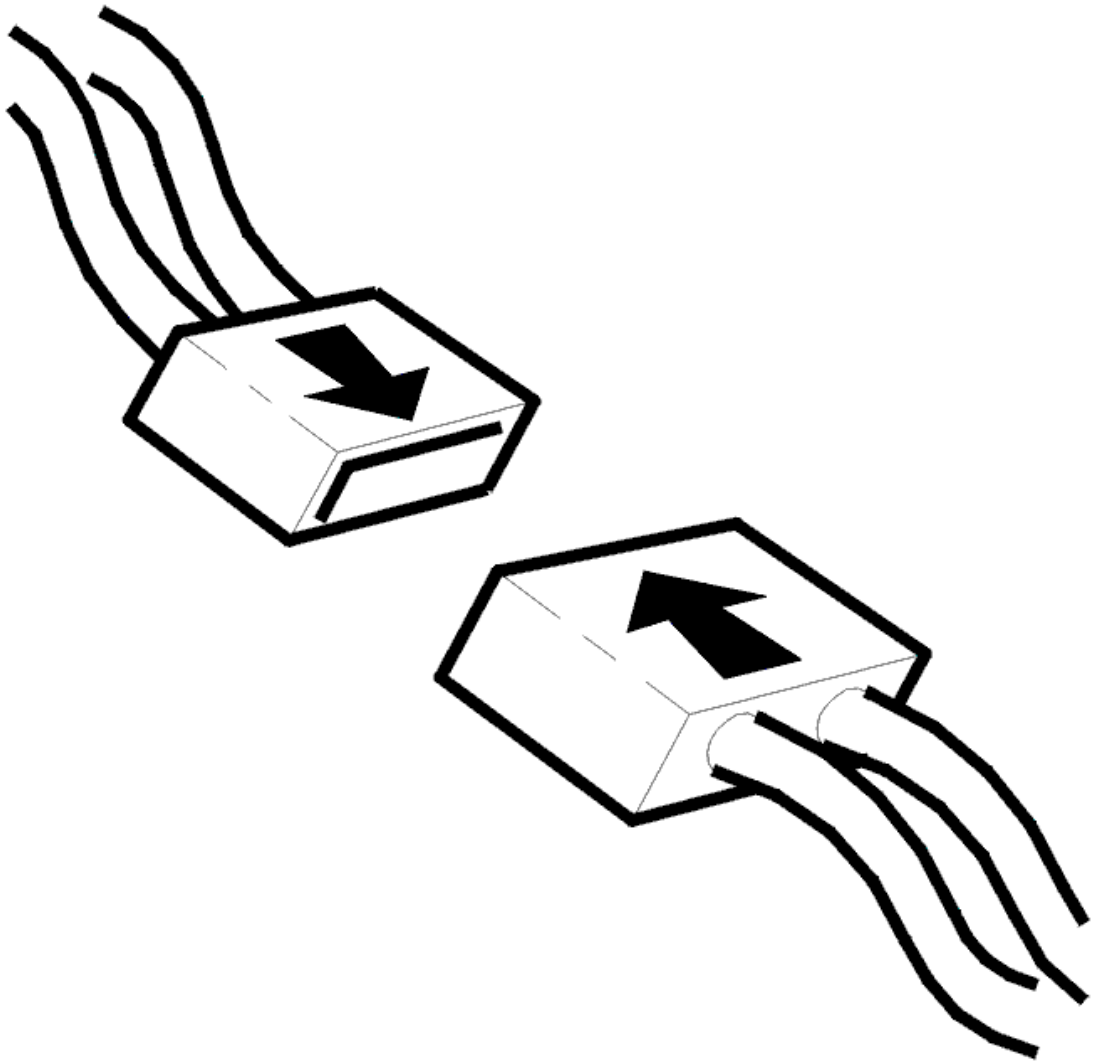

Fig. 282: Connecting Connector
Courtesy of VOLVO CARS CORPORATION

- Ignition off
- Reinstall the connectors, components etc.
- Ignition on.

  Check that the function for the relevant button or switch is OK.

Is the function OK?

- **YES**

  VERIFIED: Troubleshooting has been completed.

- **NO**

  Refer to **INFORMATION**

INFORMATION

FAULT-TRACING INFORMATION

The fault should have been detected and remedied. As this is not the case fault-tracing has failed.

Exit fault-tracing for this diagnostic trouble code (DTC) or make another attempt.

CEM-DD51: COMMUNICATION WITH THE STEERING WHEEL MODULE (SWM). SIGNAL MISSING (2005-2012)

DIAGNOSTIC TROUBLE CODE (DTC) INFORMATION CEM-DD51

Condition

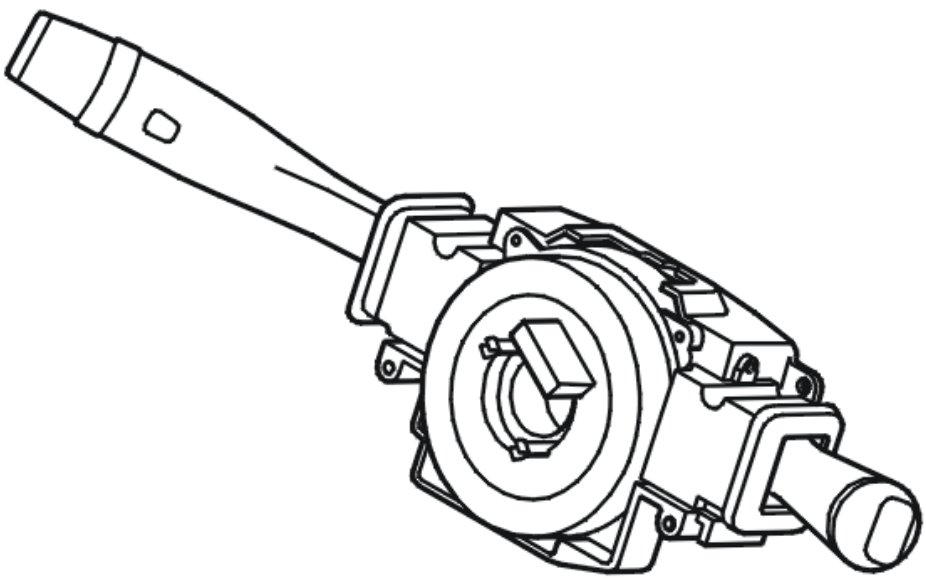

Fig. 283: Identifying Steering Wheel Control Module
Courtesy of VOLVO CARS CORPORATION

The Central Electronic Module (CEM) both transmits and receives information via a standardized serial

communication method - LIN (Local Interconnect Network). If the control module registers serious interference, for example that the LIN communication to the cruise control switch is blocked, then the Diagnostic Trouble Code (DTC) is generated.

The diagnostic trouble code (DTC) can be detected when the ignition key is in position II for at least 10 seconds and the battery voltage exceeds 10.5 V.

NOTE: **In the event of CEM-DDxx diagnostic trouble codes (DTCs), the central electronic module (CEM) must not be replaced as the diagnostic trouble code (DTC) indicates a short-circuit in one or more conductors in the LIN network. The central electronic module (CEM) is the only control module that monitors the voltage level in the LIN wiring. The central electronic module (CEM) is therefore the only control module that can store a diagnostic trouble code (DTC) for a short-circuit in one of the cables to ground or supply voltage. Do not replace the central electronic module (CEM) in the event of a LIN fault unless VADIS fault-tracing has indicated that the central electronic module (CEM) has an internal fault.**

Substitute Value

- None.

Possible Source

- Short-circuit between the LIN wiring
- Open-circuit in the LIN wiring
- Internal fault in another control module in the same part of the LIN network.

Fault symptom[s]

- Cruise control does not function at all.

SIGNAL MISSING

CHECKING THE WIRING

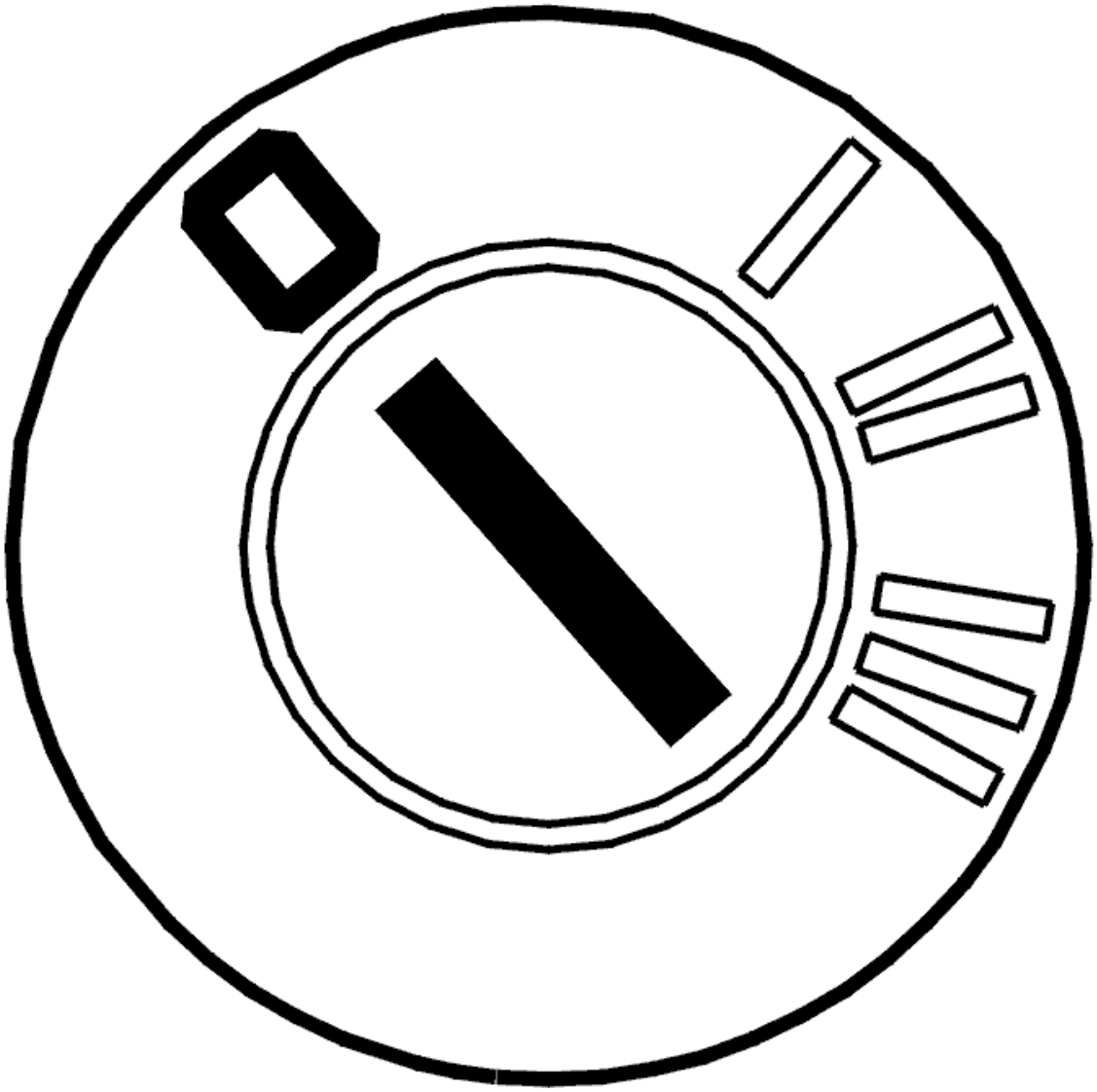

Fig. 284: Identifying Ignition OFF
Courtesy of VOLVO CARS CORPORATION

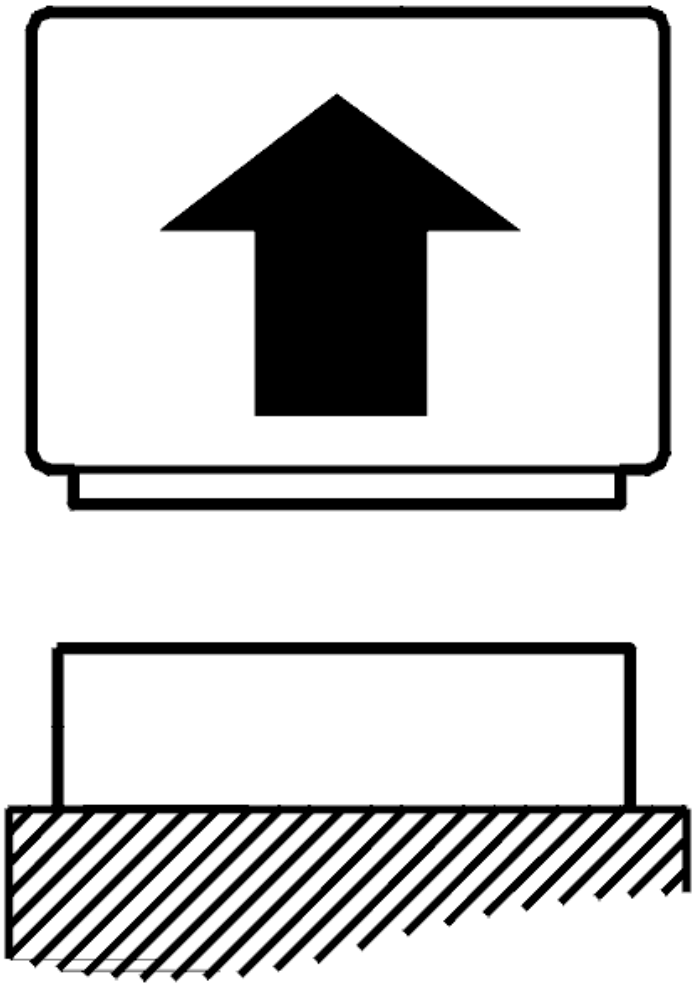

Fig. 285: Disconnecting Connector
Courtesy of VOLVO CARS CORPORATION

- Ignition off
- Disconnect central electronic module (CEM) connector D.

  The Diagnostic Trouble Code (DTC) indicates that the communication between the Central Electronic Module (CEM) and cruise control switch is not working.

  This may be due to a fault in the signal cable between the control modules or a damaged communication device in one or all of the control modules.

  Check the connectors for loose connections, damaged or bent terminal pins and oxidation.

  Check the signal cable. Check for an open-circuit. Check for a short-circuit to ground.

Take readings between:

- The Central Electronic Module (CEM) #D58 (#58) and cruise control switch #2.

Also check the intermediate connectors.

Remedy as necessary.

Other information

- see **CONNECTING THE BREAKOUT BOX**
- -2004: **SIGNAL SPECIFICATION**
- 2005-: **SIGNAL SPECIFICATION**
- see **LOCATION OF COMPONENTS**
- see **KEYPAD STEERING WHEEL, REPLACING**
- see **STEERING WHEEL MODULE (SWM), REPLACING**
- see **CHECKING WIRING AND TERMINALS**

Was a fault detected?

- **YES**

  Refer to **VERIFICATION**

- **NO**

  Refer to **REPLACING THE CONTROL MODULE**

REPLACING THE CONTROL MODULE

Try a new cruise control switch.

Remedy as necessary.

Other information

- see **KEYPAD STEERING WHEEL, REPLACING**

- **Continue**

  Refer to **VERIFICATION**

VERIFICATION

VERIFICATION

HINT: After carrying out the repair, check that the fault has been remedied.

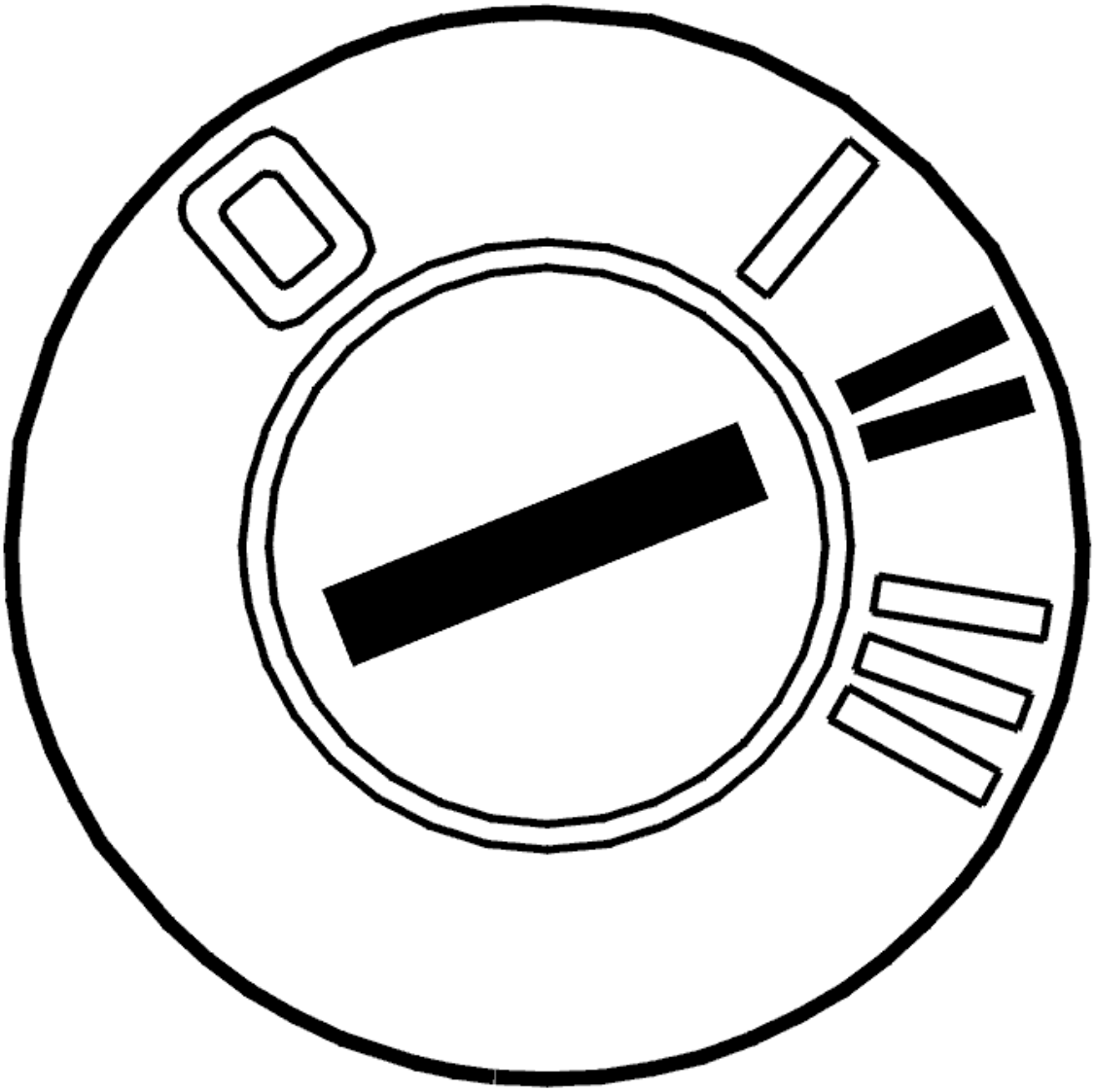

Fig. 286: Identifying Ignition ON
Courtesy of VOLVO CARS CORPORATION

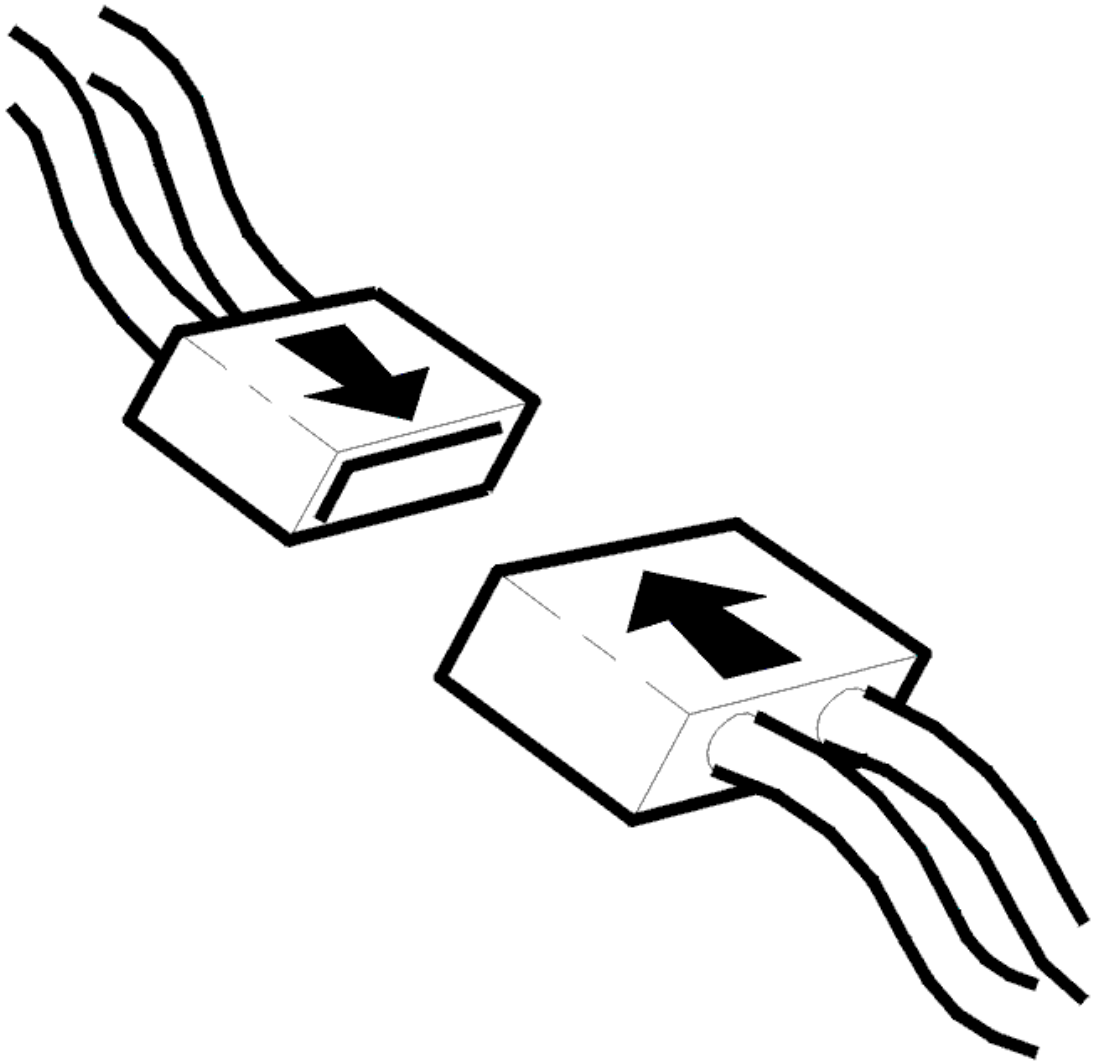

Fig. 287: Connecting Connector
Courtesy of VOLVO CARS CORPORATION

- Ignition off
- Reinstall the connectors, components etc.
- Ignition on.

  Check that the function for the relevant button or switch is OK.

Is the function OK?

- **YES**

  VERIFIED: Troubleshooting has been completed.

- **NO**

  Refer to **INFORMATION**

INFORMATION

FAULT-TRACING INFORMATION

The fault should have been detected and remedied. As this is not the case fault-tracing has failed.

Exit fault-tracing for this diagnostic trouble code (DTC) or make another attempt.

SIGNAL MISSING

CHECKING THE WIRING

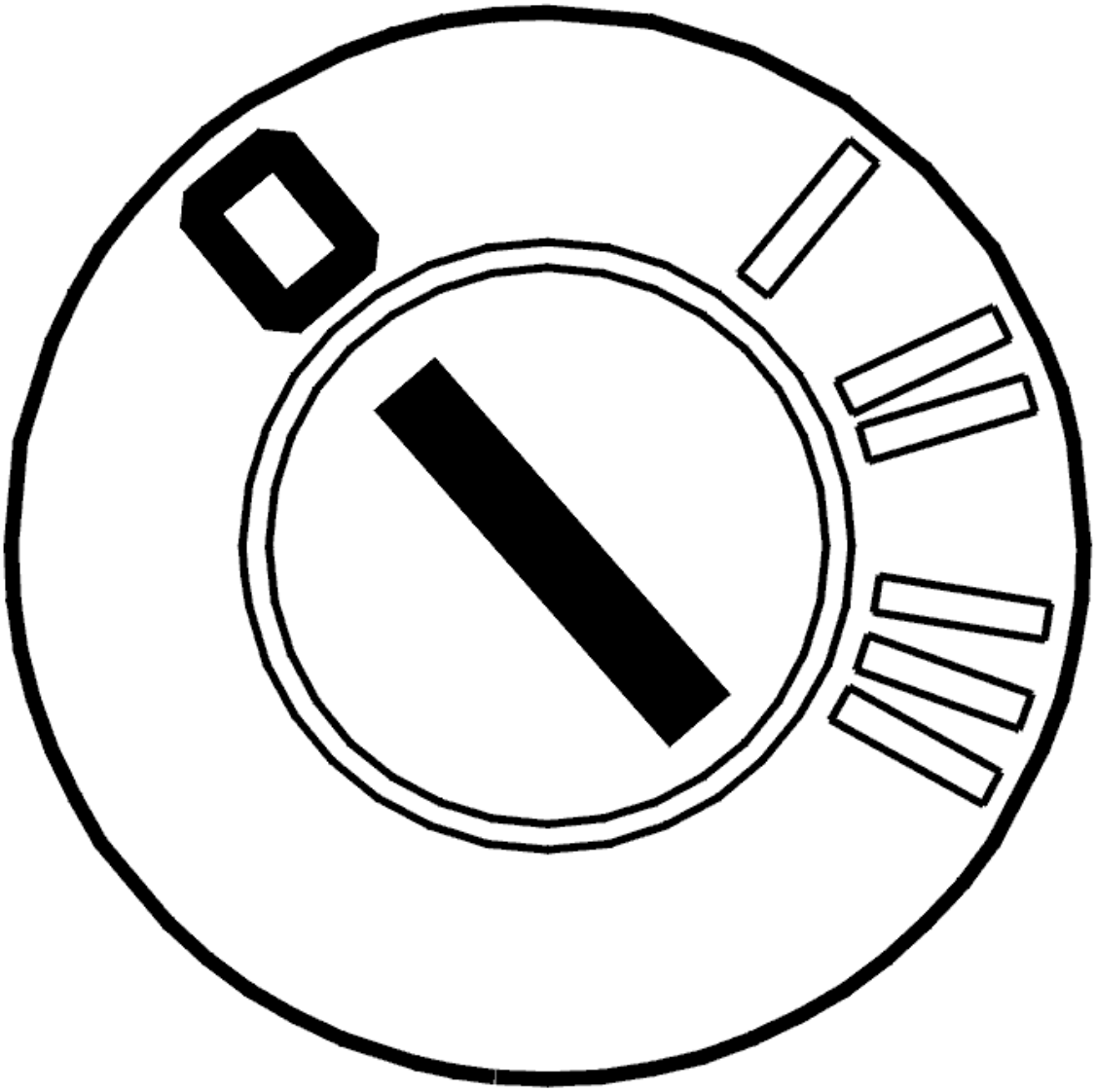

Fig. 288: Identifying Ignition OFF
Courtesy of VOLVO CARS CORPORATION

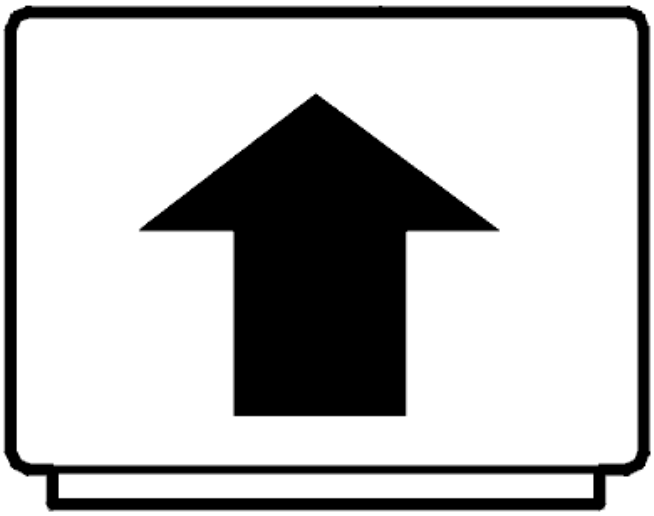

Fig. 289: Disconnecting Connector
Courtesy of VOLVO CARS CORPORATION

- Ignition off
- Disconnect central electronic module (CEM) connector D.

  The Diagnostic Trouble Code (DTC) indicates that the communication between the Central Electronic Module (CEM) and cruise control switch is not working.

  This may be due to a fault in the signal cable between the control modules or a damaged communication device in one or all of the control modules.

  Check the connectors for loose connections, damaged or bent terminal pins and oxidation.

Check the signal cable. Check for an open-circuit. Check for a short-circuit to ground.

Take readings between:

- The Central Electronic Module (CEM) #D58 (#58) and cruise control switch #2.

Also check the intermediate connectors.

Remedy as necessary.

Other information

- see **CONNECTING THE BREAKOUT BOX**
- -2004: **SIGNAL SPECIFICATION**
- 2005-: **SIGNAL SPECIFICATION**
- see **LOCATION OF COMPONENTS**
- see **KEYPAD UNIT, STEERING WHEEL, REPLACING**
- see **STEERING WHEEL MODULE (SWM), REPLACING**
- see **CHECKING WIRING AND TERMINALS**

Was a fault detected?

- **YES**

  see **VERIFICATION**

- **NO**

  see **REPLACING THE CONTROL MODULE**

REPLACING THE CONTROL MODULE

Try a new cruise control switch.

Remedy as necessary.

Other information

- see **KEYPAD UNIT, STEERING WHEEL, REPLACING**

- **Continue**

  see **VERIFICATION**

VERIFICATION

- VERIFIED

  OKAY: Troubleshooting has been completed.

- **VERIFICATION FAILED:** The fault should have been detected and remedied. As this is not the case fault-tracing has failed. Exit fault-tracing for this diagnostic trouble code (DTC) or make another attempt.

CEM-DD52: COMMUNICATION WITH THE STEERING WHEEL MODULE (SWM). SIGNAL MISSING (2005-2012)

DIAGNOSTIC TROUBLE CODE (DTC) INFORMATION CEM-DD52

Condition

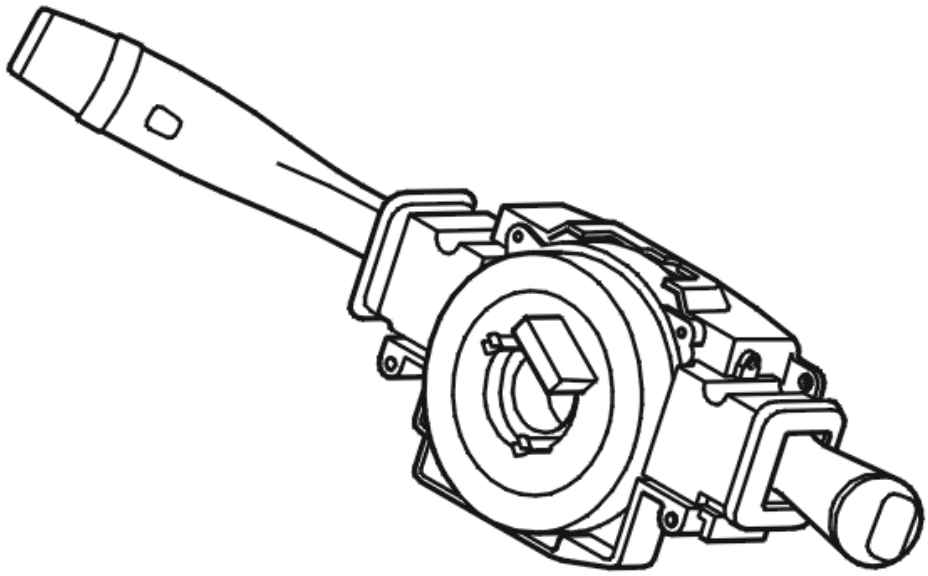

Fig. 290: Identifying Steering Wheel Control Module
Courtesy of VOLVO CARS CORPORATION

The Central Electronic Module (CEM) both transmits and receives information via a standardized serial communication method - LIN (Local Interconnect Network). If the control module registers serious interference, for example that the LIN communication to the audio/telephone switch is blocked, then the Diagnostic Trouble Code (DTC) is generated.

The diagnostic trouble code (DTC) can be detected when the ignition key is in position II for at least 10 seconds

and the battery voltage exceeds 10.5 V.

NOTE: **In the event of CEM-DDxx diagnostic trouble codes (DTCs), the central electronic module (CEM) must not be replaced as the diagnostic trouble code (DTC) indicates a short-circuit in one or more conductors in the LIN network. The central electronic module (CEM) is the only control module that monitors the voltage level in the LIN wiring. The central electronic module (CEM) is therefore the only control module that can store a diagnostic trouble code (DTC) for a short-circuit in one of the cables to ground or supply voltage. Do not replace the central electronic module (CEM) in the event of a LIN fault unless VADIS fault-tracing has indicated that the central electronic module (CEM) has an internal fault.**

Substitute Value

- None.

Possible Source

- Short-circuit between the LIN wiring
- Open-circuit in the LIN wiring
- Internal fault in another control module in the same part of the LIN network.

Fault symptom[s]

- The radio buttons on the steering wheel do not function
- The phone buttons on the steering wheel do not work.

SIGNAL MISSING

CHECKING THE WIRING

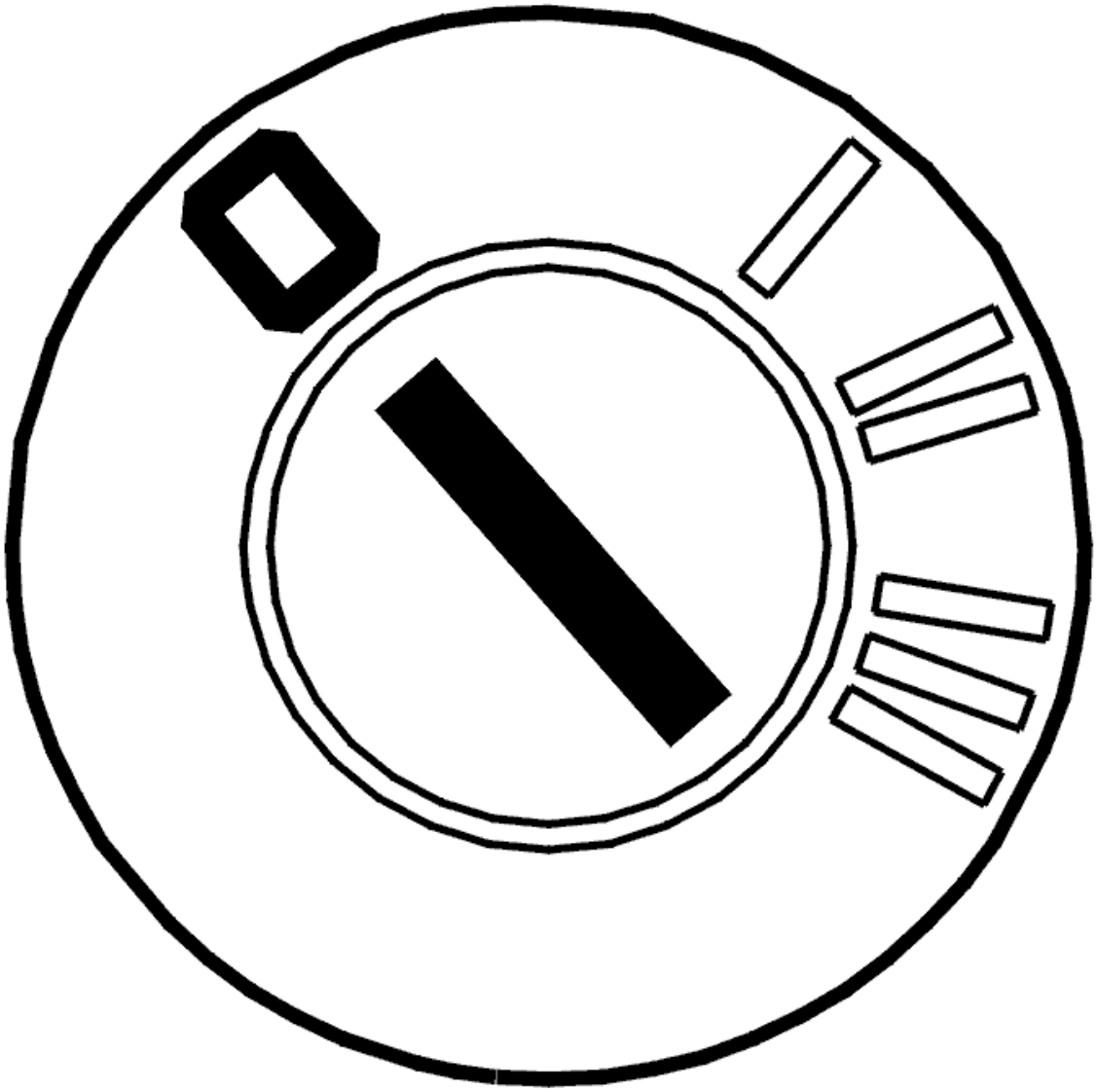

Fig. 291: Identifying Ignition OFF
Courtesy of VOLVO CARS CORPORATION

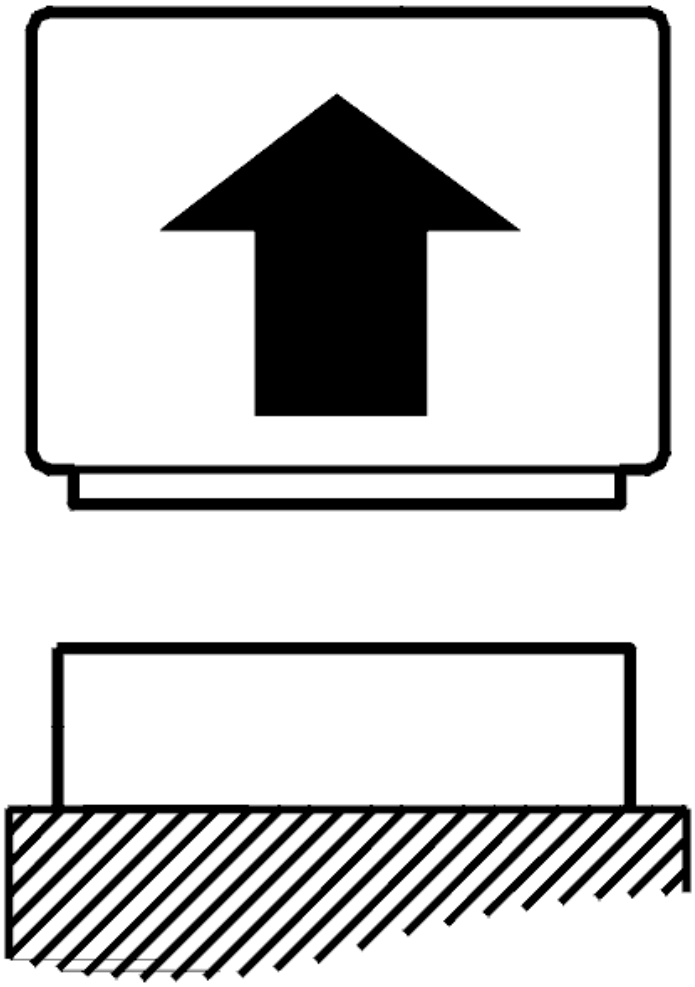

Fig. 292: Disconnecting Connector
Courtesy of VOLVO CARS CORPORATION

- Ignition off
- Disconnect central electronic module (CEM) connector D.

  The Diagnostic Trouble Code (DTC) indicates that the communication between the Central Electronic Module (CEM) and audio/telephone switch is not working.

  This may be due to a fault in the signal cable between the control modules or a damaged communication device in one or all of the control modules.

  Check the connectors for loose connections, damaged or bent terminal pins and oxidation.

  Check the signal cable. Check for an open-circuit. Check for a short-circuit to ground.

Take readings between:

- The Central Electronic Module (CEM) #D58 (#58) and audio/telephone switch #2.

Also check the intermediate connectors.

Remedy as necessary.

Other information

- see **CONNECTING THE BREAKOUT BOX**
- -2004: **SIGNAL SPECIFICATION**
- 2005-: **SIGNAL SPECIFICATION**
- see **LOCATION OF COMPONENTS**
- see **STEERING WHEEL MODULE (SWM), REPLACING**
- see **KEYPAD STEERING WHEEL, REPLACING**
- see **CHECKING WIRING AND TERMINALS**

Was a fault detected?

- **YES**

  Refer to **VERIFICATION**

- **NO**

  Refer to **REPLACING THE CONTROL MODULE**

REPLACING THE CONTROL MODULE

Try a new audio/phone switch.

Remedy as necessary.

Other information

- see **KEYPAD STEERING WHEEL, REPLACING**

- **Continue**

  Refer to **VERIFICATION**

VERIFICATION

VERIFICATION

HINT: After carrying out the repair, check that the fault has been remedied.

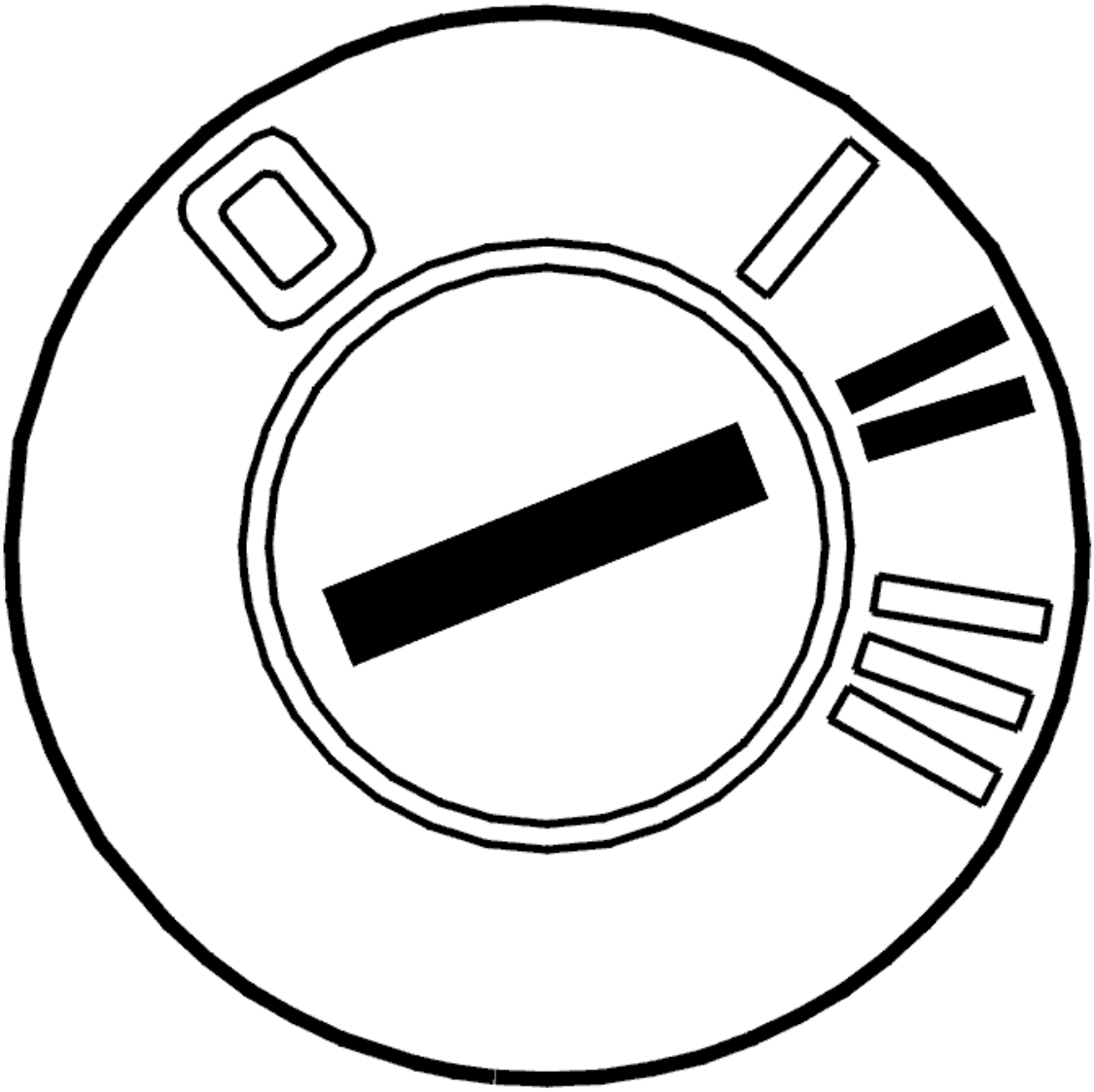

Fig. 293: Identifying Ignition ON
Courtesy of VOLVO CARS CORPORATION

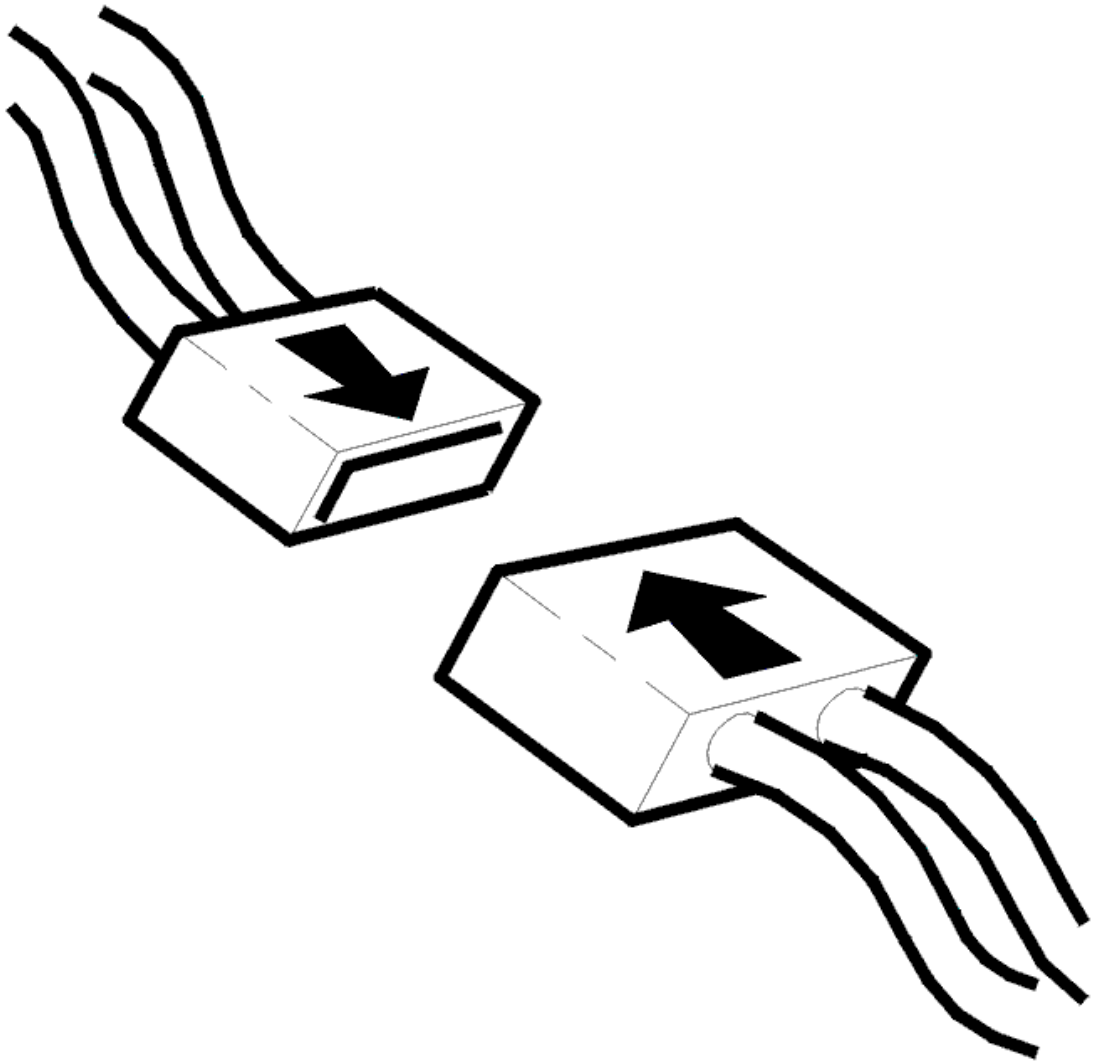

Fig. 294: Connecting Connector
Courtesy of VOLVO CARS CORPORATION

- Ignition off
- Reinstall the connectors, components etc.
- Ignition on.

  Check that the function for the relevant button or switch is OK.

Is the function OK?

- **YES**

  VERIFIED: Troubleshooting has been completed.

- **NO**

  Refer to **INFORMATION**

INFORMATION

FAULT-TRACING INFORMATION

The fault should have been detected and remedied. As this is not the case fault-tracing has failed.

Exit fault-tracing for this diagnostic trouble code (DTC) or make another attempt.

CEM-DF01: CAN-H, LOW SPEED NETWORK. SIGNAL MISSING (2005-2012)

DIAGNOSTIC TROUBLE CODE (DTC) INFORMATION CEM-DF01

Condition

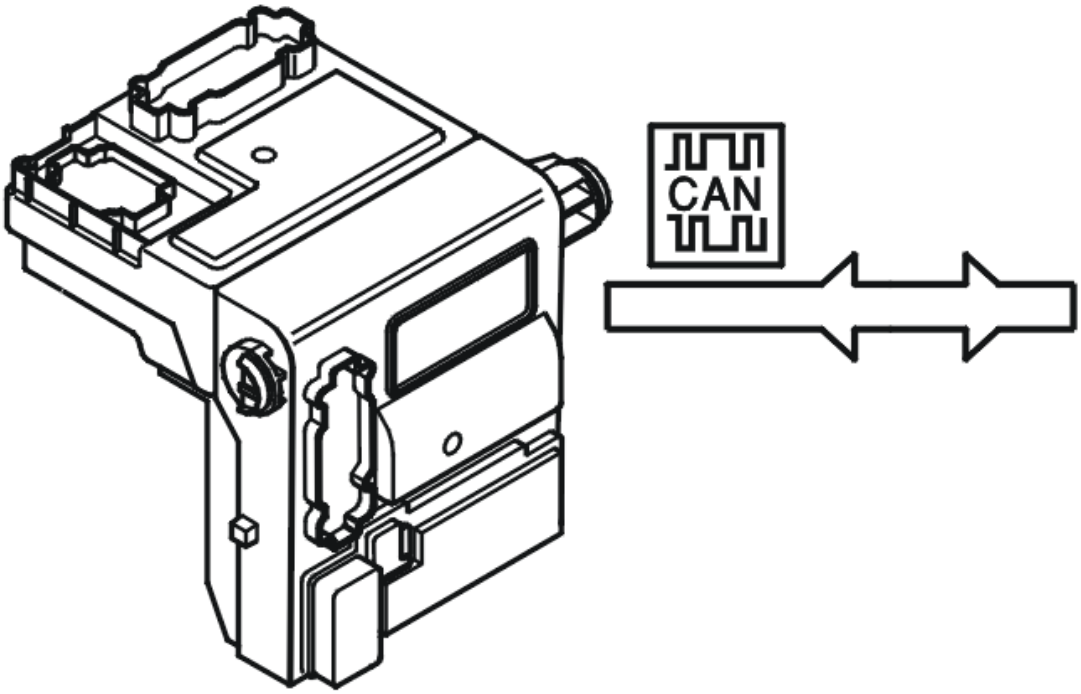

Fig. 295: Identifying Central Electronic Module
Courtesy of VOLVO CARS CORPORATION

The central electronic module (CEM) checks the voltage in the CAN wiring in the low speed network. The diagnostic trouble code (DTC) is stored if the central electronic module (CEM) registers an open-circuit in CAN

H or CAN L in the low speed network.

NOTE: **The central electronic module (CEM) is the only control module that monitors the voltage level in the Control area network wiring. The central electronic module (CEM) is the only control module that can directly store diagnostic trouble codes (DTCs) for an open-circuit in these conductors. However other control modules can store diagnostic trouble codes (DTCs) as a result of the open-circuit. Do not replace the central electronic module (CEM) in the event of a CAN fault unless VIDA (Volvo scan tool) has indicated that the central electronic module (CEM) has an internal fault.**

The diagnostic trouble code (DTC) can be diagnosed when the ignition has been on for more than 10 seconds.

Substitute Value

- None.

Possible Source

- Open-circuit in one of the control area network (CAN) cables on the low speed network
- Contact resistance in the terminals.

Fault symptom[s]

- No gauges working.
- The lighting in the instrument panel does not function.
- The central locking system does not function at all.

SIGNAL MISSING

see **SIGNAL MISSING**

CEM-DF03: CAN-H, LOW SPEED NETWORK SIGNAL TOO HIGH. INTERMITTENT FAULT (2003-2004)

DIAGNOSTIC TROUBLE CODE (DTC) INFORMATION CEM-DF03

Condition

Diagnostic trouble codes (DTCs) are stored if the central electronic module (CEM) registers that there is a short-circuit to supply voltage in the CAN H in the low speed network.

NOTE: **In the event of DFxx diagnostic trouble codes (DTCs), the central electronic module (CEM) must not be replace as the diagnostic trouble code (DTC) indicates a short-circuit in one or more conductors in the Control area network**

The central electronic module (CEM) is the only control module that monitors the voltage level in the Control area network wiring. The central electronic module (CEM) is therefore the only control module that can store a diagnostic trouble code (DTC) for a short-circuit in one of the cables to ground or supply voltage. Do not replace the central electronic module (CEM) in the event of a CAN fault unless VIDA (Volvo scan tool) has indicated that the central electronic module (CEM) has an internal fault.

Substitute Value

None.

Possible Source

- Short-circuit to supply voltage in the low speed network.

Fault symptom[s]

- The central locking system does not function at all
- Radio interference.

SIGNAL TOO HIGH. INTERMITTENT FAULT.

CHECKING CONNECTORS AND BUS WIRE

NOTE: Remember that the CAN network is only a communications network. There are therefore no fuses, switches or sensors on the CAN bus. Check the resistance as described below (see reference).

NOTE: To maintain the correct values the battery should be disconnected before measuring resistance.

Check the bus wire for a short circuit to voltage supply as described in, see **SHORT-CIRCUIT TO SUPPLY VOLTAGE, INTERMITTENT FAULTS** , and for an intermittent open circuit as described in **OPEN-CIRCUIT, INTERMITTENT FAULTS** .

HINT: When checking for an open circuit, check if possible from the rear of the connector concerned so that it is not damaged.

Also check the intermediate connectors for contact resistance and oxidation as described in, see **CONTACT RESISTANCE AND OXIDATION** , and for a loose contact as described in **LOOSE CONNECTIONS (TERMINALS)** .

HINT: If the fault is found before all the wires below have been checked, the remaining trouble-shooting should not be done.

The following wires and connectors should be checked to locate the short circuit.

Wire between:

- road traffic information module (RTI) 10A and rear electronic module (REM) 15A

  road traffic information module (RTI) 22A and rear electronic module (REM) 17A.

  To connect the test box to the RTI control unit, see **CONNECTING THE BREAKOUT BOX TO THE ROAD TRAFFIC INFORMATION (RTI) CONTROL MODULE**

  To connect the test box to the REM control unit, see **CONNECTING THE BREAKOUT BOX TO THE REAR ELECTRONIC MODULE (REM)**

- rear electronic module (REM) 14A, driver information module (DIM) 8 and intermediate connector 54/40

  rear electronic module (REM) 16A, driver information module (DIM) 9 and intermediate connector 54/40.

  To connect the test box to the REM control unit, see **CONNECTING THE BREAKOUT BOX TO THE REAR ELECTRONIC MODULE (REM)**

  To connect the test box to the DIM control unit, see **CONNECTING THE DRIVER INFORMATION MODULE (DIM) TEST BOX**

- central electronic module (CEM) 3D and driver information module (DIM) 8

  central electronic module (CEM) 2D and driver information module (DIM) 9.

  To connect the test box to the CEM control unit, see **CONNECTING THE BREAKOUT BOX**

  To connect the test box to the DIM control unit, see **CONNECTING THE DRIVER INFORMATION MODULE (DIM) TEST BOX**

- power seat module (PSM) 2B and driver information module (DIM) 8

  power seat module (PSM) 3B and driver information module (DIM) 9.

  To connect the test box to the PSM control unit, see **CONNECTING THE BREAKOUT BOX, POWER SEAT MODULE (PSM)**

  To connect the test box to the DIM control unit, see **CONNECTING THE DRIVER INFORMATION MODULE (DIM) TEST BOX**

- driver information module (DIM) 2 and climate control module (CCM) 14A

  driver information module (DIM) 3 and climate control module (CCM) 12A.

To connect the test box to the DIM control unit, see **CONNECTING THE DRIVER INFORMATION MODULE (DIM) TEST BOX**

To connect the test box to the CCM control unit, see **CONNECTING THE BREAKOUT BOX**

- audio module (AUM) 7A and climate control module (CCM) 14A

  audio module (AUM) 8A and climate control module (CCM) 12A.

  To connect the test box to the AUM control unit, see **CONNECTING THE BREAKOUT BOX, AUDIO CONTROL MODULE**

  To connect the test box to the CCM control unit, see **CONNECTING THE BREAKOUT BOX**

- phone module (PHM) 22A and climate control module (CCM) 14A

  phone module (PHM) 10A and climate control module (CCM) 12A.

  To connect the test box to the PHM control unit, see **CONNECTING THE BREAKOUT BOX, CARPHONE MODULE**

  To connect the test box to the CCM control unit, see **CONNECTING THE BREAKOUT BOX**

- passenger door module (PDM) 2A, climate control module (CCM) 14A and intermediate connector 54/11

  passenger door module (PDM) 3A, climate control module (CCM) 12A and intermediate connector 54/11.

  To connect the test box to the PDM control units, see **CONNECTING THE BREAKOUT BOX**

  To connect the test box to the CCM control unit, see **CONNECTING THE BREAKOUT BOX**

- climate control module (CCM) 13A and steering wheel module (SWM) 9

  climate control module (CCM) 11A and steering wheel module (SWM) 19.

  To connect the test box to the CCM control unit, see **CONNECTING THE BREAKOUT BOX**

  To connect the test box to the SWM control unit, see **CONNECTING THE BREAKOUT BOX**

- steering wheel module (SWM) 10 and supplemental restrain system (SRS) 23B

  steering wheel module (SWM) 20 and supplemental restrain system (SRS) 25B.

  To connect the test box to the SWM control unit, see **CONNECTING THE BREAKOUT BOX**

  To connect the test box to the SRS control unit:

  - For model year 2003-2004, see **CONNECTING THE BREAKOUT BOX** .
  - For model year 2005-, see **CONNECTING THE BREAKOUT BOX** .

- supplemental restrain system (SRS) 24B, upper electronic module (UEM) 3 and intermediate connector 54/13

  supplemental restrain system (SRS) 26B, upper electronic module (UEM) 5 and intermediate connector 54/13.

  To connect the test box to the SRS control unit:
  - For model year 2003-2004, see **CONNECTING THE BREAKOUT BOX** .
  - For model year 2005-, see **CONNECTING THE BREAKOUT BOX** .

  To connect the test box to the UEM control unit, see **CONNECTING THE BREAKOUT BOX**

- driver door module (DDM) 2A, upper electronic module (UEM) 3 and intermediate connector 54/10.

  driver door module (DDM) 3A, upper electronic module (UEM) 5 and intermediate connector 54/10.

  To connect the test box to the DDM control units, see **CONNECTING THE BREAKOUT BOX**

  To connect the test box to the UEM control unit, see **CONNECTING THE BREAKOUT BOX** .

Additional information:

- The voltage should be between approximately 1.5 V and 3.5 V
- To disconnect the battery, see **BATTERY, DISCONNECTING** .

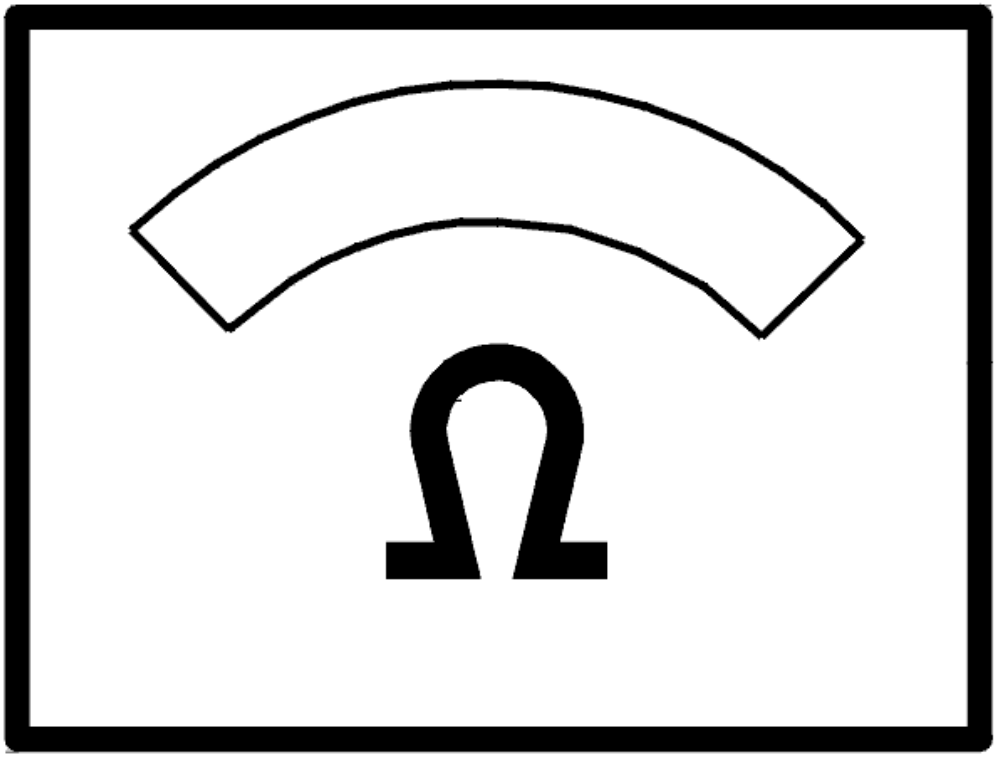

Fig. 296: Identifying Ohm Meter
Courtesy of VOLVO CARS CORPORATION

CEM-DF03: CAN-H, LOW SPEED NETWORK SIGNAL TOO HIGH. PERMANENT FAULT (2003-2004)

DIAGNOSTIC TROUBLE CODE (DTC) INFORMATION CEM-DF03

see **DIAGNOSTIC TROUBLE CODE (DTC) INFORMATION CEM-DF03**

SIGNAL TOO HIGH. PERMANENT FAULT

CHECKING CONNECTORS AND BUS WIRE

NOTE: **Remember that the CAN network is only a communications network. There are**

therefore no fuses, switches or sensors on the CAN bus. Check the resistance as described below (see reference).

NOTE: To maintain the correct resistance the battery should be disconnected.

Check the bus wire for a short circuit to voltage supply as described in, see **SHORT-CIRCUIT TO SUPPLY VOLTAGE. PERMANENT FAULTS** , and for an open circuit as described in **OPEN-CIRCUIT, PERMANENT FAULTS** .

HINT: When checking for an open circuit, check if possible from the rear of the connector concerned so that it is not damaged.

Also check the intermediate connectors for contact resistance and oxidation as described in, see **CONTACT RESISTANCE AND OXIDATION** .

The following wires and connectors should be checked to locate the short circuit.

Wire between:

- road traffic information module (RTI) 10A and rear electronic module (REM) 15A

  road traffic information module (RTI) 22A and rear electronic module (REM) 17A.

  To connect the test box to the RTI control unit, see **CONNECTING THE BREAKOUT BOX TO THE ROAD TRAFFIC INFORMATION (RTI) CONTROL MODULE** .

  To connect the test box to the REM control unit, see **CONNECTING THE BREAKOUT BOX TO THE REAR ELECTRONIC MODULE (REM)**

- rear electronic module (REM) 14A, driver information module (DIM) 8 and intermediate connector 54/40

  rear electronic module (REM) 16A, driver information module (DIM) 9 and intermediate connector 54/40.

  To connect the test box to the REM control unit, see **CONNECTING THE BREAKOUT BOX TO THE REAR ELECTRONIC MODULE (REM)**

  To connect the test box to the DIM control unit, see **CONNECTING THE DRIVER INFORMATION MODULE (DIM) TEST BOX**

- central electronic module (CEM) 3D and driver information module (DIM) 8

  central electronic module (CEM) 2D and driver information module (DIM) 9.

  To connect the test box to the CEM control unit, see **CONNECTING THE BREAKOUT BOX**

  To connect the test box to the DIM control unit, see **CONNECTING THE DRIVER INFORMATION**

MODULE (DIM) TEST BOX

- power seat module (PSM) 2B and driver information module (DIM) 8

  power seat module (PSM) 3B and driver information module (DIM) 9.

  To connect the test box to the PSM control unit, see **CONNECTING THE BREAKOUT BOX, POWER SEAT MODULE (PSM)**

  To connect the test box to the DIM control unit, see **CONNECTING THE DRIVER INFORMATION MODULE (DIM) TEST BOX**

- driver information module (DIM) 2 and climate control module (CCM) 14A

  driver information module (DIM) 3 and climate control module (CCM) 12A.

  To connect the test box to the DIM control unit, see **CONNECTING THE DRIVER INFORMATION MODULE (DIM) TEST BOX**

  To connect the test box to the CCM control unit, see **CONNECTING THE BREAKOUT BOX**

- audio module (AUM) 7A and climate control module (CCM) 14A

  audio module (AUM) 8A and climate control module (CCM) 12A.

  To connect the test box to the AUM control unit, see **CONNECTING THE BREAKOUT BOX, AUDIO CONTROL MODULE**

  To connect the test box to the CCM control unit, see **CONNECTING THE BREAKOUT BOX**

- phone module (PHM) 22A and climate control module (CCM) 14A

  phone module (PHM) 10A and climate control module (CCM) 12A.

  To connect the test box to the PHM control unit, see **CONNECTING THE BREAKOUT BOX, CARPHONE MODULE**

  To connect the test box to the CCM control unit, see **CONNECTING THE BREAKOUT BOX**

- passenger door module (PDM) 2A, climate control module (CCM) 14A and intermediate connector 54/11

  passenger door module (PDM) 3A, climate control module (CCM) 12A and intermediate connector 54/11.

  To connect the test box to the PDM control units, see **CONNECTING THE BREAKOUT BOX**

  To connect the test box to the CCM control unit, see **CONNECTING THE BREAKOUT BOX**

- climate control unit (CCM) 13A and steering wheel module (SWM) 9

  climate control unit (CCM) 11A and steering wheel module (SWM) 19.

  To connect the test box to the CCM control unit, see **CONNECTING THE BREAKOUT BOX**

  To connect the test box to the SWM control unit, see **CONNECTING THE BREAKOUT BOX**

- steering wheel module (SWM) 10 and supplemental restrain system (SRS) 23B

  steering wheel module (SWM) 20 and supplemental restrain system (SRS) 25B.

  To connect the test box to the SWM control unit, see **CONNECTING THE BREAKOUT BOX**

  To connect the test box to the SRS control unit:
  - For model year 2003-2004, see **CONNECTING THE BREAKOUT BOX** .
  - For model year 2005-, see **CONNECTING THE BREAKOUT BOX** .

- supplemental restrain system (SRS) 24B, upper electronic module (UEM) 3 and intermediate connector 54/13

  supplemental restrain system (SRS) 26B, upper electronic module (UEM) 5 and intermediate connector 54/13.

  To connect the test box to the SRS control unit:
  - For model year 2003-2004, see **CONNECTING THE BREAKOUT BOX** .
  - For model year 2005-, see **CONNECTING THE BREAKOUT BOX** .

  To connect the test box to the UEM control unit, see **CONNECTING THE BREAKOUT BOX**

- driver door module (DDM) 2A, upper electronic module (UEM) 3 and intermediate connector 54/10.

  driver door module (DDM) 3A, upper electronic module (UEM) 5 and intermediate connector 54/10.

  To connect the test box to the DDM/PDM control units, see **CONNECTING THE BREAKOUT BOX**

  To connect the test box to the UEM control unit, see **CONNECTING THE BREAKOUT BOX** .

Additional information

- The voltage should be between approximately 1.5V and 3.5V
- To disconnect the battery, see **BATTERY, DISCONNECTING** .

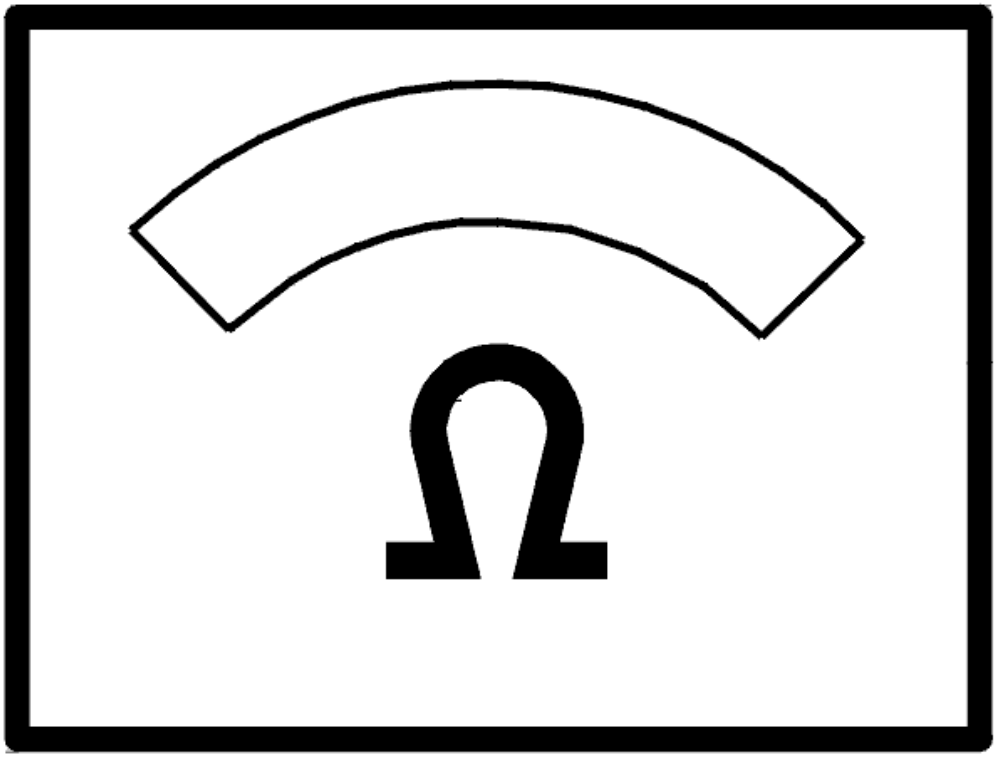

Fig. 297: Identifying Ohm Meter
Courtesy of VOLVO CARS CORPORATION

- **Continue**

  Refer to **VERIFICATION**

VERIFICATION

VERIFICATION

HINT: After the repair it is necessary to check that the fault has been rectified.

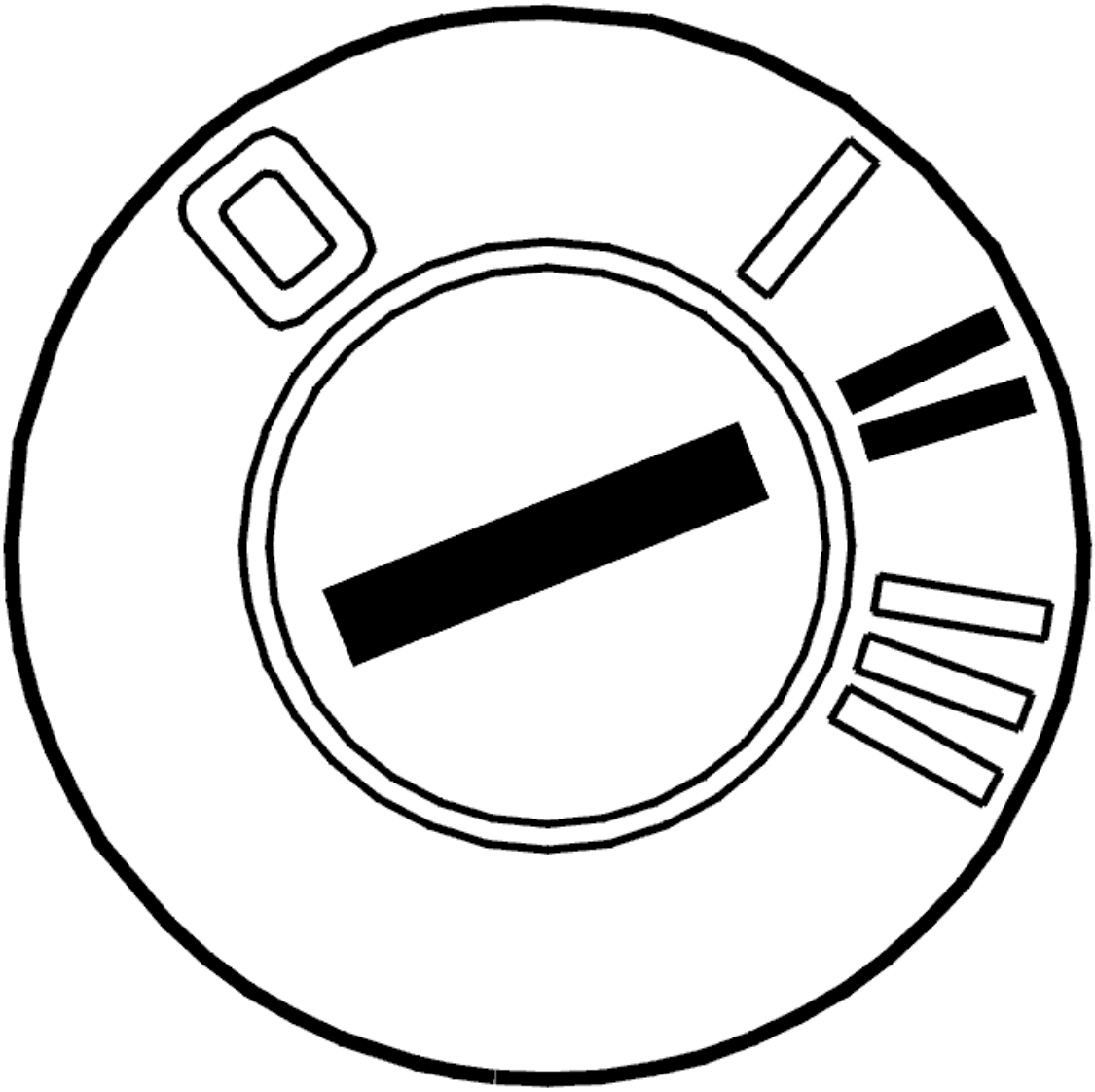

Fig. 298: Identifying Ignition ON
Courtesy of VOLVO CARS CORPORATION

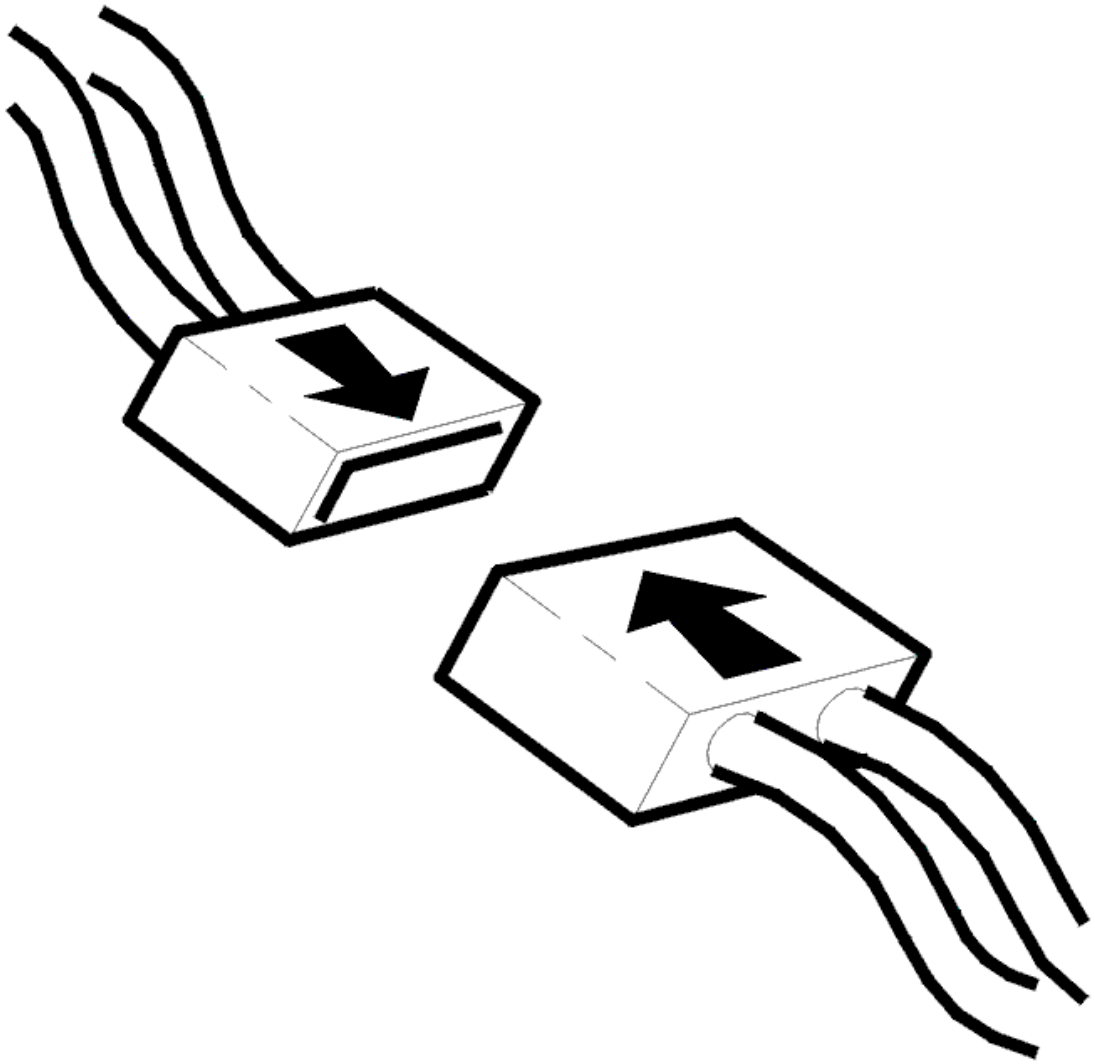

Fig. 299: Connecting Connector
Courtesy of VOLVO CARS CORPORATION

- Ignition off.
- Connect connectors, install components, etc.
- Ignition on for at least 10 seconds.

Check that diagnostic trouble code status is showing Intermittent.

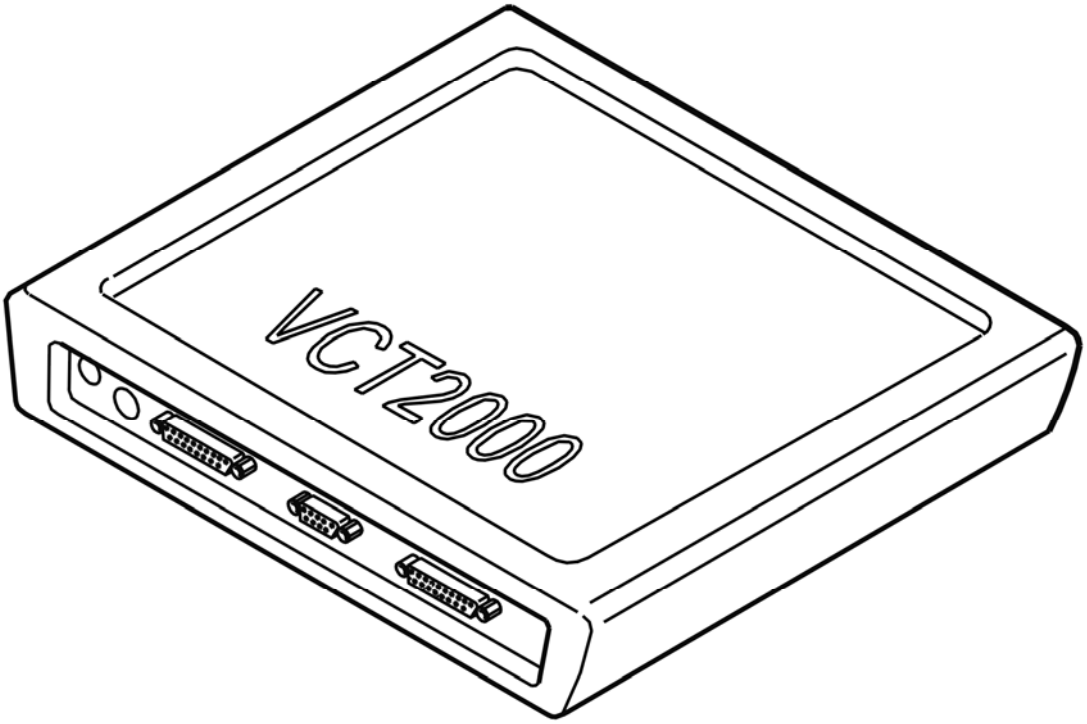

Fig. 300: Identifying VCT2000 Diagnostic Tool Symbol In VIDA
Courtesy of VOLVO CARS CORPORATION

Is the status of the diagnostic trouble code Intermittent?

- **YES**

  VERIFIED: Troubleshooting has been completed.

- **NO**

  Refer to **INFORMATION**

INFORMATION

FAULT-TRACING INFORMATION

The fault should have been detected and remedied. As this is not the case fault-tracing has failed.

Exit fault-tracing for this diagnostic trouble code (DTC) or make another attempt.

CEM-DF03: CAN-H, LOW SPEED NETWORK. SIGNAL TOO HIGH (2005-2012)

DIAGNOSTIC TROUBLE CODE (DTC) INFORMATION CEM-DF03

Condition

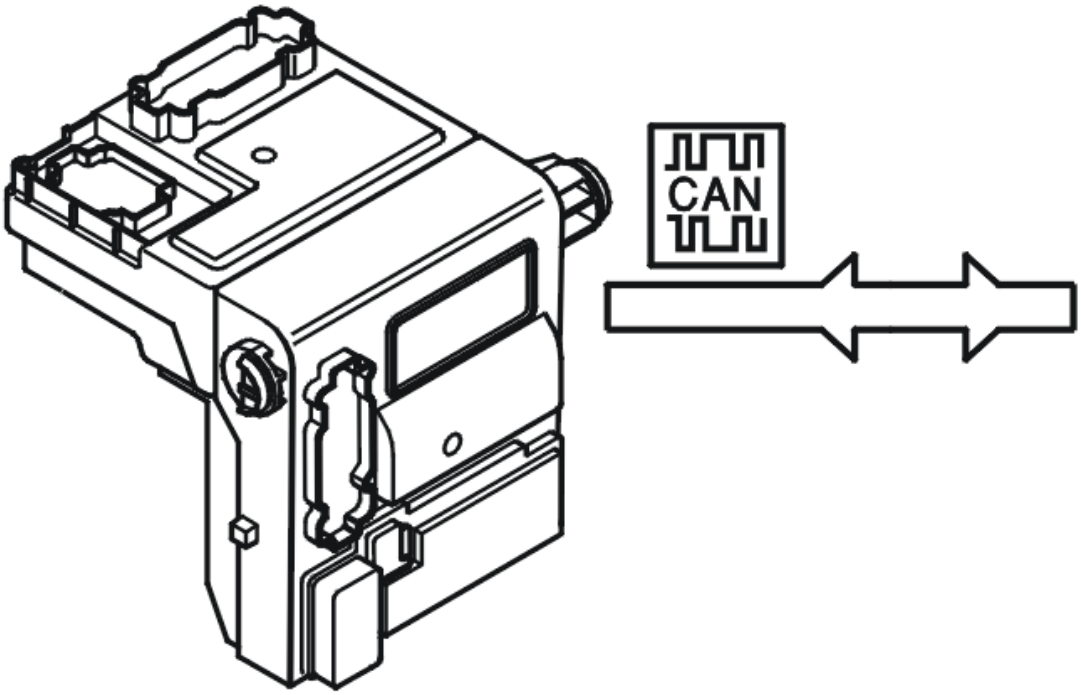

Fig. 301: Identifying Central Electronic Module
Courtesy of VOLVO CARS CORPORATION

The central electronic module (CEM) checks the voltage in the CAN wiring in the low speed network. The diagnostic trouble code (DTC) is stored if the central electronic module (CEM) registers a short-circuit to supply voltage in the CAN H in the low speed network.

NOTE: **If DFxx diagnostic trouble codes (DTCs) are stored the central electronic module (CEM) must not be replaced as the diagnostic trouble code (DTC) indicates a short-circuit in one or more conductors in the Control area network. The central electronic module (CEM) is the only control module that monitors the voltage level in the Control area network wiring. The central electronic module (CEM) is therefore the only control module that can store a diagnostic trouble code (DTC) for a short-circuit in one of the cables to ground or supply voltage. Do not replace the central electronic module (CEM) in the event of a CAN fault unless VIDA (Volvo scan tool) has indicated that the central electronic module (CEM) has an internal fault.**

The diagnostic trouble code (DTC) can be diagnosed when the ignition has been on for more than 10 seconds.

Substitute Value

- None.

Possible Source

- Short-circuit to supply voltage in the low speed network.

Fault symptom[s]

- No gauges working.
- The lighting in the instrument panel does not function.
- The central locking system does not function at all.

SIGNAL MISSING

see **SIGNAL MISSING**

CEM-DF04: CAN-L, LOW SPEED NETWORK. SIGNAL TOO LOW (2005-2012)

DIAGNOSTIC TROUBLE CODE (DTC) INFORMATION CEM-DF04

Condition

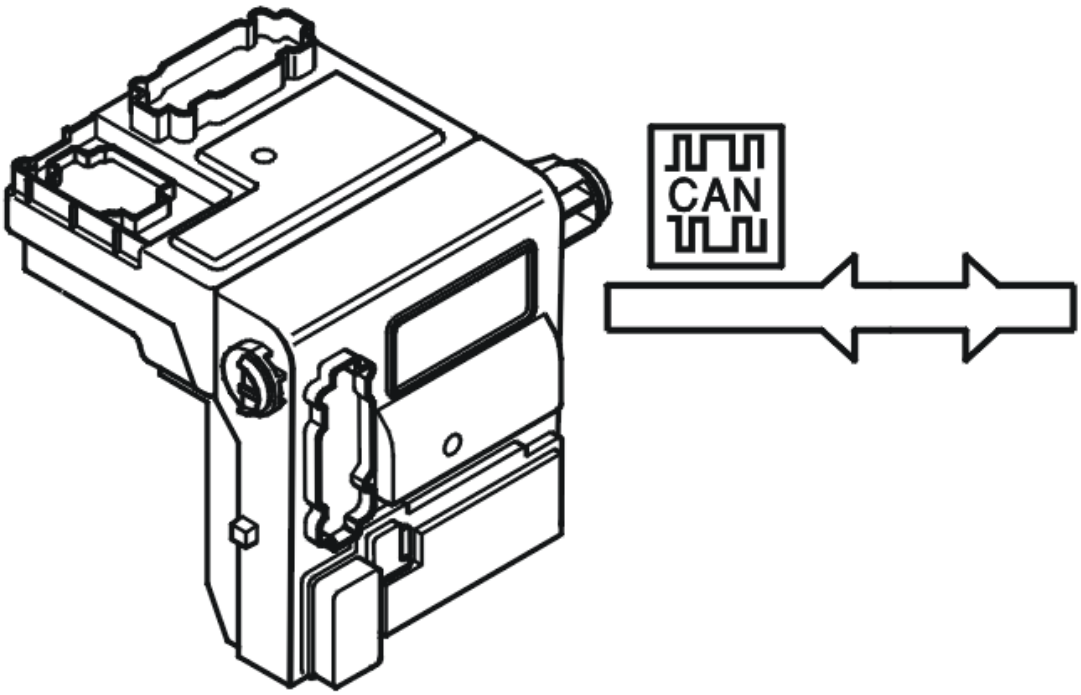

Fig. 302: Identifying Central Electronic Module
Courtesy of VOLVO CARS CORPORATION

The central electronic module (CEM) checks the voltage in the CAN wiring in the low speed network. The diagnostic trouble code (DTC) is stored if the central electronic module (CEM) registers a short-circuit to ground in the CAN L in the low speed network.

NOTE: **If DFxx diagnostic trouble codes (DTCs) are stored the central electronic module (CEM) must not be replaced as the diagnostic trouble code (DTC) indicates a short-circuit in one or more conductors in the Control area network. The central electronic module (CEM) is the only control module that monitors the voltage level in the Control area network wiring. The central electronic module (CEM) is therefore the only control module that can store a diagnostic trouble code (DTC) for a short-circuit in one of the cables to ground or supply voltage. Do not replace the central electronic module (CEM) in the event of a CAN fault unless VIDA (Volvo scan tool) has indicated that the central electronic module (CEM) has an internal fault.**

The diagnostic trouble code (DTC) can be diagnosed when the ignition has been on for more than 10 seconds.

Substitute Value

- None.

Possible Source

- Short-circuit to ground in the low speed network.

Fault symptom[s]

- Radio interference.

SIGNAL MISSING

see **SIGNAL MISSING**

CEM-DF04: CAN-L, LOW-SPEED NETWORK. SIGNAL TOO LOW. INTERMITTENT FAULT (2003-2004)

DIAGNOSTIC TROUBLE CODE (DTC) INFORMATION CEM-DF04

Condition

Diagnostic trouble codes (DTCs) are stored if the central electronic module (CEM) registers that there is a short-circuit to ground in the CAN L in the low speed network.

NOTE: **In the event of DFxx diagnostic trouble codes (DTCs), the central electronic module (CEM) must not be replace as the diagnostic trouble code (DTC) indicates a short-circuit in one or more conductors in the Control area network The central electronic module (CEM) is the only control module that monitors the voltage level in the Control area network wiring. The central electronic module (CEM) is therefore the only control module that can store a diagnostic trouble code (DTC) for a short-circuit in one of the cables to ground or supply voltage. Do not replace the central electronic module (CEM) in the event of a CAN fault unless VIDA (Volvo scan tool) has indicated that the central electronic module (CEM) has an internal fault.**

Substitute Value

None.

Possible Source

- Short-circuit to ground in the low speed network.

Fault symptom[s]

- The central locking system does not function at all
- Radio interference.

SIGNAL TOO LOW. INTERMITTENT FAULT.

CHECKING CONNECTORS AND BUS WIRE

NOTE: **Remember that the CAN network is only a communications network. There are therefore no fuses, switches and sensors on the CAN bus. Check the resistance as described below (see reference).**

NOTE: **To maintain the correct values the battery should be disconnected when measuring resistance.**

Check the bus wire for a short circuit to ground as described in, see **SHORT-CIRCUIT TO GROUND, INTERMITTENT FAULTS** .

Also check the intermediate connectors for contact resistance and oxidation as described in, see **CONTACT RESISTANCE AND OXIDATION** and for a loose contact as described in **LOOSE CONNECTIONS (TERMINALS)** .

HINT: If the fault is found before all the wires below have been checked trouble-shooting is not necessary on the wires.

The following wires and connectors should be checked to locate the short circuit.

Wire between:

- road traffic information module (RTI) 22A and rear electronic module (REM) 17A.

  road traffic information module (RTI) 10A and rear electronic module (REM) 15A.

  To connect the test box to the RTI control unit, see **CONNECTING THE BREAKOUT BOX TO THE ROAD TRAFFIC INFORMATION (RTI) CONTROL MODULE**

  To connect the test box to the REM control unit, see **CONNECTING THE BREAKOUT BOX TO THE REAR ELECTRONIC MODULE (REM)**

- rear electronic module (REM) 16A, driver information module (DIM) 9 and intermediate connector 54/40.

  rear electronic module (REM) 14A, driver information module (DIM) 8 and intermediate connector 54/40.

  To connect the test box to the REM control unit, see **CONNECTING THE BREAKOUT BOX TO THE REAR ELECTRONIC MODULE (REM)**

  To connect the test box to the DIM control unit, see **CONNECTING THE DRIVER INFORMATION MODULE (DIM) TEST BOX**

- central electronic module (CEM) 2D and driver information module (DIM) 9.

  central electronic module (CEM) 3D and driver information module (DIM) 8.

  To connect the test box to the CEM control unit, see **CONNECTING THE BREAKOUT BOX**

  To connect the test box to the DIM control unit, see **CONNECTING THE DRIVER INFORMATION MODULE (DIM) TEST BOX**

- power seat module (PSM) 3B and driver information module (DIM) 9.

  power seat module (PSM) 2B and driver information module (DIM) 8.

  To connect the test box to the PSM control unit, see **CONNECTING THE BREAKOUT BOX, POWER SEAT MODULE (PSM)**

  To connect the test box to the DIM control unit, see **CONNECTING THE DRIVER INFORMATION MODULE (DIM) TEST BOX**

- driver information module (DIM) 3 and climate control module (CCM) 12A.

  driver information module (DIM) 2 and climate control module (CCM) 14A.

  To connect the test box to the DIM control unit, see **CONNECTING THE DRIVER INFORMATION MODULE (DIM) TEST BOX**

  To connect the test box to the CCM control unit, see **CONNECTING THE BREAKOUT BOX**

- audio module (AUM) 8A and climate control module (CCM) 12A.

  audio module (AUM) 7A and climate control module (CCM) 14A.

  To connect the test box to the AUM control unit, see **CONNECTING THE BREAKOUT BOX, AUDIO CONTROL MODULE**

  To connect the test box to the CCM control unit, see **CONNECTING THE BREAKOUT BOX**

- phone module (PHM) 10A and climate control module (CCM) 12A.

  phone module (PHM) 22A and climate control module (CCM) 14A.

  To connect the test box to the PHM control unit, see **CONNECTING THE BREAKOUT BOX, CARPHONE MODULE**

  To connect the test box to the CCM control unit, see **CONNECTING THE BREAKOUT BOX**

- passenger door module (PDM) 3A, climate control module (CCM) 12A and intermediate connector

54/11.

passenger door module (PDM) 2A, climate control module (CCM) 14A and intermediate connector 54/11.

To connect the test box to the PDM control units, see **CONNECTING THE BREAKOUT BOX**

To connect the test box to the CCM control unit, see **CONNECTING THE BREAKOUT BOX**

- climate control module (CCM) 11A and steering wheel module (SWM) 19.

  climate control unit (CCM) 13A and steering wheel module (SWM) 9.

  To connect the test box to the CCM control unit, see **CONNECTING THE BREAKOUT BOX**

  To connect the test box to the SWM control unit, see **CONNECTING THE BREAKOUT BOX**

- steering wheel module (SWM) 20 and supplemental restraint system (SRS) 25B.

  steering wheel module (SWM) 10 and supplemental restraint system (SRS) 23B.

  To connect the test box to the SWM control unit, see **CONNECTING THE BREAKOUT BOX**

  To connect the test box to the SRS control unit:
  - For model year 2003-2004, see **CONNECTING THE BREAKOUT BOX** .
  - For model year 2005-, see **CONNECTING THE BREAKOUT BOX** .

- supplemental restraint system (SRS) 26B, upper electronic module (UEM) 5 and intermediate connector 54/13.

  supplemental restraint system (SRS) 24B, upper electronic module (UEM) 3 and intermediate connector 54/13.

  To connect the test box to the SRS control unit:
  - For model year 2003-2004, see **CONNECTING THE BREAKOUT BOX** .
  - For model year 2005-, see **CONNECTING THE BREAKOUT BOX** .

  To connect the test box to the UEM control unit, see **CONNECTING THE BREAKOUT BOX**

- driver door module (DDM) 3A, upper electronic module (UEM) 5 and intermediate connector 54/10.

  driver door module (DDM) 2A, upper electronic module (UEM) 3 and intermediate connector 54/10.

  To connect the test box to the DDM control units, see **CONNECTING THE BREAKOUT BOX**

  To connect the test box to the UEM control unit, see **CONNECTING THE BREAKOUT BOX**

Additional information:

- The voltage should be between approximately 1.5 V and 3.5 V.
- To disconnect the battery, see **BATTERY, DISCONNECTING** .

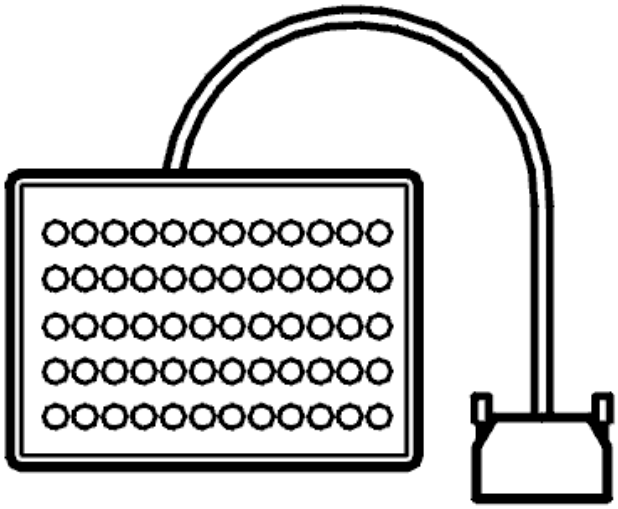

Fig. 303: Breakout Box
Courtesy of VOLVO CARS CORPORATION

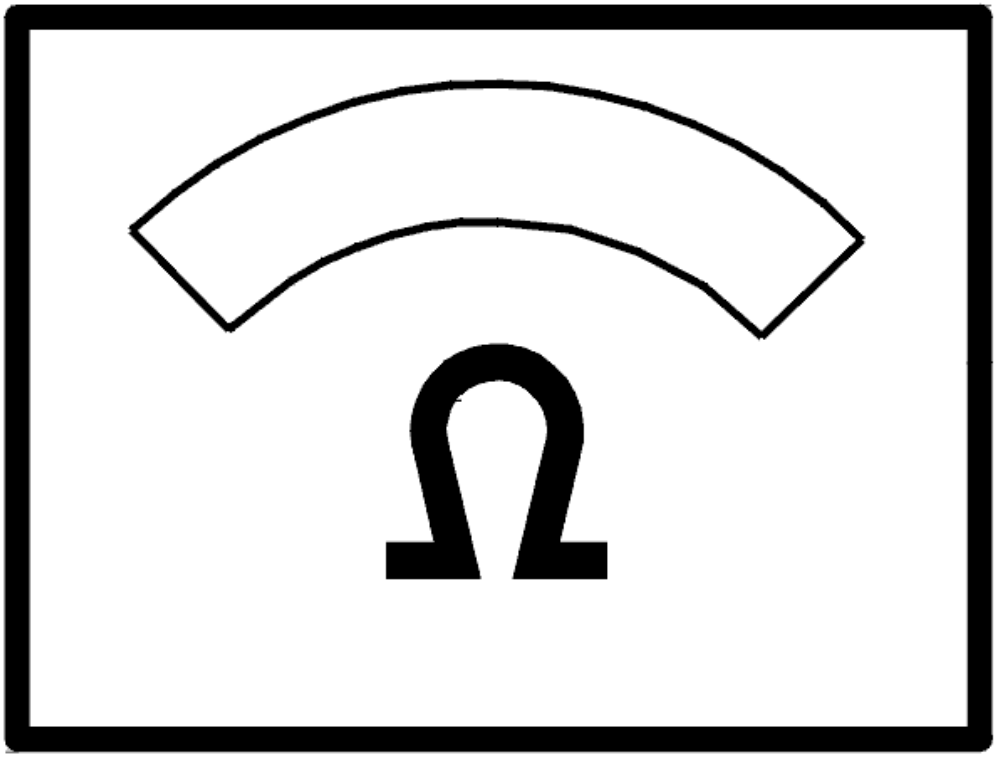

Fig. 304: Identifying Ohm Meter
Courtesy of VOLVO CARS CORPORATION

CEM-DF04: CAN-L, LOW-SPEED NETWORK. SIGNAL TOO LOW. PERMANENT FAULT (2003-2004)

DIAGNOSTIC TROUBLE CODE (DTC) INFORMATION CEM-DF04

see **DIAGNOSTIC TROUBLE CODE (DTC) INFORMATION CEM-DF04**

SIGNAL TOO LOW. PERMANENT FAULT

CHECKING CONNECTORS AND BUS WIRE

NOTE: **Remember that the CAN network is only a communications network. There are**

therefore no fuses, switches and sensors on the CAN bus. Check the resistance as described below (see reference).

NOTE: To maintain the correct values the battery should be disconnected when measuring resistance.

Check the bus wire for a short circuit to ground as described in, see **SHORT-CIRCUIT TO GROUND, PERMANENT FAULTS** . Also check the intermediate connectors for contact resistance and oxidation as described in **CONTACT RESISTANCE AND OXIDATION** .

The following wires and connectors should be checked to locate the short circuit.

Wire between:

- road traffic information module (RTI) 22A and rear electronic module (REM) 17A.

  road traffic information module (RTI) 10A and rear electronic module (REM) 15A.

  To connect the test box to the RTI control unit, see **CONNECTING THE BREAKOUT BOX TO THE ROAD TRAFFIC INFORMATION (RTI) CONTROL MODULE**

  To connect the test box to the REM control unit, see **CONNECTING THE BREAKOUT BOX TO THE REAR ELECTRONIC MODULE (REM)**

- rear electronic module (REM) 16A, driver information module (DIM) 9 and intermediate connector 54/40.

  rear electronic module (REM) 14A, driver information module (DIM) 8 and intermediate connector 54/40.

  To connect the test box to the REM control unit, see **CONNECTING THE BREAKOUT BOX TO THE REAR ELECTRONIC MODULE (REM)**

  To connect the test box to the DIM control unit, see **CONNECTING THE DRIVER INFORMATION MODULE (DIM) TEST BOX**

- central electronic module (CEM) 2D and driver information module (DIM) 9.

  central electronic module (CEM) 3D and driver information module (DIM) 8.

  To connect the test box to the CEM control unit, see **CONNECTING THE BREAKOUT BOX**

  To connect the test box to the DIM control unit, see **CONNECTING THE DRIVER INFORMATION MODULE (DIM) TEST BOX**

- power seat module (PSM) 3B and driver information module (DIM) 9.

power seat module (PSM) 2B and driver information module (DIM) 8.

To connect the test box to the PSM control unit, see **CONNECTING THE BREAKOUT BOX, POWER SEAT MODULE (PSM)**

To connect the test box to the DIM control unit, see **CONNECTING THE DRIVER INFORMATION MODULE (DIM) TEST BOX**

- driver information module (DIM) 3 and climate control module (CCM) 12A.

  driver information module (DIM) 2 and climate control module (CCM) 14A.

  To connect the test box to the DIM control unit, see **CONNECTING THE DRIVER INFORMATION MODULE (DIM) TEST BOX**

  To connect the test box to the CCM control unit, see **CONNECTING THE BREAKOUT BOX**

- audio module (AUM) 8A and climate control module (CCM) 12A.

  audio module (AUM) 7A and climate control module (CCM) 14A.

  To connect the test box to the AUM control unit, see **CONNECTING THE BREAKOUT BOX, AUDIO CONTROL MODULE**

  To connect the test box to the CCM control unit, see **CONNECTING THE BREAKOUT BOX**

- phone module (PHM) 10A and climate control module (CCM) 12A.

  phone module (PHM) 22A and climate control module (CCM) 14A.

  To connect the test box to the PHM control unit, see **CONNECTING THE BREAKOUT BOX, CARPHONE MODULE**

  To connect the test box to the CCM control unit, see **CONNECTING THE BREAKOUT BOX**

- passenger door module (PDM) 3A, climate control module (CCM) 12A and intermediate connector 54/11.

  passenger door module (PDM) 2A, climate control module (CCM) 14A and intermediate connector 54/11.

  To connect the test box to the PDM/DDM control units, see **CONNECTING THE BREAKOUT BOX**

  To connect the test box to the CCM control unit, see **CONNECTING THE BREAKOUT BOX**

- climate control module (CCM) 11A and steering wheel module (SWM) 19.

climate control unit (CCM) 13A and steering wheel module (SWM) 9.

To connect the test box to the CCM control unit, see **CONNECTING THE BREAKOUT BOX**

To connect the test box to the SWM control unit, see **CONNECTING THE BREAKOUT BOX**

- steering wheel module (SWM) 20 and supplemental restraint system (SRS) 25B.

  steering wheel module (SWM) 10 and supplemental restraint system (SRS) 23B.

  To connect the test box to the SWM control unit, see **CONNECTING THE BREAKOUT BOX**

  To connect the test box to the SRS control unit:
  - For model year 2003-2004, see **CONNECTING THE BREAKOUT BOX** .
  - For model year 2005-, see **CONNECTING THE BREAKOUT BOX** .

- supplemental restraint system (SRS) 26B, upper electronic module (UEM) 5 and intermediate connector 54/13.

  supplemental restraint system (SRS) 24B, upper electronic module (UEM) 3 and intermediate connector 54/13.

  To connect the test box to the SRS control unit:
  - For model year 2003-2004, see **CONNECTING THE BREAKOUT BOX** .
  - For model year 2005-, see **CONNECTING THE BREAKOUT BOX** .

  To connect the test box to the UEM control unit, see **CONNECTING THE BREAKOUT BOX**

- driver door module (DDM) 3A, upper electronic module (UEM) 5 and intermediate connector 54/10.

  driver door module (DDM) 2A, upper electronic module (UEM) 3 and intermediate connector 54/10.

  To connect the test box to the DDM control units, see **CONNECTING THE BREAKOUT BOX**

  To connect the test box to the UEM control unit, see **CONNECTING THE BREAKOUT BOX**

Additional information

- The voltage should be between approximately 1.5V and 3.5V.
- To disconnect the battery, see **BATTERY, DISCONNECTING** .

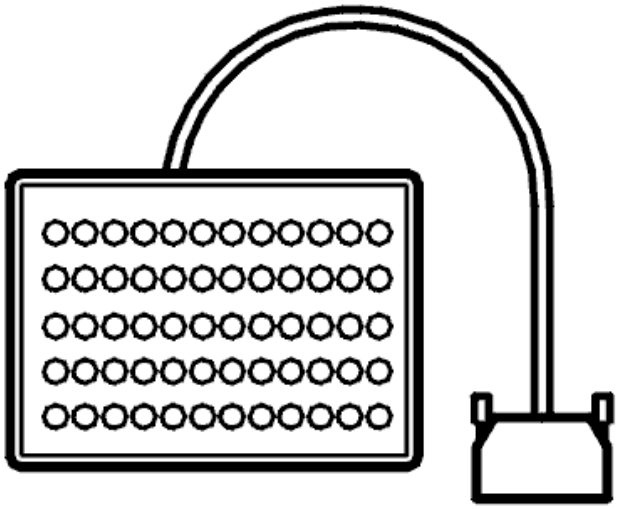

Fig. 305: Breakout Box
Courtesy of VOLVO CARS CORPORATION

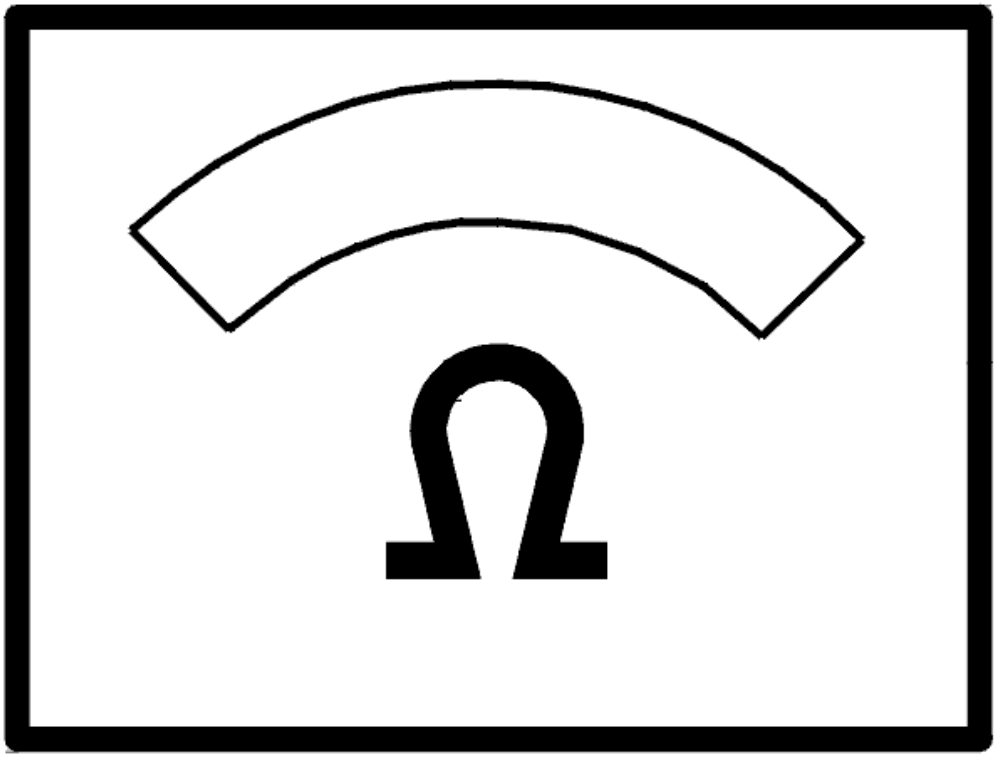

Fig. 306: Identifying Ohm Meter
Courtesy of VOLVO CARS CORPORATION

- **Continue**

  Refer to **VERIFICATION**

VERIFICATION

VERIFICATION

HINT: After the repair it is necessary to check that the fault has been rectified.

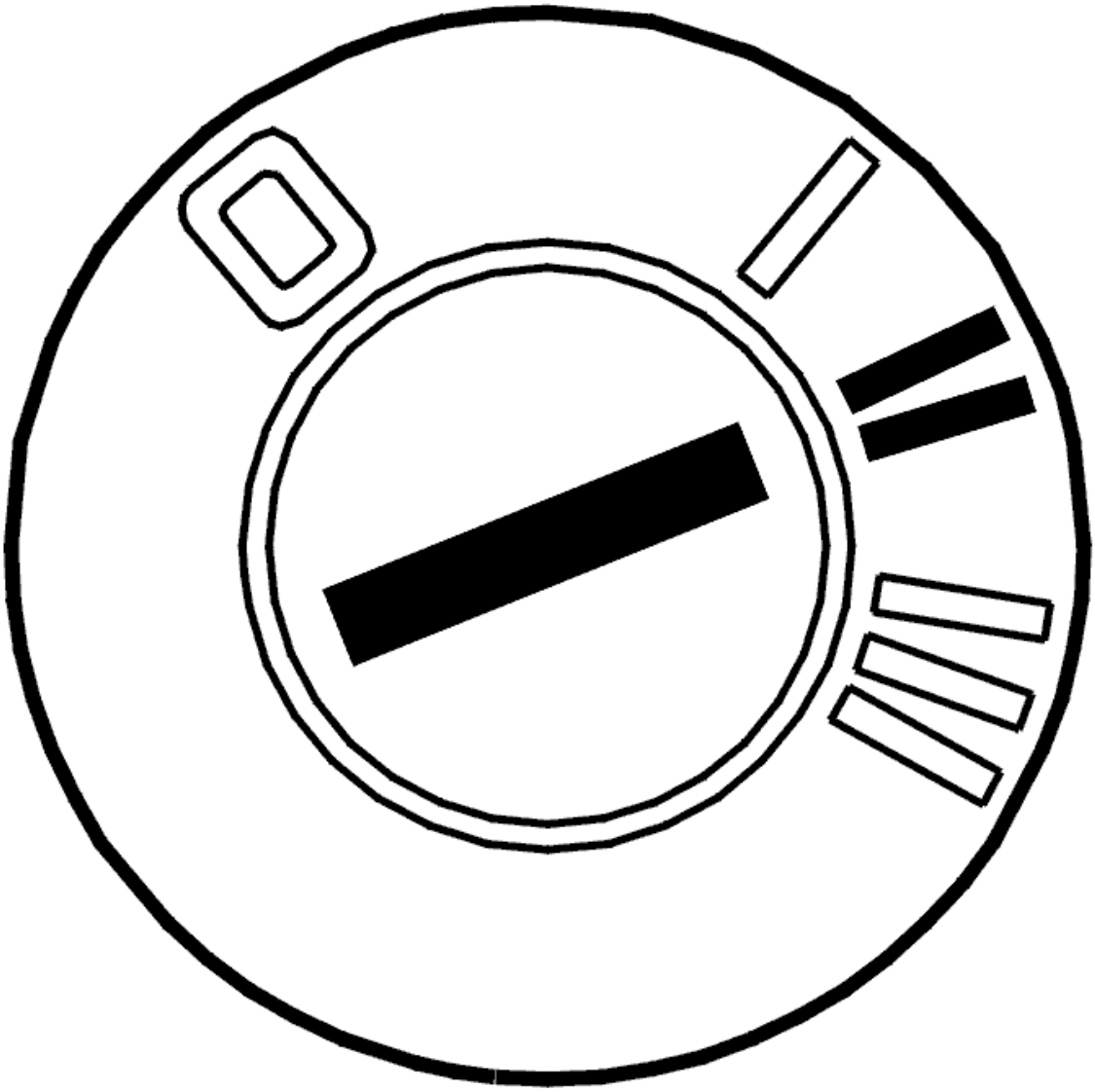

Fig. 307: Identifying Ignition ON
Courtesy of VOLVO CARS CORPORATION

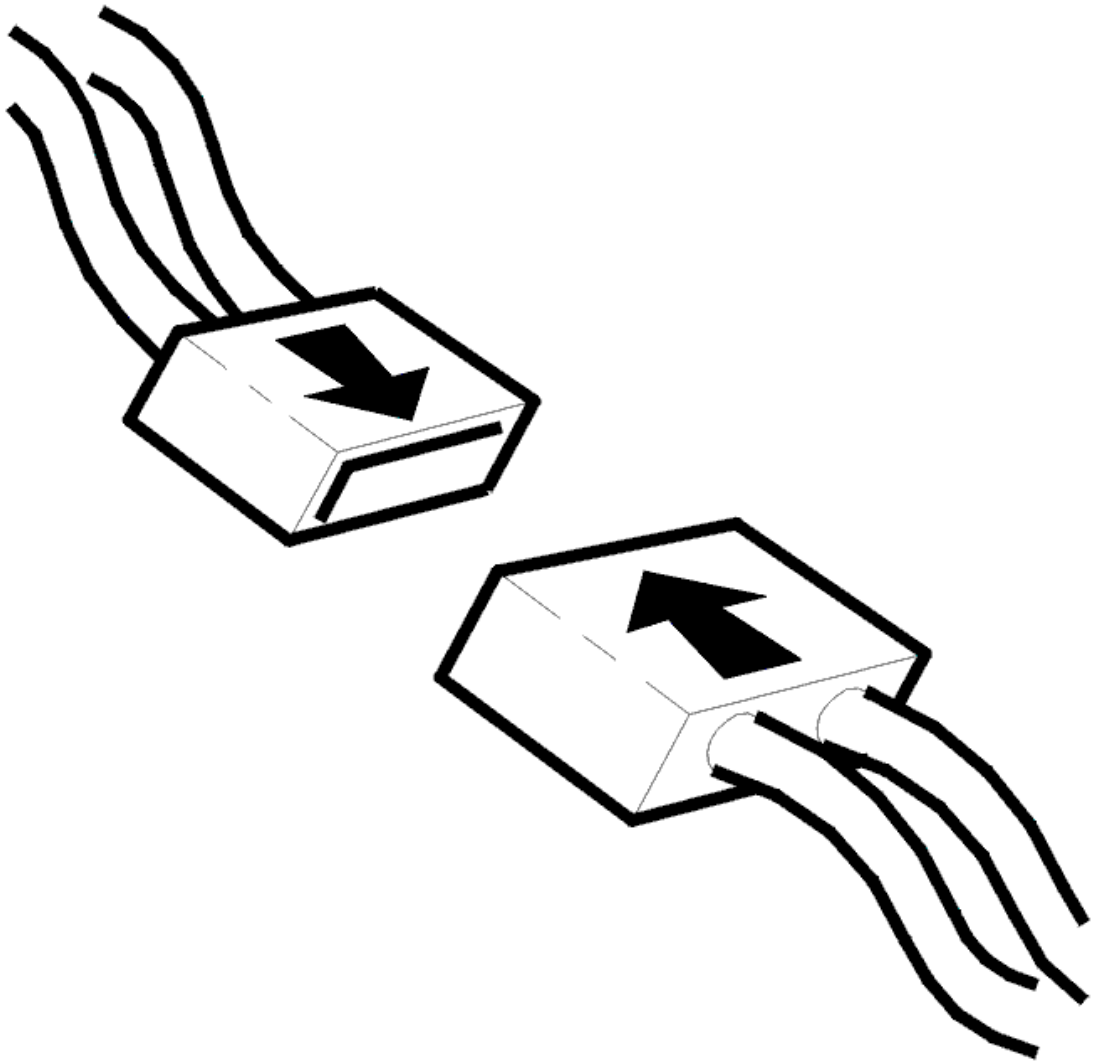

Fig. 308: Connecting Connector
Courtesy of VOLVO CARS CORPORATION

- Ignition off.
- Connect connectors, install components, etc.
- Ignition on for at least 10 seconds.

Check that diagnostic trouble code status is showing Intermittent.

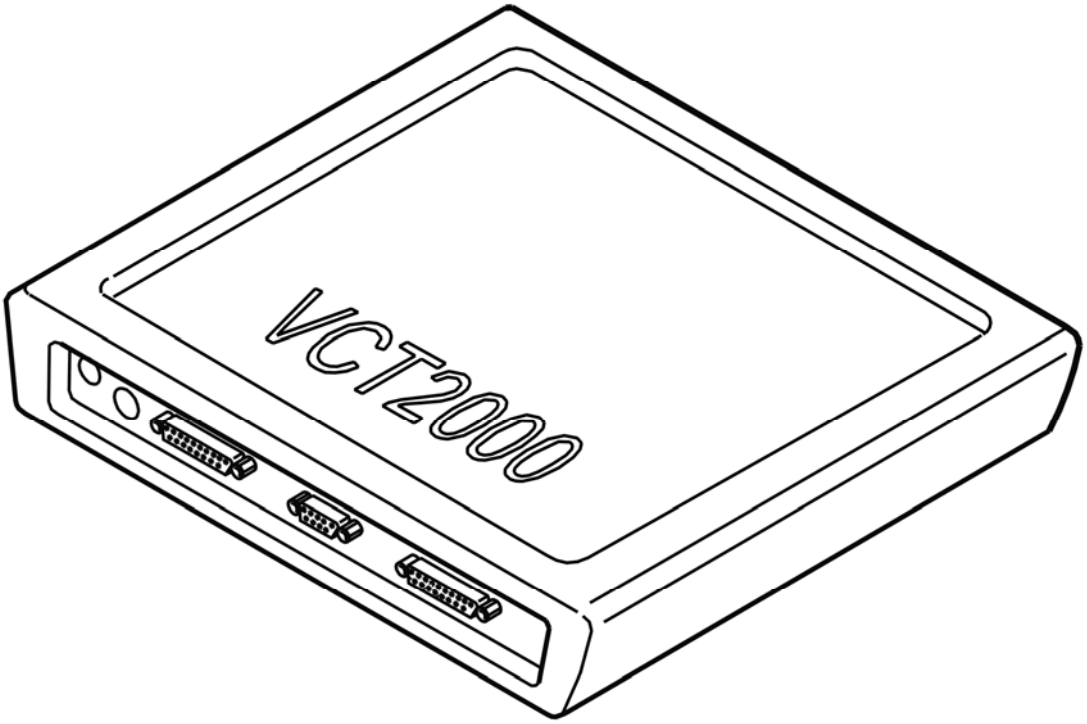

Fig. 309: Identifying VCT2000 Diagnostic Tool Symbol In VIDA
Courtesy of VOLVO CARS CORPORATION

Is the status of the diagnostic trouble code Intermittent?

- **YES**

  VERIFIED: Troubleshooting has been completed.

- **NO**

  Refer to **INFORMATION**

INFORMATION

FAULT-TRACING INFORMATION

The fault should have been detected and remedied. As this is not the case fault-tracing has failed.

Exit fault-tracing for this diagnostic trouble code (DTC) or make another attempt.

ELECTRICAL

Cables And Fuses - Diagnostic Trouble Codes and Associated Procedures

CEM-6A04: REAR RIGHT DOOR LOCKED. SIGNAL TOO LOW. INTERMITTENT FAULT (2003-2004)

DIAGNOSTIC TROUBLE CODE INFORMATION

Condition

If the central electronic module (CEM) detects a low signal from the lock position sensor 15 seconds after unlocking, diagnostic trouble code CEM-6A04 is displayed.

Possible Source

- The lock has stuck in locked position
- Lock position sensor signal wire short circuited to ground
- Relay fault
- Open circuit on relay supply/defective fuse
- Fault in locking motor circuit
- Fault in rear electronic module (REM).

Fault symptom[s]

- A door does not lock / open.

SIGNAL TOO LOW. INTERMITTENT FAULT

CHECKING THE COMPONENT

Check that the lock has not stuck by using the lock button on the inside of the door. Check that the lock unit is correctly installed.

Was a fault detected?

- **YES**

  OKAY: Troubleshooting has been completed.

- **NO**

  Refer to **CHECKING THE WIRING AND SWITCHES**

CHECKING THE WIRING AND SWITCHES

Check the signal cable for the lock position sensor between the central electronic module connector terminal #C3 and lock unit connector terminal #5. Check for an open-circuit.

NOTE: **Diagnostic trouble code (DTC) REM-6A0C or REM-6A0E may also be stored if this fault occurs. Use the VCT2000 (or appropriate scan tool) to read diagnostic trouble codes (DTCs).**

Other information:

- To access and replace the lock module:
  - For the driver's side door module, see **DRIVER DOOR MODULE (DDM), REPLACING** .
  - For the passenger side door module, see **PASSENGER DOOR MODULE (PDM), REPLACING** .
- For -2004, see: **CENTRAL ELECTRONIC MODULE (CEM), REPLACING**
- For 2005-, see: **CENTRAL ELECTRONIC MODULE (CEM), REPLACING** .
- To connect the breakout box, see **CONNECTING THE BREAKOUT BOX**
- -2004: **SIGNAL SPECIFICATION**
- 2005-: **SIGNAL SPECIFICATION**
- see **CHECKING WIRING AND TERMINALS. INTERMITTENT FAULTS** .

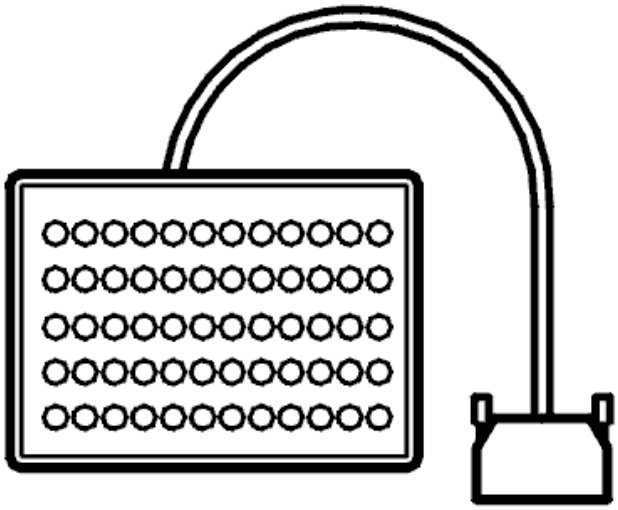

Fig. 1: Breakout Box
Courtesy of VOLVO CARS CORPORATION

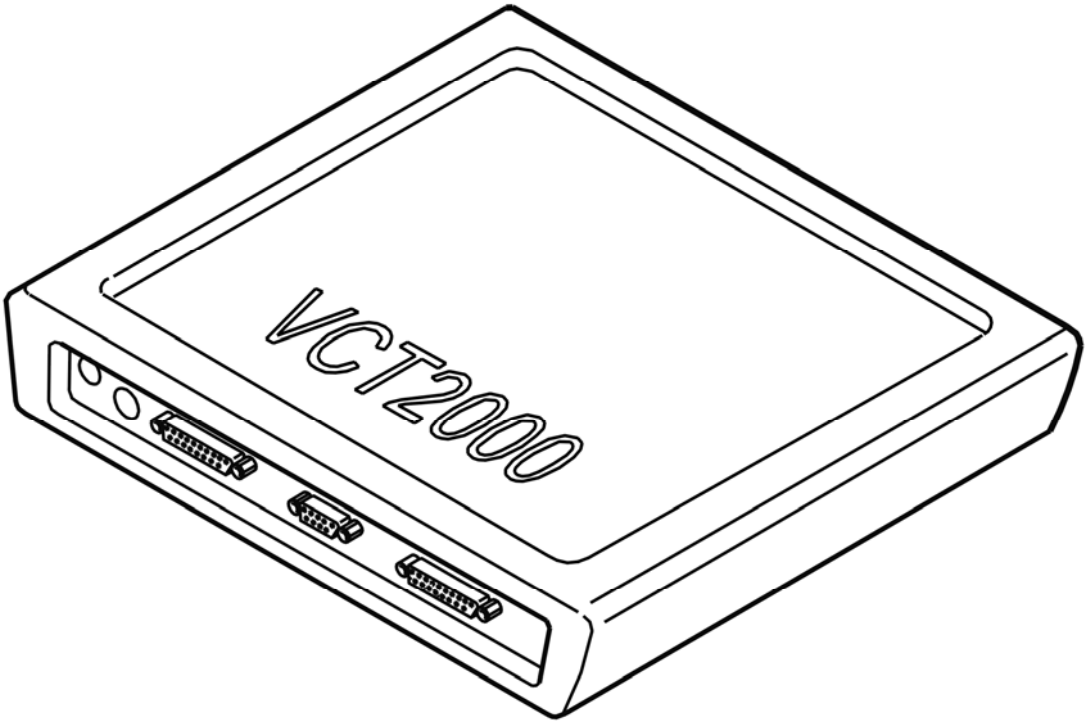

Fig. 2: Identifying VCT2000 Diagnostic Tool Symbol In VIDA
Courtesy of VOLVO CARS CORPORATION

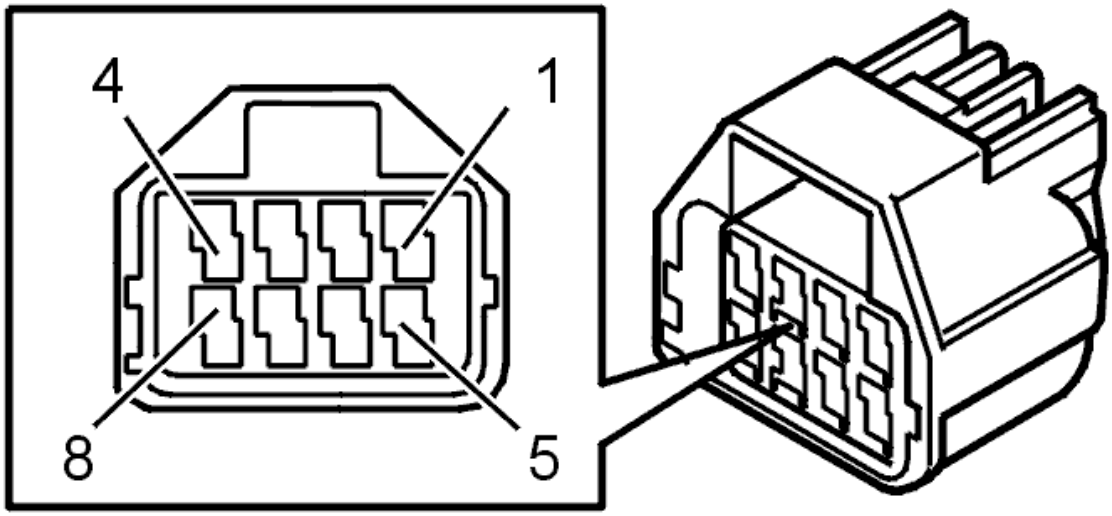

Fig. 3: Identifying Connector Terminals
Courtesy of VOLVO CARS CORPORATION

Were any diagnostic trouble codes (DTCs) stored?

- **YES**

OKAY: Troubleshooting has been completed.

- **NO**

  Refer to **CHECKING THE DOOR LOCKING FUNCTION**

CHECKING THE DOOR LOCKING FUNCTION

QUESTION

Which door has the problem?

1. Driver door.

   Refer to **CHECKING THE DRIVER DOOR**

2. Passenger door.

   Refer to **CHECKING THE PASSENGER DOOR**

3. Rear left door.

   Refer to **CHECKING THE REAR LEFT DOOR**

4. Rear right door.

   Refer to **CHECKING THE REAR RIGHT DOOR**

CHECKING THE DRIVER DOOR

CHECK

Is the passenger door lock not working?

- **YES**

  Refer to **CHECKING THE FUSE**

- **NO**

  Refer to **CHECK**

CHECKING THE FUSE

Remove the fuse 11C/27 in cargo compartment fuse box.

Check that fuse is intact and check for contact resistance and oxidation as described in, see **CONTACT RESISTANCE AND OXIDATION** .

Additional information

- To access relay/fuse box in the cargo compartment:
  - For -2004, see: **RELAY/FUSE BOX CARGO COMPARTMENT/REAR ELECTRONIC MODULE (REM), REPLACING**
  - For 2005-, see: **REAR ELECTRONIC MODULE (REM), REPLACING** .

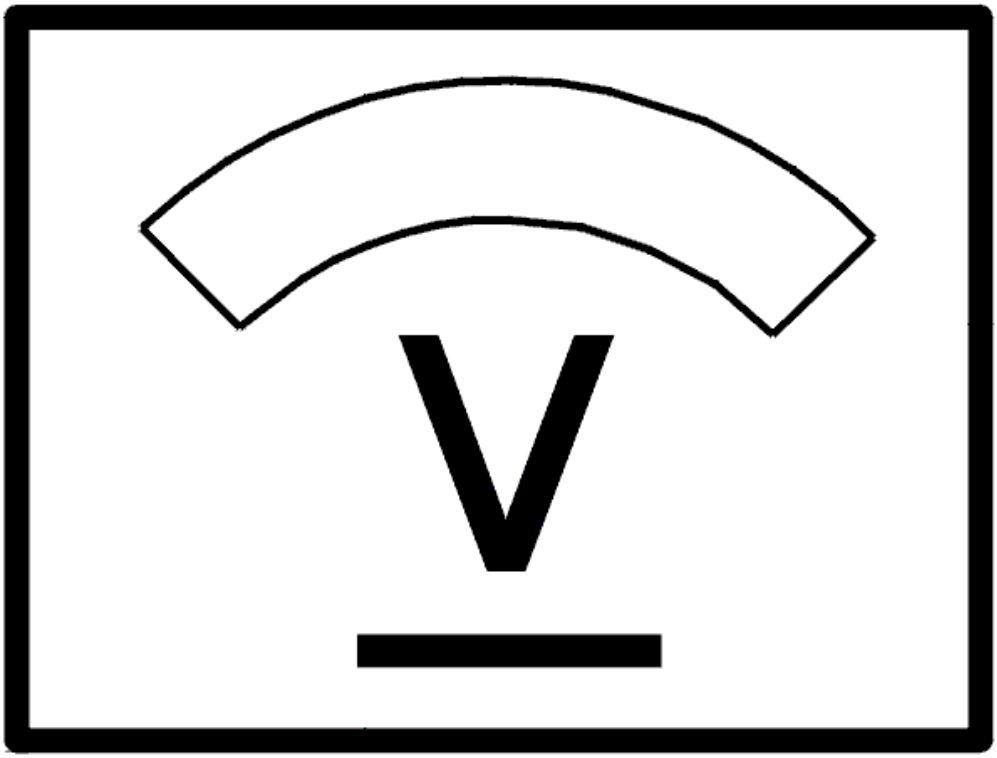

Fig. 4: Identifying Voltage Display
Courtesy of VOLVO CARS CORPORATION

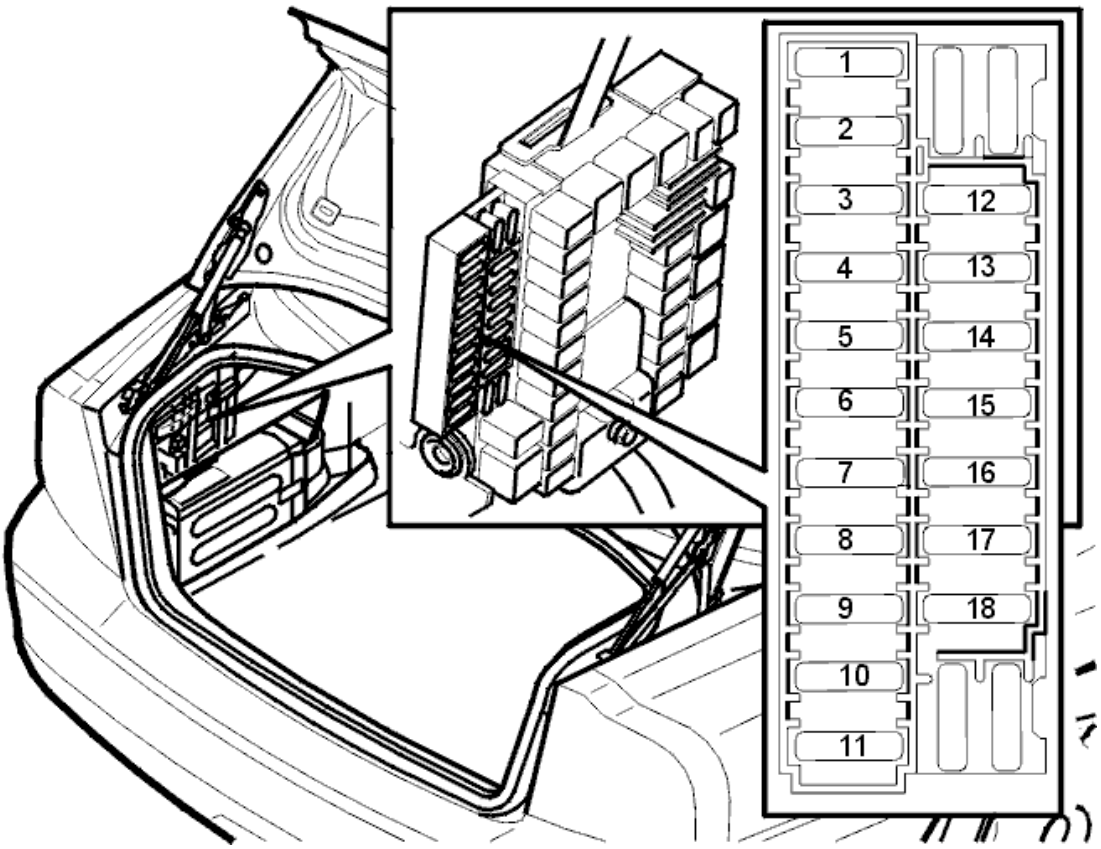

Fig. 5: Fuse Holder (Cargo Compartment)
Courtesy of VOLVO CARS CORPORATION

Is the fuse intact?

- **YES**

  Refer to **CHECKING FOR AN OPEN CIRCUIT**

- **NO**

  Refer to **CHECKING FOR A SHORT CIRCUIT**

CHECK

1. Window lift works on that particular door

   Refer to **CHECKING THE LOCKING MOTOR WIRES**

2. Window lift does not work on that particular door.

   Refer to **CHECKING THE FUSE**

CHECKING THE FUSE

Remove the fuse 11C/35 in cargo compartment fuse box.

Check that fuse is intact and check for contact resistance and oxidation as described in, see **CONTACT RESISTANCE AND OXIDATION** .

Additional information

- To access relay/fuse box in the cargo compartment:
  - For -2004, see: **RELAY/FUSE BOX CARGO COMPARTMENT/REAR ELECTRONIC MODULE (REM), REPLACING**
  - For 2005-, see: **REAR ELECTRONIC MODULE (REM), REPLACING** .

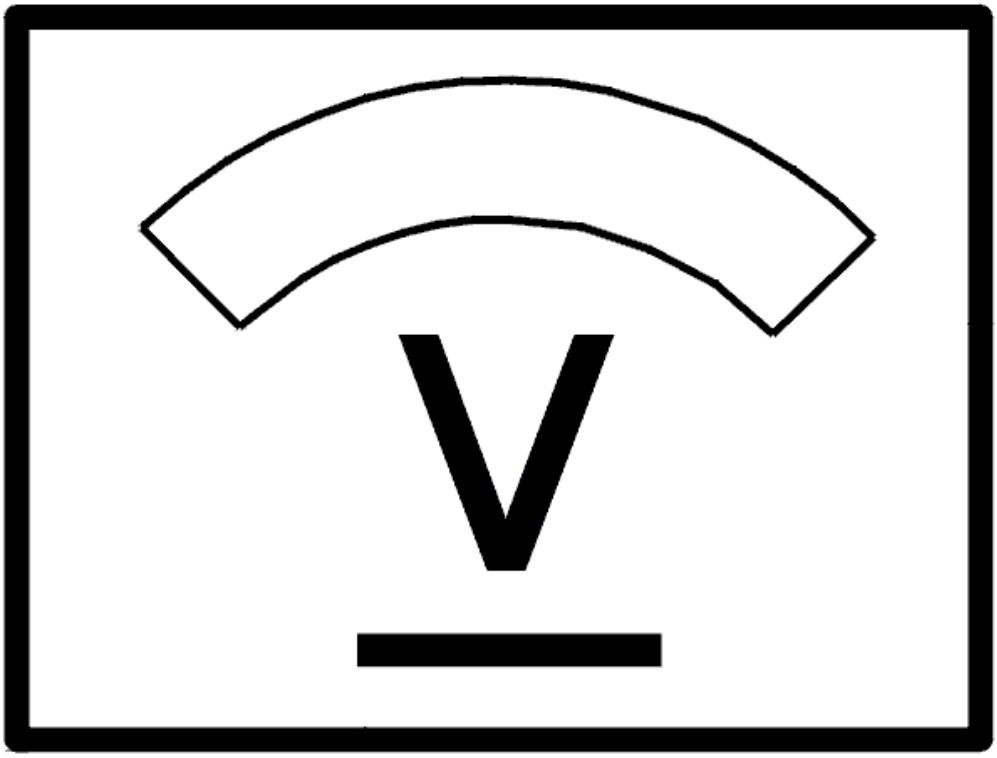

Fig. 6: Identifying Voltage Display
Courtesy of VOLVO CARS CORPORATION

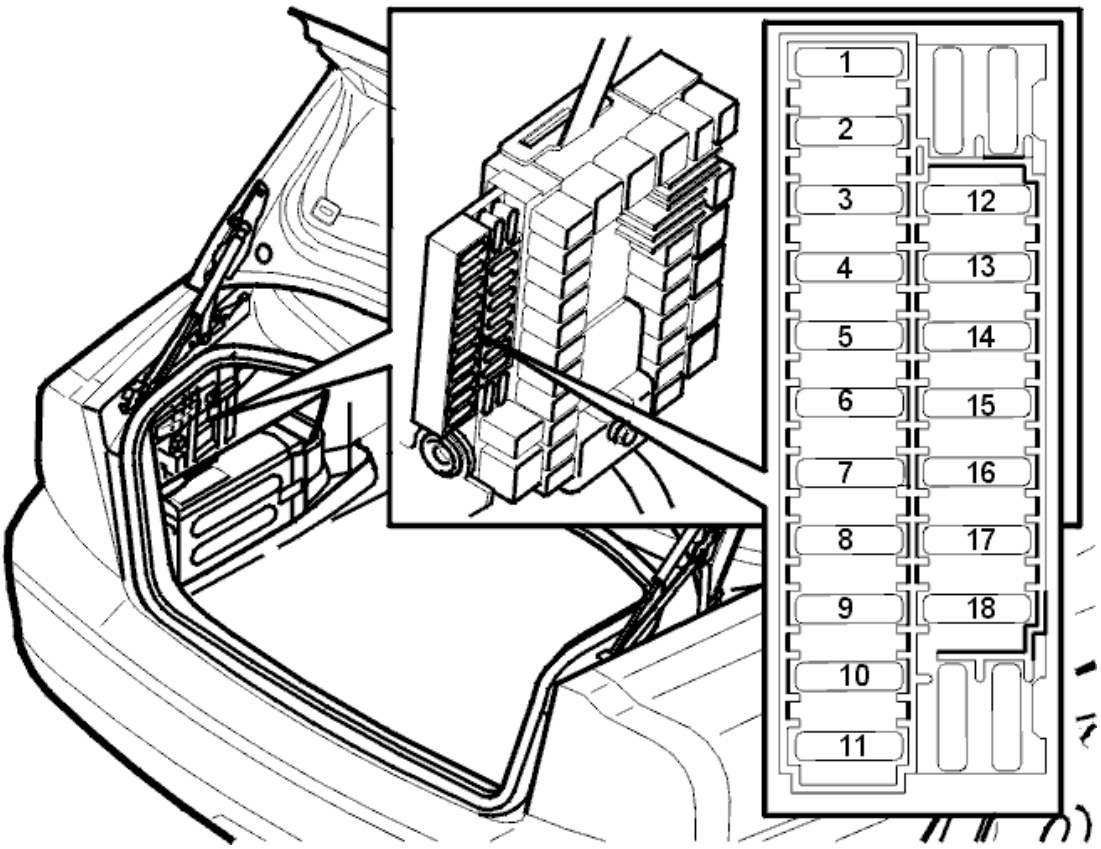

Fig. 7: Fuse Holder (Cargo Compartment)
Courtesy of VOLVO CARS CORPORATION

Is the fuse intact?

- **YES**

  Refer to **CHECKING THE VOLTAGE**

- **NO**

  Refer to **CHECKING FOR A SHORT CIRCUIT**

CHECKING FOR AN OPEN CIRCUIT

Check door control unit connector B7 for contact resistance and oxidation as described in, see **CONTACT RESISTANCE AND OXIDATION** .

Trouble-shoot the wire between fuse holder secondary side (left) and door control unit connector B7 for an open circuit as described in, see **OPEN-CIRCUIT, PERMANENT FAULTS** .

If a fault is detected, check in particular the intermediate connector in the cable harness (1/control unit) for contact resistance and oxidation as described in, see **CONTACT RESISTANCE AND OXIDATION** .

If there is an open circuit the fault should be between the fuse and the common junction point 53/427.

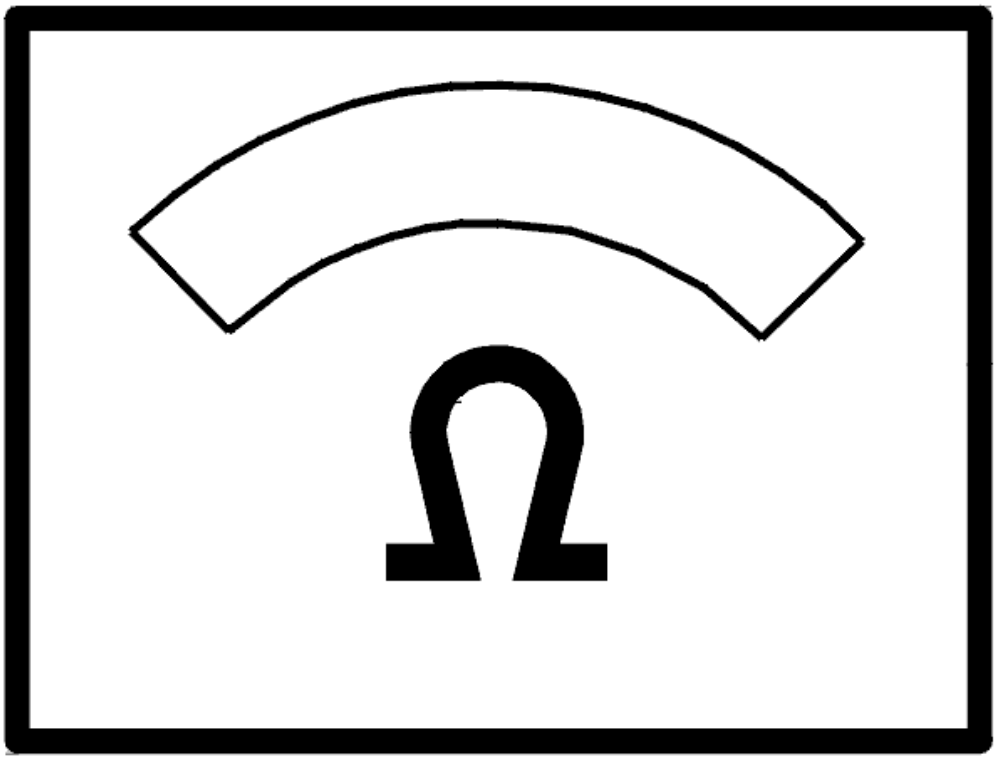

Fig. 8: Identifying Ohm Meter
Courtesy of VOLVO CARS CORPORATION

CHECKING FOR A SHORT CIRCUIT

Check the resistance between the fuse holder secondary side (left) and ground.

The ohmmeter should display infinite resistance.

NOTE: If the value is correct the fault could be intermittent.

Switch to trouble-shooting intermittent short circuits to ground as described in, see **SHORT-CIRCUIT TO GROUND, INTERMITTENT FAULTS** .

If the ohmmeter indicates a fault (short circuit), trouble-shoot the wires between the fuse and door control unit connector B7 for a short circuit to ground as described in, see **SHORT-CIRCUIT TO GROUND, PERMANENT FAULTS** .

The fault should be between the fuse and the common junction point 53/427.

Replace fuse.

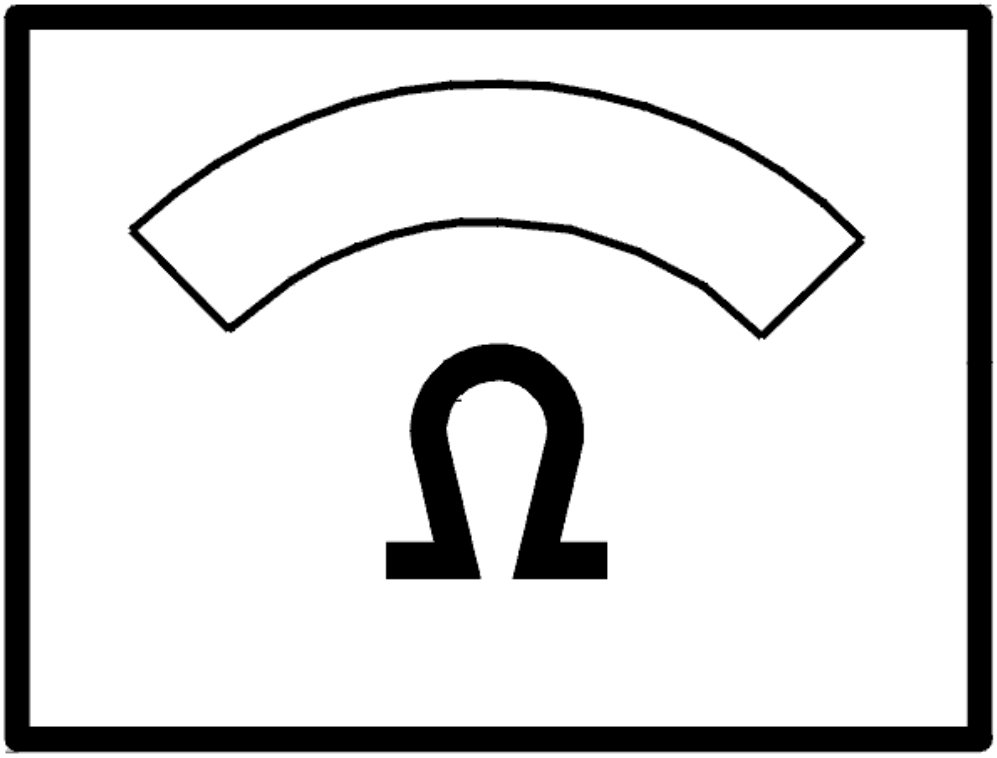

Fig. 9: Identifying Ohm Meter
Courtesy of VOLVO CARS CORPORATION

CHECKING THE VOLTAGE

Check the voltage in the door control unit connector B12.

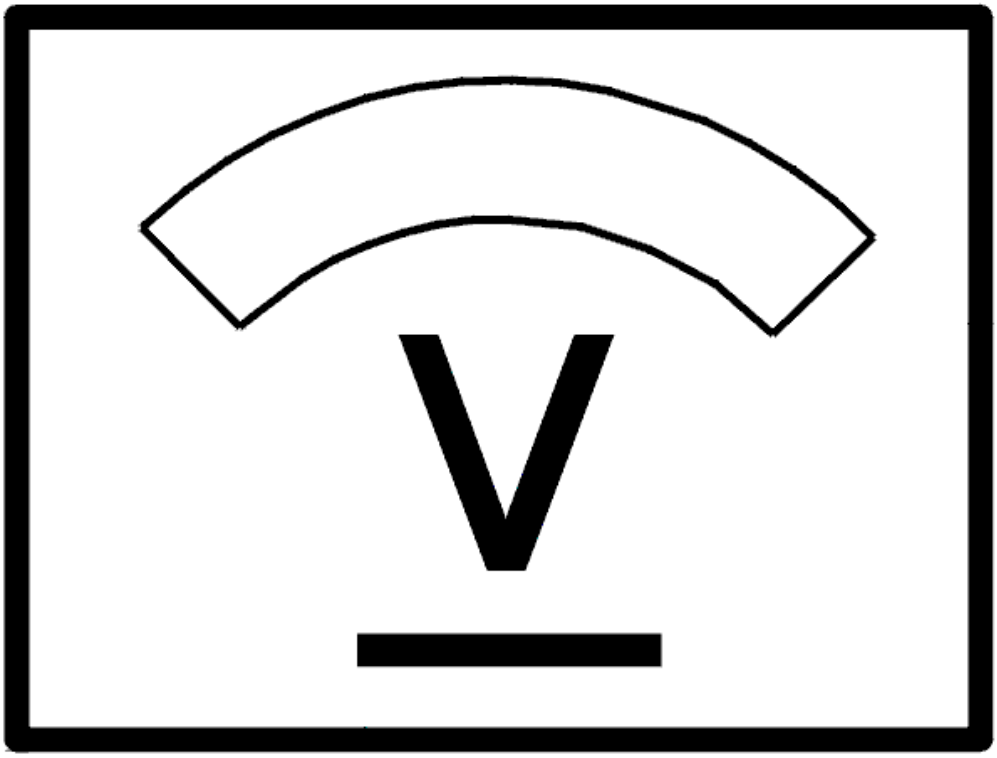

Fig. 10: Identifying Voltage Display
Courtesy of VOLVO CARS CORPORATION

Does the voltmeter show the battery voltage?

- **YES**

  Refer to **CHECKING THE LOCKING MOTOR WIRES**

- **NO**

  Refer to **CHECKING FOR AN OPEN CIRCUIT**

CHECKING FOR AN OPEN CIRCUIT

Check door control unit connector B12 for contact resistance and oxidation as described in, see **CONTACT**

RESISTANCE AND OXIDATION .

Trouble-shoot the wire between fuse holder secondary side (left) and door control unit connector B12 for an open circuit as described in, see **OPEN-CIRCUIT, PERMANENT FAULTS** .

If a fault is detected, check in particular the intermediate connector in the cable harness (1) for contact resistance and oxidation as described in, see **CONTACT RESISTANCE AND OXIDATION** .

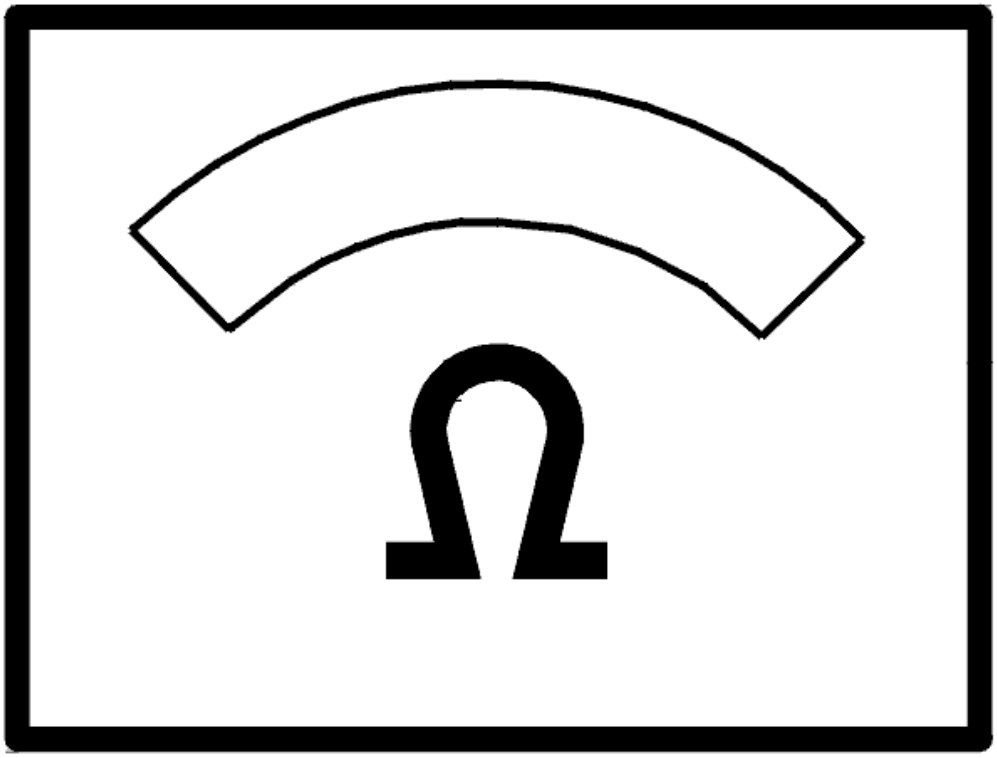

Fig. 11: Identifying Ohm Meter
Courtesy of VOLVO CARS CORPORATION

CHECKING FOR A SHORT CIRCUIT

Check the resistance between the fuse holder secondary side (left) and ground.

The ohmmeter should display infinite resistance.

NOTE: If the value is correct the fault could be intermittent.

Switch to trouble-shooting intermittent short circuits to ground as described in, see **SHORT-CIRCUIT TO GROUND, INTERMITTENT FAULTS** .

If the ohmmeter indicates a fault (short circuit), trouble-shoot the wires between the fuse and door control unit connector B12 for a short circuit to ground as described in, see **SHORT-CIRCUIT TO GROUND, PERMANENT FAULTS** .

Replace fuse.

Additional information

- To access relay/fuse box in the cargo compartment:
  - For -2004, see: **RELAY/FUSE BOX CARGO COMPARTMENT/REAR ELECTRONIC MODULE (REM), REPLACING**
  - For 2005-, see: **REAR ELECTRONIC MODULE (REM), REPLACING** .

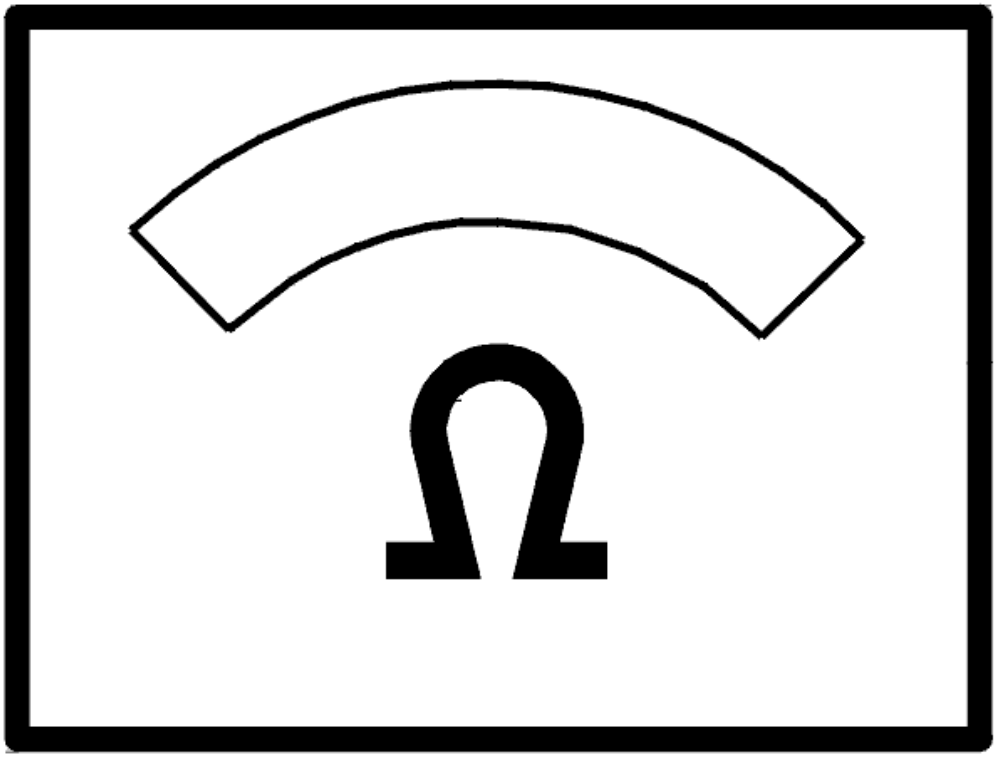

Fig. 12: Identifying Ohm Meter
Courtesy of VOLVO CARS CORPORATION

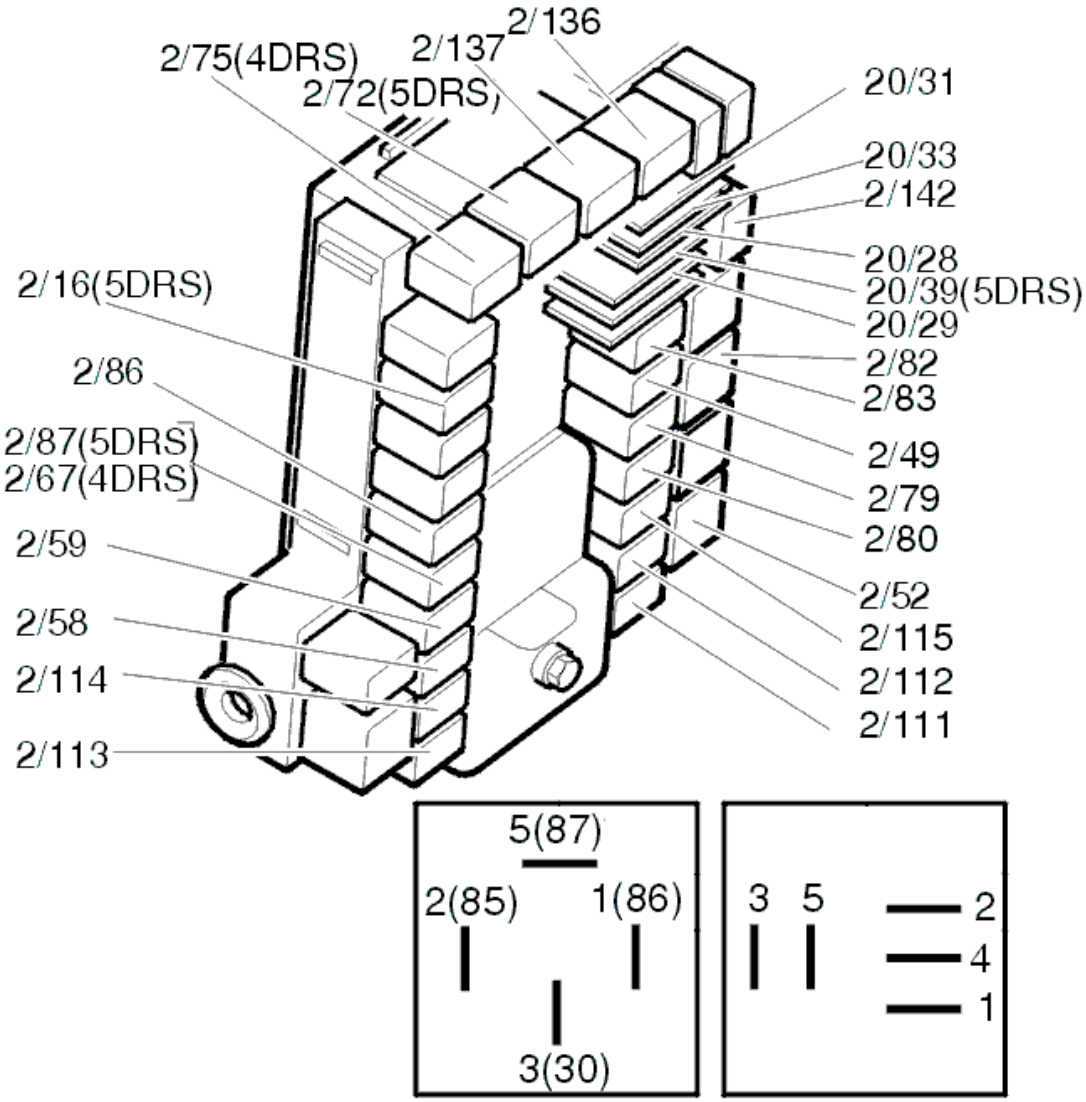

Fig. 13: Identifying Relays
Courtesy of VOLVO CARS CORPORATION

CHECKING THE LOCKING MOTOR WIRES

Check door control unit and lock unit connectors for contact resistance and oxidation as described in, see **CONTACT RESISTANCE AND OXIDATION** .

Trouble-shoot the wire between door control unit connector B2 and lock unit connector 8 for an open circuit as described in, see **OPEN-CIRCUIT, PERMANENT FAULTS** .

Trouble-shoot the wire between door control unit connector B6 and lock unit connector 7 for an open circuit as described in, see **OPEN-CIRCUIT, PERMANENT FAULTS** .

Additional information

- To access/replace rear electronic module (REM):
  - For -2004, see: **RELAY/FUSE BOX CARGO COMPARTMENT/REAR ELECTRONIC MODULE (REM), REPLACING**
  - For 2005-, see: **REAR ELECTRONIC MODULE (REM), REPLACING** .

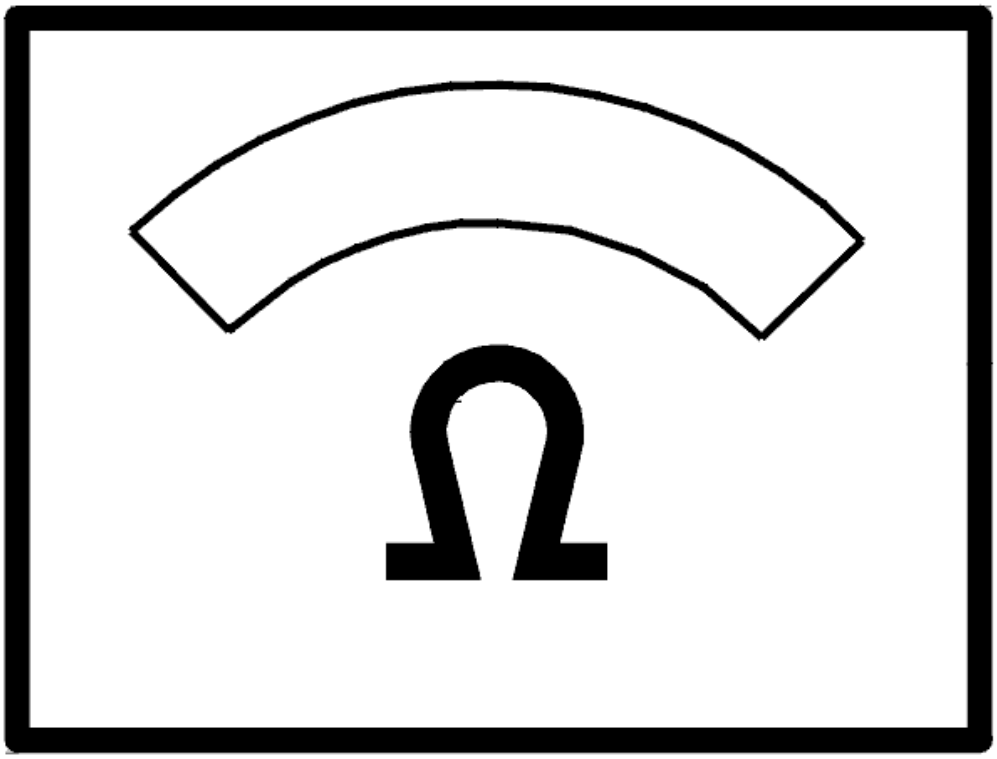

Fig. 14: Identifying Ohm Meter
Courtesy of VOLVO CARS CORPORATION

Is there a fault?

- **YES**

  OKAY: Troubleshooting has been completed.

- **NO**

Refer to **REPLACING THE COMPONENT**

REPLACING THE COMPONENT

Replace lock unit as described in, see **REPLACING THE SWITCH FOR THE LOCK UNIT / CARGO COMPARTMENT LIGHTING** .

Is there a fault?

- **YES**

  OKAY: Troubleshooting has been completed.

- **NO**

  Refer to **REPLACING THE COMPONENT**

REPLACING THE COMPONENT

Replace control unit.

- For -2004, see: **RELAY/FUSE BOX CARGO COMPARTMENT/REAR ELECTRONIC MODULE (REM), REPLACING**
- For 2005-, see: **REAR ELECTRONIC MODULE (REM), REPLACING** .

CHECKING THE PASSENGER DOOR

CHECK

Is the driver door lock not working?

- **YES**

  Refer to **CHECKING THE FUSE**

- **NO**

  Refer to **CHECK**

CHECKING THE FUSE

Remove the fuse 11C/27 in cargo compartment fuse box.

Check that fuse is intact and check for contact resistance and oxidation as described in, see **CONTACT RESISTANCE AND OXIDATION** .

Additional information

- To access relay/fuse box in the cargo compartment:
  - For -2004, see: **RELAY/FUSE BOX CARGO COMPARTMENT/REAR ELECTRONIC MODULE (REM), REPLACING**
  - For 2005-, see: **REAR ELECTRONIC MODULE (REM), REPLACING** .

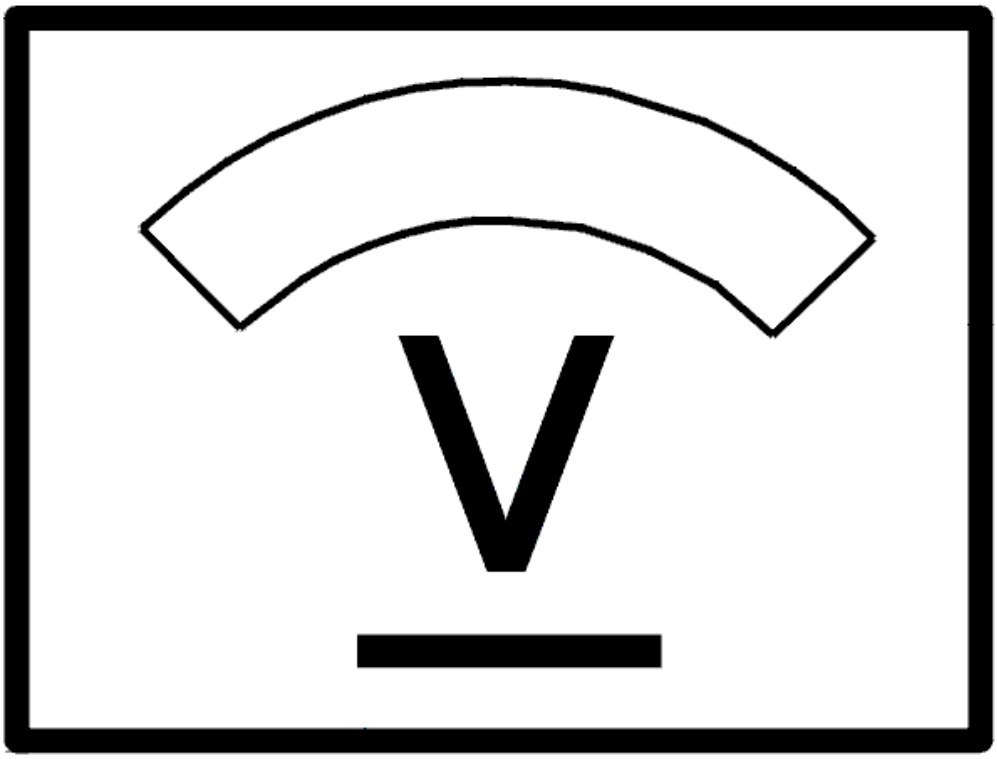

Fig. 15: Identifying Voltage Display
Courtesy of VOLVO CARS CORPORATION

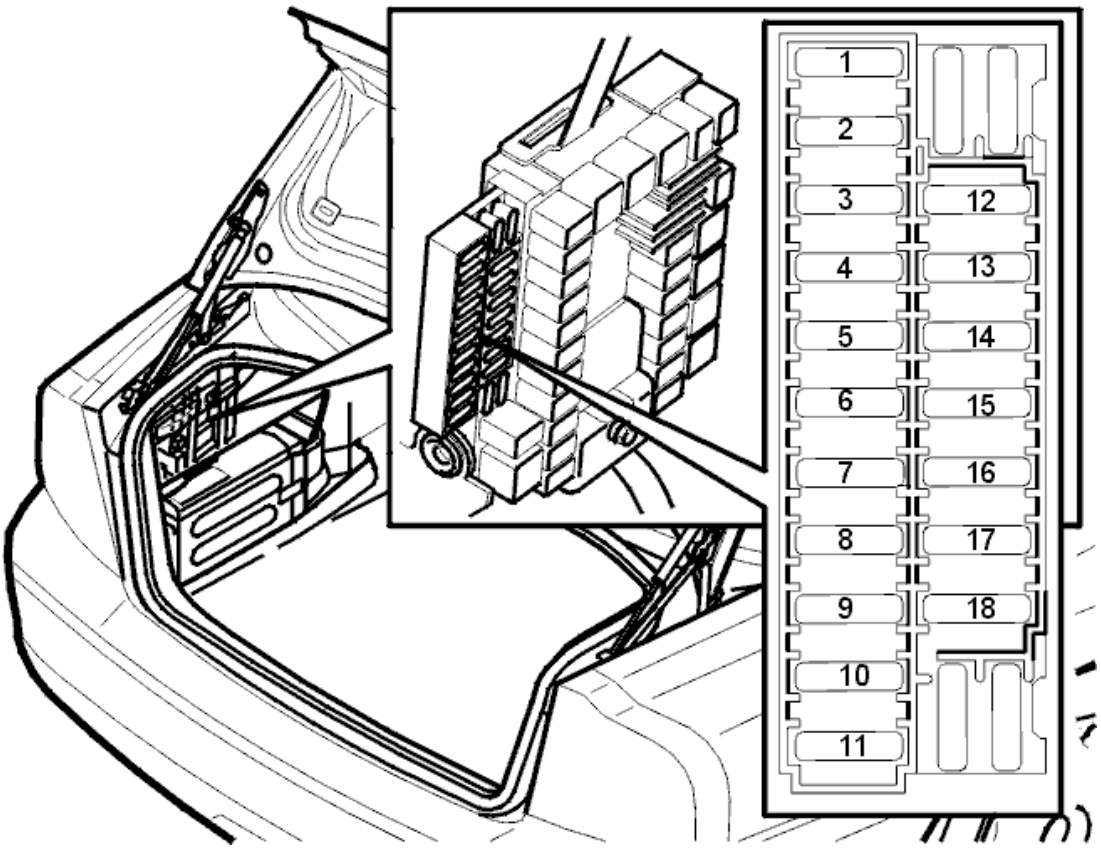

Fig. 16: Fuse Holder (Cargo Compartment)
Courtesy of VOLVO CARS CORPORATION

Is the fuse intact?

- **YES**

  Refer to **CHECKING FOR AN OPEN CIRCUIT**

- **NO**

  Refer to **CHECKING FOR A SHORT CIRCUIT**

CHECK

1. Window lift works on that particular door

   Refer to **CHECKING THE LOCKING MOTOR WIRES**

2. Window lift does not work on that particular door.

   Refer to **CHECKING THE FUSE**

CHECKING THE FUSE

Remove the fuse 11C/36 in cargo compartment fuse box.

Check that fuse is intact and check for contact resistance and oxidation as described in, see **CONTACT RESISTANCE AND OXIDATION** .

Additional information

- To access relay/fuse box in the cargo compartment:
  - For -2004, see: **RELAY/FUSE BOX CARGO COMPARTMENT/REAR ELECTRONIC MODULE (REM), REPLACING**
  - For 2005-, see: **REAR ELECTRONIC MODULE (REM), REPLACING** .

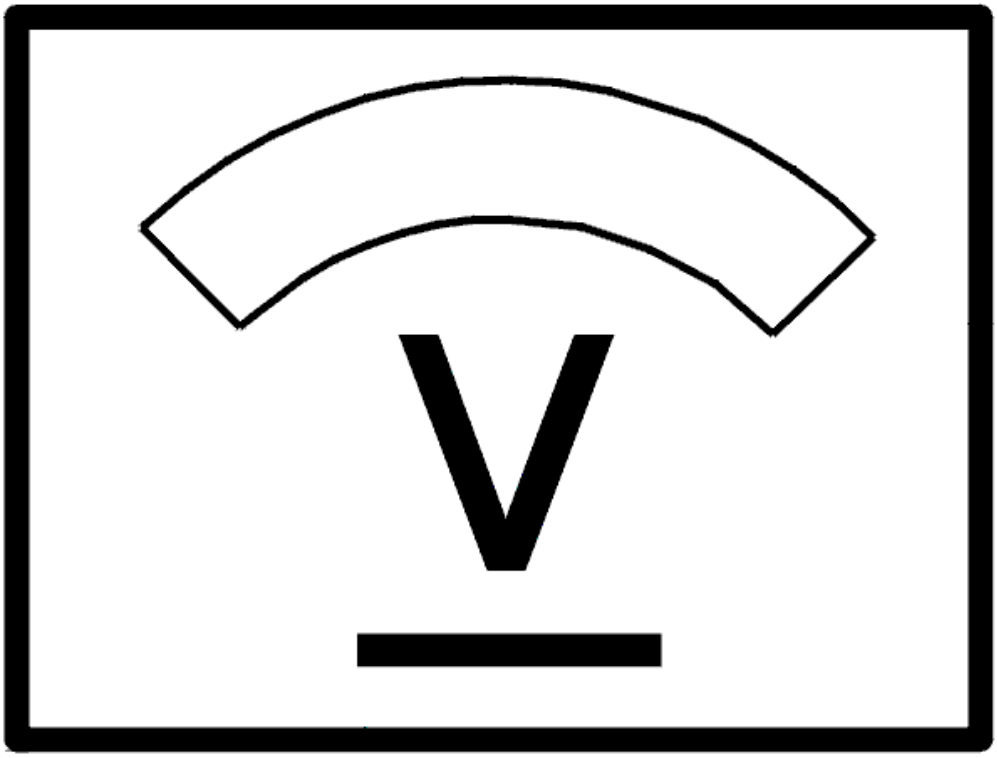

Fig. 17: Identifying Voltage Display
Courtesy of VOLVO CARS CORPORATION

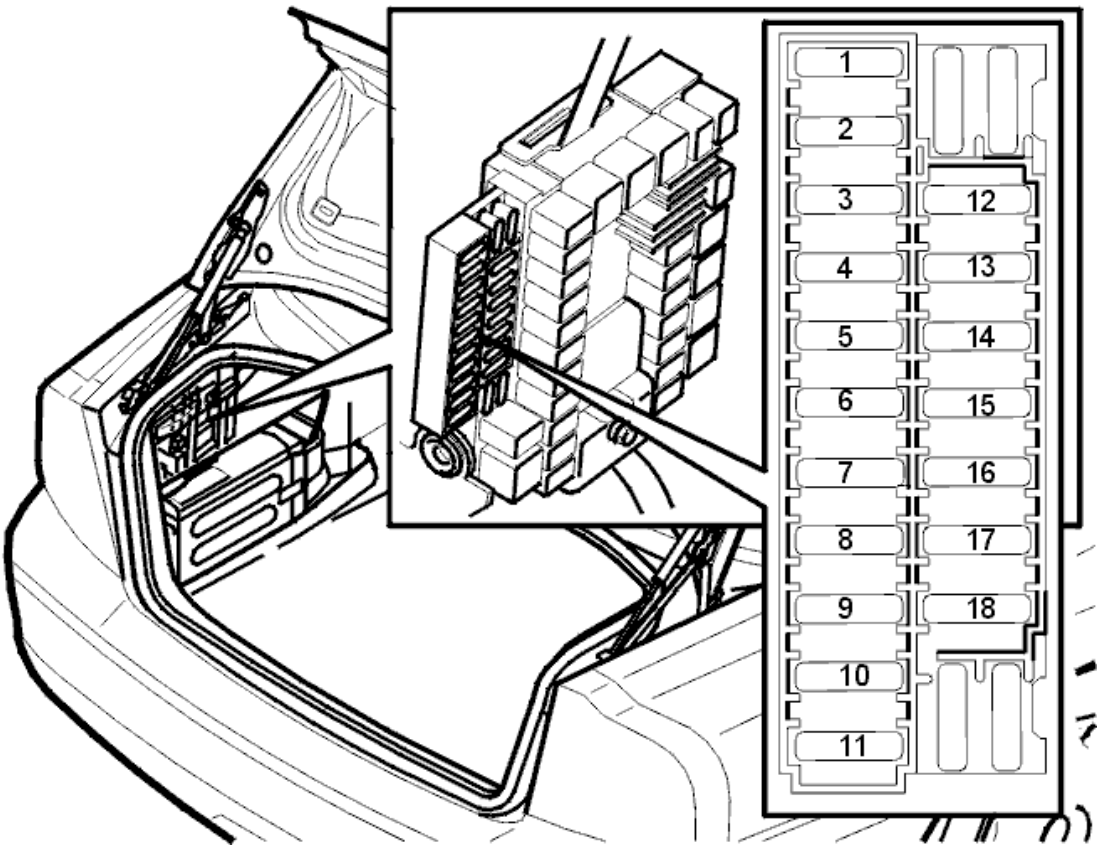

Fig. 18: Fuse Holder (Cargo Compartment)
Courtesy of VOLVO CARS CORPORATION

Is the fuse intact?

- **YES**

  Refer to **CHECKING THE VOLTAGE**

- **NO**

  Refer to **CHECKING FOR A SHORT CIRCUIT**

CHECKING FOR AN OPEN CIRCUIT

Check door control unit connector B7 for contact resistance and oxidation as described in, see **CONTACT RESISTANCE AND OXIDATION** .

Trouble-shoot the wire between fuse holder secondary side (left) and door control unit connector B7 for an open circuit as described in, see **OPEN-CIRCUIT, PERMANENT FAULTS** .

If a fault is detected, check in particular the intermediate connector in the cable harness (1/control unit) for contact resistance and oxidation as described in, see **CONTACT RESISTANCE AND OXIDATION** .

If there is an open circuit the fault should be between the fuse and the common junction point 53/427.

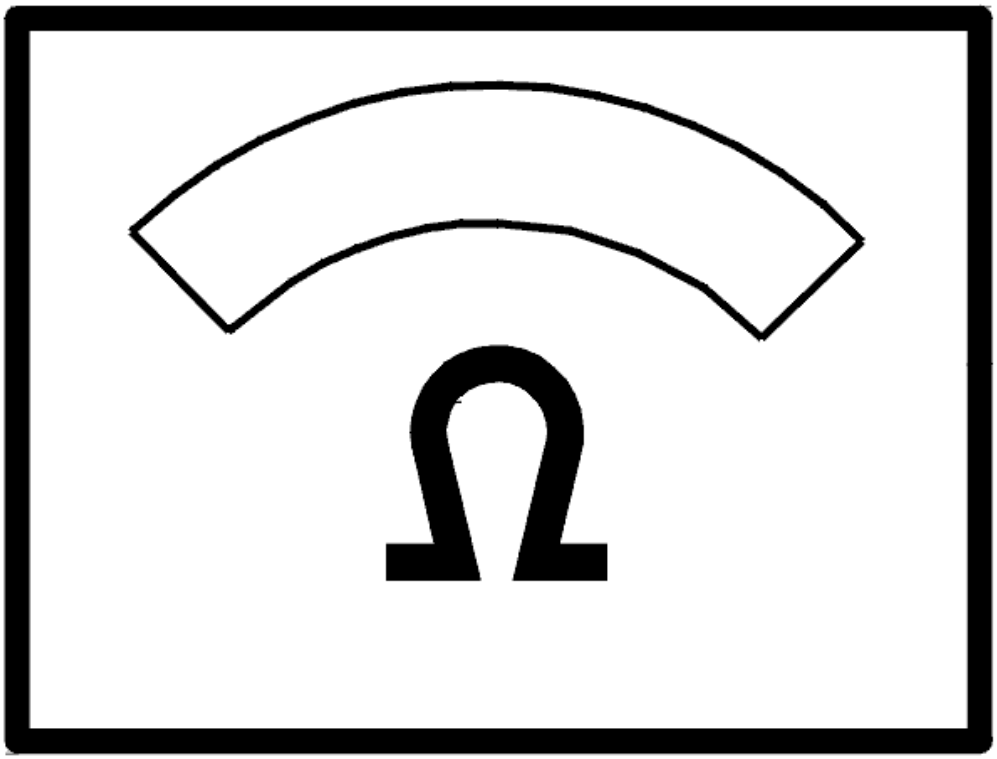

Fig. 19: Identifying Ohm Meter
Courtesy of VOLVO CARS CORPORATION

CHECKING FOR A SHORT CIRCUIT

Check the resistance between the fuse holder secondary side (left) and ground.

The ohmmeter should display infinite resistance.

NOTE: If the value is correct the fault could be intermittent.

Switch to trouble-shooting intermittent short circuits to ground as described in, see **SHORT-CIRCUIT TO GROUND, INTERMITTENT FAULTS** .

If the ohmmeter indicates a fault (short circuit), trouble-shoot the wires between the fuse and door control unit connector B7 for a short circuit to ground as described in, see **SHORT-CIRCUIT TO GROUND, PERMANENT FAULTS** .

The fault should be between the fuse and the common junction point 53/427.

Replace fuse.

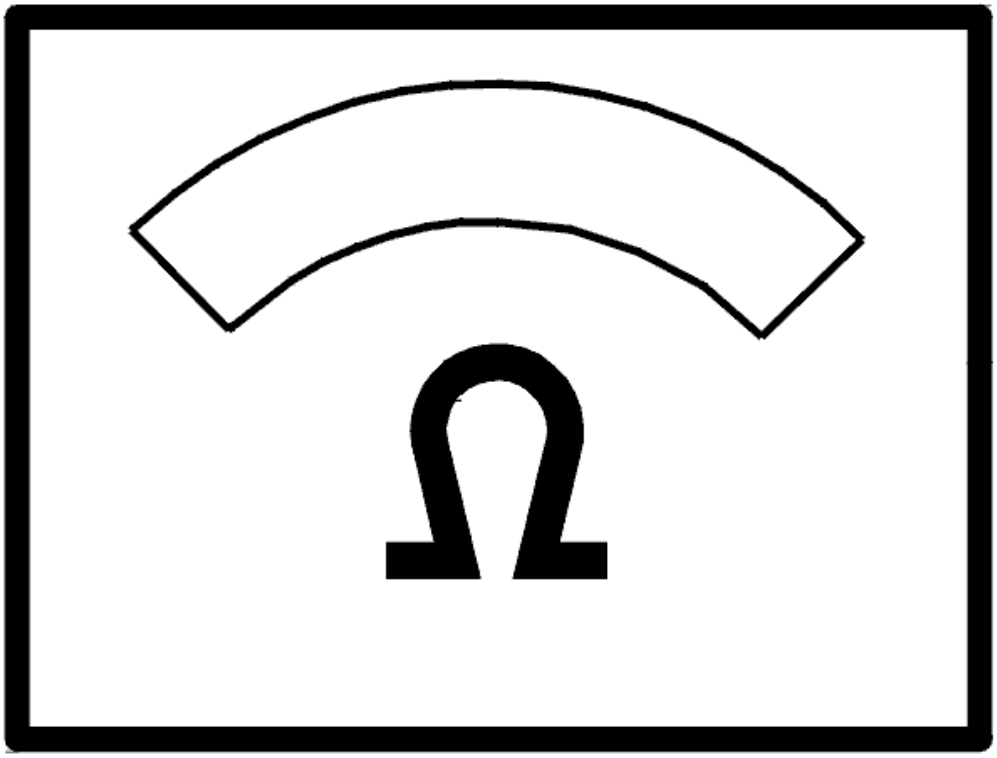

Fig. 20: Identifying Ohm Meter
Courtesy of VOLVO CARS CORPORATION

CHECKING THE VOLTAGE

Check the voltage in the door control unit connector B12.

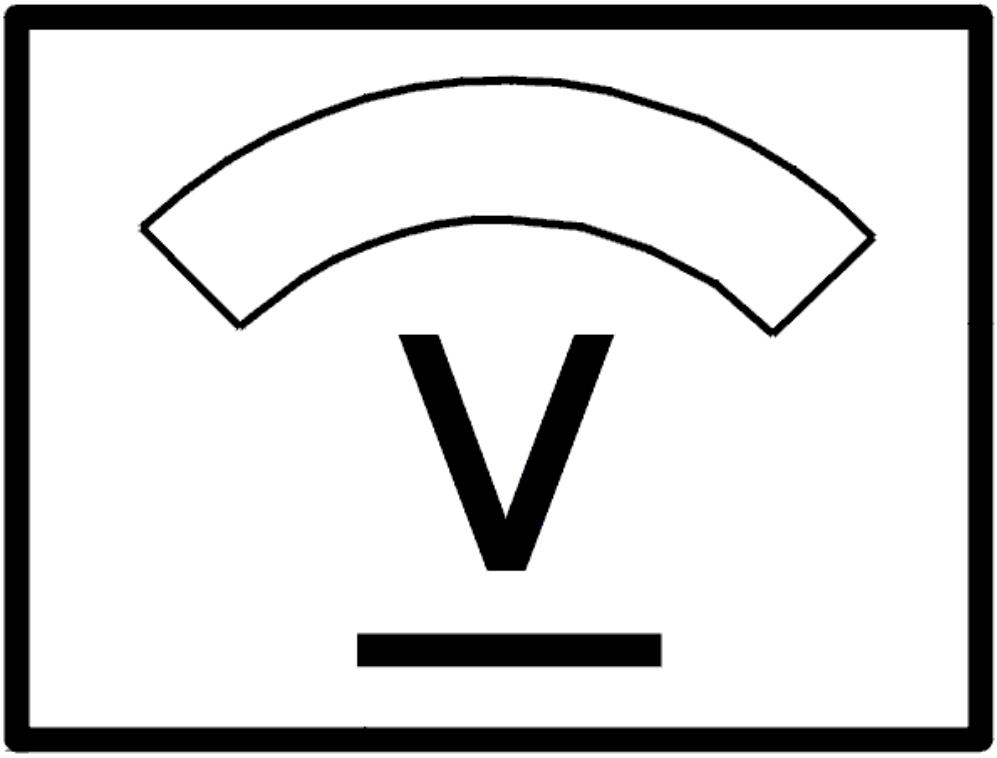

Fig. 21: Identifying Voltage Display
Courtesy of VOLVO CARS CORPORATION

Does the voltmeter show the battery voltage?

- **YES**

  Refer to **CHECKING THE LOCKING MOTOR WIRES**

- **NO**

  Refer to **CHECKING FOR AN OPEN CIRCUIT**

CHECKING FOR AN OPEN CIRCUIT

Check door control unit connector B12 for contact resistance and oxidation as described in, see **CONTACT**

RESISTANCE AND OXIDATION .

Trouble-shoot the wire between fuse holder secondary side (left) and door control unit connector B12 for an open circuit as described in, see **OPEN-CIRCUIT, PERMANENT FAULTS** .

If a fault is detected, check in particular the intermediate connector in the cable harness (1) for contact resistance and oxidation as described in, see **CONTACT RESISTANCE AND OXIDATION** .

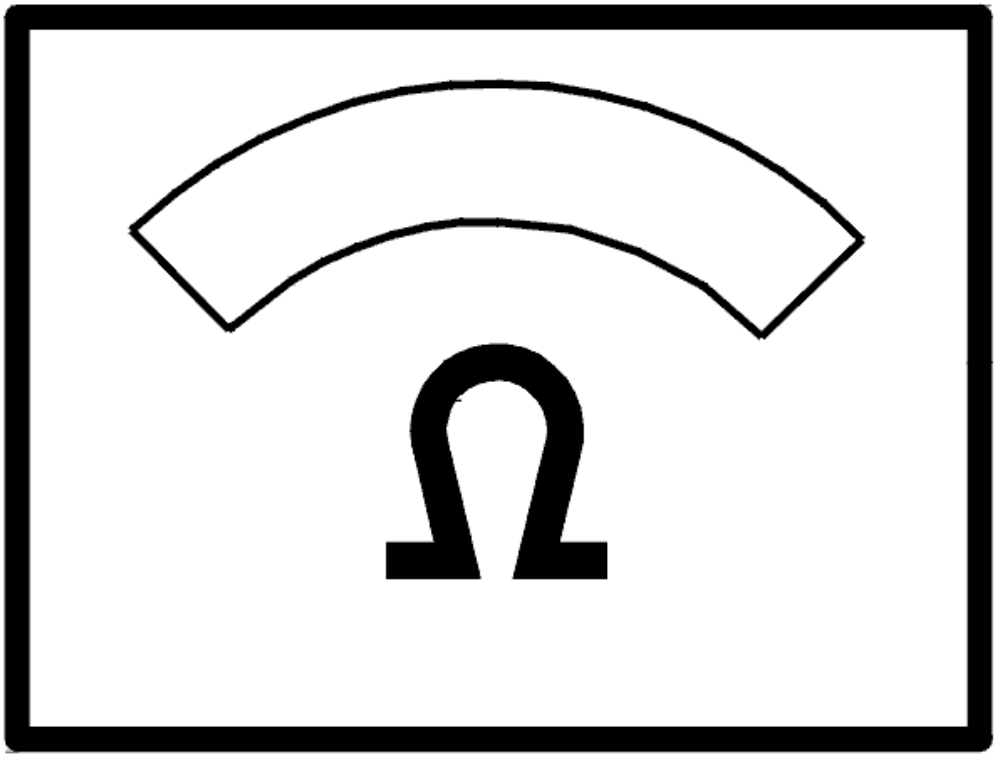

Fig. 22: Identifying Ohm Meter
Courtesy of VOLVO CARS CORPORATION

CHECKING FOR A SHORT CIRCUIT

Check the resistance between the fuse holder secondary side (left) and ground.

The ohmmeter should display infinite resistance.

NOTE: If the value is correct the fault could be intermittent.

Switch to trouble-shooting intermittent short circuits to ground as described in, see **SHORT-CIRCUIT TO GROUND, INTERMITTENT FAULTS** .

If the ohmmeter indicates a fault (short circuit), trouble-shoot the wires between the fuse and door control unit connector B12 for a short circuit to ground as described in, see **SHORT-CIRCUIT TO GROUND, PERMANENT FAULTS** .

Replace fuse.

Additional information

- To access relay/fuse box in the cargo compartment:
  - For -2004, see: **RELAY/FUSE BOX CARGO COMPARTMENT/REAR ELECTRONIC MODULE (REM), REPLACING**
  - For 2005-, see: **REAR ELECTRONIC MODULE (REM), REPLACING** .

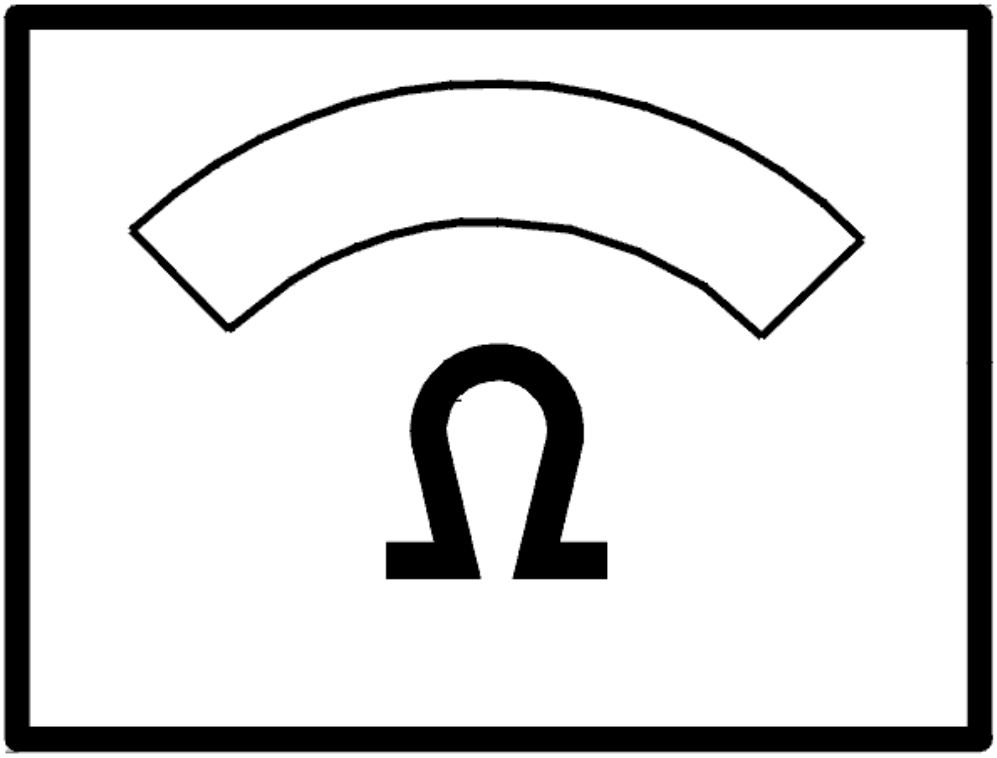

Fig. 23: Identifying Ohm Meter
Courtesy of VOLVO CARS CORPORATION

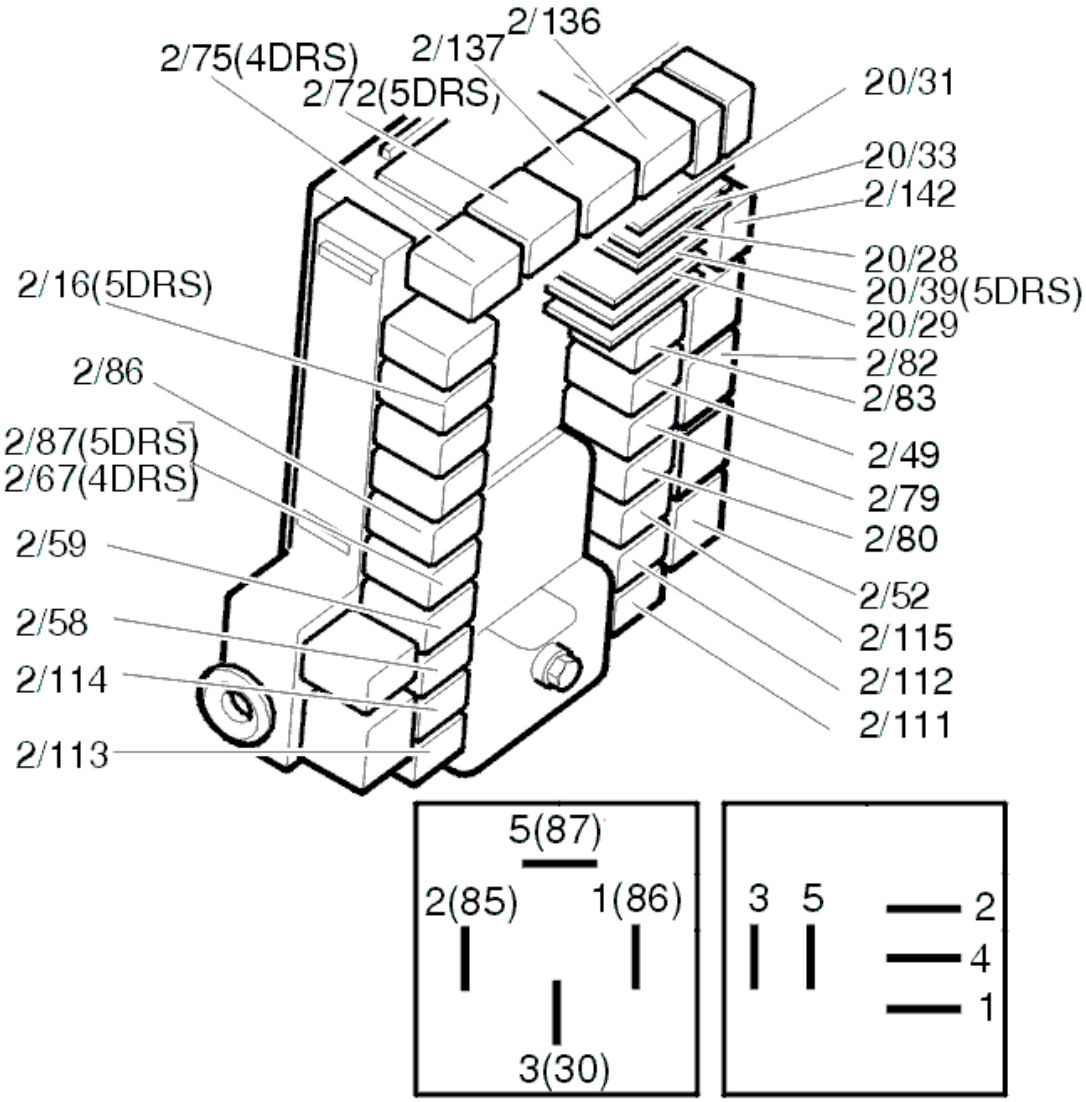

Fig. 24: Identifying Relays
Courtesy of VOLVO CARS CORPORATION

CHECKING THE LOCKING MOTOR WIRES

Check door control unit and lock unit connectors for contact resistance and oxidation as described in, see **CONTACT RESISTANCE AND OXIDATION** .

Trouble-shoot the wire between door control unit connector B2 and lock unit connector 8 for an open circuit as described in, see **OPEN-CIRCUIT, PERMANENT FAULTS** .

Trouble-shoot the wire between door control unit connector B6 and lock unit connector 7 for an open circuit as described in, see **OPEN-CIRCUIT, PERMANENT FAULTS** .

Additional information

- To access/replace rear electronic module (REM):
  - For -2004, see: **RELAY/FUSE BOX CARGO COMPARTMENT/REAR ELECTRONIC MODULE (REM), REPLACING**
  - For 2005-, see: **REAR ELECTRONIC MODULE (REM), REPLACING** .

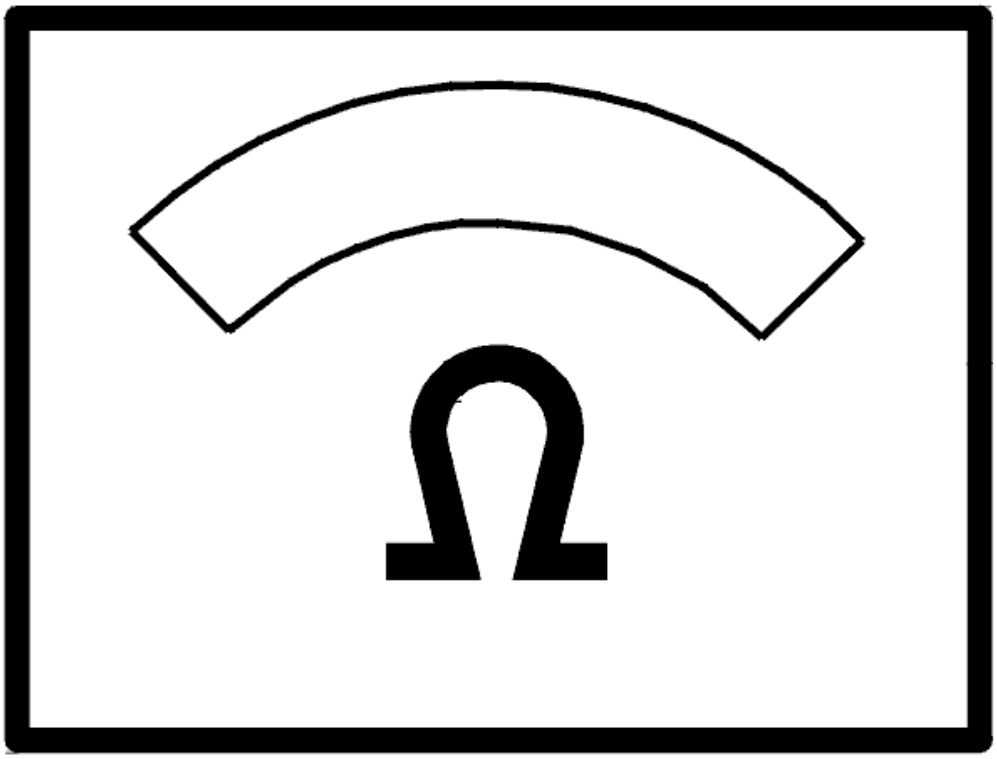

Fig. 25: Identifying Ohm Meter
Courtesy of VOLVO CARS CORPORATION

Is there a fault?

- **YES**

  OKAY: Troubleshooting has been completed.

- **NO**

Refer to **REPLACING THE COMPONENT**

REPLACING THE COMPONENT

Replace lock unit as described in, see **REPLACING THE SWITCH FOR THE LOCK UNIT / CARGO COMPARTMENT LIGHTING** .

Is there a fault?

- **YES**

  OKAY: Troubleshooting has been completed.

- **NO**

  Refer to **REPLACING THE COMPONENT**

REPLACING THE COMPONENT

Replace control unit.

- For -2004, see: **RELAY/FUSE BOX CARGO COMPARTMENT/REAR ELECTRONIC MODULE (REM), REPLACING**
- For 2005-, see: **REAR ELECTRONIC MODULE (REM), REPLACING** .

CHECKING THE REAR LEFT DOOR

CHECK

Is the lock to the other rear door not working?

- **YES**

  Refer to **CHECKING THE FUSE**

- **NO**

  Refer to **REPLACING THE COMPONENT**

REPLACING THE COMPONENT

Replace the relays for locking (2/111) and unlocking (2/112) in the cargo compartment relay/fuse box. At the same time check relay socket contacts for contact resistance and oxidation as described in, see **CONTACT RESISTANCE AND OXIDATION** .

Additional information

- To access relay/fuse box in the cargo compartment:

- For -2004, see: **RELAY/FUSE BOX CARGO COMPARTMENT/REAR ELECTRONIC MODULE (REM), REPLACING**
- For 2005-, see: **REAR ELECTRONIC MODULE (REM), REPLACING** .

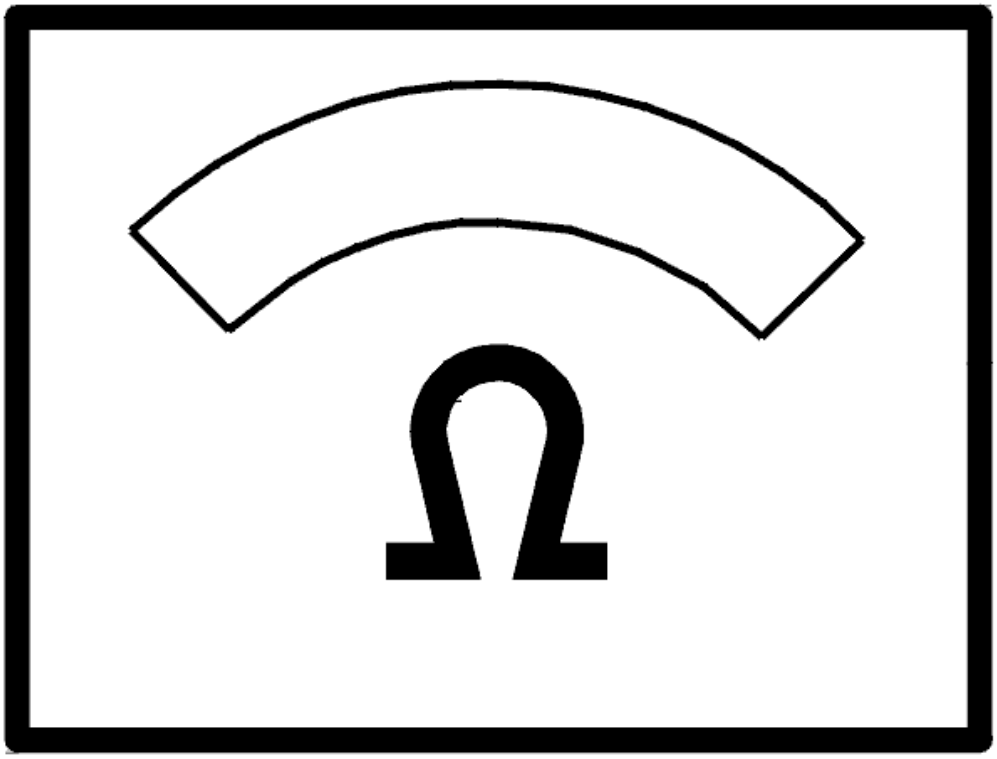

Fig. 26: Identifying Ohm Meter
Courtesy of VOLVO CARS CORPORATION

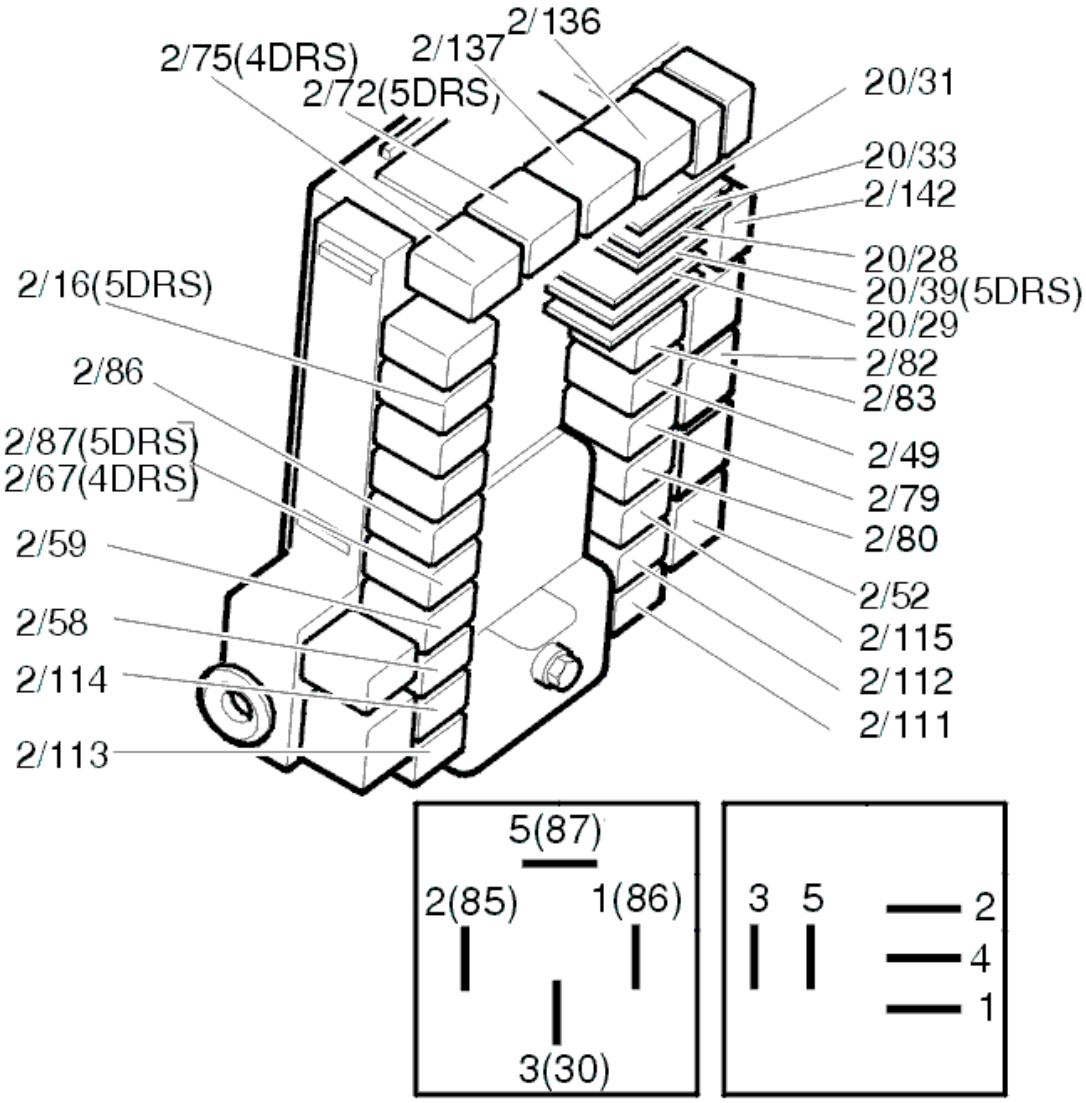

Fig. 27: Identifying Relays
Courtesy of VOLVO CARS CORPORATION

Is there a fault?

- **YES**

  OKAY: Troubleshooting has been completed.

- **NO**

  Refer to **CIRCUIT TEST**

CIRCUIT TEST

The fault is caused by an open circuit in one of the relay circuits or in the lock unit. To find out which circuit

contains the fault:

Disconnect the lock unit connector.

Check the contacts for contact resistance and oxidation as described in, see **CONTACT RESISTANCE AND OXIDATION** .

Check resistance between 4 and 6 on cable connector.

Additional information

- To access/replace the lock unit, see **LOCK MECHANISM REAR SIDE DOOR, REPLACING** .

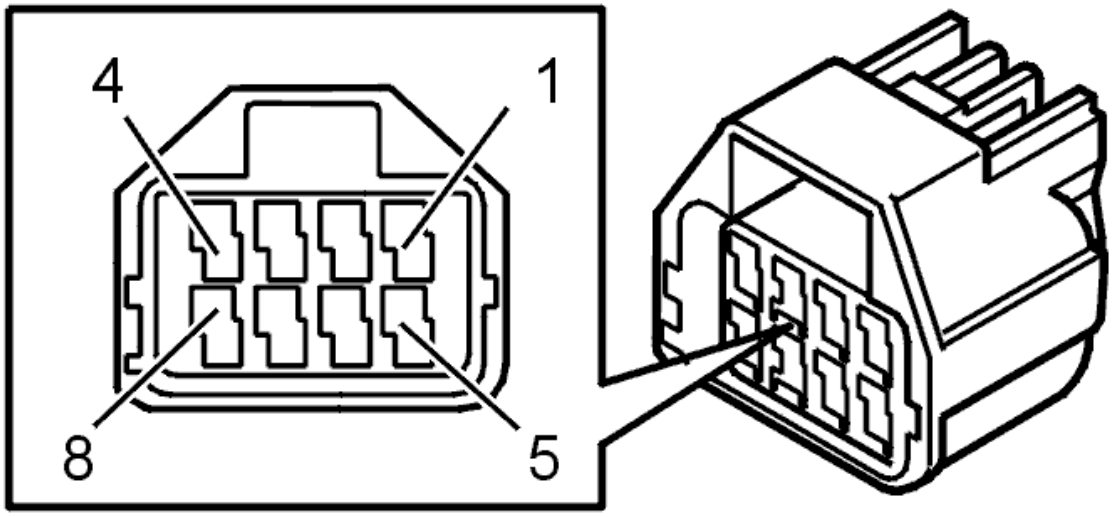

Fig. 28: Identifying Connector Terminals
Courtesy of VOLVO CARS CORPORATION

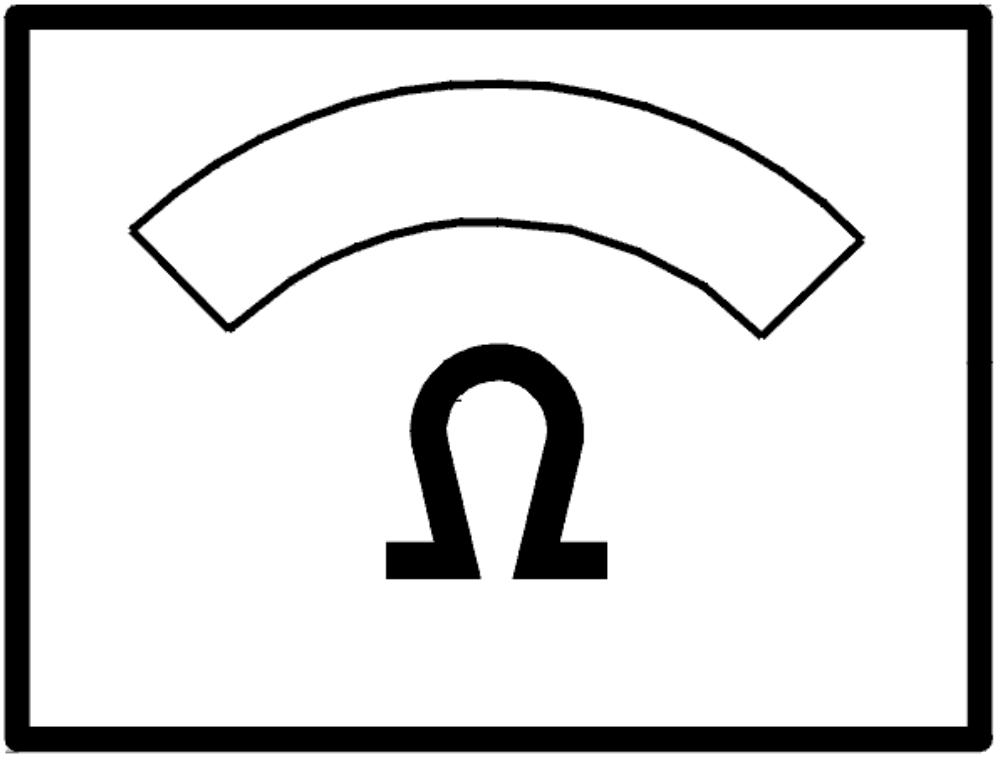

Fig. 29: Identifying Ohm Meter
Courtesy of VOLVO CARS CORPORATION

The ohmmeter should display 0 ohm.

- **OK**

  Refer to **CHECKING THE COMPONENTS**

- **NOT OK**

  Refer to **CIRCUIT TEST, CONTINUED**

CIRCUIT TEST, CONTINUED

Check the resistance between 4 and ground and between 6 and ground on the cable connector.

The ohmmeter should display 0 ohm.

1. The ohmmeter shows a fault between 4 and ground

   Refer to **CHECKING THE UNLOCKING RELAY CIRCUIT**

2. The ohmmeter shows a fault between 6 and ground.

   Refer to **CHECKING THE LOCKING RELAY CIRCUIT**

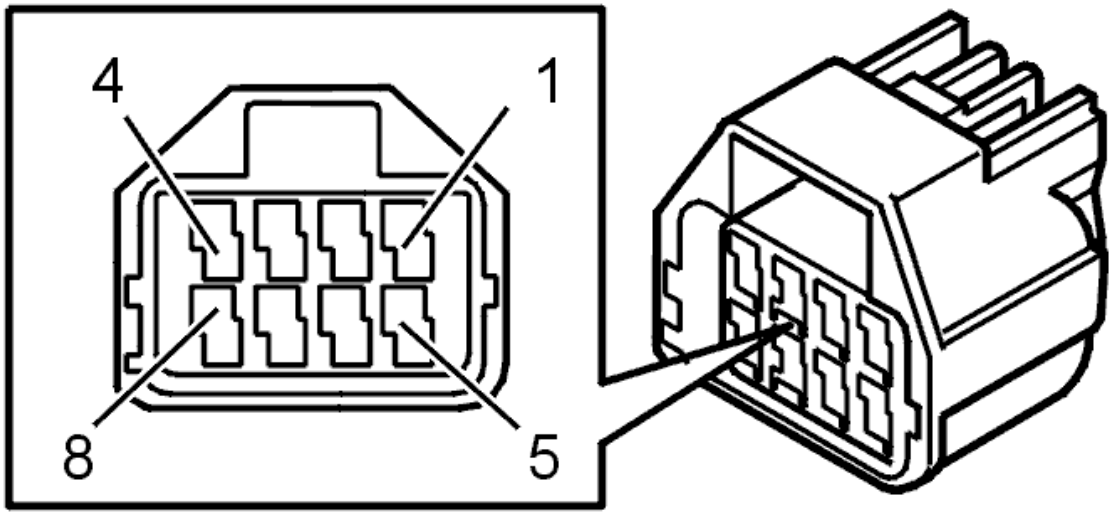

Fig. 30: Identifying Connector Terminals
Courtesy of VOLVO CARS CORPORATION

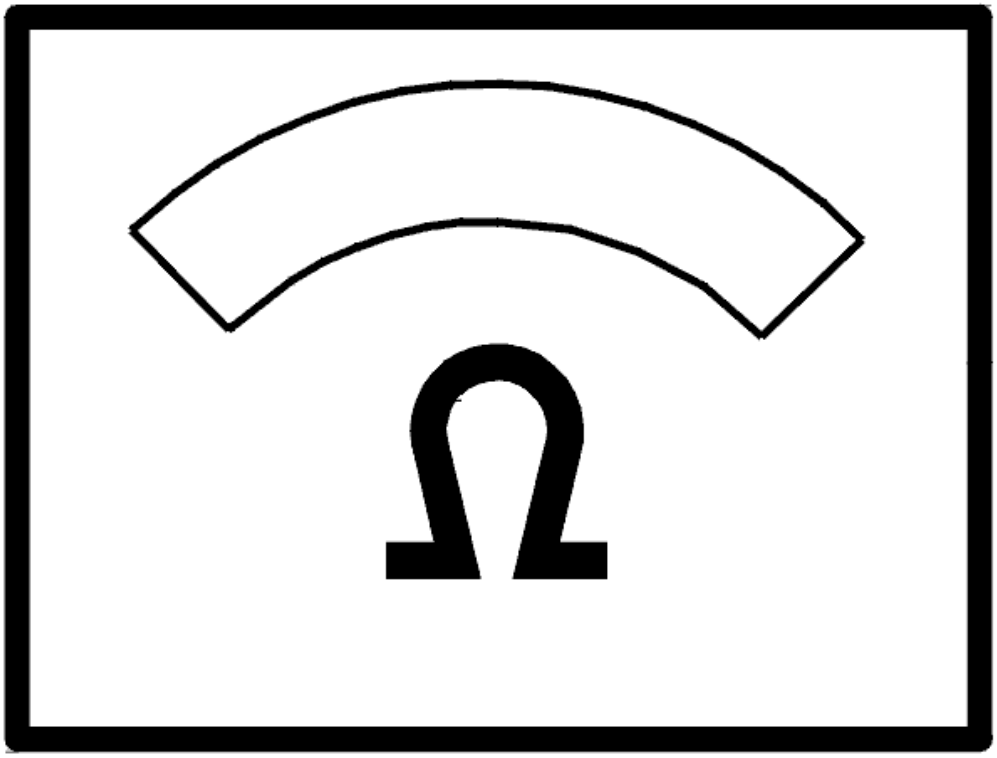

Fig. 31: Identifying Ohm Meter
Courtesy of VOLVO CARS CORPORATION

CHECKING THE LOCKING RELAY CIRCUIT

Remove the locking relay (2/111).

Check the wire between 4 in the cable connector and 3 in the relay socket for an open circuit as described in, see **OPEN-CIRCUIT, PERMANENT FAULTS** .

If a fault is detected, check in particular the intermediate connector in the cable harness (2) for contact resistance and oxidation as described in, see **CONTACT RESISTANCE AND OXIDATION** .

Do the necessary corrective action.

If no fault is found, check the resistance between 4 in the relay socket and ground.

The ohmmeter should display 0 ohm.

If the resistance deviates, replace the rear electronic module (REM).

Additional information

- To access/replace rear electronic module (REM):
  - For -2004, see: **RELAY/FUSE BOX CARGO COMPARTMENT/REAR ELECTRONIC MODULE (REM), REPLACING**
  - For 2005-, see: **REAR ELECTRONIC MODULE (REM), REPLACING** .

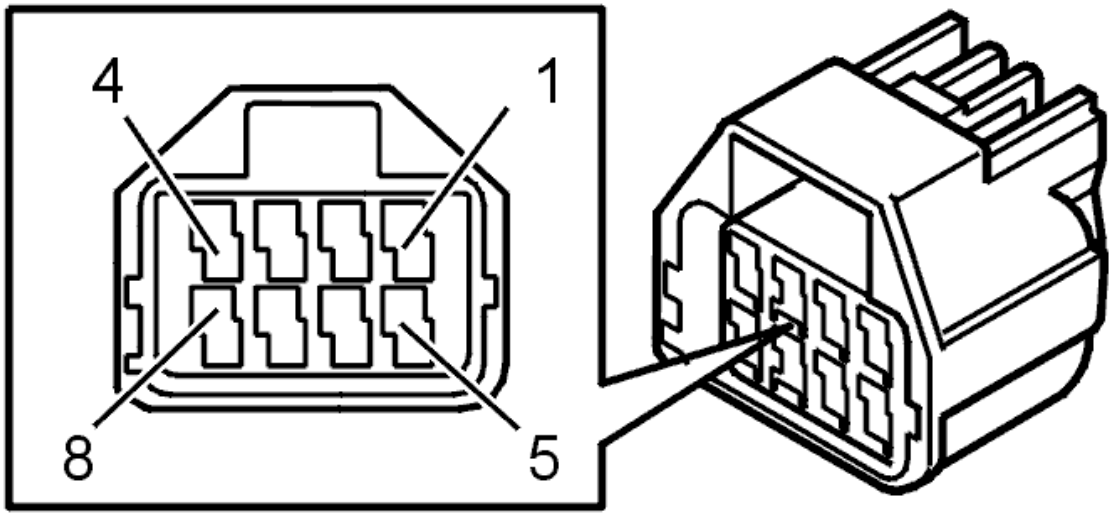

Fig. 32: Identifying Connector Terminals
Courtesy of VOLVO CARS CORPORATION

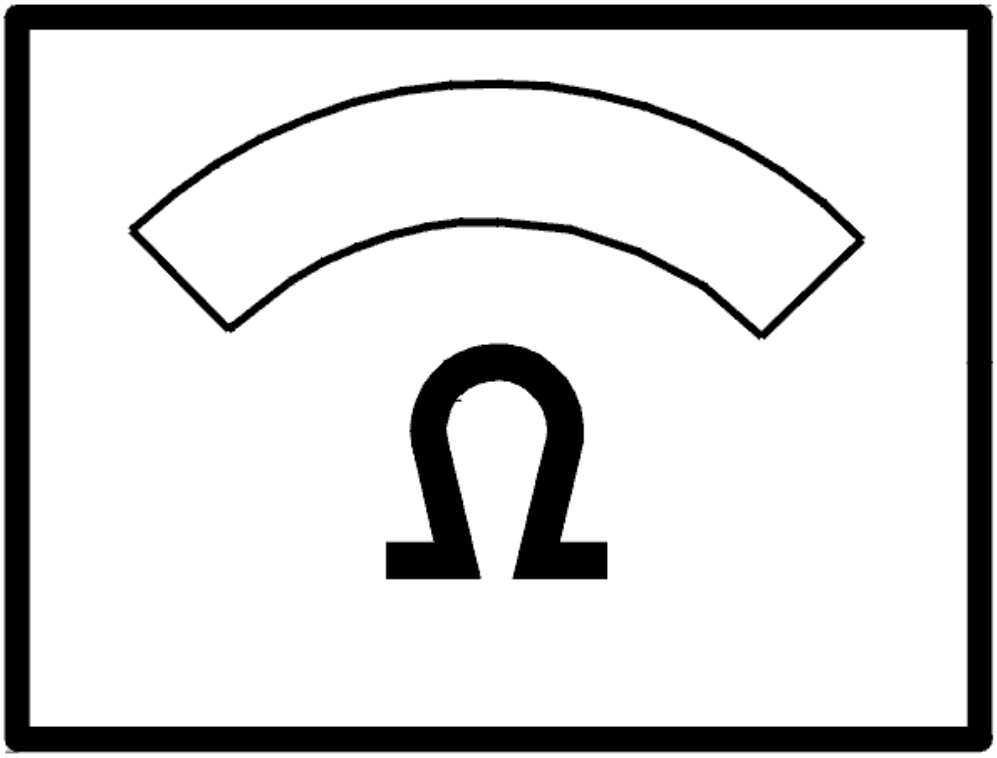

Fig. 33: Identifying Ohm Meter
Courtesy of VOLVO CARS CORPORATION

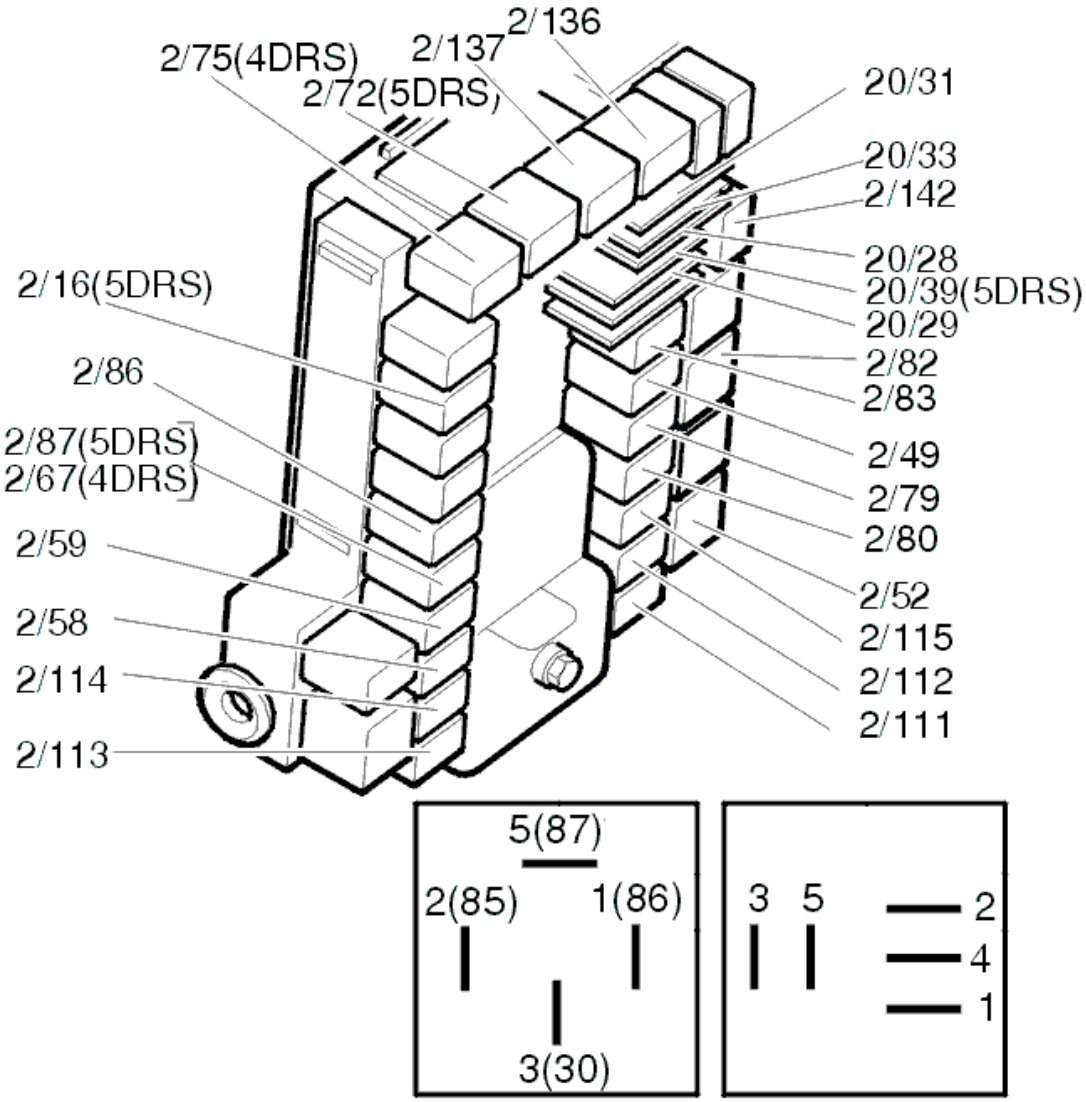

Fig. 34: Identifying Relays
Courtesy of VOLVO CARS CORPORATION

CHECKING THE UNLOCKING RELAY CIRCUIT

Remove the unlocking relay (2/112).

Check the wire between 6 in the cable connector and 3 in the relay socket for an open circuit as described in, see **OPEN-CIRCUIT, PERMANENT FAULTS** .

If a fault is detected, check in particular the intermediate connector in the cable harness (2) for contact resistance and oxidation as described in, see **CONTACT RESISTANCE AND OXIDATION** .

Do the necessary corrective action.

If no fault is found, check the resistance between 4 in the relay socket and ground.

The ohmmeter should display 0 ohm.

If the resistance deviates, replace the rear electronic module (REM).

Additional information

- To access/replace rear electronic module (REM):
  - For -2004, see: **RELAY/FUSE BOX CARGO COMPARTMENT/REAR ELECTRONIC MODULE (REM), REPLACING**
  - For 2005-, see: **REAR ELECTRONIC MODULE (REM), REPLACING** .

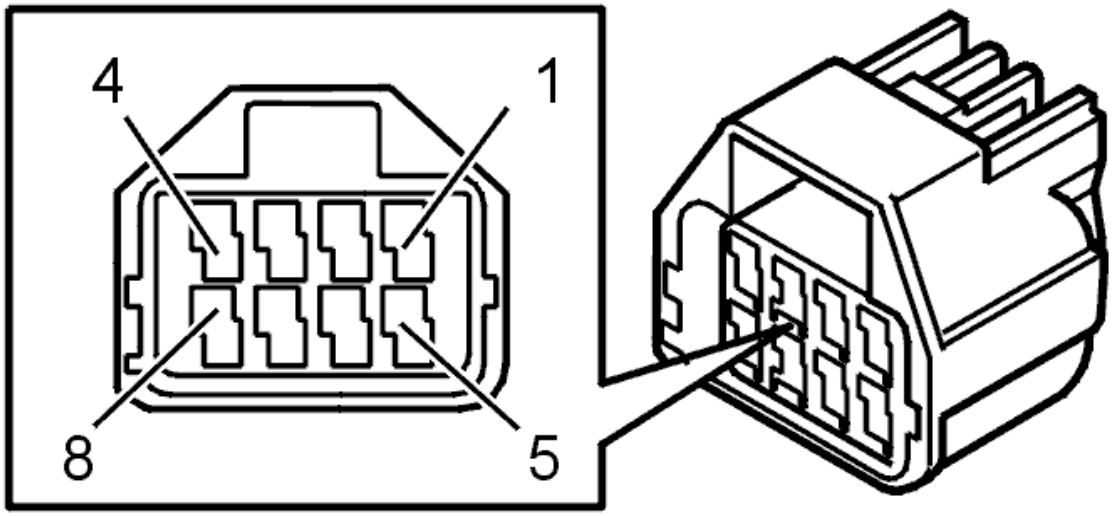

Fig. 35: Identifying Connector Terminals
Courtesy of VOLVO CARS CORPORATION

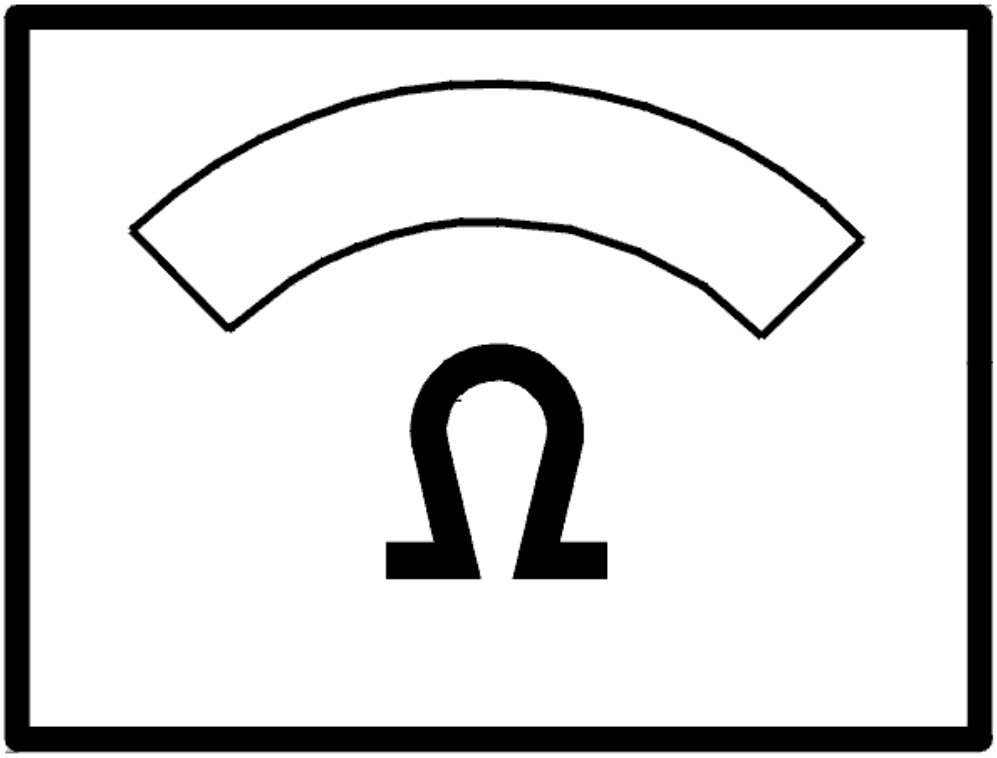

Fig. 36: Identifying Ohm Meter
Courtesy of VOLVO CARS CORPORATION

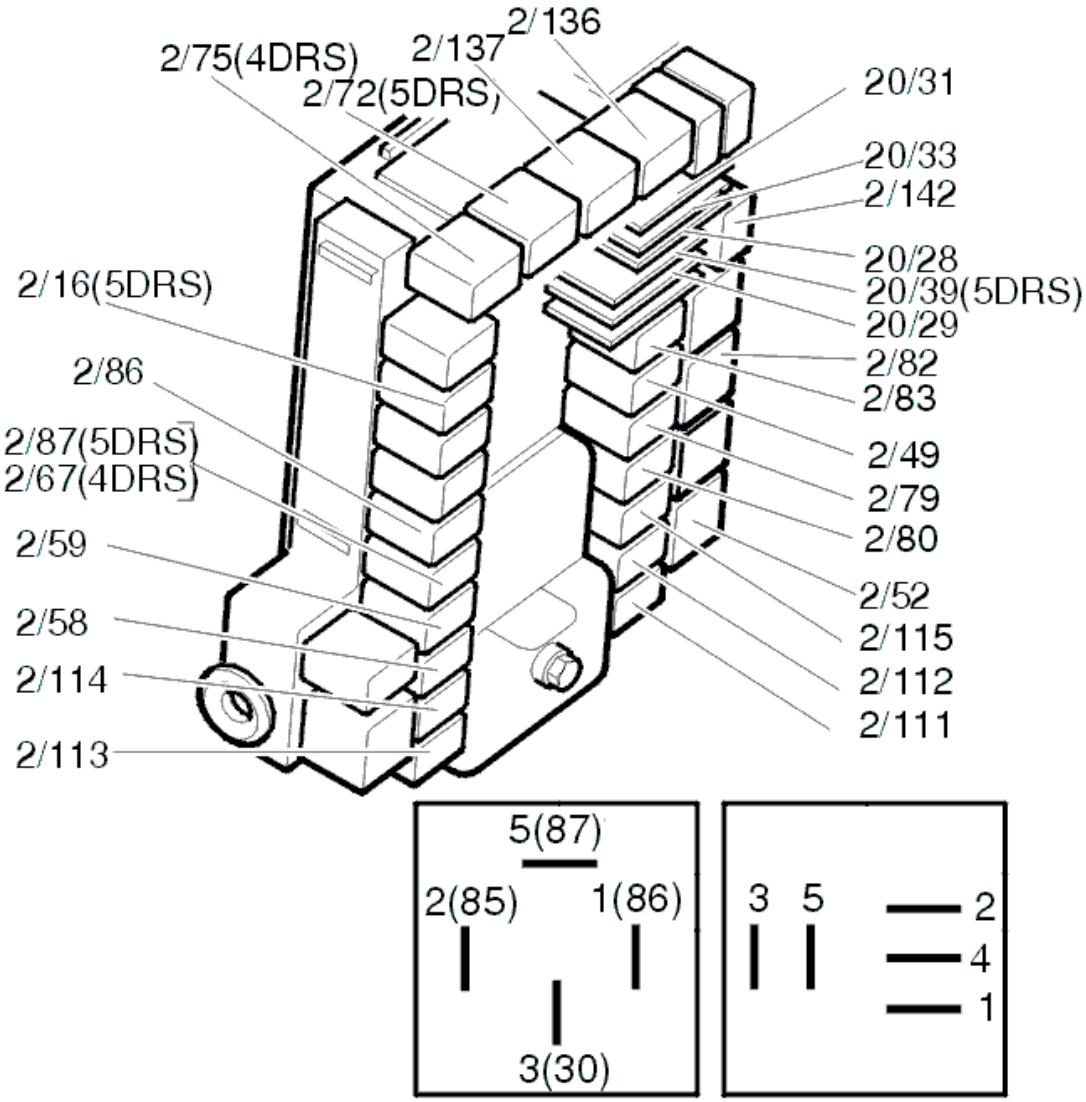

Fig. 37: Identifying Relays
Courtesy of VOLVO CARS CORPORATION

CHECKING THE COMPONENTS

Check the resistance between pin 4 and 6 in the lock unit chassis contact.

The ohmmeter should display 5 ohm.

If the resistance deviates, replace the lock unit.

Additional information

- To access/replace rear electronic module (REM):
  - For -2004, see: **RELAY/FUSE BOX CARGO COMPARTMENT/REAR ELECTRONIC MODULE (REM), REPLACING**

- For 2005-, see: **REAR ELECTRONIC MODULE (REM), REPLACING** .
- To access/replace the lock unit, see **LOCK MECHANISM REAR SIDE DOOR, REPLACING**
- For information on signals and additional values, see **SIGNAL SPECIFICATION** .

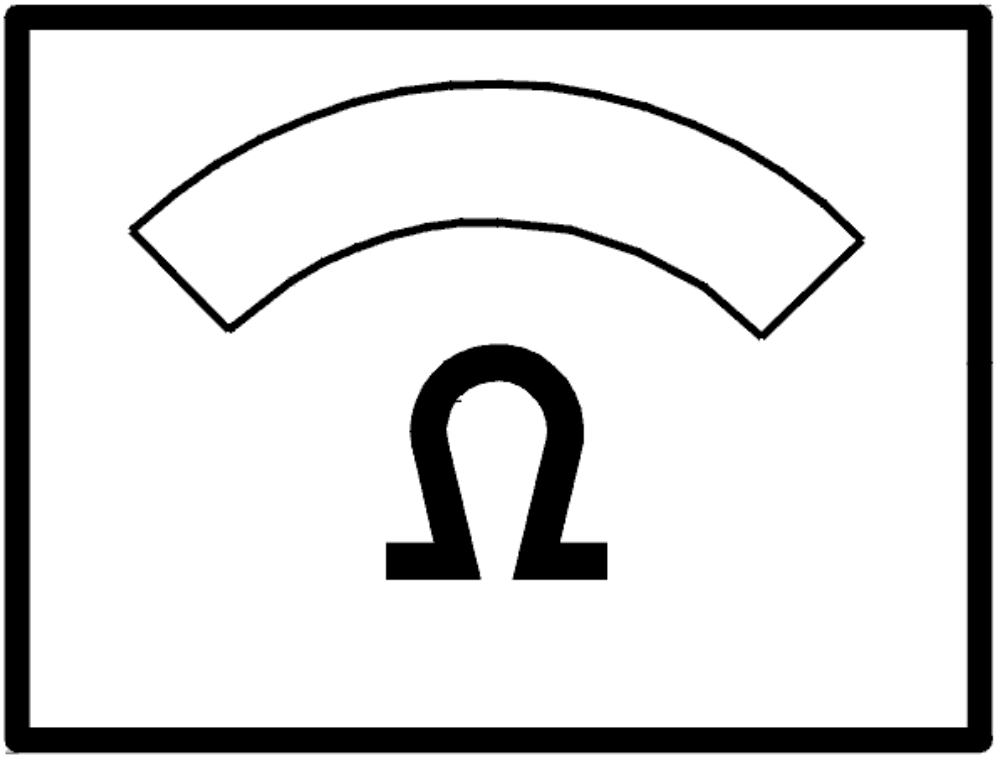

Fig. 38: Identifying Ohm Meter
Courtesy of VOLVO CARS CORPORATION

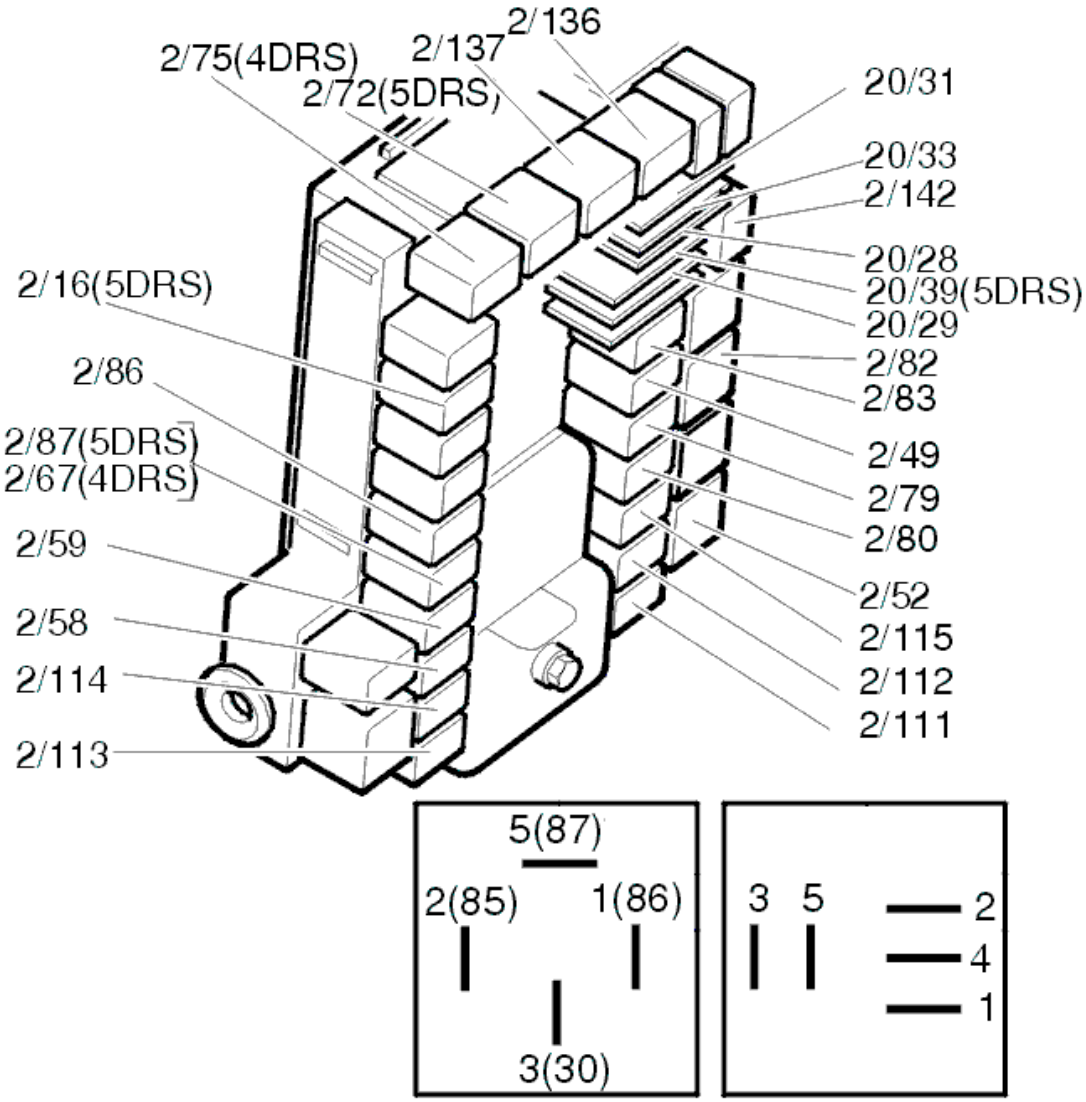

Fig. 39: Identifying Relays
Courtesy of VOLVO CARS CORPORATION

Is there a fault?

- **YES**

  OKAY: Troubleshooting has been completed.

- **NO**

  Refer to **CHECKING THE RELAY SUPPLY**

CHECKING THE RELAY SUPPLY

Remove the locking relay (2/111).

Measure the voltage between 5 in the relay socket and ground.

The voltmeter should display battery voltage.

HINT: If the value is OK but the fault still remains, connect the contacts to the lock module and link between 3 and 5 in the relay socket to force-feed the lock motor while continuing to test.

Additional information

- To access/replace rear electronic module (REM):
  - For -2004, see: **RELAY/FUSE BOX CARGO COMPARTMENT/REAR ELECTRONIC MODULE (REM), REPLACING**
  - For 2005-, see: **REAR ELECTRONIC MODULE (REM), REPLACING** .

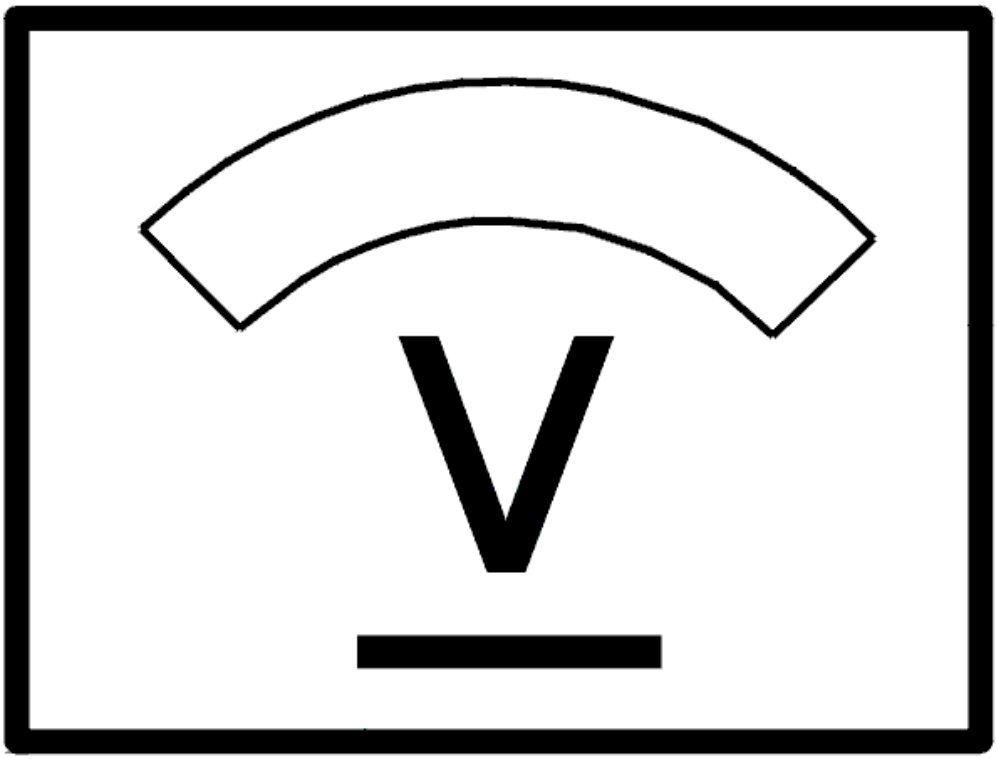

Fig. 40: Identifying Voltage Display

Courtesy of VOLVO CARS CORPORATION

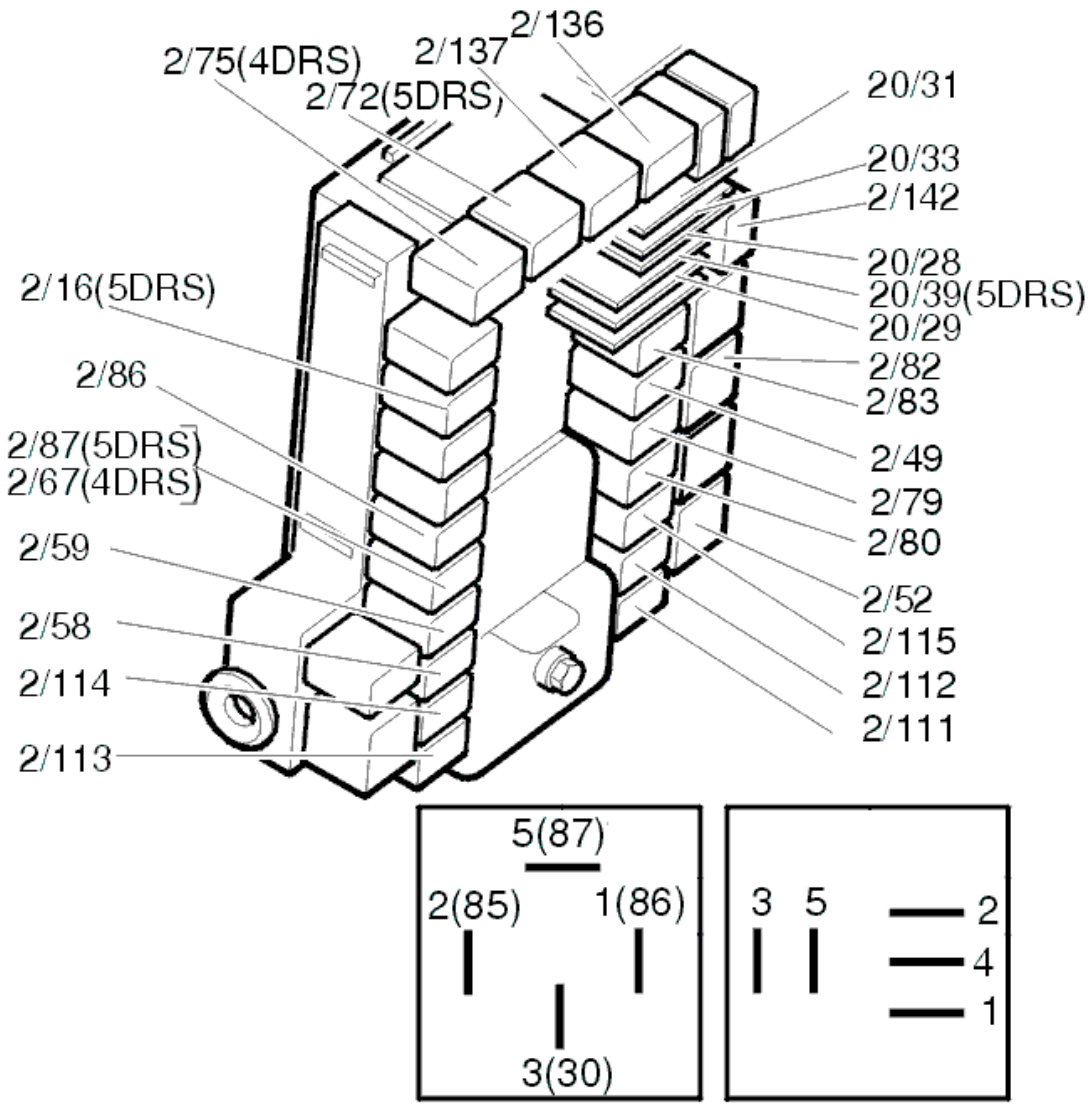

Fig. 41: Identifying Relays
Courtesy of VOLVO CARS CORPORATION

Does the voltmeter show the battery voltage?

- **YES**

  OKAY: Troubleshooting has been completed.

- **NO**

  Refer to **CHECKING THE FUSE**

CHECKING THE FUSE

Remove the fuse 11D/8 in cargo compartment fuse box.

Check that fuse 11D/8 is intact and check for contact resistance and oxidation as described in, see **CONTACT RESISTANCE AND OXIDATION** .

Additional information

- To access/replace rear electronic module (REM):
  - For -2004, see: **RELAY/FUSE BOX CARGO COMPARTMENT/REAR ELECTRONIC MODULE (REM), REPLACING**
  - For 2005-, see: **REAR ELECTRONIC MODULE (REM), REPLACING** .

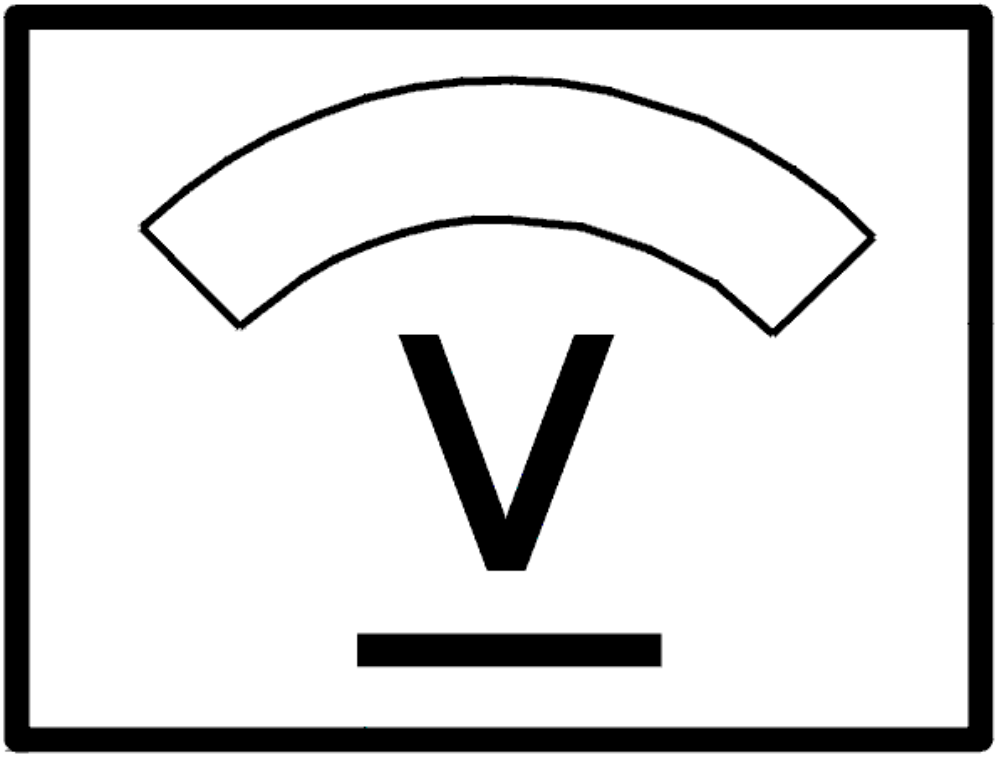

Fig. 42: Identifying Voltage Display
Courtesy of VOLVO CARS CORPORATION

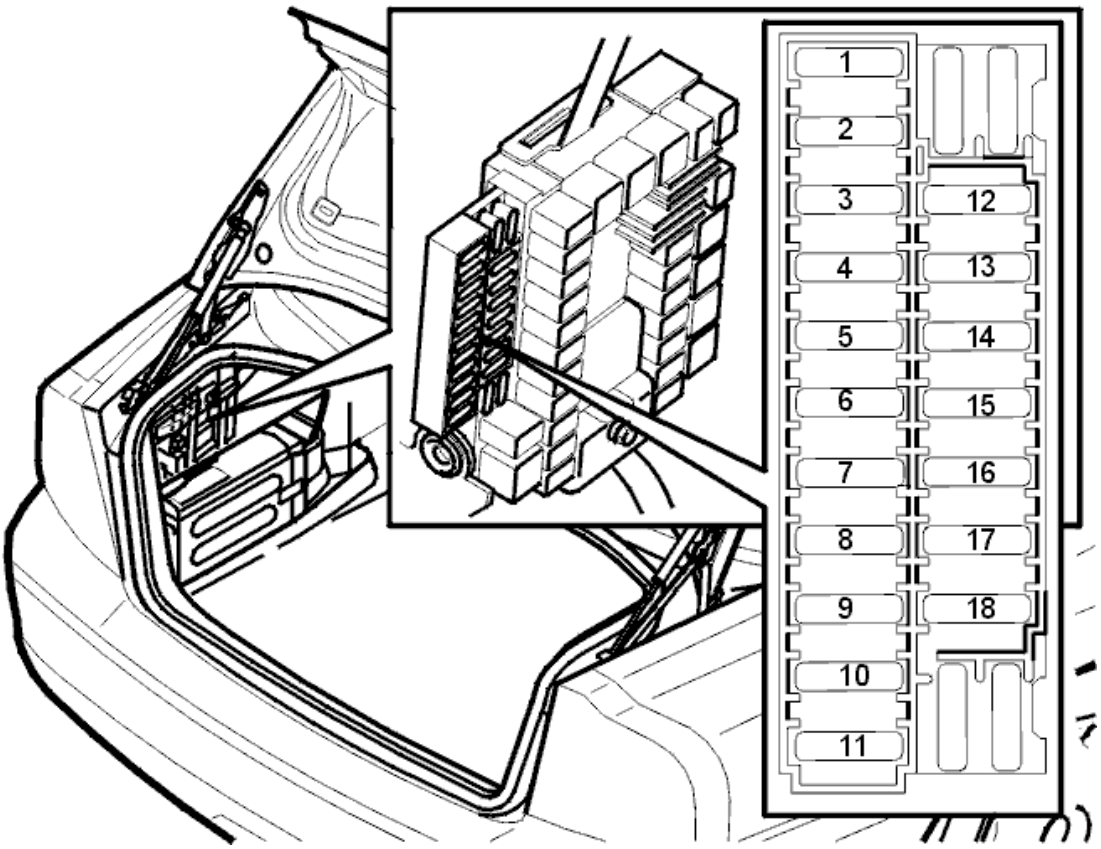

Fig. 43: Fuse Holder (Cargo Compartment)
Courtesy of VOLVO CARS CORPORATION

Is the fuse intact?

- **YES**

  Refer to **CHECKING FOR AN OPEN CIRCUIT**

- **NO**

  Refer to **CHECKING FOR A SHORT CIRCUIT**

CHECKING FOR AN OPEN CIRCUIT

Remove relay 2/111 in the rear electronic module (REM) and trouble-shoot the wire between the fuse holder secondary side (left) and 5 in the relay socket for an open circuit as described in, see **OPEN-CIRCUIT, PERMANENT FAULTS** .

Additional information

- To access/replace rear electronic module (REM):
  - For -2004, see: **RELAY/FUSE BOX CARGO COMPARTMENT/REAR ELECTRONIC MODULE (REM), REPLACING**

- For 2005-, see: **REAR ELECTRONIC MODULE (REM), REPLACING** .

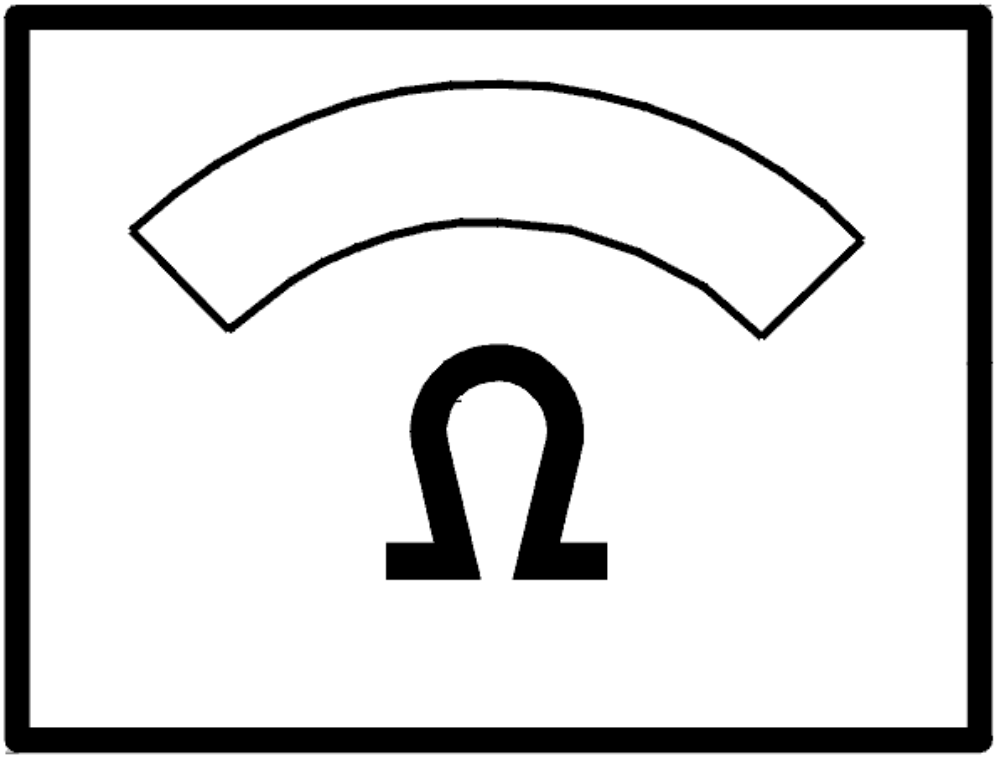

Fig. 44: Identifying Ohm Meter
Courtesy of VOLVO CARS CORPORATION

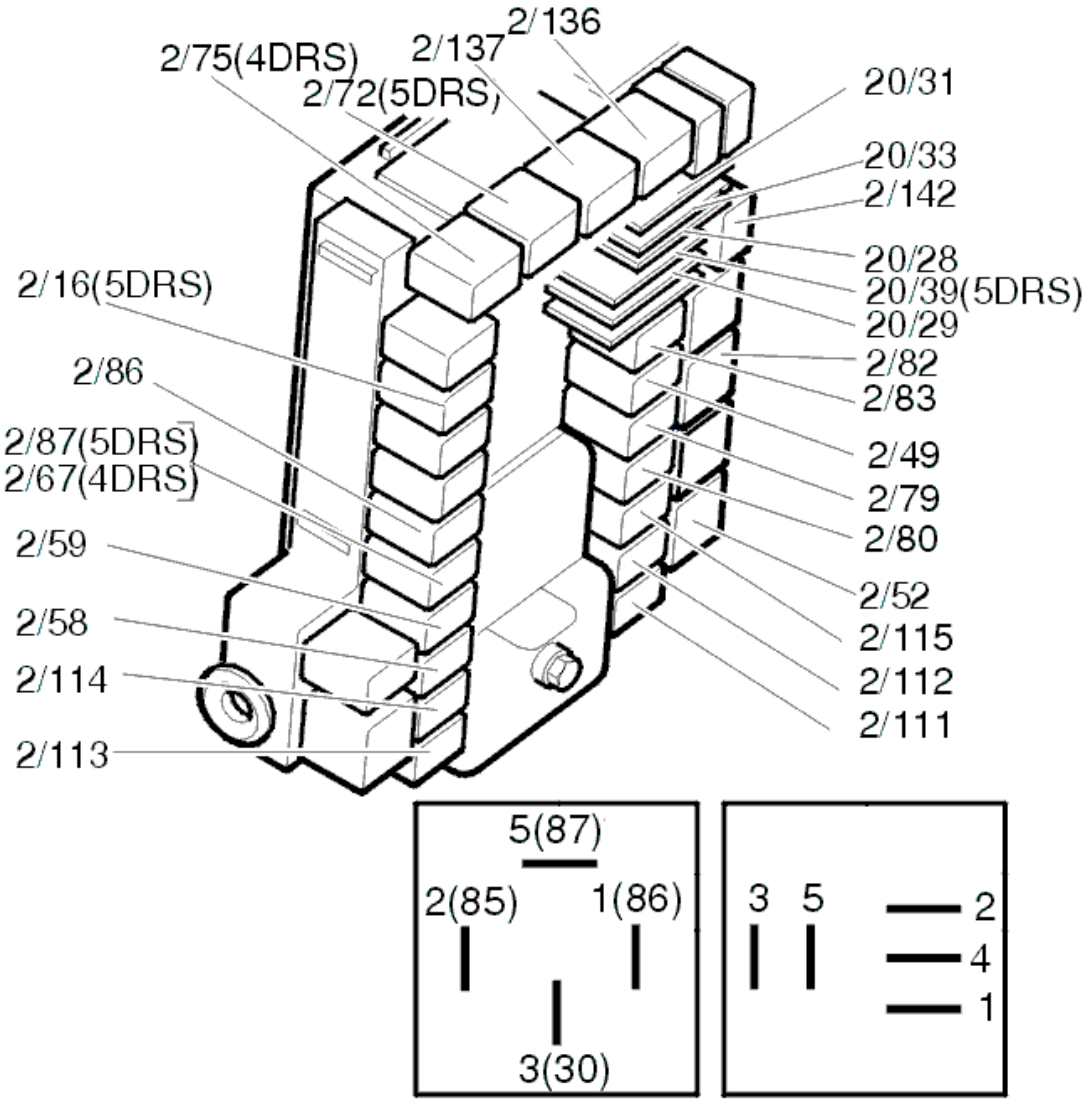

Fig. 45: Identifying Relays
Courtesy of VOLVO CARS CORPORATION

CHECKING FOR A SHORT CIRCUIT

Check the resistance between the fuse holder secondary side (left) and ground.

The ohmmeter should display infinite resistance.

If the value is correct, replace the fuse.

If the value deviates, trouble-shoot all the relay circuits involved for a short circuit to ground as described in, see **SHORT-CIRCUIT TO GROUND, PERMANENT FAULTS** .

HINT: Replace fuse.

HINT: If the fuse works straight away the fault is a short circuit on the relay supply wire.

HINT: If the fuse works when activating each relay the short circuit is on the component supply wire

HINT: The relay circuits involved belong to relays 2/111, 2/112, 2/113, 2/114, 2/115, 2/56, 2/59 and 2/67.

Additional information

- To access/replace rear electronic module (REM):
  - For -2004, see: **RELAY/FUSE BOX CARGO COMPARTMENT/REAR ELECTRONIC MODULE (REM), REPLACING**
  - For 2005-, see: **REAR ELECTRONIC MODULE (REM), REPLACING** .

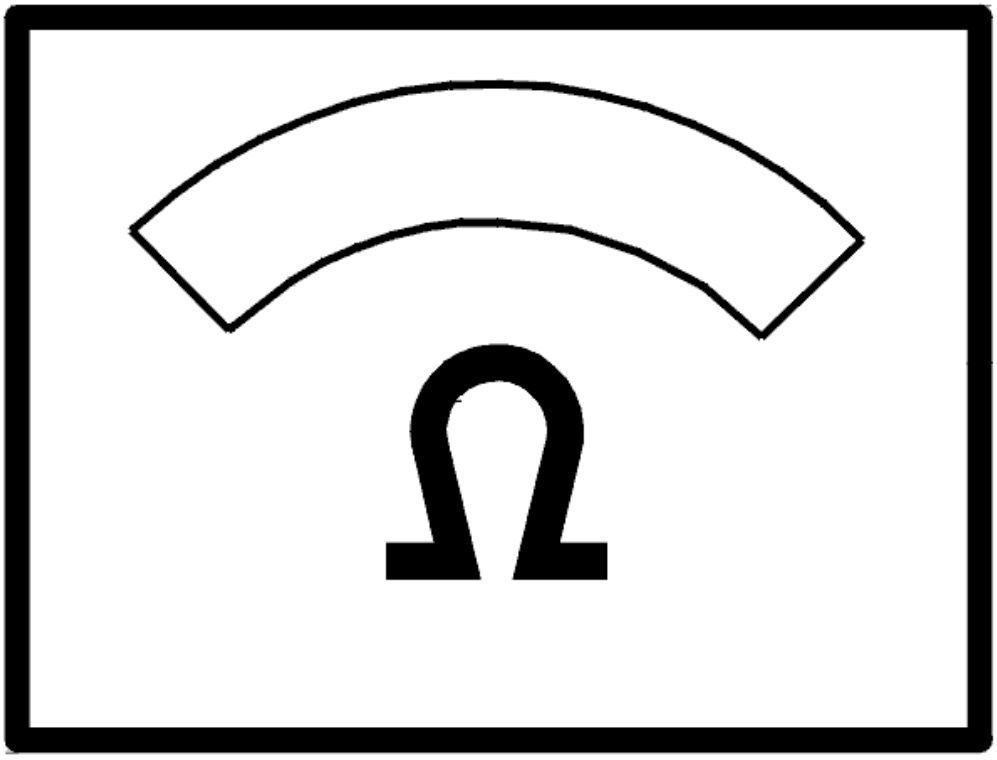

Fig. 46: Identifying Ohm Meter
Courtesy of VOLVO CARS CORPORATION

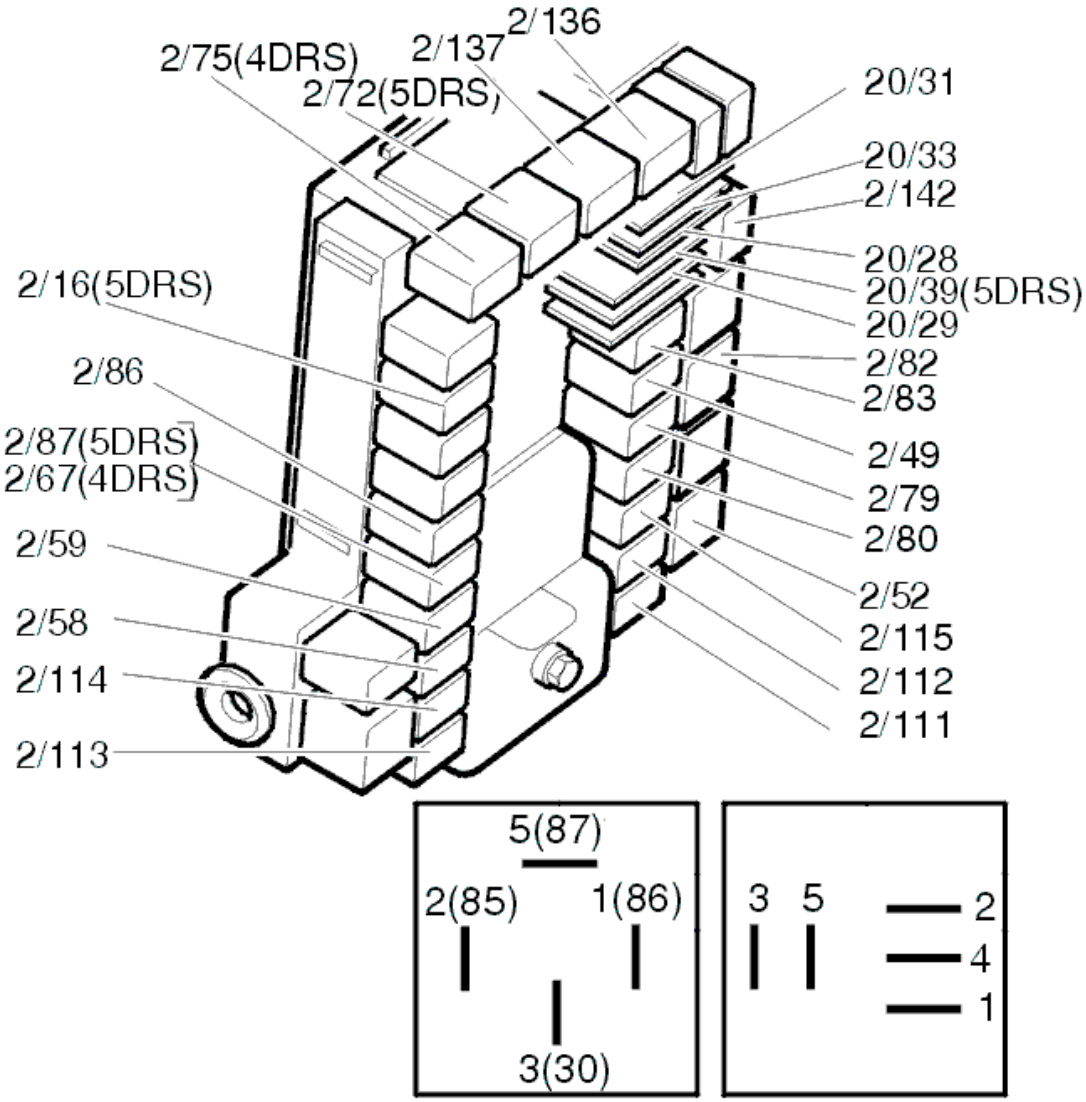

Fig. 47: Identifying Relays
Courtesy of VOLVO CARS CORPORATION

CHECKING THE REAR RIGHT DOOR

CHECK

Is the lock to the other rear door not working?

- **YES**

  Refer to **CHECKING THE FUSE**

- **NO**

  Refer to **REPLACING THE COMPONENT**

REPLACING THE COMPONENT

Replace the relays for locking (2/113) and unlocking (2/114) in the cargo compartment relay/fuse box. At the same time check relay socket contacts for contact resistance and oxidation as described in, see **CONTACT RESISTANCE AND OXIDATION** .

Additional information

- To access relay/fuse box in the cargo compartment:
  - For -2004, see: **RELAY/FUSE BOX CARGO COMPARTMENT/REAR ELECTRONIC MODULE (REM), REPLACING**
  - For 2005-, see: **REAR ELECTRONIC MODULE (REM), REPLACING** .

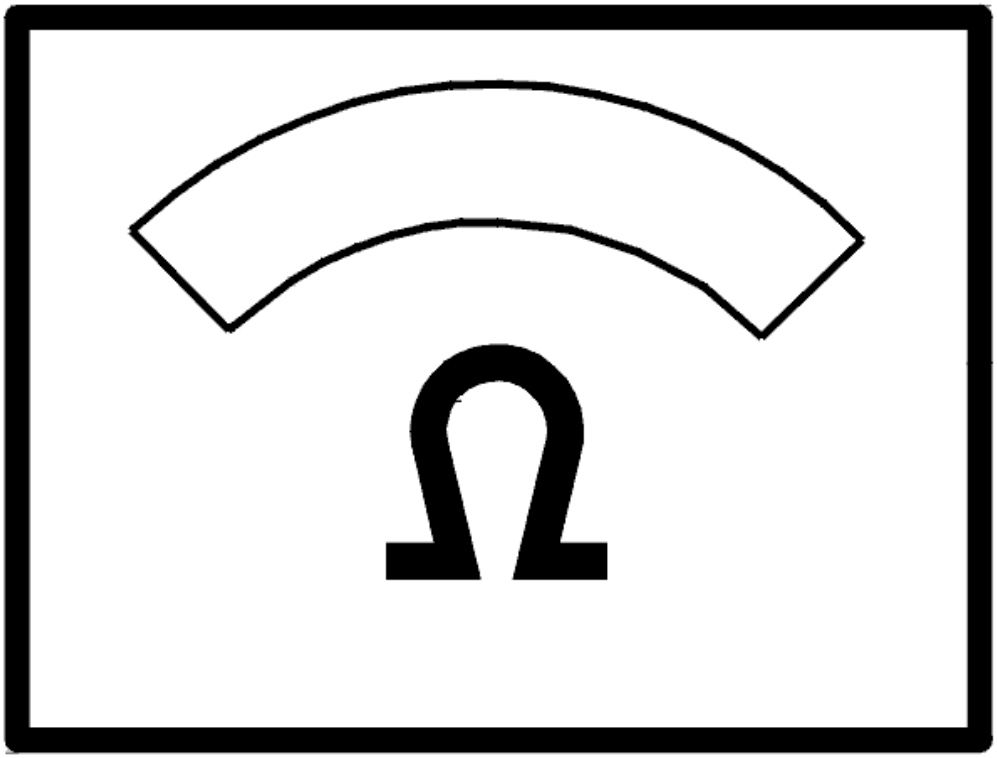

Fig. 48: Identifying Ohm Meter
Courtesy of VOLVO CARS CORPORATION

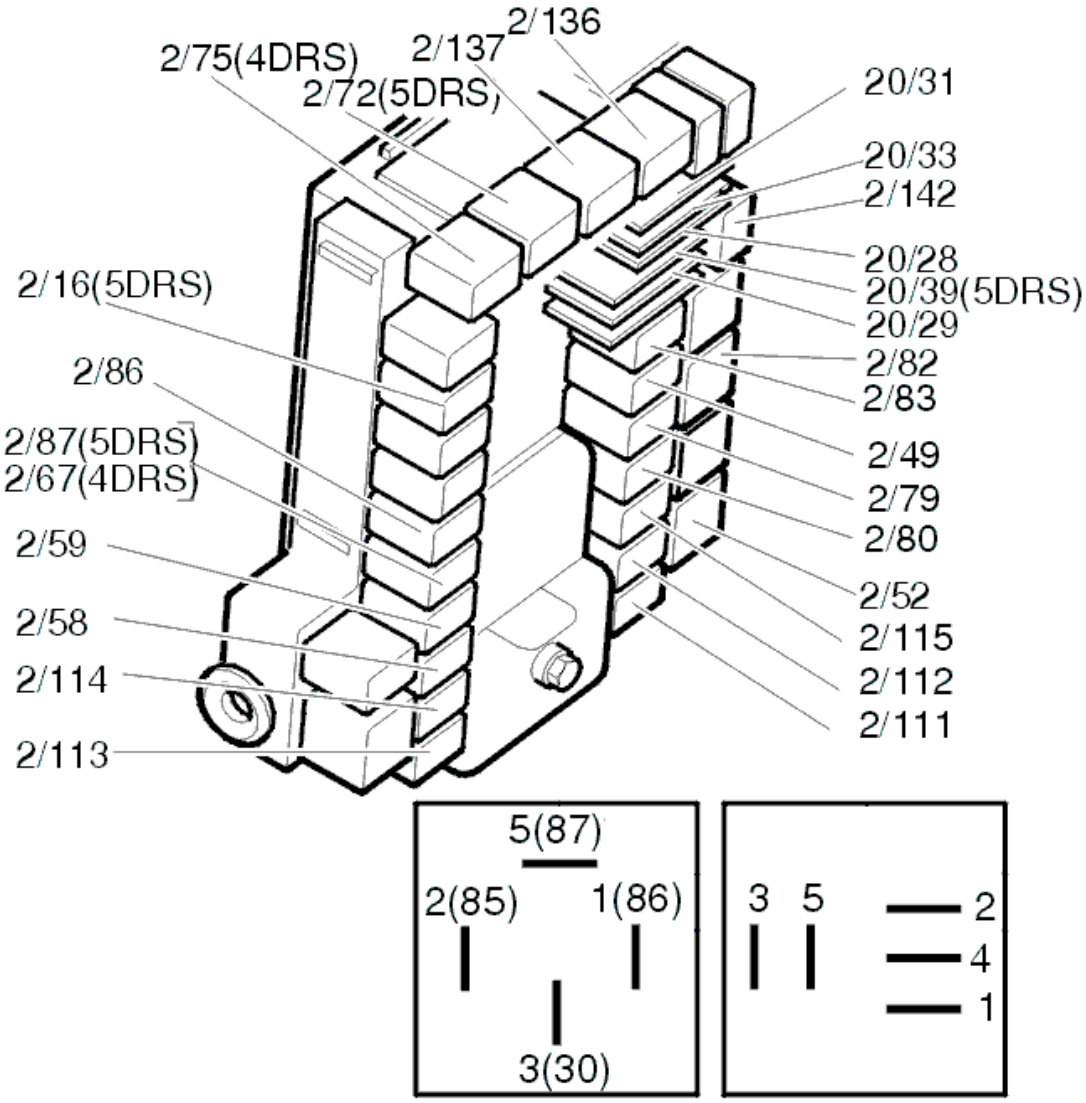

Fig. 49: Identifying Relays
Courtesy of VOLVO CARS CORPORATION

Is there a fault?

- **YES**

  OKAY: Troubleshooting has been completed.

- **NO**

  Refer to **CIRCUIT TEST**

CIRCUIT TEST

The fault is caused by an open circuit in one of the relay circuits or in the lock unit. To find out which circuit

contains the fault:

Disconnect the lock unit connector.

Check the contacts for contact resistance and oxidation as described in, see **CONTACT RESISTANCE AND OXIDATION** .

Check resistance between 4 and 6 on cable connector.

Additional information

- To access/replace the lock unit, see **LOCK MECHANISM REAR SIDE DOOR, REPLACING** .

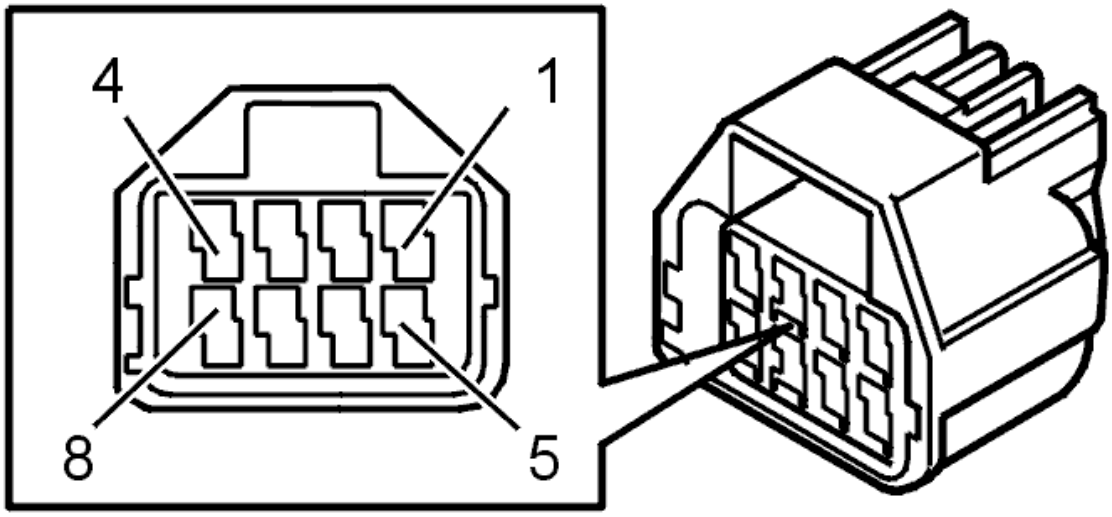

Fig. 50: Identifying Connector Terminals
Courtesy of VOLVO CARS CORPORATION

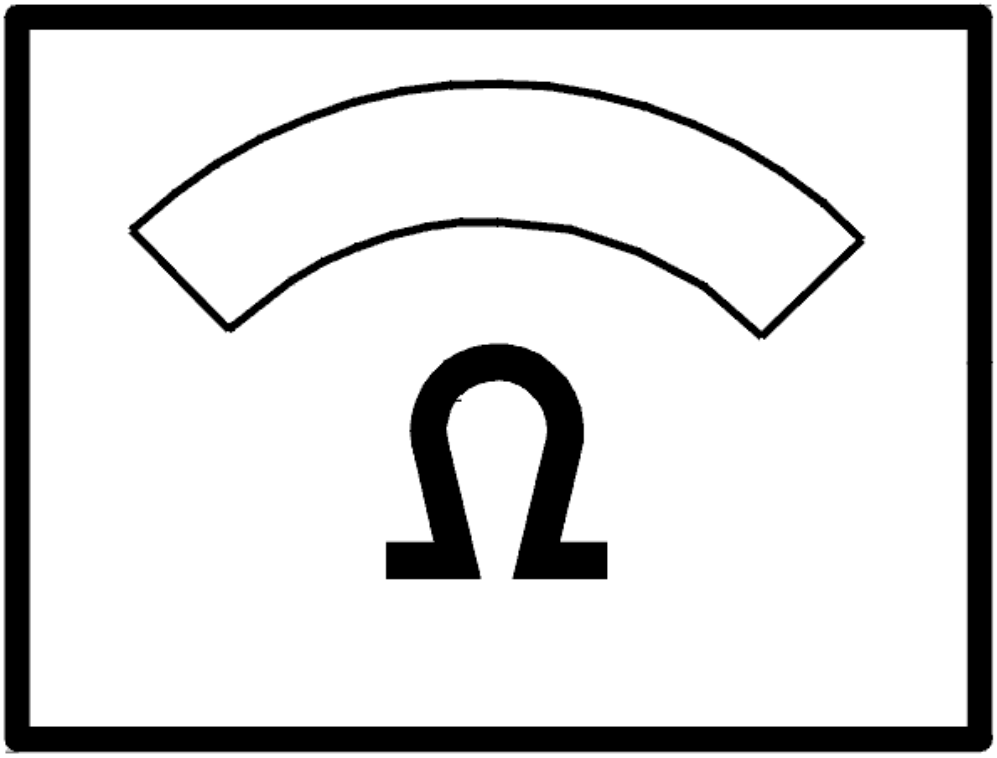

Fig. 51: Identifying Ohm Meter
Courtesy of VOLVO CARS CORPORATION

The ohmmeter should display 0 ohm.

- **OK**

  Refer to **CHECKING THE COMPONENTS**

- **NOT OK**

  Refer to **CIRCUIT TEST, CONTINUED**

CIRCUIT TEST, CONTINUED

Check the resistance between 4 and ground and between 6 and ground on the cable connector.

The ohmmeter should display 0 ohm.

1. The ohmmeter shows a fault between 4 and ground

   Refer to **CHECKING THE UNLOCKING RELAY CIRCUIT**

2. The ohmmeter shows a fault between 6 and ground.

   Refer to **CHECKING THE LOCKING RELAY CIRCUIT**

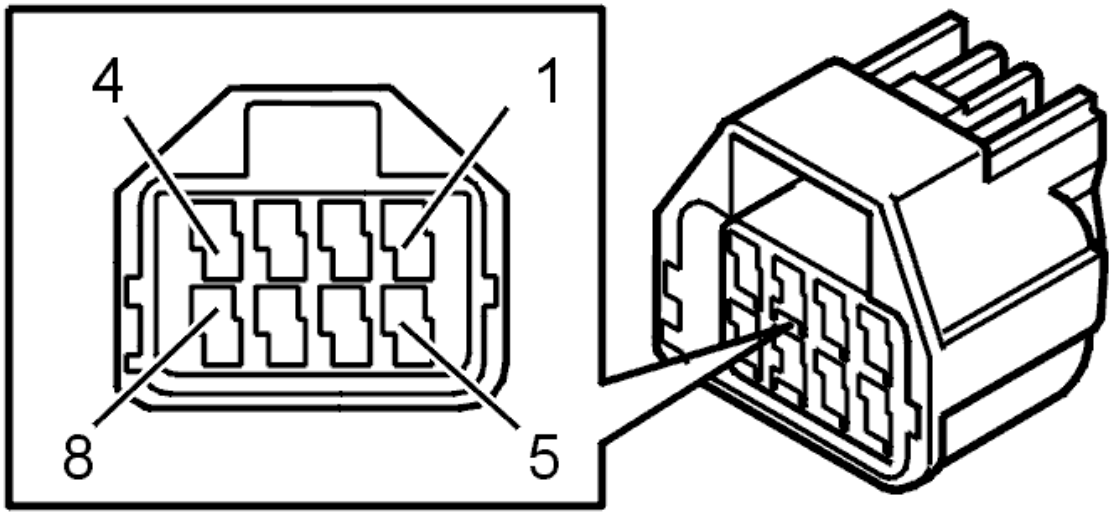

Fig. 52: Identifying Connector Terminals
Courtesy of VOLVO CARS CORPORATION

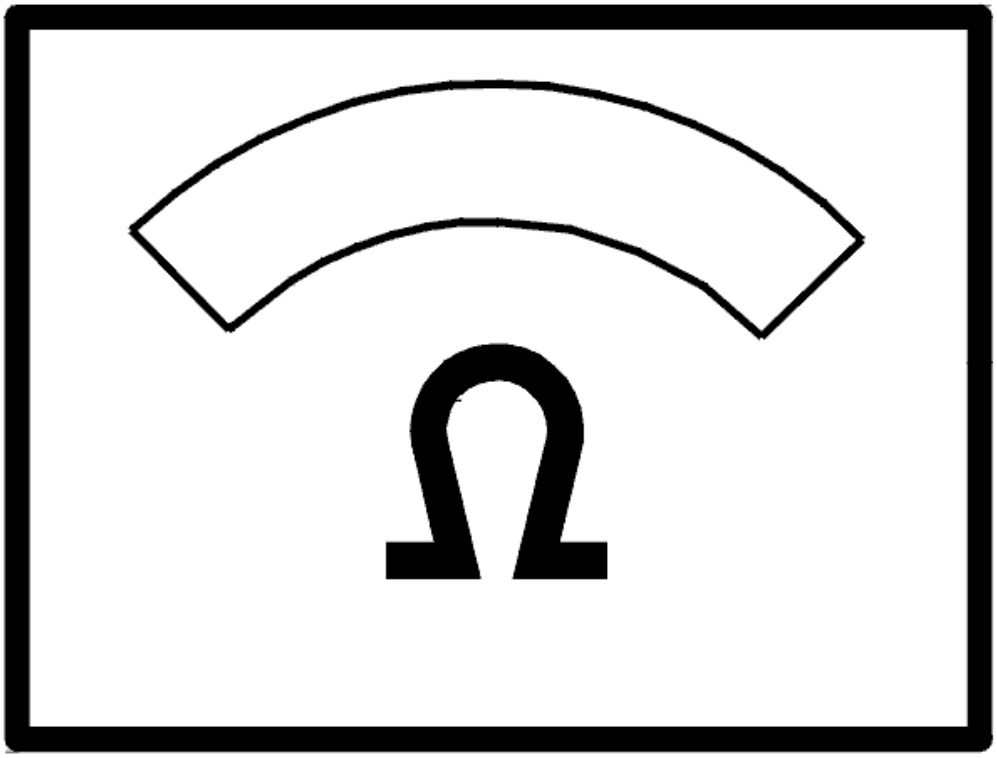

Fig. 53: Identifying Ohm Meter
Courtesy of VOLVO CARS CORPORATION

CHECKING THE LOCKING RELAY CIRCUIT

Remove the locking relay (2/113).

Check the wire between 4 in the cable connector and 3 in the relay socket for an open circuit as described in, see **OPEN-CIRCUIT, PERMANENT FAULTS** .

If a fault is detected, check in particular the intermediate connector in the cable harness (2) for contact resistance and oxidation as described in, see **CONTACT RESISTANCE AND OXIDATION** .

Do the necessary corrective action.

If no fault is found, check the resistance between 4 in the relay socket and ground.

The ohmmeter should display 0 ohm.

If the resistance deviates, replace the rear electronic module (REM).

Additional information

- To access/replace rear electronic module (REM):
  - For -2004, see: **RELAY/FUSE BOX CARGO COMPARTMENT/REAR ELECTRONIC MODULE (REM), REPLACING**
  - For 2005-, see: **REAR ELECTRONIC MODULE (REM), REPLACING** .

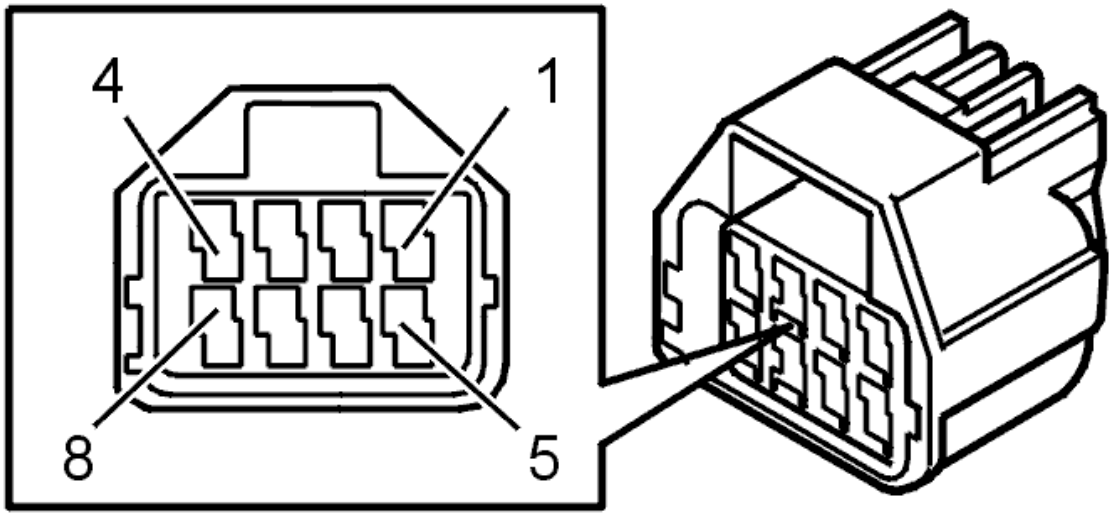

Fig. 54: Identifying Connector Terminals
Courtesy of VOLVO CARS CORPORATION

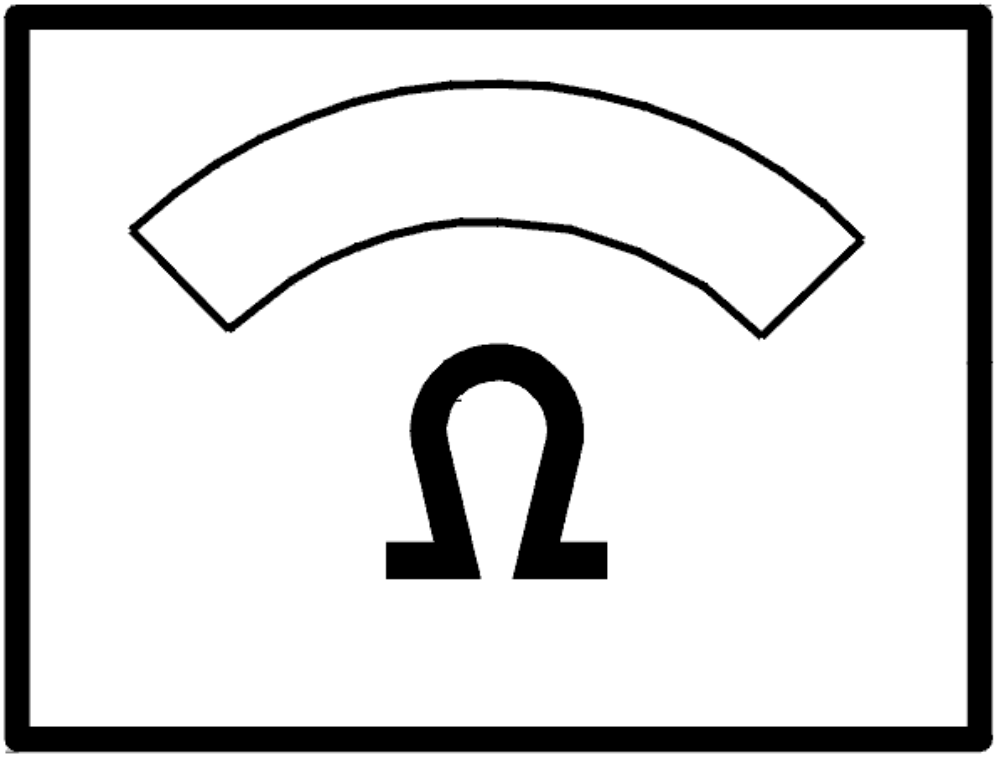

Fig. 55: Identifying Ohm Meter
Courtesy of VOLVO CARS CORPORATION

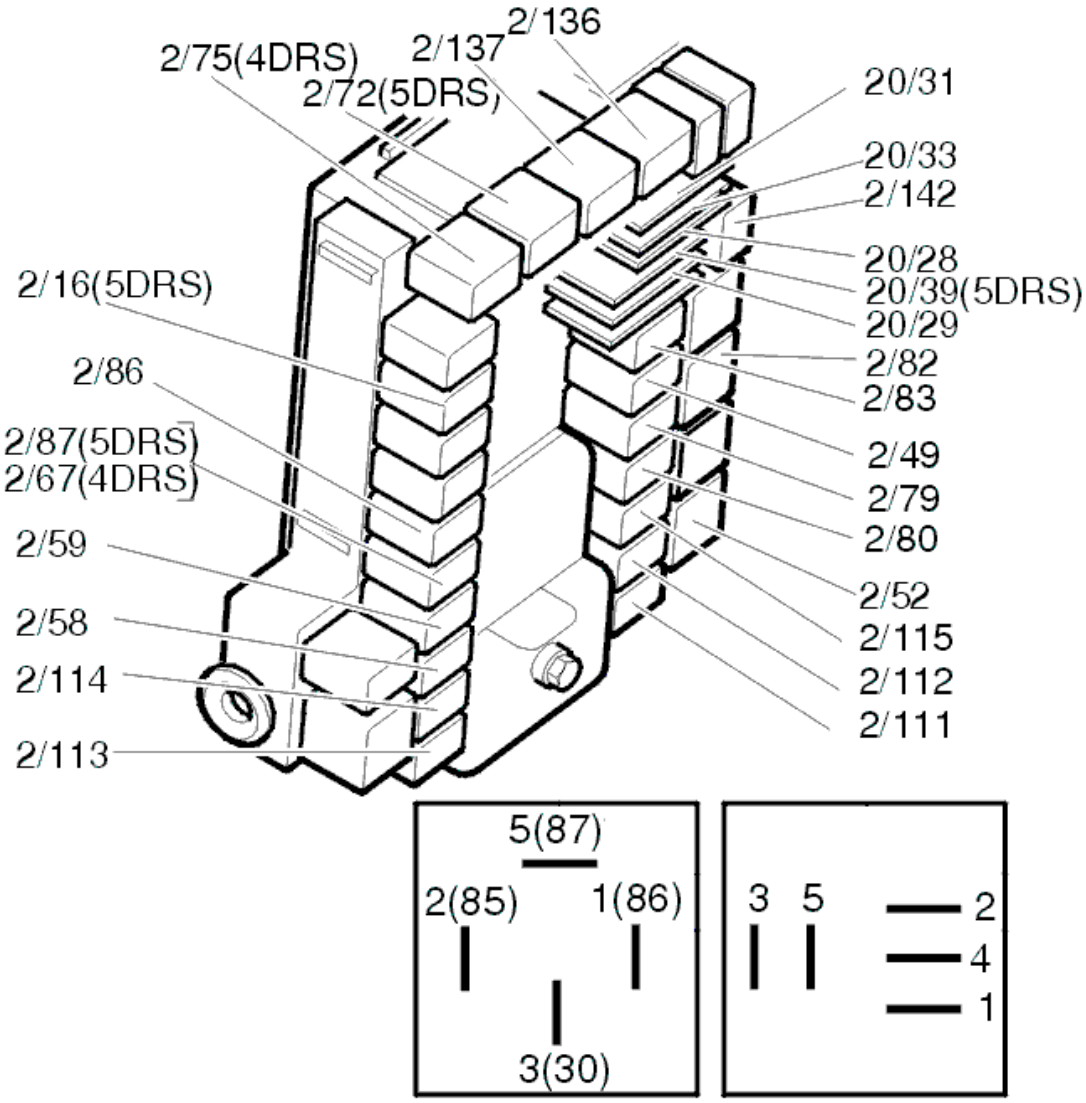

Fig. 56: Identifying Relays
Courtesy of VOLVO CARS CORPORATION

CHECKING THE UNLOCKING RELAY CIRCUIT

Remove the unlocking relay (2/114).

Check the wire between 6 in the cable connector and 3 in the relay socket for an open circuit as described in, see **OPEN-CIRCUIT, PERMANENT FAULTS** .

If a fault is detected, check in particular the intermediate connector in the cable harness (2) for contact resistance and oxidation as described in, see **CONTACT RESISTANCE AND OXIDATION** .

Do the necessary corrective action.

If no fault is found, check the resistance between 4 in the relay socket and ground.

The ohmmeter should display 0 ohm.

If the resistance deviates, replace the rear electronic module (REM).

Additional information

- To access/replace rear electronic module (REM):
  - For -2004, see: **RELAY/FUSE BOX CARGO COMPARTMENT/REAR ELECTRONIC MODULE (REM), REPLACING**
  - For 2005-, see: **REAR ELECTRONIC MODULE (REM), REPLACING** .

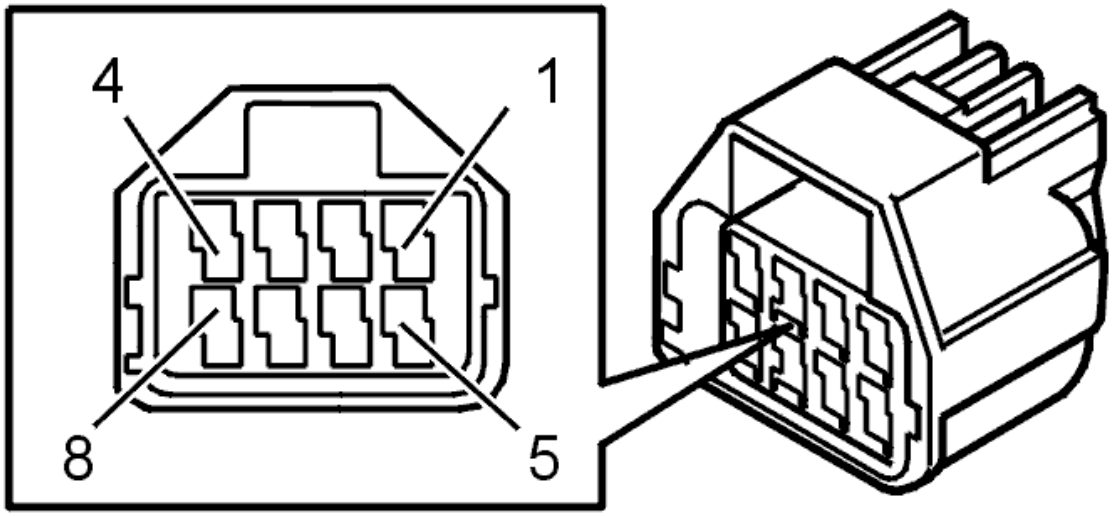

Fig. 57: Identifying Connector Terminals
Courtesy of VOLVO CARS CORPORATION

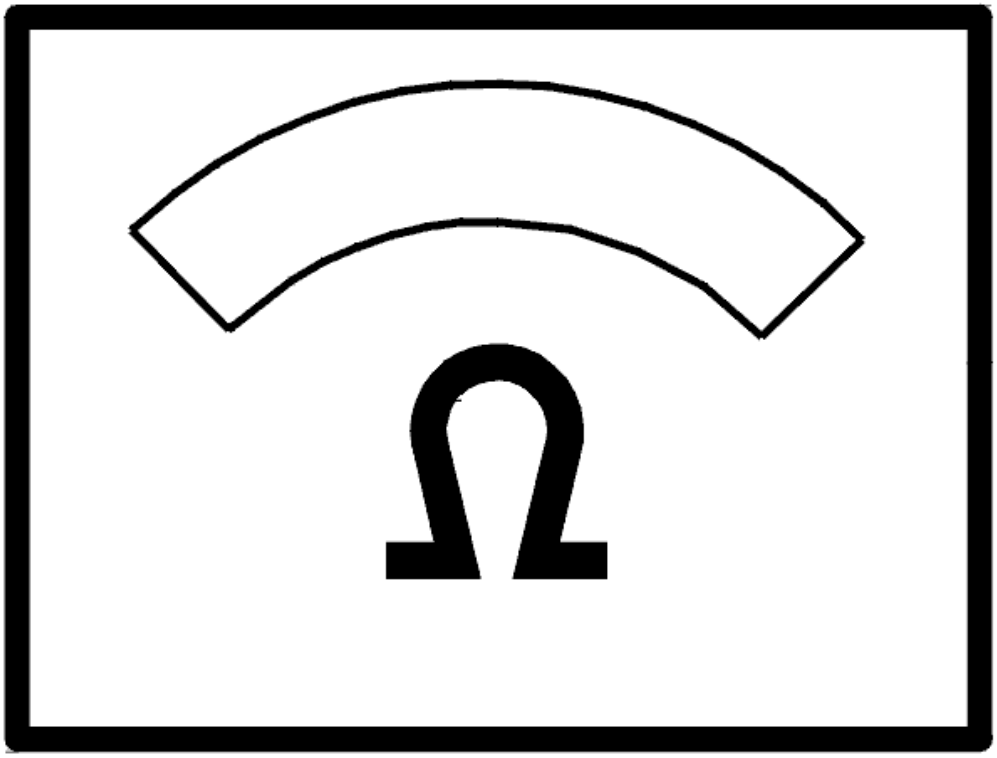

Fig. 58: Identifying Ohm Meter
Courtesy of VOLVO CARS CORPORATION

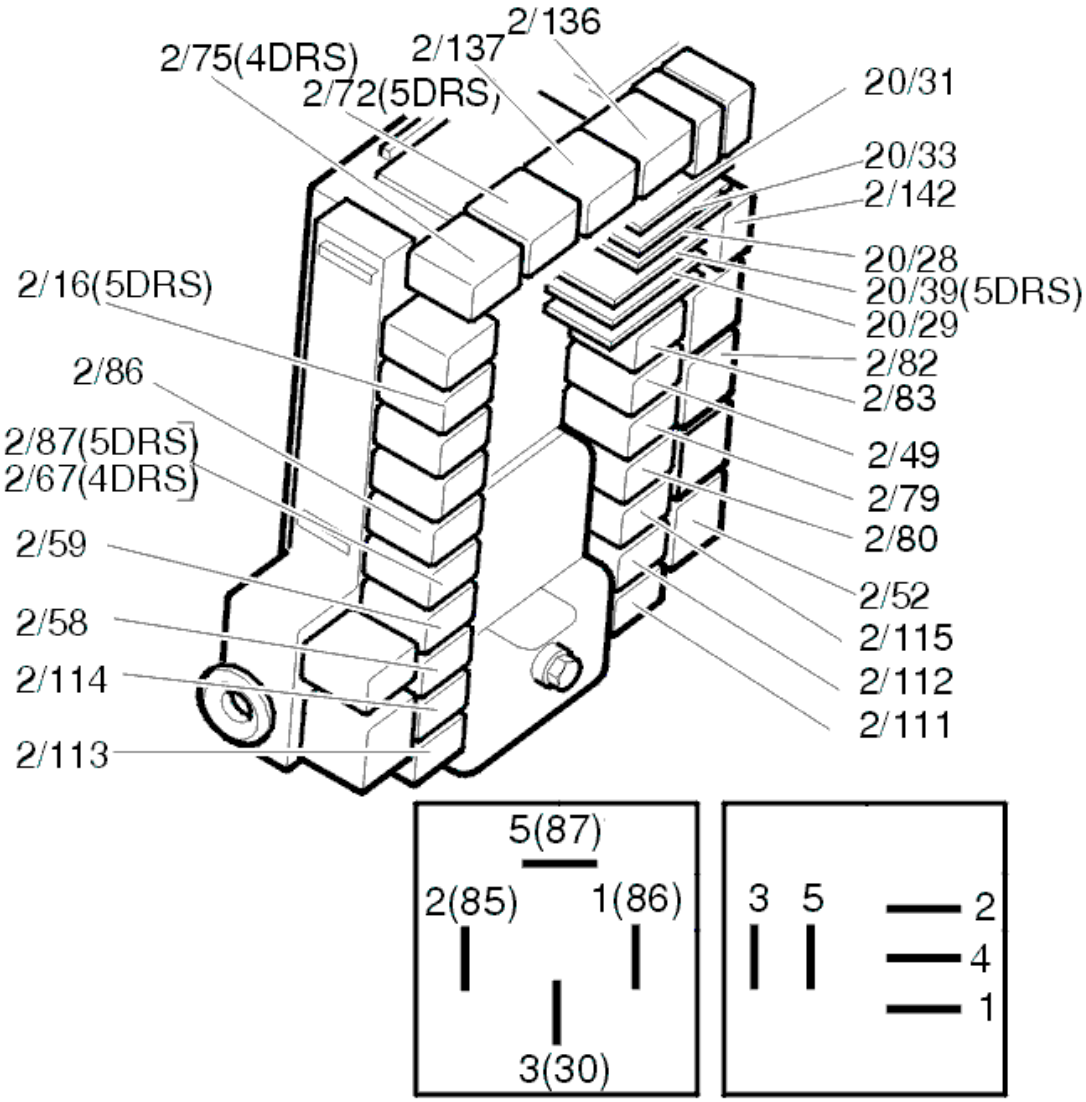

Fig. 59: Identifying Relays
Courtesy of VOLVO CARS CORPORATION

CHECKING THE COMPONENTS

Check the resistance between pin 4 and 6 in the lock unit chassis contact.

The ohmmeter should display 5 ohm.

If the resistance deviates, replace the lock unit.

Additional information

- To access/replace rear electronic module (REM):
  - For -2004, see: **RELAY/FUSE BOX CARGO COMPARTMENT/REAR ELECTRONIC MODULE (REM), REPLACING**

- For 2005-, see: **REAR ELECTRONIC MODULE (REM), REPLACING** .
- To access/replace the lock unit, see **LOCK MECHANISM REAR SIDE DOOR, REPLACING**
- For information on signals and additional values, see **SIGNAL SPECIFICATION** .

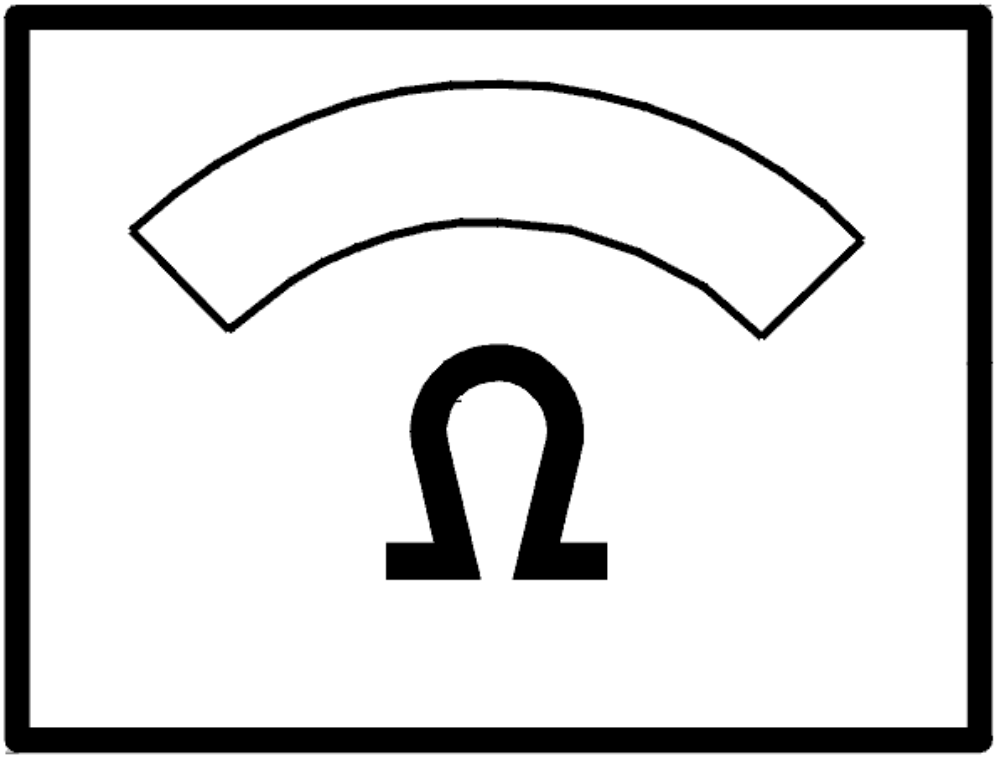

Fig. 60: Identifying Ohm Meter
Courtesy of VOLVO CARS CORPORATION

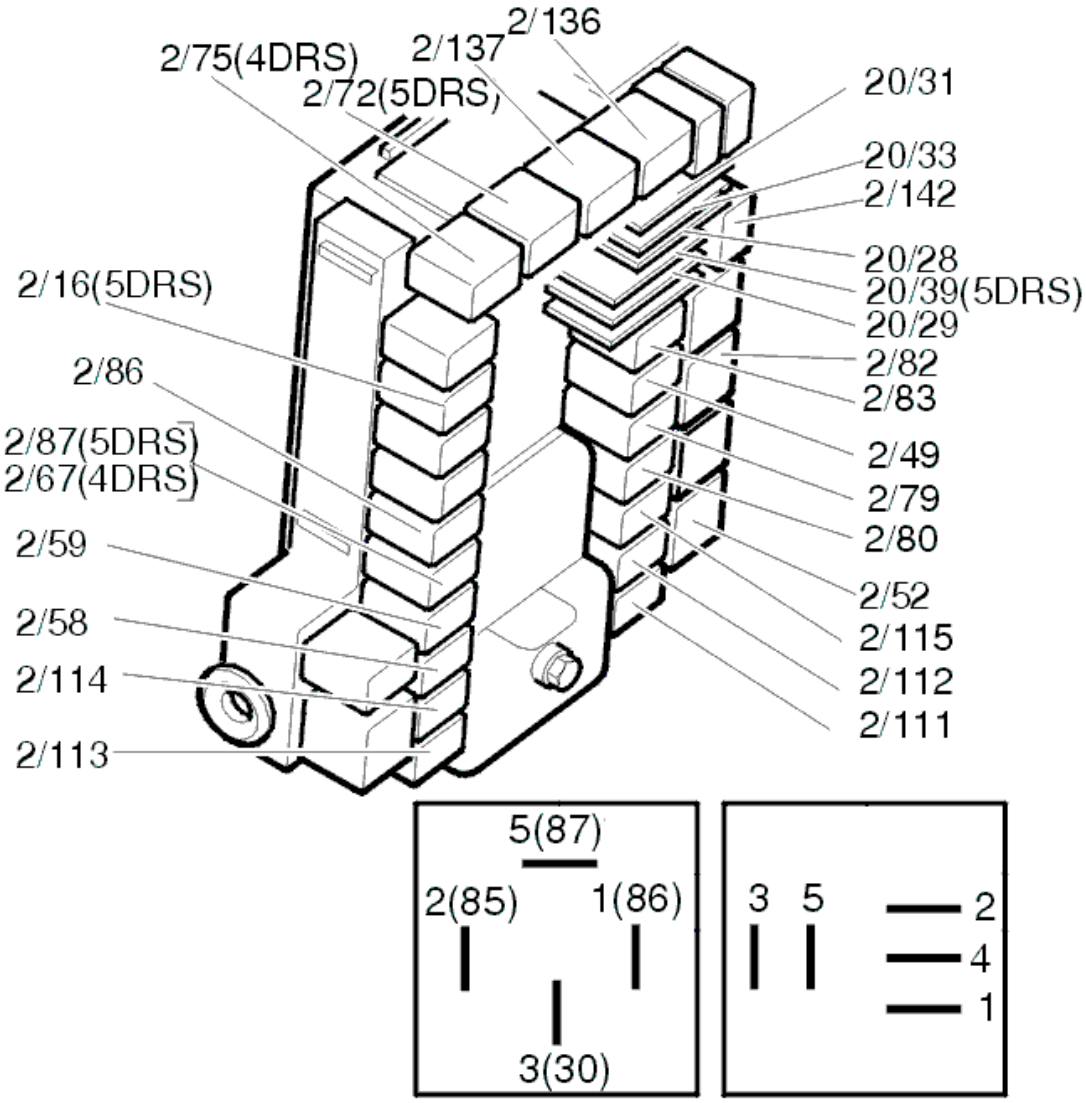

Fig. 61: Identifying Relays
Courtesy of VOLVO CARS CORPORATION

Is there a fault?

- **YES**

  OKAY: Troubleshooting has been completed.

- **NO**

  Refer to **CHECKING THE RELAY SUPPLY**

CHECKING THE RELAY SUPPLY

Remove the locking relay (2/113).

Measure the voltage between 5 in the relay socket and ground.

The voltmeter should display battery voltage.

HINT: If the value is OK but the fault still remains, connect the contacts to the lock module and link between 3 and 5 in the relay socket to force-feed the lock motor while continuing to test.

Additional information

- To access relay/fuse box in the cargo compartment:
  - For -2004, see: **RELAY/FUSE BOX CARGO COMPARTMENT/REAR ELECTRONIC MODULE (REM), REPLACING**
  - For 2005-, see: **REAR ELECTRONIC MODULE (REM), REPLACING** .

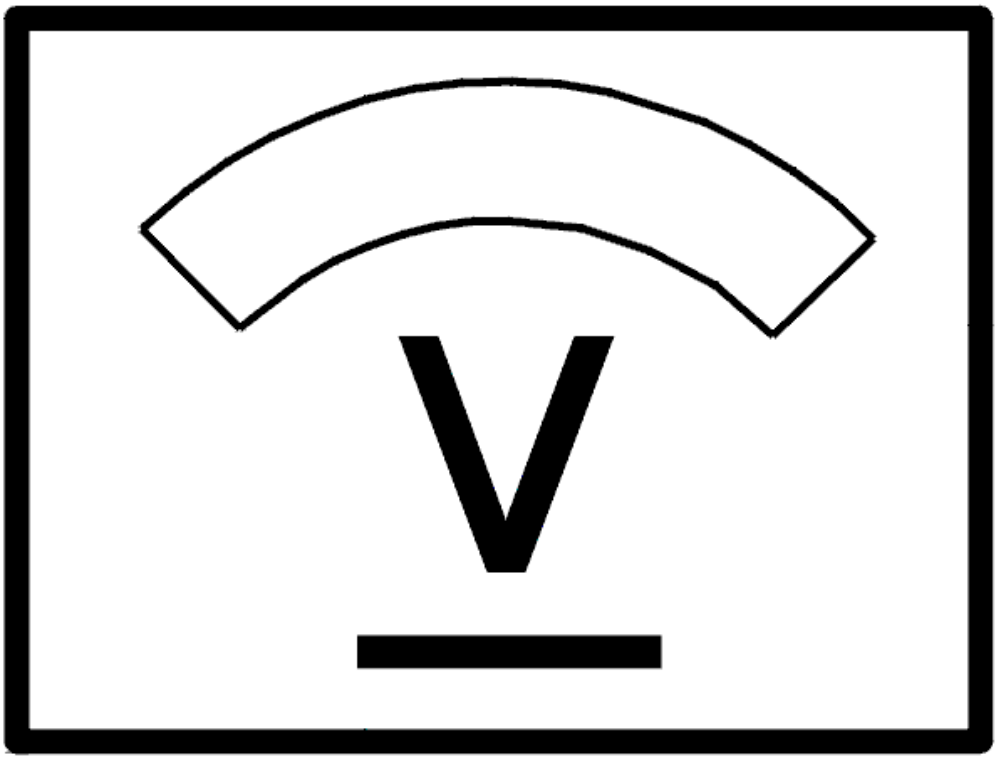

Fig. 62: Identifying Voltage Display

Courtesy of VOLVO CARS CORPORATION

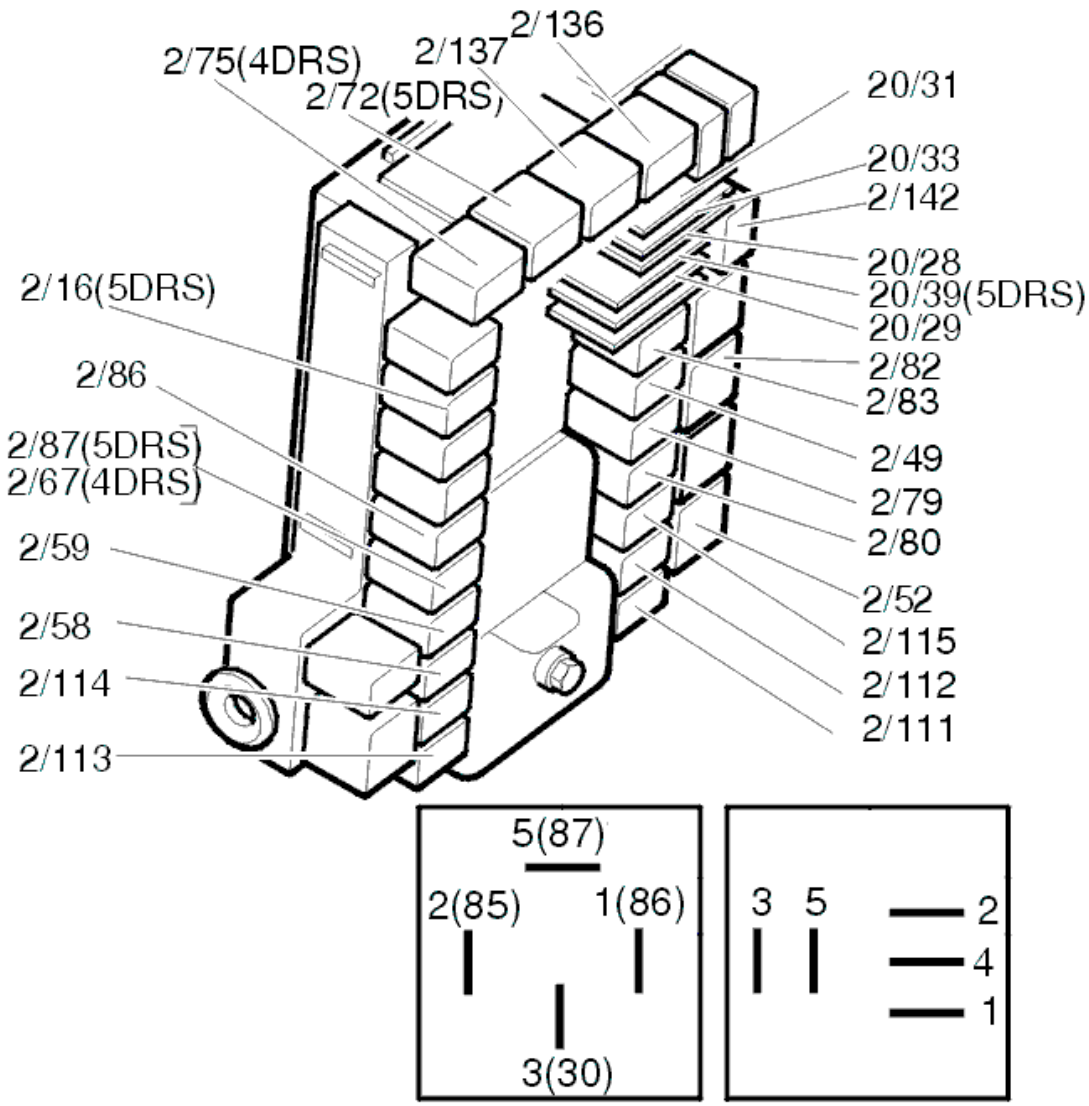

Fig. 63: Identifying Relays
Courtesy of VOLVO CARS CORPORATION

Does the voltmeter show the battery voltage?

- **YES**

  OKAY: Troubleshooting has been completed.

- **NO**

  Refer to **CHECKING THE FUSE**

CHECKING THE FUSE

Remove the fuse 11D/8 in cargo compartment fuse box.

Check that fuse 11D/8 is intact and check for contact resistance and oxidation as described in, see **CONTACT RESISTANCE AND OXIDATION** .

Additional information

- To access relay/fuse box in the cargo compartment:
  - For -2004, see: **RELAY/FUSE BOX CARGO COMPARTMENT/REAR ELECTRONIC MODULE (REM), REPLACING**
  - For 2005-, see: **REAR ELECTRONIC MODULE (REM), REPLACING** .

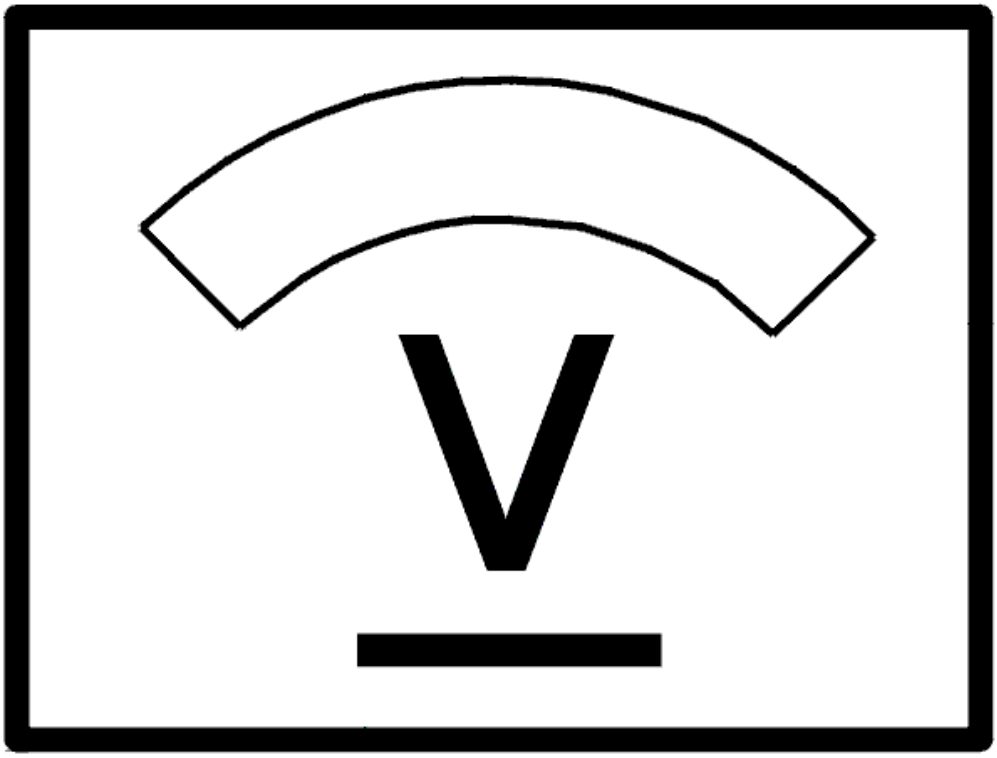

Fig. 64: Identifying Voltage Display
Courtesy of VOLVO CARS CORPORATION

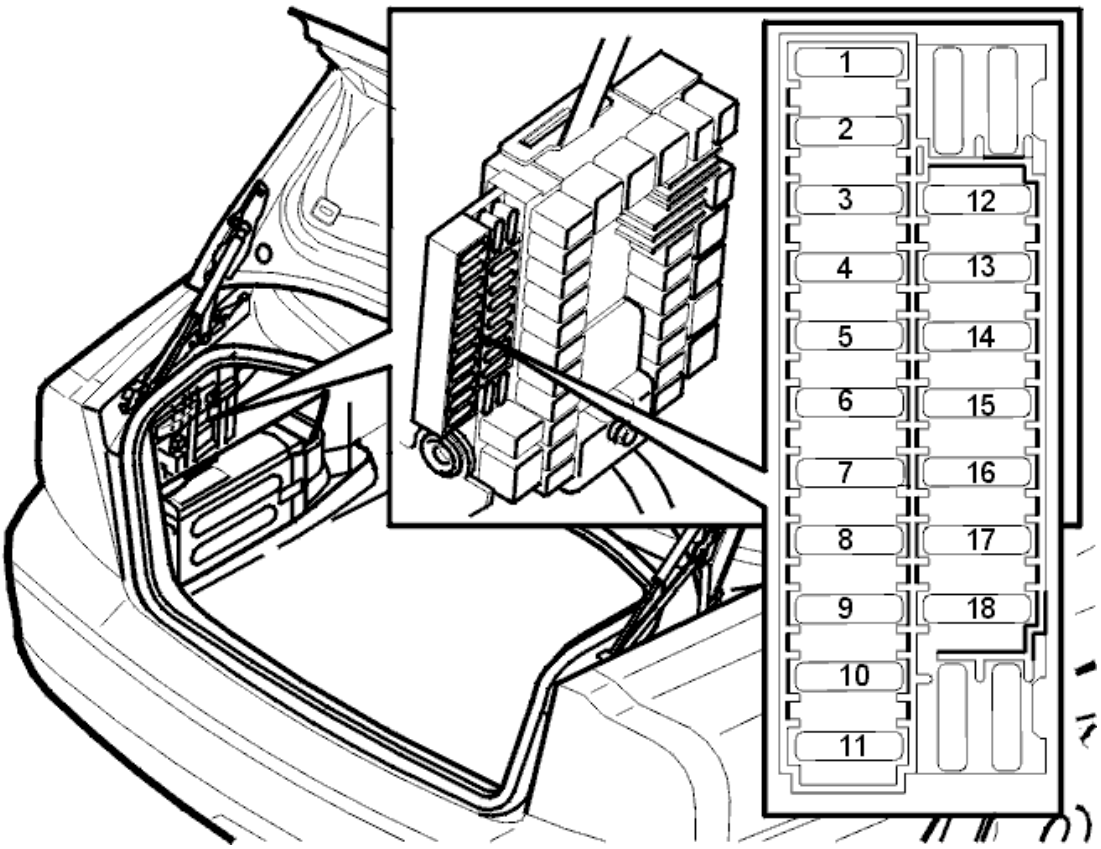

Fig. 65: Fuse Holder (Cargo Compartment)
Courtesy of VOLVO CARS CORPORATION

Is the fuse intact?

- **YES**

  Refer to **CHECKING FOR AN OPEN CIRCUIT**

- **NO**

  Refer to **CHECKING FOR A SHORT CIRCUIT**

CHECKING FOR AN OPEN CIRCUIT

Remove relay 2/113 in the cargo compartment relay/fuse box and trouble-shoot the wire between the fuse holder secondary side (left) and 5 in the relay socket for an open circuit as described in, see **OPEN-CIRCUIT, PERMANENT FAULTS** .

Additional information

- To access relay/fuse box in the cargo compartment:
  - For -2004, see: **RELAY/FUSE BOX CARGO COMPARTMENT/REAR ELECTRONIC MODULE (REM), REPLACING**

- For 2005-, see: **REAR ELECTRONIC MODULE (REM), REPLACING** .

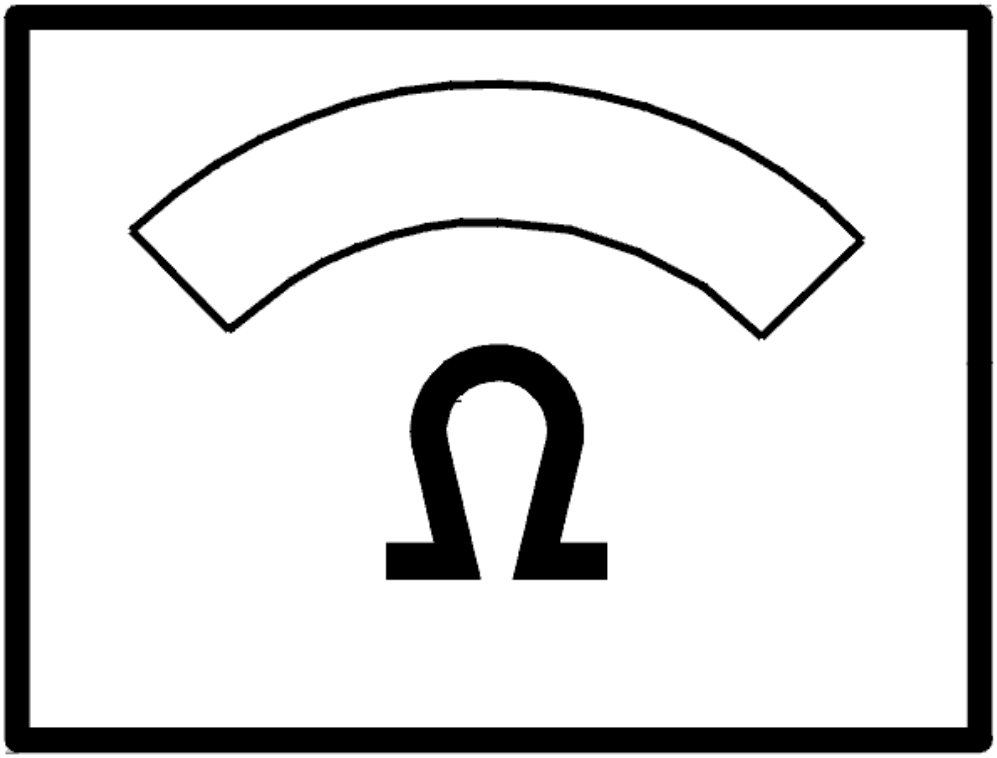

Fig. 66: Identifying Ohm Meter
Courtesy of VOLVO CARS CORPORATION

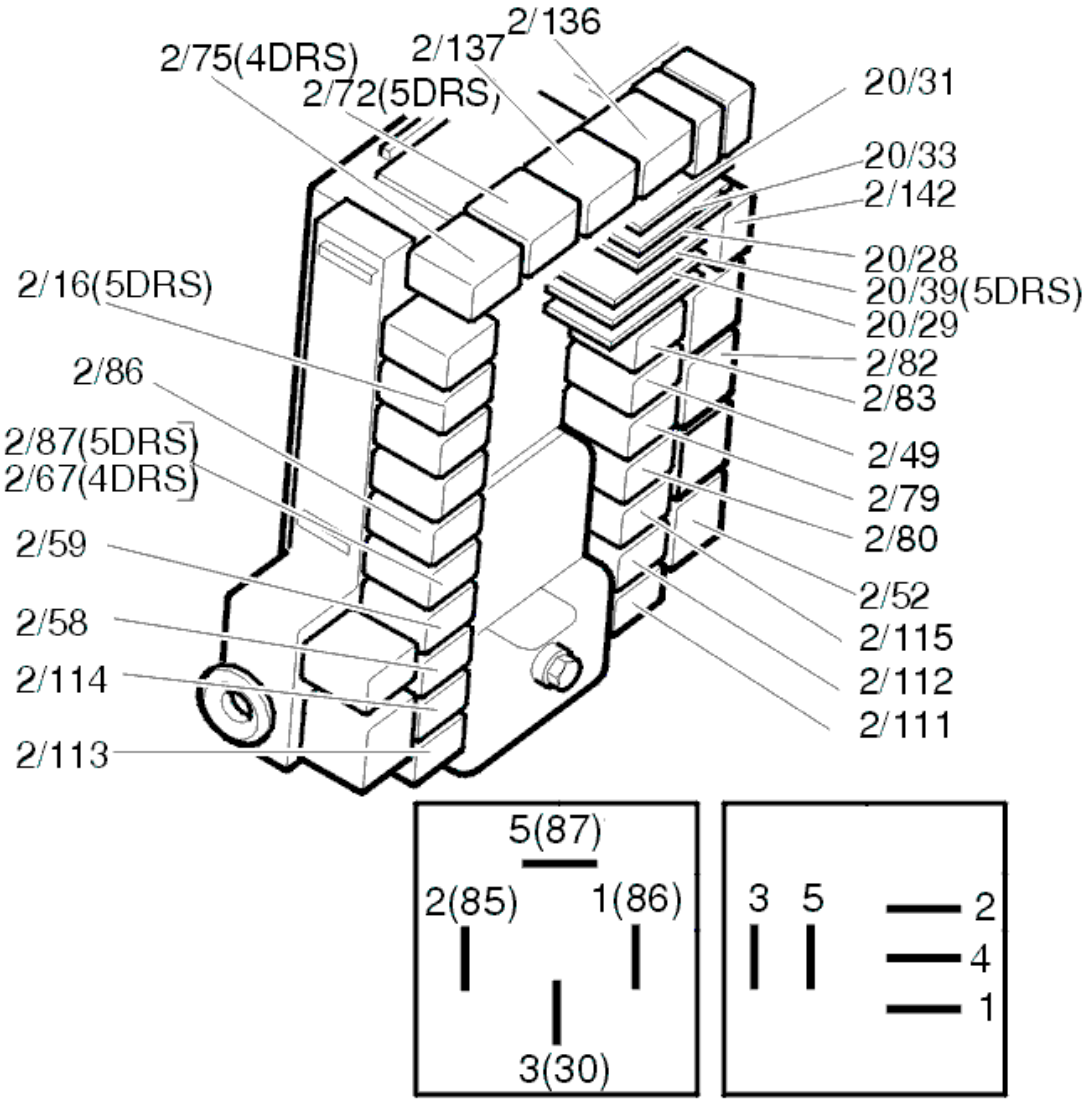

Fig. 67: Identifying Relays
Courtesy of VOLVO CARS CORPORATION

CHECKING FOR A SHORT CIRCUIT

Check the resistance between the fuse holder secondary side (left) and ground.

The ohmmeter should display infinite resistance.

If the value is correct, replace the fuse.

If the value deviates, trouble-shoot all the relay circuits involved for a short circuit to ground as described in, see **SHORT-CIRCUIT TO GROUND, PERMANENT FAULTS** .

NOTE: If the value is correct the fault could be intermittent.

HINT: Replace fuse.

HINT: If the fuse works straight away the fault is a short circuit on the relay supply wire.

HINT: If the fuse works when activating each relay the short circuit is on the component supply wire

HINT: The relay circuits involved belong to relays 2/111, 2/112, 2/113, 2/114, 2/115, 2/56, 2/59 and 2/67.

Additional information

- To access relay/fuse box in the cargo compartment:
  - For -2004, see: **RELAY/FUSE BOX CARGO COMPARTMENT/REAR ELECTRONIC MODULE (REM), REPLACING**
  - For 2005-, see: **REAR ELECTRONIC MODULE (REM), REPLACING** .

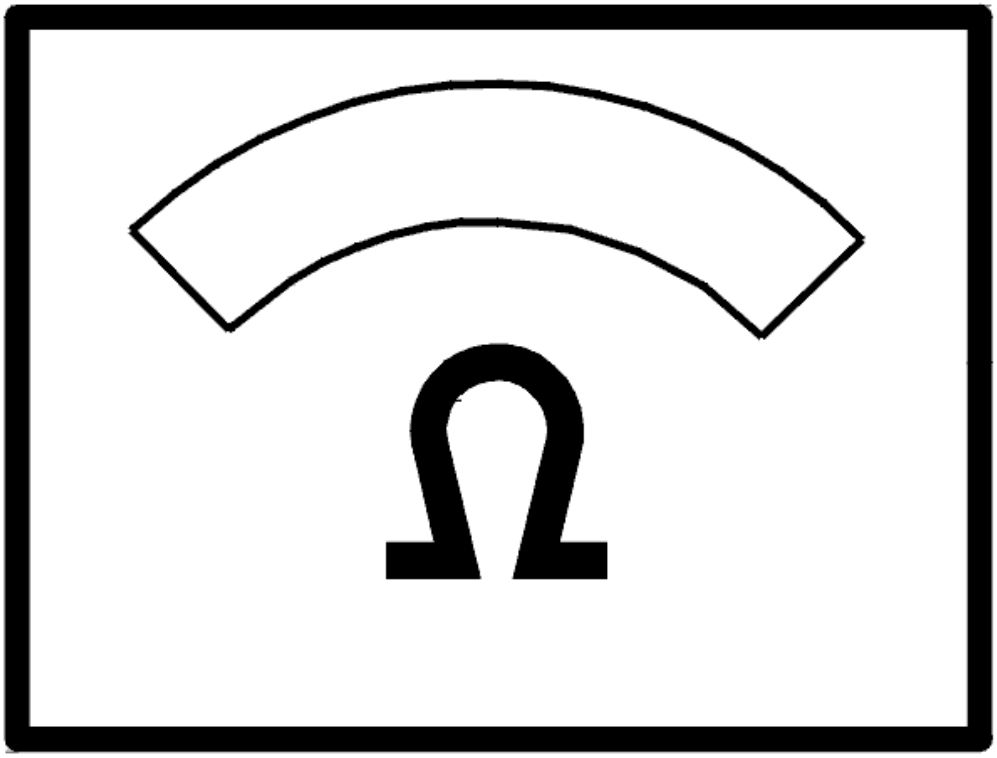

Fig. 68: Identifying Ohm Meter
Courtesy of VOLVO CARS CORPORATION

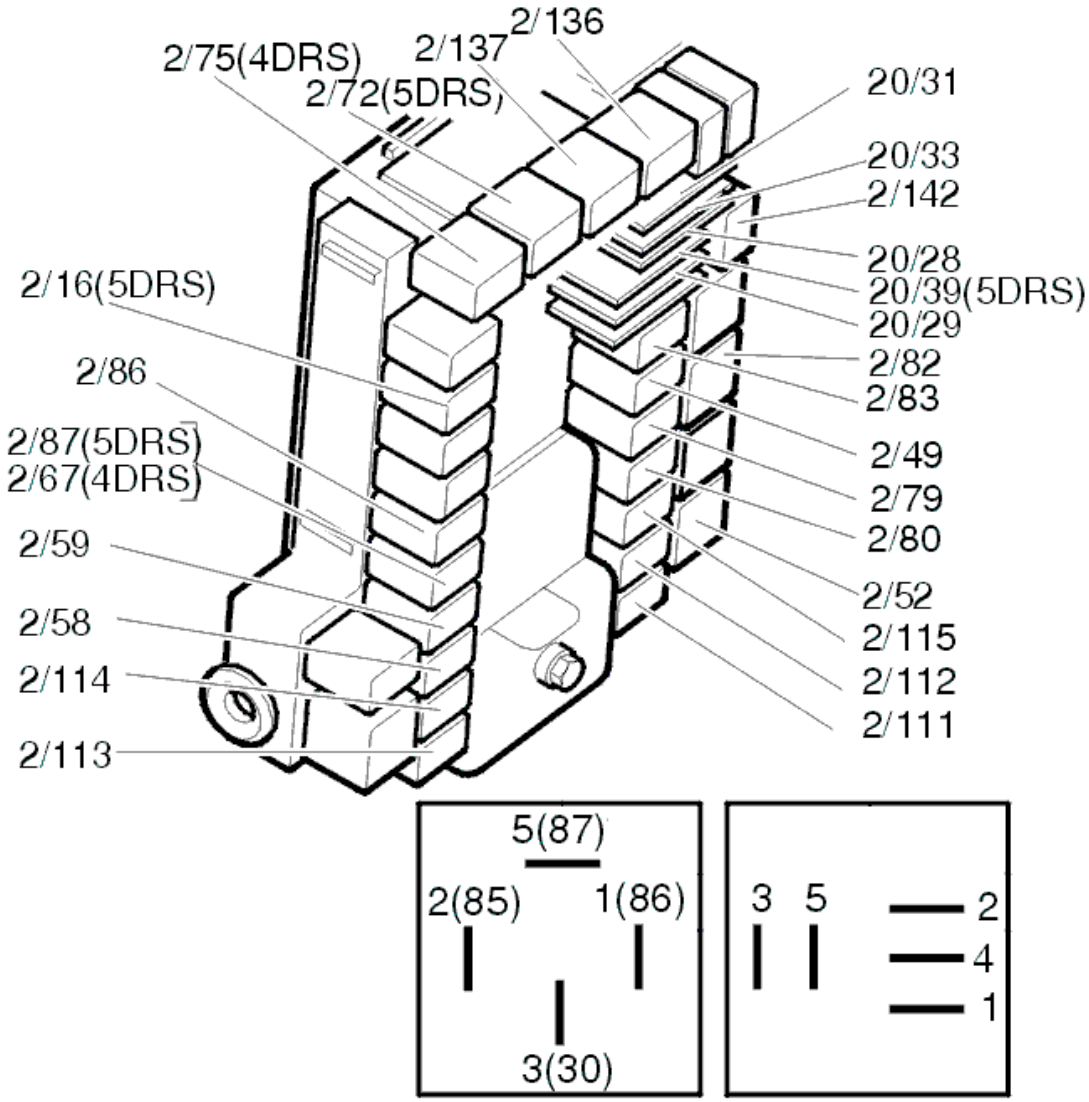

Fig. 69: Identifying Relays
Courtesy of VOLVO CARS CORPORATION

CEM-6A04: REAR RIGHT DOOR LOCKED. SIGNAL TOO LOW. PERMANENT FAULT (2003-2004)

DIAGNOSTIC TROUBLE CODE INFORMATION

see **DIAGNOSTIC TROUBLE CODE INFORMATION**

SIGNAL TOO LOW. PERMANENT FAULT

CHECKING THE COMPONENT

Check that the lock has not stuck by using the lock button on the inside of the door. Check that the lock unit is correctly installed.

Was a fault detected?

- **YES**

  Refer to **VERIFICATION**

- **NO**

  Refer to **CHECKING THE WIRING AND SWITCHES**

CHECKING THE WIRING AND SWITCHES

Check the signal cable for the lock position sensor between the central electronic module connector terminal #C3 and lock unit connector terminal #5. Check for a short-circuit to ground.

NOTE: **Diagnostic trouble code (DTC) REM-6A0C or REM-6A0E may also be stored if this fault occurs. Use the VCT2000 (or appropriate scan tool) to read diagnostic trouble codes (DTCs).**

Other information:

- To access and replace the lock module:
  - For the driver's side door module, see **DRIVER DOOR MODULE (DDM), REPLACING** .
  - For the passenger side door module, see **PASSENGER DOOR MODULE (PDM), REPLACING** .
- For -2004, see: **CENTRAL ELECTRONIC MODULE (CEM), REPLACING**
- For 2005-, see: **CENTRAL ELECTRONIC MODULE (CEM), REPLACING** .
- To connect the breakout box, see **CONNECTING THE BREAKOUT BOX**
- -2004: **SIGNAL SPECIFICATION**
- 2005-: **SIGNAL SPECIFICATION**
- see **CHECKING WIRING AND TERMINALS. PERMANENT FAULT** .

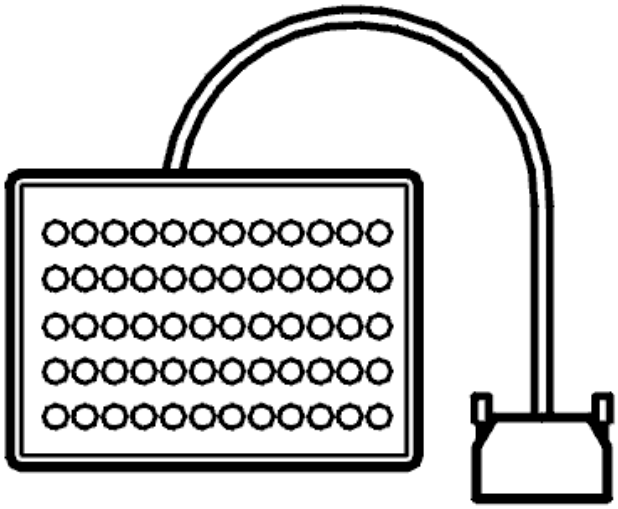

Fig. 70: Breakout Box
Courtesy of VOLVO CARS CORPORATION

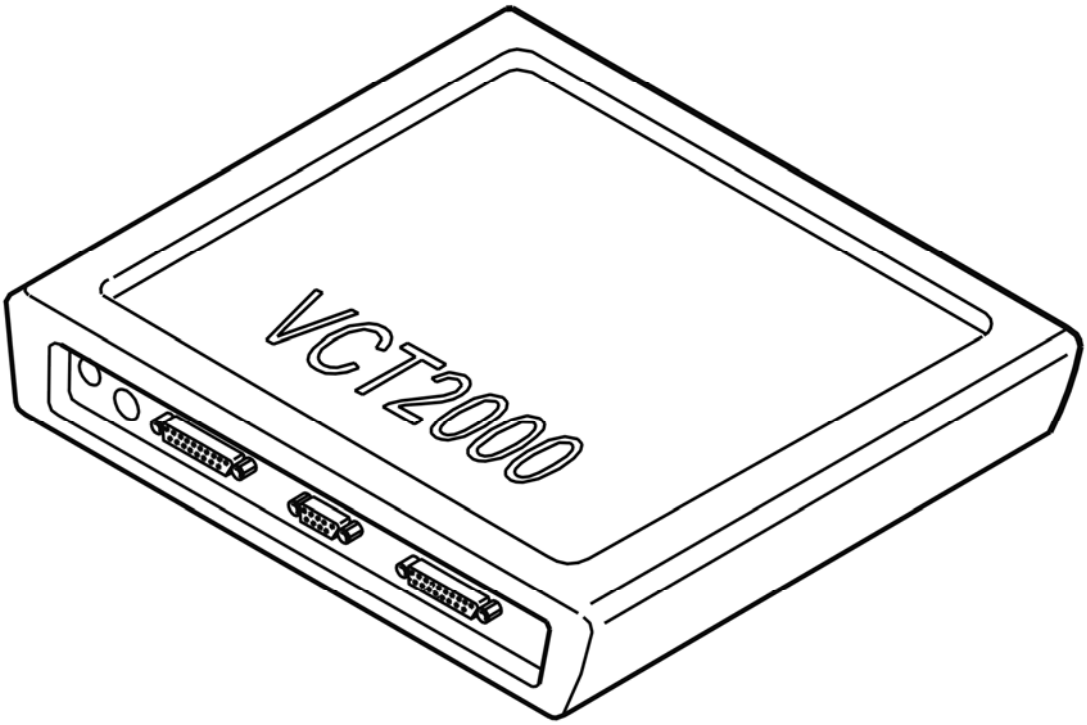

Fig. 71: Identifying VCT2000 Diagnostic Tool Symbol In VIDA
Courtesy of VOLVO CARS CORPORATION

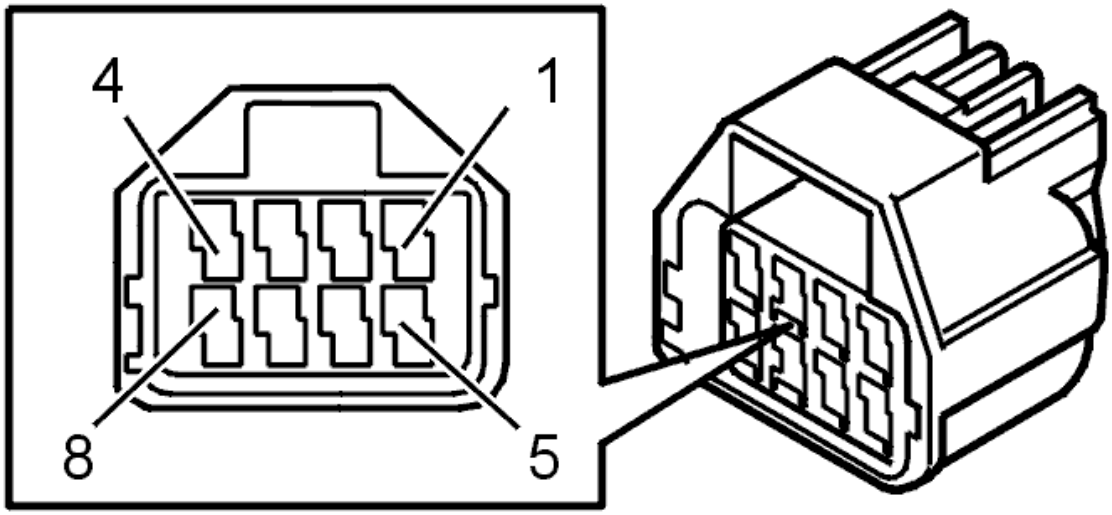

Fig. 72: Identifying Connector Terminals
Courtesy of VOLVO CARS CORPORATION

Were any diagnostic trouble codes (DTCs) stored?

- **YES**

  Refer to **VERIFICATION**

- **NO**

  Refer to **CHECKING THE DOOR LOCKING FUNCTION**

CHECKING THE DOOR LOCKING FUNCTION

QUESTION

Which door has the problem?

1. Driver door.

   Refer to **CHECKING THE DRIVER DOOR**

2. Passenger door.

   Refer to **CHECKING THE PASSENGER DOOR**

3. Rear left door.

   Refer to **CHECKING THE REAR LEFT DOOR**

4. Rear right door.

Refer to **CHECKING THE REAR RIGHT DOOR**

CHECKING THE DRIVER DOOR

CHECK

Is the passenger door lock not working?

- **YES**

  Refer to **CHECKING THE FUSE**

- **NO**

  Refer to **CHECK**

CHECKING THE FUSE

Remove the fuse 11C/27 in cargo compartment fuse box.

Check that fuse is intact and check for contact resistance and oxidation as described in, see **CONTACT RESISTANCE AND OXIDATION** .

Additional information

- To access relay/fuse box in the cargo compartment:
  - For -2004, see: **RELAY/FUSE BOX CARGO COMPARTMENT/REAR ELECTRONIC MODULE (REM), REPLACING**
  - For 2005-, see: **REAR ELECTRONIC MODULE (REM), REPLACING** .

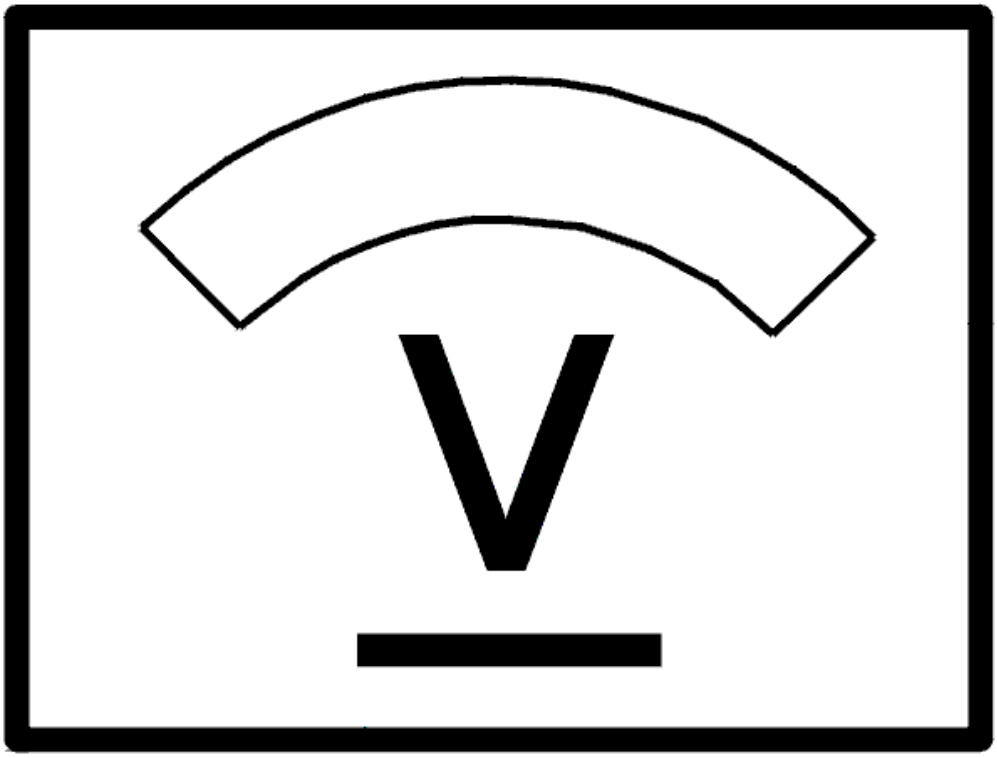

Fig. 73: Identifying Voltage Display
Courtesy of VOLVO CARS CORPORATION

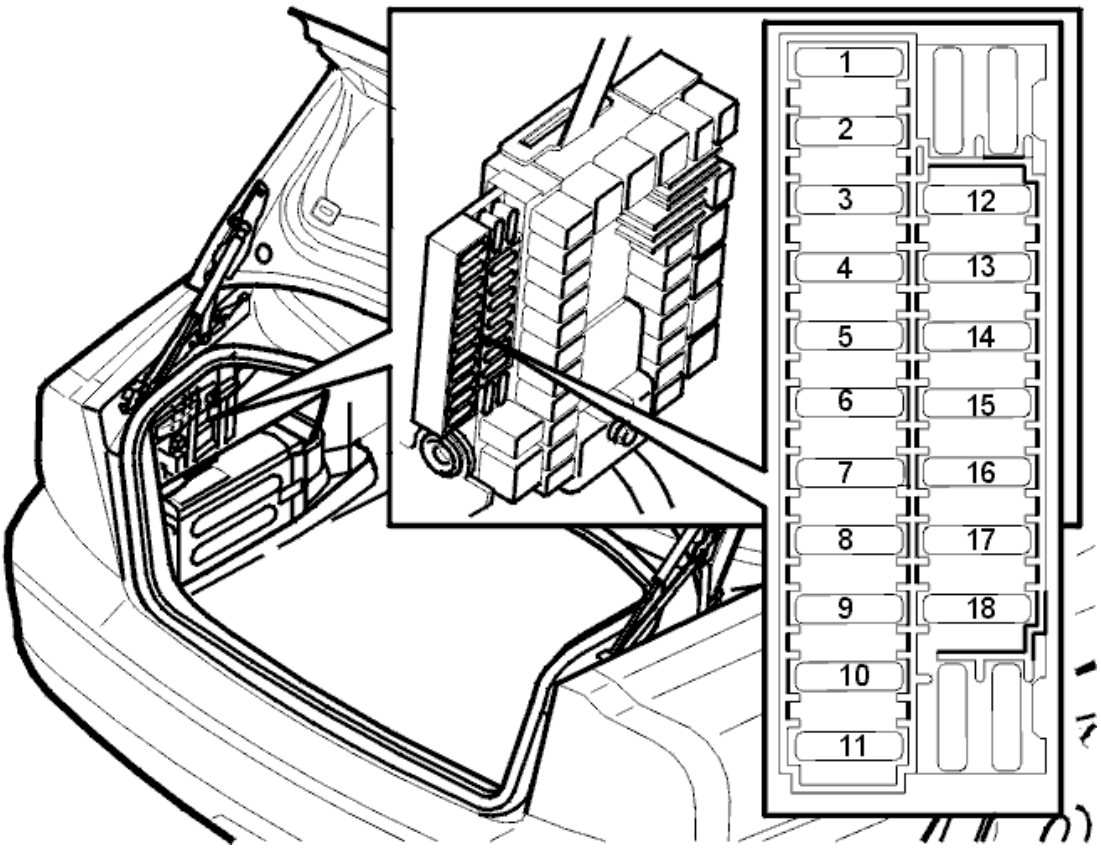

Fig. 74: Fuse Holder (Cargo Compartment)
Courtesy of VOLVO CARS CORPORATION

Is the fuse intact?

- **YES**

  Refer to **CHECKING FOR AN OPEN CIRCUIT**

- **NO**

  Refer to **CHECKING FOR A SHORT CIRCUIT**

CHECK

1. Window lift works on that particular door

   Refer to **CHECKING THE LOCKING MOTOR WIRES**

2. Window lift does not work on that particular door.

   Refer to **CHECKING THE FUSE**

CHECKING THE FUSE

Remove the fuse 11C/35 in cargo compartment fuse box.

Check that fuse is intact and check for contact resistance and oxidation as described in, see **CONTACT RESISTANCE AND OXIDATION** .

Additional information

- To access relay/fuse box in the cargo compartment:
  - For -2004, see: **RELAY/FUSE BOX CARGO COMPARTMENT/REAR ELECTRONIC MODULE (REM), REPLACING**
  - For 2005-, see: **REAR ELECTRONIC MODULE (REM), REPLACING** .

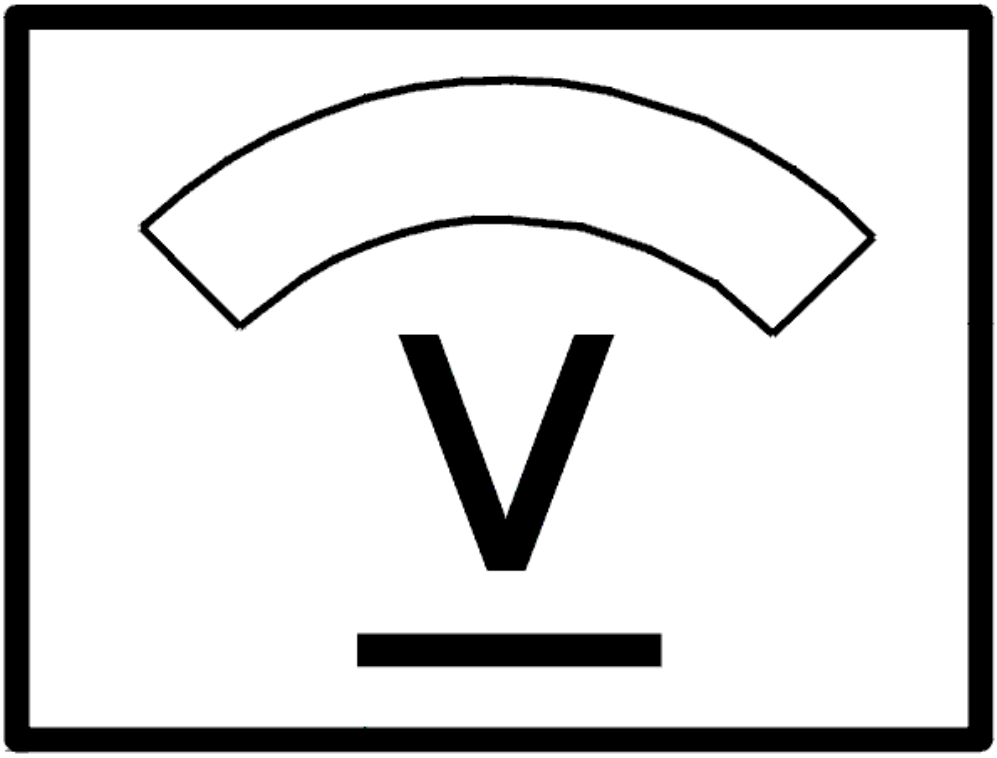

Fig. 75: Identifying Voltage Display
Courtesy of VOLVO CARS CORPORATION

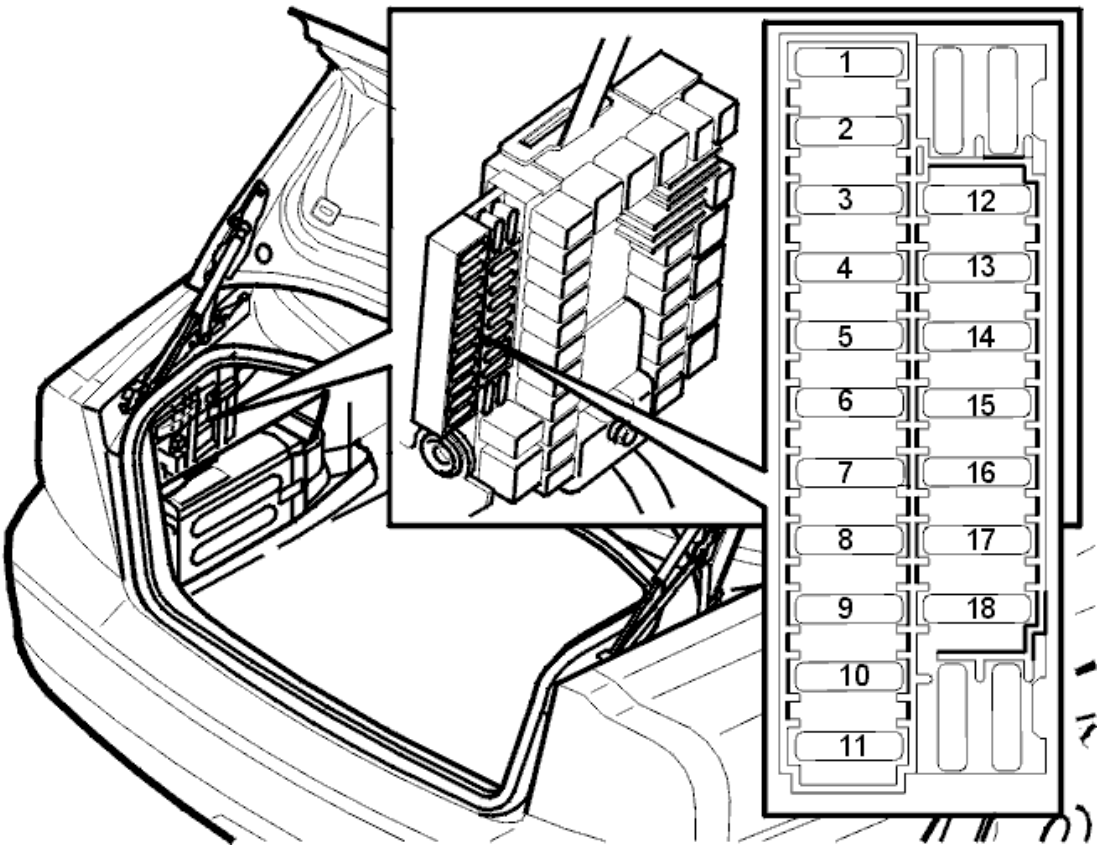

Fig. 76: Fuse Holder (Cargo Compartment)
Courtesy of VOLVO CARS CORPORATION

Is the fuse intact?

- **YES**

  Refer to **CHECKING THE VOLTAGE**

- **NO**

  Refer to **CHECKING FOR A SHORT CIRCUIT**

CHECKING FOR AN OPEN CIRCUIT

Check door control unit connector B7 for contact resistance and oxidation as described in, see **CONTACT RESISTANCE AND OXIDATION** .

Trouble-shoot the wire between fuse holder secondary side (left) and door control unit connector B7 for an open circuit as described in, see **OPEN-CIRCUIT, PERMANENT FAULTS** .

If a fault is detected, check in particular the intermediate connector in the cable harness (1/control unit) for contact resistance and oxidation as described in, see **CONTACT RESISTANCE AND OXIDATION** .

If there is an open circuit the fault should be between the fuse and the common junction point 53/427.

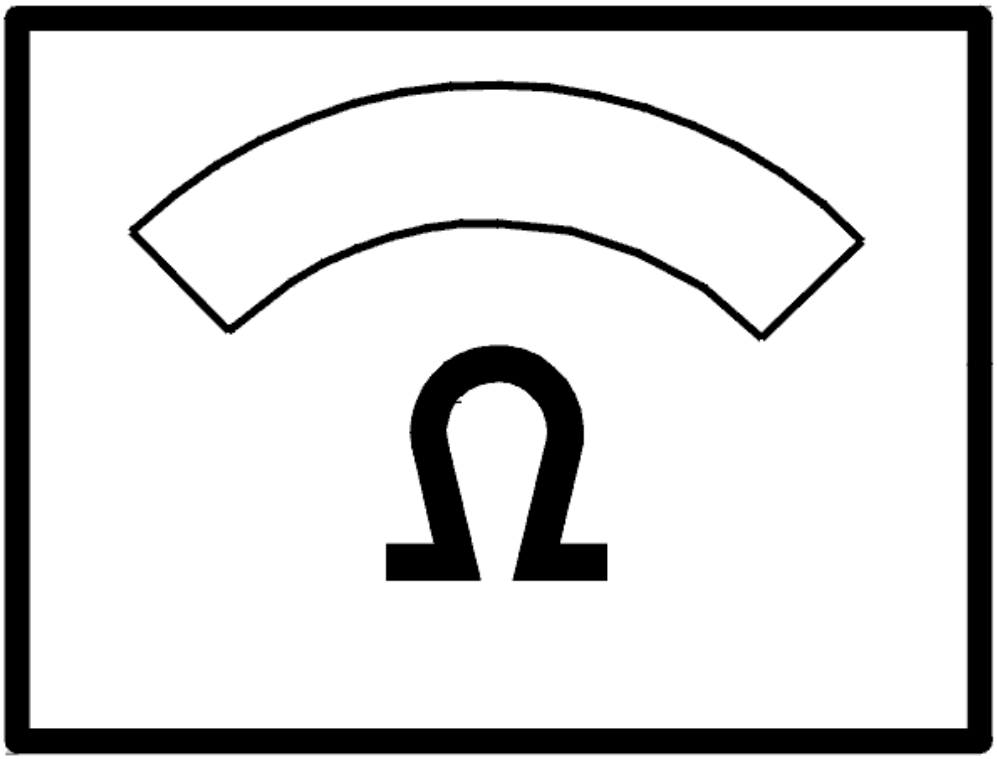

Fig. 77: Identifying Ohm Meter
Courtesy of VOLVO CARS CORPORATION

CHECKING FOR A SHORT CIRCUIT

Check the resistance between the fuse holder secondary side (left) and ground.

The ohmmeter should display infinite resistance.

NOTE: If the value is correct the fault could be intermittent.

Switch to trouble-shooting intermittent short circuits to ground as described in, see **SHORT-CIRCUIT TO GROUND, INTERMITTENT FAULTS** .

If the ohmmeter indicates a fault (short circuit), trouble-shoot the wires between the fuse and door control unit connector B7 for a short circuit to ground as described in, see **SHORT-CIRCUIT TO GROUND, PERMANENT FAULTS** .

The fault should be between the fuse and the common junction point 53/427.

Replace fuse.

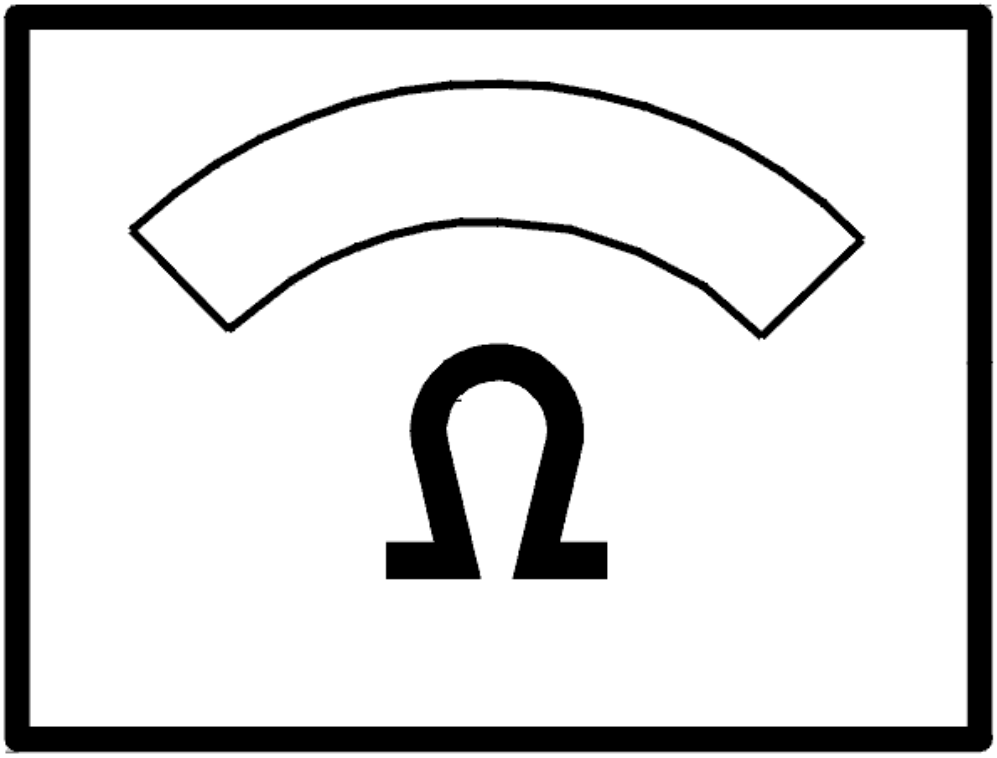

Fig. 78: Identifying Ohm Meter
Courtesy of VOLVO CARS CORPORATION

CHECKING THE VOLTAGE

Check the voltage in the door control unit connector B12.

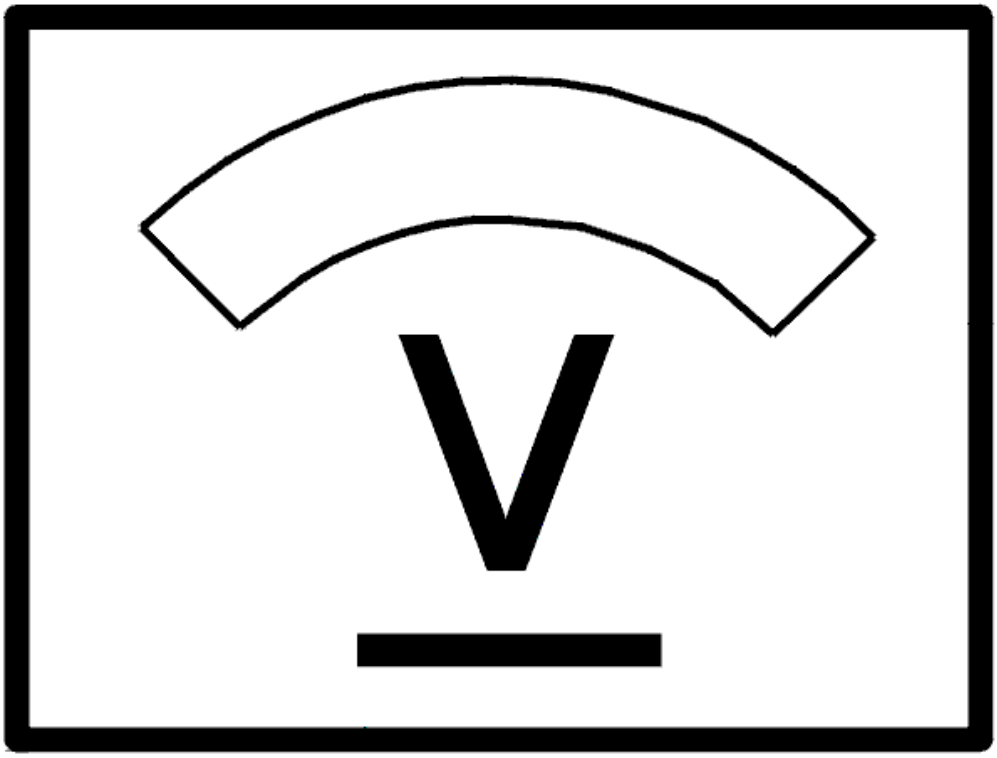

Fig. 79: Identifying Voltage Display
Courtesy of VOLVO CARS CORPORATION

Does the voltmeter show the battery voltage?

- **YES**

  Refer to **CHECKING THE LOCKING MOTOR WIRES**

- **NO**

  Refer to **CHECKING FOR AN OPEN CIRCUIT**

CHECKING FOR AN OPEN CIRCUIT

Check door control unit connector B12 for contact resistance and oxidation as described in, see **CONTACT**

RESISTANCE AND OXIDATION .

Trouble-shoot the wire between fuse holder secondary side (left) and door control unit connector B12 for an open circuit as described in, see **OPEN-CIRCUIT, PERMANENT FAULTS** .

If a fault is detected, check in particular the intermediate connector in the cable harness (1) for contact resistance and oxidation as described in, see **CONTACT RESISTANCE AND OXIDATION** .

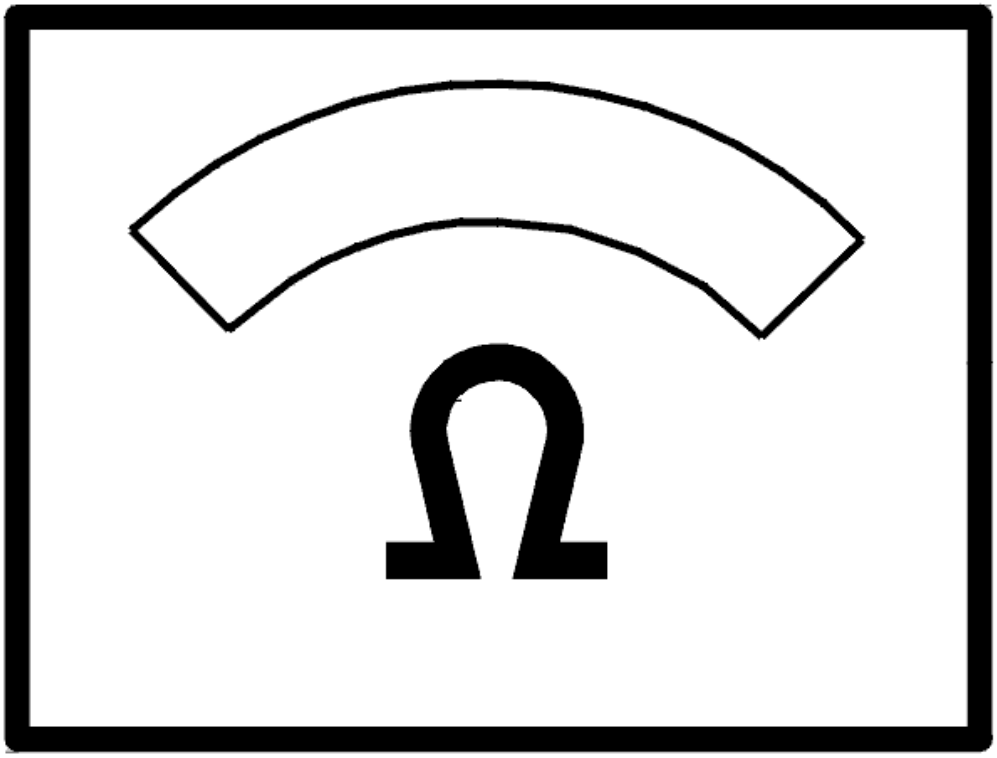

Fig. 80: Identifying Ohm Meter
Courtesy of VOLVO CARS CORPORATION

CHECKING FOR A SHORT CIRCUIT

Check the resistance between the fuse holder secondary side (left) and ground.

The ohmmeter should display infinite resistance.

NOTE: If the value is correct the fault could be intermittent.

Switch to trouble-shooting intermittent short circuits to ground as described in, see **SHORT-CIRCUIT TO GROUND, INTERMITTENT FAULTS** .

If the ohmmeter indicates a fault (short circuit), trouble-shoot the wires between the fuse and door control unit connector B12 for a short circuit to ground as described in, see **SHORT-CIRCUIT TO GROUND, PERMANENT FAULTS** .

Replace fuse.

Additional information

- To access relay/fuse box in the cargo compartment:
  - For -2004, see: **RELAY/FUSE BOX CARGO COMPARTMENT/REAR ELECTRONIC MODULE (REM), REPLACING**
  - For 2005-, see: **REAR ELECTRONIC MODULE (REM), REPLACING** .

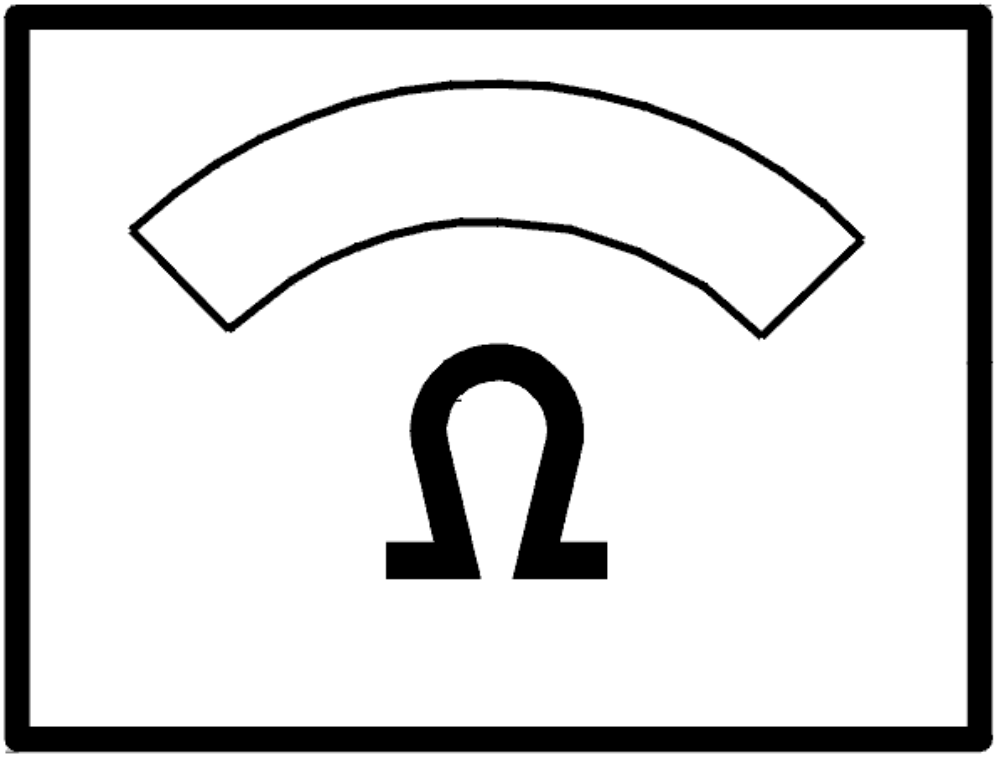

Fig. 81: Identifying Ohm Meter
Courtesy of VOLVO CARS CORPORATION

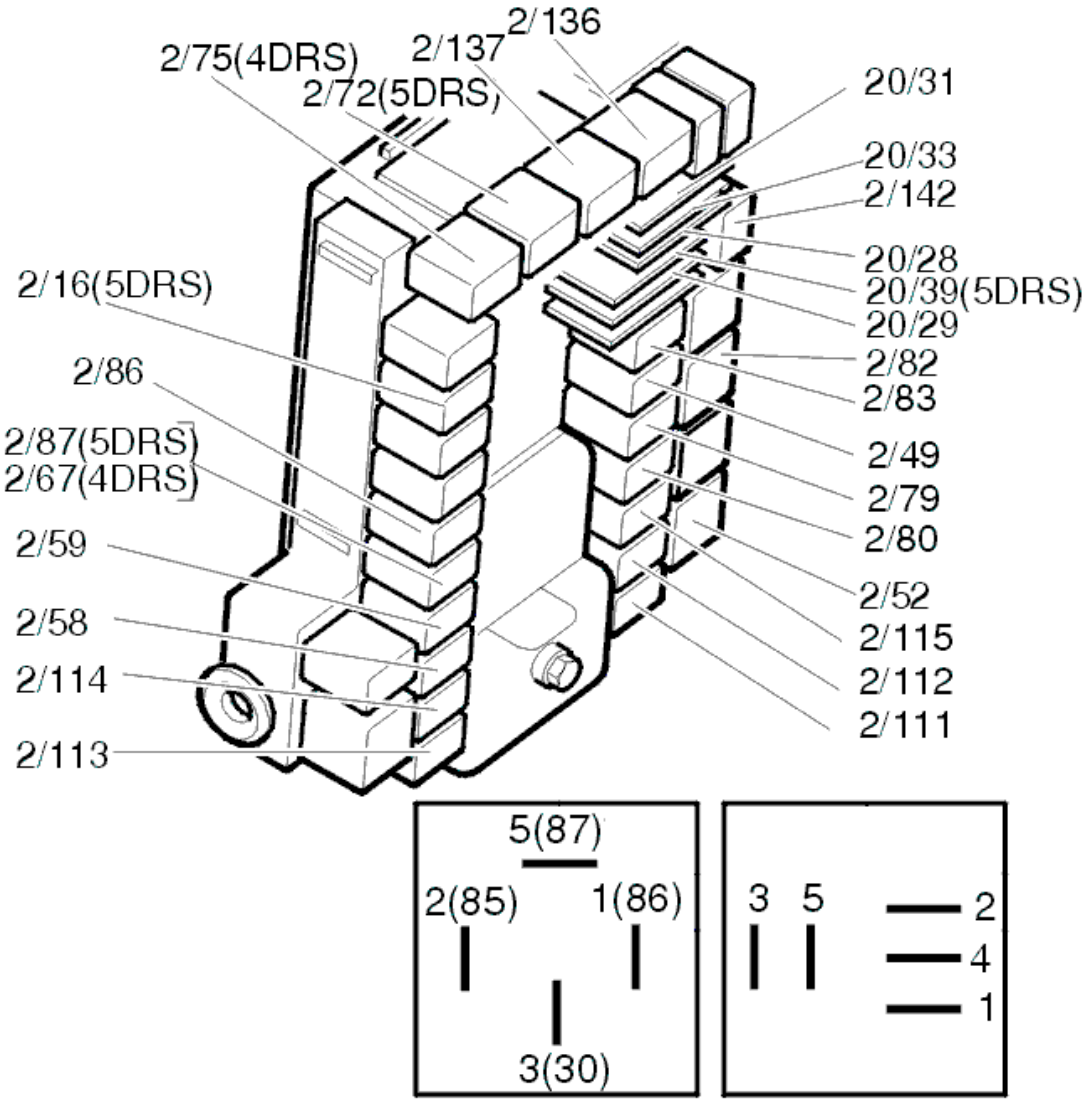

Fig. 82: Identifying Relays
Courtesy of VOLVO CARS CORPORATION

CHECKING THE LOCKING MOTOR WIRES

Check door control unit and lock unit connectors for contact resistance and oxidation as described in, see **CONTACT RESISTANCE AND OXIDATION** .

Trouble-shoot the wire between door control unit connector B2 and lock unit connector 8 for an open circuit as described in, see **OPEN-CIRCUIT, PERMANENT FAULTS** .

Trouble-shoot the wire between door control unit connector B6 and lock unit connector 7 for an open circuit as described in, see **OPEN-CIRCUIT, PERMANENT FAULTS** .

Additional information

- To access relay/fuse box in the cargo compartment:
  - For -2004, see: **RELAY/FUSE BOX CARGO COMPARTMENT/REAR ELECTRONIC MODULE (REM), REPLACING** .
  - For 2005-, see: **REAR ELECTRONIC MODULE (REM), REPLACING** .

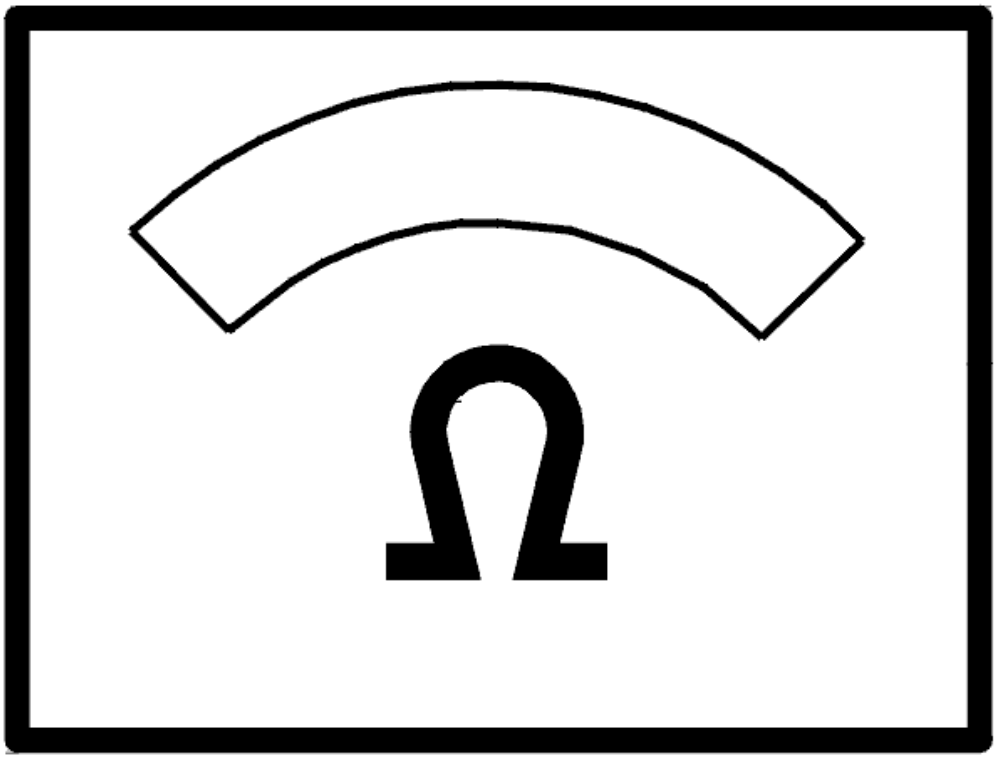

Fig. 83: Identifying Ohm Meter
Courtesy of VOLVO CARS CORPORATION

Is there a fault?

- **YES**

  OKAY: Troubleshooting has been completed.

- **NO**

Refer to **REPLACING THE COMPONENT**

REPLACING THE COMPONENT

Replace lock unit as described in, see **REPLACING THE SWITCH FOR THE LOCK UNIT / CARGO COMPARTMENT LIGHTING** .

Is there a fault?

- **YES**

  OKAY: Troubleshooting has been completed.

- **NO**

  Refer to **REPLACING THE COMPONENT**

REPLACING THE COMPONENT

Replace control unit.

- For -2004, see: **RELAY/FUSE BOX CARGO COMPARTMENT/REAR ELECTRONIC MODULE (REM), REPLACING**
- For 2005-, see: **REAR ELECTRONIC MODULE (REM), REPLACING** .

CHECKING THE PASSENGER DOOR

CHECK

Is the driver door lock not working?

- **YES**

  Refer to **CHECKING THE FUSE**

- **NO**

  Refer to **CHECK**

CHECKING THE FUSE

Remove the fuse 11C/27 in cargo compartment fuse box.

Check that fuse is intact and check for contact resistance and oxidation as described in, see **CONTACT RESISTANCE AND OXIDATION** .

Additional information

- To access relay/fuse box in the cargo compartment:
  - For -2004, see: **RELAY/FUSE BOX CARGO COMPARTMENT/REAR ELECTRONIC MODULE (REM), REPLACING** .
  - For 2005-, see: **REAR ELECTRONIC MODULE (REM), REPLACING** .

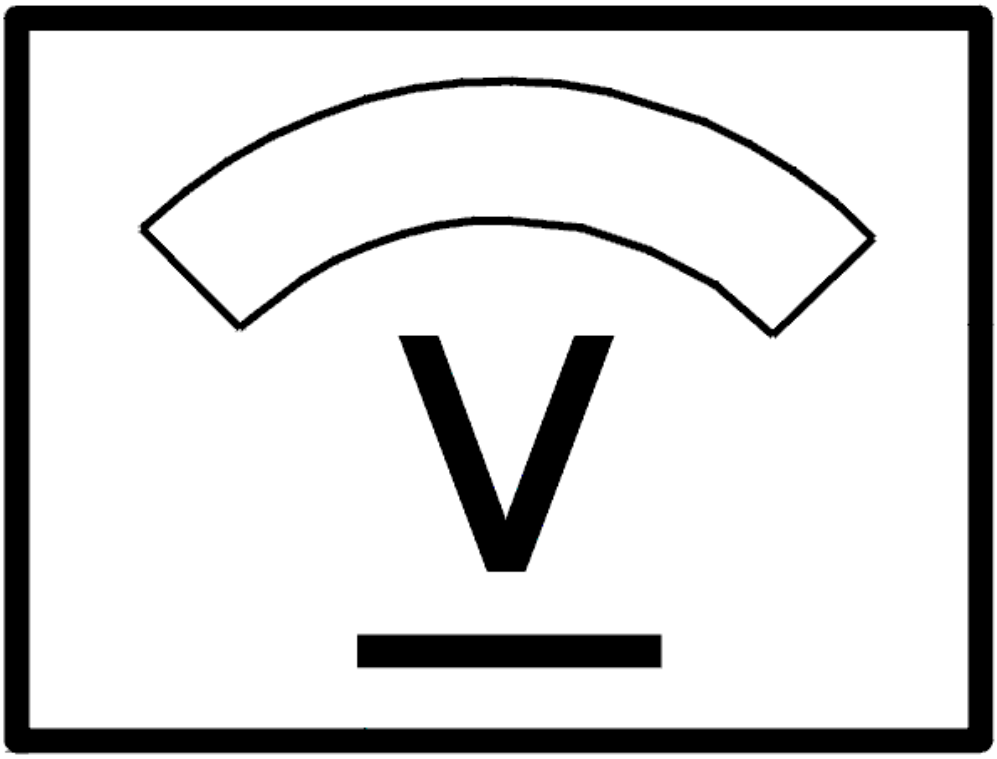

Fig. 84: Identifying Voltage Display
Courtesy of VOLVO CARS CORPORATION

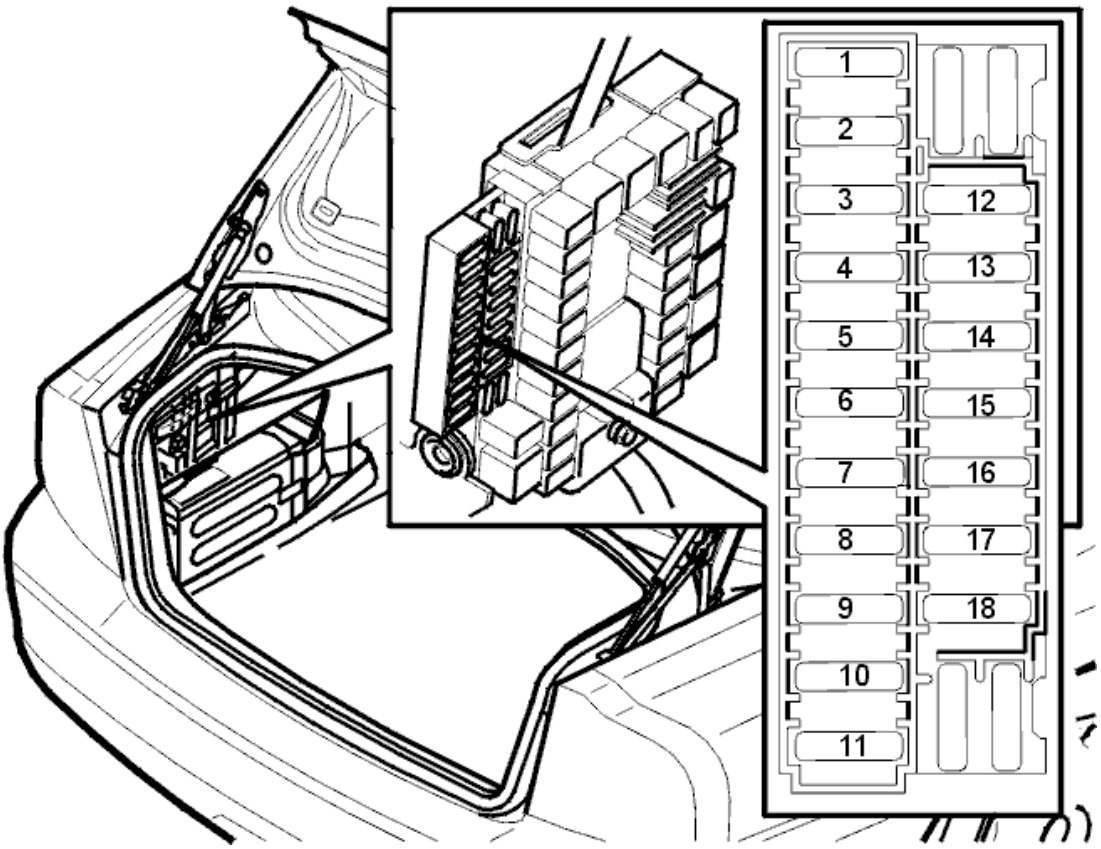

Fig. 85: Fuse Holder (Cargo Compartment)
Courtesy of VOLVO CARS CORPORATION

Is the fuse intact?

- **YES**

  Refer to **CHECKING FOR AN OPEN CIRCUIT**

- **NO**

  Refer to **CHECKING FOR A SHORT CIRCUIT**

CHECK

1. Window lift works on that particular door

   Refer to **CHECKING THE LOCKING MOTOR WIRES**

2. Window lift does not work on that particular door.

   Refer to **CHECKING THE FUSE**

CHECKING THE FUSE

Remove the fuse 11C/36 in cargo compartment fuse box.

Check that fuse is intact and check for contact resistance and oxidation as described in, see **CONTACT RESISTANCE AND OXIDATION** .

Additional information

- To access relay/fuse box in the cargo compartment:
  - For -2004, see: **RELAY/FUSE BOX CARGO COMPARTMENT/REAR ELECTRONIC MODULE (REM), REPLACING** .
  - For 2005-, see: **REAR ELECTRONIC MODULE (REM), REPLACING** .

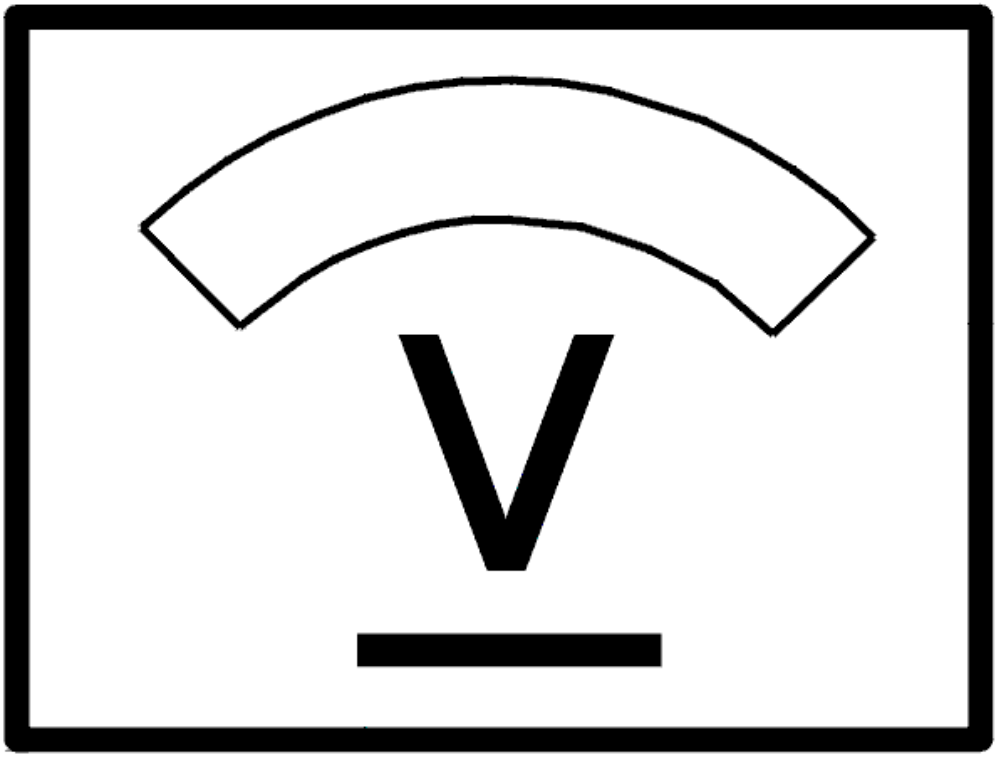

Fig. 86: Identifying Voltage Display
Courtesy of VOLVO CARS CORPORATION

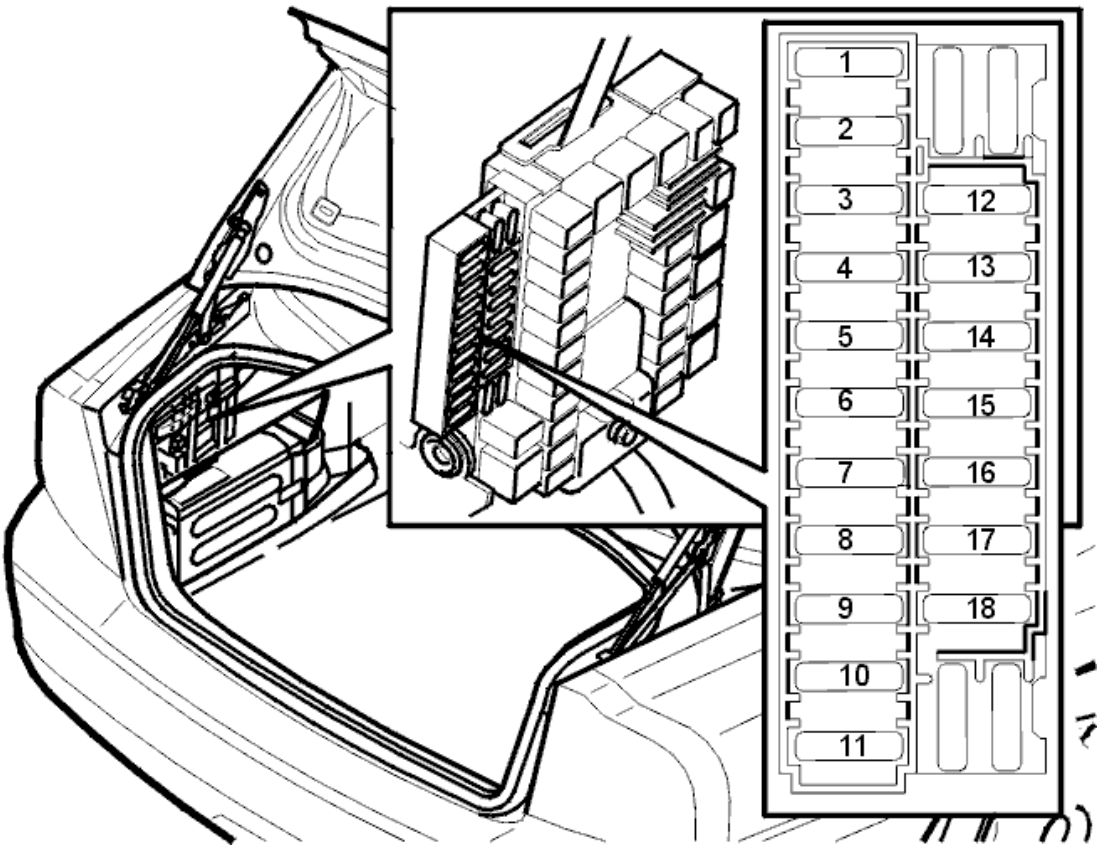

Fig. 87: Fuse Holder (Cargo Compartment)
Courtesy of VOLVO CARS CORPORATION

Is the fuse intact?

- **YES**

  Refer to **CHECKING THE VOLTAGE**

- **NO**

  Refer to **CHECKING FOR A SHORT CIRCUIT**

CHECKING FOR AN OPEN CIRCUIT

Check door control unit connector B7 for contact resistance and oxidation as described in, see **CONTACT RESISTANCE AND OXIDATION** .

Trouble-shoot the wire between fuse holder secondary side (left) and door control unit connector B7 for an open circuit as described in, see **OPEN-CIRCUIT, PERMANENT FAULTS** .

If a fault is detected, check in particular the intermediate connector in the cable harness (1/control unit) for contact resistance and oxidation as described in, see **CONTACT RESISTANCE AND OXIDATION** .

If there is an open circuit the fault should be between the fuse and the common junction point 53/427.

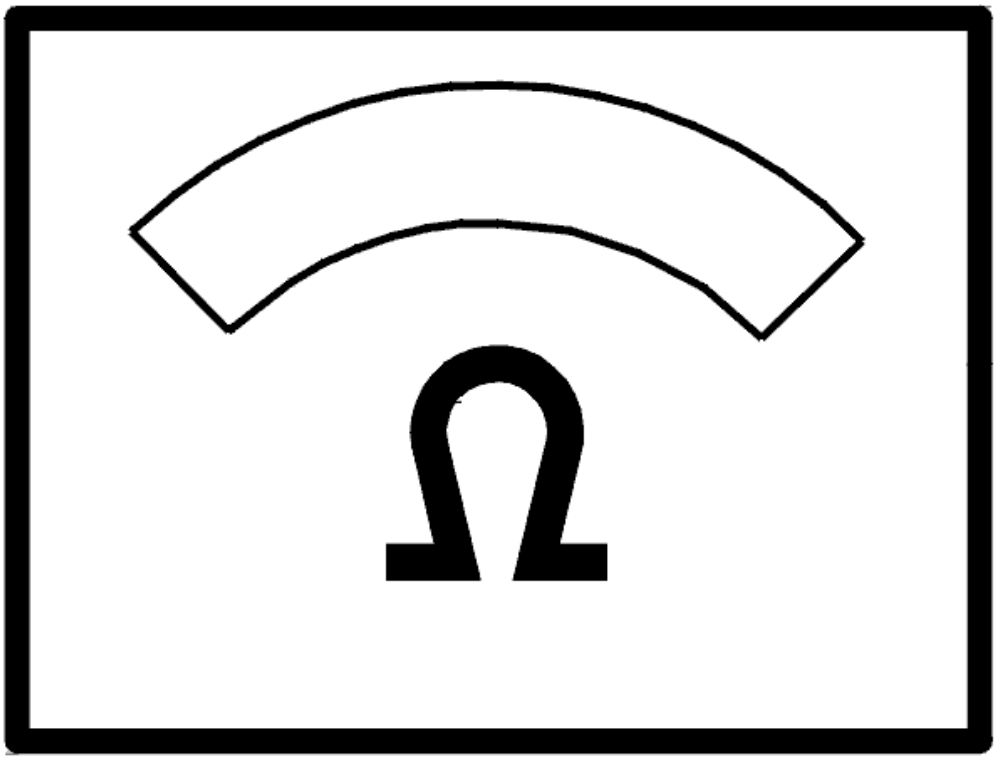

Fig. 88: Identifying Ohm Meter
Courtesy of VOLVO CARS CORPORATION

CHECKING FOR A SHORT CIRCUIT

Check the resistance between the fuse holder secondary side (left) and ground.

The ohmmeter should display infinite resistance.

NOTE: If the value is correct the fault could be intermittent.

Switch to trouble-shooting intermittent short circuits to ground as described in, see **SHORT-CIRCUIT TO GROUND, INTERMITTENT FAULTS** .

If the ohmmeter indicates a fault (short circuit), trouble-shoot the wires between the fuse and door control unit connector B7 for a short circuit to ground as described in, see **SHORT-CIRCUIT TO GROUND, PERMANENT FAULTS** .

The fault should be between the fuse and the common junction point 53/427.

Replace fuse.

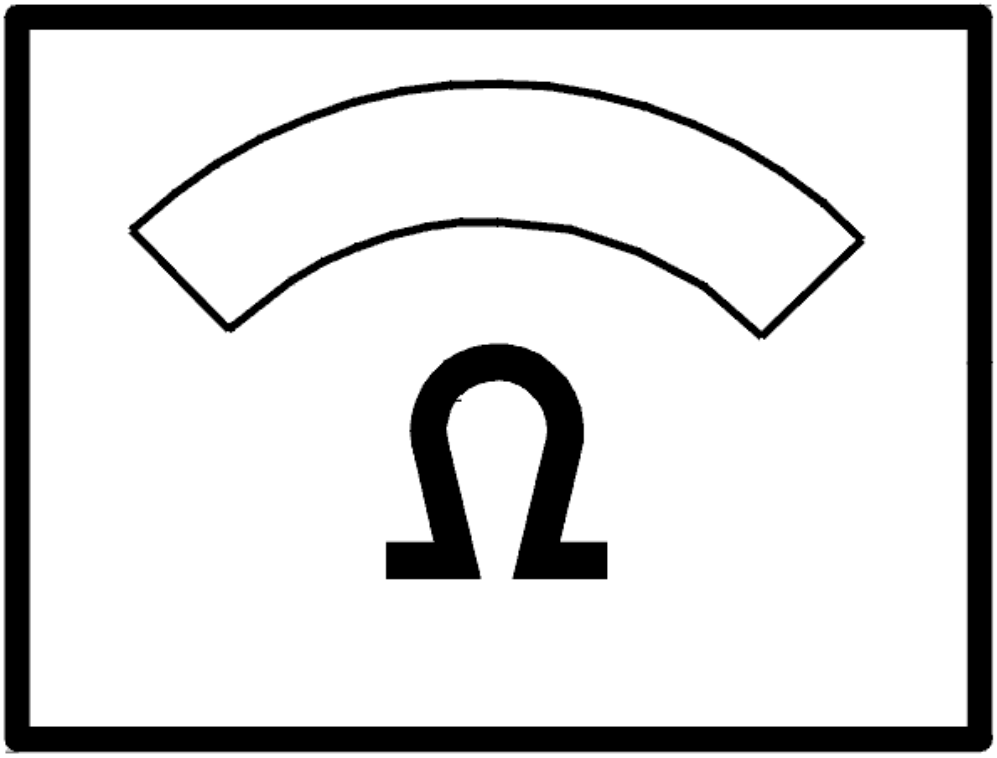

Fig. 89: Identifying Ohm Meter
Courtesy of VOLVO CARS CORPORATION

CHECKING THE VOLTAGE

Check the voltage in the door control unit connector B12.

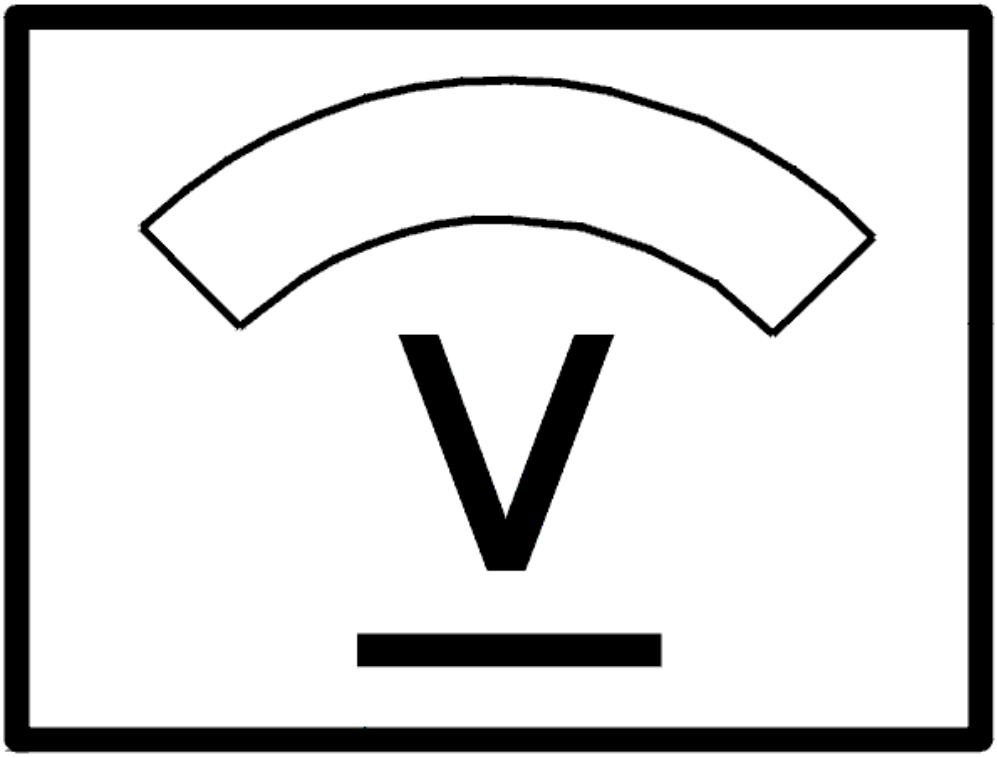

Fig. 90: Identifying Voltage Display
Courtesy of VOLVO CARS CORPORATION

Does the voltmeter show the battery voltage?

- **YES**

  Refer to **CHECKING THE LOCKING MOTOR WIRES**

- **NO**

  Refer to **CHECKING FOR AN OPEN CIRCUIT**

CHECKING FOR AN OPEN CIRCUIT

Check door control unit connector B12 for contact resistance and oxidation as described in, see **CONTACT**

RESISTANCE AND OXIDATION .

Trouble-shoot the wire between fuse holder secondary side (left) and door control unit connector B12 for an open circuit as described in, see **OPEN-CIRCUIT, PERMANENT FAULTS** .

If a fault is detected, check in particular the intermediate connector in the cable harness (1) for contact resistance and oxidation as described in, see **CONTACT RESISTANCE AND OXIDATION** .

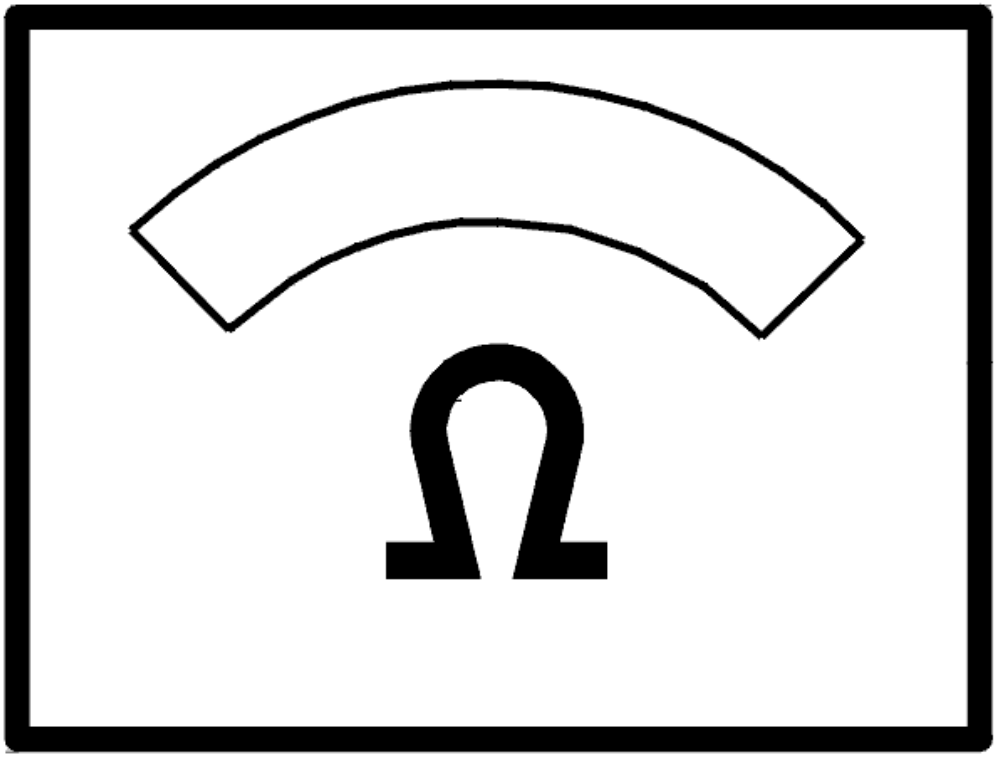

Fig. 91: Identifying Ohm Meter
Courtesy of VOLVO CARS CORPORATION

CHECKING FOR A SHORT CIRCUIT

Check the resistance between the fuse holder secondary side (left) and ground.

The ohmmeter should display infinite resistance.

NOTE: If the value is correct the fault could be intermittent.

Switch to trouble-shooting intermittent short circuits to ground as described in, see **SHORT-CIRCUIT TO GROUND, INTERMITTENT FAULTS** .

If the ohmmeter indicates a fault (short circuit), trouble-shoot the wires between the fuse and door control unit connector B12 for a short circuit to ground as described in, see **SHORT-CIRCUIT TO GROUND, PERMANENT FAULTS** .

Replace fuse.

Additional information

- To access relay/fuse box in the cargo compartment:
  - For -2004, see: **RELAY/FUSE BOX CARGO COMPARTMENT/REAR ELECTRONIC MODULE (REM), REPLACING** .
  - For 2005-, see: **REAR ELECTRONIC MODULE (REM), REPLACING** .

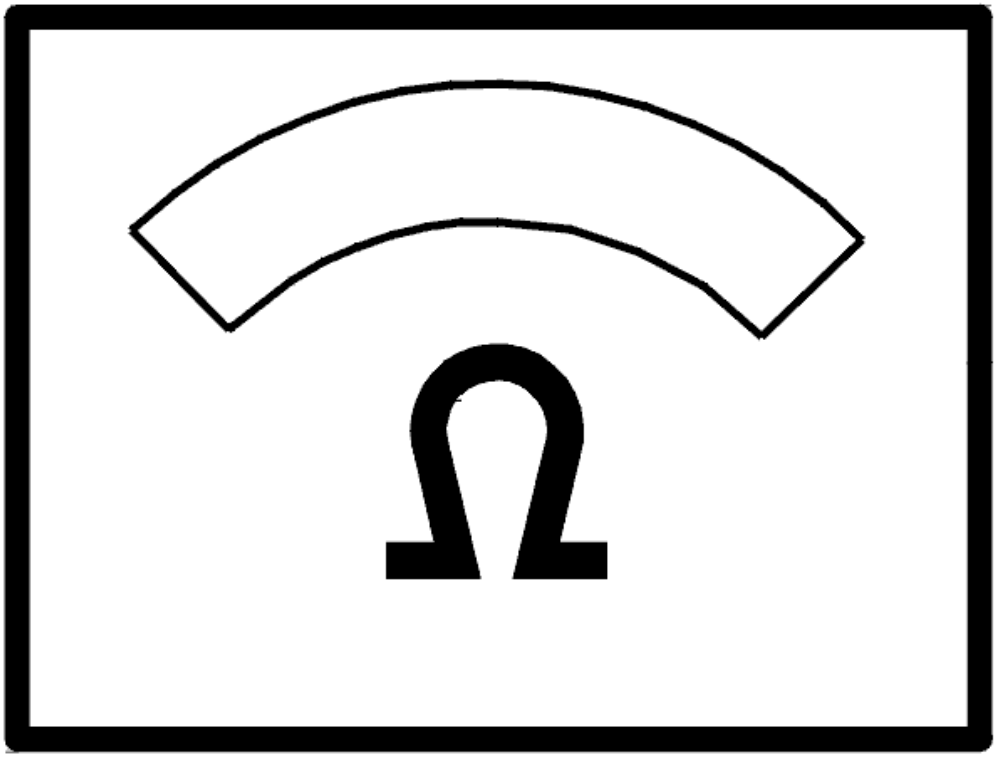

Fig. 92: Identifying Ohm Meter
Courtesy of VOLVO CARS CORPORATION

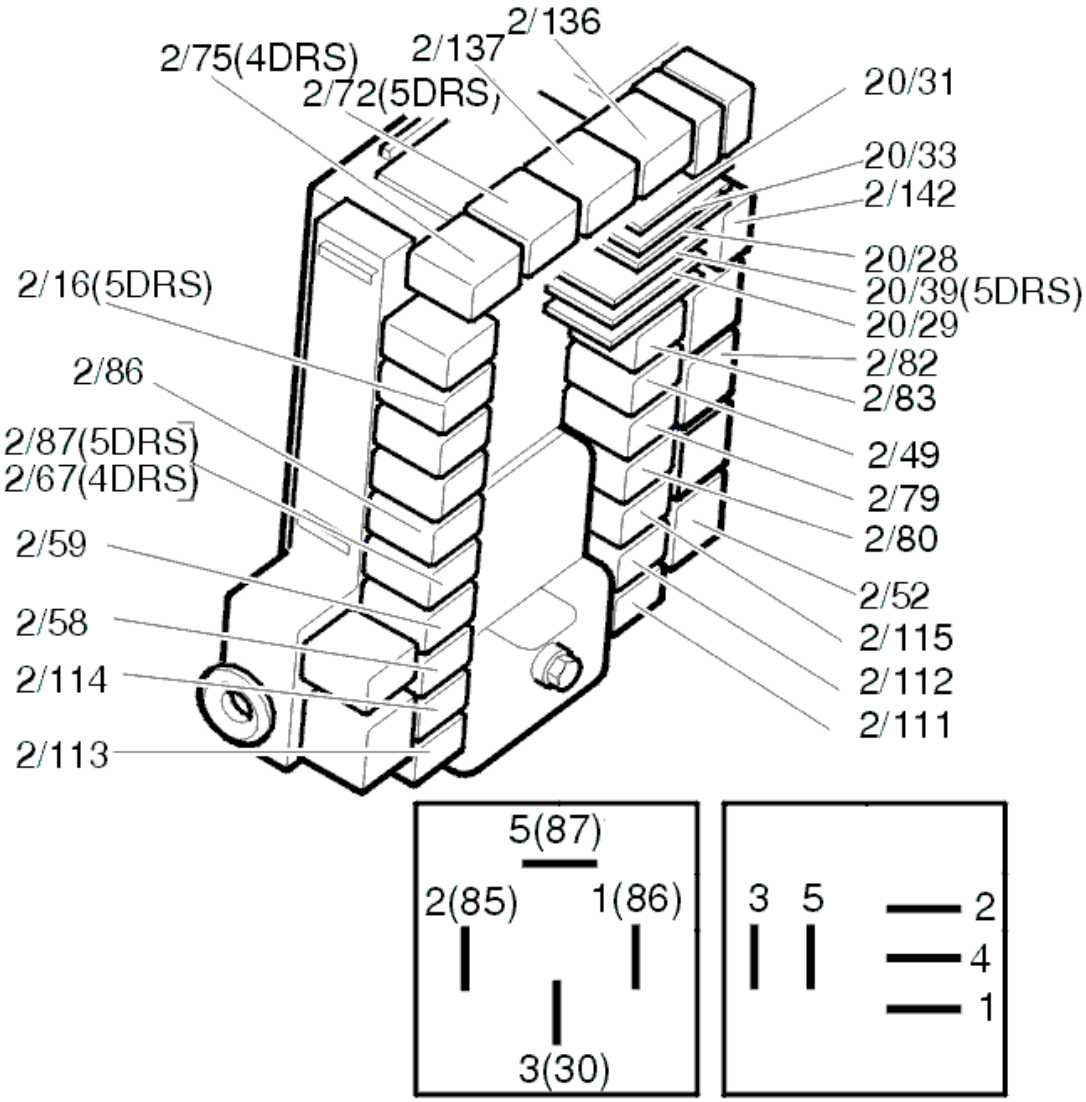

Fig. 93: Identifying Relays
Courtesy of VOLVO CARS CORPORATION

CHECKING THE LOCKING MOTOR WIRES

Check door control unit and lock unit connectors for contact resistance and oxidation as described in, see **CONTACT RESISTANCE AND OXIDATION** .

Trouble-shoot the wire between door control unit connector B2 and lock unit connector 8 for an open circuit as described in, see **OPEN-CIRCUIT, PERMANENT FAULTS** .

Trouble-shoot the wire between door control unit connector B6 and lock unit connector 7 for an open circuit as described in, see **OPEN-CIRCUIT, PERMANENT FAULTS** .

Additional information

- To access/replace rear electronic module (REM):
  - For -2004, see: **RELAY/FUSE BOX CARGO COMPARTMENT/REAR ELECTRONIC MODULE (REM), REPLACING**
  - For 2005-, see: **REAR ELECTRONIC MODULE (REM), REPLACING** .

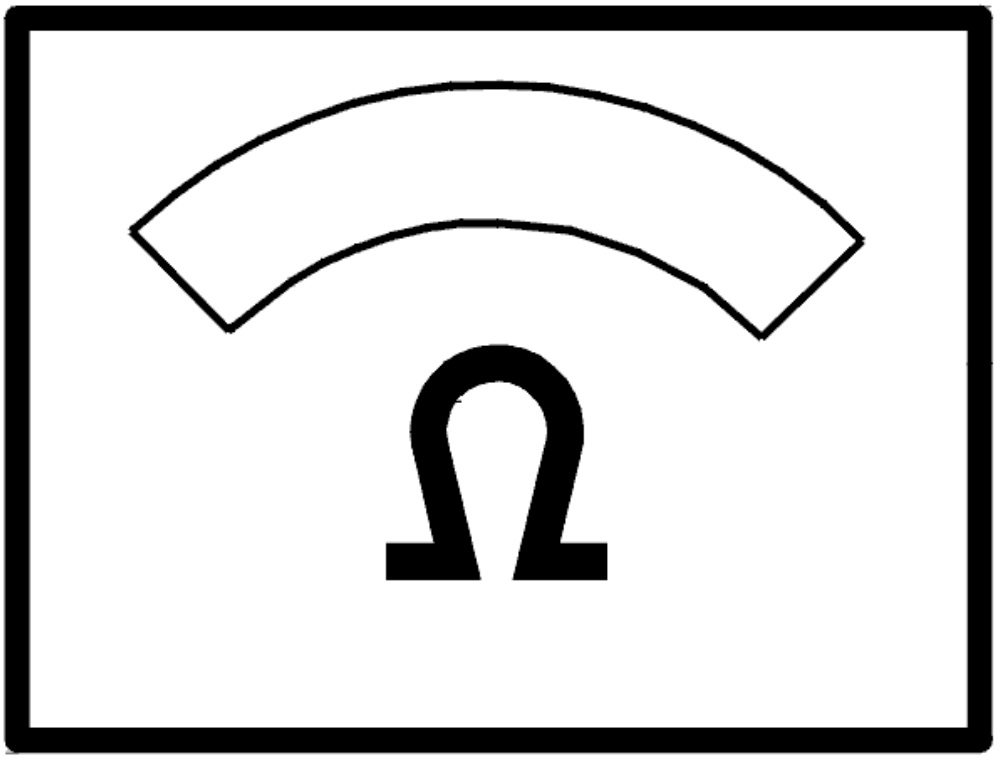

Fig. 94: Identifying Ohm Meter
Courtesy of VOLVO CARS CORPORATION

Is there a fault?

- **YES**

  OKAY: Troubleshooting has been completed.

- **NO**

Refer to **REPLACING THE COMPONENT**

REPLACING THE COMPONENT

Replace lock unit as described in, see **REPLACING THE SWITCH FOR THE LOCK UNIT / CARGO COMPARTMENT LIGHTING** .

Is there a fault?

- **YES**

  OKAY: Troubleshooting has been completed.

- **NO**

  Refer to **REPLACING THE COMPONENT**

REPLACING THE COMPONENT

Replace control unit.

- For -2004, see: **RELAY/FUSE BOX CARGO COMPARTMENT/REAR ELECTRONIC MODULE (REM), REPLACING**
- For 2005-, see: **REAR ELECTRONIC MODULE (REM), REPLACING** .

CHECKING THE REAR LEFT DOOR

CHECK

Is the lock to the other rear door not working?

- **YES**

  Refer to **CHECKING THE FUSE**

- **NO**

  Refer to **REPLACING THE COMPONENT**

REPLACING THE COMPONENT

Replace the relays for locking (2/111) and unlocking (2/112) in the cargo compartment relay/fuse box. At the same time check relay socket contacts for contact resistance and oxidation as described in, see **CONTACT RESISTANCE AND OXIDATION** .

Additional information

- To access relay/fuse box in the cargo compartment:

- For -2004, see: **RELAY/FUSE BOX CARGO COMPARTMENT/REAR ELECTRONIC MODULE (REM), REPLACING** .
- For 2005-, see: **REAR ELECTRONIC MODULE (REM), REPLACING** .

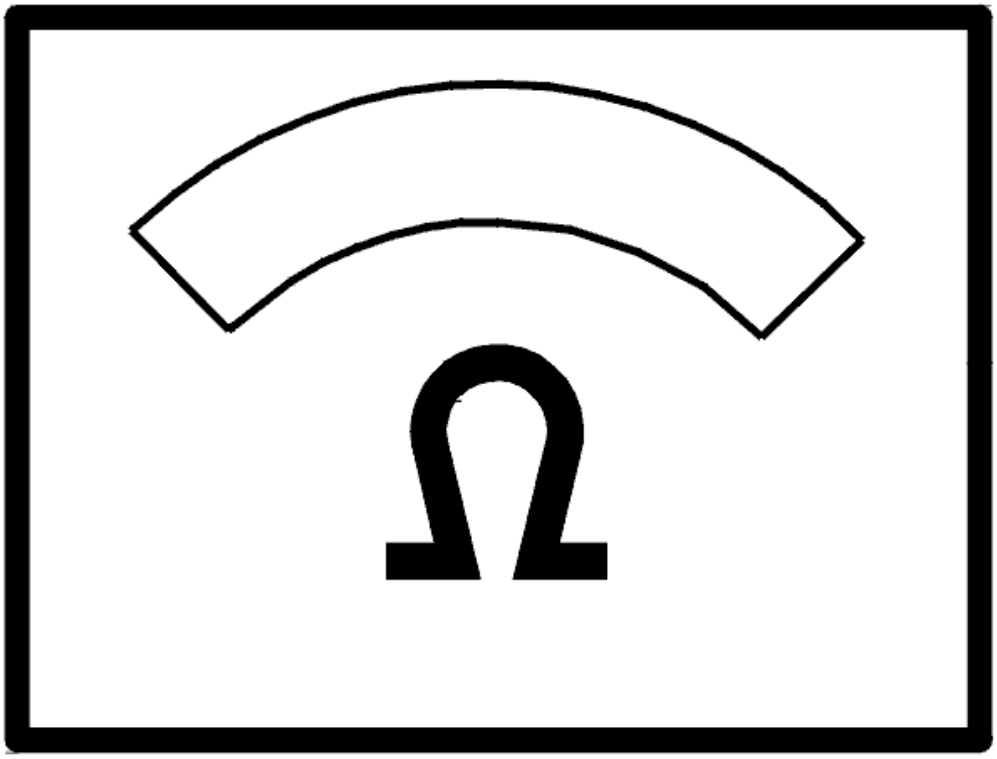

Fig. 95: Identifying Ohm Meter
Courtesy of VOLVO CARS CORPORATION

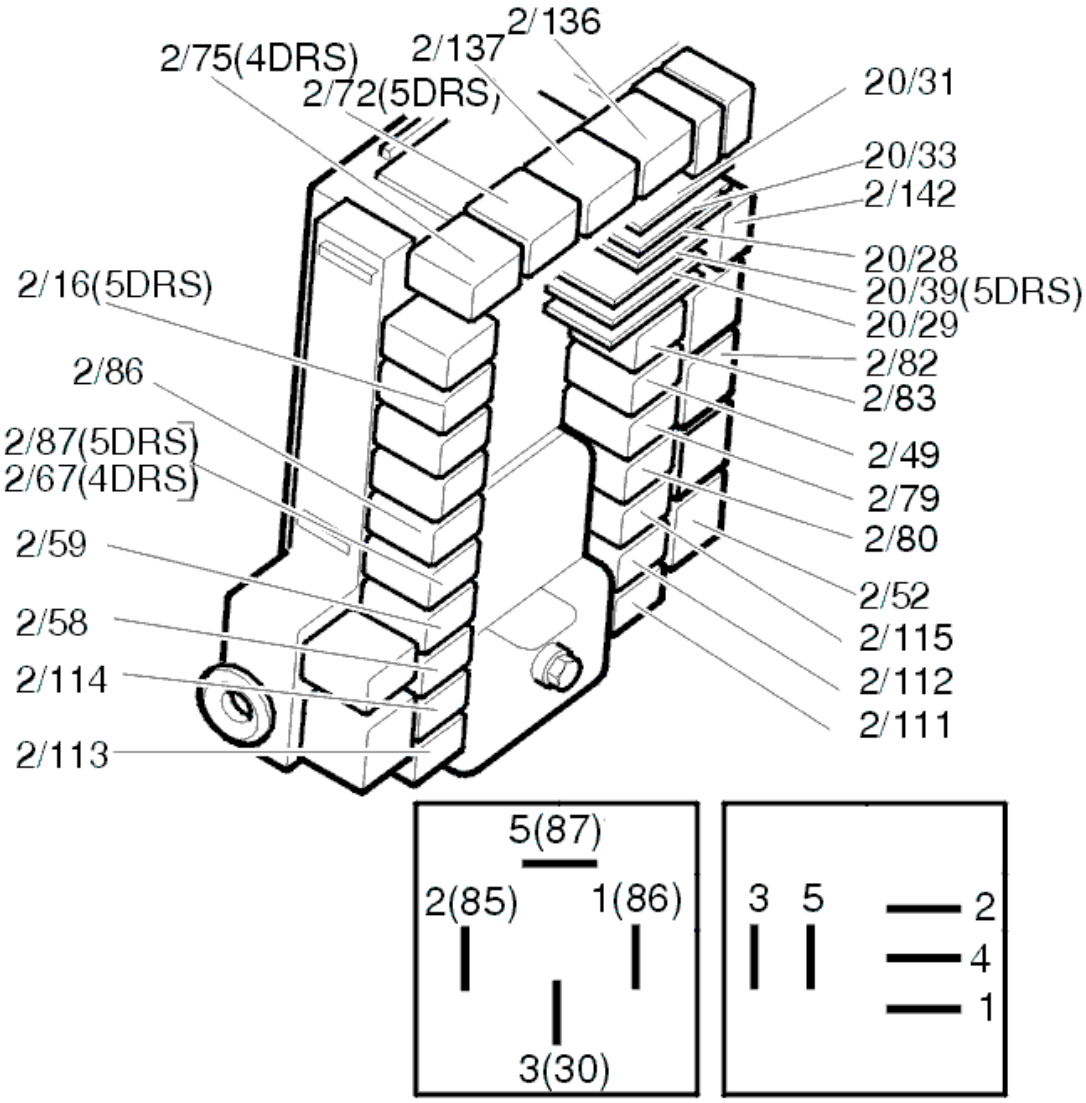

Fig. 96: Identifying Relays
Courtesy of VOLVO CARS CORPORATION

Is there a fault?

- **YES**

  OKAY: Troubleshooting has been completed.

- **NO**

  Refer to **CIRCUIT TEST**

CIRCUIT TEST

The fault is caused by an open circuit in one of the relay circuits or in the lock unit. To find out which circuit

contains the fault:

Disconnect the lock unit connector.

Check the contacts for contact resistance and oxidation as described in, see **CONTACT RESISTANCE AND OXIDATION** .

Check resistance between 4 and 6 on cable connector.

Additional information

- To access/replace the lock unit, see **LOCK MECHANISM REAR SIDE DOOR, REPLACING** .

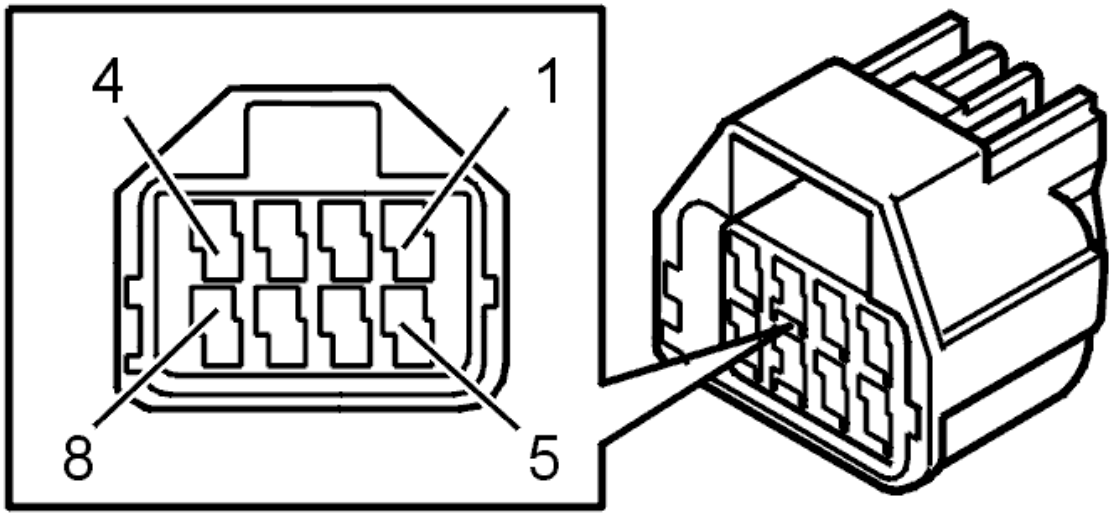

Fig. 97: Identifying Connector Terminals
Courtesy of VOLVO CARS CORPORATION

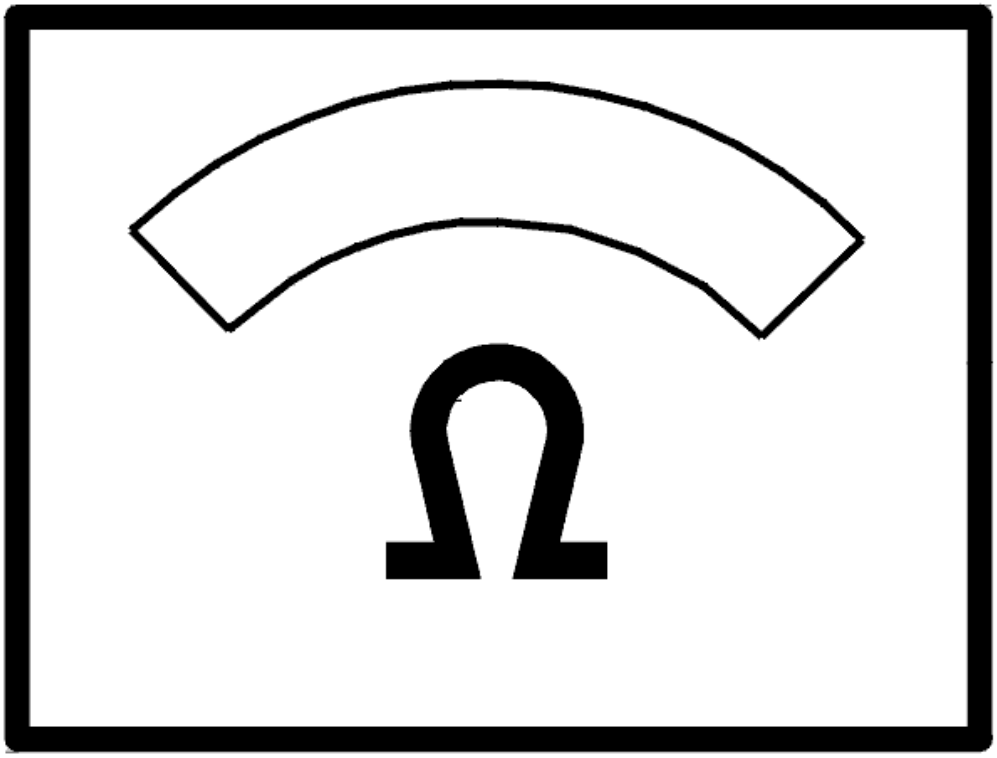

Fig. 98: Identifying Ohm Meter
Courtesy of VOLVO CARS CORPORATION

The ohmmeter should display 0 ohm.

- **OK**

  Refer to **CHECKING THE COMPONENTS**

- **NOT OK**

  Refer to **CIRCUIT TEST, CONTINUED**

CIRCUIT TEST, CONTINUED

Check the resistance between 4 and ground and between 6 and ground on the cable connector.

The ohmmeter should display 0 ohm.

1. The ohmmeter shows a fault between 4 and ground

   Refer to **CHECKING THE UNLOCKING RELAY CIRCUIT**

2. The ohmmeter shows a fault between 6 and ground.

   Refer to **CHECKING THE LOCKING RELAY CIRCUIT**

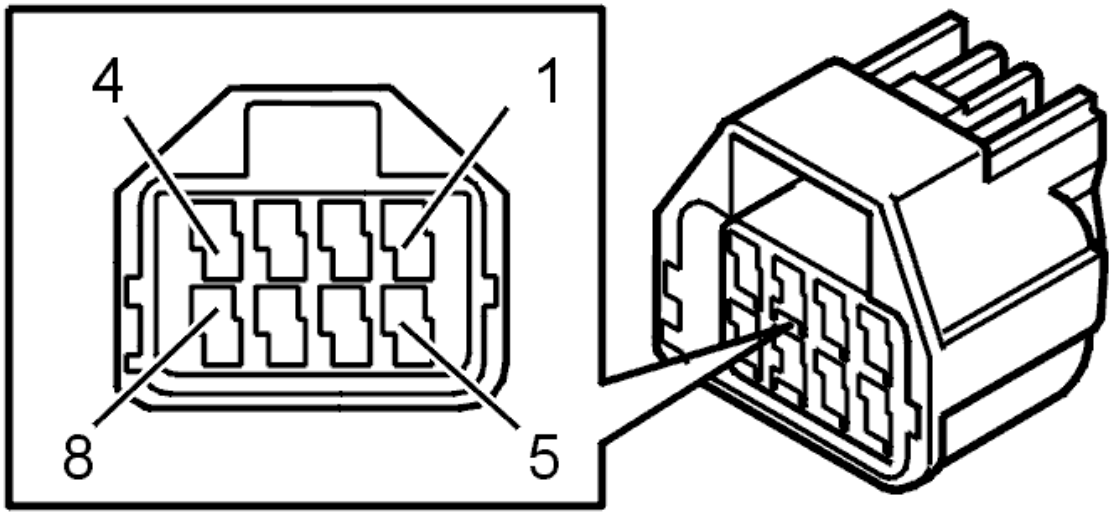

Fig. 99: Identifying Connector Terminals
Courtesy of VOLVO CARS CORPORATION

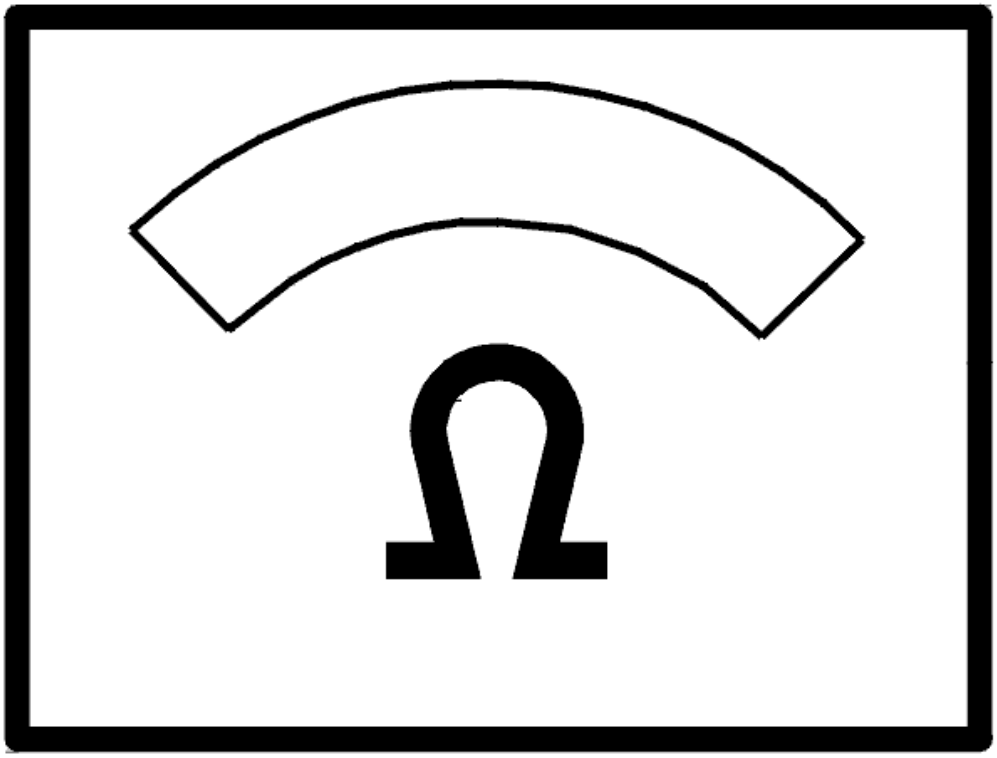

Fig. 100: Identifying Ohm Meter
Courtesy of VOLVO CARS CORPORATION

CHECKING THE LOCKING RELAY CIRCUIT

Remove the locking relay (2/111).

Check the wire between 4 in the cable connector and 3 in the relay socket for an open circuit as described in, see **OPEN-CIRCUIT, PERMANENT FAULTS** .

If a fault is detected, check in particular the intermediate connector in the cable harness (2) for contact resistance and oxidation as described in, see **CONTACT RESISTANCE AND OXIDATION** .

Do the necessary corrective action.

If no fault is found, check the resistance between 4 in the relay socket and ground.

The ohmmeter should display 0 ohm.

If the resistance deviates, replace the rear electronic module (REM).

Additional information

- To access/replace rear electronic module (REM):
  - For -2004, see: **RELAY/FUSE BOX CARGO COMPARTMENT/REAR ELECTRONIC MODULE (REM), REPLACING**
  - For 2005-, see: **REAR ELECTRONIC MODULE (REM), REPLACING** .

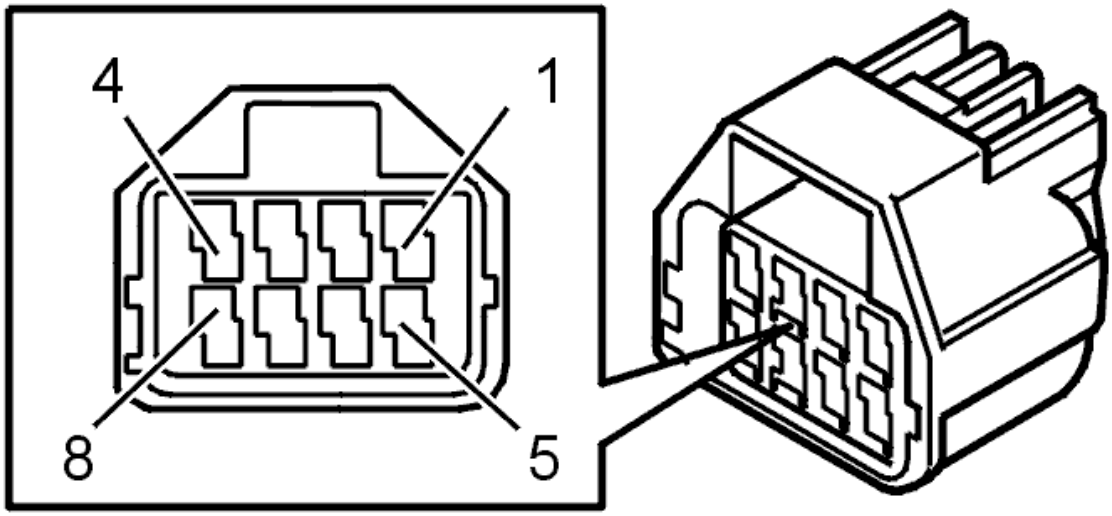

Fig. 101: Identifying Connector Terminals
Courtesy of VOLVO CARS CORPORATION

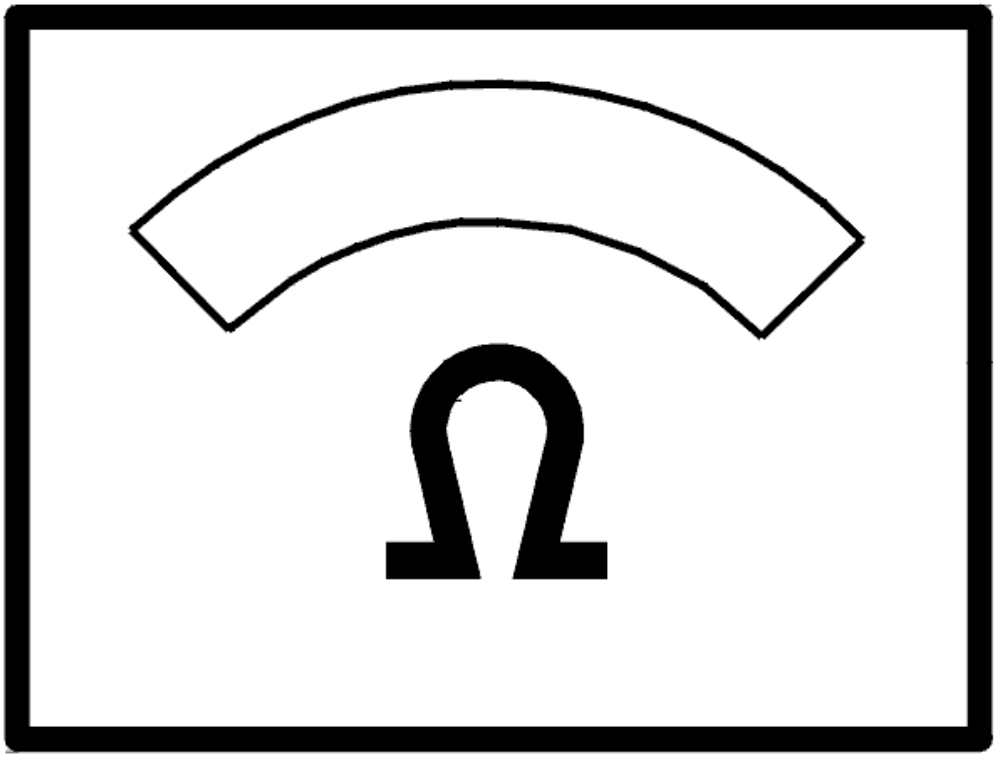

Fig. 102: Identifying Ohm Meter
Courtesy of VOLVO CARS CORPORATION

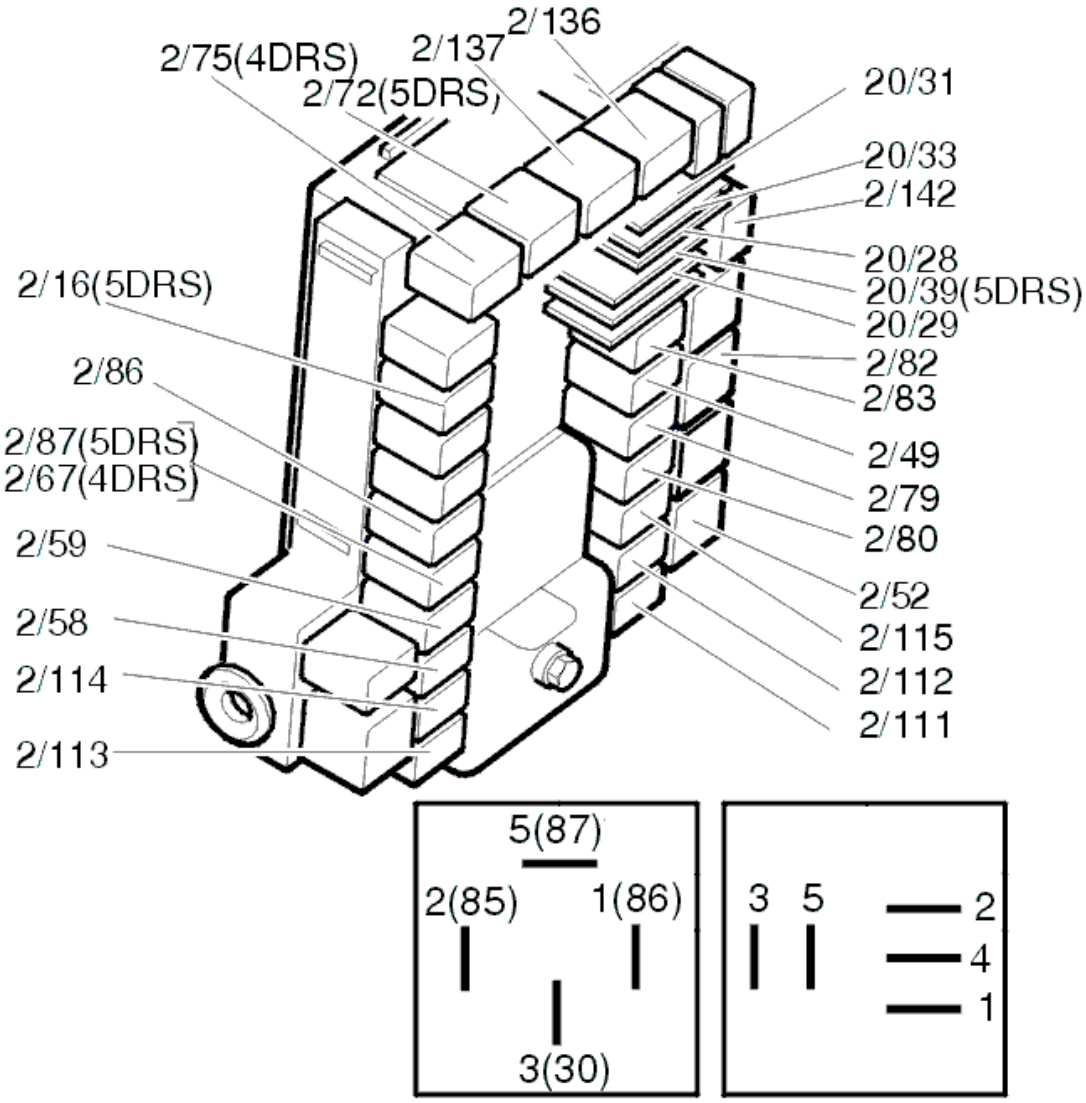

Fig. 103: Identifying Relays
Courtesy of VOLVO CARS CORPORATION

CHECKING THE UNLOCKING RELAY CIRCUIT

Remove the unlocking relay (2/112).

Check the wire between 6 in the cable connector and 3 in the relay socket for an open circuit as described in, see **OPEN-CIRCUIT, PERMANENT FAULTS** .

If a fault is detected, check in particular the intermediate connector in the cable harness (2) for contact resistance and oxidation as described in, see **CONTACT RESISTANCE AND OXIDATION** .

Do the necessary corrective action.

If no fault is found, check the resistance between 4 in the relay socket and ground.

The ohmmeter should display 0 ohm.

If the resistance deviates, replace the rear electronic module (REM).

Additional information

- To access/replace rear electronic module (REM):
  - For -2004, see: **RELAY/FUSE BOX CARGO COMPARTMENT/REAR ELECTRONIC MODULE (REM), REPLACING**
  - For 2005-, see: **REAR ELECTRONIC MODULE (REM), REPLACING** .

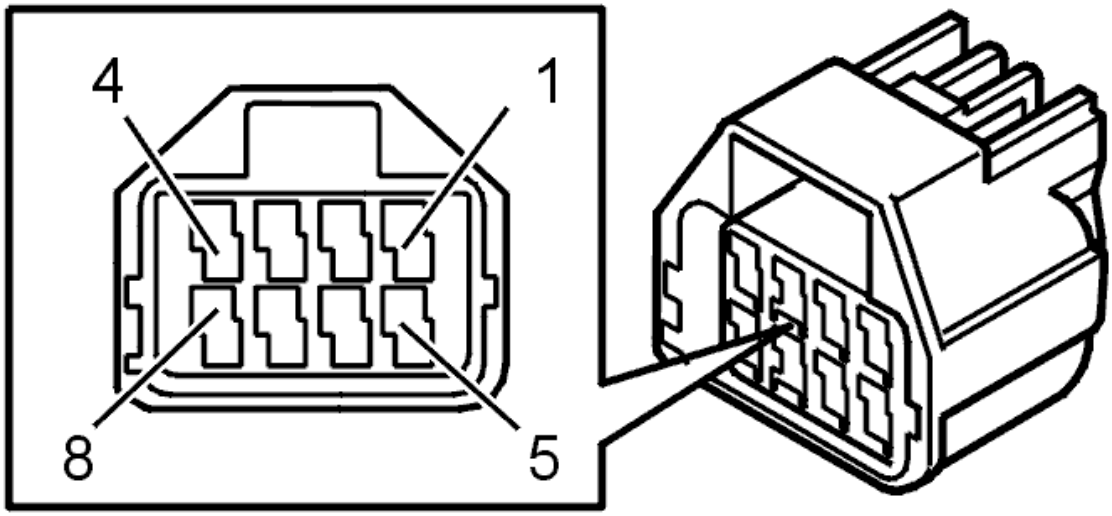

Fig. 104: Identifying Connector Terminals
Courtesy of VOLVO CARS CORPORATION

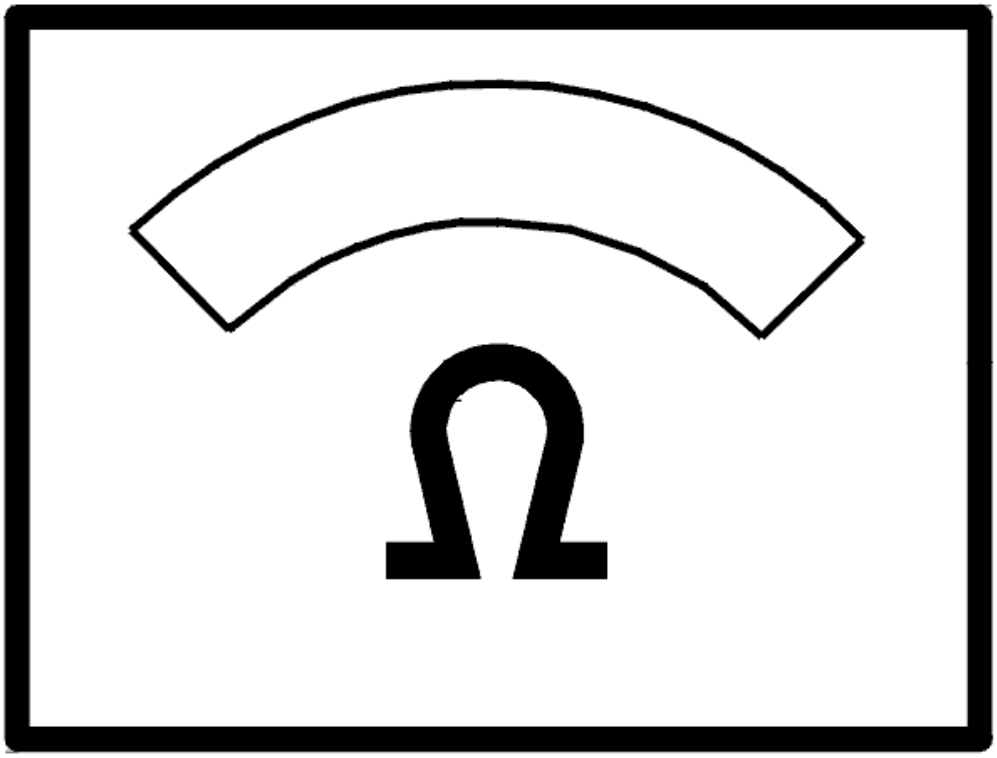

Fig. 105: Identifying Ohm Meter
Courtesy of VOLVO CARS CORPORATION

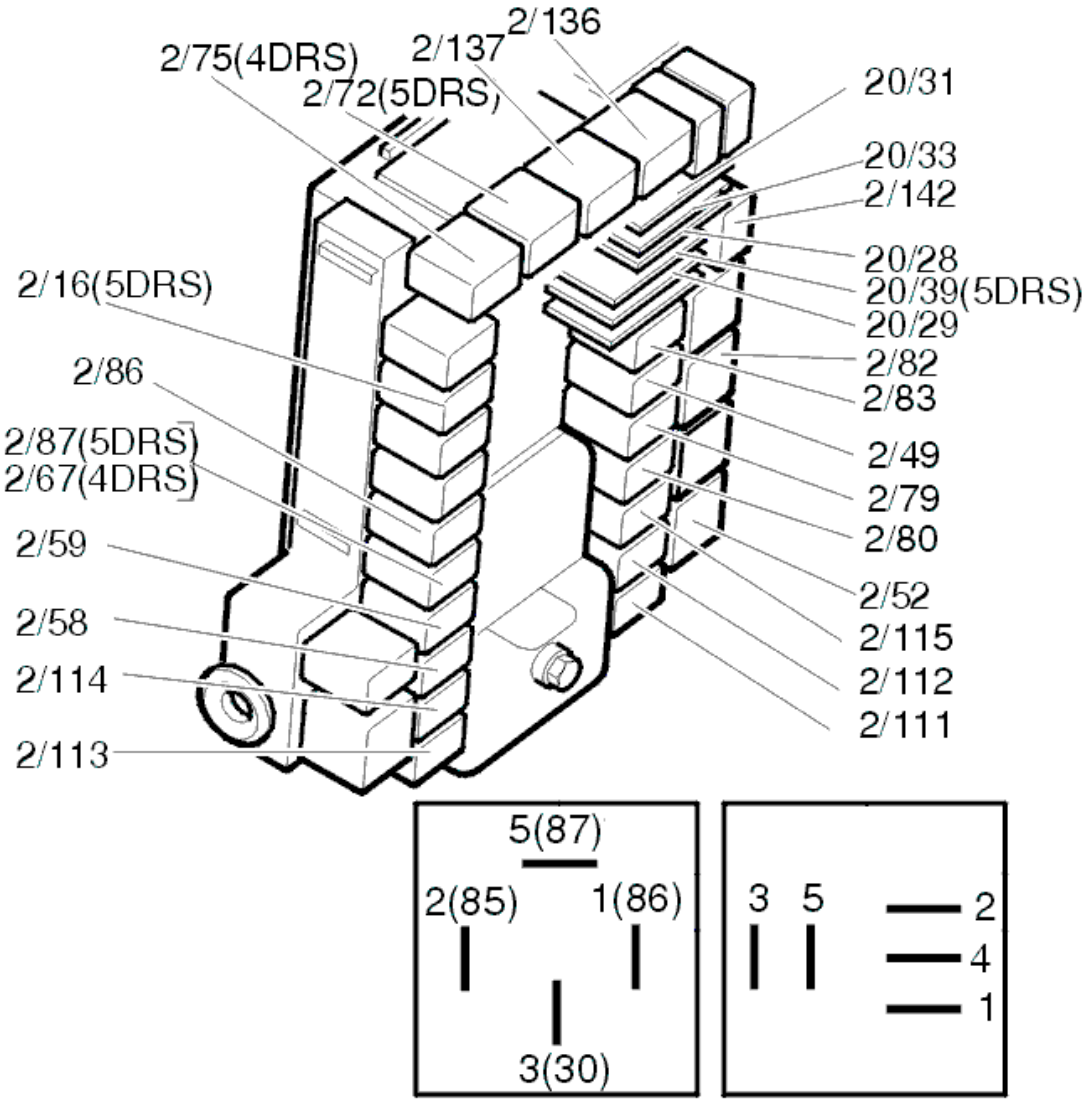

Fig. 106: Identifying Relays
Courtesy of VOLVO CARS CORPORATION

CHECKING THE COMPONENTS

Check the resistance between pin 4 and 6 in the lock unit chassis contact.

The ohmmeter should display 5 ohm.

If the resistance deviates, replace the lock unit.

Additional information

- To access/replace rear electronic module (REM):
  - For -2004, see: **RELAY/FUSE BOX CARGO COMPARTMENT/REAR ELECTRONIC MODULE (REM), REPLACING**

- For 2005-, see: **REAR ELECTRONIC MODULE (REM), REPLACING** .
- To access/replace the lock unit, see **LOCK MECHANISM REAR SIDE DOOR, REPLACING**
- For information on signals and additional values, see **SIGNAL SPECIFICATION** .

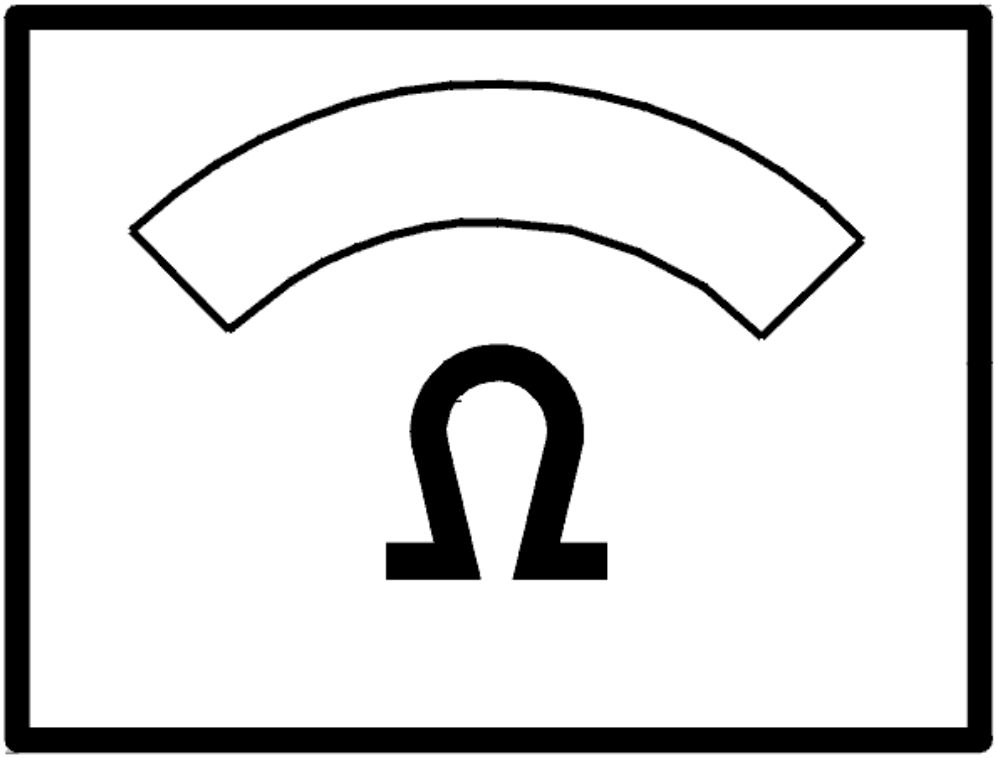

Fig. 107: Identifying Ohm Meter
Courtesy of VOLVO CARS CORPORATION

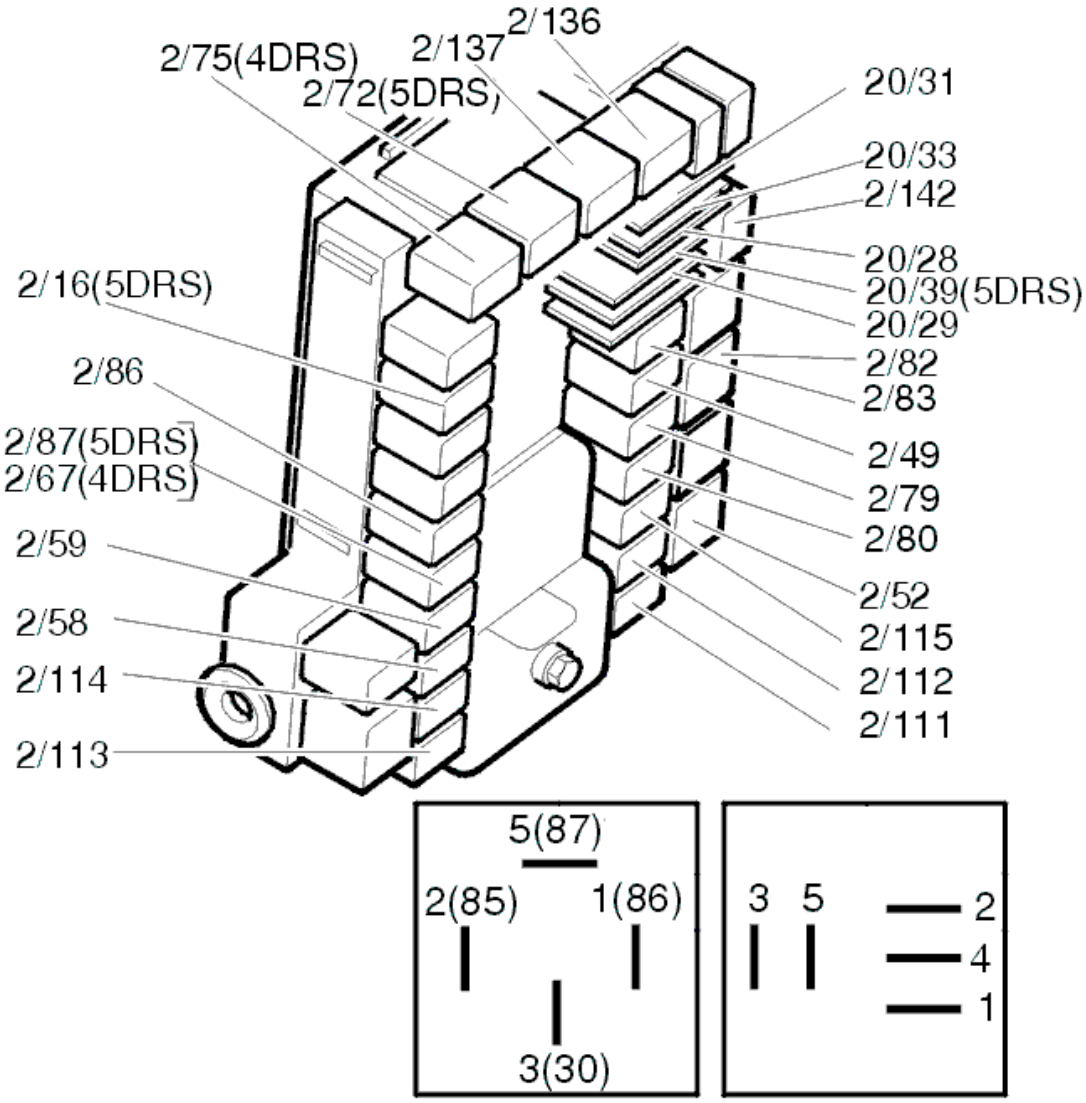

Fig. 108: Identifying Relays
Courtesy of VOLVO CARS CORPORATION

Is there a fault?

- **YES**

  OKAY: Troubleshooting has been completed.

- **NO**

  Refer to **CHECKING THE RELAY SUPPLY**

CHECKING THE RELAY SUPPLY

Remove the locking relay (2/111).

Measure the voltage between 5 in the relay socket and ground.

The voltmeter should display battery voltage.

HINT: If the value is OK but the fault still remains, connect the contacts to the lock module and link between 3 and 5 in the relay socket to force-feed the lock motor while continuing to test.

Additional information

- To access/replace rear electronic module (REM):
  - For -2004, see: **RELAY/FUSE BOX CARGO COMPARTMENT/REAR ELECTRONIC MODULE (REM), REPLACING**
  - For 2005-, see: **REAR ELECTRONIC MODULE (REM), REPLACING** .

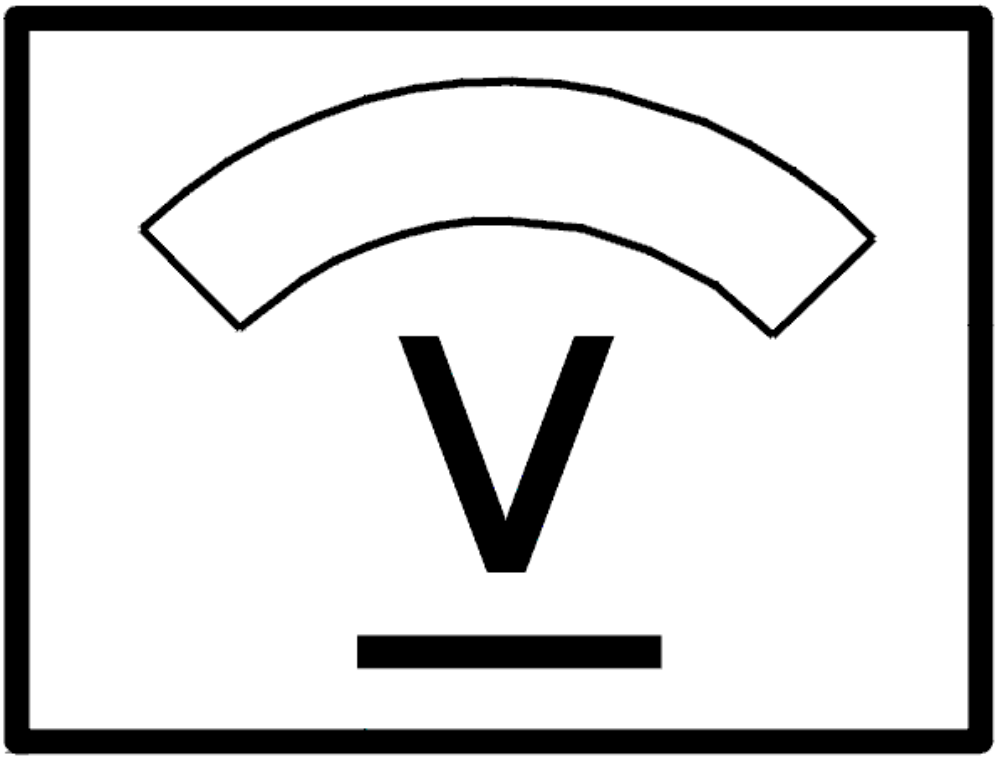

Fig. 109: Identifying Voltage Display

Courtesy of VOLVO CARS CORPORATION

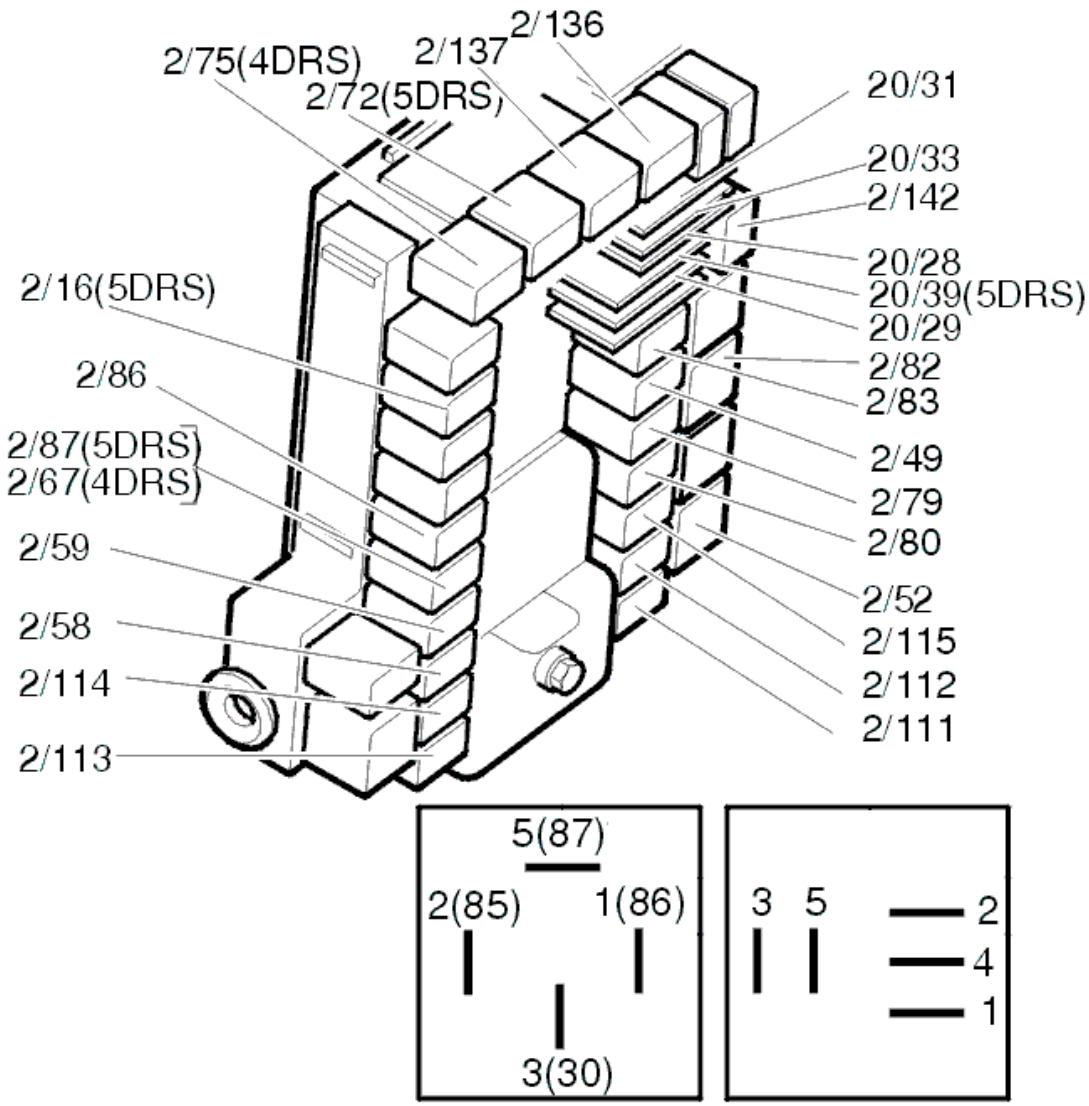

Fig. 110: Identifying Relays
Courtesy of VOLVO CARS CORPORATION

Does the voltmeter show the battery voltage?

- **YES**

  OKAY: Troubleshooting has been completed.

- **NO**

  Refer to **CHECKING THE FUSE**

CHECKING THE FUSE

Remove the fuse 11D/8 in cargo compartment fuse box.

Check that fuse 11D/8 is intact and check for contact resistance and oxidation as described in, see **CONTACT RESISTANCE AND OXIDATION** .

Additional information

- To access/replace rear electronic module (REM):
  - For -2004, see: **RELAY/FUSE BOX CARGO COMPARTMENT/REAR ELECTRONIC MODULE (REM), REPLACING**
  - For 2005-, see: **REAR ELECTRONIC MODULE (REM), REPLACING** .

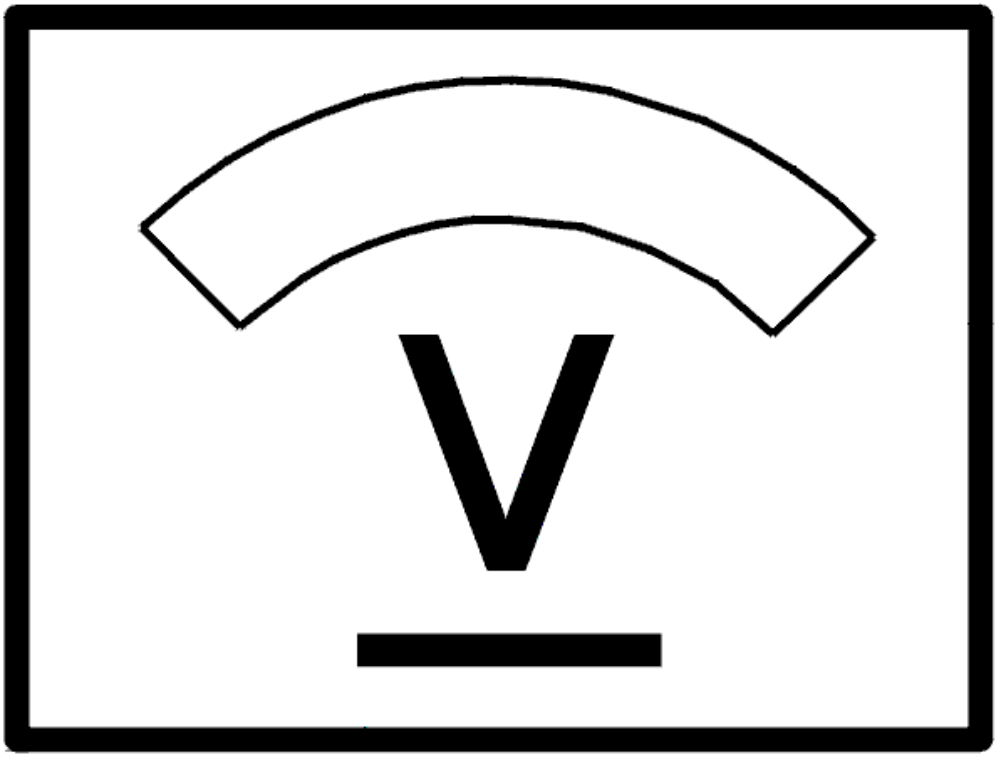

Fig. 111: Identifying Voltage Display
Courtesy of VOLVO CARS CORPORATION

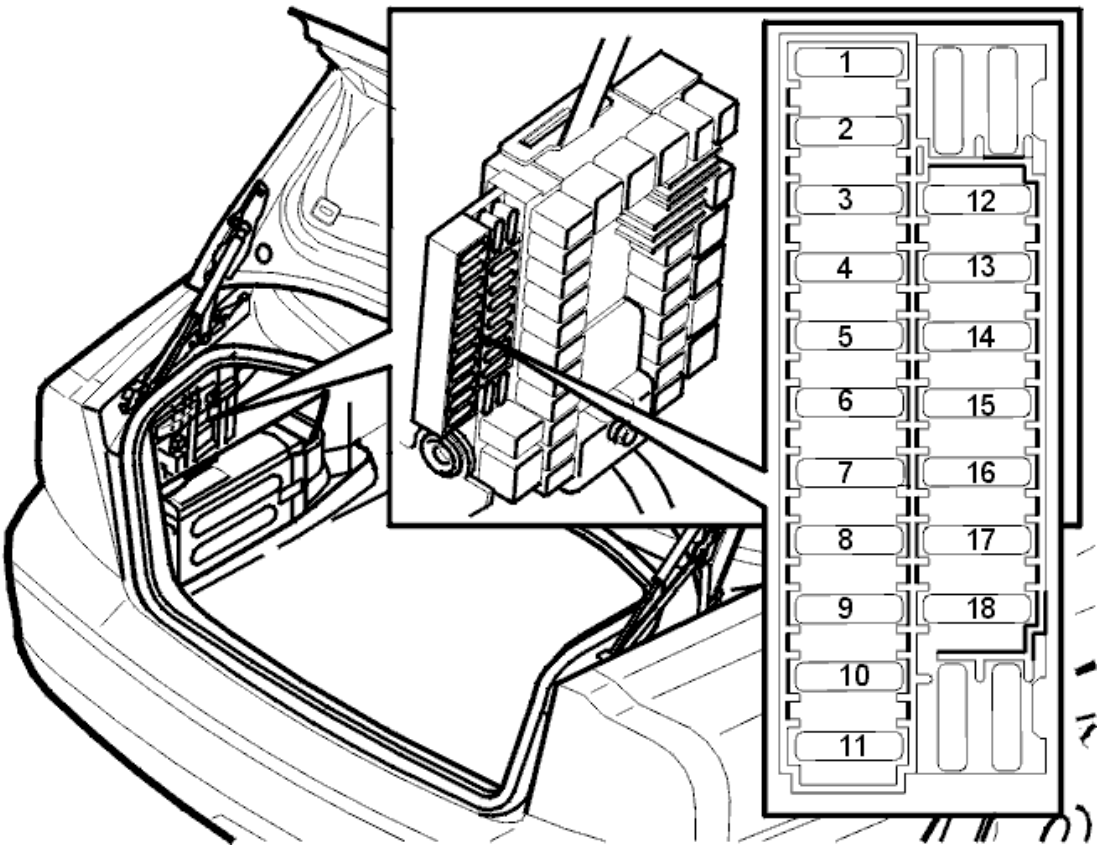

Fig. 112: Fuse Holder (Cargo Compartment)
Courtesy of VOLVO CARS CORPORATION

Is the fuse intact?

- **YES**

  Refer to **CHECKING FOR AN OPEN CIRCUIT**

- **NO**

  Refer to **CHECKING FOR A SHORT CIRCUIT**

CHECKING FOR AN OPEN CIRCUIT

Remove relay 2/111 in the rear electronic module (REM) and trouble-shoot the wire between the fuse holder secondary side (left) and 5 in the relay socket for an open circuit as described in, see **OPEN-CIRCUIT, PERMANENT FAULTS** .

Additional information

- To access/replace rear electronic module (REM):
  - For -2004, see: **RELAY/FUSE BOX CARGO COMPARTMENT/REAR ELECTRONIC MODULE (REM), REPLACING**

- For 2005-, see: **REAR ELECTRONIC MODULE (REM), REPLACING** .

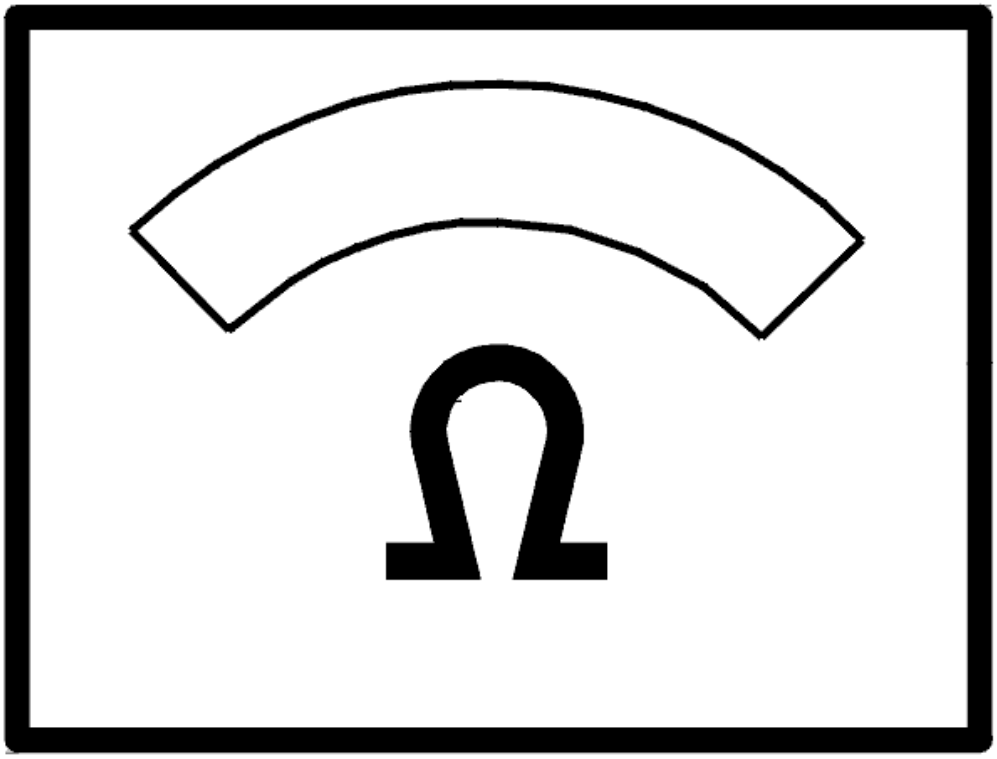

Fig. 113: Identifying Ohm Meter
Courtesy of VOLVO CARS CORPORATION

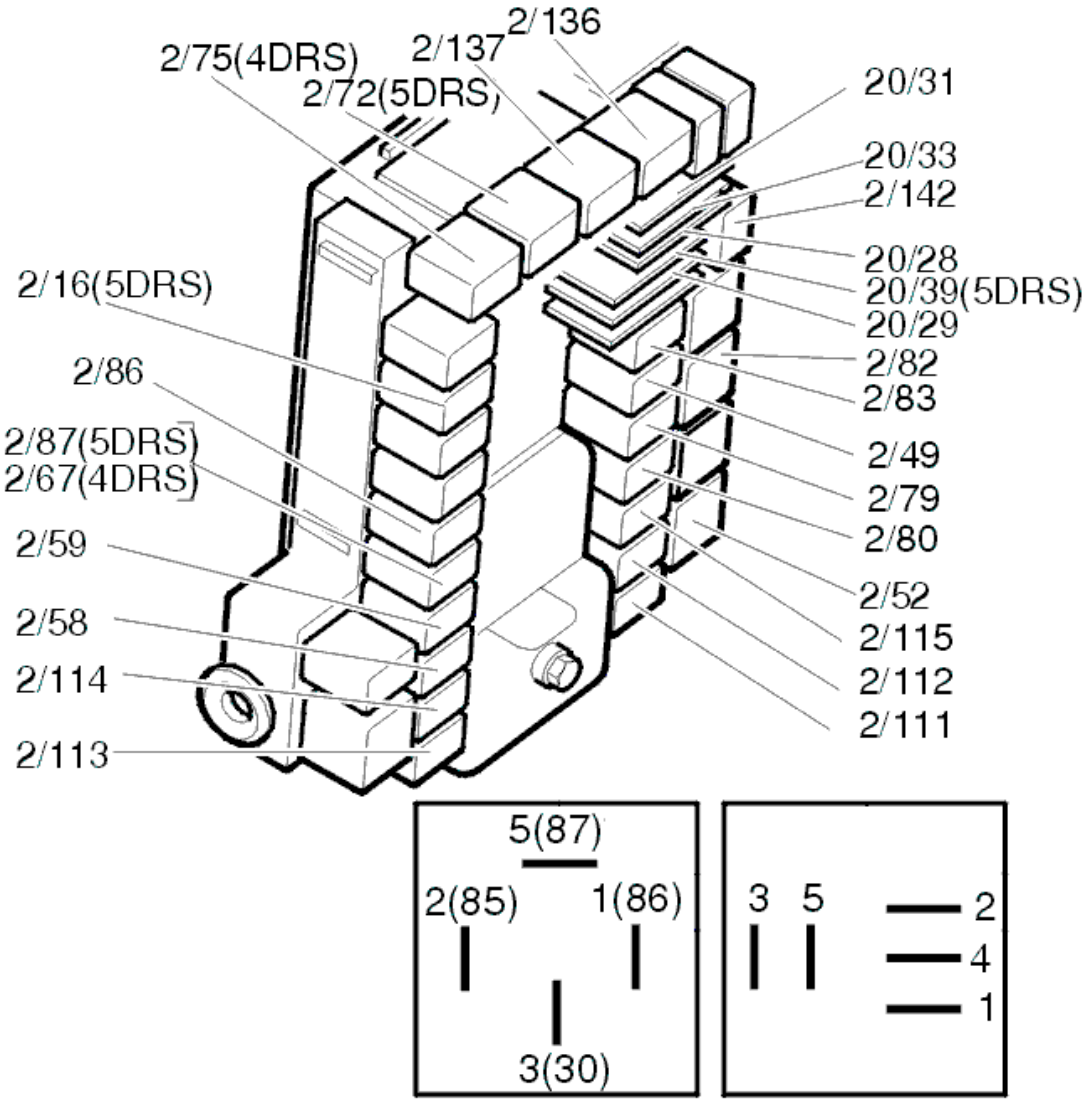

Fig. 114: Identifying Relays
Courtesy of VOLVO CARS CORPORATION

CHECKING FOR A SHORT CIRCUIT

Check the resistance between the fuse holder secondary side (left) and ground.

The ohmmeter should display infinite resistance.

If the value is correct, replace the fuse.

If the value deviates, trouble-shoot all the relay circuits involved for a short circuit to ground as described in, see **SHORT-CIRCUIT TO GROUND, PERMANENT FAULTS** .

HINT: Replace fuse.

HINT: If the fuse works straight away the fault is a short circuit on the relay supply wire.

HINT: If the fuse works when activating each relay the short circuit is on the component supply wire

HINT: The relay circuits involved belong to relays 2/111, 2/112, 2/113, 2/114, 2/115, 2/56, 2/59 and 2/67.

Additional information

- To access/replace rear electronic module (REM):
  - For -2004, see: **RELAY/FUSE BOX CARGO COMPARTMENT/REAR ELECTRONIC MODULE (REM), REPLACING**
  - For 2005-, see: **REAR ELECTRONIC MODULE (REM), REPLACING** .

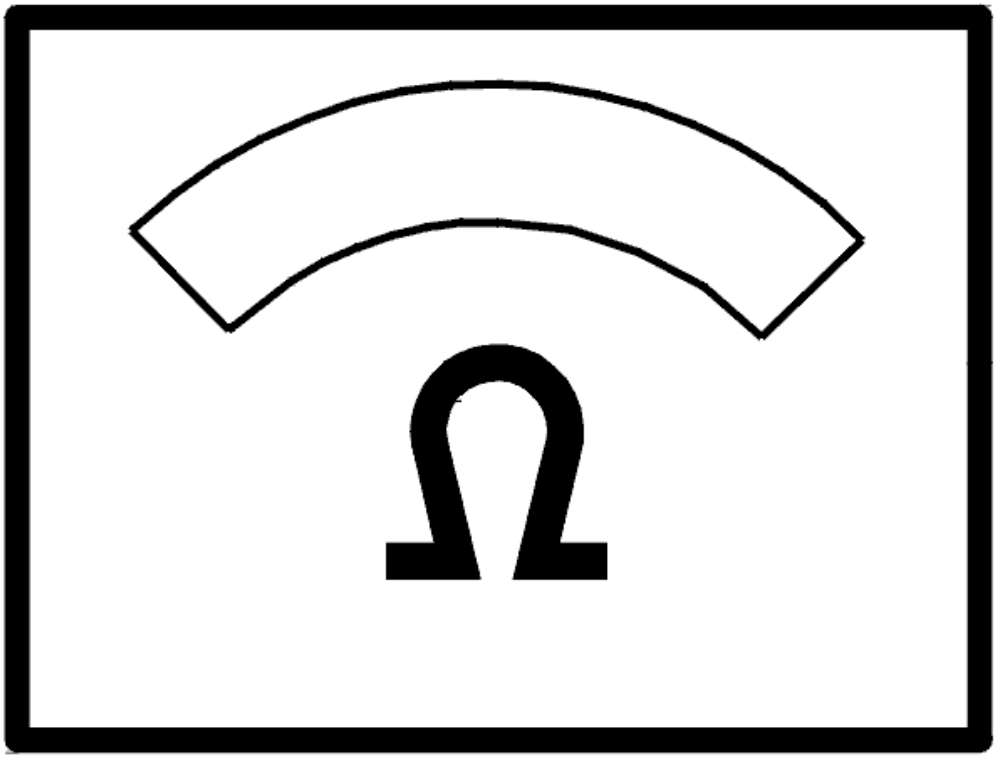

Fig. 115: Identifying Ohm Meter
Courtesy of VOLVO CARS CORPORATION

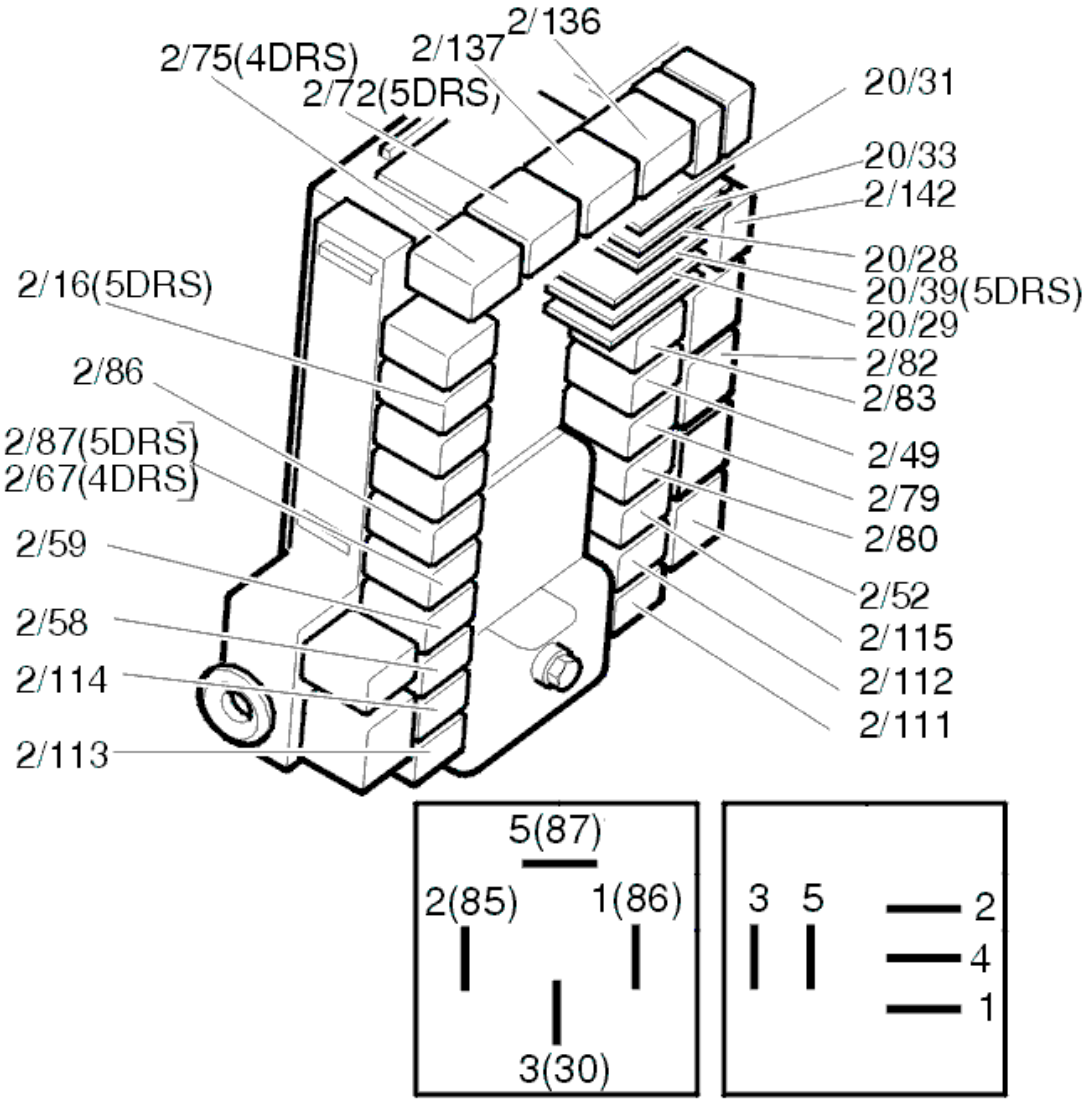

Fig. 116: Identifying Relays
Courtesy of VOLVO CARS CORPORATION

CHECKING THE REAR RIGHT DOOR

CHECK

Is the lock to the other rear door not working?

- **YES**

  Refer to **CHECKING THE FUSE**

- **NO**

  Refer to **REPLACING THE COMPONENT**

REPLACING THE COMPONENT

Replace the relays for locking (2/113) and unlocking (2/114) in the cargo compartment relay/fuse box. At the same time check relay socket contacts for contact resistance and oxidation as described in, see **CONTACT RESISTANCE AND OXIDATION** .

Additional information

- To access relay/fuse box in the cargo compartment:
  - For -2004, see: **RELAY/FUSE BOX CARGO COMPARTMENT/REAR ELECTRONIC MODULE (REM), REPLACING** .
  - For 2005-, see: **REAR ELECTRONIC MODULE (REM), REPLACING** .

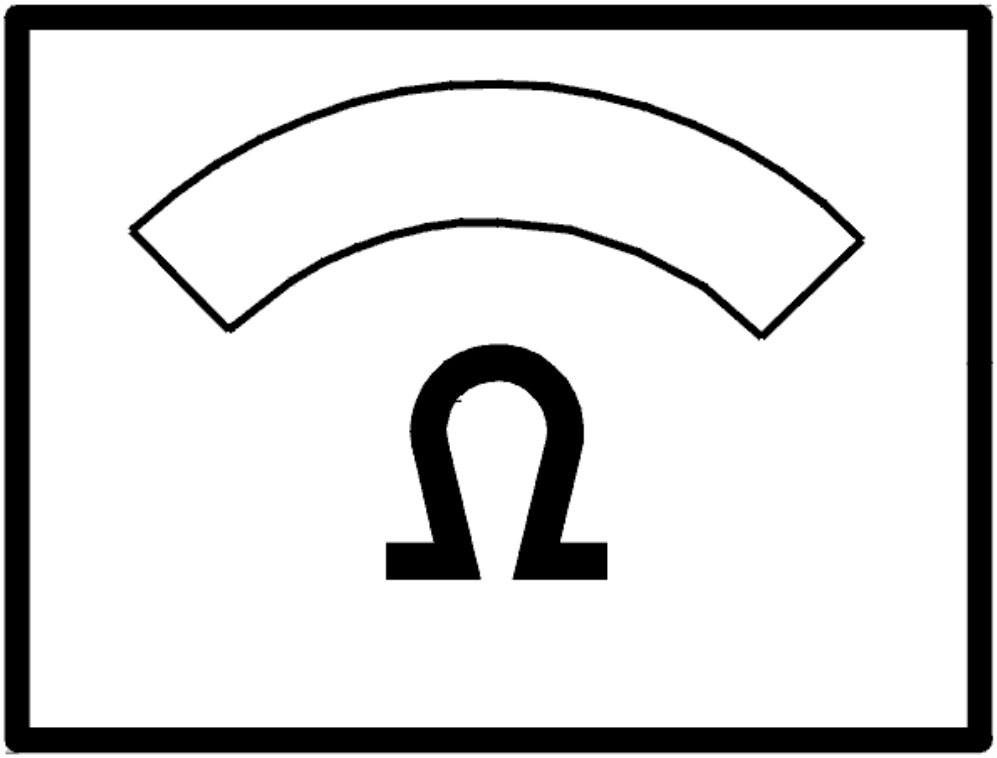

Fig. 117: Identifying Ohm Meter
Courtesy of VOLVO CARS CORPORATION

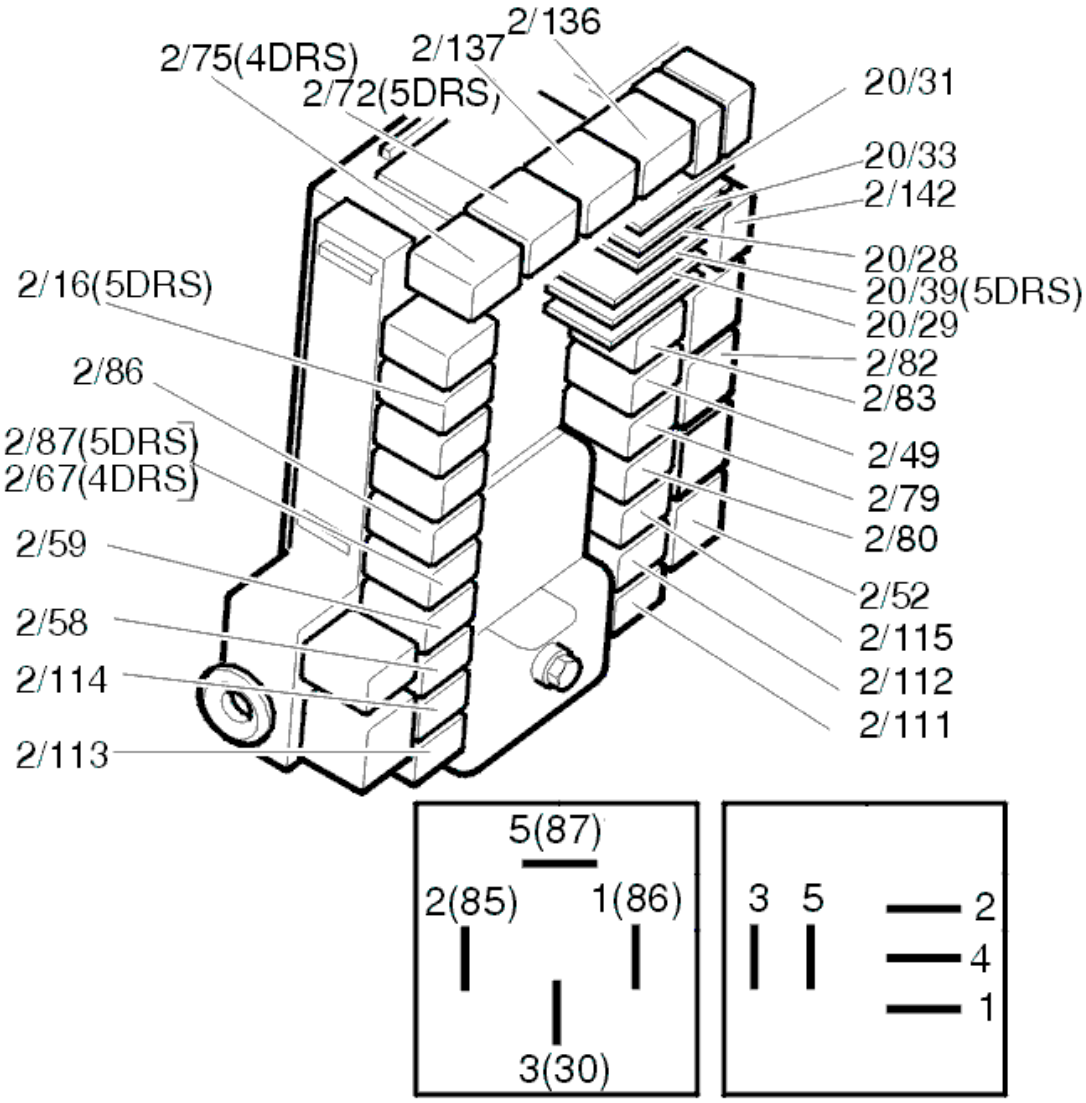

Fig. 118: Identifying Relays
Courtesy of VOLVO CARS CORPORATION

Is there a fault?

- **YES**

  OKAY: Troubleshooting has been completed.

- **NO**

  Refer to **CIRCUIT TEST**

CIRCUIT TEST

The fault is caused by an open circuit in one of the relay circuits or in the lock unit. To find out which circuit

contains the fault:

Disconnect the lock unit connector.

Check the contacts for contact resistance and oxidation as described in, see **CONTACT RESISTANCE AND OXIDATION** .

Check resistance between 4 and 6 on cable connector.

Additional information

- To access/replace the lock unit, see **LOCK MECHANISM REAR SIDE DOOR, REPLACING** .

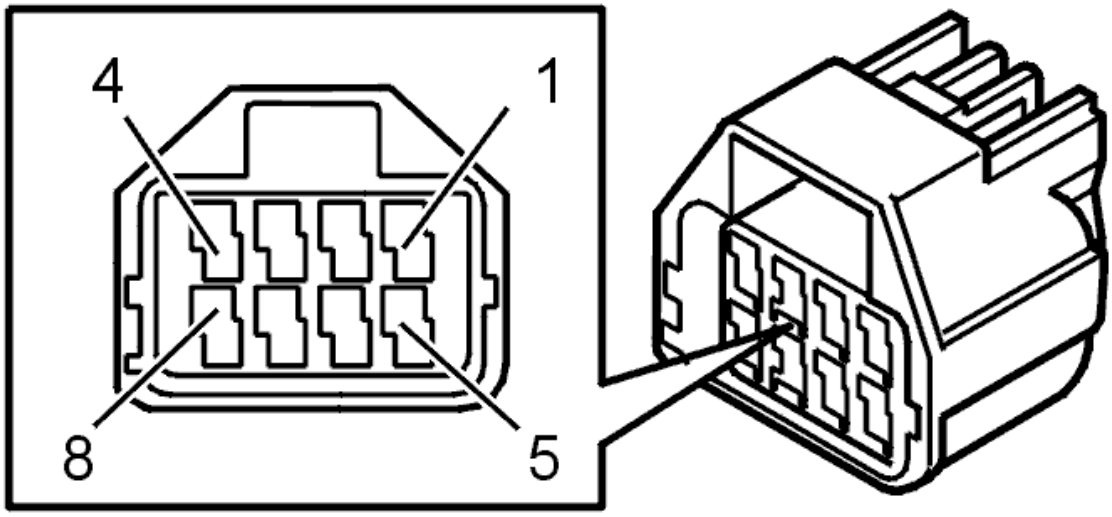

Fig. 119: Identifying Connector Terminals
Courtesy of VOLVO CARS CORPORATION

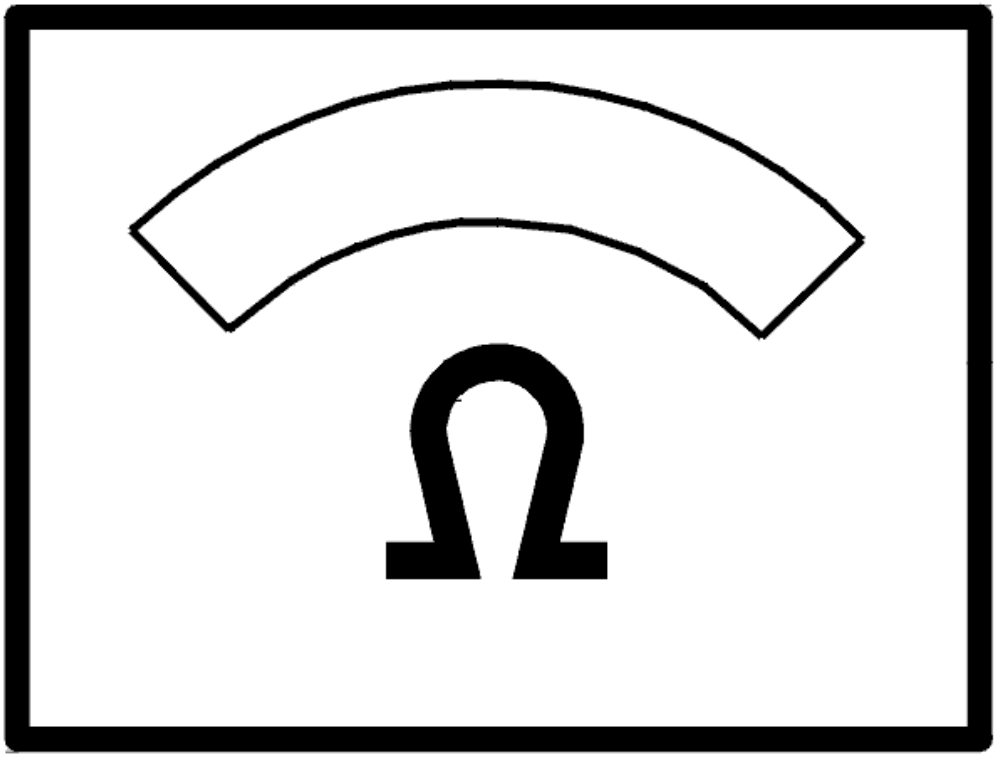

Fig. 120: Identifying Ohm Meter
Courtesy of VOLVO CARS CORPORATION

The ohmmeter should display 0 ohm.

- **OK**

  Refer to **CHECKING THE COMPONENTS**

- **NOT OK**

  Refer to **CIRCUIT TEST, CONTINUED**

CIRCUIT TEST, CONTINUED

Check the resistance between 4 and ground and between 6 and ground on the cable connector.

The ohmmeter should display 0 ohm.

1. The ohmmeter shows a fault between 4 and ground

   Refer to **CHECKING THE UNLOCKING RELAY CIRCUIT**

2. The ohmmeter shows a fault between 6 and ground.

   Refer to **CHECKING THE LOCKING RELAY CIRCUIT**

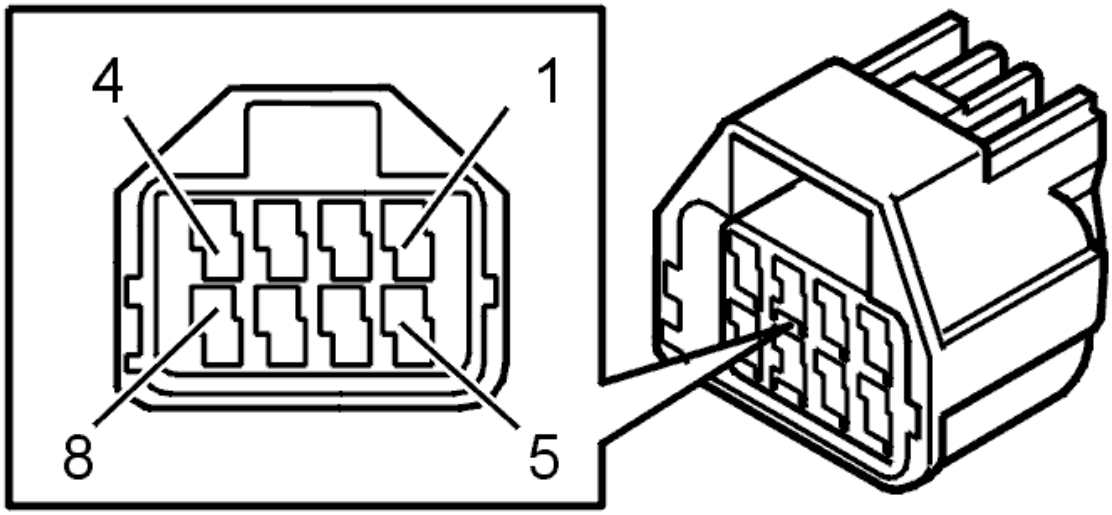

Fig. 121: Identifying Connector Terminals
Courtesy of VOLVO CARS CORPORATION

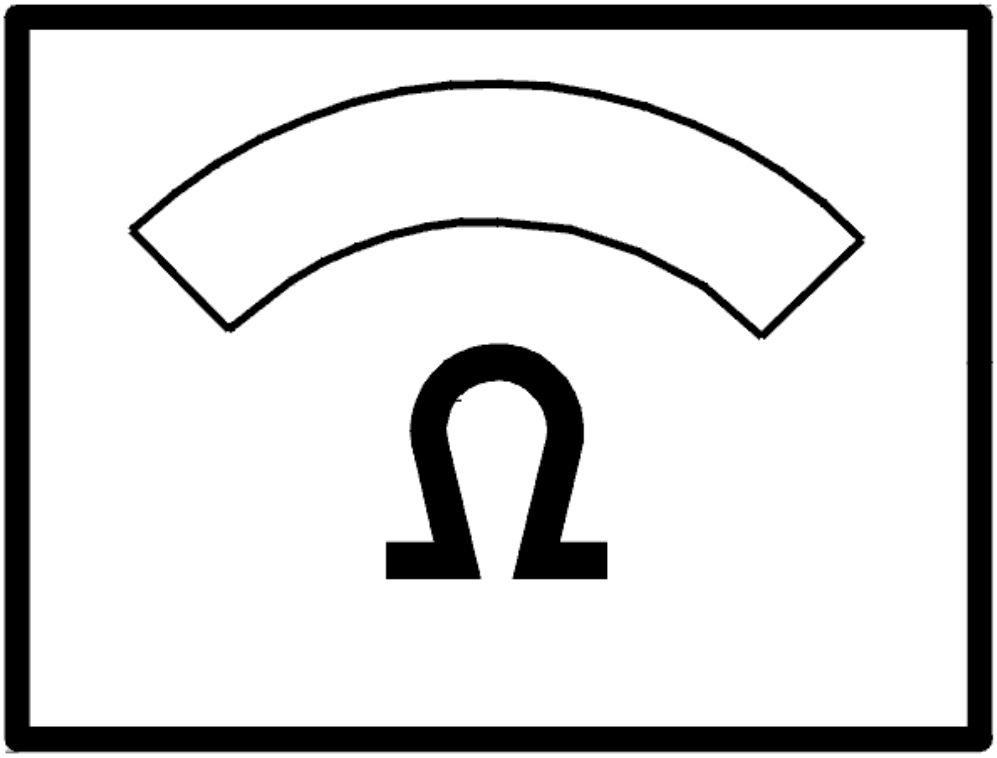

Fig. 122: Identifying Ohm Meter
Courtesy of VOLVO CARS CORPORATION

CHECKING THE LOCKING RELAY CIRCUIT

Remove the locking relay (2/113).

Check the wire between 4 in the cable connector and 3 in the relay socket for an open circuit as described in, see **OPEN-CIRCUIT, PERMANENT FAULTS** .

If a fault is detected, check in particular the intermediate connector in the cable harness (2) for contact resistance and oxidation as described in, see **CONTACT RESISTANCE AND OXIDATION** .

Do the necessary corrective action.

If no fault is found, check the resistance between 4 in the relay socket and ground.

The ohmmeter should display 0 ohm.

If the resistance deviates, replace the rear electronic module (REM).

Additional information

- To access/replace rear electronic module (REM):
  - For -2004, see: **RELAY/FUSE BOX CARGO COMPARTMENT/REAR ELECTRONIC MODULE (REM), REPLACING**
  - For 2005-, see: **REAR ELECTRONIC MODULE (REM), REPLACING** .

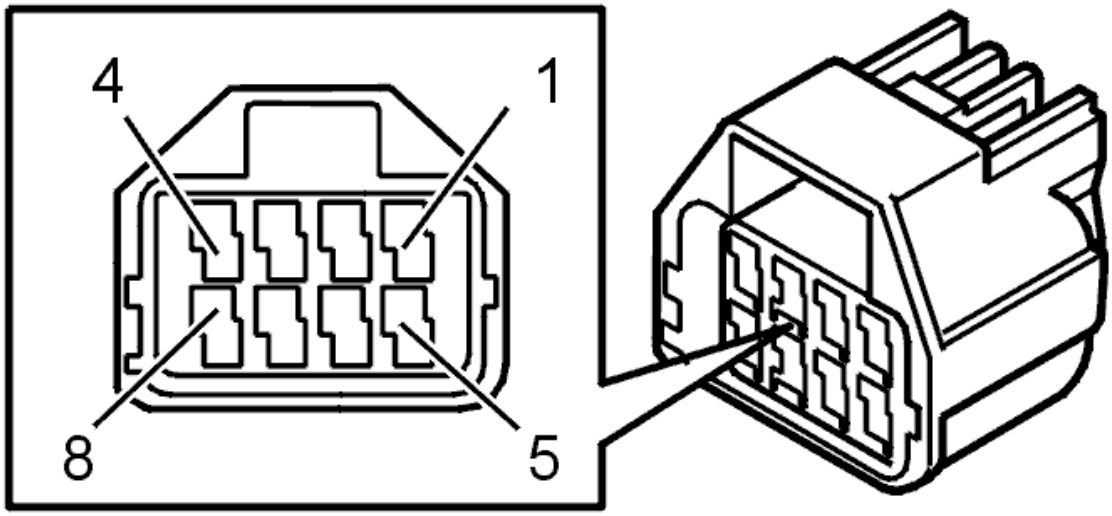

Fig. 123: Identifying Connector Terminals
Courtesy of VOLVO CARS CORPORATION

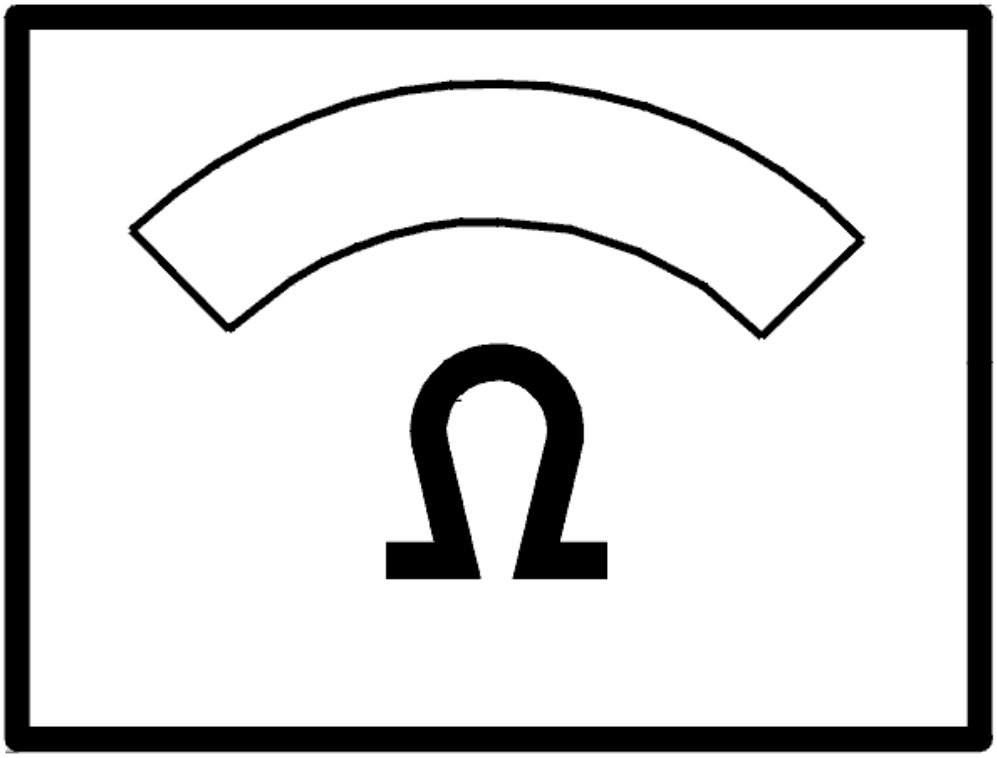

Fig. 124: Identifying Ohm Meter
Courtesy of VOLVO CARS CORPORATION

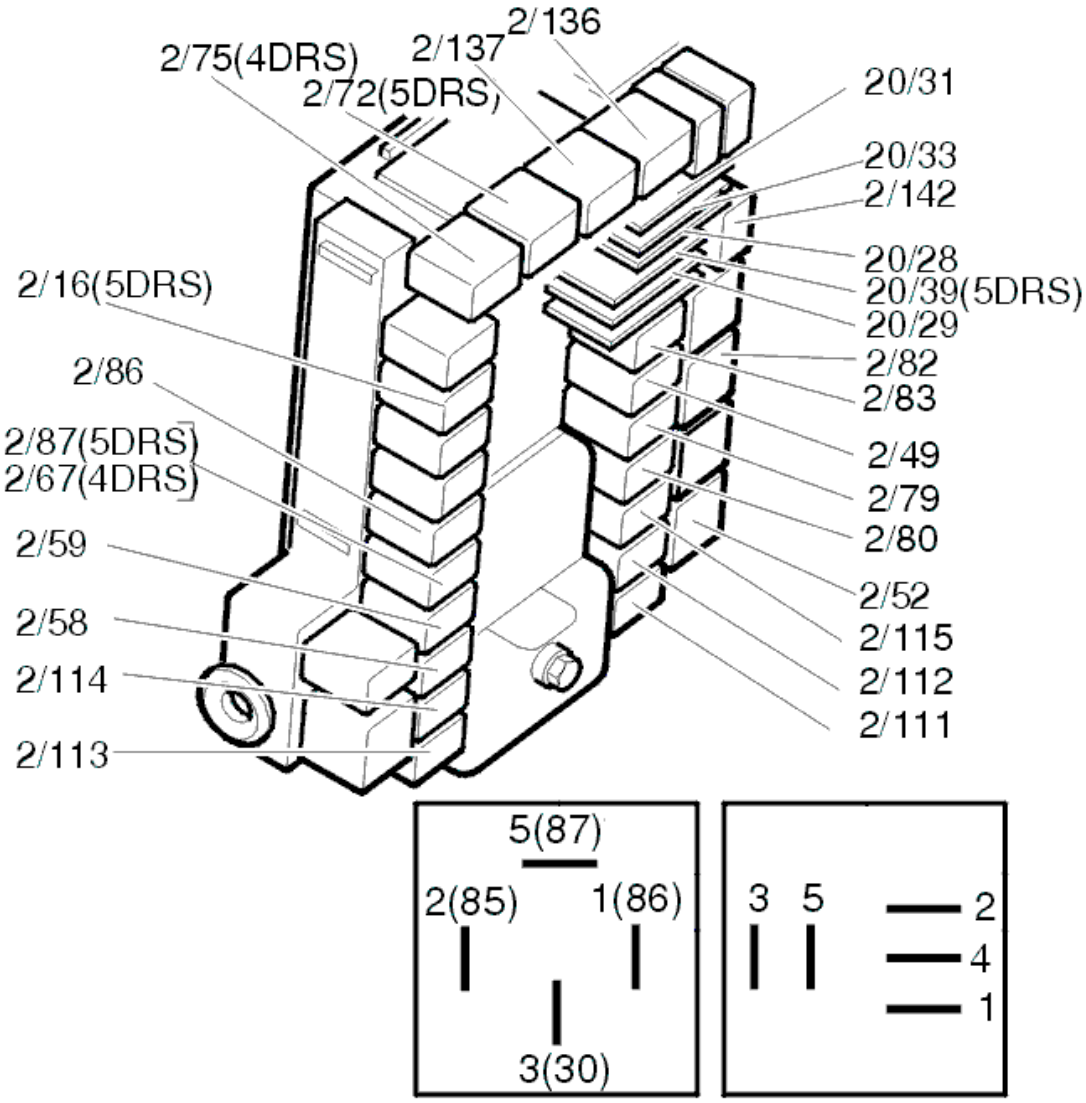

Fig. 125: Identifying Relays
Courtesy of VOLVO CARS CORPORATION

CHECKING THE UNLOCKING RELAY CIRCUIT

Remove the unlocking relay (2/114).

Check the wire between 6 in the cable connector and 3 in the relay socket for an open circuit as described in, see **OPEN-CIRCUIT, PERMANENT FAULTS** .

If a fault is detected, check in particular the intermediate connector in the cable harness (2) for contact resistance and oxidation as described in, see **CONTACT RESISTANCE AND OXIDATION** .

Do the necessary corrective action.

If no fault is found, check the resistance between 4 in the relay socket and ground.

The ohmmeter should display 0 ohm.

If the resistance deviates, replace the rear electronic module (REM).

Additional information

- To access/replace rear electronic module (REM):
  - For -2004, see: **RELAY/FUSE BOX CARGO COMPARTMENT/REAR ELECTRONIC MODULE (REM), REPLACING**
  - For 2005-, see: **REAR ELECTRONIC MODULE (REM), REPLACING** .

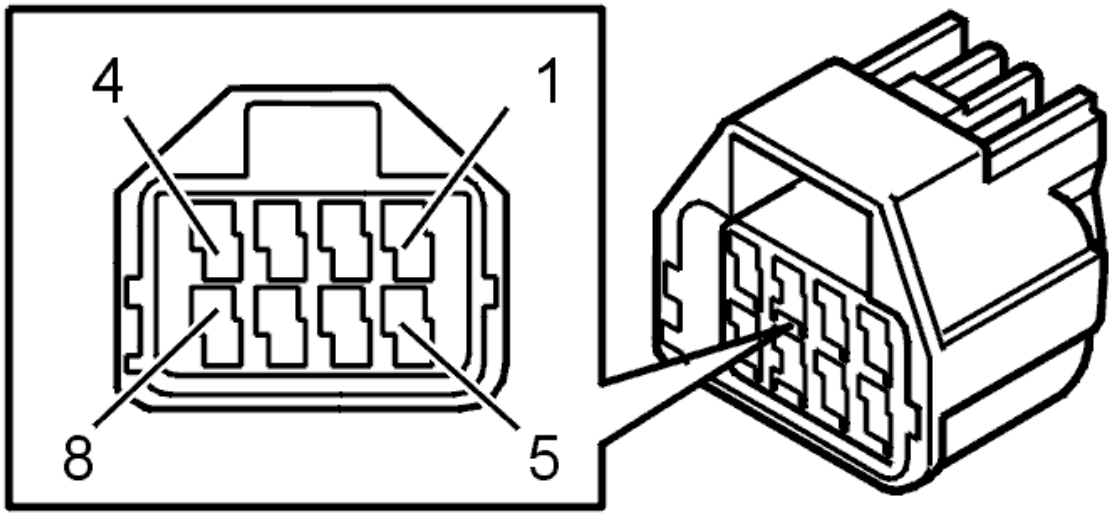

Fig. 126: Identifying Connector Terminals
Courtesy of VOLVO CARS CORPORATION

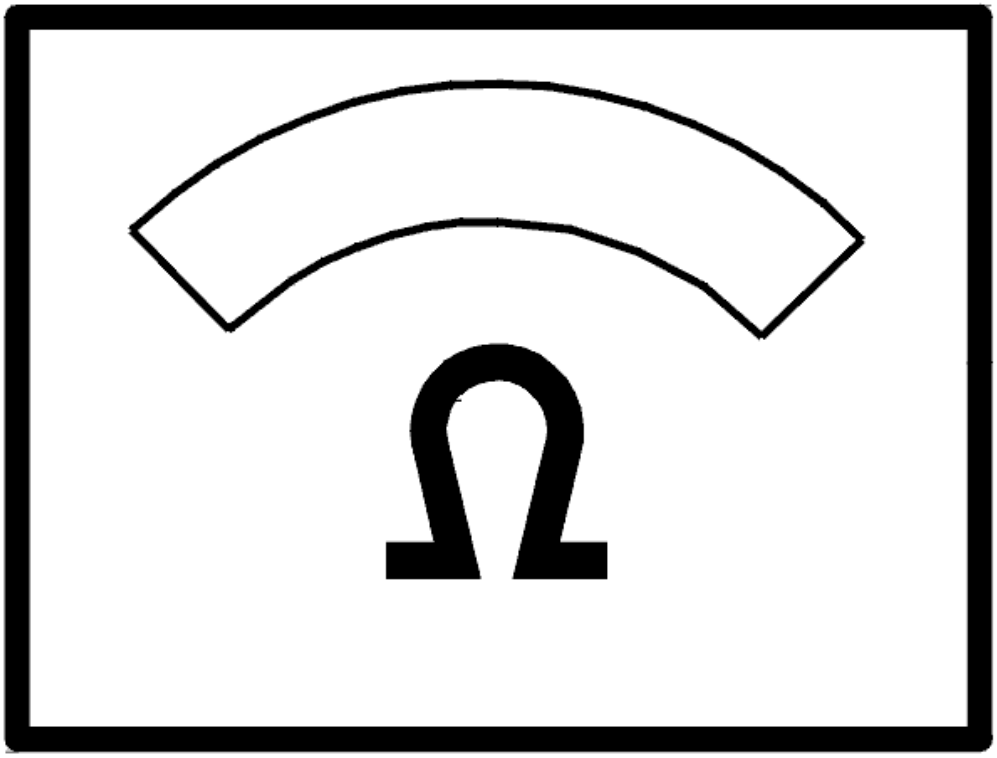

Fig. 127: Identifying Ohm Meter
Courtesy of VOLVO CARS CORPORATION

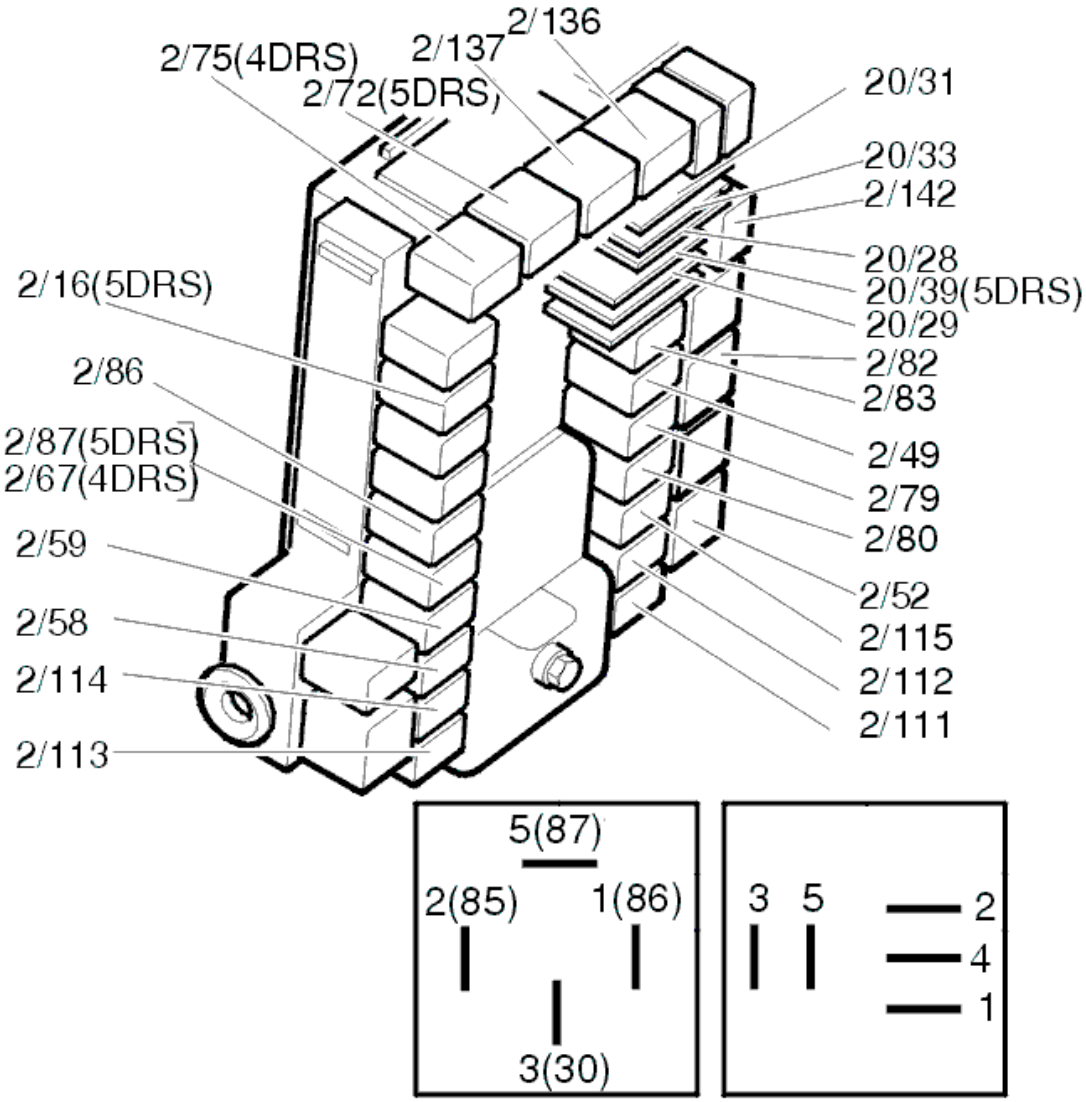

Fig. 128: Identifying Relays
Courtesy of VOLVO CARS CORPORATION

CHECKING THE COMPONENTS

Check the resistance between pin 4 and 6 in the lock unit chassis contact.

The ohmmeter should display 5 ohm.

If the resistance deviates, replace the lock unit.

Additional information

- To access/replace rear electronic module (REM):
  - For -2004, see: **RELAY/FUSE BOX CARGO COMPARTMENT/REAR ELECTRONIC MODULE (REM), REPLACING**

- For 2005-, see: **REAR ELECTRONIC MODULE (REM), REPLACING** .
- To access/replace the lock unit, see **LOCK MECHANISM REAR SIDE DOOR, REPLACING**
- For information on signals and additional values, see **SIGNAL SPECIFICATION** .

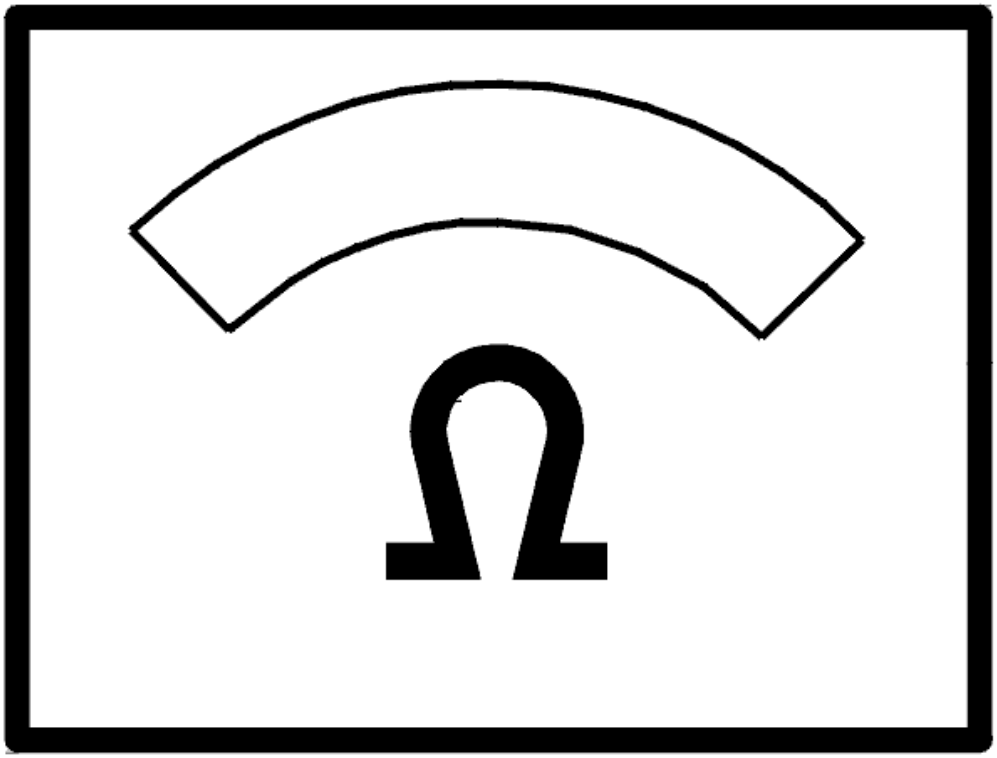

Fig. 129: Identifying Ohm Meter
Courtesy of VOLVO CARS CORPORATION

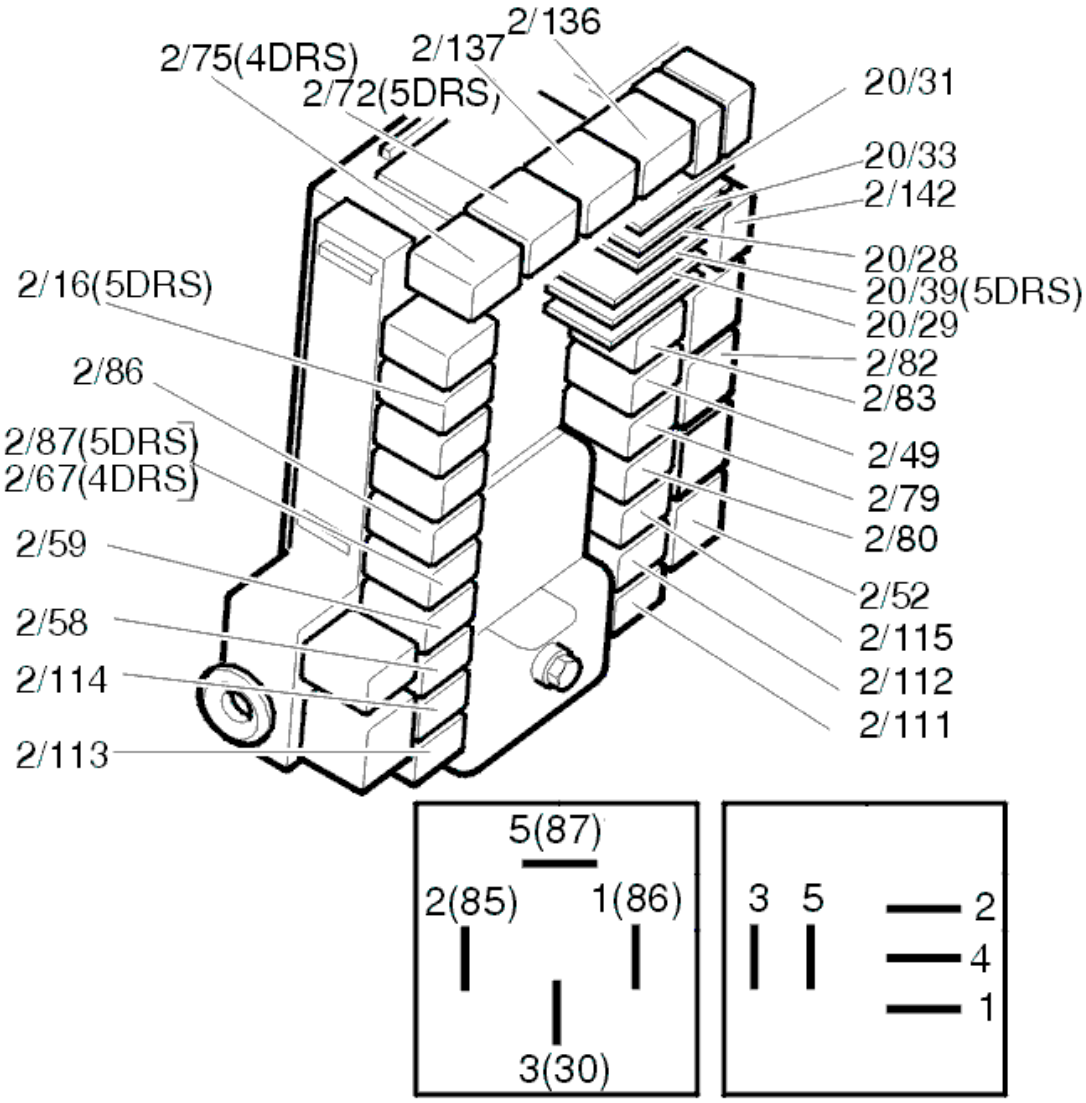

Fig. 130: Identifying Relays
Courtesy of VOLVO CARS CORPORATION

Is there a fault?

- **YES**

  OKAY: Troubleshooting has been completed.

- **NO**

  Refer to **CHECKING THE RELAY SUPPLY**

CHECKING THE RELAY SUPPLY

Remove the locking relay (2/113).

Measure the voltage between 5 in the relay socket and ground.

The voltmeter should display battery voltage.

HINT: If the value is OK but the fault still remains, connect the contacts to the lock module and link between 3 and 5 in the relay socket to force-feed the lock motor while continuing to test.

Additional information

- To access relay/fuse box in the cargo compartment:
  - For -2004, see: **RELAY/FUSE BOX CARGO COMPARTMENT/REAR ELECTRONIC MODULE (REM), REPLACING** .
  - For 2005-, see: **REAR ELECTRONIC MODULE (REM), REPLACING** .

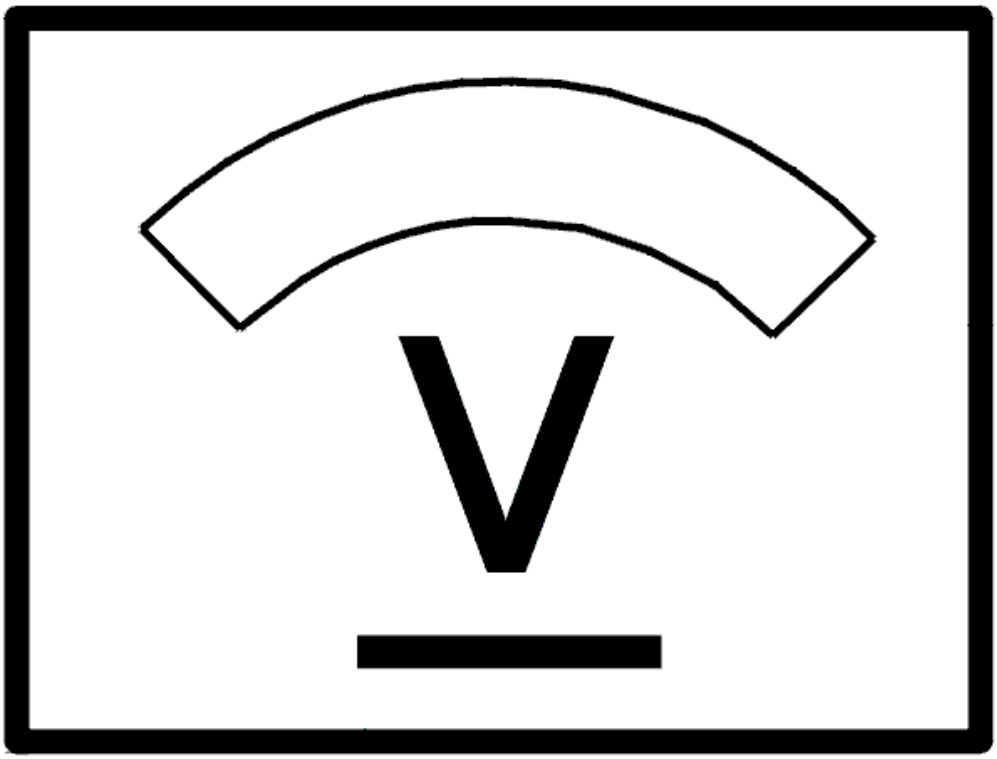

Fig. 131: Identifying Voltage Display

Courtesy of VOLVO CARS CORPORATION

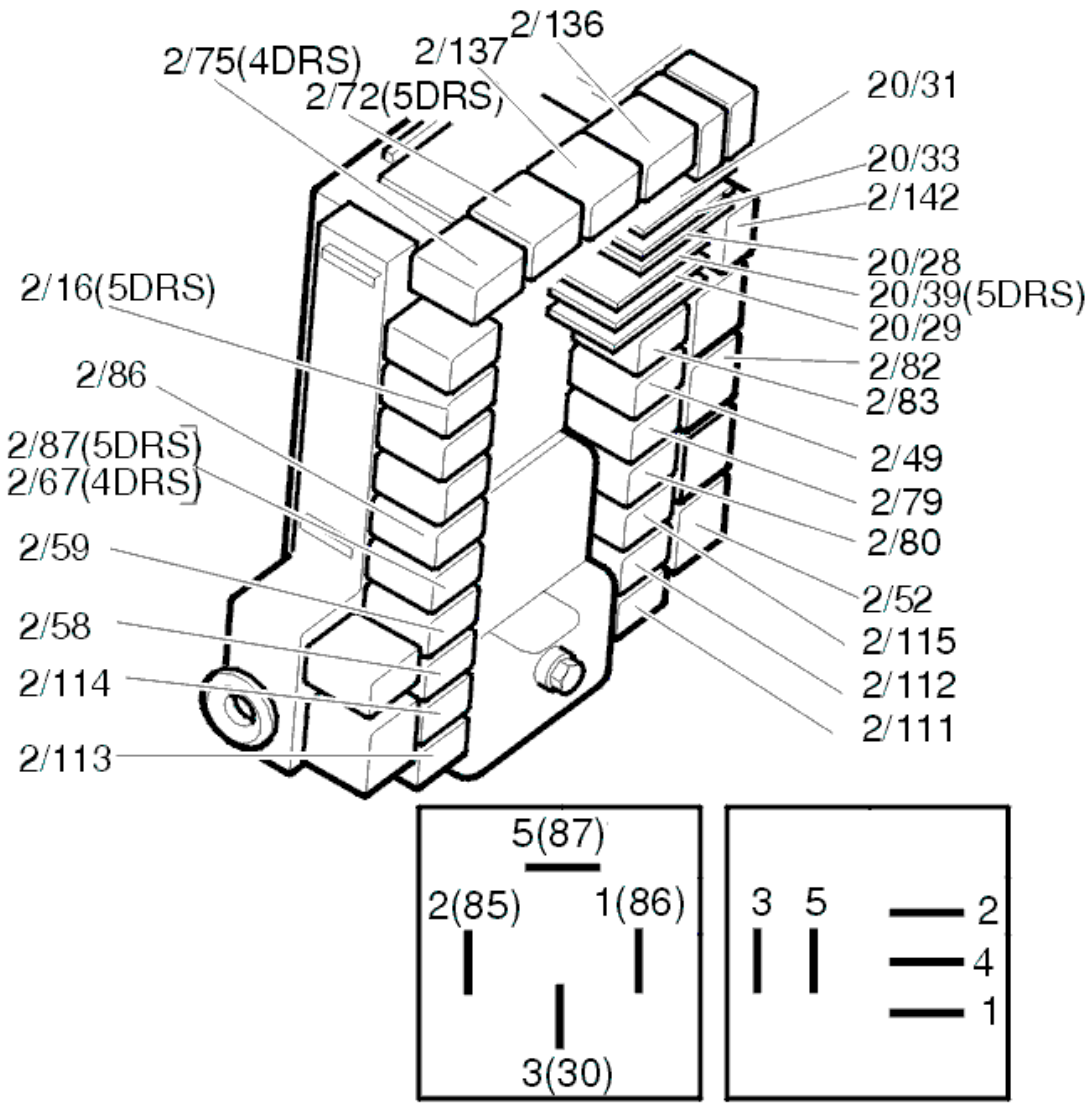

Fig. 132: Identifying Relays
Courtesy of VOLVO CARS CORPORATION

Does the voltmeter show the battery voltage?

- **YES**

  OKAY: Troubleshooting has been completed.

- **NO**

  Refer to **CHECKING THE FUSE**

CHECKING THE FUSE

Remove the fuse 11D/8 in cargo compartment fuse box.

Check that fuse 11D/8 is intact and check for contact resistance and oxidation as described in, see **CONTACT RESISTANCE AND OXIDATION** .

Additional information

- To access relay/fuse box in the cargo compartment:
  - For -2004, see: **RELAY/FUSE BOX CARGO COMPARTMENT/REAR ELECTRONIC MODULE (REM), REPLACING** .
  - For 2005-, see: **REAR ELECTRONIC MODULE (REM), REPLACING** .

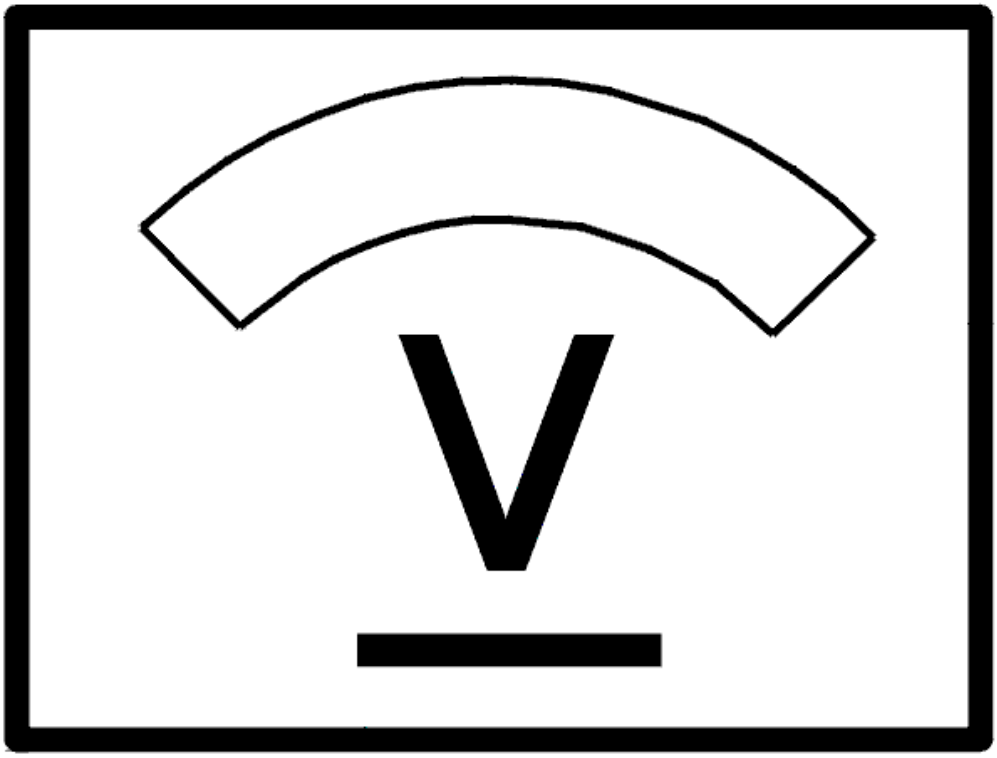

Fig. 133: Identifying Voltage Display
Courtesy of VOLVO CARS CORPORATION

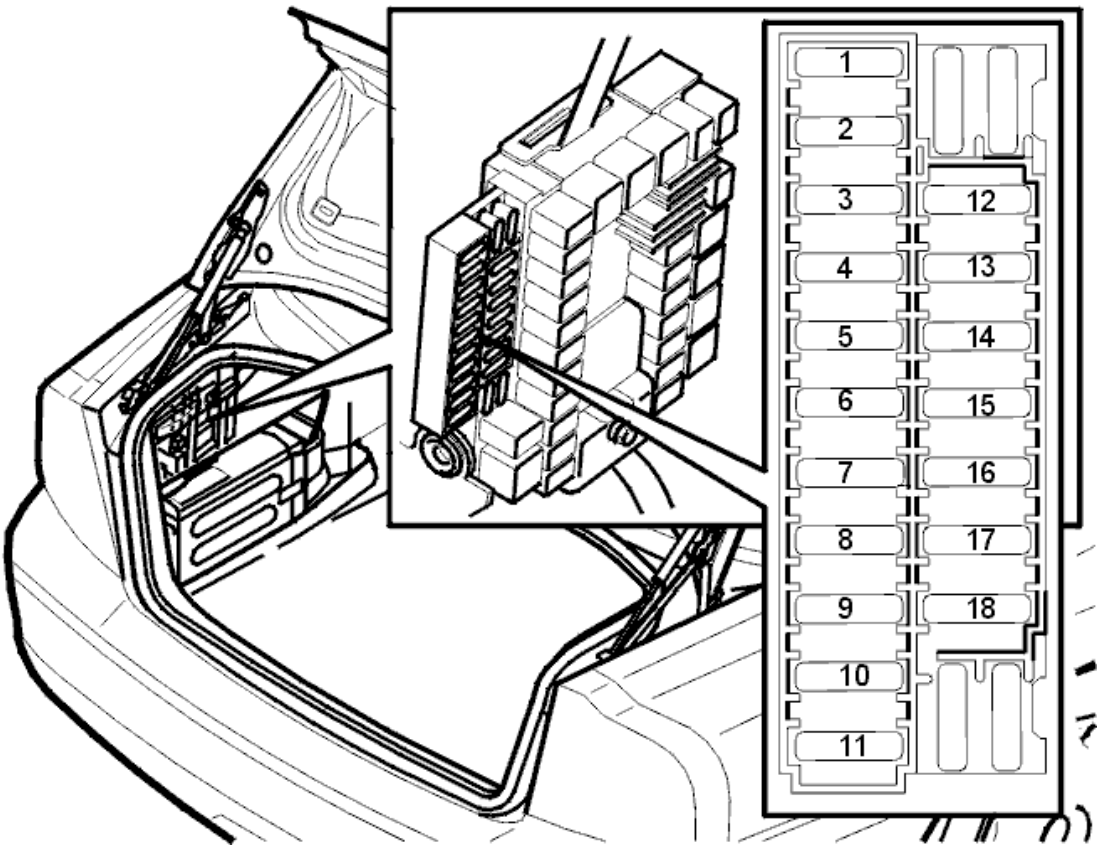

Fig. 134: Fuse Holder (Cargo Compartment)
Courtesy of VOLVO CARS CORPORATION

Is the fuse intact?

- **YES**

  Refer to **CHECKING FOR AN OPEN CIRCUIT**

- **NO**

  Refer to **CHECKING FOR A SHORT CIRCUIT**

CHECKING FOR AN OPEN CIRCUIT

Remove relay 2/113 in the cargo compartment relay/fuse box and trouble-shoot the wire between the fuse holder secondary side (left) and 5 in the relay socket for an open circuit as described in, see **OPEN-CIRCUIT, PERMANENT FAULTS** .

Additional information

- To access relay/fuse box in the cargo compartment:
  - For -2004, see: **RELAY/FUSE BOX CARGO COMPARTMENT/REAR ELECTRONIC MODULE (REM), REPLACING** .

- For 2005-, see: **REAR ELECTRONIC MODULE (REM), REPLACING** .

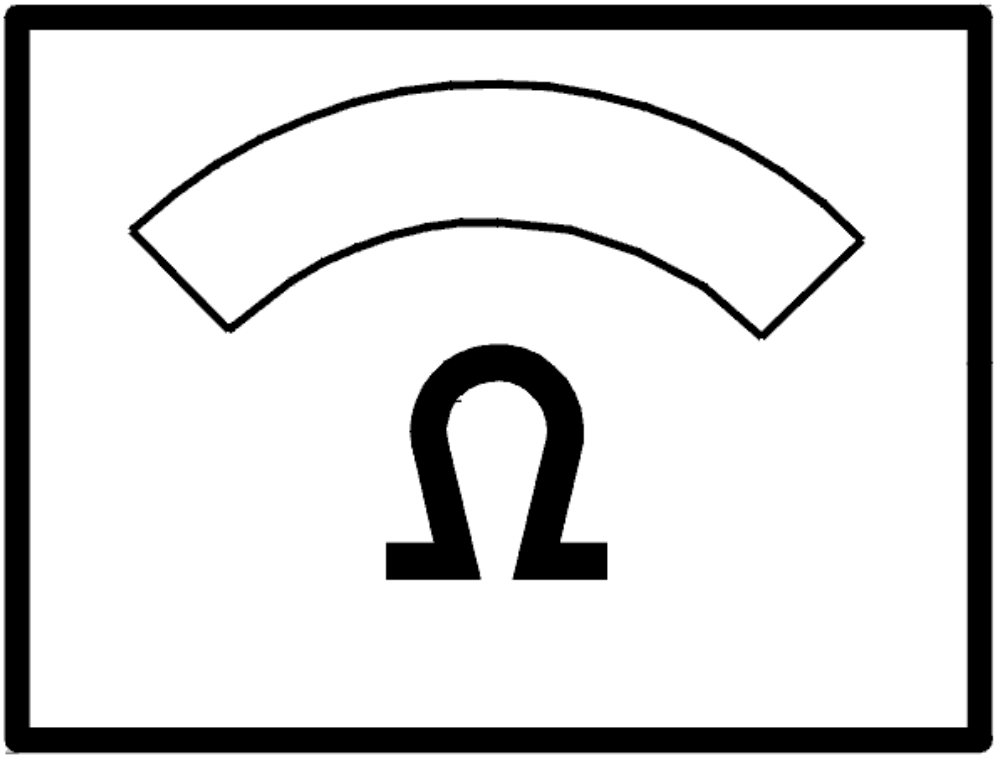

Fig. 135: Identifying Ohm Meter
Courtesy of VOLVO CARS CORPORATION

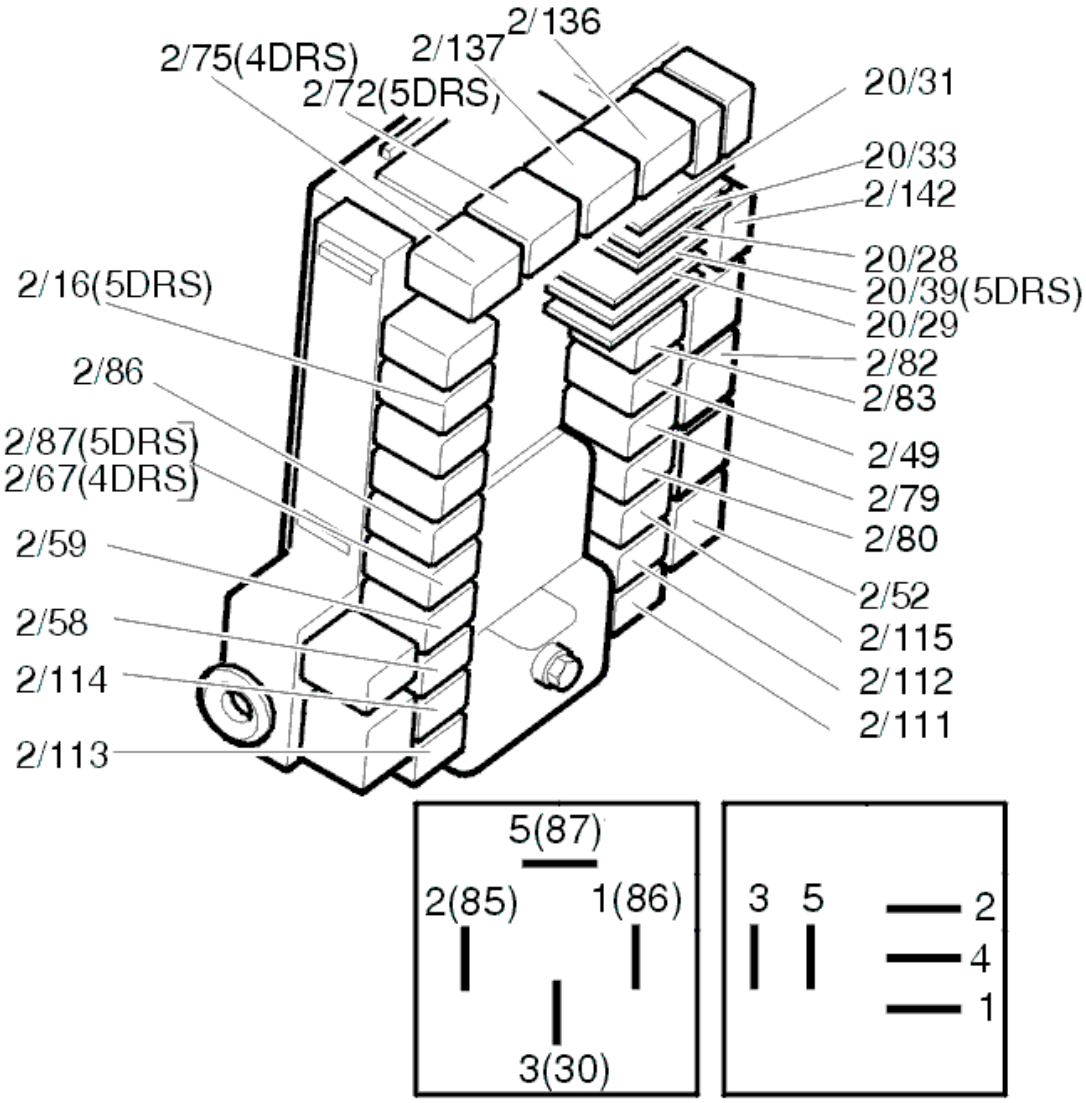

Fig. 136: Identifying Relays
Courtesy of VOLVO CARS CORPORATION

CHECKING FOR A SHORT CIRCUIT

Check the resistance between the fuse holder secondary side (left) and ground.

The ohmmeter should display infinite resistance.

If the value is correct, replace the fuse.

If the value deviates, trouble-shoot all the relay circuits involved for a short circuit to ground as described in, see **SHORT-CIRCUIT TO GROUND, PERMANENT FAULTS** .

NOTE: If the value is correct the fault could be intermittent.

HINT: Replace fuse.

HINT: If the fuse works straight away the fault is a short circuit on the relay supply wire.

HINT: If the fuse works when activating each relay the short circuit is on the component supply wire

HINT: The relay circuits involved belong to relays 2/111, 2/112, 2/113, 2/114, 2/115, 2/56, 2/59 and 2/67.

Additional information

- To access relay/fuse box in the cargo compartment:
  - For -2004, see: **RELAY/FUSE BOX CARGO COMPARTMENT/REAR ELECTRONIC MODULE (REM), REPLACING** .
  - For 2005-, see: **REAR ELECTRONIC MODULE (REM), REPLACING** .

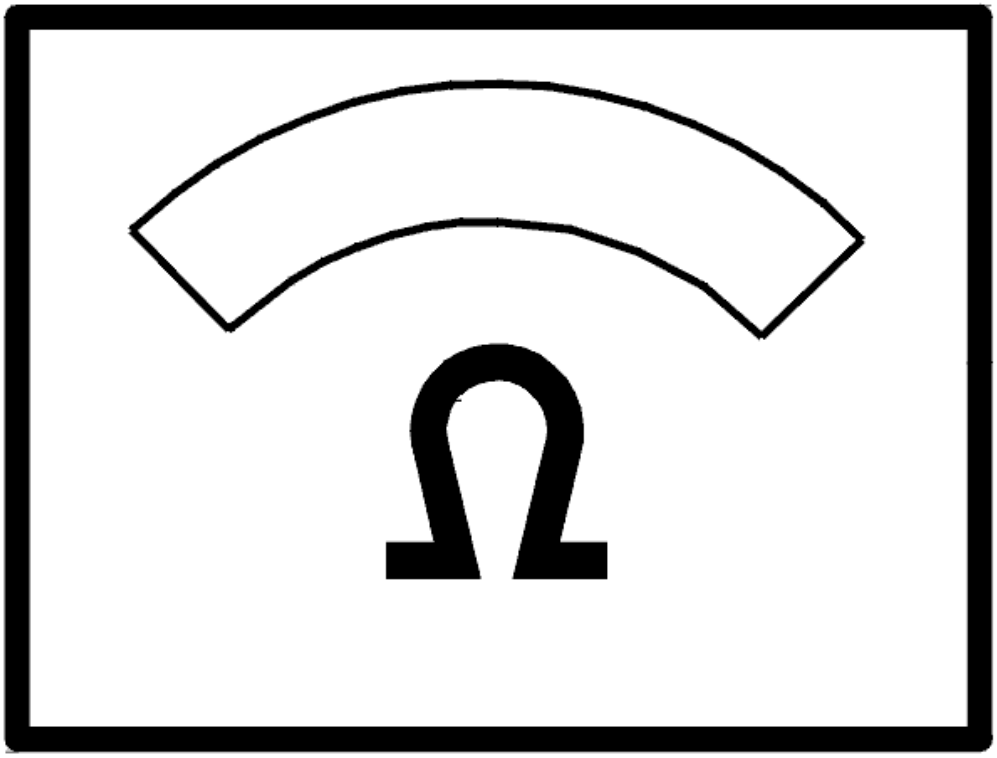

Fig. 137: Identifying Ohm Meter
Courtesy of VOLVO CARS CORPORATION

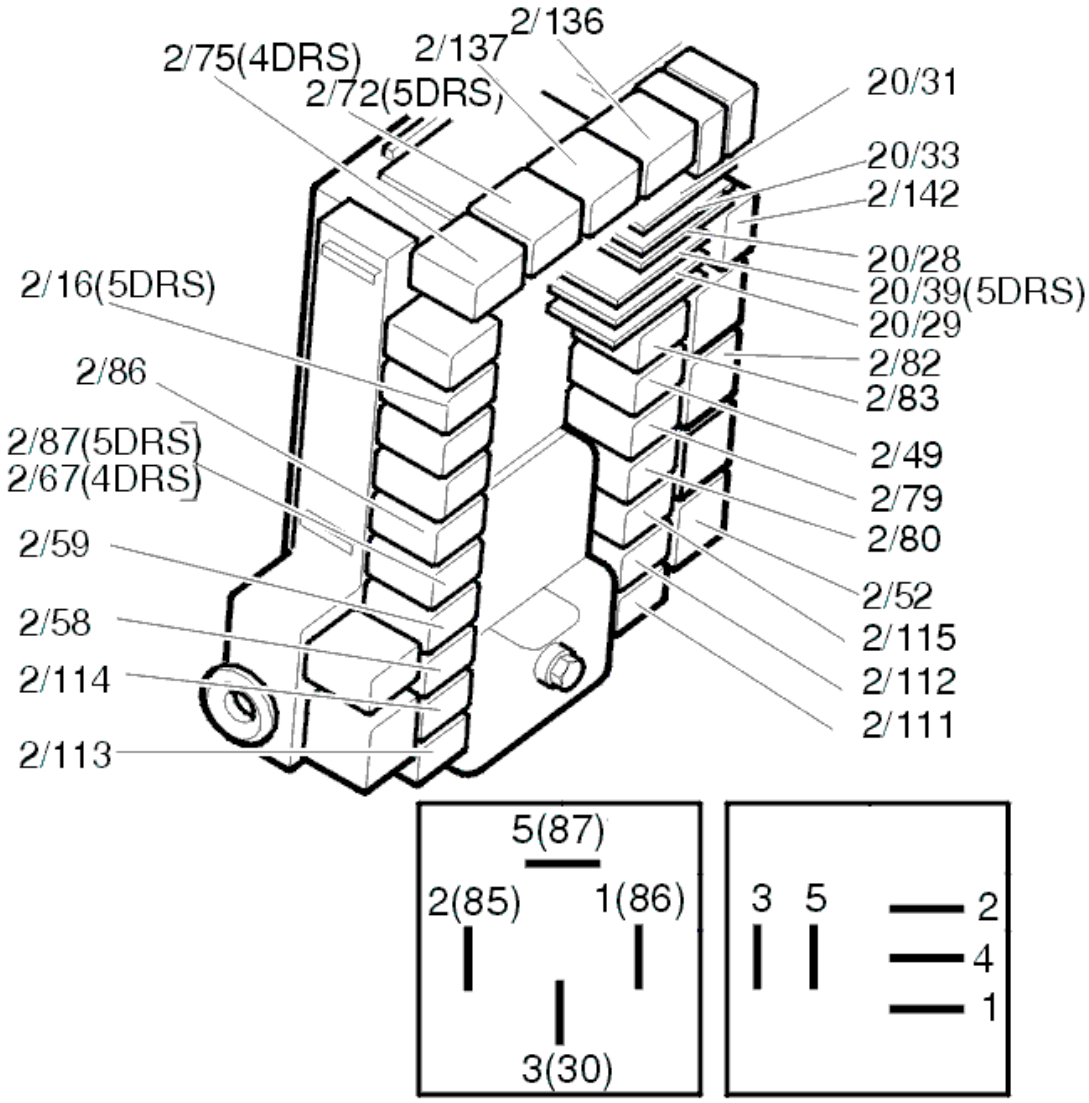

Fig. 138: Identifying Relays
Courtesy of VOLVO CARS CORPORATION

VERIFICATION

VERIFICATION

HINT: After the repair it is necessary to check that the fault has been rectified.

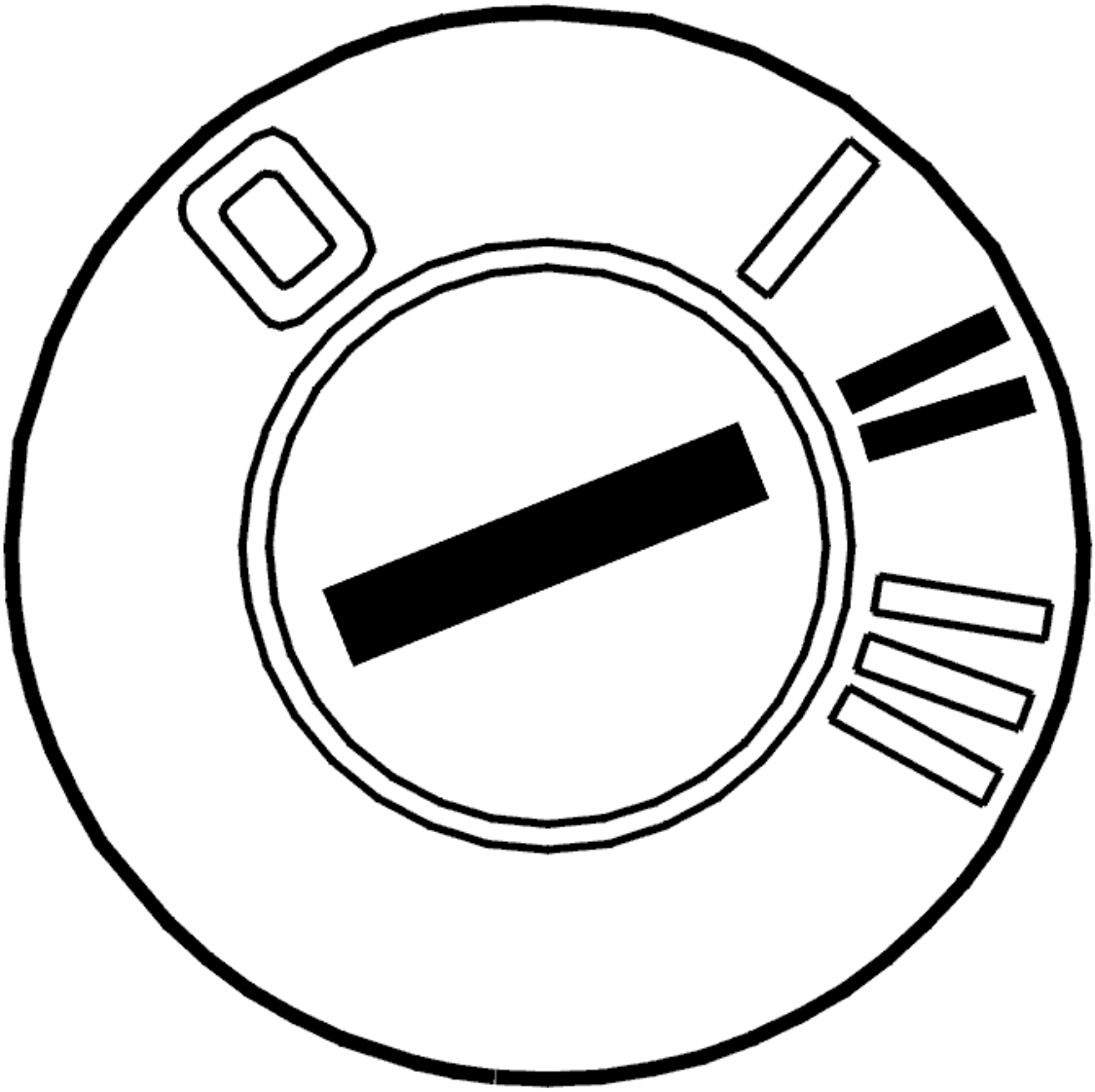

Fig. 139: Identifying Ignition ON
Courtesy of VOLVO CARS CORPORATION

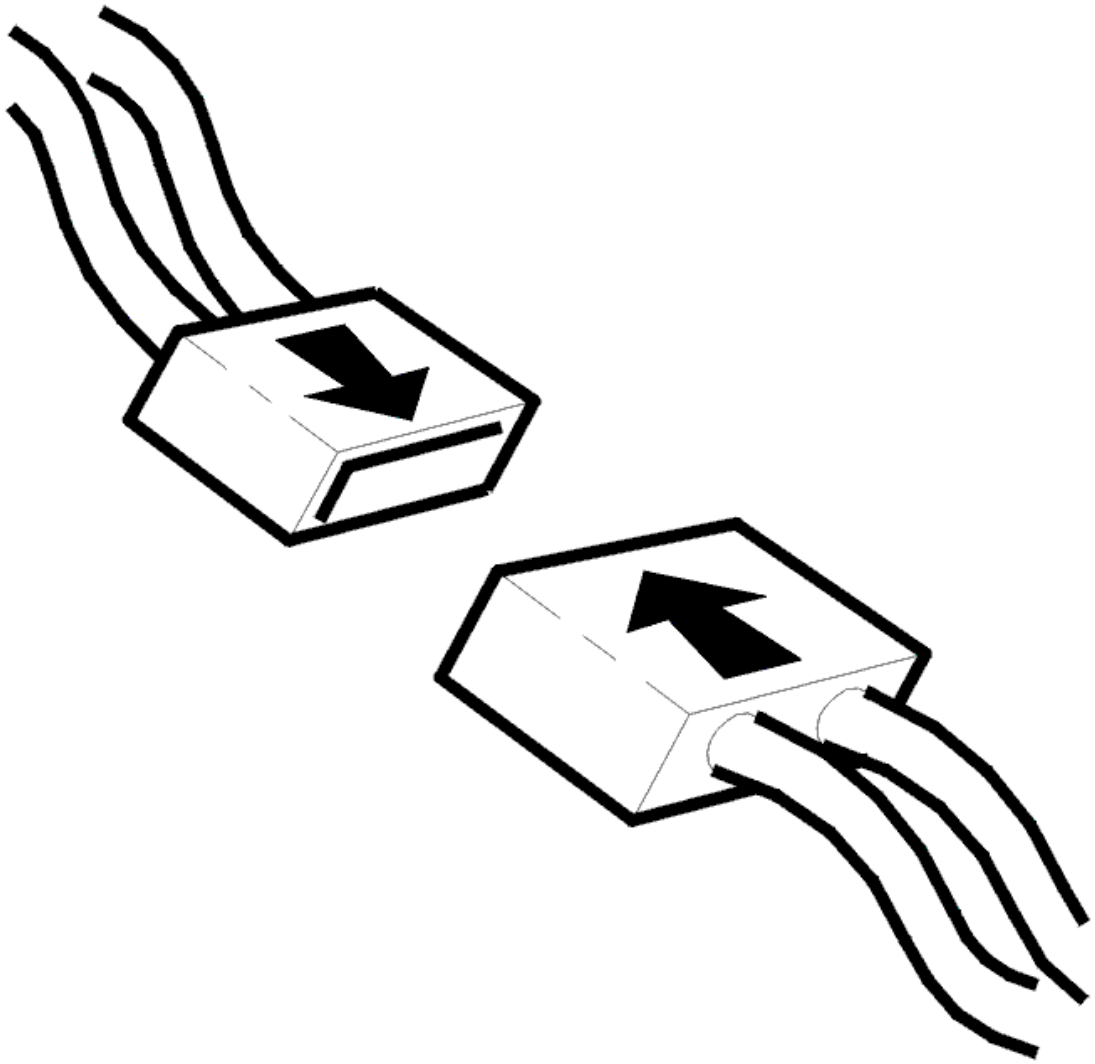

Fig. 140: Connecting Connector
Courtesy of VOLVO CARS CORPORATION

- Ignition off.
- Connect the connectors, install the components, etc.
- Ignition on.

  Lock by remote control and check that the text displays LOCKED.

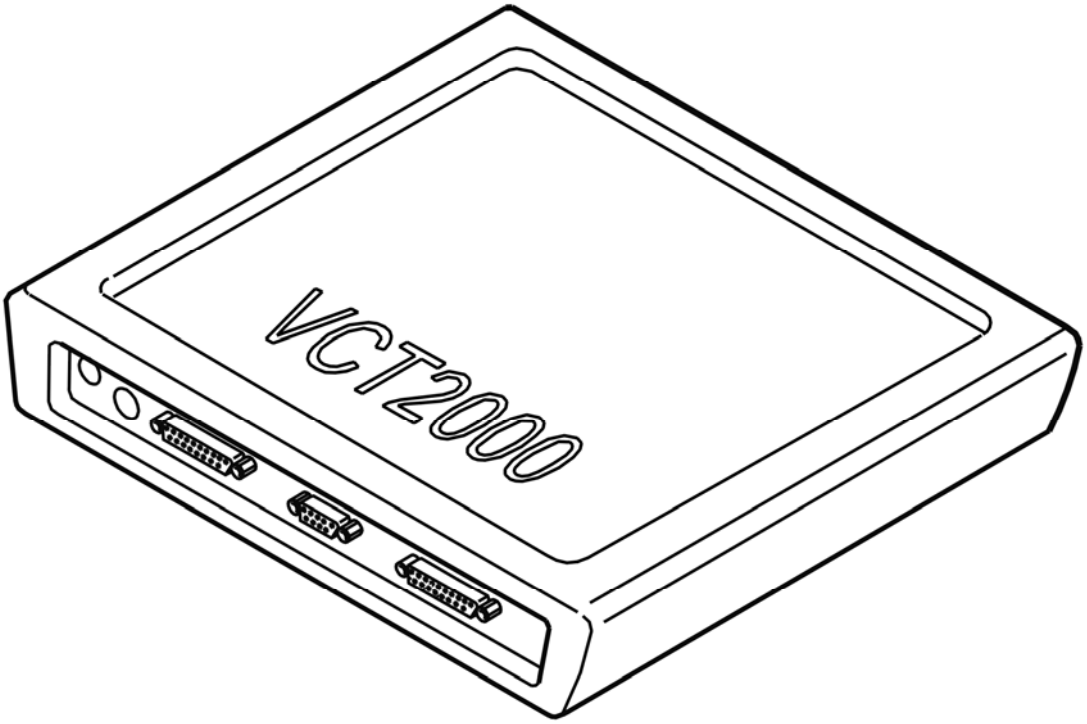

Fig. 141: Identifying VCT2000 Diagnostic Tool Symbol In VIDA
Courtesy of VOLVO CARS CORPORATION

Does the text display LOCKED?

- **YES**

  VERIFIED: Troubleshooting has been completed.

- **NO**

  Refer to **INFORMATION**

INFORMATION

FAULT-TRACING INFORMATION

The fault should have been detected and remedied. As this is not the case fault-tracing has failed.

Exit fault-tracing for this diagnostic trouble code (DTC) or make another attempt.

CEM-6C11: GLASS BREAKAGE LOOP, REAR WINDOWS. SIGNAL TOO LOW. INTERMITTENT FAULT (2003-2004)

DIAGNOSTIC TROUBLE CODE (DTC) INFORMATION

Condition

Diagnostic trouble code (DTC) CEM-6C11 is stored if the signal from the glass breakage loop is too low.

Substitute Value

None.

Possible Source

- Open-circuit in the left glass breakage loop.
- Open-circuit in the right glass breakage loop.
- Open-circuit in the glass breakage loop for the tailgate.
- Open-circuit in one of the cables between the glass breakage loops.

Fault symptom[s]

- Indicator LED / status panel; faulty indication.

SIGNAL TOO LOW. INTERMITTENT FAULT

CHECKING THE SIGNAL CABLE

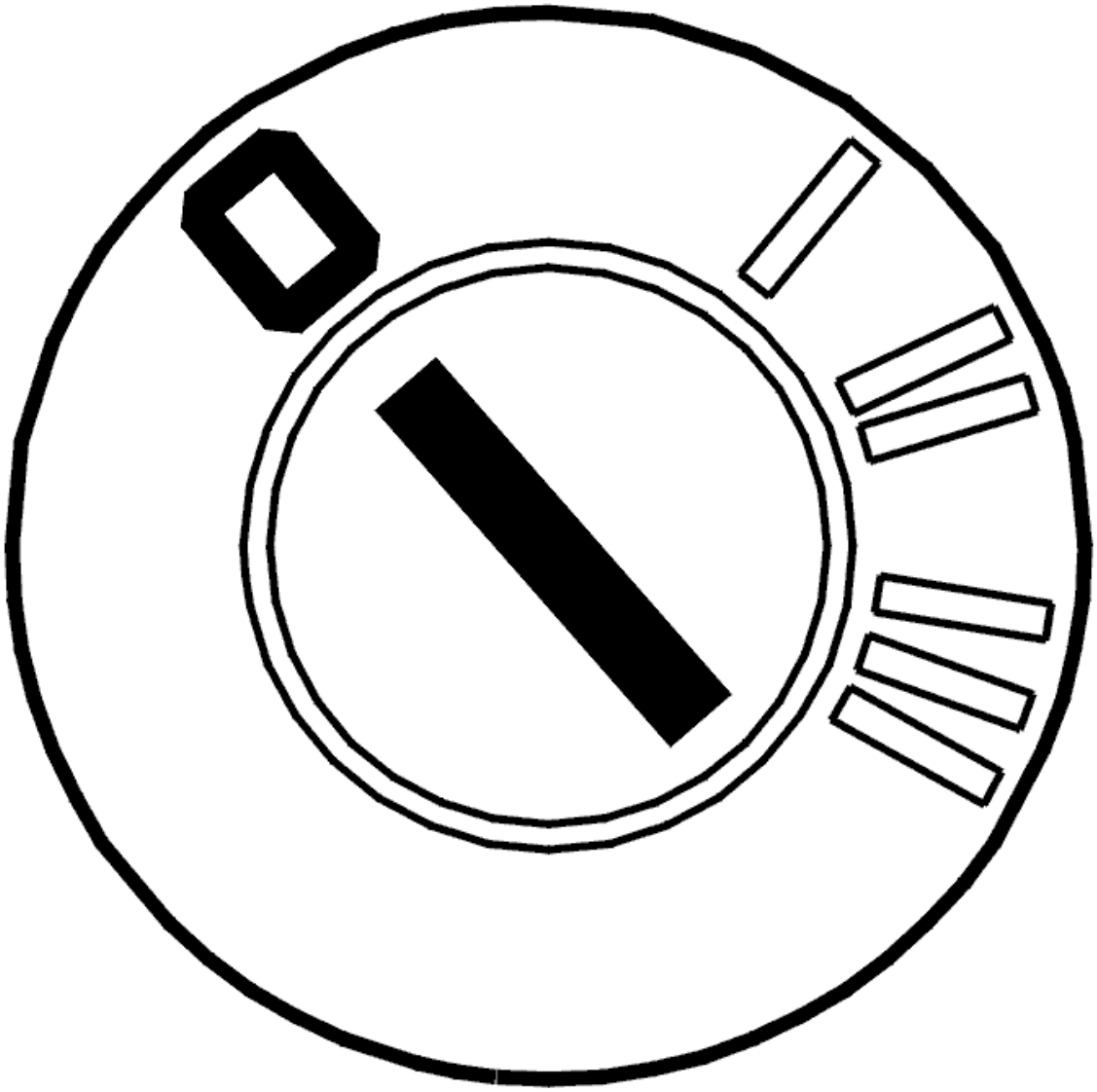

Fig. 142: Identifying Ignition OFF
Courtesy of VOLVO CARS CORPORATION

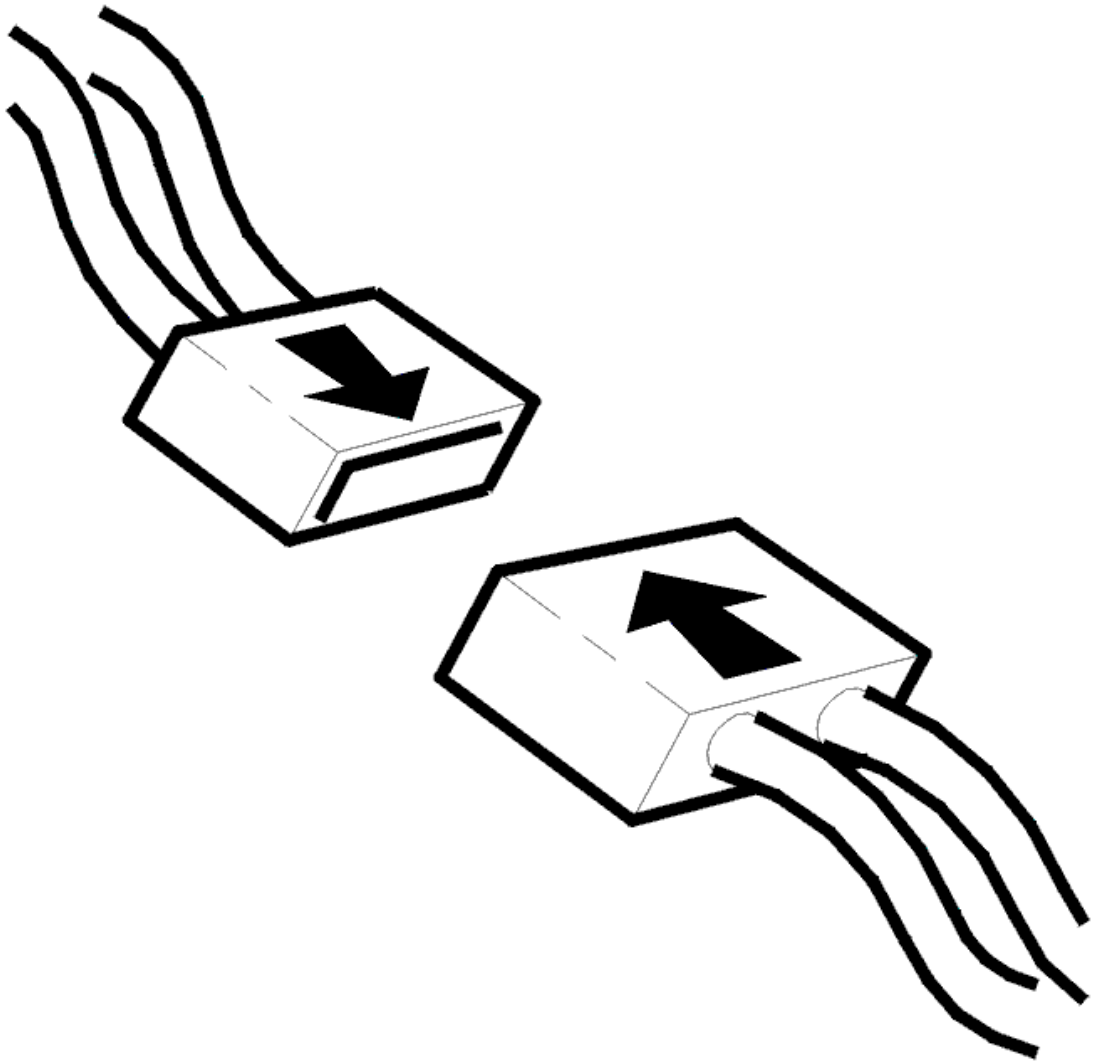

Fig. 143: Connecting Connector
Courtesy of VOLVO CARS CORPORATION

- Ignition off
- Disconnect the connector from the central electronic module (CEM).

  HINT: The signal cable goes from the Central electronic module (CEM) to ground via glass breakage circuit right and glass breakage circuit left.

  Check the signal cable. Check for a short-circuit to ground.

  Begin by measuring at the grounding point and then go backward along the circuit to find the defect.

  Remedy as necessary.

  Other information:

- see **CONNECTING THE BREAKOUT BOX**
- -2004: **SIGNAL SPECIFICATION**
- 2005-: **SIGNAL SPECIFICATION**
- For -2004, see: **CENTRAL ELECTRONIC MODULE (CEM), REPLACING**
- For 2005-, see: **CENTRAL ELECTRONIC MODULE (CEM), REPLACING** .
- see **CHECKING WIRING AND TERMINALS. INTERMITTENT FAULTS**

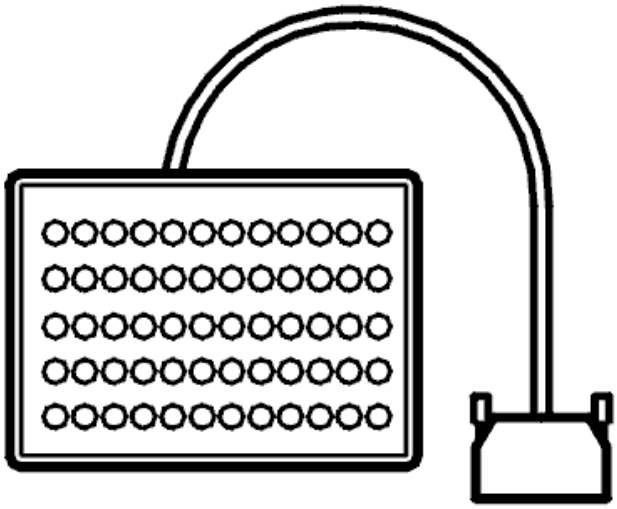

Fig. 144: Breakout Box
Courtesy of VOLVO CARS CORPORATION

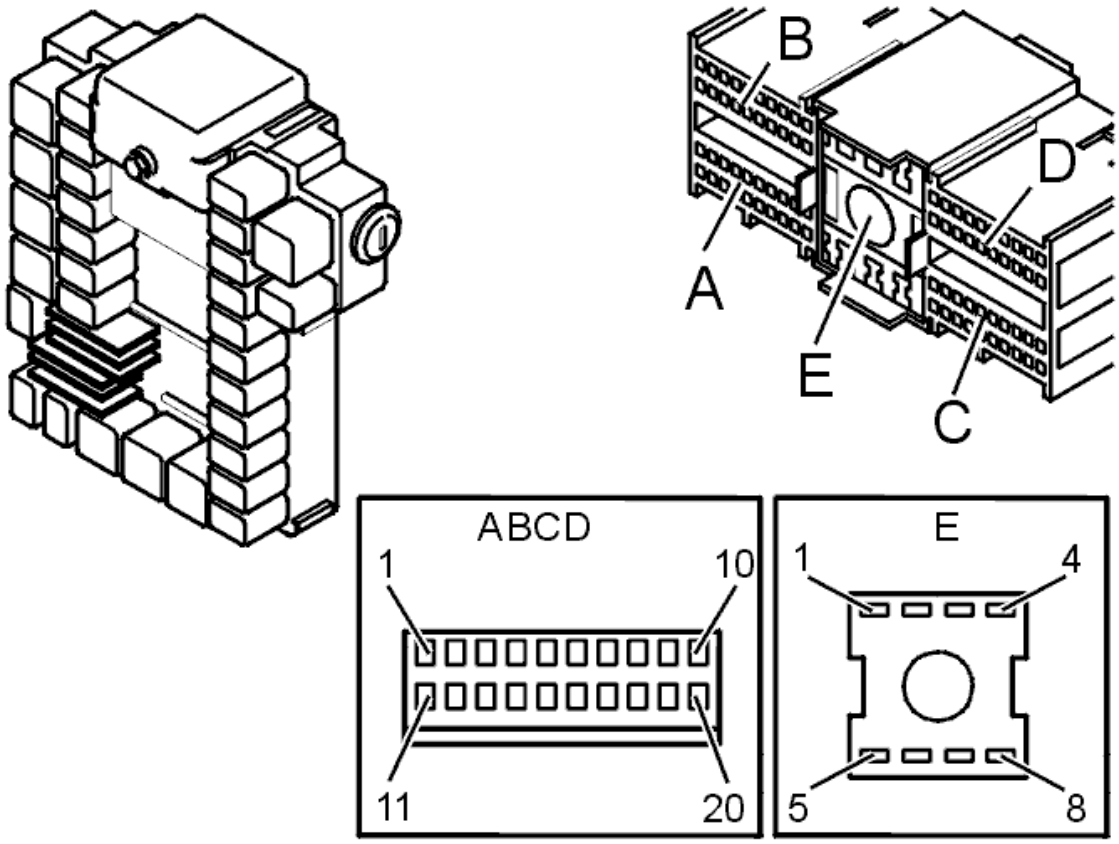

Fig. 145: Ground Terminals
Courtesy of VOLVO CARS CORPORATION

- **Continue**

  Refer to **INFORMATION**

INFORMATION

FAULT-TRACING INFORMATION

If the fault is intermittent, do not verify fault-tracing if the fault does not recur.

It is possible to view the information again, or leave fault-tracing for this diagnostic trouble code (DTC).

CEM-6C11: GLASS BREAKAGE LOOP, REAR WINDOWS. SIGNAL TOO LOW. PERMANENT FAULT (2003-2004)

DIAGNOSTIC TROUBLE CODE (DTC) INFORMATION

see **DIAGNOSTIC TROUBLE CODE (DTC) INFORMATION**

SIGNAL TOO LOW. PERMANENT FAULT

CHECKING THE SIGNAL CABLE

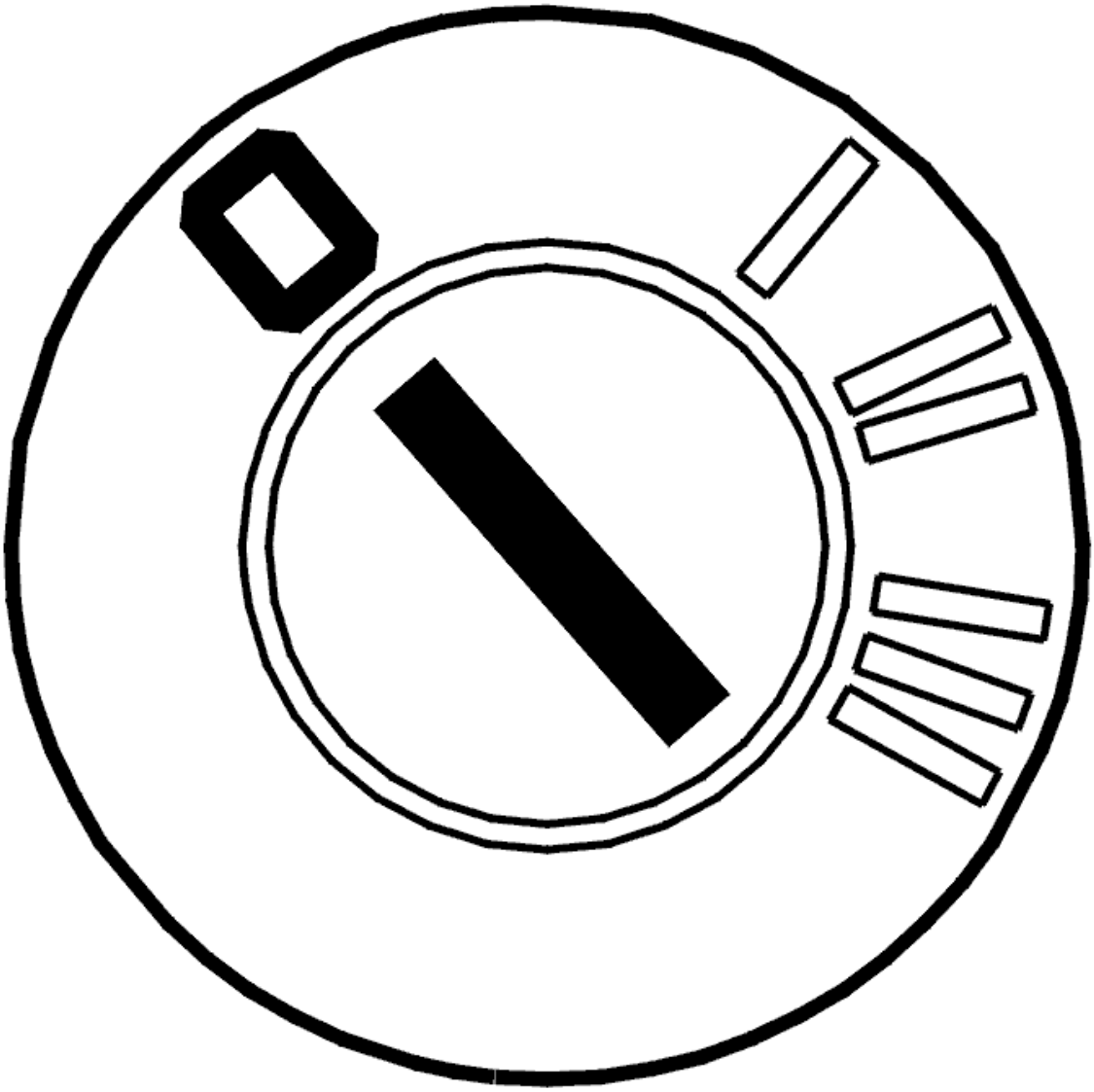

Fig. 146: Identifying Ignition OFF
Courtesy of VOLVO CARS CORPORATION

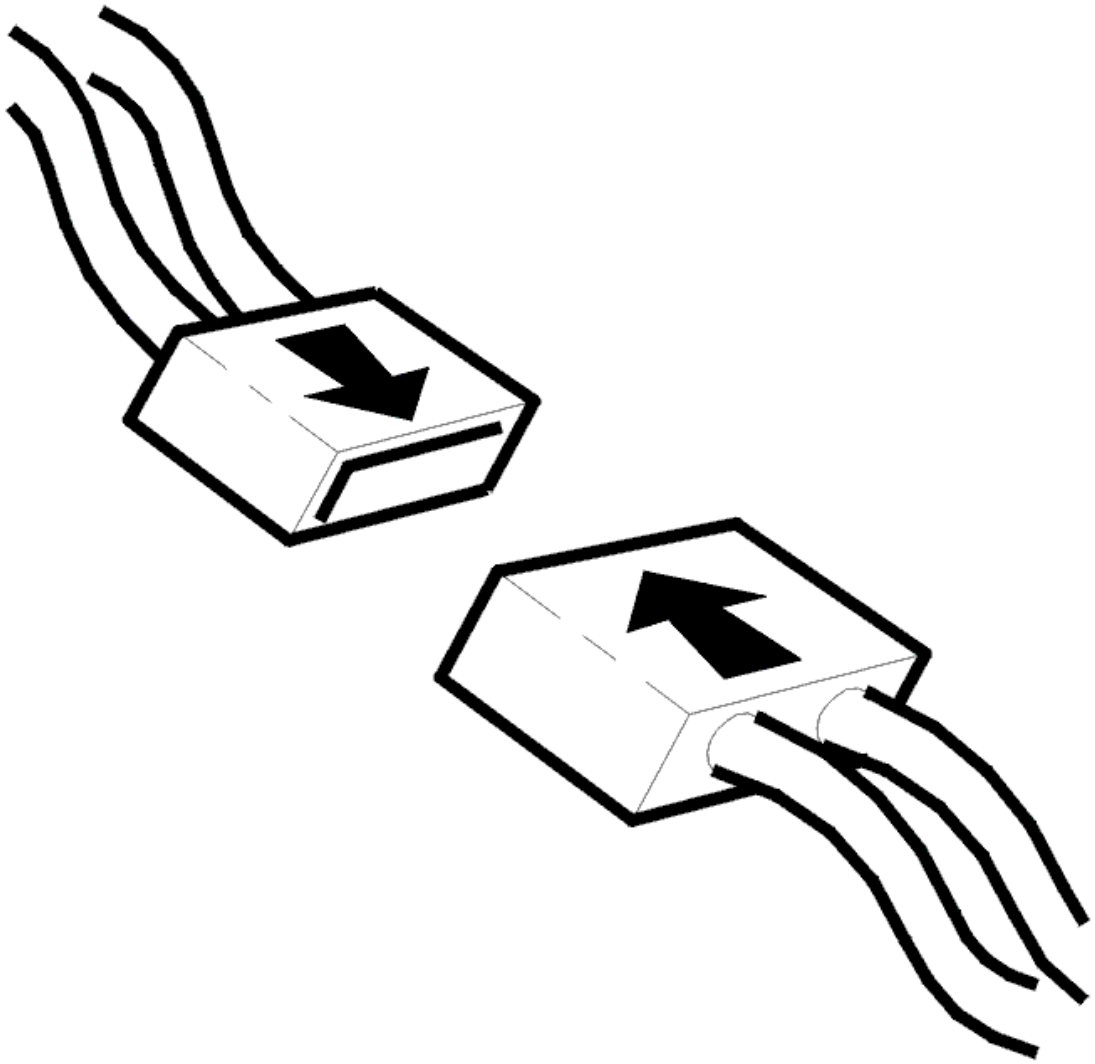

Fig. 147: Connecting Connector
Courtesy of VOLVO CARS CORPORATION

- Ignition off
- Disconnect the connector from the central electronic module (CEM).

  HINT: The signal cable goes from the Central electronic module (CEM) to ground via glass breakage circuit right and glass breakage circuit left.

  Check the signal cable. Check for a short-circuit to ground.

  Begin by measuring at the grounding point and then go backward along the circuit to find the defect.

  Remedy as necessary.

  Other information:

- see **CONNECTING THE BREAKOUT BOX**
- -2004: **SIGNAL SPECIFICATION**
- 2005-: **SIGNAL SPECIFICATION**
- For -2004, see: **CENTRAL ELECTRONIC MODULE (CEM), REPLACING**
- For 2005-, see: **CENTRAL ELECTRONIC MODULE (CEM), REPLACING** .
- see **CHECKING WIRING AND TERMINALS. PERMANENT FAULT**

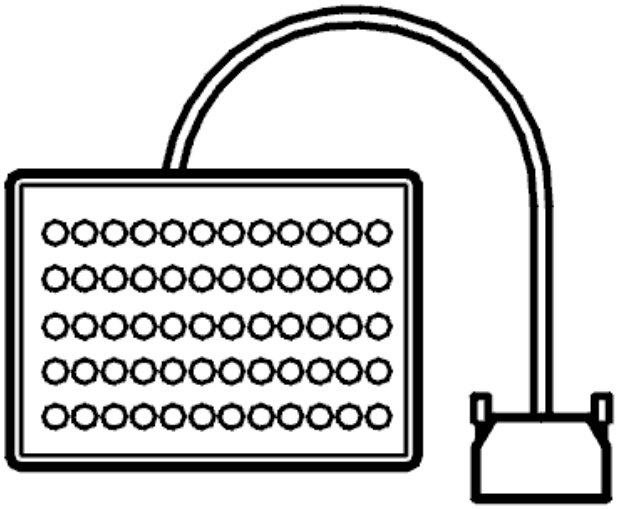

Fig. 148: Breakout Box
Courtesy of VOLVO CARS CORPORATION

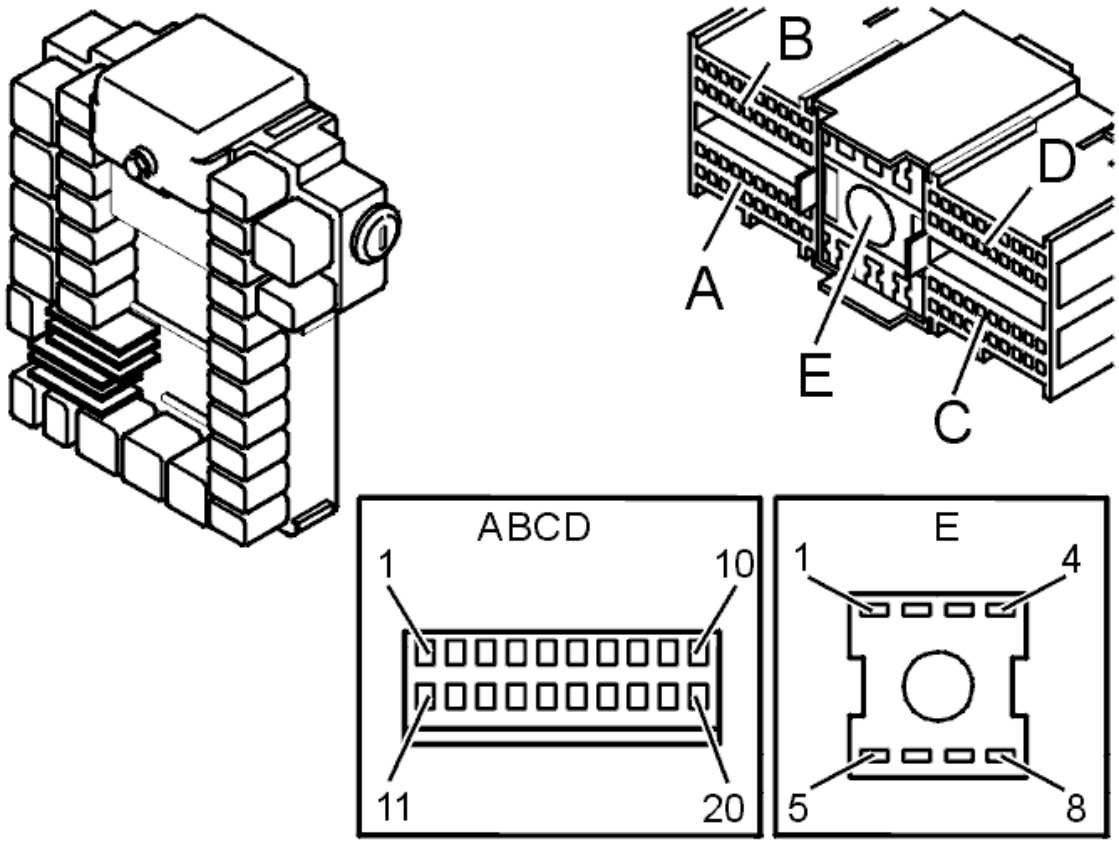

Fig. 149: Ground Terminals
Courtesy of VOLVO CARS CORPORATION

Is the circuit OK?

- **YES**

  Refer to **INFORMATION**

- **NO**

  Refer to **VERIFICATION**

VERIFICATION

VERIFICATION

HINT: After carrying out the repair, check that the fault has been remedied.

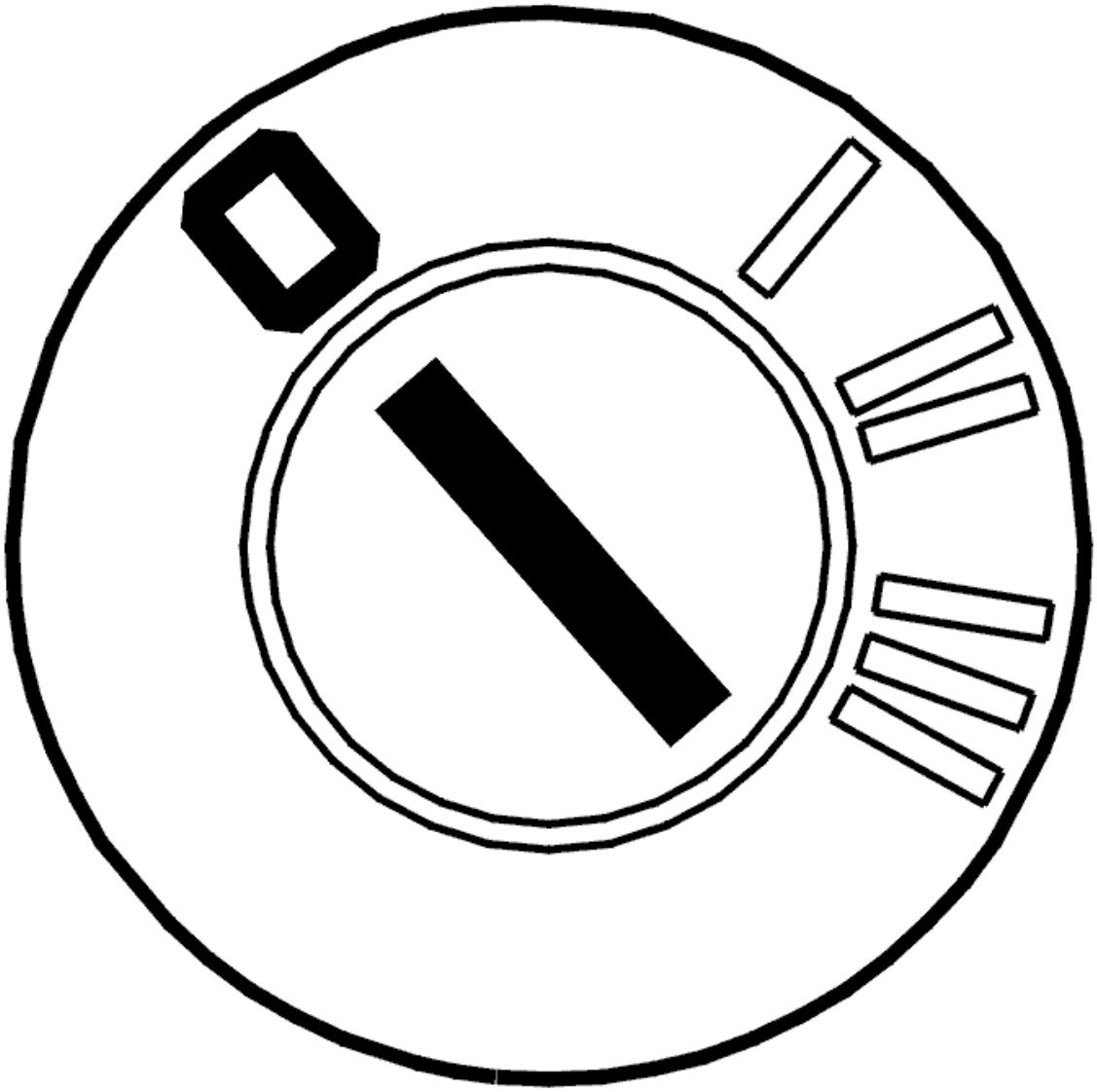

Fig. 150: Identifying Ignition OFF
Courtesy of VOLVO CARS CORPORATION

- Ignition off.
- Reinstall the connectors, components etc.
- Shut all the doors. Activate the alarm.
- Deactivate alarm.

Check that the diagnostic trouble code (DTC) status displays Intermittent.

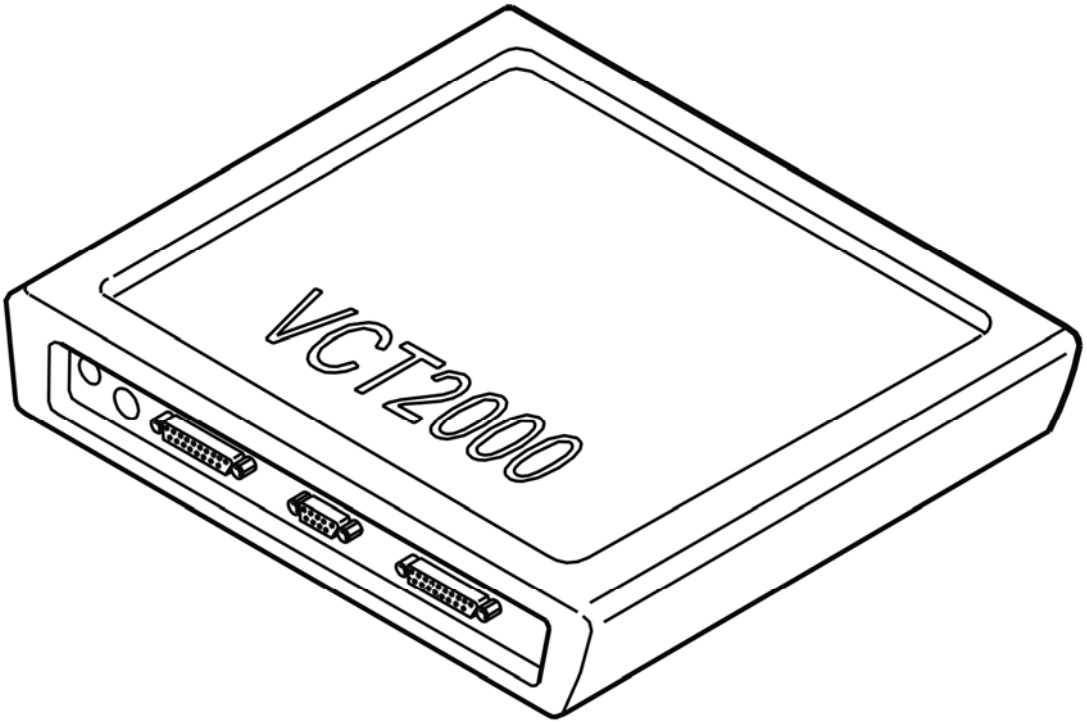

Fig. 151: Identifying VCT2000 Diagnostic Tool Symbol In VIDA
Courtesy of VOLVO CARS CORPORATION

Does the diagnostic trouble code (DTC) status display Intermittent?

- **YES**

  VERIFIED: Troubleshooting has been completed.

- **NO**

  Refer to **INFORMATION**

INFORMATION

FAULT-TRACING INFORMATION

The fault should have been detected and remedied. As this is not the case fault-tracing has failed.

Exit fault-tracing for this diagnostic trouble code (DTC) or make another attempt.

CEM-6C12: GLASS BREAKAGE LOOP, REAR WINDOWS. SIGNAL TOO HIGH. INTERMITTENT FAULT (2003-2004)

DIAGNOSTIC TROUBLE CODE (DTC) INFORMATION

Condition

Diagnostic trouble code (DTC) CEM-6C12 is stored if the signal from the glass breakage loop is too high.

Substitute Value

None.

Possible Source

- Short-circuit to supply voltage in the cable to, between and from glass breakage loops.

Fault symptom[s]

- Indicator LED / status panel; faulty indication.

SIGNAL TOO HIGH. INTERMITTENT FAULT

CHECKING THE SIGNAL CABLE

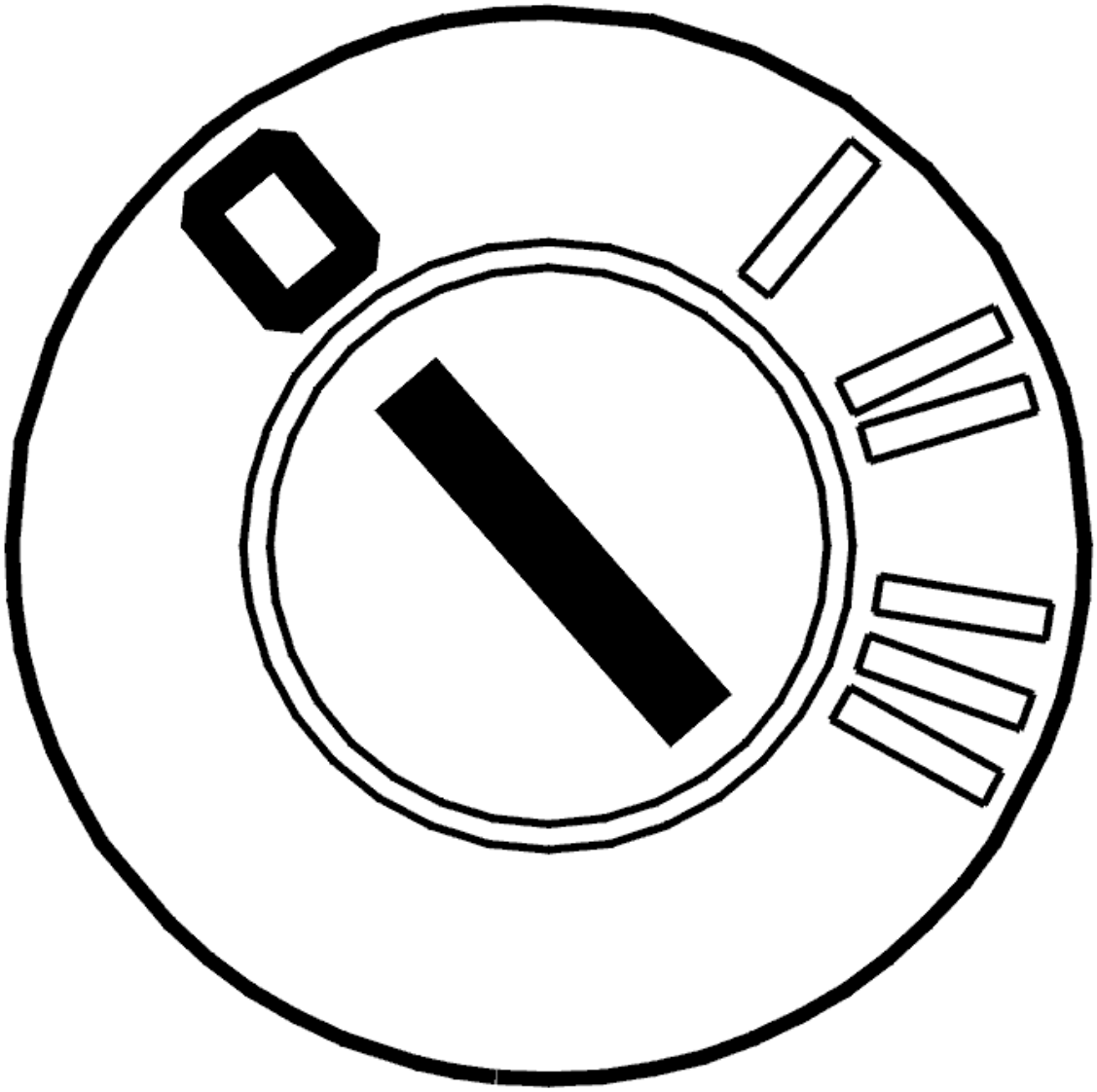

Fig. 152: Identifying Ignition OFF
Courtesy of VOLVO CARS CORPORATION

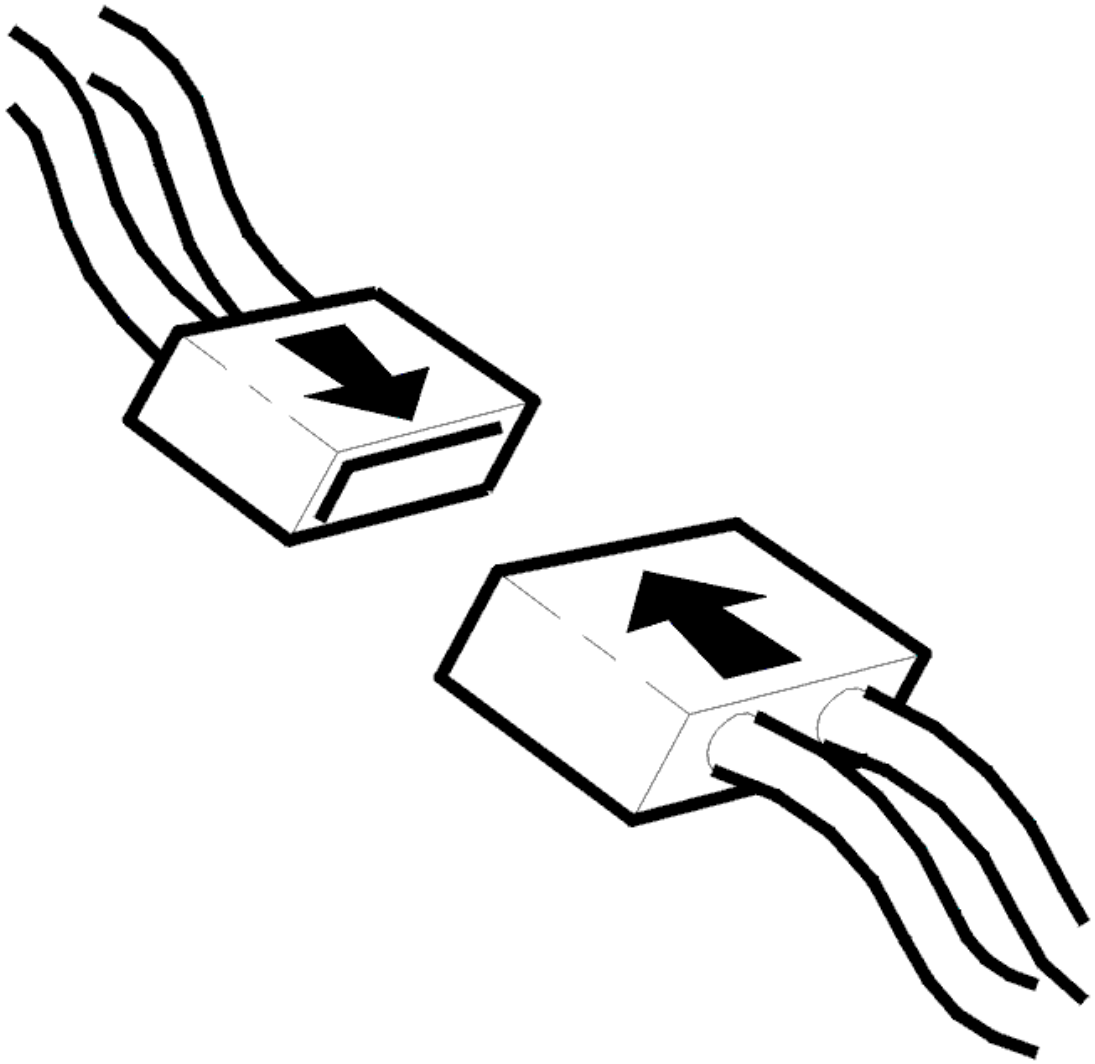

Fig. 153: Connecting Connector
Courtesy of VOLVO CARS CORPORATION

- Ignition off.
- Disconnect the connector from the central electronic module (CEM).

  HINT: The signal cable goes from the Central electronic module (CEM) to ground via glass breakage circuit right and glass breakage circuit left.

  Check the signal cable. Check for a short-circuit to supply voltage.

  Begin by measuring at the grounding point and then go backward along the circuit to find the defect.

  Remedy as necessary.

  Other information:

- see **CONNECTING THE BREAKOUT BOX**
- -2004: **SIGNAL SPECIFICATION**
- 2005-: **SIGNAL SPECIFICATION**
- For -2004, see: **CENTRAL ELECTRONIC MODULE (CEM), REPLACING**
- For 2005-, see: **CENTRAL ELECTRONIC MODULE (CEM), REPLACING** .
- see **CHECKING WIRING AND TERMINALS. INTERMITTENT FAULTS**

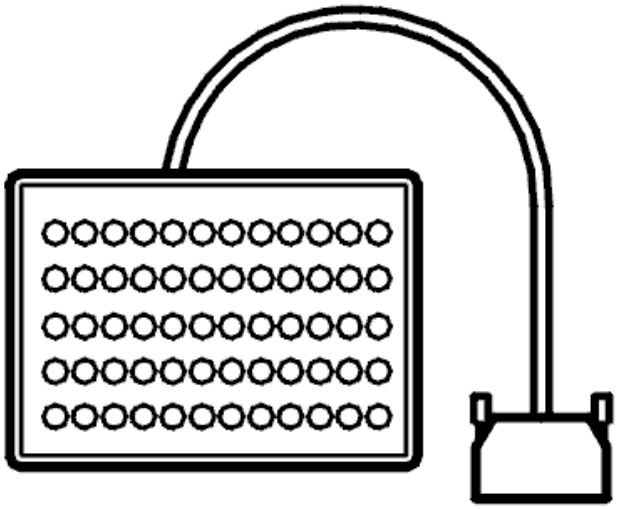

Fig. 154: Breakout Box
Courtesy of VOLVO CARS CORPORATION

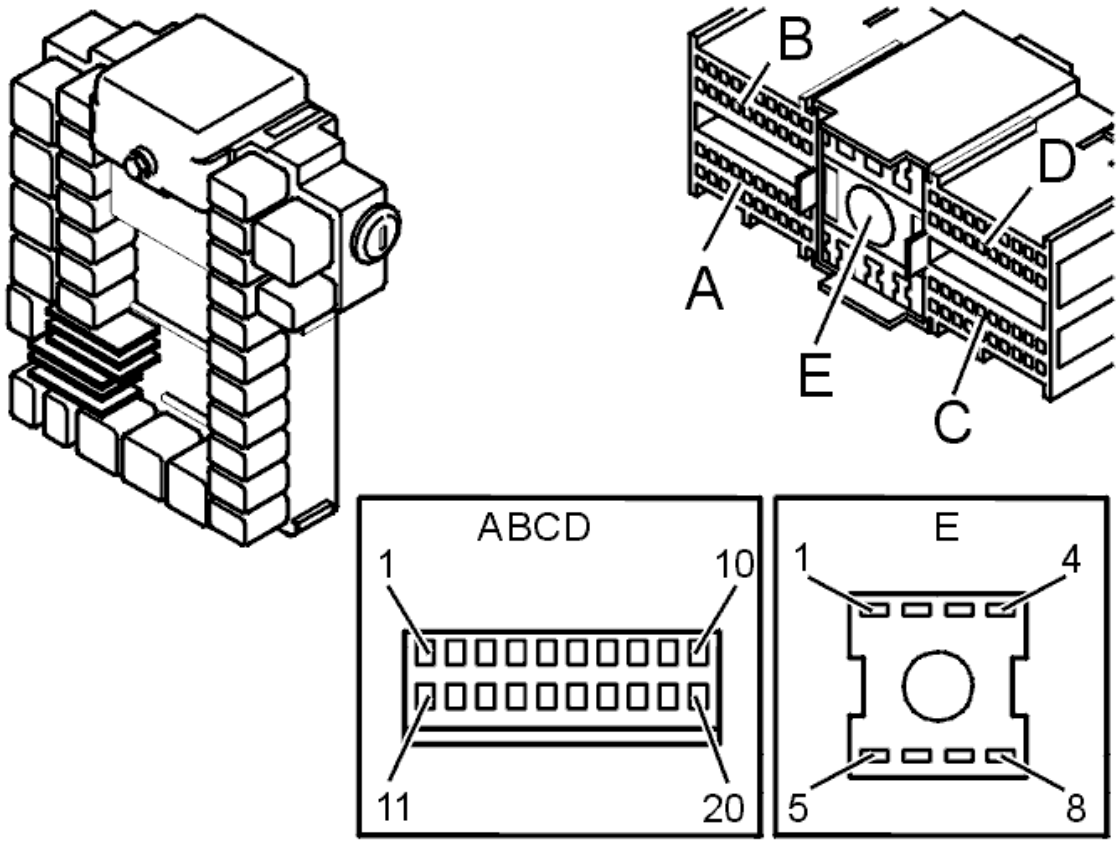

Fig. 155: Ground Terminals
Courtesy of VOLVO CARS CORPORATION

- **Continue**

  Refer to **INFORMATION**

INFORMATION

FAULT-TRACING INFORMATION

If the fault is intermittent, do not verify fault-tracing if the fault does not recur.

It is possible to view the information again, or leave fault-tracing for this diagnostic trouble code (DTC).

CEM-6C12: GLASS BREAKAGE LOOP, REAR WINDOWS. SIGNAL TOO HIGH. PERMANENT FAULT (2003-2004)

DIAGNOSTIC TROUBLE CODE (DTC) INFORMATION

see **DIAGNOSTIC TROUBLE CODE (DTC) INFORMATION**

SIGNAL TOO HIGH. PERMANENT FAULT

CHECKING THE SIGNAL CABLE

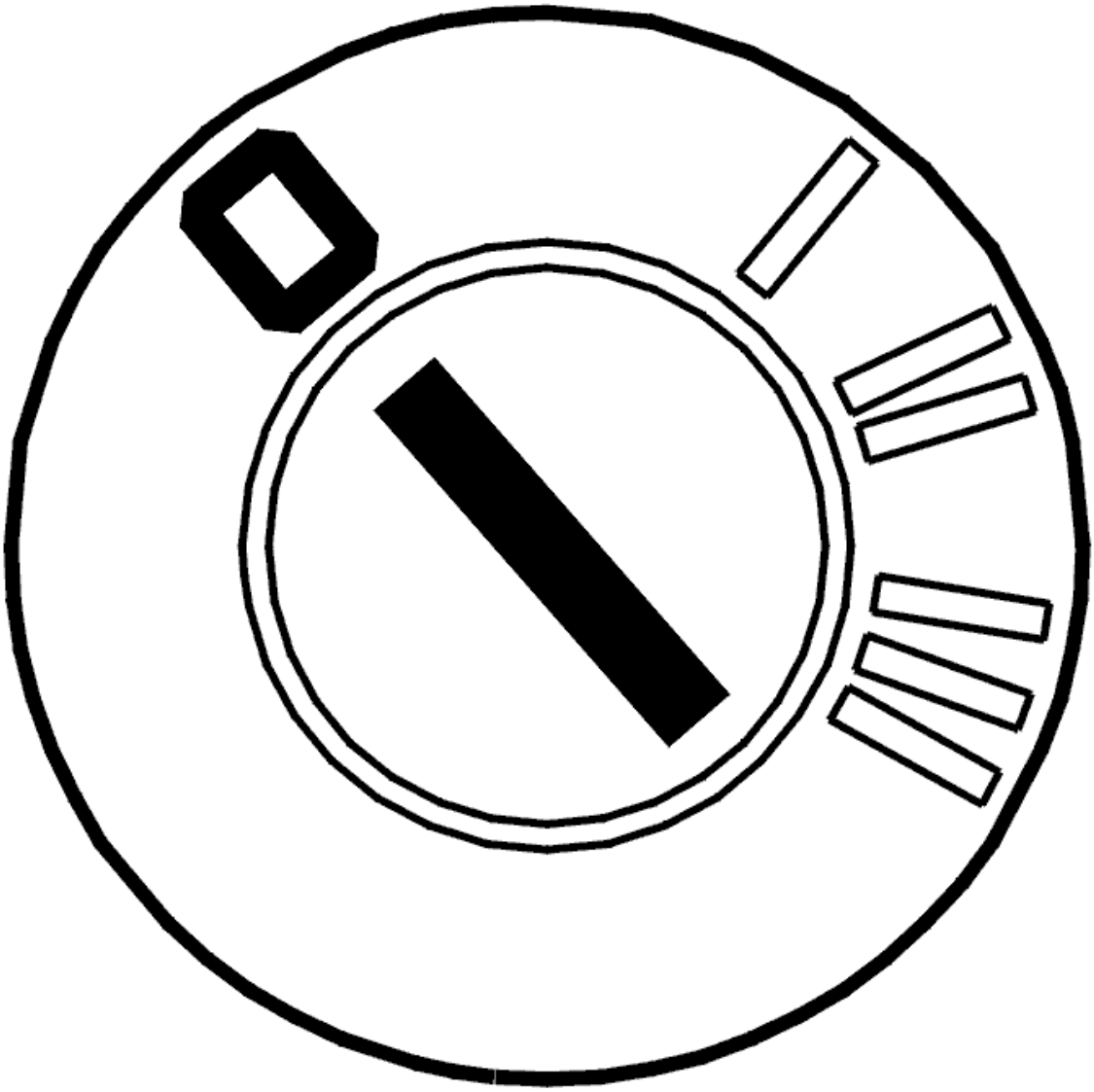

Fig. 156: Identifying Ignition OFF
Courtesy of VOLVO CARS CORPORATION

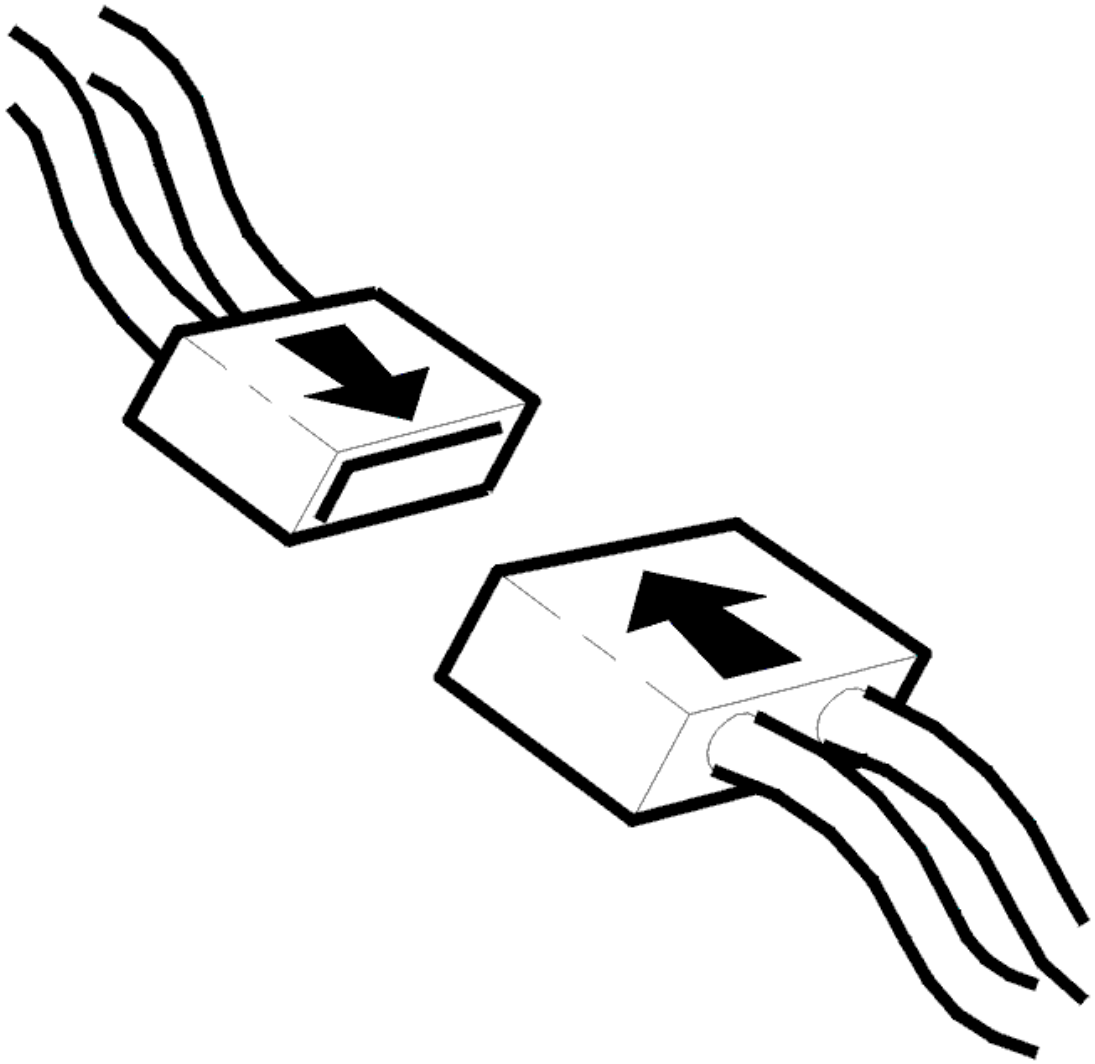

Fig. 157: Connecting Connector
Courtesy of VOLVO CARS CORPORATION

- Ignition off
- Disconnect the connector from the central electronic module (CEM).

  HINT: The signal cable goes from the Central electronic module (CEM) to ground via glass breakage circuit right and glass breakage circuit left.

  Check the signal cable. Check for a short-circuit to supply voltage.

  Begin by measuring at the grounding point and then go backward along the circuit to find the defect.

  Remedy as necessary.

  Other information:

- see **CONNECTING THE BREAKOUT BOX**
- -2004: **SIGNAL SPECIFICATION**
- 2005-: **SIGNAL SPECIFICATION**
- For -2004, see: **CENTRAL ELECTRONIC MODULE (CEM), REPLACING**
- For 2005-, see: **CENTRAL ELECTRONIC MODULE (CEM), REPLACING** .
- see **CHECKING WIRING AND TERMINALS. PERMANENT FAULT**

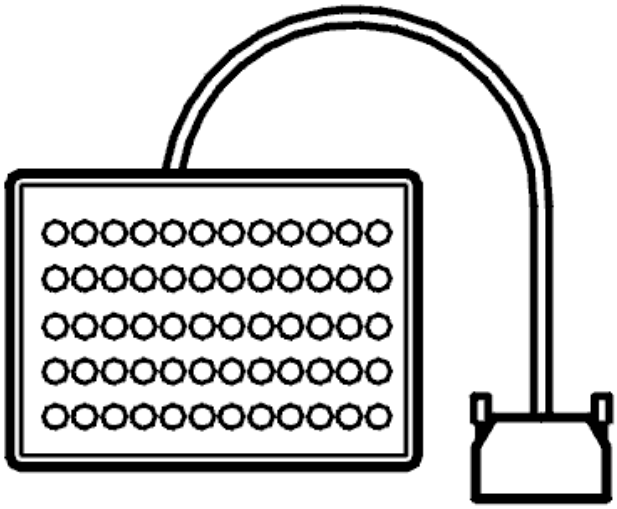

Fig. 158: Breakout Box
Courtesy of VOLVO CARS CORPORATION

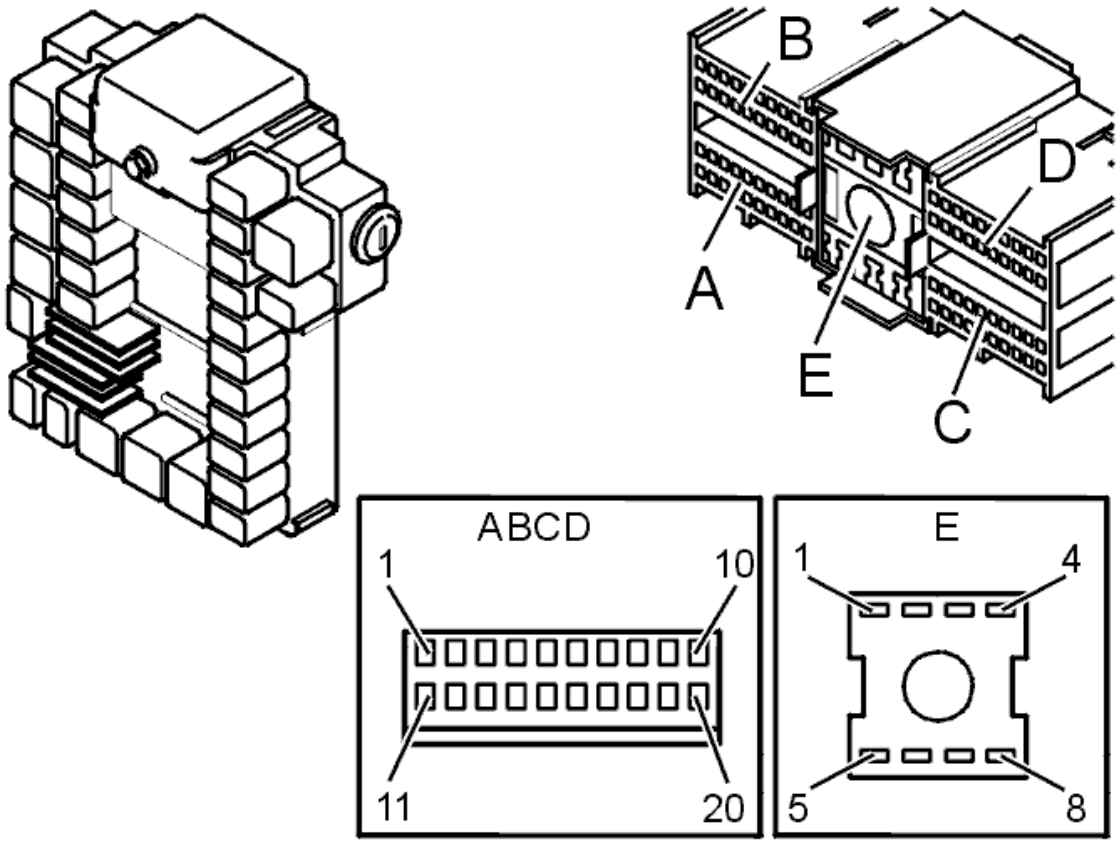

Fig. 159: Ground Terminals
Courtesy of VOLVO CARS CORPORATION

Is the circuit OK?

- **YES**

  Refer to **INFORMATION**

- **NO**

  Refer to **VERIFICATION**

VERIFICATION

VERIFICATION

HINT: After carrying out the repair, check that the fault has been remedied.

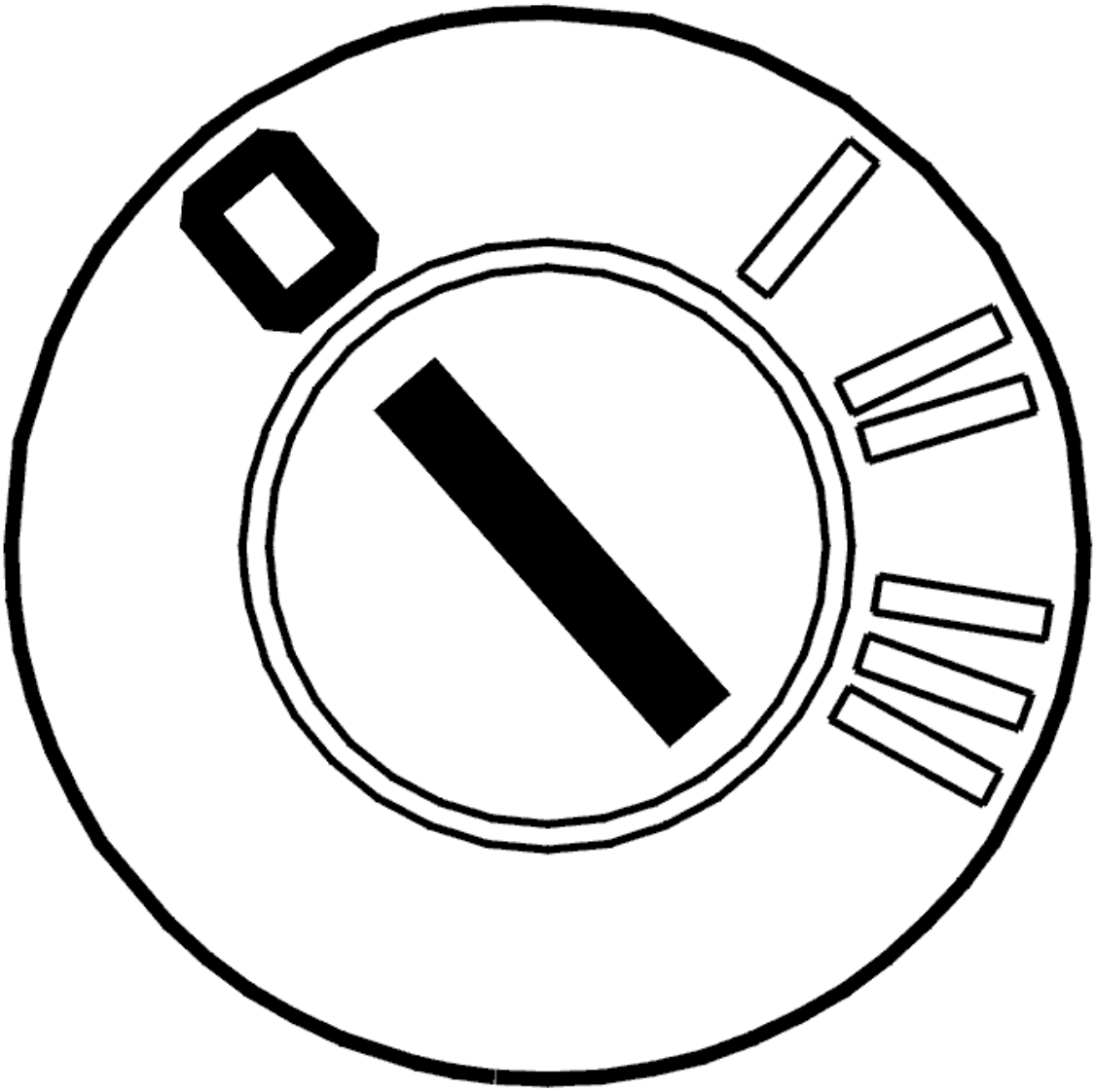

Fig. 160: Identifying Ignition OFF
Courtesy of VOLVO CARS CORPORATION

- Ignition off.
- Reinstall the connectors, components etc.
- Shut all the doors. Activate the alarm.
- Deactivate alarm.

Check that the diagnostic trouble code (DTC) status displays Intermittent.

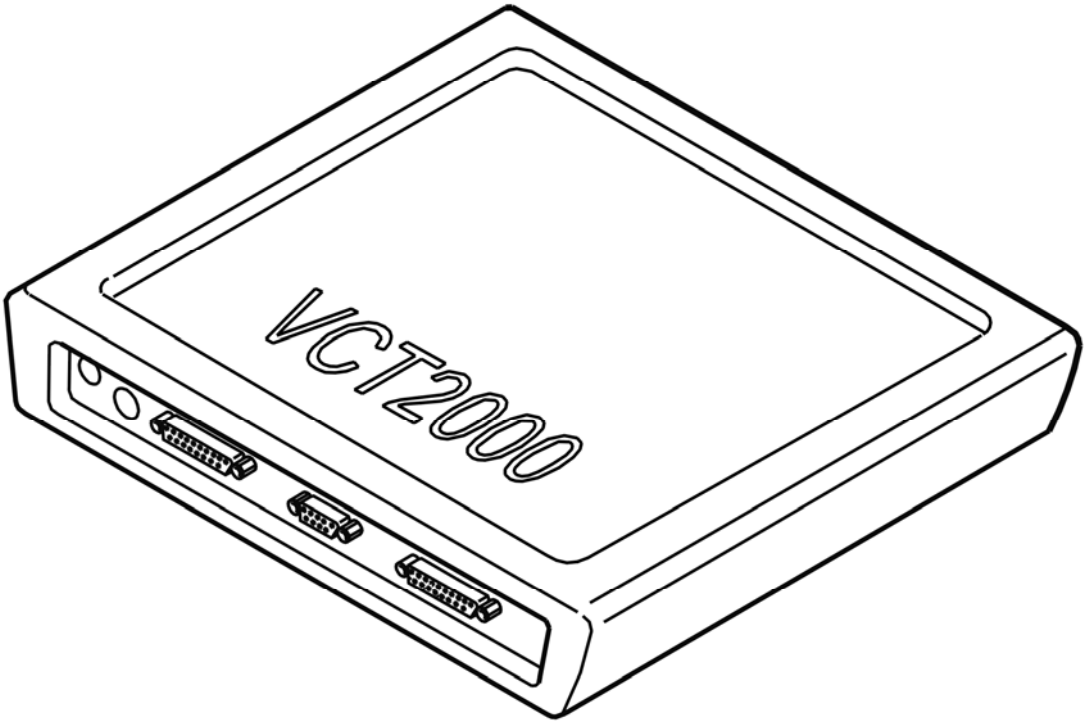

Fig. 161: Identifying VCT2000 Diagnostic Tool Symbol In VIDA
Courtesy of VOLVO CARS CORPORATION

Does the diagnostic trouble code (DTC) status display Intermittent?

- **YES**

  VERIFIED: Troubleshooting has been completed.

- **NO**

  Refer to **INFORMATION**

INFORMATION

FAULT-TRACING INFORMATION

The fault should have been detected and remedied. As this is not the case fault-tracing has failed.

Exit fault-tracing for this diagnostic trouble code (DTC) or make another attempt.

CEM-6C41: ANTENNA/LIGHT RING WIRE CLOCK-SIGNAL (ICK). SIGNAL TOO HIGH. INTERMITTENT FAULT (2003-2004)

DIAGNOSTIC TROUBLE CODE INFORMATION

Condition

If the control unit detects a high signal on the ICK wire between central electronic module (CEM) 14D and antenna unit 2 when the signal should be low, diagnostic trouble code CEM-6C41 is displayed.

Substitute Value

Nothing.

Possible Source

- Wire between central electronic module (CEM) 14D and antenna unit 2 short circuited to battery voltage.
- Open-circuit on cable between #7 on antenna/light ring and ground.

Fault symptom[s]

- The engine will not start. (The starter motor does not work.).

SIGNAL TOO HIGH. INTERMITTENT FAULT

INTERMITTENT FAULT

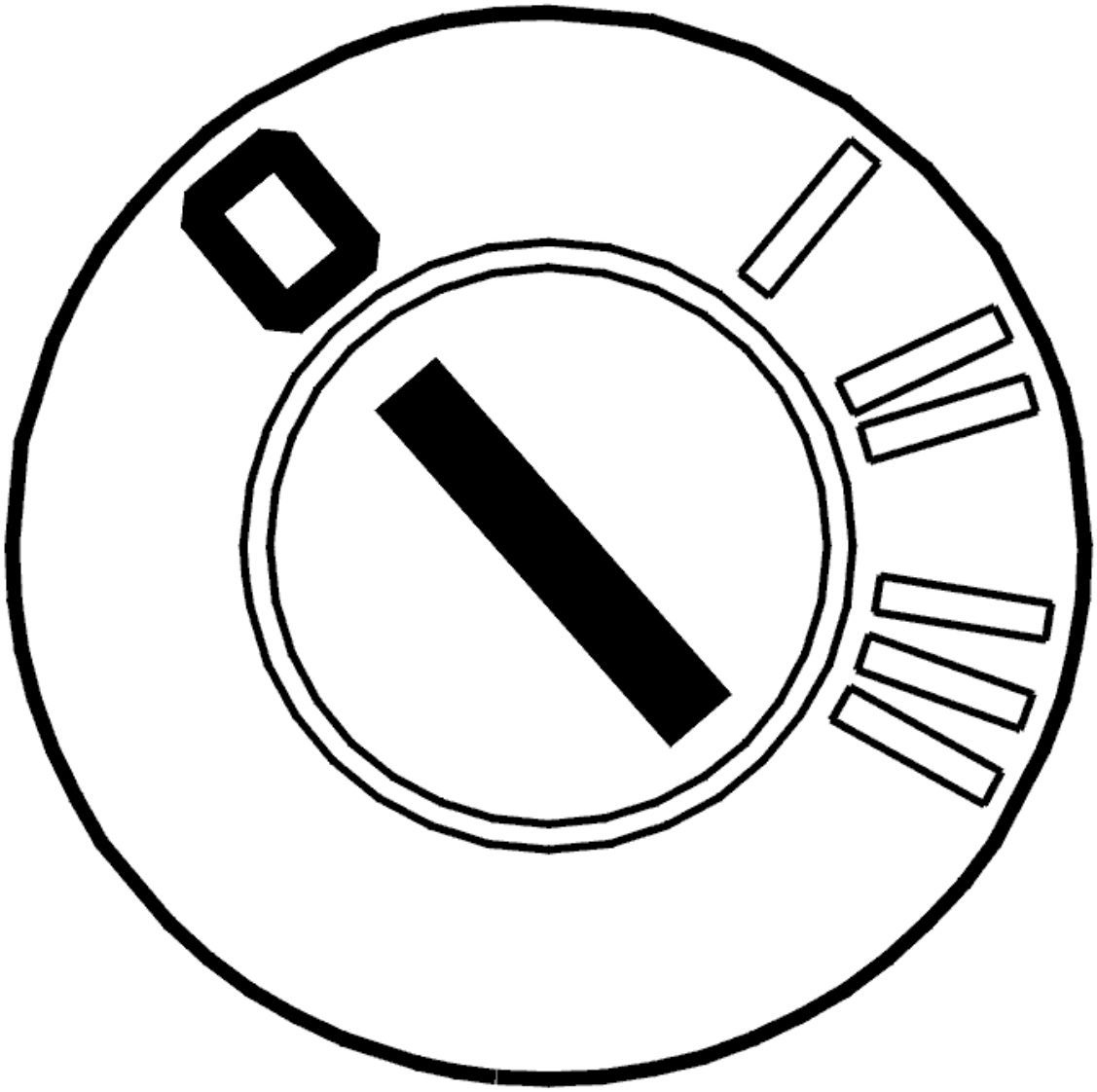

Fig. 162: Identifying Ignition OFF
Courtesy of VOLVO CARS CORPORATION

- Ignition off.

  Check the signal cable between the central electronic module (CEM) and the immobilizer antenna unit.

  Diagnostic trouble code (DTC) CEM-6C41:

  The cable between the central electronic module (CEM) terminal #14D and the immobilizer antenna unit terminal #2

  Diagnostic trouble code (DTC) CEM-6C43:

  The cable between the central electronic module (CEM) terminal #13D and the immobilizer antenna unit terminal #3.

Check signal cable for supply voltage.

Remedy as necessary.

Other information:

- For -2004, see: **CENTRAL ELECTRONIC MODULE (CEM), REPLACING**
- For 2005-, see: **CENTRAL ELECTRONIC MODULE (CEM), REPLACING** .
- To access the immobilizer antenna unit/connector, see **ANTENNA UNIT, START INHIBITOR, REPLACING**
- To connect the breakout box, see **CONNECTING THE BREAKOUT BOX**
- -2004: **SIGNAL SPECIFICATION**
- 2005-: **SIGNAL SPECIFICATION**
- see **CHECKING WIRING AND TERMINALS** .

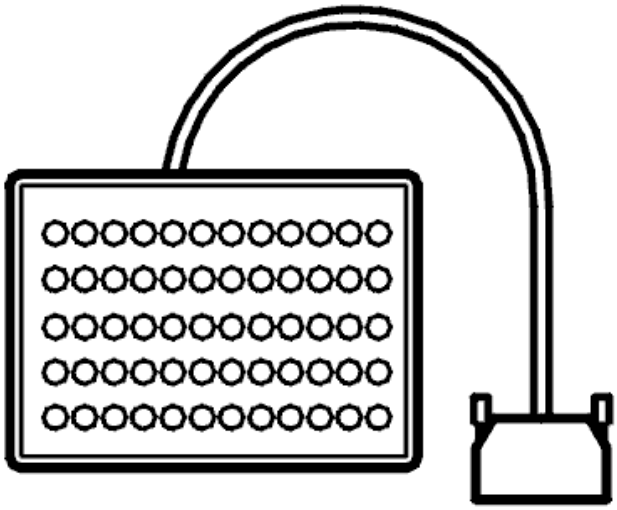

Fig. 163: Breakout Box
Courtesy of VOLVO CARS CORPORATION

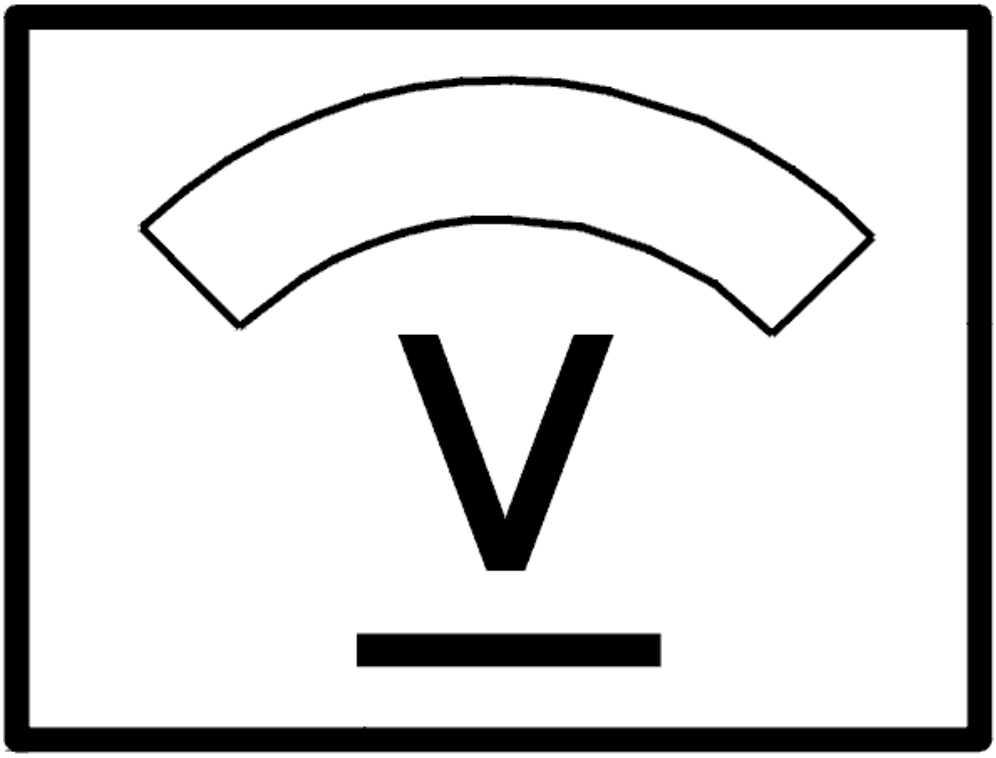

Fig. 164: Identifying Voltage Display
Courtesy of VOLVO CARS CORPORATION

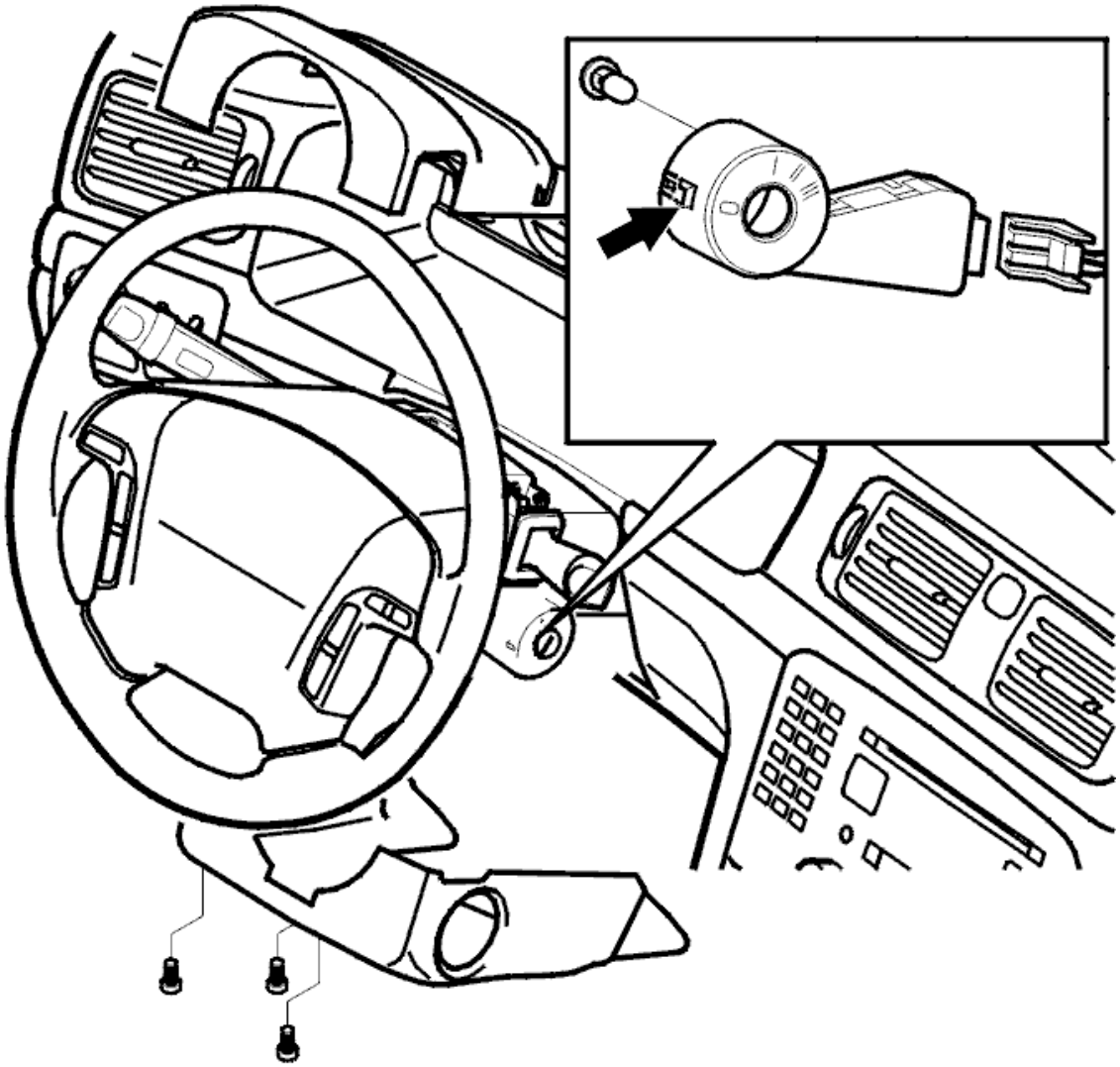

Fig. 165: Identifying Ignition Switch Bulb
Courtesy of VOLVO CARS CORPORATION

- **Continue**

  Refer to **INFORMATION**

INFORMATION

FAULT-TRACING INFORMATION

If the fault is intermittent, do not verify fault-tracing if the fault does not recur.

It is possible to view the information again, or leave fault-tracing for this diagnostic trouble code (DTC).

CEM-6C41: ANTENNA/LIGHT RING WIRE CLOCK-SIGNAL (ICK). SIGNAL

TOO HIGH. PERMANENT FAULT (2003-2004)

DIAGNOSTIC TROUBLE CODE INFORMATION

see **DIAGNOSTIC TROUBLE CODE INFORMATION**

SIGNAL TOO HIGH. PERMANENT FAULT

CHECKING THE SIGNAL CABLE

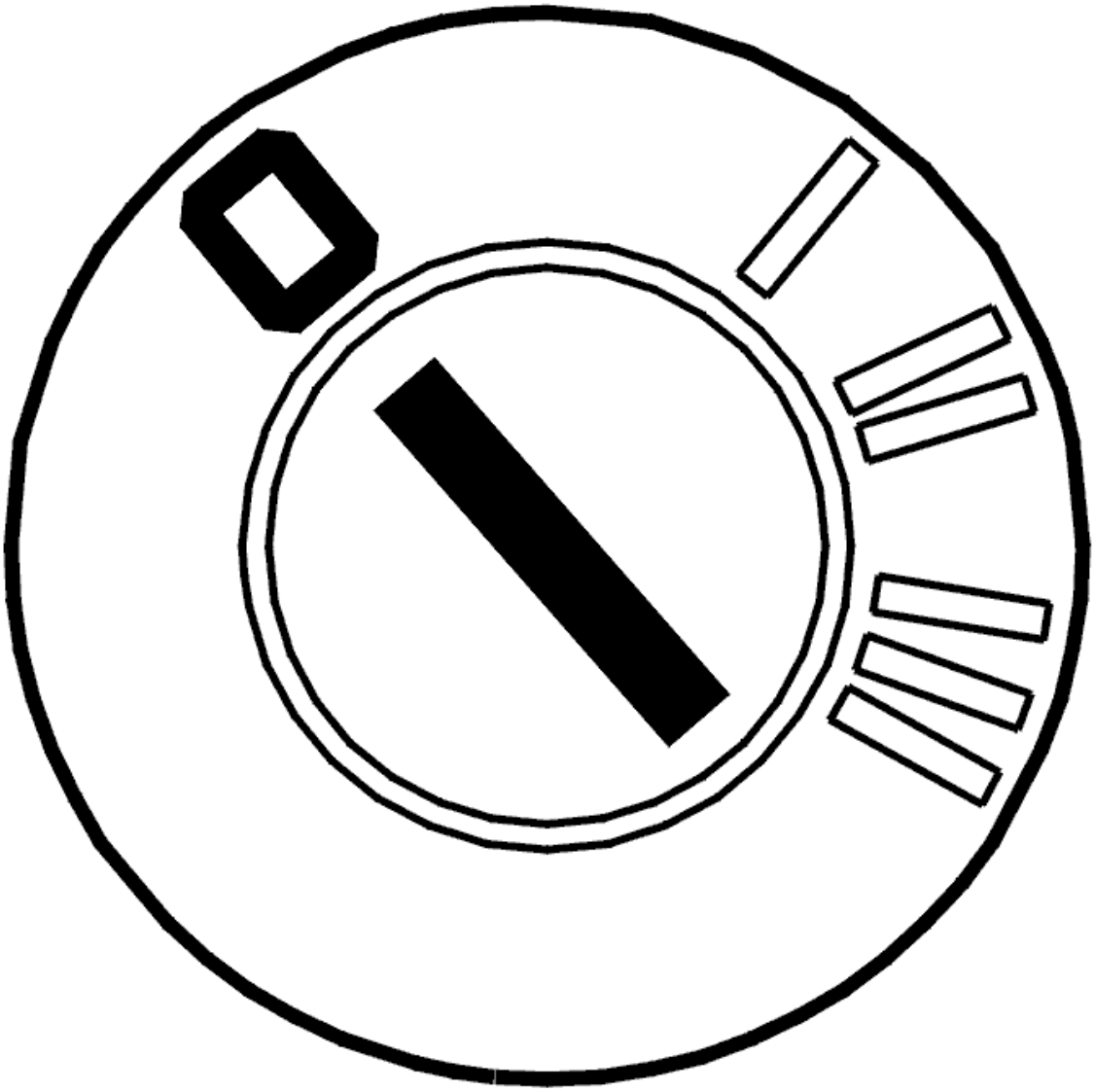

Fig. 166: Identifying Ignition OFF
Courtesy of VOLVO CARS CORPORATION

- Ignition off
- Disconnect the connector from the central electronic module (CEM)

- Disconnect the immobilizer antenna unit.

  Check the signal cable between central electronic module (CEM) connector terminal #14D and immobilizer antenna unit terminal #2. Check for a short-circuit to supply voltage.

  Remedy as necessary.

  Other information:

  - For -2004, see: **CENTRAL ELECTRONIC MODULE (CEM), REPLACING**
  - For 2005-, see: **CENTRAL ELECTRONIC MODULE (CEM), REPLACING** .
  - To access the immobilizer antenna unit/connector, see **ANTENNA UNIT, START INHIBITOR, REPLACING**
  - To connect the breakout box, see **CONNECTING THE BREAKOUT BOX**
  - -2004: **SIGNAL SPECIFICATION**
  - 2005-: **SIGNAL SPECIFICATION**
  - see **CHECKING WIRING AND TERMINALS**

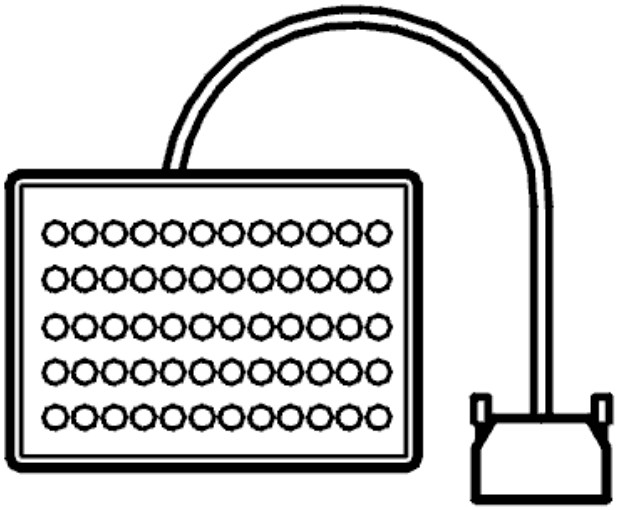

Fig. 167: Breakout Box
Courtesy of VOLVO CARS CORPORATION

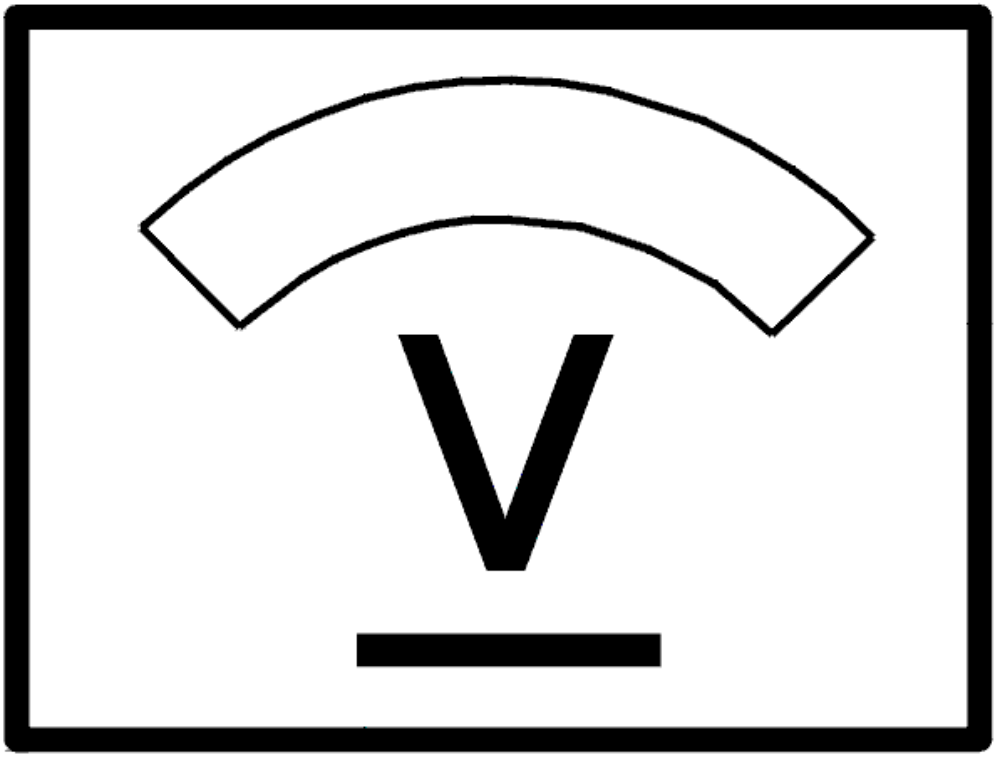

Fig. 168: Identifying Voltage Display
Courtesy of VOLVO CARS CORPORATION

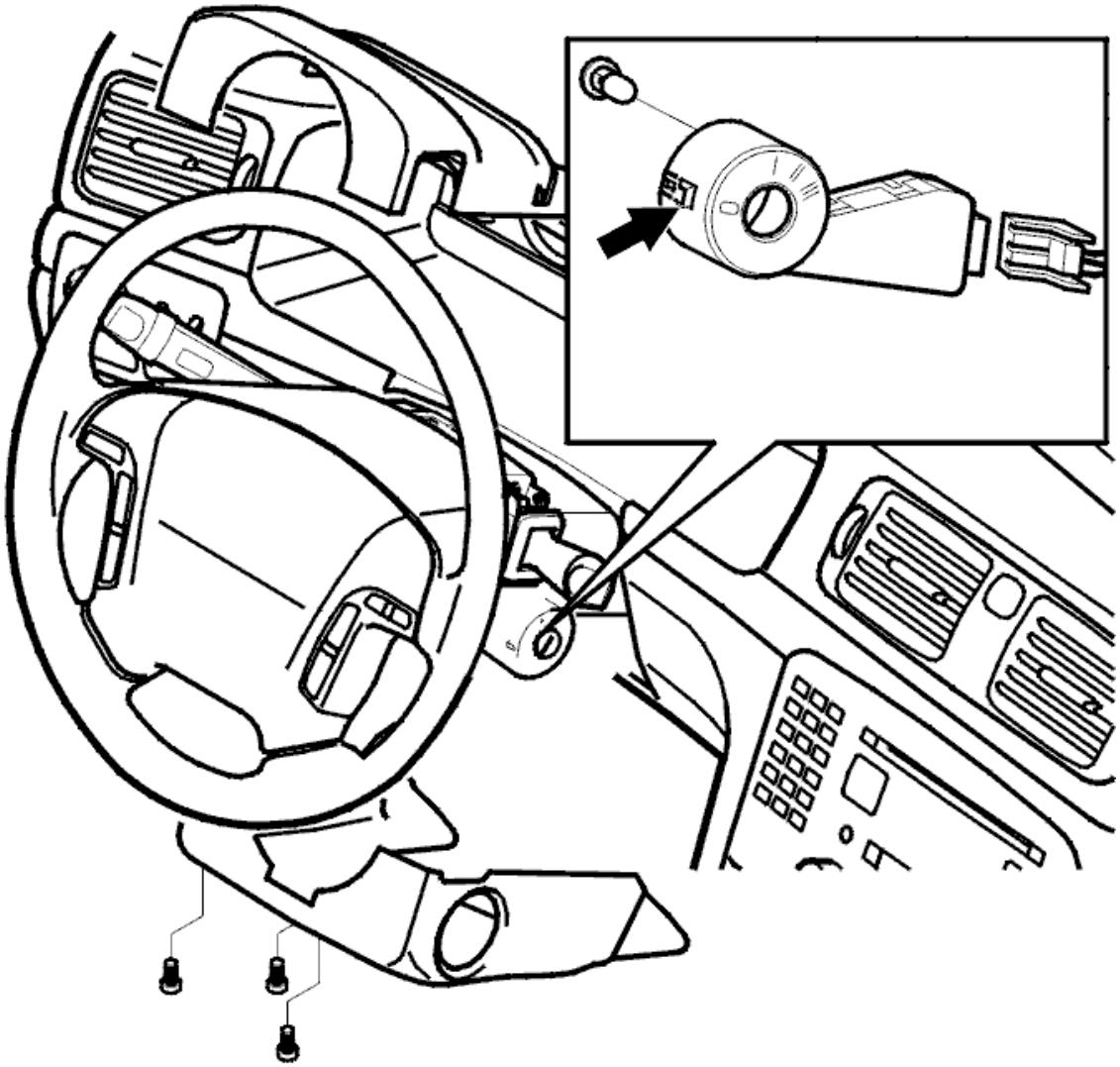

Fig. 169: Identifying Ignition Switch Bulb
Courtesy of VOLVO CARS CORPORATION

Is the signal cable OK?

- **YES**

  Refer to **REPLACING THE COMPONENT**

- **NO**

  Refer to **VERIFICATION**

REPLACING THE COMPONENT

Replace the central electronic module (CEM).

The immobilizer function is included in the central electronic module (CEM) but cannot be replaced separately.

Other information

- For -2004, see: **CENTRAL ELECTRONIC MODULE (CEM), REPLACING**
- For 2005-, see: **CENTRAL ELECTRONIC MODULE (CEM), REPLACING** .

- **Continue**

  Refer to **VERIFICATION**

VERIFICATION

VERIFICATION

HINT: After the repair it is necessary to check that the fault has been rectified.

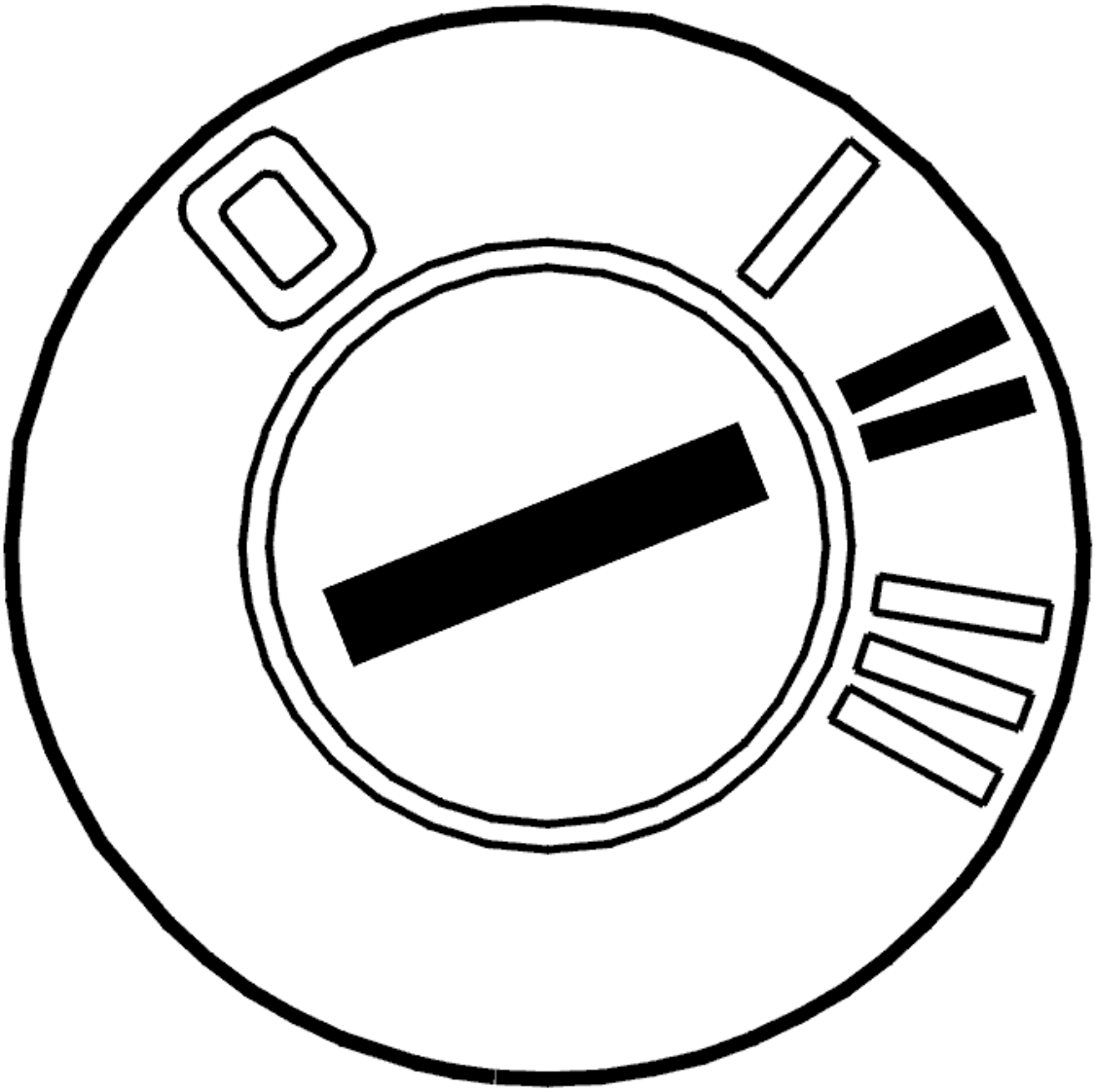

Fig. 170: Identifying Ignition ON
Courtesy of VOLVO CARS CORPORATION

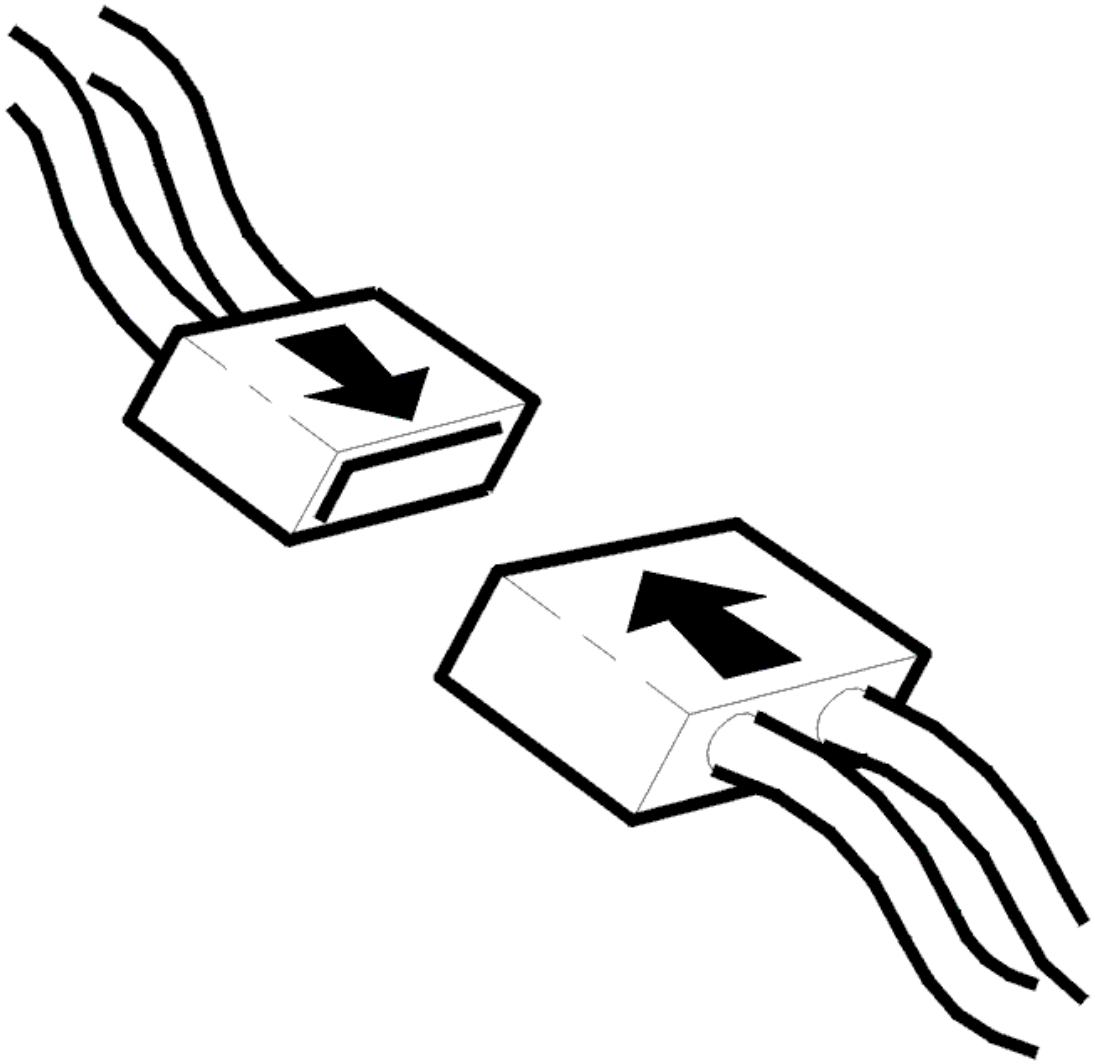

Fig. 171: Connecting Connector
Courtesy of VOLVO CARS CORPORATION

- Ignition off.
- Connect the connectors, install the components, etc.
- Ignition on.

  Check that diagnostic trouble code status changes from permanent to intermittent.

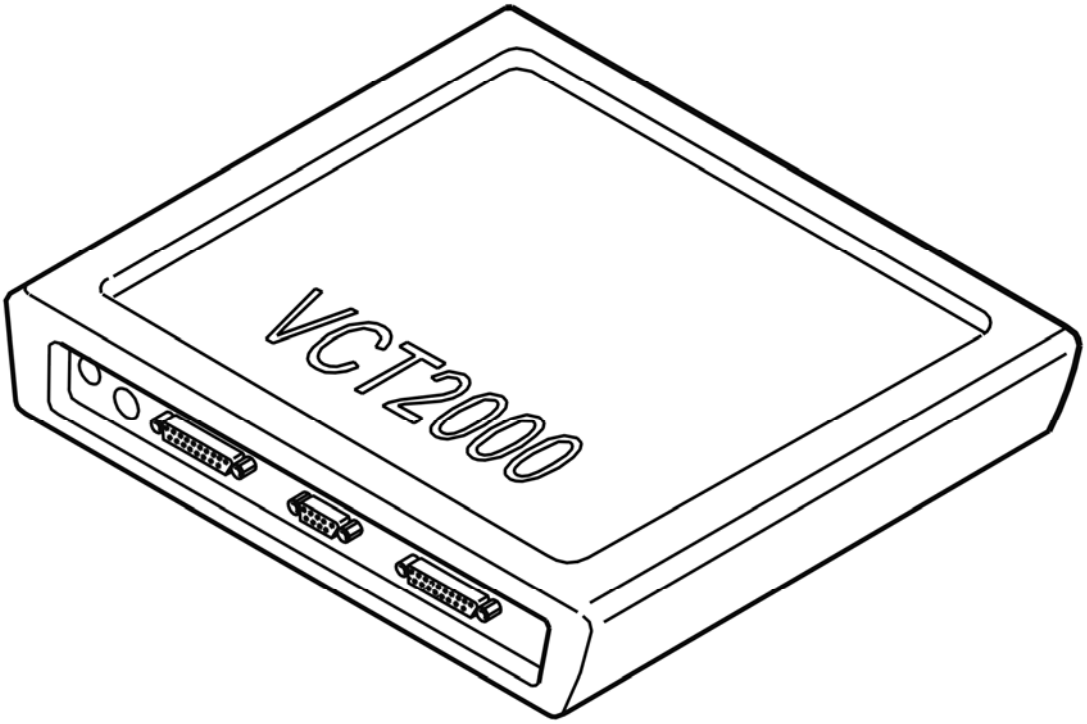

Fig. 172: Identifying VCT2000 Diagnostic Tool Symbol In VIDA
Courtesy of VOLVO CARS CORPORATION

Is the diagnostic trouble code status intermittent?

- **YES**

  VERIFIED: Troubleshooting has been completed.

- **NO**

  Refer to **INFORMATION**

INFORMATION

FAULT-TRACING INFORMATION

The fault should have been detected and remedied. As this is not the case fault-tracing has failed.

Exit fault-tracing for this diagnostic trouble code (DTC) or make another attempt.

CEM-6C41: ANTENNA/LIGHT RING-CLOCK SIGNAL CABLE. SIGNAL TOO HIGH (2005-2012)

DIAGNOSTIC TROUBLE CODE (DTC) INFORMATION CEM-6C41

Condition

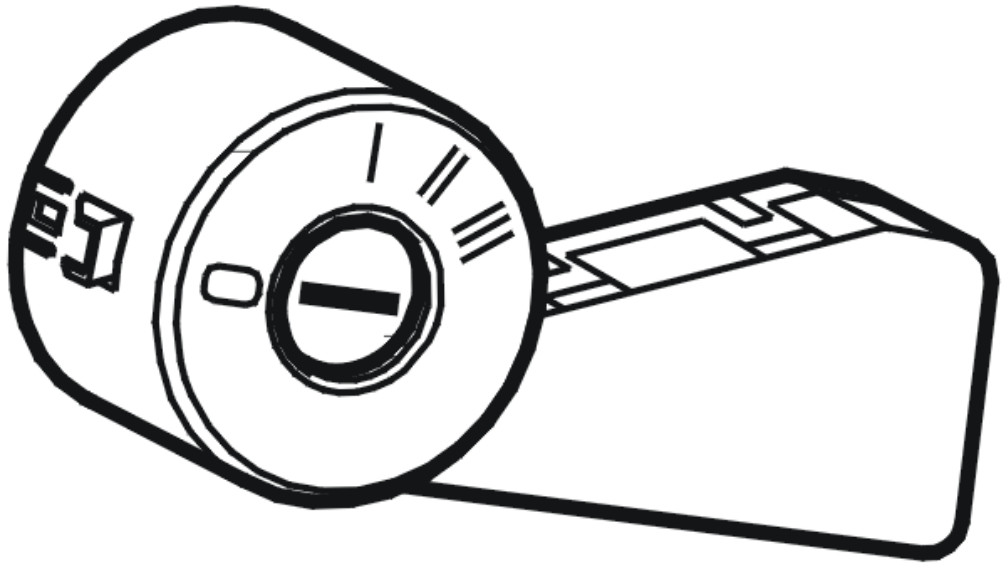

Fig. 173: Identifying Ignition Switch
Courtesy of VOLVO CARS CORPORATION

The central electronic module (CEM) communicates with the ignition key when the key is inserted in the ignition switch.

The diagnostic trouble code (DTC) is stored if the central electronic module (CEM) detects a short-circuit to supply voltage in the ignition switch.

The diagnostic trouble code (DTC) can be diagnosed when the ignition is switched on.

Substitute Value

- None.

Possible Source

- Short-circuit to supply voltage in the clock signal.
- Open-circuit on cable between #7 on antenna/light ring and ground.

Fault symptom[s]

- The starter motor does not turn.

SIGNAL TOO HIGH

CHECKING THE WIRING

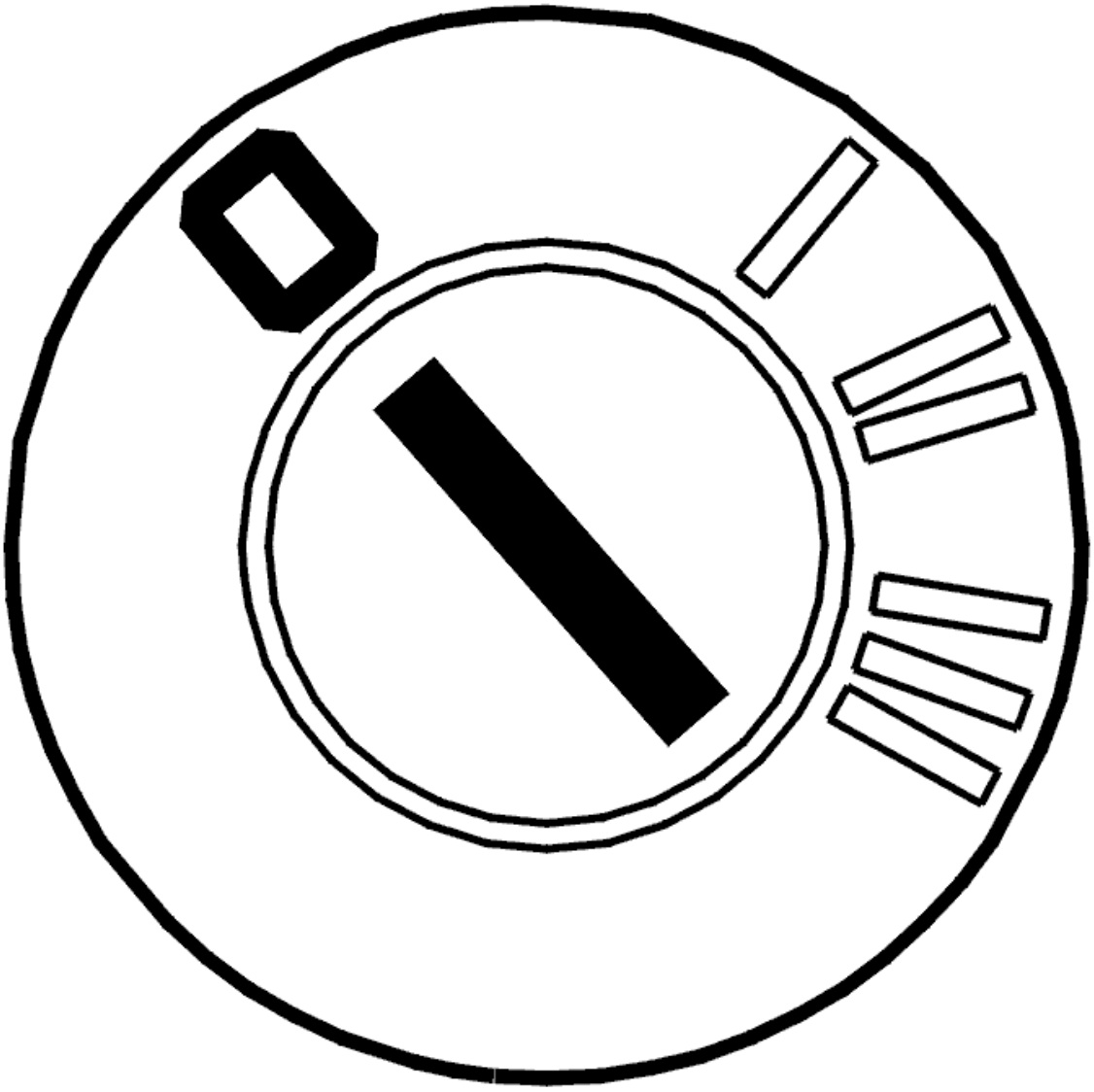

Fig. 174: Identifying Ignition OFF
Courtesy of VOLVO CARS CORPORATION

- Ignition off.

  Check central electronic module (CEM) connector D and the connector for the immobilizer antenna unit. Check for contact resistance. Check for oxidation. Check for damaged or loose connections.

  Check the signal cable. Check for a short-circuit to supply voltage.

  Take readings between:

  - Central electronic module (CEM) connector terminal #D57 (#57) and immobilizer antenna unit terminal #2.

  Remedy as necessary.

  Other information

  - see **CONNECTING THE BREAKOUT BOX**
  - -2004: **SIGNAL SPECIFICATION**
  - 2005-: **SIGNAL SPECIFICATION**
  - see **LOCATION OF COMPONENTS**
  - For -2004, see: **CENTRAL ELECTRONIC MODULE (CEM), REPLACING**
  - For 2005-, see: **CENTRAL ELECTRONIC MODULE (CEM), REPLACING** .
  - see **ANTENNA UNIT, START INHIBITOR, REPLACING**
  - see **CHECKING WIRING AND TERMINALS**

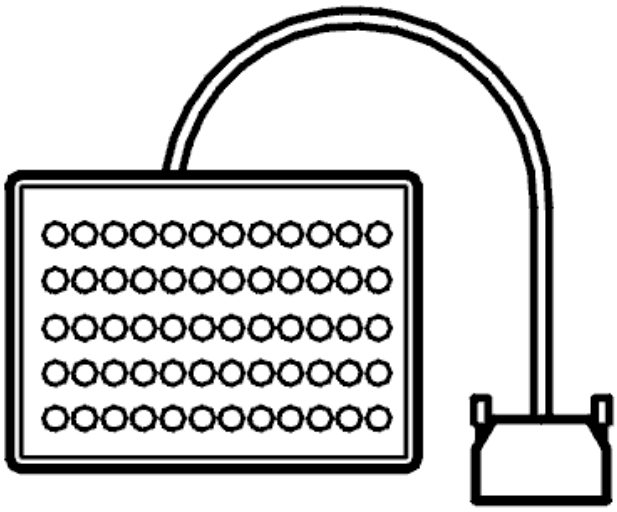

Fig. 175: Breakout Box
Courtesy of VOLVO CARS CORPORATION

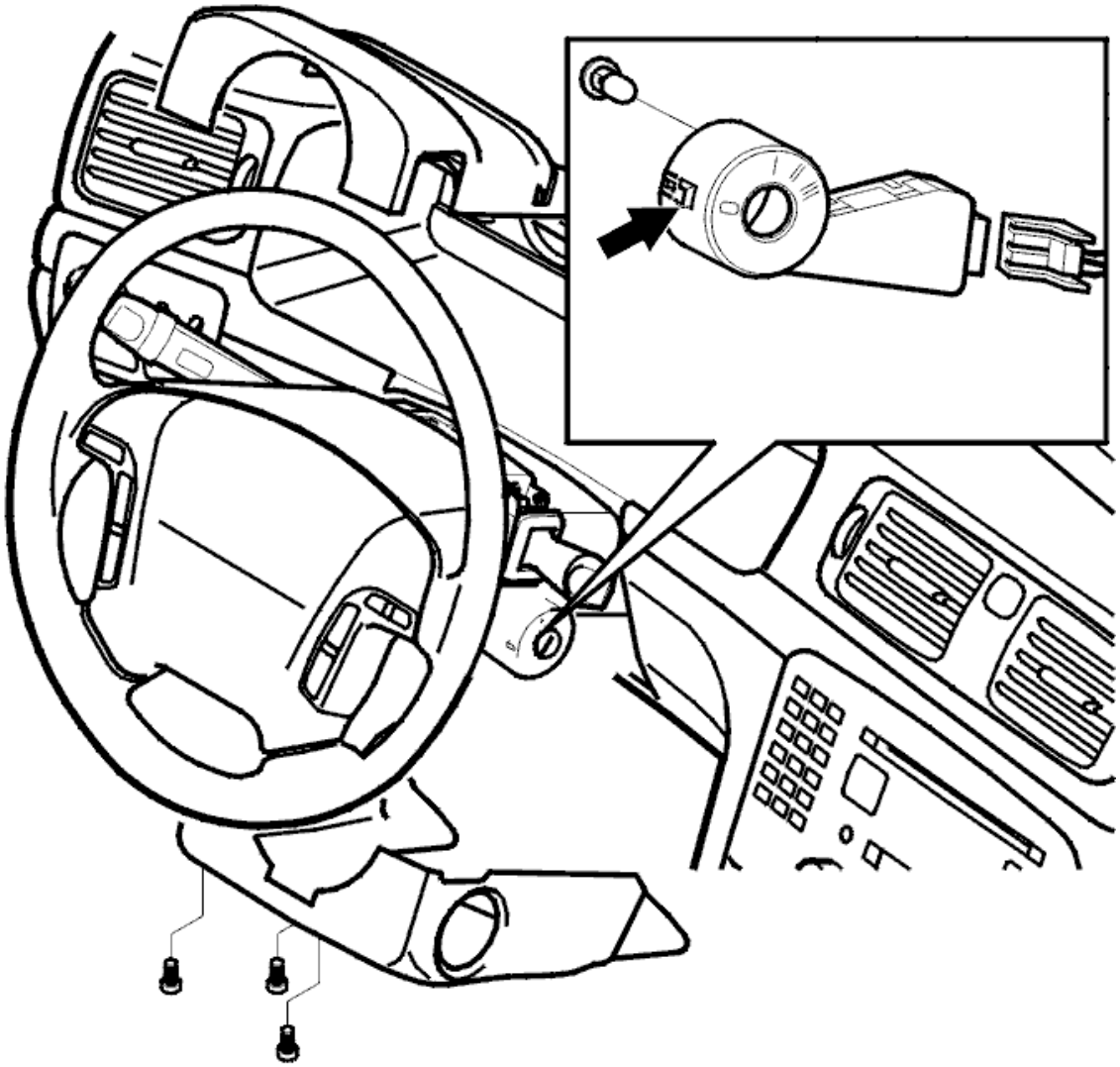

Fig. 176: Identifying Ignition Switch Bulb
Courtesy of VOLVO CARS CORPORATION

- **Continue**

  Refer to **VERIFICATION**

VERIFICATION

VERIFICATION

HINT: After carrying out the repair, check that the fault has been remedied.

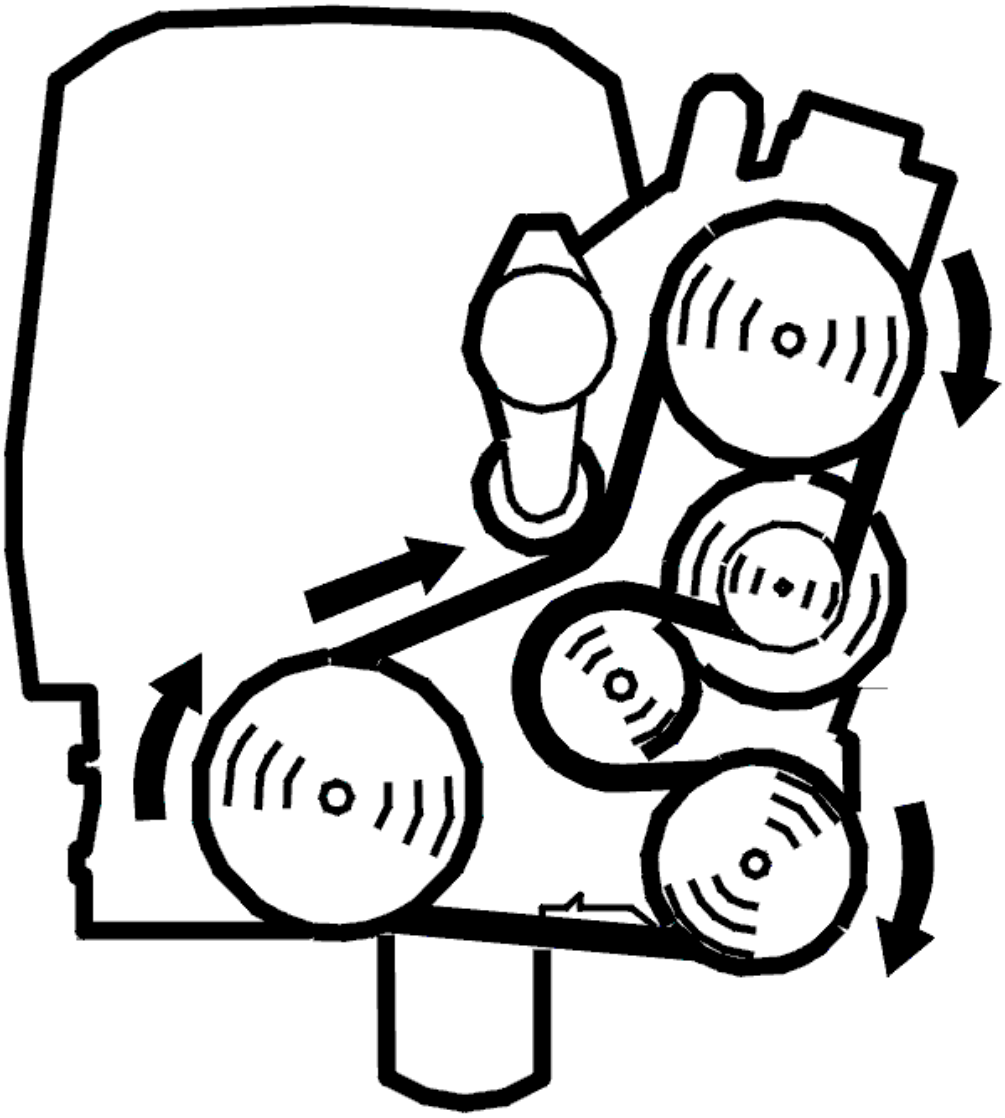

Fig. 177: Belt Routing / Engine Idling - Volvo
Courtesy of VOLVO CARS CORPORATION

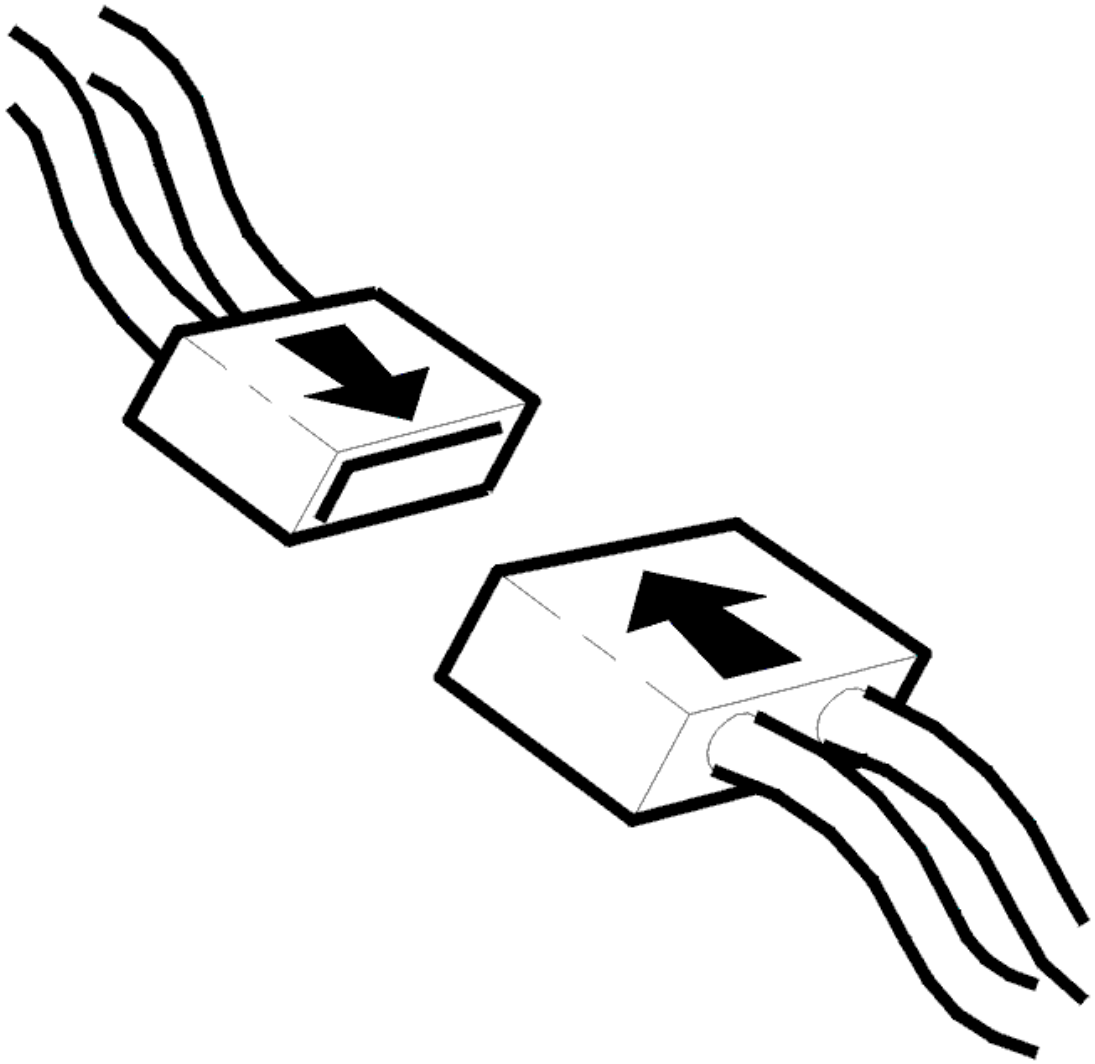

Fig. 178: Connecting Connector
Courtesy of VOLVO CARS CORPORATION

- Ignition off
- Reinstall the connectors, components etc.
- Try to start the vehicle.

Does the vehicle start?

- **YES**

  VERIFIED: Troubleshooting has been completed.

- **NO**

Refer to **INFORMATION**

INFORMATION

FAULT-TRACING INFORMATION

The fault should have been detected and remedied. As this is not the case fault-tracing has failed.

Exit fault-tracing for this diagnostic trouble code (DTC) or make another attempt.

CEM-6C42: ANTENNA / LIGHT RING - CLOCK SIGNAL CABLE. SIGNAL TOO LOW (2005-2012)

DIAGNOSTIC TROUBLE CODE (DTC) INFORMATION CEM-6C42

Condition

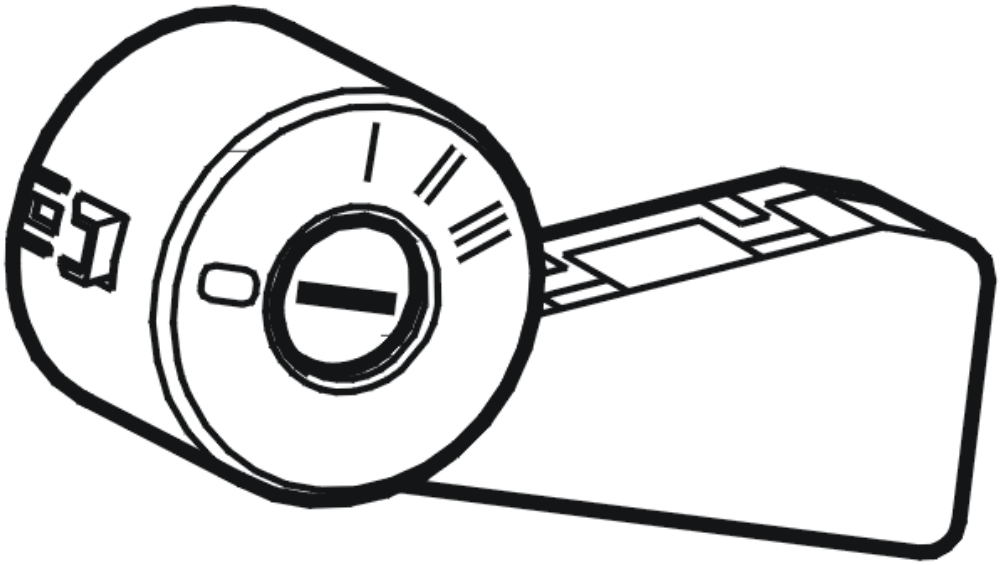

Fig. 179: Identifying Ignition Switch
Courtesy of VOLVO CARS CORPORATION

The central electronic module (CEM) communicates with the ignition key when the key is inserted in the ignition switch.

The diagnostic trouble code (DTC) is stored if the central electronic module (CEM) registers an open-circuit in the cable for the clock signal to the ignition switch or a short-circuit to ground in the cable.

The diagnostic trouble code (DTC) can be diagnosed when the ignition is switched on.

Substitute Value

- None.

Possible Source

- Fault in the power supply (15) to the ignition switch
- Open-circuit in the cable for the clock signal
- Short-circuit to ground in the clock signal.

Fault symptom[s]

- The starter motor does not turn.

SIGNAL TOO LOW

CHECKING THE POWER SUPPLY

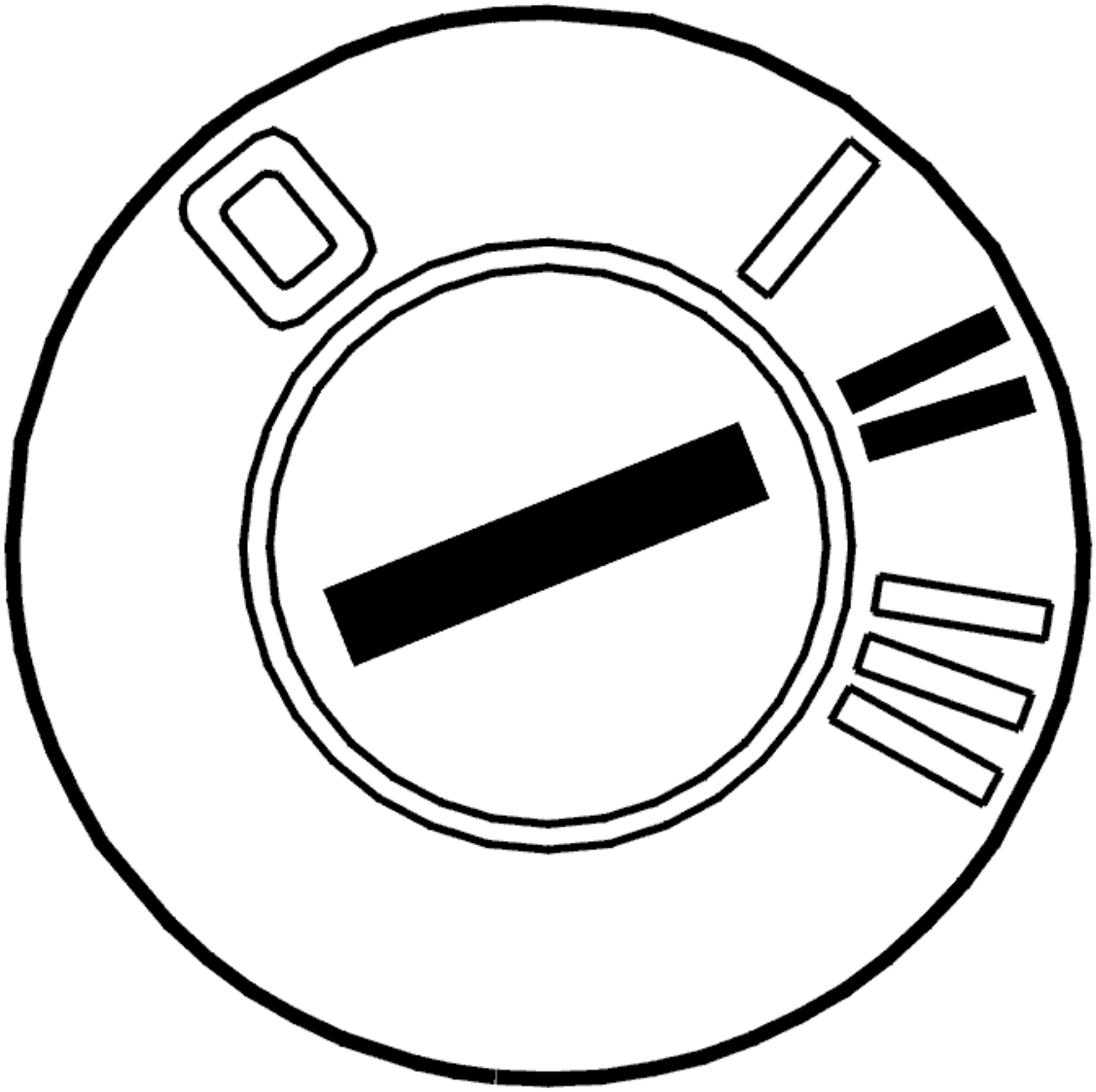

Fig. 180: Identifying Ignition ON
Courtesy of VOLVO CARS CORPORATION

- Ignition on.

  Check the power supply cable from the ignition switch to connector terminal #1 on the immobilizer antenna unit. Check for an open-circuit. Check for loose connections. Check for contact resistance and oxidation.

  Remedy as necessary.

  Other information

  - see **ANTENNA UNIT, START INHIBITOR, REPLACING**
  - see **CHECKING WIRING AND TERMINALS**

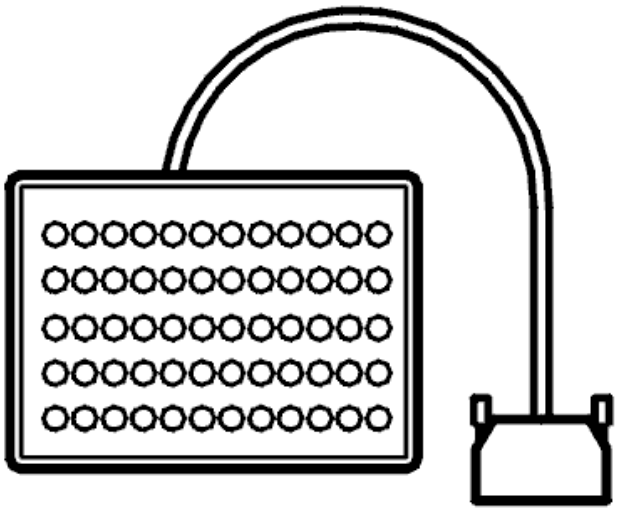

Fig. 181: Breakout Box
Courtesy of VOLVO CARS CORPORATION

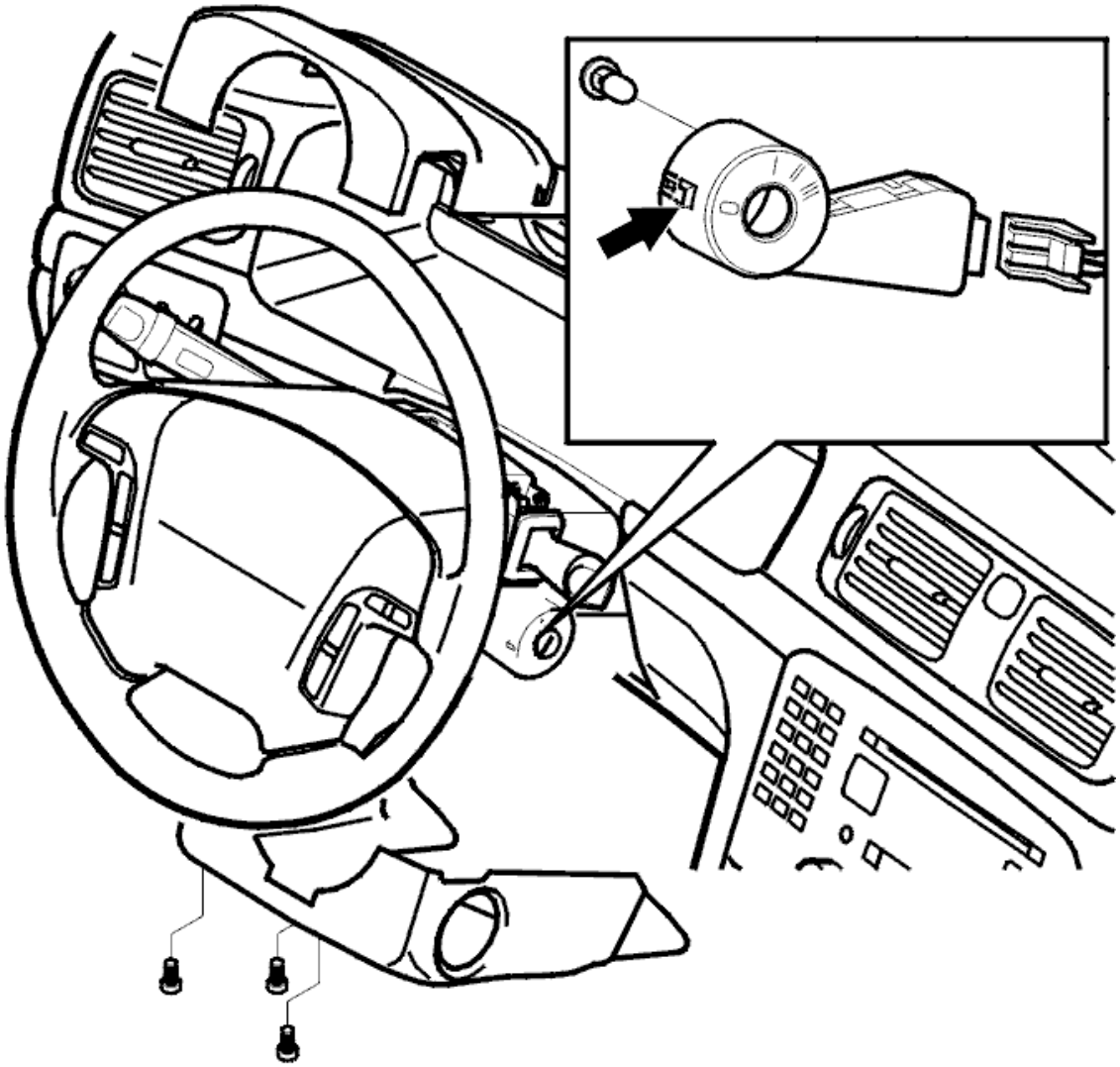

Fig. 182: Identifying Ignition Switch Bulb
Courtesy of VOLVO CARS CORPORATION

- **Continue**

  Refer to **CHECKING THE SIGNAL CABLE**

CHECKING THE SIGNAL CABLE

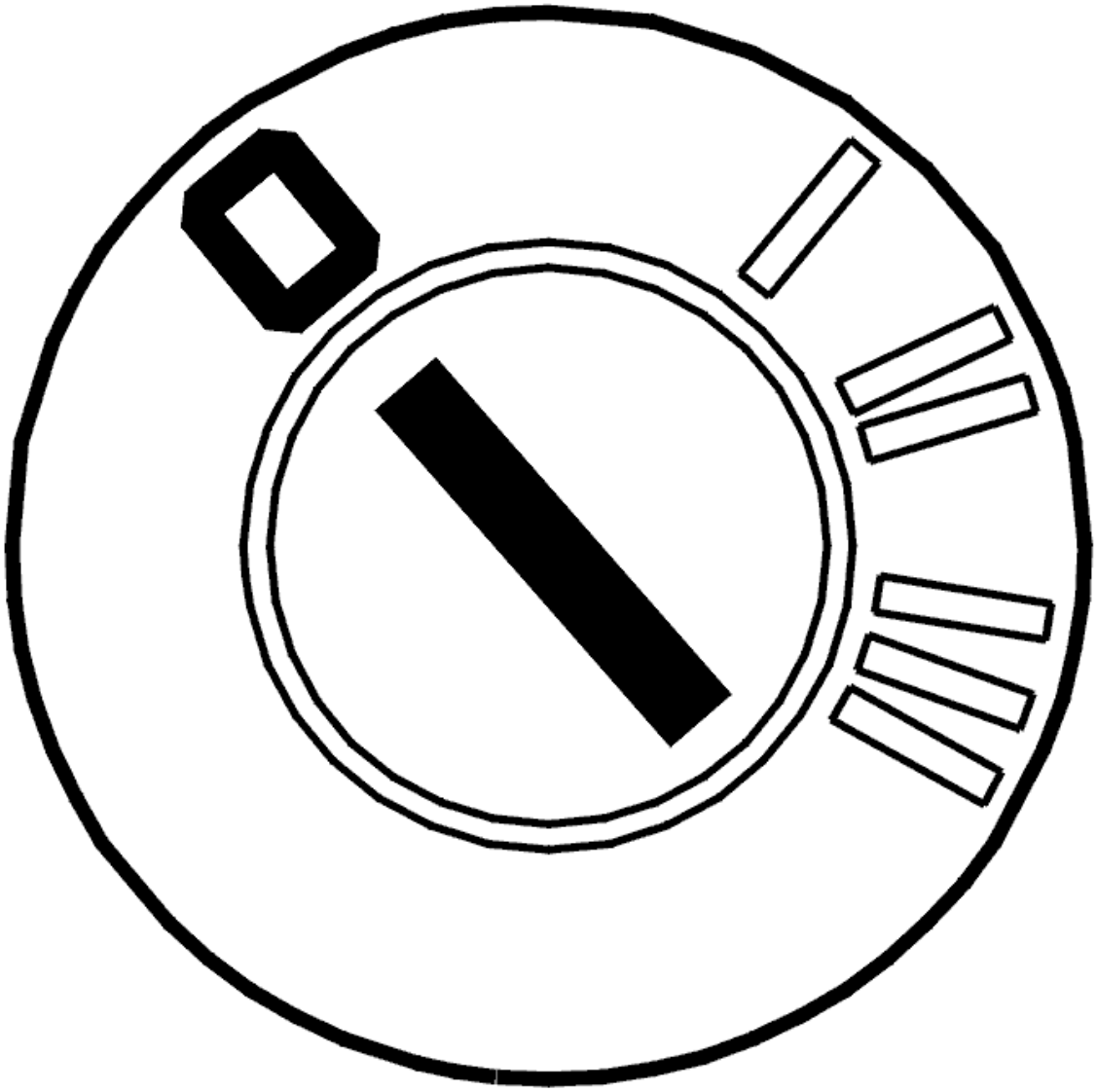

Fig. 183: Identifying Ignition OFF
Courtesy of VOLVO CARS CORPORATION

- Ignition off.

  Check central electronic module (CEM) connector D and the connector for the immobilizer antenna unit. Check for contact resistance. Check for oxidation. Check for damaged or loose connections.

  Check the signal cable. Check for an open-circuit. Check for a short-circuit to ground.

  Take readings between:

  - Central electronic module (CEM) connector terminal #D57 (#57) and immobilizer antenna unit terminal #2.

  Remedy as necessary.

Other information

- see **CONNECTING THE BREAKOUT BOX**
- -2004: **SIGNAL SPECIFICATION**
- 2005-: **SIGNAL SPECIFICATION**
- see **LOCATION OF COMPONENTS**
- For -2004, see: **CENTRAL ELECTRONIC MODULE (CEM), REPLACING**
- For 2005-, see: **CENTRAL ELECTRONIC MODULE (CEM), REPLACING** .
- see **ANTENNA UNIT, START INHIBITOR, REPLACING**
- see **CHECKING WIRING AND TERMINALS**

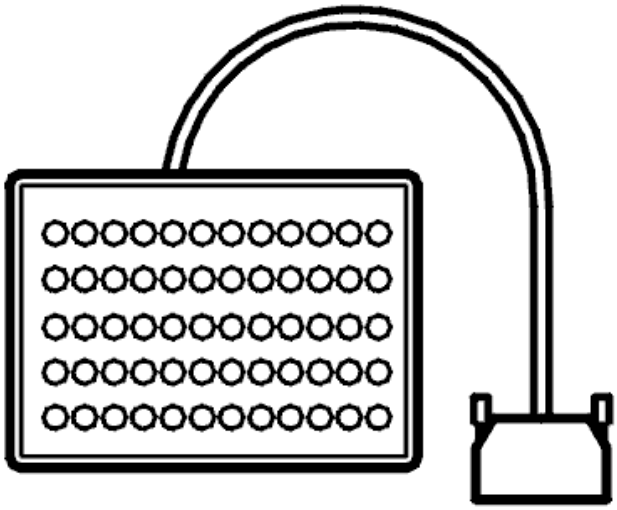

Fig. 184: Breakout Box
Courtesy of VOLVO CARS CORPORATION

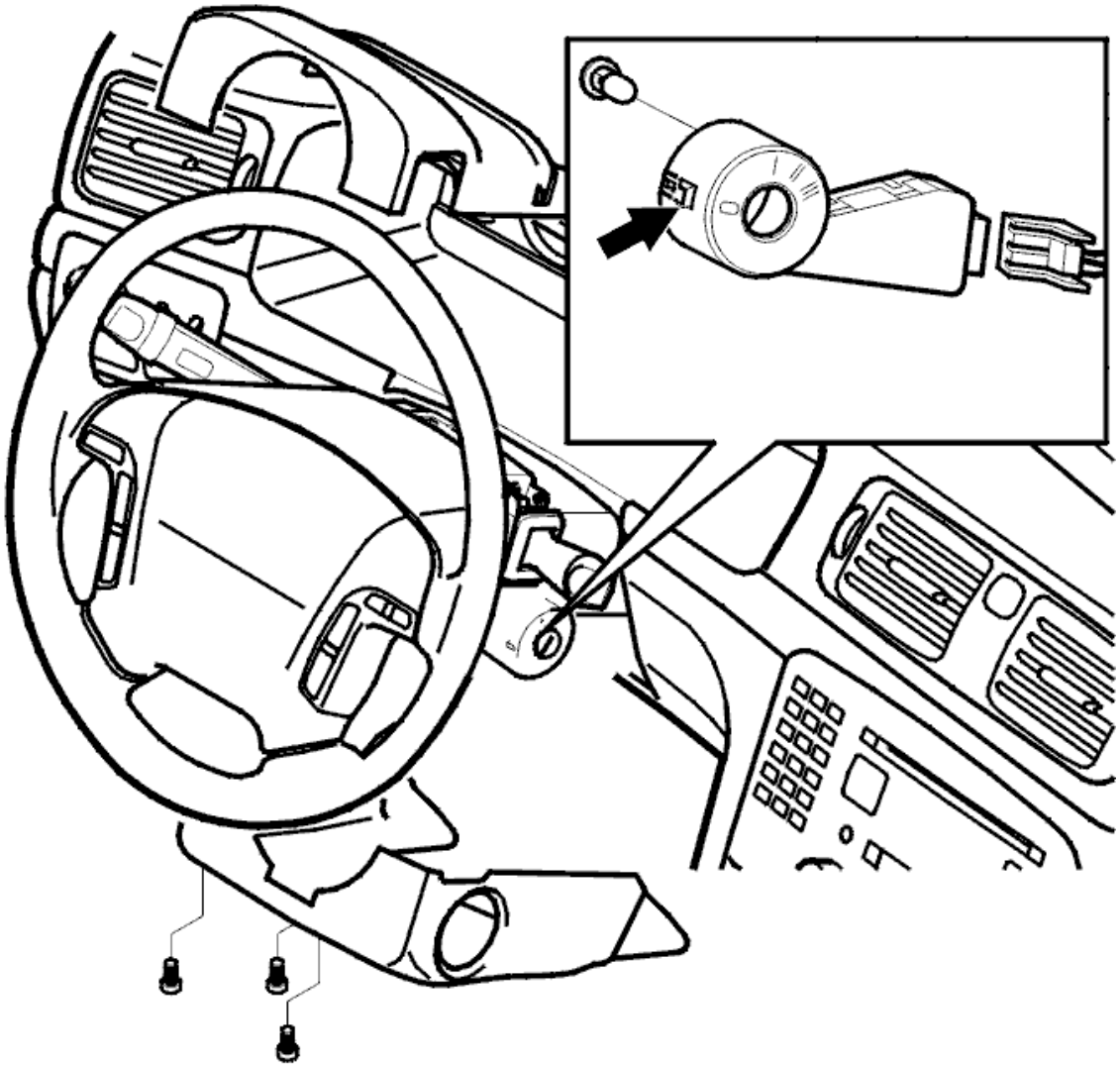

Fig. 185: Identifying Ignition Switch Bulb
Courtesy of VOLVO CARS CORPORATION

- **Continue**

  Refer to **VERIFICATION**

VERIFICATION

VERIFICATION

HINT: After carrying out the repair, check that the fault has been remedied.

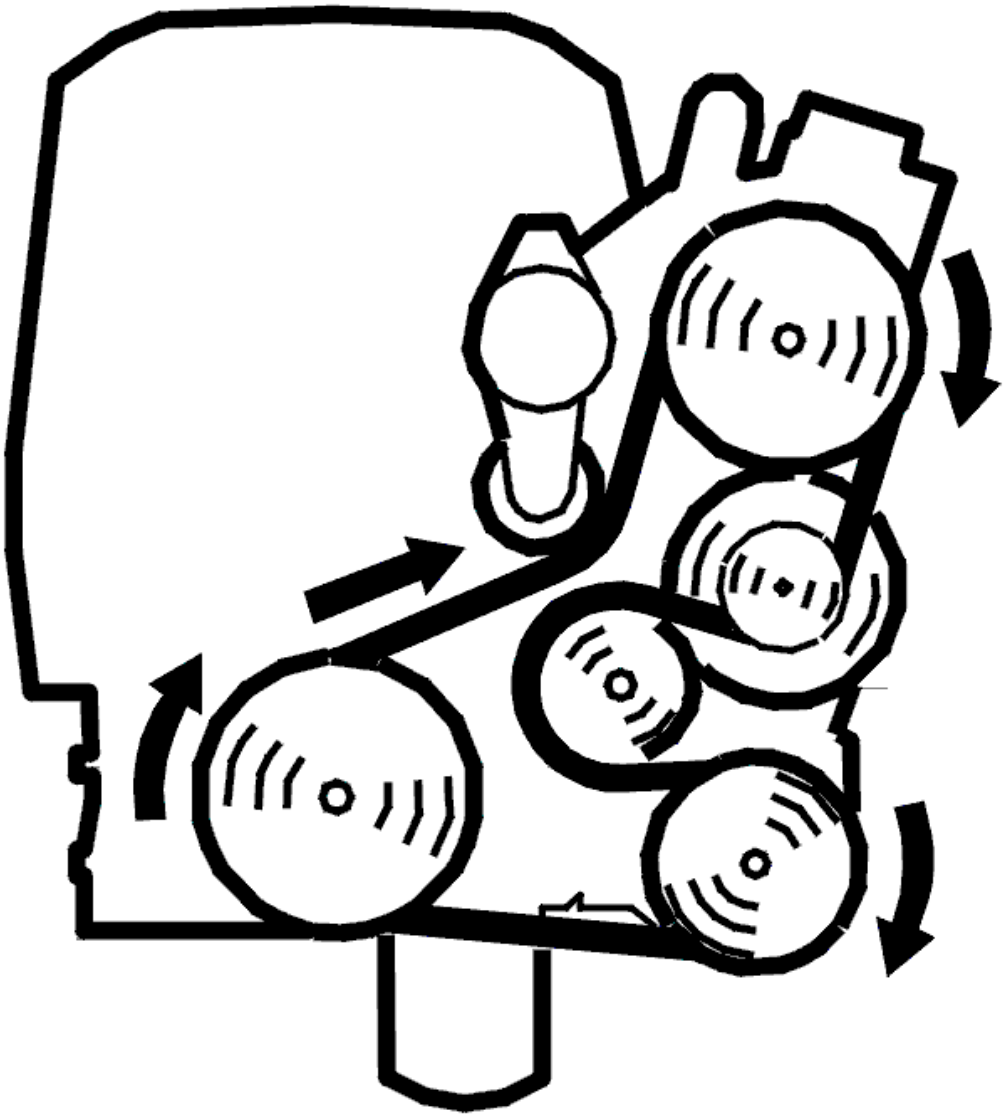

Fig. 186: Belt Routing / Engine Idling - Volvo
Courtesy of VOLVO CARS CORPORATION

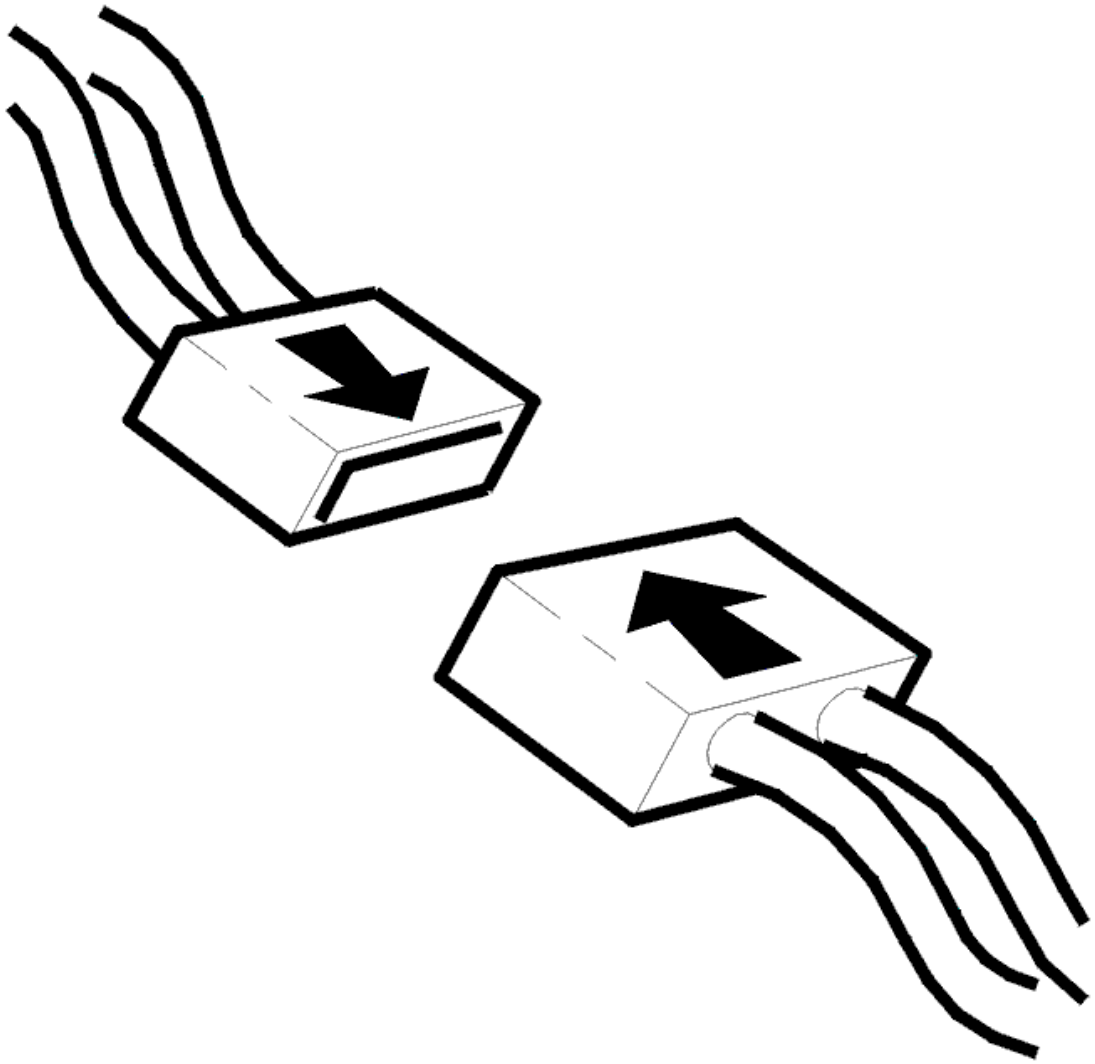

Fig. 187: Connecting Connector
Courtesy of VOLVO CARS CORPORATION

- Ignition off
- Reinstall the connectors, components etc.
- Try to start the vehicle.

Does the vehicle start?

- **YES**

  VERIFIED: Troubleshooting has been completed.

- **NO**

Refer to **INFORMATION**

INFORMATION

FAULT-TRACING INFORMATION

The fault should have been detected and remedied. As this is not the case fault-tracing has failed.

Exit fault-tracing for this diagnostic trouble code (DTC) or make another attempt.

CEM-6C42: ANTENNA/LIGHT RING WIRE CLOCK-SIGNAL (ICK). SIGNAL TOO LOW. INTERMITTENT FAULT (2003-2004)

DIAGNOSTIC TROUBLE CODE INFORMATION

Condition

If the control unit detects a low signal on the ICK wire between central electronic module (CEM) 14D and antenna unit 2 when the signal should be high or no signal, diagnostic trouble code CEM-6C42 is displayed.

Substitute Value

Nothing.

Possible Source

- Wire between central electronic module (CEM) 14D and antenna unit 2 short circuited to ground
- Open circuit on wire between central electronic module (CEM) 14D and antenna unit 2
- Open circuit on +15 supply.

Fault symptom[s]

- The engine will not start. (The starter motor does not work.).

SIGNAL TOO LOW. INTERMITTENT FAULT

CHECKING GROUND LEAD

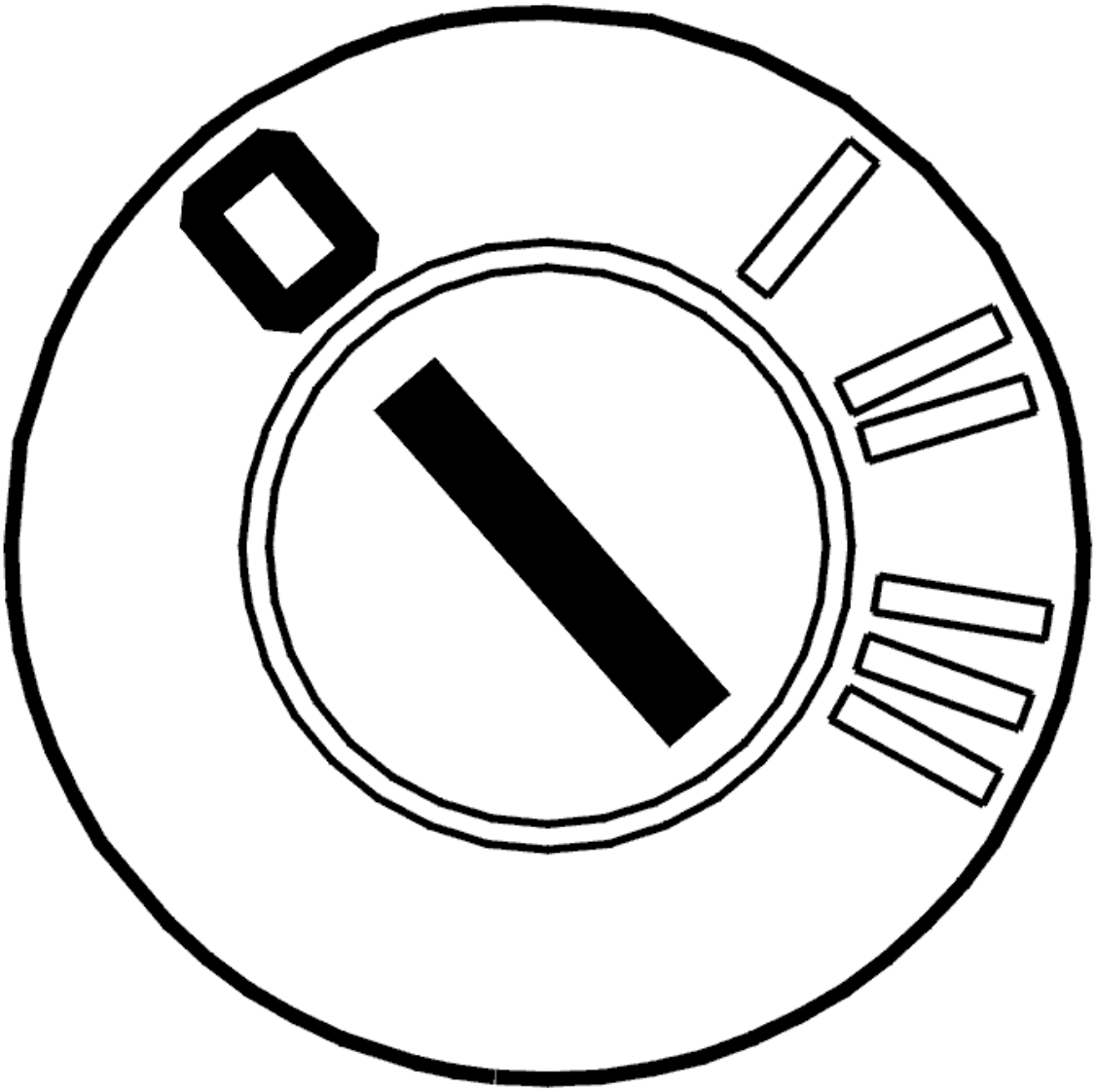

Fig. 188: Identifying Ignition OFF
Courtesy of VOLVO CARS CORPORATION

- Ignition off.

  Remove the connector from the antenna unit.

  Check the cable between the antenna unit terminal #7 and ground terminal 31/83. Check for an intermittent open-circuit.

  Remedy as necessary.

  Other information:

  - see **CHECKING WIRING AND TERMINALS** .

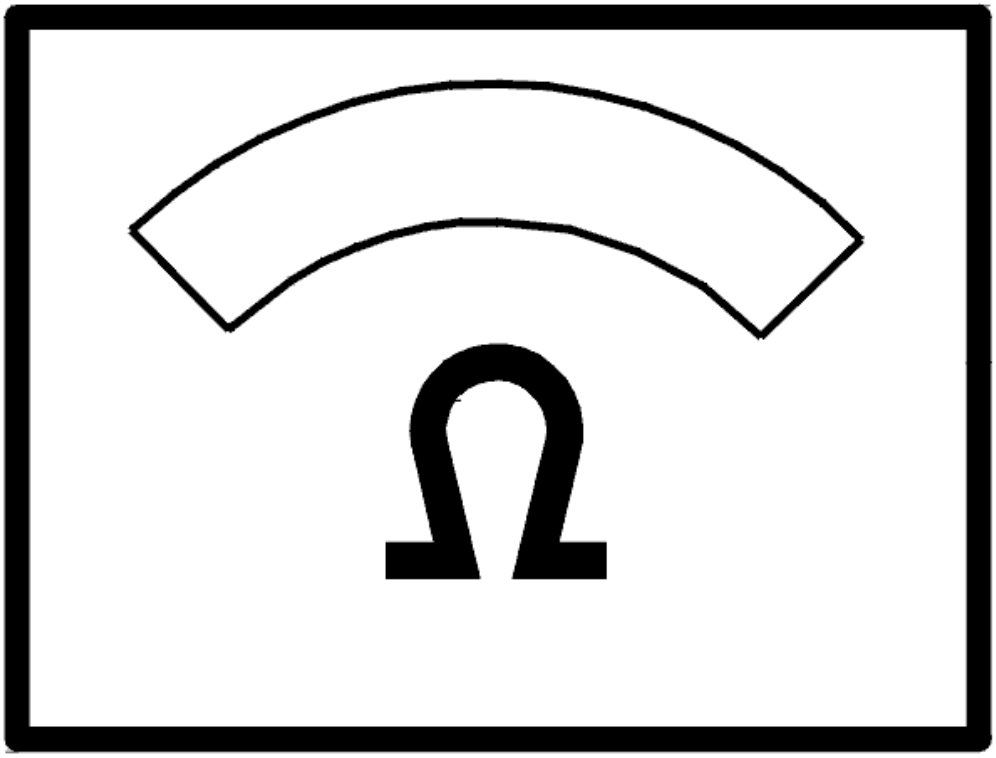

Fig. 189: Identifying Ohm Meter
Courtesy of VOLVO CARS CORPORATION

Is the cable OK?

- **YES**

  Refer to **CHECKING THE POWER SUPPLY**

- **NO**

  Refer to **INFORMATION**

CHECKING THE POWER SUPPLY

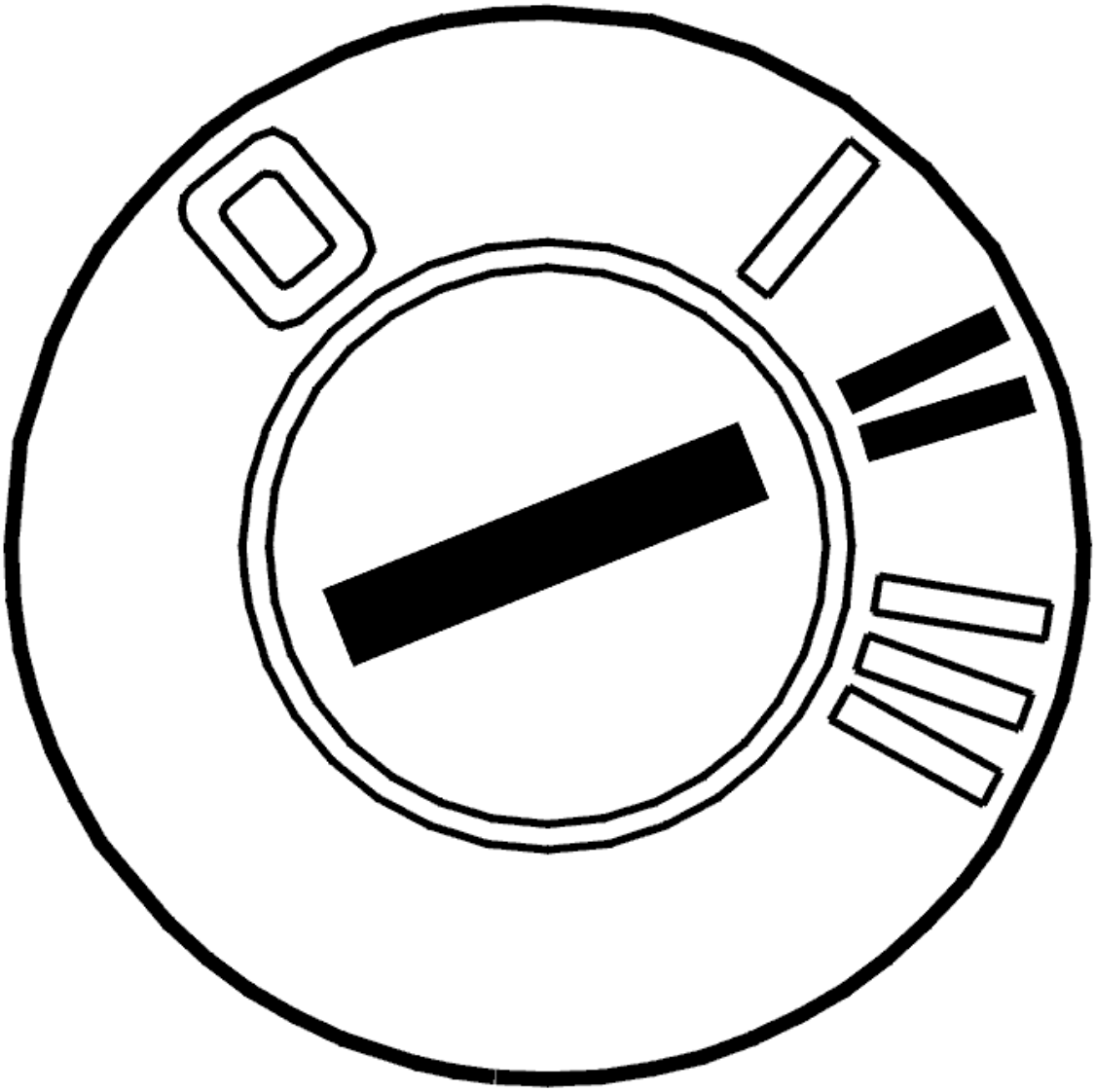

Fig. 190: Identifying Ignition ON
Courtesy of VOLVO CARS CORPORATION

- Ignition on.

  Check the supply voltage between antenna unit terminal #1 and ground.

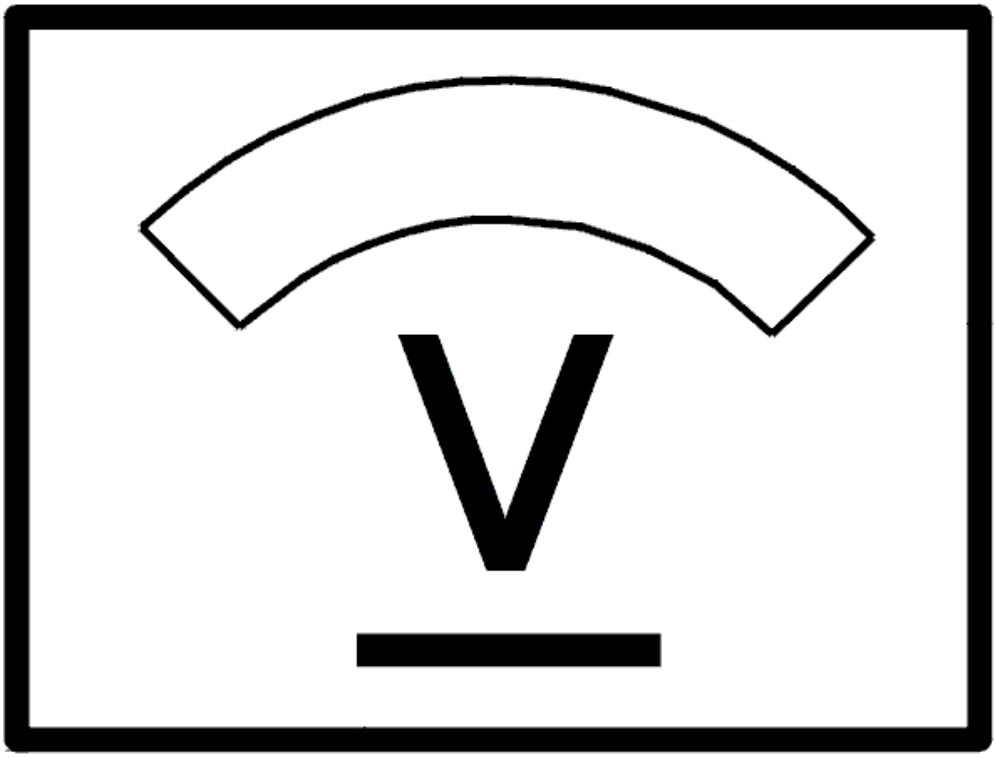

Fig. 191: Identifying Voltage Display
Courtesy of VOLVO CARS CORPORATION

Is the voltage OK?

- **YES**

  Refer to **CHECKING THE SIGNAL CABLE**

- **NO**

  Refer to **CHECKING CABLE FOR AN OPEN-CIRCUIT**

CHECKING THE SIGNAL CABLE

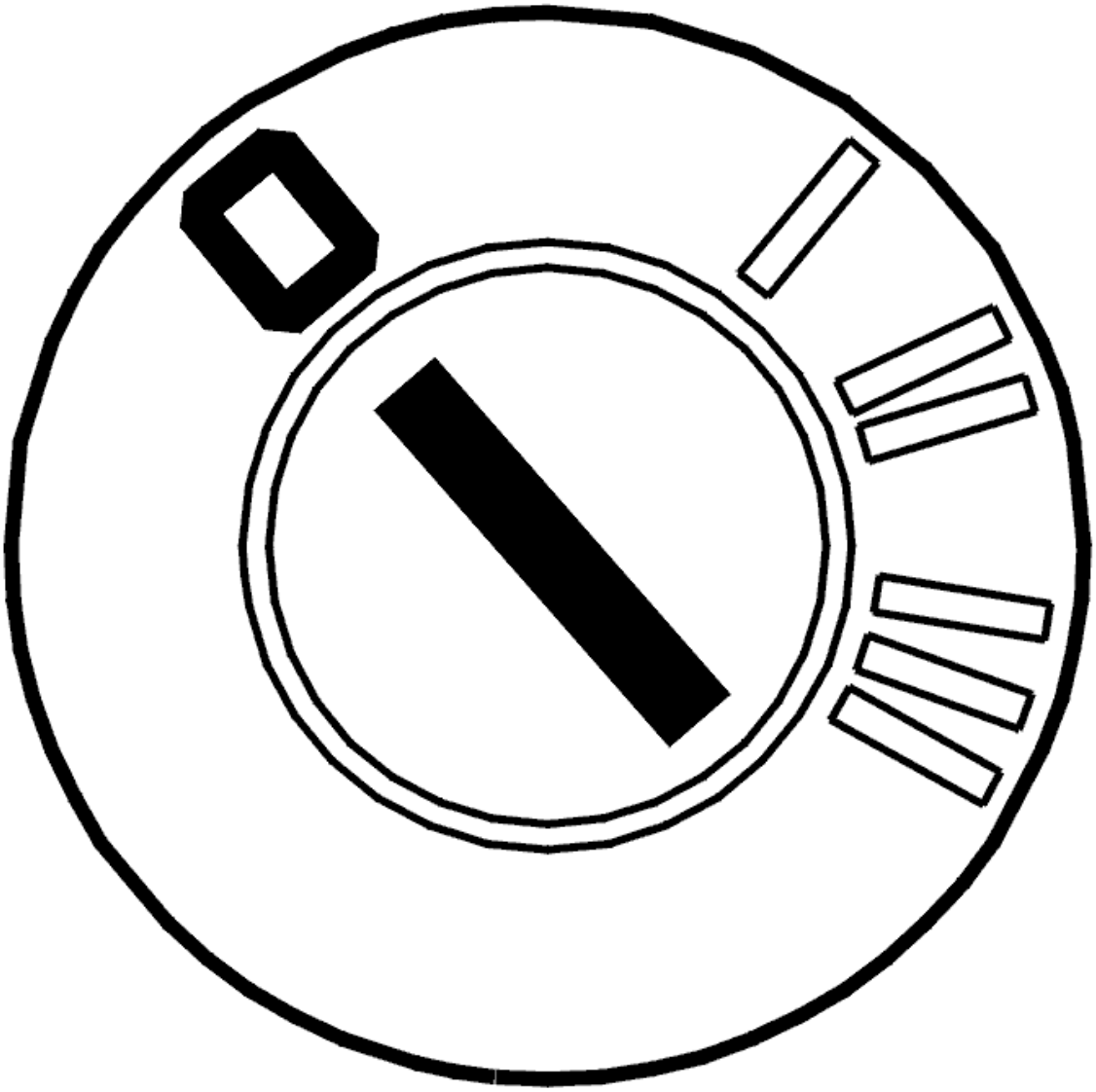

Fig. 192: Identifying Ignition OFF
Courtesy of VOLVO CARS CORPORATION

- Ignition off.

  Check the signal cable between the central electronic module (CEM) and the immobilizer antenna unit.

  Diagnostic trouble code (DTC) CEM-6C42:

  The cable between the central electronic module (CEM) terminal #14D and the immobilizer antenna unit terminal #2.

  Diagnostic trouble code (DTC) CEM-6C44:

  The cable between the central electronic module (CEM) terminal #13D and the immobilizer antenna unit terminal #3.

Check the signal cable. Check for an intermittent short-circuit to ground. Check for an intermittent open-circuit. Check for contact resistance and oxidation.

Remedy as necessary.

Other information:

- For -2004, see: **CENTRAL ELECTRONIC MODULE (CEM), REPLACING**
- For 2005-, see: **CENTRAL ELECTRONIC MODULE (CEM), REPLACING** .
- To access the immobilizer antenna unit/connector, see **ANTENNA UNIT, START INHIBITOR, REPLACING**
- To connect the breakout box, see **CONNECTING THE BREAKOUT BOX**
- -2004: **SIGNAL SPECIFICATION**
- 2005-: **SIGNAL SPECIFICATION**
- see **CHECKING WIRING AND TERMINALS** .

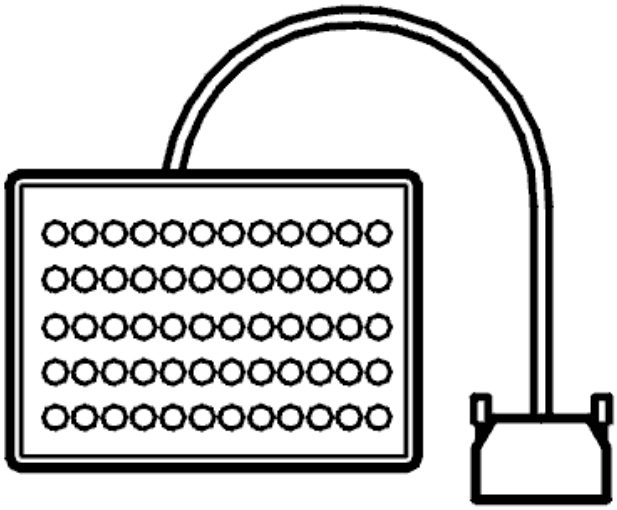

Fig. 193: Breakout Box
Courtesy of VOLVO CARS CORPORATION

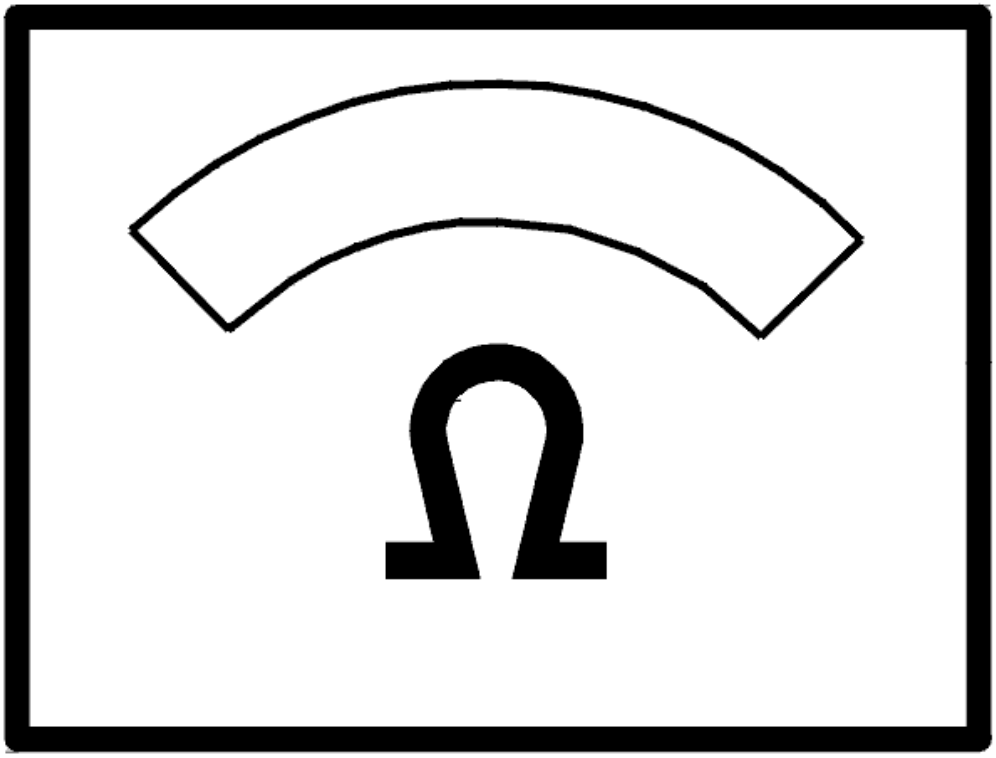

Fig. 194: Identifying Ohm Meter
Courtesy of VOLVO CARS CORPORATION

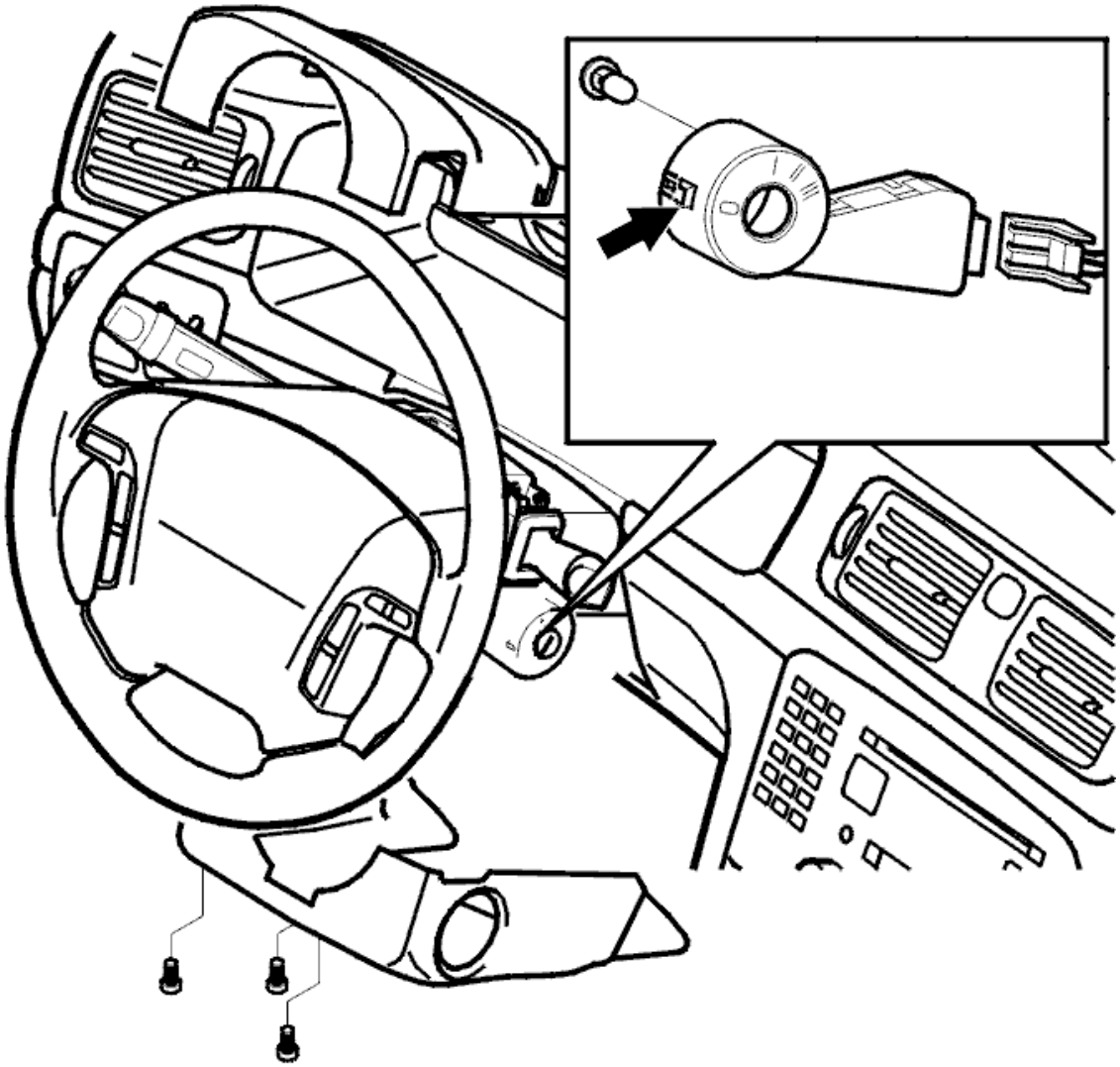

Fig. 195: Identifying Ignition Switch Bulb
Courtesy of VOLVO CARS CORPORATION

- **Continue**

  Refer to **INFORMATION**

CHECKING CABLE FOR AN OPEN-CIRCUIT

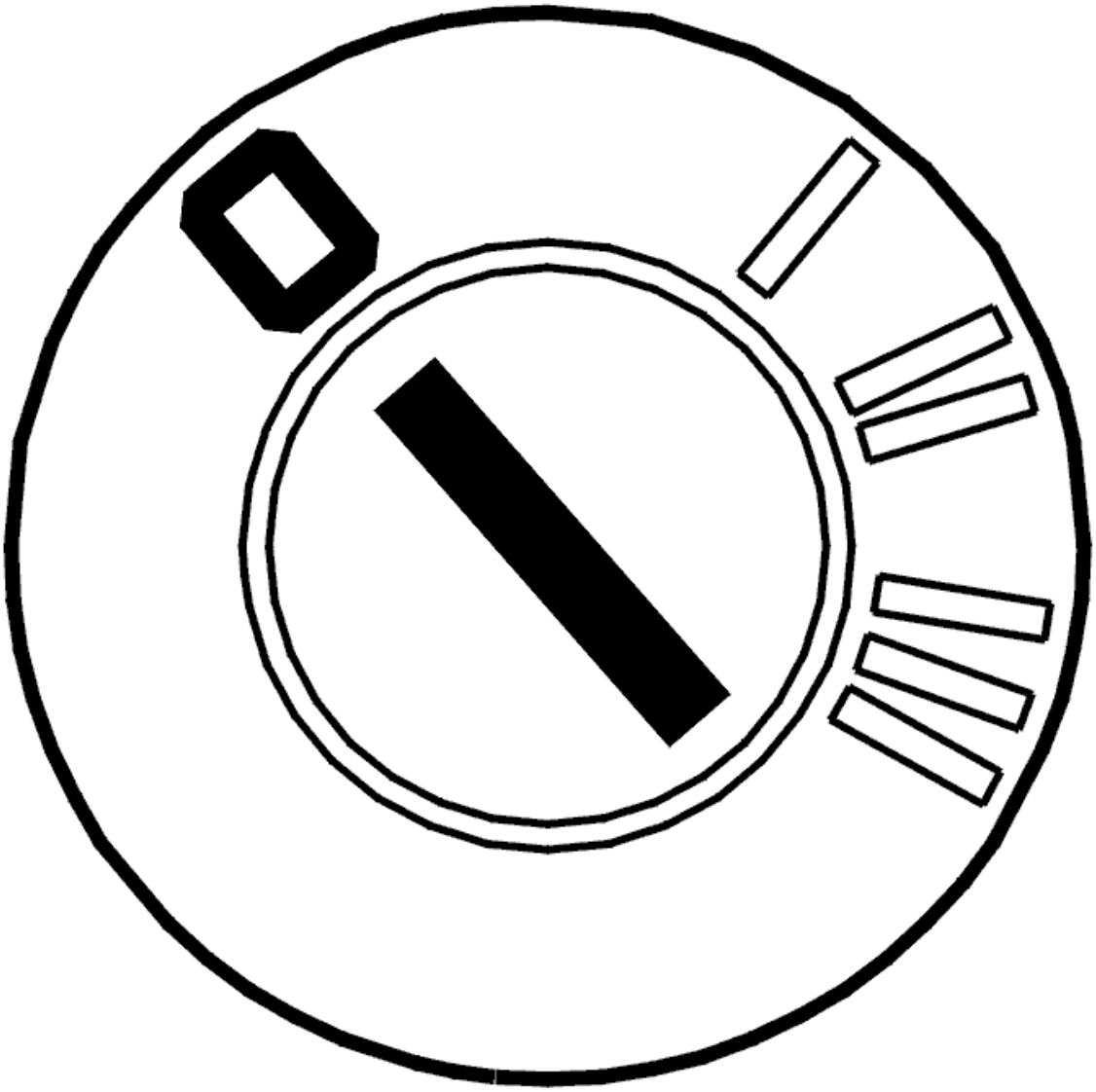

Fig. 196: Identifying Ignition OFF
Courtesy of VOLVO CARS CORPORATION

- Ignition off.

  Check the cable between the ignition switch #15A and antenna unit terminal #1. Check for an intermittent open-circuit.

  Other information:

  - see **CHECKING WIRING AND TERMINALS** .

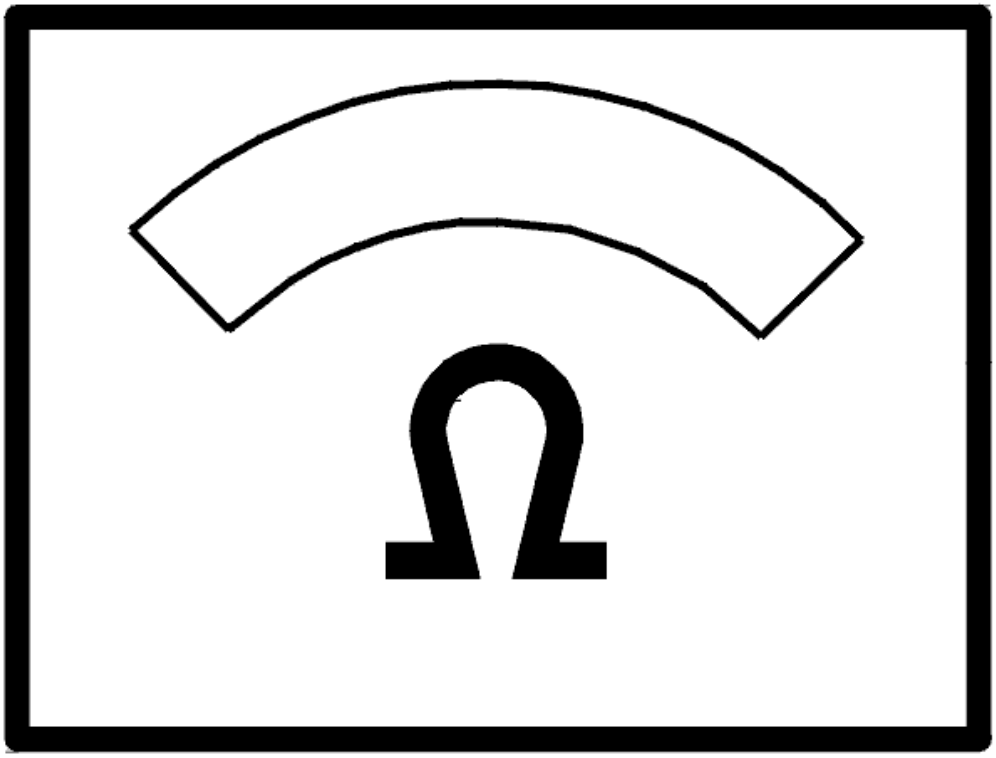

Fig. 197: Identifying Ohm Meter
Courtesy of VOLVO CARS CORPORATION

- **Continue**

  Refer to **INFORMATION**

INFORMATION

FAULT-TRACING INFORMATION

If the fault is intermittent, do not verify fault-tracing if the fault does not recur.

It is possible to view the information again, or leave fault-tracing for this diagnostic trouble code (DTC).

CEM-6C42: ANTENNA/LIGHT RING WIRE CLOCK-SIGNAL (ICK). SIGNAL

TOO LOW. PERMANENT FAULT (2003-2004)

DIAGNOSTIC TROUBLE CODE INFORMATION

see **DIAGNOSTIC TROUBLE CODE INFORMATION**

SIGNAL TOO LOW. PERMANENT FAULT

CHECKING GROUND LEAD

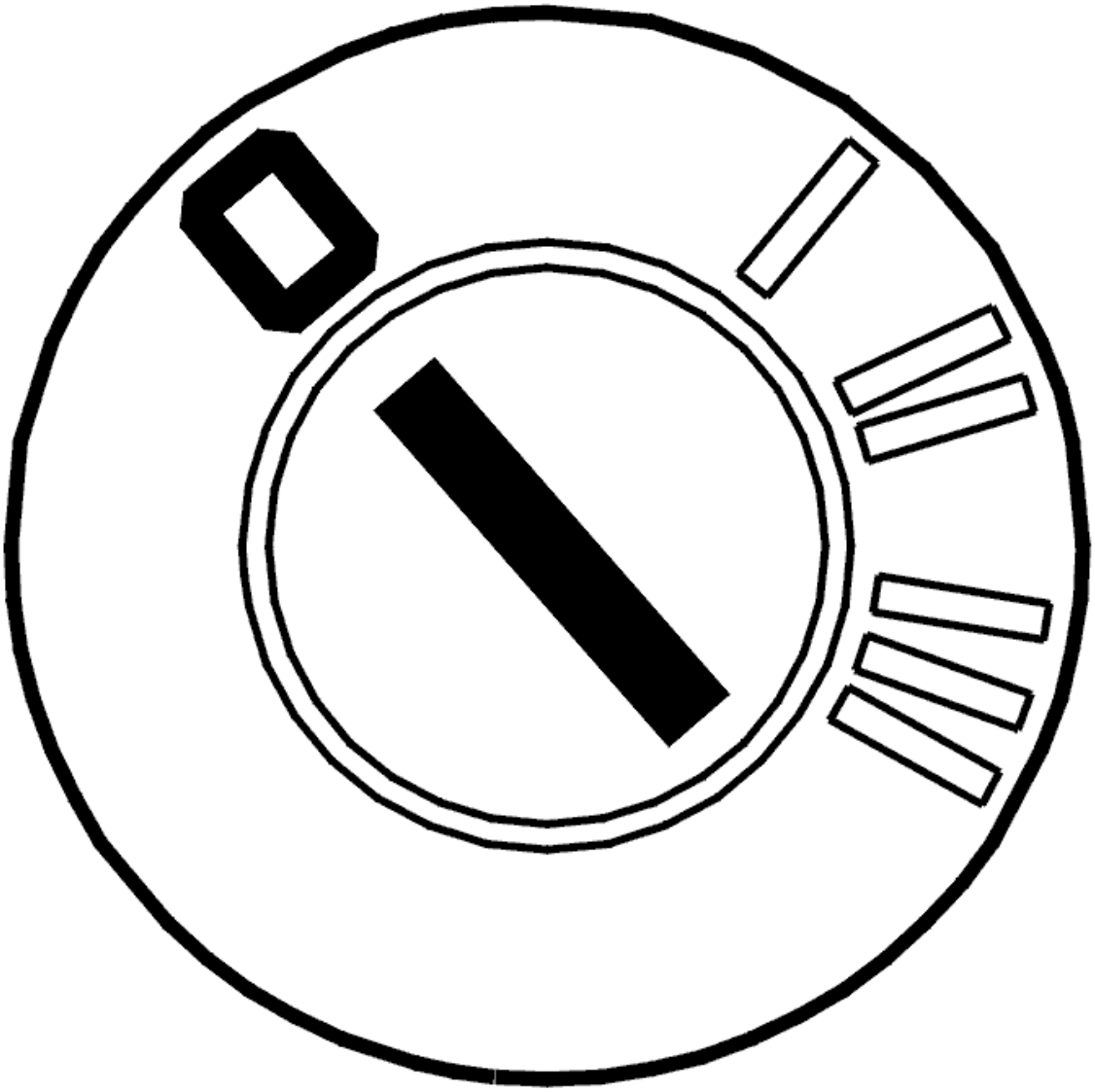

Fig. 198: Identifying Ignition OFF
Courtesy of VOLVO CARS CORPORATION

- Ignition off.

  Remove the connector from the antenna unit.

Check the cable between the antenna unit terminal #7 and ground terminal 31/83. Check for an open-circuit.

Remedy as necessary.

Other information:

- To access the immobilizer antenna unit/connector, see **ANTENNA UNIT, START INHIBITOR, REPLACING**
- see **CHECKING WIRING AND TERMINALS** .

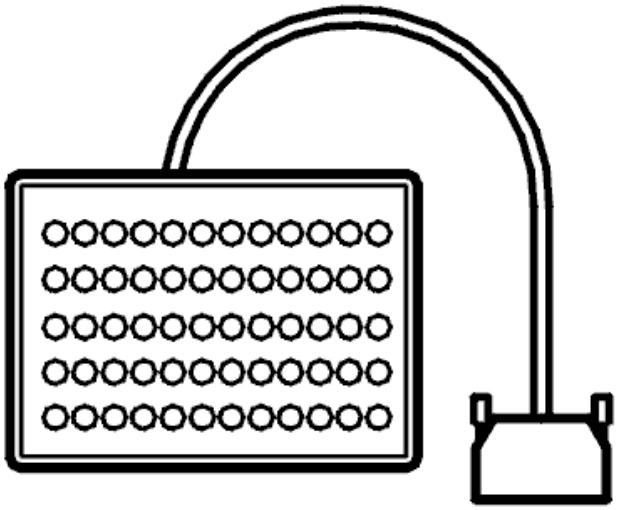

Fig. 199: Breakout Box
Courtesy of VOLVO CARS CORPORATION

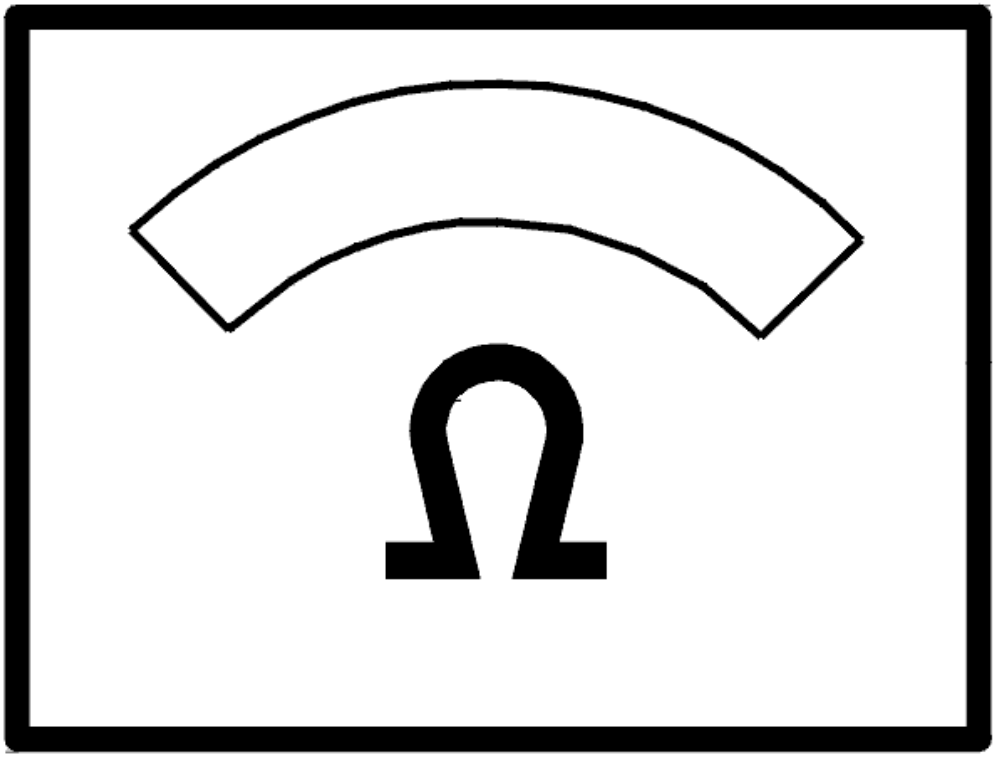

Fig. 200: Identifying Ohm Meter
Courtesy of VOLVO CARS CORPORATION

Is the cable OK?

- **YES**

  Refer to **CHECKING THE POWER SUPPLY**

- **NO**

  Refer to **VERIFICATION**

CHECKING THE POWER SUPPLY

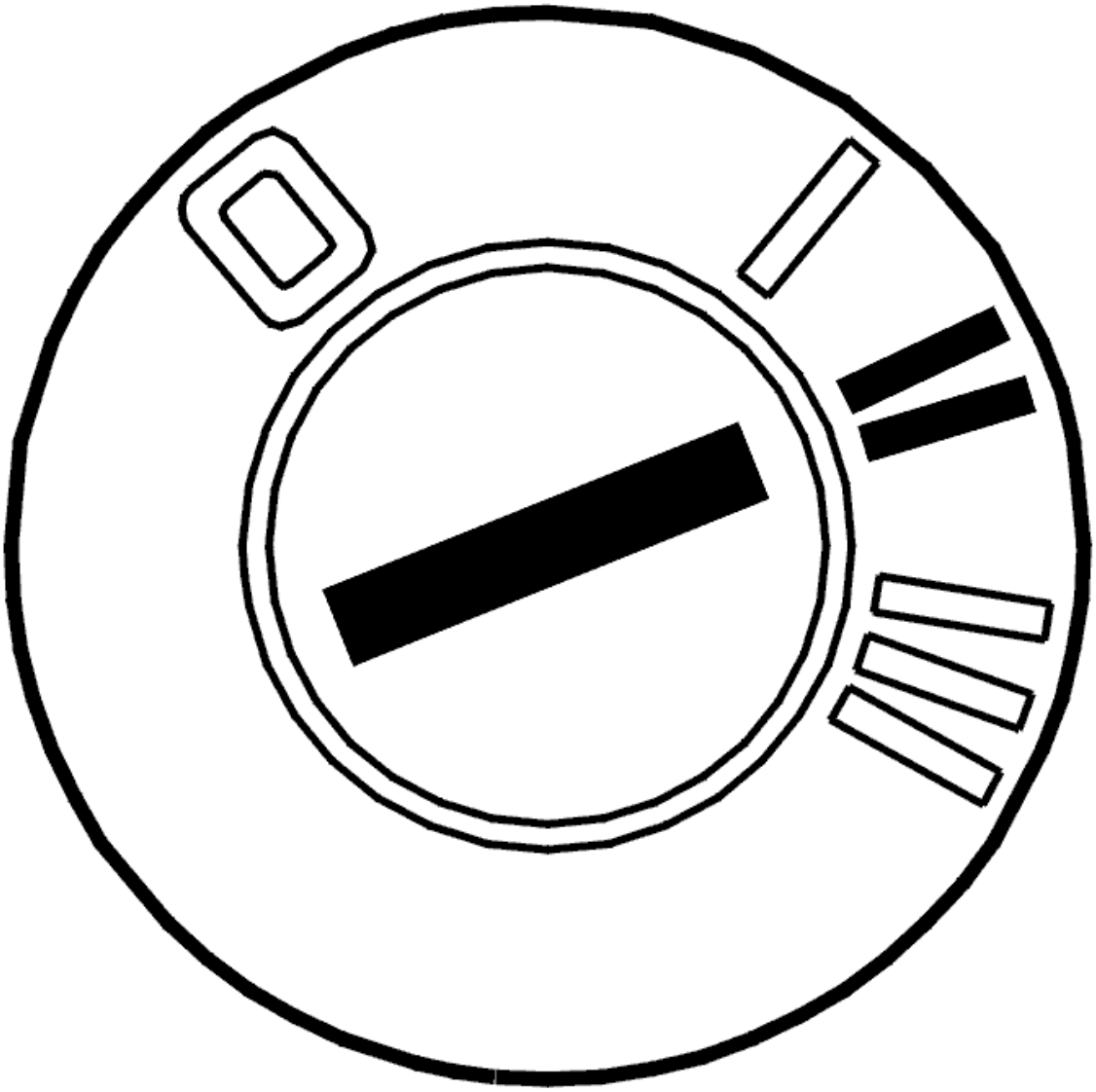

Fig. 201: Identifying Ignition ON
Courtesy of VOLVO CARS CORPORATION

- Ignition on.

  Check the supply voltage between antenna unit terminal #1 and ground.

  Other information

  - To access the immobilizer antenna unit/connector, see **ANTENNA UNIT, START INHIBITOR, REPLACING** .

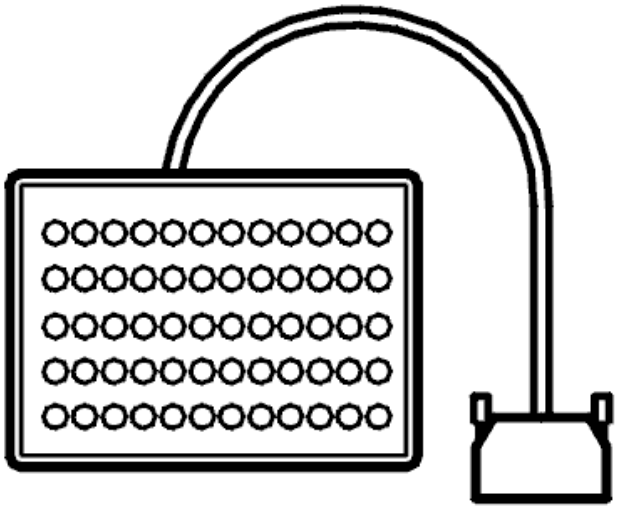

Fig. 202: Breakout Box
Courtesy of VOLVO CARS CORPORATION

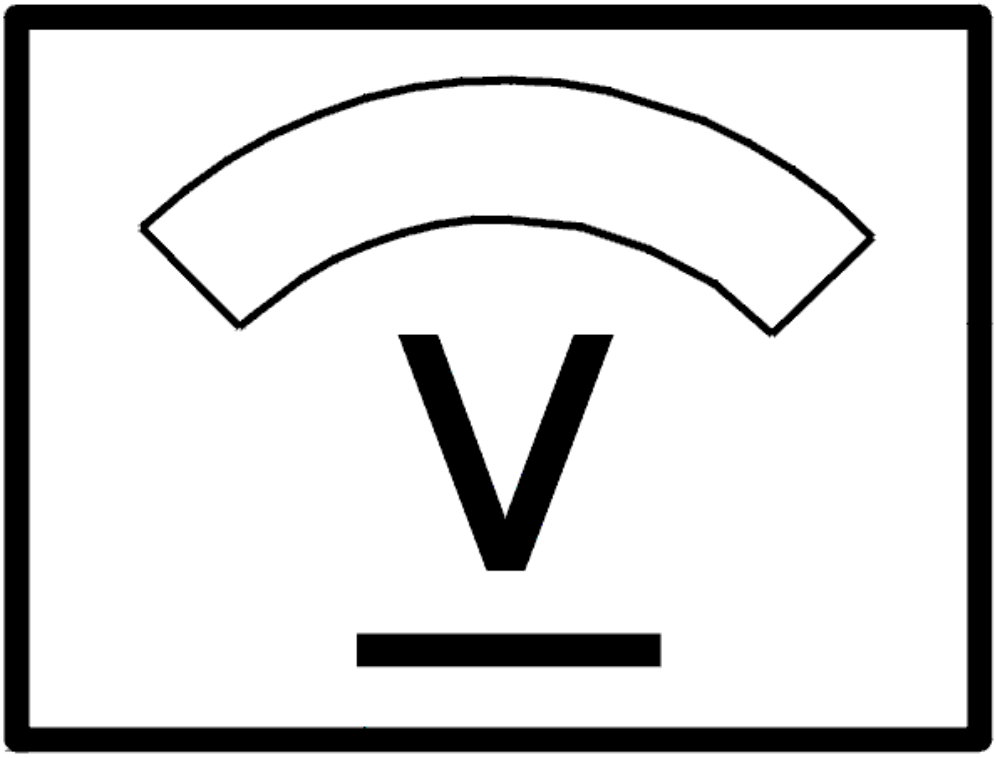

Fig. 203: Identifying Voltage Display
Courtesy of VOLVO CARS CORPORATION

Is the voltage OK?

- **YES**

  Refer to **CHECKING THE SIGNAL CABLE**

- **NO**

  Refer to **CHECKING CABLE FOR AN OPEN-CIRCUIT**

CHECKING THE SIGNAL CABLE

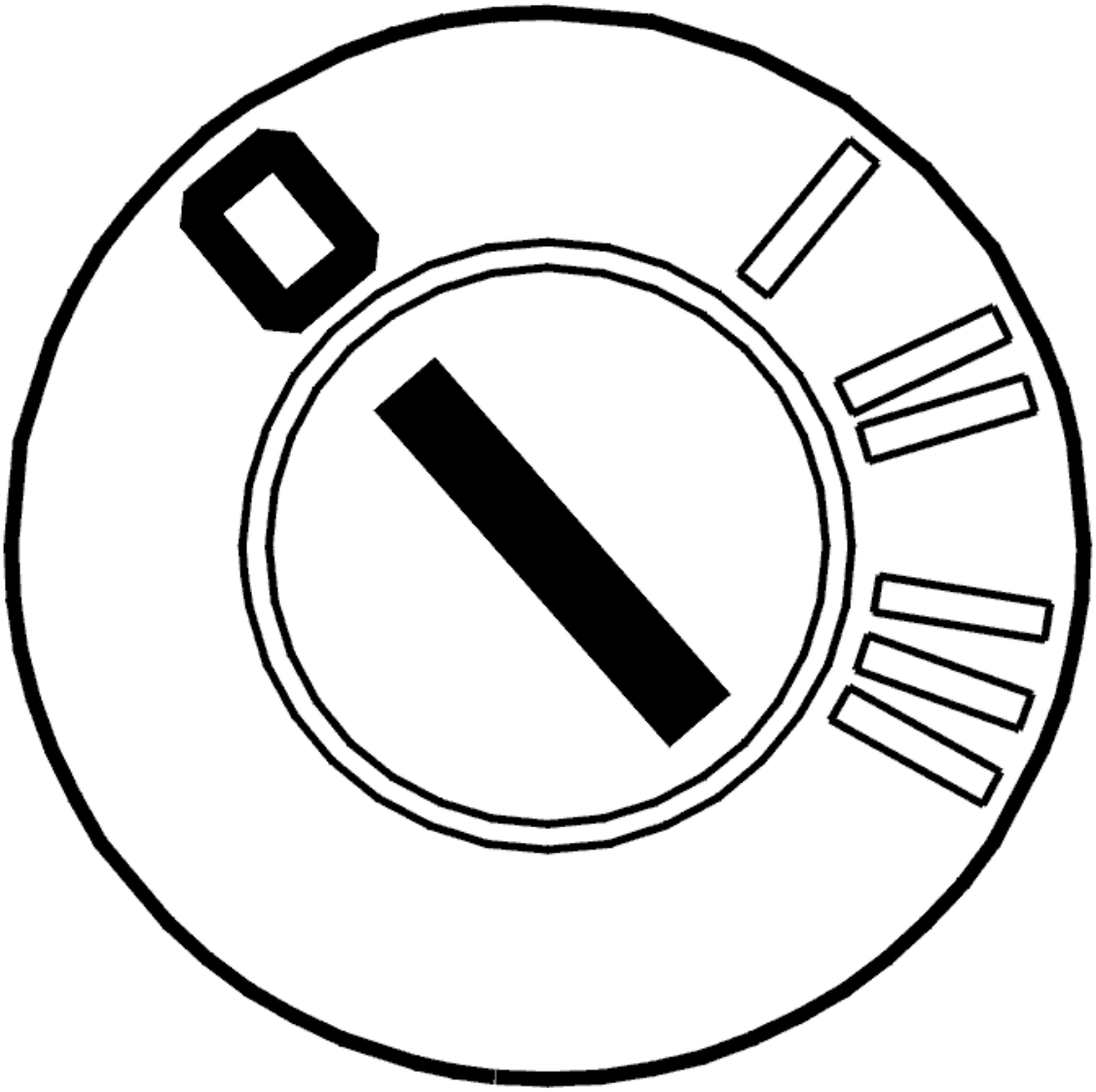

Fig. 204: Identifying Ignition OFF
Courtesy of VOLVO CARS CORPORATION

- Ignition off
- Disconnect the connector from the central electronic module (CEM)
- Disconnect the immobilizer antenna unit.

Check the signal cable between the central electronic module (CEM) and the immobilizer antenna unit.

Diagnostic trouble code (DTC) CEM-6C42:

The cable between the central electronic module (CEM) terminal #14D and the immobilizer antenna unit terminal #2.

Diagnostic trouble code (DTC) CEM-6C44:

The cable between the central electronic module (CEM) terminal #13D and the immobilizer antenna unit terminal #3.

Check signal cable. Check for a short-circuit to ground. Check for an open-circuit.

Remedy as necessary.

Other information:

- For -2004, see: **CENTRAL ELECTRONIC MODULE (CEM), REPLACING**
- For 2005-, see: **CENTRAL ELECTRONIC MODULE (CEM), REPLACING** .
- To access the immobilizer antenna unit/connector, see **ANTENNA UNIT, START INHIBITOR, REPLACING**
- To connect the breakout box, see **CONNECTING THE BREAKOUT BOX**
- -2004: **SIGNAL SPECIFICATION**
- 2005-: **SIGNAL SPECIFICATION**
- see **CHECKING WIRING AND TERMINALS** .

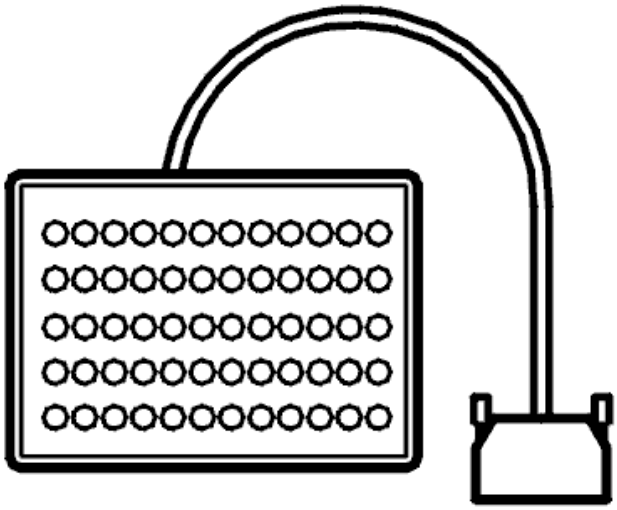

Fig. 205: Breakout Box
Courtesy of VOLVO CARS CORPORATION

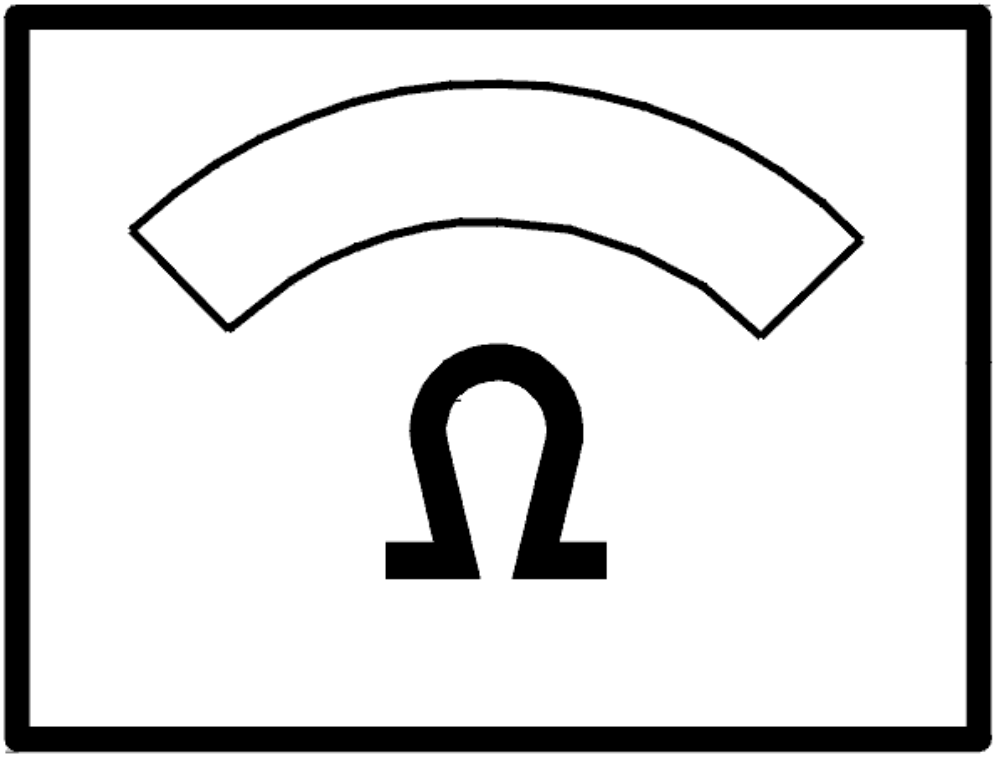

Fig. 206: Identifying Ohm Meter
Courtesy of VOLVO CARS CORPORATION

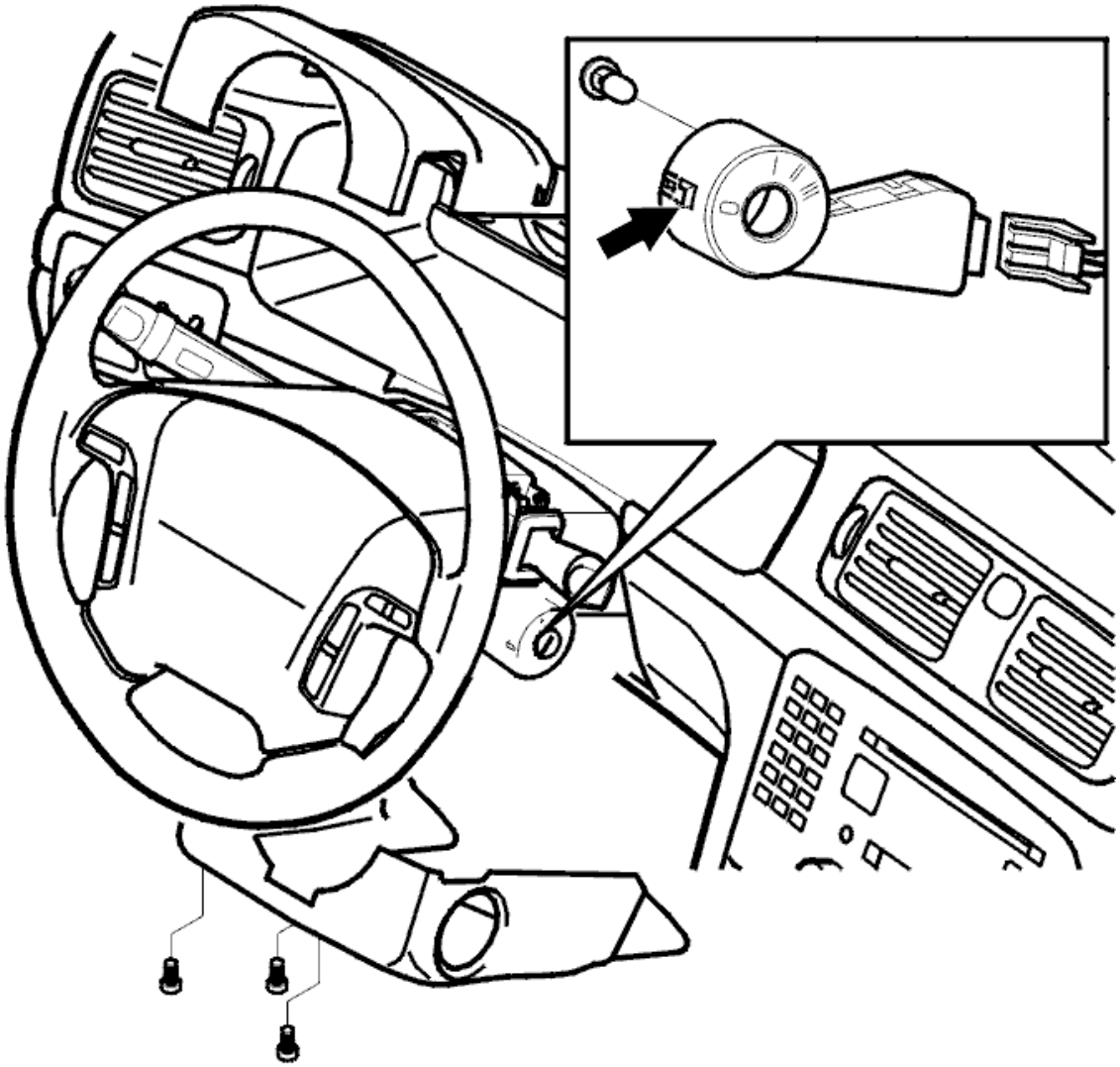

Fig. 207: Identifying Ignition Switch Bulb
Courtesy of VOLVO CARS CORPORATION

Is the signal cable OK?

- **YES**

  Refer to **REPLACING THE COMPONENT**

- **NO**

  Refer to **VERIFICATION**

REPLACING THE COMPONENT

Replace the central electronic module (CEM).

The immobilizer function is included in the central electronic module (CEM) but cannot be replaced separately.

Other information

- For -2004, see: **CENTRAL ELECTRONIC MODULE (CEM), REPLACING**
- For 2005-, see: **CENTRAL ELECTRONIC MODULE (CEM), REPLACING** .

- **Continue**

  Refer to **VERIFICATION**

CHECKING CABLE FOR AN OPEN-CIRCUIT

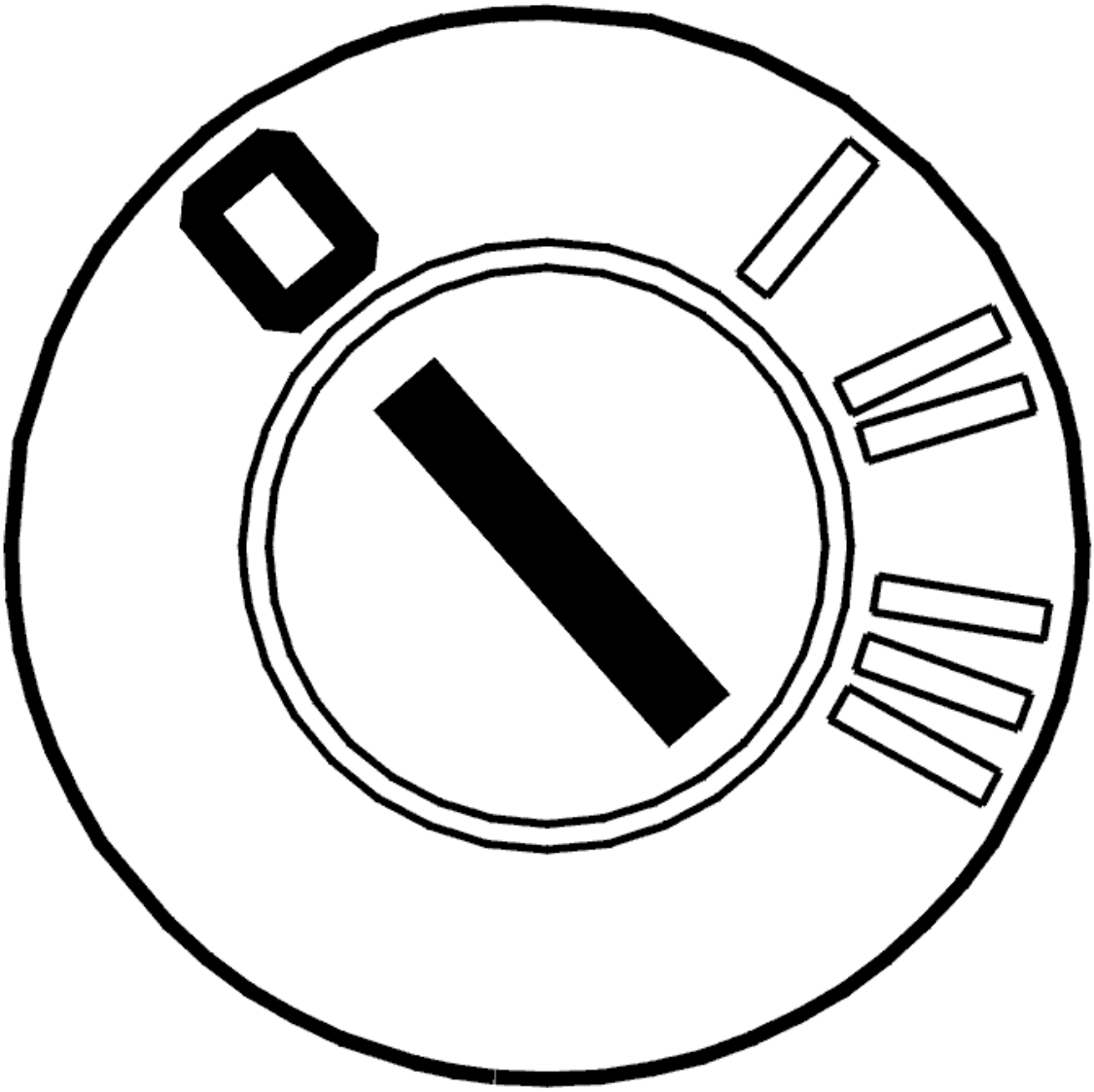

Fig. 208: Identifying Ignition OFF
Courtesy of VOLVO CARS CORPORATION

- Ignition off.

  Check the cable between the ignition switch #15A and antenna unit terminal #1. Check for an open-circuit.

  Other information:

  - see **CHECKING WIRING AND TERMINALS** .

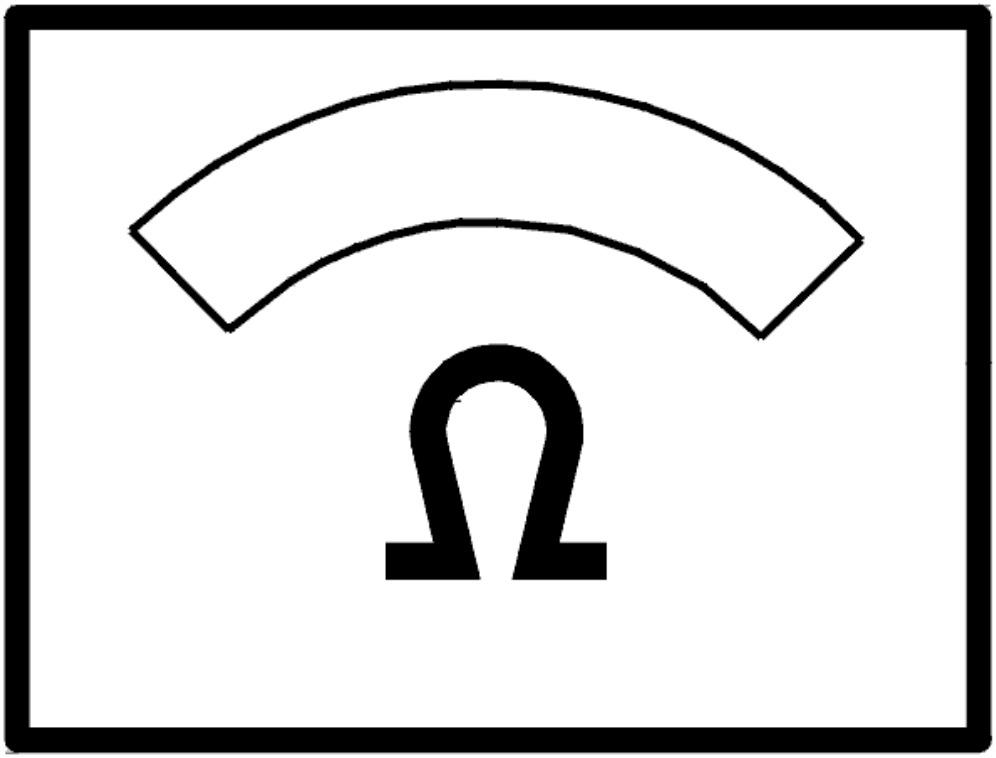

Fig. 209: Identifying Ohm Meter
Courtesy of VOLVO CARS CORPORATION

- **Continue**

  Refer to **VERIFICATION**

VERIFICATION

VERIFICATION

HINT: After the repair it is necessary to check that the fault has been rectified.

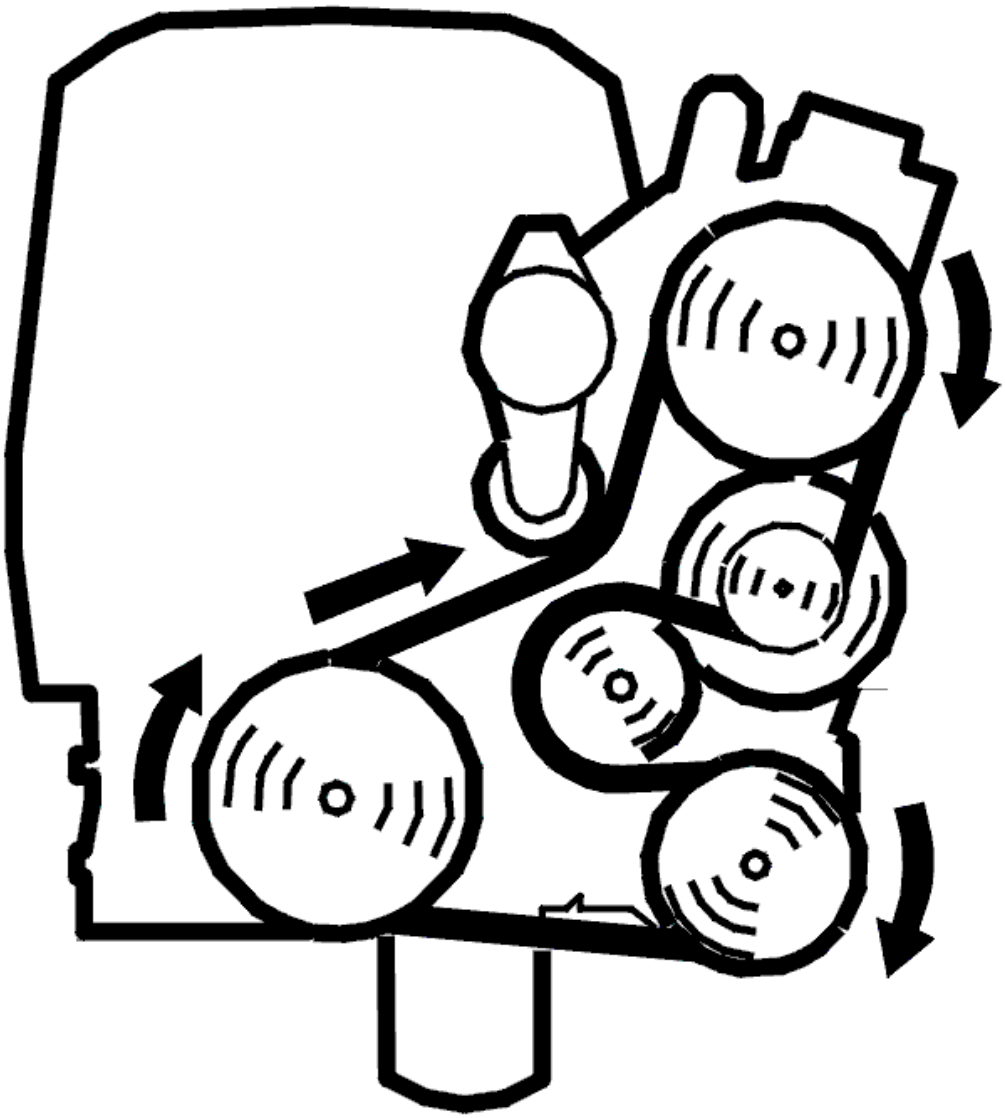

Fig. 210: Belt Routing / Engine Idling - Volvo
Courtesy of VOLVO CARS CORPORATION

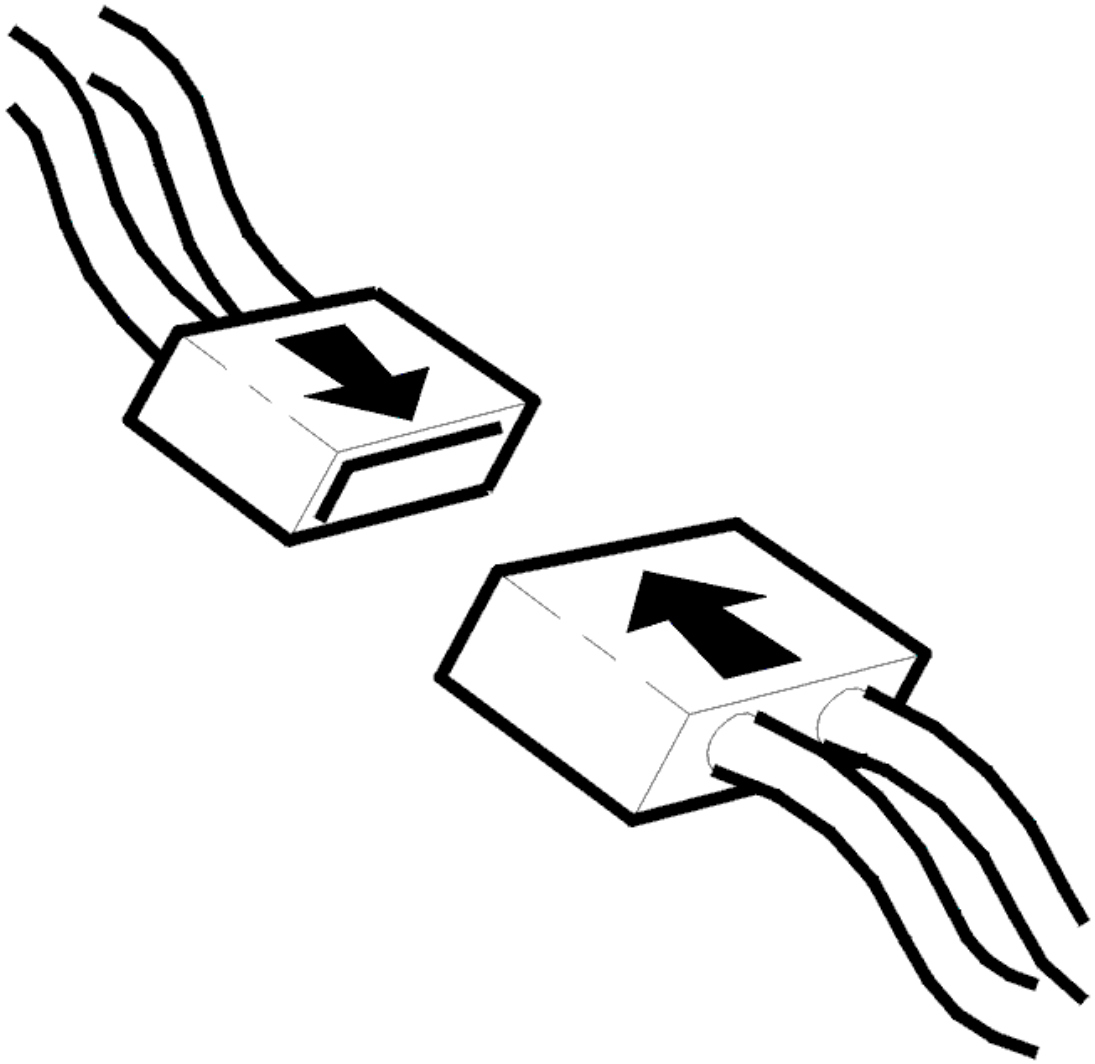

Fig. 211: Connecting Connector
Courtesy of VOLVO CARS CORPORATION

- Ignition off.
- Connect connectors, install components, etc.
- Start the engine.

  Check that diagnostic trouble code status changes from permanent to intermittent.

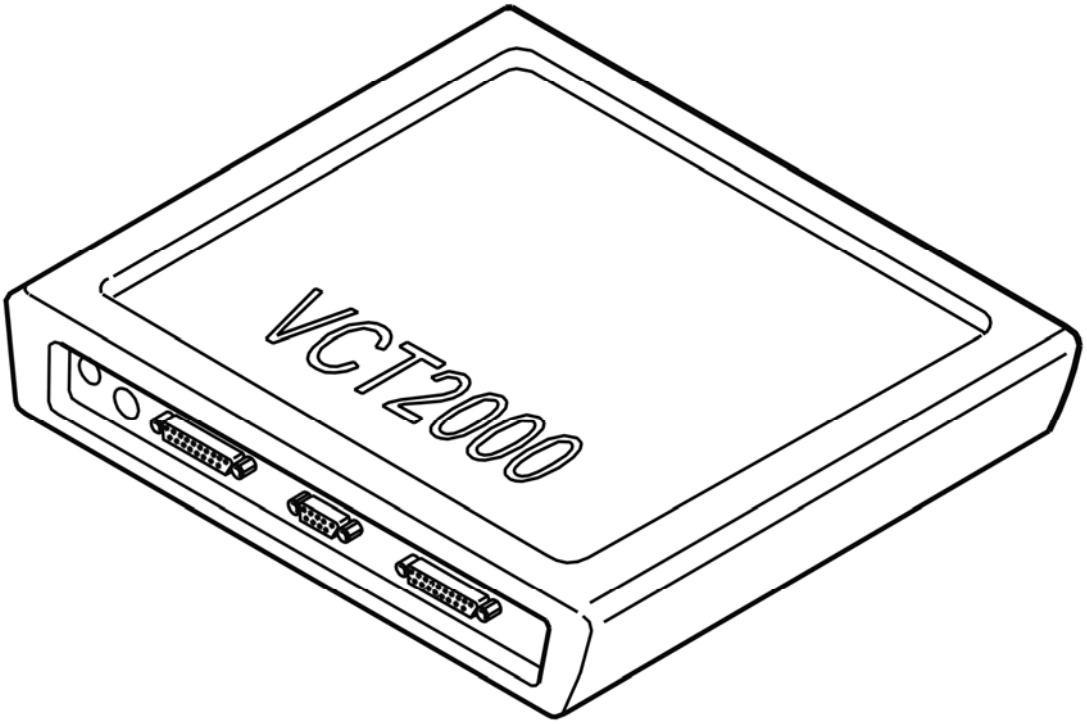

Fig. 212: Identifying VCT2000 Diagnostic Tool Symbol In VIDA
Courtesy of VOLVO CARS CORPORATION

Is the diagnostic trouble code status intermittent?

- **YES**

  VERIFIED: Troubleshooting has been completed.

- **NO**

  Refer to **INFORMATION**

INFORMATION

FAULT-TRACING INFORMATION

The fault should have been detected and remedied. As this is not the case fault-tracing has failed.

Exit fault-tracing for this diagnostic trouble code (DTC) or make another attempt.

CEM-6C43: ANTENNA / LIGHT RING - DATA COMMUNICATION CABLE. SIGNAL TOO HIGH (2005-2012)

DIAGNOSTIC TROUBLE CODE (DTC) INFORMATION CEM-6C43

Condition

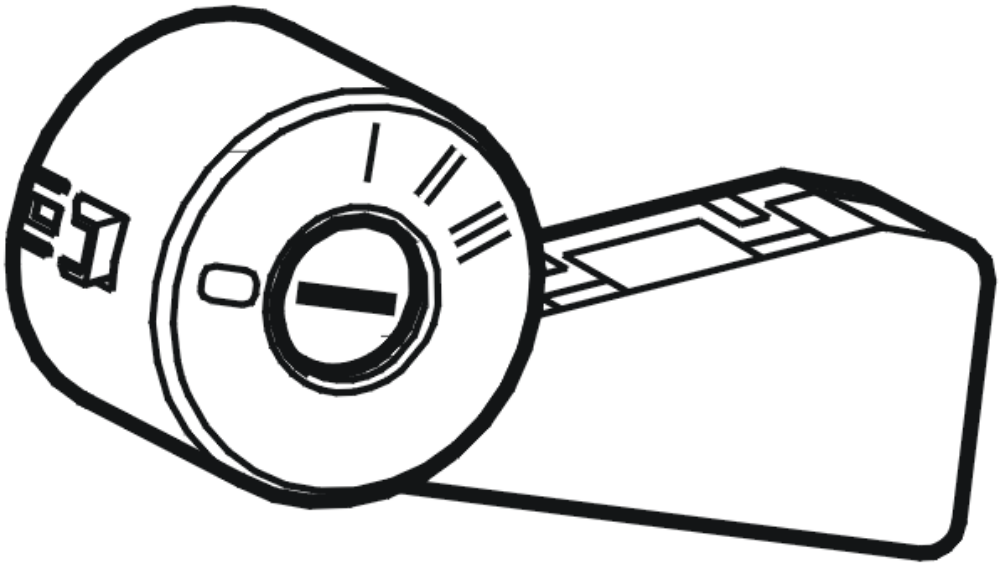

Fig. 213: Identifying Ignition Switch
Courtesy of VOLVO CARS CORPORATION

The central electronic module (CEM) communicates with the ignition key when the key is inserted in the ignition switch.

The diagnostic trouble code (DTC) is stored if the central electronic module (CEM) registers a short-circuit to supply voltage in the data cable for the ignition switch.

The diagnostic trouble code (DTC) can be diagnosed when the ignition is switched on.

Substitute Value

- None.

Possible Source

- Short-circuit to supply voltage in the data cable.
- Open-circuit on cable between #7 on antenna/light ring and ground.

Fault symptom[s]

- The starter motor does not turn.

SIGNAL TOO HIGH

CHECKING THE WIRING

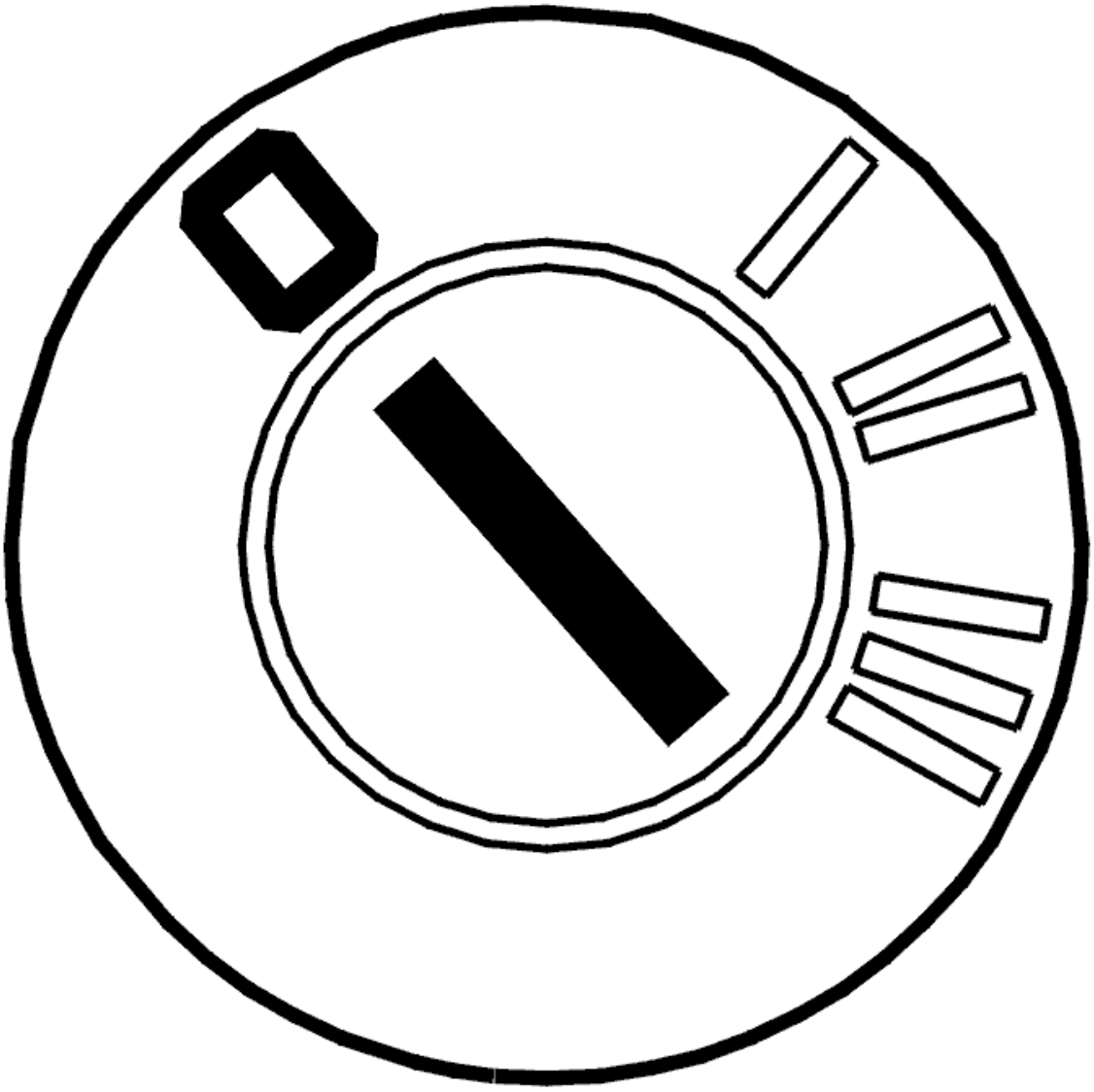

Fig. 214: Identifying Ignition OFF
Courtesy of VOLVO CARS CORPORATION

- Ignition off.

  Check central electronic module (CEM) connector D and the connector for the immobilizer antenna unit. Check for contact resistance. Check for oxidation. Check for damaged or loose connections.

  Check the signal cable. Check for a short-circuit to supply voltage.

  Take readings between:

  - Central electronic module (CEM) connector terminal #D56 (#56) and immobilizer antenna unit terminal #3.

  Remedy as necessary.

  Other information

  - see **CONNECTING THE BREAKOUT BOX**
  - -2004: **SIGNAL SPECIFICATION**
  - 2005-: **SIGNAL SPECIFICATION**
  - see **LOCATION OF COMPONENTS**
  - For -2004, see: **CENTRAL ELECTRONIC MODULE (CEM), REPLACING**
  - For 2005-, see: **CENTRAL ELECTRONIC MODULE (CEM), REPLACING** .
  - see **ANTENNA UNIT, START INHIBITOR, REPLACING**
  - see **CHECKING WIRING AND TERMINALS**

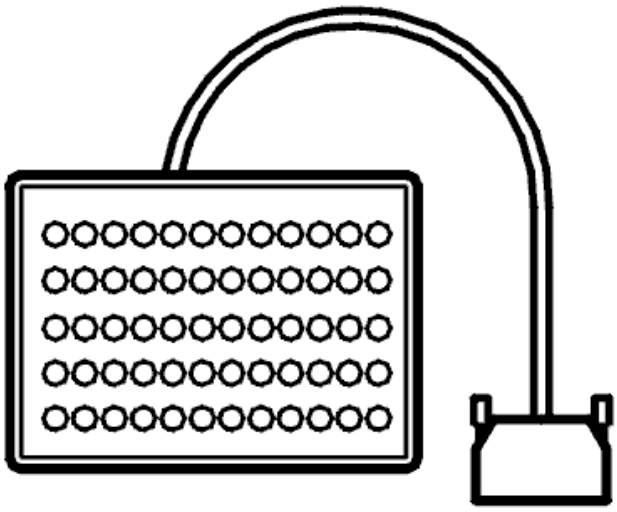

Fig. 215: Breakout Box
Courtesy of VOLVO CARS CORPORATION

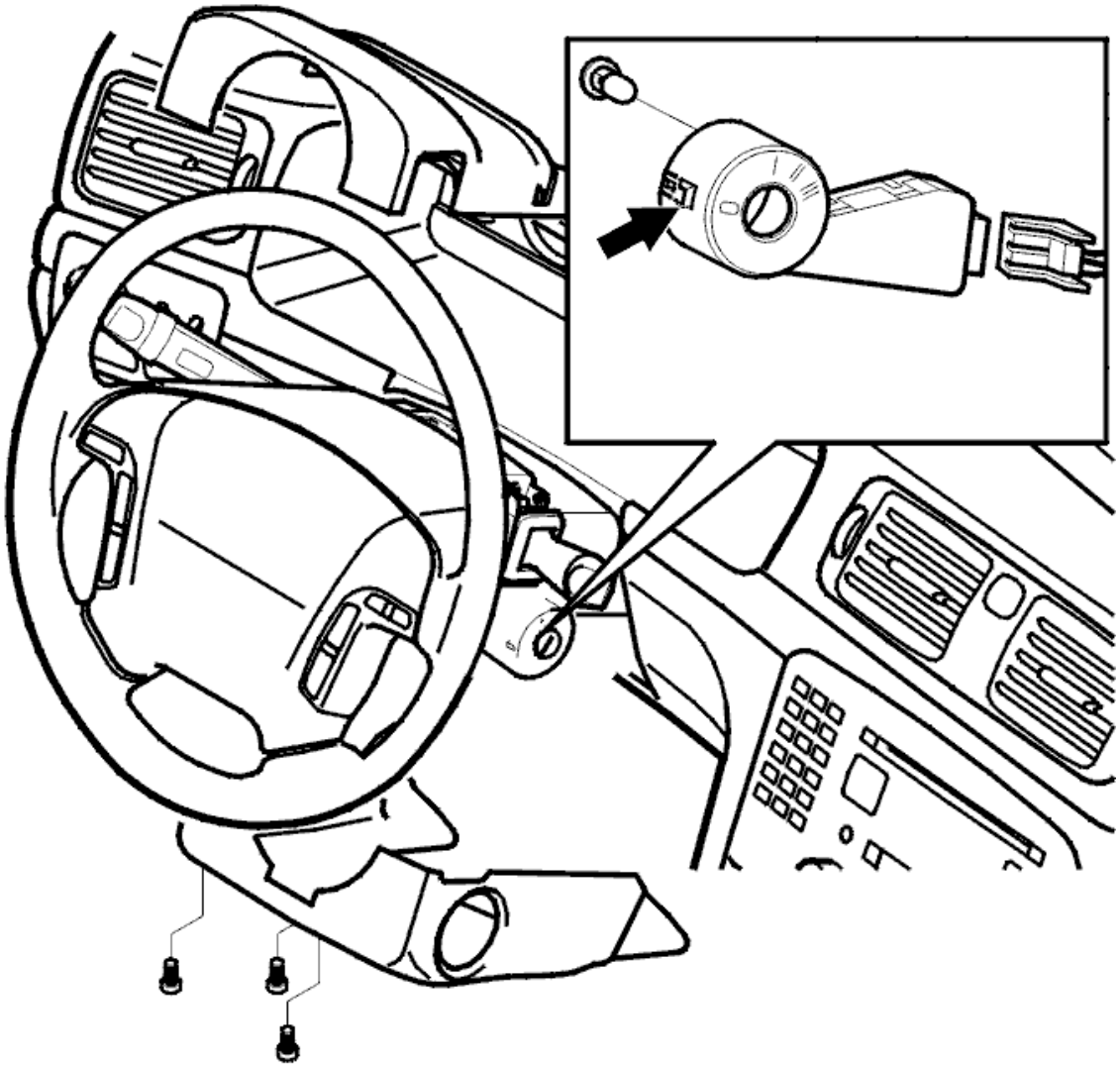

Fig. 216: Identifying Ignition Switch Bulb
Courtesy of VOLVO CARS CORPORATION

- **Continue**

  Refer to **VERIFICATION**

VERIFICATION

VERIFICATION

HINT: After carrying out the repair, check that the fault has been remedied.

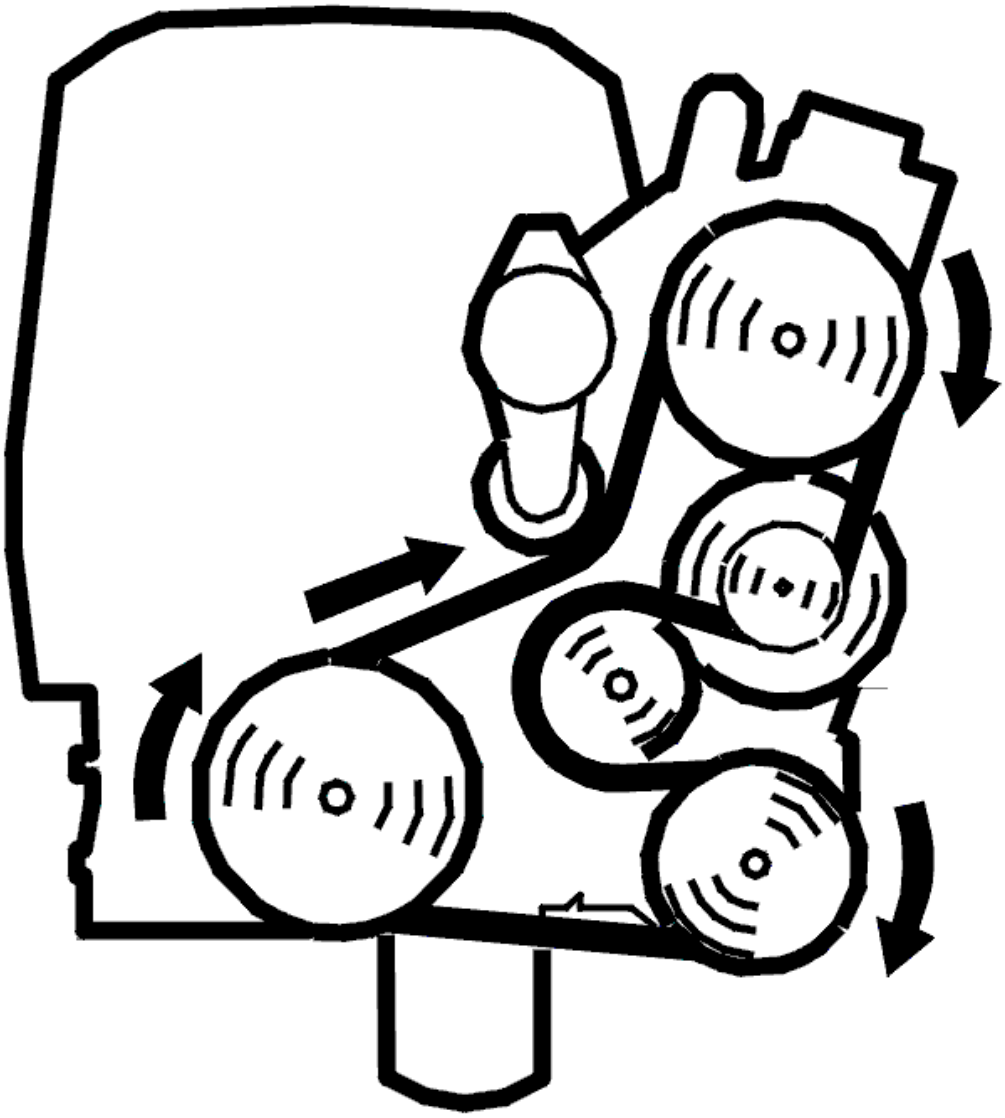

Fig. 217: Belt Routing / Engine Idling - Volvo
Courtesy of VOLVO CARS CORPORATION

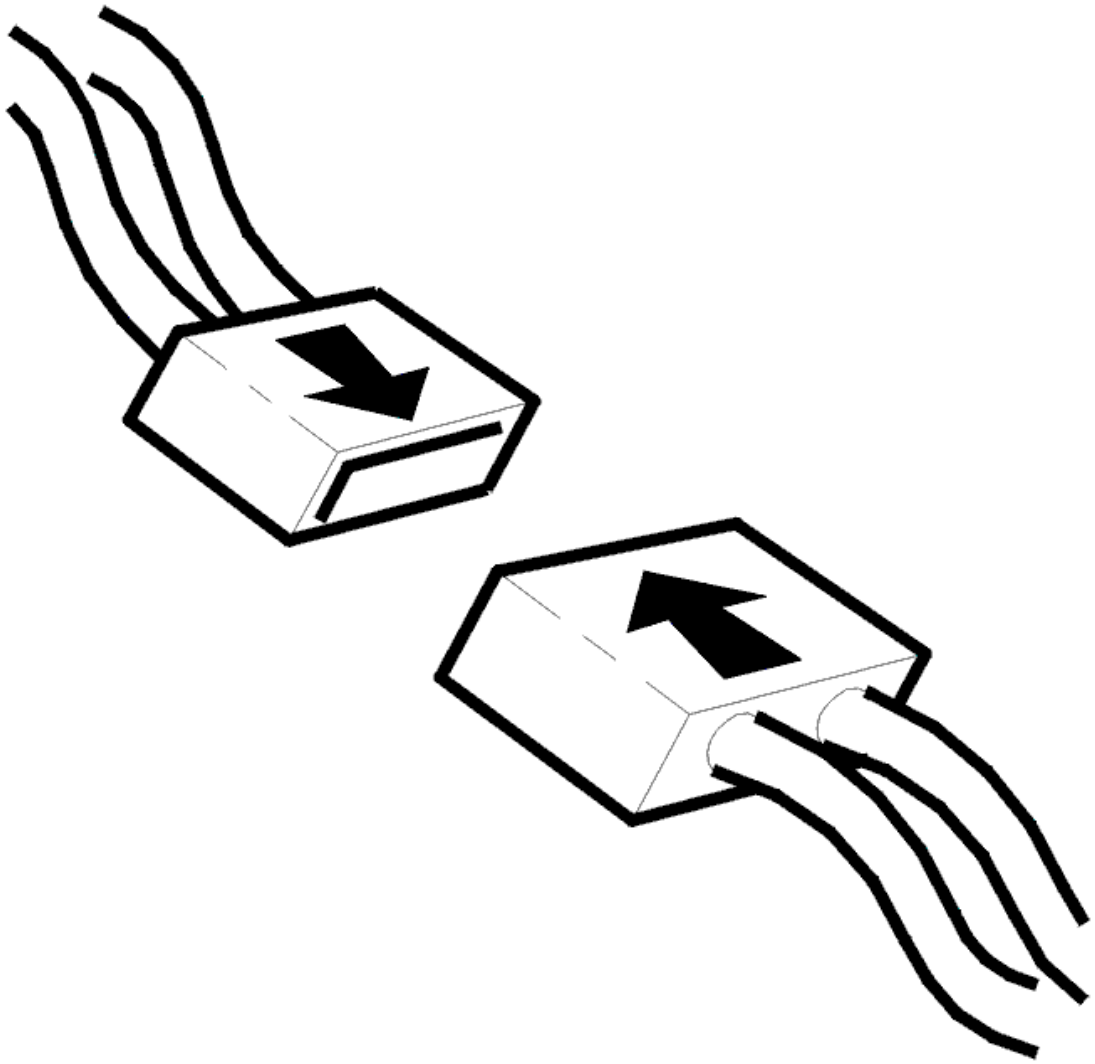

Fig. 218: Connecting Connector
Courtesy of VOLVO CARS CORPORATION

- Ignition off
- Reinstall the connectors, components etc.
- Try to start the vehicle.

Does the vehicle start?

- **YES**

  VERIFIED: Troubleshooting has been completed.

- **NO**

Refer to **INFORMATION**

INFORMATION

FAULT-TRACING INFORMATION

The fault should have been detected and remedied. As this is not the case fault-tracing has failed.

Exit fault-tracing for this diagnostic trouble code (DTC) or make another attempt.

CEM-6C43: ANTENNA/LIGHT RING DATA COMMUNICATION (IDS). SIGNAL TOO HIGH. PERMANENT FAULT (2003-2004)

DIAGNOSTIC TROUBLE CODE INFORMATION

Condition

If the central electronic module (CEM) detects a high signal on the IDS wire between central electronic module (CEM) 13D and antenna unit 3 when the signal should be low, diagnostic trouble code CEM-6C43 is displayed.

Substitute Value

Nothing.

Possible Source

- Wire between central electronic module (CEM) 13D and antenna unit 3 short circuited to battery voltage.
- Open-circuit on cable between #7 on antenna/light ring and ground.

Fault symptom[s]

- The engine will not start. (The starter motor does not work.).

SIGNAL TOO HIGH. PERMANENT FAULT

CHECKING THE SIGNAL CABLE

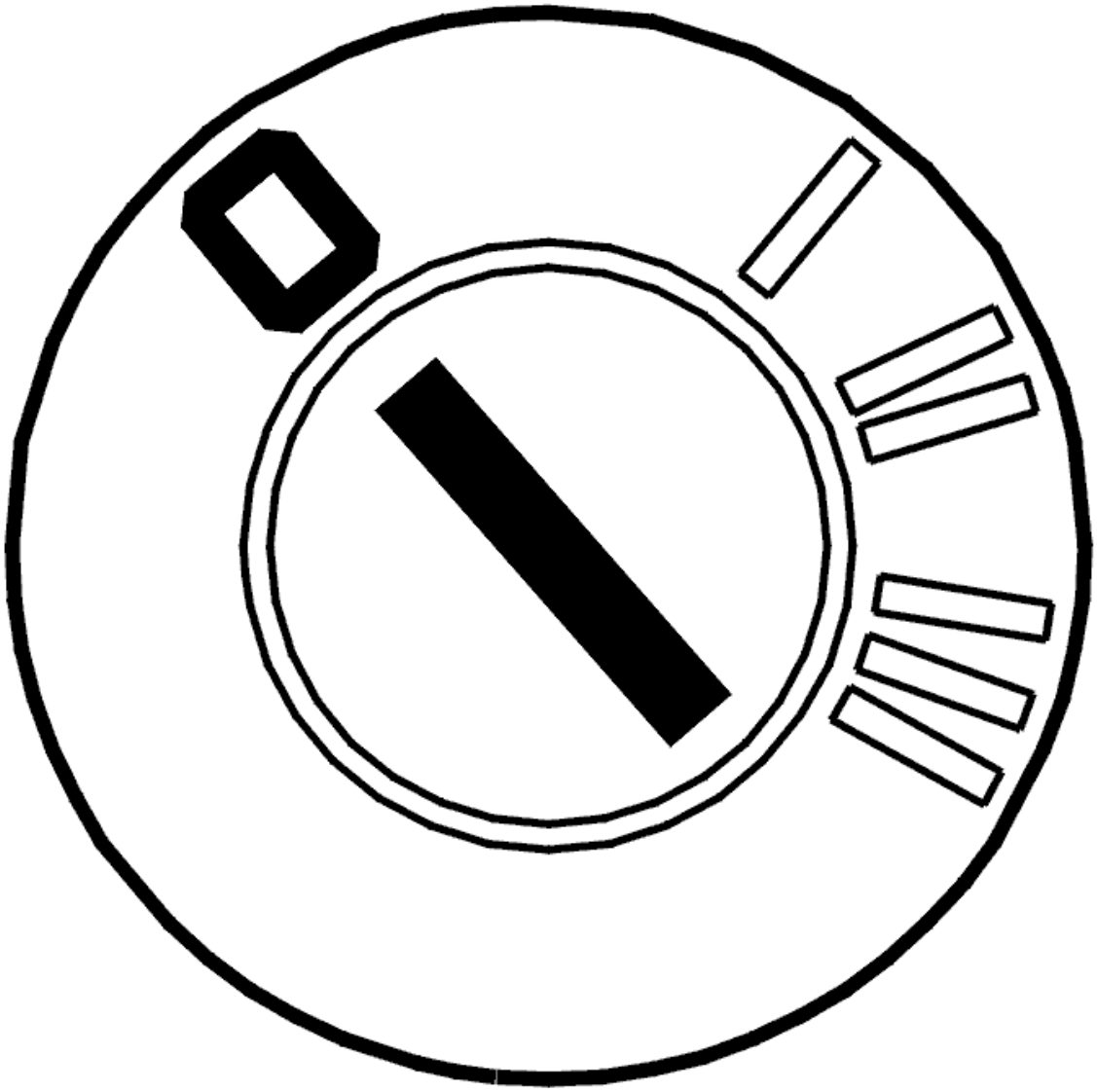

Fig. 219: Identifying Ignition OFF
Courtesy of VOLVO CARS CORPORATION

- Ignition off
- Disconnect the connector from the central electronic module (CEM)
- Disconnect the immobilizer antenna unit.

  Check the signal cable between central electronic module (CEM) connector terminal #13D and immobilizer antenna unit terminal #3. Check for a short-circuit to supply voltage.

  Remedy as necessary.

  Other information:

  - For -2004, see: **CENTRAL ELECTRONIC MODULE (CEM), REPLACING**

- For 2005-, see: **CENTRAL ELECTRONIC MODULE (CEM), REPLACING** .
- To access the immobilizer antenna unit/connector, see **ANTENNA UNIT, START INHIBITOR, REPLACING**
- To connect the breakout box, see **CONNECTING THE BREAKOUT BOX**
- -2004: **SIGNAL SPECIFICATION**
- 2005-: **SIGNAL SPECIFICATION**
- see **CHECKING WIRING AND TERMINALS** .

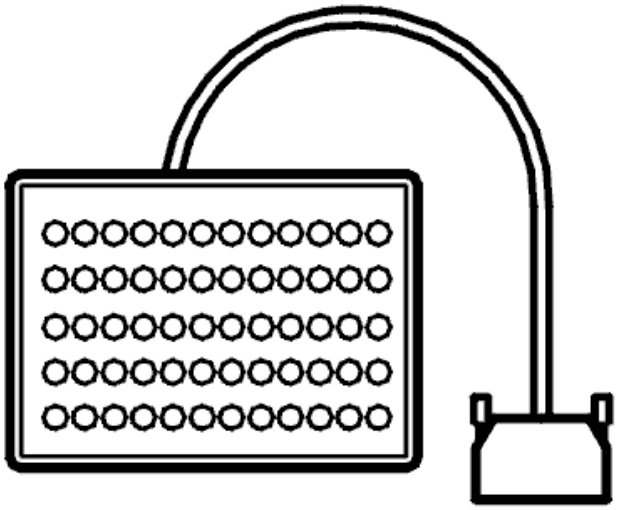

Fig. 220: Breakout Box
Courtesy of VOLVO CARS CORPORATION

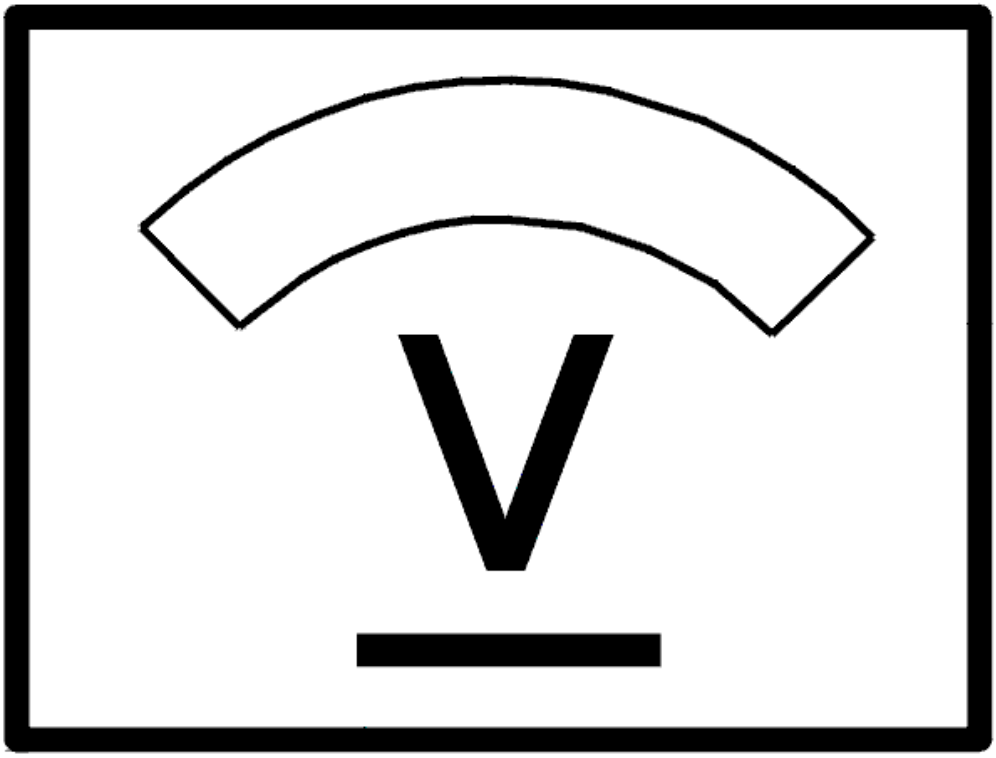

Fig. 221: Identifying Voltage Display
Courtesy of VOLVO CARS CORPORATION

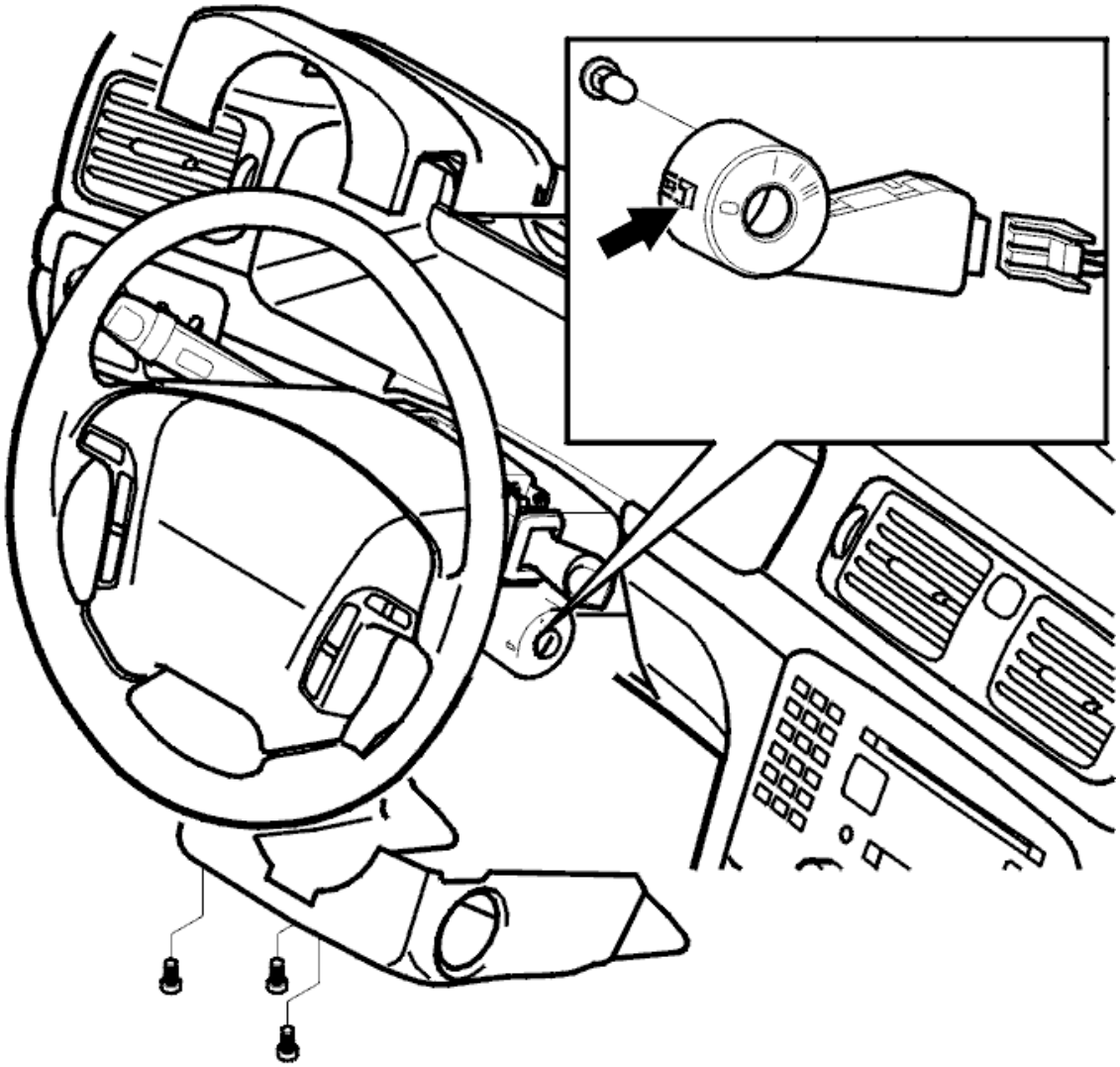

Fig. 222: Identifying Ignition Switch Bulb
Courtesy of VOLVO CARS CORPORATION

Is the signal cable OK?

- **YES**

  Refer to **REPLACING THE COMPONENT**

- **NO**

  Refer to **VERIFICATION**

REPLACING THE COMPONENT

Replace the central electronic module (CEM).

The immobilizer function is included in the central electronic module (CEM) but cannot be replaced separately.

Other information

- For -2004, see: **CENTRAL ELECTRONIC MODULE (CEM), REPLACING**
- For 2005-, see: **CENTRAL ELECTRONIC MODULE (CEM), REPLACING** .

- **Continue**

  Refer to **VERIFICATION**

VERIFICATION

VERIFICATION

HINT: After the repair it is necessary to check that the fault has been rectified.

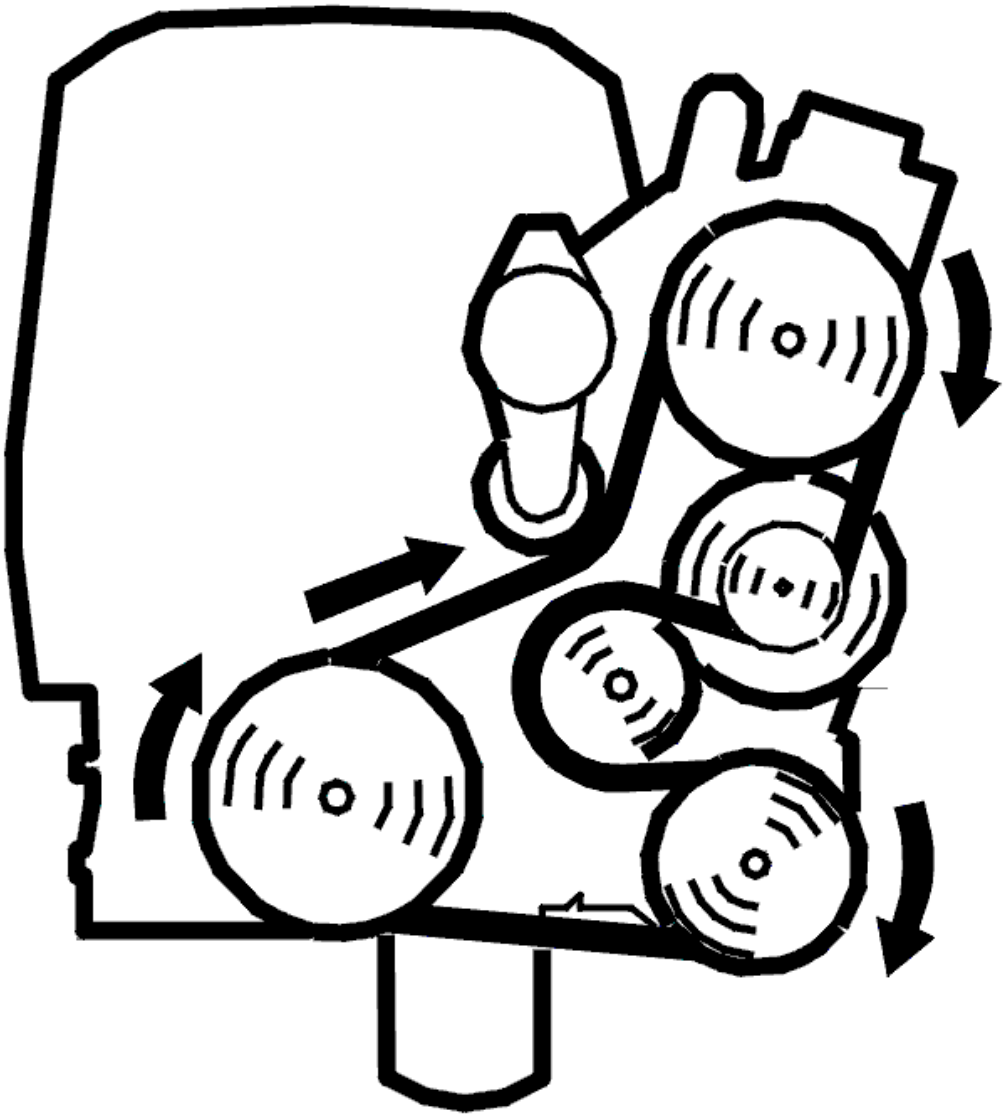

Fig. 223: Belt Routing / Engine Idling - Volvo
Courtesy of VOLVO CARS CORPORATION

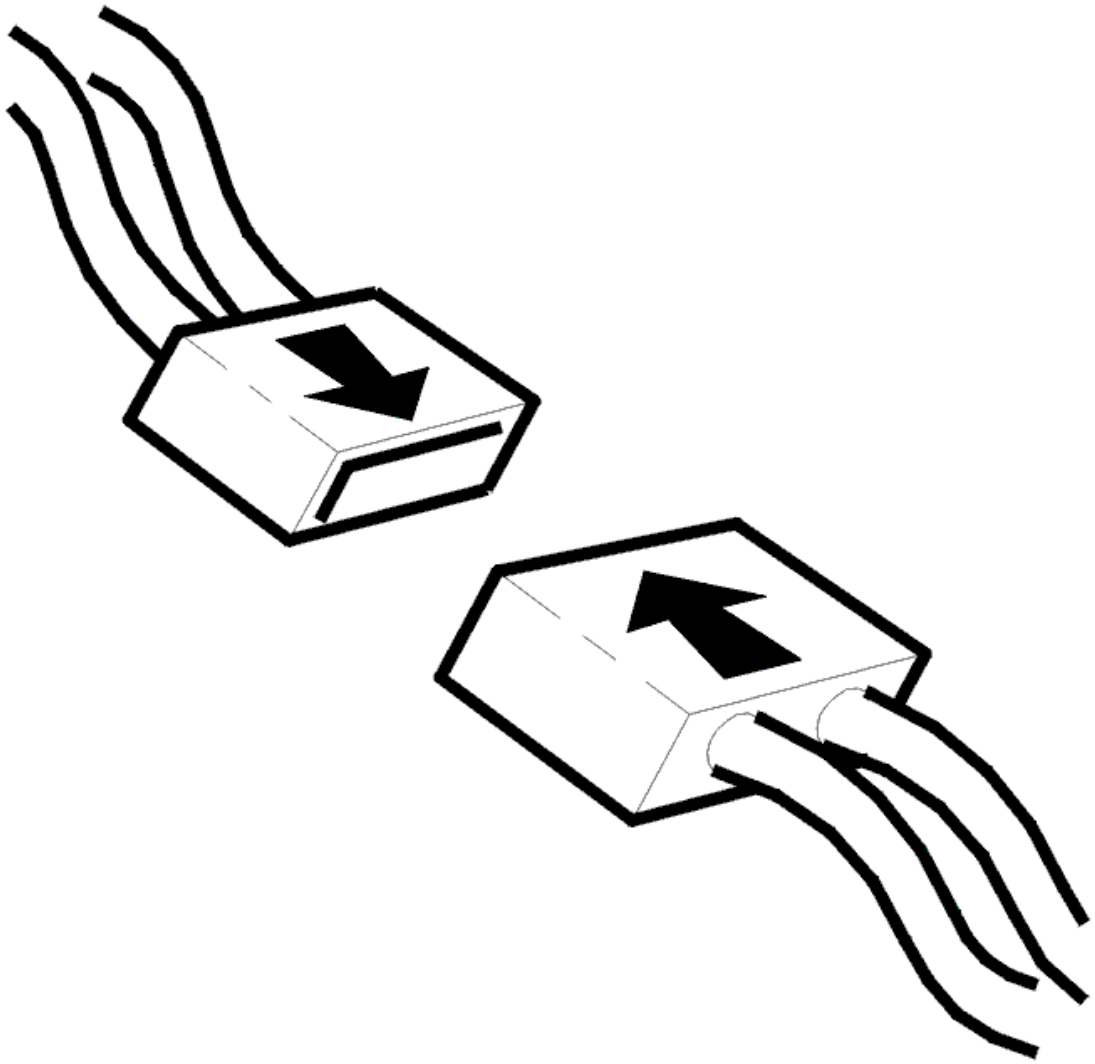

Fig. 224: Connecting Connector
Courtesy of VOLVO CARS CORPORATION

- Ignition off.
- Connect connectors, install components, etc.
- Start the engine.

  Check that diagnostic trouble code status changes from permanent to intermittent.

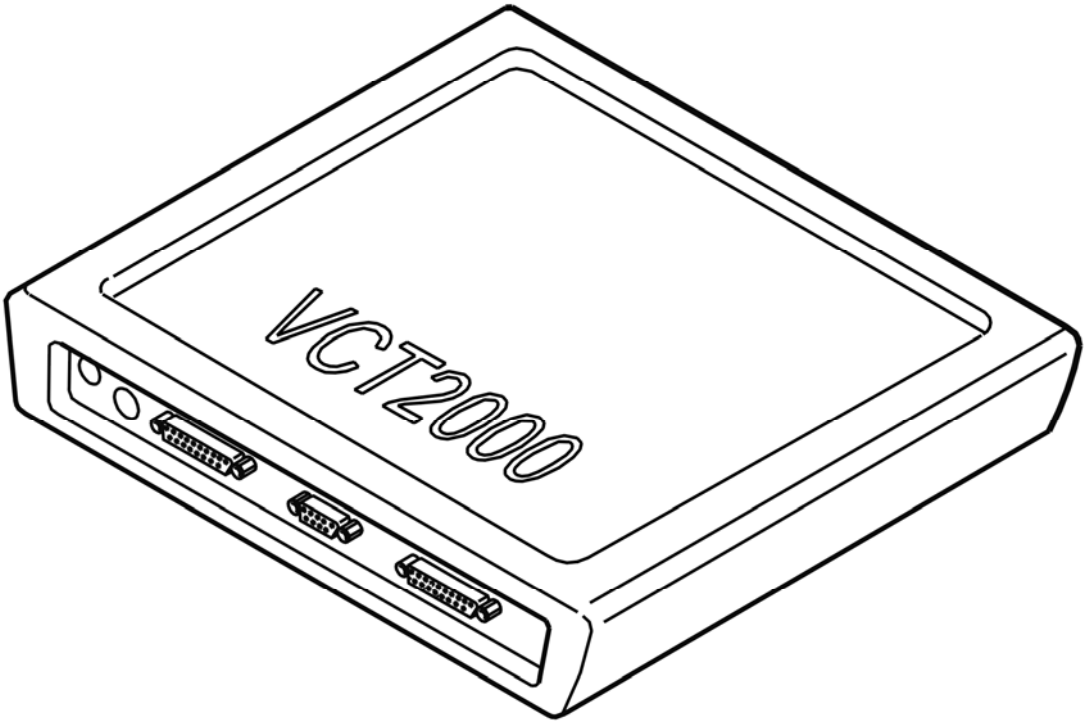

Fig. 225: Identifying VCT2000 Diagnostic Tool Symbol In VIDA
Courtesy of VOLVO CARS CORPORATION

Is the diagnostic trouble code status intermittent?

- **YES**

  VERIFIED: Troubleshooting has been completed.

- **NO**

  Refer to **INFORMATION**

INFORMATION

FAULT-TRACING INFORMATION

The fault should have been detected and remedied. As this is not the case fault-tracing has failed.

Exit fault-tracing for this diagnostic trouble code (DTC) or make another attempt.

CEM-6C43: ANTENNA/LIGHT RING WIRE DATA COMMUNICATION (IDS). SIGNAL TOO HIGH. INTERMITTENT FAULT (2003-2004)

DIAGNOSTIC TROUBLE CODE INFORMATION

see **DIAGNOSTIC TROUBLE CODE INFORMATION**

SIGNAL TOO HIGH. INTERMITTENT FAULT

see **SIGNAL TOO HIGH. INTERMITTENT FAULT**

CEM-6C44: ANTENNA / LIGHT RING - DATA COMMUNICATION CABLE. SIGNAL TOO LOW (2005-2012)

DIAGNOSTIC TROUBLE CODE (DTC) INFORMATION CEM-6C44

Condition

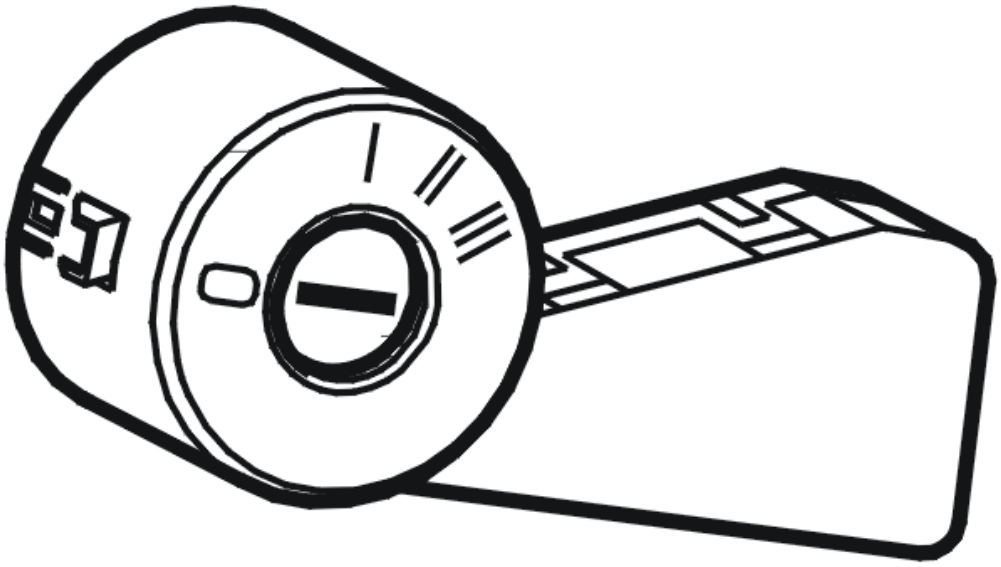

Fig. 226: Identifying Ignition Switch
Courtesy of VOLVO CARS CORPORATION

The central electronic module (CEM) communicates with the ignition key when the key is inserted in the ignition switch.

The diagnostic trouble code (DTC) is stored if the central electronic module (CEM) registers an open-circuit in the data cable for the ignition switch, a short-circuit to ground in the cable or that there is no communication.

The diagnostic trouble code (DTC) can be diagnosed when the ignition is switched on.

Substitute Value

- None.

Possible Source

- Fault in the power supply to the ignition switch
- Short-circuit to ground in the data cable
- Open-circuit in the data cable.

Fault symptom[s]

- The starter motor does not turn.

SIGNAL TOO LOW

CHECKING THE POWER SUPPLY

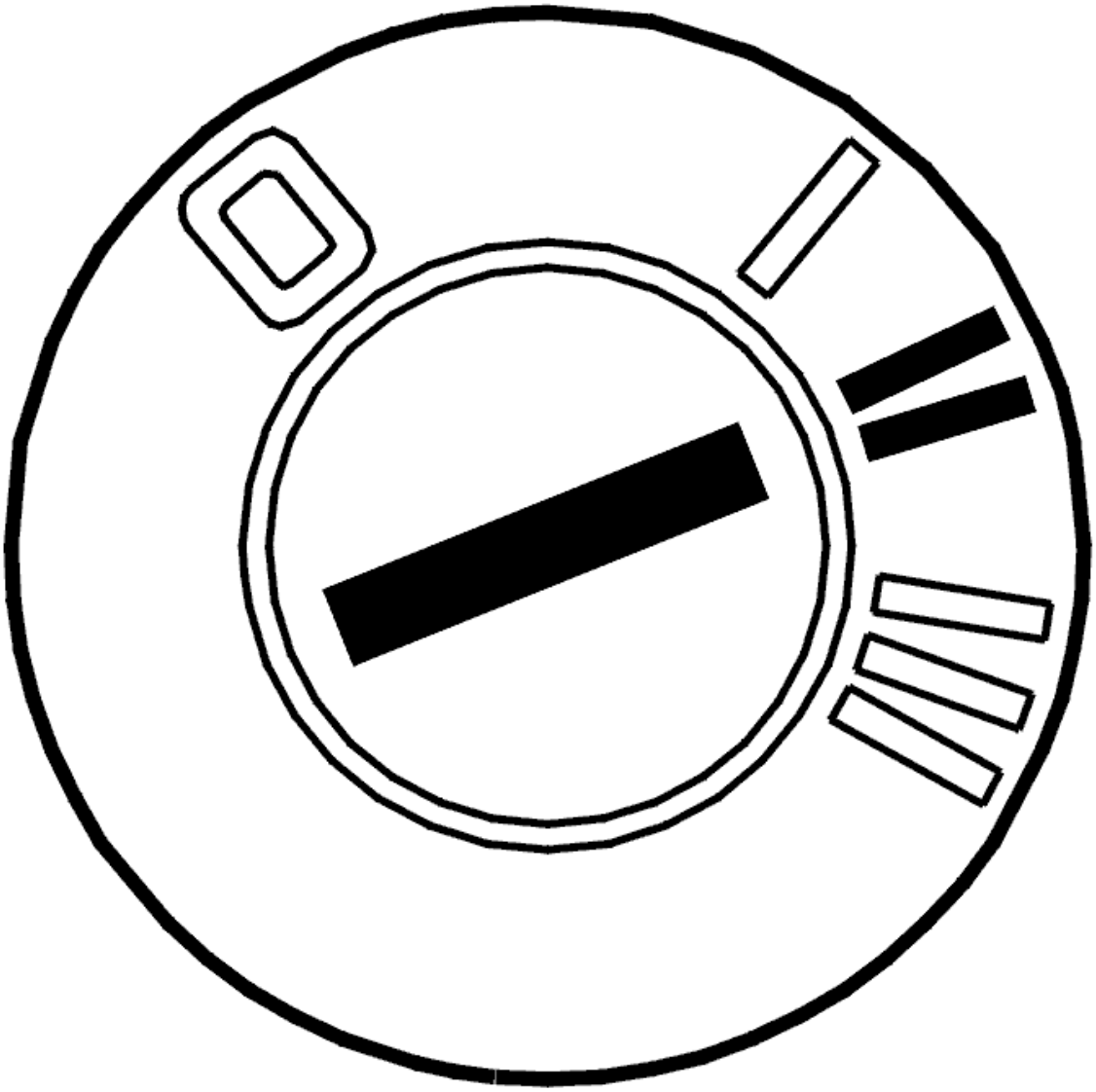

Fig. 227: Identifying Ignition ON
Courtesy of VOLVO CARS CORPORATION

- Ignition on.

  Check the power supply cable from the ignition switch to connector terminal #1 on the immobilizer antenna unit. Check for an open-circuit. Check for loose connections. Check for contact resistance and oxidation.

  Remedy as necessary.

  Other information

  - see **ANTENNA UNIT, START INHIBITOR, REPLACING**
  - see **CHECKING WIRING AND TERMINALS**

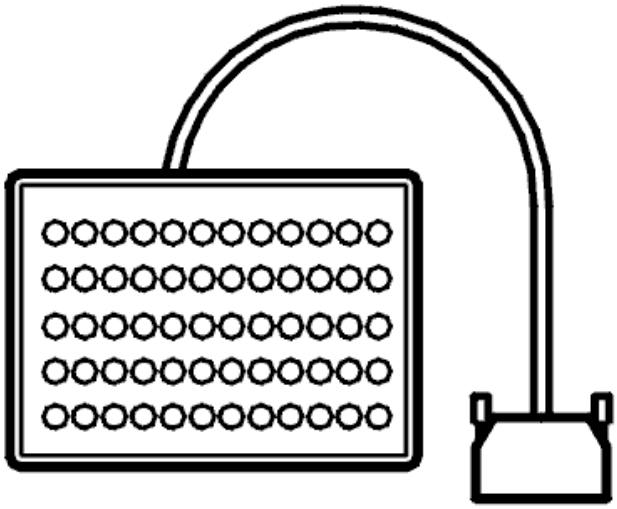

Fig. 228: Breakout Box
Courtesy of VOLVO CARS CORPORATION

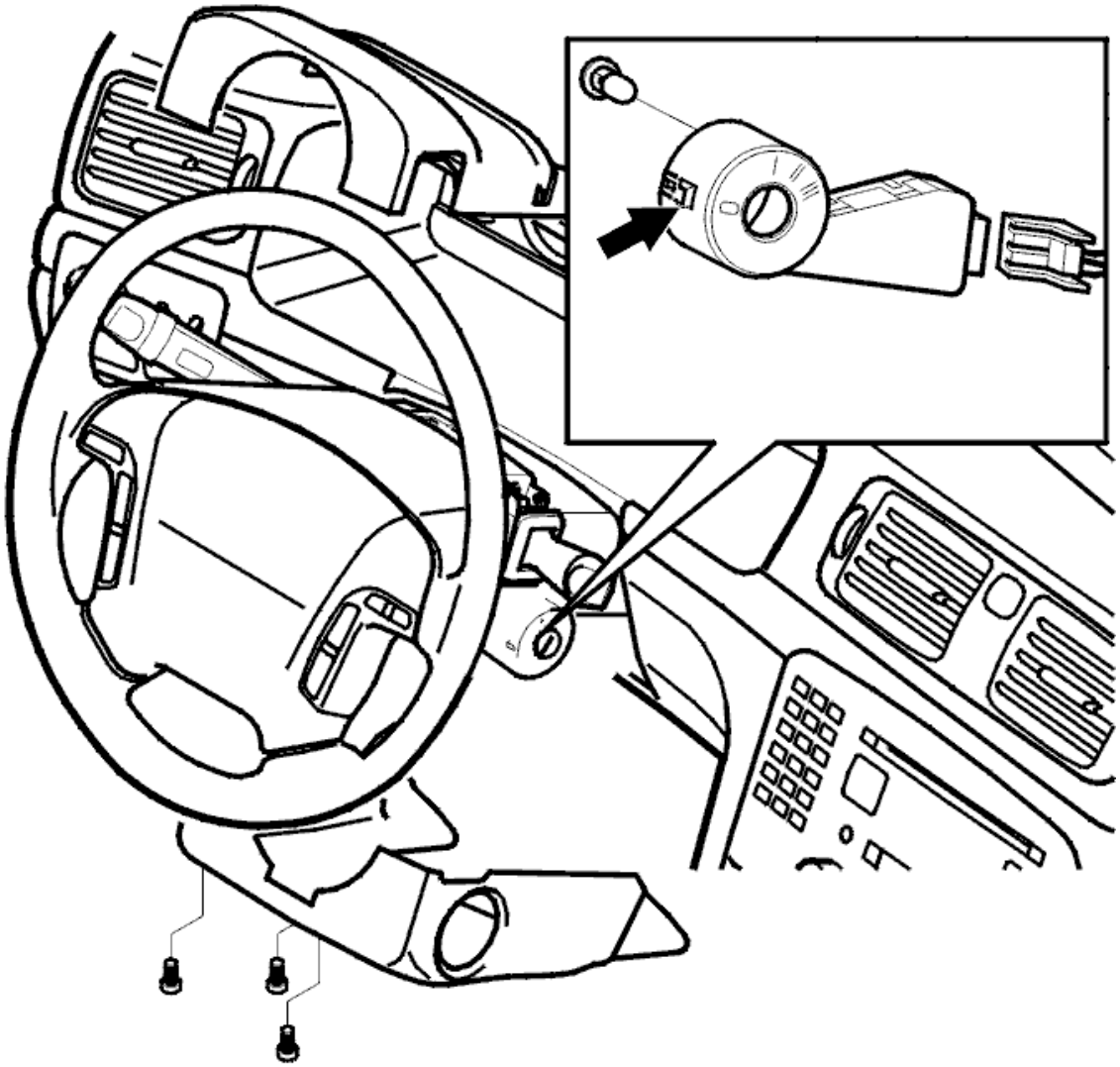

Fig. 229: Identifying Ignition Switch Bulb
Courtesy of VOLVO CARS CORPORATION

- **Continue**

  Refer to **CHECKING THE SIGNAL CABLE**

CHECKING THE SIGNAL CABLE

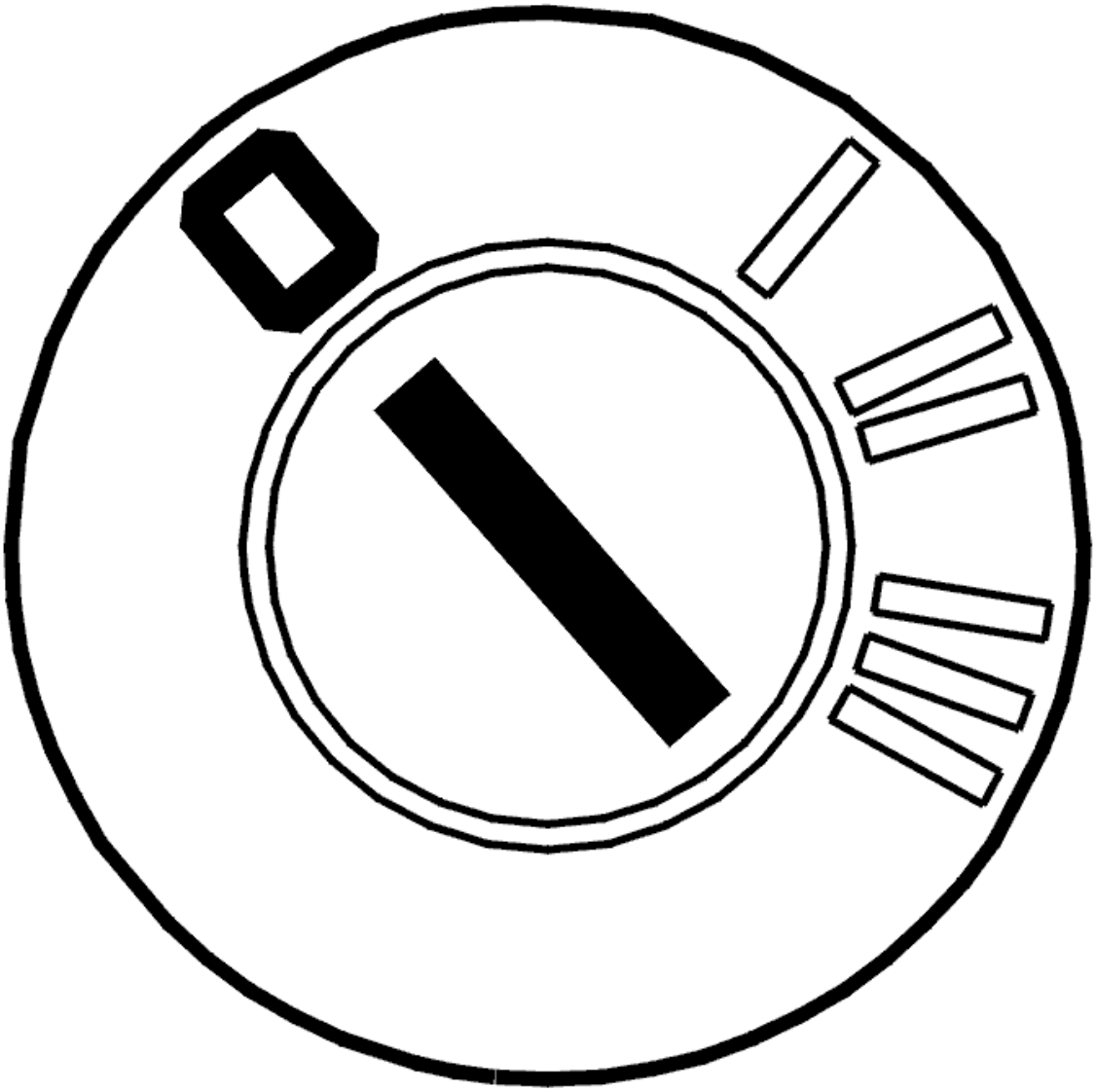

Fig. 230: Identifying Ignition OFF
Courtesy of VOLVO CARS CORPORATION

- Ignition off.

  Check central electronic module (CEM) connector D and the connector for the immobilizer antenna unit. Check for contact resistance. Check for oxidation. Check for damaged or loose connections.

  Check the signal cable. Check for an open-circuit. Check for a short-circuit to ground.

  Take readings between:

  - Central electronic module (CEM) connector terminal #D56 (#56) and immobilizer antenna unit terminal #3.

  Remedy as necessary.

Other information

- see **CONNECTING THE BREAKOUT BOX**
- -2004: **SIGNAL SPECIFICATION**
- 2005-: **SIGNAL SPECIFICATION**
- see **LOCATION OF COMPONENTS**
- For -2004, see: **CENTRAL ELECTRONIC MODULE (CEM), REPLACING**
- For 2005-, see: **CENTRAL ELECTRONIC MODULE (CEM), REPLACING** .
- see **ANTENNA UNIT, START INHIBITOR, REPLACING**
- see **CHECKING WIRING AND TERMINALS**

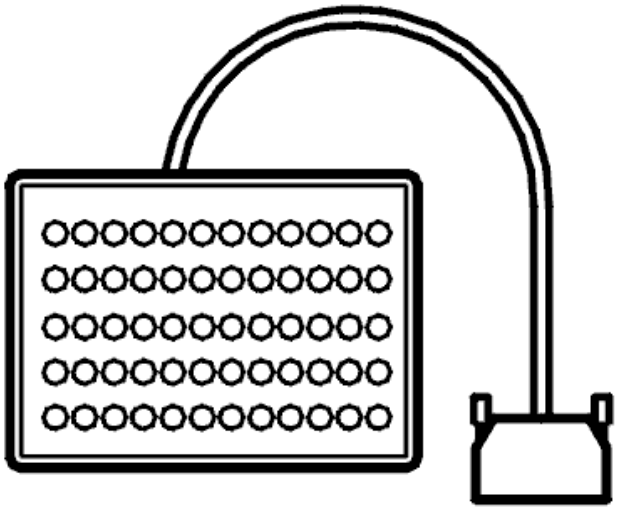

Fig. 231: Breakout Box
Courtesy of VOLVO CARS CORPORATION

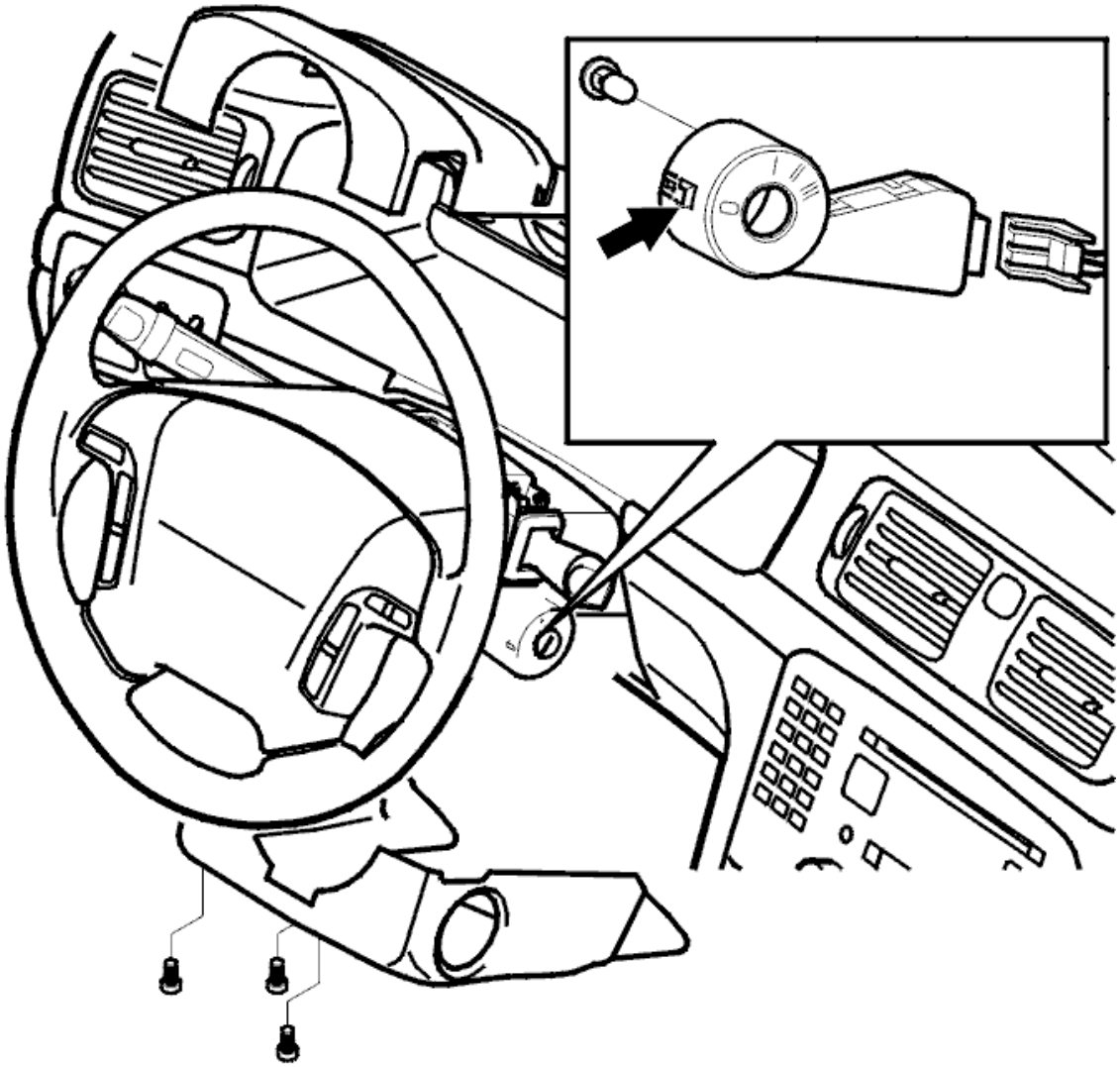

Fig. 232: Identifying Ignition Switch Bulb
Courtesy of VOLVO CARS CORPORATION

- **Continue**

  Refer to **VERIFICATION**

VERIFICATION

VERIFICATION

HINT: After carrying out the repair, check that the fault has been remedied.

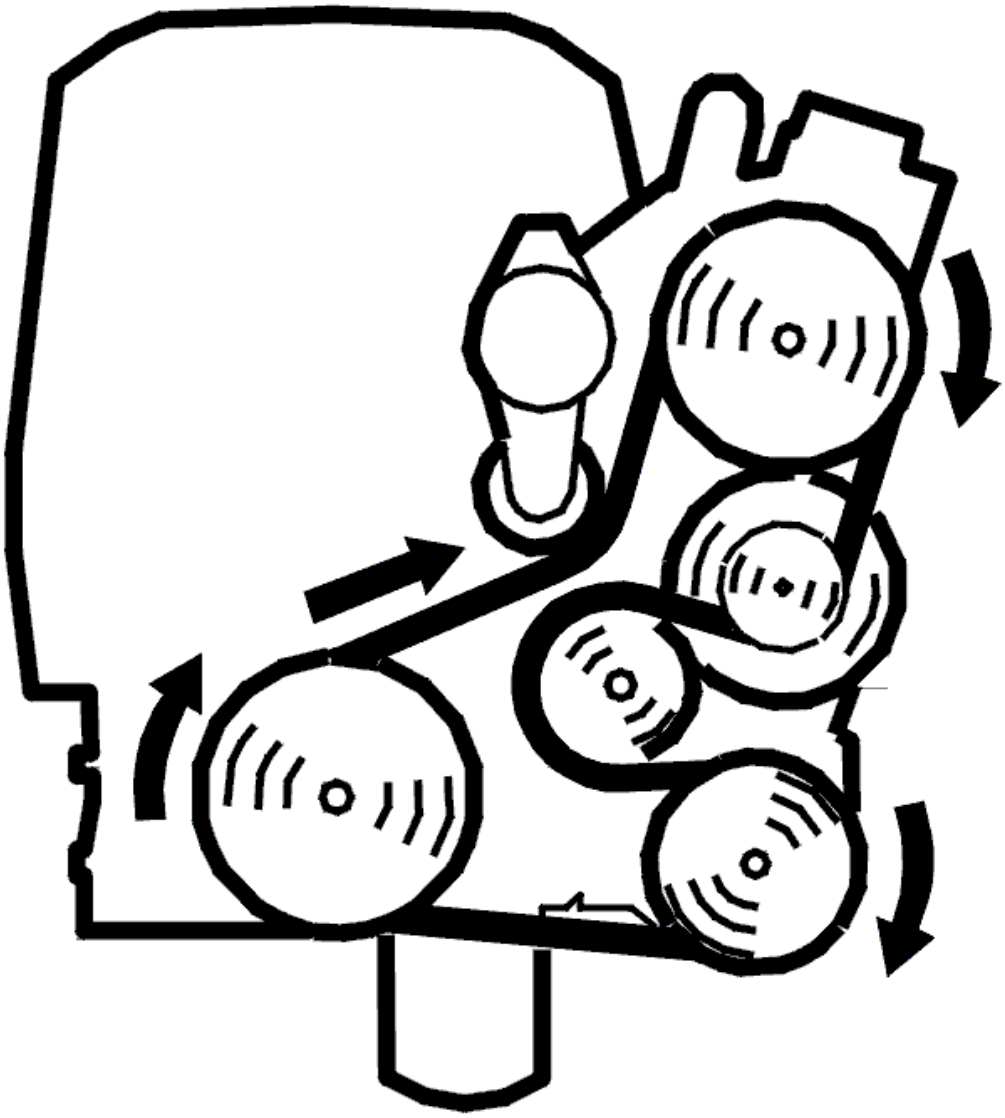

Fig. 233: Belt Routing / Engine Idling - Volvo
Courtesy of VOLVO CARS CORPORATION

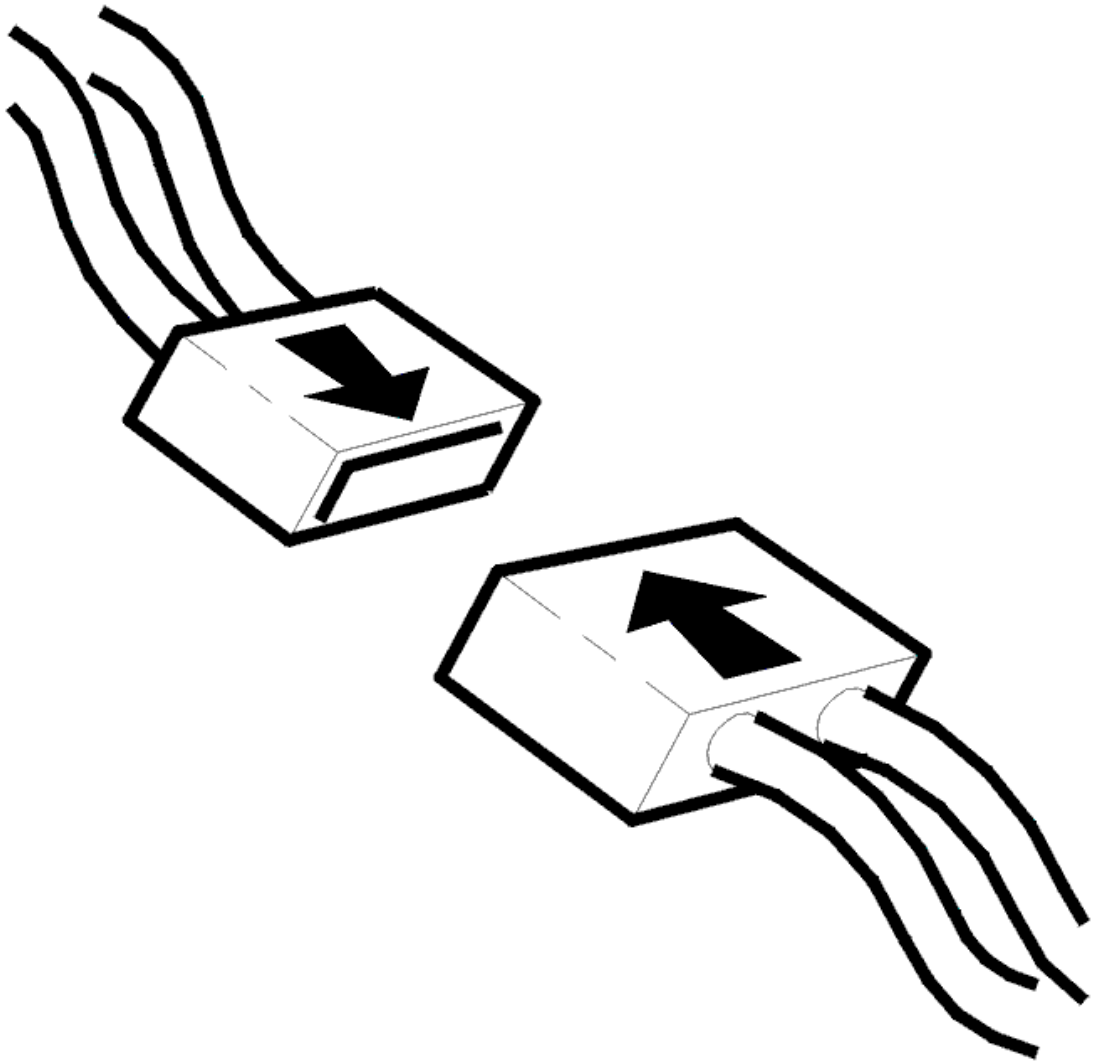

Fig. 234: Connecting Connector
Courtesy of VOLVO CARS CORPORATION

- Ignition off
- Reinstall the connectors, components etc.
- Try to start the vehicle.

Does the vehicle start?

- **YES**

  VERIFIED: Troubleshooting has been completed.

- **NO**

Refer to **INFORMATION**

INFORMATION

FAULT-TRACING INFORMATION

The fault should have been detected and remedied. As this is not the case fault-tracing has failed.

Exit fault-tracing for this diagnostic trouble code (DTC) or make another attempt.

CEM-6C44: ANTENNA/LIGHT RING WIRE DATA COMMUNICATION (IDS). SIGNAL TOO LOW. INTERMITTENT FAULT (2003-2004)

DIAGNOSTIC TROUBLE CODE INFORMATION

Condition

If the control unit detects a low signal on the IDS wire between central electronic module (CEM) 13D and antenna unit 3 when the signal should be high or no signal, diagnostic trouble code CEM-6C44 is displayed.

Substitute Value

Nothing.

Possible Source

- Wire between central electronic module (CEM) 13D and antenna unit 3 short circuited to ground
- Open circuit on wire between central electronic module (CEM) 13D and antenna unit 3
- Open circuit on +15 supply.

Fault symptom[s]

- The engine will not start. (The starter motor does not work.).

SIGNAL TOO LOW. INTERMITTENT FAULT

see **SIGNAL TOO LOW. INTERMITTENT FAULT**

CEM-6C44: ANTENNA/LIGHT RING WIRE DATA COMMUNICATION (IDS). SIGNAL TOO LOW. PERMANENT FAULT (2003-2004)

DIAGNOSTIC TROUBLE CODE INFORMATION

see **DIAGNOSTIC TROUBLE CODE INFORMATION**

SIGNAL TOO LOW. PERMANENT FAULT

see **SIGNAL TOO LOW. PERMANENT FAULT**

CEM-6C45: ANTENNA/LIGHT RING. COMMUNICATION FAULT (2004)

DIAGNOSTIC TROUBLE CODE (DTC) INFORMATION CEM-6C45

Condition

The central electronic module (CEM) checks the communication with the immobilizer antenna unit (IAU). The diagnostic trouble code (DTC) is stored if the central electronic module (CEM) registers a fault in the communication with the immobilizer antenna unit (IAU).

The diagnostic trouble code (DTC) can be detected with the ignition on and if the diagnostic trouble codes (DTCs) CEM-6C41 - CEM-6C44 are not stored during communication with the immobilizer antenna unit (IAU).

Substitute Value

- None.

Possible Source

- Temporary interference in the communication with the immobilizer antenna unit (IAU)
- Immobilizer antenna unit (IAU) not working.

Fault symptom[s]

- The starter motor does not turn.

FAULT-TRACING INFORMATION

see **FAULT-TRACING INFORMATION**

CEM-6C45: ANTENNA/LIGHT RING. COMMUNICATION PROBLEMS (2005-2012)

DIAGNOSTIC TROUBLE CODE (DTC) INFORMATION CEM-6C45

Condition

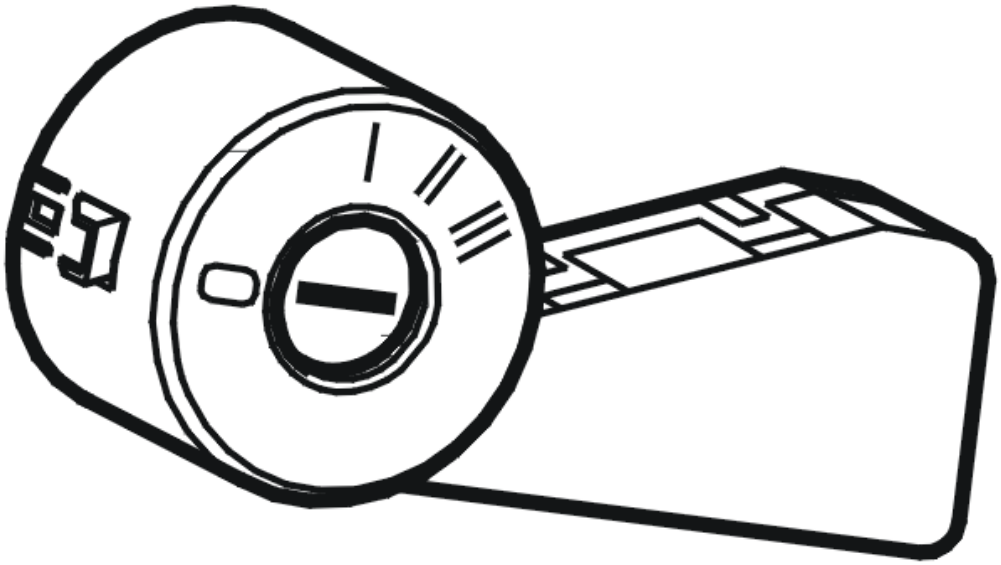

Fig. 235: Identifying Ignition Switch
Courtesy of VOLVO CARS CORPORATION

The central electronic module (CEM) checks the communication with the immobilizer antenna unit (IAU). The diagnostic trouble code (DTC) is stored if the central electronic module (CEM) registers a fault in the communication with the immobilizer antenna unit (IAU).

The diagnostic trouble code (DTC) can be detected with the ignition on and if diagnostic trouble codes (DTCs) CEM-6C41 - CEM-6C44 are not stored during communication with the immobilizer antenna unit (IAU).

Substitute Value

- None.

Possible Source

- Temporary interference in the communication with the immobilizer antenna unit (IAU)
- Immobilizer antenna unit (IAU) not working.

Fault symptom[s]

- The starter motor does not turn.

COMMUNICATION FAULT

REPLACING THE ANTENNA UNIT

The antenna unit has registered an internal fault.

If the fault is intermittent, it has been registered previously but is no longer present. Intermittent faults can be caused by interference at start up of the antenna module (ATM) or can be a different type of fault which occurs on different occasions. The fault is evaluated depending on how it occurs. If the fault recurs, replace the antenna unit.

HINT: The diagnostic trouble code (DTC) can also be stored by temporary interference in the communication with the antenna unit. If this is the case the antenna unit need not be replaced and the diagnostic trouble code (DTC) can be erased.

see **ANTENNA UNIT, START INHIBITOR, REPLACING**

Remedy as necessary.

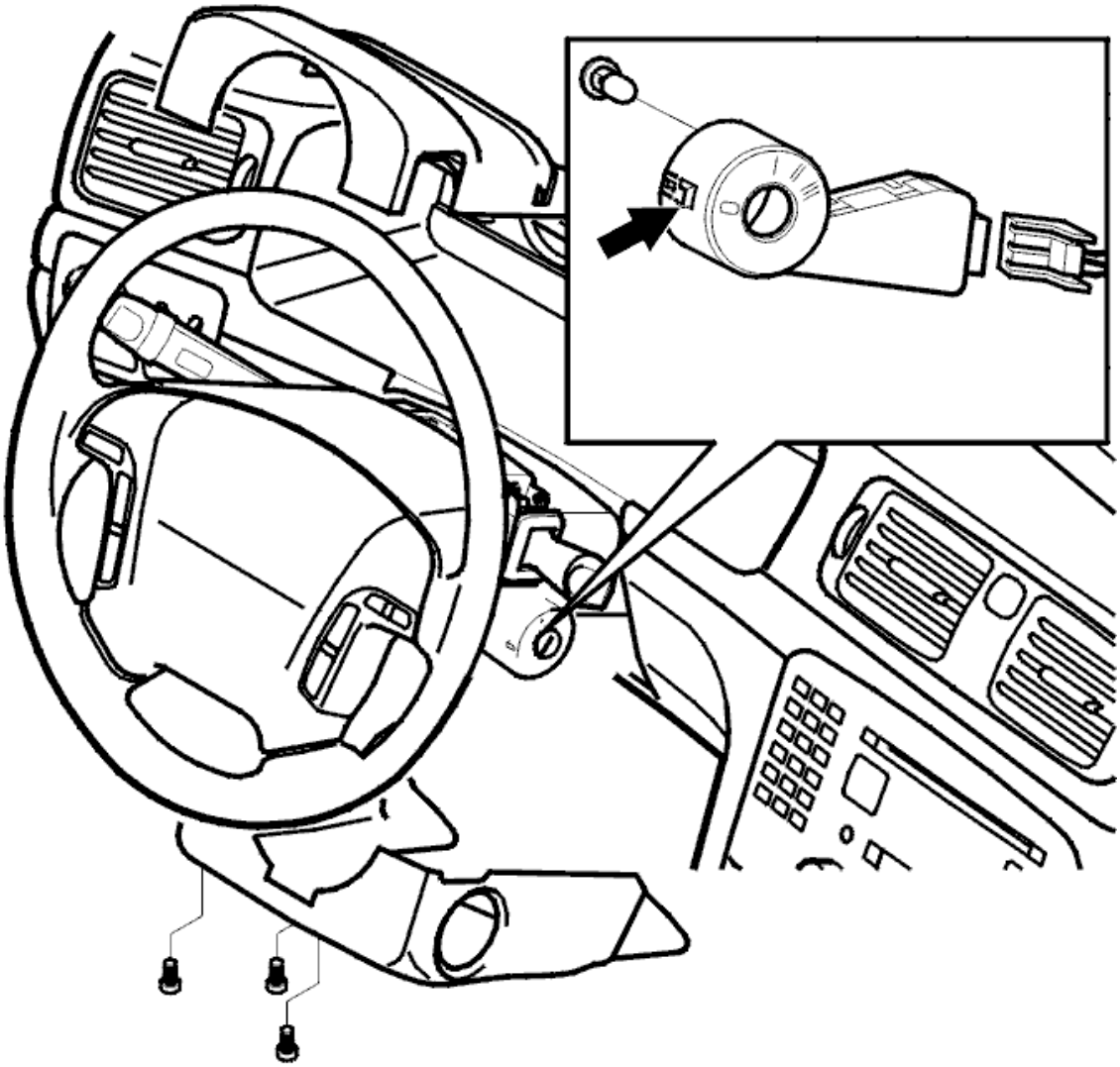

Fig. 236: Identifying Ignition Switch Bulb
Courtesy of VOLVO CARS CORPORATION

- **Continue**

  Refer to **INFORMATION**

INFORMATION

FAULT-TRACING INFORMATION

In case of this defect, troubleshooting is not followed by verification.

The information can be displayed again or the fault-tracing for this fault can be interrupted.

CEM-6C46: ANTENNA / LIGHT RING. INTERNAL FAULT (2005-2012)

DIAGNOSTIC TROUBLE CODE (DTC) INFORMATION CEM-6C46

Condition

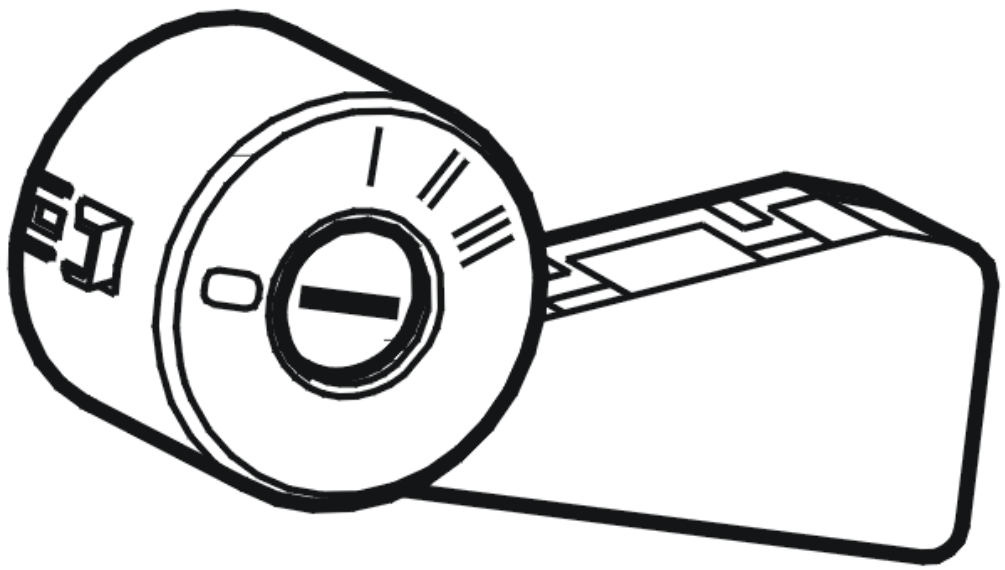

Fig. 237: Identifying Ignition Switch
Courtesy of VOLVO CARS CORPORATION

When the ignition is switched on, the central electronic module (CEM) attempts to read the identity number of the transponder in the ignition key. The central electronic module (CEM) tests the antenna unit before this. The diagnostic trouble code (DTC) is stored if the central electronic module (CEM) registers an internal fault in the antenna unit.

HINT: The diagnostic trouble code (DTC) may also be stored in the event of temporary interference in the communication with the antenna unit.

Substitute Value

- None.

Possible Source

- Temporary interference in the communication with the immobilizer antenna unit (IAU)
- Internal fault in the immobilizer antenna unit (IAU).

Fault symptom[s]

- The starter motor does not turn.

INTERNAL FAULT

REPLACING THE ANTENNA UNIT

The antenna unit has registered an internal fault.

If the fault is intermittent, it has been registered previously but is no longer present. Intermittent faults can be caused by interference at start up of the antenna module (ATM) or can be a different type of fault which occurs on different occasions. The fault is evaluated depending on how it occurs. If the fault recurs, replace the antenna unit.

HINT: The diagnostic trouble code (DTC) can also be stored by temporary interference in the communication with the antenna unit. If this is the case the antenna unit need not be replaced and the diagnostic trouble code (DTC) can be erased.

see **ANTENNA UNIT, START INHIBITOR, REPLACING**

Remedy as necessary.

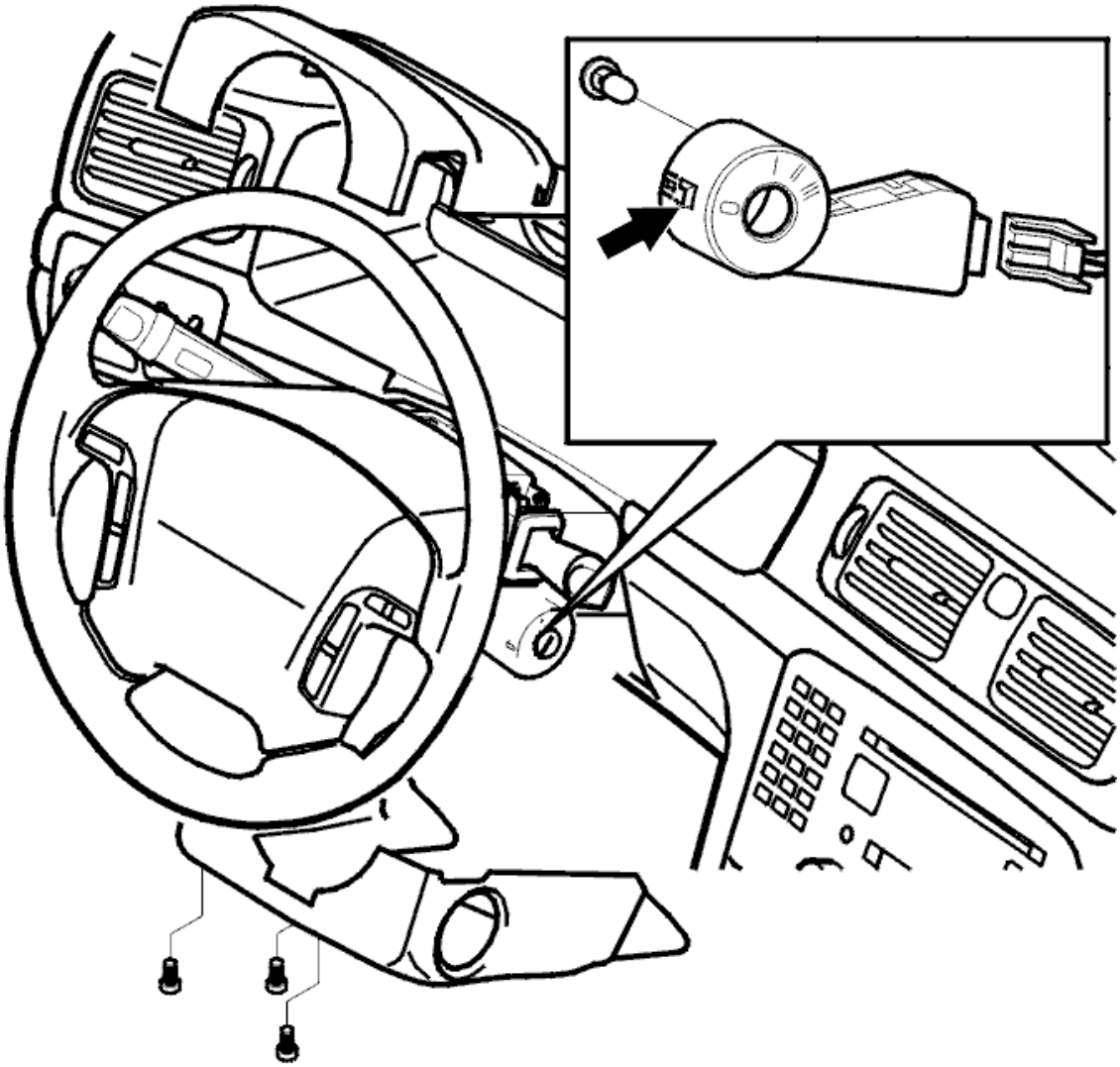

Fig. 238: Identifying Ignition Switch Bulb
Courtesy of VOLVO CARS CORPORATION

- **Continue**

  Refer to **INFORMATION**

INFORMATION

FAULT-TRACING INFORMATION

In case of this defect, troubleshooting is not followed by verification.

The information can be displayed again or the fault-tracing for this fault can be interrupted.

CEM-6C46: ANTENNA/LIGHT RING. INTERNAL FAULT. INTERMITTENT

FAULT (2003-2004)

DIAGNOSTIC TROUBLE CODE (DTC) INFORMATION

Condition

Diagnostic trouble code (DTC) CEM-6C46 is stored if the control module registers that the antenna unit is faulty when the immobilizer tries to connect to communicate.

HINT: The diagnostic trouble code (DTC) can also be stored by temporary interference in the communication with the immobilizer antenna unit.

Substitute Value

None.

Possible Source

- Temporary interference in the communication with the immobilizer antenna unit
- Internal fault in the immobilizer antenna unit.

Fault symptom[s]

- Engine does not start. (The starter motor does not operate).

INTERNAL FAULT. INTERMITTENT FAULT

TROUBLE-SHOOTING INFORMATION

The diagnostic trouble code indicates that the control unit has registered an intermittent fault on a previous occasion but that the fault is no longer there.

CEM-6C46: ANTENNA/LIGHT RING. INTERNAL FAULT. PERMANENT FAULT (2003-2004)

DIAGNOSTIC TROUBLE CODE (DTC) INFORMATION

see **DIAGNOSTIC TROUBLE CODE (DTC) INFORMATION**

INTERNAL FAULT. PERMANENT FAULT

CHECKING THE COMPONENT

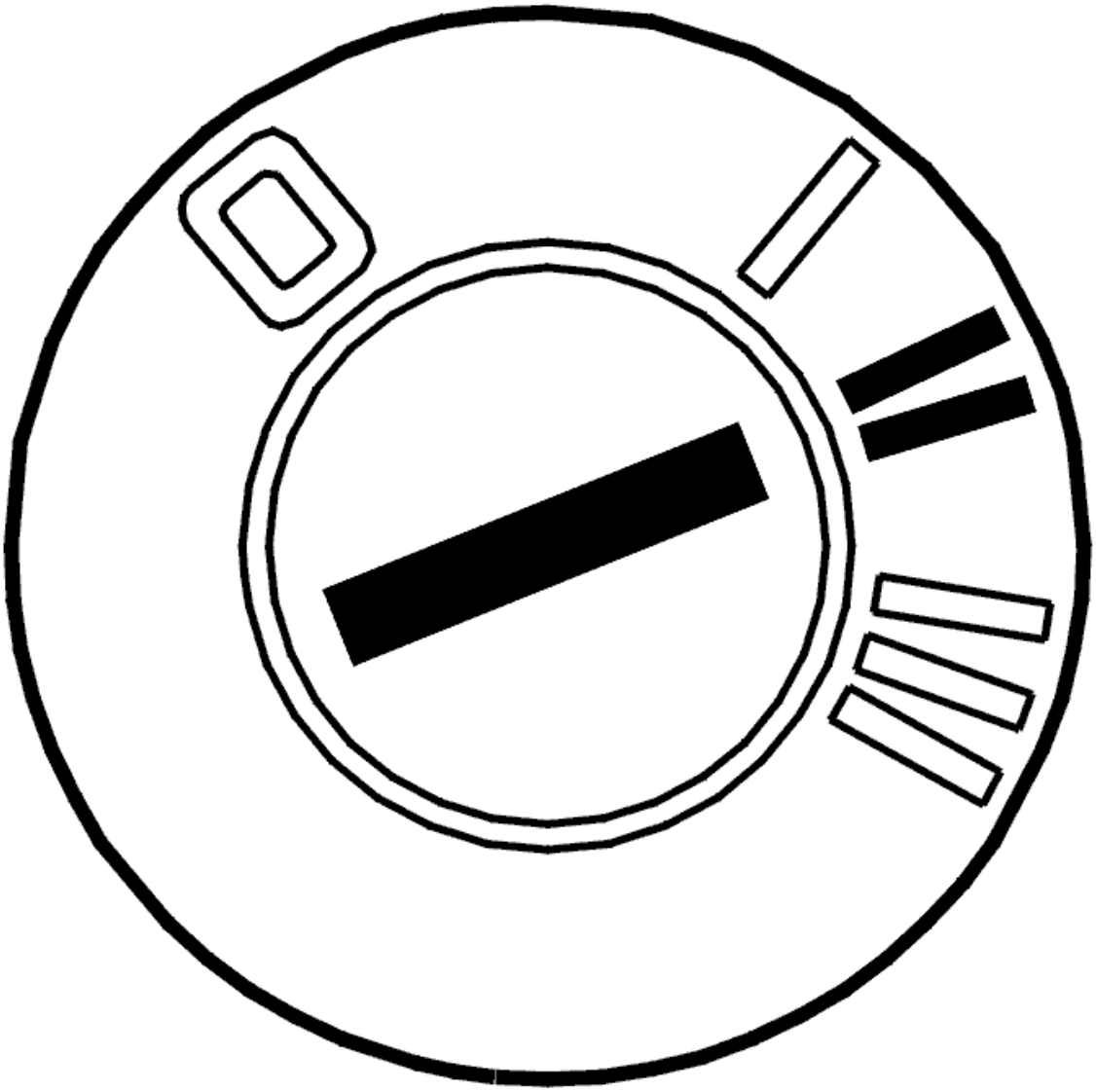

Fig. 239: Identifying Ignition ON
Courtesy of VOLVO CARS CORPORATION

HINT: The diagnostic trouble code (DTC) can also be stored by temporary interference in the communication with the antenna unit. If this is the case the antenna unit need not be replaced and the diagnostic trouble code (DTC) can be erased.

Check that the antenna unit functions by reading off the TP status.

Use the VCT2000 (or appropriate scan tool) to read off the TP status.

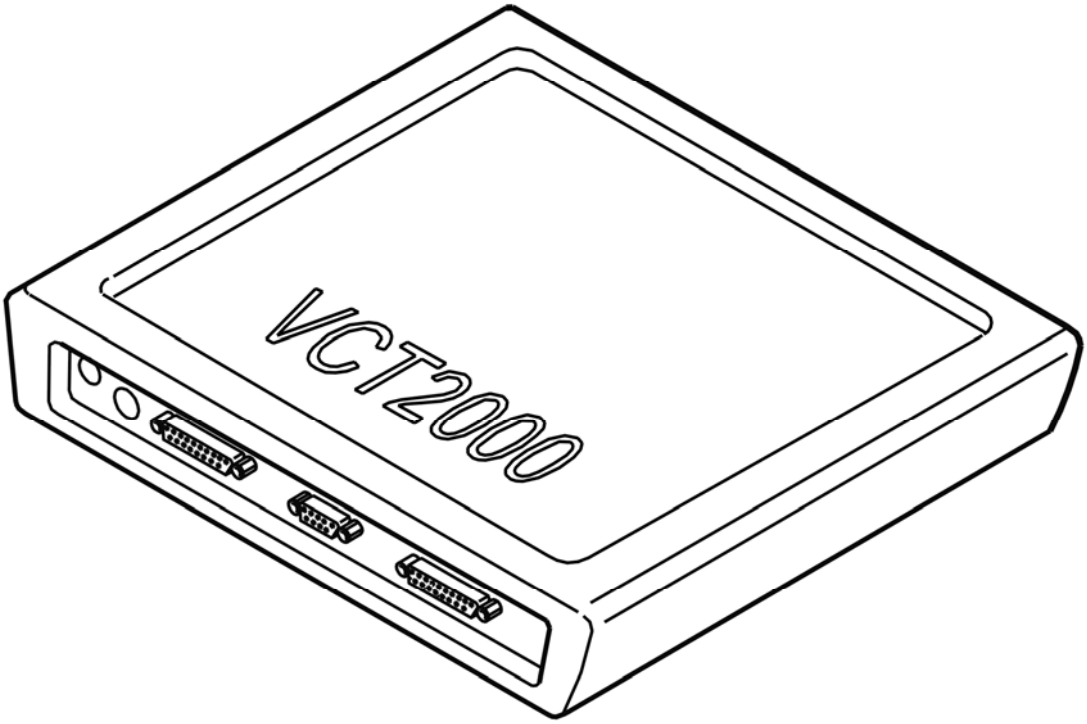

Fig. 240: Identifying VCT2000 Diagnostic Tool Symbol In VIDA
Courtesy of VOLVO CARS CORPORATION

Was the antenna unit OK?

- **YES**

  OKAY: Troubleshooting has been completed.

- **NO**

  Refer to **REPLACING THE COMPONENT**

REPLACING THE COMPONENT

Try replacing the central locking switch. See **ANTENNA UNIT, START INHIBITOR, REPLACING** .

- **Continue**

  Refer to **VERIFICATION**

VERIFICATION

VERIFICATION

HINT: After the repair it is necessary to check that the fault has been rectified.

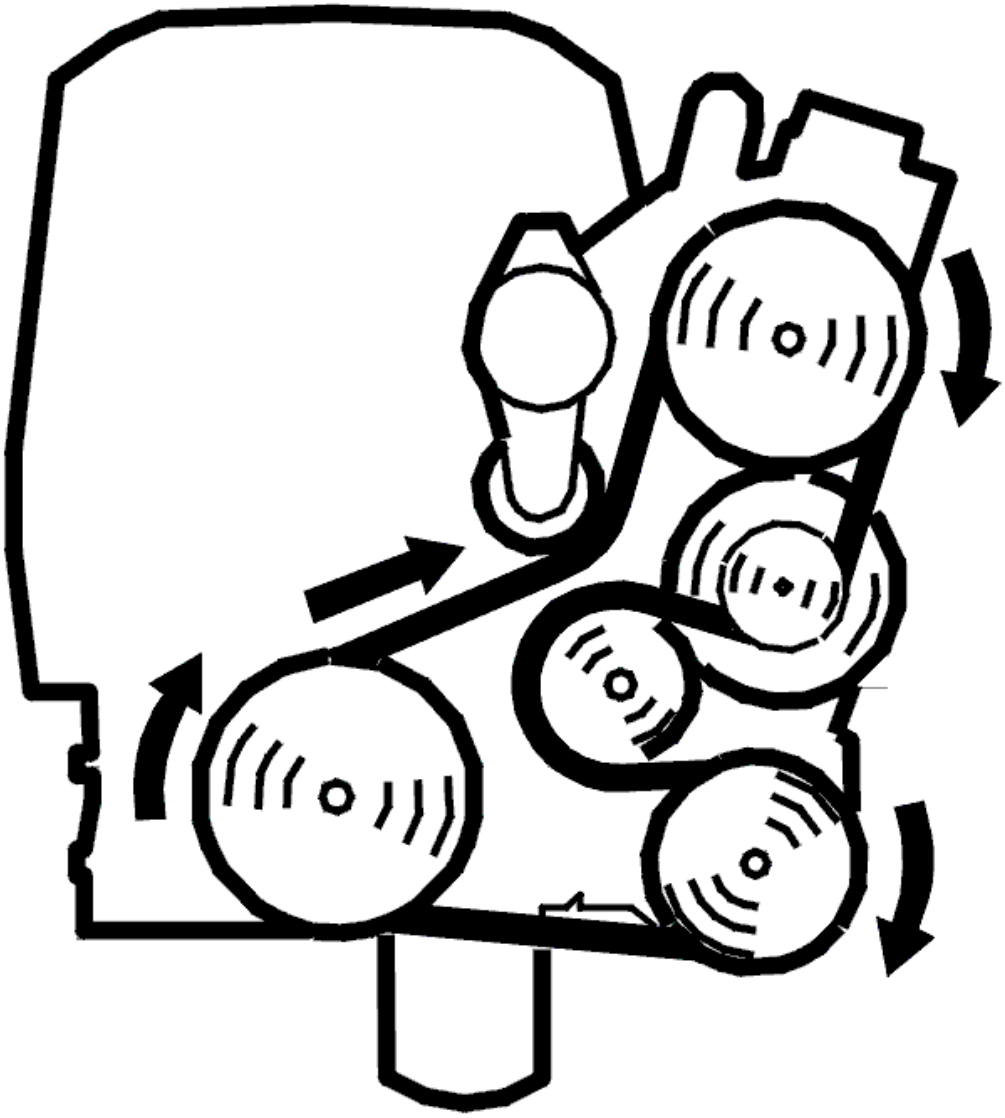

Fig. 241: Belt Routing / Engine Idling - Volvo
Courtesy of VOLVO CARS CORPORATION

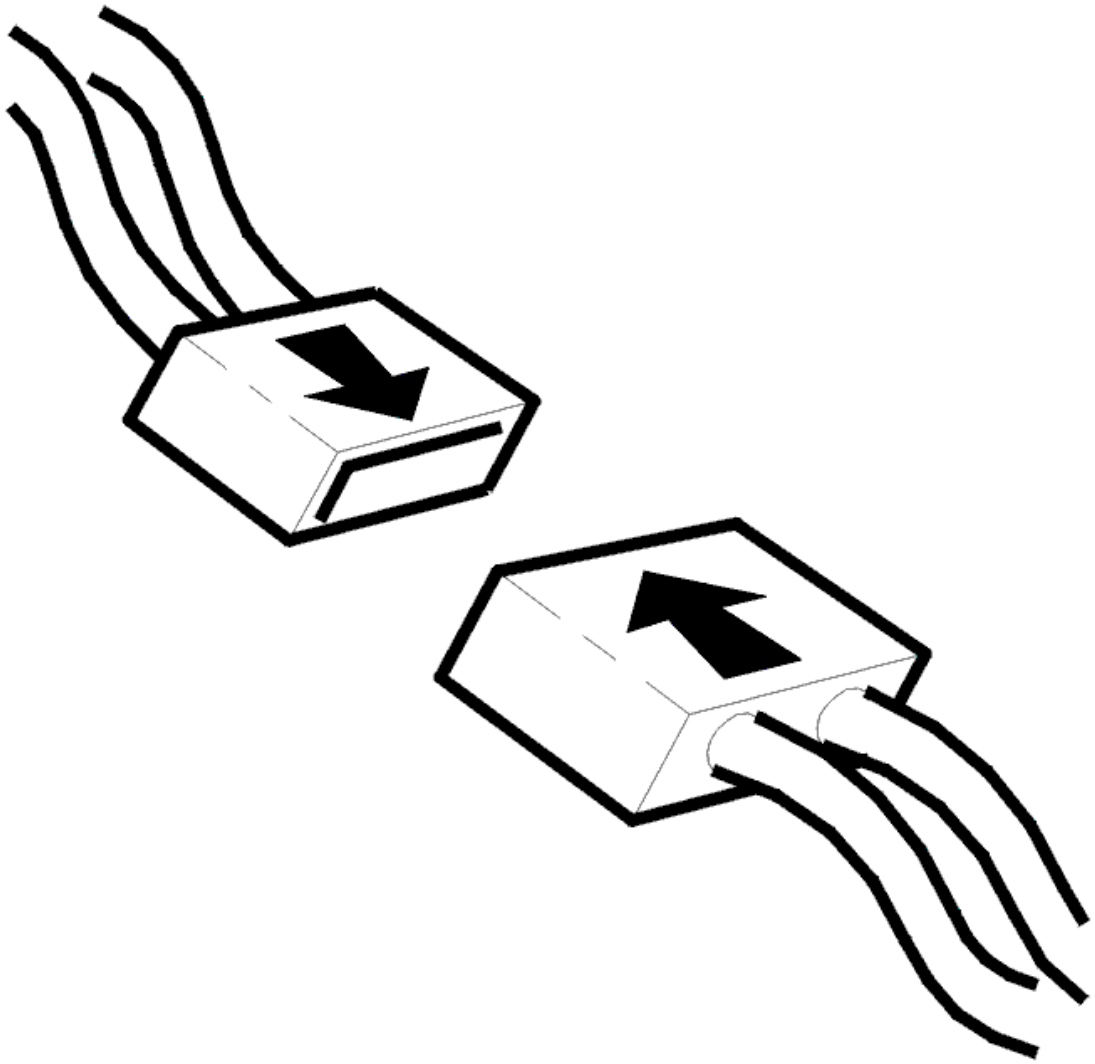

Fig. 242: Connecting Connector
Courtesy of VOLVO CARS CORPORATION

- Ignition off.
- Connect connectors, install components, etc.
- Start the engine.

  Check that diagnostic trouble code status changes from permanent to intermittent.

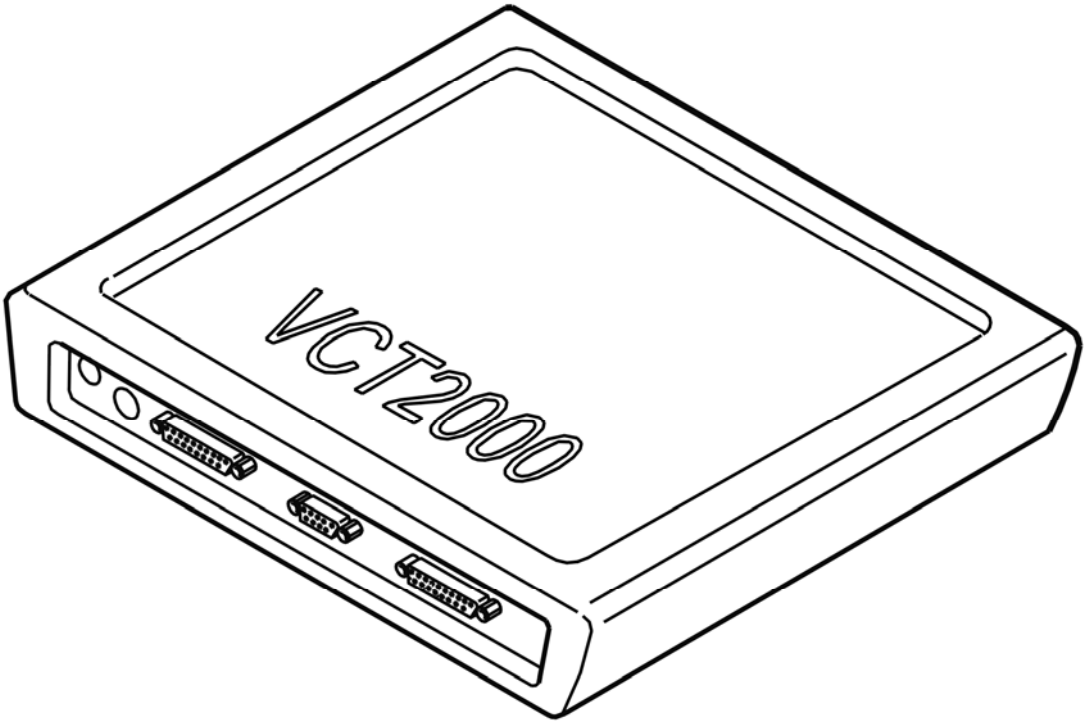

Fig. 243: Identifying VCT2000 Diagnostic Tool Symbol In VIDA
Courtesy of VOLVO CARS CORPORATION

Is the diagnostic trouble code status intermittent?

- **YES**

  VERIFIED: Troubleshooting has been completed.

- **NO**

  Refer to **INFORMATION**

INFORMATION

FAULT-TRACING INFORMATION

The fault should have been detected and remedied. As this is not the case fault-tracing has failed.

Exit fault-tracing for this diagnostic trouble code (DTC) or make another attempt.

CEM-6C48: TRANSPONDER TYPE. FAULTY SIGNAL (2005-2012)

DIAGNOSTIC TROUBLE CODE (DTC) INFORMATION CEM-6C48

Condition

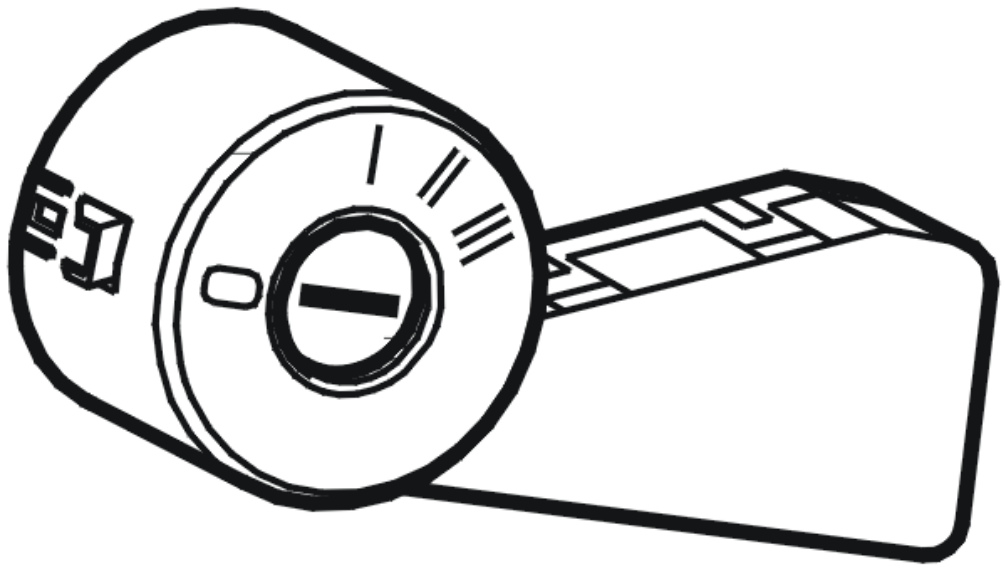

Fig. 244: Identifying Ignition Switch
Courtesy of VOLVO CARS CORPORATION

With the ignition on the central electronic module (CEM) reads the transponder signal. The diagnostic trouble code (DTC) is stored if the transponder responds with an unknown transponder, a non-approved code (not stored in the memory), no transponder code at all or an unknown communication format.

NOTE: **This diagnostic trouble code (DTC) may be stored for example if there are several ignition keys on the same key ring and one of them is inserted in the ignition switch.**

Substitute Value

- None.

Possible Source

- The ignition key has a damaged transponder
- The ignition key is of the wrong type. It has no transponder
- The ignition key has previously belonged to the vehicle but has been erased from the memory for the central electronic module (CEM)
- The ignition key is a new key and has not yet been programmed into the memory for the central electronic module (CEM)
- Several keys are too close to each other during the read off
- An electronic door key was too close to the antenna unit during the read off
- An automatic road toll transponder is installed too close to the antenna unit
- EMC interference (strong electrical field) during the communication phase (when starting the engine)
- The ignition key is a Volvo key but for a different model
- The ignition key belongs to another Volvo of the same type, i. e. it has a different transponder code
- The ignition key is for another make of car and therefore does not have the same type of transponder.

Fault symptom[s]

- The starter motor does not turn.

FAULTY SIGNAL

CHECKING THE KEY TYPE

Visually check to, see if the key in the ignition switch is the correct type. See the illustration.

Check that the color marking (a small semi-circular plastic marking positioned on the head of the key nearest one of the short sides of the metal section) is the correct color: The correct color is gray or red.

The key is for another type of Volvo if the color marking is black or blue.

If the color is not correct, replace the key with the color marking as above. Insert the key in the ignition switch. If there is no key the correct color, order a new key and program it.

see **ADD/REMOVE KEY**

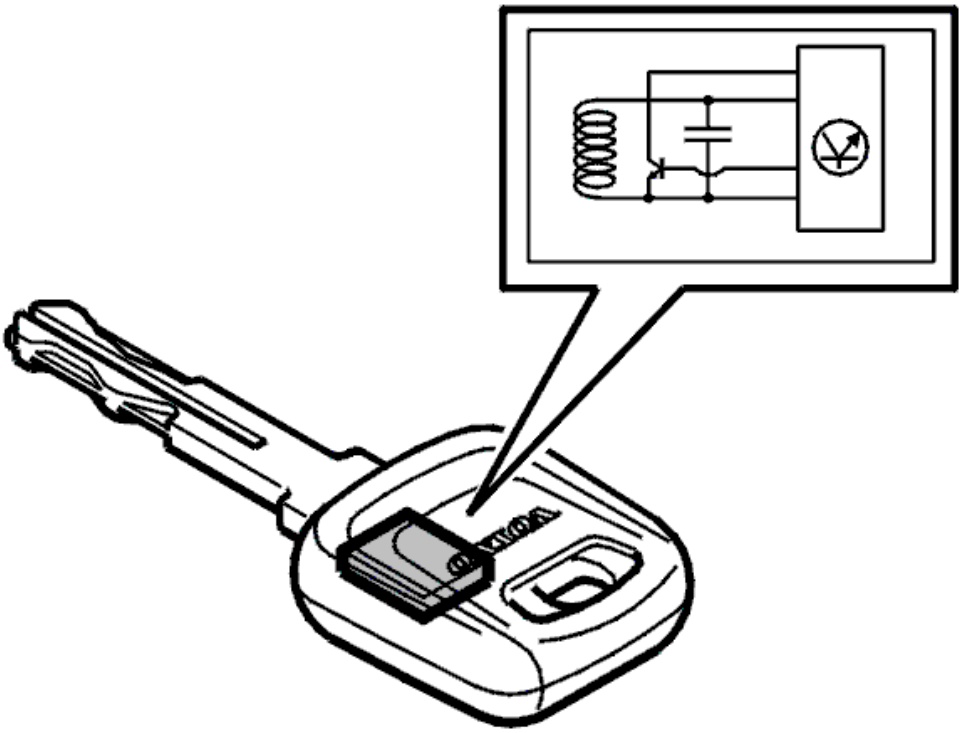

Fig. 245: Adding/Erasing Ignition Keys
Courtesy of VOLVO CARS CORPORATION

- **Continue**

  Refer to **CHECKING THE KEY CODE**

CHECKING THE KEY CODE

NOTE: **Check to, see if there are several keys (with transponders) on the same key ring. These keys should be separate so that they do not touch the key being used. Also check that no other transponder, such as an electronic door key or an identity card with an integrated transponder, is near by.**

If there is an automatic toll road transponder in the car, this should be positioned as far from the antenna unit as possible.

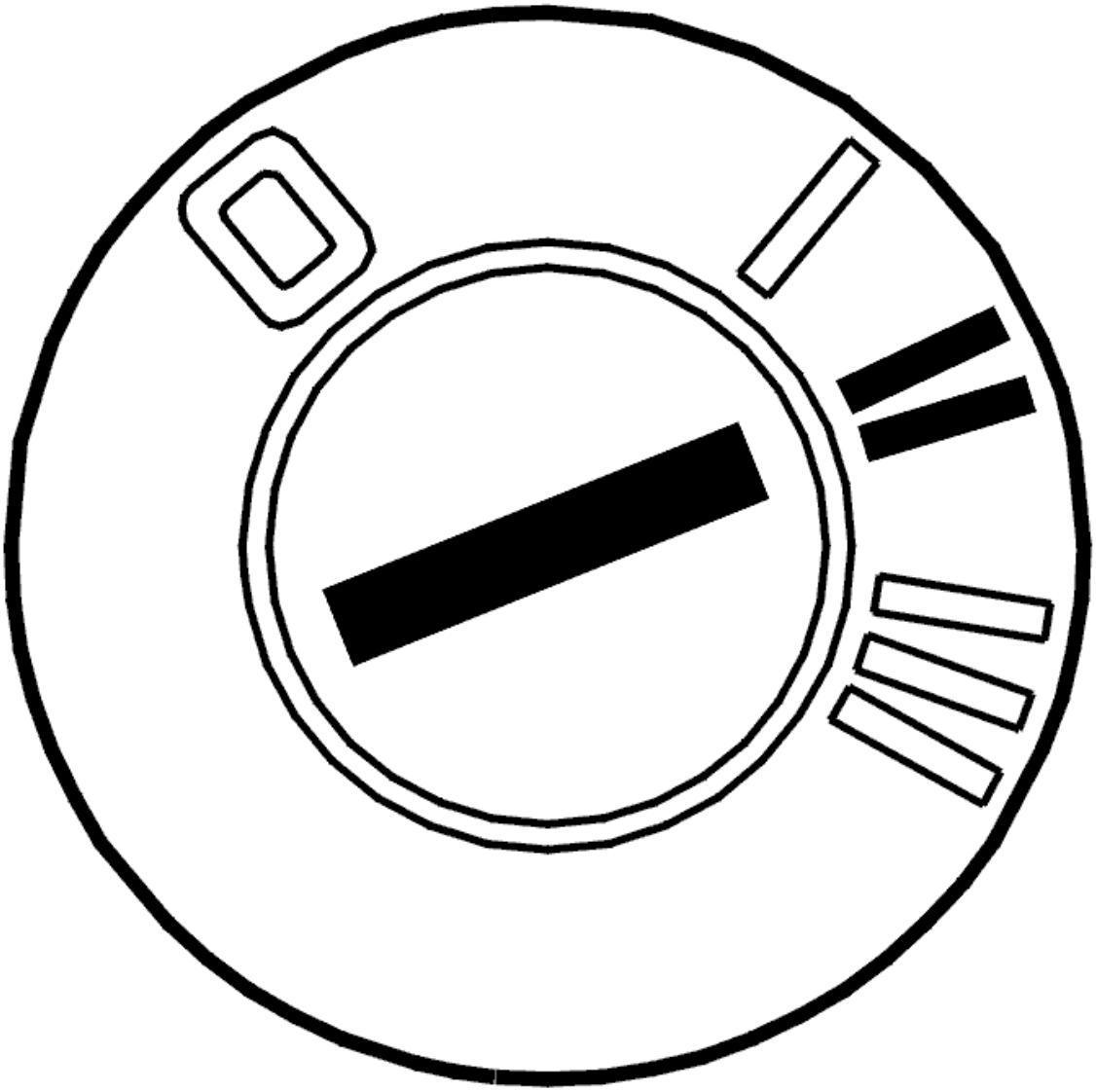

Fig. 246: Identifying Ignition ON
Courtesy of VOLVO CARS CORPORATION

- Ignition on

  Read off the CODE RECEIVED parameter to, see if the key code has been received by the central electronic module (CEM).

  If the code has been received Yes is shown.

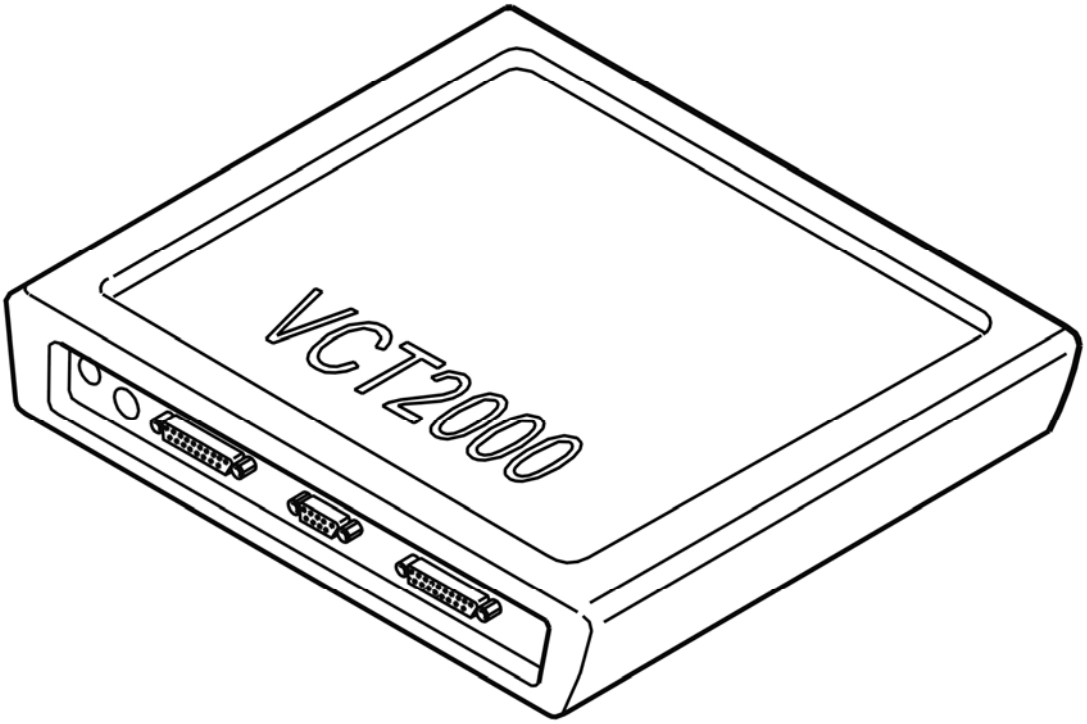

Fig. 247: Identifying VCT2000 Diagnostic Tool Symbol In VIDA
Courtesy of VOLVO CARS CORPORATION

Has the code been received?

- **YES**

  Refer to **CHECKING THE STORED CODE**

- **NO**

  Refer to **DAMAGED TRANSPONDER**

DAMAGED TRANSPONDER

The key has a damaged transponder.

Order new key(s) and software.

see **ADD/REMOVE KEY**

- **Continue**

  Refer to **VERIFICATION**

CHECKING THE STORED CODE

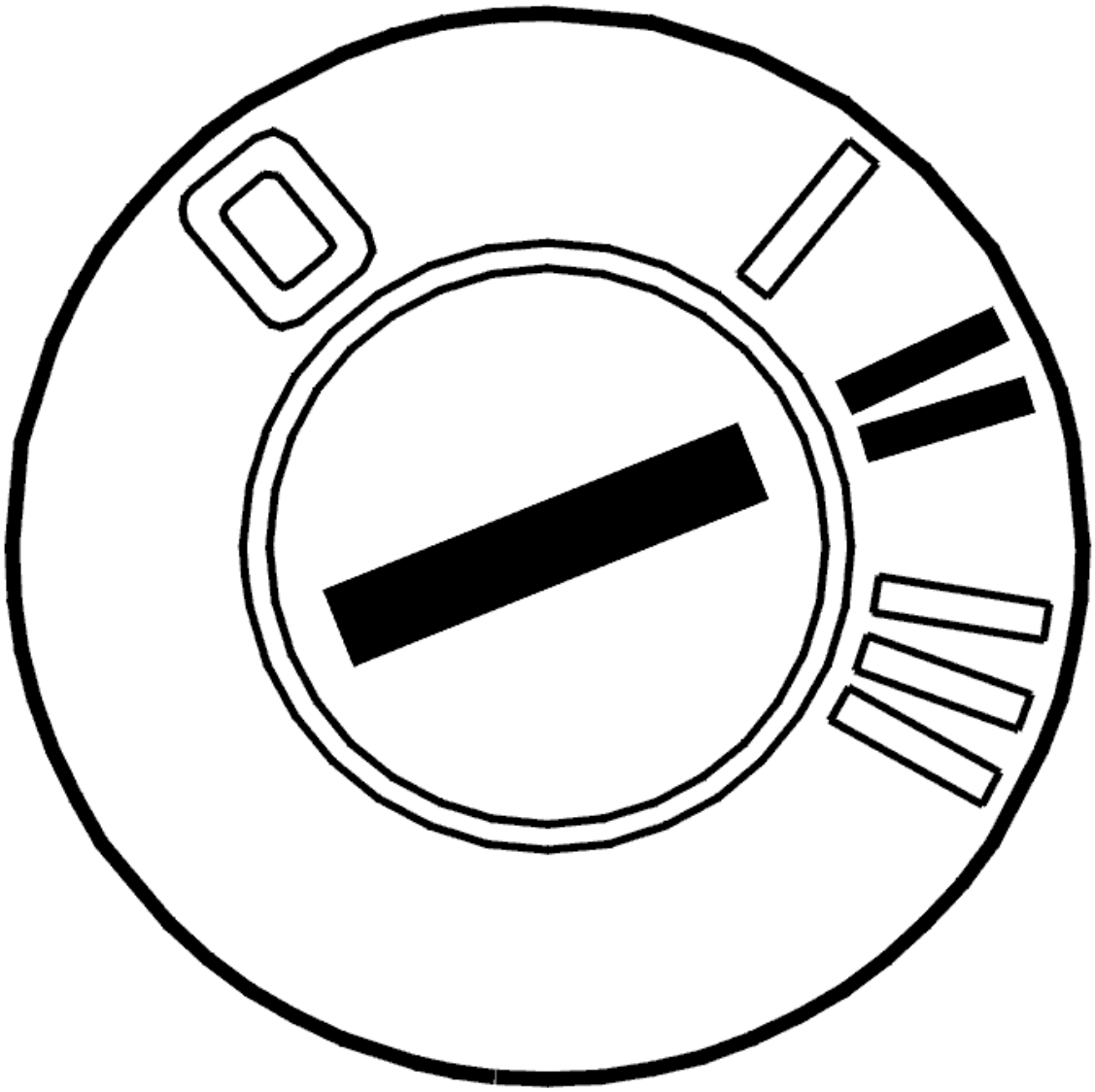

Fig. 248: Identifying Ignition ON
Courtesy of VOLVO CARS CORPORATION

- Ignition on

  Read off the CODE STORED parameter to, see if the key code has been stored in the central electronic module (CEM).

  If the code has been stored Yes is shown.

  Check all the keys belonging to the car.

  Make a note of the keys that are not stored.

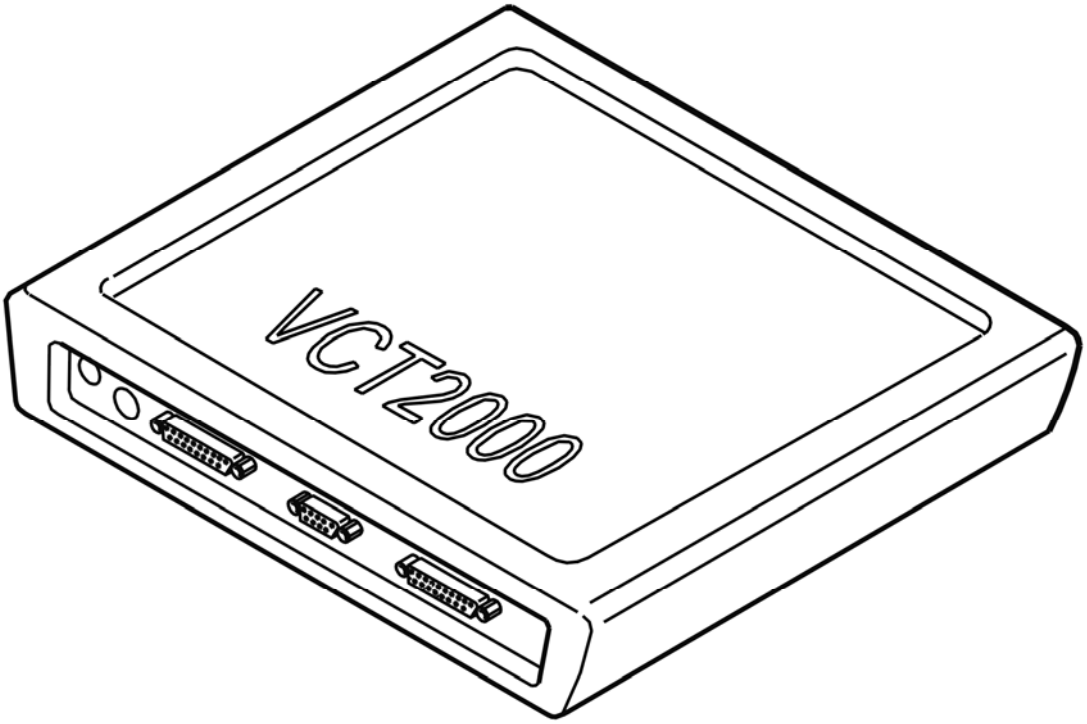

Fig. 249: Identifying VCT2000 Diagnostic Tool Symbol In VIDA
Courtesy of VOLVO CARS CORPORATION

Is the code stored for all keys?

- **YES**

  Refer to **VERIFICATION**

- **NO**

  Refer to **PROGRAMMING KEYS**

PROGRAMMING KEYS

Program the key(s) which displayed NO, when CODE STORED was read off according to:

see **ADD/REMOVE KEY**

- **Continue**

  Refer to **VERIFICATION**

VERIFICATION

VERIFICATION

HINT: After carrying out the repair, check that the fault has been remedied.

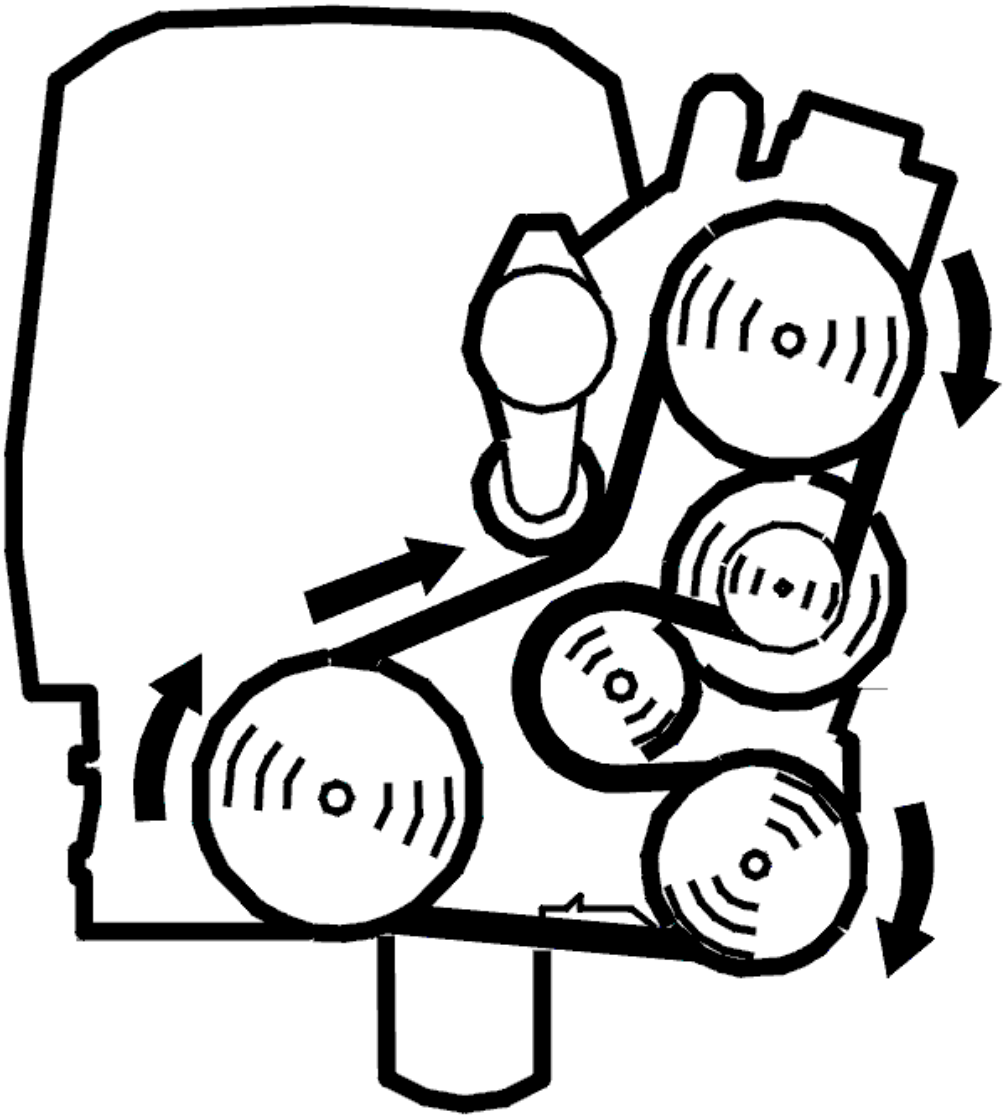

Fig. 250: Belt Routing / Engine Idling - Volvo
Courtesy of VOLVO CARS CORPORATION

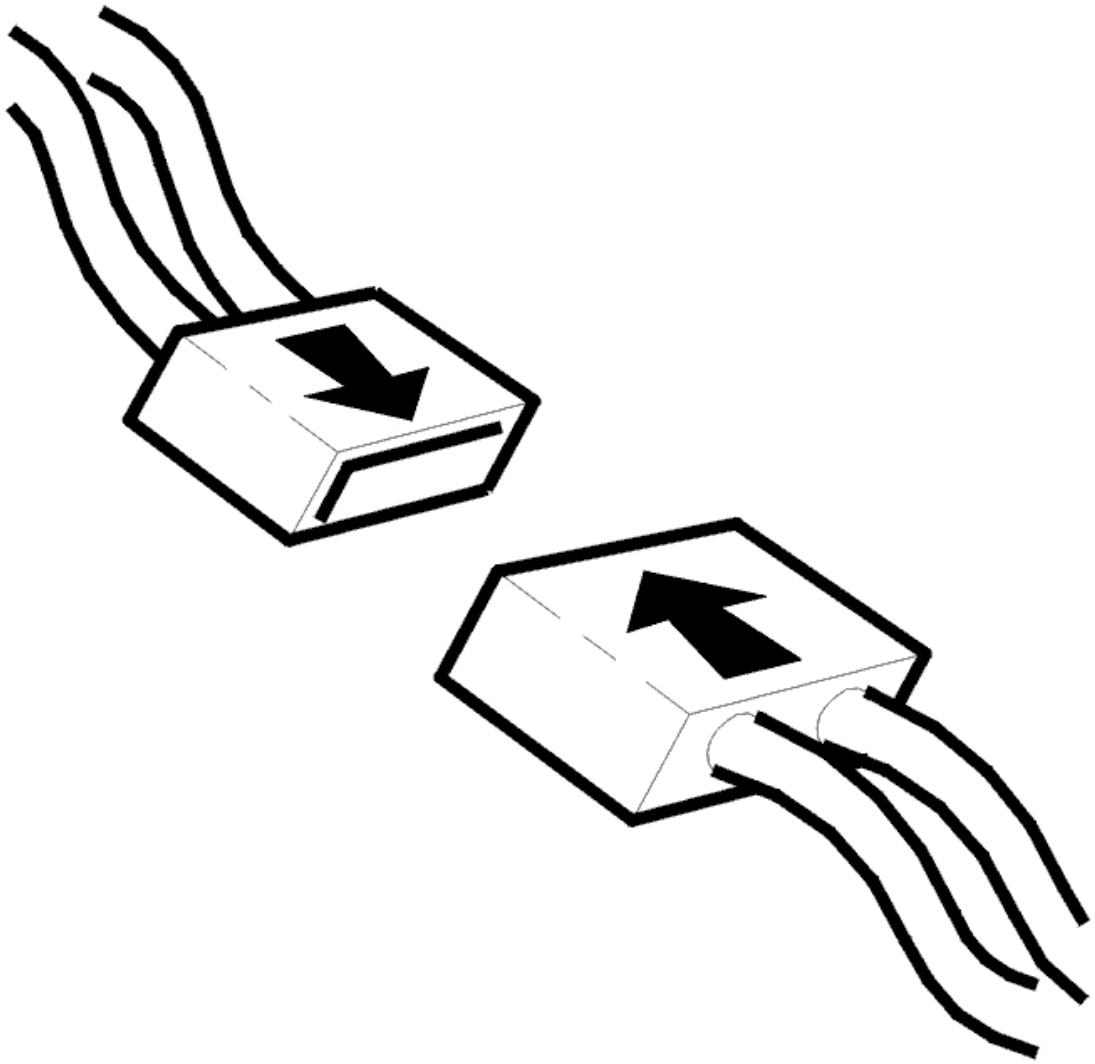

Fig. 251: Connecting Connector
Courtesy of VOLVO CARS CORPORATION

- Ignition off
- Reinstall the connectors, components etc.
- Try to start the car with all the keys (of the correct type).

Does the car start with all the keys?

- **YES**

  VERIFIED: Troubleshooting has been completed.

- **NO**

Refer to **INFORMATION**

INFORMATION

FAULT-TRACING INFORMATION

The fault should have been detected and remedied. As this is not the case fault-tracing has failed.

Exit fault-tracing for this diagnostic trouble code (DTC) or make another attempt.

CEM-6C48: TRANSPONDER TYPE. FAULTY SIGNAL. INTERMITTENT FAULT (2003-2004)

DIAGNOSTIC TROUBLE CODE INFORMATION

Condition

When the ignition is on, the central electronic module (CEM) takes a transponder reading. If the transponder responds with an unrecognized transponder code that is not approved (i. e. not stored in the memory), no transponder code or in an unrecognized communication form, the diagnostic trouble code (DTC) is generated.

NOTE: This diagnostic trouble code can be generated if, for example, several ignition keys hang together on the same keychain when one of them is inserted in the ignition switch.

Substitute Value

Nothing.

Possible Source

- The ignition key has a damaged transponder.
- The ignition key is faulty, or has no transponder
- The ignition key is a constituent of the vehicle, that is to say it has the correct security code programmed into the transponder memory, but the key's transponder code is not programmed as it has been cleared from the memory of the central electronic module (CEM).
- The ignition key is new and its transponder code has not yet been programmed into the memory of the central electronic module (CEM).
- Several similar keys are used to ensure that several transponder codes have been read during transponder reading. The result is an unknown code which is a combination of several keys' transponder codes
- An electronic door key was too close to the antenna unit during locking.
- An automatic road toll transponder was installed too close to the antenna unit.
- EMC interference (powerful electrical fields) during communication stage (at start)
- The ignition key is a Volvo key, but it is for another type of Volvo.

- The ignition key is for another Volvo of the same type, that is to say it has a different transponder code. This type of key also has a different security code programmed into the transponder memory. It cannot be programmed into the central electronic module (CEM) of the vehicle in question.
- The ignition key is for another make of vehicle, that is to say it does not have the same type of transponder.

Fault symptom[s]

- The engine does not start.

SIGNAL MISSING OR FAULTY. INTERMITTENT FAULT.

CHECKING START

Try to start the car with all the customer's keys.

One of the following may occur:

1. The engine starts with all keys

   Refer to **COMMUNICATION**

2. The engine starts with at least one of the keys.

   Refer to **CHECKING THE KEY TYPE**

COMMUNICATION

HINT: The fault was due to a temporary disruption in communication between the transponder and the central electronic module (CEM) or a key that is damaged, does not belong to the vehicle or has not yet been programmed into the central electronic module (CEM) has been used to try and start the vehicle.

NOTE: **Check to, see if there are several keys (with transponders) on the same key ring. These keys should be separate so that they do not touch the key being used. Also check that no other transponder, such as an electronic door key or an identity card with an integrated transponder, is near by.**

If there is an automatic toll road transponder in the car, this should be positioned as far from the antenna unit as possible.

- **Continue**

  Refer to **INFORMATION**

CHECKING THE KEY TYPE

Visually check to, see if the key in the ignition switch is the correct type. See the illustration.

Check that the color marking (a small semi-circular plastic marking positioned on the head of the key nearest one of the short sides of the metal section) is the correct color: The correct color is gray or red.

The key is for another type of Volvo if the color marking is black or blue.

If the color is not correct, replace the key with the color marking as above. Insert the key in the ignition switch. If the key with the correct color marking is missing order a new key. Program the key(s). See **ADD/REMOVE KEY** .

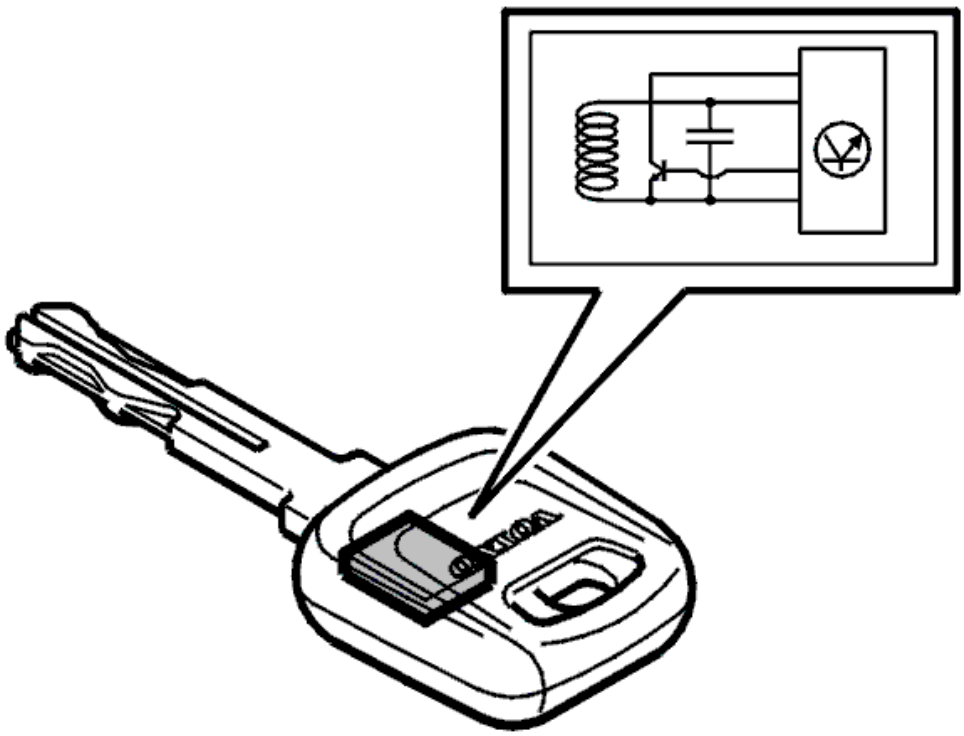

Fig. 252: Adding/Erasing Ignition Keys
Courtesy of VOLVO CARS CORPORATION

- **Continue**

  Refer to **CHECKING THE KEY CODE**

CHECKING THE KEY CODE

NOTE: **Check to, see if there are several keys (with transponders) on the same key ring. These keys should be separate so that they do not touch the key being used. Also check that no other transponder, such as an electronic door key or an identity card with an integrated transponder, is near by.**

If there is an automatic toll road transponder in the car, this should be

positioned as far from the antenna unit as possible.

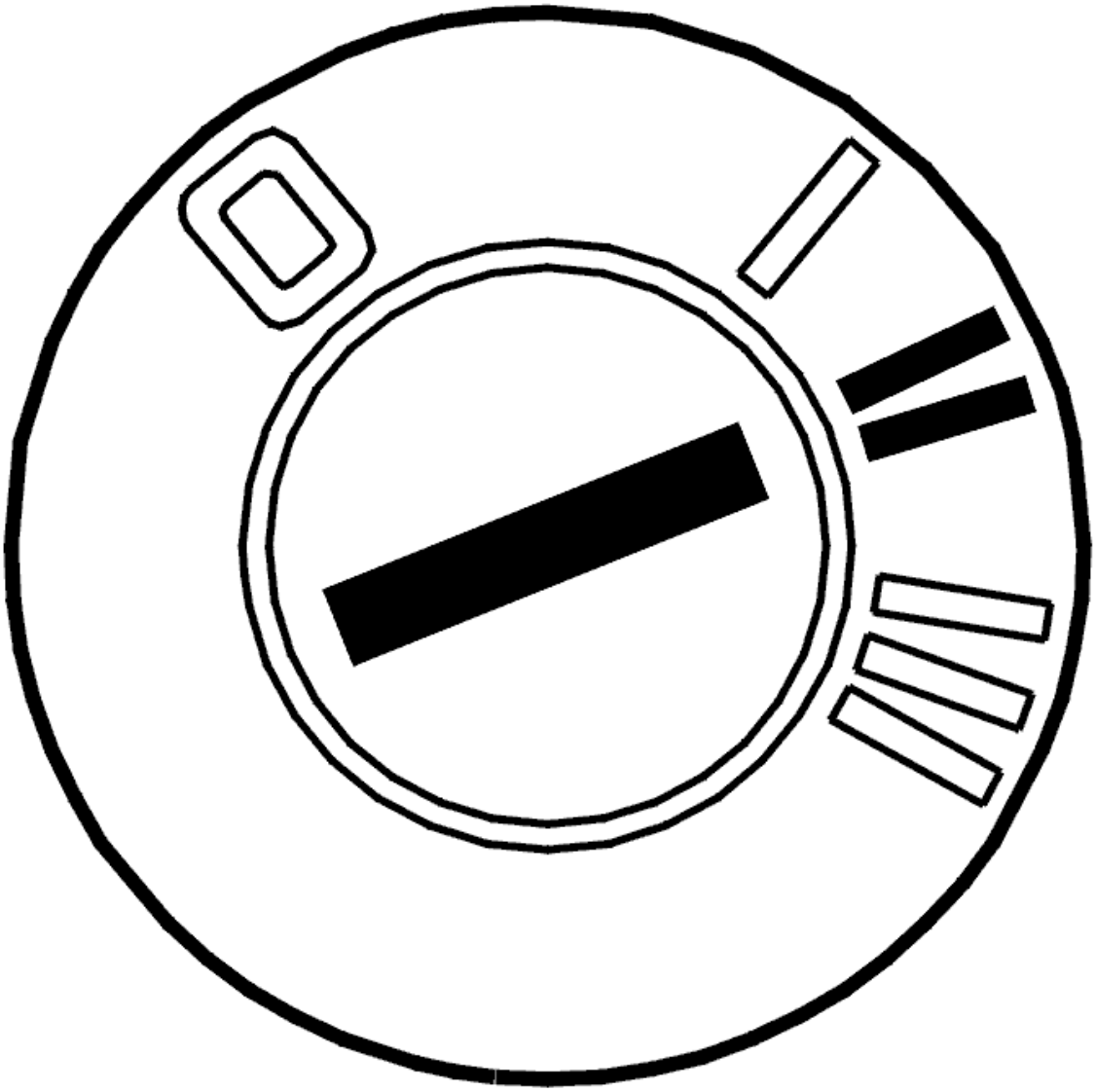

Fig. 253: Identifying Ignition ON
Courtesy of VOLVO CARS CORPORATION

- Ignition on

  Read off the CODE RECEIVED parameter to, see if the key code has been received by the central electronic module (CEM).

  If the code has been received Yes is shown.

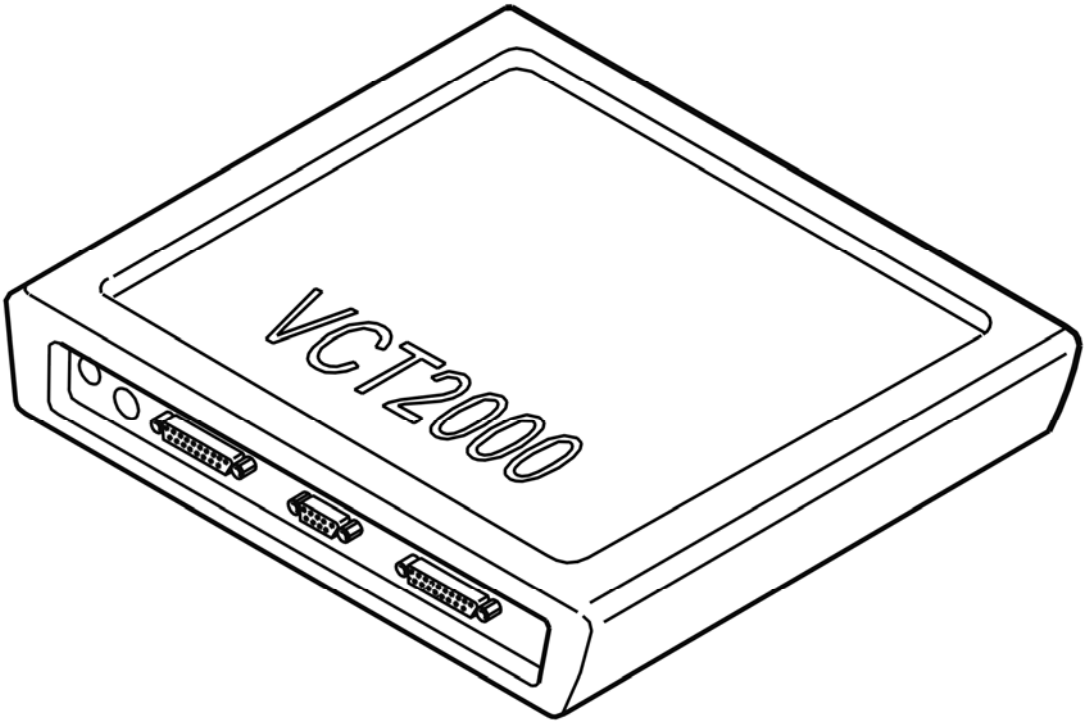

Fig. 254: Identifying VCT2000 Diagnostic Tool Symbol In VIDA
Courtesy of VOLVO CARS CORPORATION

Has the code been received?

- **YES**

  Refer to **CHECKING THE STORED CODE**

- **NO**

  Refer to **DAMAGED TRANSPONDER**

DAMAGED TRANSPONDER

The key has a damaged transponder.

Order new key(s). Program the key(s). See **ADD/REMOVE KEY** .

- **Continue**

  Refer to **INFORMATION**

CHECKING THE STORED CODE

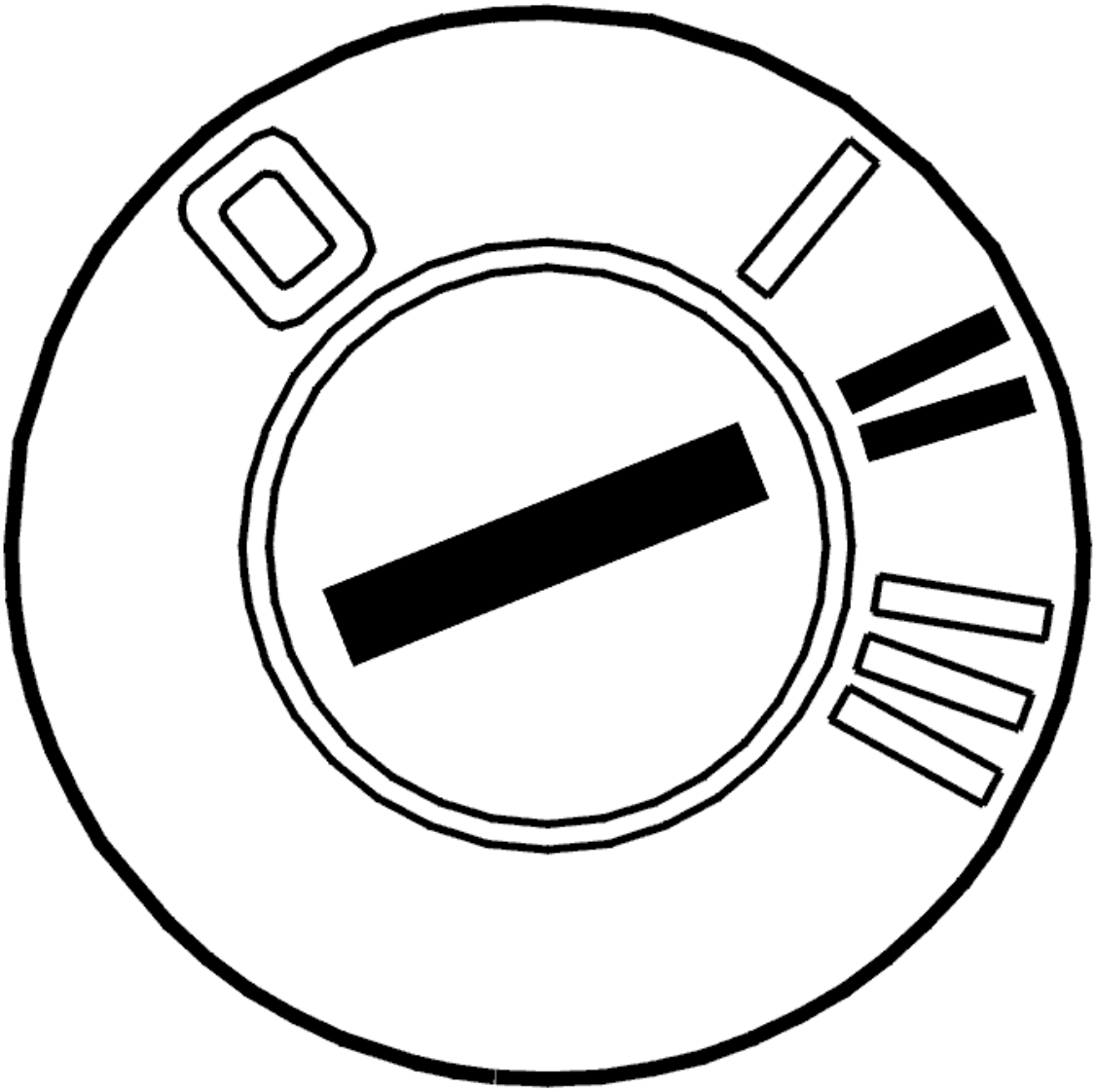

Fig. 255: Identifying Ignition ON
Courtesy of VOLVO CARS CORPORATION

- Ignition on.

  Read off the CODE STORED parameter to, see if the key code has been stored in the central electronic module (CEM).

  If the code has been stored Yes is shown.

  Check all the keys belonging to the car.

  Make a note of the keys that are not stored.

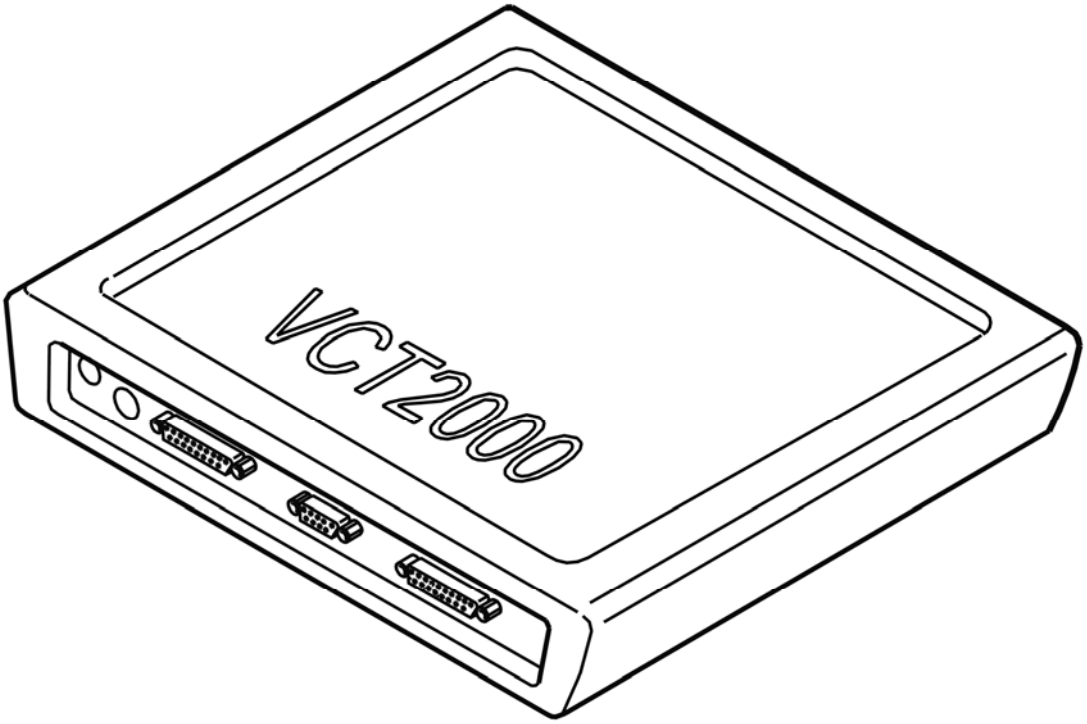

Fig. 256: Identifying VCT2000 Diagnostic Tool Symbol In VIDA
Courtesy of VOLVO CARS CORPORATION

Is the code stored for all keys?

- **YES**

  Refer to **INFORMATION**

- **NO**

  Refer to **PROGRAMMING KEYS**

PROGRAMMING KEYS

Program the key(s) which displayed NO, when CODE STORED was read off. See **ADD/REMOVE KEY** .

- **Continue**

  Refer to **INFORMATION**

INFORMATION

FAULT-TRACING INFORMATION

If the fault is intermittent, do not verify fault-tracing if the fault does not recur.

It is possible to view the information again, or leave fault-tracing for this diagnostic trouble code (DTC).

CEM-6C48: TRANSPONDER TYPE. FAULTY SIGNAL. PERMANENT FAULT (2003-2004)

DIAGNOSTIC TROUBLE CODE INFORMATION

see **DIAGNOSTIC TROUBLE CODE INFORMATION**

SIGNAL MISSING OR FAULTY. PERMANENT FAULT

CHECKING THE KEY TYPE

Visually check to, see if the key in the ignition switch is the correct type. See the illustration.

Check that the color marking (a small semi-circular plastic marking positioned on the head of the key nearest one of the short sides of the metal section) is the correct color: The correct color is gray or red.

The key is for another type of Volvo if the color marking is black or blue.

If the color is not correct, replace the key with the color marking as above. Insert the key in the ignition switch. If the key with the correct color marking is missing order a new key. Program the key(s). See **ADD/REMOVE KEY** .

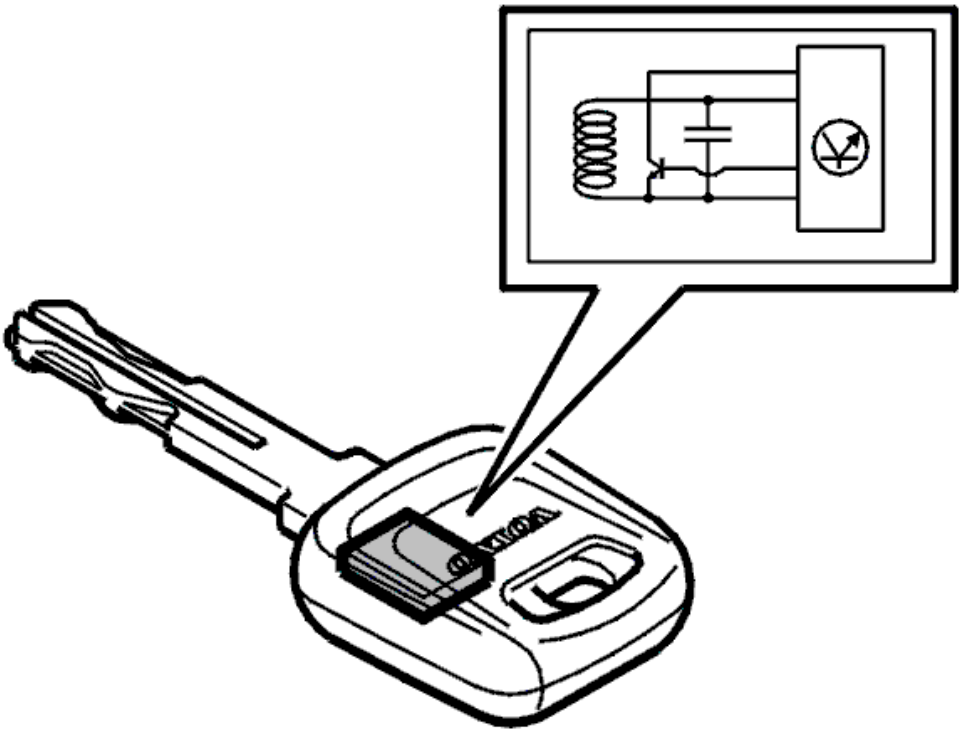

Fig. 257: Adding/Erasing Ignition Keys
Courtesy of VOLVO CARS CORPORATION

- **Continue**

  Refer to **CHECKING THE KEY CODE**

CHECKING THE KEY CODE

NOTE: **Check to, see if there are several keys (with transponders) on the same key ring. These keys should be separate so that they do not touch the key being used. Also check that no other transponder, such as an electronic door key or an identity card with an integrated transponder, is near by.**

If there is an automatic toll road transponder in the car, this should be positioned as far from the antenna unit as possible.

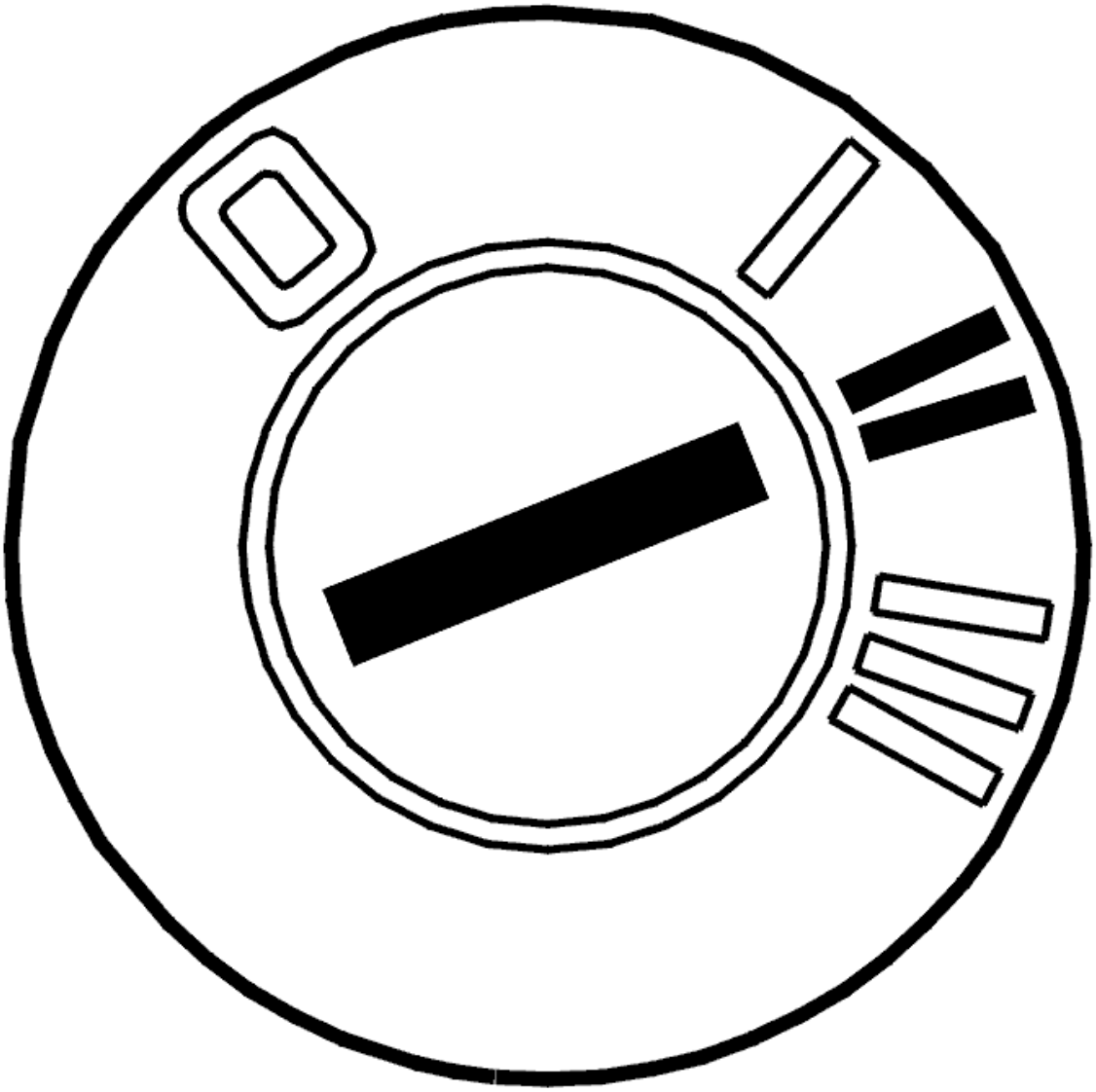

Fig. 258: Identifying Ignition ON
Courtesy of VOLVO CARS CORPORATION

- Ignition on

  Read off the CODE RECEIVED parameter to, see if the key code has been received by the central electronic module (CEM).

  If the code has been received Yes is shown.

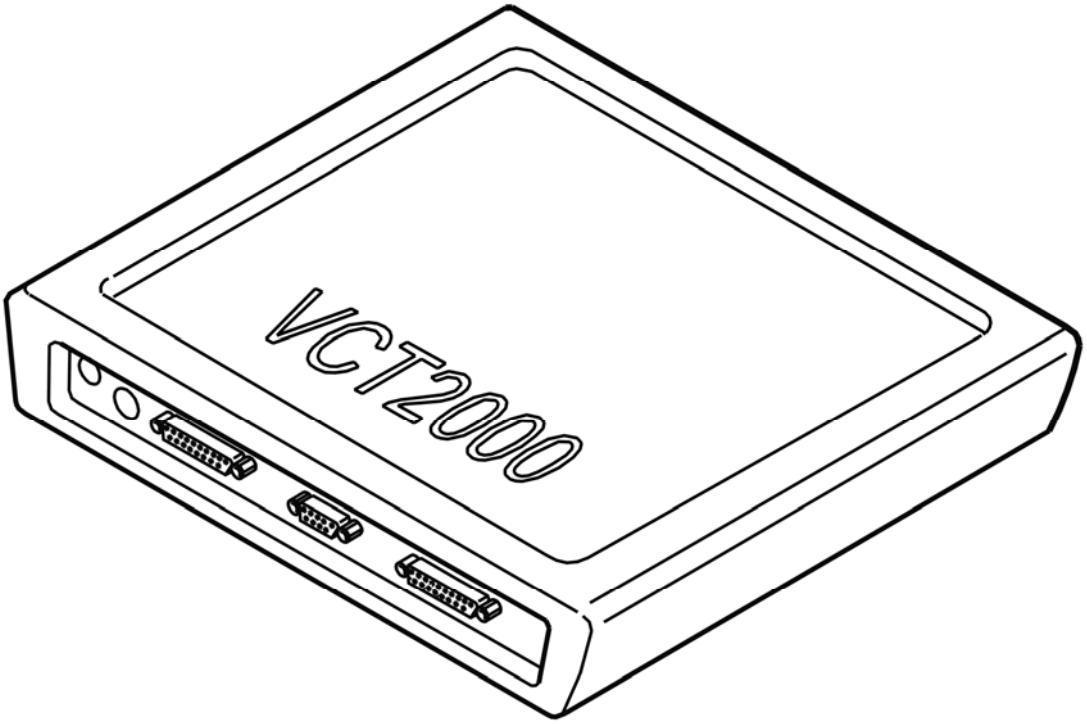

Fig. 259: Identifying VCT2000 Diagnostic Tool Symbol In VIDA
Courtesy of VOLVO CARS CORPORATION

Has the code been received?

- **YES**

  Refer to **CHECKING THE STORED CODE**

- **NO**

  Refer to **DAMAGED TRANSPONDER**

DAMAGED TRANSPONDER

The key has a damaged transponder.

Order new key(s). Program the key(s). See **ADD/REMOVE KEY** .

- **Continue**

  Refer to **VERIFICATION**

CHECKING THE STORED CODE

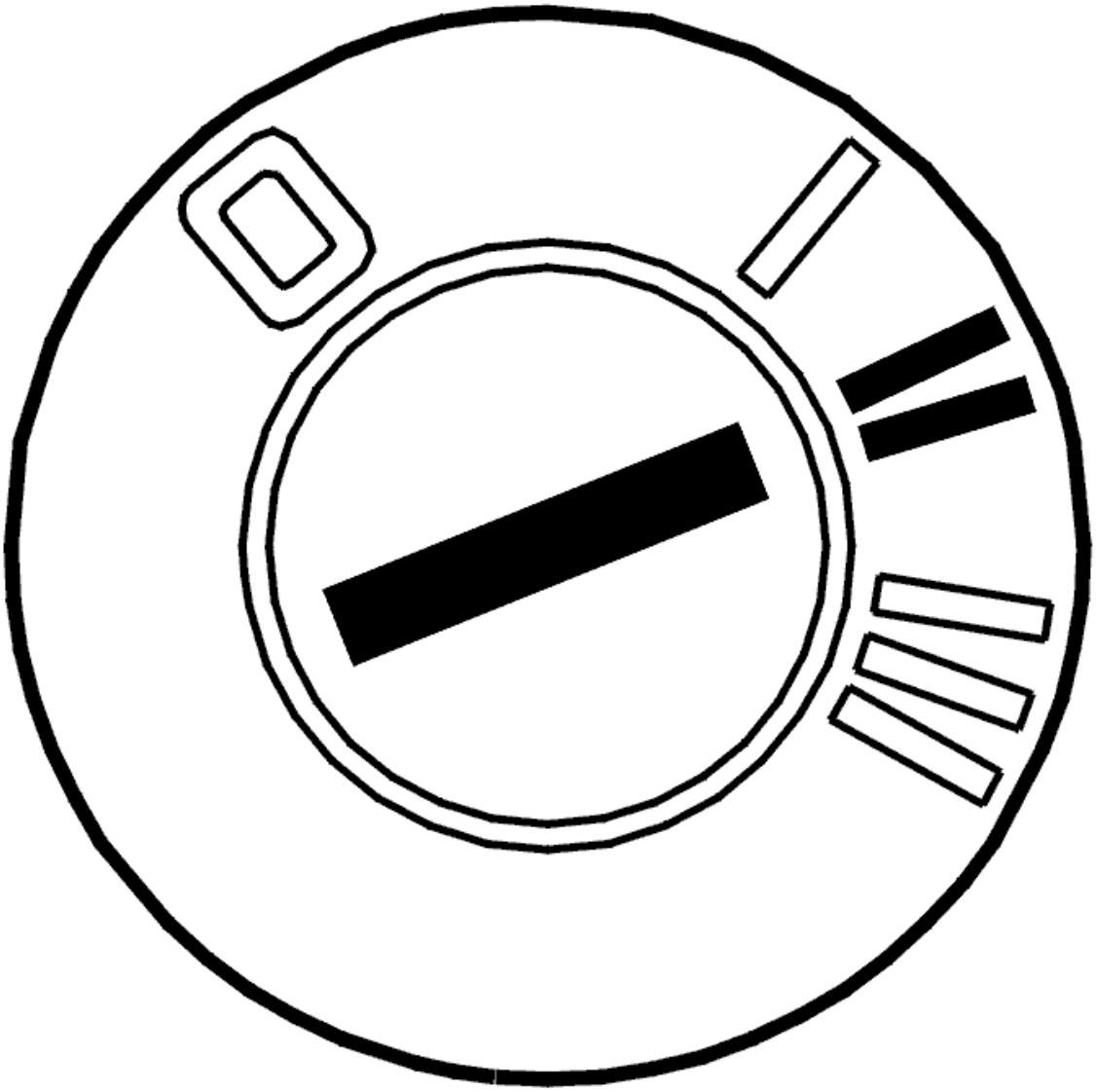

Fig. 260: Identifying Ignition ON
Courtesy of VOLVO CARS CORPORATION

- Ignition on

  Read off the CODE STORED parameter to, see if the key code has been stored in the central electronic module (CEM).

  If the code has been stored Yes is shown.

  Check all the keys belonging to the car.

  Make a note of the keys that are not stored.

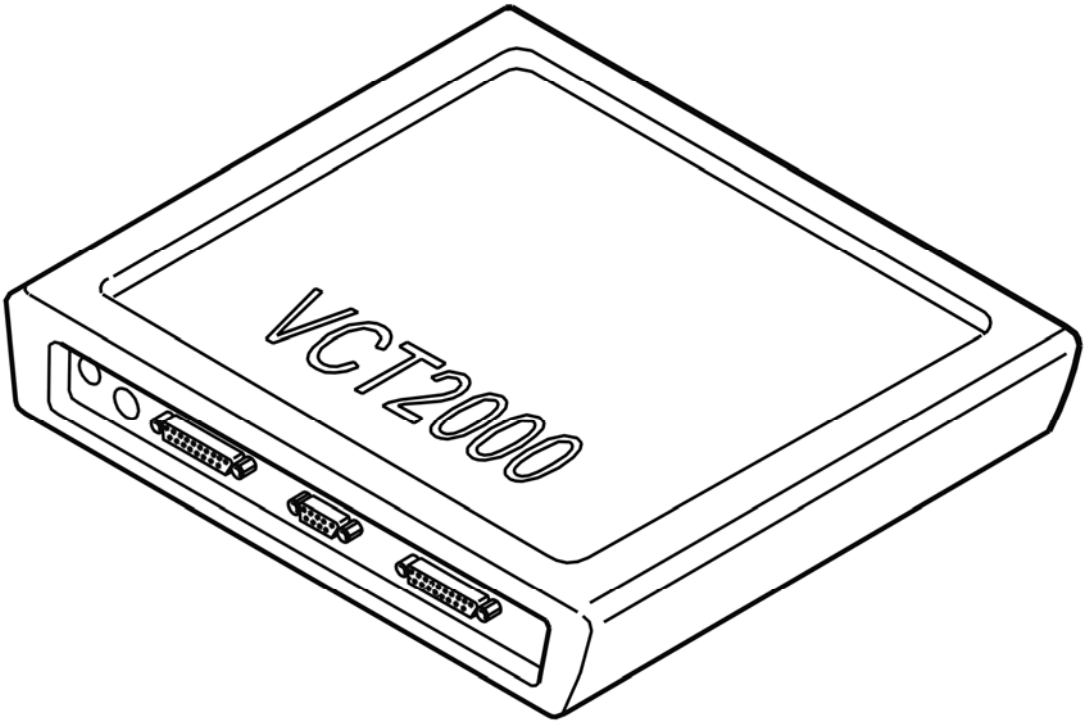

Fig. 261: Identifying VCT2000 Diagnostic Tool Symbol In VIDA
Courtesy of VOLVO CARS CORPORATION

Is the code stored for all keys?

- **YES**

  Refer to **VERIFICATION**

- **NO**

  Refer to **PROGRAMMING KEYS**

PROGRAMMING KEYS

Program the key(s) which displayed NO, when CODE STORED was read off. See **ADD/REMOVE KEY** .

- **Continue**

  Refer to **VERIFICATION**

VERIFICATION

VERIFICATION

HINT: After the repair it is necessary to check that the fault has been rectified.

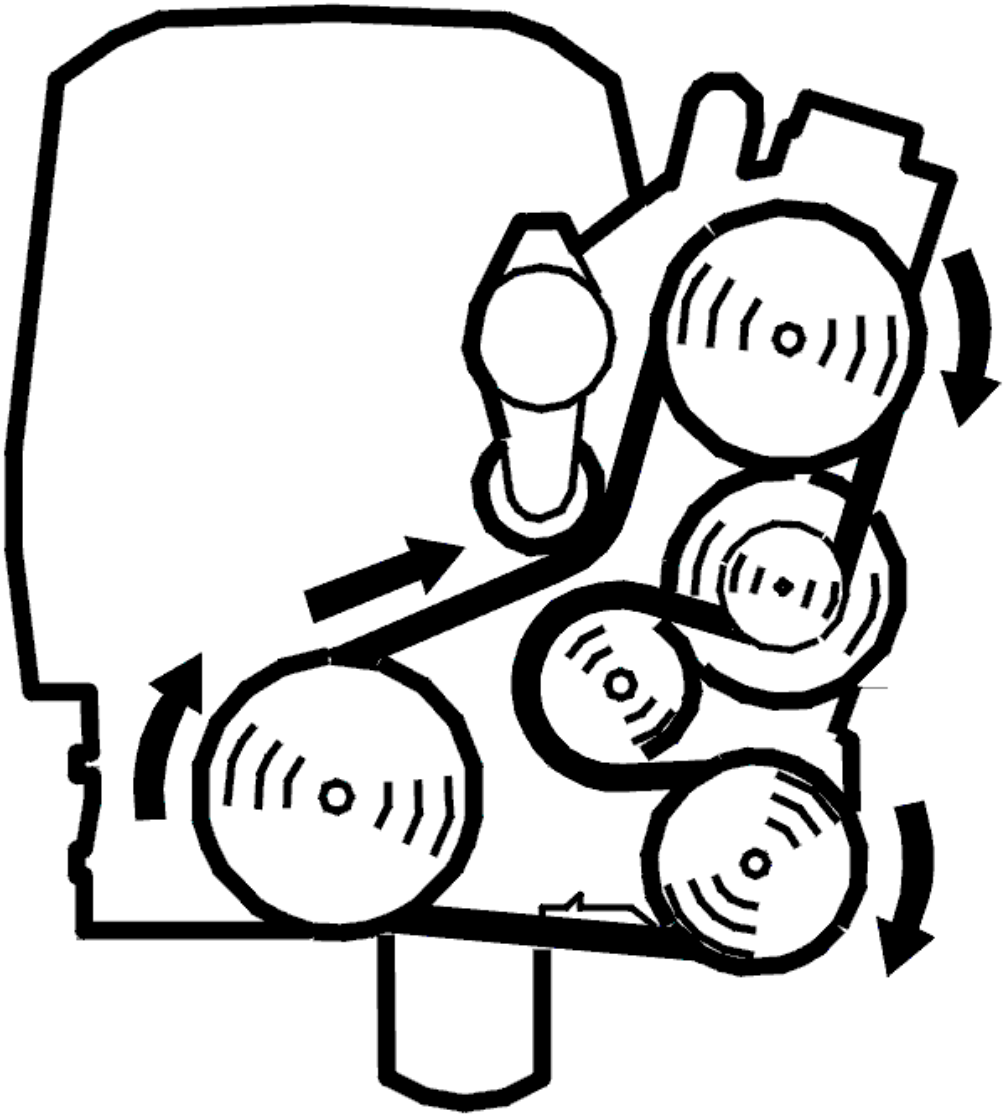

Fig. 262: Belt Routing / Engine Idling - Volvo
Courtesy of VOLVO CARS CORPORATION

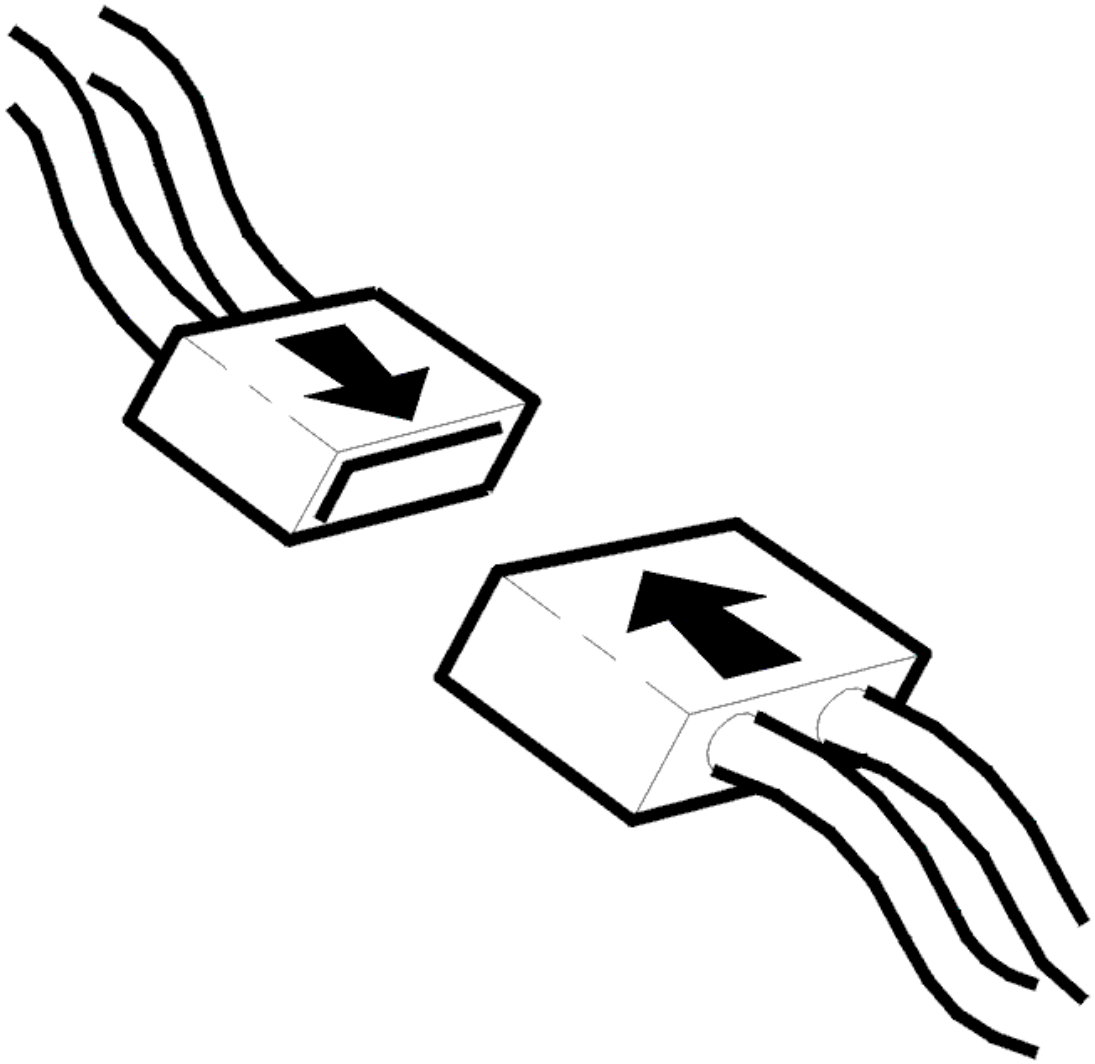

Fig. 263: Connecting Connector
Courtesy of VOLVO CARS CORPORATION

- Ignition off.
- Connect the connectors, install the components, etc.
- Try to start the vehicle using all the keys (which are the correct type).

Does the vehicle start using all the keys?

- **YES**

  VERIFIED: Troubleshooting has been completed.

- **NO**

Refer to **INFORMATION**

INFORMATION

FAULT-TRACING INFORMATION

The fault should have been detected and remedied. As this is not the case fault-tracing has failed.

Exit fault-tracing for this diagnostic trouble code (DTC) or make another attempt.

CEM-6C49: TRANSPONDER COMMUNICATION. FAULTY SIGNAL (2005-2012)

DIAGNOSTIC TROUBLE CODE (DTC) INFORMATION CEM-6C49

Condition

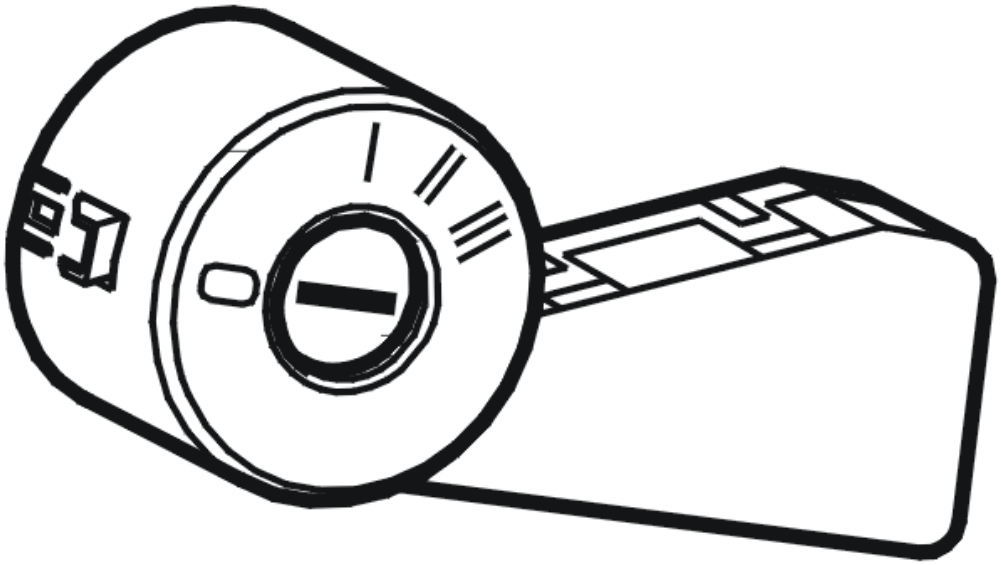

Fig. 264: Identifying Ignition Switch
Courtesy of VOLVO CARS CORPORATION

With the ignition on the central electronic module (CEM) reads the transponder signal. The diagnostic trouble code (DTC) is stored if the transponder responds with a correct code (the key belongs to the vehicle) but something else failed during communication.

NOTE: **This diagnostic trouble code (DTC) may be stored for example if there are several ignition keys on the same key ring and one of them is inserted in the ignition switch.**

Substitute Value

- None.

Possible Source

- Several keys are too close to each other during the read off
- An electronic door key was too close to the antenna unit during the read off
- An automatic road toll transponder is installed too close to the antenna unit
- EMC interference (strong electrical field) during the communication phase (when starting the engine)
- The ignition key belongs to another Volvo of the same type, i. e. it has a different transponder code.

Fault symptom[s]

- The starter motor does not turn.

FAULTY SIGNAL

CHECKING THE KEY TYPE

NOTE: **Check to, see if there are several keys (with transponders) on the same key ring. These keys should be separate so that they do not touch the key being used. Also check that no other transponder, such as an electronic door key or an identity card with an integrated transponder, is near by.**

If there is an automatic toll road transponder in the car, this should be positioned as far from the antenna unit as possible.

Visually check to, see if the key in the ignition switch is the correct type. See the illustration.

Check that the color marking (a small semi-circular plastic marking positioned on the head of the key nearest one of the short sides of the metal section) is the correct color: The correct color is gray or red.

The key is for another type of Volvo if the color marking is black or blue.

If the color is not correct, replace the key with the color marking as above. Insert the key in the ignition switch. If there is no key the correct color, order a new key and program it.

see **ADD/REMOVE KEY**

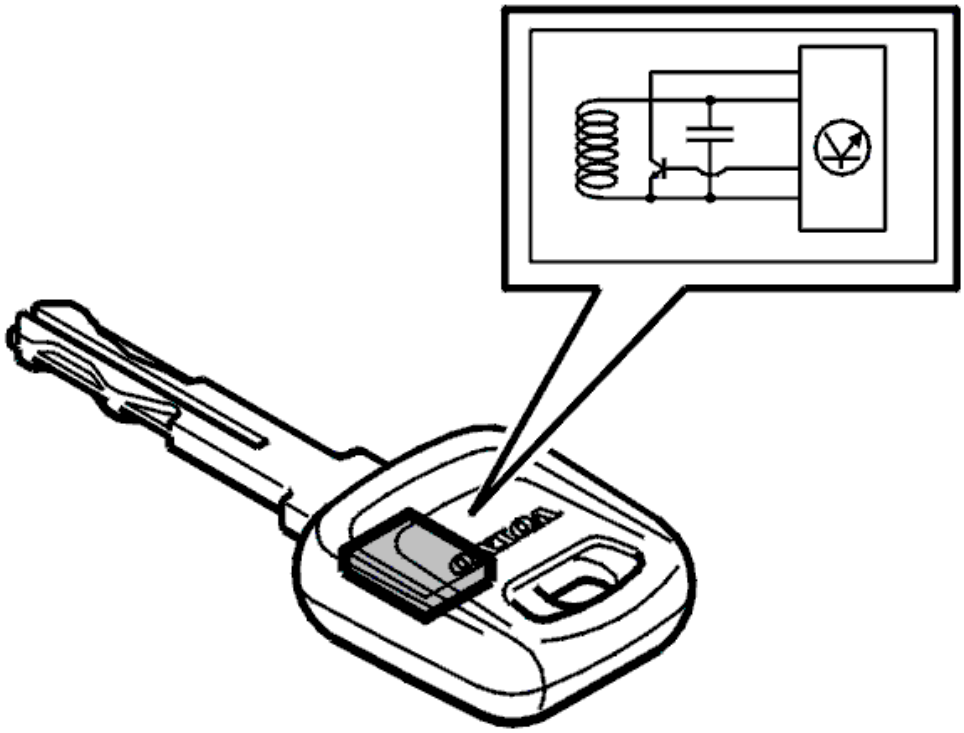

Fig. 265: Adding/Erasing Ignition Keys
Courtesy of VOLVO CARS CORPORATION

- **Continue**

  Refer to **CHECKING START**

CHECKING START

Use the same key which previously could not start the engine. Carry out three more start attempts.

HINT: If the start attempts are carried out in quick succession, remove the key from the ignition switch for at least two seconds between each start attempt. Otherwise a new transponder check will not be carried out. (If the key is left in the ignition switch between each start attempt, a new transponder check will not occur until the ignition has been switched off for approximately 30 seconds.).

One of the following may occur:

1. The engine starts every time

   Refer to **COMMUNICATION**

2. The engine starts at least once

Refer to **DAMAGED TRANSPONDER**

3. The engine does not start.

   Refer to **INCORRECT KEY**

COMMUNICATION

HINT: The fault was caused by a temporary interruption in the communication between the transponder and the central electronic module (CEM).

- **Continue**

  Refer to **VERIFICATION**

DAMAGED TRANSPONDER

The key has a damaged transponder.

Order new key(s) and software.

see **ADD/REMOVE KEY**

- **Continue**

  Refer to **VERIFICATION**

INCORRECT KEY

The key belongs to another vehicle. The transponder code and the mechanical key code (the key fits in the ignition switch) correspond but the security code for the key does not correspond with the security code of the car.

Order new key(s) and software.

see **ADD/REMOVE KEY**

- **Continue**

  Refer to **VERIFICATION**

VERIFICATION

VERIFICATION

HINT: After carrying out the repair, check that the fault has been remedied.

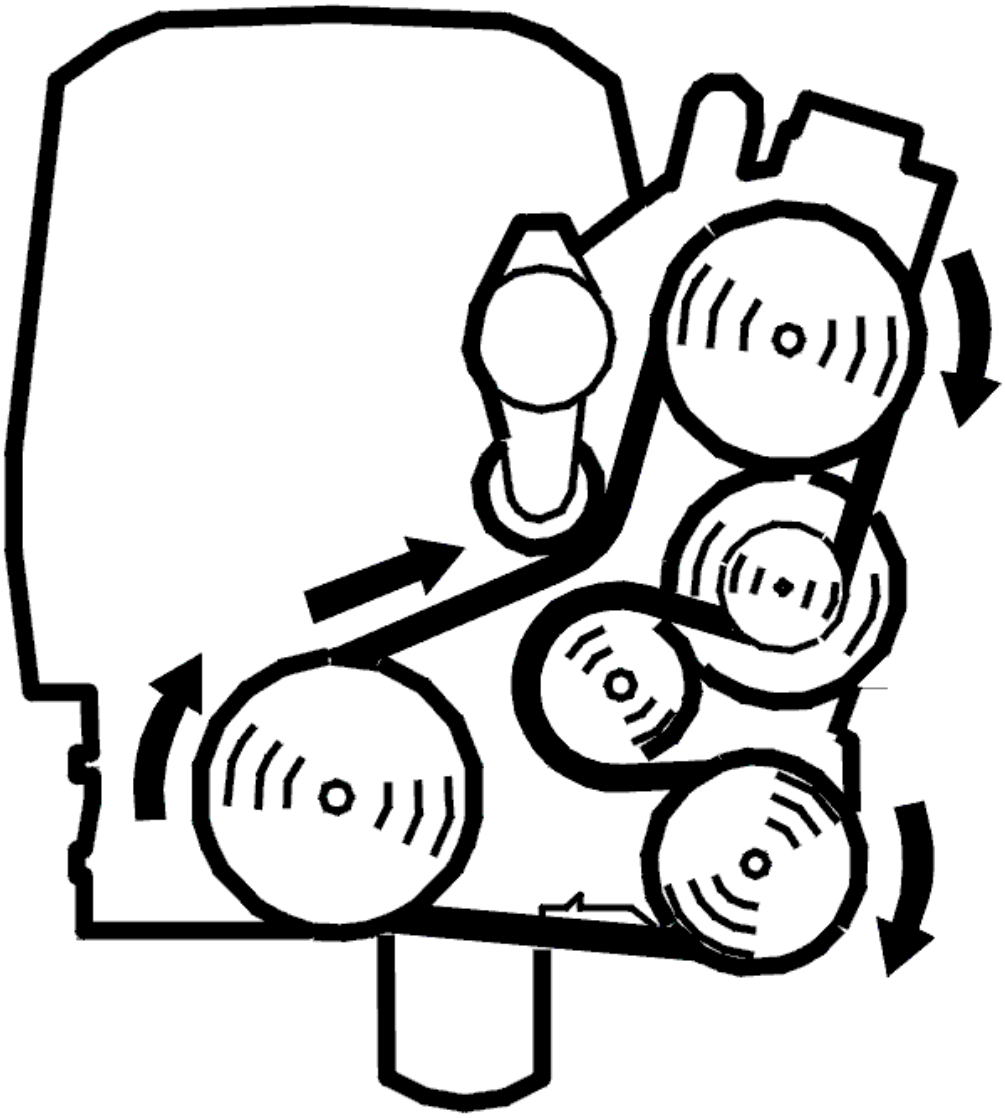

Fig. 266: Belt Routing / Engine Idling - Volvo
Courtesy of VOLVO CARS CORPORATION

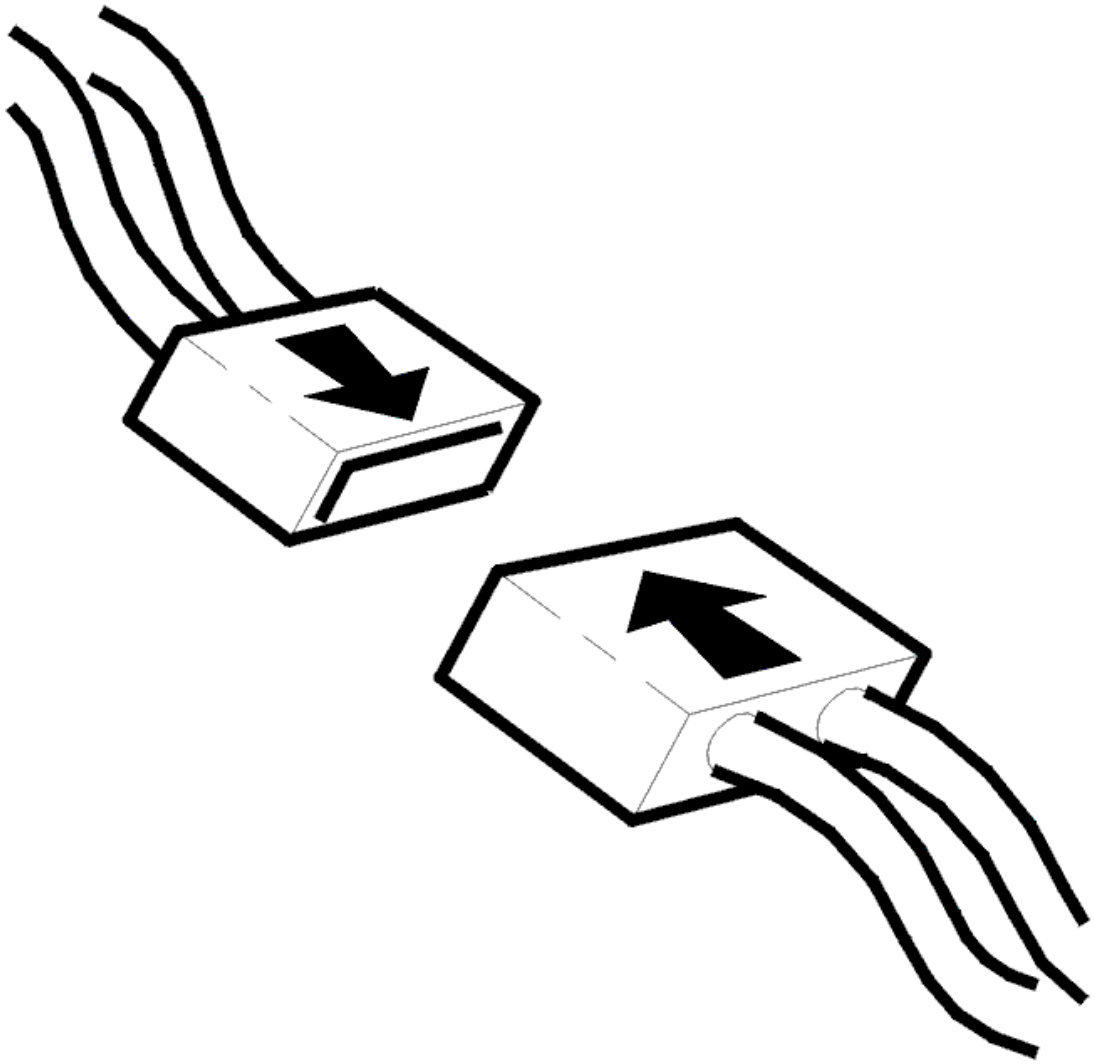

Fig. 267: Connecting Connector
Courtesy of VOLVO CARS CORPORATION

- Ignition off
- Reinstall the connectors, components etc.
- Try to start the car with all the keys (of the correct type).

Does the car start with all the keys?

- **YES**

  VERIFIED: Troubleshooting has been completed.

- **NO**

Refer to **INFORMATION**

INFORMATION

FAULT-TRACING INFORMATION

The fault should have been detected and remedied. As this is not the case fault-tracing has failed.

Exit fault-tracing for this diagnostic trouble code (DTC) or make another attempt.

CEM-6C49: TRANSPONDER COMMUNICATION. FAULTY SIGNAL. INTERMITTENT FAULT (2003-2004)

DIAGNOSTIC TROUBLE CODE INFORMATION

Condition

When the ignition is on, the central electronic module (CEM) takes a transponder reading. If the transponder responds with a recognized transponder code but another part of transponder communication is faulty or fails, the diagnostic trouble code (DTC) is generated.

NOTE: This diagnostic trouble code can be generated if, for example, several ignition keys hang together on the same keychain when one of them is inserted in the ignition switch.

Substitute Value

Nothing.

Possible Source

- Several similar keys are used to ensure that several transponder codes have been read during transponder reading. The result is an unknown code which is a combination of several keys' transponder codes.
- An electronic door key was too close to the antenna unit during locking.
- An automatic road toll transponder was installed too close to the antenna unit.
- EMC interference (powerful electrical fields) during communication stage (at start)
- The ignition key is for another vehicle. The transponder code happens to match, but the security code does not match that of the vehicle in question.

Fault symptom[s]

- The engine does not start.

SIGNAL MISSING OR FAULTY

CHECKING THE KEY TYPE

NOTE: **Check to, see if there are several keys (with transponders) on the same key ring. These keys should be separate so that they do not touch the key being used. Also check that no other transponder, such as an electronic door key or an identity card with an integrated transponder, is near by.**

If there is an automatic toll road transponder in the car, this should be positioned as far from the antenna unit as possible.

Visually check to, see if the key in the ignition switch is the correct type. See the illustration.

Check that the color marking (a small semi-circular plastic marking positioned on the head of the key nearest one of the short sides of the metal section) is the correct color: The correct color is gray or red.

The key is for another type of Volvo if the color marking is black or blue.

If the color is not correct, replace the key with the color marking as above. Insert the key in the ignition switch. If the key with the correct color marking is missing order a new key. Program the key(s). See **ADD/REMOVE KEY** .

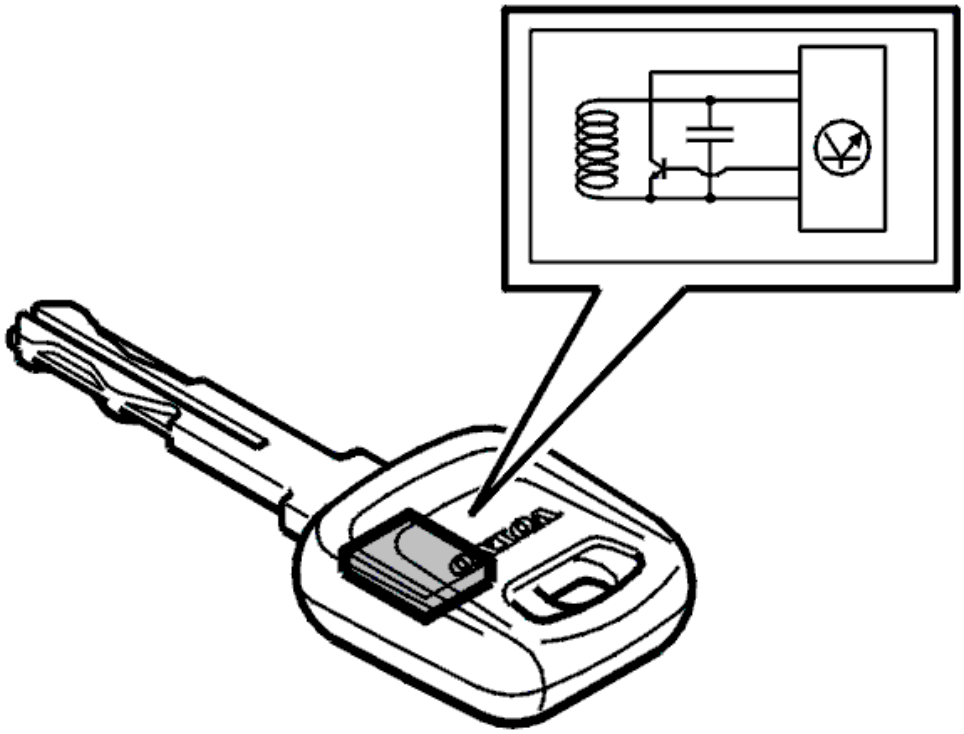

Fig. 268: Adding/Erasing Ignition Keys
Courtesy of VOLVO CARS CORPORATION

- **Continue**

Refer to **CHECKING START**

CHECKING START

Use the same key which previously could not start the engine. Carry out three more start attempts.

Note, if the start attempts are carried out in quick succession, remove the key from the ignition switch for at least two seconds between each start attempt. Otherwise a new transponder check will not be carried out. (If the key is left in the ignition switch between each start attempt, a new transponder check will not occur until the ignition has been switched off for approximately 30 seconds.)

One of the following may occur:

1. The engine starts every time

   Refer to **COMMUNICATION**

2. The engine starts at least once

   Refer to **DAMAGED TRANSPONDER**

3. The engine does not start.

   Refer to **INCORRECT KEY**

COMMUNICATION

HINT: The fault was due to a temporary disruption in communication between the transponder and the central electronic module (CEM).

- **Continue**

  Refer to **VERIFICATION**

DAMAGED TRANSPONDER

The key has a damaged transponder.

Order new key(s). Program the key(s). See **ADD/REMOVE KEY** .

- **Continue**

  Refer to **VERIFICATION**

INCORRECT KEY

The key is for another vehicle. The transponder code and the mechanical key code (key fits in the ignition switch) happen to match, but the security code does not match that of the vehicle in question.

Order new key(s). Program the key(s). See **ADD/REMOVE KEY** .

- **Continue**

  Refer to **VERIFICATION**

VERIFICATION

VERIFICATION

HINT: After the repair it is necessary to check that the fault has been rectified.

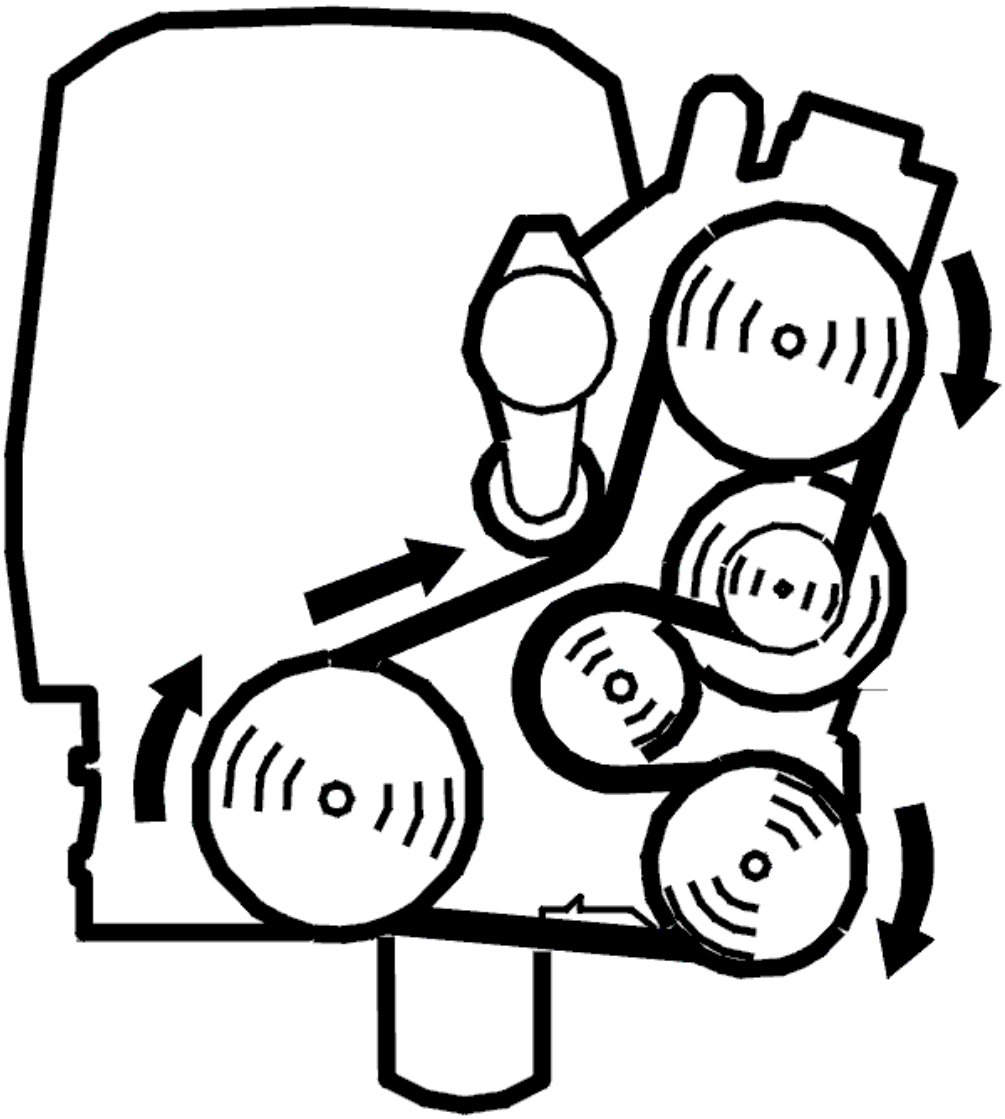

Fig. 269: Belt Routing / Engine Idling - Volvo
Courtesy of VOLVO CARS CORPORATION

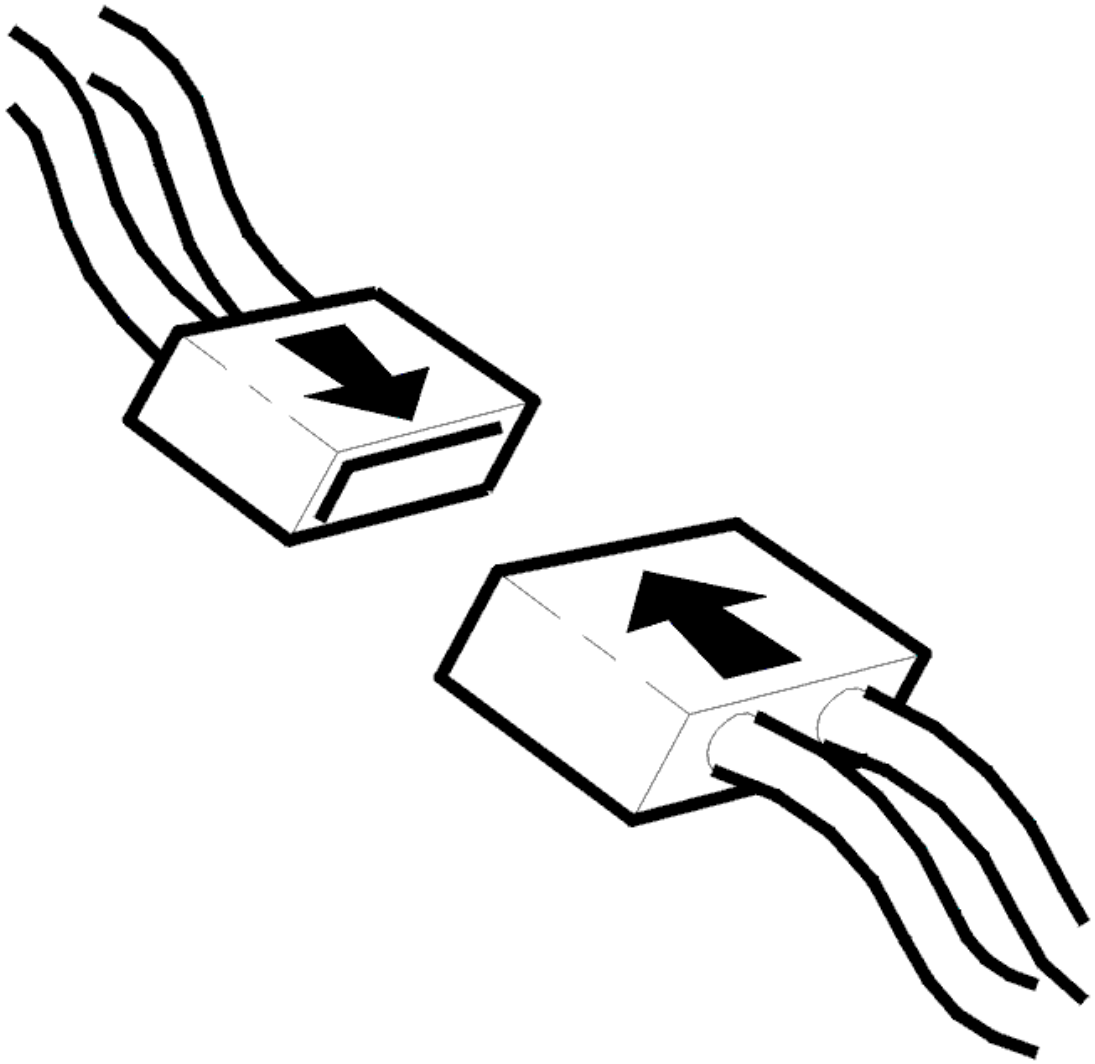

Fig. 270: Connecting Connector
Courtesy of VOLVO CARS CORPORATION

- Ignition off.
- Connect the connectors, install the components, etc.
- Try to start the vehicle using all the keys (which are the correct type).

Does the vehicle start using all the keys?

- **YES**

  VERIFIED: Troubleshooting has been completed.

- **NO**

Refer to **INFORMATION**

INFORMATION

FAULT-TRACING INFORMATION

The fault should have been detected and remedied. As this is not the case fault-tracing has failed.

Exit fault-tracing for this diagnostic trouble code (DTC) or make another attempt.

CEM-6C57: TRANSPONDER COMMUNICATION FAULTY SIGNAL (2011-2012)

DIAGNOSTIC TROUBLE CODE (DTC) INFORMATION CEM-6C57

Condition

The central electronic module (CEM) is continuously supplied with the necessary information from the phone module (PHM). The central electronic module (CEM) checks information coming from the phone module (PHM).

The diagnostic trouble code (DTC) is stored if the control module detects that:

- The transmitting control module sends an incorrect value to the central electronic module (CEM).

The control module's test for the diagnostic trouble code (DTC) starts in the event of:

- All ignition positions.

NOTE: The control module can only detect the fault once the test has been started and the diagnostic trouble code (DTC) is stored when the conditions are met.

Substitute Value

- None.

Possible Source

- Incorrect software in the phone module (PHM).
- Incorrect software in the central electronic module (CEM).

HINT: If several diagnostic trouble codes (DTCs) are stored in the central electronic module (CEM) for communication faults with other control modules in the low speed network, this indicates a common fault in the Control area network. Do not replace the Central electronic module (CEM) unnecessarily.

Fault symptom[s]

- Volvo On Call/Does not work
- Volvo On Call/Other Volvo On Call problems

FAULT-TRACING

CHECKING SOFTWARE

Remedy the fault by downloading new software to the Phone module (PHM).

If the fault remains, download new software in Central electronic module (CEM).

CEM-6D01: RELAY, WINDOW LIFT LR UP. SIGNAL TOO HIGH. INTERMITTENT FAULT (2003-2004)

DIAGNOSTIC TROUBLE CODE INFORMATION

Condition

If the control unit registers signal too high in the relay coil (2/116) when the window lift in the rear LH door is activated upwards, diagnostic trouble code CEM-6D01 will be set.

Substitute Value

- None.

Possible Source

- Defective relay (short circuit in the relay coil) which means that the window lift cannot be operated.
- Defective control unit.

Fault symptom[s]

- Electric window lift does not work.

SIGNAL TOO HIGH. INTERMITTENT FAULT

CHECKING THE WIRING

Check the relay coil driver circuit for an intermittent short-circuit to supply voltage by taking a voltmeter reading between terminal #2 and ground in the relay base for relay 2/116.

For further information about a short-circuit to supply voltage, see **SHORT-CIRCUIT TO SUPPLY VOLTAGE, INTERMITTENT FAULTS** .

HINT: The voltage between terminal #2 and ground should be approximately 0 volt.

Other information

- For -2004, see: **CENTRAL ELECTRONIC MODULE (CEM), REPLACING**
- For 2005-, see: **CENTRAL ELECTRONIC MODULE (CEM), REPLACING** .

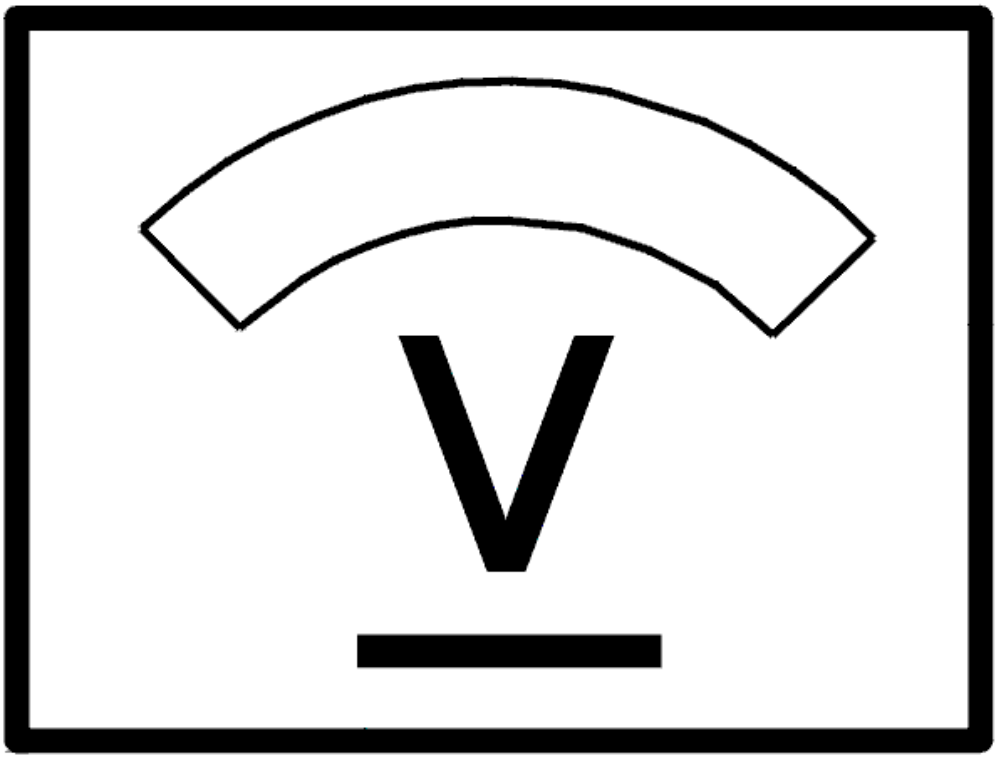

Fig. 271: Identifying Voltage Display
Courtesy of VOLVO CARS CORPORATION

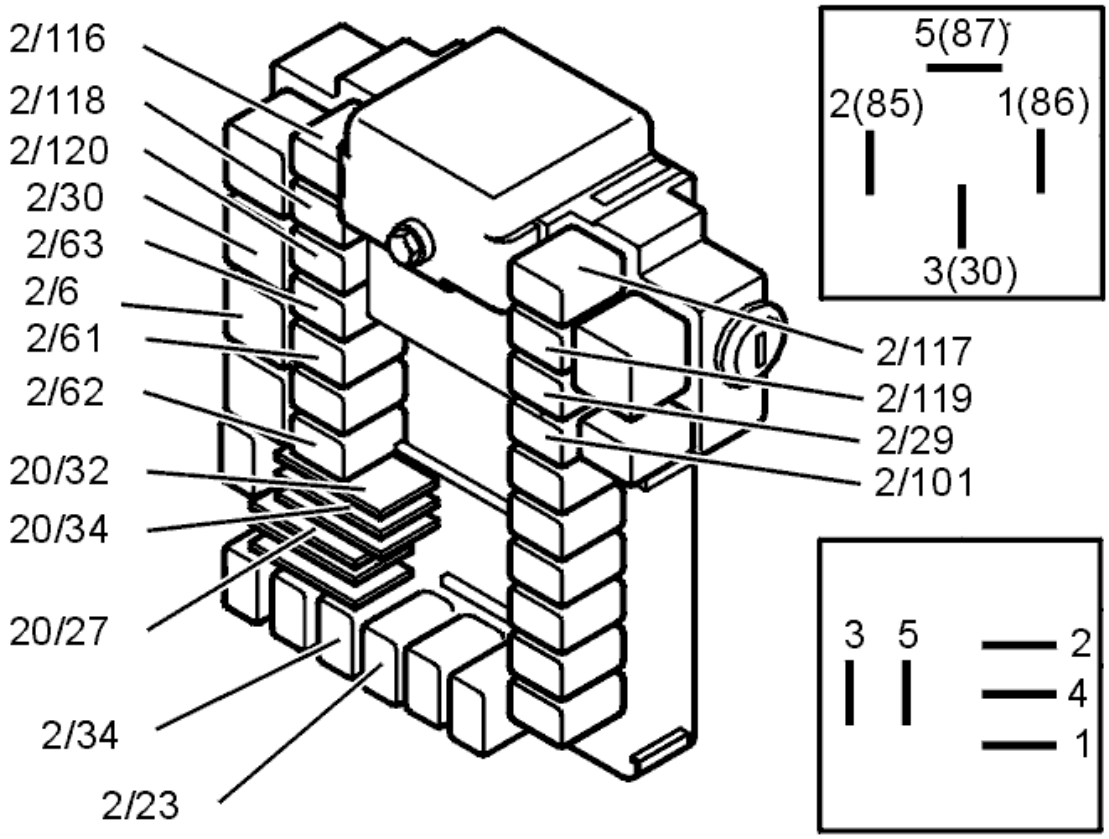

Fig. 272: Identifying Relays
Courtesy of VOLVO CARS CORPORATION

- **Continue**

  Refer to **INFORMATION**

INFORMATION

FAULT-TRACING INFORMATION

If the fault is intermittent, do not verify fault-tracing if the fault does not recur.

It is possible to view the information again, or leave fault-tracing for this diagnostic trouble code (DTC).

CEM-6D01: RELAY, WINDOW LIFT LR UP. SIGNAL TOO HIGH. PERMANENT FAULT (2003-2004)

DIAGNOSTIC TROUBLE CODE INFORMATION

see **DIAGNOSTIC TROUBLE CODE INFORMATION**

SIGNAL TOO HIGH. PERMANENT FAULT

CHECKING AND REPLACING THE COMPONENT

Replace the relay, 2/116.

Activate the relay using the left rear door control panel, window up.

If the function is OK, the cause of the fault was a defective relay (short-circuit in the relay).

Other information

- For -2004, see: **CENTRAL ELECTRONIC MODULE (CEM), REPLACING**
- For 2005-, see: **CENTRAL ELECTRONIC MODULE (CEM), REPLACING** .

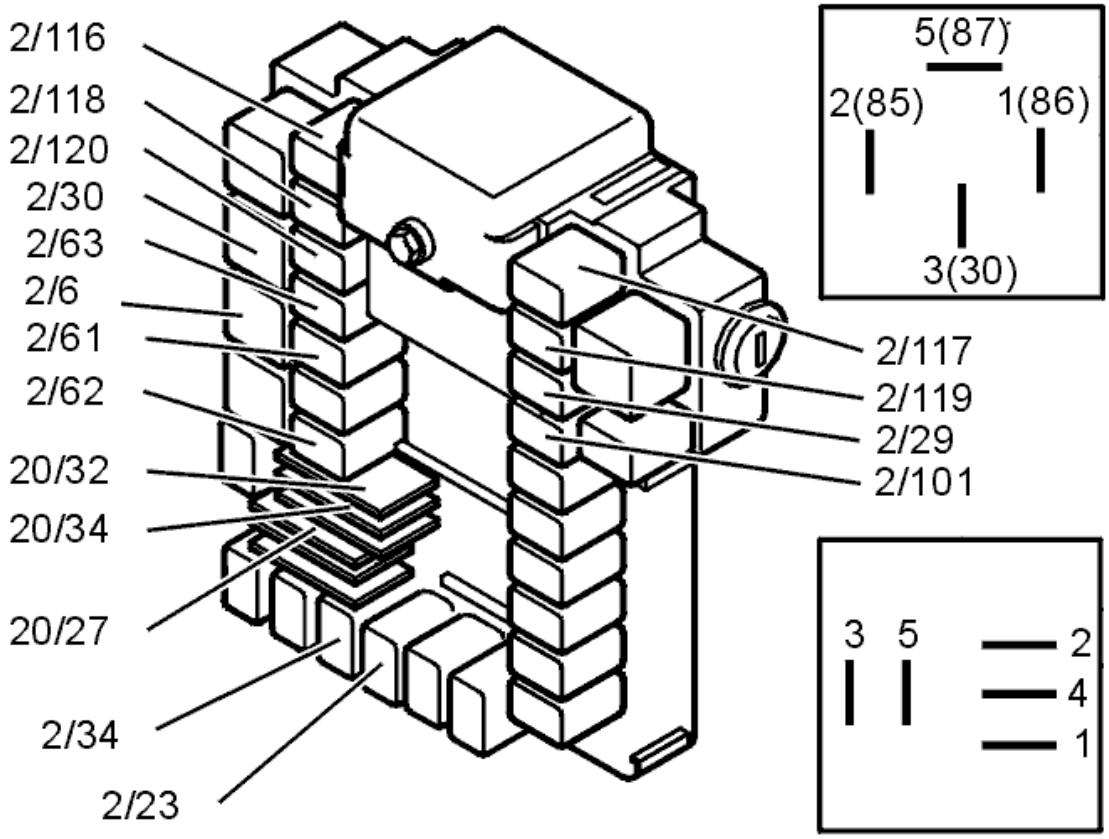

Fig. 273: Identifying Relays
Courtesy of VOLVO CARS CORPORATION

Was the function OK?

- **YES**

  OKAY: Troubleshooting has been completed.

- **NO**

Refer to **INFORMATION**

VERIFICATION

VERIFICATION

HINT: After the repair it is necessary to check that the fault has been rectified.

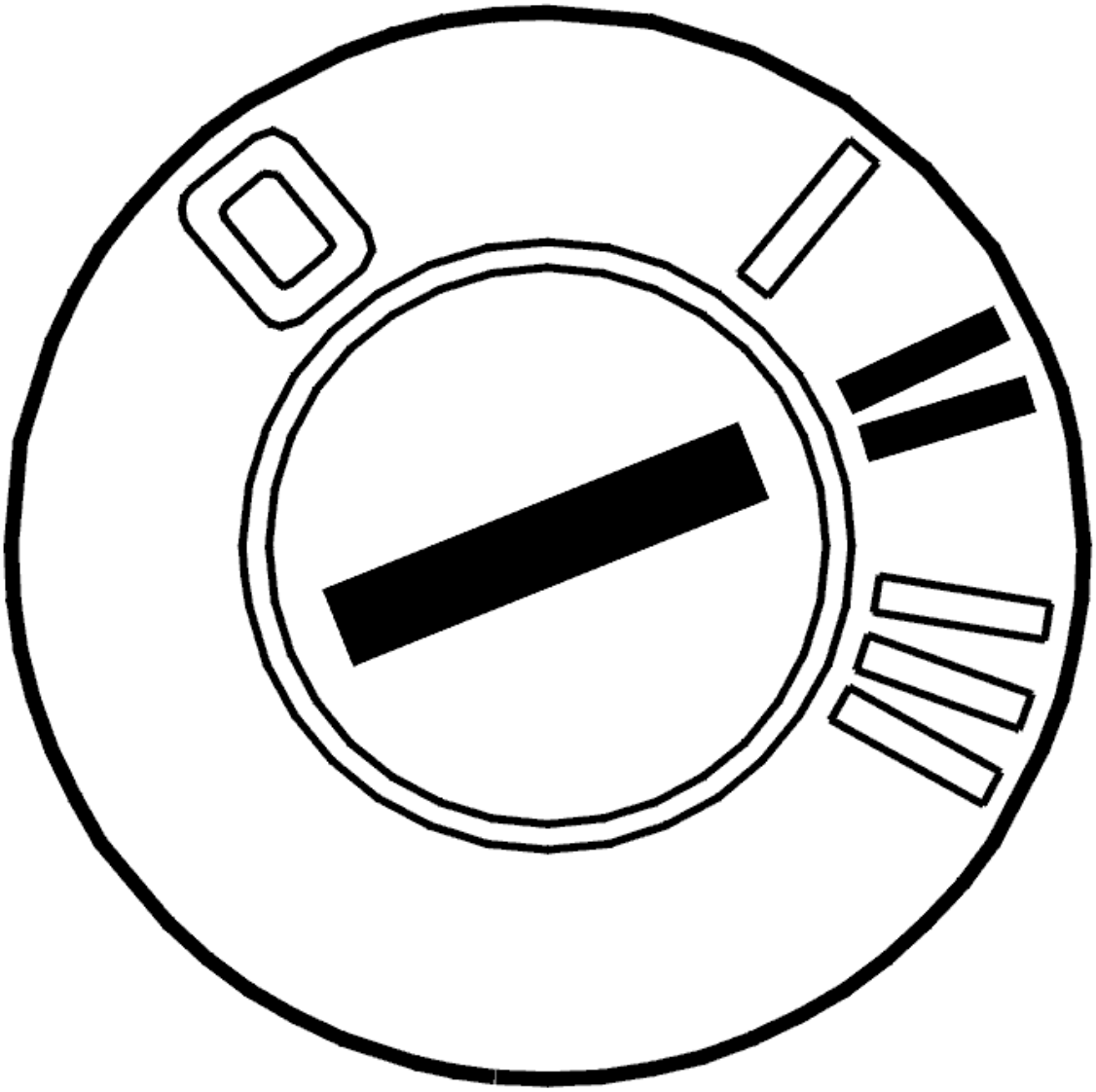

Fig. 274: Identifying Ignition ON
Courtesy of VOLVO CARS CORPORATION

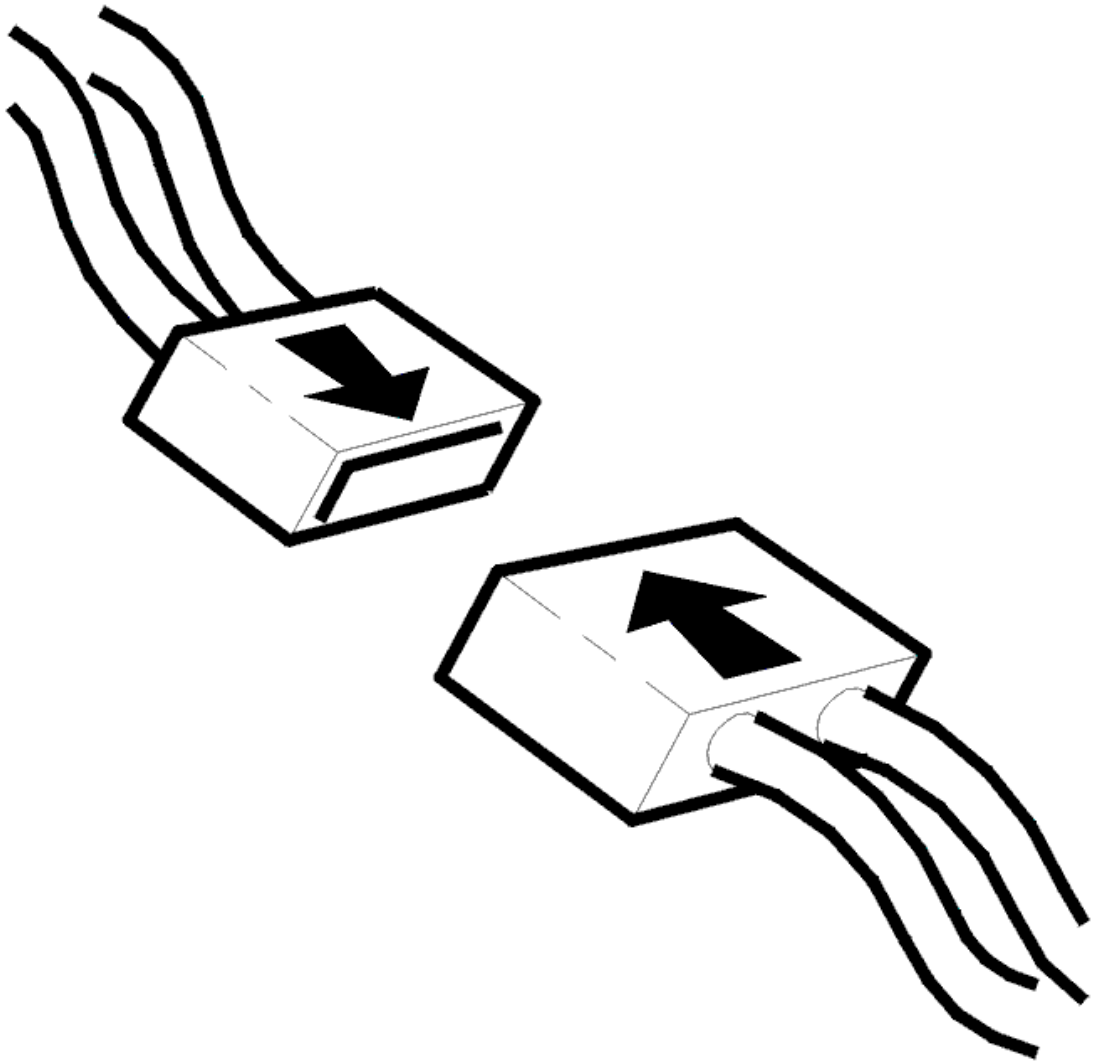

Fig. 275: Connecting Connector
Courtesy of VOLVO CARS CORPORATION

- Ignition off.
- Connect connectors, install components etc.
- Ignition on.

  Activate the relay using the left rear door control panel, window up.

  If the function now operates, this means that the fault was probably caused by a short circuit in the relay driver circuit.

Does it work?

- **YES**

VERIFIED: Troubleshooting has been completed.

- **NO**

  Refer to **INFORMATION**

INFORMATION

FAULT-TRACING INFORMATION

The fault should have been detected and remedied. As this is not the case fault-tracing has failed.

Exit fault-tracing for this diagnostic trouble code (DTC) or make another attempt.

CEM-6D03: RELAY, WINDOW LIFT LR UP. SIGNAL TOO LOW. INTERMITTENT FAULT (2003-2004)

DIAGNOSTIC TROUBLE CODE INFORMATION

Condition

If the control unit registers no signal/signal too low on relay coil (2/116) when the window lift in rear LH door is activated upwards, diagnostic trouble code CEM-6D03 is set.

Substitute Value

- None.

Possible Source

- Oxidation on relay socket contacts.
- Relay is loose or missing.
- Relay fault, open circuit/short circuit to ground in relay coil (meaning that window lift will not activate).
- Defective control unit.

Fault symptom[s]

- Electric window lift does not work.

SIGNAL TOO LOW. INTERMITTENT FAULT

CHECKING THE CONTROL MODULE FOR OPEN-CIRCUITS

Remove relay 2/116.

Check the driver circuit for the relay coil for an intermittent open-circuit as follows:

Measure the voltage between terminals #1 and #2 on the relay base. For further information about intermittent open-circuits, see **OPEN-CIRCUIT, INTERMITTENT FAULTS** .

Activate the relay driver, window up: Use the VCT2000 (or appropriate scan tool).

HINT: The voltage between terminals #1 and #2 should be battery voltage.

If the value deviates excessively, check the voltage between terminal #2 and the battery and between terminal #1 and ground. Both should equal battery voltage. Check for an intermittent open-circuit according to **OPEN-CIRCUIT, INTERMITTENT FAULTS** . Do not forget to check that the power supply to the control module is OK.

Other information

- For -2004, see: **CENTRAL ELECTRONIC MODULE (CEM), REPLACING**
- For 2005-, see: **CENTRAL ELECTRONIC MODULE (CEM), REPLACING** .

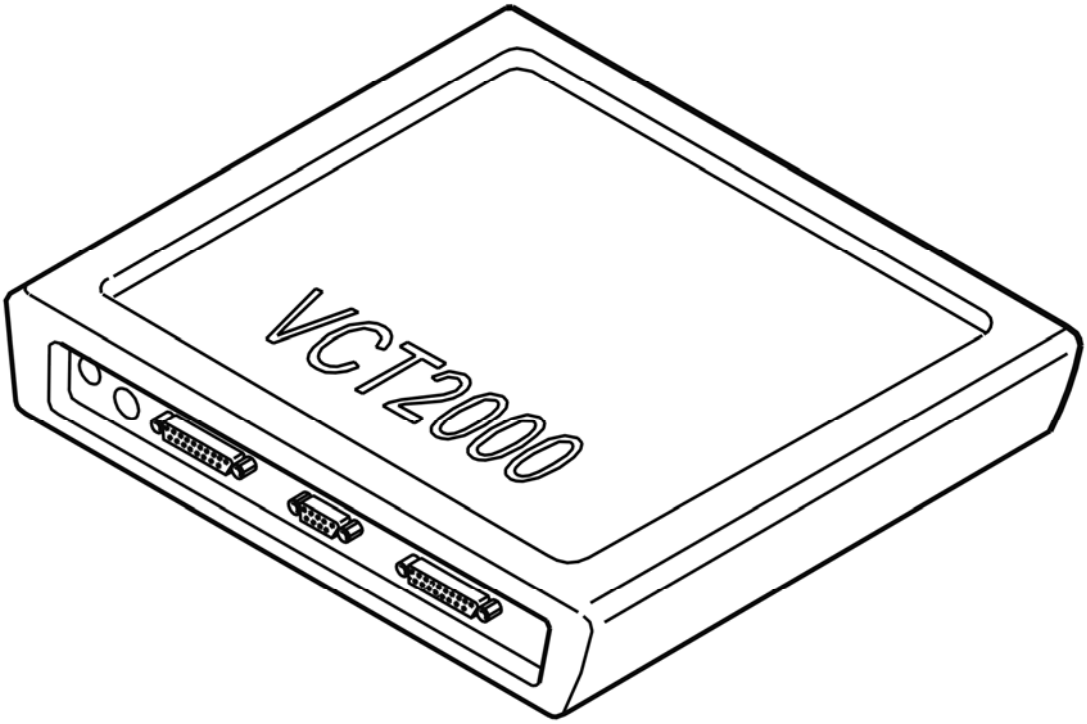

Fig. 276: Identifying VCT2000 Diagnostic Tool Symbol In VIDA
Courtesy of VOLVO CARS CORPORATION

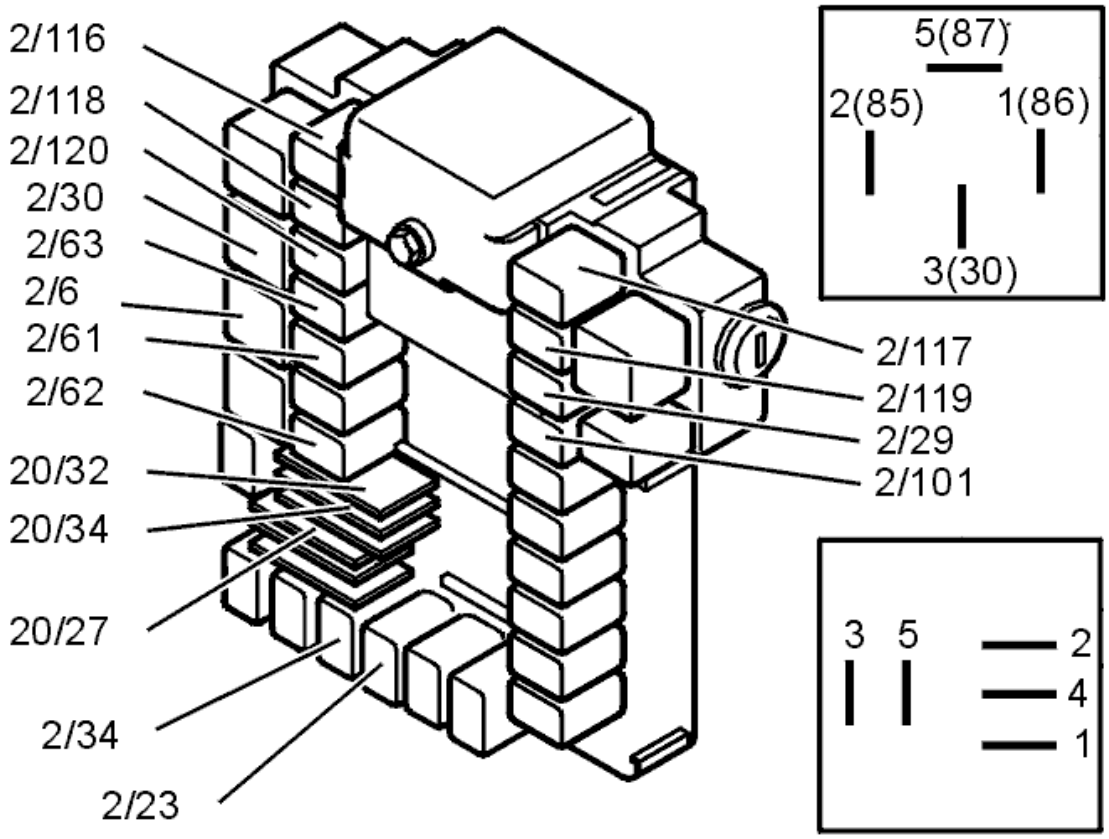

Fig. 277: Identifying Relays
Courtesy of VOLVO CARS CORPORATION

- **Continue**

  Refer to **INFORMATION**

INFORMATION

FAULT-TRACING INFORMATION

If the fault is intermittent, do not verify fault-tracing if the fault does not recur.

It is possible to view the information again, or leave fault-tracing for this diagnostic trouble code (DTC).

CEM-6D03: RELAY, WINDOW LIFT LR UP. SIGNAL TOO LOW. PERMANENT FAULT (2003-2004)

DIAGNOSTIC TROUBLE CODE INFORMATION

see **DIAGNOSTIC TROUBLE CODE INFORMATION**

SIGNAL TOO LOW. PERMANENT FAULT

CHECKING AND REPLACING THE COMPONENT

Remove relay 2/116. Check the relay base switches for contact resistance and oxidation according to **CONTACT RESISTANCE AND OXIDATION** .

Install the relay.

Activate the relay using the left rear door control panel, window up.

If the function is now OK the fault was caused by a contact fault in the relay base.

Other information

- For -2004, see: **CENTRAL ELECTRONIC MODULE (CEM), REPLACING**
- For 2005-, see: **CENTRAL ELECTRONIC MODULE (CEM), REPLACING** .

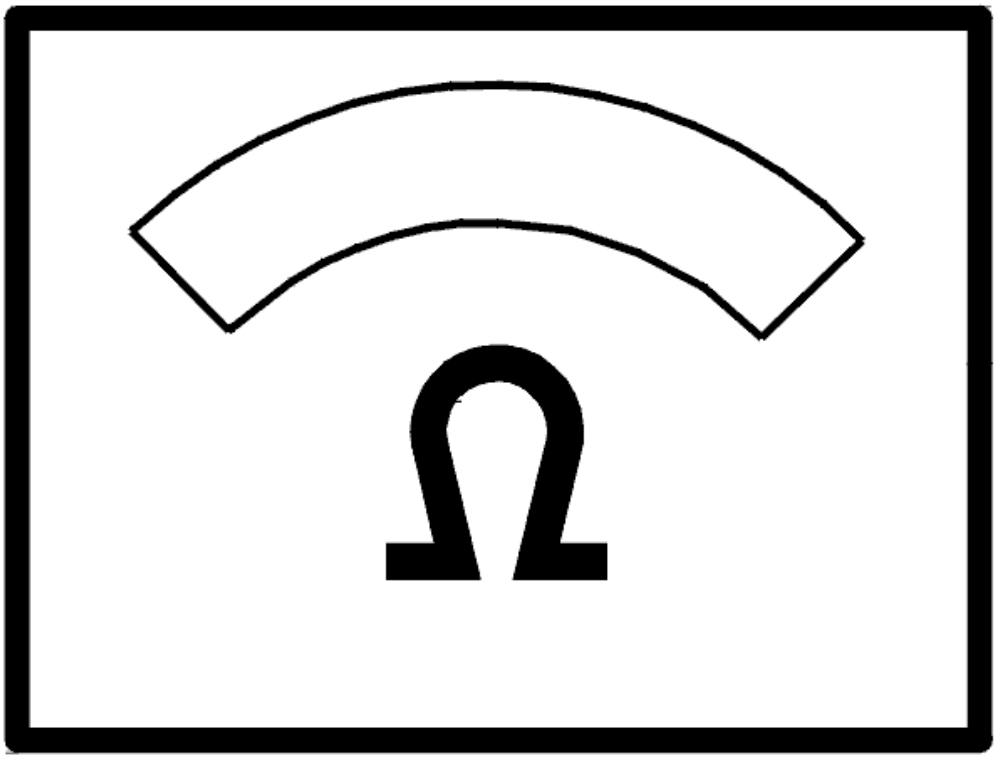

Fig. 278: Identifying Ohm Meter
Courtesy of VOLVO CARS CORPORATION

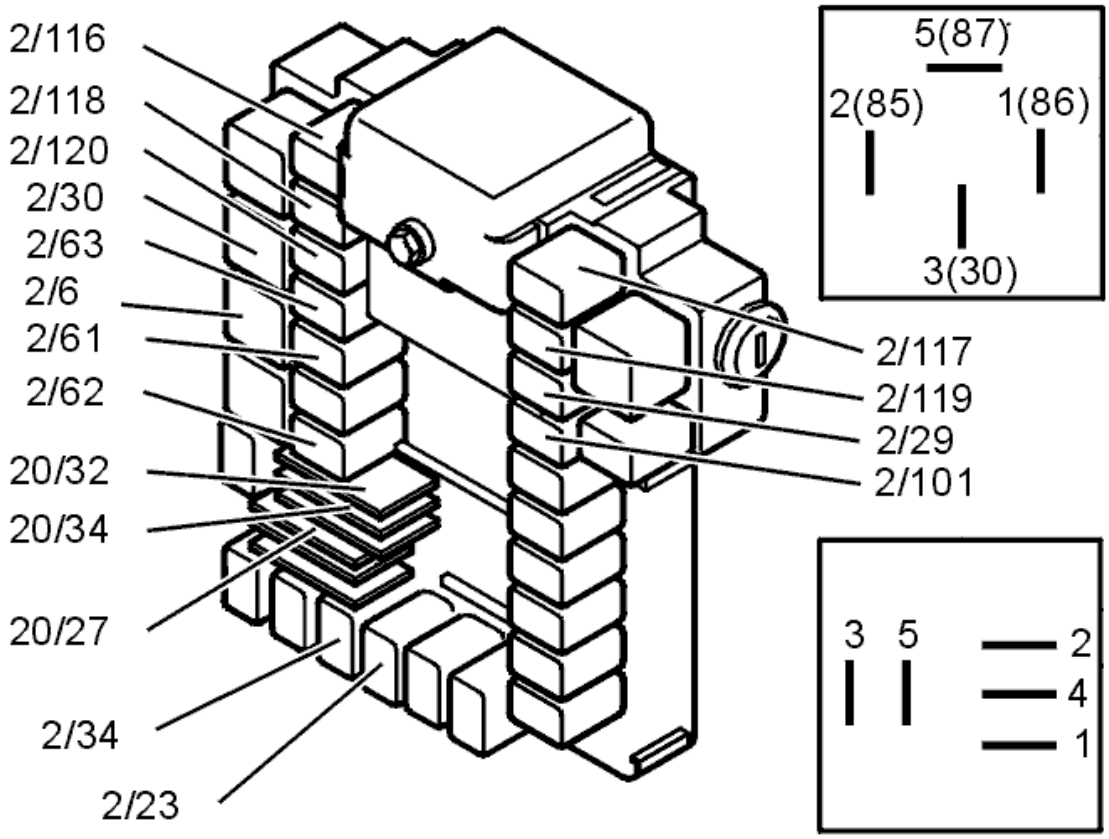

Fig. 279: Identifying Relays
Courtesy of VOLVO CARS CORPORATION

Was the function OK?

- **YES**

  Refer to **VERIFICATION**

- **NO**

  Refer to **REPLACING THE COMPONENT**

REPLACING THE COMPONENT

Replace the relay, 2/116.

Activate the relay using the left rear door control panel, window up.

If the function is OK the cause of the fault was a defective relay (short-circuit or open-circuit in the relay).

Other information

- For -2004, see: **CENTRAL ELECTRONIC MODULE (CEM), REPLACING**
- For 2005-, see: **CENTRAL ELECTRONIC MODULE (CEM), REPLACING** .

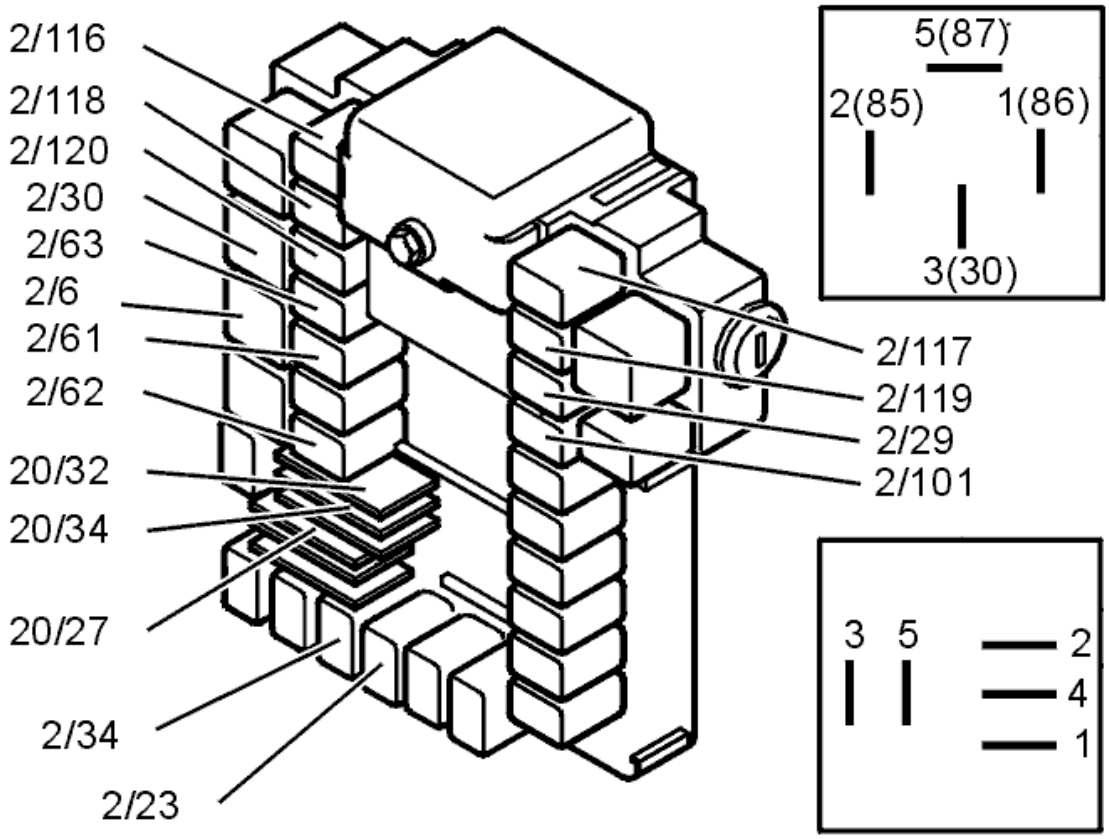

Fig. 280: Identifying Relays
Courtesy of VOLVO CARS CORPORATION

Is the function OK?

- **YES**

  OKAY: Troubleshooting has been completed.

- **NO**

  Refer to **INFORMATION**

VERIFICATION

VERIFICATION

HINT: After the repair it is necessary to check that the fault has been rectified.

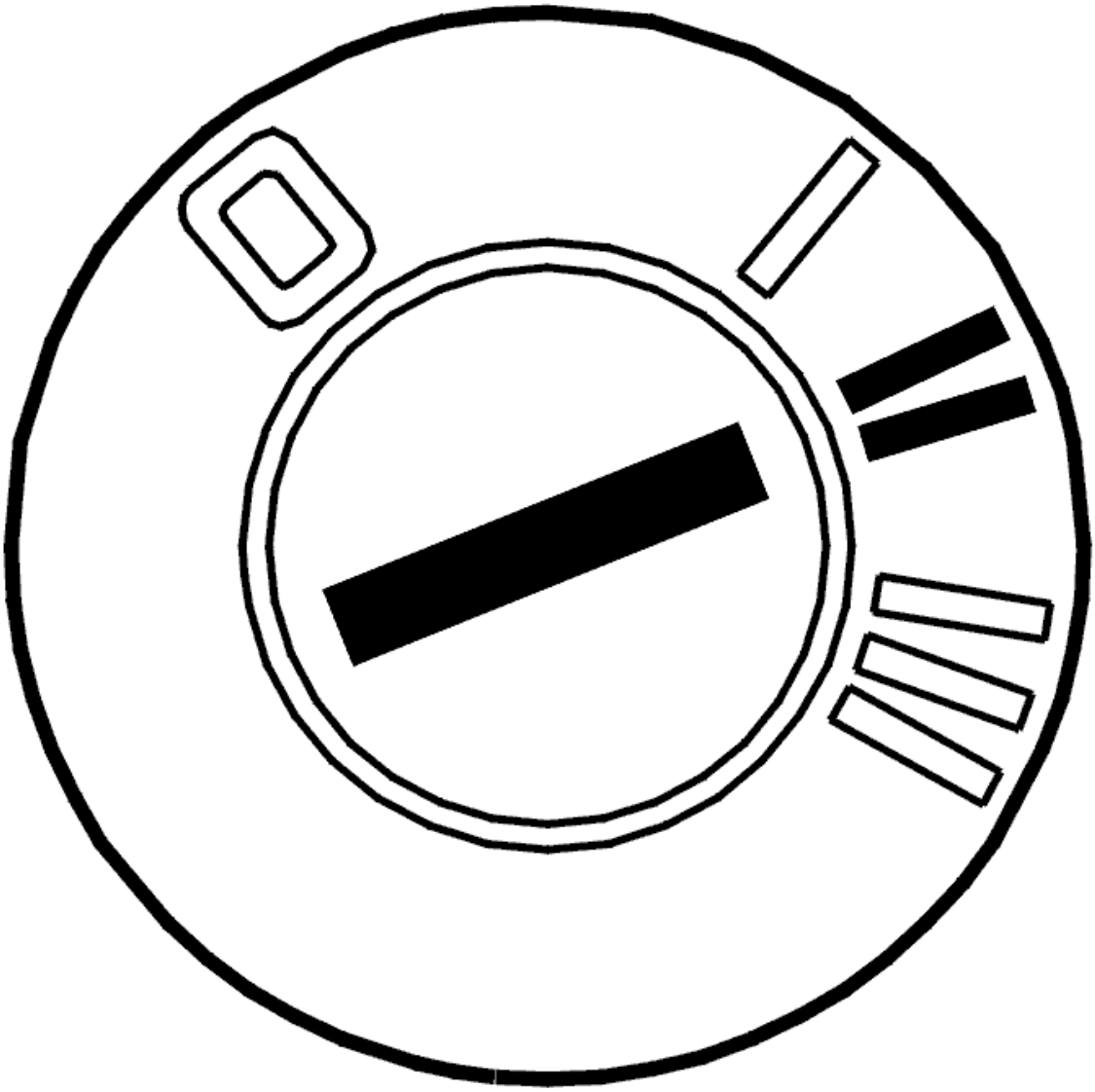

Fig. 281: Identifying Ignition ON
Courtesy of VOLVO CARS CORPORATION

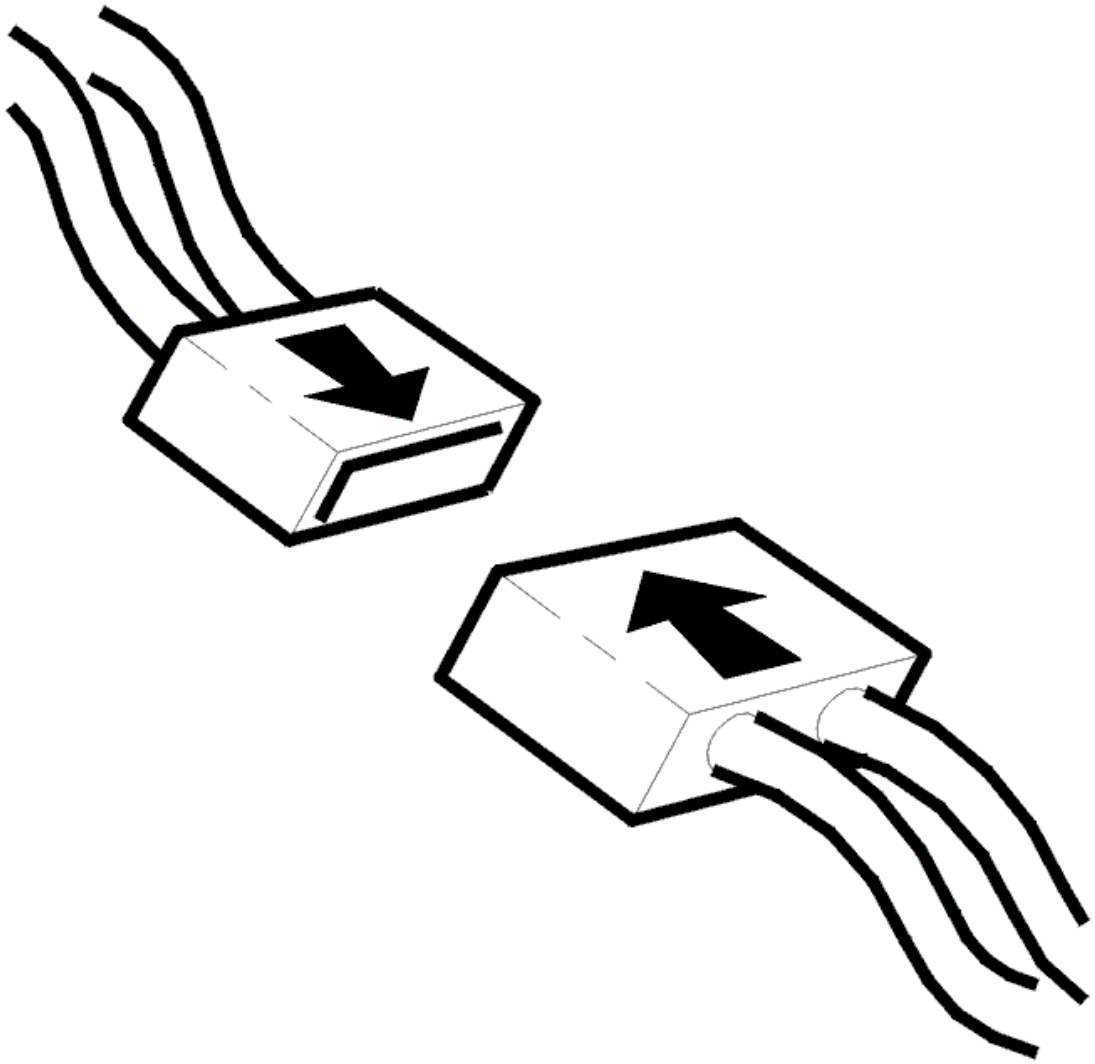

Fig. 282: Connecting Connector
Courtesy of VOLVO CARS CORPORATION

- Ignition off.
- Connect connectors, install components etc.
- Ignition on.

  Activate the relay using the left rear door control panel, window up.

Does it work?

- **YES**

  VERIFIED: Troubleshooting has been completed.

- **NO**

  Refer to **INFORMATION**

INFORMATION

FAULT-TRACING INFORMATION

The fault should have been detected and remedied. As this is not the case fault-tracing has failed.

Exit fault-tracing for this diagnostic trouble code (DTC) or make another attempt.

CEM-6D04: RELAY, WINDOW LIFT LR DOWN. SIGNAL TOO HIGH. INTERMITTENT FAULT (2003-2004)

DIAGNOSTIC TROUBLE CODE INFORMATION

Condition

If control unit registers signal too high on relay coil (2/118) when the window lift in rear LH door is activated downwards, diagnostic trouble code CEM-6D04 is set.

Substitute Value

- None.

Possible Source

- Relay fault (short circuit in relay coil), meaning that window lift will not activate.
- Defective control unit.

Fault symptom[s]

- Electric window lift does not work.

SIGNAL TOO HIGH. INTERMITTENT FAULT

CHECKING THE WIRING

Check the relay coil driver circuit for an intermittent short-circuit to supply voltage by taking a voltmeter reading between terminal #2 and ground in the relay base for relay 2/118.

For further information about a short-circuit to supply voltage, see **SHORT-CIRCUIT TO SUPPLY VOLTAGE, INTERMITTENT FAULTS** .

HINT: The voltage between terminal #2 and ground should be approximately 0 volt.

Other information

- For -2004, see: **CENTRAL ELECTRONIC MODULE (CEM), REPLACING**
- For 2005-, see: **CENTRAL ELECTRONIC MODULE (CEM), REPLACING** .

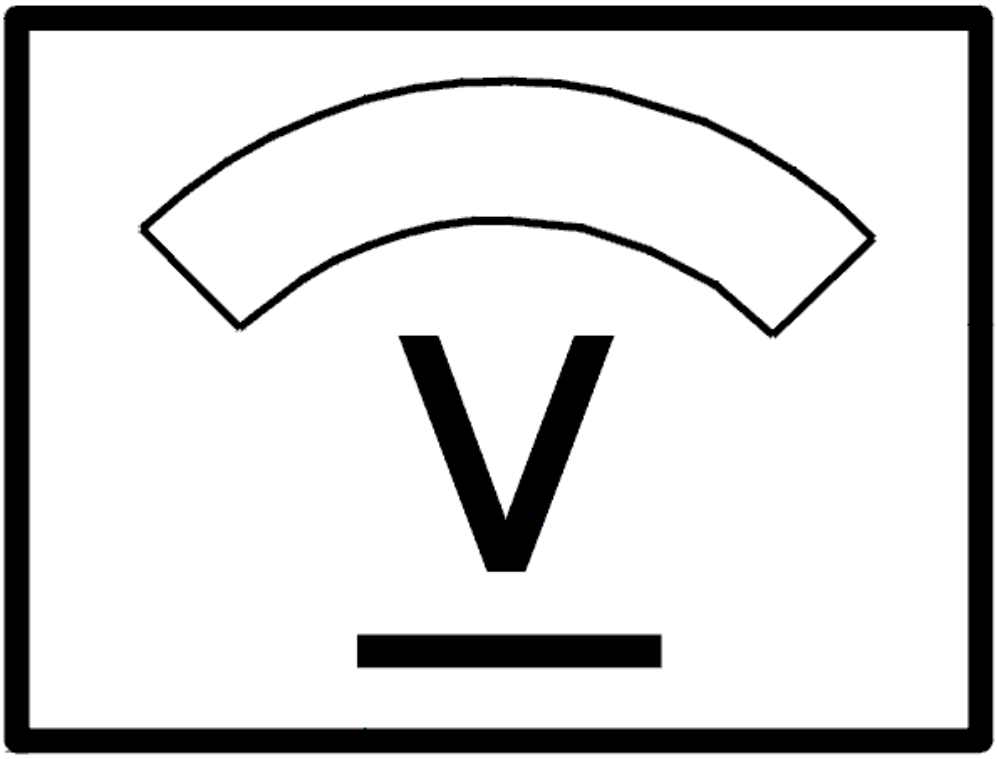

Fig. 283: Identifying Voltage Display
Courtesy of VOLVO CARS CORPORATION

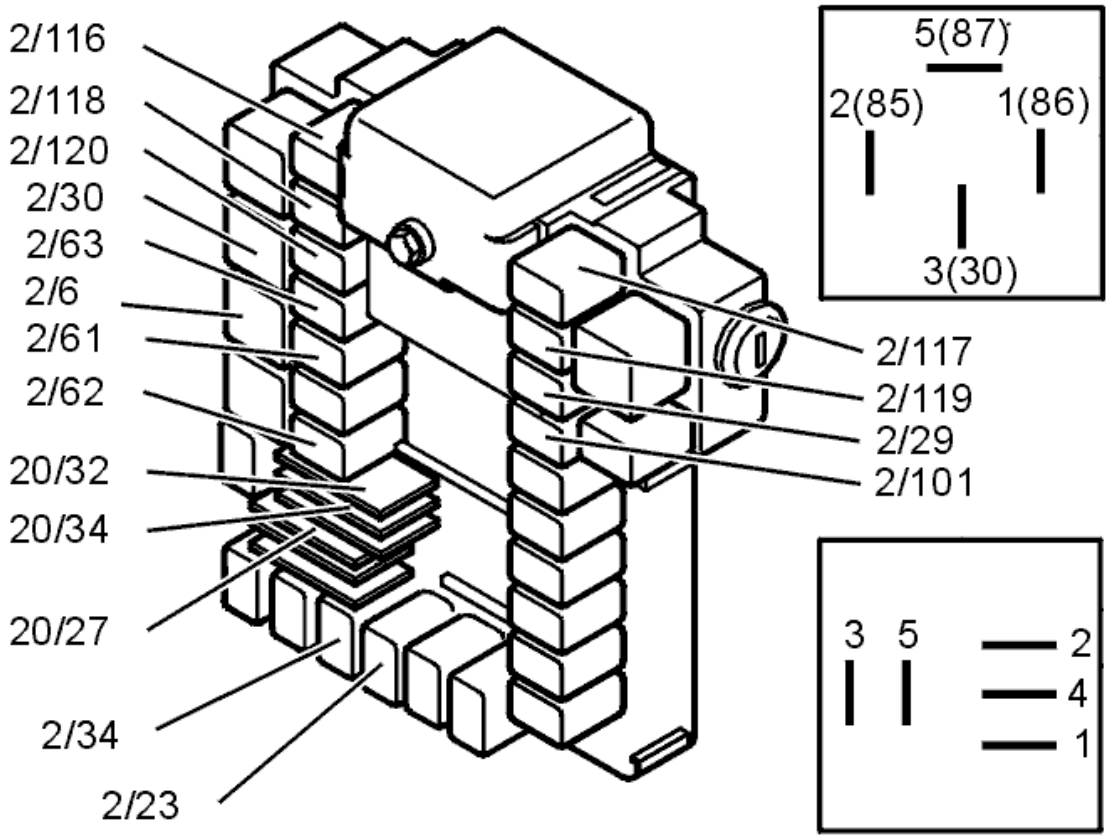

Fig. 284: Identifying Relays
Courtesy of VOLVO CARS CORPORATION

- **Continue**

  Refer to **INFORMATION**

INFORMATION

FAULT-TRACING INFORMATION

If the fault is intermittent, do not verify fault-tracing if the fault does not recur.

It is possible to view the information again, or leave fault-tracing for this diagnostic trouble code (DTC).

CEM-6D04: RELAY, WINDOW LIFT LR DOWN. SIGNAL TOO HIGH. PERMANENT FAULT (2003-2004)

DIAGNOSTIC TROUBLE CODE INFORMATION

see **DIAGNOSTIC TROUBLE CODE INFORMATION**

SIGNAL TOO HIGH. PERMANENT FAULT

CHECKING AND REPLACING THE COMPONENT

Replace the relay, 2/118.

Activate the relay using the control panel on the left rear door, window down.

If the function is OK, the cause of the fault was a defective relay (short-circuit in the relay).

Other information

- For -2004, see: **CENTRAL ELECTRONIC MODULE (CEM), REPLACING**
- For 2005-, see: **CENTRAL ELECTRONIC MODULE (CEM), REPLACING** .

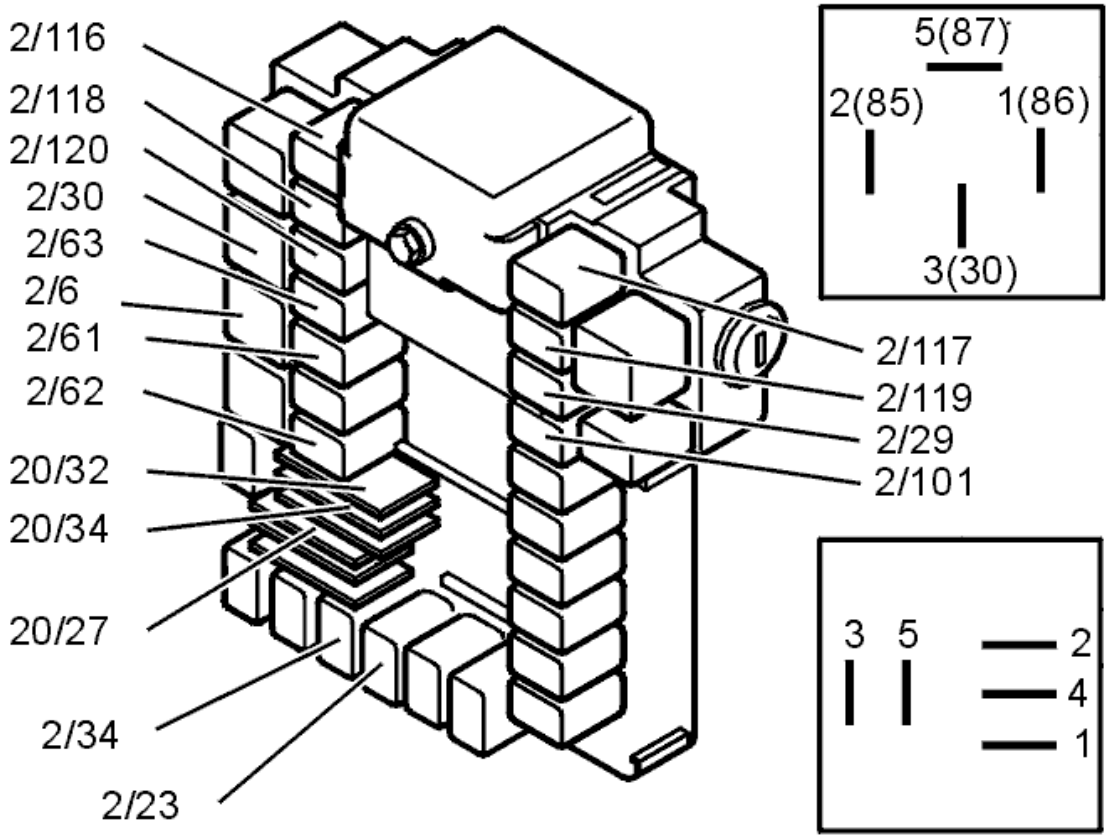

Fig. 285: Identifying Relays
Courtesy of VOLVO CARS CORPORATION

Was the function OK?

- **YES**

  Refer to **VERIFICATION**

- **NO**

Refer to **INFORMATION**

VERIFICATION

VERIFICATION

HINT: After the repair it is necessary to check that the fault has been rectified.

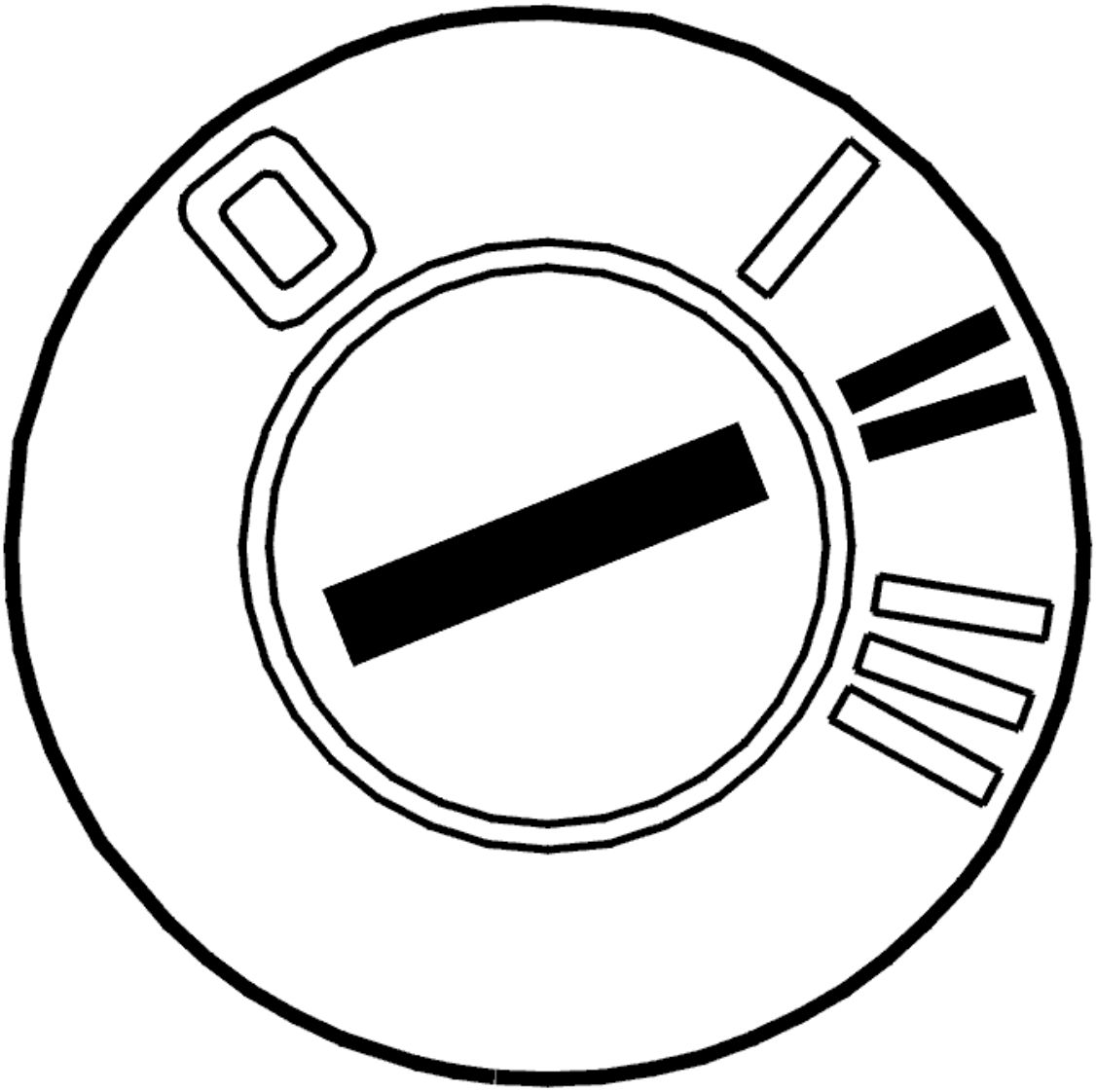

Fig. 286: Identifying Ignition ON
Courtesy of VOLVO CARS CORPORATION

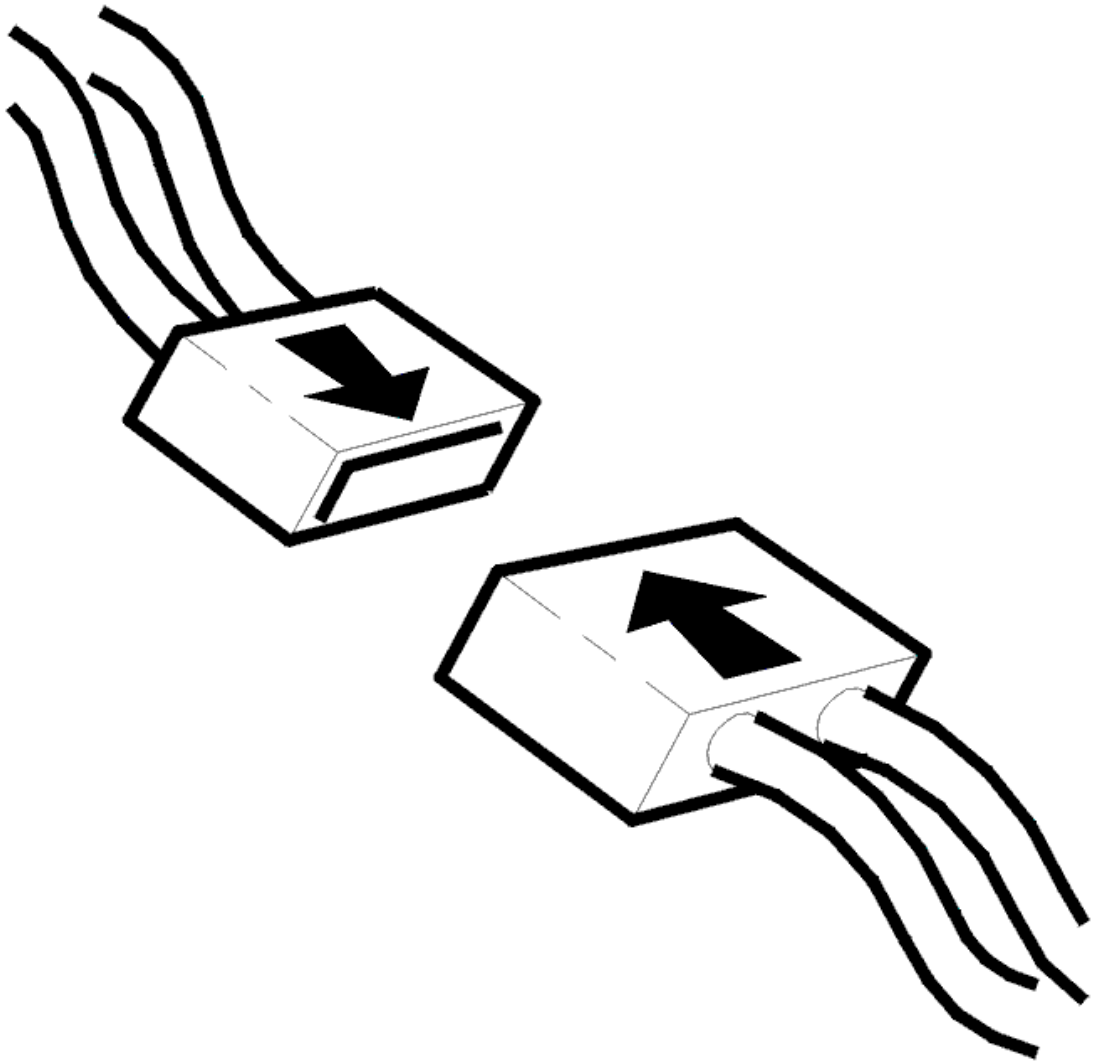

Fig. 287: Connecting Connector
Courtesy of VOLVO CARS CORPORATION

- Ignition off.
- Connect connectors, install components etc.
- Ignition on.

  Activate relay with the control panel on rear LH door, window down.

  If the function now operates, this means that the fault was probably caused by a short circuit in the relay driver circuit.

Does it work?

- **YES**

VERIFIED: Troubleshooting has been completed.

- **NO**

  Refer to **INFORMATION**

INFORMATION

FAULT-TRACING INFORMATION

The fault should have been detected and remedied. As this is not the case fault-tracing has failed.

Exit fault-tracing for this diagnostic trouble code (DTC) or make another attempt.

CEM-6D06: RELAY, WINDOW LIFT LR DOWN SIGNAL TOO LOW. INTERMITTENT FAULT (2003-2004)

DIAGNOSTIC TROUBLE CODE INFORMATION

Condition

If the control unit registers no signal/signal too low on relay coil (2/118) when the window lift in rear LH door is activated downwards, diagnostic trouble code CEM-6D06 is set.

Substitute Value

- None.

Possible Source

- Oxidation on relay socket contacts.
- Relay is loose or missing.
- Faulty relay, open circuit/short circuit to ground in relay coil.
- Defective control unit.

Fault symptom[s]

- Electric window lift does not work.

SIGNAL TOO LOW. INTERMITTENT FAULT

CHECKING THE CONTROL MODULE FOR OPEN-CIRCUITS

Remove relay 2/118.

Check the driver circuit for the relay coil for an intermittent open-circuit as follows:

Measure the voltage between terminals #1 and #2 on the relay base.

For further information about intermittent open-circuits, see **OPEN-CIRCUIT, INTERMITTENT FAULTS** .

Activate the relay driver for the rear window down: Use the VCT2000 (or appropriate scan tool).

HINT: The voltage between terminals #1 and #2 should be battery voltage.

If the value deviates excessively, check the voltage between terminal #2 and the battery and between terminal #1 and ground. Both should equal battery voltage. Check for an intermittent open-circuit according to **OPEN-CIRCUIT, INTERMITTENT FAULTS** . Do not forget to check that the power supply to the control module is OK.

Other information

- For -2004, see: **CENTRAL ELECTRONIC MODULE (CEM), REPLACING**
- For 2005-, see: **CENTRAL ELECTRONIC MODULE (CEM), REPLACING** .

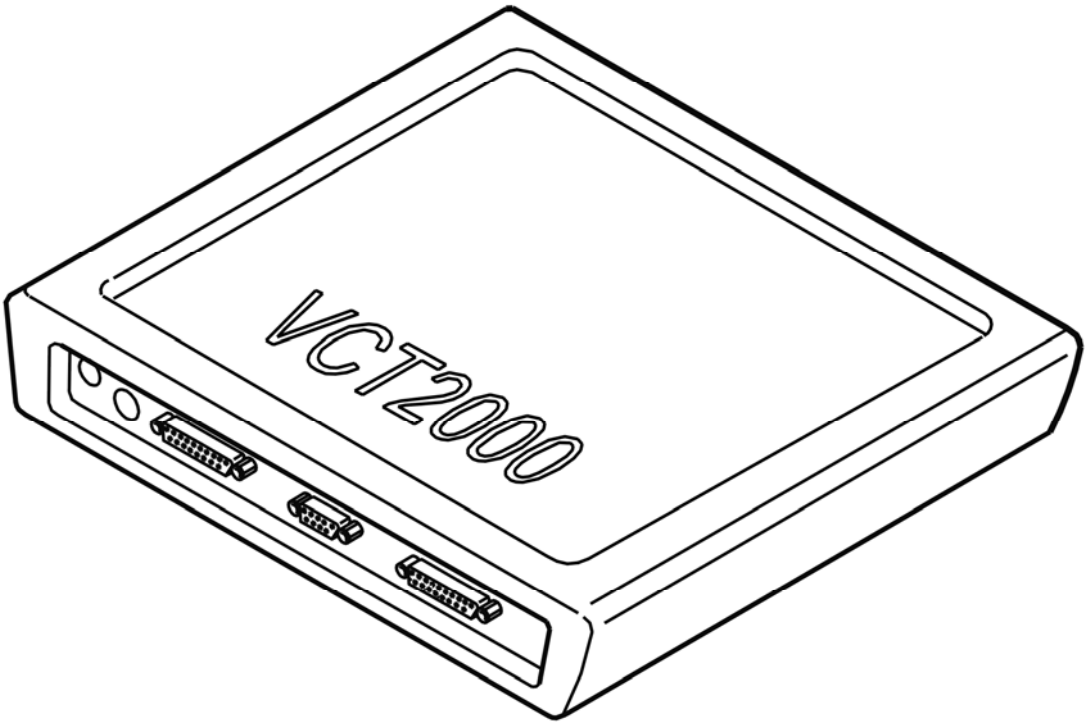

Fig. 288: Identifying VCT2000 Diagnostic Tool Symbol In VIDA
Courtesy of VOLVO CARS CORPORATION

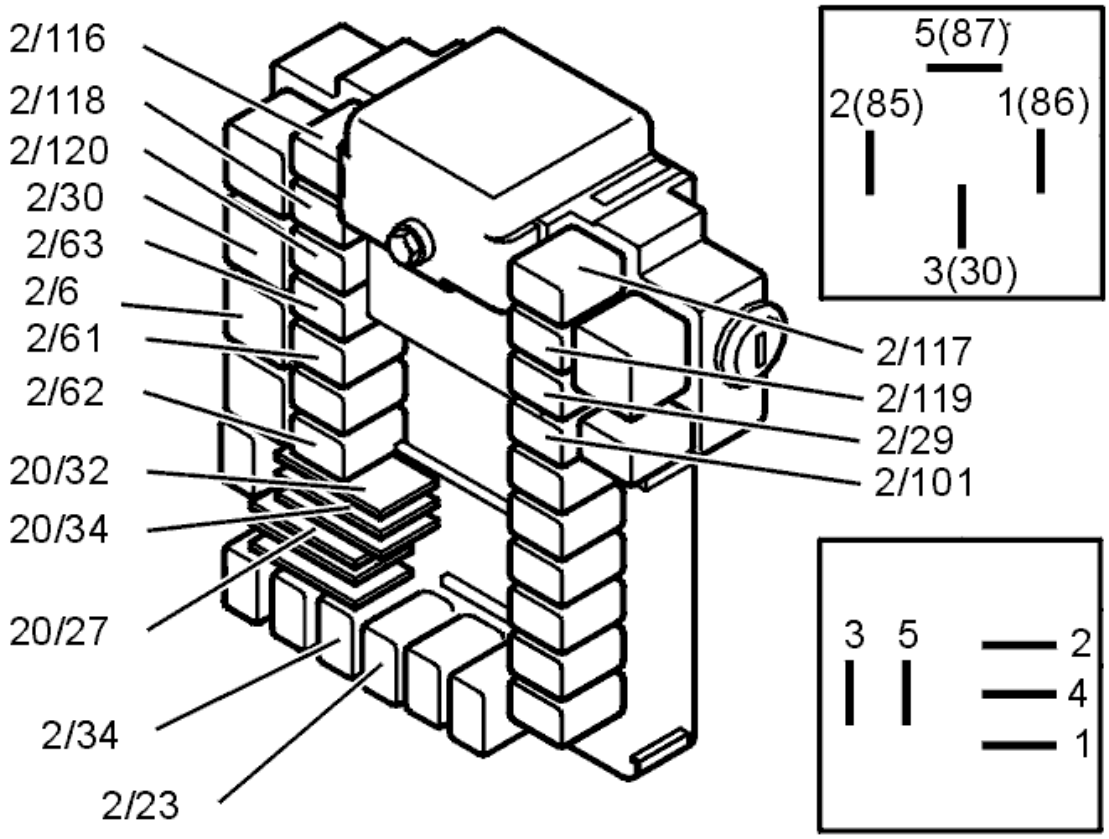

Fig. 289: Identifying Relays
Courtesy of VOLVO CARS CORPORATION

- **Continue**

  Refer to **INFORMATION**

INFORMATION

FAULT-TRACING INFORMATION

If the fault is intermittent, do not verify fault-tracing if the fault does not recur.

It is possible to view the information again, or leave fault-tracing for this diagnostic trouble code (DTC).

CEM-6D06: RELAY, WINDOW LIFT LR DOWN. SIGNAL TOO LOW. PERMANENT FAULT (2003-2004)

DIAGNOSTIC TROUBLE CODE INFORMATION

see **DIAGNOSTIC TROUBLE CODE INFORMATION**

SIGNAL TOO LOW. PERMANENT FAULT

CHECKING AND REPLACING THE COMPONENT

Remove relay 2/118. Check the relay base switches for contact resistance and oxidation according to **CONTACT RESISTANCE AND OXIDATION** .

Install the relay.

Activate the relay using the control panel on the left rear door, window down.

If the function is now OK the fault was caused by a contact fault in the relay base.

Other information

- For -2004, see: **CENTRAL ELECTRONIC MODULE (CEM), REPLACING**
- For 2005-, see: **CENTRAL ELECTRONIC MODULE (CEM), REPLACING** .

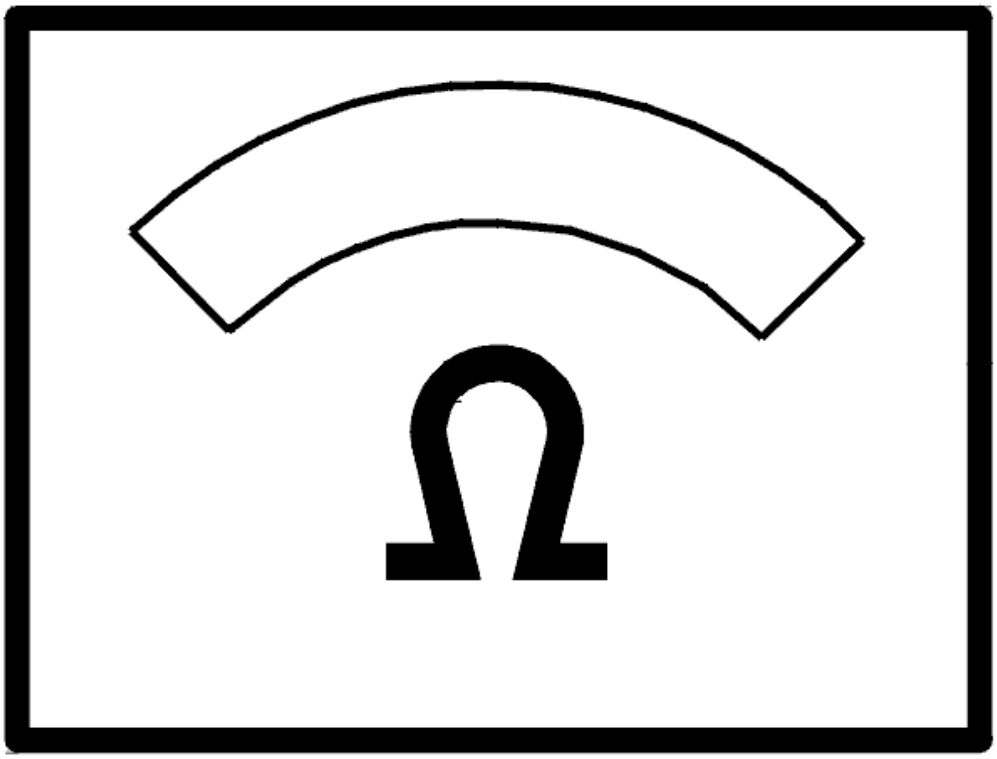

Fig. 290: Identifying Ohm Meter
Courtesy of VOLVO CARS CORPORATION

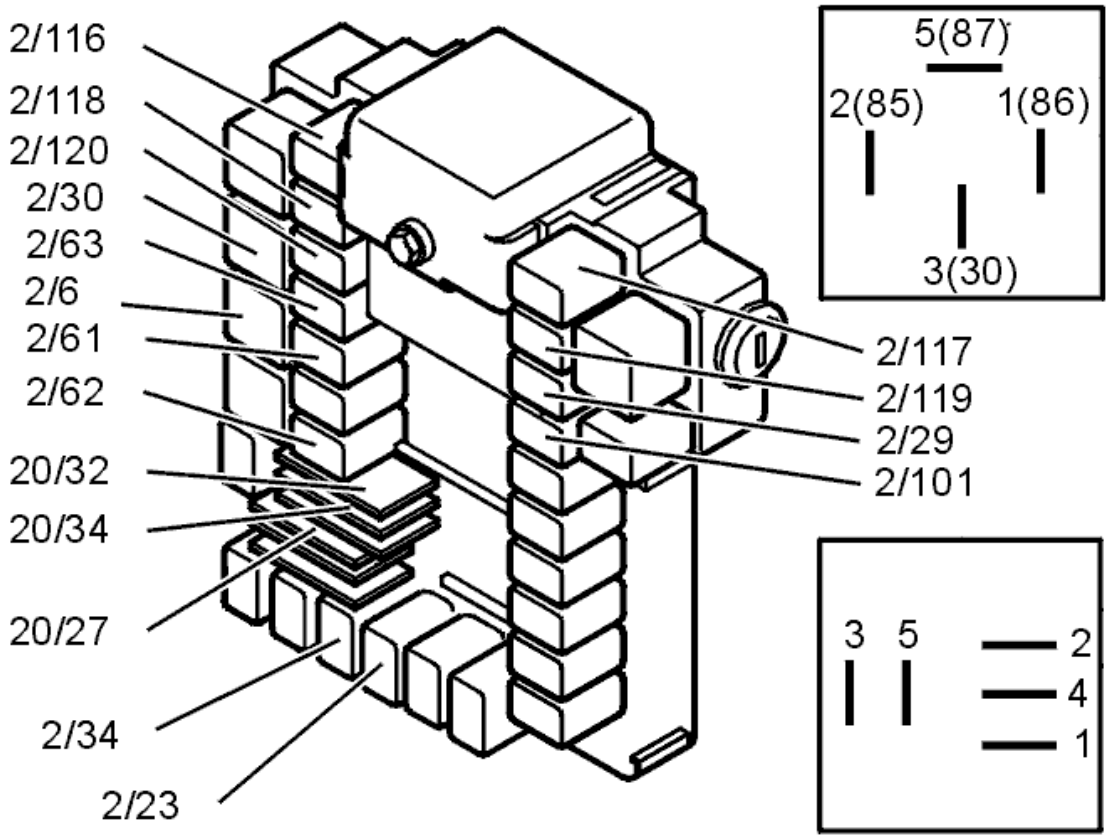

Fig. 291: Identifying Relays
Courtesy of VOLVO CARS CORPORATION

Was the function OK?

- **YES**

  Refer to **VERIFICATION**

- **NO**

  Refer to **REPLACING THE COMPONENT**

REPLACING THE COMPONENT

Replace the relay, 2/118.

Activate the relay using the control panel on the left rear door, window down.

If the function is OK the cause of the fault was a defective relay (short-circuit or open-circuit in the relay).

Other information

- For -2004, see: **CENTRAL ELECTRONIC MODULE (CEM), REPLACING**
- For 2005-, see: **CENTRAL ELECTRONIC MODULE (CEM), REPLACING** .

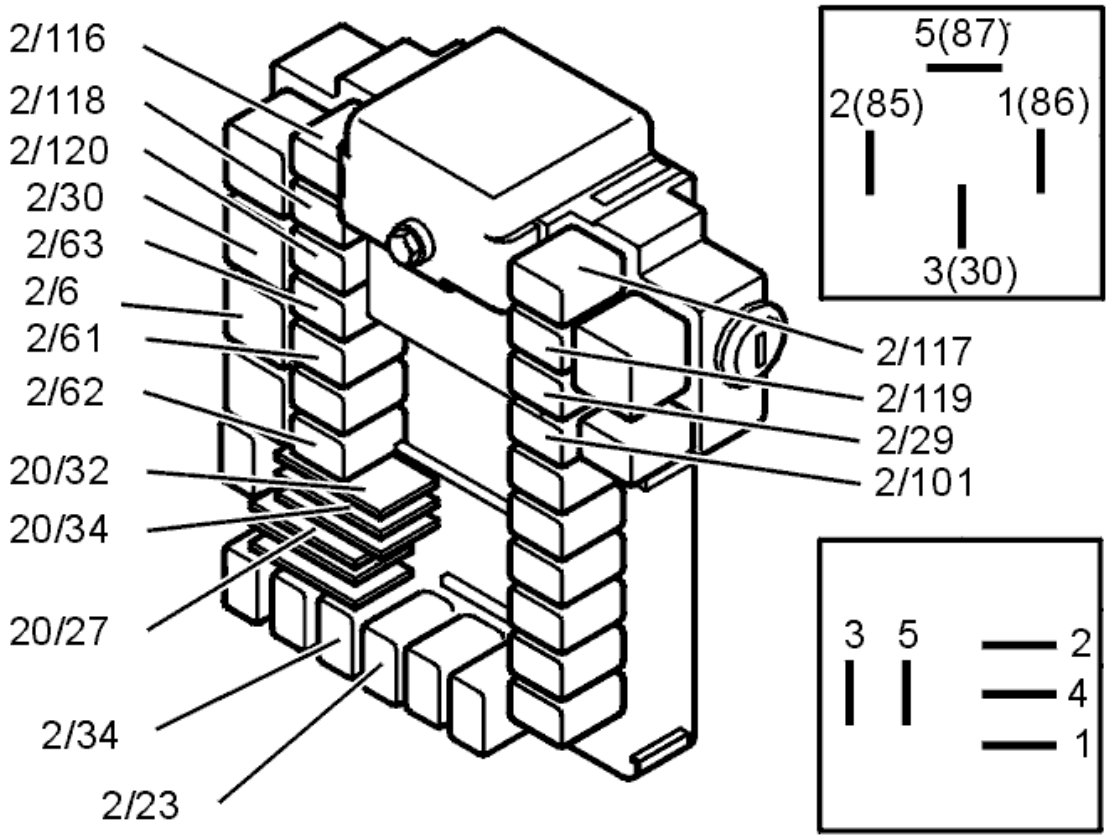

Fig. 292: Identifying Relays
Courtesy of VOLVO CARS CORPORATION

Was the function OK?

- **YES**

  OKAY: Troubleshooting has been completed.

- **NO**

  Refer to **INFORMATION**

VERIFICATION

VERIFICATION

HINT: After the repair it is necessary to check that the fault has been rectified.

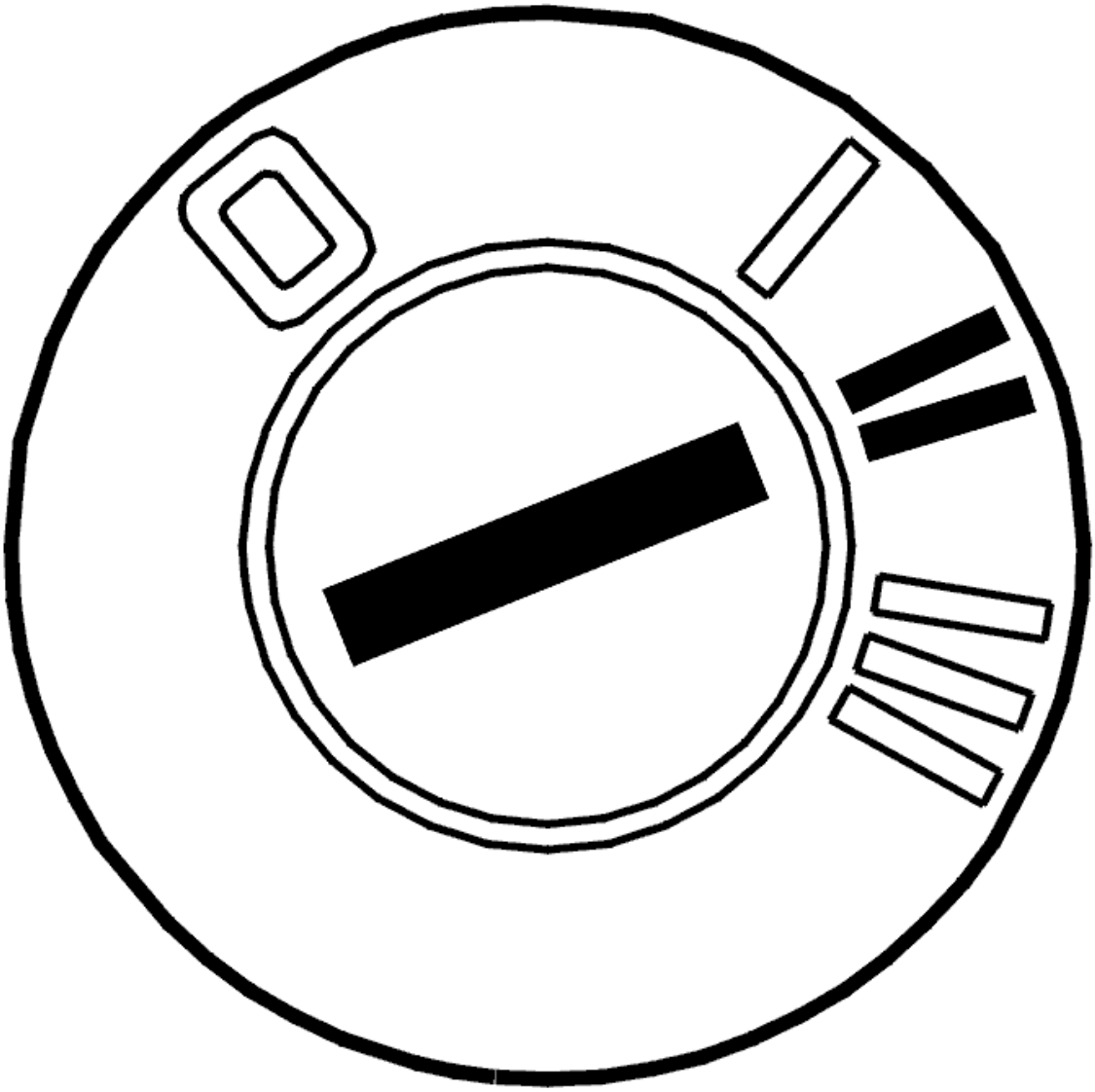

Fig. 293: Identifying Ignition ON
Courtesy of VOLVO CARS CORPORATION

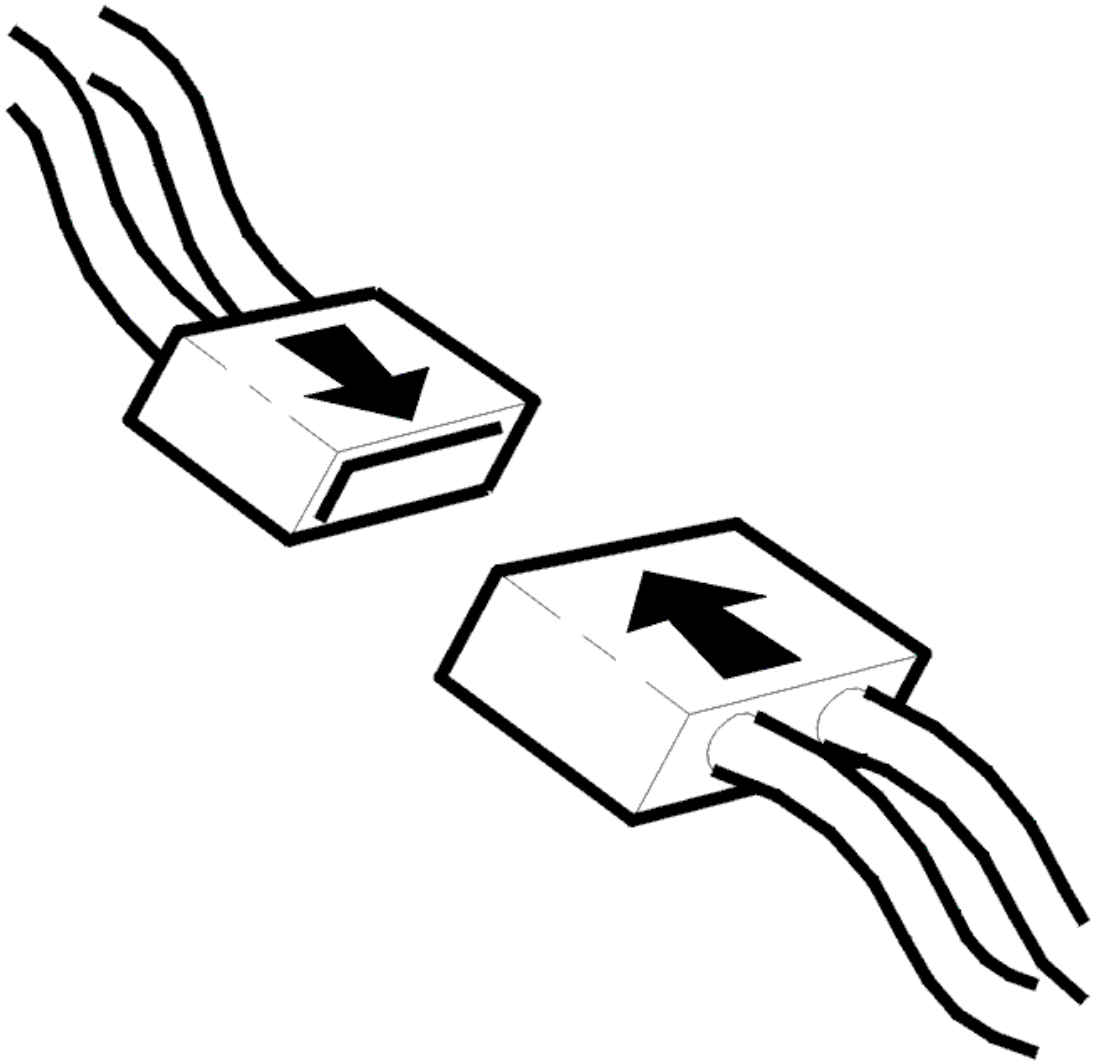

Fig. 294: Connecting Connector
Courtesy of VOLVO CARS CORPORATION

- Ignition off.
- Connect connectors, install components etc.
- Ignition on.

  Activate relay with the control panel on LH rear door, window down.

Does it work?

- **YES**

  VERIFIED: Troubleshooting has been completed.

- **NO**

  Refer to **INFORMATION**

INFORMATION

FAULT-TRACING INFORMATION

The fault should have been detected and remedied. As this is not the case fault-tracing has failed.

Exit fault-tracing for this diagnostic trouble code (DTC) or make another attempt.

CEM-6D07: RELAY, WINDOW LIFT RR UP. SIGNAL TOO HIGH. INTERMITTENT FAULT (2003-2004)

DIAGNOSTIC TROUBLE CODE INFORMATION

Condition

If control unit registers signal too high on relay coil (2/117) when the window lift in rear RH door is activated upwards, diagnostic trouble code CEM-6D07 is set.

Substitute Value

- None.

Possible Source

- Defective relay (short circuit in relay coil).
- Defective control unit.

Fault symptom[s]

- Electric window lift does not work.

SIGNAL TOO HIGH. INTERMITTENT FAULT

CHECKING THE WIRING

Remove relay 2/116.

Check the relay coil driver circuit for an intermittent short-circuit to supply voltage: Take a voltmeter reading between terminal #2 and ground in the relay base for relay (2/116).

For further information about a short-circuit to supply voltage, see **SHORT-CIRCUIT TO SUPPLY VOLTAGE, INTERMITTENT FAULTS** .

HINT: The voltage between terminal #2 and ground should be approximately 0 volt.

Other information

- For -2004, see: **CENTRAL ELECTRONIC MODULE (CEM), REPLACING**
- For 2005-, see: **CENTRAL ELECTRONIC MODULE (CEM), REPLACING** .

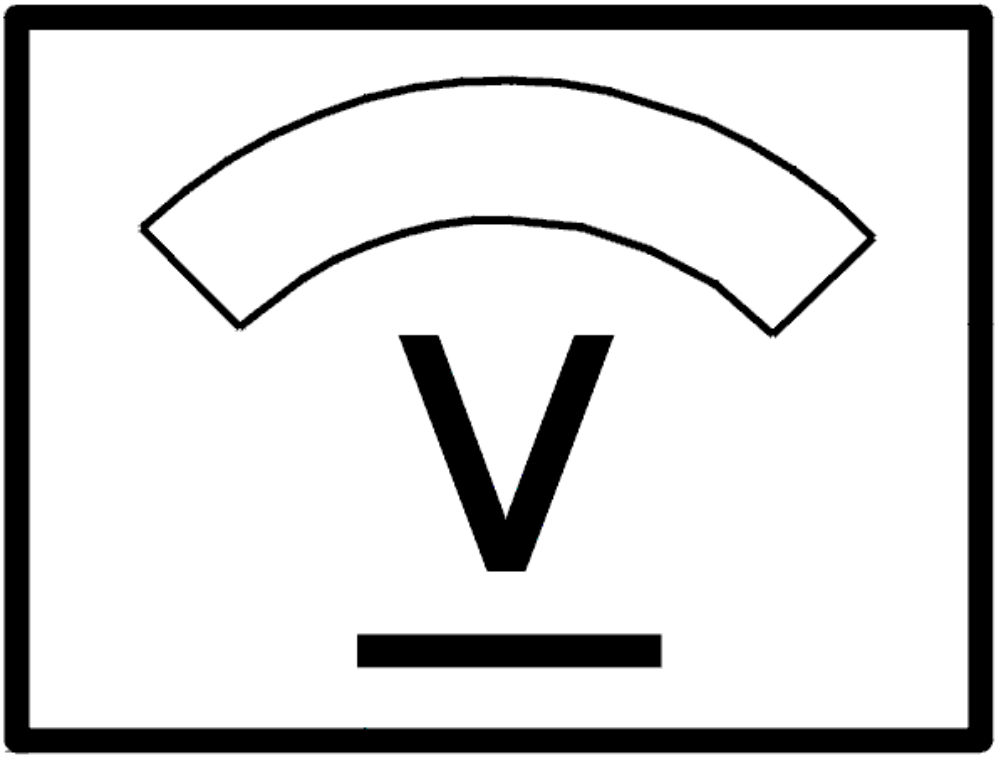

Fig. 295: Identifying Voltage Display
Courtesy of VOLVO CARS CORPORATION

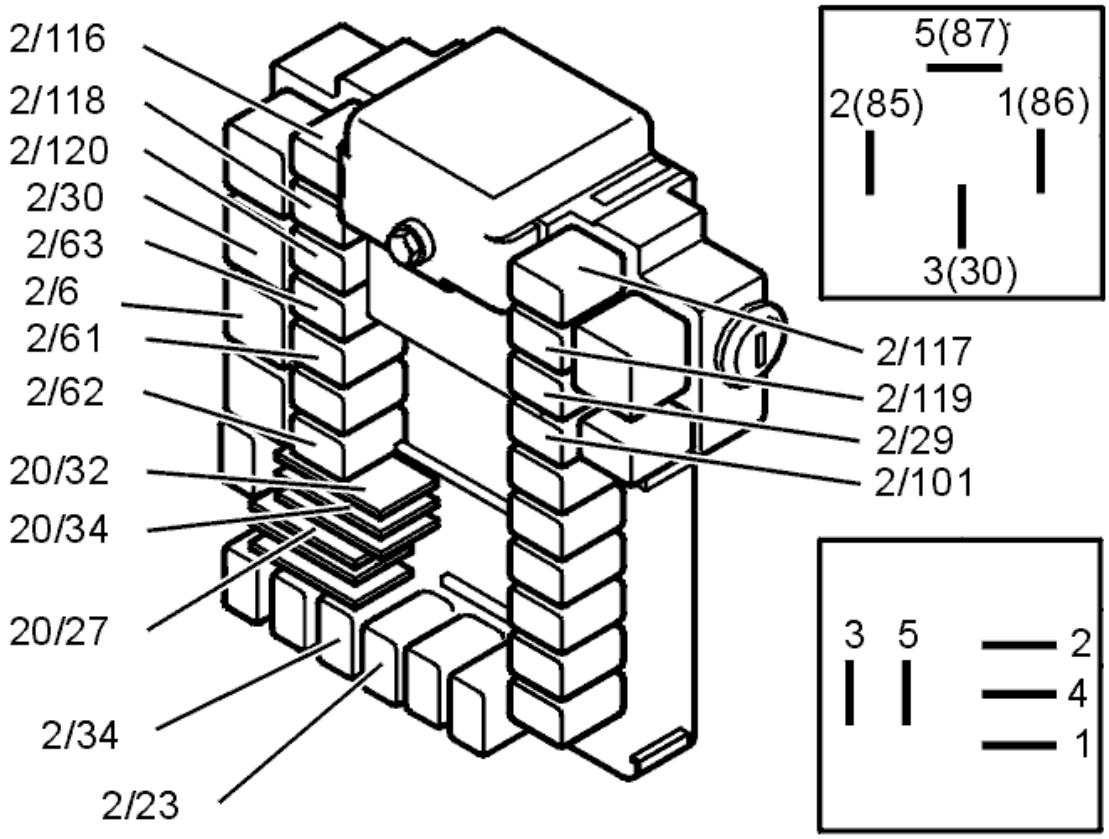

Fig. 296: Identifying Relays
Courtesy of VOLVO CARS CORPORATION

- **Continue**

  Refer to **INFORMATION**

INFORMATION

FAULT-TRACING INFORMATION

If the fault is intermittent, do not verify fault-tracing if the fault does not recur.

It is possible to view the information again, or leave fault-tracing for this diagnostic trouble code (DTC).

CEM-6D07: RELAY, WINDOW LIFT RR UP. SIGNAL TOO HIGH. PERMANENT FAULT (2003-2004)

DIAGNOSTIC TROUBLE CODE INFORMATION

see **DIAGNOSTIC TROUBLE CODE INFORMATION**

SIGNAL TOO HIGH. PERMANENT FAULT

CHECKING/REPLACING THE COMPONENT

Replace relay, 2/117.

Activate relay with button from control panel on RH rear door, window up.

If the function is now OK, this means that the fault was probably caused by a faulty relay (short circuit in the relay).

Additional information

- For -2004, see: **CENTRAL ELECTRONIC MODULE (CEM), REPLACING**
- For 2005-, see: **CENTRAL ELECTRONIC MODULE (CEM), REPLACING** .

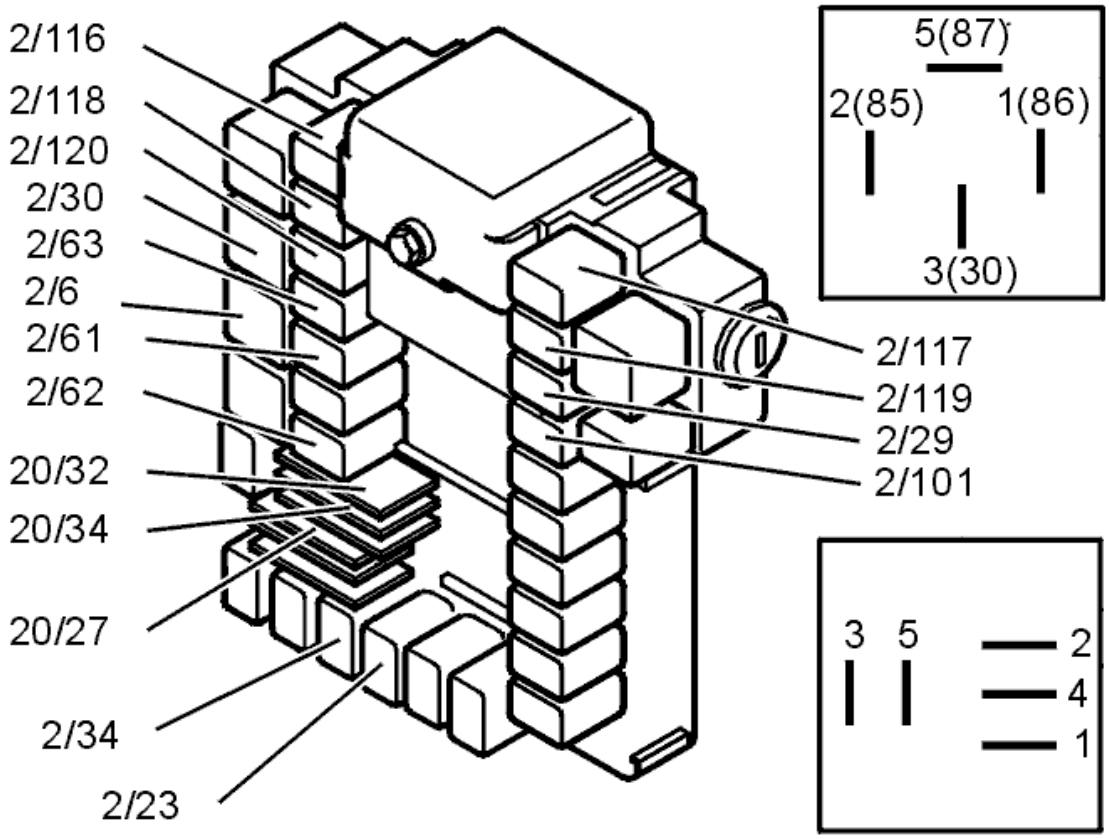

Fig. 297: Identifying Relays
Courtesy of VOLVO CARS CORPORATION

Was the function OK?

- **YES**

  OKAY: Troubleshooting has been completed.

- **NO**

  Refer to **CHECKING THE CONTROL UNIT**

CHECKING THE CONTROL UNIT

Remove window lift relay 2/117 from CEM socket.

Check the relay coil driver circuit for a short circuit to voltage supply by checking the voltage between #2 and ground in the relay socket to relay 2/117.

For additional information regarding short circuits to voltage supply, see **SHORT-CIRCUIT TO SUPPLY VOLTAGE. PERMANENT FAULTS** .

HINT: The voltage between #2 and ground should be approximately 0 volt. If the voltmeter indicates an incorrect value, the control unit must be replaced.

Additional information

- For -2004, see: **CENTRAL ELECTRONIC MODULE (CEM), REPLACING**
- For 2005-, see: **CENTRAL ELECTRONIC MODULE (CEM), REPLACING** .

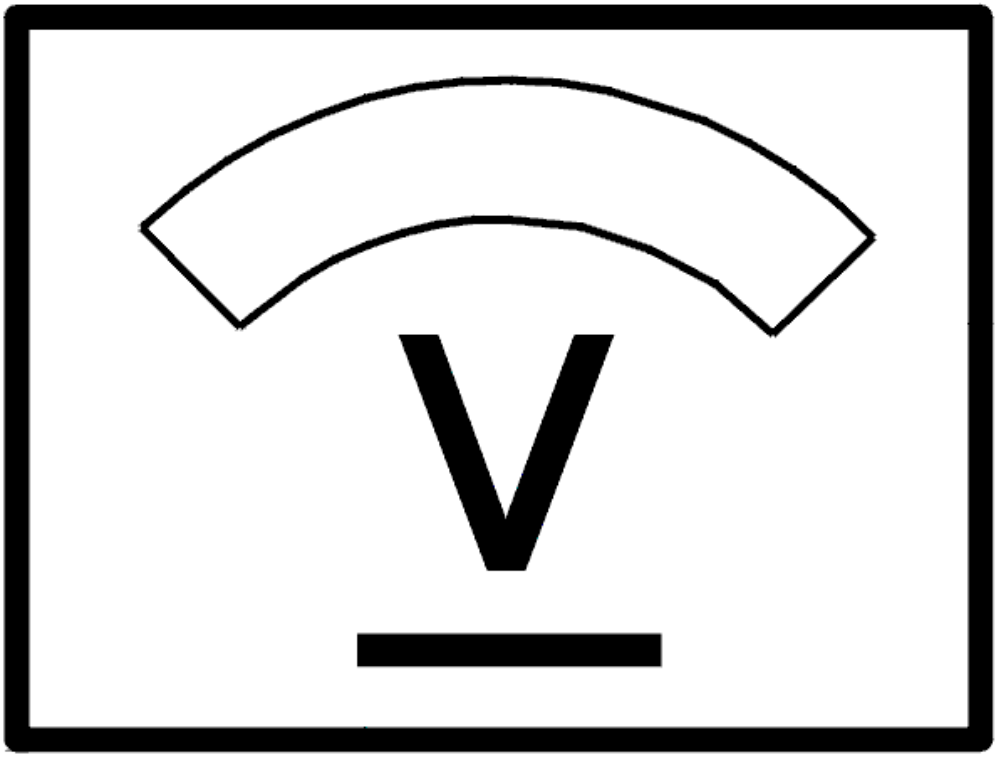

Fig. 298: Identifying Voltage Display
Courtesy of VOLVO CARS CORPORATION

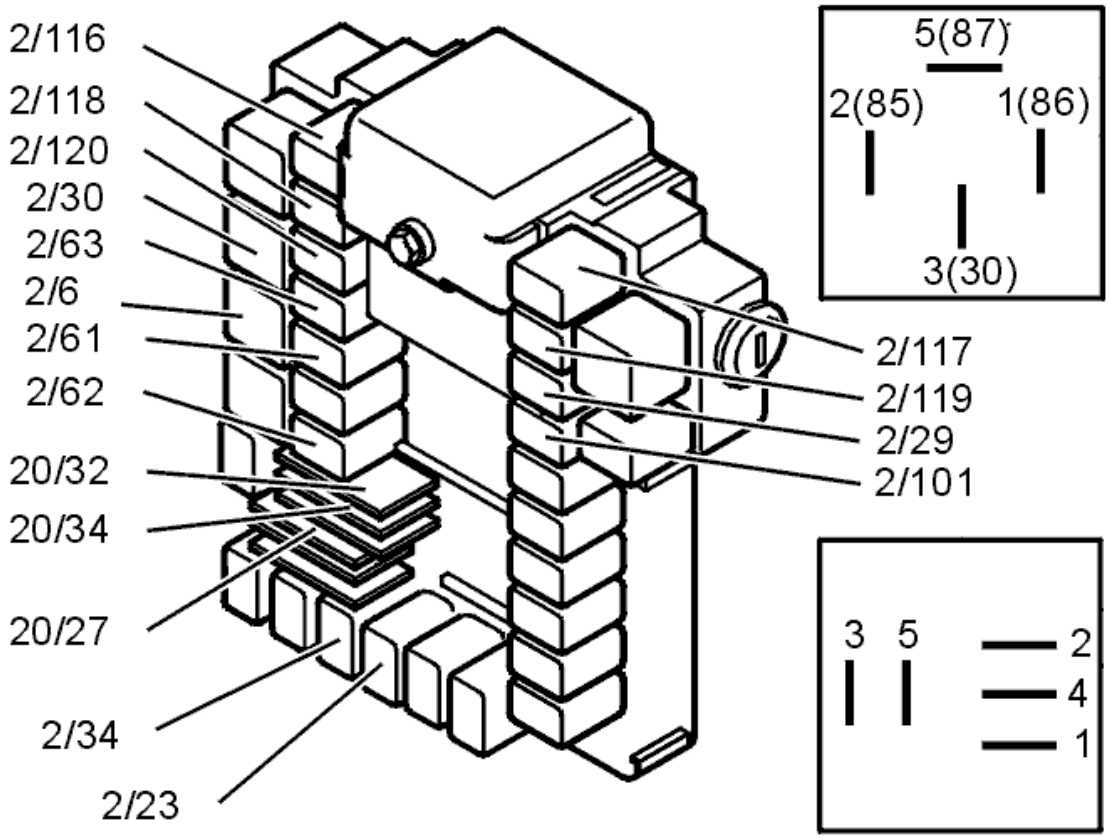

Fig. 299: Identifying Relays
Courtesy of VOLVO CARS CORPORATION

- **Continue**

  Refer to **VERIFICATION**

VERIFICATION

VERIFICATION

HINT: After the repair it is necessary to check that the fault has been rectified.

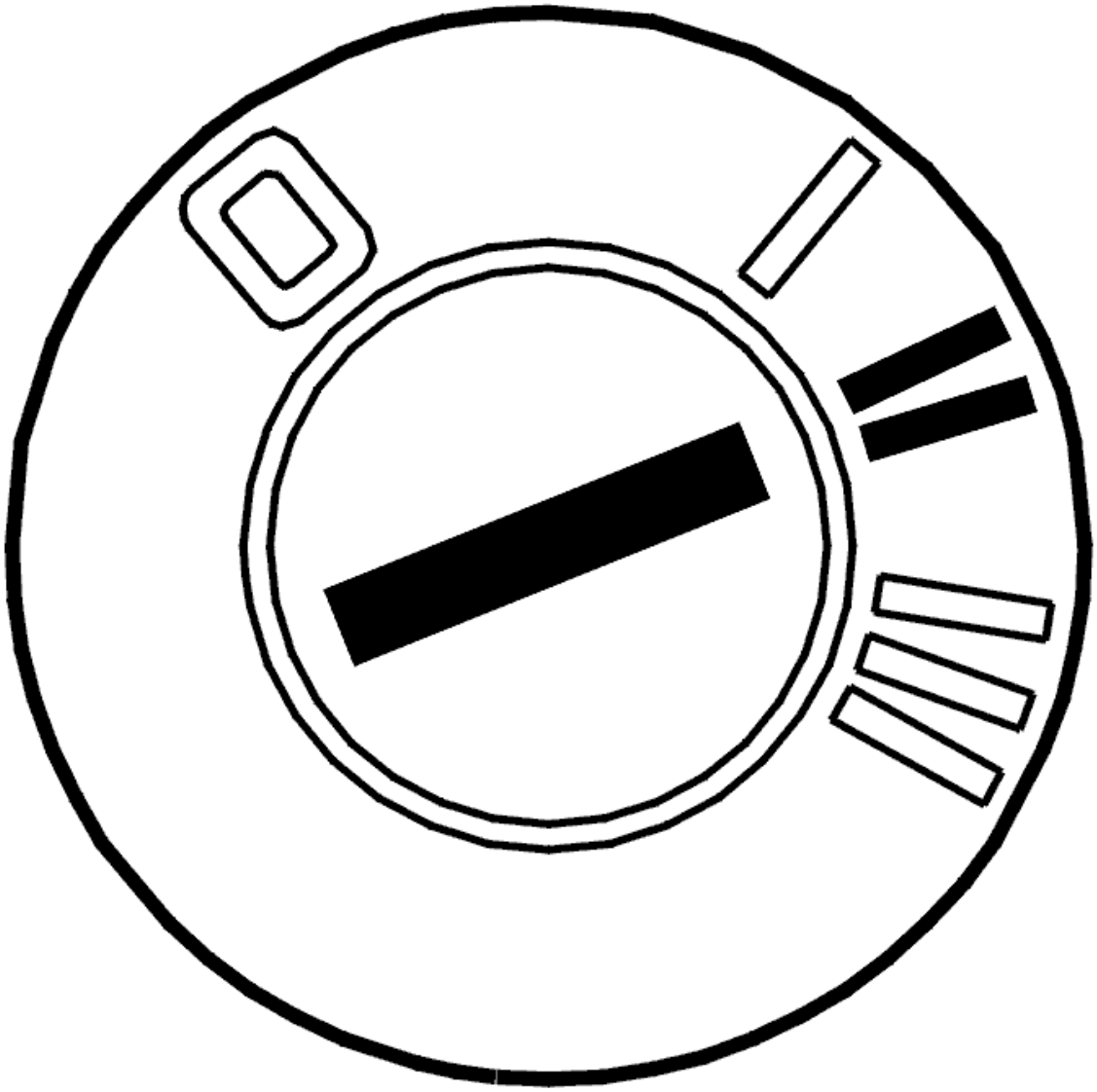

Fig. 300: Identifying Ignition ON
Courtesy of VOLVO CARS CORPORATION

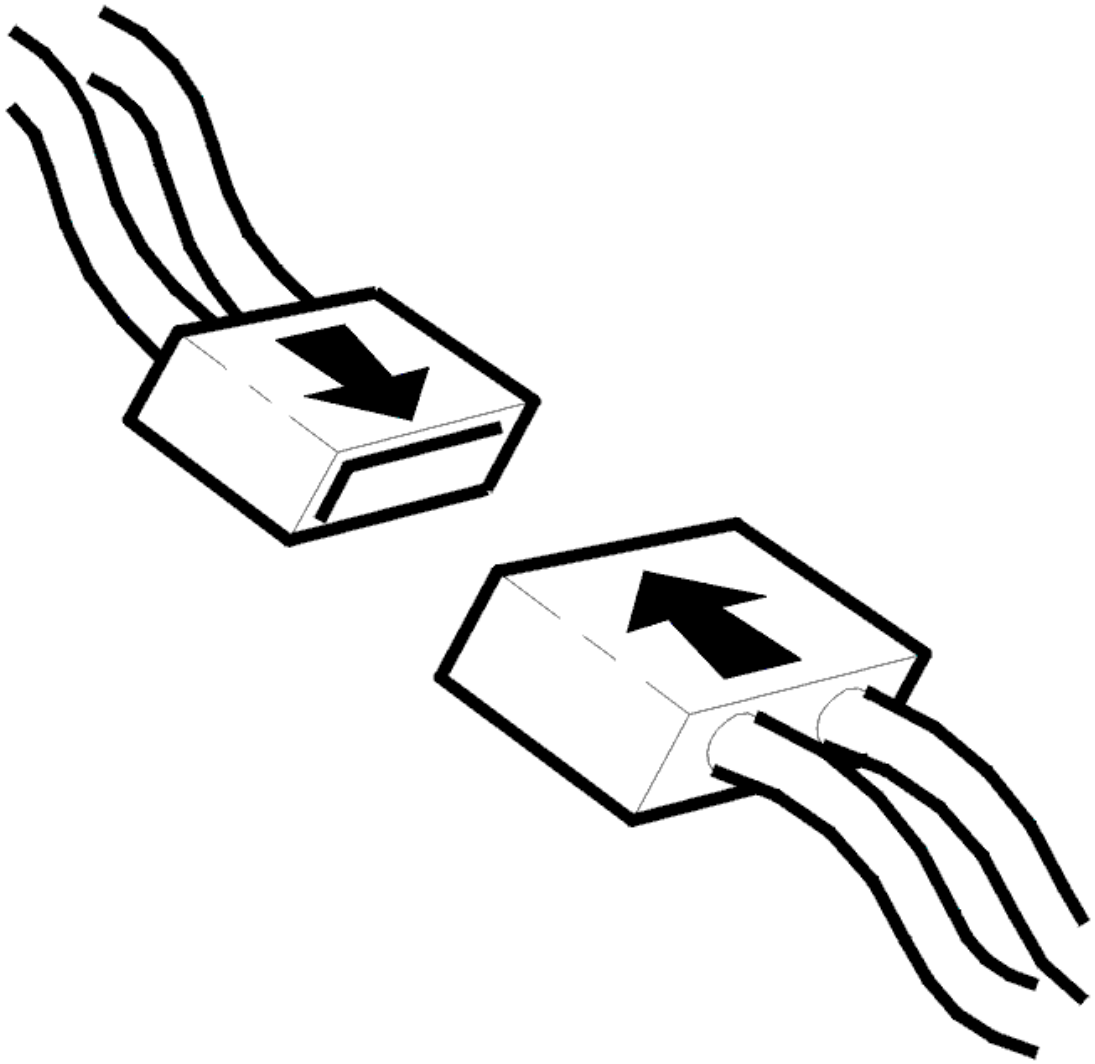

Fig. 301: Connecting Connector
Courtesy of VOLVO CARS CORPORATION

- Ignition off.
- Connect connectors, install components etc.
- Ignition on.

  Activate relay with button from control panel on RH rear door, window up.

  If the function now operates, this means that the fault was probably caused by a short circuit in the relay driver circuit.

Does it work?

- **YES**

VERIFIED: Troubleshooting has been completed.

- **NO**

  Refer to **INFORMATION**

INFORMATION

FAULT-TRACING INFORMATION

The fault should have been detected and remedied. As this is not the case fault-tracing has failed.

Exit fault-tracing for this diagnostic trouble code (DTC) or make another attempt.

CEM-6D09: RELAY, WINDOW LIFT RR UP. SIGNAL TOO LOW. INTERMITTENT FAULT (2003-2004)

DIAGNOSTIC TROUBLE CODE INFORMATION

Condition

If control unit registers no signal/ signal too low on relay coil 2/117 when the window lift in rear RH door is activated upwards, diagnostic trouble code CEM-6D09 is set.

Substitute Value

- None.

Possible Source

- Oxidation on relay socket contacts.
- Relay is loose or missing.
- Faulty relay, open circuit/short circuit to ground in relay coil.
- Defective control unit.

Fault symptom[s]

- Electric window lift does not work.

SIGNAL TOO LOW. INTERMITTENT FAULT

CHECKING THE CONTROL MODULE FOR OPEN-CIRCUITS

Remove relay 2/117.

Check the driver circuit for the relay coil for an intermittent open-circuit as follows:

Measure the voltage between terminals #1 and #2 on the relay base.

For further information about intermittent open-circuits, see **OPEN-CIRCUIT, INTERMITTENT FAULTS** .

Activate the relay driver for the rear window up: Use the VCT2000 (or appropriate scan tool).

HINT: The voltage between terminals #1 and #2 should be battery voltage.

If the value deviates excessively, check the voltage between terminal #2 and the battery and between terminal #1 and ground. Both should equal battery voltage. Check for an intermittent open-circuit according to **OPEN-CIRCUIT, INTERMITTENT FAULTS** . Do not forget to check that the power supply to the control module is OK.

Other information

- For -2004, see: **CENTRAL ELECTRONIC MODULE (CEM), REPLACING**
- For 2005-, see: **CENTRAL ELECTRONIC MODULE (CEM), REPLACING** .

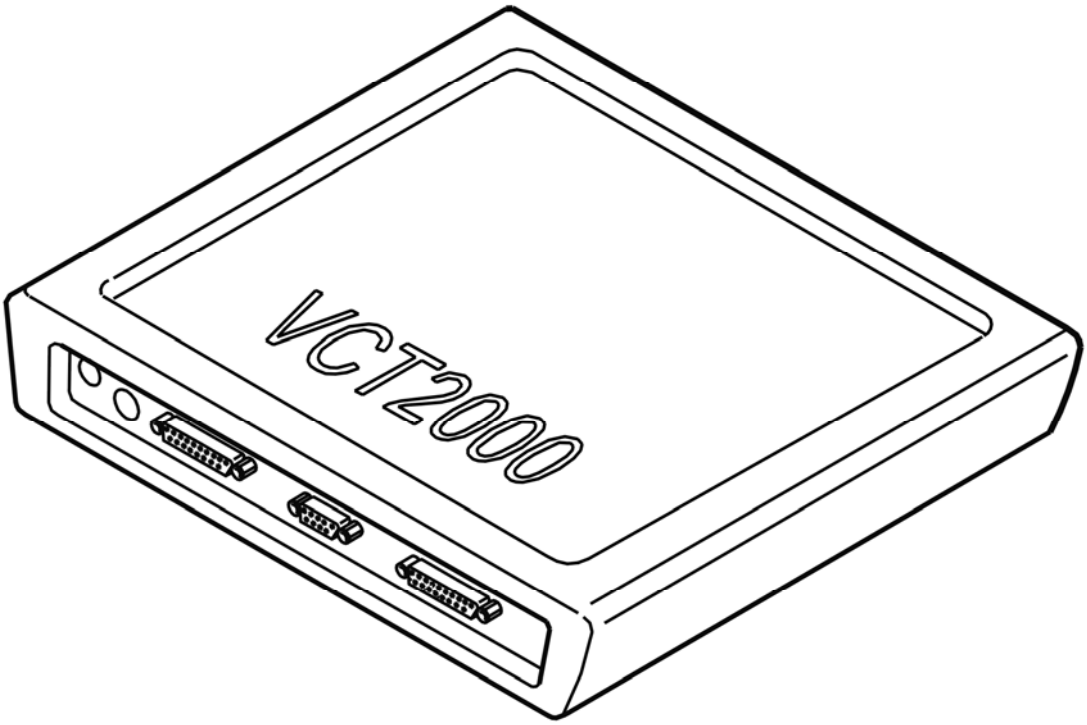

Fig. 302: Identifying VCT2000 Diagnostic Tool Symbol In VIDA
Courtesy of VOLVO CARS CORPORATION

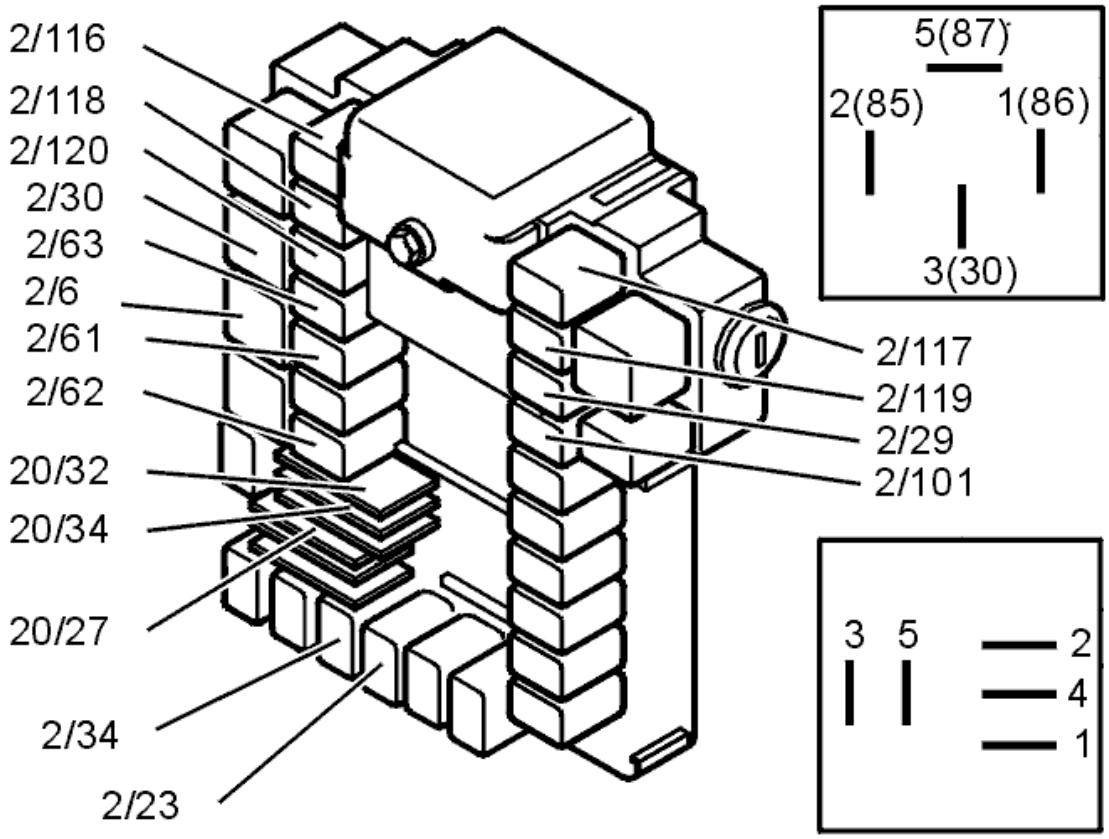

Fig. 303: Identifying Relays
Courtesy of VOLVO CARS CORPORATION

- **Continue**

  Refer to **INFORMATION**

INFORMATION

FAULT-TRACING INFORMATION

If the fault is intermittent, do not verify fault-tracing if the fault does not recur.

It is possible to view the information again, or leave fault-tracing for this diagnostic trouble code (DTC).

CEM-6D09: RELAY, WINDOW LIFT RR UP. SIGNAL TOO LOW. PERMANENT FAULT (2003-2004)

DIAGNOSTIC TROUBLE CODE INFORMATION

see **DIAGNOSTIC TROUBLE CODE INFORMATION**

SIGNAL TOO LOW. PERMANENT FAULT

CHECKING AND REPLACING THE COMPONENT

Remove relay 2/117. Check the relay base switches for contact resistance and oxidation according to **CONTACT RESISTANCE AND OXIDATION** .

Install the relay.

Activate the relay using the button on the control panel on the right rear door, window up.

If the function is now OK the fault was caused by a contact fault in the relay base.

Other information

- For -2004, see: **CENTRAL ELECTRONIC MODULE (CEM), REPLACING**
- For 2005-, see: **CENTRAL ELECTRONIC MODULE (CEM), REPLACING** .

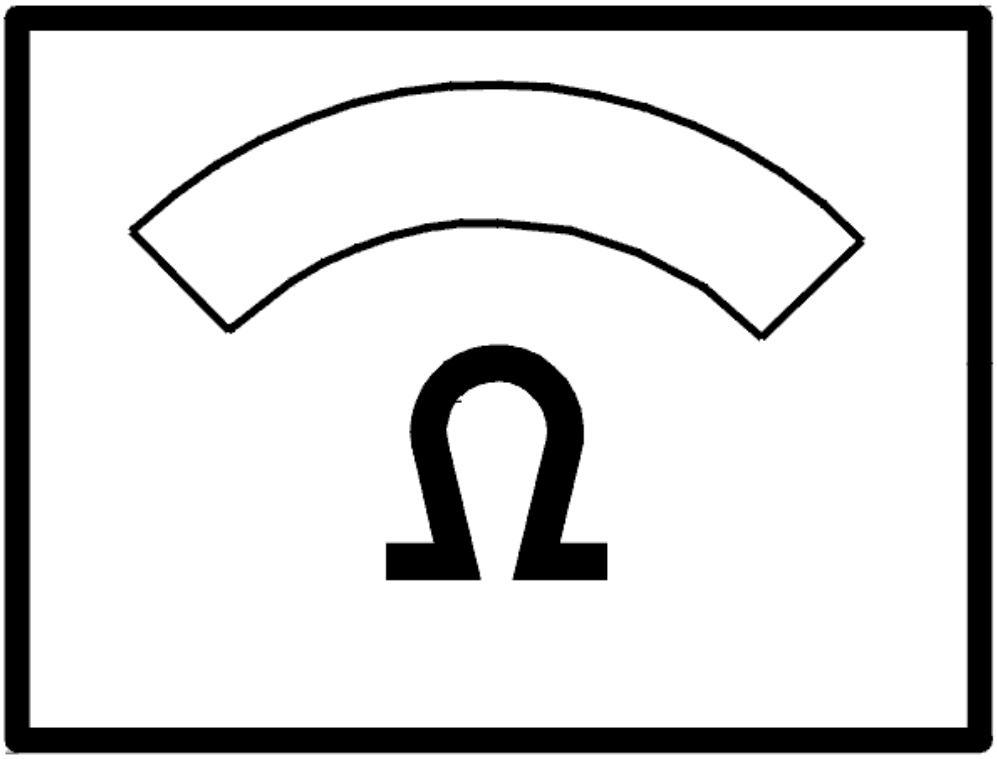

Fig. 304: Identifying Ohm Meter
Courtesy of VOLVO CARS CORPORATION

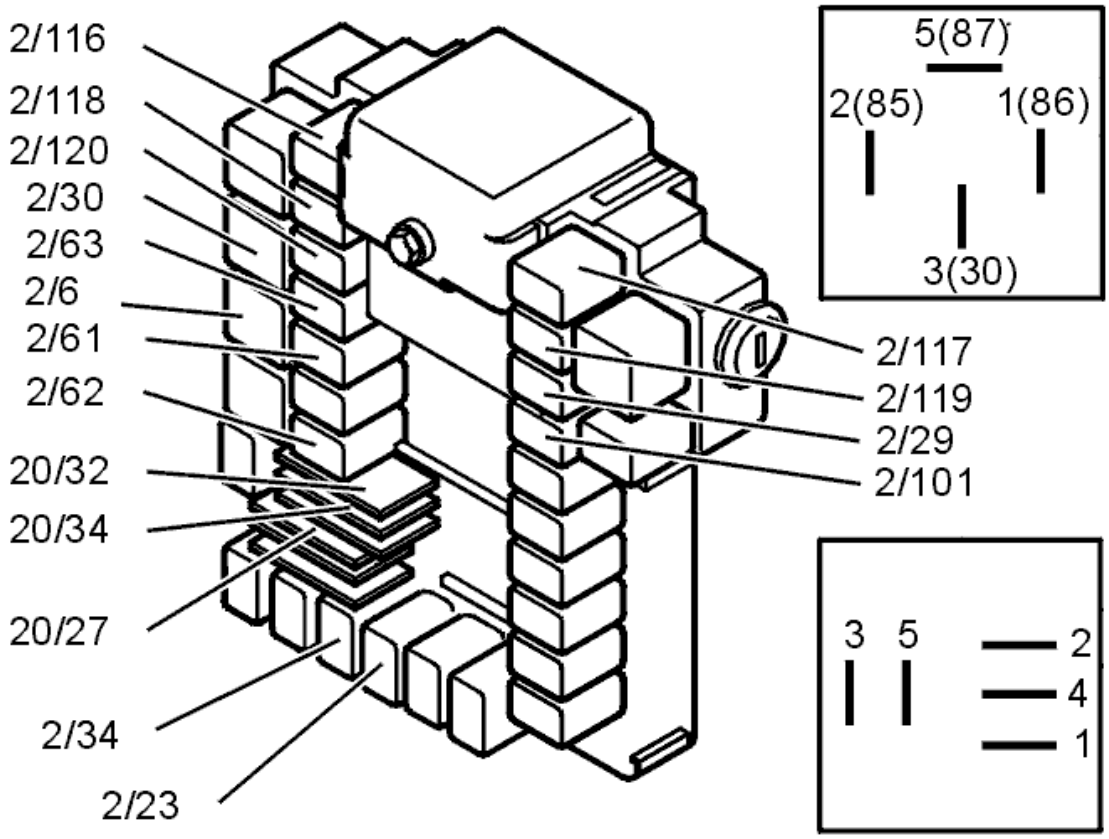

Fig. 305: Identifying Relays
Courtesy of VOLVO CARS CORPORATION

Was the function OK?

- **YES**

  Refer to **VERIFICATION**

- **NO**

  Refer to **REPLACING THE COMPONENT**

REPLACING THE COMPONENT

Replace the relay, 2/117.

Activate the relay using the button on the control panel on the right rear door, window up.

If the function is OK the cause of the fault was a defective relay (open-circuit or short-circuit in the relay).

Other information

- For -2004, see: **CENTRAL ELECTRONIC MODULE (CEM), REPLACING**
- For 2005-, see: **CENTRAL ELECTRONIC MODULE (CEM), REPLACING** .

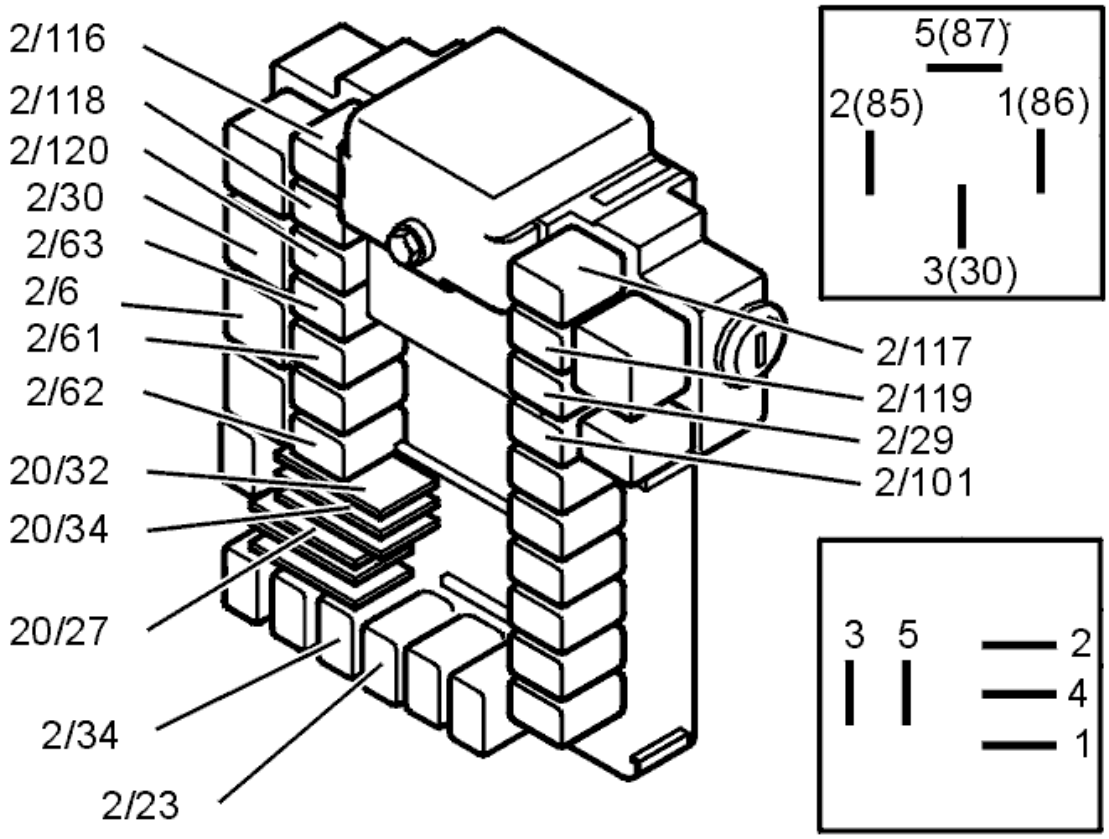

Fig. 306: Identifying Relays
Courtesy of VOLVO CARS CORPORATION

Was the function OK?

- **YES**

  OKAY: Troubleshooting has been completed.

- **NO**

  Refer to **INFORMATION**

VERIFICATION

VERIFICATION

HINT: After the repair it is necessary to check that the fault has been rectified.

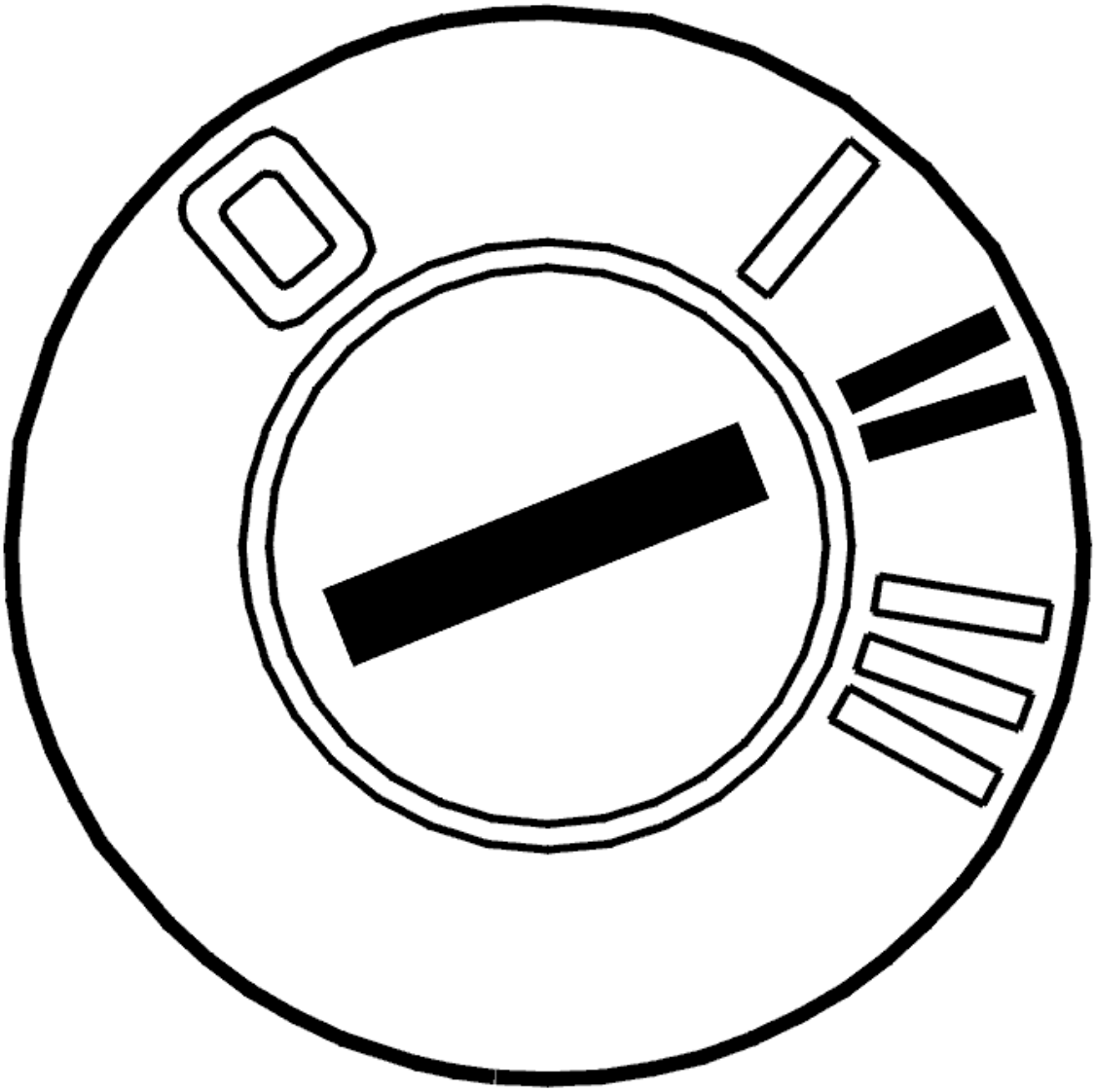

Fig. 307: Identifying Ignition ON
Courtesy of VOLVO CARS CORPORATION

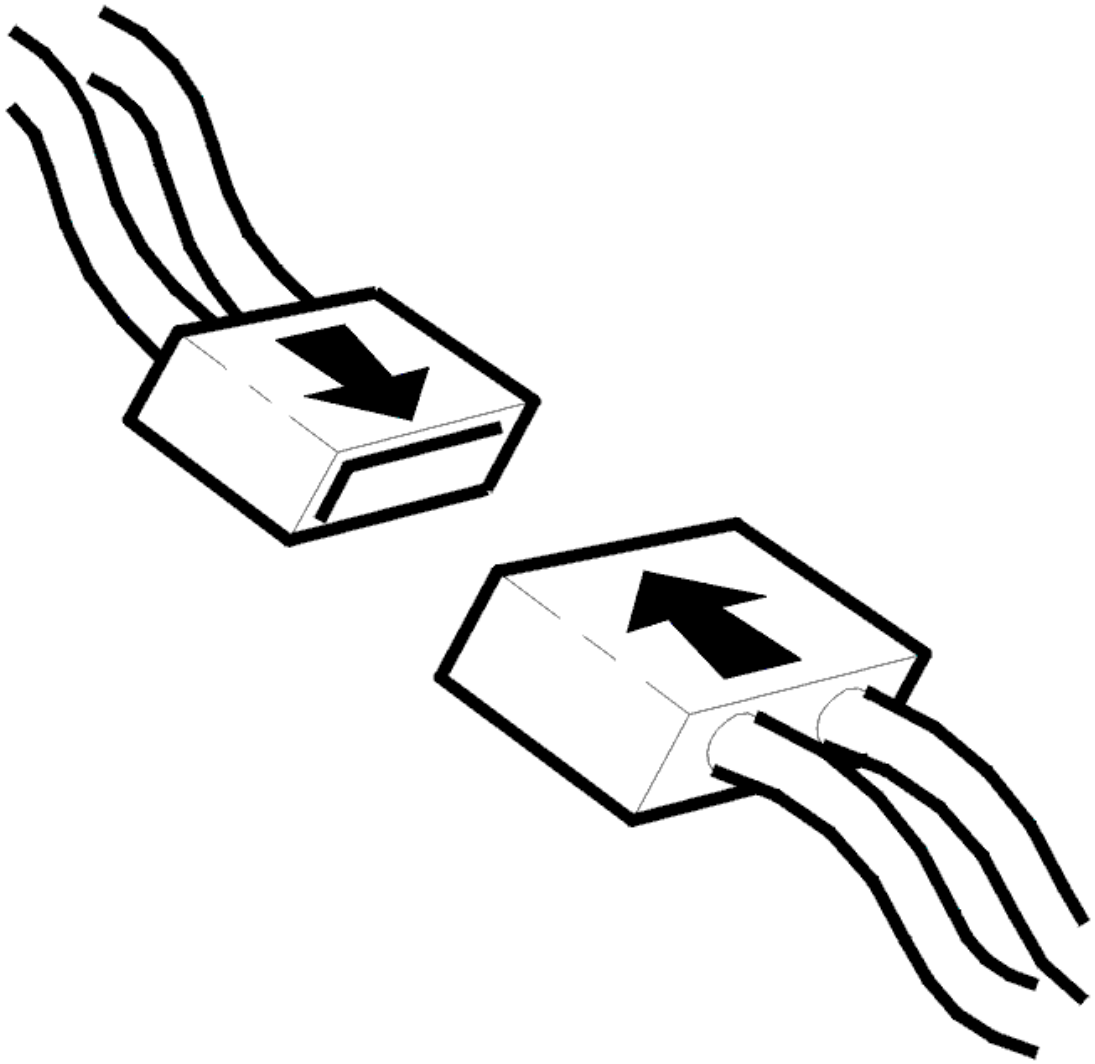

Fig. 308: Connecting Connector
Courtesy of VOLVO CARS CORPORATION

- Ignition off.
- Connect connectors, install components etc.
- Ignition on.

  Activate relay with switch unit from control panel on RH rear door, window up.

Does it work?

- **YES**

  VERIFIED: Troubleshooting has been completed.

- **NO**

  Refer to **INFORMATION**

INFORMATION

FAULT-TRACING INFORMATION

The fault should have been detected and remedied. As this is not the case fault-tracing has failed.

Exit fault-tracing for this diagnostic trouble code (DTC) or make another attempt.

CEM-6D0A: RELAY, WINDOW LIFT RR DOWN. SIGNAL TOO HIGH. INTERMITTENT FAULT (2003-2004)

DIAGNOSTIC TROUBLE CODE INFORMATION

Condition

If control unit registers signal too high on relay coil (2/119) when the window lift in rear RH door is activated downwards, diagnostic trouble code CEM-6D0A is set.

Substitute Value

- None.

Possible Source

- Defective relay (short circuit in relay coil).
- Defective control unit.

Fault symptom[s]

- Electric window lift does not work.

SIGNAL TOO HIGH. INTERMITTENT FAULT

CHECKING THE WIRING

Check the relay coil driver circuit for an intermittent short-circuit to supply voltage: Take a voltmeter reading between terminal #2 and ground in the relay base for relay 2/119.

For more information about short-circuiting to voltage, see:**CHECKING WIRING AND TERMINALS. INTERMITTENT FAULTS**

HINT: Voltage between #2 and ground shall be approx. 0 Volt.

Other information

- For -2004, see: **CENTRAL ELECTRONIC MODULE (CEM), REPLACING**
- For 2005-, see: **CENTRAL ELECTRONIC MODULE (CEM), REPLACING** .

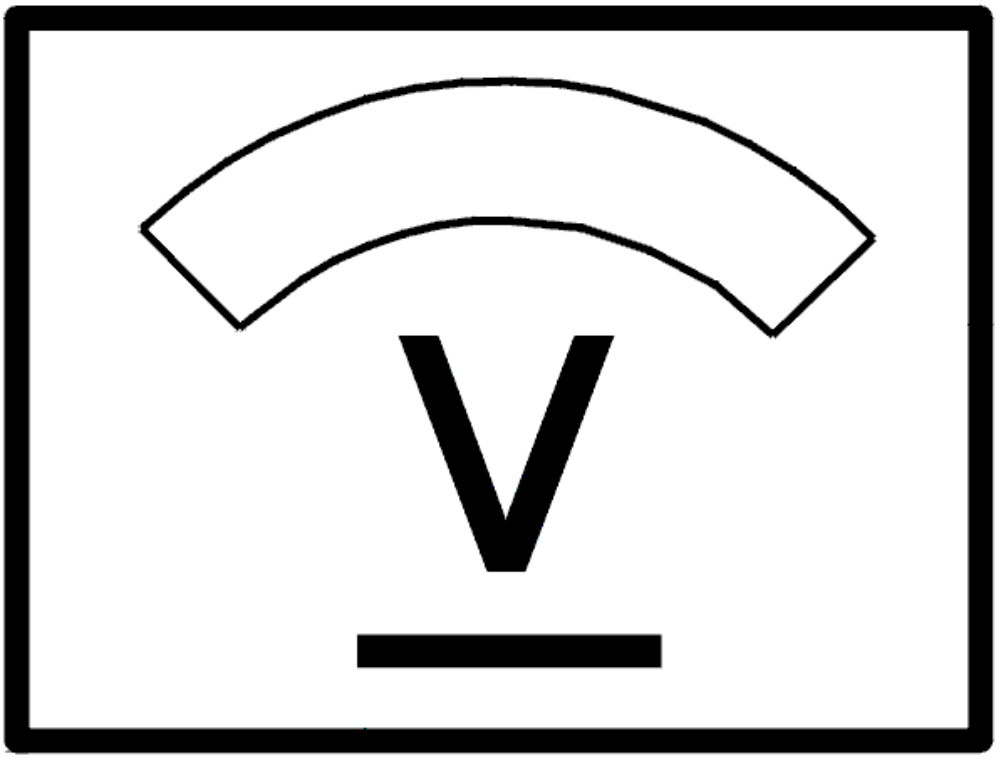

Fig. 309: Identifying Voltage Display
Courtesy of VOLVO CARS CORPORATION

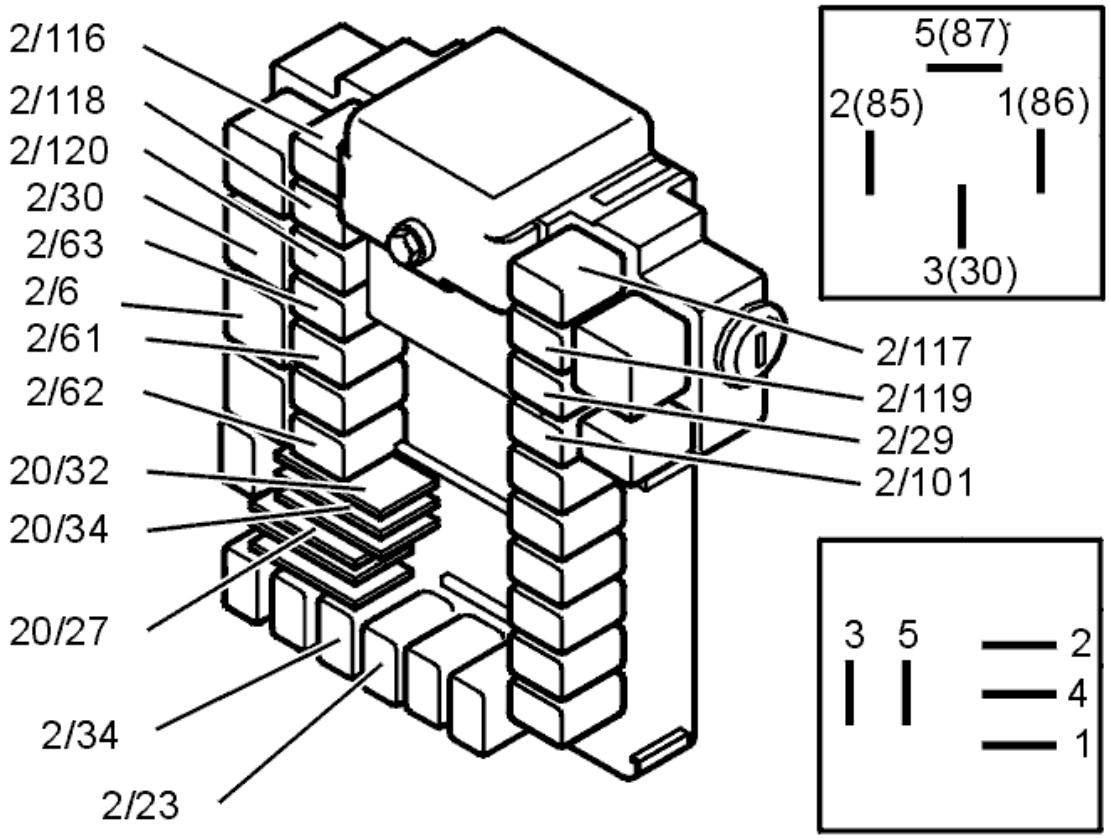

Fig. 310: Identifying Relays
Courtesy of VOLVO CARS CORPORATION

- **Continue**

  Refer to **INFORMATION**

INFORMATION

FAULT-TRACING INFORMATION

If the fault is intermittent, do not verify fault-tracing if the fault does not recur.

It is possible to view the information again, or leave fault-tracing for this diagnostic trouble code (DTC).

CEM-6D0A: RELAY, WINDOW LIFT RR DOWN. SIGNAL TOO HIGH. PERMANENT FAULT (2003-2004)

DIAGNOSTIC TROUBLE CODE INFORMATION

see **DIAGNOSTIC TROUBLE CODE INFORMATION**

SIGNAL TOO HIGH. PERMANENT FAULT

CHECKING AND REPLACING THE COMPONENT

Replace the relay, 2/119.

Activate the relay using the button on the control panel on the right rear door, window down.

If the function is OK, the cause of the fault was a damaged relay (short-circuit in the relay).

Other information

- For -2004, see: **CENTRAL ELECTRONIC MODULE (CEM), REPLACING**
- For 2005-, see: **CENTRAL ELECTRONIC MODULE (CEM), REPLACING** .

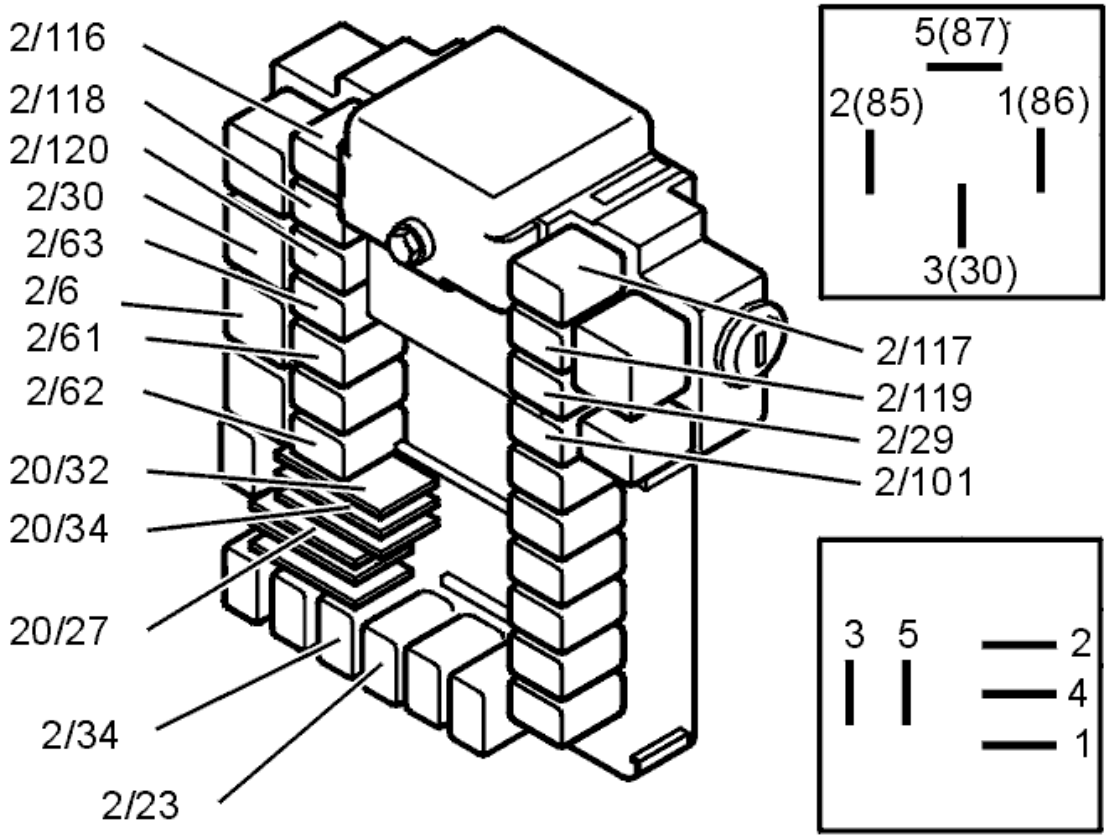

Fig. 311: Identifying Relays
Courtesy of VOLVO CARS CORPORATION

Was the function OK?

- **YES**

  OKAY: Troubleshooting has been completed.

- **NO**

Refer to **INFORMATION**

VERIFICATION

VERIFICATION

HINT: After the repair it is necessary to check that the fault has been rectified.

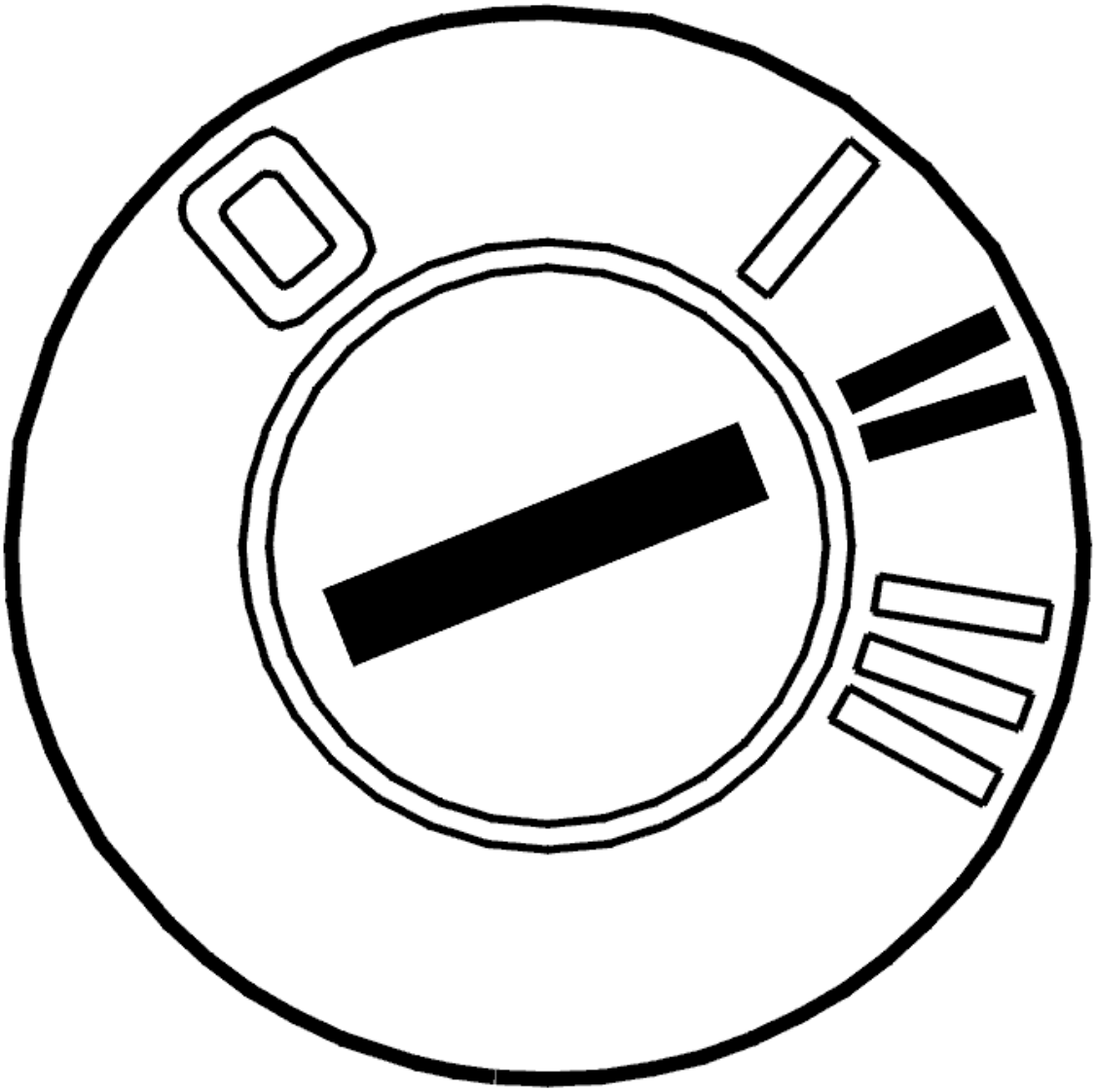

Fig. 312: Identifying Ignition ON
Courtesy of VOLVO CARS CORPORATION

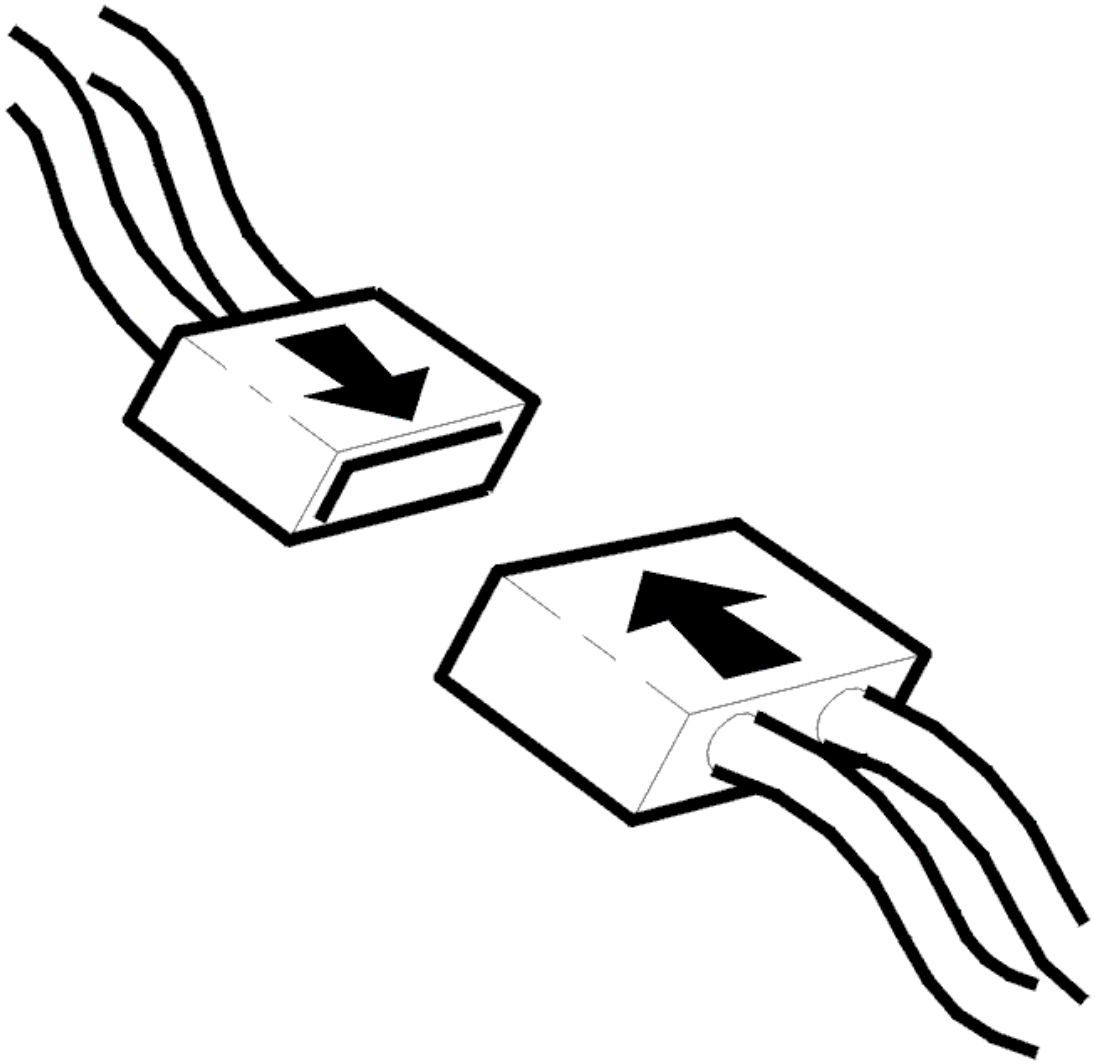

Fig. 313: Connecting Connector
Courtesy of VOLVO CARS CORPORATION

- Ignition off.
- Connect connectors, install components etc.
- Ignition on.

  Activate relay with switch unit on control panel on RH rear door, window down.

  If the function now operates, this means that the fault was probably caused by a short circuit in the relay driver circuit.

Does it work?

- **YES**

VERIFIED: Troubleshooting has been completed.

- **NO**

  Refer to **INFORMATION**

INFORMATION

FAULT-TRACING INFORMATION

The fault should have been detected and remedied. As this is not the case fault-tracing has failed.

Exit fault-tracing for this diagnostic trouble code (DTC) or make another attempt.

CEM-6D0C: RELAY, WINDOW LIFT RR DOWN. SIGNAL TOO LOW. INTERMITTENT FAULT (2003-2004)

DIAGNOSTIC TROUBLE CODE INFORMATION

Condition

If control unit registers no signal/signal too low on relay coil (2/119) when the window lift in rear RH door is activated downwards from rear door switch unit, diagnostic trouble code CEM-6D0C is set.

Substitute Value

- None.

Possible Source

- Oxidation on relay socket contacts.
- Relay is loose or missing.
- Faulty relay, open circuit/short circuit to ground in relay coil.
- Defective control unit.

Fault symptom[s]

- Electric window lift does not work.

SIGNAL TOO LOW. INTERMITTENT FAULT

CHECKING THE CONTROL MODULE FOR OPEN-CIRCUITS

Remove relay 2/119.

Check the driver circuit for the relay coil for an intermittent open-circuit as follows:

Measure the voltage between terminals #1 and #2 on the relay base.

see **CHECKING WIRING AND TERMINALS. INTERMITTENT FAULTS**

Activate the relay driver for the right rear window down: Use the VCT2000 (or appropriate scan tool).

HINT: The voltage between terminals #1 and #2 should be battery voltage.

If the value deviates significantly, check voltage between #2 and battery voltage as well as between #1 and ground. Both shall be equal to battery voltage. Check for an intermittent open-circuit. See **CHECKING WIRING AND TERMINALS. INTERMITTENT FAULTS** Do not forget to check that the power supply to the control module is OK.

Other information

- For -2004, see: **CENTRAL ELECTRONIC MODULE (CEM), REPLACING**
- For 2005-, see: **CENTRAL ELECTRONIC MODULE (CEM), REPLACING** .

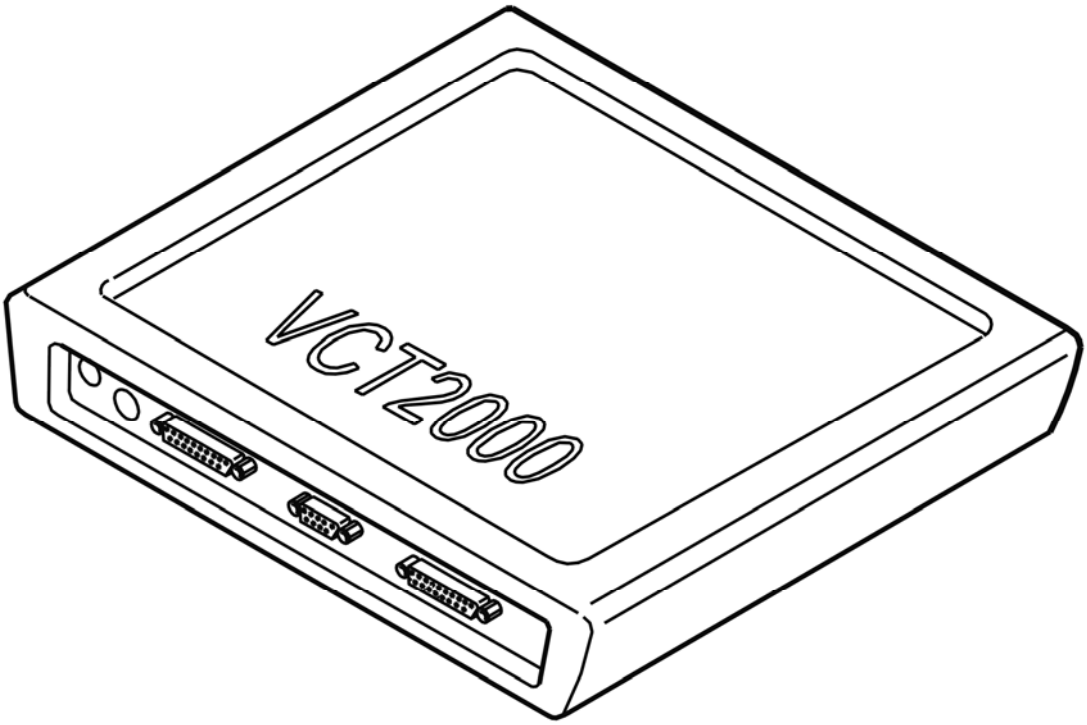

Fig. 314: Identifying VCT2000 Diagnostic Tool Symbol In VIDA
Courtesy of VOLVO CARS CORPORATION

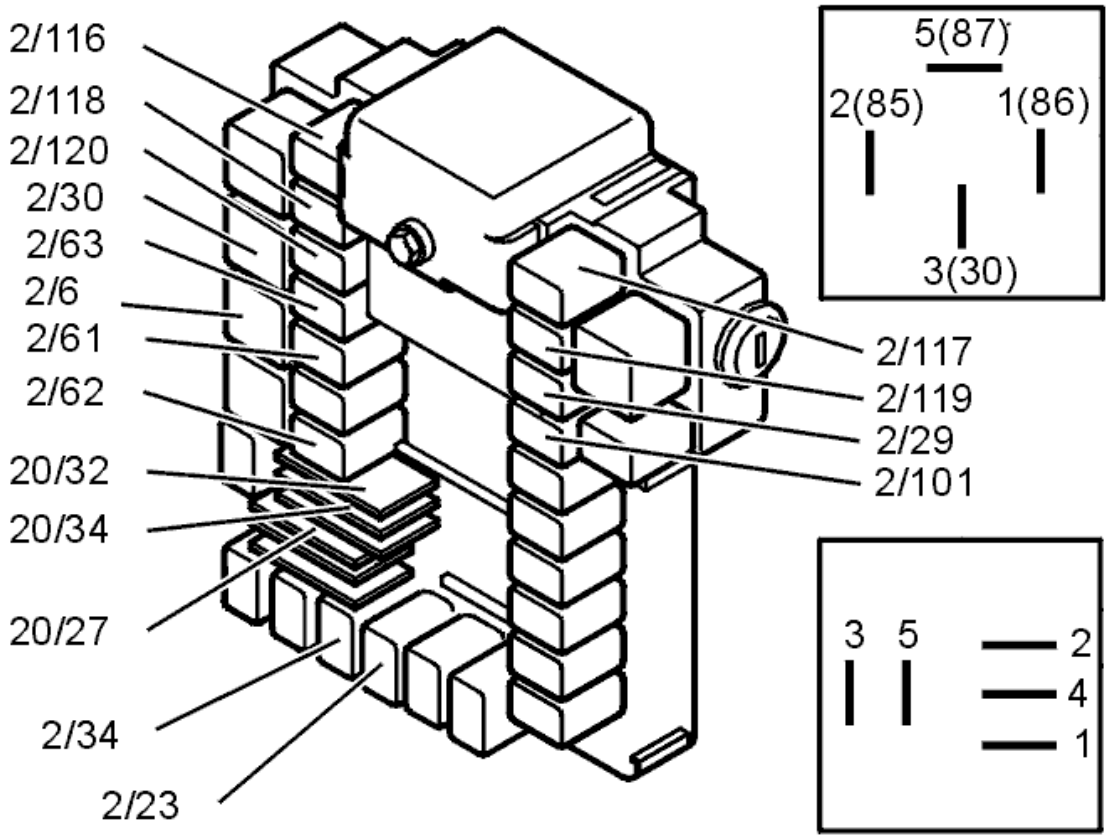

Fig. 315: Identifying Relays
Courtesy of VOLVO CARS CORPORATION

- **Continue**

  Refer to **INFORMATION**

INFORMATION

FAULT-TRACING INFORMATION

If the fault is intermittent, do not verify fault-tracing if the fault does not recur.

It is possible to view the information again, or leave fault-tracing for this diagnostic trouble code (DTC).

CEM-6D0C: RELAY, WINDOW LIFT RR DOWN. SIGNAL TOO LOW. PERMANENT FAULT (2003-2004)

DIAGNOSTIC TROUBLE CODE INFORMATION

see **DIAGNOSTIC TROUBLE CODE INFORMATION**

SIGNAL TOO LOW. PERMANENT FAULT

CHECKING AND REPLACING THE COMPONENT

Remove relay 2/119 and check the relay socket's contacts for contact resistance and oxidation. See **CHECKING WIRING AND TERMINALS. PERMANENT FAULT**

Install the relay.

Activate the relay using the button on the control panel on the right rear door, window down.

If the function is now OK the fault was caused by a contact fault in the relay base.

Other information

- For -2004, see: **CENTRAL ELECTRONIC MODULE (CEM), REPLACING**
- For 2005-, see: **CENTRAL ELECTRONIC MODULE (CEM), REPLACING** .

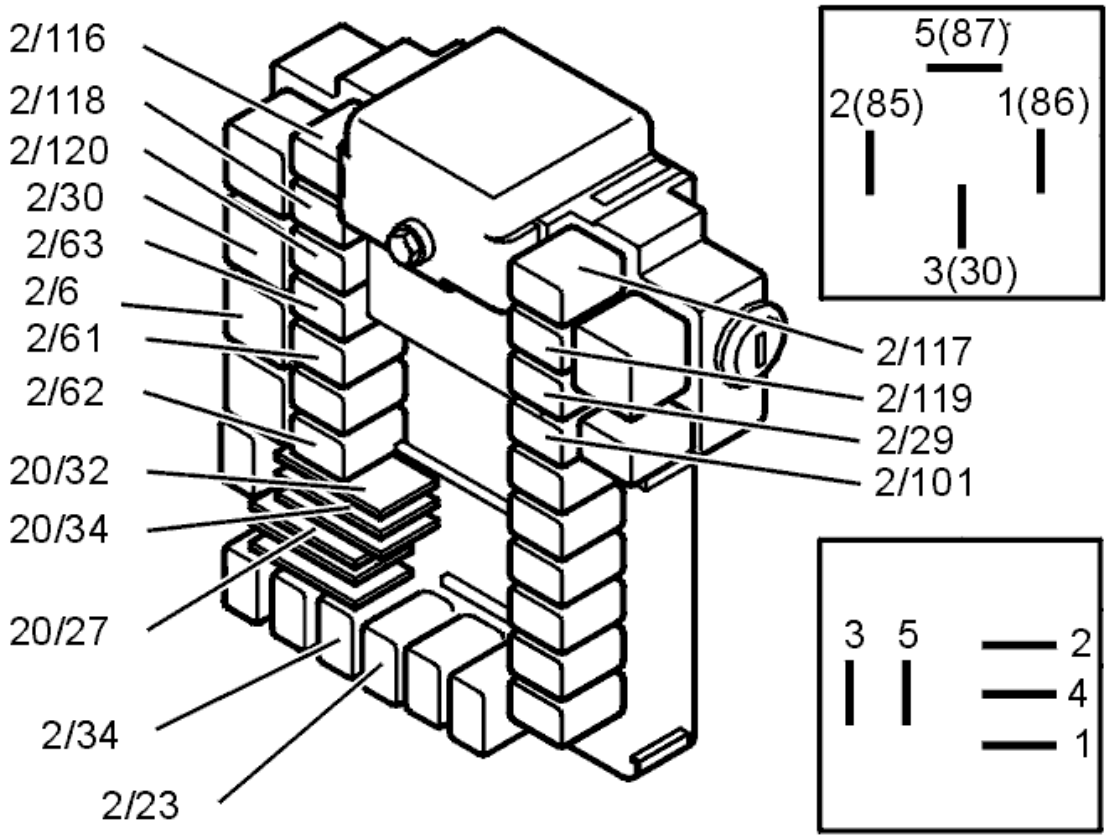

Fig. 316: Identifying Relays
Courtesy of VOLVO CARS CORPORATION

Was the function OK?

- **YES**

Refer to **VERIFICATION**

- **NO**

  Refer to **REPLACING THE COMPONENT**

REPLACING THE COMPONENT

Replace the relay, 2/119.

Activate the relay using the button on the control panel on the right rear door, window down.

If the function is OK the cause of the fault was a damaged relay (open circuit/short-circuiting in the relay coil).

Other information

- For -2004, see: **CENTRAL ELECTRONIC MODULE (CEM), REPLACING**
- For 2005-, see: **CENTRAL ELECTRONIC MODULE (CEM), REPLACING** .

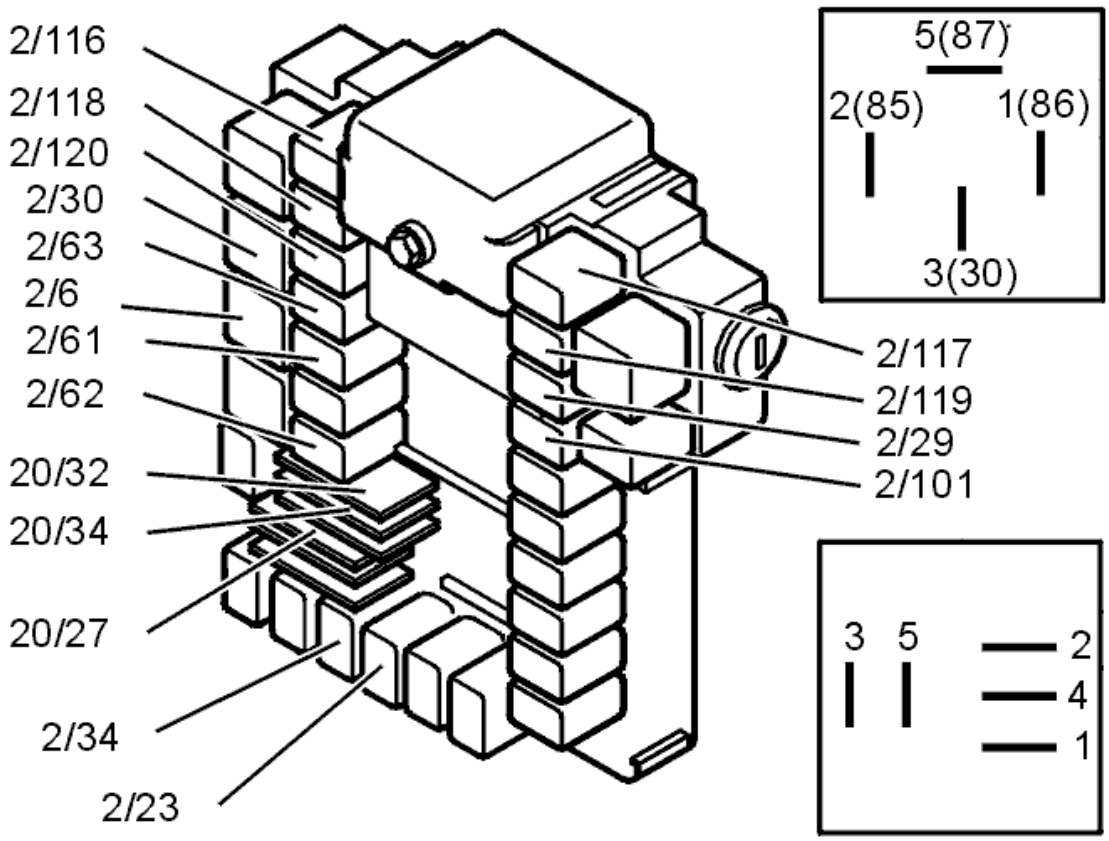

Fig. 317: Identifying Relays
Courtesy of VOLVO CARS CORPORATION

Was the function OK?

- **YES**

  OKAY: Troubleshooting has been completed.

- **NO**

  Refer to **INFORMATION**

VERIFICATION

VERIFICATION

HINT: After the repair it is necessary to check that the fault has been rectified.

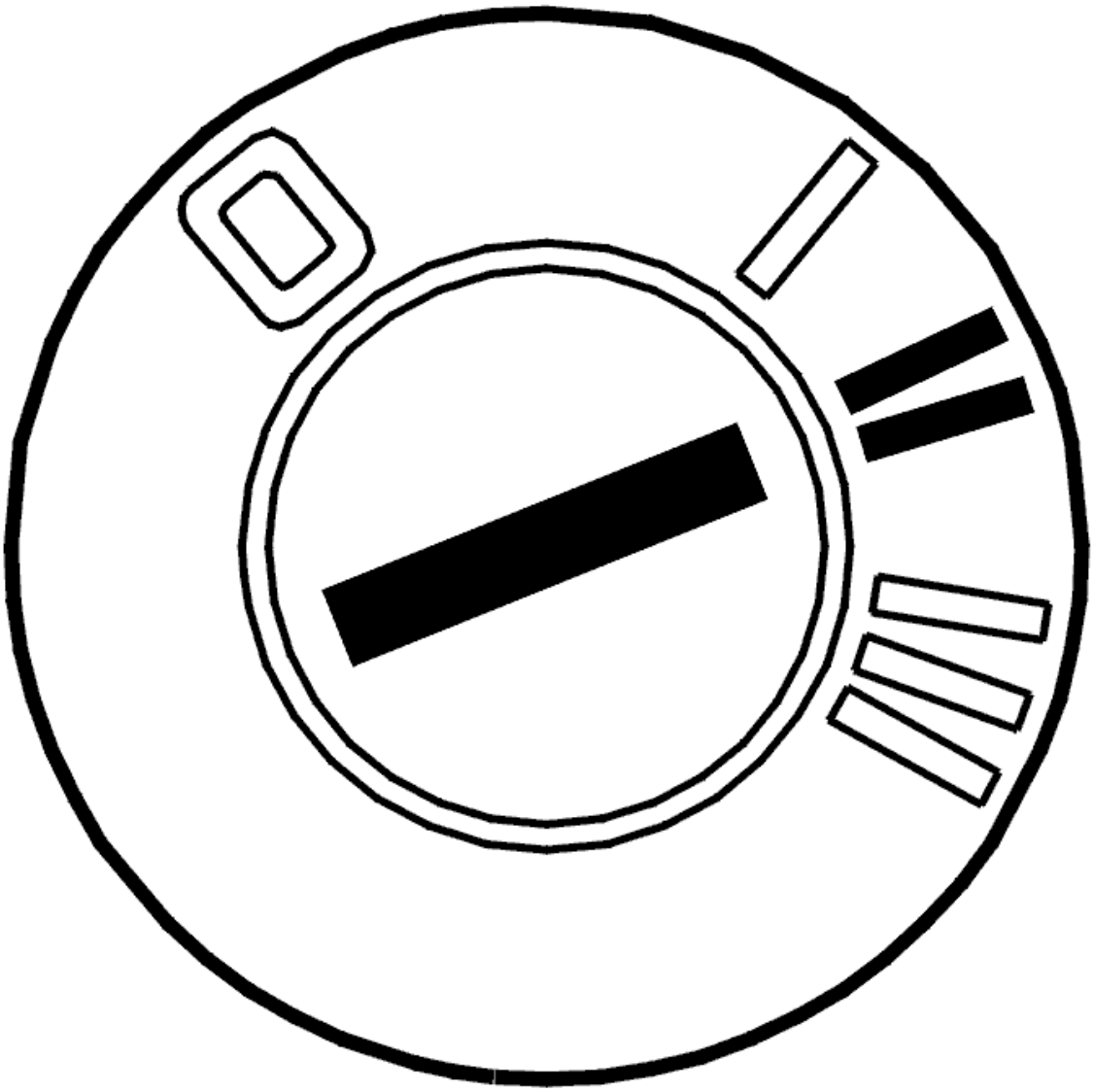

Fig. 318: Identifying Ignition ON
Courtesy of VOLVO CARS CORPORATION

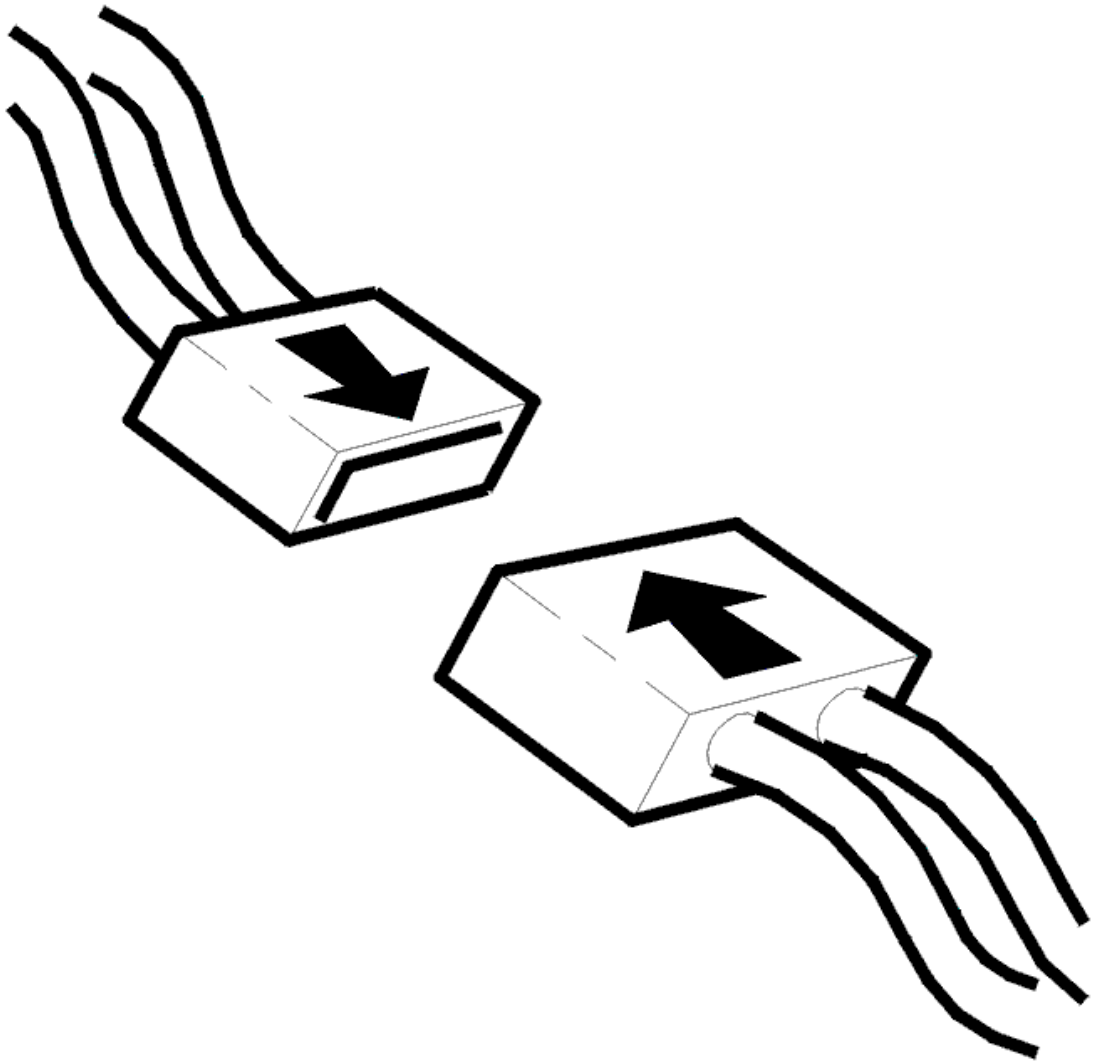

Fig. 319: Connecting Connector
Courtesy of VOLVO CARS CORPORATION

- Ignition off.
- Connect connectors, install components etc.
- Ignition on.

  Activate relay with switch unit on control panel on RH rear door, window down.

Does it work?

- **YES**

  VERIFIED: Troubleshooting has been completed.

- **NO**

  Refer to **INFORMATION**

INFORMATION

FAULT-TRACING INFORMATION

The fault should have been detected and remedied. As this is not the case fault-tracing has failed.

Exit fault-tracing for this diagnostic trouble code (DTC) or make another attempt.

CEM-6D0D: RELAY, CHILD SAFETY BLOCKING. SIGNAL TOO HIGH. INTERMITTENT FAULT (2003-2004)

DIAGNOSTIC TROUBLE CODE INFORMATION

Condition

If the central electronic module (CEM) detects signal too high on relay coil 2/120, for child safety blocking of rear windows when function is activated, diagnostic trouble code CEM-6D0D will be set.

Substitute Value

- None.

Possible Source

- Defective relay (short circuit in relay coil).
- Defective control unit.

Fault symptom[s]

- Electric window lift does not work.

SIGNAL TOO HIGH. INTERMITTENT FAULT

CHECKING THE WIRING

Check the relay coil driver circuit for an intermittent short-circuit to supply voltage: Take a voltmeter reading between terminal #2 and ground in the relay base for relay 2/120.

Activate the relay with the switch child safety lock, for windows rear doors, on the driver's control panel (activated relay LED on).

For more information about short-circuiting to voltage, see:**CHECKING WIRING AND TERMINALS. INTERMITTENT FAULTS**

HINT: Voltage between #2 and ground shall be approx. 0 Volt.

Other information

- For -2004, see: **CENTRAL ELECTRONIC MODULE (CEM), REPLACING**
- For 2005-, see: **CENTRAL ELECTRONIC MODULE (CEM), REPLACING** .

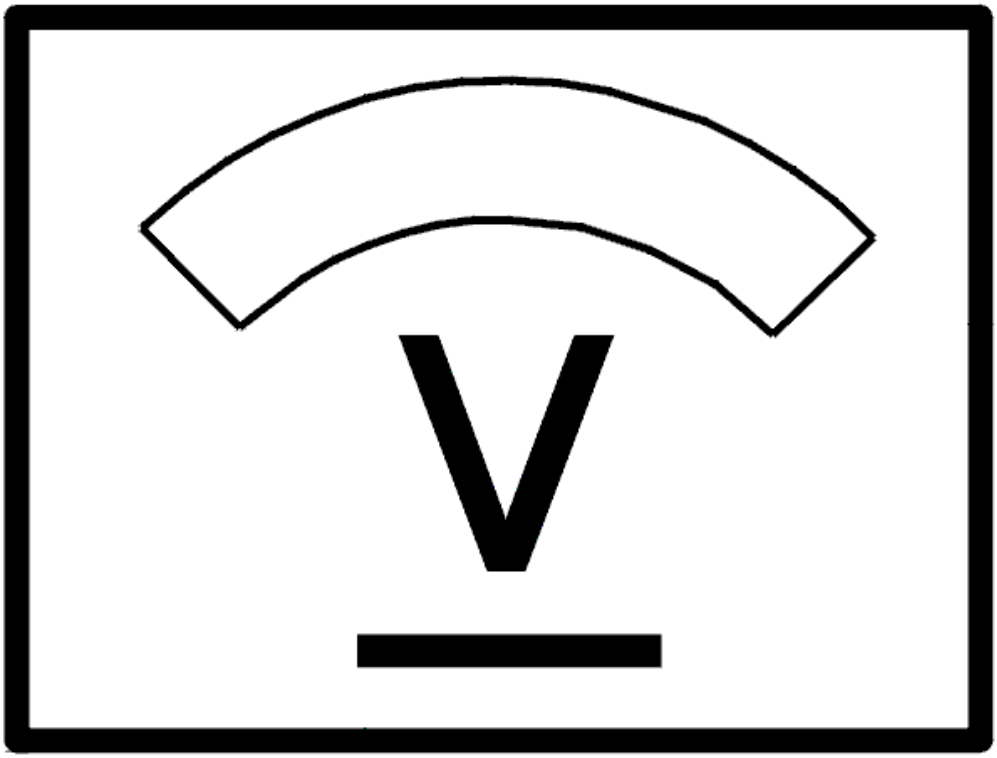

Fig. 320: Identifying Voltage Display
Courtesy of VOLVO CARS CORPORATION

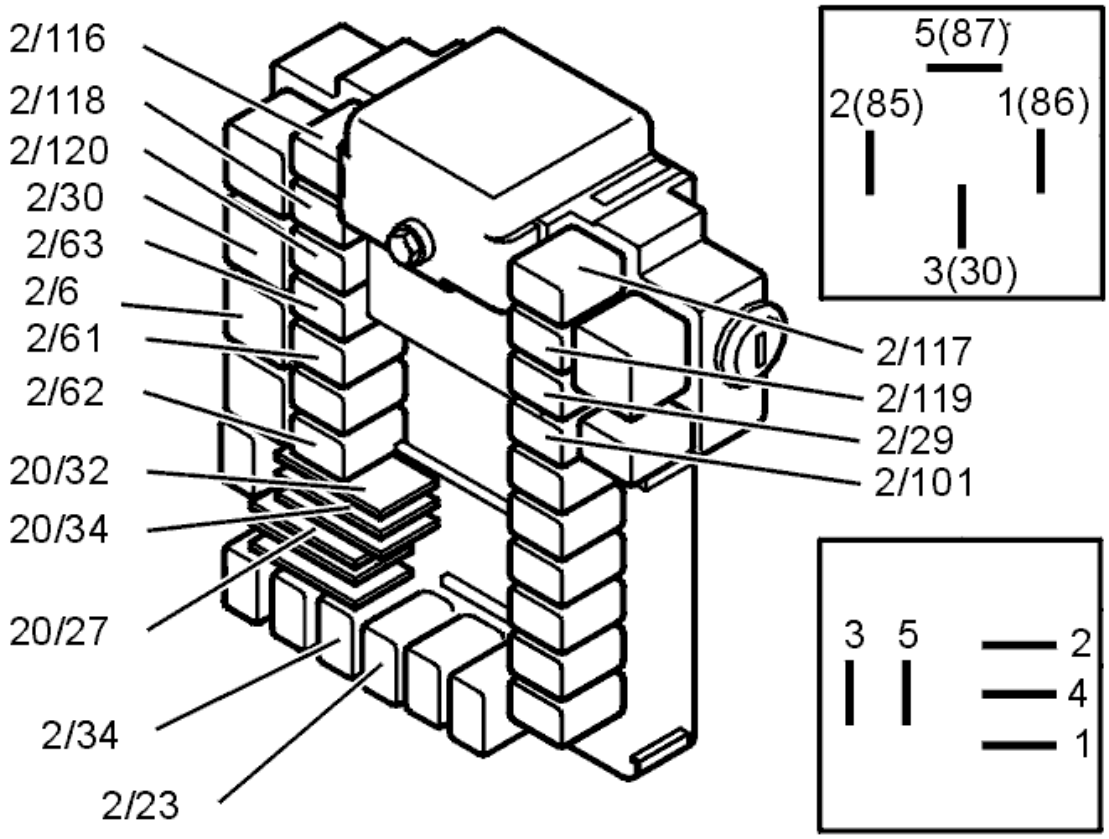

Fig. 321: Identifying Relays
Courtesy of VOLVO CARS CORPORATION

- **Continue**

  Refer to **INFORMATION**

INFORMATION

FAULT-TRACING INFORMATION

If the fault is intermittent, do not verify fault-tracing if the fault does not recur.

It is possible to view the information again, or leave fault-tracing for this diagnostic trouble code (DTC).

CEM-6D0D: RELAY, CHILD SAFETY BLOCKING. SIGNAL TOO HIGH. PERMANENT FAULT (2003-2004)

DIAGNOSTIC TROUBLE CODE INFORMATION

Condition

If the central electronic module (CEM) detects signal too high on relay coil 2/120, for child safety blocking of

rear windows when function is activated, diagnostic trouble code CEM-6D0D will be set.

Substitute Value

- None.

Possible Source

- Defective relay (short circuit in relay coil).
- Defective control unit.

Fault symptom[s]

- Electric window lift does not work.

SIGNAL TOO HIGH. PERMANENT FAULT

CHECKING AND REPLACING THE COMPONENT

Replace relay, 2/120.

Activate the relay with the switch child safety lock, for windows rear doors, on the driver's control panel (activated relay LED on). Activate the rear door window up and down using the control panel in the rear door.

If the function is OK, the cause of the fault was a damaged relay (short-circuit in the relay).

Other information

- For -2004, see: **CENTRAL ELECTRONIC MODULE (CEM), REPLACING**
- For 2005-, see: **CENTRAL ELECTRONIC MODULE (CEM), REPLACING** .

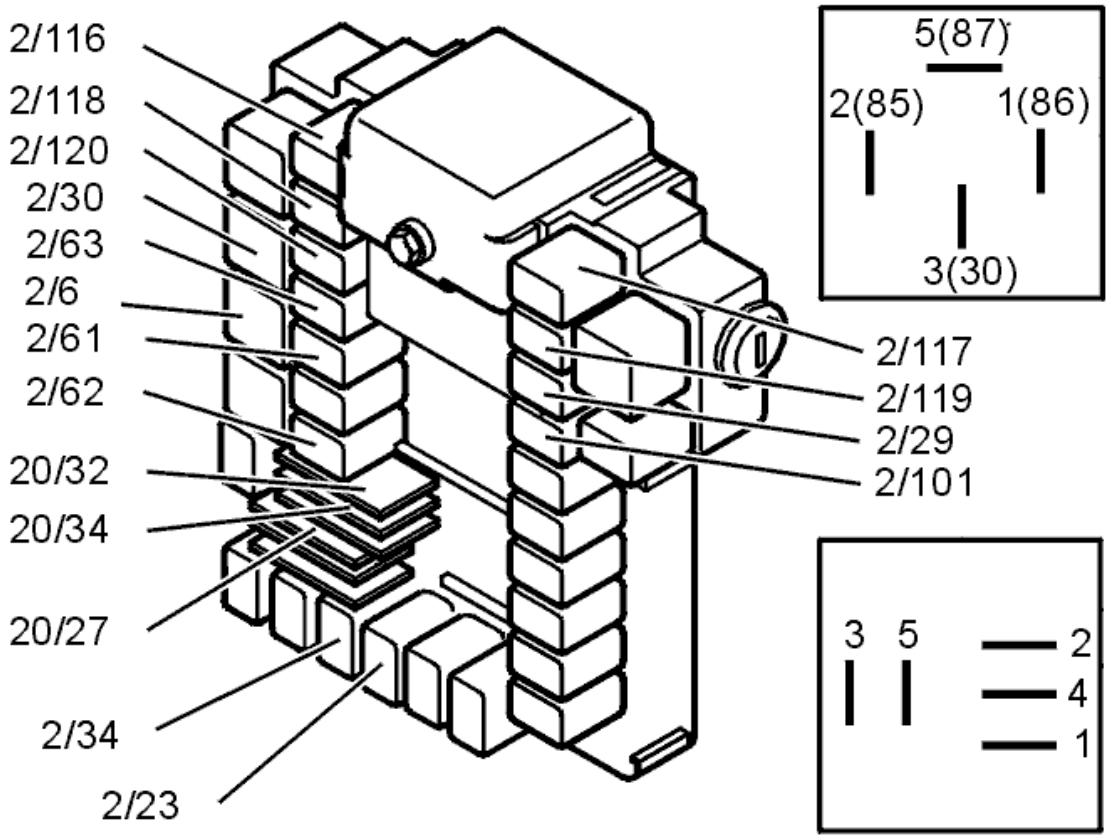

Fig. 322: Identifying Relays
Courtesy of VOLVO CARS CORPORATION

Was the function OK?

- **YES**

  OKAY: Troubleshooting has been completed.

- **NO**

  Refer to **INFORMATION**

VERIFICATION

VERIFICATION

HINT: After the repair it is necessary to check that the fault has been rectified.

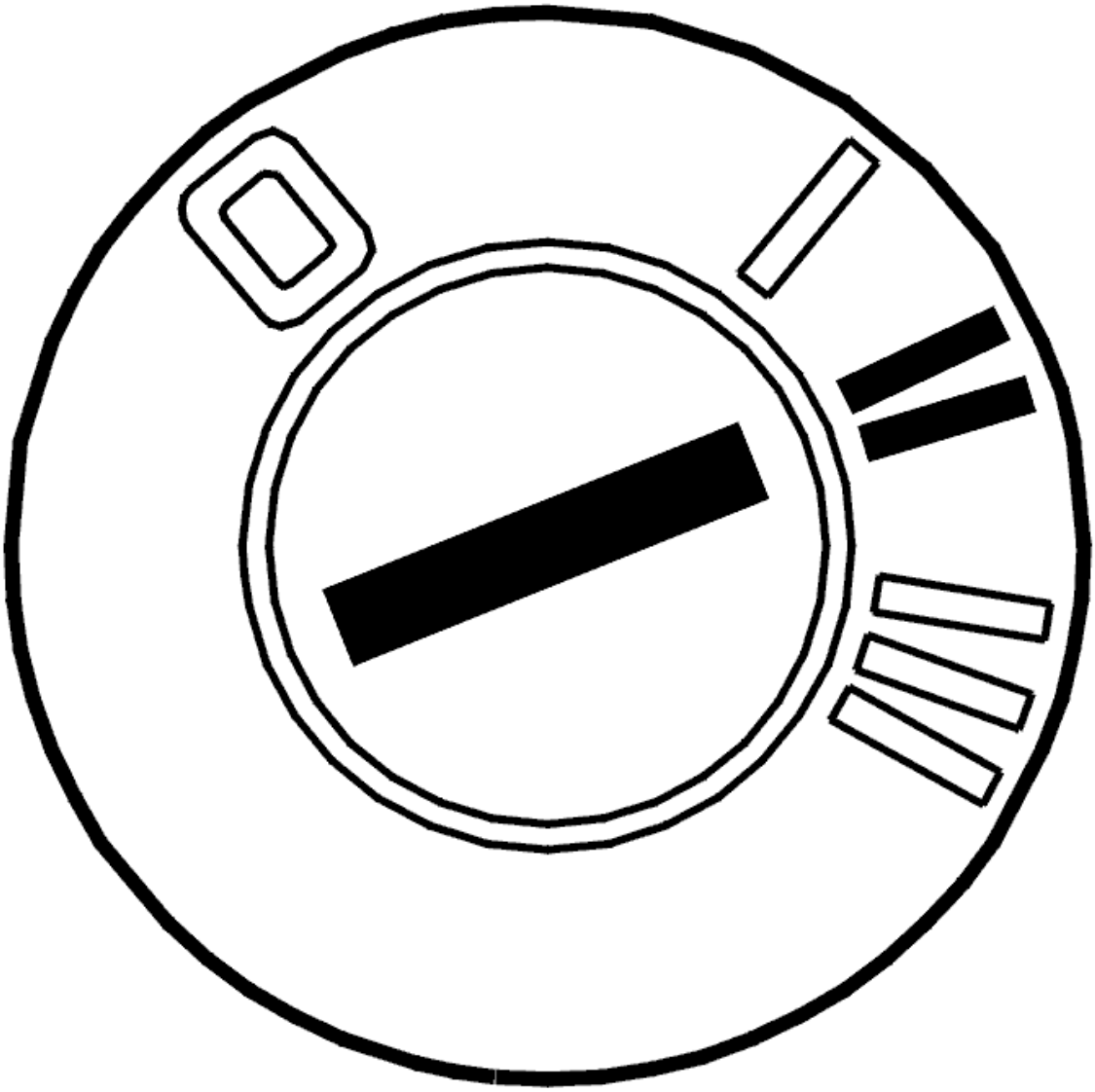

Fig. 323: Identifying Ignition ON
Courtesy of VOLVO CARS CORPORATION

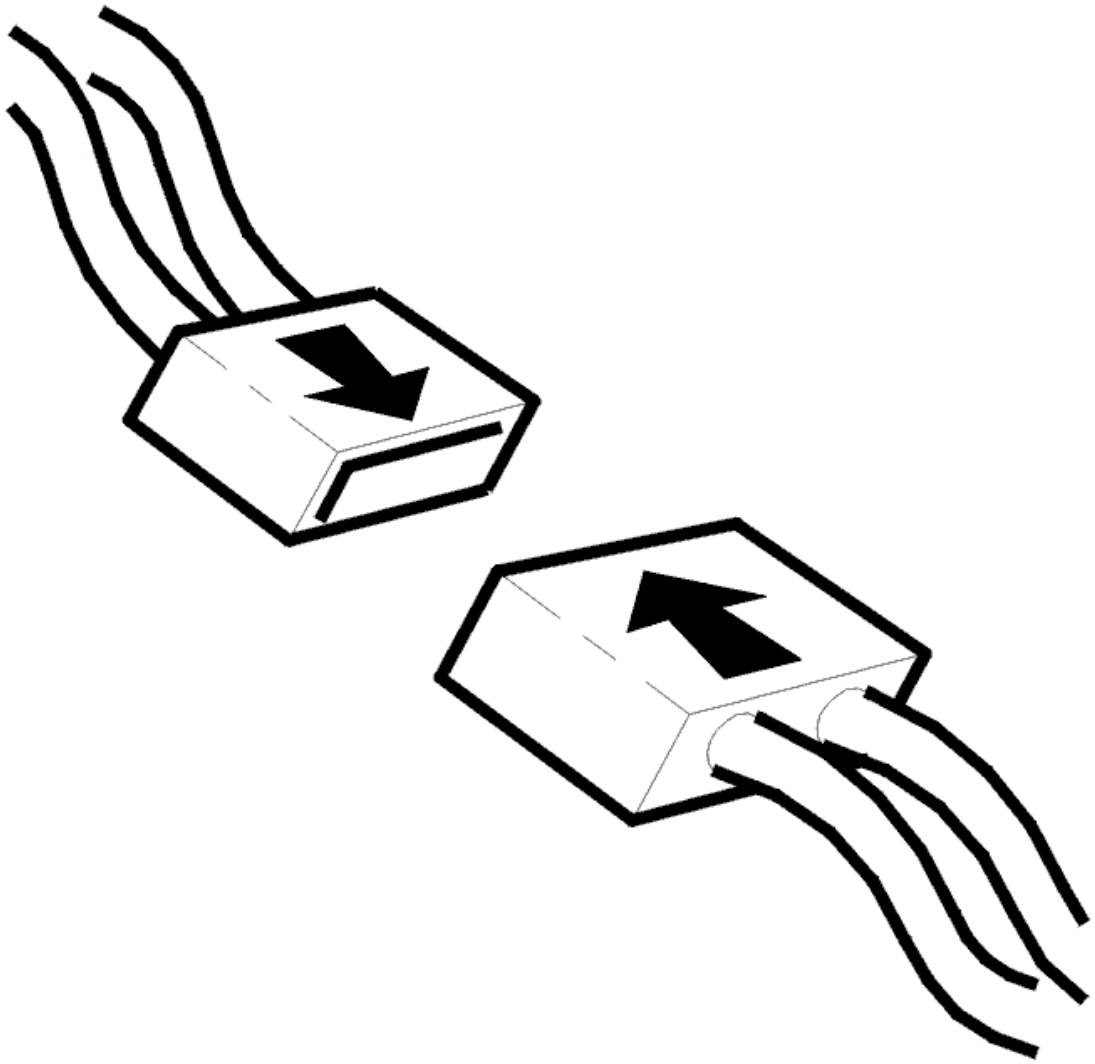

Fig. 324: Connecting Connector
Courtesy of VOLVO CARS CORPORATION

- Ignition off.
- Connect connectors, install components etc.
- Ignition on.

  Activate relay for child safety blocking on window of rear door up/down, using control panel on driver door (activated relay diode illuminates). Activate window of rear door up/down using control panel in rear door.

Does it work?

- **YES**

VERIFIED: Troubleshooting has been completed.

- **NO**

  Refer to **INFORMATION**

INFORMATION

FAULT-TRACING INFORMATION

The fault should have been detected and remedied. As this is not the case fault-tracing has failed.

Exit fault-tracing for this diagnostic trouble code (DTC) or make another attempt.

DIAGNOSTIC TROUBLE CODE INFORMATION

see **DIAGNOSTIC TROUBLE CODE INFORMATION**

CEM-6D0F: RELAY, CHILD SAFETY BLOCKING. SIGNAL TOO LOW. INTERMITTENT FAULT (2003-2004)

DIAGNOSTIC TROUBLE CODE INFORMATION

Condition

If the central electronic module (CEM) detects signal too low on relay coil 2/120, for child safety blocking of rear windows when function is activated, diagnostic trouble code CEM-6D0F will be set.

Substitute Value

- None.

Possible Source

- Oxidation of relay socket contacts.
- Relay is loose or missing.
- Relay fault, open circuit/short circuit to ground in relay coil (meaning that rear window safety blocking will not work when activated).
- Defective control unit.

Fault symptom[s]

- Electric window lift does not work.

SIGNAL TOO LOW. INTERMITTENT FAULT

CHECKING THE CONTROL MODULE FOR OPEN-CIRCUITS

Remove relay 2/120.

Check the driver circuit for the relay coil for an open-circuit as follows:

Measure the voltage between the points #1 and #2 in the relay socket. For more information about open circuits, see:**CHECKING WIRING AND TERMINALS. PERMANENT FAULT**

Activate the relay with the switch child safety lock, for windows rear doors, on the driver's control panel (activated relay LED on).

HINT: Voltage between #1 and #2 shall be battery voltage.

If the value deviates significantly, check voltage between #2 and battery voltage as well as between #1 and ground. Both shall be equal to battery voltage. Check for open circuits according to: **CHECKING WIRING AND TERMINALS. PERMANENT FAULT**

Do not forget to check that the power supply to the control module is OK.

Other information

- For -2004, see: **CENTRAL ELECTRONIC MODULE (CEM), REPLACING**
- For 2005-, see: **CENTRAL ELECTRONIC MODULE (CEM), REPLACING** .

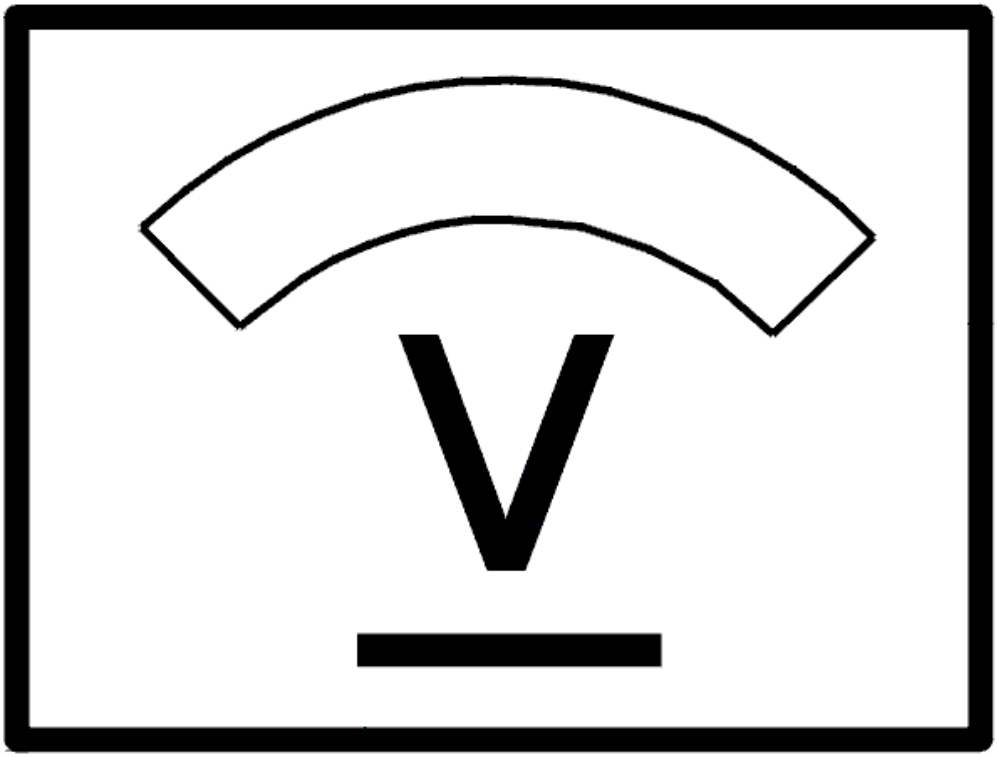

Fig. 325: Identifying Voltage Display
Courtesy of VOLVO CARS CORPORATION

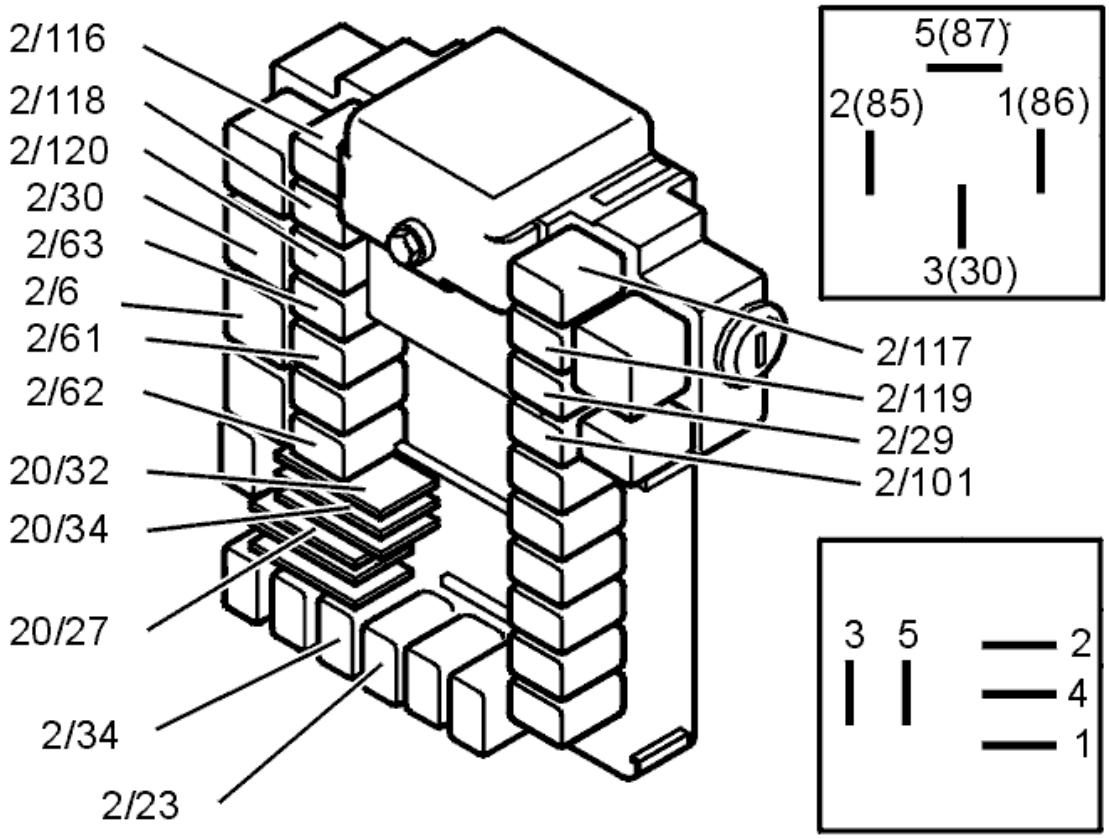

Fig. 326: Identifying Relays
Courtesy of VOLVO CARS CORPORATION

- **Continue**

  Refer to **INFORMATION**

INFORMATION

FAULT-TRACING INFORMATION

If the fault is intermittent, do not verify fault-tracing if the fault does not recur.

It is possible to view the information again, or leave fault-tracing for this diagnostic trouble code (DTC).

CEM-6D0F: RELAY, CHILD SAFETY BLOCKING. SIGNAL TOO LOW. PERMANENT FAULT (2003-2004)

DIAGNOSTIC TROUBLE CODE INFORMATION

see **DIAGNOSTIC TROUBLE CODE INFORMATION**

SIGNAL TOO LOW. PERMANENT FAULT

CHECKING AND REPLACING THE COMPONENT

Remove the relay 2/120 and check the relay socket's contacts for contact resistance and oxidation. See **CHECKING WIRING AND TERMINALS. PERMANENT FAULT**

Install the relay.

Activate the relay with the switch child safety lock, for windows rear doors, on the driver's control panel (activated relay LED on).

If the function is now OK the fault was caused by a contact fault in the relay base.

Other information

- For -2004, see: **CENTRAL ELECTRONIC MODULE (CEM), REPLACING**
- For 2005-, see: **CENTRAL ELECTRONIC MODULE (CEM), REPLACING** .

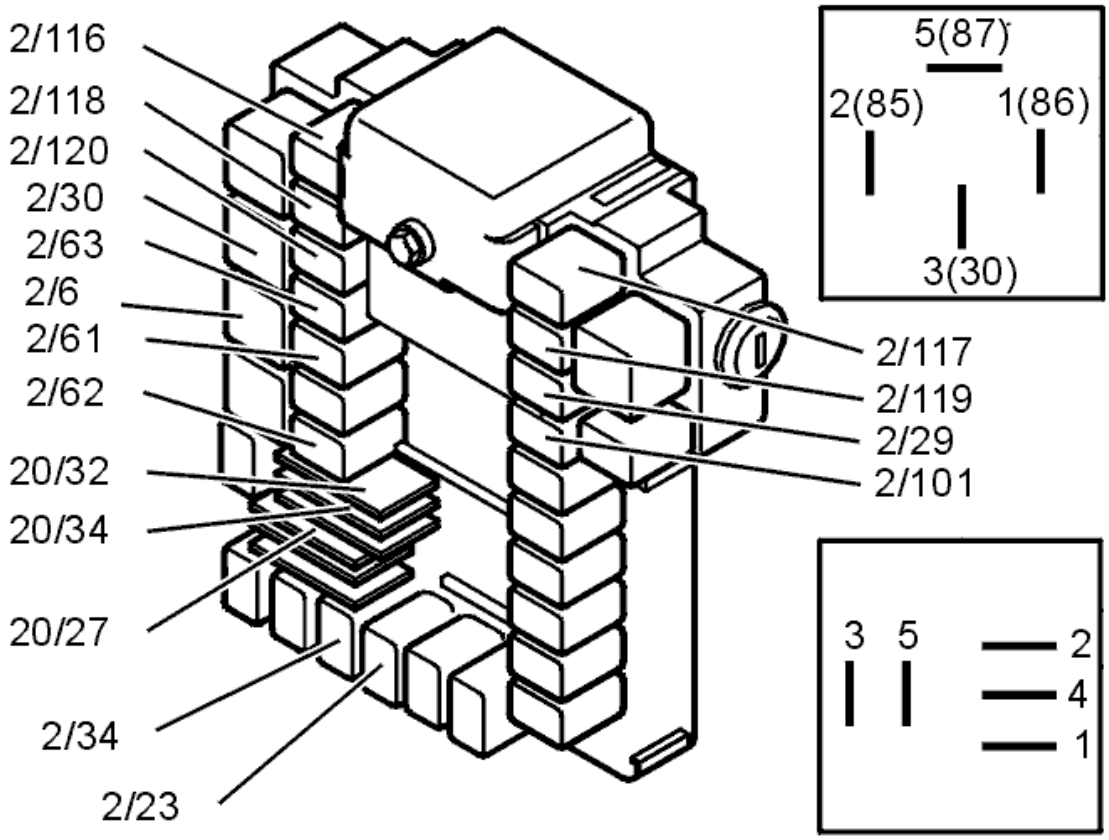

Fig. 327: Identifying Relays
Courtesy of VOLVO CARS CORPORATION

Was the function OK?

- **YES**

Refer to **VERIFICATION**

- **NO**

  Refer to **REPLACING THE COMPONENT**

REPLACING THE COMPONENT

Replace relay, 2/120.

Activate the relay with the switch child safety lock, for windows rear doors, on the driver's control panel (activated relay LED on).

If the function is OK the cause of the fault was a damaged relay (open circuit/short-circuiting in the relay coil).

Other information

- For -2004, see: **CENTRAL ELECTRONIC MODULE (CEM), REPLACING**
- For 2005-, see: **CENTRAL ELECTRONIC MODULE (CEM), REPLACING** .

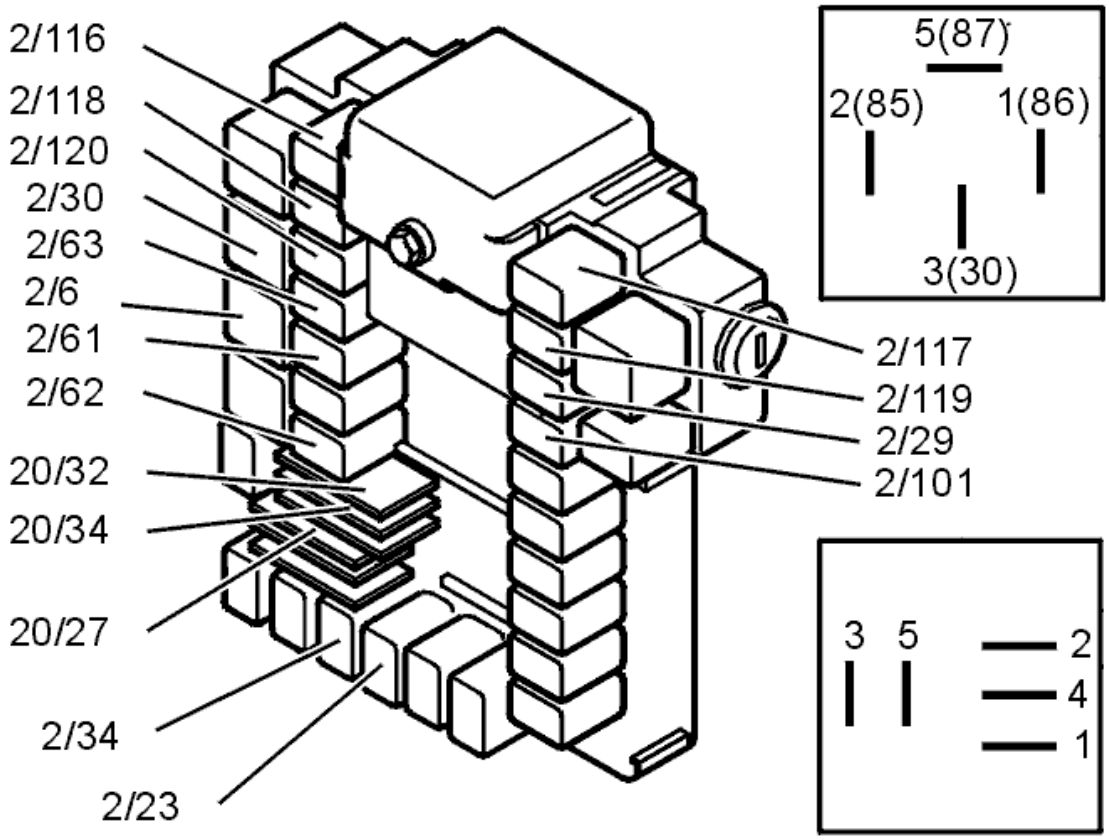

Fig. 328: Identifying Relays
Courtesy of VOLVO CARS CORPORATION

Was the function OK?

- **YES**

  OKAY: Troubleshooting has been completed.

- **NO**

  Refer to **INFORMATION**

VERIFICATION

VERIFICATION

HINT: After the repair it is necessary to check that the fault has been rectified.

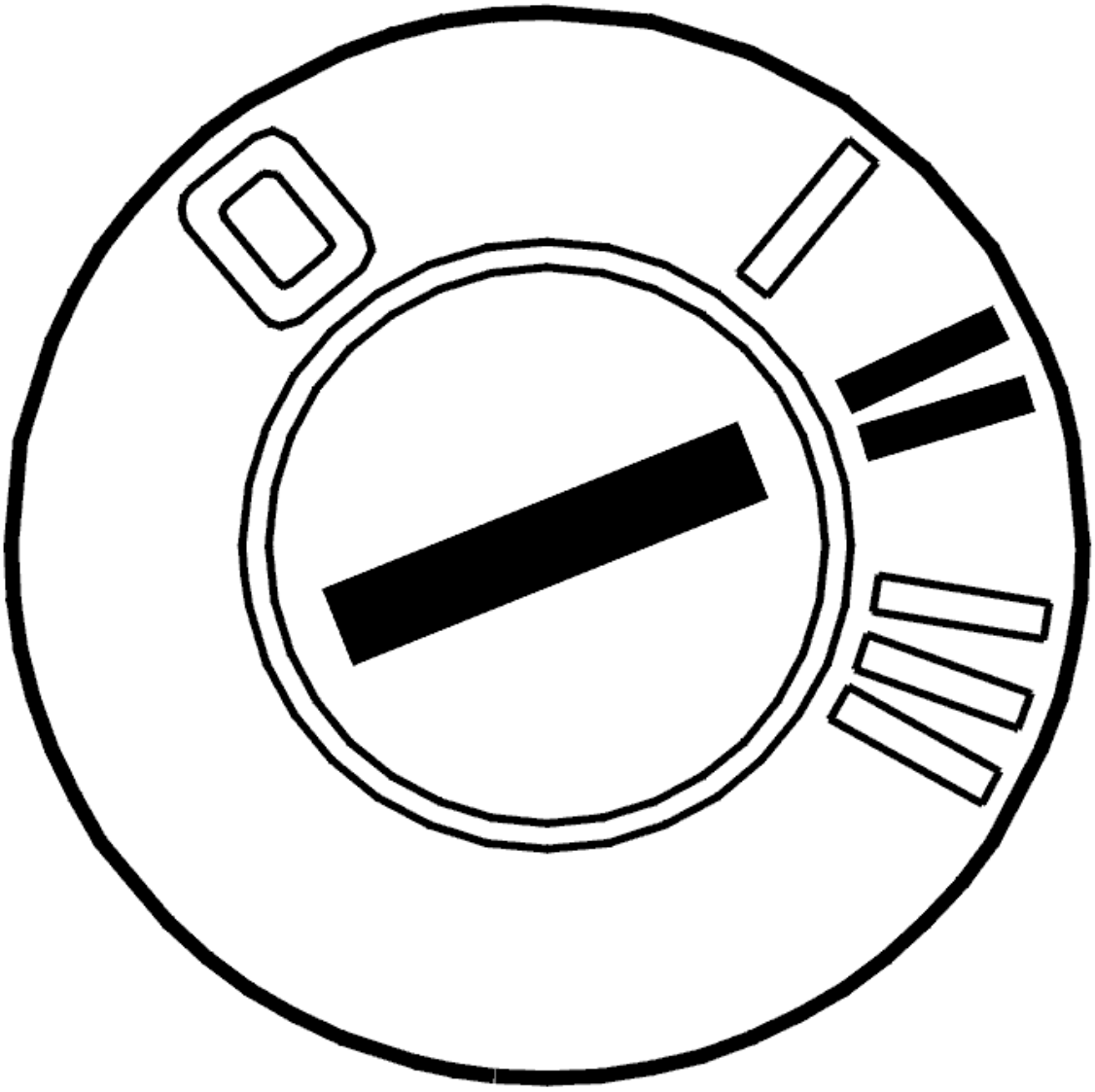

Fig. 329: Identifying Ignition ON
Courtesy of VOLVO CARS CORPORATION

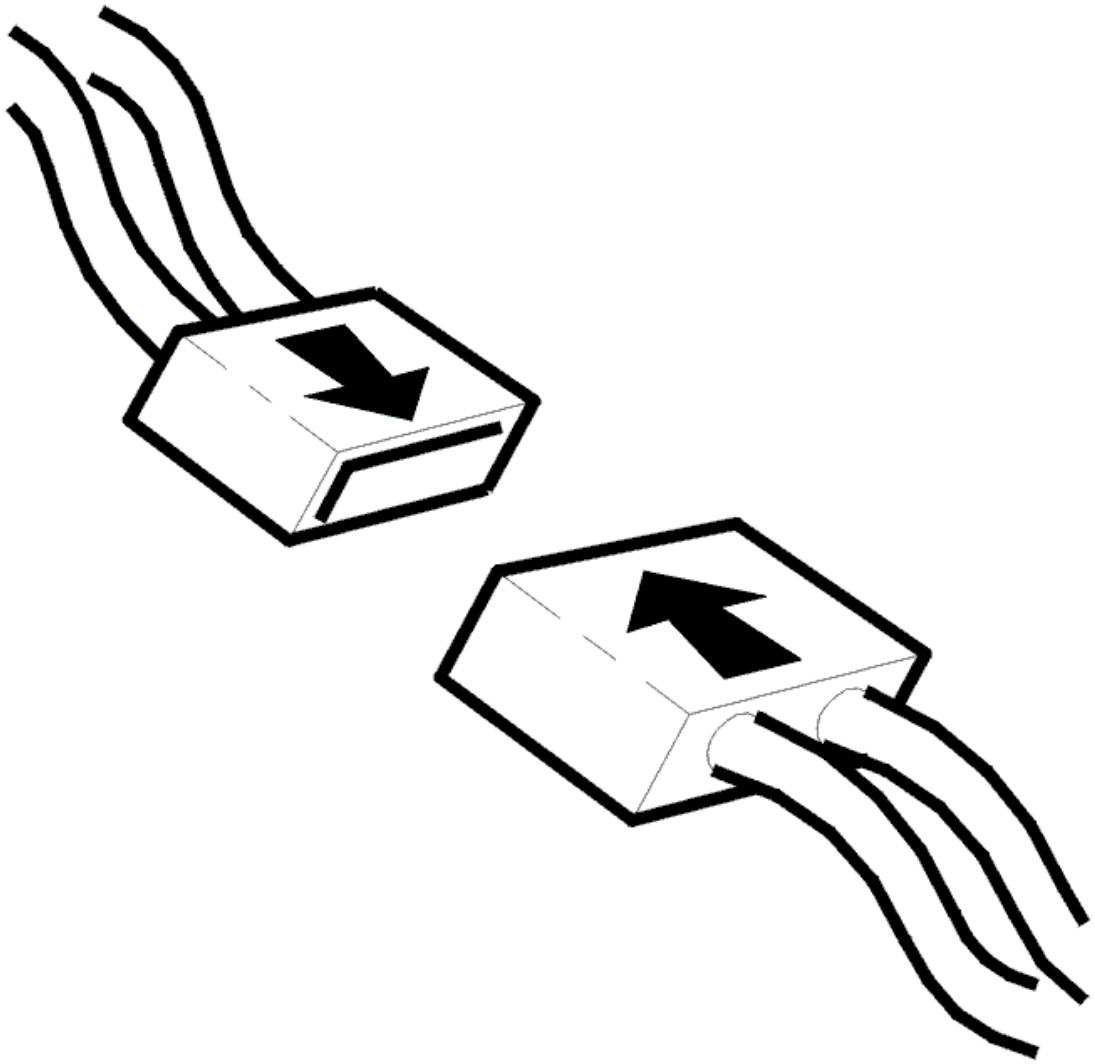

Fig. 330: Connecting Connector
Courtesy of VOLVO CARS CORPORATION

- Ignition off.
- Connect connectors, install components etc.
- Ignition on.

  Activate relay for child safety blocking on window of rear door up/down, using control panel on driver door (activated relay diode illuminates). Activate window of rear door up/down using control panel in rear door.

Does it work?

- **YES**

  VERIFIED: Troubleshooting has been completed.

- **NO**

  Refer to **INFORMATION**

INFORMATION

FAULT-TRACING INFORMATION

The fault should have been detected and remedied. As this is not the case fault-tracing has failed.

Exit fault-tracing for this diagnostic trouble code (DTC) or make another attempt.

CEM-6E01: SWITCH, FUEL TANK FILLER COVER. FAULTY SIGNAL (2005-2012)

DIAGNOSTIC TROUBLE CODE (DTC) INFORMATION CEM-6E01

Condition

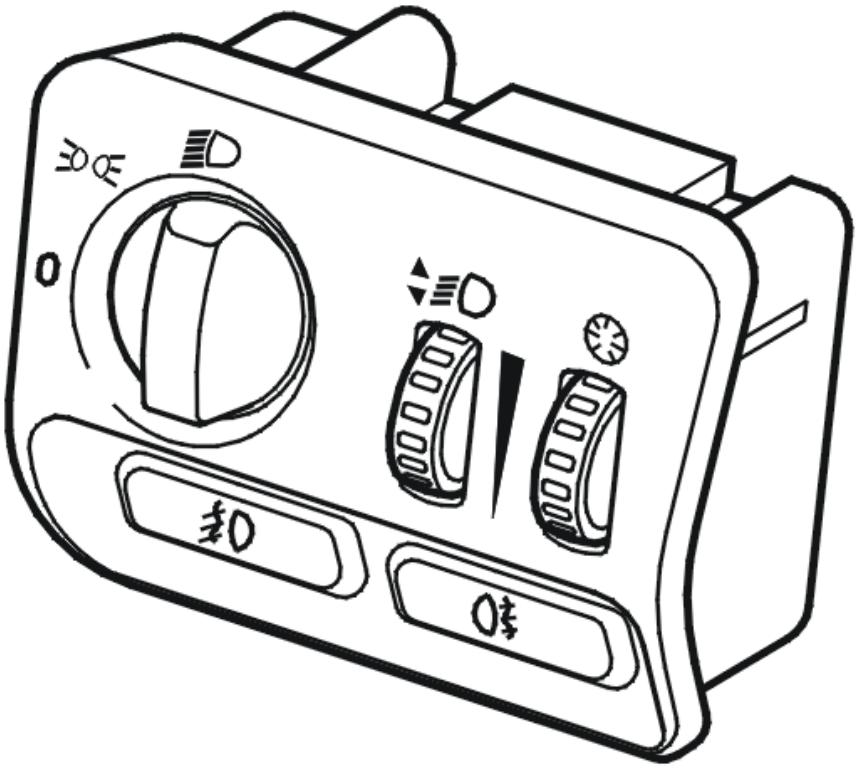

Fig. 331: Identifying Light Switch Module (LSM)
Courtesy of VOLVO CARS CORPORATION

The central electronic module (CEM) communicates with the light switch module (LSM).

The diagnostic trouble code (DTC) is stored if the central electronic module (CEM) receives information from the light switch module (LSM) indicating that it has detected that the switch for opening the fuel tank filler cover has been activated for more than 60 seconds.

The diagnostic trouble code (DTC) can be diagnosed at ignition switch position II.

Substitute Value

- None.

Possible Source

- Damaged switch for opening the fuel tank filler cover
- Fault in the communication with the light switch module (LSM).

Fault symptom[s]

- Does not lock / unlock the fuel tank filler cap.

ACTIVATED TOO LONG

CHECKING THE CONTROL

The diagnostic trouble code (DTC) is stored when a button or switch has been depressed for a long time.

If the fault is intermittent, it has been registered previously but is no longer present. Intermittent faults can be caused by interference at start up or can be a different type of fault which occurs on different occasions. The fault is evaluated depending on how it occurs.

Check that the button or switch does not stick in the activated position.

Remedy as necessary.

Other information

see **SWITCHES LIGHTS, REPLACING**

- **Continue**

  Refer to **VERIFICATION**

VERIFICATION

VERIFICATION

HINT: After carrying out the repair, check that the fault has been remedied.

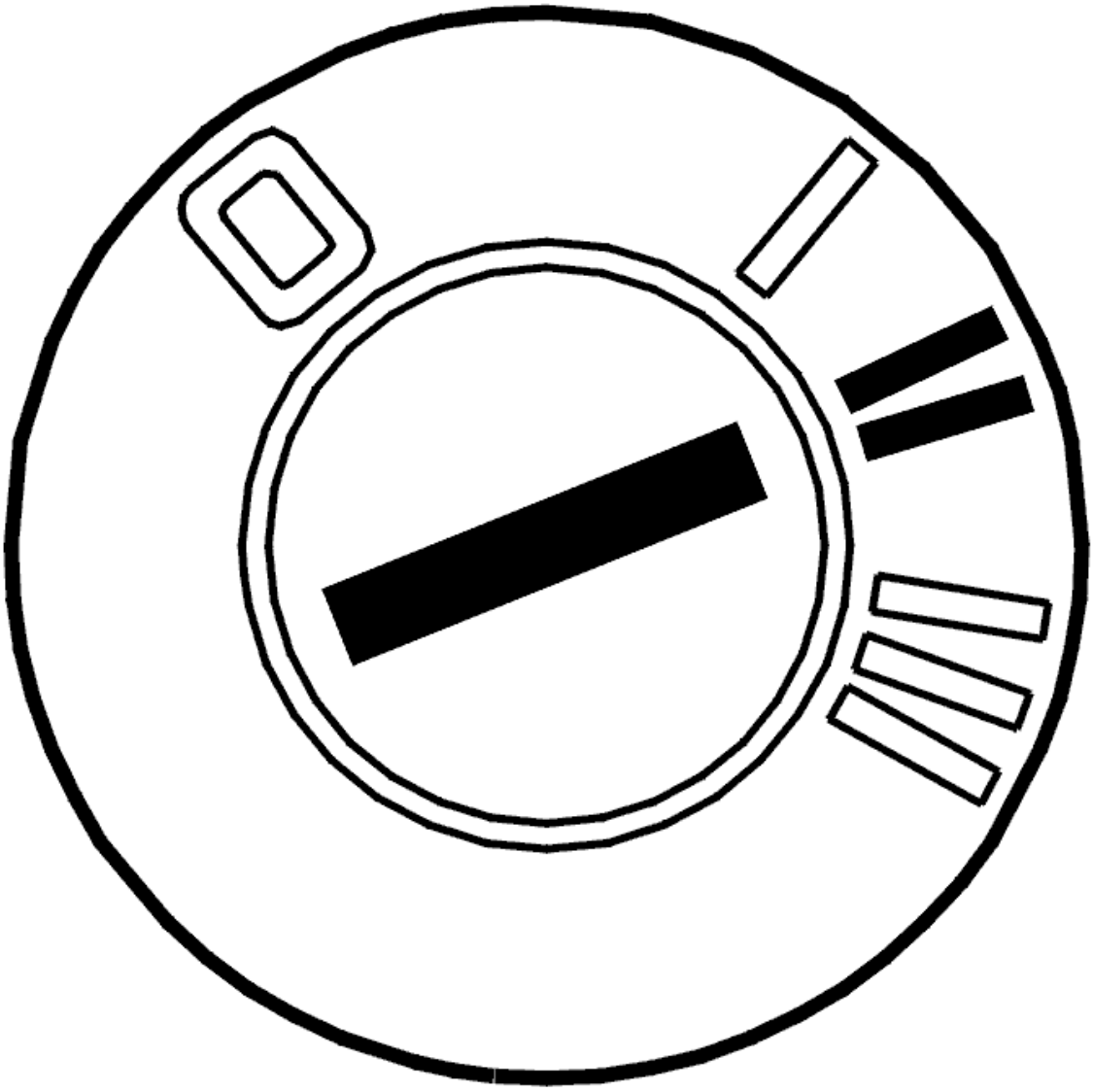

Fig. 332: Identifying Ignition ON
Courtesy of VOLVO CARS CORPORATION

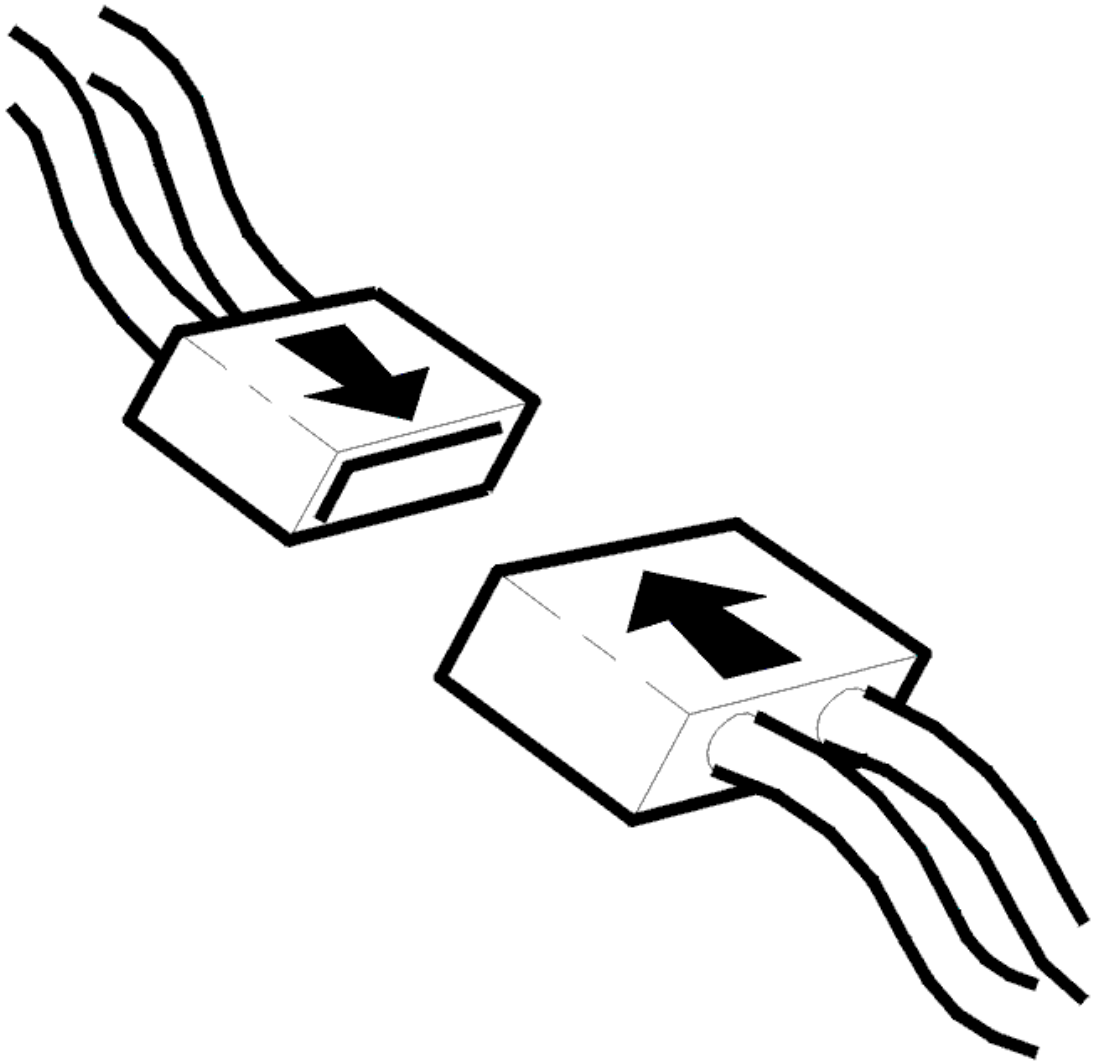

Fig. 333: Connecting Connector
Courtesy of VOLVO CARS CORPORATION

- Ignition off
- Reinstall the connectors, components etc.
- Ignition on.

  Check that the function for the relevant button or switch is correct.

Is the function OK?

- **YES**

  VERIFIED: Troubleshooting has been completed.

- **NO**

  Refer to **INFORMATION**

INFORMATION

FAULT-TRACING INFORMATION

The fault should have been detected and remedied. As this is not the case fault-tracing has failed.

Exit fault-tracing for this diagnostic trouble code (DTC) or make another attempt.

CEM-6F01: CRUISE CONTROL ON/OFF BUTTON. ACTIVATED TOO LONG (2005-2012)

DIAGNOSTIC TROUBLE CODE (DTC) INFORMATION CEM-6F01

Condition

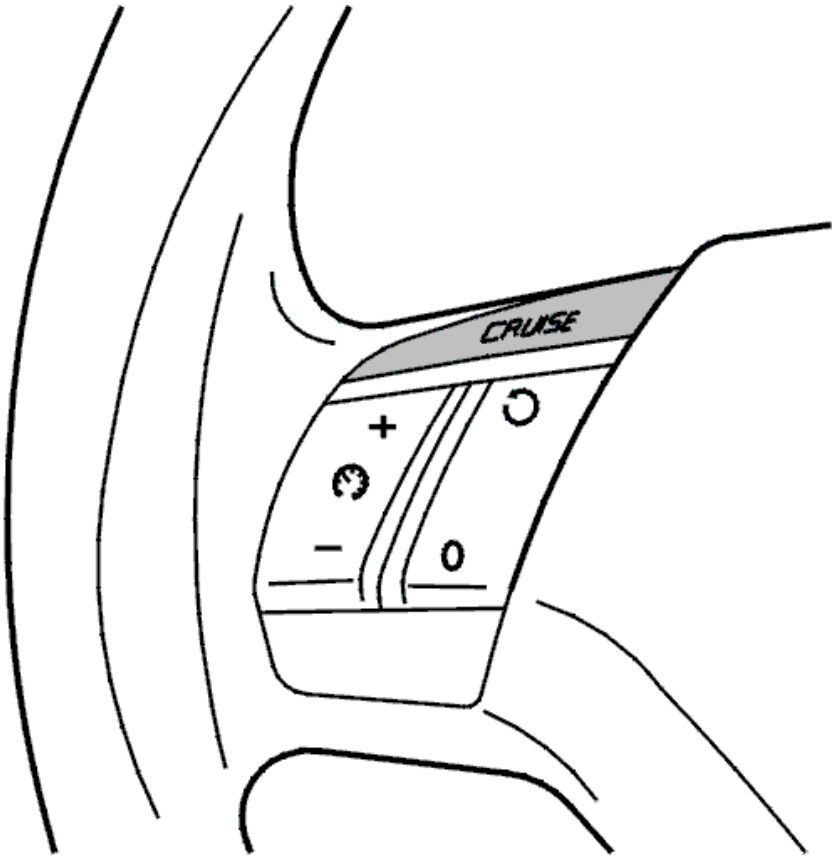

Fig. 334: Identifying ON/OFF Button For Cruise Control
Courtesy of VOLVO CARS CORPORATION

The central electronic module (CEM) checks the signal from the ON/OFF button for the cruise control.

The diagnostic trouble code (DTC) is stored if the central electronic module (CEM) registers that the ON/OFF button has been active for more than 3 minutes.

The diagnostic trouble code (DTC) can be diagnosed when the ignition is switched on.

Substitute Value

- None.

Possible Source

- The ON/OFF button is jammed in the depressed position
- Damaged ON/OFF button.

Fault symptom[s]

- Cruise control does not function at all.

ACTIVATED TOO LONG

CHECKING THE CONTROL

The diagnostic trouble code (DTC) is stored when a button or switch has been depressed for a long time.

If the fault is intermittent, it has been registered previously but is no longer present. Intermittent faults can be caused by interference at start up of the central electronic module (CEM) or may be a different type of fault which occurs on different occasions. The fault is evaluated depending on how it occurs.

Check that the button or switch does not stick in the activated position.

Remedy as necessary.

Other information

see **KEYPAD STEERING WHEEL, REPLACING**

- **Continue**

  Refer to **VERIFICATION**

VERIFICATION

VERIFICATION

HINT: After carrying out the repair, check that the fault has been remedied.

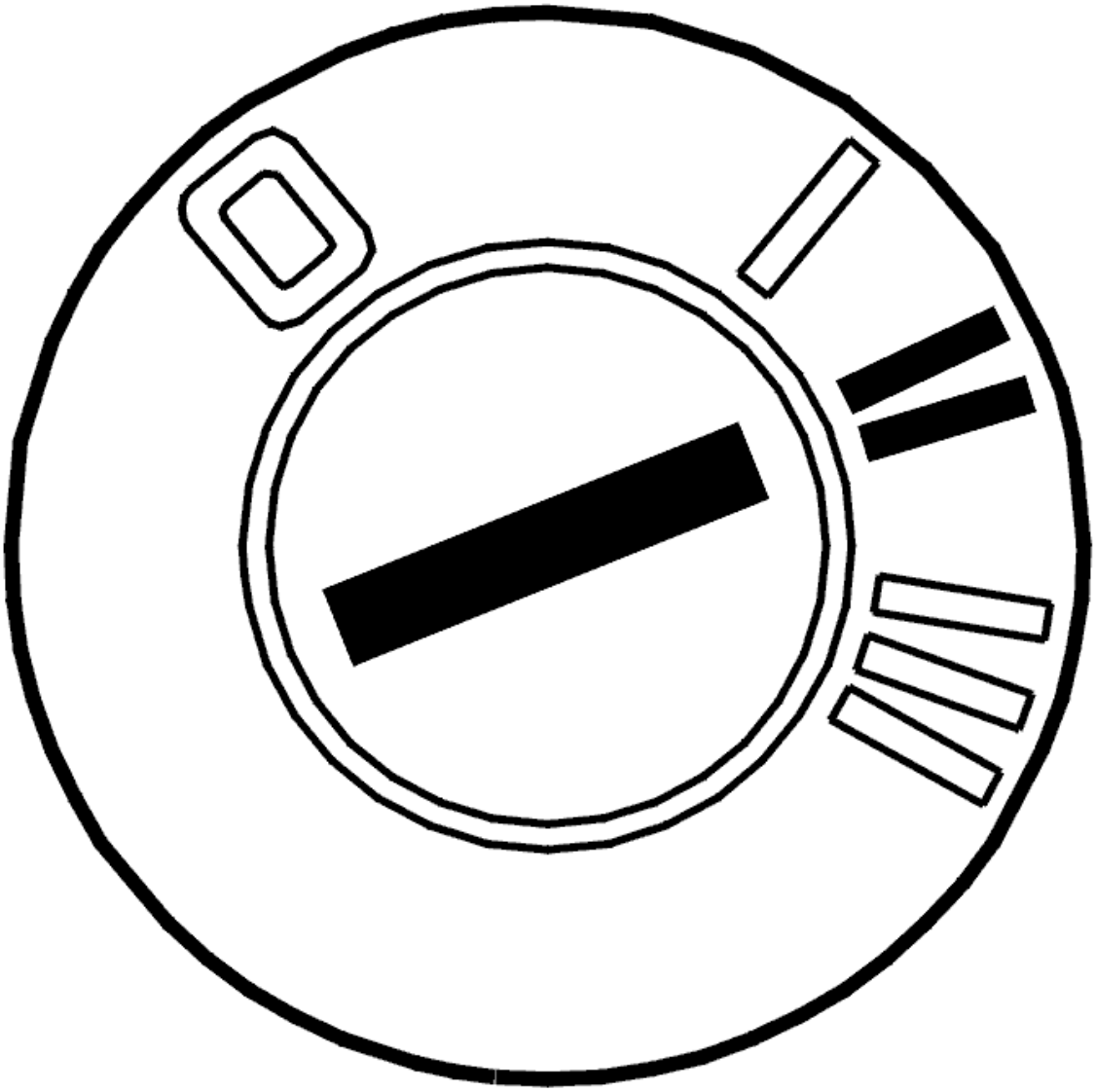

Fig. 335: Identifying Ignition ON
Courtesy of VOLVO CARS CORPORATION

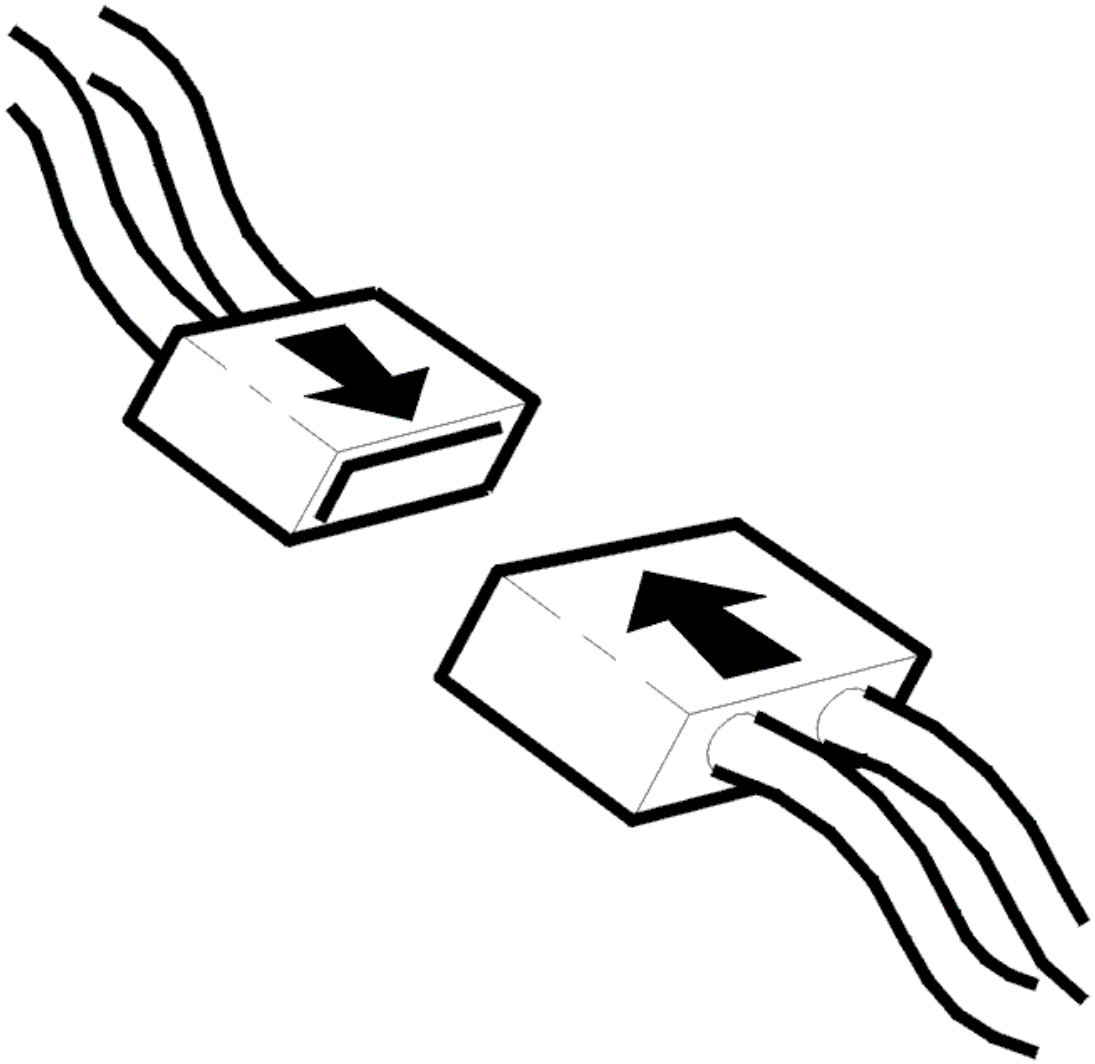

Fig. 336: Connecting Connector
Courtesy of VOLVO CARS CORPORATION

- Ignition off
- Reinstall the connectors, components etc.
- Ignition on.

  Check that all switches are working.

Is the function OK?

- **YES**

  VERIFIED: Troubleshooting has been completed.

- **NO**

  Refer to **INFORMATION**

INFORMATION

FAULT-TRACING INFORMATION

The fault should have been detected and remedied. As this is not the case fault-tracing has failed.

Exit fault-tracing for this diagnostic trouble code (DTC) or make another attempt.

CEM-6F02: CRUISE CONTROL SET+ BUTTON. ACTIVATED TOO LONG (2005-2012)

DIAGNOSTIC TROUBLE CODE (DTC) INFORMATION CEM-6F02

Condition

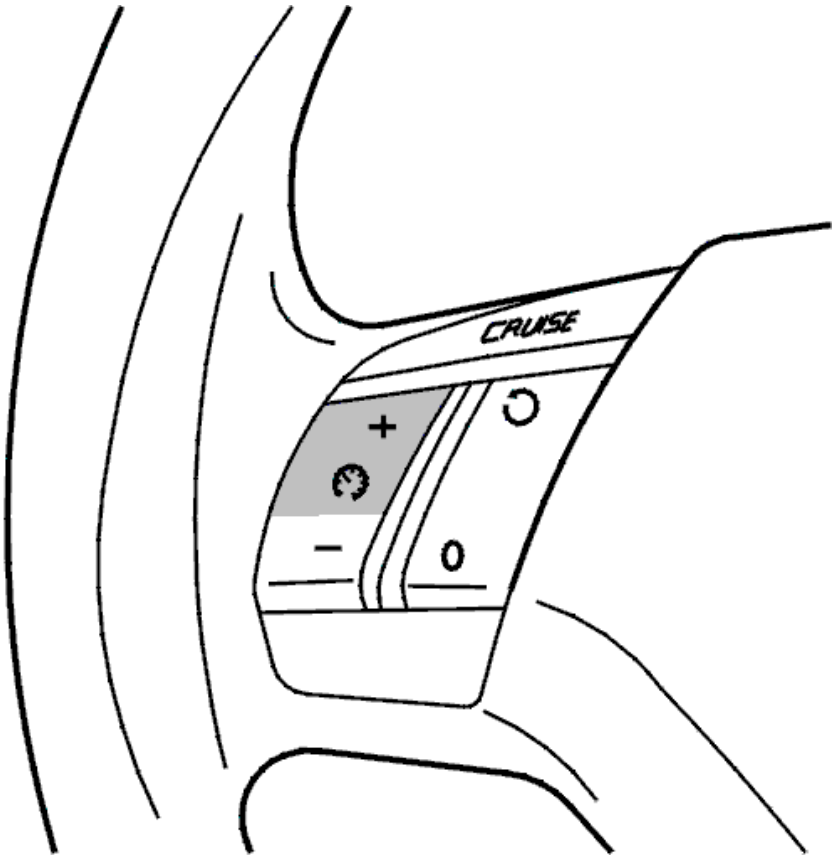

Fig. 337: Identifying Set+ Button For Cruise Control
Courtesy of VOLVO CARS CORPORATION

The central electronic module (CEM) checks the signal from the Set+ button for the cruise control.

The diagnostic trouble code (DTC) is stored if the central electronic module (CEM) registers that the Set+ button has been active for more than 3 minutes.

The diagnostic trouble code (DTC) can be diagnosed when the ignition is switched on.

Substitute Value

- None.

Possible Source

- The Set+ button is jammed in the pressed in position
- Damaged Set+ button.

Fault symptom[s]

- Cruise control does not function at all.

ACTIVATED TOO LONG

CHECKING THE CONTROL

The diagnostic trouble code (DTC) is stored when a button or switch has been depressed for a long time.

If the fault is intermittent, it has been registered previously but is no longer present. Intermittent faults can be caused by interference at start up of the central electronic module (CEM) or may be a different type of fault which occurs on different occasions. The fault is evaluated depending on how it occurs.

Check that the button or switch does not stick in the activated position.

Remedy as necessary.

Other information

see **KEYPAD STEERING WHEEL, REPLACING**

- **Continue**

  Refer to **VERIFICATION**

VERIFICATION

VERIFICATION

HINT: After carrying out the repair, check that the fault has been remedied.

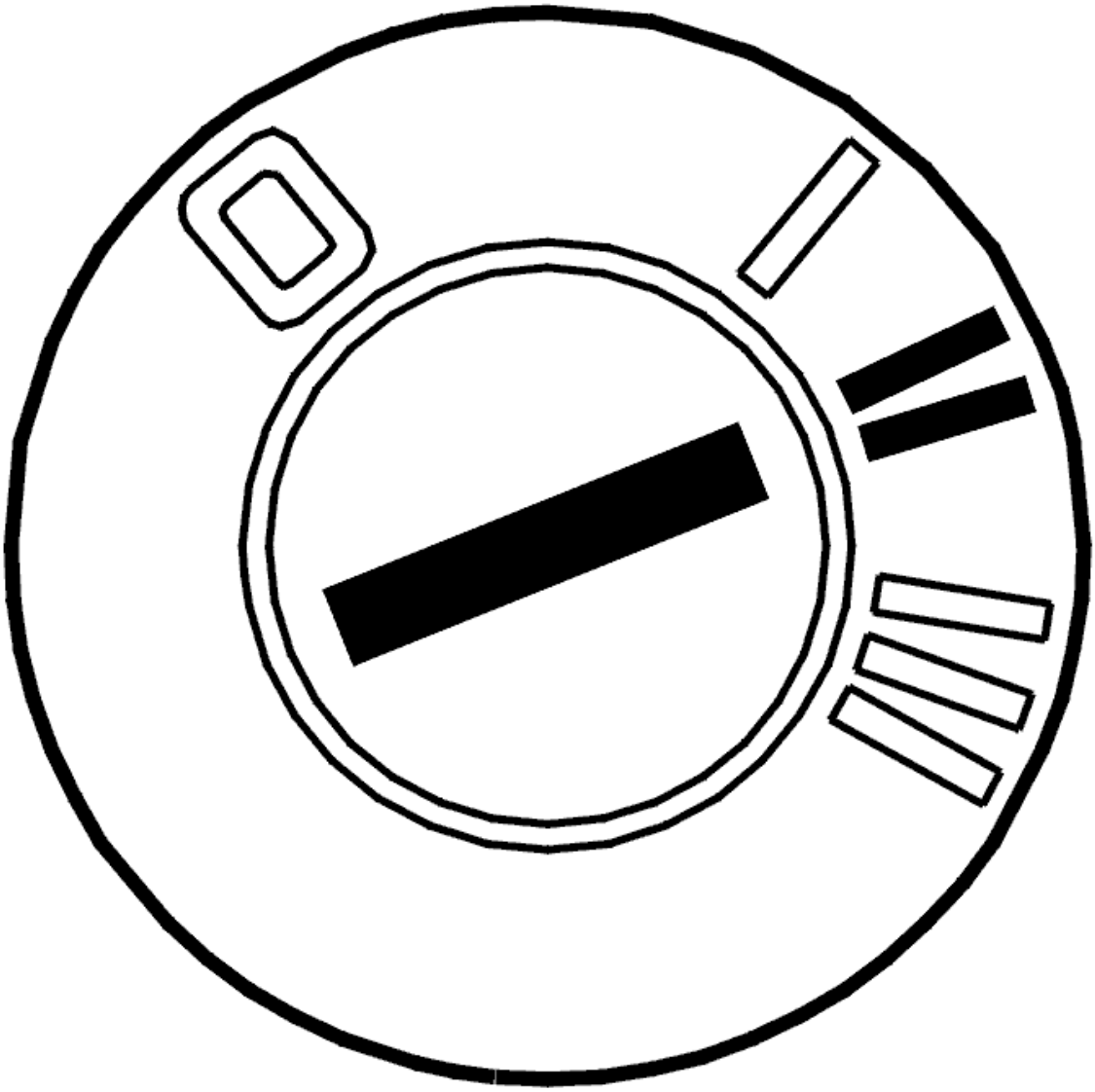

Fig. 338: Identifying Ignition ON
Courtesy of VOLVO CARS CORPORATION

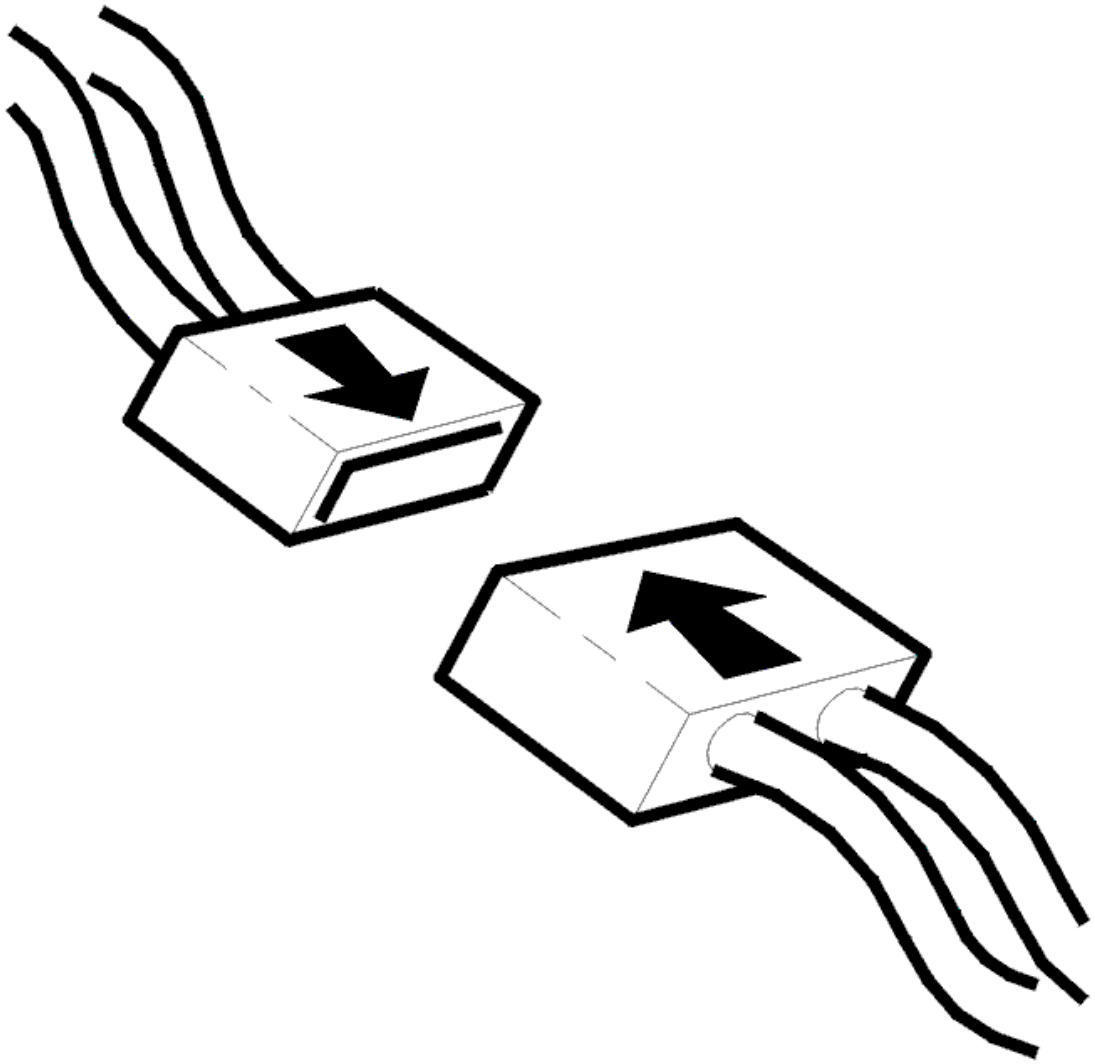

Fig. 339: Connecting Connector
Courtesy of VOLVO CARS CORPORATION

- Ignition off
- Reinstall the connectors, components etc.
- Ignition on.

  Check that all switches are working.

Is the function OK?

- **YES**

  VERIFIED: Troubleshooting has been completed.

- **NO**

  Refer to **INFORMATION**

INFORMATION

FAULT-TRACING INFORMATION

The fault should have been detected and remedied. As this is not the case fault-tracing has failed.

Exit fault-tracing for this diagnostic trouble code (DTC) or make another attempt.

CEM-6F03: CRUISE CONTROL SET- BUTTON. ACTIVATED TOO LONG (2005-2012)

DIAGNOSTIC TROUBLE CODE (DTC) INFORMATION CEM-6F03

Condition

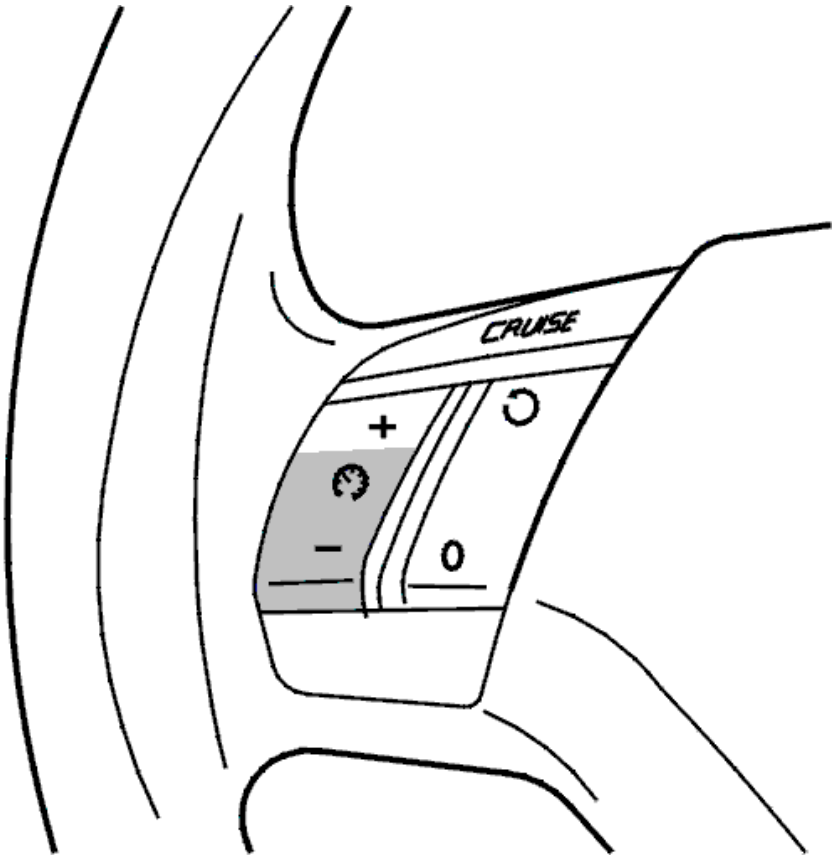

Fig. 340: Identifying Set- Button For Cruise Control
Courtesy of VOLVO CARS CORPORATION

The central electronic module (CEM) checks the signal from the Set- button for the cruise control.

The diagnostic trouble code (DTC) is stored if the central electronic module (CEM) registers that the Set- button has been active for more than 3 minutes.

The diagnostic trouble code (DTC) can be diagnosed when the ignition is switched on.

Substitute Value

- None.

Possible Source

- The Set- button is jammed in the pressed in position
- Damaged Set- button.

Fault symptom[s]

- Cruise control does not function at all.

ACTIVATED TOO LONG

CHECKING THE CONTROL

The diagnostic trouble code (DTC) is stored when a button or switch has been depressed for a long time.

If the fault is intermittent, it has been registered previously but is no longer present. Intermittent faults can be caused by interference at start up of the central electronic module (CEM) or may be a different type of fault which occurs on different occasions. The fault is evaluated depending on how it occurs.

Check that the button or switch does not stick in the activated position.

Remedy as necessary.

Other information

see **KEYPAD STEERING WHEEL, REPLACING**

- **Continue**

  Refer to **VERIFICATION**

VERIFICATION

VERIFICATION

HINT: After carrying out the repair, check that the fault has been remedied.

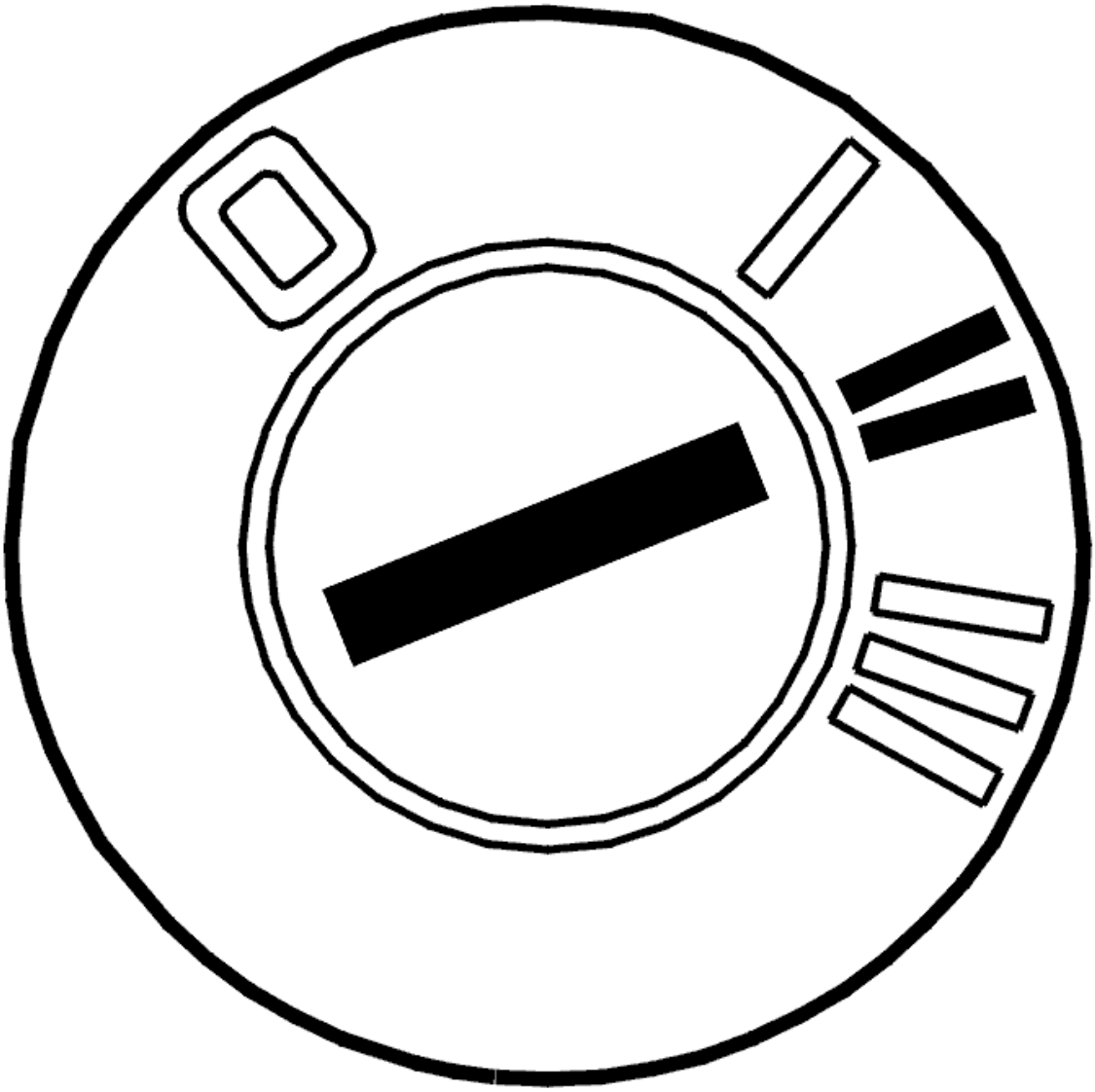

Fig. 341: Identifying Ignition ON
Courtesy of VOLVO CARS CORPORATION

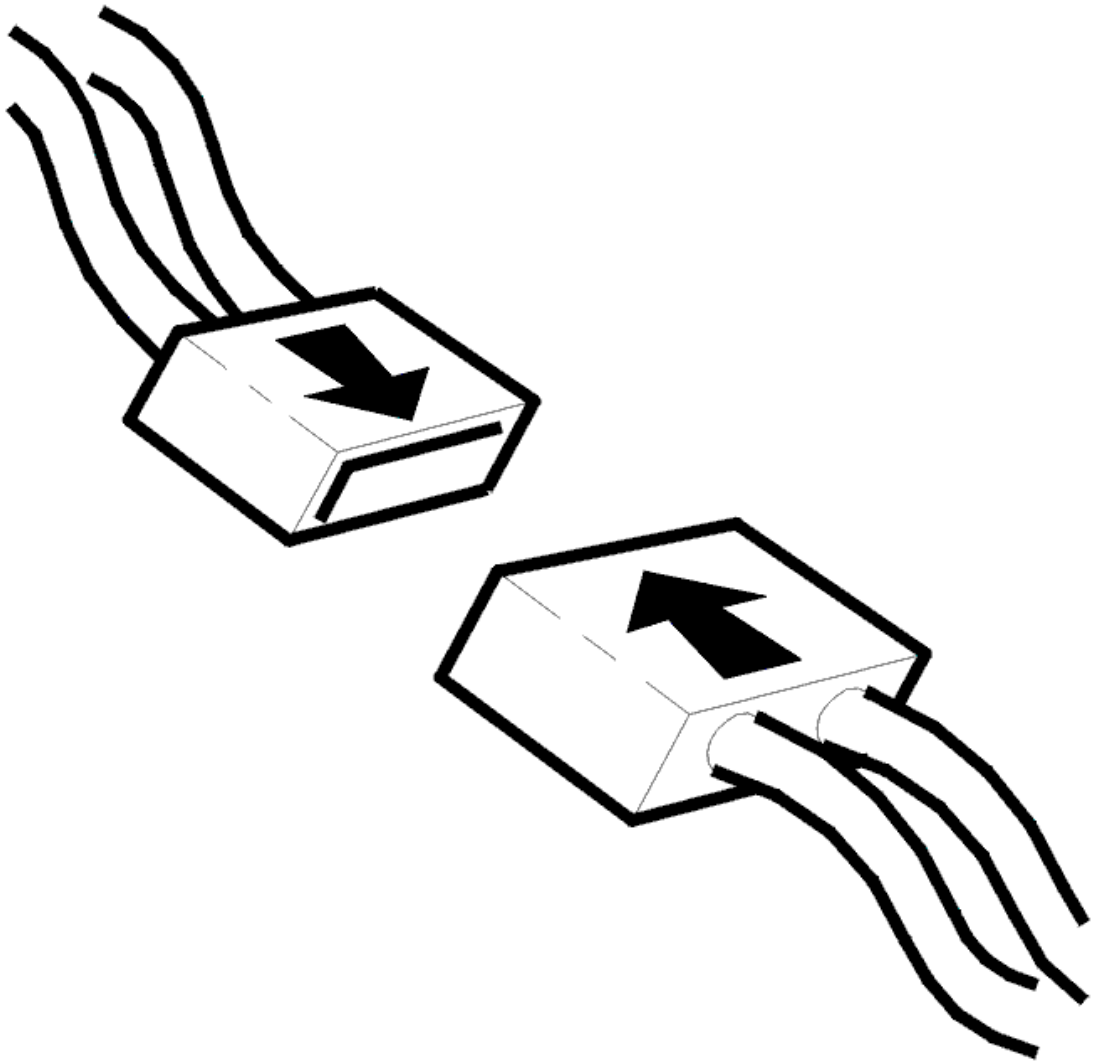

Fig. 342: Connecting Connector
Courtesy of VOLVO CARS CORPORATION

- Ignition off
- Reinstall the connectors, components etc.
- Ignition on.

  Check that all switches are working.

Is the function OK?

- **YES**

  VERIFIED: Troubleshooting has been completed.

- **NO**

  Refer to **INFORMATION**

INFORMATION

FAULT-TRACING INFORMATION

The fault should have been detected and remedied. As this is not the case fault-tracing has failed.

Exit fault-tracing for this diagnostic trouble code (DTC) or make another attempt.

CEM-6F04: CRUISE CONTROL, RESUME BUTTON. ACTIVATED TOO LONG (2005-2012)

DIAGNOSTIC TROUBLE CODE (DTC) INFORMATION CEM-6F04

Condition

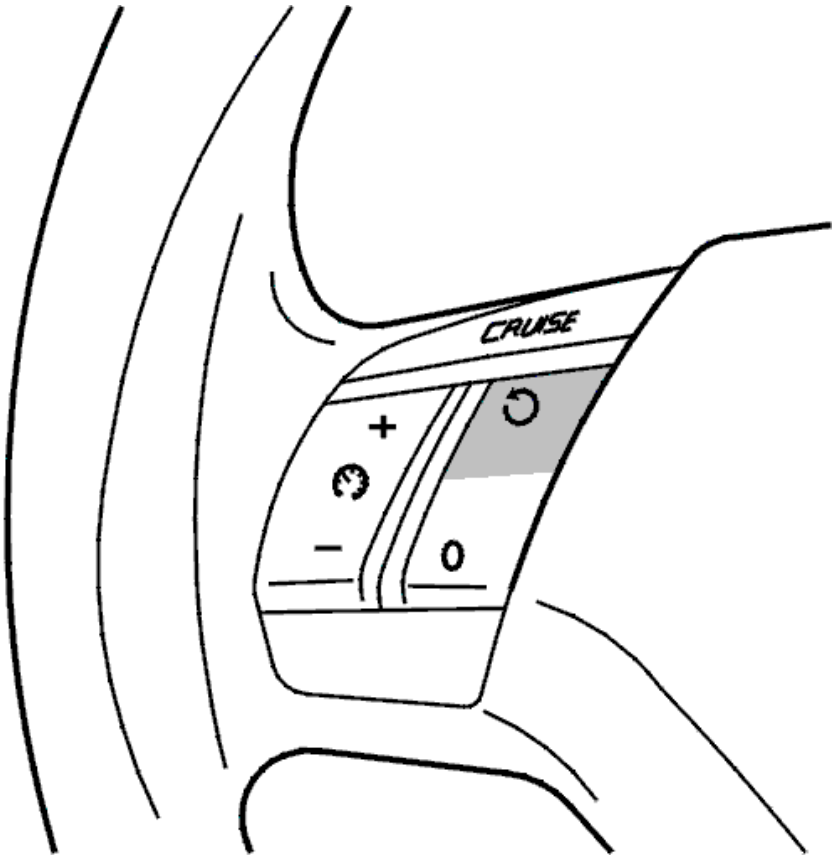

Fig. 343: Identifying Resume Button For Cruise Control
Courtesy of VOLVO CARS CORPORATION

The central electronic module (CEM) checks the signal from the Resume button for the cruise control.

The diagnostic trouble code (DTC) is stored if the central electronic module (CEM) registers that the Resume button has been active for more than 3 minutes.

The diagnostic trouble code (DTC) can be diagnosed when the ignition is switched on.

Substitute Value

- None.

Possible Source

- The Resume button is jammed in the pressed in position
- Damaged Resume button.

Fault symptom[s]

- Cruise control does not function at all.

ACTIVATED TOO LONG

CHECKING THE CONTROL

The diagnostic trouble code (DTC) is stored when a button or switch has been depressed for a long time.

If the fault is intermittent, it has been registered previously but is no longer present. Intermittent faults can be caused by interference at start up of the central electronic module (CEM) or may be a different type of fault which occurs on different occasions. The fault is evaluated depending on how it occurs.

Check that the button or switch does not stick in the activated position.

Remedy as necessary.

Other information

see **KEYPAD STEERING WHEEL, REPLACING**

- **Continue**

  Refer to **VERIFICATION**

VERIFICATION

VERIFICATION

HINT: After carrying out the repair, check that the fault has been remedied.

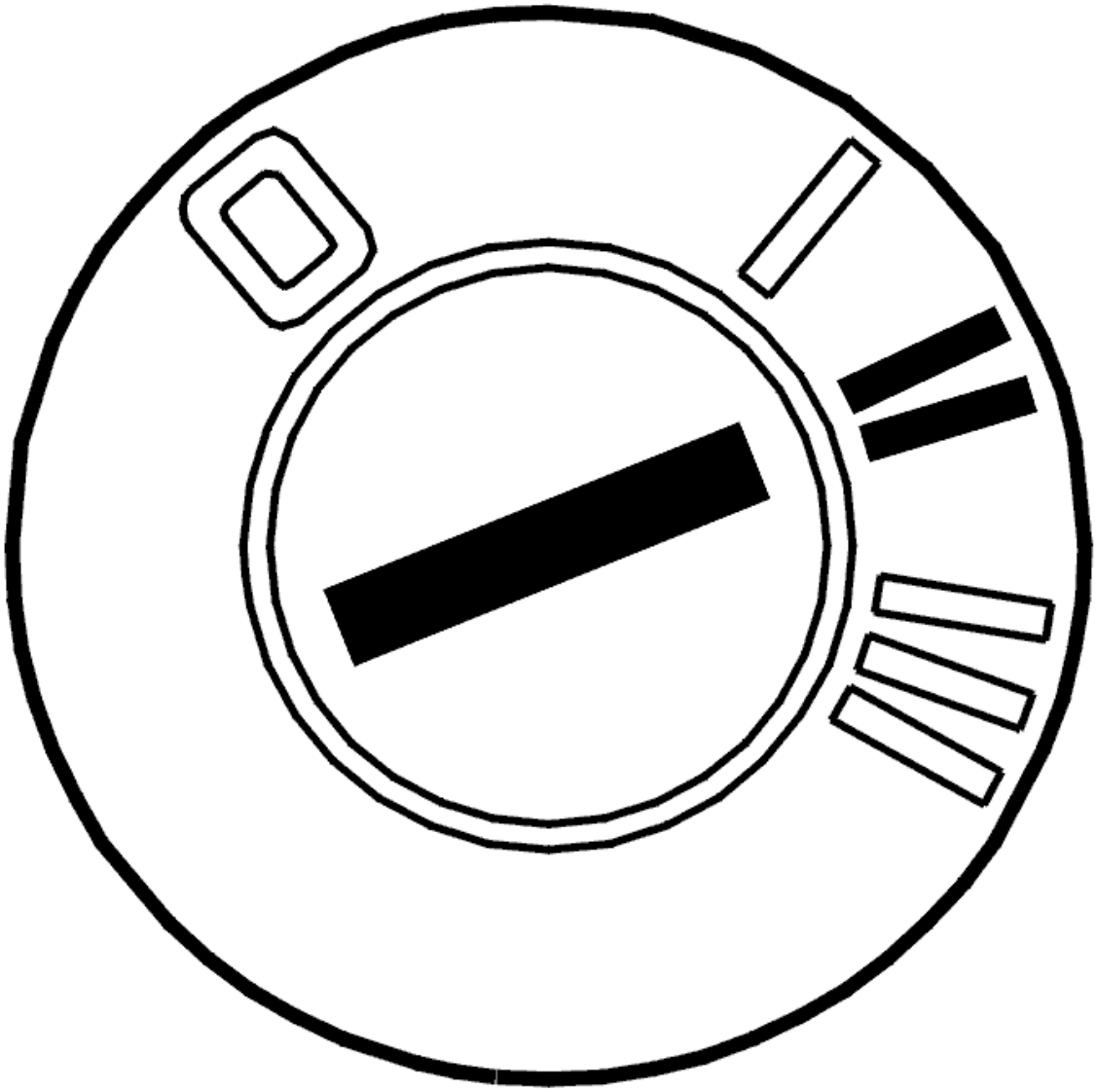

Fig. 344: Identifying Ignition ON
Courtesy of VOLVO CARS CORPORATION

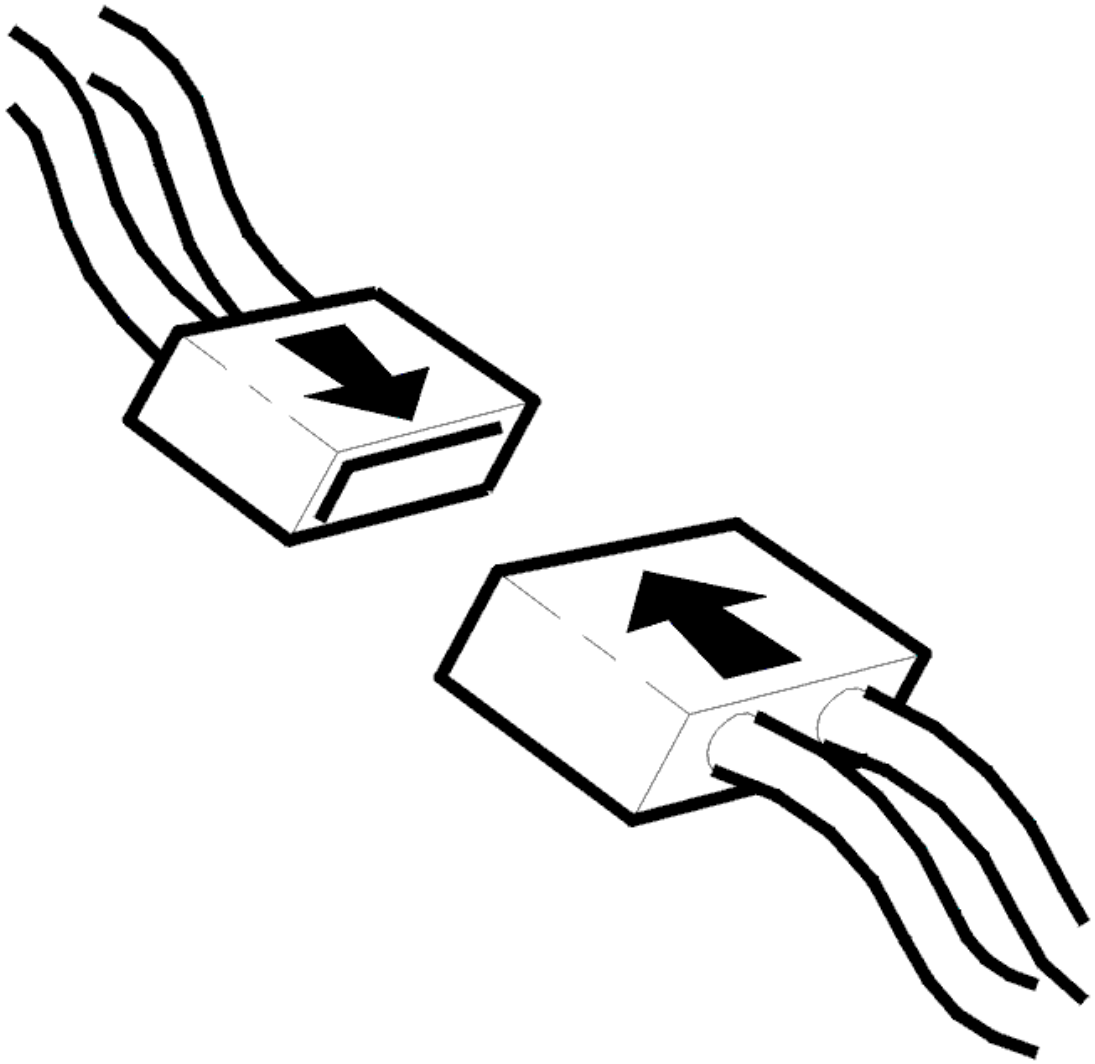

Fig. 345: Connecting Connector
Courtesy of VOLVO CARS CORPORATION

- Ignition off
- Reinstall the connectors, components etc.
- Ignition on.

  Check that all switches are working.

Is the function OK?

- **YES**

  VERIFIED: Troubleshooting has been completed.

- **NO**

  Refer to **INFORMATION**

INFORMATION

FAULT-TRACING INFORMATION

The fault should have been detected and remedied. As this is not the case fault-tracing has failed.

Exit fault-tracing for this diagnostic trouble code (DTC) or make another attempt.

CEM-6F05: CRUISE CONTROL, CANCEL BUTTON. ACTIVATED TOO LONG (2005-2012)

DIAGNOSTIC TROUBLE CODE (DTC) INFORMATION CEM-6F05

Condition

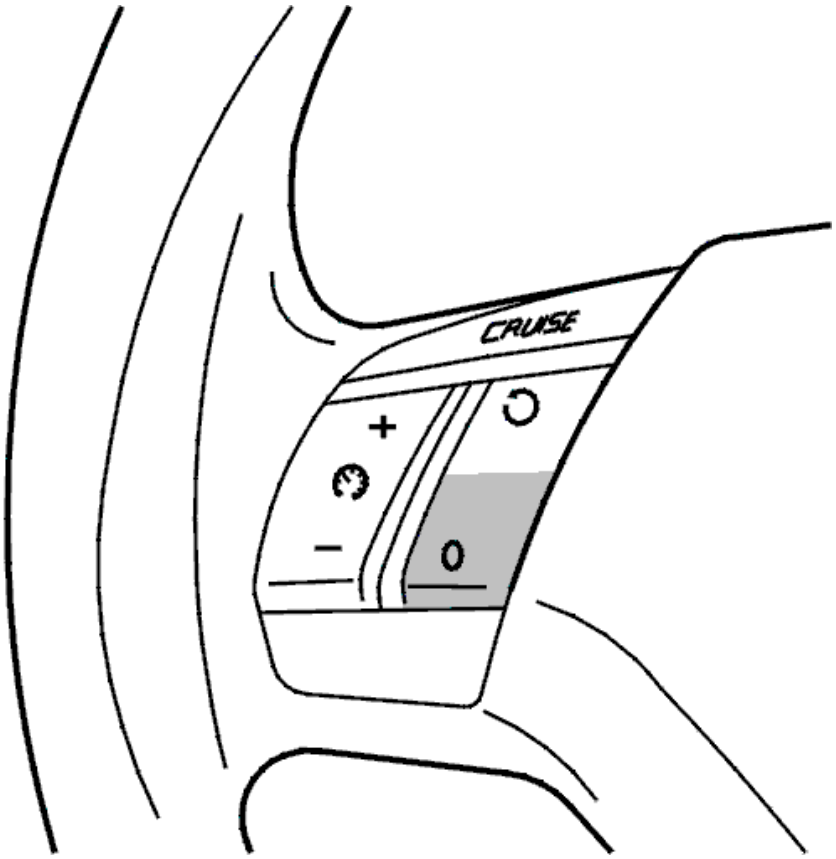

Fig. 346: Identifying Cancel Button For Cruise Control
Courtesy of VOLVO CARS CORPORATION

The central electronic module (CEM) checks the signal from the Cancel button for the cruise control.

The diagnostic trouble code (DTC) is stored if the central electronic module (CEM) registers that the Cancel button has been active for more than 3 minutes.

The diagnostic trouble code (DTC) can be diagnosed when the ignition is switched on.

Substitute Value

- None.

Possible Source

- The Cancel button is jammed in the pressed in position
- Damaged Cancel button.

Fault symptom[s]

- Cruise control does not function at all.

ACTIVATED TOO LONG

CHECKING THE CONTROL

The diagnostic trouble code (DTC) is stored when a button or switch has been depressed for a long time.

If the fault is intermittent, it has been registered previously but is no longer present. Intermittent faults can be caused by interference at start up of the central electronic module (CEM) or may be a different type of fault which occurs on different occasions. The fault is evaluated depending on how it occurs.

Check that the button or switch does not stick in the activated position.

Remedy as necessary.

Other information

see **KEYPAD STEERING WHEEL, REPLACING**

- **Continue**

  Refer to **VERIFICATION**

VERIFICATION

VERIFICATION

HINT: After carrying out the repair, check that the fault has been remedied.

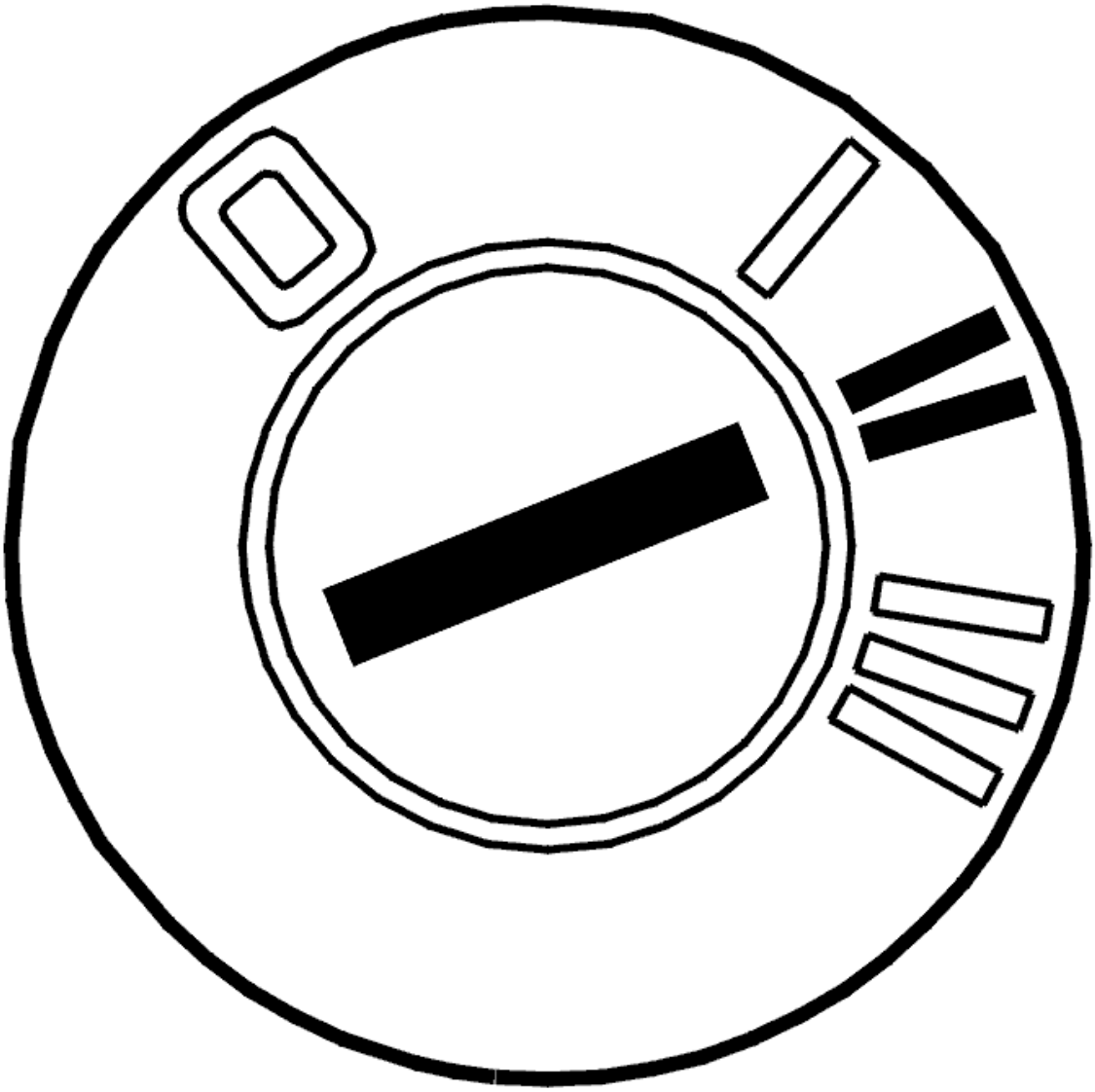

Fig. 347: Identifying Ignition ON
Courtesy of VOLVO CARS CORPORATION

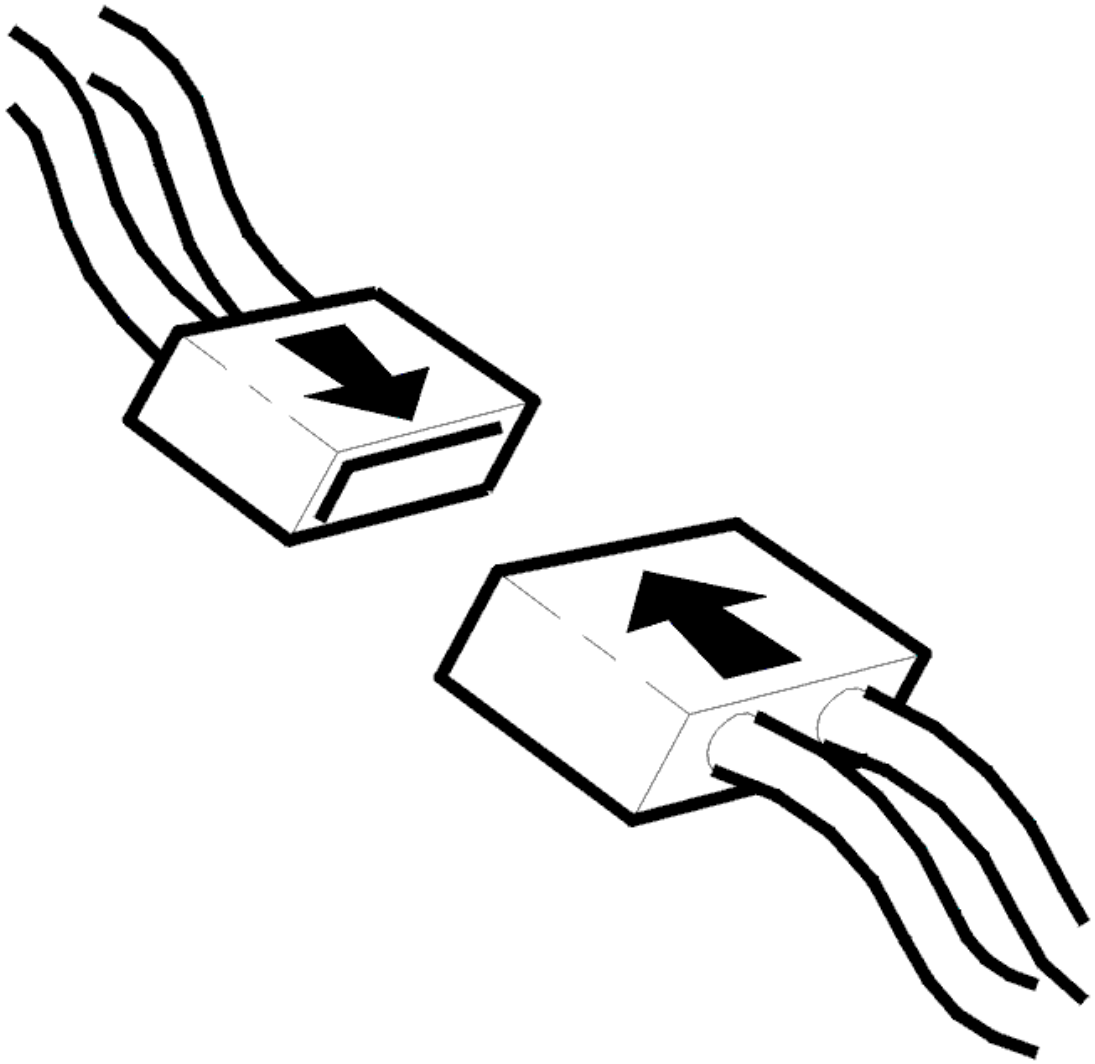

Fig. 348: Connecting Connector
Courtesy of VOLVO CARS CORPORATION

- Ignition off
- Reinstall the connectors, components etc.
- Ignition on.

  Check that all switches are working.

Is the function OK?

- **YES**

  VERIFIED: Troubleshooting has been completed.

- **NO**

  Refer to **INFORMATION**

INFORMATION

FAULT-TRACING INFORMATION

The fault should have been detected and remedied. As this is not the case fault-tracing has failed.

Exit fault-tracing for this diagnostic trouble code (DTC) or make another attempt.

CEM-6F06: CRUISE CONTROL. FAULTY SIGNAL (2005-2012)

DIAGNOSTIC TROUBLE CODE (DTC) INFORMATION CEM-6F06

Condition

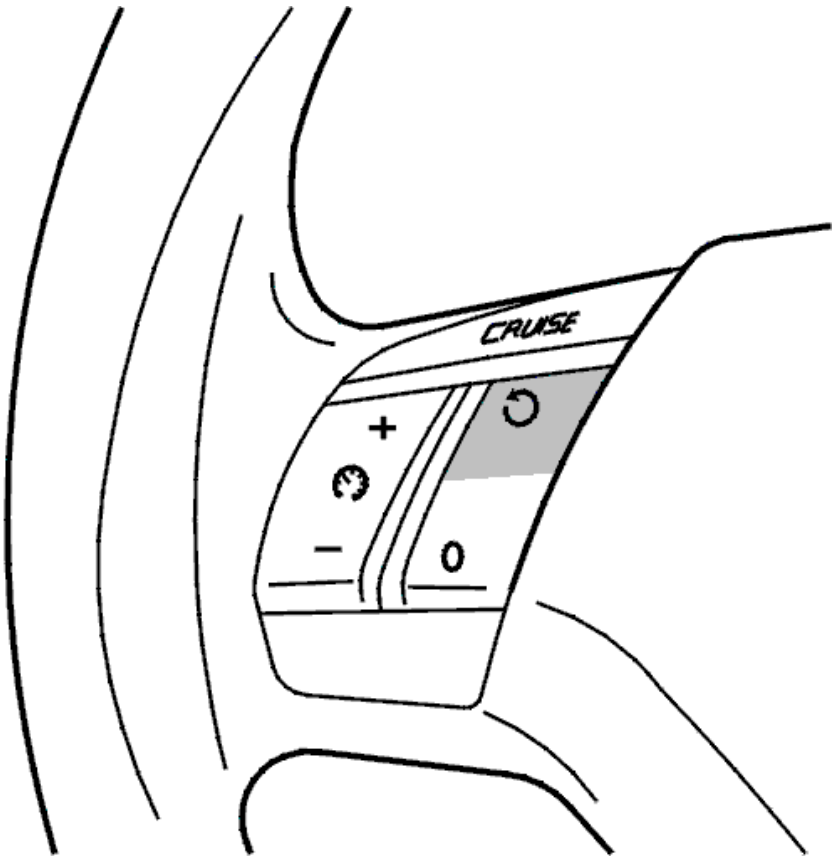

Fig. 349: Identifying Resume Button For Cruise Control
Courtesy of VOLVO CARS CORPORATION

The central electronic module (CEM) checks the signal from the buttons on the steering wheel.

The diagnostic trouble code (DTC) is stored if the central electronic module (CEM) registers that the Resume and Cancel buttons for the cruise control are active at the same time.

The diagnostic trouble code (DTC) can be diagnosed when the ignition is switched on.

Substitute Value

- None.

Possible Source

- Damaged buttons on the steering wheel.

Fault symptom[s]

- Cruise control does not function at all.

FAULTY SIGNAL

CHECKING THE CONTROL

The diagnostic trouble code (DTC) is stored when the steering wheel module (SWM) has detected an invalid combination for the button or switch position.

If the fault is intermittent, it has been registered previously but is no longer present. Intermittent faults can be caused by interference at start up of the central electronic module (CEM) or may be a different type of fault which occurs on different occasions. The fault is evaluated depending on how it occurs.

Check that the button or switch does not stick in the activated position.

Remedy as necessary.

Other information

see **KEYPAD STEERING WHEEL, REPLACING**

- **Continue**

  Refer to **VERIFICATION**

VERIFICATION

VERIFICATION

HINT: After carrying out the repair, check that the fault has been remedied.

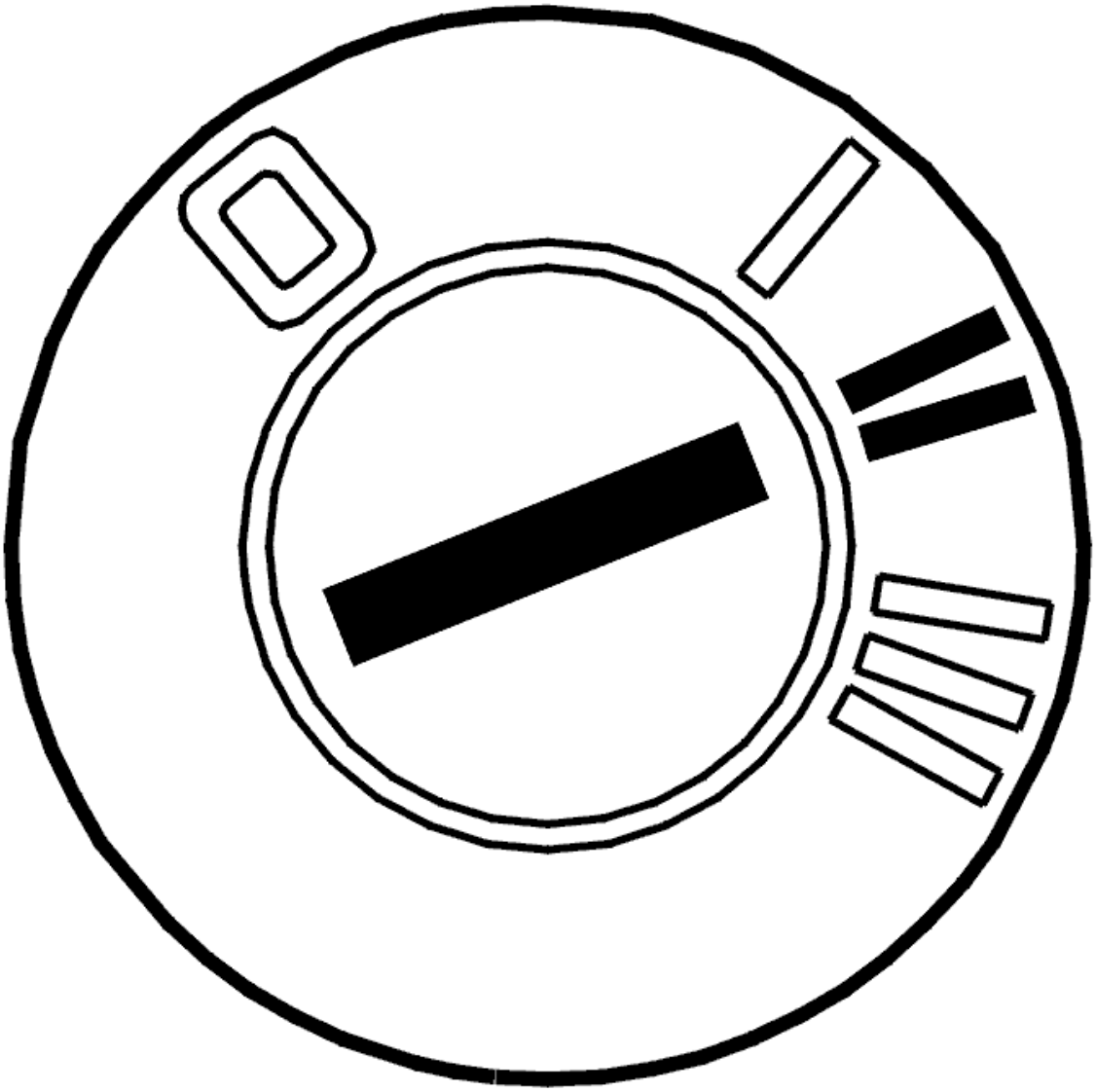

Fig. 350: Identifying Ignition ON
Courtesy of VOLVO CARS CORPORATION

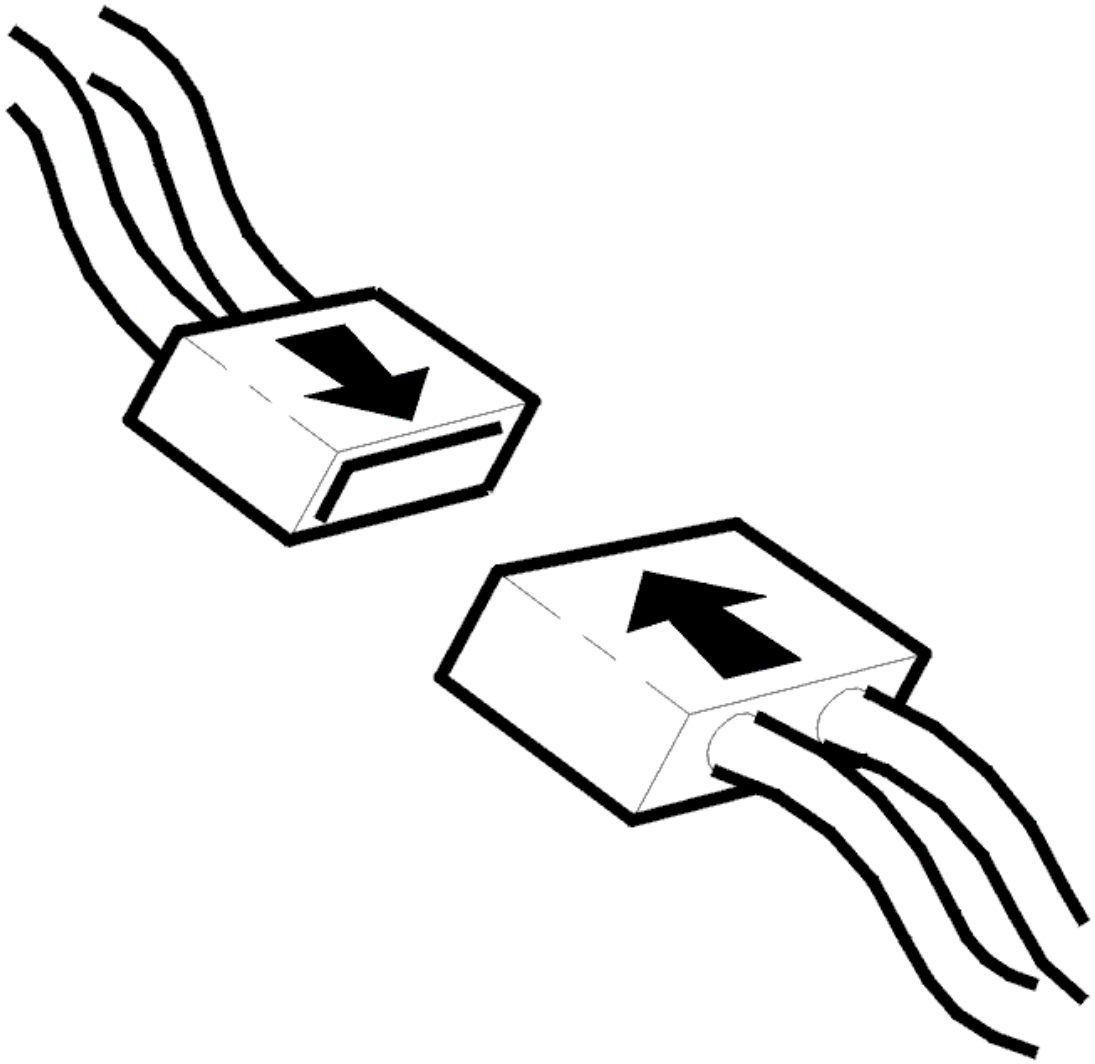

Fig. 351: Connecting Connector
Courtesy of VOLVO CARS CORPORATION

- Ignition off
- Reinstall the connectors, components etc.
- Ignition on.

  Check that all switches are working.

Is the function OK?

- **YES**

  VERIFIED: Troubleshooting has been completed.

- **NO**

  Refer to **INFORMATION**

INFORMATION

FAULT-TRACING INFORMATION

The fault should have been detected and remedied. As this is not the case fault-tracing has failed.

Exit fault-tracing for this diagnostic trouble code (DTC) or make another attempt.

CEM-6F07: CRUISE CONTROL. FAULTY SIGNAL (2005-2012)

DIAGNOSTIC TROUBLE CODE (DTC) INFORMATION CEM-6F07

Condition

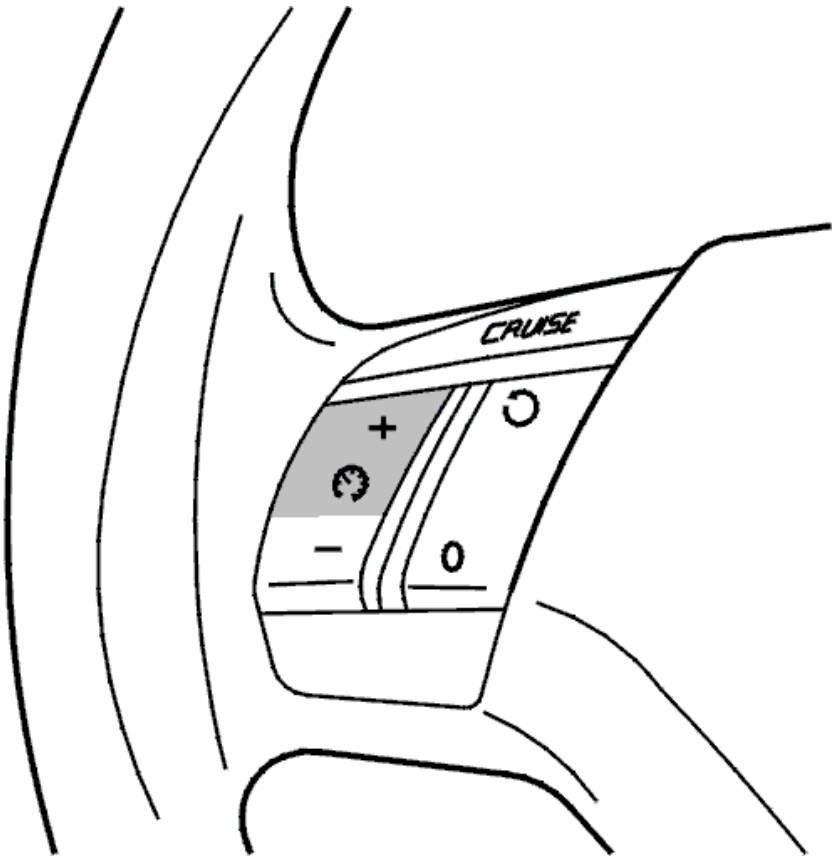

Fig. 352: Identifying Set+ Button For Cruise Control
Courtesy of VOLVO CARS CORPORATION

The central electronic module (CEM) checks the signal from the buttons on the steering wheel.

The diagnostic trouble code (DTC) is stored if the central electronic module (CEM) registers that the Set+ and Set- buttons for the cruise control are active at the same time.

The diagnostic trouble code (DTC) can be diagnosed when the ignition is switched on.

Substitute Value

- None.

Possible Source

- Damaged buttons on the steering wheel.

Fault symptom[s]

- Cruise control does not function at all.

FAULTY SIGNAL

CHECKING THE CONTROL

The diagnostic trouble code (DTC) is stored when the steering wheel module (SWM) has detected an invalid combination for the button or switch position.

If the fault is intermittent, it has been registered previously but is no longer present. Intermittent faults can be caused by interference at start up of the central electronic module (CEM) or may be a different type of fault which occurs on different occasions. The fault is evaluated depending on how it occurs.

Check that the button or switch does not stick in the activated position.

Remedy as necessary.

Other information

see **KEYPAD STEERING WHEEL, REPLACING**

- **Continue**

  Refer to **VERIFICATION**

VERIFICATION

VERIFICATION

HINT: After carrying out the repair, check that the fault has been remedied.

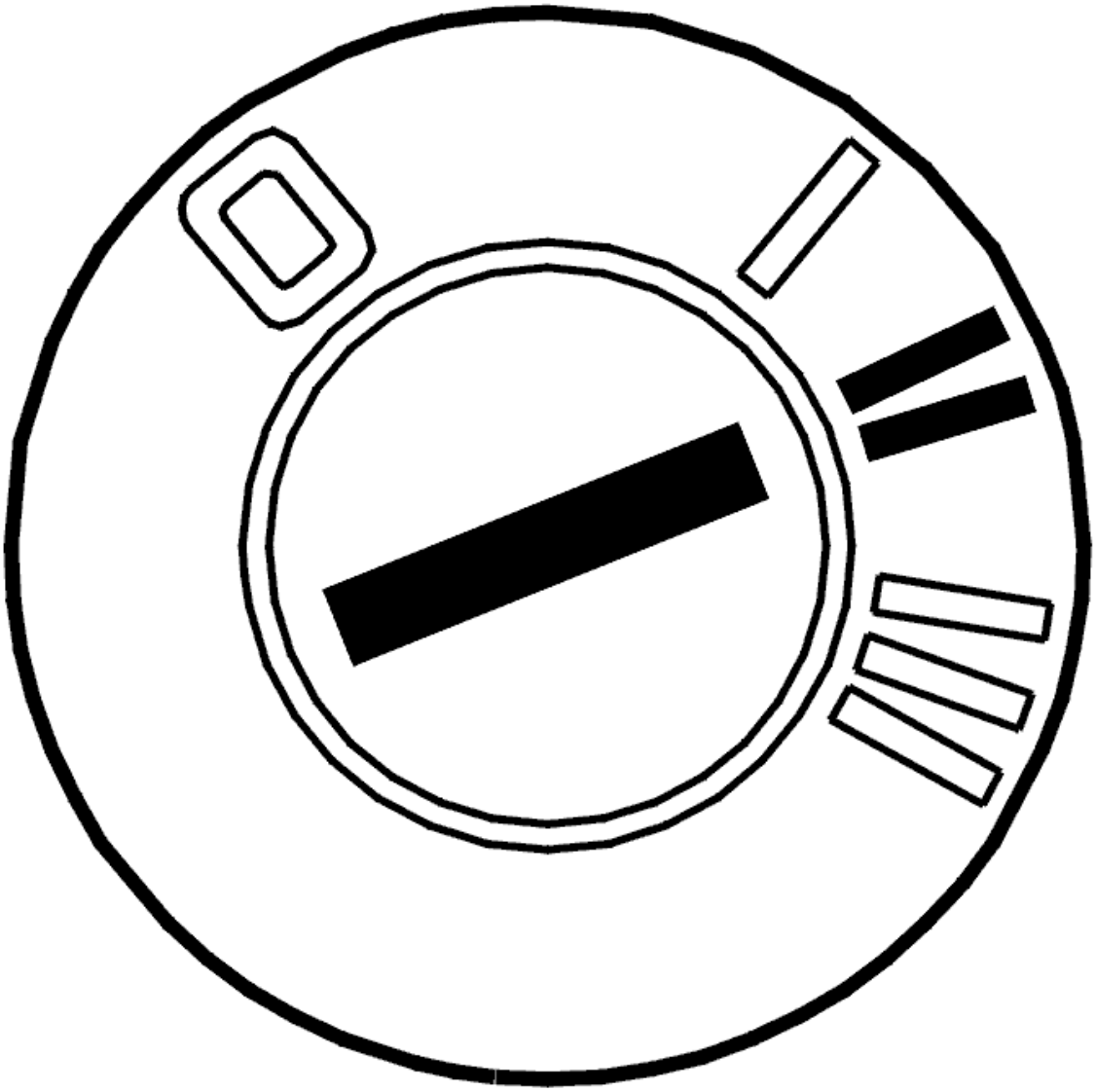

Fig. 353: Identifying Ignition ON
Courtesy of VOLVO CARS CORPORATION

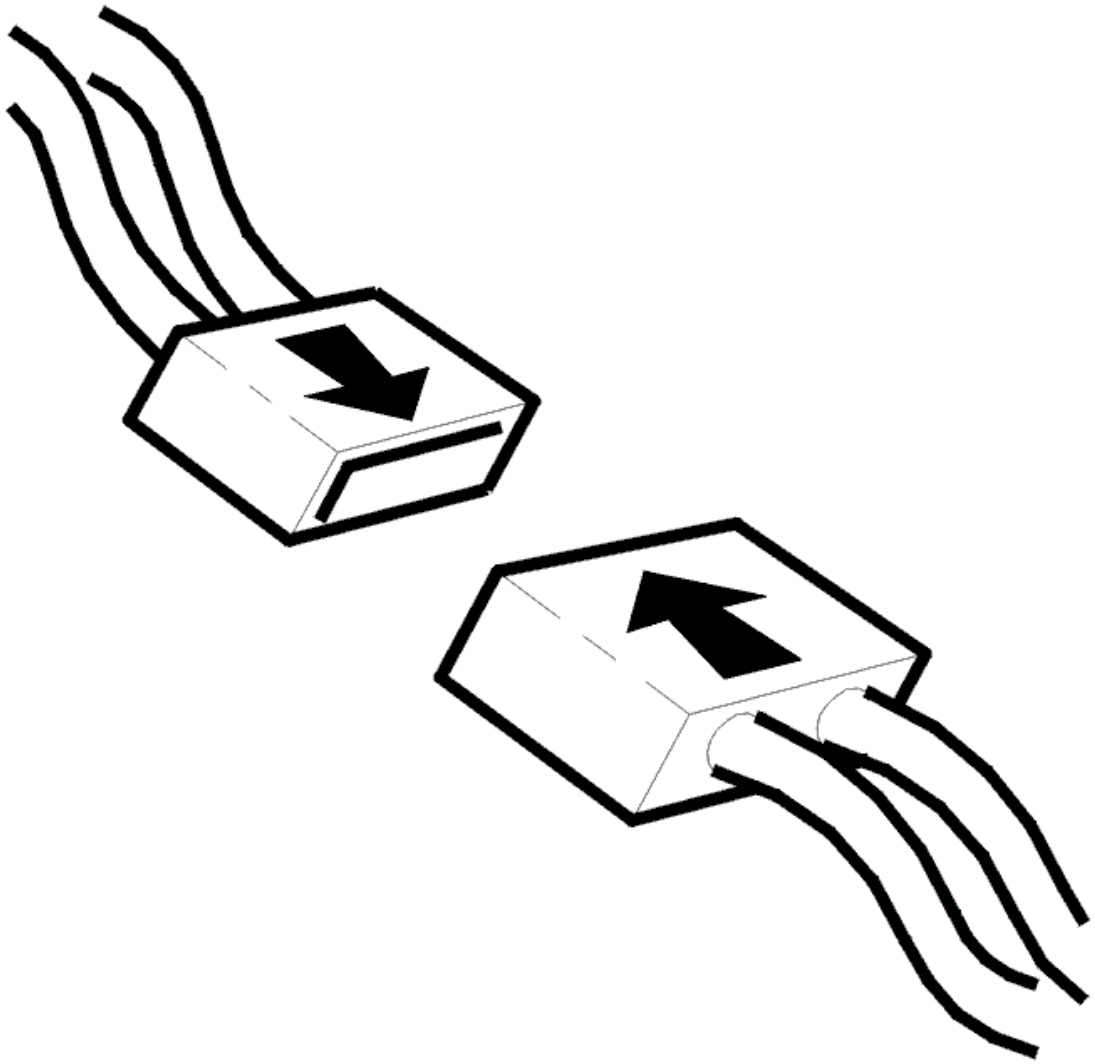

Fig. 354: Connecting Connector
Courtesy of VOLVO CARS CORPORATION

- Ignition off
- Reinstall the connectors, components etc.
- Ignition on.

  Check that all switches are working.

Is the function OK?

- **YES**

  VERIFIED: Troubleshooting has been completed.

- **NO**

  Refer to **INFORMATION**

INFORMATION

FAULT-TRACING INFORMATION

The fault should have been detected and remedied. As this is not the case fault-tracing has failed.

Exit fault-tracing for this diagnostic trouble code (DTC) or make another attempt.

CEM-6F71: SWITCH, FUEL TANK FILLER COVER. SIGNAL TOO LOW (2003-2004)

DIAGNOSTIC TROUBLE CODE (DTC) INFORMATION

Condition

The central electronic module checks if the button for opening the fuel tank filler cover has stuck.

Diagnostic trouble code (DTC) CEM-6F71 is stored in the central electronic module if the it registers that the button for opening the fuel tank filler cover is pressed in for longer than 60 seconds.

Diagnostic trouble code (DTC) CEM-6F71 can be detected when the battery voltage is > 10.5 volt.

Substitute Value

- None.

Possible Source

- The button has jammed in the pressed in position
- Defective lamp switch module.

Fault symptom[s]

-

FAULTY SIGNAL

REPLACING THE COMPONENT

The diagnostic trouble code (DTC) indicates that the button for the fuel tank filler cover in the light switch is defective.

Replace the light switch.

Other information:

- To replace the light switch, see **SWITCHES LIGHTS, REPLACING** .
- **Continue**

  Refer to **VERIFICATION**

VERIFICATION

VERIFICATION

HINT: After carrying out the repair, check that the fault has been remedied.

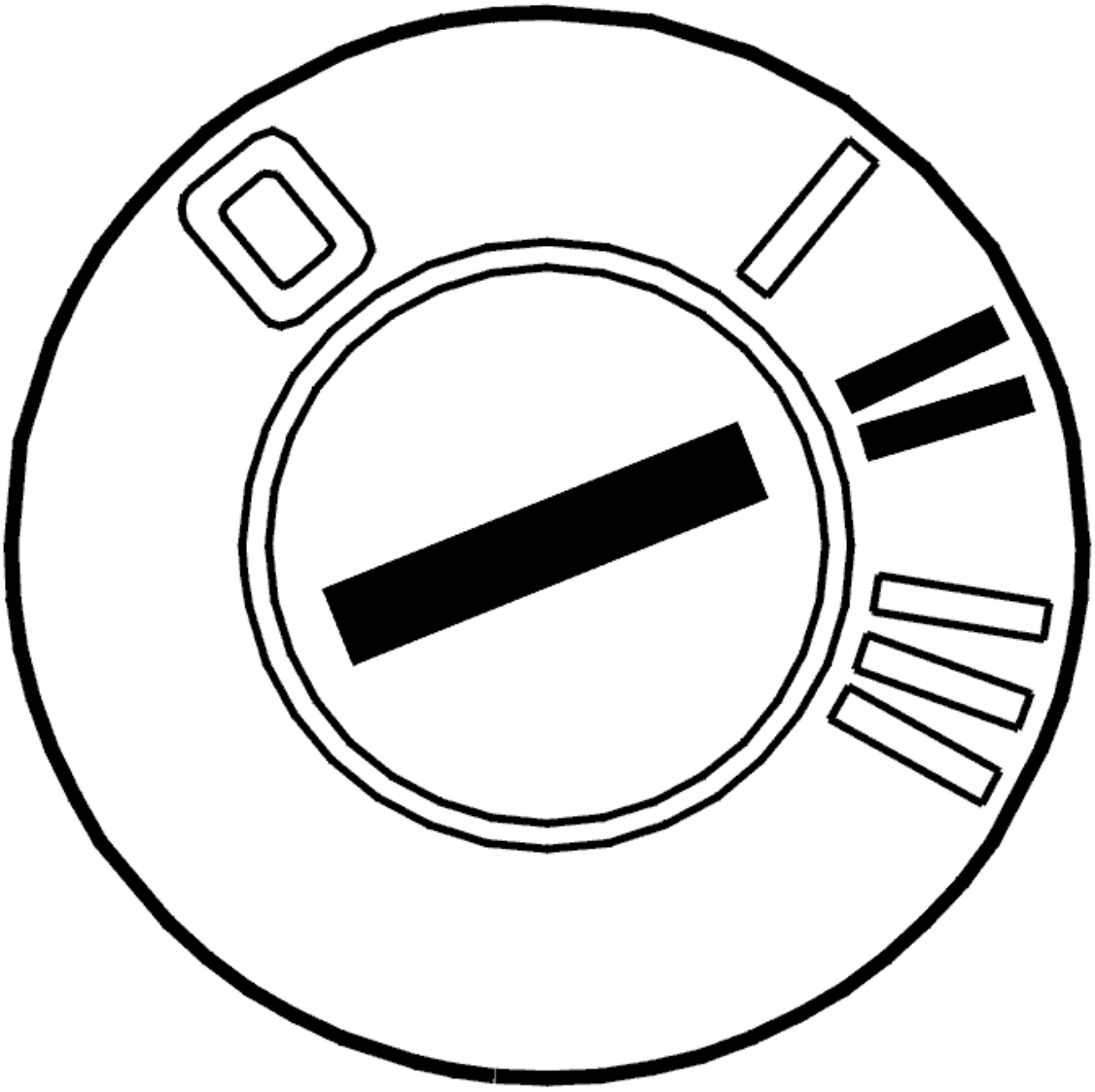

Fig. 355: Identifying Ignition ON
Courtesy of VOLVO CARS CORPORATION

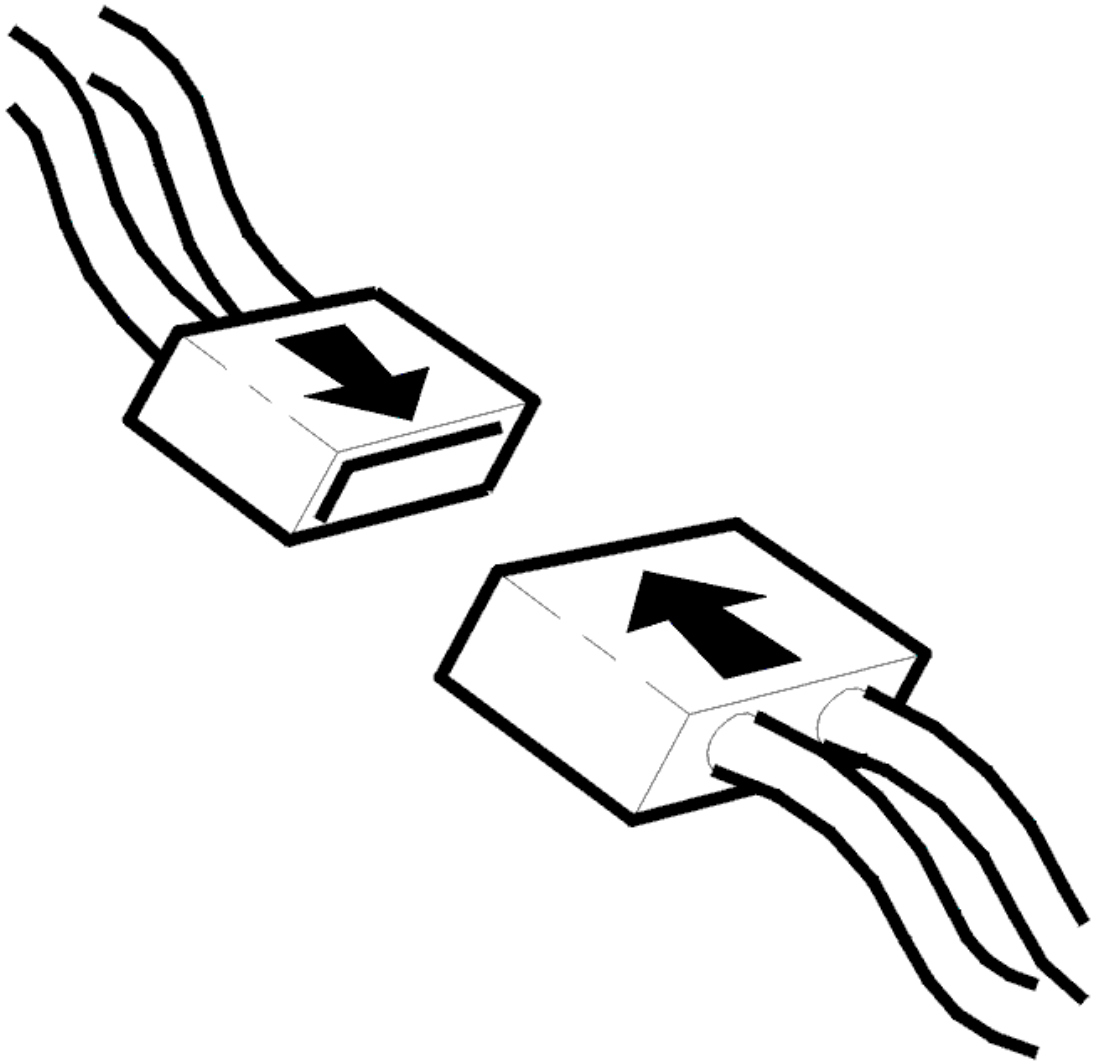

Fig. 356: Connecting Connector
Courtesy of VOLVO CARS CORPORATION

- Ignition off
- Reinstall the connectors, components etc.
- Ignition on.

  Read off the position of the button.

  Activate the control button for the fuel tank filler cover.

  Other information

- The value must vary depending on whether the button is held in or if the button is released.

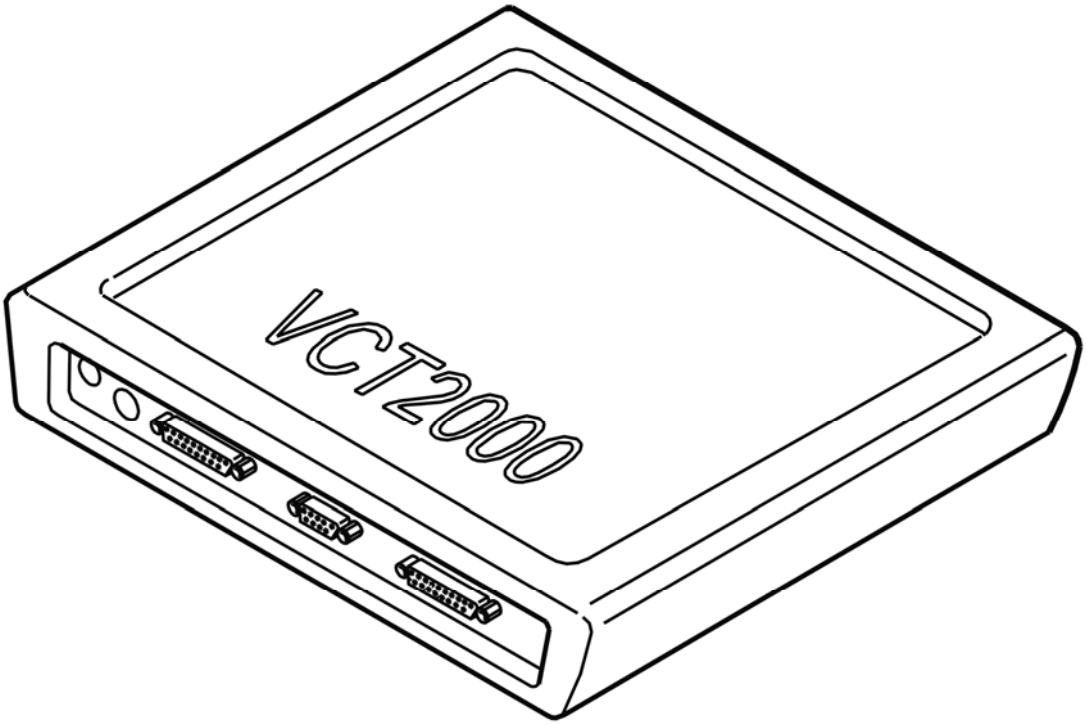

Fig. 357: Identifying VCT2000 Diagnostic Tool Symbol In VIDA
Courtesy of VOLVO CARS CORPORATION

Is the function OK?

- **YES**

  VERIFIED: Troubleshooting has been completed.

- **NO**

  Refer to **INFORMATION**

INFORMATION

FAULT-TRACING INFORMATION

The fault should have been detected and remedied. As this is not the case fault-tracing has failed.

Exit fault-tracing for this diagnostic trouble code (DTC) or make another attempt.

CEM-7A01: SCAN- BUTTON. ACTIVATED TOO LONG (2005-2012)

DIAGNOSTIC TROUBLE CODE (DTC) INFORMATION CEM-7A01

Condition

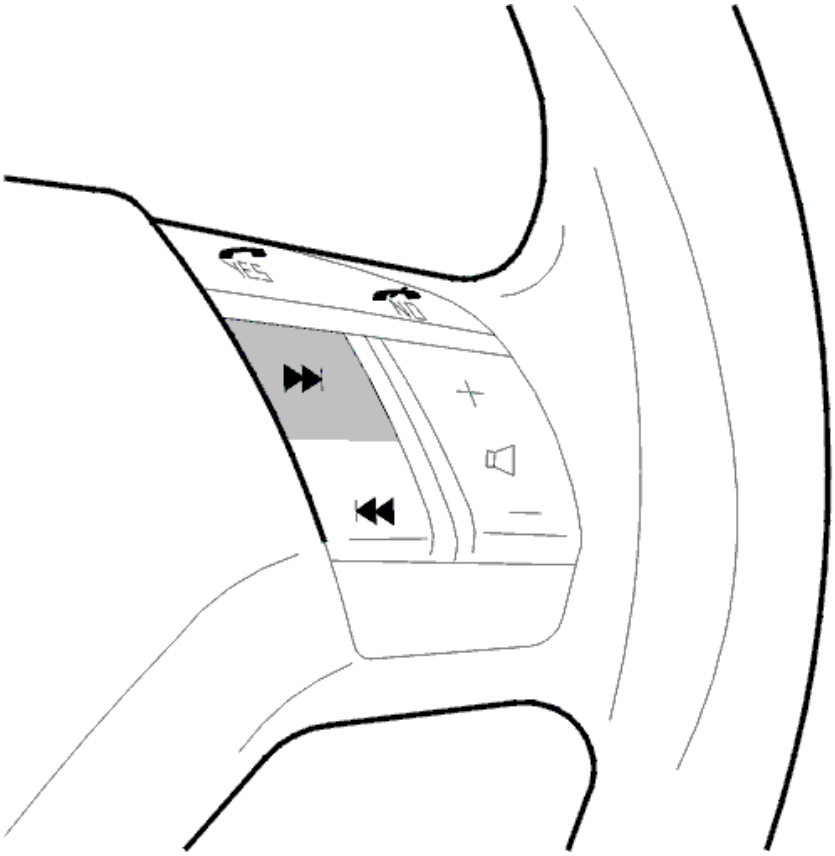

Fig. 358: Identifying Scan- Button
Courtesy of VOLVO CARS CORPORATION

The central electronic module (CEM) checks the signal from the Scan- button.

The diagnostic trouble code (DTC) is stored if the central electronic module (CEM) registers that the Scan- button has been active for more than 1 minute.

The diagnostic trouble code (DTC) can be diagnosed when the ignition is switched on.

Substitute Value

- None.

Possible Source

- The Scan- button is jammed in the pressed in position

- Damaged Scan- button.

Fault symptom[s]

- The radio buttons on the steering wheel do not function
- The phone is not working.

ACTIVATED TOO LONG

CHECKING THE CONTROL

The diagnostic trouble code (DTC) is stored when a button or switch has been depressed for a long time.

If the fault is intermittent, it has been registered previously but is no longer present. Intermittent faults can be caused by interference at start up of the central electronic module (CEM) or may be a different type of fault which occurs on different occasions. The fault is evaluated depending on how it occurs.

Check that the button or switch does not stick in the activated position.

Remedy as necessary.

Other information

see **KEYPAD STEERING WHEEL, REPLACING**

- **Continue**

  Refer to **VERIFICATION**

VERIFICATION

VERIFICATION

HINT: After carrying out the repair, check that the fault has been remedied.

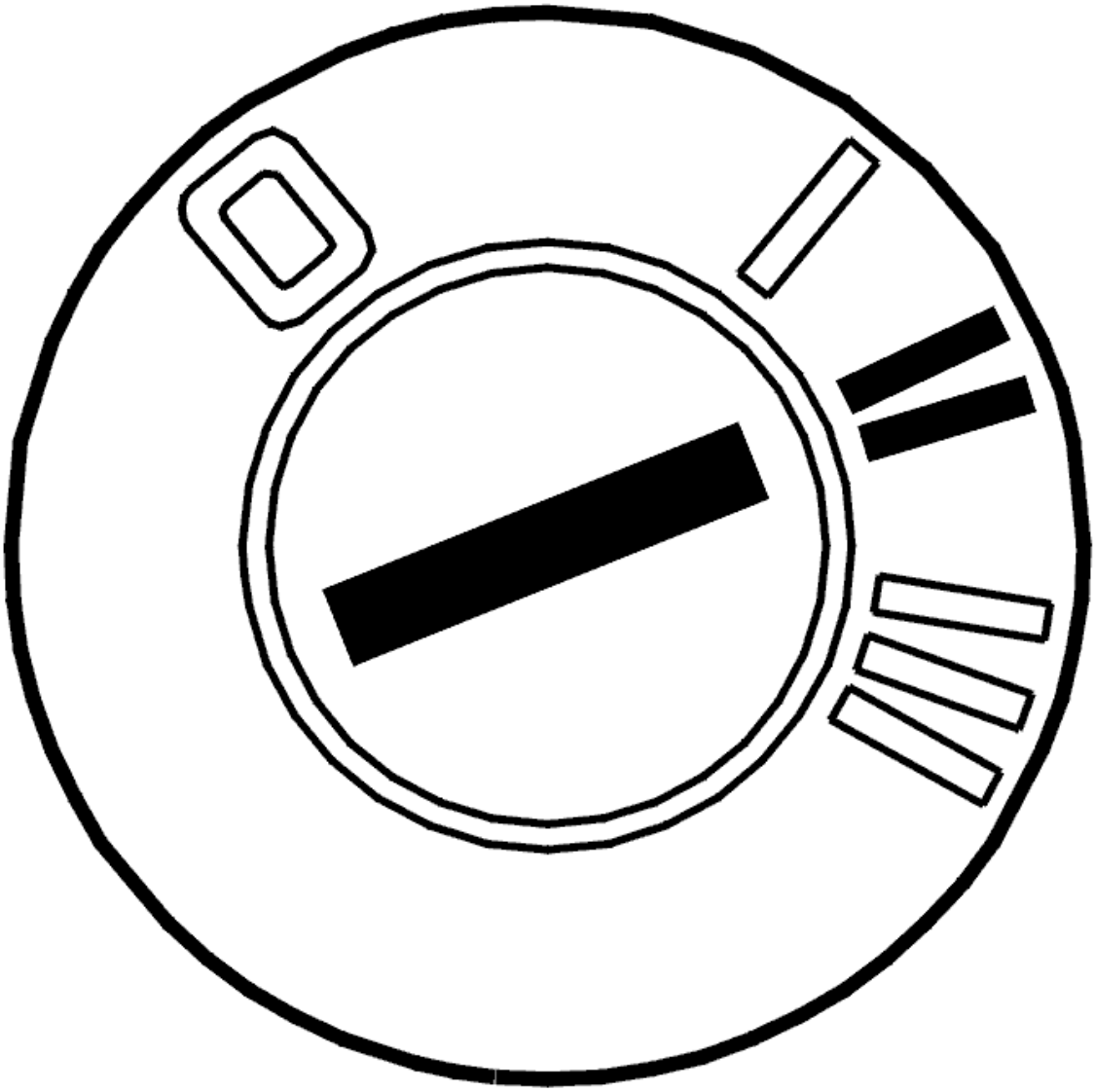

Fig. 359: Identifying Ignition ON
Courtesy of VOLVO CARS CORPORATION

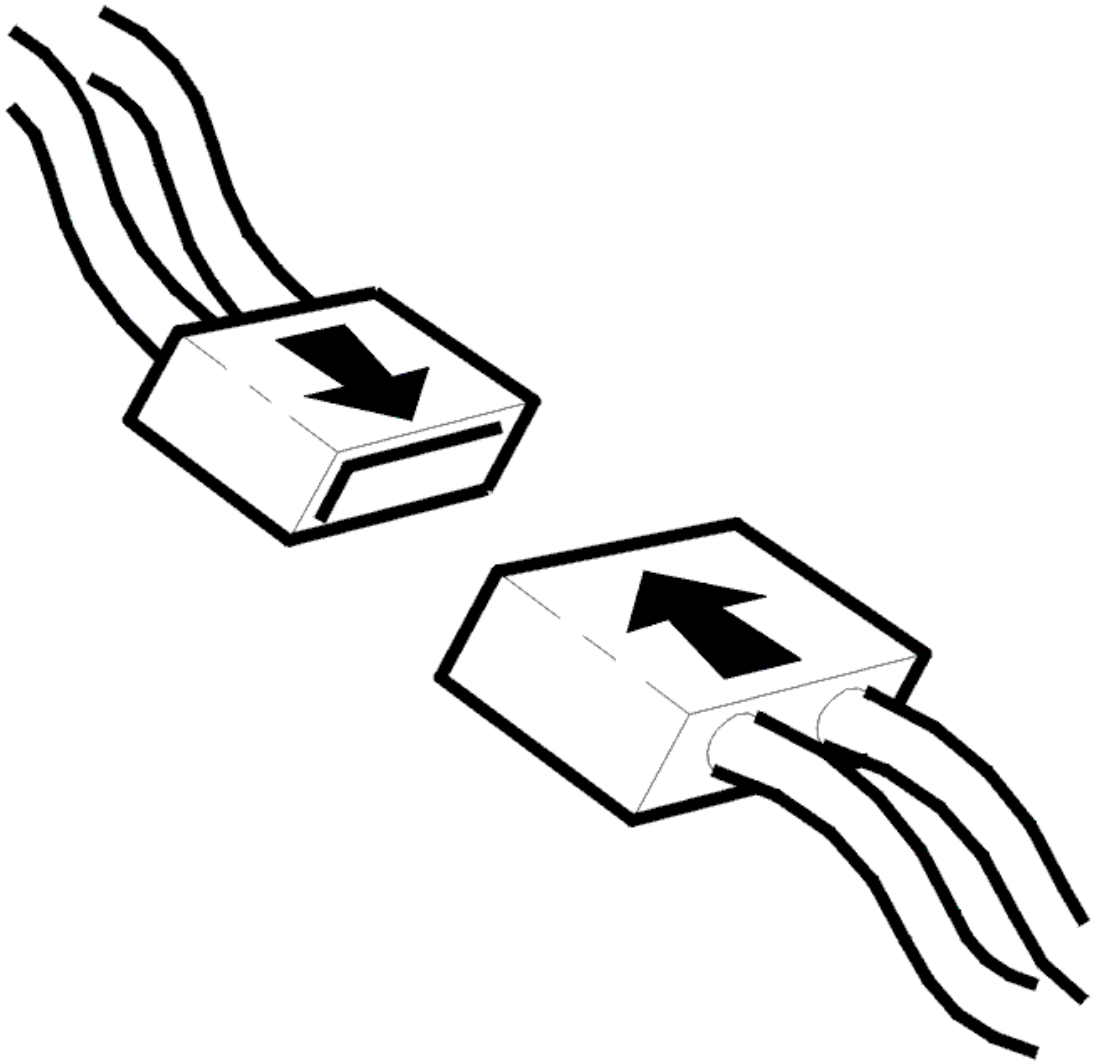

Fig. 360: Connecting Connector
Courtesy of VOLVO CARS CORPORATION

- Ignition off
- Reinstall the connectors, components etc.
- Ignition on.

  Check that the function for the relevant button or switch is OK.

Is the function OK?

- **YES**

  VERIFIED: Troubleshooting has been completed.

- **NO**

  Refer to **INFORMATION**

INFORMATION

FAULT-TRACING INFORMATION

The fault should have been detected and remedied. As this is not the case fault-tracing has failed.

Exit fault-tracing for this diagnostic trouble code (DTC) or make another attempt.

CEM-7A02: SCAN+ BUTTON. ACTIVATED TOO LONG (2005-2012)

DIAGNOSTIC TROUBLE CODE (DTC) INFORMATION CEM-7A02

Condition

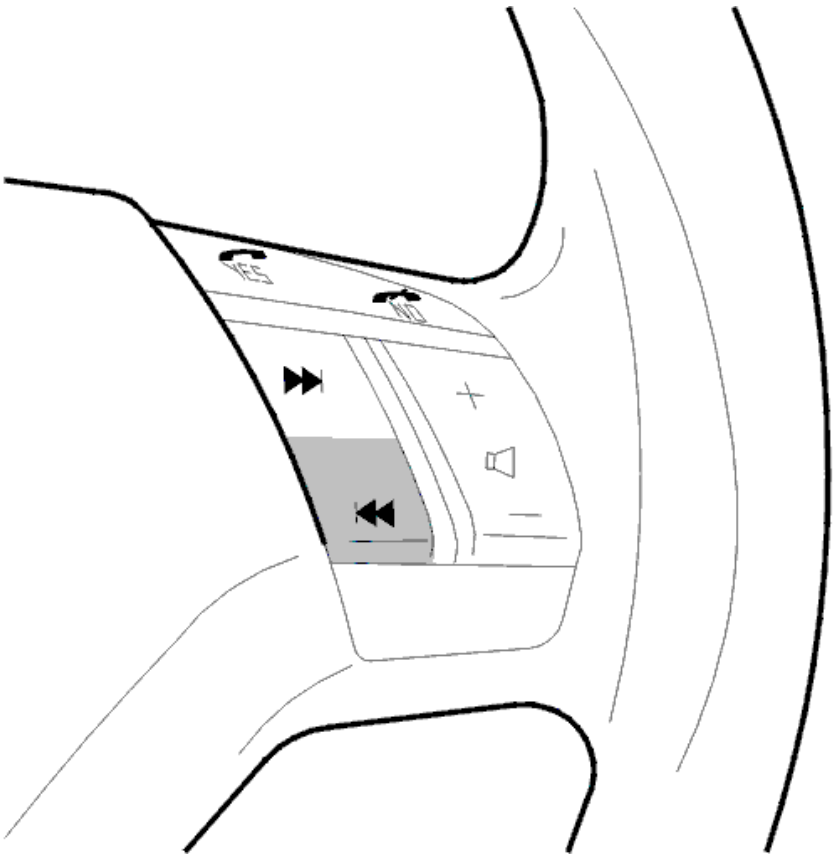

Fig. 361: Identifying Scan+ Button
Courtesy of VOLVO CARS CORPORATION

The central electronic module (CEM) checks the signal from the Scan+ button.

The diagnostic trouble code (DTC) is stored if the central electronic module (CEM) registers that the Scan+ button has been active for more than 1 minute.

The diagnostic trouble code (DTC) can be diagnosed when the ignition is switched on.

Substitute Value

- None.

Possible Source

- The Scan+ button is jammed in the pressed in position
- Damaged Scan+ button.

Fault symptom[s]

- The radio buttons on the steering wheel do not function
- The phone is not working.

ACTIVATED TOO LONG

CHECKING THE CONTROL

The diagnostic trouble code (DTC) is stored when a button or switch has been depressed for a long time.

If the fault is intermittent, it has been registered previously but is no longer present. Intermittent faults can be caused by interference at start up of the central electronic module (CEM) or may be a different type of fault which occurs on different occasions. The fault is evaluated depending on how it occurs.

Check that the button or switch does not stick in the activated position.

Remedy as necessary.

Other information

see **KEYPAD STEERING WHEEL, REPLACING**

- **Continue**

  Refer to **VERIFICATION**

VERIFICATION

VERIFICATION

HINT: After carrying out the repair, check that the fault has been remedied.

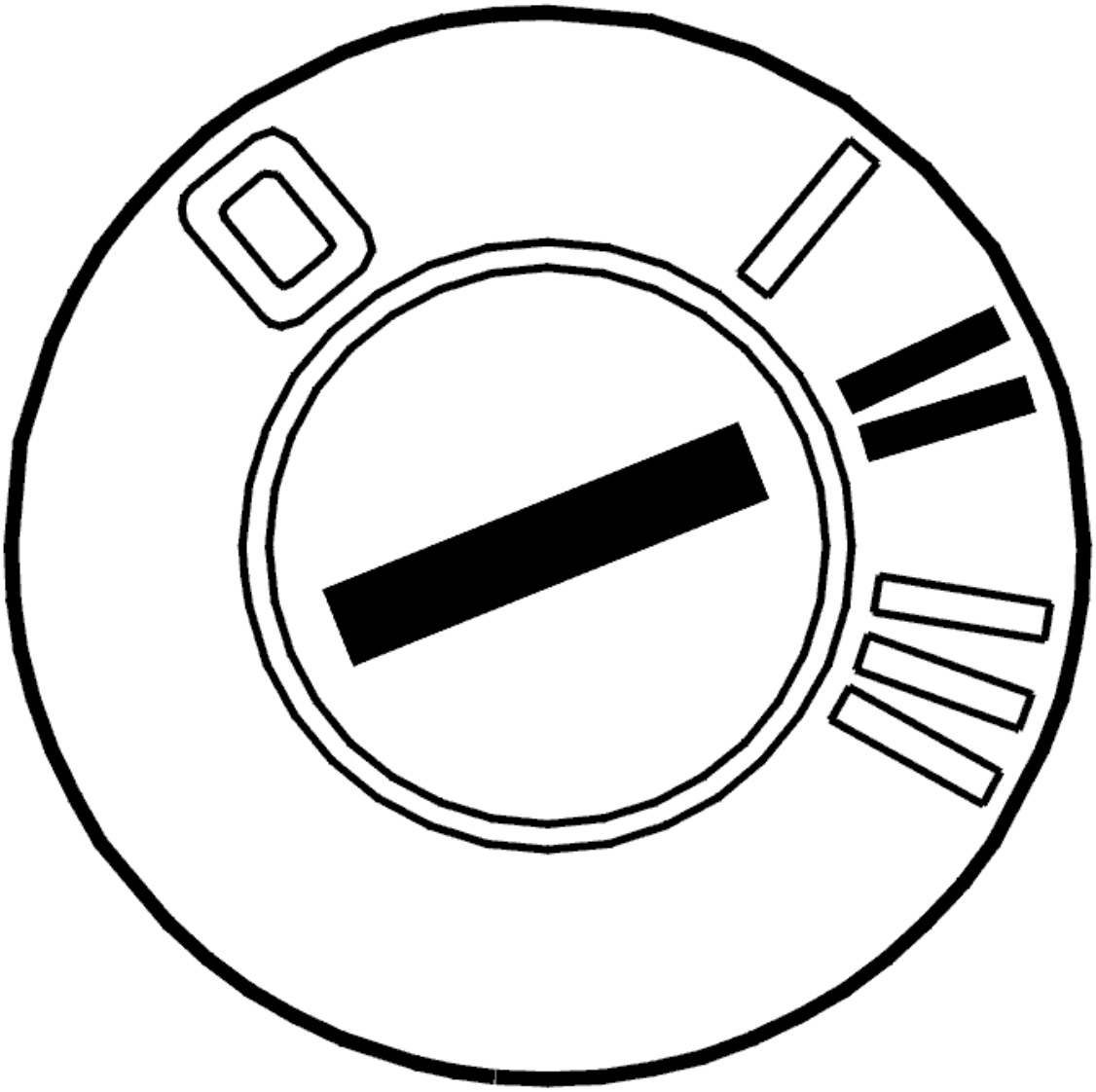

Fig. 362: Identifying Ignition ON
Courtesy of VOLVO CARS CORPORATION

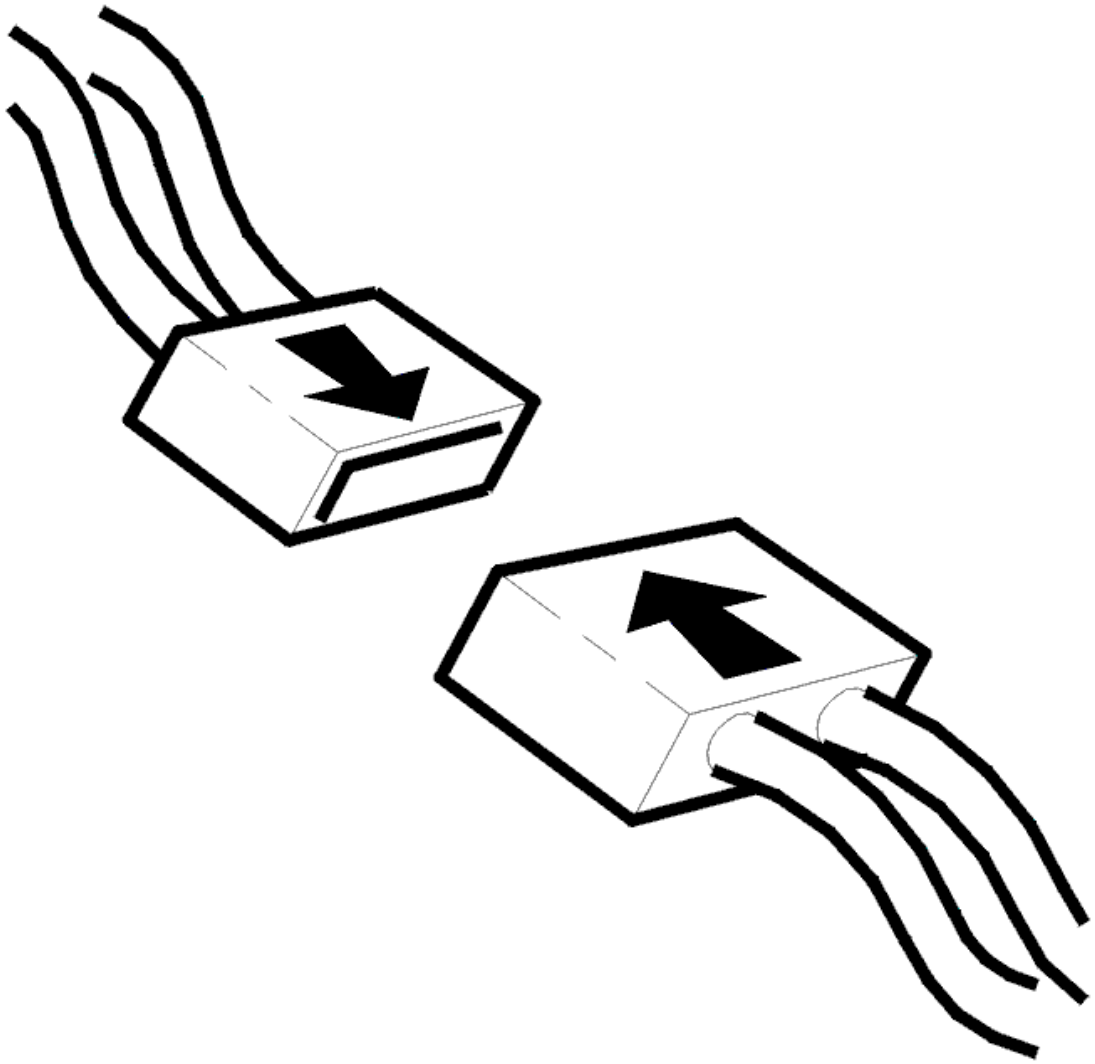

Fig. 363: Connecting Connector
Courtesy of VOLVO CARS CORPORATION

- Ignition off
- Reinstall the connectors, components etc.
- Ignition on.

  Check that the function for the relevant button or switch is OK.

Is the function OK?

- **YES**

  VERIFIED: Troubleshooting has been completed.

- **NO**

  Refer to **INFORMATION**

INFORMATION

FAULT-TRACING INFORMATION

The fault should have been detected and remedied. As this is not the case fault-tracing has failed.

Exit fault-tracing for this diagnostic trouble code (DTC) or make another attempt.

CEM-7A03: SCAN- BUTTON. ACTIVATED TOO LONG (2005-2012)

DIAGNOSTIC TROUBLE CODE (DTC) INFORMATION CEM-7A03

Condition

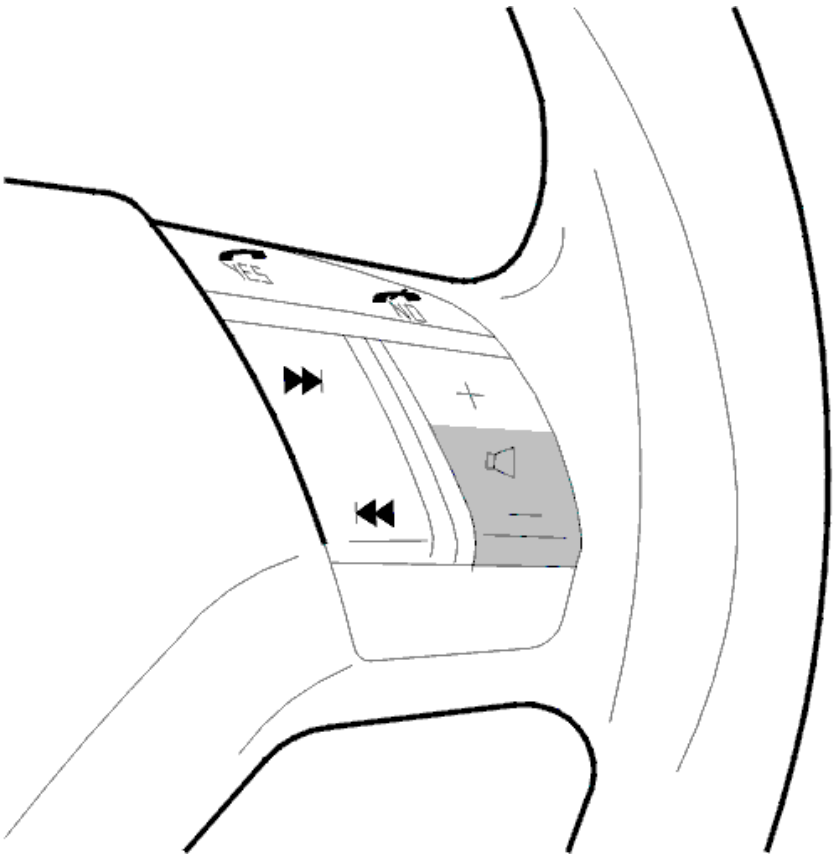

Fig. 364: Identifying Volume- Button
Courtesy of VOLVO CARS CORPORATION

The central electronic module (CEM) checks the signal from the Volume- button.

The diagnostic trouble code (DTC) is stored if the central electronic module (CEM) registers that the Volume- button has been active for more than 1 minute.

The diagnostic trouble code (DTC) can be diagnosed when the ignition is switched on.

Substitute Value

- None.

Possible Source

- The Volume- button is jammed in the pressed in position
- Damaged Volume- button.

Fault symptom[s]

- The radio buttons on the steering wheel do not function
- The phone buttons on the steering wheel do not work.

ACTIVATED TOO LONG

CHECKING THE CONTROL

The diagnostic trouble code (DTC) is stored when a button or switch has been depressed for a long time.

If the fault is intermittent, it has been registered previously but is no longer present. Intermittent faults can be caused by interference at start up of the central electronic module (CEM) or may be a different type of fault which occurs on different occasions. The fault is evaluated depending on how it occurs.

Check that the button or switch does not stick in the activated position.

Remedy as necessary.

Other information

see **KEYPAD STEERING WHEEL, REPLACING**

- **Continue**

  Refer to **VERIFICATION**

VERIFICATION

VERIFICATION

HINT: After carrying out the repair, check that the fault has been remedied.

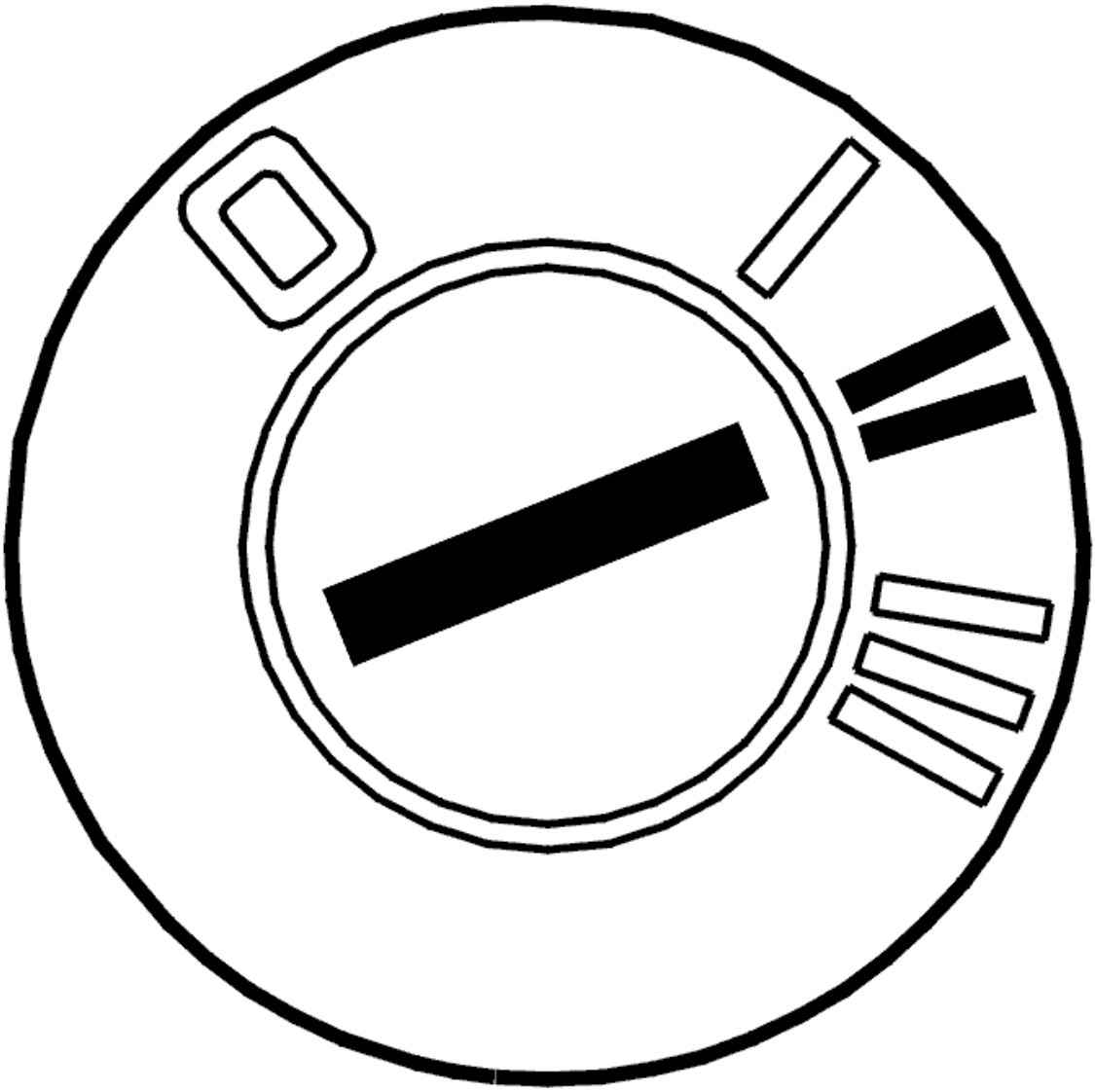

Fig. 365: Identifying Ignition ON
Courtesy of VOLVO CARS CORPORATION

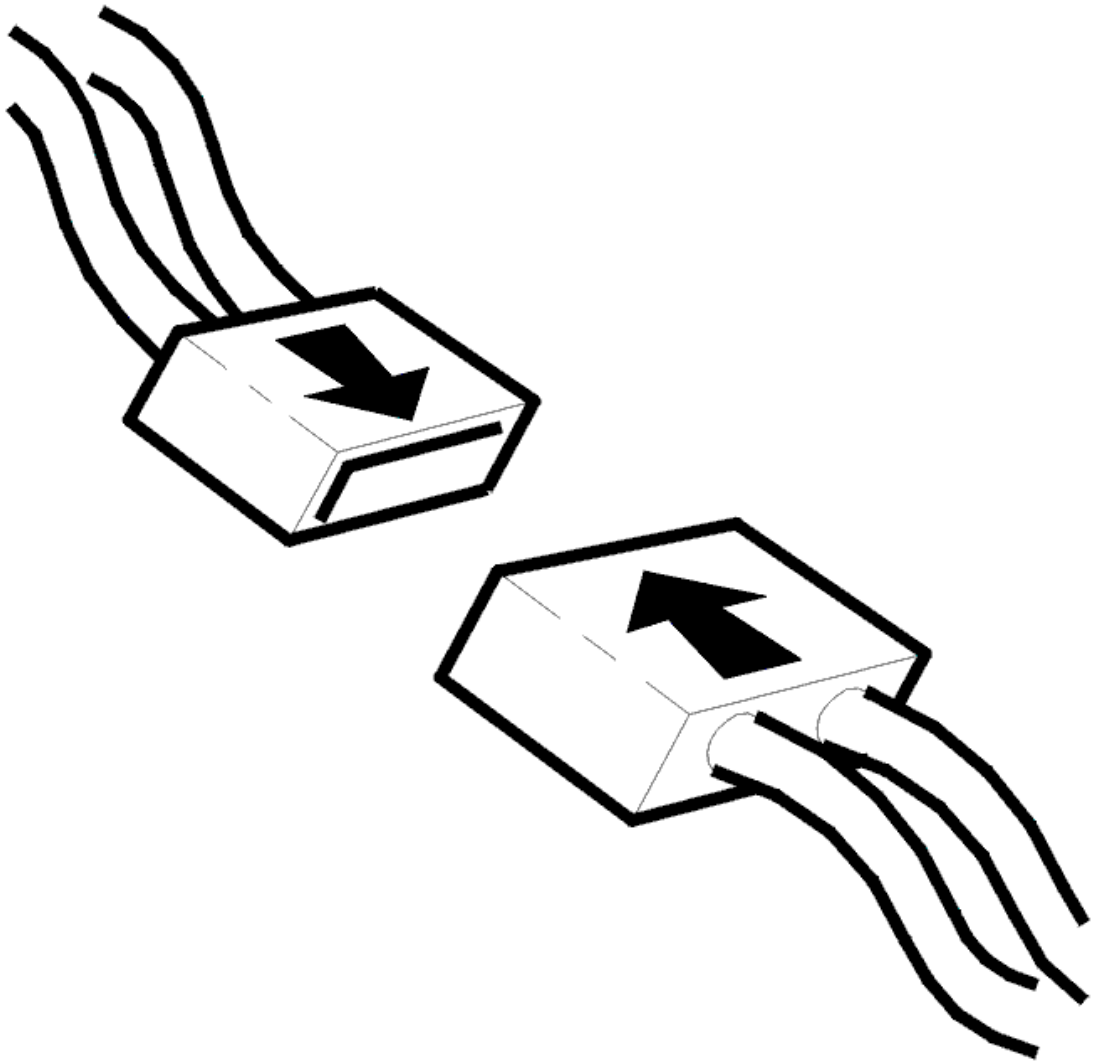

Fig. 366: Connecting Connector
Courtesy of VOLVO CARS CORPORATION

- Ignition off
- Reinstall the connectors, components etc.
- Ignition on.

  Check that the function for the relevant button or switch is OK.

Is the function OK?

- **YES**

  VERIFIED: Troubleshooting has been completed.

- **NO**

  Refer to **INFORMATION**

INFORMATION

FAULT-TRACING INFORMATION

The fault should have been detected and remedied. As this is not the case fault-tracing has failed.

Exit fault-tracing for this diagnostic trouble code (DTC) or make another attempt.

CEM-7A04: VOLUME+ BUTTON. ACTIVATED TOO LONG (2005-2012)

DIAGNOSTIC TROUBLE CODE (DTC) INFORMATION CEM-7A04

Condition

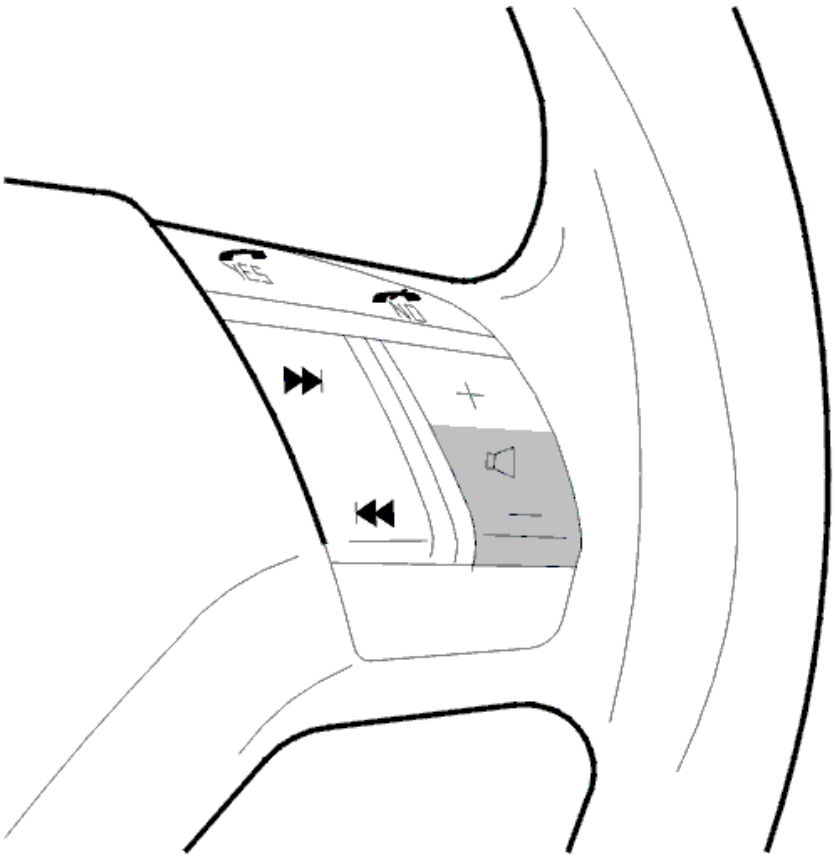

Fig. 367: Identifying Volume- Button
Courtesy of VOLVO CARS CORPORATION

The central electronic module (CEM) checks the signal from the Volume+ button.

The diagnostic trouble code (DTC) is stored if the central electronic module (CEM) registers that the Volume+ button has been active for more than 1 minute.

The diagnostic trouble code (DTC) can be diagnosed when the ignition is switched on.

Substitute Value

- None.

Possible Source

- The Volume+ button is jammed in the pressed in position
- Damaged Volume+ button.

Fault symptom[s]

- The radio buttons on the steering wheel do not function
- The phone buttons on the steering wheel do not work.

ACTIVATED TOO LONG

CHECKING THE CONTROL

The diagnostic trouble code (DTC) is stored when a button or switch has been depressed for a long time.

If the fault is intermittent, it has been registered previously but is no longer present. Intermittent faults can be caused by interference at start up of the central electronic module (CEM) or may be a different type of fault which occurs on different occasions. The fault is evaluated depending on how it occurs.

Check that the button or switch does not stick in the activated position.

Remedy as necessary.

Other information

see **KEYPAD STEERING WHEEL, REPLACING**

- **Continue**

  Refer to **VERIFICATION**

VERIFICATION

VERIFICATION

HINT: After carrying out the repair, check that the fault has been remedied.

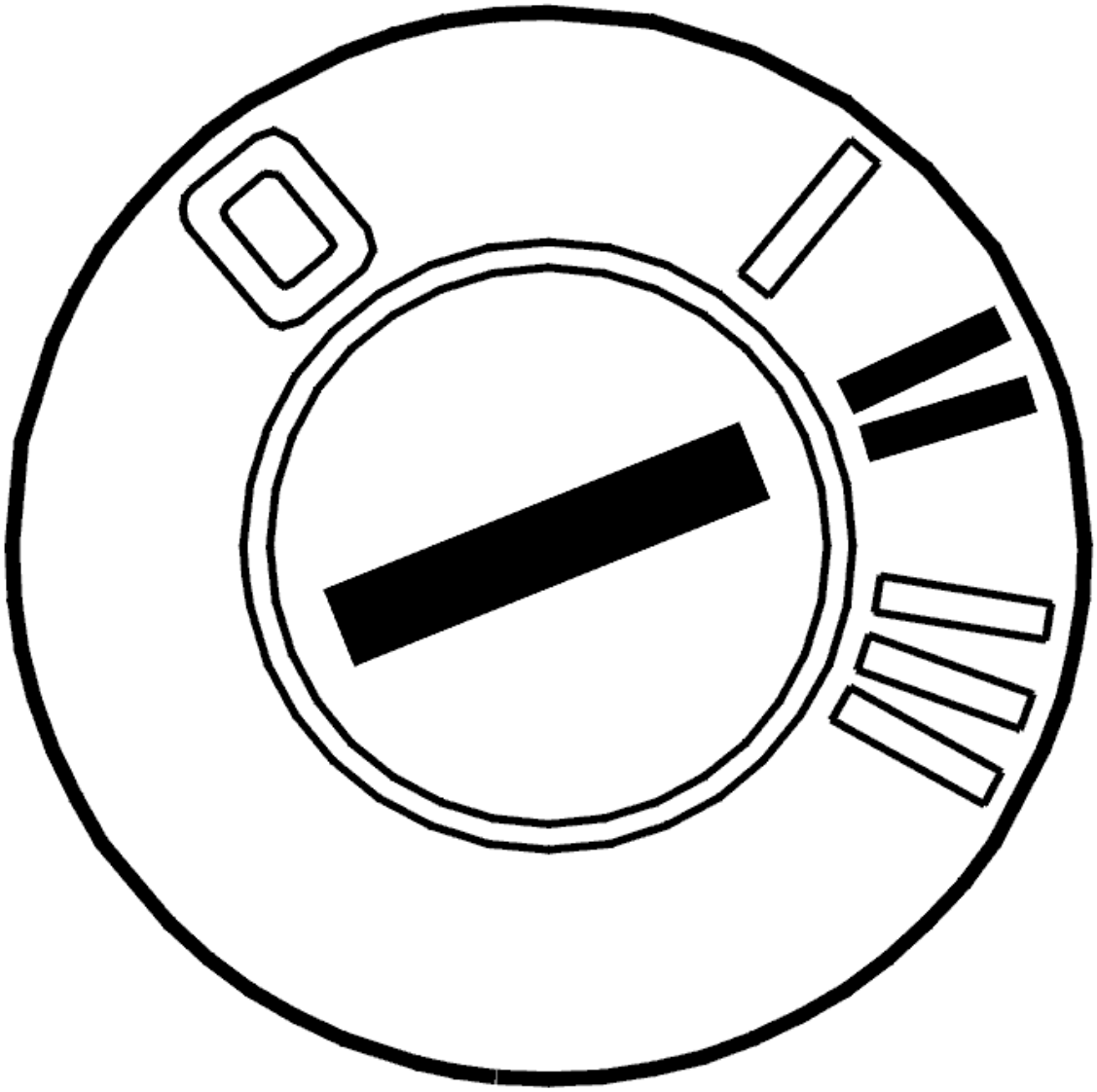

Fig. 368: Identifying Ignition ON
Courtesy of VOLVO CARS CORPORATION

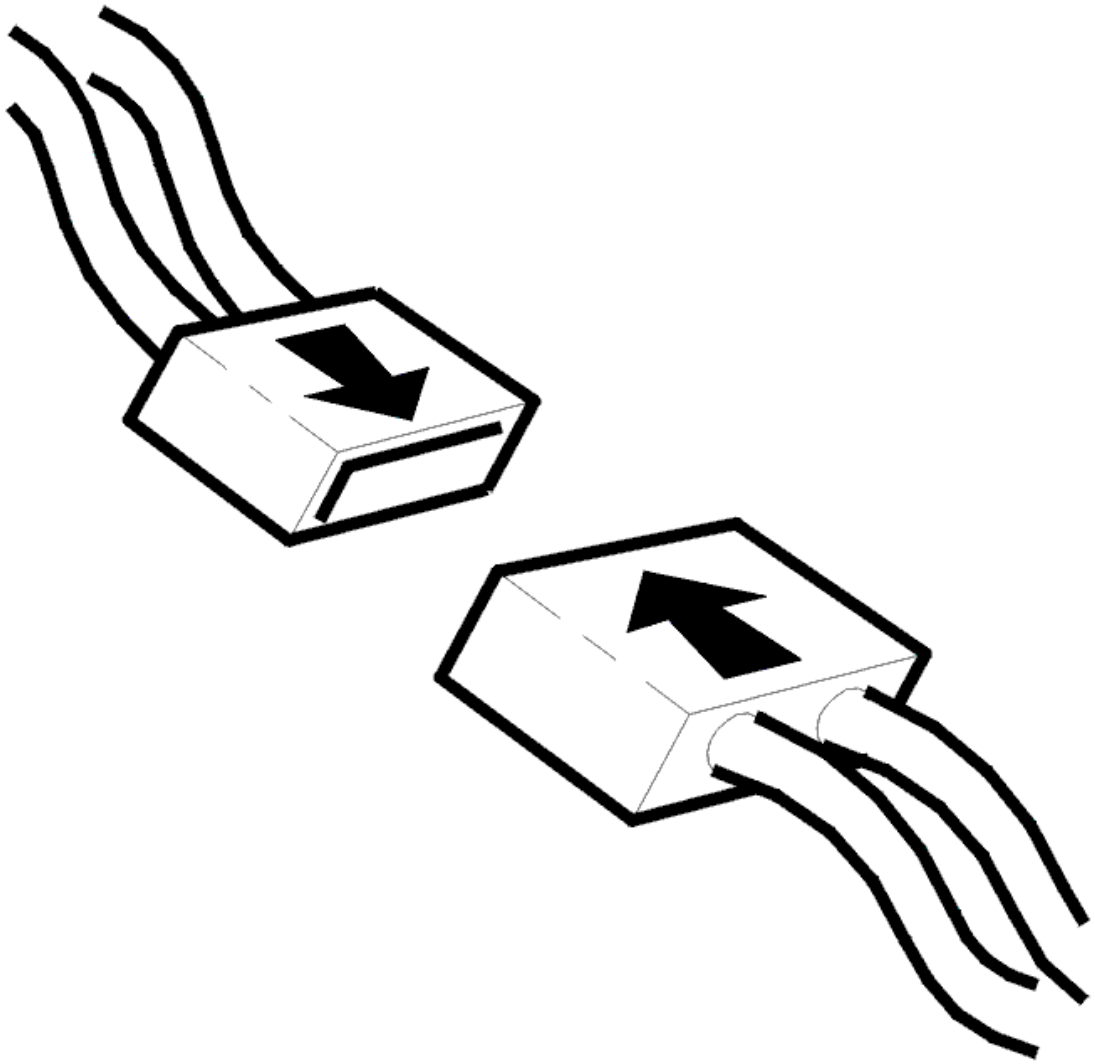

Fig. 369: Connecting Connector
Courtesy of VOLVO CARS CORPORATION

- Ignition off
- Reinstall the connectors, components etc.
- Ignition on.

  Check that the function for the relevant button or switch is OK.

Is the function OK?

- **YES**

  VERIFIED: Troubleshooting has been completed.

- **NO**

  Refer to **INFORMATION**

INFORMATION

FAULT-TRACING INFORMATION

The fault should have been detected and remedied. As this is not the case fault-tracing has failed.

Exit fault-tracing for this diagnostic trouble code (DTC) or make another attempt.

CEM-7A05: PHONE YES BUTTON. ACTIVATED TOO LONG (2005-2012)

DIAGNOSTIC TROUBLE CODE (DTC) INFORMATION CEM-7A05

Condition

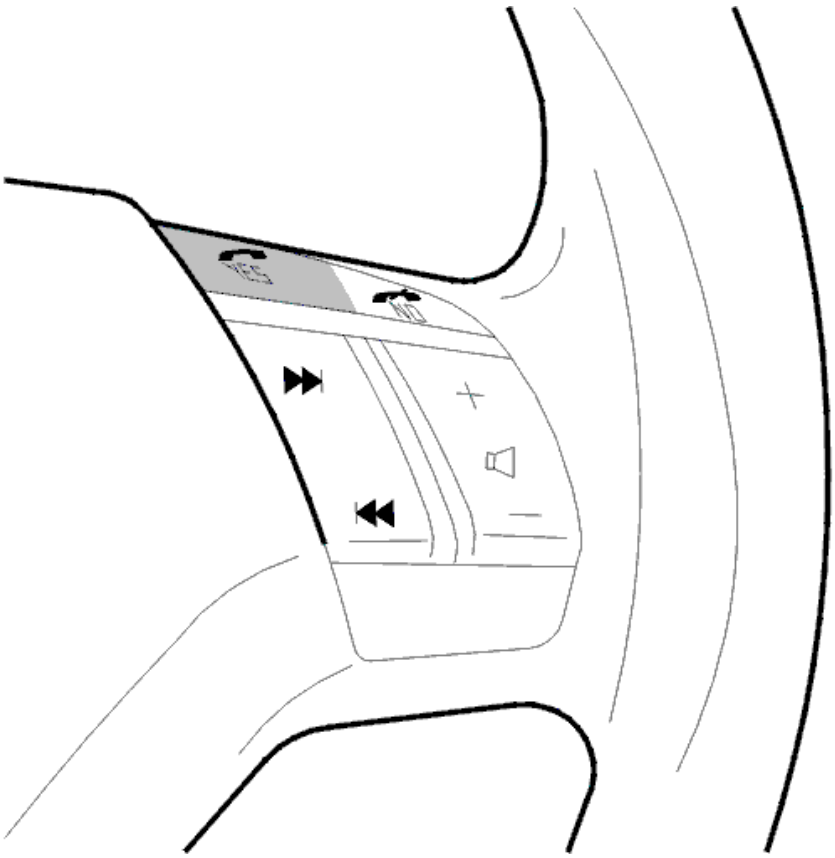

Fig. 370: Identifying YES Button
Courtesy of VOLVO CARS CORPORATION

The central electronic module (CEM) checks the signal from the YES button.

The diagnostic trouble code (DTC) is stored if the central electronic module (CEM) registers that the YES button has been active for more than 1 minute.

The diagnostic trouble code (DTC) can be diagnosed when the ignition is switched on.

Substitute Value

- None.

Possible Source

- The YES button is jammed in the pressed in position
- Damaged YES button.

Fault symptom[s]

- The phone buttons on the steering wheel do not work.

ACTIVATED TOO LONG

CHECKING THE CONTROL

The diagnostic trouble code (DTC) is stored when a button or switch has been depressed for a long time.

If the fault is intermittent, it has been registered previously but is no longer present. Intermittent faults can be caused by interference at start up of the central electronic module (CEM) or may be a different type of fault which occurs on different occasions. The fault is evaluated depending on how it occurs.

Check that the button or switch does not stick in the activated position.

Remedy as necessary.

Other information

see **KEYPAD STEERING WHEEL, REPLACING**

- **Continue**

  Refer to **VERIFICATION**

VERIFICATION

VERIFICATION

HINT: After carrying out the repair, check that the fault has been remedied.

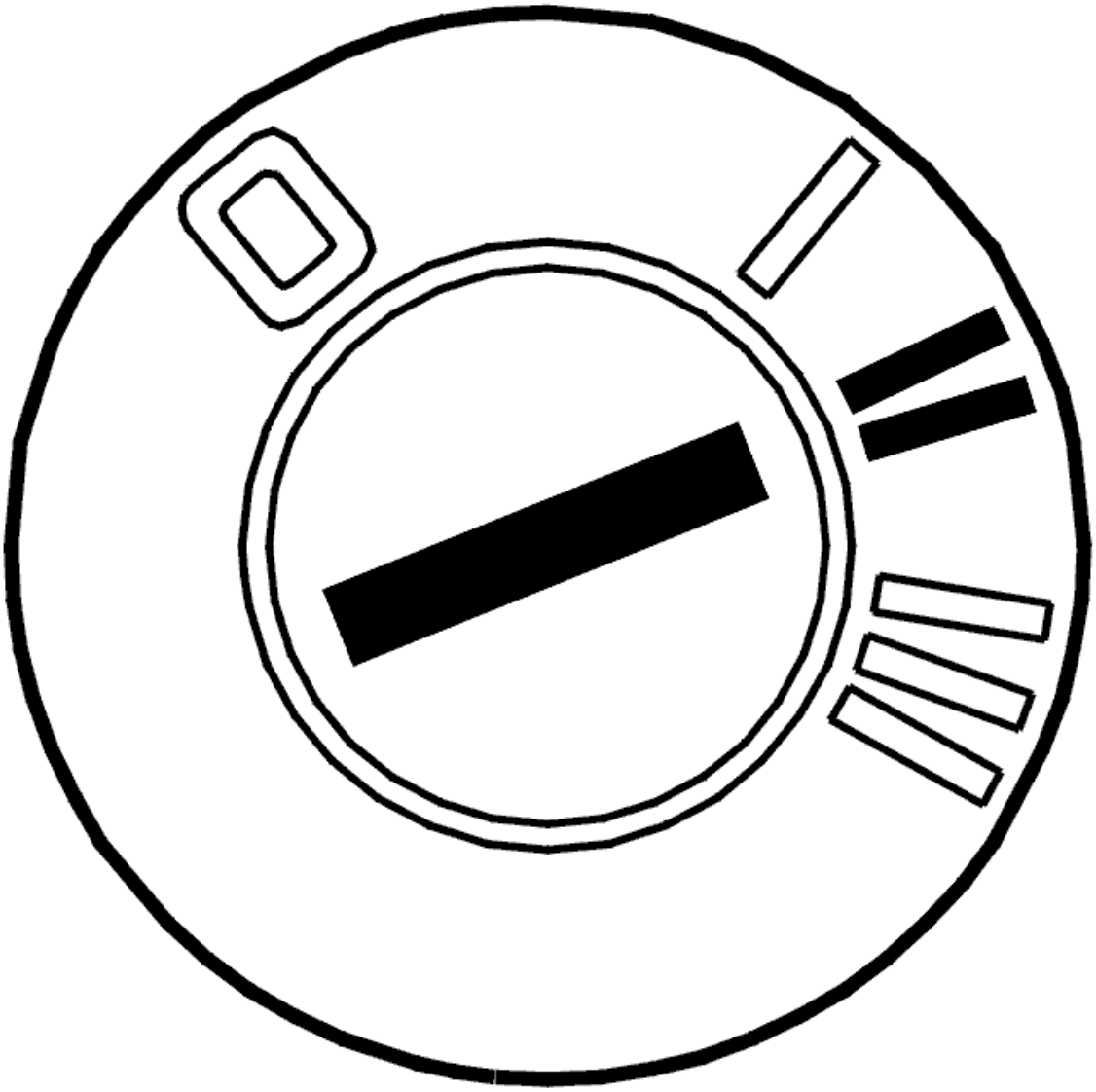

Fig. 371: Identifying Ignition ON
Courtesy of VOLVO CARS CORPORATION

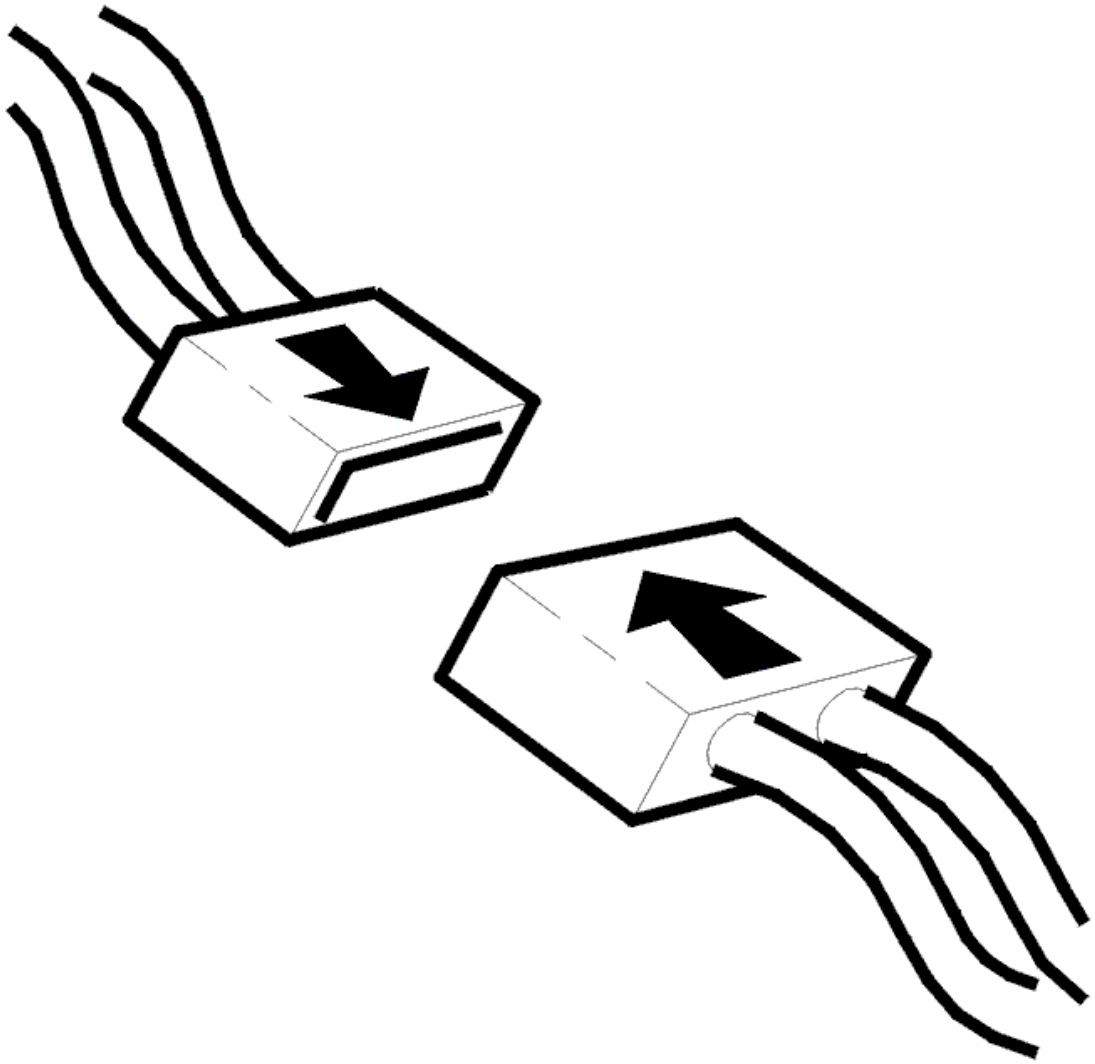

Fig. 372: Connecting Connector
Courtesy of VOLVO CARS CORPORATION

- Ignition off
- Reinstall the connectors, components etc.
- Ignition on.

  Check that the function for the relevant button or switch is OK.

Is the function OK?

- **YES**

  VERIFIED: Troubleshooting has been completed.

- **NO**

  Refer to **INFORMATION**

INFORMATION

FAULT-TRACING INFORMATION

The fault should have been detected and remedied. As this is not the case fault-tracing has failed.

Exit fault-tracing for this diagnostic trouble code (DTC) or make another attempt.

CEM-7A06: PHONE NO BUTTON. ACTIVATED TOO LONG (2005-2012)

DIAGNOSTIC TROUBLE CODE (DTC) INFORMATION CEM-7A06

Condition

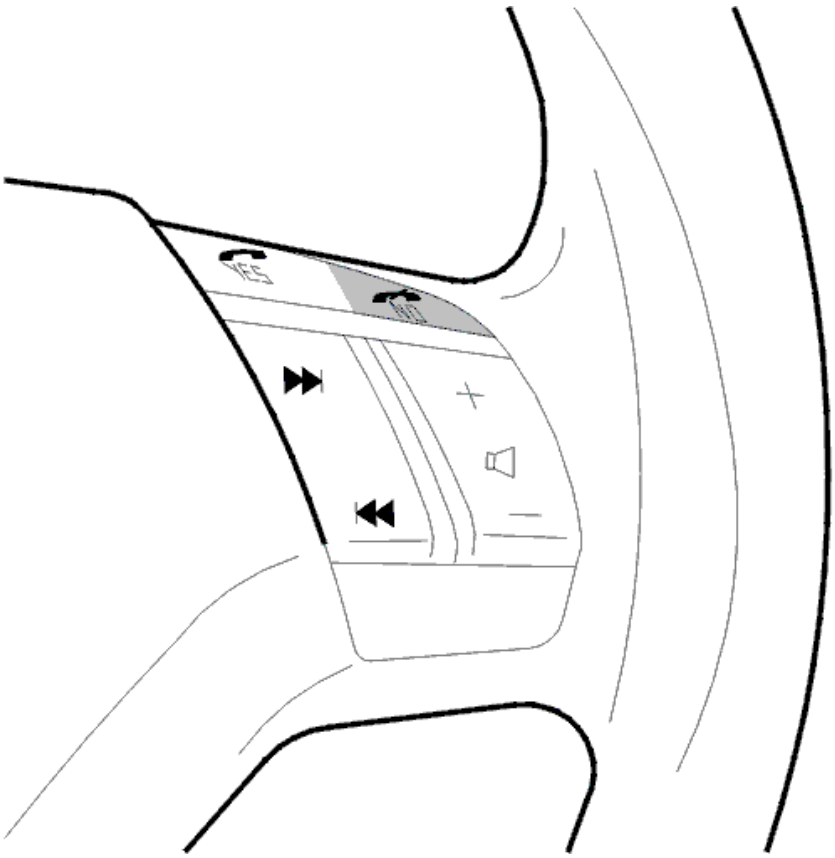

Fig. 373: Identifying NO Button
Courtesy of VOLVO CARS CORPORATION

The central electronic module (CEM) checks the signal from the NO button.

The diagnostic trouble code (DTC) is stored if the central electronic module (CEM) registers that the NO button has been active for more than 1 minute.

The diagnostic trouble code (DTC) can be diagnosed when the ignition is switched on.

Substitute Value

- None.

Possible Source

- The NO button is jammed in the pressed in position
- Damaged NO button.

Fault symptom[s]

- The phone buttons on the steering wheel do not work.

ACTIVATED TOO LONG

CHECKING THE CONTROL

The diagnostic trouble code (DTC) is stored when a button or switch has been depressed for a long time.

If the fault is intermittent, it has been registered previously but is no longer present. Intermittent faults can be caused by interference at start up of the central electronic module (CEM) or may be a different type of fault which occurs on different occasions. The fault is evaluated depending on how it occurs.

Check that the button or switch does not stick in the activated position.

Remedy as necessary.

Other information

see **KEYPAD STEERING WHEEL, REPLACING**

- **Continue**

  Refer to **VERIFICATION**

VERIFICATION

VERIFICATION

HINT: After carrying out the repair, check that the fault has been remedied.

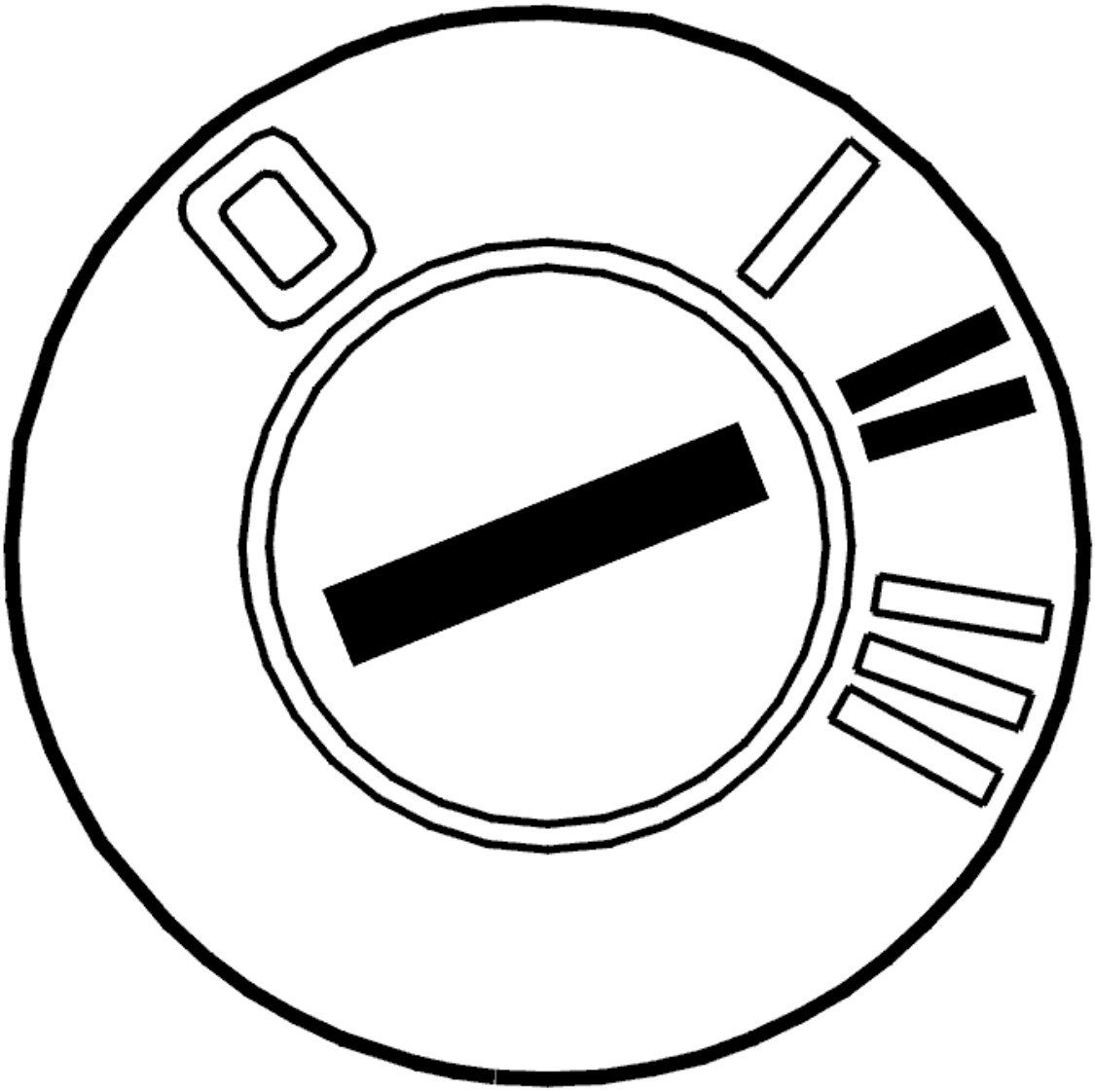

Fig. 374: Identifying Ignition ON
Courtesy of VOLVO CARS CORPORATION

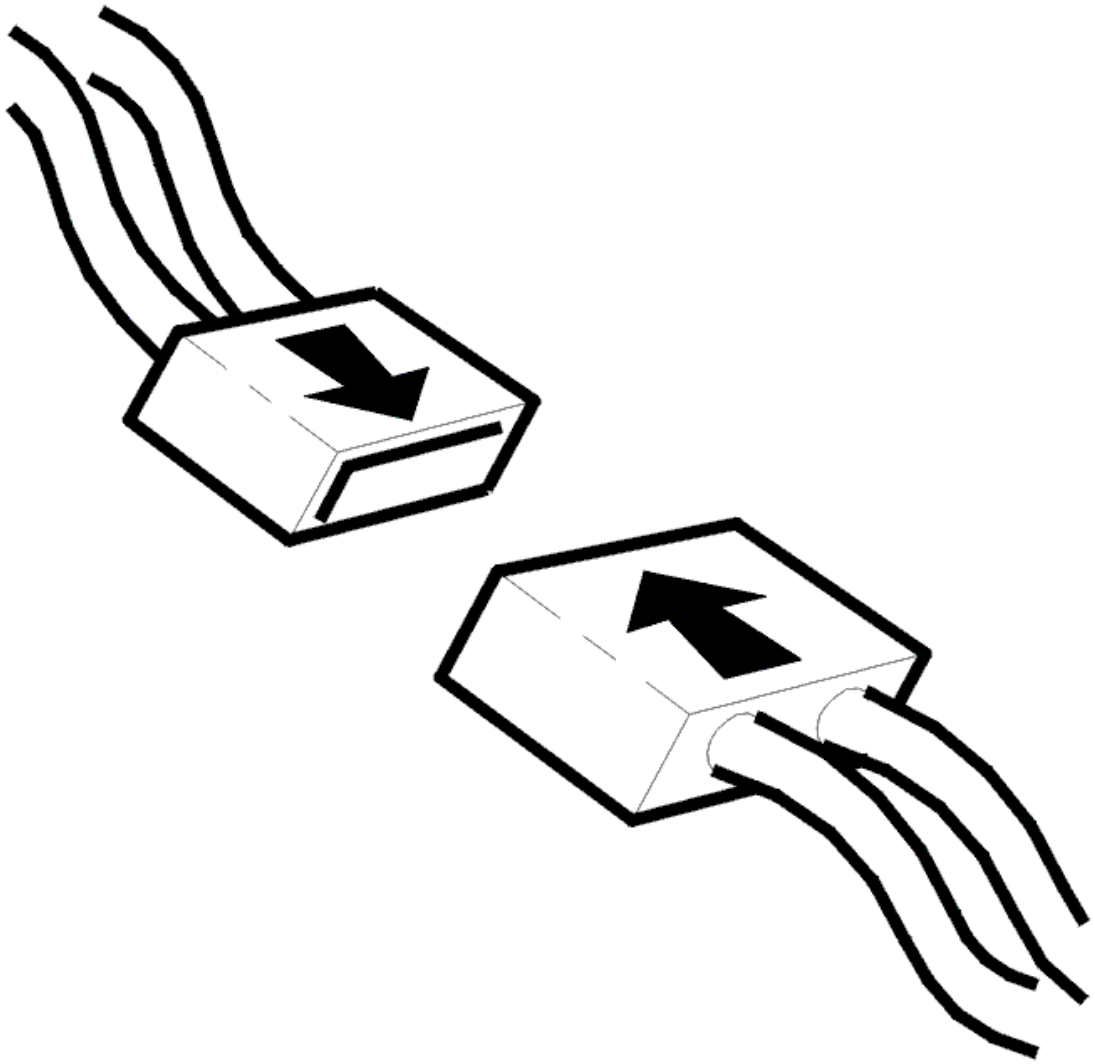

Fig. 375: Connecting Connector
Courtesy of VOLVO CARS CORPORATION

- Ignition off
- Reinstall the connectors, components etc.
- Ignition on.

  Check that the function for the relevant button or switch is OK.

Is the function OK?

- **YES**

  VERIFIED: Troubleshooting has been completed.

- **NO**

  Refer to **INFORMATION**

INFORMATION

FAULT-TRACING INFORMATION

The fault should have been detected and remedied. As this is not the case fault-tracing has failed.

Exit fault-tracing for this diagnostic trouble code (DTC) or make another attempt.

CEM-7A07: RTI RIGHT BUTTON. ACTIVATED TOO LONG (2005-2012)

DIAGNOSTIC TROUBLE CODE (DTC) INFORMATION CEM-7A07

Condition

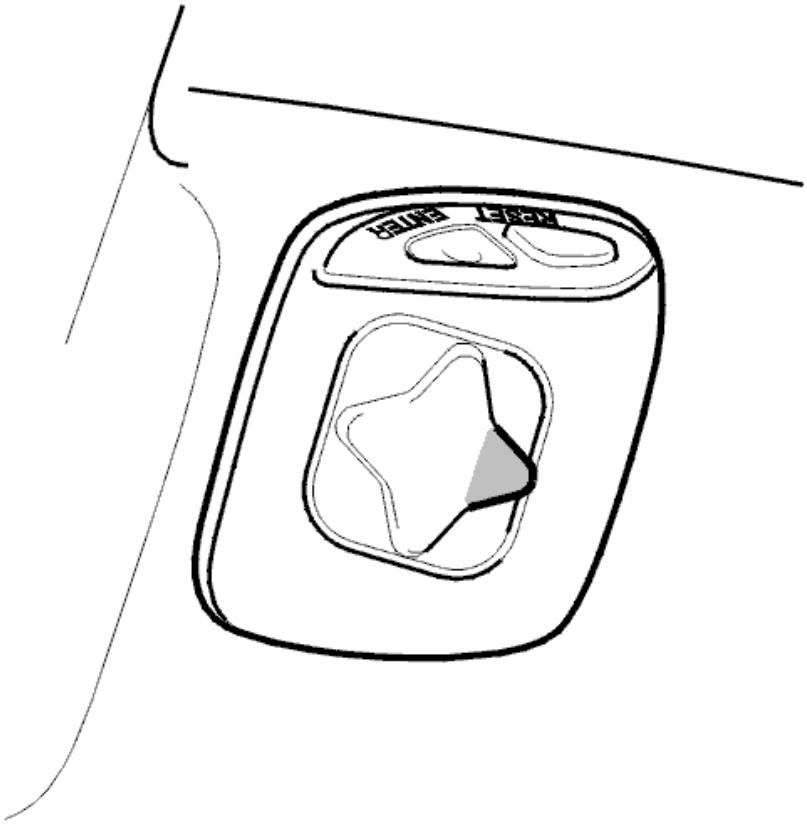

Fig. 376: Identifying RTI Right Button
Courtesy of VOLVO CARS CORPORATION

The central electronic module (CEM) checks the signal from the right button.

The diagnostic trouble code (DTC) is stored if the central electronic module (CEM) registers that the right button has been active for more than 1 minute.

The diagnostic trouble code (DTC) can be diagnosed when the ignition is switched on.

Substitute Value

- None.

Possible Source

- The right button has jammed in the pressed in position
- Damaged right button.

Fault symptom[s]

- The RTI buttons on the steering wheel do not function
- The navigation buttons on the steering wheel do not function.

ACTIVATED TOO LONG

CHECKING THE CONTROL

The diagnostic trouble code (DTC) is stored when a button or switch has been depressed for a long time.

If the fault is intermittent, it has been registered previously but is no longer present. Intermittent faults can be caused by interference at start up of the central electronic module (CEM) or may be a different type of fault which occurs on different occasions. The fault is evaluated depending on how it occurs.

Check that the button or switch does not stick in the activated position.

Remedy as necessary.

Other information

see **KEYPAD STEERING WHEEL, REPLACING**

- **Continue**

  Refer to **VERIFICATION**

VERIFICATION

VERIFICATION

HINT: After carrying out the repair, check that the fault has been remedied.

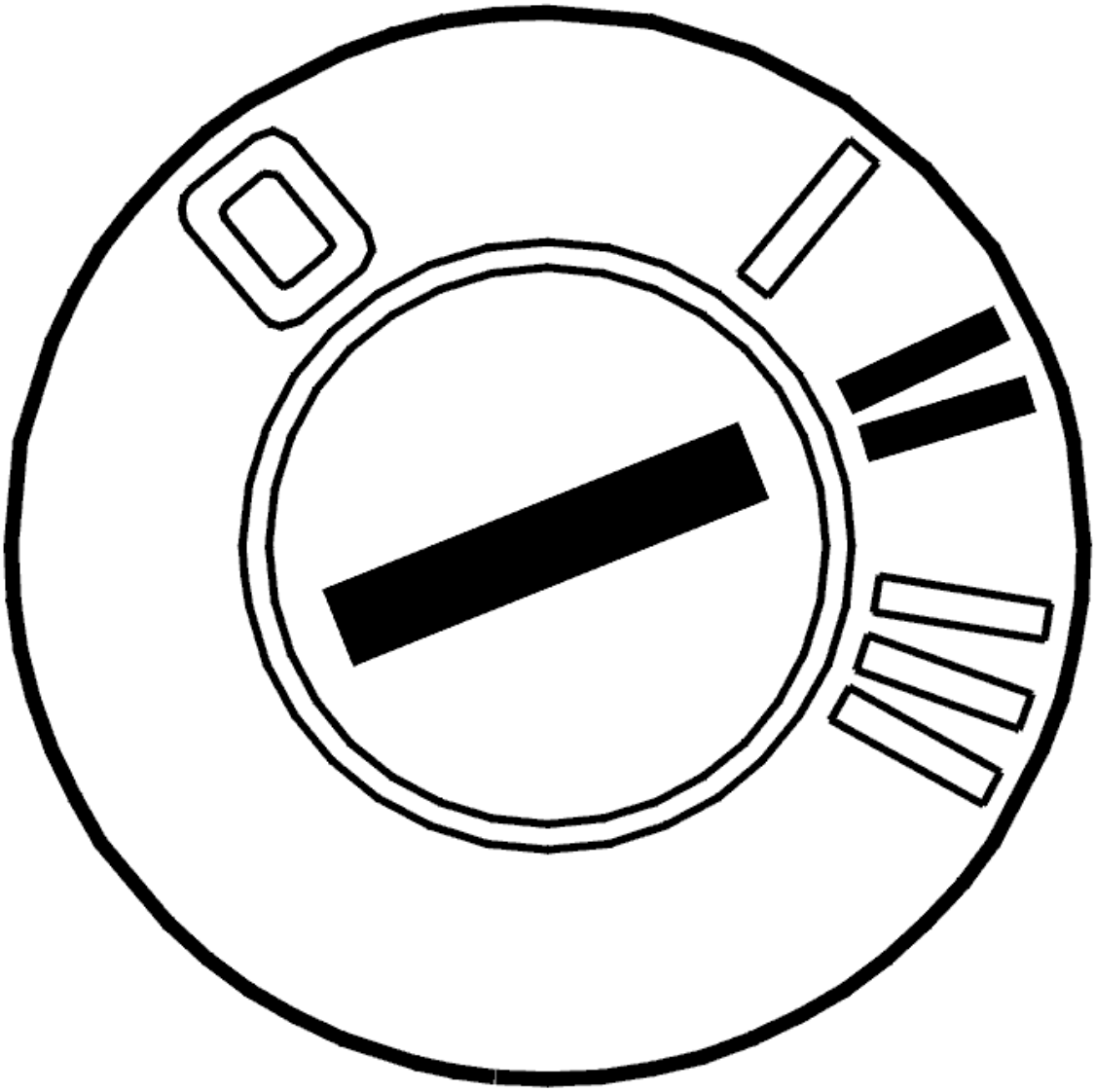

Fig. 377: Identifying Ignition ON
Courtesy of VOLVO CARS CORPORATION

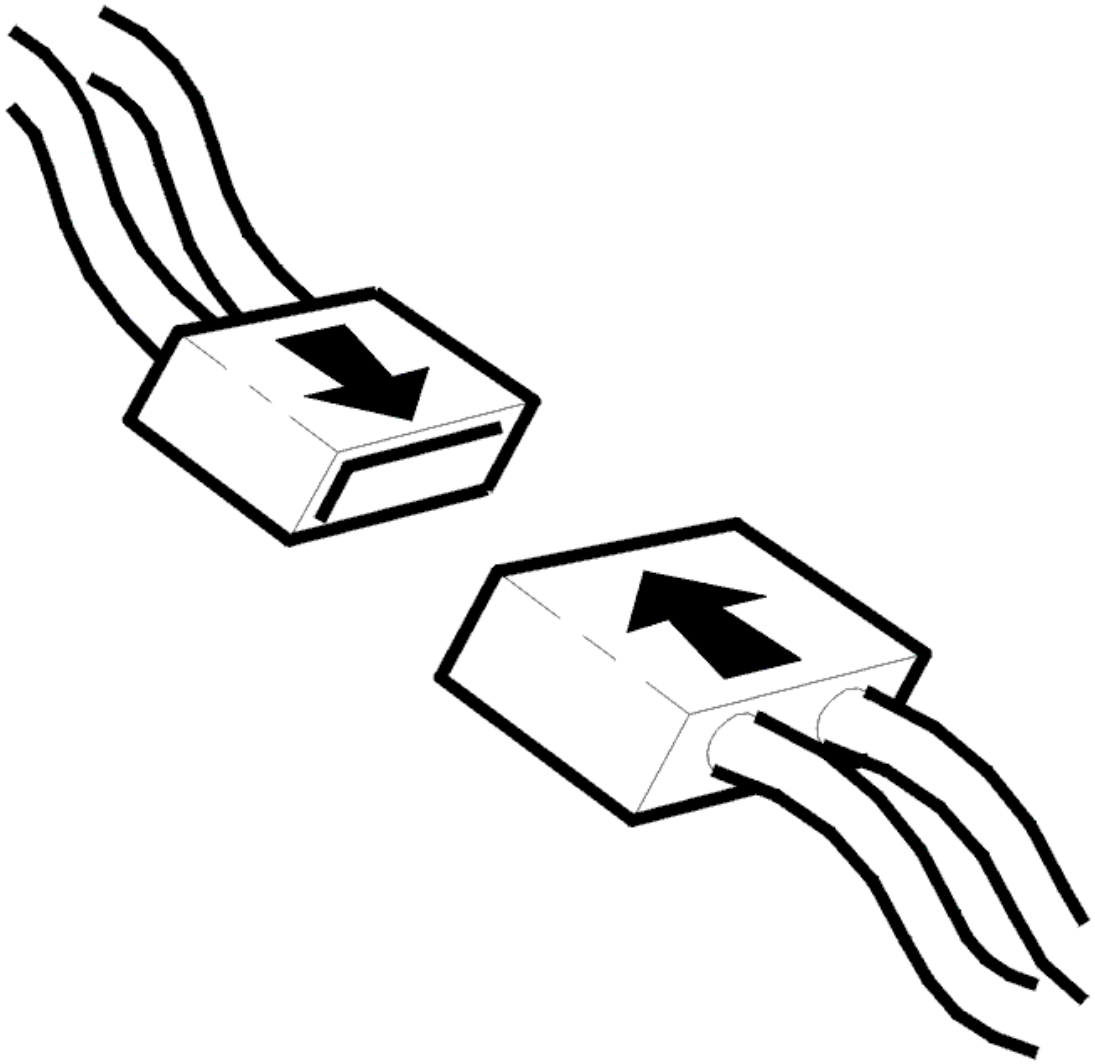

Fig. 378: Connecting Connector
Courtesy of VOLVO CARS CORPORATION

- Ignition off
- Reinstall the connectors, components etc.
- Ignition on.

  Check that the function for the relevant button or switch is OK.

Is the function OK?

- **YES**

  VERIFIED: Troubleshooting has been completed.

- **NO**

  Refer to **INFORMATION**

INFORMATION

FAULT-TRACING INFORMATION

The fault should have been detected and remedied. As this is not the case fault-tracing has failed.

Exit fault-tracing for this diagnostic trouble code (DTC) or make another attempt.

CEM-7A08: RTI LEFT BUTTON. ACTIVATED TOO LONG (2005-2012)

DIAGNOSTIC TROUBLE CODE (DTC) INFORMATION CEM-7A08

Condition

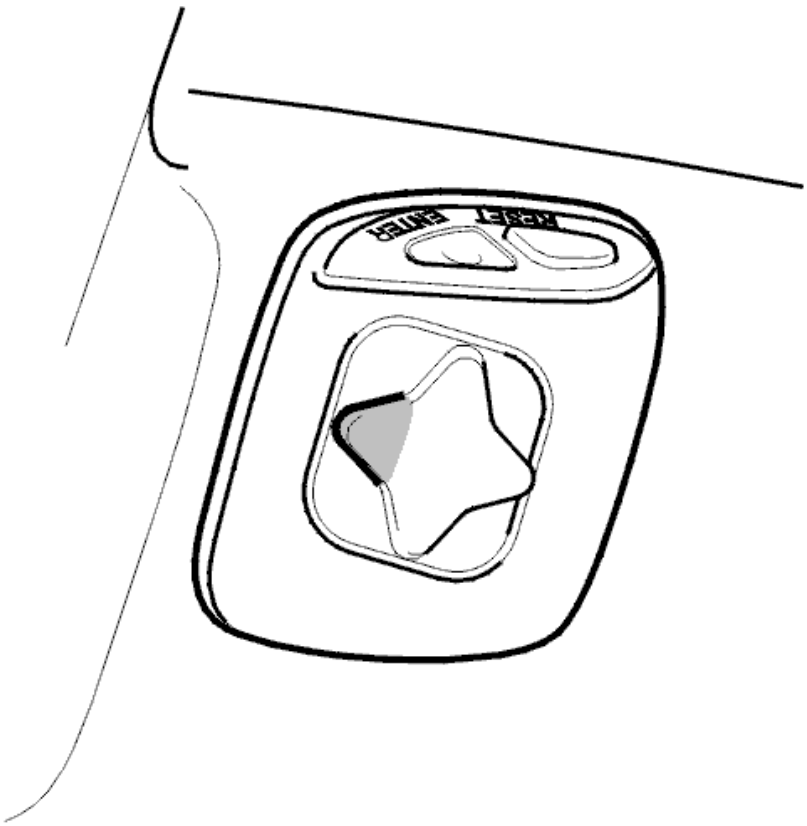

Fig. 379: Identifying Left Button
Courtesy of VOLVO CARS CORPORATION

The central electronic module (CEM) checks the signal from the left button.

The diagnostic trouble code (DTC) is stored if the central electronic module (CEM) registers that the left button has been active for more than 1 minute.

The diagnostic trouble code (DTC) can be diagnosed when the ignition is switched on.

Substitute Value

- None.

Possible Source

- The left button has jammed in the pressed in position
- Damaged left button.

Fault symptom[s]

- The RTI buttons on the steering wheel do not function
- The navigation buttons on the steering wheel do not function.

ACTIVATED TOO LONG

CHECKING THE CONTROL

The diagnostic trouble code (DTC) is stored when a button or switch has been depressed for a long time.

If the fault is intermittent, it has been registered previously but is no longer present. Intermittent faults can be caused by interference at start up of the central electronic module (CEM) or may be a different type of fault which occurs on different occasions. The fault is evaluated depending on how it occurs.

Check that the button or switch does not stick in the activated position.

Remedy as necessary.

Other information

see **KEYPAD STEERING WHEEL, REPLACING**

- **Continue**

  Refer to **VERIFICATION**

VERIFICATION

VERIFICATION

HINT: After carrying out the repair, check that the fault has been remedied.

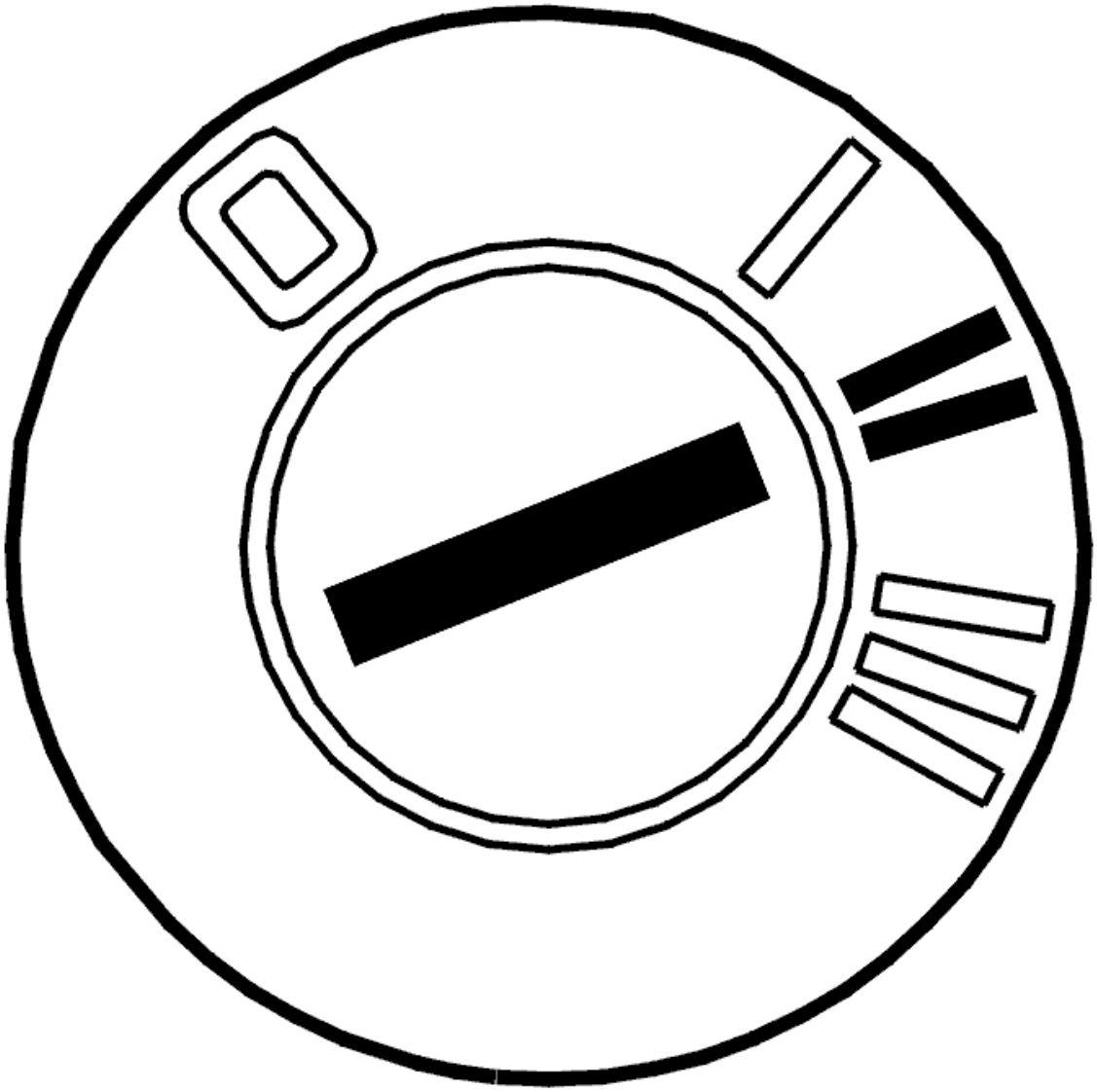

Fig. 380: Identifying Ignition ON
Courtesy of VOLVO CARS CORPORATION

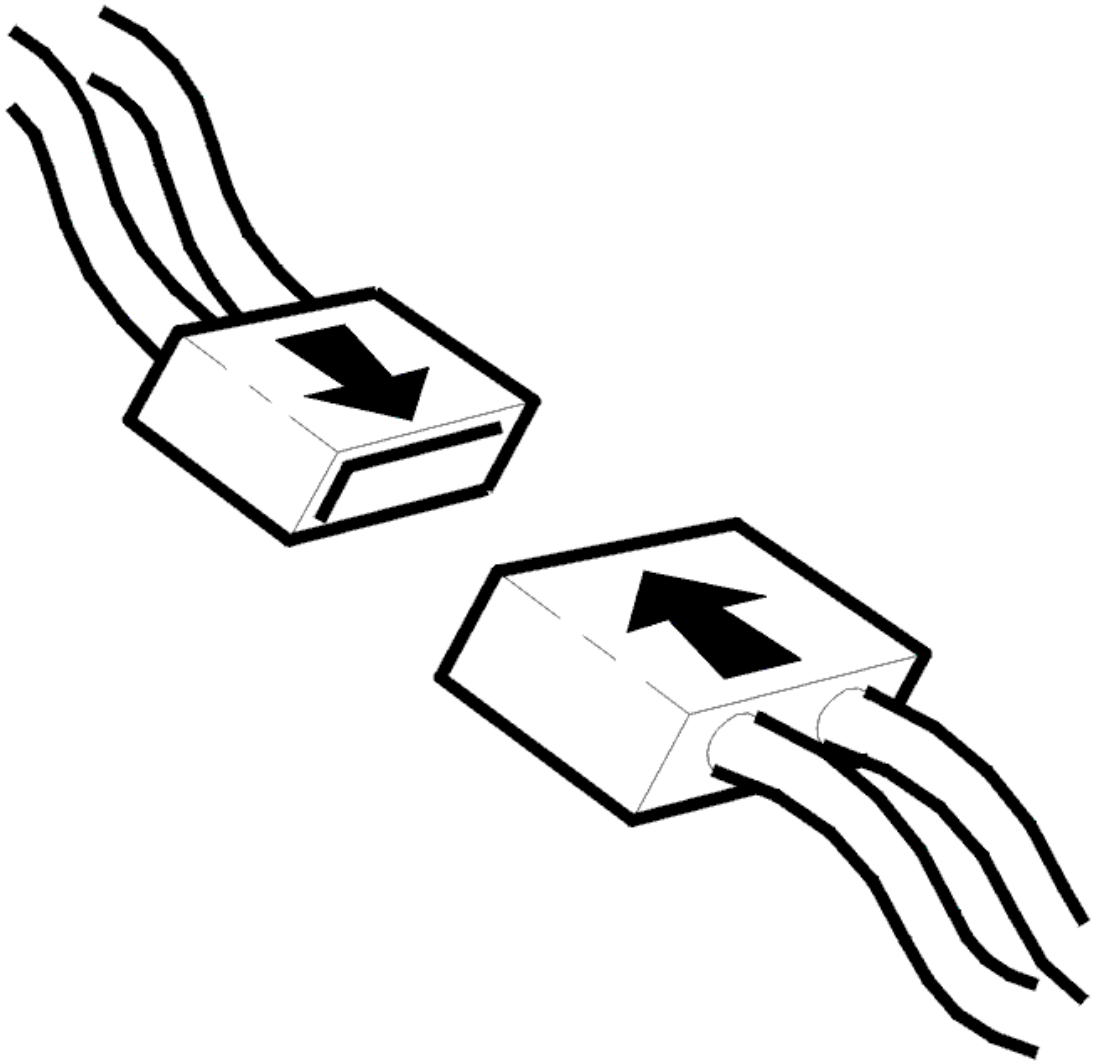

Fig. 381: Connecting Connector
Courtesy of VOLVO CARS CORPORATION

- Ignition off
- Reinstall the connectors, components etc.
- Ignition on.

  Check that the function for the relevant button or switch is OK.

Is the function OK?

- **YES**

  VERIFIED: Troubleshooting has been completed.

- **NO**

  Refer to **INFORMATION**

INFORMATION

FAULT-TRACING INFORMATION

The fault should have been detected and remedied. As this is not the case fault-tracing has failed.

Exit fault-tracing for this diagnostic trouble code (DTC) or make another attempt.

CEM-7A09: RTI DOWN BUTTON. ACTIVATED TOO LONG (2005-2012)

DIAGNOSTIC TROUBLE CODE (DTC) INFORMATION CEM-7A09

Condition

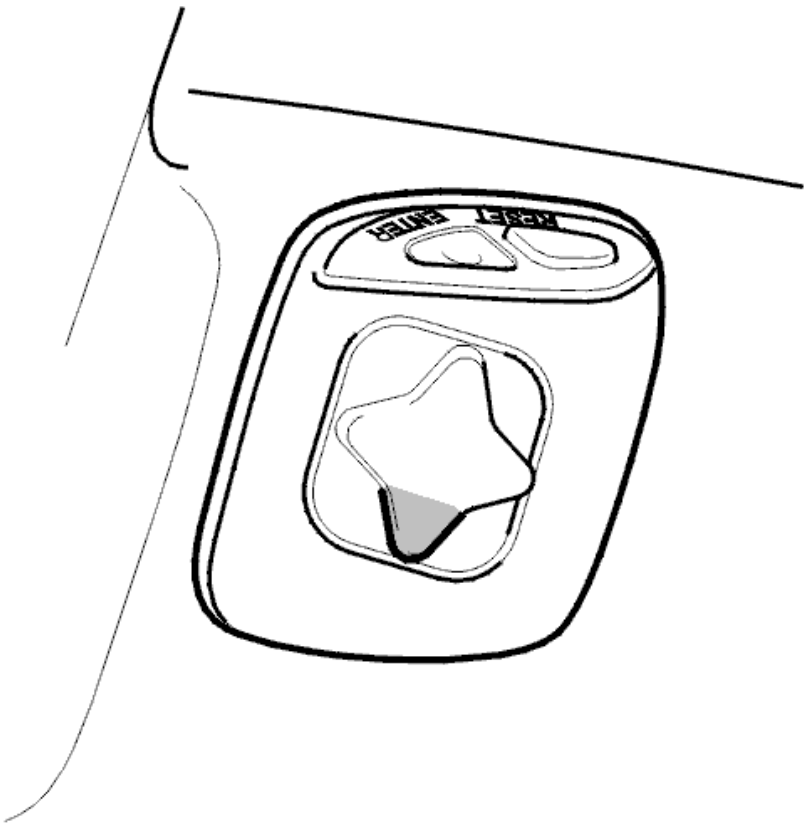

Fig. 382: Identifying Down Button
Courtesy of VOLVO CARS CORPORATION

The central electronic module (CEM) checks the signal from the down button.

The diagnostic trouble code (DTC) is stored if the central electronic module (CEM) registers that the down button has been active for more than 1 minute.

The diagnostic trouble code (DTC) can be diagnosed when the ignition is switched on.

Substitute Value

- None.

Possible Source

- The down button has jammed in the pressed in position
- Damaged down button.

Fault symptom[s]

- The RTI buttons on the steering wheel do not function
- The navigation buttons on the steering wheel do not function.

ACTIVATED TOO LONG

CHECKING THE CONTROL

The diagnostic trouble code (DTC) is stored when a button or switch has been depressed for a long time.

If the fault is intermittent, it has been registered previously but is no longer present. Intermittent faults can be caused by interference at start up of the central electronic module (CEM) or may be a different type of fault which occurs on different occasions. The fault is evaluated depending on how it occurs.

Check that the button or switch does not stick in the activated position.

Remedy as necessary.

Other information

see **KEYPAD STEERING WHEEL, REPLACING**

- **Continue**

  Refer to **VERIFICATION**

VERIFICATION

VERIFICATION

HINT: After carrying out the repair, check that the fault has been remedied.

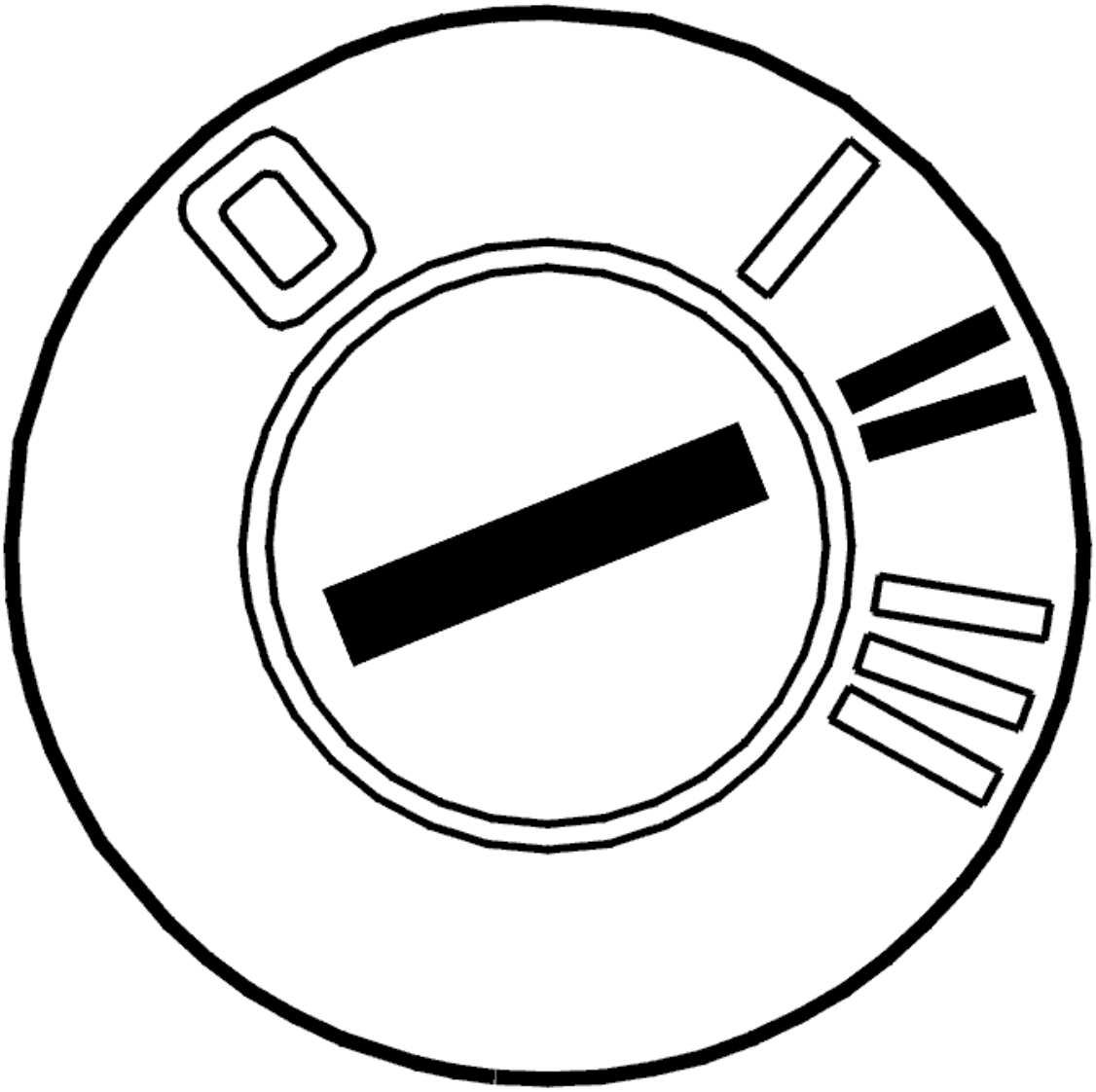

Fig. 383: Identifying Ignition ON
Courtesy of VOLVO CARS CORPORATION

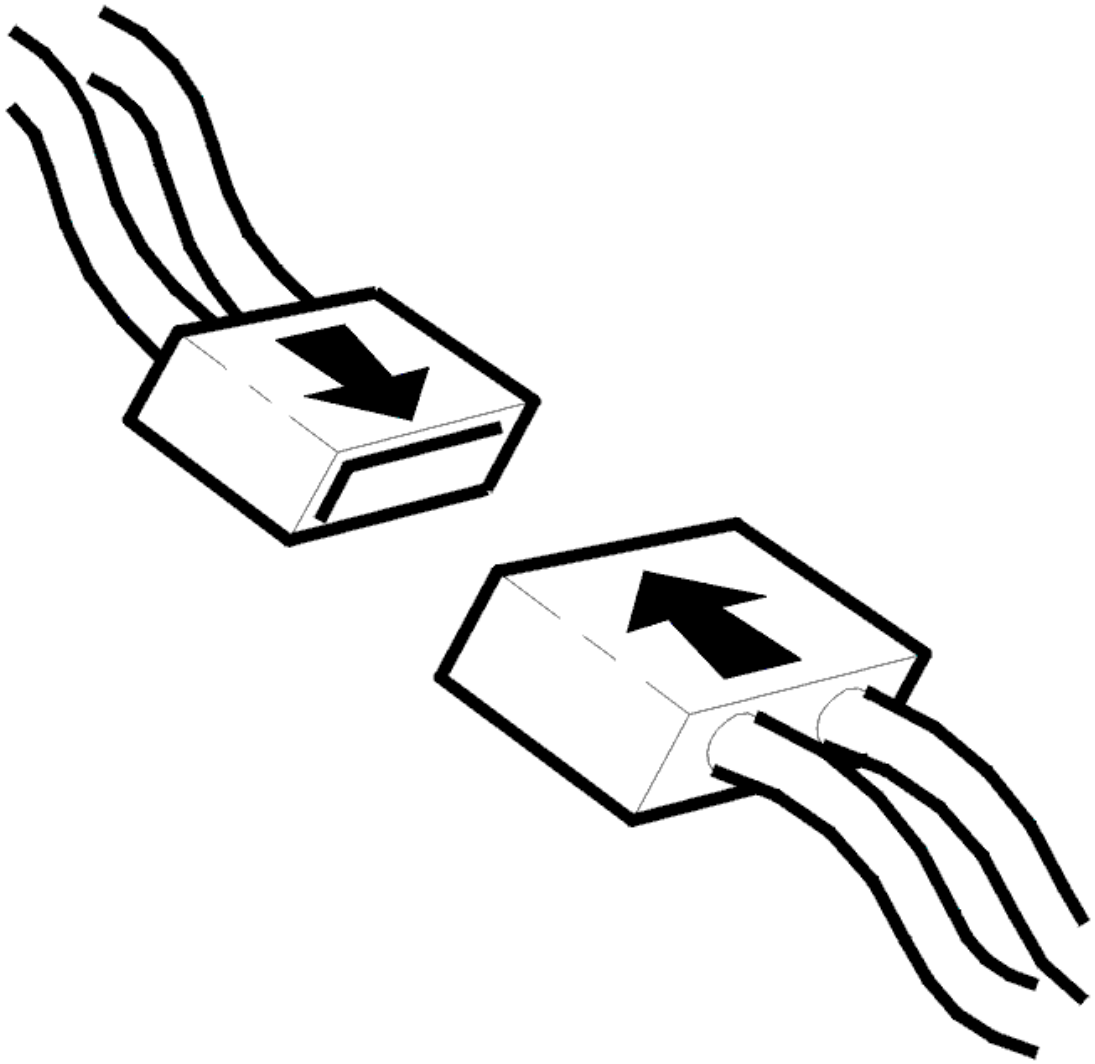

Fig. 384: Connecting Connector
Courtesy of VOLVO CARS CORPORATION

- Ignition off
- Reinstall the connectors, components etc.
- Ignition on.

  Check that the function for the relevant button or switch is OK.

Is the function OK?

- **YES**

  VERIFIED: Troubleshooting has been completed.

- **NO**

  Refer to **INFORMATION**

INFORMATION

FAULT-TRACING INFORMATION

The fault should have been detected and remedied. As this is not the case fault-tracing has failed.

Exit fault-tracing for this diagnostic trouble code (DTC) or make another attempt.

CEM-7A0A: RTI UP BUTTON. ACTIVATED TOO LONG (2005-2012)

DIAGNOSTIC TROUBLE CODE (DTC) INFORMATION CEM-7A0A

Condition

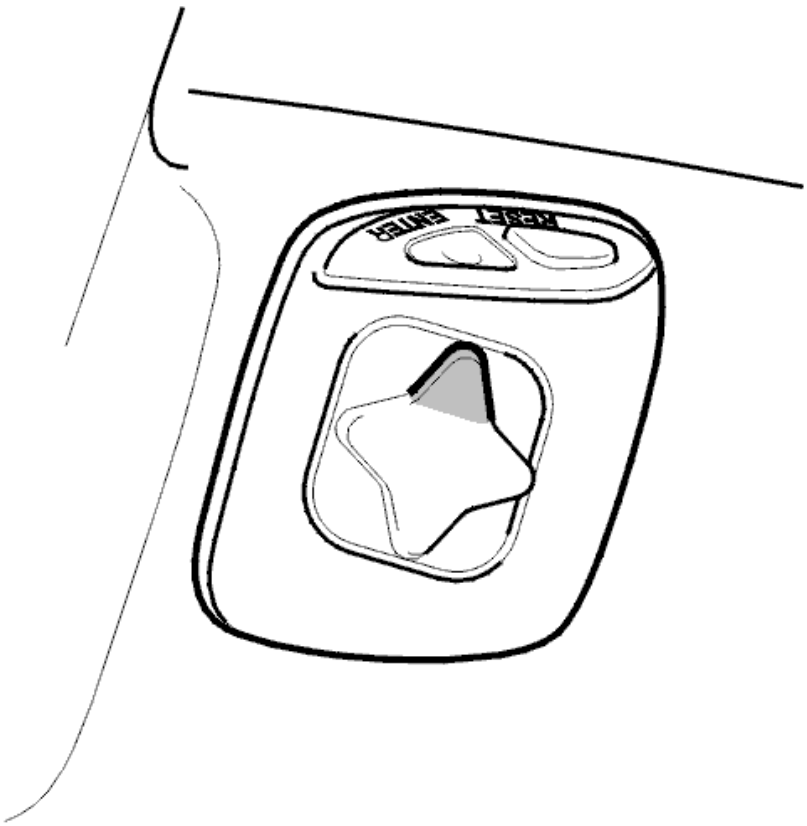

Fig. 385: Identifying RTI Up Button
Courtesy of VOLVO CARS CORPORATION

The central electronic module (CEM) checks the signal from the up button.

The diagnostic trouble code (DTC) is stored if the central electronic module (CEM) registers that the up button has been active for more than 1 minute.

The diagnostic trouble code (DTC) can be diagnosed when the ignition is switched on.

Substitute Value

- None.

Possible Source

- The up button has jammed in the pressed in position
- Damaged up button.

Fault symptom[s]

- The RTI buttons on the steering wheel do not function
- The navigation buttons on the steering wheel do not function.

ACTIVATED TOO LONG

CHECKING THE CONTROL

The diagnostic trouble code (DTC) is stored when a button or switch has been depressed for a long time.

If the fault is intermittent, it has been registered previously but is no longer present. Intermittent faults can be caused by interference at start up of the central electronic module (CEM) or may be a different type of fault which occurs on different occasions. The fault is evaluated depending on how it occurs.

Check that the button or switch does not stick in the activated position.

Remedy as necessary.

Other information

see **KEYPAD STEERING WHEEL, REPLACING**

- **Continue**

  Refer to **VERIFICATION**

VERIFICATION

VERIFICATION

HINT: After carrying out the repair, check that the fault has been remedied.

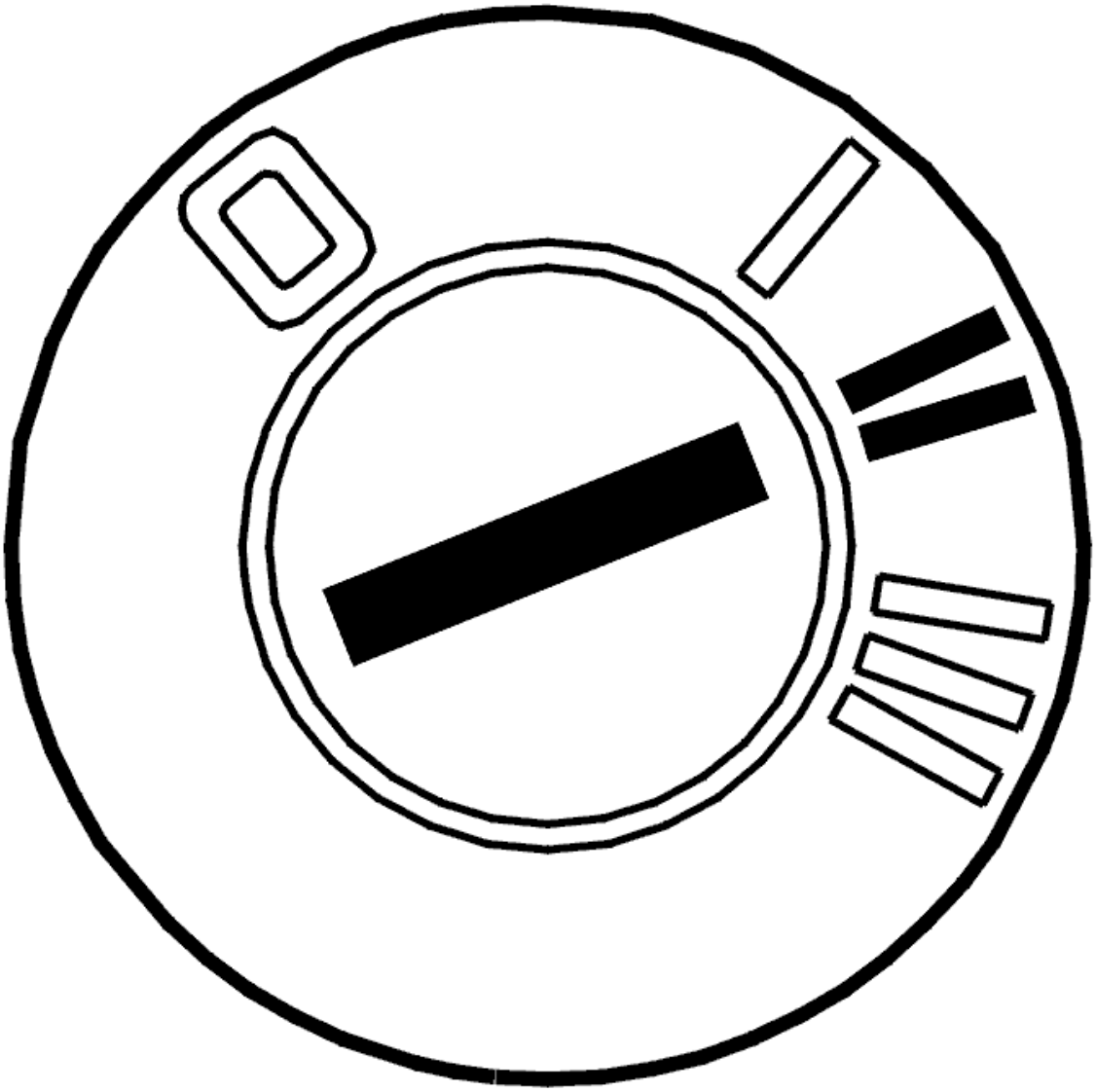

Fig. 386: Identifying Ignition ON
Courtesy of VOLVO CARS CORPORATION

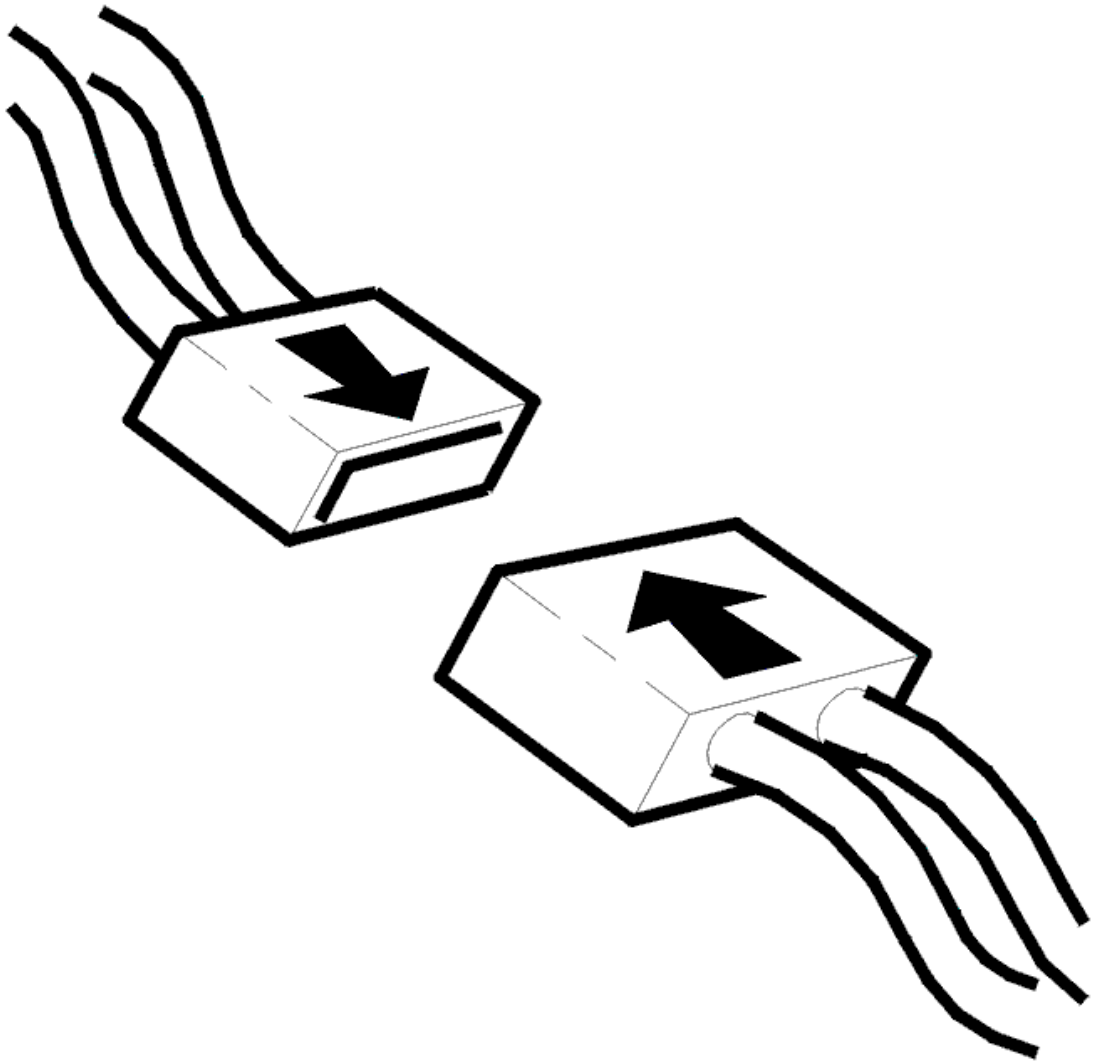

Fig. 387: Connecting Connector
Courtesy of VOLVO CARS CORPORATION

- Ignition off
- Reinstall the connectors, components etc.
- Ignition on.

  Check that the function for the relevant button or switch is OK.

Is the function OK?

- **YES**

  VERIFIED: Troubleshooting has been completed.

- **NO**

  Refer to **INFORMATION**

INFORMATION

FAULT-TRACING INFORMATION

The fault should have been detected and remedied. As this is not the case fault-tracing has failed.

Exit fault-tracing for this diagnostic trouble code (DTC) or make another attempt.

CEM-7A0B: RTI BACK BUTTON. ACTIVATED TOO LONG (2005-2012)

DIAGNOSTIC TROUBLE CODE (DTC) INFORMATION CEM-7A0B

Condition

Fig. 388: Identifying Back Button
Courtesy of VOLVO CARS CORPORATION

The central electronic module (CEM) checks the signal from the back button.

The diagnostic trouble code (DTC) is stored if the central electronic module (CEM) registers that the back button has been active for more than 1 minute.

The diagnostic trouble code (DTC) can be diagnosed when the ignition is switched on.

Substitute Value

- None.

Possible Source

- The back button has jammed in the pressed in position
- Damaged back button.

Fault symptom[s]

- The RTI buttons on the steering wheel do not function
- The navigation buttons on the steering wheel do not function.

ACTIVATED TOO LONG

CHECKING THE CONTROL

The diagnostic trouble code (DTC) is stored when a button or switch has been depressed for a long time.

If the fault is intermittent, it has been registered previously but is no longer present. Intermittent faults can be caused by interference at start up of the central electronic module (CEM) or may be a different type of fault which occurs on different occasions. The fault is evaluated depending on how it occurs.

Check that the button or switch does not stick in the activated position.

Remedy as necessary.

Other information

see **KEYPAD STEERING WHEEL, REPLACING**

- **Continue**

  Refer to **VERIFICATION**

VERIFICATION

VERIFICATION

HINT: After carrying out the repair, check that the fault has been remedied.

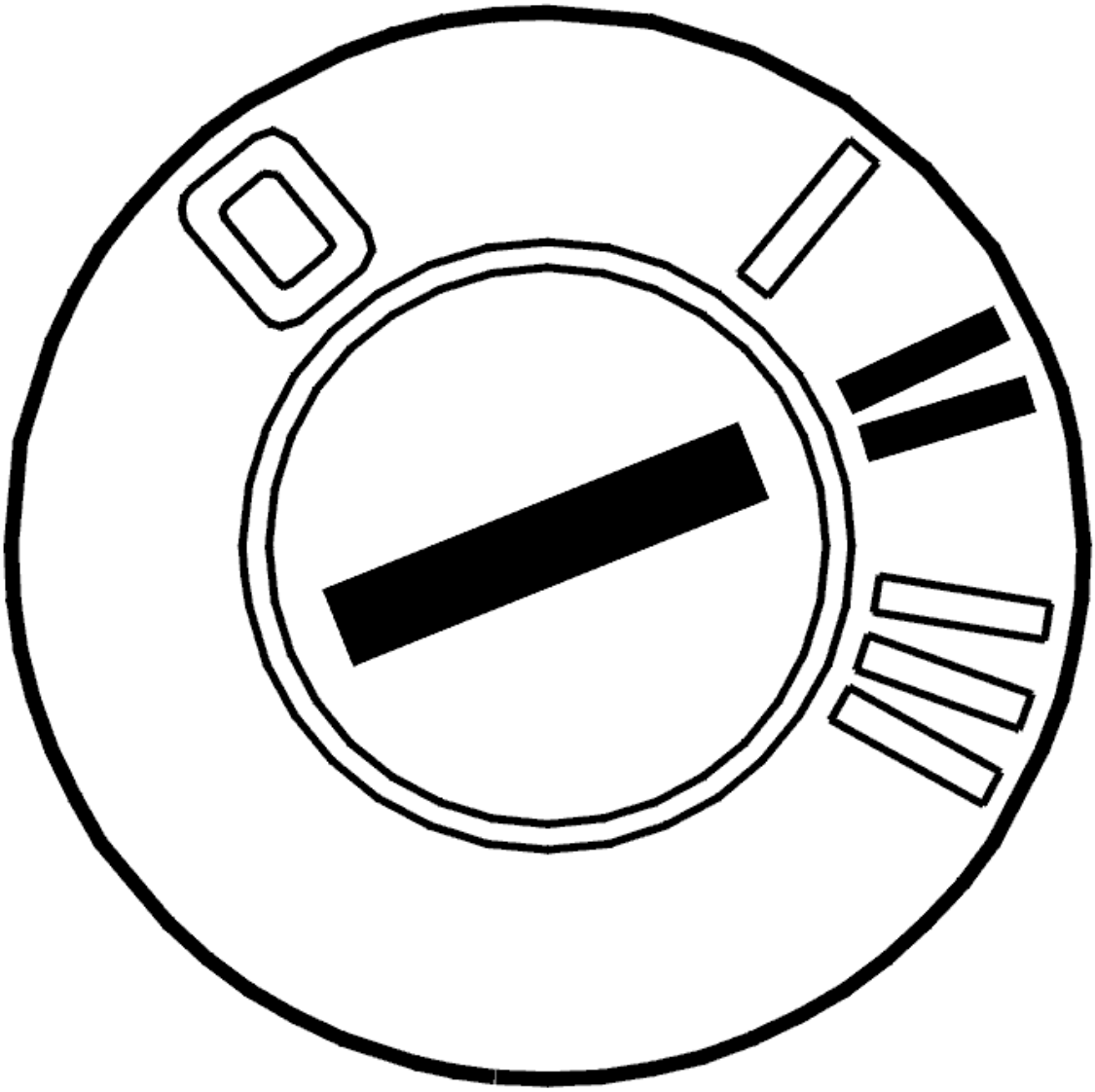

Fig. 389: Identifying Ignition ON
Courtesy of VOLVO CARS CORPORATION

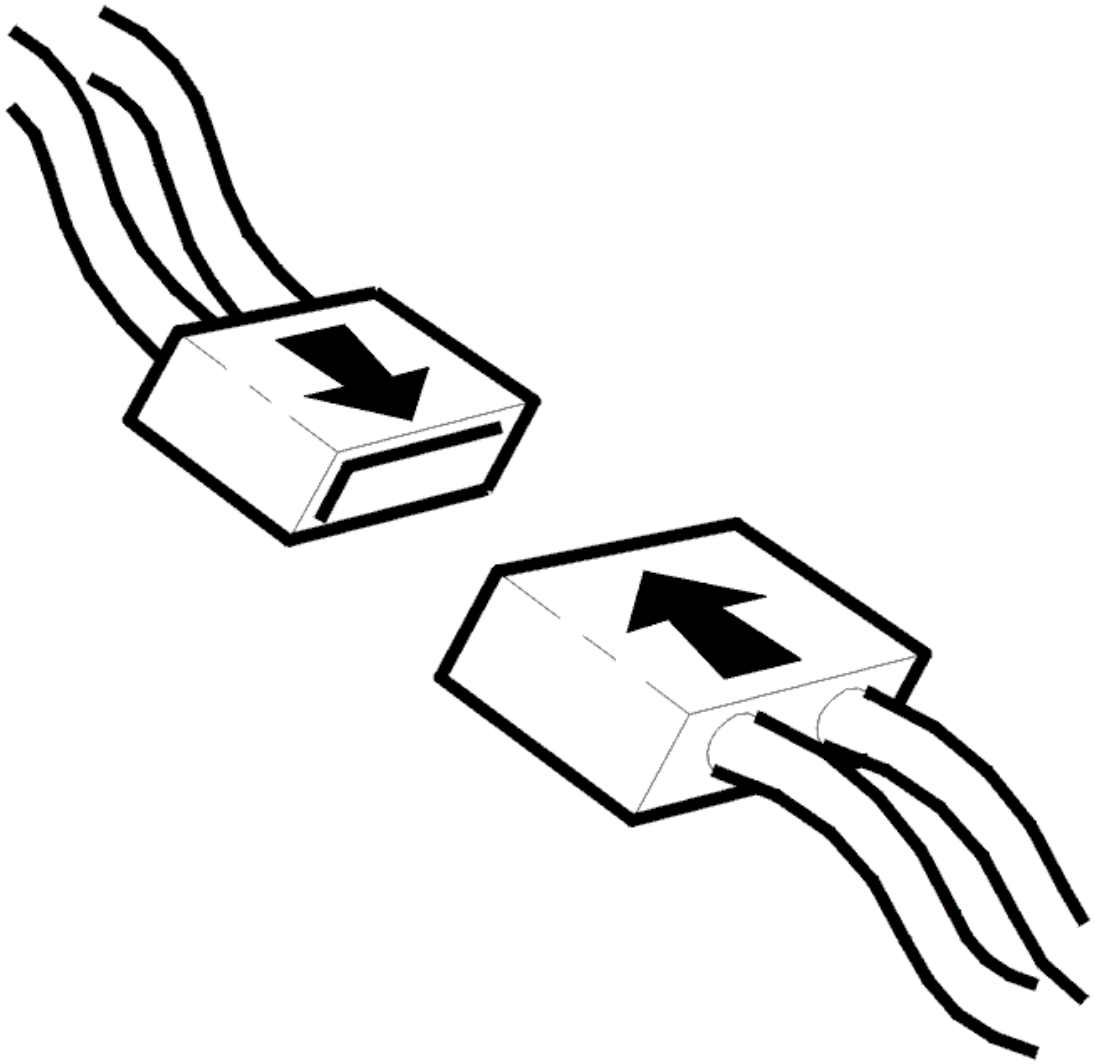

Fig. 390: Connecting Connector
Courtesy of VOLVO CARS CORPORATION

- Ignition off
- Reinstall the connectors, components etc.
- Ignition on.

  Check that the function for the relevant button or switch is OK.

Is the function OK?

- **YES**

  VERIFIED: Troubleshooting has been completed.

- **NO**

  Refer to **INFORMATION**

INFORMATION

FAULT-TRACING INFORMATION

The fault should have been detected and remedied. As this is not the case fault-tracing has failed.

Exit fault-tracing for this diagnostic trouble code (DTC) or make another attempt.

CEM-7A0C: RTI ENTER BUTTON. ACTIVATED TOO LONG (2005-2012)

DIAGNOSTIC TROUBLE CODE (DTC) INFORMATION CEM-7A0C

Condition

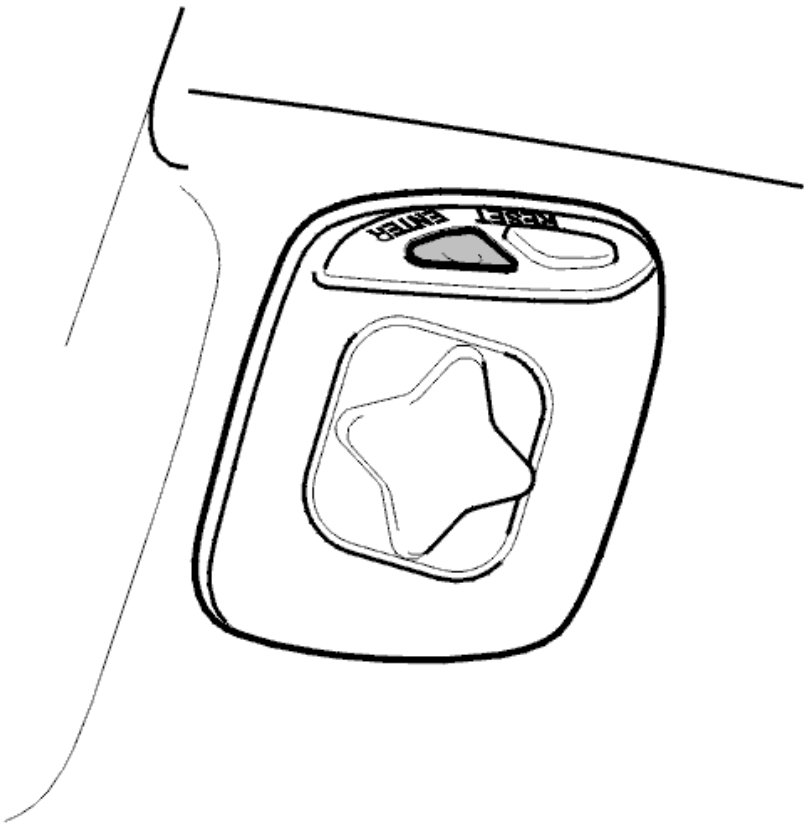

Fig. 391: Identifying Enter Button
Courtesy of VOLVO CARS CORPORATION

The central electronic module (CEM) checks the signal from the enter button.

The diagnostic trouble code (DTC) is stored if the central electronic module (CEM) registers that the enter button has been active for more than 1 minute.

The diagnostic trouble code (DTC) can be diagnosed when the ignition is switched on.

Substitute Value

- None.

Possible Source

- The Enter button has jammed in the pressed in position
- Damaged enter button.

Fault symptom[s]

- The RTI buttons on the steering wheel do not function
- The navigation buttons on the steering wheel do not function.

ACTIVATED TOO LONG

CHECKING THE CONTROL

The diagnostic trouble code (DTC) is stored when a button or switch has been depressed for a long time.

If the fault is intermittent, it has been registered previously but is no longer present. Intermittent faults can be caused by interference at start up of the central electronic module (CEM) or may be a different type of fault which occurs on different occasions. The fault is evaluated depending on how it occurs.

Check that the button or switch does not stick in the activated position.

Remedy as necessary.

Other information

see **KEYPAD STEERING WHEEL, REPLACING**

- **Continue**

  Refer to **VERIFICATION**

VERIFICATION

VERIFICATION

HINT: After carrying out the repair, check that the fault has been remedied.

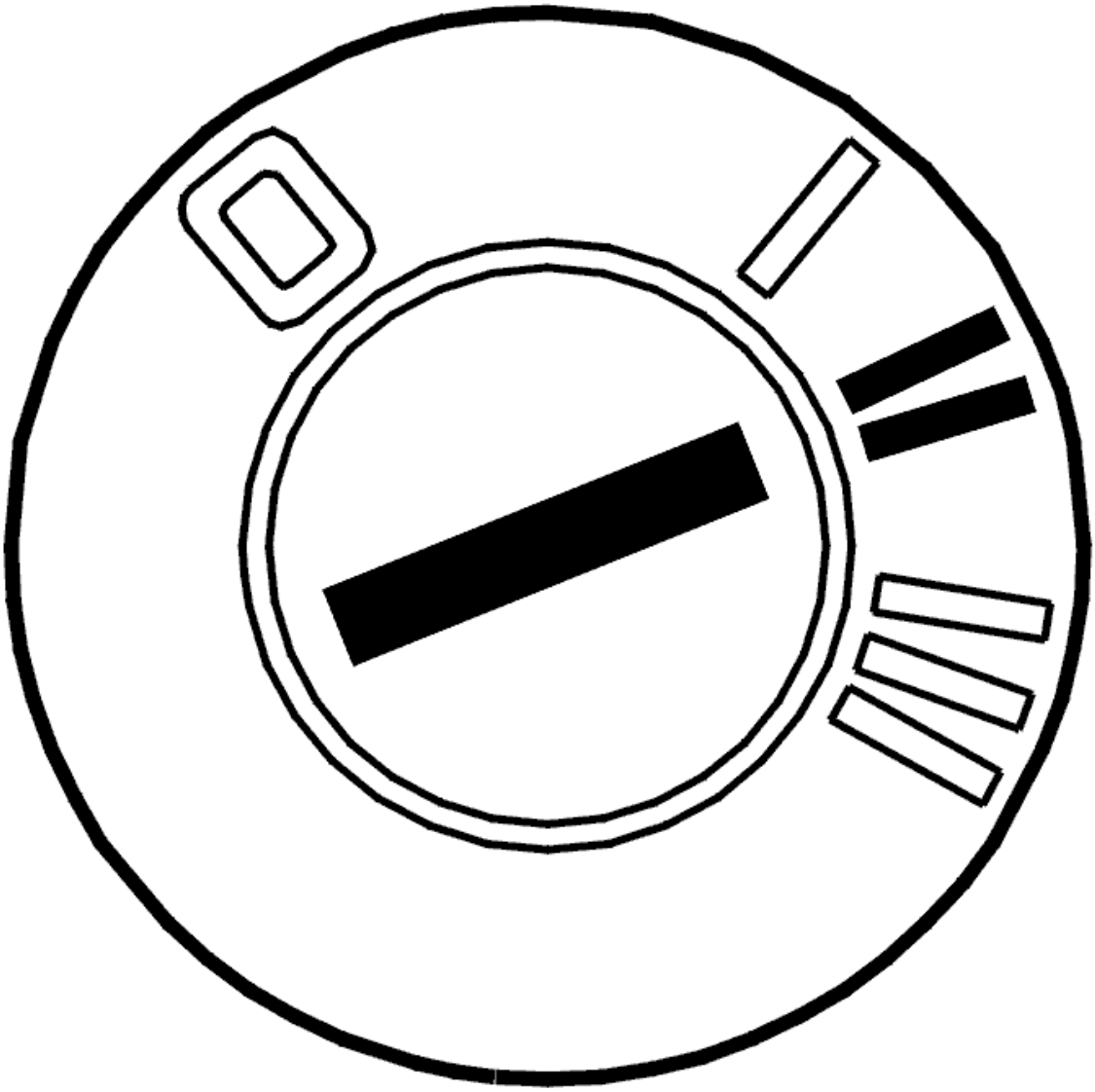

Fig. 392: Identifying Ignition ON
Courtesy of VOLVO CARS CORPORATION

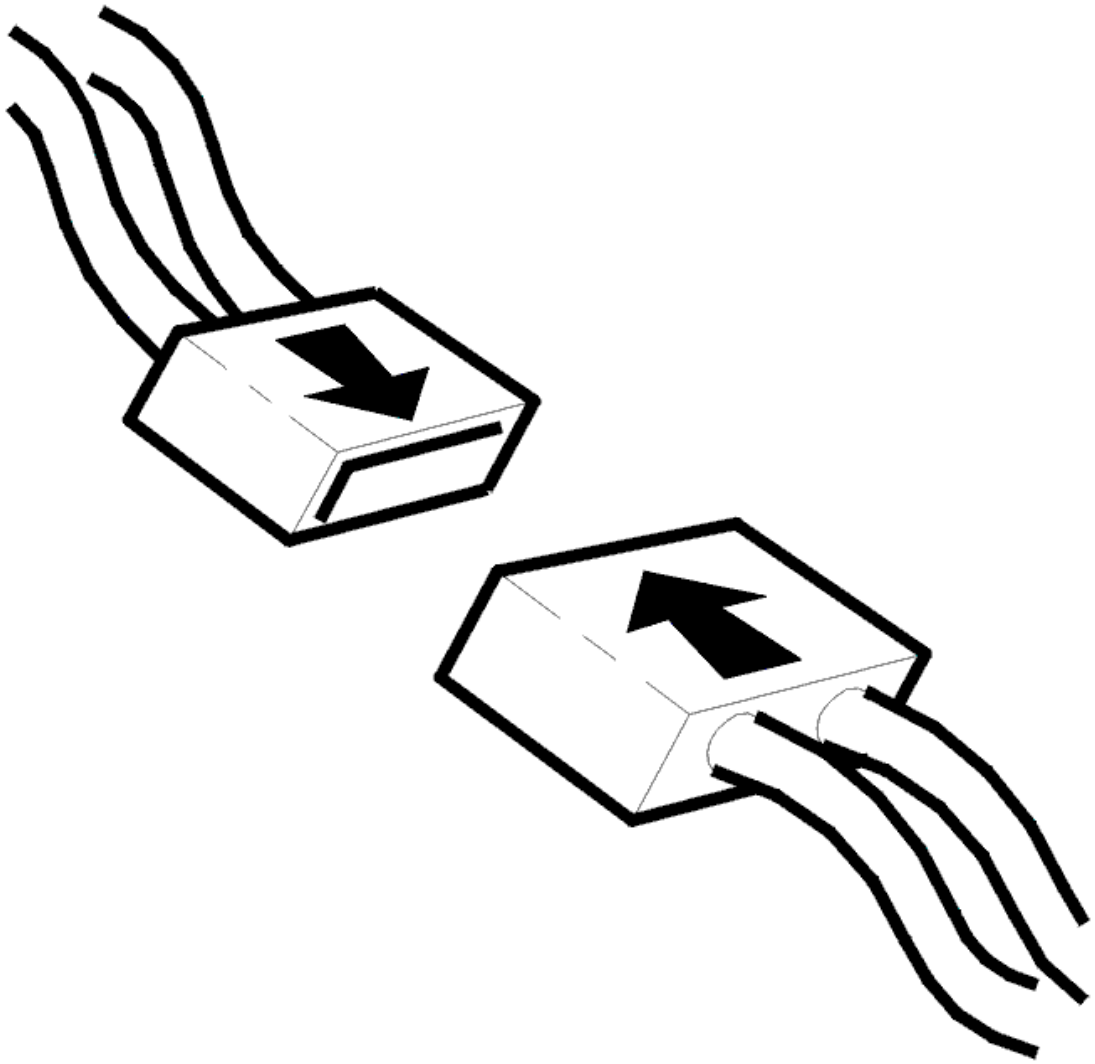

Fig. 393: Connecting Connector
Courtesy of VOLVO CARS CORPORATION

- Ignition off
- Reinstall the connectors, components etc.
- Ignition on.

  Check that the function for the relevant button or switch is OK.

Is the function OK?

- **YES**

  VERIFIED: Troubleshooting has been completed.

- **NO**

  Refer to **INFORMATION**

INFORMATION

FAULT-TRACING INFORMATION

The fault should have been detected and remedied. As this is not the case fault-tracing has failed.

Exit fault-tracing for this diagnostic trouble code (DTC) or make another attempt.

CEM-8A01: INVALID SWITCH POSITION FOR LIGHT SWITCH. SIGNAL FAULTY. INTERMITTENT FAULT (2003-2004)

DIAGNOSTIC TROUBLE CODE INFORMATION

Condition

The voltage in the central electronic module (CEM) must exceed 10V for at least 1 second for the diagnostic trouble code to be detected. If the central electronic module (CEM) indicates that the light switch has an undefined position, diagnostic trouble code 8A01 is displayed.

Possible Source

- Faulty light switch.

Fault symptom[s]

- Light switch does not work.

FAULTY SIGNAL/SIGNAL TOO LOW. INTERMITTENT FAULT.

TROUBLE-SHOOTING INFORMATION

The central electronic module (CEM) has detected an internal fault in the switch.

There is no fault at present.

CEM-8A01: INVALID SWITCH POSITION FOR LIGHT SWITCH. SIGNAL FAULTY. PERMANENT FAULT (2003-2004)

DIAGNOSTIC TROUBLE CODE INFORMATION

see **DIAGNOSTIC TROUBLE CODE INFORMATION**

FAULTY SIGNAL. PERMANENT FAULT

REPLACING THE COMPONENT

The diagnostic trouble code (DTC) indicates that the switch is defective.

Replace switch. See **SWITCHES LIGHTS, REPLACING** .

- **Continue**

  Refer to **VERIFICATION**

VERIFICATION

VERIFICATION

HINT: After the repair it is necessary to check that the fault has been rectified.

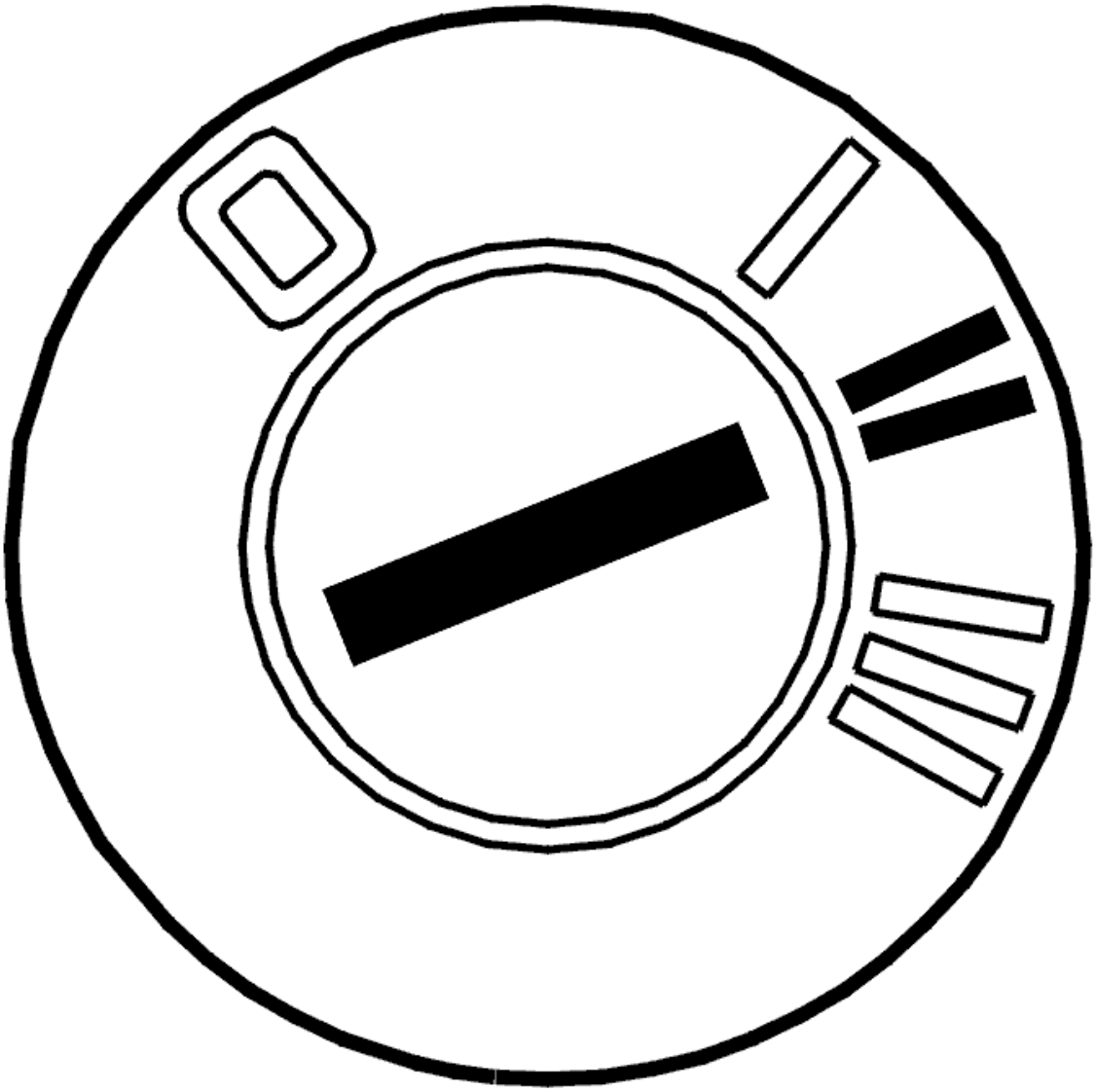

Fig. 394: Identifying Ignition ON
Courtesy of VOLVO CARS CORPORATION

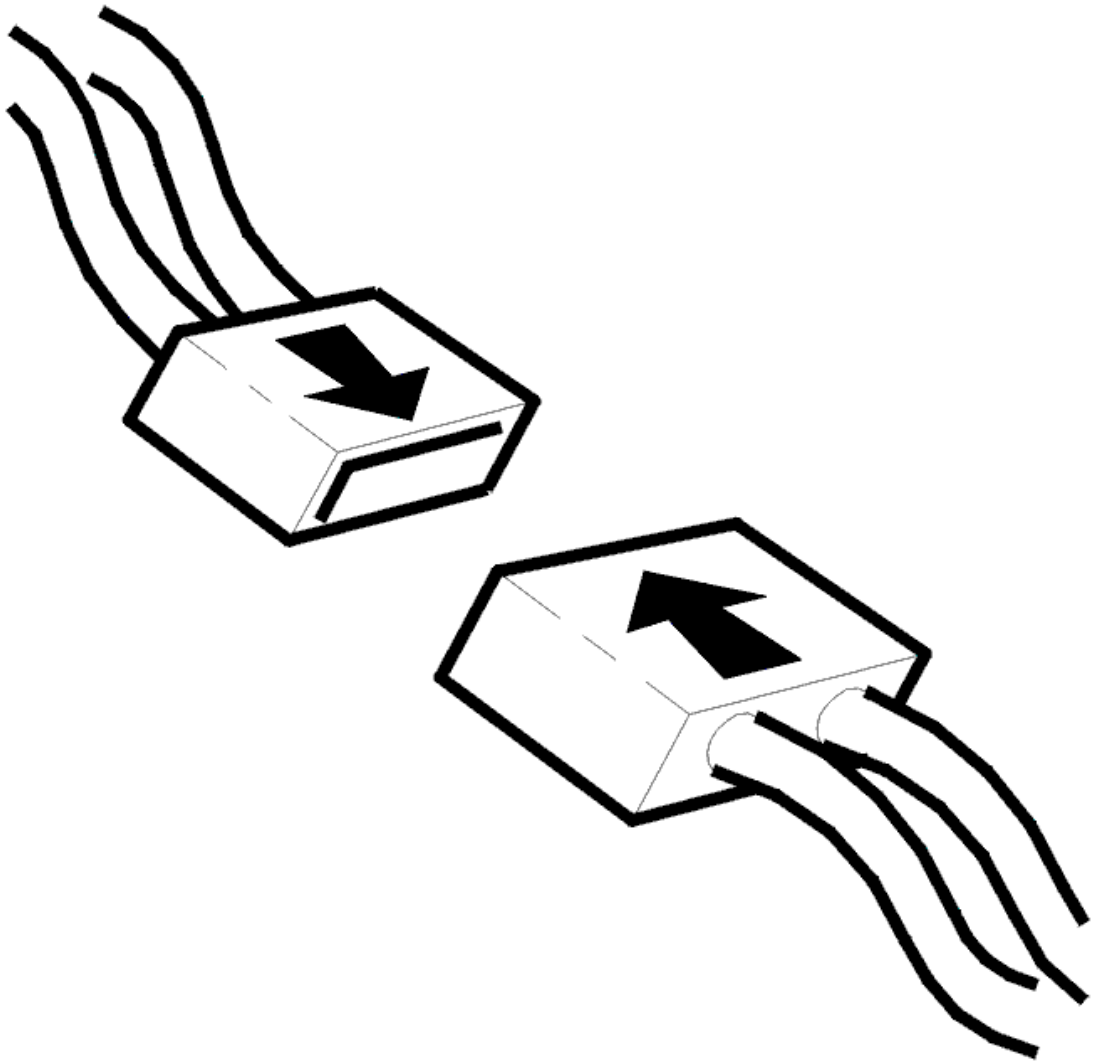

Fig. 395: Connecting Connector
Courtesy of VOLVO CARS CORPORATION

- Ignition off.
- Connect the connectors, install the components, etc.
- Ignition on.

  Read switch signal.

  Turn the switch to all positions.

  HINT: The light switch sends the status of contacts to the central electronic module (CEM). For an invalid combination at the light switch, "Not permitted" is shown on the read-out.

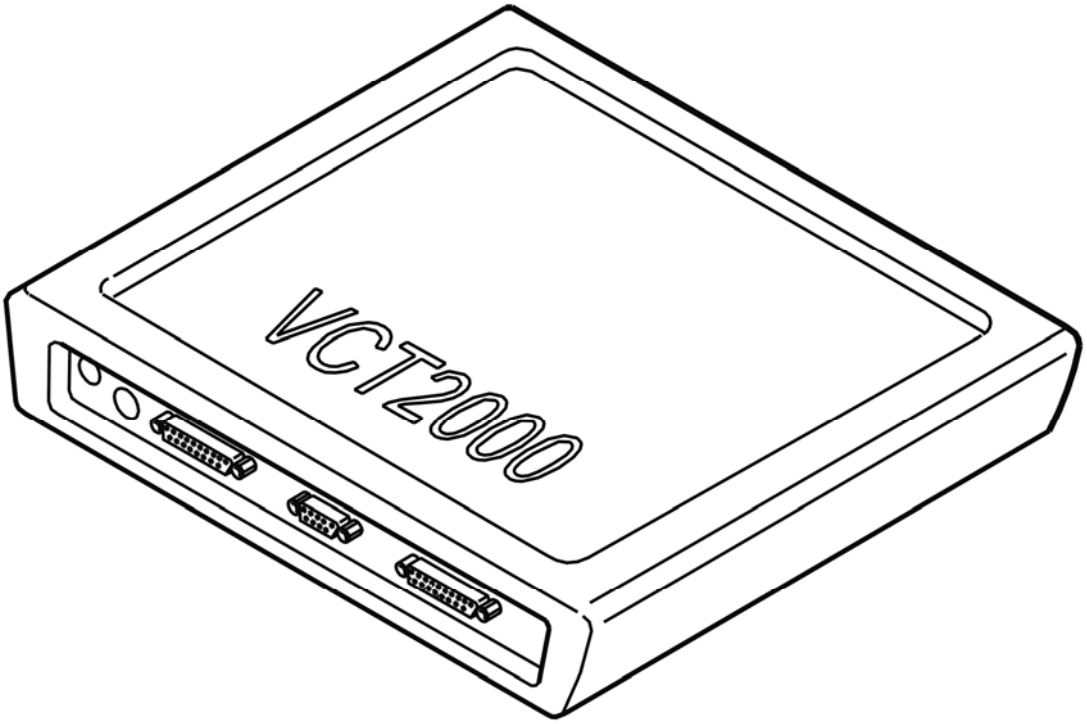

Fig. 396: Identifying VCT2000 Diagnostic Tool Symbol In VIDA
Courtesy of VOLVO CARS CORPORATION

Does the switch work in all positions?

- **YES**

  VERIFIED: Troubleshooting has been completed.

- **NO**

  Refer to **INFORMATION**

INFORMATION

FAULT-TRACING INFORMATION

The fault should have been detected and remedied. As this is not the case fault-tracing has failed.

Exit fault-tracing for this diagnostic trouble code (DTC) or make another attempt.

CEM-8A01: INVALID SWITCH POSITION FOR THE LIGHT SWITCH. FAULTY POSITION (2005-2012)

DIAGNOSTIC TROUBLE CODE (DTC) INFORMATION CEM-8A01

Condition

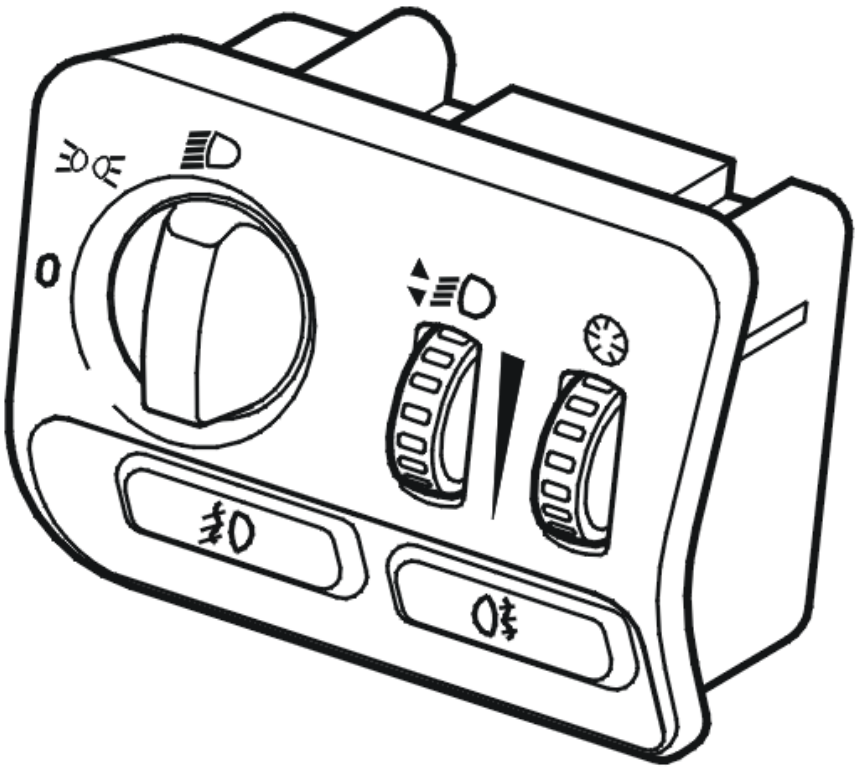

Fig. 397: Identifying Light Switch Module (LSM)
Courtesy of VOLVO CARS CORPORATION

The central electronic module (CEM) communicates with the light switch module (LSM).

The diagnostic trouble code (DTC) is stored if the central electronic module (CEM) receives information from the light switch module (LSM) that the light switch is not in an approved position. For example it is in-between the position for parking lamps and low beam.

The voltage in the central electronic module (CEM) must exceed 10 V for at least 1 second in order for the diagnostic trouble code (DTC) to be detected.

The diagnostic trouble code (DTC) can be diagnosed at ignition switch position II.

Substitute Value

- Low beam always on.

Possible Source

- Fault in the communication with the light switch module (LSM)
- Damaged light switch module (LSM).

Fault symptom[s]

- The low beam is constantly lit.

FAULTY POSITION

CHECKING THE CONTROL

The diagnostic trouble code (DTC) is stored when the button or switch has been pressed in for too long or is in a non-approved position.

If the fault is intermittent, it has been registered previously but is no longer present. Intermittent faults can be caused by interference at start up or can be a different type of fault which occurs on different occasions. The fault is evaluated depending on how it occurs.

Check that the button or the switch is not sticking, jammed in the activated position or in a non-approved position.

Remedy as necessary.

Other information

see **SWITCHES LIGHTS, REPLACING**

- **Continue**

  Refer to **VERIFICATION**

VERIFICATION

VERIFICATION

HINT: After carrying out the repair, check that the fault has been remedied.

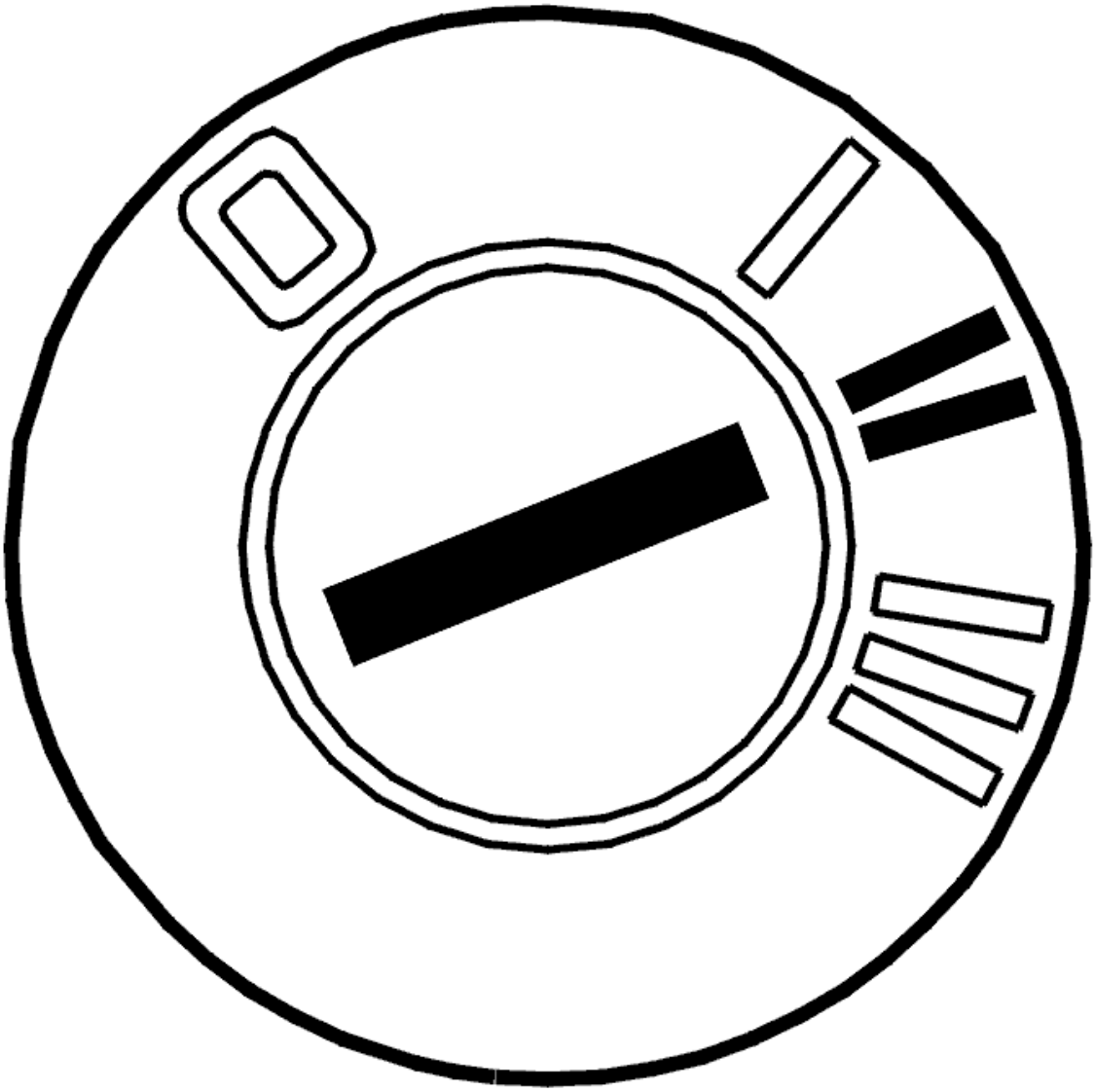

Fig. 398: Identifying Ignition ON
Courtesy of VOLVO CARS CORPORATION

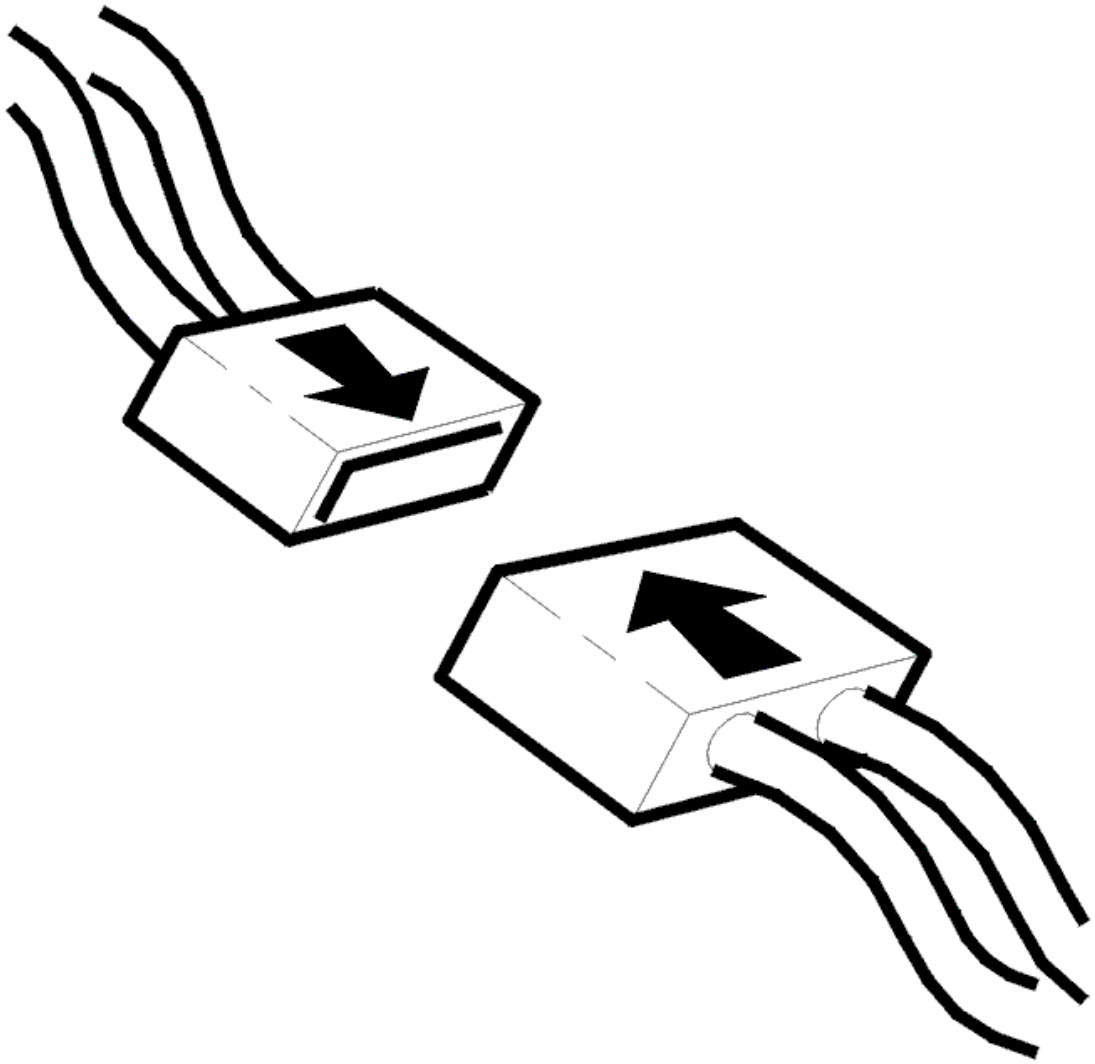

Fig. 399: Connecting Connector
Courtesy of VOLVO CARS CORPORATION

- Ignition off
- Reinstall the connectors, components etc.
- Ignition on.

  Check that the function for the relevant button or switch is correct.

Is the function OK?

- **YES**

  VERIFIED: Troubleshooting has been completed.

- **NO**

  Refer to **INFORMATION**

INFORMATION

FAULT-TRACING INFORMATION

The fault should have been detected and remedied. As this is not the case fault-tracing has failed.

Exit fault-tracing for this diagnostic trouble code (DTC) or make another attempt.

CEM-8A02: MAIN BEAM RELAY. SIGNAL TOO HIGH. INTERMITTENT FAULT (2003-2004)

DIAGNOSTIC TROUBLE CODE INFORMATION

Condition

Main beam relay must be activated to display the diagnostic trouble code. If the central electronic module (CEM) indicates that the main beam is short circuited to the battery voltage, diagnostic trouble code CEM-8A02 is displayed.

Possible Source

- The main beam relay circuit is short circuited to voltage supply.

Fault symptom[s]

- Front lamp is not working.

SIGNAL TOO HIGH/SIGNAL MISSING. INTERMITTENT FAULT

CHECKING THE RELAY

Check that relay 2/63 is installed correctly.

At the same time check the relay connections, in particular 2/63 2, for an intermittent short circuit to voltage supply as described in, see **SHORT-CIRCUIT TO SUPPLY VOLTAGE, INTERMITTENT FAULTS** , contact resistance and oxidation as described in **CONTACT RESISTANCE AND OXIDATION** and a loose connection as described in **LOOSE CONNECTIONS (TERMINALS)**

Additional information:

- For -2004, see: **CENTRAL ELECTRONIC MODULE (CEM), REPLACING**
- For 2005-, see: **CENTRAL ELECTRONIC MODULE (CEM), REPLACING** .

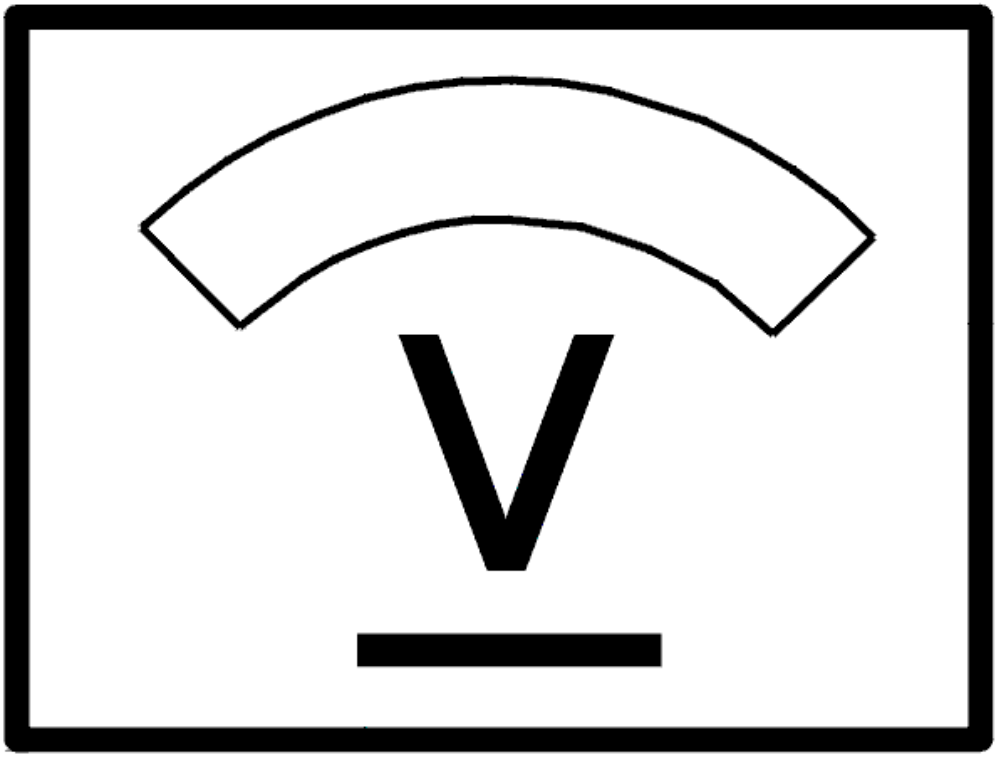

Fig. 400: Identifying Voltage Display
Courtesy of VOLVO CARS CORPORATION

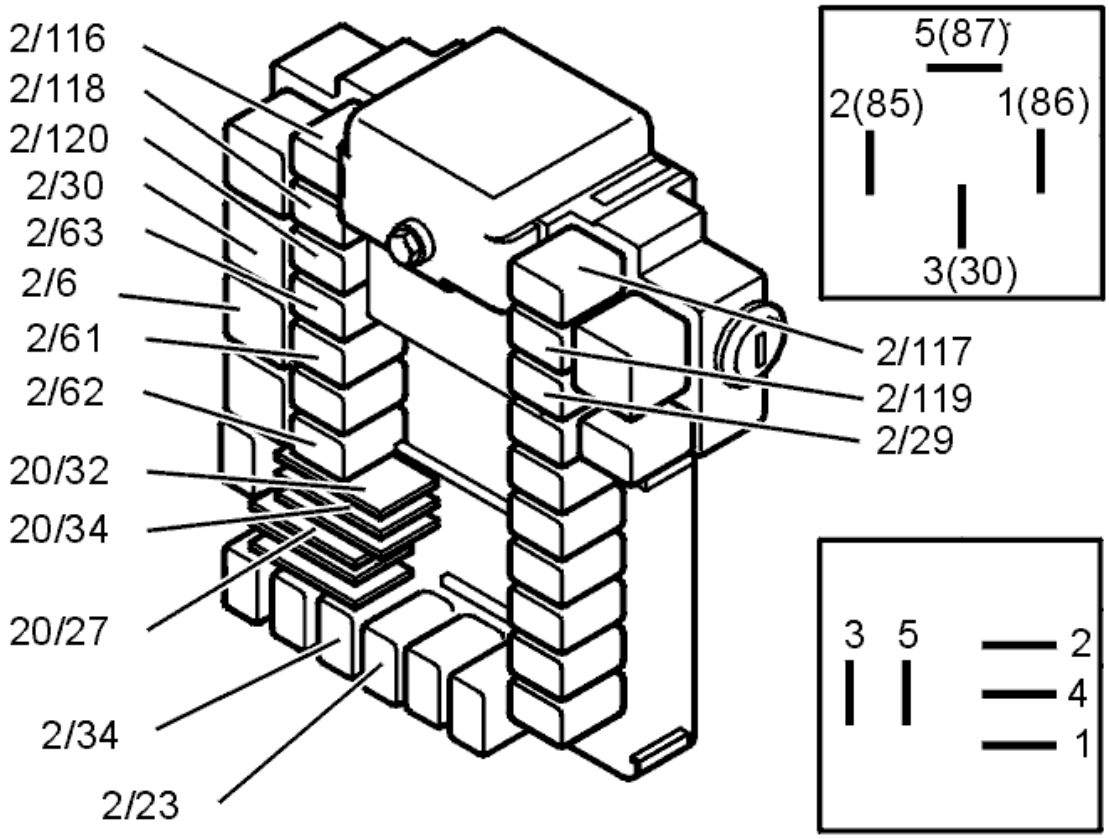

Fig. 401: Identifying Relays
Courtesy of VOLVO CARS CORPORATION

CEM-8A02: MAIN BEAM RELAY. SIGNAL TOO HIGH. PERMANENT FAULT (2003-2004)

DIAGNOSTIC TROUBLE CODE INFORMATION

see **DIAGNOSTIC TROUBLE CODE INFORMATION**

SIGNAL TOO HIGH. PERMANENT FAULT

CHECKING THE RELAY

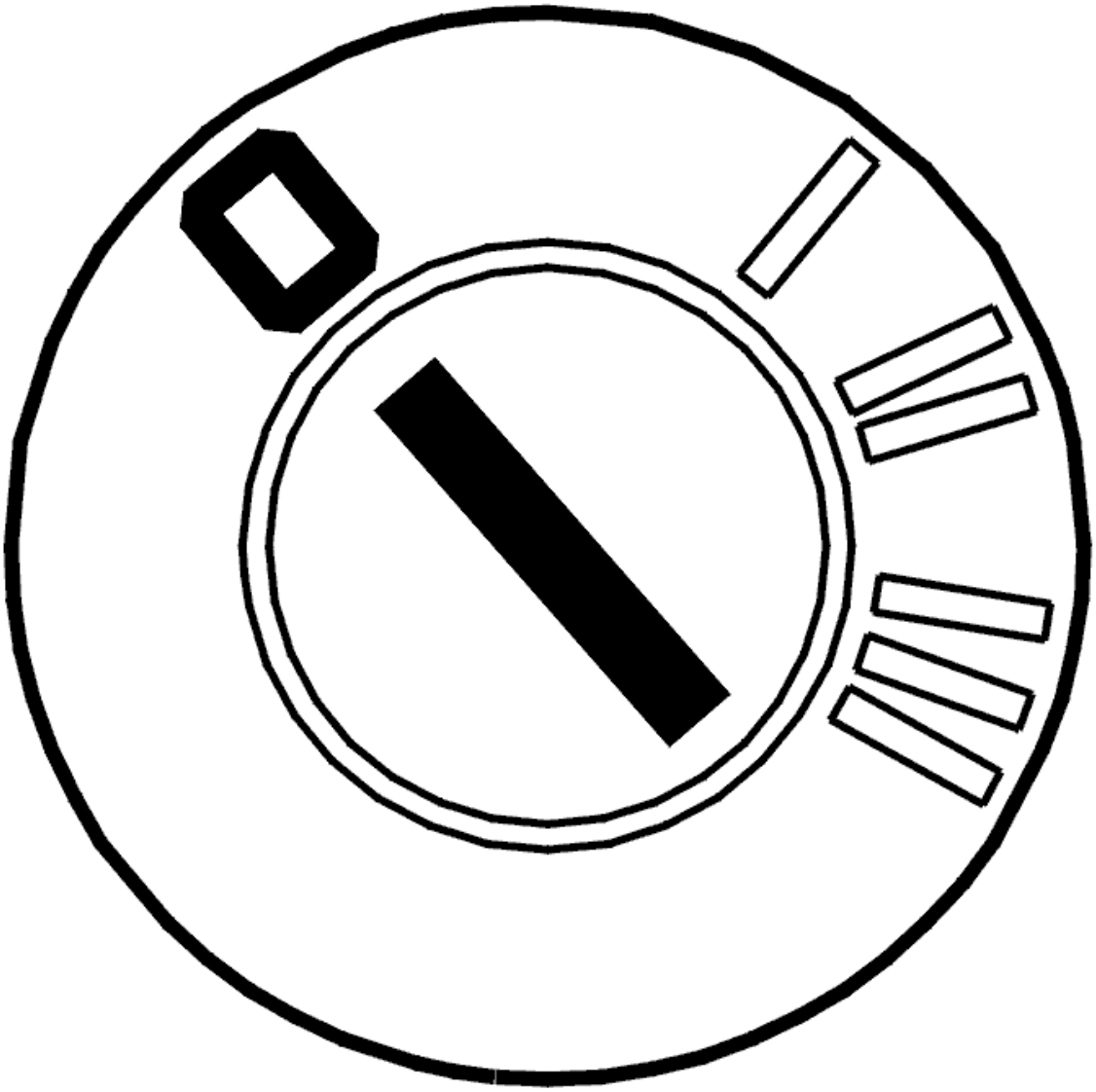

Fig. 402: Identifying Ignition OFF
Courtesy of VOLVO CARS CORPORATION

- Ignition off.

  Check that relay 2/63 is installed correctly. At the same time check the relay connections, in particular 2/63 2, for a short circuit to voltage supply as described in, see **SHORT-CIRCUIT TO SUPPLY VOLTAGE. PERMANENT FAULTS** .

  Additional information:

  - For -2004, see: **CENTRAL ELECTRONIC MODULE (CEM), REPLACING**
  - For 2005-, see: **CENTRAL ELECTRONIC MODULE (CEM), REPLACING** .
  - To connect the test box, see **CONNECTING THE BREAKOUT BOX** .

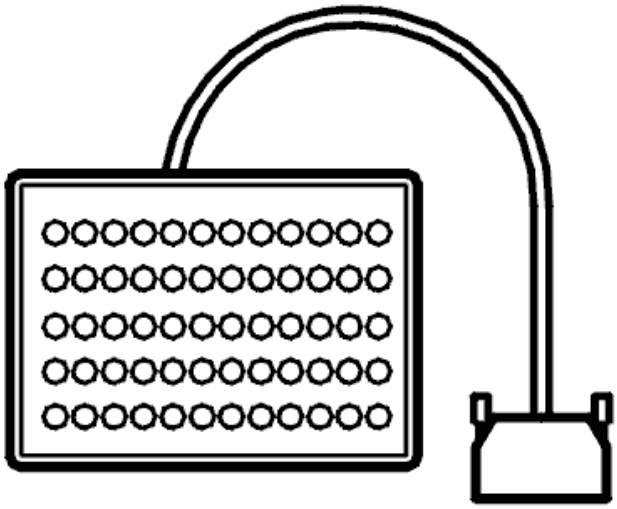

Fig. 403: Breakout Box
Courtesy of VOLVO CARS CORPORATION

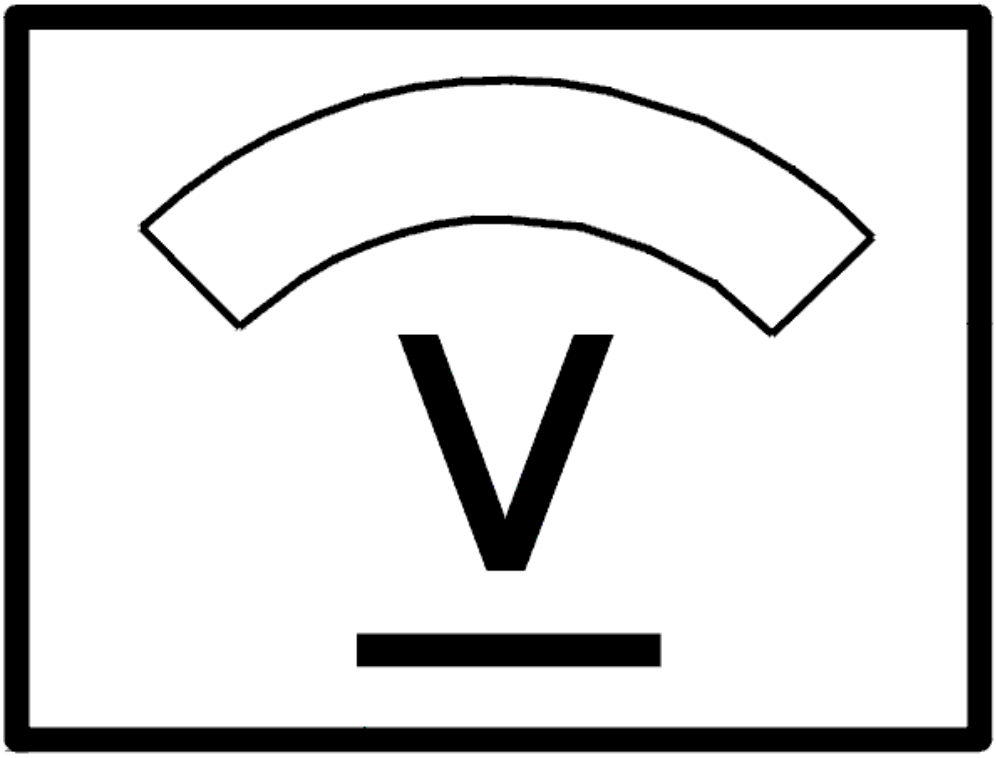

Fig. 404: Identifying Voltage Display
Courtesy of VOLVO CARS CORPORATION

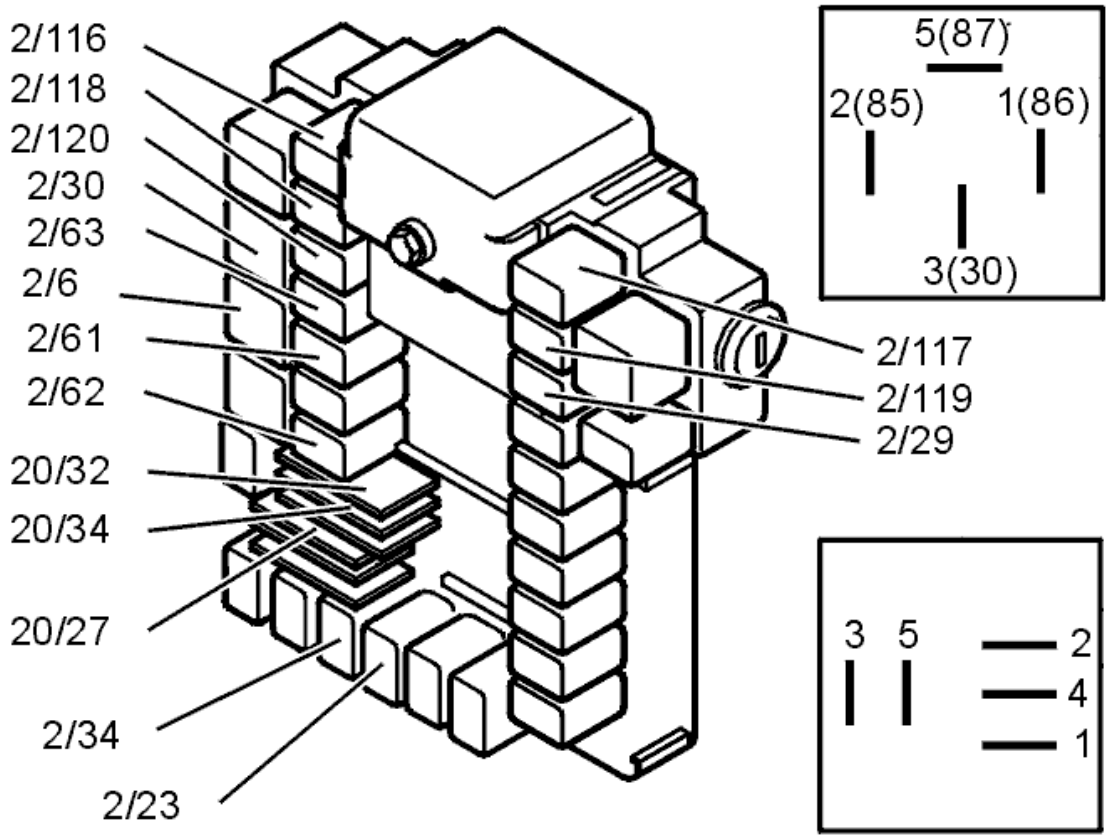

Fig. 405: Identifying Relays
Courtesy of VOLVO CARS CORPORATION

Is there a fault?

- **YES**

  Refer to **VERIFICATION**

- **NO**

  Refer to **REPLACING THE COMPONENT**

REPLACING THE COMPONENT

Replace relay.

- For -2004, see: **CENTRAL ELECTRONIC MODULE (CEM), REPLACING**
- For 2005-, see: **CENTRAL ELECTRONIC MODULE (CEM), REPLACING** .

- **Continue**

  Refer to **VERIFICATION**

VERIFICATION

VERIFICATION

HINT: After the repair it is necessary to check that the fault has been rectified.

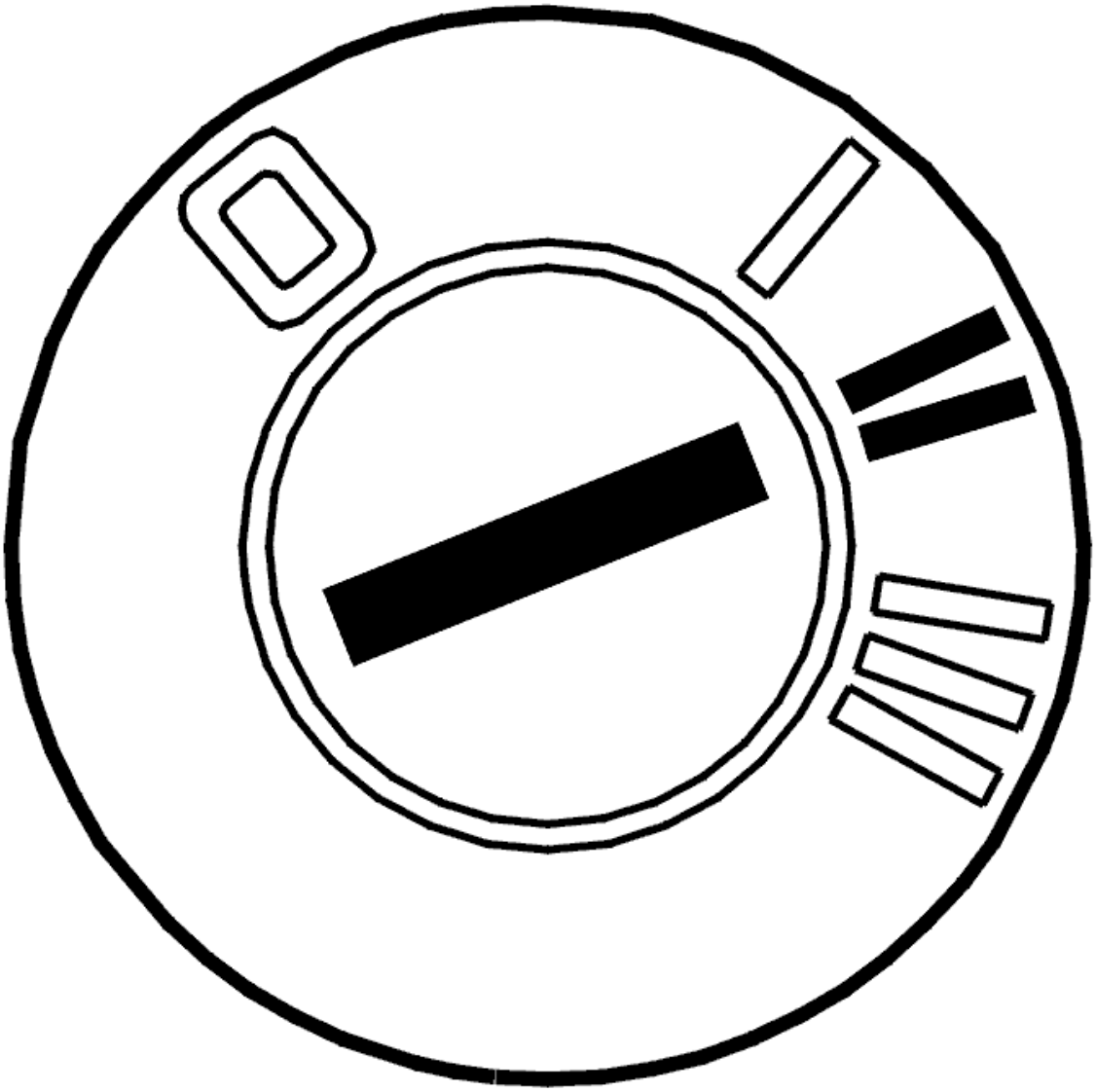

Fig. 406: Identifying Ignition ON
Courtesy of VOLVO CARS CORPORATION

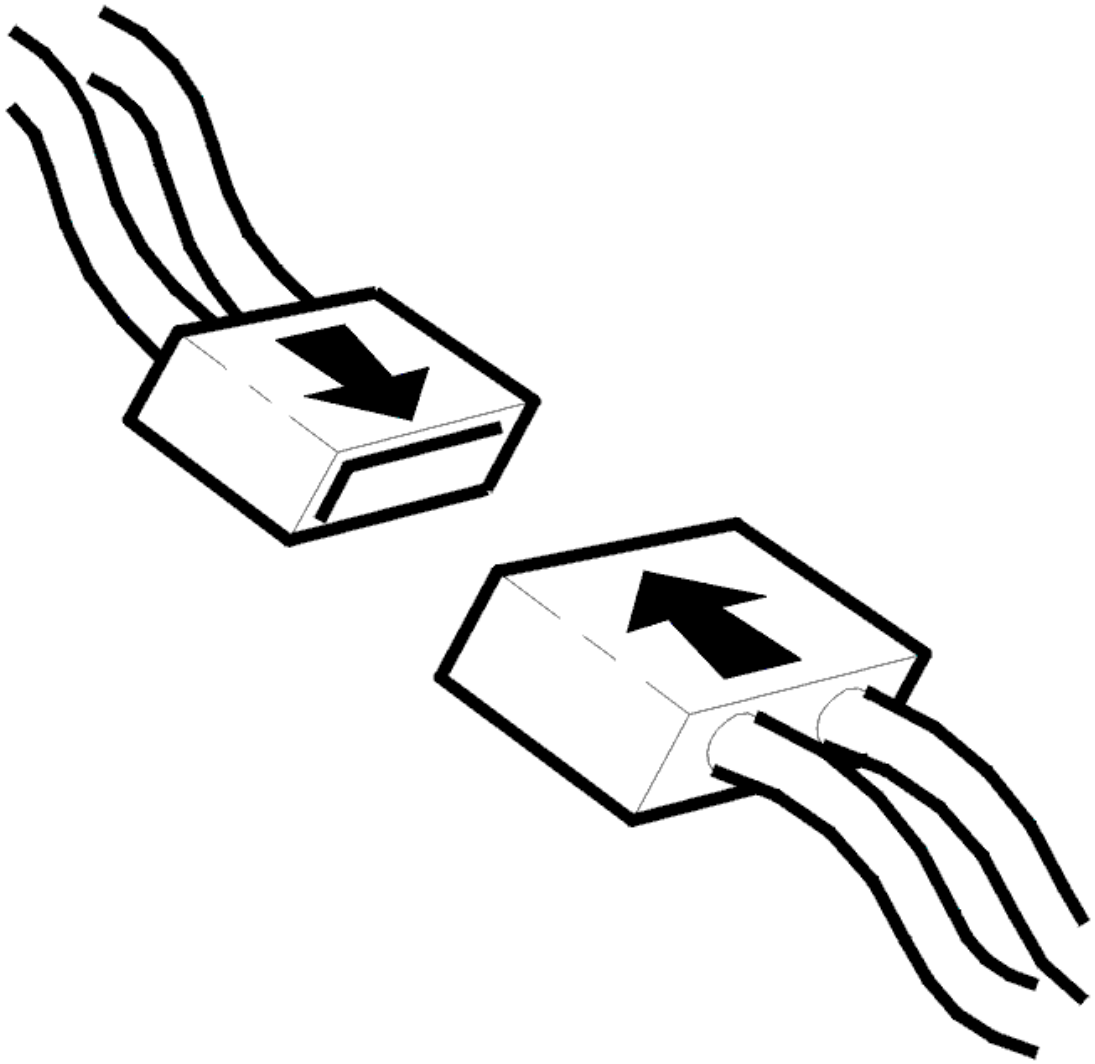

Fig. 407: Connecting Connector
Courtesy of VOLVO CARS CORPORATION

- Ignition off.
- Connect the connectors, install the components, etc.
- Ignition on.

  Read main beam relay.

  Activate main beam.

  With main beam on, the value should be "on" and when main beam is switched off, the value should be "off".

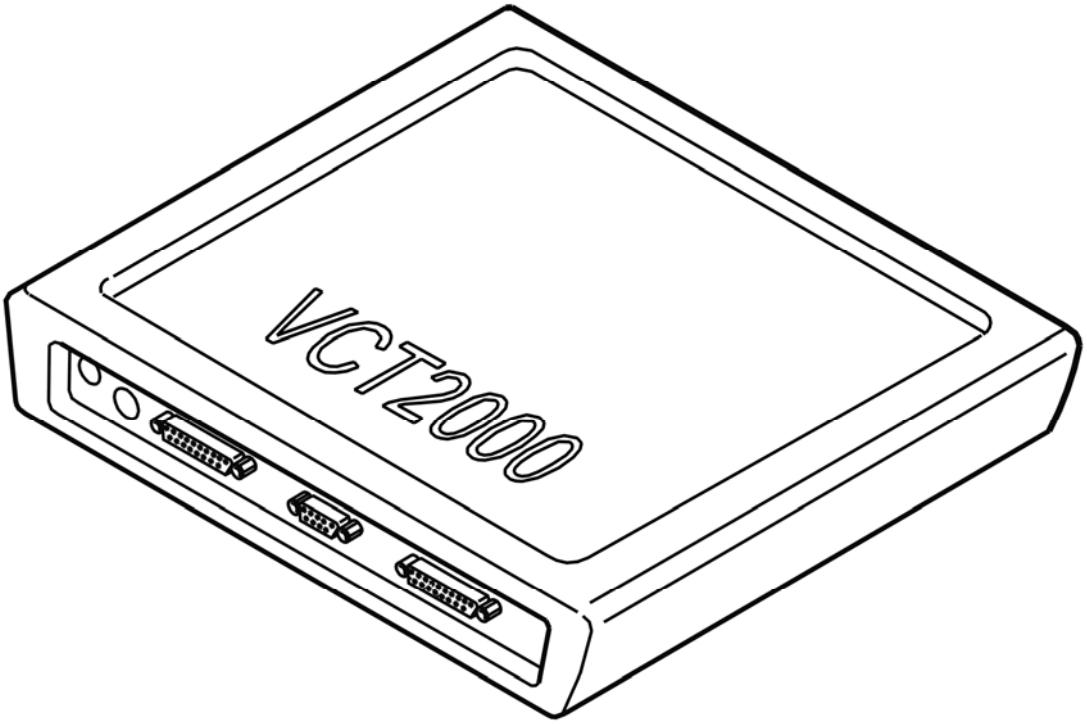

Fig. 408: Identifying VCT2000 Diagnostic Tool Symbol In VIDA
Courtesy of VOLVO CARS CORPORATION

Does it work?

- **YES**

  VERIFIED: Troubleshooting has been completed.

- **NO**

  Refer to **INFORMATION**

INFORMATION

FAULT-TRACING INFORMATION

The fault should have been detected and remedied. As this is not the case fault-tracing has failed.

Exit fault-tracing for this diagnostic trouble code (DTC) or make another attempt.

CEM-5B02: RH HEATING ELEMENT. SIGNAL FAULTY. INTERMITTENT FAULT (2003-2004)

DIAGNOSTIC TROUBLE CODE (DTC) INFORMATION

Condition

The central electronic module (CEM) communicates with the right-hand seat heating module (SHM).

The diagnostic trouble code (DTC) is stored if the central electronic module (CEM) receives information from the right-hand seat heating module (SHM) registering a fault in the heater pad.

The voltage in the central electronic module (CEM) must exceed 10.5 V for at least 1.5 seconds in order for the diagnostic trouble code (DTC) to be detected.

The diagnostic trouble code (DTC) can be diagnosed at key position II.

Substitute Value

- None.

Possible Source

- Defective seat heater pad in the right-hand seat.

Fault symptom[s]

- The front seat heating does not function.

FAULTY SIGNAL. INTERMITTENT FAULT

CHECKING FOR CONTACT RESISTANCE AND OXIDATION

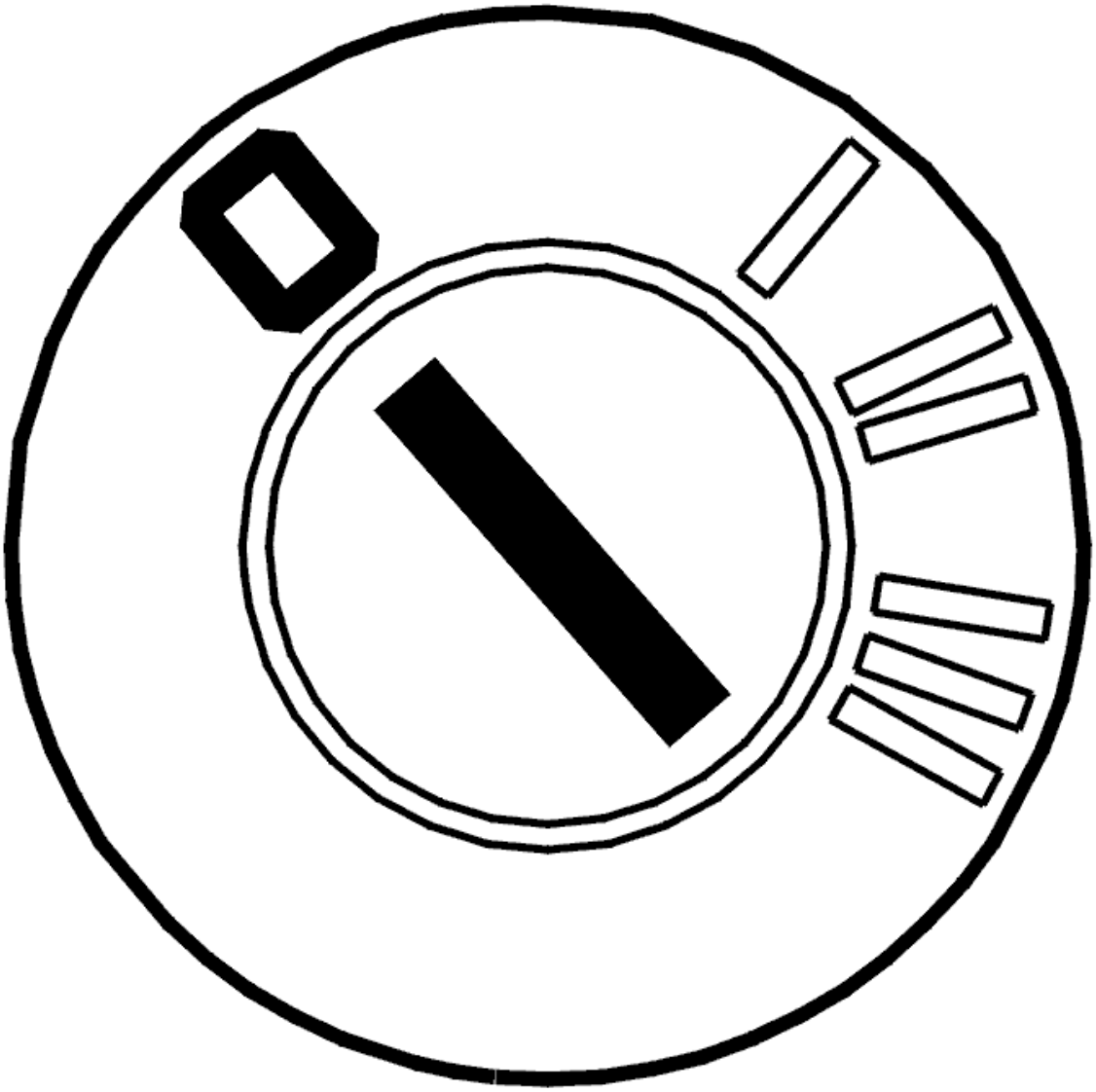

Fig. 1: Identifying Ignition OFF
Courtesy of VOLVO CARS CORPORATION

- Ignition off.

  Disconnect the connectors from the right-hand seat heating module (SHM). Check all connectors. Check for contact resistance and oxidation.

  Remedy as necessary.

  Other information

  - see **CHECKING WIRING AND TERMINALS**

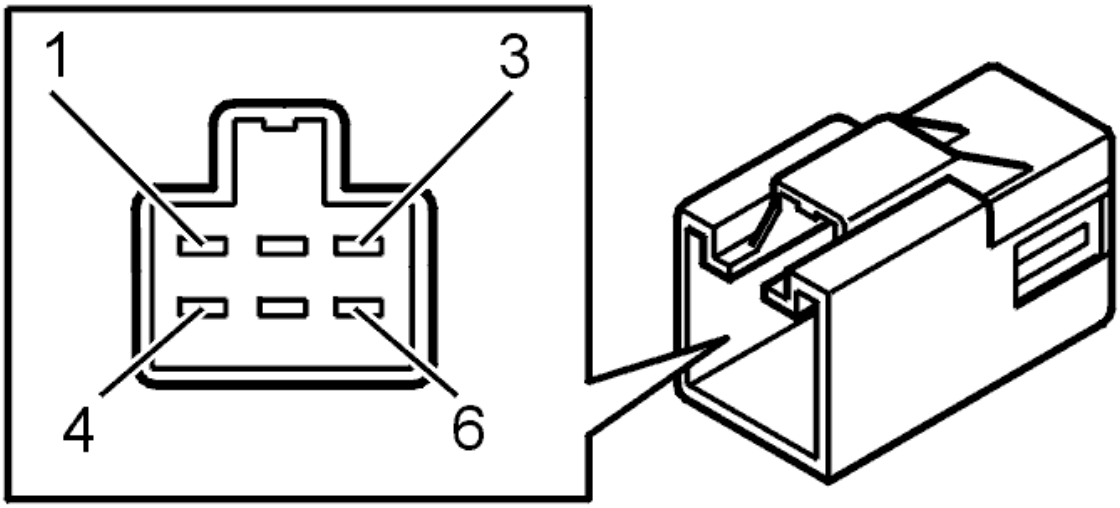

Fig. 2: Identifying Connector Terminals
Courtesy of VOLVO CARS CORPORATION

Was a fault detected?

- **YES**

  Refer to **INFORMATION**

- **NO**

  Refer to **REPLACING THE COMPONENT**

REPLACING THE COMPONENT

If there is an internal fault in the heater pad, it must be replaced.

- See **HEATER PAD BACKREST AND CUSHION, REPLACING** (-2004) or **HEATER PAD BACKREST AND CUSHION, REPLACING** (2005-).

- **Continue**

  Refer to **INFORMATION**

INFORMATION

FAULT-TRACING INFORMATION

If the fault is intermittent, do not verify fault-tracing if the fault does not recur.

It is possible to view the information again, or leave fault-tracing for this diagnostic trouble code (DTC).

CEM-5B02: RH HEATING ELEMENT. SIGNAL FAULTY. PERMANENT FAULT

(2003-2004)

DIAGNOSTIC TROUBLE CODE (DTC) INFORMATION

see **DIAGNOSTIC TROUBLE CODE (DTC) INFORMATION**

FAULTY SIGNAL. PERMANENT FAULT

CHECKING FOR CONTACT RESISTANCE AND OXIDATION

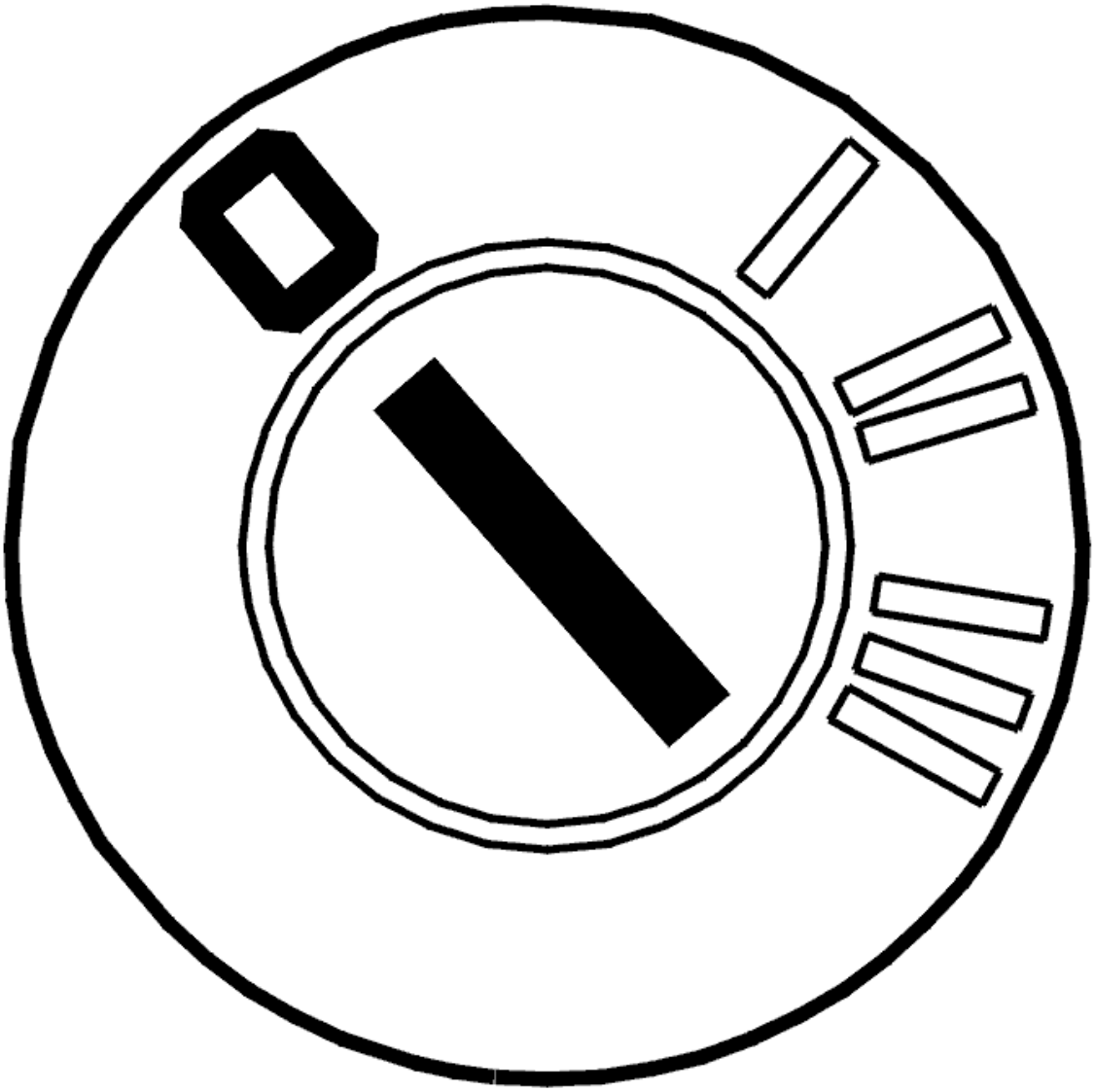

Fig. 3: Identifying Ignition OFF
Courtesy of VOLVO CARS CORPORATION

- Ignition off.

  Disconnect the connectors from the right-hand seat heating module (SHM). Check all connectors. Check

for contact resistance and oxidation.

Remedy as necessary.

Other information

- see **CHECKING WIRING AND TERMINALS**

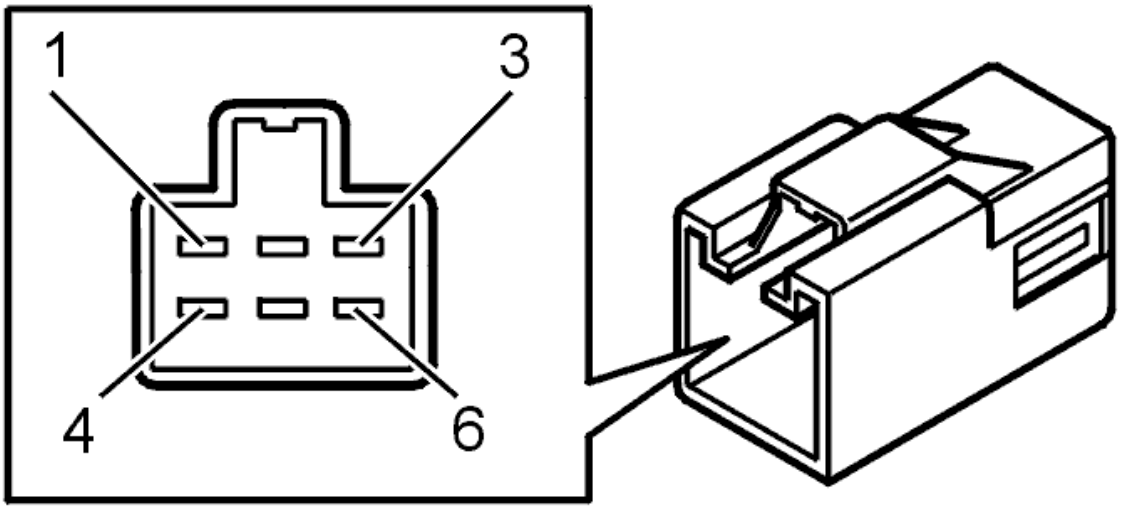

Fig. 4: Identifying Connector Terminals
Courtesy of VOLVO CARS CORPORATION

Was a fault detected?

- **YES**

  Refer to **VERIFICATION**

- **NO**

  Refer to **REPLACING THE COMPONENT**

REPLACING THE COMPONENT

Replace the right seat heater pad.

- See **HEATER PAD BACKREST AND CUSHION, REPLACING** (-2004) or **HEATER PAD BACKREST AND CUSHION, REPLACING** (2005-).

- **Continue**

  Refer to **VERIFICATION**

VERIFICATION

VERIFICATION

HINT: After carrying out the repair, check that the fault has been remedied.

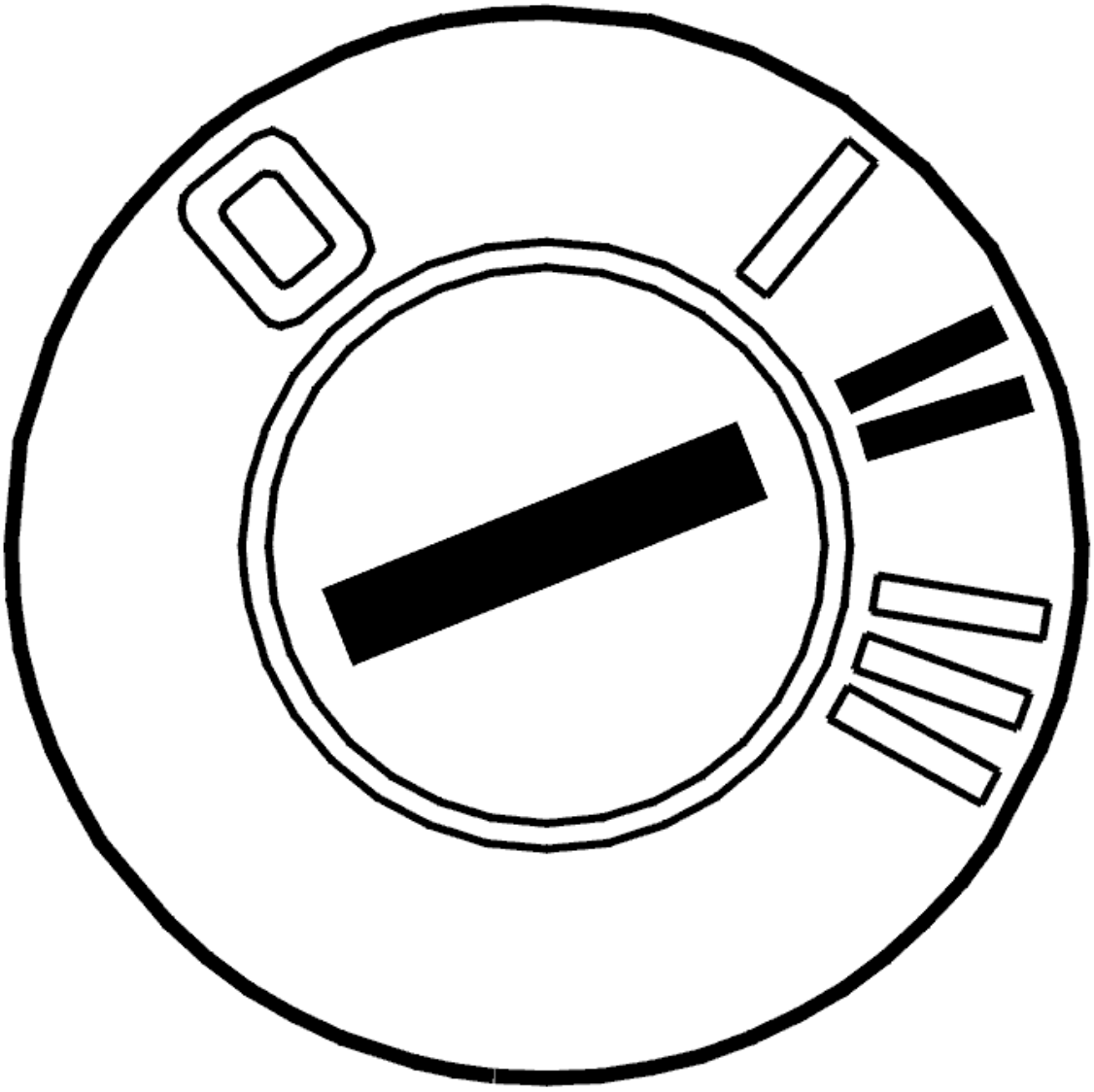

Fig. 5: Identifying Ignition ON
Courtesy of VOLVO CARS CORPORATION

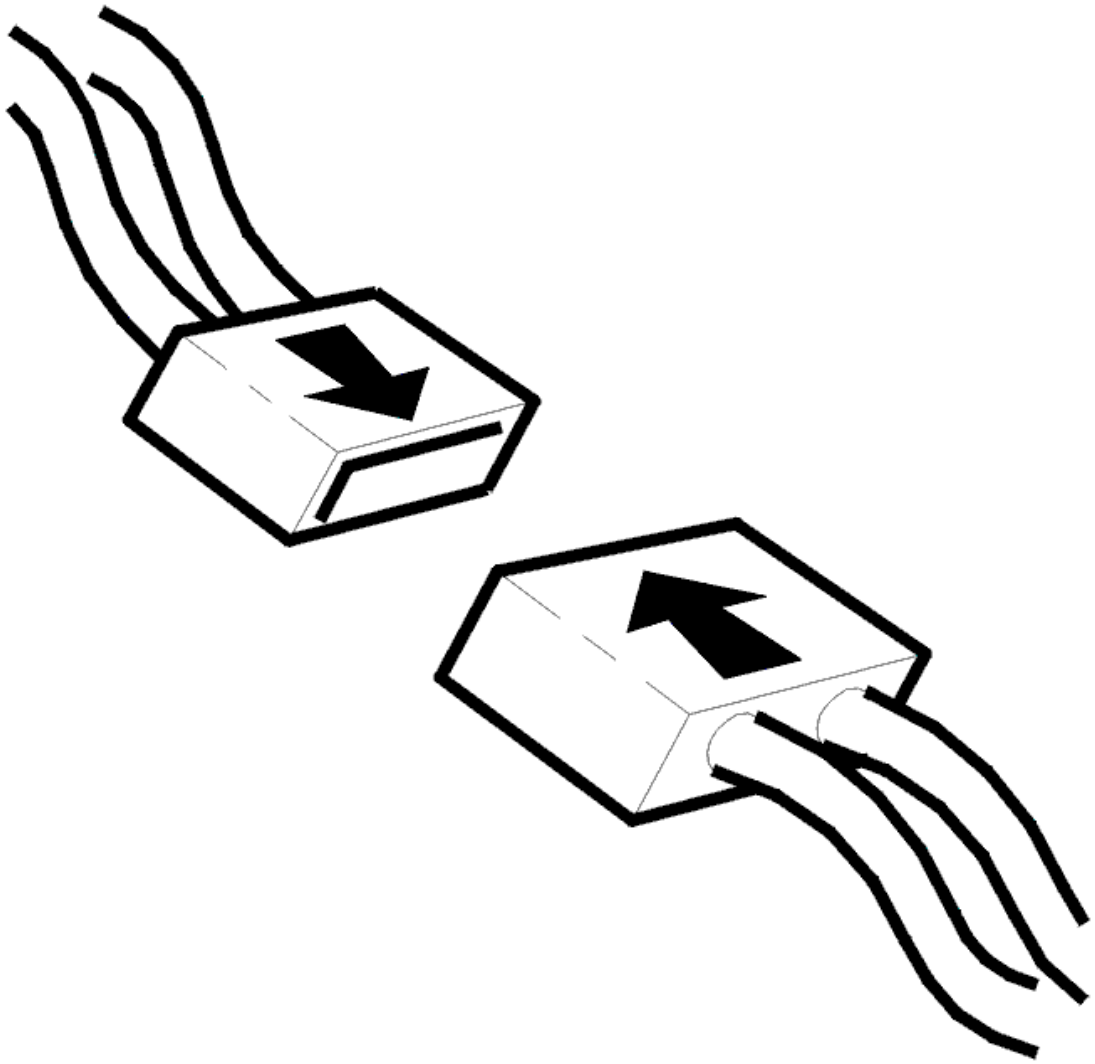

Fig. 6: Connecting Connector
Courtesy of VOLVO CARS CORPORATION

- Ignition off.
- Reinstall the connectors, components etc.
- Ignition on.

  Set the seat heating for full.

Was the function OK?

- **YES**

  VERIFIED: Troubleshooting has been completed.

- **NO**

  Refer to **INFORMATION**

INFORMATION

FAULT-TRACING INFORMATION

The fault should have been detected and remedied. As this is not the case fault-tracing has failed.

Exit fault-tracing for this diagnostic trouble code (DTC) or make another attempt.

CEM-5B05: LEFT SEAT HEATER. SIGNAL TOO LOW. INTERMITTENT FAULT (2003-2004)

DIAGNOSTIC TROUBLE CODE INFORMATION

Condition

If the central electronic module (CEM) registers signal too low or no signal to left seat heater, diagnostic trouble code CEM-5B05 is displayed.

Substitute Value

None

Possible Source

- Short circuit to ground or open circuit on wire to left seat heater
- Input signal low when communication link is not activated.

Fault symptom[s]

- Front seat heating does not work.

SIGNAL TOO LOW. INTERMITTENT FAULT

CHECKING THE CABLE

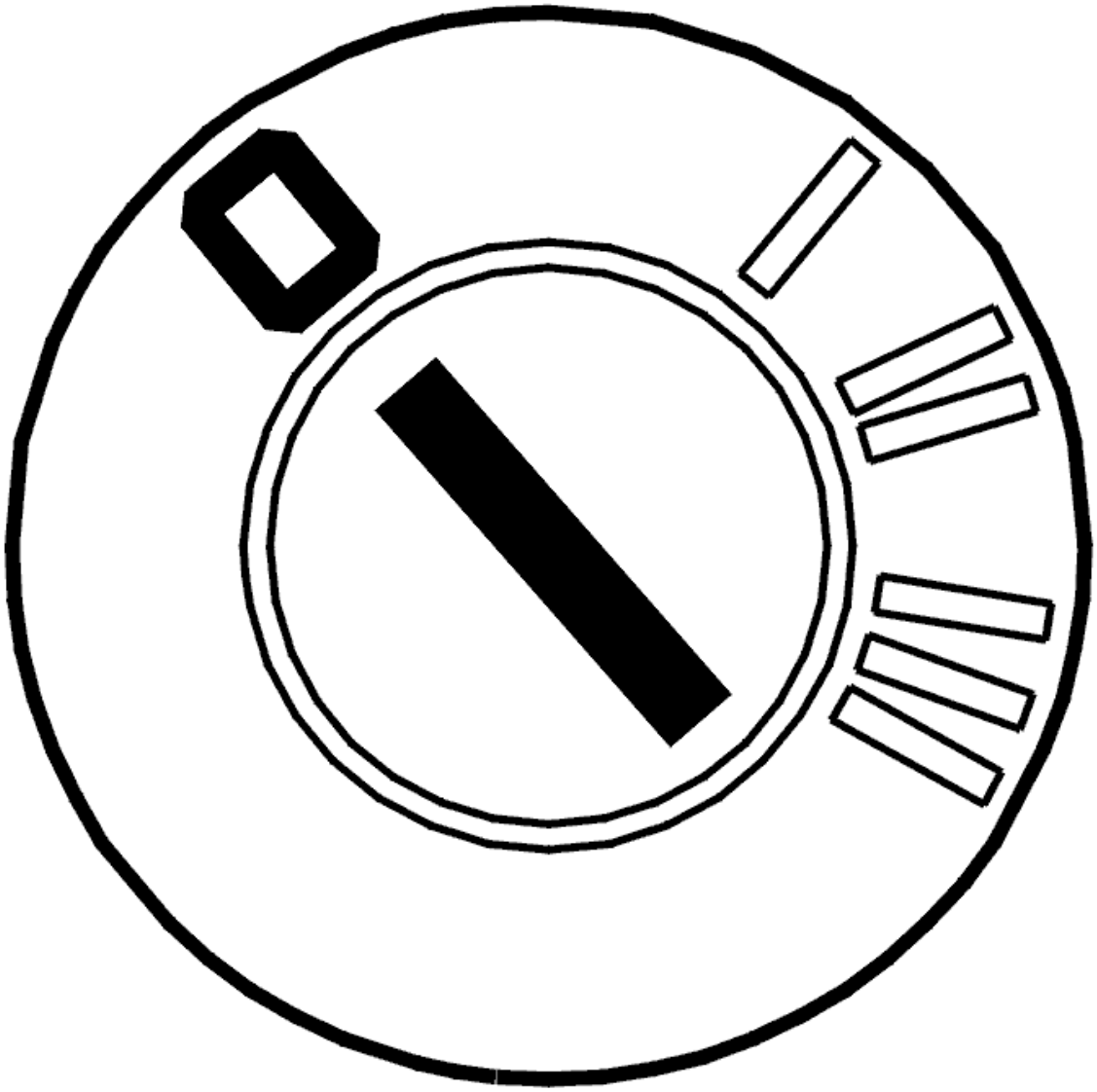

Fig. 7: Identifying Ignition OFF
Courtesy of VOLVO CARS CORPORATION

- Ignition off.

  Check the cable between central electronic module #11B and the front left seat heater (9/12) connector #2 for a short-circuit to ground according to **SHORT-CIRCUIT TO GROUND, INTERMITTENT FAULTS** .

  Check the signal cable between central electronic module #11B and front left seat heater (9/12) connector #2 for an open-circuit according to **OPEN-CIRCUIT, INTERMITTENT FAULTS** .

  Remedy as necessary.

  Other information:

- For -2004, see: **CENTRAL ELECTRONIC MODULE (CEM), REPLACING**
- For 2005-, see: **CENTRAL ELECTRONIC MODULE (CEM), REPLACING** .
- To connect the breakout box, see **CONNECTING THE BREAKOUT BOX** .
- -2004: **SIGNAL SPECIFICATION**
- 2005-: **SIGNAL SPECIFICATION**

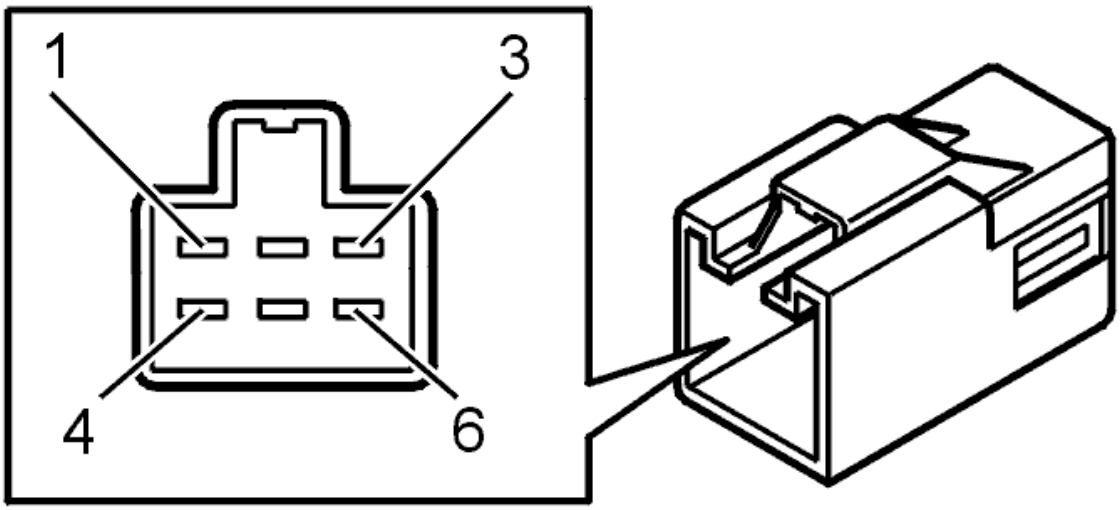

Fig. 8: Identifying Connector Terminals
Courtesy of VOLVO CARS CORPORATION

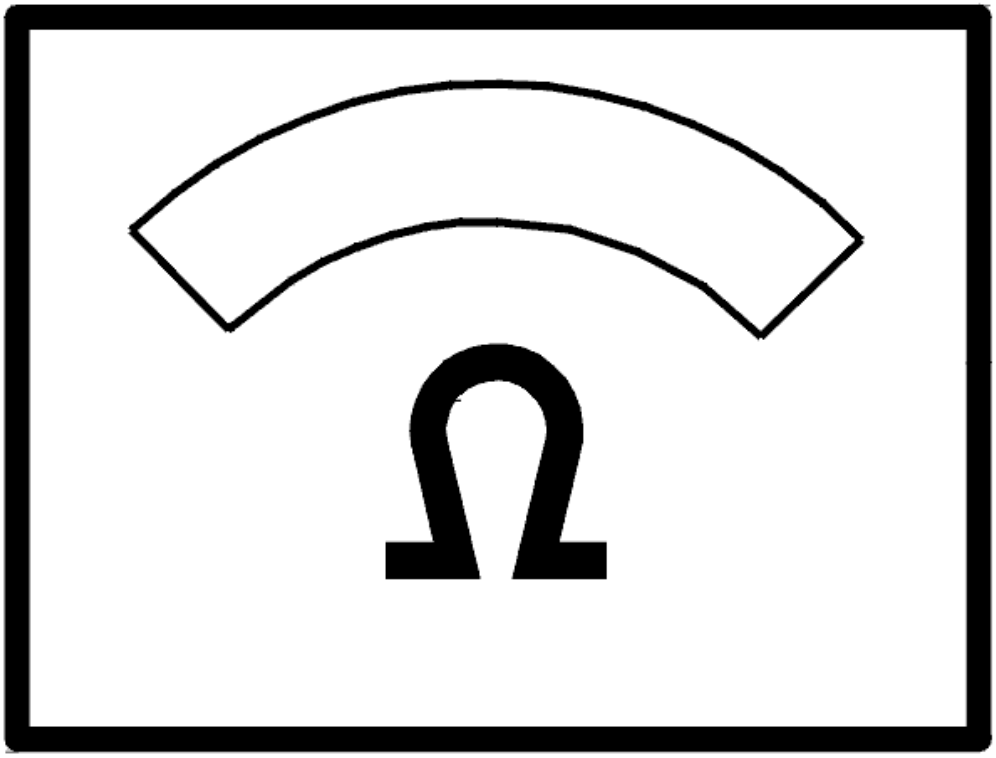

Fig. 9: Identifying Ohm Meter
Courtesy of VOLVO CARS CORPORATION

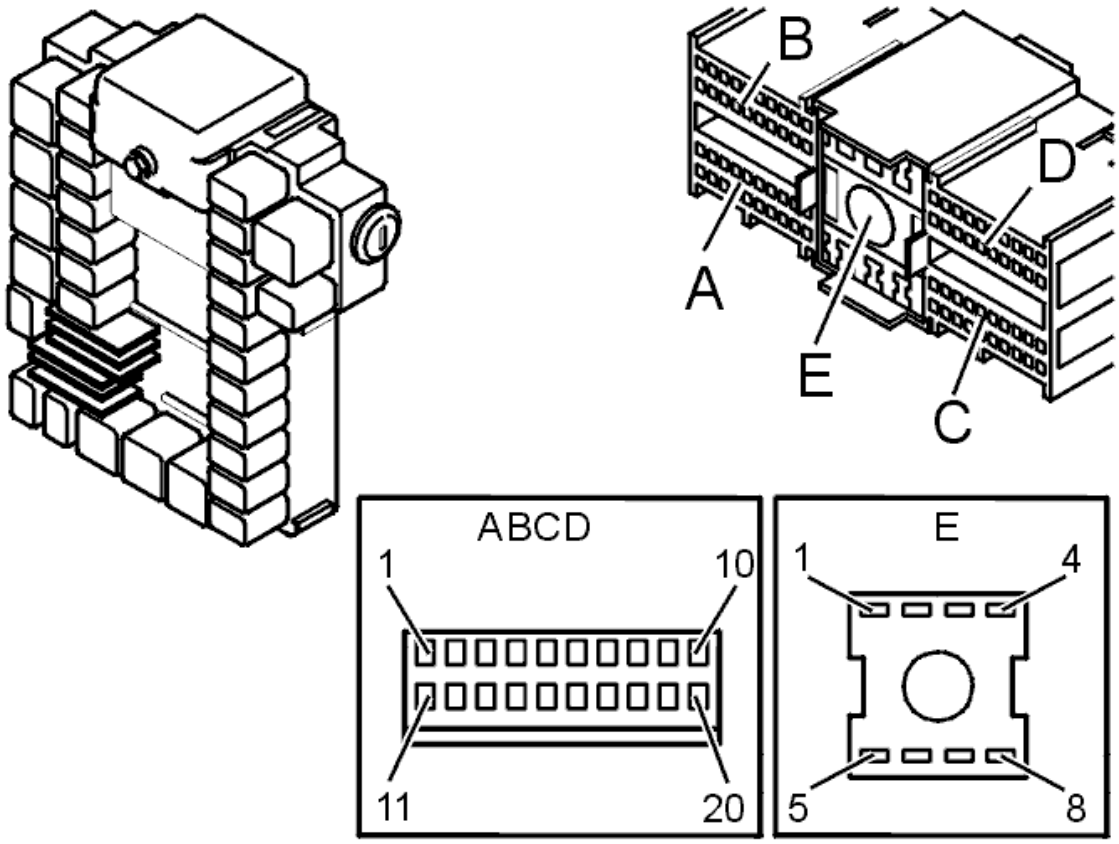

Fig. 10: Ground Terminals
Courtesy of VOLVO CARS CORPORATION

- **Continue**

  Refer to **INFORMATION**

INFORMATION

FAULT-TRACING INFORMATION

If the fault is intermittent, do not verify fault-tracing if the fault does not recur.

It is possible to view the information again, or leave fault-tracing for this diagnostic trouble code (DTC).

CEM-5B05: LEFT SEAT HEATER. SIGNAL TOO LOW. PERMANENT FAULT (2003-2004)

DIAGNOSTIC TROUBLE CODE INFORMATION

see **DIAGNOSTIC TROUBLE CODE INFORMATION**

SIGNAL TOO LOW. PERMANENT FAULT

CHECKING THE COMPONENT

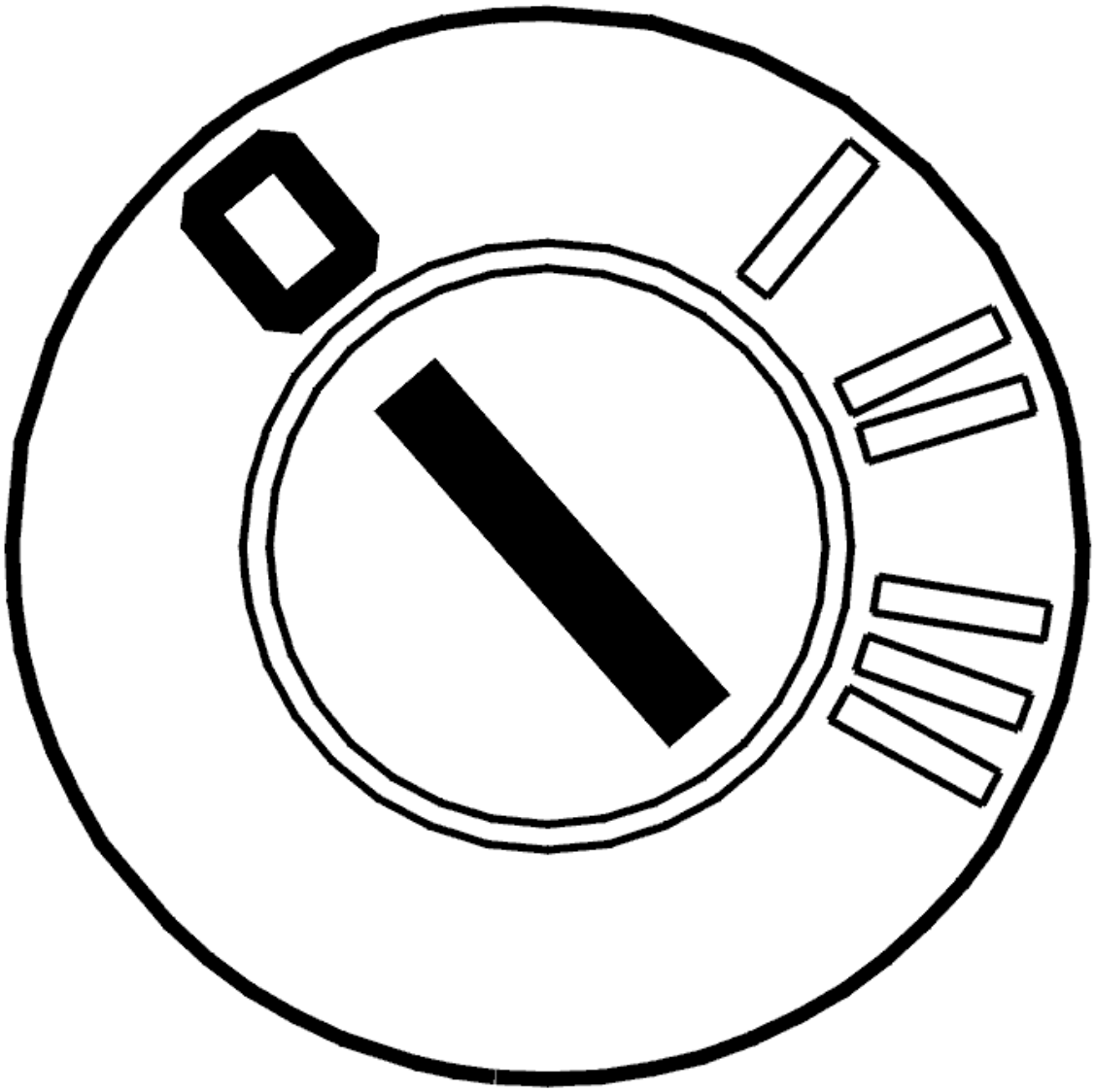

Fig. 11: Identifying Ignition OFF
Courtesy of VOLVO CARS CORPORATION

- Ignition off.

  Disconnect left seat heater 9/12.

  Check the control module for the left-hand seat heater and the connector. Check for contact resistance and oxidation.

  Other information:

  - see **CHECKING WIRING AND TERMINALS** .

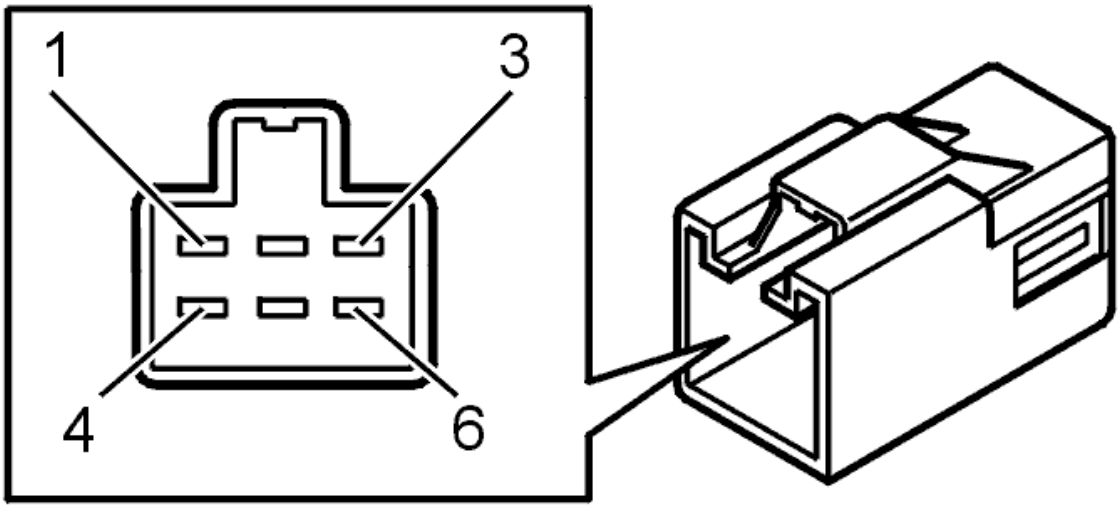

Fig. 12: Identifying Connector Terminals
Courtesy of VOLVO CARS CORPORATION

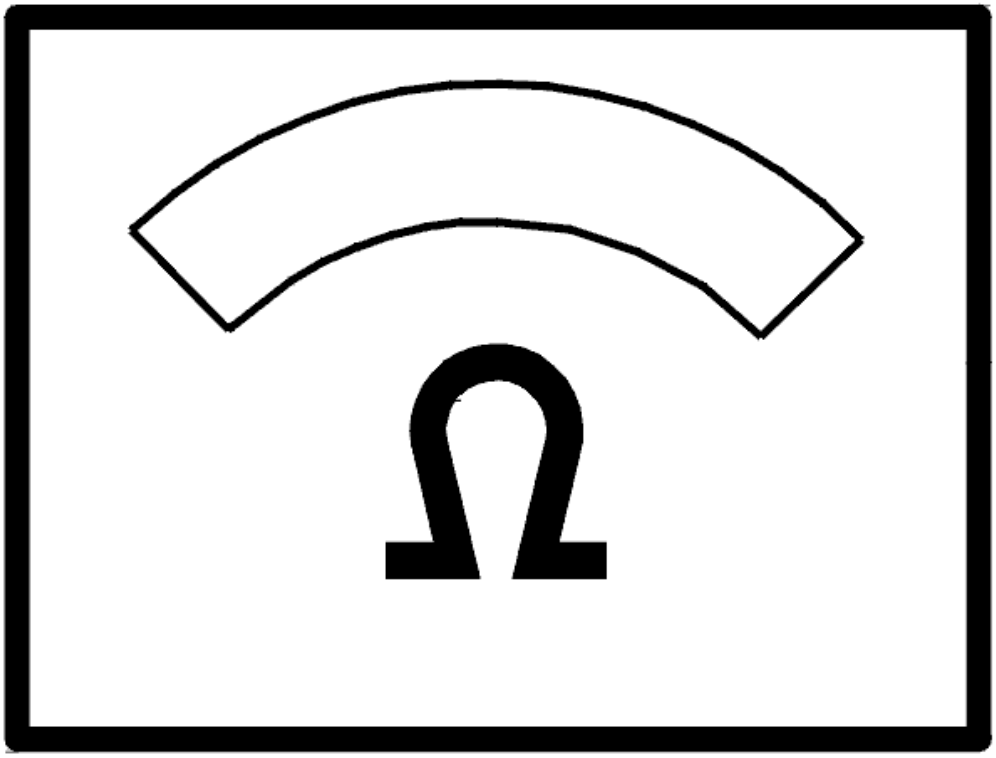

Fig. 13: Identifying Ohm Meter
Courtesy of VOLVO CARS CORPORATION

Was a problem found?

- **YES**

  Refer to **VERIFICATION**

- **NO**

  Refer to **CHECKING THE CABLE**

CHECKING THE CABLE

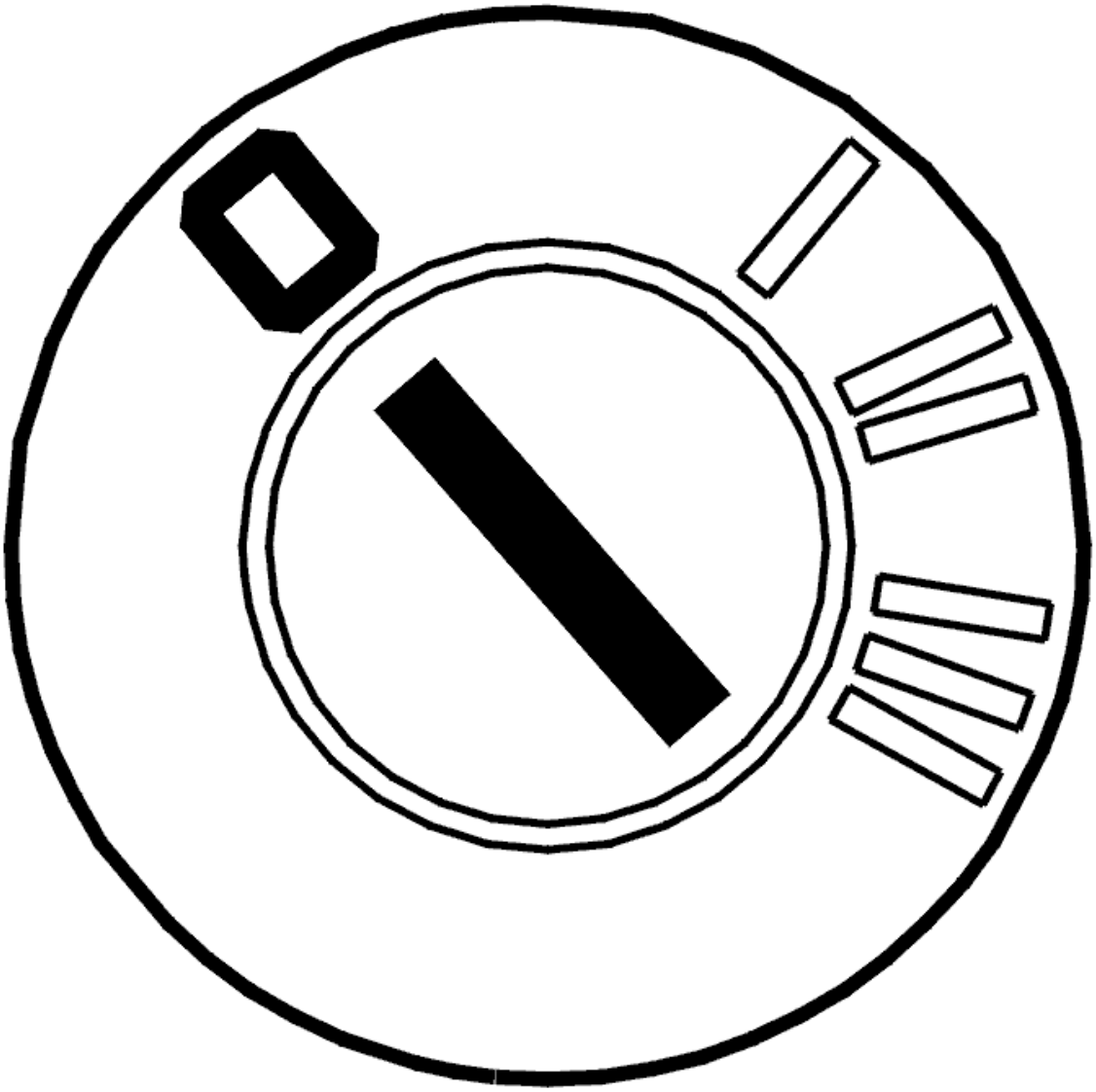

Fig. 14: Identifying Ignition OFF
Courtesy of VOLVO CARS CORPORATION

- Ignition off
- Disconnect the connector for the central electronic module (CEM)
- Disconnect connector (9/12) from the front left seat heater.

  Check the signal cable between central electronic module (CEM) terminal #11B and the front left seat heater (9/12). Check for a short-circuit to ground.

  Check the signal cable between central electronic module (CEM) terminal #11B and front left seat heater (9/12) connector terminal #2. Check for an open-circuit.

  Remedy as necessary.

Other information:

- For -2004, see: **CENTRAL ELECTRONIC MODULE (CEM), REPLACING**
- For 2005-, see: **CENTRAL ELECTRONIC MODULE (CEM), REPLACING** .
- To connect the breakout box, see **CONNECTING THE BREAKOUT BOX**
- -2004: **SIGNAL SPECIFICATION**
- 2005-: **SIGNAL SPECIFICATION**
- see **CHECKING WIRING AND TERMINALS** .

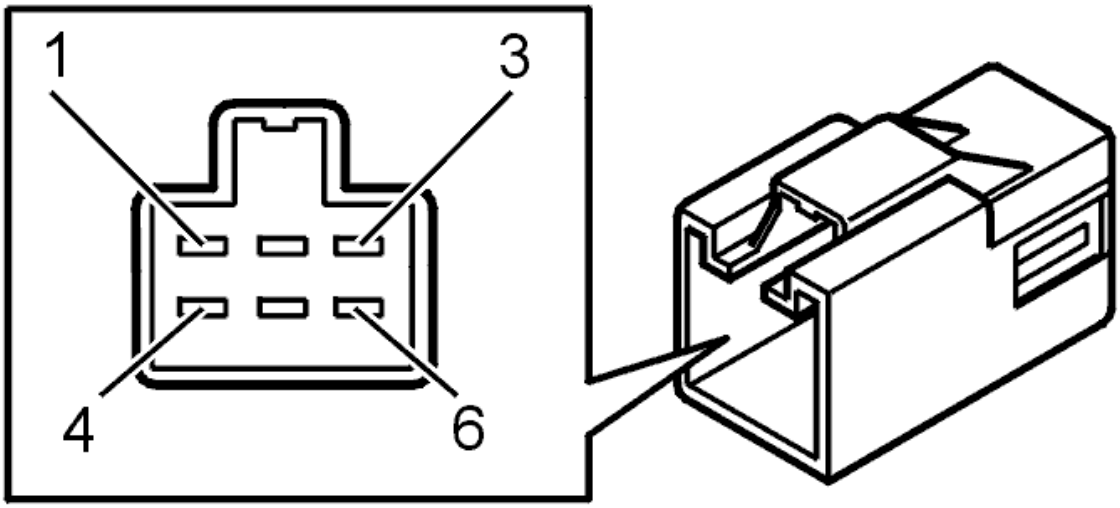

Fig. 15: Identifying Connector Terminals
Courtesy of VOLVO CARS CORPORATION

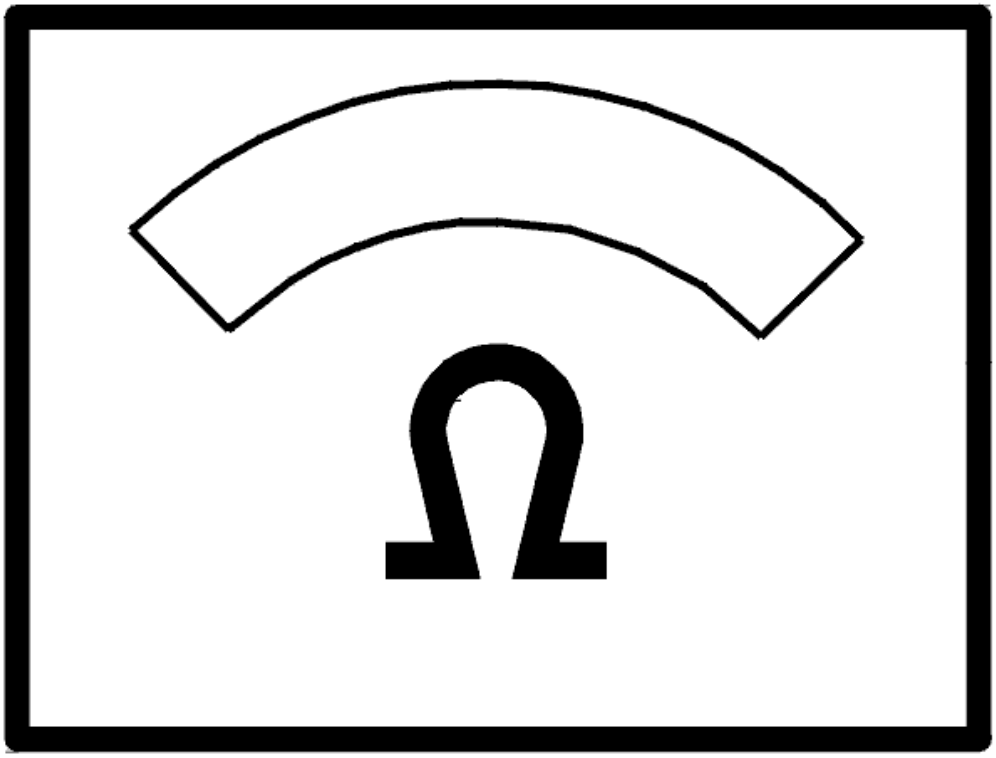

Fig. 16: Identifying Ohm Meter
Courtesy of VOLVO CARS CORPORATION

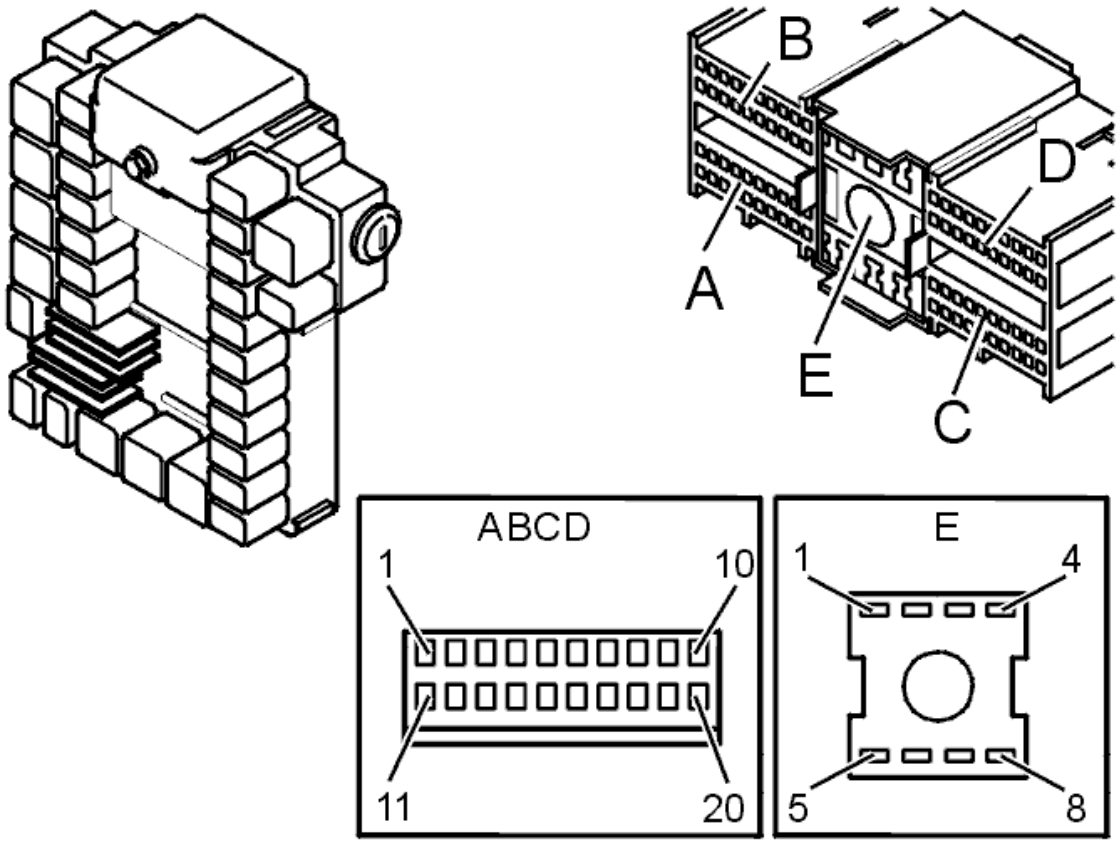

Fig. 17: Ground Terminals
Courtesy of VOLVO CARS CORPORATION

Is the circuit OK?

- **YES**

  Refer to **REPLACING THE COMPONENT**

- **NO**

  Refer to **VERIFICATION**

REPLACING THE COMPONENT

see **CONTROL MODULE HEATER PAD, REPLACING**

- **Continue**

  Refer to **VERIFICATION**

VERIFICATION

VERIFICATION

HINT: After the repair it is necessary to check that the fault has been rectified.

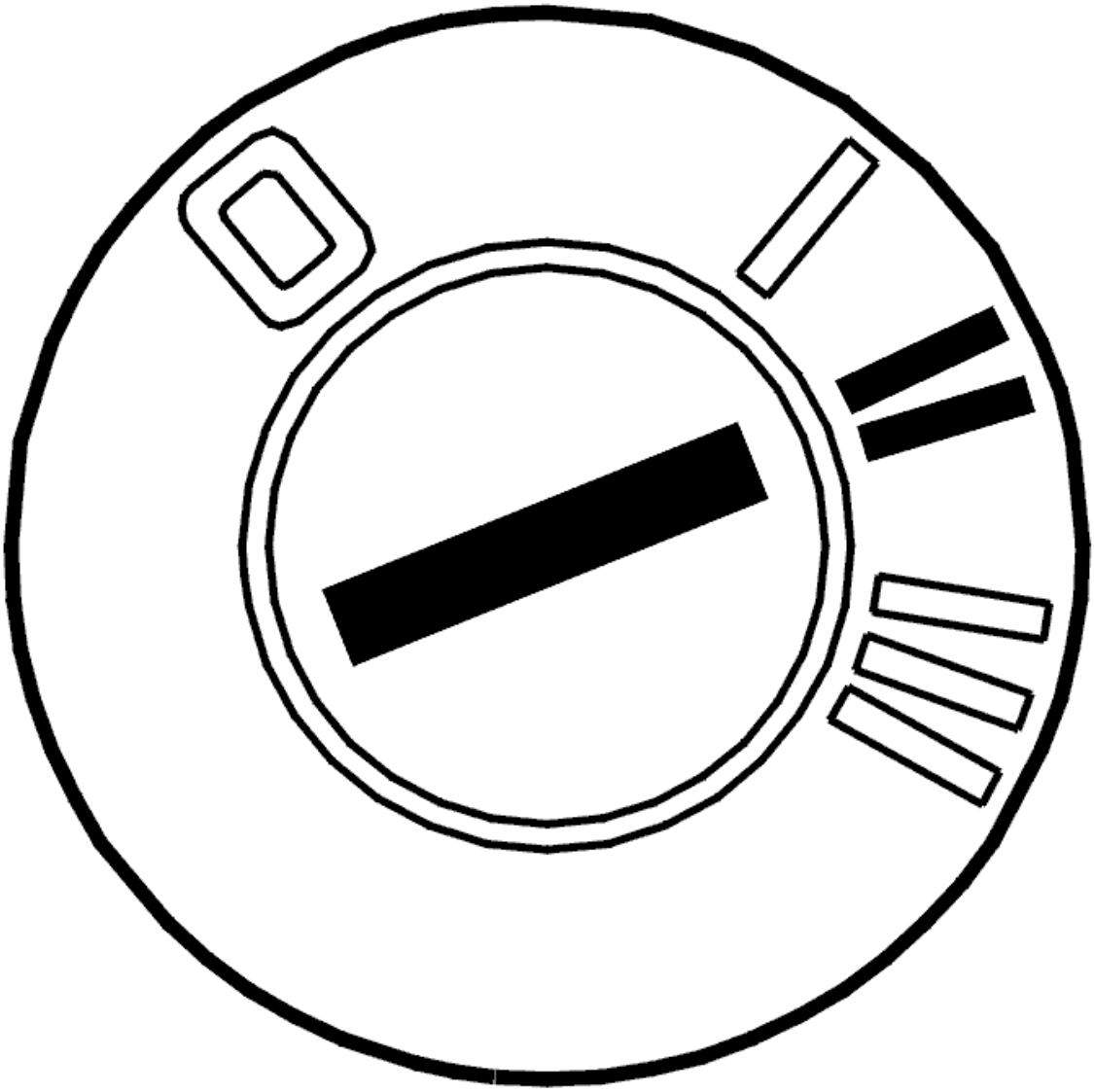

Fig. 18: Identifying Ignition ON
Courtesy of VOLVO CARS CORPORATION

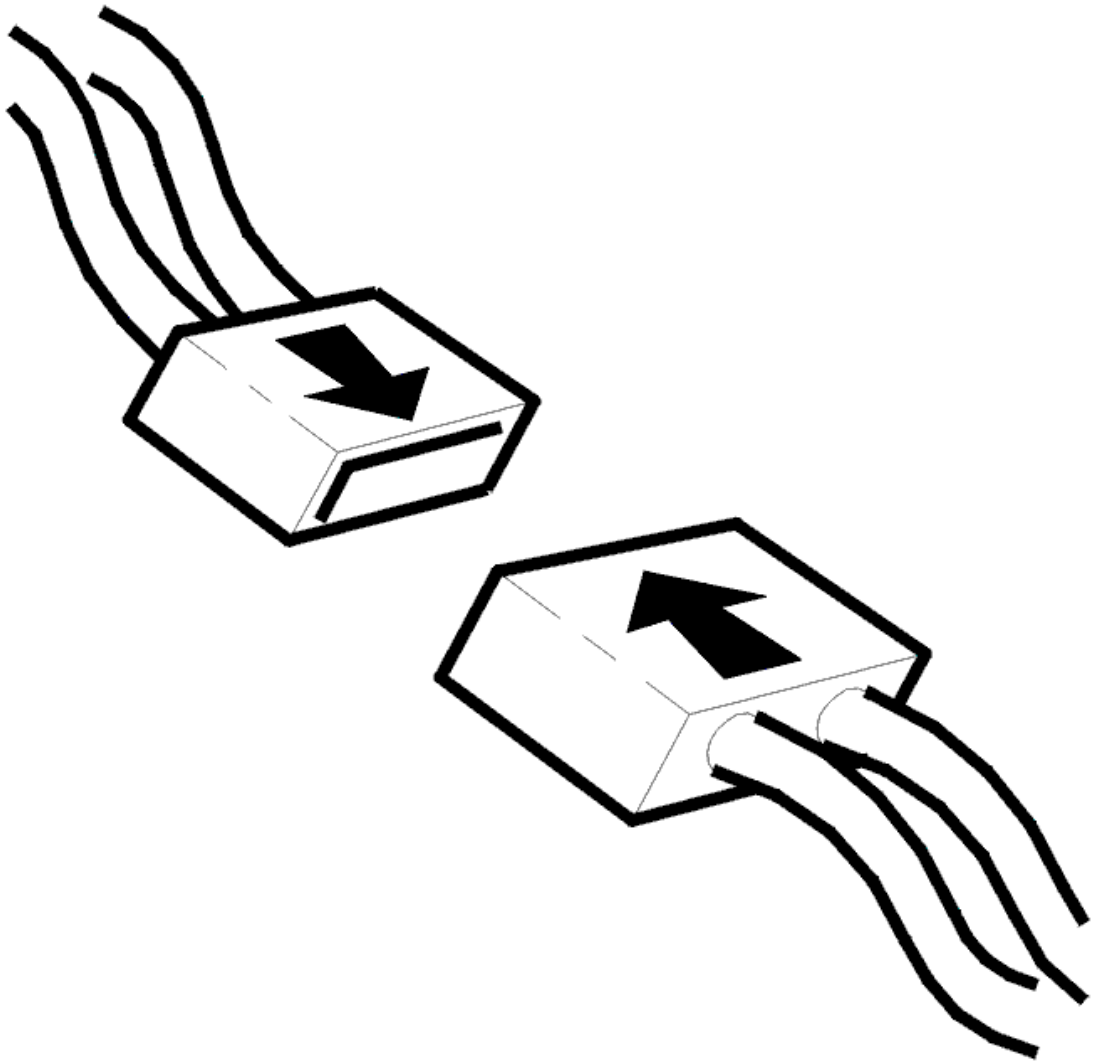

Fig. 19: Connecting Connector
Courtesy of VOLVO CARS CORPORATION

- Ignition off.
- Connect the connectors, install the components, etc.
- Ignition on.

  Check that diagnostic trouble code status changes from permanent to intermittent.

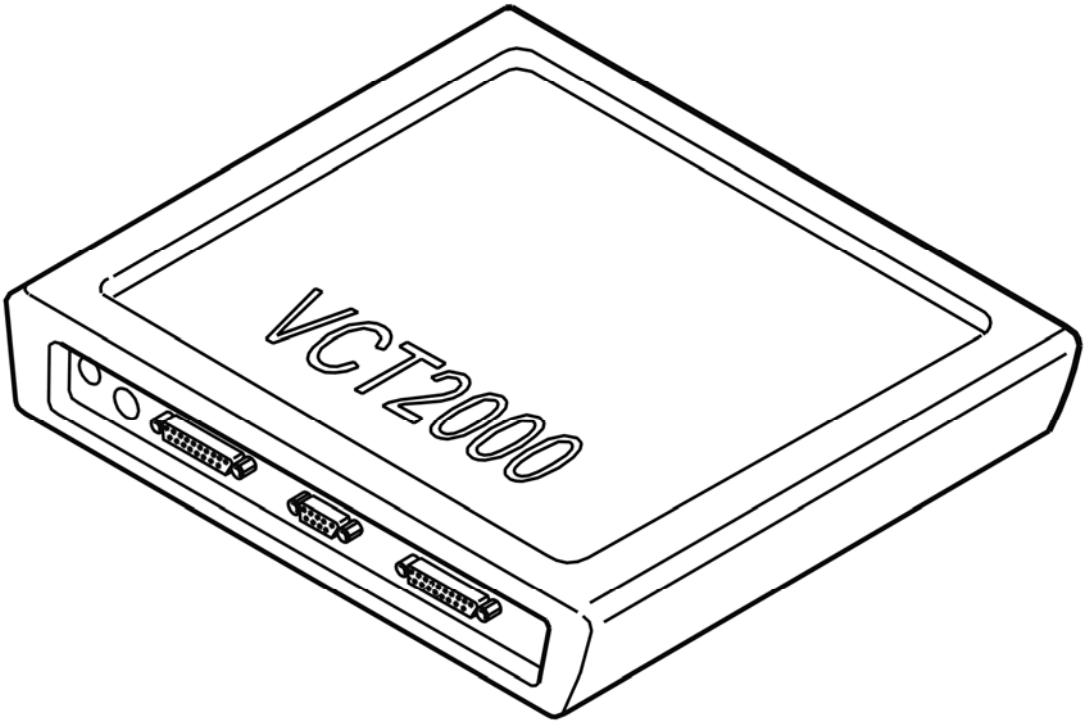

Fig. 20: Identifying VCT2000 Diagnostic Tool Symbol In VIDA
Courtesy of VOLVO CARS CORPORATION

Is the diagnostic trouble code status intermittent?

- **YES**

  VERIFIED: Troubleshooting has been completed.

- **NO**

  Refer to **INFORMATION**

INFORMATION

FAULT-TRACING INFORMATION

The fault should have been detected and remedied. As this is not the case fault-tracing has failed.

Exit fault-tracing for this diagnostic trouble code (DTC) or make another attempt.

CEM-5B06: RIGHT SEAT HEATER. SIGNAL TOO LOW. INTERMITTENT FAULT (2003-2004)

DIAGNOSTIC TROUBLE CODE INFORMATION

Condition

If the central electronic module (CEM) registers signal too low or no signal to right seat heater, diagnostic trouble code CEM-5B06 is displayed.

Substitute Value

None

Possible Source

- Short circuit to ground or open circuit on wire to right seat heater
- Input signal low when communication link is not activated.

Fault symptom[s]

- Front seat heating does not work.

SIGNAL TOO LOW. INTERMITTENT FAULT

INTERMITTENT FAULT

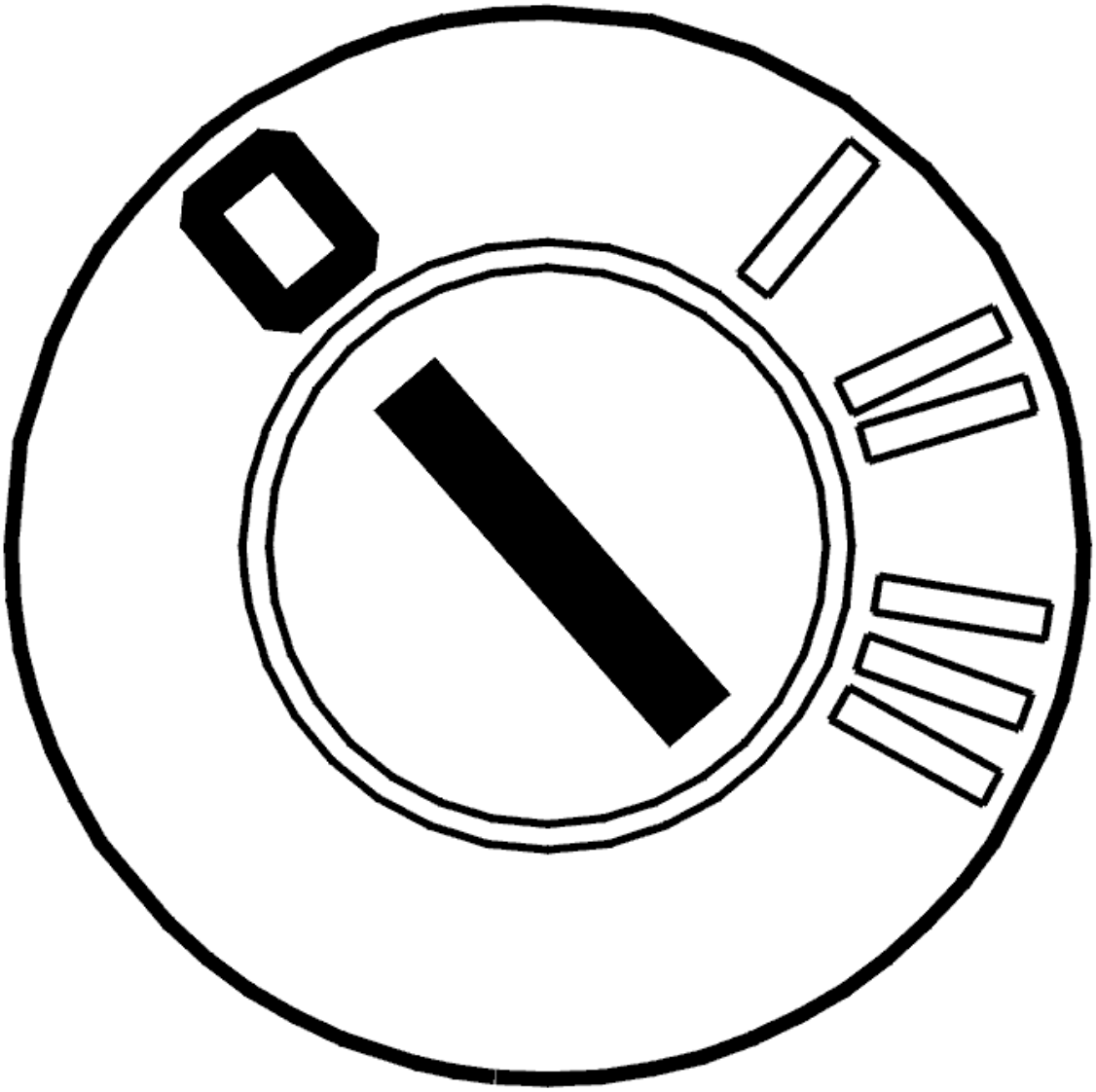

Fig. 21: Identifying Ignition OFF
Courtesy of VOLVO CARS CORPORATION

- Ignition off.

  Check the signal cable between central electronic module #4C and front right seat heater (9/13) connector #2 for a short-circuit to ground according to **SHORT-CIRCUIT TO GROUND, INTERMITTENT FAULTS** and an open-circuit according to **OPEN-CIRCUIT, INTERMITTENT FAULTS** .

  Remedy as necessary.

  Other information:

  - For -2004, see: **CENTRAL ELECTRONIC MODULE (CEM), REPLACING**
  - For 2005-, see: **CENTRAL ELECTRONIC MODULE (CEM), REPLACING** .

- To connect the breakout box, see **CONNECTING THE BREAKOUT BOX** .
- -2004: **SIGNAL SPECIFICATION**
- 2005-: **SIGNAL SPECIFICATION**

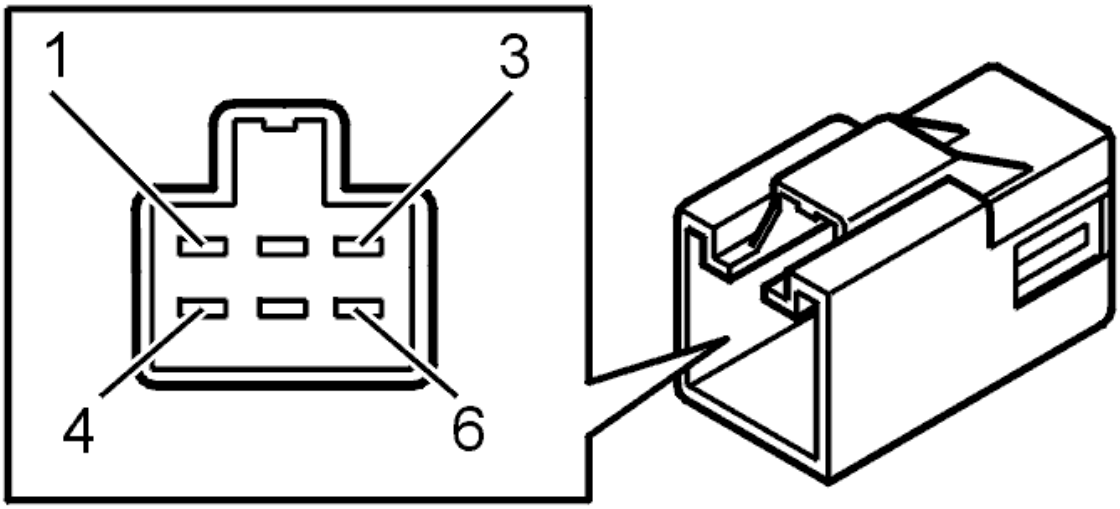

Fig. 22: Identifying Connector Terminals
Courtesy of VOLVO CARS CORPORATION

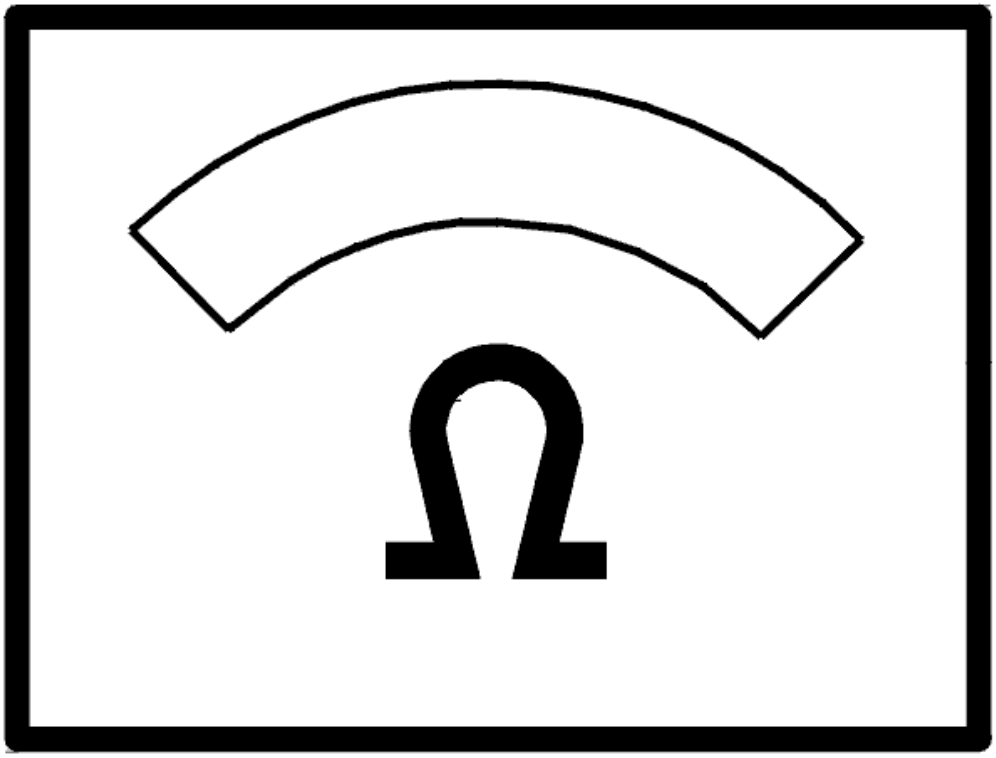

Fig. 23: Identifying Ohm Meter
Courtesy of VOLVO CARS CORPORATION

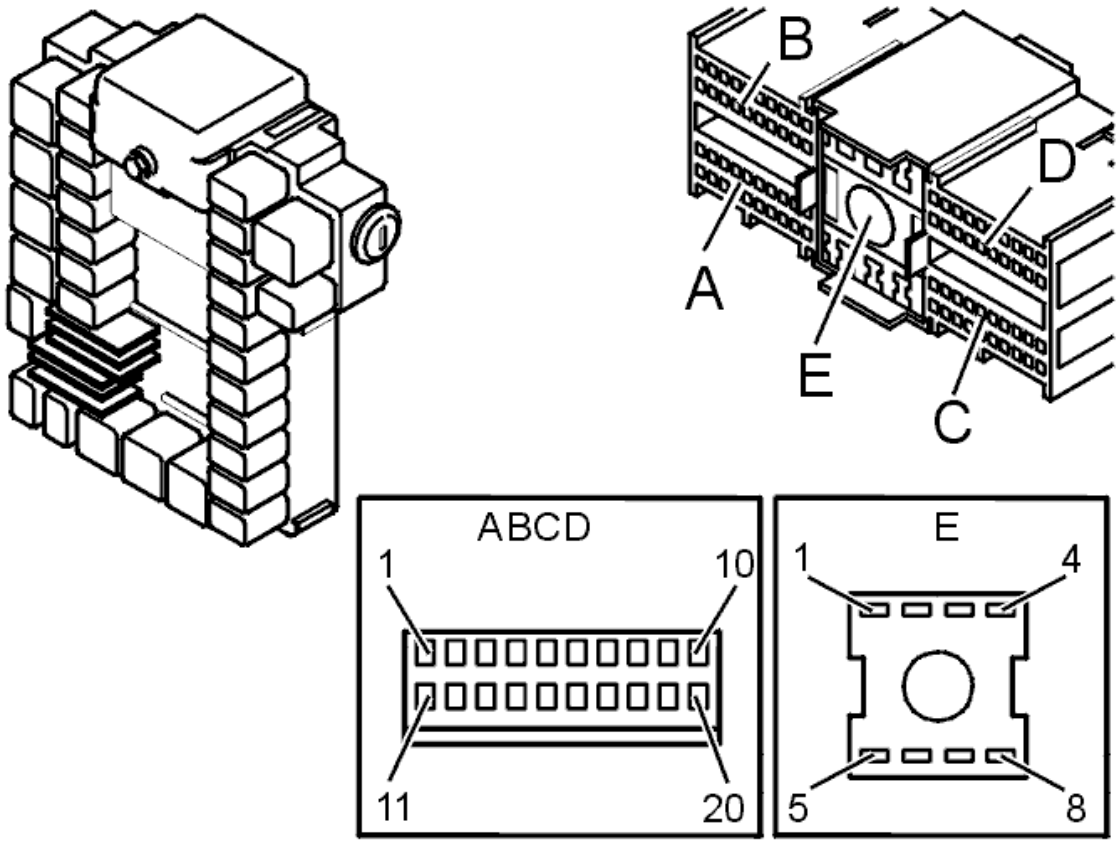

Fig. 24: Ground Terminals
Courtesy of VOLVO CARS CORPORATION

- **Continue**

  Refer to **INFORMATION**

INFORMATION

FAULT-TRACING INFORMATION

If the fault is intermittent, do not verify fault-tracing if the fault does not recur.

It is possible to view the information again, or leave fault-tracing for this diagnostic trouble code (DTC).

CEM-5B06: RIGHT SEAT HEATER. SIGNAL TOO LOW. PERMANENT FAULT (2003-2004)

DIAGNOSTIC TROUBLE CODE INFORMATION

see **DIAGNOSTIC TROUBLE CODE INFORMATION**

SIGNAL TOO LOW. PERMANENT FAULT

CHECKING THE COMPONENT

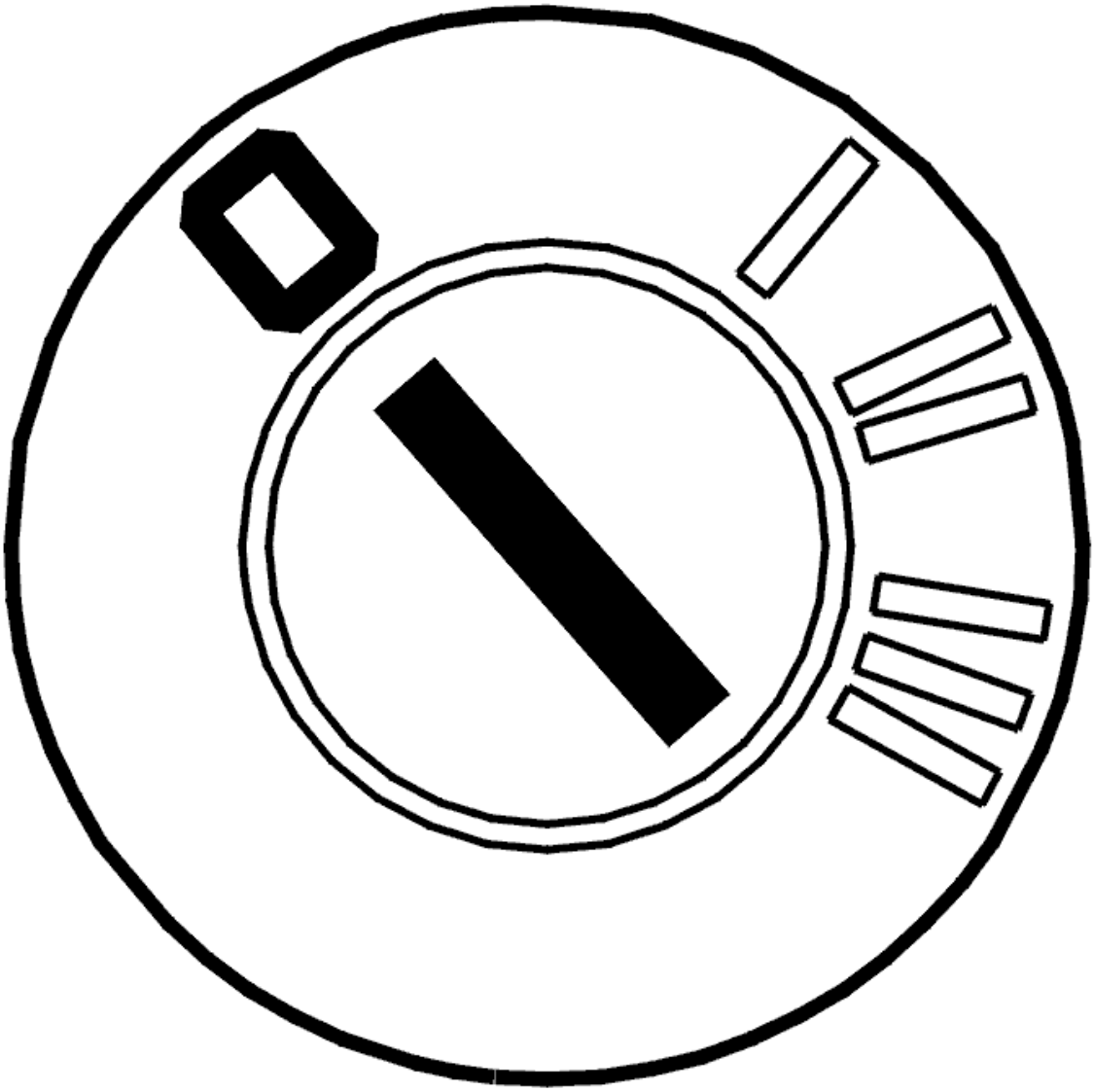

Fig. 25: Identifying Ignition OFF
Courtesy of VOLVO CARS CORPORATION

- Ignition off.

  Disconnect right seat heater 9/13.

  Check the control module for the right-hand seat heater and the connector. Check for contact resistance and oxidation.

  Remedy as necessary.

  Other information:

- see **CHECKING WIRING AND TERMINALS** .

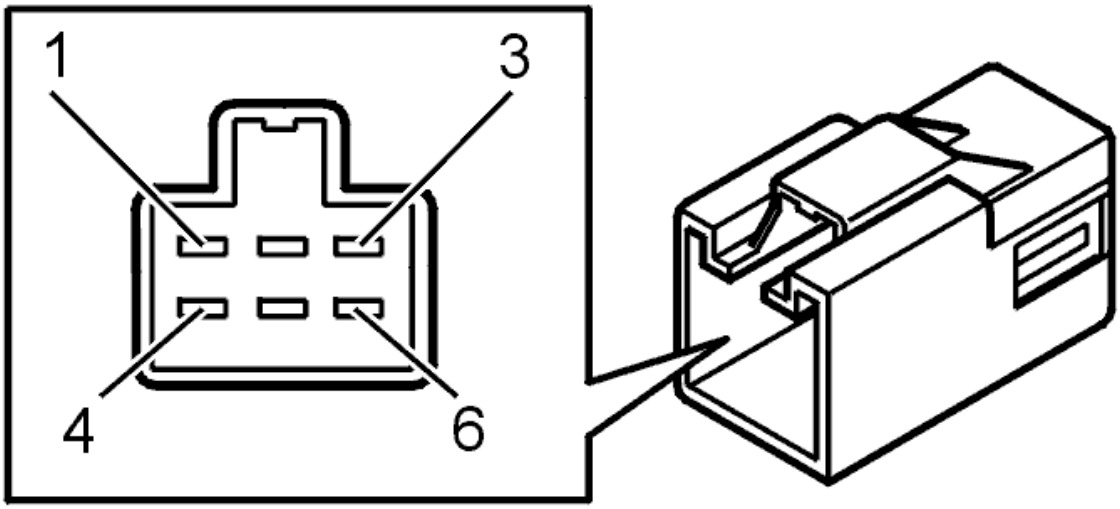

Fig. 26: Identifying Connector Terminals
Courtesy of VOLVO CARS CORPORATION

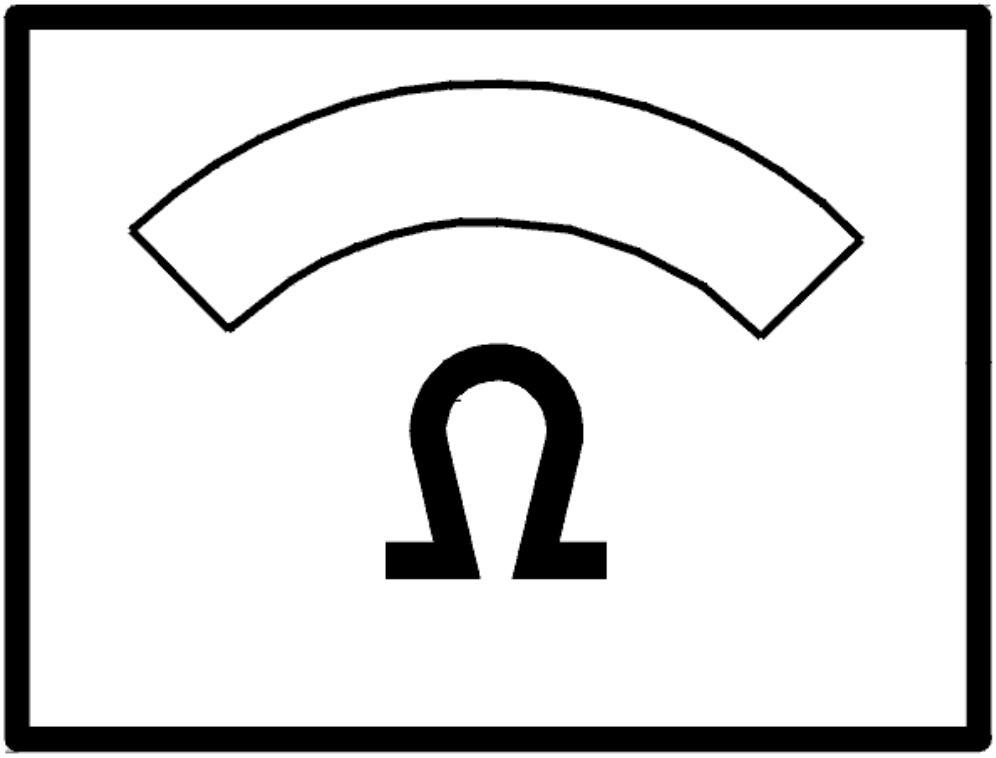

Fig. 27: Identifying Ohm Meter
Courtesy of VOLVO CARS CORPORATION

Was a problem found?

- **YES**

  Refer to **VERIFICATION**

- **NO**

  Refer to **CHECKING THE CABLE**

CHECKING THE CABLE

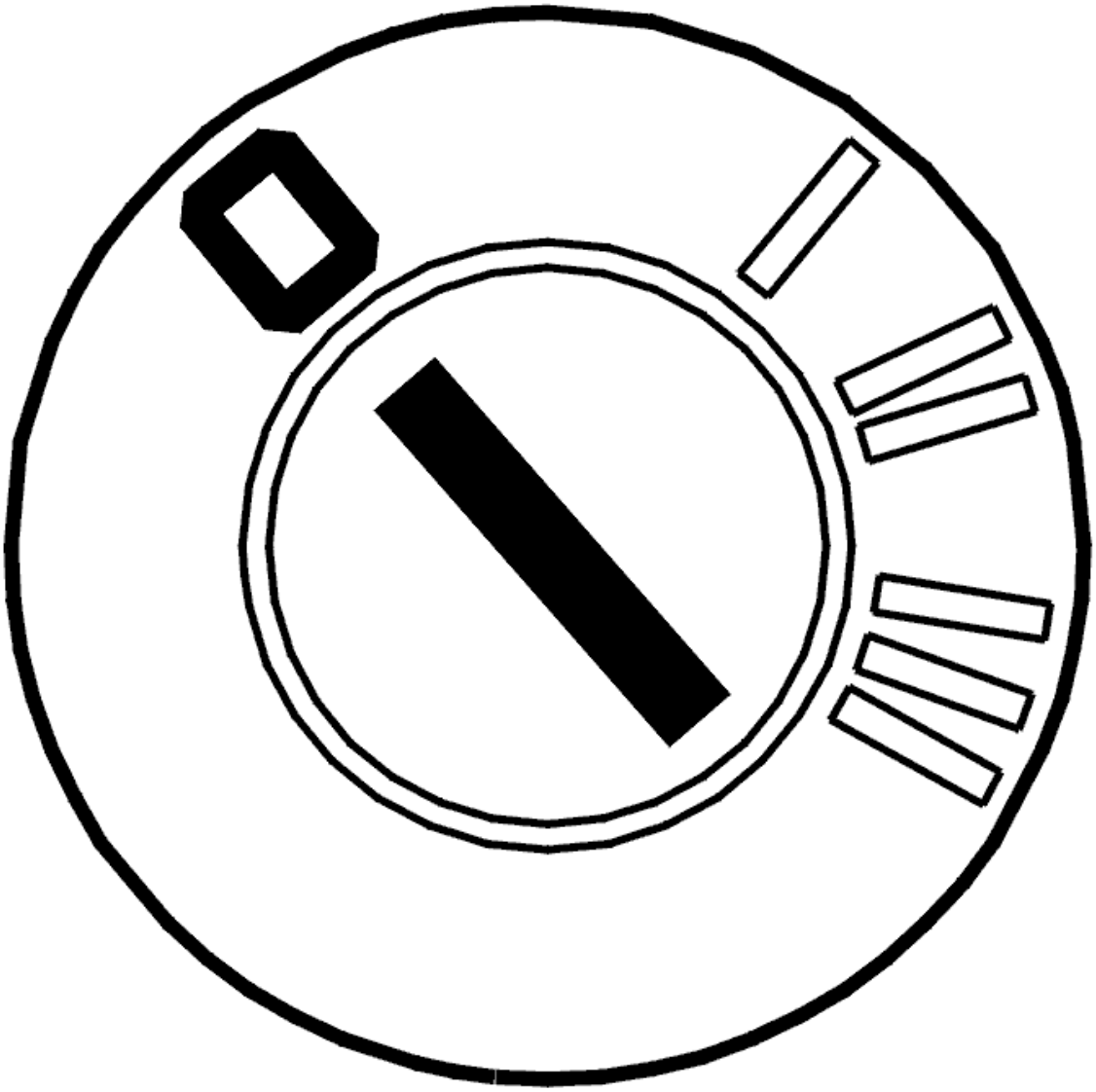

Fig. 28: Identifying Ignition OFF
Courtesy of VOLVO CARS CORPORATION

- Ignition off
- Disconnect the connector from the central electronic module (CEM)
- Disconnect connector (9/13) from the front right seat heater.

  Check the signal cable between central electronic module (CEM) terminal #4C and front right seat heater (9/13) connector terminal #2. Check for a short-circuit to ground. Check for an open-circuit.

  Remedy as necessary.

  Other information:

  - For -2004, see: **CENTRAL ELECTRONIC MODULE (CEM), REPLACING**

- For 2005-, see: **CENTRAL ELECTRONIC MODULE (CEM), REPLACING** .
- To connect the breakout box, see **CONNECTING THE BREAKOUT BOX**
- -2004: **SIGNAL SPECIFICATION**
- 2005-: **SIGNAL SPECIFICATION**
- see **CHECKING WIRING AND TERMINALS**

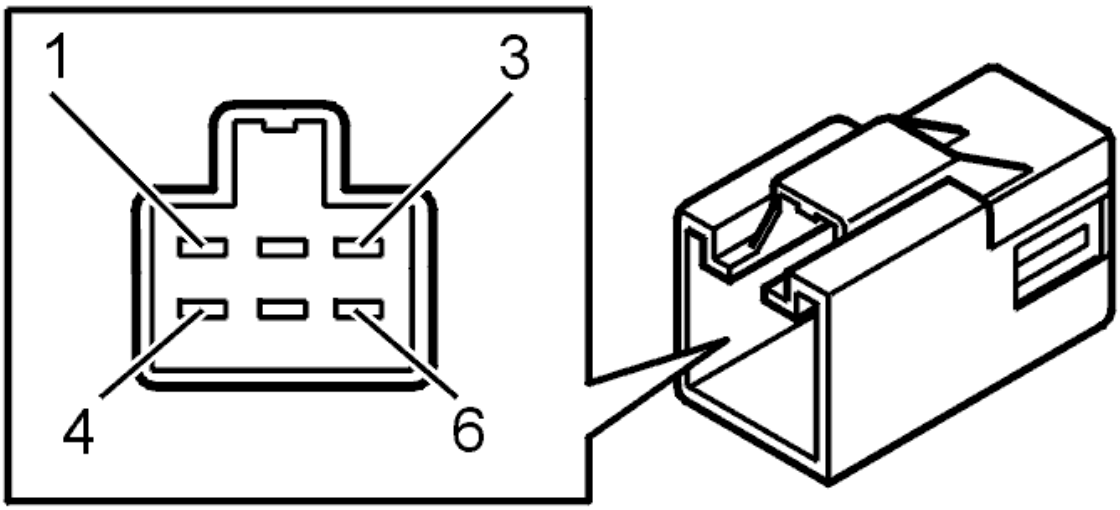

Fig. 29: Identifying Connector Terminals
Courtesy of VOLVO CARS CORPORATION

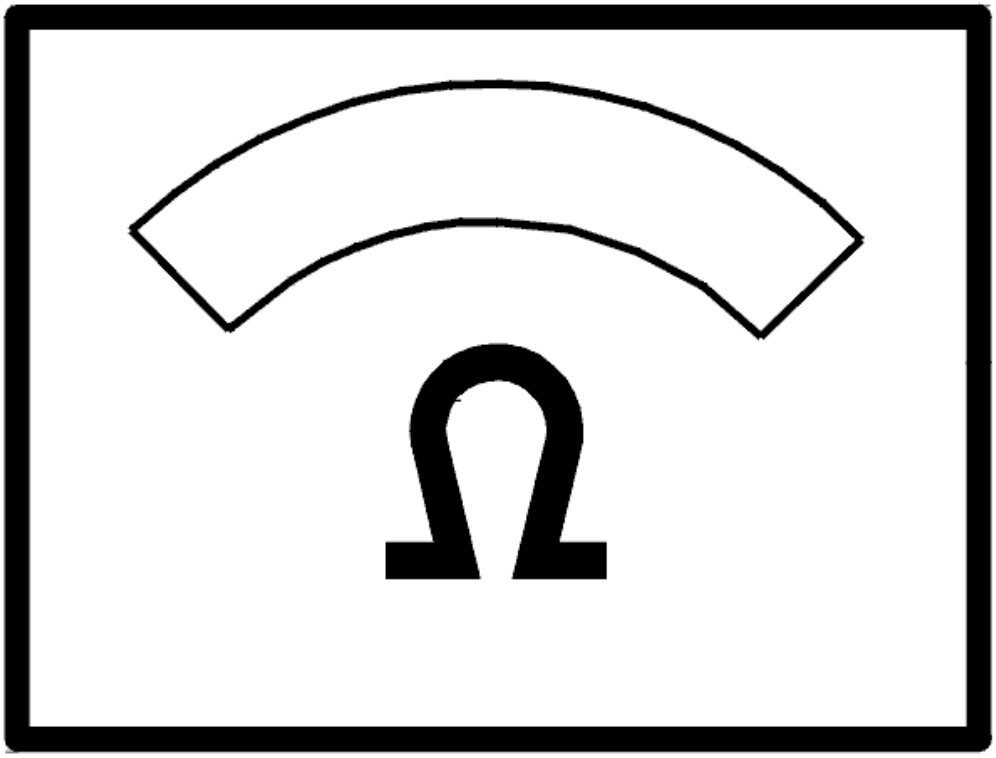

Fig. 30: Identifying Ohm Meter
Courtesy of VOLVO CARS CORPORATION

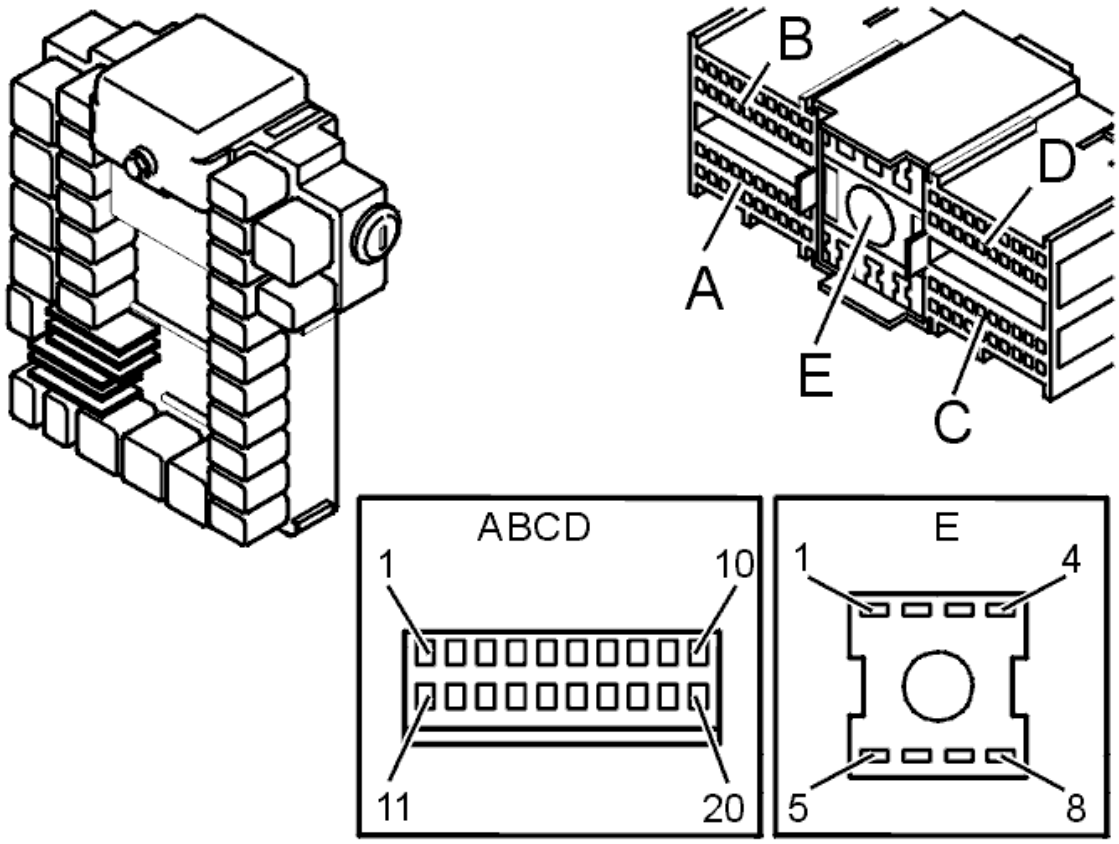

Fig. 31: Ground Terminals
Courtesy of VOLVO CARS CORPORATION

Is the circuit OK?

- **YES**

  Refer to **REPLACING THE COMPONENT**

- **NO**

  Refer to **VERIFICATION**

REPLACING THE COMPONENT

see **CONTROL MODULE HEATER PAD, REPLACING**

- **Continue**

  Refer to **VERIFICATION**

VERIFICATION

VERIFICATION

HINT: After the repair it is necessary to check that the fault has been rectified.

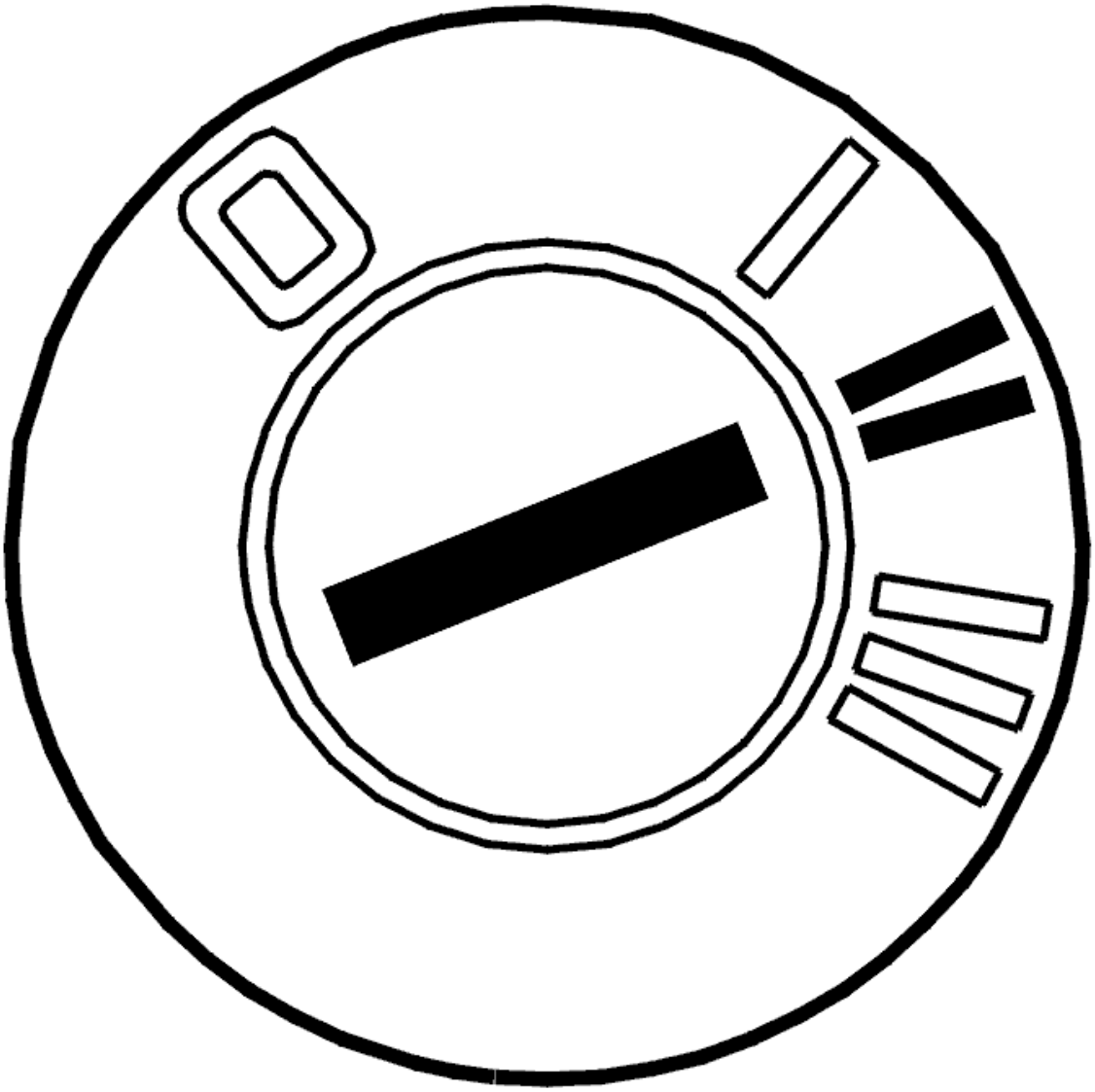

Fig. 32: Identifying Ignition ON
Courtesy of VOLVO CARS CORPORATION

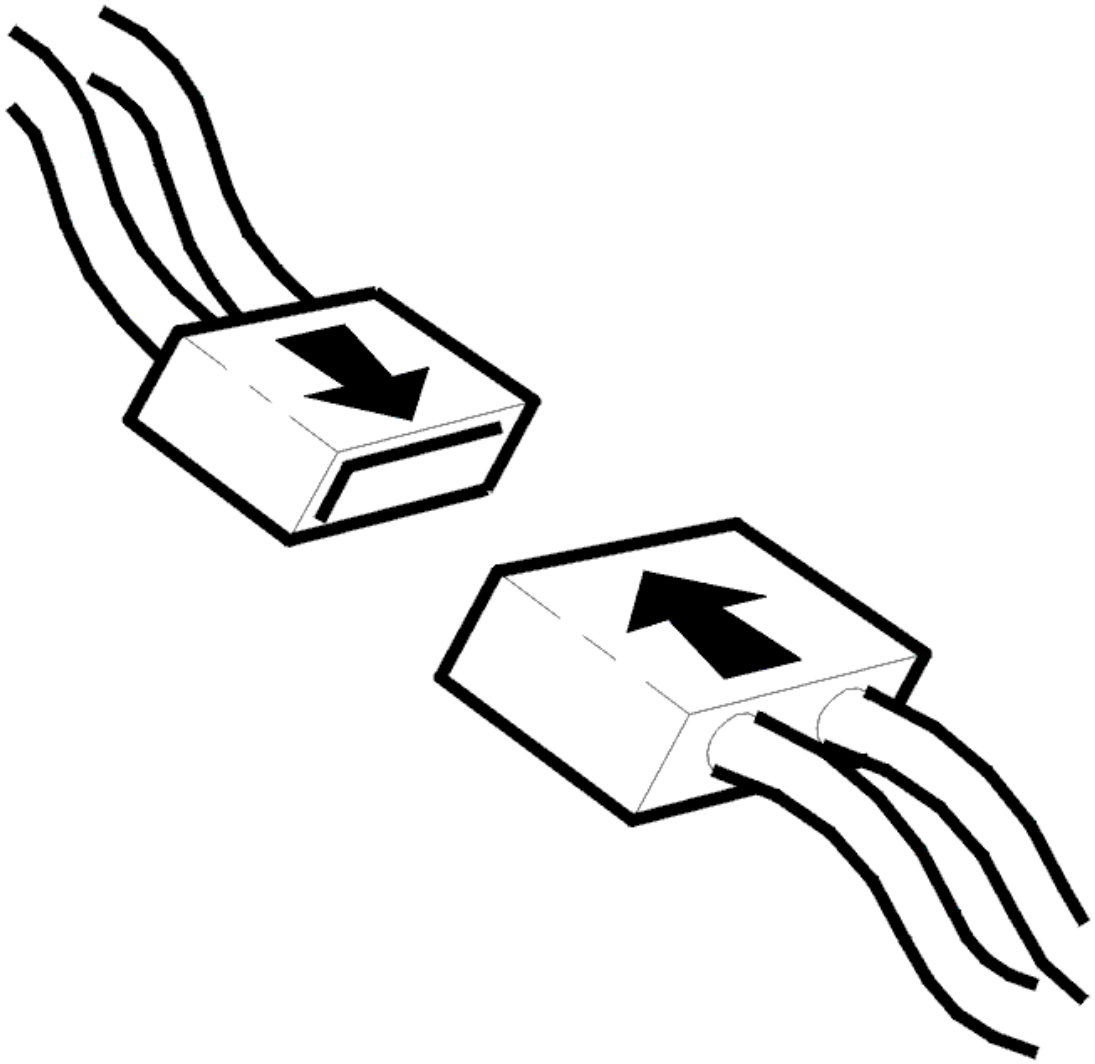

Fig. 33: Connecting Connector
Courtesy of VOLVO CARS CORPORATION

- Ignition off.
- Connect the connectors, install the components, etc.
- Ignition on.

  Check that diagnostic trouble code status changes from permanent to intermittent.

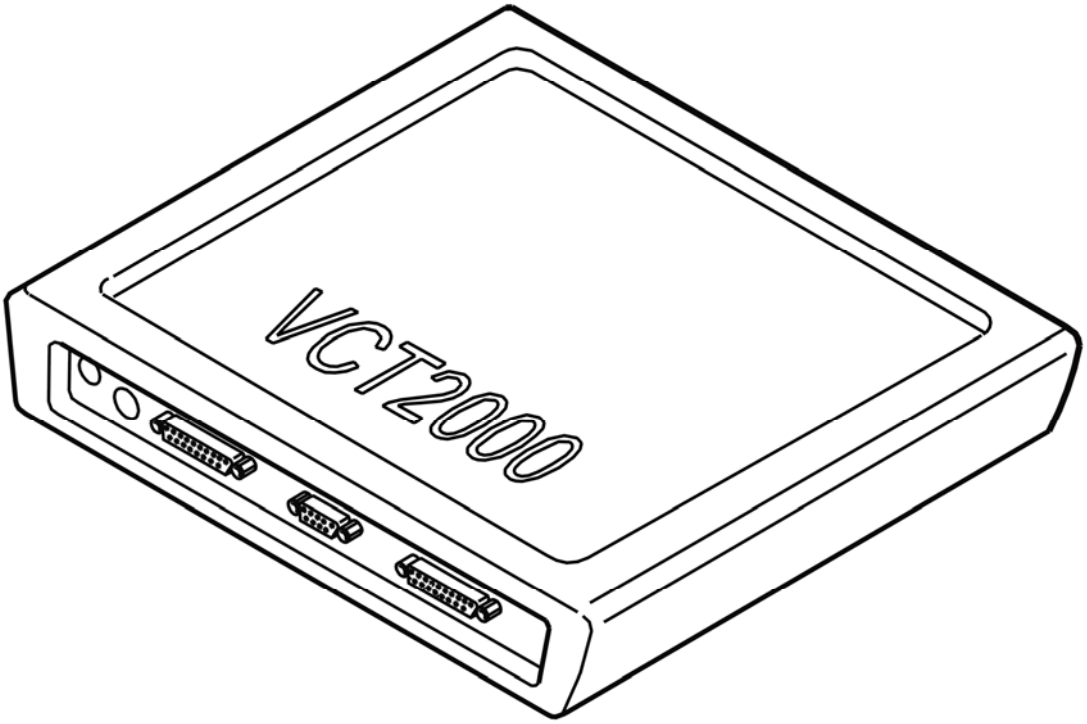

Fig. 34: Identifying VCT2000 Diagnostic Tool Symbol In VIDA
Courtesy of VOLVO CARS CORPORATION

Is the diagnostic trouble code status intermittent?

- **YES**

  VERIFIED: Troubleshooting has been completed.

- **NO**

  Refer to **INFORMATION**

INFORMATION

FAULT-TRACING INFORMATION

The fault should have been detected and remedied. As this is not the case fault-tracing has failed.

Exit fault-tracing for this diagnostic trouble code (DTC) or make another attempt.

CEM-5B07: LEFT SEAT HEATER. SIGNAL TOO HIGH. INTERMITTENT FAULT (2003-2004)

DIAGNOSTIC TROUBLE CODE INFORMATION

Condition

If the central electronic module (CEM) registers signal too high or faulty signal on wire to left seat heater, diagnostic trouble code CEM-5B07 is displayed.

Substitute Value

None

Possible Source

- Short circuit to plus on wire or faulty output stage on wire to left seat heater
- Output signal constantly high when communication is activated.

Fault symptom[s]

- Front left seat heating does not work.

SIGNAL TOO HIGH. INTERMITTENT FAULT

INTERMITTENT FAULT

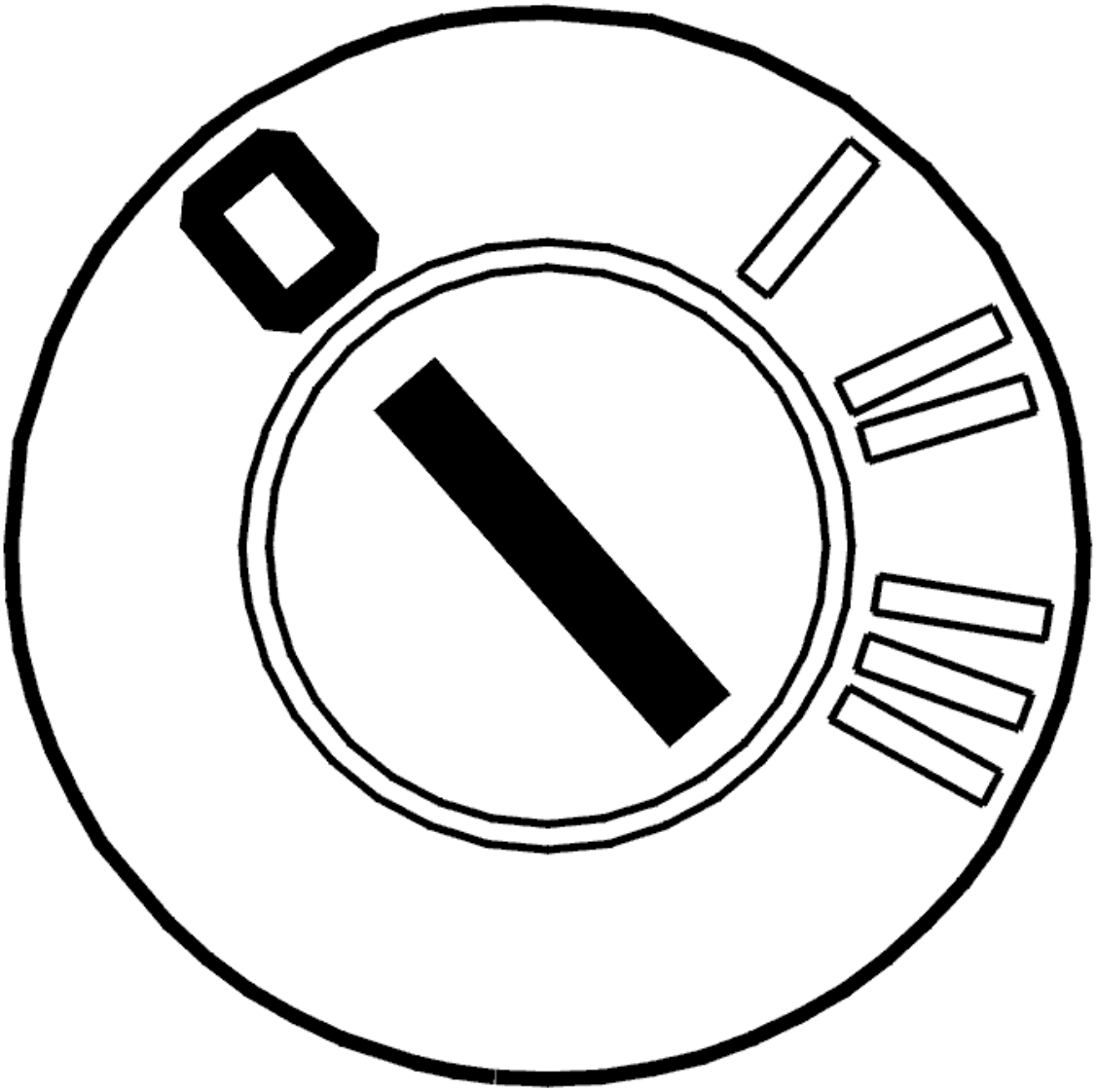

Fig. 35: Identifying Ignition OFF
Courtesy of VOLVO CARS CORPORATION

- Ignition off.

  Check wire between central electronic module (CEM) 11B and left seat heater connector 2 for a short circuit to voltage supply as described in, see **SHORT-CIRCUIT TO SUPPLY VOLTAGE, INTERMITTENT FAULTS** .

  Do the necessary corrective action.

  Additional information:

  - For -2004, see: **CENTRAL ELECTRONIC MODULE (CEM), REPLACING** .
  - For 2005-, see: **CENTRAL ELECTRONIC MODULE (CEM), REPLACING** .

- To connect the test box, see **CONNECTING THE BREAKOUT BOX**
- -2004: **SIGNAL SPECIFICATION**
- 2005-: **SIGNAL SPECIFICATION**

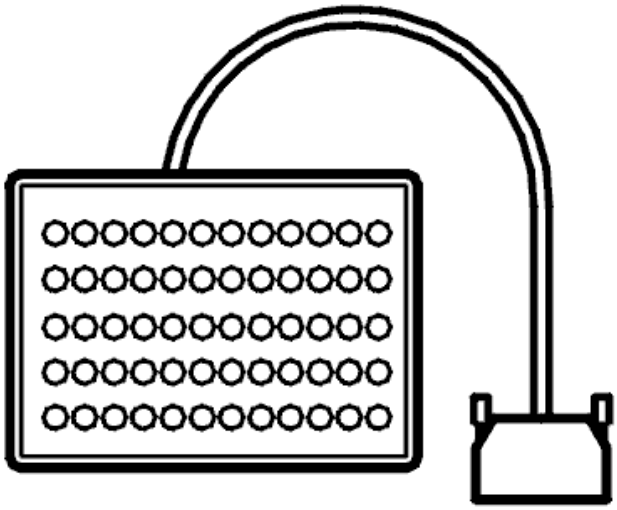

Fig. 36: Breakout Box
Courtesy of VOLVO CARS CORPORATION

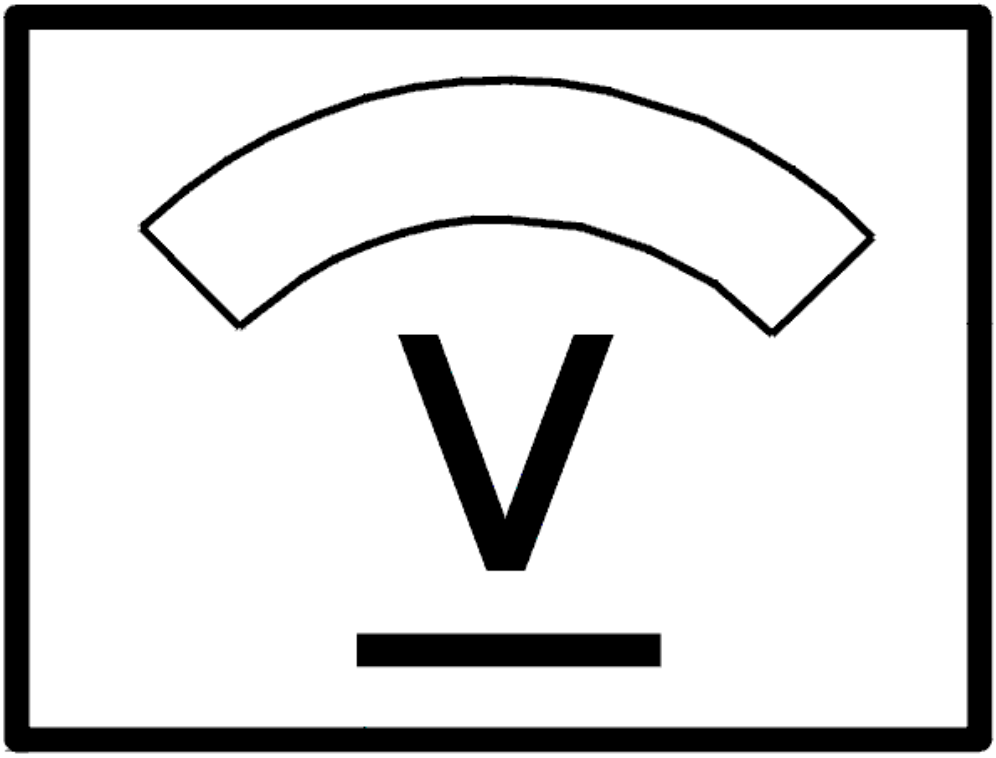

Fig. 37: Identifying Voltage Display
Courtesy of VOLVO CARS CORPORATION

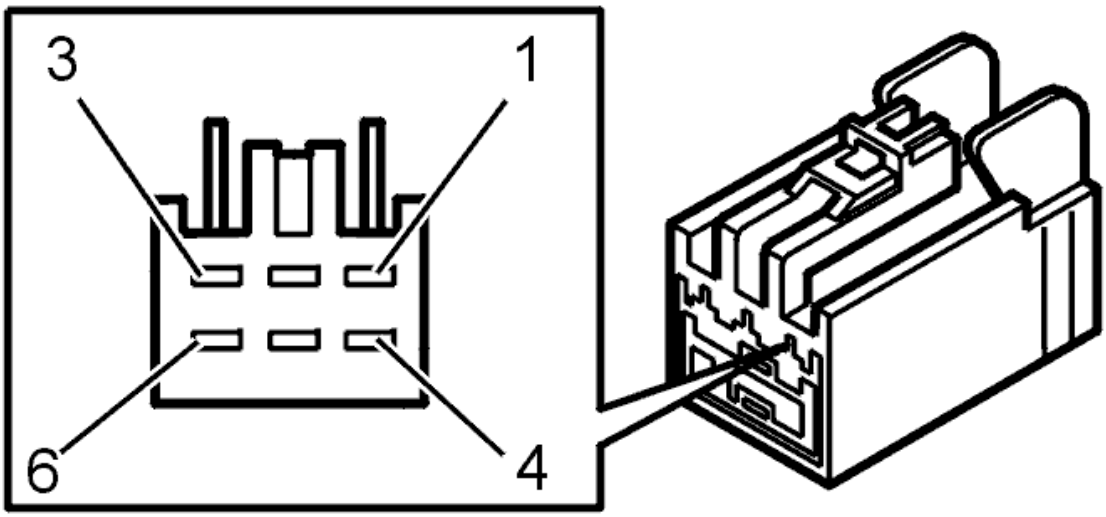

Fig. 38: Identifying Connector Terminals
Courtesy of VOLVO CARS CORPORATION

- **Continue**

  Refer to **INFORMATION**

INFORMATION

FAULT-TRACING INFORMATION

If the fault is intermittent, do not verify fault-tracing if the fault does not recur.

It is possible to view the information again, or leave fault-tracing for this diagnostic trouble code (DTC).

CEM-5B07: LEFT SEAT HEATER. SIGNAL TOO HIGH. PERMANENT FAULT (2003-2004)

DIAGNOSTIC TROUBLE CODE INFORMATION

see **DIAGNOSTIC TROUBLE CODE INFORMATION**

SIGNAL TOO HIGH. PERMANENT FAULT

CHECKING THE SIGNAL WIRE

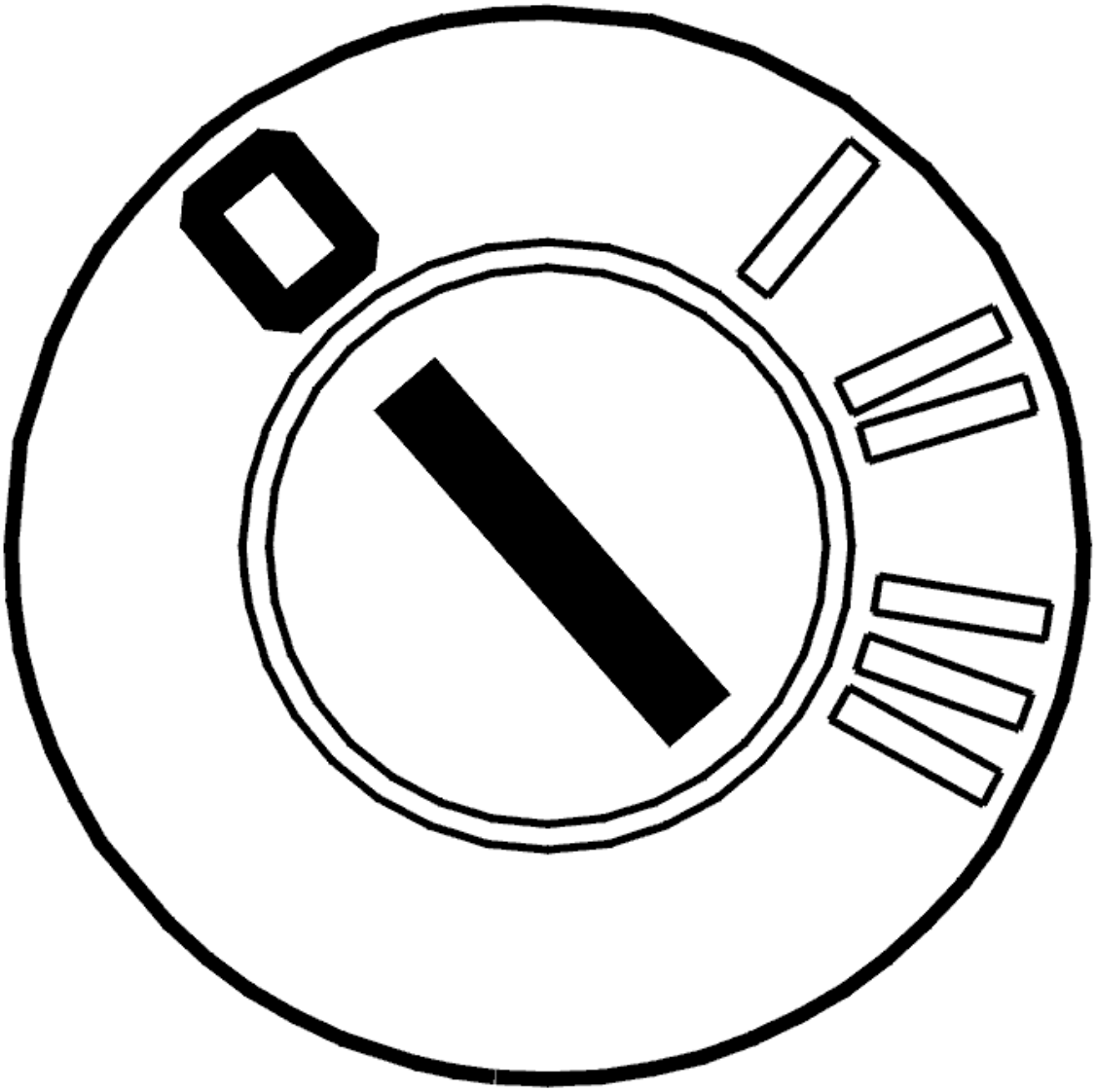

Fig. 39: Identifying Ignition OFF
Courtesy of VOLVO CARS CORPORATION

- Ignition off.
- Disconnect the 20-pin connector (group B) from the central electronic module (CEM).
- Disconnect connector from front left seat heater.

  Check signal wire between central electronic module (CEM) 11B and front left seat heater 2 for a short circuit to voltage supply as described in, see **SHORT-CIRCUIT TO SUPPLY VOLTAGE. PERMANENT FAULTS** .

  Do the necessary corrective action.

  Additional information:

- For -2004, see: **CENTRAL ELECTRONIC MODULE (CEM), REPLACING** .
- For 2005-, see: **CENTRAL ELECTRONIC MODULE (CEM), REPLACING** .
- To connect the test box, see **CONNECTING THE BREAKOUT BOX**
- -2004: **SIGNAL SPECIFICATION**
- 2005-: **SIGNAL SPECIFICATION**

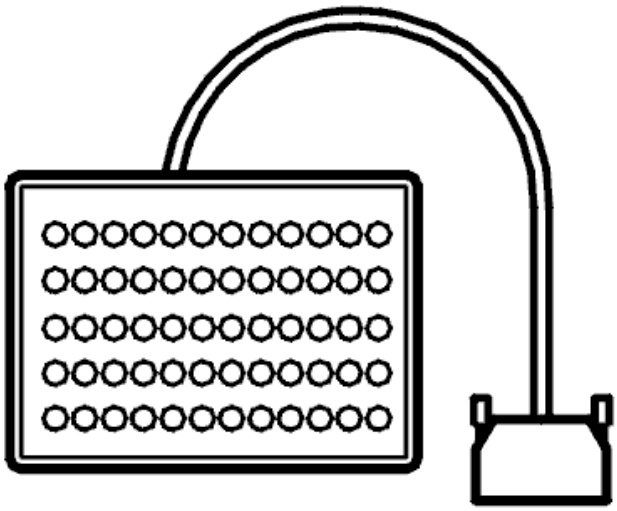

Fig. 40: Breakout Box
Courtesy of VOLVO CARS CORPORATION

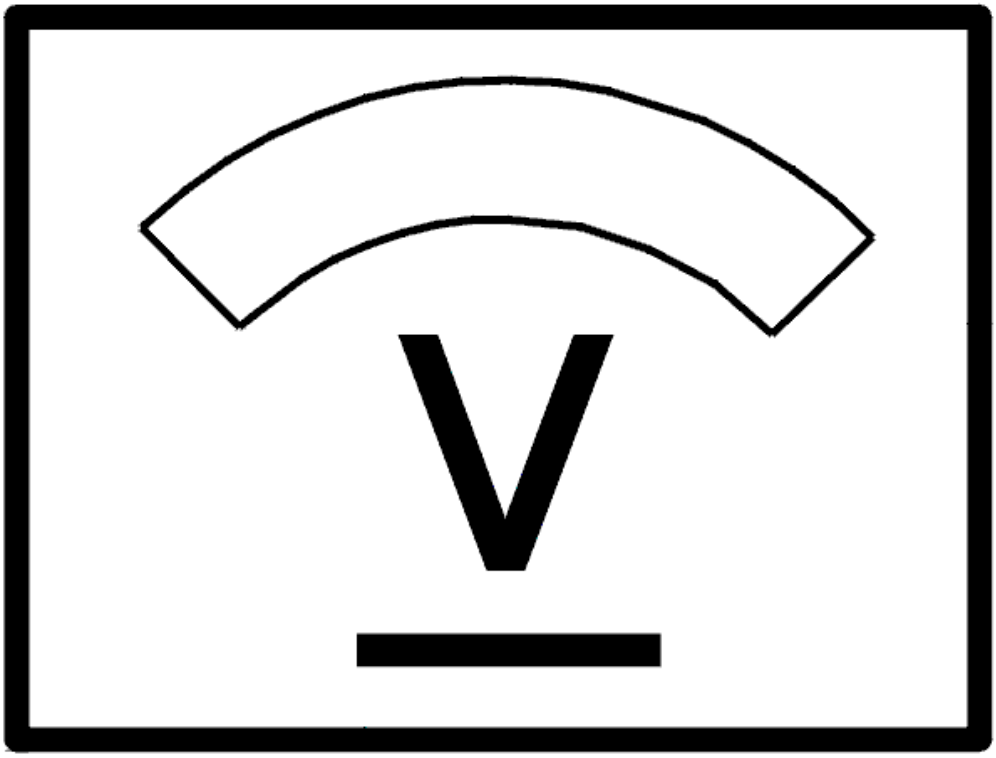

Fig. 41: Identifying Voltage Display
Courtesy of VOLVO CARS CORPORATION

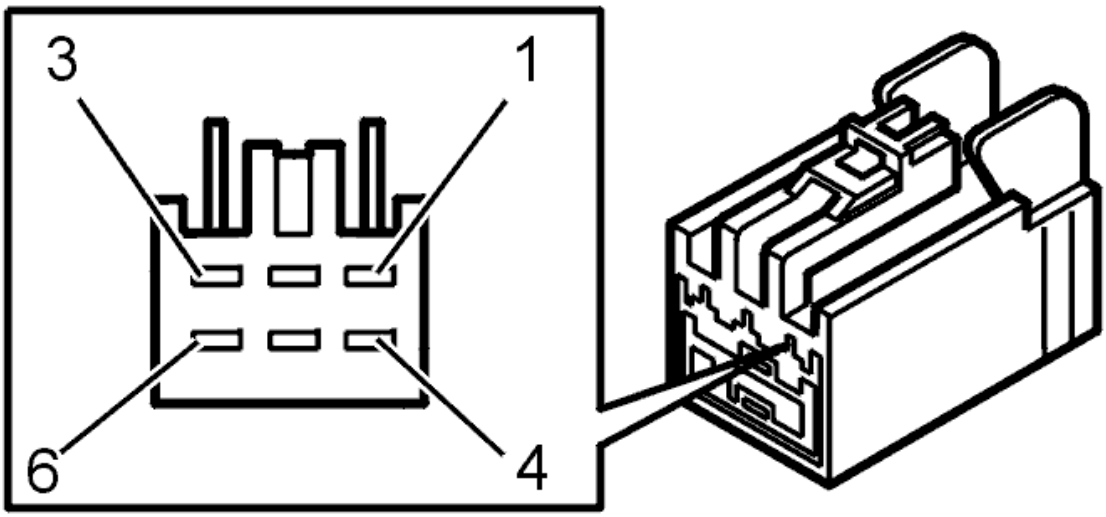

Fig. 42: Identifying Connector Terminals
Courtesy of VOLVO CARS CORPORATION

Is the circuit OK?

- **YES**

  Refer to **REPLACING THE COMPONENT**

- **NO**

  Refer to **VERIFICATION**

REPLACING THE COMPONENT

see **CONTROL MODULE HEATER PAD, REPLACING**

- **Continue**

  Refer to **VERIFICATION**

VERIFICATION

VERIFICATION

HINT: After the repair it is necessary to check that the fault has been rectified.

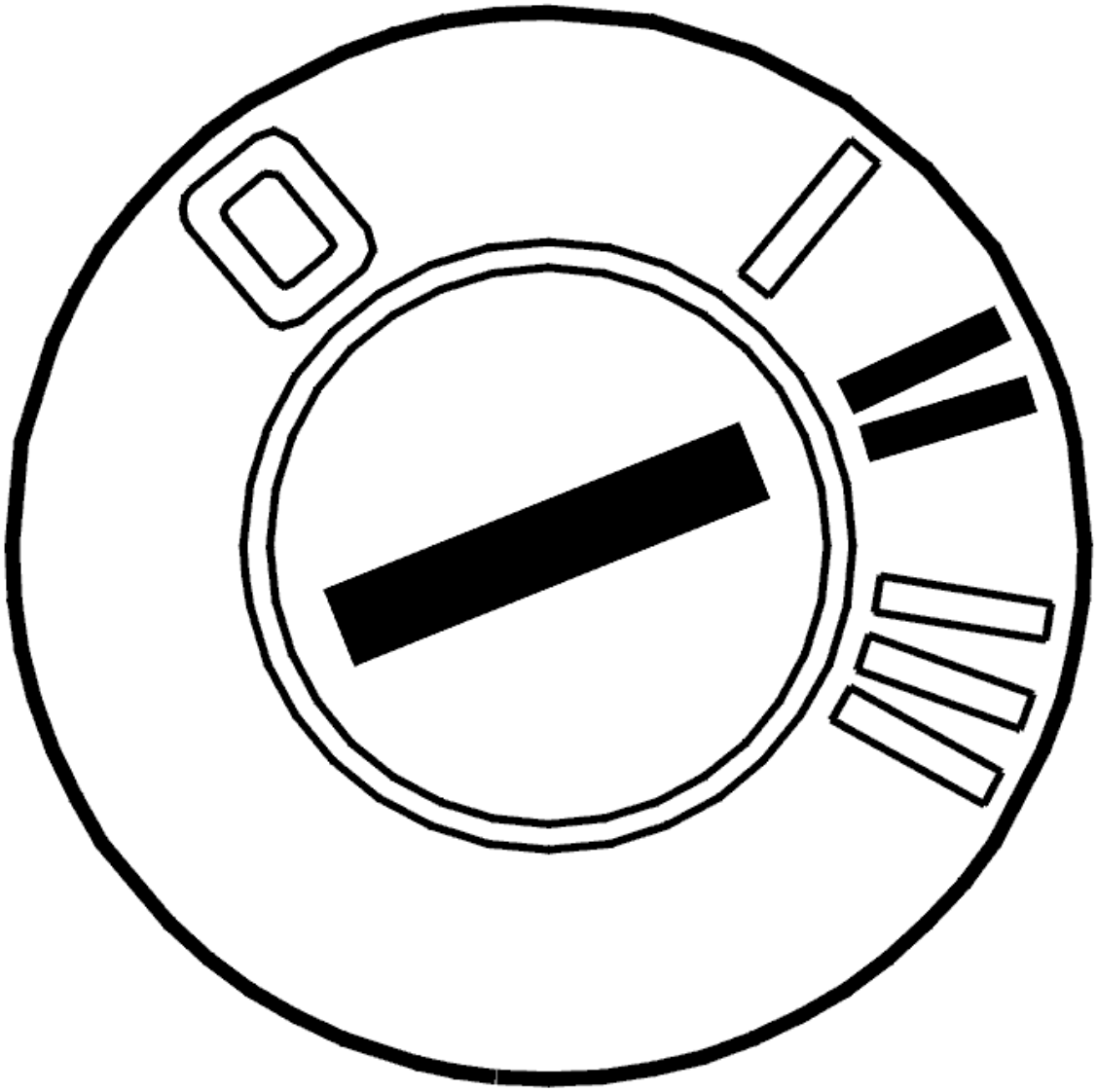

Fig. 43: Identifying Ignition ON
Courtesy of VOLVO CARS CORPORATION

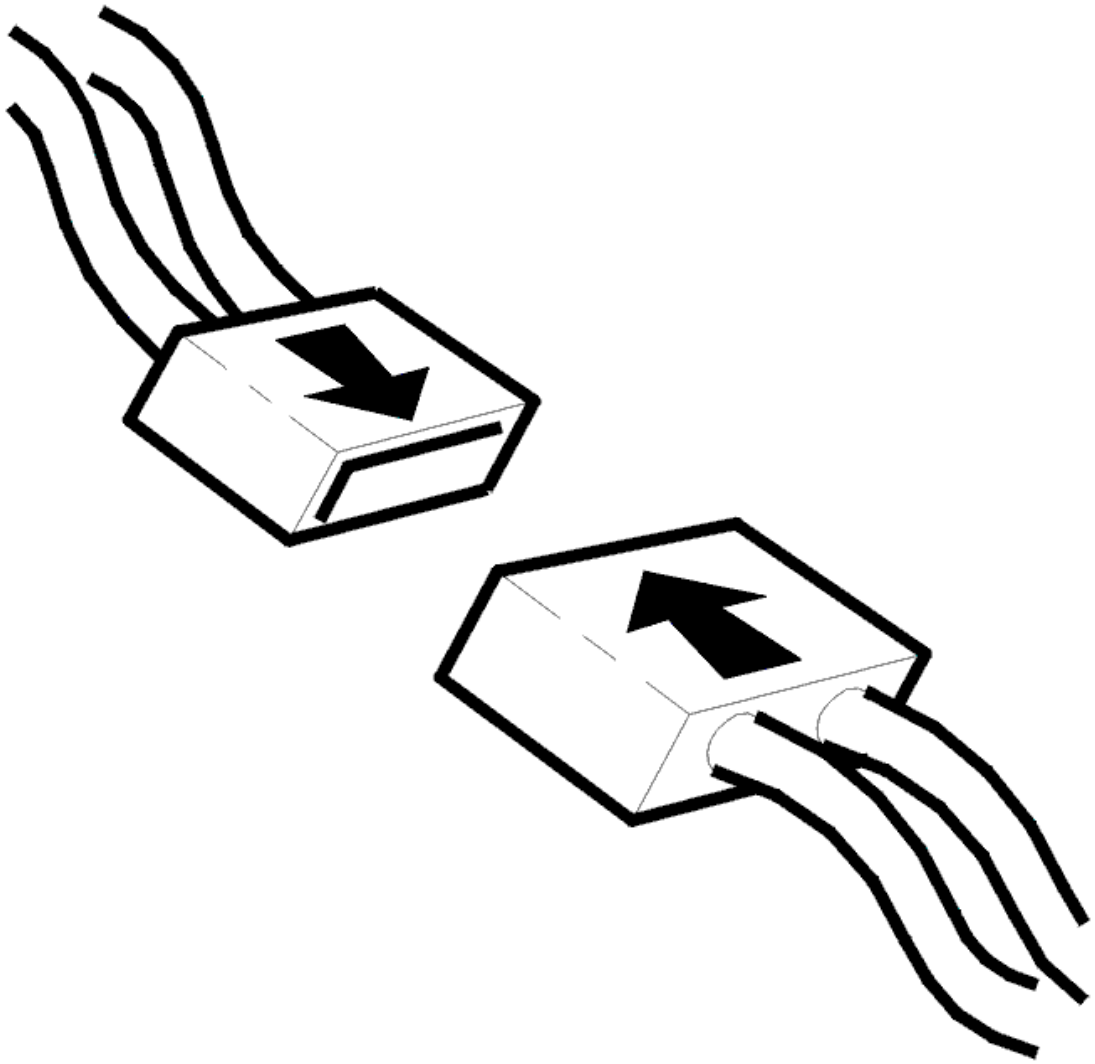

Fig. 44: Connecting Connector
Courtesy of VOLVO CARS CORPORATION

- Ignition off.
- Connect the connectors, install the components, etc.
- Ignition on.

  Check that diagnostic trouble code status changes from permanent to intermittent.

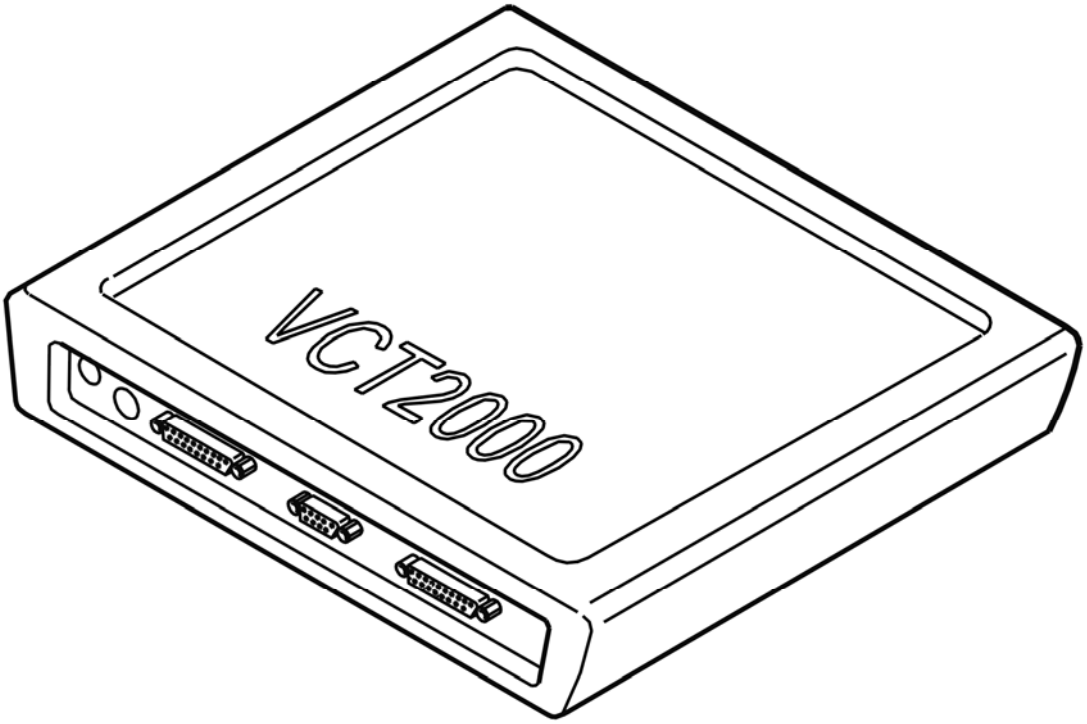

Fig. 45: Identifying VCT2000 Diagnostic Tool Symbol In VIDA
Courtesy of VOLVO CARS CORPORATION

Is the diagnostic trouble code status intermittent?

- **YES**

  VERIFIED: Troubleshooting has been completed.

- **NO**

  Refer to **INFORMATION**

INFORMATION

FAULT-TRACING INFORMATION

The fault should have been detected and remedied. As this is not the case fault-tracing has failed.

Exit fault-tracing for this diagnostic trouble code (DTC) or make another attempt.

CEM-5B08: RIGHT SEAT HEATER. SIGNAL TOO HIGH. INTERMITTENT FAULT (2003-2004)

DIAGNOSTIC TROUBLE CODE (DTC) INFORMATION

Condition

If the central electronic module (CEM) registers that the signal is high or there is a faulty signal from the wiring in the right seat heater, diagnostic trouble code (DTC) CEM-5B08 is stored.

Substitute Value

None.

Possible Source

- Short-circuit to positive in the wiring or faulty output in the wiring of the right seat heater.
- The output signal is constantly high when communication is active.

Fault symptom[s]

- The heater in the front right seat does not operate.

SIGNAL TOO HIGH. INTERMITTENT FAULT

CHECKING THE CABLE

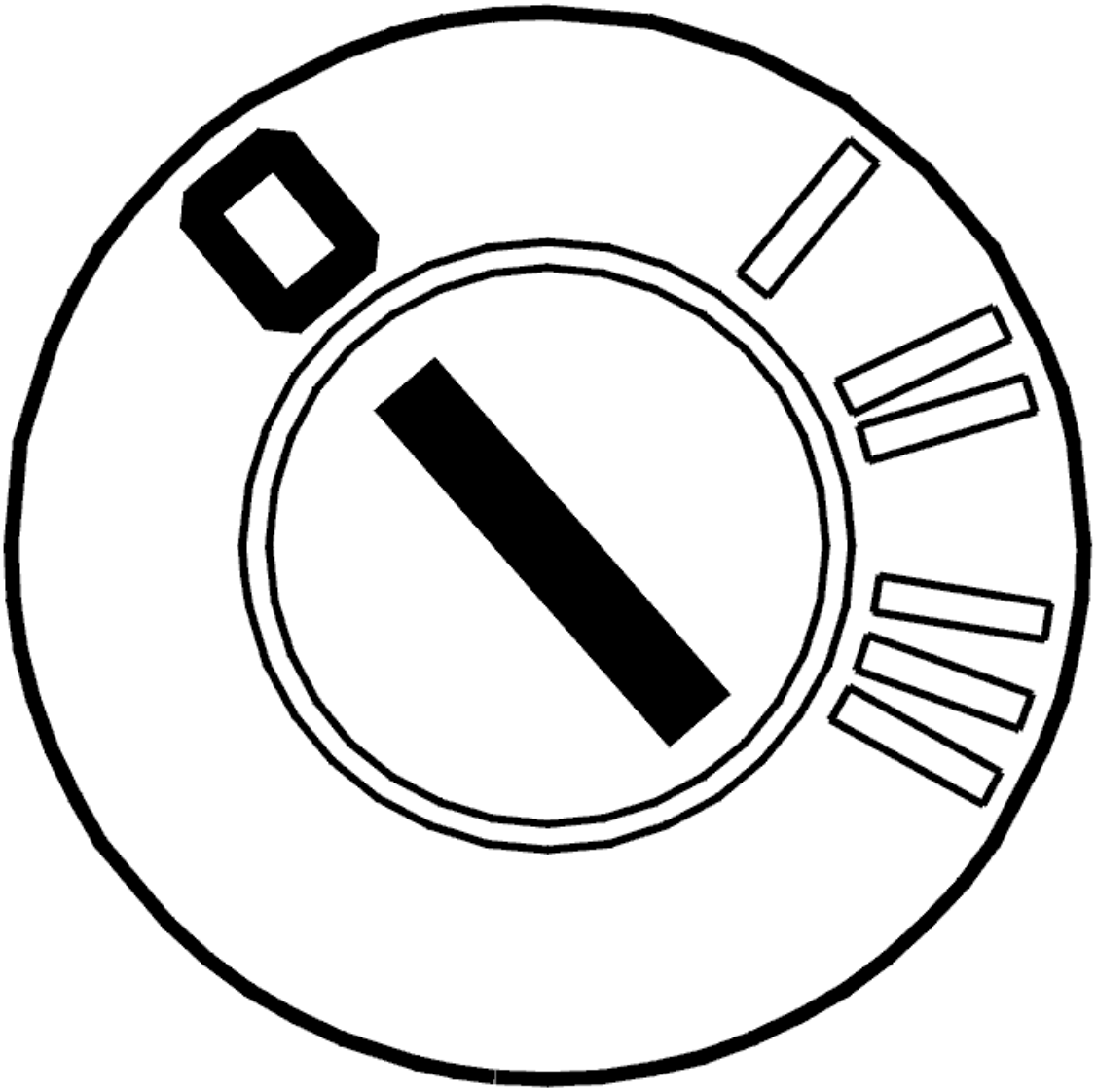

Fig. 46: Identifying Ignition OFF
Courtesy of VOLVO CARS CORPORATION

- Ignition off.

  Check the signal cable between central electronic module #4C and front right seat heater (9/12) connector #2 for a short-circuit to ground according to **SHORT-CIRCUIT TO SUPPLY VOLTAGE, INTERMITTENT FAULTS** .

  Remedy as necessary.

  Other information:

  - For -2004, see: **CENTRAL ELECTRONIC MODULE (CEM), REPLACING** .
  - For 2005-, see: **CENTRAL ELECTRONIC MODULE (CEM), REPLACING** .

- To connect the breakout box, see **CONNECTING THE BREAKOUT BOX** .
- -2004: **SIGNAL SPECIFICATION**
- 2005-: **SIGNAL SPECIFICATION**

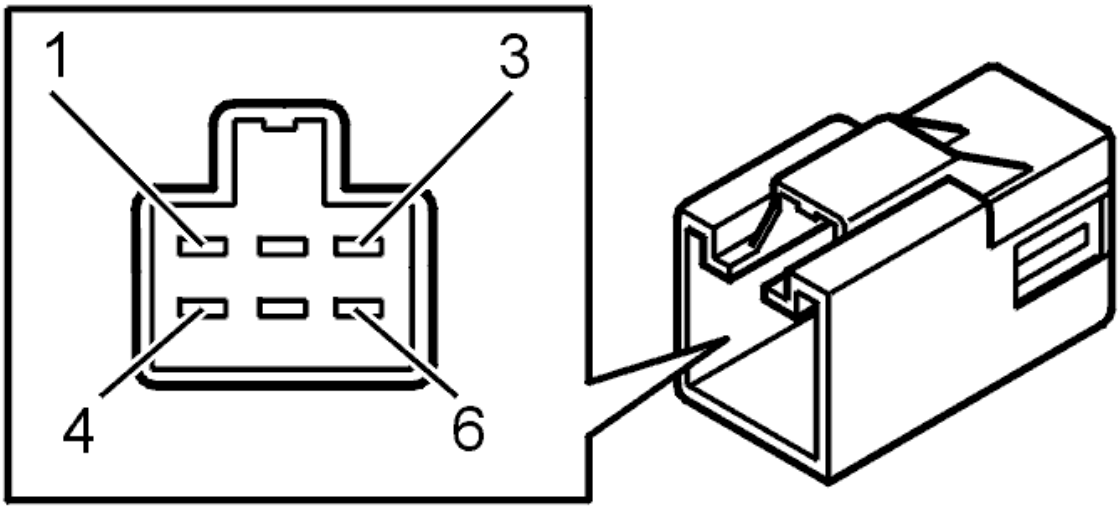

Fig. 47: Identifying Connector Terminals
Courtesy of VOLVO CARS CORPORATION

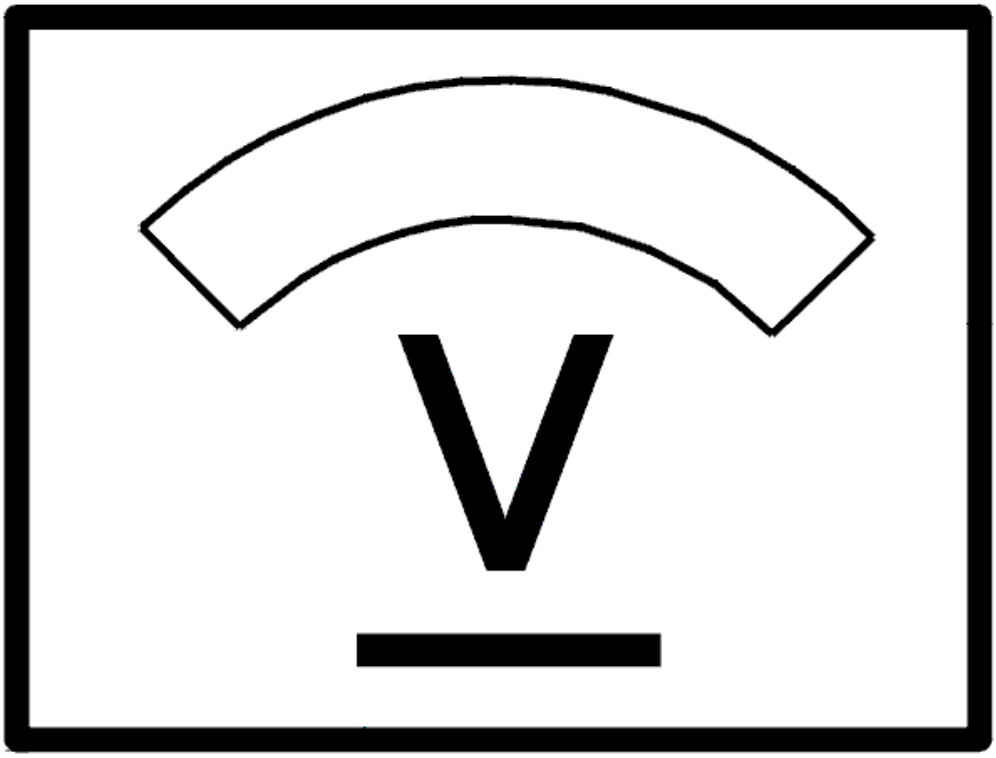

Fig. 48: Identifying Voltage Display
Courtesy of VOLVO CARS CORPORATION

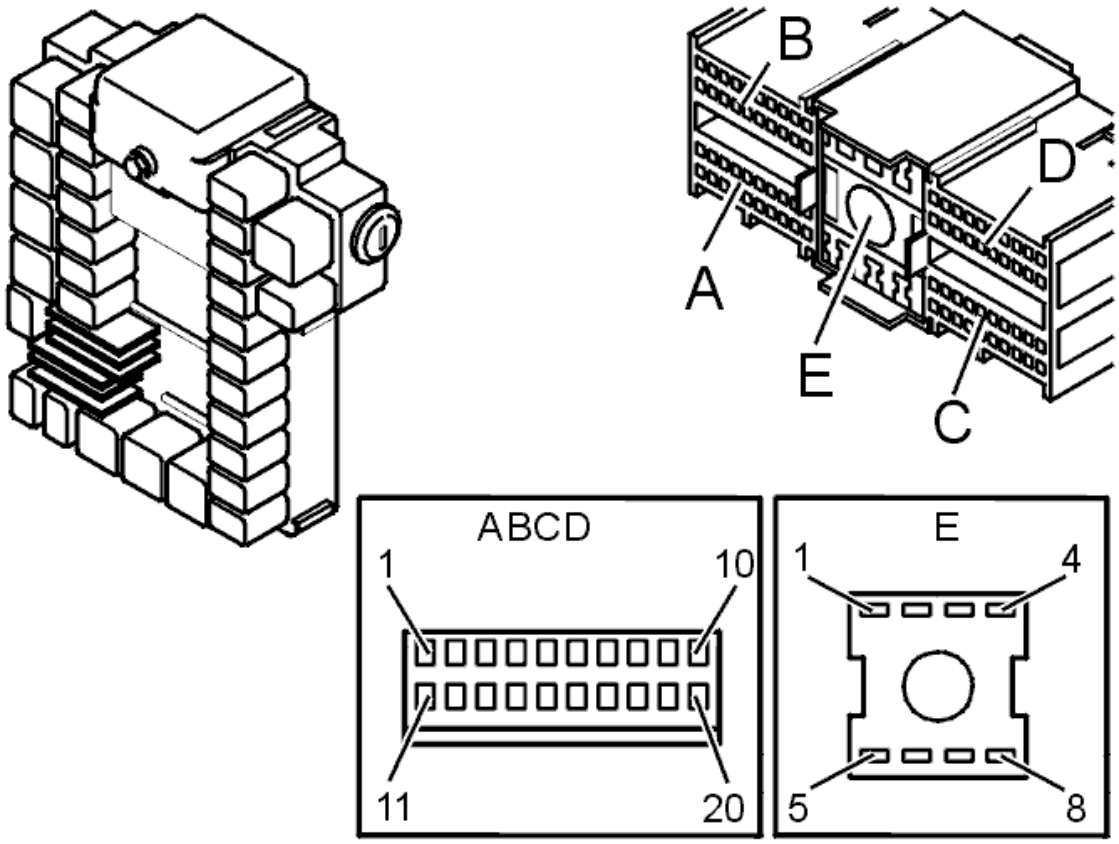

Fig. 49: Ground Terminals
Courtesy of VOLVO CARS CORPORATION

- **Continue**

  Refer to **INFORMATION**

INFORMATION

FAULT-TRACING INFORMATION

If the fault is intermittent, do not verify fault-tracing if the fault does not recur.

It is possible to view the information again, or leave fault-tracing for this diagnostic trouble code (DTC).

CEM-5B08: RIGHT SEAT HEATER. SIGNAL TOO HIGH. PERMANENT FAULT (2003-2004)

DIAGNOSTIC TROUBLE CODE (DTC) INFORMATION

see **DIAGNOSTIC TROUBLE CODE (DTC) INFORMATION**

SIGNAL TOO HIGH. PERMANENT FAULT

CHECKING THE COMPONENT

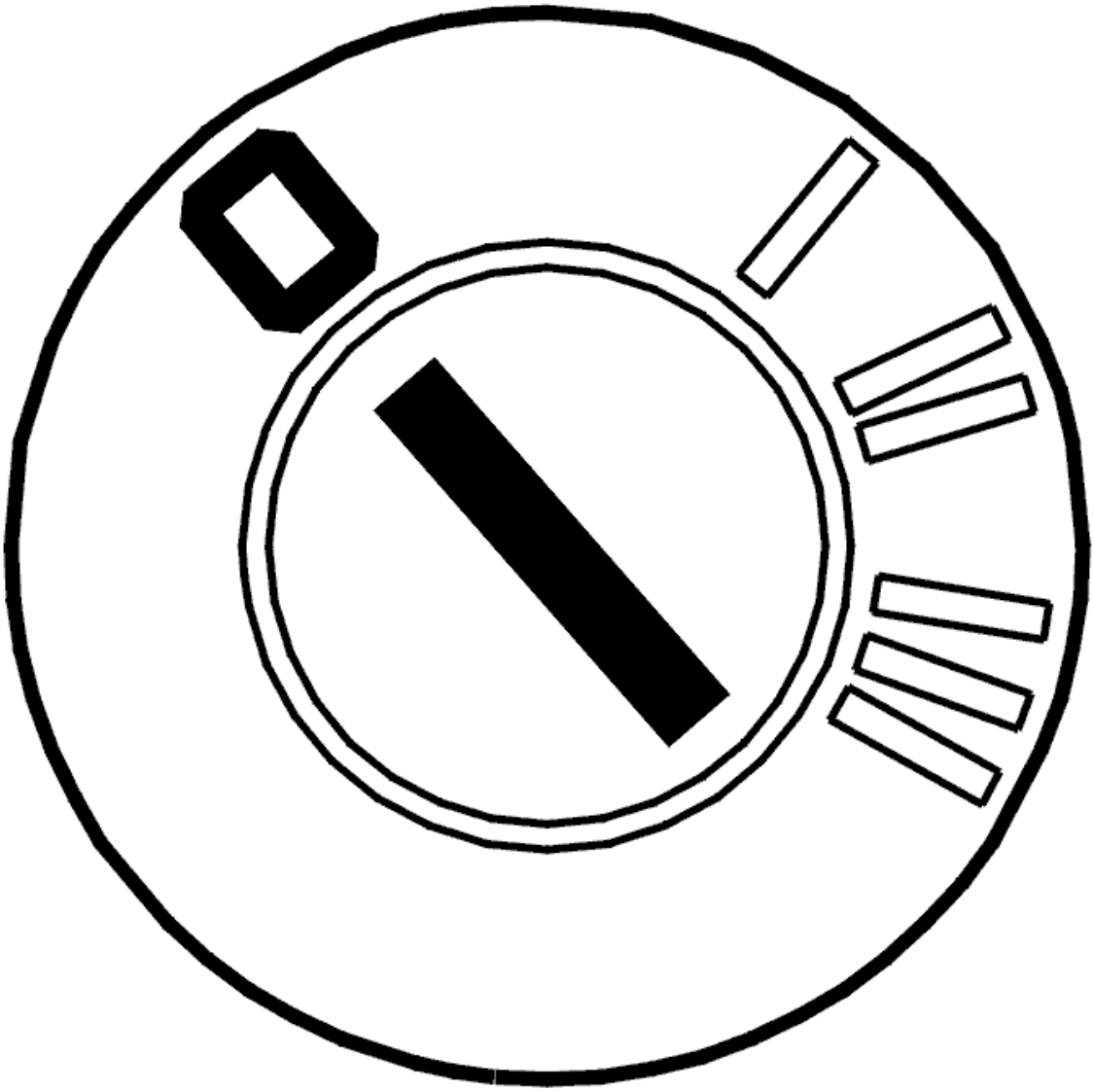

Fig. 50: Identifying Ignition OFF
Courtesy of VOLVO CARS CORPORATION

- Ignition off.

  Disconnect left seat heater 9/12.

  Check the left seat heater module and connector. Check for oxidation.

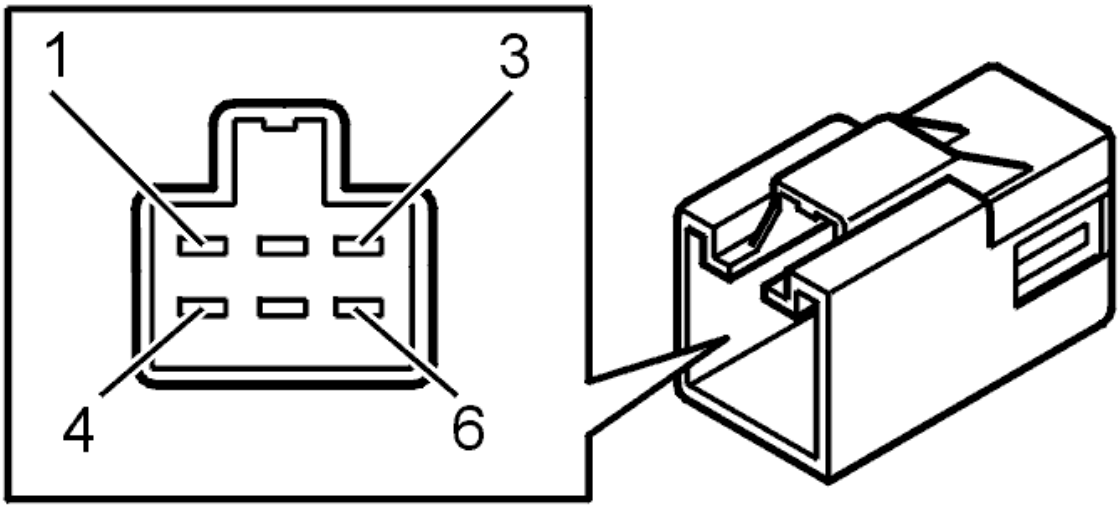

Fig. 51: Identifying Connector Terminals
Courtesy of VOLVO CARS CORPORATION

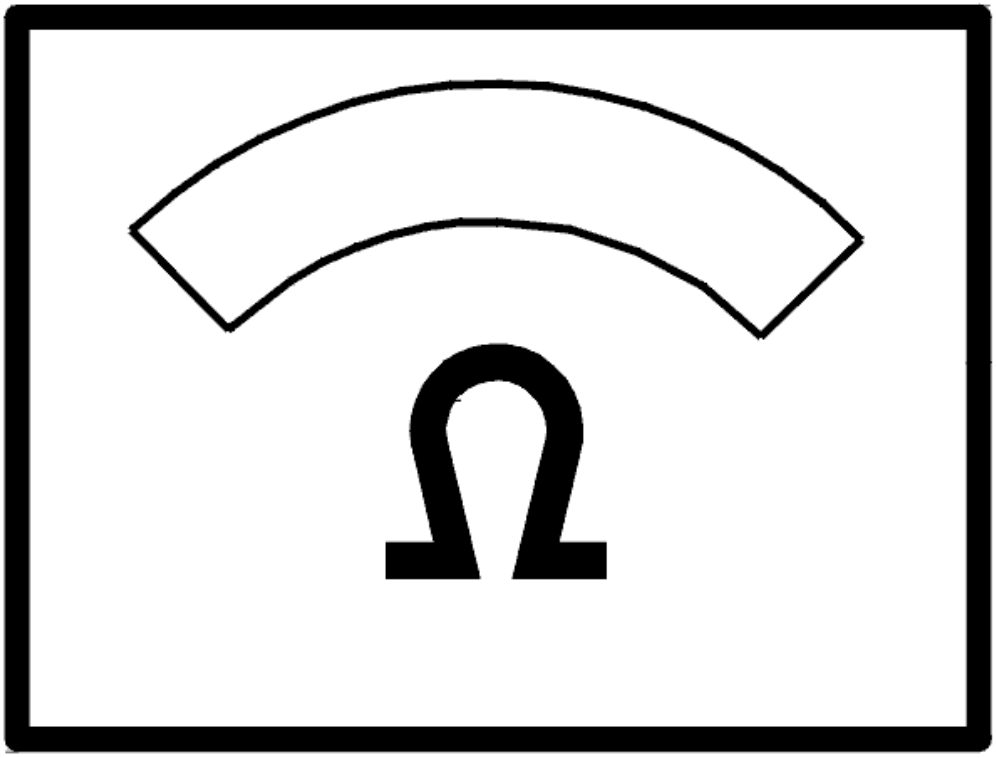

Fig. 52: Identifying Ohm Meter
Courtesy of VOLVO CARS CORPORATION

Was a problem found?

- **YES**

  Refer to **VERIFICATION**

- **NO**

  Refer to **CHECKING THE CABLE**

CHECKING THE CABLE

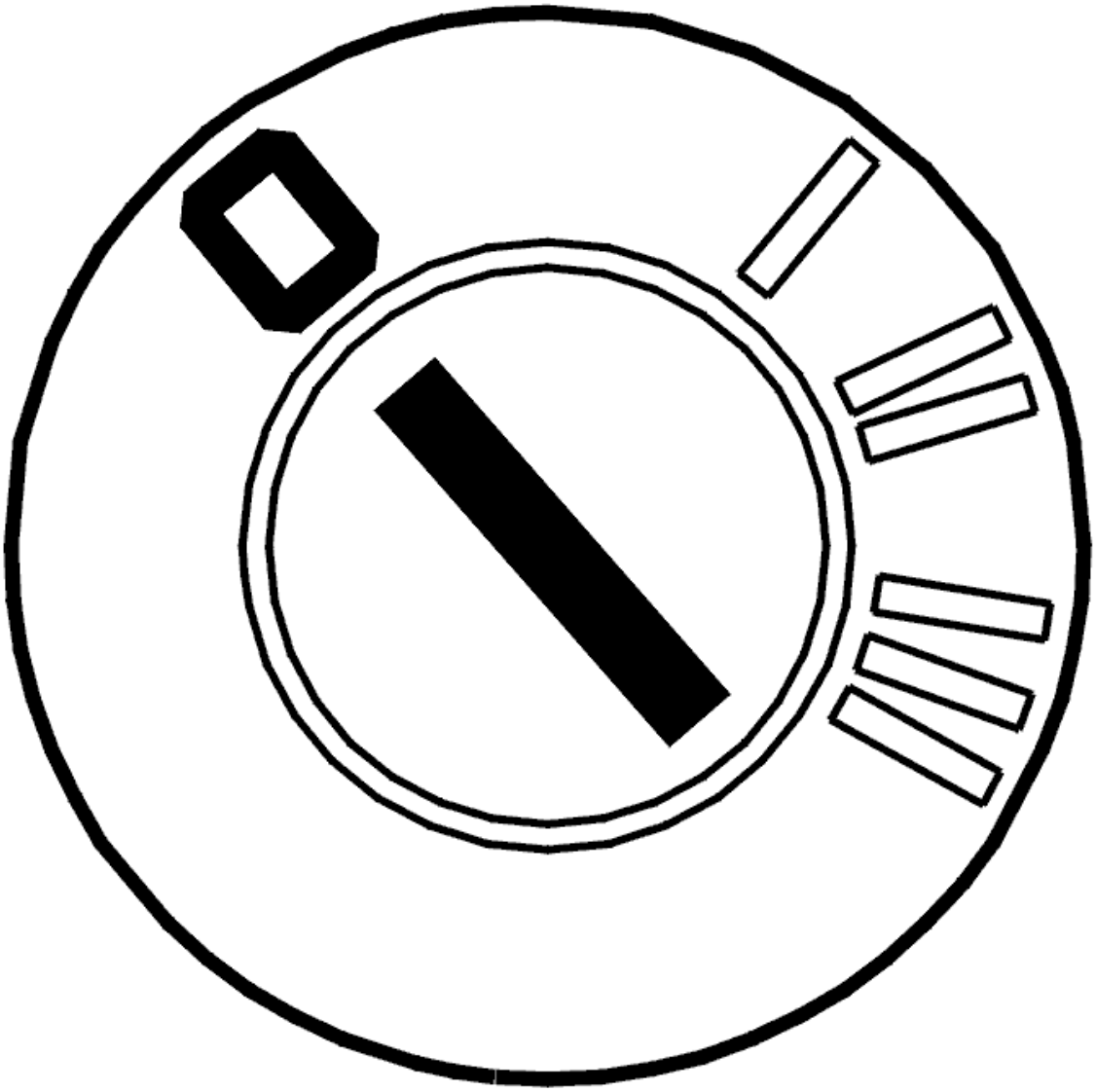

Fig. 53: Identifying Ignition OFF
Courtesy of VOLVO CARS CORPORATION

- Ignition off
- Disconnect the connector from the central electronic module (CEM)
- Disconnect connector (9/12) from the front right seat heater.

  Check the signal cable between central electronic module (CEM) terminal #4C and front right seat heater (9/12) connector terminal #2. Check for a short-circuit to supply voltage.

  Remedy as necessary.

  Other information:

  - For -2004, see: **CENTRAL ELECTRONIC MODULE (CEM), REPLACING** .

- For 2005-, see: **CENTRAL ELECTRONIC MODULE (CEM), REPLACING** .
- To connect the breakout box, see **CONNECTING THE BREAKOUT BOX**
- -2004: **SIGNAL SPECIFICATION**
- 2005-: **SIGNAL SPECIFICATION**
- see **CHECKING WIRING AND TERMINALS** .

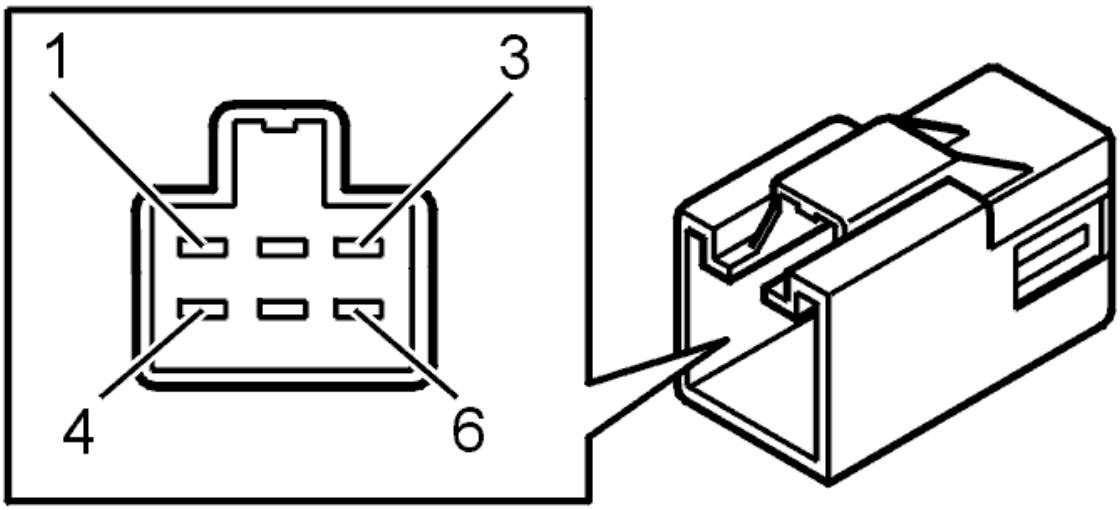

Fig. 54: Identifying Connector Terminals
Courtesy of VOLVO CARS CORPORATION

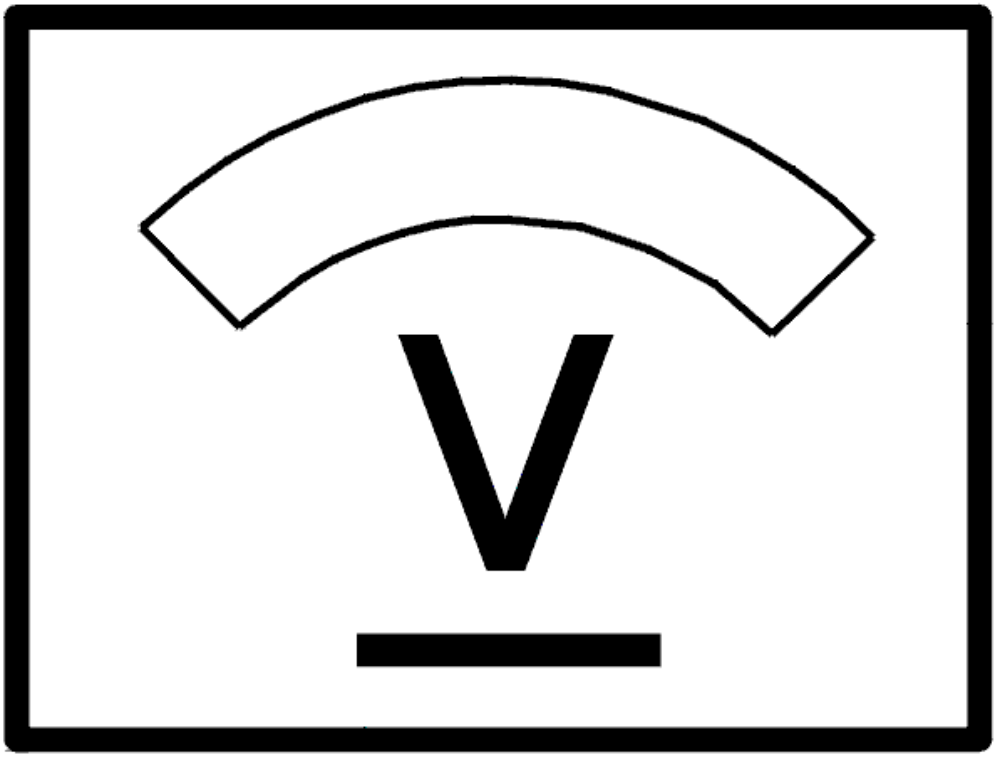

Fig. 55: Identifying Voltage Display
Courtesy of VOLVO CARS CORPORATION

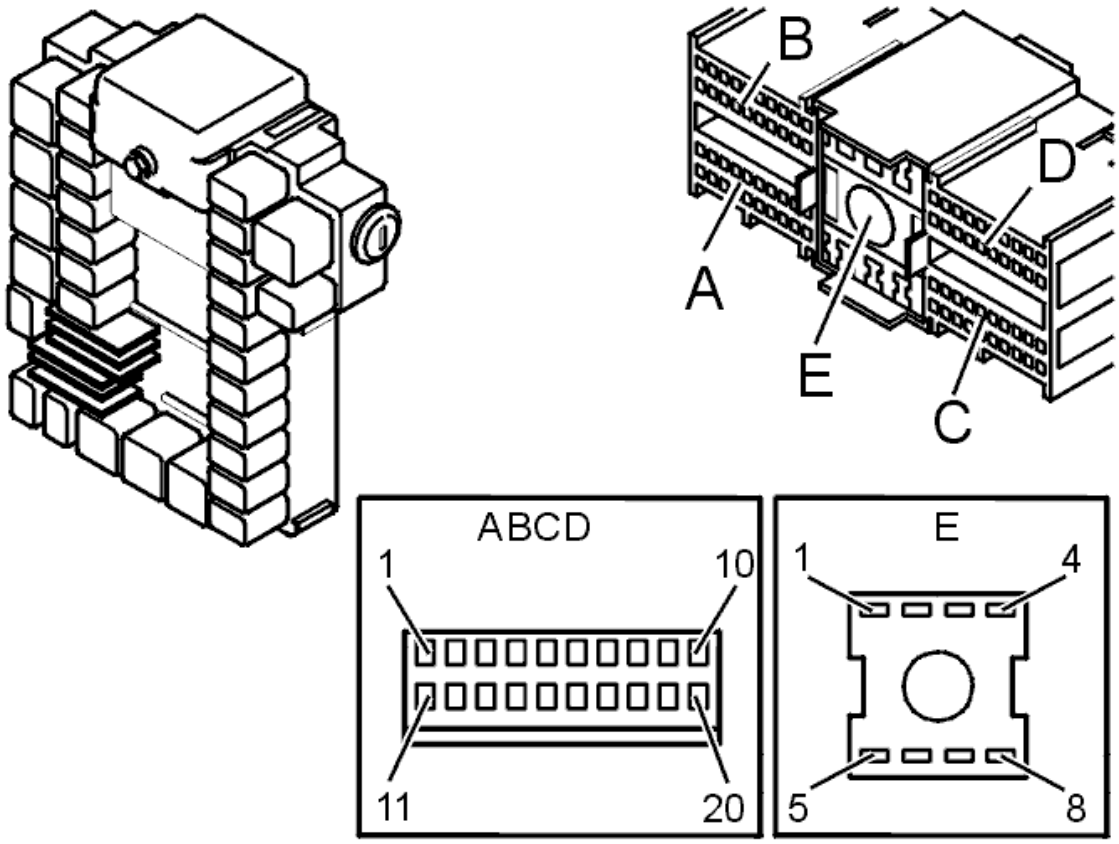

Fig. 56: Ground Terminals
Courtesy of VOLVO CARS CORPORATION

Is the circuit OK?

- **YES**

  Refer to **REPLACING THE COMPONENT**

- **NO**

  Refer to **VERIFICATION**

REPLACING THE COMPONENT

see **CONTROL MODULE HEATER PAD, REPLACING**

- **Continue**

  Refer to **VERIFICATION**

VERIFICATION

VERIFICATION

HINT: After the repair it is necessary to check that the fault has been rectified.

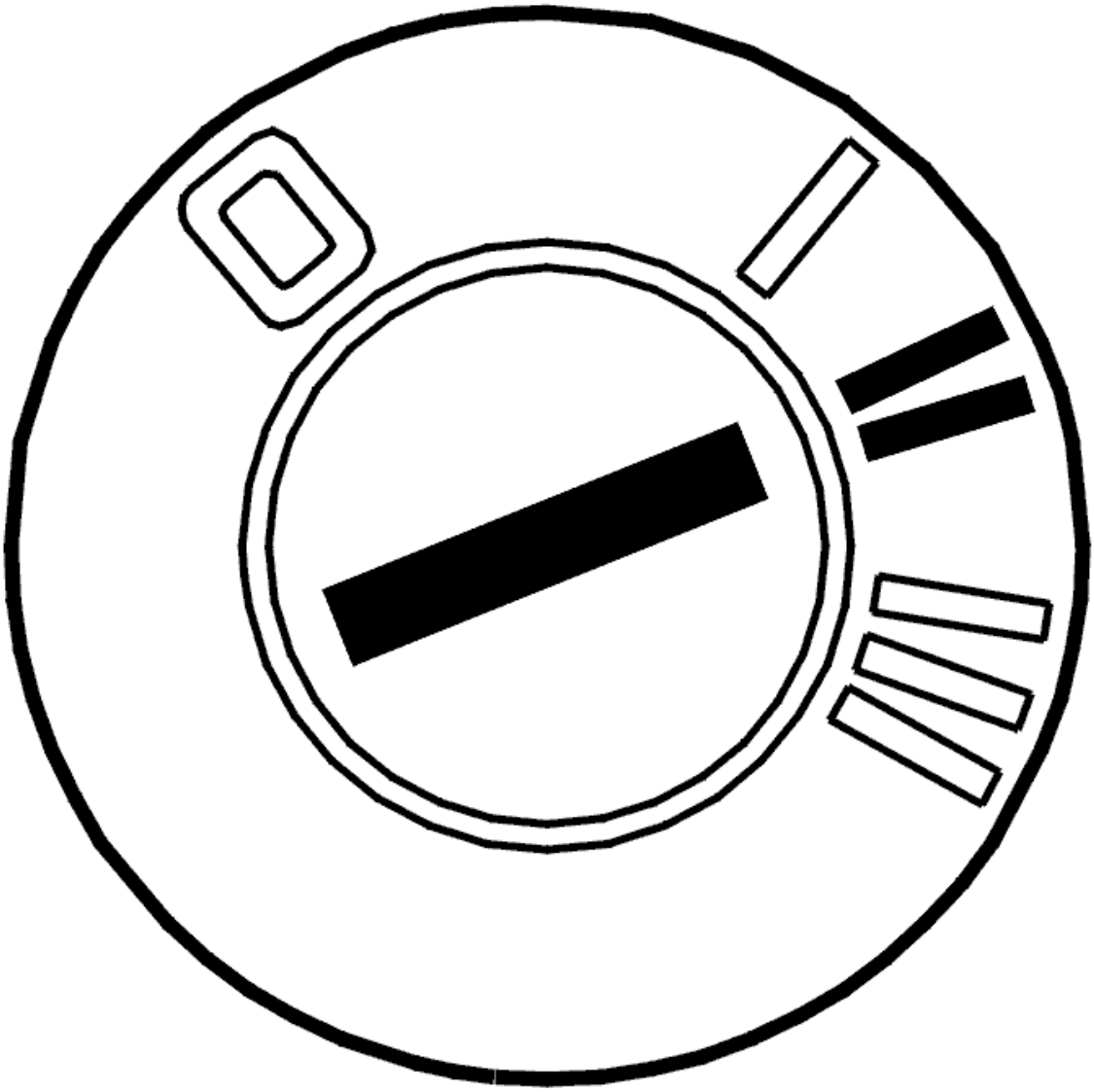

Fig. 57: Identifying Ignition ON
Courtesy of VOLVO CARS CORPORATION

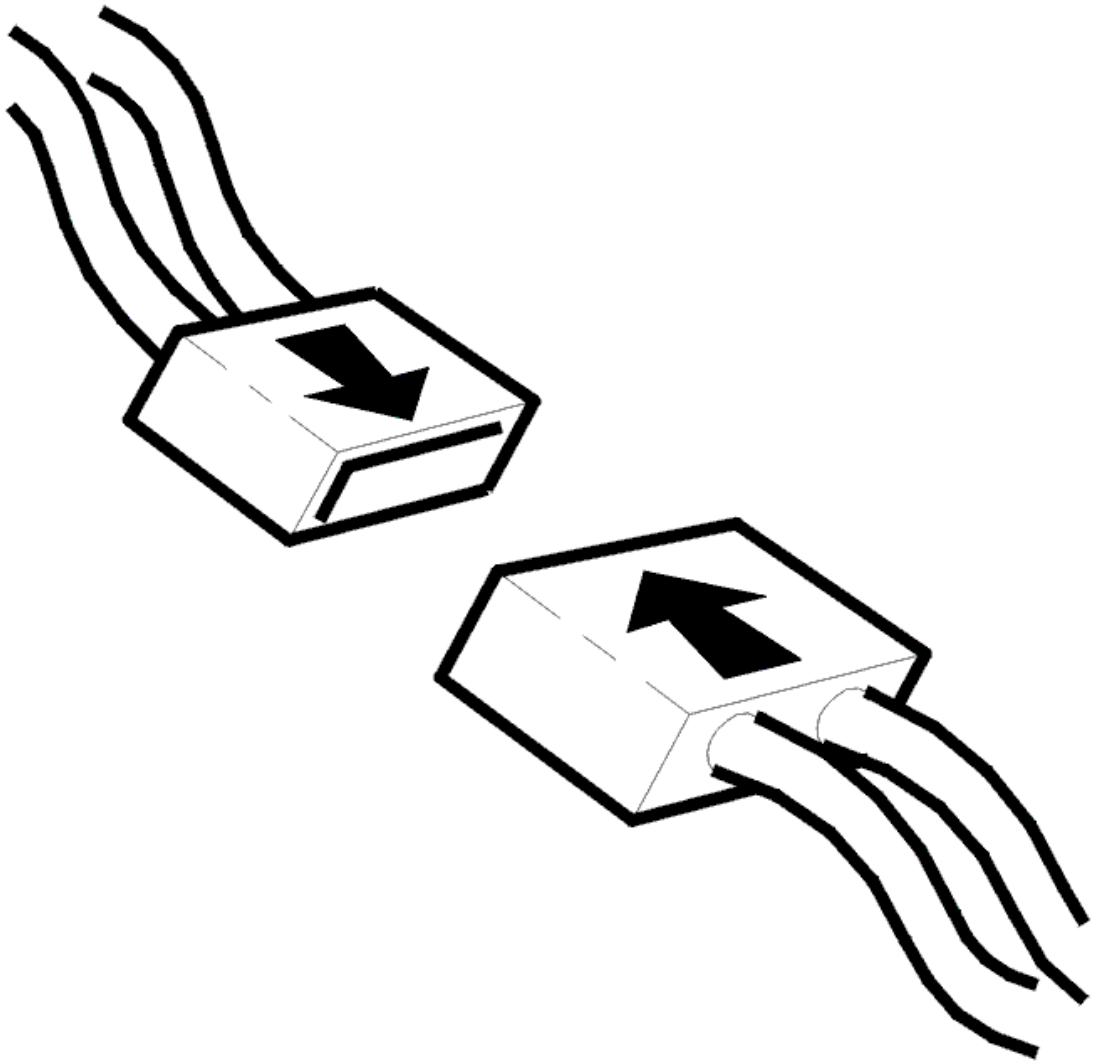

Fig. 58: Connecting Connector
Courtesy of VOLVO CARS CORPORATION

- Ignition off.
- Connect the connectors, install the components, etc.
- Ignition on.

Check that diagnostic trouble code status changes from permanent to intermittent.

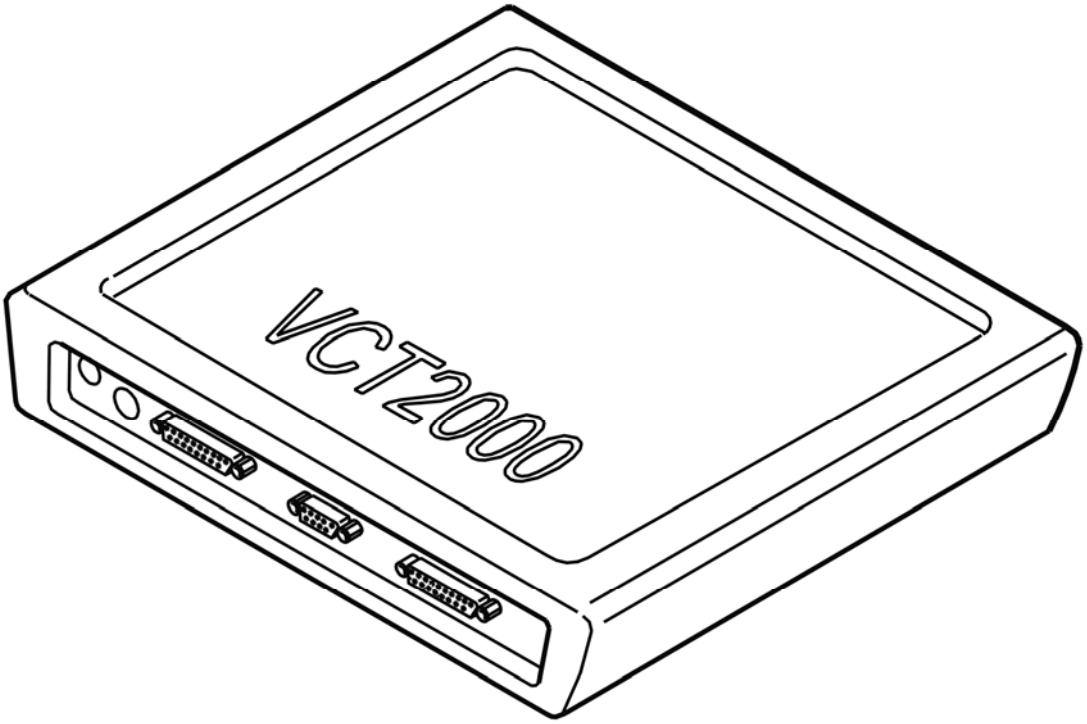

Fig. 59: Identifying VCT2000 Diagnostic Tool Symbol In VIDA
Courtesy of VOLVO CARS CORPORATION

Is the diagnostic trouble code status intermittent?

- **YES**

  VERIFIED: Troubleshooting has been completed.

- **NO**

  Refer to **INFORMATION**

INFORMATION

FAULT-TRACING INFORMATION

The fault should have been detected and remedied. As this is not the case fault-tracing has failed.

Exit fault-tracing for this diagnostic trouble code (DTC) or make another attempt.

CEM-5B09: COMMUNICATION WITH THE SEAT HEATER MODULE. SIGNAL MISSING. INTERMITTENT FAULT (2003-2004)

DIAGNOSTIC TROUBLE CODE (DTC) INFORMATION

Condition

Diagnostic trouble code (DTC) CEM-5B09 is stored if the central electronic module is unable to establish communication with the left seat heater module.

Substitute Value

None.

Possible Source

- Defective control module in the seat heater in the left-hand seat.

Fault symptom[s]

- The left front seat heating does not function.

SIGNAL MISSING. INTERMITTENT FAULT

REPLACING THE COMPONENT

If there is an internal fault in the control module, it must be replaced.

see **CONTROL MODULE HEATER PAD, REPLACING**

- **Continue**

  Refer to **INFORMATION**

INFORMATION

FAULT-TRACING INFORMATION

If the fault is intermittent, do not verify fault-tracing if the fault does not recur.

It is possible to view the information again, or leave fault-tracing for this diagnostic trouble code (DTC).

CEM-5B09: COMMUNICATION WITH THE SEAT HEATER MODULE. SIGNAL MISSING. PERMANENT FAULT (2003-2004)

DIAGNOSTIC TROUBLE CODE (DTC) INFORMATION

see **DIAGNOSTIC TROUBLE CODE (DTC) INFORMATION**

SIGNAL MISSING. PERMANENT FAULT

CHECKING THE COMPONENT

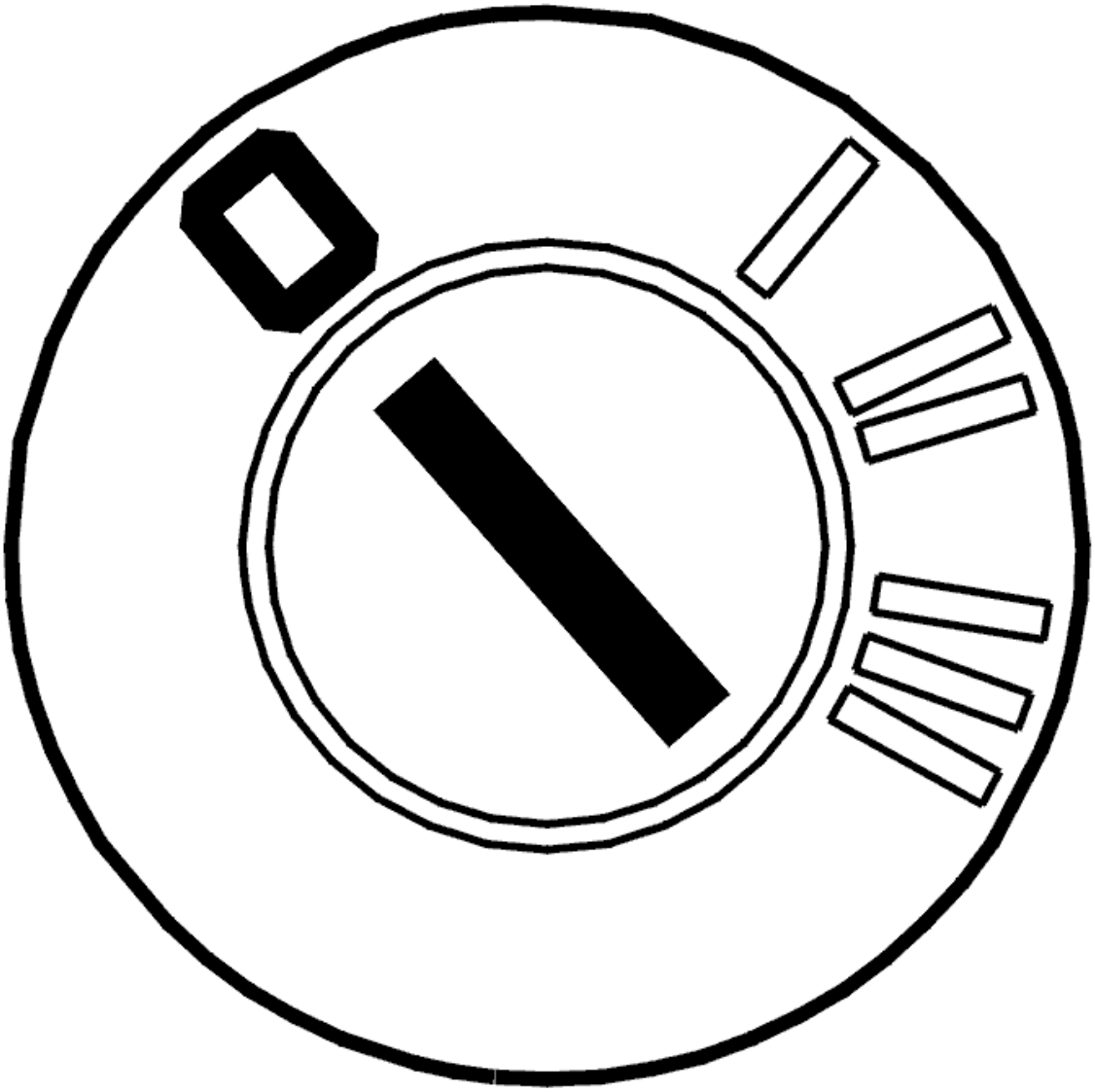

Fig. 60: Identifying Ignition OFF
Courtesy of VOLVO CARS CORPORATION

- Ignition off.

  Disconnect left seat heater 9/12.

  Check the left seat heater module and connector. Check for oxidation.

  Other information:

  - see **CHECKING WIRING AND TERMINALS** .

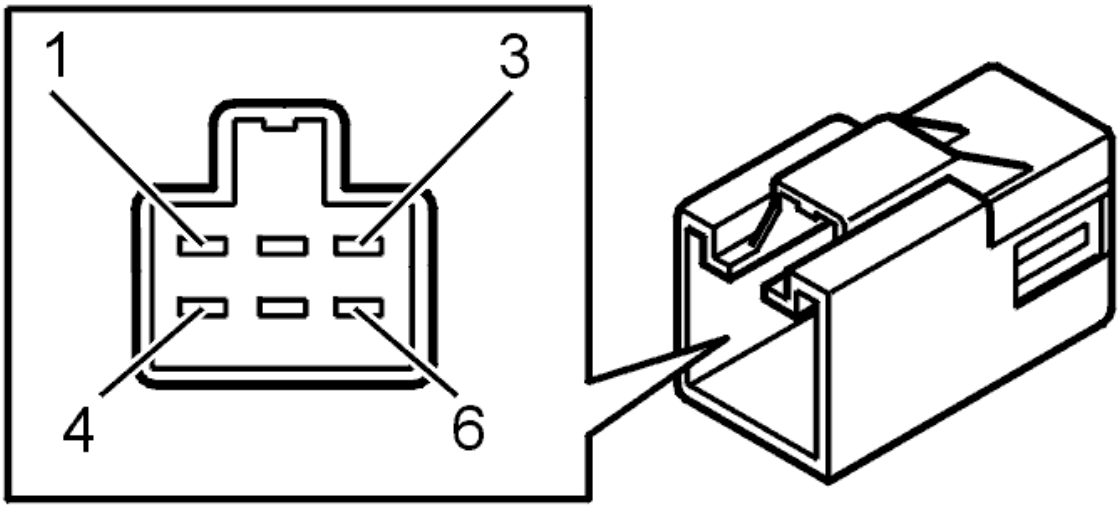

Fig. 61: Identifying Connector Terminals
Courtesy of VOLVO CARS CORPORATION

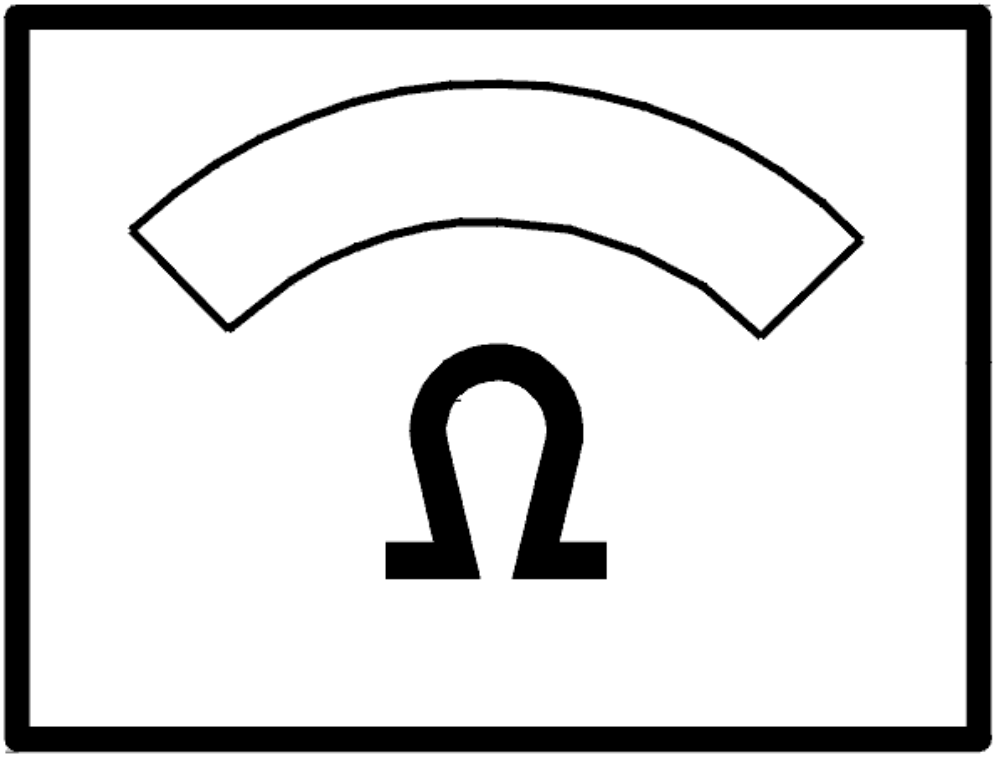

Fig. 62: Identifying Ohm Meter
Courtesy of VOLVO CARS CORPORATION

Was a fault detected?

- **YES**

  Refer to **VERIFICATION**

- **NO**

  Refer to **CHECKING THE CABLE**

CHECKING THE CABLE

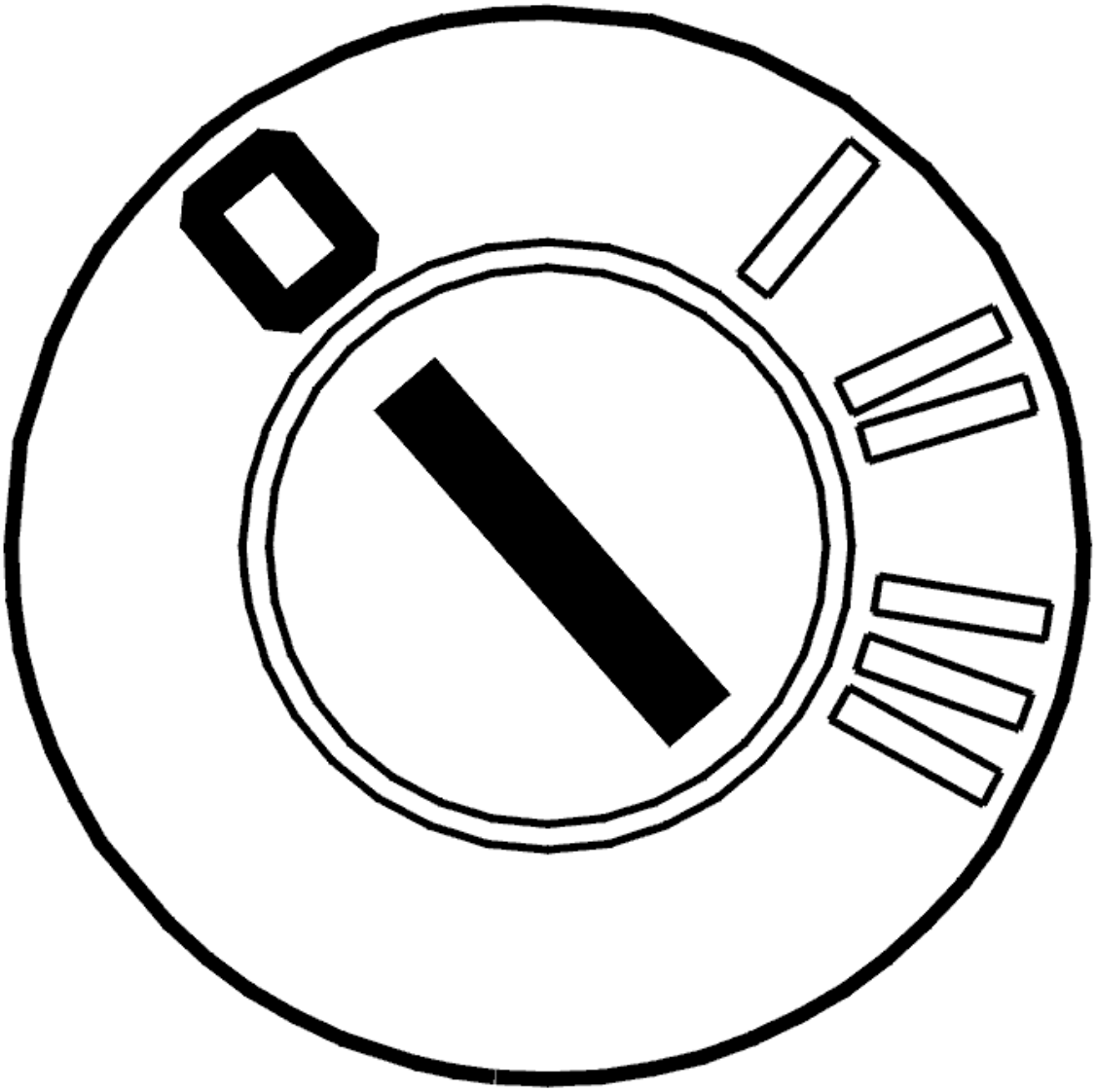

Fig. 63: Identifying Ignition OFF
Courtesy of VOLVO CARS CORPORATION

- Ignition off
- Disconnect the connector from the central electronic module (CEM)
- Disconnect connector (9/12) from the front left seat heater.

  Check the signal cable between central electronic module (CEM) terminal #11B and front left seat heater (9/12) connector terminal #2. Check for a short-circuit to ground. Check for an open-circuit.

  Remedy as necessary.

  Other information:

  - For -2004, see: **CENTRAL ELECTRONIC MODULE (CEM), REPLACING** .

- For 2005-, see: **CENTRAL ELECTRONIC MODULE (CEM), REPLACING** .
- To connect the breakout box, see **CONNECTING THE BREAKOUT BOX**
- -2004: **SIGNAL SPECIFICATION**
- 2005-: **SIGNAL SPECIFICATION**
- see **CHECKING WIRING AND TERMINALS** .

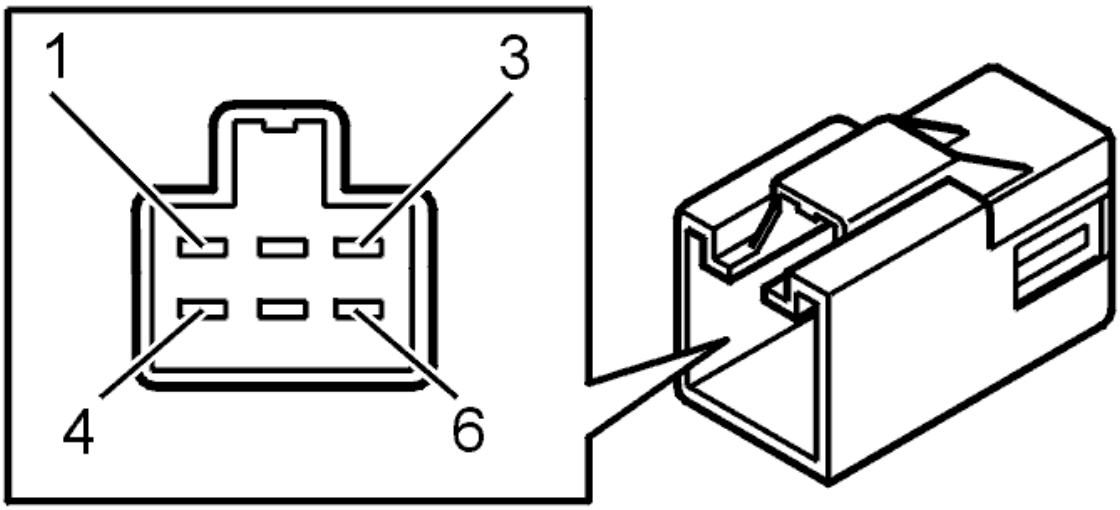

Fig. 64: Identifying Connector Terminals
Courtesy of VOLVO CARS CORPORATION

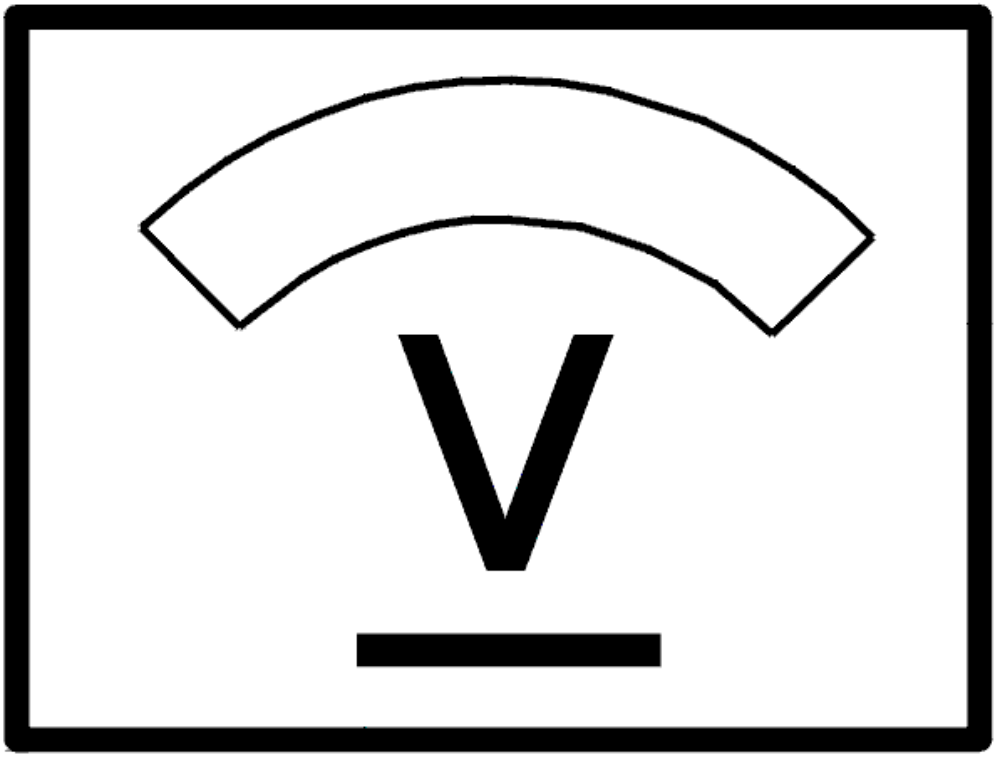

Fig. 65: Identifying Voltage Display
Courtesy of VOLVO CARS CORPORATION

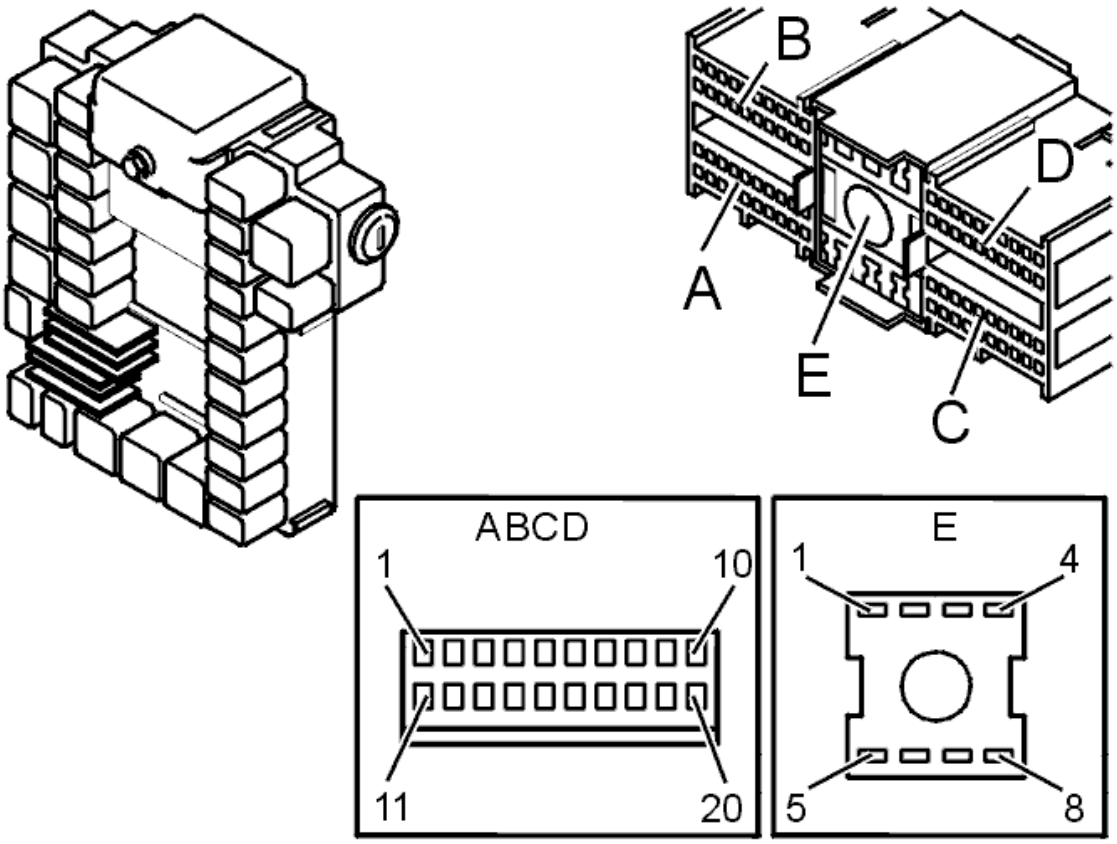

Fig. 66: Ground Terminals
Courtesy of VOLVO CARS CORPORATION

Is the cable OK?

- **YES**

  Refer to **VERIFICATION**

- **NO**

  Refer to **REPLACING THE COMPONENT**

REPLACING THE COMPONENT

Replace the seat heater control module.

- See **POWER SEAT MODULE (PSM), REPLACING** (-2004) or **POWER SEAT MODULE (PSM), REPLACING** (2005-).

- **Continue**

  Refer to **VERIFICATION**

VERIFICATION

VERIFICATION

HINT: After carrying out the repair, check that the fault has been remedied.

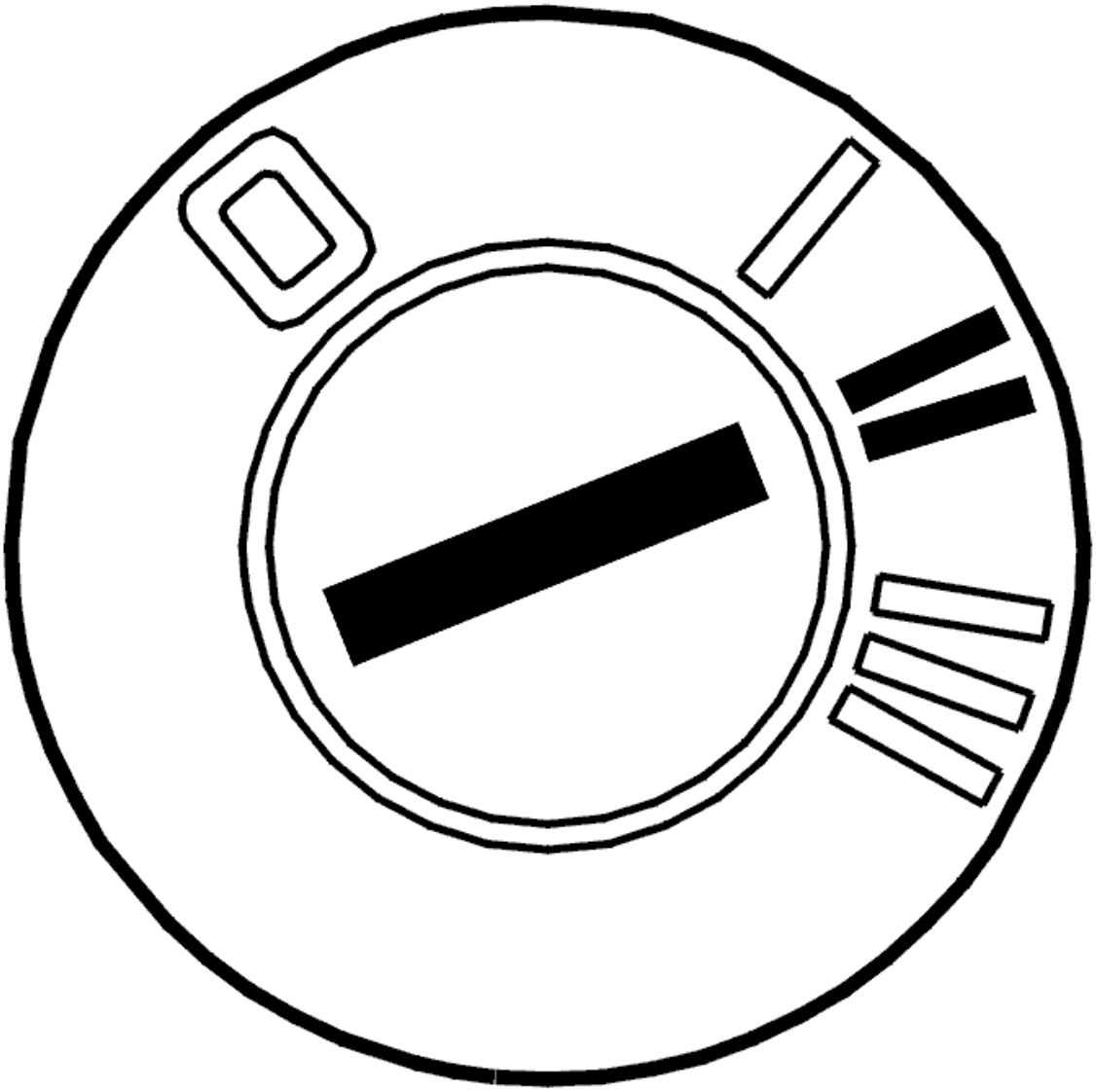

Fig. 67: Identifying Ignition ON
Courtesy of VOLVO CARS CORPORATION

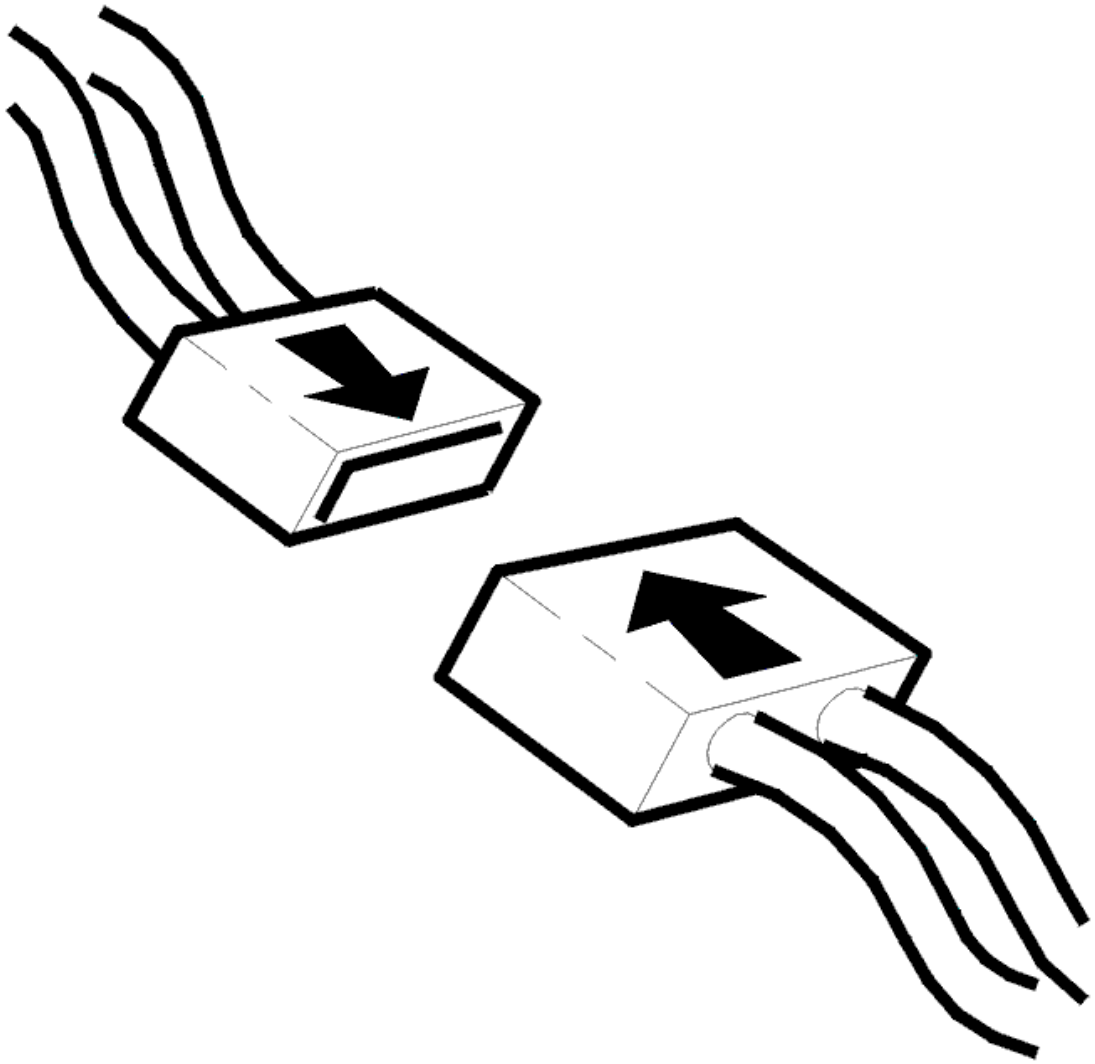

Fig. 68: Connecting Connector
Courtesy of VOLVO CARS CORPORATION

- Ignition off.
- Reinstall the connectors, components etc.
- Ignition on.

  Set the seat heating to maximum.

Was the function OK?

- **YES**

  VERIFIED: Troubleshooting has been completed.

- **NO**

  Refer to **INFORMATION**

INFORMATION

FAULT-TRACING INFORMATION

The fault should have been detected and remedied. As this is not the case fault-tracing has failed.

Exit fault-tracing for this diagnostic trouble code (DTC) or make another attempt.

CEM-5B10: COMMUNICATION WITH THE SEAT HEATER MODULE. SIGNAL MISSING. INTERMITTENT FAULT (2003-2004)

DIAGNOSTIC TROUBLE CODE (DTC) INFORMATION

Condition

Diagnostic trouble code (DTC) CEM-5B10 is stored if the central electronic module (CEM) is unable to establish communication with the right seat heater module.

Substitute Value

None.

Possible Source

- Defective control module in the seat heater in the right-hand seat.

Fault symptom[s]

- The heating in the front right seat does not operate.

SIGNAL MISSING. INTERMITTENT FAULT

REPLACING THE COMPONENT

If there is an internal fault in the control module, it must be replaced.

see **CONTROL MODULE HEATER PAD, REPLACING**

- **Continue**

  Refer to **INFORMATION**

INFORMATION

FAULT-TRACING INFORMATION

If the fault is intermittent, do not verify fault-tracing if the fault does not recur.

It is possible to view the information again, or leave fault-tracing for this diagnostic trouble code (DTC).

CEM-5B10: COMMUNICATION WITH THE SEAT HEATER MODULE. SIGNAL MISSING. PERMANENT FAULT (2003-2004)

DIAGNOSTIC TROUBLE CODE (DTC) INFORMATION

see **DIAGNOSTIC TROUBLE CODE (DTC) INFORMATION**

SIGNAL MISSING. PERMANENT FAULT

CHECKING THE COMPONENT

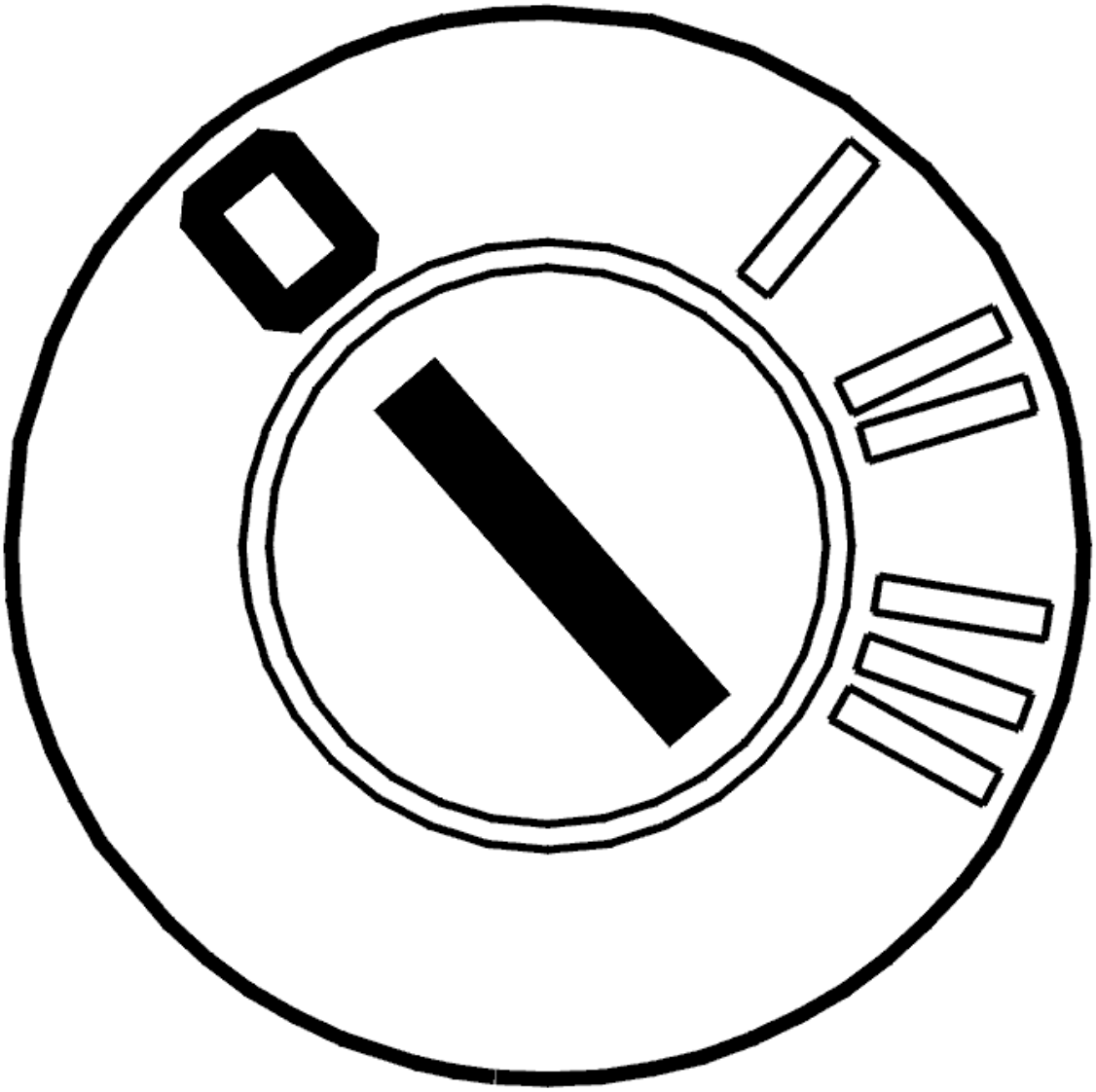

Fig. 69: Identifying Ignition OFF
Courtesy of VOLVO CARS CORPORATION

- Ignition off.

  Disconnect right seat heater 9/13.

  Check the right seat heater module and connector. Check for oxidation.

  Other information:

  - see **CHECKING WIRING AND TERMINALS** .

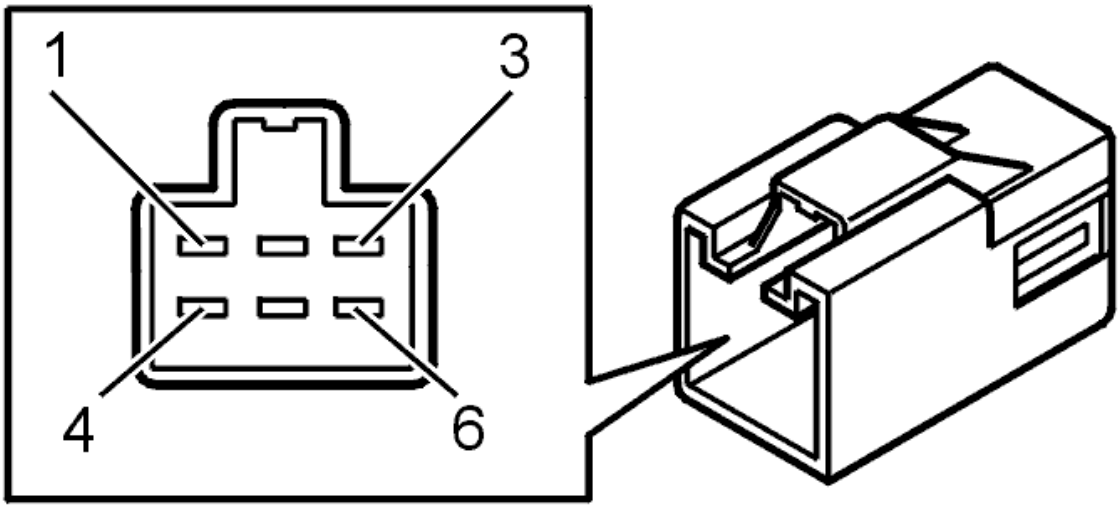

Fig. 70: Identifying Connector Terminals
Courtesy of VOLVO CARS CORPORATION

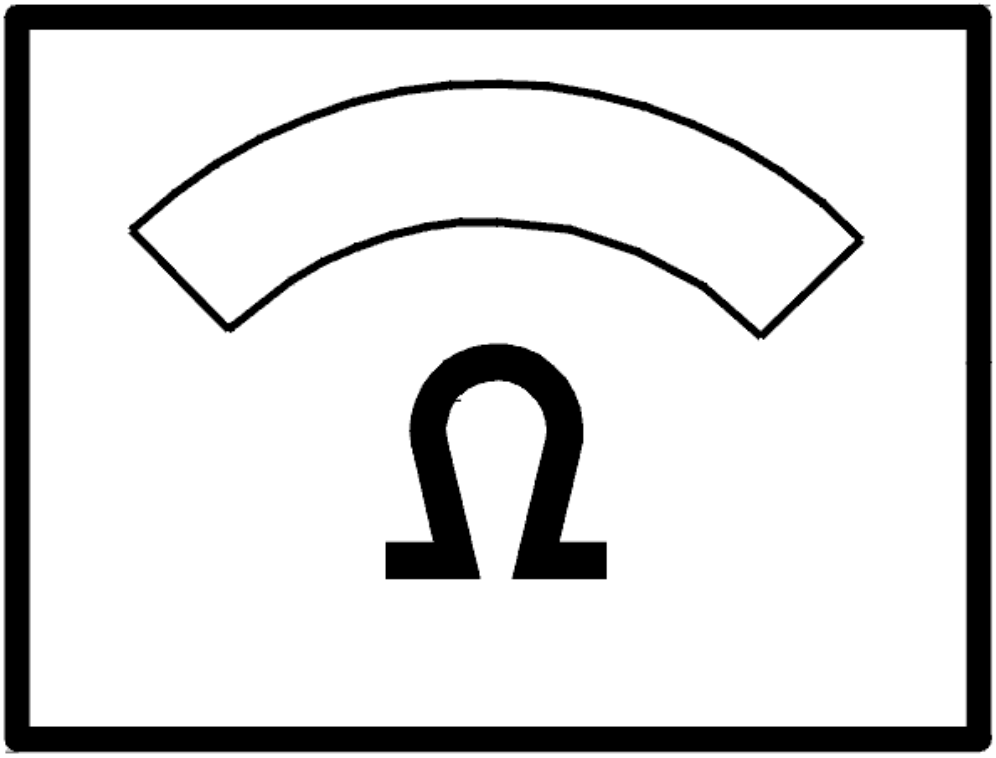

Fig. 71: Identifying Ohm Meter
Courtesy of VOLVO CARS CORPORATION

Was a fault detected?

- **YES**

  Refer to **VERIFICATION**

- **NO**

  Refer to **CHECKING THE CABLE**

CHECKING THE CABLE

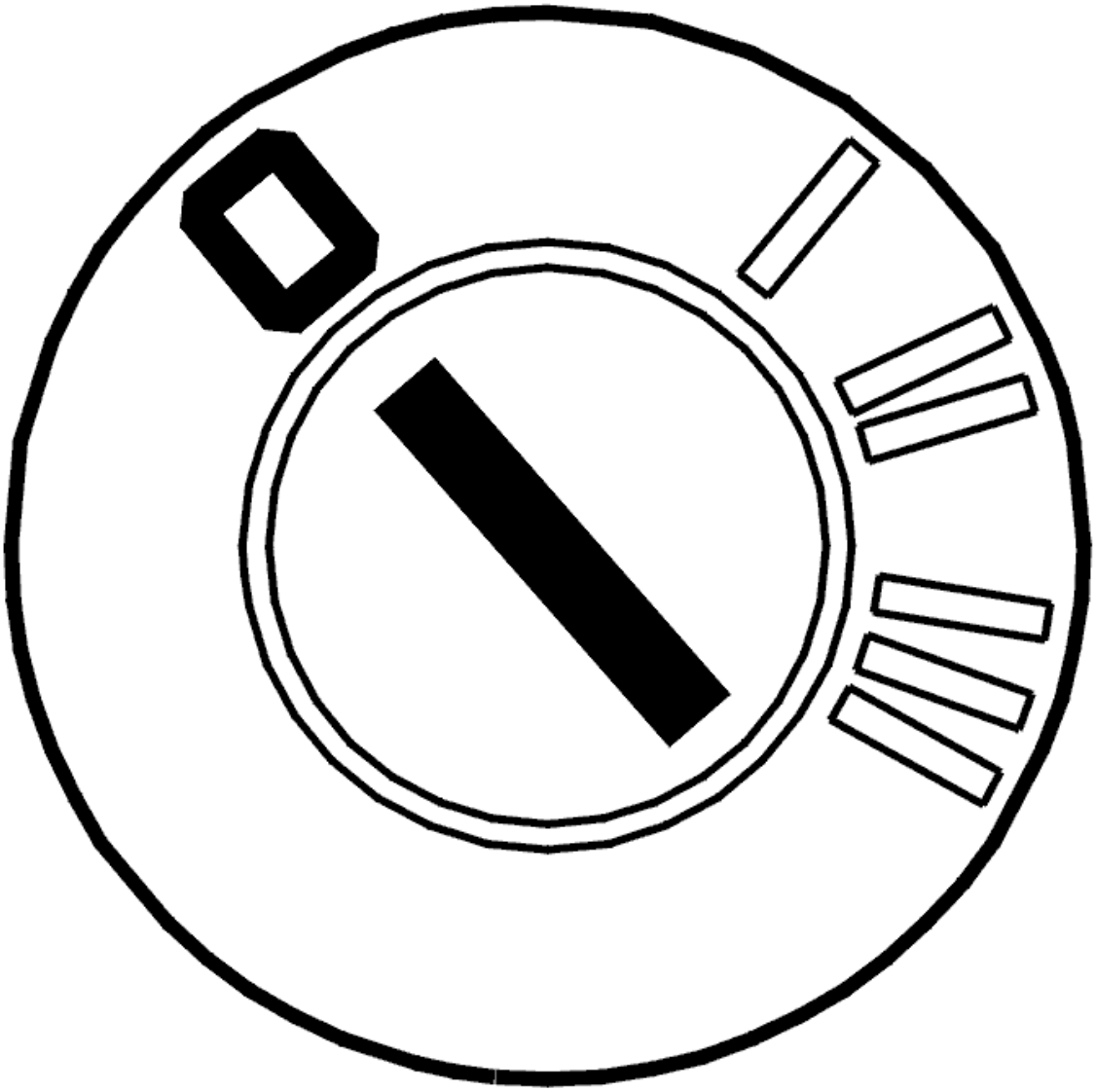

Fig. 72: Identifying Ignition OFF
Courtesy of VOLVO CARS CORPORATION

- Ignition off
- Disconnect the connector from the central electronic module (CEM)
- Disconnect connector (9/13) from the front right seat heater.

  Check the signal cable between central electronic module (CEM) terminal #4C and front right seat heater (9/13) connector terminal #2. Check for a short-circuit to ground. Check for an open-circuit.

  Remedy as necessary.

  Other information:

  - For -2004, see: **CENTRAL ELECTRONIC MODULE (CEM), REPLACING** .

- For 2005-, see: **CENTRAL ELECTRONIC MODULE (CEM), REPLACING** .
- To connect the breakout box, see **CONNECTING THE BREAKOUT BOX**
- -2004: **SIGNAL SPECIFICATION**
- 2005-: **SIGNAL SPECIFICATION**
- see **CHECKING WIRING AND TERMINALS** .

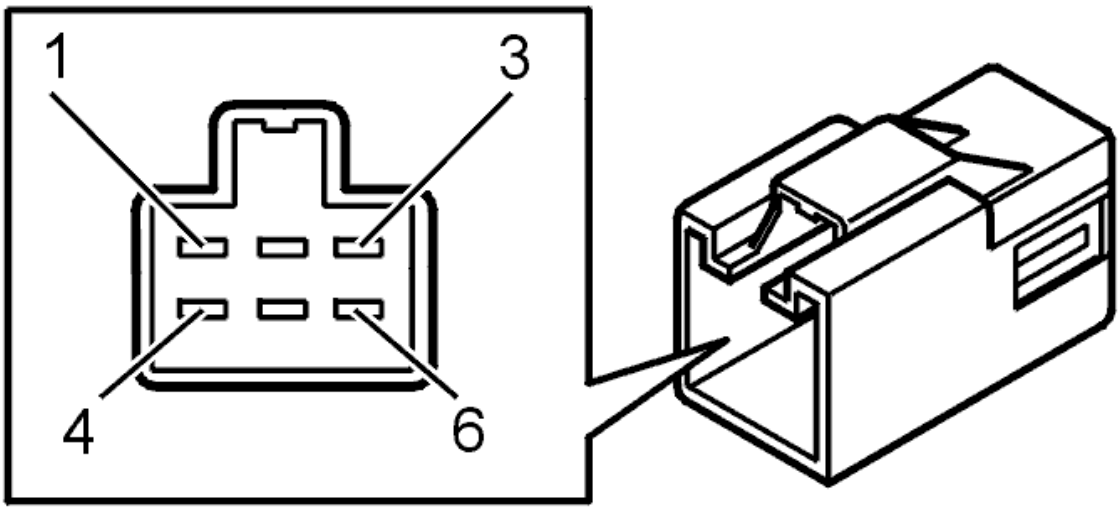

Fig. 73: Identifying Connector Terminals
Courtesy of VOLVO CARS CORPORATION

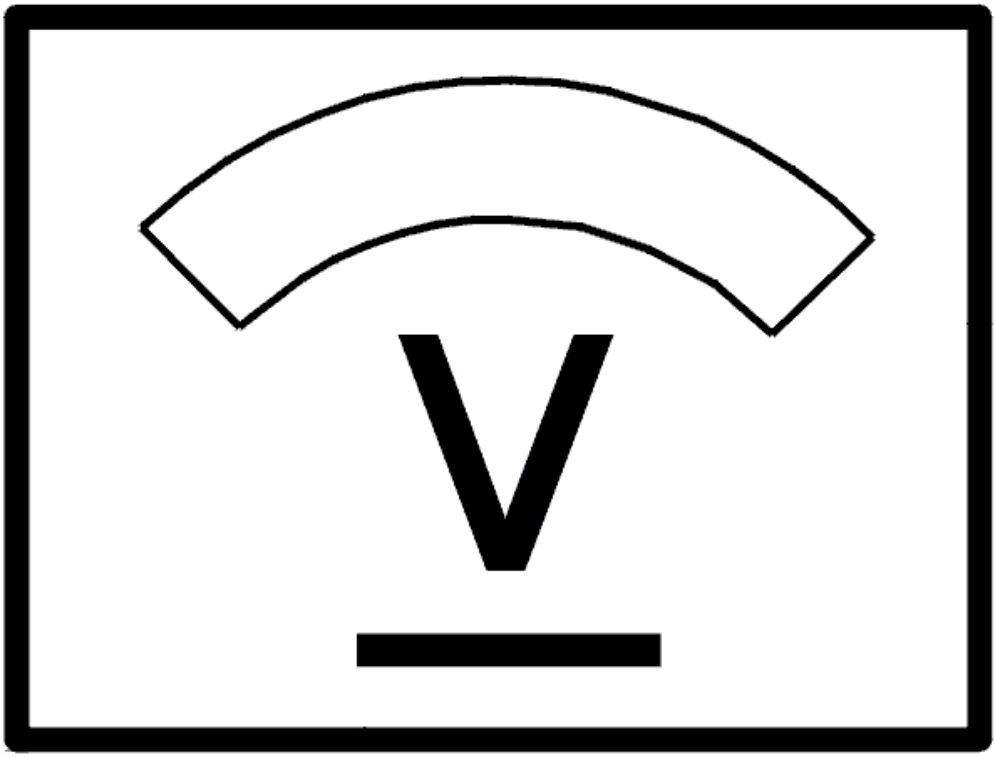

Fig. 74: Identifying Voltage Display
Courtesy of VOLVO CARS CORPORATION

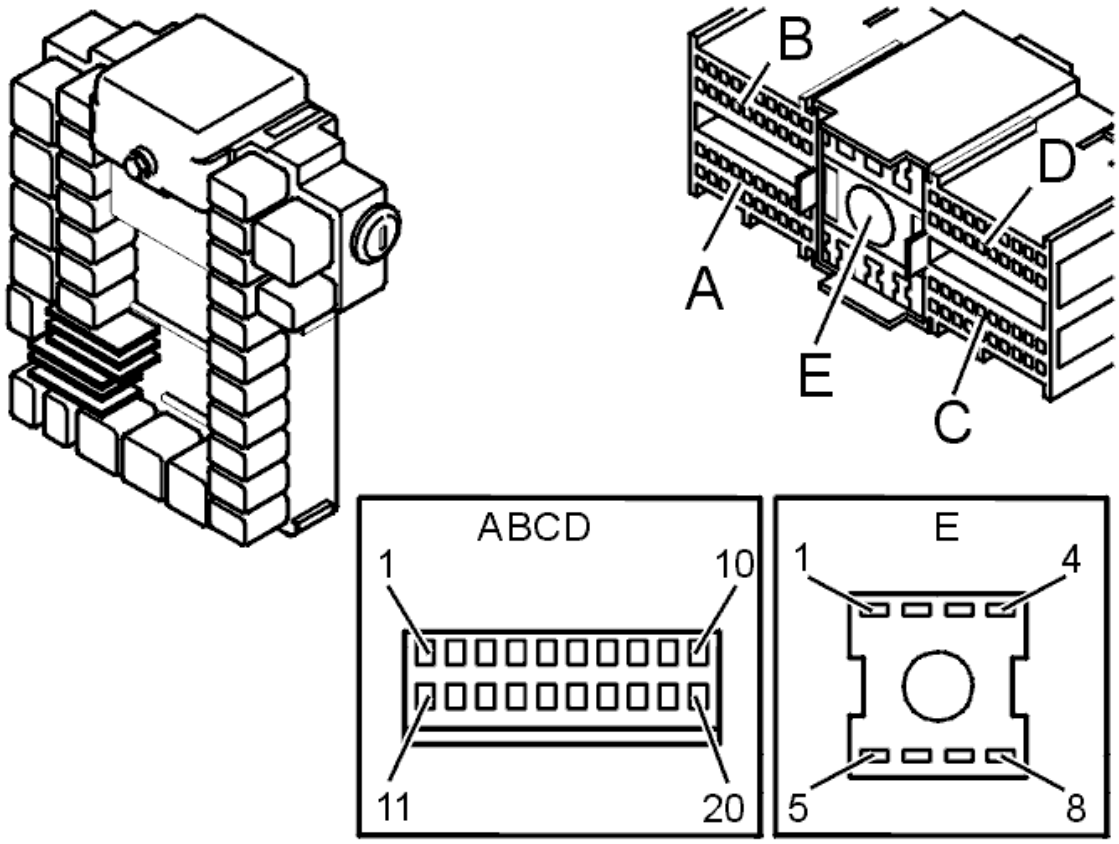

Fig. 75: Ground Terminals
Courtesy of VOLVO CARS CORPORATION

Is the cable OK?

- **YES**

  Refer to **VERIFICATION**

- **NO**

  Refer to **REPLACING THE COMPONENT**

REPLACING THE COMPONENT

Replacing the seat heater control module.

- See **POWER SEAT MODULE (PSM), REPLACING** (-2004) or **POWER SEAT MODULE (PSM), REPLACING** (2005-).

- **Continue**

  Refer to **VERIFICATION**

VERIFICATION

VERIFICATION

HINT: After carrying out the repair, check that the fault has been remedied.

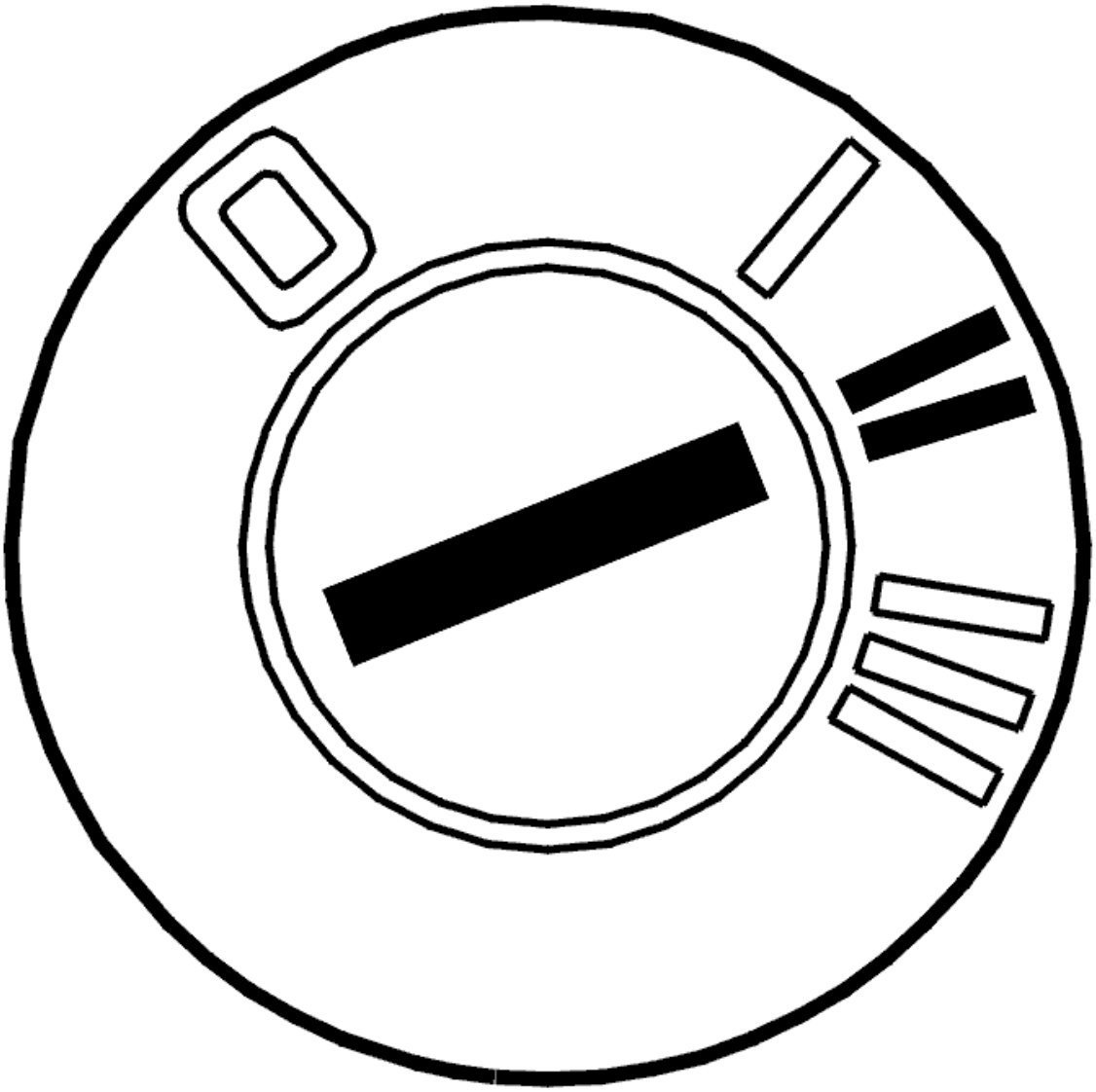

Fig. 76: Identifying Ignition ON
Courtesy of VOLVO CARS CORPORATION

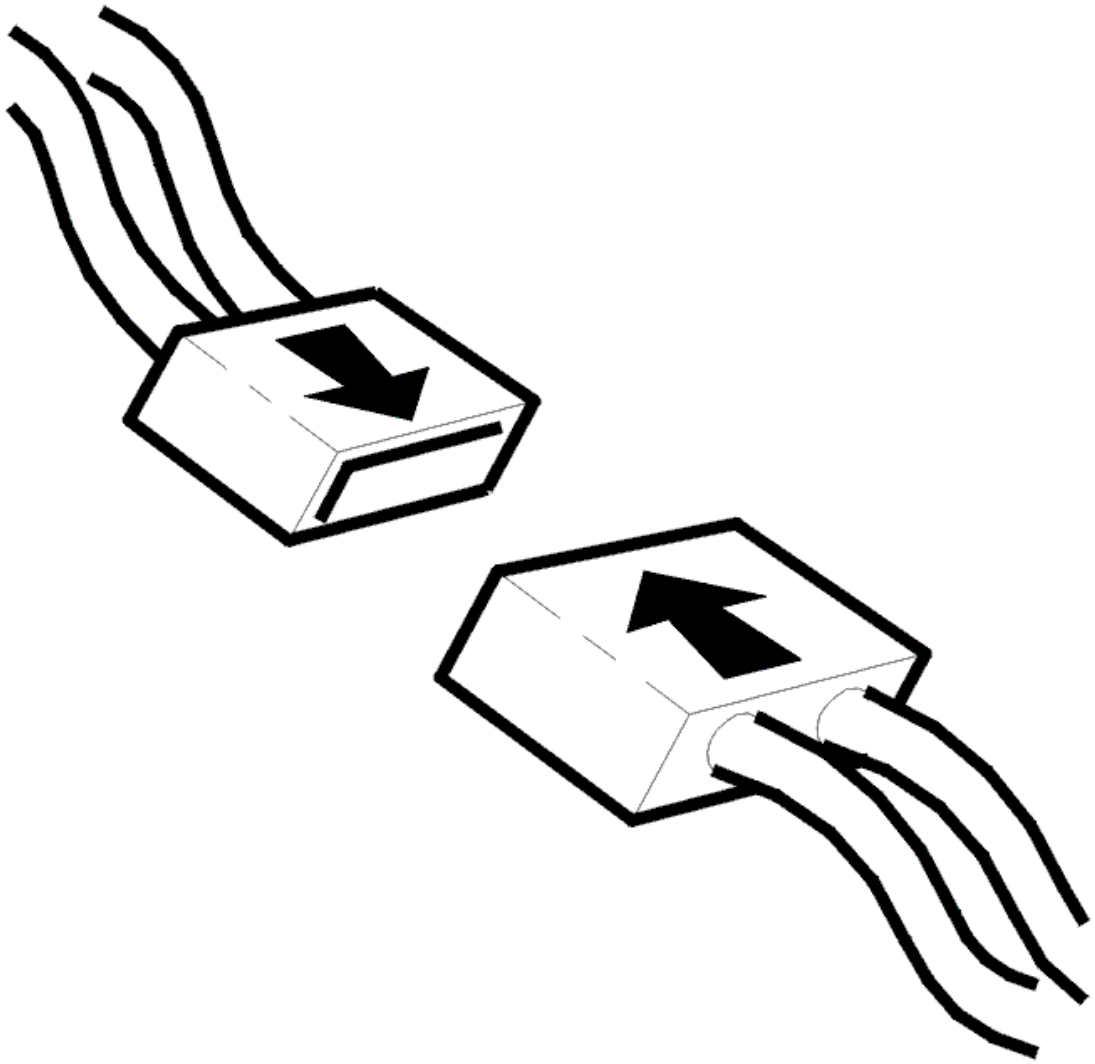

Fig. 77: Connecting Connector
Courtesy of VOLVO CARS CORPORATION

- Ignition off.
- Reinstall the connectors, components etc.
- Ignition on.

  Set the seat heating to maximum.

Was the function OK?

- **YES**

  VERIFIED: Troubleshooting has been completed.

- **NO**

  Refer to **INFORMATION**

INFORMATION

FAULT-TRACING INFORMATION

The fault should have been detected and remedied. As this is not the case fault-tracing has failed.

Exit fault-tracing for this diagnostic trouble code (DTC) or make another attempt.

CEM-5F11: RELAY, AUXILIARY HEATER. SIGNAL TOO HIGH. INTERMITTENT FAULT (B5254T2; B6294T; 2003-2004)

DIAGNOSTIC TROUBLE CODE INFORMATION

Condition

The auxiliary heater relay must be activated to store the diagnostic trouble code. If the central electronic module (CEM) indicates that the auxiliary heater is short-circuited to battery voltage, diagnostic trouble code CEM-5F11 will be set.

Substitute Value

- None.

Possible Source

- The auxiliary heater relay circuit is short-circuited to voltage supply.

Fault symptom[s]

- Poor interior heating.

SIGNAL TOO HIGH. INTERMITTENT FAULT

CHECKING THE RELAY

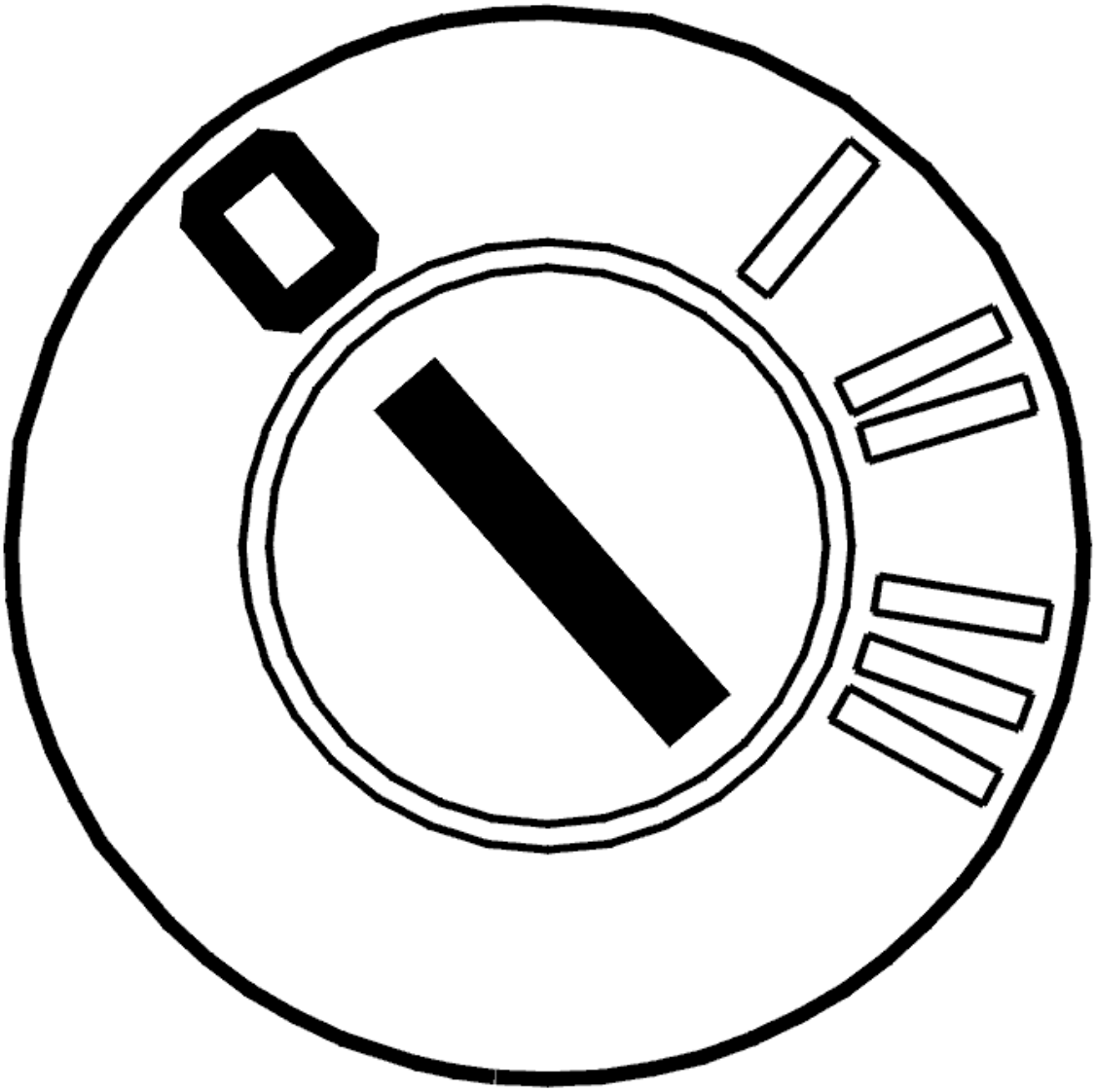

Fig. 78: Identifying Ignition OFF
Courtesy of VOLVO CARS CORPORATION

- Ignition off.

  Check that relay 2/29 is installed correctly. At the same time check the relay connections, in particular 2/29#2, for a short circuit to voltage supply as described in, see **SHORT-CIRCUIT TO SUPPLY VOLTAGE, INTERMITTENT FAULTS** .

  Additional information:

  - For -2004, see: **CENTRAL ELECTRONIC MODULE (CEM), REPLACING** .
  - For 2005-, see: **CENTRAL ELECTRONIC MODULE (CEM), REPLACING** .
  - To connect the test box, see **CONNECTING THE BREAKOUT BOX** .

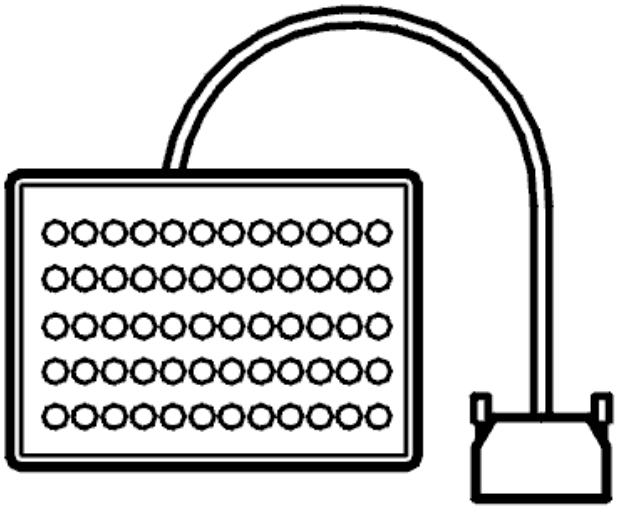

Fig. 79: Breakout Box
Courtesy of VOLVO CARS CORPORATION

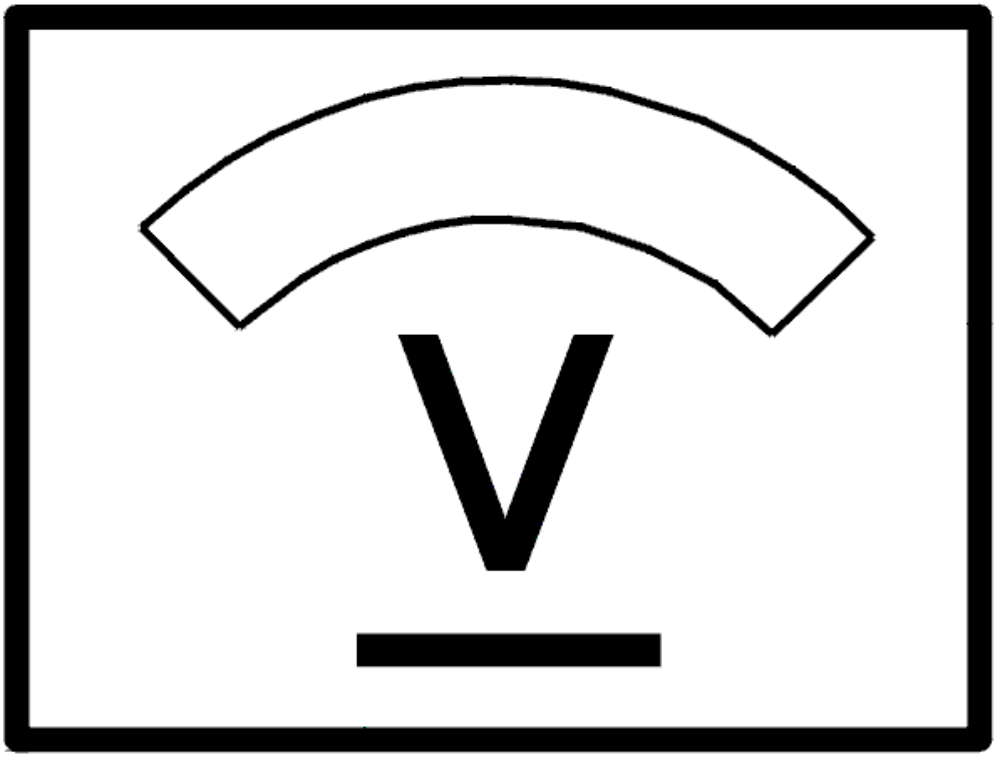

Fig. 80: Identifying Voltage Display
Courtesy of VOLVO CARS CORPORATION

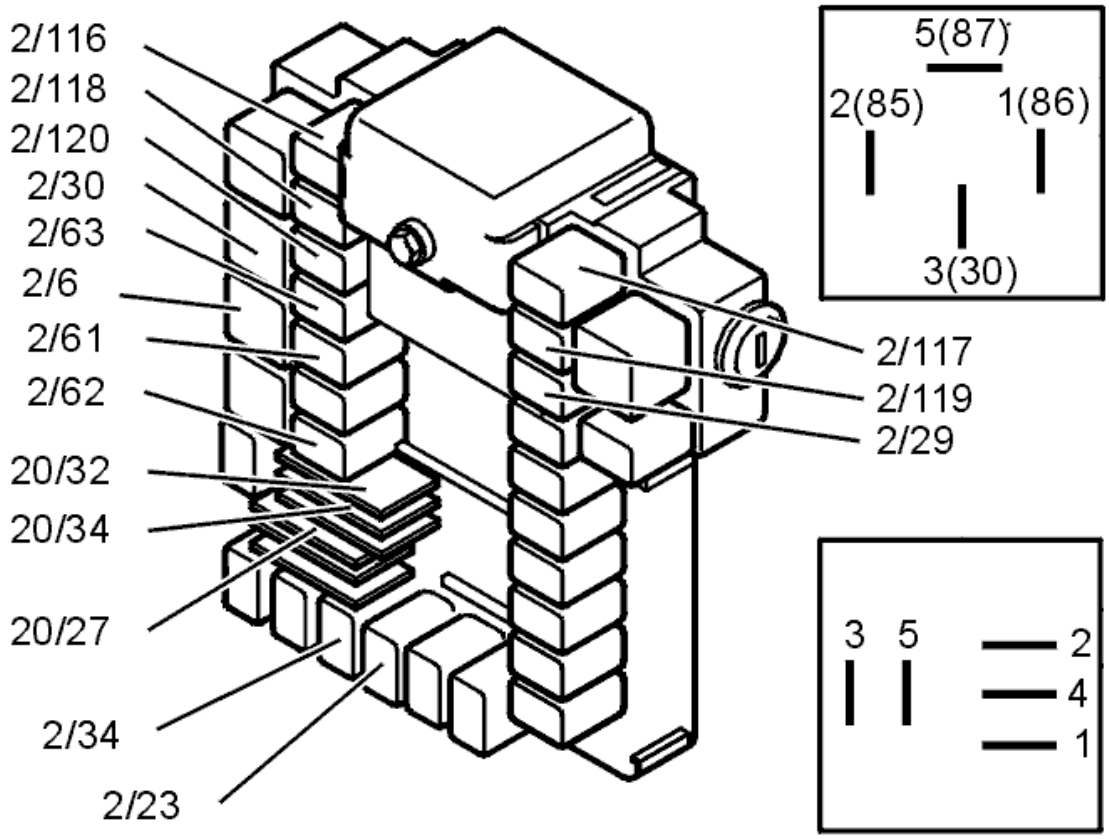

Fig. 81: Identifying Relays
Courtesy of VOLVO CARS CORPORATION

- **Continue**

  Refer to **INFORMATION**

INFORMATION

FAULT-TRACING INFORMATION

If the fault is intermittent, do not verify fault-tracing if the fault does not recur.

It is possible to view the information again, or leave fault-tracing for this diagnostic trouble code (DTC).

CEM-5F11: RELAY, AUXILIARY HEATER. SIGNAL TOO HIGH. PERMANENT FAULT (B5254T2; B6294T; 2003-2004)

DIAGNOSTIC TROUBLE CODE INFORMATION

see **DIAGNOSTIC TROUBLE CODE INFORMATION**

SIGNAL TOO HIGH. PERMANENT FAULT

CHECKING THE RELAY

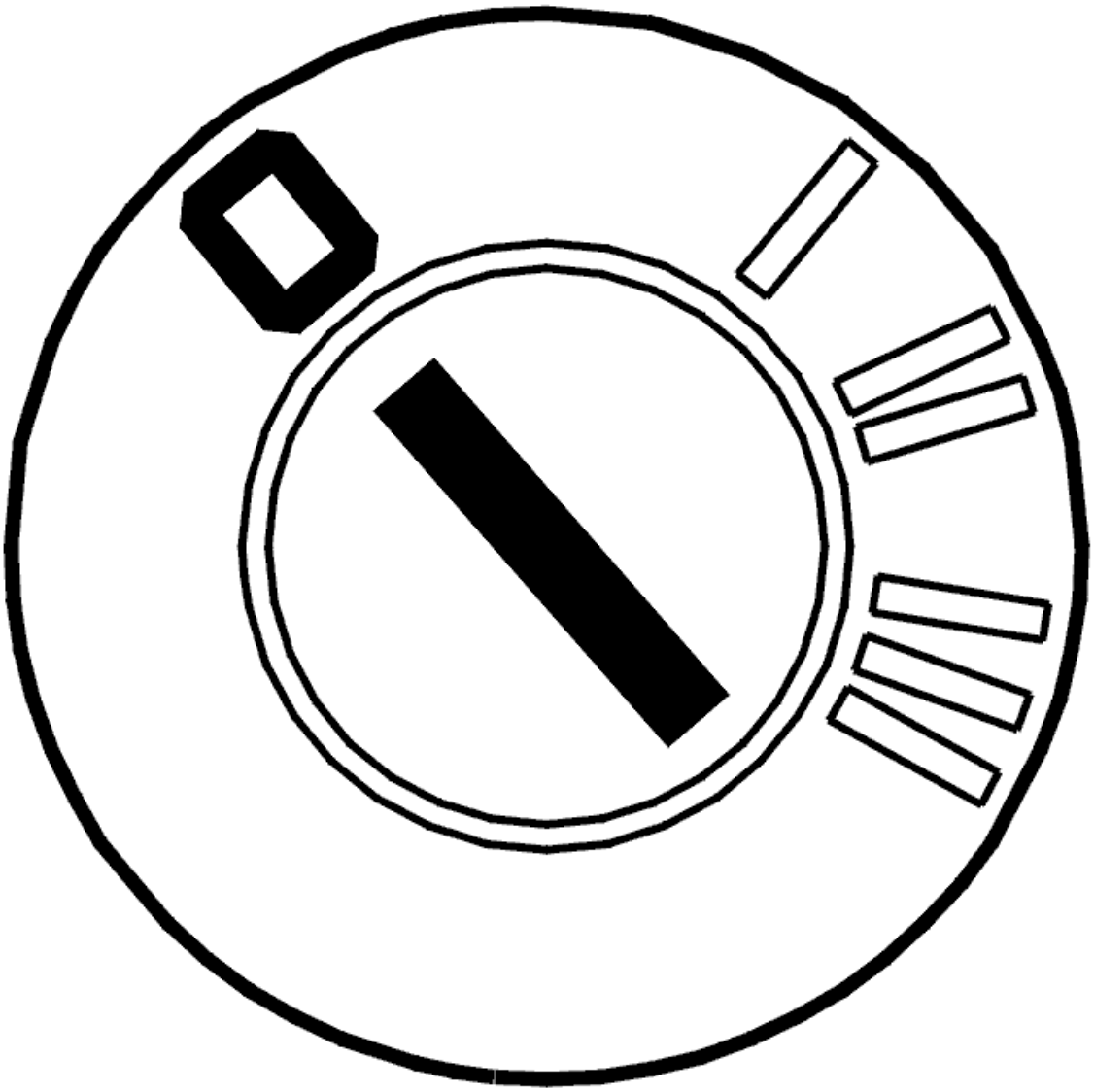

Fig. 82: Identifying Ignition OFF
Courtesy of VOLVO CARS CORPORATION

- Ignition off.

  Check that relay 2/29 is installed correctly. At the same time check the relay connections, in particular 2/29 #2, for a short circuit to voltage supply as described in, see **SHORT-CIRCUIT TO SUPPLY VOLTAGE. PERMANENT FAULTS** .

  Additional information:

  - For -2004, see: **CENTRAL ELECTRONIC MODULE (CEM), REPLACING** .
  - For 2005-, see: **CENTRAL ELECTRONIC MODULE (CEM), REPLACING** .
  - To connect the test box, see **CONNECTING THE BREAKOUT BOX** .

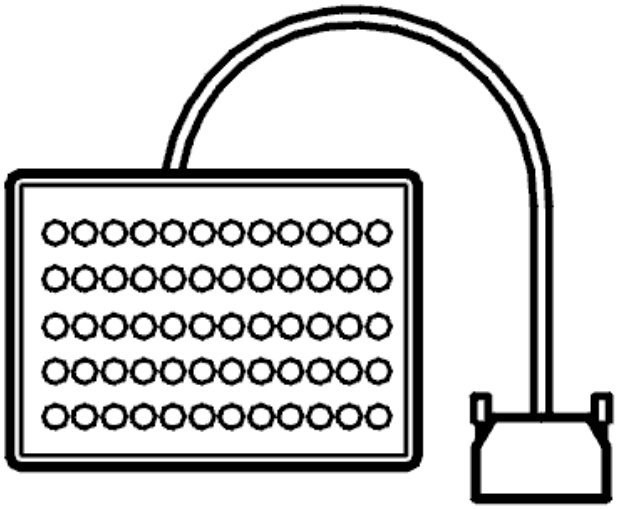

Fig. 83: Breakout Box
Courtesy of VOLVO CARS CORPORATION

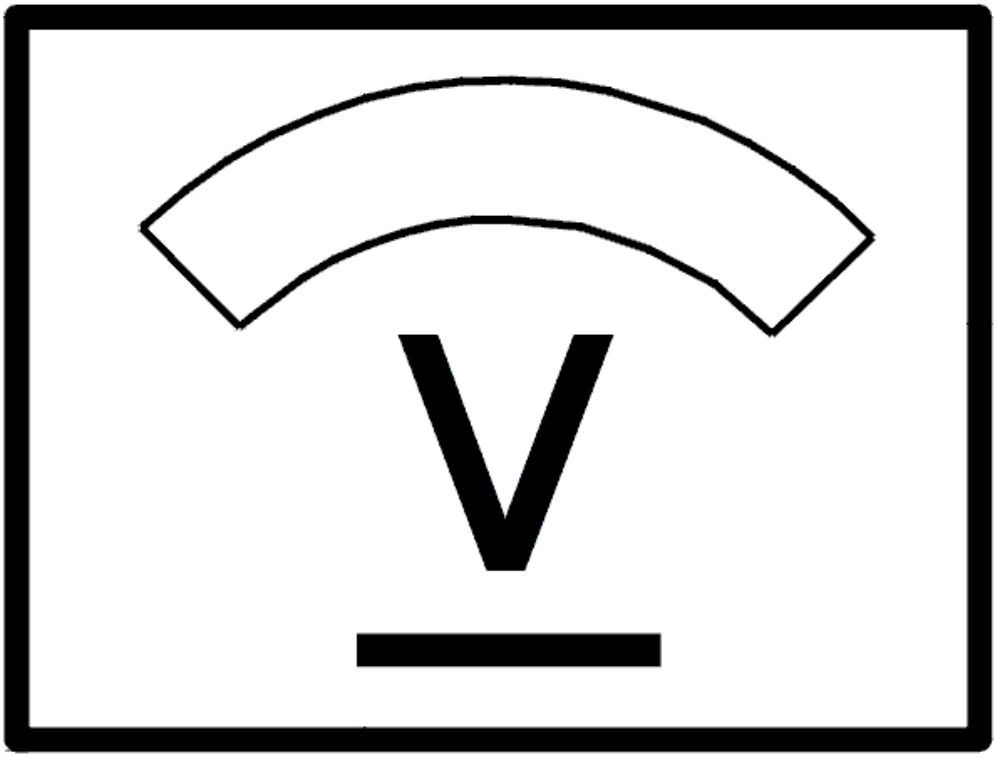

Fig. 84: Identifying Voltage Display
Courtesy of VOLVO CARS CORPORATION

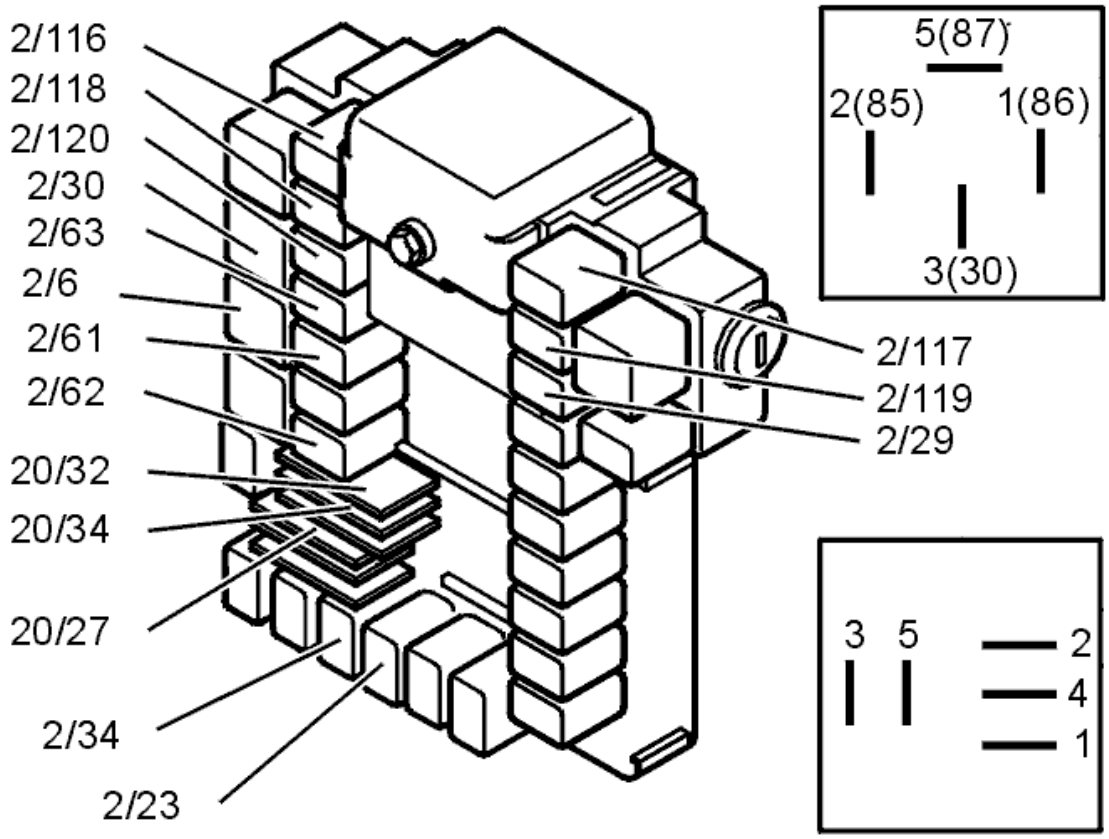

Fig. 85: Identifying Relays
Courtesy of VOLVO CARS CORPORATION

Is there a fault?

- **YES**

  Refer to **VERIFICATION**

- **NO**

  Refer to **REPLACING THE COMPONENT**

REPLACING THE COMPONENT

Replace relay.

- For -2004, see: **CENTRAL ELECTRONIC MODULE (CEM), REPLACING**
- For 2005-, see: **CENTRAL ELECTRONIC MODULE (CEM), REPLACING** .

- **Continue**

  Refer to **VERIFICATION**

VERIFICATION

VERIFICATION

HINT: After the repair it is necessary to check that the fault has been rectified.

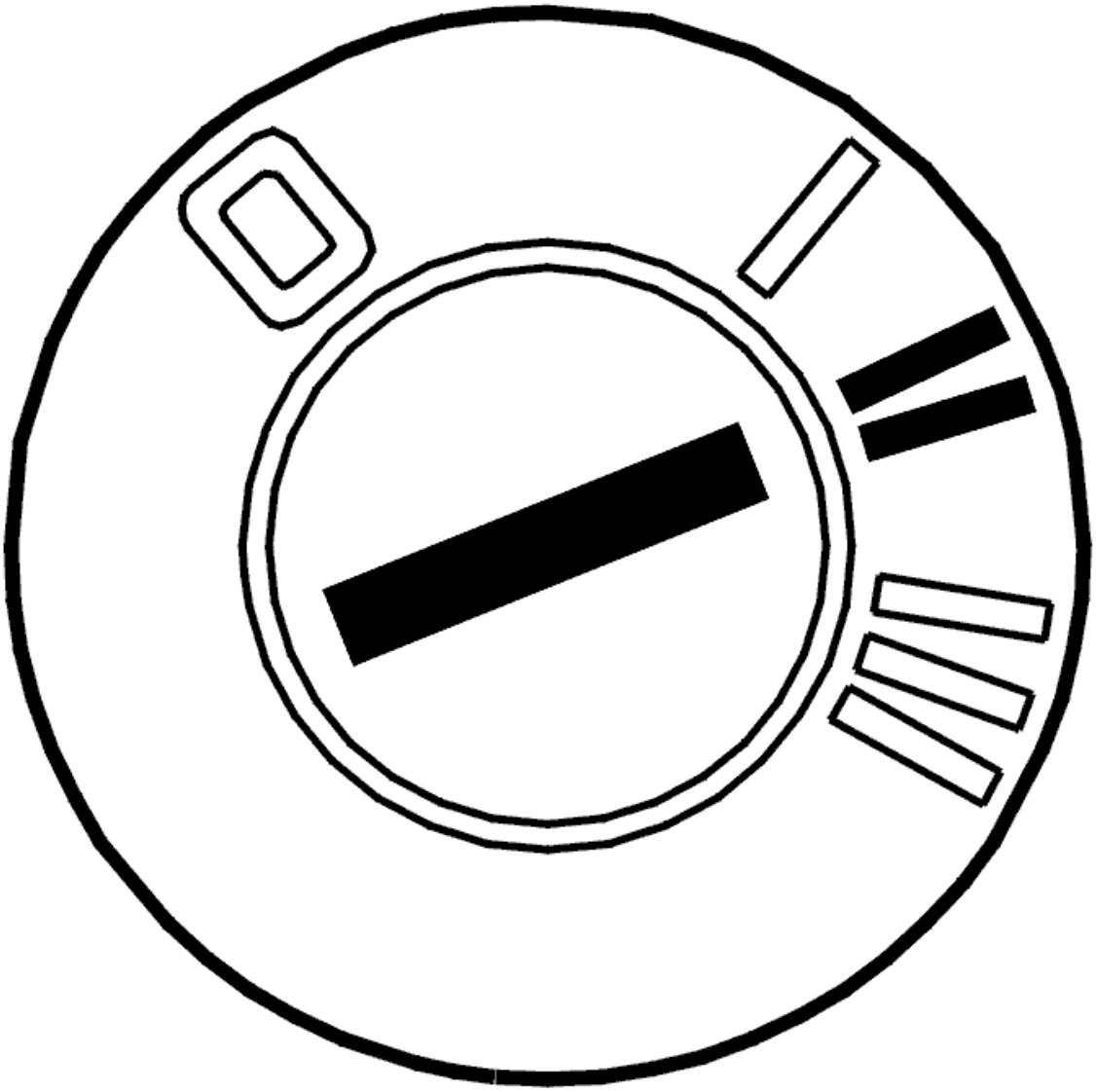

Fig. 86: Identifying Ignition ON
Courtesy of VOLVO CARS CORPORATION

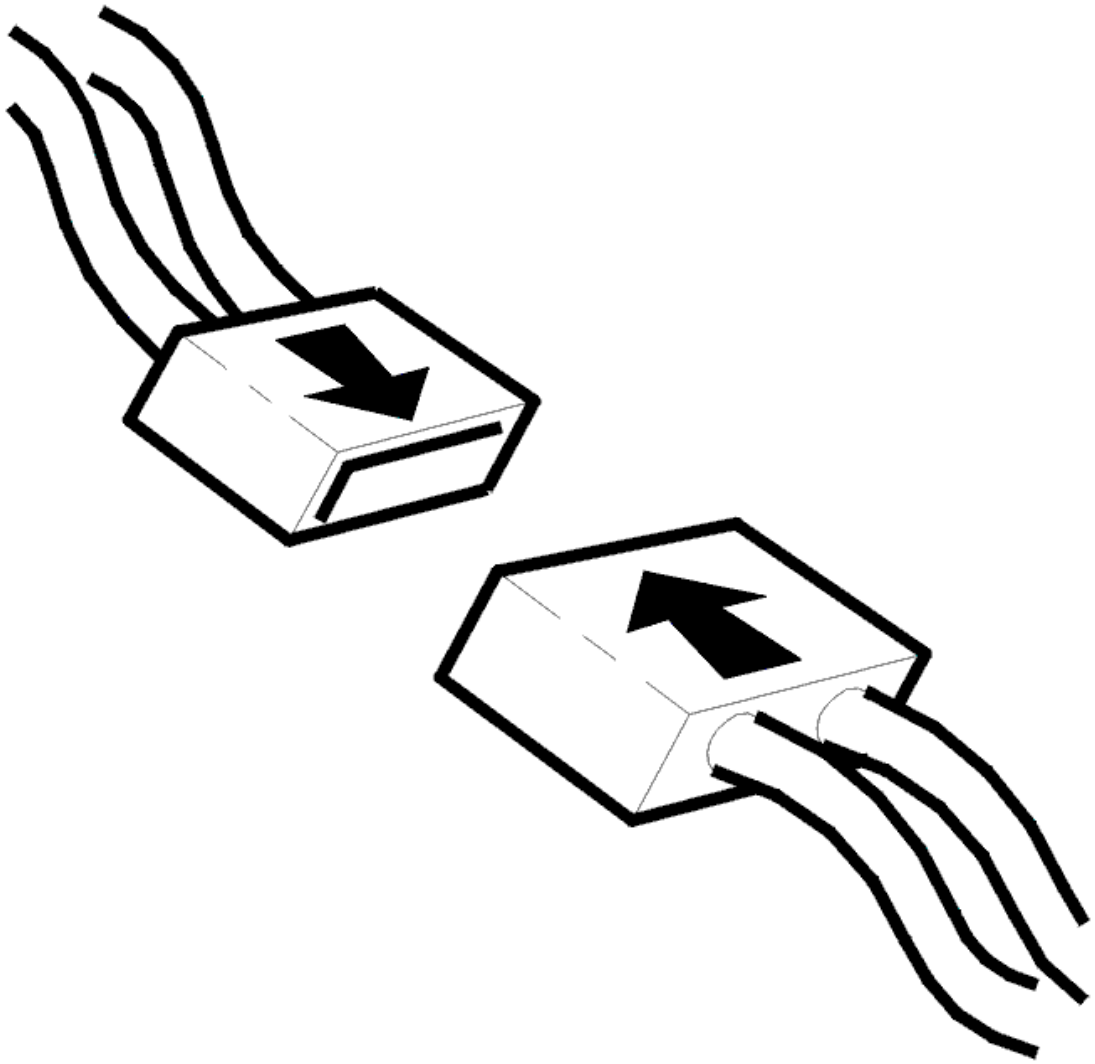

Fig. 87: Connecting Connector
Courtesy of VOLVO CARS CORPORATION

- Ignition off.
- Connect connectors, install components etc.
- Ignition on.

Activate the heater by clicking on the symbol for VCT 2000.

Additional information:

- For information on how the heater works in operation, see **ENGINE COOLANT HEATER, TEST RUNNING** .
- For a description of the parameters, see **DESCRIPTION OF PARAMETERS** .
- For a description of activations, see **ACTIVATING COMPONENTS/FUNCTIONS** .

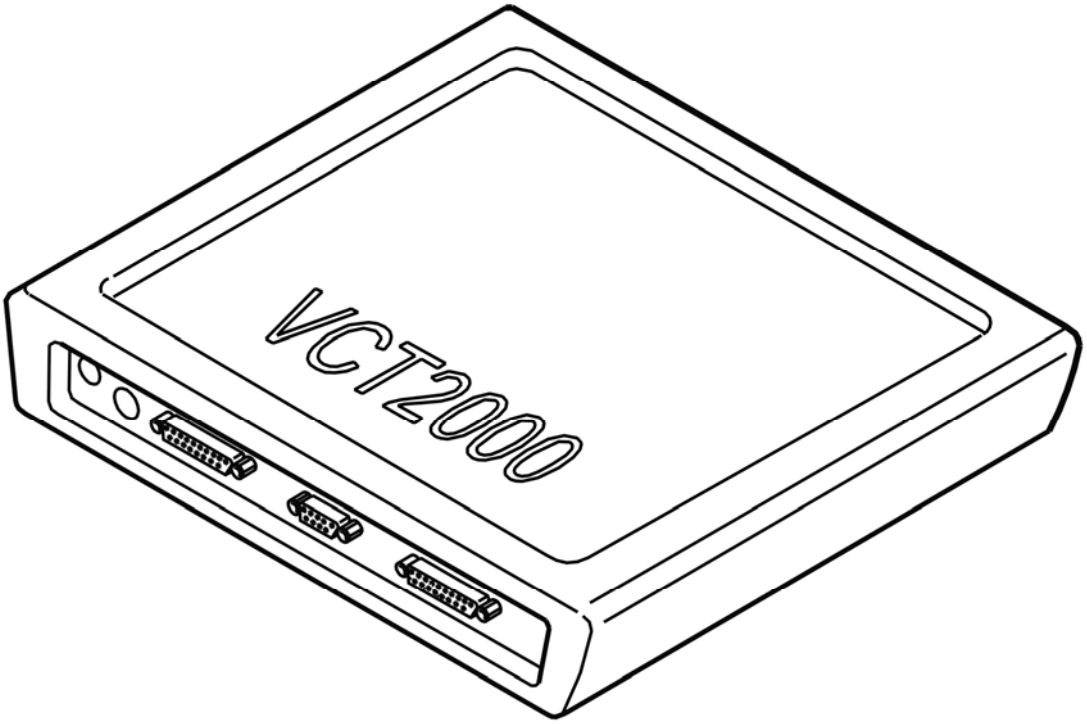

Fig. 88: Identifying VCT2000 Diagnostic Tool Symbol In VIDA
Courtesy of VOLVO CARS CORPORATION

Does it work?

- **YES**

  VERIFIED: Troubleshooting has been completed.

- **NO**

  Refer to **INFORMATION**

INFORMATION

FAULT-TRACING INFORMATION

The fault should have been detected and remedied. As this is not the case fault-tracing has failed.

Exit fault-tracing for this diagnostic trouble code (DTC) or make another attempt.

CEM-5F13: RELAY, AUXILIARY HEATER. SIGNAL TOO LOW. INTERMITTENT FAULT (B5254T2; B6294T; 2003-2004)

DIAGNOSTIC TROUBLE CODE INFORMATION

Condition

The auxiliary heater relay may not be activated if the diagnostic trouble code is to be set. If the central electronic module (CEM) indicates that the auxiliary heater is short-circuited to ground or that there is an open circuit in the wire, diagnostic trouble code CEM-5F13 will be set.

Substitute Value

- None.

Possible Source

- The auxiliary heater relay circuit is short-circuited to ground or has an open circuit on its wire.

Fault symptom[s]

- Poor interior heating.

SIGNAL TOO LOW. INTERMITTENT FAULT

CHECKING THE RELAY

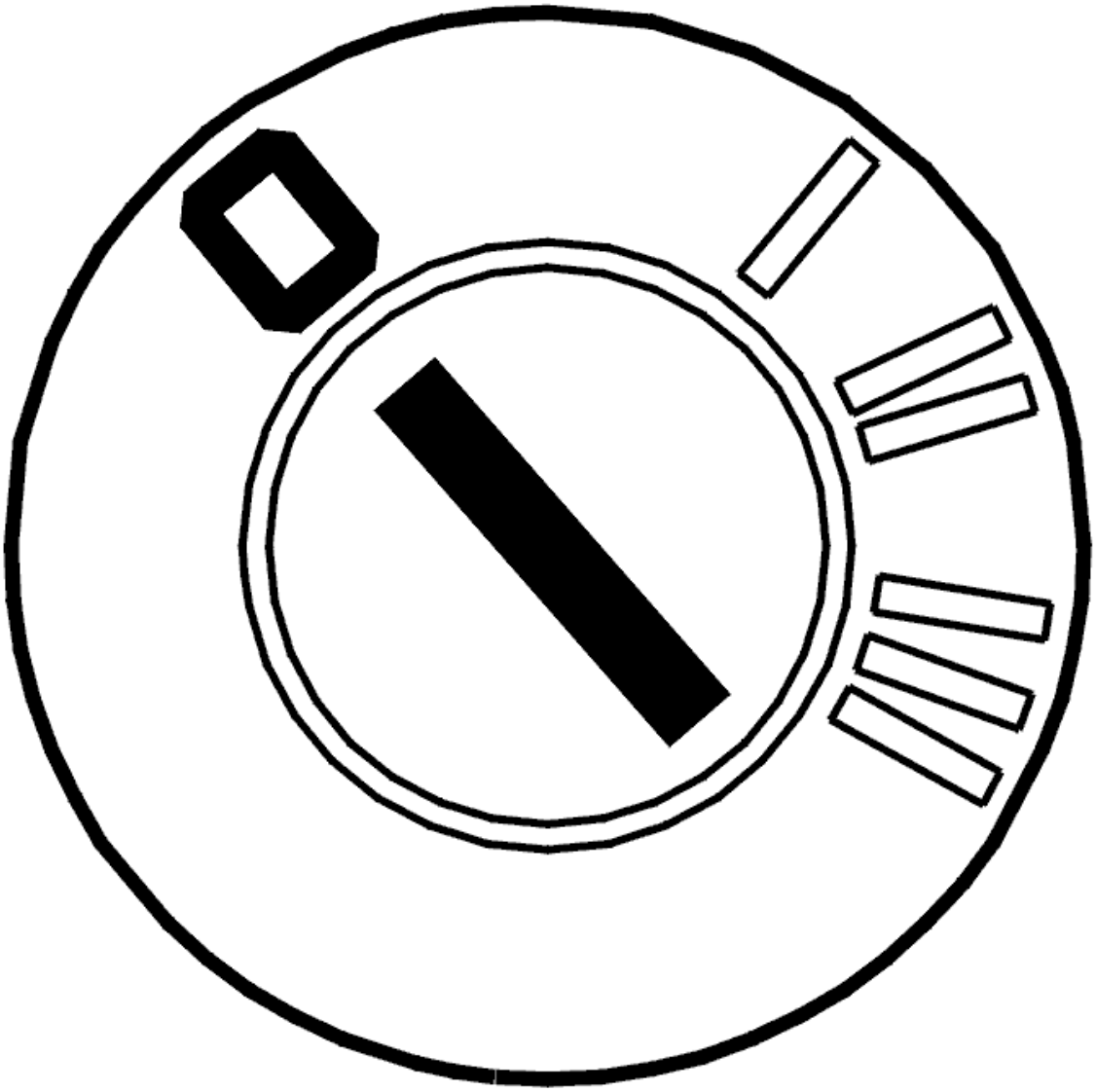

Fig. 89: Identifying Ignition OFF
Courtesy of VOLVO CARS CORPORATION

- Ignition off.

  Check that relay 2/29 is installed correctly. At the same time check the relay connections, in particular 2/29 #2, for a short circuit to ground as described in, see **SHORT-CIRCUIT TO GROUND, INTERMITTENT FAULTS** . Also check the relay circuit for any open circuits, as described in **OPEN-CIRCUIT, INTERMITTENT FAULTS** .

  Additional information:

  - To replace relay:
    - For -2004, see: **CENTRAL ELECTRONIC MODULE (CEM), REPLACING**
    - For 2005-, see: **CENTRAL ELECTRONIC MODULE (CEM), REPLACING** .

- To connect the test box, see **CONNECTING THE BREAKOUT BOX** .

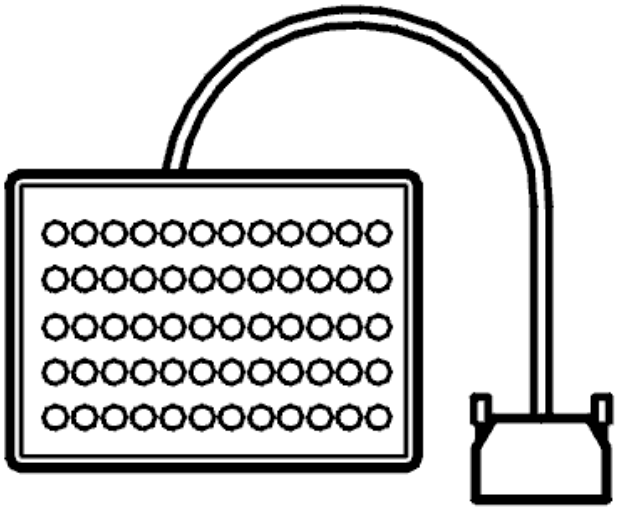

Fig. 90: Breakout Box
Courtesy of VOLVO CARS CORPORATION

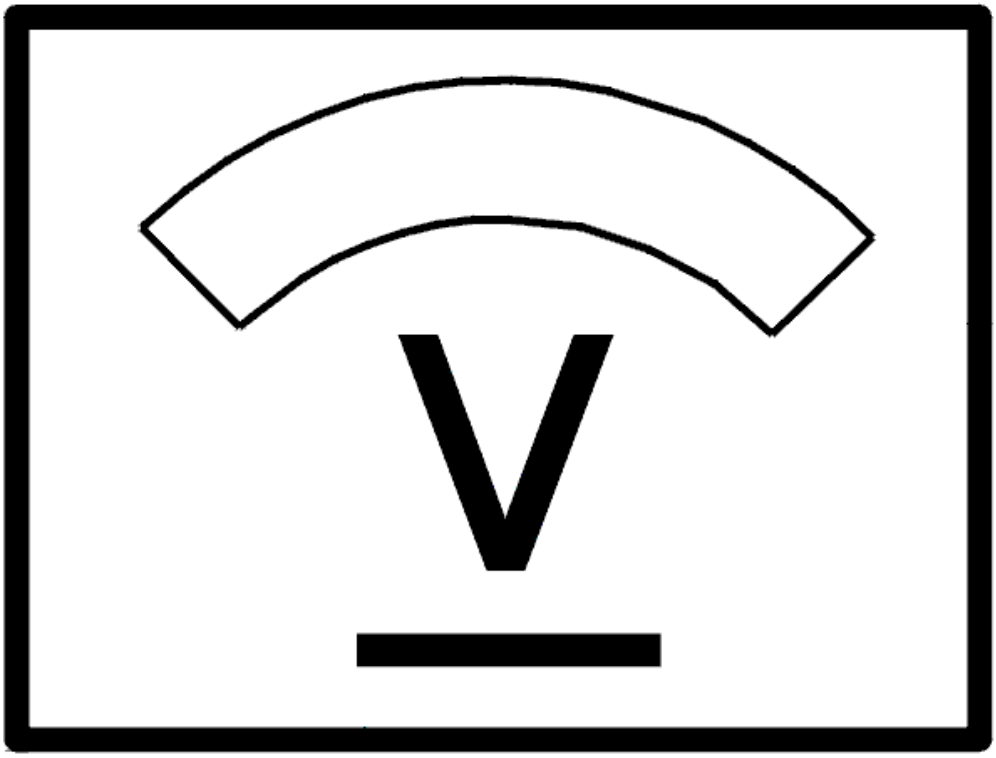

Fig. 91: Identifying Voltage Display
Courtesy of VOLVO CARS CORPORATION

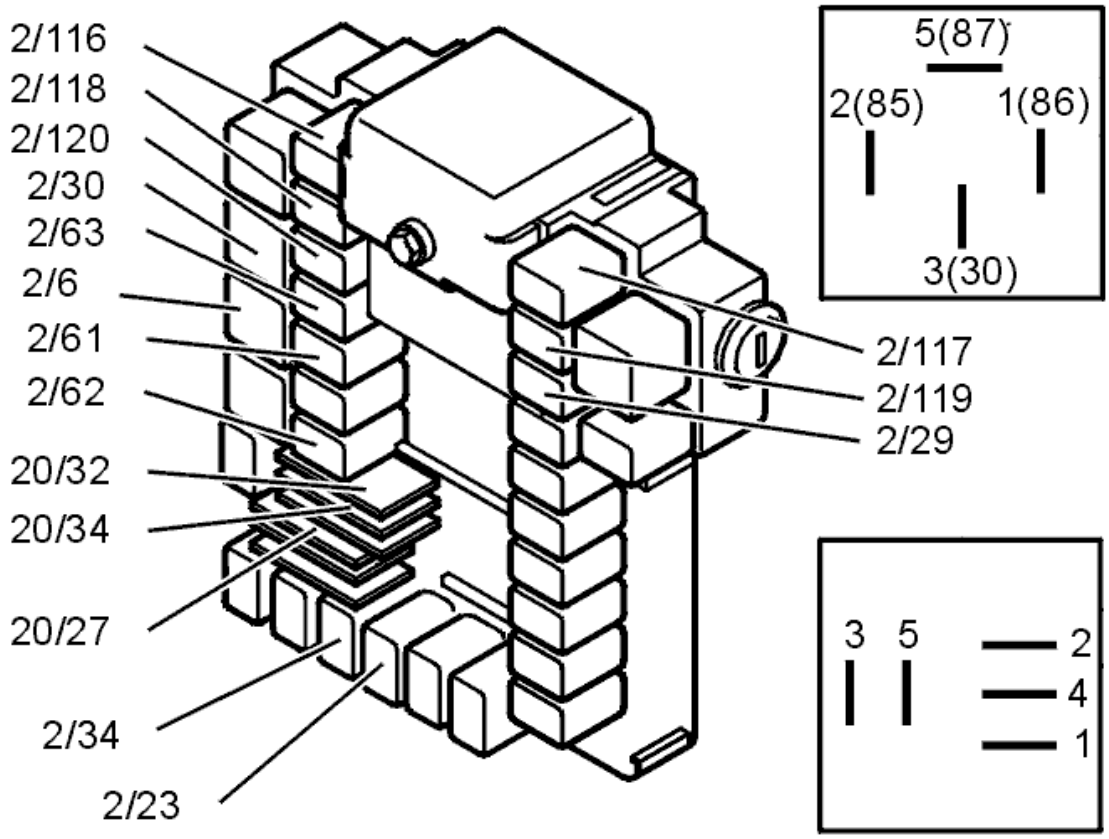

Fig. 92: Identifying Relays
Courtesy of VOLVO CARS CORPORATION

- **Continue**

  Refer to **INFORMATION**

INFORMATION

FAULT-TRACING INFORMATION

If the fault is intermittent, do not verify fault-tracing if the fault does not recur.

It is possible to view the information again, or leave fault-tracing for this diagnostic trouble code (DTC).

CEM-5F13: RELAY, AUXILIARY HEATER. SIGNAL TOO LOW. PERMANENT FAULT (B5254T2; B6294T; 2003-2004)

DIAGNOSTIC TROUBLE CODE INFORMATION

see **DIAGNOSTIC TROUBLE CODE INFORMATION**

SIGNAL TOO LOW. PERMANENT FAULT

CHECKING THE RELAY

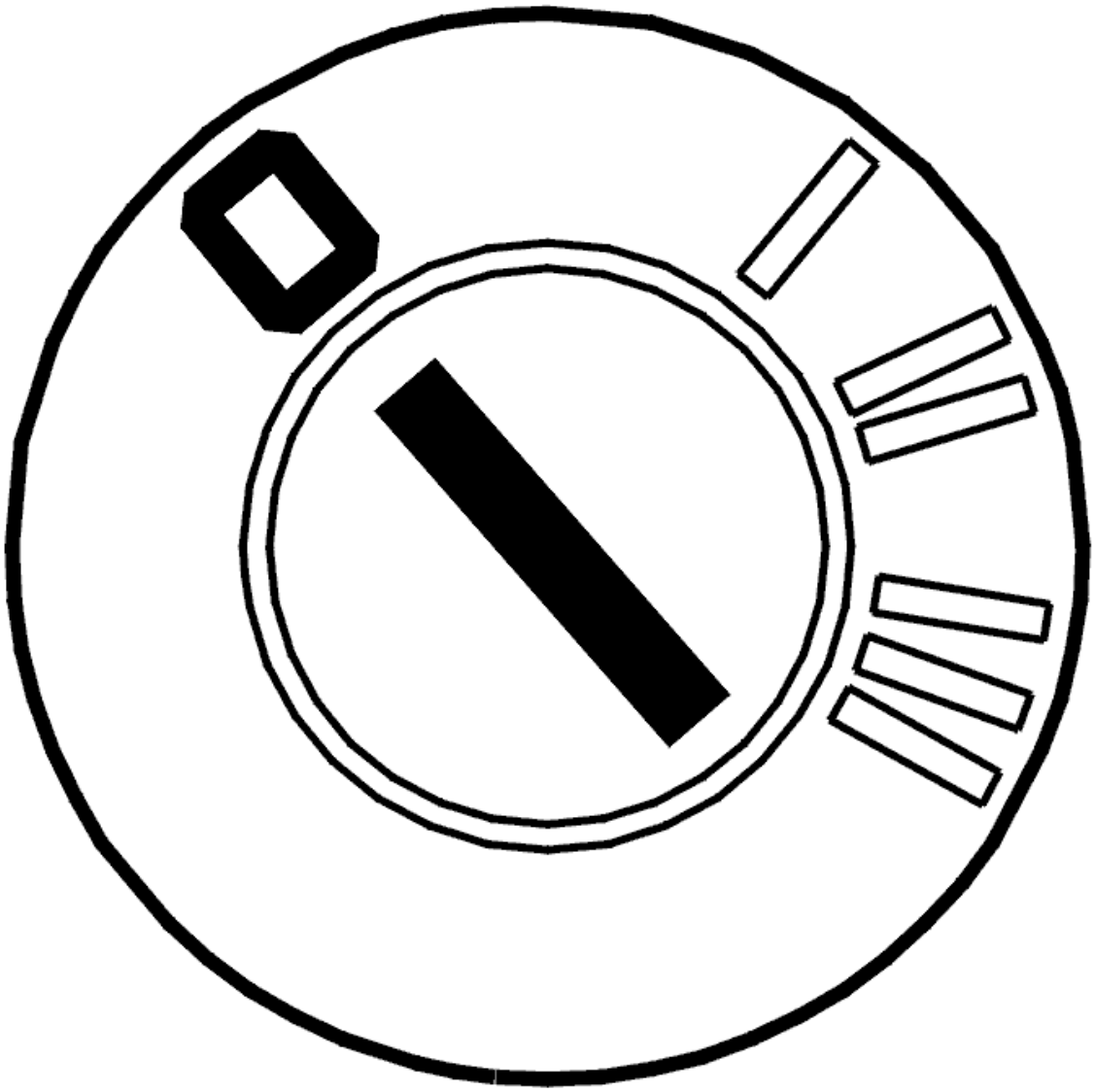

Fig. 93: Identifying Ignition OFF
Courtesy of VOLVO CARS CORPORATION

- Ignition off.

  Check that relay 2/29 is installed correctly. At the same time check the relay connections, in particular 2/29 #2, for a short circuit to ground as described in, see **SHORT-CIRCUIT TO GROUND, PERMANENT FAULTS** . Also check the relay circuit for any open circuits, as described in **OPEN-CIRCUIT, PERMANENT FAULTS** .

  Additional information:

  - To replace relay:
    - For -2004, see: **CENTRAL ELECTRONIC MODULE (CEM), REPLACING**

- For 2005-, see: **CENTRAL ELECTRONIC MODULE (CEM), REPLACING** .
- To connect the test box, see **CONNECTING THE BREAKOUT BOX** .

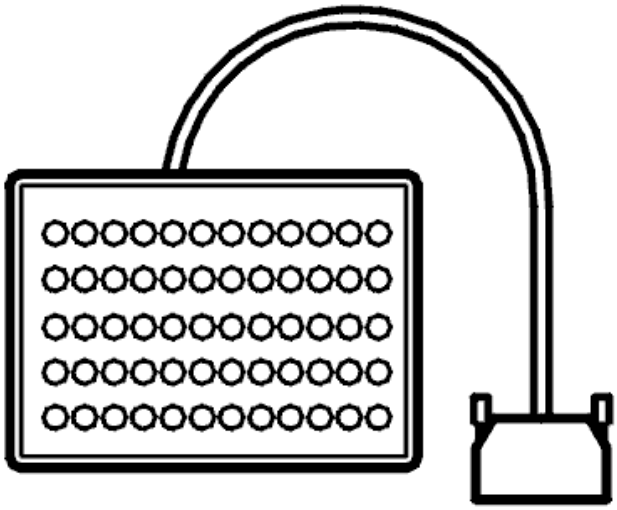

Fig. 94: Breakout Box
Courtesy of VOLVO CARS CORPORATION

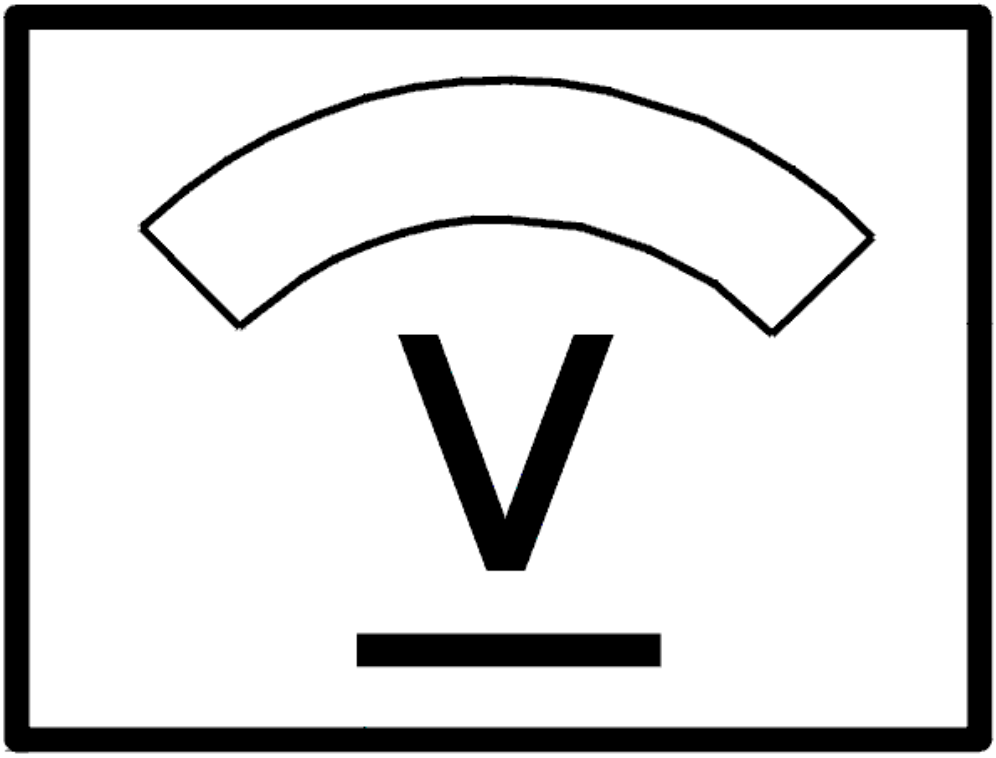

Fig. 95: Identifying Voltage Display
Courtesy of VOLVO CARS CORPORATION

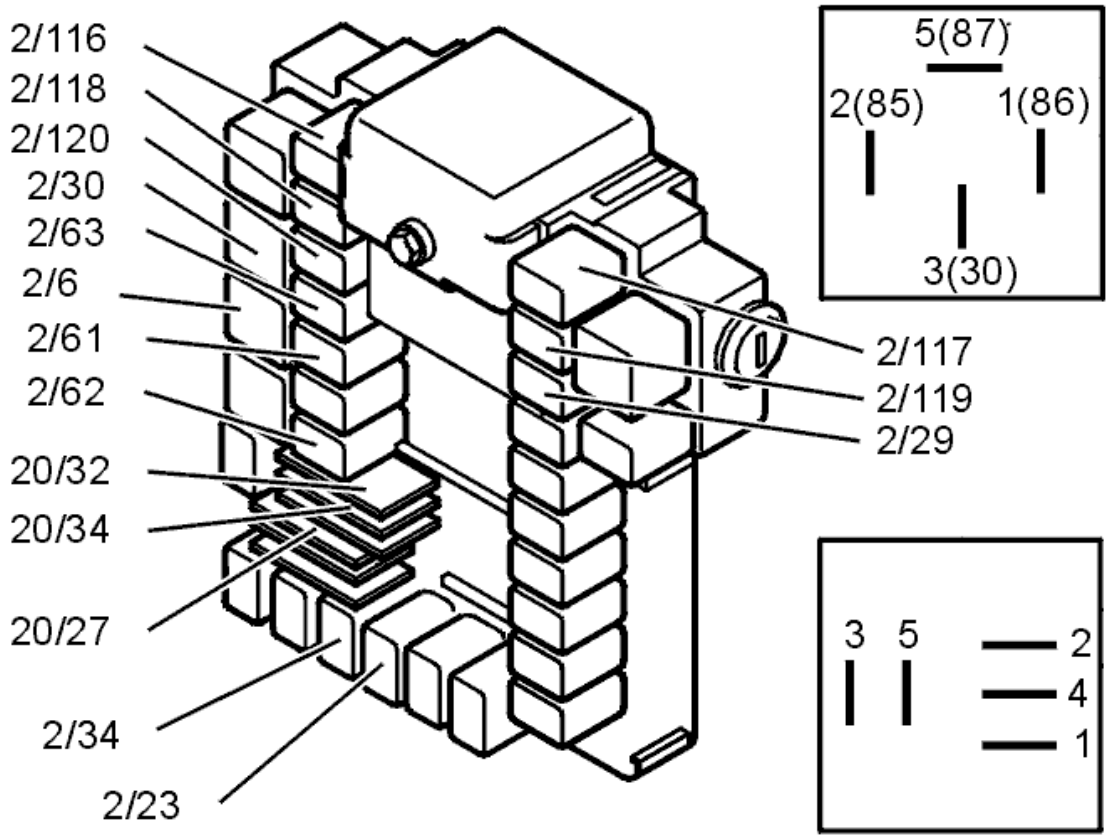

Fig. 96: Identifying Relays
Courtesy of VOLVO CARS CORPORATION

Is there a fault?

- **YES**

  Refer to **VERIFICATION**

- **NO**

  Refer to **REPLACING THE COMPONENT**

REPLACING THE COMPONENT

Replace relay.

- For -2004, see: **CENTRAL ELECTRONIC MODULE (CEM), REPLACING**
- For 2005-, see: **CENTRAL ELECTRONIC MODULE (CEM), REPLACING** .

- **Continue**

  Refer to **VERIFICATION**

VERIFICATION

VERIFICATION

HINT: After the repair it is necessary to check that the fault has been rectified.

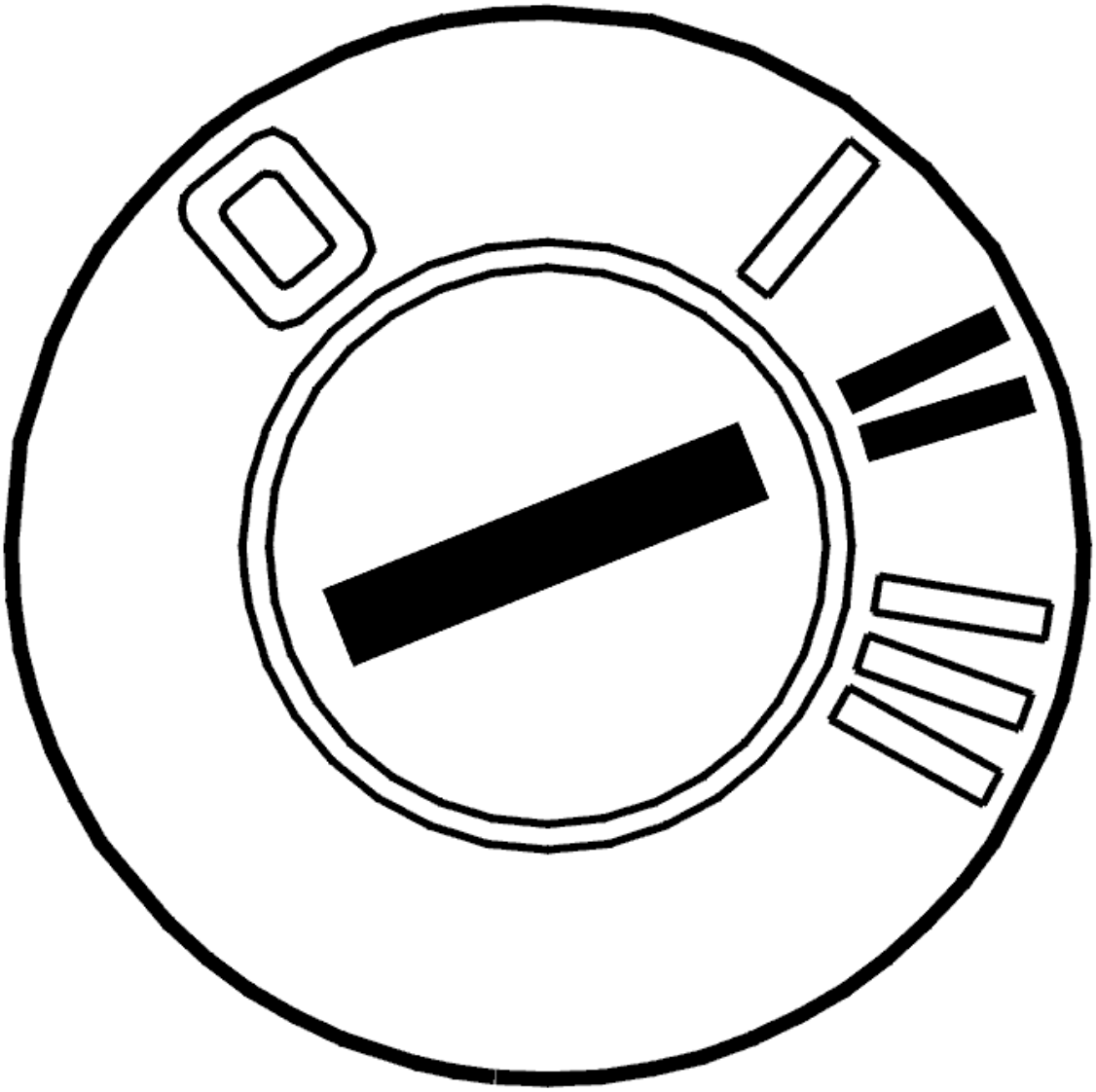

Fig. 97: Identifying Ignition ON
Courtesy of VOLVO CARS CORPORATION

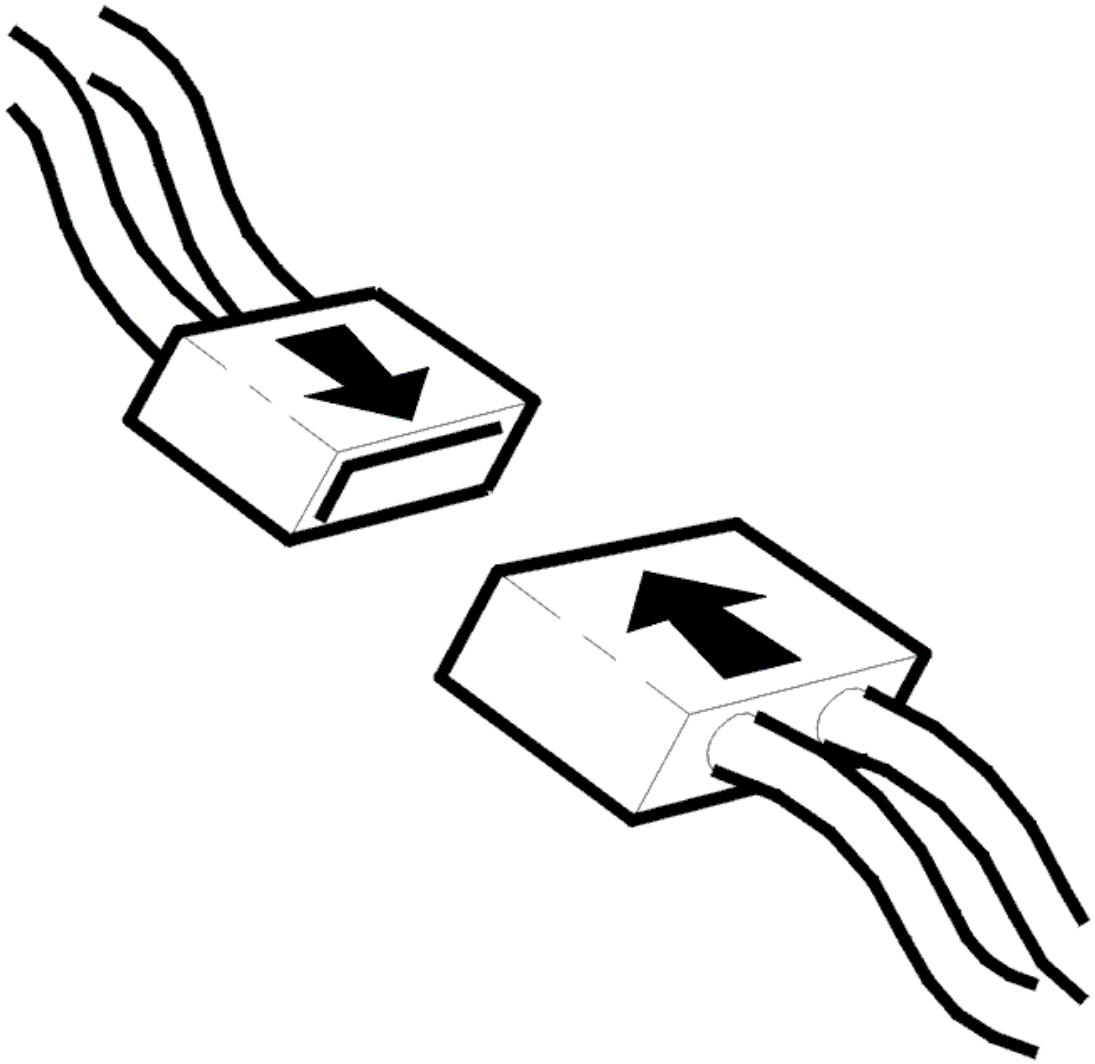

Fig. 98: Connecting Connector
Courtesy of VOLVO CARS CORPORATION

- Ignition off.
- Connect connectors, install components etc.
- Ignition on.

Activate the heater by clicking on the symbol for VCT 2000.

Additional information:

- For information on how the heater works in operation, see **ENGINE COOLANT HEATER, TEST RUNNING** .
- For a description of the parameters, see **DESCRIPTION OF PARAMETERS** .
- For a description of activations, see **ACTIVATING COMPONENTS/FUNCTIONS** .

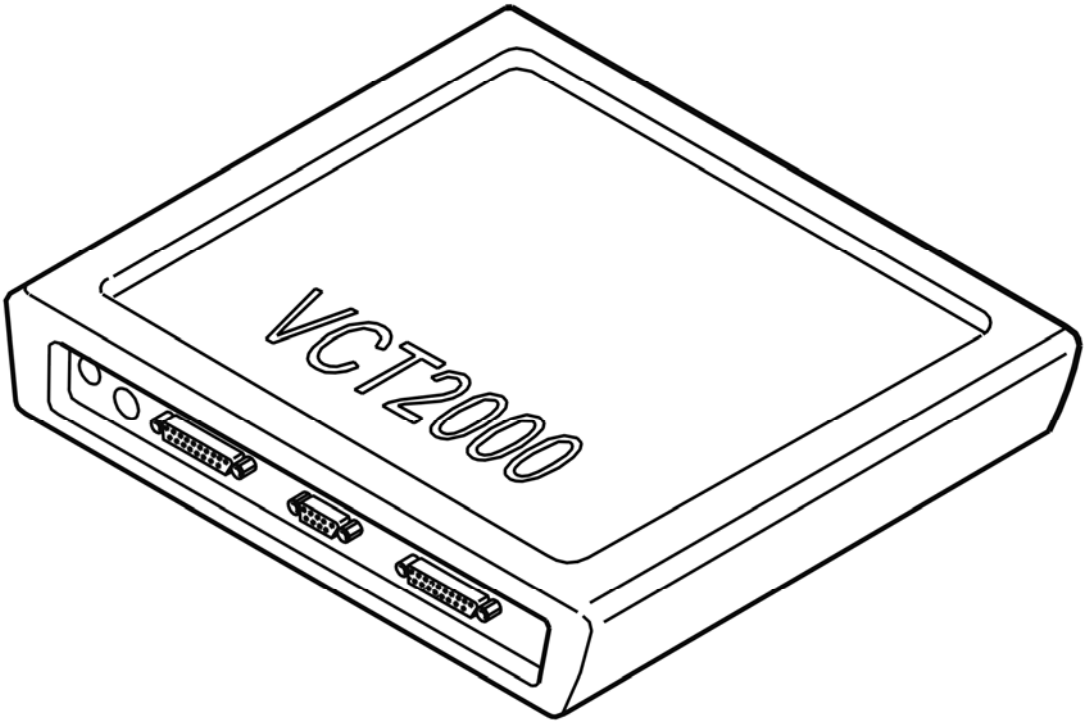

Fig. 99: Identifying VCT2000 Diagnostic Tool Symbol In VIDA
Courtesy of VOLVO CARS CORPORATION

Does it work?

- **YES**

  VERIFIED: Troubleshooting has been completed.

- **NO**

  Refer to **INFORMATION**

INFORMATION

FAULT-TRACING INFORMATION

The fault should have been detected and remedied. As this is not the case fault-tracing has failed.

Exit fault-tracing for this diagnostic trouble code (DTC) or make another attempt.

CEM-5F31: COOLANT TEMPERATURE SENSOR OPEN CIRCUIT OR SHORT CIRCUIT TO SUPPLY (2003-2004)

DIAGNOSTIC TROUBLE CODE INFORMATION

Condition

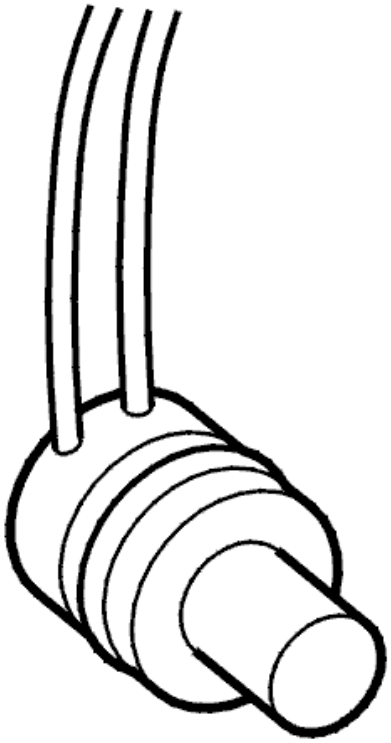

Fig. 100: Identifying Engine Coolant Temperature Sensor
Courtesy of VOLVO CARS CORPORATION

If the water temperature sensor circuit is short-circuited to voltage supply or if there is an open circuit, the control unit will interpret this as a fault, and diagnostic trouble code CEM-5F31 will be set.

Substitute Value

- None.

Possible Source

- The signal wire has an open circuit or is short-circuited to voltage supply.
- Open circuit in the signal ground wire.
- Contact resistance in control unit connector.
- Defective water temperature sensor.

Fault symptom[s]

- Poor interior heating.

OPEN CIRCUIT OR SHORT-CIRCUIT TO VOLTAGE

CHECKING THE FUNCTION OF THE ENGINE COOLANT TEMPERATURE SENSOR

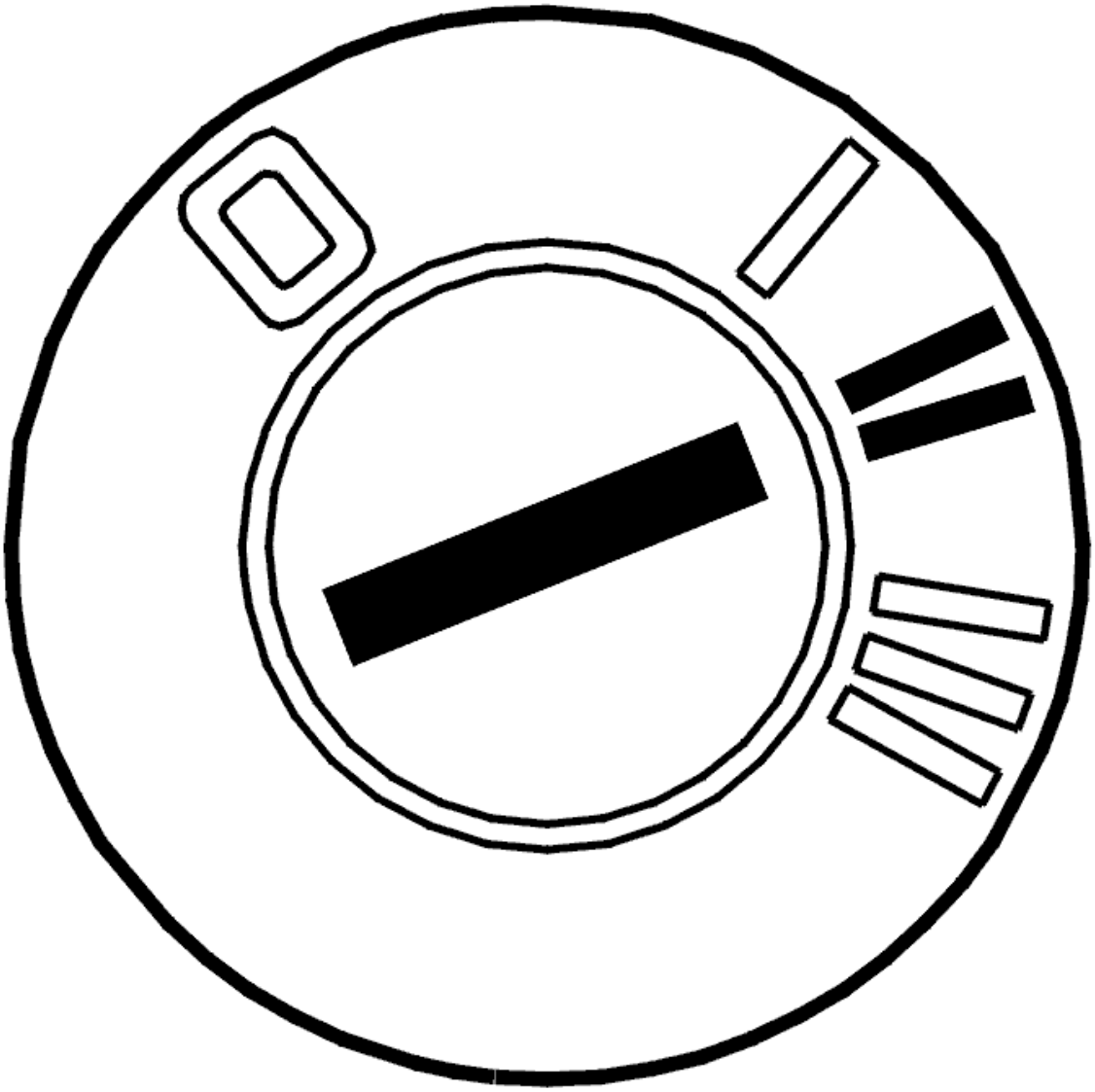

Fig. 101: Identifying Ignition ON
Courtesy of VOLVO CARS CORPORATION

- Ignition on
- Read off the engine coolant temperature.

  Check that the engine coolant temperature (ECT) reading is correct. Compare with the actual coolant temperature of the engine.

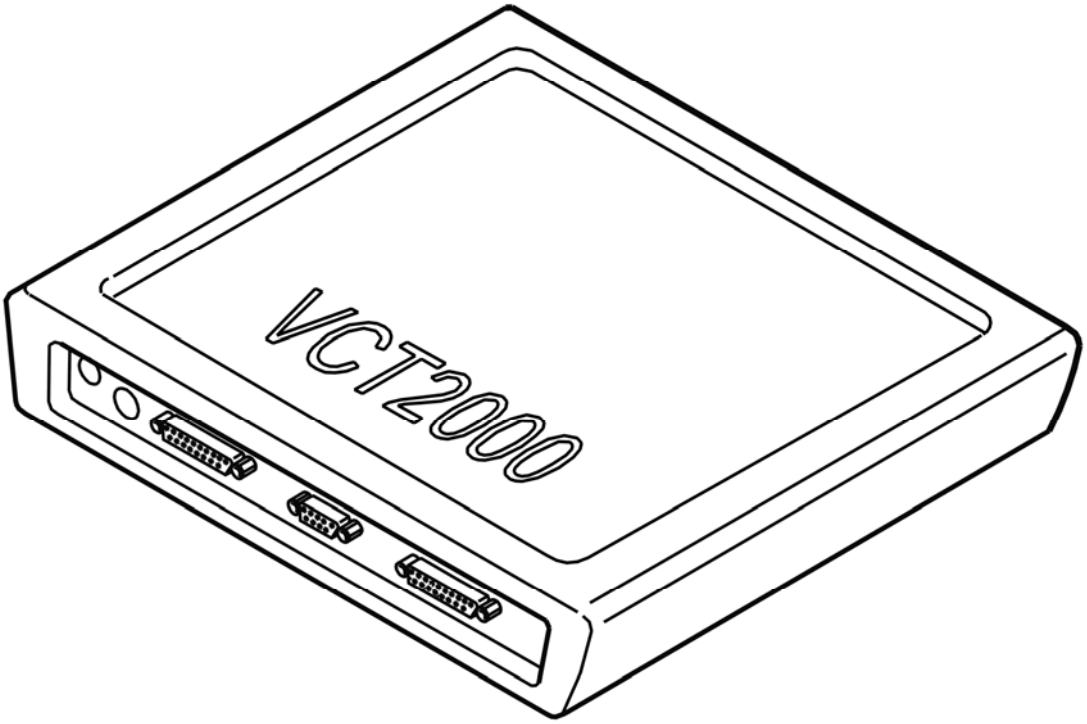

Fig. 102: Identifying VCT2000 Diagnostic Tool Symbol In VIDA
Courtesy of VOLVO CARS CORPORATION

Is the temperature OK?

- **YES**

  Refer to **INTERMITTENT FAULT**

- **NO**

  Refer to **CHECKING THE CONNECTORS**

CHECKING THE CONNECTORS

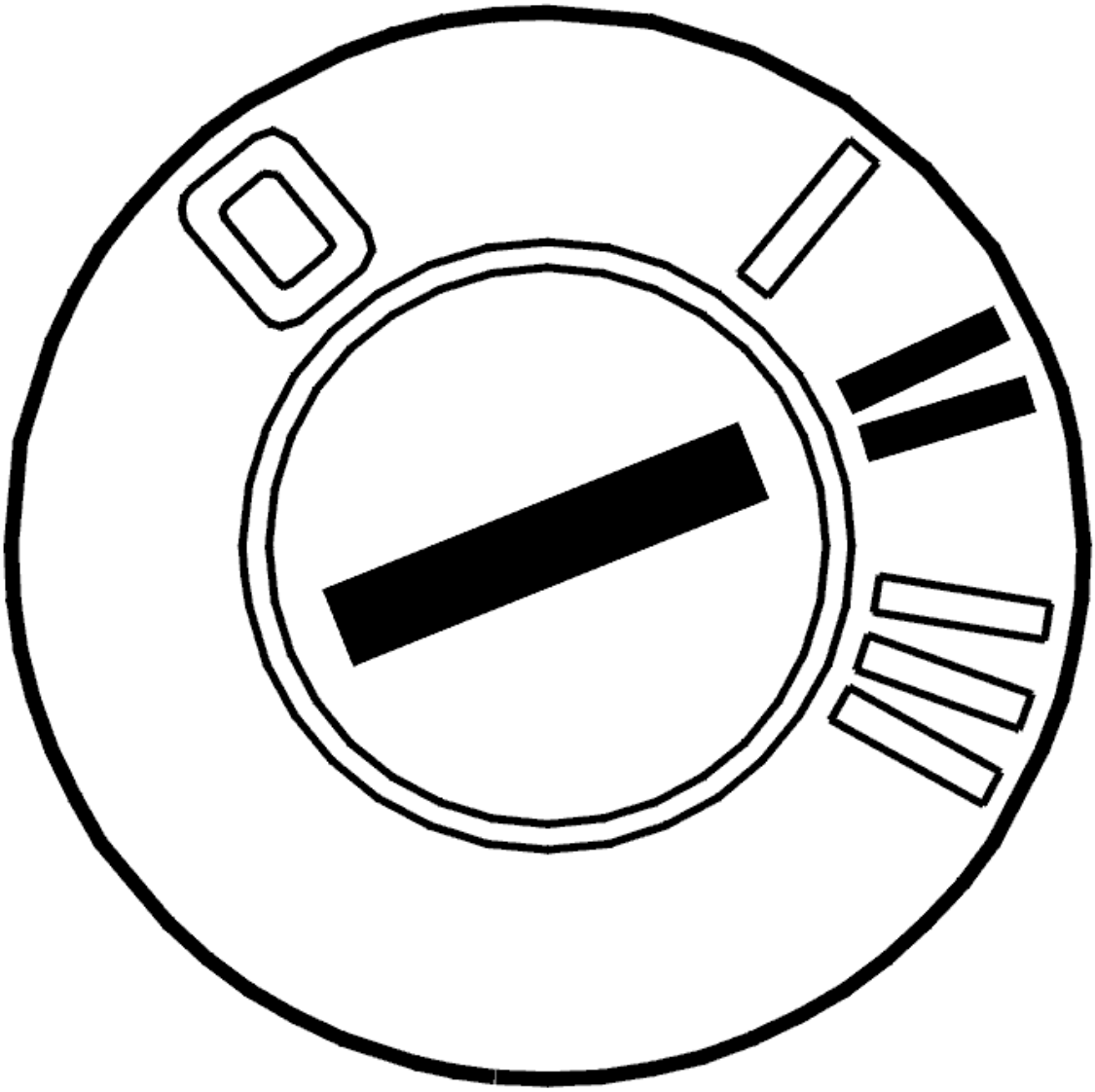

Fig. 103: Identifying Ignition ON
Courtesy of VOLVO CARS CORPORATION

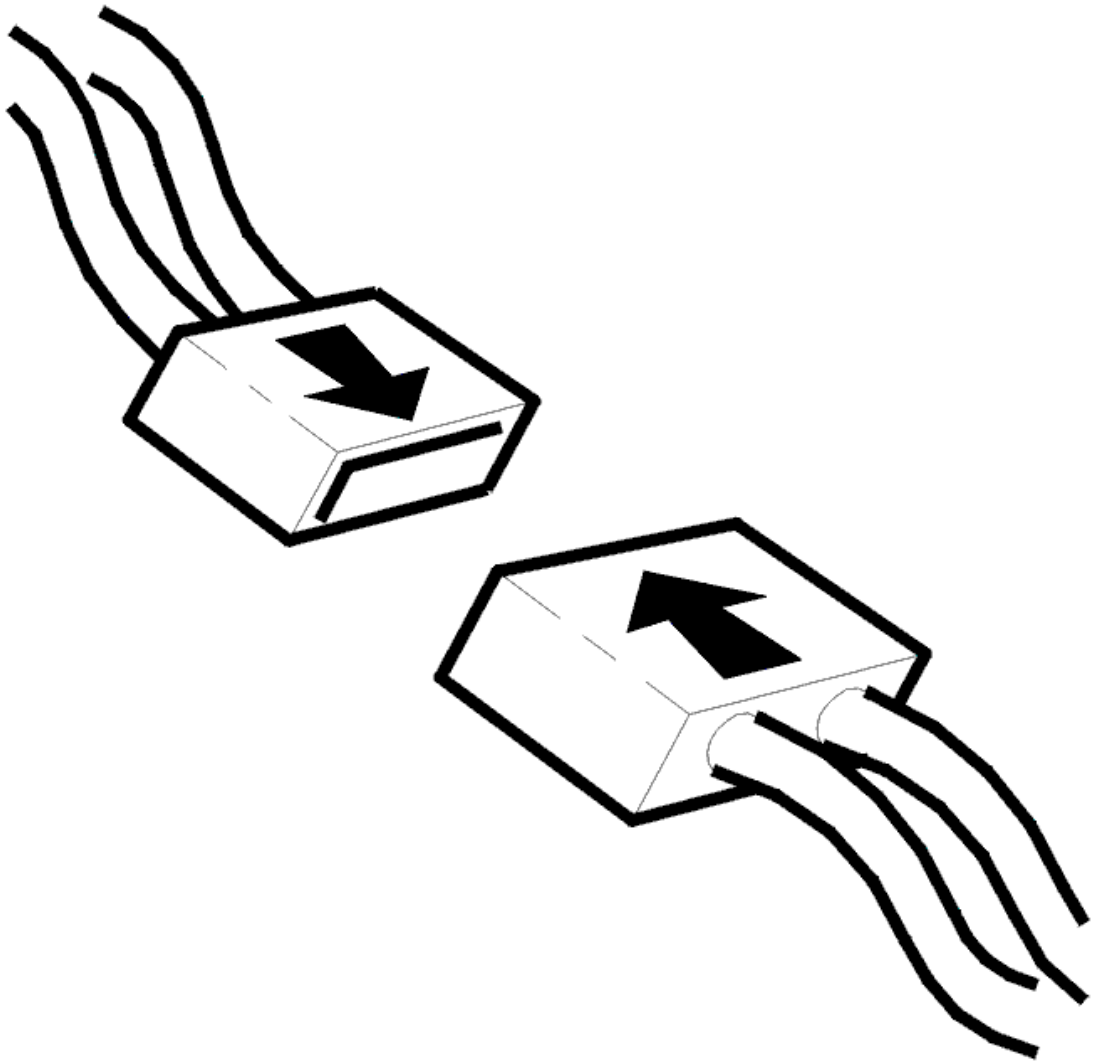

Fig. 104: Connecting Connector
Courtesy of VOLVO CARS CORPORATION

- Ignition off
- Check the control module connector for contact resistance and oxidation. Remedy if necessary.

  Check for damage carefully

- Reinstall the components, reconnect the connectors etc.
- Ignition on
- Read off the engine coolant temperature.

  Check that the engine coolant temperature (ECT) reading is correct. Compare with the actual coolant temperature of the engine.

If the temperature reading is now OK, the fault was probably caused by poor contact in the connector.

Other information:

- To access the control module or connect the breakout box, see **CONNECTING THE BREAKOUT BOX**
- see **CHECKING WIRING AND TERMINALS** .

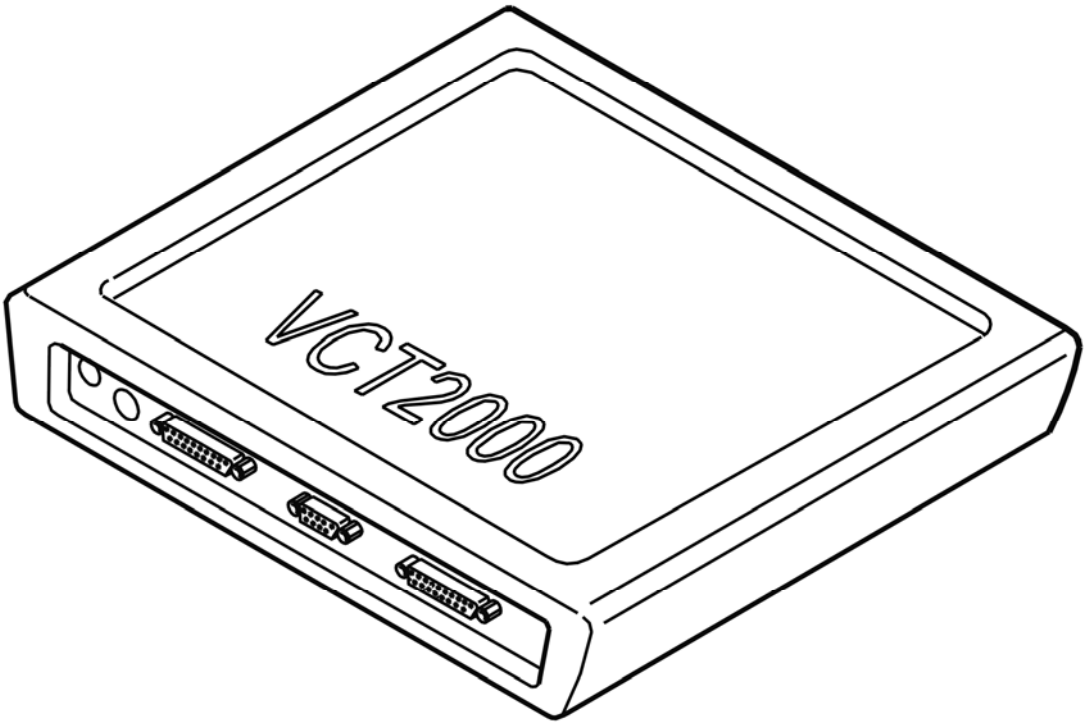

Fig. 105: Identifying VCT2000 Diagnostic Tool Symbol In VIDA
Courtesy of VOLVO CARS CORPORATION

Is the temperature OK?

- **YES**

  OKAY: Troubleshooting has been completed.

- **NO**

  Refer to **CHECKING COMPONENTS AND WIRING**

CHECKING COMPONENTS AND WIRING

Check the resistance of the engine coolant temperature sensor. For the resistance values, see **COMPONENTS RESISTANCE VALUES** .

Check the cable between control module terminal #4 and the ground terminal for the engine coolant temperature sensor. Check for an open-circuit.

HINT: Because it is difficult to separate the cables to the engine coolant temperature sensor, measure between control module #4 and both cables to the water temperature sensor.

Check the cable between control module terminal #16 and the signal terminal for the engine coolant temperature sensor. Check for an open-circuit. Check for a short-circuit to supply voltage.

HINT: It is difficult to separate the cables to the engine coolant temperature sensor. Test the cables one at a time therefore, and, see if a relevant value was obtained from either of them.

Remedy as necessary.

Other information:

- To access the control module or connect the breakout box, see **CONNECTING THE BREAKOUT BOX**
- See **OVERHEAT PROTECTION THERMOSTAT / FLAME SENSOR / ENGINE COOLANT TEMPERATURE SENSOR, REPLACING** .
- With the ignition on and the signal cable for the engine coolant temperature sensor cut, the voltage between the signal cable for the engine coolant temperature sensor (engine control module (ECM) side) and ground should be approximately 5 V
- For other values, see **SIGNAL SPECIFICATION**
- see **CHECKING WIRING AND TERMINALS** .

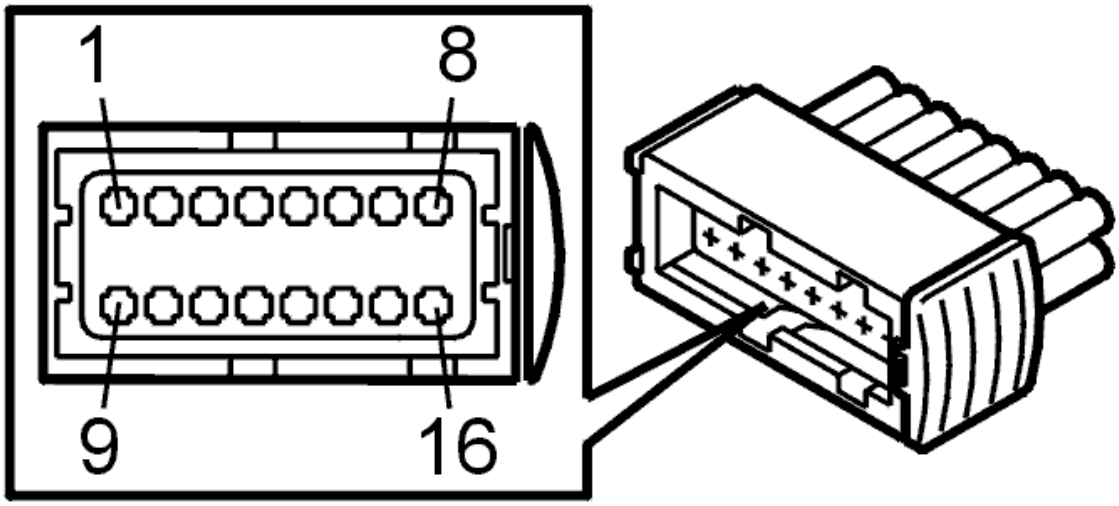

Fig. 106: Identifying Connector Terminals
Courtesy of VOLVO CARS CORPORATION

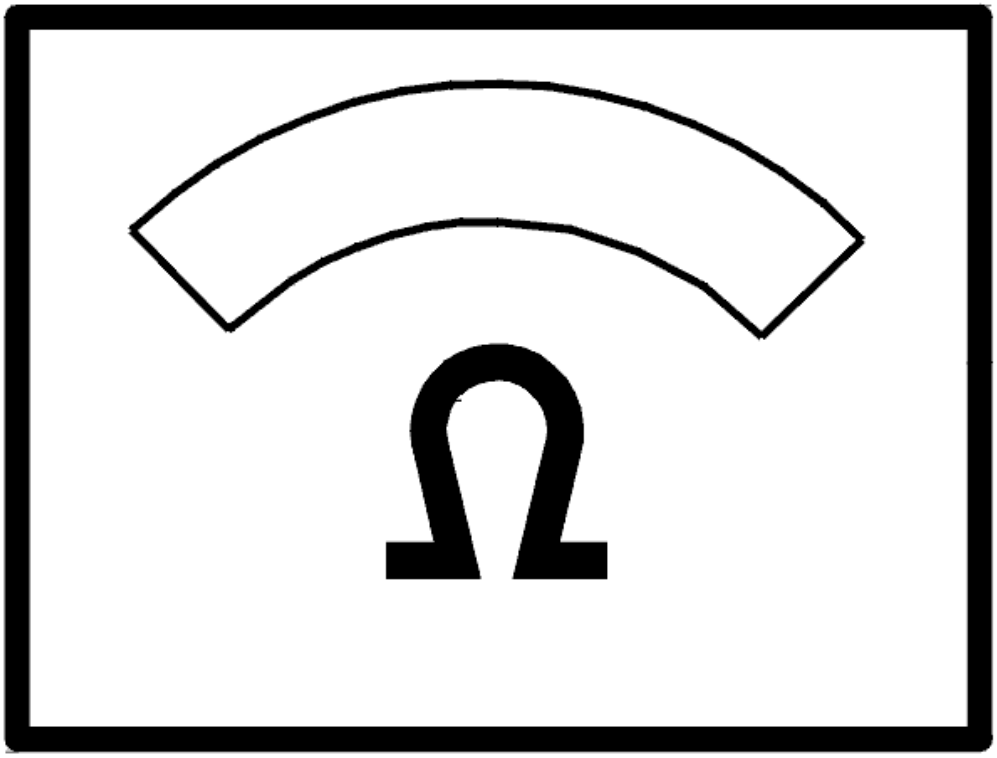

Fig. 107: Identifying Ohm Meter
Courtesy of VOLVO CARS CORPORATION

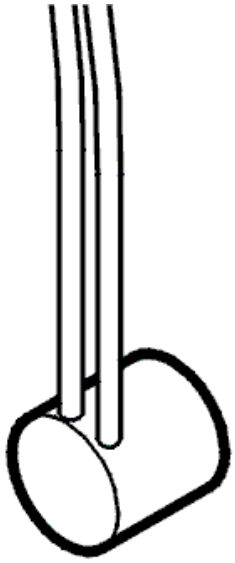

Fig. 108: Identifying Coolant Temperature Sensor
Courtesy of VOLVO CARS CORPORATION

- **Continue**

  Refer to **VERIFICATION**

INTERMITTENT FAULT

Check the control module connector. Check for contact resistance and oxidation.

Check the circuit for an intermittent open-circuit. Measure the resistance between control module connector terminals #16 and #4 (sensor side). The resistance must be. See **COMPONENTS RESISTANCE VALUES** .

Check the cable between control module terminal #16 and the engine coolant temperature sensor. Check for an intermittent short-circuit to supply voltage.

Remedy as necessary.

Other information:

- To access the control module or connect the breakout box, see **CONNECTING THE BREAKOUT BOX**
- To access or replace the engine coolant temperature sensor, see **OVERHEAT PROTECTION**

THERMOSTAT / FLAME SENSOR / ENGINE COOLANT TEMPERATURE SENSOR, REPLACING

- For other values, see **SIGNAL SPECIFICATION**
- see **CHECKING WIRING AND TERMINALS** .

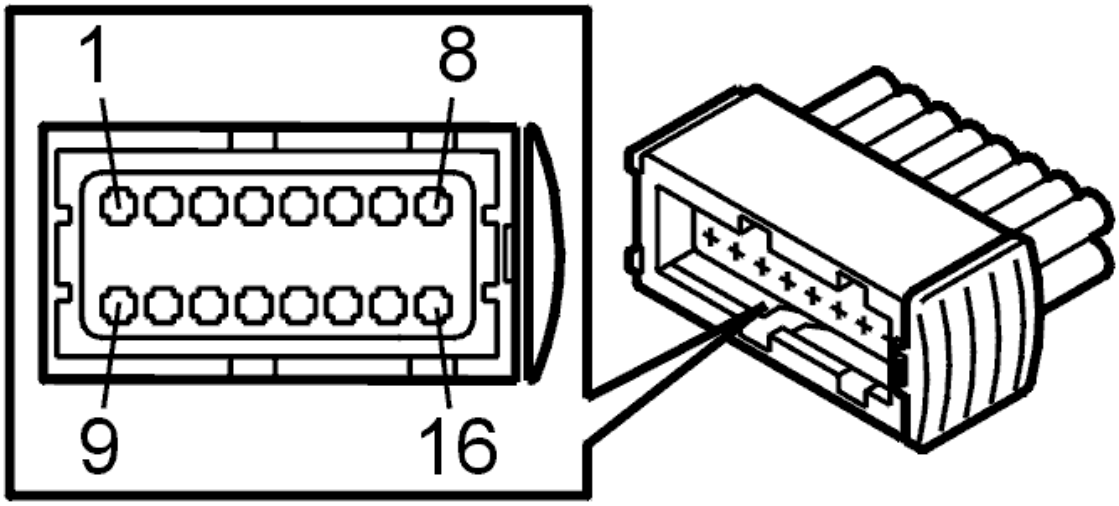

Fig. 109: Identifying Connector Terminals
Courtesy of VOLVO CARS CORPORATION

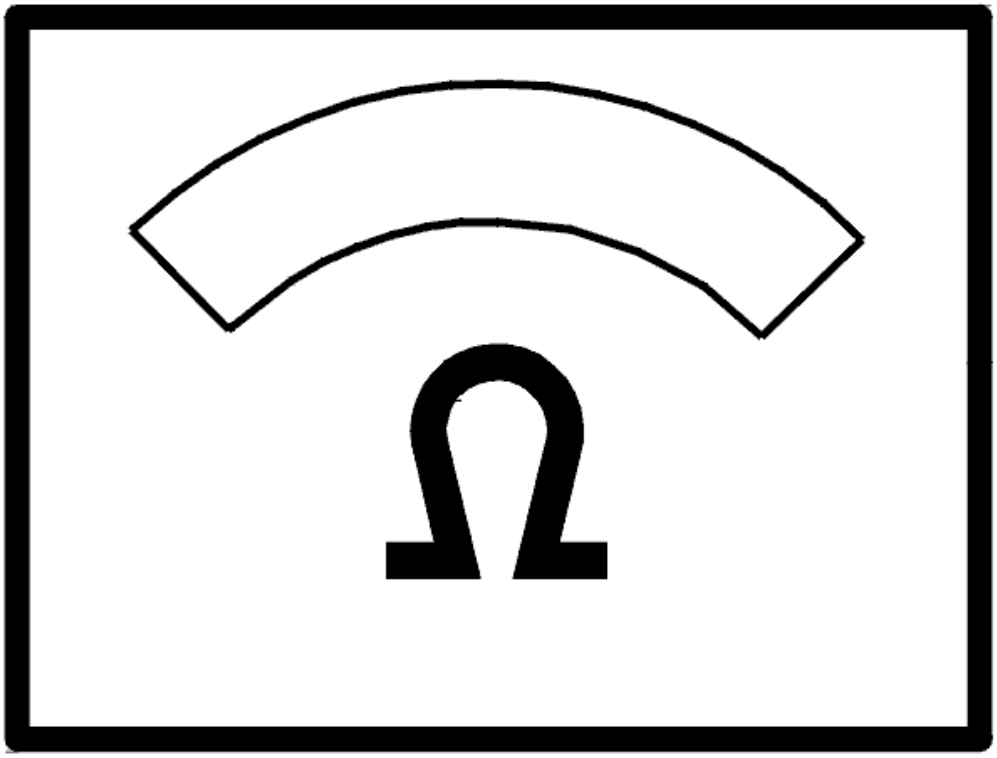

Fig. 110: Identifying Ohm Meter
Courtesy of VOLVO CARS CORPORATION

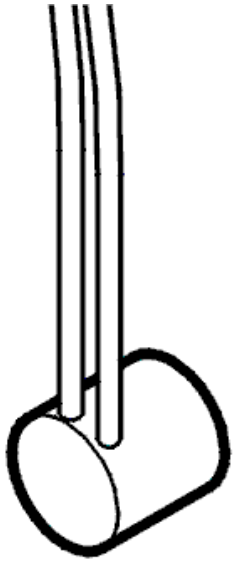

Fig. 111: Identifying Coolant Temperature Sensor
Courtesy of VOLVO CARS CORPORATION

- **Continue**

  Refer to **INFORMATION**

  OKAY: Troubleshooting has been completed.

VERIFICATION

VERIFICATION

HINT: After the repair it is necessary to check that the fault has been rectified.

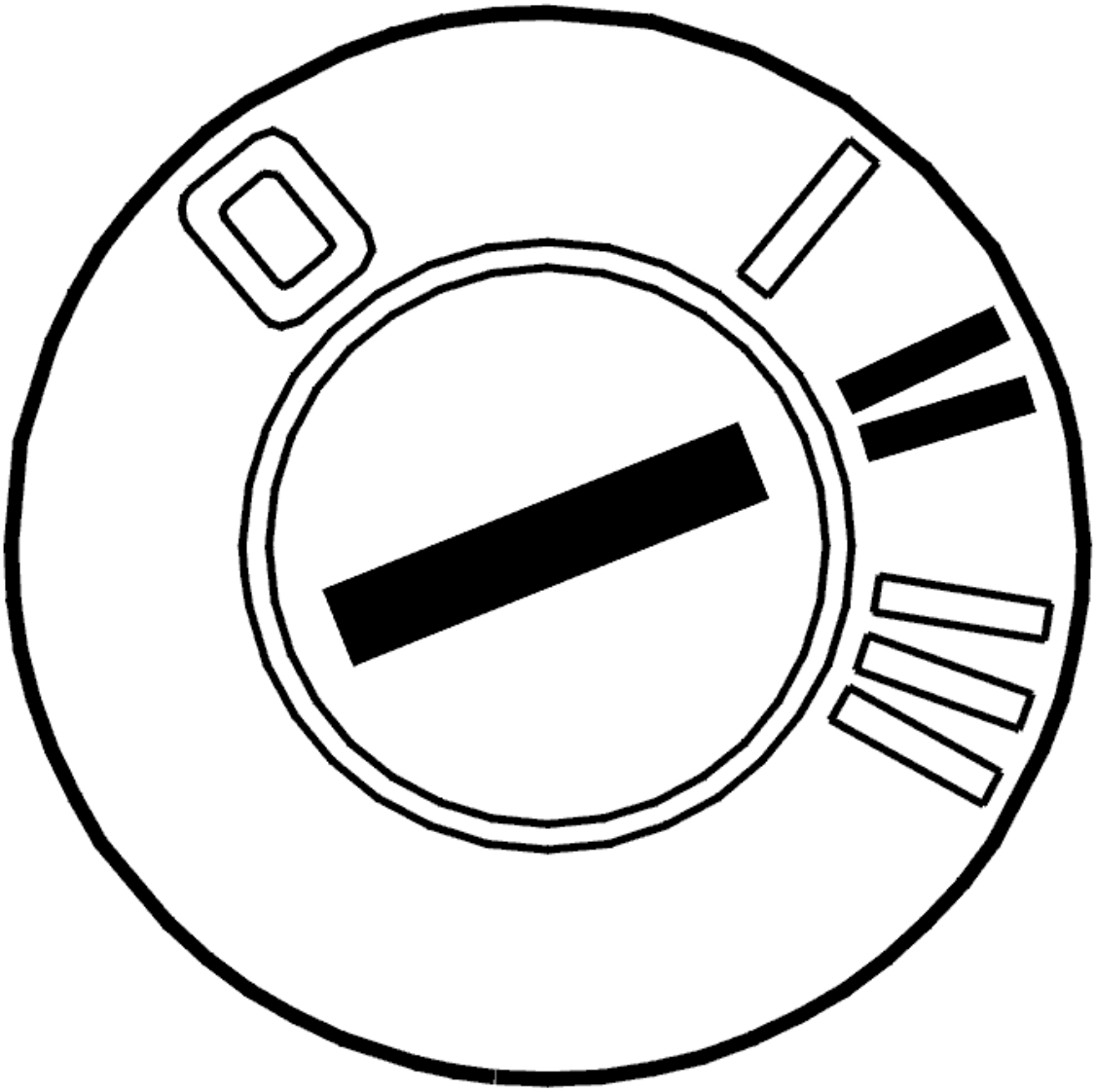

Fig. 112: Identifying Ignition ON
Courtesy of VOLVO CARS CORPORATION

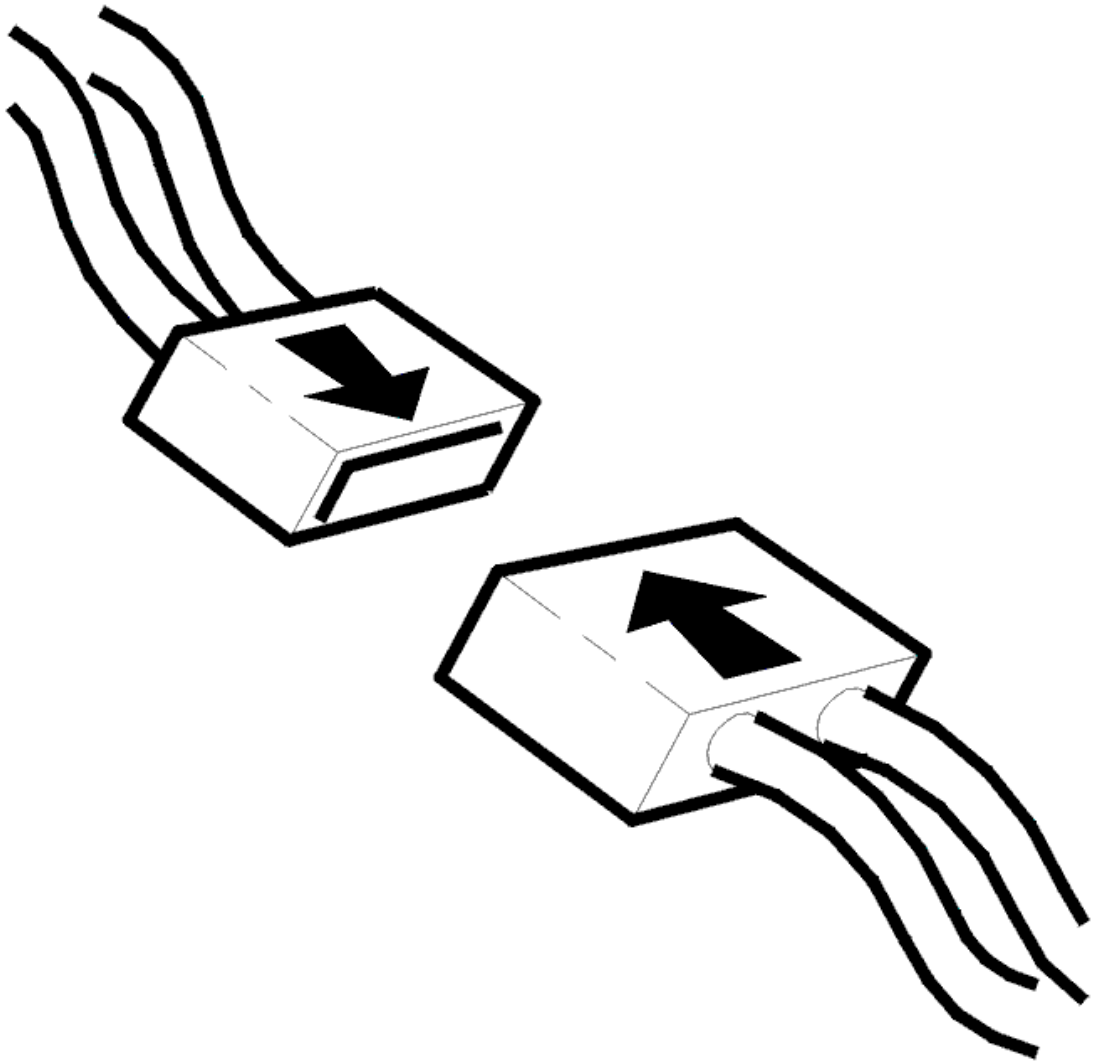

Fig. 113: Connecting Connector
Courtesy of VOLVO CARS CORPORATION

- Ignition off.
- Connect connector, install components etc.
- Ignition on.
- Read the water temperature.

  Check that the coolant temperature is correct. Compare with the actual temperature of the engine.

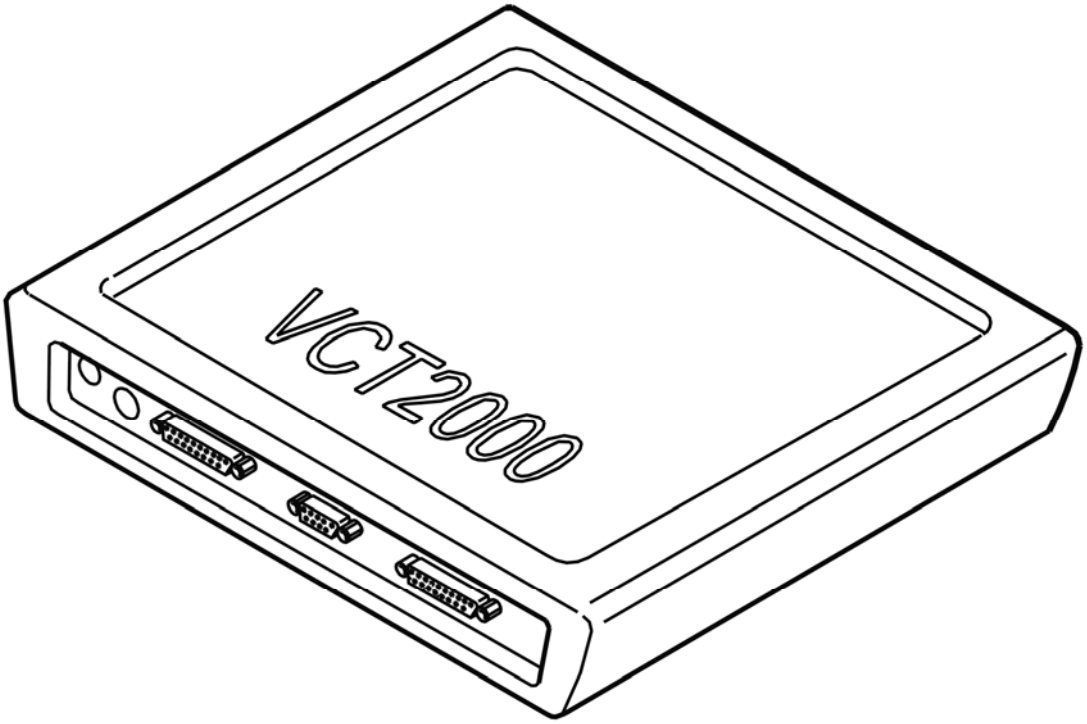

Fig. 114: Identifying VCT2000 Diagnostic Tool Symbol In VIDA
Courtesy of VOLVO CARS CORPORATION

Is the temperature reasonable?

- **YES**

  VERIFIED: Troubleshooting has been completed.

- **NO**

  Refer to **INFORMATION**

INFORMATION

FAULT-TRACING INFORMATION

The fault should have been detected and remedied. As this is not the case fault-tracing has failed.

Exit fault-tracing for this diagnostic trouble code (DTC) or make another attempt.

INFORMATION

FAULT-TRACING INFORMATION

If the fault is intermittent, do not verify fault-tracing if the fault does not recur.

It is possible to view the information again, or leave fault-tracing for this diagnostic trouble code (DTC).

CEM-5F31: COOLANT TEMPERATURE SENSOR OPEN CIRCUIT OR SHORT CIRCUIT TO SUPPLY (2005-2012)

DIAGNOSTIC TROUBLE CODE (DTC) INFORMATION CEM-5F31

Condition

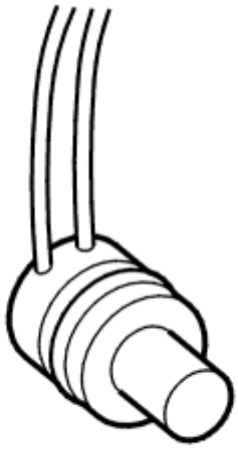

Fig. 115: Identifying Engine Coolant Temperature Sensor
Courtesy of VOLVO CARS CORPORATION

The central electronic module (CEM) checks the communication with the combustion preheater module (CPM).

If Central electronic module (CEM) registers open circuit or short-circuiting to voltage on the circuit for the water temperature sensor, the diagnostic trouble code is generated.

The diagnostic trouble code (DTC) can be diagnosed when the heater is activated.

Substitute Value

- None.

Possible Source

- Open-circuit in the signal cable.
- Short-circuit to supply voltage in the signal cable
- Damaged engine coolant temperature (ECT) sensor.

Fault symptom[s]

- Poor heating in the passenger compartment.

OPEN CIRCUIT OR SHORT-CIRCUIT TO VOLTAGE

CHECKING THE FUNCTION OF THE ENGINE COOLANT TEMPERATURE SENSOR

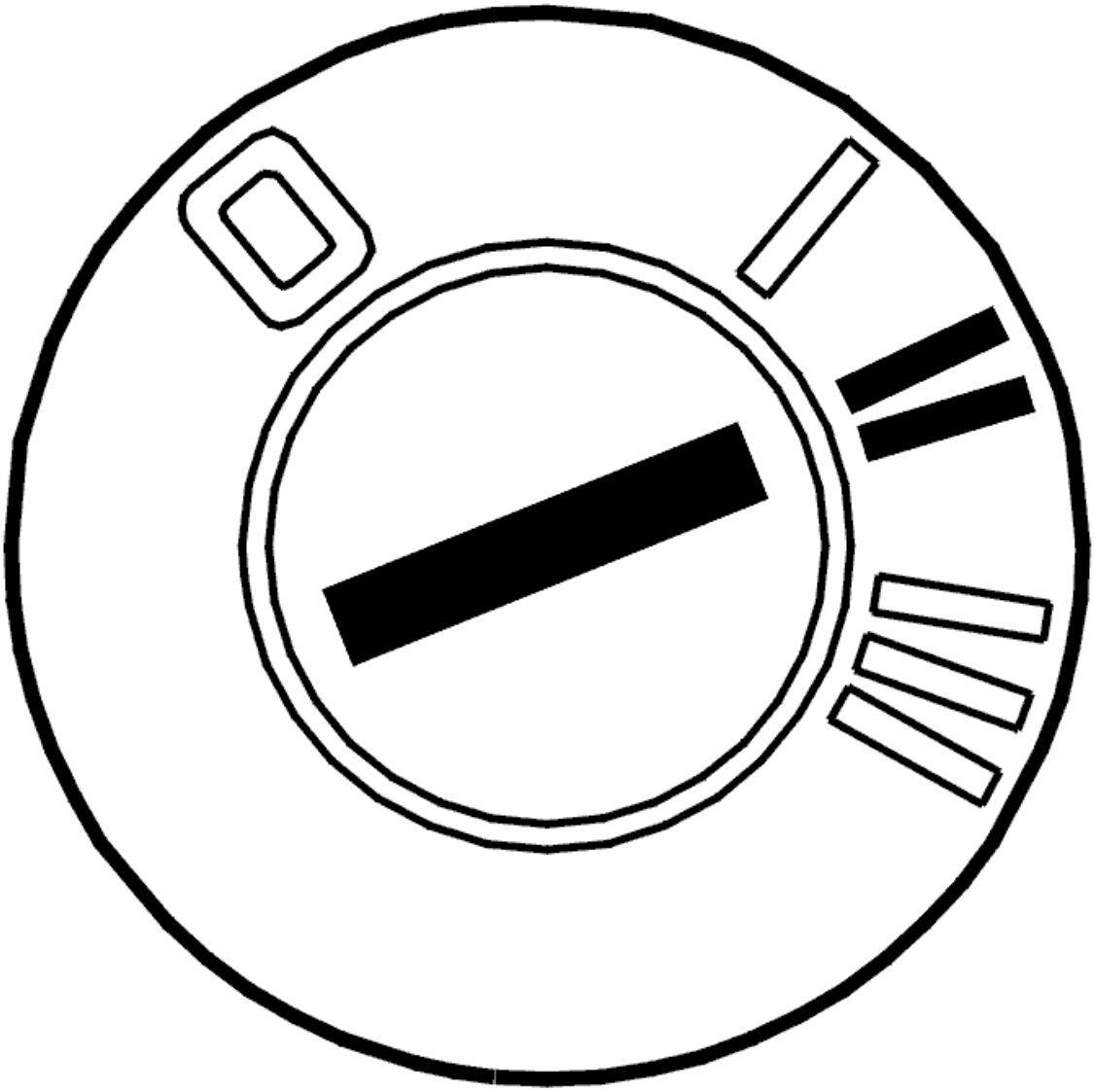

Fig. 116: Identifying Ignition ON
Courtesy of VOLVO CARS CORPORATION

- Ignition on.

  Read off the engine coolant temperature.

  Check that the engine coolant temperature (ECT) reading is correct. Compare with the actual coolant temperature of the engine.

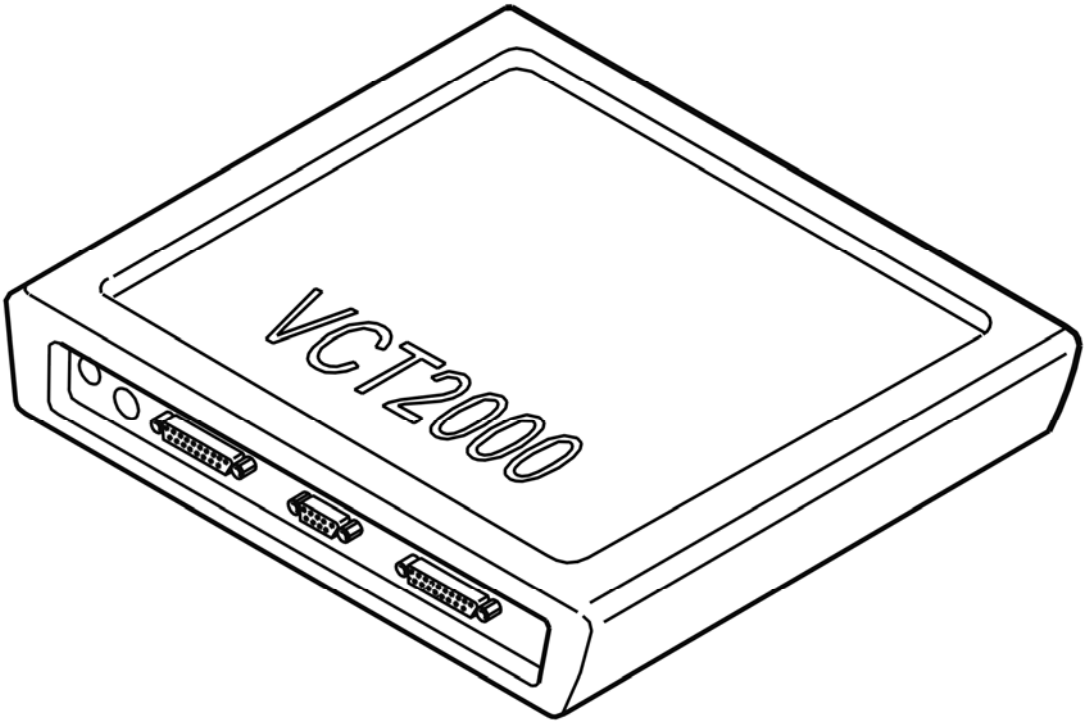

Fig. 117: Identifying VCT2000 Diagnostic Tool Symbol In VIDA
Courtesy of VOLVO CARS CORPORATION

Is the temperature reading OK?

- **YES**

  Refer to **CHECKING COMPONENTS AND WIRING**

- **NO**

  Refer to **CHECKING THE CONNECTORS**

CHECKING THE CONNECTORS

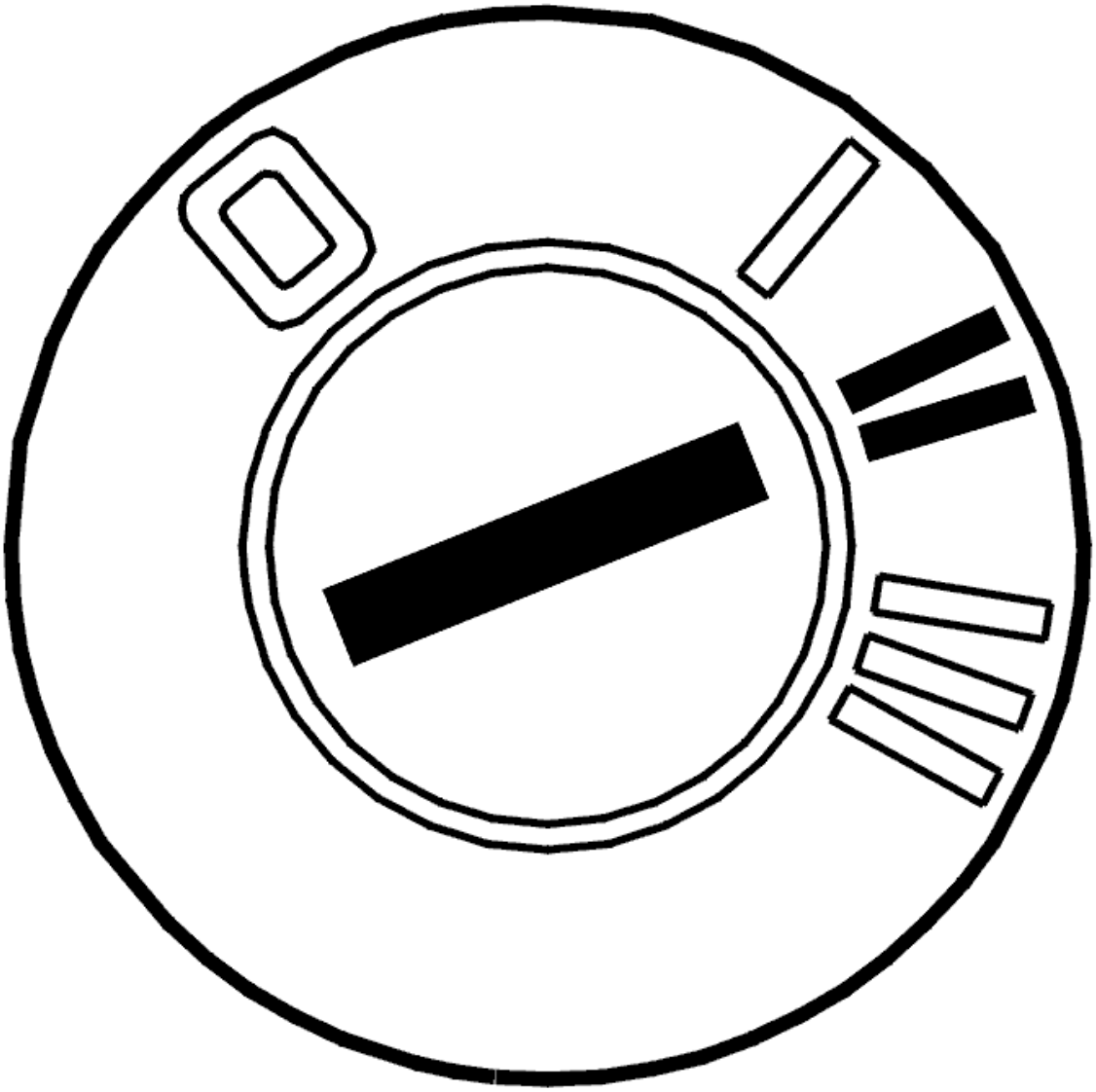

Fig. 118: Identifying Ignition ON
Courtesy of VOLVO CARS CORPORATION

- Ignition off.

  Check the combustion preheater module (CPM) connectors. Check for contact resistance and oxidation. Remedy if necessary.

  - Reinstall the components, reconnect the connectors etc.
  - Ignition on
  - Read off the engine coolant temperature.

  Check that the engine coolant temperature (ECT) reading is correct. Compare with the actual coolant temperature of the engine.

If the temperature reading is now OK, the fault was probably caused by poor contact in the connector.

Other information

- To access the control module, see: **CONNECTING THE BREAKOUT BOX**
- see **CHECKING WIRING AND TERMINALS**

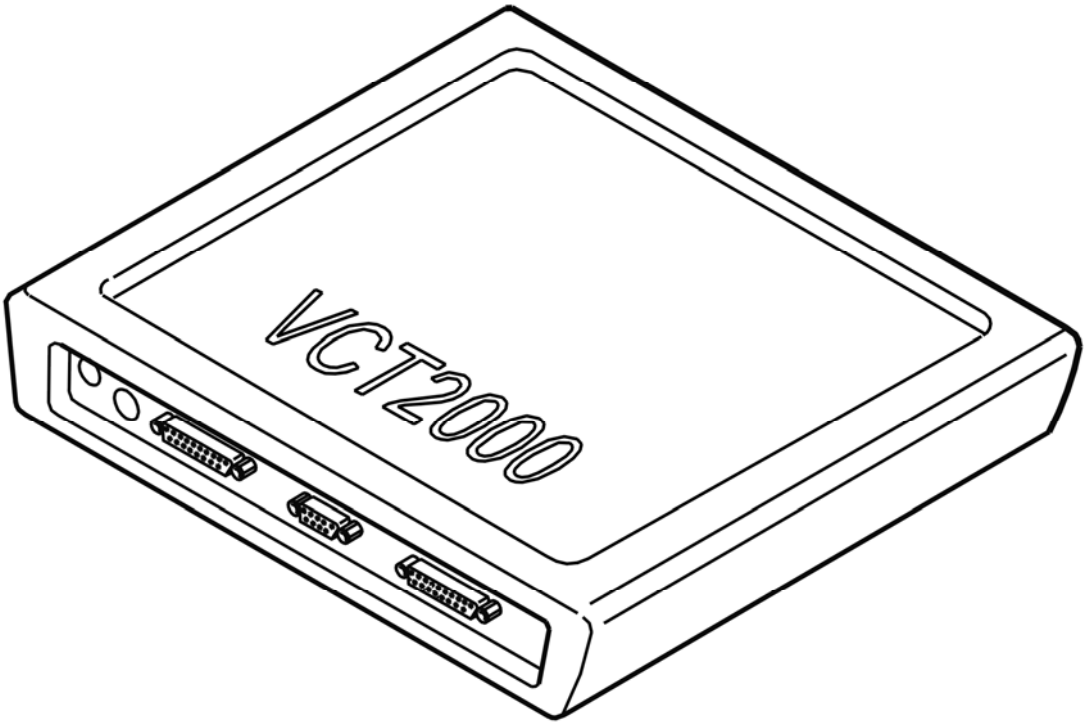

Fig. 119: Identifying VCT2000 Diagnostic Tool Symbol In VIDA
Courtesy of VOLVO CARS CORPORATION

Is the temperature reading OK?

- **YES**

  Refer to **VERIFICATION**

- **NO**

  Refer to **CHECKING COMPONENTS AND WIRING**

CHECKING COMPONENTS AND WIRING

- Check the resistance of the engine coolant temperature sensor

- Check the cable between combustion preheater module (CPM) terminal #4 and the ground terminal for the engine coolant temperature sensor. Check for an open-circuit.

  HINT: Because it is difficult to separate the cables to the engine coolant temperature sensor, measure between combustion preheater module (CPM) terminal #4 and both cables to the water temperature sensor.

- Check the cable between combustion preheater module (CPM) terminal #16 and the signal terminal for the engine coolant temperature sensor. Check for an open-circuit. Check for a short-circuit to supply voltage.

  HINT: It is difficult to differentiate the cables to the engine coolant temperature sensor. Test the cables one at a time therefore, and, see if a relevant value was obtained from either of them.

Remedy as necessary.

Other information

- see **CONNECTING THE BREAKOUT BOX**
- see **SIGNAL SPECIFICATION**
- For the resistance values, see: **COMPONENTS RESISTANCE VALUES**
- see **OVERHEAT PROTECTION THERMOSTAT / FLAME SENSOR / ENGINE COOLANT TEMPERATURE SENSOR, REPLACING**
- see **CHECKING WIRING AND TERMINALS**

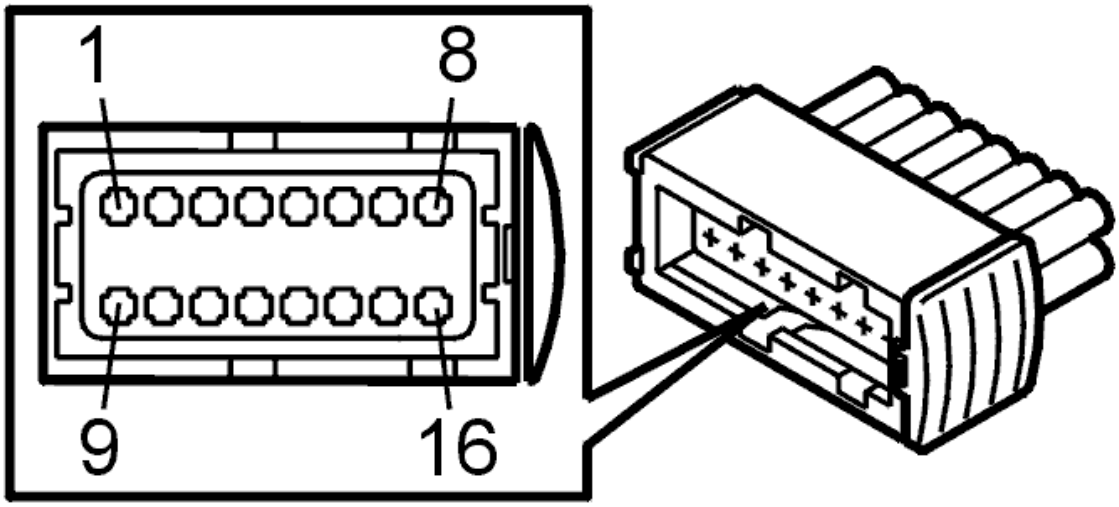

Fig. 120: Identifying Connector Terminals
Courtesy of VOLVO CARS CORPORATION

- **Continue**

  Refer to **VERIFICATION**

CHECKING COMPONENTS AND WIRING

- Check the combustion preheater module (CPM) connectors. Check for contact resistance and oxidation
- Check the circuit for an intermittent open-circuit. Measure the resistance between combustion preheater module (CPM) connector terminals #16 and #4 (sensor side)
- Check the cable between combustion preheater module (CPM) terminal #16 and the engine coolant temperature sensor. Check for an intermittent short-circuit to supply voltage.

Remedy as necessary.

Other information

- see **CONNECTING THE BREAKOUT BOX**
- see **SIGNAL SPECIFICATION**
- For the resistance values, see: **COMPONENTS RESISTANCE VALUES**
- see **OVERHEAT PROTECTION THERMOSTAT / FLAME SENSOR / ENGINE COOLANT TEMPERATURE SENSOR, REPLACING**
- see **CHECKING WIRING AND TERMINALS**

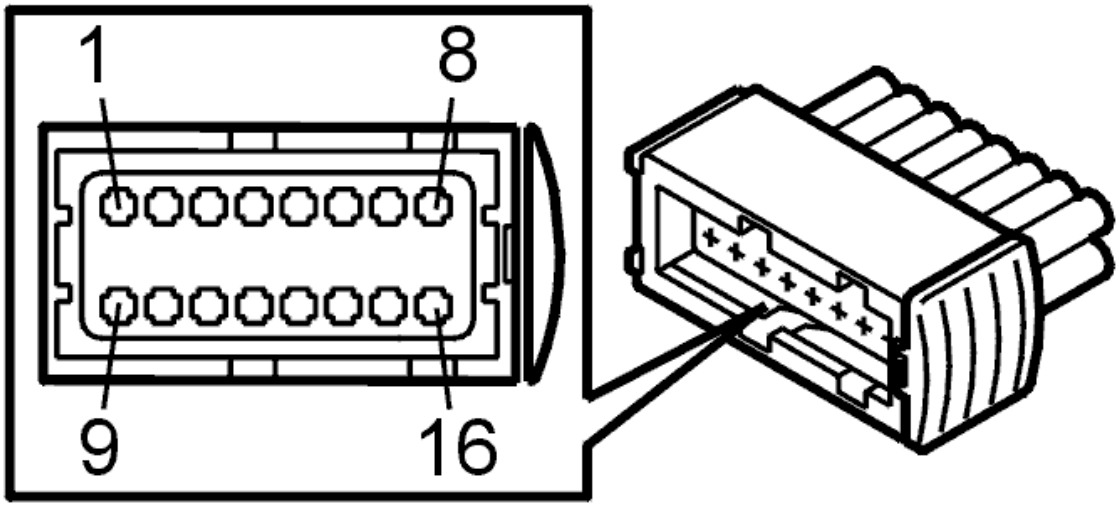

Fig. 121: Identifying Connector Terminals
Courtesy of VOLVO CARS CORPORATION

- **Continue**

  Refer to **VERIFICATION**

VERIFICATION

VERIFICATION

HINT: After carrying out the repair, check that the fault has been remedied.

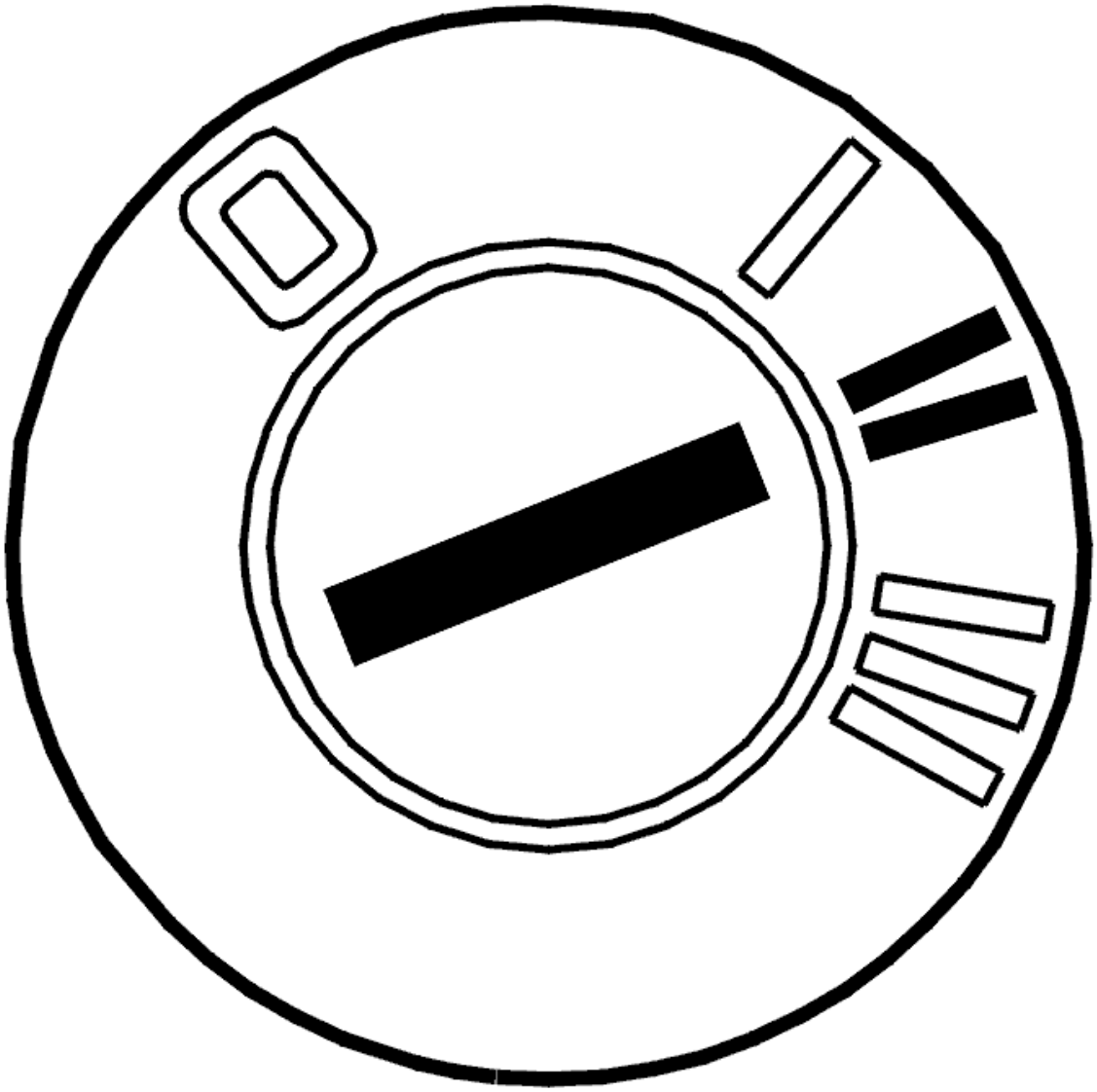

Fig. 122: Identifying Ignition ON
Courtesy of VOLVO CARS CORPORATION

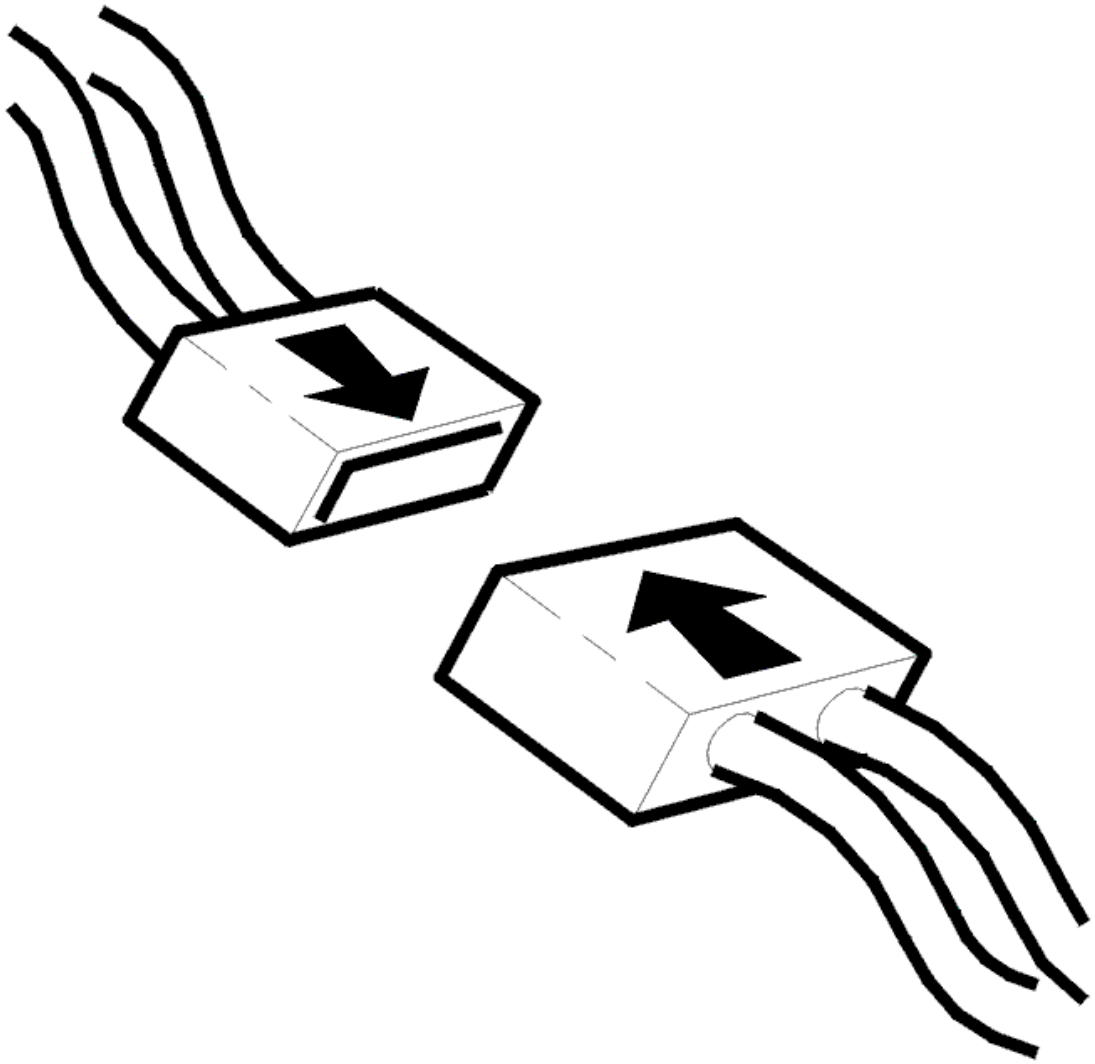

Fig. 123: Connecting Connector
Courtesy of VOLVO CARS CORPORATION

- Ignition off
- Reinstall the connectors, components etc.
- Ignition on
- Read off the engine coolant temperature.

  Check that the engine coolant temperature (ECT) reading is correct. Compare with the actual coolant temperature of the engine.

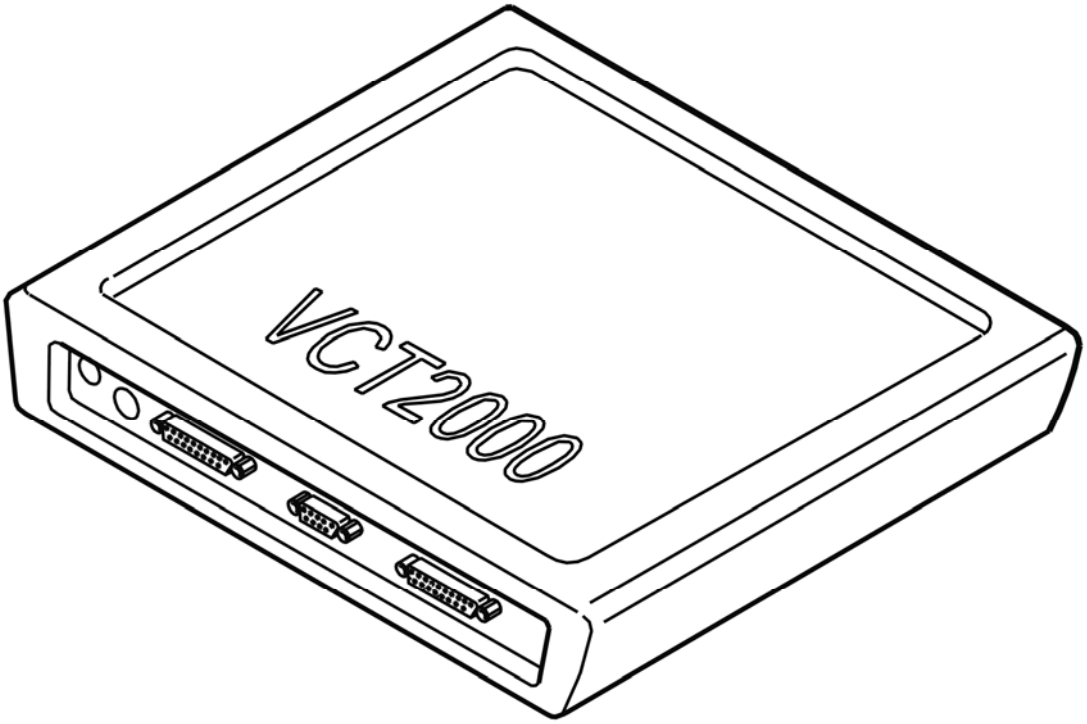

Fig. 124: Identifying VCT2000 Diagnostic Tool Symbol In VIDA
Courtesy of VOLVO CARS CORPORATION

Is the temperature within its permitted range?

- **YES**

  VERIFIED: Troubleshooting has been completed.

- **NO**

  Refer to **INFORMATION**

INFORMATION

FAULT-TRACING INFORMATION

The fault should have been detected and remedied. As this is not the case fault-tracing has failed.

Exit fault-tracing for this diagnostic trouble code (DTC) or make another attempt.

CEM-5F32: COOLANT TEMPERATURE SENSOR SHORT CIRCUIT TO GROUND (2005-2012)

DIAGNOSTIC TROUBLE CODE (DTC) INFORMATION CEM-5F32

Condition

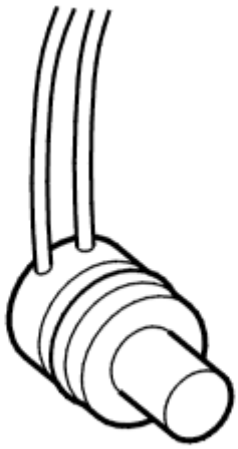

Fig. 125: Identifying Engine Coolant Temperature Sensor
Courtesy of VOLVO CARS CORPORATION

The central electronic module (CEM) checks the communication with the combustion preheater module (CPM).

If the Central electronic module (CEM) registers that the circuit for the water temperature sensor is short-circuited to ground, the diagnostic trouble code is generated.

The diagnostic trouble code (DTC) can be diagnosed when the heater is activated.

Substitute Value

- None.

Possible Source

- Short-circuit to ground in the signal cable
- Damaged engine coolant temperature (ECT) sensor.

Fault symptom[s]

- Poor heating in the passenger compartment.

SHORT-CIRCUIT TO GROUND

CHECKING THE FUNCTION OF THE ENGINE COOLANT TEMPERATURE SENSOR

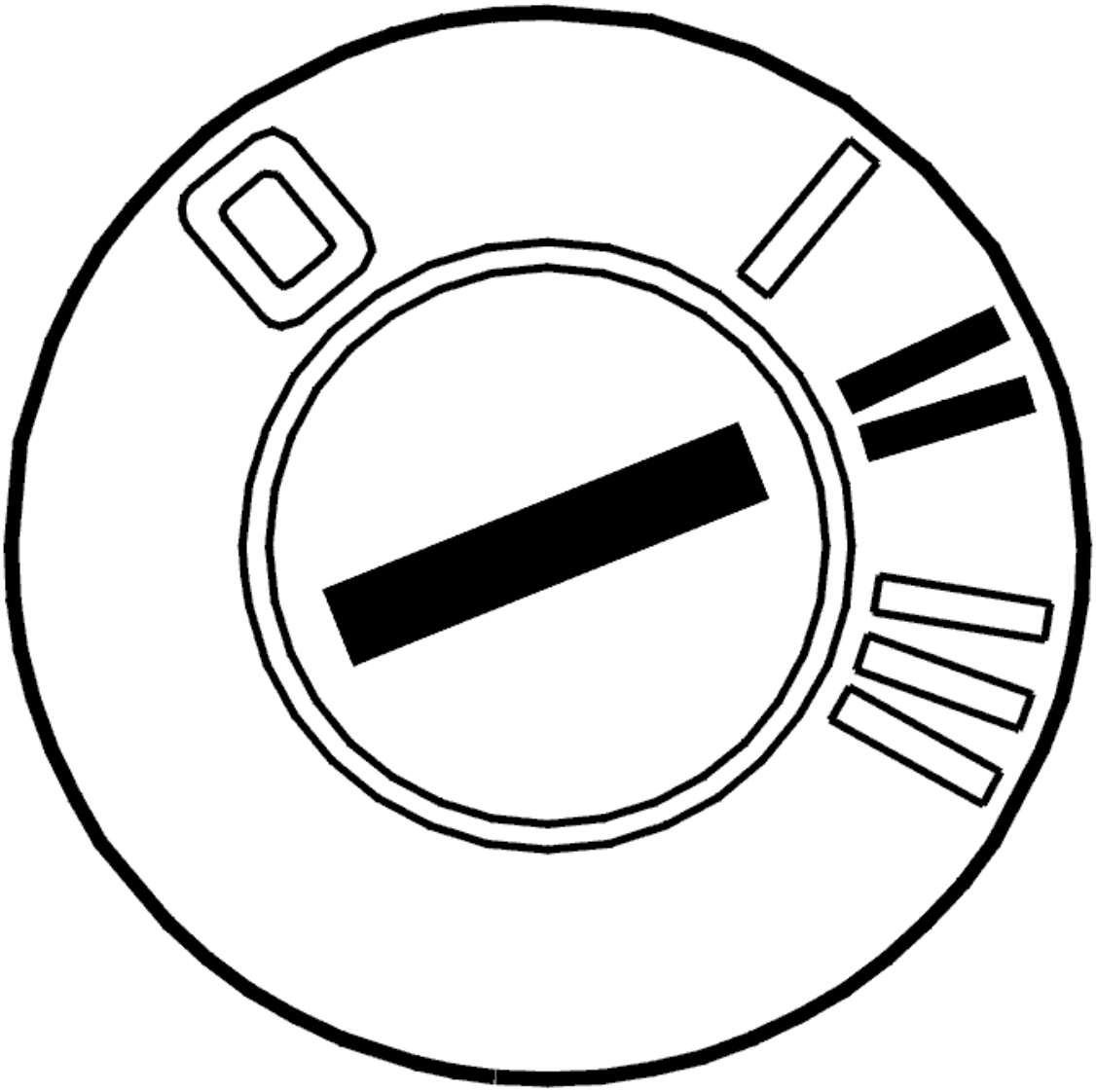

Fig. 126: Identifying Ignition ON
Courtesy of VOLVO CARS CORPORATION

- Ignition on.

  Read off the engine coolant temperature.

  Check that the engine coolant temperature (ECT) reading is correct. Compare with the actual coolant temperature of the engine.

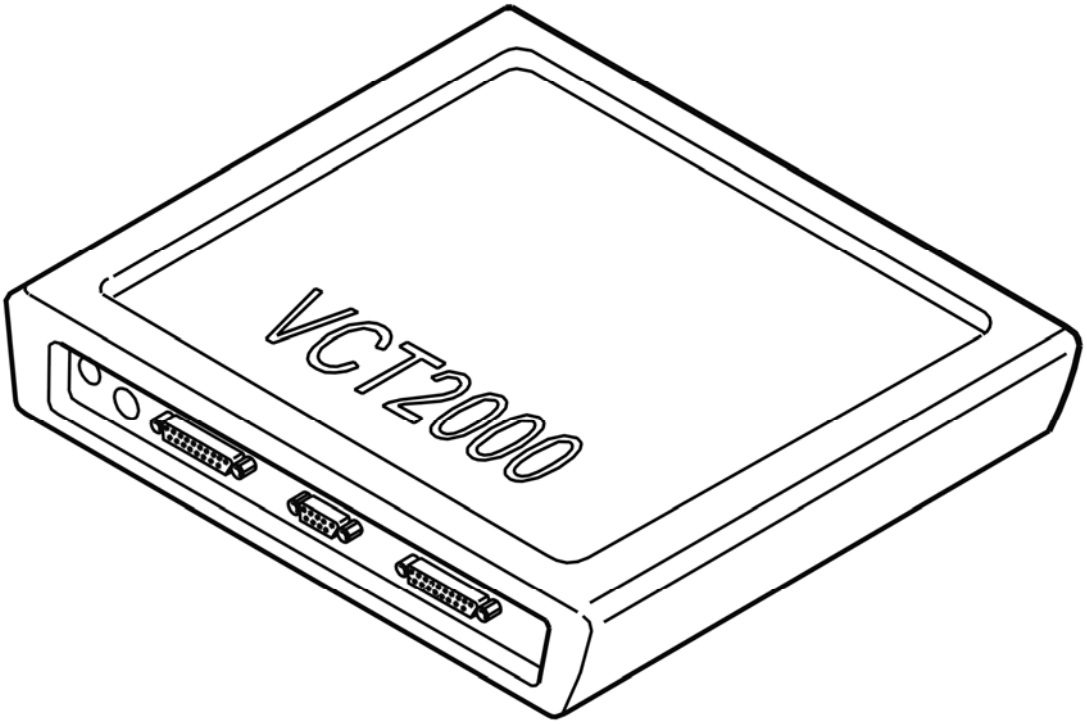

Fig. 127: Identifying VCT2000 Diagnostic Tool Symbol In VIDA
Courtesy of VOLVO CARS CORPORATION

Is the temperature reading OK?

- **YES**

  Refer to **CHECKING COMPONENTS AND WIRING**

- **NO**

  Refer to **CHECKING COMPONENTS AND WIRING**

CHECKING COMPONENTS AND WIRING

- Check the resistance of the engine coolant temperature sensor
- Check the cable between combustion preheater module (CPM) terminal #4 and the ground terminal for the engine coolant temperature sensor. Check for a short-circuit to ground.

HINT: It is difficult to separate the ground lead for the engine coolant temperature sensor from the signal cable. Therefore, measure one cable at a time and, see if plausible values are obtained from either of them.

Remedy as necessary.

Other information

- see **CONNECTING THE BREAKOUT BOX**
- see **SIGNAL SPECIFICATION**
- For resistance values: **COMPONENTS RESISTANCE VALUES**
- see **OVERHEAT PROTECTION THERMOSTAT / FLAME SENSOR / ENGINE COOLANT TEMPERATURE SENSOR, REPLACING**
- see **CHECKING WIRING AND TERMINALS**

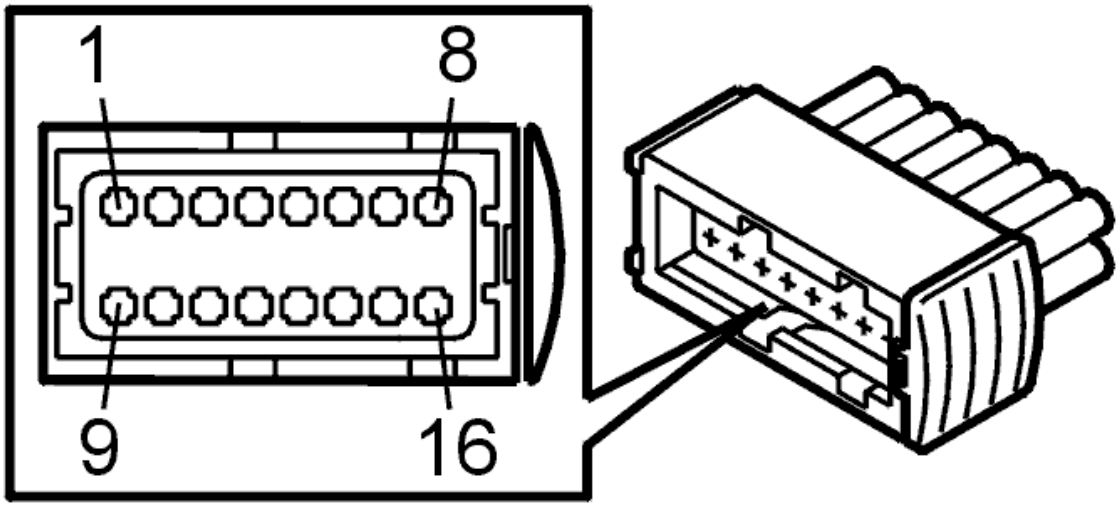

Fig. 128: Identifying Connector Terminals
Courtesy of VOLVO CARS CORPORATION

- **Continue**

  Refer to **VERIFICATION**

CHECKING COMPONENTS AND WIRING

- Check the combustion preheater module (CPM) connectors. Check for contact resistance and oxidation
- Check the cable between combustion preheater module (CPM) terminal #16 and the signal terminal for the engine coolant temperature sensor. Check for an intermittent short-circuit to ground.

Remedy as necessary.

Other information

- see **CONNECTING THE BREAKOUT BOX**
- see **SIGNAL SPECIFICATION**
- For resistance values: **COMPONENTS RESISTANCE VALUES**
- see **OVERHEAT PROTECTION THERMOSTAT / FLAME SENSOR / ENGINE COOLANT TEMPERATURE SENSOR, REPLACING**

- see **CHECKING WIRING AND TERMINALS**

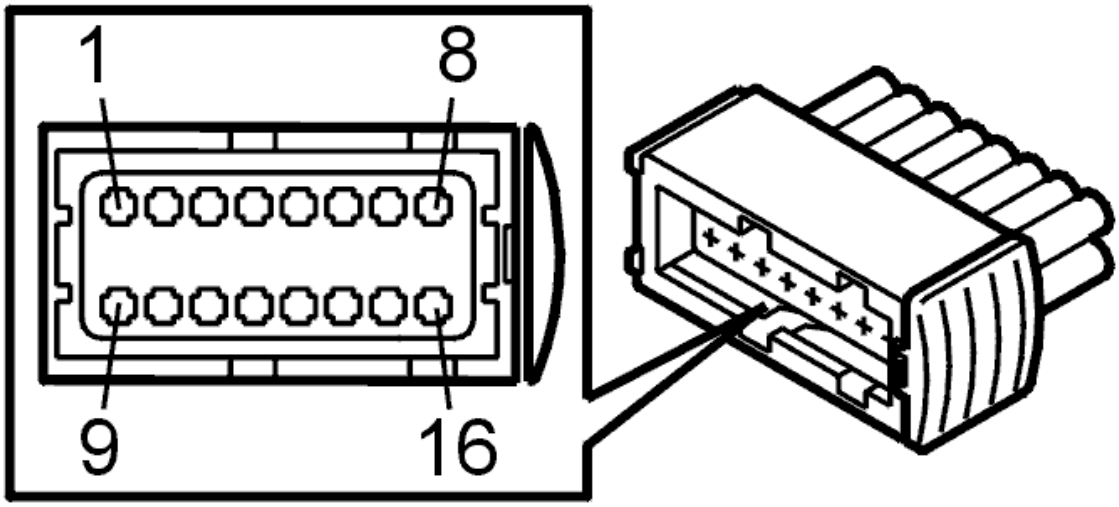

Fig. 129: Identifying Connector Terminals
Courtesy of VOLVO CARS CORPORATION

- **Continue**

  Refer to **VERIFICATION**

VERIFICATION

VERIFICATION

HINT: After carrying out the repair, check that the fault has been remedied.

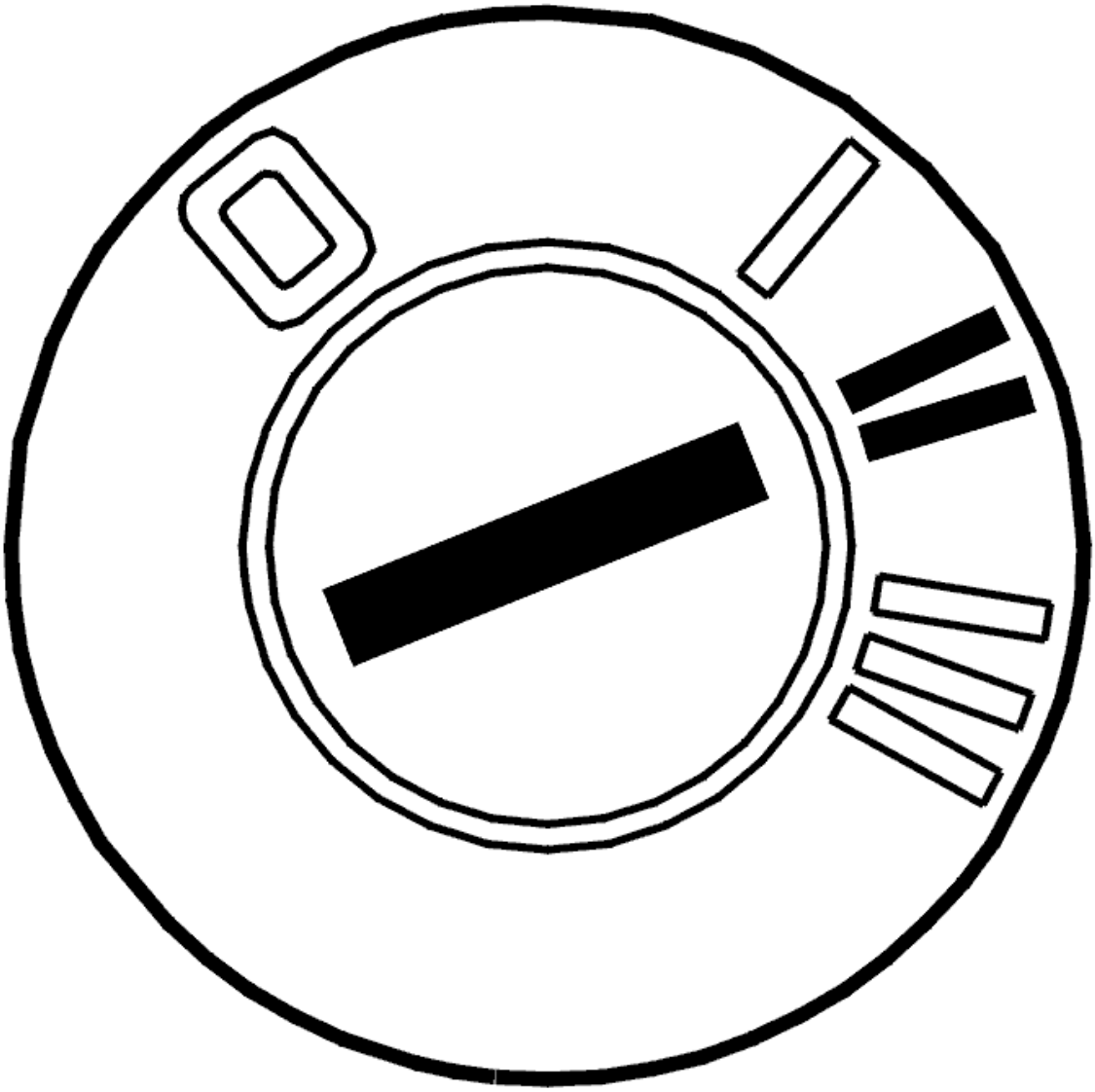

Fig. 130: Identifying Ignition ON
Courtesy of VOLVO CARS CORPORATION

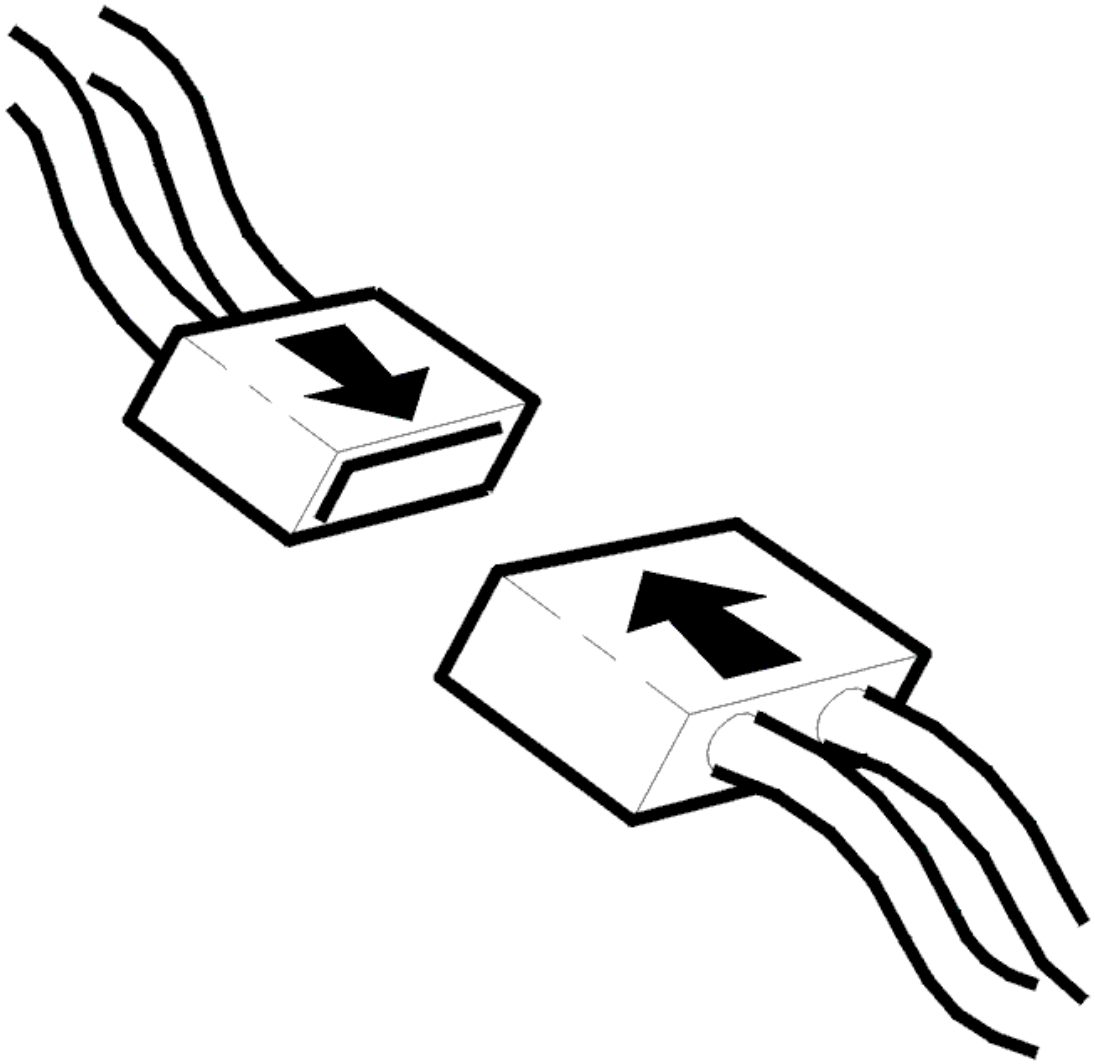

Fig. 131: Connecting Connector
Courtesy of VOLVO CARS CORPORATION

- Ignition off
- Reinstall the connectors, components etc.
- Ignition on
- Read off the engine coolant temperature.

  Check that the engine coolant temperature (ECT) reading is correct. Compare with the actual coolant temperature of the engine.

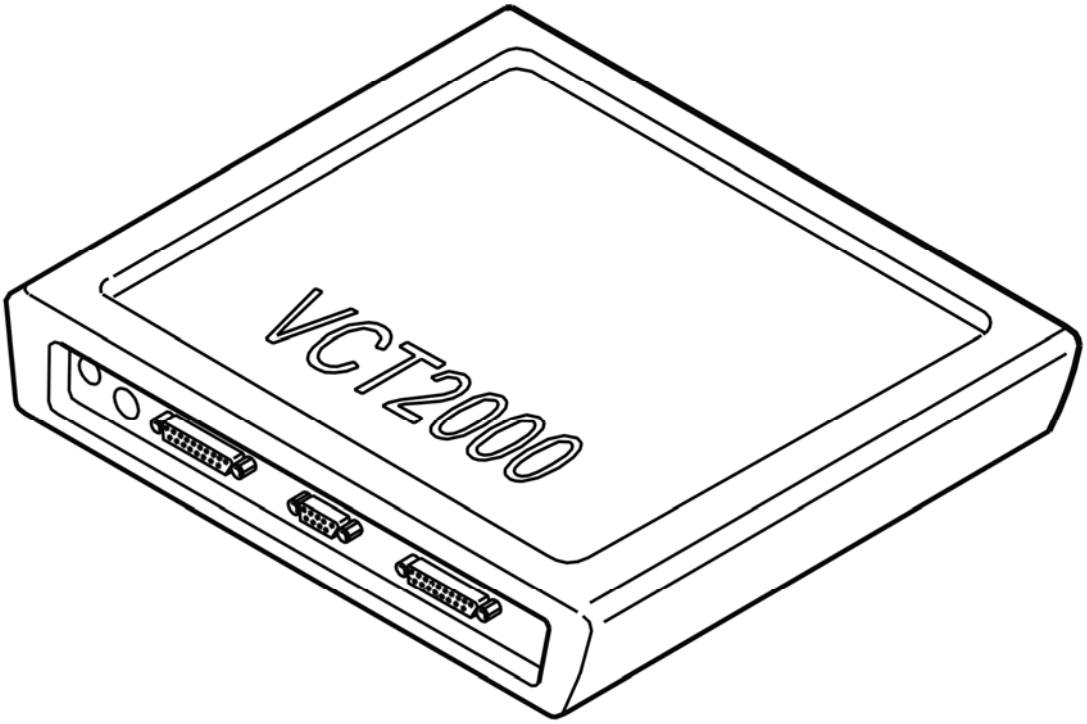

Fig. 132: Identifying VCT2000 Diagnostic Tool Symbol In VIDA
Courtesy of VOLVO CARS CORPORATION

Is the temperature within its permitted range?

- **YES**

  VERIFIED: Troubleshooting has been completed.

- **NO**

  Refer to **INFORMATION**

INFORMATION

FAULT-TRACING INFORMATION

The fault should have been detected and remedied. As this is not the case fault-tracing has failed.

Exit fault-tracing for this diagnostic trouble code (DTC) or make another attempt.

CEM-5F32: COOLANT TEMPERATURE SENSOR SHORT CIRCUIT TO GROUND (2003-2004)

DIAGNOSTIC TROUBLE CODE INFORMATION

Condition

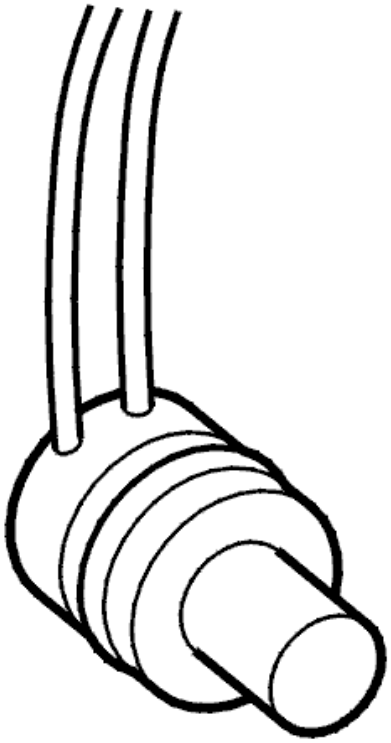

Fig. 133: Identifying Engine Coolant Temperature Sensor
Courtesy of VOLVO CARS CORPORATION

If the water temperature sensor circuit is short-circuited to ground, the control unit will interpret this as a fault and diagnostic trouble code CEM-5F32 will be set.

Substitute Value

- None.

Possible Source

- Signal wire short-circuited to ground.
- Defective water temperature sensor.

Fault symptom[s]

- Poor interior heating.

SHORT-CIRCUIT TO GROUND

CHECKING THE FUNCTION OF THE ENGINE COOLANT TEMPERATURE SENSOR

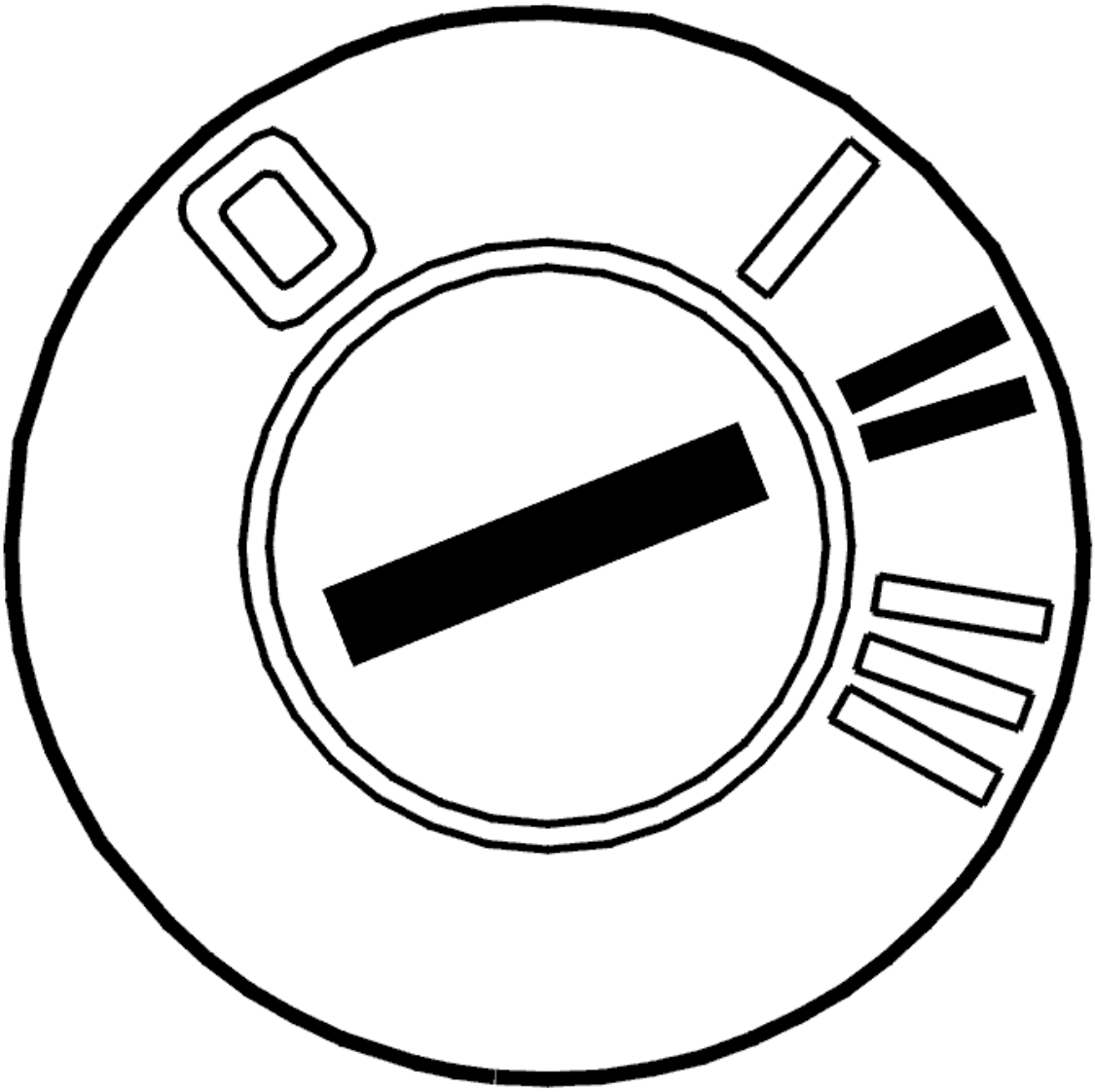

Fig. 134: Identifying Ignition ON
Courtesy of VOLVO CARS CORPORATION

- Ignition on
- Read off the engine coolant temperature.

  Check that the engine coolant temperature (ECT) reading is correct. Compare with the actual coolant temperature of the engine.

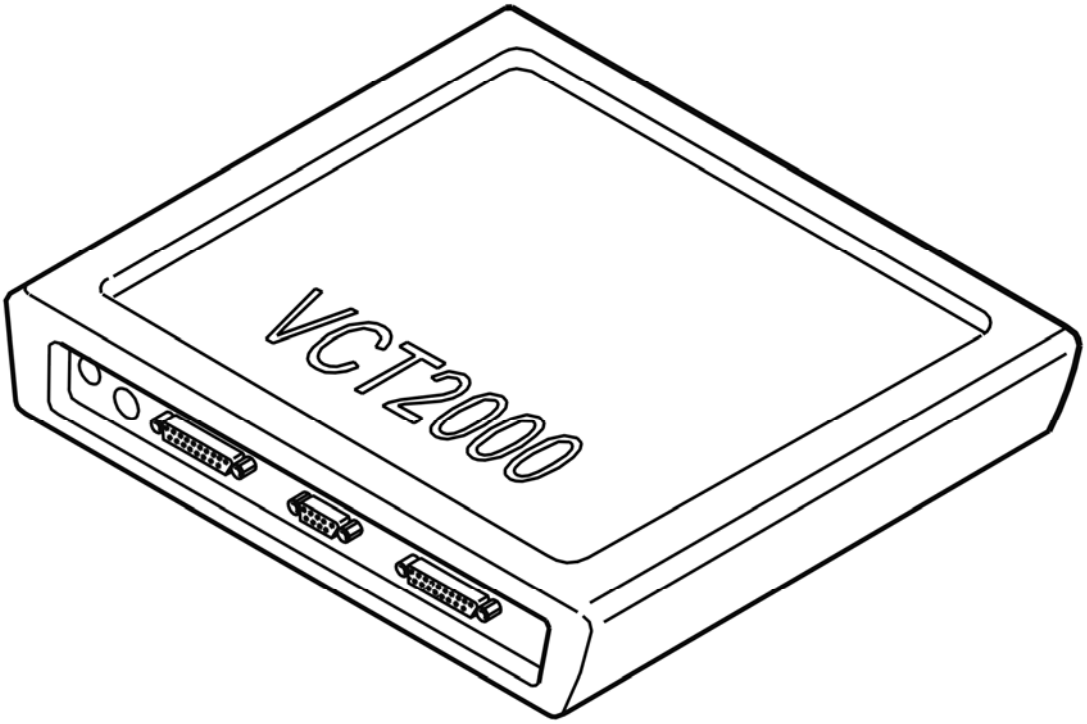

Fig. 135: Identifying VCT2000 Diagnostic Tool Symbol In VIDA
Courtesy of VOLVO CARS CORPORATION

Is the temperature OK?

- **YES**

  Refer to **INTERMITTENT FAULT**

- **NO**

  Refer to **CHECKING COMPONENTS AND WIRING**

CHECKING COMPONENTS AND WIRING

Check the resistance of the engine coolant temperature sensor. For the resistance values, see **COMPONENTS RESISTANCE VALUES** .

Check the cable between control module terminal #16 and the signal terminal for the engine coolant temperature (ECT) sensor. Check for a short-circuit to ground. See **SHORT-CIRCUIT TO GROUND, PERMANENT FAULTS** .

HINT: It is difficult to separate the ground lead for the engine coolant temperature sensor from the signal cable. Therefore, measure one cable at a time and, see if the permitted values are present on either

of them.

Remedy as necessary.

Other information:

- To access the control module or connect the breakout box, see **CONNECTING THE BREAKOUT BOX**
- To access or replace the engine coolant temperature sensor, see **OVERHEAT PROTECTION THERMOSTAT / FLAME SENSOR / ENGINE COOLANT TEMPERATURE SENSOR, REPLACING**
- With the ignition on and the signal cable for the engine coolant temperature sensor cut, the voltage between the signal cable for the engine coolant temperature sensor (engine control module (ECM) side) and ground should be approximately 5 V
- For other values, see **SIGNAL SPECIFICATION** .

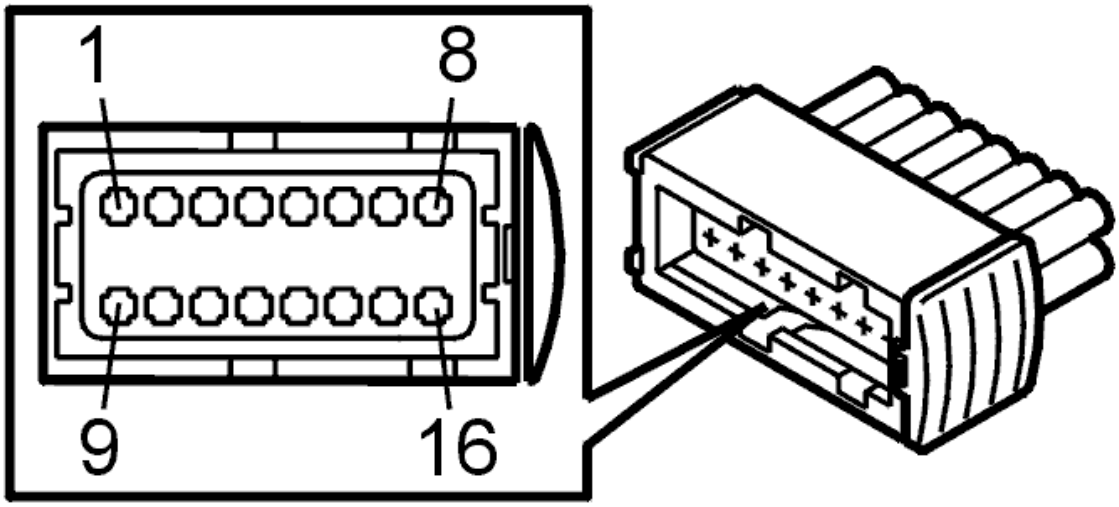

Fig. 136: Identifying Connector Terminals
Courtesy of VOLVO CARS CORPORATION

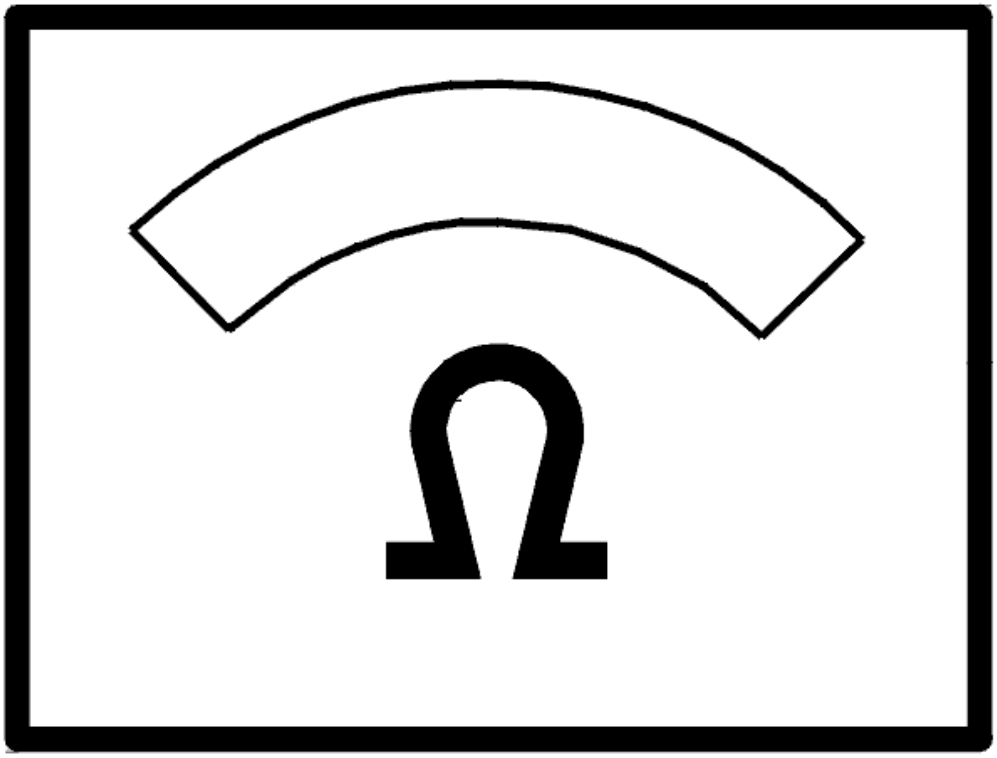

Fig. 137: Identifying Ohm Meter
Courtesy of VOLVO CARS CORPORATION

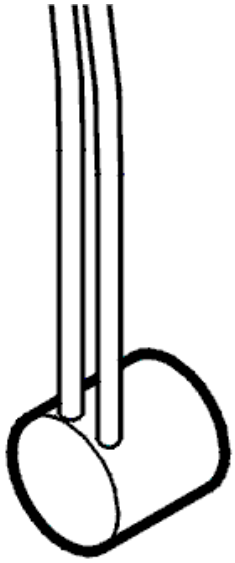

Fig. 138: Identifying Coolant Temperature Sensor
Courtesy of VOLVO CARS CORPORATION

- **Continue**

  Refer to **VERIFICATION**

INTERMITTENT FAULT

Check the cable between control module terminal #16 and the signal terminal for the engine coolant temperature sensor. Check for an intermittent short-circuit to ground.

Remedy as necessary.

Other information:

- To access the control module or connect the breakout box, see **CONNECTING THE BREAKOUT BOX**
- To access or replace the engine coolant temperature sensor, see **OVERHEAT PROTECTION THERMOSTAT / FLAME SENSOR / ENGINE COOLANT TEMPERATURE SENSOR, REPLACING**
- For other values, see **SIGNAL SPECIFICATION**
- see **CHECKING WIRING AND TERMINALS** .

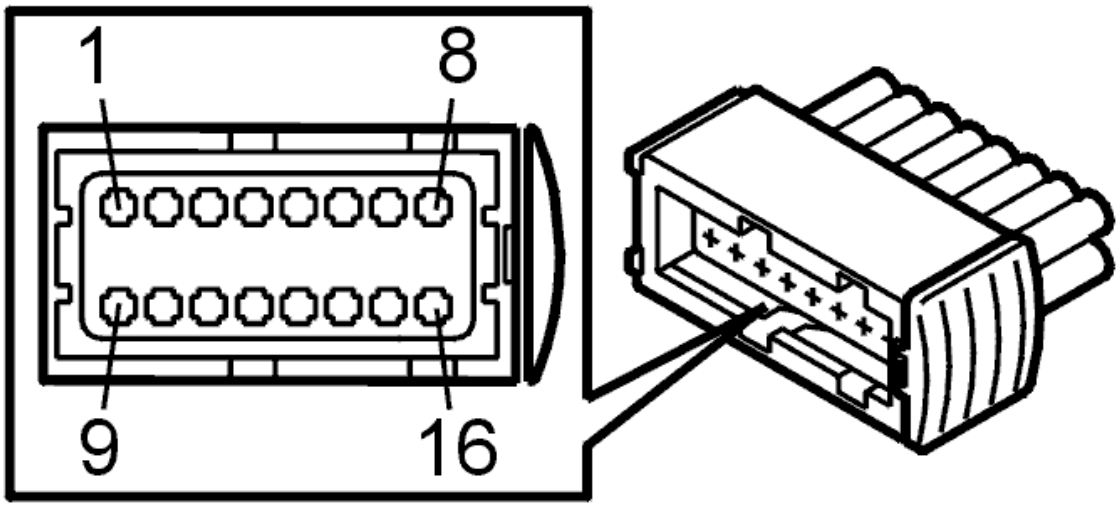

Fig. 139: Identifying Connector Terminals
Courtesy of VOLVO CARS CORPORATION

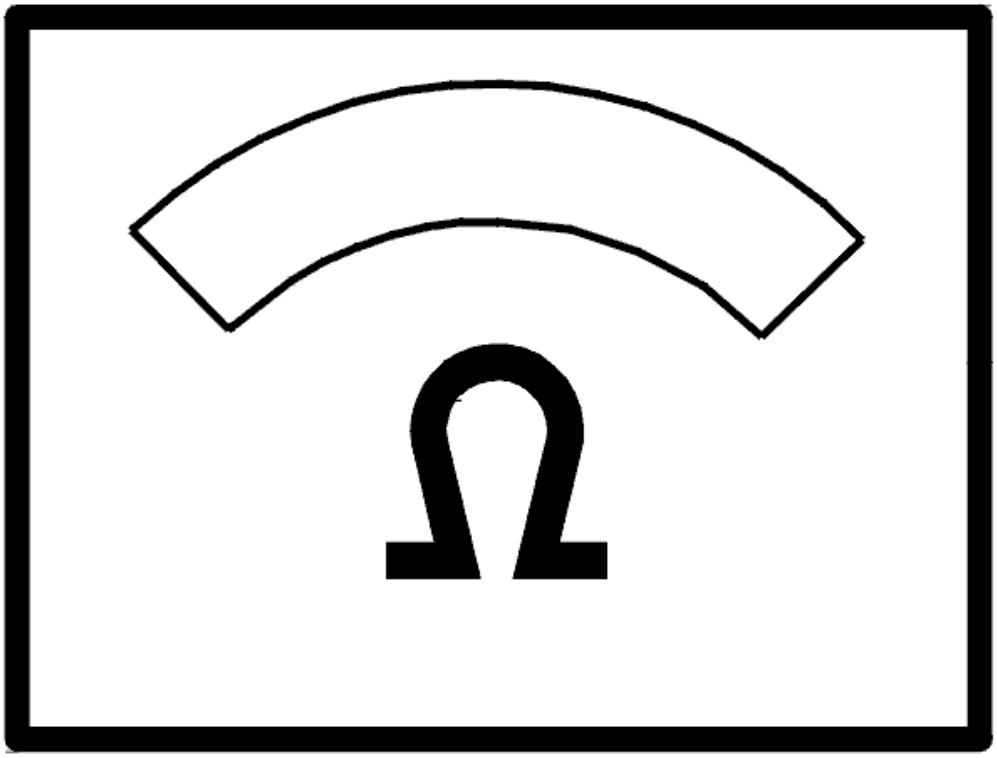

Fig. 140: Identifying Ohm Meter
Courtesy of VOLVO CARS CORPORATION

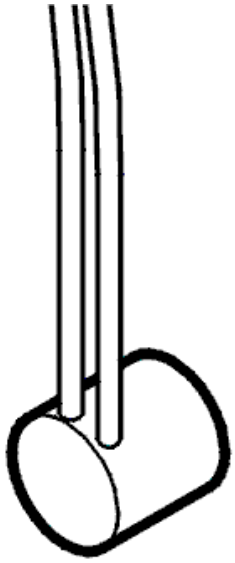

Fig. 141: Identifying Coolant Temperature Sensor
Courtesy of VOLVO CARS CORPORATION

- **Continue**

  Refer to **INFORMATION**

VERIFICATION

VERIFICATION

HINT: After the repair it is necessary to check that the fault has been rectified.

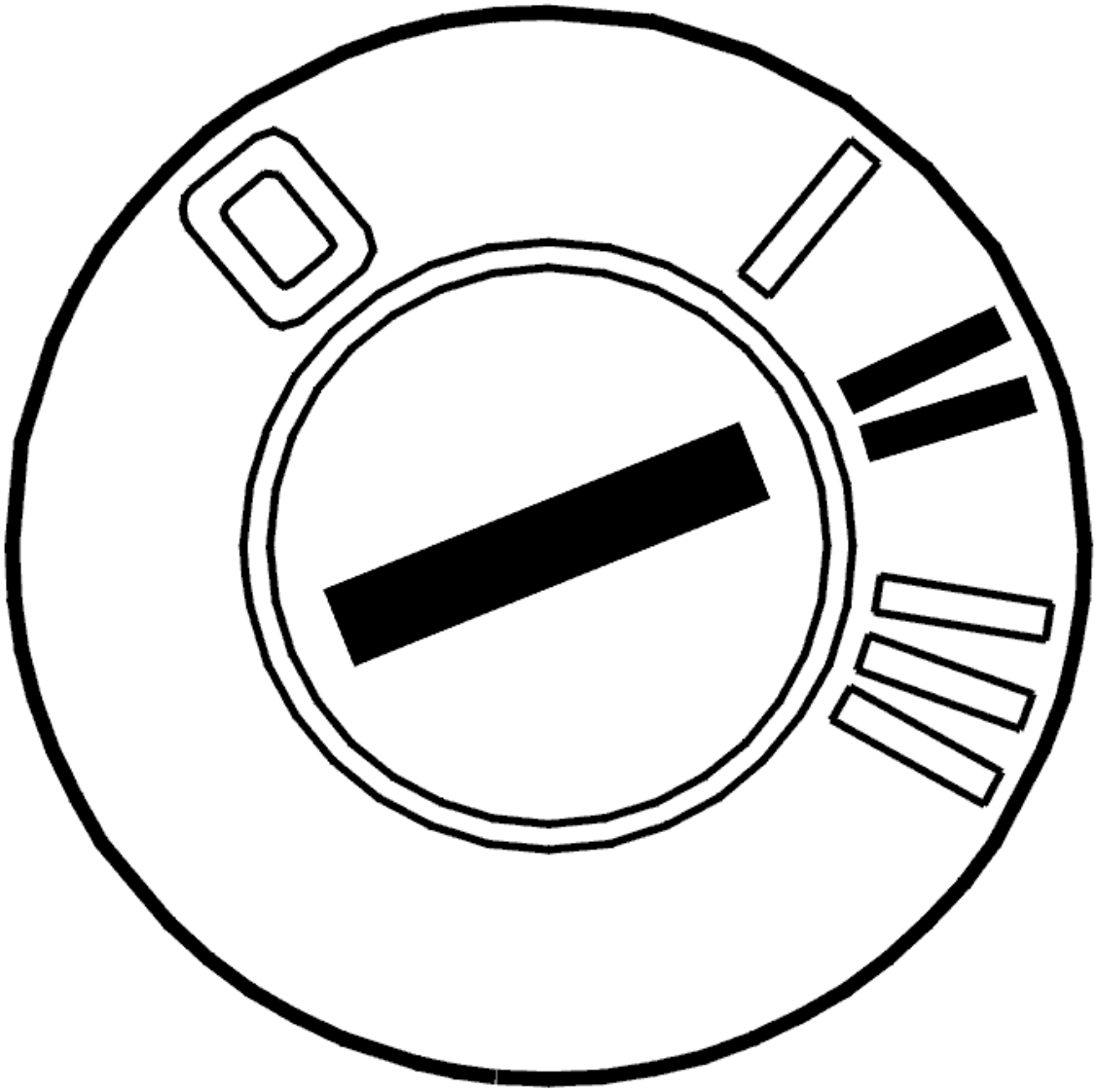

Fig. 142: Identifying Ignition ON
Courtesy of VOLVO CARS CORPORATION

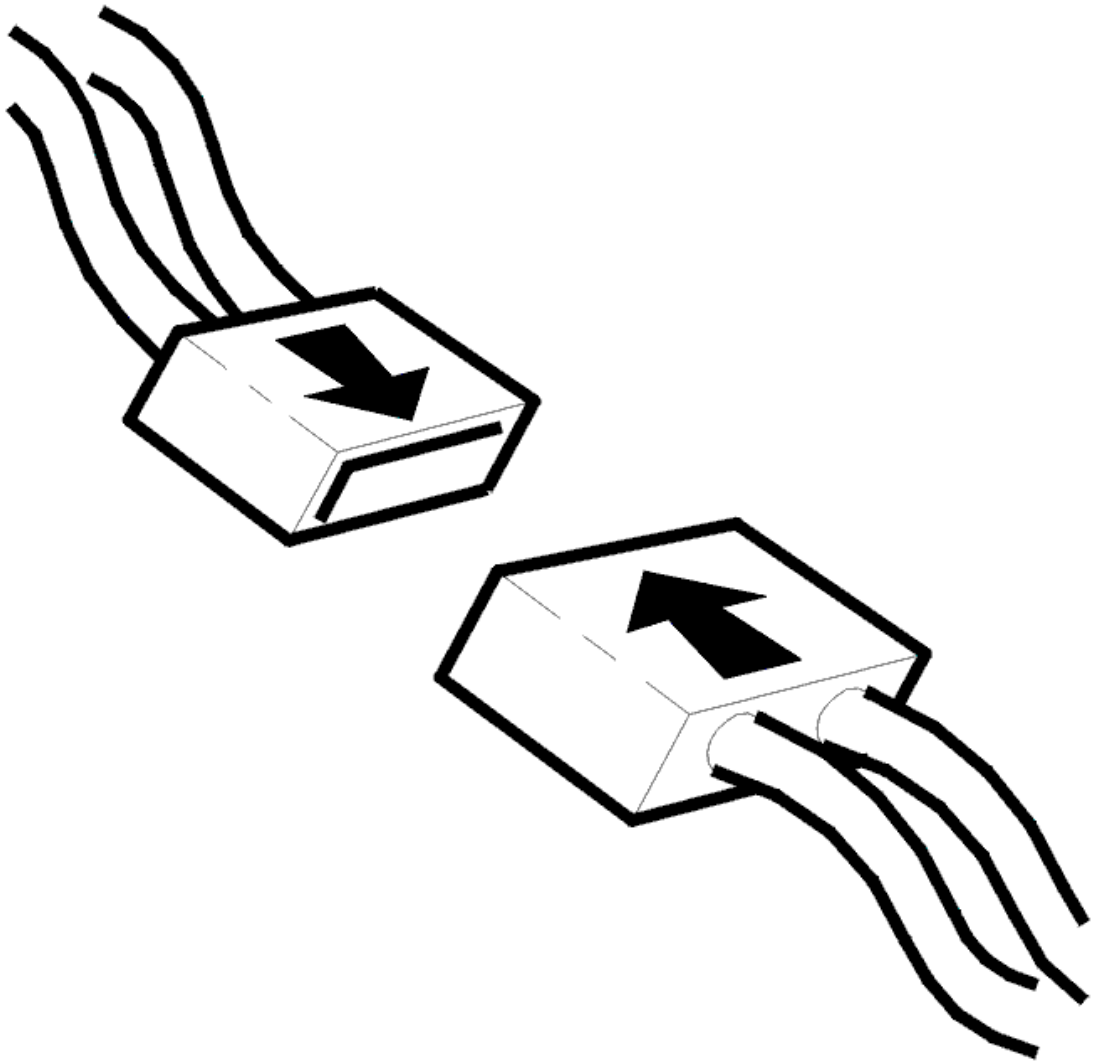

Fig. 143: Connecting Connector
Courtesy of VOLVO CARS CORPORATION

- Ignition off.
- Connect connector, install components etc.
- Ignition on.
- Read the water temperature.

  Check that the coolant temperature is correct. Compare with the actual temperature of the engine.

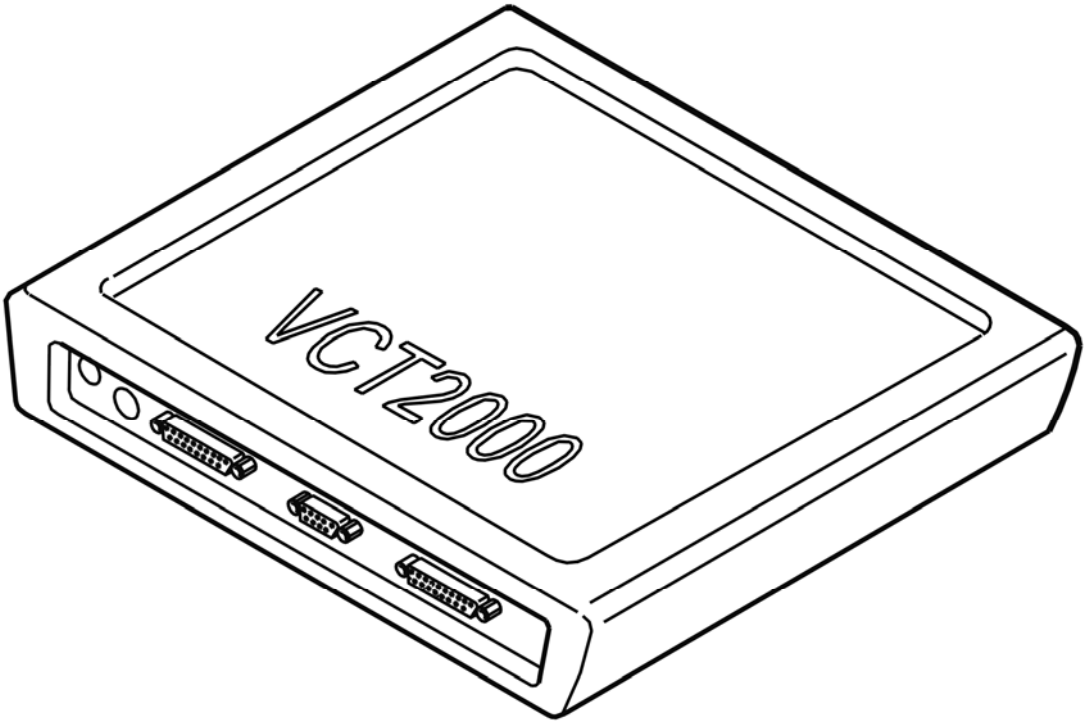

Fig. 144: Identifying VCT2000 Diagnostic Tool Symbol In VIDA
Courtesy of VOLVO CARS CORPORATION

Is the temperature reasonable?

- **YES**

  VERIFIED: Troubleshooting has been completed.

- **NO**

  Refer to **INFORMATION**

INFORMATION

FAULT-TRACING INFORMATION

The fault should have been detected and remedied. As this is not the case fault-tracing has failed.

Exit fault-tracing for this diagnostic trouble code (DTC) or make another attempt.

INFORMATION

FAULT-TRACING INFORMATION

If the fault is intermittent, do not verify fault-tracing if the fault does not recur.

It is possible to view the information again, or leave fault-tracing for this diagnostic trouble code (DTC).

CEM-5F36: FLAME SENSOR SHORT CIRCUIT TO GROUND (2005-2012)

DIAGNOSTIC TROUBLE CODE (DTC) INFORMATION CEM-5F36

Condition

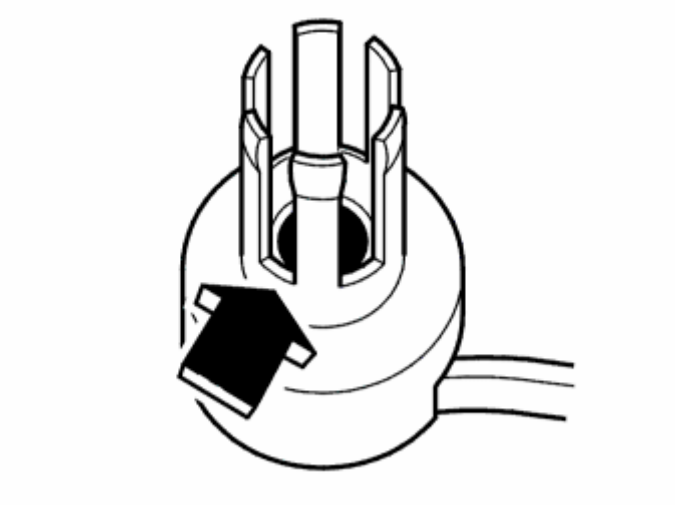

Fig. 145: Identifying Flame Sensor
Courtesy of VOLVO CARS CORPORATION

The central electronic module (CEM) checks the communication with the combustion preheater module (CPM).

The diagnostic trouble code is generated if Central electronic module (CEM) registers that the circuit for flame guard is short-circuited to ground.

The diagnostic trouble code (DTC) can be diagnosed when the heater is activated.

Substitute Value

- None.

Possible Source

- Short-circuit to ground in the signal cable
- Damaged flame sensor.

Fault symptom[s]

- Poor heating in the passenger compartment.

SHORT-CIRCUIT TO GROUND

CHECKING THE FUNCTION OF THE FLAME SENSOR

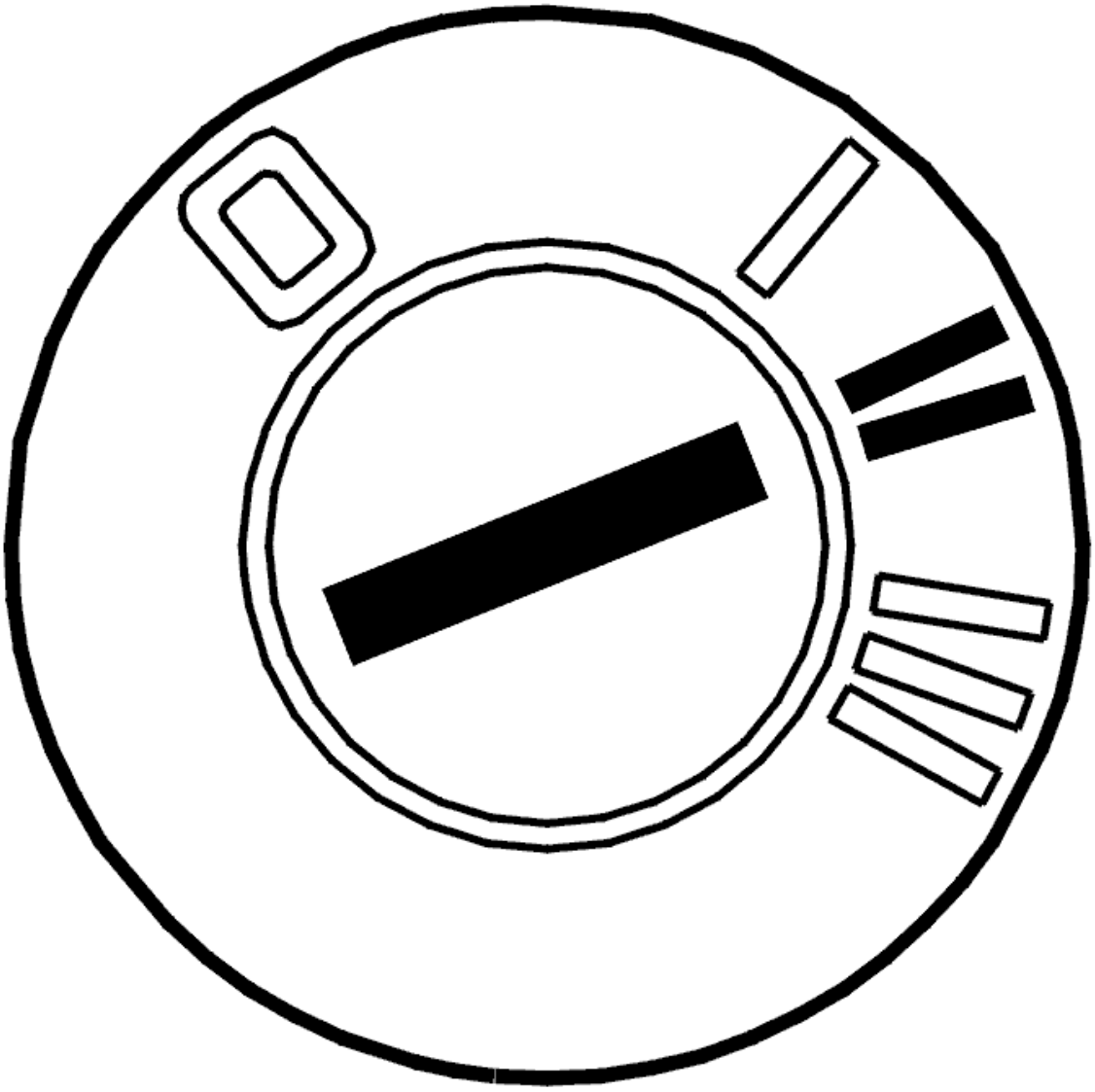

Fig. 146: Identifying Ignition ON
Courtesy of VOLVO CARS CORPORATION

- Ignition on.

NOTE: **It is important that only the ignition is on in order for the heater to start.**

- Activate the heater.

Listen for a buzzing sound which indicates that the heater is running.

Check the heater function.

Other information

- see **ENGINE COOLANT HEATER, TEST RUNNING**

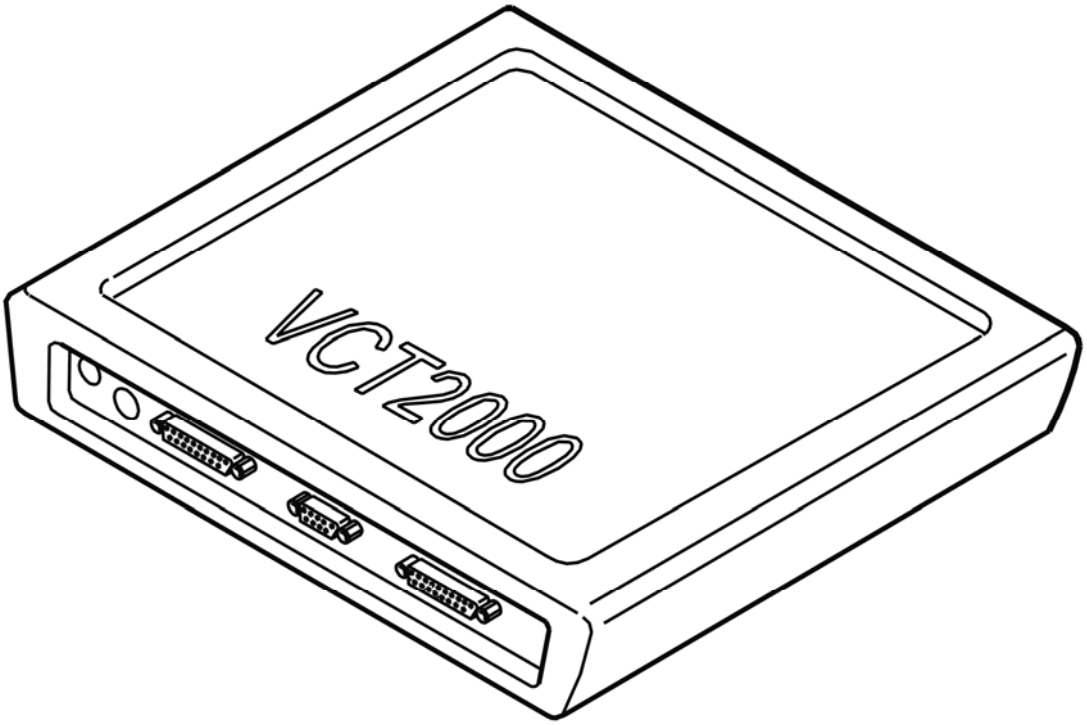

Fig. 147: Identifying VCT2000 Diagnostic Tool Symbol In VIDA
Courtesy of VOLVO CARS CORPORATION

Is the heater working?

- **YES**

  Refer to **CHECKING COMPONENTS AND WIRING**

- **NO**

  Refer to **CHECKING COMPONENTS AND WIRING**

CHECKING COMPONENTS AND WIRING

Check the cable between central electronic module (CEM) terminal #8 and the signal cable for the flame sensor. Check for a short-circuit to ground.

HINT: It is difficult to differentiate between the ground lead for the flame sensor and the signal cable. Take readings on one cable at a time to check for a plausible value on either of them.

Replace the flame sensor if no fault is found in the cable.

Remedy as necessary.

Other information

- see **CONNECTING THE BREAKOUT BOX**
- see **SIGNAL SPECIFICATION**
- see **OVERHEAT PROTECTION THERMOSTAT / FLAME SENSOR / ENGINE COOLANT TEMPERATURE SENSOR, REPLACING**
- see **CHECKING WIRING AND TERMINALS**

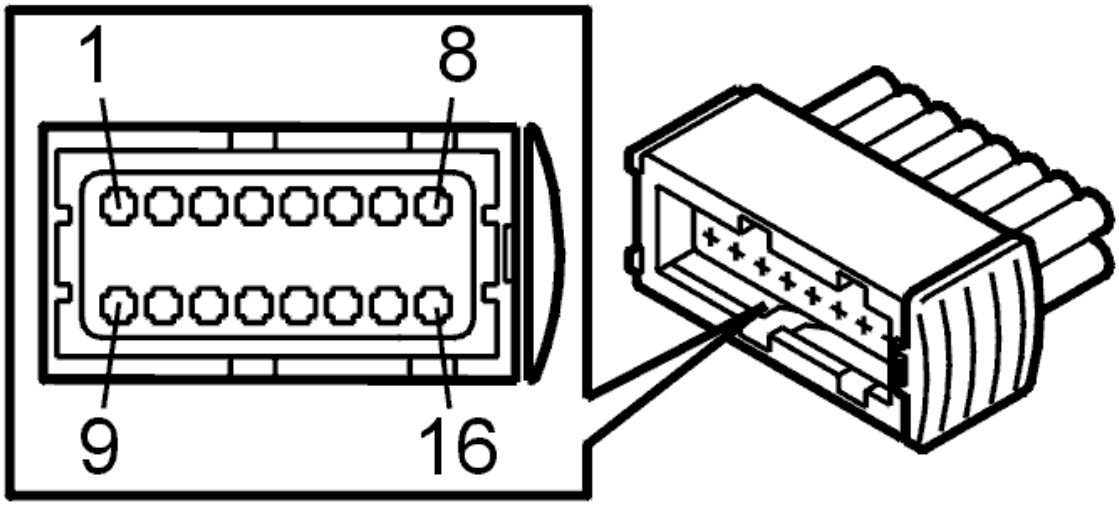

Fig. 148: Identifying Connector Terminals
Courtesy of VOLVO CARS CORPORATION

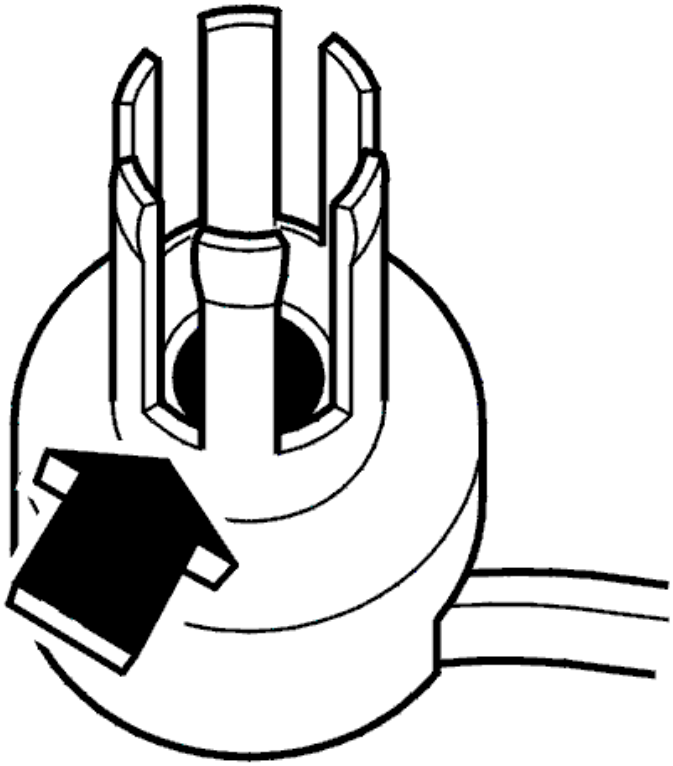

Fig. 149: Identifying Flame Sensor
Courtesy of VOLVO CARS CORPORATION

- **Continue**

  Refer to **VERIFICATION**

CHECKING COMPONENTS AND WIRING

- Check the central electronic module (CEM) connector. Check for contact resistance and oxidation
- Check the cable between central electronic module (CEM) terminal #8 and the signal terminal for the flame sensor. Check for an intermittent short-circuit to ground.

Remedy as necessary.

Other information

- see **CONNECTING THE BREAKOUT BOX**
- see **SIGNAL SPECIFICATION**
- see **CHECKING WIRING AND TERMINALS**

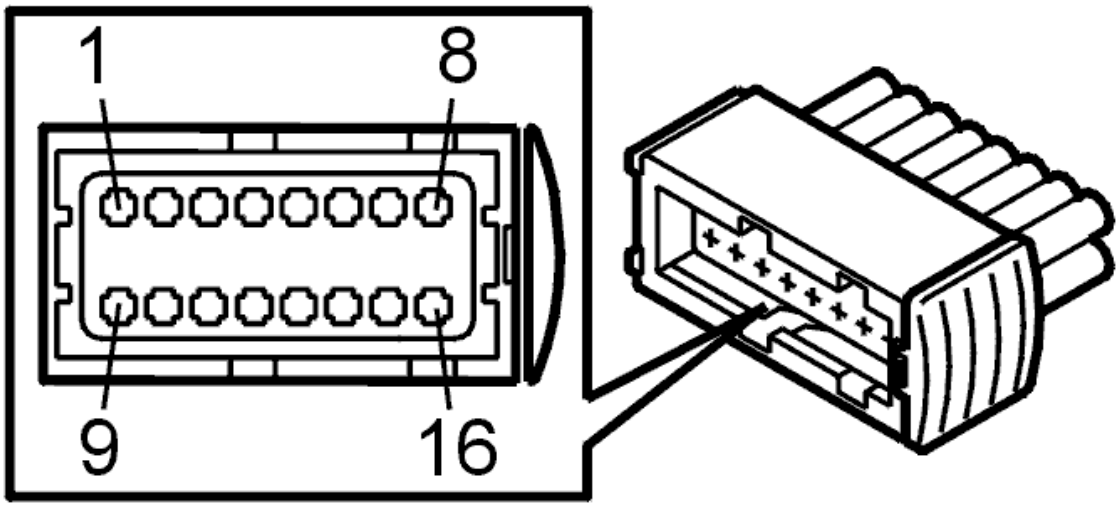

Fig. 150: Identifying Connector Terminals
Courtesy of VOLVO CARS CORPORATION

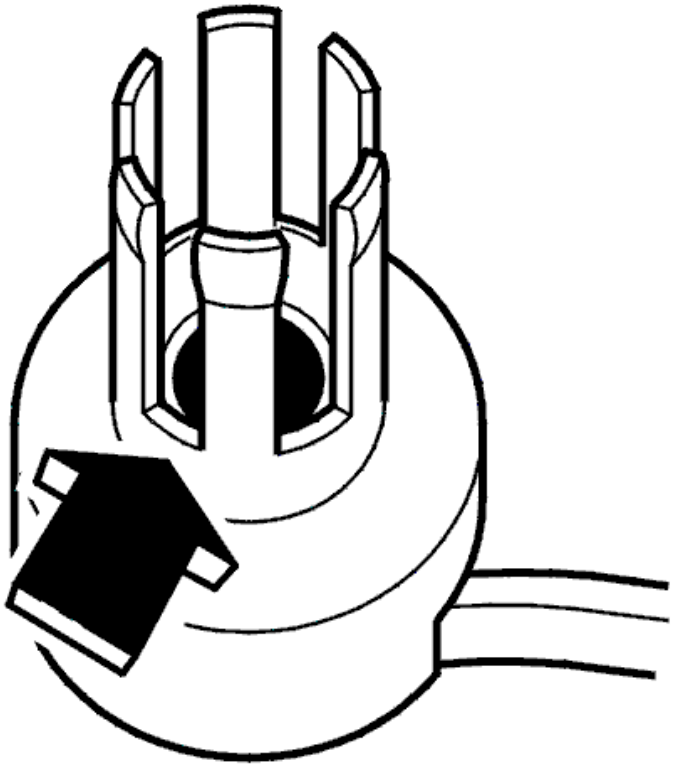

Fig. 151: Identifying Flame Sensor
Courtesy of VOLVO CARS CORPORATION

- **Continue**

  Refer to **VERIFICATION**

VERIFICATION

VERIFICATION

HINT: After carrying out the repair, check that the fault has been remedied.

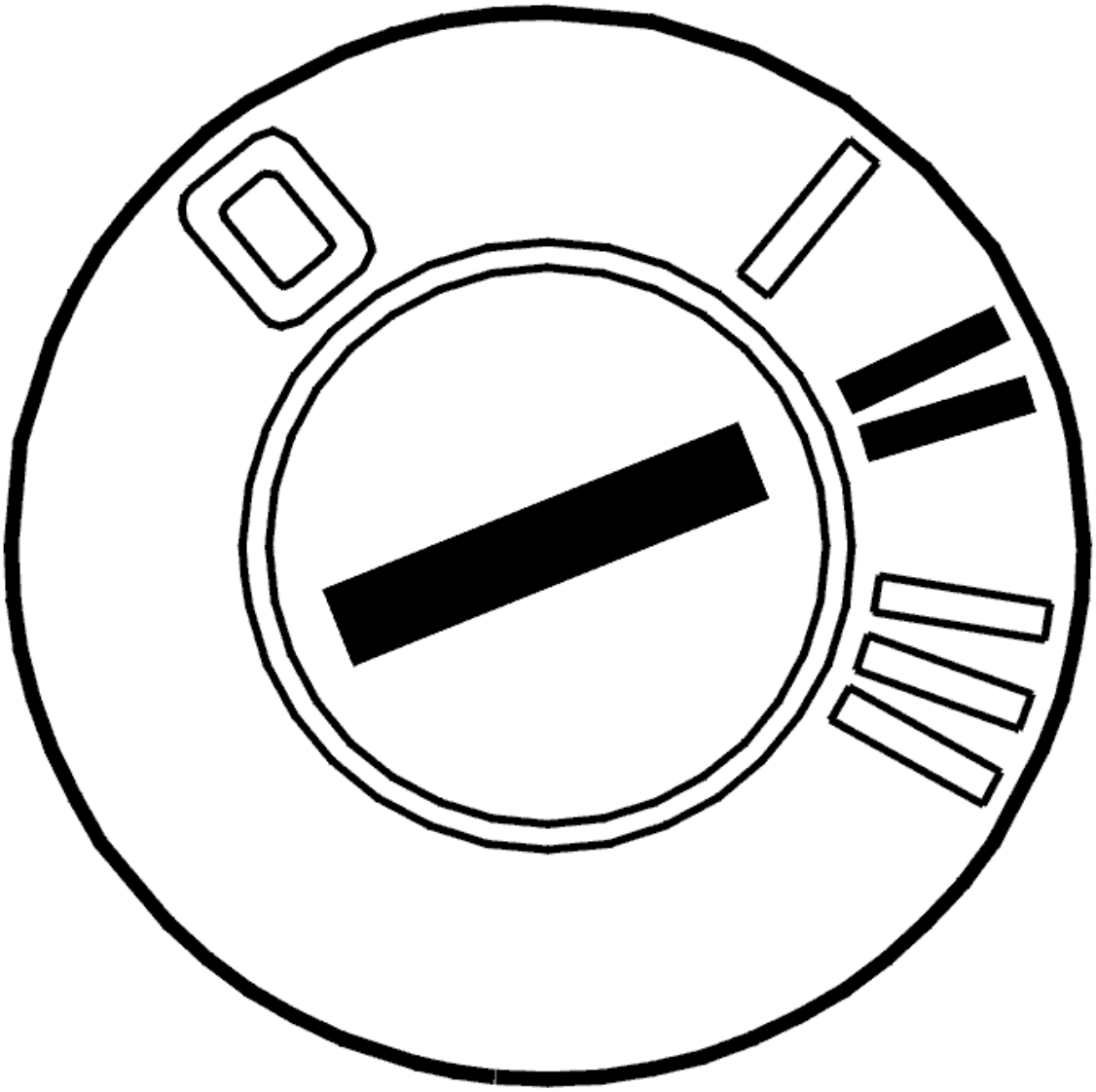

Fig. 152: Identifying Ignition ON
Courtesy of VOLVO CARS CORPORATION

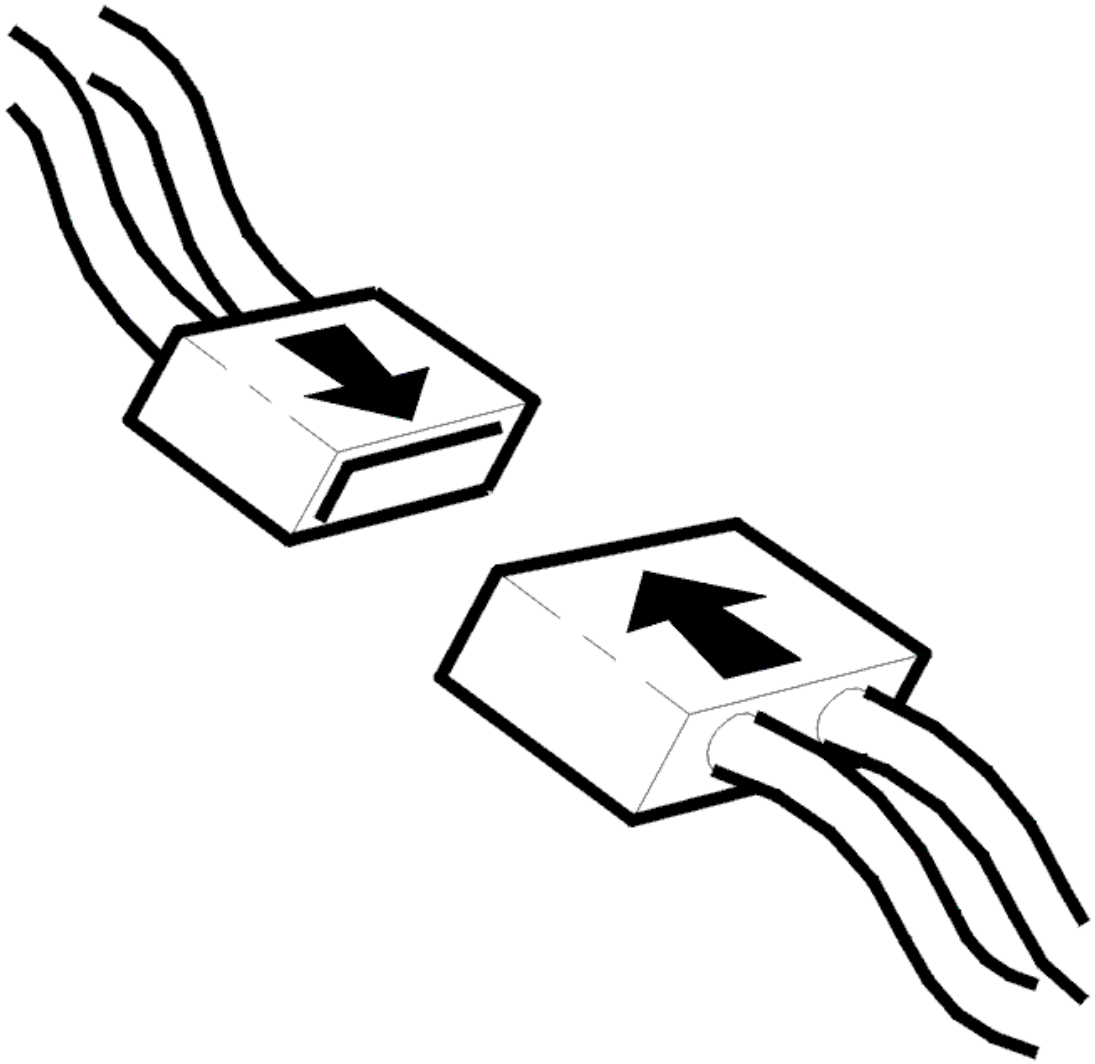

Fig. 153: Connecting Connector
Courtesy of VOLVO CARS CORPORATION

- Ignition off
- Reinstall the connectors, components etc.
- Ignition on
- Read off the engine coolant temperature.

NOTE: It is important that only the ignition is on in order for the heater to start.

- Activate the heater.

HINT: After repair, the voltage of the flame sensor can be checked. The voltage must be a maximum of 1.0 V.

Check the heater function.

CAUTION: In order for to enable start of the heater itself, the battery voltage must be normal, coolant temperature must be lower than +96 °C and the heater's after-run/stop sequence must be finished. There must also be enough fuel in the tank.

CAUTION: If the heater or other components are not activated, try starting the activation again using the VCT2000 (or appropriate scan tool).

Other information:

- see **ENGINE COOLANT HEATER, TEST RUNNING** .

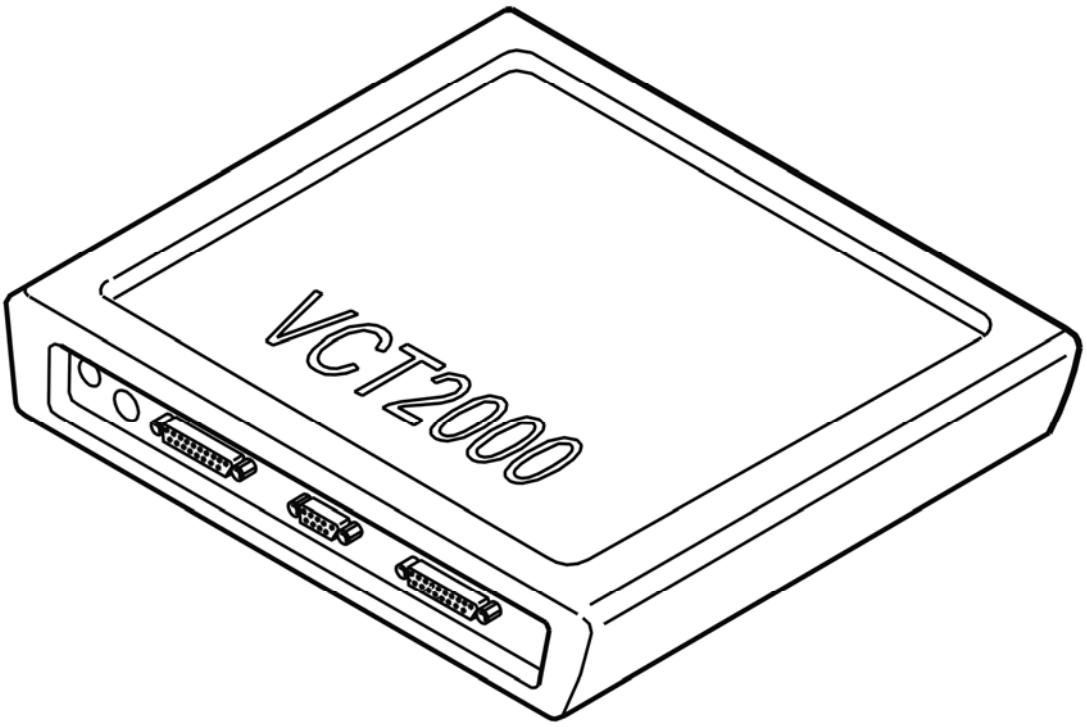

Fig. 154: Identifying VCT2000 Diagnostic Tool Symbol In VIDA
Courtesy of VOLVO CARS CORPORATION

Is the heater working?

- **YES**

VERIFIED: Troubleshooting has been completed.

- **NO**

  Refer to **INFORMATION**

INFORMATION

FAULT-TRACING INFORMATION

The fault should have been detected and remedied. As this is not the case fault-tracing has failed.

Exit fault-tracing for this diagnostic trouble code (DTC) or make another attempt.

CEM-5F36: FLAME SENSOR SHORT CIRCUIT TO GROUND (B5254T2; B6294T; 2003-2004)

DIAGNOSTIC TROUBLE CODE INFORMATION

Condition

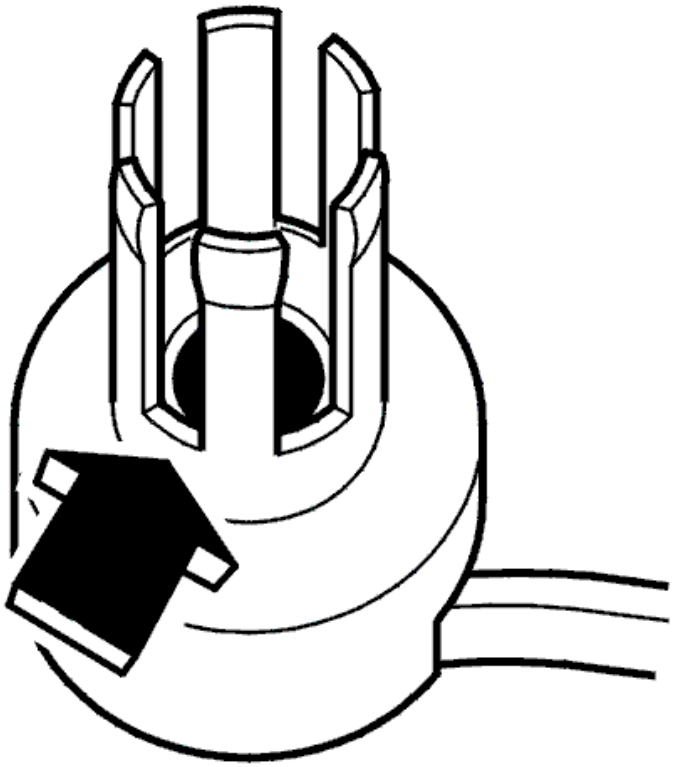

Fig. 155: Identifying Flame Sensor
Courtesy of VOLVO CARS CORPORATION

If the flame shield circuit is short-circuited to ground, the control unit will interpret this as a fault and diagnostic

trouble code CEM-5F36 will be set.

Substitute Value

- None.

Possible Source

- Signal wire short-circuited to ground.
- Defective flame indicator.

Fault symptom[s]

- Poor interior heating.

SHORT-CIRCUIT TO GROUND

CHECKING THE FUNCTION OF THE FLAME SENSOR

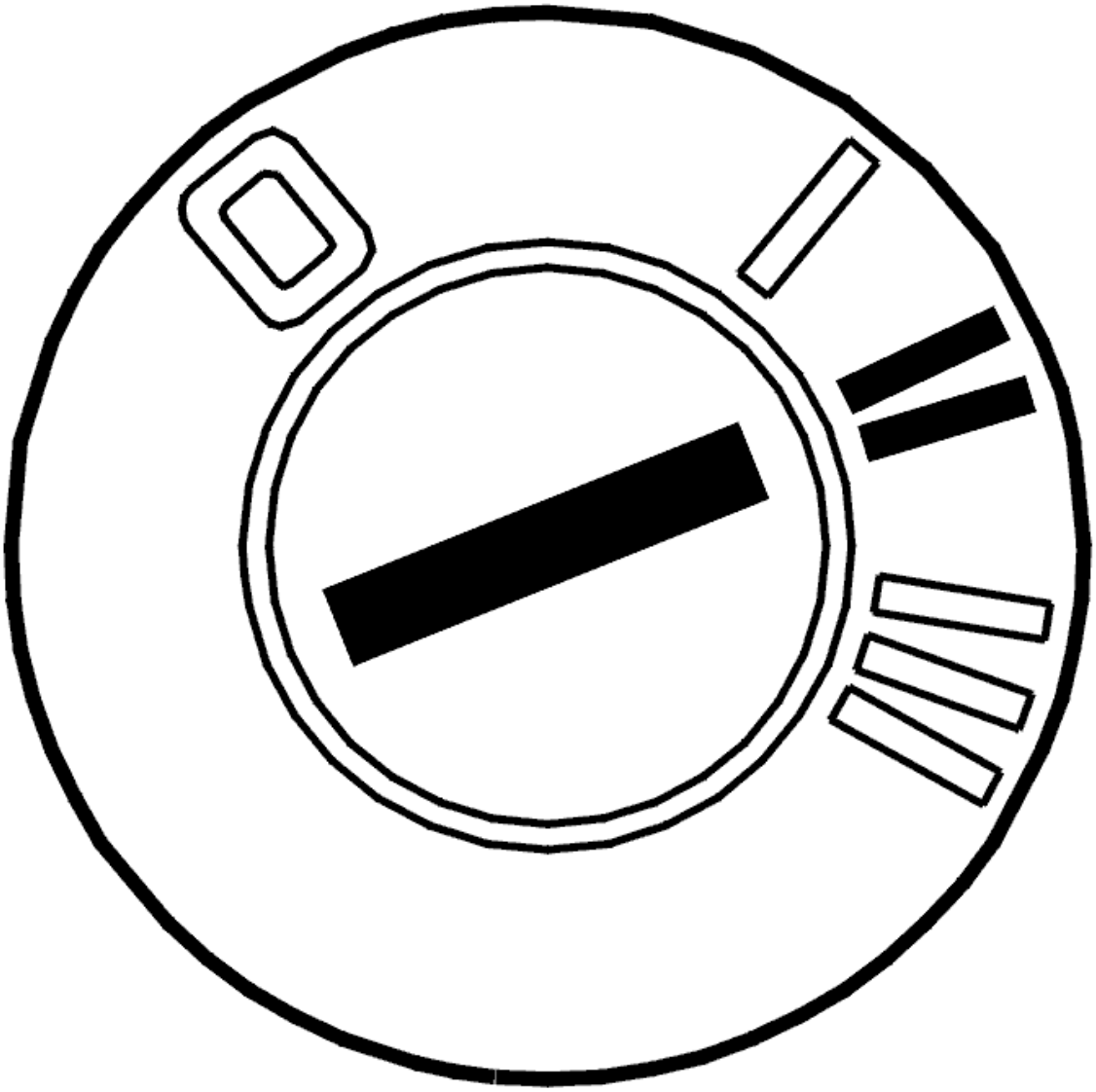

Fig. 156: Identifying Ignition ON
Courtesy of VOLVO CARS CORPORATION

- Ignition on.

  NOTE: It is important that only the ignition is on in order for the heater to start.

- Activate the heater.

  A buzzing sound should be heard from the heater.

  Other information:

  - For information about how the heater should operate when running, see **ENGINE COOLANT HEATER, TEST RUNNING**

- For a description of parameters, see **DESCRIPTION OF PARAMETERS**
- For a description of activations, see **ACTIVATING COMPONENTS/FUNCTIONS** .

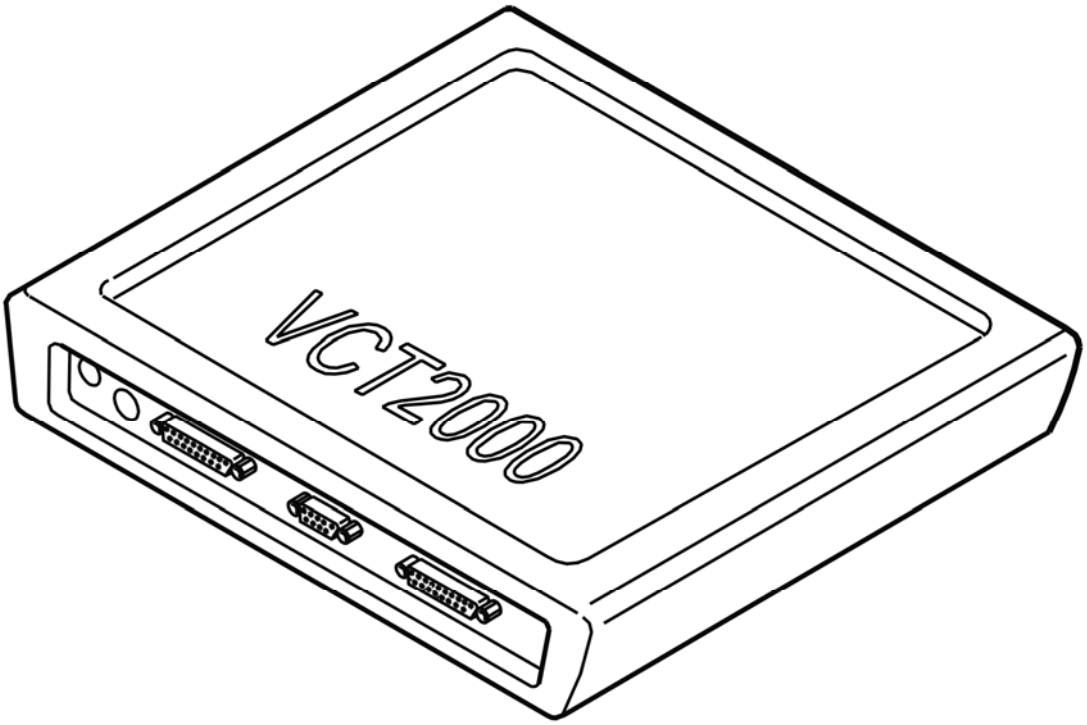

Fig. 157: Identifying VCT2000 Diagnostic Tool Symbol In VIDA
Courtesy of VOLVO CARS CORPORATION

Is the function OK?

- **YES**

  Refer to **INTERMITTENT FAULT**

- **NO**

  Refer to **CHECKING COMPONENTS AND WIRING**

CHECKING COMPONENTS AND WIRING

Check the cable between control module terminal #8 and the signal cable for the flame sensor. Check for a short-circuit to ground.

HINT: It is difficult to differentiate between the ground lead for the flame sensor and the signal cable. Take readings on one cable at a time to check for a relevant value on either of them.

Replace the flame sensor if no fault is found in the cable.

Remedy as necessary.

Other information:

- To access the control module or connect the breakout box, see **CONNECTING THE BREAKOUT BOX**
- To access or replace the flame sensor, see **OVERHEAT PROTECTION THERMOSTAT / FLAME SENSOR / ENGINE COOLANT TEMPERATURE SENSOR, REPLACING**
- For other values, see **SIGNAL SPECIFICATION** .

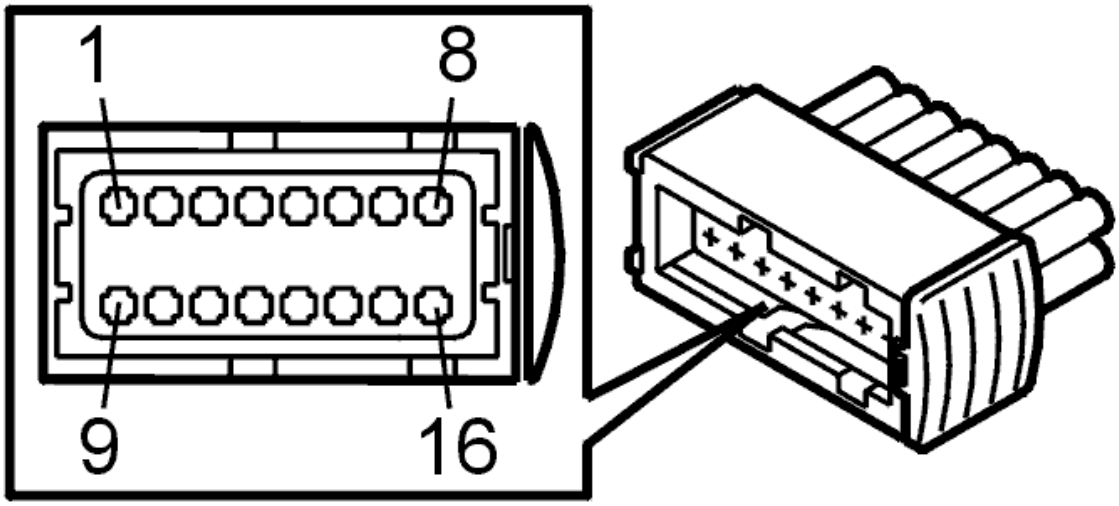

Fig. 158: Identifying Connector Terminals
Courtesy of VOLVO CARS CORPORATION

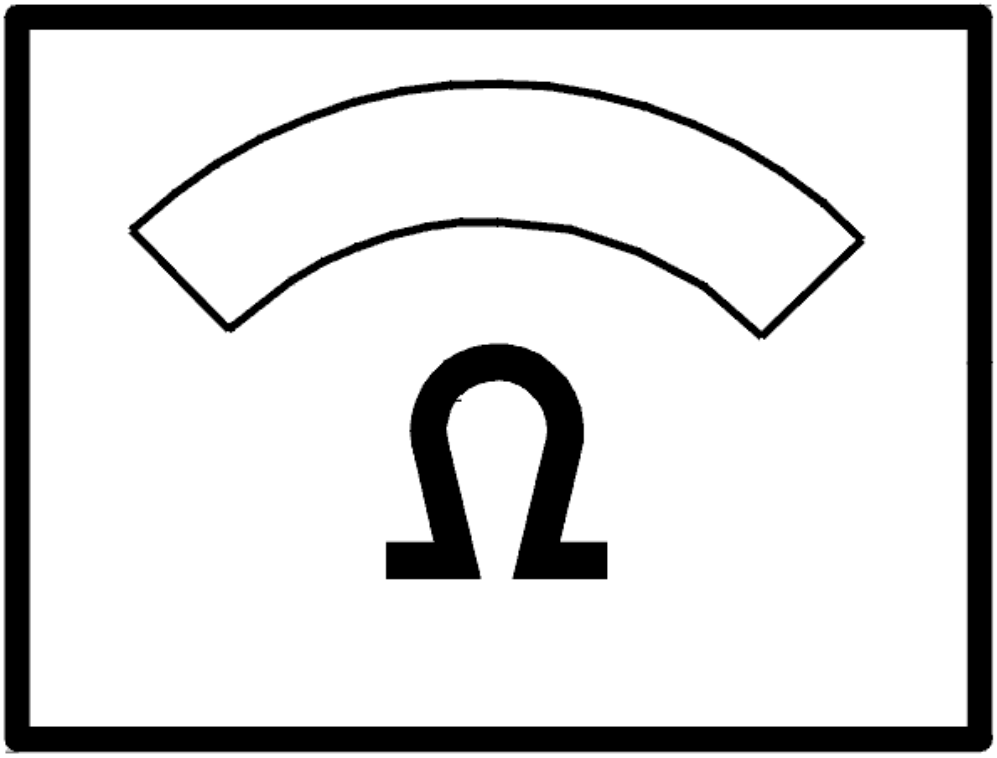

Fig. 159: Identifying Ohm Meter
Courtesy of VOLVO CARS CORPORATION

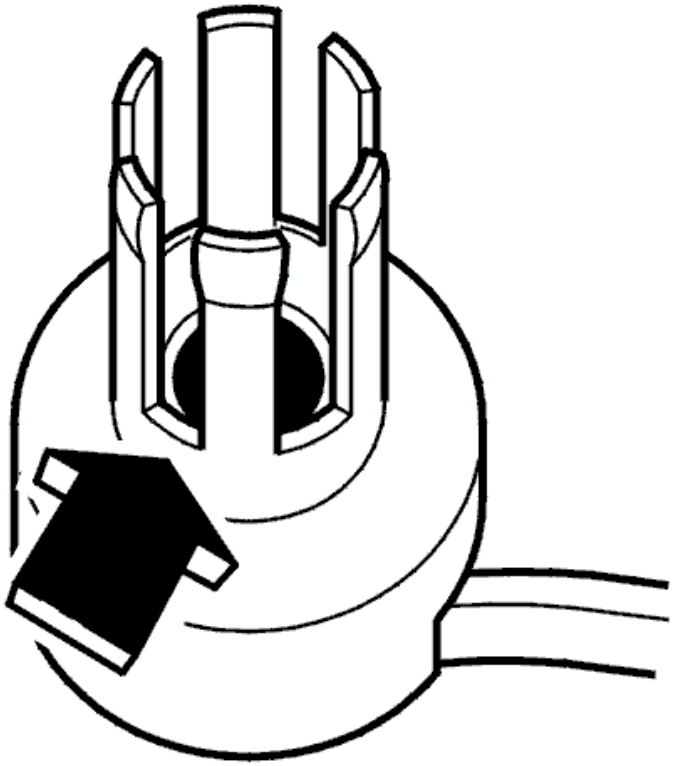

Fig. 160: Identifying Flame Sensor
Courtesy of VOLVO CARS CORPORATION

- **Continue**

  Refer to **VERIFICATION**

INTERMITTENT FAULT

Check the cable between control module terminal #8 and the signal terminal for the flame sensor. Check for an intermittent short-circuit to ground.

Remedy as necessary.

Other information:

- To access the control module or connect the breakout box, see **CONNECTING THE BREAKOUT BOX**
- For other values, see **SIGNAL SPECIFICATION**
- see **CHECKING WIRING AND TERMINALS** .

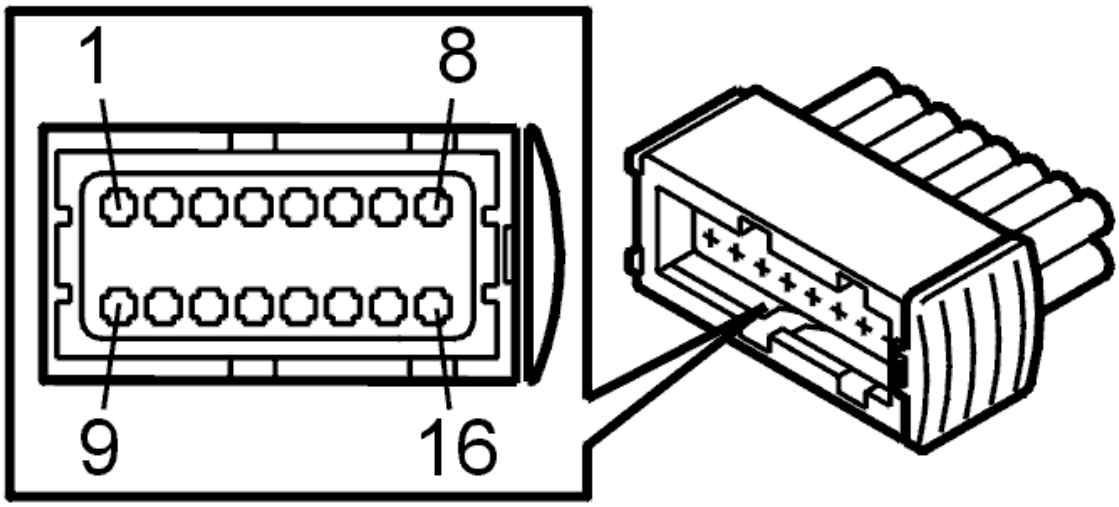

Fig. 161: Identifying Connector Terminals
Courtesy of VOLVO CARS CORPORATION

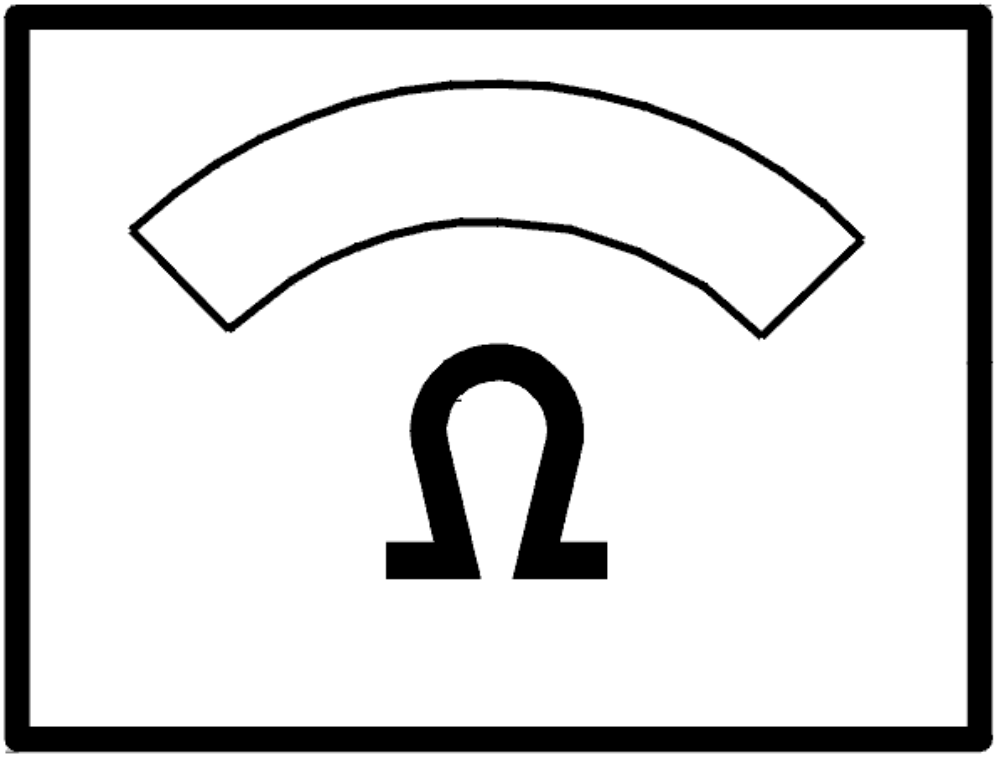

Fig. 162: Identifying Ohm Meter
Courtesy of VOLVO CARS CORPORATION

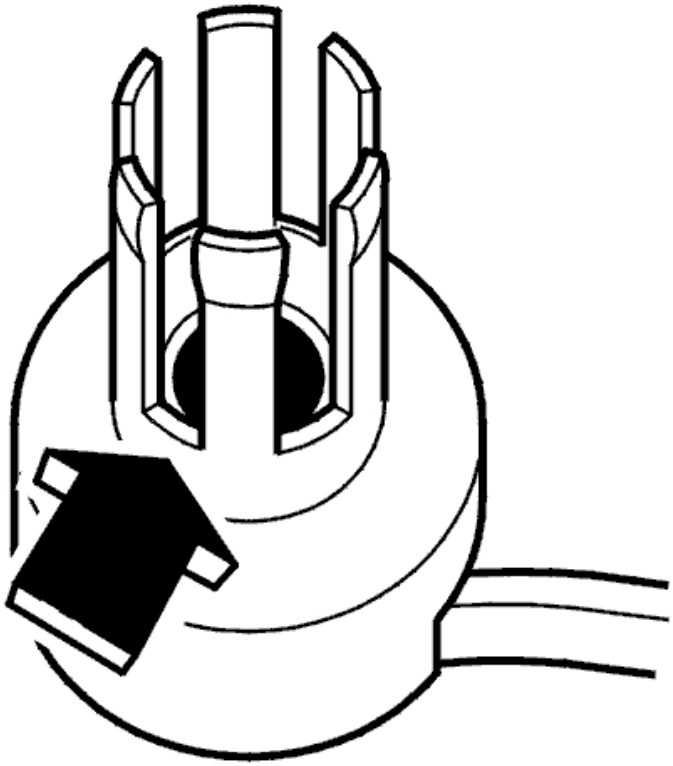

Fig. 163: Identifying Flame Sensor
Courtesy of VOLVO CARS CORPORATION

- **Continue**

  Refer to **INFORMATION**

VERIFICATION

VERIFICATION

HINT: After carrying out the repair, check that the fault has been remedied.

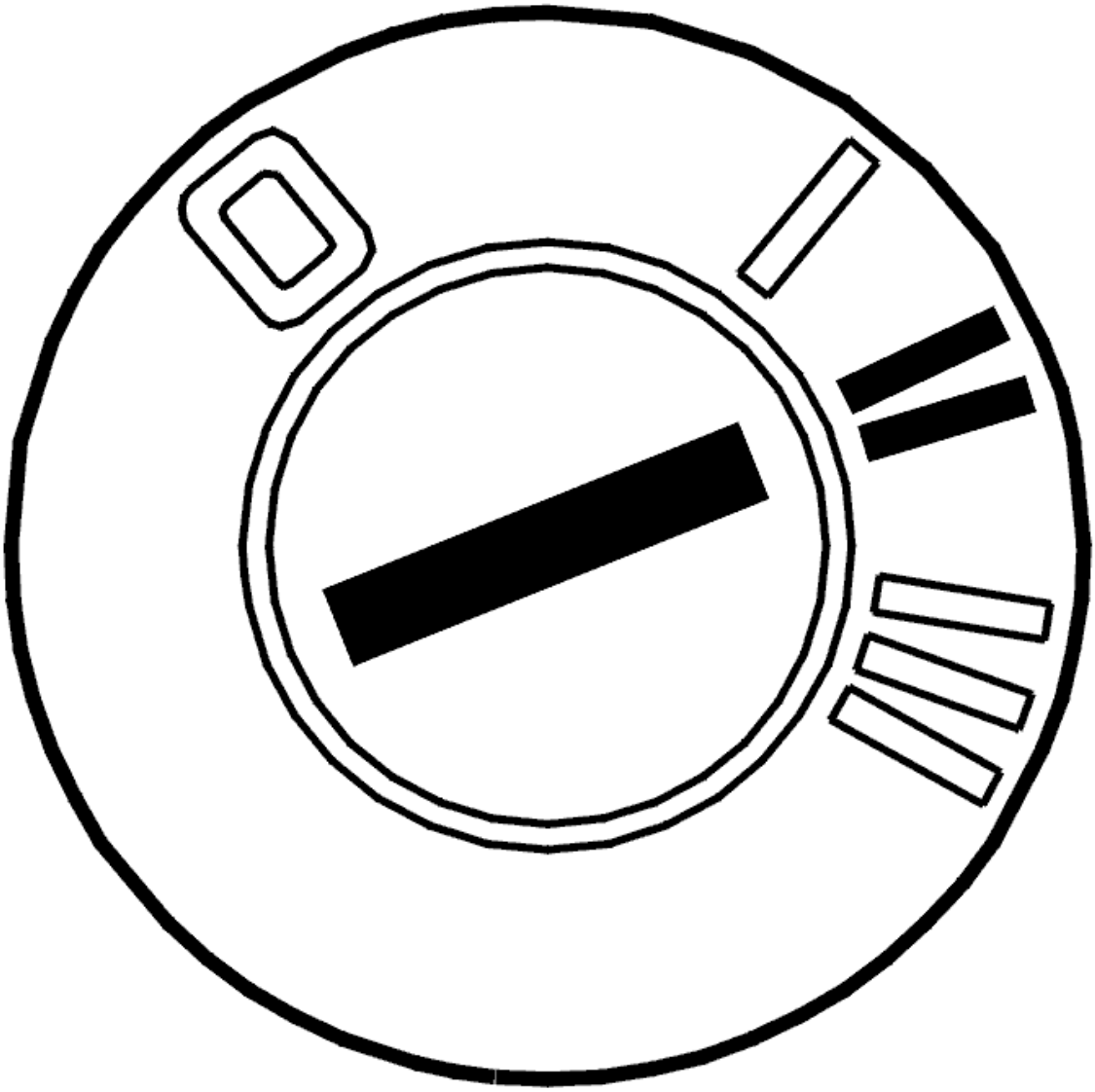

Fig. 164: Identifying Ignition ON
Courtesy of VOLVO CARS CORPORATION

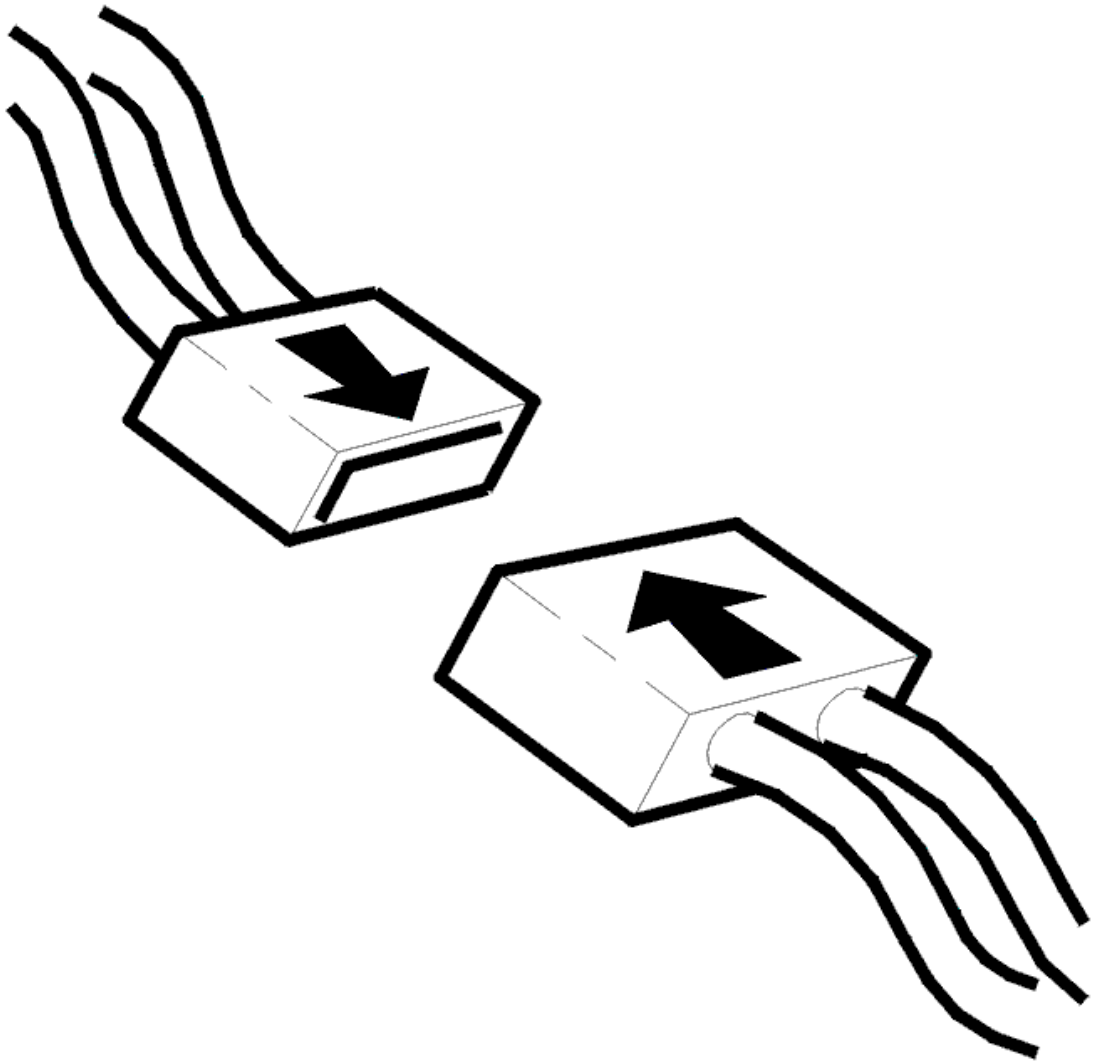

Fig. 165: Connecting Connector
Courtesy of VOLVO CARS CORPORATION

- Ignition off
- Reinstall the connectors, components etc.
- Ignition on.

NOTE: **It is important that only the ignition is on in order for the heater to start.**

- Activate the heater.

  A buzzing sound should be heard from the heater.

  HINT: After repair, the voltage of the flame sensor can be checked. The voltage should be a maximum of 1.0 V.

Check the function of the heater. See **ENGINE COOLANT HEATER, TEST RUNNING** .

Other information:

- For a description of parameters, see **DESCRIPTION OF PARAMETERS**
- For a description of activations, see **ACTIVATING COMPONENTS/FUNCTIONS** .

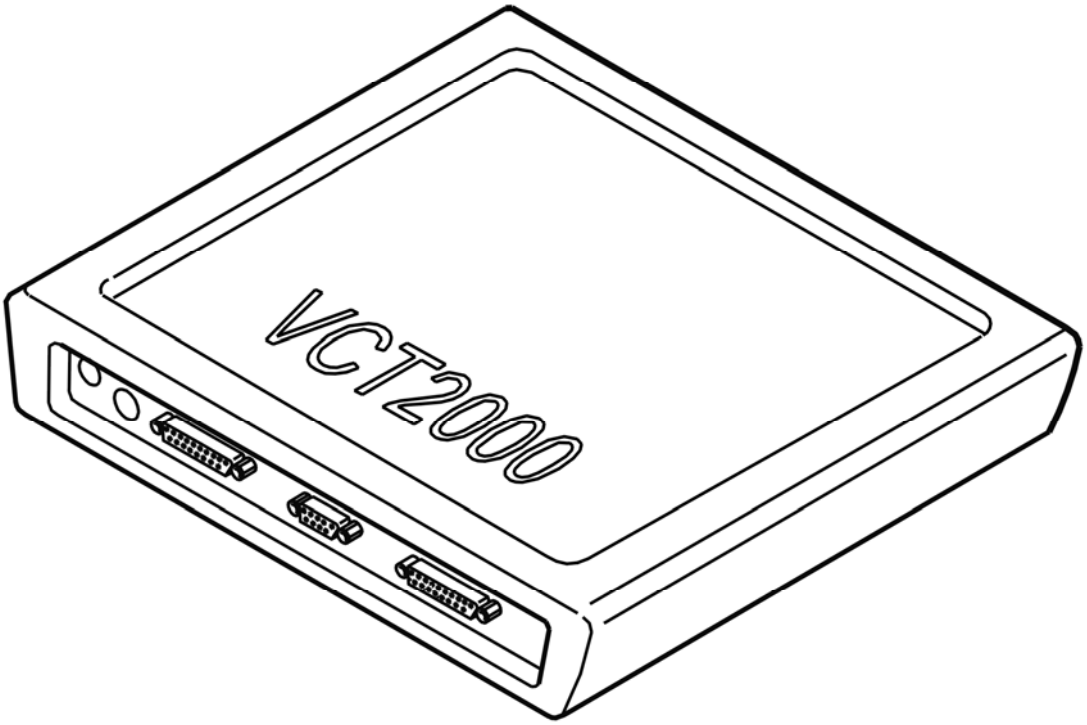

Fig. 166: Identifying VCT2000 Diagnostic Tool Symbol In VIDA
Courtesy of VOLVO CARS CORPORATION

Does the heater operate?

- **YES**

  VERIFIED: Troubleshooting has been completed.

- **NO**

  Refer to **INFORMATION**

INFORMATION

FAULT-TRACING INFORMATION

The fault should have been detected and remedied. As this is not the case fault-tracing has failed.

Exit fault-tracing for this diagnostic trouble code (DTC) or make another attempt.

INFORMATION

FAULT-TRACING INFORMATION

If the fault is intermittent, do not verify fault-tracing if the fault does not recur.

It is possible to view the information again, or leave fault-tracing for this diagnostic trouble code (DTC).

CEM-5F37: FACTORY SET DIAGNOSTIC TROUBLE CODE (DTC). FAULTY CODE (2005-2012)

DIAGNOSTIC TROUBLE CODE (DTC) INFORMATION CEM-5F37

Condition

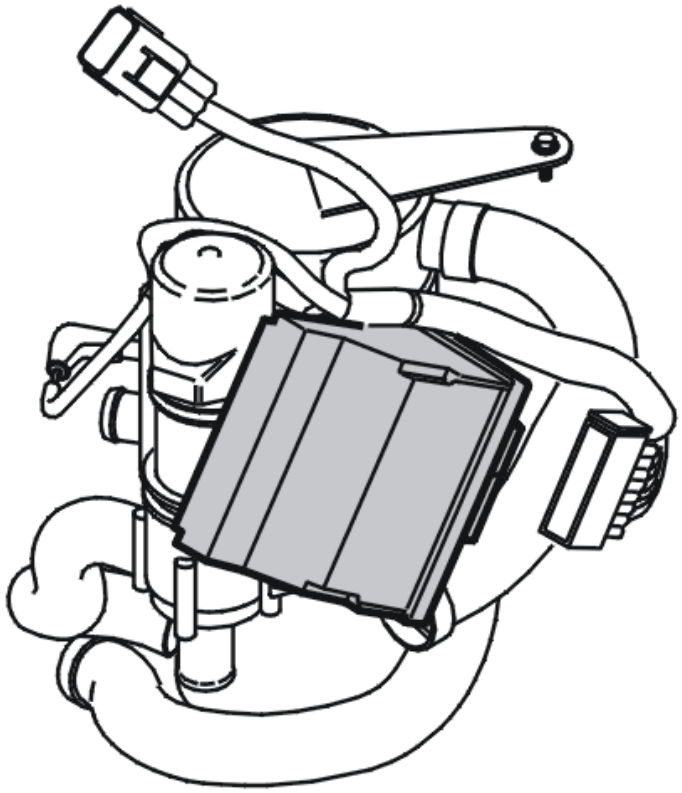

Fig. 167: Additional Heater And Parking Heater
Courtesy of VOLVO CARS CORPORATION

The central electronic module (CEM) checks the communication with the combustion preheater module (CPM).

The diagnostic trouble code (DTC) is stored if the central electronic module (CEM) does not register a flame when the VISP test is carried out.

The diagnostic trouble code (DTC) can be diagnosed when the heater is activated.

Substitute Value

- None.

Possible Source

- No flame registered during the VISP test.

Fault symptom[s]

- Poor heating in the passenger compartment
- The engine block heater does not operate.

FAULTY CODE

FAULT-TRACING INFORMATION

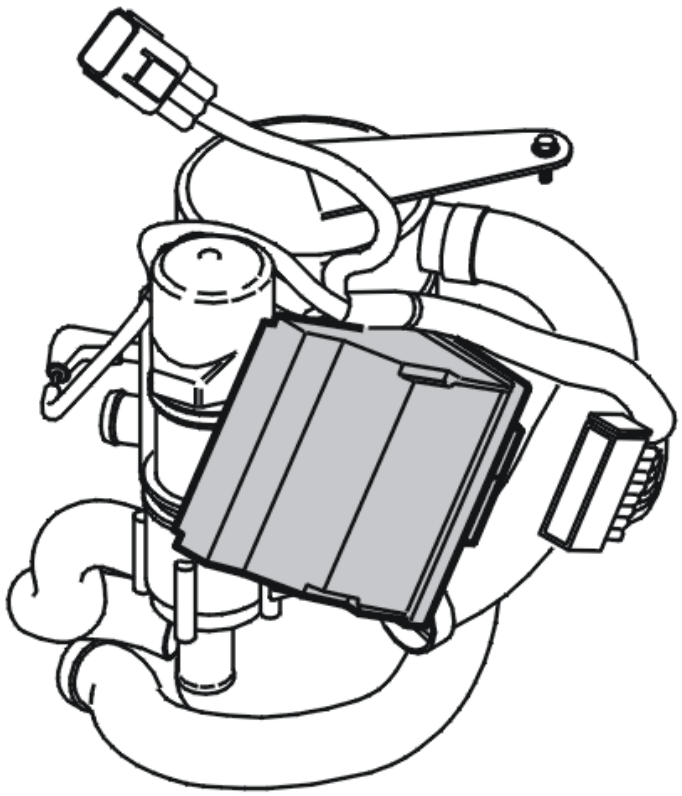

Fig. 168: Additional Heater And Parking Heater

Courtesy of VOLVO CARS CORPORATION

This diagnostic trouble code (DTC) indicates that the combustion preheater module (CPM) registered a fault in the factory when the heater was started, but that the fault is no longer present.

CEM-5F37: PRODUCTION DIAGNOSTIC TROUBLE CODE. FAULTY CODE (2003-2004)

DIAGNOSTIC TROUBLE CODE INFORMATION

Condition

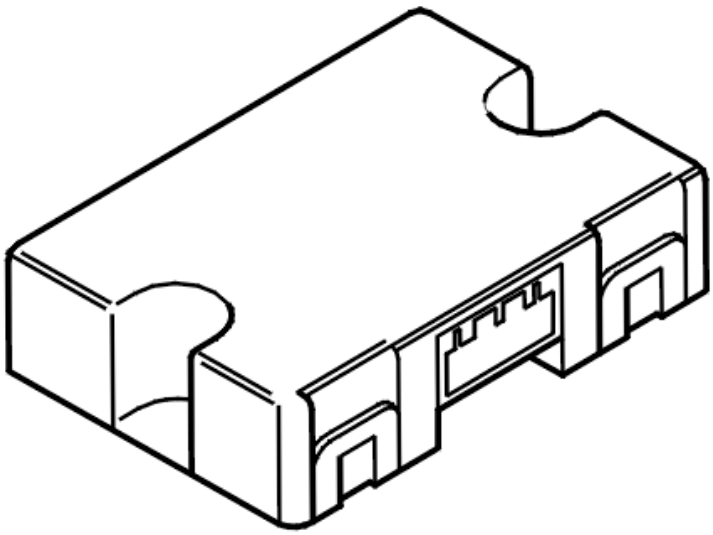

Fig. 169: Identifying Immobilizer Control Module
Courtesy of VOLVO CARS CORPORATION

If the control unit registers that there is no flame during the VISP test, diagnostic trouble code CEM-5F37 will be set.

Substitute Value

- None.

Possible Source

- No flame during VISP test.

Fault symptom[s]

- Poor interior heating.
- Engine heater function not working.

FAULTY CODE

TROUBLE-SHOOTING INFORMATION

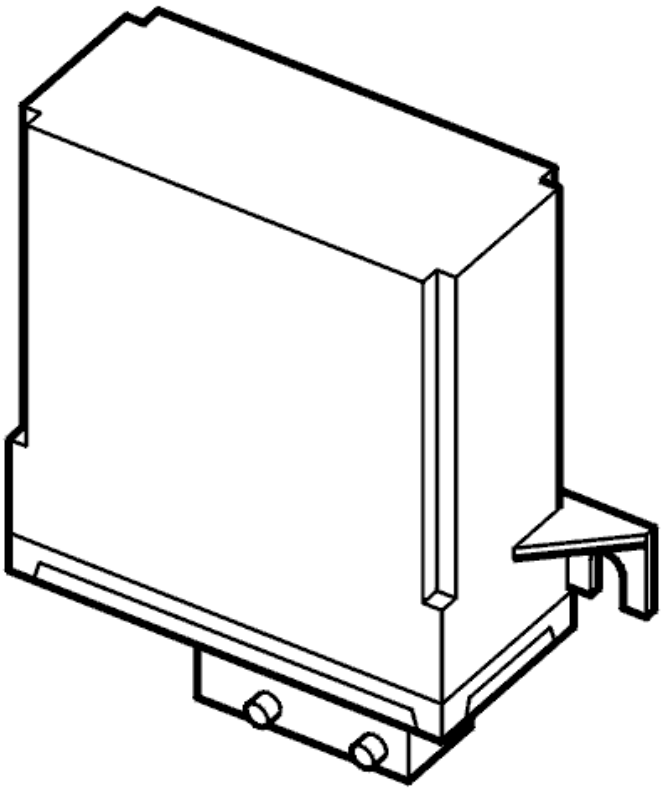

Fig. 170: Additional Heater And Parking Heater (Combustion Preheater Module)
Courtesy of VOLVO CARS CORPORATION

This diagnostic trouble code means that the control unit registered a fault at the factory when the heater started up, but the fault is no longer present.

CEM-5F39: FLAME SENSOR FLAME INTERRUPTION (2005-2012)

DIAGNOSTIC TROUBLE CODE (DTC) INFORMATION CEM-5F39

Condition

Fig. 171: Identifying Parking Heater
Courtesy of VOLVO CARS CORPORATION

The central electronic module (CEM) checks the communication with the combustion preheater module (CPM).

If Central electronic module (CEM) registers that the flame goes out in an non-allowed way during operation, the diagnostic trouble code is generated.

The diagnostic trouble code (DTC) can be diagnosed when the heater is activated.

Substitute Value

- None.

Possible Source

- No fuel supply
- Flame sensor clogged with soot
- Damaged flame sensor.
- Contact resistance in the control module connectors
- Open-circuit in the signal cable
- Short-circuit to supply voltage in the signal cable
- Open-circuit in the ground lead

Fault symptom[s]

- Poor heating in the passenger compartment.
- Parking heater/Does not work

FLAME INTERRUPTION

CHECKING THE FUNCTION OF THE FLAME SENSOR

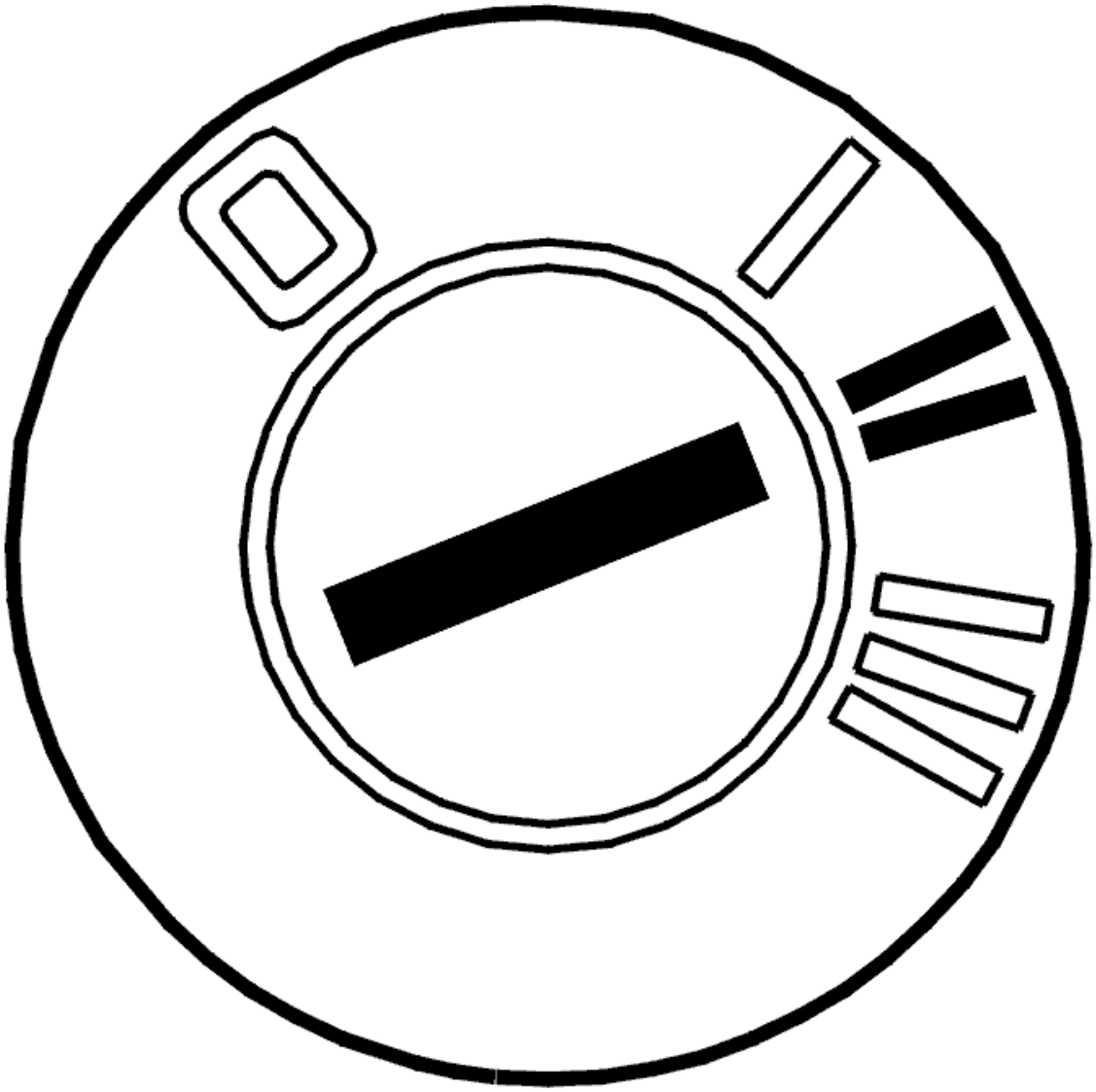

Fig. 172: Identifying Ignition ON
Courtesy of VOLVO CARS CORPORATION

- **HINT: A transparent hose can be used to check if fuel supply to the parking heater works.**

  Ignition on.

  NOTE: It is important that only the ignition is on in order for the heater to start.

  - Activate the heater.

  Listen for a buzzing sound which indicates that the heater is running.

  Check the heater function.

Other information

- see **ENGINE COOLANT HEATER, TEST RUNNING**

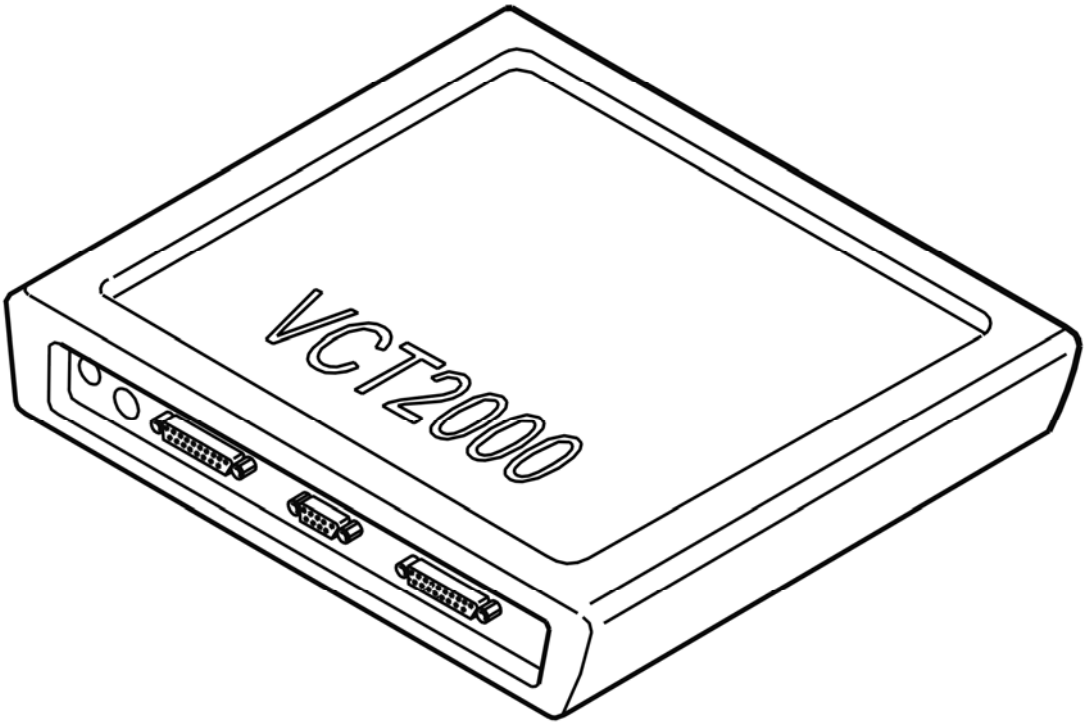

Fig. 173: Identifying VCT2000 Diagnostic Tool Symbol In VIDA
Courtesy of VOLVO CARS CORPORATION

Does the heater start?

- **YES**

  Refer to **CHECKING COMPONENTS AND WIRING**

- **NO**

  Refer to **CHECKING COMPONENTS AND WIRING**

CHECKING COMPONENTS AND WIRING

Check the cable between central electronic module (CEM) terminal #8 and the signal cable for the flame sensor. Check for a short-circuit to supply voltage. Check for an open-circuit.

HINT: It is difficult to differentiate between the ground lead for the flame sensor and the signal cable. Take readings on one cable at a time to check for a plausible value on either of them.

Replace the flame sensor if no fault is found in the cable.

Remedy as necessary.

Other information

- see **CONNECTING THE BREAKOUT BOX**
- see **SIGNAL SPECIFICATION**
- see **OVERHEAT PROTECTION THERMOSTAT / FLAME SENSOR / ENGINE COOLANT TEMPERATURE SENSOR, REPLACING**
- see **CHECKING WIRING AND TERMINALS**

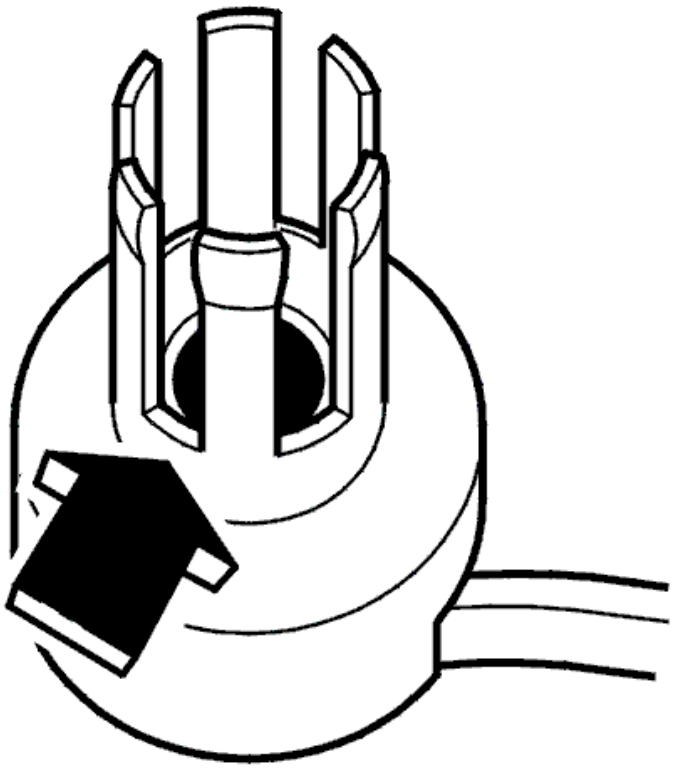

Fig. 174: Identifying Flame Sensor
Courtesy of VOLVO CARS CORPORATION

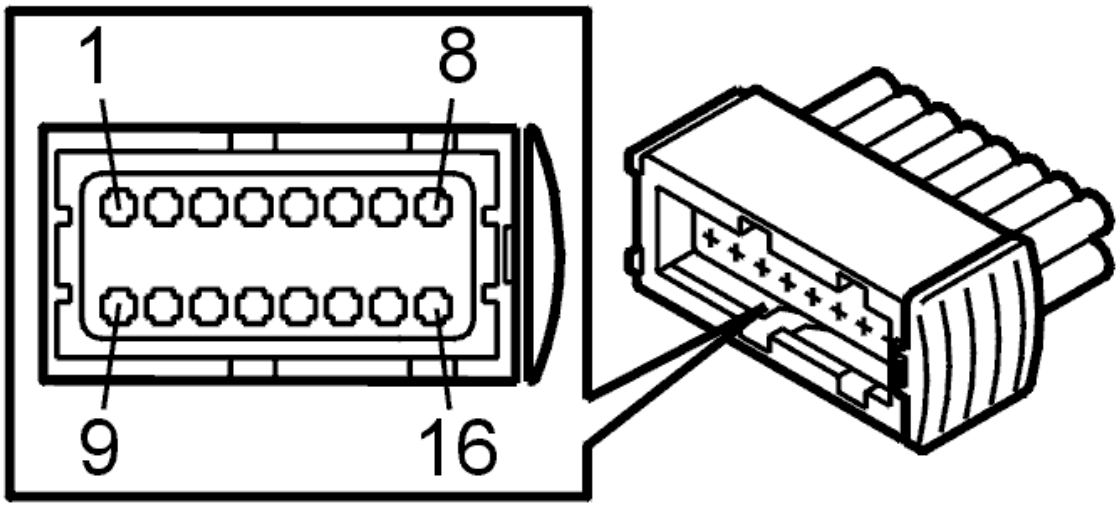

Fig. 175: Identifying Connector Terminals
Courtesy of VOLVO CARS CORPORATION

- **Continue**

  Refer to **VERIFICATION**

CHECKING COMPONENTS AND WIRING

Check the central electronic module (CEM) connector. Check for contact resistance and oxidation.

Check the flame sensor circuit. Check for an intermittent open-circuit.

Check the cable between central electronic module (CEM) terminal #8 and the signal terminal for the flame sensor. Check for an intermittent short-circuit to supply voltage.

Remedy as necessary.

Other information

- see **CONNECTING THE BREAKOUT BOX**
- see **SIGNAL SPECIFICATION**
- see **OVERHEAT PROTECTION THERMOSTAT / FLAME SENSOR / ENGINE COOLANT TEMPERATURE SENSOR, REPLACING**
- see **CHECKING WIRING AND TERMINALS**

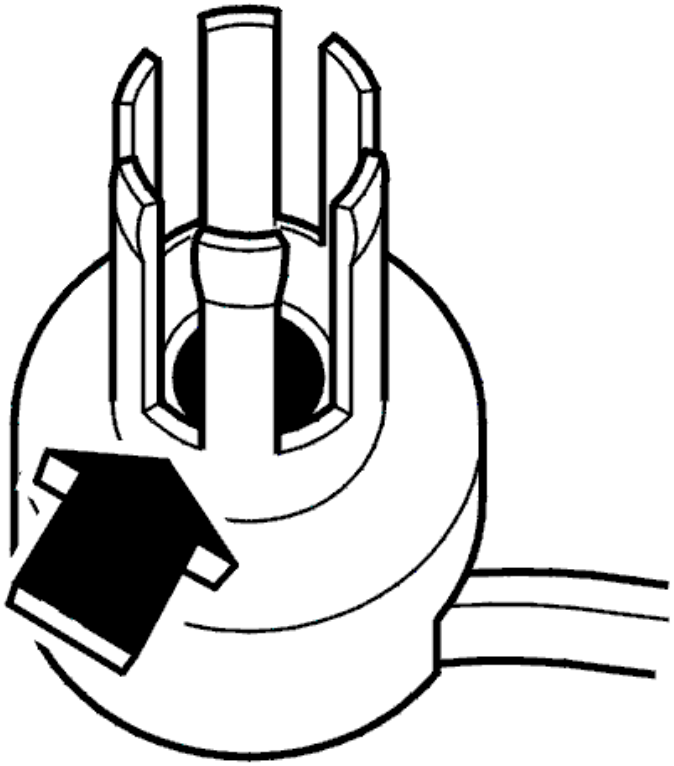

Fig. 176: Identifying Flame Sensor
Courtesy of VOLVO CARS CORPORATION

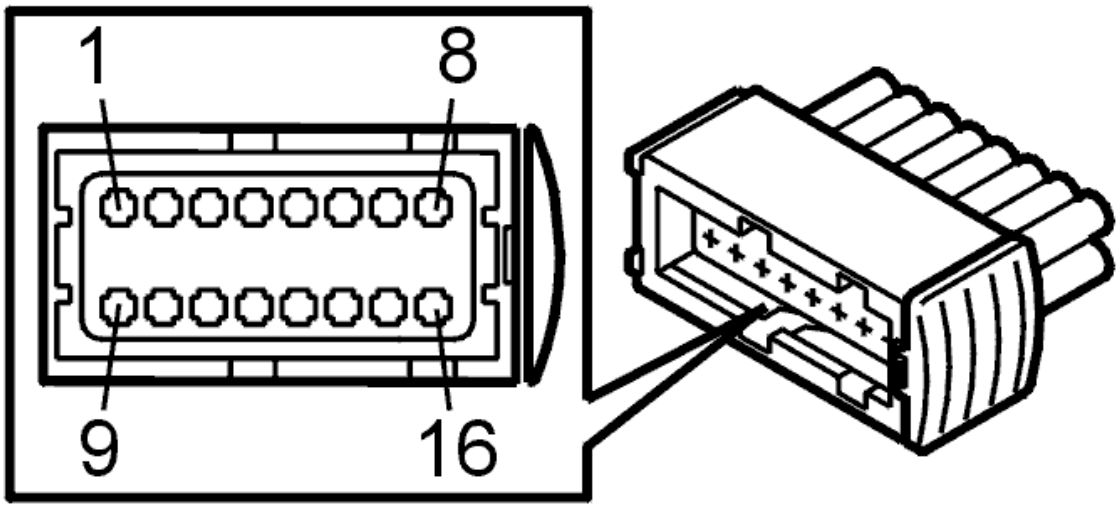

Fig. 177: Identifying Connector Terminals
Courtesy of VOLVO CARS CORPORATION

- **Continue**

  Refer to **VERIFICATION**

VERIFICATION

VERIFICATION

HINT: After carrying out the repair, check that the fault has been remedied.

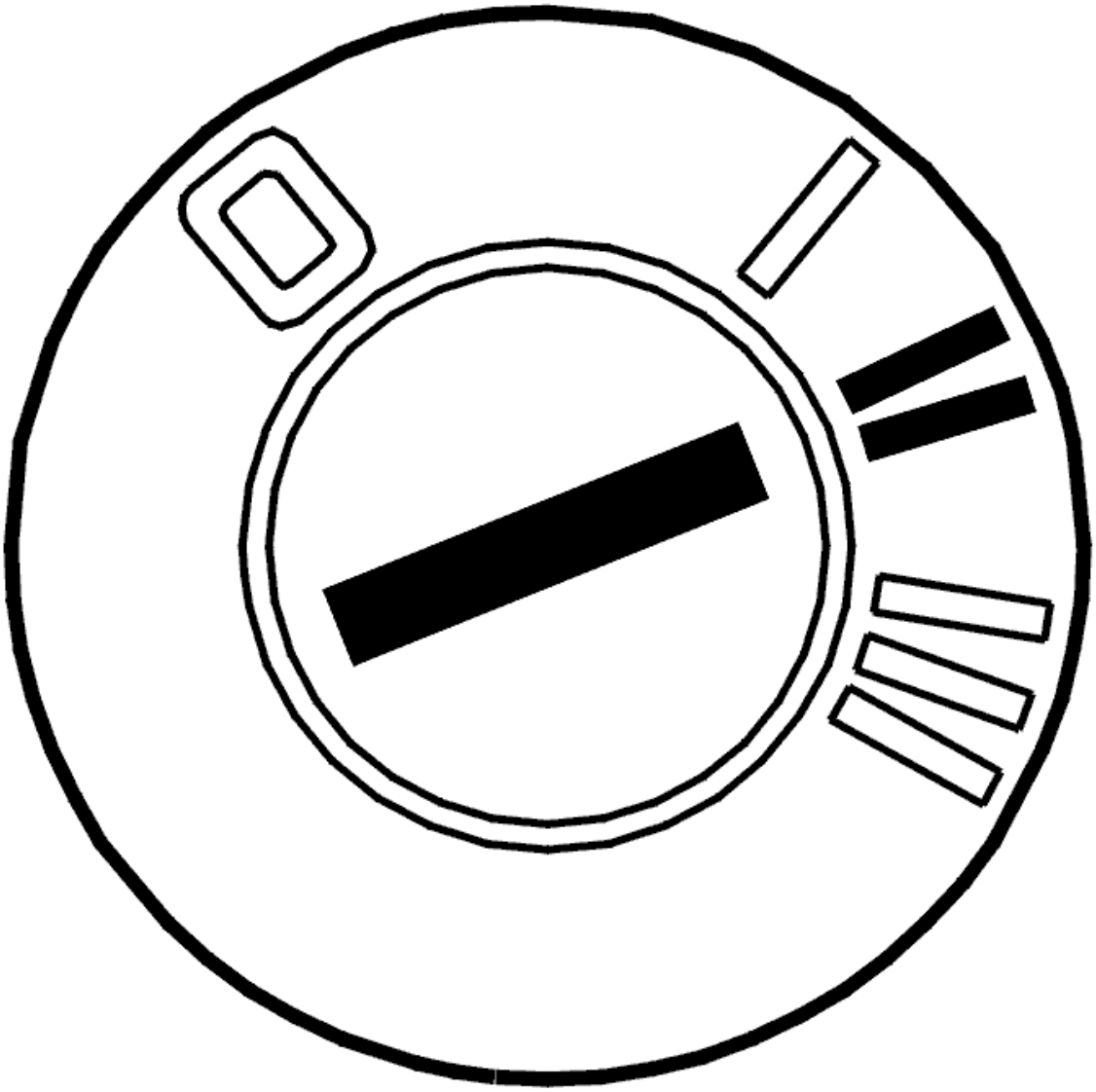

Fig. 178: Identifying Ignition ON
Courtesy of VOLVO CARS CORPORATION

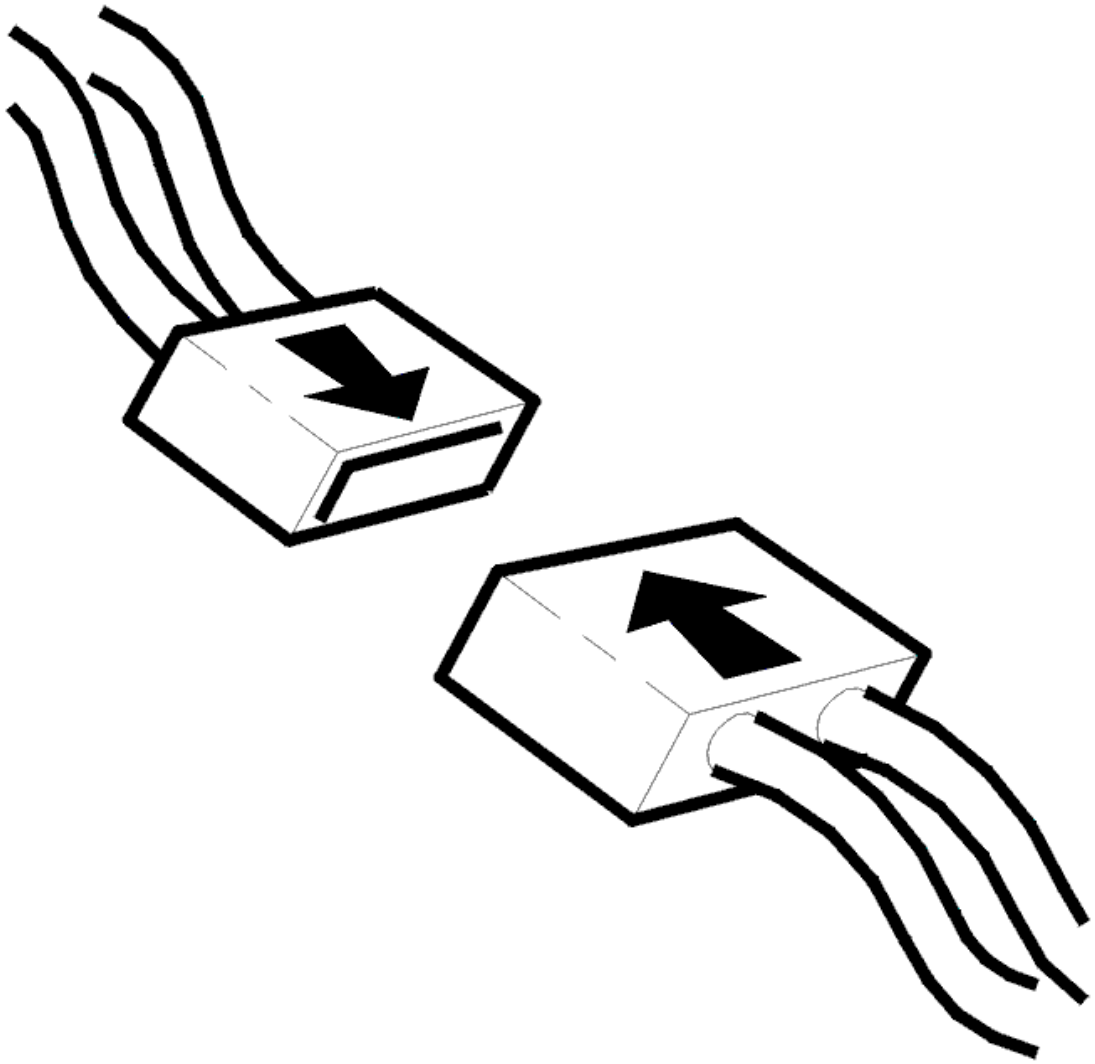

Fig. 179: Connecting Connector
Courtesy of VOLVO CARS CORPORATION

- Ignition off
- Reinstall the connectors, components etc.
- Ignition on
- Read off the engine coolant temperature.

NOTE: It is important that only the ignition is on in order for the heater to start.

- Activate the heater.

HINT: After repair, the voltage of the flame sensor can be checked. The voltage must be a maximum of 1.0 V.

Check the heater function.

CAUTION: In order for to enable start of the heater itself, the battery voltage must be normal, coolant temperature must be lower than +96 °C and the heater's after-run/stop sequence must be finished. There must also be enough fuel in the tank.

CAUTION: If the heater or other components are not activated, try starting the activation again using the VCT2000 (or appropriate scan tool).

Other information:

- see **ENGINE COOLANT HEATER, TEST RUNNING** .

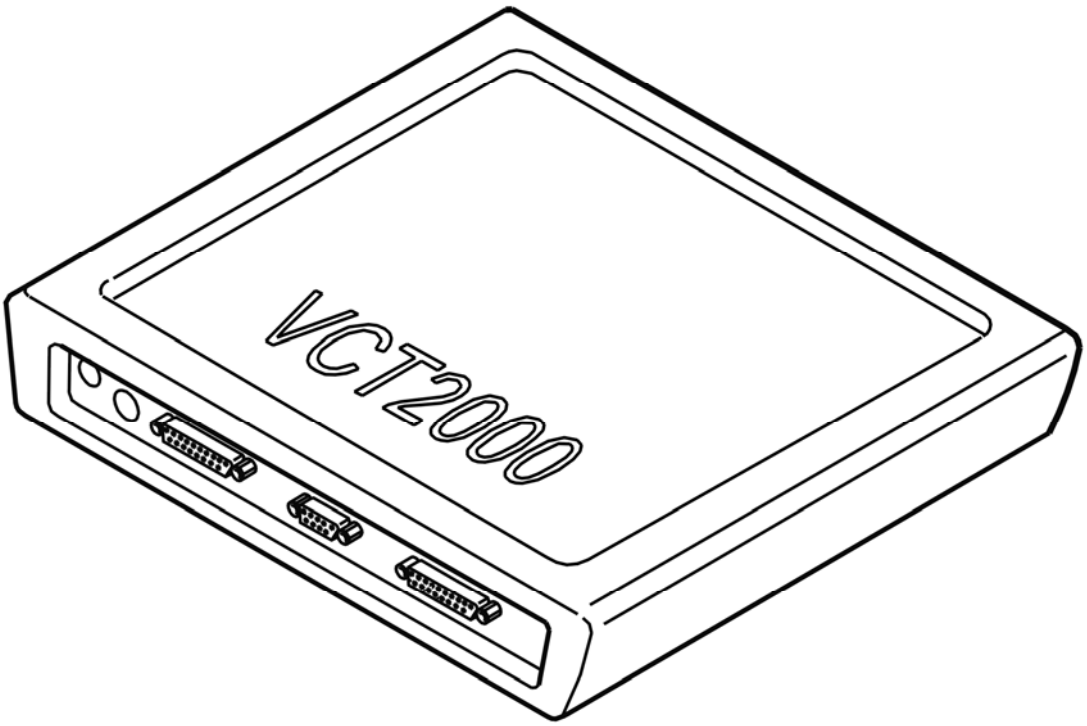

Fig. 180: Identifying VCT2000 Diagnostic Tool Symbol In VIDA
Courtesy of VOLVO CARS CORPORATION

Is the heater working?

- **YES**

VERIFIED: Troubleshooting has been completed.

- **NO**

  Refer to **INFORMATION**

INFORMATION

FAULT-TRACING INFORMATION

The fault should have been detected and remedied. As this is not the case fault-tracing has failed.

Exit fault-tracing for this diagnostic trouble code (DTC) or make another attempt.

CEM-5F39: FLAME SENSOR FLAME INTERRUPTION (B5254T2; B6294T; 2003-2004)

DIAGNOSTIC TROUBLE CODE INFORMATION

Condition

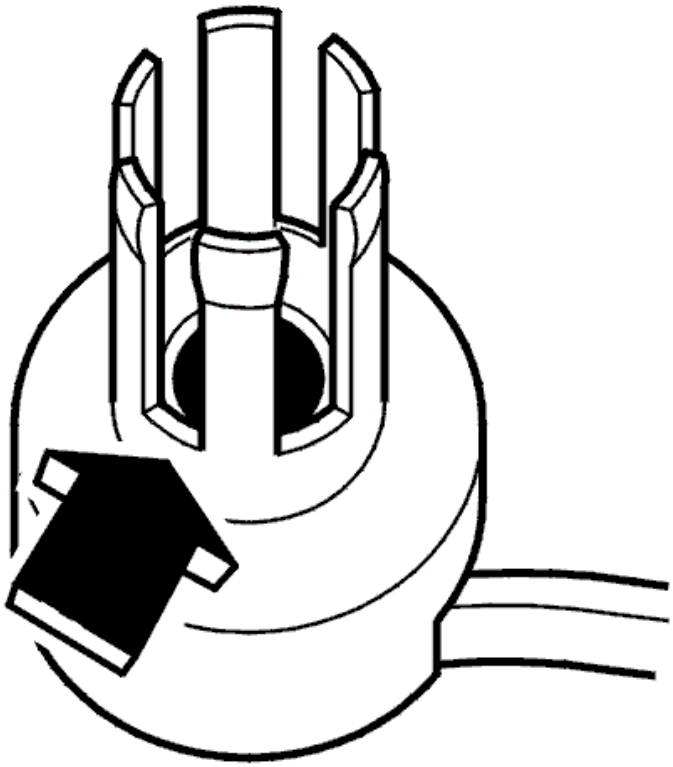

Fig. 181: Identifying Flame Sensor
Courtesy of VOLVO CARS CORPORATION

If the flame goes out unexpectedly during operation, this will be interpreted by the control unit as a fault and

diagnostic trouble code CEM-5F39 will be set.

Substitute Value

- None.

Possible Source

- No fuel feed.
- Flame indicator covered with soot.
- Damaged flame sensor.
- Contact resistance in control unit connector.
- Open circuit in signal wire.
- Signal wire short-circuited to voltage supply.
- Open circuit in ground wire.

Fault symptom[s]

- Poor interior heating.

FLAME INTERRUPTION

CHECKING THE FUNCTION OF THE HEATER

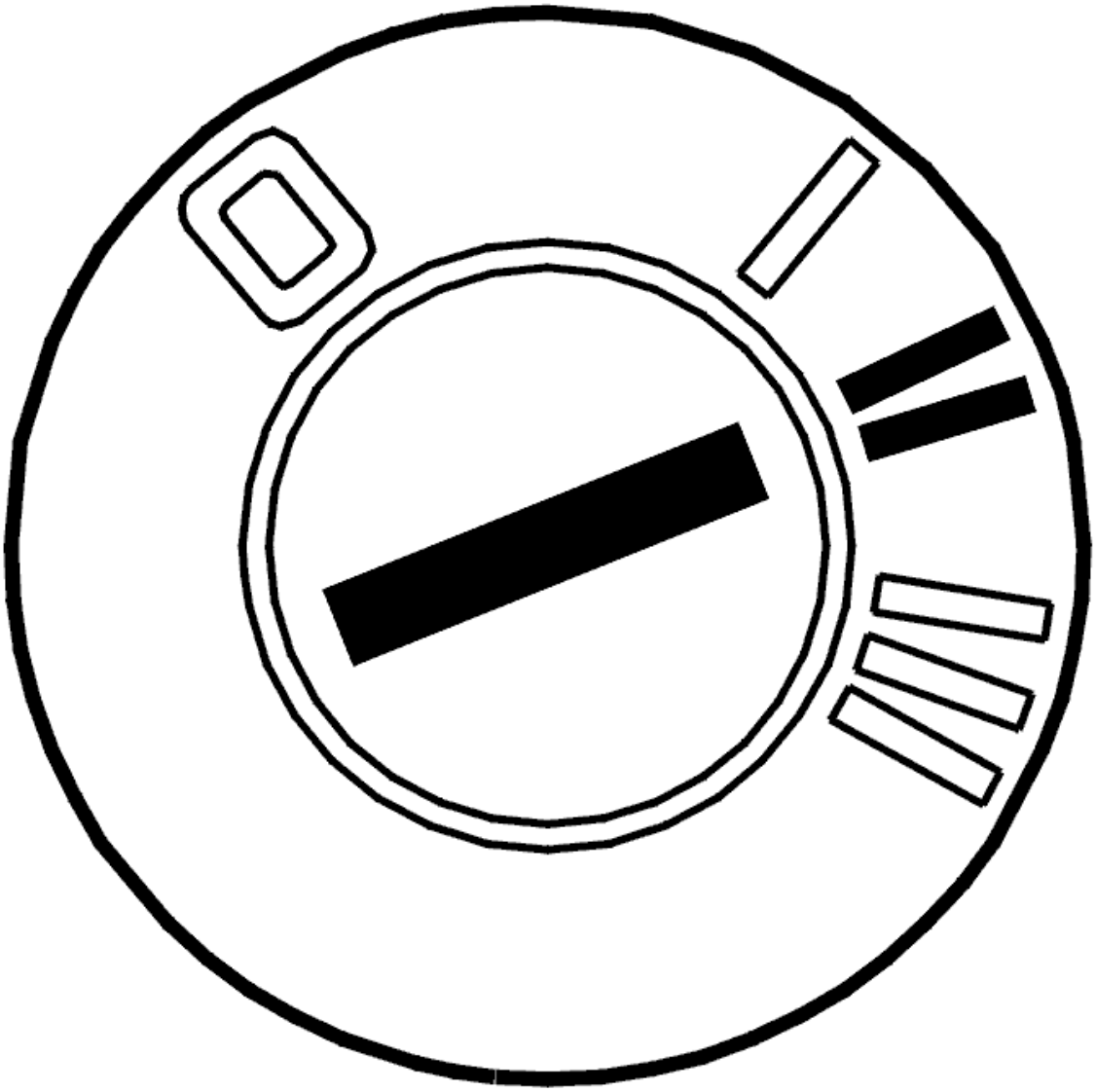

Fig. 182: Identifying Ignition ON
Courtesy of VOLVO CARS CORPORATION

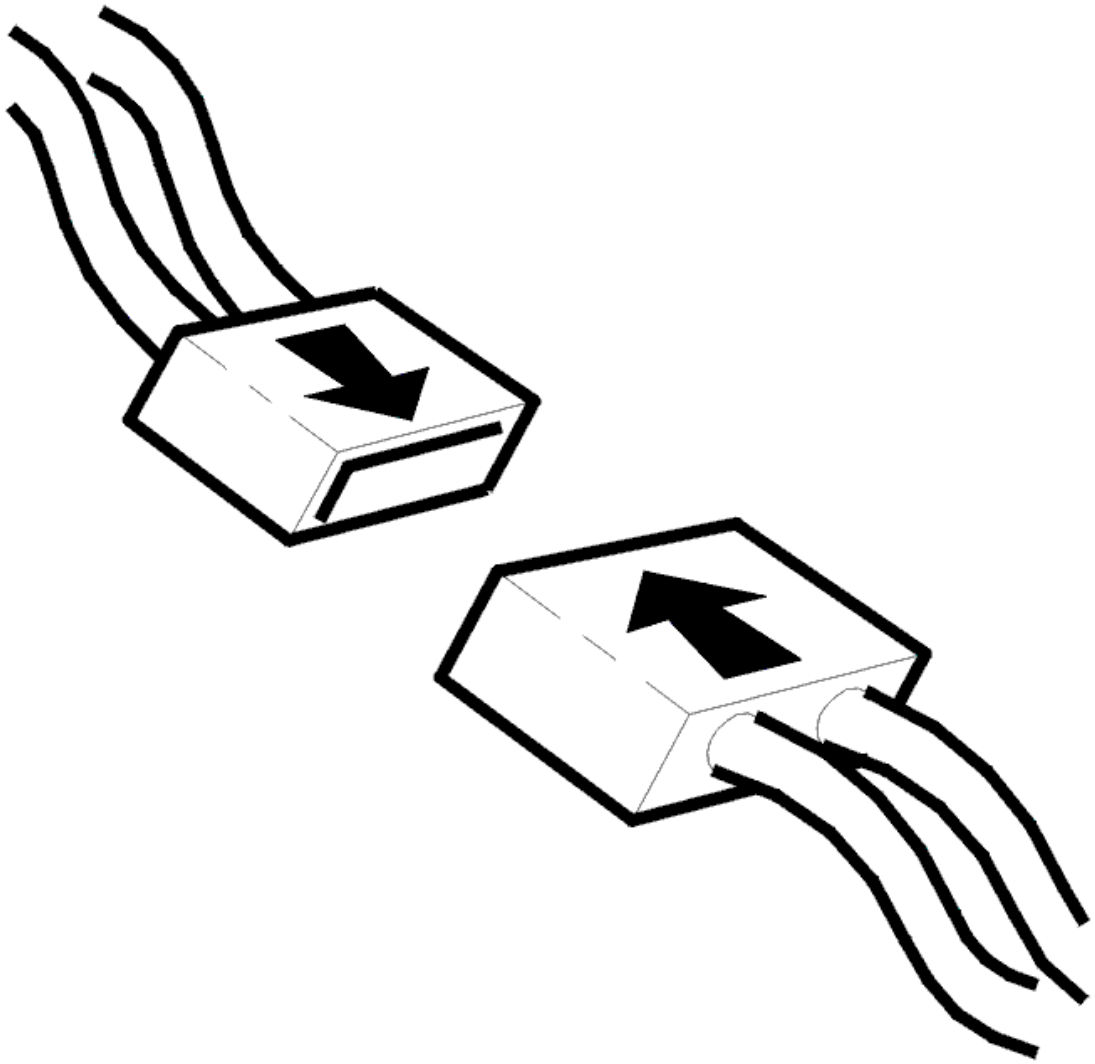

Fig. 183: Connecting Connector
Courtesy of VOLVO CARS CORPORATION

- Ignition on.

  NOTE: It is important that only the ignition is on in order for the heater to start.

- Activate the heater.

  A buzzing sound should be heard from the heater.

  Check the function of the heater. See **ENGINE COOLANT HEATER, TEST RUNNING** .

  Other information:

- For a description of parameters, see **DESCRIPTION OF PARAMETERS**
- For a description of activations, see **ACTIVATING COMPONENTS/FUNCTIONS** .

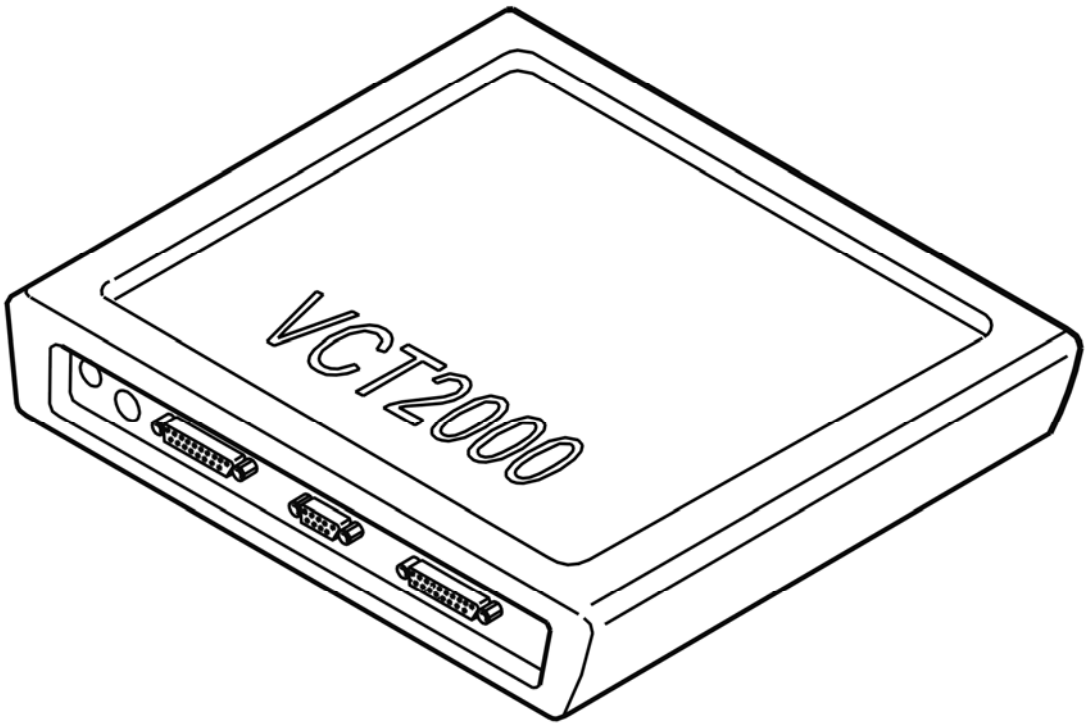

Fig. 184: Identifying VCT2000 Diagnostic Tool Symbol In VIDA
Courtesy of VOLVO CARS CORPORATION

Is the function OK?

- **YES**

  Refer to **INTERMITTENT FAULT**

- **NO**

  Refer to **TOO MANY UNSUCCESSFUL ATTEMPTS**

INTERMITTENT FAULT

Check the control module connector. Check for contact resistance and oxidation.

Check the flame sensor circuit. Check for an intermittent open-circuit.

Check the cable between control module terminal #8 and the signal terminal for the flame sensor. Check for an

intermittent short-circuit to supply voltage.

Remedy as necessary.

Other information:

- To access the control module or connect the breakout box, see **CONNECTING THE BREAKOUT BOX**
- To access or replace the flame sensor, see **OVERHEAT PROTECTION THERMOSTAT / FLAME SENSOR / ENGINE COOLANT TEMPERATURE SENSOR, REPLACING**
- For other values, see **SIGNAL SPECIFICATION**
- see **CHECKING WIRING AND TERMINALS** .

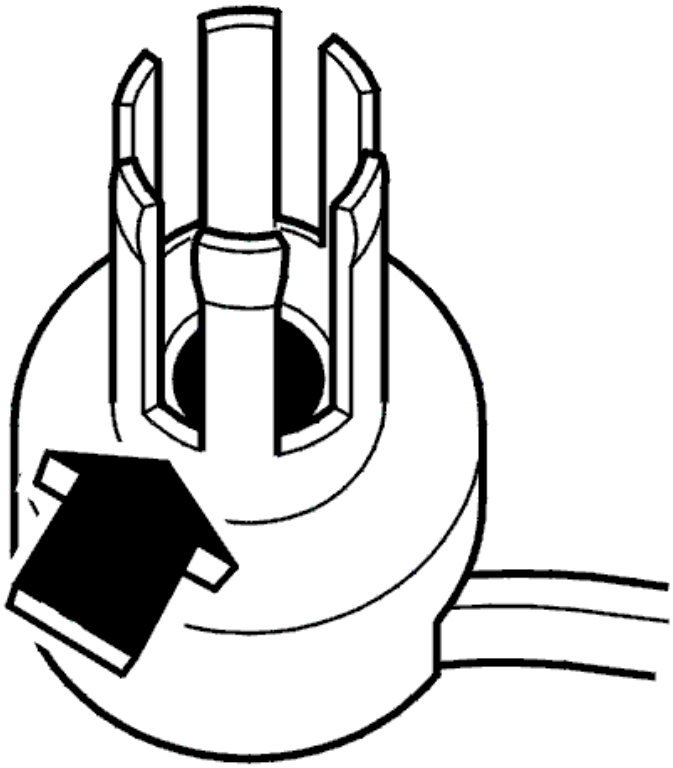

Fig. 185: Identifying Flame Sensor
Courtesy of VOLVO CARS CORPORATION

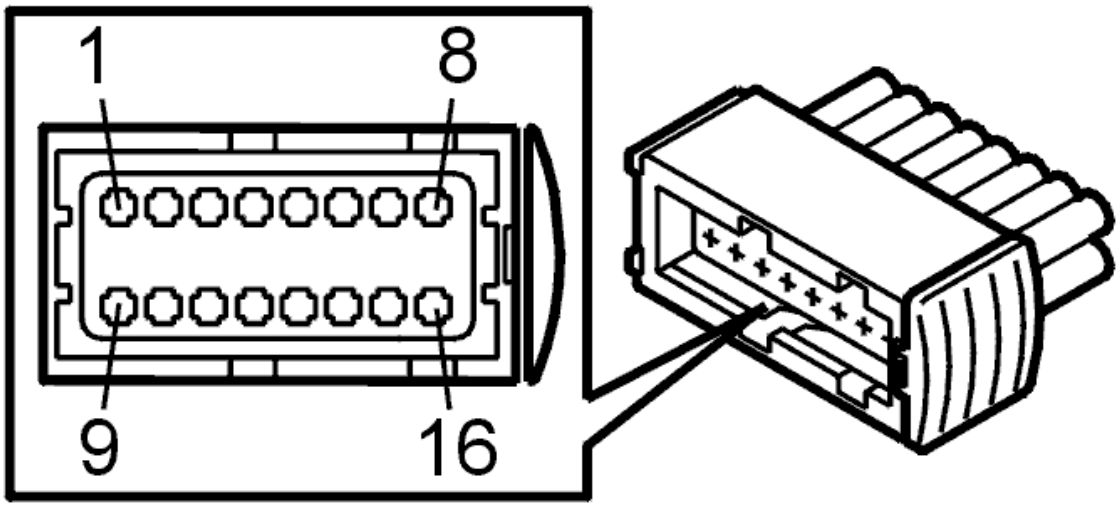

Fig. 186: Identifying Connector Terminals
Courtesy of VOLVO CARS CORPORATION

- **Continue**

  Refer to **INFORMATION**

INFORMATION

FAULT-TRACING INFORMATION

If the fault is intermittent, do not verify fault-tracing if the fault does not recur.

It is possible to view the information again, or leave fault-tracing for this diagnostic trouble code (DTC).

TOO-MANY: UNSUCCESSFUL ATTEMPTS

CHECKING QUANTITY OF FUEL AND VOLTAGE

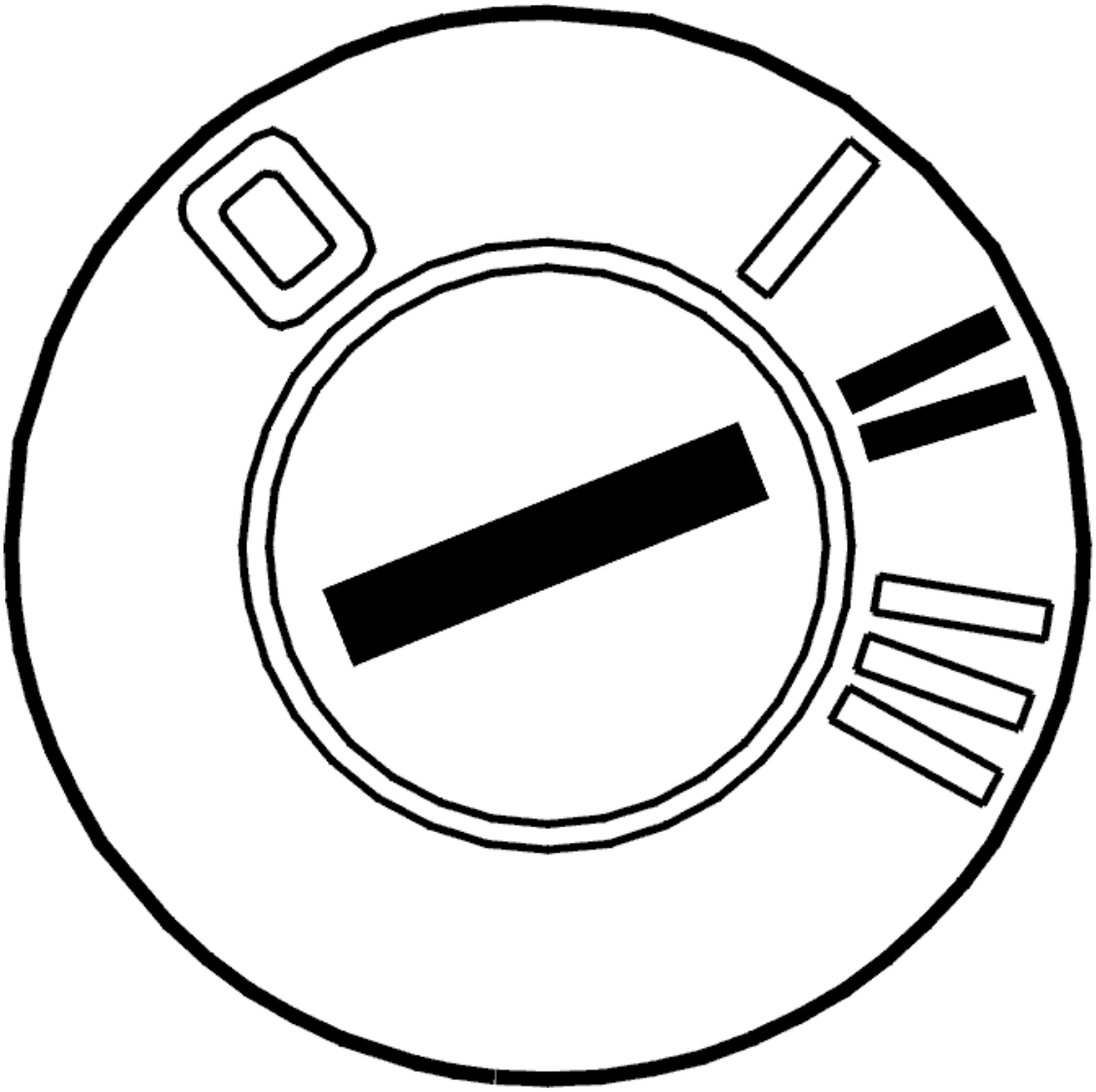

Fig. 187: Identifying Ignition ON
Courtesy of VOLVO CARS CORPORATION

- If the quantity of fuel in the fuel tank is below 6 liters the heater is not permitted to start. If the battery voltage is poor the heater is not permitted to start. The control module interprets 3 or more failed start attempts as a fault in the heater. The heater cannot then be started until the diagnostic trouble codes (DTCs) have been erased
- Ignition on.

NOTE: The heater must be switched off when reading off

Read off the values.

The fuel level status must be OK and the voltage to the heater must be normal.

Other information:

- For a description of parameters, see **DESCRIPTION OF PARAMETERS** .

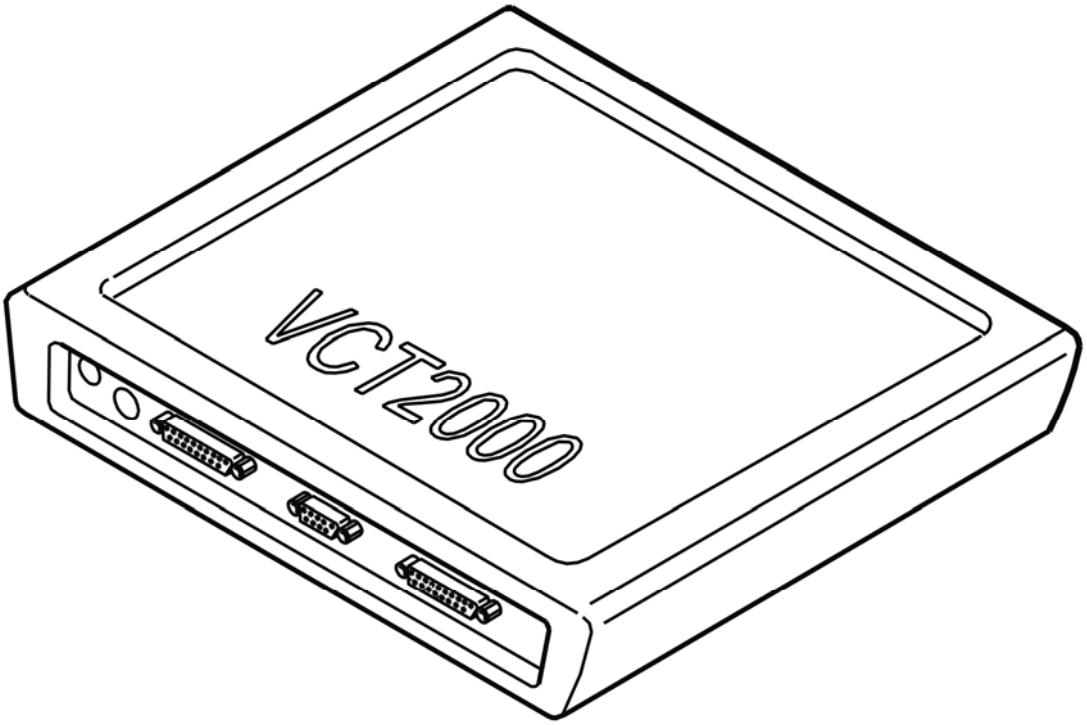

Fig. 188: Identifying VCT2000 Diagnostic Tool Symbol In VIDA
Courtesy of VOLVO CARS CORPORATION

Was a fault detected?

- **YES**

  Refer to **VERIFICATION**

- **NO**

  Refer to **CHECKING THE FUEL LINES**

CHECKING THE FUEL LINES

WARNING: **Use protective gloves and protective goggles due to the risk of fuel spillage.**

- To expose the heater and access the fuel lines, see **ENGINE COOLANT HEATER, REPLACING** .

Check the fuel lines for damage and leaks between their connection point to the engine fuel system and the heater via the fuel pump (FP).

Check the fuel lines for blockages.

Was a fault detected?

- **YES**

  Refer to **VERIFICATION**

- **NO**

  Refer to **CHECKING COMPONENTS**

CHECKING COMPONENTS

WARNING: **Use protective gloves and protective goggles due to the risk of fuel spillage.**

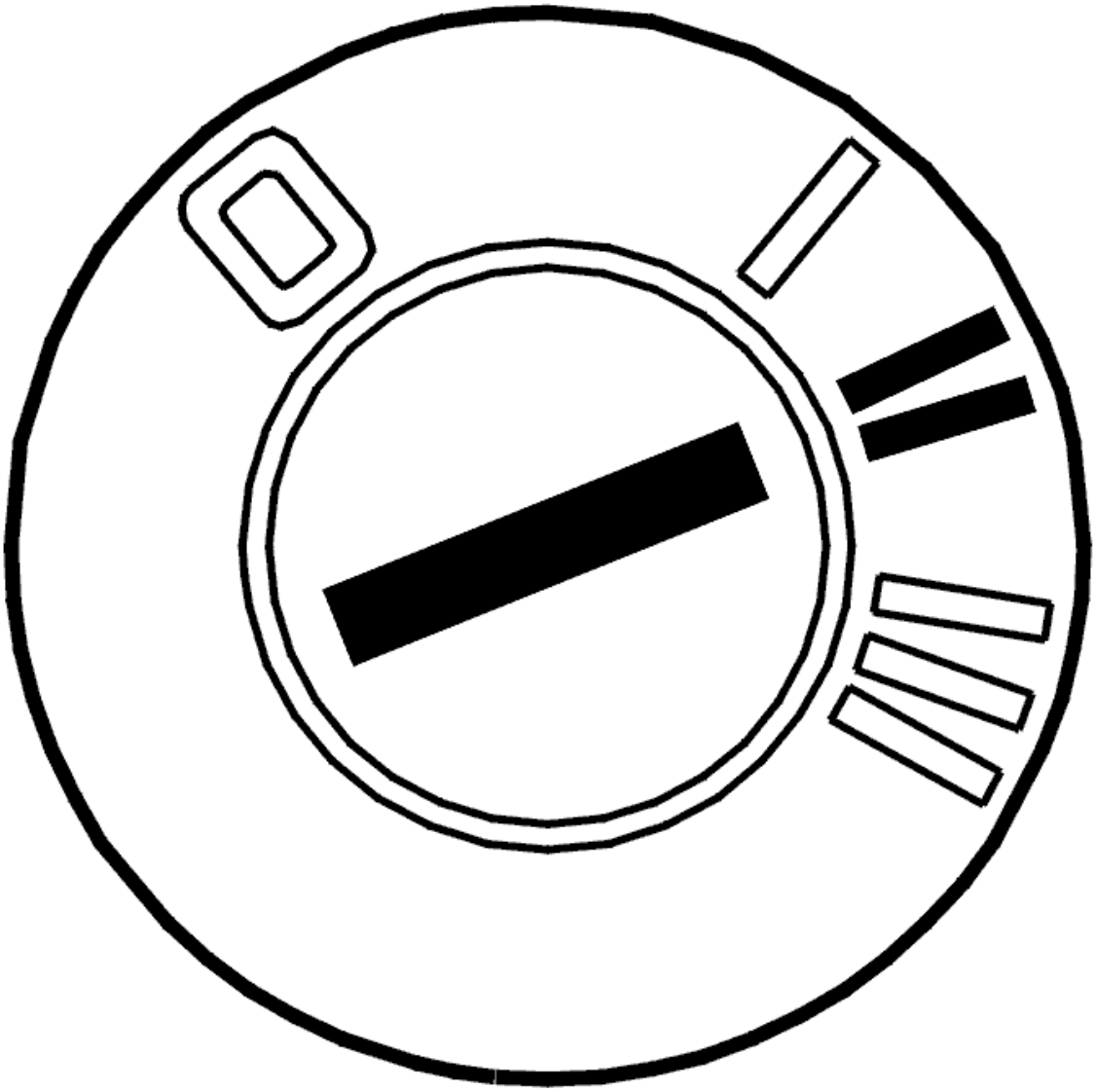

Fig. 189: Identifying Ignition ON
Courtesy of VOLVO CARS CORPORATION

- Ignition on.

  NOTE: It is important that only the ignition is on in order for the heater to start.

- Activate the heater.

  A buzzing sound must be heard from the heater

  Check whether the fuel pump is operating. The pump should make a ticking sound.

  If the pump does not operate replace the fuel pump according to **FUEL PUMP AUXILIARY HEATER, REPLACING** .

Other information:

- For a description of parameters, see **DESCRIPTION OF PARAMETERS**
- For a description of activations, see **ACTIVATING COMPONENTS/FUNCTIONS** .

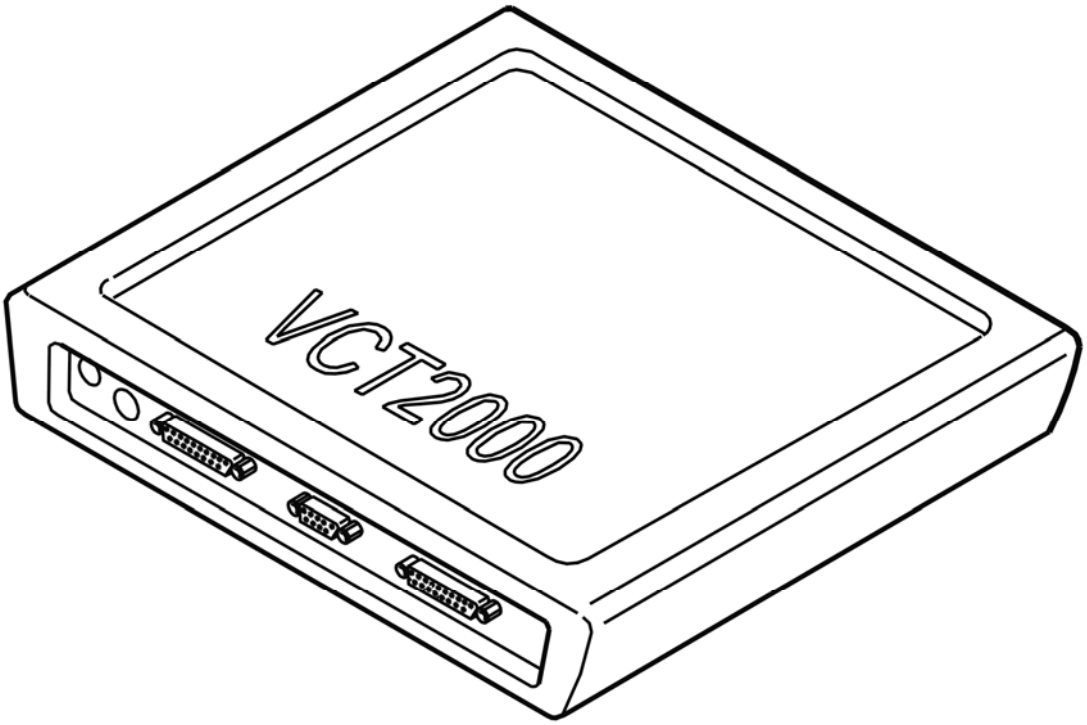

Fig. 190: Identifying VCT2000 Diagnostic Tool Symbol In VIDA
Courtesy of VOLVO CARS CORPORATION

Did the heater operate?

- **YES**

  Refer to **CHECKING THE NOZZLE PIPE**

- **NO**

  Refer to **VERIFICATION**

CHECKING THE NOZZLE PIPE

- Remove the heater. See **ENGINE COOLANT HEATER, REPLACING**
- Disconnect the nozzle pipe according to **FUEL INJECTION NOZZLE / FAN MOTOR / PRESSURE EQUALIZER, REPLACING** .

Check that the nozzle pipe is OK and that it is not blocked.

Remedy as necessary.

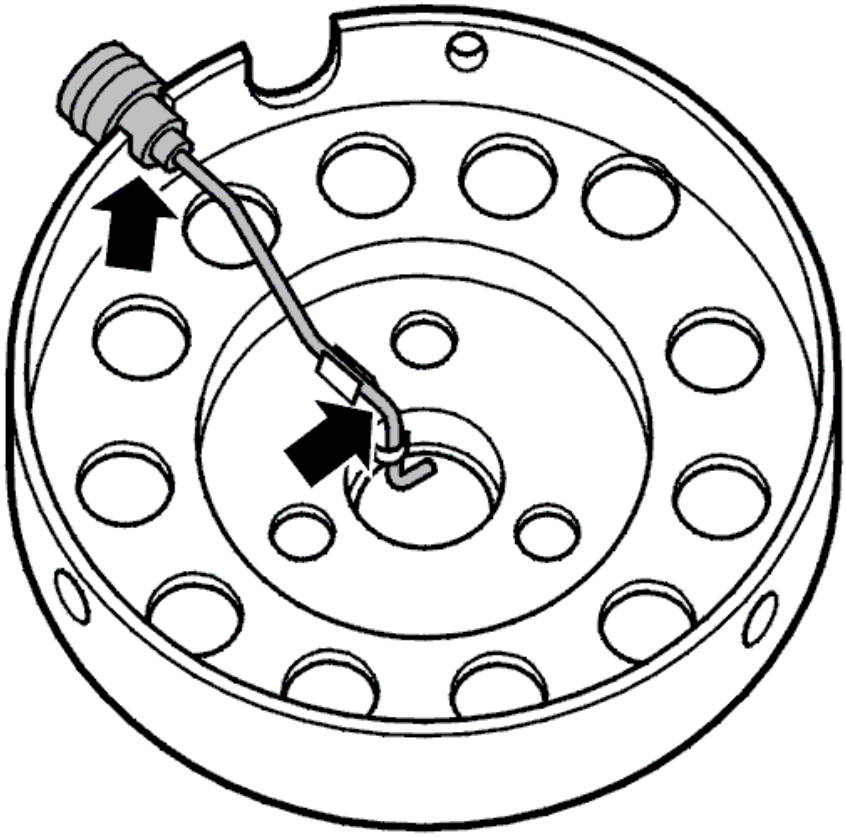

Fig. 191: Identifying Nozzle Pipe Installation Position
Courtesy of VOLVO CARS CORPORATION

Was a fault detected?

- **YES**

  Refer to **VERIFICATION**

- **NO**

  Refer to **CHECKING THE INTAKE AIR FLOW**

CHECKING THE INTAKE AIR FLOW

- Remove the heater. See **ENGINE COOLANT HEATER, REPLACING** .

  Check that the air flow through the heater is free (that the air intake and exhaust are not blocked).

  Remedy as necessary.

Was a fault detected?

- **YES**

  Refer to **VERIFICATION**

- **NO**

  Refer to **CHECKING THE FLAME SENSOR**

CHECKING THE FLAME SENSOR

Check that the flame sensor is not clogged with soot.

Remedy as necessary.

Other information:

- To access or replace the flame sensor, see **OVERHEAT PROTECTION THERMOSTAT / FLAME SENSOR / ENGINE COOLANT TEMPERATURE SENSOR, REPLACING** .

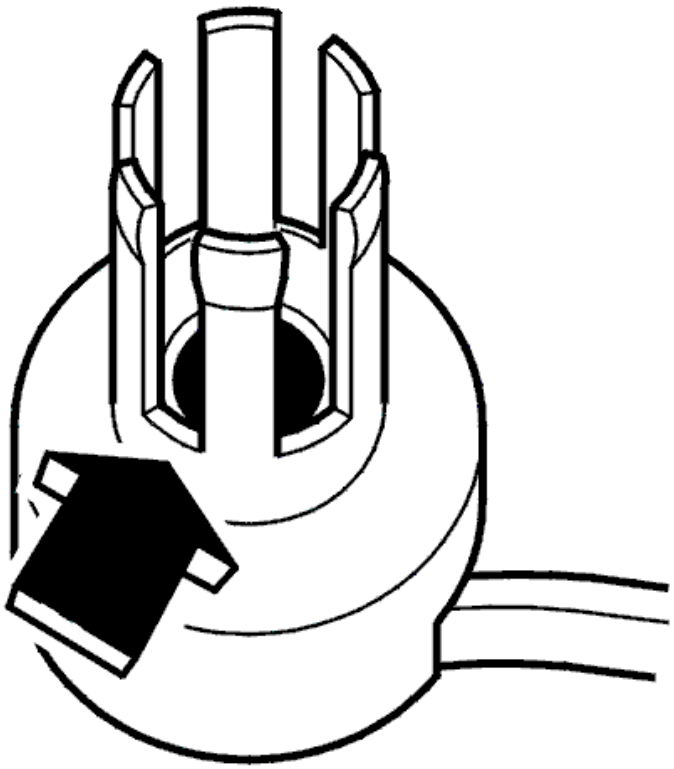

Fig. 192: Identifying Flame Sensor
Courtesy of VOLVO CARS CORPORATION

Was a fault detected?

- **YES**

  Refer to **VERIFICATION**

- **NO**

  Refer to **CHECKING COMPONENTS AND WIRING**

CHECKING COMPONENTS AND WIRING

Check the cable between control module terminal #4 and the ground terminal for the flame sensor. Check for an open-circuit.

HINT: It is difficult to differentiate between the flame sensor cables so take readings between control module terminal #4 and both flame sensor cables.

Check the cable between control module terminal #8 and the positive terminal for the flame sensor. Check for an open-circuit. Check for a short-circuit to supply voltage.

HINT: It is difficult to differentiate between the cables to the flame sensor. Take readings on the cables one at a time and, see if a relevant value was obtained from either of them.

If no fault is found in the connectors or cables, try a new flame sensor.

Remedy as necessary.

Other information:

- To access the control module or connect the breakout box, see **CONNECTING THE BREAKOUT BOX**
- To access or replace the flame sensor, see **OVERHEAT PROTECTION THERMOSTAT / FLAME SENSOR / ENGINE COOLANT TEMPERATURE SENSOR, REPLACING**
- For other values, see **SIGNAL SPECIFICATION**
- see **CHECKING WIRING AND TERMINALS** .

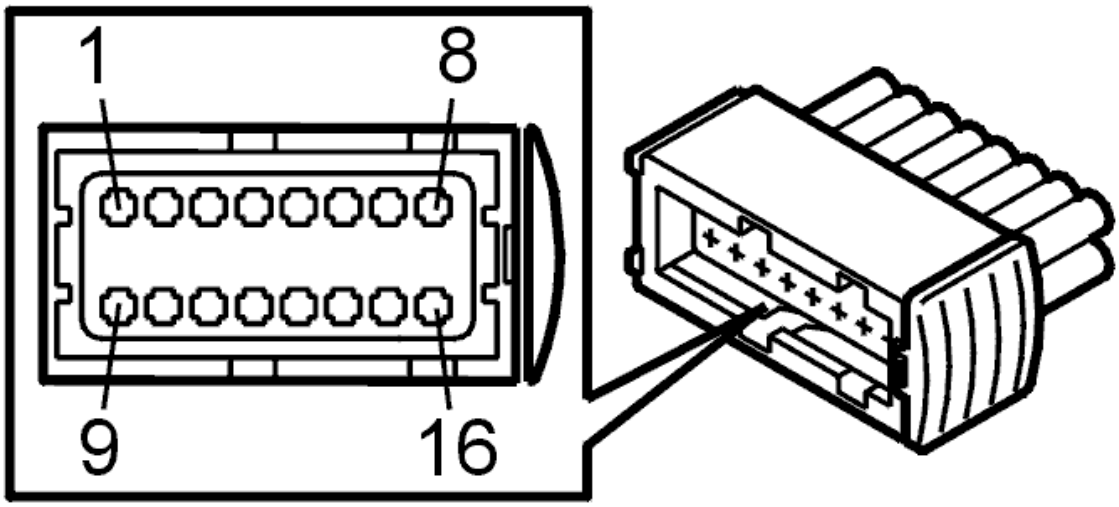

Fig. 193: Identifying Connector Terminals
Courtesy of VOLVO CARS CORPORATION

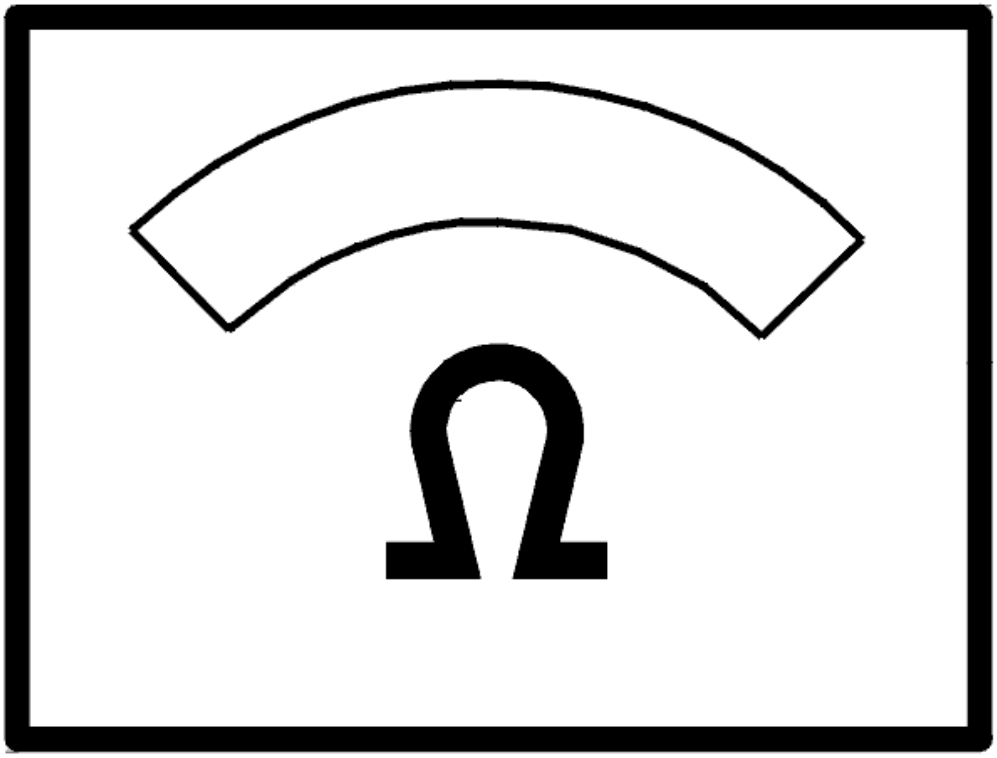

Fig. 194: Identifying Ohm Meter
Courtesy of VOLVO CARS CORPORATION

- **Continue**

  Refer to **VERIFICATION**

VERIFICATION

VERIFICATION

HINT: After carrying out the repair, check that the fault has been remedied.

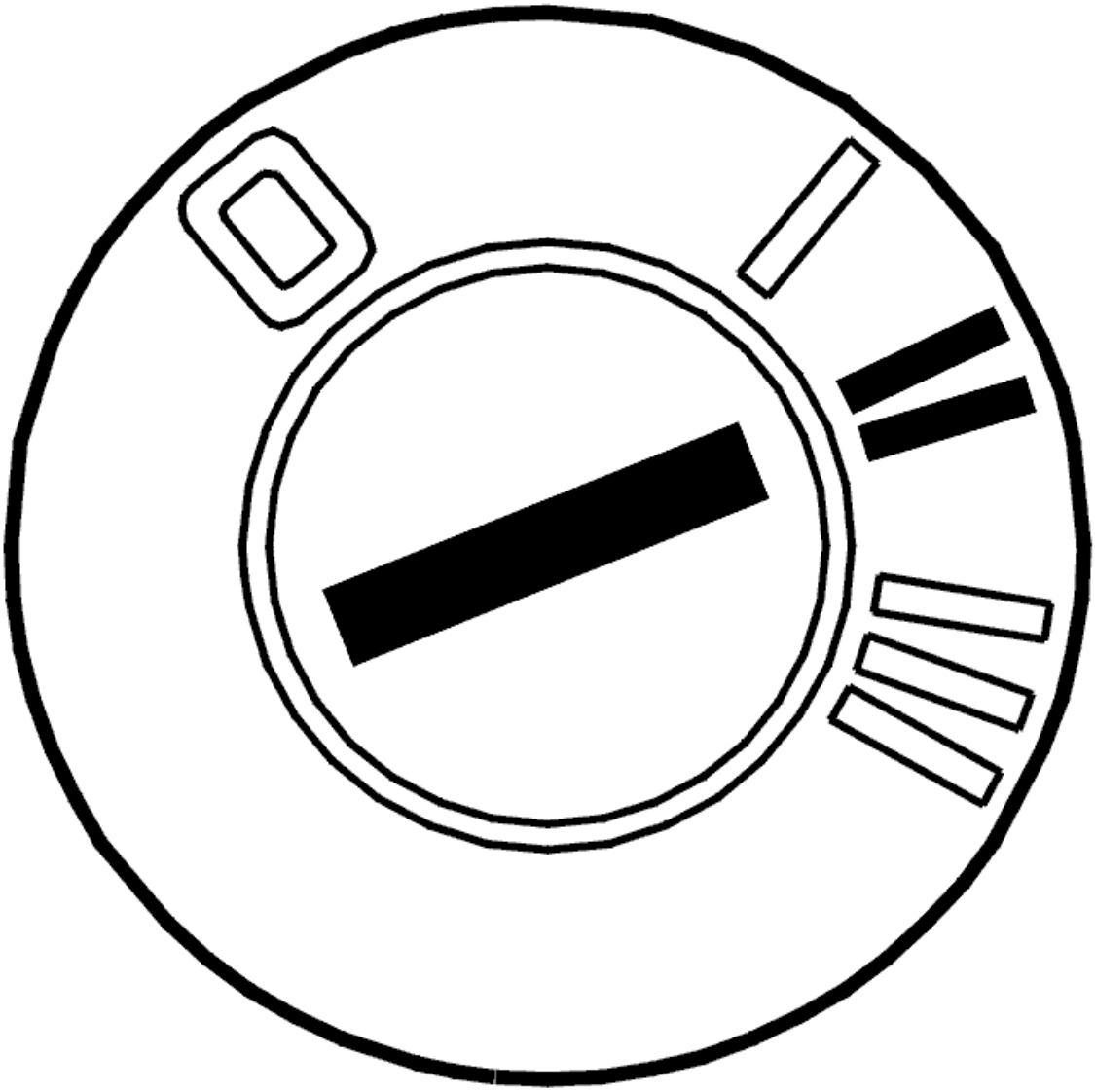

Fig. 195: Identifying Ignition ON
Courtesy of VOLVO CARS CORPORATION

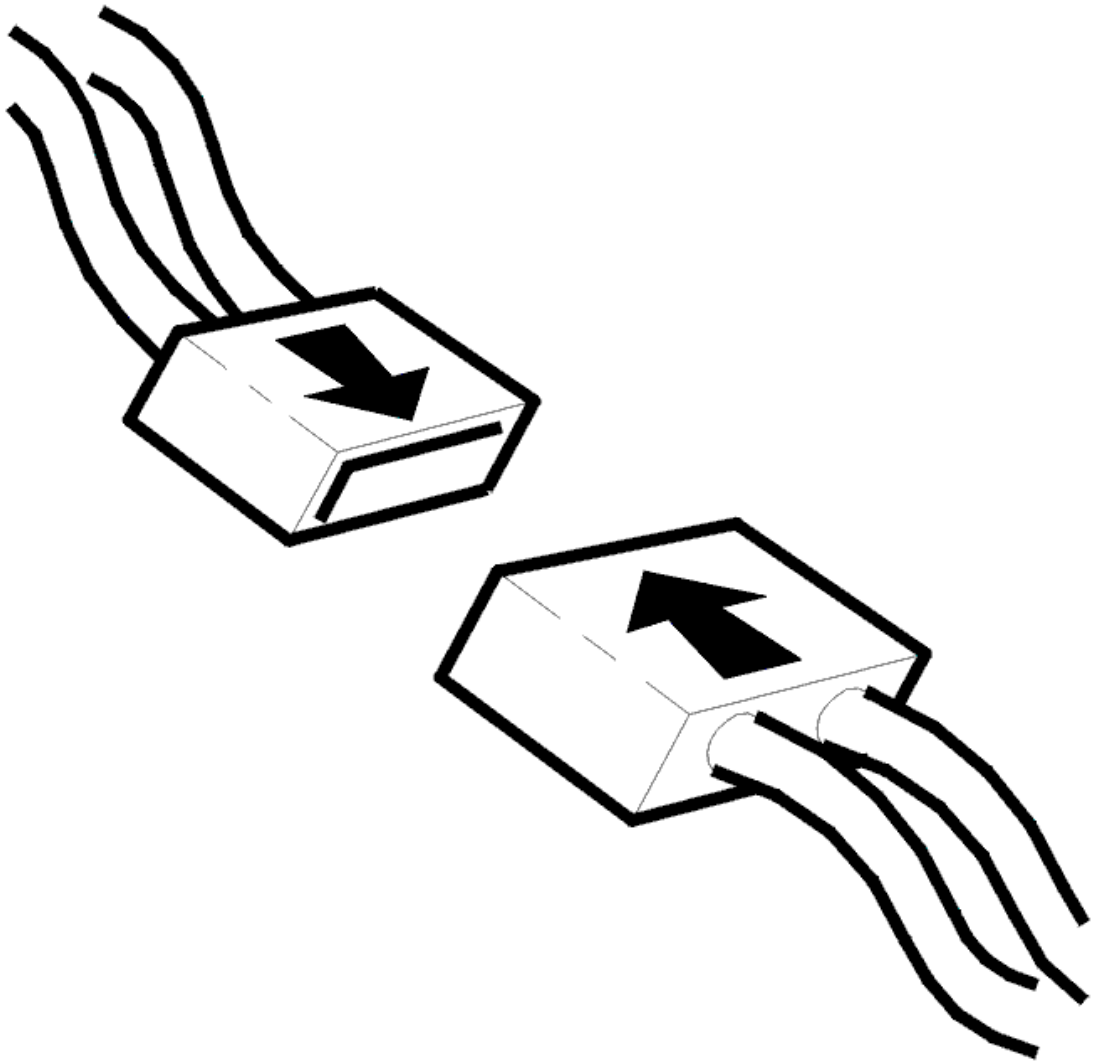

Fig. 196: Connecting Connector
Courtesy of VOLVO CARS CORPORATION

- Ignition off
- Reinstall the connectors, components etc.
- Ignition on.

Erase diagnostic trouble codes (DTCs).

NOTE: **Diagnostic trouble codes (DTCs) must be erased to start the heater. Before erasing diagnostic trouble codes (DTCs) all indicated faults must be corrected.**

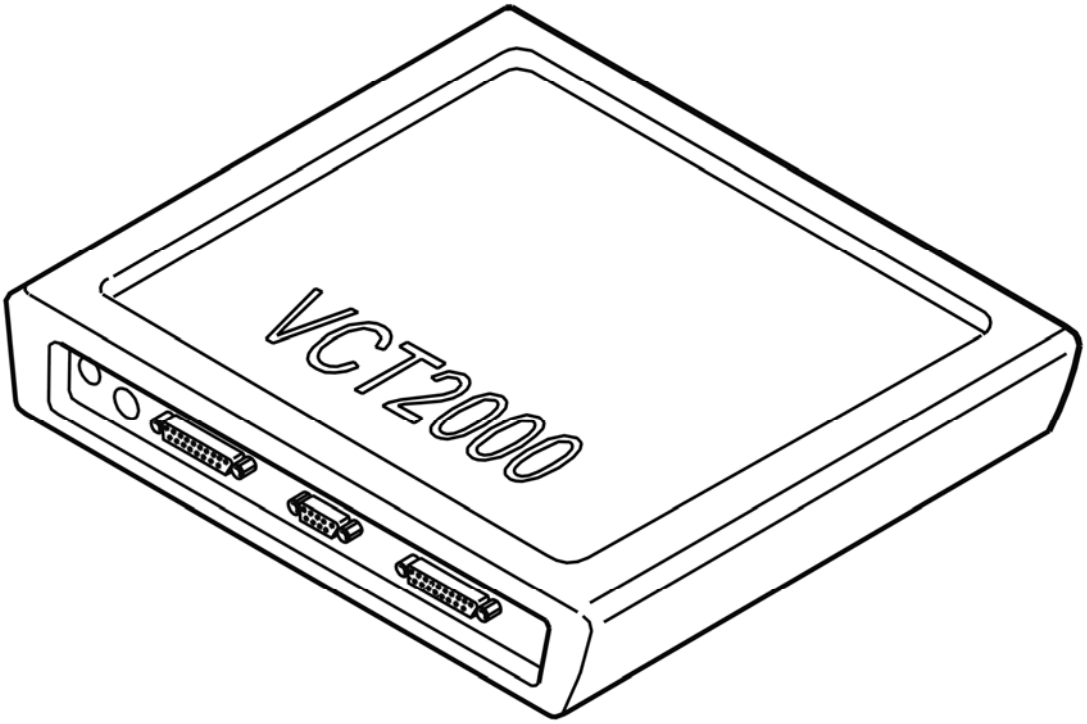

Fig. 197: Identifying VCT2000 Diagnostic Tool Symbol In VIDA
Courtesy of VOLVO CARS CORPORATION

- **Continue**

  Refer to **VERIFICATION, CONTINUED**

VERIFICATION, CONTINUED

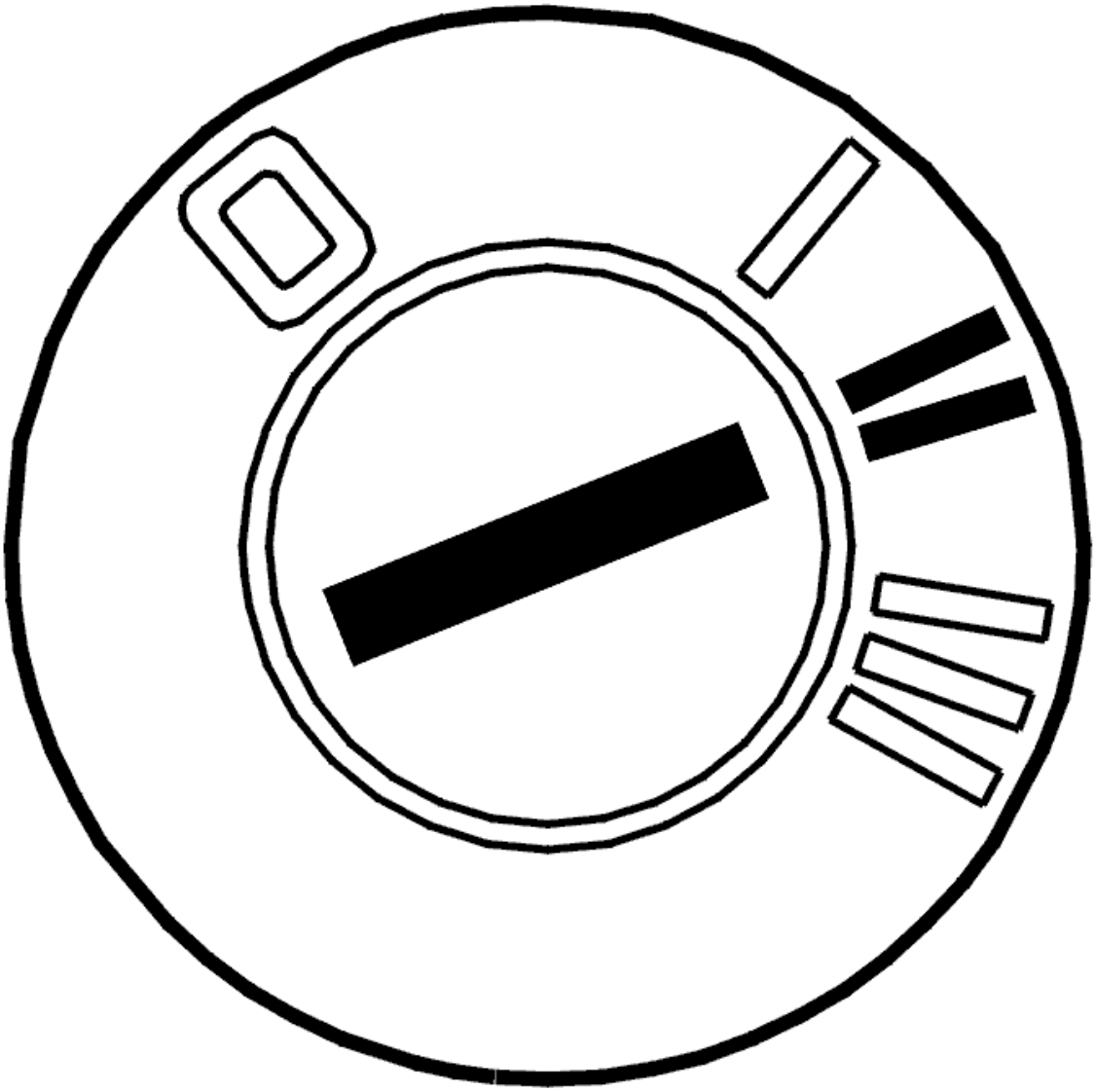

Fig. 198: Identifying Ignition ON
Courtesy of VOLVO CARS CORPORATION

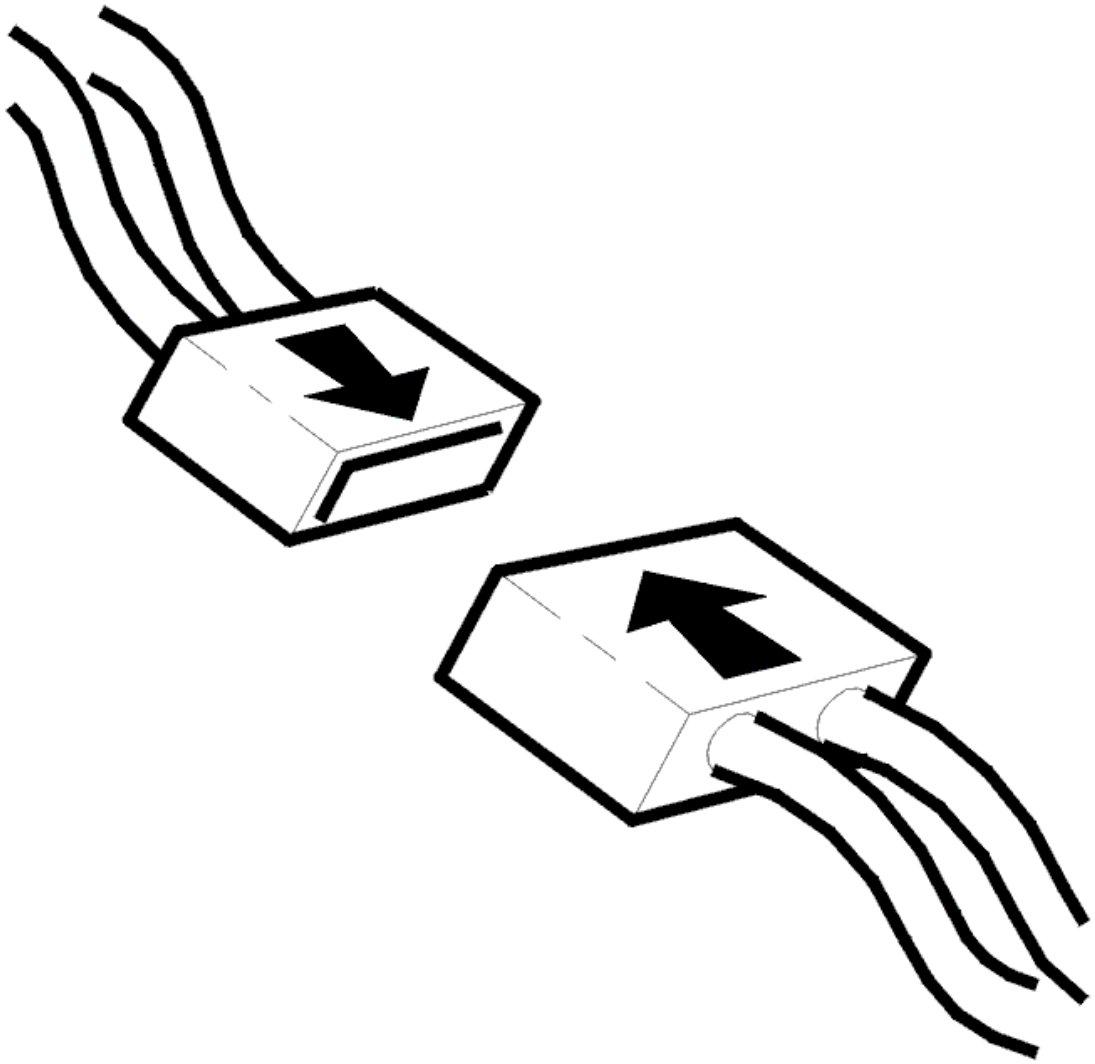

Fig. 199: Connecting Connector
Courtesy of VOLVO CARS CORPORATION

- Ignition off
- Reinstall the connectors, components etc.
- Ignition on.

NOTE: It is important that only the ignition is on in order for the heater to start.

- Activate the heater.

  A buzzing sound should be heard from the heater.

  HINT: After repair, the voltage of the flame sensor can be checked. The voltage should be a maximum of 1.0 V.

Check the function of the heater. See **ENGINE COOLANT HEATER, TEST RUNNING** .

Other information:

- For a description of parameters, see **DESCRIPTION OF PARAMETERS**
- For a description of activations, see **ACTIVATING COMPONENTS/FUNCTIONS** .

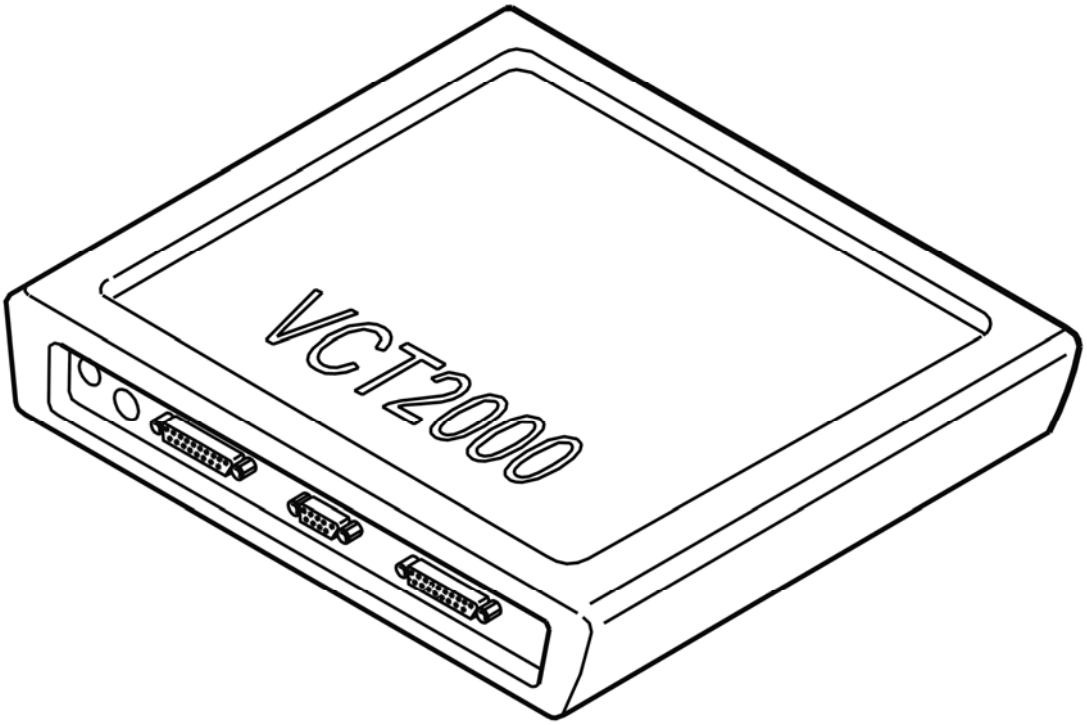

Fig. 200: Identifying VCT2000 Diagnostic Tool Symbol In VIDA
Courtesy of VOLVO CARS CORPORATION

Does the heater operate?

- **YES**

  VERIFIED: Troubleshooting has been completed.

- **NO**

  Refer to **INFORMATION**

INFORMATION

FAULT-TRACING INFORMATION

The fault should have been detected and remedied. As this is not the case fault-tracing has failed.

Exit fault-tracing for this diagnostic trouble code (DTC) or make another attempt.

CEM-5F3A: WATER PUMP. SIGNAL TOO HIGH (2003-2004)

DIAGNOSTIC TROUBLE CODE INFORMATION

Condition

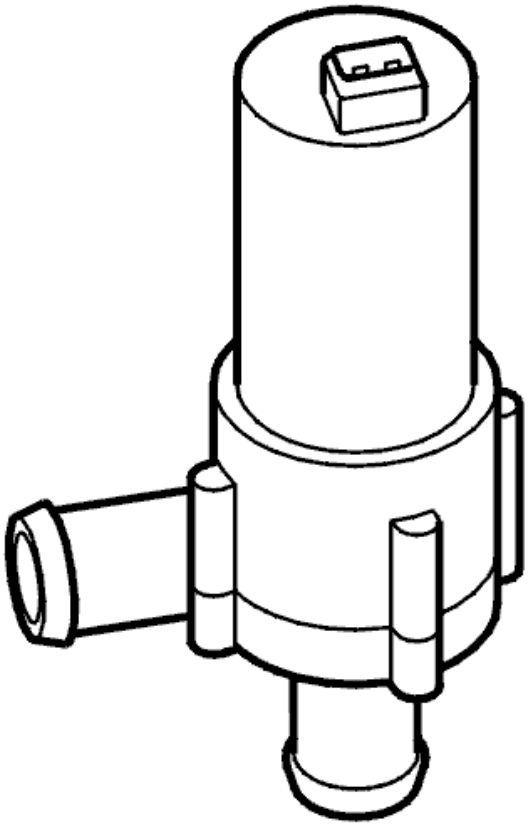

Fig. 201: Identifying Water Pump
Courtesy of VOLVO CARS CORPORATION

If the water pump circuit is short-circuited to voltage supply, the control unit will interpret this as a fault and the diagnostic trouble code CEM-5F3A will be set.

Substitute Value

- None.

Possible Source

- Signal wire short-circuited to voltage supply.
- Defective water pump.

Fault symptom[s]

- Parking heater does not work.
- Poor interior heating.

SIGNAL TOO HIGH

CHECKING THE FUNCTION OF THE WATER PUMP

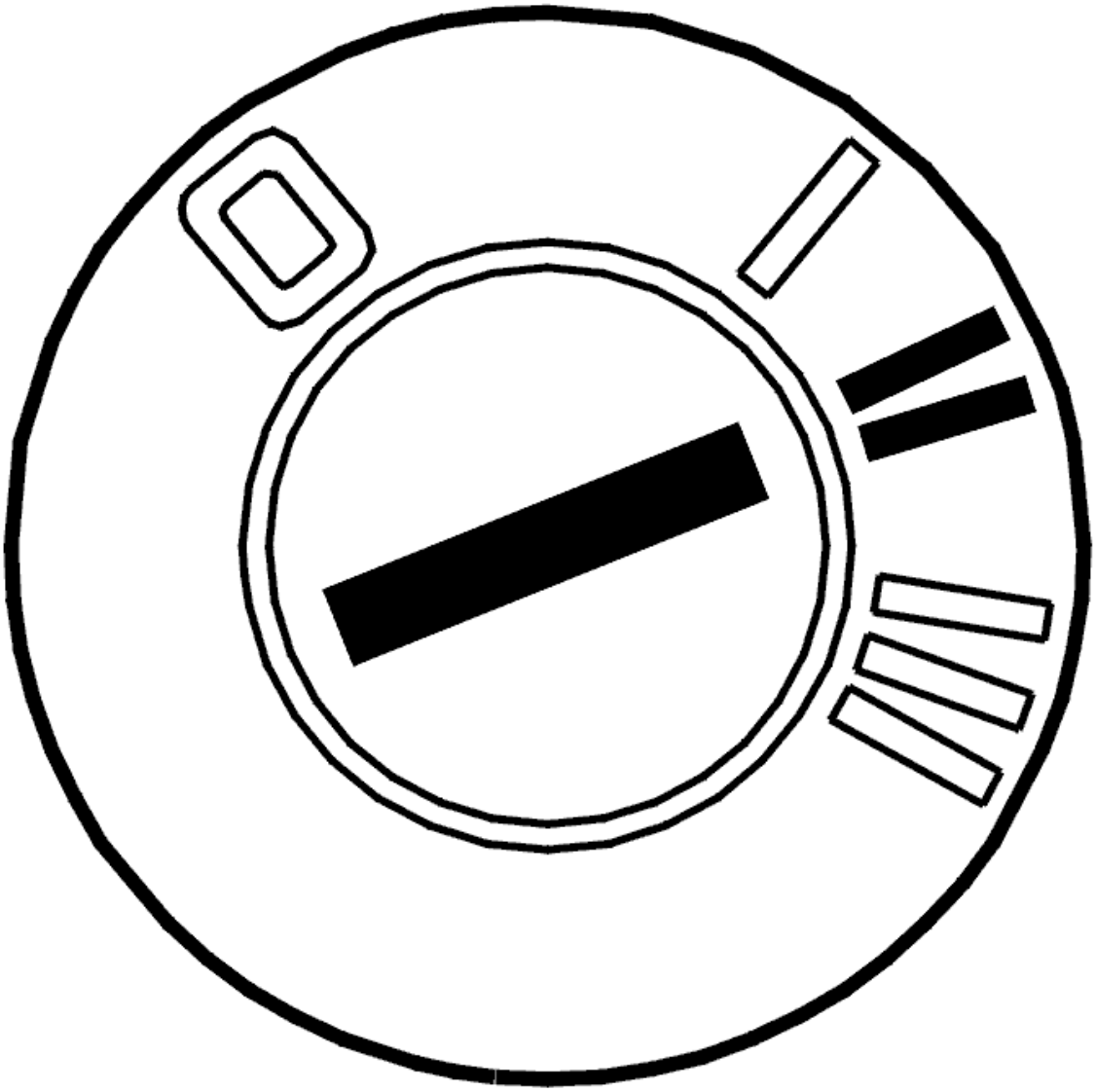

Fig. 202: Identifying Ignition ON
Courtesy of VOLVO CARS CORPORATION

- Ignition on
- Activate the water pump.

  Listen for a buzzing sound which indicates that the water pump is running.

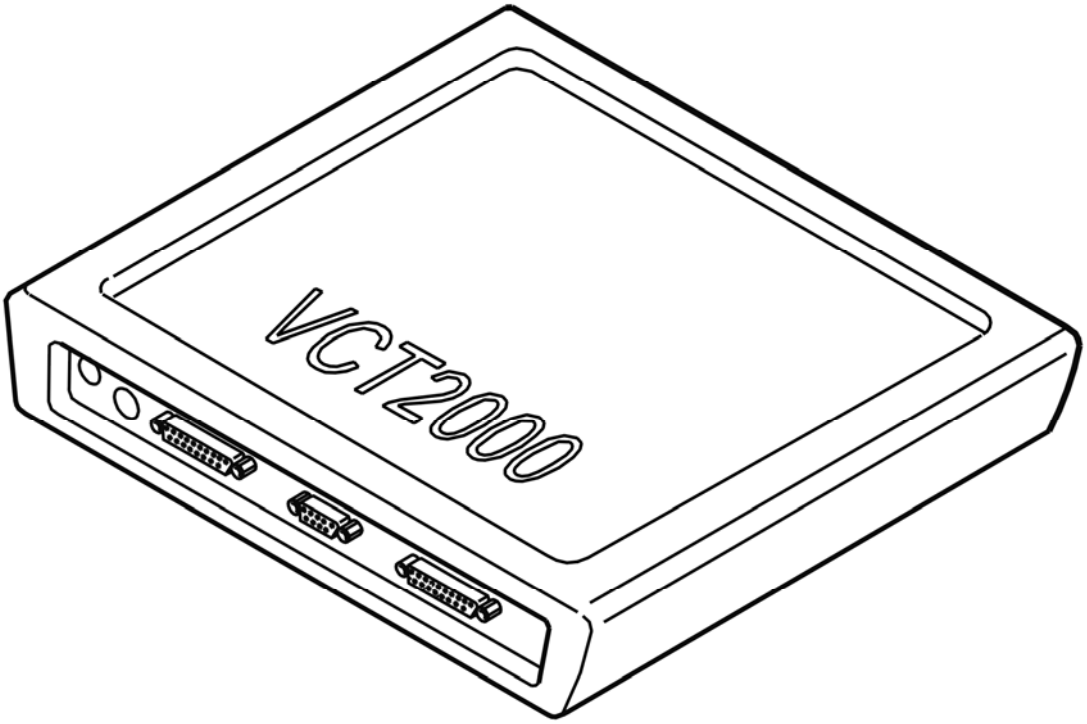

Fig. 203: Identifying VCT2000 Diagnostic Tool Symbol In VIDA
Courtesy of VOLVO CARS CORPORATION

Does the water pump function?

- **YES**

  Refer to **INTERMITTENT FAULT**

- **NO**

  Refer to **CHECKING COMPONENTS AND WIRING**

CHECKING COMPONENTS AND WIRING

Check the cable between control module terminal #12 and water pump terminal 1. Check for a short-circuit to supply voltage.

The water pump must be replaced if no faults are found in the cable.

Remedy as necessary.

Other information:

- To access the control module or connect the breakout box, see **CONNECTING THE BREAKOUT BOX**
- To access or replace the water pump, see **WATER PUMP ENGINE COOLANT HEATER, REPLACING**
- With the ignition on and the water pump connector disconnected, the voltage between water pump terminal 1 (control module side) and ground should be approximately 0 V
- For other values, see **SIGNAL SPECIFICATION**
- see **CHECKING WIRING AND TERMINALS** .

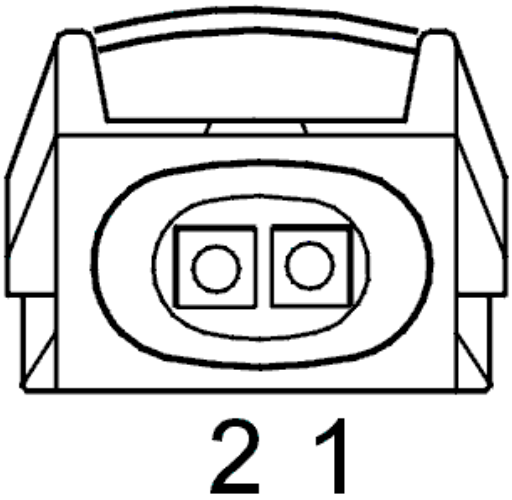

Fig. 204: Identifying 2-Pin Connector
Courtesy of VOLVO CARS CORPORATION

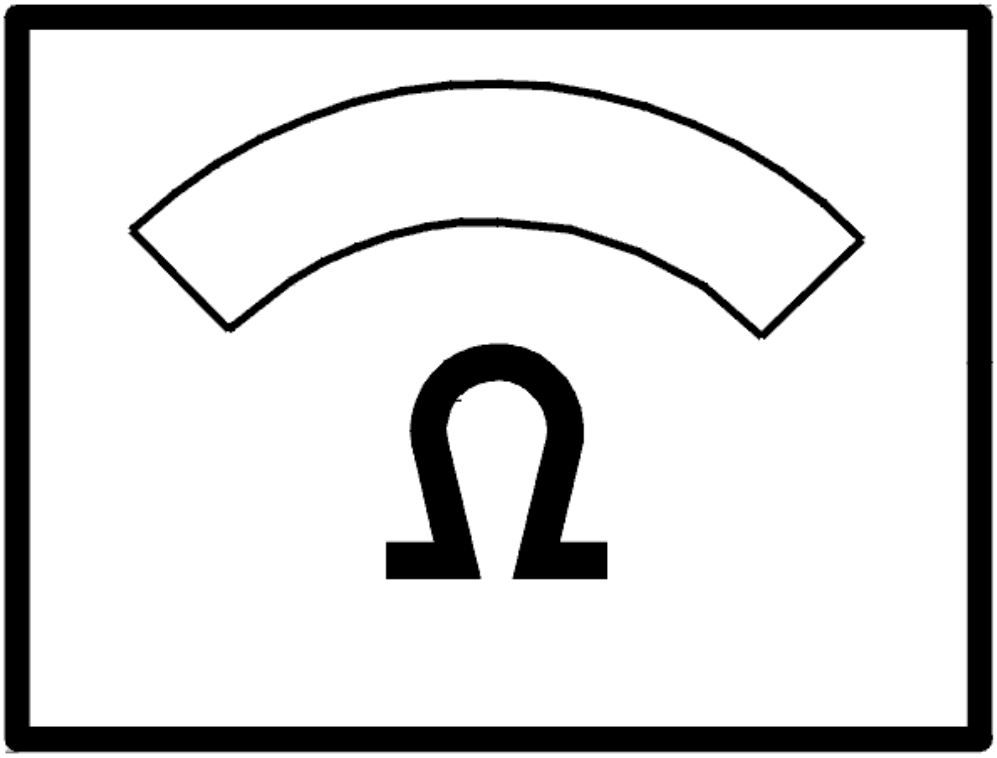

Fig. 205: Identifying Ohm Meter
Courtesy of VOLVO CARS CORPORATION

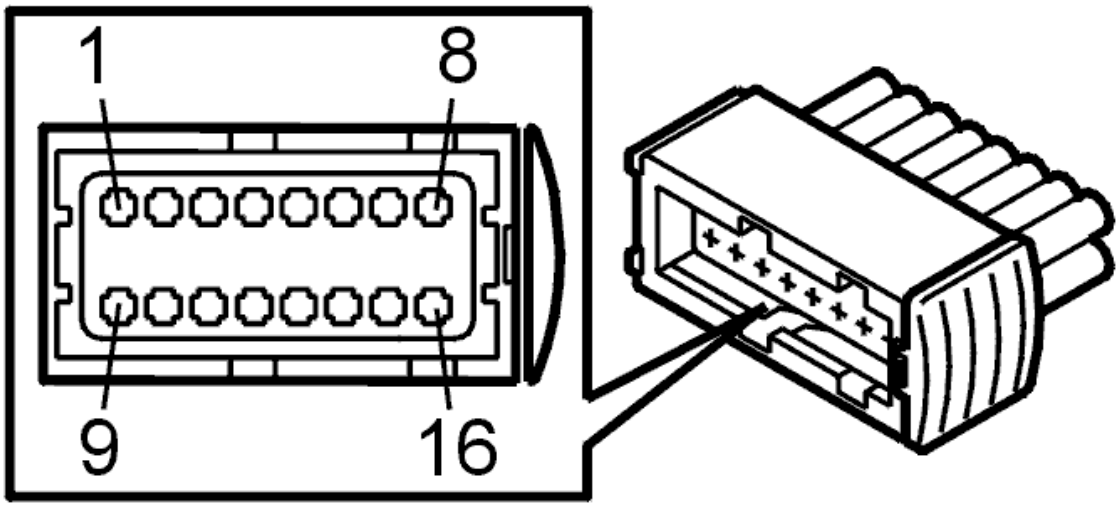

Fig. 206: Identifying Connector Terminals
Courtesy of VOLVO CARS CORPORATION

- **Continue**

  Refer to **VERIFICATION**

INTERMITTENT FAULT

Check the cable between control module terminal #12 and water pump terminal 1. Check for an intermittent short-circuit to supply voltage.

Remedy as necessary.

Other information:

- To access the control module or connect the breakout box, see **CONNECTING THE BREAKOUT BOX**
- To access or replace the water pump, see **WATER PUMP ENGINE COOLANT HEATER, REPLACING**
- With the ignition on and the water pump connector disconnected, the voltage between water pump terminal 1 (control module side) and ground should be approximately 0 V
- For other values, see **SIGNAL SPECIFICATION**
- see **CHECKING WIRING AND TERMINALS** .

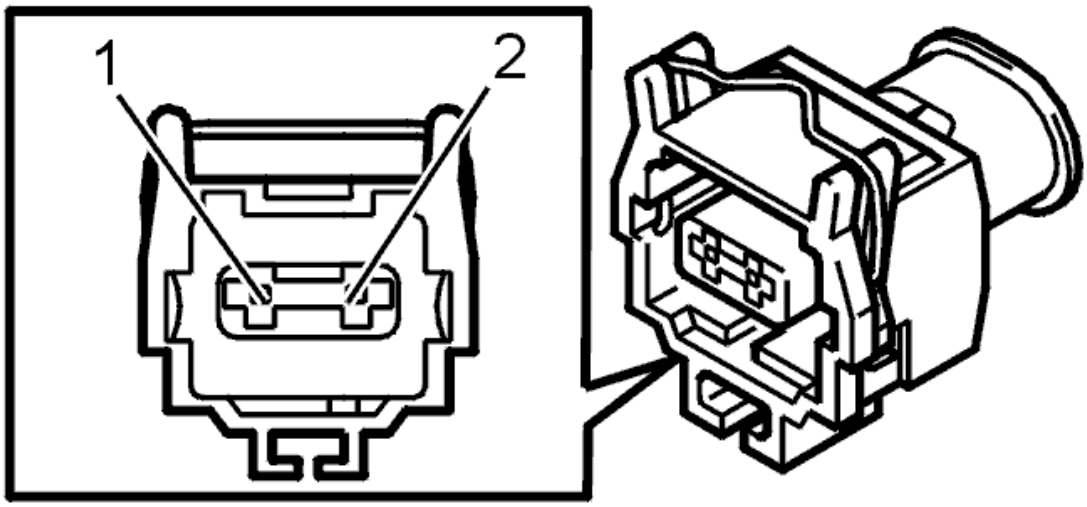

Fig. 207: Brake Pedal Position Sensor Connector Terminal Identification
Courtesy of VOLVO CARS CORPORATION

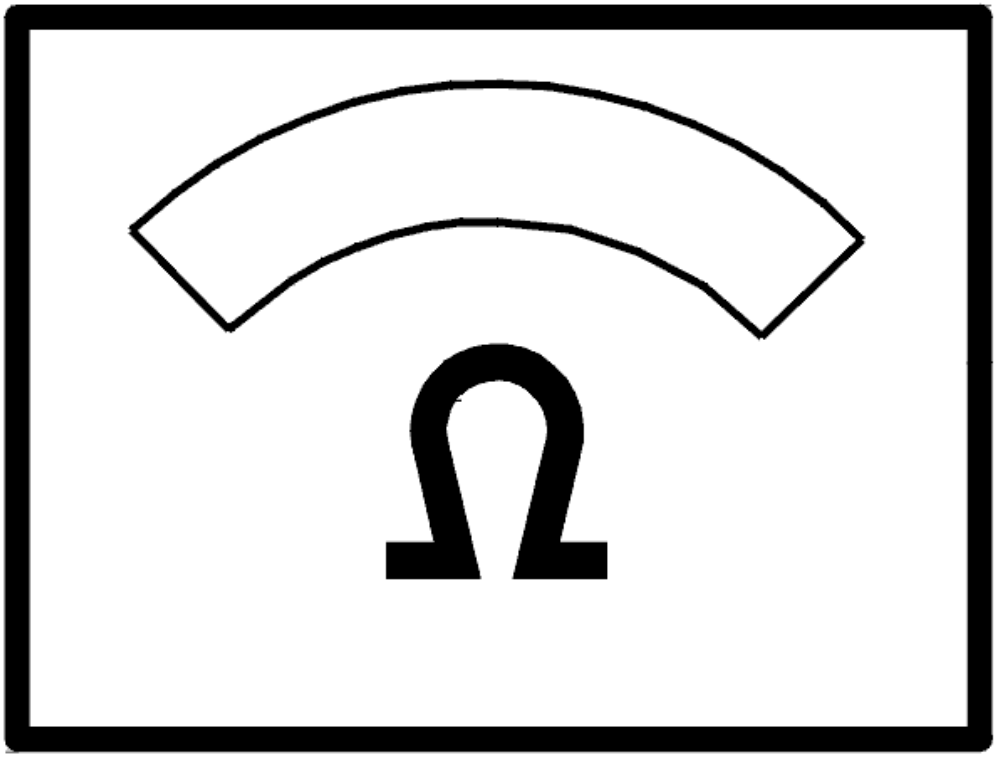

Fig. 208: Identifying Ohm Meter
Courtesy of VOLVO CARS CORPORATION

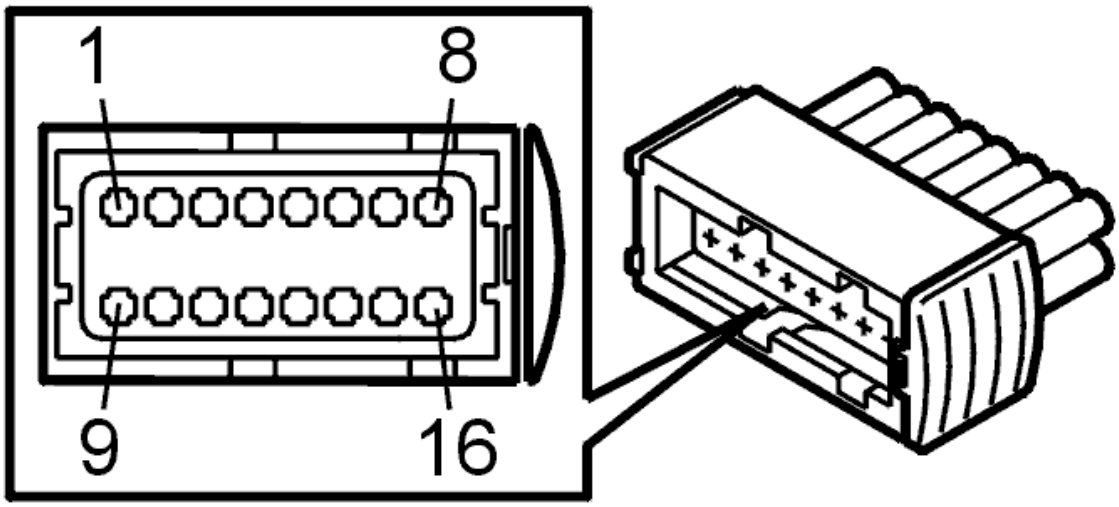

Fig. 209: Identifying Connector Terminals
Courtesy of VOLVO CARS CORPORATION

- **Continue**

  Refer to **INFORMATION**

VERIFICATION

VERIFICATION

HINT: After the repair it is necessary to check that the fault has been rectified.

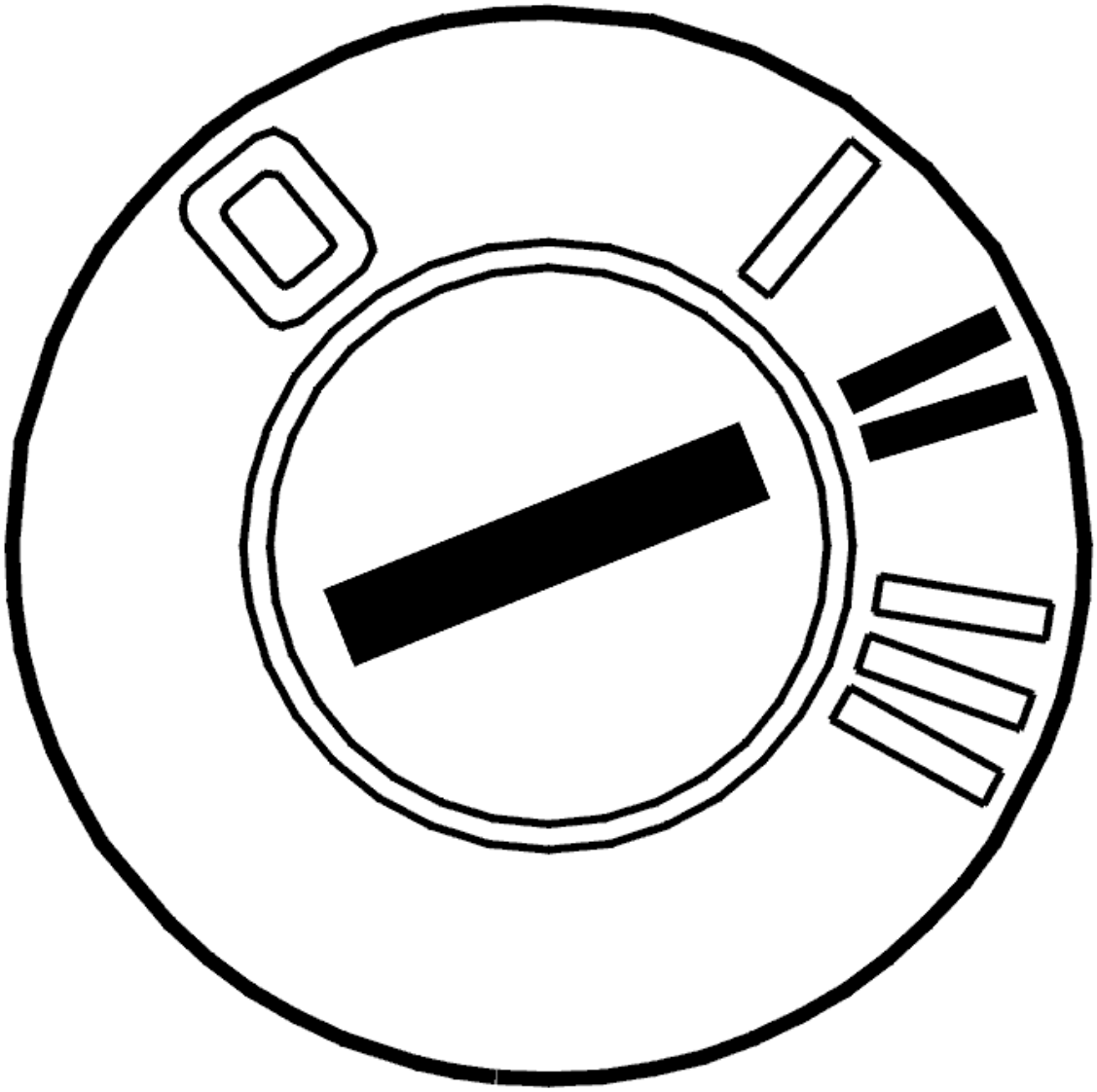

Fig. 210: Identifying Ignition ON
Courtesy of VOLVO CARS CORPORATION

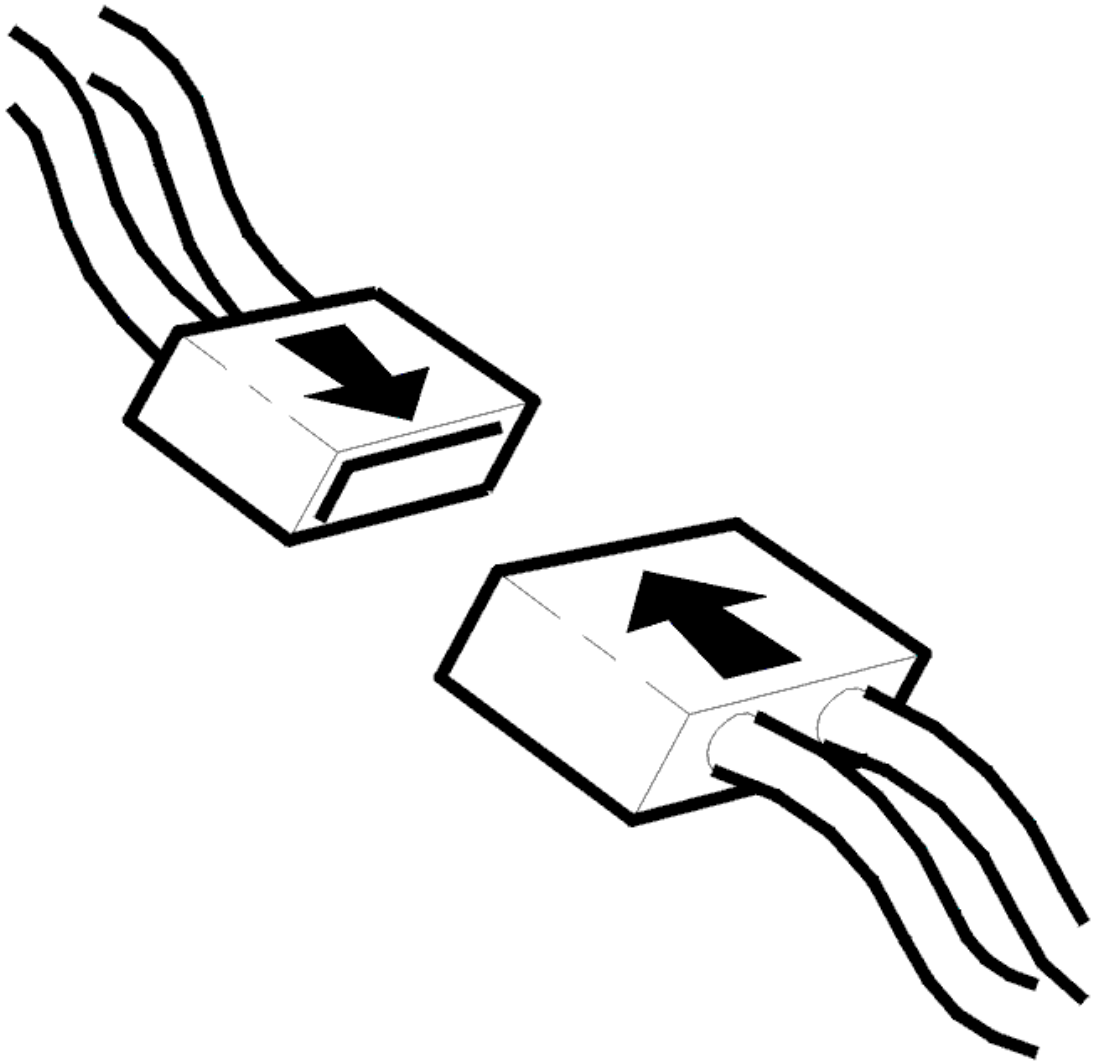

Fig. 211: Connecting Connector
Courtesy of VOLVO CARS CORPORATION

- Ignition off.
- Connect connector, install components etc.
- Ignition on.
- Activate the water pump.

  Listen for a buzzing sound indicating that the water pump is working.

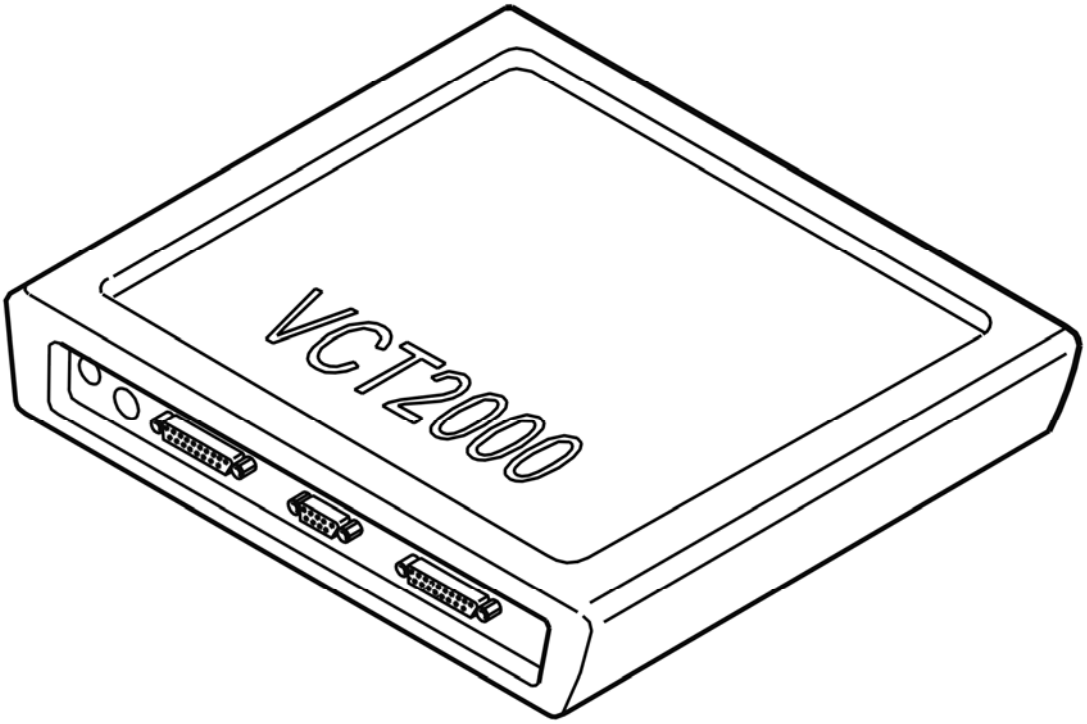

Fig. 212: Identifying VCT2000 Diagnostic Tool Symbol In VIDA
Courtesy of VOLVO CARS CORPORATION

Is the water pump working?

- **YES**

  VERIFIED: Troubleshooting has been completed.

- **NO**

  Refer to **INFORMATION**

INFORMATION

FAULT-TRACING INFORMATION

The fault should have been detected and remedied. As this is not the case fault-tracing has failed.

Exit fault-tracing for this diagnostic trouble code (DTC) or make another attempt.

INFORMATION

FAULT-TRACING INFORMATION

If the fault is intermittent, do not verify fault-tracing if the fault does not recur.

It is possible to view the information again, or leave fault-tracing for this diagnostic trouble code (DTC).

CEM-5F3A: WATER PUMP. SIGNAL TOO HIGH (2005-2012)

DIAGNOSTIC TROUBLE CODE (DTC) INFORMATION CEM-5F3A

Condition

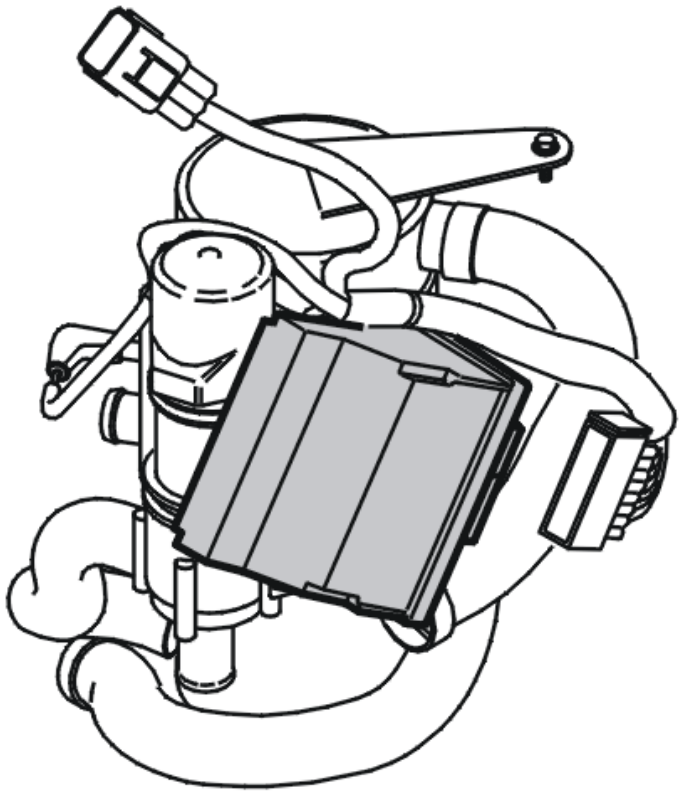

Fig. 213: Additional Heater And Parking Heater
Courtesy of VOLVO CARS CORPORATION

The central electronic module (CEM) checks the communication with the combustion preheater module (CPM).

The diagnostic trouble code (DTC) is stored if the central electronic module (CEM) registers that the signal in the circuit for the water pump is too high.

The diagnostic trouble code (DTC) can be diagnosed when the heater is activated.

Substitute Value

- None.

Possible Source

- Short-circuit to supply voltage in the signal cable
- Damaged water pump.

Fault symptom[s]

- Poor heating in the passenger compartment
- The parking heater does not operate.

SIGNAL TOO HIGH

CHECKING THE FUNCTION OF THE WATER PUMP

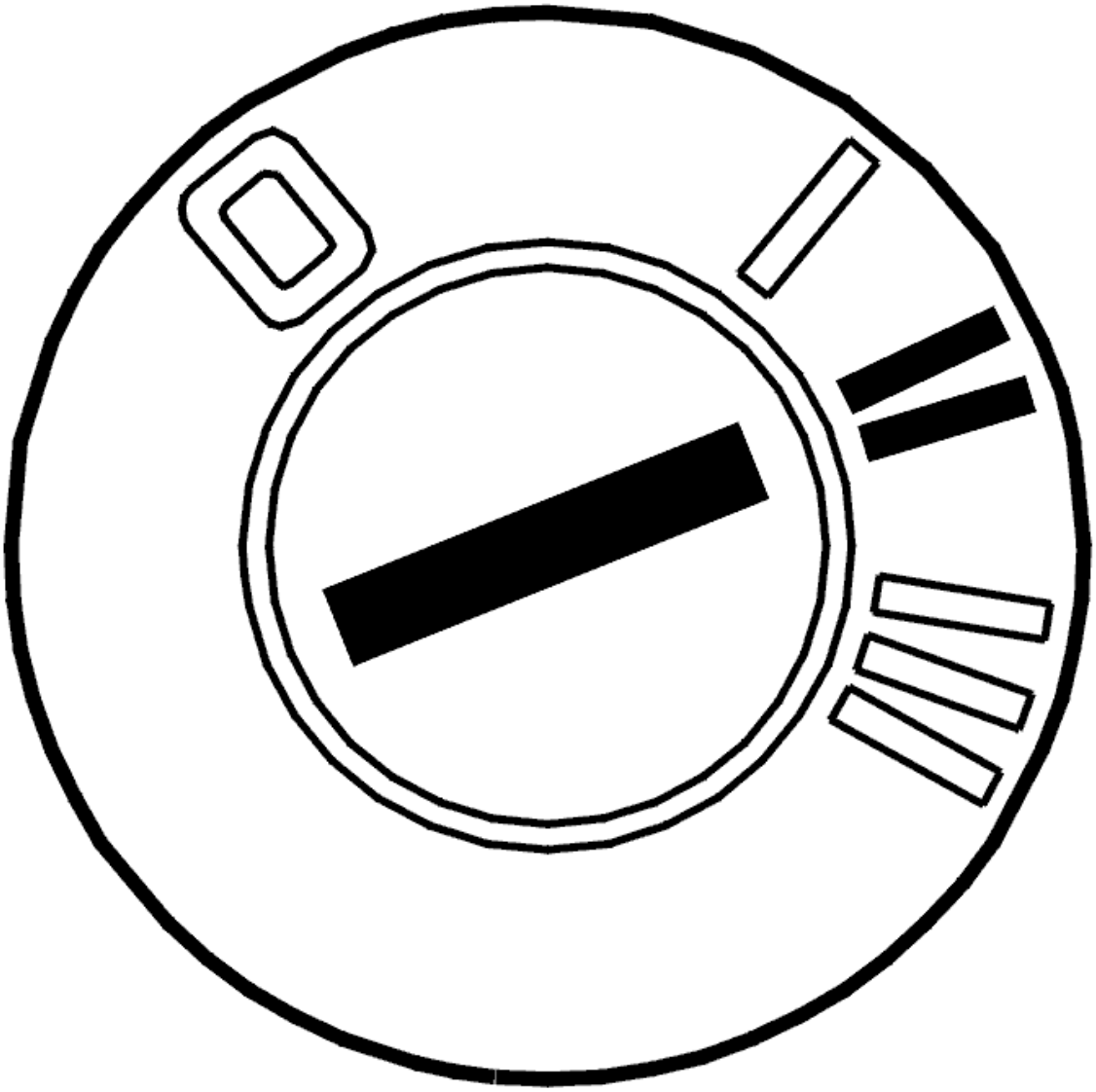

Fig. 214: Identifying Ignition ON

Courtesy of VOLVO CARS CORPORATION

- Ignition on.
  - Activate the water pump.

  Listen for a buzzing sound which indicates that the water pump is running.

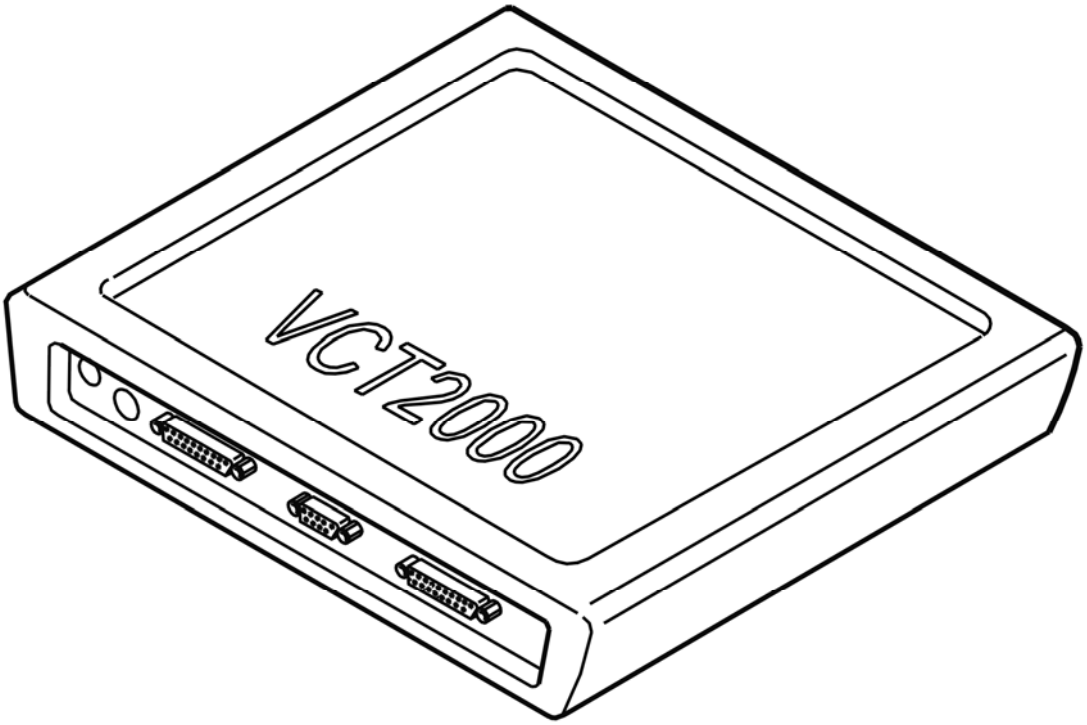

Fig. 215: Identifying VCT2000 Diagnostic Tool Symbol In VIDA
Courtesy of VOLVO CARS CORPORATION

Is the water pump working?

- **YES**

  Refer to **CHECKING COMPONENTS AND WIRING**

- **NO**

  Refer to **CHECKING COMPONENTS AND WIRING**

CHECKING COMPONENTS AND WIRING

Check the cable between combustion preheater module (CPM) terminal #12 and water pump terminal 1. Check

for a short-circuit to supply voltage.

HINT: With the ignition on and the water pump connector disconnected, the voltage between water pump terminal 1 (control module side) and ground should be approximately 0 V.

The water pump must be replaced if no faults are found in the cable.

Remedy as necessary.

Other information

- see **CONNECTING THE BREAKOUT BOX**
- see **SIGNAL SPECIFICATION**
- see **WATER PUMP ENGINE COOLANT HEATER, REPLACING**
- see **CHECKING WIRING AND TERMINALS**

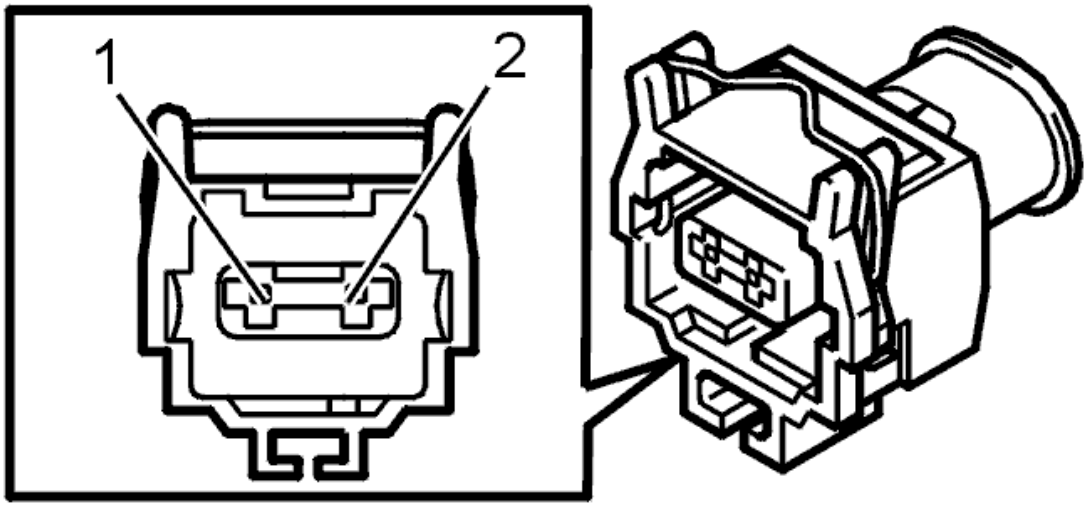

Fig. 216: Brake Pedal Position Sensor Connector Terminal Identification
Courtesy of VOLVO CARS CORPORATION

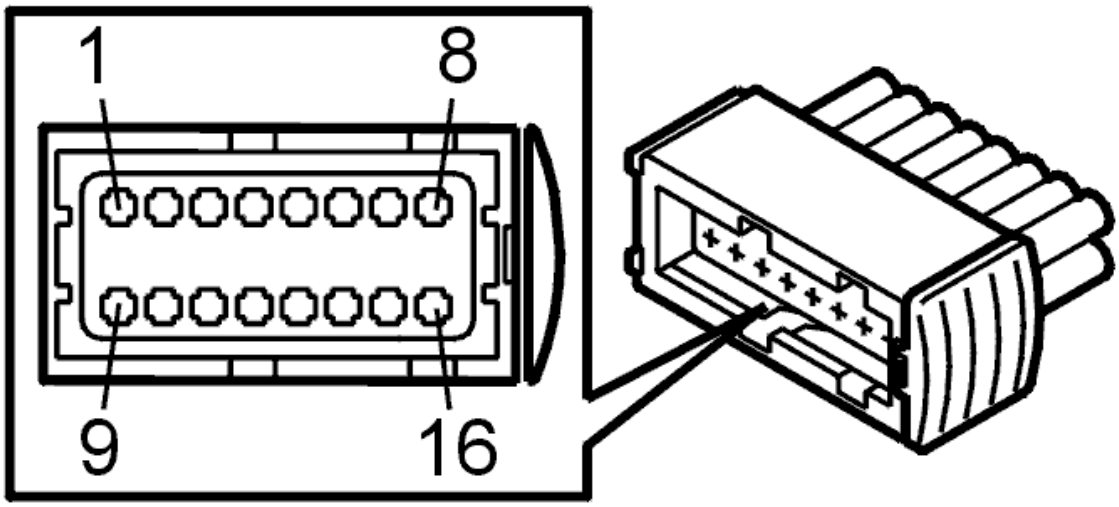

Fig. 217: Identifying Connector Terminals
Courtesy of VOLVO CARS CORPORATION

- **Continue**

  Refer to **VERIFICATION**

CHECKING COMPONENTS AND WIRING

Check the cable between combustion preheater module (CPM) terminal #12 and water pump terminal 1. Check for an intermittent short-circuit to supply voltage.

Remedy as necessary.

Other information

- see **CONNECTING THE BREAKOUT BOX**
- see **SIGNAL SPECIFICATION**
- see **WATER PUMP ENGINE COOLANT HEATER, REPLACING**
- see **CHECKING WIRING AND TERMINALS**

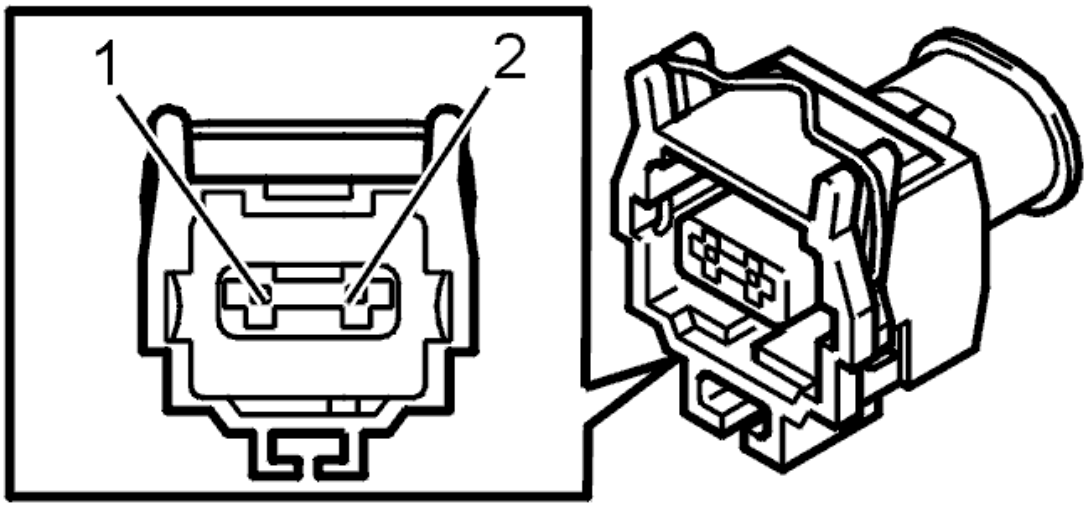

Fig. 218: Brake Pedal Position Sensor Connector Terminal Identification
Courtesy of VOLVO CARS CORPORATION

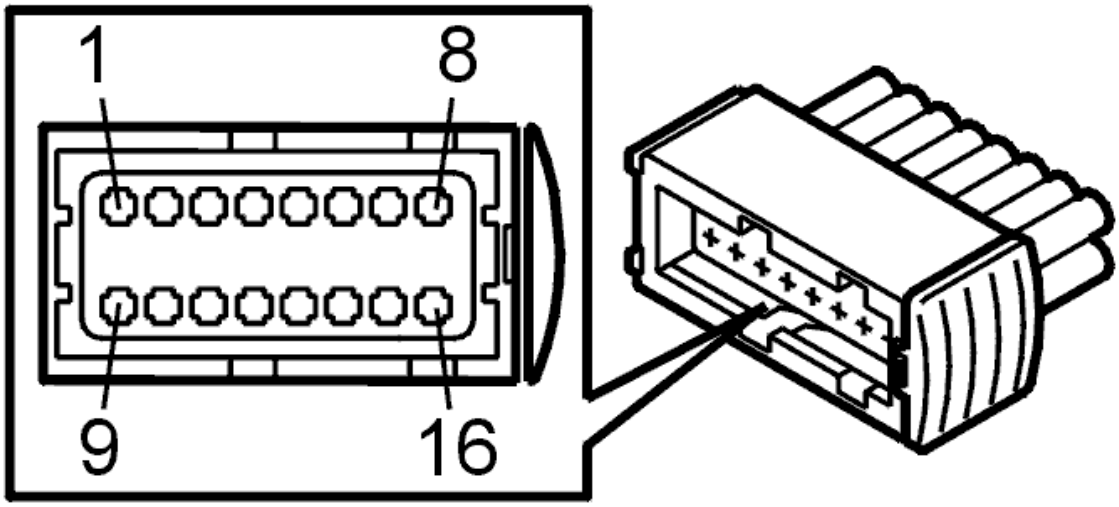

Fig. 219: Identifying Connector Terminals
Courtesy of VOLVO CARS CORPORATION

- **Continue**

  Refer to **VERIFICATION**

VERIFICATION

VERIFICATION

HINT: After carrying out the repair, check that the fault has been remedied.

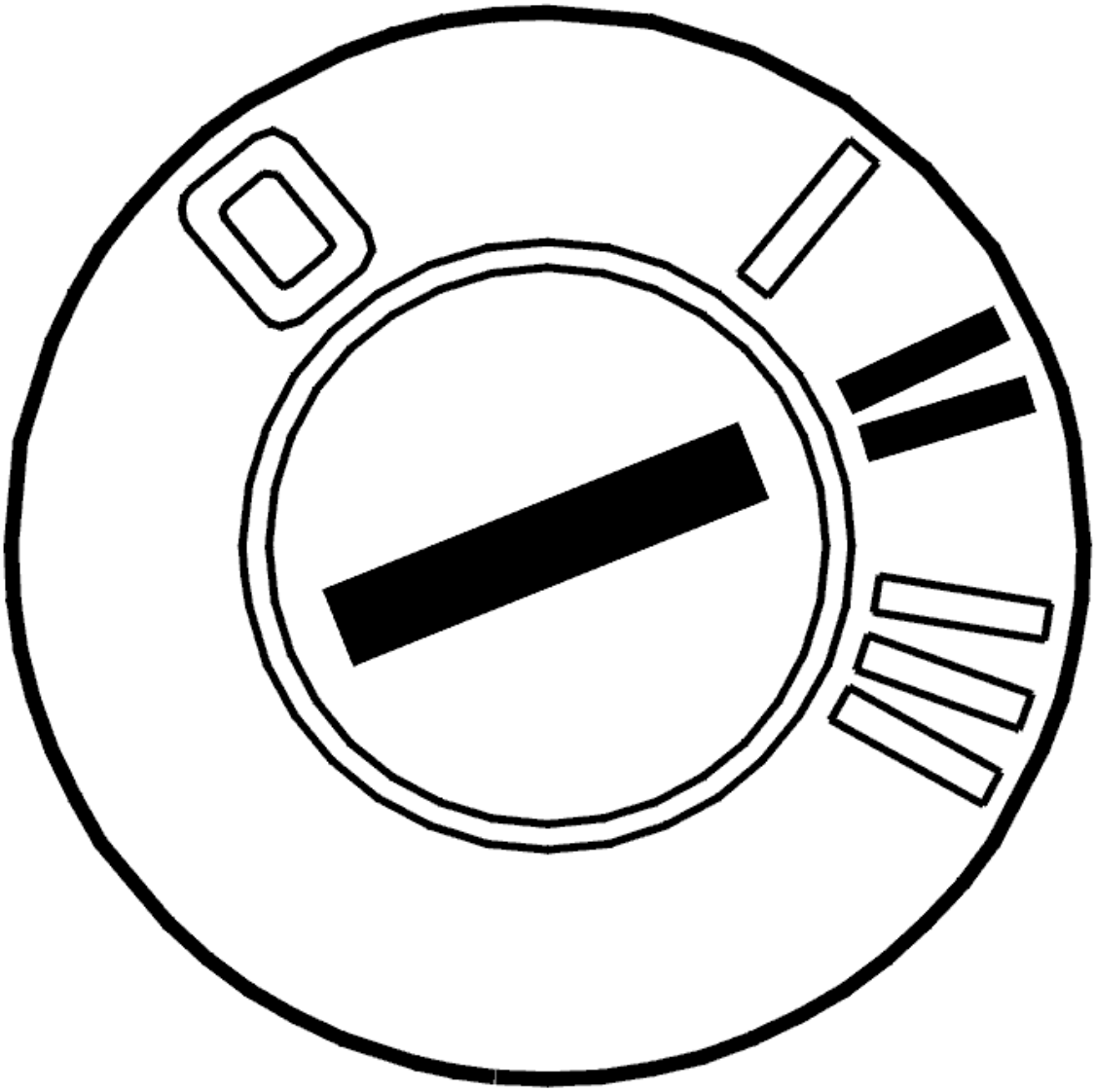

Fig. 220: Identifying Ignition ON
Courtesy of VOLVO CARS CORPORATION

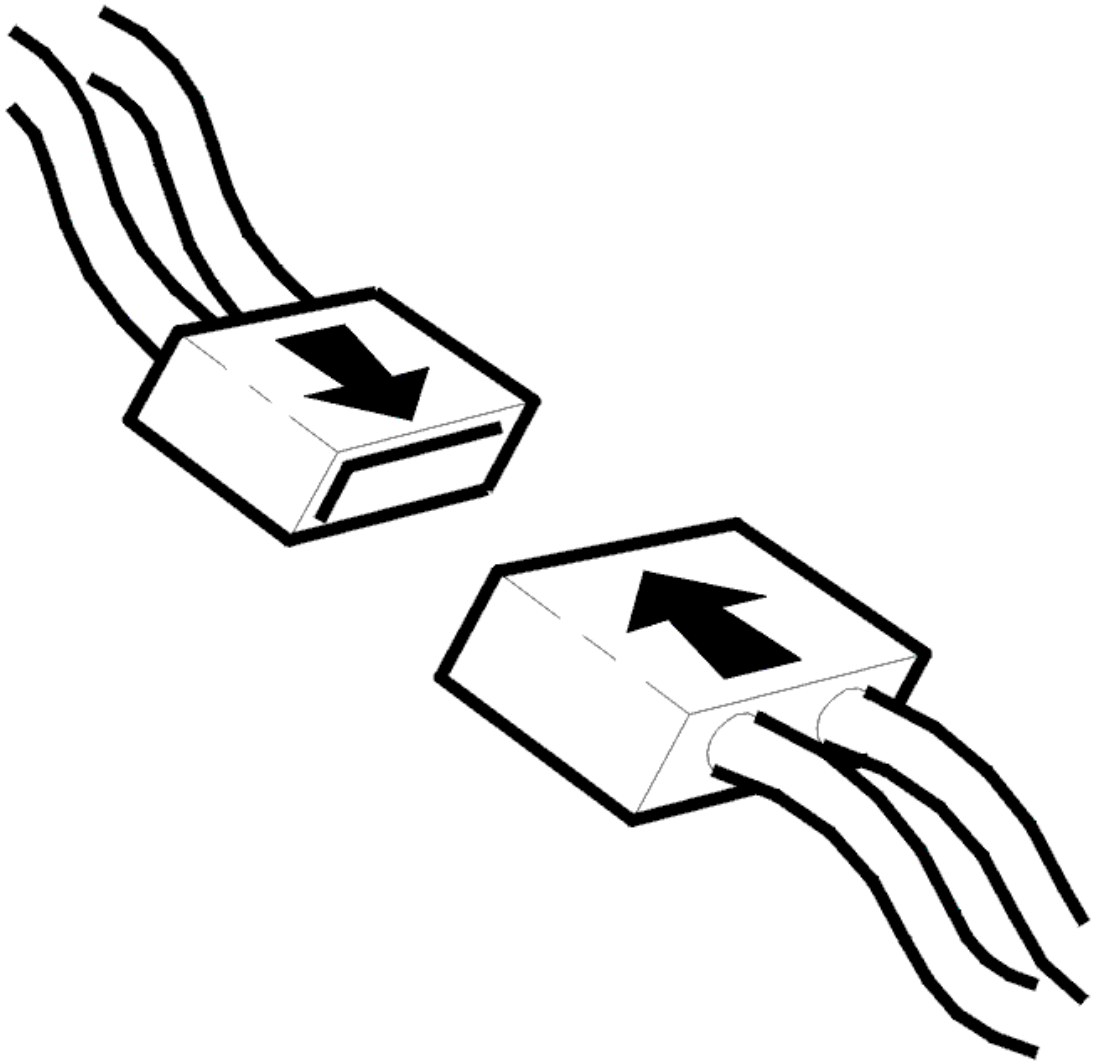

Fig. 221: Connecting Connector
Courtesy of VOLVO CARS CORPORATION

- Ignition off
- Reinstall the connectors, components etc.
- Ignition on
- Activate the water pump.

  Listen for a buzzing sound which indicates that the water pump is running.

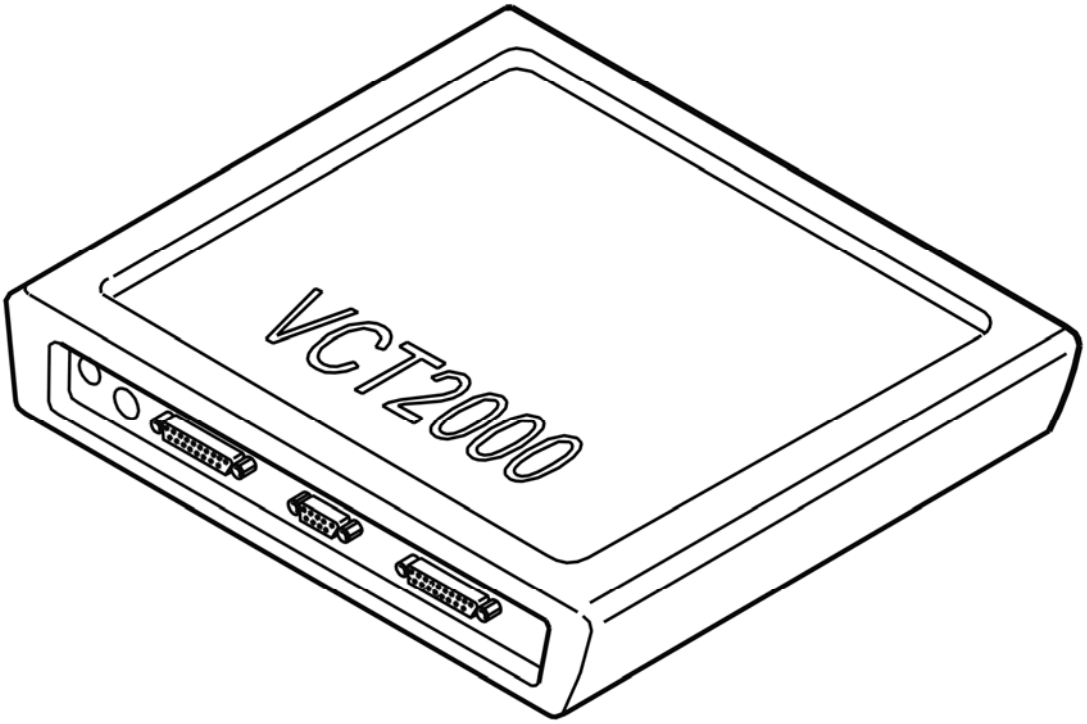

Fig. 222: Identifying VCT2000 Diagnostic Tool Symbol In VIDA
Courtesy of VOLVO CARS CORPORATION

Is the water pump working?

- **YES**

  VERIFIED: Troubleshooting has been completed.

- **NO**

  Refer to **INFORMATION**

INFORMATION

FAULT-TRACING INFORMATION

The fault should have been detected and remedied. As this is not the case fault-tracing has failed.

Exit fault-tracing for this diagnostic trouble code (DTC) or make another attempt.

CEM-5F3B: WATER PUMP. SIGNAL TOO LOW (2003-2004)

DIAGNOSTIC TROUBLE CODE INFORMATION

Condition

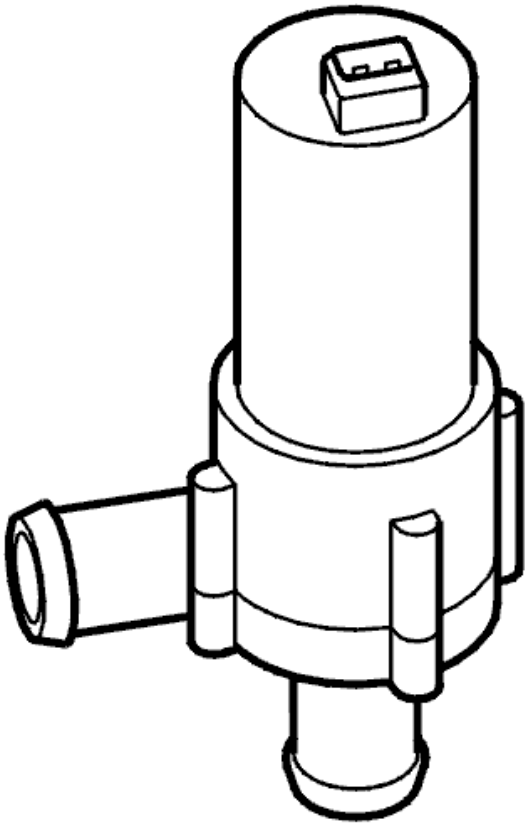

Fig. 223: Identifying Water Pump
Courtesy of VOLVO CARS CORPORATION

If the water pump circuit is short-circuited to ground or if there is an open circuit, the control unit will interpret this as a fault, and diagnostic trouble code CEM-5F3B will be set.

Substitute Value

- None.

Possible Source

- Contact resistance in control unit or water pump connector.
- Signal wire short-circuited to ground.
- Open circuit in voltage wire.
- Open circuit in signal wire.
- Defective water pump.

Fault symptom[s]

- Parking heater does not work.

- Poor interior heating.

SIGNAL TOO LOW

CHECKING THE FUNCTION OF THE WATER PUMP

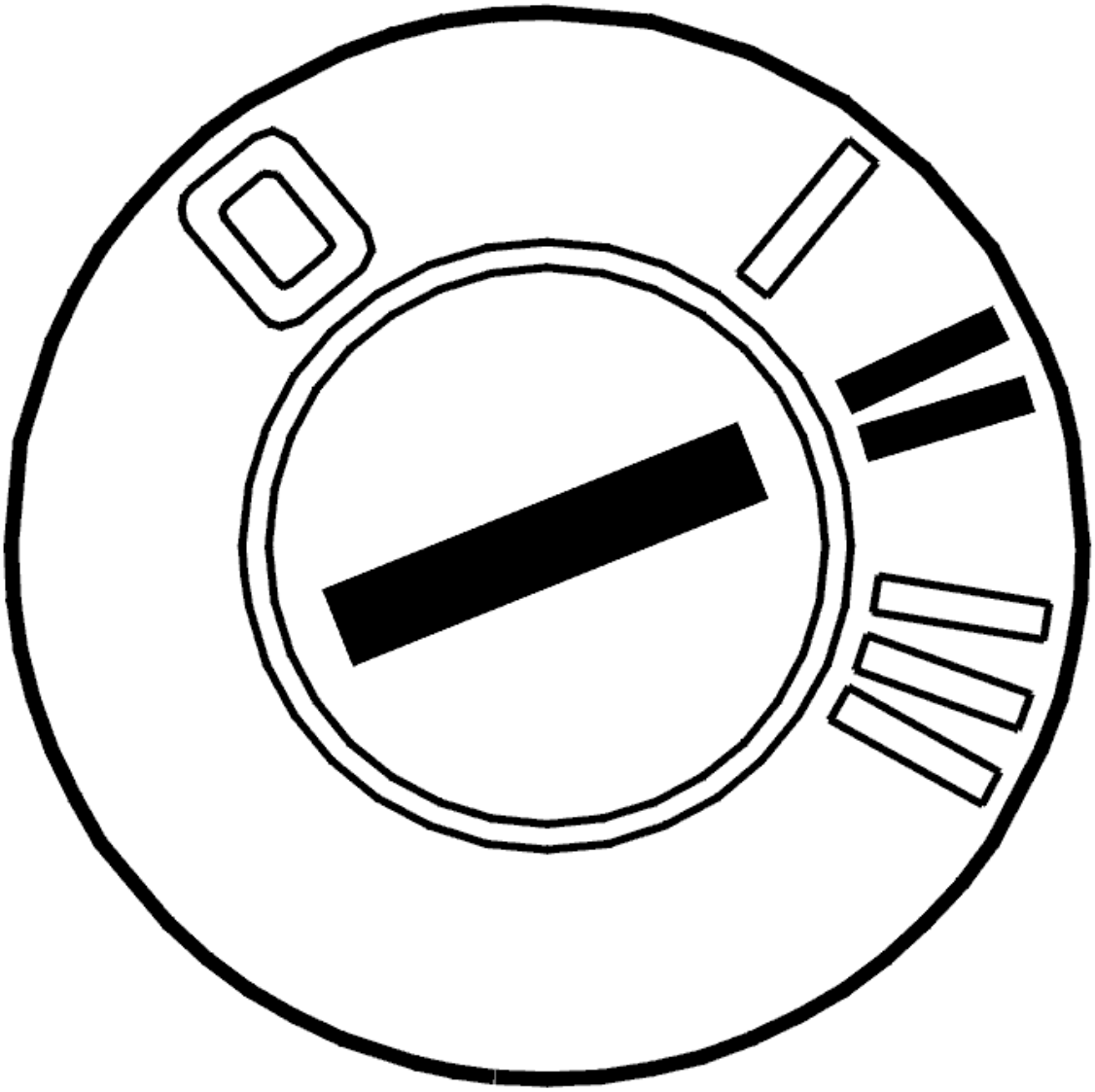

Fig. 224: Identifying Ignition ON
Courtesy of VOLVO CARS CORPORATION

- Ignition on
- Activate the water pump.

  Listen for a buzzing sound which indicates that the water pump is running.

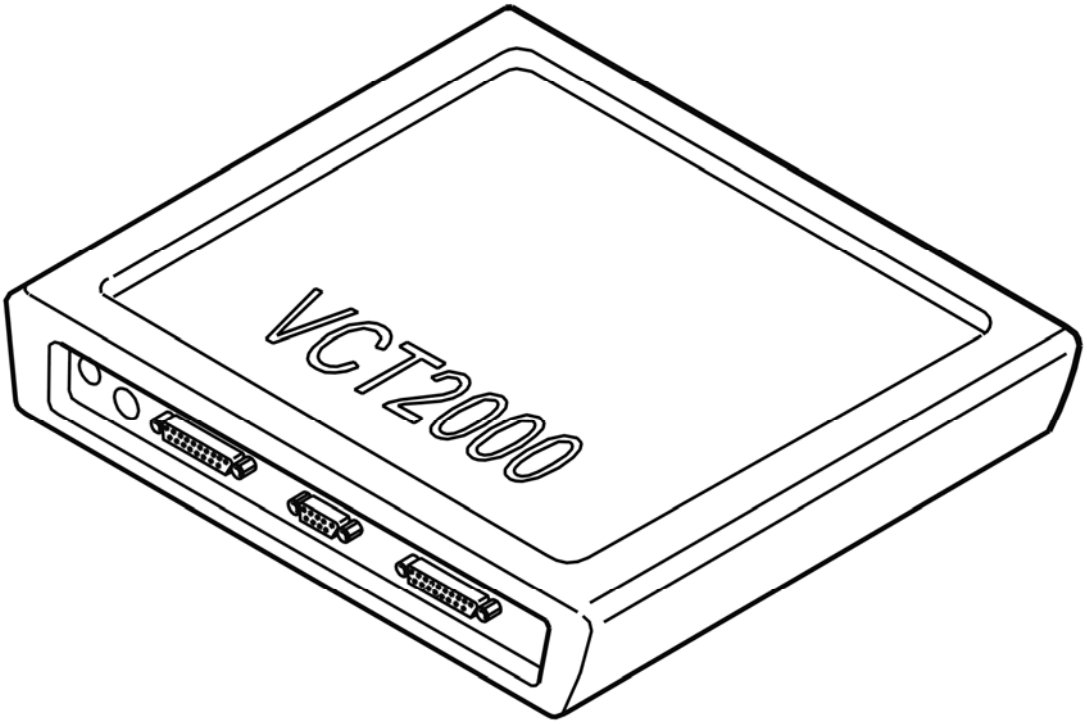

Fig. 225: Identifying VCT2000 Diagnostic Tool Symbol In VIDA
Courtesy of VOLVO CARS CORPORATION

Does the water pump function?

- **YES**

  Refer to **INTERMITTENT FAULT**

- **NO**

  Refer to **CHECKING THE CONNECTORS**

CHECKING THE CONNECTORS

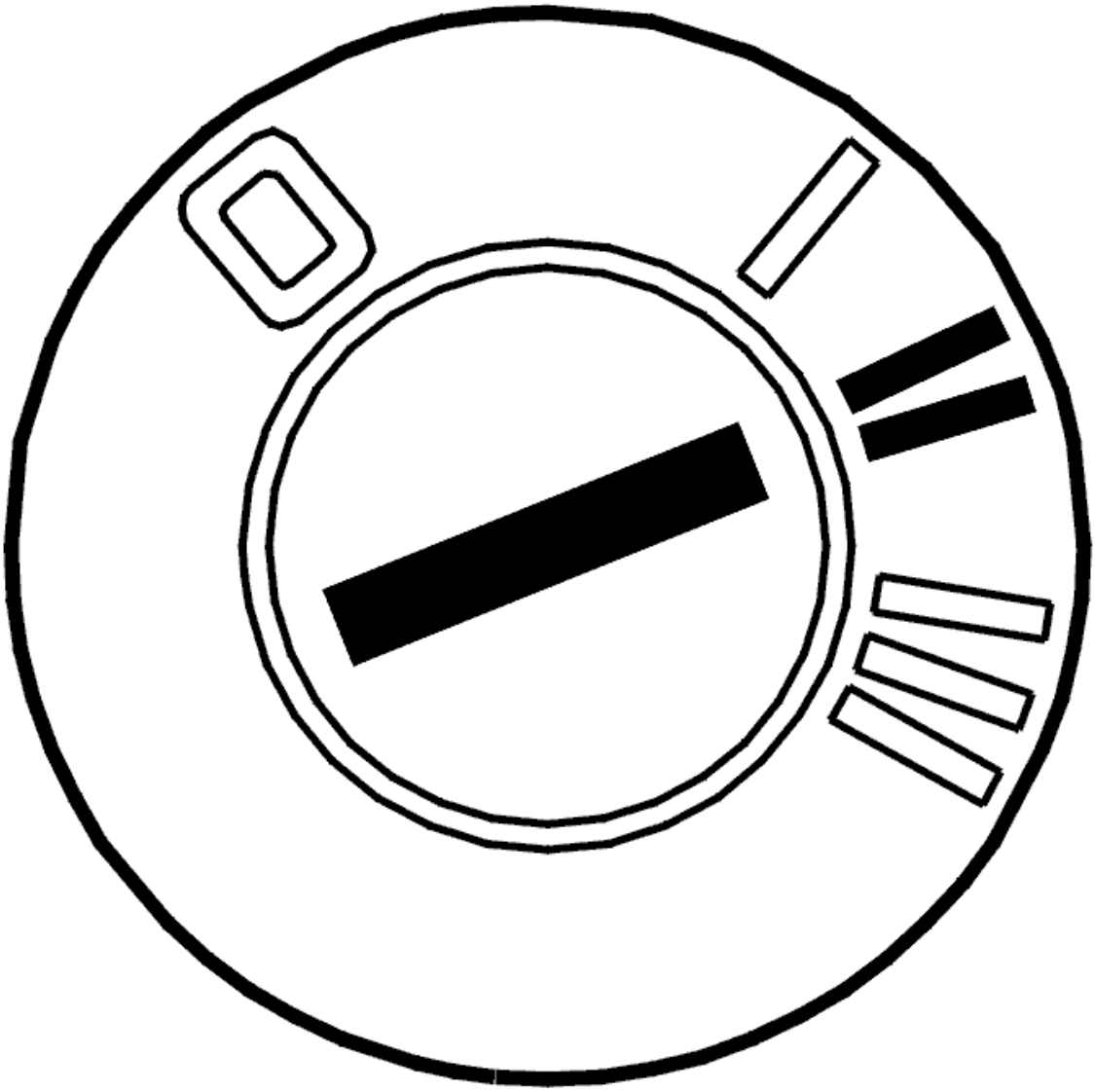

Fig. 226: Identifying Ignition ON
Courtesy of VOLVO CARS CORPORATION

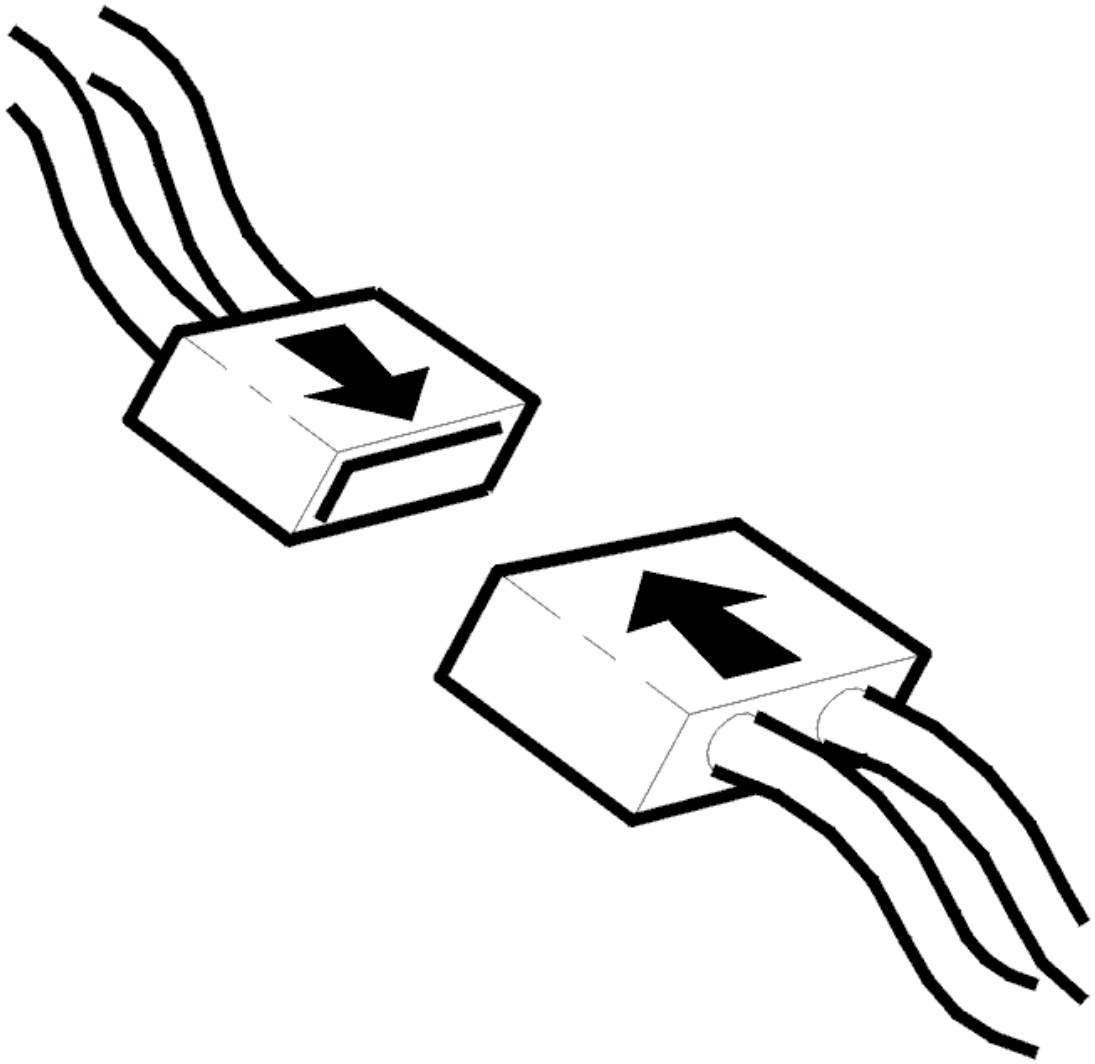

Fig. 227: Connecting Connector
Courtesy of VOLVO CARS CORPORATION

- Ignition off
- Check the water pump and control module connector. Check for contact resistance and oxidation and remedy.

  Check for damage carefully

- Reinstall the components, reconnect the connectors etc.
- Ignition on
- Activate the water pump.

  Listen for a buzzing sound which indicates that the water pump is running.

If the water pump now functions, the cause of the fault was loose connections in the connectors.

Other information:

- To access the control module or connect the breakout box, see **CONNECTING THE BREAKOUT BOX**
- To access or replace the water pump, see **WATER PUMP ENGINE COOLANT HEATER, REPLACING**
- see **CHECKING WIRING AND TERMINALS** .

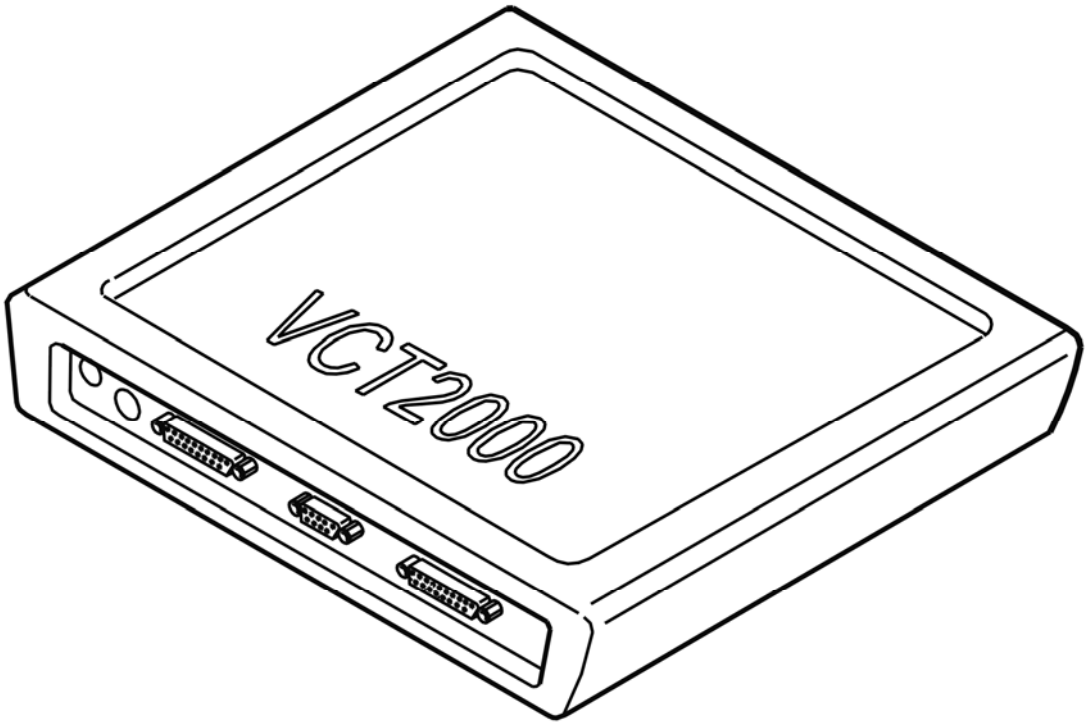

Fig. 228: Identifying VCT2000 Diagnostic Tool Symbol In VIDA
Courtesy of VOLVO CARS CORPORATION

Does the water pump function?

- **YES**

  OKAY: Troubleshooting has been completed.

- **NO**

  Refer to **CHECKING COMPONENTS AND WIRING**

CHECKING COMPONENTS AND WIRING

Check the cable between control module terminal #12 and water pump terminal 1. Check for an open-circuit. Check for a short-circuit to ground.

Check the cable between control module #11 and water pump terminal 2. Check for an open-circuit.

The water pump must be changed if no fault is found on the cable.

NOTE: **Diagnostic trouble code (DTC) CEM-5F3D combustion fan, signal and / or diagnostic trouble code (DTC) CEM-5F3F Fuel pump (FP), signal may be stored if there is a fault in the power cable.**

Remedy as necessary.

Other information:

- To access the control module or connect the breakout box, see **CONNECTING THE BREAKOUT BOX**
- To access or replace the water pump, see **WATER PUMP ENGINE COOLANT HEATER, REPLACING**
- For other values, see **SIGNAL SPECIFICATION**
- see **CHECKING WIRING AND TERMINALS** .

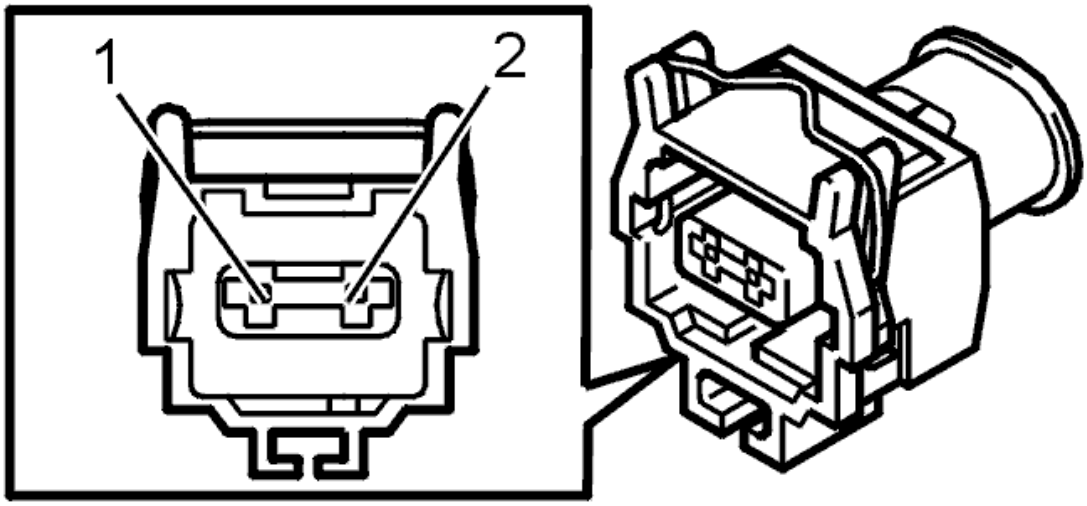

Fig. 229: Brake Pedal Position Sensor Connector Terminal Identification
Courtesy of VOLVO CARS CORPORATION

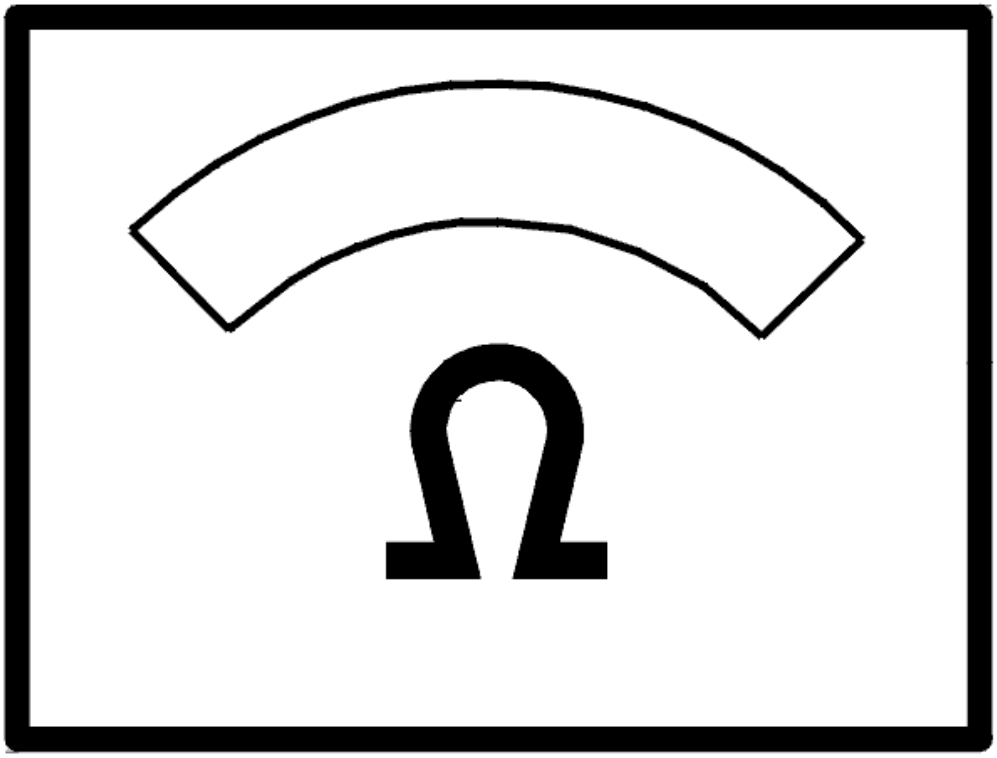

Fig. 230: Identifying Ohm Meter
Courtesy of VOLVO CARS CORPORATION

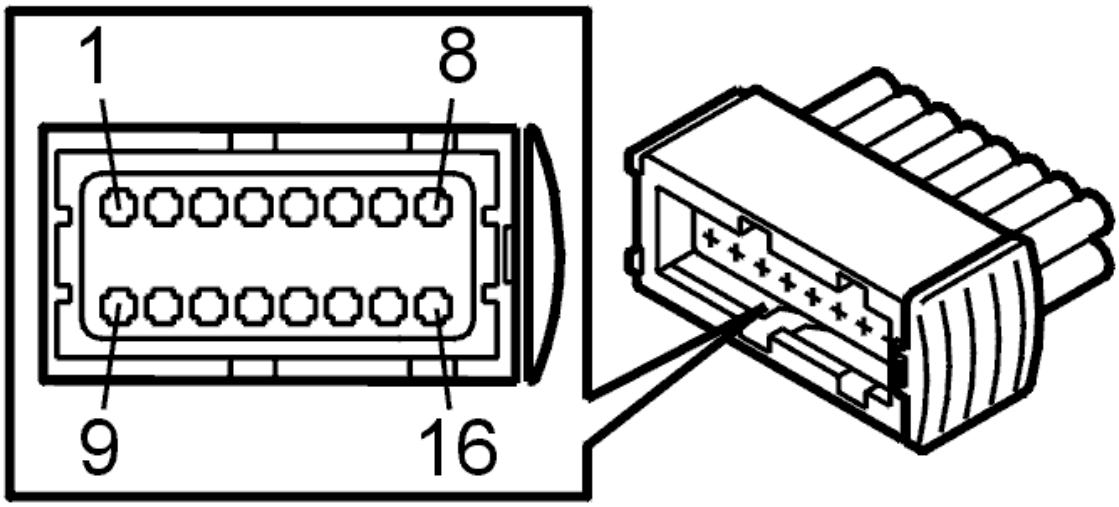

Fig. 231: Identifying Connector Terminals
Courtesy of VOLVO CARS CORPORATION

- **Continue**

  Refer to **VERIFICATION**

INTERMITTENT FAULT

Check the water pump and control module connectors. Check for contact resistance and oxidation.

Check the cable between control module terminal #12 and water pump terminal 1. Check for an intermittent open-circuit. Check for a short-circuit to ground.

Check the cable between control module #11 and water pump terminal 2. Check for an intermittent open-circuit.

Remedy as necessary.

Other information:

- To access the control module or connect the breakout box, see **CONNECTING THE BREAKOUT BOX**
- To access or replace the water pump, see **WATER PUMP ENGINE COOLANT HEATER, REPLACING**
- For other values, see **SIGNAL SPECIFICATION**
- see **CHECKING WIRING AND TERMINALS** .

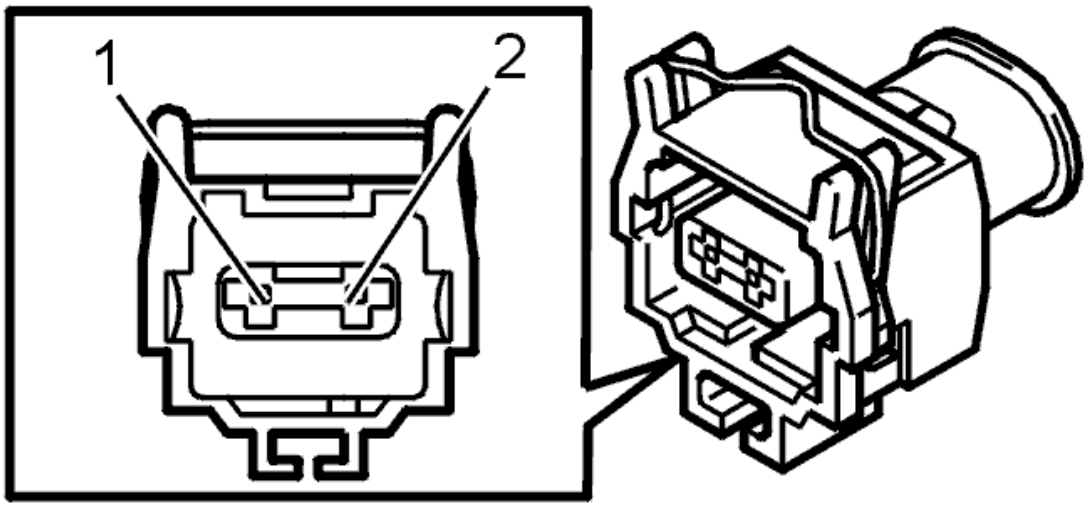

Fig. 232: Brake Pedal Position Sensor Connector Terminal Identification
Courtesy of VOLVO CARS CORPORATION

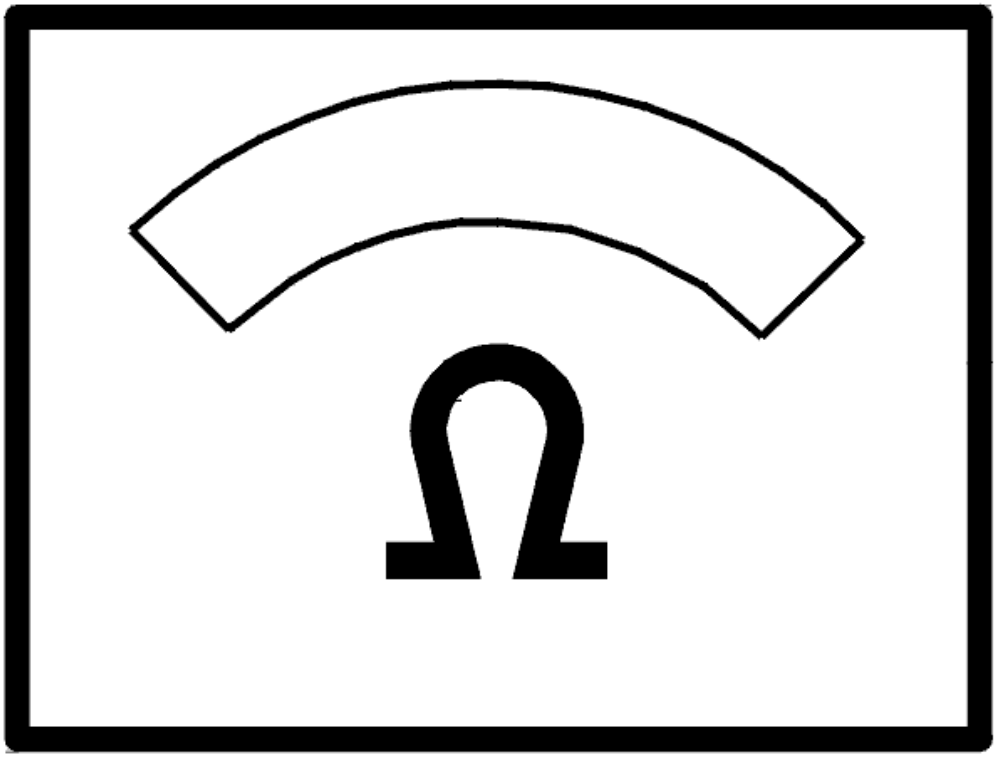

Fig. 233: Identifying Ohm Meter
Courtesy of VOLVO CARS CORPORATION

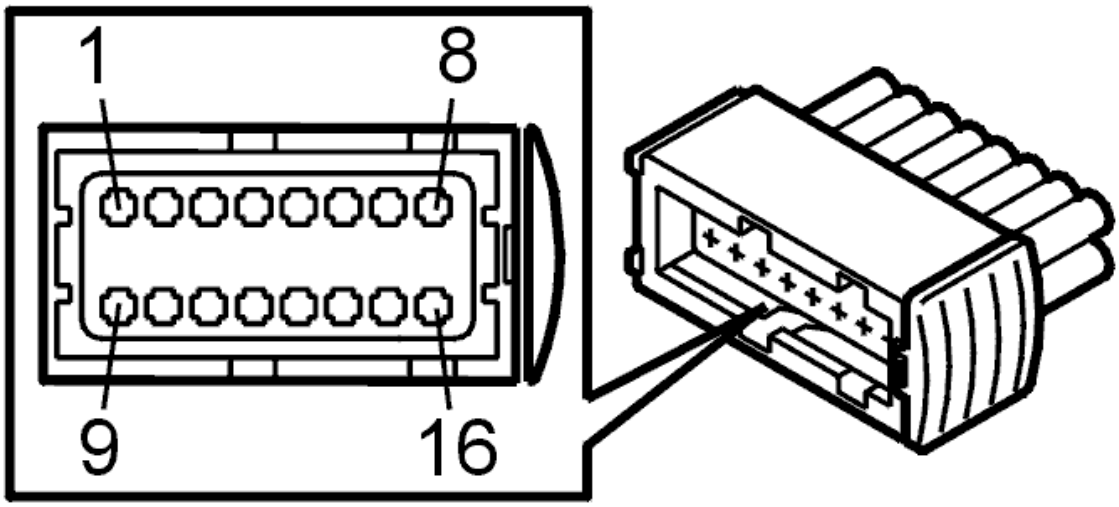

Fig. 234: Identifying Connector Terminals
Courtesy of VOLVO CARS CORPORATION

- **Continue**

  Refer to **INFORMATION**

  OKAY: Troubleshooting has been completed.

VERIFICATION

VERIFICATION

HINT: After the repair it is necessary to check that the fault has been rectified.

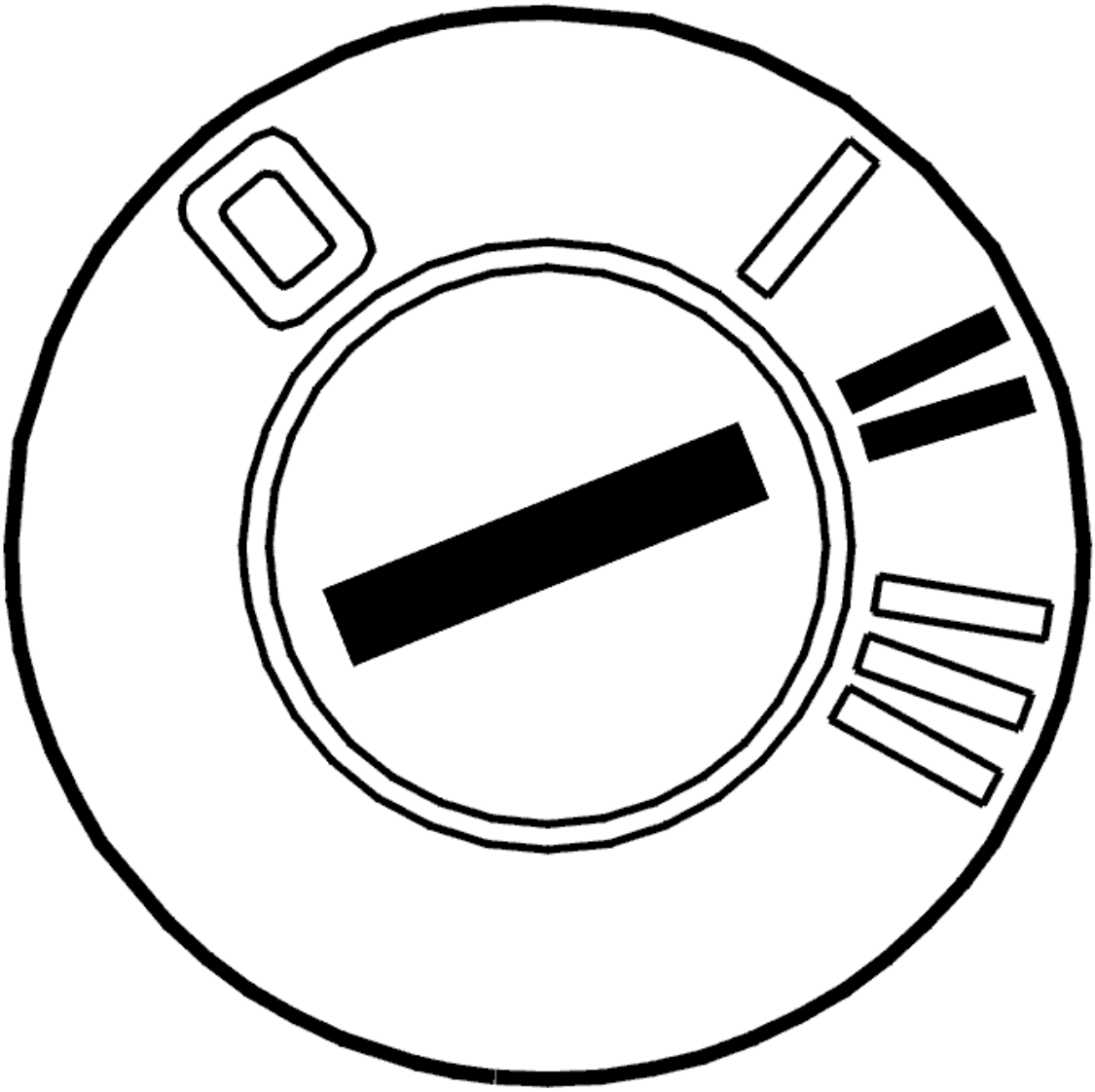

Fig. 235: Identifying Ignition ON
Courtesy of VOLVO CARS CORPORATION

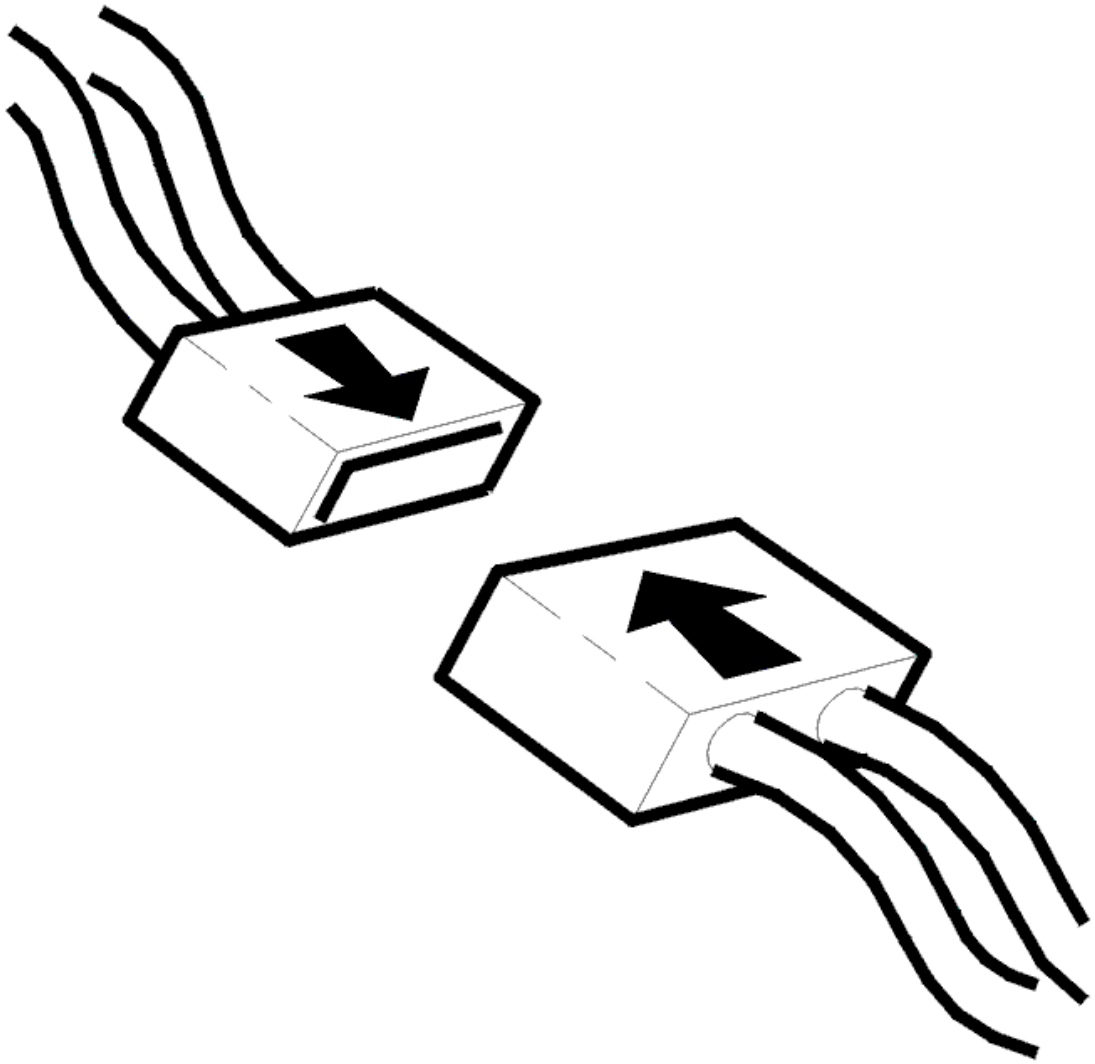

Fig. 236: Connecting Connector
Courtesy of VOLVO CARS CORPORATION

- Ignition off.
- Connect connector, install components etc.
- Ignition on.
- Activate the water pump.

  Listen for a buzzing sound indicating that the water pump is working.

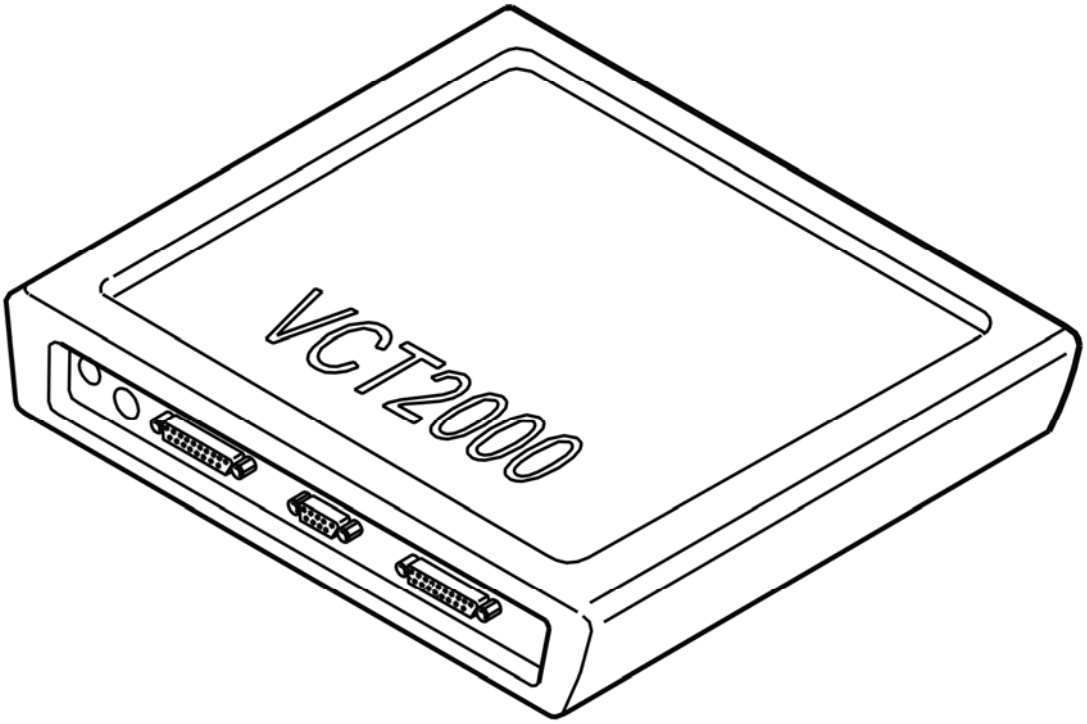

Fig. 237: Identifying VCT2000 Diagnostic Tool Symbol In VIDA
Courtesy of VOLVO CARS CORPORATION

Is the water pump working?

- **YES**

  VERIFIED: Troubleshooting has been completed.

- **NO**

  Refer to **INFORMATION**

INFORMATION

FAULT-TRACING INFORMATION

The fault should have been detected and remedied. As this is not the case fault-tracing has failed.

Exit fault-tracing for this diagnostic trouble code (DTC) or make another attempt.

INFORMATION

FAULT-TRACING INFORMATION

If the fault is intermittent, do not verify fault-tracing if the fault does not recur.

It is possible to view the information again, or leave fault-tracing for this diagnostic trouble code (DTC).

CEM-5F3B: WATER PUMP. SIGNAL TOO LOW (2005-2012)

DIAGNOSTIC TROUBLE CODE (DTC) INFORMATION CEM-5F3B

Condition

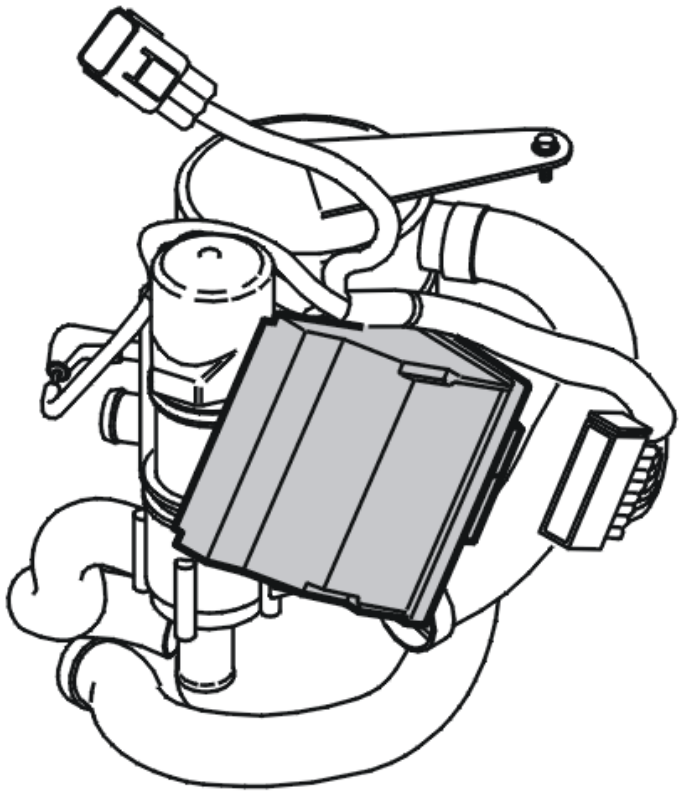

Fig. 238: Additional Heater And Parking Heater
Courtesy of VOLVO CARS CORPORATION

The central electronic module (CEM) checks the communication with the combustion preheater module (CPM).

The diagnostic trouble code (DTC) is stored if the central electronic module (CEM) registers that the signal in the circuit for the water pump is too low or missing.

The diagnostic trouble code (DTC) can be diagnosed when the heater is activated.

Substitute Value

- None.

Possible Source

- Contact resistance in the control module or water pump connectors
- Short-circuit to ground in the signal cable
- Open-circuit in the power cable
- Open-circuit in the signal cable
- Damaged water pump.

Fault symptom[s]

- Poor heating in the passenger compartment
- The parking heater does not operate.

SIGNAL TOO LOW

CHECKING THE FUNCTION OF THE WATER PUMP

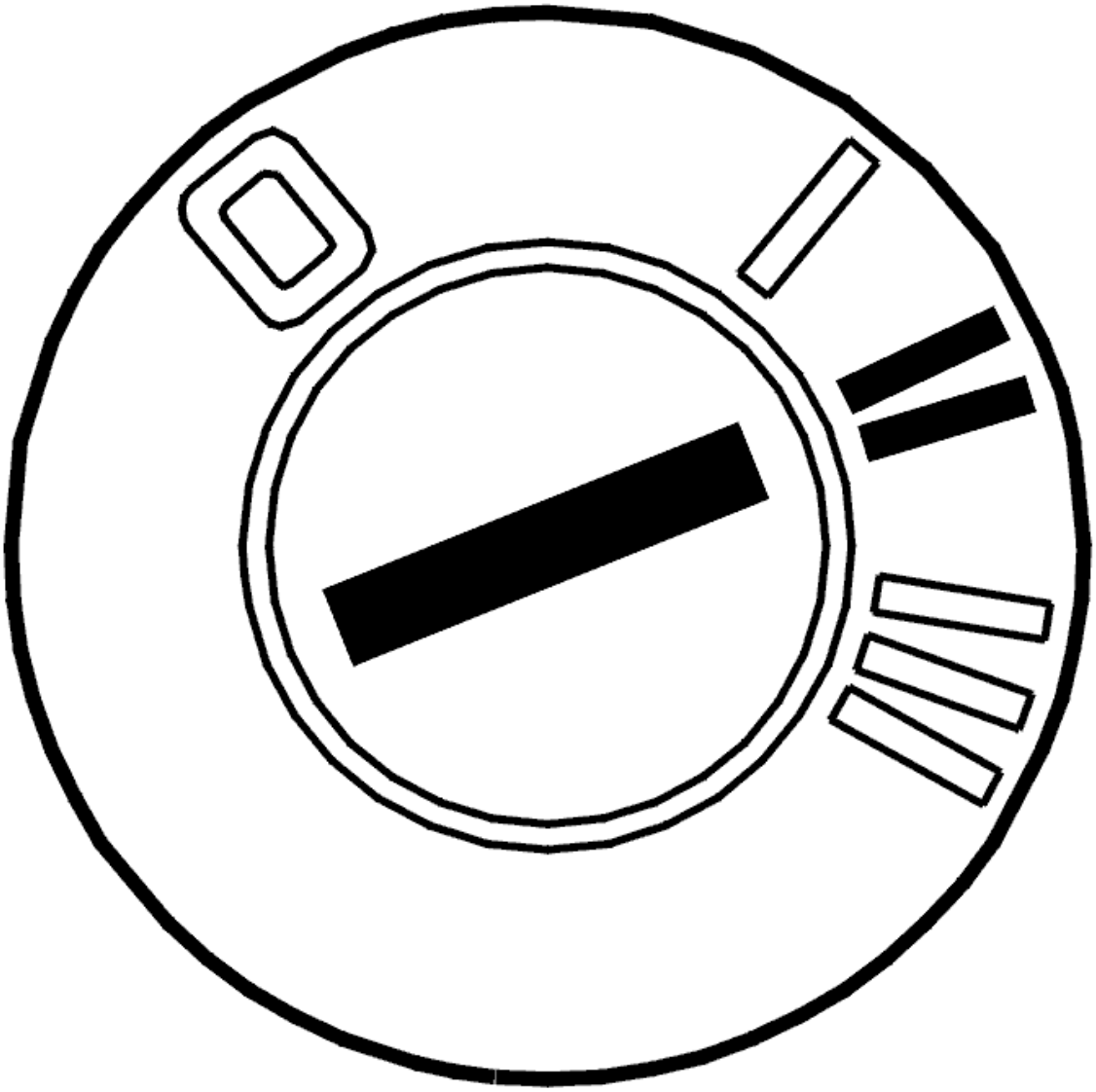

Fig. 239: Identifying Ignition ON
Courtesy of VOLVO CARS CORPORATION

- Ignition on.
  - Activate the water pump.

Listen for a buzzing sound which indicates that the water pump is running.

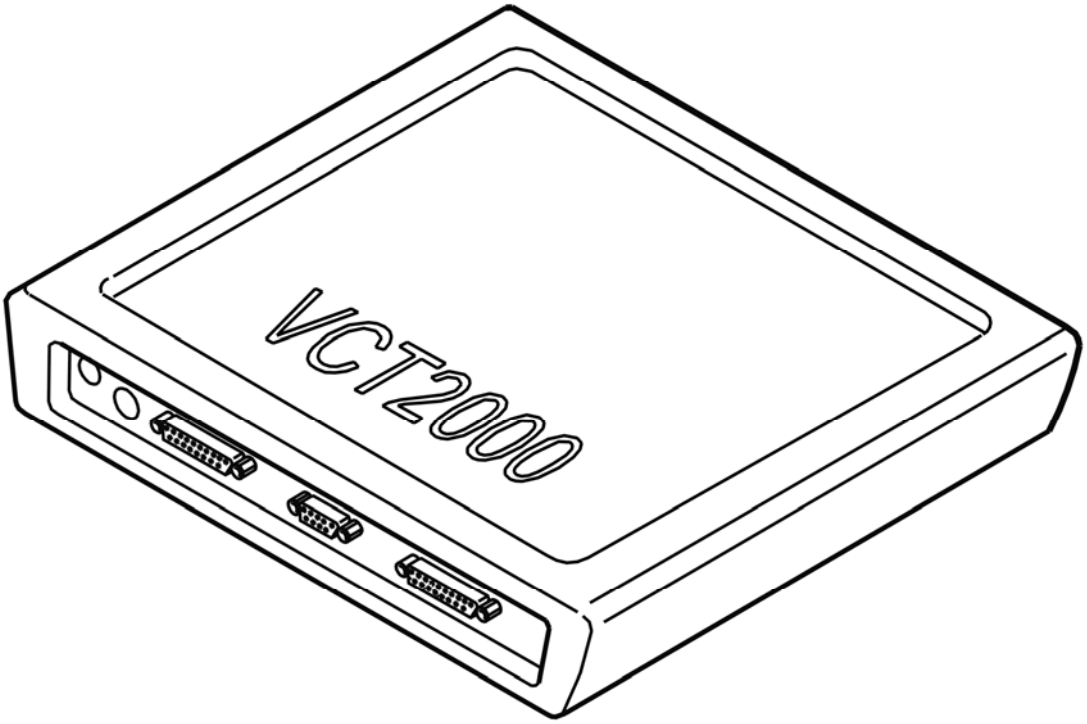

Fig. 240: Identifying VCT2000 Diagnostic Tool Symbol In VIDA
Courtesy of VOLVO CARS CORPORATION

Is the water pump working?

- **YES**

  Refer to **CHECKING COMPONENTS AND WIRING**

- **NO**

  Refer to **CHECKING COMPONENTS AND WIRING**

CHECKING COMPONENTS AND WIRING

- Check the water pump and combustion preheater module (CPM) connectors. Check for contact resistance and oxidation. Check for damage in particular
- Check the cable between combustion preheater module (CPM) terminal #12 and water pump terminal 1. Check for an open-circuit. Check for a short-circuit to ground
- Check the cable between combustion preheater module (CPM) terminal #11 and water pump terminal 2. Check for an open-circuit.

NOTE: Diagnostic trouble codes (DTC) CEM-5F3D and/or CEM-5F3F may also be stored

if there is a fault in the power cable.

The water pump must be replaced if no faults are found in the wiring.

Remedy as necessary.

Other information

- see **CONNECTING THE BREAKOUT BOX**
- see **SIGNAL SPECIFICATION**
- see **WATER PUMP ENGINE COOLANT HEATER, REPLACING**
- see **CHECKING WIRING AND TERMINALS**

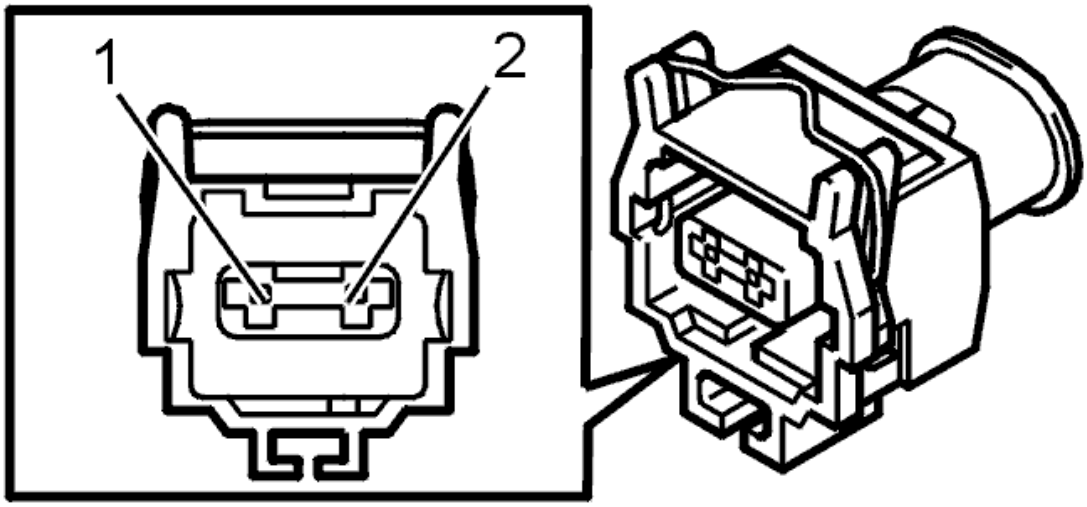

Fig. 241: Brake Pedal Position Sensor Connector Terminal Identification
Courtesy of VOLVO CARS CORPORATION

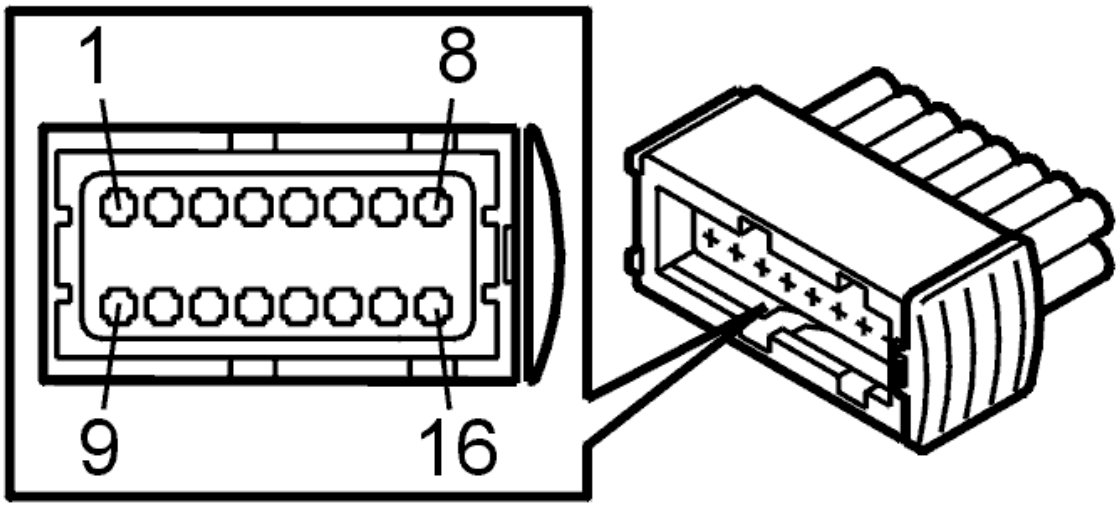

Fig. 242: Identifying Connector Terminals

Courtesy of VOLVO CARS CORPORATION

- **Continue**

  Refer to **VERIFICATION**

CHECKING COMPONENTS AND WIRING

- Check the water pump and combustion preheater module (CPM) connectors. Check for contact resistance and oxidation
- Check the cable between combustion preheater module (CPM) terminal #12 and water pump terminal 1. Check for an intermittent open-circuit. Check for an intermittent short-circuit to ground
- Check the cable between combustion preheater module (CPM) terminal #11 and water pump terminal 2. Check for an intermittent open-circuit.

Remedy as necessary.

Other information

- see **CONNECTING THE BREAKOUT BOX**
- see **SIGNAL SPECIFICATION**
- see **WATER PUMP ENGINE COOLANT HEATER, REPLACING**
- see **CHECKING WIRING AND TERMINALS**

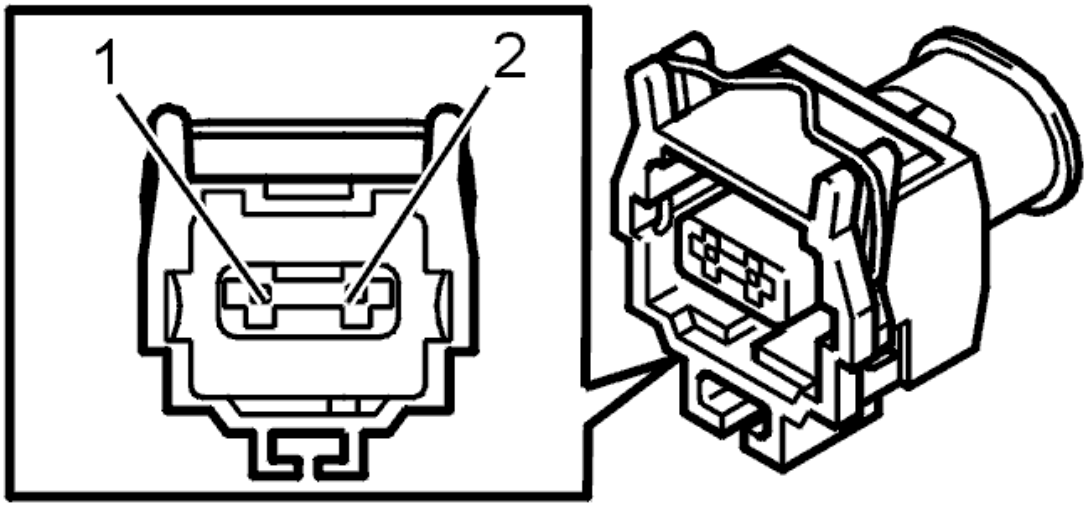

Fig. 243: Brake Pedal Position Sensor Connector Terminal Identification
Courtesy of VOLVO CARS CORPORATION

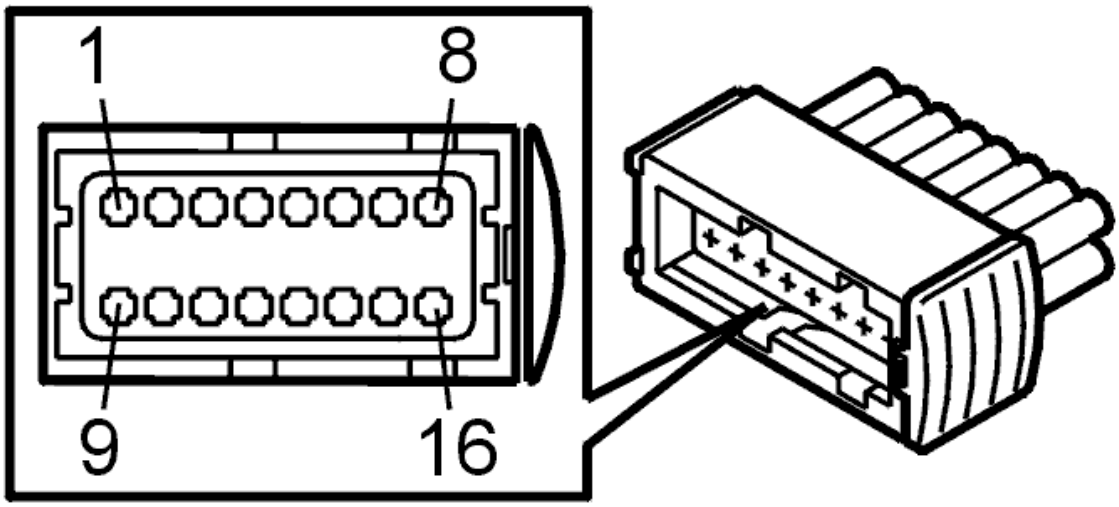

Fig. 244: Identifying Connector Terminals
Courtesy of VOLVO CARS CORPORATION

- **Continue**

  Refer to **VERIFICATION**

VERIFICATION

VERIFICATION

HINT: After carrying out the repair, check that the fault has been remedied.

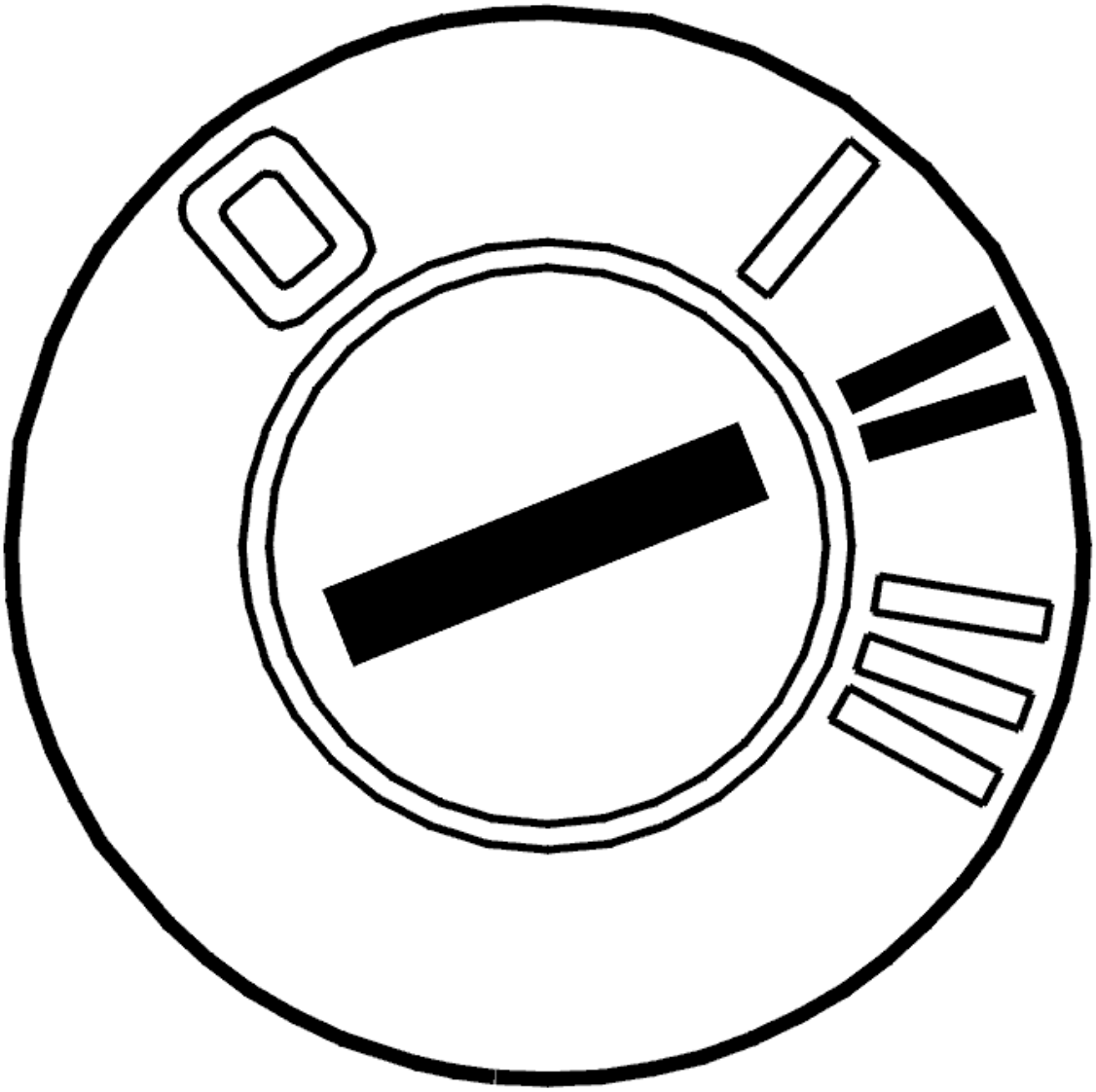

Fig. 245: Identifying Ignition ON
Courtesy of VOLVO CARS CORPORATION

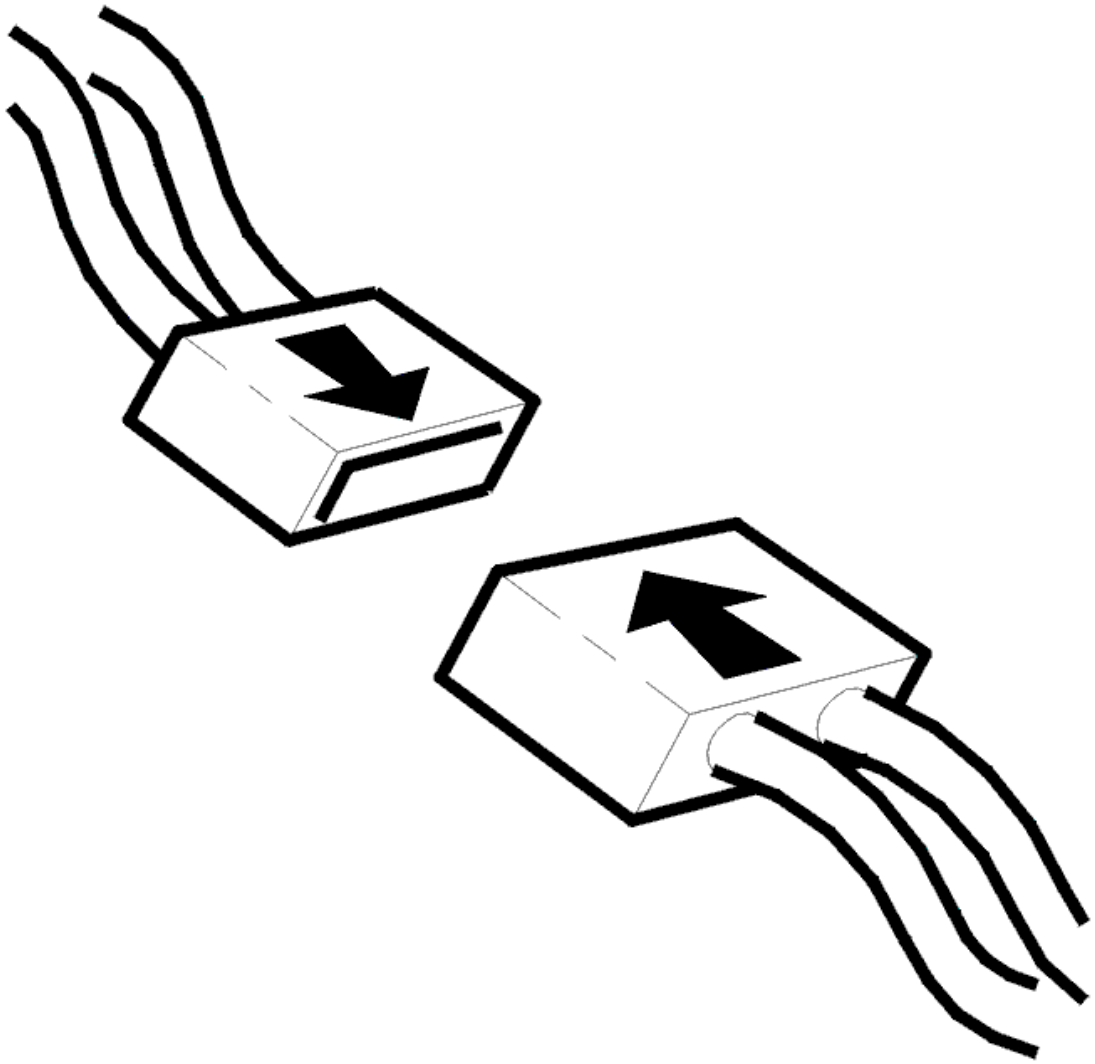

Fig. 246: Connecting Connector
Courtesy of VOLVO CARS CORPORATION

- Ignition off
- Reinstall the connectors, components etc.
- Ignition on
- Activate the water pump.

  Listen for a buzzing sound which indicates that the water pump is running.

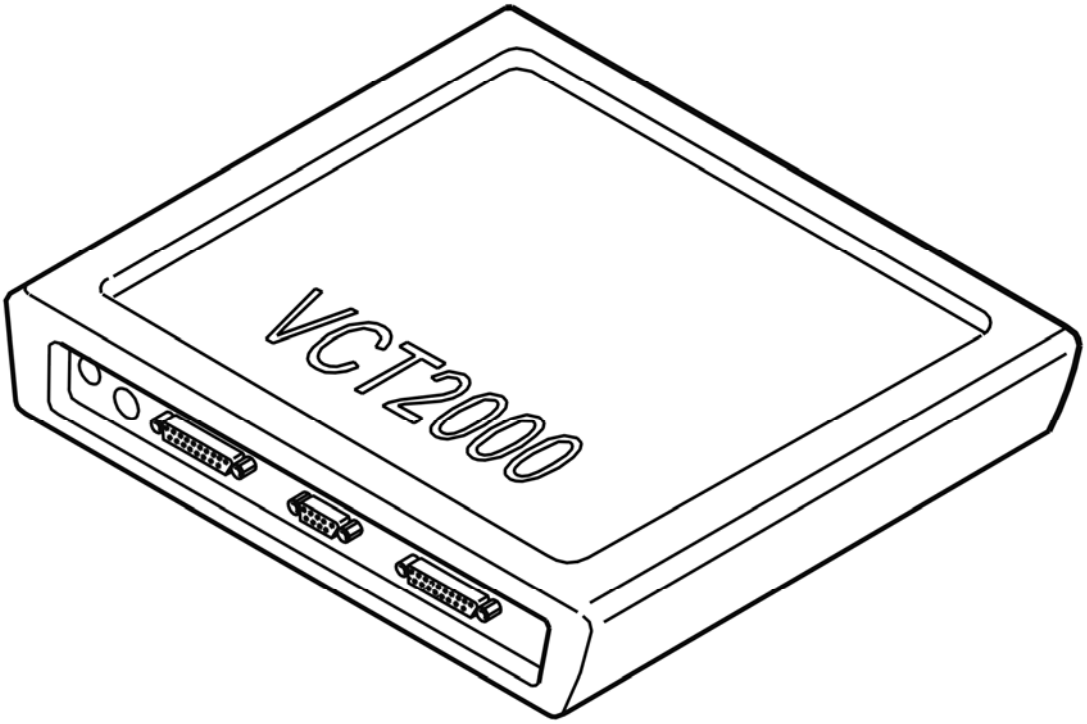

Fig. 247: Identifying VCT2000 Diagnostic Tool Symbol In VIDA
Courtesy of VOLVO CARS CORPORATION

Is the water pump working?

- **YES**

  VERIFIED: Troubleshooting has been completed.

- **NO**

  Refer to **INFORMATION**

INFORMATION

FAULT-TRACING INFORMATION

The fault should have been detected and remedied. As this is not the case fault-tracing has failed.

Exit fault-tracing for this diagnostic trouble code (DTC) or make another attempt.

CEM-5F3C: COMBUSTION FAN. SIGNAL TOO HIGH (2005-2012)

DIAGNOSTIC TROUBLE CODE (DTC) INFORMATION CEM-5F3C

Condition

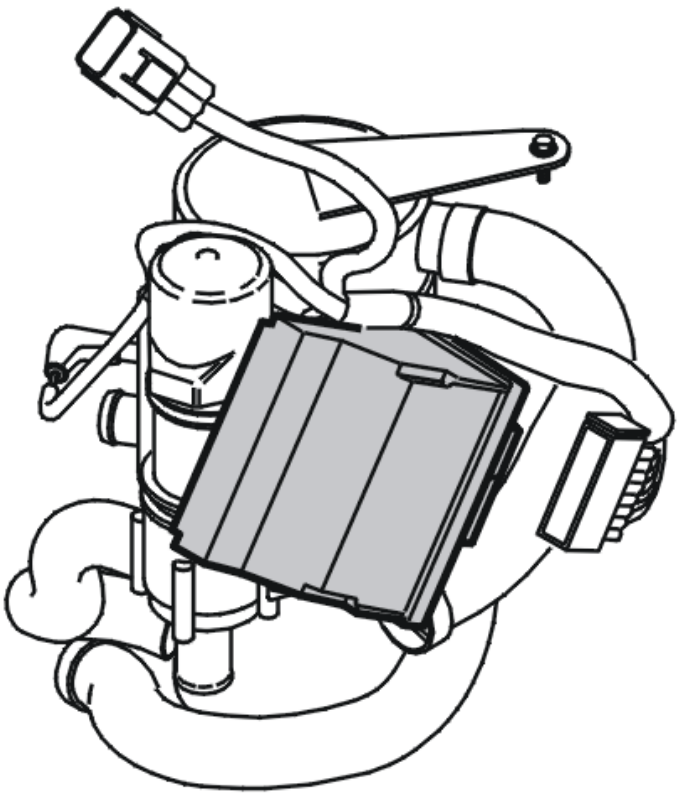

Fig. 248: Additional Heater And Parking Heater
Courtesy of VOLVO CARS CORPORATION

The central electronic module (CEM) checks the communication with the combustion preheater module (CPM).

The diagnostic trouble code (DTC) is stored if the central electronic module (CEM) registers that the signal in the circuit for the combustion fan is too high.

The diagnostic trouble code (DTC) can be diagnosed when the heater is activated.

Substitute Value

- None.

Possible Source

- Short-circuit to supply voltage in the signal cable
- Damaged combustion fan.

Fault symptom[s]

- Poor heating in the passenger compartment.

SIGNAL TOO HIGH

CHECKING THE FUNCTION OF THE WATER PUMP

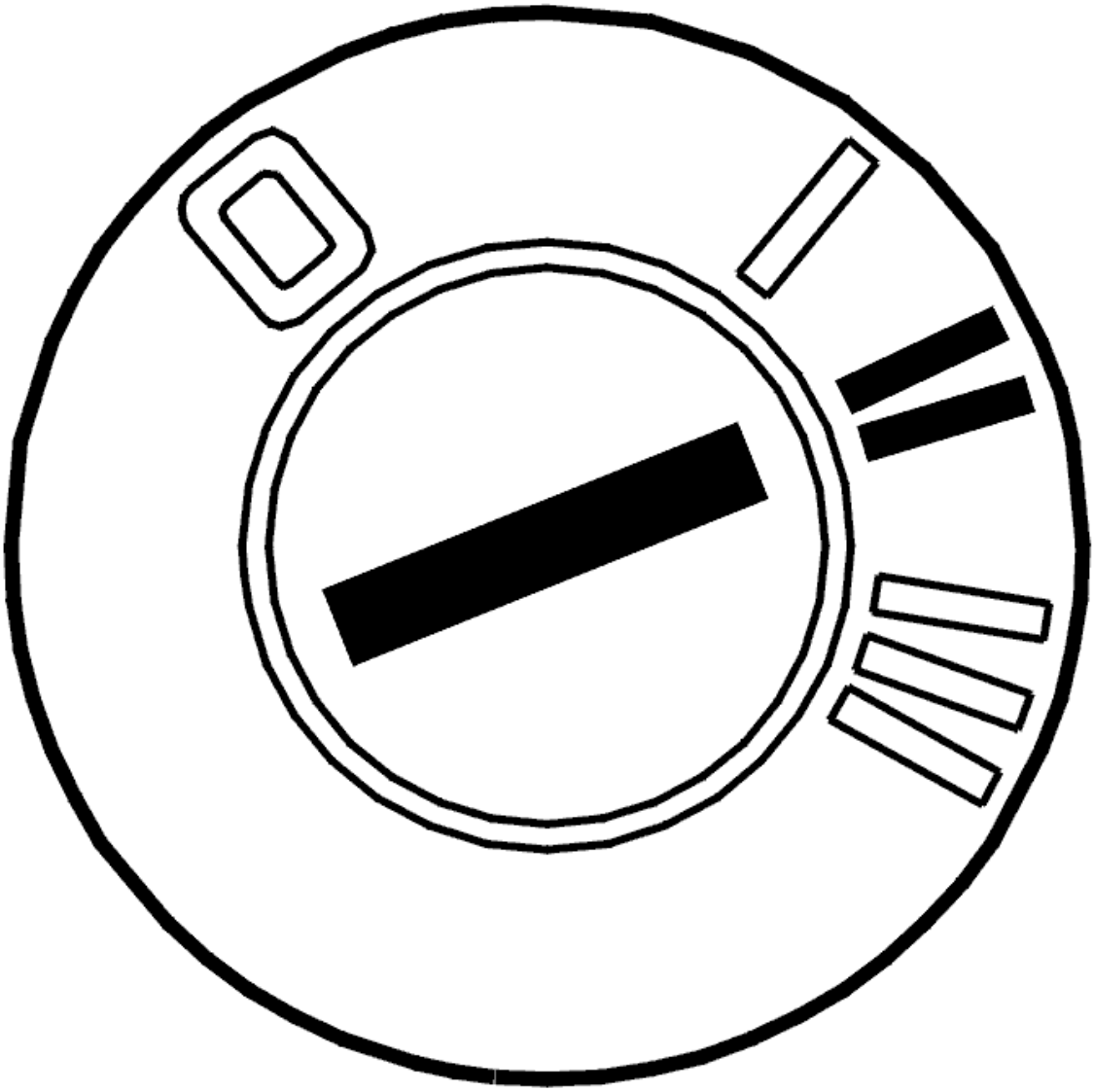

Fig. 249: Identifying Ignition ON
Courtesy of VOLVO CARS CORPORATION

- Ignition on.
    - Activate the combustion fan.

  Listen for a buzzing sound which indicates that the combustion fan is running.

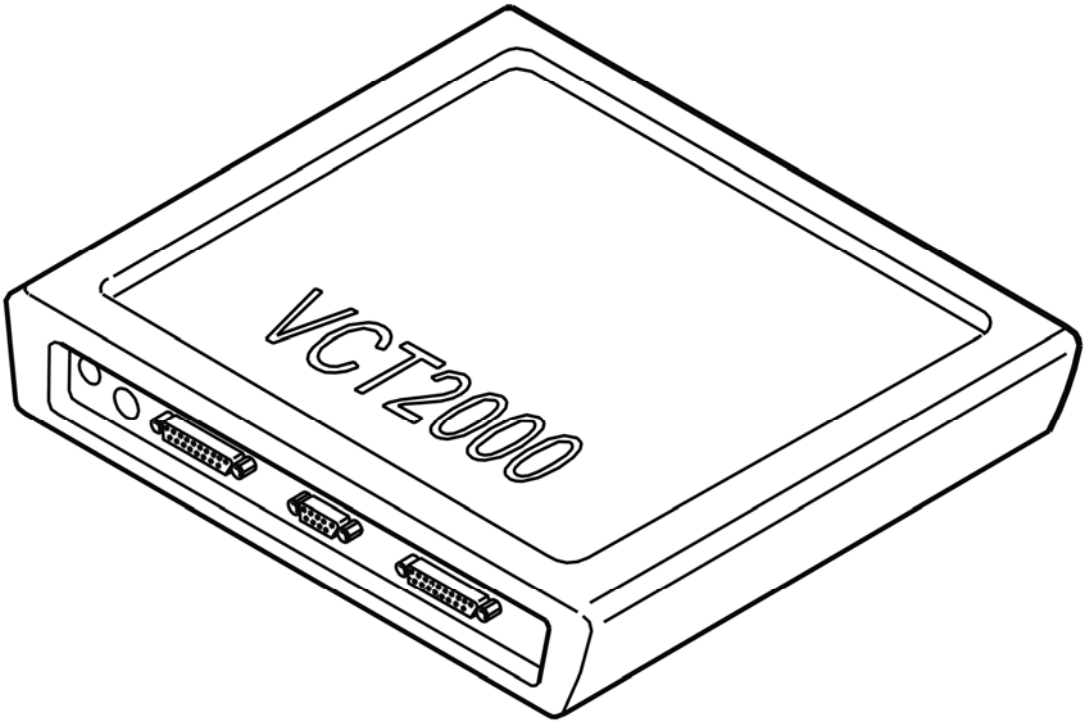

Fig. 250: Identifying VCT2000 Diagnostic Tool Symbol In VIDA
Courtesy of VOLVO CARS CORPORATION

Is the combustion fan working?

- **YES**

  Refer to **CHECKING COMPONENTS AND WIRING**

- **NO**

  Refer to **CHECKING COMPONENTS AND WIRING**

CHECKING COMPONENTS AND WIRING

Check the cable between combustion preheater module (CPM) terminal #10 and the signal terminal for the combustion fan (the black lead from the fan). Check for a short-circuit to supply voltage.

The combustion fan must be replaced if no faults are found in the cable.

Remedy as necessary.

Other information

- see **CONNECTING THE BREAKOUT BOX**
- see **SIGNAL SPECIFICATION**
- see **FUEL INJECTION NOZZLE / FAN MOTOR / PRESSURE EQUALIZER, REPLACING**
- see **CHECKING WIRING AND TERMINALS**

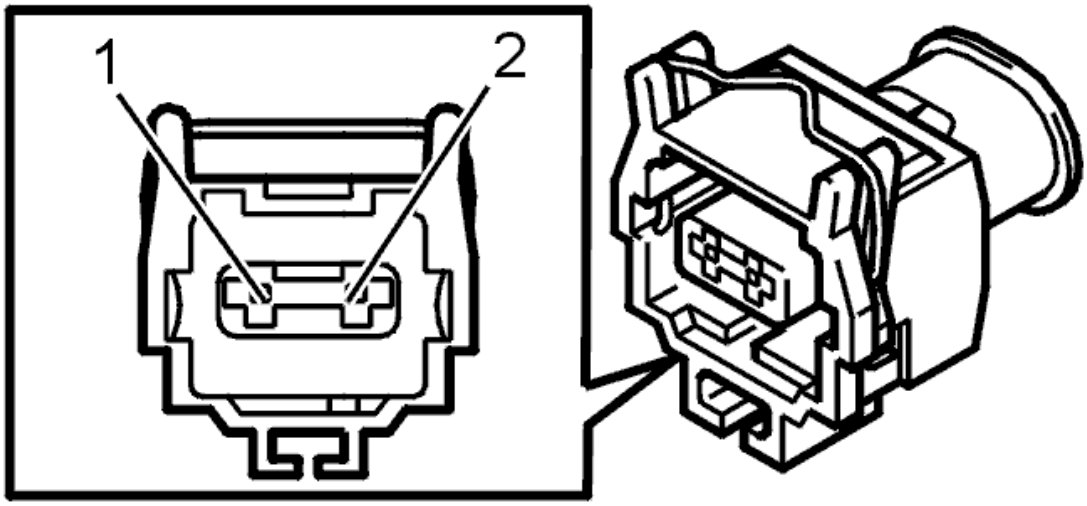

Fig. 251: Brake Pedal Position Sensor Connector Terminal Identification
Courtesy of VOLVO CARS CORPORATION

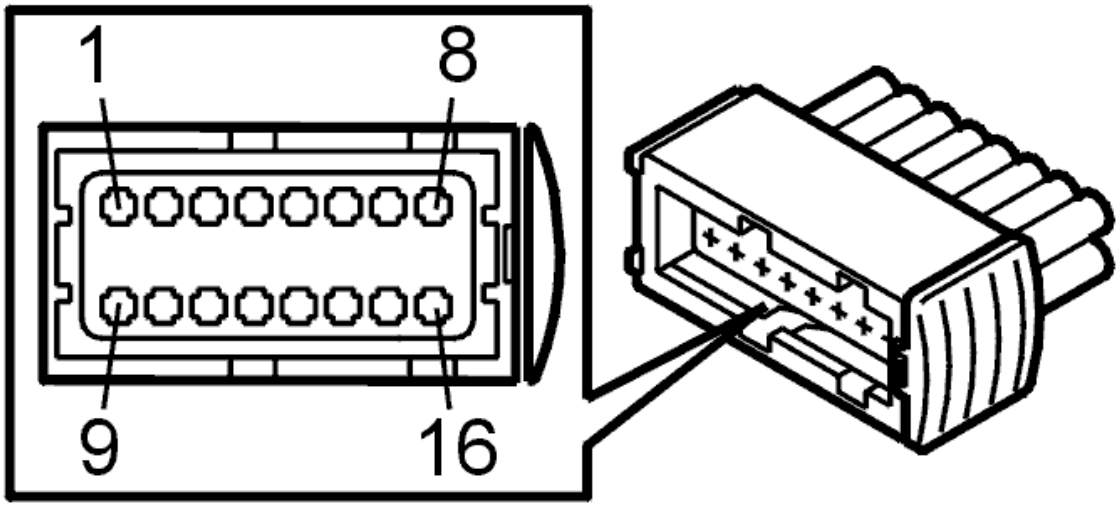

Fig. 252: Identifying Connector Terminals
Courtesy of VOLVO CARS CORPORATION

- **Continue**

  Refer to **VERIFICATION**

CHECKING COMPONENTS AND WIRING

Check the cable between combustion preheater module (CPM) terminal #10 and the signal terminal for the combustion fan (the black lead from the fan). Check for an intermittent short-circuit to supply voltage.

Remedy as necessary.

Other information

- see **CONNECTING THE BREAKOUT BOX**
- To access the combustion fan, see: **FUEL INJECTION NOZZLE / FAN MOTOR / PRESSURE EQUALIZER, REPLACING**
- see **SIGNAL SPECIFICATION**
- see **WATER PUMP ENGINE COOLANT HEATER, REPLACING**
- see **CHECKING WIRING AND TERMINALS**

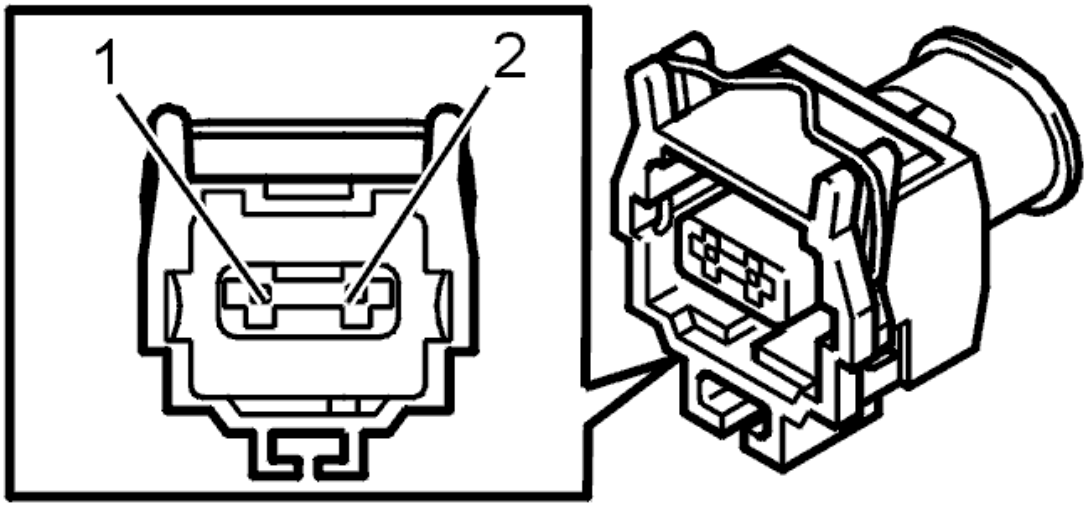

Fig. 253: Brake Pedal Position Sensor Connector Terminal Identification
Courtesy of VOLVO CARS CORPORATION

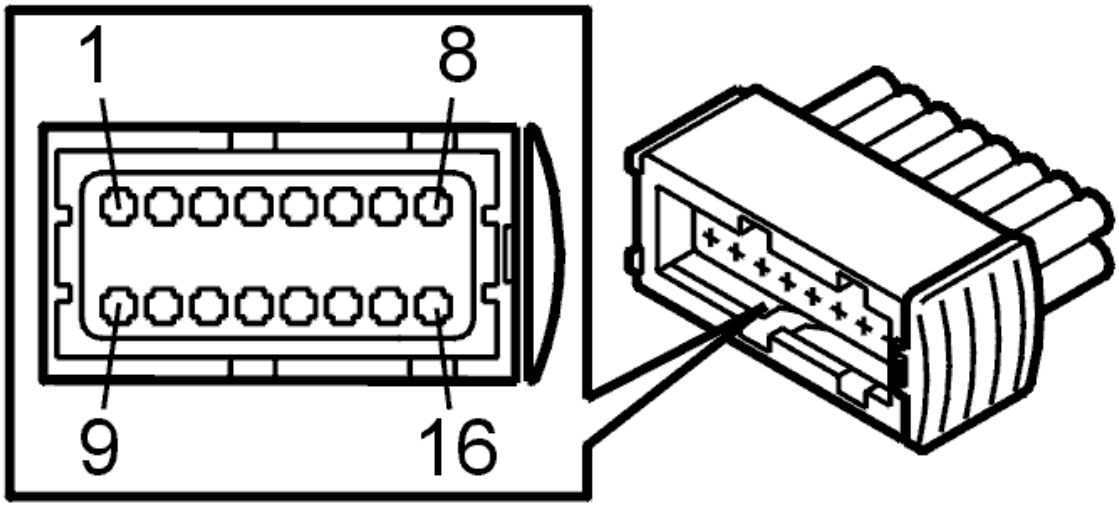

Fig. 254: Identifying Connector Terminals
Courtesy of VOLVO CARS CORPORATION

- **Continue**

  Refer to **VERIFICATION**

VERIFICATION

VERIFICATION

HINT: After carrying out the repair, check that the fault has been remedied.

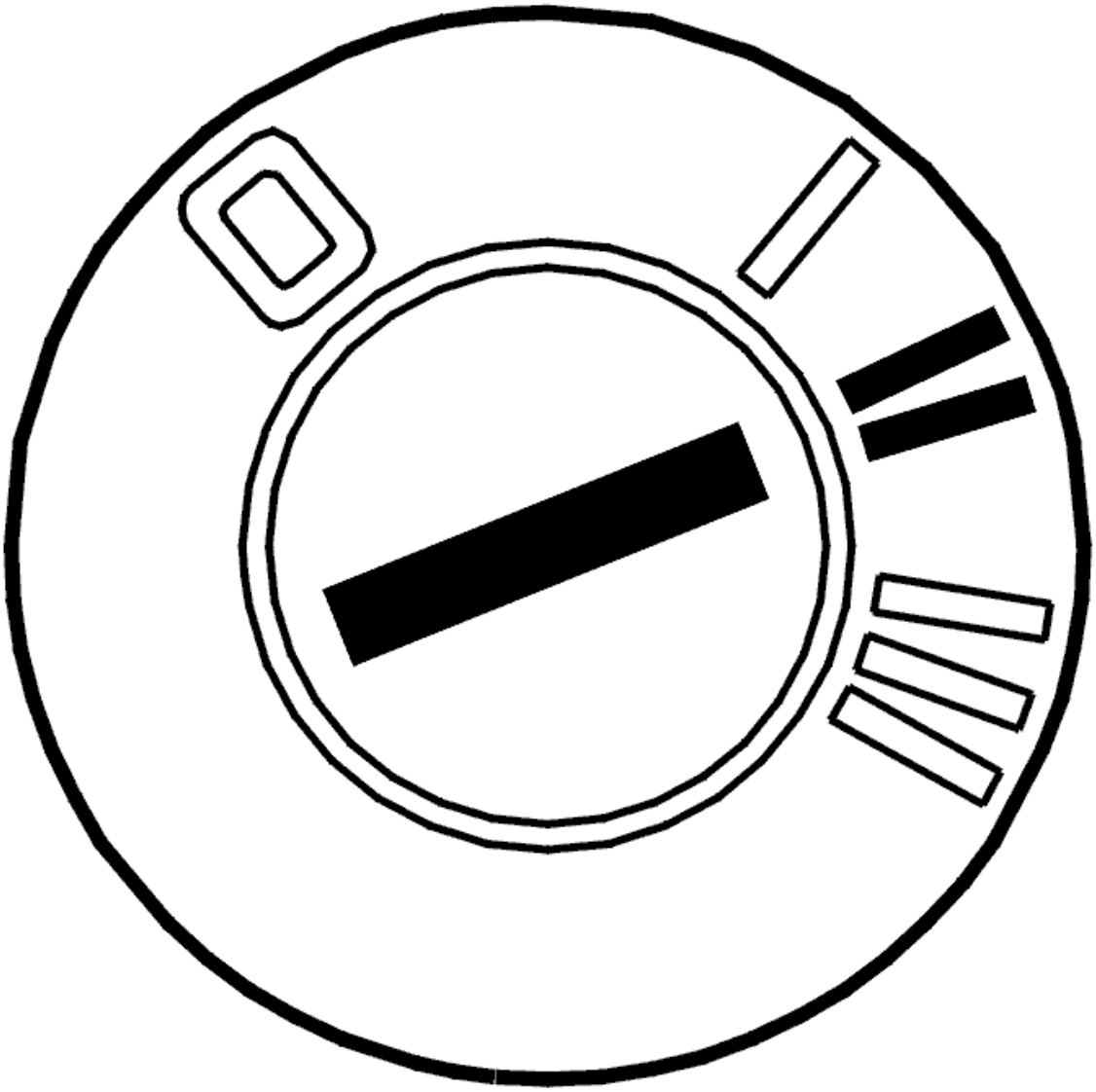

Fig. 255: Identifying Ignition ON
Courtesy of VOLVO CARS CORPORATION

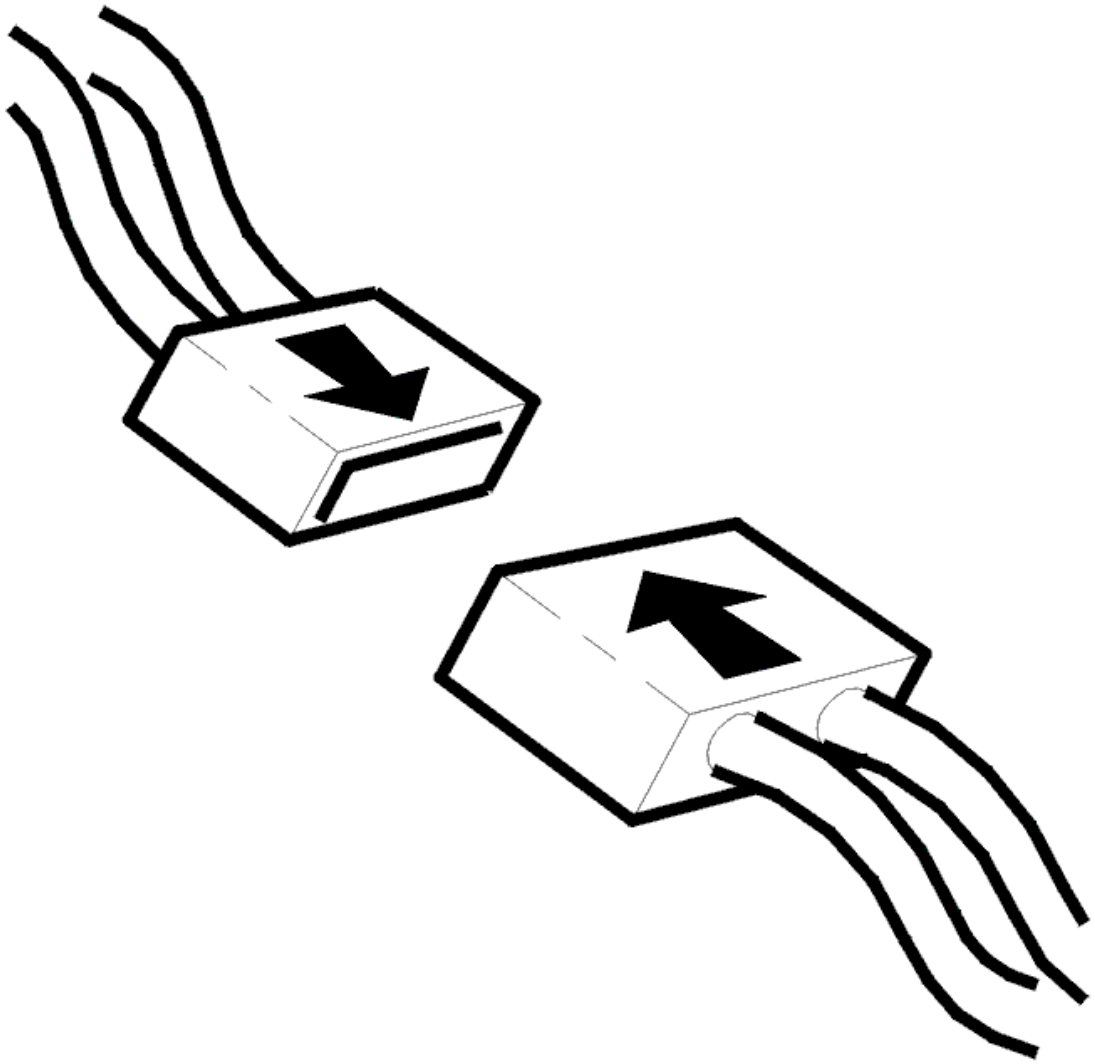

Fig. 256: Connecting Connector
Courtesy of VOLVO CARS CORPORATION

- Ignition off
- Reinstall the connectors, components etc.
- Ignition on
- Activate the combustion fan.

  Listen for a buzzing sound which indicates that the combustion fan is running.

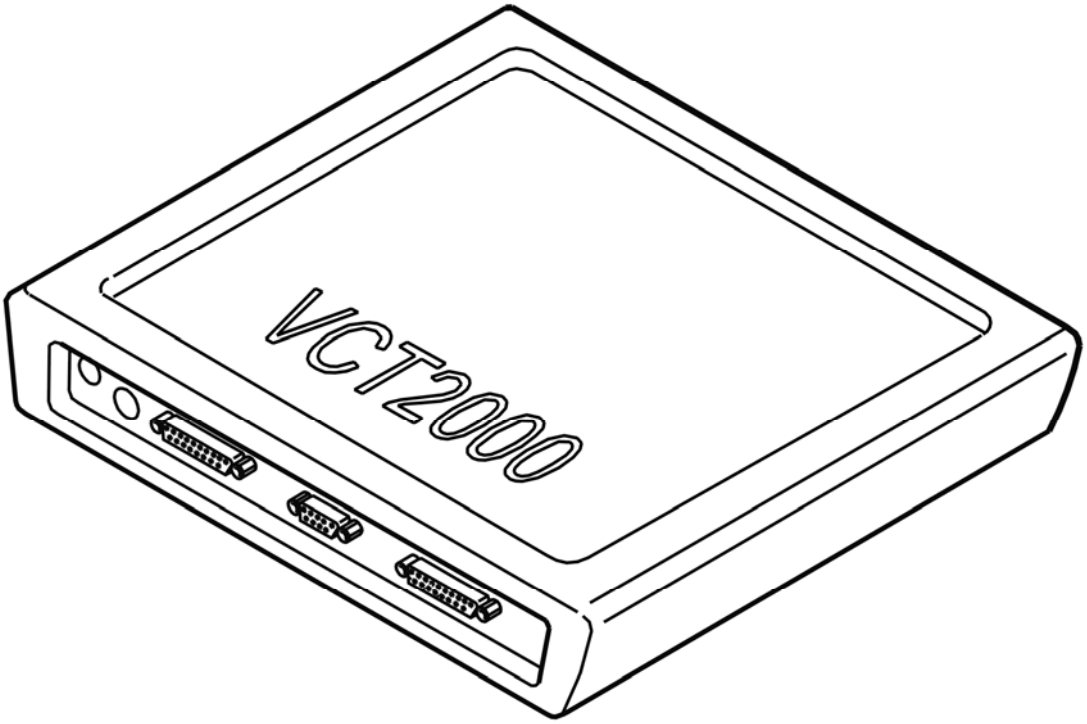

Fig. 257: Identifying VCT2000 Diagnostic Tool Symbol In VIDA
Courtesy of VOLVO CARS CORPORATION

Is the combustion fan working?

- **YES**

  VERIFIED: Troubleshooting has been completed.

- **NO**

  Refer to **INFORMATION**

INFORMATION

FAULT-TRACING INFORMATION

The fault should have been detected and remedied. As this is not the case fault-tracing has failed.

Exit fault-tracing for this diagnostic trouble code (DTC) or make another attempt.

CEM-5F3C: HEATER FAN. SIGNAL TOO HIGH (2003-2004)

DIAGNOSTIC TROUBLE CODE INFORMATION

Condition

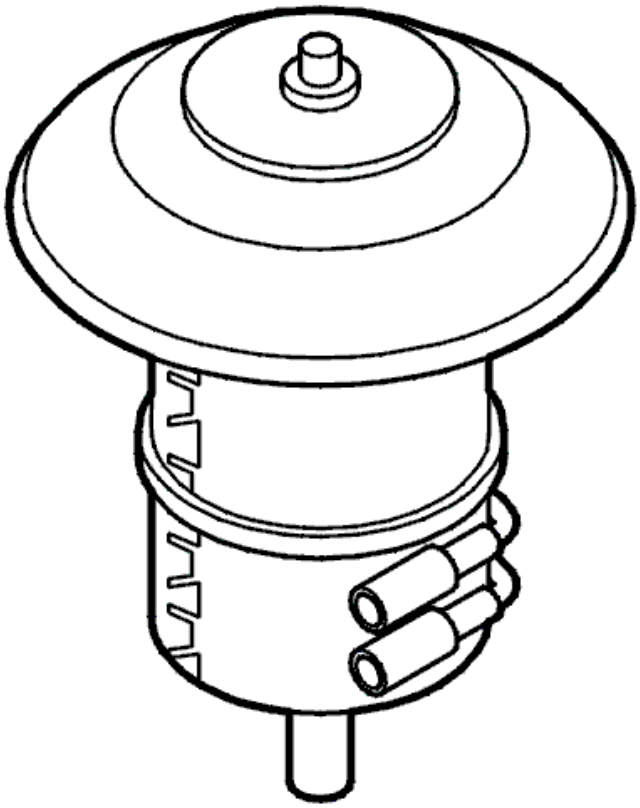

Fig. 258: Identifying Combustion Fan Circuit
Courtesy of VOLVO CARS CORPORATION

If the heater fan circuit is short-circuited to voltage supply, the control unit will interpret this as a fault and the diagnostic trouble code CEM-5F3C will be set.

Substitute Value

- None.

Possible Source

- Signal wire short-circuited to voltage supply.
- Defective heater fan.

Fault symptom[s]

- Poor interior heating.

SIGNAL TOO HIGH

CHECKING THE FUNCTION OF THE COMBUSTION FAN

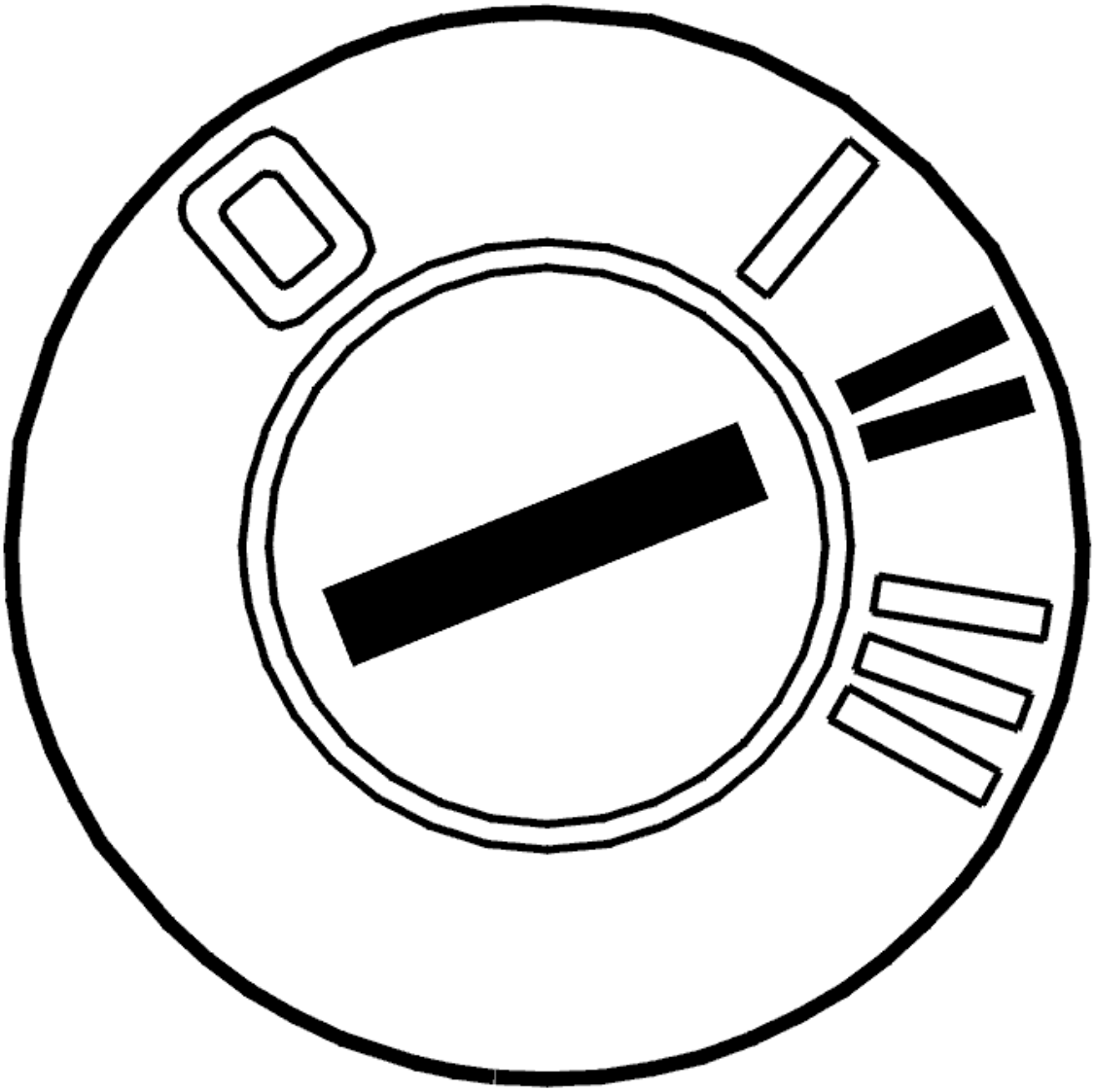

Fig. 259: Identifying Ignition ON
Courtesy of VOLVO CARS CORPORATION

- Ignition on
- Activate the combustion fan.

  Listen for a buzzing sound which indicates that the combustion fan is running.

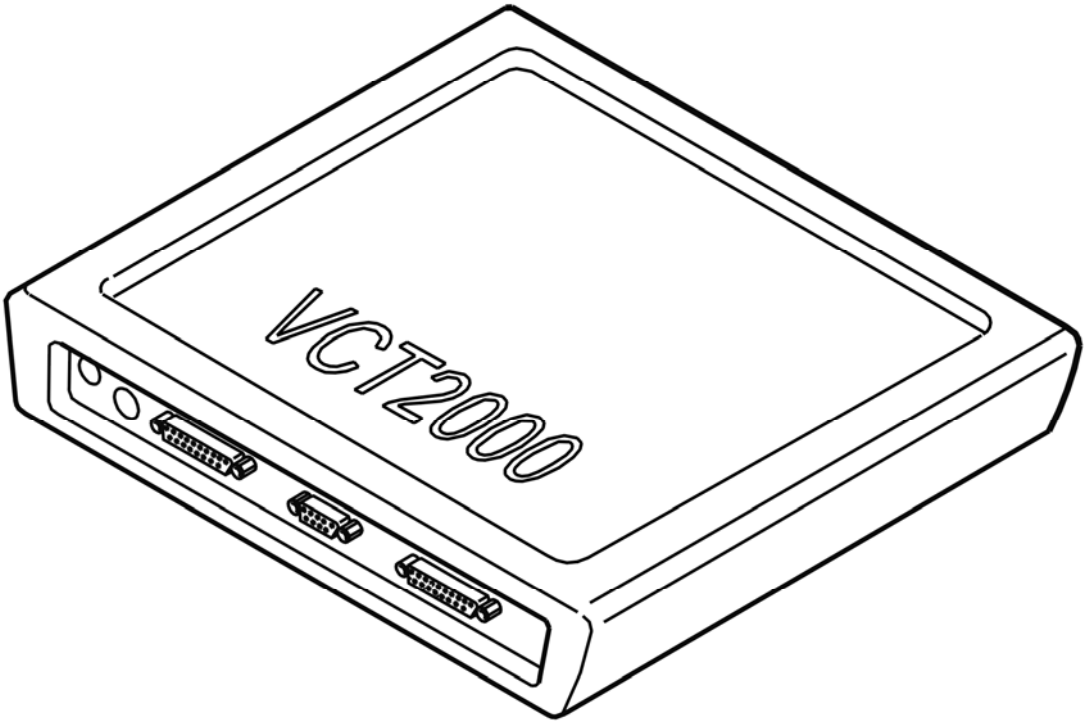

Fig. 260: Identifying VCT2000 Diagnostic Tool Symbol In VIDA
Courtesy of VOLVO CARS CORPORATION

Does the combustion fan function?

- **YES**

  Refer to **INTERMITTENT FAULT**

- **NO**

  Refer to **CHECKING COMPONENTS AND WIRING**

CHECKING COMPONENTS AND WIRING

Check the cable between control module terminal #10 and the signal terminal for the combustion fan (the black lead from the fan). Check for a short-circuit to supply voltage.

If no faults are found in the cable, the combustion fan must be replaced. See **FUEL INJECTION NOZZLE / FAN MOTOR / PRESSURE EQUALIZER, REPLACING** .

Remedy as necessary.

Other information:

- To access the control module or connect the breakout box, see **CONNECTING THE BREAKOUT BOX**
- With the ignition on and the signal terminal for the combustion fan disconnected, the voltage between the signal terminal for the combustion fan (control module side) and ground must be approximately 0 V
- For other values, see **SIGNAL SPECIFICATION**
- see **CHECKING WIRING AND TERMINALS** .

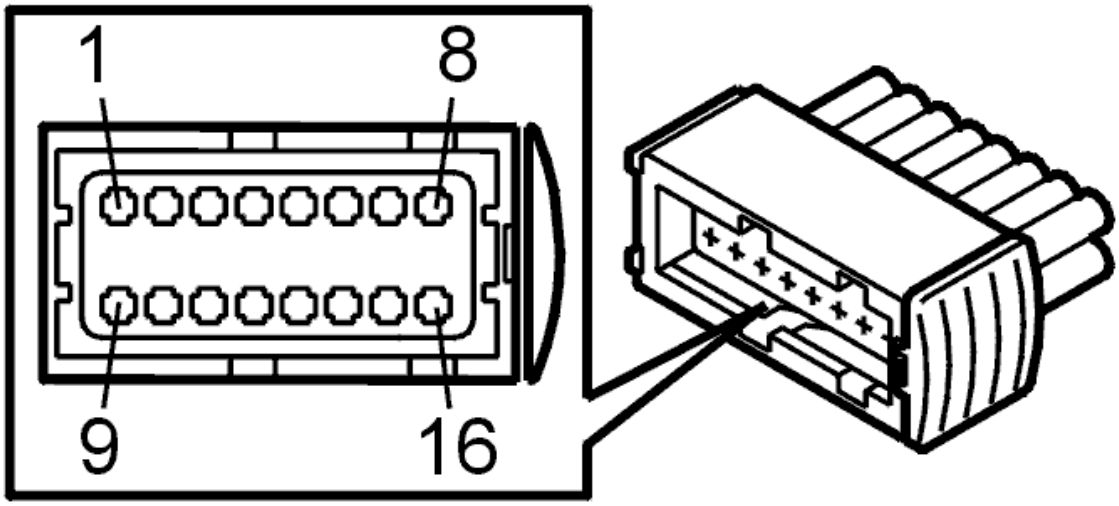

Fig. 261: Identifying Connector Terminals
Courtesy of VOLVO CARS CORPORATION

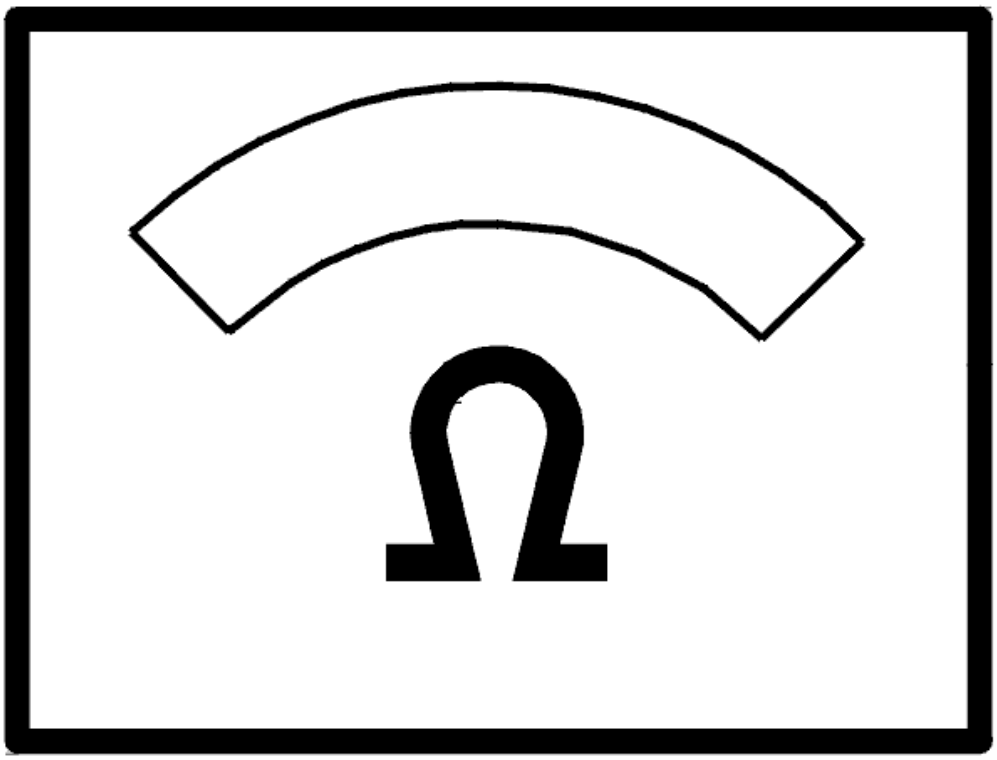

Fig. 262: Identifying Ohm Meter
Courtesy of VOLVO CARS CORPORATION

- **Continue**

  Refer to **VERIFICATION**

INTERMITTENT FAULT

Check the cable between control module terminal #10 and the signal terminal for the combustion fan (the black lead from the fan). Check for a short-circuit to supply voltage. See **SHORT-CIRCUIT TO GROUND, INTERMITTENT FAULTS** .

Remedy as necessary.

Other information:

- To access the control module or connect the breakout box, see **CONNECTING THE BREAKOUT BOX**
- To access the combustion fan, see **FUEL INJECTION NOZZLE / FAN MOTOR / PRESSURE EQUALIZER, REPLACING**
- With the ignition on and the signal terminal for the combustion fan disconnected, the voltage between the signal terminal for the combustion fan (control module side) and ground must be approximately 0 V
- For other values, see **SIGNAL SPECIFICATION** .

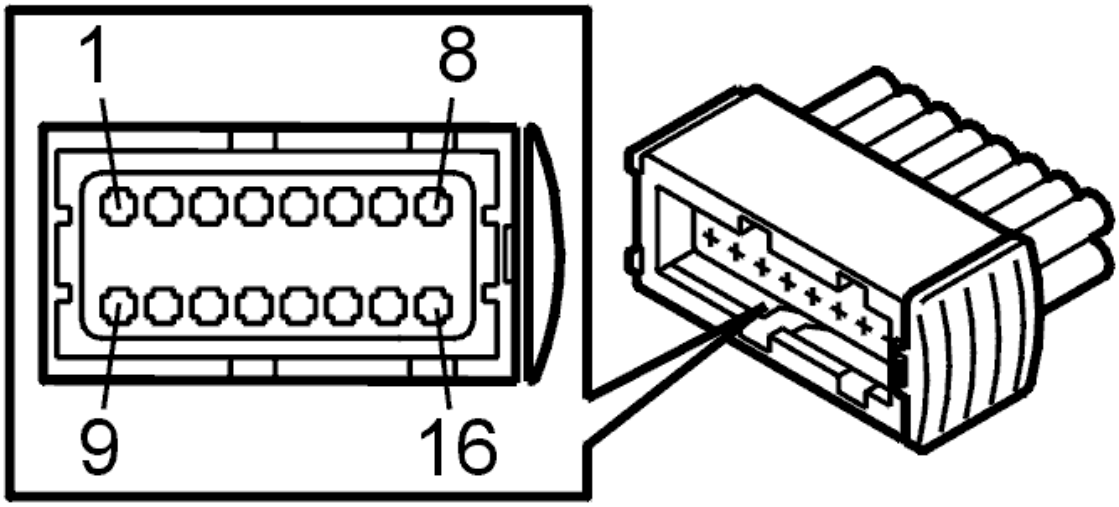

Fig. 263: Identifying Connector Terminals
Courtesy of VOLVO CARS CORPORATION

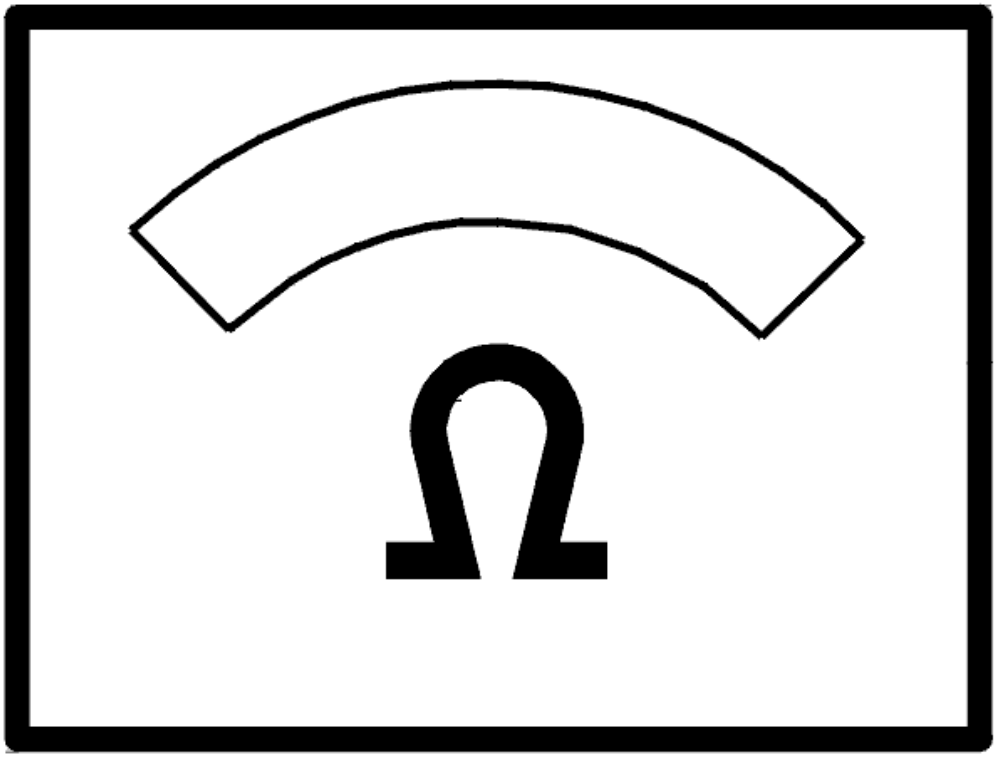

Fig. 264: Identifying Ohm Meter
Courtesy of VOLVO CARS CORPORATION

- **Continue**

  Refer to **INFORMATION**

VERIFICATION

VERIFICATION

HINT: After the repair it is necessary to check that the fault has been rectified.

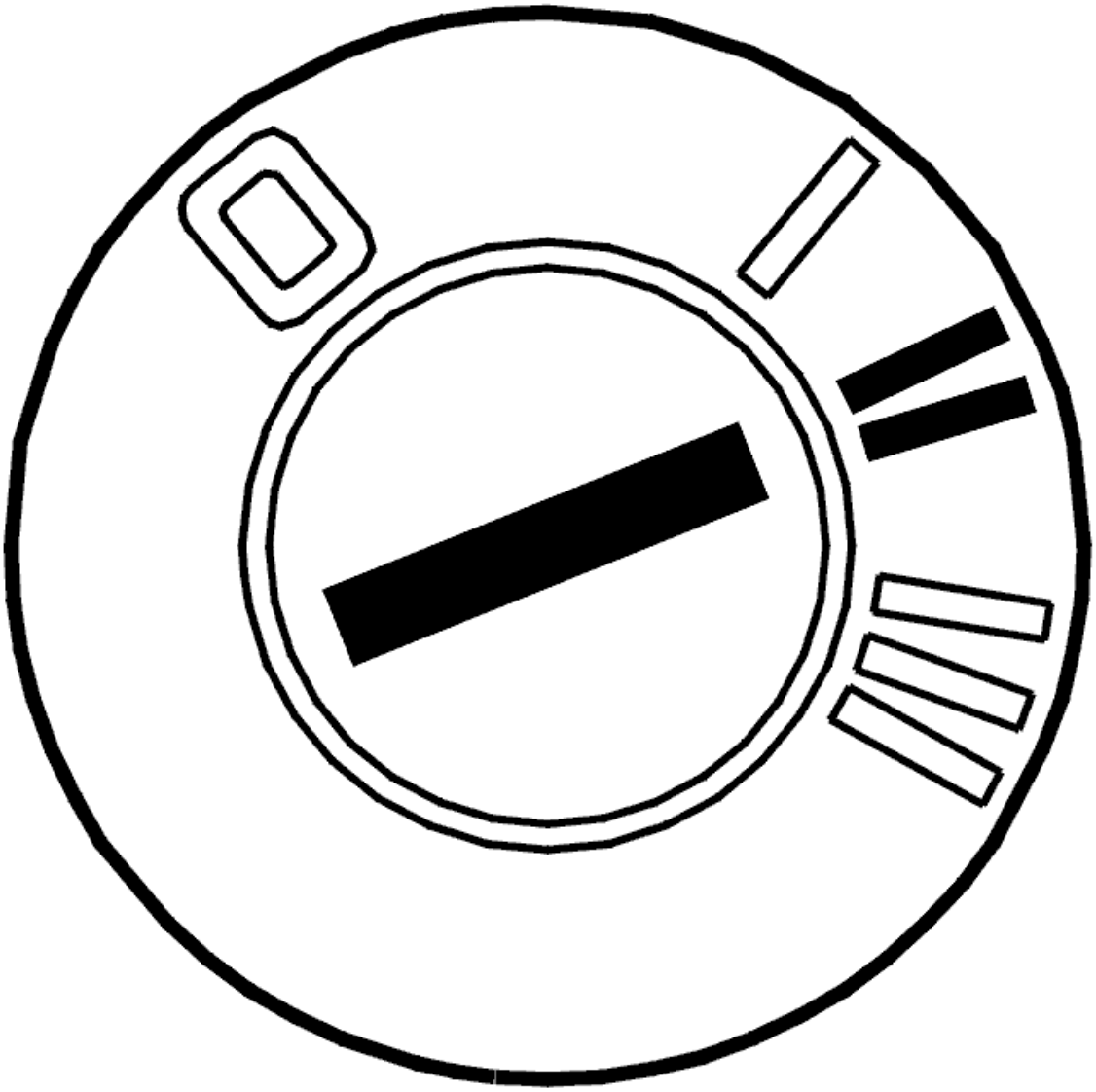

Fig. 265: Identifying Ignition ON
Courtesy of VOLVO CARS CORPORATION

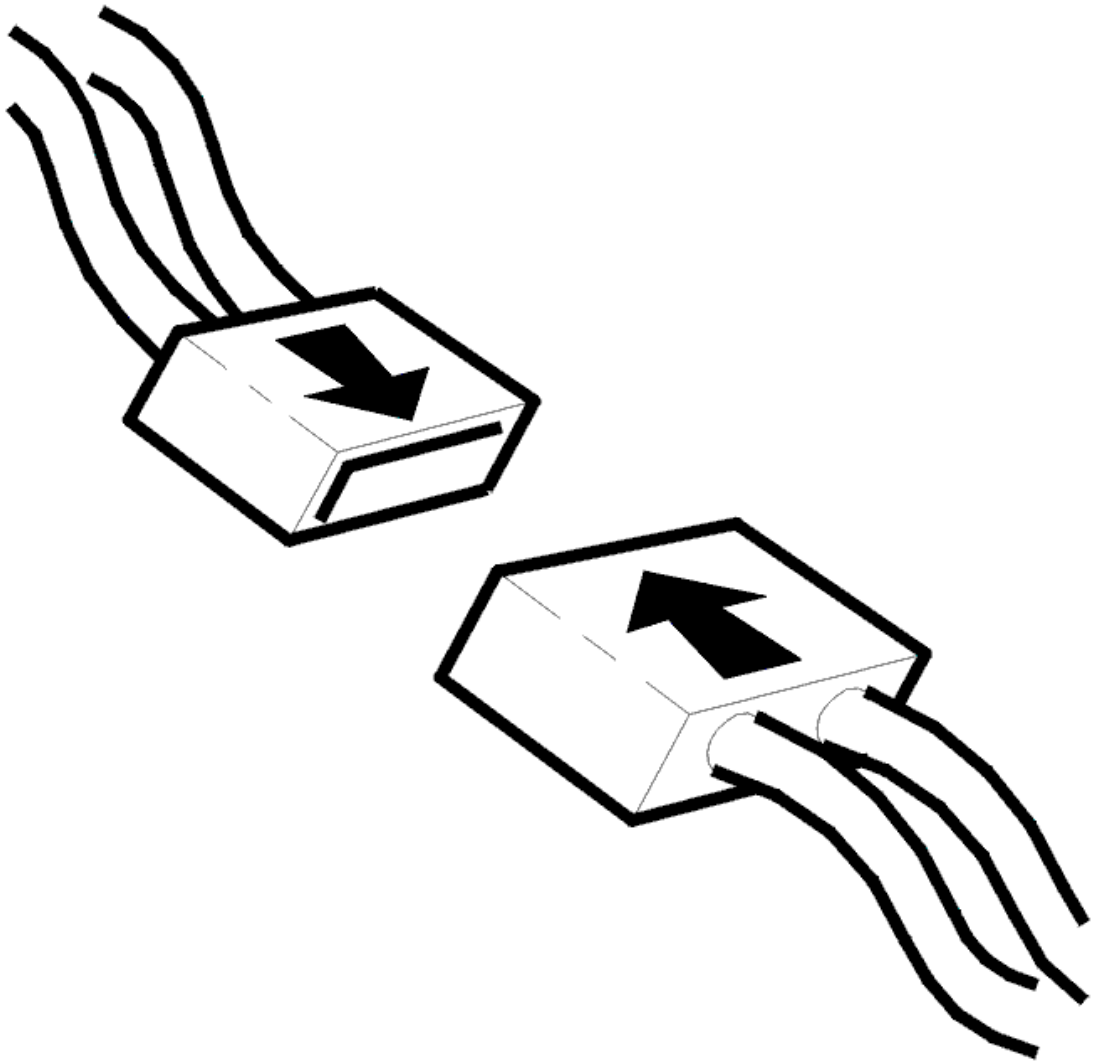

Fig. 266: Connecting Connector
Courtesy of VOLVO CARS CORPORATION

- Ignition off.
- Connect connector, install components etc.
- Ignition on.
- Activate the heater fan.

  Listen for a buzzing sound indicating that the heater fan is working.

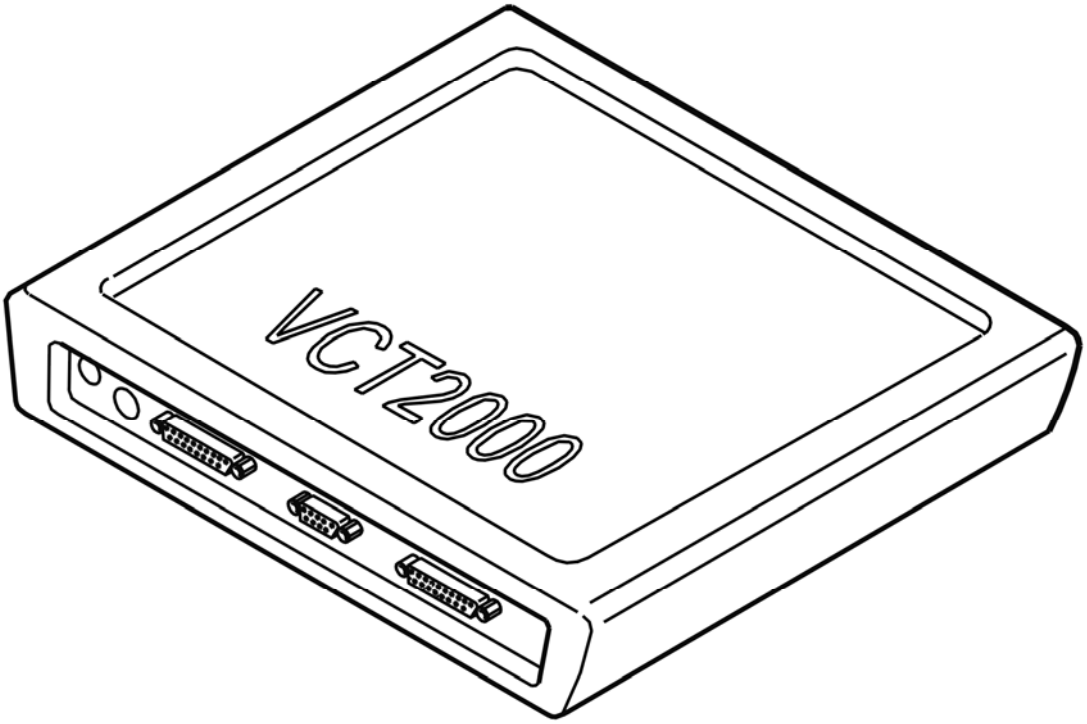

Fig. 267: Identifying VCT2000 Diagnostic Tool Symbol In VIDA
Courtesy of VOLVO CARS CORPORATION

Is the heater fan working?

- **YES**

  VERIFIED: Troubleshooting has been completed.

- **NO**

  Refer to **INFORMATION**

INFORMATION

FAULT-TRACING INFORMATION

The fault should have been detected and remedied. As this is not the case fault-tracing has failed.

Exit fault-tracing for this diagnostic trouble code (DTC) or make another attempt.

INFORMATION

FAULT-TRACING INFORMATION

If the fault is intermittent, do not verify fault-tracing if the fault does not recur.

It is possible to view the information again, or leave fault-tracing for this diagnostic trouble code (DTC).

CEM-5F3D: COMBUSTION FAN. SIGNAL TOO LOW (2005-2012)

DIAGNOSTIC TROUBLE CODE (DTC) INFORMATION CEM-5F3D

Condition

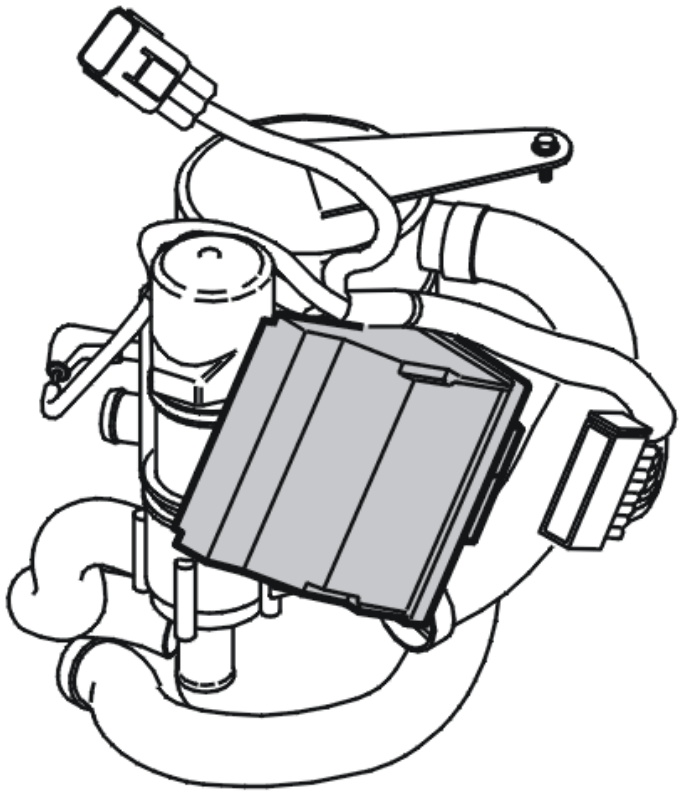

Fig. 268: Additional Heater And Parking Heater
Courtesy of VOLVO CARS CORPORATION

The central electronic module (CEM) checks the communication with the combustion preheater module (CPM).

The diagnostic trouble code (DTC) is stored if the central electronic module (CEM) registers that the signal in the circuit for the combustion fan is too low or missing.

The diagnostic trouble code (DTC) can be diagnosed when the heater is activated.

Substitute Value

- None.

Possible Source

- Contact resistance in the control module or the combustion fan connectors
- Open-circuit in the signal cable
- Open-circuit in the power cable
- Short-circuit to ground in the signal cable
- Damaged combustion fan.

Fault symptom[s]

- Poor heating in the passenger compartment.
- Parking heater/Does not work

SIGNAL TOO LOW

CHECKING THE FUNCTION OF THE WATER PUMP

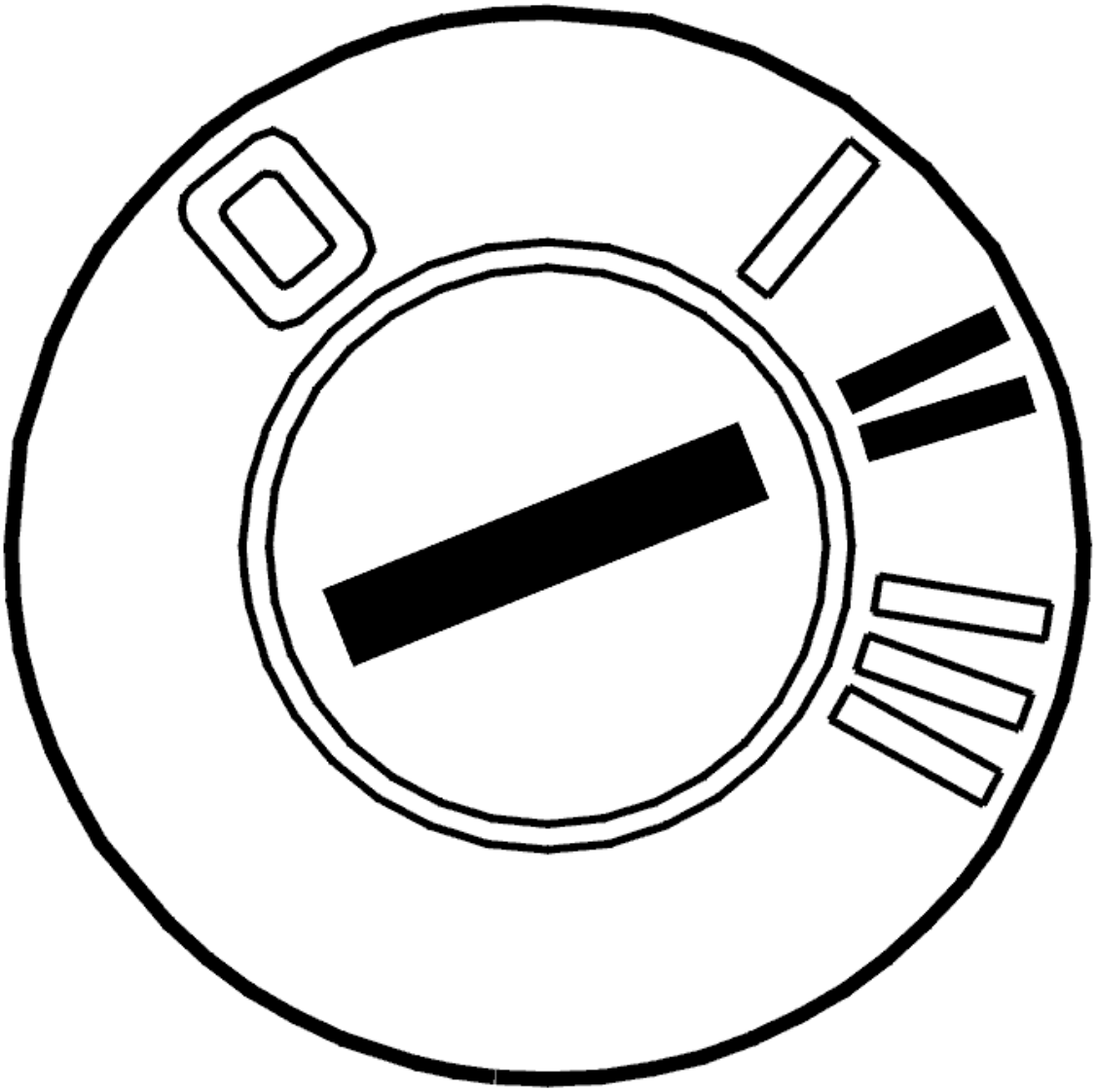

Fig. 269: Identifying Ignition ON
Courtesy of VOLVO CARS CORPORATION

- Ignition on.
  - Activate the combustion fan.

Listen for a buzzing sound which indicates that the combustion fan is running.

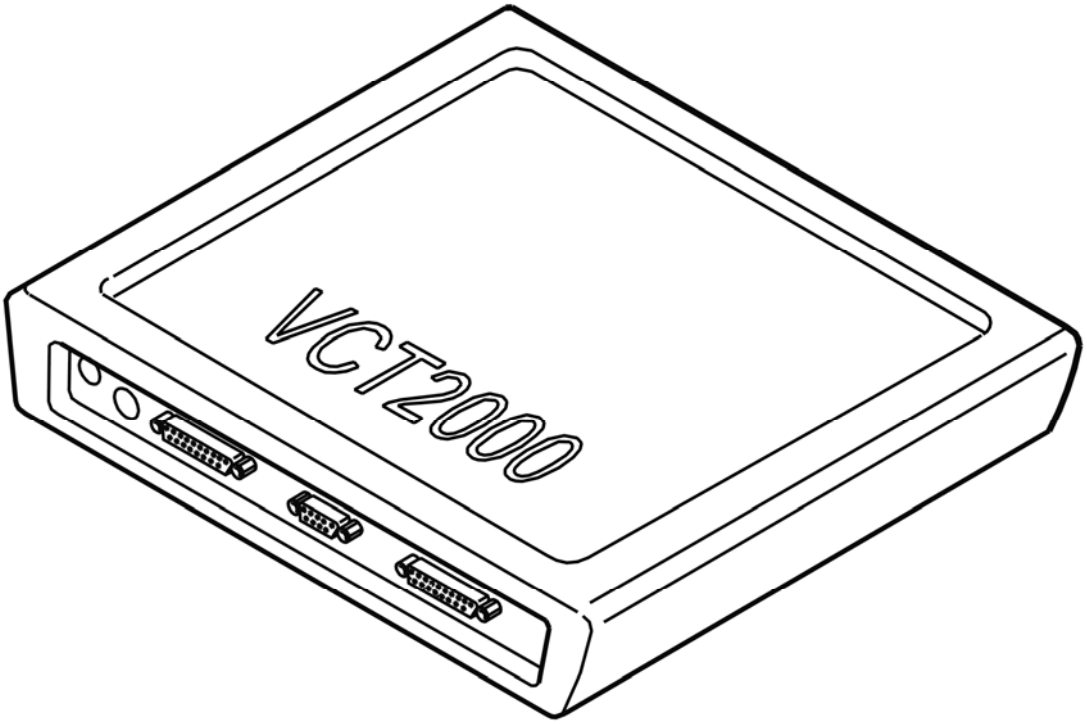

Fig. 270: Identifying VCT2000 Diagnostic Tool Symbol In VIDA
Courtesy of VOLVO CARS CORPORATION

Is the combustion fan working?

- **YES**

  Refer to **CHECKING COMPONENTS AND WIRING**

- **NO**

  Refer to **CHECKING COMPONENTS AND WIRING**

CHECKING COMPONENTS AND WIRING

- Check the cable between combustion preheater module (CPM) terminal #10 and the signal terminal for the combustion fan (the black lead from the fan). Check for an open-circuit. Check for a short-circuit to ground
- Check the cable between combustion preheater module (CPM) terminal #11 and the voltage terminal for the combustion fan (the red cable from the fan). Check for an open-circuit.

NOTE: Diagnostic trouble codes (DTC) CEM-5F3A and/or CEM-5F3F may also be stored if there is a fault in the power cable.

The combustion fan must be replaced if no faults are found in the cable.

Remedy as necessary.

Other information

- see **CONNECTING THE BREAKOUT BOX**
- see **SIGNAL SPECIFICATION**
- see **FUEL INJECTION NOZZLE / FAN MOTOR / PRESSURE EQUALIZER, REPLACING**
- see **CHECKING WIRING AND TERMINALS**

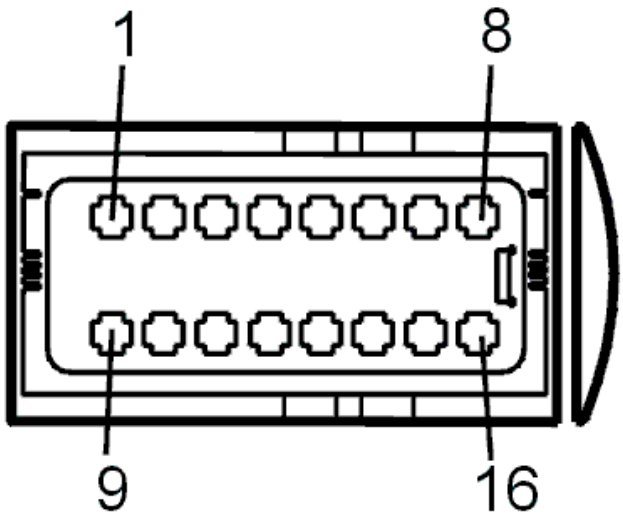

Fig. 271: Identifying Data Link Connector
Courtesy of VOLVO CARS CORPORATION

- **Continue**

  Refer to **VERIFICATION**

CHECKING COMPONENTS AND WIRING

- Check the electrical terminals for the combustion fan and the combustion preheater module (CPM) connector. Check for contact resistance and oxidation
- Check the cable between combustion preheater module (CPM) terminal #10 and the signal terminal for the combustion fan (the black lead from the fan). Check for an intermittent open-circuit. Check for an intermittent short-circuit to ground
- Check the cable between combustion preheater module (CPM) terminal #11 and the voltage terminal for the combustion fan (the red cable from the fan). Check for an intermittent open-circuit.

Remedy as necessary.

Other information

- see **CONNECTING THE BREAKOUT BOX**
- To access the combustion fan, see: **FUEL INJECTION NOZZLE / FAN MOTOR / PRESSURE EQUALIZER, REPLACING**
- see **SIGNAL SPECIFICATION**
- see **WATER PUMP ENGINE COOLANT HEATER, REPLACING**
- see **CHECKING WIRING AND TERMINALS**

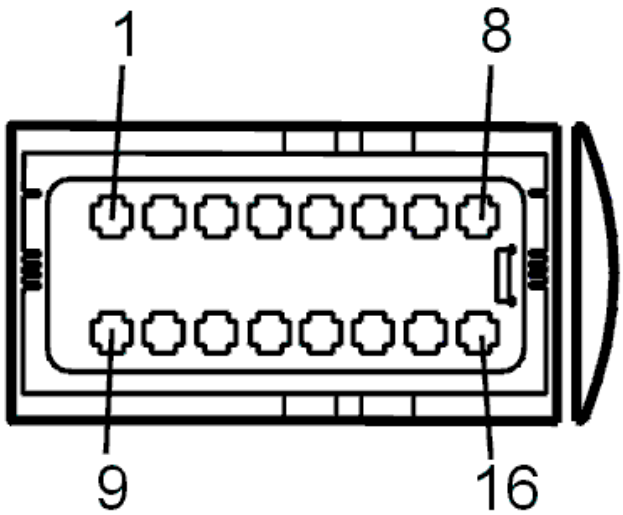

Fig. 272: Identifying Data Link Connector
Courtesy of VOLVO CARS CORPORATION

- **Continue**

  Refer to **VERIFICATION**

VERIFICATION

VERIFICATION

HINT: After carrying out the repair, check that the fault has been remedied.

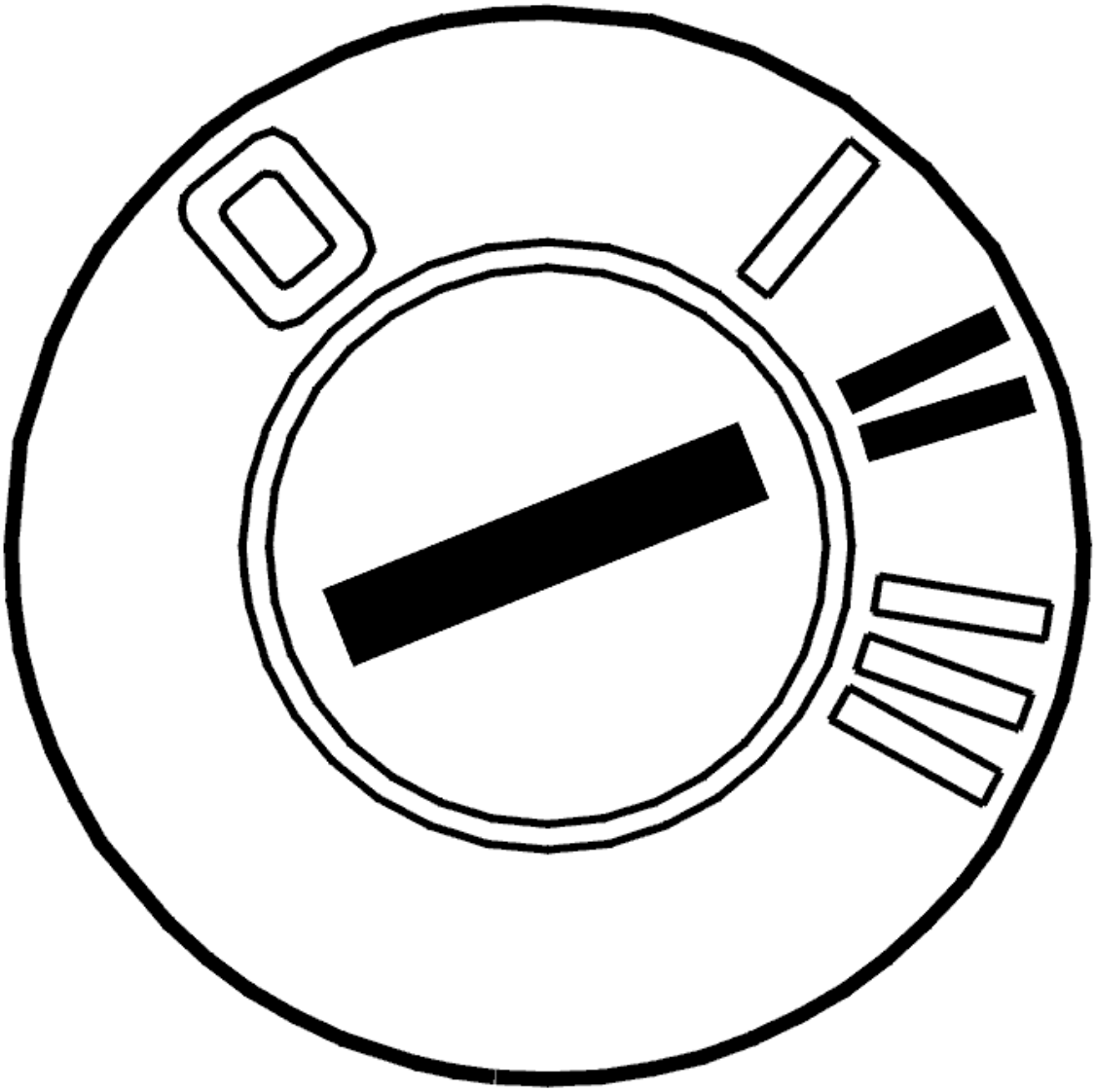

Fig. 273: Identifying Ignition ON
Courtesy of VOLVO CARS CORPORATION

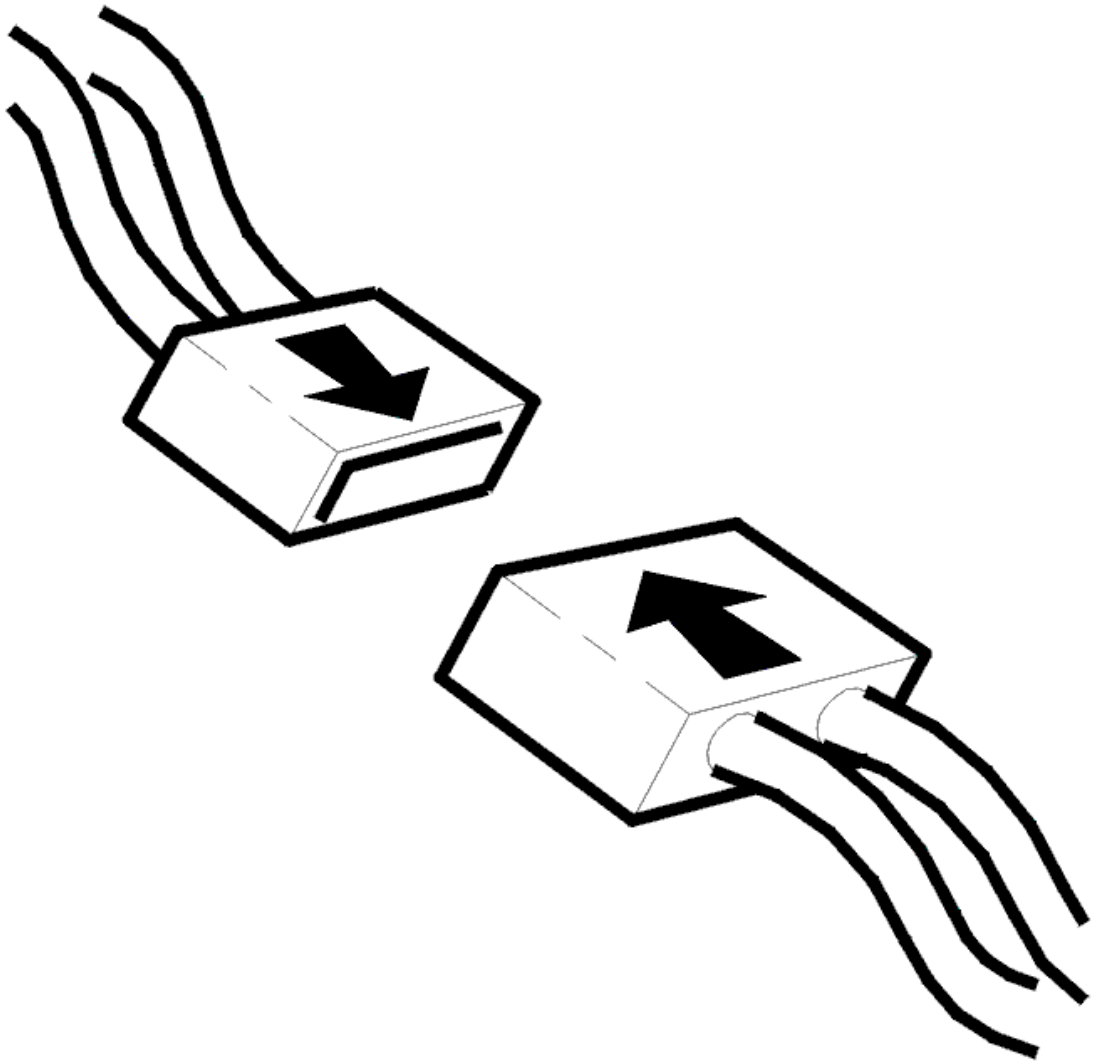

Fig. 274: Connecting Connector
Courtesy of VOLVO CARS CORPORATION

- Ignition off
- Reinstall the connectors, components etc.
- Ignition on
- Activate the combustion fan.

  Listen for a buzzing sound which indicates that the combustion fan is running.

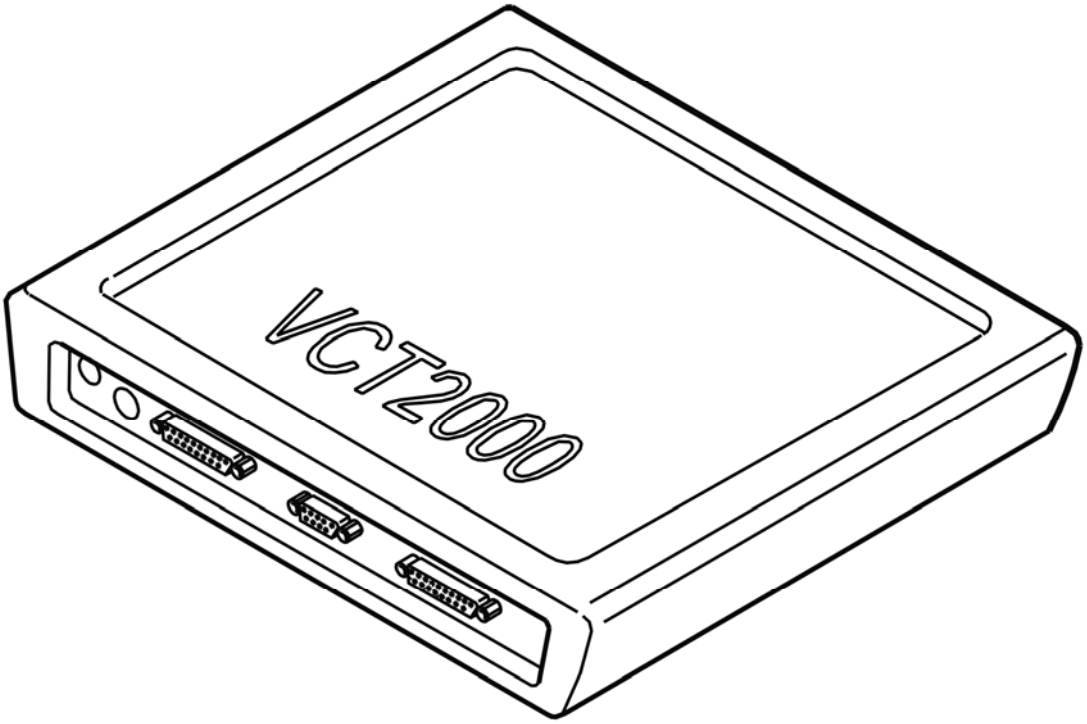

Fig. 275: Identifying VCT2000 Diagnostic Tool Symbol In VIDA
Courtesy of VOLVO CARS CORPORATION

Is the combustion fan working?

- **YES**

  VERIFIED: Troubleshooting has been completed.

- **NO**

  Refer to **INFORMATION**

INFORMATION

FAULT-TRACING INFORMATION

The fault should have been detected and remedied. As this is not the case fault-tracing has failed.

Exit fault-tracing for this diagnostic trouble code (DTC) or make another attempt.

CEM-5F3D: HEATER FAN. SIGNAL TOO LOW (2003-2004)

DIAGNOSTIC TROUBLE CODE INFORMATION

Condition

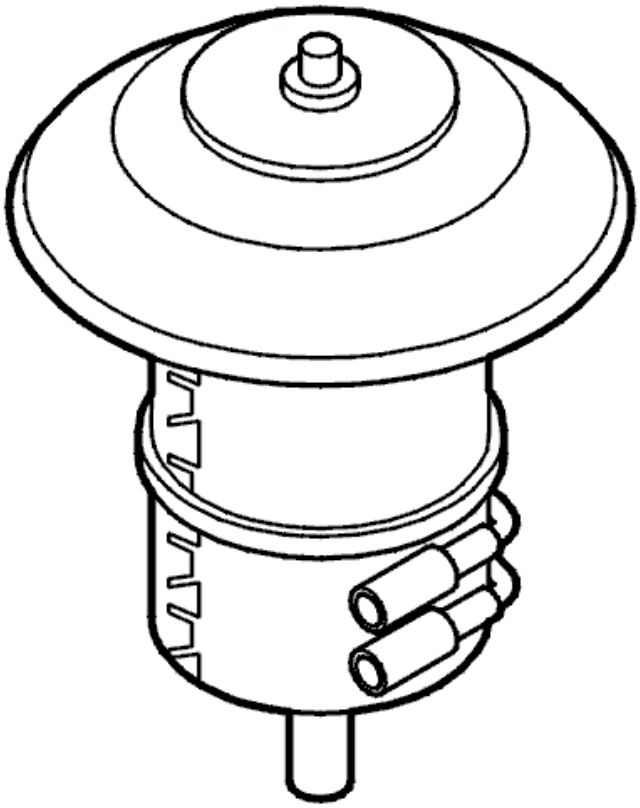

Fig. 276: Identifying Combustion Fan Circuit
Courtesy of VOLVO CARS CORPORATION

If the heater fan circuit is short-circuited to ground or if there is an open circuit, the control unit will interpret this as a fault, and diagnostic trouble code CEM-5F3D will be set.

Substitute Value

- None.

Possible Source

- Contact resistance in control unit or heater fan connector.
- Open circuit in signal wire.
- Open circuit in voltage wire.
- Signal wire short-circuited to ground.
- Defective heater fan.

Fault symptom[s]

- Poor interior heating.

SIGNAL TOO LOW

CHECKING THE FUNCTION OF THE COMBUSTION FAN

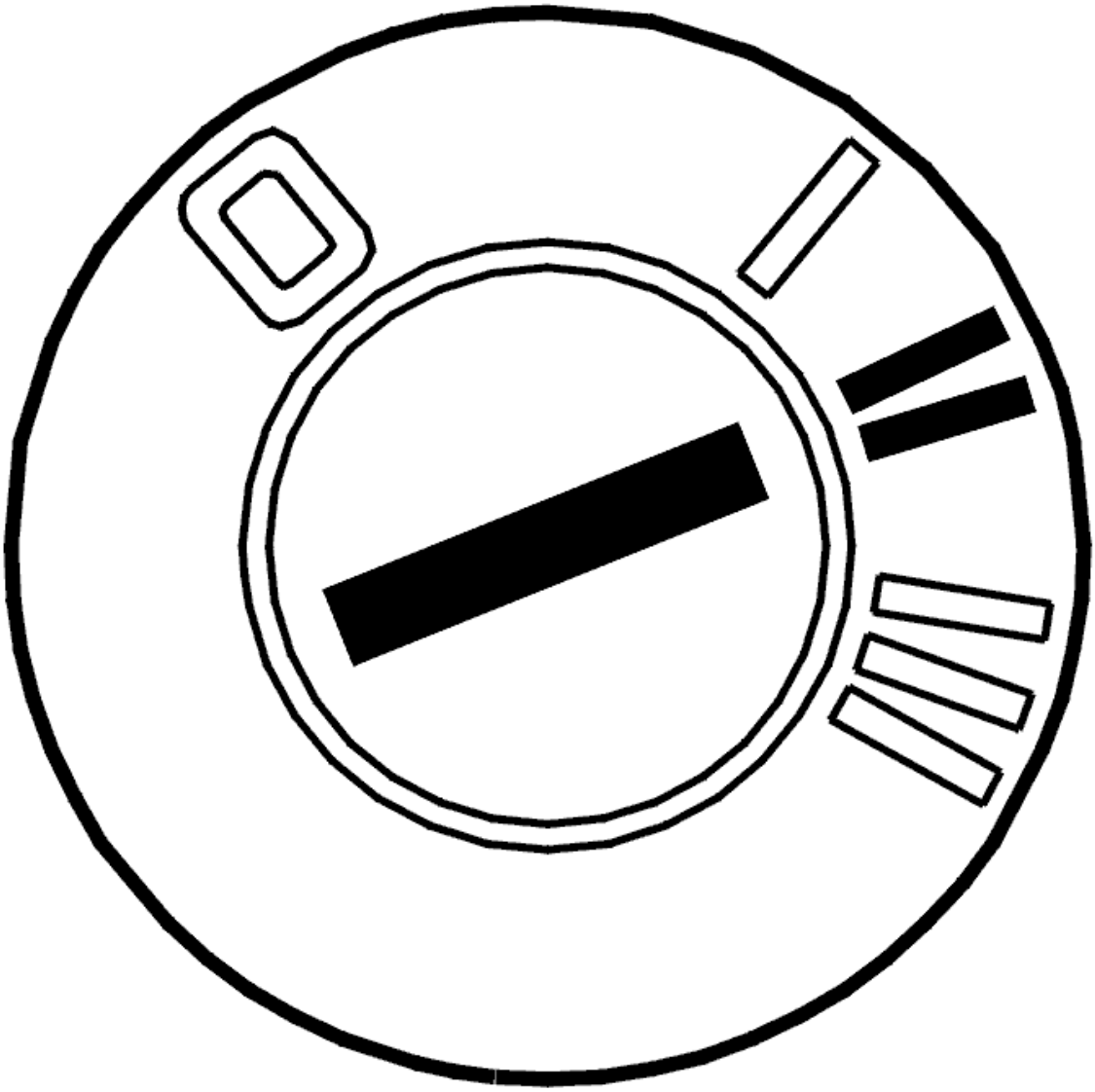

Fig. 277: Identifying Ignition ON
Courtesy of VOLVO CARS CORPORATION

- Ignition on
- Activate the combustion fan.

  Listen for a buzzing sound which indicates that the combustion fan is running.

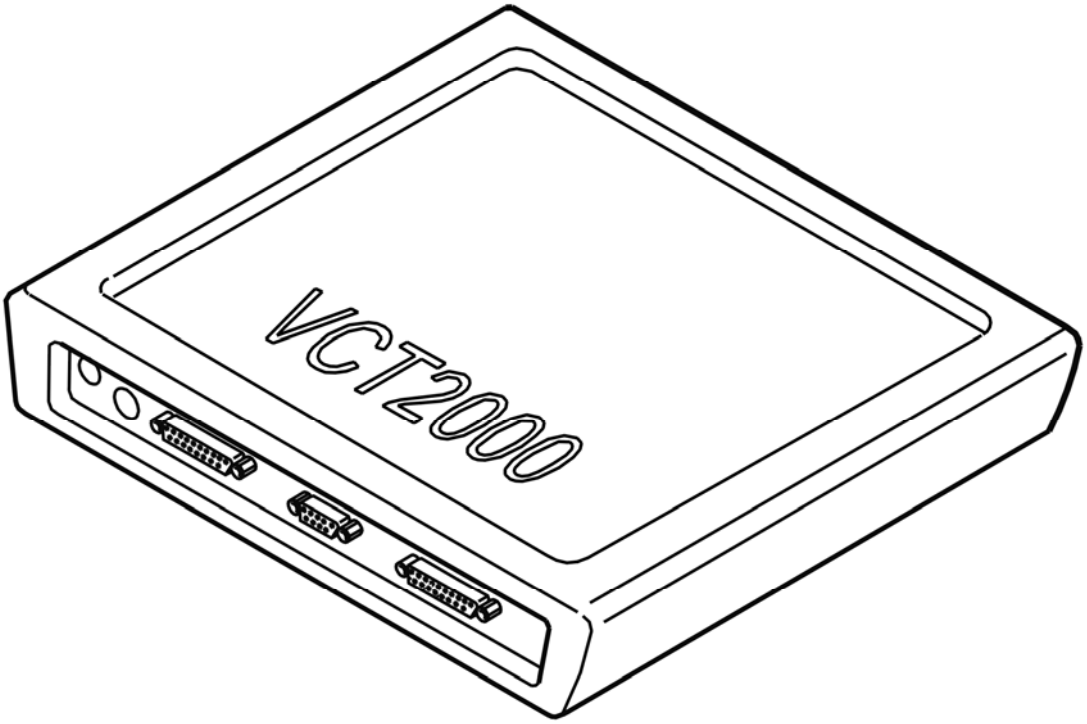

Fig. 278: Identifying VCT2000 Diagnostic Tool Symbol In VIDA
Courtesy of VOLVO CARS CORPORATION

Does the combustion fan function?

- **YES**

  Refer to **INTERMITTENT FAULT**

- **NO**

  Refer to **CHECKING THE CONNECTORS**

CHECKING THE CONNECTORS

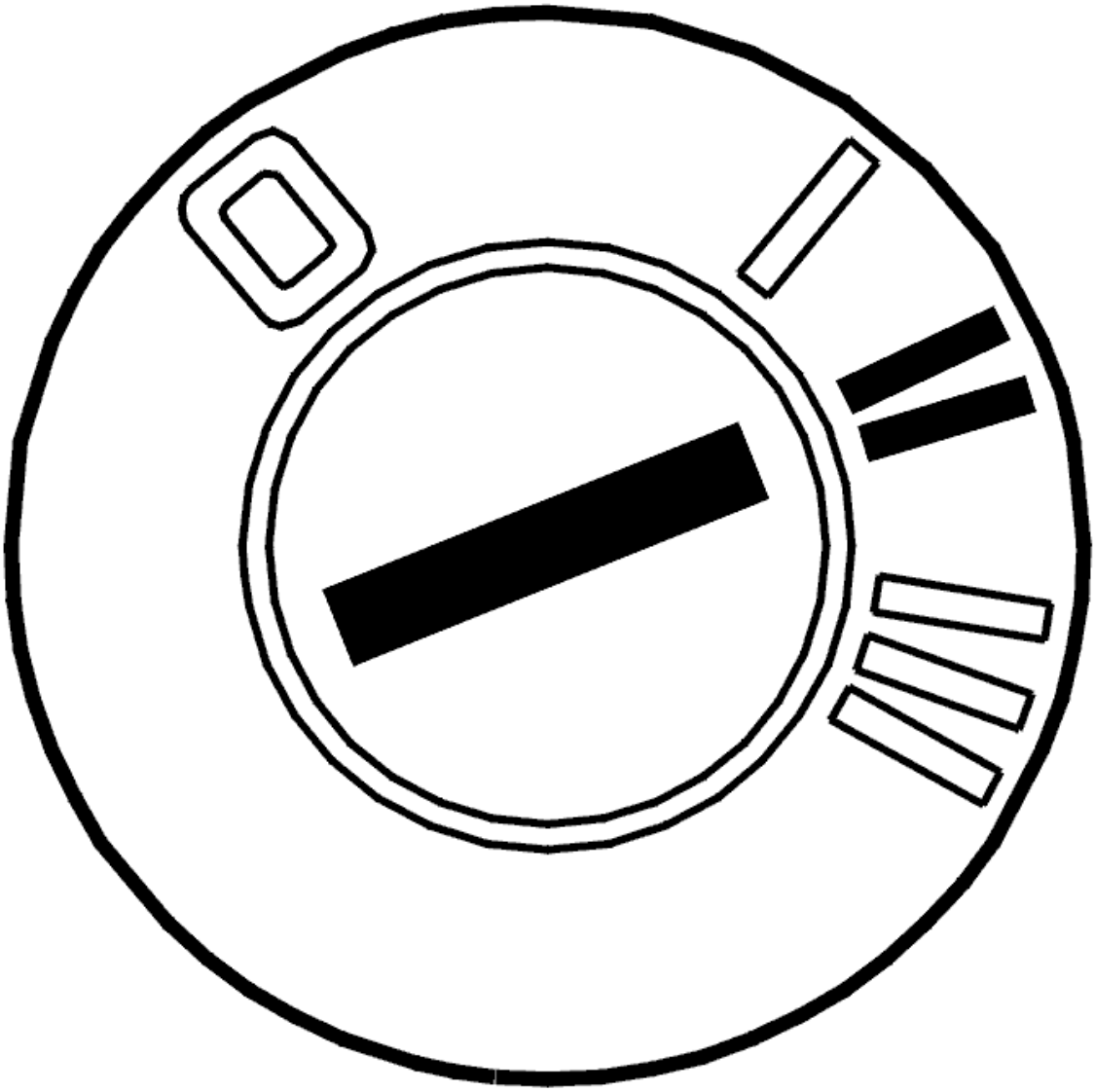

Fig. 279: Identifying Ignition ON
Courtesy of VOLVO CARS CORPORATION

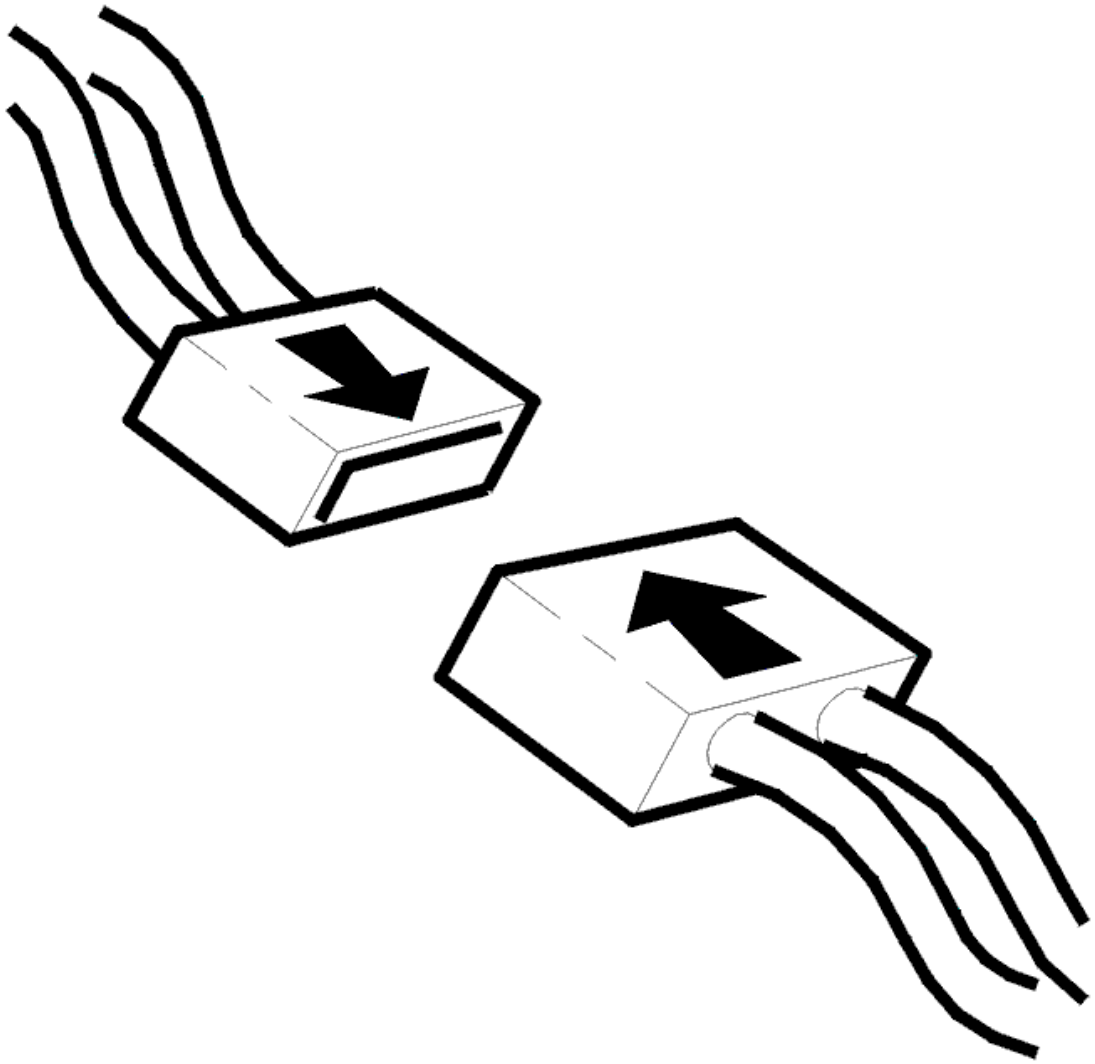

Fig. 280: Connecting Connector
Courtesy of VOLVO CARS CORPORATION

- Ignition off
- Check the electrical terminals on the combustion fan and the control module connector. Check for contact resistance and oxidation and remedy.

  Check for damage carefully

- Reinstall the components, reconnect the connectors etc.
- Ignition on
- Activate the combustion fan.

  Listen for a buzzing sound which indicates that the combustion fan is running.

If the combustion fan now operates, the cause of the fault was loose connections in the connectors.

Other information:

- To access the control module or connect the breakout box, see **CONNECTING THE BREAKOUT BOX**
- To access the combustion fan, see **FUEL INJECTION NOZZLE / FAN MOTOR / PRESSURE EQUALIZER, REPLACING**
- see **CHECKING WIRING AND TERMINALS** .

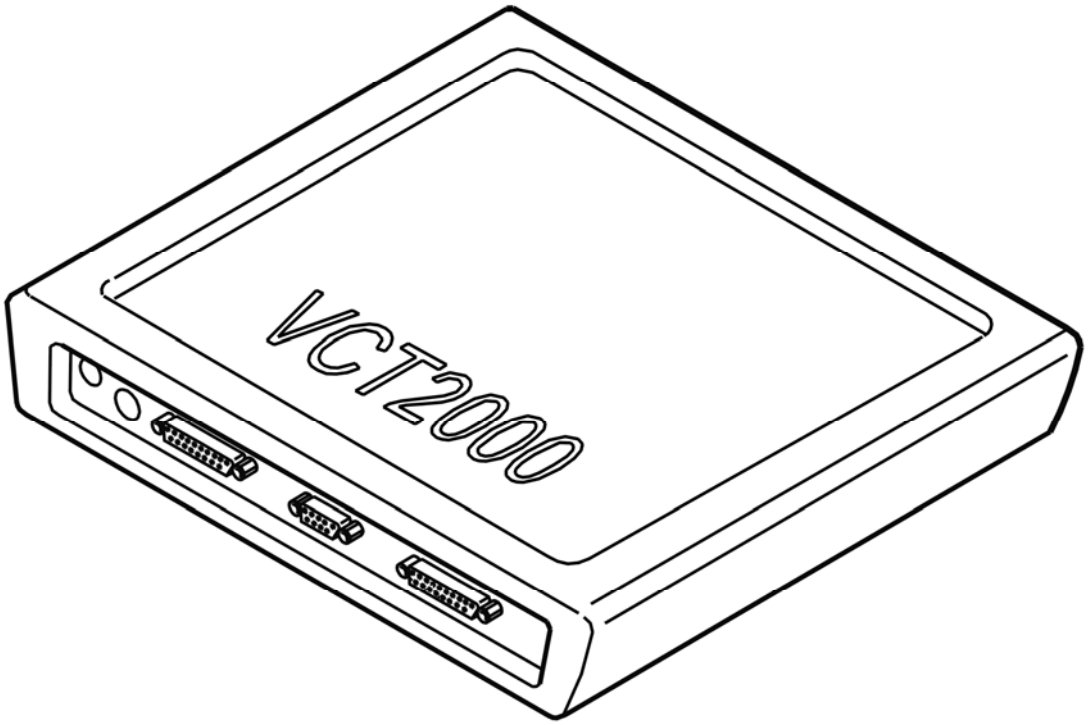

Fig. 281: Identifying VCT2000 Diagnostic Tool Symbol In VIDA
Courtesy of VOLVO CARS CORPORATION

Does the combustion fan function?

- **YES**

  OKAY: Troubleshooting has been completed.

- **NO**

  Refer to **CHECKING COMPONENTS AND WIRING**

CHECKING COMPONENTS AND WIRING

Check the cable between control module terminal #10 and the signal terminal for the combustion fan (the black lead from the fan). Check for an open-circuit. Check for a short-circuit to ground.

Check the cable between control module terminal #11 and the voltage terminal for the combustion fan (the red cable from the fan). Check for an open-circuit.

If no faults are found in the wiring, the combustion fan must be replaced. See **FUEL INJECTION NOZZLE / FAN MOTOR / PRESSURE EQUALIZER, REPLACING** .

NOTE: **Diagnostic trouble code (DTC) CEM-5F3A Water pump, signal and / or diagnostic trouble code (DTC) CEM-5F3F Fuel pump (FP), signal may be stored in the event of a fault in the power cable.**

Remedy as necessary.

Other information:

- To access the control module or connect the breakout box, see **CONNECTING THE BREAKOUT BOX**
- For other values, see **SIGNAL SPECIFICATION**
- see **CHECKING WIRING AND TERMINALS** .

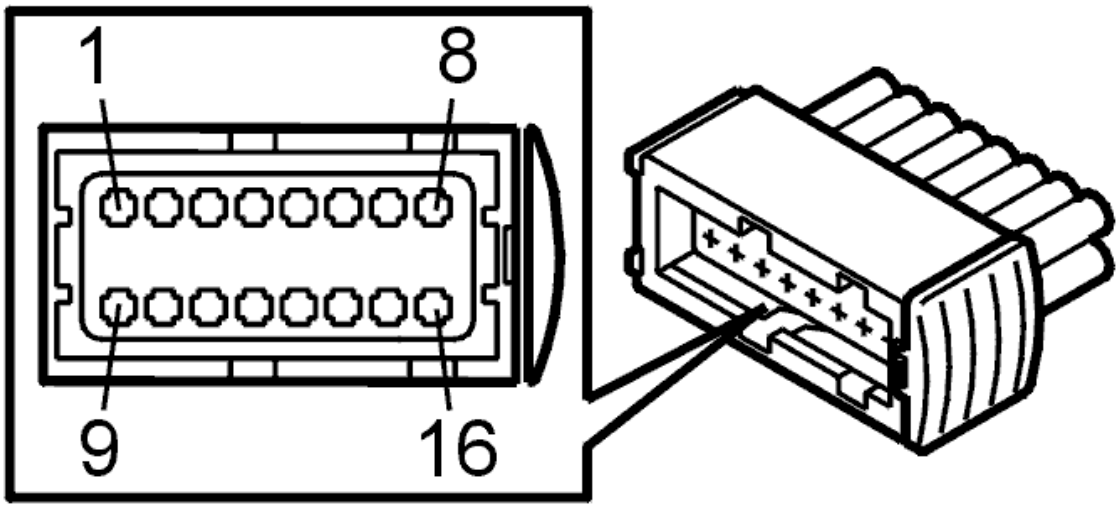

Fig. 282: Identifying Connector Terminals
Courtesy of VOLVO CARS CORPORATION

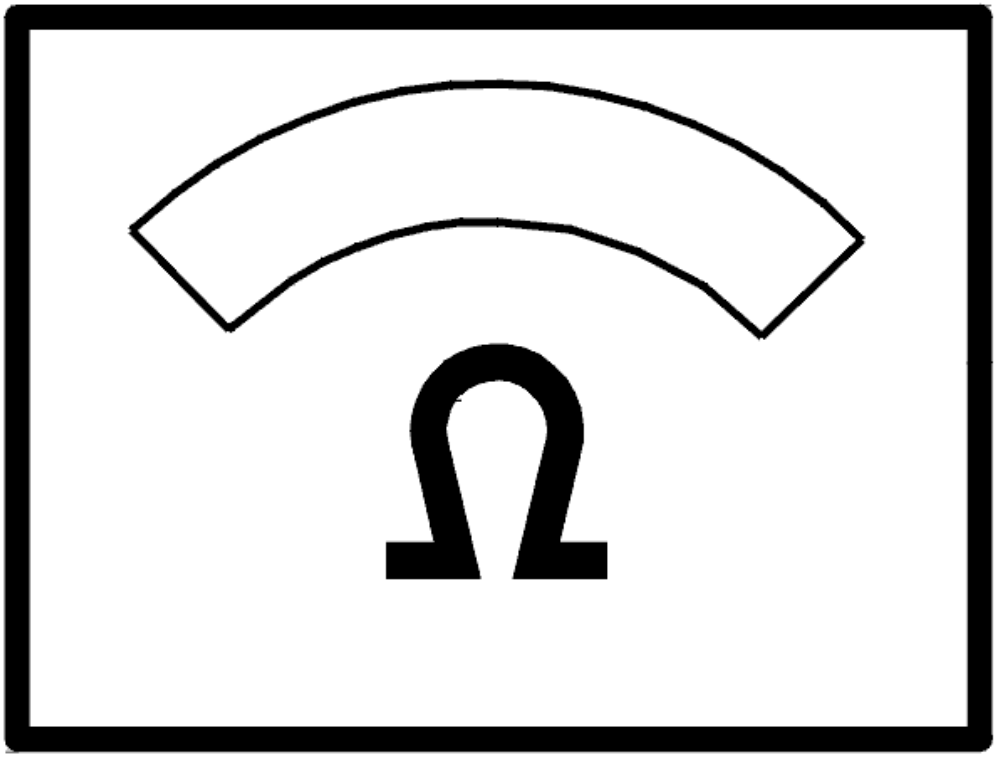

Fig. 283: Identifying Ohm Meter
Courtesy of VOLVO CARS CORPORATION

- **Continue**

  Refer to **VERIFICATION**

INTERMITTENT FAULT

Check the electrical terminals on the combustion fan and the control module connector. Check for contact resistance and oxidation.

Check the cable between control module terminal #10 and the signal terminal for the combustion fan (the black lead from the fan). Check for an intermittent open-circuit. Check for an intermittent short-circuit to ground.

Check the cable between control module terminal #11 and the voltage terminal for the combustion fan (the red

cable from the fan). Check for an intermittent open-circuit.

Remedy as necessary.

Other information:

- To access the control module or connect the breakout box, see **CONNECTING THE BREAKOUT BOX**
- To access the combustion fan, see **FUEL INJECTION NOZZLE / FAN MOTOR / PRESSURE EQUALIZER, REPLACING**
- For other values, see **SIGNAL SPECIFICATION**
- see **CHECKING WIRING AND TERMINALS** .

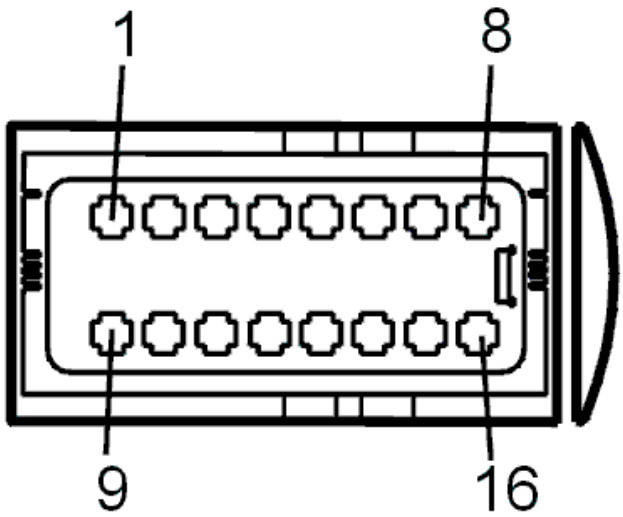

Fig. 284: Identifying Data Link Connector
Courtesy of VOLVO CARS CORPORATION

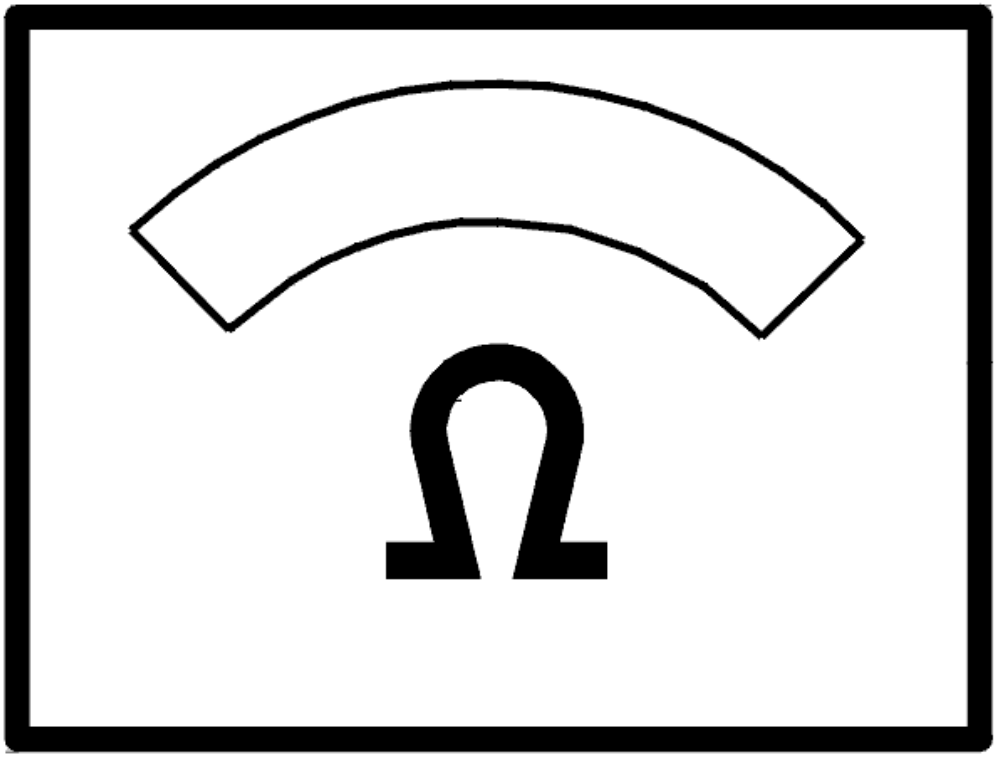

Fig. 285: Identifying Ohm Meter
Courtesy of VOLVO CARS CORPORATION

- **Continue**

  Refer to **INFORMATION**

  OKAY: Troubleshooting has been completed.

VERIFICATION

VERIFICATION

HINT: After the repair it is necessary to check that the fault has been rectified.

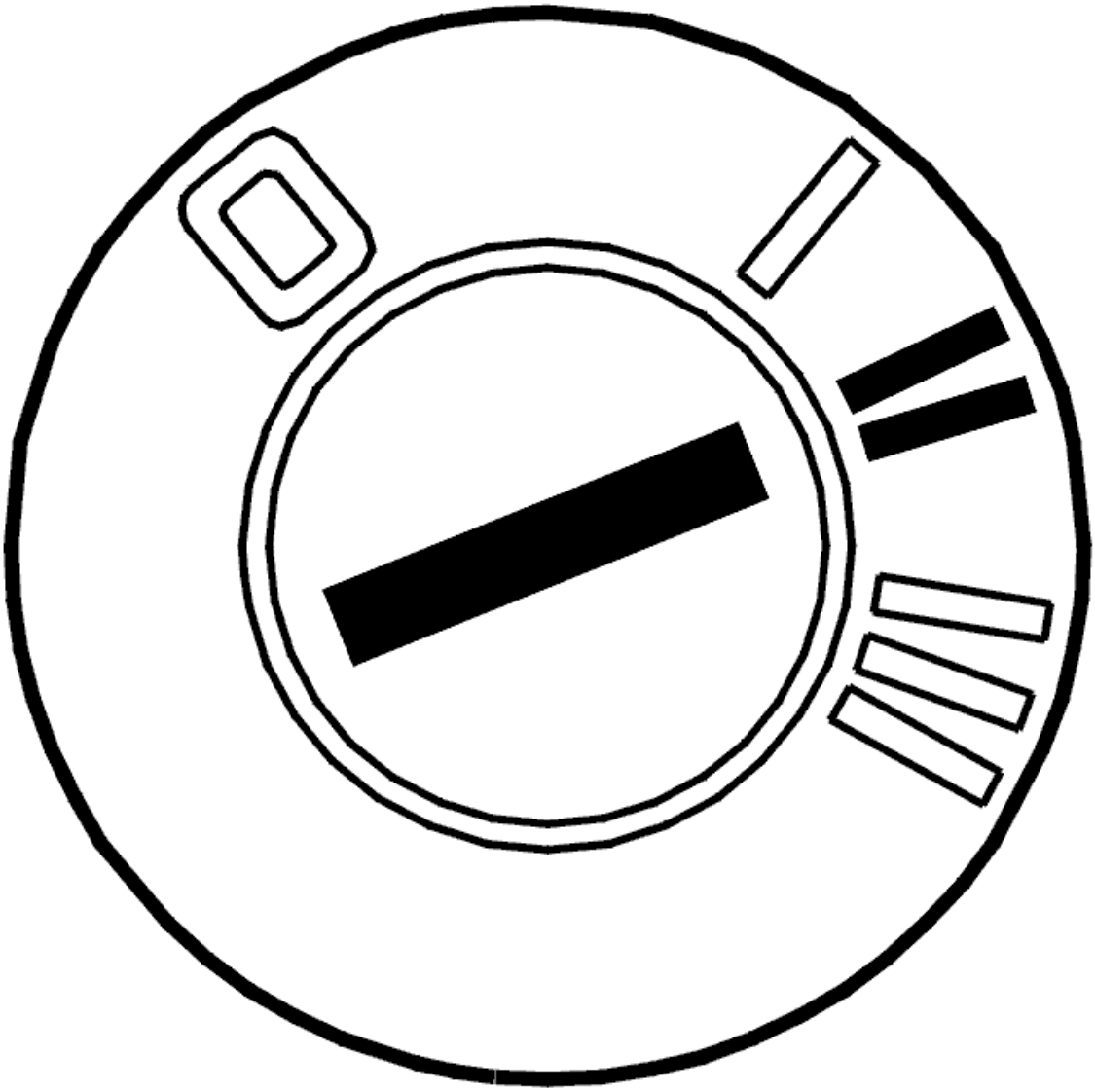

Fig. 286: Identifying Ignition ON
Courtesy of VOLVO CARS CORPORATION

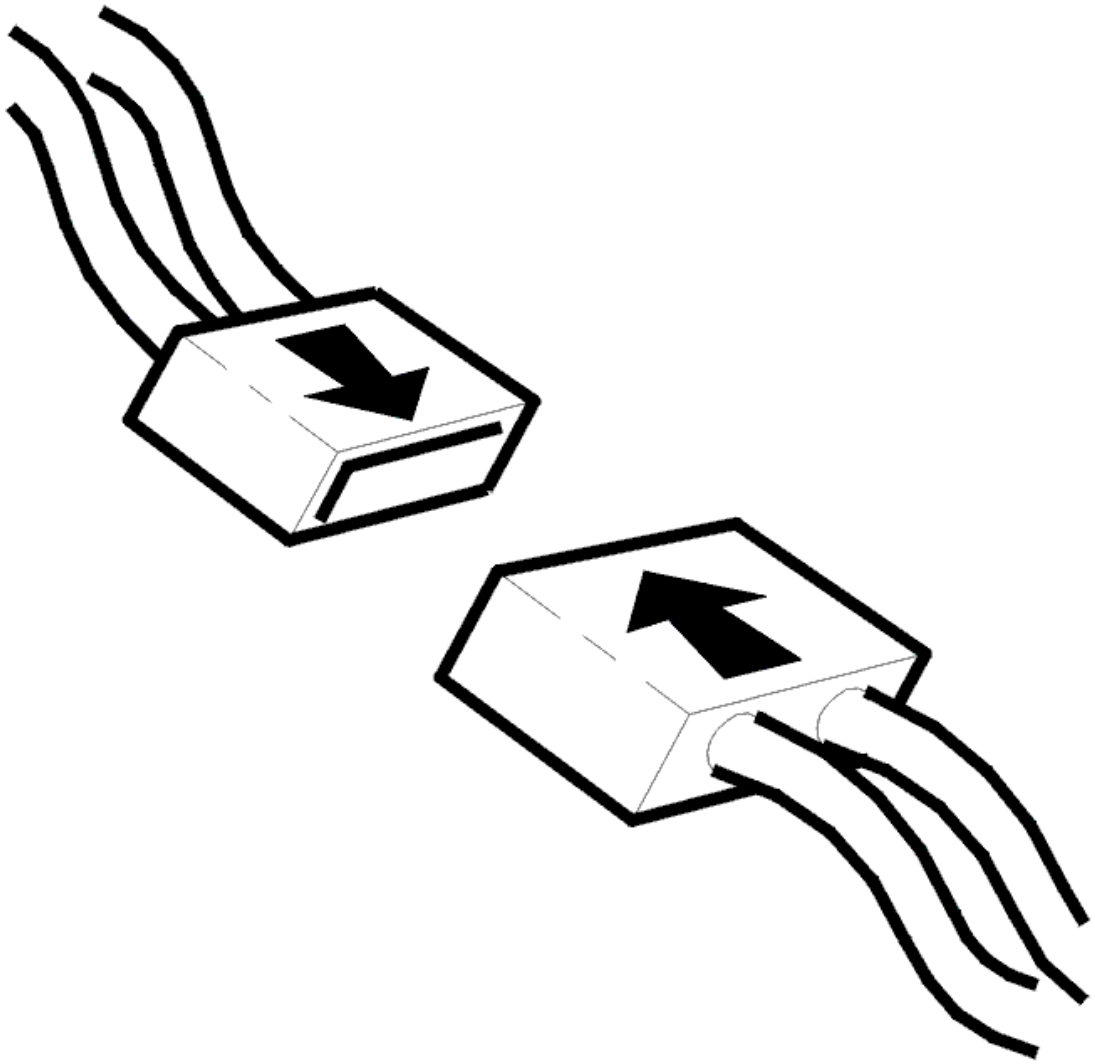

Fig. 287: Connecting Connector
Courtesy of VOLVO CARS CORPORATION

- Ignition off.
- Connect connector, install components etc.
- Ignition on.
- Activate the heater fan.

  Listen for a buzzing sound indicating that the heater fan is working.

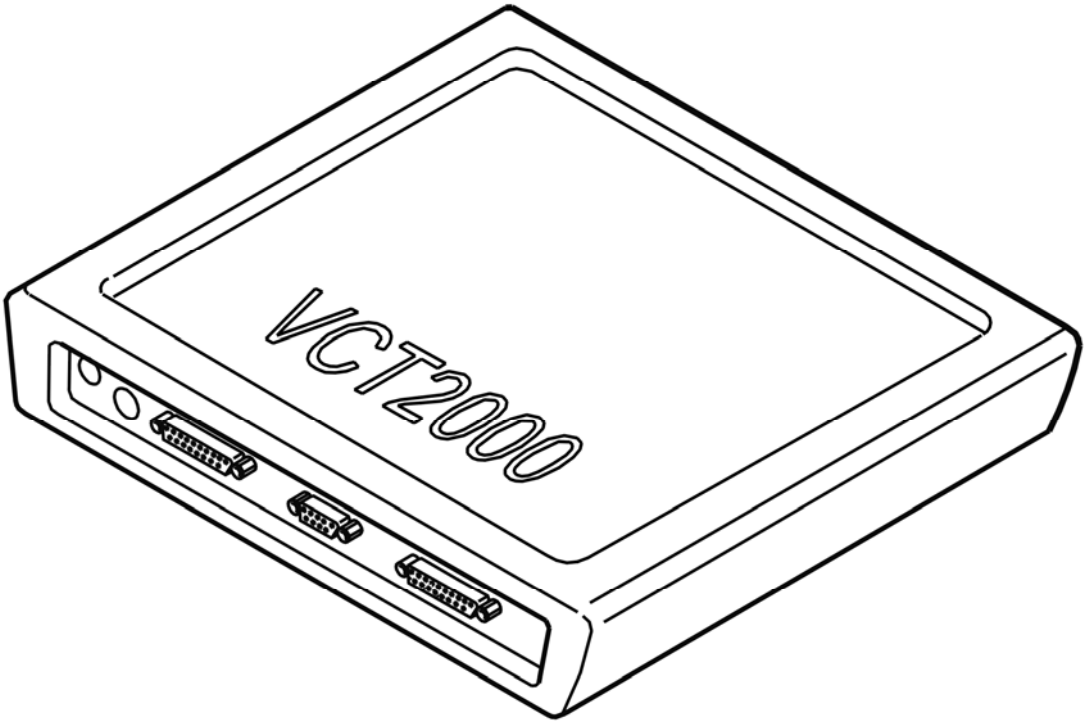

Fig. 288: Identifying VCT2000 Diagnostic Tool Symbol In VIDA
Courtesy of VOLVO CARS CORPORATION

Is the heater fan working?

- **YES**

  VERIFIED: Troubleshooting has been completed.

- **NO**

  Refer to **INFORMATION**

INFORMATION

FAULT-TRACING INFORMATION

The fault should have been detected and remedied. As this is not the case fault-tracing has failed.

Exit fault-tracing for this diagnostic trouble code (DTC) or make another attempt.

INFORMATION

FAULT-TRACING INFORMATION

If the fault is intermittent, do not verify fault-tracing if the fault does not recur.

It is possible to view the information again, or leave fault-tracing for this diagnostic trouble code (DTC).

CEM-5F3E: COMBUSTION FAN. FAULTY SIGNAL (2005-2012)

DIAGNOSTIC TROUBLE CODE (DTC) INFORMATION CEM-5F3E

Condition

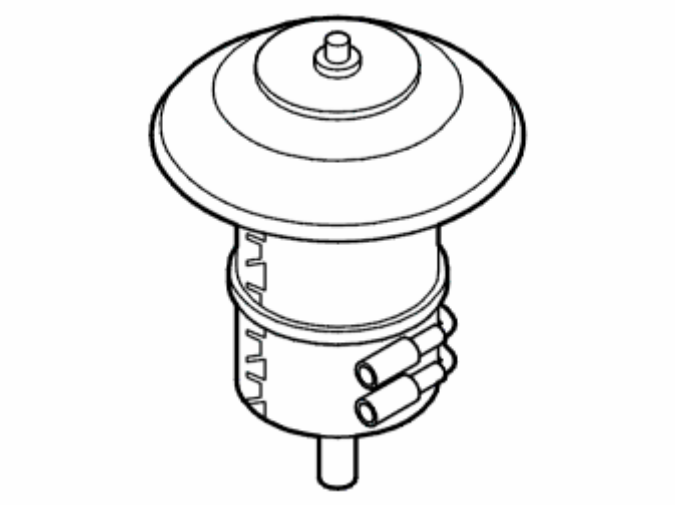

Fig. 289: Identifying Combustion Fan
Courtesy of VOLVO CARS CORPORATION

The central electronic module (CEM) checks the communication with the combustion preheater module (CPM).

The diagnostic trouble code (DTC) is stored if the central electronic module (CEM) registers that the combustion fan is running too slowly.

The diagnostic trouble code (DTC) can be diagnosed when the heater is activated.

Substitute Value

- None.

Possible Source

- Damaged combustion fan.
- Contact resistance in the control module or the combustion fan connectors

Fault symptom[s]

- Poor heating in the passenger compartment.

FAULTY SIGNAL

CHECKING THE FUNCTION OF THE WATER PUMP

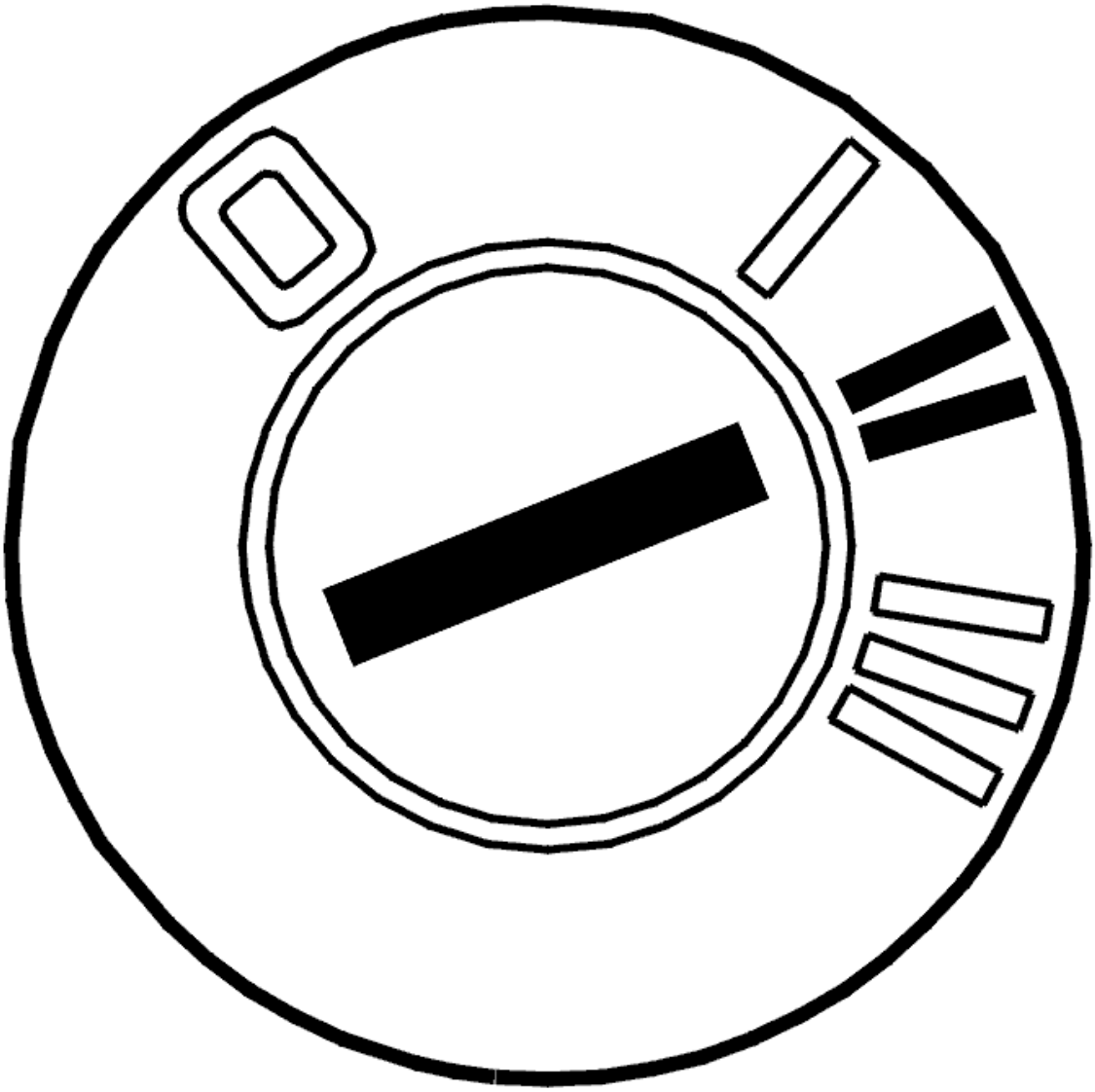

Fig. 290: Identifying Ignition ON
Courtesy of VOLVO CARS CORPORATION

- Ignition on.
  - Activate the combustion fan.

Listen for a buzzing sound which indicates that the combustion fan is running.

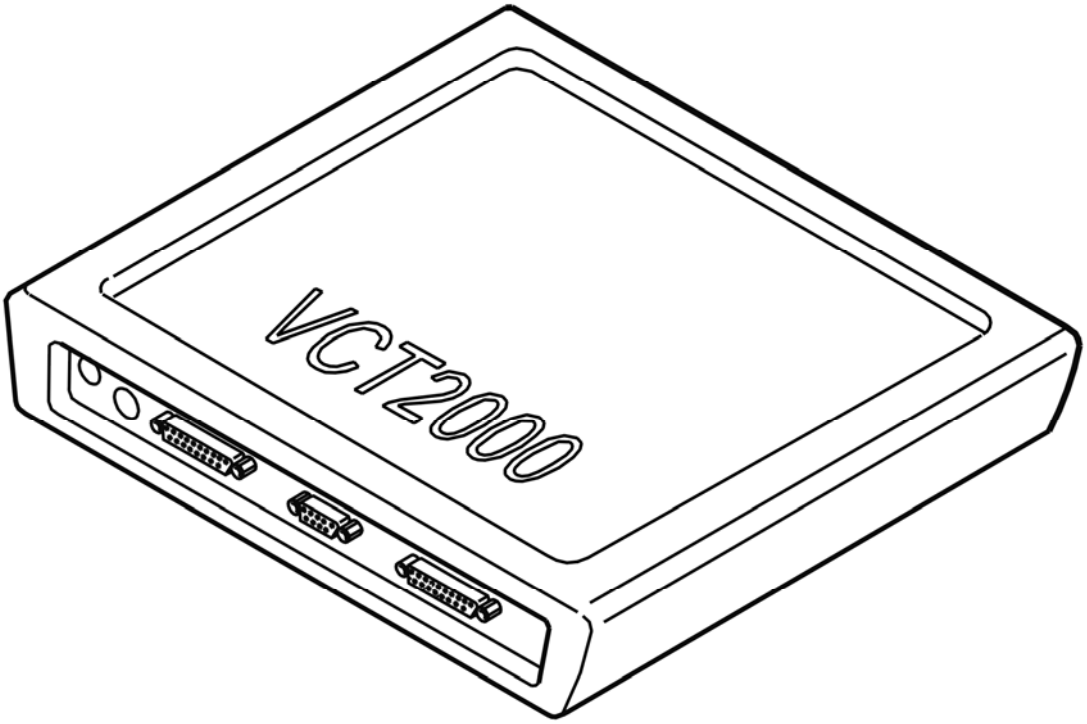

Fig. 291: Identifying VCT2000 Diagnostic Tool Symbol In VIDA
Courtesy of VOLVO CARS CORPORATION

Is the combustion fan working?

- **YES**

  Refer to **CHECKING COMPONENTS AND WIRING**

- **NO**

  Refer to **CHECKING COMPONENTS AND WIRING**

CHECKING COMPONENTS AND WIRING

Check the electrical terminals for the combustion fan and the combustion preheater module (CPM) connector. Check for contact resistance and oxidation.

- Reinstall the components, reconnect the connectors etc.
- Ignition on
- Activate the combustion fan.

Listen for a buzzing sound which indicates that the combustion fan is running. If the combustion fan now

operates, the cause of the fault was loose connections in the connectors.

The combustion fan must be replaced if no faults are found.

Remedy as necessary.

Other information

- see **CONNECTING THE BREAKOUT BOX**
- see **SIGNAL SPECIFICATION**
- see **FUEL INJECTION NOZZLE / FAN MOTOR / PRESSURE EQUALIZER, REPLACING**
- see **CHECKING WIRING AND TERMINALS**

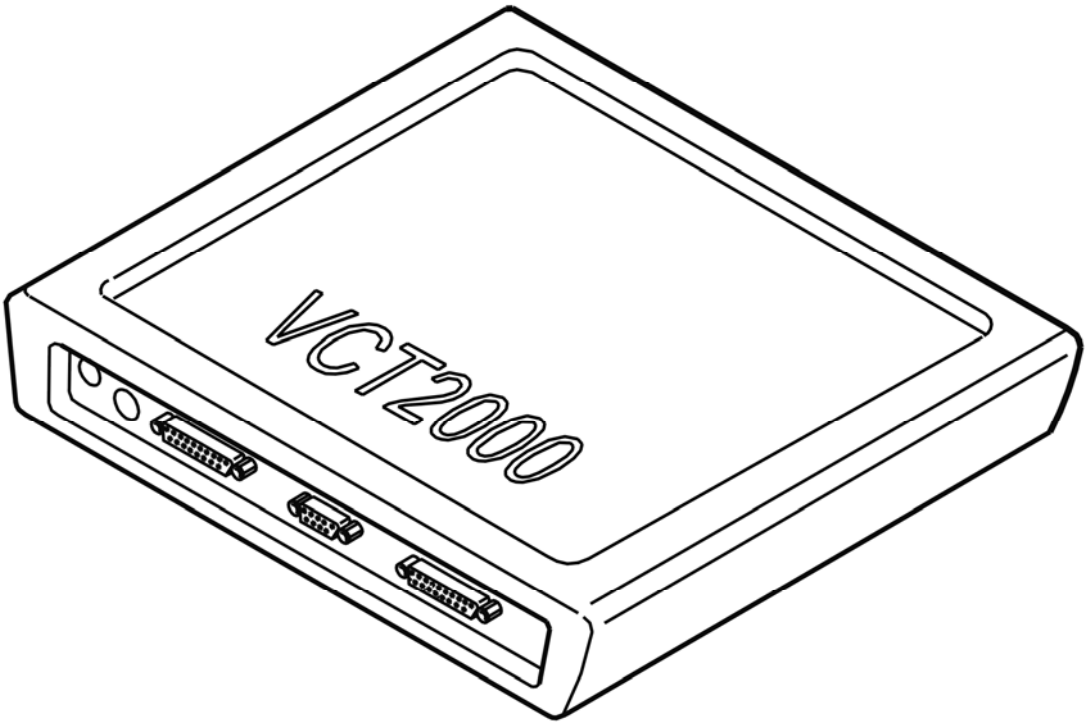

Fig. 292: Identifying VCT2000 Diagnostic Tool Symbol In VIDA
Courtesy of VOLVO CARS CORPORATION

- **Continue**

  Refer to **VERIFICATION**

CHECKING COMPONENTS AND WIRING

Check the electrical terminals for the combustion fan and the combustion preheater module (CPM) connector.

Check for contact resistance and oxidation.

Remedy as necessary.

Other information

- see **CONNECTING THE BREAKOUT BOX**
- To access or replace the combustion fan, see: **FUEL INJECTION NOZZLE / FAN MOTOR / PRESSURE EQUALIZER, REPLACING**
- see **SIGNAL SPECIFICATION**
- see **CHECKING WIRING AND TERMINALS**

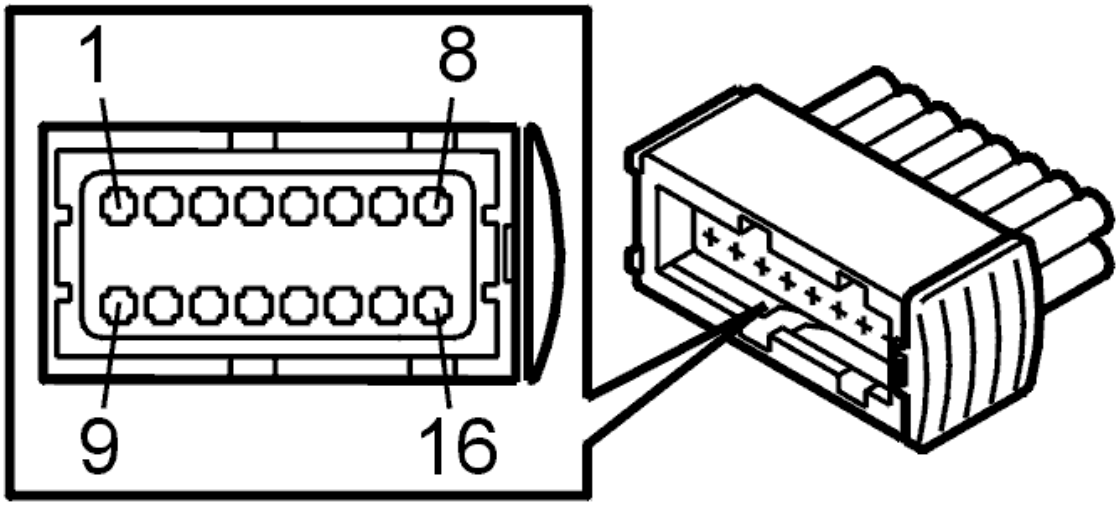

Fig. 293: Identifying Connector Terminals
Courtesy of VOLVO CARS CORPORATION

- **Continue**

  Refer to **VERIFICATION**

VERIFICATION

VERIFICATION

HINT: After carrying out the repair, check that the fault has been remedied.

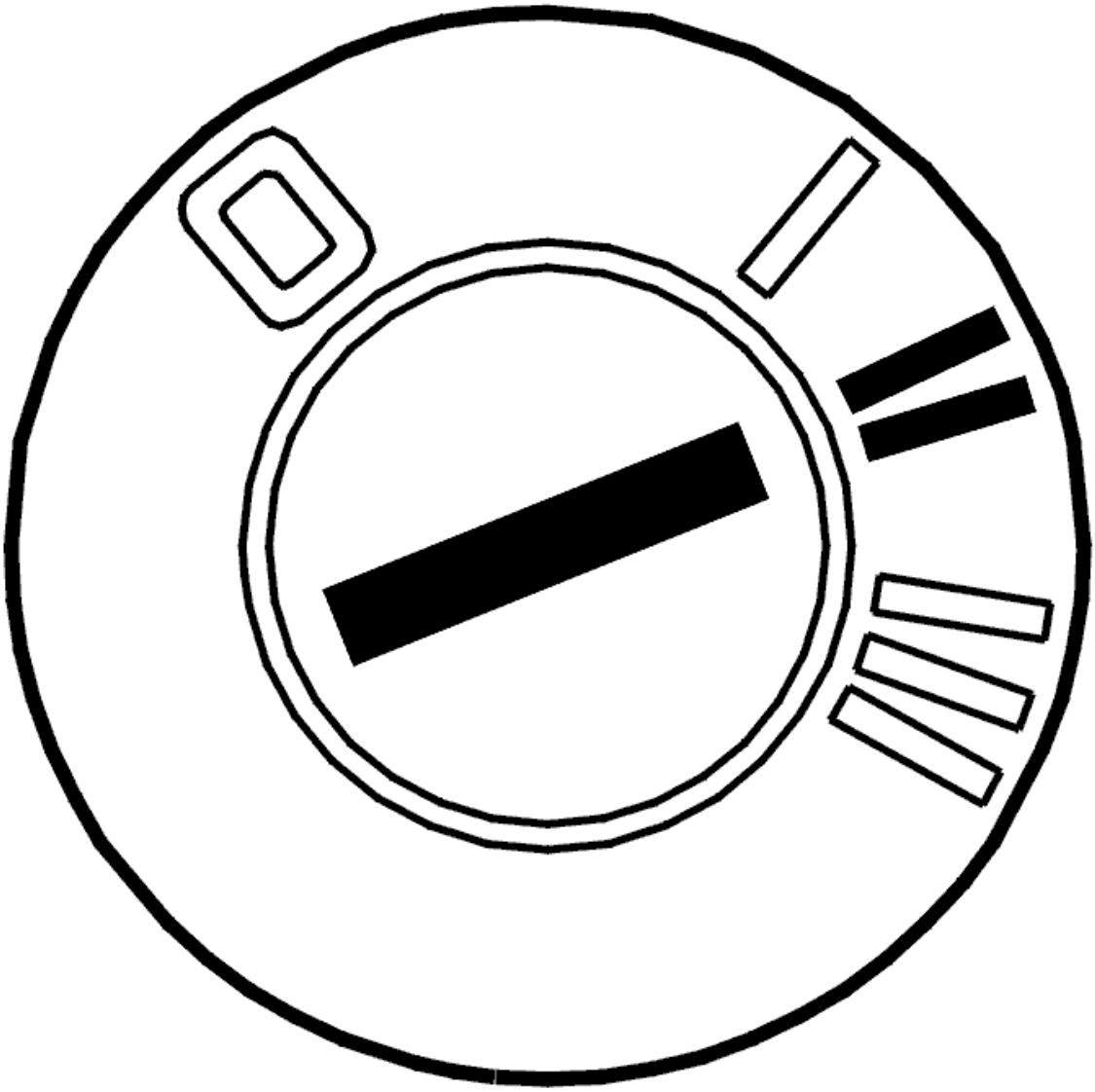

Fig. 294: Identifying Ignition ON
Courtesy of VOLVO CARS CORPORATION

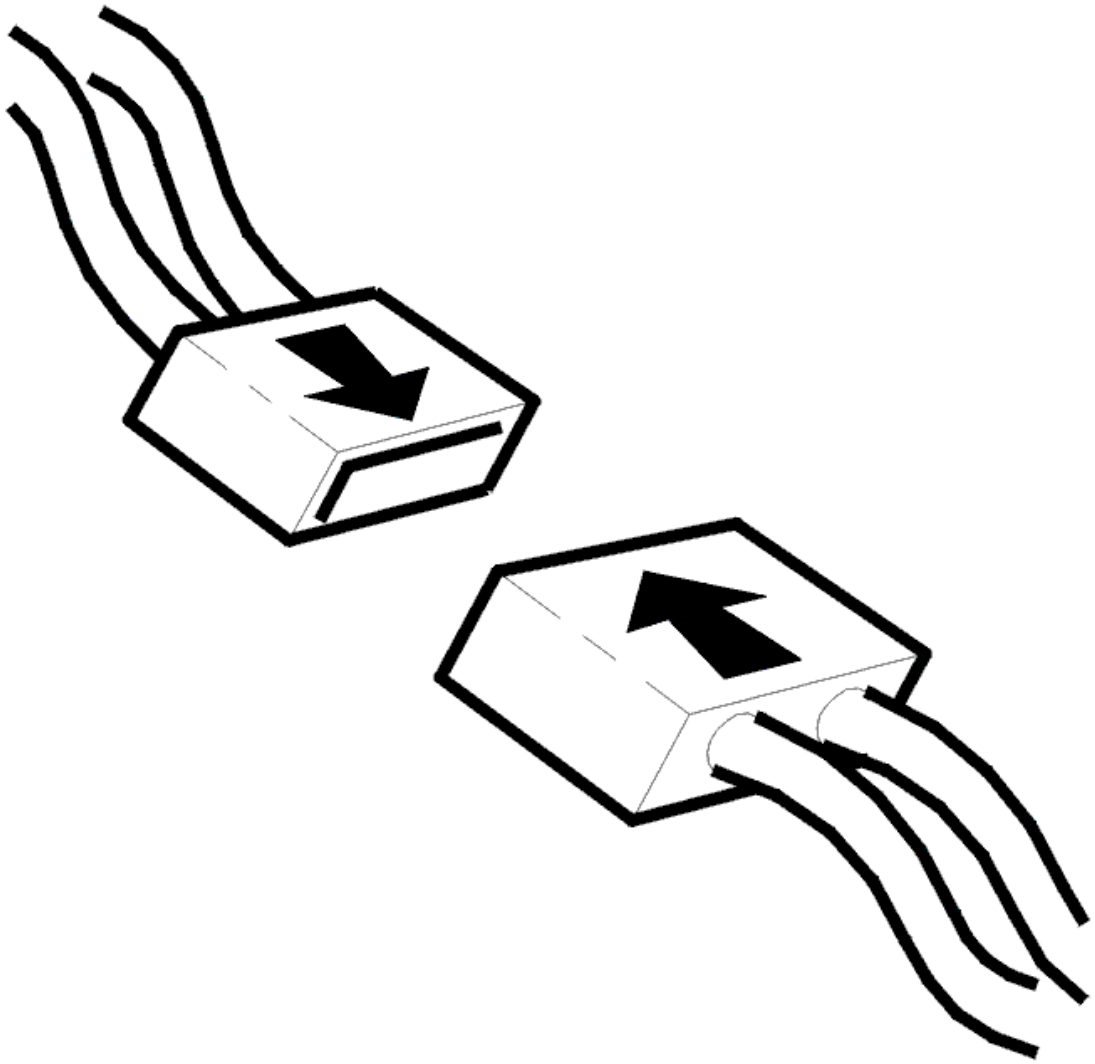

Fig. 295: Connecting Connector
Courtesy of VOLVO CARS CORPORATION

- Ignition off
- Reinstall the connectors, components etc.
- Ignition on
- Activate the combustion fan.

  Listen for a buzzing sound which indicates that the combustion fan is running.

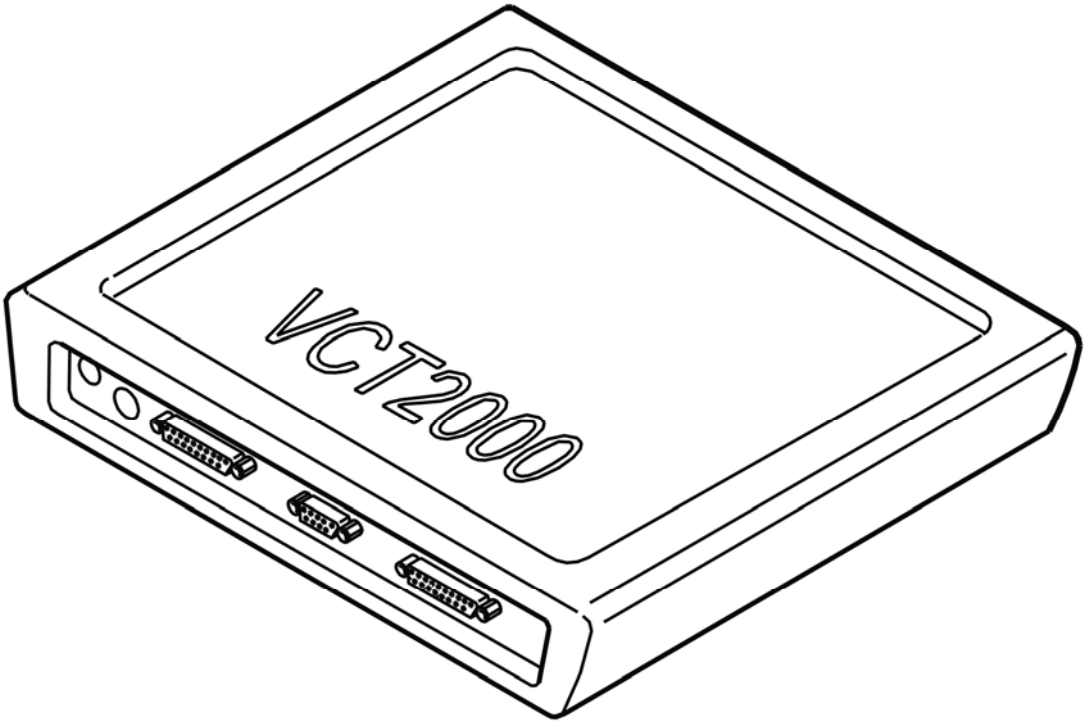

Fig. 296: Identifying VCT2000 Diagnostic Tool Symbol In VIDA
Courtesy of VOLVO CARS CORPORATION

Is the combustion fan working?

- **YES**

  VERIFIED: Troubleshooting has been completed.

- **NO**

  Refer to **INFORMATION**

INFORMATION

FAULT-TRACING INFORMATION

The fault should have been detected and remedied. As this is not the case fault-tracing has failed.

Exit fault-tracing for this diagnostic trouble code (DTC) or make another attempt.

CEM-5F3E: HEATER FAN. SIGNAL FAULTY (2003-2004)

DIAGNOSTIC TROUBLE CODE INFORMATION

Condition

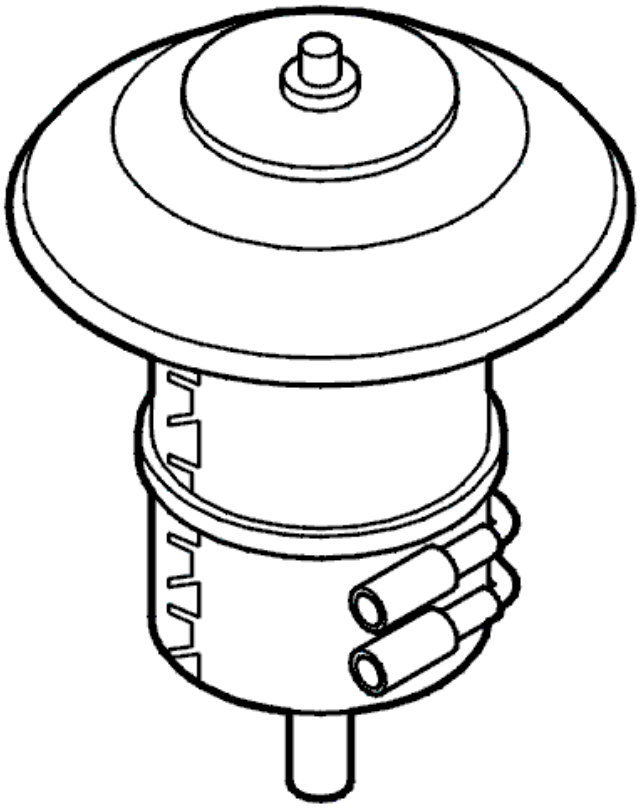

Fig. 297: Identifying Combustion Fan Circuit
Courtesy of VOLVO CARS CORPORATION

If the control unit receives a signal indicating that the heater fan is operating to slowly, it will interpret this as a fault, and trouble code CEM-5F3E will be set.

Substitute Value

- None.

Possible Source

- Defective heater fan.
- Contact resistance in control unit or heater fan connector.

Fault symptom[s]

- Poor interior heating.

FAULTY SIGNAL

CHECKING THE FUNCTION OF THE COMBUSTION FAN

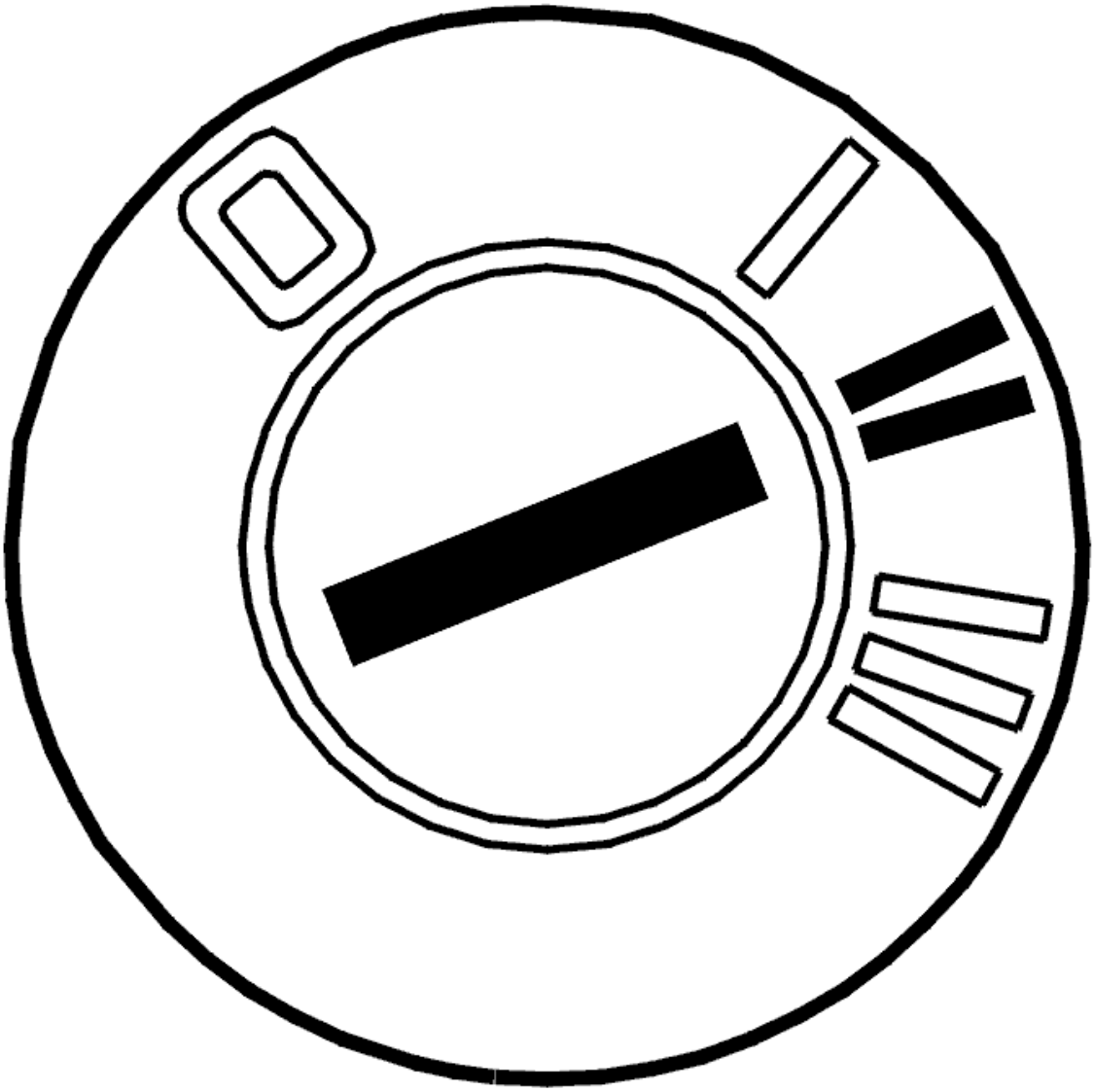

Fig. 298: Identifying Ignition ON
Courtesy of VOLVO CARS CORPORATION

- Ignition on
- Activate the combustion fan.

  Listen for a buzzing sound which indicates that the combustion fan is running.

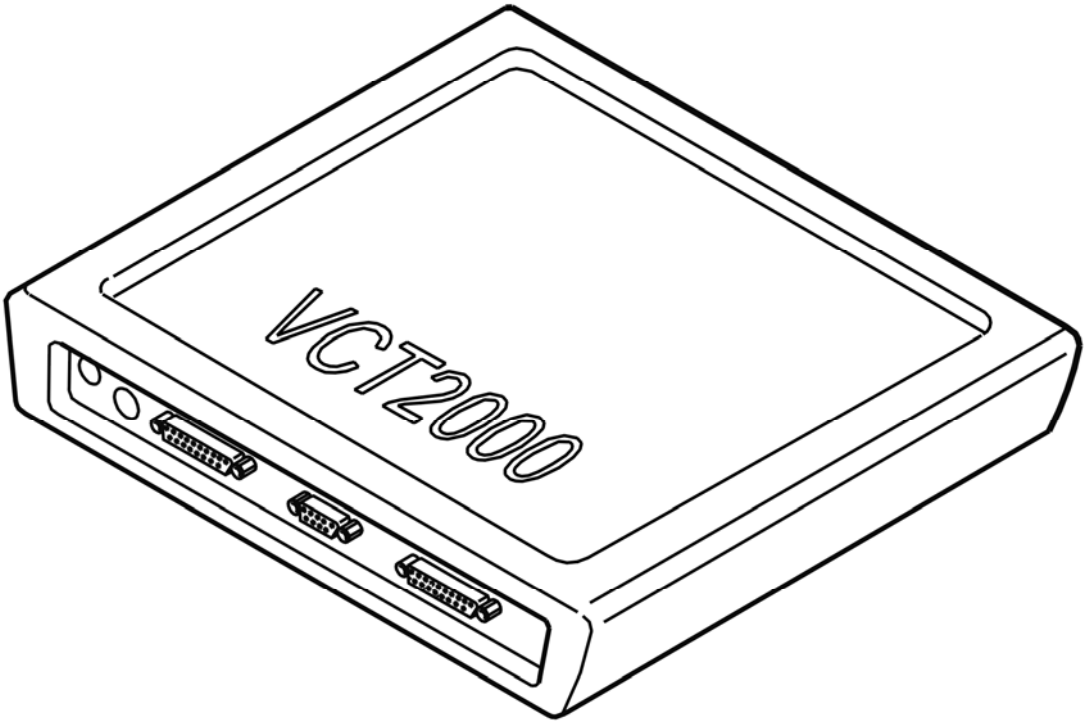

Fig. 299: Identifying VCT2000 Diagnostic Tool Symbol In VIDA
Courtesy of VOLVO CARS CORPORATION

Does the combustion fan function?

- **YES**

  Refer to **INTERMITTENT FAULT**

- **NO**

  Refer to **CHECKING THE CONNECTORS**

CHECKING THE CONNECTORS

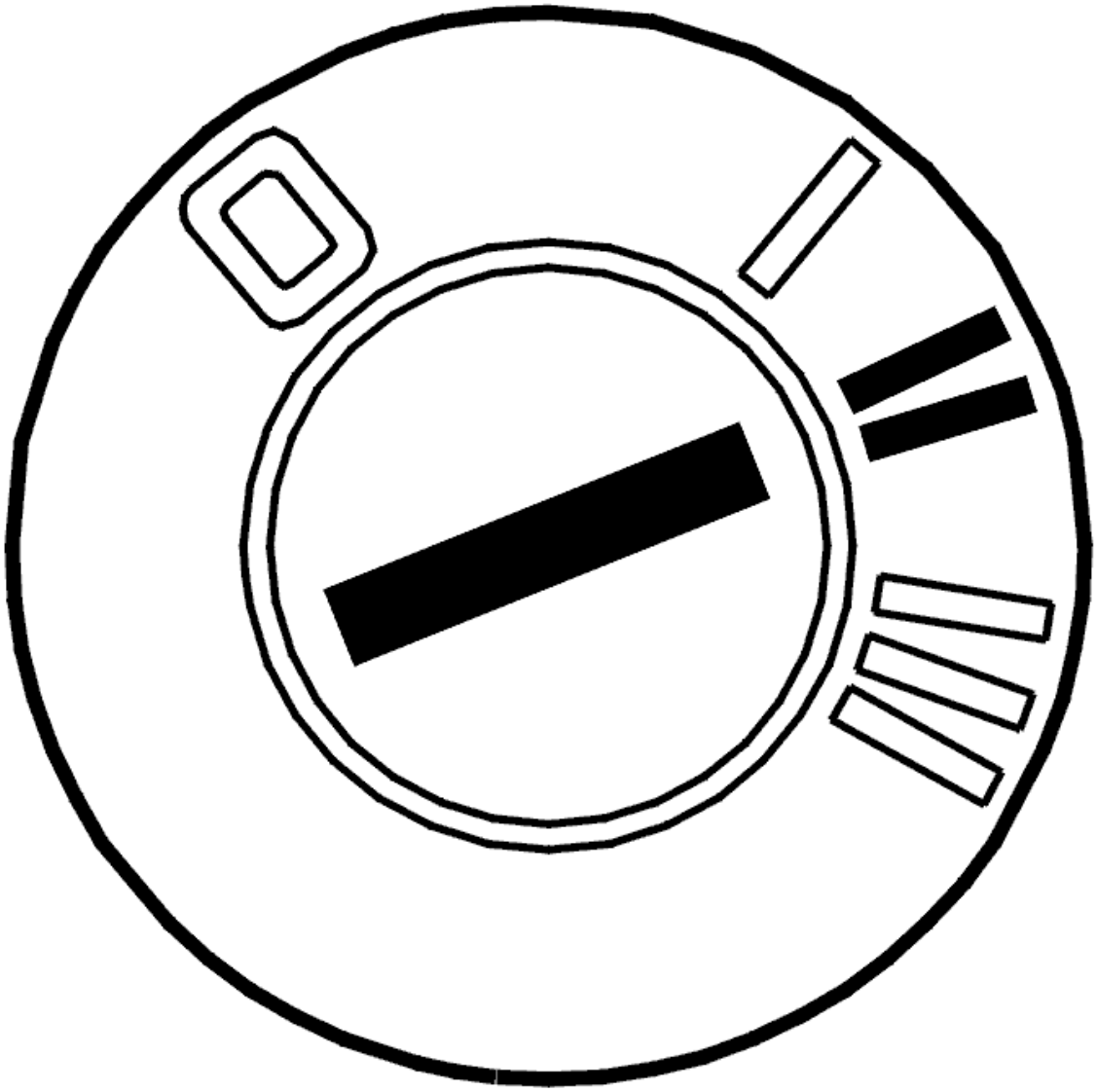

Fig. 300: Identifying Ignition ON
Courtesy of VOLVO CARS CORPORATION

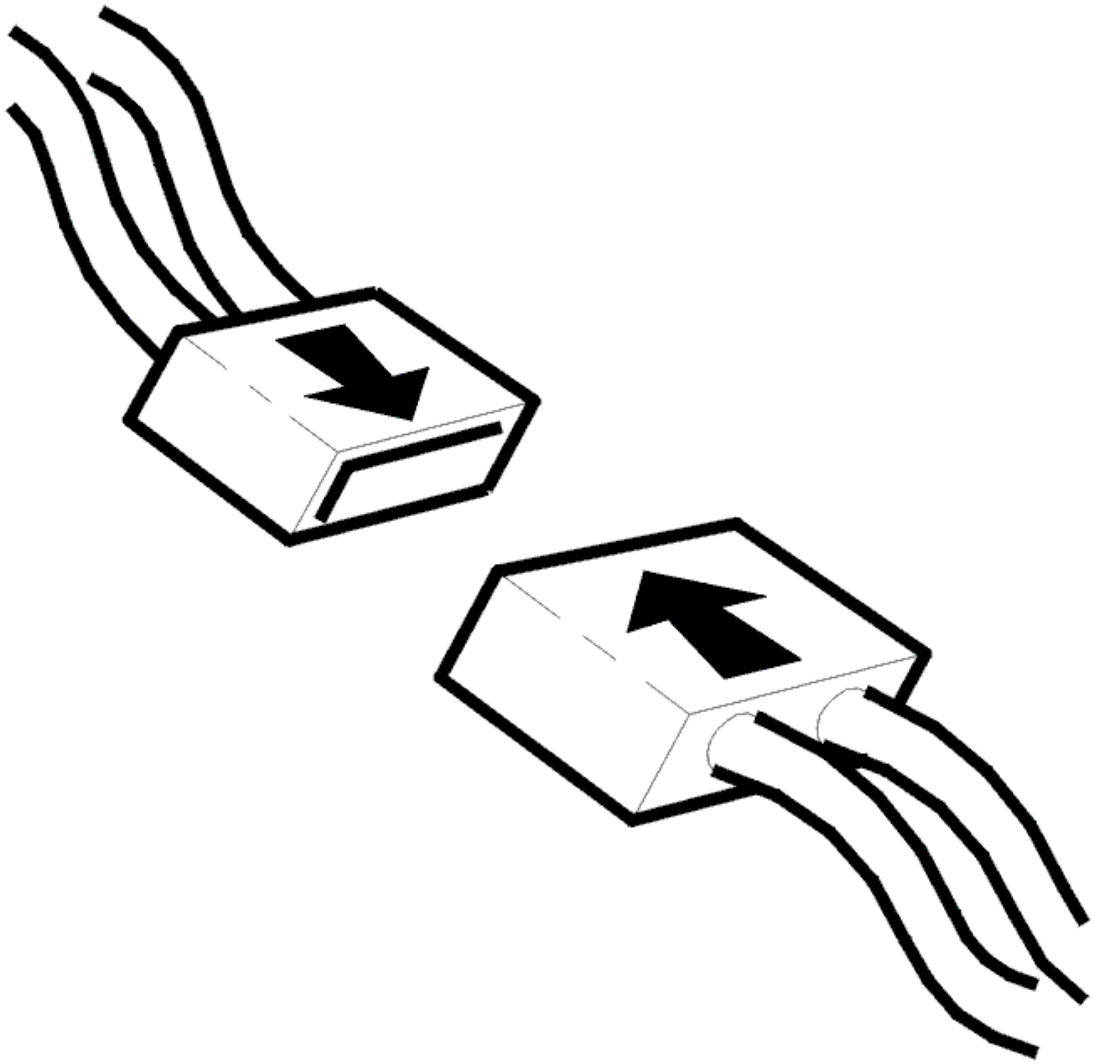

Fig. 301: Connecting Connector
Courtesy of VOLVO CARS CORPORATION

- Ignition off
- Check the electrical terminals on the combustion fan and the control module connector. Check for contact resistance and oxidation and remedy.

  Check for damage carefully

- Reinstall the components, reconnect the connectors etc.
- Ignition on
- Activate the combustion fan.

  Listen for a buzzing sound which indicates that the combustion fan is running.

If the combustion fan now operates, the cause of the fault was loose connections in the connectors.

Other information:

- To access the control module or connect the breakout box, see **CONNECTING THE BREAKOUT BOX**
- To access the combustion fan, see **FUEL INJECTION NOZZLE / FAN MOTOR / PRESSURE EQUALIZER, REPLACING**
- see **CHECKING WIRING AND TERMINALS** .

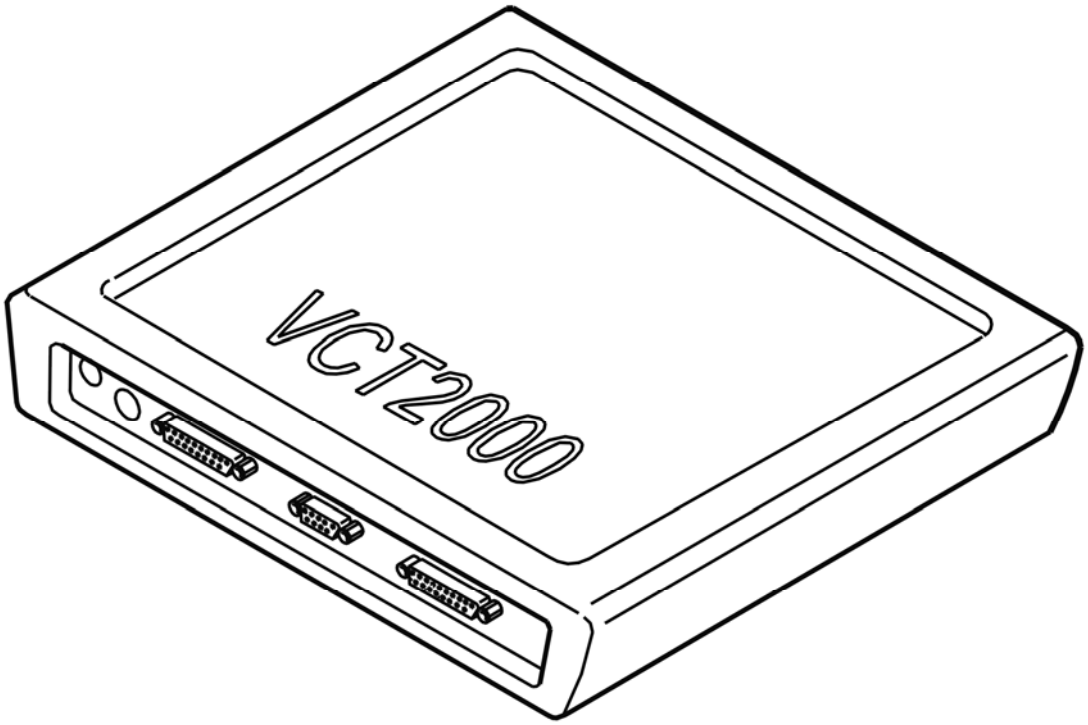

Fig. 302: Identifying VCT2000 Diagnostic Tool Symbol In VIDA
Courtesy of VOLVO CARS CORPORATION

Does the combustion fan function?

- **YES**

  OKAY: Troubleshooting has been completed.

- **NO**

  Refer to **REPLACING THE COMPONENT**

REPLACING THE COMPONENT

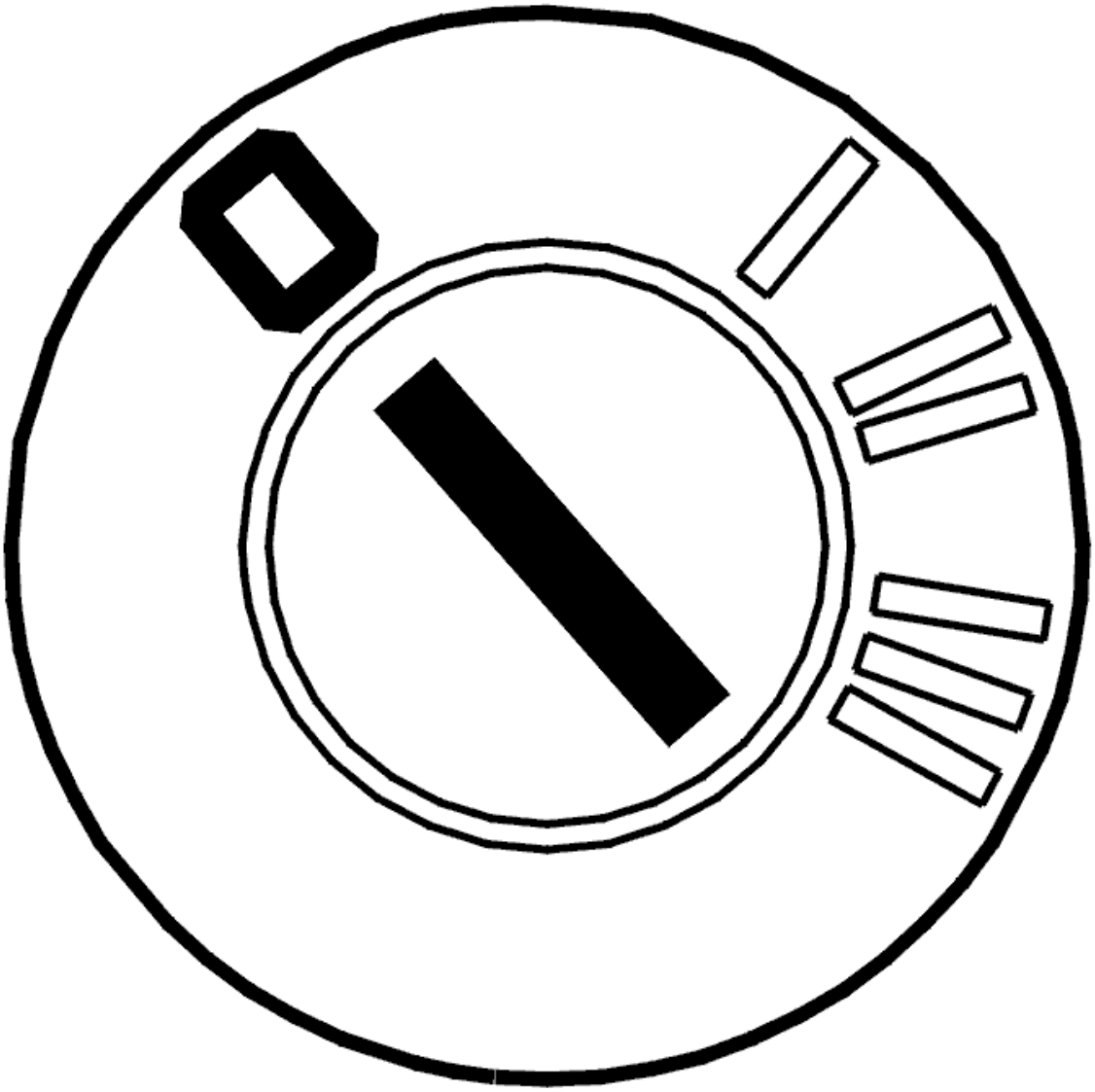

Fig. 303: Identifying Ignition OFF
Courtesy of VOLVO CARS CORPORATION

- Ignition off.

  Try a new combustion fan. See **FUEL INJECTION NOZZLE / FAN MOTOR / PRESSURE EQUALIZER, REPLACING** .

- **Continue**

  Refer to **VERIFICATION**

INTERMITTENT FAULT

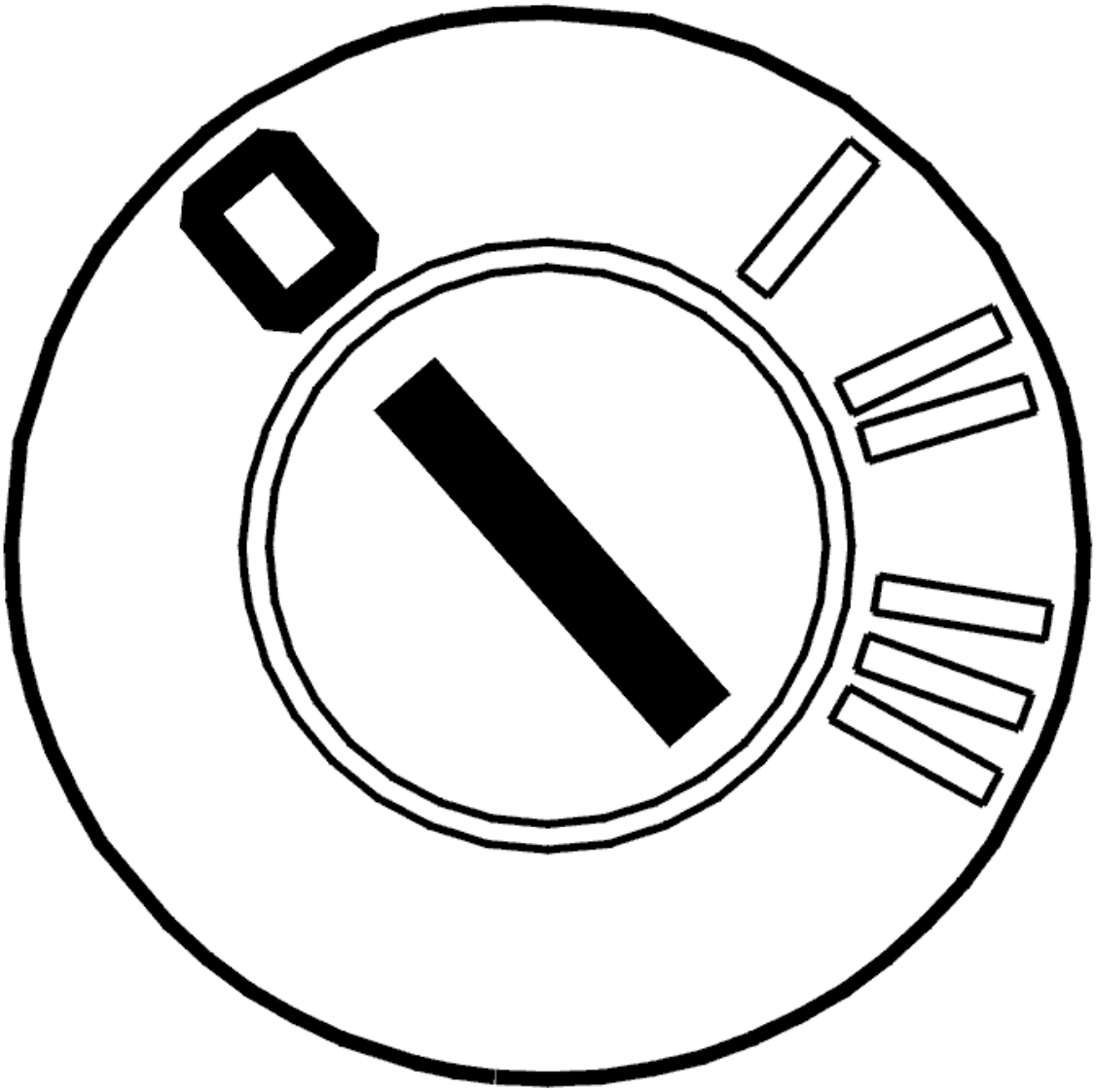

Fig. 304: Identifying Ignition OFF
Courtesy of VOLVO CARS CORPORATION

- Ignition off.

  Check the electrical terminals on the combustion fan and the control module connector. Check for contact resistance and oxidation.

  Other information:

  - To access the control module or connect the breakout box, see **CONNECTING THE BREAKOUT BOX**
  - To access the combustion fan, see **FUEL INJECTION NOZZLE / FAN MOTOR / PRESSURE EQUALIZER, REPLACING**
  - see **CHECKING WIRING AND TERMINALS** .

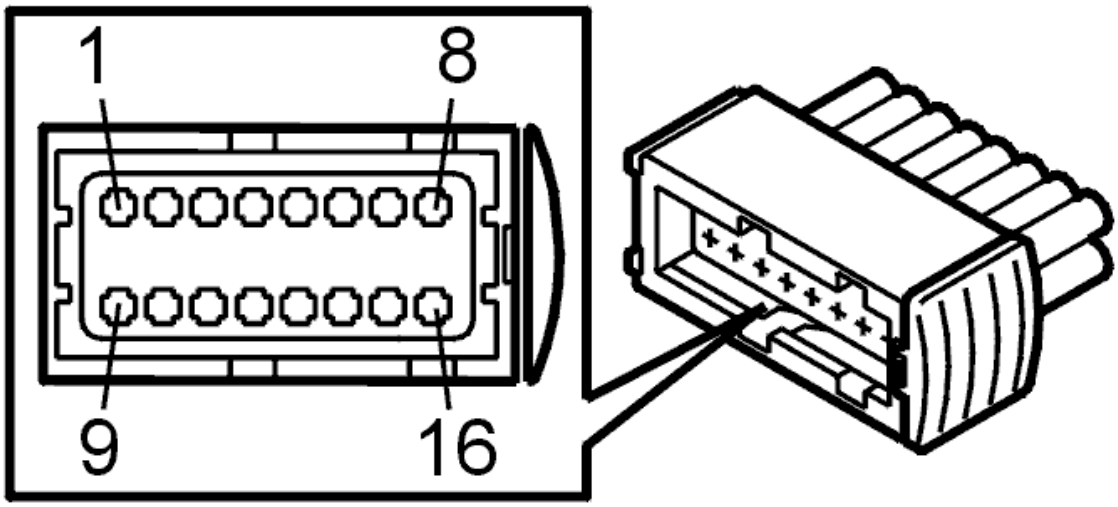

Fig. 305: Identifying Connector Terminals
Courtesy of VOLVO CARS CORPORATION

- **Continue**

  Refer to **INFORMATION**

  OKAY: Troubleshooting has been completed.

VERIFICATION

VERIFICATION

HINT: After the repair it is necessary to check that the fault has been rectified.

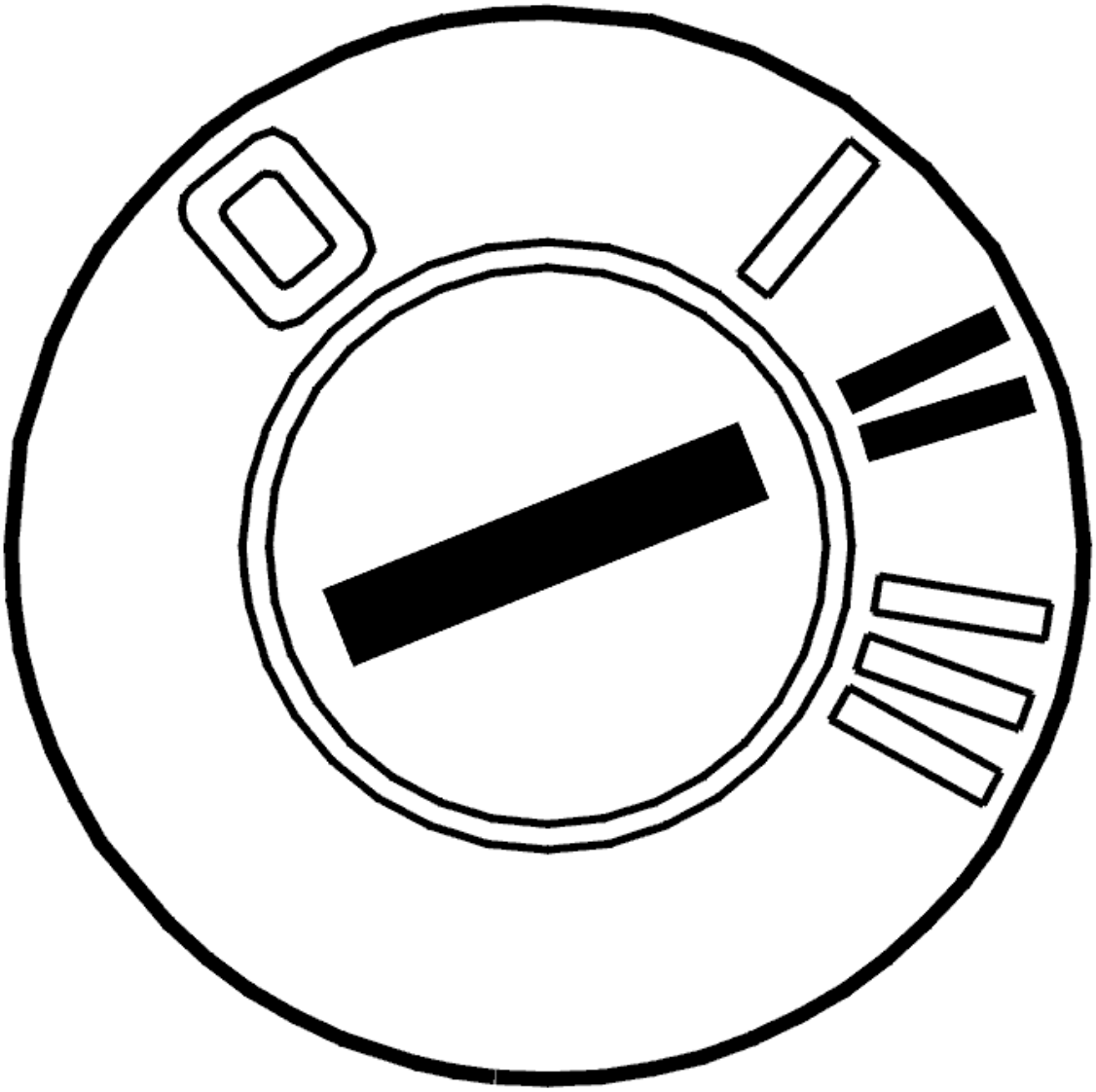

Fig. 306: Identifying Ignition ON
Courtesy of VOLVO CARS CORPORATION

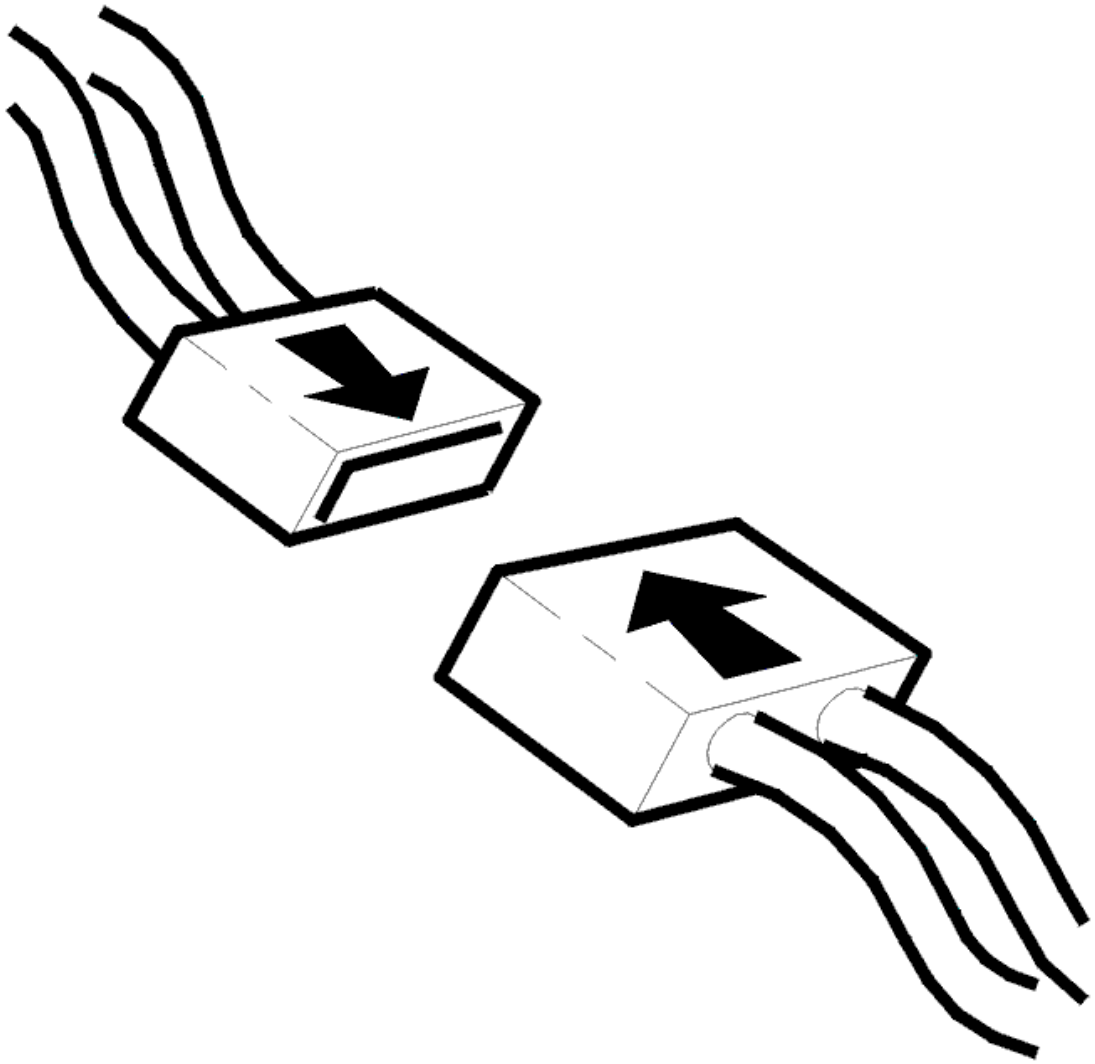

Fig. 307: Connecting Connector
Courtesy of VOLVO CARS CORPORATION

- Ignition off.
- Connect connector, install components etc.
- Ignition on.
- Activate the heater fan.

  Listen for a buzzing sound indicating that the heater fan is working.

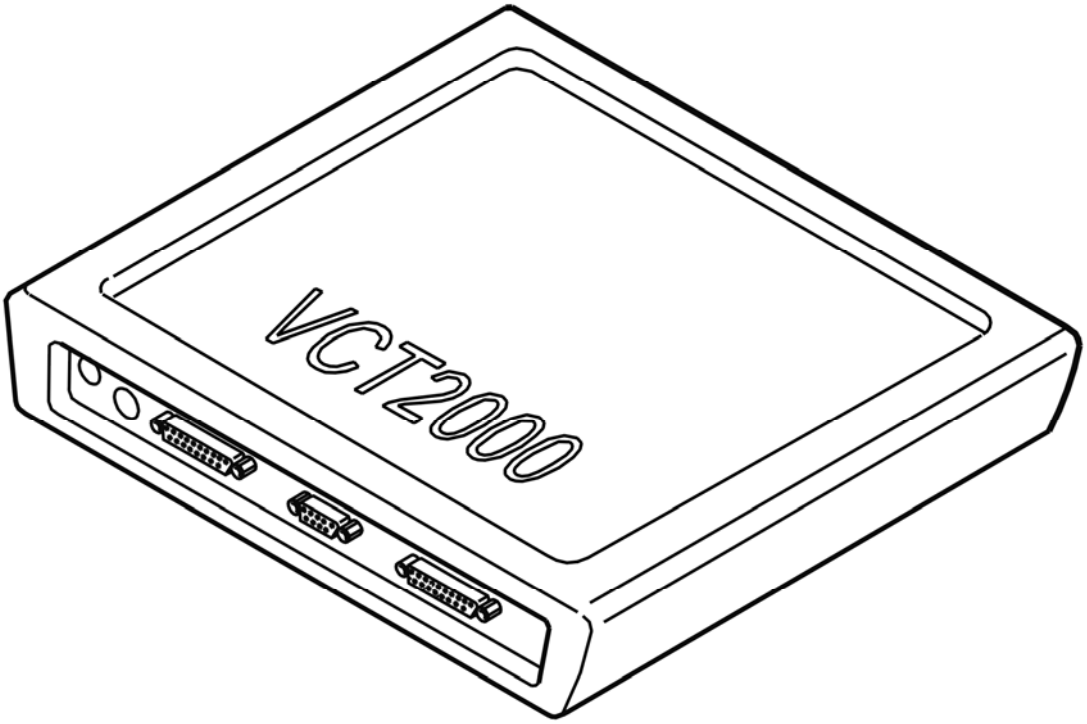

Fig. 308: Identifying VCT2000 Diagnostic Tool Symbol In VIDA
Courtesy of VOLVO CARS CORPORATION

Is the heater fan working?

- **YES**

  VERIFIED: Troubleshooting has been completed.

- **NO**

  Refer to **INFORMATION**

INFORMATION

FAULT-TRACING INFORMATION

The fault should have been detected and remedied. As this is not the case fault-tracing has failed.

Exit fault-tracing for this diagnostic trouble code (DTC) or make another attempt.

INFORMATION

FAULT-TRACING INFORMATION

If the fault is intermittent, do not verify fault-tracing if the fault does not recur.

It is possible to view the information again, or leave fault-tracing for this diagnostic trouble code (DTC).

CEM-5F3F: FUEL PUMP (FP). SIGNAL TOO HIGH (2005-2012)

DIAGNOSTIC TROUBLE CODE (DTC) INFORMATION CEM-5F3F

Condition

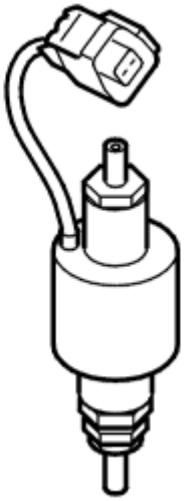

Fig. 309: Identifying Fuel Pump
Courtesy of VOLVO CARS CORPORATION

The central electronic module (CEM) checks the communication with the combustion preheater module (CPM).

The diagnostic trouble code (DTC) is stored if the central electronic module (CEM) registers that the signal in the circuit for the fuel pump (FP) is too high.

The diagnostic trouble code (DTC) can be diagnosed when the heater is activated.

Substitute Value

- None.

Possible Source

- Short-circuit to supply voltage in the signal cable
- Damaged fuel pump.

Fault symptom[s]

- Poor heating in the passenger compartment.

- Parking heater/Does not work

SIGNAL TOO HIGH

CHECKING THE FUNCTION OF THE FUEL PUMP (FP)

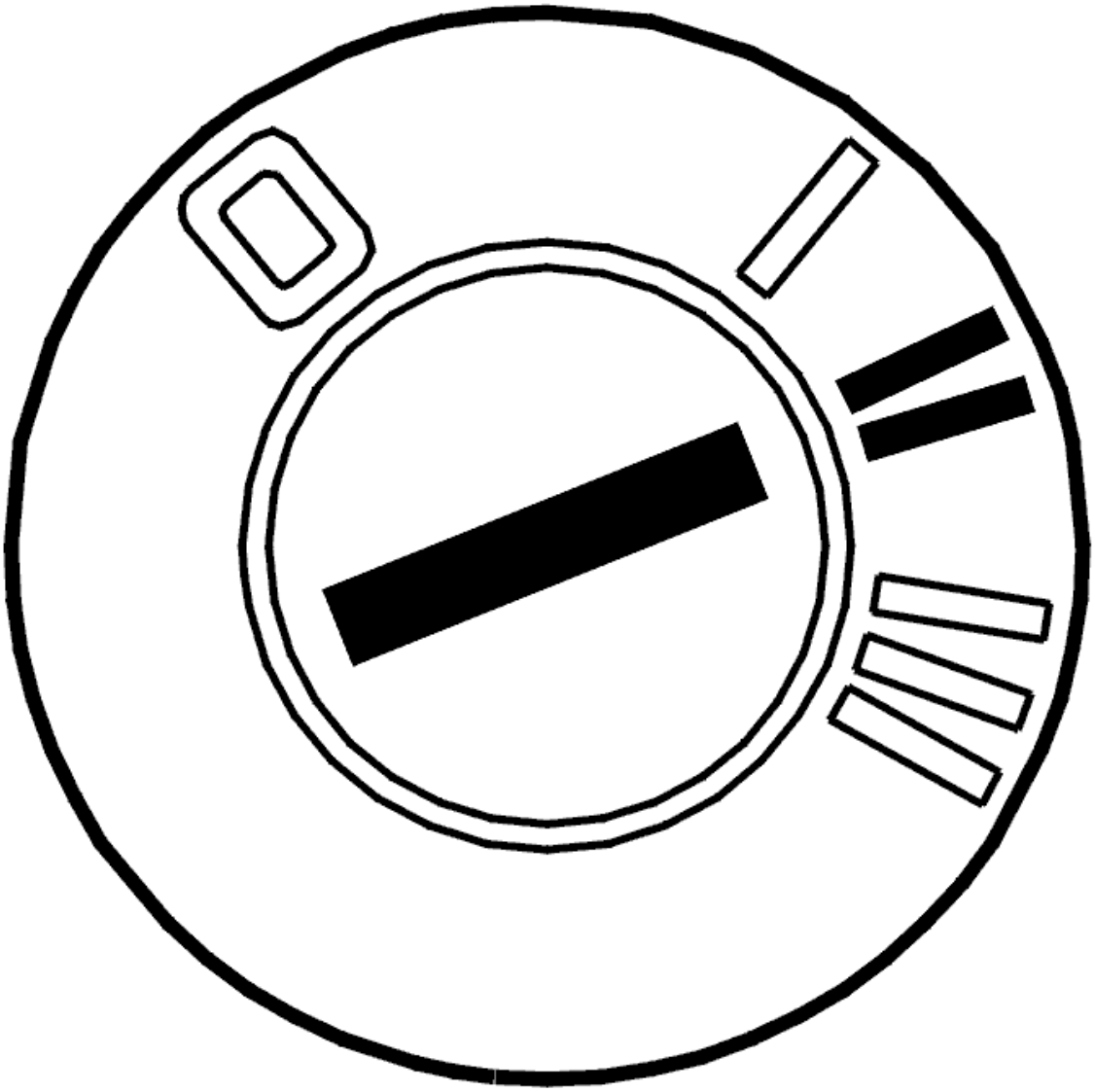

Fig. 310: Identifying Ignition ON
Courtesy of VOLVO CARS CORPORATION

- Ignition on.

NOTE: **It is important that only the ignition is on in order for the heater to start.**

  - Activate the heater.

Listen for a buzzing sound which indicates that the heater is running.

Check the heater function.

Other information

- see **ENGINE COOLANT HEATER, TEST RUNNING**

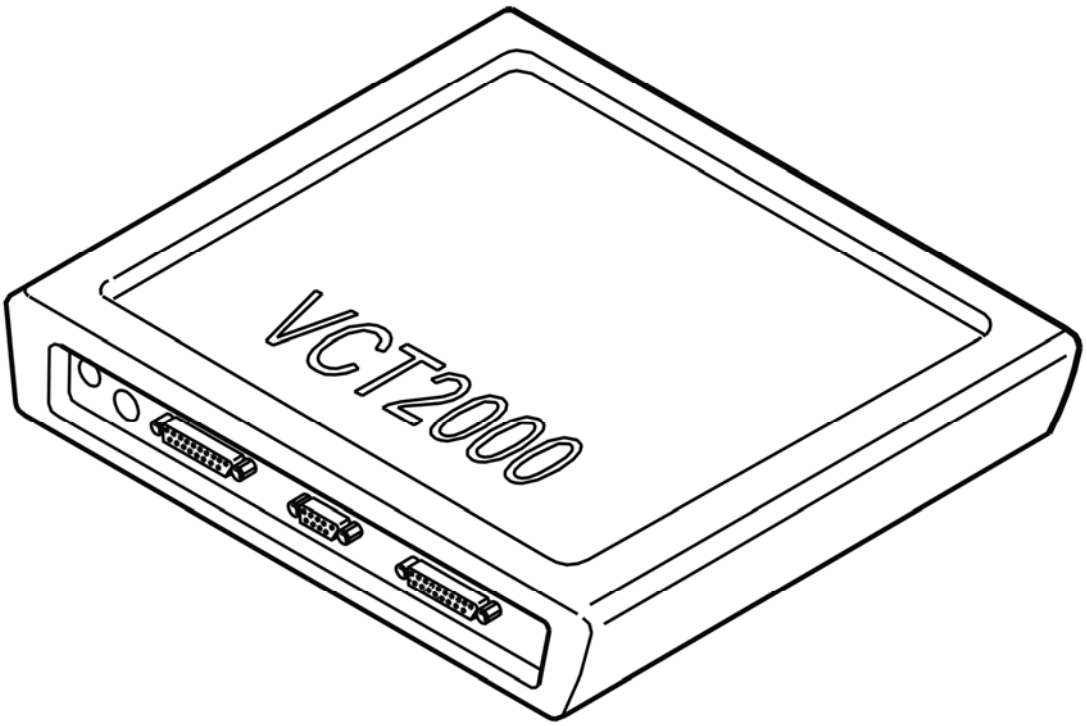

Fig. 311: Identifying VCT2000 Diagnostic Tool Symbol In VIDA
Courtesy of VOLVO CARS CORPORATION

Is the heater working?

- **YES**

  Refer to **CHECKING COMPONENTS AND WIRING**

- **NO**

  Refer to **CHECKING COMPONENTS AND WIRING**

CHECKING COMPONENTS AND WIRING

Check the cable between combustion preheater module (CPM) terminal #13 and fuel pump (FP) terminal 2.

Check for a short-circuit to supply voltage.

With the ignition on and the fuel pump (FP) connector disconnected, the voltage between fuel pump (FP) terminal 2 (control module side) and ground must be 0 V.

The fuel pump (FP) must be replaced if no faults are found in the cable.

Remedy as necessary.

Other information

- see **CONNECTING THE BREAKOUT BOX**
- see **SIGNAL SPECIFICATION**
- see **FUEL PUMP AUXILIARY HEATER, REPLACING**
- see **CHECKING WIRING AND TERMINALS**

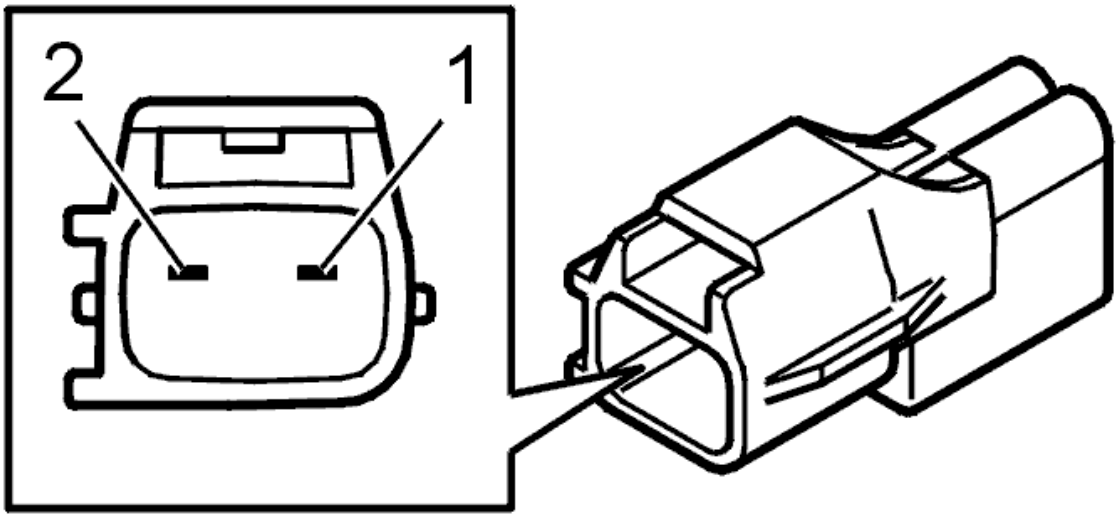

Fig. 312: Identifying Fuel Pump Connector Terminals
Courtesy of VOLVO CARS CORPORATION

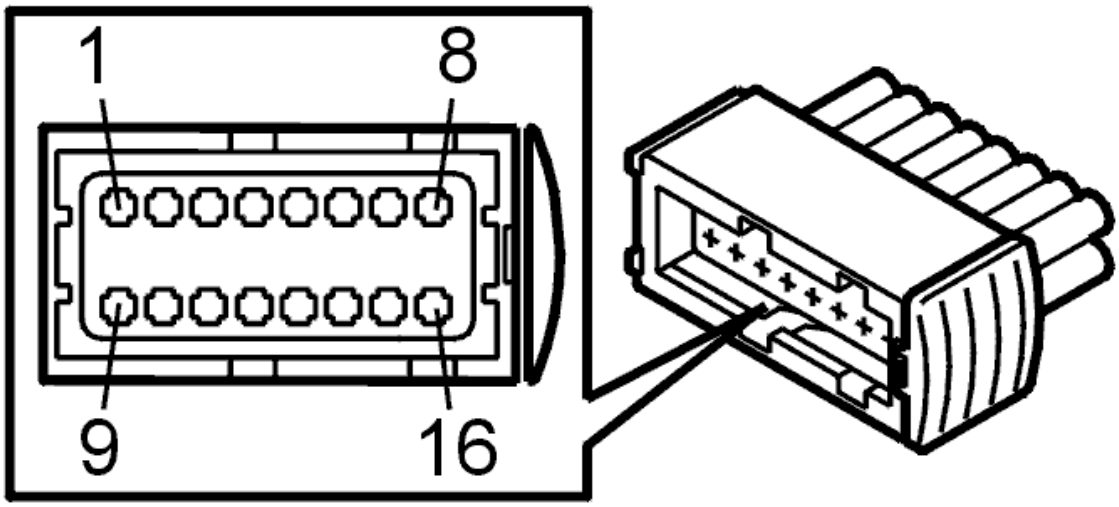

Fig. 313: Identifying Connector Terminals
Courtesy of VOLVO CARS CORPORATION

- **Continue**

  Refer to **VERIFICATION**

CHECKING COMPONENTS AND WIRING

Check the cable between combustion preheater module (CPM) terminal #13 and fuel pump (FP) terminal 2. Check for a short-circuit to supply voltage.

Remedy as necessary.

Other information

- see **CONNECTING THE BREAKOUT BOX**
- see **FUEL PUMP AUXILIARY HEATER, REPLACING**
- see **SIGNAL SPECIFICATION**
- see **CHECKING WIRING AND TERMINALS**

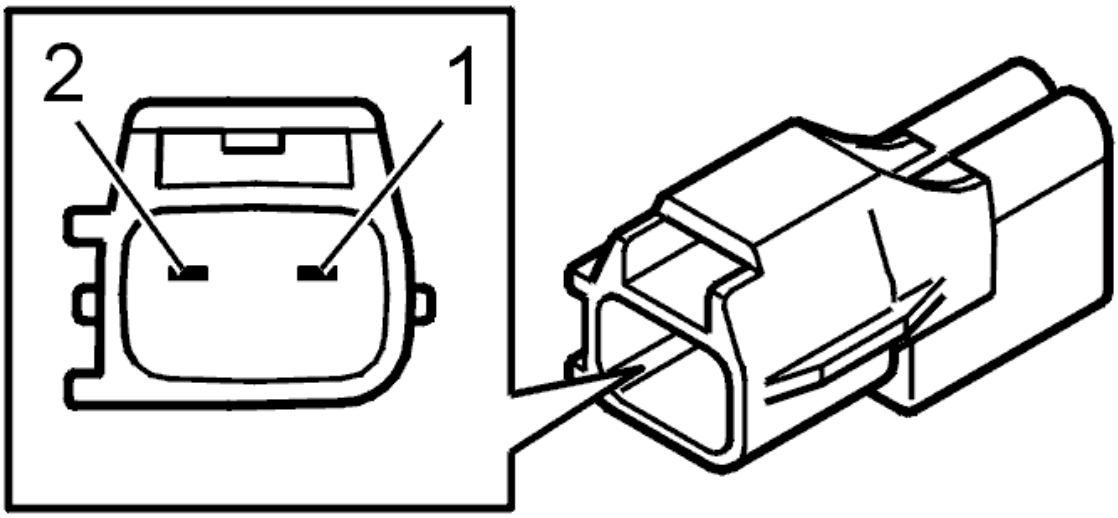

Fig. 314: Identifying Fuel Pump Connector Terminals
Courtesy of VOLVO CARS CORPORATION

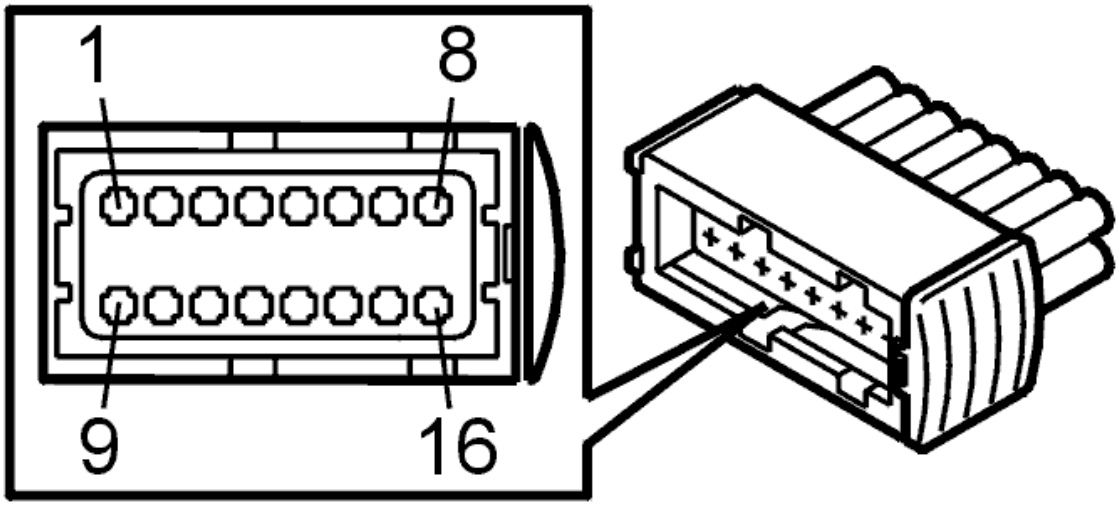

Fig. 315: Identifying Connector Terminals
Courtesy of VOLVO CARS CORPORATION

- **Continue**

  Refer to **VERIFICATION**

VERIFICATION

VERIFICATION

HINT: After carrying out the repair, check that the fault has been remedied.

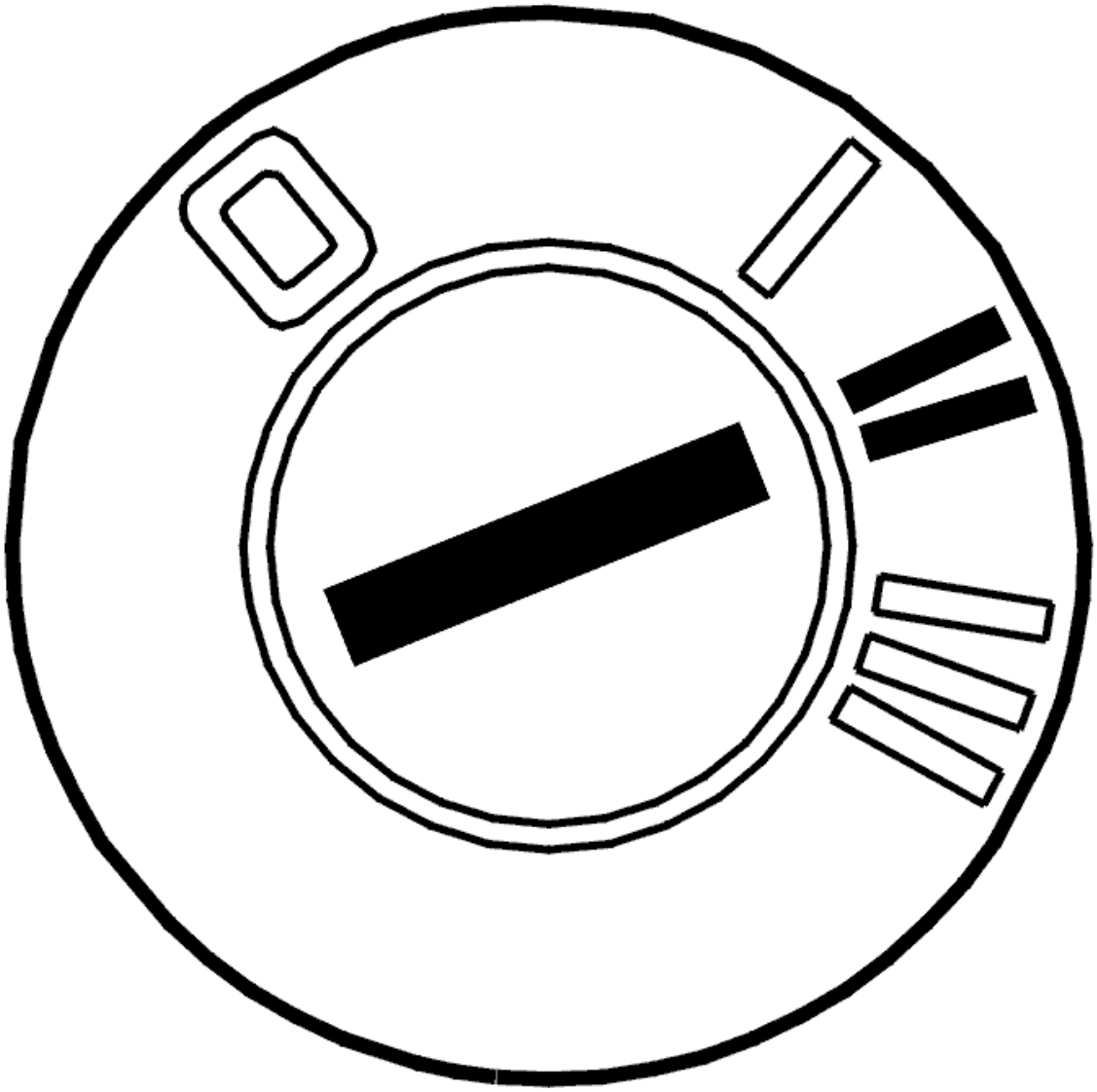

Fig. 316: Identifying Ignition ON
Courtesy of VOLVO CARS CORPORATION

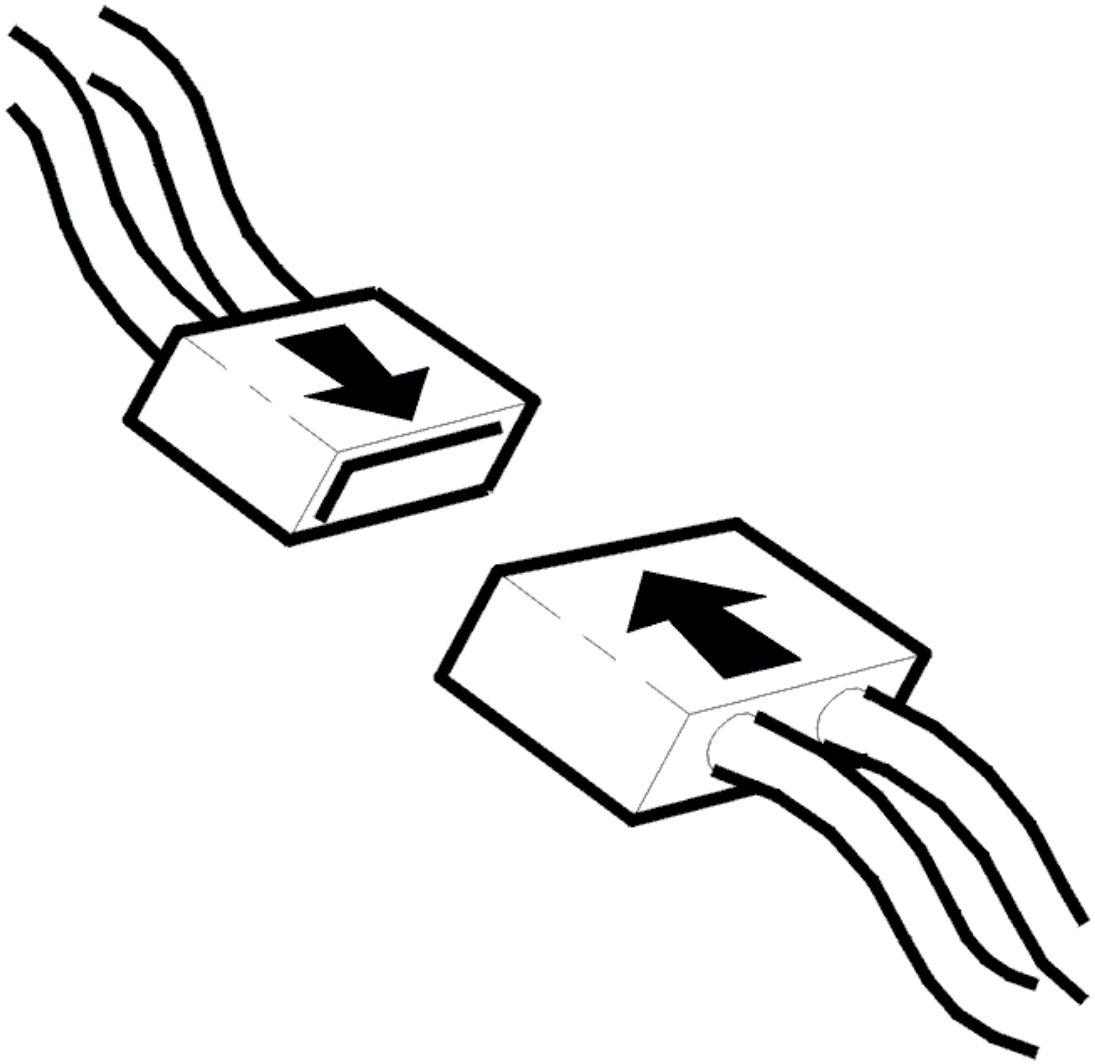

Fig. 317: Connecting Connector
Courtesy of VOLVO CARS CORPORATION

- Ignition off
- Reinstall the connectors, components etc.
- Ignition on
- Read off the engine coolant temperature.

NOTE: It is important that only the ignition is on in order for the heater to start.

- Activate the heater.

HINT: After repair, the voltage of the flame sensor can be checked. The voltage must be a maximum of 1.0 V.

Check the heater function.

CAUTION: In order for to enable start of the heater itself, the battery voltage must be normal, coolant temperature must be lower than +96 °C and the heater's after-run/stop sequence must be finished. There must also be enough fuel in the tank.

CAUTION: If the heater or other components are not activated, try starting the activation again using the VCT2000 (or appropriate scan tool).

Other information:

- see **ENGINE COOLANT HEATER, TEST RUNNING** .

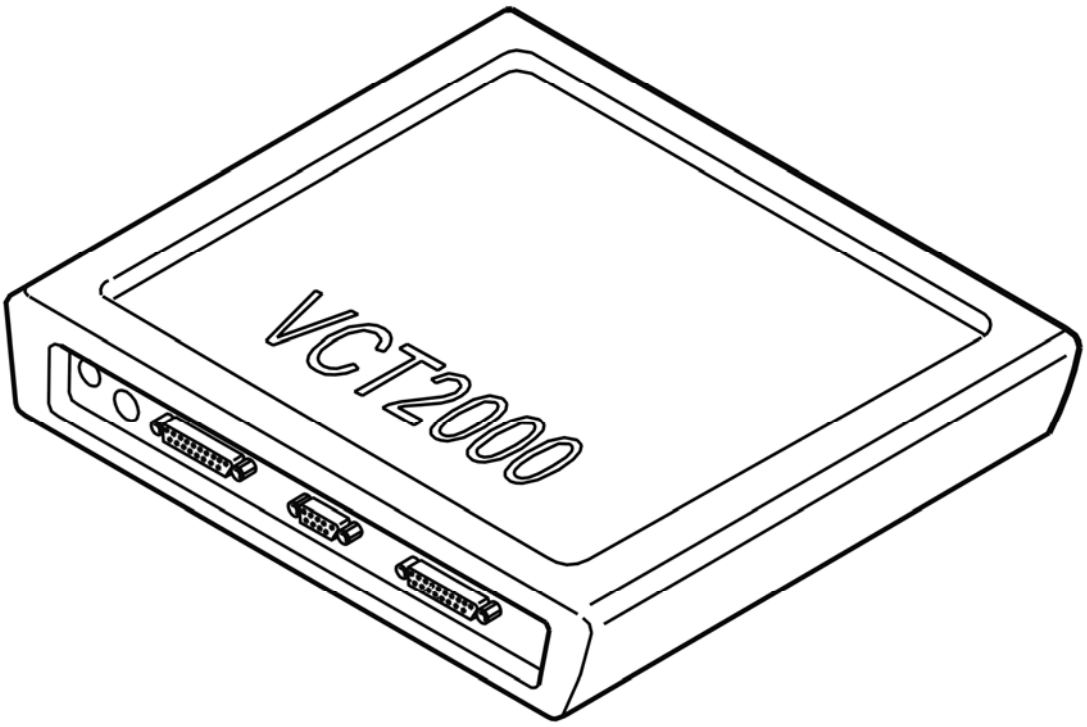

Fig. 318: Identifying VCT2000 Diagnostic Tool Symbol In VIDA
Courtesy of VOLVO CARS CORPORATION

Is the heater working?

- **YES**

VERIFIED: Troubleshooting has been completed.

- **NO**

  Refer to **INFORMATION**

INFORMATION

FAULT-TRACING INFORMATION

The fault should have been detected and remedied. As this is not the case fault-tracing has failed.

Exit fault-tracing for this diagnostic trouble code (DTC) or make another attempt.

CEM-5F3F: FUEL PUMP. SIGNAL TOO HIGH (B5254T2; B6294T; 2003-2004)

DIAGNOSTIC TROUBLE CODE INFORMATION

Condition

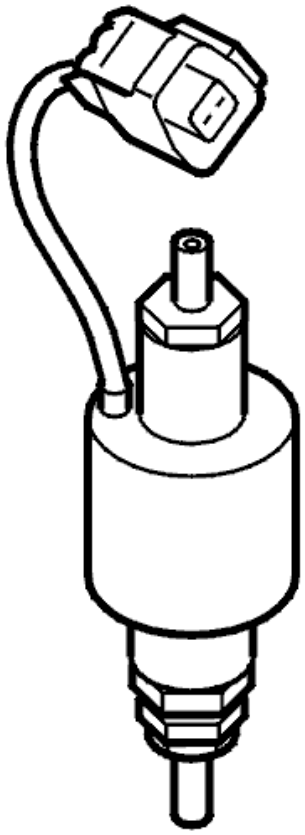

Fig. 319: Identifying Fuel Pump
Courtesy of VOLVO CARS CORPORATION

If the fuel pump circuit is short-circuited to voltage supply, the control unit will interpret this as a fault and diagnostic trouble code CEM-5F3F will be set.

Substitute Value

- None.

Possible Source

- Signal wire short-circuited to voltage supply.
- Defective fuel pump.

Fault symptom[s]

- Poor interior heating.

SIGNAL TOO HIGH

CHECKING THE FUNCTION OF THE FUEL PUMP (FP)

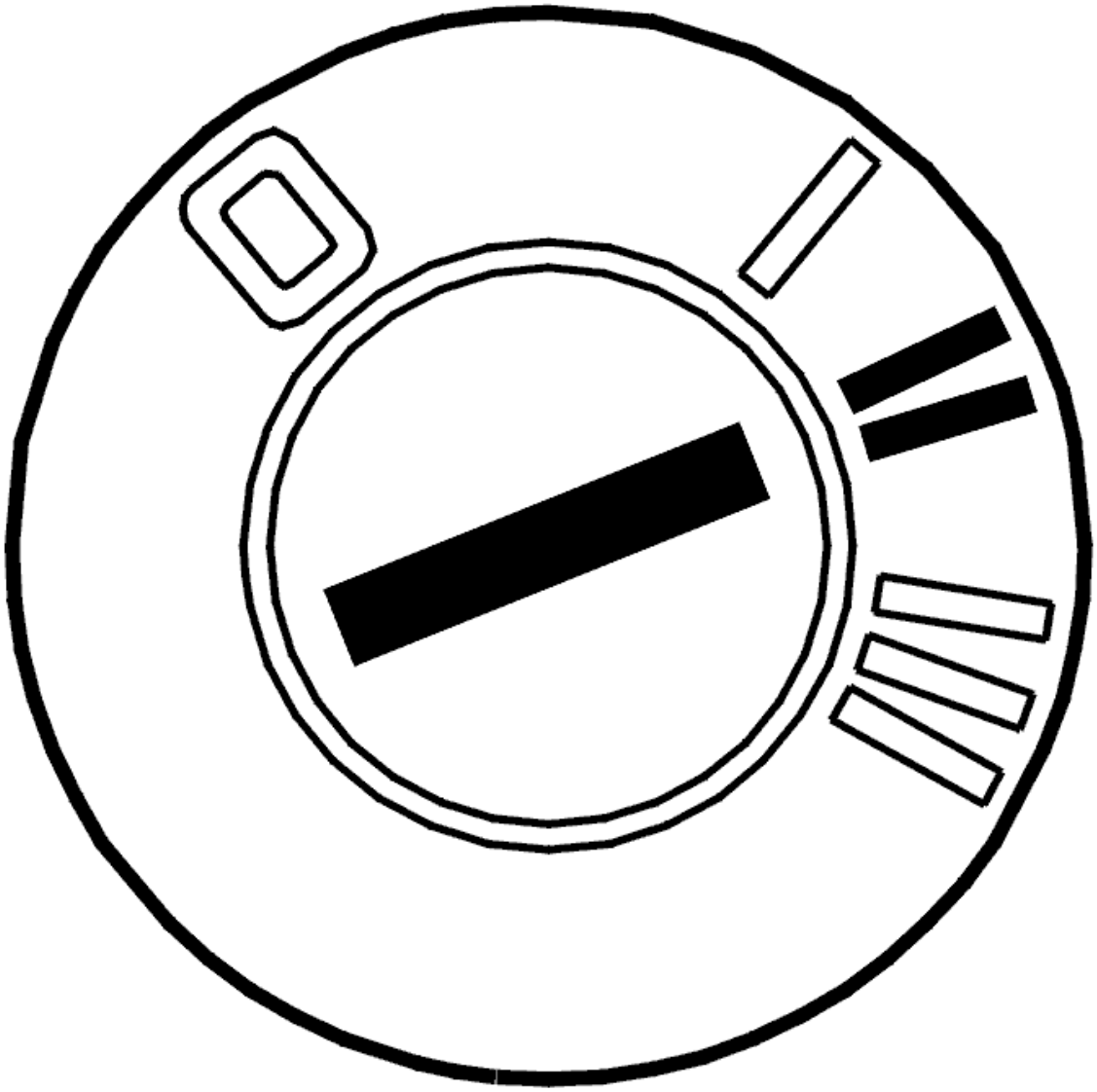

Fig. 320: Identifying Ignition ON
Courtesy of VOLVO CARS CORPORATION

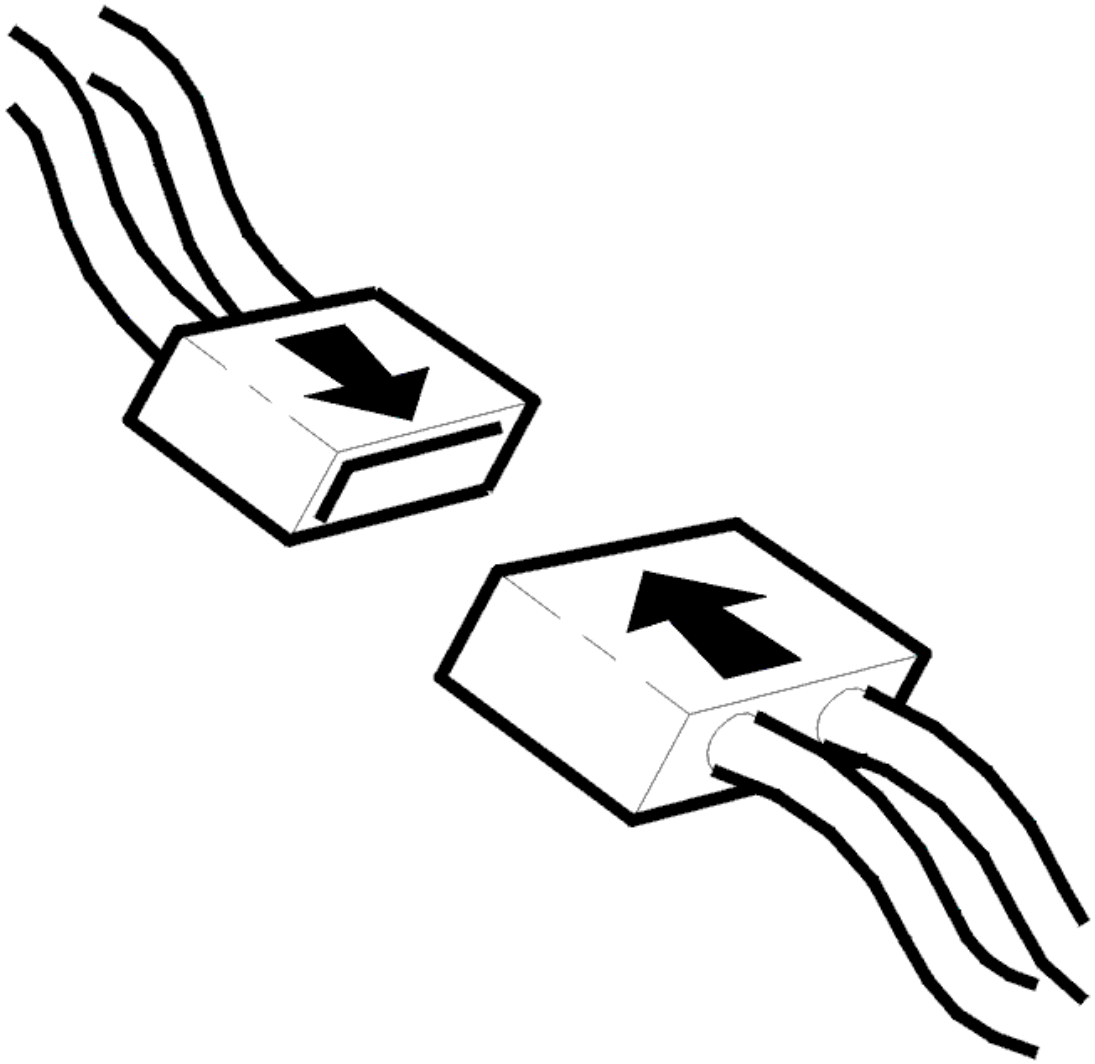

Fig. 321: Connecting Connector
Courtesy of VOLVO CARS CORPORATION

- Ignition on.

  NOTE: It is important that only the ignition is on in order for the heater to start.

- Activate the heater.

  A buzzing sound should be heard from the heater.

  Check the function of the heater. See **ENGINE COOLANT HEATER, TEST RUNNING** .

  Other information:

- For a description of parameters, see **DESCRIPTION OF PARAMETERS**
- For a description of activations, see **ACTIVATING COMPONENTS/FUNCTIONS** .

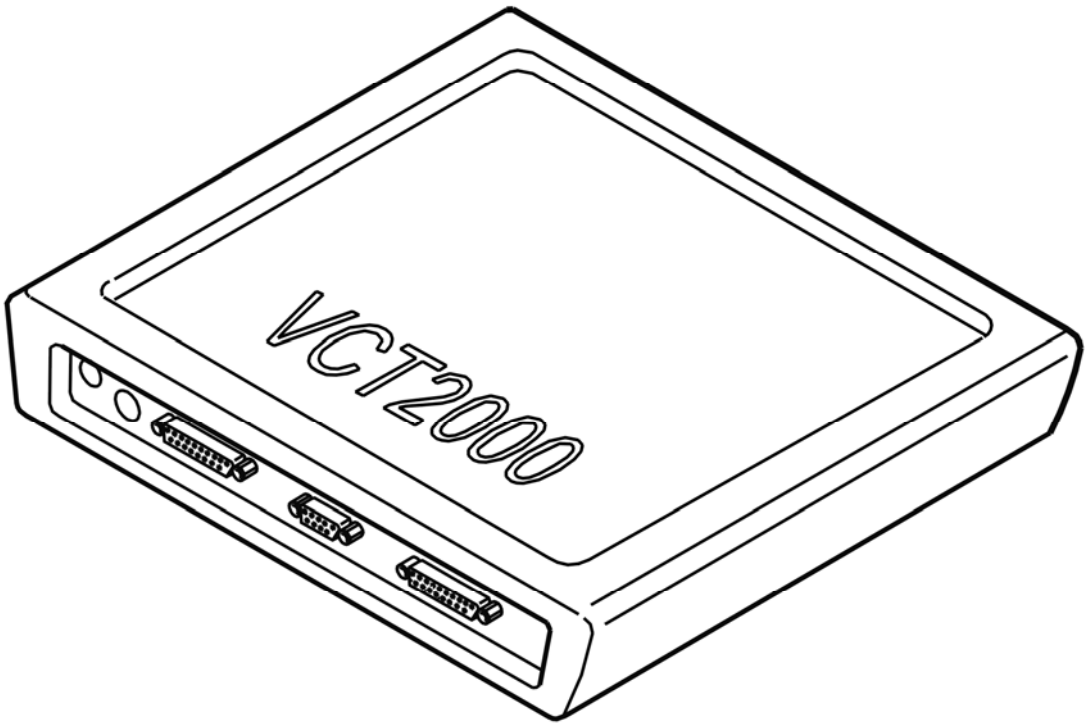

Fig. 322: Identifying VCT2000 Diagnostic Tool Symbol In VIDA
Courtesy of VOLVO CARS CORPORATION

Does the heater operate?

- **YES**

  Refer to **INTERMITTENT FAULT**

- **NO**

  Refer to **CHECKING COMPONENTS AND WIRING**

CHECKING COMPONENTS AND WIRING

Check the cable between control module terminal #13 and fuel pump (FP) terminal 2. Check for a short-circuit to supply voltage.

The fuel pump (FP) must be replaced if no faults are found in the cable.

Remedy as necessary.

Other information:

- To access the control module or connect the breakout box, see **CONNECTING THE BREAKOUT BOX**
- To access or replace the fuel pump (FP), see **FUEL PUMP AUXILIARY HEATER, REPLACING**
- With the ignition on and the fuel pump (FP) connector disconnected, the voltage between fuel pump (FP) terminal 2 (control module side) and ground must be 0 V
- For other values, see **SIGNAL SPECIFICATION**
- see **CHECKING WIRING AND TERMINALS** .

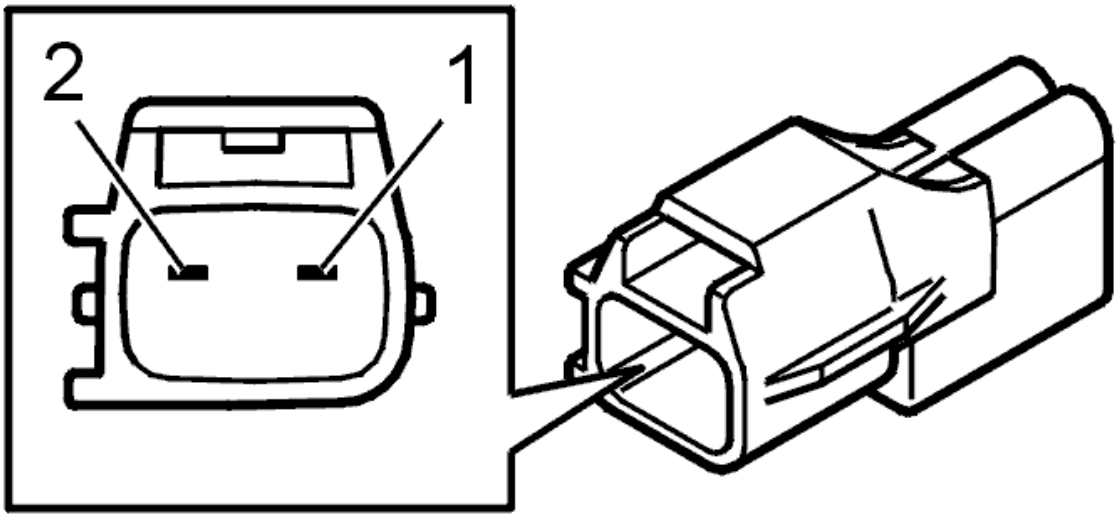

Fig. 323: Identifying Fuel Pump Connector Terminals
Courtesy of VOLVO CARS CORPORATION

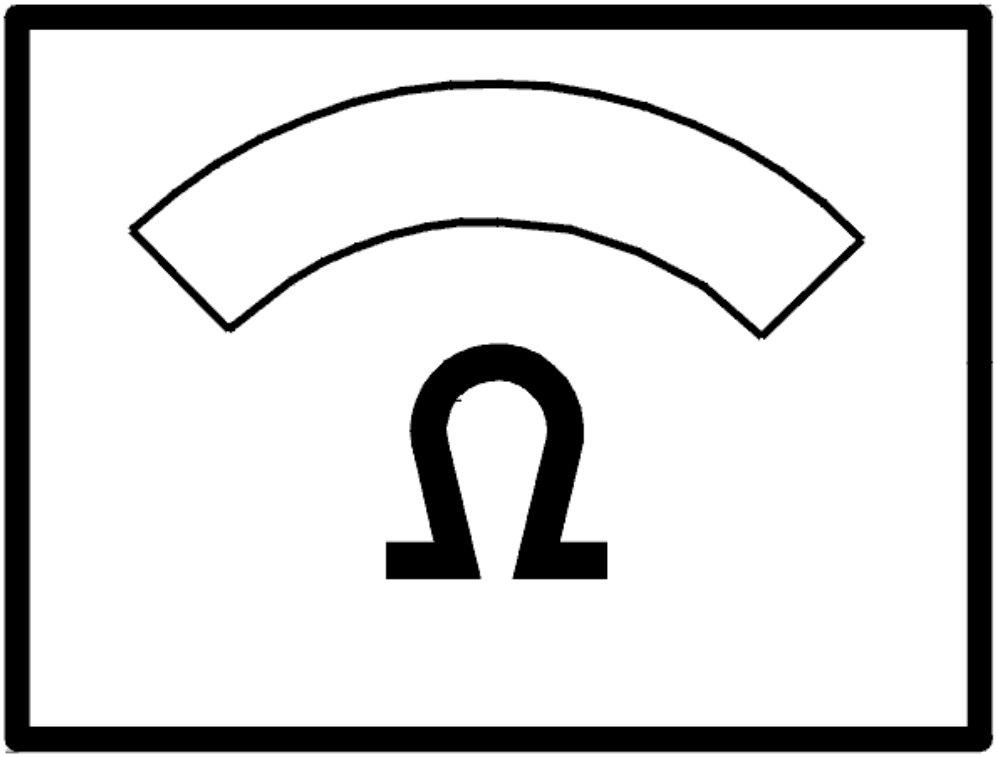

Fig. 324: Identifying Ohm Meter
Courtesy of VOLVO CARS CORPORATION

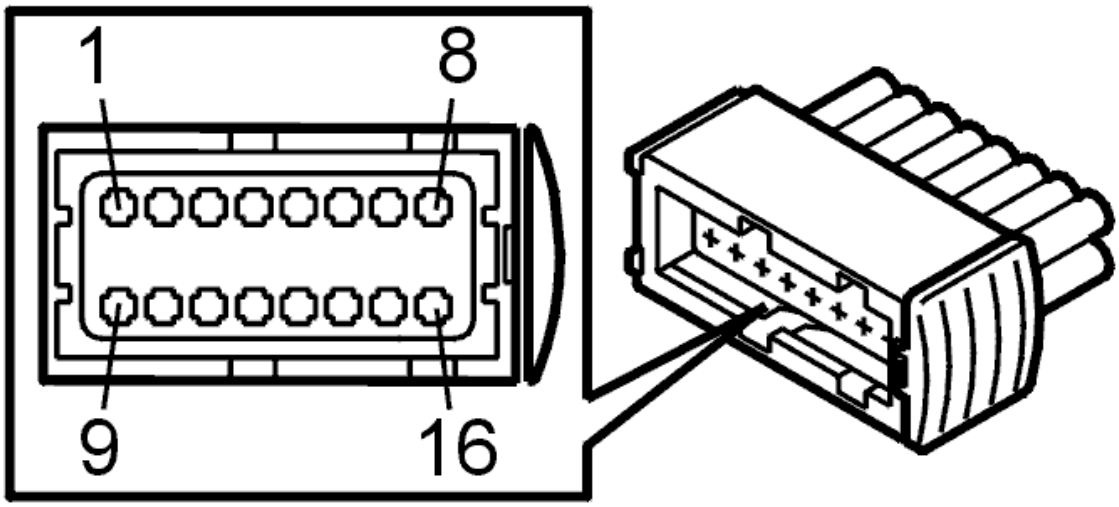

Fig. 325: Identifying Connector Terminals
Courtesy of VOLVO CARS CORPORATION

- **Continue**

  Refer to **VERIFICATION**

INTERMITTENT FAULT

Check the cable between control module terminal #13 and fuel pump (FP) terminal 2. Check for a short-circuit to supply voltage.

Remedy as necessary.

Other information:

- To access the control module or connect the breakout box, see **CONNECTING THE BREAKOUT BOX**
- To access or replace the fuel pump (FP), see **FUEL PUMP AUXILIARY HEATER, REPLACING**
- With the ignition on and the fuel pump (FP) connector disconnected, the voltage between fuel pump (FP) terminal 2 (control module side) and ground must be 0 V
- For other values, see **SIGNAL SPECIFICATION**
- see **CHECKING WIRING AND TERMINALS**

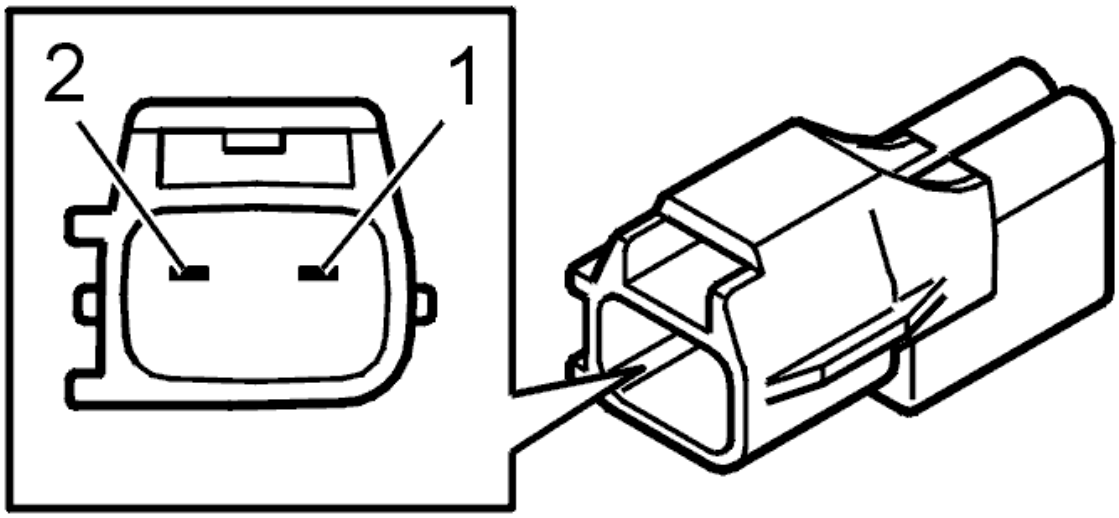

Fig. 326: Identifying Fuel Pump Connector Terminals
Courtesy of VOLVO CARS CORPORATION

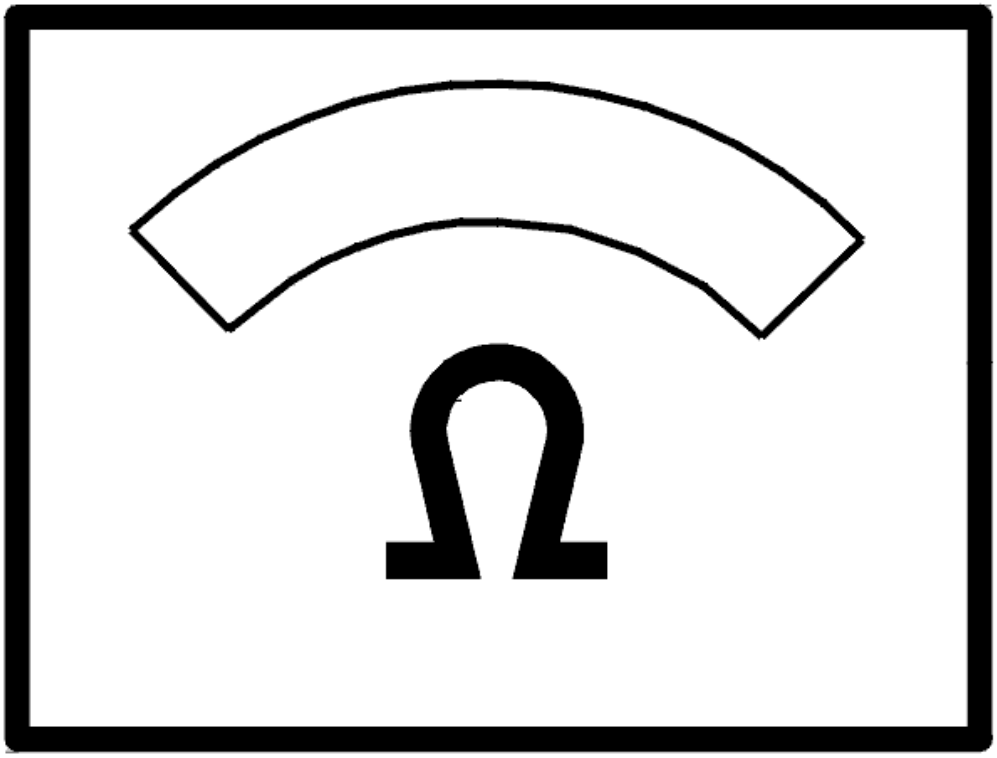

Fig. 327: Identifying Ohm Meter
Courtesy of VOLVO CARS CORPORATION

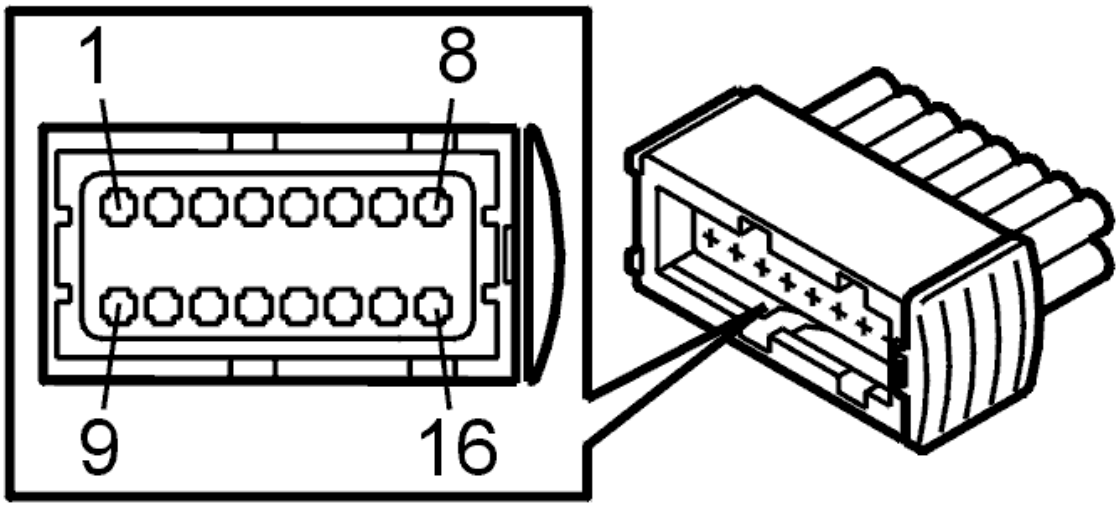

Fig. 328: Identifying Connector Terminals
Courtesy of VOLVO CARS CORPORATION

- **Continue**

  Refer to **INFORMATION**

VERIFICATION

VERIFICATION

HINT: After the repair it is necessary to check that the fault has been rectified.

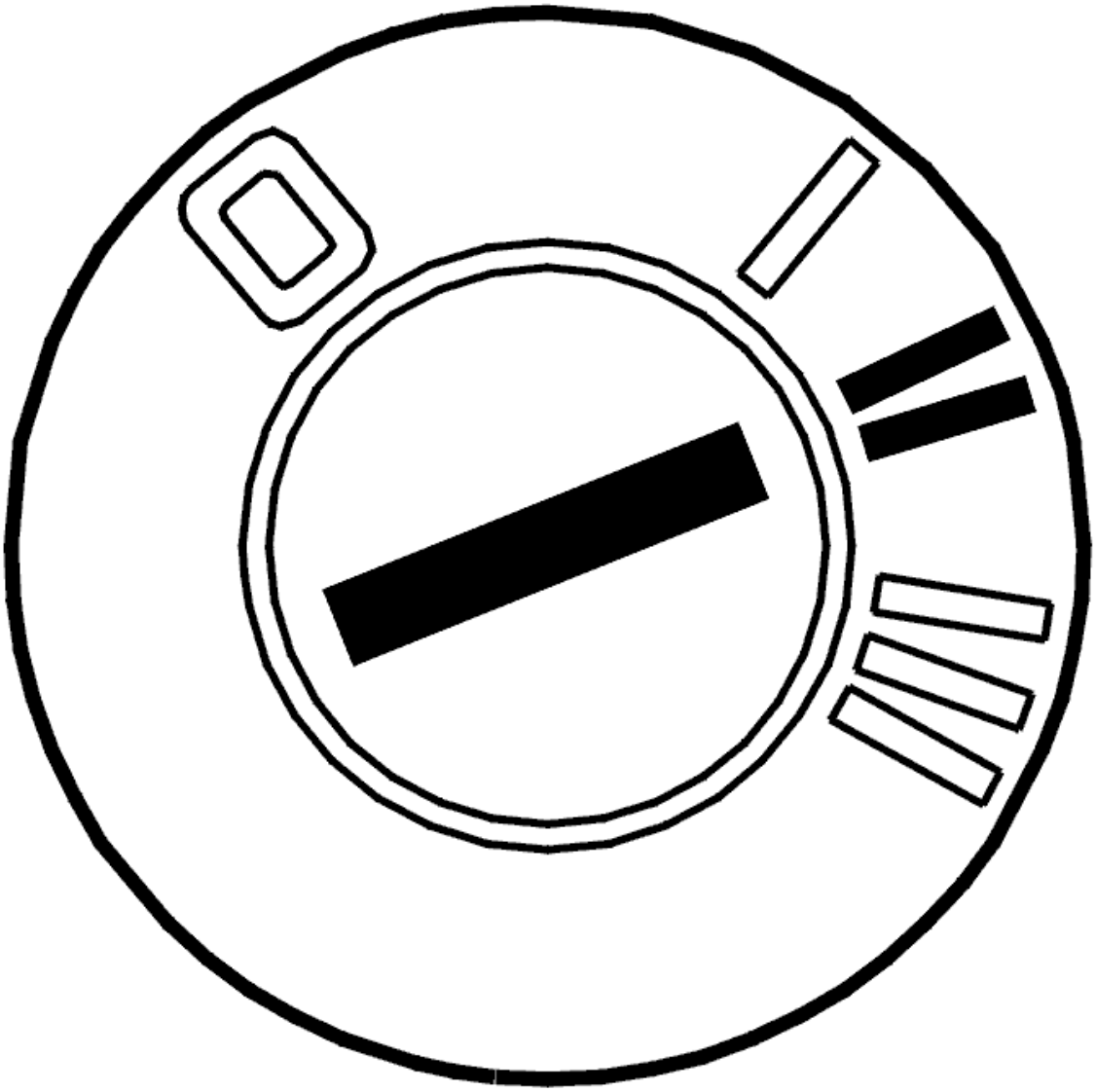

Fig. 329: Identifying Ignition ON
Courtesy of VOLVO CARS CORPORATION

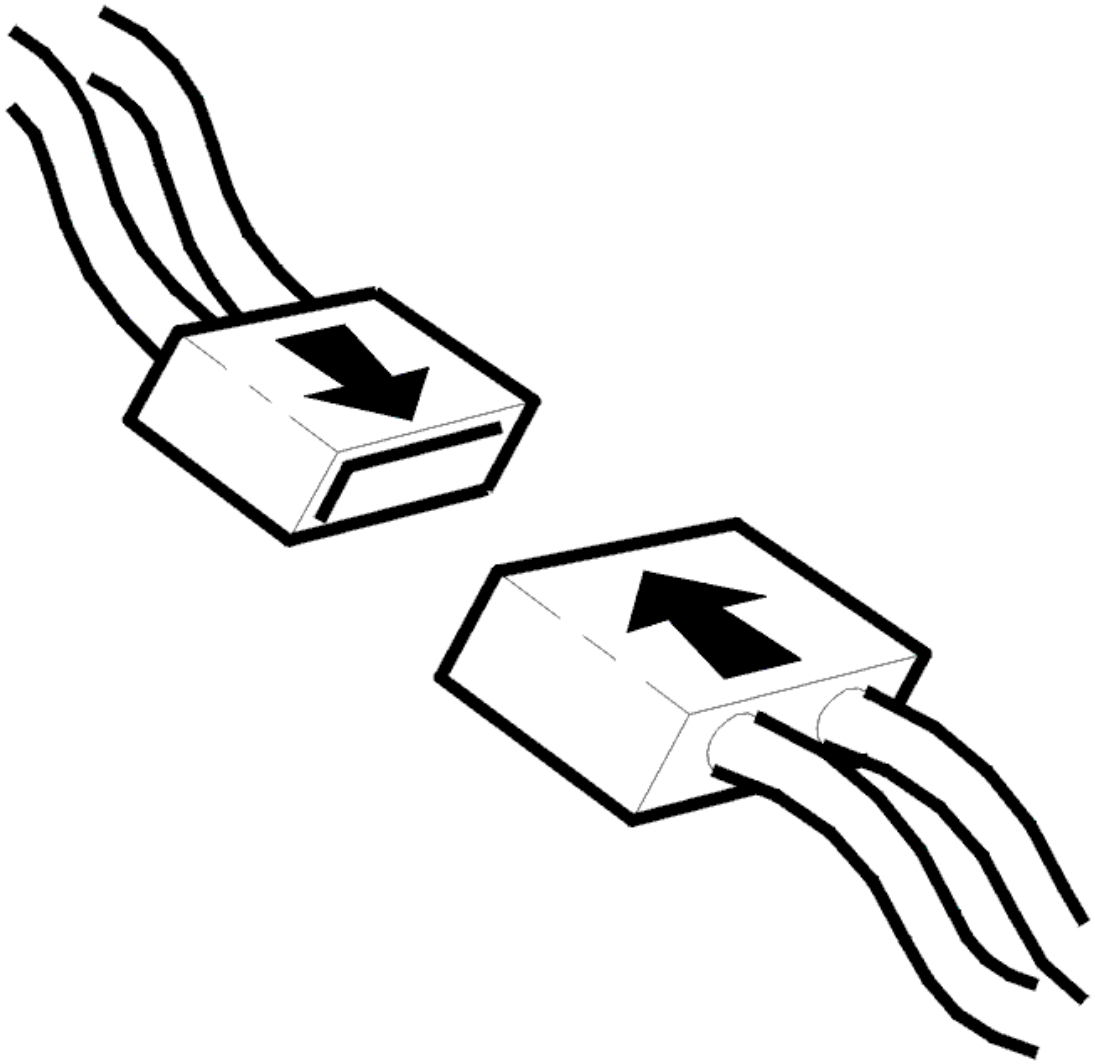

Fig. 330: Connecting Connector
Courtesy of VOLVO CARS CORPORATION

- Ignition off.
- Connect connector, install components etc.
- Ignition on.

NOTE: It is important that only the ignition is on for the heater to start up.

- Activate the heater.

  A buzzing sound should be heard from the heater.

  Check the function of the heater as described in, see **ENGINE COOLANT HEATER, TEST RUNNING** .

Additional information:

- For a description of the parameters, see **DESCRIPTION OF PARAMETERS** .
- For a description of activations, see **ACTIVATING COMPONENTS/FUNCTIONS** .

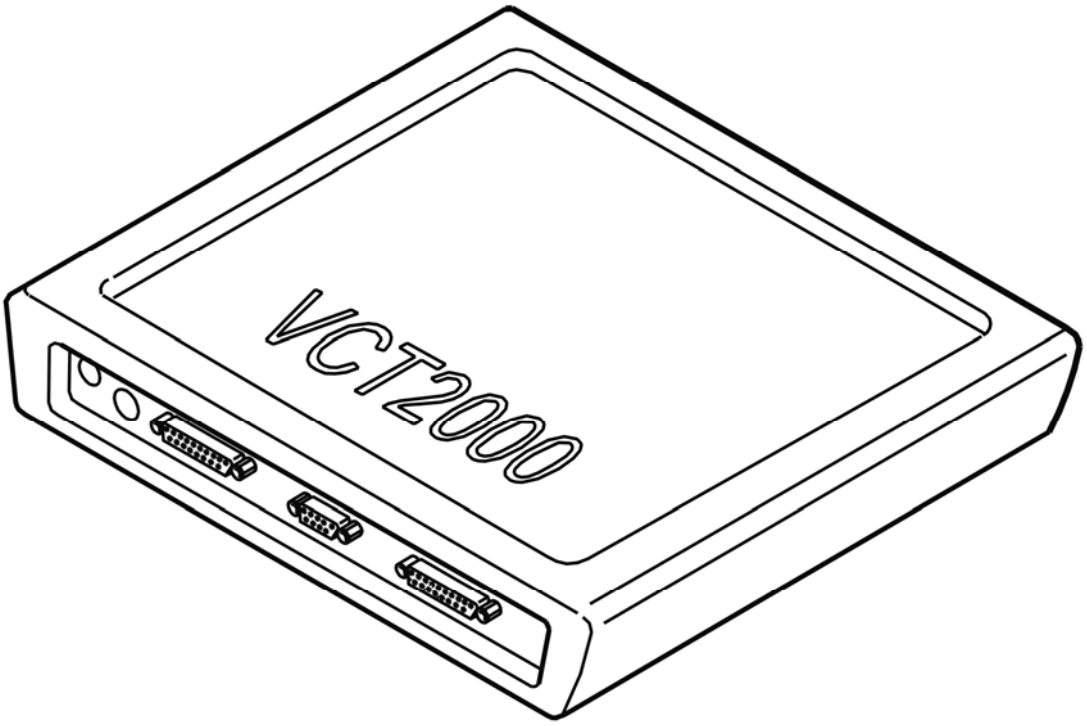

Fig. 331: Identifying VCT2000 Diagnostic Tool Symbol In VIDA
Courtesy of VOLVO CARS CORPORATION

Does the heater work?

- **YES**

  VERIFIED: Troubleshooting has been completed.

- **NO**

  Refer to **INFORMATION**

INFORMATION

FAULT-TRACING INFORMATION

The fault should have been detected and remedied. As this is not the case fault-tracing has failed.

Exit fault-tracing for this diagnostic trouble code (DTC) or make another attempt.

INFORMATION

FAULT-TRACING INFORMATION

If the fault is intermittent, do not verify fault-tracing if the fault does not recur.

It is possible to view the information again, or leave fault-tracing for this diagnostic trouble code (DTC).

CEM-5F40: FUEL PUMP (FP). SIGNAL TOO LOW (2005-2012)

DIAGNOSTIC TROUBLE CODE (DTC) INFORMATION CEM-5F40

Condition

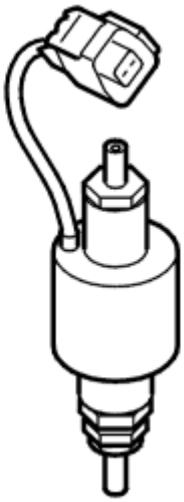

Fig. 332: Identifying Fuel Pump
Courtesy of VOLVO CARS CORPORATION

The central electronic module (CEM) checks the communication with the combustion preheater module (CPM).

The diagnostic trouble code (DTC) is stored if the central electronic module (CEM) registers that the signal in the circuit for the fuel pump (FP) is too low.

The diagnostic trouble code (DTC) can be diagnosed when the heater is activated.

Substitute Value

- None.

Possible Source

- Contact resistance in the control module or fuel pump connectors

- Short-circuit to ground in the signal cable
- Open-circuit in the signal cable
- Open-circuit in the power cable
- Damaged overheat protection thermostat
- Damaged fuel pump.

Fault symptom[s]

- Poor heating in the passenger compartment.

SIGNAL TOO LOW

CHECKING THE FUNCTION OF THE FUEL PUMP (FP)

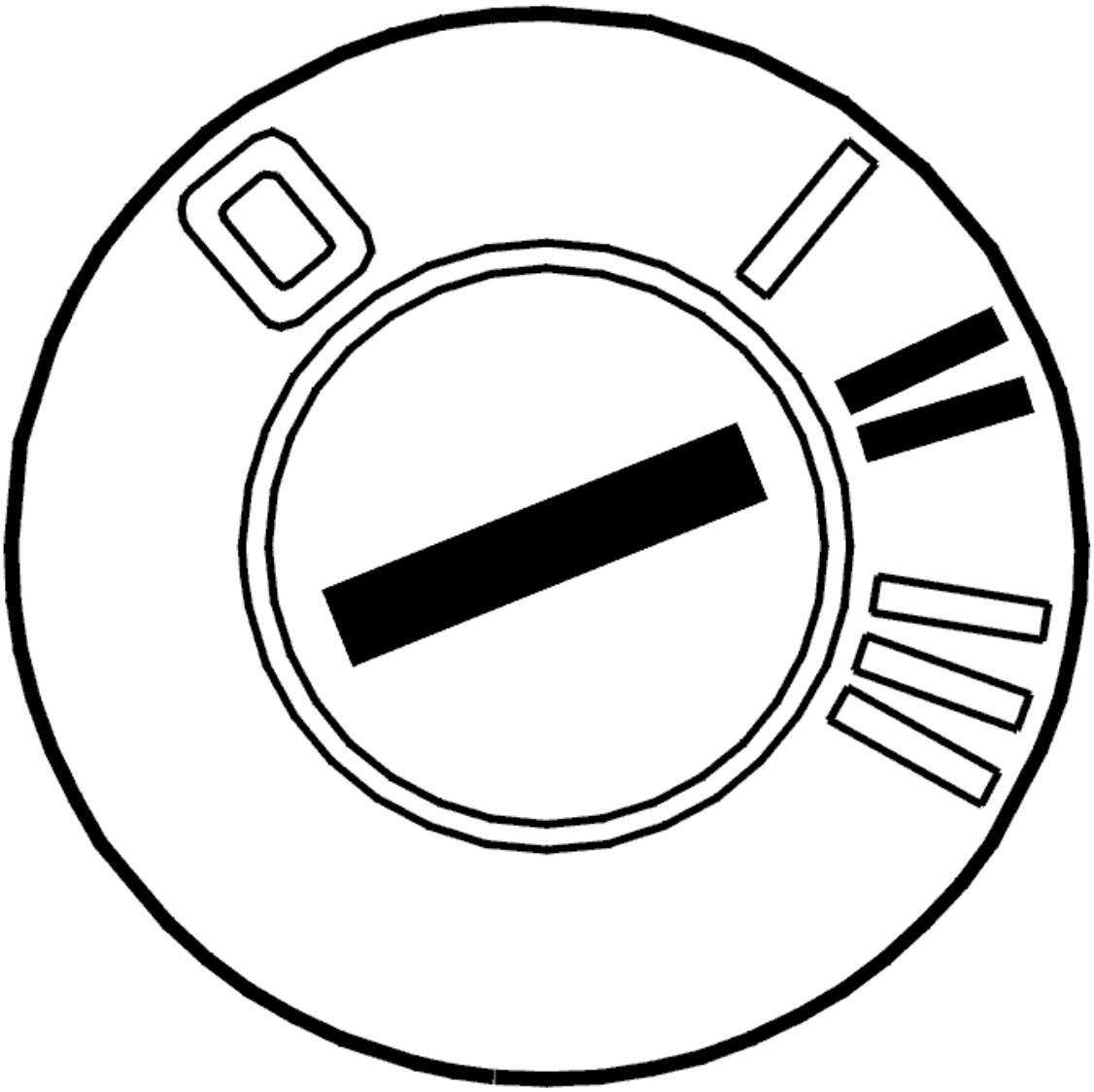

Fig. 333: Identifying Ignition ON

Courtesy of VOLVO CARS CORPORATION

- Ignition on.

NOTE: It is important that only the ignition is on in order for the heater to start.

- Activate the heater.

Listen for a buzzing sound which indicates that the heater is running.

Check the heater function.

Other information

- see **ENGINE COOLANT HEATER, TEST RUNNING**

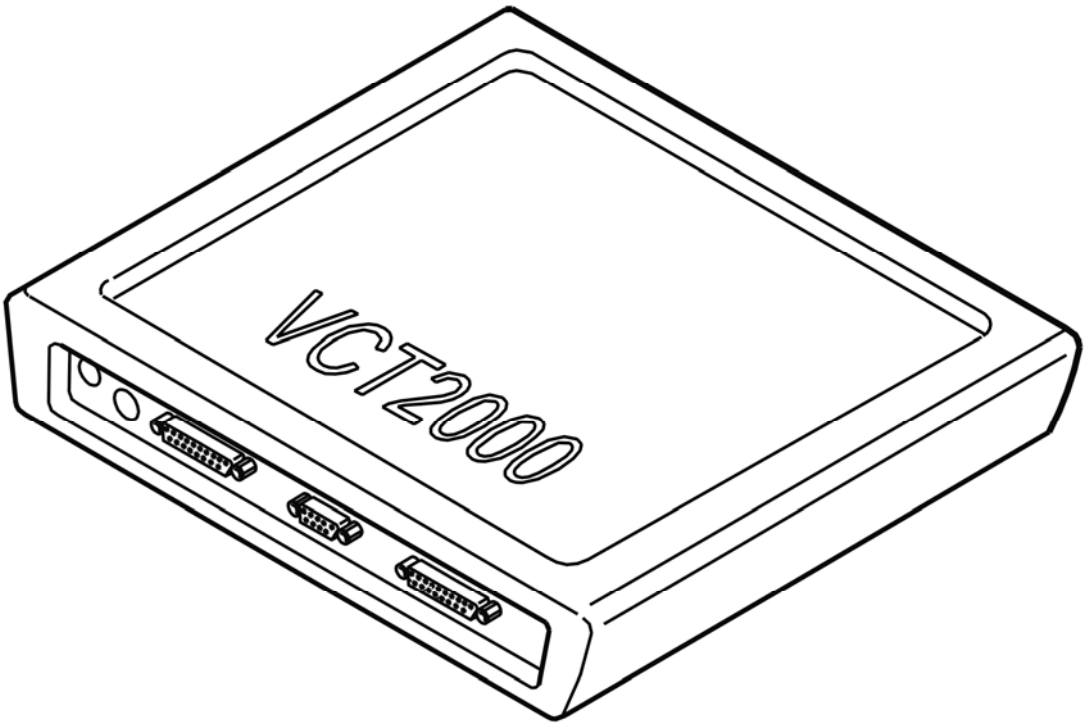

Fig. 334: Identifying VCT2000 Diagnostic Tool Symbol In VIDA
Courtesy of VOLVO CARS CORPORATION

Is the heater working?

- **YES**

Refer to **CHECKING COMPONENTS AND WIRING**

- **NO**

  Refer to **CHECKING COMPONENTS AND WIRING**

CHECKING COMPONENTS AND WIRING

Check the fuel pump (FP) and combustion preheater module (CPM) connectors. Check for contact resistance and oxidation.

Check the cable between combustion preheater module (CPM) terminal #13 and fuel pump (FP) terminal 2. Check for an intermittent open-circuit. Check for an intermittent short-circuit to ground.

Check the cable between combustion preheater module (CPM) terminal #11 and water pump terminal 1. Check for an intermittent open-circuit.

Remedy as necessary.

Other information

- see **CONNECTING THE BREAKOUT BOX**
- see **SIGNAL SPECIFICATION**
- see **FUEL PUMP AUXILIARY HEATER, REPLACING**
- see **CHECKING WIRING AND TERMINALS**

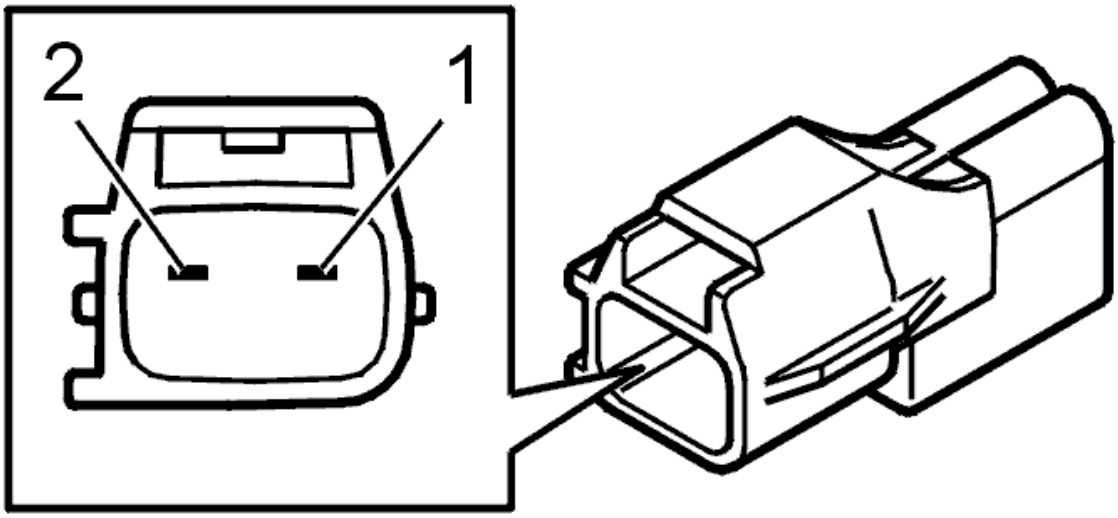

Fig. 335: Identifying Fuel Pump Connector Terminals
Courtesy of VOLVO CARS CORPORATION

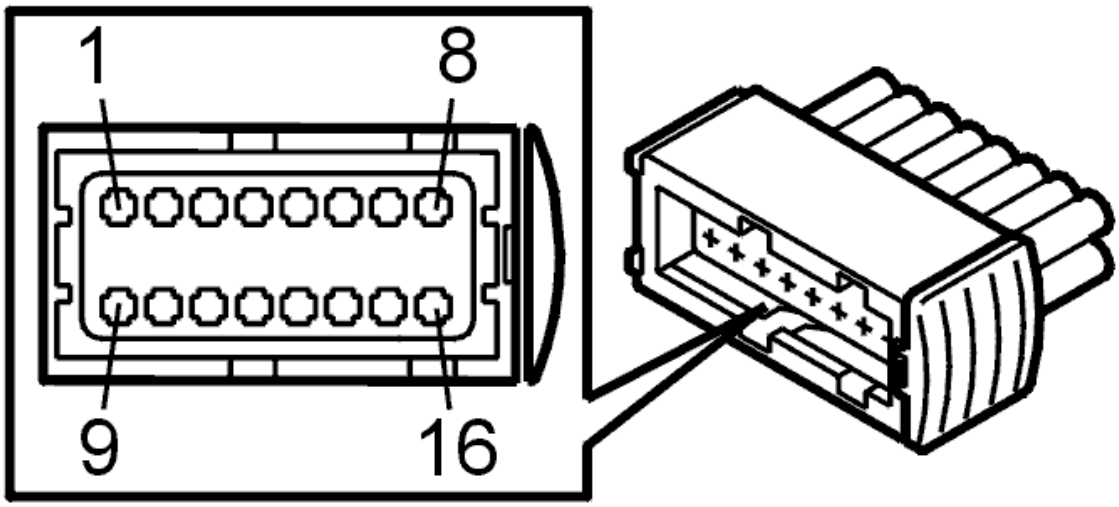

Fig. 336: Identifying Connector Terminals
Courtesy of VOLVO CARS CORPORATION

- **Continue**

  Refer to **VERIFICATION**

CHECKING COMPONENTS AND WIRING

Check the fuel pump (FP) and combustion preheater module (CPM) connectors. Check for contact resistance and oxidation. Remedy as necessary Check for damage in particular.

Measure between the overheat protection thermostat terminals using an ohmmeter. The resistance must be approximately 0 ohms.

The overheat protection thermostat must be replaced if the value is not correct.

Check the cable between combustion preheater module (CPM) terminal #13 and fuel pump (FP) terminal 2. Check for an open-circuit. Check for an short-circuit to ground.

Check the cable between combustion preheater module (CPM) terminal #11 and fuel pump terminal 1. Check for an open-circuit.

The fuel pump (FP) must be replaced if no faults are found in the cable.

NOTE: Diagnostic trouble code (DTC) CEM-5F3B and/or diagnostic trouble code (DTC) CEM-5F3D may also be stored if there is a fault in the power cable.

Remedy as necessary.

Other information

- see **CONNECTING THE BREAKOUT BOX**
- see **SIGNAL SPECIFICATION**
- see **OVERHEAT PROTECTION THERMOSTAT / FLAME SENSOR / ENGINE COOLANT TEMPERATURE SENSOR, REPLACING**
- see **FUEL PUMP AUXILIARY HEATER, REPLACING**
- see **CHECKING WIRING AND TERMINALS**

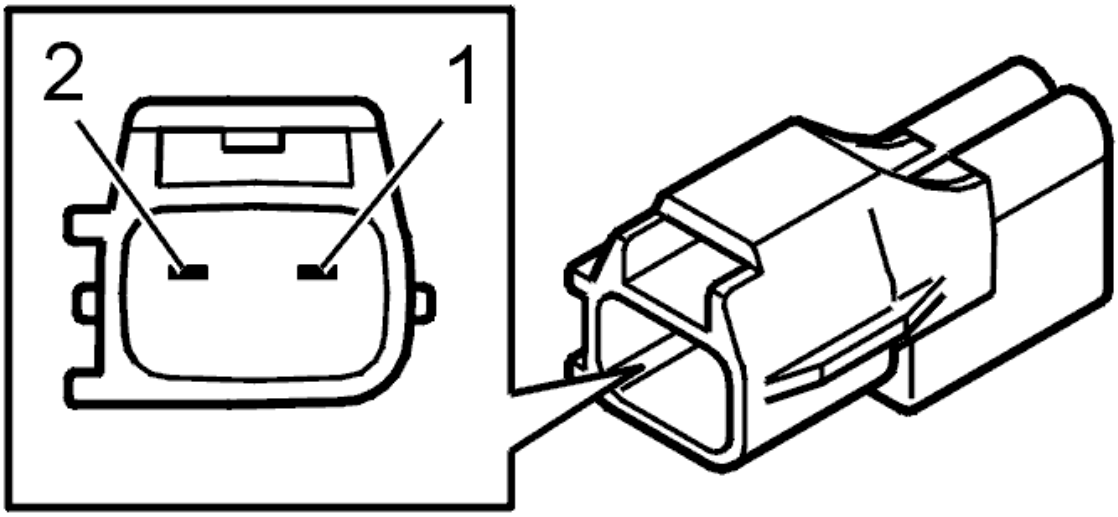

Fig. 337: Identifying Fuel Pump Connector Terminals
Courtesy of VOLVO CARS CORPORATION

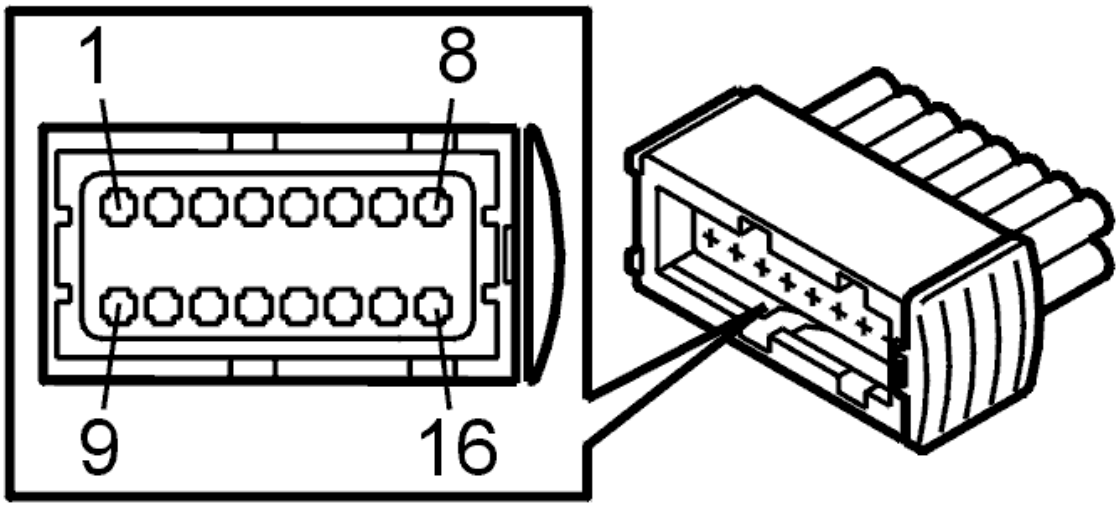

Fig. 338: Identifying Connector Terminals
Courtesy of VOLVO CARS CORPORATION

- **Continue**

  Refer to **VERIFICATION**

VERIFICATION

VERIFICATION

HINT: After carrying out the repair, check that the fault has been remedied.

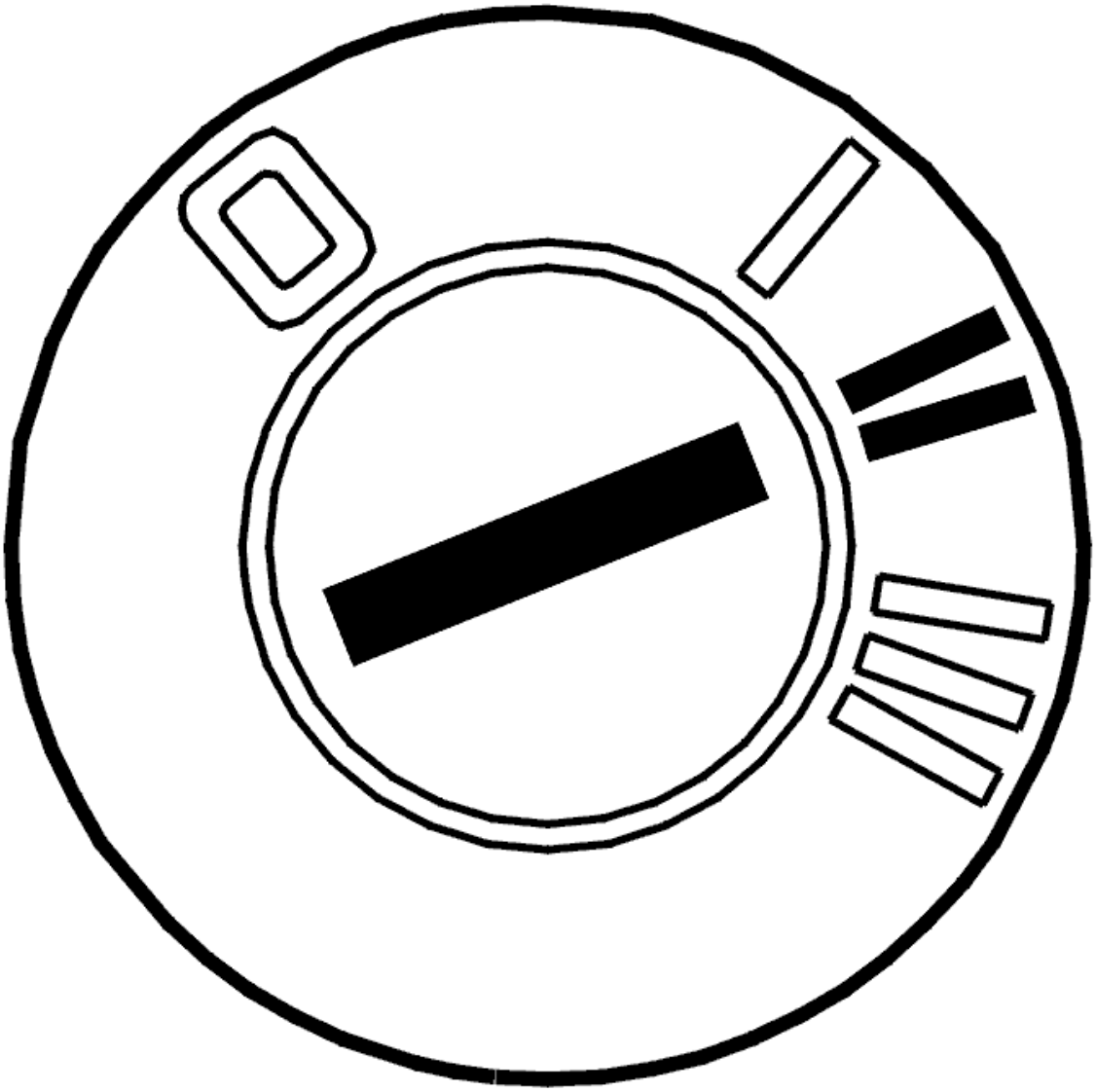

Fig. 339: Identifying Ignition ON
Courtesy of VOLVO CARS CORPORATION

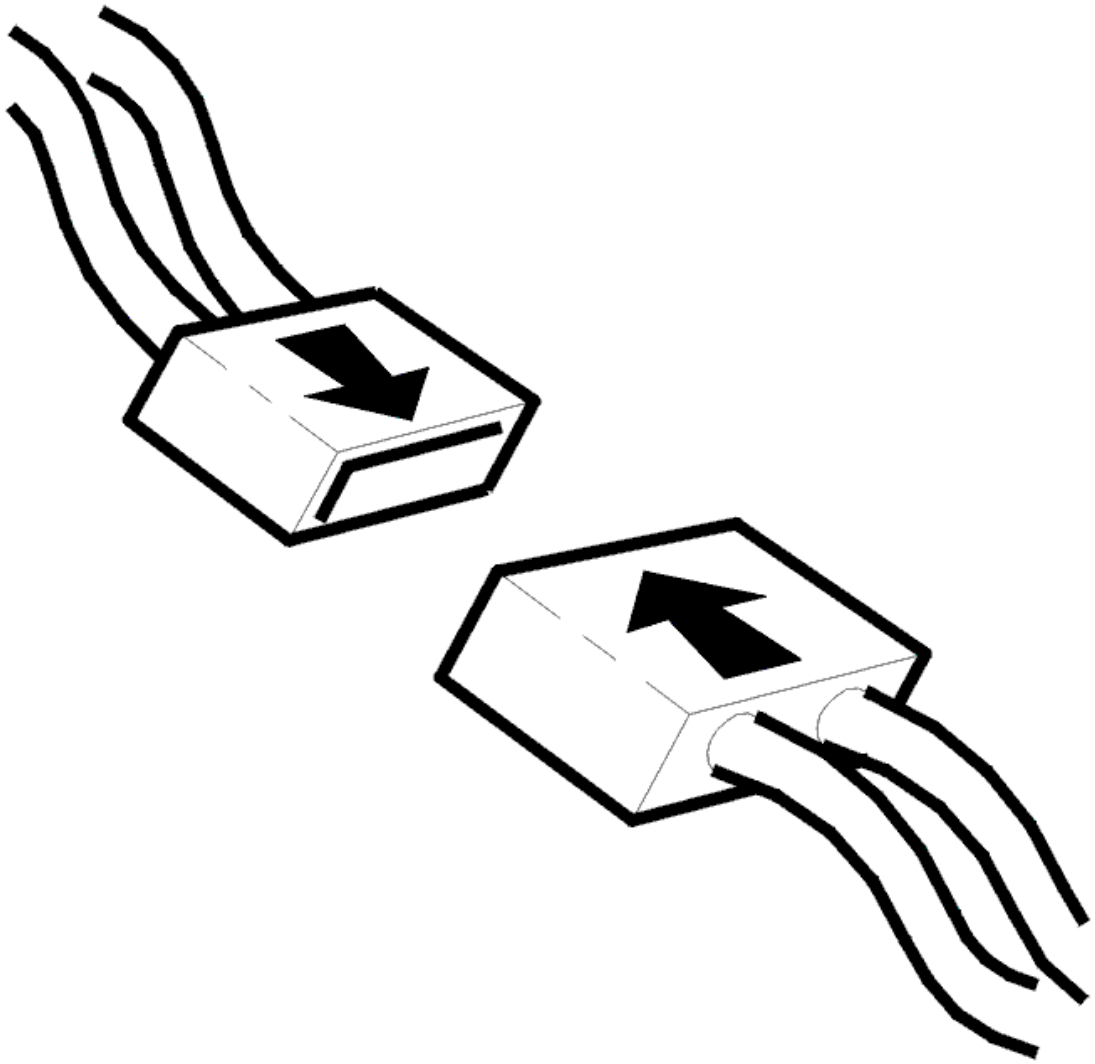

Fig. 340: Connecting Connector
Courtesy of VOLVO CARS CORPORATION

- Ignition off
- Reinstall the connectors, components etc.
- Ignition on
- Read off the engine coolant temperature.

NOTE: It is important that only the ignition is on in order for the heater to start.

- Activate the heater.

HINT: After repair, the voltage of the flame sensor can be checked. The voltage must be a maximum of 1.0 V.

Check the heater function.

CAUTION: In order for to enable start of the heater itself, the battery voltage must be normal, coolant temperature must be lower than +96 °C and the heater's after-run/stop sequence must be finished. There must also be enough fuel in the tank.

CAUTION: If the heater or other components are not activated, try starting the activation again using the VCT2000 (or appropriate scan tool).

Other information:

- see **ENGINE COOLANT HEATER, TEST RUNNING** .

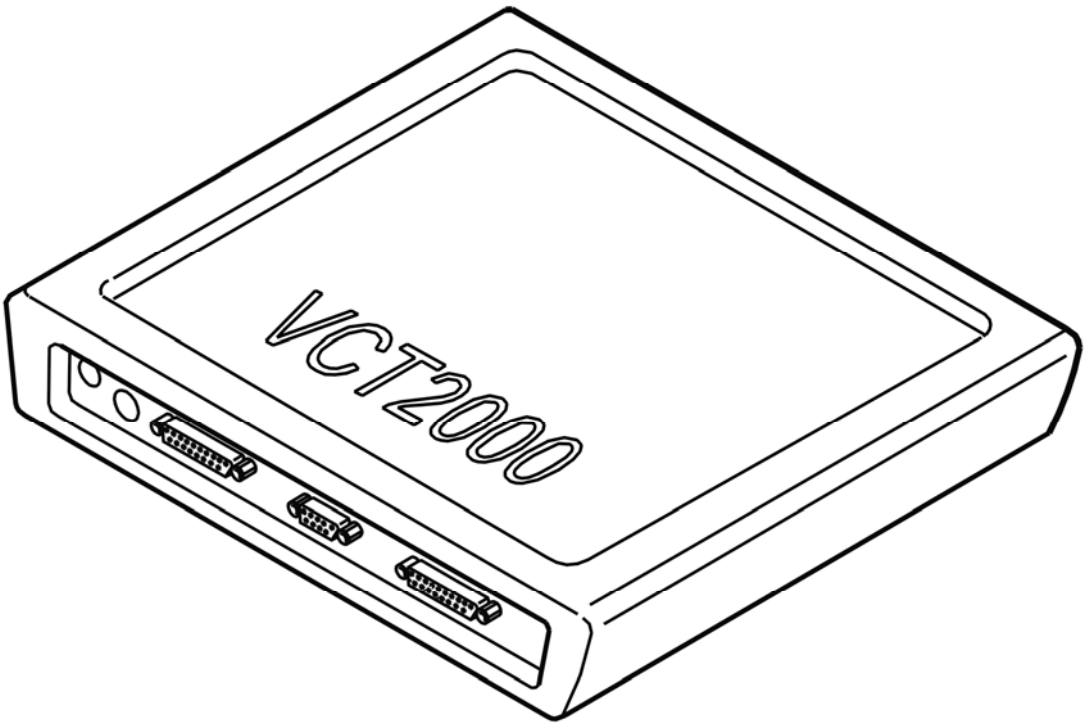

Fig. 341: Identifying VCT2000 Diagnostic Tool Symbol In VIDA
Courtesy of VOLVO CARS CORPORATION

Is the heater working?

- **YES**

VERIFIED: Troubleshooting has been completed.

- **NO**

  Refer to **INFORMATION**

INFORMATION

FAULT-TRACING INFORMATION

The fault should have been detected and remedied. As this is not the case fault-tracing has failed.

Exit fault-tracing for this diagnostic trouble code (DTC) or make another attempt.

CEM-5F40: FUEL PUMP. SIGNAL TOO LOW (B5254T2; B6294T; 2003-2004)

DIAGNOSTIC TROUBLE CODE INFORMATION

Condition

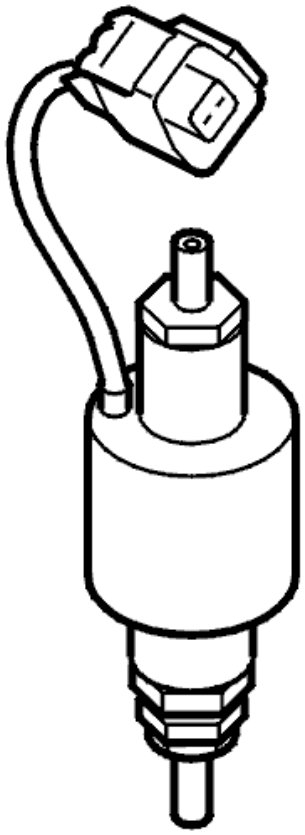

Fig. 342: Identifying Fuel Pump
Courtesy of VOLVO CARS CORPORATION

If the fuel pump circuit is short-circuited to ground or if there is an open circuit, the control unit will interpret this as a fault, and diagnostic trouble code CEM-5F40 will be set.

Substitute Value

- None.

Possible Source

- Contact resistance in control unit or fuel pump connector.
- Signal wire short-circuited to ground.
- Open circuit in signal wire.
- Open circuit in voltage wire.
- Damaged fuel pump.
- Damaged overheat protection thermostat.

Fault symptom[s]

- Poor interior heating.

SIGNAL TOO LOW

CHECKING THE FUNCTION OF THE FUEL PUMP (FP)

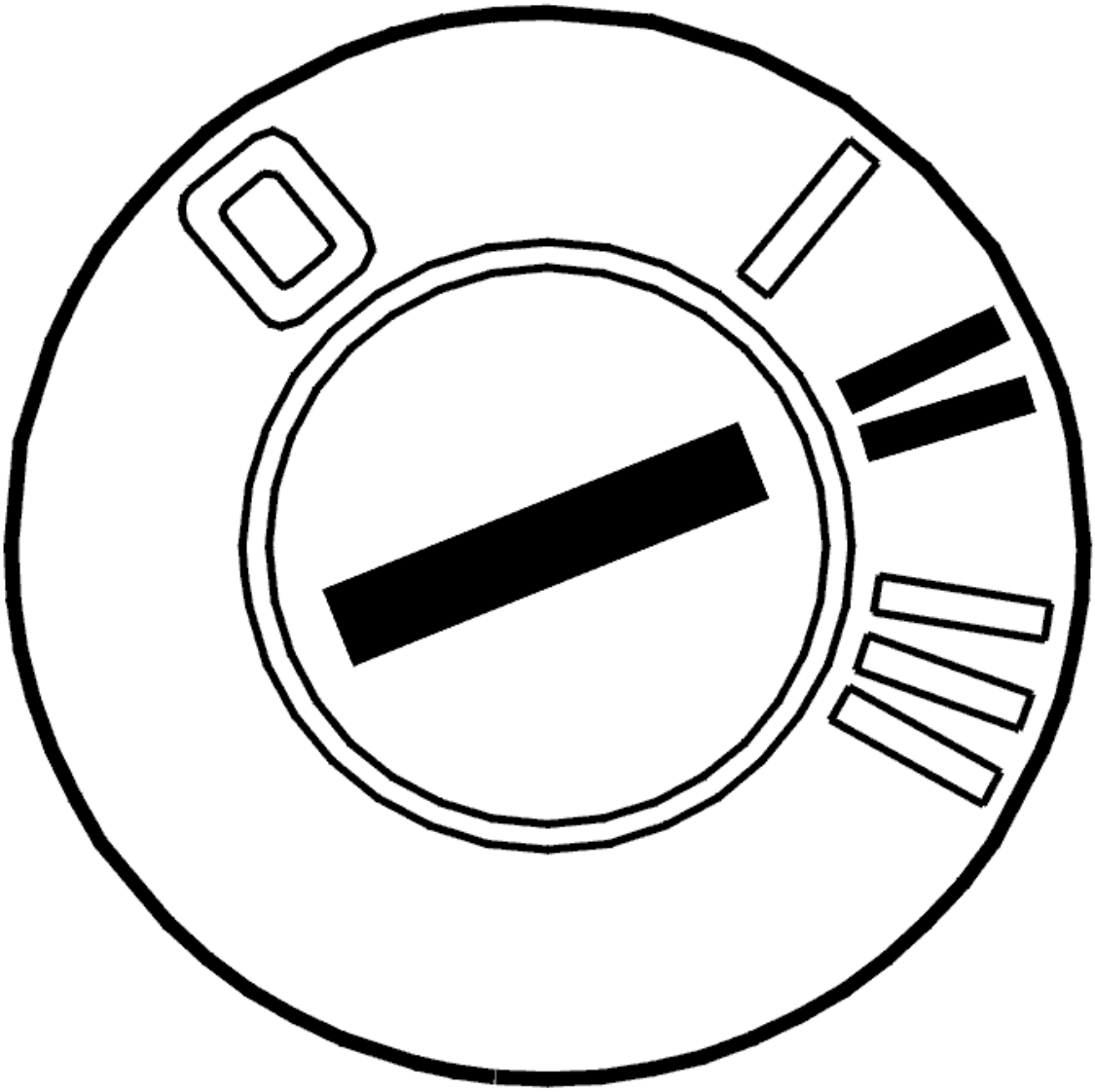

Fig. 343: Identifying Ignition ON
Courtesy of VOLVO CARS CORPORATION

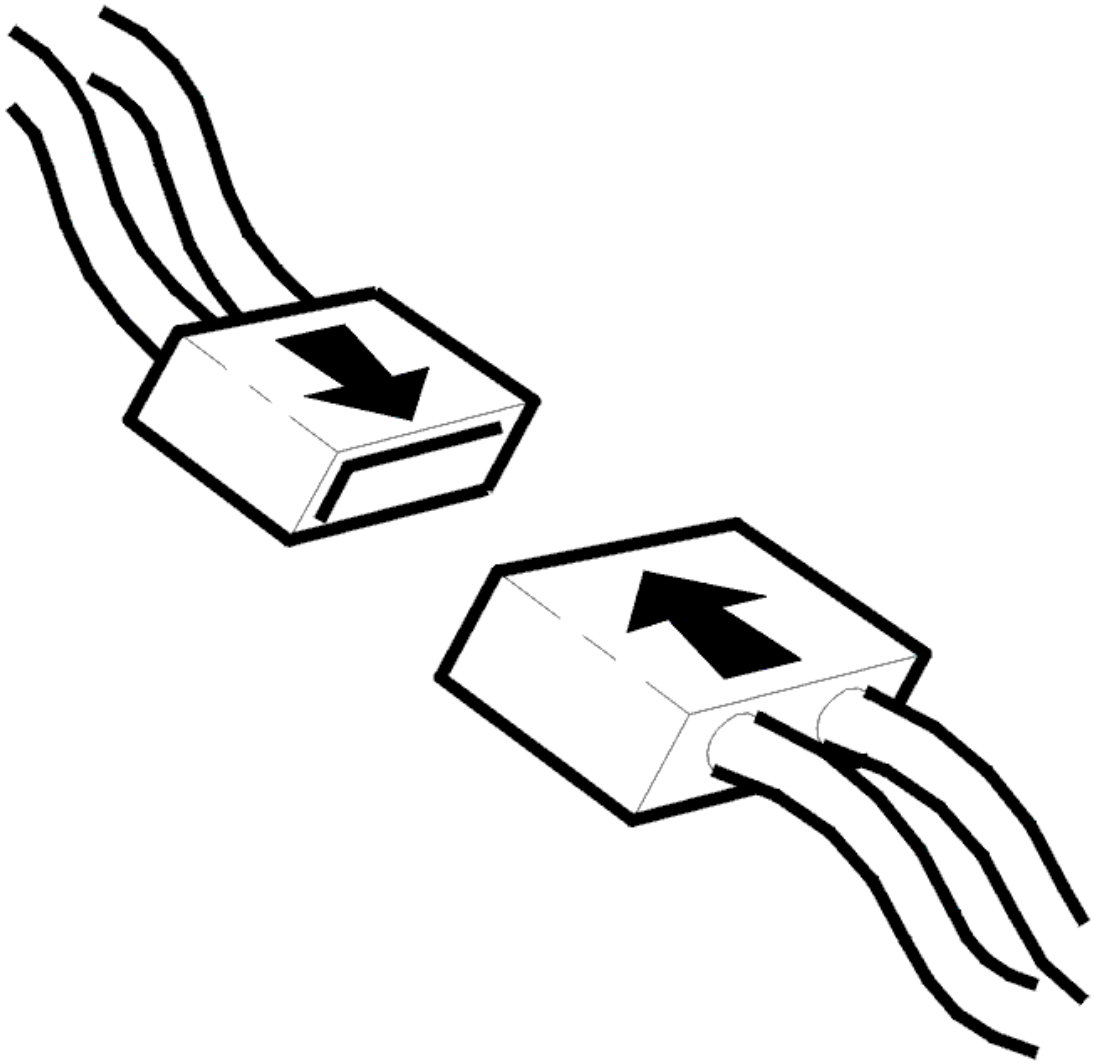

Fig. 344: Connecting Connector
Courtesy of VOLVO CARS CORPORATION

- Ignition on.

  NOTE: It is important that only the ignition is on in order for the heater to start.

- Activate the heater.

  A buzzing sound should be heard from the heater.

  Check the function of the heater. See **ENGINE COOLANT HEATER, TEST RUNNING** .

  Other information:

- For a description of parameters, see **DESCRIPTION OF PARAMETERS**
- For a description of activations, see **ACTIVATING COMPONENTS/FUNCTIONS** .

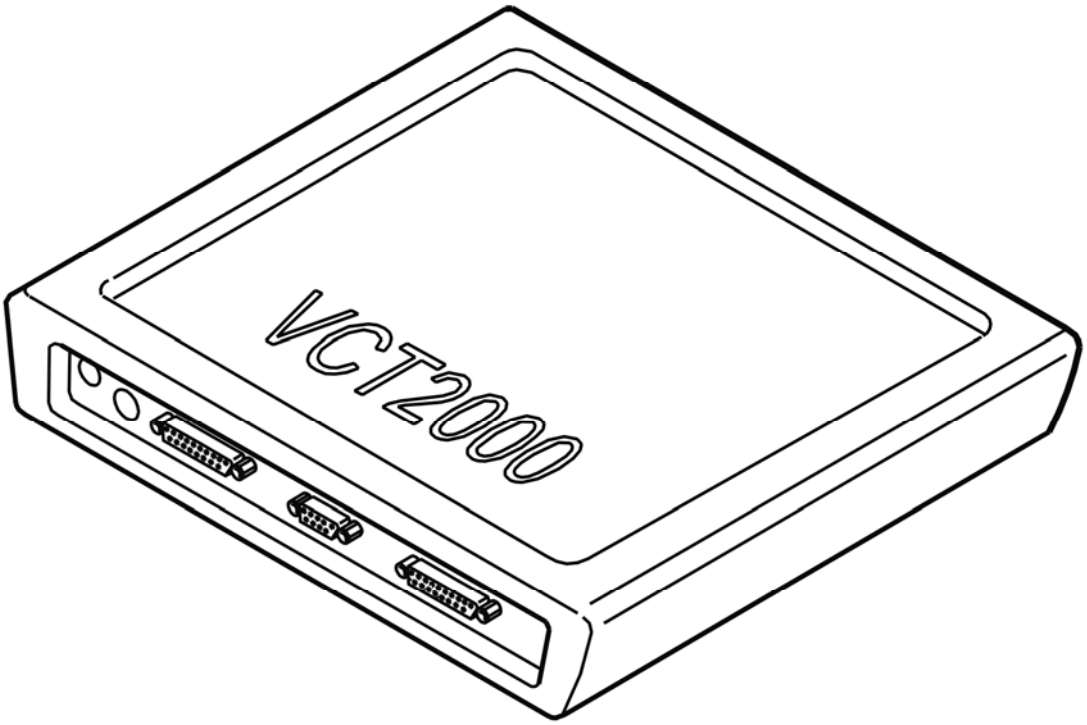

Fig. 345: Identifying VCT2000 Diagnostic Tool Symbol In VIDA
Courtesy of VOLVO CARS CORPORATION

Does the heater operate?

- **YES**

  Refer to **INTERMITTENT FAULT**

- **NO**

  Refer to **CHECKING THE CONNECTORS**

CHECKING THE CONNECTORS

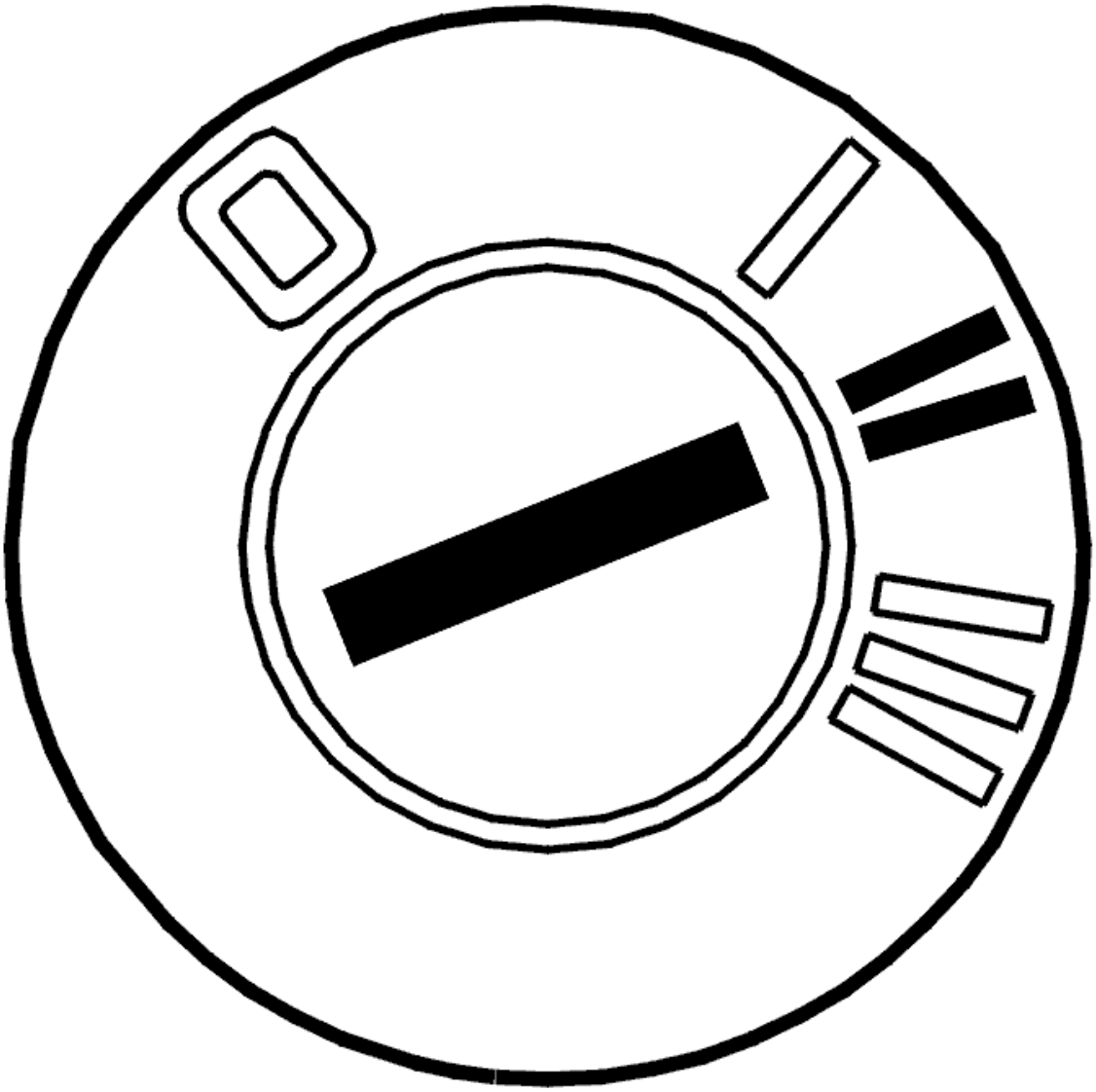

Fig. 346: Identifying Ignition ON
Courtesy of VOLVO CARS CORPORATION

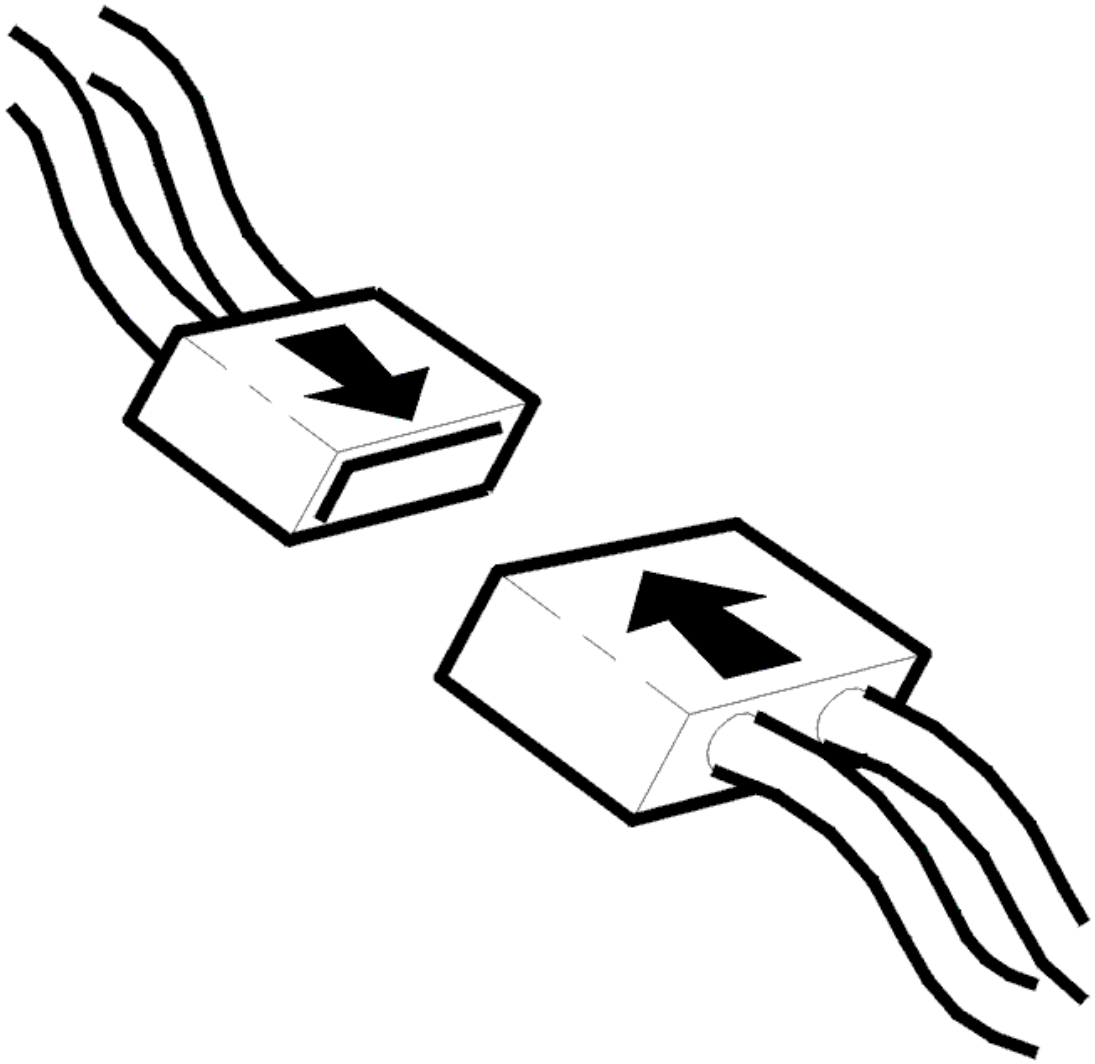

Fig. 347: Connecting Connector
Courtesy of VOLVO CARS CORPORATION

- Ignition off
- Check the fuel pump (FP) and the control module connectors. Check for contact resistance and oxidation and remedy.

  Check for damage carefully

- Reinstall the components, reconnect the connectors etc.
- Ignition on.

NOTE: It is important that only the ignition is on in order for the heater to start.

- Activate the heater.

A buzzing sound should be heard from the heater.

Check the function of the heater. See **ENGINE COOLANT HEATER, TEST RUNNING** .

If the heater now functions, the cause of the fault was loose connections in the connectors.

Other information:

- To access the control module or connect the breakout box, see **CONNECTING THE BREAKOUT BOX**
- To access or replace the fuel pump (FP), see **FUEL PUMP AUXILIARY HEATER, REPLACING**
- For other values, see **SIGNAL SPECIFICATION**
- see **CHECKING WIRING AND TERMINALS** .

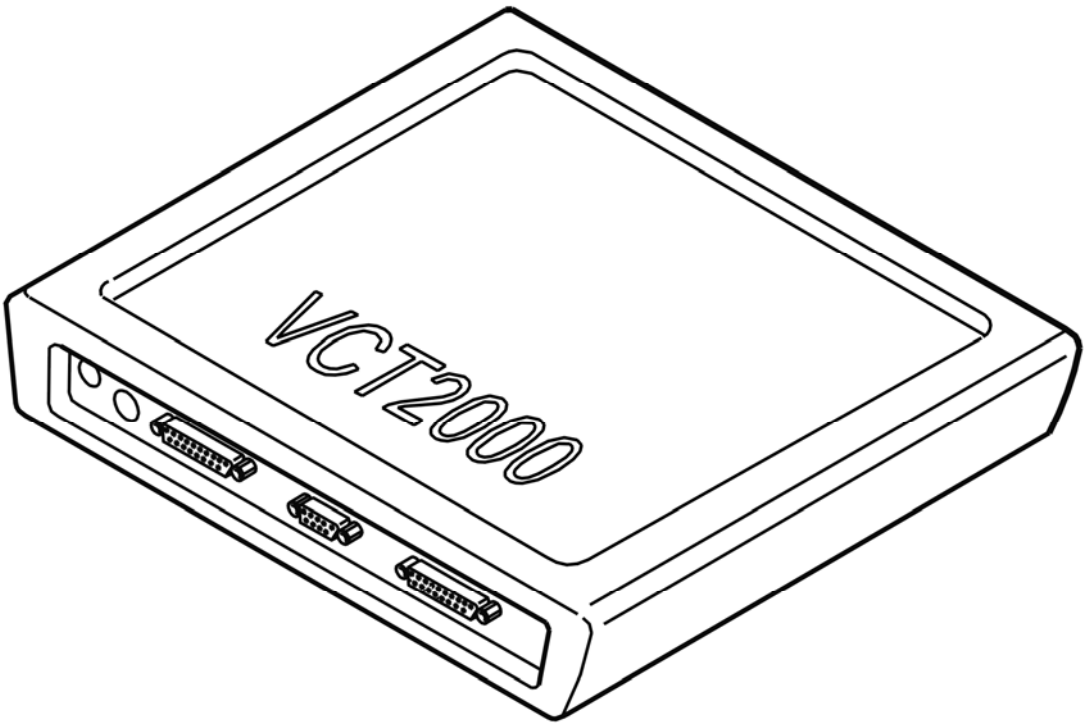

Fig. 348: Identifying VCT2000 Diagnostic Tool Symbol In VIDA
Courtesy of VOLVO CARS CORPORATION

Does the heater operate?

- **YES**

OKAY: Troubleshooting has been completed.

- **NO**

  Refer to **CHECKING THE OVERHEAT PROTECTION THERMOSTAT**

CHECKING THE OVERHEAT PROTECTION THERMOSTAT

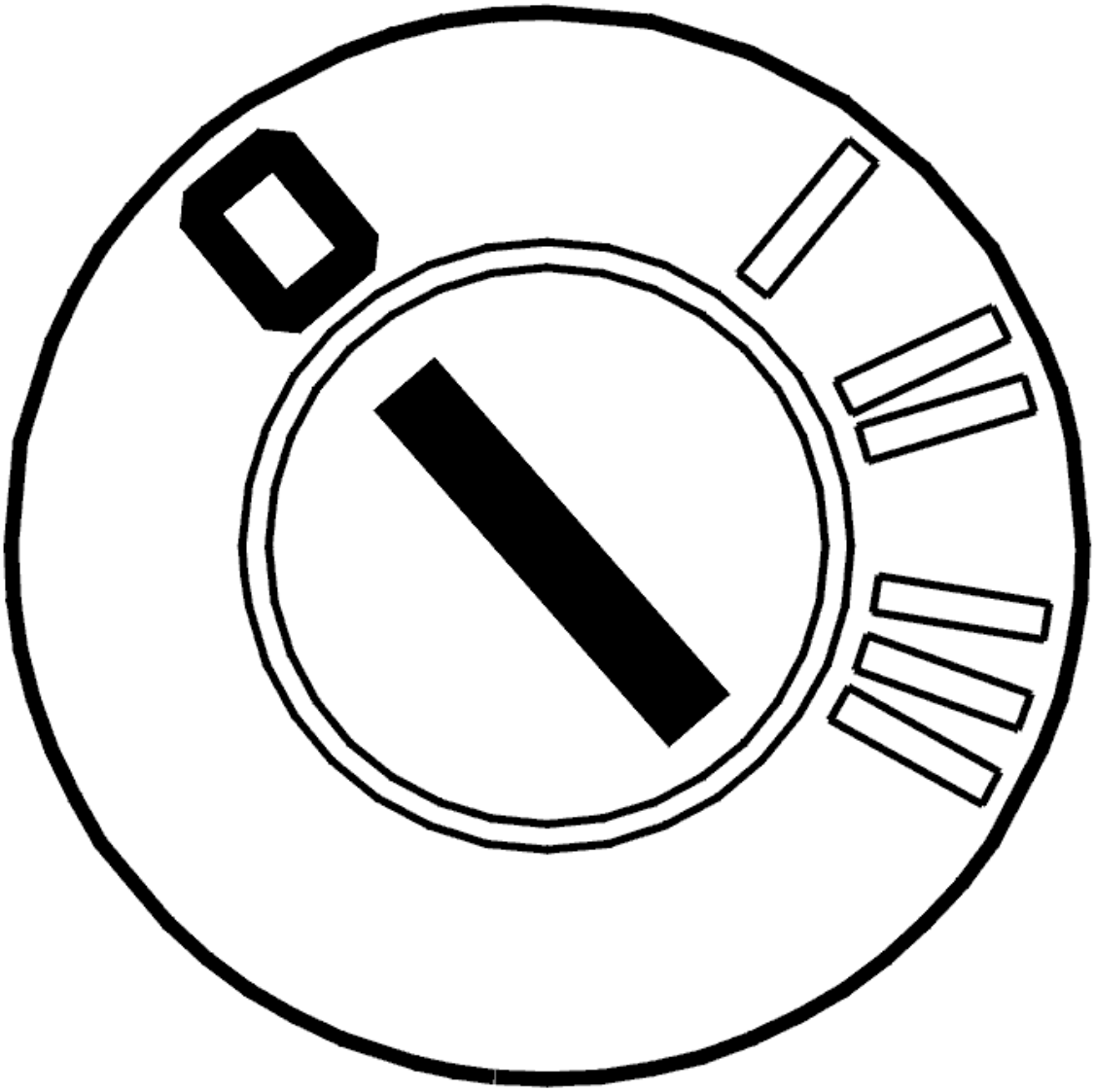

Fig. 349: Identifying Ignition OFF
Courtesy of VOLVO CARS CORPORATION

- Ignition off.

  Measure between the overheat protection thermostat terminals using an ohmmeter. The resistance must be approximately 0 ohms.

  The overheat protection thermostat must be replaced if the value is not correct.

Other information:

- To access or replace the overheat protection thermostat, see **OVERHEAT PROTECTION THERMOSTAT / FLAME SENSOR / ENGINE COOLANT TEMPERATURE SENSOR, REPLACING** .

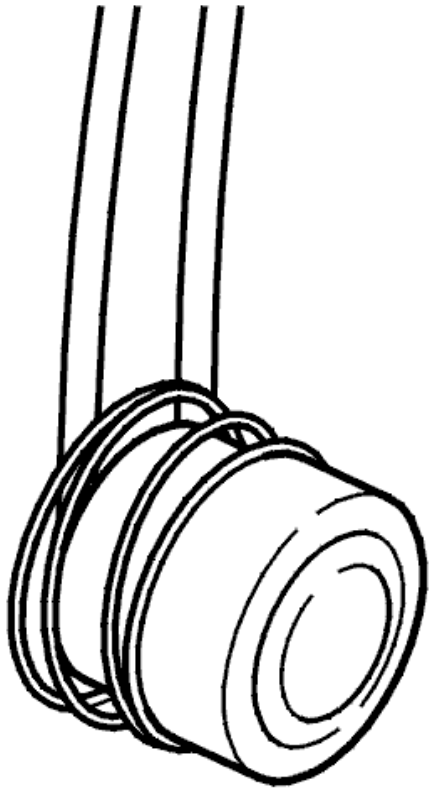

Fig. 350: Identifying Overheat Protection Thermostat
Courtesy of VOLVO CARS CORPORATION

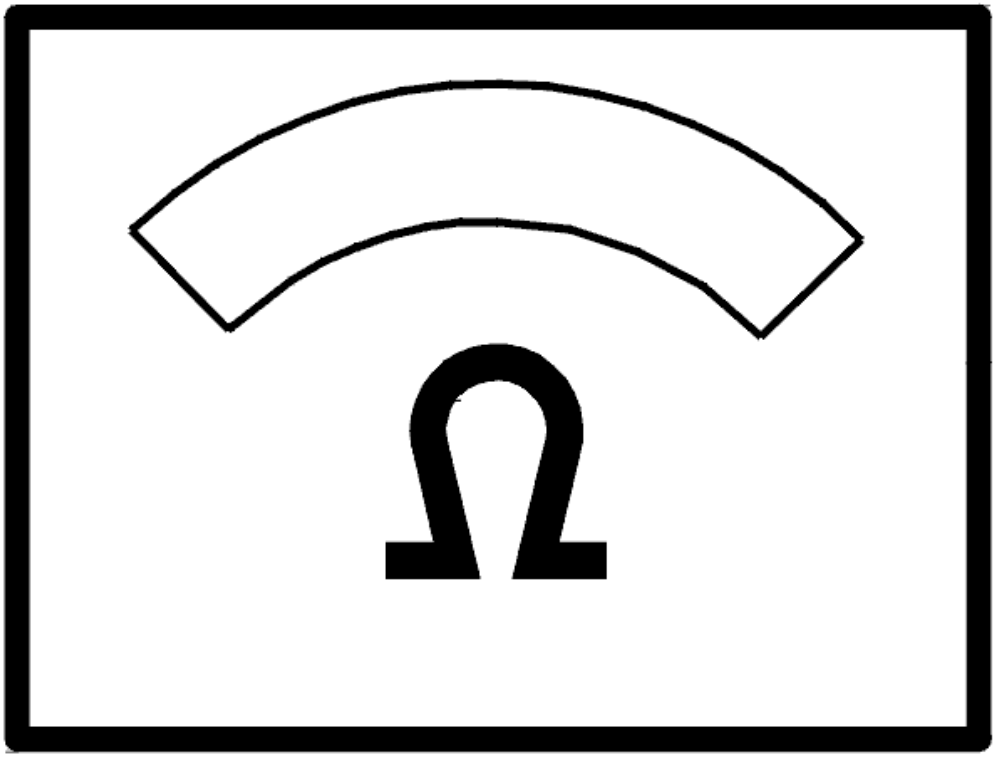

Fig. 351: Identifying Ohm Meter
Courtesy of VOLVO CARS CORPORATION

Was a fault detected?

- **YES**

  Refer to **VERIFICATION**

- **NO**

  Refer to **CHECKING COMPONENTS AND WIRING**

CHECKING COMPONENTS AND WIRING

Check the cable between control module terminal #13 and fuel pump terminal 2. Check for an open-circuit.

Check for a short-circuit to ground.

Check the cable between control module terminal #11 and fuel pump (FP) terminal 1. Check for an open-circuit.

Replace the fuel pump (FP) if no fault is found in the wiring.

NOTE: **Diagnostic trouble code (DTC) CEM-5F3B Water pump, signal and / or diagnostic trouble code (DTC) CEM-5F3D Combustion fan, signal may also be stored if there is a fault in the power cable.**

Remedy as necessary.

Other information:

- To access the control module or connect the breakout box, see **CONNECTING THE BREAKOUT BOX**
- To access or replace the fuel pump (FP), see **FUEL PUMP AUXILIARY HEATER, REPLACING**
- For other values, see **SIGNAL SPECIFICATION**
- see **CHECKING WIRING AND TERMINALS** .

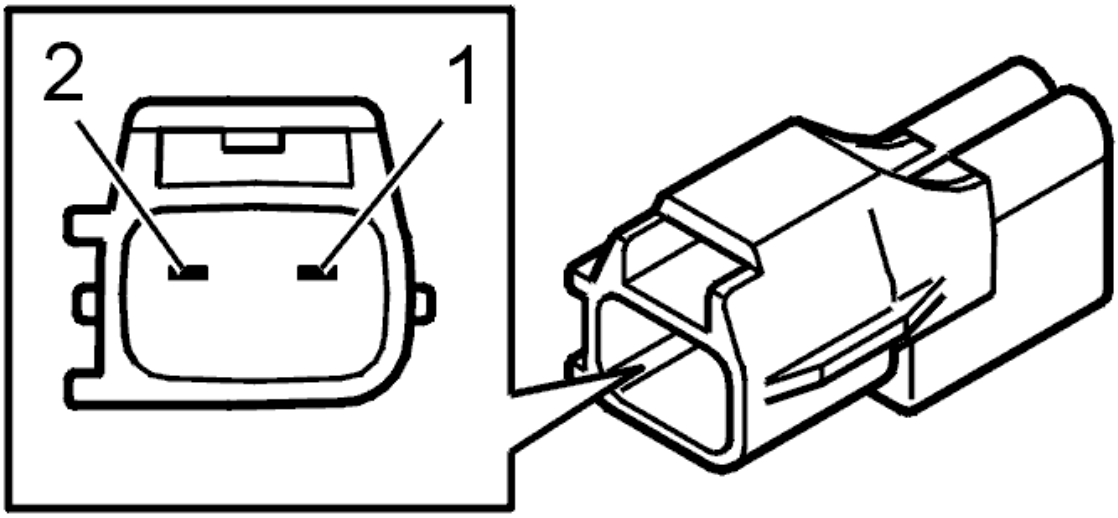

Fig. 352: Identifying Fuel Pump Connector Terminals
Courtesy of VOLVO CARS CORPORATION

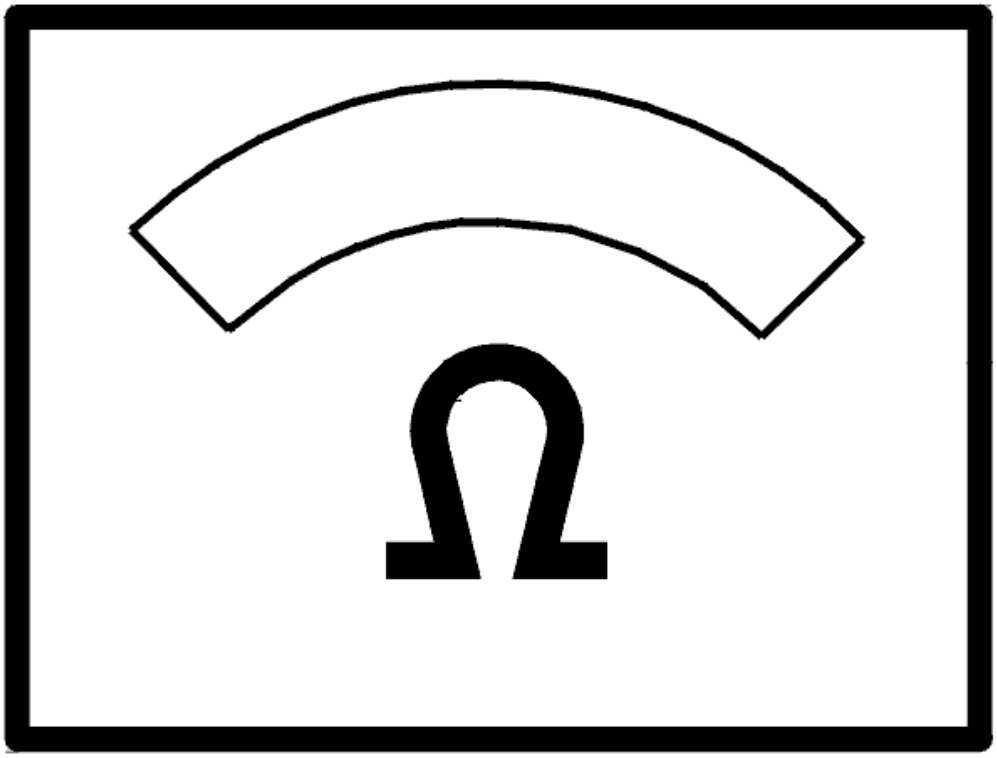

Fig. 353: Identifying Ohm Meter
Courtesy of VOLVO CARS CORPORATION

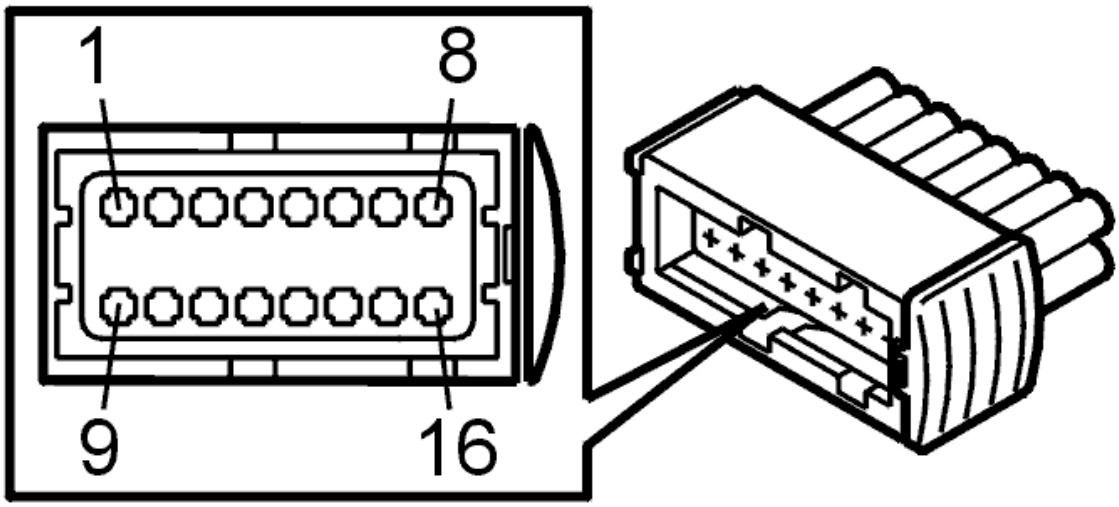

Fig. 354: Identifying Connector Terminals
Courtesy of VOLVO CARS CORPORATION

- **Continue**

  Refer to **VERIFICATION**

INTERMITTENT FAULT

Check the fuel pump (FP) and the control module connectors. Check for contact resistance and oxidation.

Check the cable between control module terminal #13 and fuel pump terminal 2. Check for an intermittent open-circuit. Check for a short-circuit to ground.

Check the cable between control module #11 and water pump terminal 1. Check for an intermittent open-circuit.

Remedy as necessary.

Other information:

- To access the control module or connect the breakout box, see **CONNECTING THE BREAKOUT BOX**
- To access or replace the fuel pump (FP), see **FUEL PUMP AUXILIARY HEATER, REPLACING**
- For other values, see **SIGNAL SPECIFICATION**
- see **CHECKING WIRING AND TERMINALS** .

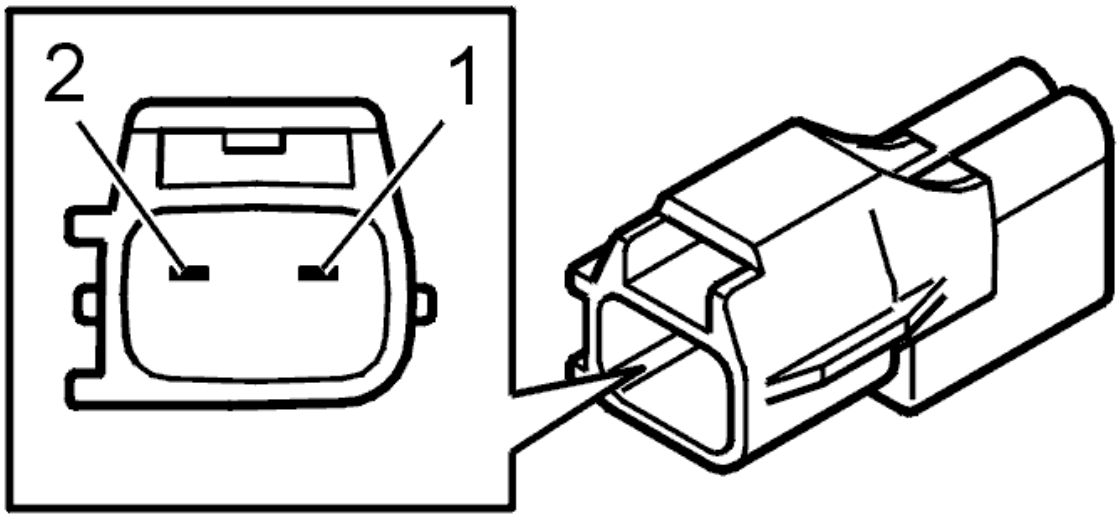

Fig. 355: Identifying Fuel Pump Connector Terminals
Courtesy of VOLVO CARS CORPORATION

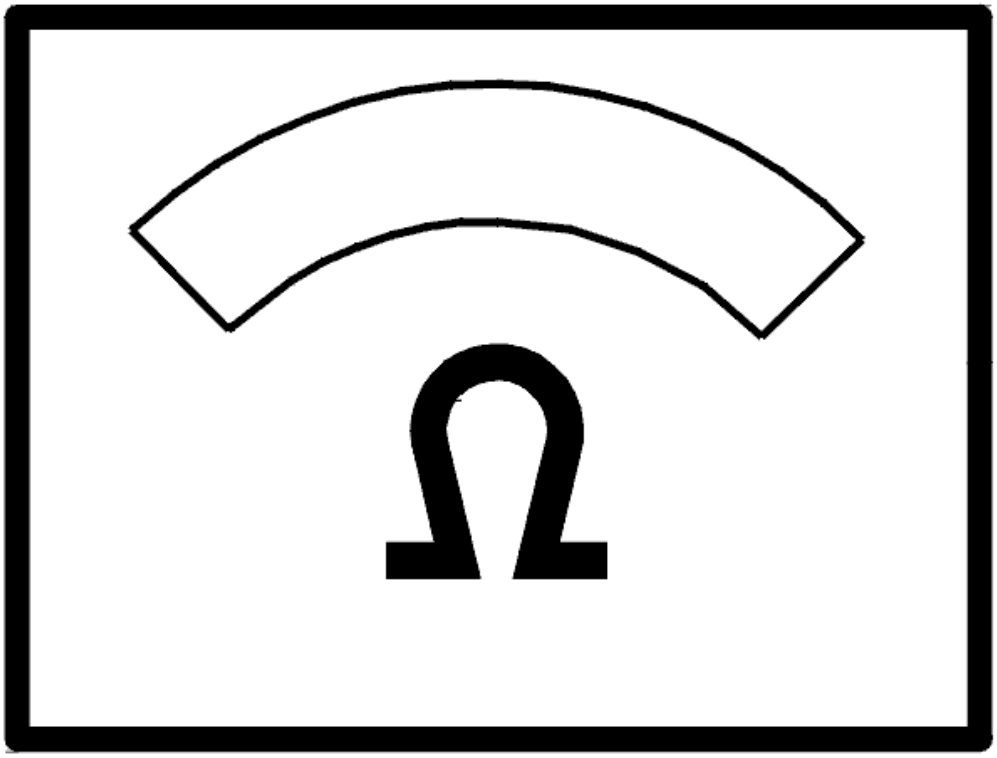

Fig. 356: Identifying Ohm Meter
Courtesy of VOLVO CARS CORPORATION

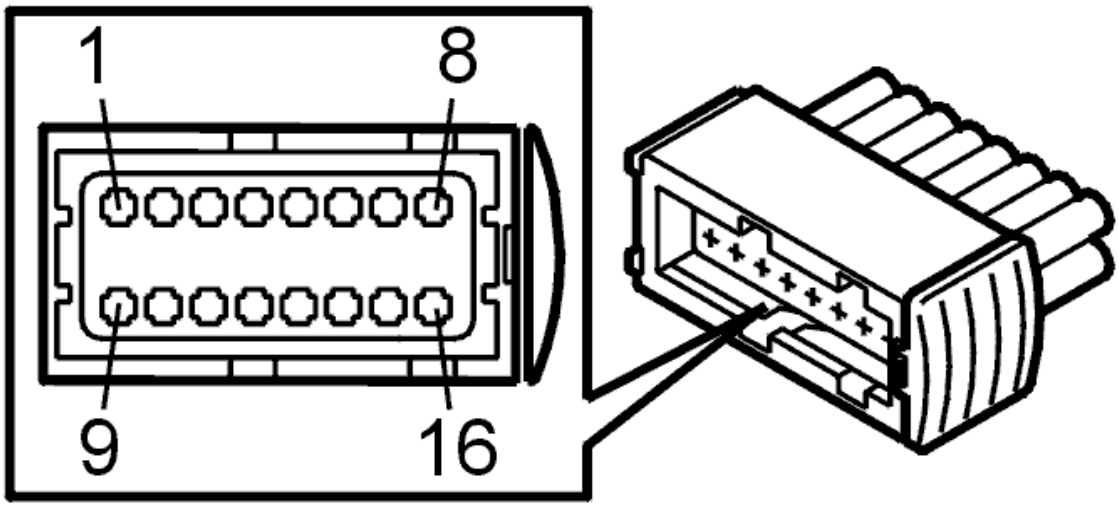

Fig. 357: Identifying Connector Terminals
Courtesy of VOLVO CARS CORPORATION

- **Continue**

  Refer to **INFORMATION**

  OKAY: Troubleshooting has been completed.

VERIFICATION

VERIFICATION

HINT: After the repair it is necessary to check that the fault has been rectified.

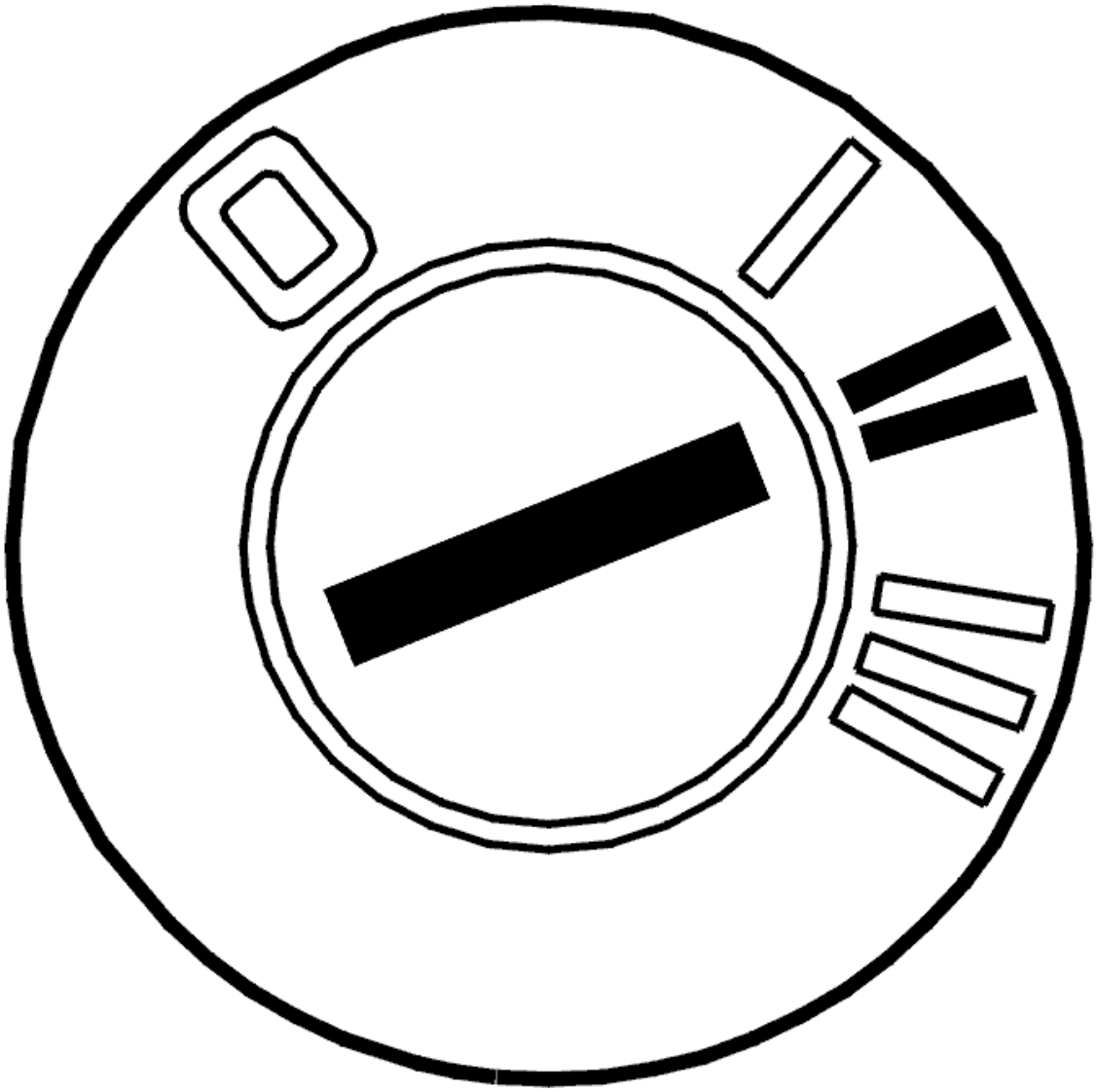

Fig. 358: Identifying Ignition ON
Courtesy of VOLVO CARS CORPORATION

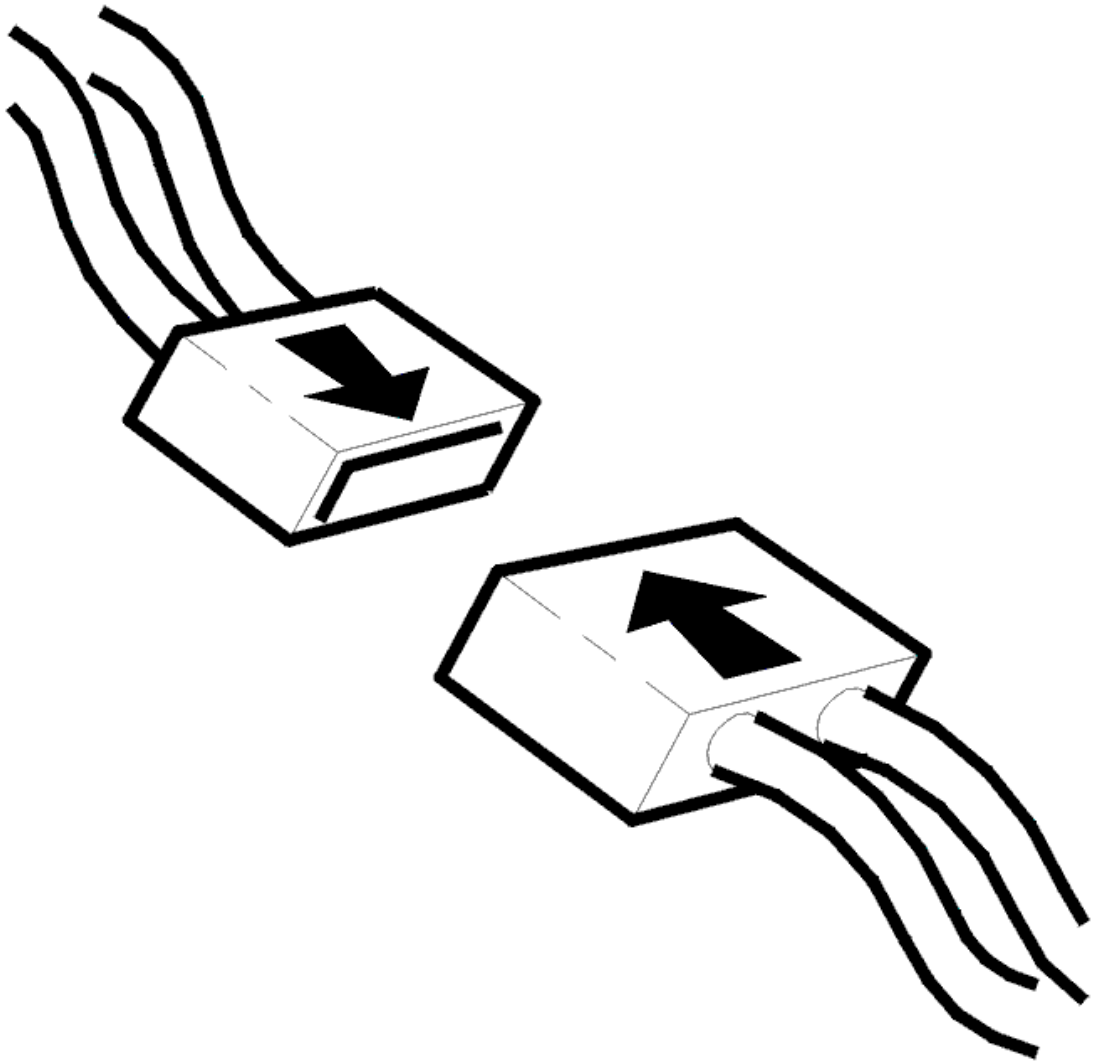

Fig. 359: Connecting Connector
Courtesy of VOLVO CARS CORPORATION

- Ignition off.
- Connect connector, install components etc.
- Ignition on.

NOTE: It is important that only the ignition is on for the heater to start up.

- Activate the heater.

  A buzzing sound should be heard from the heater.

  Check the function of the heater as described in, see **ENGINE COOLANT HEATER, TEST RUNNING** .

Additional information:

- For a description of the parameters, see **DESCRIPTION OF PARAMETERS** .
- For a description of activations, see **ACTIVATING COMPONENTS/FUNCTIONS** .

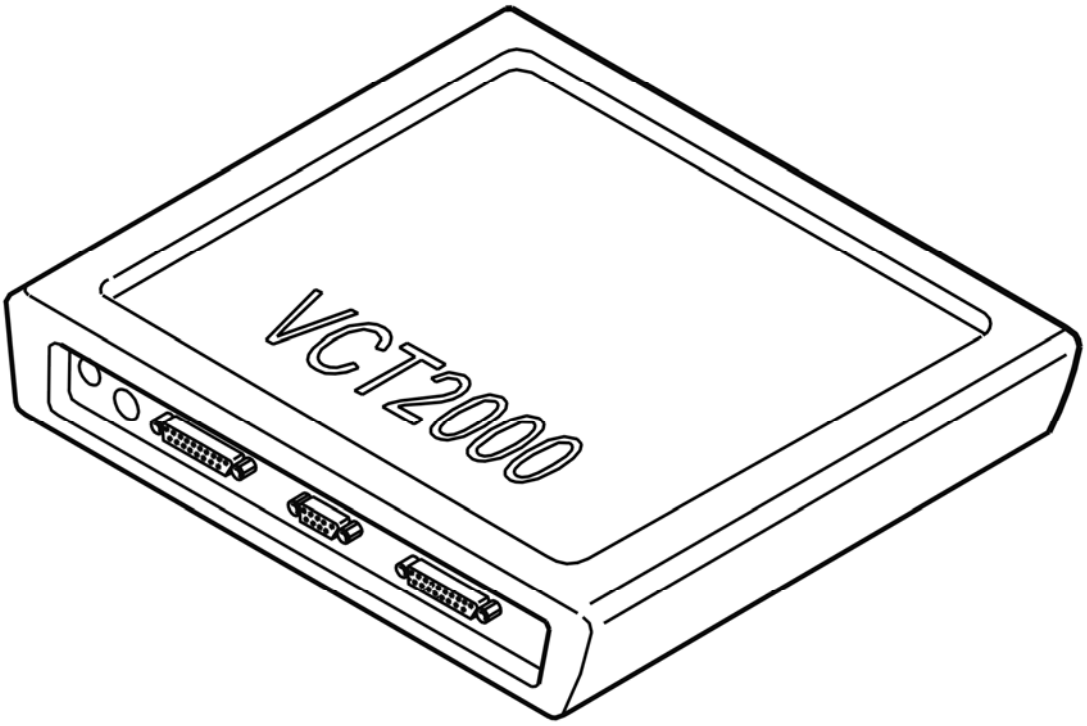

Fig. 360: Identifying VCT2000 Diagnostic Tool Symbol In VIDA
Courtesy of VOLVO CARS CORPORATION

Does the heater work?

- **YES**

  VERIFIED: Troubleshooting has been completed.

- **NO**

  Refer to **INFORMATION**

INFORMATION

FAULT-TRACING INFORMATION

The fault should have been detected and remedied. As this is not the case fault-tracing has failed.

Exit fault-tracing for this diagnostic trouble code (DTC) or make another attempt.

INFORMATION

FAULT-TRACING INFORMATION

If the fault is intermittent, do not verify fault-tracing if the fault does not recur.

It is possible to view the information again, or leave fault-tracing for this diagnostic trouble code (DTC).

CEM-5F41: OVERHEAT PROTECTION THERMOSTAT. SIGNAL TOO LOW (2005-2012)

DIAGNOSTIC TROUBLE CODE (DTC) INFORMATION CEM-5F41

Condition

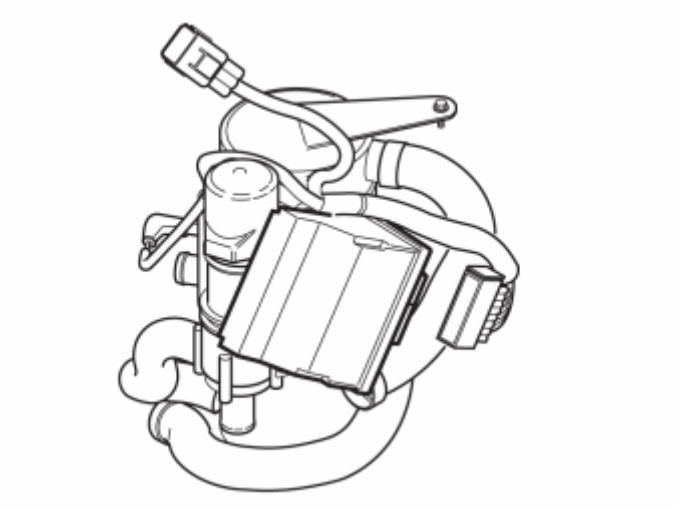

Fig. 361: Identifying Parking Heater
Courtesy of VOLVO CARS CORPORATION

The central electronic module (CEM) checks the communication with the combustion preheater module (CPM).

The diagnostic trouble code (DTC) is stored if the central electronic module (CEM) registers that the overheat protection thermostat has deployed.

The diagnostic trouble code (DTC) can be diagnosed when the heater is activated.

Substitute Value

- None.

Possible Source

- Air in the cooling system
- The cooling system is blocked
- Damaged overheat protection thermostat
- Damaged engine coolant temperature (ECT) sensor.
- Open circuit on fuel pump circuit.

Fault symptom[s]

- Poor heating in the passenger compartment.

SIGNAL TOO LOW

CHECKING THE WATER FLOW

HINT: The overheating thermostat cuts out at 120 °C.

Check if the lines to and from the heater are blocked, or if the heater is damaged causing the through flow to be restricted in some way.

Remedy as necessary.

Was a fault detected?

- **YES**

  Refer to **VERIFICATION**

- **NO**

  Refer to **CHECKING THE ENGINE COOLANT TEMPERATURE SENSOR**

CHECKING THE ENGINE COOLANT TEMPERATURE SENSOR

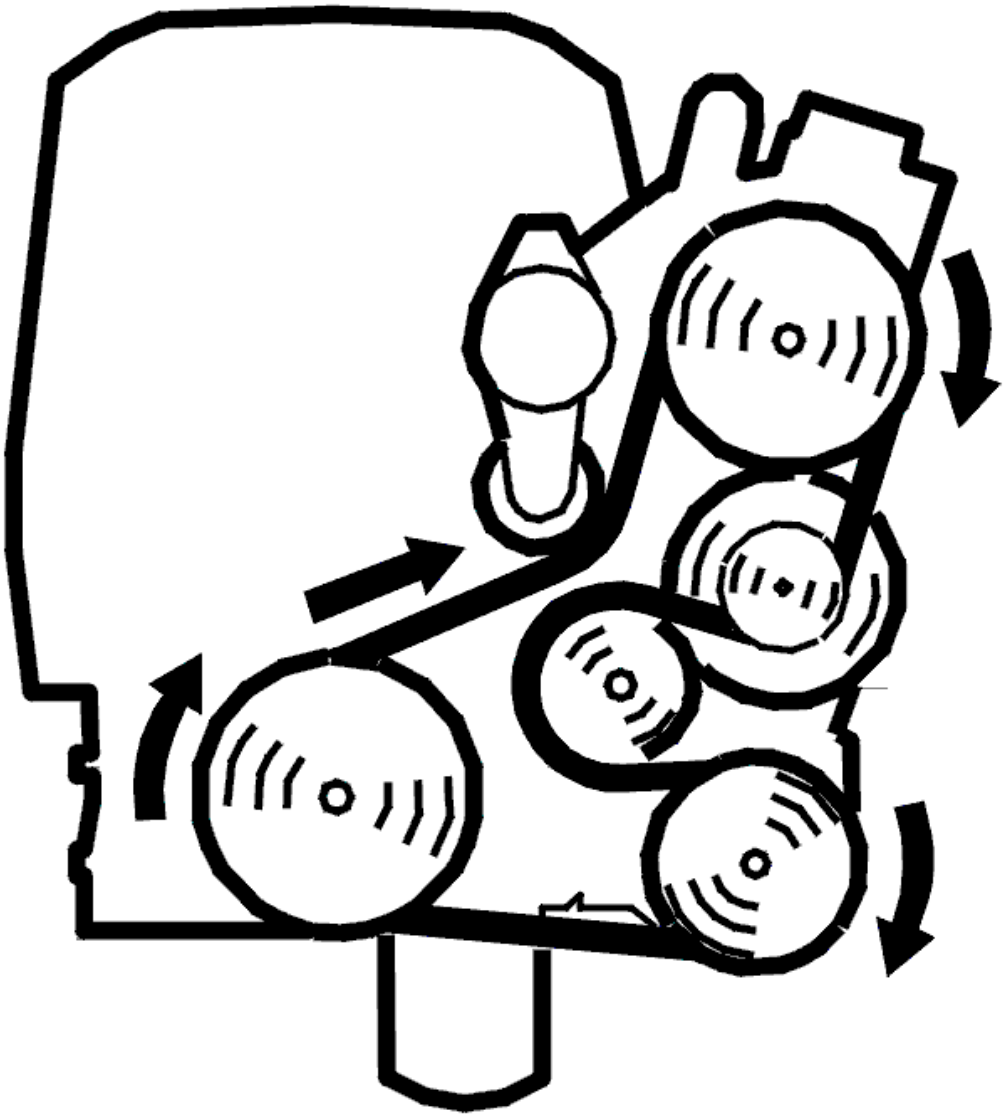

Fig. 362: Belt Routing / Engine Idling - Volvo
Courtesy of VOLVO CARS CORPORATION

- Start the engine
- Read off the coolant temperature in the heater.

  Check that the engine coolant temperature (ECT) reading is correct. Compare with the actual coolant temperature of the engine.

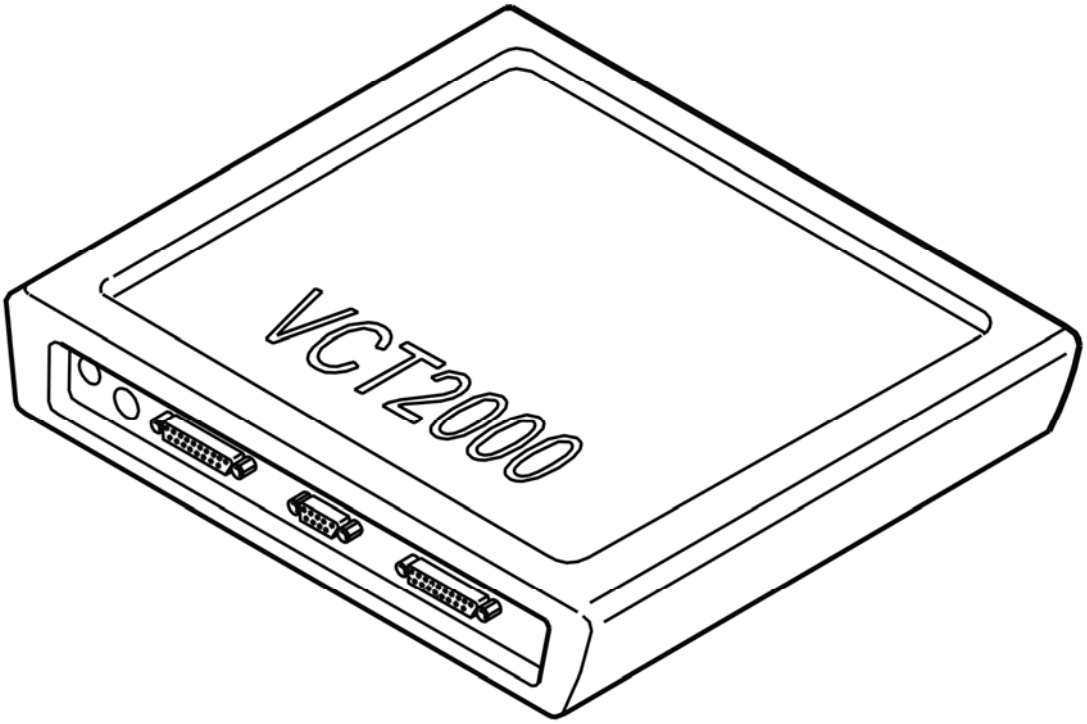

Fig. 363: Identifying VCT2000 Diagnostic Tool Symbol In VIDA
Courtesy of VOLVO CARS CORPORATION

Is the temperature reading OK?

- **YES**

  Refer to **CHECKING COMPONENTS AND WIRING**

- **NO**

  Refer to **CHECKING COMPONENTS AND WIRING**

CHECKING COMPONENTS AND WIRING

Check the resistance of the engine coolant temperature sensor.

Remedy as necessary.

Other information:

- see **SIGNAL SPECIFICATION**
- see **COMPONENTS RESISTANCE VALUES**

- see **OVERHEAT PROTECTION THERMOSTAT / FLAME SENSOR / ENGINE COOLANT TEMPERATURE SENSOR, REPLACING**

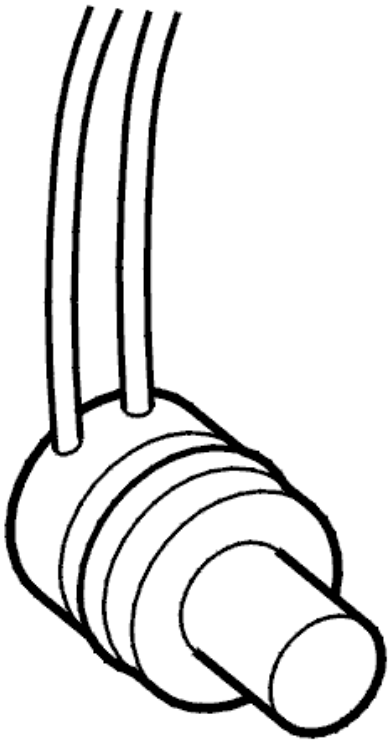

Fig. 364: Identifying Engine Coolant Temperature Sensor
Courtesy of VOLVO CARS CORPORATION

- **Continue**

  Refer to **VERIFICATION**

CHECKING COMPONENTS AND WIRING

Check the fuel pump (FP) and combustion preheater module (CPM) connectors. Check for contact resistance and oxidation.

Check the cable between combustion preheater module (CPM) terminal #13 and fuel pump terminal 1. Check for an intermittent open-circuit.

Check the cable between combustion preheater module (CPM) terminal #11 and fuel pump terminal 2. Check for an intermittent open-circuit.

NOTE: Diagnostic trouble code (DTC) CEM-5F3B and/or diagnostic trouble code (DTC) CEM-5F3D may also be stored if there is a fault in the power cable.

Remedy as necessary.

Other information:

- see **CONNECTING THE BREAKOUT BOX**
- see **FUEL PUMP AUXILIARY HEATER, REPLACING**
- see **OVERHEAT PROTECTION THERMOSTAT / FLAME SENSOR / ENGINE COOLANT TEMPERATURE SENSOR, REPLACING**
- see **CHECKING WIRING AND TERMINALS**

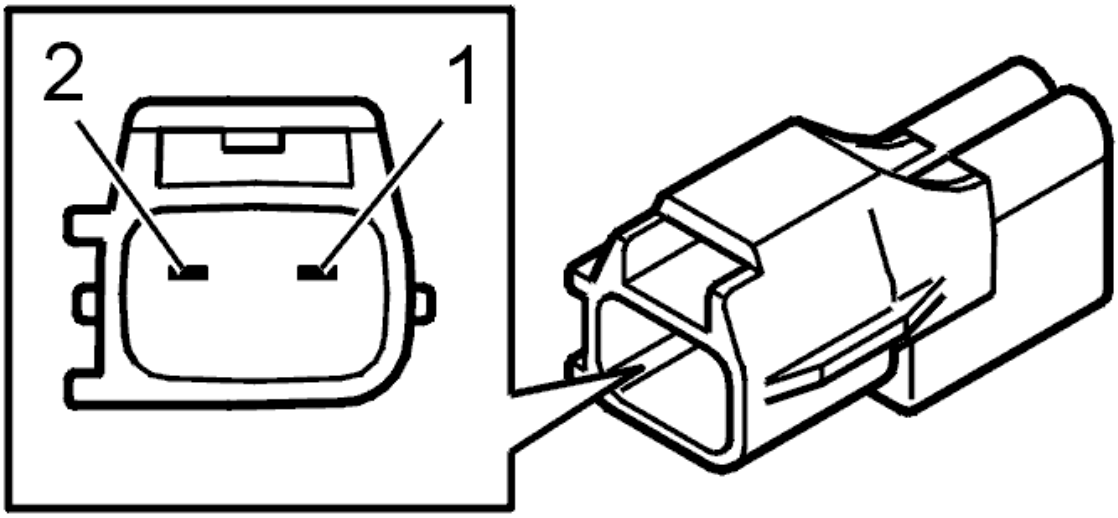

Fig. 365: Identifying Fuel Pump Connector Terminals
Courtesy of VOLVO CARS CORPORATION

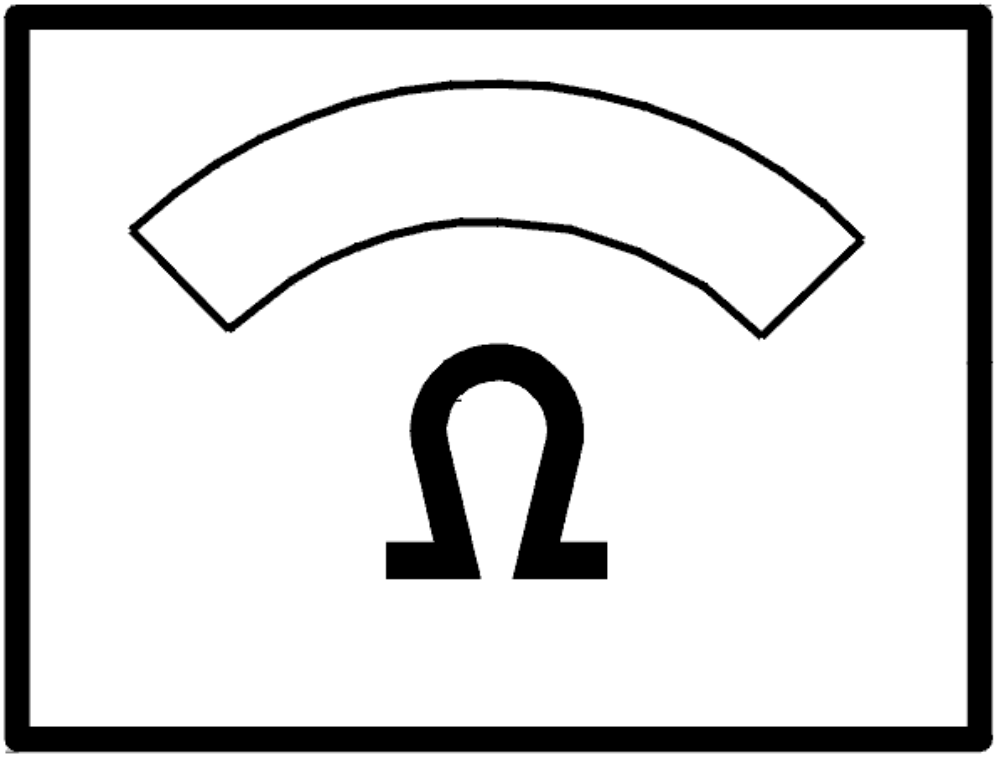

Fig. 366: Identifying Ohm Meter
Courtesy of VOLVO CARS CORPORATION

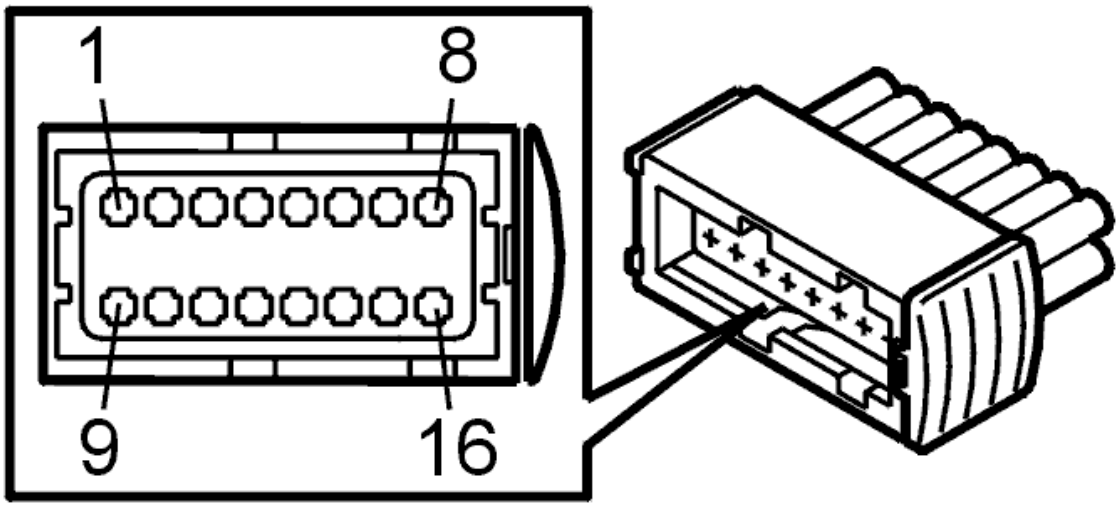

Fig. 367: Identifying Connector Terminals
Courtesy of VOLVO CARS CORPORATION

- **Continue**

  Refer to **VERIFICATION**

VERIFICATION

VERIFICATION

HINT: After carrying out the repair, check that the fault has been remedied.

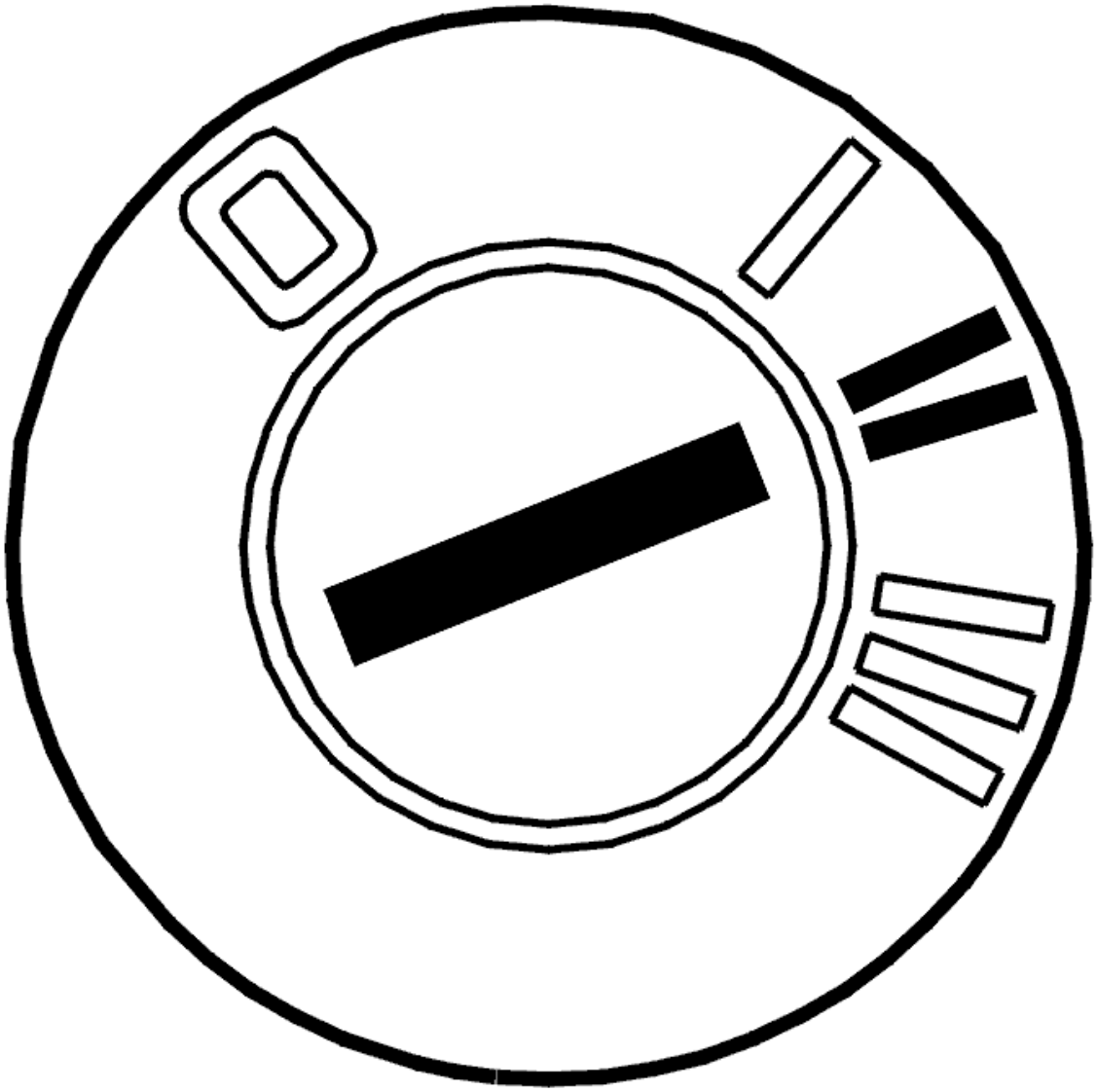

Fig. 368: Identifying Ignition ON
Courtesy of VOLVO CARS CORPORATION

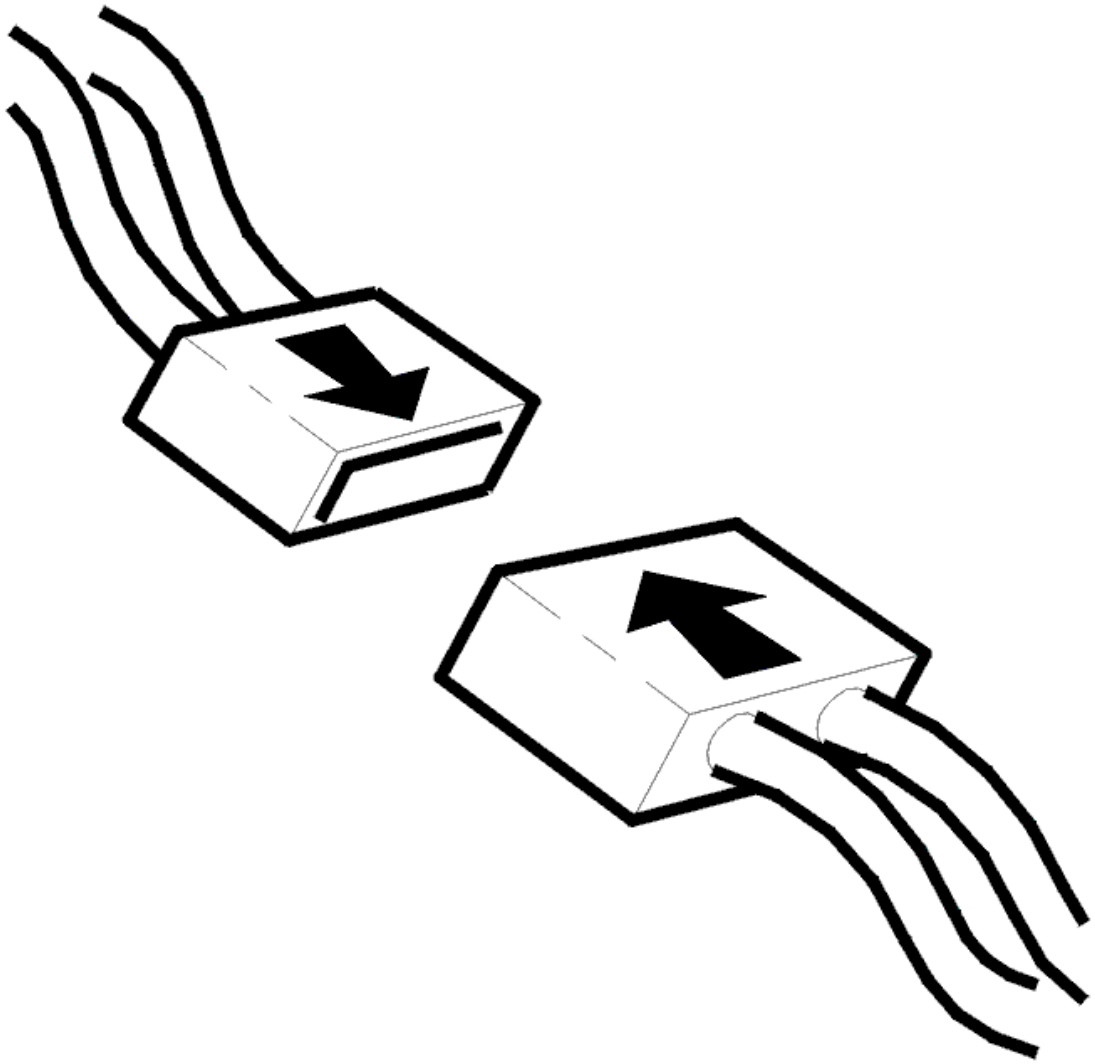

Fig. 369: Connecting Connector
Courtesy of VOLVO CARS CORPORATION

- Ignition off
- Reinstall the connectors, components etc.
- Ignition on
- Read off the engine coolant temperature.

NOTE: It is important that only the ignition is on in order for the heater to start.

- Activate the heater.

HINT: After repair, the voltage of the flame sensor can be checked. The voltage must be a maximum of 1.0 V.

Check the heater function.

CAUTION: In order for to enable start of the heater itself, the battery voltage must be normal, coolant temperature must be lower than +96 °C and the heater's after-run/stop sequence must be finished. There must also be enough fuel in the tank.

CAUTION: If the heater or other components are not activated, try starting the activation again using the VCT2000 (or appropriate scan tool).

Other information:

- see **ENGINE COOLANT HEATER, TEST RUNNING** .

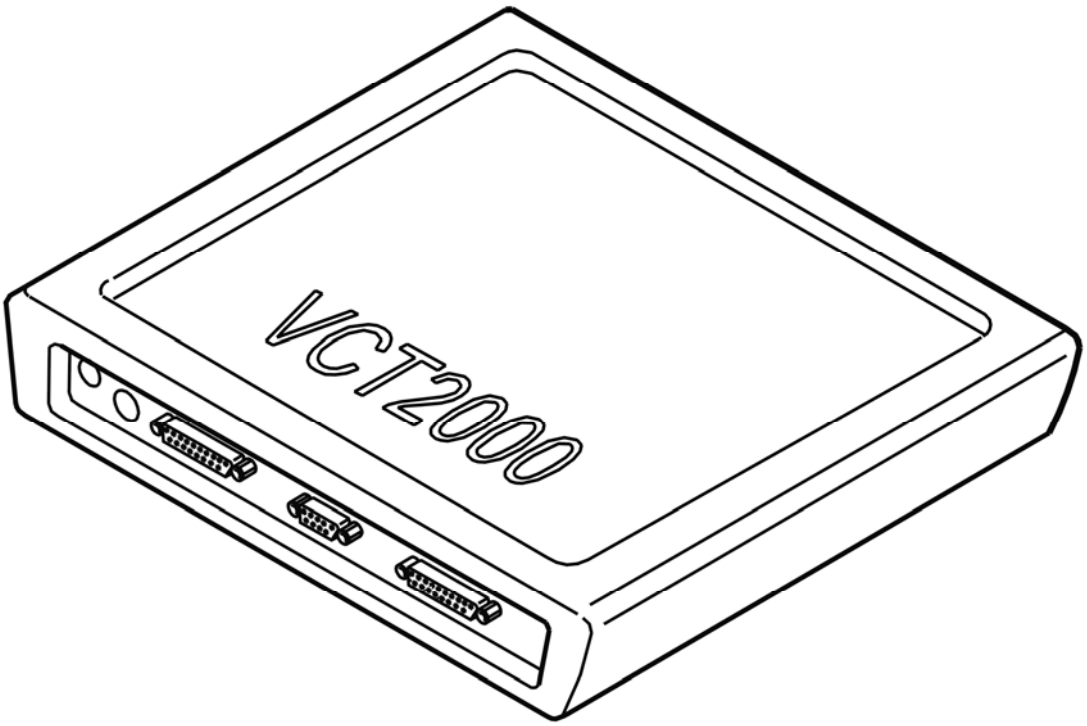

Fig. 370: Identifying VCT2000 Diagnostic Tool Symbol In VIDA
Courtesy of VOLVO CARS CORPORATION

Is the heater working?

- **YES**

VERIFIED: Troubleshooting has been completed.

- **NO**

  Refer to **INFORMATION**

INFORMATION

FAULT-TRACING INFORMATION

The fault should have been detected and remedied. As this is not the case fault-tracing has failed.

Exit fault-tracing for this diagnostic trouble code (DTC) or make another attempt.

CEM-5F41: OVERHEAT THERMOSTAT. SIGNAL TOO LOW (B5254T2; B6294T; 2003-2004)

DIAGNOSTIC TROUBLE CODE INFORMATION

Condition

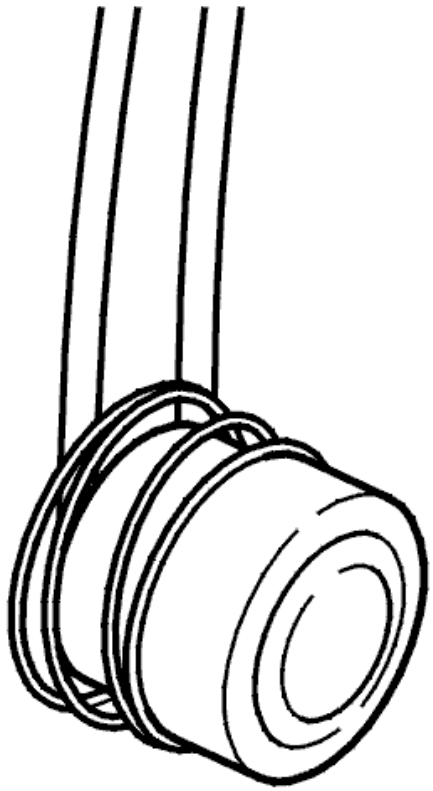

Fig. 371: Identifying Overheat Protection Thermostat
Courtesy of VOLVO CARS CORPORATION

If the overheat thermostat trips, the control unit will interpret this as a fault and diagnostic trouble code CEM-

5F41 will be set.

Substitute Value

- None.

Possible Source

- Air in the cooling system.
- Cooling system blocked.
- Defective overheat thermostat.
- Defective water temperature sensor.
- Open circuit on fuel pump circuit.

Fault symptom[s]

- Poor interior heating.

SIGNAL TOO LOW

CHECKING THE WATER FLOW

Check if the lines to and from the heater are blocked, or if the heater is damaged causing the through flow to be restricted in some way.

Remedy as necessary.

Was a fault detected?

- **YES**

  Refer to **VERIFICATION**

- **NO**

  Refer to **CHECKING THE ENGINE COOLANT TEMPERATURE SENSOR**

CHECKING THE ENGINE COOLANT TEMPERATURE SENSOR

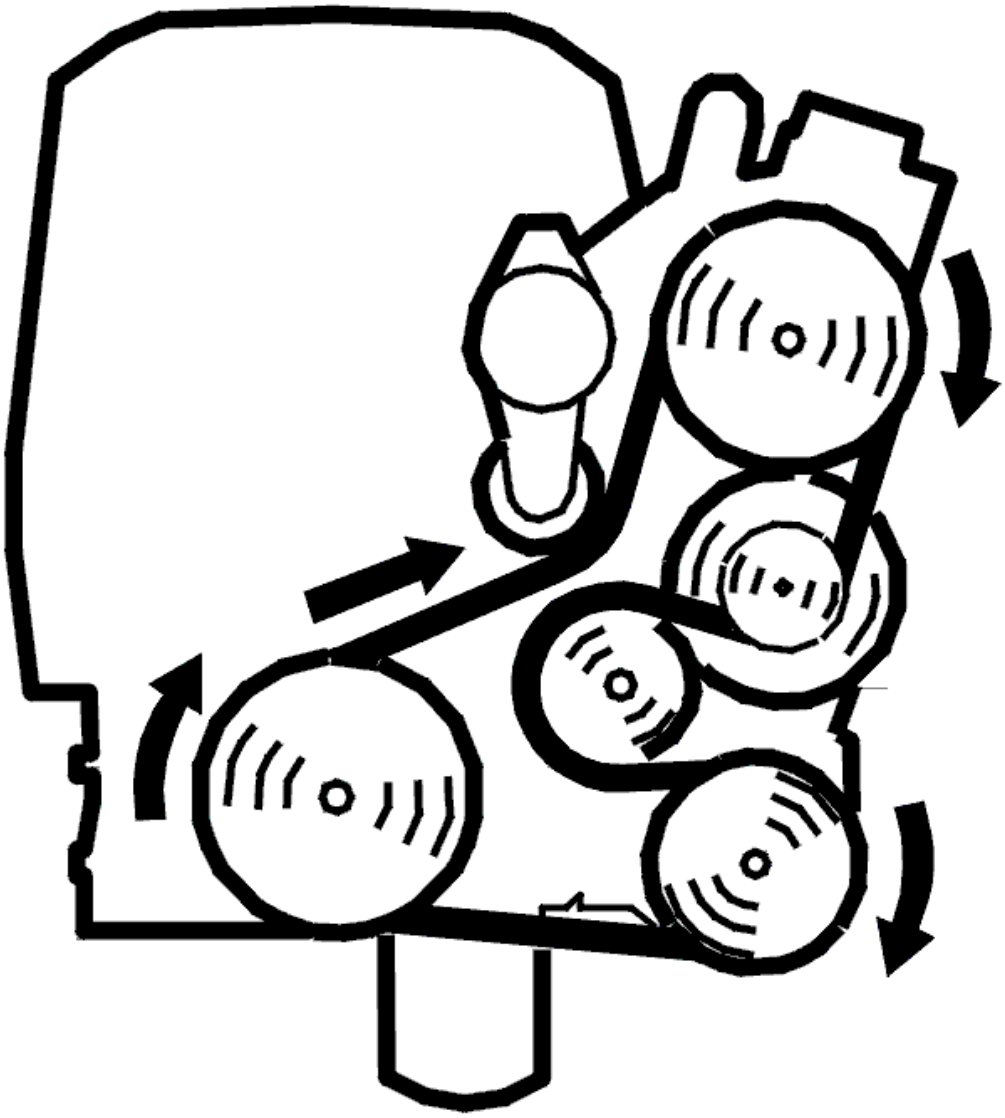

Fig. 372: Belt Routing / Engine Idling - Volvo
Courtesy of VOLVO CARS CORPORATION

- Start the engine
- Read off the coolant temperature in the heater.

  Check that the engine coolant temperature (ECT) reading is correct. Compare with the actual coolant temperature of the engine.

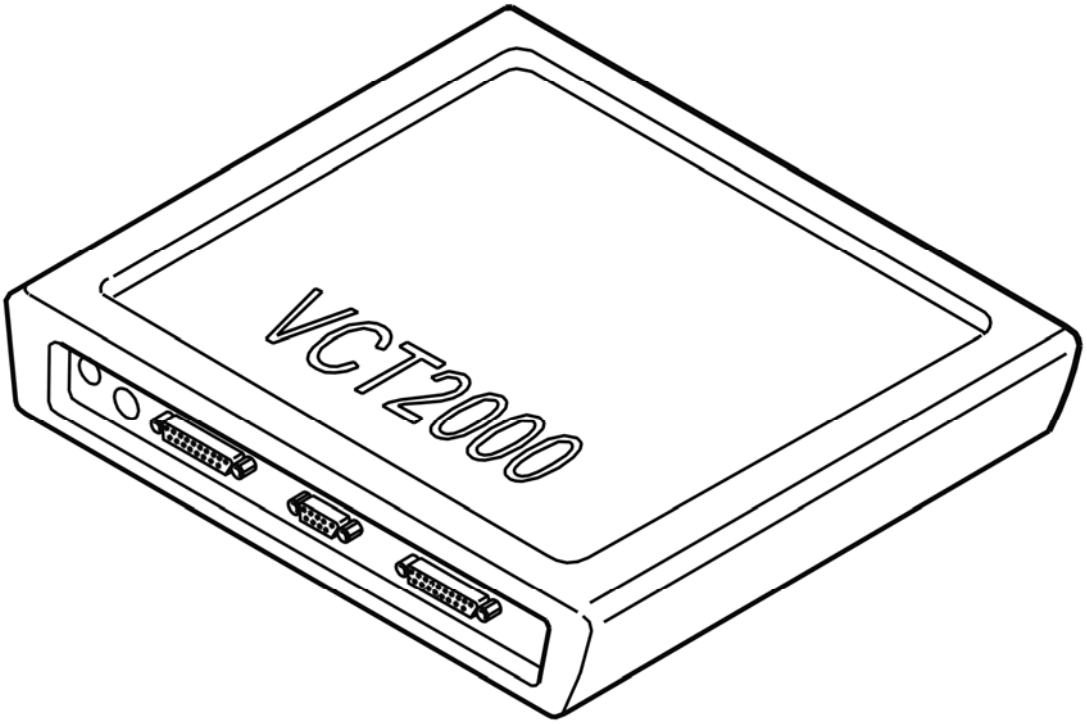

Fig. 373: Identifying VCT2000 Diagnostic Tool Symbol In VIDA
Courtesy of VOLVO CARS CORPORATION

Is the temperature reading OK?

- **YES**

  Refer to **CHECKING COMPONENTS AND WIRING**

- **NO**

  Refer to **CHECKING COMPONENTS AND WIRING**

CHECKING COMPONENTS AND WIRING

Check the resistance of the engine coolant temperature sensor. For the resistance values, see **COMPONENTS RESISTANCE VALUES** .

Remedy as necessary.

Other information:

- To access or replace the engine coolant temperature sensor, see **OVERHEAT PROTECTION THERMOSTAT / FLAME SENSOR / ENGINE COOLANT TEMPERATURE SENSOR,**

REPLACING

- For other values, see **SIGNAL SPECIFICATION** .

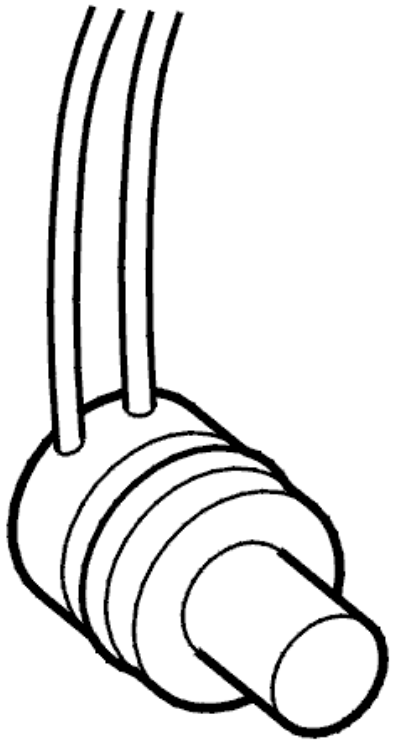

Fig. 374: Identifying Engine Coolant Temperature Sensor
Courtesy of VOLVO CARS CORPORATION

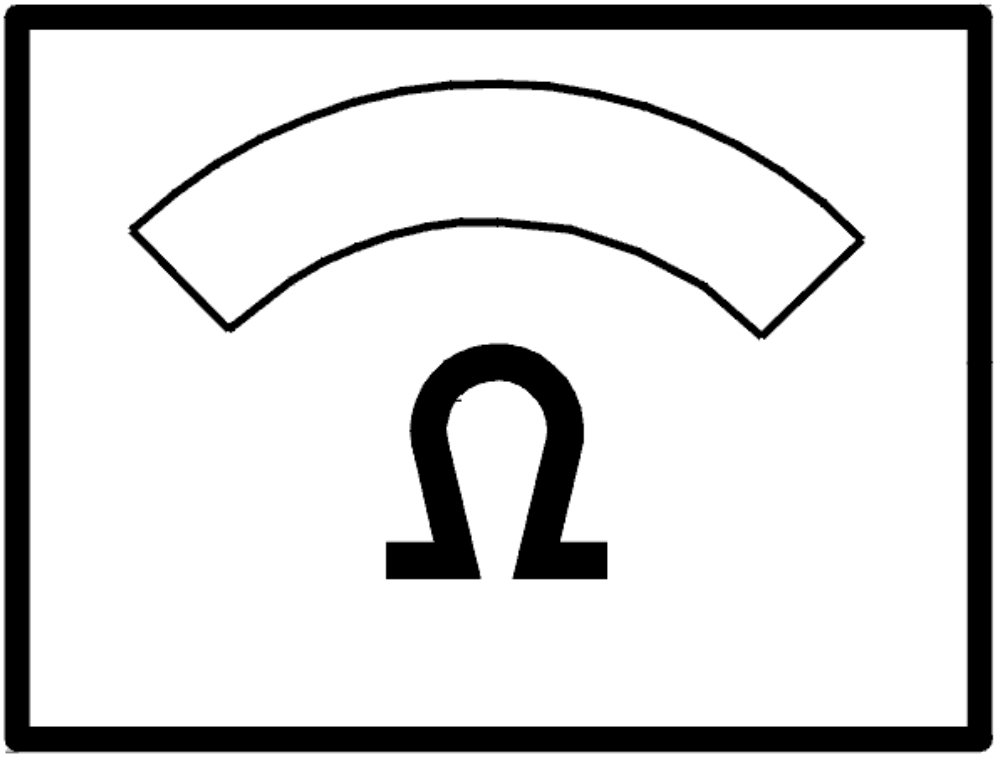

Fig. 375: Identifying Ohm Meter
Courtesy of VOLVO CARS CORPORATION

- **Continue**

  Refer to **VERIFICATION**

CHECKING COMPONENTS AND WIRING

Check the fuel pump (FP) and the control module connectors. Check for contact resistance and oxidation.

Check the cable between control module terminal #13 and fuel pump (FP) terminal 1. Check for an intermittent open-circuit.

Check the cable between control module terminal #11 and fuel pump (FP) terminal 2. Check for an intermittent open-circuit.

NOTE: **Diagnostic trouble code (DTC) CEM-5F3B Water pump, signal and / or diagnostic trouble code (DTC) CEM-5F3D Combustion fan, signal may also be stored if there is a fault in the power cable.**

Remedy as necessary.

Other information:

- To access the control module or connect the breakout box, see **CONNECTING THE BREAKOUT BOX**
- To access or replace the fuel pump (FP), see **FUEL PUMP AUXILIARY HEATER, REPLACING**
- To access or replace the overheat protection thermostat, see **OVERHEAT PROTECTION THERMOSTAT / FLAME SENSOR / ENGINE COOLANT TEMPERATURE SENSOR, REPLACING**
- see **CHECKING WIRING AND TERMINALS** .

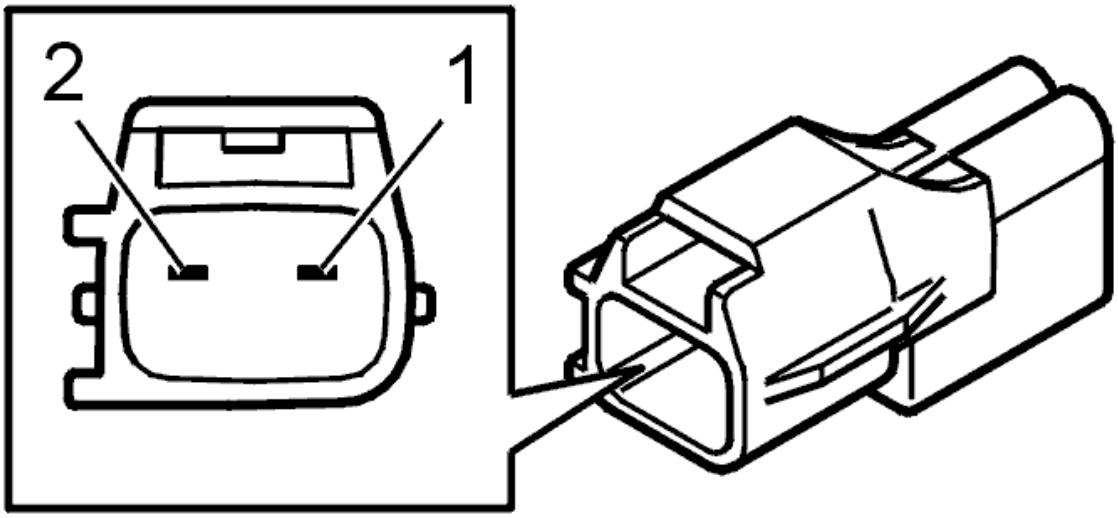

Fig. 376: Identifying Fuel Pump Connector Terminals
Courtesy of VOLVO CARS CORPORATION

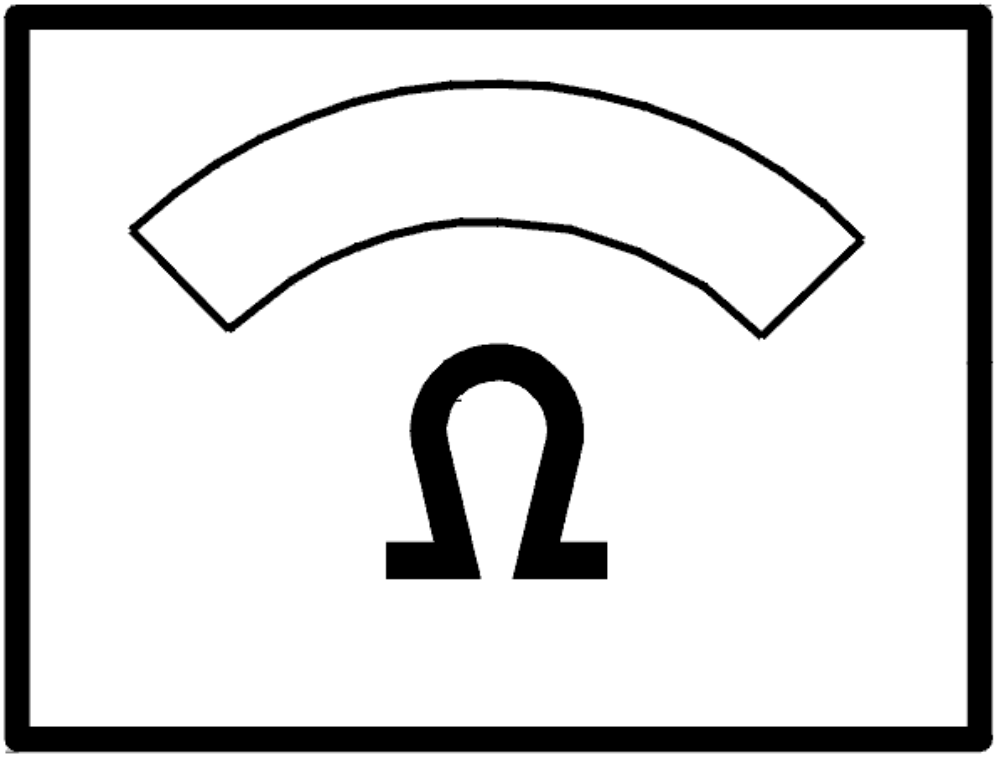

Fig. 377: Identifying Ohm Meter
Courtesy of VOLVO CARS CORPORATION

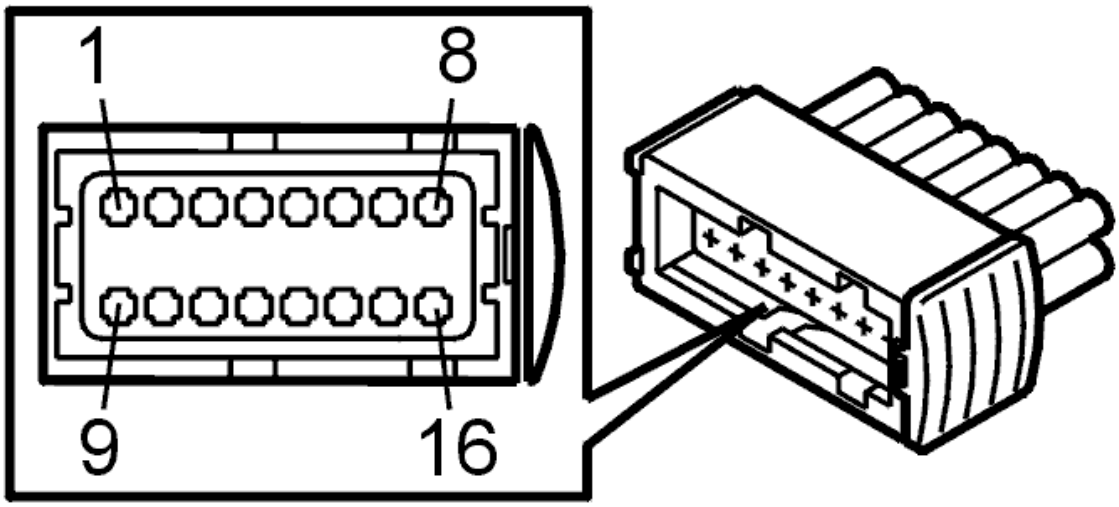

Fig. 378: Identifying Connector Terminals
Courtesy of VOLVO CARS CORPORATION

- **Continue**

  Refer to **VERIFICATION**

VERIFICATION

VERIFICATION

HINT: After the repair it is necessary to check that the fault has been rectified.

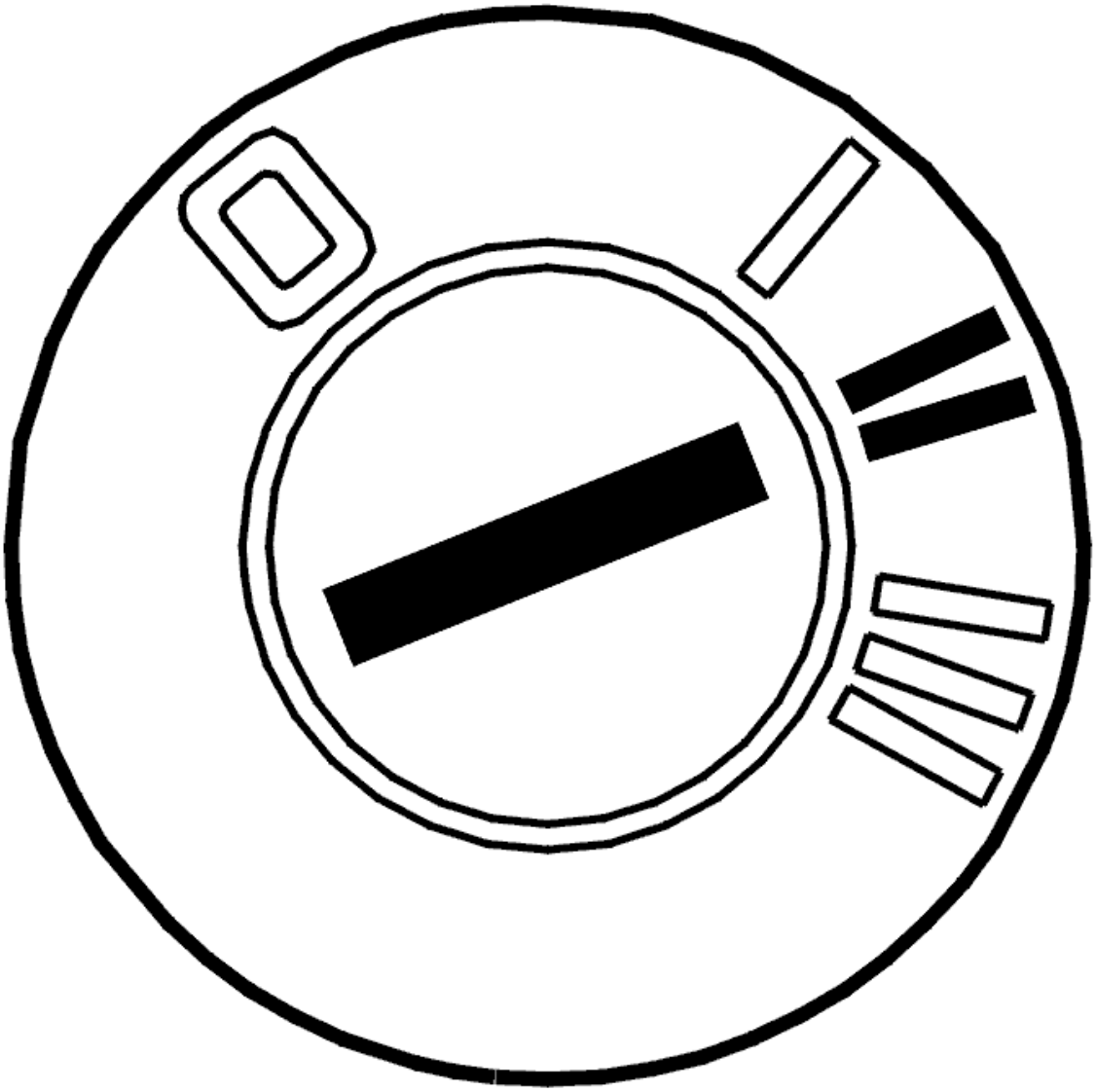

Fig. 379: Identifying Ignition ON
Courtesy of VOLVO CARS CORPORATION

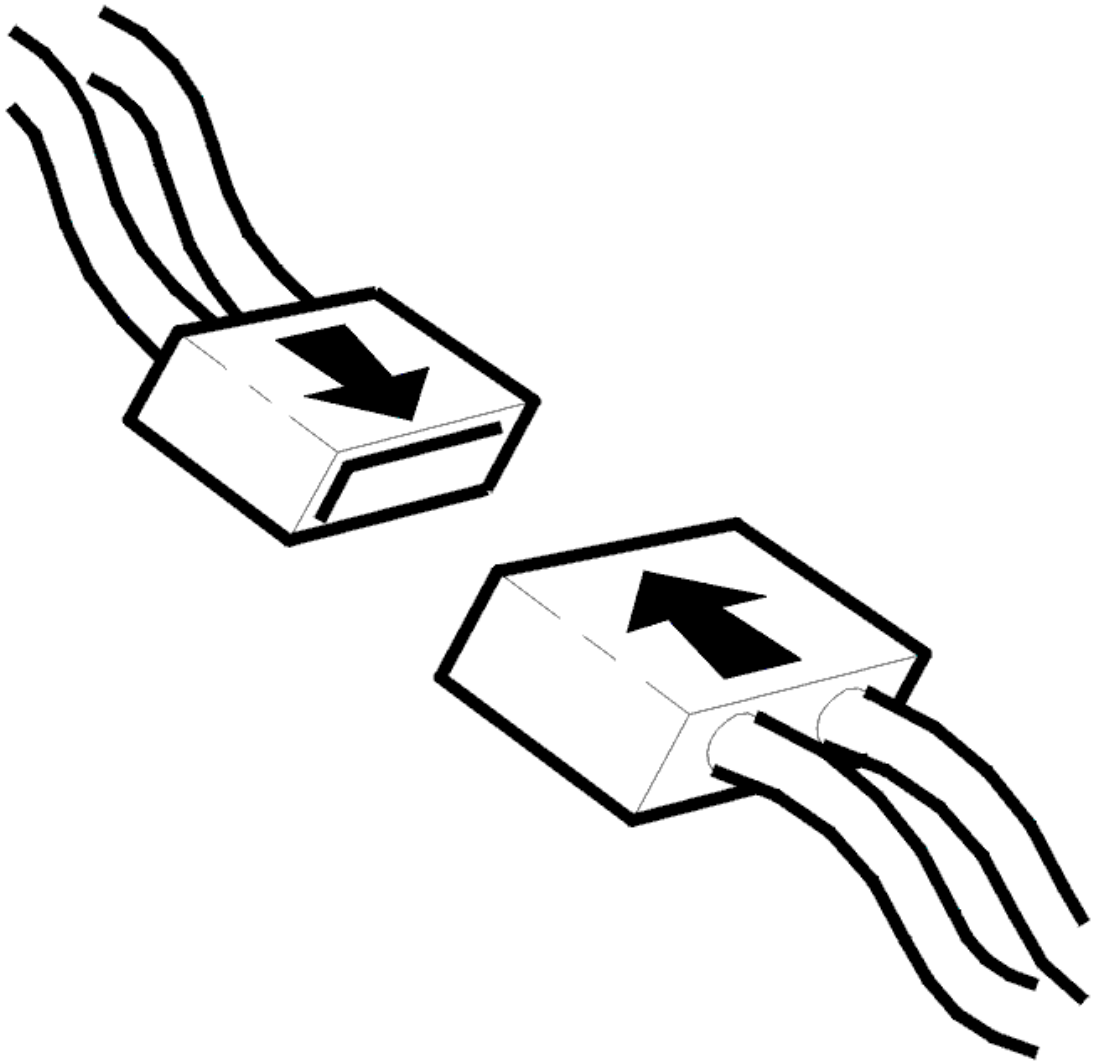

Fig. 380: Connecting Connector
Courtesy of VOLVO CARS CORPORATION

- Ignition off.
- Connect connector, install components etc.
- Ignition on.

NOTE: It is important that only the ignition is on for the heater to start up.

- Activate the heater.

  A buzzing sound should be heard from the heater.

  Check the function of the heater as described in, see **ENGINE COOLANT HEATER, TEST RUNNING** .

Additional information:

- For a description of the parameters, see **DESCRIPTION OF PARAMETERS** .
- For a description of activations, see **ACTIVATING COMPONENTS/FUNCTIONS** .

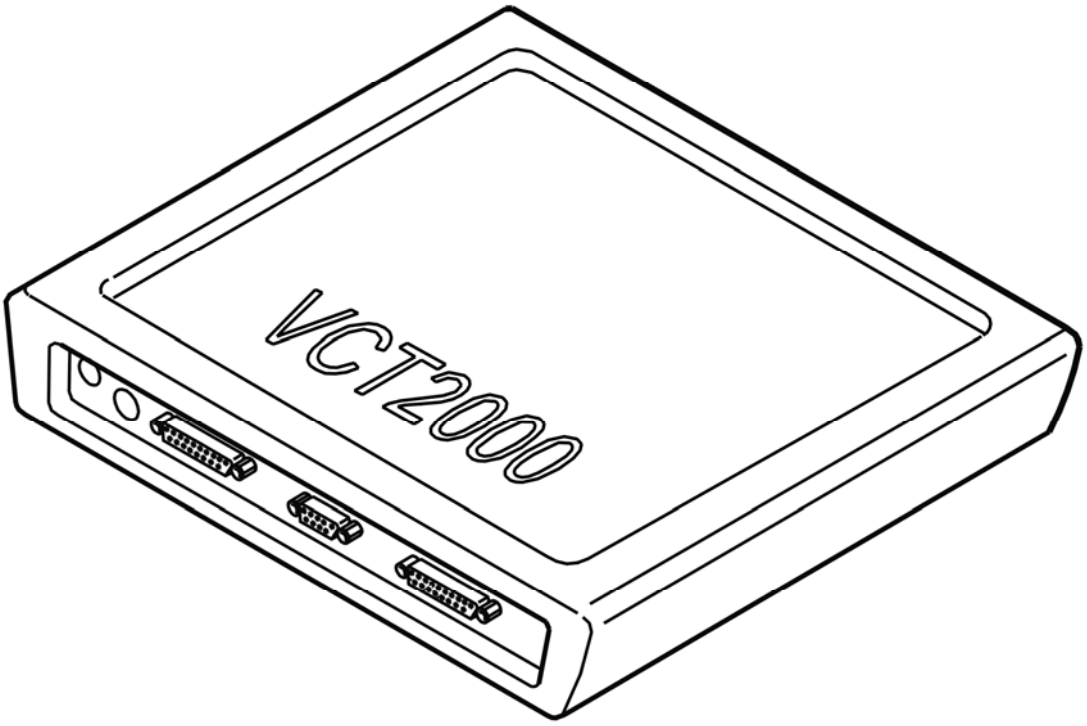

Fig. 381: Identifying VCT2000 Diagnostic Tool Symbol In VIDA
Courtesy of VOLVO CARS CORPORATION

Does the heater work?

- **YES**

  VERIFIED: Troubleshooting has been completed.

- **NO**

  Refer to **INFORMATION**

INFORMATION

FAULT-TRACING INFORMATION

The fault should have been detected and remedied. As this is not the case fault-tracing has failed.

Exit fault-tracing for this diagnostic trouble code (DTC) or make another attempt.

CEM-5F42: POWER SUPPLY. FAULTY (2003-2004)

DIAGNOSTIC TROUBLE CODE INFORMATION

Condition

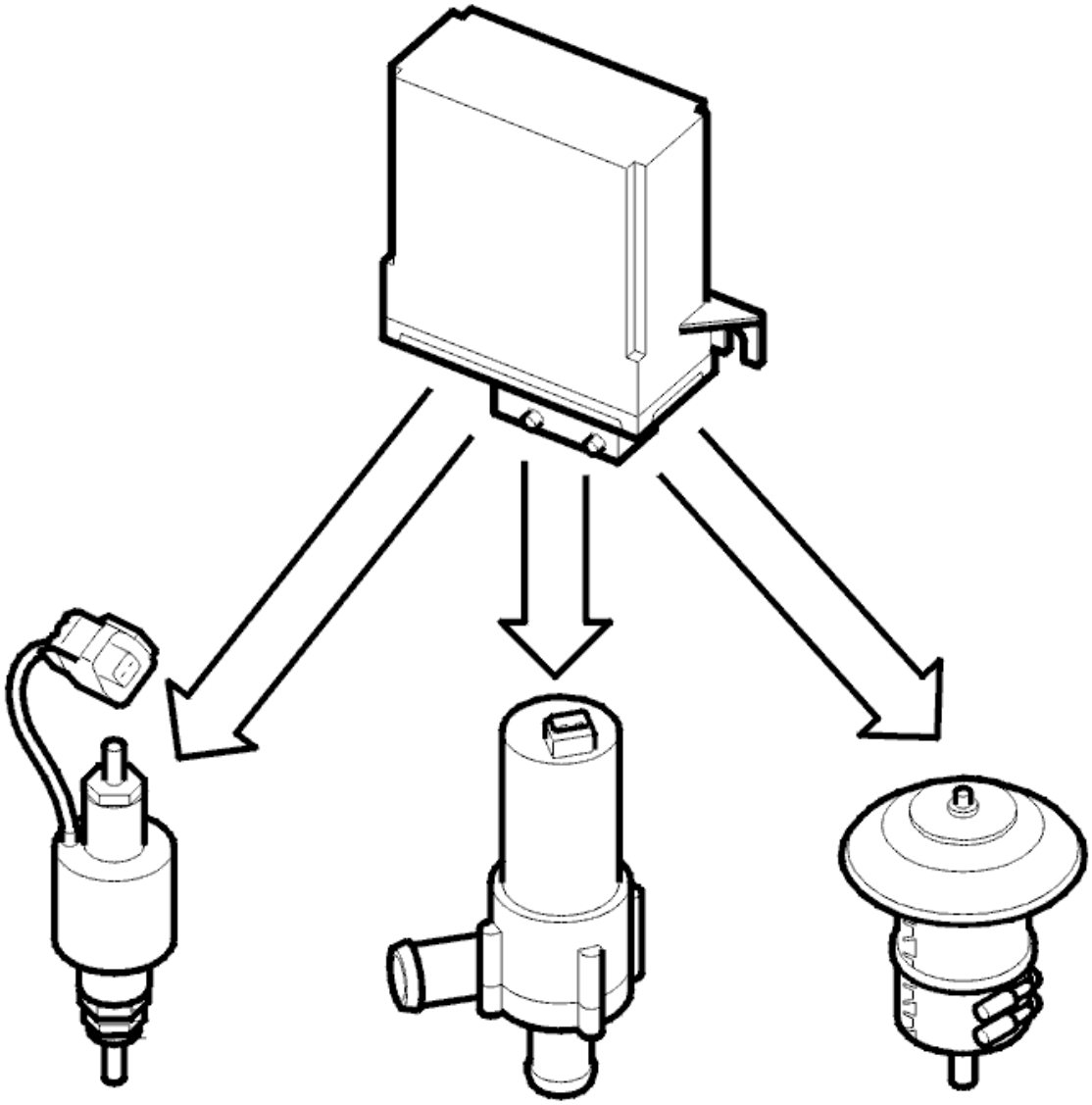

Fig. 382: Fuel Pump, Water Pump, And Heater Fan Power Supply Diagram
Courtesy of VOLVO CARS CORPORATION

If the power supply from the control unit to the fuel pump, water pump and heater fan is short-circuited to voltage supply, the control unit will interpret this as a fault and diagnostic trouble code CEM-5F42 will be set.

Substitute Value

- None.

Possible Source

- Power supply wire short-circuited to voltage supply.

Fault symptom[s]

- Nothing.

FAULTY

CHECKING GROUND POINTS

Special tools:

see **9511373**

see **9511428**

CONNECTING THE TEST BOX

Connect test box as described in, see **CONNECTING THE BREAKOUT BOX** .

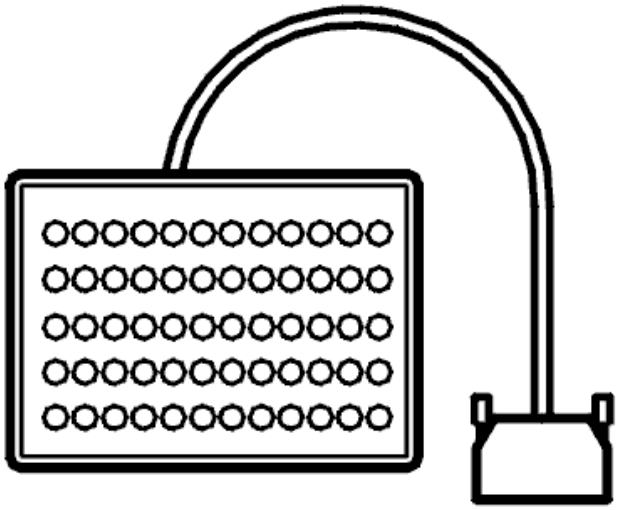

Fig. 383: Breakout Box
Courtesy of VOLVO CARS CORPORATION

- **Continue**

  Refer to **CHECKING GROUND POINT**

CHECKING GROUND POINT

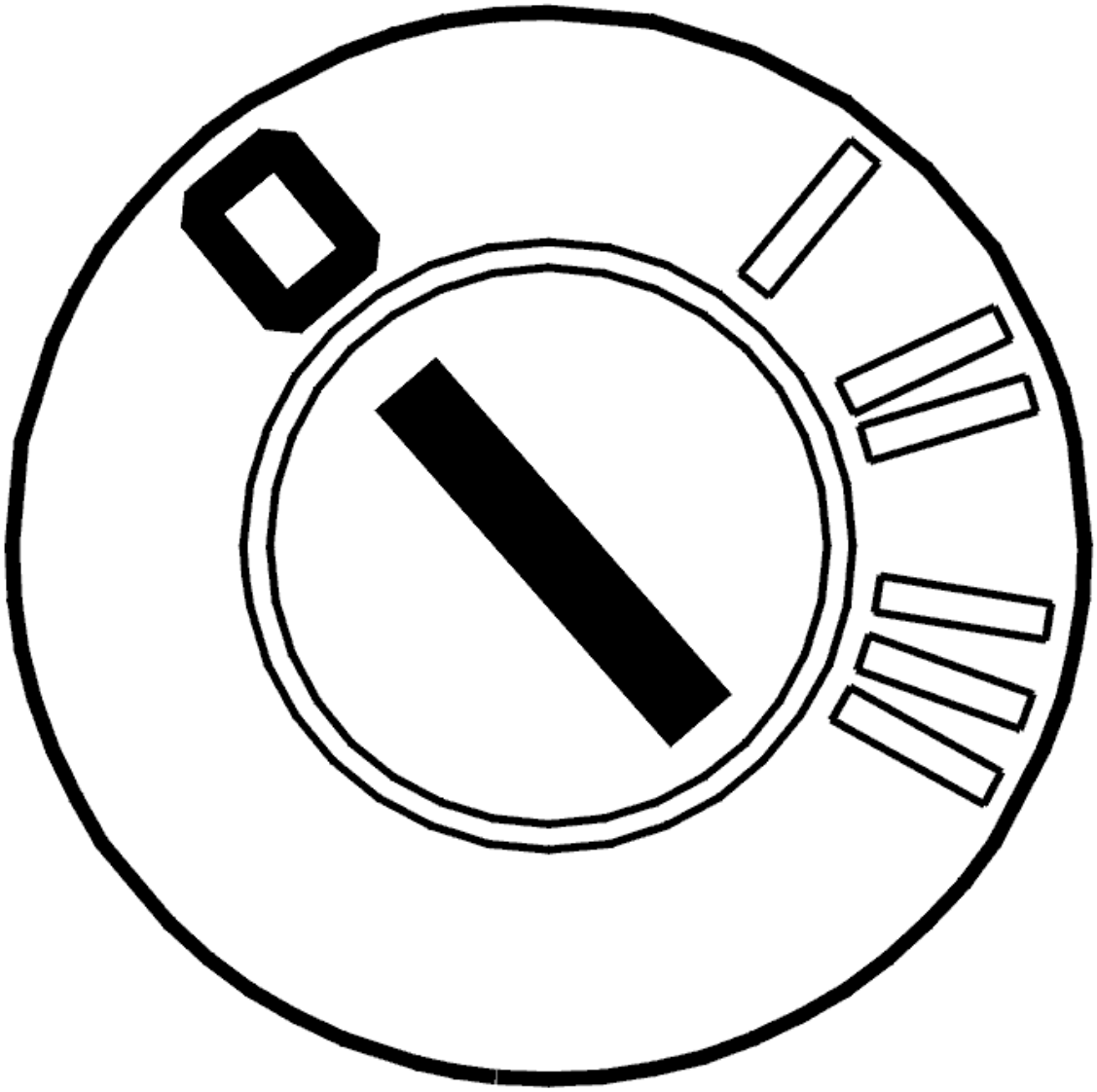

Fig. 384: Identifying Ignition OFF
Courtesy of VOLVO CARS CORPORATION

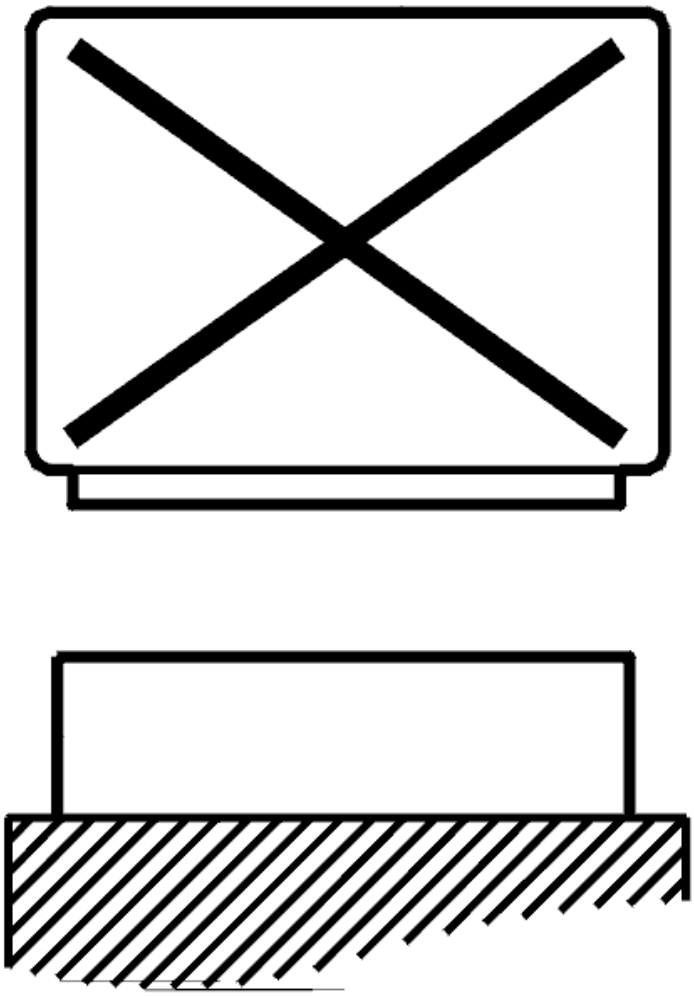

Fig. 385: Disconnecting Control Unit
Courtesy of VOLVO CARS CORPORATION

- Ignition off.
- Control unit disconnected.
- Switch off all battery loads such as entrance lights and radio.

Connect an ohmmeter between the battery negative terminal and #3 on the test box.

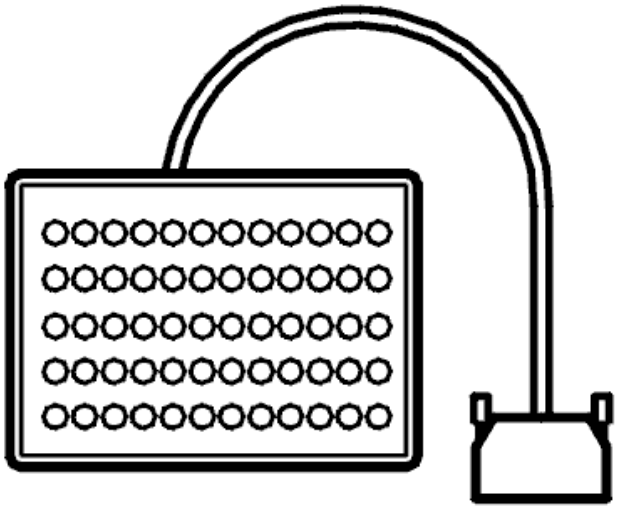

Fig. 386: Breakout Box
Courtesy of VOLVO CARS CORPORATION

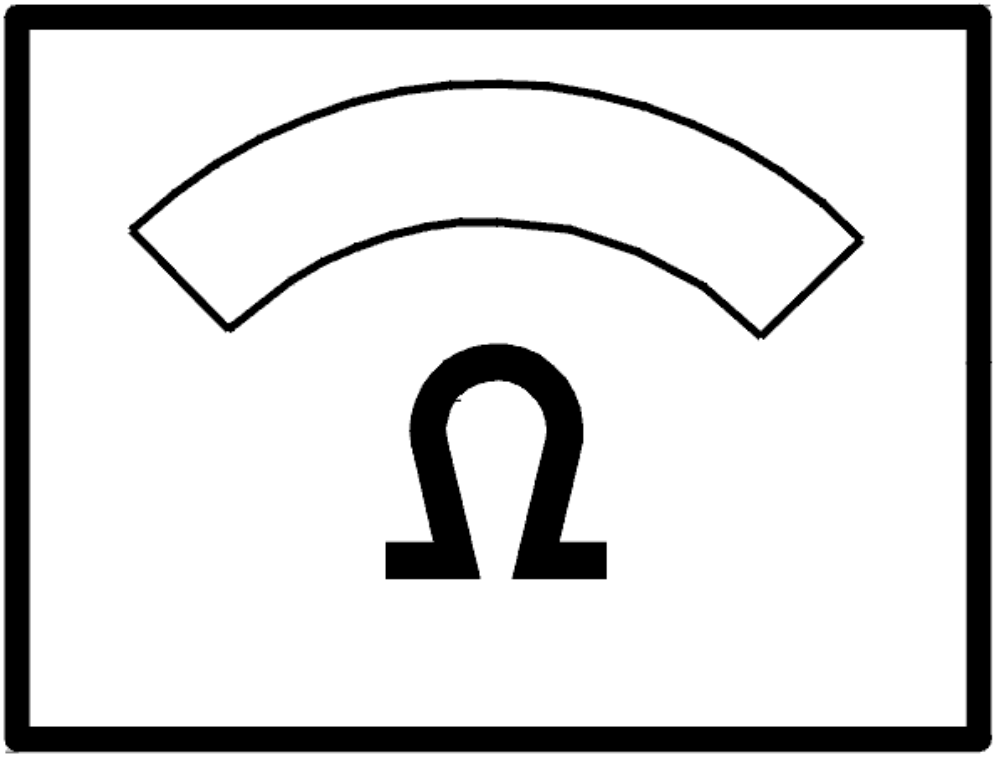

Fig. 387: Identifying Ohm Meter
Courtesy of VOLVO CARS CORPORATION

The ohmmeter should display approximately 0 (.

- **OK**

  Refer to **CHECKING THE POWER SUPPLY**

- **NOT OK**

  Refer to **CHECKING FOR OPEN CIRCUITS, CONTACT RESISTANCE AND OXIDATION**

CHECKING FOR OPEN CIRCUITS, CONTACT RESISTANCE AND OXIDATION

Check the heater's ground point and wires connected to it for an open circuit as described in, see **OPEN-**

CIRCUIT, PERMANENT FAULTS , and for contact resistance and oxidation as described in **CONTACT RESISTANCE AND OXIDATION** .

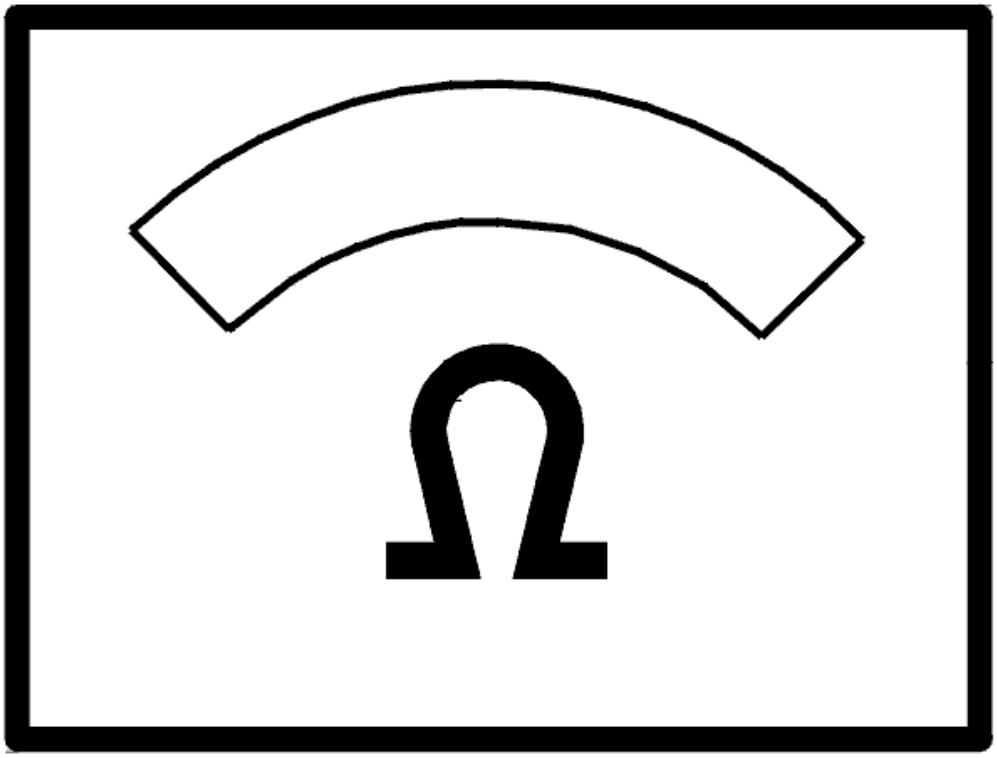

Fig. 388: Identifying Ohm Meter
Courtesy of VOLVO CARS CORPORATION

- **Continue**

  Refer to **VERIFICATION**

CHECKING THE POWER SUPPLY

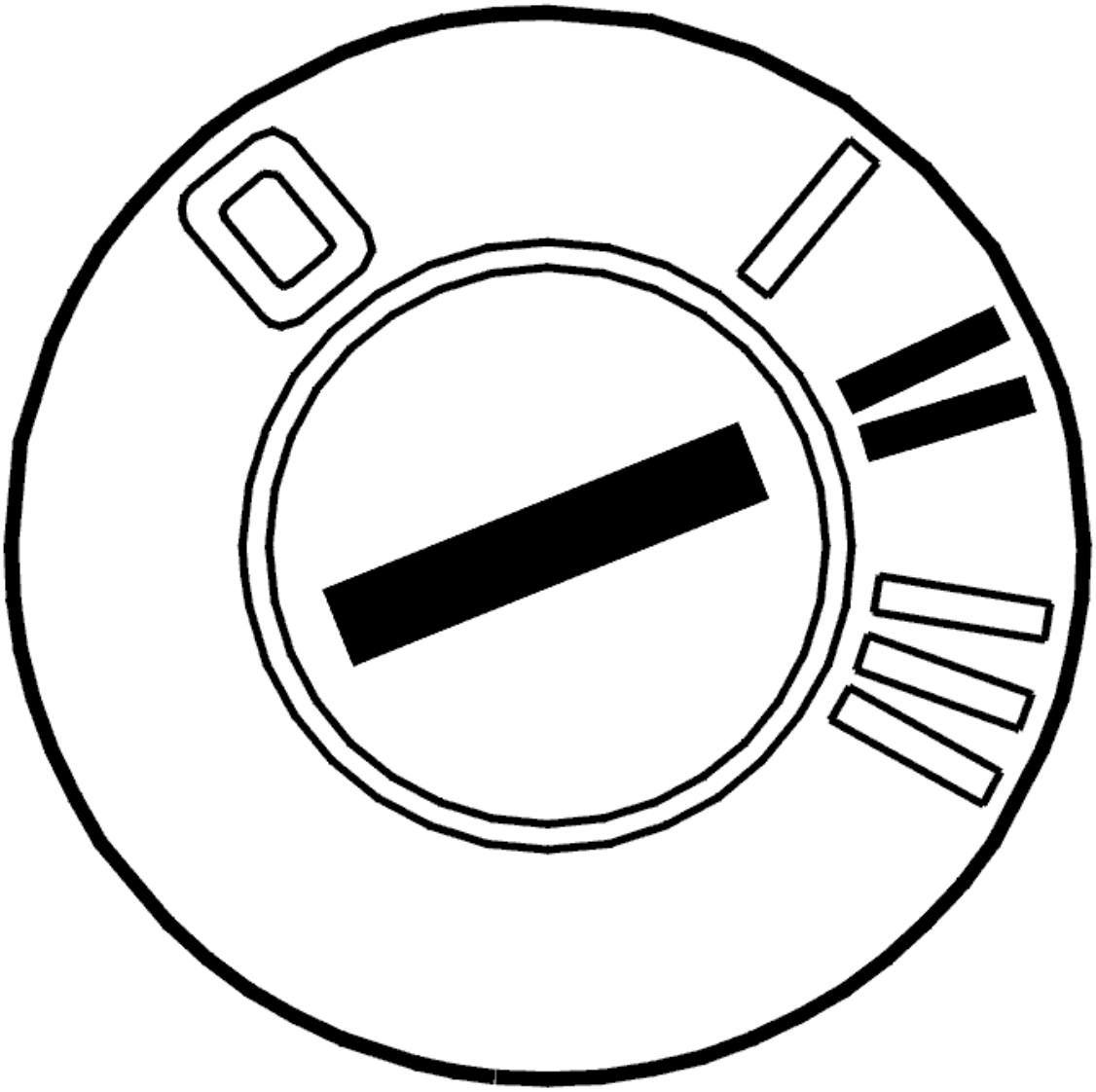

Fig. 389: Identifying Ignition ON
Courtesy of VOLVO CARS CORPORATION

- Ignition on
- Connect a voltmeter between terminals #11 and #3 on the breakout box.

  The voltmeter should read approximately 0 V.

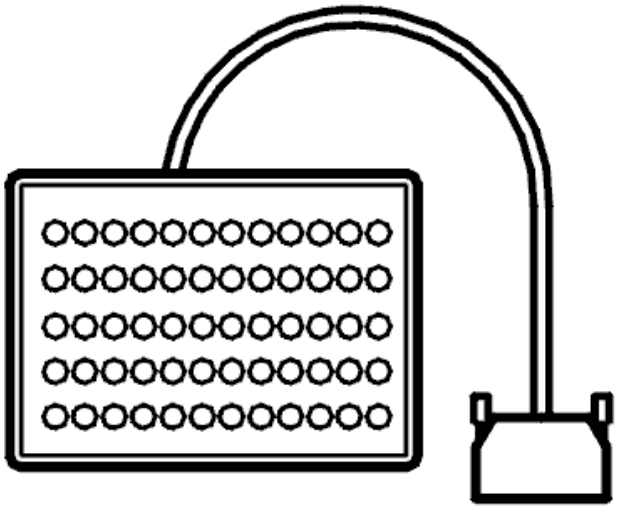

Fig. 390: Breakout Box
Courtesy of VOLVO CARS CORPORATION

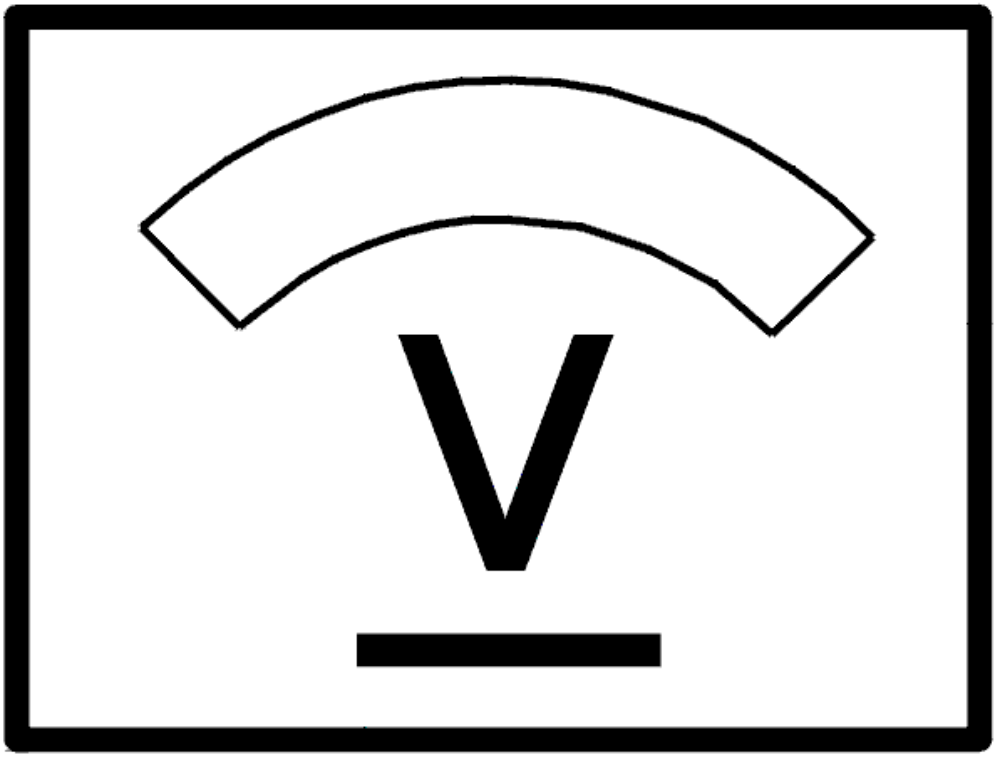

Fig. 391: Identifying Voltage Display
Courtesy of VOLVO CARS CORPORATION

Does the voltmeter read approximately 0 V?

- **YES**

  Refer to **INTERMITTENT FAULT**

- **NO**

  Refer to **CHECKING THE SUPPLY CIRCUIT**

CHECKING THE SUPPLY CIRCUIT

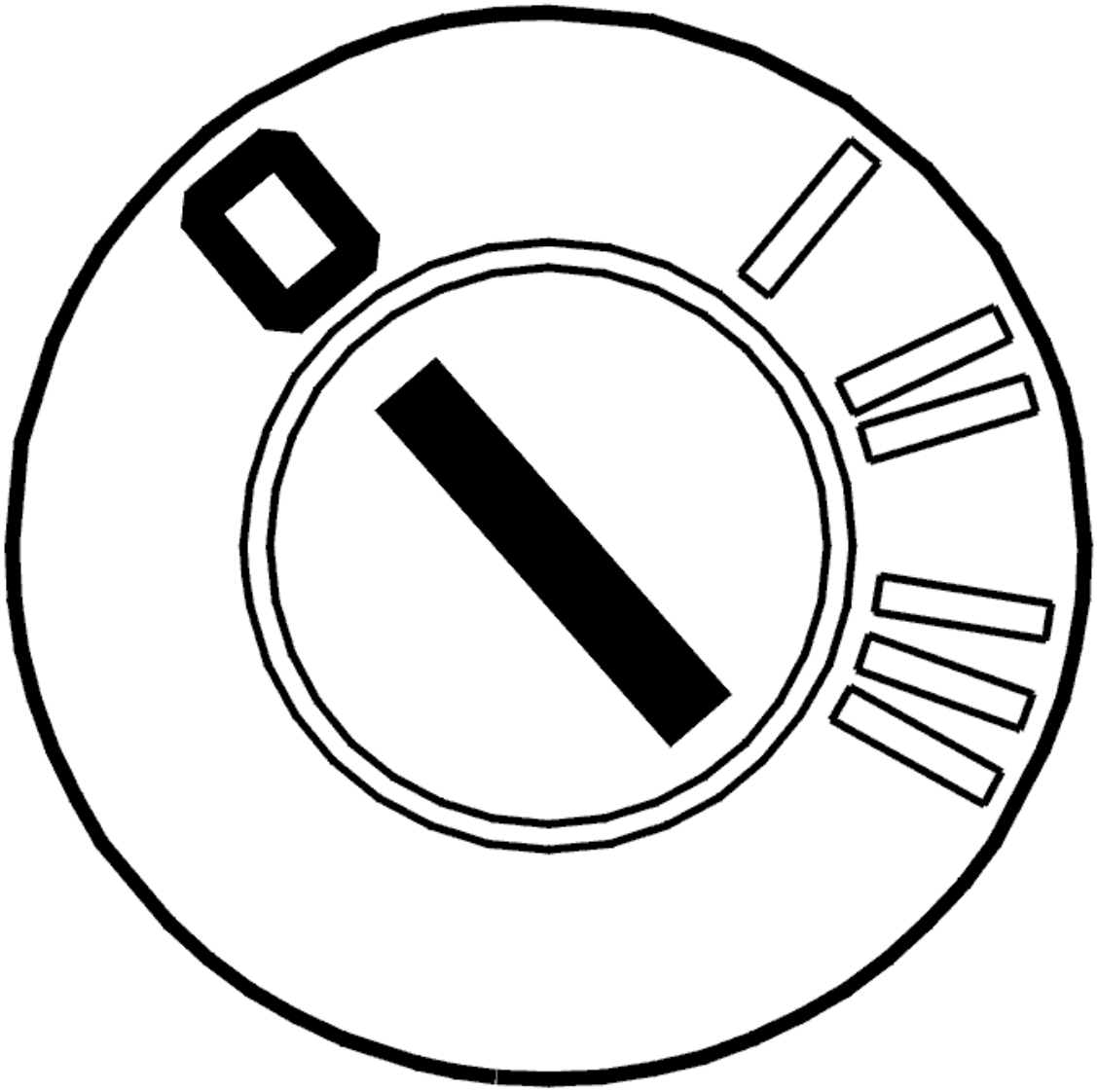

Fig. 392: Identifying Ignition OFF
Courtesy of VOLVO CARS CORPORATION

- Ignition off
- Remove the heater. See **ENGINE COOLANT HEATER, REPLACING** .

  Check circuit between control module #11 and the components which are connected to the supply circuit (water pump terminal 2, fuel pump (FP) terminal 2 and combustion fan supply terminal). Check for a short-circuit to supply voltage.

  Remedy as necessary.

  Other information:

  - To access the control module or connect the breakout box, see **CONNECTING THE BREAKOUT BOX**

- To access or replace the water pump, see **WATER PUMP ENGINE COOLANT HEATER, REPLACING**
- To access or replace the fuel pump (FP), see **FUEL PUMP AUXILIARY HEATER, REPLACING**
- To access or replace the blower fan, see **FUEL INJECTION NOZZLE / FAN MOTOR / PRESSURE EQUALIZER, REPLACING**
- With the ignition on and the water pump connector disconnected, the voltage between water pump terminal 1 (control module side) and ground should be approximately 0 V
- For other values, see **SIGNAL SPECIFICATION**
- see **CHECKING WIRING AND TERMINALS** .

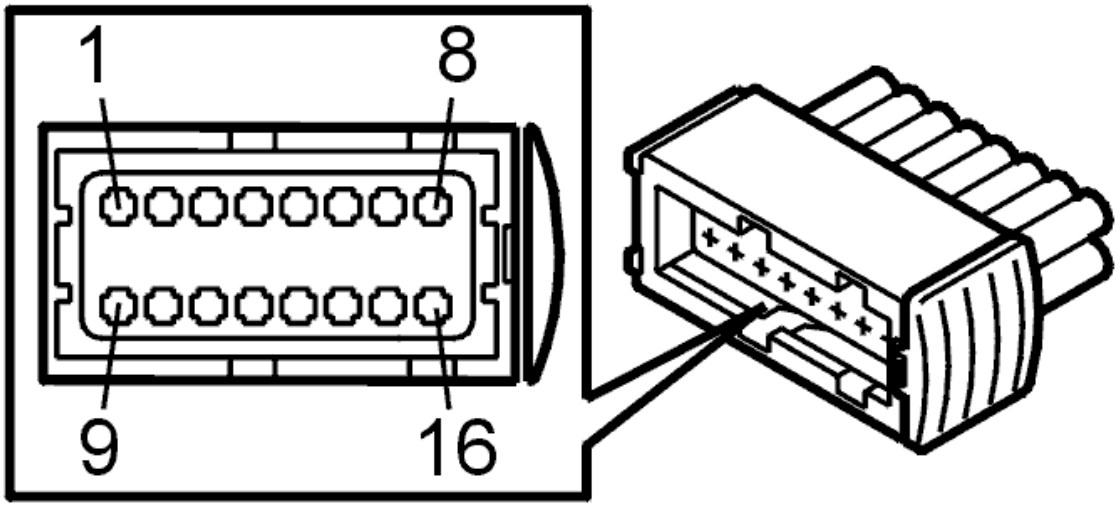

Fig. 393: Identifying Connector Terminals
Courtesy of VOLVO CARS CORPORATION

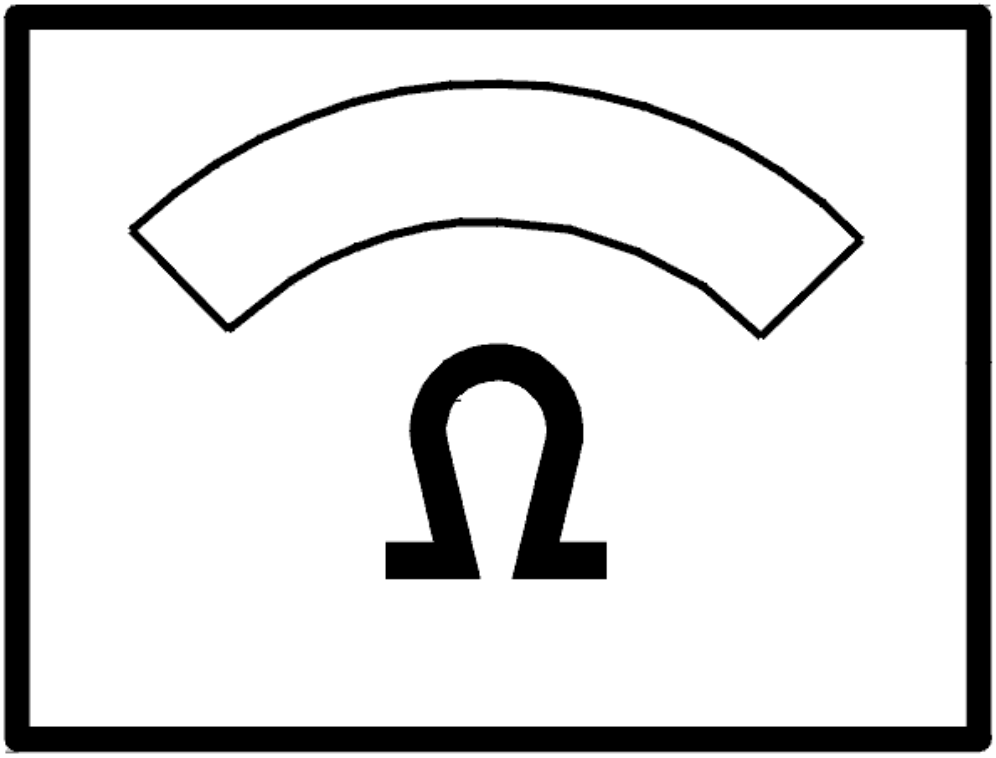

Fig. 394: Identifying Ohm Meter
Courtesy of VOLVO CARS CORPORATION

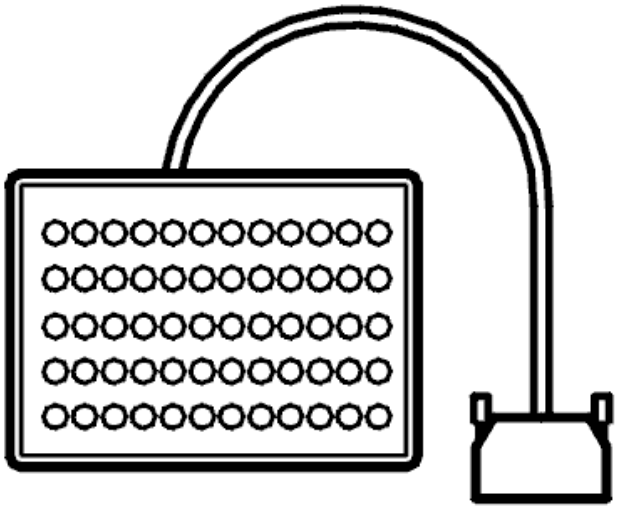

Fig. 395: Breakout Box
Courtesy of VOLVO CARS CORPORATION

- **Continue**

  Refer to **VERIFICATION**

INTERMITTENT FAULT

Check circuit between control module #11 and the components which are connected to the supply circuit (water pump terminal 1, fuel pump (FP) terminal 2 and combustion fan supply terminal). Check for an intermittent short-circuit to supply voltage.

Remedy as necessary.

Other information:

- To access the control module or connect the breakout box, see **CONNECTING THE BREAKOUT BOX**
- To access or replace the water pump, see **WATER PUMP ENGINE COOLANT HEATER, REPLACING**
- To access or replace the fuel pump (FP), see **FUEL PUMP AUXILIARY HEATER, REPLACING**
- To access or replace the blower fan, see **FUEL INJECTION NOZZLE / FAN MOTOR / PRESSURE EQUALIZER, REPLACING**
- With the ignition on and the water pump connector disconnected, the voltage between water pump terminal 1 (control module side) and ground should be approximately 0 V
- For other values, see **SIGNAL SPECIFICATION**
- see **CHECKING WIRING AND TERMINALS** .

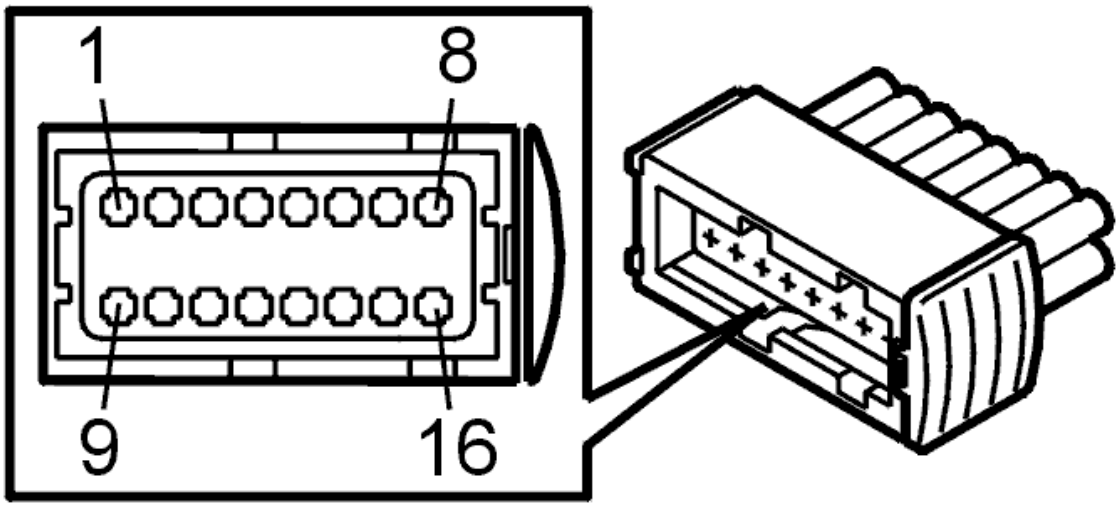

Fig. 396: Identifying Connector Terminals
Courtesy of VOLVO CARS CORPORATION

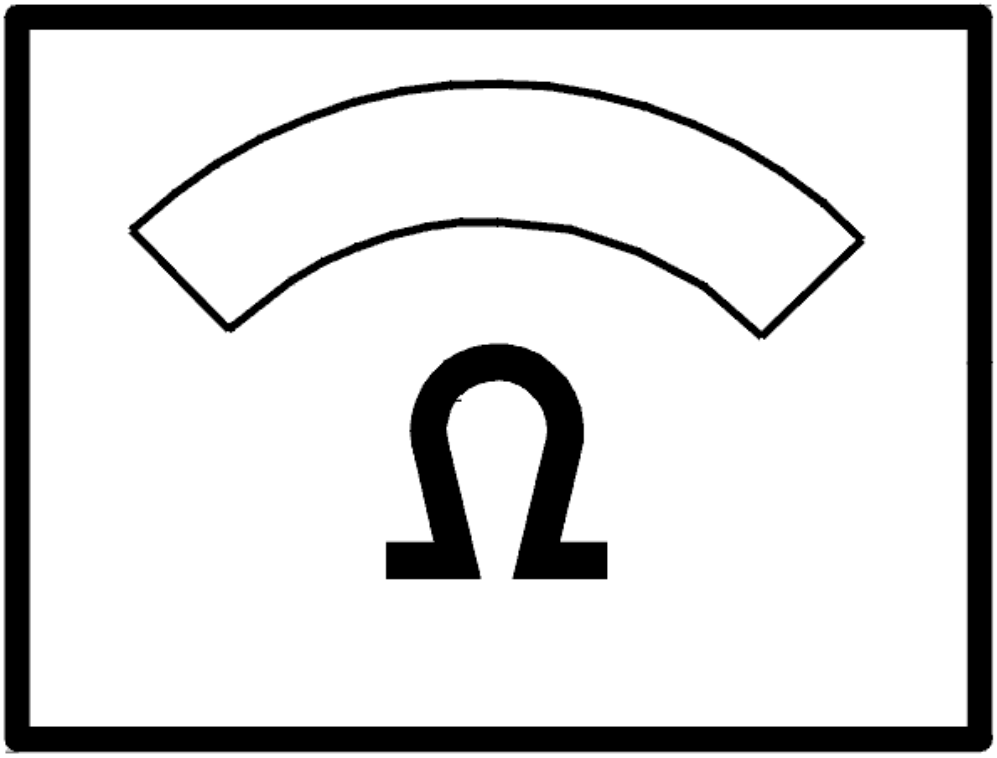

Fig. 397: Identifying Ohm Meter
Courtesy of VOLVO CARS CORPORATION

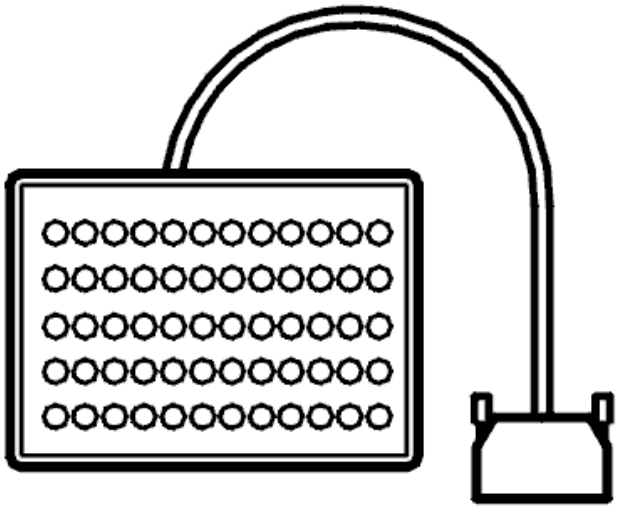

Fig. 398: Breakout Box
Courtesy of VOLVO CARS CORPORATION

- **Continue**

  Refer to **INFORMATION**

INFORMATION

CONNECTING THE TEST BOX

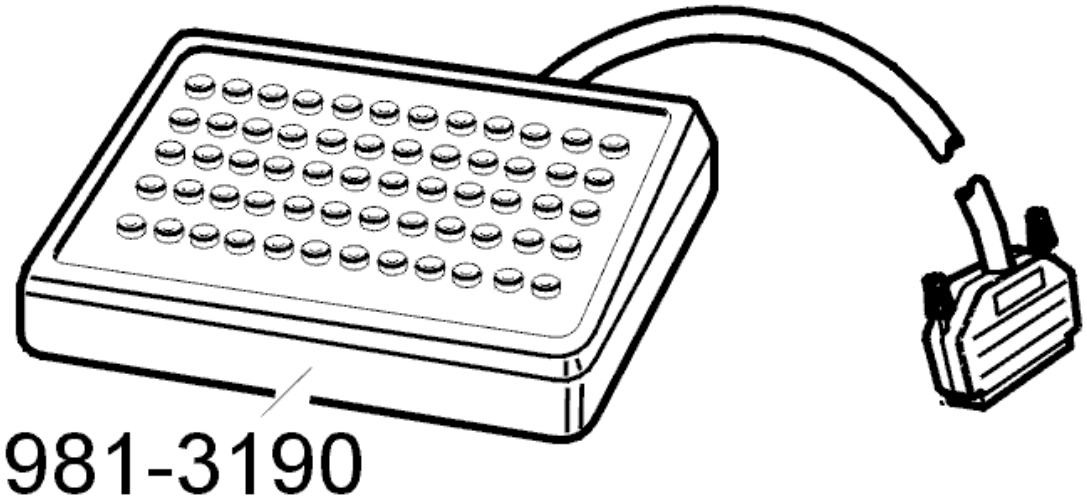

Fig. 399: Identifying Breakout Box
Courtesy of VOLVO CARS CORPORATION

Is the test box connected to the control unit?

- **YES**

Refer to **CHECKING THE POWER SUPPLY**

- **NO**

  Refer to **CONNECTING THE TEST BOX**

VERIFICATION

VERIFICATION

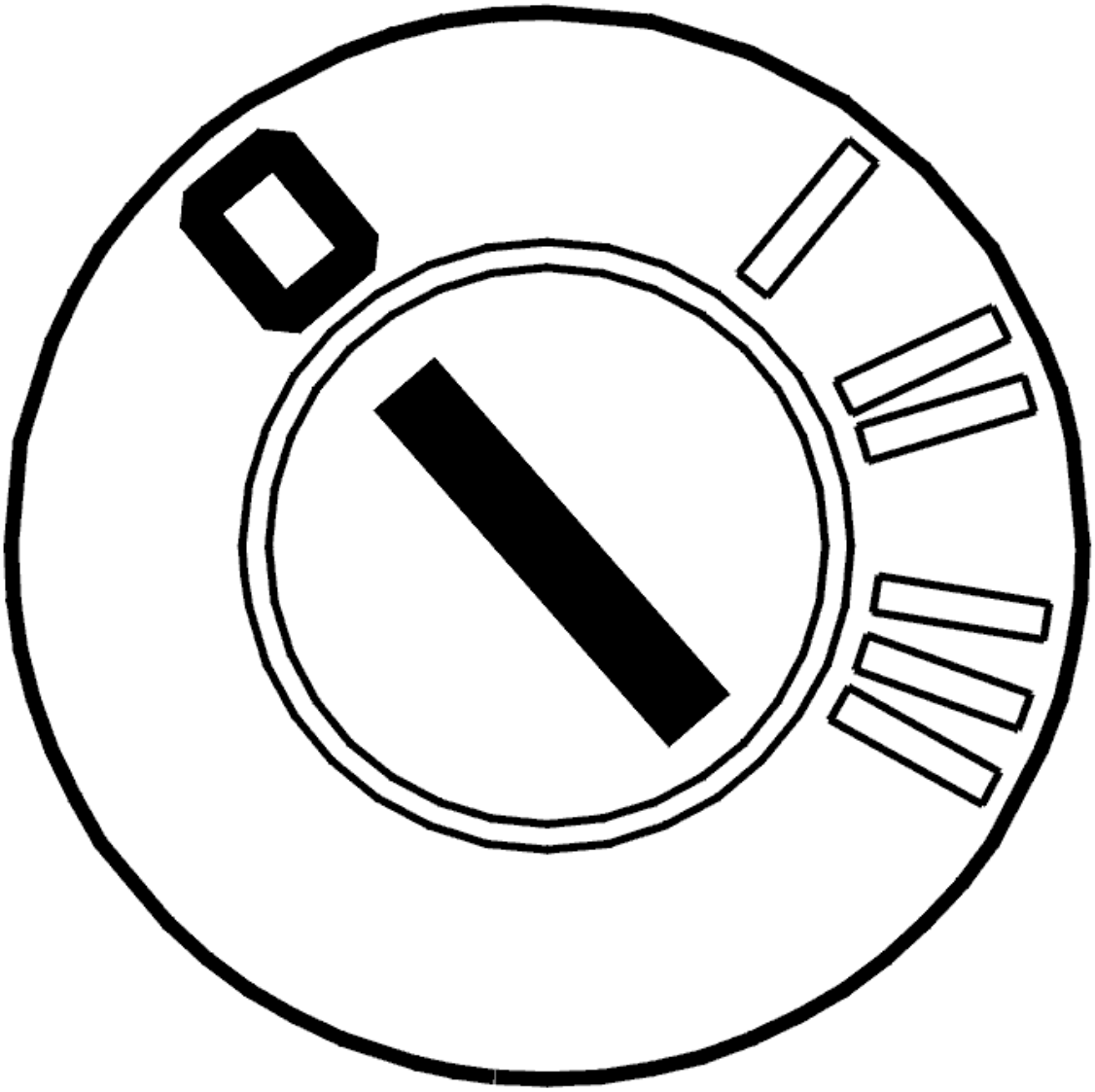

Fig. 400: Identifying Ignition OFF
Courtesy of VOLVO CARS CORPORATION

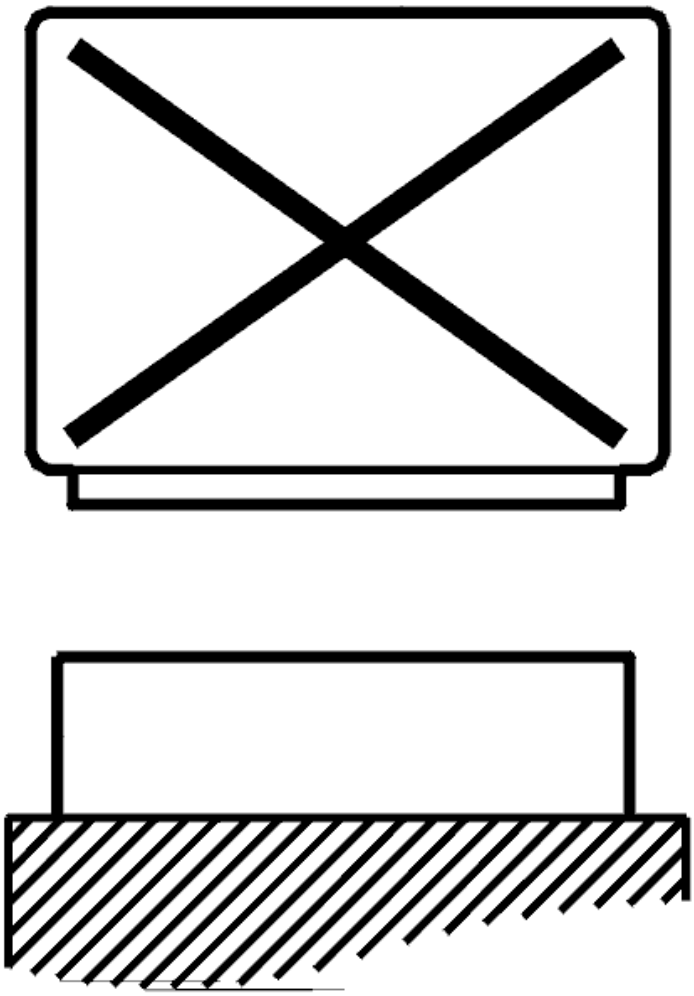

Fig. 401: Disconnecting Control Unit
Courtesy of VOLVO CARS CORPORATION

- Ignition off.
- Control unit disconnected.
- Switch off all parts fed by the battery such as courtesy lights and radio.

Connect an ohmmeter between the battery negative terminal and #3 on the test box.

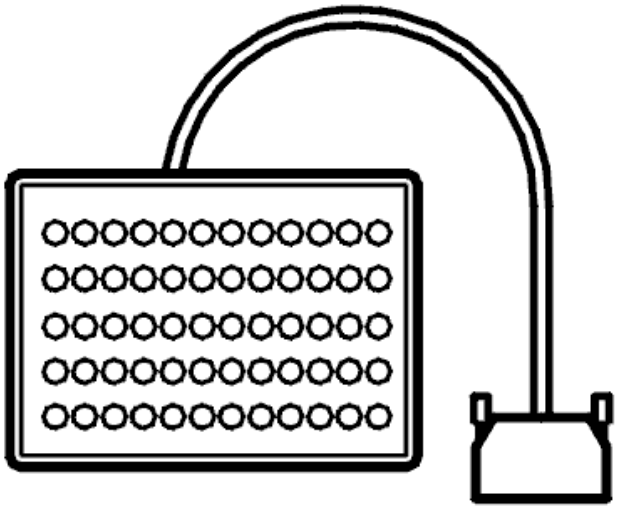

Fig. 402: Breakout Box
Courtesy of VOLVO CARS CORPORATION

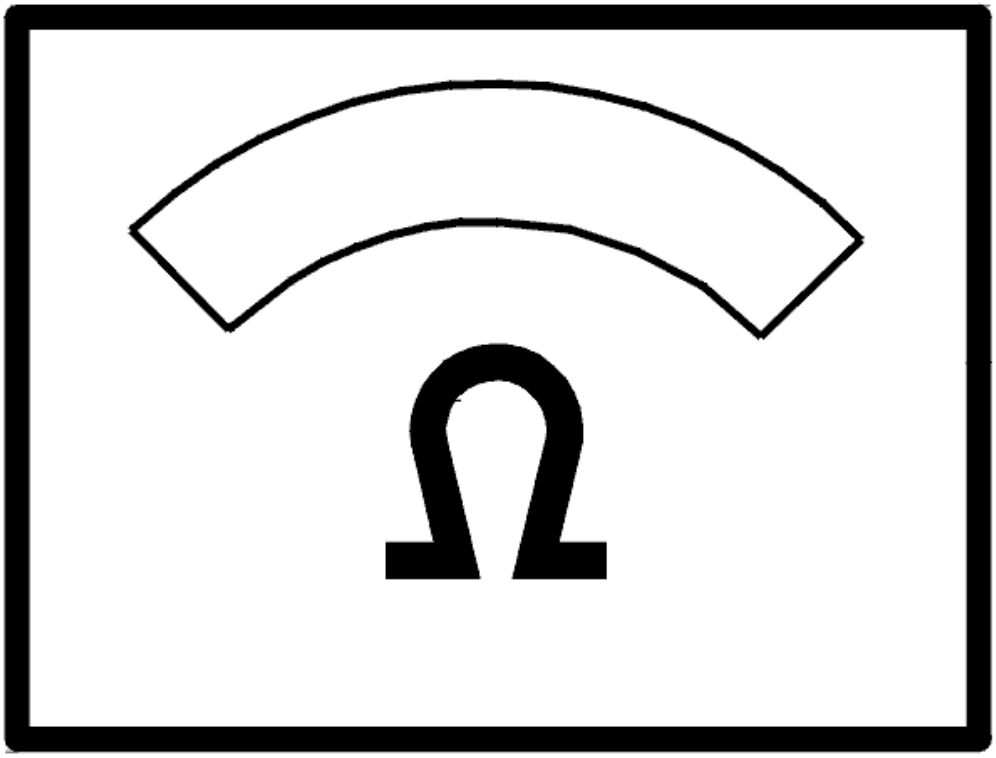

Fig. 403: Identifying Ohm Meter
Courtesy of VOLVO CARS CORPORATION

The ohmmeter should display approximately 0 (.

- **OK**

  VERIFIED: Troubleshooting has been completed.

- **NOT OK**

  Refer to **INFORMATION**

INFORMATION

FAULT-TRACING INFORMATION

The fault should be diagnosed and remedied. Since this is not the case the fault-tracing process has failed.

Complete the fault-tracing for those fault or try again.

VERIFICATION

VERIFICATION

HINT: After the repair it is necessary to check that the fault has been rectified.

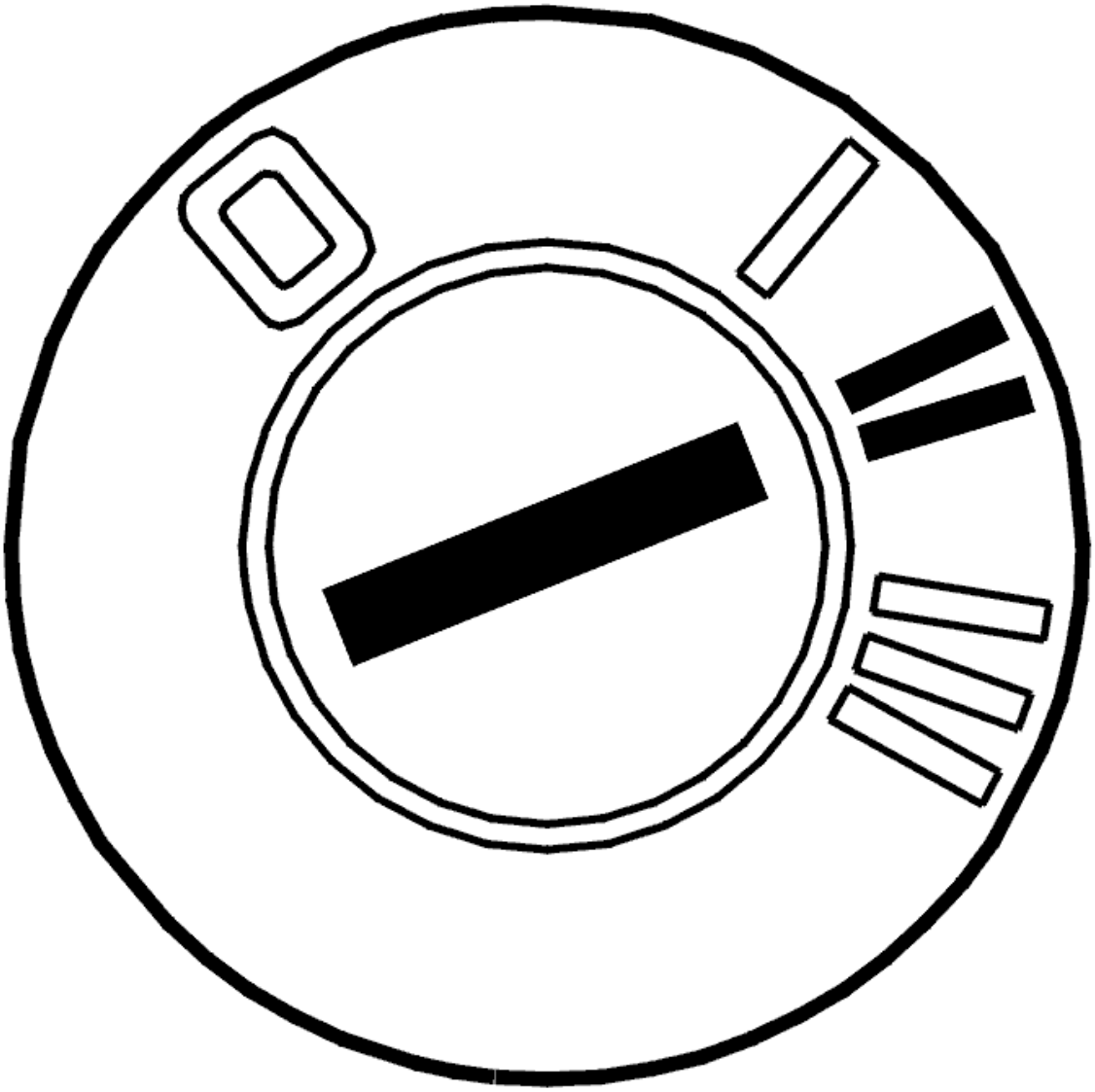

Fig. 404: Identifying Ignition ON
Courtesy of VOLVO CARS CORPORATION

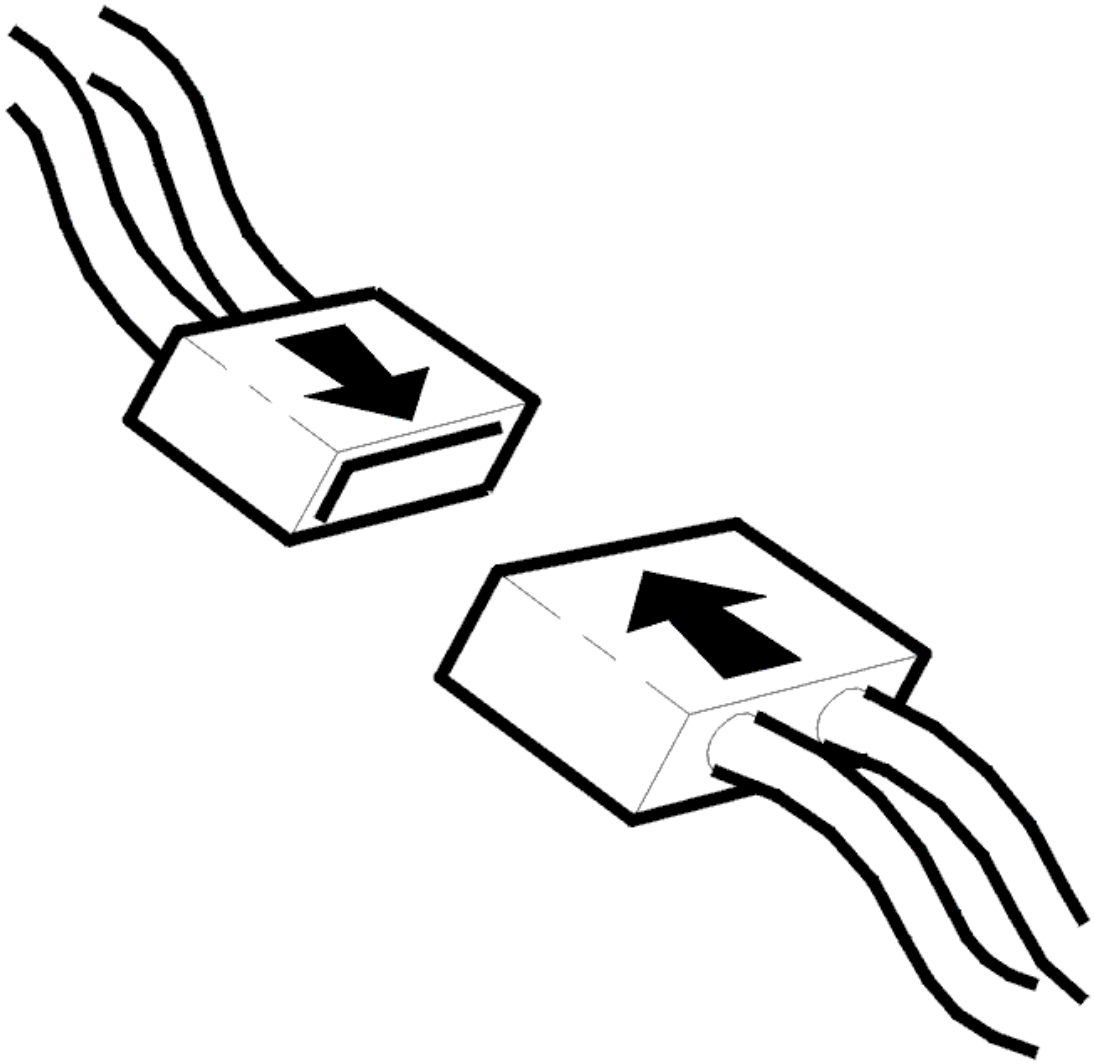

Fig. 405: Connecting Connector
Courtesy of VOLVO CARS CORPORATION

- Ignition off.
- Test box connected.
- Connect connector, install components etc.
- Ignition on.
- Connect a voltmeter between #11 and #3 on the test box.

  The voltmeter should display approximately 0 V

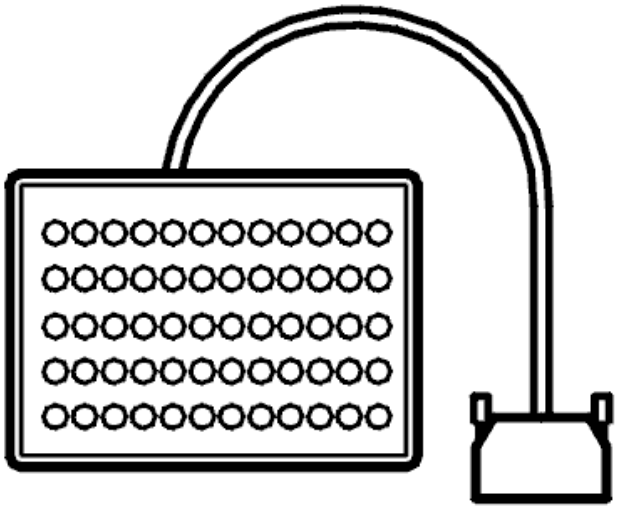

Fig. 406: Breakout Box
Courtesy of VOLVO CARS CORPORATION

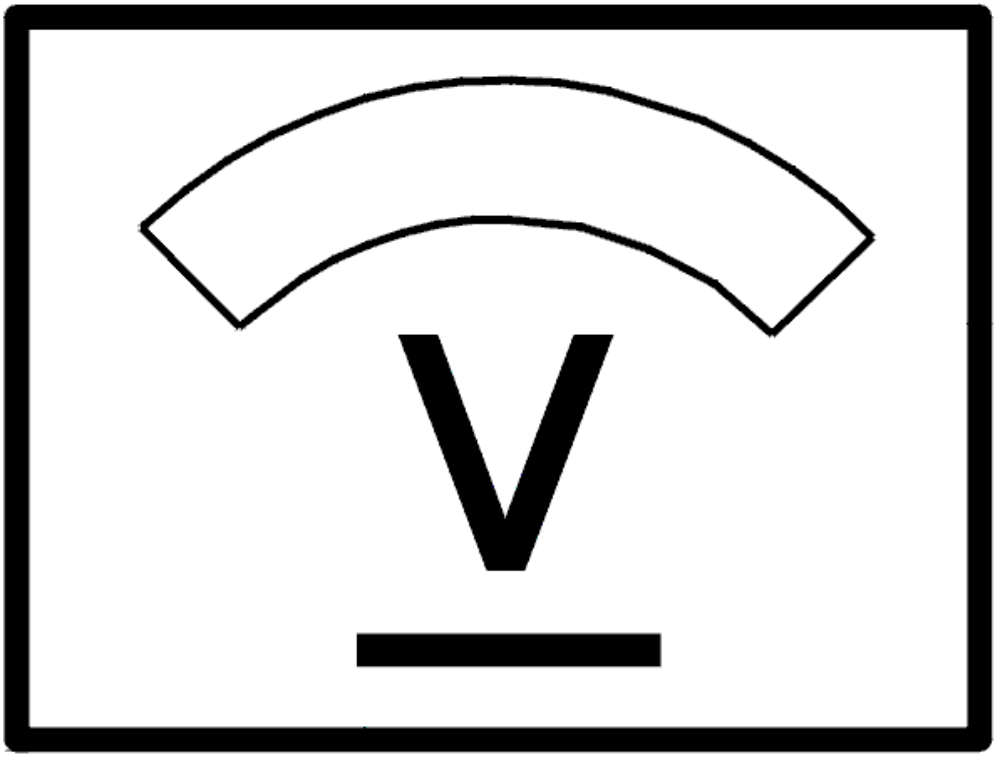

Fig. 407: Identifying Voltage Display
Courtesy of VOLVO CARS CORPORATION

Does the voltmeter display approximately 0 V?

- **YES**

  VERIFIED: Troubleshooting has been completed.

- **NO**

  Refer to **INFORMATION**

INFORMATION

FAULT-TRACING INFORMATION

The fault should have been detected and remedied. As this is not the case fault-tracing has failed.

Exit fault-tracing for this diagnostic trouble code (DTC) or make another attempt.

INFORMATION

FAULT-TRACING INFORMATION

If the fault is intermittent, do not verify fault-tracing if the fault does not recur.

It is possible to view the information again, or leave fault-tracing for this diagnostic trouble code (DTC).

CEM-5F42: POWER SUPPLY. FAULTY (2005-2012)

DIAGNOSTIC TROUBLE CODE (DTC) INFORMATION CEM-5F42

Condition

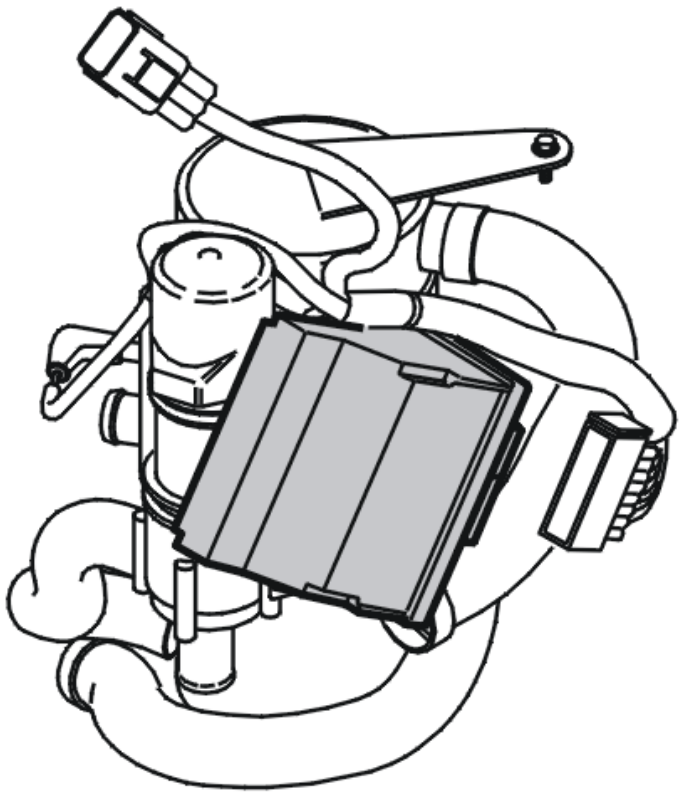

Fig. 408: Additional Heater And Parking Heater
Courtesy of VOLVO CARS CORPORATION

The central electronic module (CEM) checks the communication with the combustion preheater module (CPM).

The diagnostic trouble code (DTC) is stored if the central electronic module (CEM) registers a short-circuit in

the power supply from the combustion preheater module (CPM) to the fuel pump (FP), water pump and combustion fan.

The diagnostic trouble code (DTC) can be diagnosed when the heater is activated.

Substitute Value

- None.

Possible Source

- Short-circuit to supply voltage in the power supply cable.

Fault symptom[s]

- Poor heating in the passenger compartment.

FAULTY

CHECKING THE POWER SUPPLY

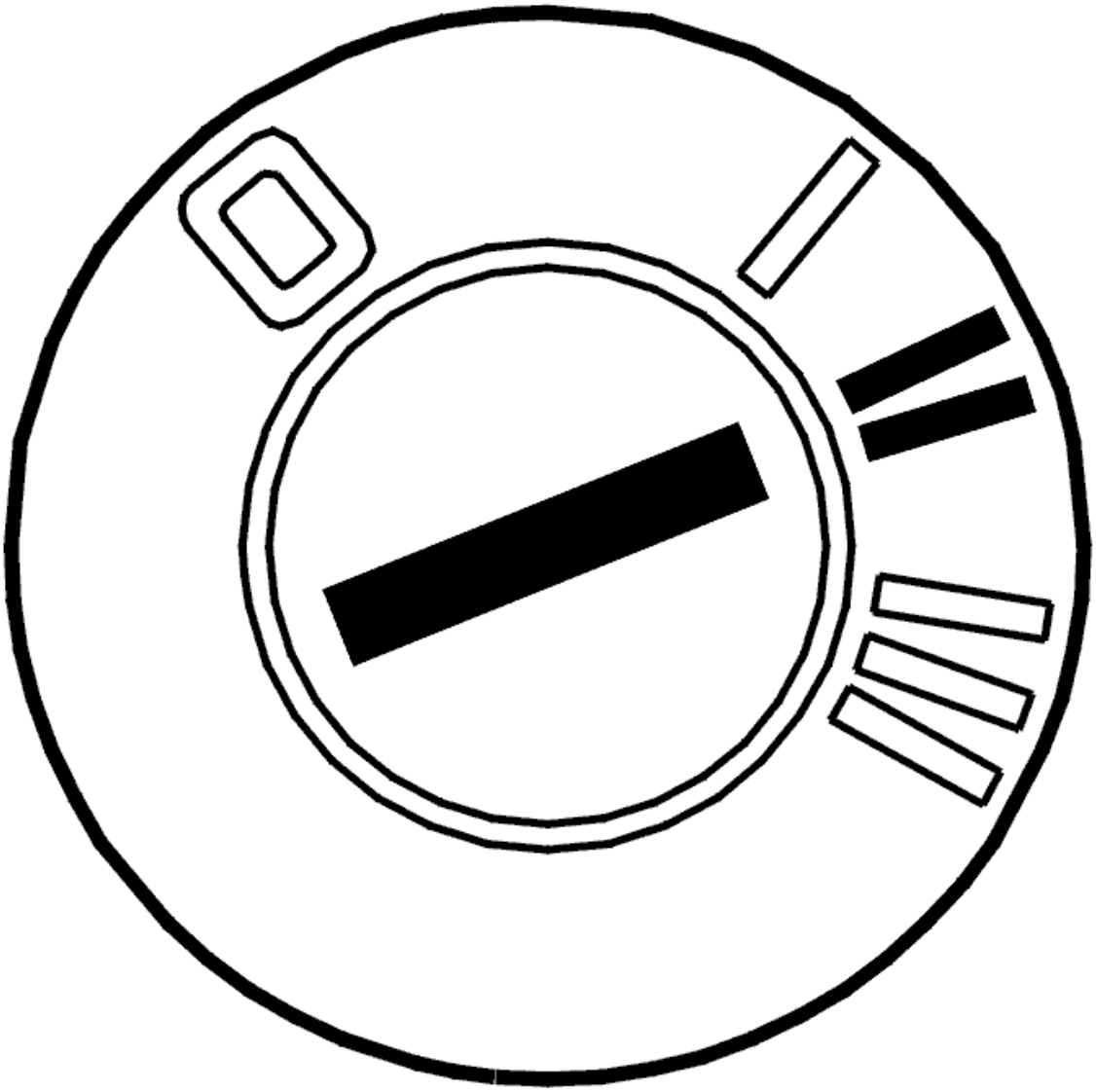

Fig. 409: Identifying Ignition ON
Courtesy of VOLVO CARS CORPORATION

- Ignition on
- Connect a voltmeter between terminals #11 and #3 on the breakout box.

  The voltmeter should read approximately 0 V.

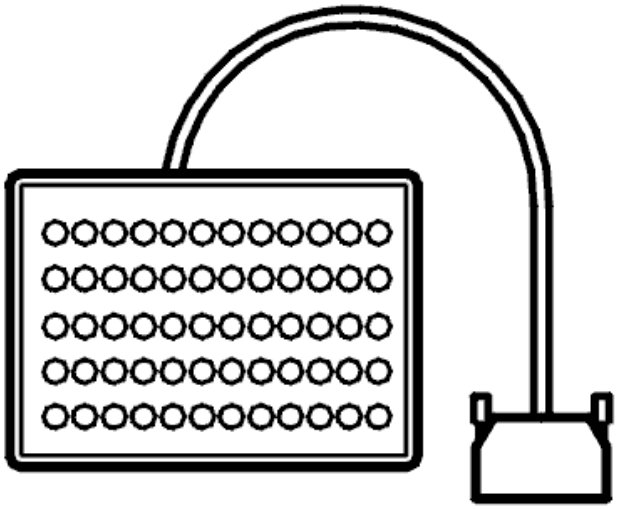

Fig. 410: Breakout Box
Courtesy of VOLVO CARS CORPORATION

Does the voltmeter read approximately 0 V?

- **YES**

  Refer to **INTERMITTENT FAULT**

- **NO**

  Refer to **CHECKING THE SUPPLY CIRCUIT**

CHECKING THE SUPPLY CIRCUIT

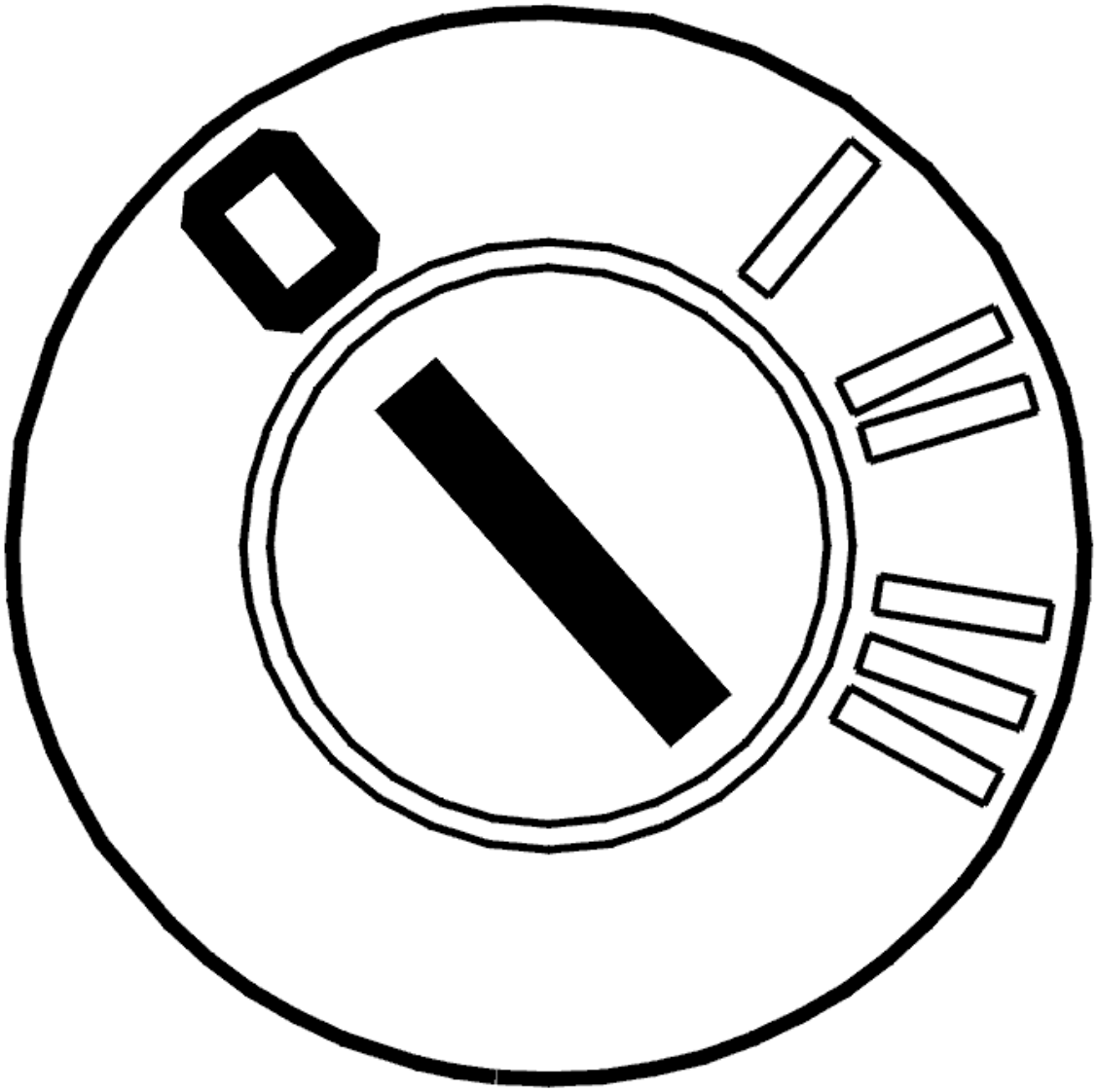

Fig. 411: Identifying Ignition OFF
Courtesy of VOLVO CARS CORPORATION

- Ignition off
- Remove the heater.

Check the circuit between combustion preheater module (CPM) terminal #11 and the components which are connected to the supply circuit (water pump terminal 2, fuel pump (FP) terminal 2 and combustion fan supply terminal). Check for a short-circuit to supply voltage.

With the ignition on and the water pump connector disconnected, the voltage between water pump terminal 1 (control module side) and ground should be approximately 0 V.

Remedy as necessary.

Other information:

- see **CONNECTING THE BREAKOUT BOX**
- see **SIGNAL SPECIFICATION**
- see **ENGINE COOLANT HEATER, REPLACING**
- see **WATER PUMP ENGINE COOLANT HEATER, REPLACING**
- see **FUEL PUMP AUXILIARY HEATER, REPLACING**
- see **FUEL INJECTION NOZZLE / FAN MOTOR / PRESSURE EQUALIZER, REPLACING**
- see **CHECKING WIRING AND TERMINALS**

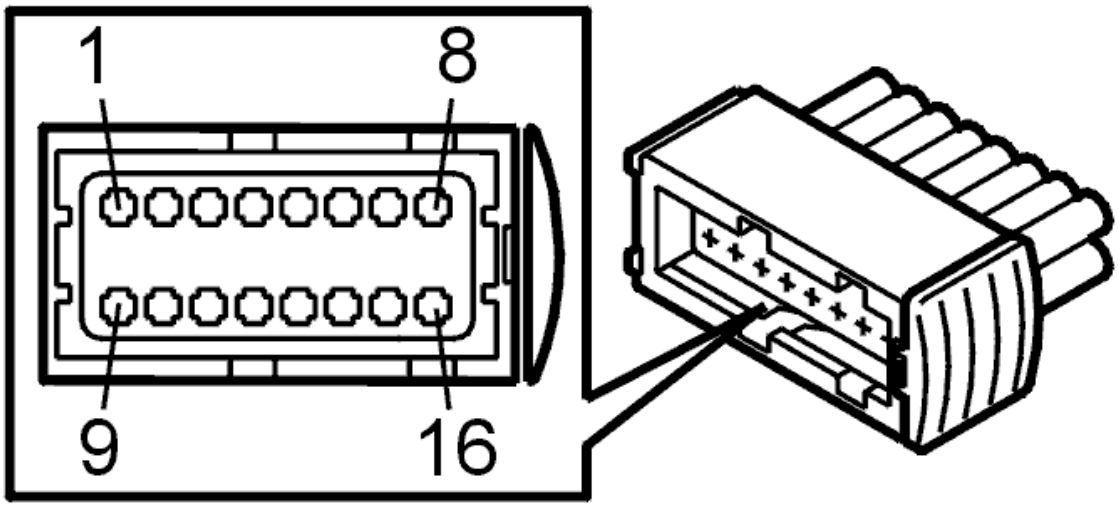

Fig. 412: Identifying Connector Terminals
Courtesy of VOLVO CARS CORPORATION

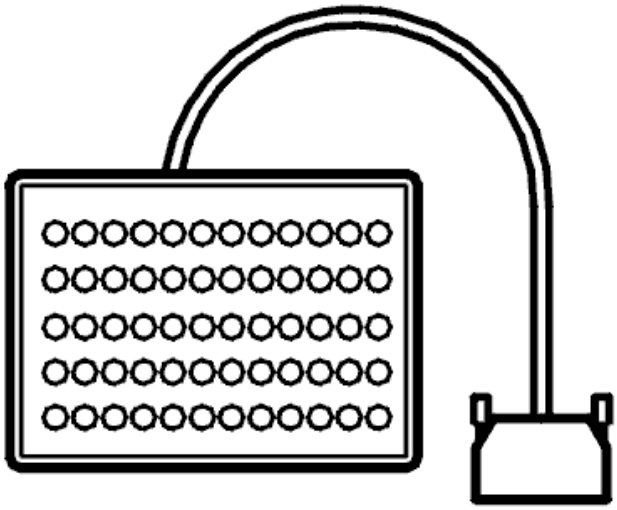

Fig. 413: Breakout Box
Courtesy of VOLVO CARS CORPORATION

- **Continue**

Refer to **VERIFICATION**

INTERMITTENT FAULT

Check the circuit between combustion preheater module (CPM) terminal #11 and the components which are connected to the supply circuit (water pump terminal 2, fuel pump (FP) terminal 1 and combustion fan supply terminal). Check for an intermittent short-circuit to supply voltage.

With the ignition on and the water pump connector disconnected, the voltage between water pump terminal 1 (control module side) and ground should be approximately 0 V.

Remedy as necessary.

Other information:

- see **CONNECTING THE BREAKOUT BOX**
- see **SIGNAL SPECIFICATION**
- see **WATER PUMP ENGINE COOLANT HEATER, REPLACING**
- see **FUEL PUMP AUXILIARY HEATER, REPLACING**
- see **FUEL INJECTION NOZZLE / FAN MOTOR / PRESSURE EQUALIZER, REPLACING**
- see **CHECKING WIRING AND TERMINALS**

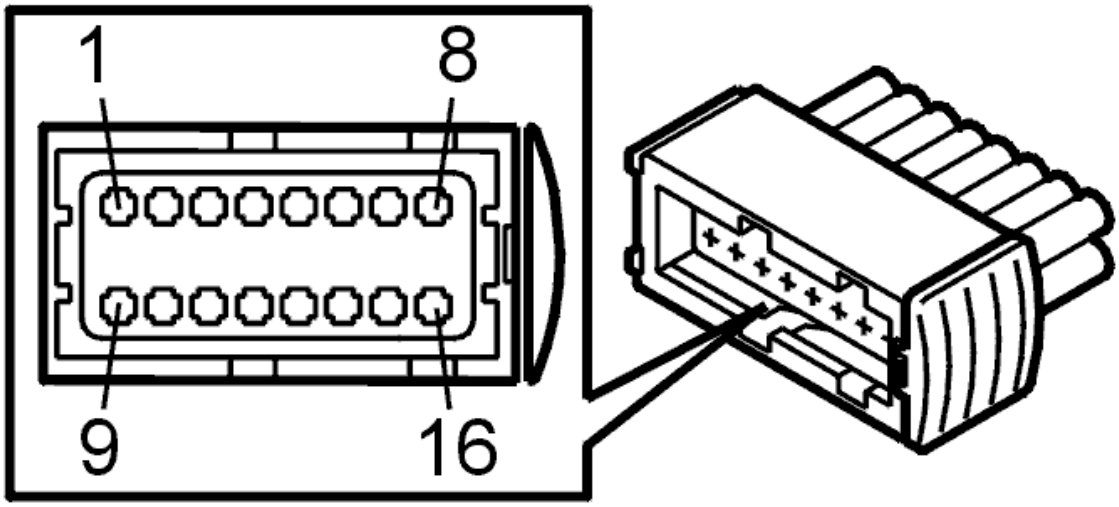

Fig. 414: Identifying Connector Terminals
Courtesy of VOLVO CARS CORPORATION

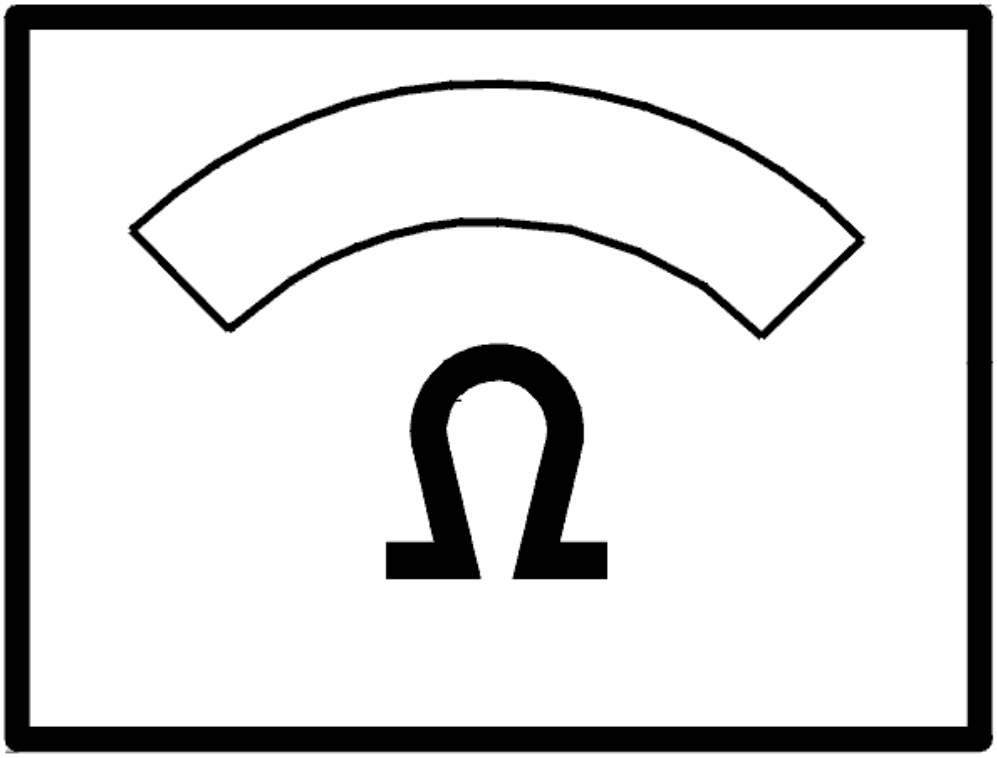

Fig. 415: Identifying Ohm Meter
Courtesy of VOLVO CARS CORPORATION

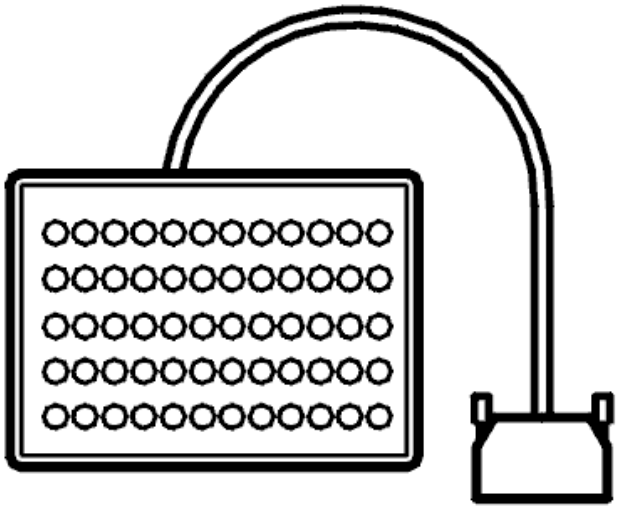

Fig. 416: Breakout Box
Courtesy of VOLVO CARS CORPORATION

- **Continue**

  Refer to **INFORMATION**

VERIFICATION

VERIFICATION

HINT: After carrying out the repair, check that the fault has been remedied.

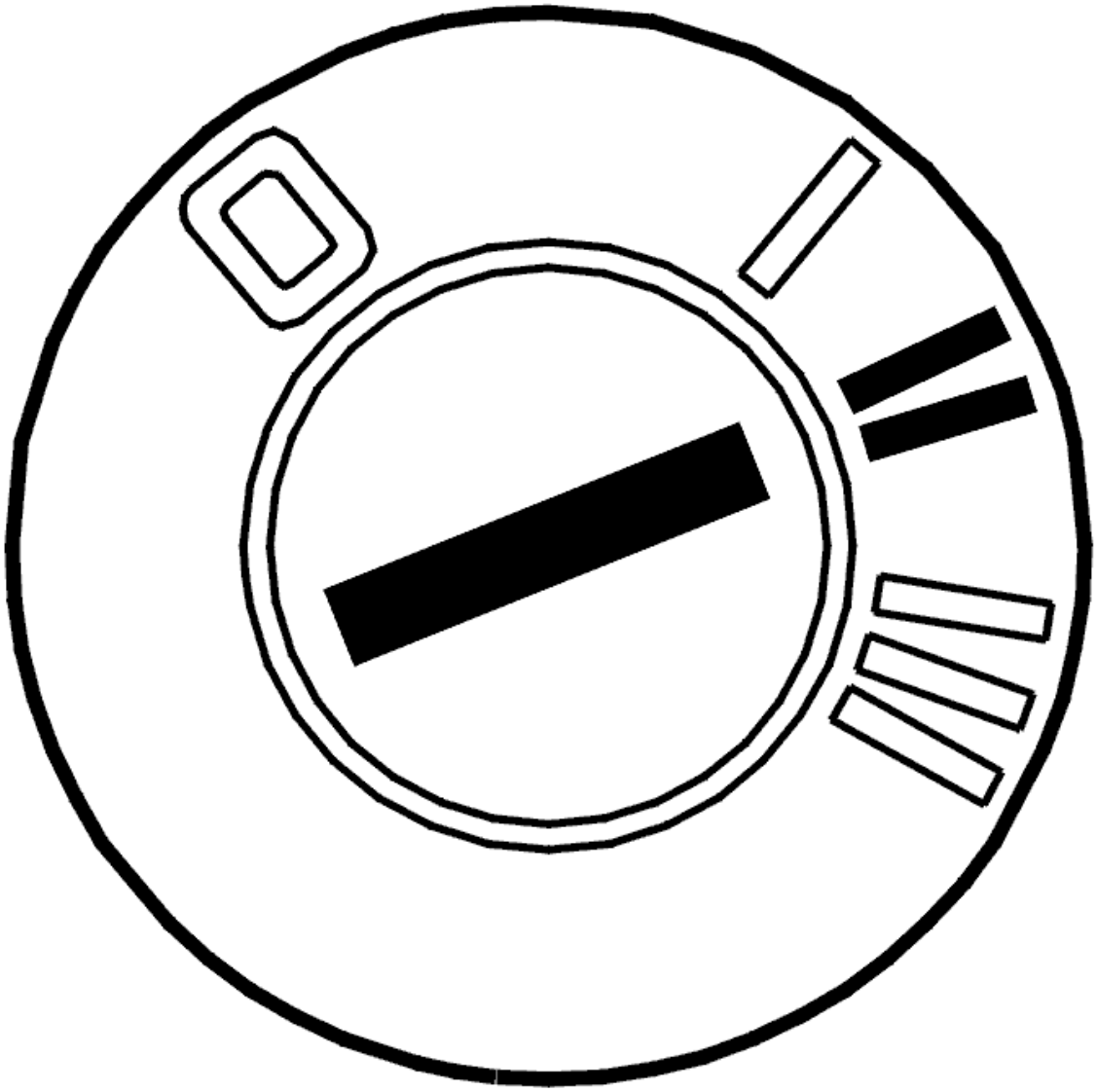

Fig. 417: Identifying Ignition ON
Courtesy of VOLVO CARS CORPORATION

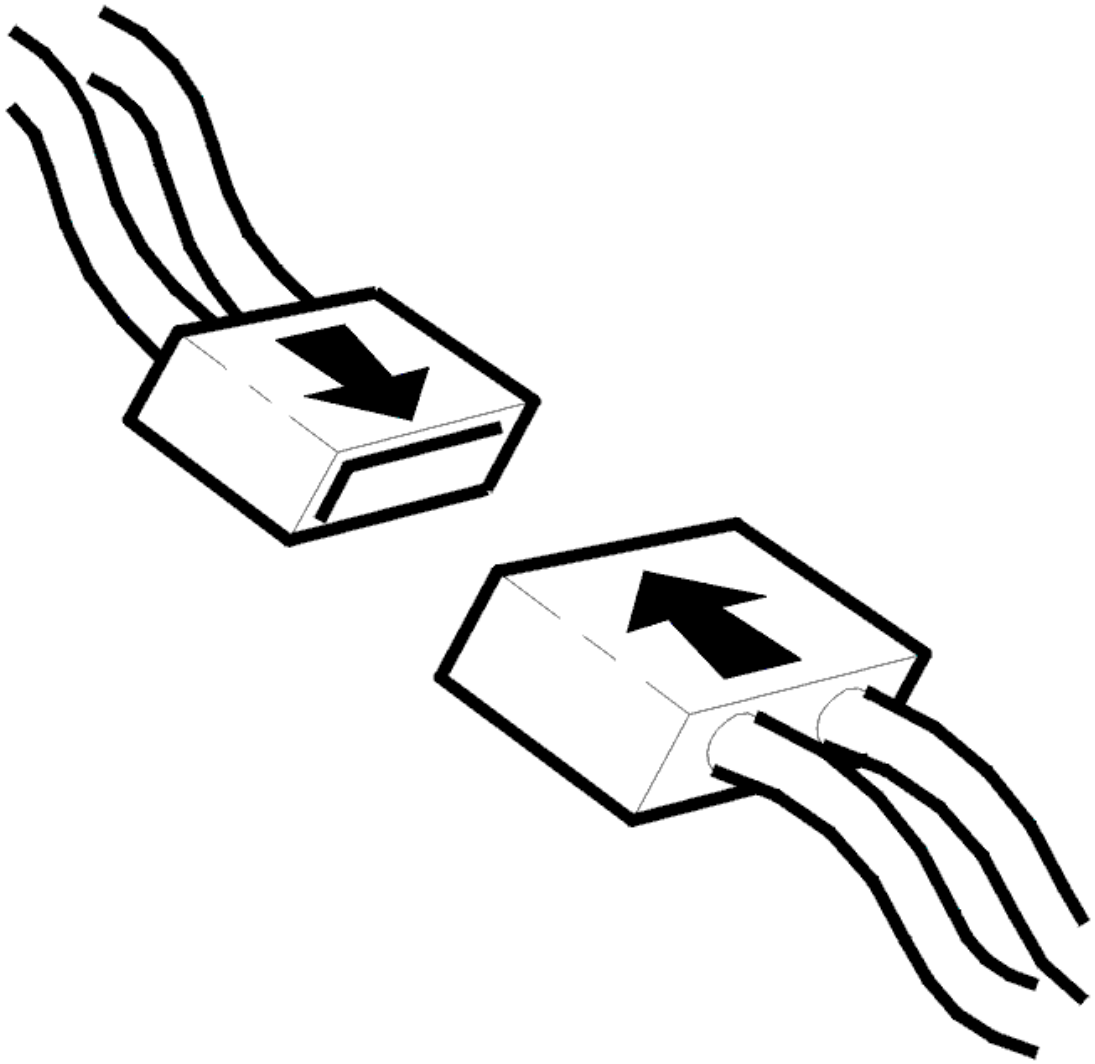

Fig. 418: Connecting Connector
Courtesy of VOLVO CARS CORPORATION

- Ignition off
- Reinstall the connectors, components etc.
- Ignition on
- Read off the engine coolant temperature.

NOTE: It is important that only the ignition is on in order for the heater to start.

- Activate the heater.

HINT: After repair, the voltage of the flame sensor can be checked. The voltage must be a maximum of 1.0 V.

Check the heater function.

CAUTION: In order for to enable start of the heater itself, the battery voltage must be normal, coolant temperature must be lower than +96 °C and the heater's after-run/stop sequence must be finished. There must also be enough fuel in the tank.

CAUTION: If the heater or other components are not activated, try starting the activation again using the VCT2000 (or appropriate scan tool).

Other information:

- see **ENGINE COOLANT HEATER, TEST RUNNING** .

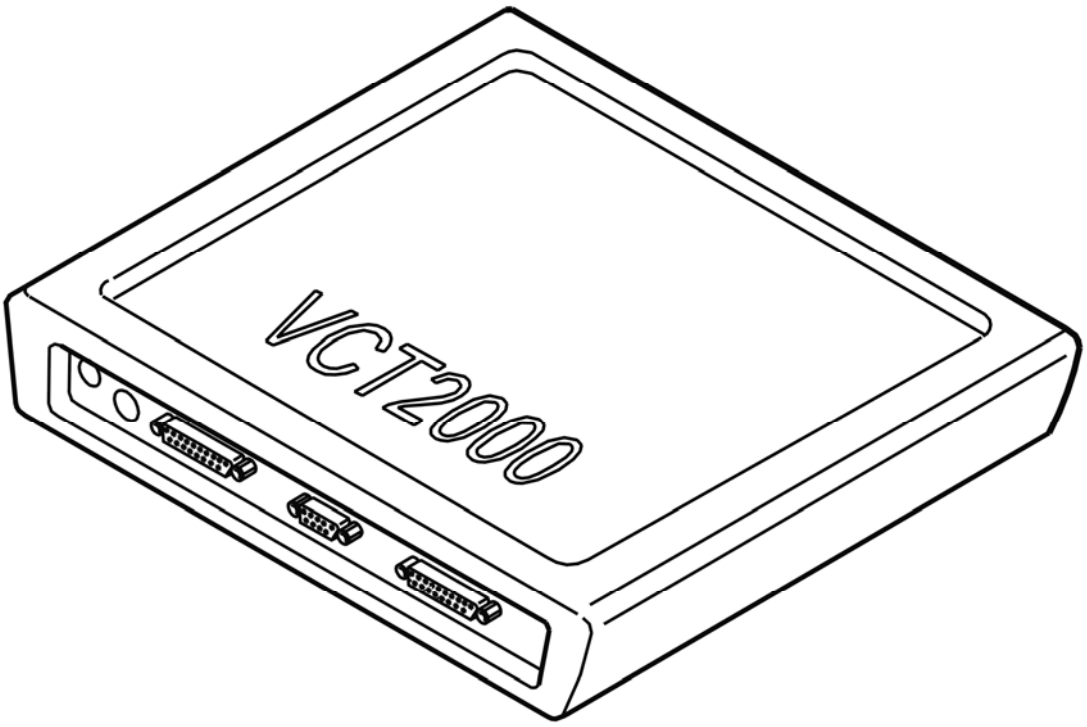

Fig. 419: Identifying VCT2000 Diagnostic Tool Symbol In VIDA
Courtesy of VOLVO CARS CORPORATION

Is the heater working?

- **YES**

VERIFIED: Troubleshooting has been completed.

- **NO**

  Refer to **INFORMATION**

INFORMATION

FAULT-TRACING INFORMATION

The fault should have been detected and remedied. As this is not the case fault-tracing has failed.

Exit fault-tracing for this diagnostic trouble code (DTC) or make another attempt.

INFORMATION

FAULT-TRACING INFORMATION

If the fault is intermittent, do not verify fault-tracing if the fault does not recur.

It is possible to view the information again, or leave fault-tracing for this diagnostic trouble code (DTC).

FAULTY

CHECKING THE POWER SUPPLY

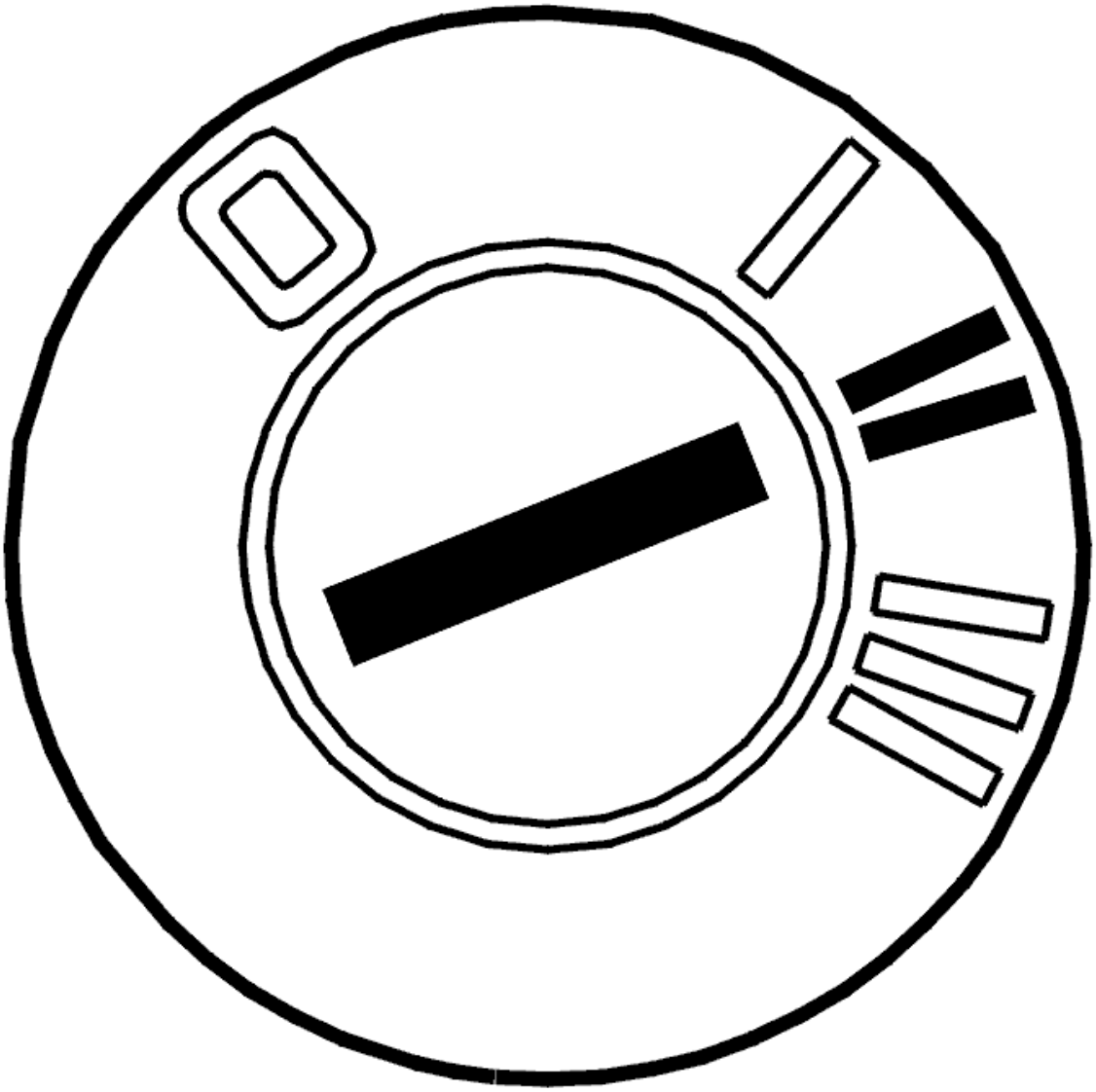

Fig. 420: Identifying Ignition ON
Courtesy of VOLVO CARS CORPORATION

- Ignition on
- Connect a voltmeter between terminals #11 and #3 on the breakout box.

  The voltmeter should read approximately 0 V.

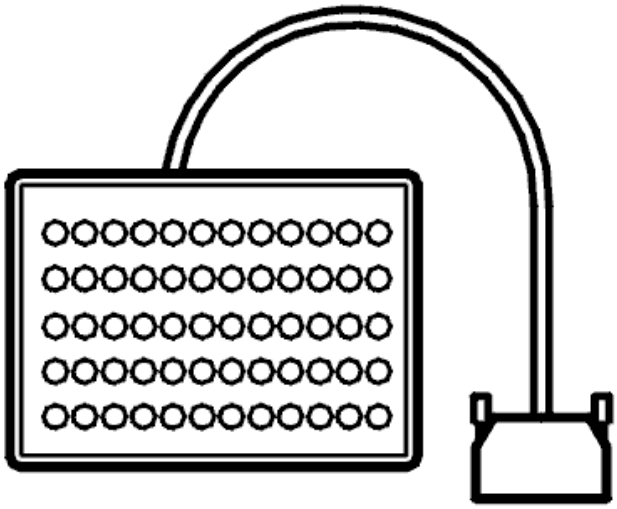

Fig. 421: Breakout Box
Courtesy of VOLVO CARS CORPORATION

Does the voltmeter read approximately 0 V?

- **YES**

  see **INTERMITTENT FAULT**

- **NO**

  see **CHECKING THE SUPPLY CIRCUIT**

CHECKING THE SUPPLY CIRCUIT

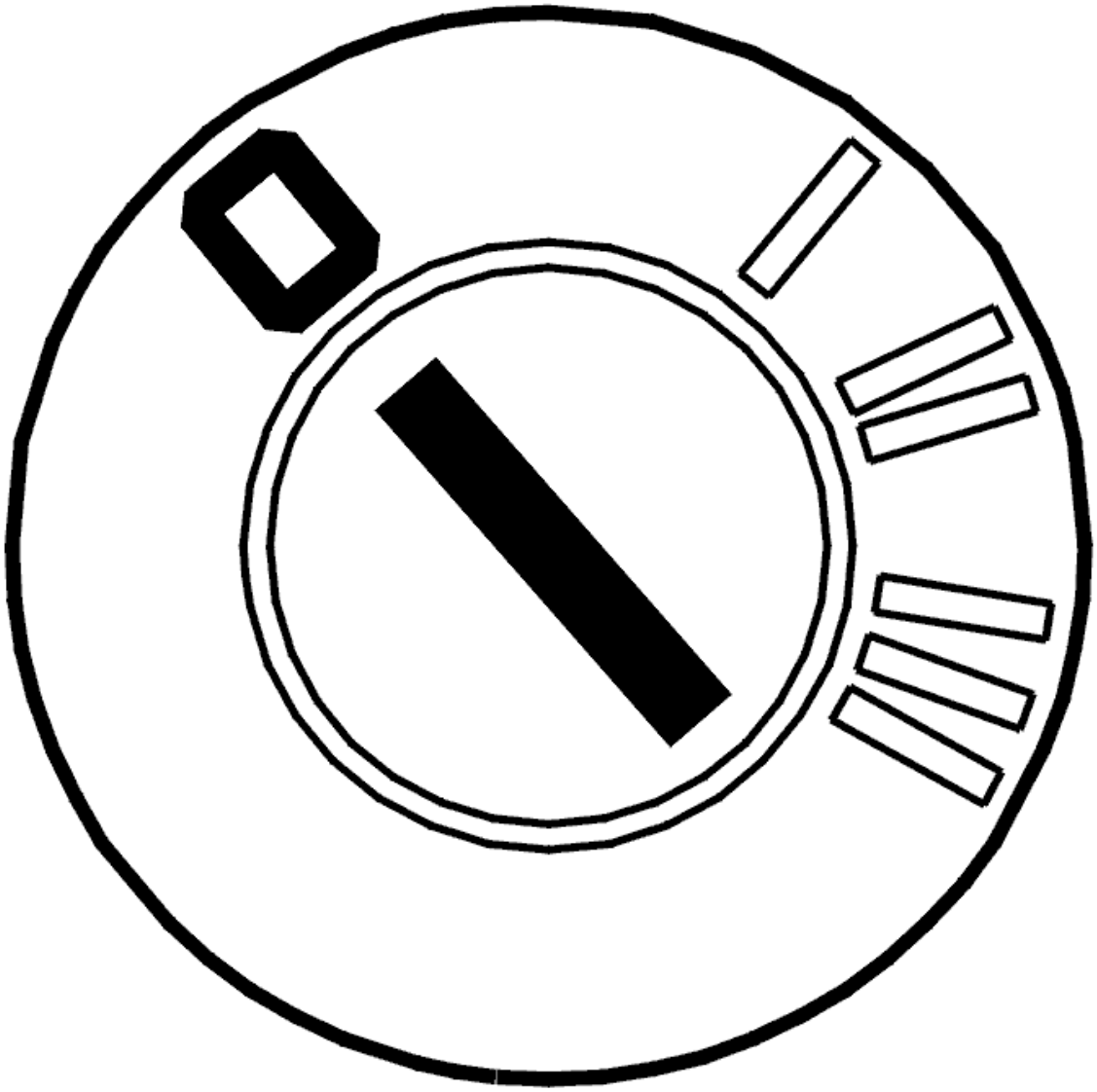

Fig. 422: Identifying Ignition OFF
Courtesy of VOLVO CARS CORPORATION

- Ignition off
- Remove the heater.

Check the circuit between combustion preheater module (CPM) terminal #11 and the components which are connected to the supply circuit (water pump terminal 2, fuel pump (FP) terminal 2 and combustion fan supply terminal). Check for a short-circuit to supply voltage.

With the ignition on and the water pump connector disconnected, the voltage between water pump terminal 1 (control module side) and ground should be approximately 0 V.

Remedy as necessary.

Other information:

- see **CONNECTING THE BREAKOUT BOX**
- see **SIGNAL SPECIFICATION**
- see **ENGINE COOLANT HEATER, FUEL DRIVEN (2003-2012)**
- see **WATER PUMP ENGINE COOLANT HEATER, REPLACING**
- see **FUEL PUMP AUXILIARY HEATER, REPLACING**
- see **FUEL INJECTION NOZZLE / FAN MOTOR / PRESSURE EQUALIZER, REPLACING**
- see **CHECKING WIRING AND TERMINALS**

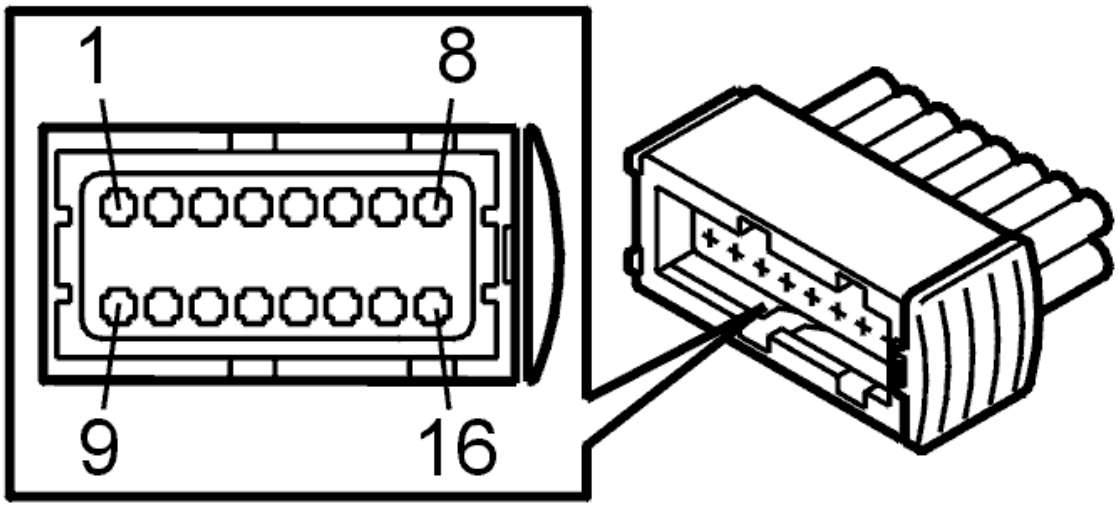

Fig. 423: Identifying Connector Terminals
Courtesy of VOLVO CARS CORPORATION

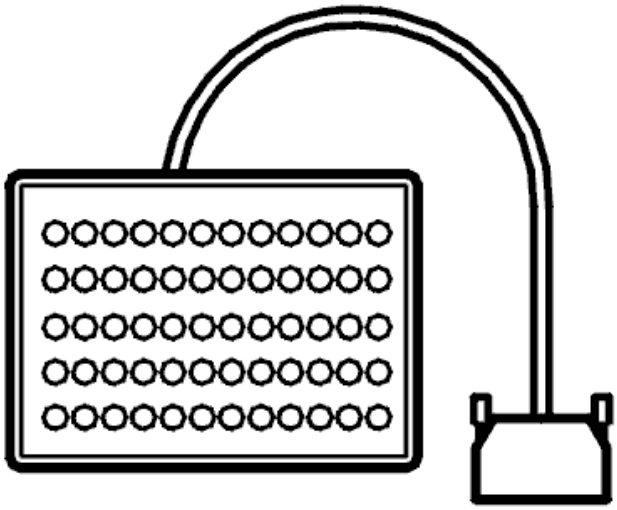

Fig. 424: Breakout Box
Courtesy of VOLVO CARS CORPORATION

- **Continue**

see **VERIFICATION**

VERIFICATION

- VERIFIED

  OKAY: Troubleshooting has been completed.

- **VERIFICATION FAILED:** The fault should have been detected and remedied. As this is not the case fault-tracing has failed. Exit fault-tracing for this diagnostic trouble code (DTC) or make another attempt.

FAULT-TRACING INFORMATION

- **FAULT TRACING FAILED:**

  The fault should have been detected and remedied. As this is not the case fault-tracing has failed. Exit fault-tracing for this diagnostic trouble code (DTC) or make another attempt.

INTERMITTENT FAULT

Check the circuit between combustion preheater module (CPM) terminal #11 and the components which are connected to the supply circuit (water pump terminal 2, fuel pump (FP) terminal 1 and combustion fan supply terminal). Check for an intermittent short-circuit to supply voltage.

With the ignition on and the water pump connector disconnected, the voltage between water pump terminal 1 (control module side) and ground should be approximately 0 V.

Remedy as necessary.

Other information:

- see **CONNECTING THE BREAKOUT BOX**
- see **SIGNAL SPECIFICATION**
- see **WATER PUMP ENGINE COOLANT HEATER, REPLACING**
- see **FUEL PUMP AUXILIARY HEATER, REPLACING**
- see **FUEL INJECTION NOZZLE / FAN MOTOR / PRESSURE EQUALIZER, REPLACING**
- see **CHECKING WIRING AND TERMINALS**

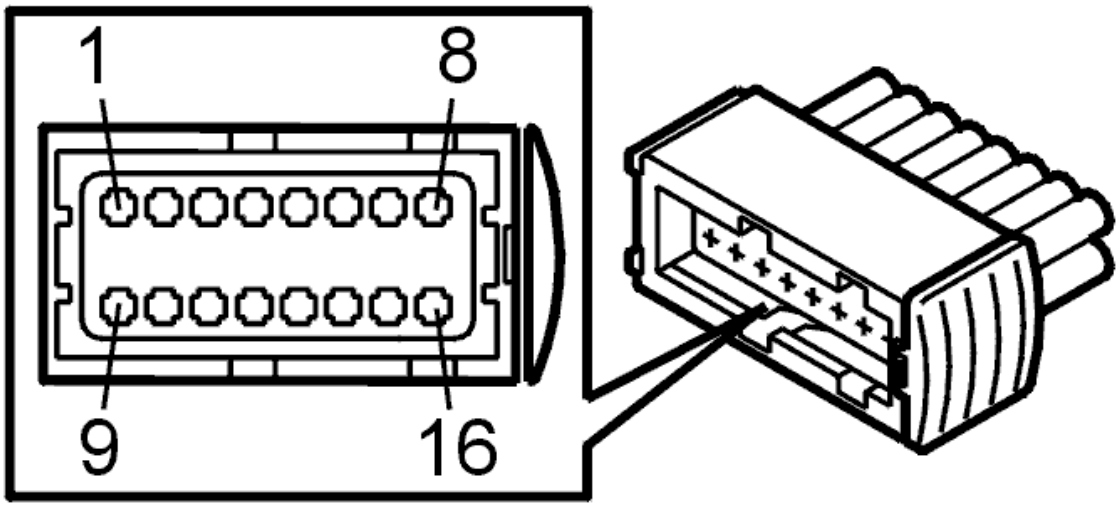

Fig. 425: Identifying Connector Terminals
Courtesy of VOLVO CARS CORPORATION

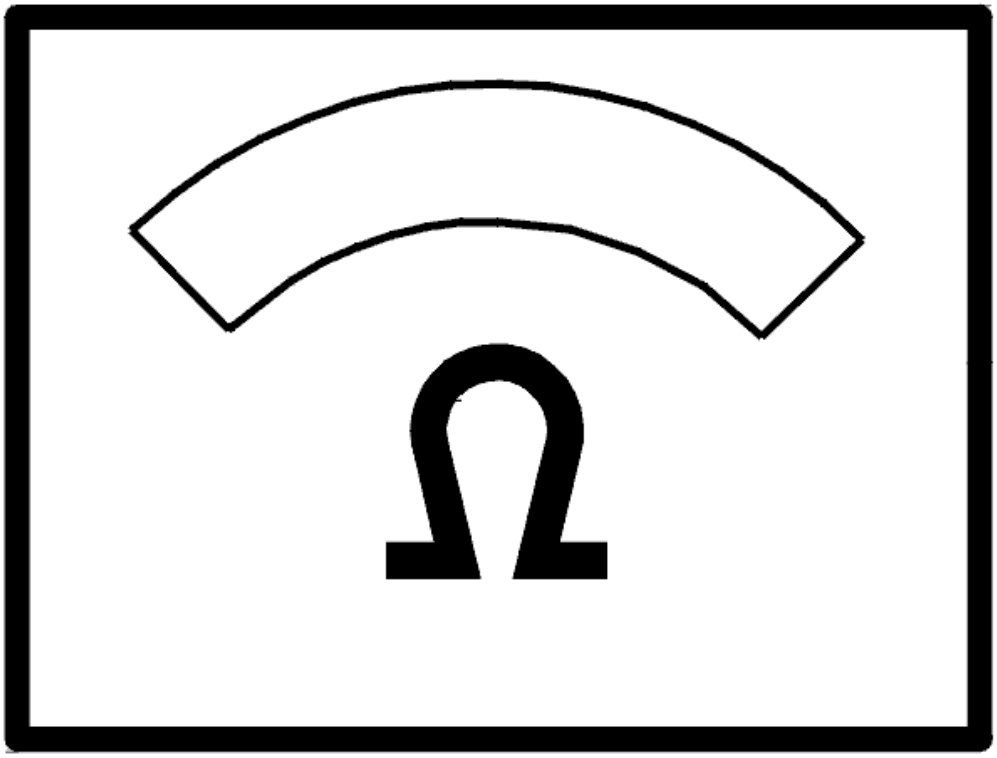

Fig. 426: Identifying Ohm Meter
Courtesy of VOLVO CARS CORPORATION

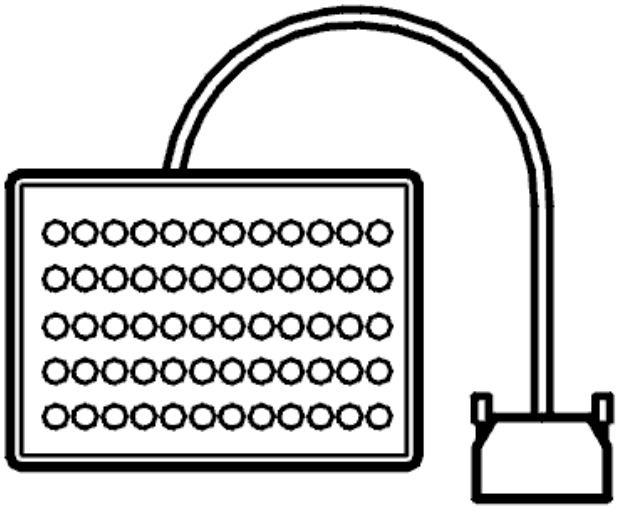

Fig. 427: Breakout Box
Courtesy of VOLVO CARS CORPORATION

CEM-5F43: POWER SUPPLY. MISSING (2005-2012)

DIAGNOSTIC TROUBLE CODE (DTC) INFORMATION CEM-5F43

Condition

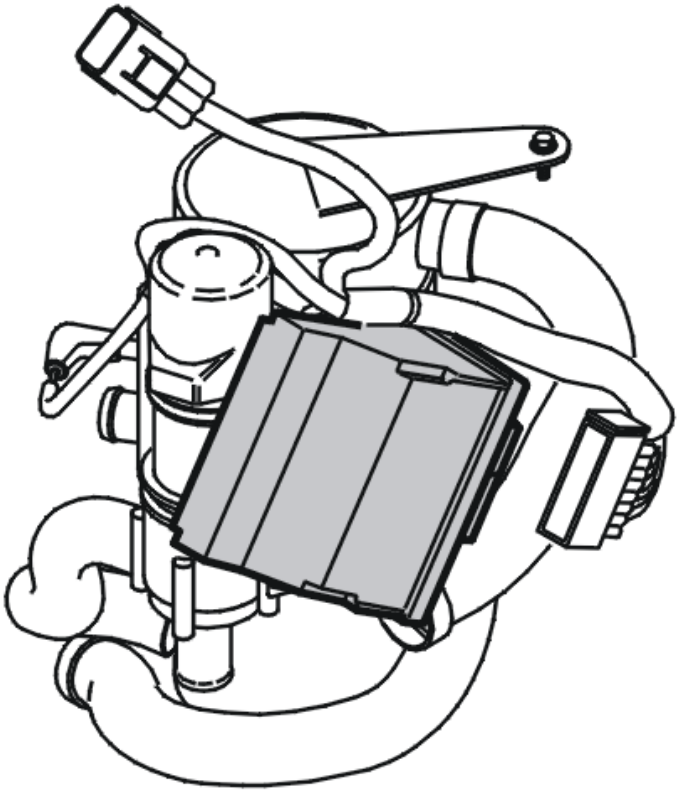

Fig. 428: Additional Heater And Parking Heater
Courtesy of VOLVO CARS CORPORATION

The central electronic module (CEM) checks the communication with the combustion preheater module (CPM).

The diagnostic trouble code (DTC) is stored if the central electronic module (CEM) registers a short-circuit to ground in the power supply from the combustion preheater module (CPM) to the fuel pump (FP), water pump and combustion fan or that there is no power at all.

The diagnostic trouble code (DTC) can be diagnosed when the heater is activated.

Substitute Value

- None.

Possible Source

- Short-circuit to ground in the power supply cable
- Contact resistance in the control module connectors
- Open-circuit in the power supply cable.

Fault symptom[s]

- Poor heating in the passenger compartment.

MISSING

CHECKING THE POWER SUPPLY

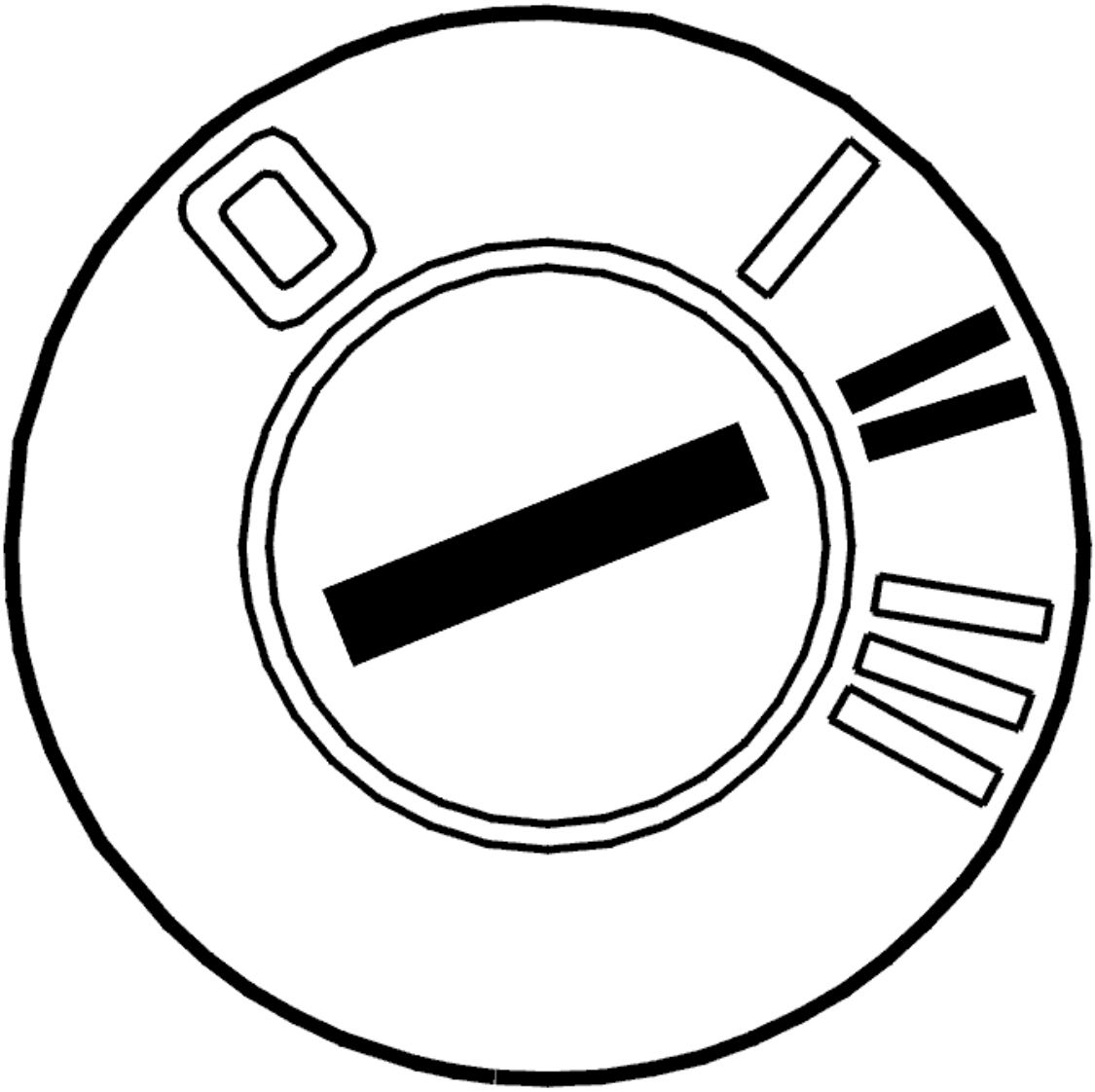

Fig. 429: Identifying Ignition ON
Courtesy of VOLVO CARS CORPORATION

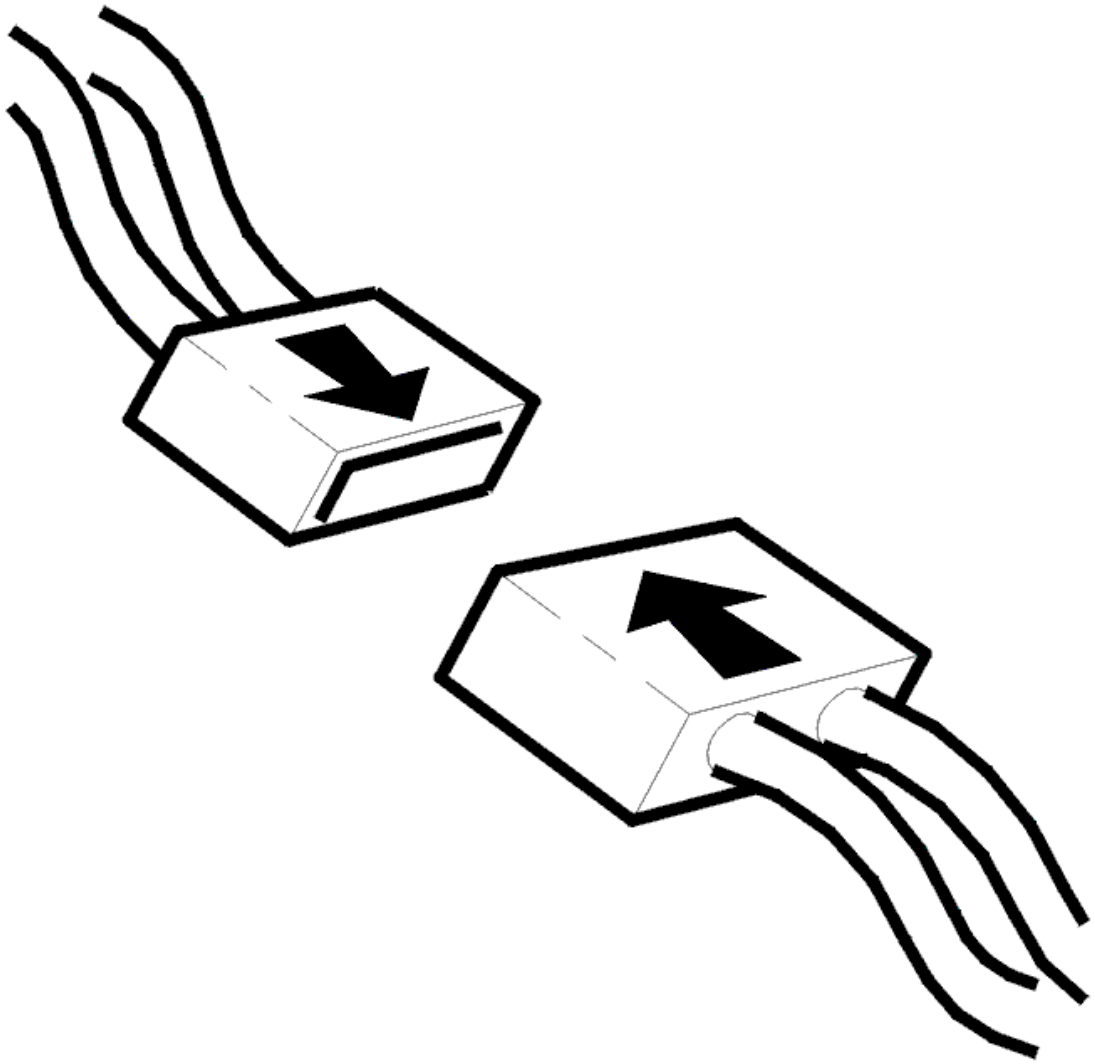

Fig. 430: Connecting Connector
Courtesy of VOLVO CARS CORPORATION

- Ignition on.

  NOTE: It is important that only the ignition is on in order for the heater to start.

- Activate the heater.

  Listen for a buzzing sound which indicates that the heater is running.

  Check the heater function.

  Other information:

- see **ENGINE COOLANT HEATER, TEST RUNNING**

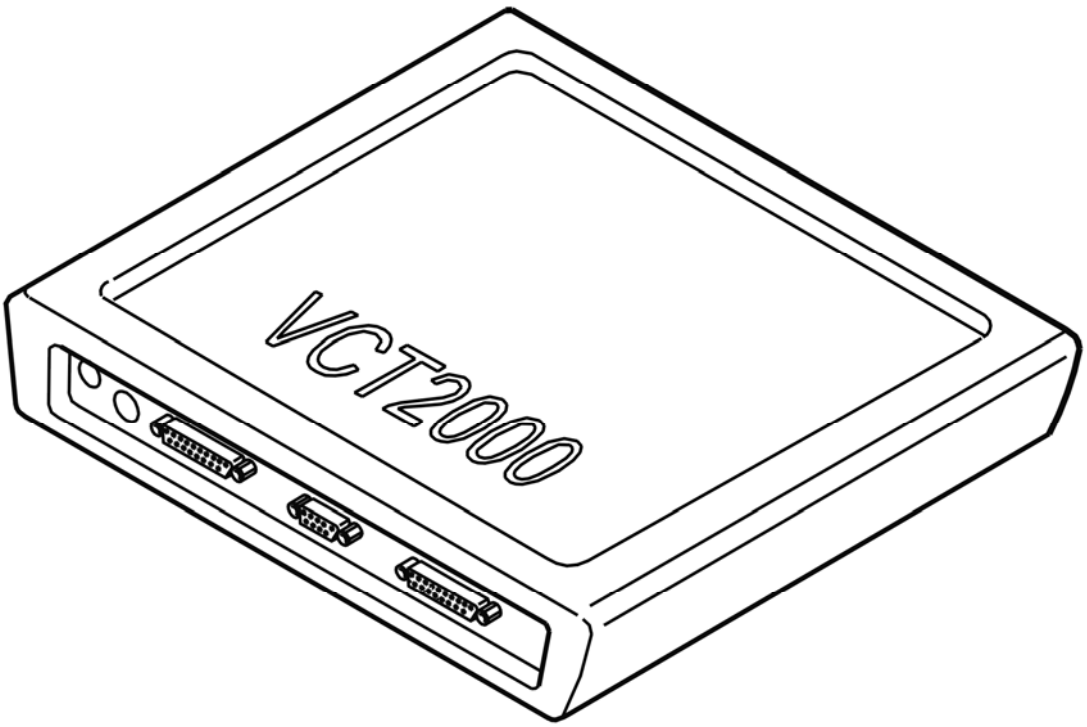

Fig. 431: Identifying VCT2000 Diagnostic Tool Symbol In VIDA
Courtesy of VOLVO CARS CORPORATION

Is the heater working?

- **YES**

  Refer to **INTERMITTENT FAULT**

- **NO**

  Refer to **CHECKING THE CONNECTOR**

CHECKING THE CONNECTOR

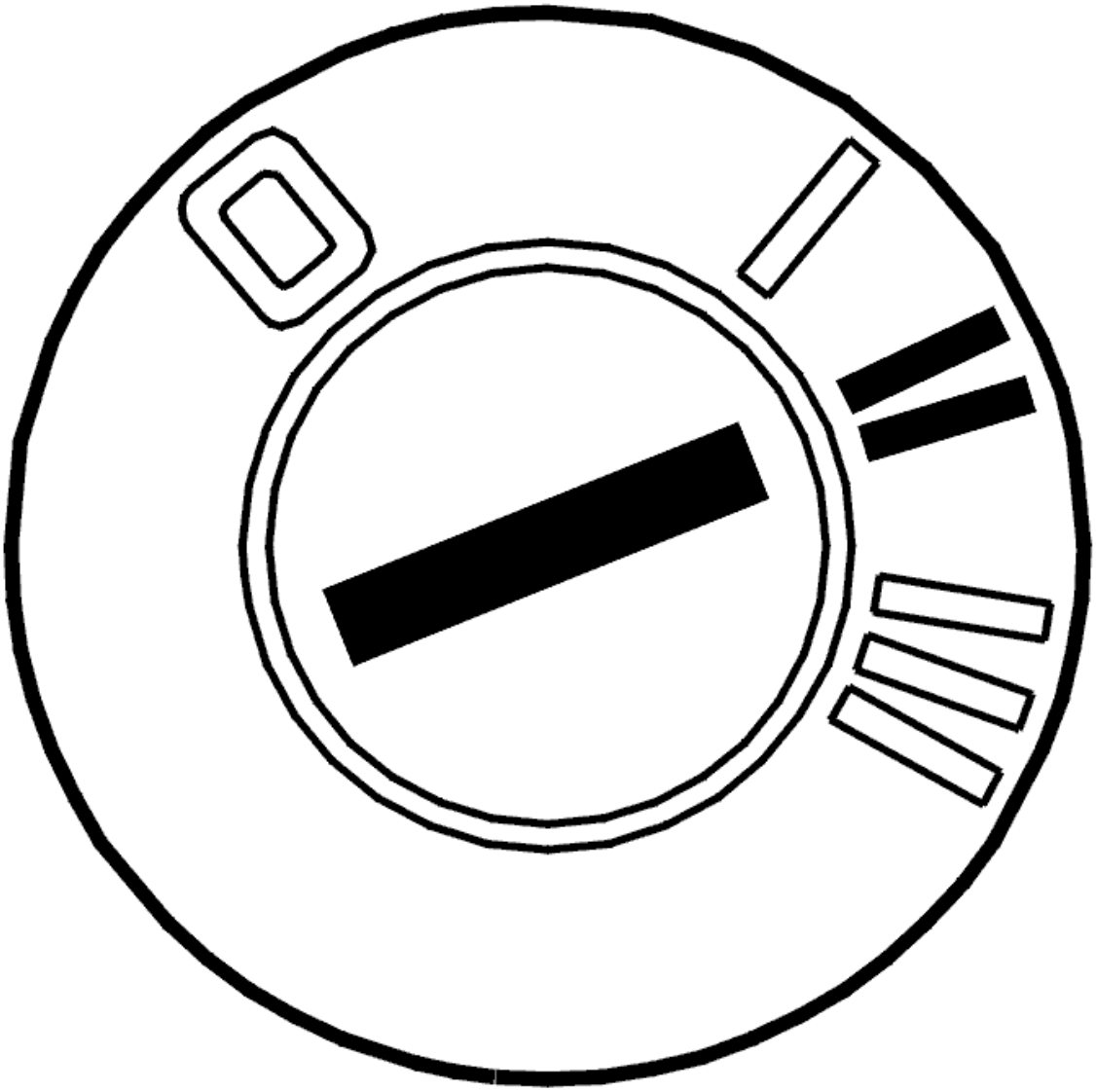

Fig. 432: Identifying Ignition ON
Courtesy of VOLVO CARS CORPORATION

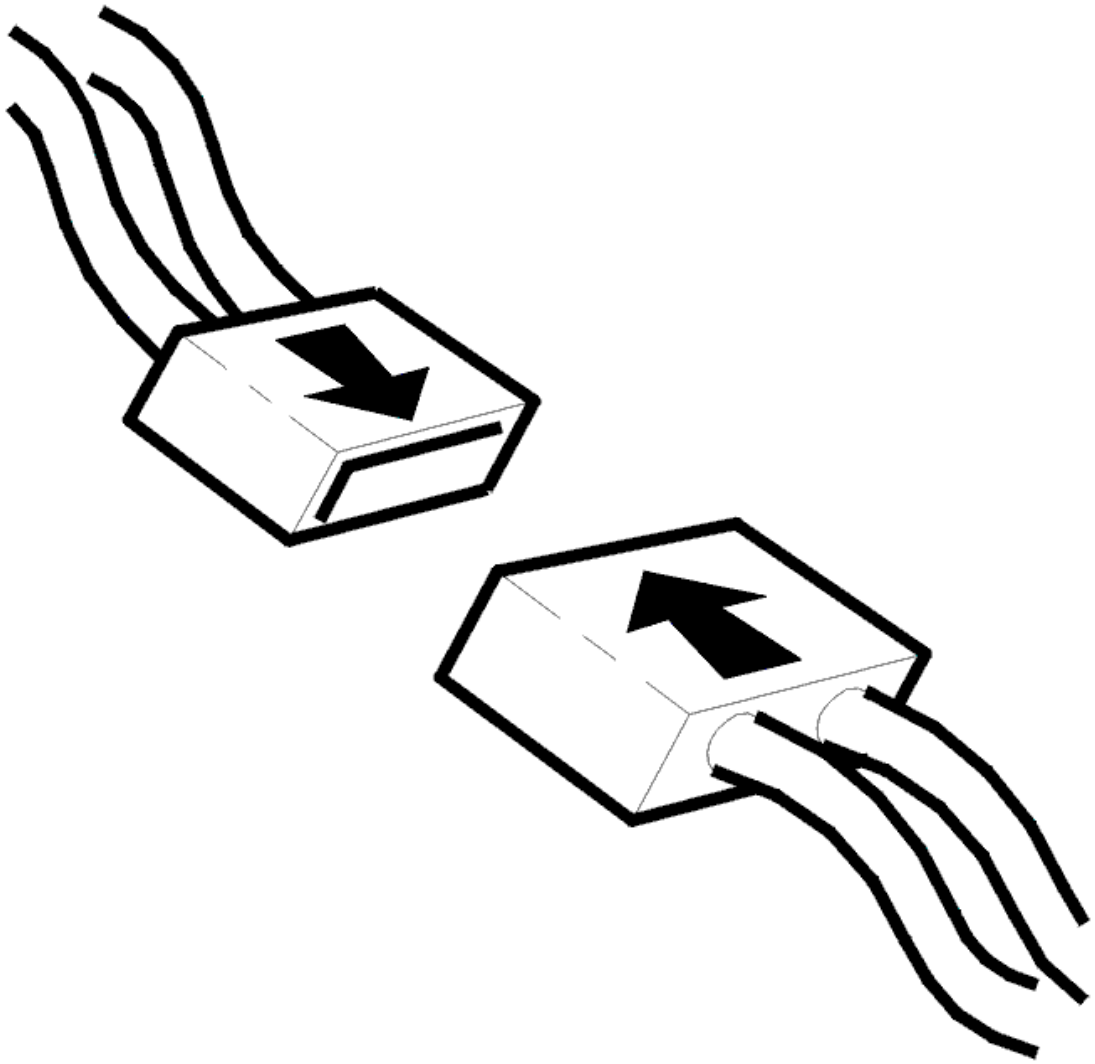

Fig. 433: Connecting Connector
Courtesy of VOLVO CARS CORPORATION

- Ignition off
- Check the control module connector. Check for contact resistance and oxidation. Remedy if necessary.

  In particular, check for any damage

- Reinstall the components, reconnect the connectors etc.
- Ignition on.

  NOTE: It is important that only the ignition is on in order for the heater to start.

- Activate the heater.

Listen for a buzzing sound which indicates that the heater is running.

Check the heater function.

If the heater now functions, the cause of the fault was loose connections in the connector.

Other information:

- see **CONNECTING THE BREAKOUT BOX**
- see **ENGINE COOLANT HEATER, TEST RUNNING**
- see **CHECKING WIRING AND TERMINALS**

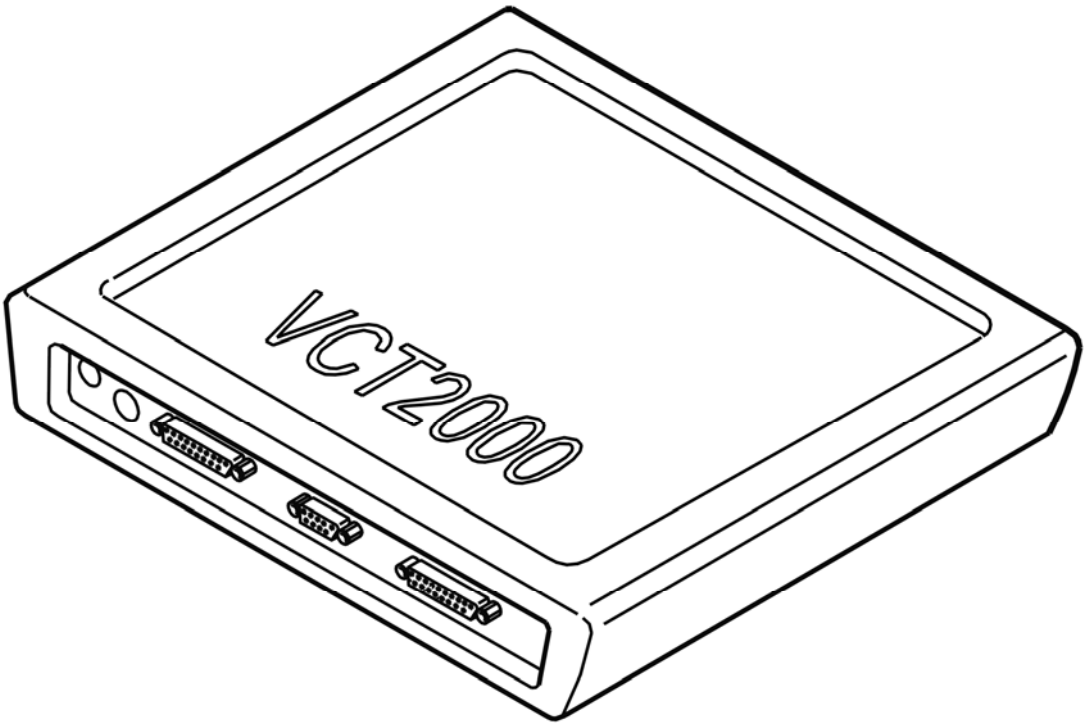

Fig. 434: Identifying VCT2000 Diagnostic Tool Symbol In VIDA
Courtesy of VOLVO CARS CORPORATION

Is the heater working?

- **YES**

  OKAY: Troubleshooting has been completed.

- **NO**

Refer to **CHECKING THE SUPPLY CIRCUIT**

CHECKING THE SUPPLY CIRCUIT

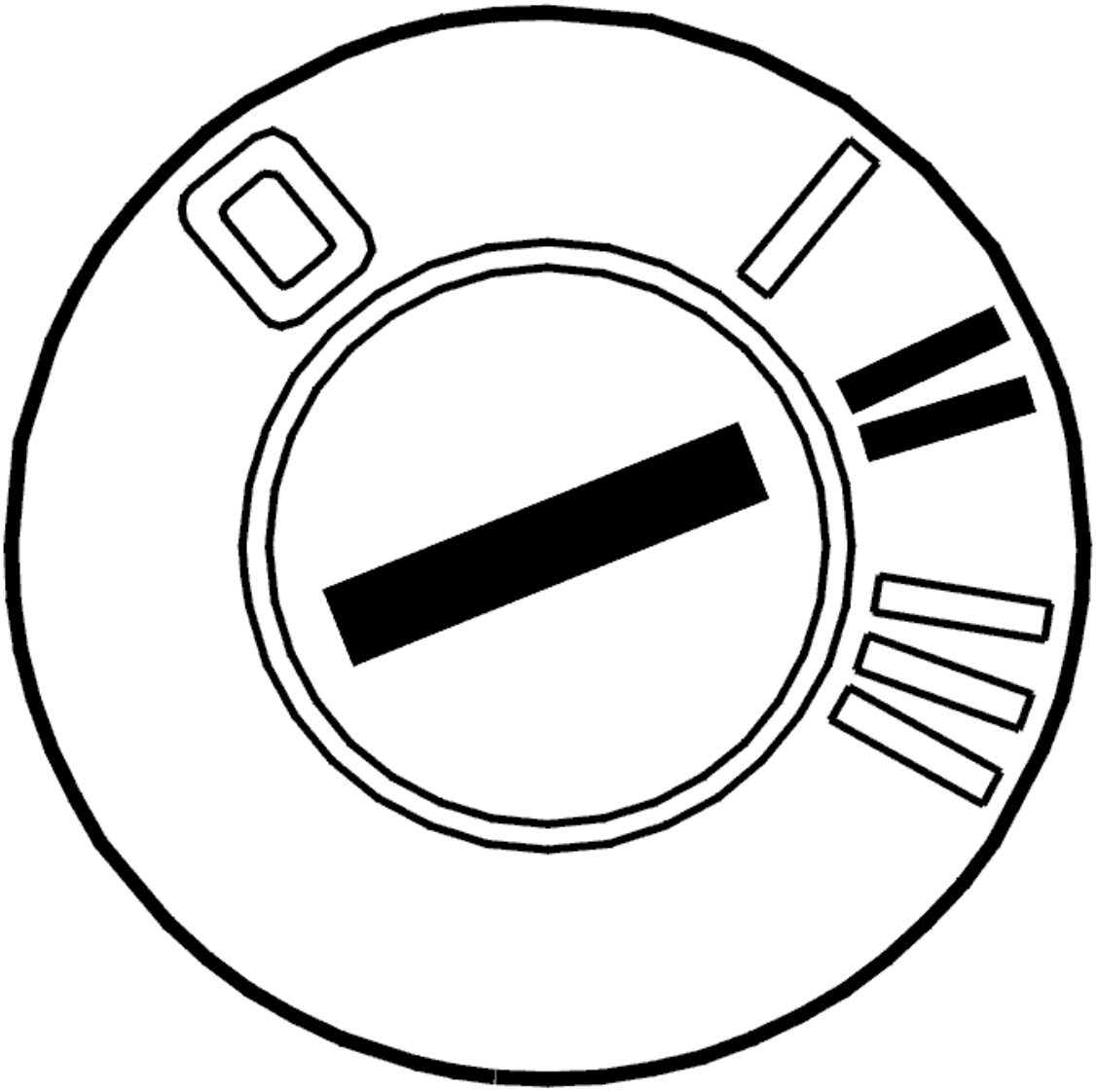

Fig. 435: Identifying Ignition ON
Courtesy of VOLVO CARS CORPORATION

- Ignition on.

  There is a common power supply for the water pump, fuel pump (FP) and combustion fan. It is easier to locate the fault if the components are activated one at a time.

  Activate the water pump, fuel pump (FP) and combustion fan.

  WARNING: Do not activate the fuel pump (FP) for longer than a few seconds.

Check the circuit between combustion preheater module (CPM) terminal #11 and the components which are connected to the supply circuit (water pump terminal 2, fuel pump (FP) terminal 2 and combustion fan supply terminal). Check for an open-circuit. Check for a short-circuit to ground.

Remedy as necessary.

Other information:

- see **CONNECTING THE BREAKOUT BOX**
- see **SIGNAL SPECIFICATION**
- see **WATER PUMP ENGINE COOLANT HEATER, REPLACING**
- see **FUEL PUMP AUXILIARY HEATER, REPLACING**
- see **FUEL INJECTION NOZZLE / FAN MOTOR / PRESSURE EQUALIZER, REPLACING**
- see **CHECKING WIRING AND TERMINALS**

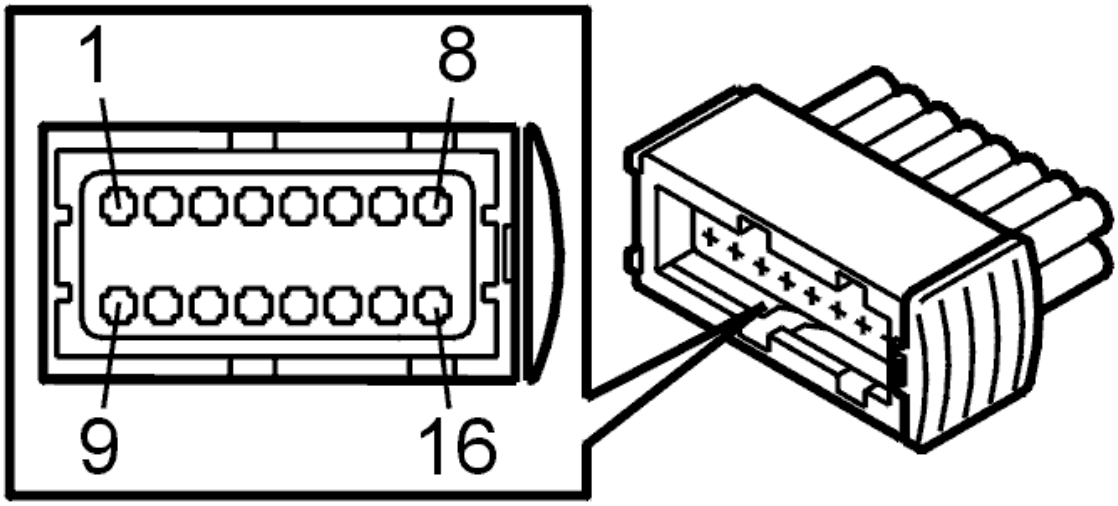

Fig. 436: Identifying Connector Terminals
Courtesy of VOLVO CARS CORPORATION

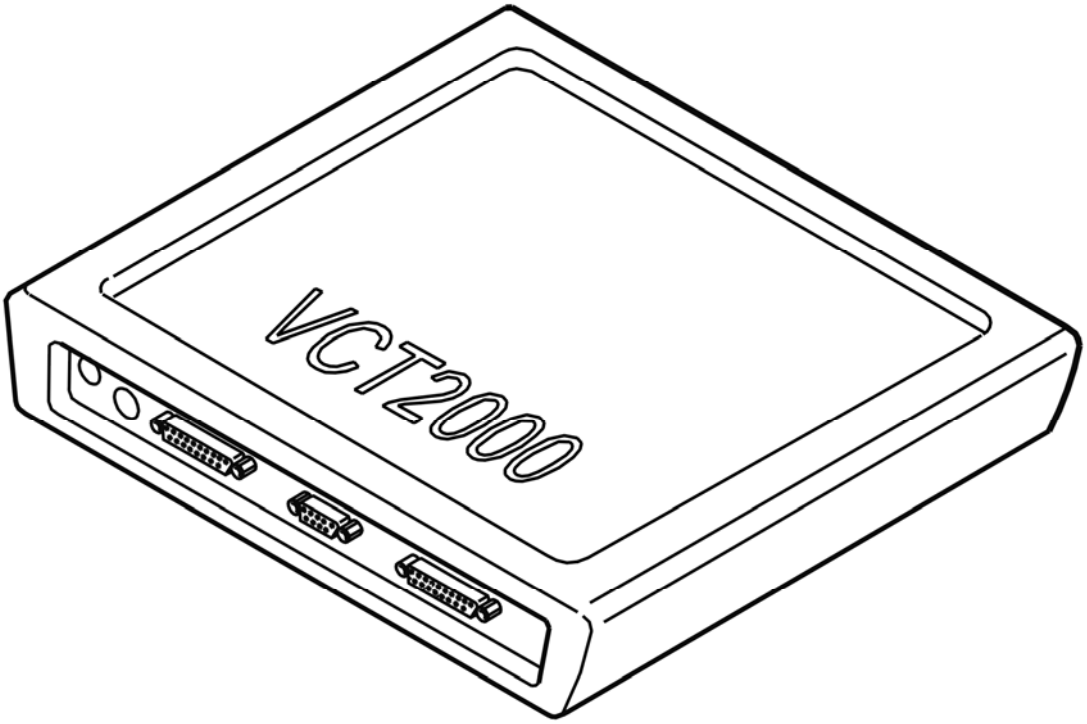

Fig. 437: Identifying VCT2000 Diagnostic Tool Symbol In VIDA
Courtesy of VOLVO CARS CORPORATION

- **Continue**

  Refer to **VERIFICATION**

INTERMITTENT FAULT

Check the combustion preheater module (CPM) connectors. Check for loose connections. Check for contact resistance and oxidation.

Check the circuit between combustion preheater module (CPM) terminal #11 and the components which are connected to the supply circuit (water pump terminal 2, fuel pump (FP) terminal 1 and combustion fan supply terminal). Check for an intermittent open-circuit. Check for an intermittent short-circuit to ground.

Remedy as necessary.

Other information:

- see **CONNECTING THE BREAKOUT BOX**
- see **SIGNAL SPECIFICATION**
- see **WATER PUMP ENGINE COOLANT HEATER, REPLACING**

- see **FUEL PUMP AUXILIARY HEATER, REPLACING**
- see **FUEL INJECTION NOZZLE / FAN MOTOR / PRESSURE EQUALIZER, REPLACING**
- see **CHECKING WIRING AND TERMINALS**

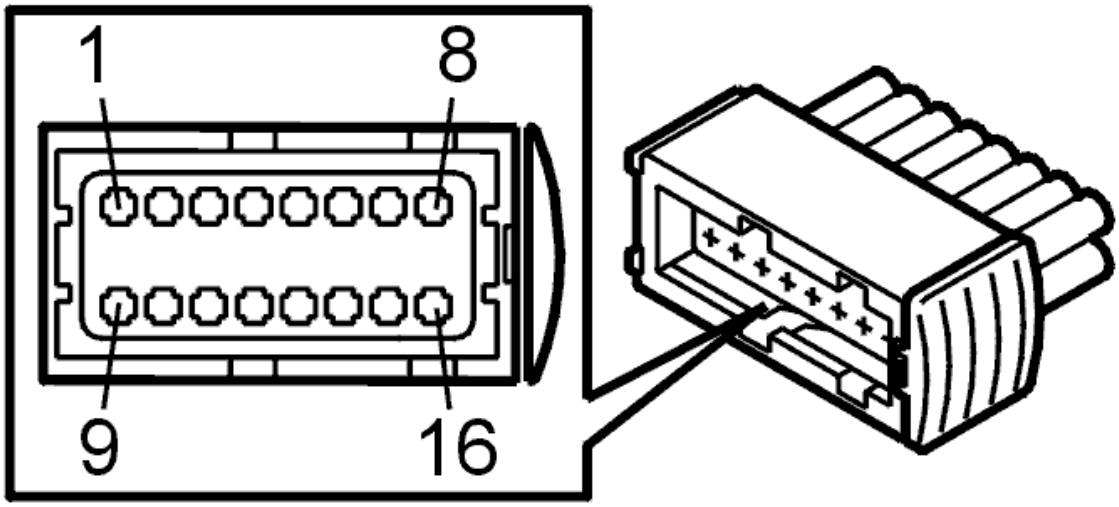

Fig. 438: Identifying Connector Terminals
Courtesy of VOLVO CARS CORPORATION

- **Continue**

  Refer to **INFORMATION**

VERIFICATION

VERIFICATION

HINT: After carrying out the repair, check that the fault has been remedied.

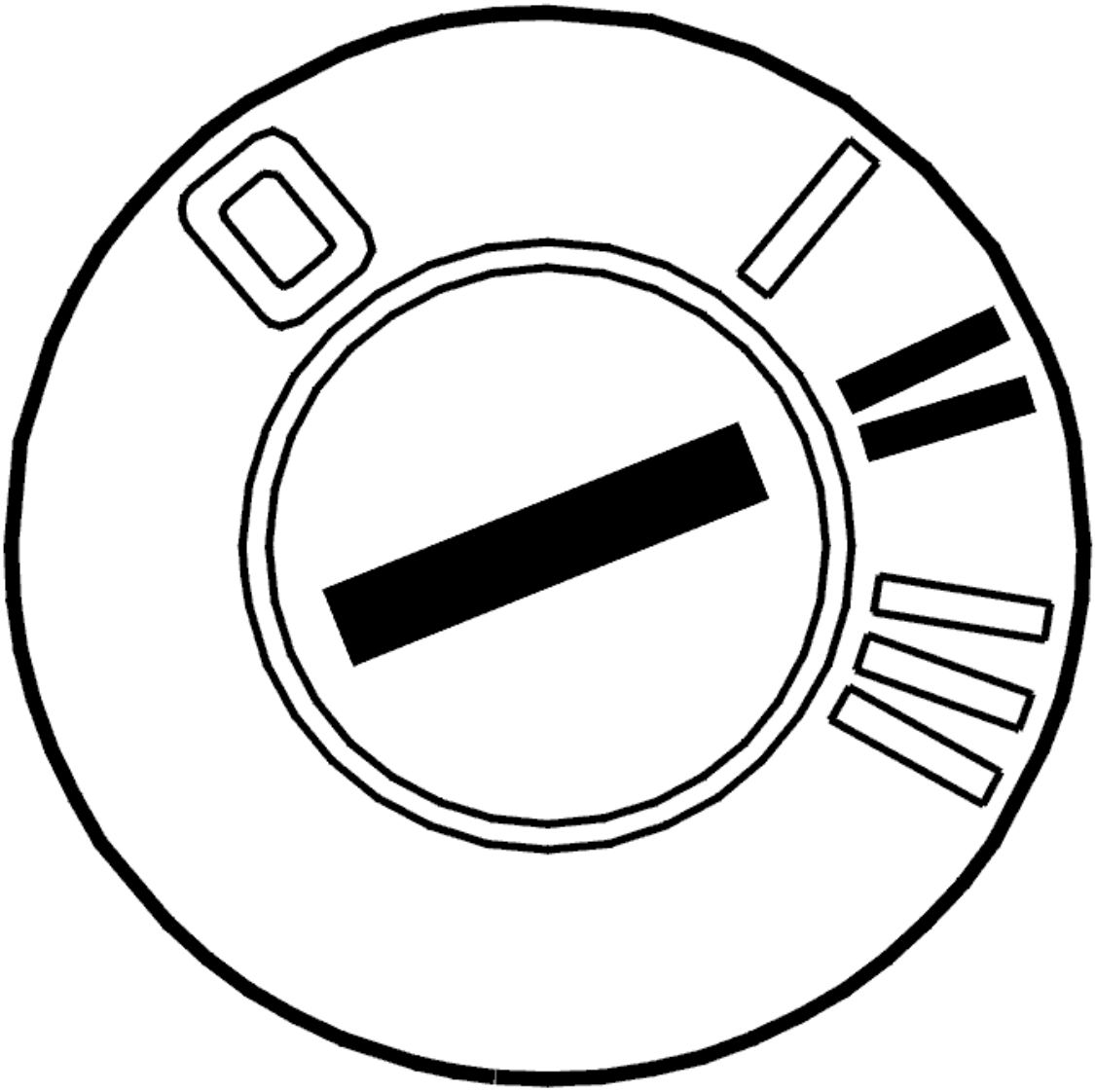

Fig. 439: Identifying Ignition ON
Courtesy of VOLVO CARS CORPORATION

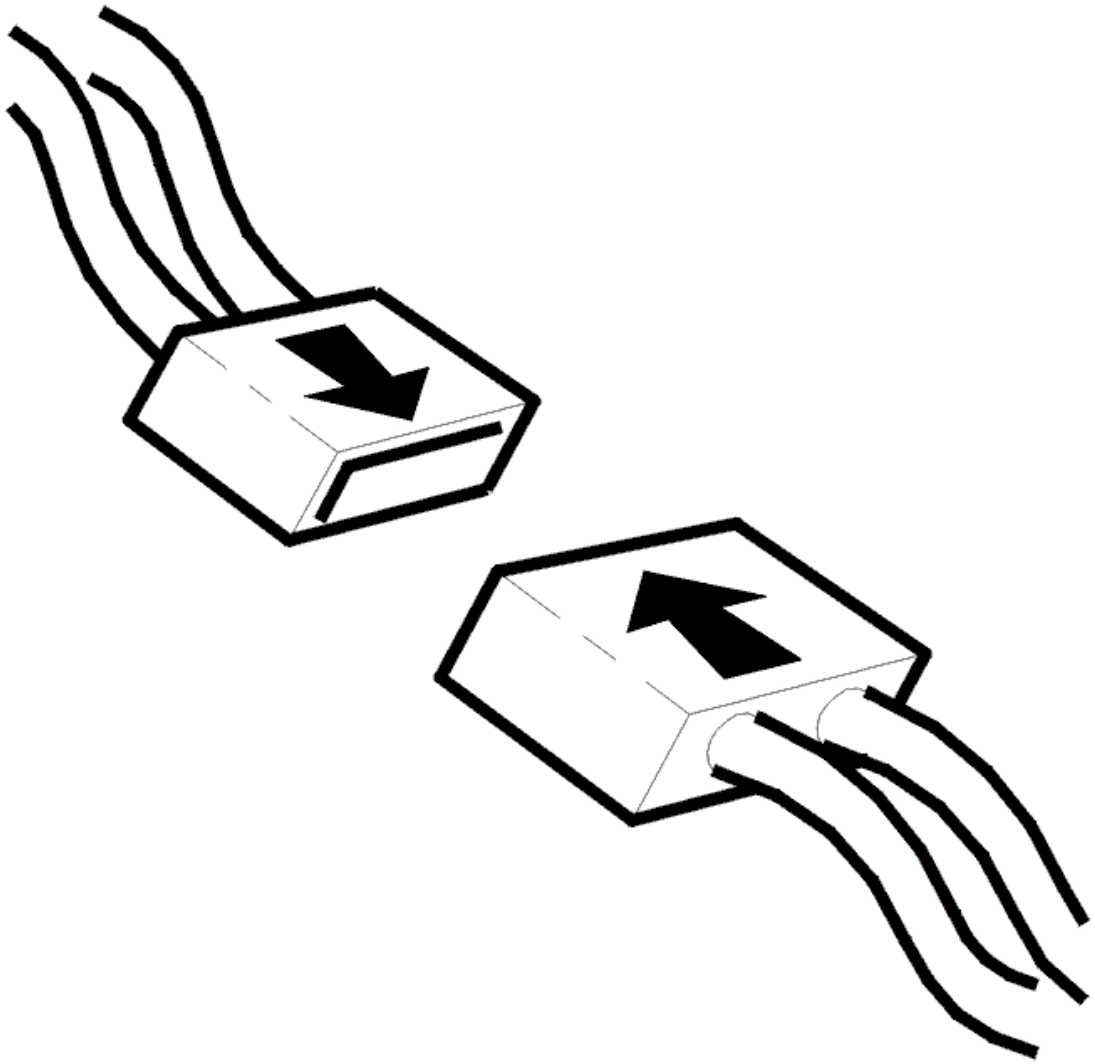

Fig. 440: Connecting Connector
Courtesy of VOLVO CARS CORPORATION

- Ignition off
- Reinstall the connectors, components etc.
- Ignition on
- Read off the engine coolant temperature.

NOTE: It is important that only the ignition is on in order for the heater to start.

- Activate the heater.

HINT: After repair, the voltage of the flame sensor can be checked. The voltage must be a maximum of 1.0 V.

Check the heater function.

CAUTION: In order for to enable start of the heater itself, the battery voltage must be normal, coolant temperature must be lower than +96 °C and the heater's after-run/stop sequence must be finished. There must also be enough fuel in the tank.

CAUTION: If the heater or other components are not activated, try starting the activation again using the VCT2000 (or appropriate scan tool).

Other information:

- see **ENGINE COOLANT HEATER, TEST RUNNING** .

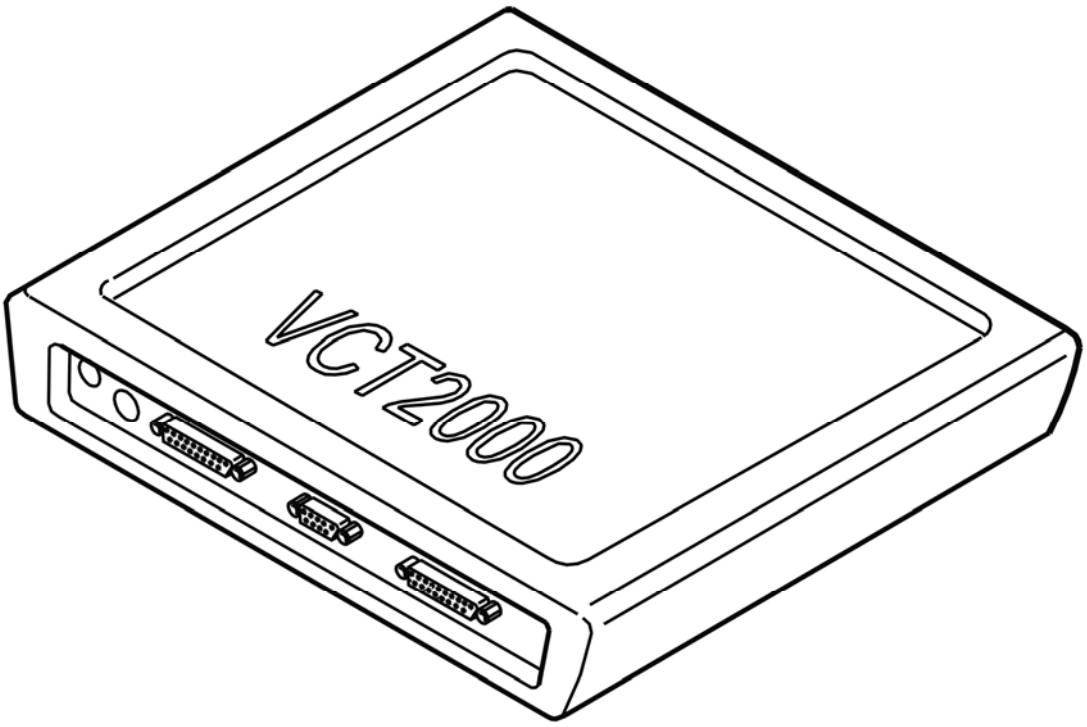

Fig. 441: Identifying VCT2000 Diagnostic Tool Symbol In VIDA
Courtesy of VOLVO CARS CORPORATION

Is the heater working?

- **YES**

VERIFIED: Troubleshooting has been completed.

- **NO**

  Refer to **INFORMATION**

INFORMATION

FAULT-TRACING INFORMATION

The fault should have been detected and remedied. As this is not the case fault-tracing has failed.

Exit fault-tracing for this diagnostic trouble code (DTC) or make another attempt.

INFORMATION

FAULT-TRACING INFORMATION

If the fault is intermittent, do not verify fault-tracing if the fault does not recur.

It is possible to view the information again, or leave fault-tracing for this diagnostic trouble code (DTC).

CEM-5F43: POWER SUPPLY. MISSING (B5254T2; B6294T; 2003-2004)

DIAGNOSTIC TROUBLE CODE INFORMATION

Condition

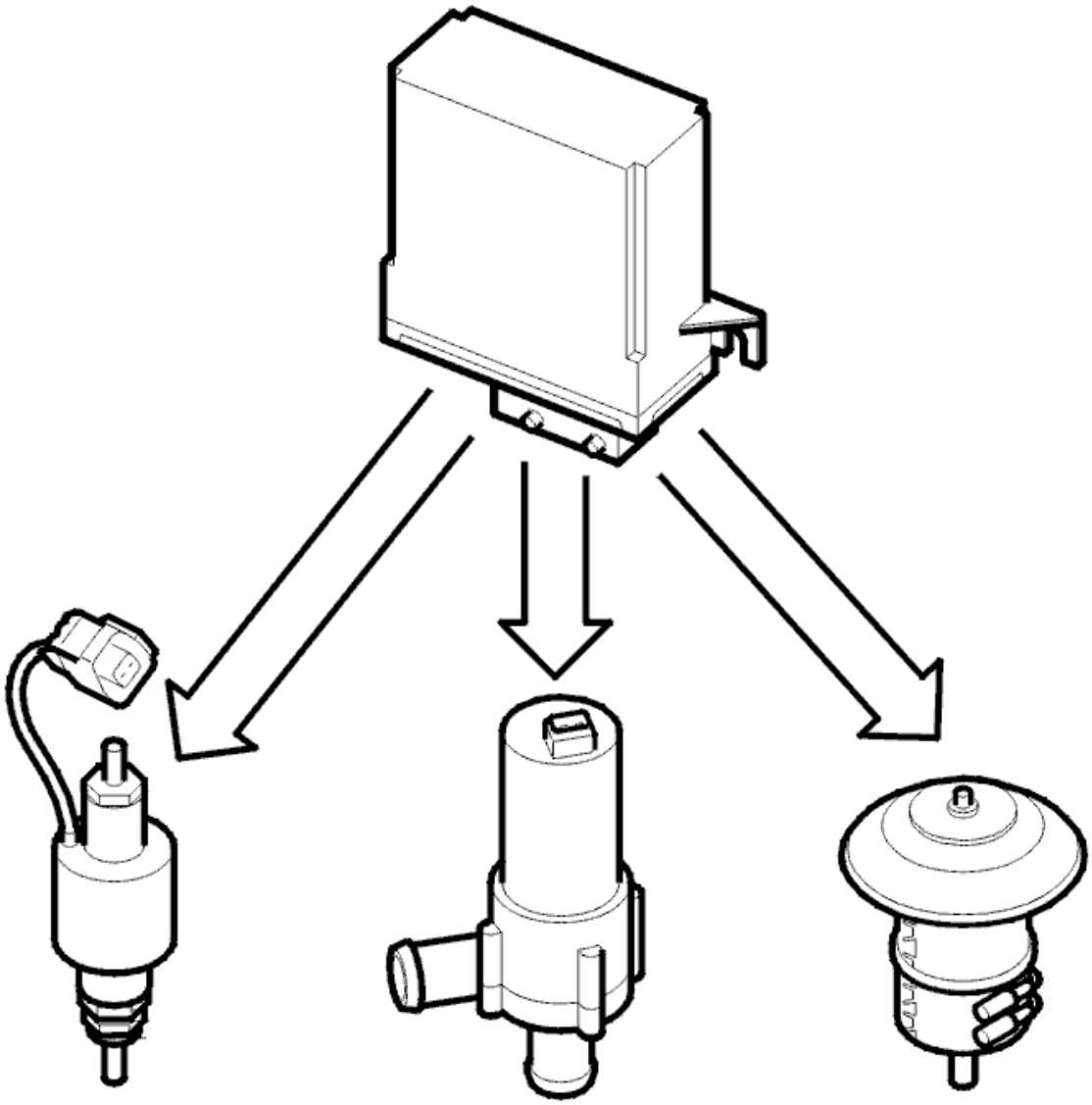

Fig. 442: Fuel Pump, Water Pump, And Heater Fan Power Supply Diagram
Courtesy of VOLVO CARS CORPORATION

If the power supply from the control unit to the fuel pump, water pump and heater fan is short-circuited to ground or if there is an open circuit, the control unit will interpret this as a fault, and diagnostic trouble code CEM-5F43 will be set.

Substitute Value

- None.

Possible Source

- Contact resistance in control unit connector.
- Voltage supply circuit short-circuited to ground.

- Open circuit in power supply wire.

Fault symptom[s]

- Poor interior heating.

MISSING

CHECKING THE POWER SUPPLY

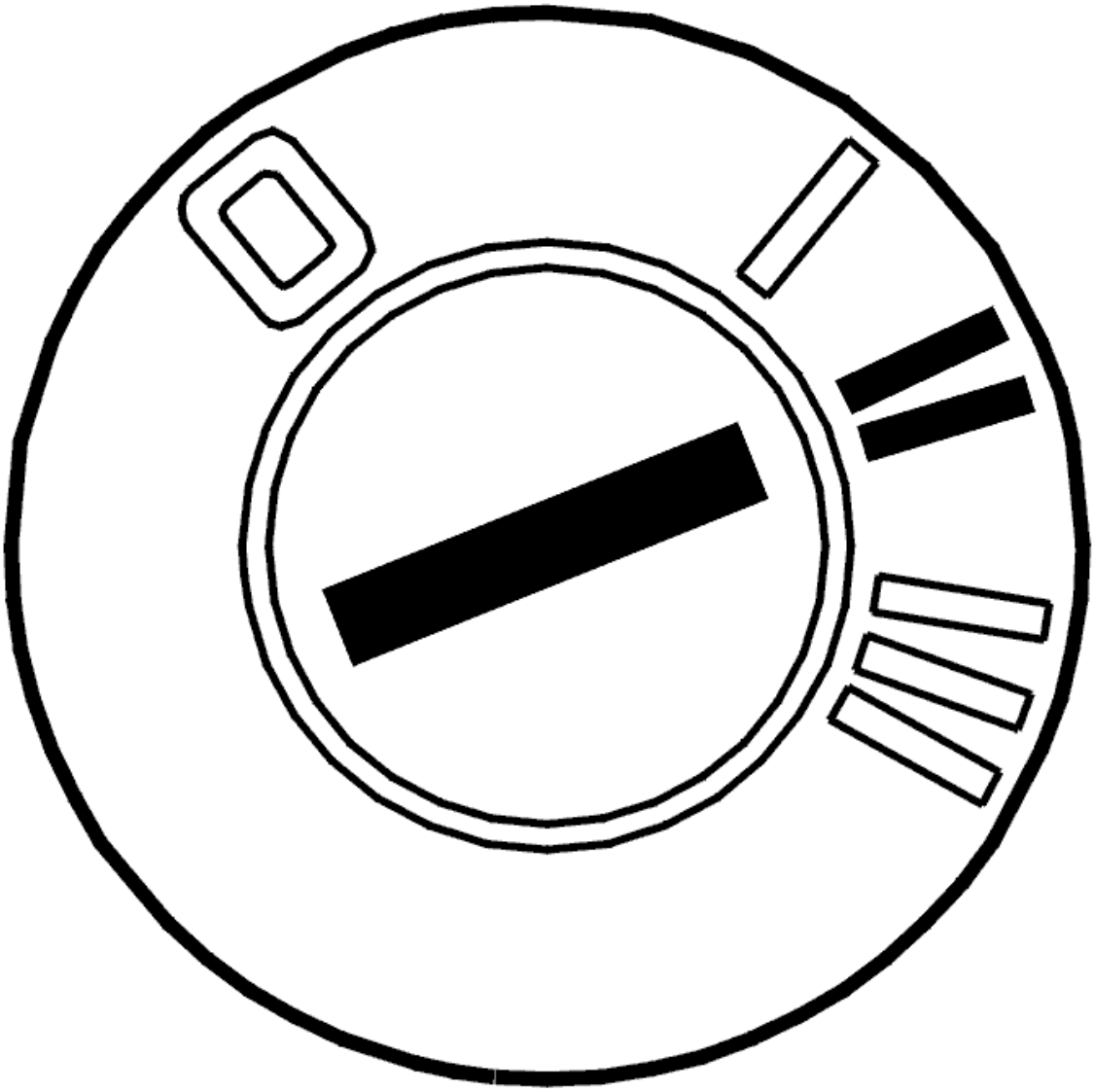

Fig. 443: Identifying Ignition ON
Courtesy of VOLVO CARS CORPORATION

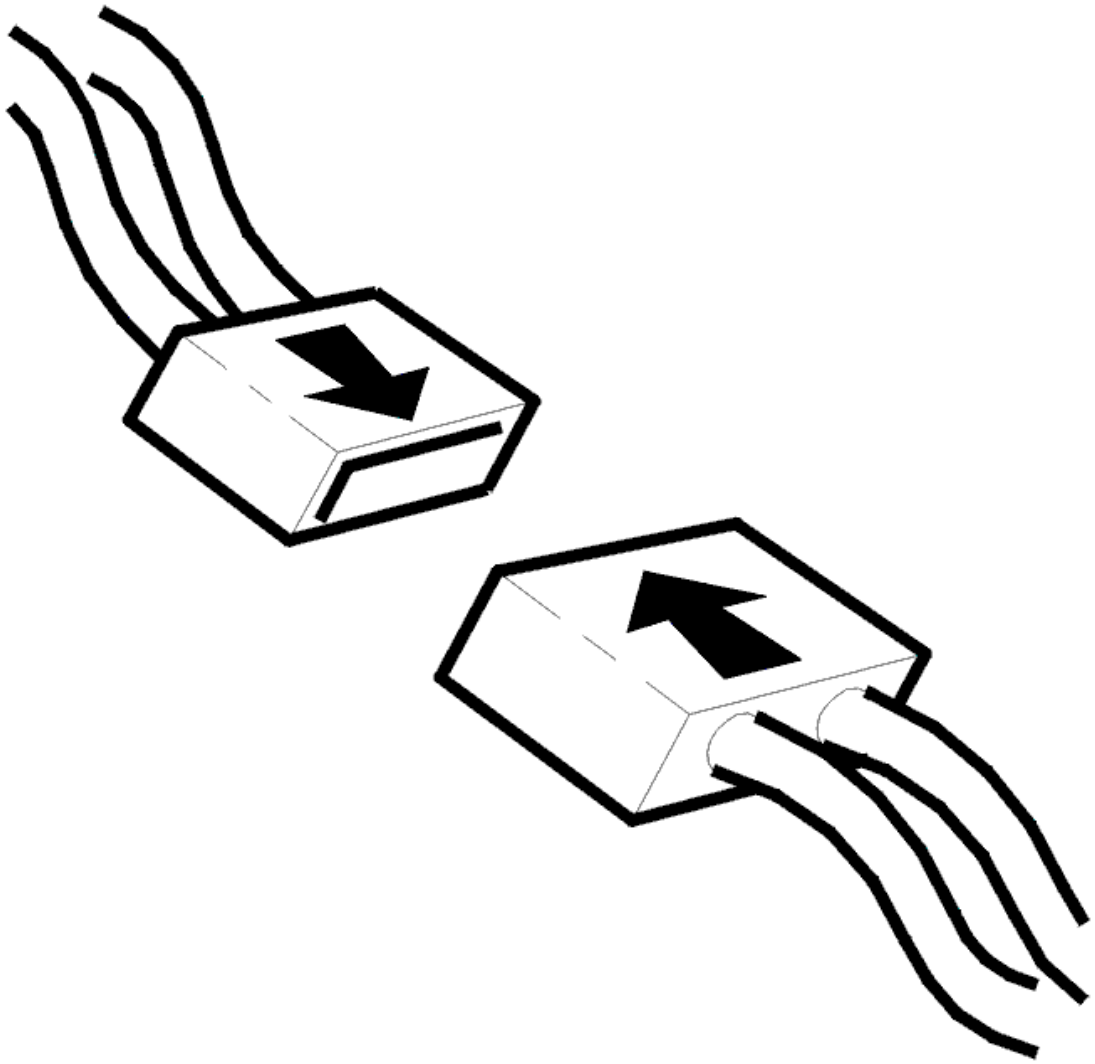

Fig. 444: Connecting Connector
Courtesy of VOLVO CARS CORPORATION

- Ignition on.

  NOTE: It is important that only the ignition is on in order for the heater to start.

- Activate the heater.

  A buzzing sound should be heard from the heater.

  Check the function of the heater. See **ENGINE COOLANT HEATER, TEST RUNNING** .

  Other information:

- For a description of parameters, see **DESCRIPTION OF PARAMETERS**
- For a description of activations, see **ACTIVATING COMPONENTS/FUNCTIONS** .

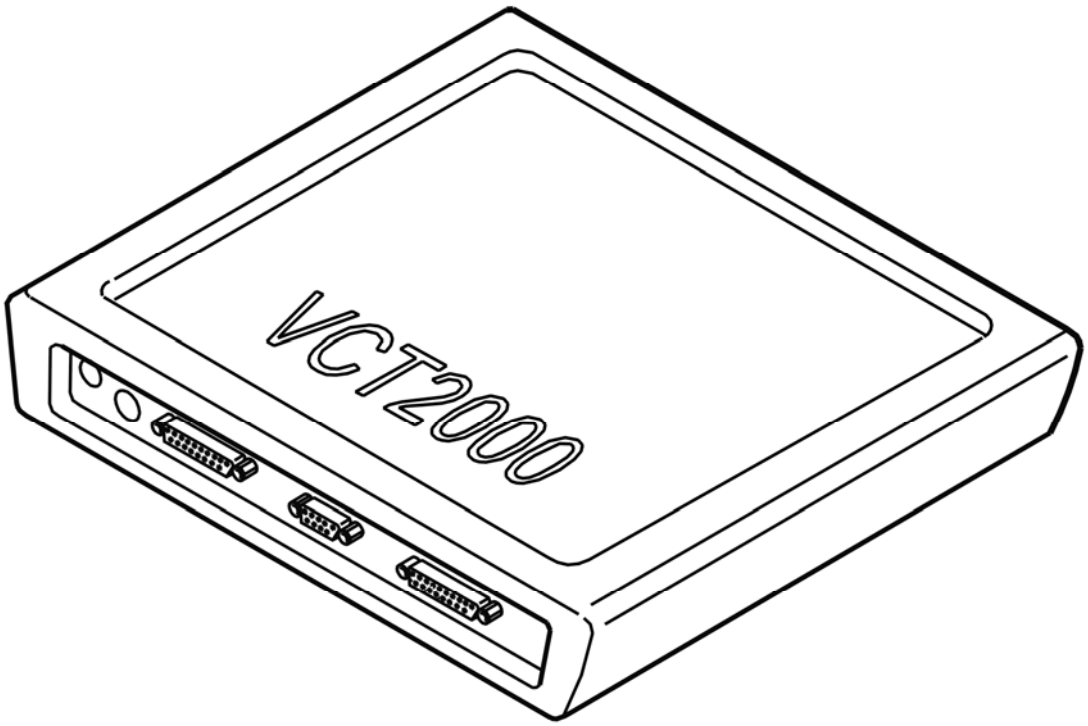

Fig. 445: Identifying VCT2000 Diagnostic Tool Symbol In VIDA
Courtesy of VOLVO CARS CORPORATION

Does the heater operate?

- **YES**

  Refer to **INTERMITTENT FAULT**

- **NO**

  Refer to **CHECKING THE CONNECTOR**

CHECKING THE CONNECTOR

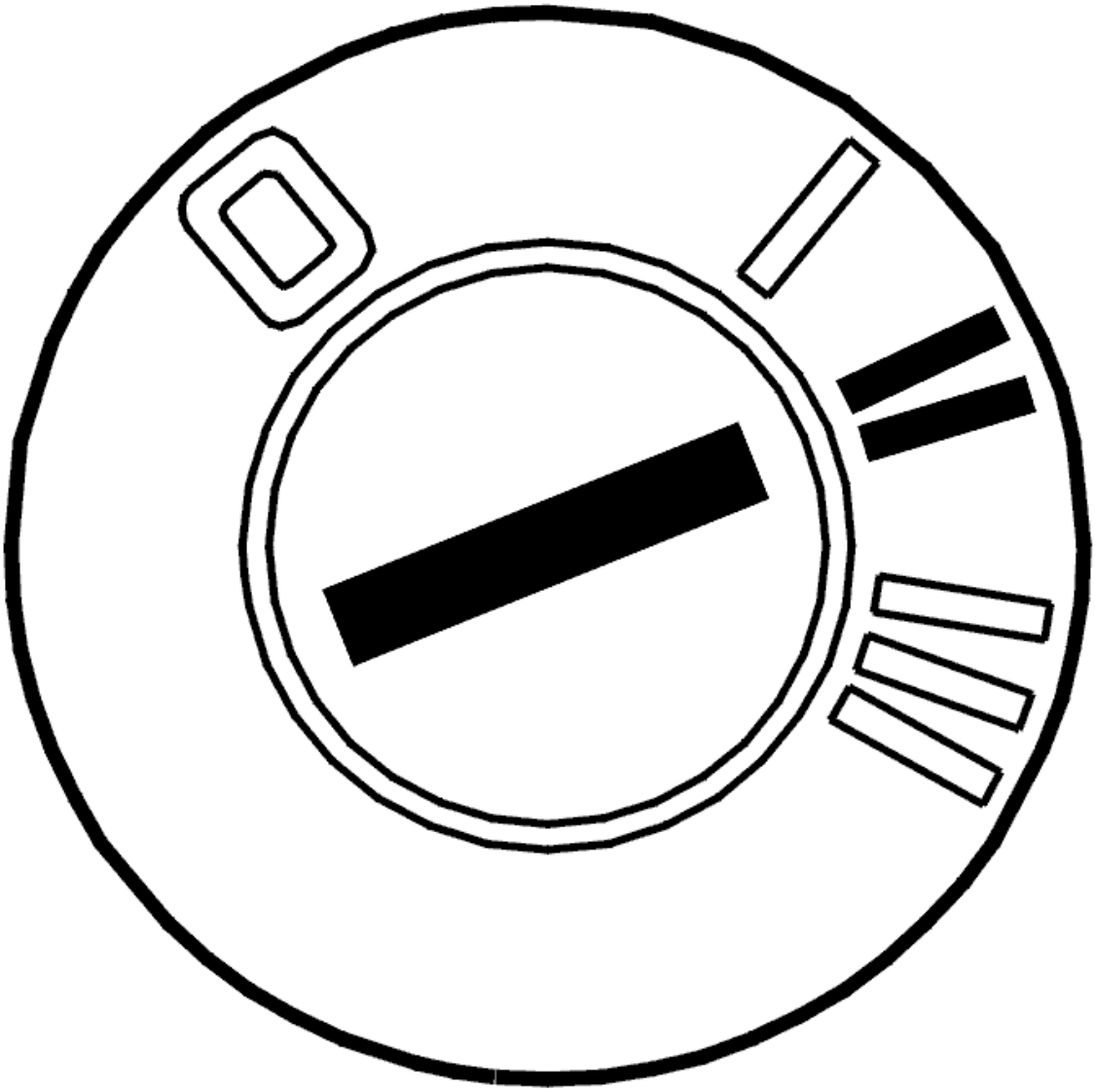

Fig. 446: Identifying Ignition ON
Courtesy of VOLVO CARS CORPORATION

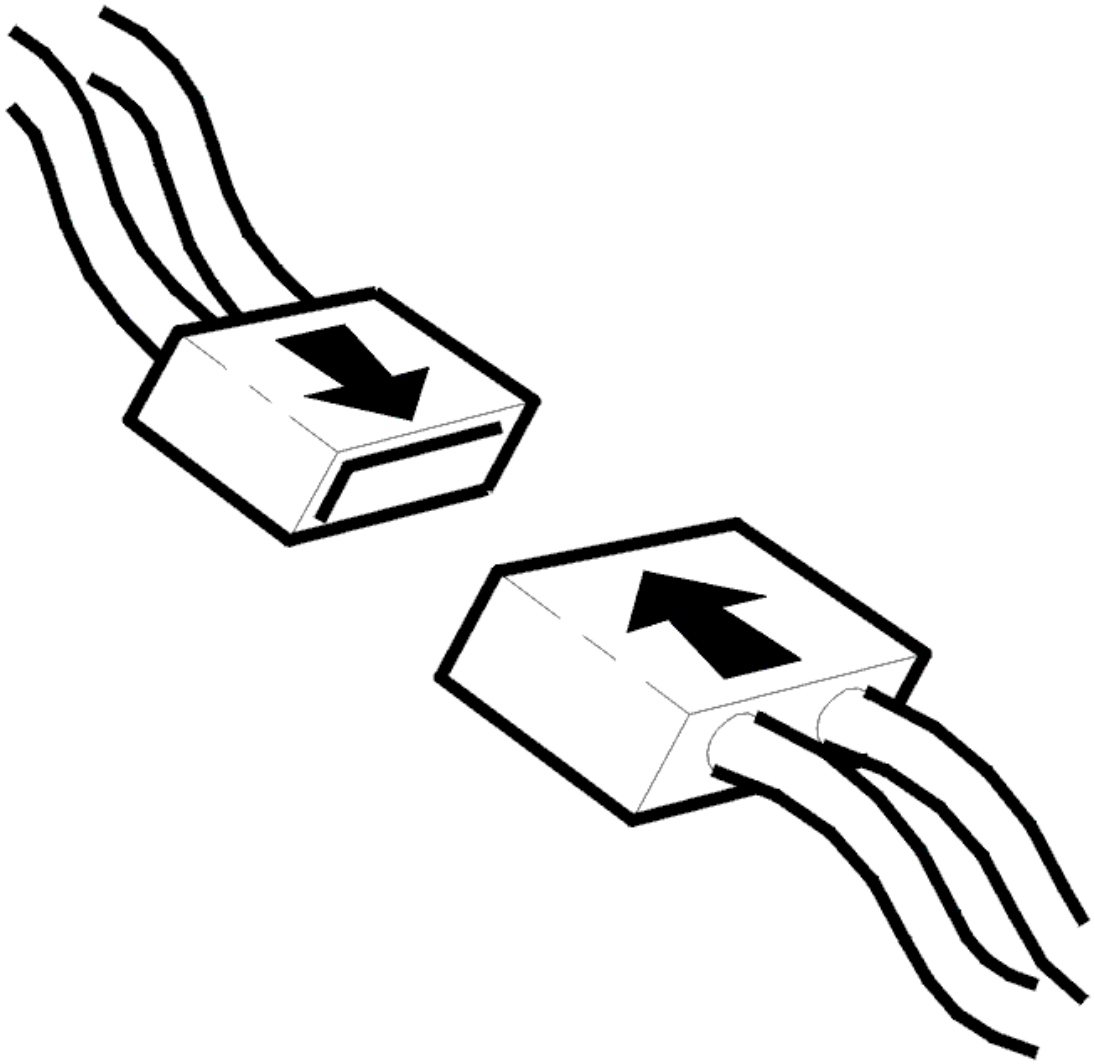

Fig. 447: Connecting Connector
Courtesy of VOLVO CARS CORPORATION

- Ignition off
- Check the control module connector for contact resistance and oxidation. Remedy if necessary.

  Check for damage carefully

- Reinstall the components, reconnect the connectors etc.
- Ignition on.

  NOTE: It is important that only the ignition is on in order for the heater to start.

- Activate the heater.

A buzzing sound should be heard from the heater.

Check the function of the heater. See **ENGINE COOLANT HEATER, TEST RUNNING** .

If the heater now functions, the cause of the fault was loose connections in the connector.

Other information:

- To access the control module or connect the breakout box, see **CONNECTING THE BREAKOUT BOX**
- see **CHECKING WIRING AND TERMINALS** .

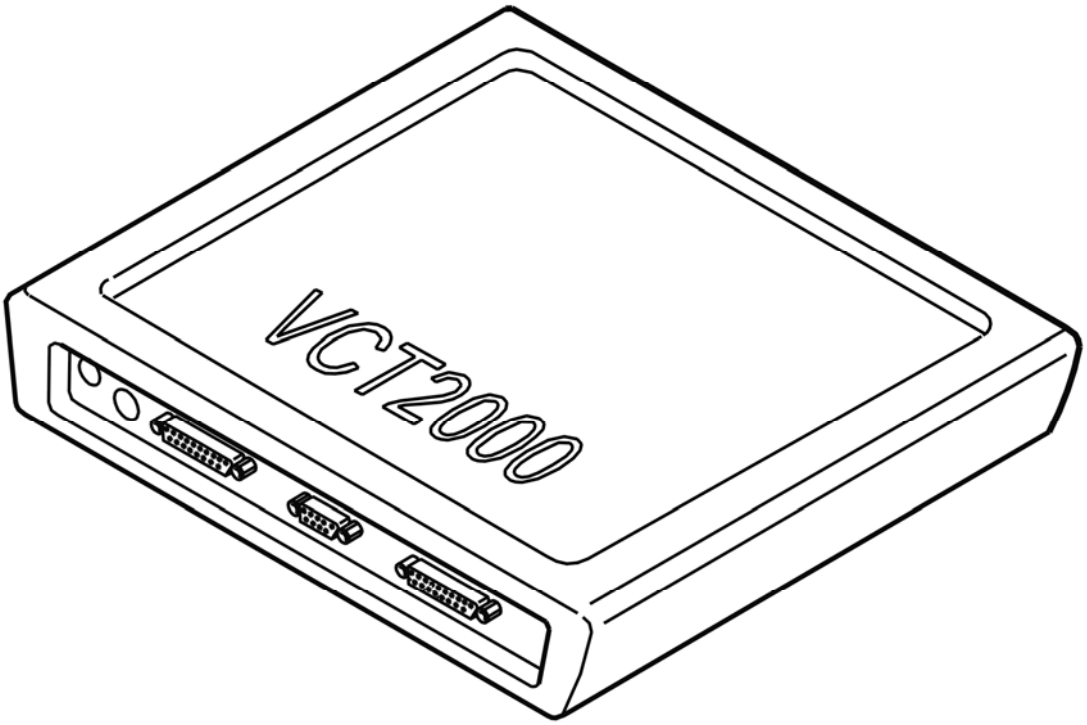

Fig. 448: Identifying VCT2000 Diagnostic Tool Symbol In VIDA
Courtesy of VOLVO CARS CORPORATION

Does the heater operate?

- **YES**

  OKAY: Troubleshooting has been completed.

- **NO**

Refer to **CHECKING THE SUPPLY CIRCUIT**

CHECKING THE SUPPLY CIRCUIT

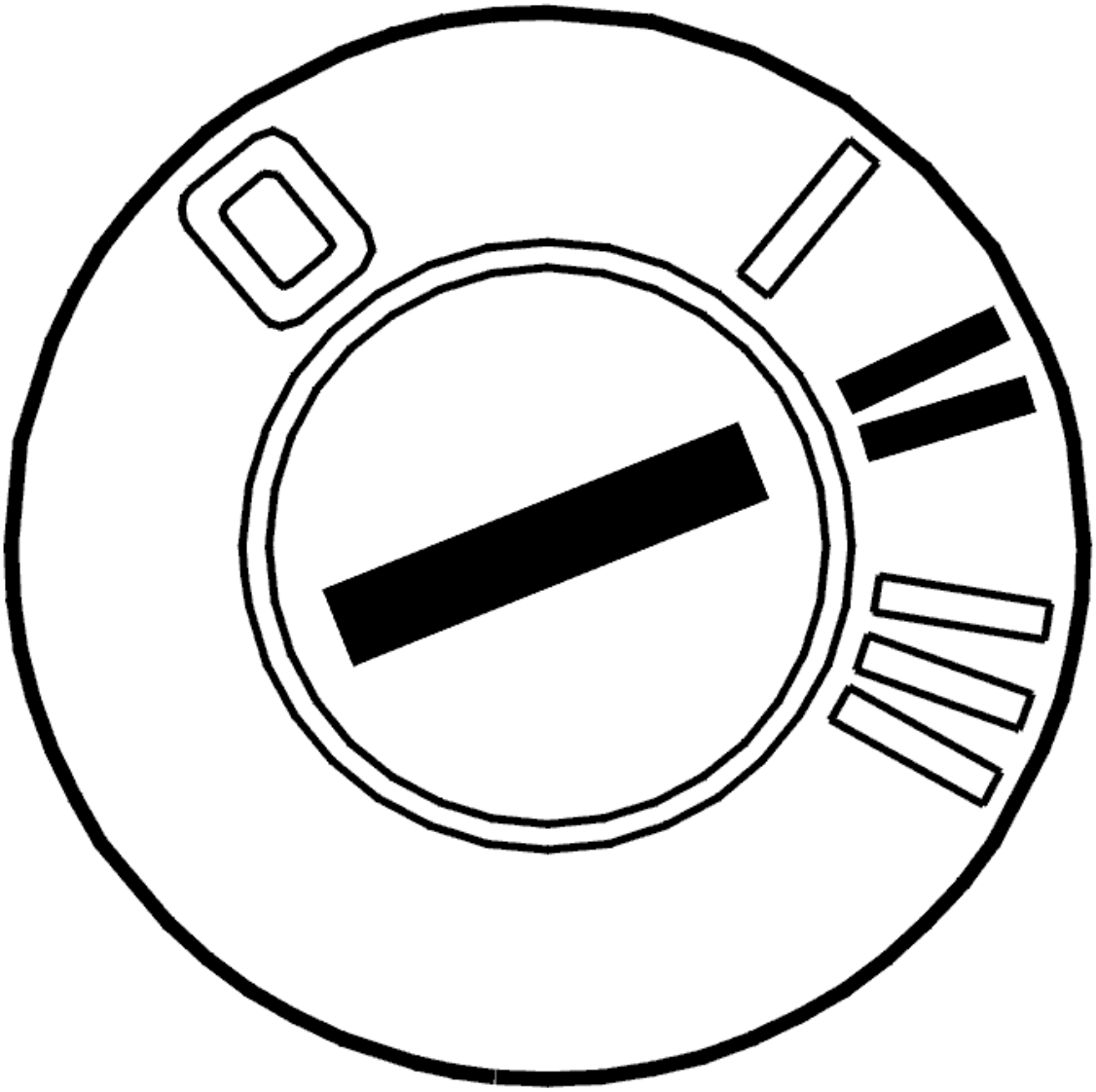

Fig. 449: Identifying Ignition ON
Courtesy of VOLVO CARS CORPORATION

- Ignition on.

  There is a common power supply for the water pump, fuel pump (FP) and combustion fan. It is easier to locate the fault if the components are activated one at a time.

  Activate the water pump, fuel pump (FP) and combustion fan. Use the smart tool.

  WARNING: Do not activate the fuel pump (FP) for longer than a few seconds.

Check the circuit between control module terminal #11 and the components which are connected to the supply circuit (water pump terminal 2, fuel pump (FP) terminal 2 and combustion fan supply terminal). Check for an open-circuit. Check for a short-circuit to ground.

Remedy as necessary.

Other information:

- To access the control module or connect the breakout box, see **CONNECTING THE BREAKOUT BOX**
- To access or replace the water pump, see **WATER PUMP ENGINE COOLANT HEATER, REPLACING**
- To access or replace the fuel pump (FP), see **FUEL PUMP AUXILIARY HEATER, REPLACING**
- To access or replace combustion fan, see **FUEL INJECTION NOZZLE / FAN MOTOR / PRESSURE EQUALIZER, REPLACING**
- For other values, see **SIGNAL SPECIFICATION**
- see **CHECKING WIRING AND TERMINALS** .

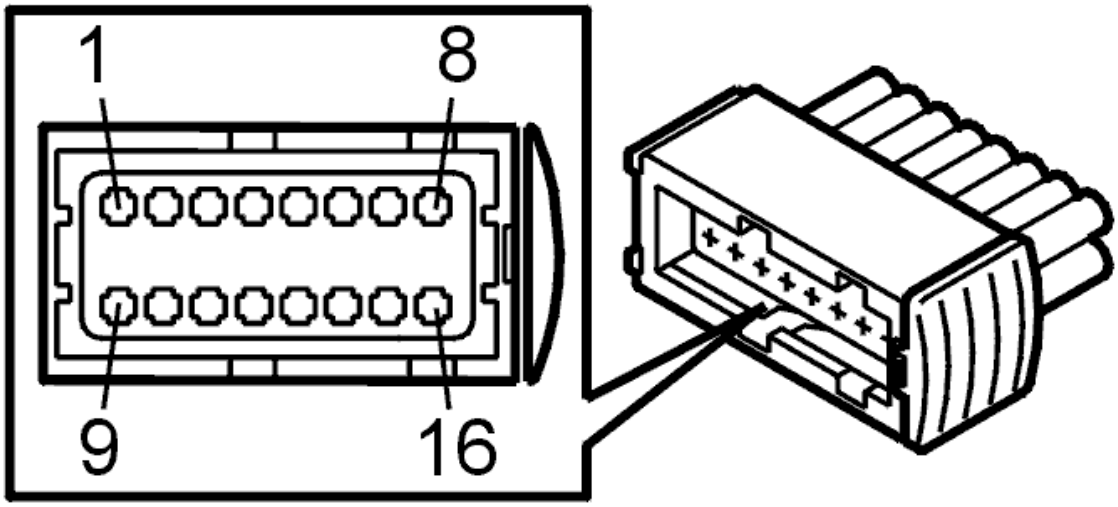

Fig. 450: Identifying Connector Terminals
Courtesy of VOLVO CARS CORPORATION

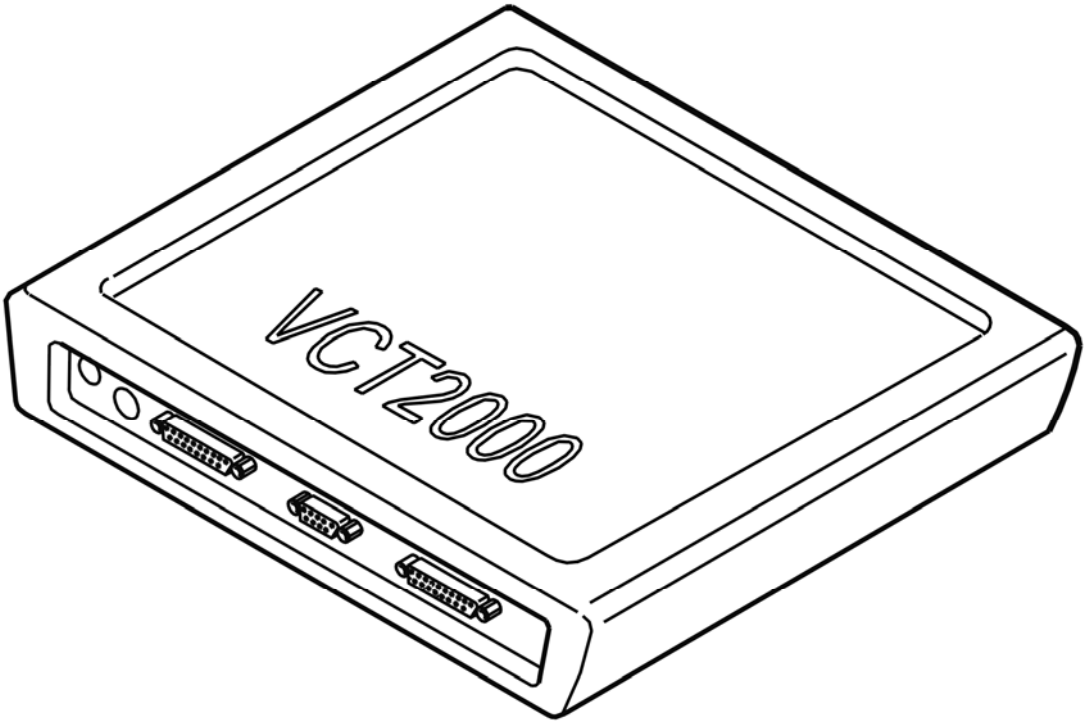

Fig. 451: Identifying VCT2000 Diagnostic Tool Symbol In VIDA
Courtesy of VOLVO CARS CORPORATION

- **Continue**

  Refer to **VERIFICATION**

INTERMITTENT FAULT

Check the control module connector. Check for loose connections. Check for contact resistance and oxidation.

Check the circuit between control module terminal #11 and the components which are connected to the supply circuit (water pump terminal 2, fuel pump (FP) terminal 1 and combustion fan supply terminal). Check for an intermittent open-circuit. Check for an intermittent short-circuit to ground.

Remedy as necessary.

Other information:

- To access the control module or connect the breakout box, see **CONNECTING THE BREAKOUT BOX**
- To access or replace the water pump, see **WATER PUMP ENGINE COOLANT HEATER, REPLACING**

- To access or replace the fuel pump (FP), see **FUEL PUMP AUXILIARY HEATER, REPLACING**
- To access or replace combustion fan, see **FUEL INJECTION NOZZLE / FAN MOTOR / PRESSURE EQUALIZER, REPLACING**
- For other values, see **SIGNAL SPECIFICATION**
- see **CHECKING WIRING AND TERMINALS**

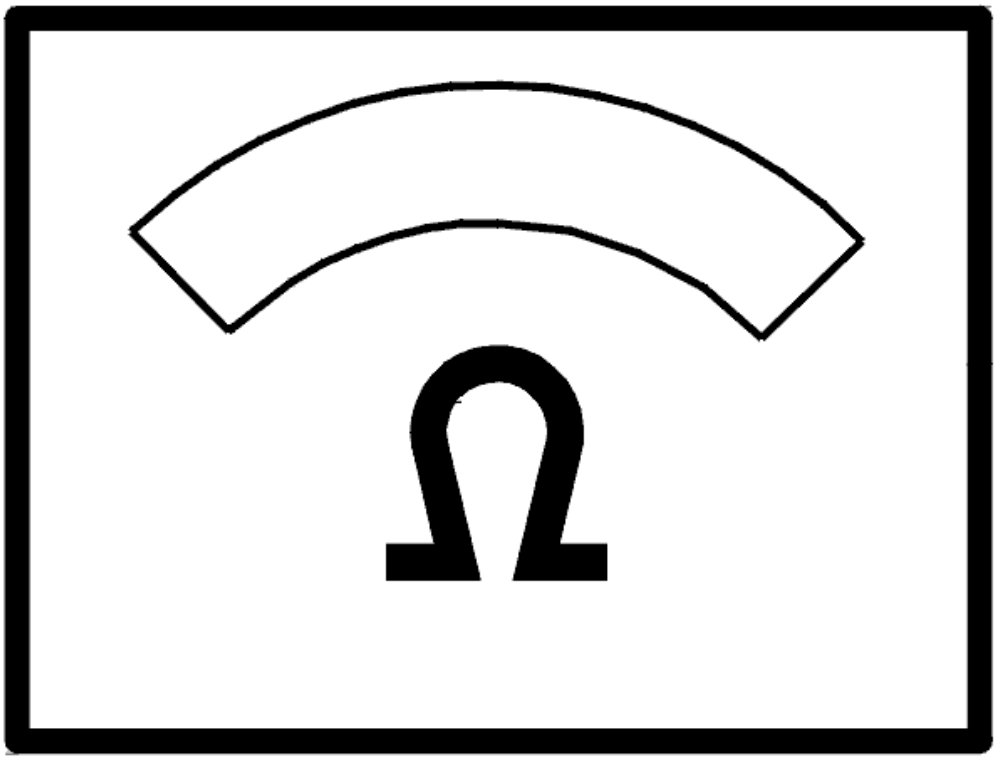

Fig. 452: Identifying Ohm Meter
Courtesy of VOLVO CARS CORPORATION

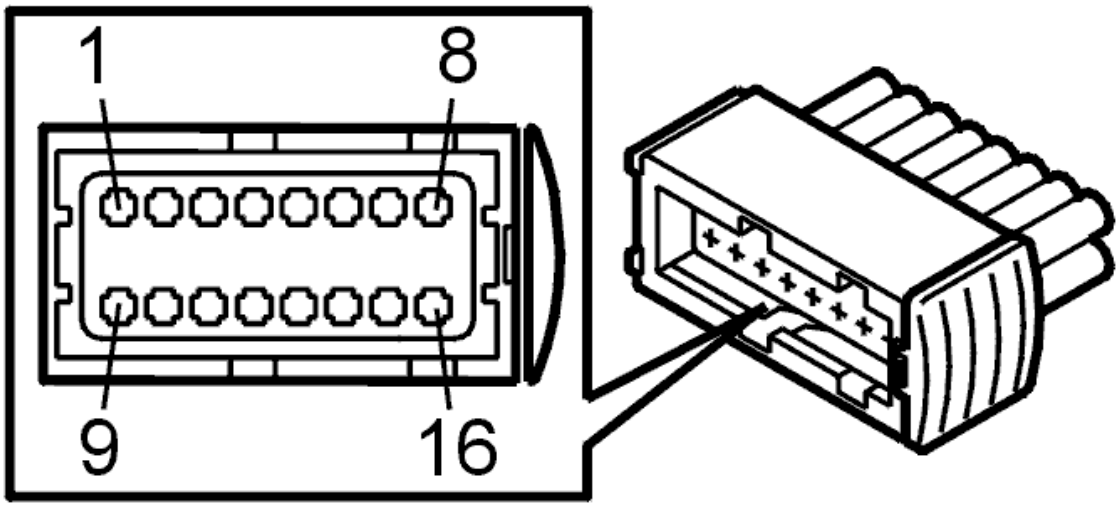

Fig. 453: Identifying Connector Terminals
Courtesy of VOLVO CARS CORPORATION

VERIFICATION

VERIFICATION

HINT: After the repair it is necessary to check that the fault has been rectified.

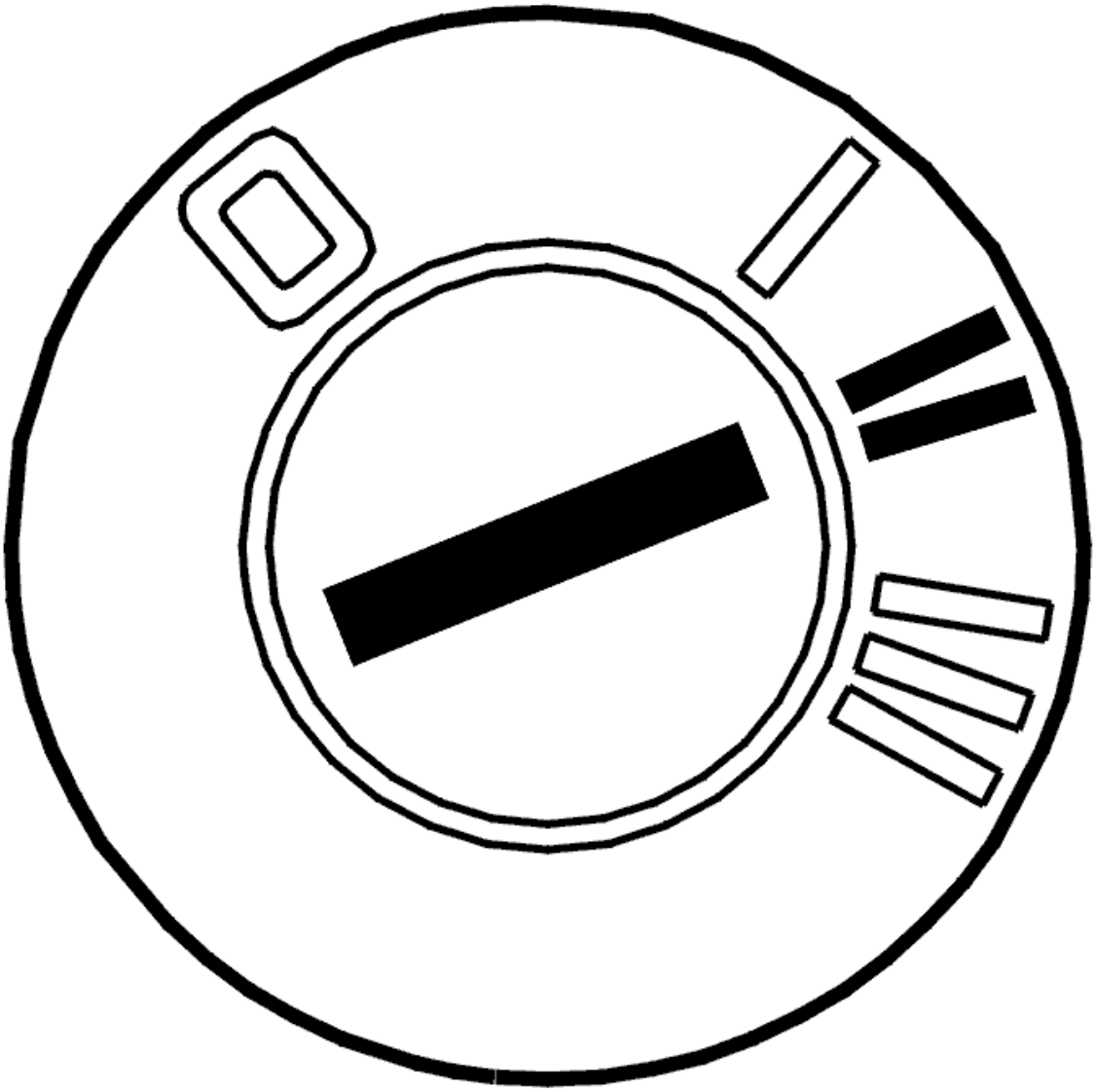

Fig. 454: Identifying Ignition ON
Courtesy of VOLVO CARS CORPORATION

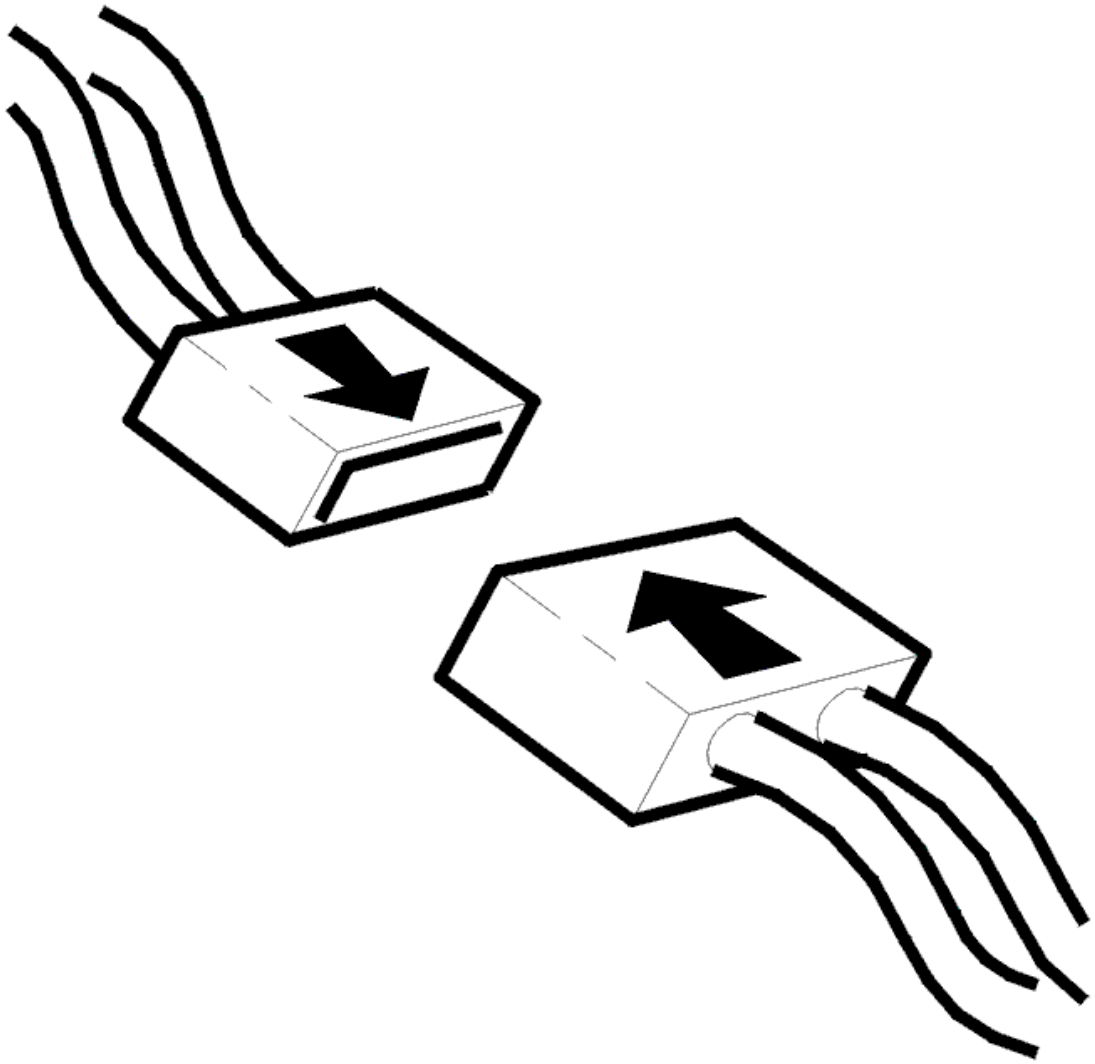

Fig. 455: Connecting Connector
Courtesy of VOLVO CARS CORPORATION

- Ignition off.
- Connect connector, install components etc.
- Ignition on.

NOTE: It is important that only the ignition is on for the heater to start up.

- Activate the heater.

  A buzzing sound should be heard from the heater.

  Check the function of the heater as described in, see **ENGINE COOLANT HEATER, TEST RUNNING** .

Additional information:

- For a description of the parameters, see **DESCRIPTION OF PARAMETERS** .
- For a description of activations, see **ACTIVATING COMPONENTS/FUNCTIONS** .

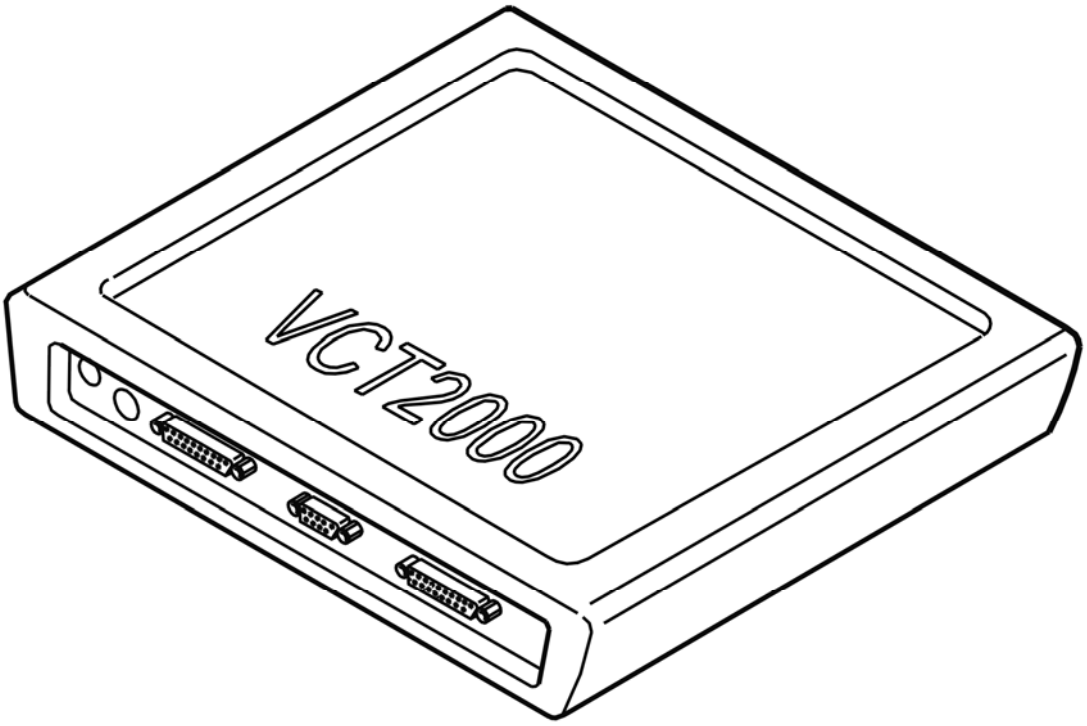

Fig. 456: Identifying VCT2000 Diagnostic Tool Symbol In VIDA
Courtesy of VOLVO CARS CORPORATION

Does the heater work?

- **YES**

  VERIFIED: Troubleshooting has been completed.

- **NO**

  Refer to **INFORMATION**

INFORMATION

FAULT-TRACING INFORMATION

The fault should have been detected and remedied. As this is not the case fault-tracing has failed.

Exit fault-tracing for this diagnostic trouble code (DTC) or make another attempt.

INFORMATION

FAULT-TRACING INFORMATION

If the fault is intermittent, do not verify fault-tracing if the fault does not recur.

It is possible to view the information again, or leave fault-tracing for this diagnostic trouble code (DTC).

CEM-5F46: GLOW PLUG. SIGNAL FAULTY (B5254T2; B6294T; 2003-2004)

DIAGNOSTIC TROUBLE CODE INFORMATION

Condition

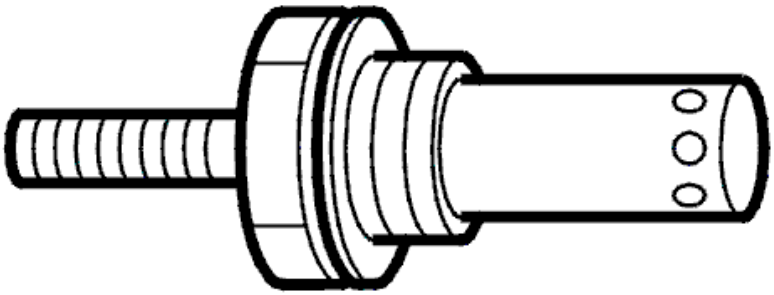

Fig. 457: Identifying Glow Plug
Courtesy of VOLVO CARS CORPORATION

If the glow plug circuit is short-circuited to voltage supply, ground or if there is an open circuit, the control unit will interpret this as a fault, and diagnostic trouble code CEM-5F46 will be set.

Substitute Value

- None.

Possible Source

- Damaged glow plug.
- Contact resistance in control unit connector.
- Contact resistance in the glow plug's electrical connection.
- Open circuit in signal wire.
- Signal wire short-circuited to ground or voltage supply.

Fault symptom[s]

- Poor interior heating.

FAULTY SIGNAL

CHECKING THE FUNCTION OF THE GLOW PLUG

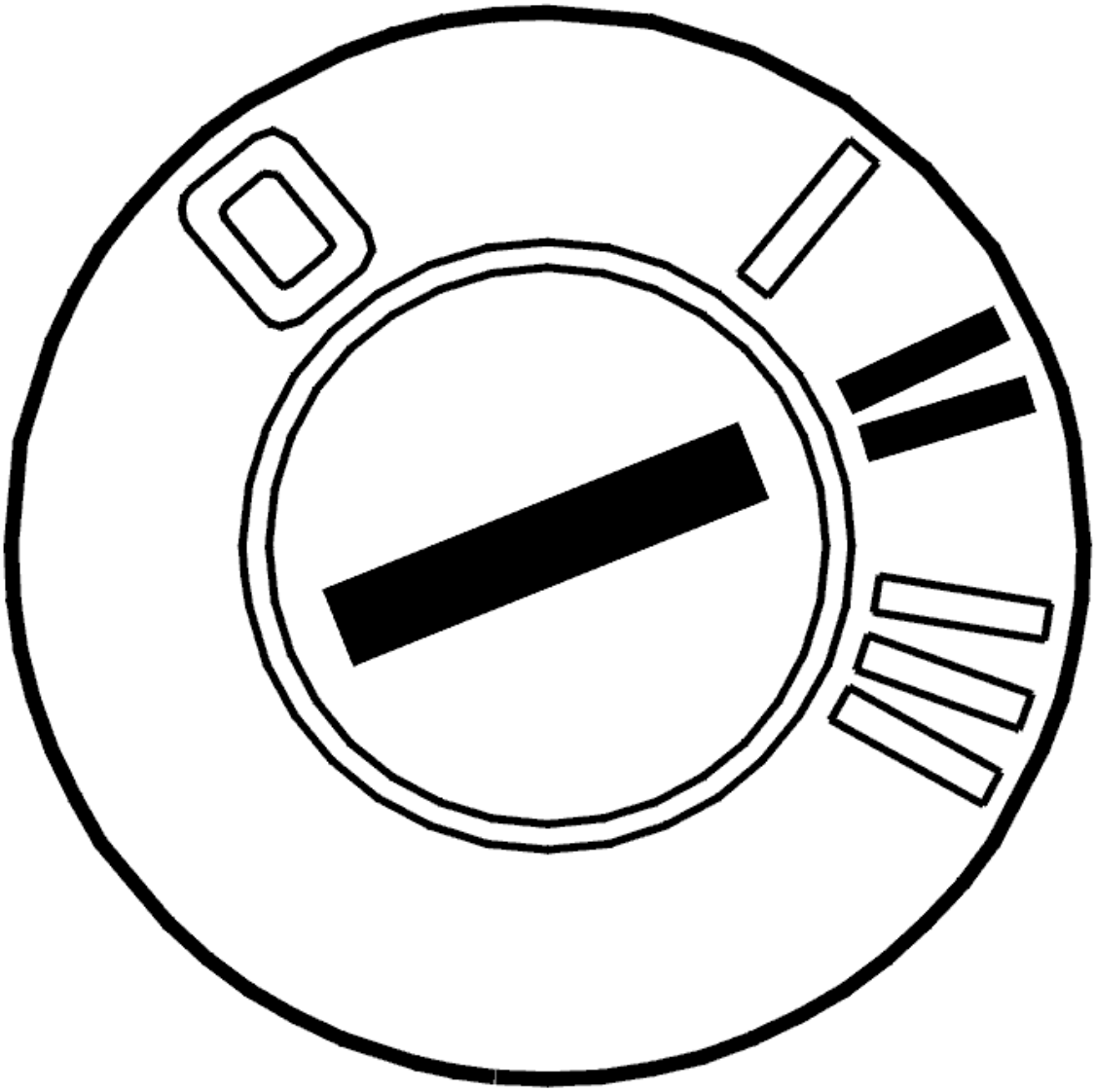

Fig. 458: Identifying Ignition ON
Courtesy of VOLVO CARS CORPORATION

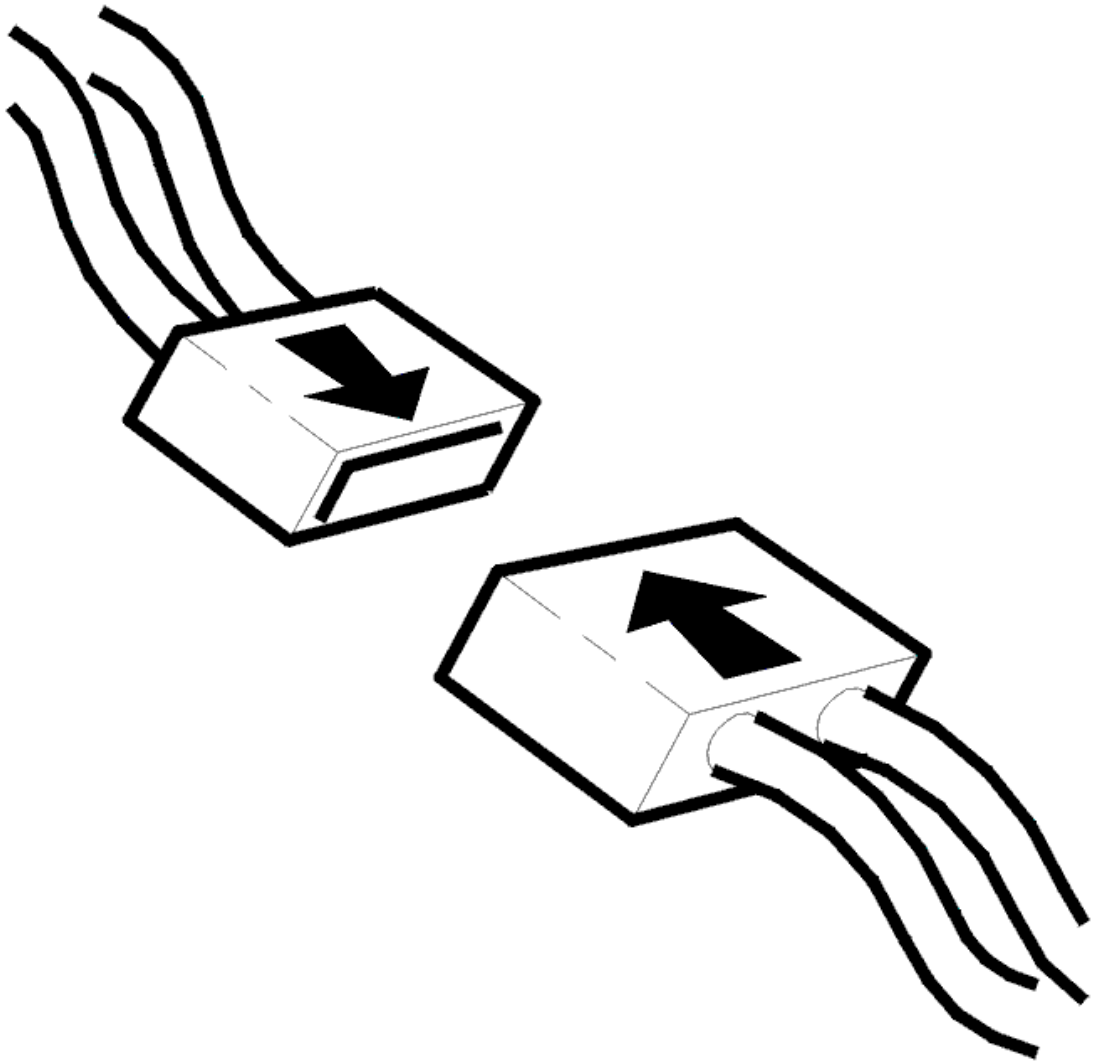

Fig. 459: Connecting Connector
Courtesy of VOLVO CARS CORPORATION

- Ignition on.

  NOTE: It is important that only the ignition is on in order for the heater to start.

- Activate the heater.

  A buzzing sound should be heard from the heater.

  Check the function of the heater. See **ENGINE COOLANT HEATER, TEST RUNNING** .

  Other information:

- For a description of parameters, see **DESCRIPTION OF PARAMETERS**
- For a description of activations, see **ACTIVATING COMPONENTS/FUNCTIONS** .

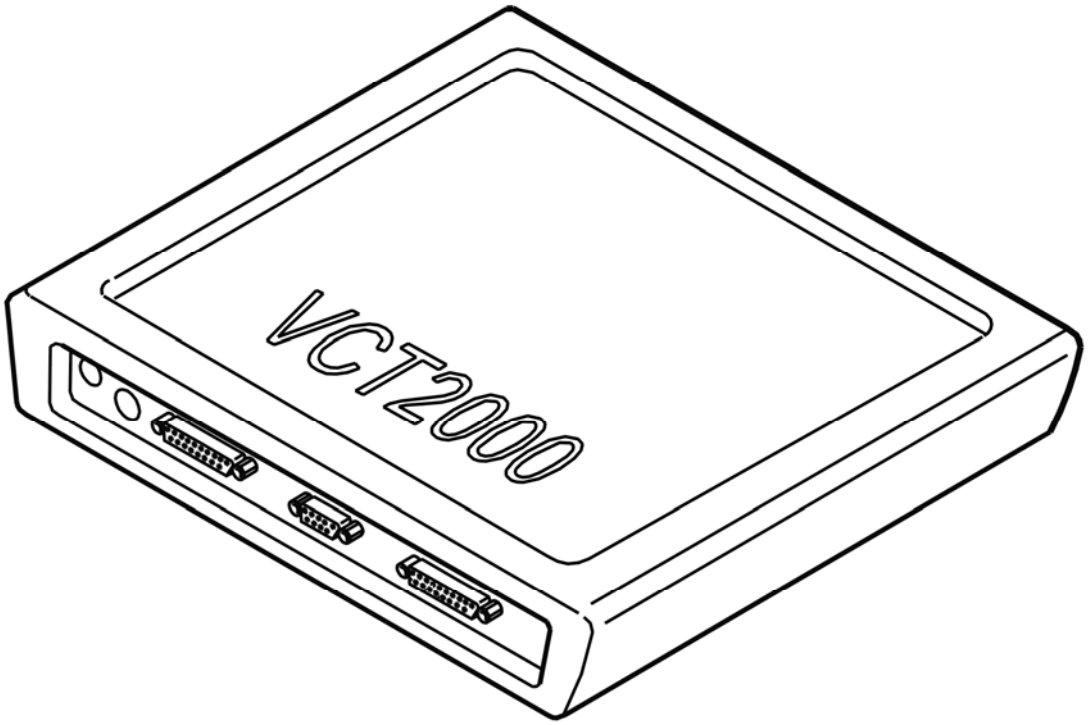

Fig. 460: Identifying VCT2000 Diagnostic Tool Symbol In VIDA
Courtesy of VOLVO CARS CORPORATION

Does the heater operate?

- **YES**

  Refer to **INTERMITTENT FAULT**

- **NO**

  Refer to **CHECKING THE CONNECTORS**

CHECKING THE CONNECTORS

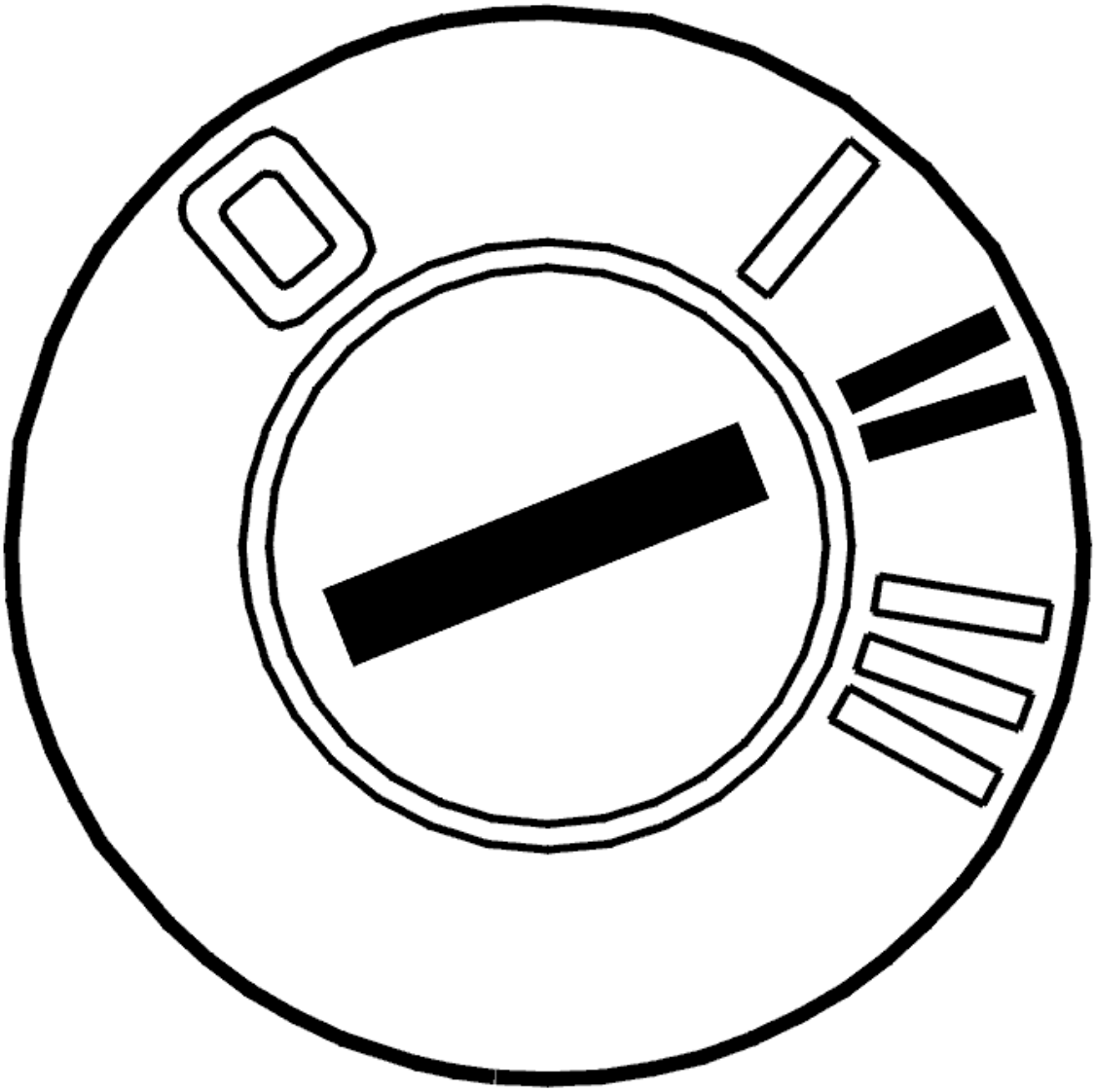

Fig. 461: Identifying Ignition ON
Courtesy of VOLVO CARS CORPORATION

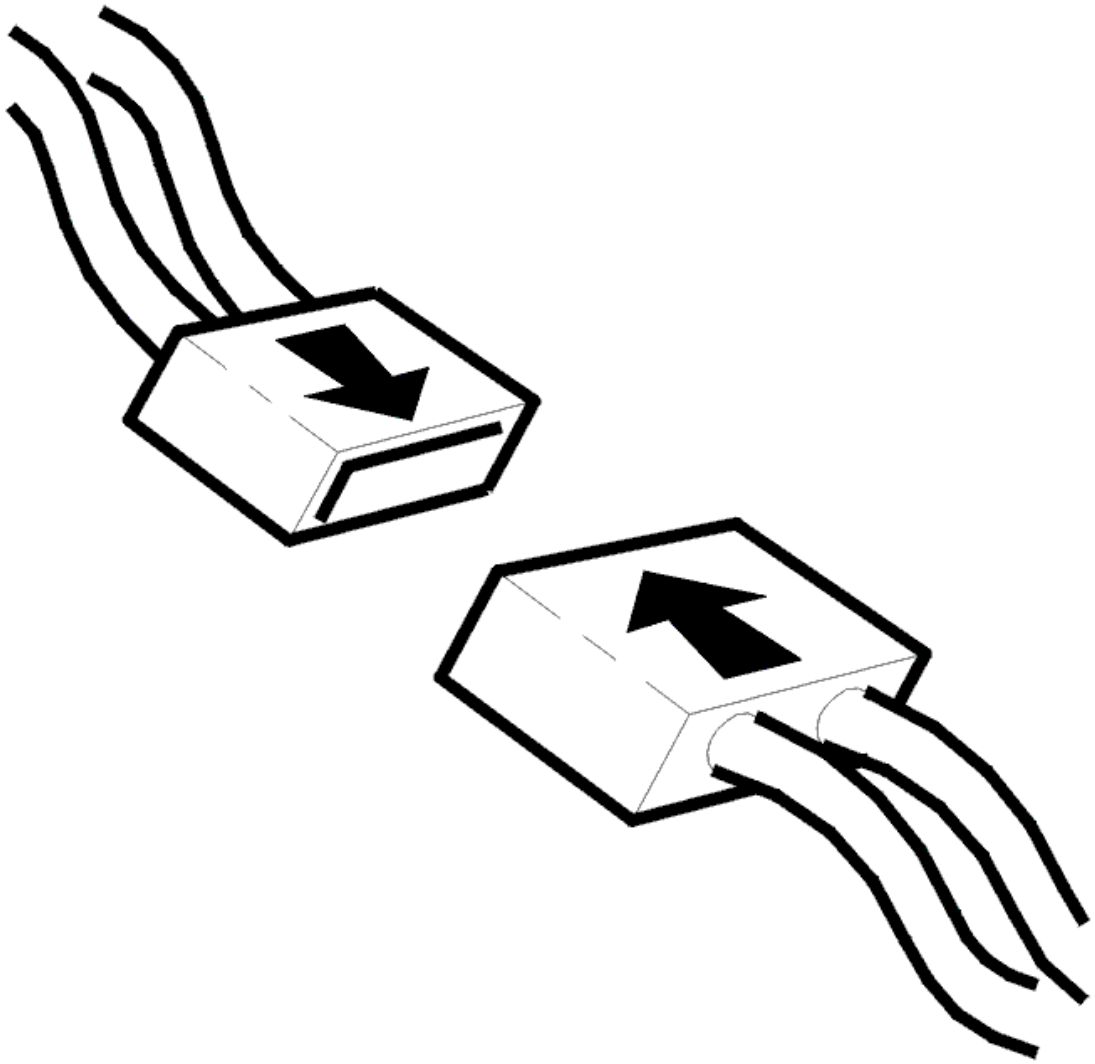

Fig. 462: Connecting Connector
Courtesy of VOLVO CARS CORPORATION

- Ignition off
- Remedy the glow plug electrical terminal and control module connector. Check for contact resistance and oxidation.

  Check for damage carefully

- Reinstall the components, reconnect the connectors etc.
- Ignition on.

NOTE: It is important that only the ignition is on in order for the heater to start.

- Activate the heater.

A buzzing sound should be heard from the heater.

Check that the heater starts and runs.

If the heater now functions, the cause of the fault was loose connections in the connectors.

Other information:

- To access the control module or connect the breakout box, see **CONNECTING THE BREAKOUT BOX**
- To access the glow plug, see **GLOW PLUG ENGINE COOLANT HEATER, REPLACING**
- see **CHECKING WIRING AND TERMINALS** .

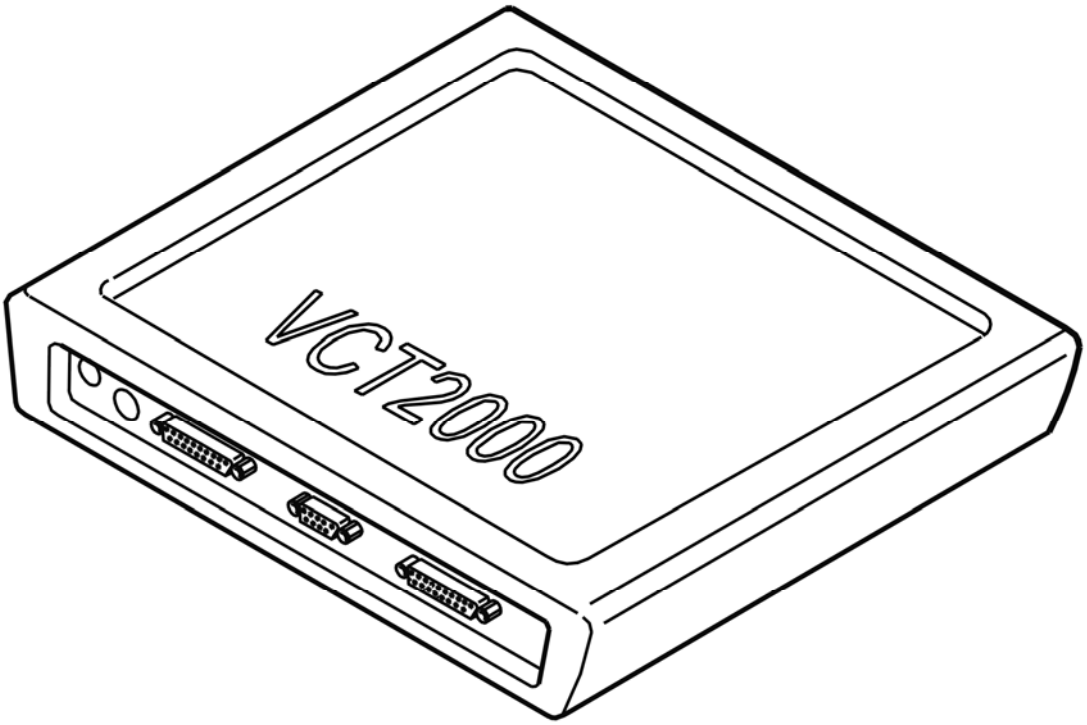

Fig. 463: Identifying VCT2000 Diagnostic Tool Symbol In VIDA
Courtesy of VOLVO CARS CORPORATION

Does the heater operate?

- **YES**

  OKAY: Troubleshooting has been completed.

- **NO**

Refer to **CHECKING COMPONENTS AND WIRING**

CHECKING COMPONENTS AND WIRING

Check the cable between control module terminal #1 and the glow plug terminal. Check for an open-circuit. Check for a short-circuit to ground. Check for a short-circuit to supply voltage.

Replace the glow plug if no fault is found in the cable.

Remedy as necessary.

Other information:

- To access the control module or connect the breakout box, see **CONNECTING THE BREAKOUT BOX**
- To access the glow plug, see **GLOW PLUG ENGINE COOLANT HEATER, REPLACING**
- With the ignition on and the glow plug electrical terminal disconnected, the voltage between the glow plug electrical terminal (control module side) and ground must be approximately 9 V
- For other values, see **SIGNAL SPECIFICATION**
- see **CHECKING WIRING AND TERMINALS** .

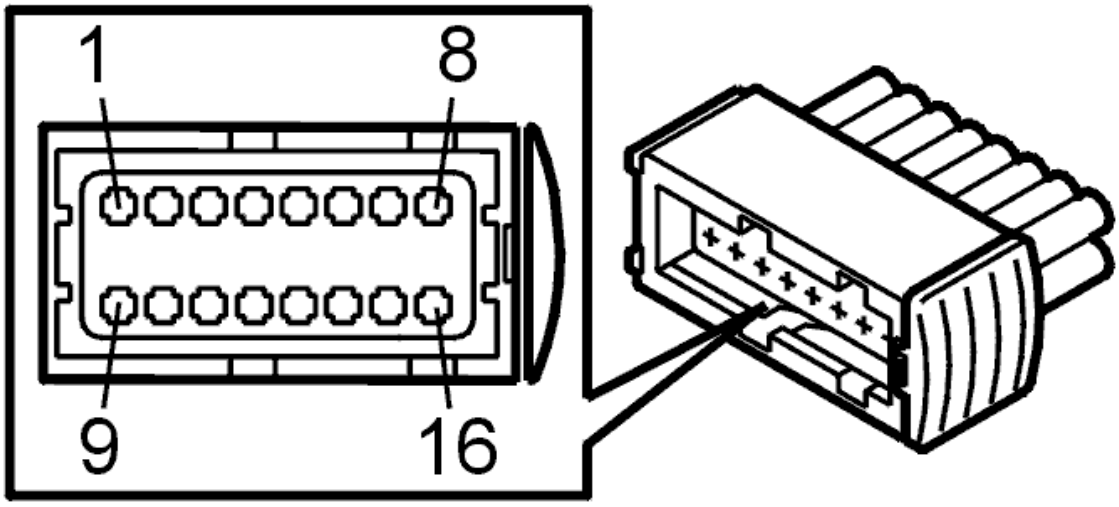

Fig. 464: Identifying Connector Terminals
Courtesy of VOLVO CARS CORPORATION

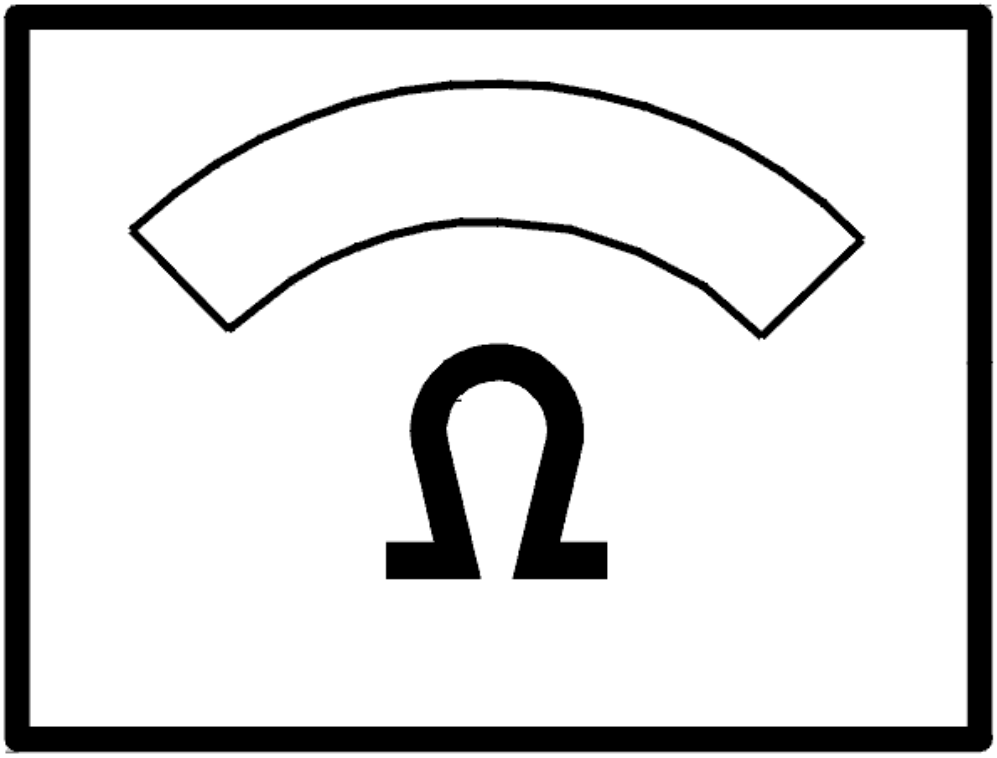

Fig. 465: Identifying Ohm Meter
Courtesy of VOLVO CARS CORPORATION

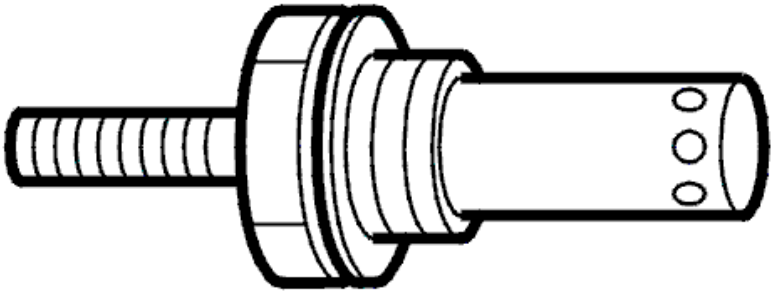

Fig. 466: Identifying Glow Plug
Courtesy of VOLVO CARS CORPORATION

- **Continue**

  Refer to **VERIFICATION**

INTERMITTENT FAULT

Check the control module connector and the electrical terminal for the glow plug. Check for loose connections. See **LOOSE CONNECTIONS (TERMINALS)** . Check for contact resistance and oxidation. See **CONTACT RESISTANCE AND OXIDATION** .

Check the cable between control module terminal #1 and the glow plug terminal. Check for an intermittent open-circuit. Check for an intermittent short-circuit to ground. Check for an intermittent short-circuit to supply voltage.

Remedy as necessary.

Other information:

- To access the control module or connect the breakout box, see **CONNECTING THE BREAKOUT BOX**
- To access the glow plug, see **GLOW PLUG ENGINE COOLANT HEATER, REPLACING**

- With the ignition on and the glow plug electrical terminal disconnected, the voltage between the glow plug electrical terminal (control module side) and ground must be approximately 9 V
- For other values, see **SIGNAL SPECIFICATION**
- see **CHECKING WIRING AND TERMINALS** .

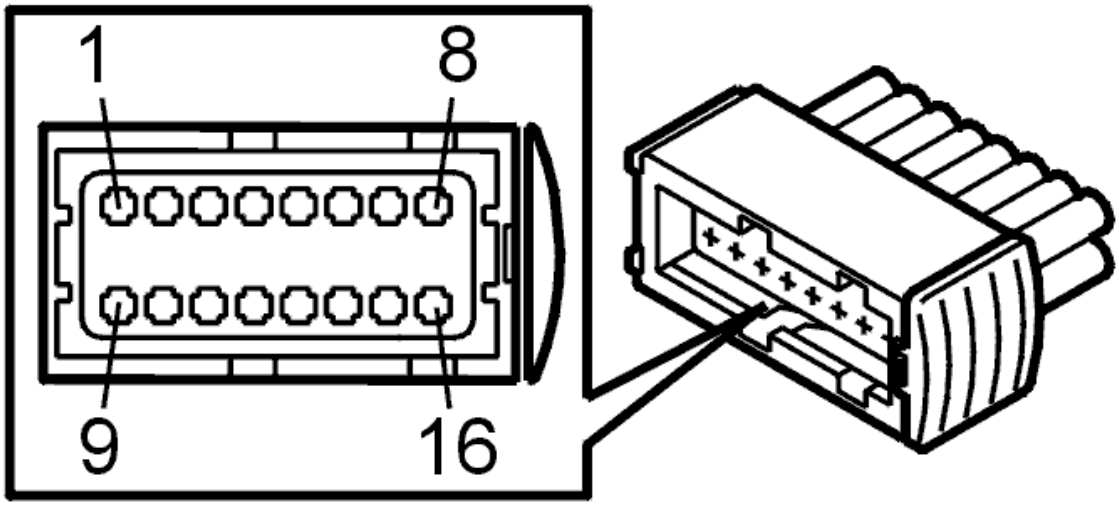

Fig. 467: Identifying Connector Terminals
Courtesy of VOLVO CARS CORPORATION

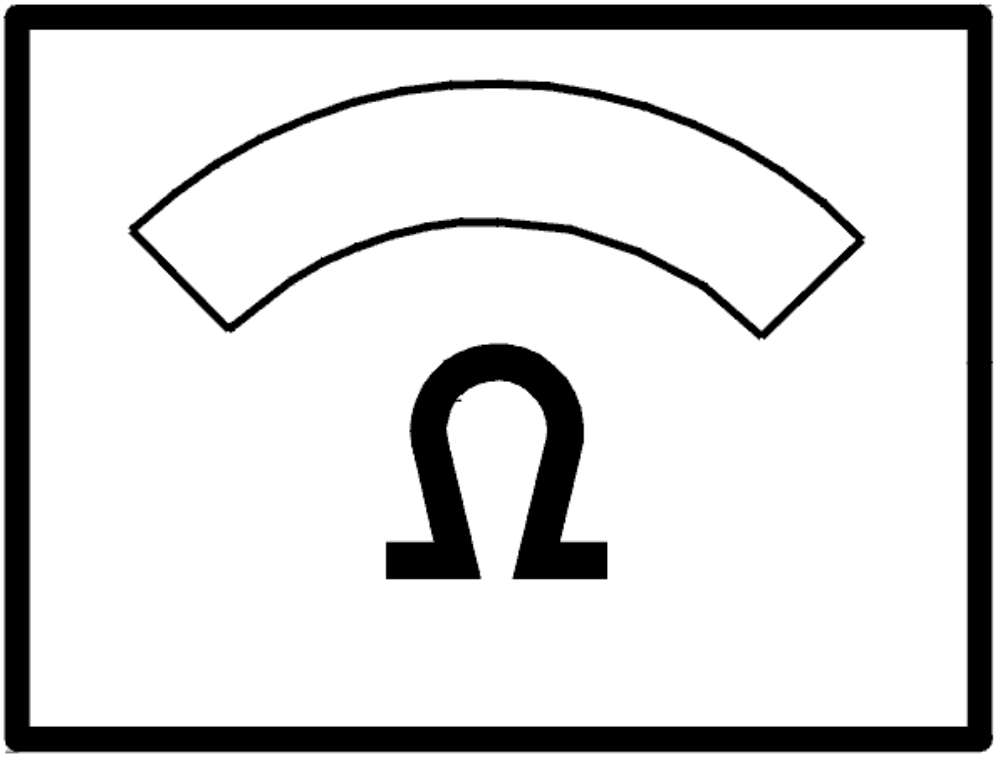

Fig. 468: Identifying Ohm Meter
Courtesy of VOLVO CARS CORPORATION

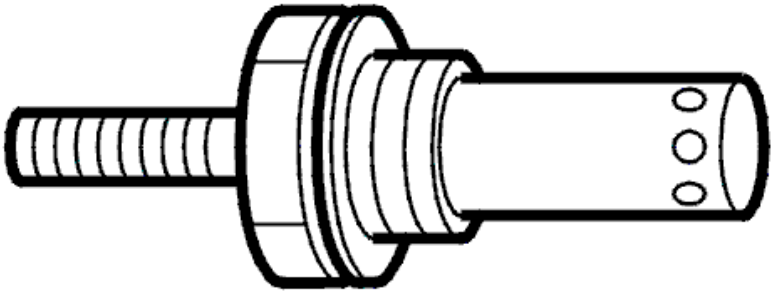

Fig. 469: Identifying Glow Plug
Courtesy of VOLVO CARS CORPORATION

- **Continue**

  Refer to **INFORMATION**

  OKAY: Troubleshooting has been completed.

VERIFICATION

VERIFICATION

HINT: After the repair it is necessary to check that the fault has been rectified.

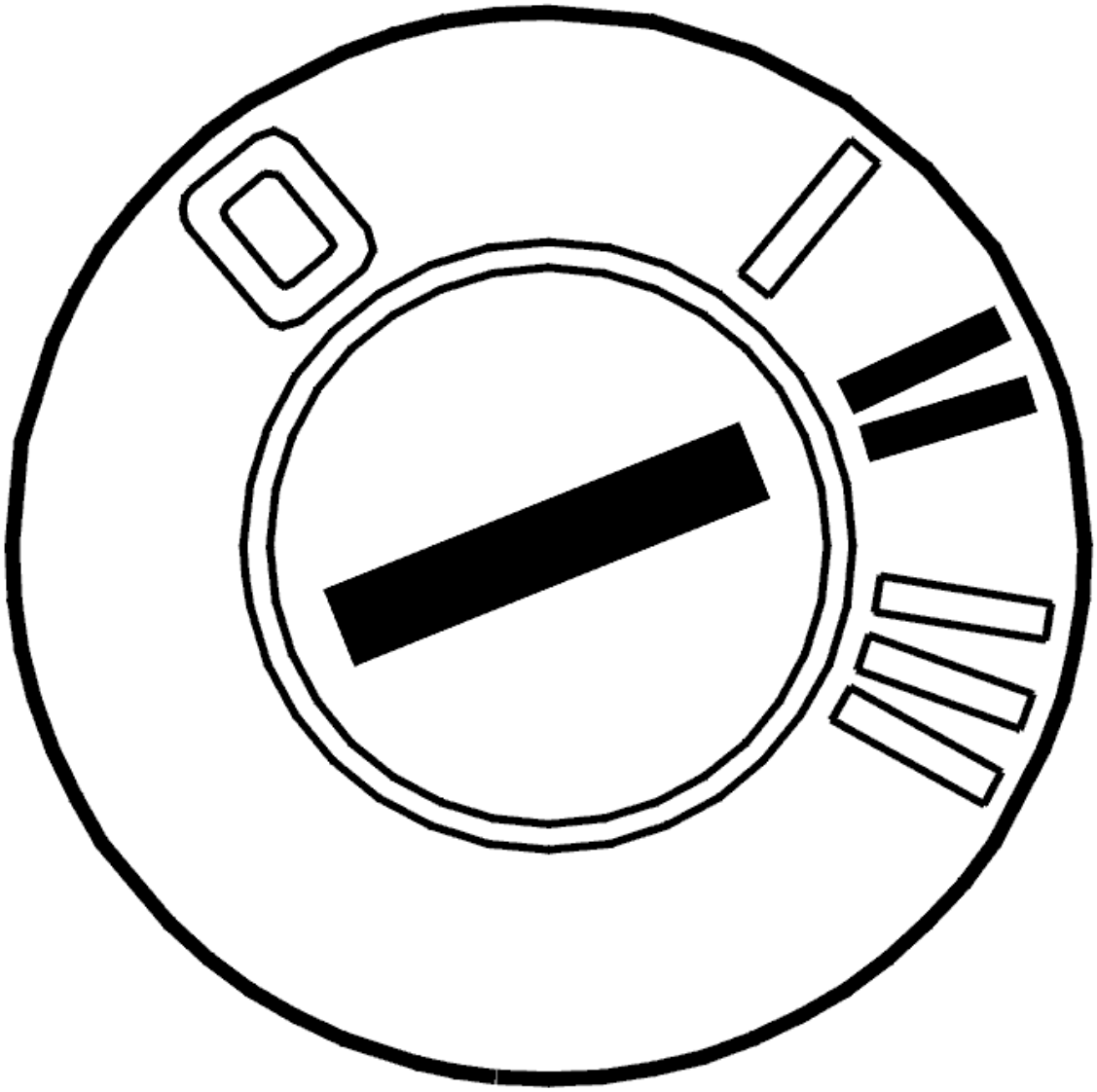

Fig. 470: Identifying Ignition ON
Courtesy of VOLVO CARS CORPORATION

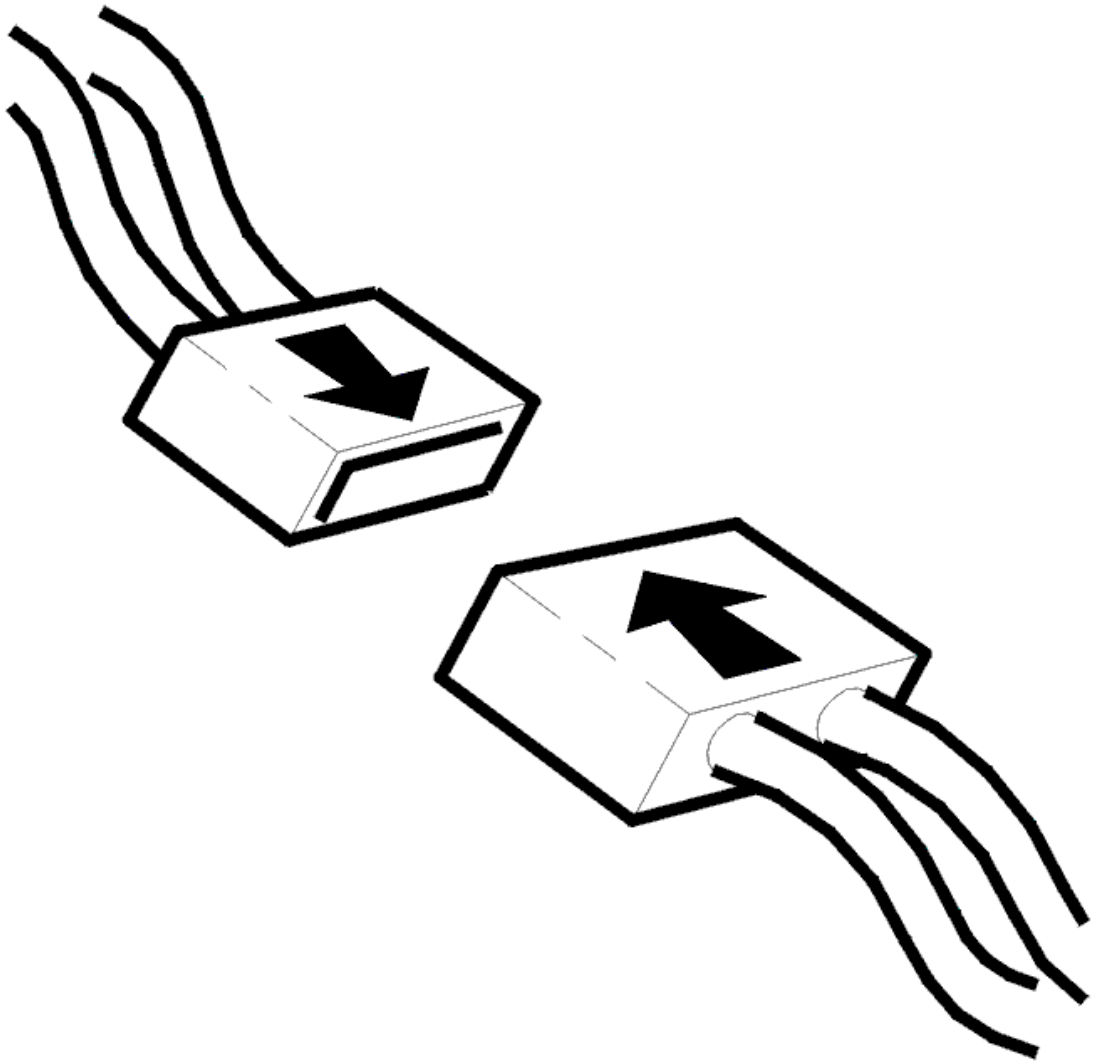

Fig. 471: Connecting Connector
Courtesy of VOLVO CARS CORPORATION

- Ignition off.
- Connect connector, install components etc.
- Ignition on.

NOTE: It is important that only the ignition is on for the heater to start up.

- Activate the heater.

  A buzzing sound should be heard from the heater.

  Check the function of the heater as described in, see **ENGINE COOLANT HEATER, TEST RUNNING** .

Additional information:

- For a description of the parameters, see **DESCRIPTION OF PARAMETERS** .
- For a description of activations, see **ACTIVATING COMPONENTS/FUNCTIONS** .

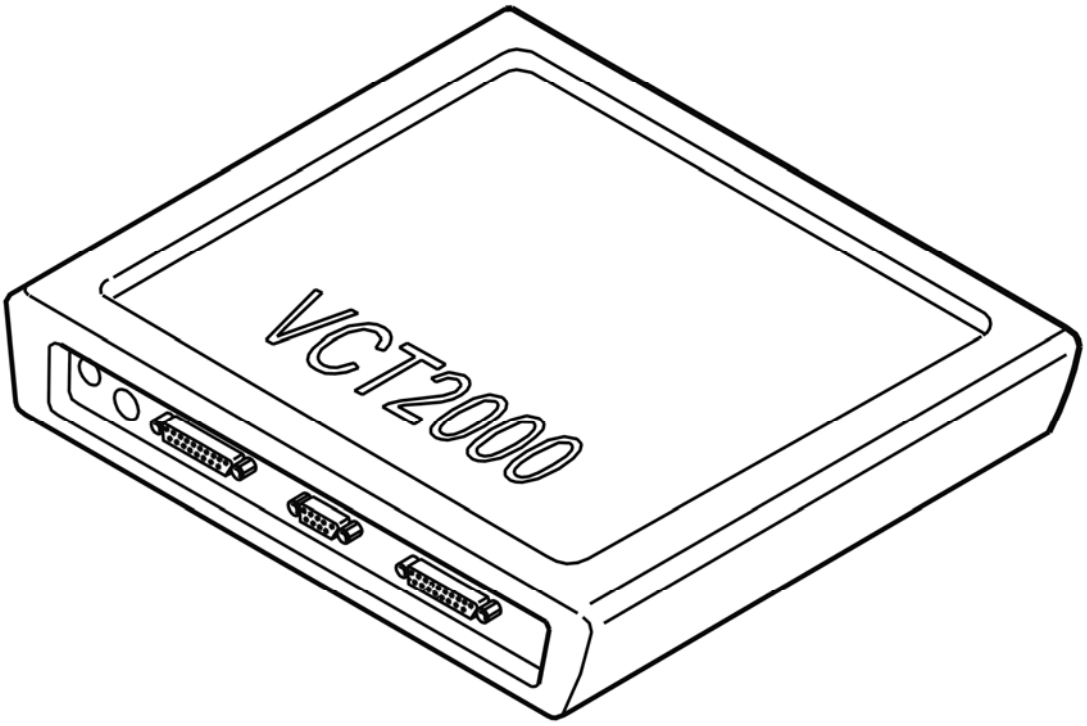

Fig. 472: Identifying VCT2000 Diagnostic Tool Symbol In VIDA
Courtesy of VOLVO CARS CORPORATION

Does the heater work?

- **YES**

  VERIFIED: Troubleshooting has been completed.

- **NO**

  Refer to **INFORMATION**

INFORMATION

FAULT-TRACING INFORMATION

The fault should have been detected and remedied. As this is not the case fault-tracing has failed.

Exit fault-tracing for this diagnostic trouble code (DTC) or make another attempt.

INFORMATION

FAULT-TRACING INFORMATION

If the fault is intermittent, do not verify fault-tracing if the fault does not recur.

It is possible to view the information again, or leave fault-tracing for this diagnostic trouble code (DTC).

ELECTRICAL

Cables And Fuses - Diagnostic Trouble Codes and Associated Procedures

CEM-8A04: MAIN BEAM RELAY. SIGNAL MISSING. INTERMITTENT FAULT (2003-2004)

DIAGNOSTIC TROUBLE CODE INFORMATION

Condition

Main beam relay should not have to be activated to display the diagnostic trouble code. If the central electronic module (CEM) indicates that the main beam circuit is not closed, diagnostic trouble code CEM-8A04 is displayed.

Possible Source

- Open circuit in main beam relay circuit.

Fault symptom[s]

- Front lights are not working.

SIGNAL TOO HIGH/SIGNAL MISSING. INTERMITTENT FAULT

see **SIGNAL TOO HIGH/SIGNAL MISSING. INTERMITTENT FAULT**

CEM-8A04: MAIN BEAM RELAY. SIGNAL MISSING. PERMANENT FAULT (2003-2004)

DIAGNOSTIC TROUBLE CODE INFORMATION

see **DIAGNOSTIC TROUBLE CODE INFORMATION**

SIGNAL MISSING. PERMANENT FAULT

CHECKING THE RELAY

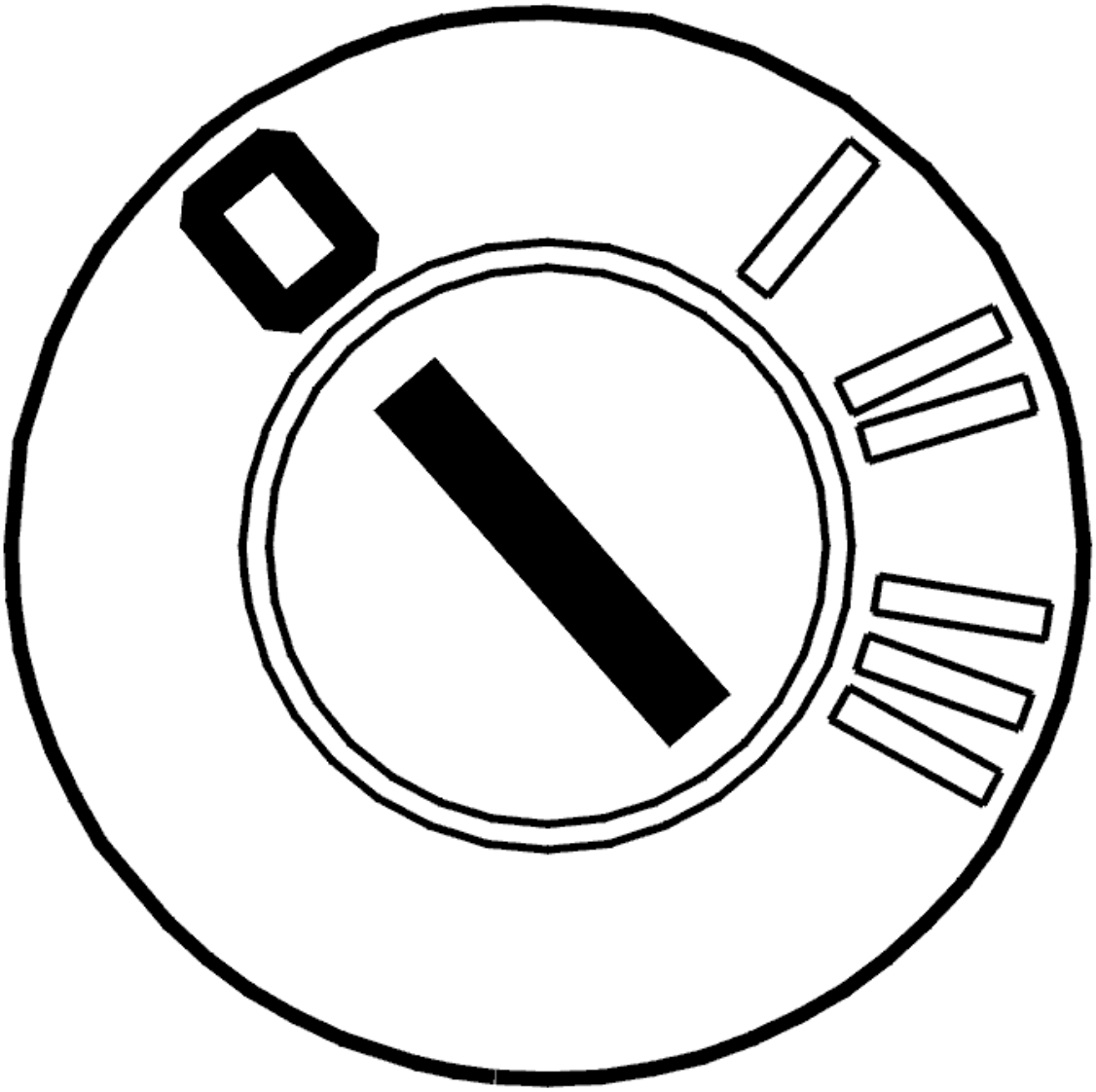

Fig. 1: Identifying Ignition OFF
Courtesy of VOLVO CARS CORPORATION

- Ignition off.

  Check that relay 2/63 is installed correctly. At the same time check the relay connections, in particular 2/63 2, for an open circuit as described in, see **OPEN-CIRCUIT, PERMANENT FAULTS** .

  Additional information:

  - To replace relay:
    - For -2004, see: **CENTRAL ELECTRONIC MODULE (CEM), REPLACING**
    - For 2005-, see: **CENTRAL ELECTRONIC MODULE (CEM), REPLACING** .
  - To connect the test box, see **CONNECTING THE BREAKOUT BOX** .

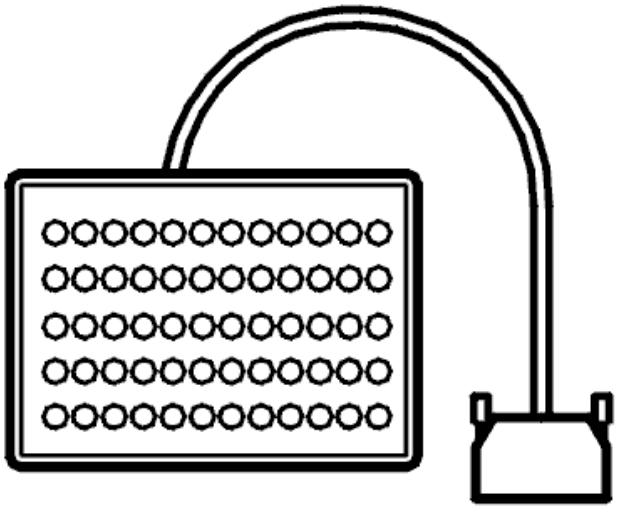

Fig. 2: Breakout Box
Courtesy of VOLVO CARS CORPORATION

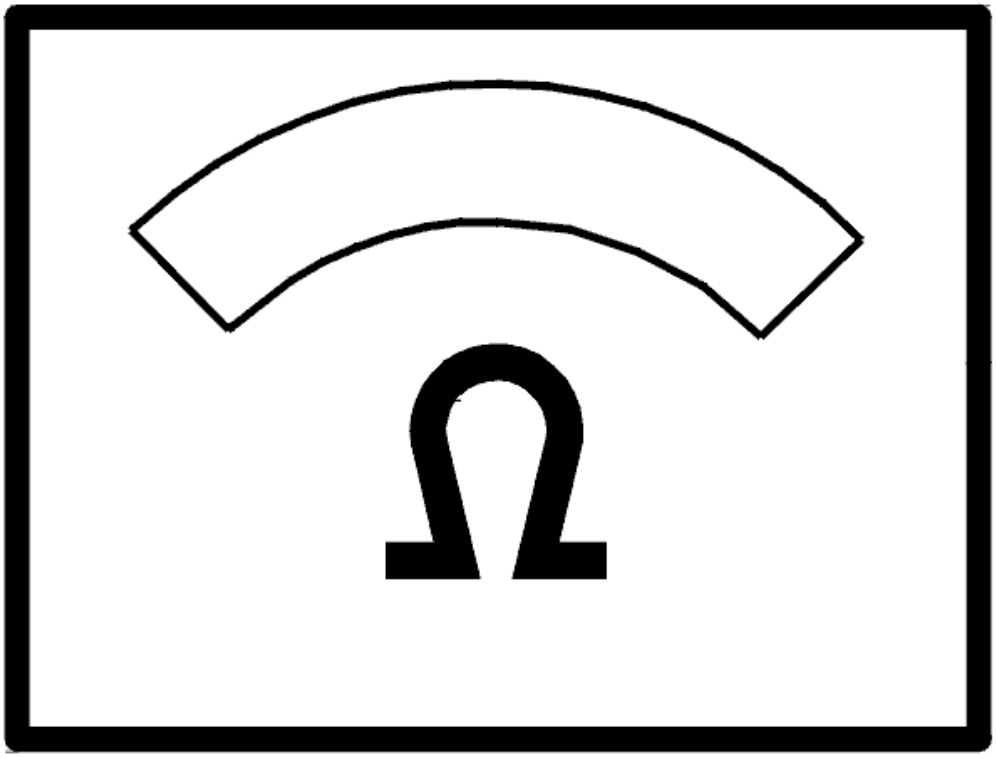

Fig. 3: Identifying Ohm Meter
Courtesy of VOLVO CARS CORPORATION

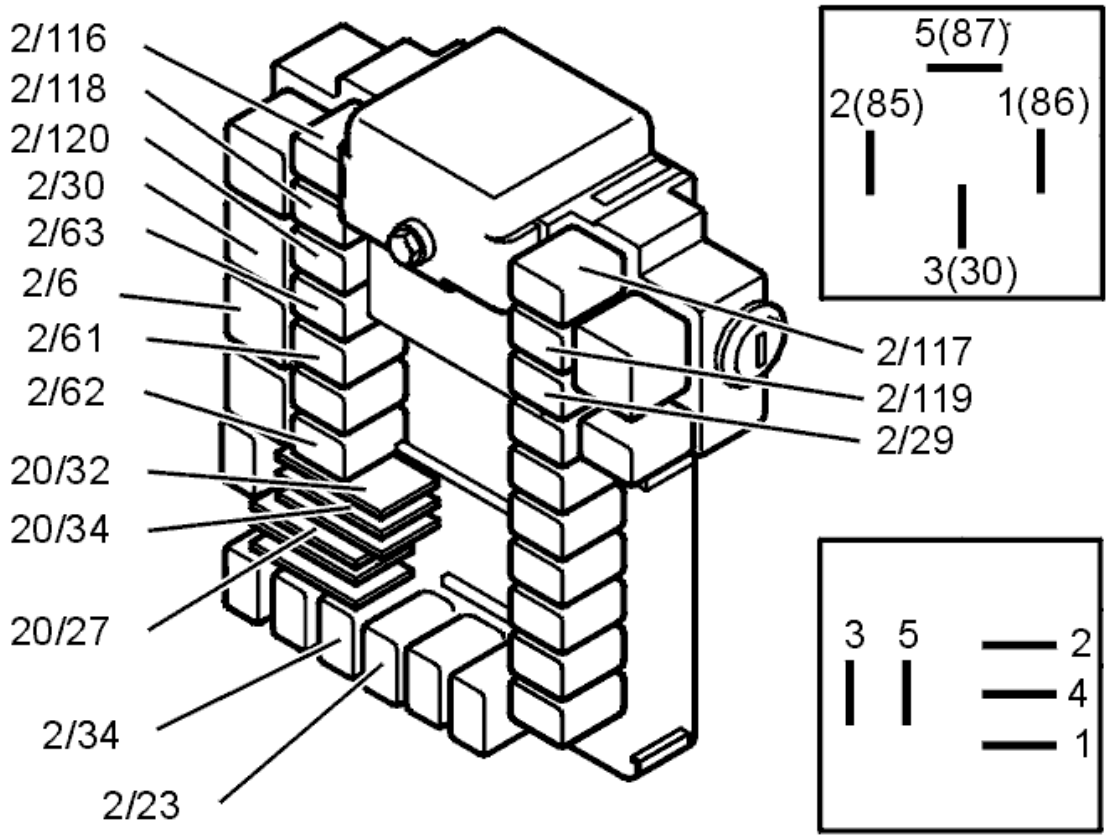

Fig. 4: Identifying Relays
Courtesy of VOLVO CARS CORPORATION

Is there a fault?

- **YES**

  Refer to **VERIFICATION**

- **NO**

  Refer to **REPLACING THE COMPONENT**

REPLACING THE COMPONENT

Replace relay.

- For -2004, see: **CENTRAL ELECTRONIC MODULE (CEM), REPLACING**
- For 2005-, see: **CENTRAL ELECTRONIC MODULE (CEM), REPLACING** .

- **Continue**

  Refer to **VERIFICATION**

VERIFICATION

VERIFICATION

HINT: After the repair it is necessary to check that the fault has been rectified.

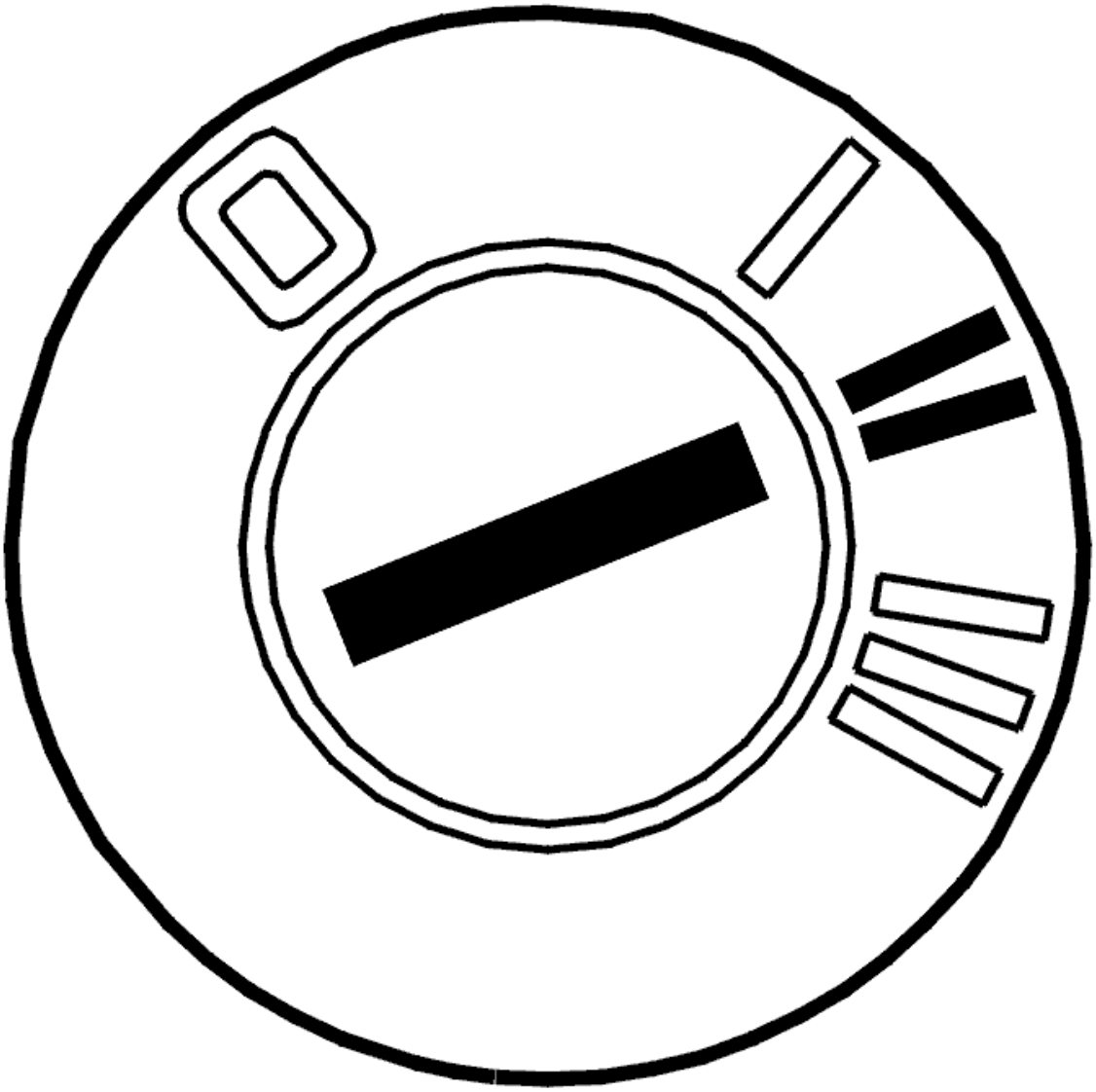

Fig. 5: Identifying Ignition ON
Courtesy of VOLVO CARS CORPORATION

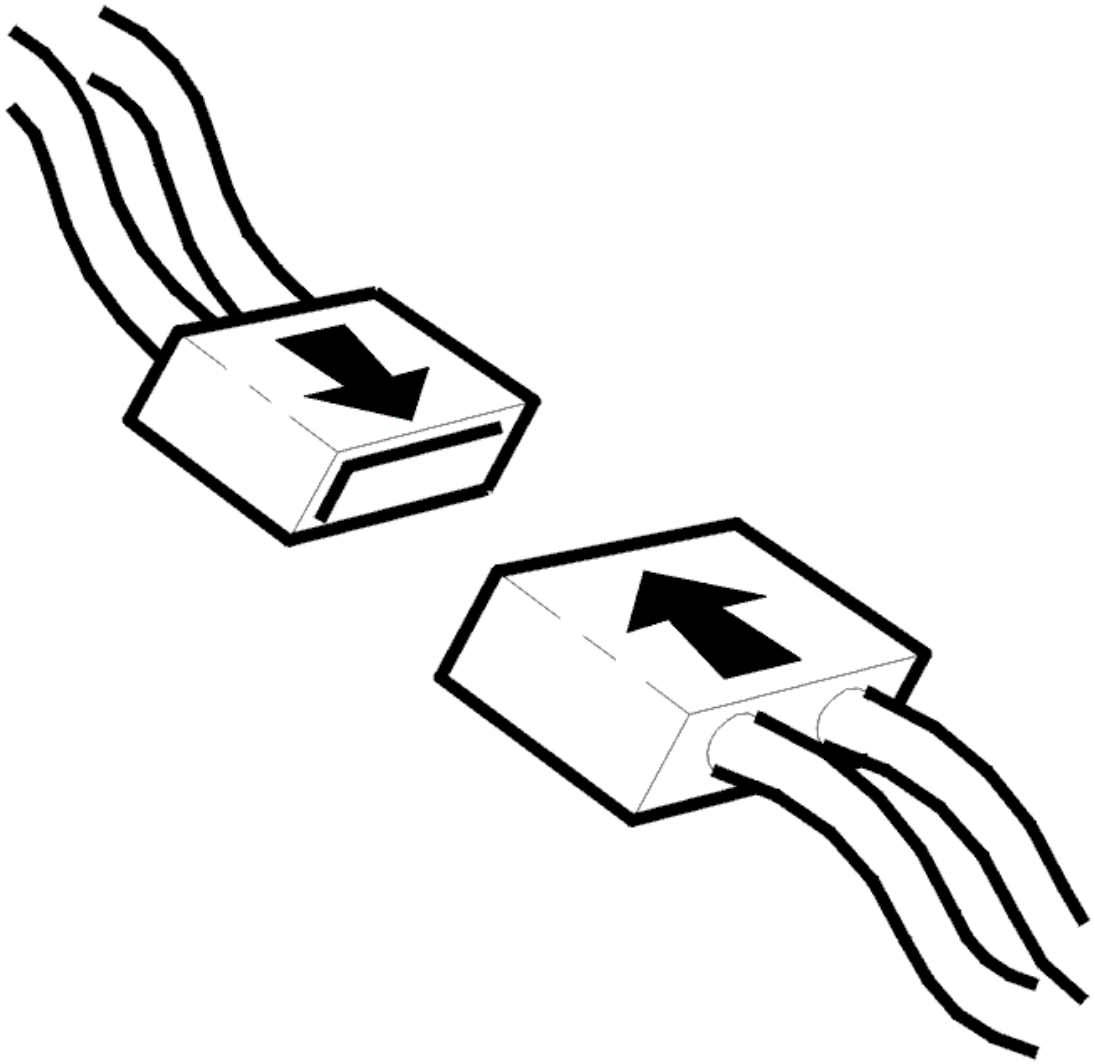

Fig. 6: Connecting Connector
Courtesy of VOLVO CARS CORPORATION

- Ignition off.
- Connect the connectors, install the components, etc.
- Ignition on.

  Read main beam relay.

  Activate main beam.

  With main beam on, the value should be "on" and when main beam is switched off, the value should be "off".

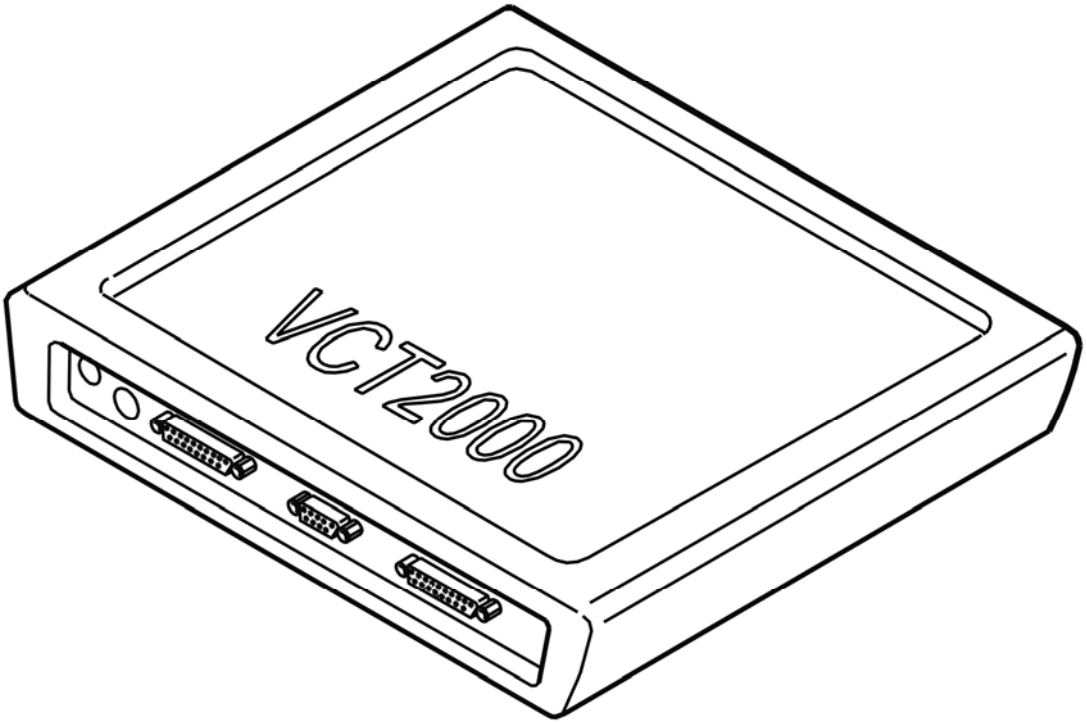

Fig. 7: Identifying VCT2000 Diagnostic Tool Symbol In VIDA
Courtesy of VOLVO CARS CORPORATION

Does it work?

- **YES**

  VERIFIED: Troubleshooting has been completed.

- **NO**

  Refer to **INFORMATION**

INFORMATION

FAULT-TRACING INFORMATION

The fault should have been detected and remedied. As this is not the case fault-tracing has failed.

Exit fault-tracing for this diagnostic trouble code (DTC) or make another attempt.

CEM-8A05: DIPPED HEADLAMP RELAY. SIGNAL TOO HIGH. INTERMITTENT FAULT (2003-2004)

DIAGNOSTIC TROUBLE CODE INFORMATION

Condition

Dipped headlamp relay must be activated to display the diagnostic trouble. If the central electronic module (CEM) indicates that the dipped headlamp is short circuited to the battery voltage, diagnostic trouble code CEM-8A05 is displayed.

Possible Source

- The dipped headlamp relay is short circuited to voltage supply.

Fault symptom[s]

- Front lights are not working.

SIGNAL TOO HIGH/SIGNAL MISSING. INTERMITTENT FAULT.

CHECKING THE RELAY

Check that the relay is fitted correctly.

At the same time check the relay connections, in particular the connection according to the table below, for an intermittent short circuit to voltage supply as described in, see **SHORT-CIRCUIT TO SUPPLY VOLTAGE, INTERMITTENT FAULTS** , contact resistance and oxidation as described in **CONTACT RESISTANCE AND OXIDATION** and a loose contact as described in **LOOSE CONNECTIONS (TERMINALS)** .

The diagnostic trouble code	Relay
CEM-8A05	2/62 2
CEM-8A07	2/62 2
CEM-8B01	2/61 2
CEM-8B03	2/61 2
CEM-8C13	2/34 2
CEM-8C15	2/34 2

Additional information:

- To replace relay:
  - For -2004, see: **CENTRAL ELECTRONIC MODULE (CEM), REPLACING**
  - For 2005-, see: **CENTRAL ELECTRONIC MODULE (CEM), REPLACING** .

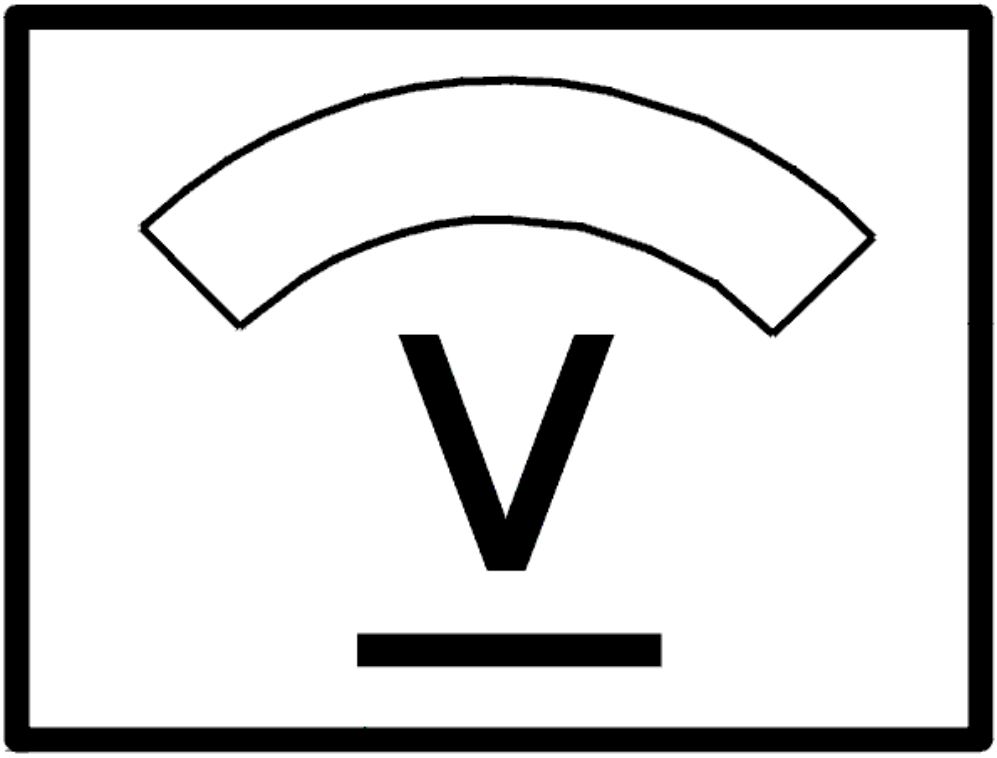

Fig. 8: Identifying Voltage Display
Courtesy of VOLVO CARS CORPORATION

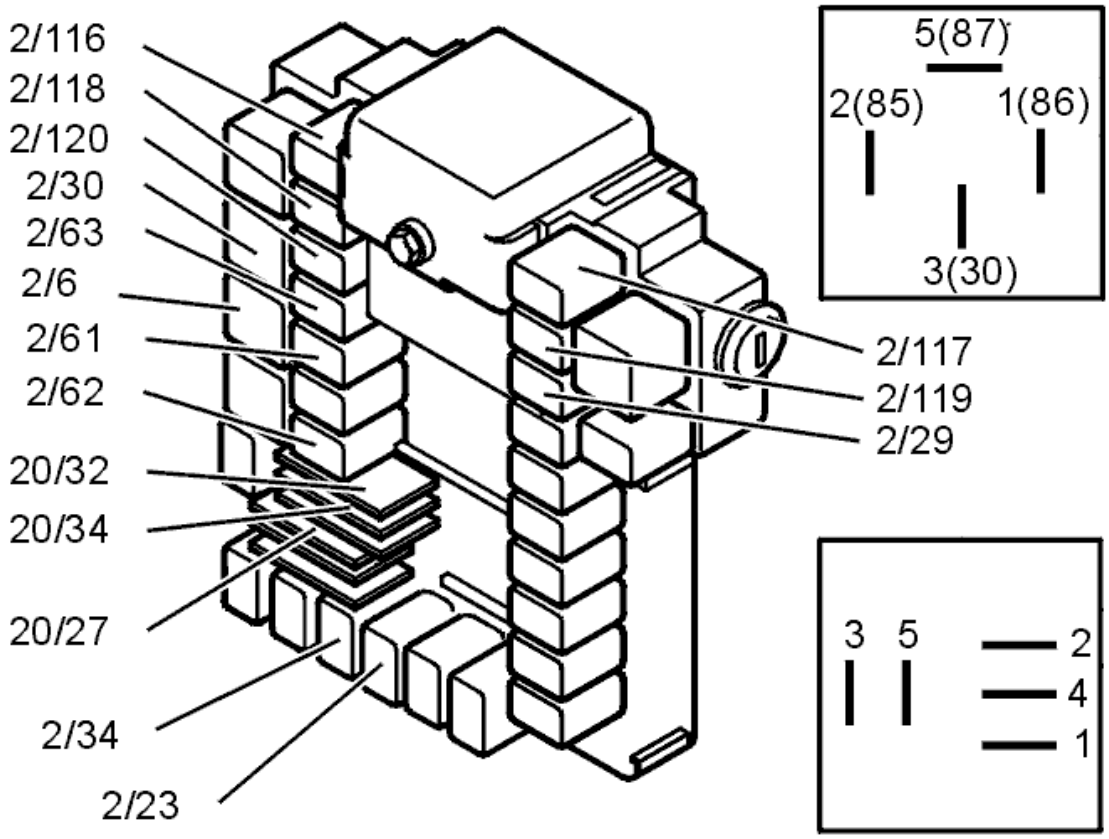

Fig. 9: Identifying Relays
Courtesy of VOLVO CARS CORPORATION

CEM-8A05: DIPPED HEADLAMP RELAY. SIGNAL TOO HIGH. PERMANENT FAULT (2003-2004)

DIAGNOSTIC TROUBLE CODE INFORMATION

see **DIAGNOSTIC TROUBLE CODE INFORMATION**

SIGNAL TOO HIGH. PERMANENT FAULT

CHECKING THE RELAY

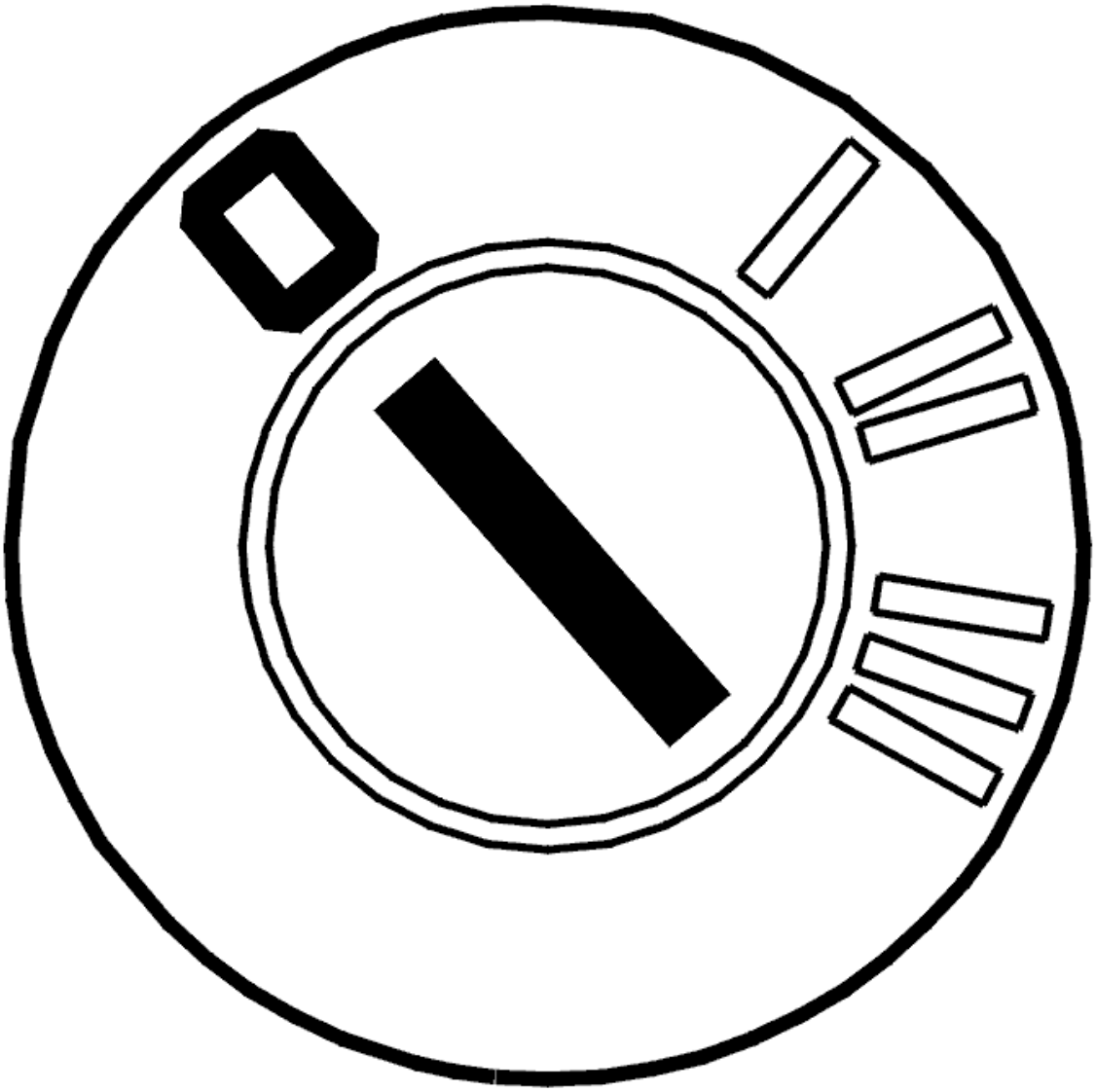

Fig. 10: Identifying Ignition OFF
Courtesy of VOLVO CARS CORPORATION

- Ignition off.

  Check that relay 2/62 is installed correctly. At the same time check the relay connections, in particular 2/62 2, for a short circuit to voltage supply as described in, see **SHORT-CIRCUIT TO SUPPLY VOLTAGE. PERMANENT FAULTS** .

  Additional information:

  - To replace relay:
    - For -2004, see: **CENTRAL ELECTRONIC MODULE (CEM), REPLACING**
    - For 2005-, see: **CENTRAL ELECTRONIC MODULE (CEM), REPLACING** .
  - To connect the test box, see **CONNECTING THE BREAKOUT BOX** .

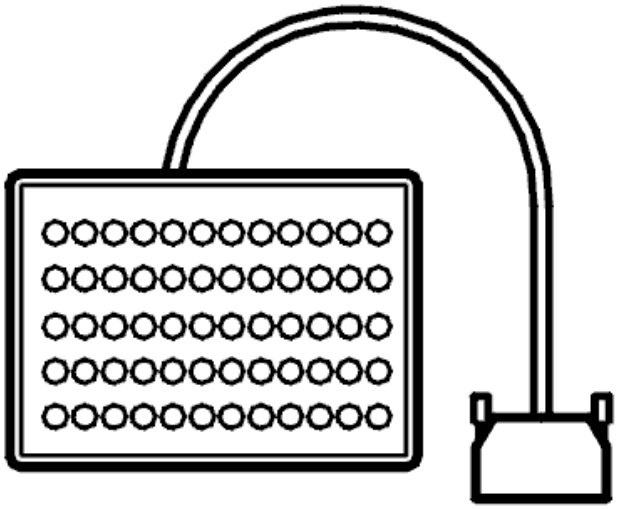

Fig. 11: Breakout Box
Courtesy of VOLVO CARS CORPORATION

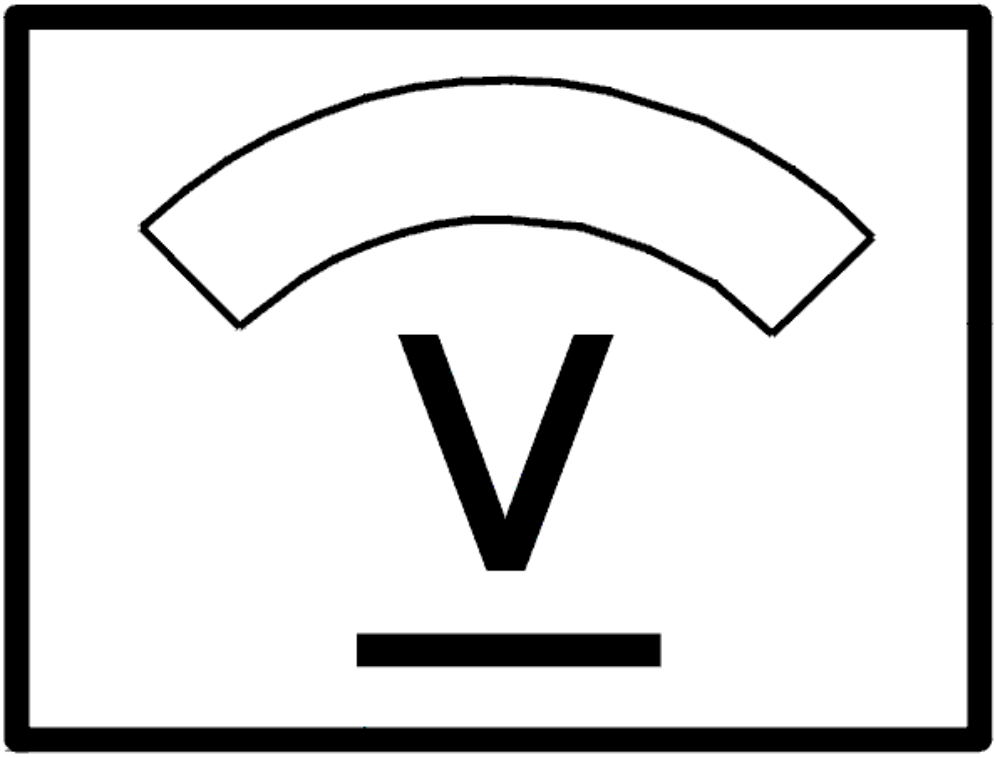

Fig. 12: Identifying Voltage Display
Courtesy of VOLVO CARS CORPORATION

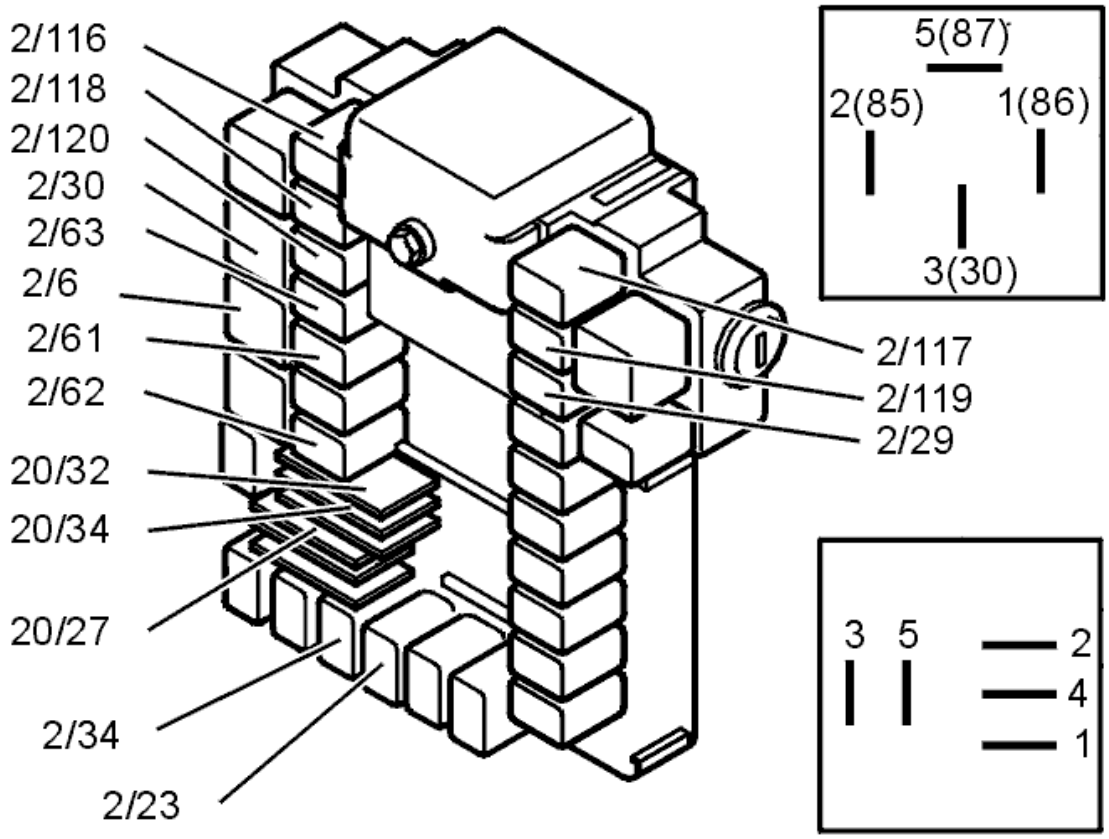

Fig. 13: Identifying Relays
Courtesy of VOLVO CARS CORPORATION

Is there a fault?

- **YES**

  Refer to **VERIFICATION**

- **NO**

  Refer to **REPLACING THE COMPONENT**

REPLACING THE COMPONENT

Replace relay.

- For -2004, see: **CENTRAL ELECTRONIC MODULE (CEM), REPLACING**
- For 2005-, see: **CENTRAL ELECTRONIC MODULE (CEM), REPLACING** .

- **Continue**

  Refer to **VERIFICATION**

VERIFICATION

VERIFICATION

HINT: After the repair it is necessary to check that the fault has been rectified.

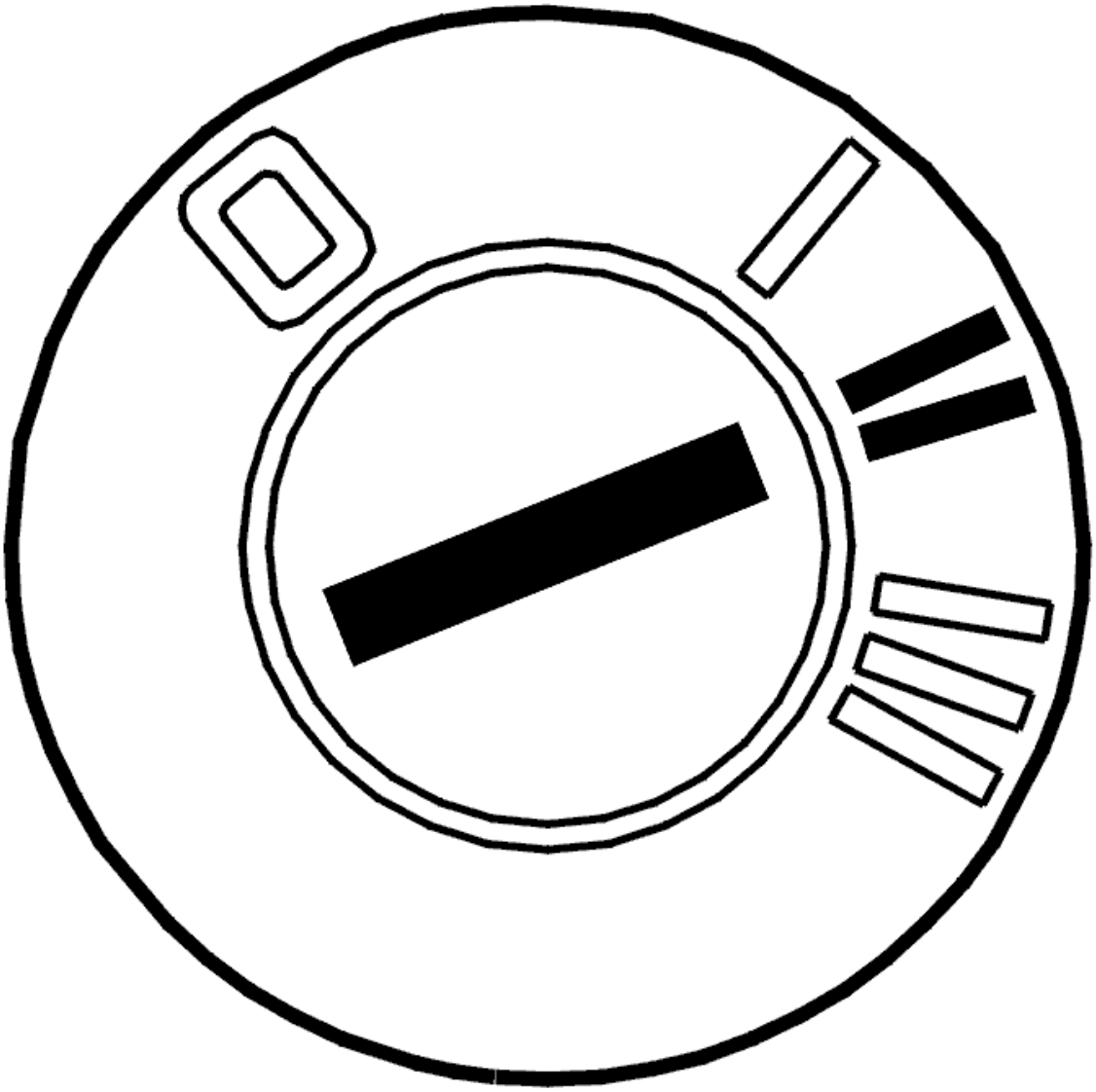

Fig. 14: Identifying Ignition ON
Courtesy of VOLVO CARS CORPORATION

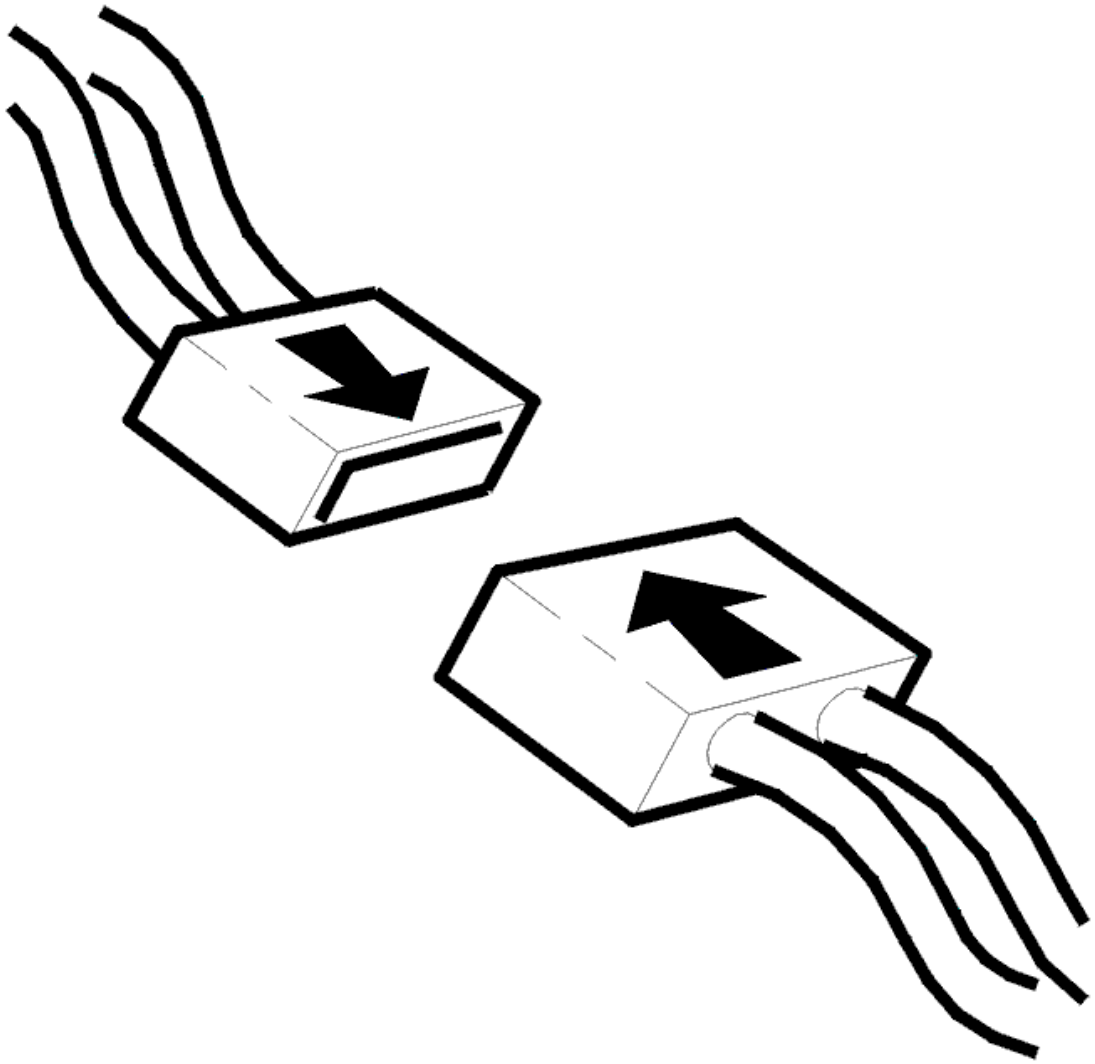

Fig. 15: Connecting Connector
Courtesy of VOLVO CARS CORPORATION

- Ignition off.
- Connect the connectors, install the components, etc.
- Ignition on.

  Read dipped headlamp relay.

  Activate dipped headlamps.

  Additional information:

  - With dipped headlamp on, the value should be "on" and when dipped headlamp is switched off, the value should be "off".

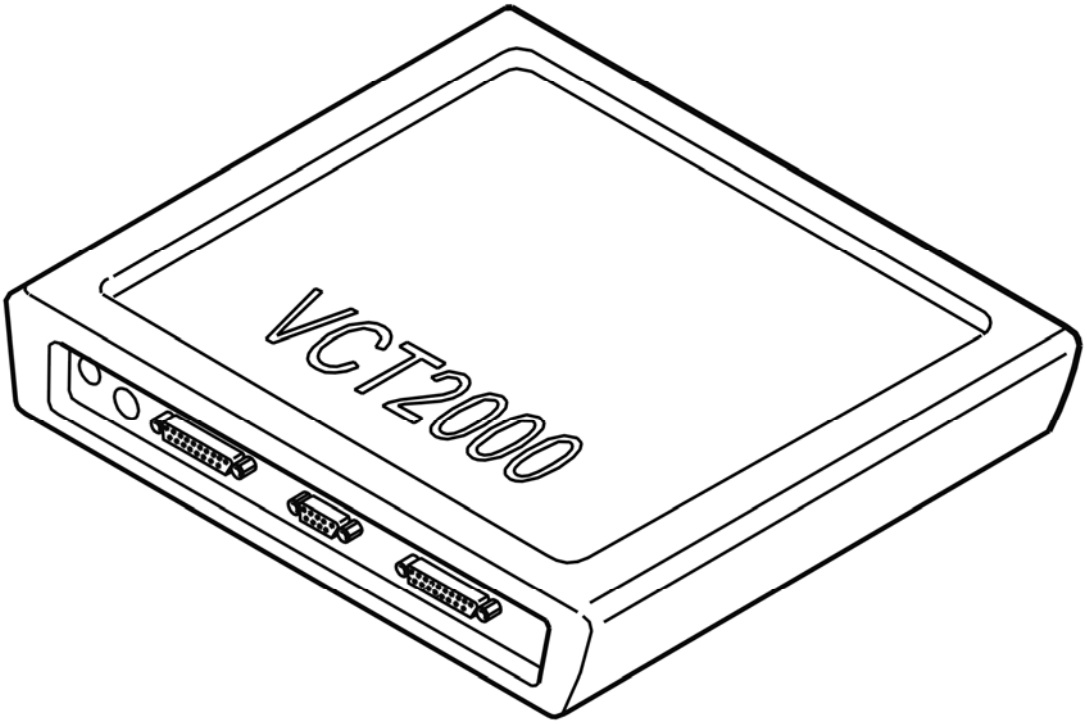

Fig. 16: Identifying VCT2000 Diagnostic Tool Symbol In VIDA
Courtesy of VOLVO CARS CORPORATION

Does it work?

- **YES**

  VERIFIED: Troubleshooting has been completed.

- **NO**

  Refer to **INFORMATION**

INFORMATION

FAULT-TRACING INFORMATION

The fault should have been detected and remedied. As this is not the case fault-tracing has failed.

Exit fault-tracing for this diagnostic trouble code (DTC) or make another attempt.

CEM-8A07: DIPPED HEADLAMP RELAY. SIGNAL MISSING. INTERMITTENT FAULT (2003-2004)

DIAGNOSTIC TROUBLE CODE INFORMATION

Condition

Dipped headlamp relay should not have to be activated to display the diagnostic trouble code. If the central electronic module (CEM) indicates that the dipped headlamp circuit is not closed, diagnostic trouble code CEM-8A07 is displayed.

Possible Source

- Open circuit in dipped headlamp relay circuit.

Fault symptom[s]

- Front lights are not working.

SIGNAL TOO HIGH/SIGNAL MISSING. INTERMITTENT FAULT.

see **SIGNAL TOO HIGH/SIGNAL MISSING. INTERMITTENT FAULT.**

CEM-8A07: DIPPED HEADLAMP RELAY. SIGNAL MISSING. PERMANENT FAULT (2003-2004)

DIAGNOSTIC TROUBLE CODE INFORMATION

see **DIAGNOSTIC TROUBLE CODE INFORMATION**

SIGNAL MISSING. PERMANENT FAULT

CHECKING THE RELAY

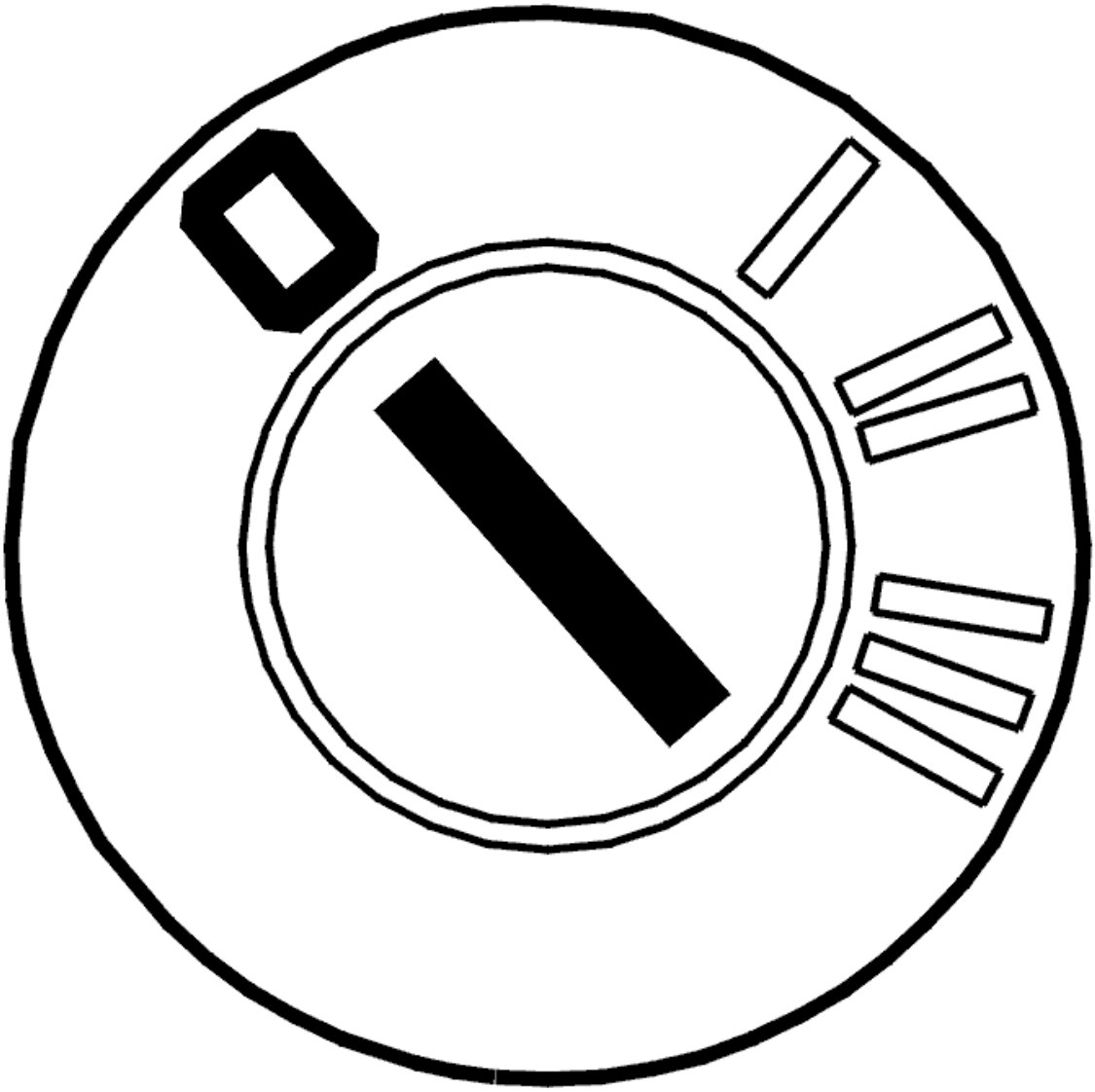

Fig. 17: Identifying Ignition OFF
Courtesy of VOLVO CARS CORPORATION

- Ignition off.

  Check that relay 2/62 is installed correctly. At the same time check the relay connections, in particular 2/62 2, for an open circuit as described in, see **OPEN-CIRCUIT, PERMANENT FAULTS** .

  Additional information:

  - To replace relay:
    - For -2004, see: **CENTRAL ELECTRONIC MODULE (CEM), REPLACING**
    - For 2005-, see: **CENTRAL ELECTRONIC MODULE (CEM), REPLACING** .
  - To connect the test box, see **CONNECTING THE BREAKOUT BOX** .

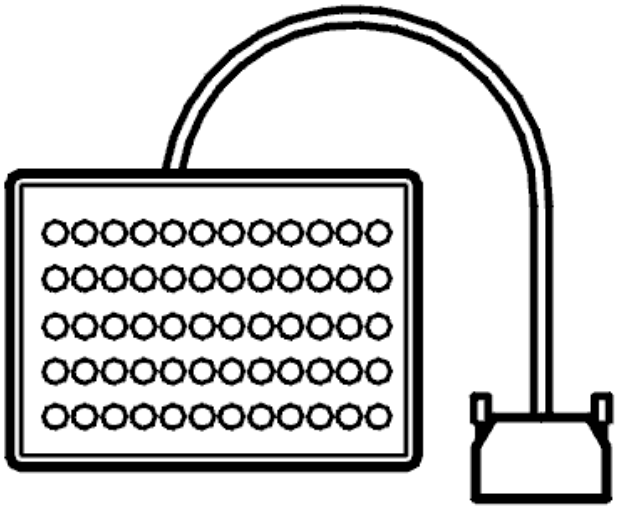

Fig. 18: Breakout Box
Courtesy of VOLVO CARS CORPORATION

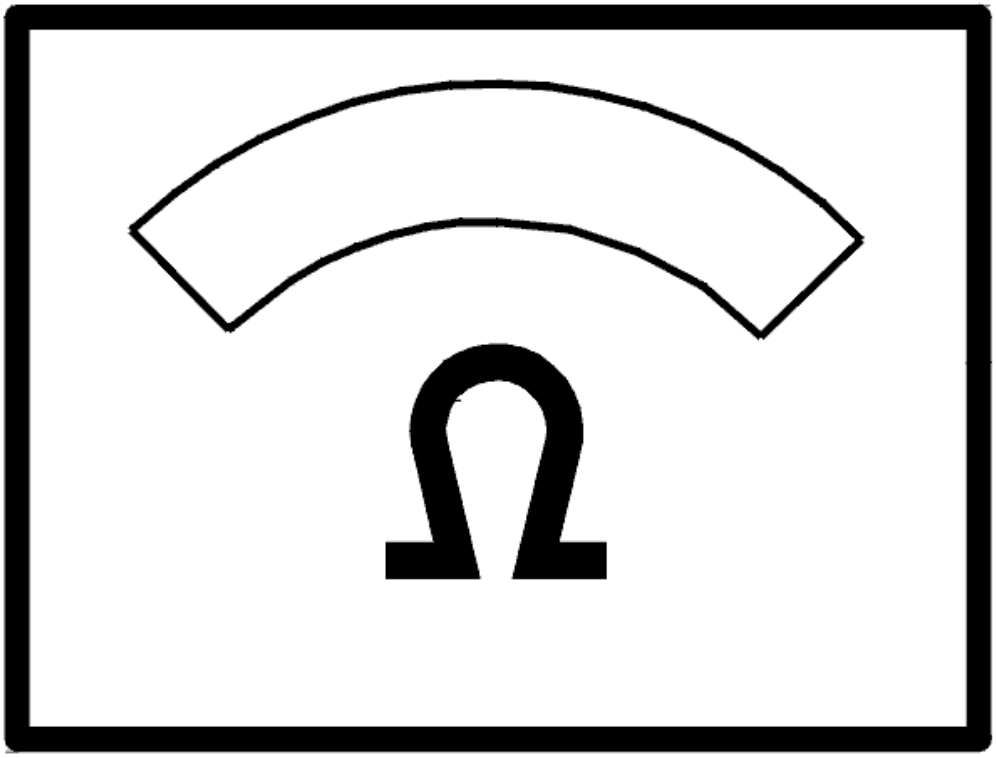

Fig. 19: Identifying Ohm Meter
Courtesy of VOLVO CARS CORPORATION

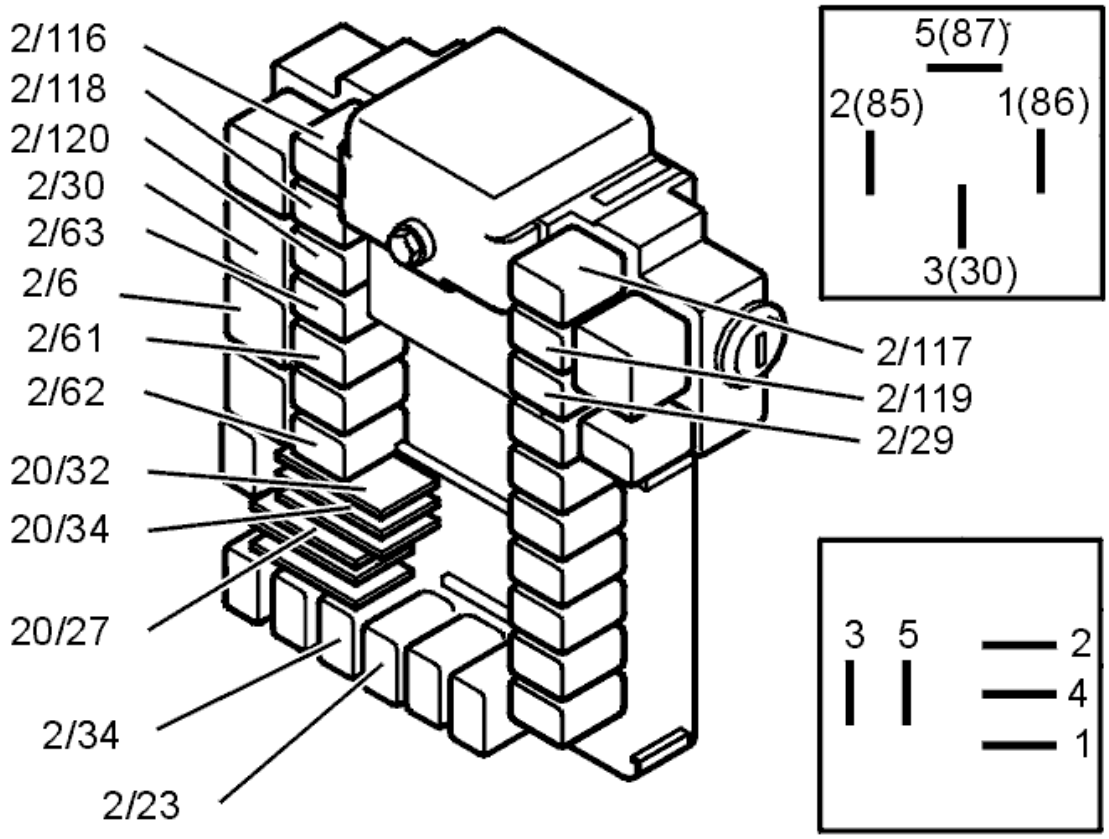

Fig. 20: Identifying Relays
Courtesy of VOLVO CARS CORPORATION

Is there a fault?

- **YES**

  Refer to **VERIFICATION**

- **NO**

  Refer to **REPLACING THE COMPONENT**

REPLACING THE COMPONENT

Replace relay.

- For -2004, see: **CENTRAL ELECTRONIC MODULE (CEM), REPLACING**
- For 2005-, see: **CENTRAL ELECTRONIC MODULE (CEM), REPLACING** .

- **Continue**

  Refer to **VERIFICATION**

VERIFICATION

VERIFICATION

HINT: After the repair it is necessary to check that the fault has been rectified.

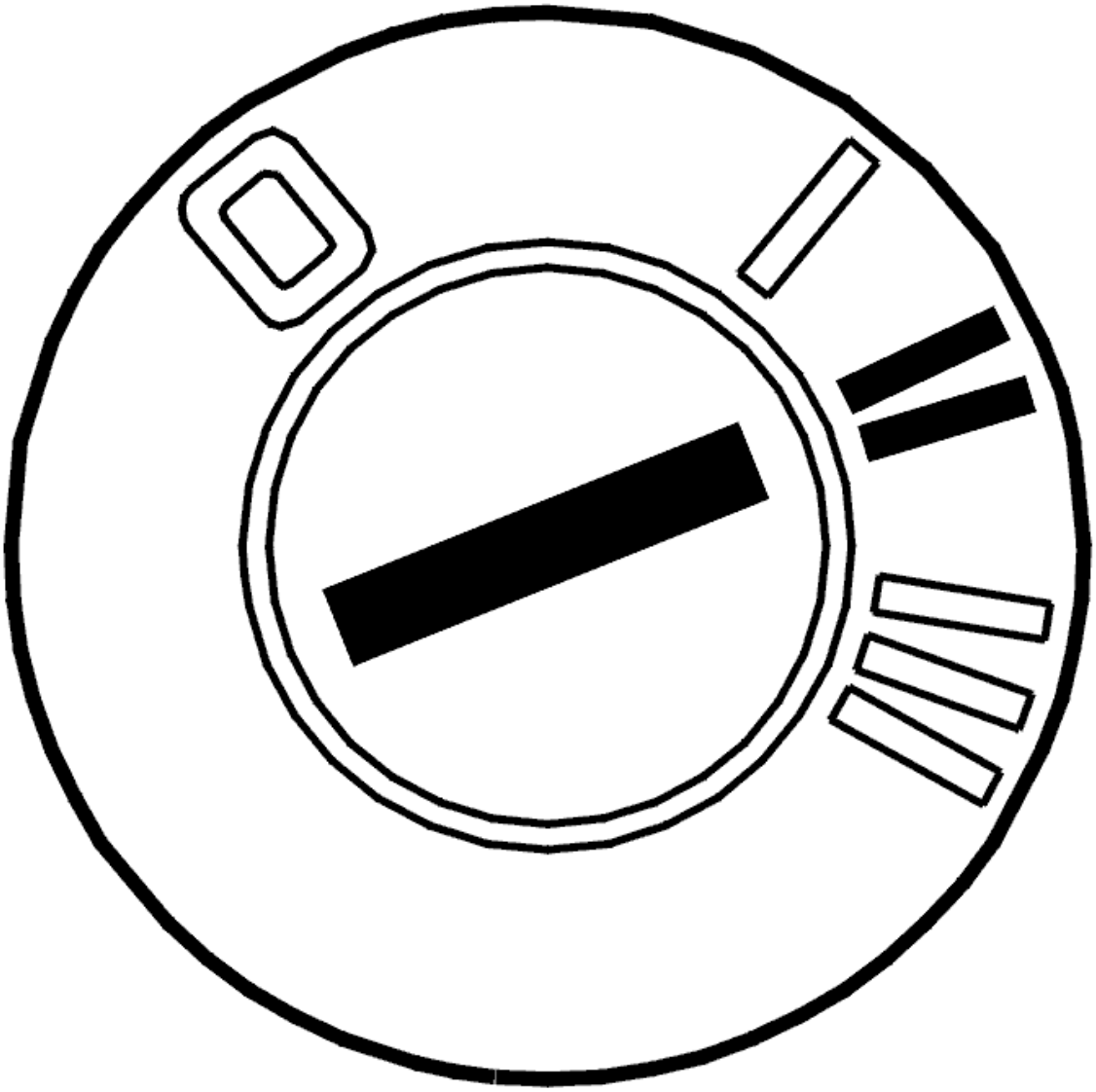

Fig. 21: Identifying Ignition ON
Courtesy of VOLVO CARS CORPORATION

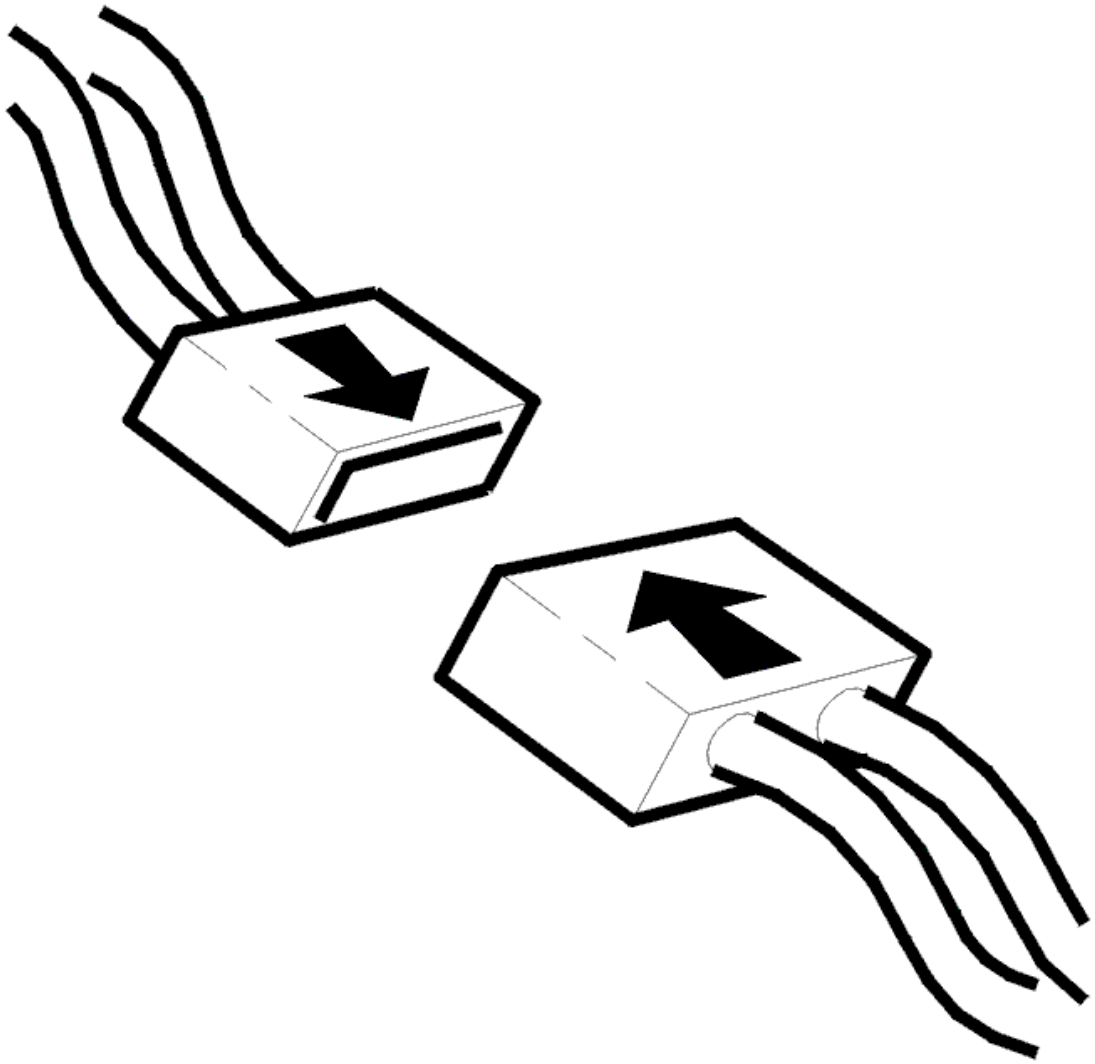

Fig. 22: Connecting Connector
Courtesy of VOLVO CARS CORPORATION

- Ignition off.
- Connect the connectors, install the components, etc.
- Ignition on.

  Read dipped headlamp relay.

  Activate dipped headlamps.

  Additional information:

  - With dipped headlamp on, the value should be "on" and when dipped headlamp is switched off, the value should be "off".

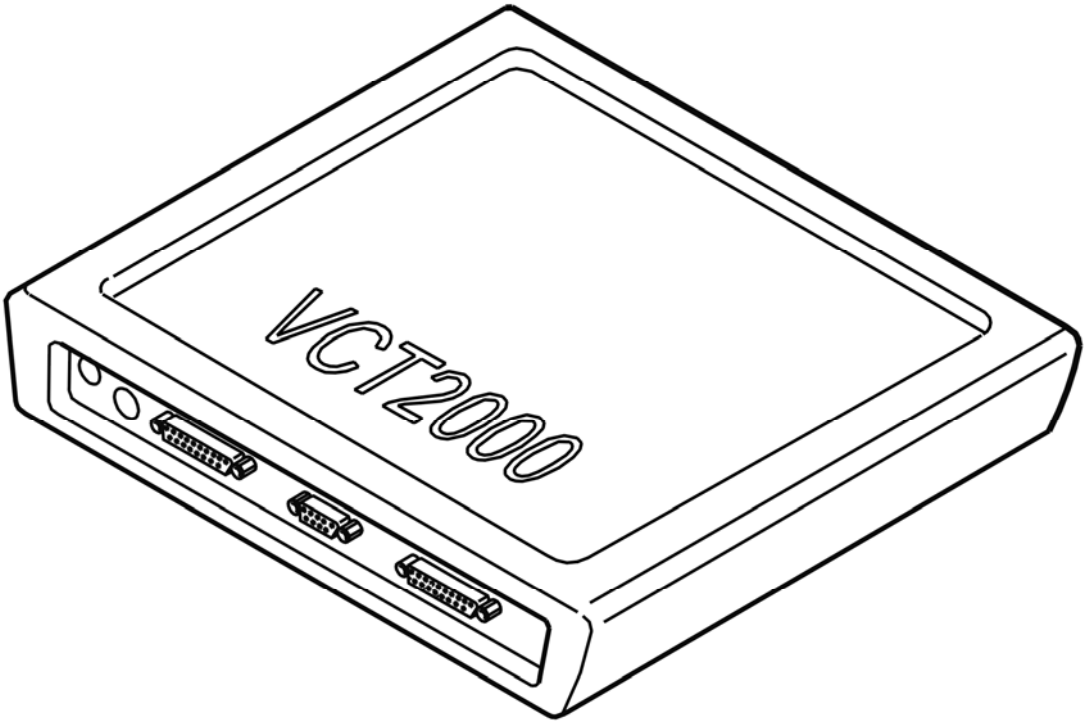

Fig. 23: Identifying VCT2000 Diagnostic Tool Symbol In VIDA
Courtesy of VOLVO CARS CORPORATION

Does it work?

- **YES**

  VERIFIED: Troubleshooting has been completed.

- **NO**

  Refer to **INFORMATION**

INFORMATION

FAULT-TRACING INFORMATION

The fault should have been detected and remedied. As this is not the case fault-tracing has failed.

Exit fault-tracing for this diagnostic trouble code (DTC) or make another attempt.

CEM-8A08: EXTRA LAMP RELAY. SIGNAL TOO HIGH. INTERMITTENT FAULT (2003-2004)

DIAGNOSTIC TROUBLE CODE INFORMATION

Condition

Extra lamp relay must be activated to display the diagnostic trouble code. If the central electronic module (CEM) shows that an extra lamp is fitted and the extra lamp circuit is short circuited to voltage supply, diagnostic trouble code CEM-8A08 is displayed.

Possible Source

- The extra lamp relay circuit is short circuited to voltage supply.

Fault symptom[s]

- Front lights are not working.

SIGNAL TOO HIGH/SIGNAL MISSING. INTERMITTENT FAULT

CHECKING THE WIRE AND RELAY

Check the wire between control unit 6C and relay 2/64 1 for an intermittent short circuit to voltage supply as described in, see **SHORT-CIRCUIT TO SUPPLY VOLTAGE, INTERMITTENT FAULTS** , contact resistance and oxidation as described in **CONTACT RESISTANCE AND OXIDATION** and a loose connection as described in **LOOSE CONNECTIONS (TERMINALS)** .

Also check the same connectors for an intermittent short circuit to voltage supply as described in, see **SHORT-CIRCUIT TO SUPPLY VOLTAGE, INTERMITTENT FAULTS** or for contact resistance and oxidation as described in **CONTACT RESISTANCE AND OXIDATION** and for a loose connection as described in **LOOSE CONNECTIONS (TERMINALS)** .

Check that relay 2/64 is installed correctly.

Do the necessary corrective action.

Additional information:

- For information on the central electronic module (CEM) connector:
  - For -2004, see: **CENTRAL ELECTRONIC MODULE (CEM), REPLACING**
  - For 2005-, see: **CENTRAL ELECTRONIC MODULE (CEM), REPLACING** .
- To connect the test box, see **CONNECTING THE BREAKOUT BOX** .
- -2004: **SIGNAL SPECIFICATION**
- 2005-: **SIGNAL SPECIFICATION**

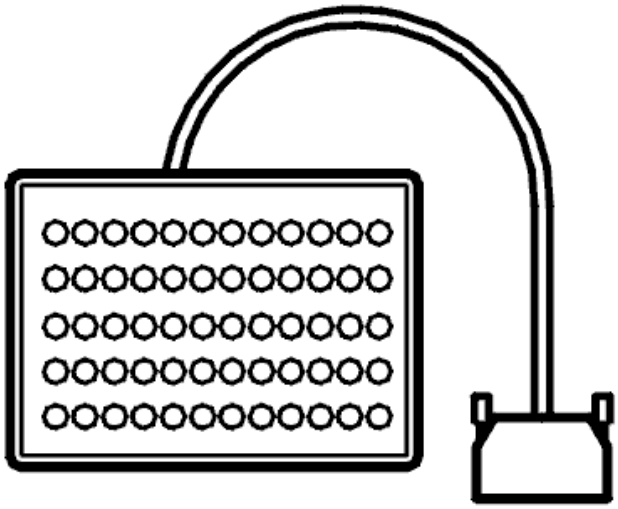

Fig. 24: Breakout Box
Courtesy of VOLVO CARS CORPORATION

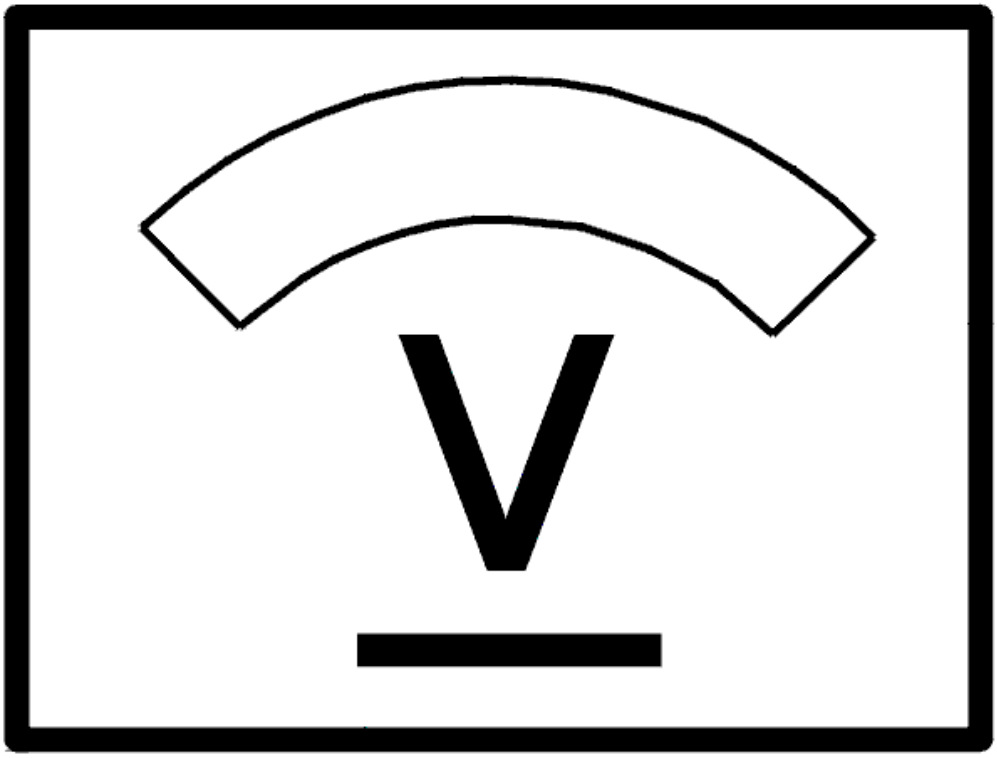

Fig. 25: Identifying Voltage Display
Courtesy of VOLVO CARS CORPORATION

CEM-8A08: EXTRA LAMP RELAY. SIGNAL TOO HIGH. PERMANENT FAULT (2003-2004)

DIAGNOSTIC TROUBLE CODE INFORMATION

see **DIAGNOSTIC TROUBLE CODE INFORMATION**

SIGNAL TOO HIGH. PERMANENT FAULT

CHECKING THE WIRE AND THE RELAY

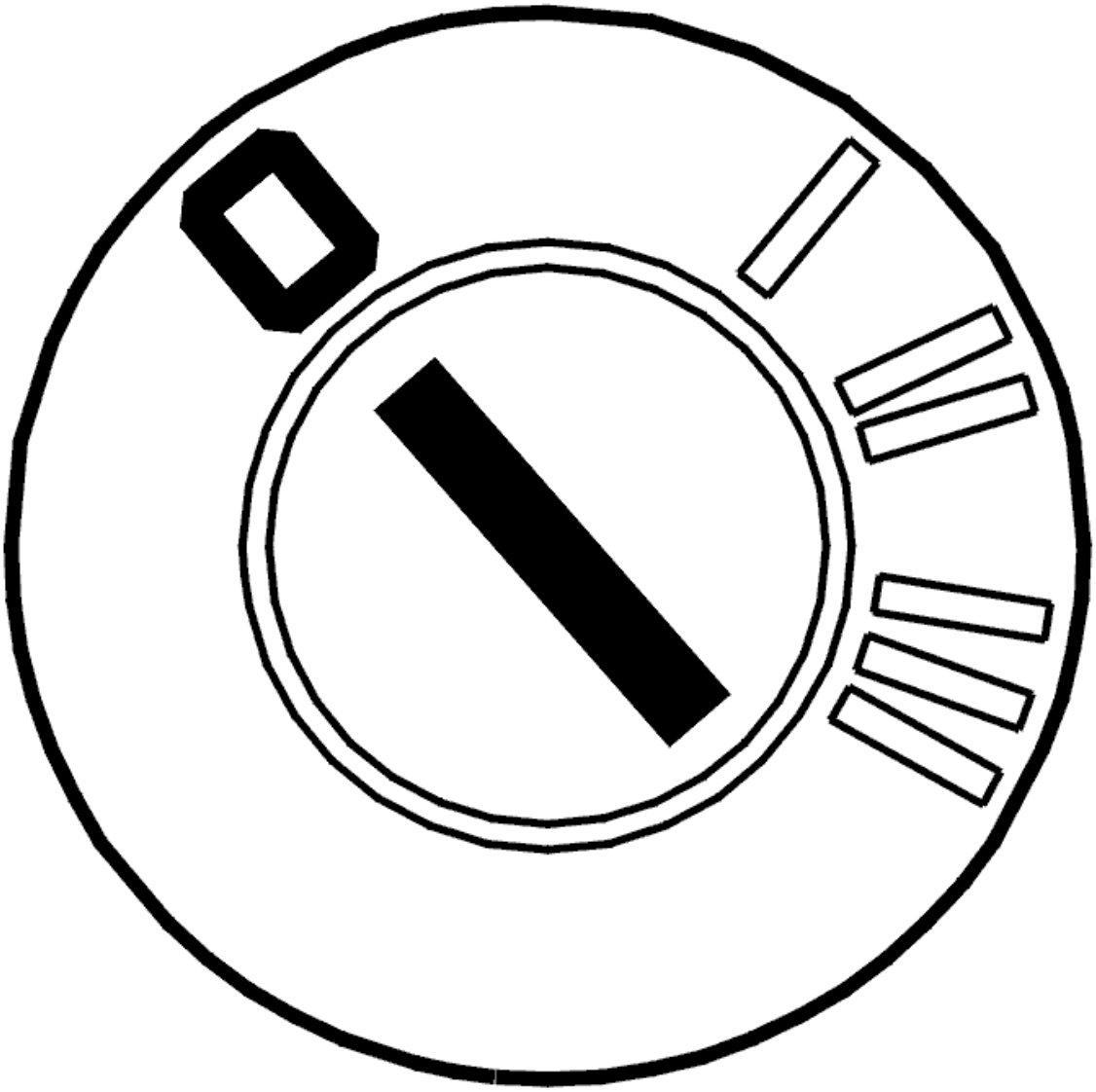

Fig. 26: Identifying Ignition OFF
Courtesy of VOLVO CARS CORPORATION

- Ignition off.

  Check the wire between central electronic module (CEM) 6C and relay 2/64 1 and connector 8 and 2 for a short circuit to voltage supply as described in, see **SHORT-CIRCUIT TO SUPPLY VOLTAGE. PERMANENT FAULTS** .

  Check that relay 2/64 is installed correctly.

  Do the necessary corrective action.

  Additional information:

  - For information on the central electronic module (CEM) connector:

- For -2004, see: **CENTRAL ELECTRONIC MODULE (CEM), REPLACING**
- For 2005-, see: **CENTRAL ELECTRONIC MODULE (CEM), REPLACING** .

- To connect the test box, see **CONNECTING THE BREAKOUT BOX** .
- -2004: **SIGNAL SPECIFICATION**
- 2005-: **SIGNAL SPECIFICATION**

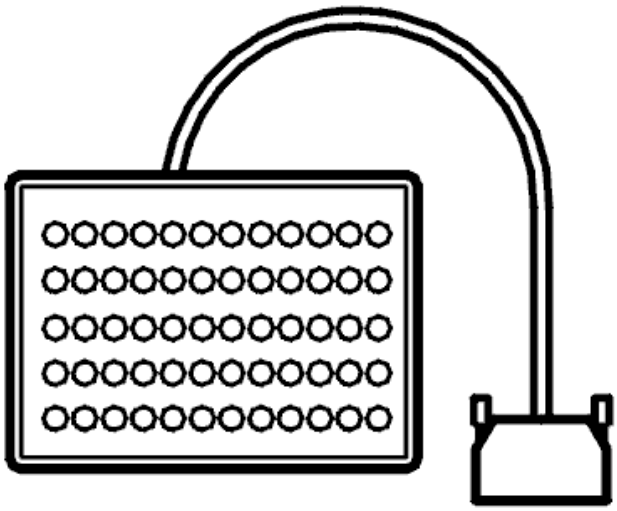

Fig. 27: Breakout Box
Courtesy of VOLVO CARS CORPORATION

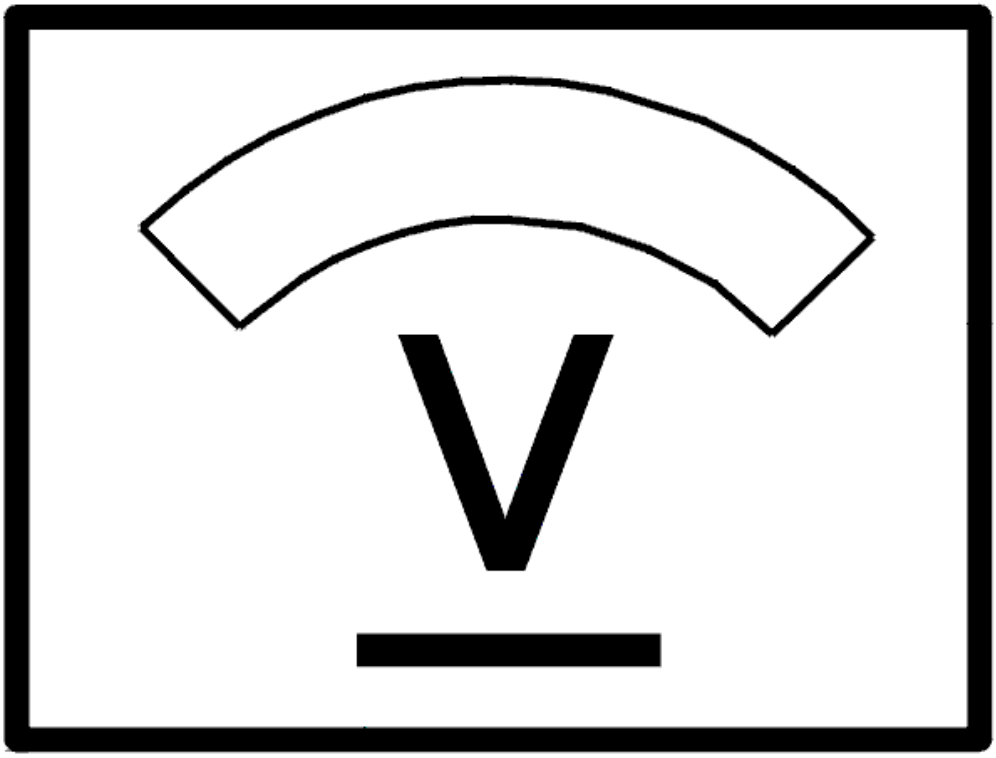

Fig. 28: Identifying Voltage Display
Courtesy of VOLVO CARS CORPORATION

Is there a fault?

- **YES**

  Refer to **VERIFICATION**

- **NO**

  Refer to **REPLACING THE COMPONENT**

REPLACING THE COMPONENT

Replace relay.

- For -2004, see: **CENTRAL ELECTRONIC MODULE (CEM), REPLACING** .
- For 2005-, see: **CENTRAL ELECTRONIC MODULE (CEM), REPLACING** .

- **Continue**

  Refer to **VERIFICATION**

VERIFICATION

VERIFICATION

HINT: After the repair it is necessary to check that the fault has been rectified.

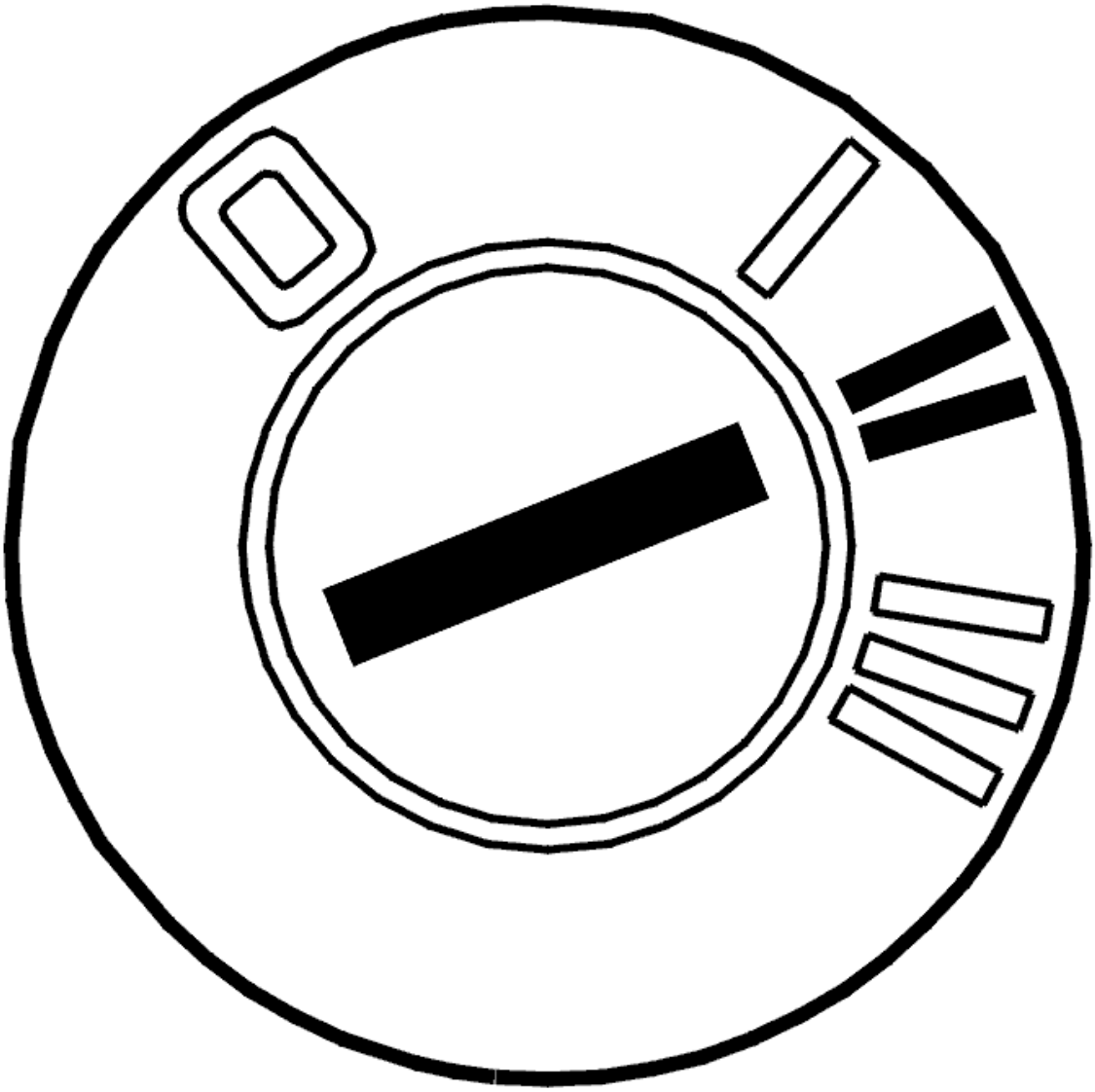

Fig. 29: Identifying Ignition ON
Courtesy of VOLVO CARS CORPORATION

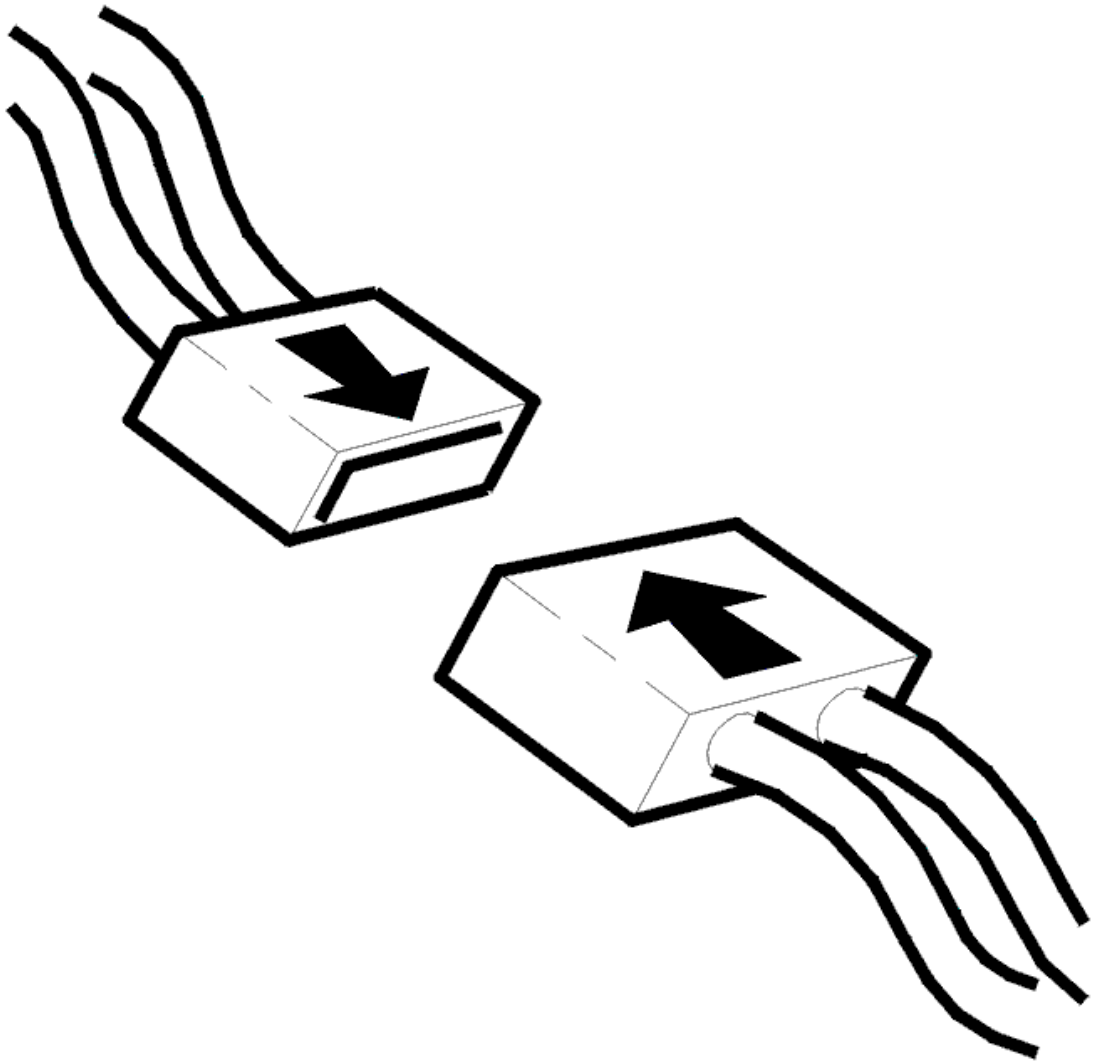

Fig. 30: Connecting Connector
Courtesy of VOLVO CARS CORPORATION

- Ignition off.
- Connect the connectors, install the components, etc.
- Ignition on.

  Read the extra lamp relay.

  Activate the extra lamp.

  Additional information:

  - With extra lamp on, the value should be "on" and when dipped headlamp is switched off, the value should be "off".

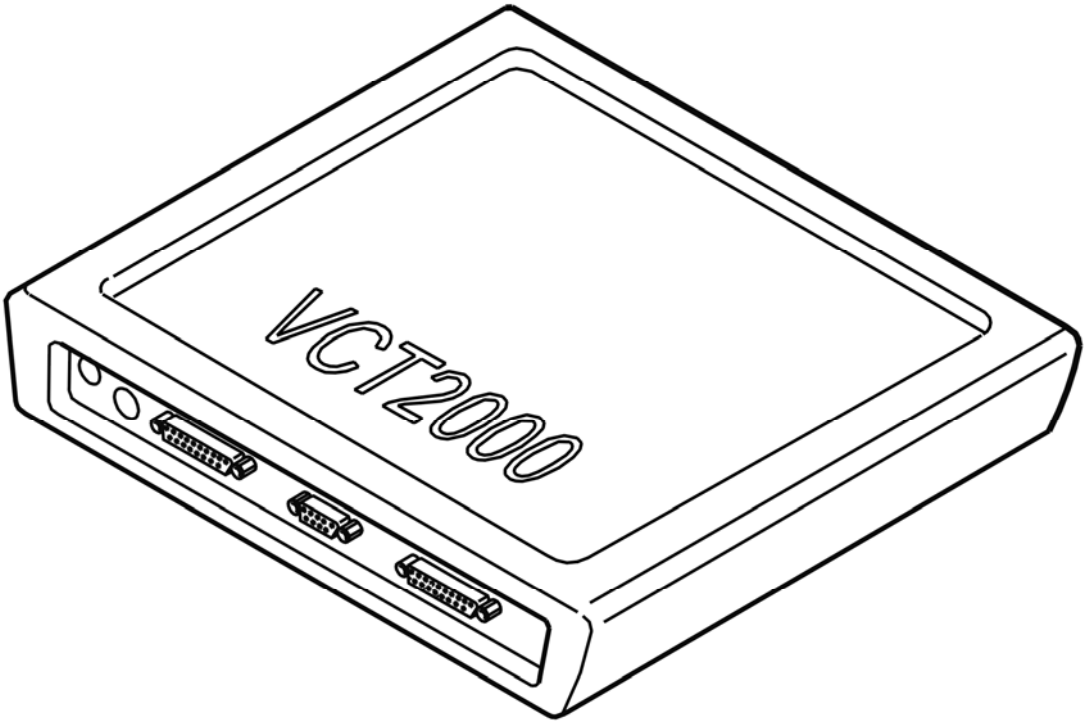

Fig. 31: Identifying VCT2000 Diagnostic Tool Symbol In VIDA
Courtesy of VOLVO CARS CORPORATION

Does it work?

- **YES**

  VERIFIED: Troubleshooting has been completed.

- **NO**

  Refer to **INFORMATION**

INFORMATION

FAULT-TRACING INFORMATION

The fault should have been detected and remedied. As this is not the case fault-tracing has failed.

Exit fault-tracing for this diagnostic trouble code (DTC) or make another attempt.

CEM-8A0A: EXTRA LAMP RELAY. SIGNAL MISSING. INTERMITTENT FAULT (2003-2004)

DIAGNOSTIC TROUBLE CODE INFORMATION

Condition

Extra lamp relay should not have to be activated to display the diagnostic trouble code. If the central electronic module (CEM) shows that an extra lamp is fitted and there is an open circuit in the extra lamp circuit, diagnostic trouble code CEM-8A0A is displayed.

Possible Source

- Open circuit in extra lamp relay circuit.

Fault symptom[s]

- Front lights are not working.

SIGNAL TOO HIGH/SIGNAL MISSING. INTERMITTENT FAULT

see **SIGNAL TOO HIGH/SIGNAL MISSING. INTERMITTENT FAULT**

CEM-8A0A: EXTRA LAMP RELAY. SIGNAL MISSING. PERMANENT FAULT (2003-2004)

DIAGNOSTIC TROUBLE CODE INFORMATION

see **DIAGNOSTIC TROUBLE CODE INFORMATION**

SIGNAL MISSING. PERMANENT FAULT

CHECKING THE WIRE AND THE RELAY

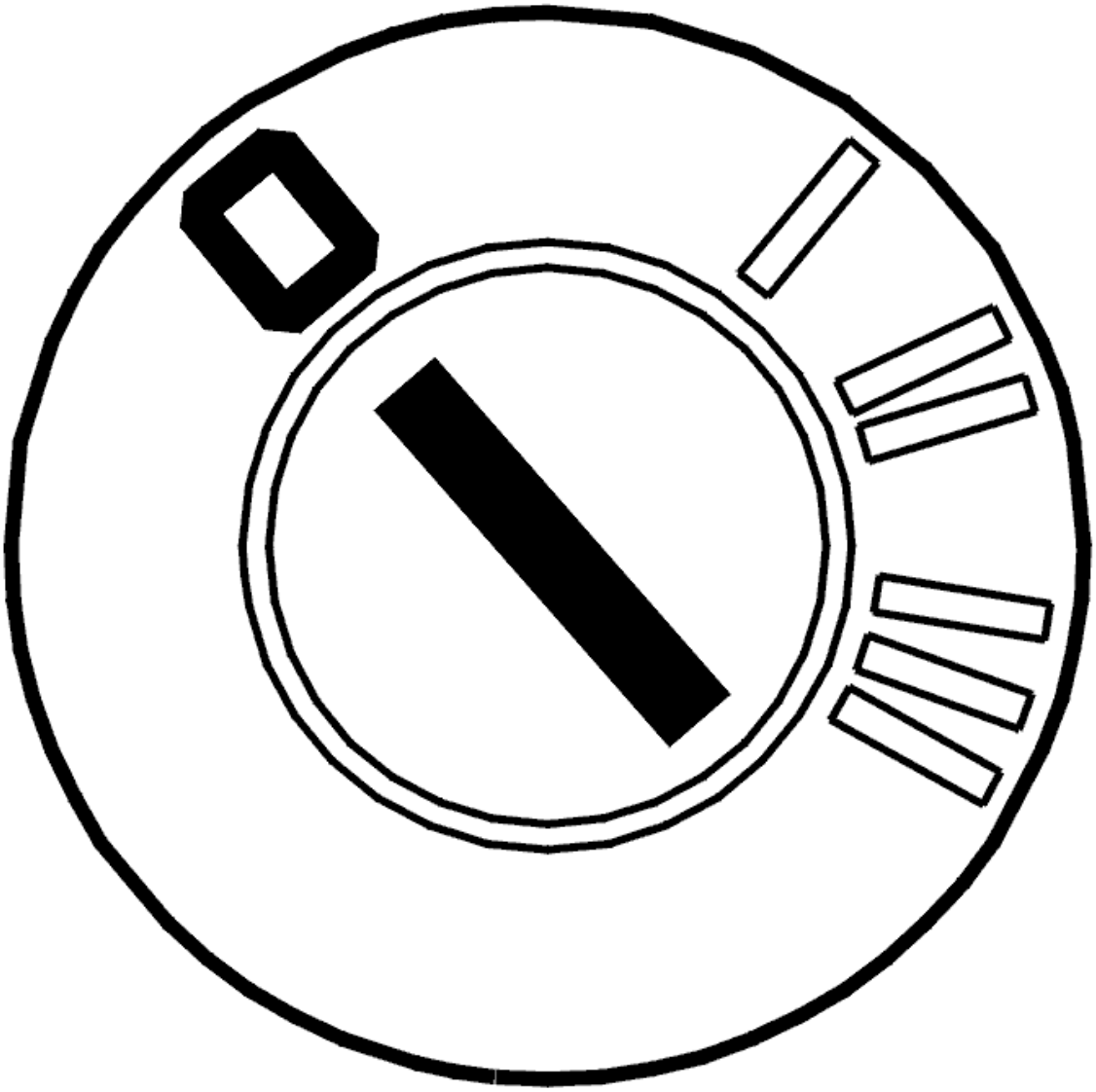

Fig. 32: Identifying Ignition OFF
Courtesy of VOLVO CARS CORPORATION

- Ignition off.

  Check the wire between central electronic module (CEM) 6C and relay 2/64 1 and connector 8 and 2 for a short circuit to voltage supply as described in, see **OPEN-CIRCUIT, PERMANENT FAULTS** .

  Check that relay 2/64 is installed correctly.

  Do the necessary corrective action.

  Additional information:

  - For information on the central electronic module (CEM) connector:
    - For -2004, see: **CENTRAL ELECTRONIC MODULE (CEM), REPLACING**

- For 2005-, see: **CENTRAL ELECTRONIC MODULE (CEM), REPLACING** .
- To connect the test box, see **CONNECTING THE BREAKOUT BOX** .
- -2004: **SIGNAL SPECIFICATION**
- 2005-: **SIGNAL SPECIFICATION**

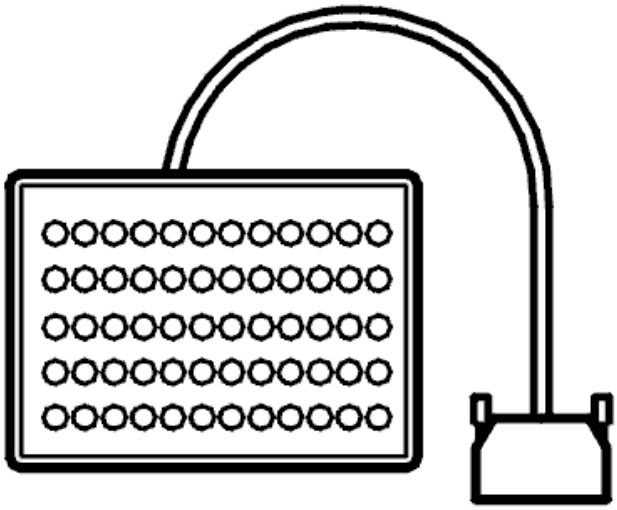

Fig. 33: Breakout Box
Courtesy of VOLVO CARS CORPORATION

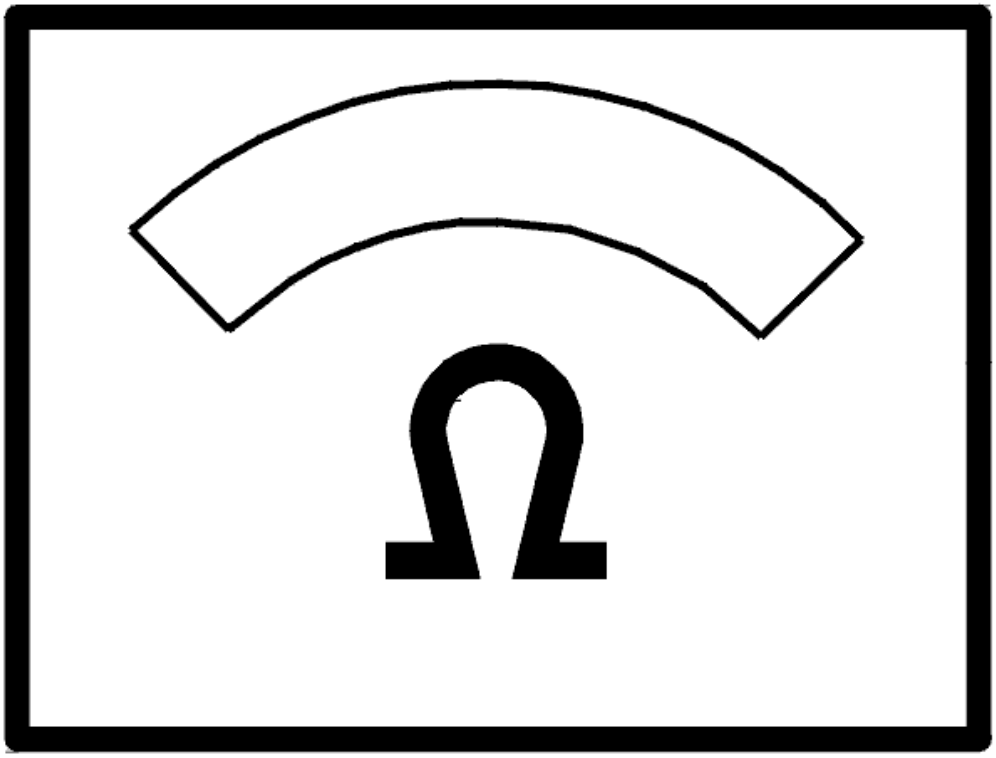

Fig. 34: Identifying Ohm Meter
Courtesy of VOLVO CARS CORPORATION

Is there a fault?

- **YES**

  Refer to **VERIFICATION**

- **NO**

  Refer to **REPLACING THE COMPONENT**

REPLACING THE COMPONENT

Replace relay.

- For -2004, see: **CENTRAL ELECTRONIC MODULE (CEM), REPLACING** .
- For 2005-, see: **CENTRAL ELECTRONIC MODULE (CEM), REPLACING** .

- **Continue**

  Refer to **VERIFICATION**

VERIFICATION

VERIFICATION

HINT: After the repair it is necessary to check that the fault has been rectified.

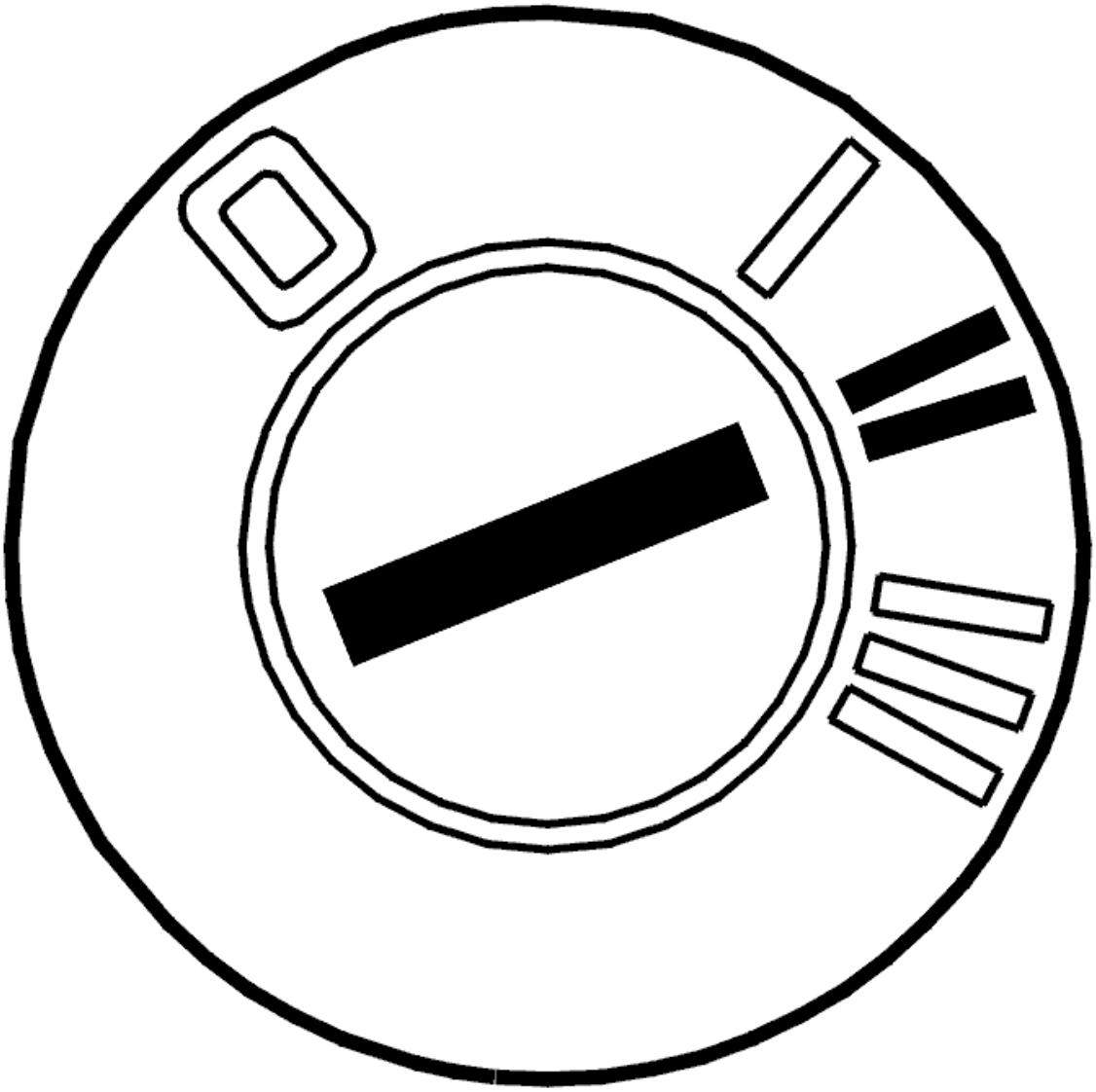

Fig. 35: Identifying Ignition ON
Courtesy of VOLVO CARS CORPORATION

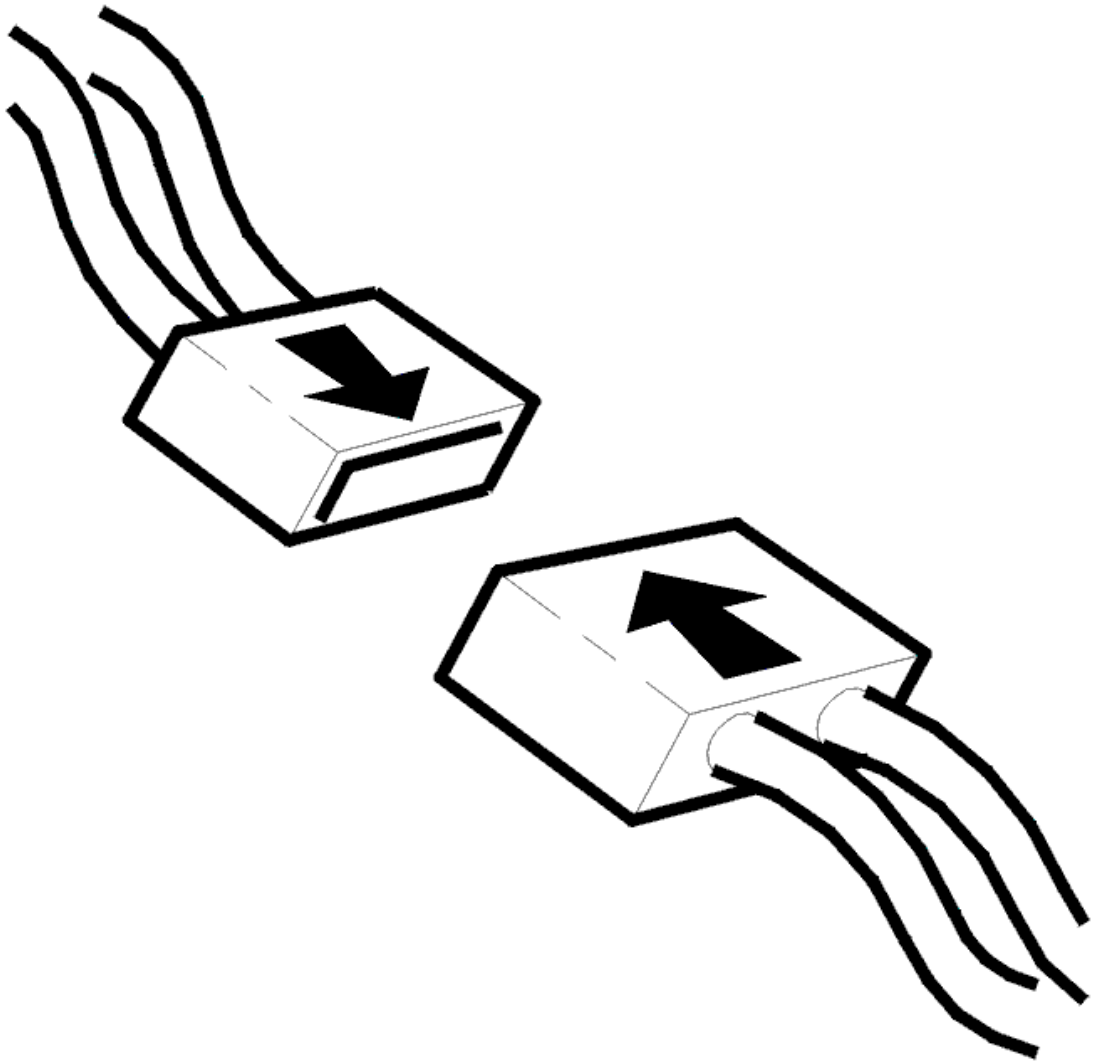

Fig. 36: Connecting Connector
Courtesy of VOLVO CARS CORPORATION

- Ignition off.
- Connect the connectors, install the components, etc.
- Ignition on.

  Read the extra lamp relay.

  Activate the extra lamp.

  Additional information:

  - With extra lamp on, the value should be "on" and when dipped headlamp is switched off, the value should be "off".

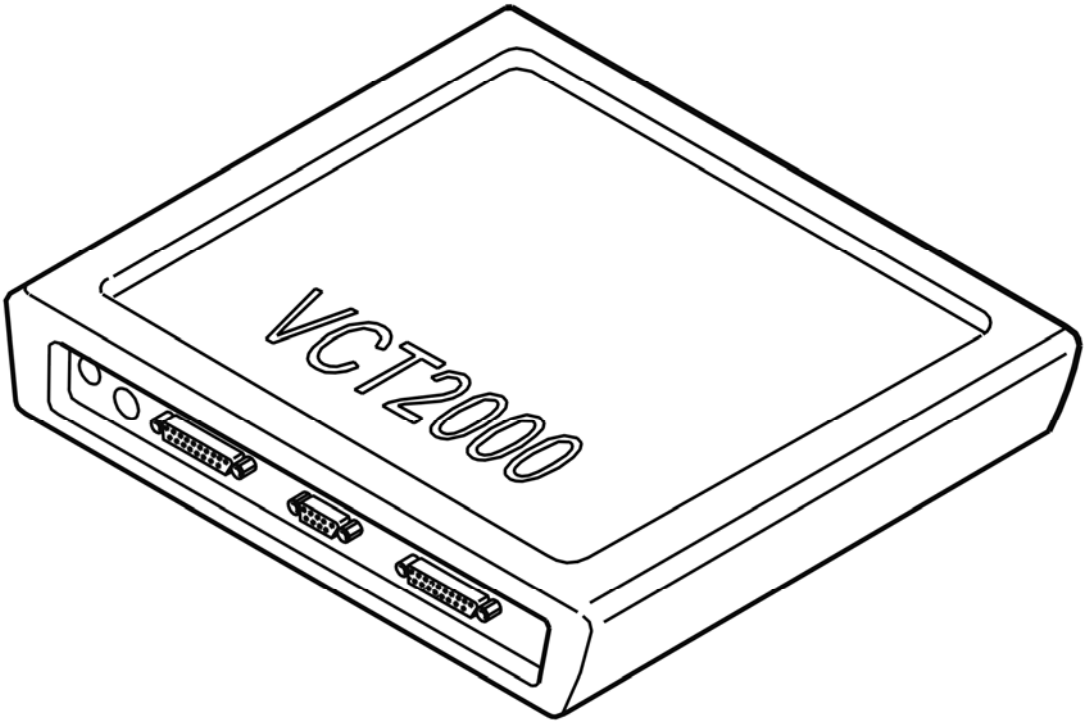

Fig. 37: Identifying VCT2000 Diagnostic Tool Symbol In VIDA
Courtesy of VOLVO CARS CORPORATION

Does it work?

- **YES**

  VERIFIED: Troubleshooting has been completed.

- **NO**

  Refer to **INFORMATION**

INFORMATION

FAULT-TRACING INFORMATION

The fault should have been detected and remedied. As this is not the case fault-tracing has failed.

Exit fault-tracing for this diagnostic trouble code (DTC) or make another attempt.

CEM-8A0B: RELAY, DAYTIME RUNNING LAMP. SIGNAL TOO HIGH (2003-2004)

DIAGNOSTIC TROUBLE CODE (DTC) INFORMATION

Condition

The diagnostic trouble code (DTC) is stored if the control module registers a high signal from the status flag when activating the relay guide for the "day time running lamp" relay.

Diagnostic trouble code (DTC) CEM-8A0B can be detected at ignition on.

Substitute Value

- None.

Possible Source

- The relay guide for the "daytime running lamp" relay is short-circuited to battery voltage.

Fault symptom[s]

- The front lighting does not function.

SIGNAL TOO HIGH

CHECKING THE RELAY

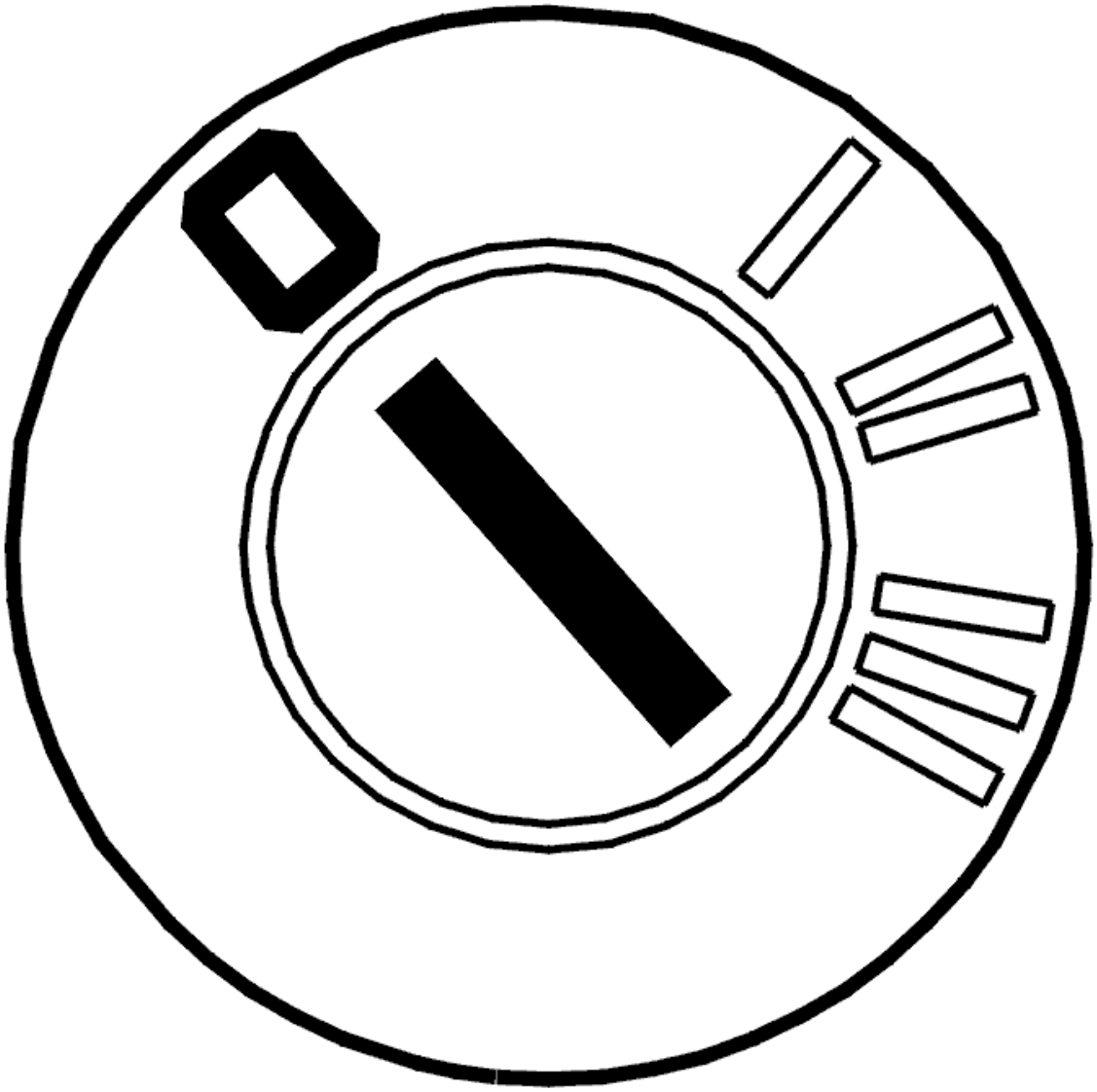

Fig. 38: Identifying Ignition OFF
Courtesy of VOLVO CARS CORPORATION

- Ignition off.

  Check that the "daytime lamp" relay is correctly installed. Also check the relay terminal, in particular terminal #2. Check for a short-circuit to supply voltage.

  Remedy as necessary.

  Try a new relay if no faults are found.

  Other information:

  - To connect the breakout box, see **CONNECTING THE BREAKOUT BOX**
  - To replace relay:

- For -2004, see: **CENTRAL ELECTRONIC MODULE (CEM), REPLACING**
- For 2005-, see: **CENTRAL ELECTRONIC MODULE (CEM), REPLACING** .

- see **CHECKING WIRING AND TERMINALS**

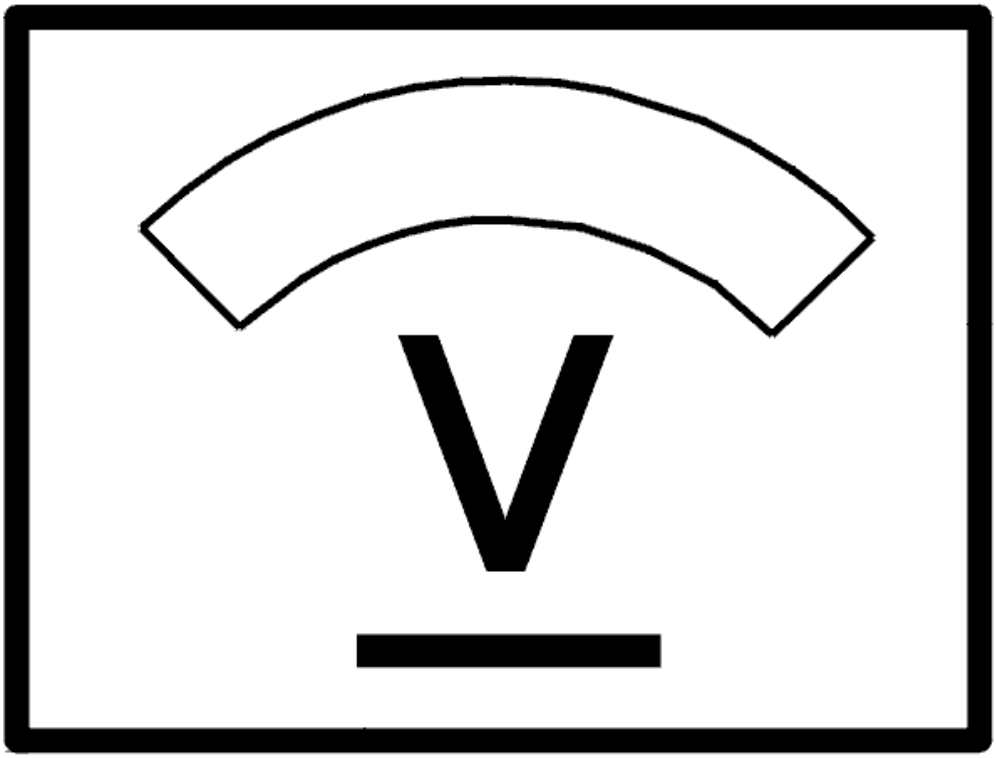

Fig. 39: Identifying Voltage Display
Courtesy of VOLVO CARS CORPORATION

- **Continue**

  Refer to **VERIFICATION**

VERIFICATION

VERIFICATION

HINT: After carrying out the repair, check that the fault has been remedied.

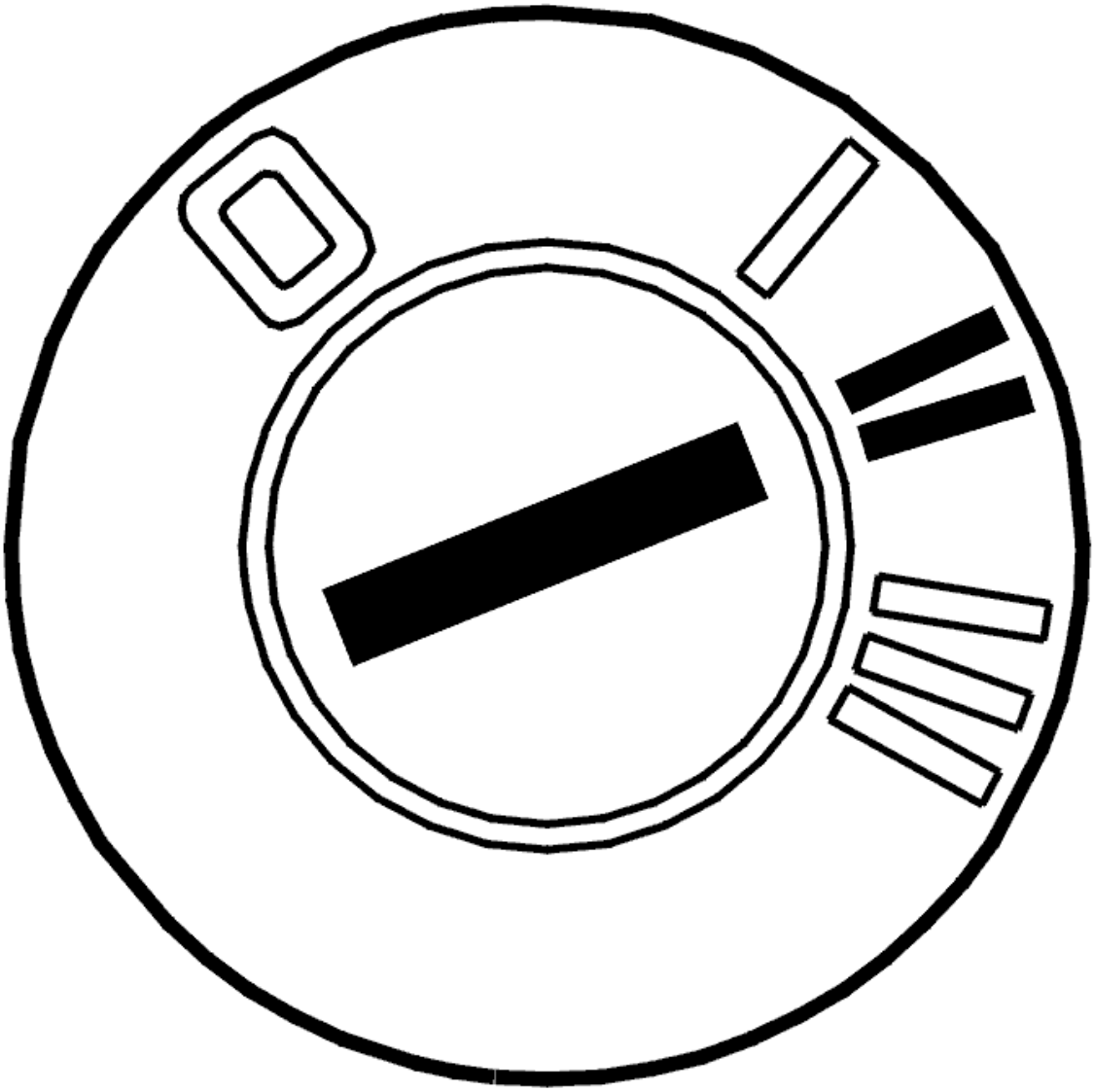

Fig. 40: Identifying Ignition ON
Courtesy of VOLVO CARS CORPORATION

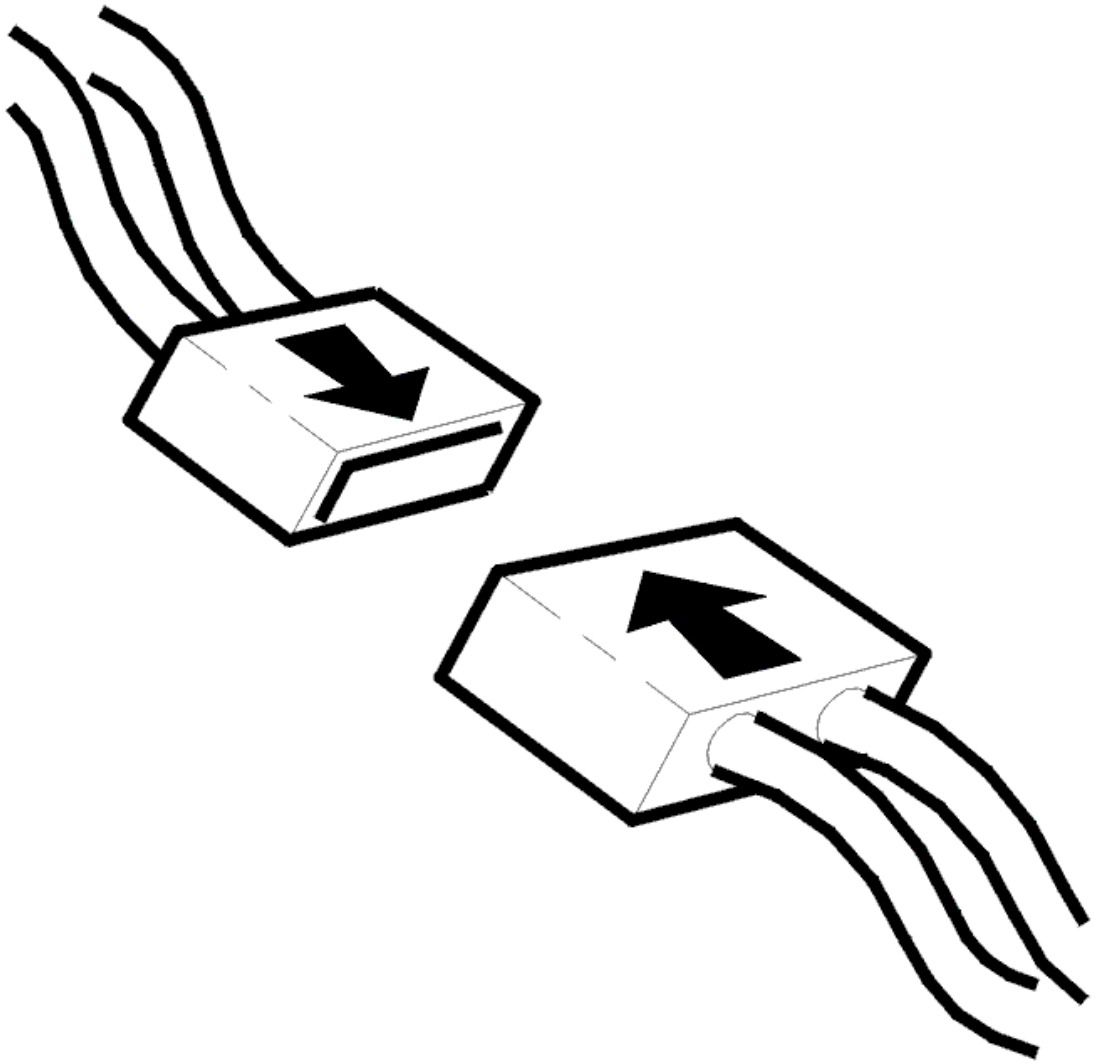

Fig. 41: Connecting Connector
Courtesy of VOLVO CARS CORPORATION

- Ignition off
- Reinstall the connectors, components etc.
- Ignition on.

  Activate and deactivate the relay.

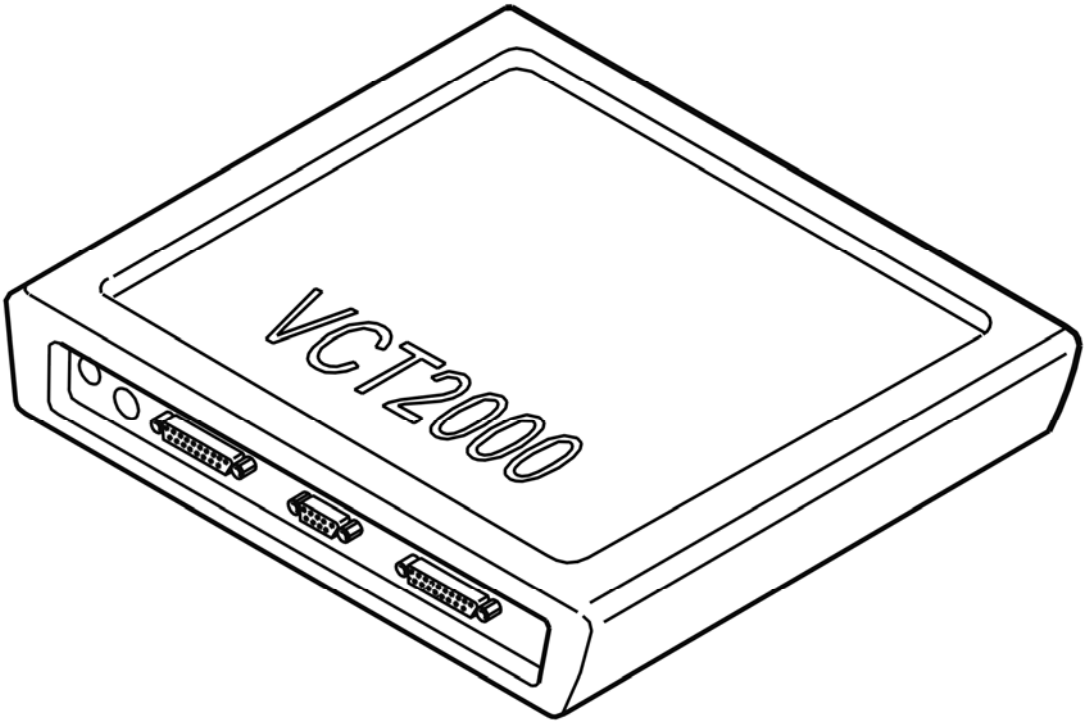

Fig. 42: Identifying VCT2000 Diagnostic Tool Symbol In VIDA
Courtesy of VOLVO CARS CORPORATION

Is there a click in the relay at activation and deactivation?

- **YES**

  VERIFIED: Troubleshooting has been completed.

- **NO**

  Refer to **INFORMATION**

INFORMATION

FAULT-TRACING INFORMATION

The fault should have been detected and remedied. As this is not the case fault-tracing has failed.

Exit fault-tracing for this diagnostic trouble code (DTC) or make another attempt.

CEM-8A0C: RELAY, DAY RUNNING LAMP. SIGNAL MISSING (2003-2004)

DIAGNOSTIC TROUBLE CODE (DTC) INFORMATION

Condition

The diagnostic trouble code (DTC) is stored if the control module registers an open-circuit from the status flag when the relay guide for the "daytime running lamp" relay is not activated.

Diagnostic trouble code (DTC) CEM-8A0C can be detected at ignition on.

Substitute Value

- None.

Possible Source

- Open-circuit in the relay guide for the "daytime running lamp" relay
- "Daytime running lamp" relay not installed.

Fault symptom[s]

- The low beam is constantly lit.

SIGNAL MISSING

CHECKING THE RELAY

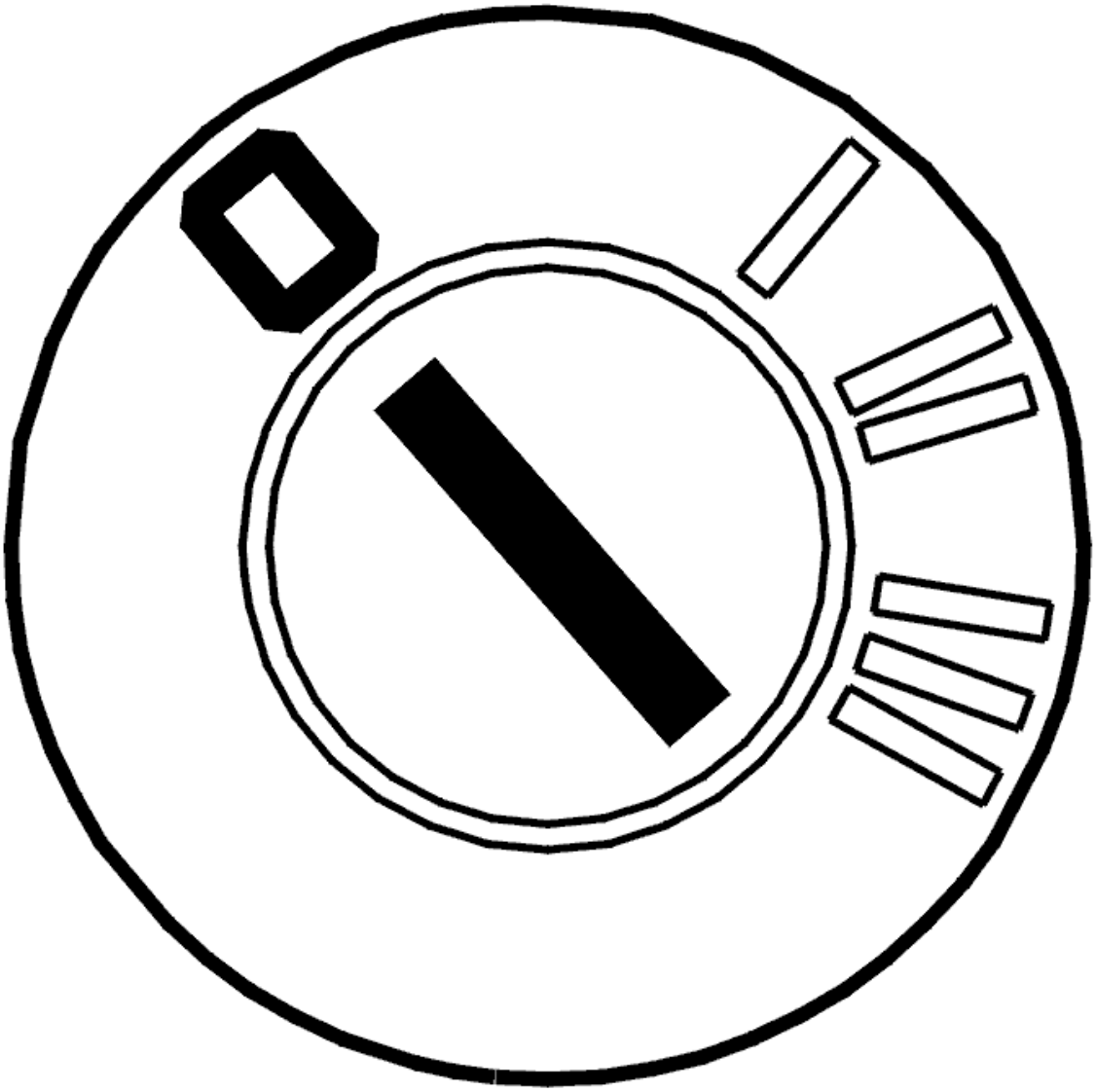

Fig. 43: Identifying Ignition OFF
Courtesy of VOLVO CARS CORPORATION

- Ignition off.

  Check that the "daytime lamp" relay is correctly installed. Also check the relay terminal, in particular terminal #2. Check for an open-circuit. Check for a short-circuit to ground.

  Remedy as necessary.

  Try a new relay if no faults are found.

  Other information:

  - To connect the breakout box, see **CONNECTING THE BREAKOUT BOX**
  - To replace relay:

- For -2004, see: **CENTRAL ELECTRONIC MODULE (CEM), REPLACING**
- For 2005-, see: **CENTRAL ELECTRONIC MODULE (CEM), REPLACING** .

- see **CHECKING WIRING AND TERMINALS** .

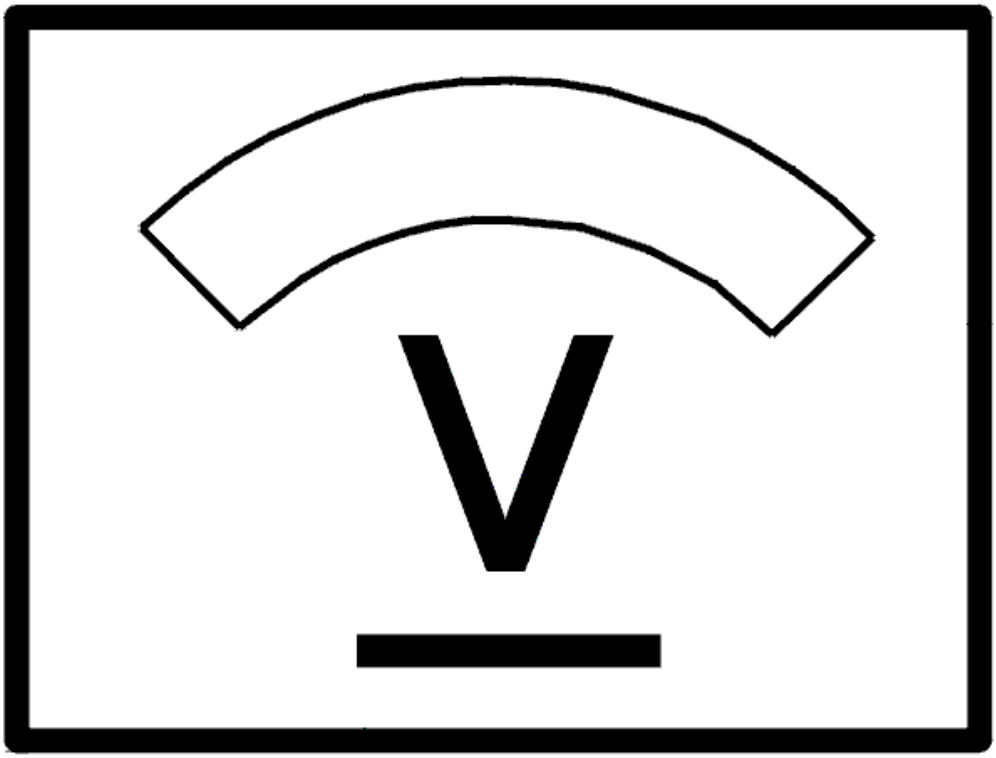

Fig. 44: Identifying Voltage Display
Courtesy of VOLVO CARS CORPORATION

- **Continue**

  Refer to **VERIFICATION**

VERIFICATION

VERIFICATION

HINT: After carrying out the repair, check that the fault has been remedied.

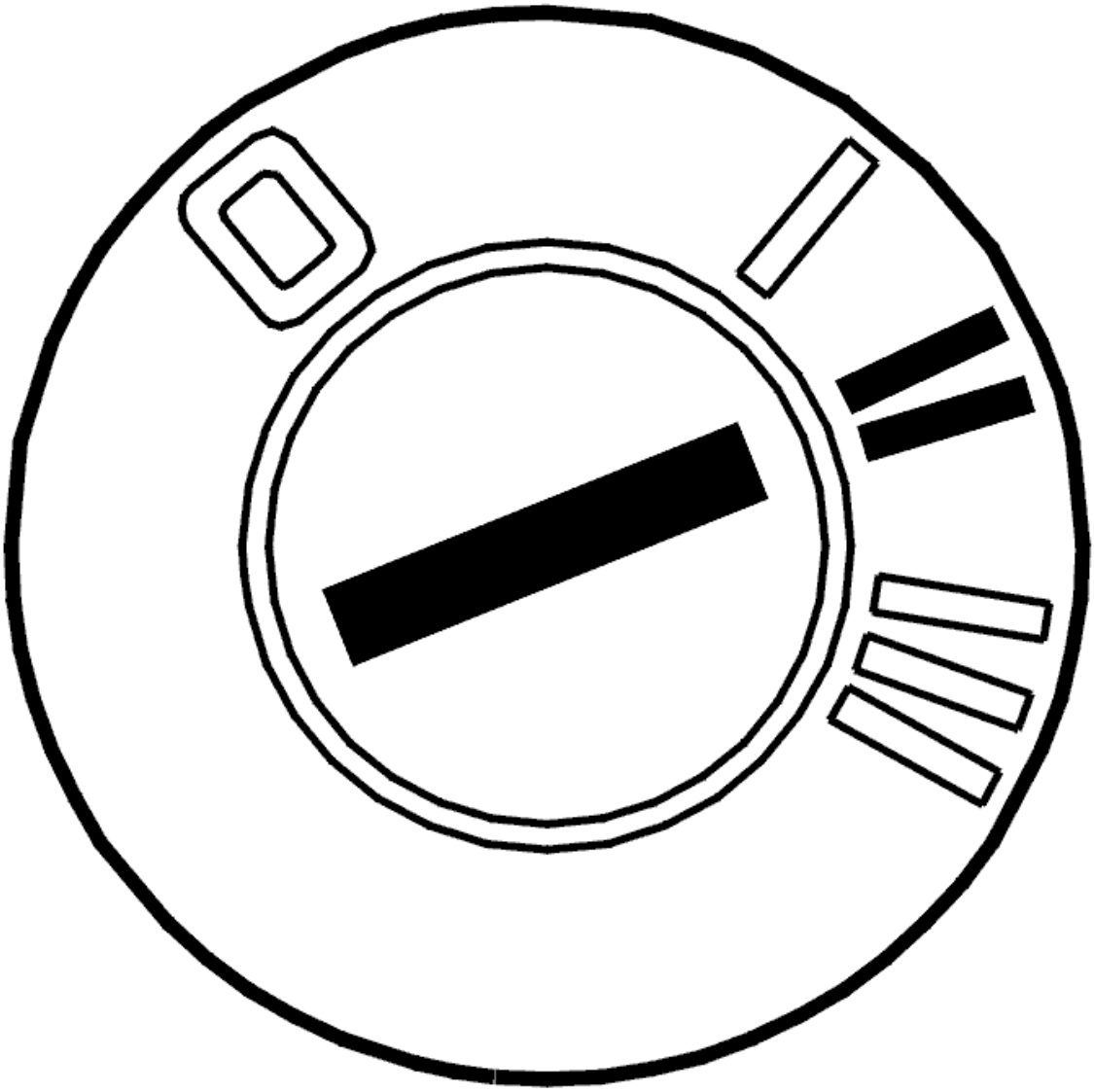

Fig. 45: Identifying Ignition ON
Courtesy of VOLVO CARS CORPORATION

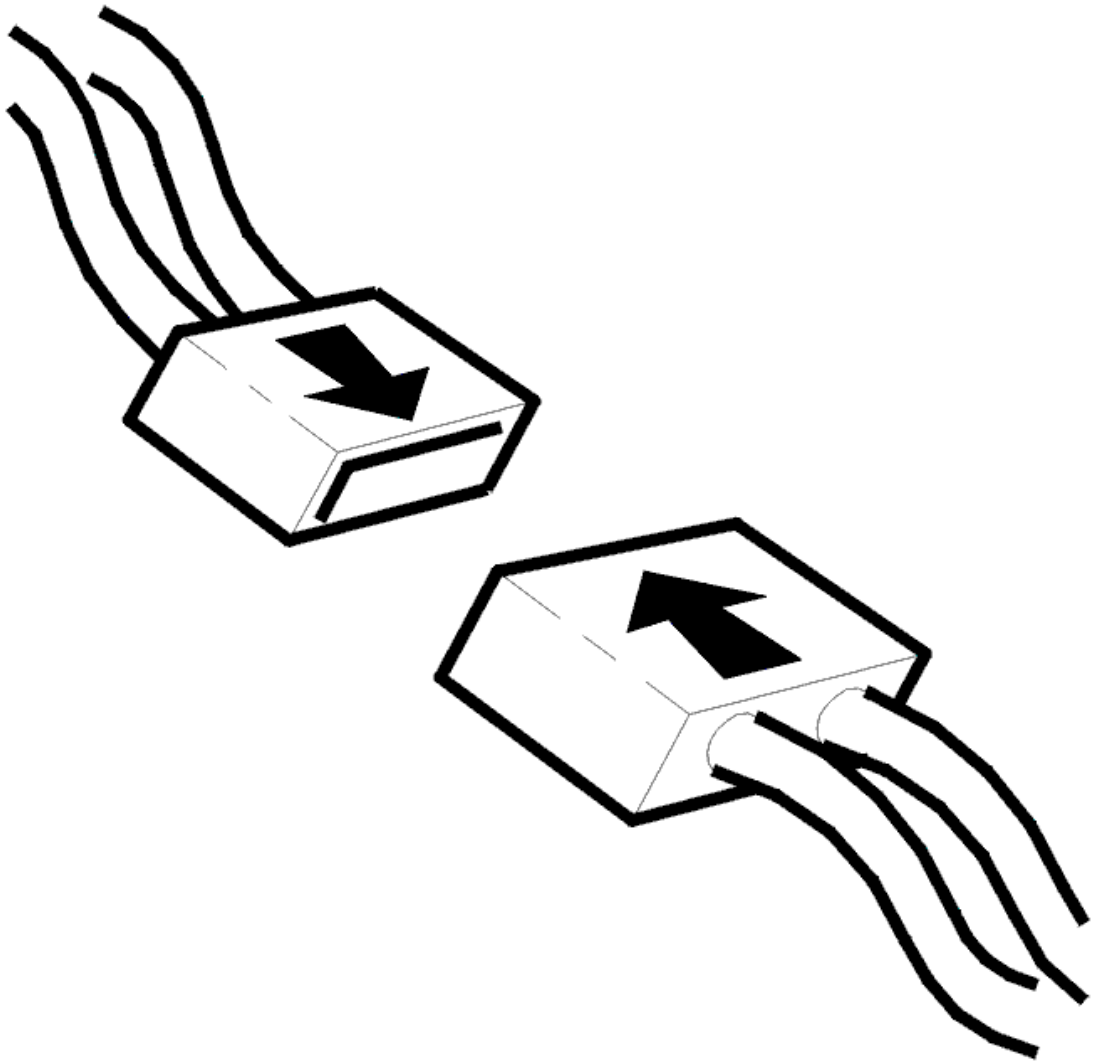

Fig. 46: Connecting Connector
Courtesy of VOLVO CARS CORPORATION

- Ignition off
- Reinstall the connectors, components etc.
- Ignition on.

Activate and deactivate the relay.

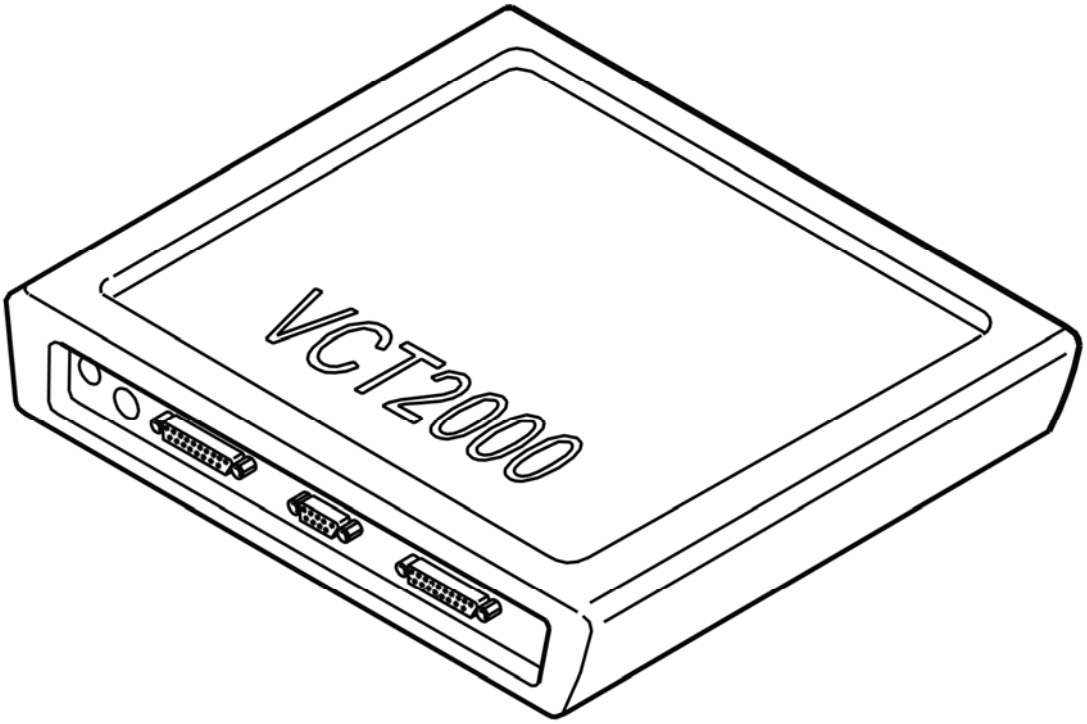

Fig. 47: Identifying VCT2000 Diagnostic Tool Symbol In VIDA
Courtesy of VOLVO CARS CORPORATION

Is there a click in the relay at activation and deactivation?

- **YES**

  VERIFIED: Troubleshooting has been completed.

- **NO**

  Refer to **INFORMATION**

INFORMATION

FAULT-TRACING INFORMATION

The fault should have been detected and remedied. As this is not the case fault-tracing has failed.

Exit fault-tracing for this diagnostic trouble code (DTC) or make another attempt.

CEM-8A20: LOW BEAM LEFT. SIGNAL TOO LOW (2005-2012)

DIAGNOSTIC TROUBLE CODE (DTC) INFORMATION CEM-8A20

Condition

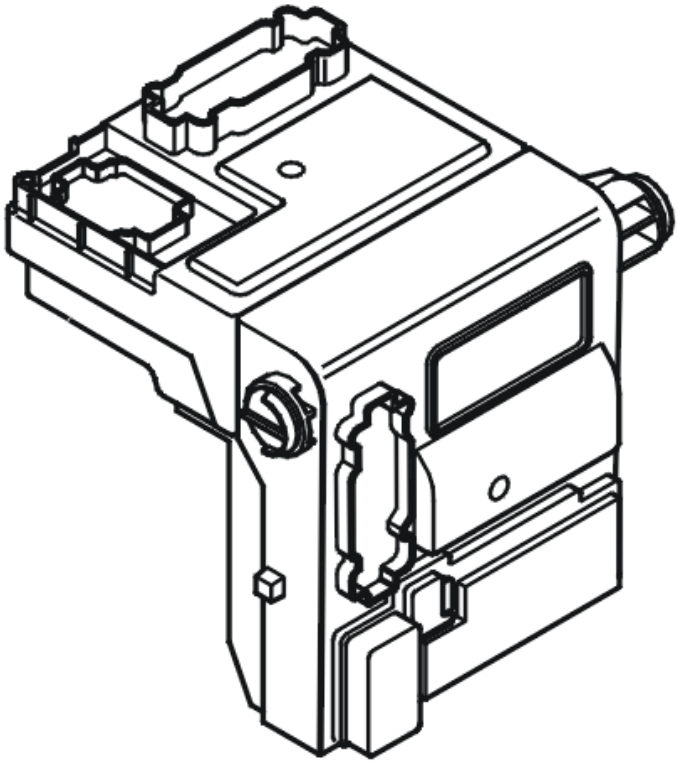

Fig. 48: Identifying Central Electronic Module (CEM)
Courtesy of VOLVO CARS CORPORATION

The central electronic module (CEM) powers the left-hand low beam directly via an output. The diagnostic trouble code (DTC) is stored if the central electronic module (CEM) registers that the power consumption for the output is too high.

The diagnostic trouble code (DTC) can be diagnosed when the ignition has been on for more than 40 seconds.

Substitute Value

- If the fault has been detected in 200 ignition cycles, the output is closed permanently until the diagnostic trouble code is erased.

Possible Source

- Short-circuit to ground in the low beam signal cable.

Fault symptom[s]

- Low beam does not work.

SIGNAL TOO LOW

CHECKING THE WIRING

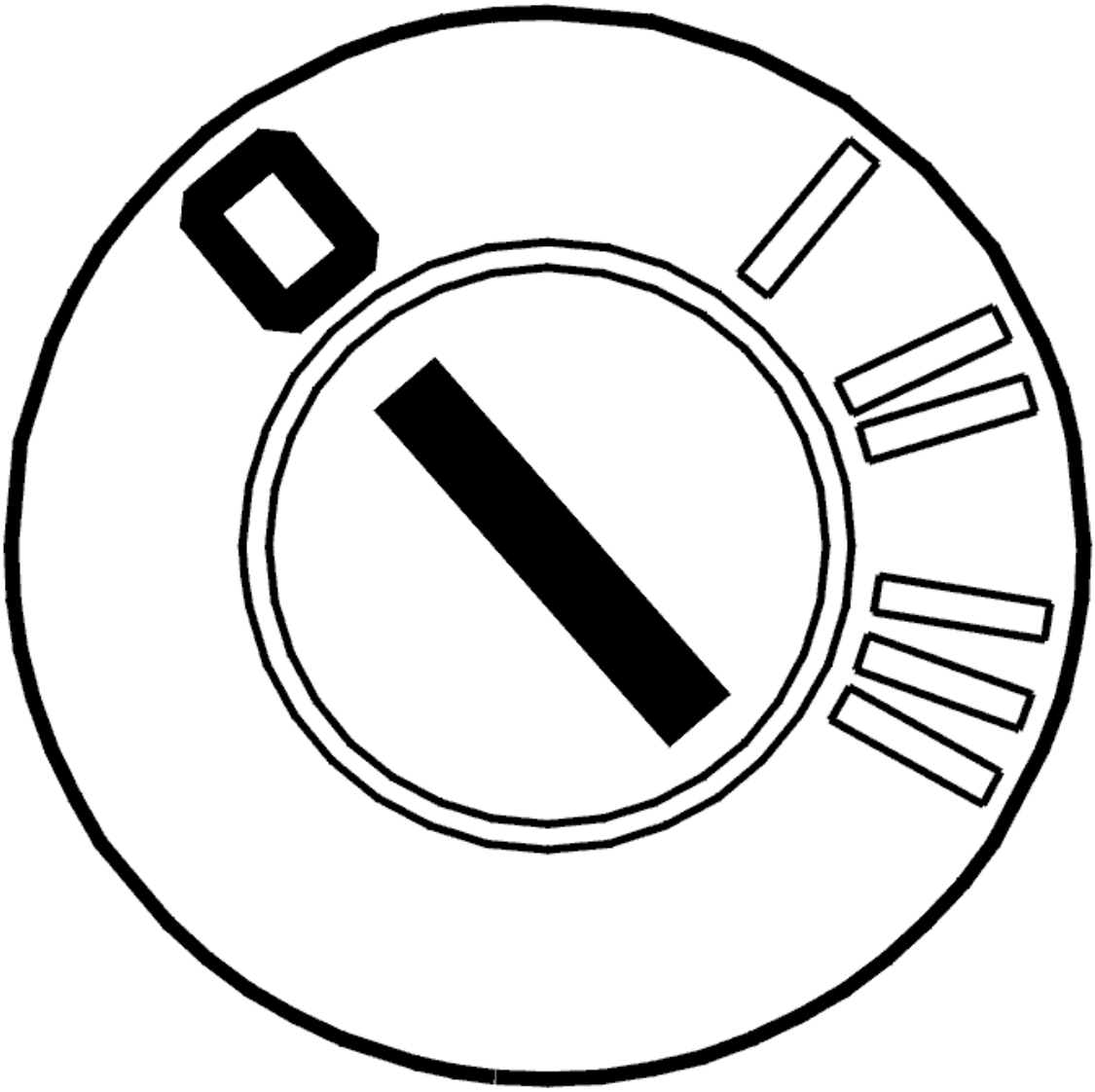

Fig. 49: Identifying Ignition OFF
Courtesy of VOLVO CARS CORPORATION

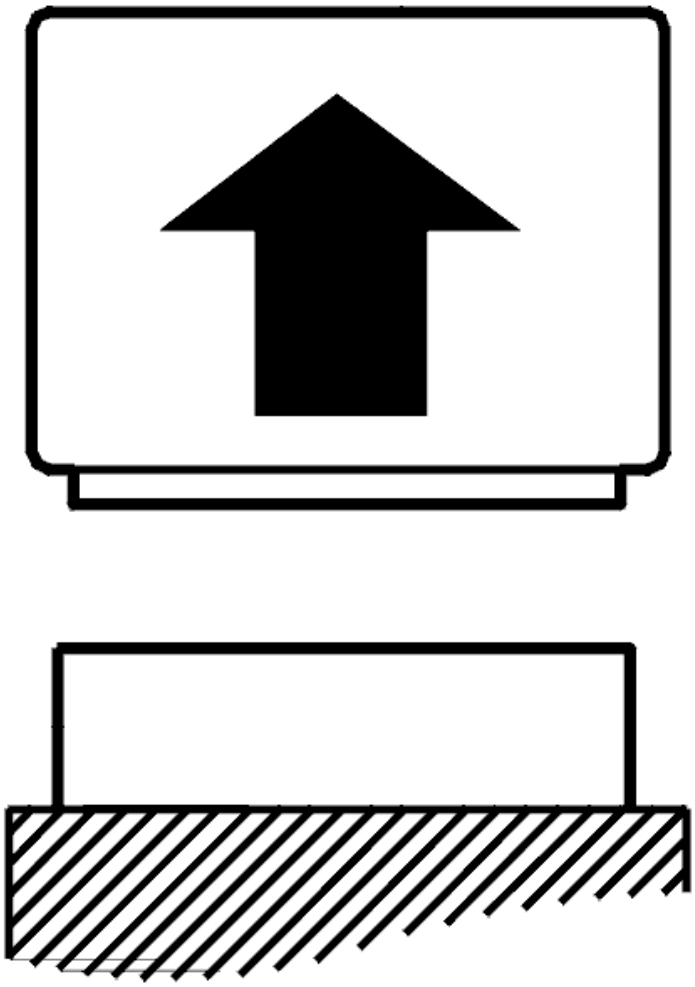

Fig. 50: Disconnecting Connector
Courtesy of VOLVO CARS CORPORATION

- Ignition off
- Disconnect central electronic module (CEM) connector B.

  Check the power cable for a short-circuit to ground.

  Take readings between:

  - Central electronic module (CEM) terminal #B7 (#B7) and left-hand lamp housing connector terminal #A2.

  Other information

  - see **CONNECTING THE BREAKOUT BOX**

- -2004: **SIGNAL SPECIFICATION**
- 2005-: **SIGNAL SPECIFICATION**
- see **LOCATION OF COMPONENTS**
- see **CHECKING WIRING AND TERMINALS**

- **Continue**

  Refer to **VERIFICATION**

VERIFICATION

VERIFICATION

HINT: After carrying out the repair, check that the fault has been remedied.

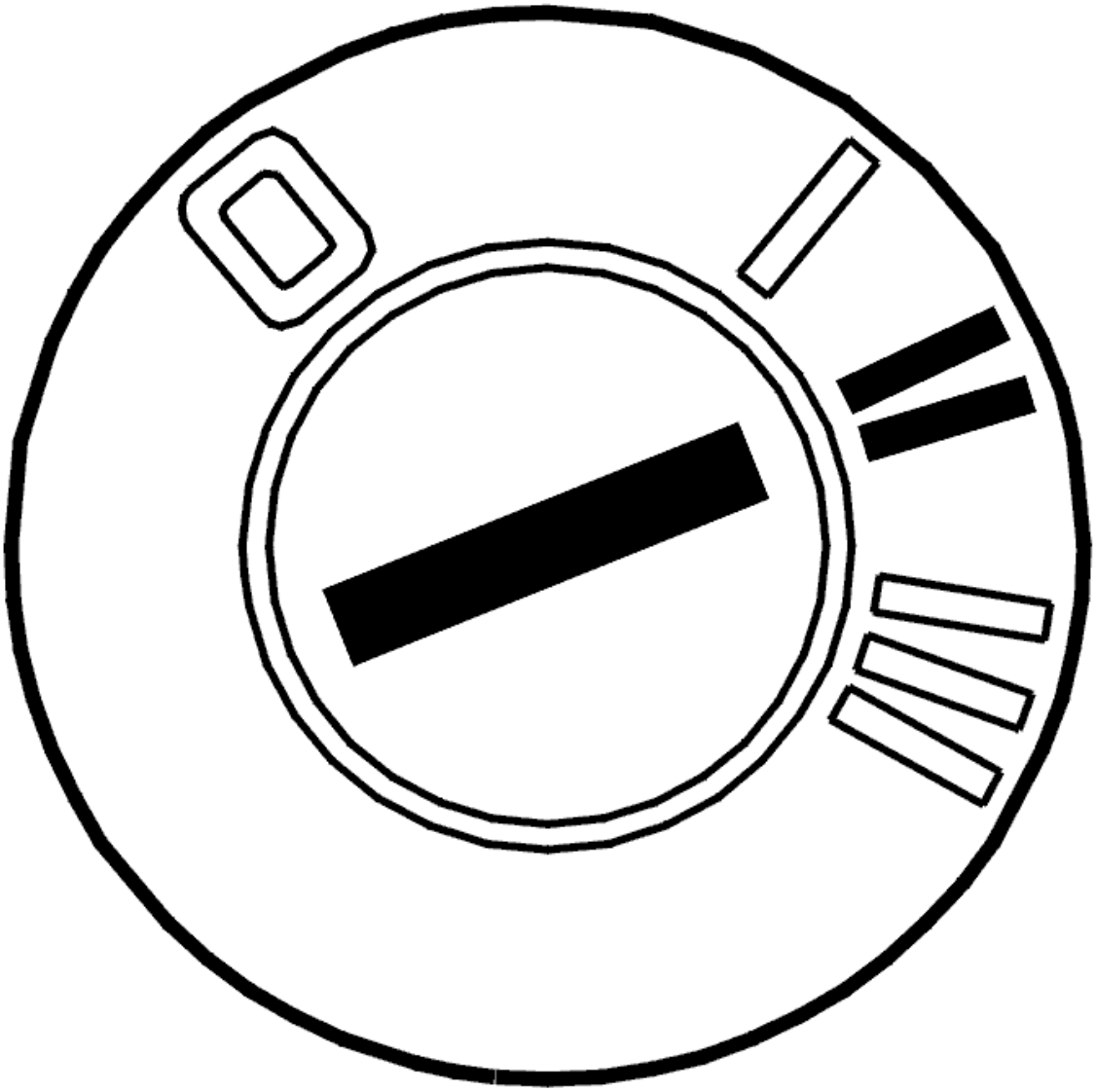

Fig. 51: Identifying Ignition ON
Courtesy of VOLVO CARS CORPORATION

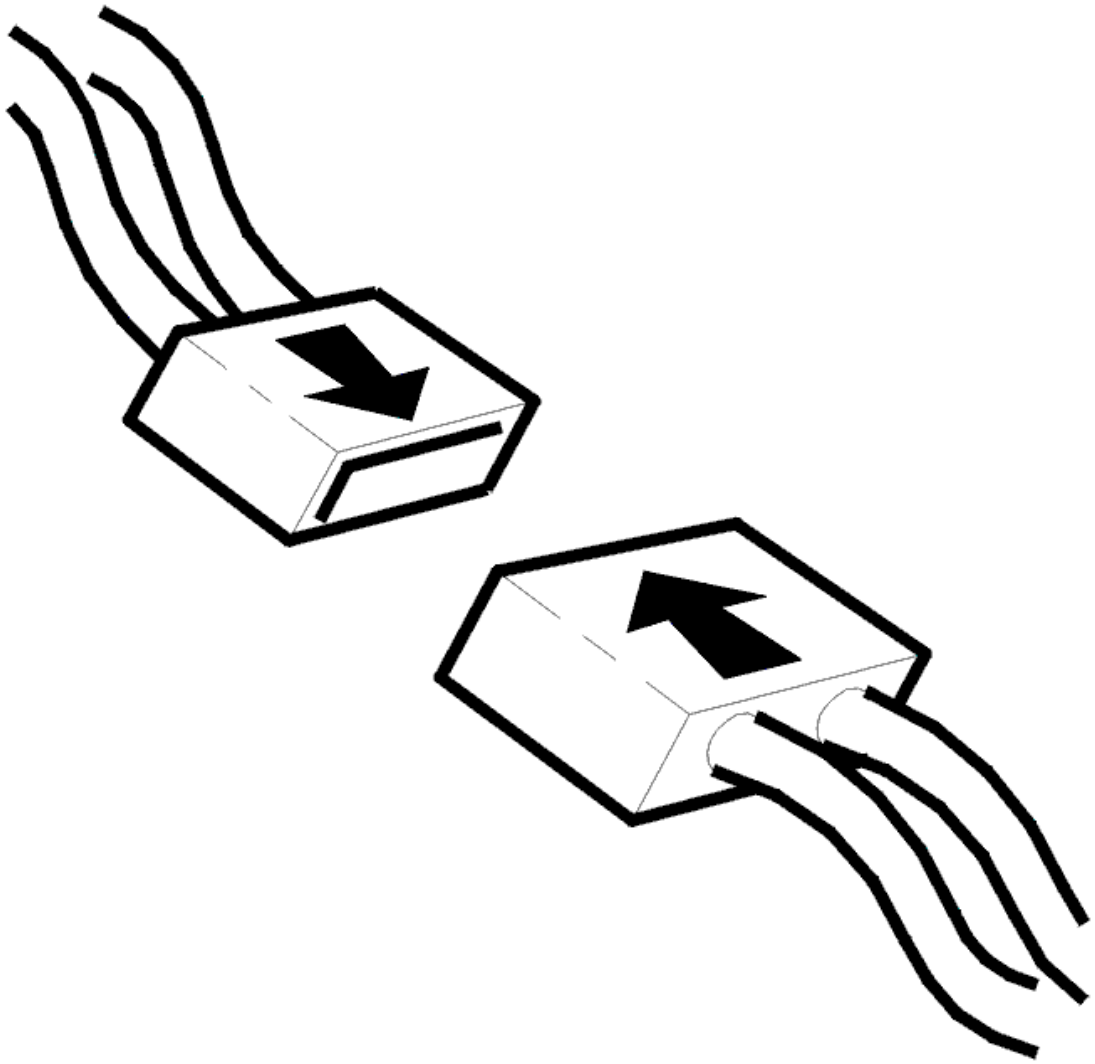

Fig. 52: Connecting Connector
Courtesy of VOLVO CARS CORPORATION

- Ignition off
- Reinstall the connectors, components etc.
- Ignition on.

  Set the light switch to low beam.

  Check that low beam is activated.

Is low beam activated?

- **YES**

  VERIFIED: Troubleshooting has been completed.

- **NO**

  Refer to **INFORMATION**

INFORMATION

FAULT-TRACING INFORMATION

The fault should have been detected and remedied. As this is not the case fault-tracing has failed.

Exit fault-tracing for this diagnostic trouble code (DTC) or make another attempt.

CEM-8A21: LOW BEAM RIGHT. SIGNAL TOO LOW (2005-2012)

DIAGNOSTIC TROUBLE CODE (DTC) INFORMATION CEM-8A21

Condition

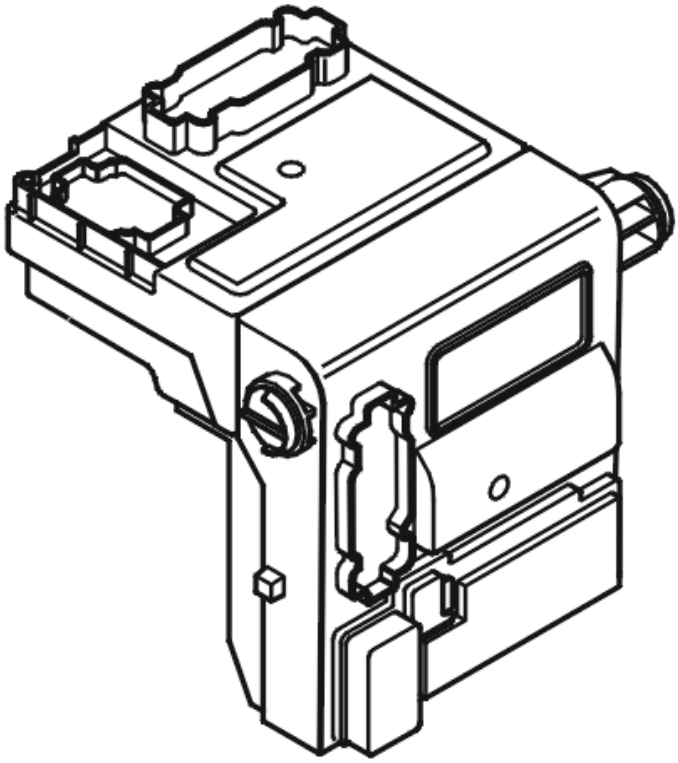

Fig. 53: Identifying Central Electronic Module (CEM)

Courtesy of VOLVO CARS CORPORATION

The central electronic module (CEM) powers the right-hand low beam directly via an output. The diagnostic trouble code (DTC) is stored if the central electronic module (CEM) registers that the power consumption for the output is too high.

The diagnostic trouble code (DTC) can be diagnosed when the ignition has been on for more than 40 seconds.

Substitute Value

- If the fault has been detected in 200 ignition cycles, the output is closed permanently until the diagnostic trouble code is erased.

Possible Source

- Short-circuit to ground in the low beam signal cable.

Fault symptom[s]

- Low beam does not work.

SIGNAL TOO LOW

CHECKING THE WIRING

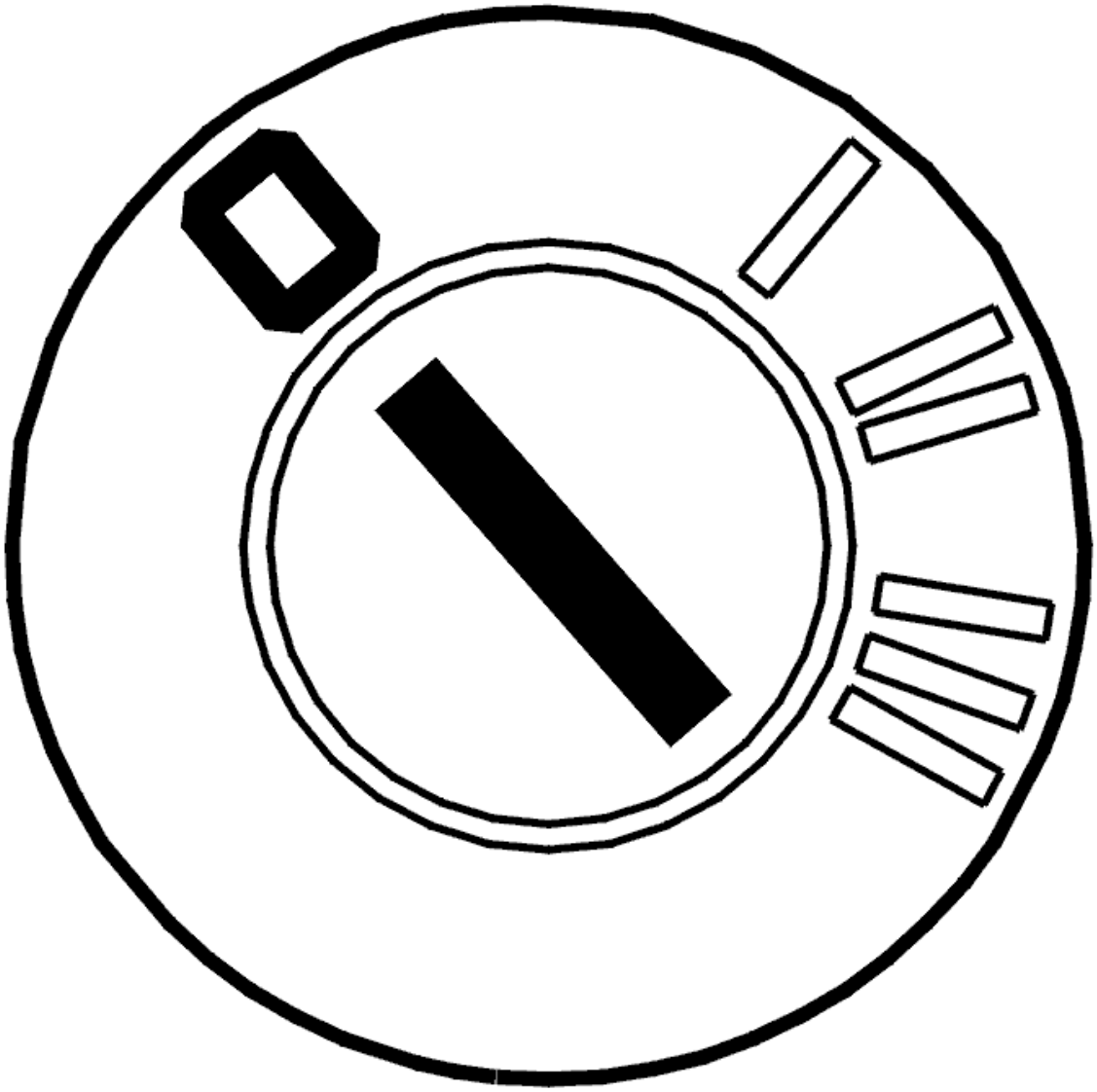

Fig. 54: Identifying Ignition OFF
Courtesy of VOLVO CARS CORPORATION

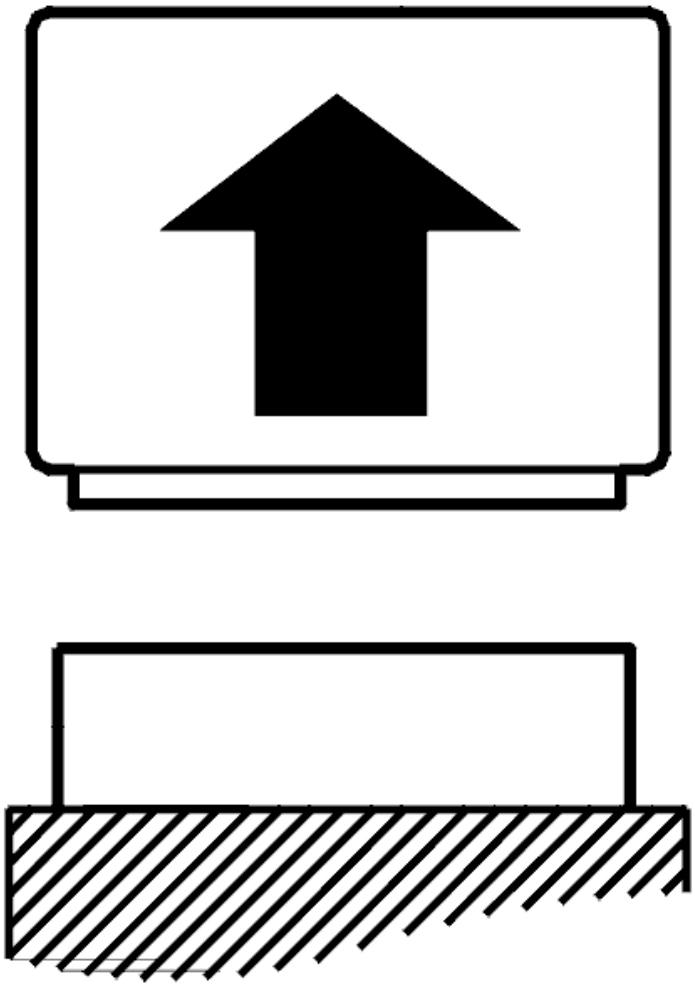

Fig. 55: Disconnecting Connector
Courtesy of VOLVO CARS CORPORATION

- Ignition off
- Disconnect central electronic module (CEM) connector B.

  Check the power cable for a short-circuit to ground.

  Take readings between:

  - Central electronic module (CEM) terminal #B4 (#B4) and right-hand stop lamp connector terminal #A2.

  Other information

  - see **CONNECTING THE BREAKOUT BOX**

- -2004: **SIGNAL SPECIFICATION**
- 2005-: **SIGNAL SPECIFICATION**
- see **LOCATION OF COMPONENTS**
- see **CHECKING WIRING AND TERMINALS**

- **Continue**

  Refer to **VERIFICATION**

VERIFICATION

VERIFICATION

HINT: After carrying out the repair, check that the fault has been remedied.

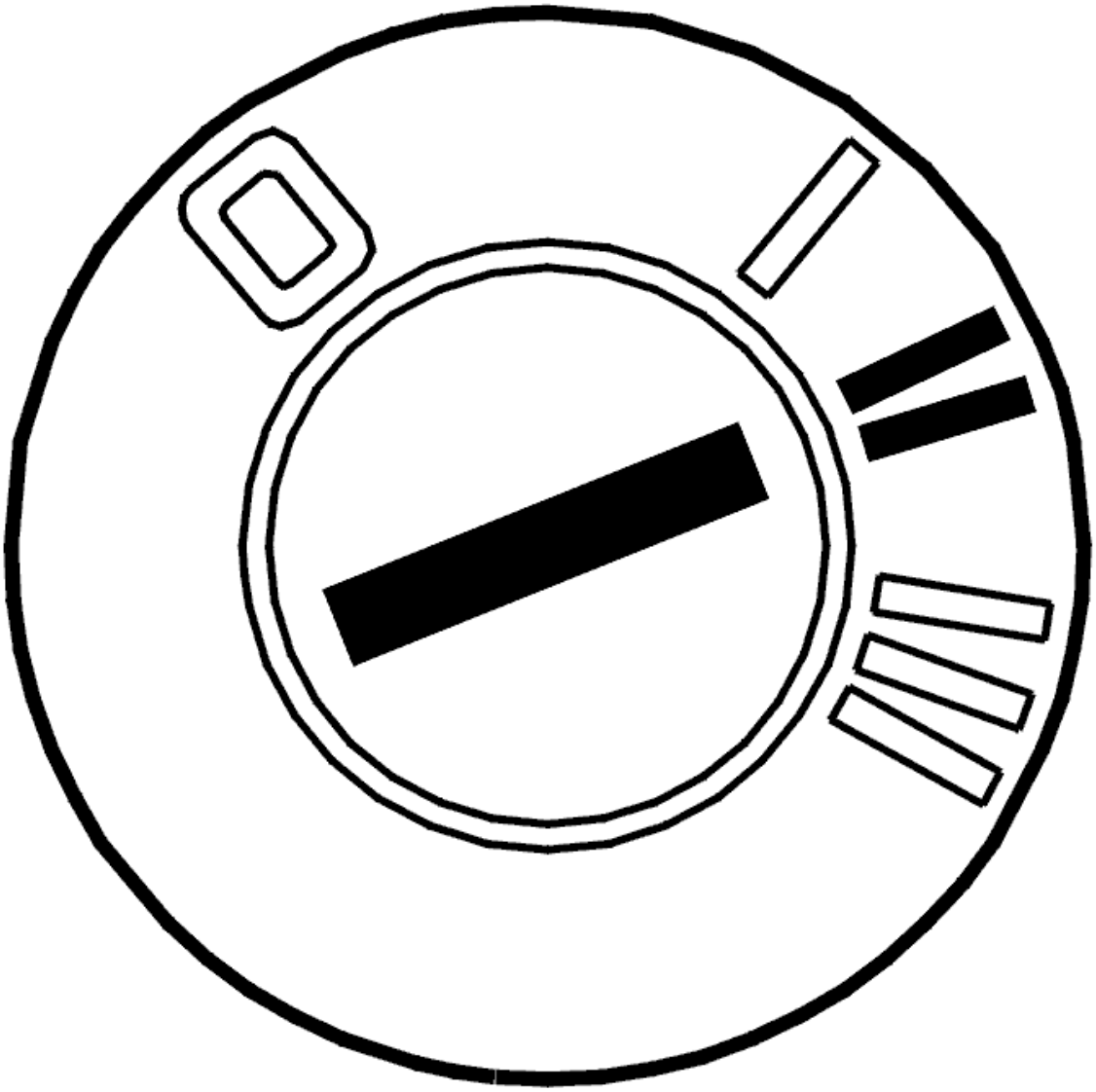

Fig. 56: Identifying Ignition ON
Courtesy of VOLVO CARS CORPORATION

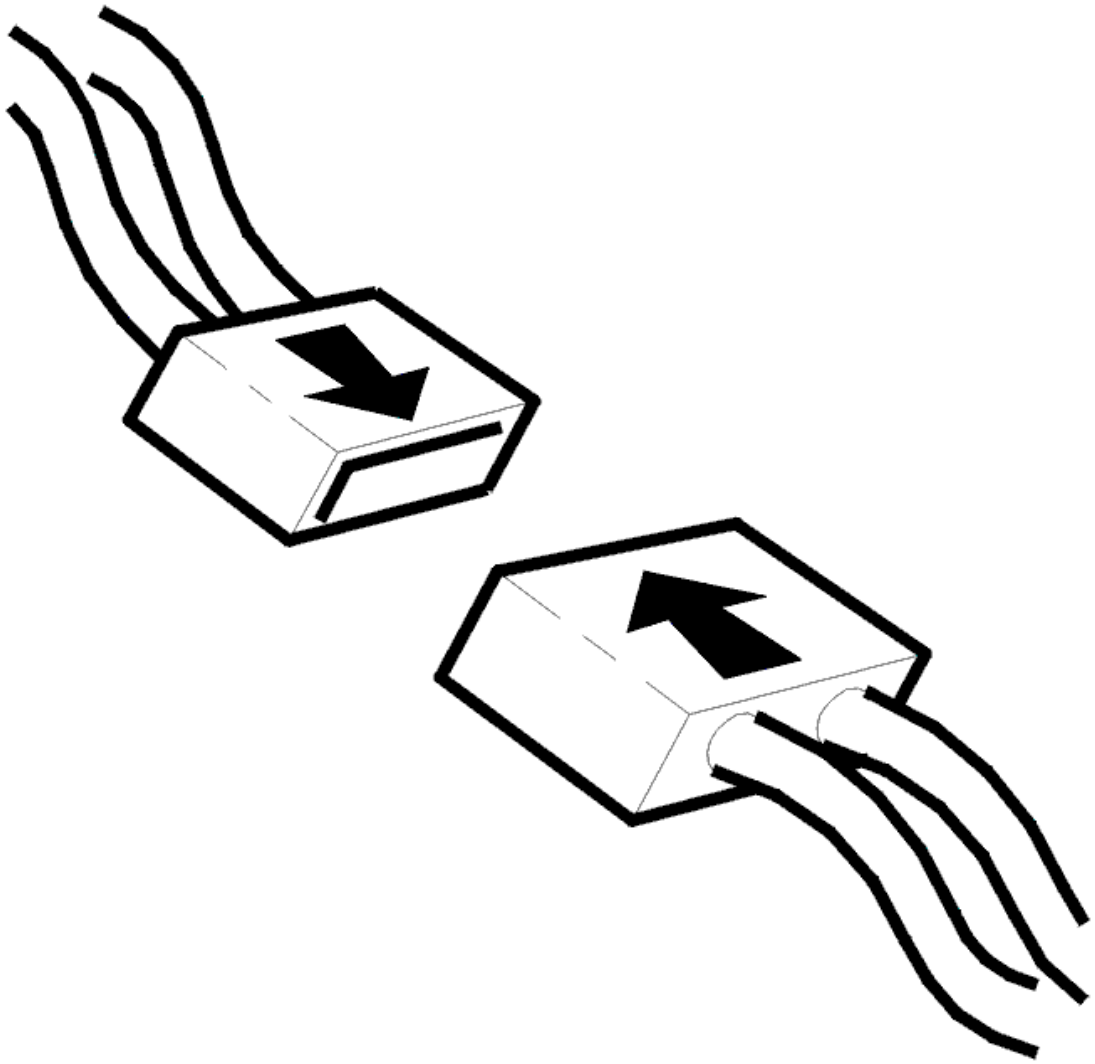

Fig. 57: Connecting Connector
Courtesy of VOLVO CARS CORPORATION

- Ignition off
- Reinstall the connectors, components etc.
- Ignition on.

  Set the light switch to low beam.

  Check that low beam is activated.

Is low beam activated?

- **YES**

  VERIFIED: Troubleshooting has been completed.

- **NO**

  Refer to **INFORMATION**

INFORMATION

FAULT-TRACING INFORMATION

The fault should have been detected and remedied. As this is not the case fault-tracing has failed.

Exit fault-tracing for this diagnostic trouble code (DTC) or make another attempt.

CEM-8A30: DAYTIME RUNNING LAMPS, LEFT. FAULTY SIGNAL (2005-2012)

DIAGNOSTIC TROUBLE CODE (DTC) INFORMATION CEM-8A30

Condition

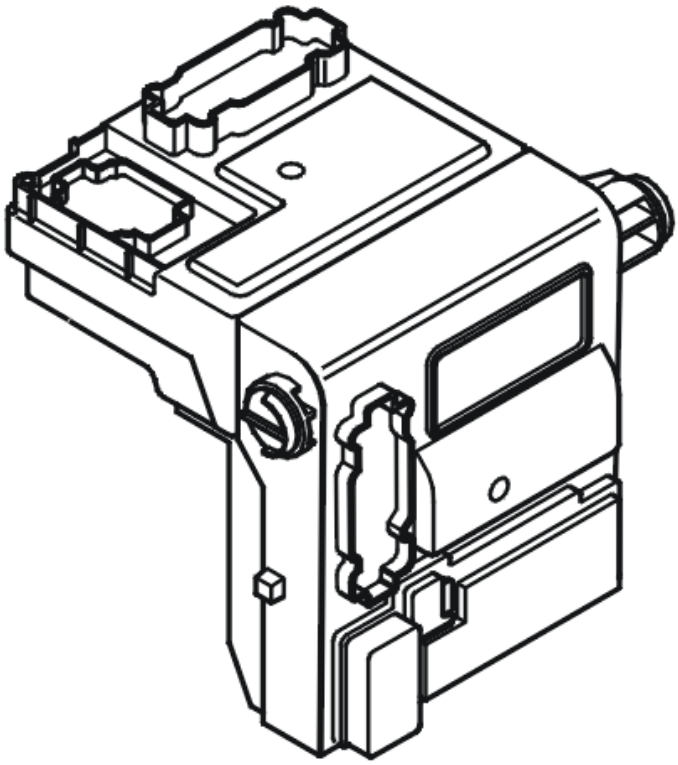

Fig. 58: Identifying Central Electronic Module (CEM)
Courtesy of VOLVO CARS CORPORATION

The central electronic module (CEM) powers the left-hand daytime running lamps directly via an output. The diagnostic trouble code (DTC) is stored if the central electronic module (CEM) registers that the power consumption for the output is too high.

The diagnostic trouble code (DTC) can be diagnosed at ignition switch position II.

Substitute Value

- If the fault has been detected in 100 ignition cycles, the output is closed permanently until the diagnostic trouble code is erased (applies from structure week 200539).

Possible Source

- Short-circuit to ground in the signal cable for the daytime running lamps.

Fault symptom[s]

- The daytime running lamps do not operate.

FAULTY SIGNAL

CHECKING THE WIRING

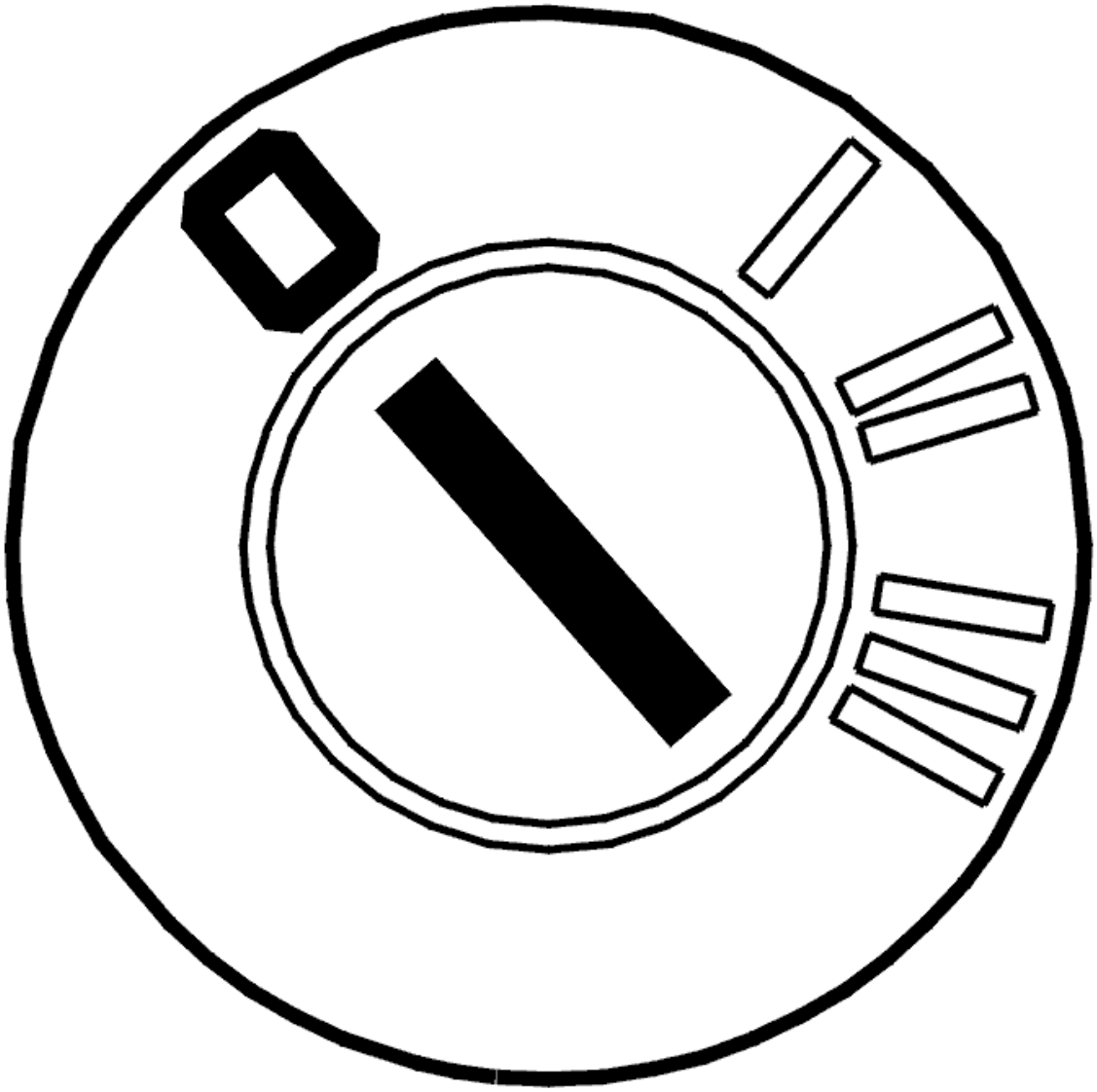

Fig. 59: Identifying Ignition OFF
Courtesy of VOLVO CARS CORPORATION

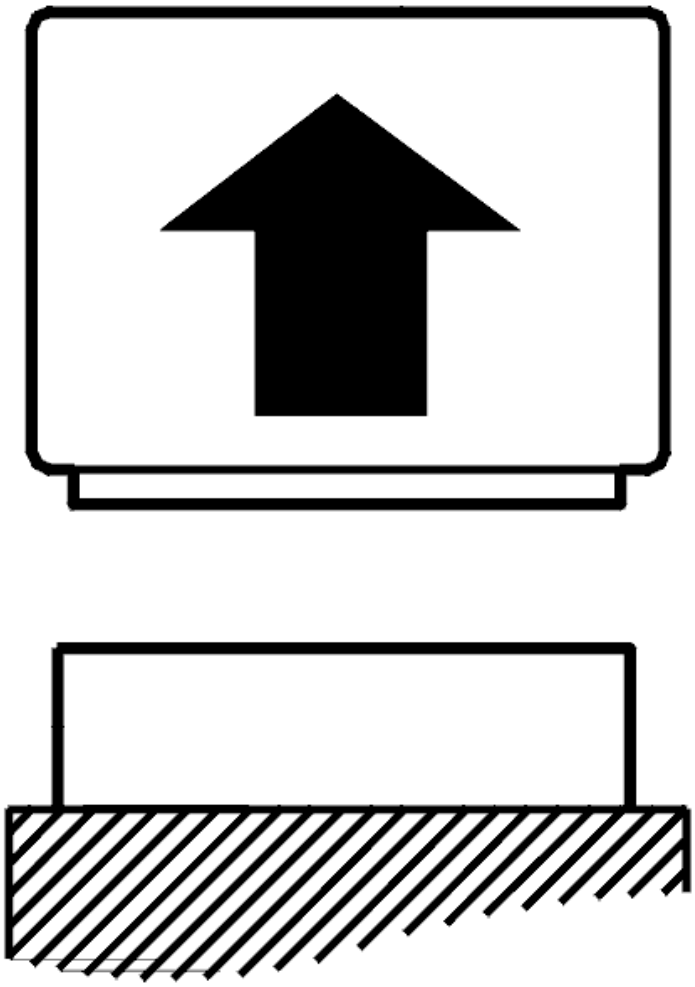

Fig. 60: Disconnecting Connector
Courtesy of VOLVO CARS CORPORATION

- Ignition off
- Disconnect central electronic module (CEM) connector B.

  Check the power cable for a short-circuit to ground.

  Take readings between:

  - Central electronic module (CEM) terminal #B8 (#B8) and left-hand lamp housing connector terminal #A6.

  Remedy as necessary.

  Other information

- see **CONNECTING THE BREAKOUT BOX**
- -2004: **SIGNAL SPECIFICATION**
- 2005-: **SIGNAL SPECIFICATION**
- see **LOCATION OF COMPONENTS**
- see **CHECKING WIRING AND TERMINALS**

- **Continue**

  Refer to **VERIFICATION**

VERIFICATION

VERIFICATION

HINT: After carrying out the repair, check that the fault has been remedied.

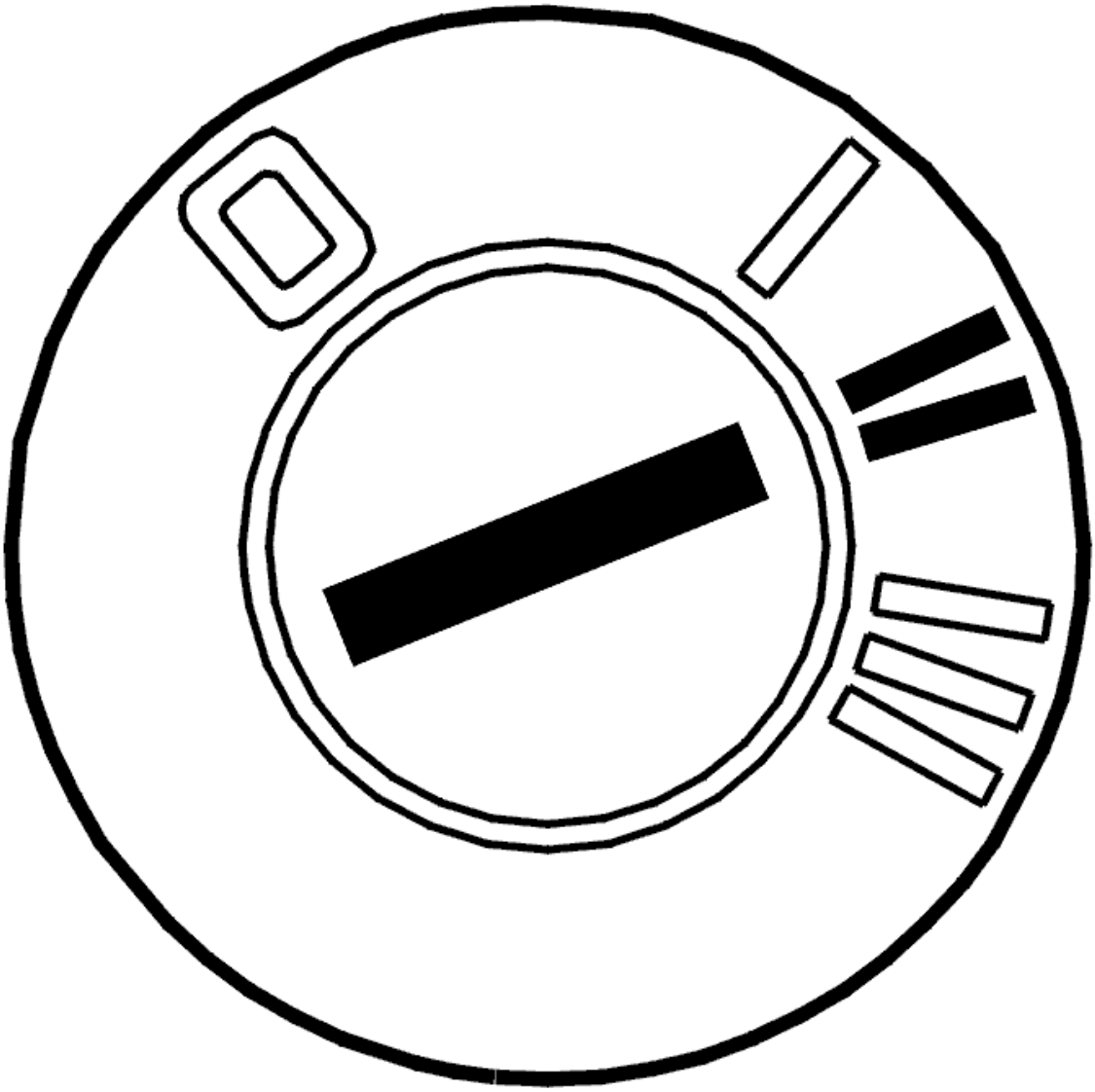

Fig. 61: Identifying Ignition ON
Courtesy of VOLVO CARS CORPORATION

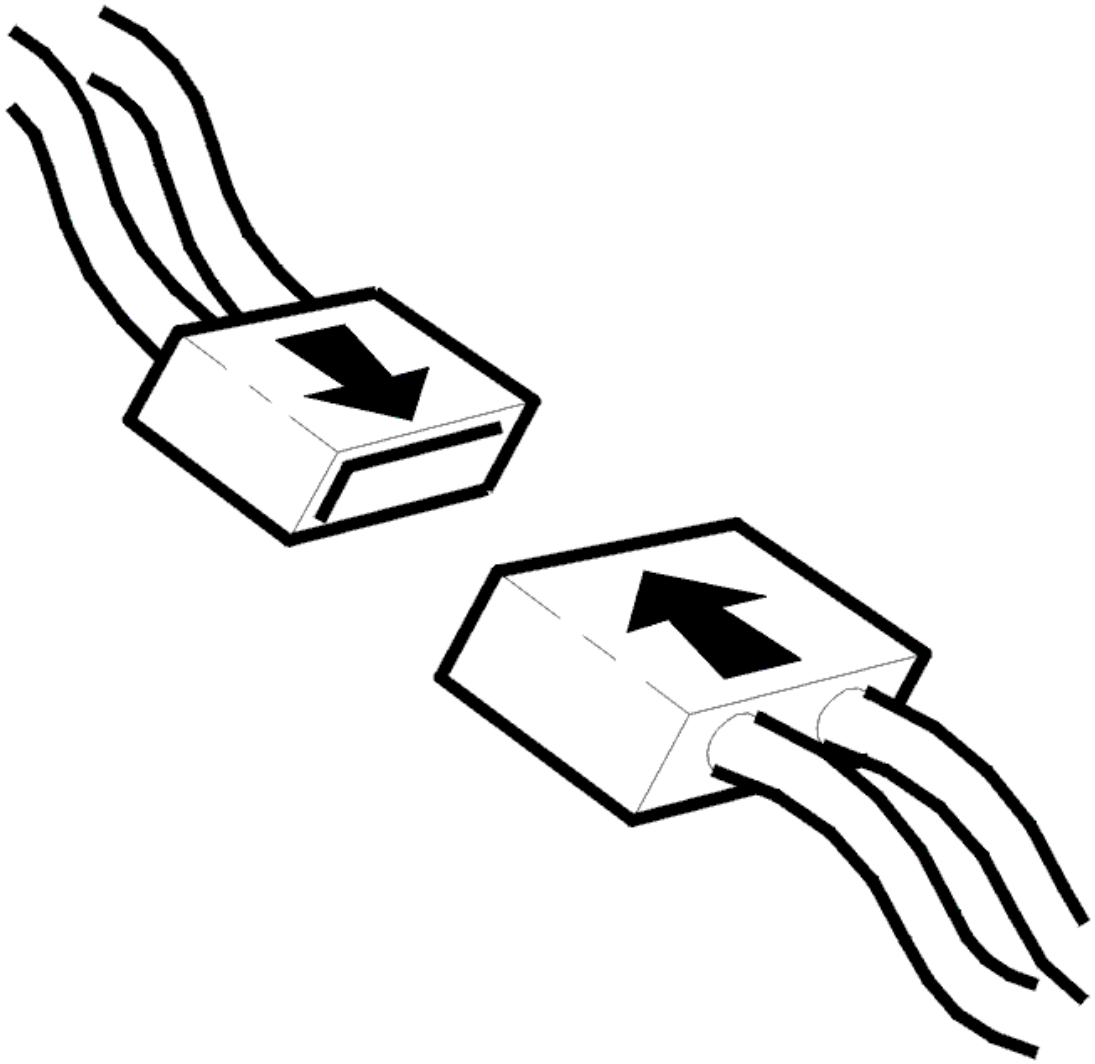

Fig. 62: Connecting Connector
Courtesy of VOLVO CARS CORPORATION

- Ignition off
- Reinstall the connectors, components etc.
- Ignition on.

  Activate the daytime running lamps.

  Check that the daytime running lamps are activated.

Are the daytime running lamps activated?

- **YES**

VERIFIED: Troubleshooting has been completed.

- **NO**

  Refer to **INFORMATION**

INFORMATION

FAULT-TRACING INFORMATION

The fault should have been detected and remedied. As this is not the case fault-tracing has failed.

Exit fault-tracing for this diagnostic trouble code (DTC) or make another attempt.

CEM-8A31: DAYTIME RUNNING LAMPS, RIGHT. FAULTY SIGNAL (2005-2012)

DIAGNOSTIC TROUBLE CODE (DTC) INFORMATION CEM-8A31

Condition

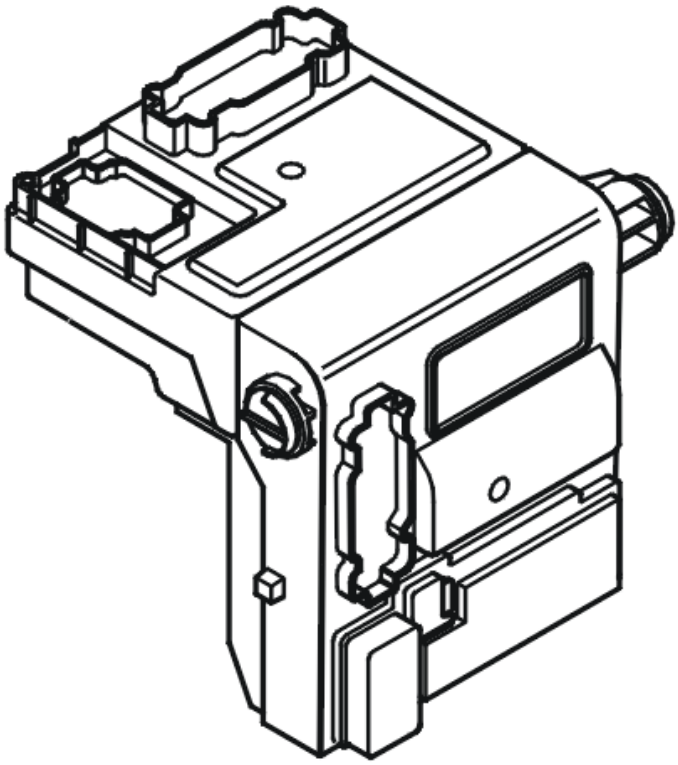

Fig. 63: Identifying Central Electronic Module (CEM)
Courtesy of VOLVO CARS CORPORATION

The central electronic module (CEM) powers the right-hand daytime running lamps directly via an output. The diagnostic trouble code (DTC) is stored if the central electronic module (CEM) registers that the power consumption for the output is too high.

The diagnostic trouble code (DTC) can be diagnosed at ignition switch position II.

Substitute Value

- If the fault has been detected in 100 ignition cycles, the output is closed permanently until the diagnostic trouble code is erased (applies from structure week 200539).

Possible Source

- Short-circuit to ground in the signal cable for the daytime running lamps.

Fault symptom[s]

- The daytime running lamps do not operate.

FAULTY SIGNAL

CHECKING THE WIRING

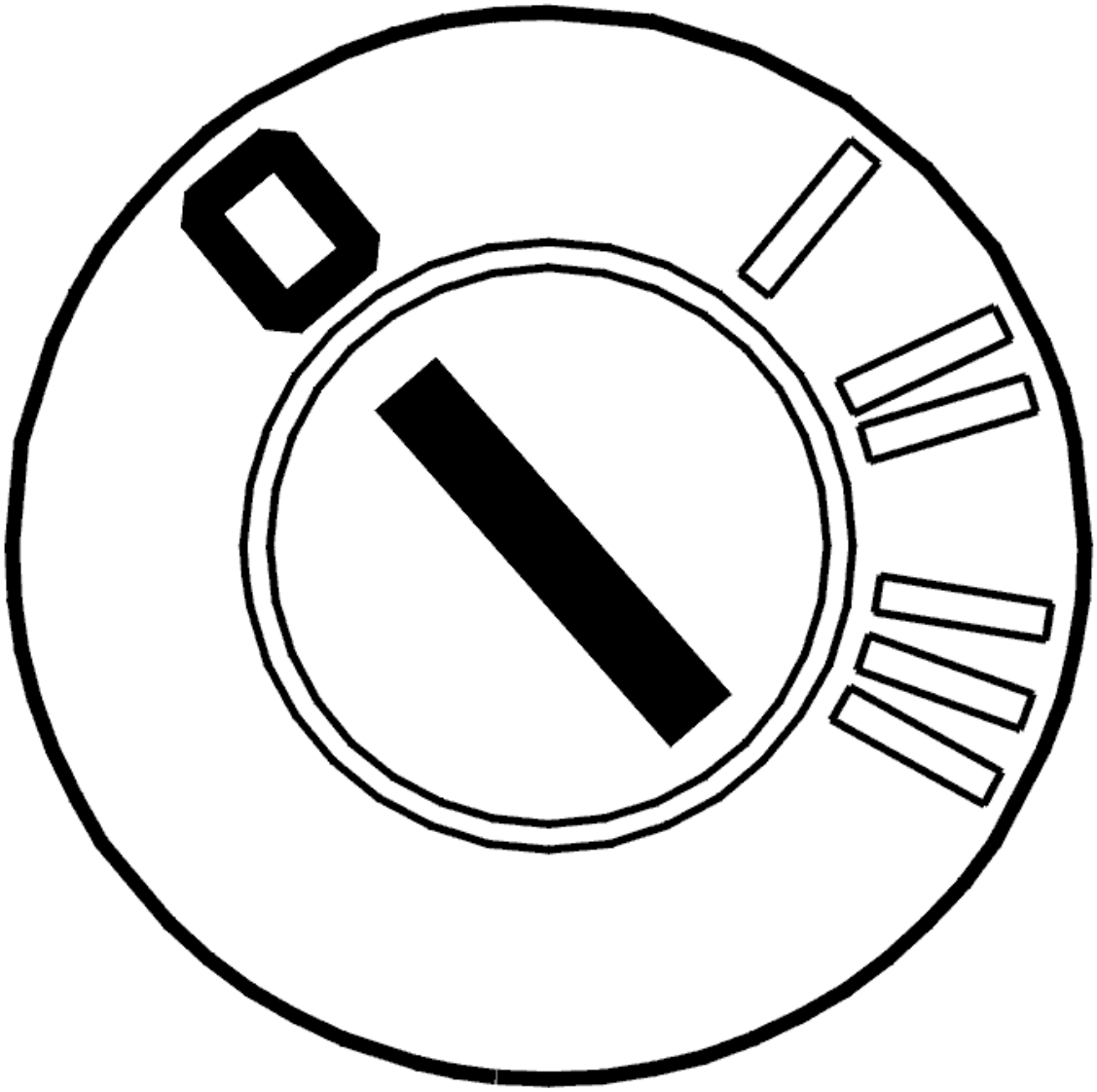

Fig. 64: Identifying Ignition OFF
Courtesy of VOLVO CARS CORPORATION

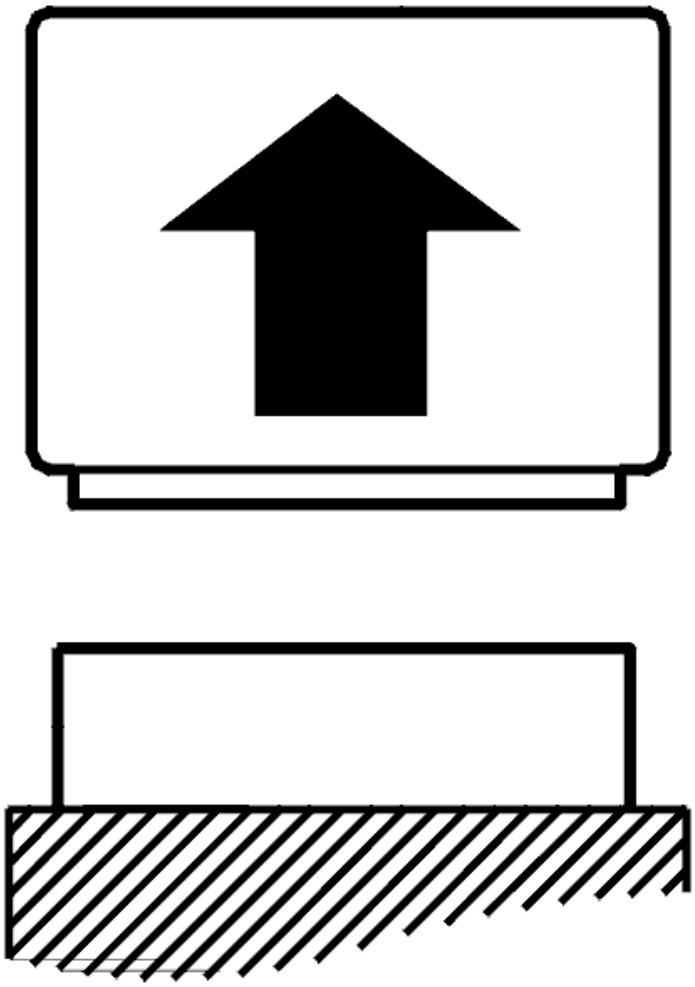

Fig. 65: Disconnecting Connector
Courtesy of VOLVO CARS CORPORATION

- Ignition off
- Disconnect central electronic module (CEM) connector B.

  Check the power cable for a short-circuit to ground.

  Take readings between:

  - Central electronic module (CEM) terminal #B9 (#B9) and right-hand stop lamp connector terminal #A6.

  Remedy as necessary.

  Other information

- see **CONNECTING THE BREAKOUT BOX**
- -2004: **SIGNAL SPECIFICATION**
- 2005-: **SIGNAL SPECIFICATION**
- see **LOCATION OF COMPONENTS**
- see **CHECKING WIRING AND TERMINALS**

- **Continue**

  Refer to **VERIFICATION**

VERIFICATION

VERIFICATION

HINT: After carrying out the repair, check that the fault has been remedied.

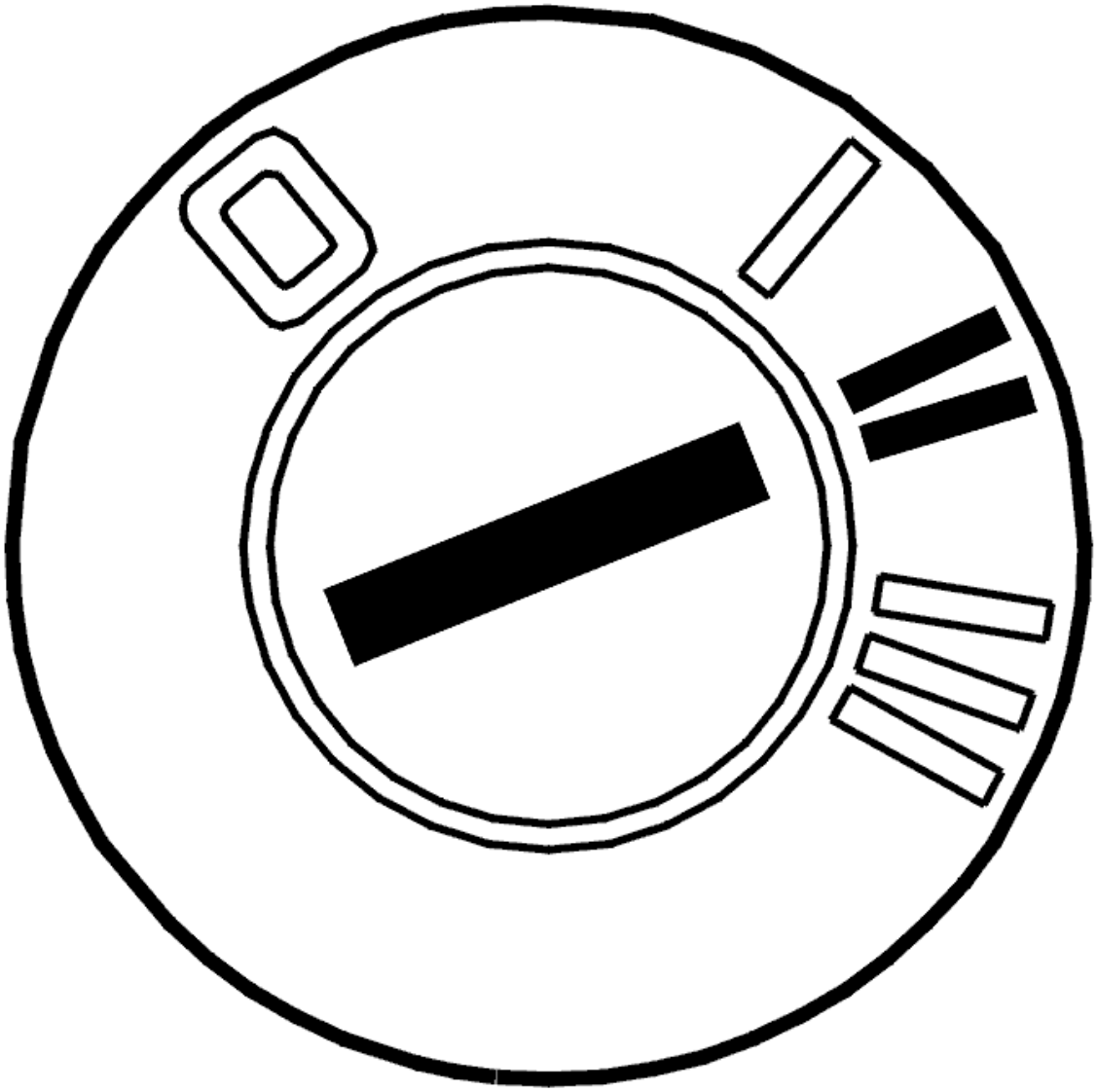

Fig. 66: Identifying Ignition ON
Courtesy of VOLVO CARS CORPORATION

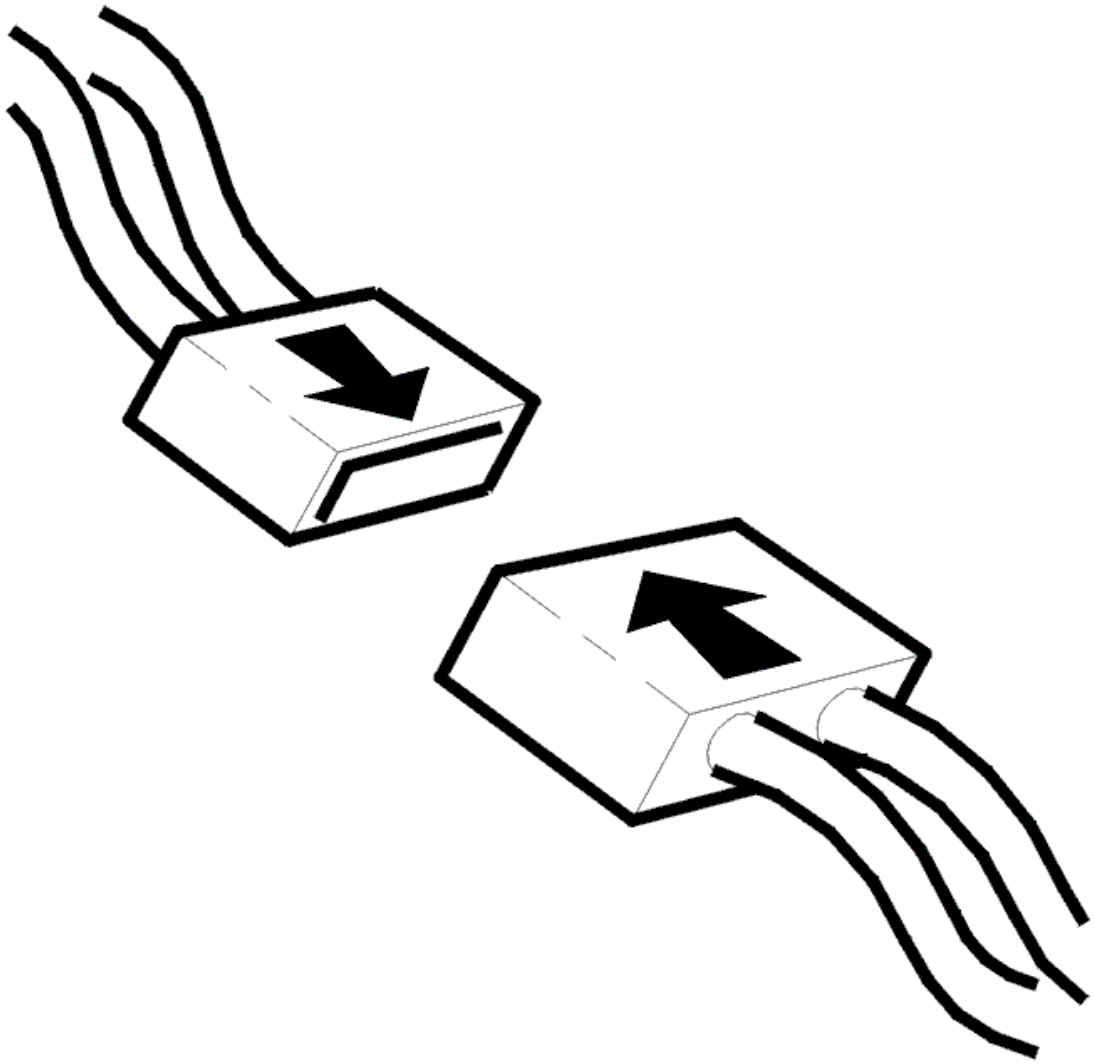

Fig. 67: Connecting Connector
Courtesy of VOLVO CARS CORPORATION

- Ignition off
- Reinstall the connectors, components etc.
- Ignition on.

  Activate the daytime running lamps.

  Check that the daytime running lamps are activated.

Are the daytime running lamps activated?

- **YES**

VERIFIED: Troubleshooting has been completed.

- **NO**

  Refer to **INFORMATION**

INFORMATION

FAULT-TRACING INFORMATION

The fault should have been detected and remedied. As this is not the case fault-tracing has failed.

Exit fault-tracing for this diagnostic trouble code (DTC) or make another attempt.

CEM-8A32: HIGH BEAM FLASH. ACTIVATED TOO LONG (2005-2012)

DIAGNOSTIC TROUBLE CODE (DTC) INFORMATION CEM-8A32

Condition

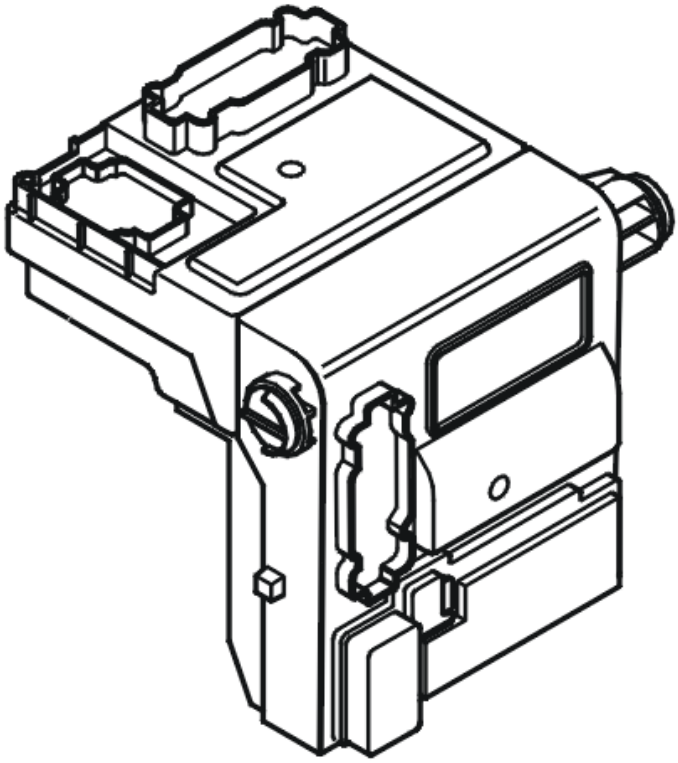

Fig. 68: Identifying Central Electronic Module (CEM)
Courtesy of VOLVO CARS CORPORATION

The central electronic module (CEM) activates the relay for full beam. The diagnostic trouble code (DTC) is

stored if the central electronic module (CEM) registers that the switch for high beam flash has been active for more than 60 seconds.

The diagnostic trouble code (DTC) can be diagnosed at ignition switch position II.

Substitute Value

- None.

Possible Source

- Damaged dip switch
- Fault in the communication with the steering wheel module (SWM).

Fault symptom[s]

- The high beam is constantly lit.

ACTIVATED TOO LONG

CHECKING THE CONTROL

The diagnostic trouble code (DTC) is stored when the button or switch has been pressed in for too long or is in a non-approved position.

If the fault is intermittent, it has been registered previously but is no longer present. Intermittent faults can be caused by interference at start up or can be a different type of fault which occurs on different occasions. The fault is evaluated depending on how it occurs.

Check that the button or the switch is not sticking, jammed in the activated position or in a non-approved position.

Remedy as necessary.

Other information

see **SWITCHES LIGHTS, REPLACING**

- **Continue**

  Refer to **VERIFICATION**

VERIFICATION

VERIFICATION

HINT: After carrying out the repair, check that the fault has been remedied.

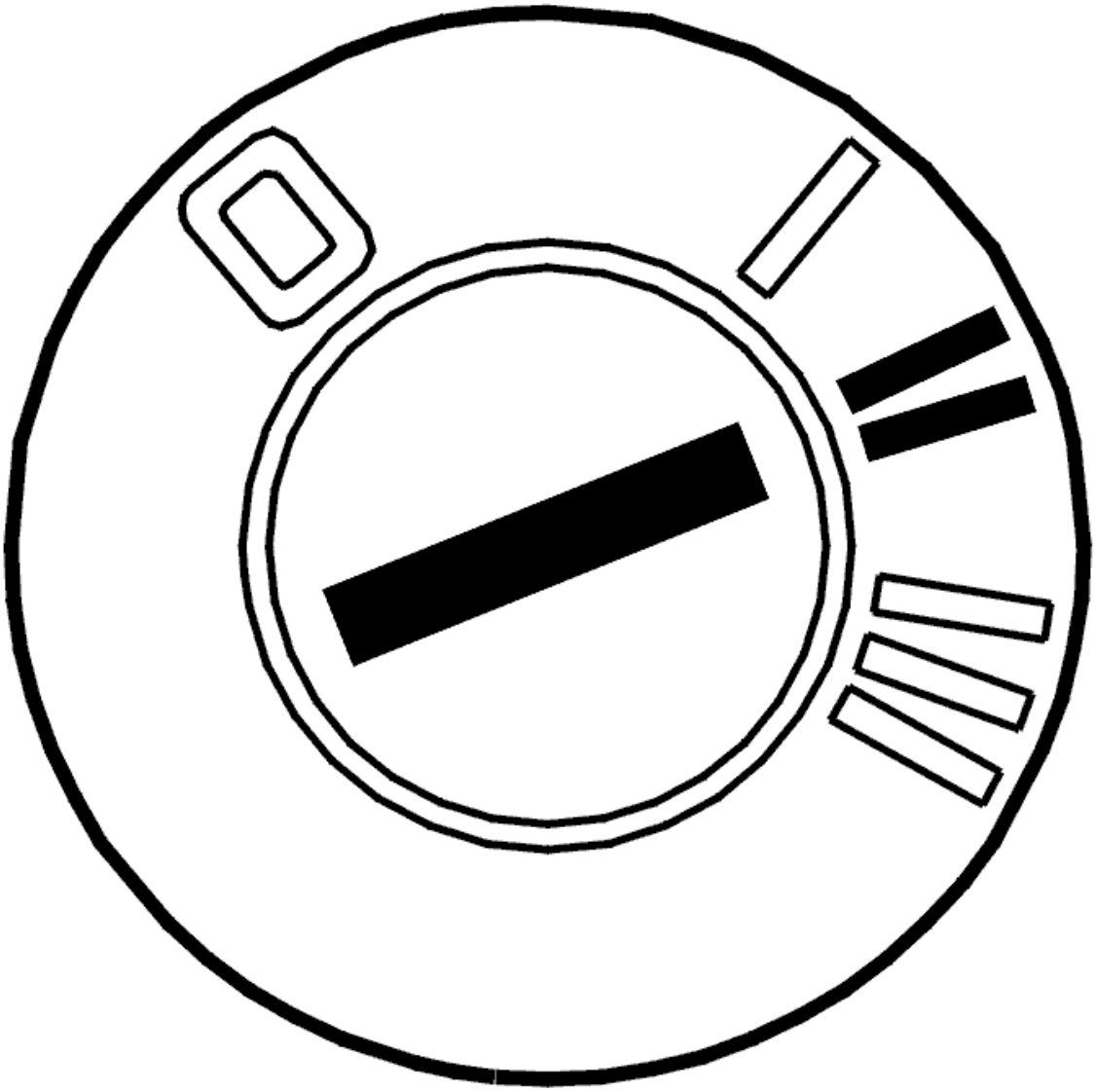

Fig. 69: Identifying Ignition ON
Courtesy of VOLVO CARS CORPORATION

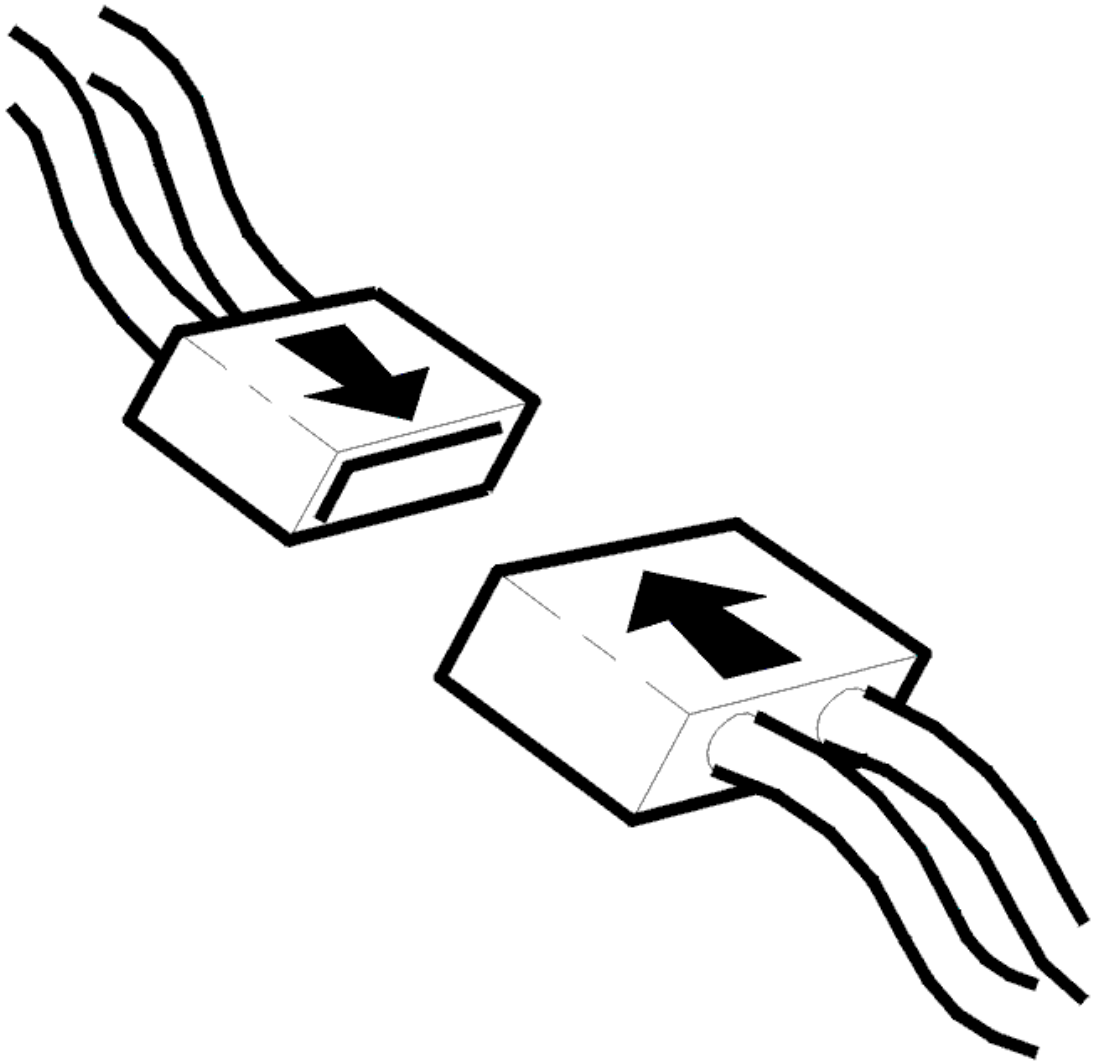

Fig. 70: Connecting Connector
Courtesy of VOLVO CARS CORPORATION

- Ignition off
- Reinstall the connectors, components etc.
- Ignition on.

  Check that the function for the relevant button or switch is correct.

Is the function OK?

- **YES**

  VERIFIED: Troubleshooting has been completed.

- **NO**

  Refer to **INFORMATION**

INFORMATION

FAULT-TRACING INFORMATION

The fault should have been detected and remedied. As this is not the case fault-tracing has failed.

Exit fault-tracing for this diagnostic trouble code (DTC) or make another attempt.

CEM-8B01: PARKING LAMPS. SIGNAL TOO LOW (2005-2012)

DIAGNOSTIC TROUBLE CODE (DTC) INFORMATION CEM-8B01

Condition

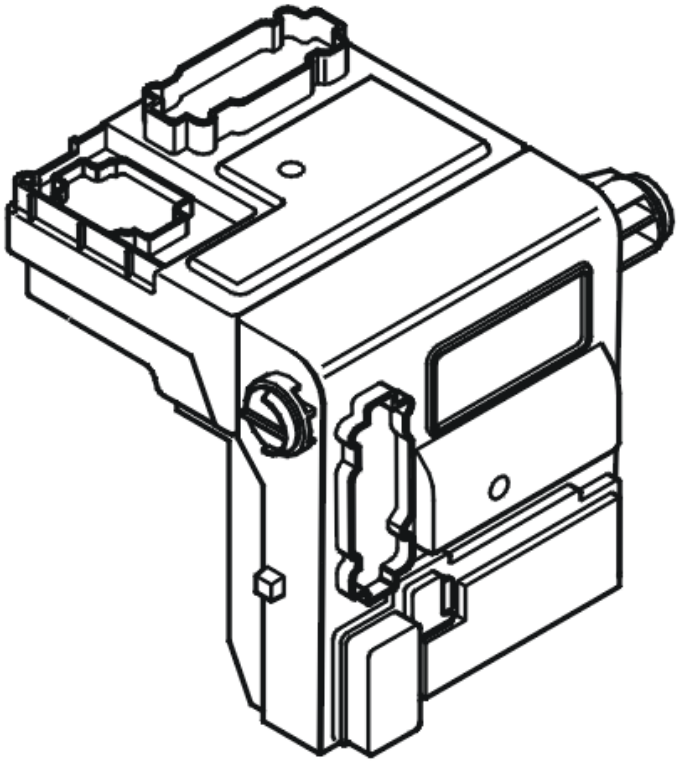

Fig. 71: Identifying Central Electronic Module (CEM)
Courtesy of VOLVO CARS CORPORATION

The central electronic module (CEM) powers the left-hand parking lamps directly via an output. The diagnostic trouble code (DTC) is stored if the central electronic module (CEM) registers that the power consumption for

the output is too high.

The diagnostic trouble code (DTC) can be diagnosed at ignition switch position II.

Substitute Value

- If the fault has been detected in 100 ignition cycles, the output is closed permanently until the diagnostic trouble code is erased (applies from structure week 200539).

Possible Source

- Short-circuit to ground in the signal cable for the parking lamp bulb.

Fault symptom[s]

- The parking lamps do not operate.

SIGNAL TOO LOW

CHECKING THE WIRING

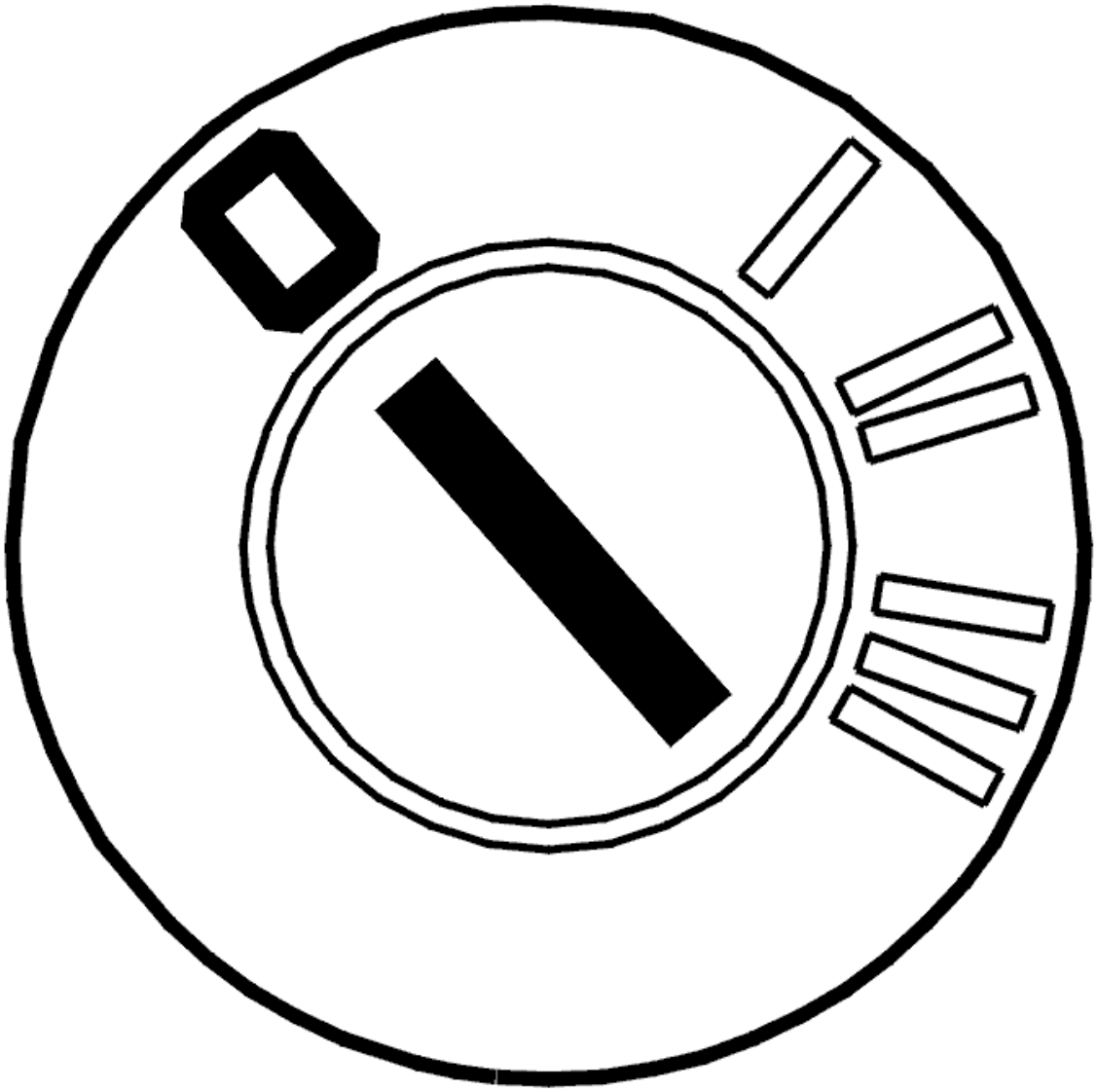

Fig. 72: Identifying Ignition OFF
Courtesy of VOLVO CARS CORPORATION

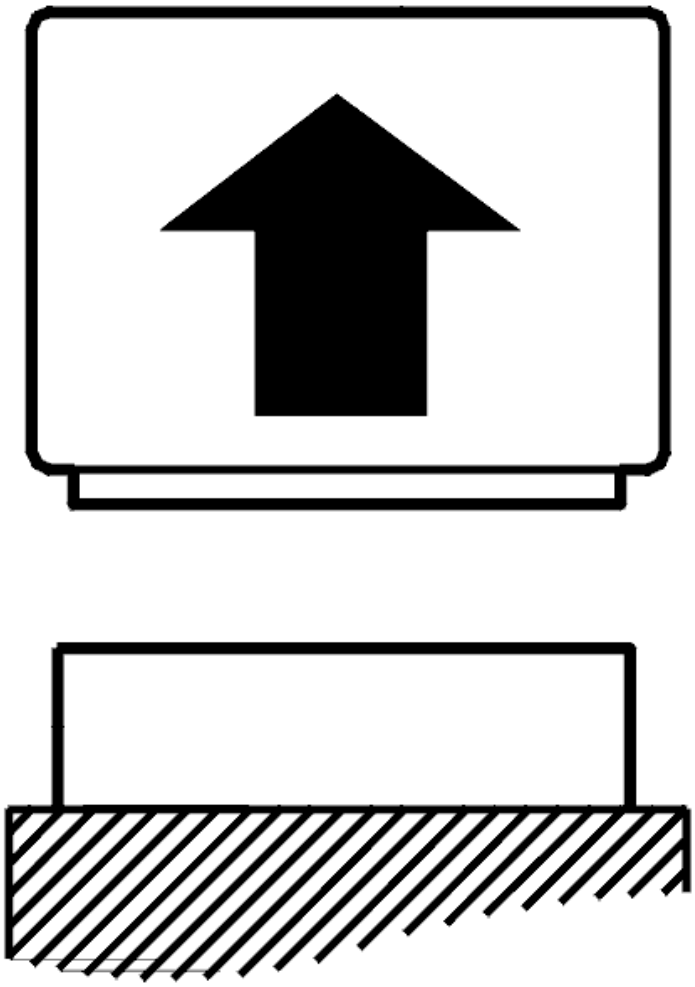

Fig. 73: Disconnecting Connector
Courtesy of VOLVO CARS CORPORATION

- Ignition off
- Disconnect central electronic module (CEM) connector C.

  Check the power cable for a short-circuit to ground.

  Take readings between:

  - Central electronic module (CEM) terminal #C19 (#19) and left-hand parking lamp terminal #A1
  - Central electronic module (CEM) terminal #C19 (#19) and left-hand parking lamp terminal #A1.

  Remedy as necessary.

Other information

- see **CONNECTING THE BREAKOUT BOX**
- -2004: **SIGNAL SPECIFICATION**
- 2005-: **SIGNAL SPECIFICATION**
- see **LOCATION OF COMPONENTS**
- see **CHECKING WIRING AND TERMINALS**

- **Continue**

  Refer to **VERIFICATION**

VERIFICATION

VERIFICATION

HINT: After carrying out the repair, check that the fault has been remedied.

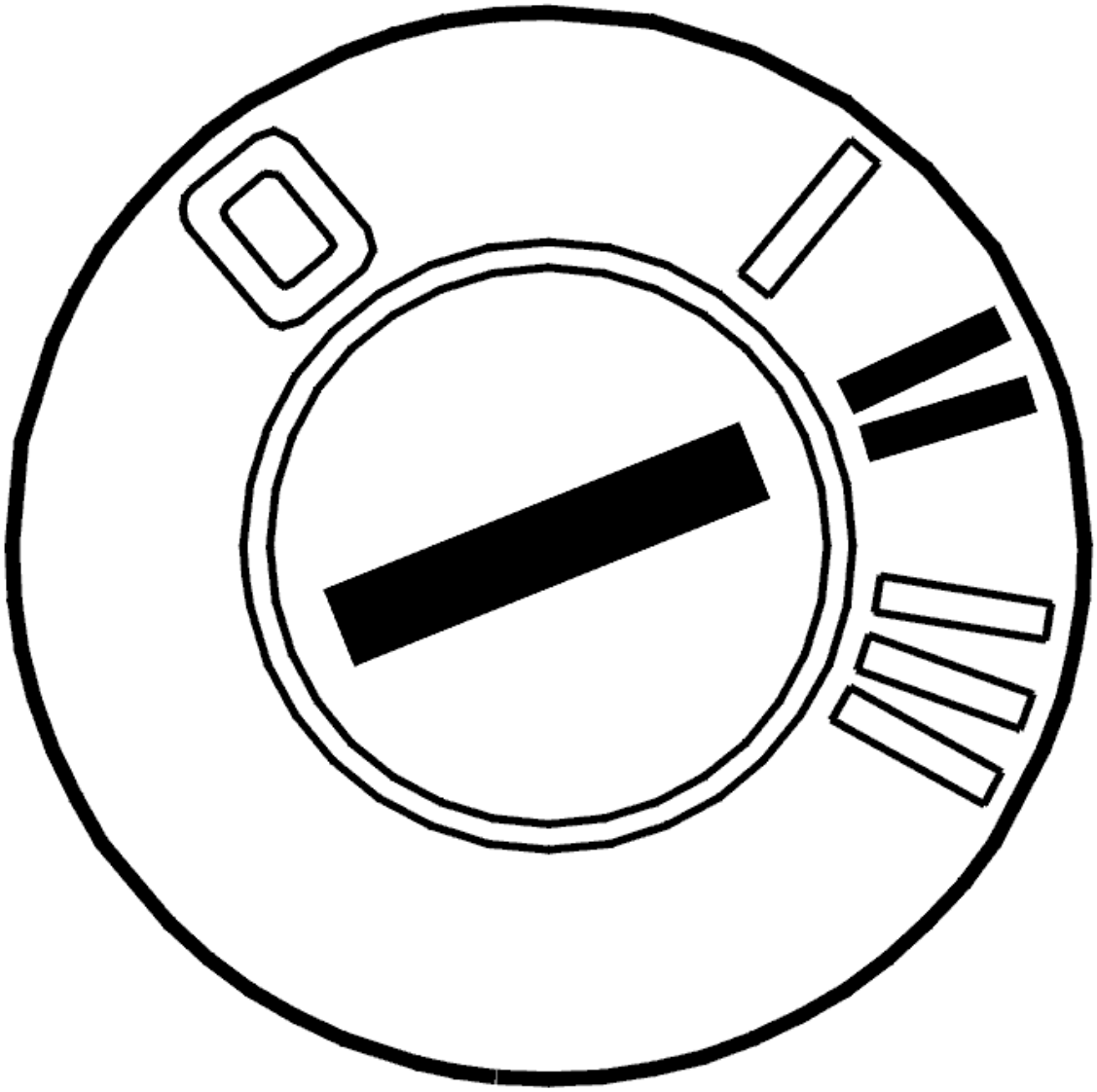

Fig. 74: Identifying Ignition ON
Courtesy of VOLVO CARS CORPORATION

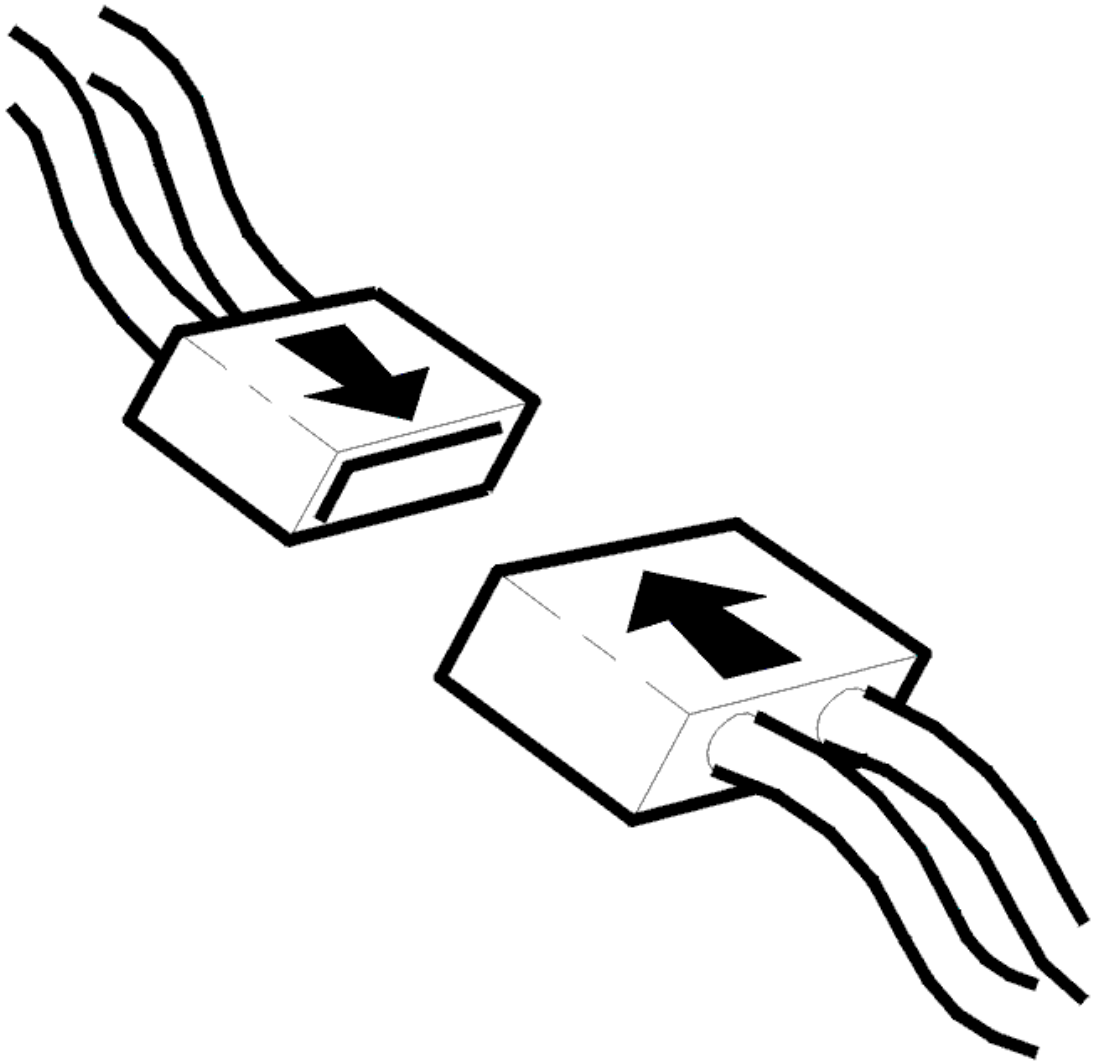

Fig. 75: Connecting Connector
Courtesy of VOLVO CARS CORPORATION

- Ignition off
- Reinstall the connectors, components etc.
- Ignition on.

  Activate the parking lamp.

  Check that the parking lamp is activated.

Is the parking lamp activated?

- **YES**

VERIFIED: Troubleshooting has been completed.

- **NO**

  Refer to **INFORMATION**

INFORMATION

FAULT-TRACING INFORMATION

The fault should have been detected and remedied. As this is not the case fault-tracing has failed.

Exit fault-tracing for this diagnostic trouble code (DTC) or make another attempt.

CEM-8B01: POSITION LAMP RELAY. SIGNAL TOO HIGH. INTERMITTENT FAULT (2003-2004)

DIAGNOSTIC TROUBLE CODE INFORMATION

Condition

Position lamp relay must be activated to display the diagnostic trouble code. If the central electronic module (CEM) indicates that the position lamp is short circuited to the battery voltage, diagnostic trouble code CEM-8B01 is displayed.

Possible Source

- The position lamp relay is short circuited to voltage supply.

Fault symptom[s]

- Position lamps are not working.

SIGNAL TOO HIGH/SIGNAL MISSING. INTERMITTENT FAULT.

see **SIGNAL TOO HIGH/SIGNAL MISSING. INTERMITTENT FAULT.**

CEM-8B01: POSITION LAMP RELAY. SIGNAL TOO HIGH. PERMANENT FAULT (2003-2004)

DIAGNOSTIC TROUBLE CODE INFORMATION

see **DIAGNOSTIC TROUBLE CODE INFORMATION**

SIGNAL TOO HIGH/SIGNAL MISSING. PERMANENT FAULT

CHECKING THE RELAY

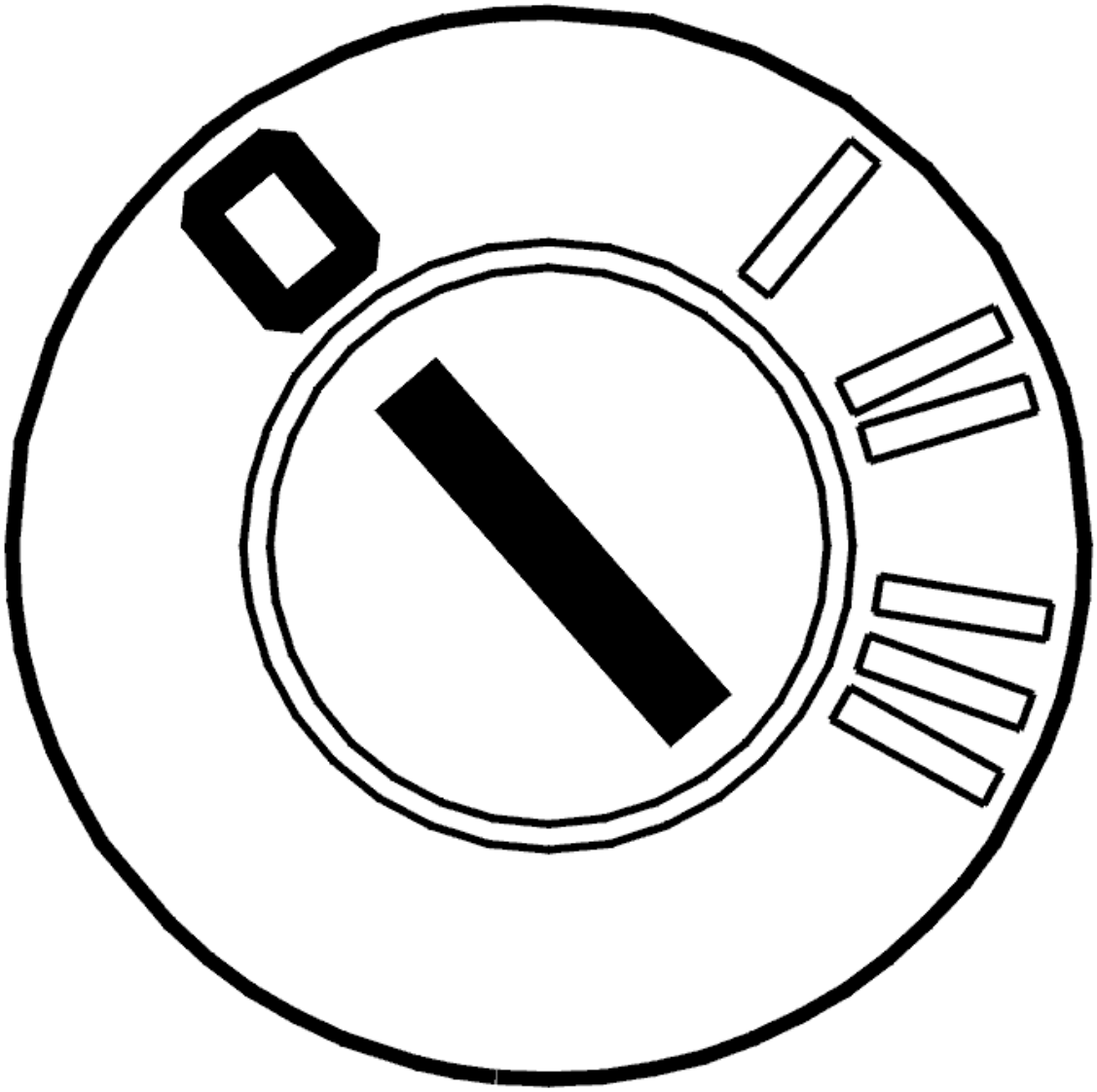

Fig. 76: Identifying Ignition OFF
Courtesy of VOLVO CARS CORPORATION

- Ignition off.

  Check that relay 2/61 is installed correctly. At the same time check the relay connections, in particular 2/61 2, for:

  diagnostic trouble code CEM-8B01

  short circuit to voltage supply as described in, see **SHORT-CIRCUIT TO SUPPLY VOLTAGE. PERMANENT FAULTS** .

  diagnostic trouble code CEM-8B03

  open circuit as described in, see **OPEN-CIRCUIT, PERMANENT FAULTS** .

Do the necessary corrective action.

Additional information:

- To replace relay:
  - For -2004, see: **CENTRAL ELECTRONIC MODULE (CEM), REPLACING**
  - For 2005-, see: **CENTRAL ELECTRONIC MODULE (CEM), REPLACING** .
- To connect the test box, see **CONNECTING THE BREAKOUT BOX** .

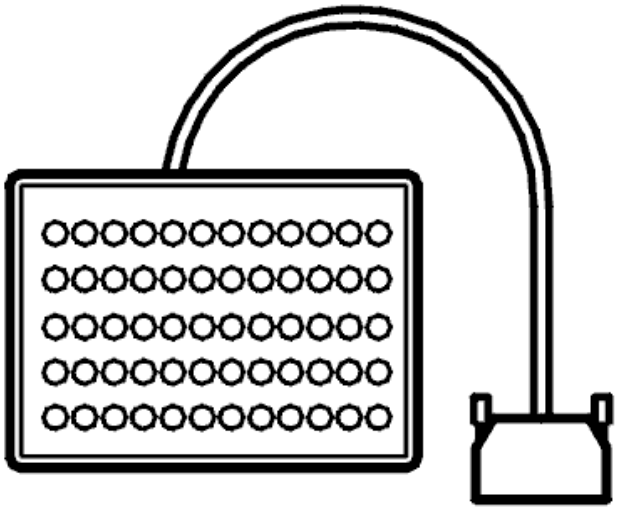

Fig. 77: Breakout Box
Courtesy of VOLVO CARS CORPORATION

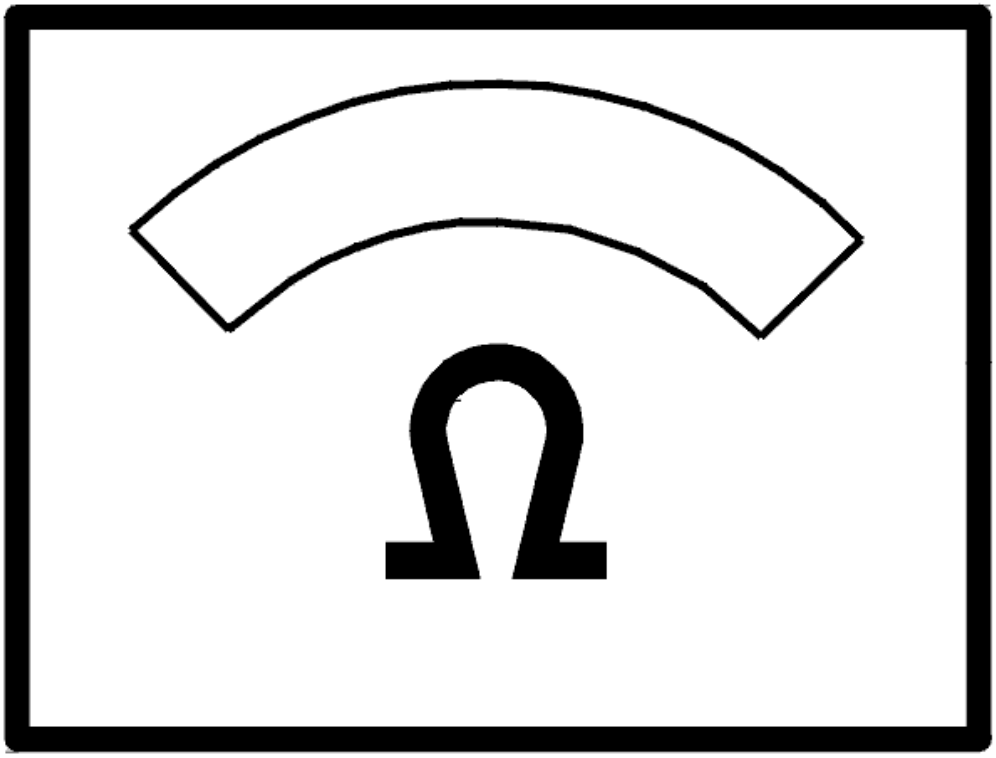

Fig. 78: Identifying Ohm Meter
Courtesy of VOLVO CARS CORPORATION

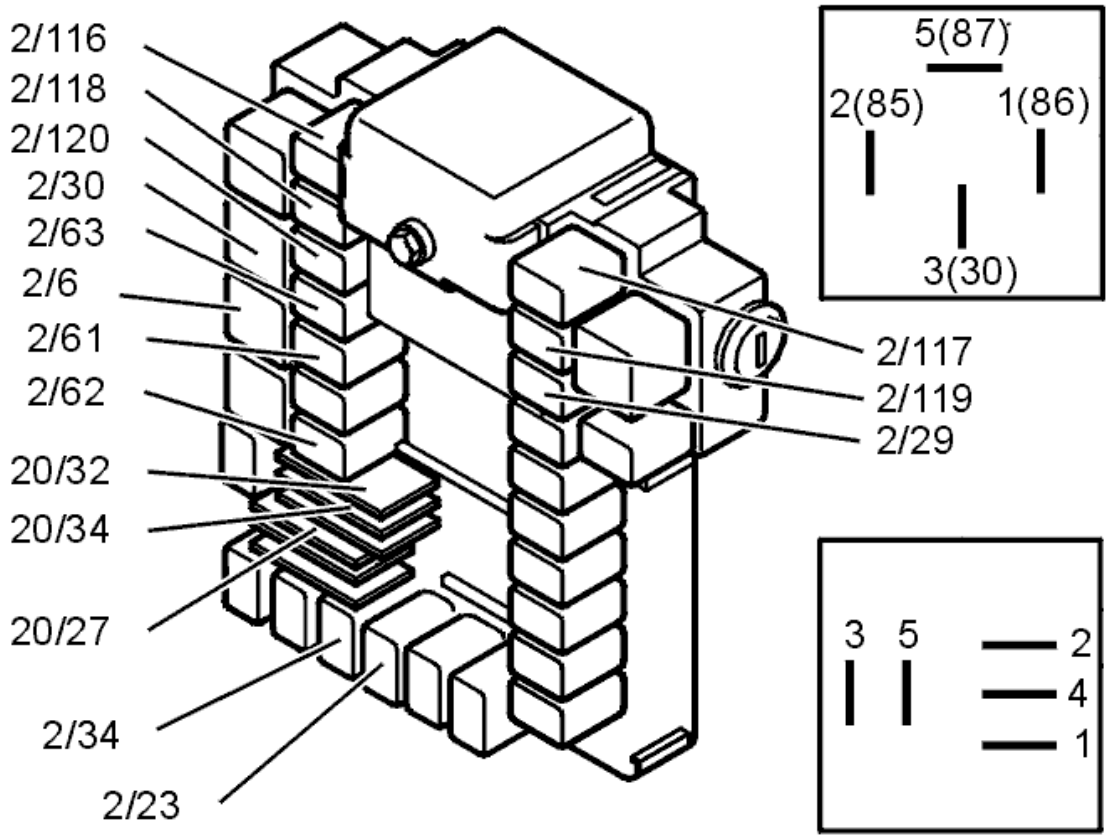

Fig. 79: Identifying Relays
Courtesy of VOLVO CARS CORPORATION

Is there a fault?

- **YES**

  Refer to **VERIFICATION**

- **NO**

  Refer to **REPLACING THE COMPONENT**

REPLACING THE COMPONENT

Replace relay.

- For -2004, see: **CENTRAL ELECTRONIC MODULE (CEM), REPLACING** .
- For 2005-, see: **CENTRAL ELECTRONIC MODULE (CEM), REPLACING** .

- **Continue**

  Refer to **VERIFICATION**

VERIFICATION

VERIFICATION

HINT: After the repair it is necessary to check that the fault has been rectified.

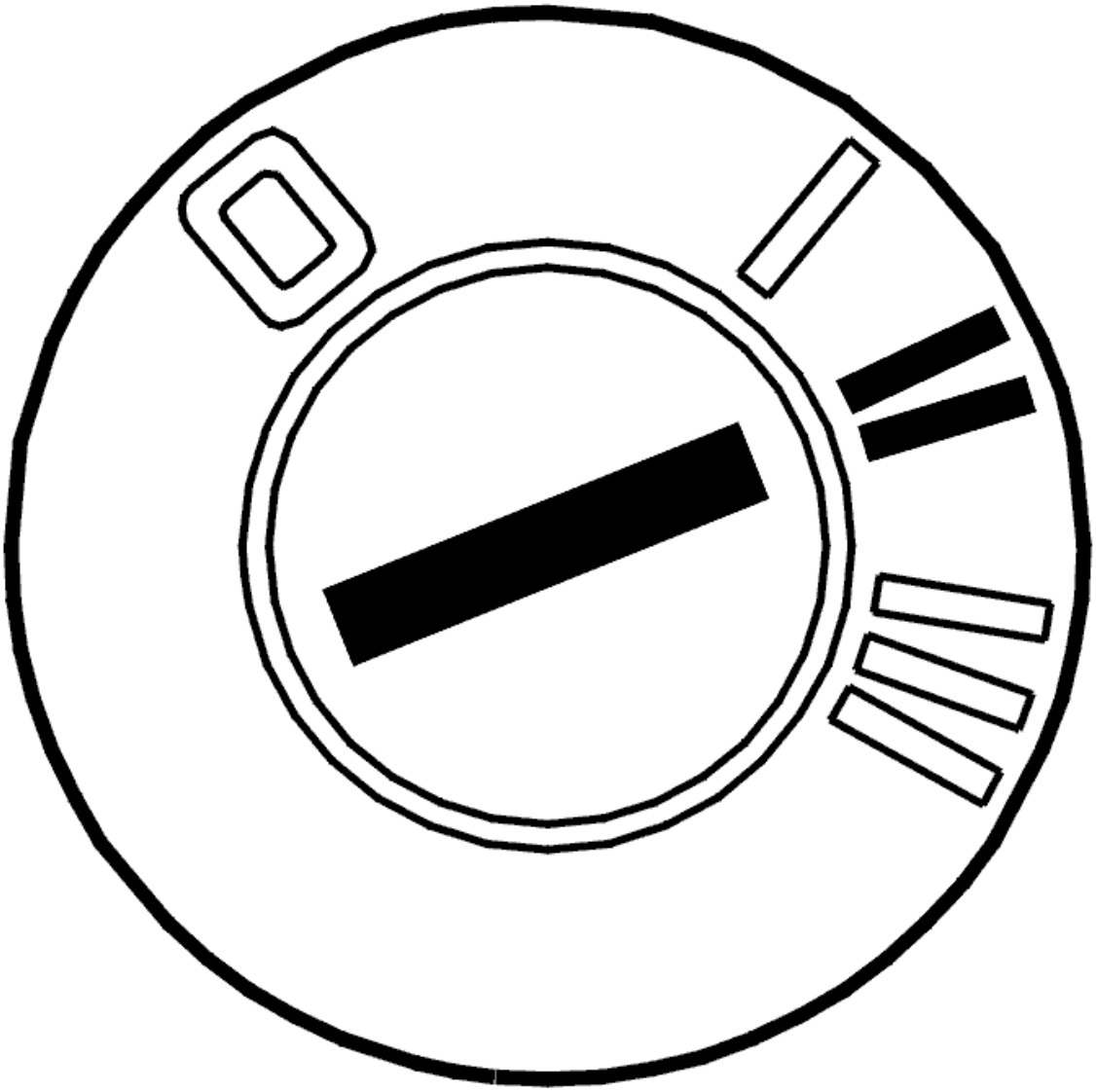

Fig. 80: Identifying Ignition ON
Courtesy of VOLVO CARS CORPORATION

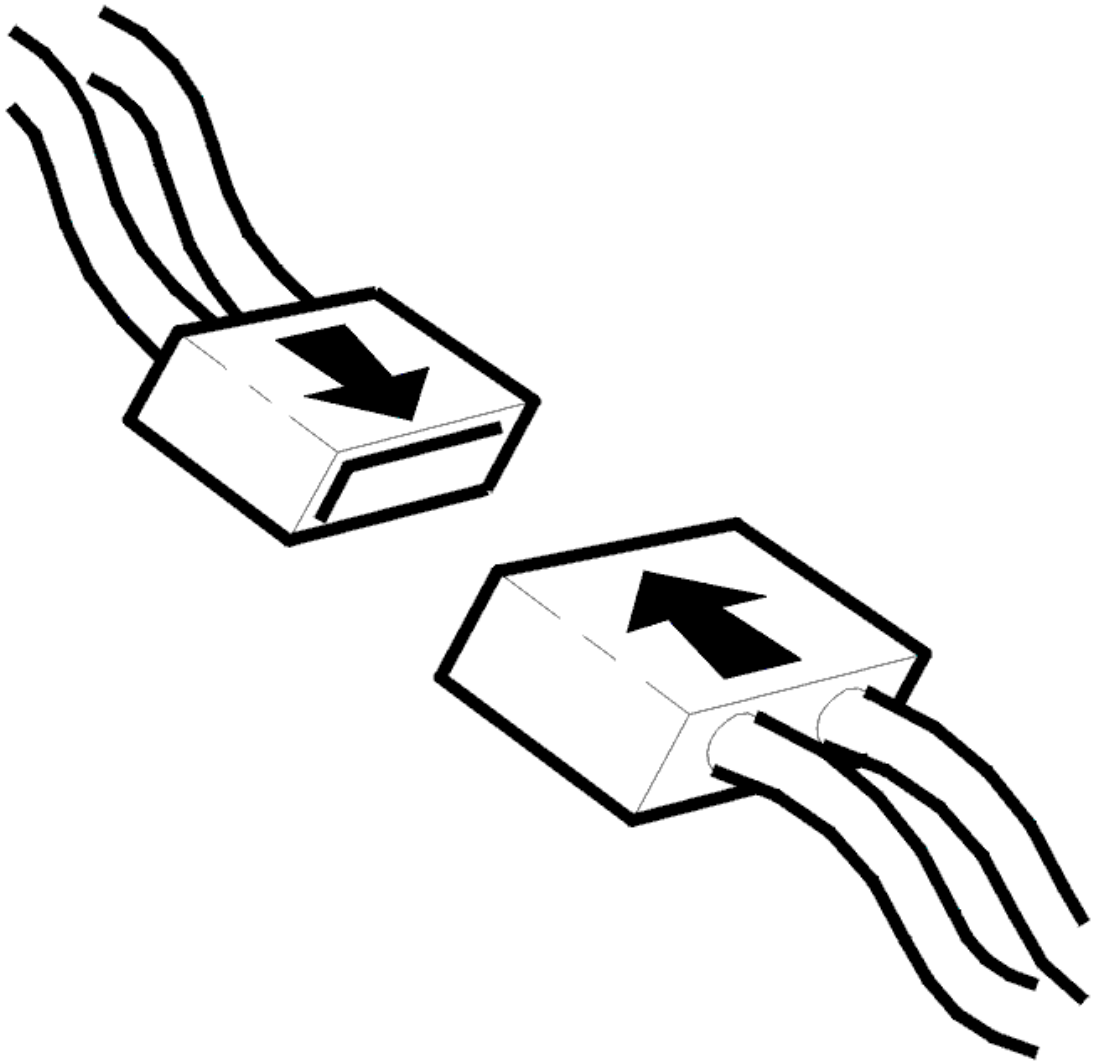

Fig. 81: Connecting Connector
Courtesy of VOLVO CARS CORPORATION

- Ignition off.
- Connect the connectors, install the components, etc.
- Ignition on.

  Read the position lamp relay.

  Activate the position lamp.

  Additional information:

  - With position lamp on, the value should be "on" and when position lamp is switched off, the value should be "off".

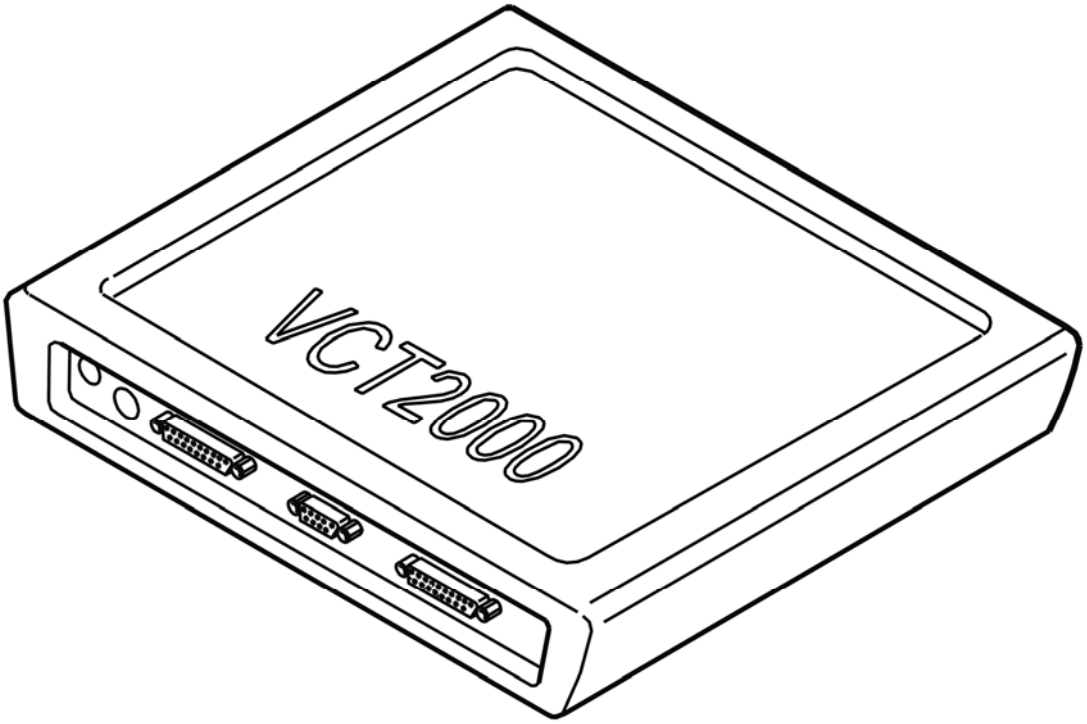

Fig. 82: Identifying VCT2000 Diagnostic Tool Symbol In VIDA
Courtesy of VOLVO CARS CORPORATION

Does it work?

- **YES**

  VERIFIED: Troubleshooting has been completed.

- **NO**

  Refer to **INFORMATION**

INFORMATION

FAULT-TRACING INFORMATION

The fault should have been detected and remedied. As this is not the case fault-tracing has failed.

Exit fault-tracing for this diagnostic trouble code (DTC) or make another attempt.

CEM-8B03: POSITION LAMP RELAY. SIGNAL MISSING. INTERMITTENT FAULT (2003-2004)

DIAGNOSTIC TROUBLE CODE INFORMATION

Condition

Position lamp relay should not have to be activated to display the diagnostic trouble code. If the central electronic module (CEM) indicates that the position lamp circuit is not closed, diagnostic trouble code CEM-8B03 is displayed.

Possible Source

- Open circuit in position lamp relay circuit.

Fault symptom[s]

- Position lamps are not working.

SIGNAL TOO HIGH/SIGNAL MISSING. INTERMITTENT FAULT.

see **SIGNAL TOO HIGH/SIGNAL MISSING. INTERMITTENT FAULT.**

CEM-8B03: POSITION LAMP RELAY. SIGNAL MISSING. PERMANENT FAULT (2003-2004)

DIAGNOSTIC TROUBLE CODE INFORMATION

see **DIAGNOSTIC TROUBLE CODE INFORMATION**

SIGNAL TOO HIGH/SIGNAL MISSING. PERMANENT FAULT

see **SIGNAL TOO HIGH/SIGNAL MISSING. PERMANENT FAULT**

CEM-8C11: FRONT FOG LAMP SWITCH. SIGNAL TOO LOW. INTERMITTENT FAULT (2003-2004)

DIAGNOSTIC TROUBLE CODE INFORMATION

Condition

Front fog lamp switch must be activated for at least 60 seconds for the diagnostic trouble code to be detected. If the central electronic module (CEM) detects that the front fog lamp switch has been registered for 60 seconds, diagnostic trouble code CEM-8C11 is displayed.

Possible Source

- Faulty front fog lamp switch.

Fault symptom[s]

- Front fog lamp is not working

FAULTY SIGNAL/SIGNAL TOO LOW. INTERMITTENT FAULT.

see **FAULTY SIGNAL/SIGNAL TOO LOW. INTERMITTENT FAULT.**

CEM-8C11: FRONT FOG LAMP SWITCH. SIGNAL TOO LOW. PERMANENT FAULT (2003-2004)

DIAGNOSTIC TROUBLE CODE INFORMATION

see **DIAGNOSTIC TROUBLE CODE INFORMATION**

SIGNAL TOO LOW. PERMANENT FAULT

REPLACING THE COMPONENT

The diagnostic trouble code (DTC) indicates that the light switch is defective.

Replace the light switch.

Other information:

- To replace the light switch, see **SWITCHES LIGHTS, REPLACING** .
- **Continue**

  Refer to **VERIFICATION**

VERIFICATION

VERIFICATION

HINT: After the repair it is necessary to check that the fault has been rectified.

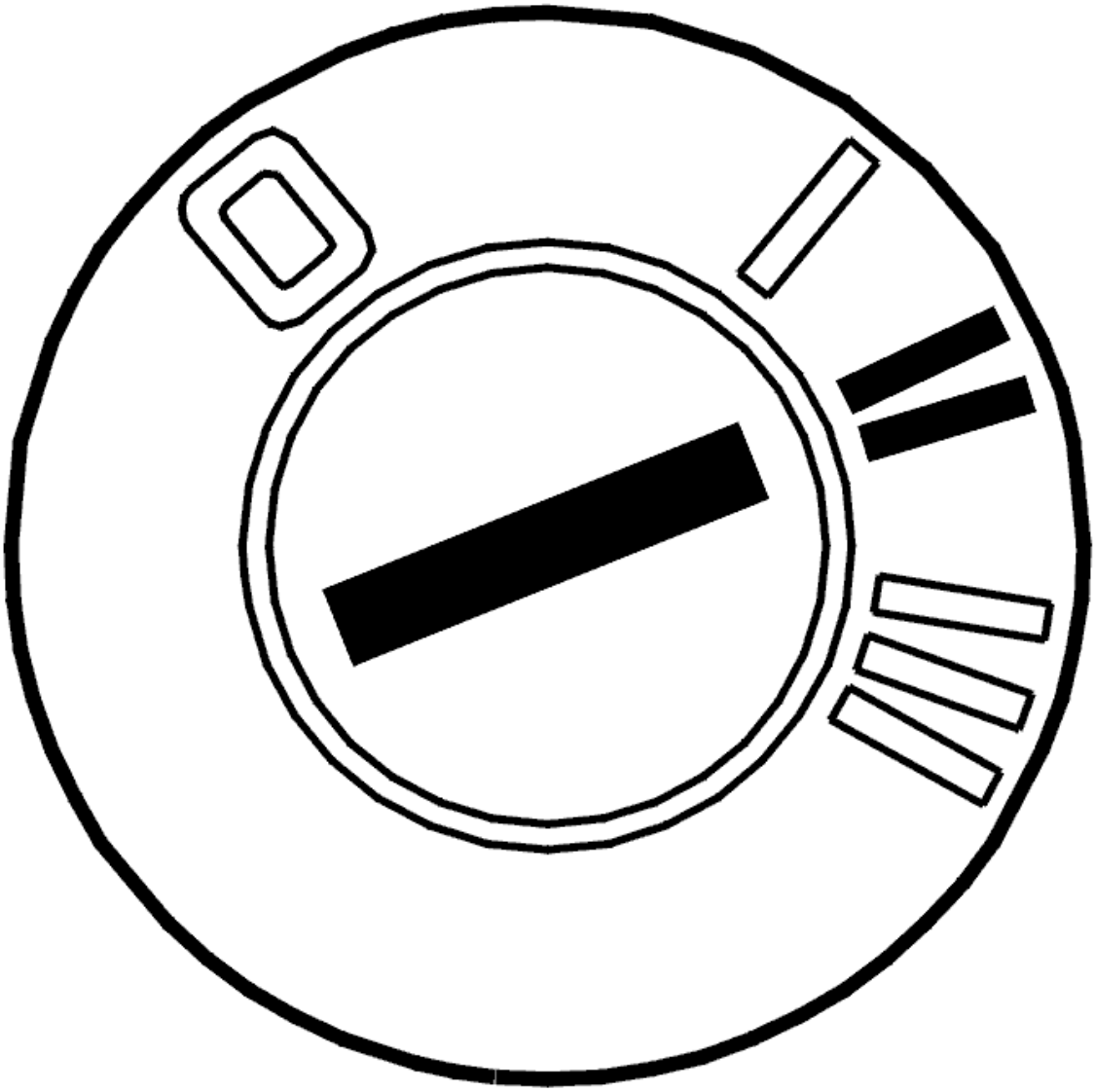

Fig. 83: Identifying Ignition ON
Courtesy of VOLVO CARS CORPORATION

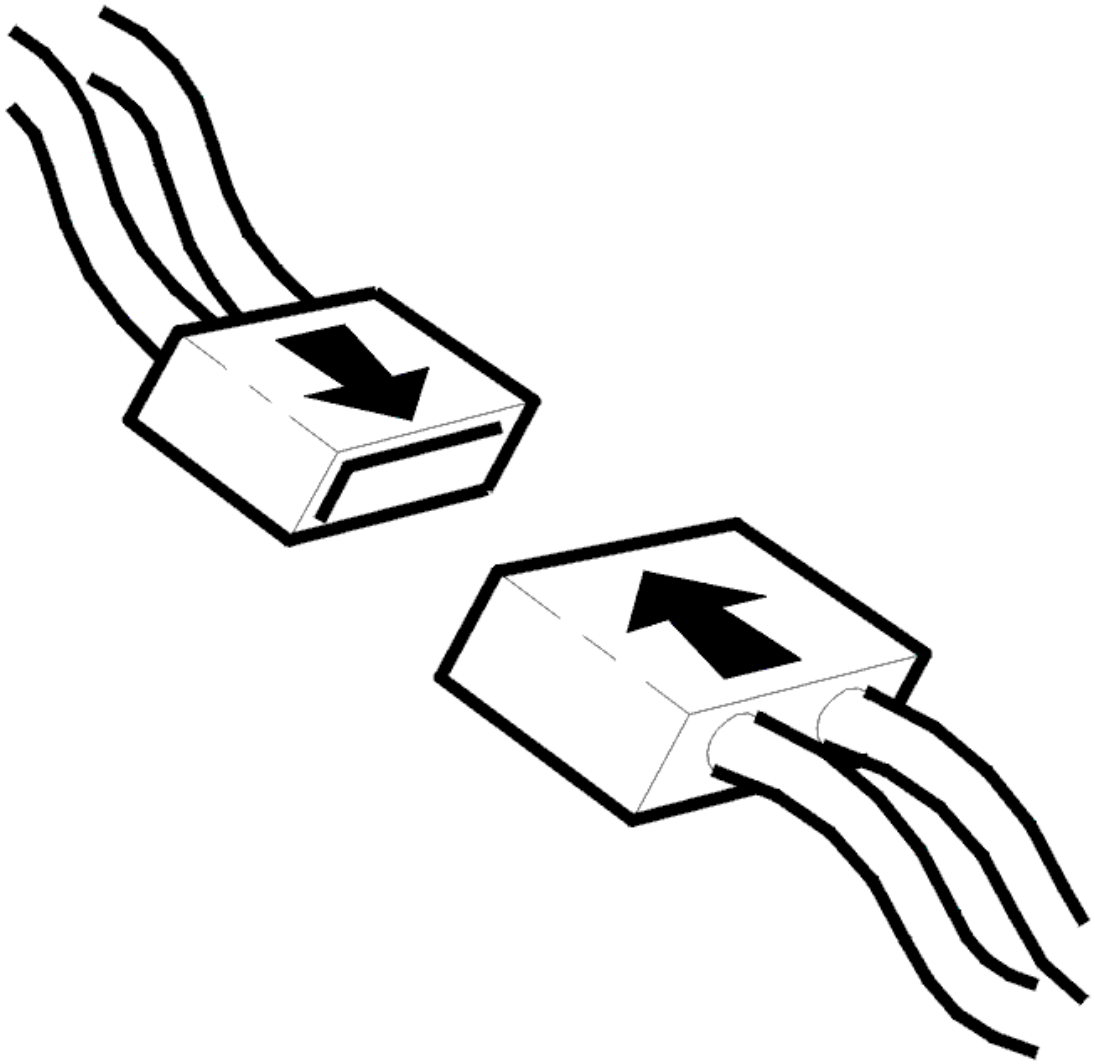

Fig. 84: Connecting Connector
Courtesy of VOLVO CARS CORPORATION

- Ignition off.
- Connect the connectors, install the components, etc.
- Ignition on.

  Read the button position.

  Activate the control button for the front fog lamp.

  Additional information:

  - The value should vary depending on whether the button is pressed in or not activated.

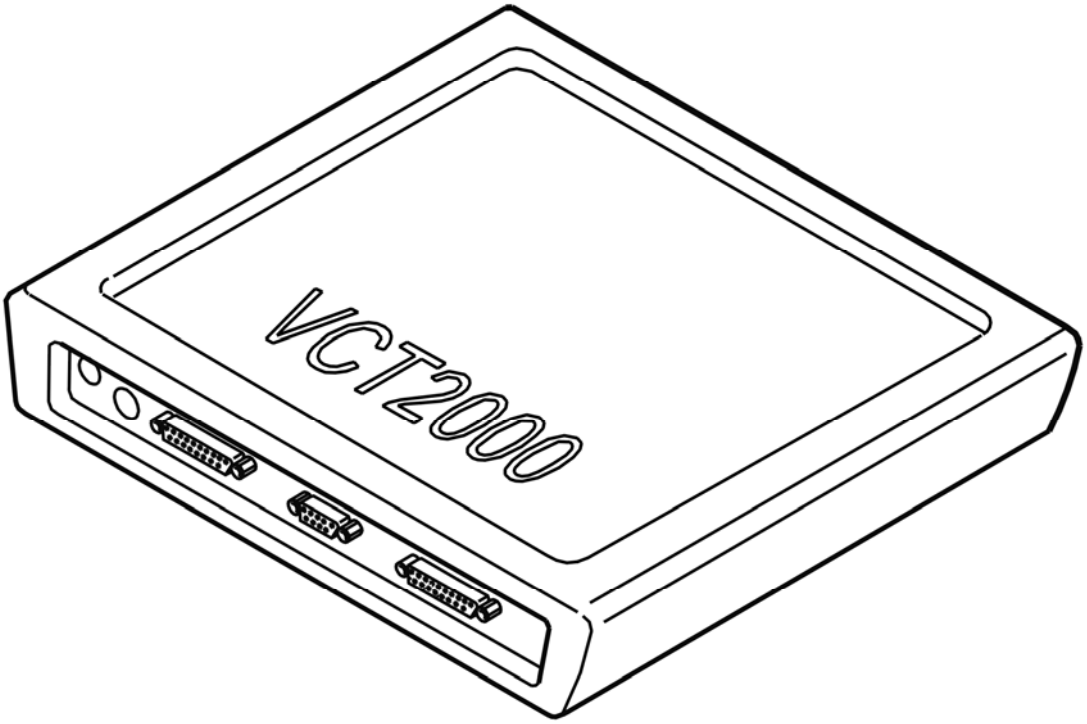

Fig. 85: Identifying VCT2000 Diagnostic Tool Symbol In VIDA
Courtesy of VOLVO CARS CORPORATION

Does it work?

- **YES**

  VERIFIED: Troubleshooting has been completed.

- **NO**

  Refer to **INFORMATION**

INFORMATION

FAULT-TRACING INFORMATION

The fault should have been detected and remedied. As this is not the case fault-tracing has failed.

Exit fault-tracing for this diagnostic trouble code (DTC) or make another attempt.

CEM-8C11: SWITCH, FRONT FOG LAMPS. ACTIVATED TOO LONG (2005-2012)

DIAGNOSTIC TROUBLE CODE (DTC) INFORMATION CEM-8C11

Condition

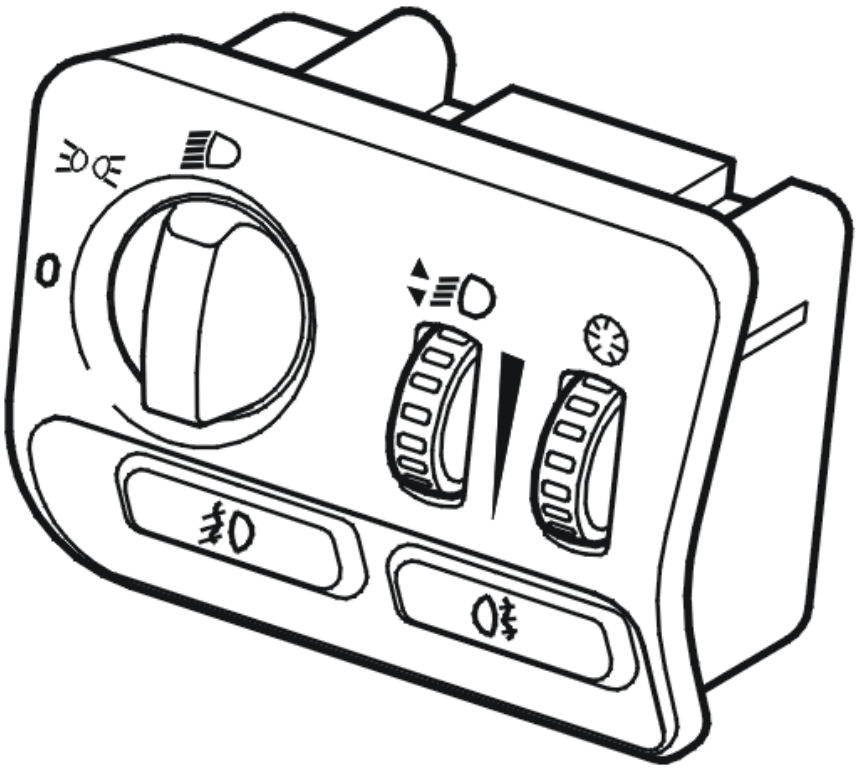

Fig. 86: Identifying Light Switch Module (LSM)
Courtesy of VOLVO CARS CORPORATION

The central electronic module (CEM) communicates with the light switch module (LSM).

The diagnostic trouble code (DTC) is stored if the central electronic module (CEM) receives information from the light switch module (LSM) indicating that it has detected that the switch for the front fog lamps has been activated for more than 60 seconds.

The diagnostic trouble code (DTC) can be diagnosed at ignition switch position II.

Substitute Value

- None.

Possible Source

- Damaged switch for the front fog lamps
- Fault in the communication with the light switch module (LSM).

Fault symptom[s]

- The front fog lamps do not work.

ACTIVATED TOO LONG

CHECKING THE CONTROL

The diagnostic trouble code (DTC) is stored when a button or switch has been depressed for a long time.

If the fault is intermittent, it has been registered previously but is no longer present. Intermittent faults can be caused by interference at start up or can be a different type of fault which occurs on different occasions. The fault is evaluated depending on how it occurs.

Check that the button or switch does not stick in the activated position.

Remedy as necessary.

Other information

see **SWITCHES LIGHTS, REPLACING**

- **Continue**

  Refer to **VERIFICATION**

VERIFICATION

VERIFICATION

HINT: After carrying out the repair, check that the fault has been remedied.

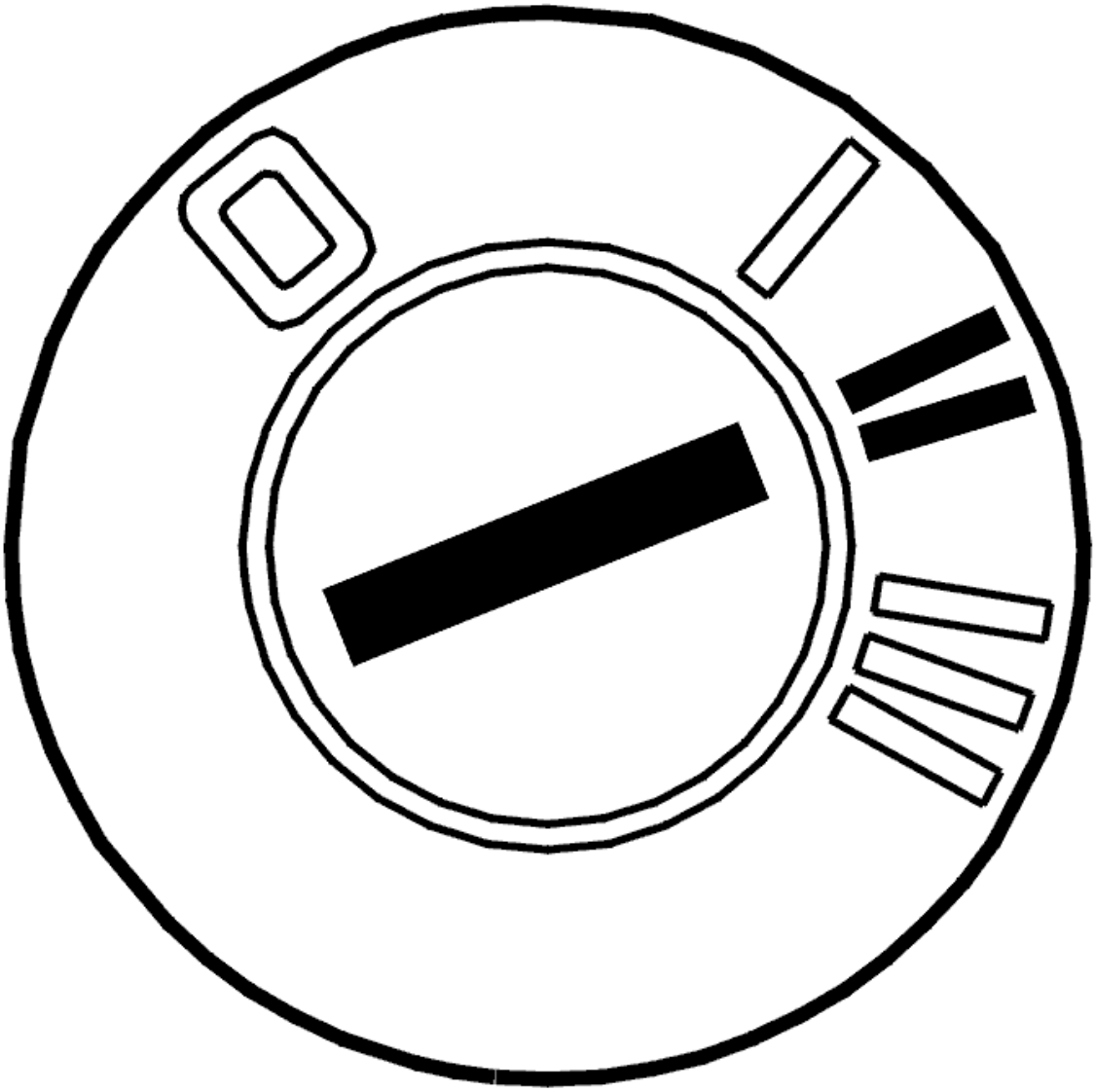

Fig. 87: Identifying Ignition ON
Courtesy of VOLVO CARS CORPORATION

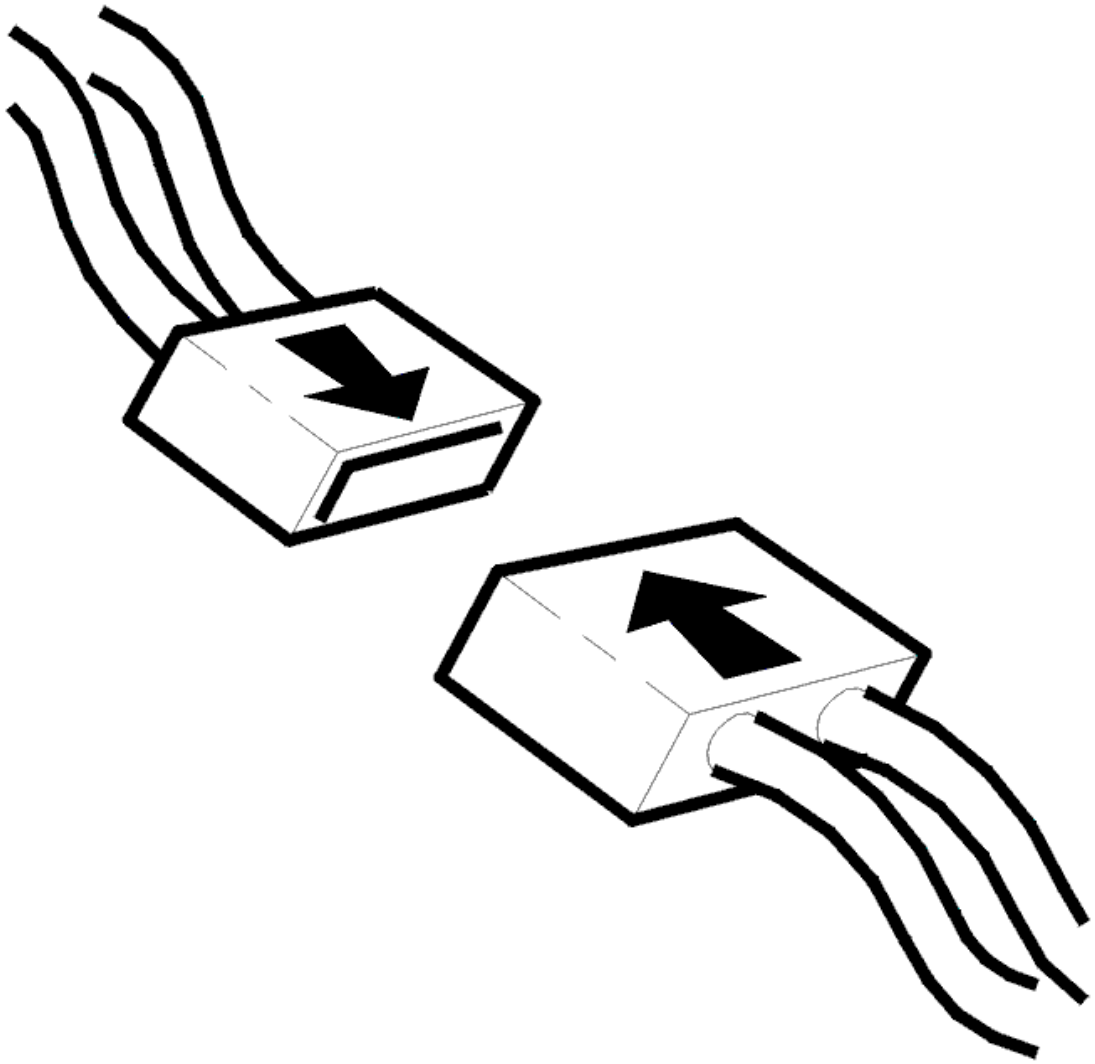

Fig. 88: Connecting Connector
Courtesy of VOLVO CARS CORPORATION

- Ignition off
- Reinstall the connectors, components etc.
- Ignition on.

  Check that the function for the relevant button or switch is correct.

Is the function OK?

- **YES**

  VERIFIED: Troubleshooting has been completed.

- **NO**

  Refer to **INFORMATION**

INFORMATION

FAULT-TRACING INFORMATION

The fault should have been detected and remedied. As this is not the case fault-tracing has failed.

Exit fault-tracing for this diagnostic trouble code (DTC) or make another attempt.

CEM-8C12: REAR FOG SWITCH ACTIVATED TOO LONG (2005-2012)

DIAGNOSTIC TROUBLE CODE (DTC) INFORMATION CEM-8C12

Condition

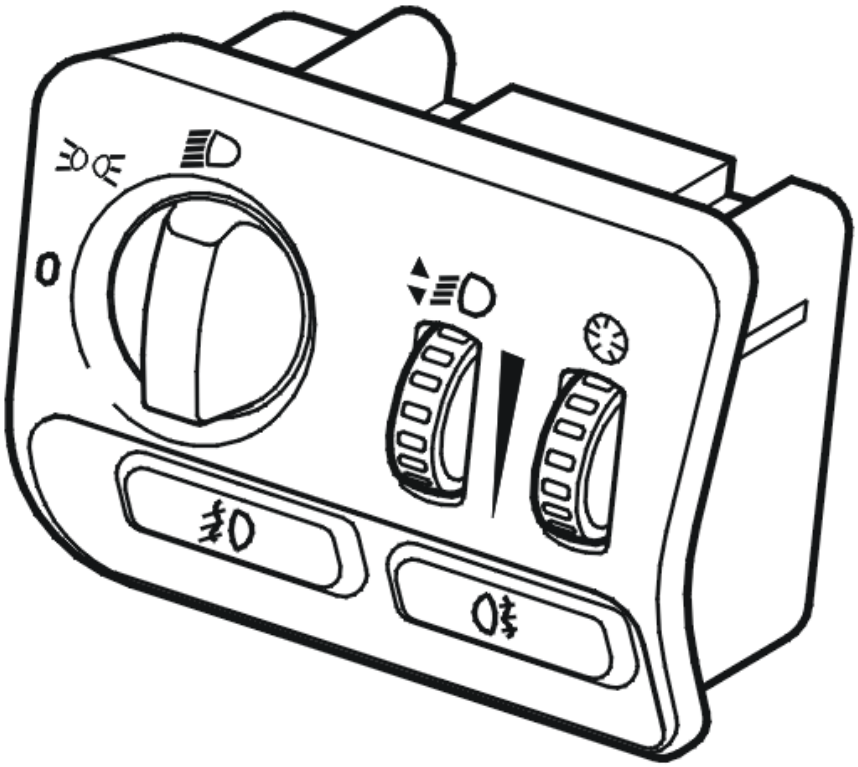

Fig. 89: Identifying Light Switch Module (LSM)
Courtesy of VOLVO CARS CORPORATION

The central electronic module (CEM) communicates with the light switch module (LSM).

The diagnostic trouble code (DTC) is stored if the central electronic module (CEM) receives information from the light switch module (LSM) indicating that it has detected that the switch for the rear fog lamps has been activated for more than 60 seconds.

The diagnostic trouble code (DTC) can be diagnosed at ignition switch position II.

Substitute Value

- None.

Possible Source

- Damaged switch for the rear fog lamps
- Fault in the communication with the light switch module (LSM).

Fault symptom[s]

- The rear fog lamp does not work.

ACTIVATED TOO LONG

CHECKING THE CONTROL

The diagnostic trouble code (DTC) is stored when a button or switch has been depressed for a long time.

If the fault is intermittent, it has been registered previously but is no longer present. Intermittent faults can be caused by interference at start up or can be a different type of fault which occurs on different occasions. The fault is evaluated depending on how it occurs.

Check that the button or switch does not stick in the activated position.

Remedy as necessary.

Other information

see **SWITCHES LIGHTS, REPLACING**

- **Continue**

  Refer to **VERIFICATION**

VERIFICATION

VERIFICATION

HINT: After carrying out the repair, check that the fault has been remedied.

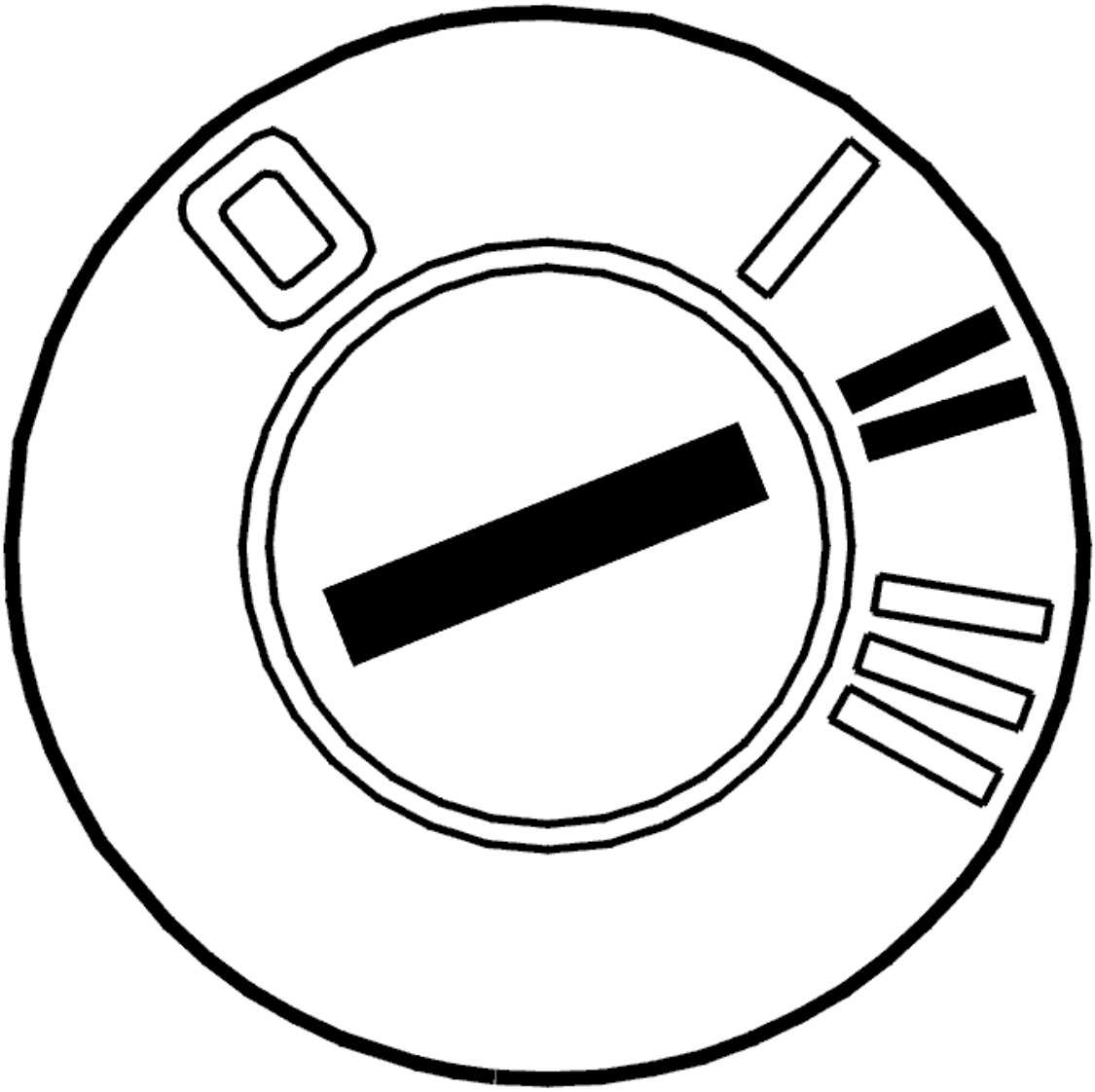

Fig. 90: Identifying Ignition ON
Courtesy of VOLVO CARS CORPORATION

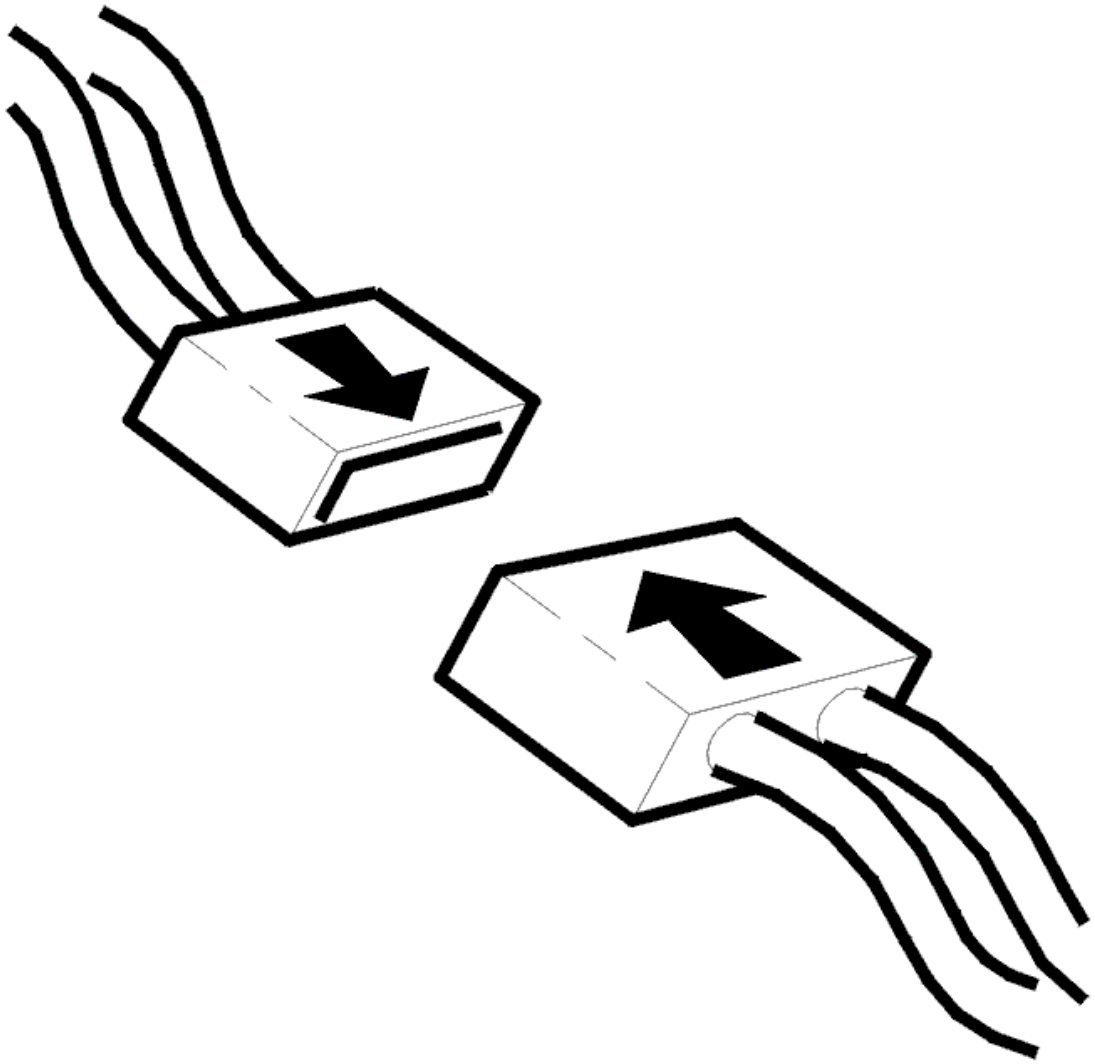

Fig. 91: Connecting Connector
Courtesy of VOLVO CARS CORPORATION

- Ignition off
- Reinstall the connectors, components etc.
- Ignition on.

  Check that the function for the relevant button or switch is correct.

Is the function OK?

- **YES**

  VERIFIED: Troubleshooting has been completed.

- **NO**

  Refer to **INFORMATION**

INFORMATION

FAULT-TRACING INFORMATION

The fault should have been detected and remedied. As this is not the case fault-tracing has failed.

Exit fault-tracing for this diagnostic trouble code (DTC) or make another attempt.

CEM-8C12: REAR FOG LAMP SWITCH. SIGNAL TOO LOW. INTERMITTENT FAULT (2003-2004)

DIAGNOSTIC TROUBLE CODE INFORMATION

Condition

Rear fog lamp switch must be activated for at least 60 seconds for the diagnostic trouble code to be detected. If the central electronic module (CEM) detects that the rear fog lamp switch has been registered for 60 seconds, diagnostic trouble code CEM-8C12 is displayed.

Possible Source

- Faulty rear fog lamp switch.

Fault symptom[s]

- Rear fog lamp does not work.

FAULTY SIGNAL/SIGNAL TOO LOW. INTERMITTENT FAULT.

see **FAULTY SIGNAL/SIGNAL TOO LOW. INTERMITTENT FAULT.**

CEM-8C12: REAR FOG LAMP SWITCH. SIGNAL TOO LOW. PERMANENT FAULT (2003-2004)

DIAGNOSTIC TROUBLE CODE INFORMATION

see **DIAGNOSTIC TROUBLE CODE INFORMATION**

SIGNAL TOO LOW. PERMANENT FAULT

REPLACING THE COMPONENT

The diagnostic trouble code (DTC) indicates that the light switch is defective.

Replace the light switch.

Other information:

- To replace the light switch, see **SWITCHES LIGHTS, REPLACING** .
- **Continue**

  Refer to **VERIFICATION**

VERIFICATION

VERIFICATION

HINT: After the repair it is necessary to check that the fault has been rectified.

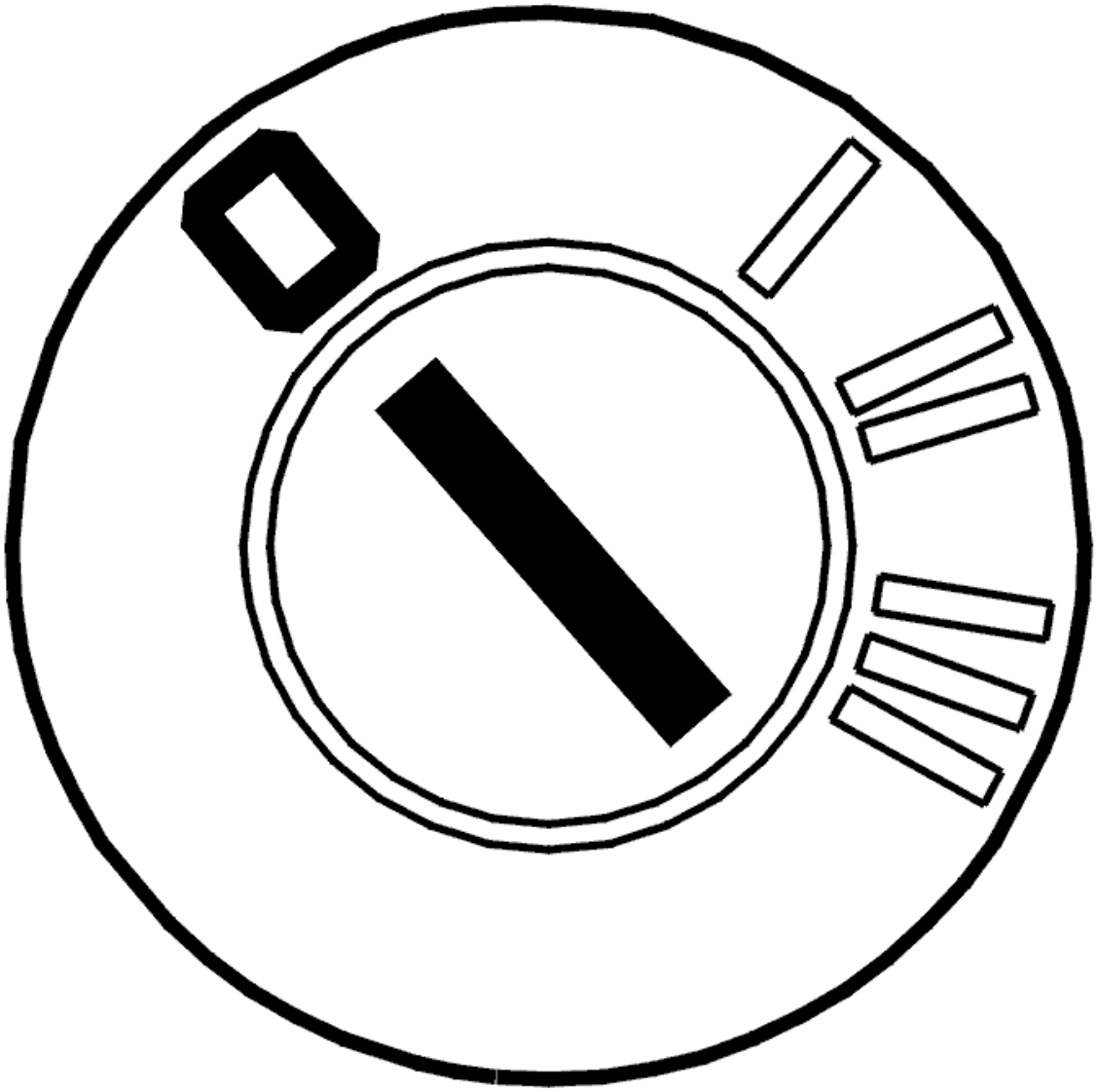

Fig. 92: Identifying Ignition OFF
Courtesy of VOLVO CARS CORPORATION

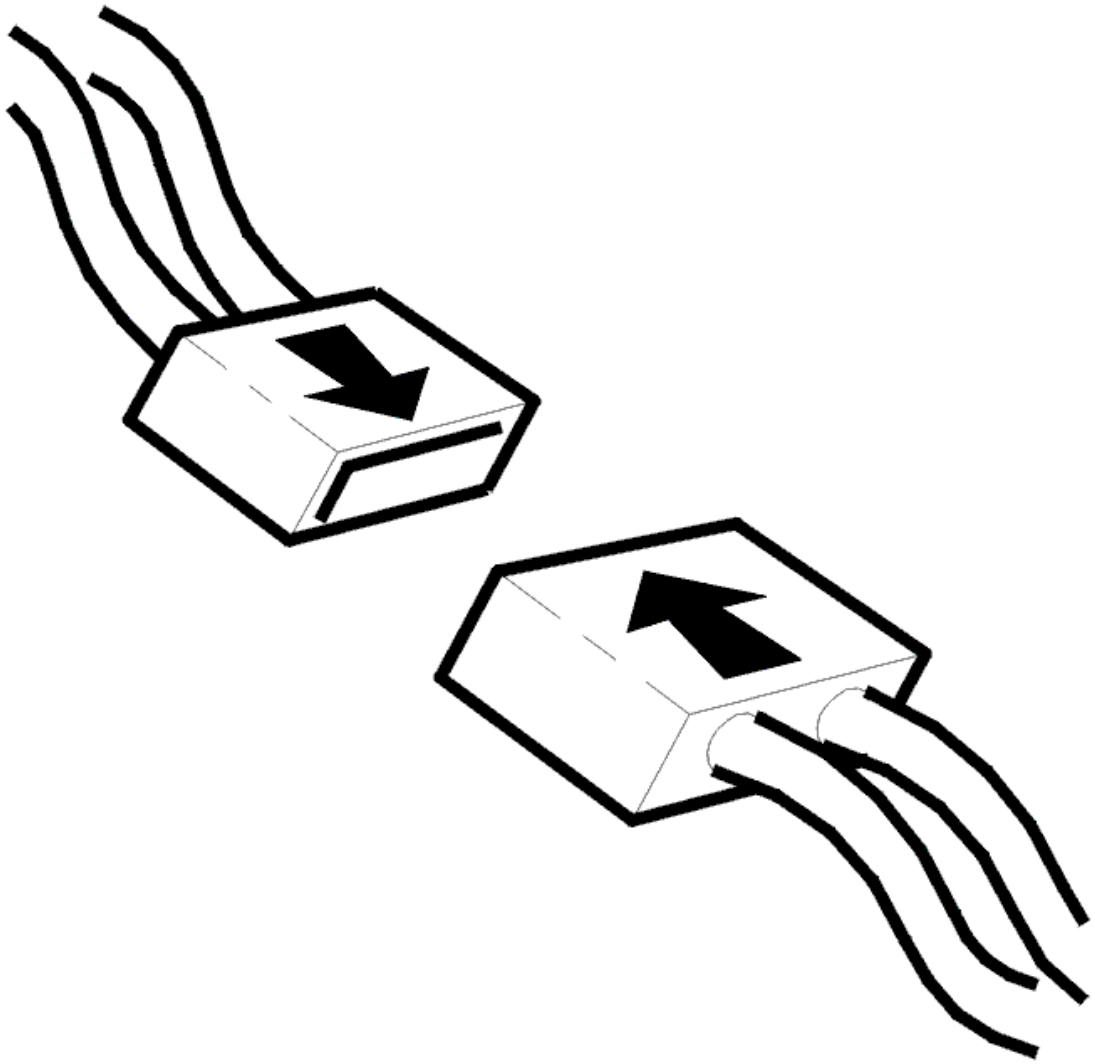

Fig. 93: Connecting Connector
Courtesy of VOLVO CARS CORPORATION

- Ignition off.
- Connect the connectors, install the components, etc.

  Read the button position.

  Activate the control button for the rear fog lamp.

  Additional information:

  - The value should vary depending on whether the button is pressed in or not activated.

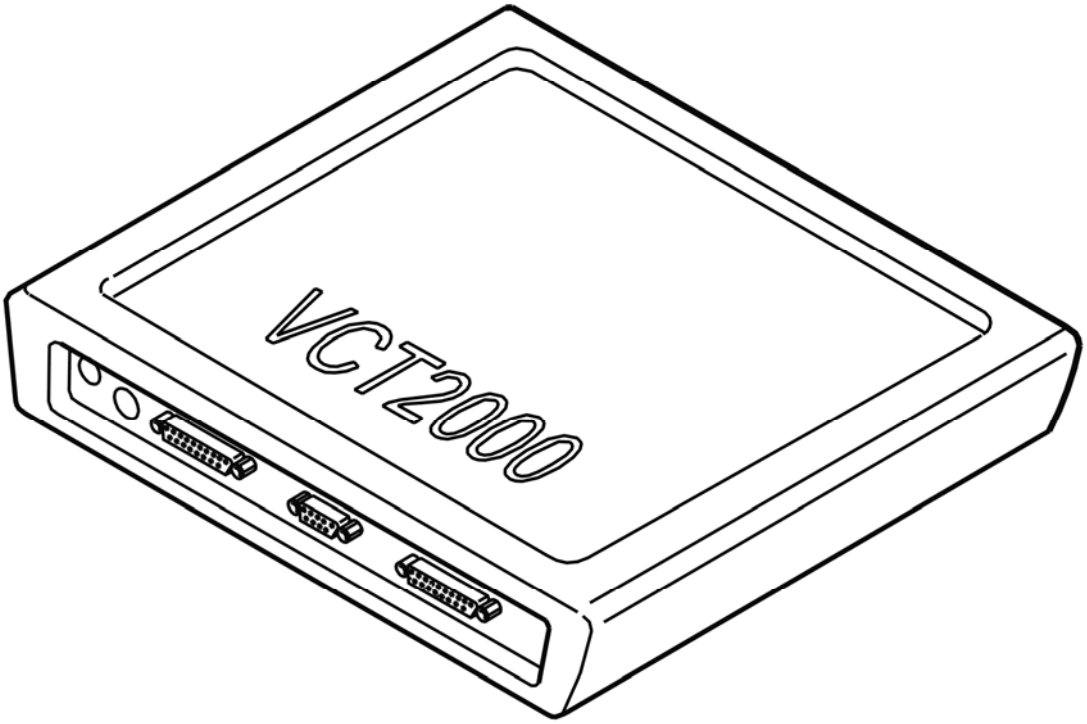

Fig. 94: Identifying VCT2000 Diagnostic Tool Symbol In VIDA
Courtesy of VOLVO CARS CORPORATION

Does it work?

- **YES**

  VERIFIED: Troubleshooting has been completed.

- **NO**

  Refer to **INFORMATION**

INFORMATION

FAULT-TRACING INFORMATION

The fault should have been detected and remedied. As this is not the case fault-tracing has failed.

Exit fault-tracing for this diagnostic trouble code (DTC) or make another attempt.

CEM-8C13: FRONT FOG LAMP RELAY. SIGNAL TOO HIGH. INTERMITTENT FAULT (2003-2004)

DIAGNOSTIC TROUBLE CODE INFORMATION

Condition

Front fog lamp relay must be activated to display the diagnostic trouble code. If the central electronic module (CEM) indicates that the front fog lamp is short circuited to the battery voltage, diagnostic trouble code CEM-8C13 is displayed.

Possible Source

- The front fog lamp relay is short circuited to voltage supply.

Fault symptom[s]

- Front fog lamp is not working.

SIGNAL TOO HIGH/SIGNAL MISSING. INTERMITTENT FAULT.

see **SIGNAL TOO HIGH/SIGNAL MISSING. INTERMITTENT FAULT.**

CEM-8C13: FRONT FOG LAMP RELAY. SIGNAL TOO HIGH. PERMANENT FAULT (2003-2004)

DIAGNOSTIC TROUBLE CODE INFORMATION

see **DIAGNOSTIC TROUBLE CODE INFORMATION**

SIGNAL TOO HIGH/SIGNAL MISSING. PERMANENT FAULT

CHECKING THE RELAY

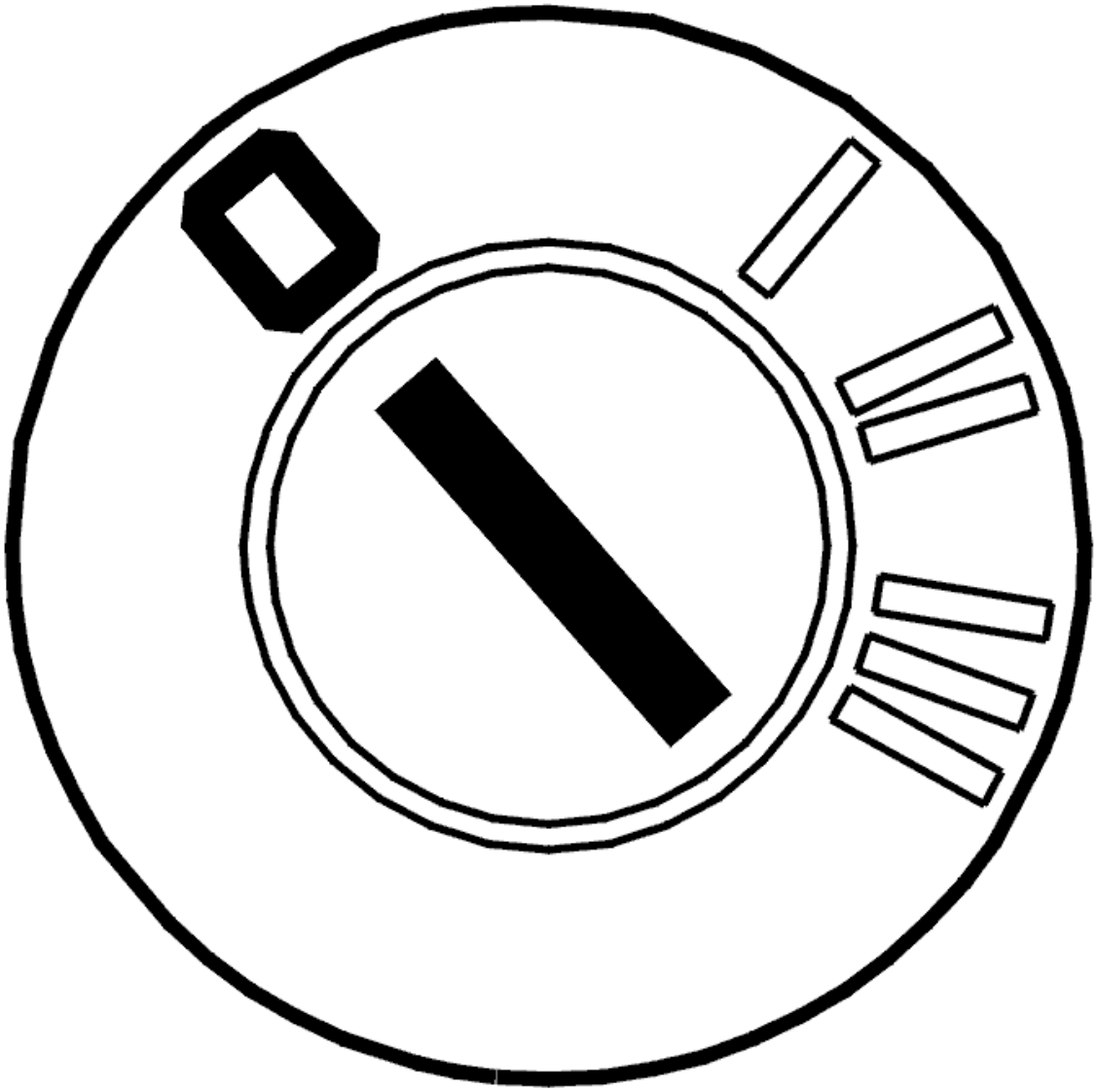

Fig. 95: Identifying Ignition OFF
Courtesy of VOLVO CARS CORPORATION

- Ignition off.

  Check that relay 2/34 is installed correctly. At the same time check the relay connections, in particular 2/34 2, for:

  diagnostic trouble code CEM-8C13

  short circuit to voltage supply as described in, see **SHORT-CIRCUIT TO SUPPLY VOLTAGE. PERMANENT FAULTS** .

  diagnostic trouble code CEM-8C15

  open circuit as described in, see **OPEN-CIRCUIT, PERMANENT FAULTS** .

Check that relay 2/34 is installed correctly.

Do the necessary corrective action.

Additional information:

- To replace relay:
  - For -2004, see: **CENTRAL ELECTRONIC MODULE (CEM), REPLACING**
  - For 2005-, see: **CENTRAL ELECTRONIC MODULE (CEM), REPLACING** .
- To connect the test box, see **CONNECTING THE BREAKOUT BOX** .

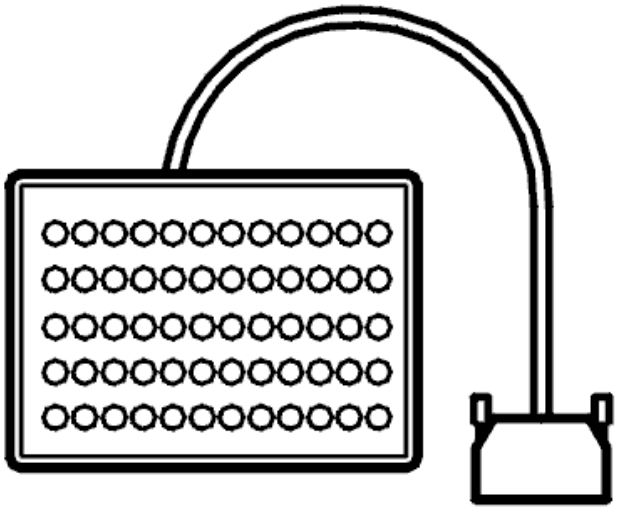

Fig. 96: Breakout Box
Courtesy of VOLVO CARS CORPORATION

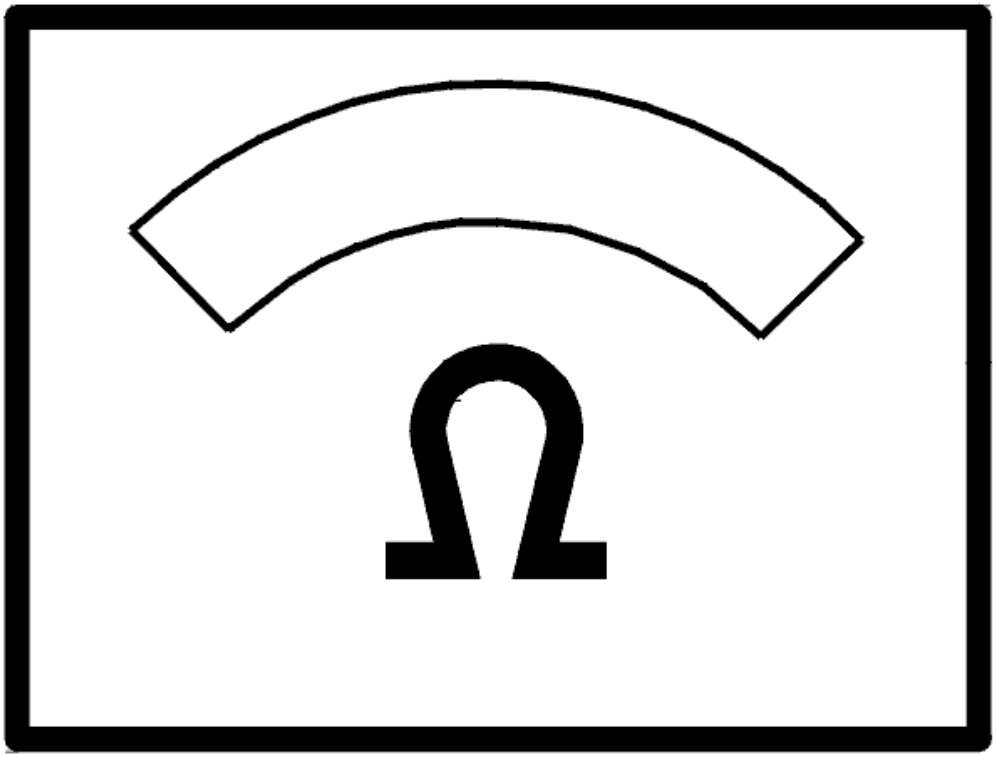

Fig. 97: Identifying Ohm Meter
Courtesy of VOLVO CARS CORPORATION

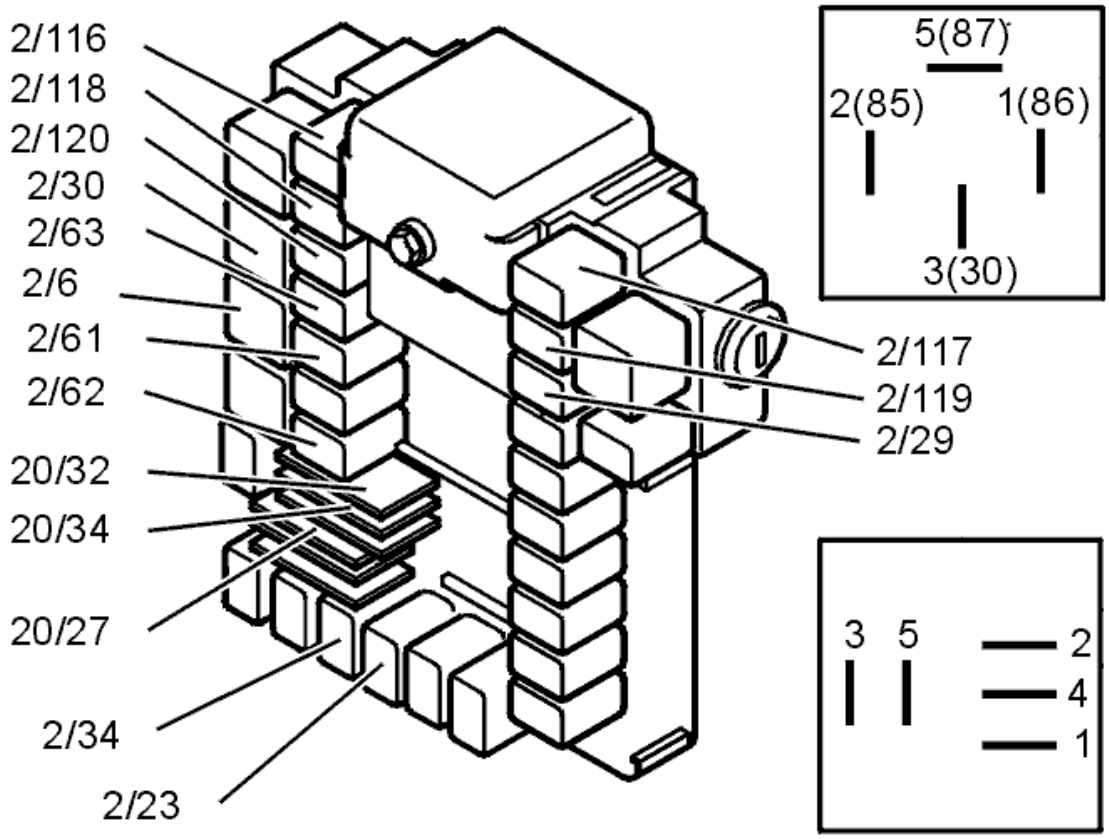

Fig. 98: Identifying Relays
Courtesy of VOLVO CARS CORPORATION

Is there a fault?

- **YES**

  Refer to **VERIFICATION**

- **NO**

  Refer to **REPLACING THE COMPONENT**

REPLACING THE COMPONENT

Replace relay.

- For -2004, see: **CENTRAL ELECTRONIC MODULE (CEM), REPLACING** .
- For 2005-, see: **CENTRAL ELECTRONIC MODULE (CEM), REPLACING** .

- **Continue**

  Refer to **VERIFICATION**

VERIFICATION

VERIFICATION

HINT: After the repair it is necessary to check that the fault has been rectified.

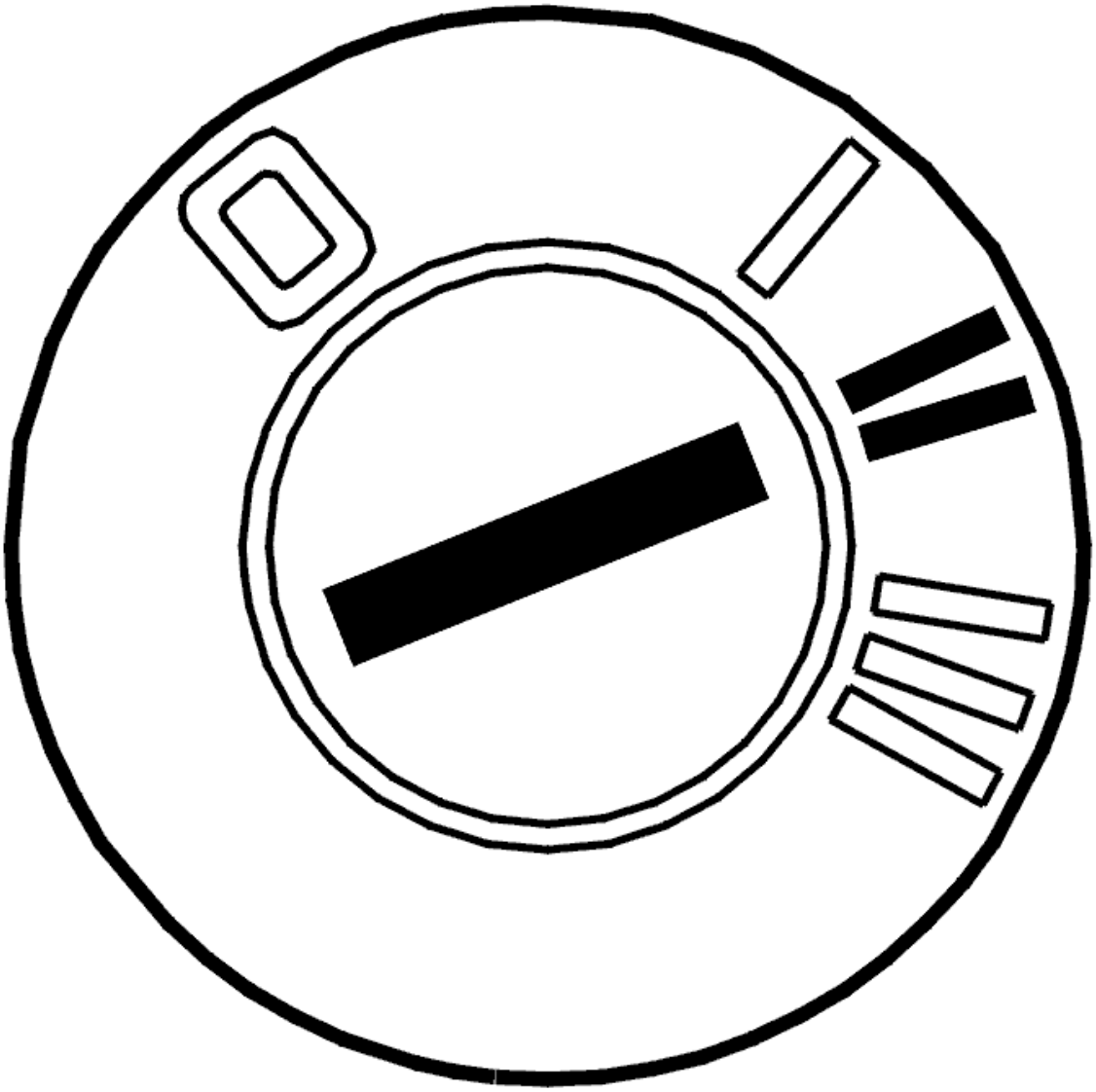

Fig. 99: Identifying Ignition ON
Courtesy of VOLVO CARS CORPORATION

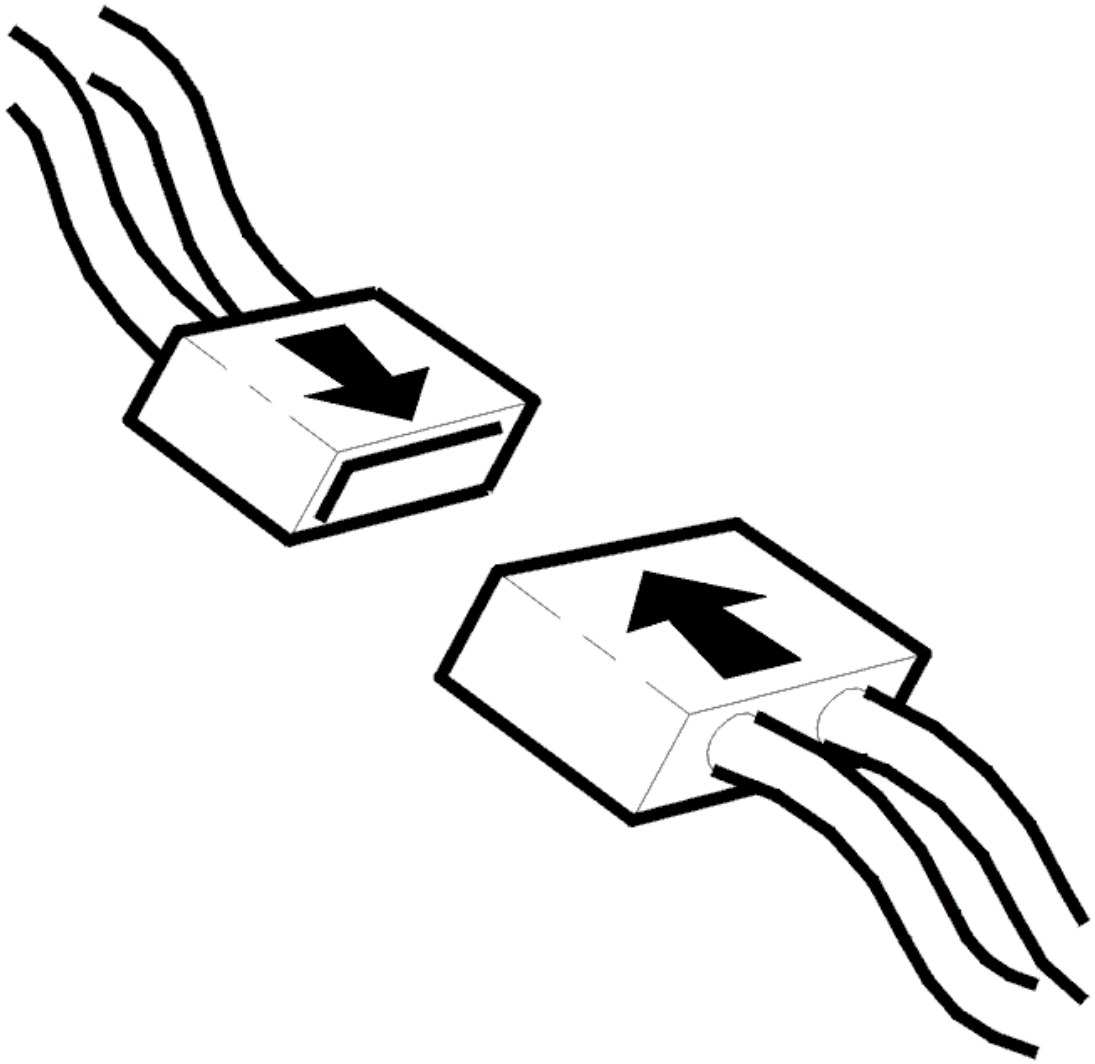

Fig. 100: Connecting Connector
Courtesy of VOLVO CARS CORPORATION

- Ignition off.
- Connect the connectors, install the components, etc.
- Ignition on.

Read front fog lamp relay.

The value will change between activated and not activated if the front fog lamp switch is operated.

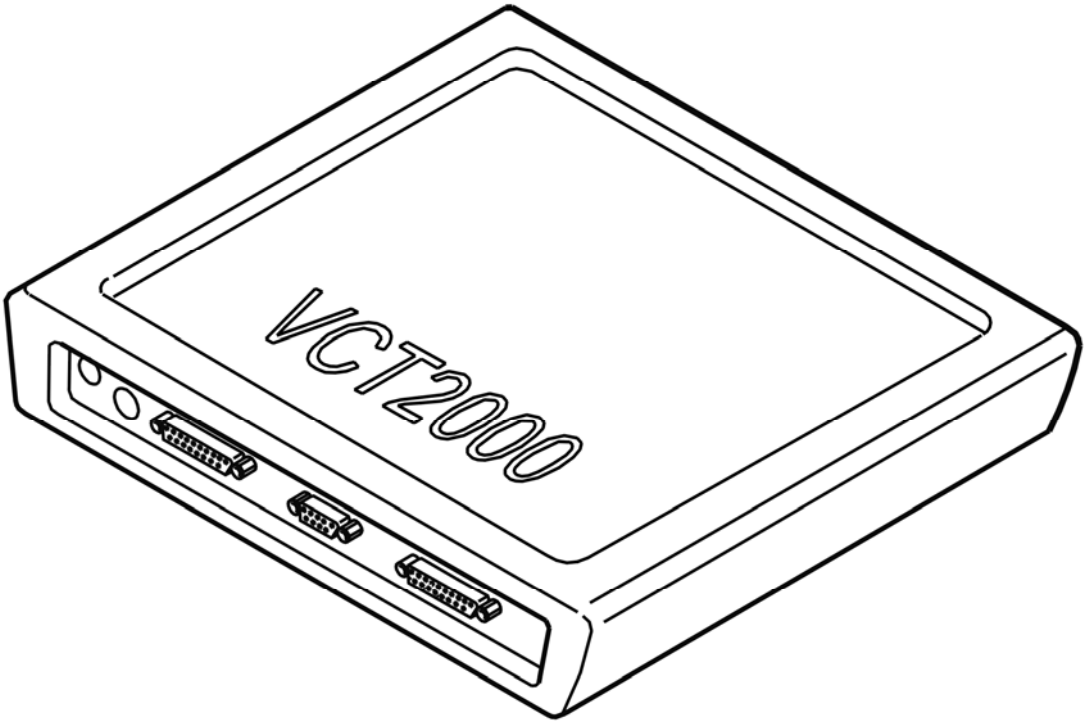

Fig. 101: Identifying VCT2000 Diagnostic Tool Symbol In VIDA
Courtesy of VOLVO CARS CORPORATION

Does it work?

- **YES**

  VERIFIED: Troubleshooting has been completed.

- **NO**

  Refer to **INFORMATION**

INFORMATION

FAULT-TRACING INFORMATION

The fault should have been detected and remedied. As this is not the case fault-tracing has failed.

Exit fault-tracing for this diagnostic trouble code (DTC) or make another attempt.

CEM-8C15: FRONT FOG LAMP RELAY. SIGNAL MISSING. INTERMITTENT FAULT (2003-2004)

DIAGNOSTIC TROUBLE CODE INFORMATION

Condition

Front fog lamp relay should not have to be activated to display the diagnostic trouble code. If the central electronic module (CEM) indicates that the front fog lamp circuit is not closed, diagnostic trouble code CEM-8C15 is displayed.

Possible Source

- Open circuit in front fog lamp relay circuit.

Fault symptom[s]

- Front fog lamp is not working.

SIGNAL TOO HIGH/SIGNAL MISSING. INTERMITTENT FAULT.

see **SIGNAL TOO HIGH/SIGNAL MISSING. INTERMITTENT FAULT.**

CEM-8C15: FRONT FOG LAMP RELAY. SIGNAL MISSING. PERMANENT FAULT (2003-2004)

DIAGNOSTIC TROUBLE CODE INFORMATION

see **DIAGNOSTIC TROUBLE CODE INFORMATION**

SIGNAL TOO HIGH/SIGNAL MISSING. PERMANENT FAULT

see **SIGNAL TOO HIGH/SIGNAL MISSING. PERMANENT FAULT**

CEM-8D01: IGNITION LOCK LIGHT AND EXTRA BRAKE LIGHT. SIGNAL TOO LOW. INTERMITTENT FAULT (2003-2004)

DIAGNOSTIC TROUBLE CODE (DTC) INFORMATION

Condition

For the diagnostic trouble code (DTC) to be stored, neither the ignition switch lighting or the stop (brake) lamp may be activated. Diagnostic trouble code (DTC) CEM-8D01 is stored if the central electronic module (CEM) indicates a short-circuit to ground in the high level additional stop (brake) lamp or the ignition ring lighting.

Possible Source

- Over heated.
- Short-circuit to ground in the circuit for the ignition switch or the stop (brake) lamp circuit.

- Defective high level stop (brake) lamp.

Fault symptom[s]

- The stop (brake) lamp does not light when the brake pedal is depressed.

SIGNAL TOO LOW. INTERMITTENT FAULT.

CHECKING THE WIRE

Check the wire between central electronic module (CEM) 17D and ignition lock light (16/65) 5 for an intermittent short circuit to ground as described in, see **SHORT-CIRCUIT TO GROUND, INTERMITTENT FAULTS** and for a loose contact as described in **LOOSE CONNECTIONS (TERMINALS)** .

Check the wire between central electronic module (CEM) 5B and high level brake light (10/19) 5 for an intermittent short circuit to ground as described in, see **SHORT-CIRCUIT TO GROUND, INTERMITTENT FAULTS** and for a loose contact as described in **LOOSE CONNECTIONS (TERMINALS)** .

Also check the connector.

Additional information:

- For information on the central electronic module (CEM) connector:
  - For -2004, see: **CENTRAL ELECTRONIC MODULE (CEM), REPLACING**
  - For 2005-, see: **CENTRAL ELECTRONIC MODULE (CEM), REPLACING** .
- To connect the test box, see **CONNECTING THE BREAKOUT BOX**
- -2004: **SIGNAL SPECIFICATION**
- 2005-: **SIGNAL SPECIFICATION**

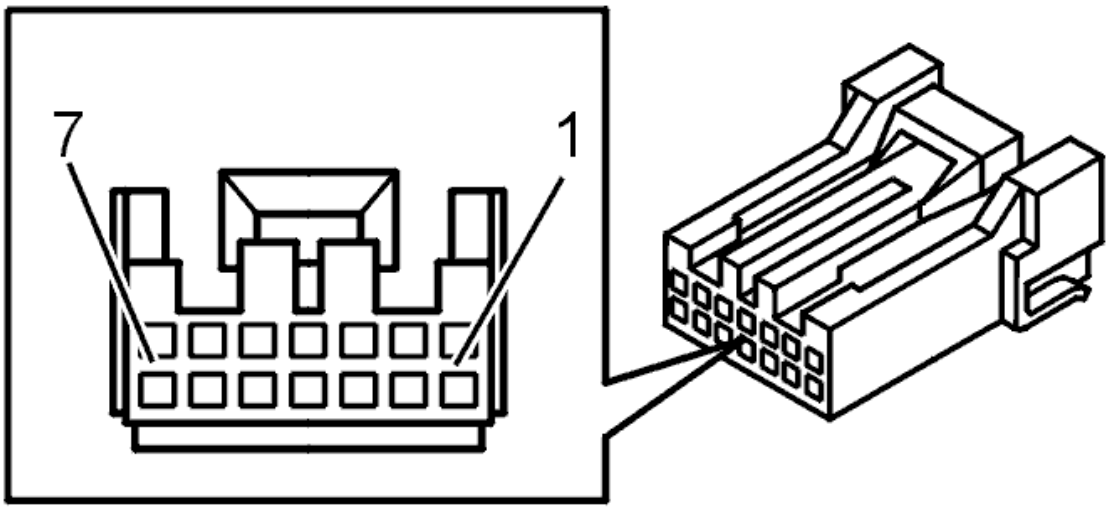

Fig. 102: Identifying Connector Terminals
Courtesy of VOLVO CARS CORPORATION

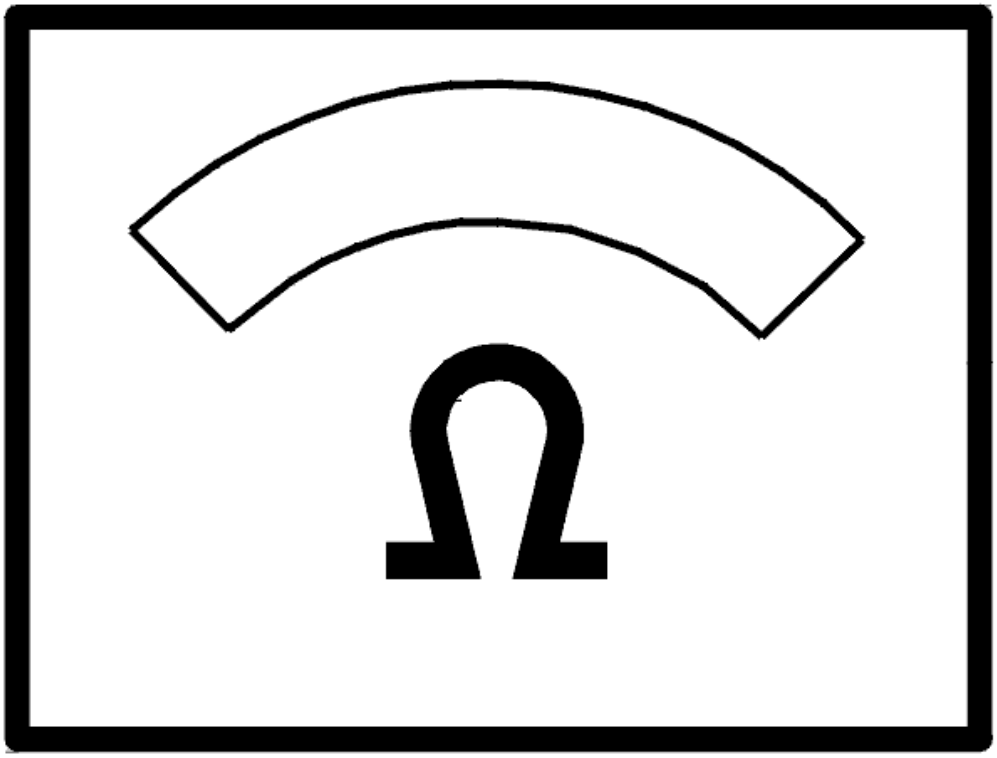

Fig. 103: Identifying Ohm Meter
Courtesy of VOLVO CARS CORPORATION

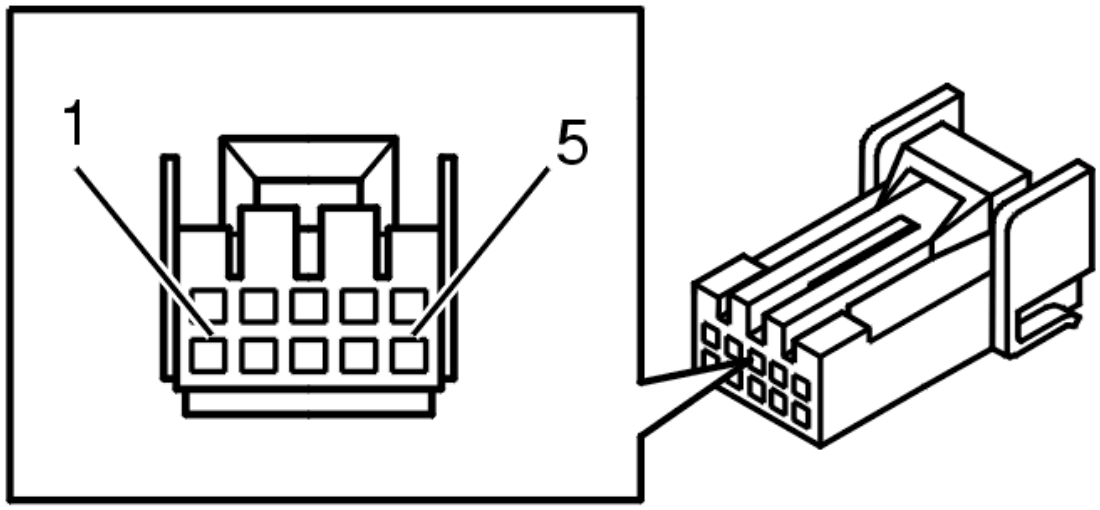

Fig. 104: 10 CD Changer Connector Terminals
Courtesy of VOLVO CARS CORPORATION

CEM-8D01: IGNITION LOCK LIGHT AND EXTRA BRAKE LIGHT. SIGNAL TOO LOW. PERMANENT FAULT (2003)

DIAGNOSTIC TROUBLE CODE (DTC) INFORMATION

see **DIAGNOSTIC TROUBLE CODE (DTC) INFORMATION**

SIGNAL TOO LOW. PERMANENT FAULT

CHECKING THE IGNITION LOCK WIRE

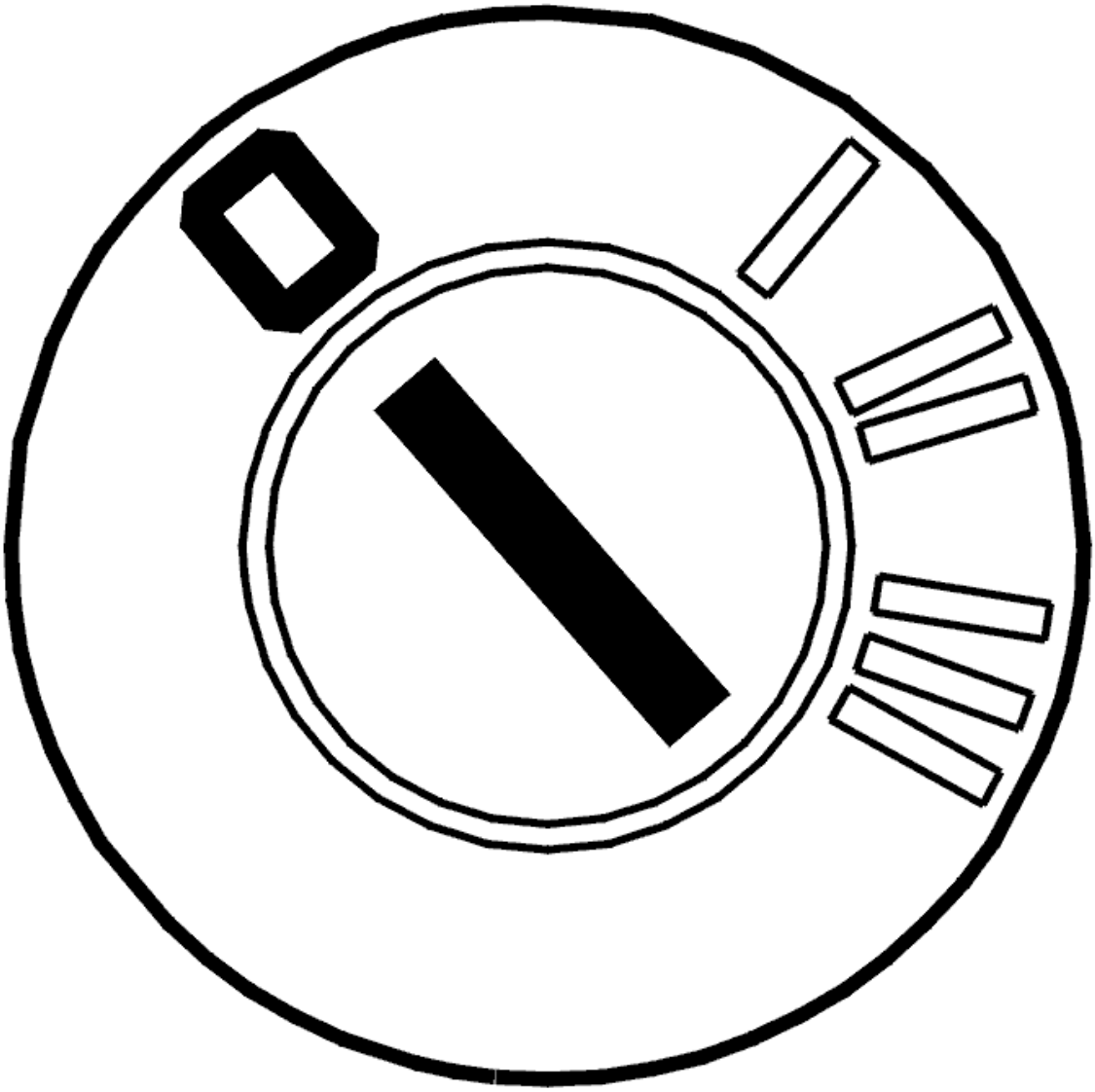

Fig. 105: Identifying Ignition OFF
Courtesy of VOLVO CARS CORPORATION

- Ignition off.

  Apply the brake then release the brake to check whether the brake light works correctly. If the high level brake light is not working, the fault may be caused by overheating. Wait about 10 minutes and check whether the fault was caused by overheating.

  If the brake light works, the diagnostic trouble code may also be caused by a fault in the lighting circuit to the ignition lock. If the ignition lock light does not work correctly, check the wire between central electronic module (CEM) 19D and ignition lock light (16/65) 5 for a short circuit to ground as described in, see **SHORT-CIRCUIT TO GROUND, PERMANENT FAULTS** .

  Do the necessary corrective action.

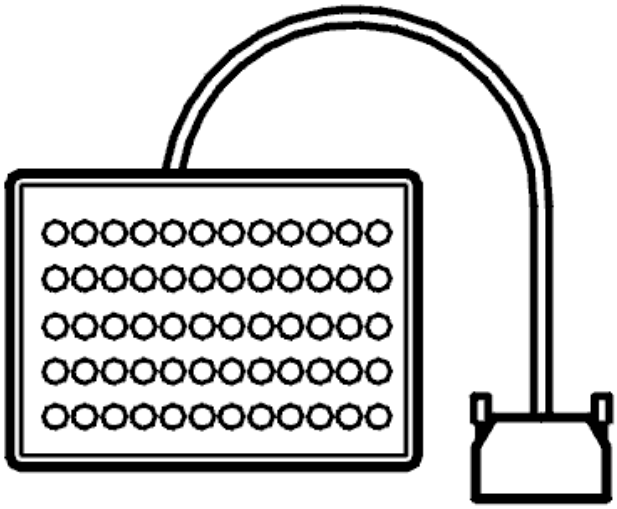

Fig. 106: Breakout Box
Courtesy of VOLVO CARS CORPORATION

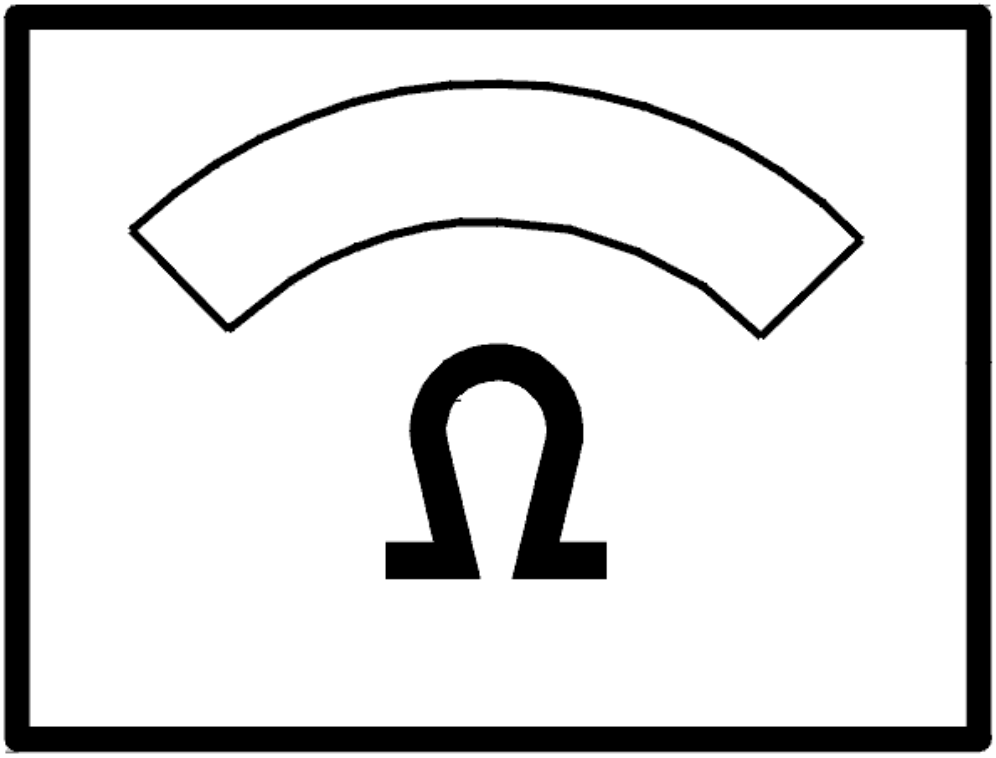

Fig. 107: Identifying Ohm Meter
Courtesy of VOLVO CARS CORPORATION

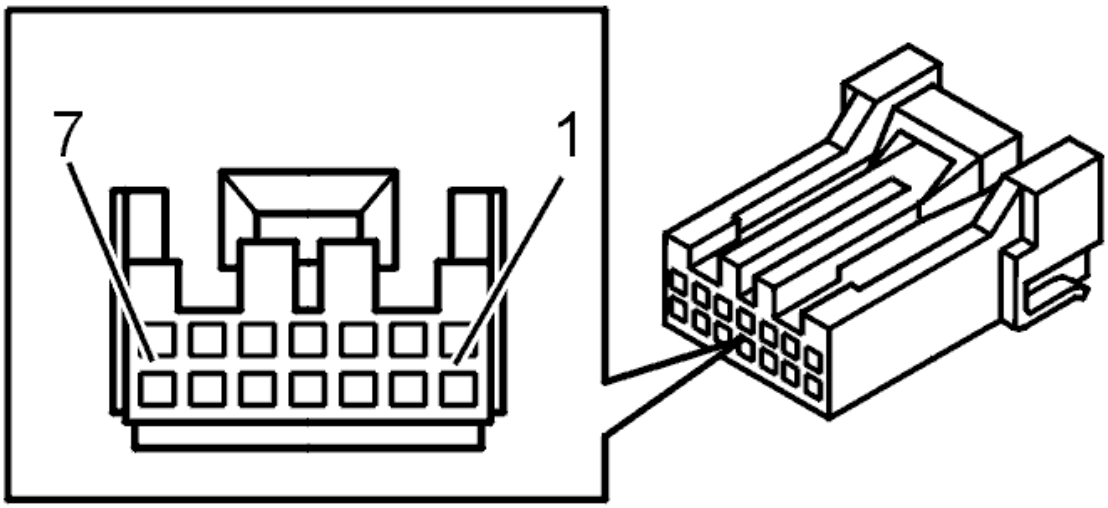

Fig. 108: Identifying Connector Terminals
Courtesy of VOLVO CARS CORPORATION

Are there any faults with the wire?

- **YES**

  Refer to **VERIFICATION**

- **NO**

  Refer to **CHECKING THE BRAKE LIGHT WIRE**

CHECKING THE BRAKE LIGHT WIRE

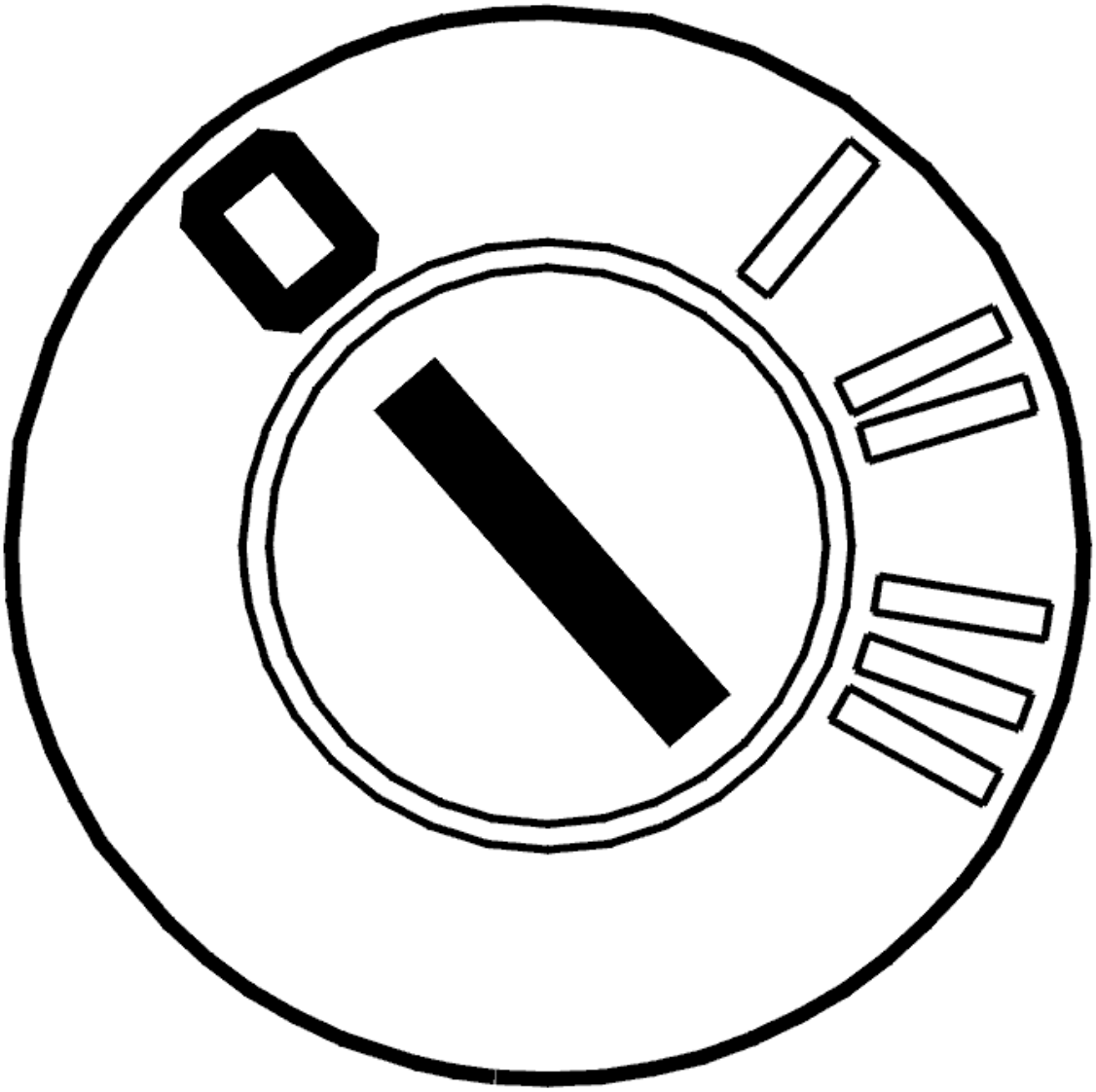

Fig. 109: Identifying Ignition OFF
Courtesy of VOLVO CARS CORPORATION

- Ignition off.

  After it has cooled, check the wire between central electronic module (CEM) 5B and high level brake light (10/19) 5 for a short circuit to ground as described in, see **SHORT-CIRCUIT TO GROUND, PERMANENT FAULTS** . Also check connector 54/13 11.

  Additional information:

  - For information on the central electronic module (CEM) connector:
    - For -2004, see: **CENTRAL ELECTRONIC MODULE (CEM), REPLACING**
    - For 2005-, see: **CENTRAL ELECTRONIC MODULE (CEM), REPLACING** .
  - To connect the test box, see **CONNECTING THE BREAKOUT BOX** .

- -2004: **SIGNAL SPECIFICATION**
- 2005-: **SIGNAL SPECIFICATION**

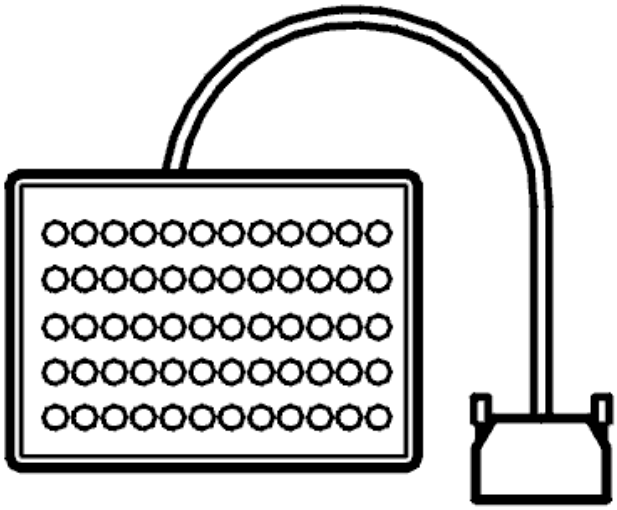

Fig. 110: Breakout Box
Courtesy of VOLVO CARS CORPORATION

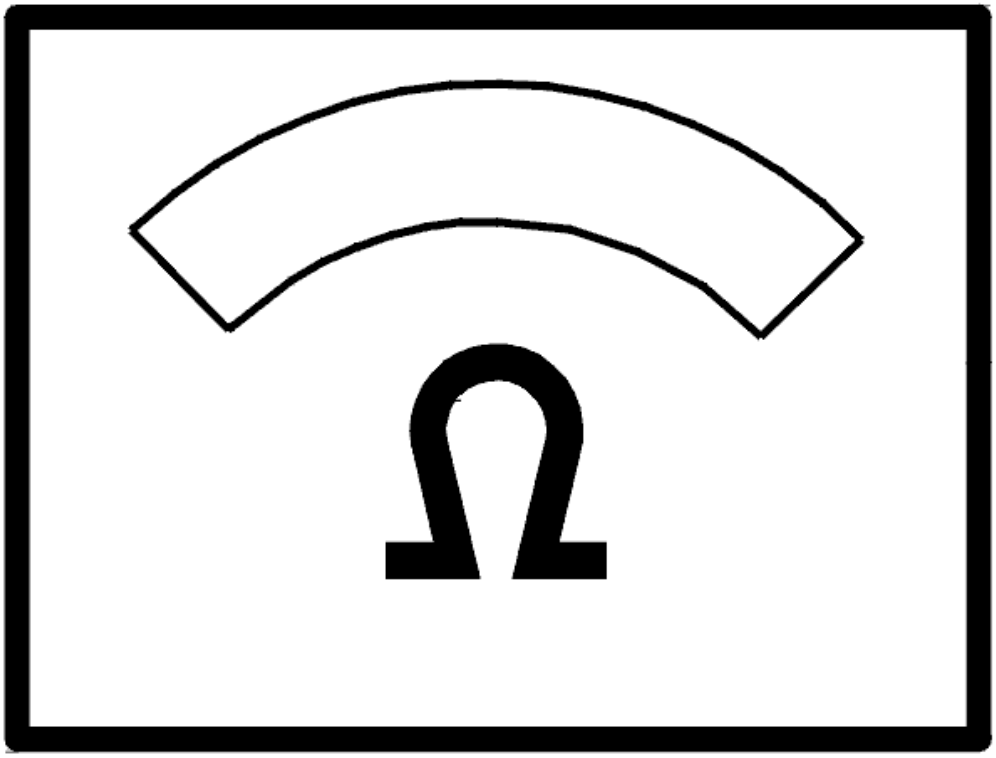

Fig. 111: Identifying Ohm Meter
Courtesy of VOLVO CARS CORPORATION

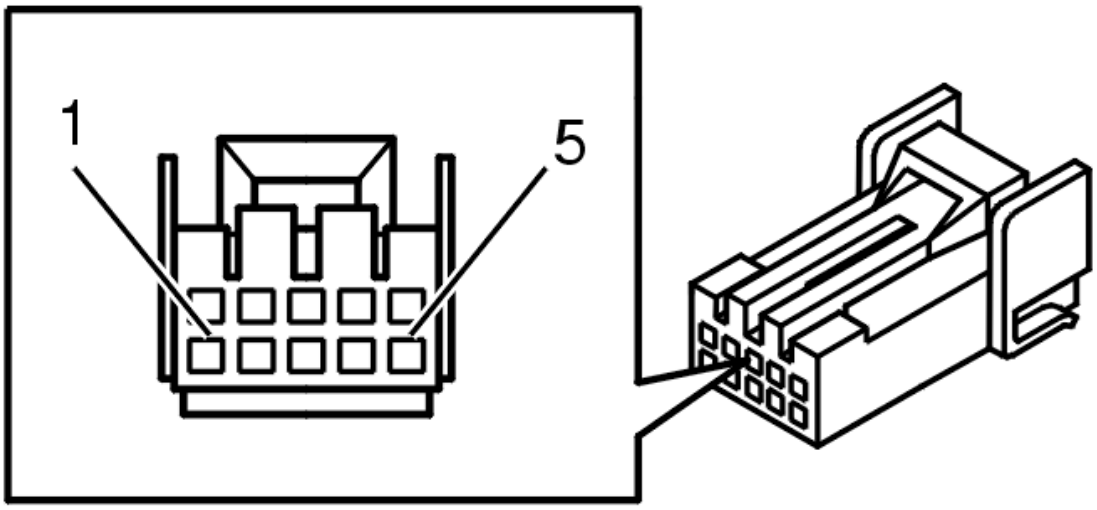

Fig. 112: 10 CD Changer Connector Terminals
Courtesy of VOLVO CARS CORPORATION

- **Continue**

  Refer to **VERIFICATION**

VERIFICATION

VERIFICATION

HINT: After the repair it is necessary to check that the fault has been rectified.

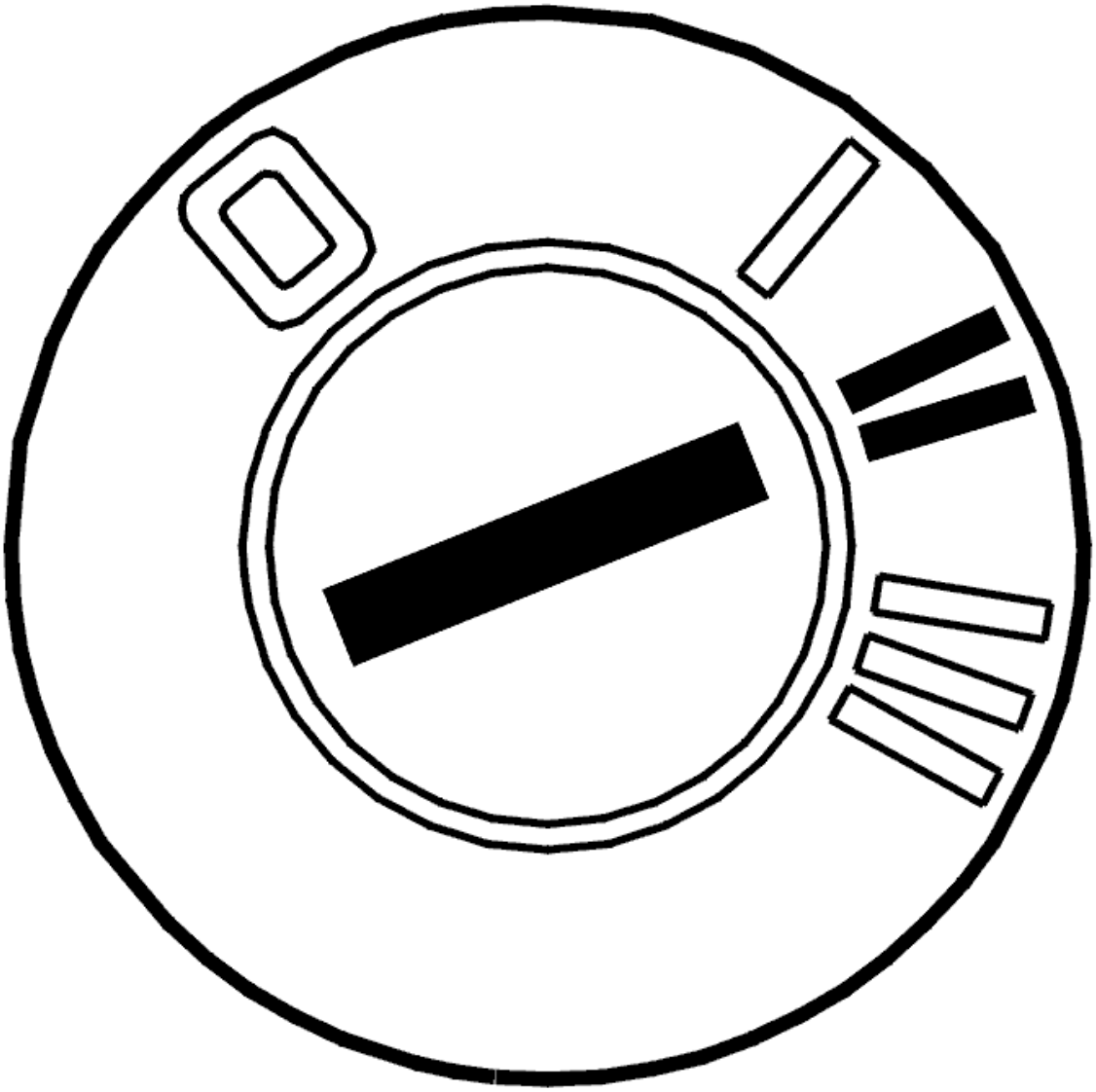

Fig. 113: Identifying Ignition ON
Courtesy of VOLVO CARS CORPORATION

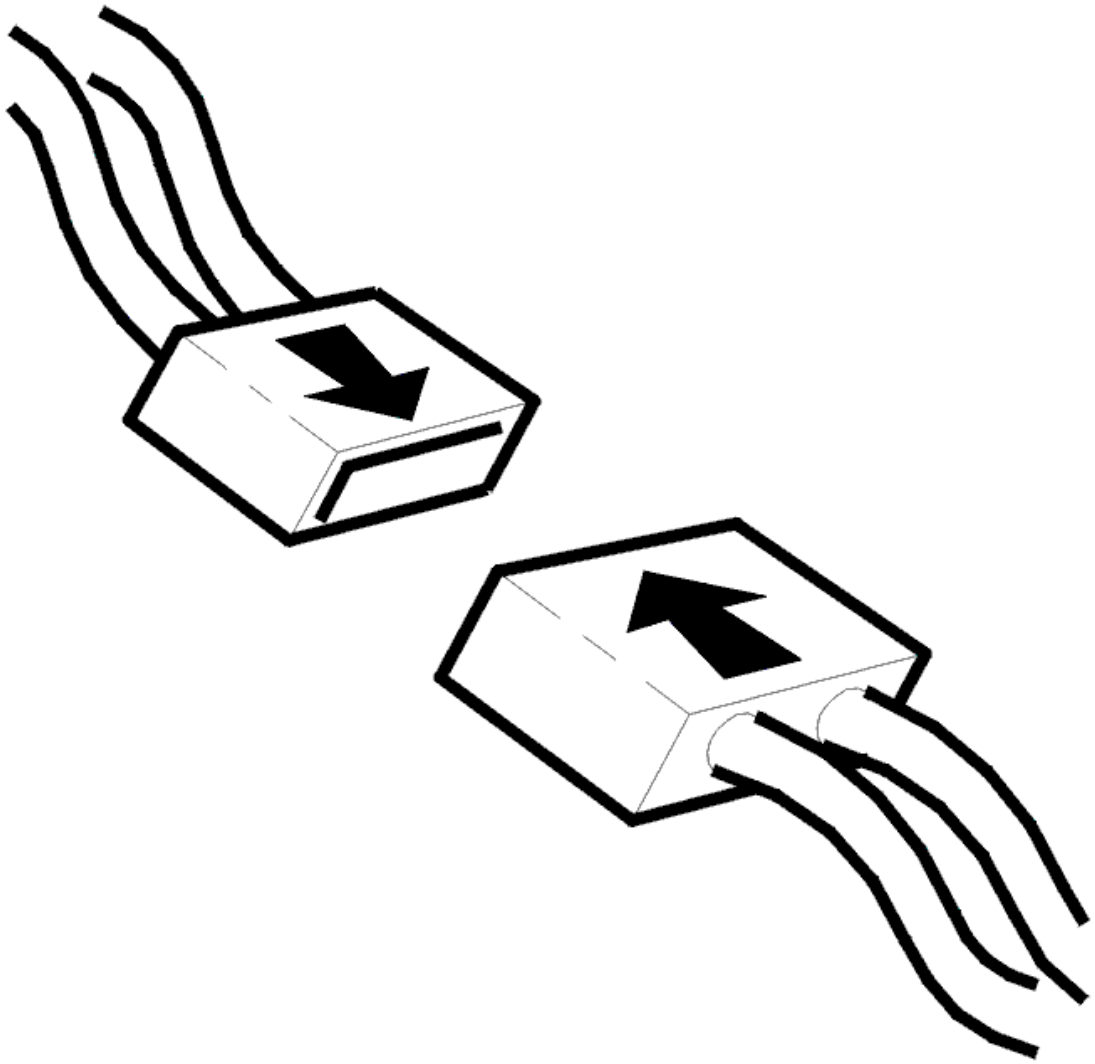

Fig. 114: Connecting Connector
Courtesy of VOLVO CARS CORPORATION

- Ignition off.
- Connect the connectors, install the components, etc.
- Ignition on.

  Read the diagnostic trouble codes.

  If diagnostic trouble code has changed to intermittent status this indicates that the fault is no longer activated.

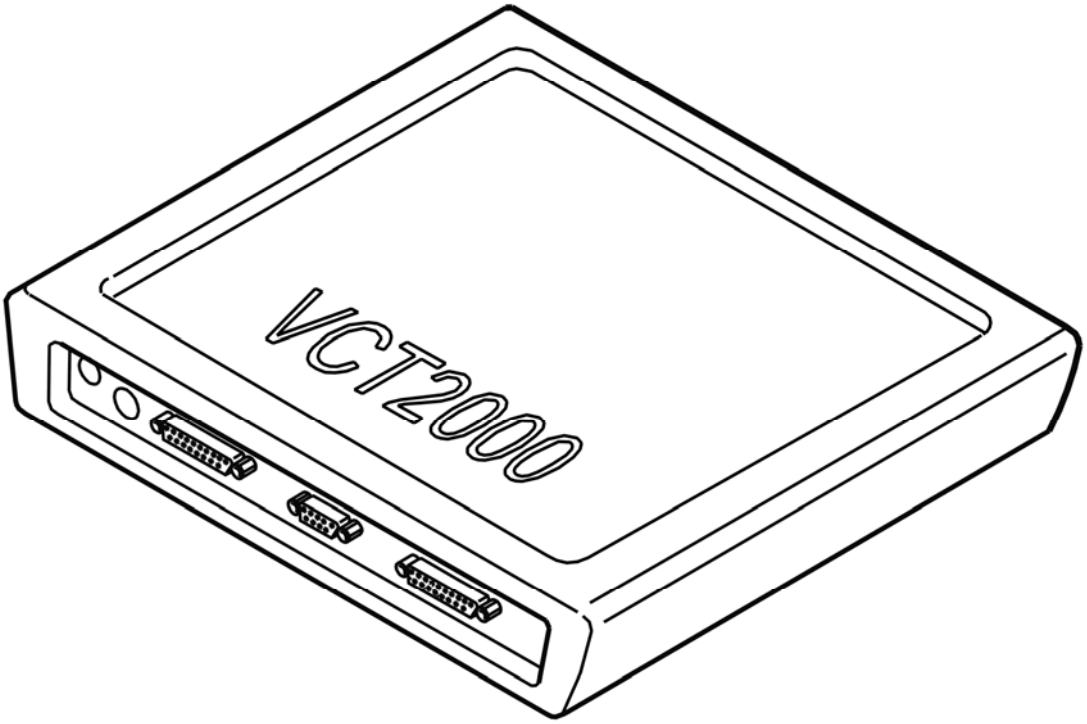

Fig. 115: Identifying VCT2000 Diagnostic Tool Symbol In VIDA
Courtesy of VOLVO CARS CORPORATION

Is the diagnostic trouble code intermittent?

- **YES**

  VERIFIED: Troubleshooting has been completed.

- **NO**

  Refer to **INFORMATION**

INFORMATION

FAULT-TRACING INFORMATION

The fault should have been detected and remedied. As this is not the case fault-tracing has failed.

Exit fault-tracing for this diagnostic trouble code (DTC) or make another attempt.

CEM-8D01: IGNITION SWITCH LIGHTING AND HIGH-MOUNTED STOP LAMP (LED). SIGNAL TOO LOW (2004)

DIAGNOSTIC TROUBLE CODE (DTC) INFORMATION CEM-8D01

Condition

For the diagnostic trouble code (DTC) to be stored, either the ignition switch lighting or the stop lamp must be activated. Diagnostic trouble code (DTC) CEM 8D01 is stored if the central electronic module (CEM) indicates a short-circuit to ground in the high level additional stop lamp or in the ignition ring lighting.

Possible Source

- Over heated
- Short-circuit to ground in the circuit for the ignition switch or the stop lamp circuit
- Defective high level stop lamp.

Fault symptom[s]

- The stop lamp does not light when the brake pedal is depressed.

SIGNAL TOO LOW. PERMANENT FAULT

see **SIGNAL TOO LOW. PERMANENT FAULT**

CEM-8D01: STOP LAMPS. SIGNAL TOO LOW (2005-2012)

DIAGNOSTIC TROUBLE CODE (DTC) INFORMATION CEM-8D01

Condition

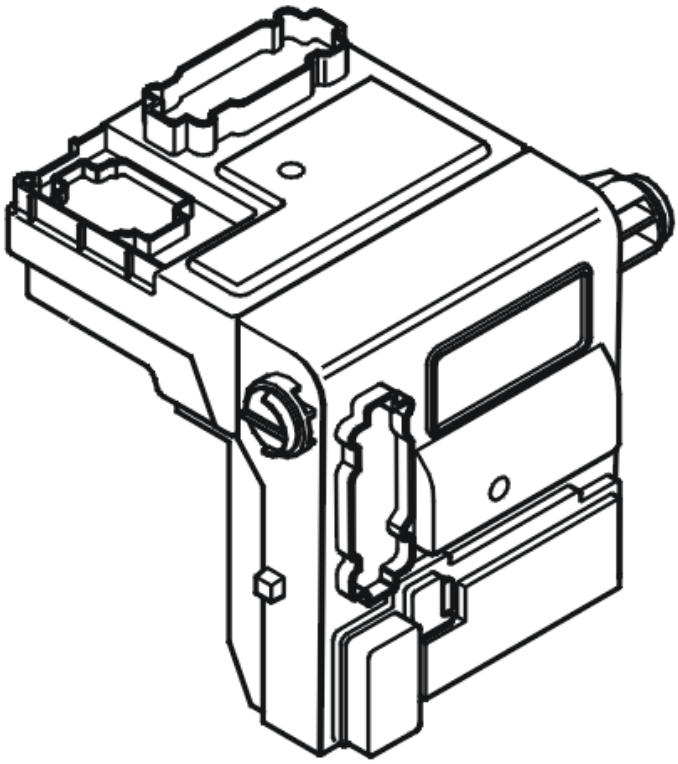

Fig. 116: Identifying Central Electronic Module (CEM)
Courtesy of VOLVO CARS CORPORATION

The central electronic module (CEM) checks the stop lamps.

The diagnostic trouble code (DTC) is stored if the central electronic module (CEM) detects that the signal from the lower brake lights is too low.

The diagnostic trouble code (DTC) can be diagnosed when the stop lamp is active.

Substitute Value

- If the fault has been detected in 200 ignition cycles, the output is closed permanently until the diagnostic trouble code is erased.

Possible Source

- The circuit between Central electronic module (CEM) and lower brake lights is short-circuited to ground.

Fault symptom[s]

- The stop lamp does not light when the brake pedal is depressed.

SIGNAL TOO LOW

CHECKING THE STATUS

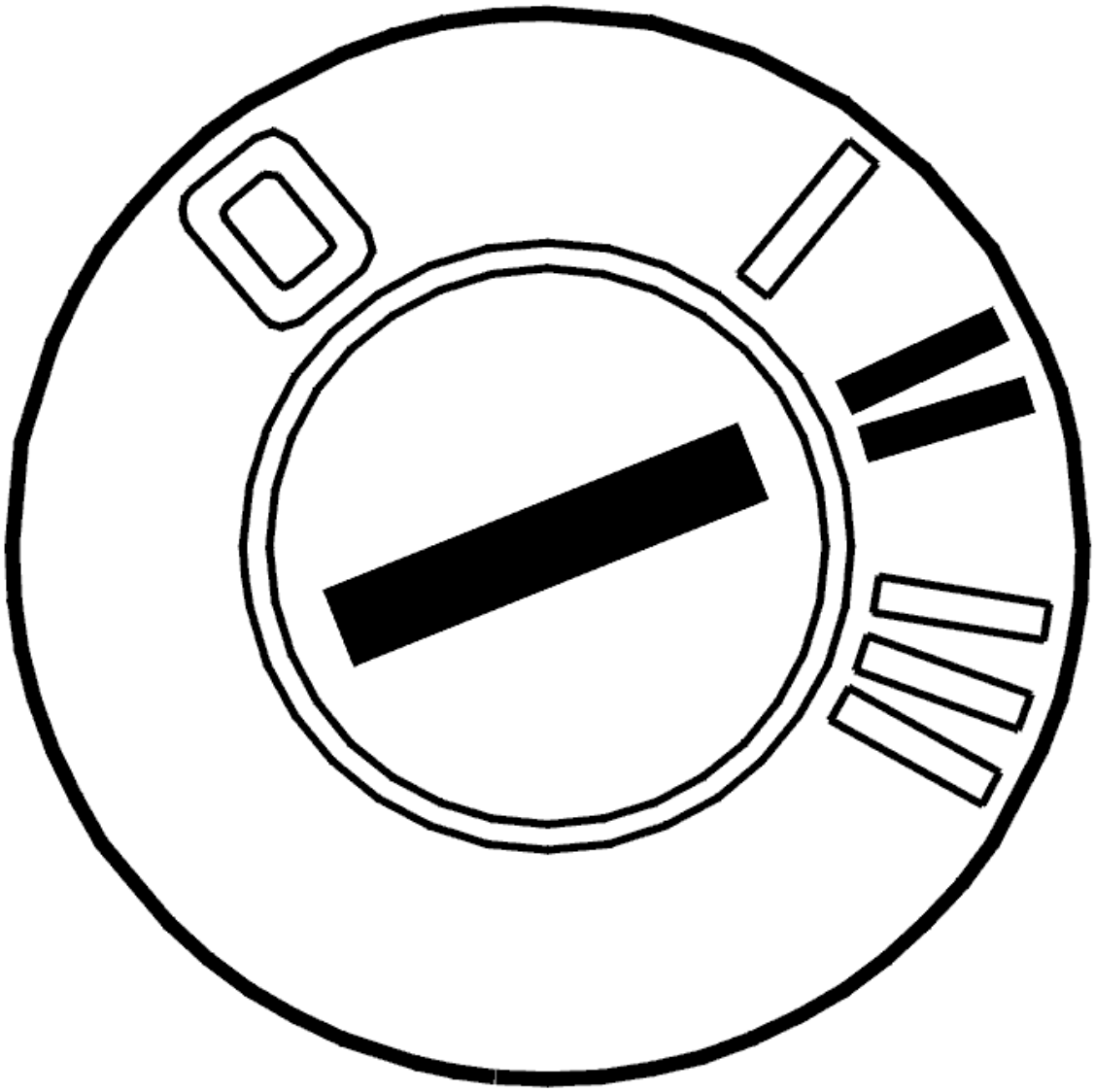

Fig. 117: Identifying Ignition ON
Courtesy of VOLVO CARS CORPORATION

- Ignition on.

  Activate the stop lamp.

  Check if the fault is permanent or intermittent.

  The stop lamp must light on activation.

  The fault is permanent if the stop lamp does not activate.

  If the stop lamp is activated, this is an indication that the fault was present previously but that it is not

active at the moment, i. e. the fault is intermittent.

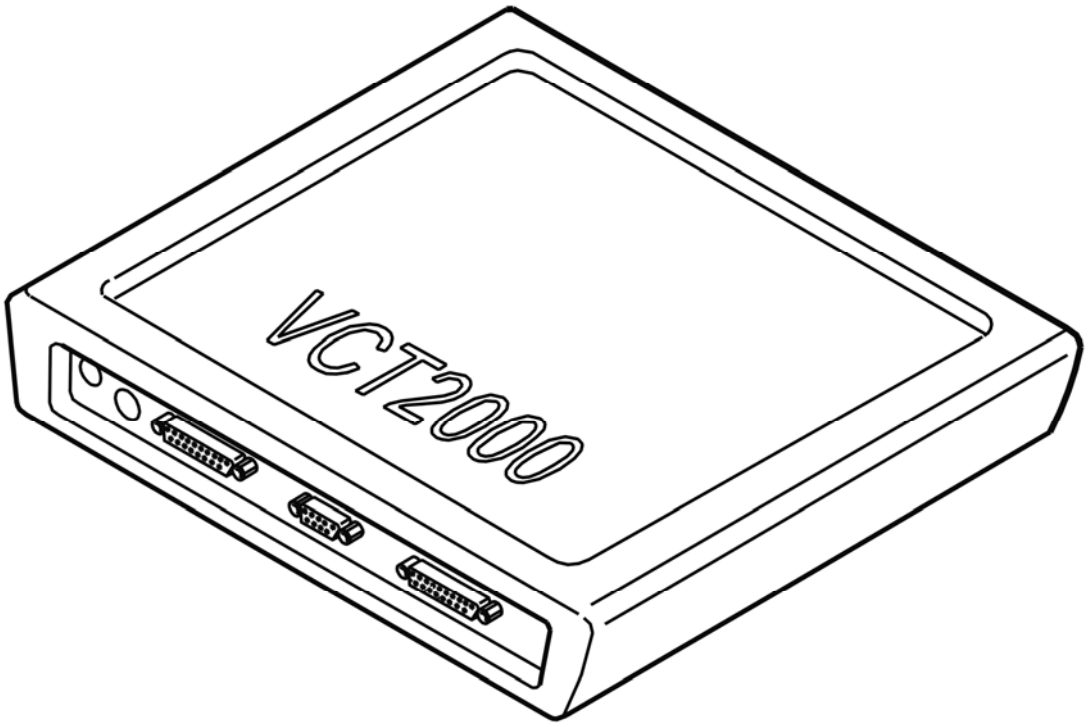

Fig. 118: Identifying VCT2000 Diagnostic Tool Symbol In VIDA
Courtesy of VOLVO CARS CORPORATION

- **Continue**

  Refer to **CHECKING COMPONENTS AND WIRING**

CHECKING COMPONENTS AND WIRING

When too low voltage has been detected, the Central electronic module (CEM) turns off the output to the next ignition cycle. If low voltage has been detected in 200 ignition cycles, the Central electronic module (CEM) is closed by the output until the DTC is erased.

HINT: Erase the diagnostic trouble code, turn off and on the ignition and read out the diagnostic trouble codes again. If the fault has disappeared, the output activates and then the brake light when the brake pedal is depressed. Otherwise the DTC will be stored again.

Check the voltage between the left and right-hand stop lamps and the output on the rear electronic module (REM). The voltage must be approximately 12 V when the stop lamp is activated.

Check the cable between central electronic module (CEM) terminal #A15 (15) and rear electronic module (REM) terminal #A18 (18). Check for a short-circuit to ground.

Check the cable between Rear electronic module (REM) and brake lights with regards to short-circuiting to ground.

HINT: Disconnect the cable between the Rear electronic module (REM) and the brake lights to ensure that the cable between the Central electronic module (CEM) and Rear electronic module (REM) is OK.

Remedy as necessary.

Other information

- Central electronic module (CEM): **CONNECTING THE BREAKOUT BOX**
- Rear electronic module (REM): **CONNECTING THE BREAKOUT BOX**
- Central electronic module (CEM):
  - -2004: **SIGNAL SPECIFICATION**
  - 2005-: **SIGNAL SPECIFICATION**
- Rear electronic module (REM): **SIGNAL SPECIFICATION**
- For -2004, see: **CENTRAL ELECTRONIC MODULE (CEM), REPLACING** .
- For 2005-, see: **CENTRAL ELECTRONIC MODULE (CEM), REPLACING** .
- For -2004, see: **RELAY/FUSE BOX CARGO COMPARTMENT/REAR ELECTRONIC MODULE (REM), REPLACING**
- For 2005-, see: **REAR ELECTRONIC MODULE (REM), REPLACING** .
- see **HIGH LEVEL STOP LAMP, REPLACING**
- see **CHECKING WIRING AND TERMINALS**

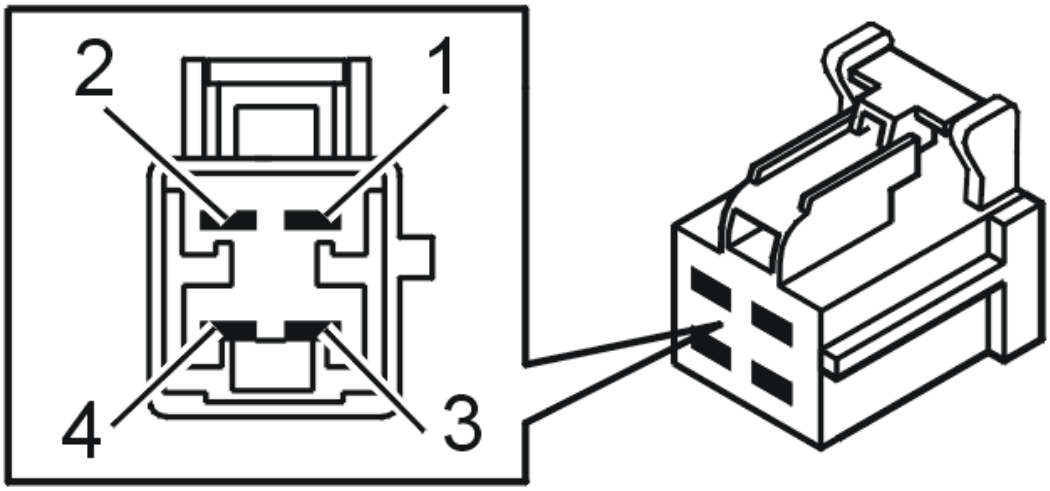

Fig. 119: Identifying 4-Bit Connector
Courtesy of VOLVO CARS CORPORATION

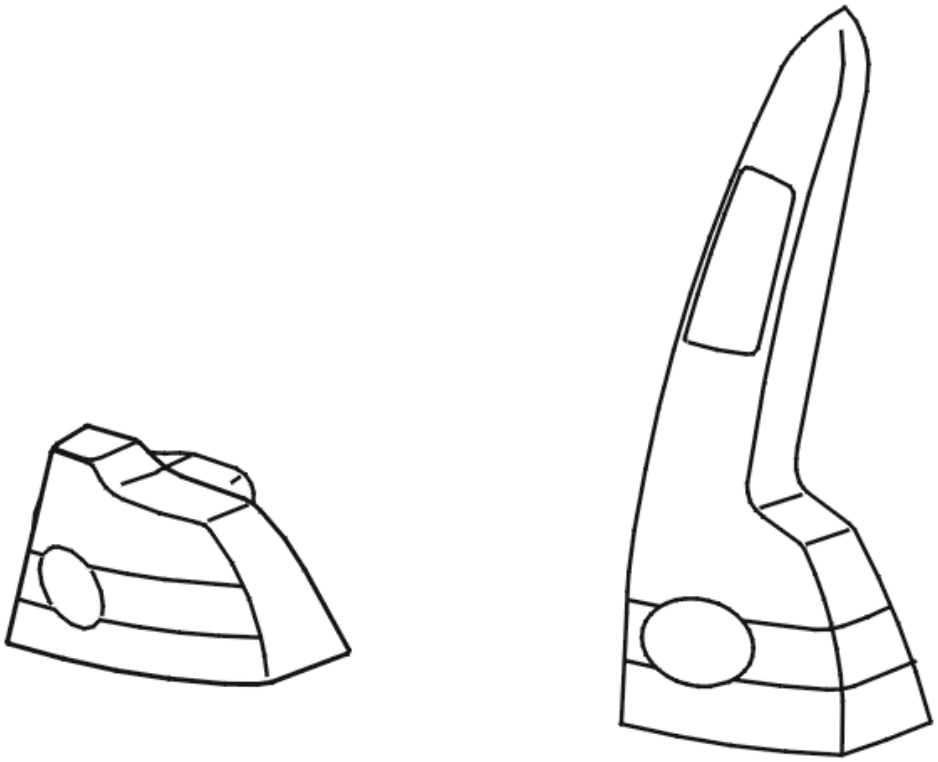

Fig. 120: Identifying Tail Lamps
Courtesy of VOLVO CARS CORPORATION

- **Continue**

  Refer to **VERIFICATION**

VERIFICATION

VERIFICATION

HINT: After carrying out the repair, check that the fault has been remedied.

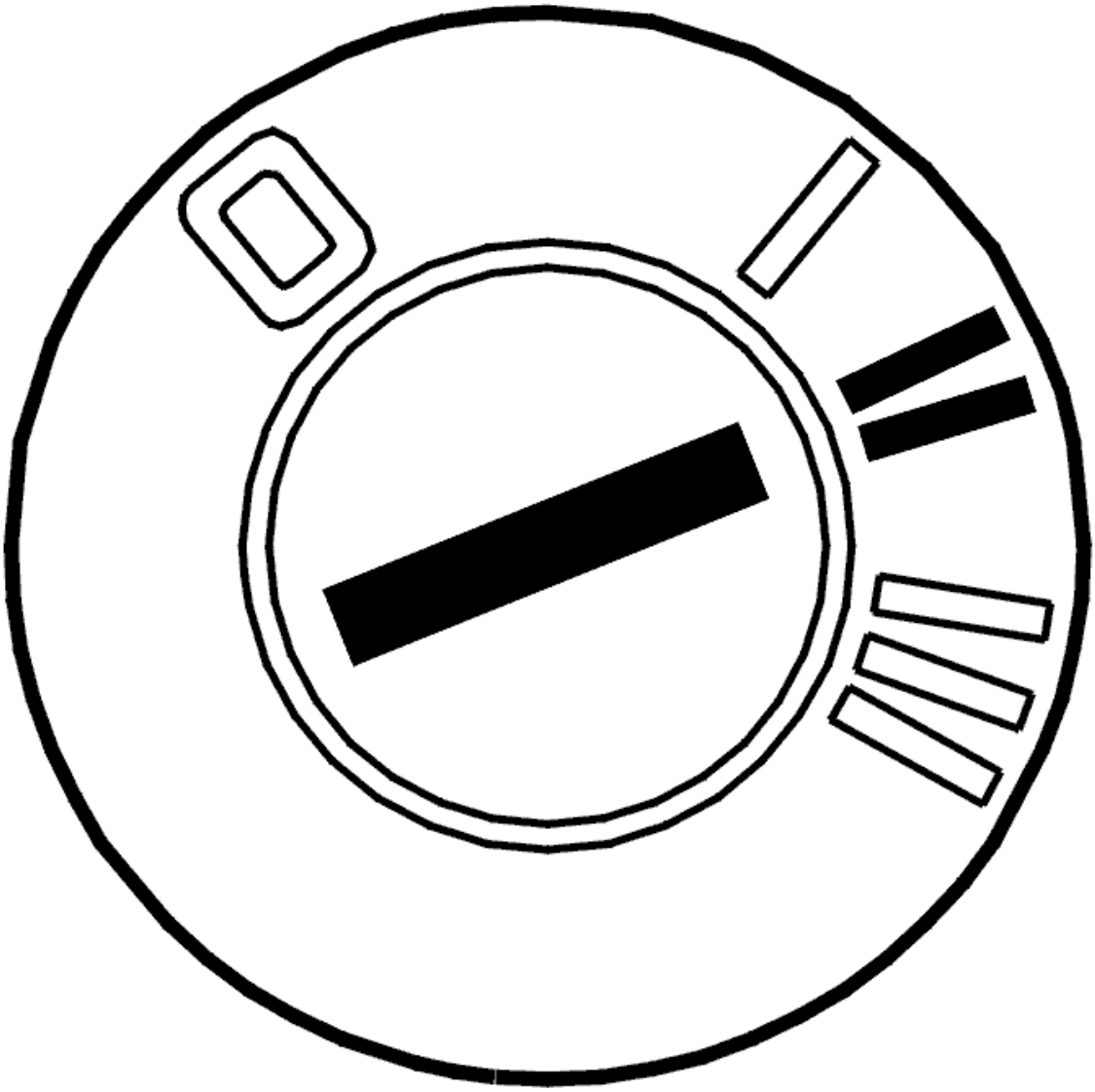

Fig. 121: Identifying Ignition ON
Courtesy of VOLVO CARS CORPORATION

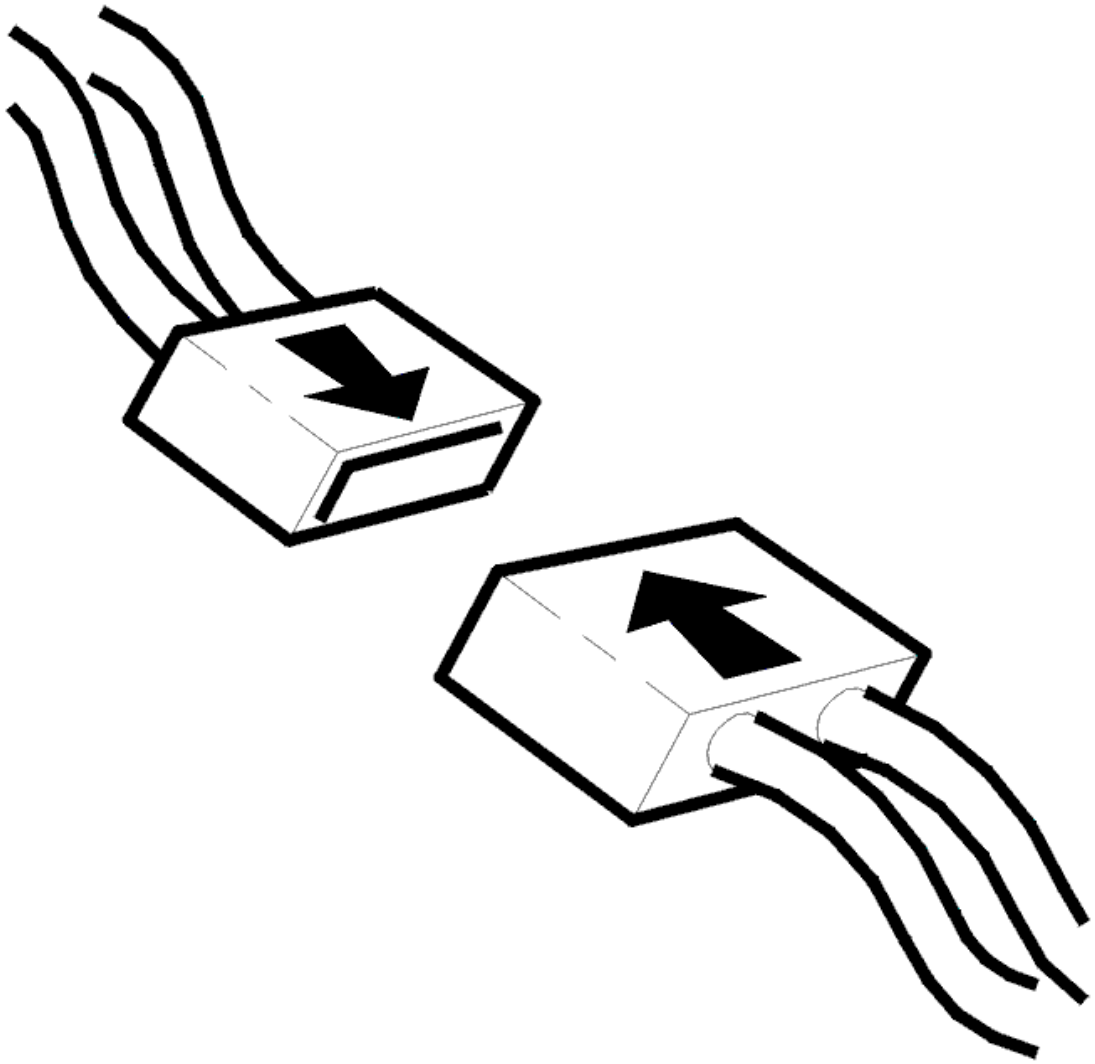

Fig. 122: Connecting Connector
Courtesy of VOLVO CARS CORPORATION

- Ignition off
- Reinstall the connectors, components etc.
- Ignition on
- Activate the stop lamps.

  Check that the stop lamps are working.

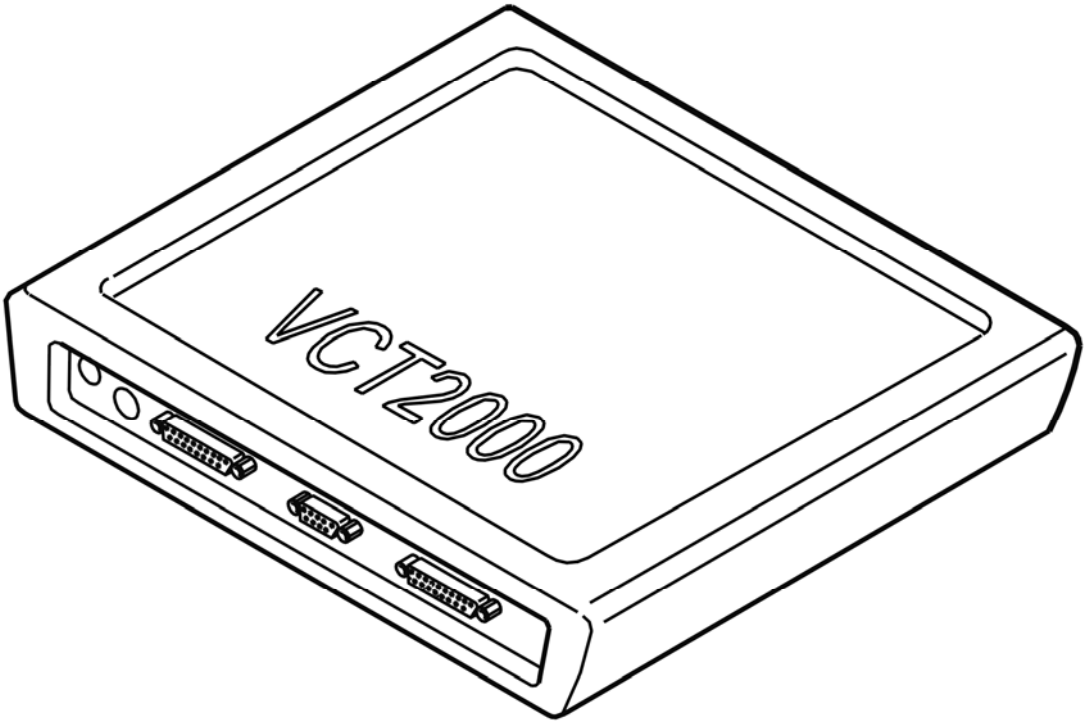

Fig. 123: Identifying VCT2000 Diagnostic Tool Symbol In VIDA
Courtesy of VOLVO CARS CORPORATION

Are the stop lamps working?

- **YES**

  VERIFIED: Troubleshooting has been completed.

- **NO**

  Refer to **INFORMATION**

INFORMATION

FAULT-TRACING INFORMATION

The fault should have been detected and remedied. As this is not the case fault-tracing has failed.

Exit fault-tracing for this diagnostic trouble code (DTC) or make another attempt.

CEM-8D02: IGNITION LAMP AND HIGH-MOUNTED STOP (BRAKE) LAMPS SIGNAL TOO HIGH/SIGNAL MISSING (2004)

DIAGNOSTIC TROUBLE CODE (DTC) INFORMATION CEM-8D02

Condition

For diagnostic trouble code (DTC) CEM-8D02 to be stored, neither the ignition switch lighting or the stop lamp may be activated.

Diagnostic trouble code (DTC) CEM-8D02 is stored if the central electronic module indicates a short-circuit to supply voltage or an open-circuit in the high level stop lamp or the ignition switch lighting.

Possible Source

- Open-circuit in the circuit for the ignition switch or the high level stop lamp
- Short-circuit to supply voltage in the circuit for the ignition switch or the high level stop lamp
- Defective ignition switch lighting
- Defective high level stop lamp.

Fault symptom[s]

- The stop lamps do not light when the brake pedal is pressed
- The stop lamp lights constantly.

SIGNAL TOO HIGH / SIGNAL MISSING

CHECKING THE FUNCTION

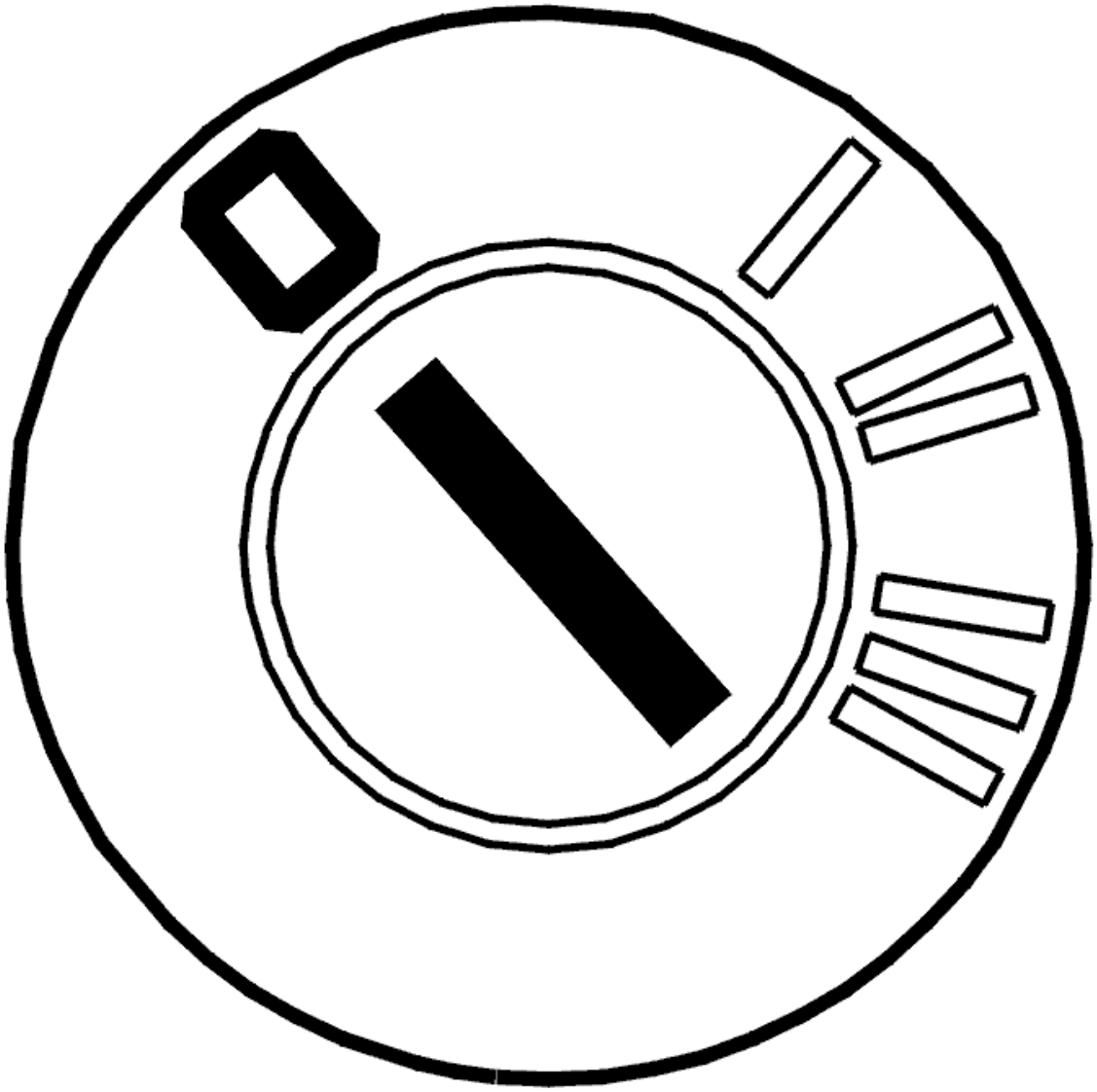

Fig. 124: Identifying Ignition OFF
Courtesy of VOLVO CARS CORPORATION

- Ignition off.

  Check whether the fault is due to the ignition switch lighting or the high level stop lamp.

  The ignition switch lighting comes on when the car is unlocked and goes out when the car is locked or the engine is running.

  The high level stop lamp must light when the brake pedal is depressed and go out when the pedal is released.

  Select the function to be fault-traced.

  Select an alternative.

1. Ignition switch lighting

   Refer to **CHECKING THE IGNITION SWITCH LIGHTING**

2. High level stop lamp.

   Refer to **CHECKING THE HIGH LEVEL STOP LAMPS**

CHECKING THE IGNITION SWITCH LIGHTING

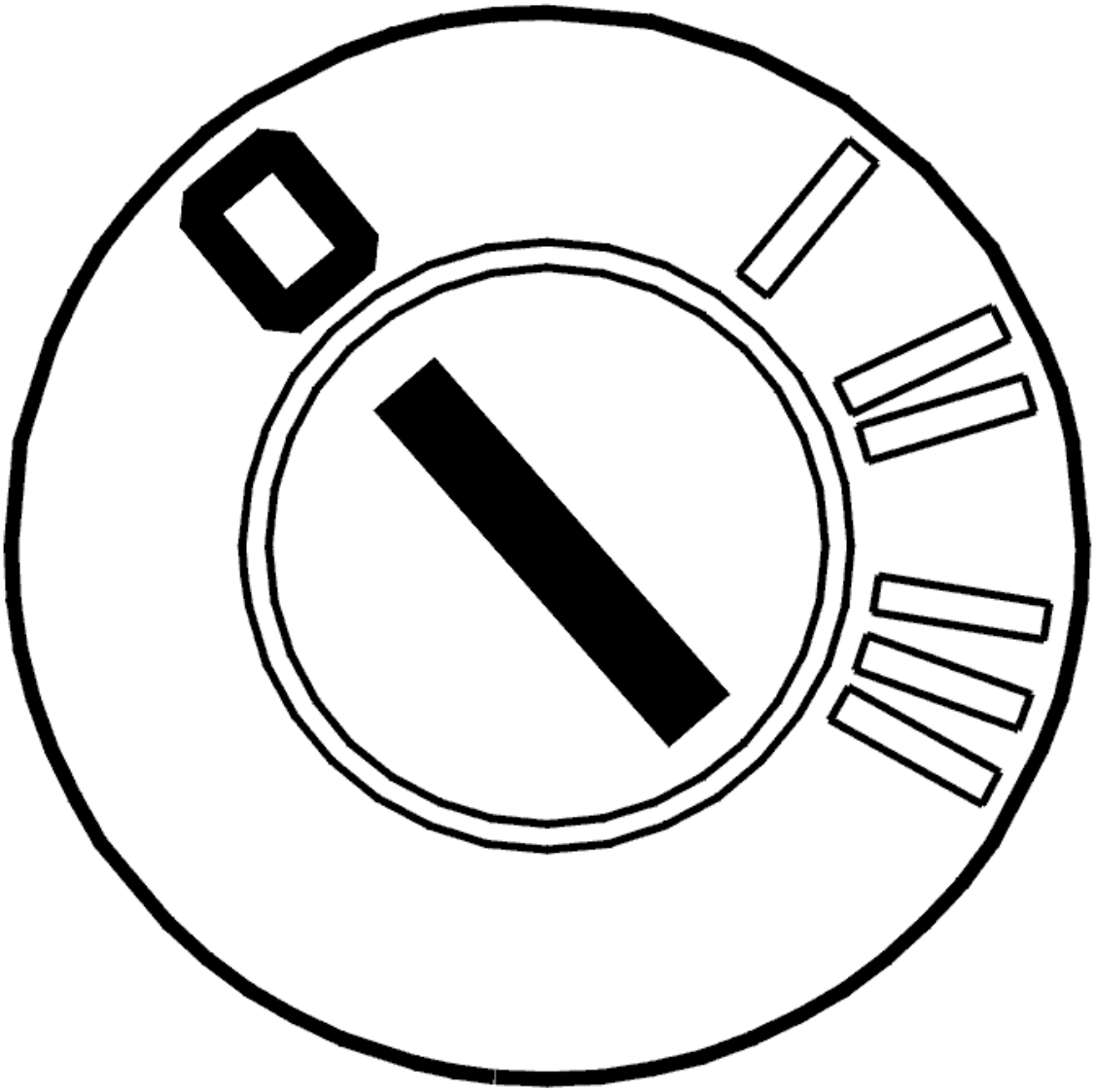

Fig. 125: Identifying Ignition OFF
Courtesy of VOLVO CARS CORPORATION

- Ignition off.

  Check that the bulb is intact.

Check the connectors for the central electronic module (CEM) and ignition switch lighting. Check for contact resistance and oxidation. Check for loose connections. Check for damage carefully.

Check the power supply cable between central electronic module (CEM) terminal #19D (#B19) and ignition switch lighting terminal #5. Check for an open-circuit. Check for a short-circuit to supply voltage.

Check the ground lead between ignition switch terminal #6 and the ground terminal. Check for an open-circuit. Check for a short-circuit to supply voltage.

Remedy as necessary.

Other information

- To access the bulb and connector for the ignition switch, see **BULB, IGNITION SWITCH, REPLACING**
- To access the central electronic module (CEM):
  - For -2004, see: **CENTRAL ELECTRONIC MODULE (CEM), REPLACING** .
  - For 2005-, see: **CENTRAL ELECTRONIC MODULE (CEM), REPLACING** .
- To connect the breakout box, see **CONNECTING THE BREAKOUT BOX**
- -2004: **SIGNAL SPECIFICATION**
- 2005-: **SIGNAL SPECIFICATION**
- see **CHECKING WIRING AND TERMINALS**

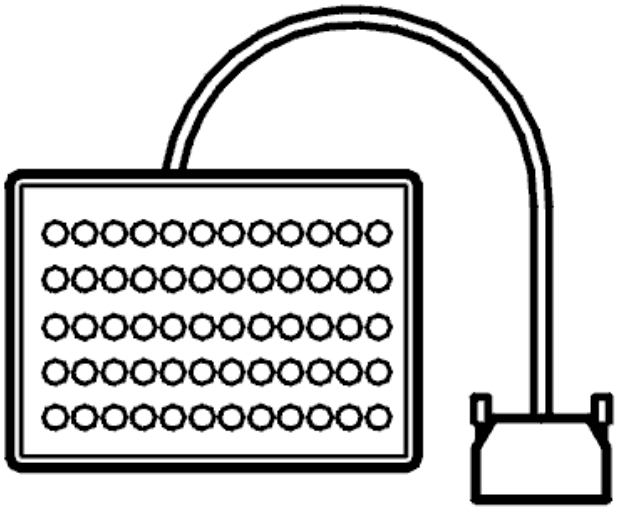

Fig. 126: Breakout Box
Courtesy of VOLVO CARS CORPORATION

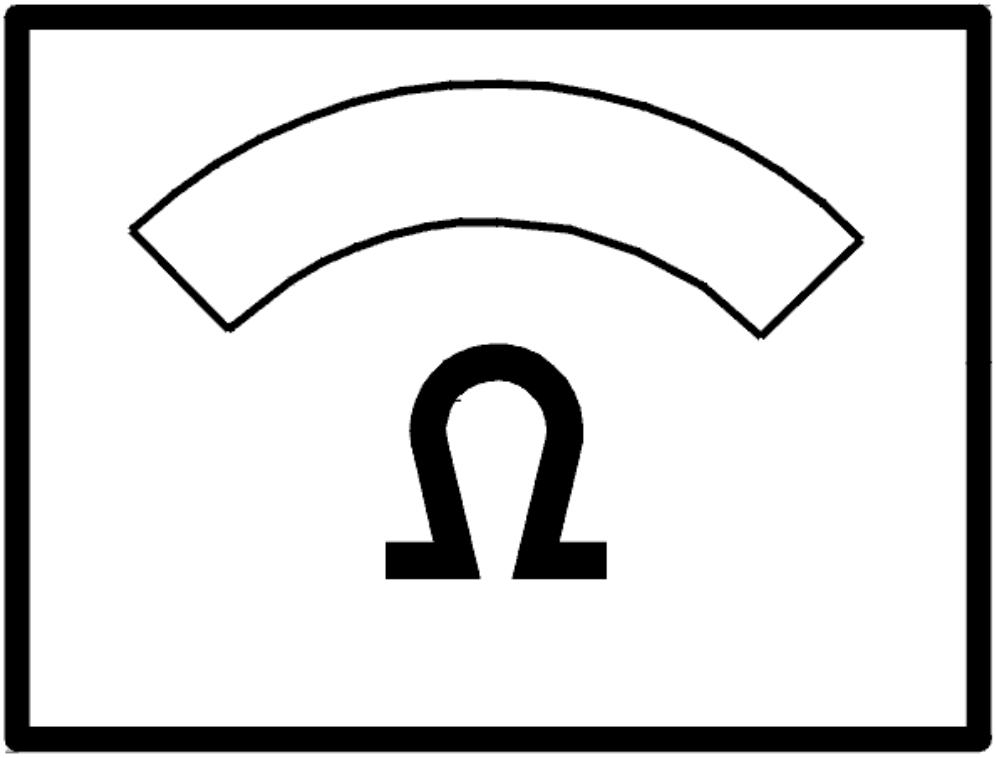

Fig. 127: Identifying Ohm Meter
Courtesy of VOLVO CARS CORPORATION

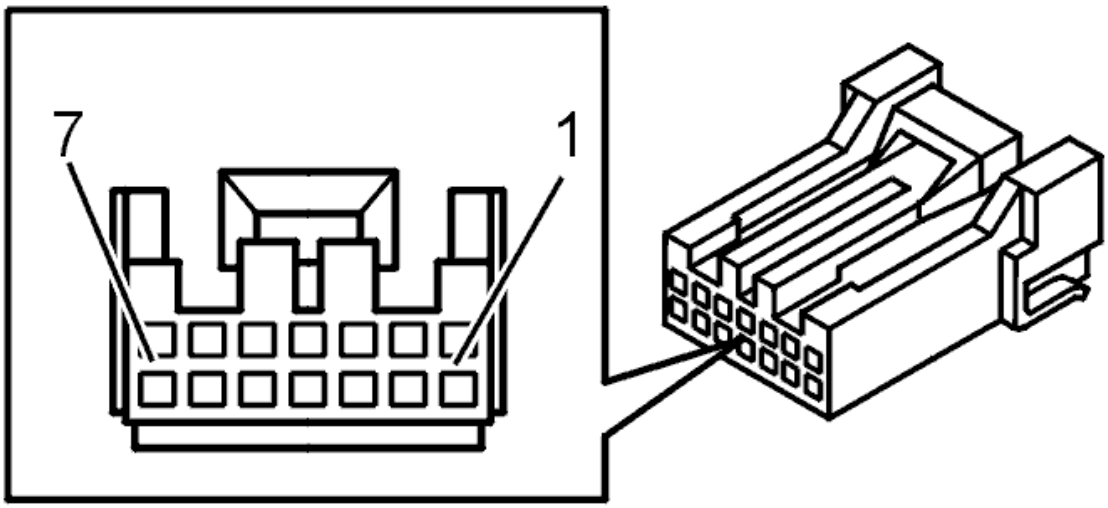

Fig. 128: Identifying Connector Terminals
Courtesy of VOLVO CARS CORPORATION

- **Continue**

  Refer to **VERIFICATION**

CHECKING THE HIGH LEVEL STOP LAMPS

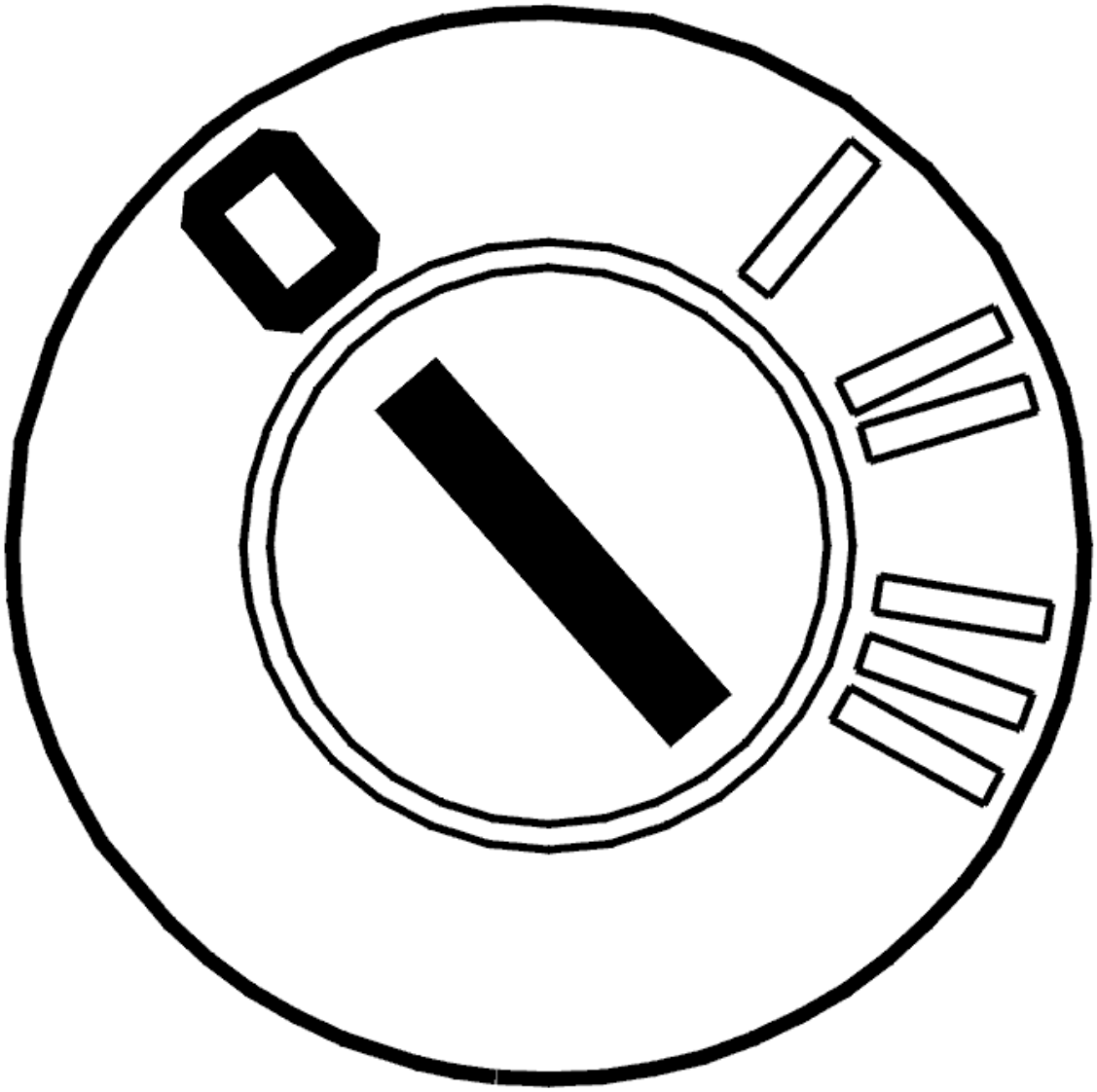

Fig. 129: Identifying Ignition OFF
Courtesy of VOLVO CARS CORPORATION

- Ignition off.

  Check the central electronic module (CEM) and the high-mounted stop lamp connectors. Check for contact resistance and oxidation. Check for loose connections. Check for damage carefully.

  Check the power supply cable between central electronic module (CEM) terminal #5B (#A25) and brake light connector terminal #1. Check for an open-circuit. Check for a short-circuit to supply voltage.

  Check the ground lead between brake light connector terminal #5 and the ground terminal. Check for an open-circuit. Check for a short-circuit to supply voltage.

  Try a new brake light if no faults were found.

Remedy as necessary.

Other information:

- To access / replace the high mounted stop lamp, see **STOP LAMP, REAR WINDSHIELD, REPLACING**
- To access the central electronic module (CEM):
  - For -2004, see: **CENTRAL ELECTRONIC MODULE (CEM), REPLACING** .
  - For 2005-, see: **CENTRAL ELECTRONIC MODULE (CEM), REPLACING** .
- To connect the breakout box, see **CONNECTING THE BREAKOUT BOX**
- -2004: **SIGNAL SPECIFICATION**
- 2005-: **SIGNAL SPECIFICATION**
- see **CHECKING WIRING AND TERMINALS**

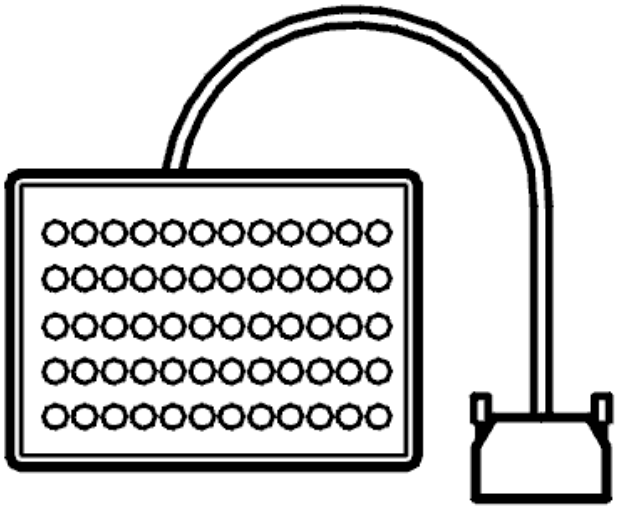

Fig. 130: Breakout Box
Courtesy of VOLVO CARS CORPORATION

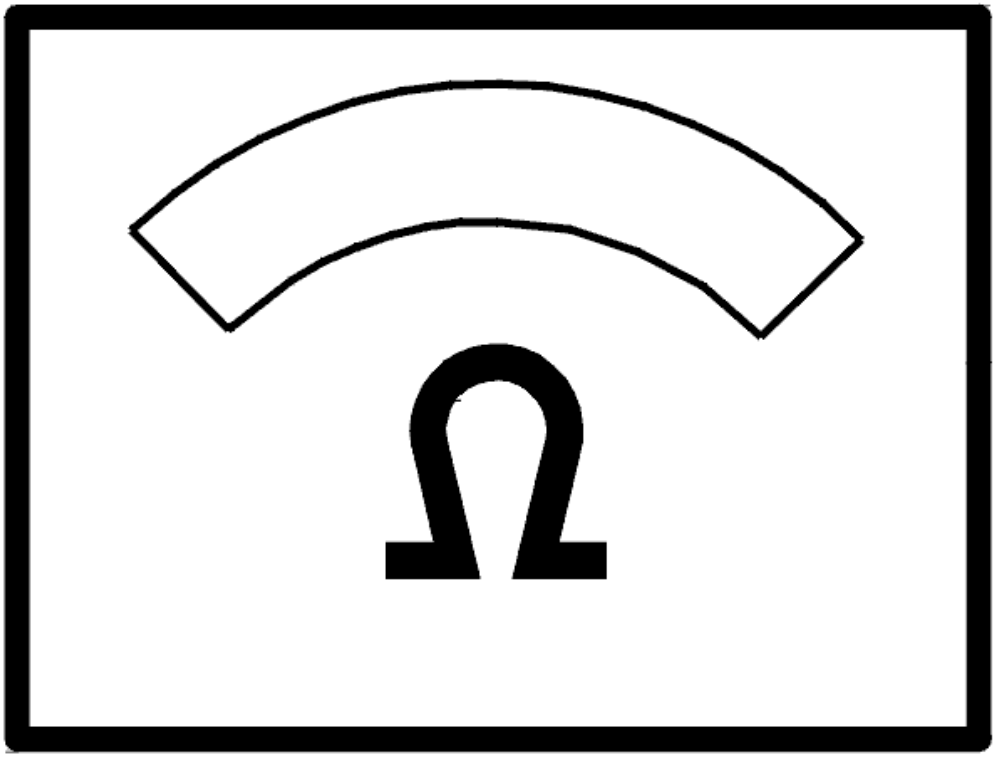

Fig. 131: Identifying Ohm Meter
Courtesy of VOLVO CARS CORPORATION

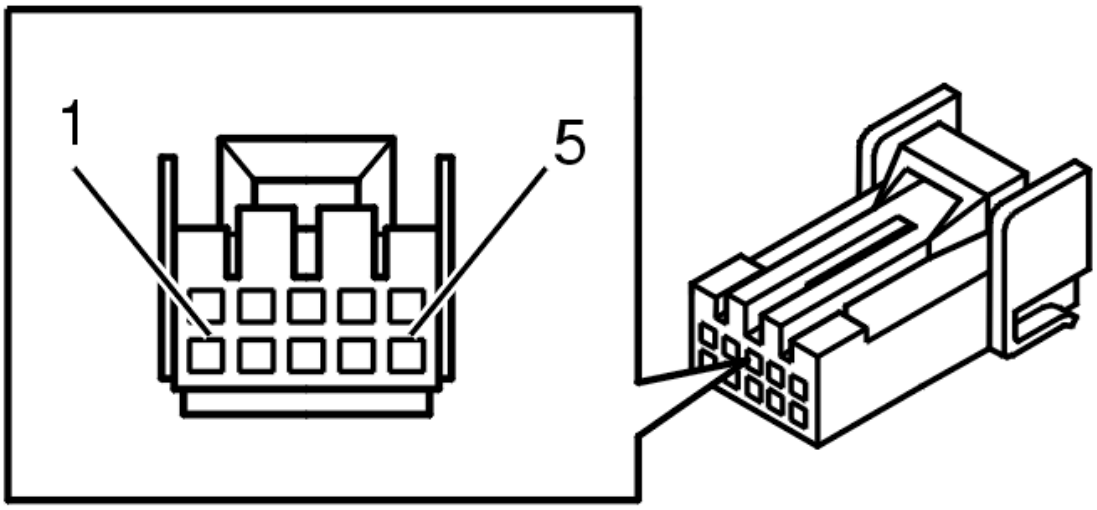

Fig. 132: 10 CD Changer Connector Terminals
Courtesy of VOLVO CARS CORPORATION

- **Continue**

  Refer to **VERIFICATION**

VERIFICATION

VERIFICATION

HINT: After the repair it is necessary to check that the fault has been rectified.

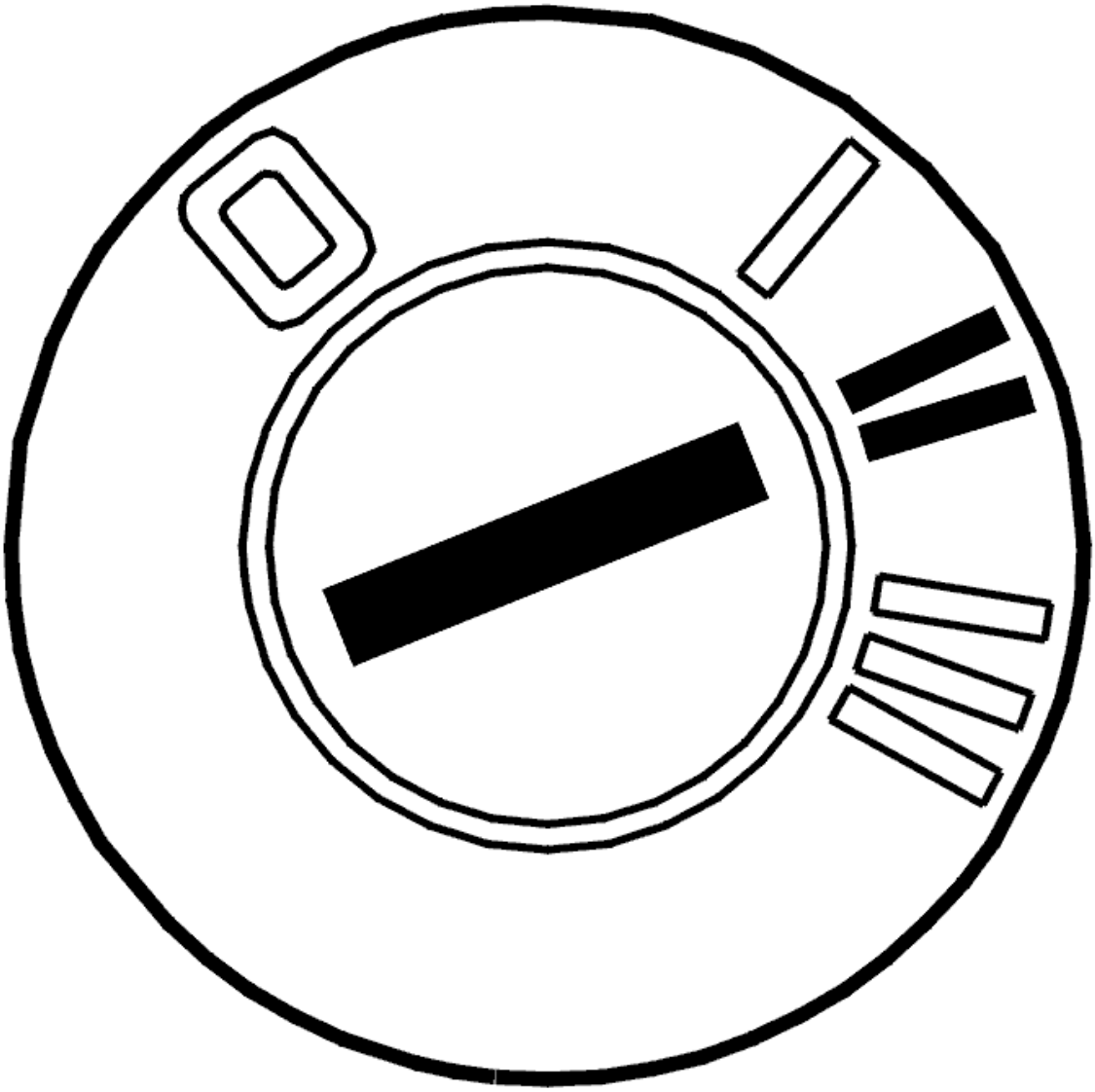

Fig. 133: Identifying Ignition ON
Courtesy of VOLVO CARS CORPORATION

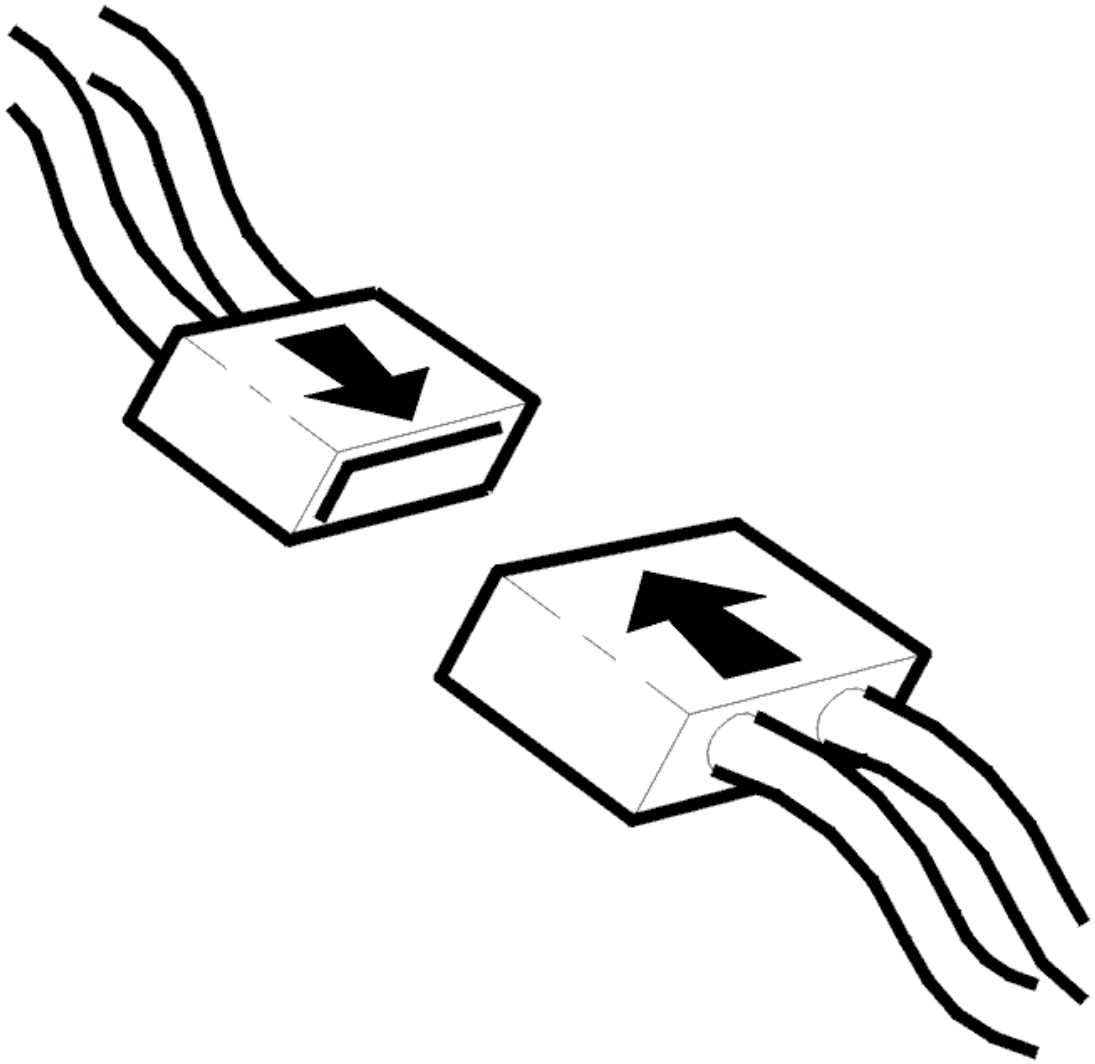

Fig. 134: Connecting Connector
Courtesy of VOLVO CARS CORPORATION

- Ignition off.
- Connect the connectors, install the components, etc.
- Ignition on.

  Read the diagnostic trouble codes.

  If diagnostic trouble code has changed to intermittent status this indicates that the fault is no longer activated.

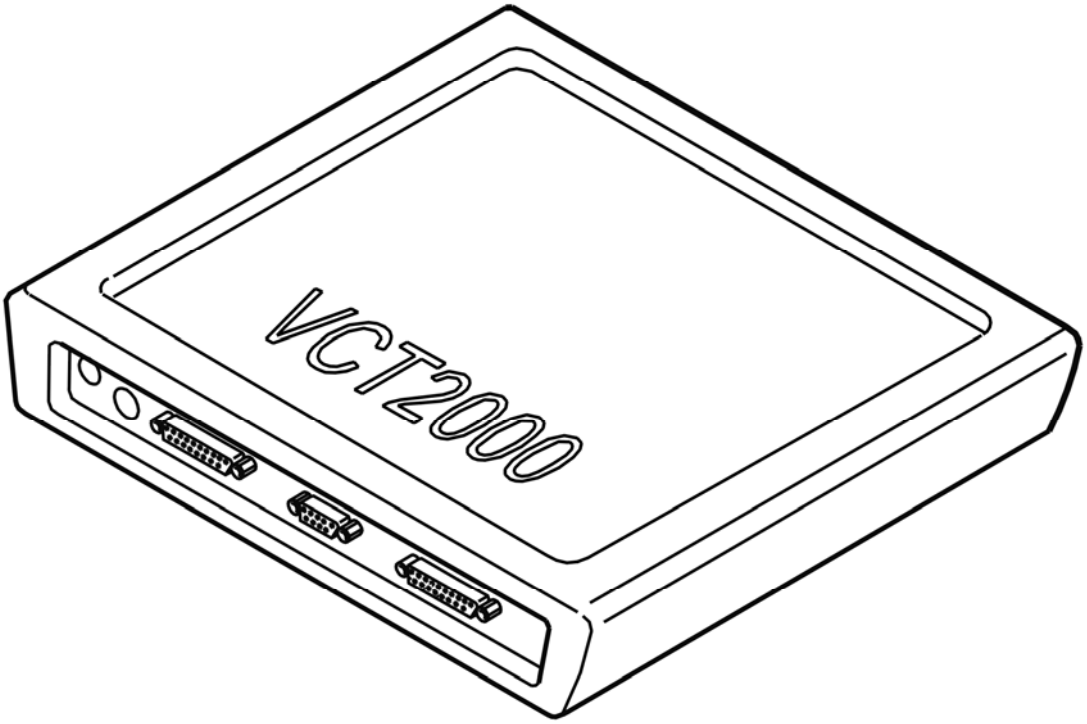

Fig. 135: Identifying VCT2000 Diagnostic Tool Symbol In VIDA
Courtesy of VOLVO CARS CORPORATION

Is the diagnostic trouble code intermittent?

- **YES**

  VERIFIED: Troubleshooting has been completed.

- **NO**

  Refer to **INFORMATION**

INFORMATION

FAULT-TRACING INFORMATION

The fault should have been detected and remedied. As this is not the case fault-tracing has failed.

Exit fault-tracing for this diagnostic trouble code (DTC) or make another attempt.

STOP LAMP, REAR WINDSHIELD, REPLACING

Special tools:

see **9512636**

REMOVING THE STOP LAMP

USE CLEAN GLOVES

To avoid customer complaints:

- gloves which leave no prints must be used
- visible surfaces, where the stop lamp can cover the rear windshield, must be kept unmarked and fault-free
- visible surfaces on the stop lamp must be kept unmarked and fault-free.

PREPARATORY WORK

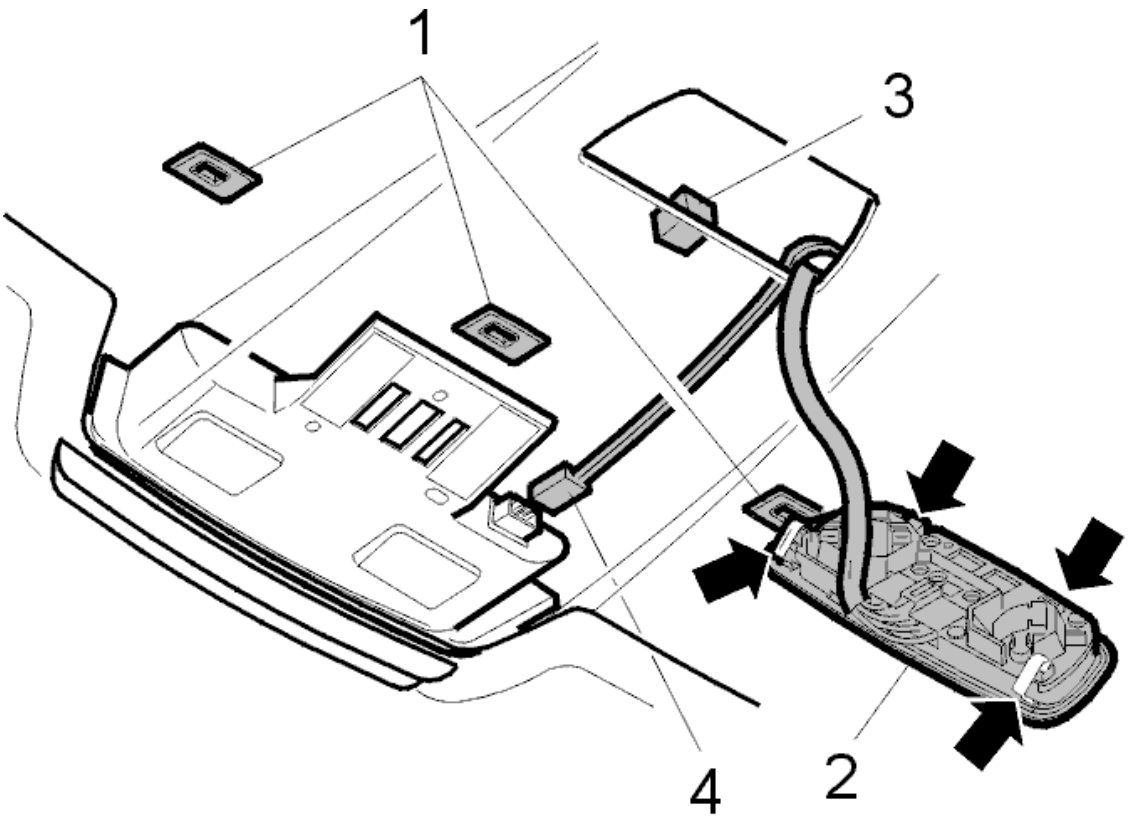

Fig. 136: Clips, Rear Interior Lighting And Rubber
Courtesy of VOLVO CARS CORPORATION

Remove:

- three rear clips (1) in the headlining by twisting a quarter of a turn and pulling it out
- the rear interior lighting (2). The mounting mechanism consists of metal springs
- foam rubber (3) from the top of the headlining. Be careful. It must be reused.

NOTE: Note the position of the foam rubber.

- connector (4) from the stop lamp
- stop lamp wiring. Pull it out through the hole for the rear interior lighting.

REMOVING THE STOP LAMP

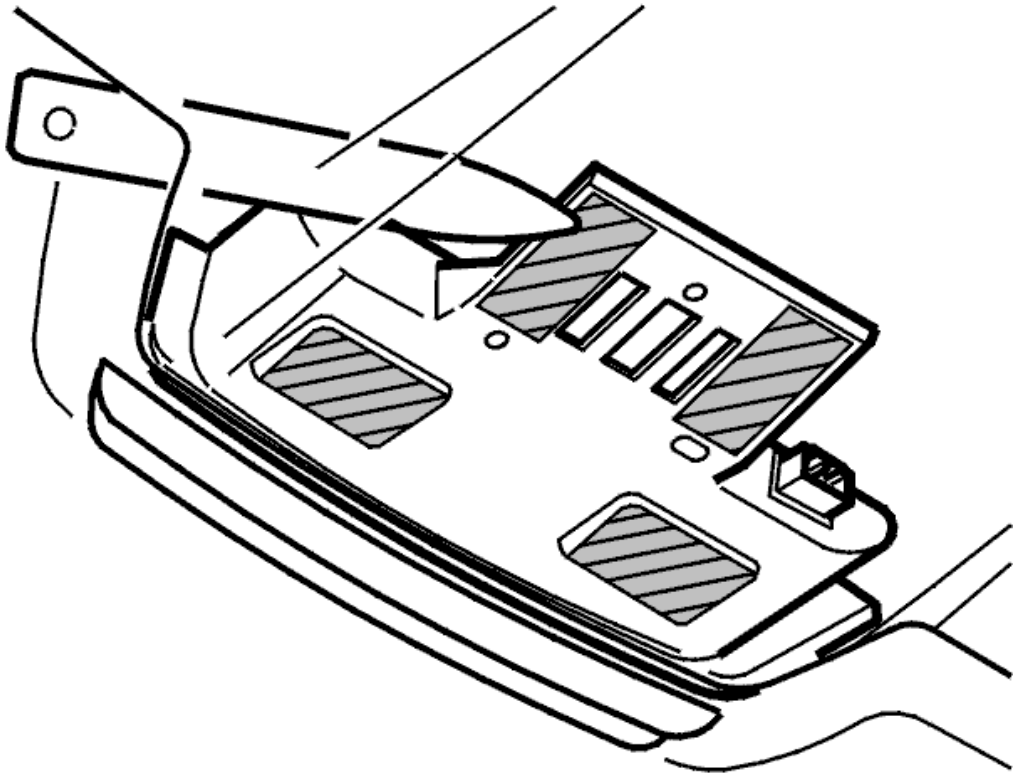

Fig. 137: Identifying Stop Lamp Removal
Courtesy of VOLVO CARS CORPORATION

WARNING: The stop lamp must be removed from the headlining. Do this carefully as the headlining is made of corrugated cardboard.

Use a weatherstrip tool to cut as close to the stop lamp tape as possible. This is to avoid damaging the headlining.

Start with the two pieces of tape on the section that points forwards. Then cut the two pieces of tape closest to the rear windshield.

Do one corner at a time.

IDENTIFICATION

IDENTIFYING THE STOP LAMP

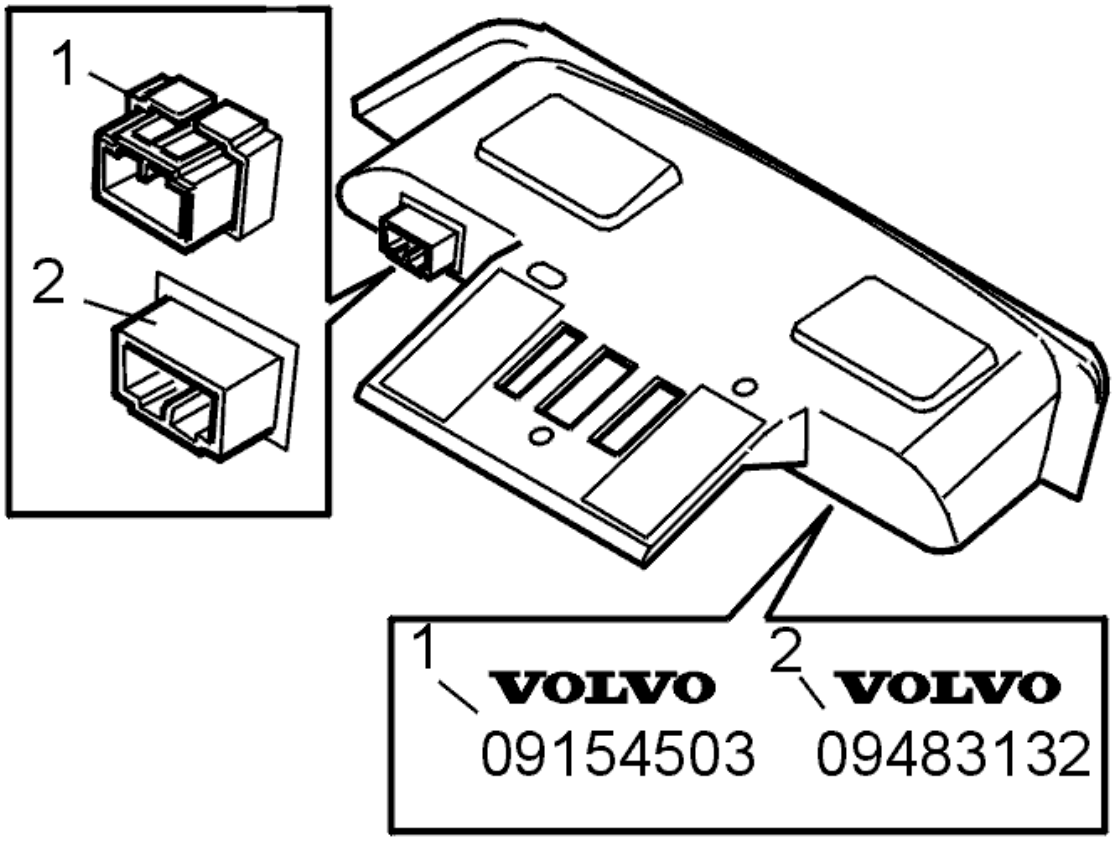

Fig. 138: Identifying Stop Lamp
Courtesy of VOLVO CARS CORPORATION

A **version 1** stop lamp can be identified as follows:

- The P/N (1), stamped onto the left-hand side of the stop lamp, is 9154503
- the connector (1) on the stop lamp has a smooth surface facing downwards and an enclosing collar.

A **version 2** stop lamp can be identified as follows:

- The P/N (2), stamped onto the left-hand side of the stop lamp, is 9483132
- the connector (2) on the stop lamp has a smooth surface facing upwards.

REMOVING LOOSE PAPER

Remove loose paper from the inside of the headlining where the stop lamp was located.

NOTE: Do not damage the headlining.

REPLACING THE STOP LAMP TO THE SAME MODEL

If the stop lamp is being replaced with one of the same model, no modifications need to be made. Continue with:**INSTALLING COMPONENTS**.

REPLACING THE STOP LAMP, VERSION 1 TO VERSION 2

If a version 1 stop (brake) lamp is replaced with a version 2 stop (brake) lamp (see, see **IDENTIFICATION**) the cables should exchange positions (change polarity). See **REVERSING POLARITY OF CABLES**.

REVERSING POLARITY OF CABLES

OPENING THE SECONDARY CATCH

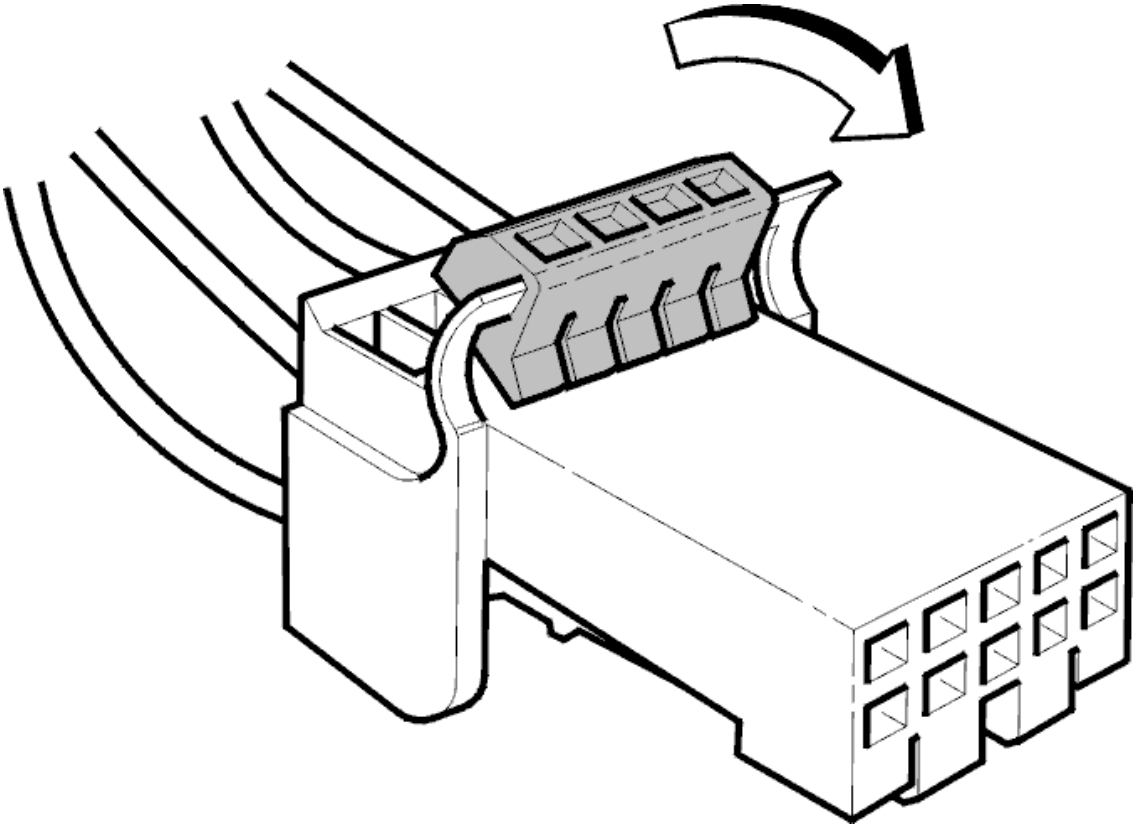

Fig. 139: Identifying Opened Secondary Catch
Courtesy of VOLVO CARS CORPORATION

Use a thin screwdriver with a 3-4mm wide blade.

Carefully undo the hooks on the secondary catch.

REMOVING CABLE

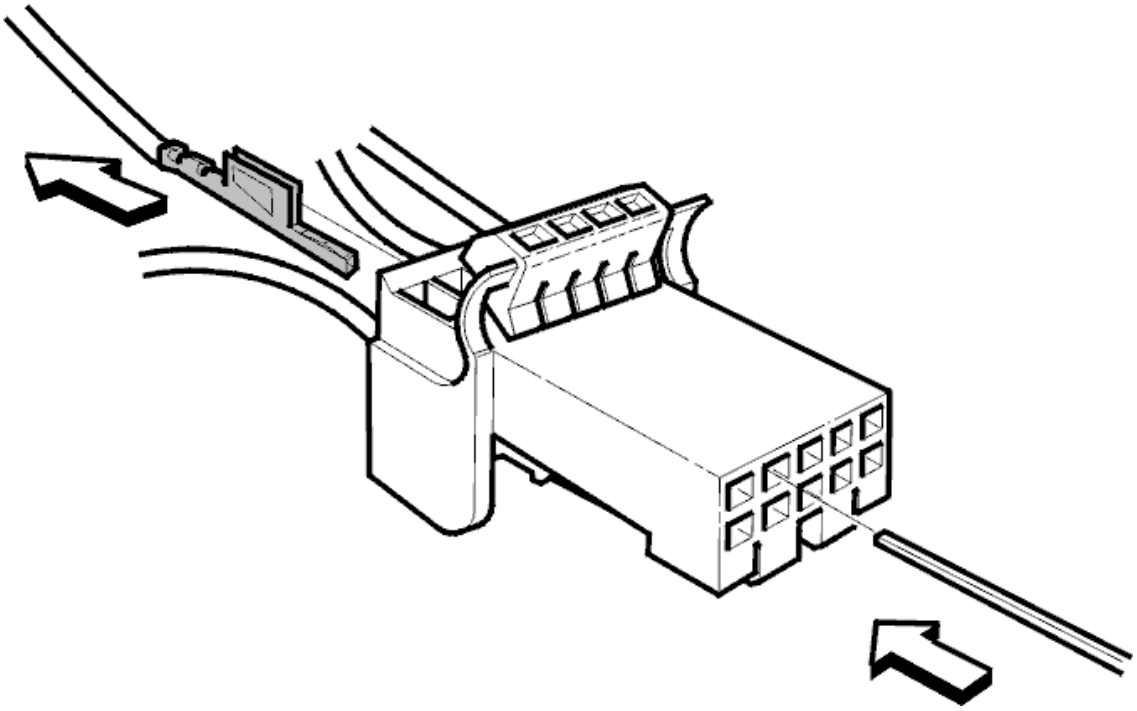

Fig. 140: Extracting Cable Terminal -- Double Cavity Row
Courtesy of VOLVO CARS CORPORATION

NOTE: Transfer one cable at a time.

Press the cable terminal through the cavity.

Insert the terminal removal tool see **9512636** from the contact side into the upper cavity bank, by the cable terminal. The beveled side of the tool should face sideways.

Extract the cable terminal.

Repeat for each cable.

CHECKING THE CABLE TERMINAL

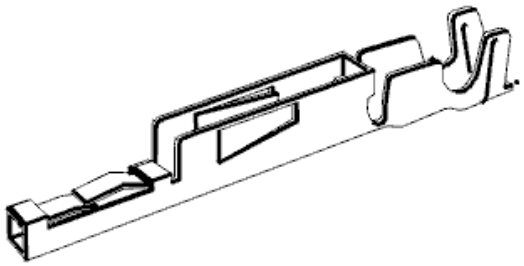

Fig. 141: 0. 64 Socket
Courtesy of VOLVO CARS CORPORATION

Inspect the locking tabs on the terminal for damage. Check that the tabs are not pressed inward.

INSTALLING THE CABLE

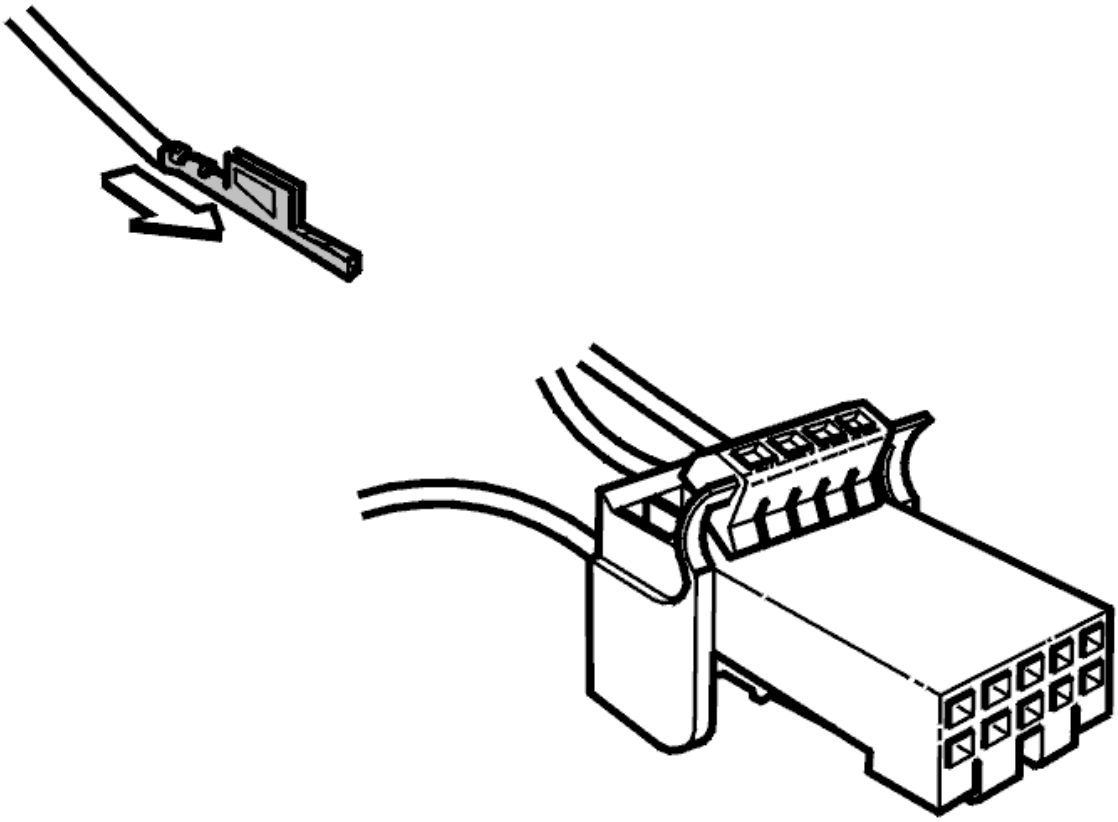

Fig. 142: Identifying Cable Terminal Inserted In Housing
Courtesy of VOLVO CARS CORPORATION

Use a new connector, P/N 978305.

Install the yellow-red cable in terminal 1.

Install the brown cable in terminal 5.

When the cable terminal is inserted in the cavity a click is often heard when the primary catch engages.

Pull the cable gently to check that the cable terminal is properly seated in the cavity.

CLOSING THE SECONDARY CATCH

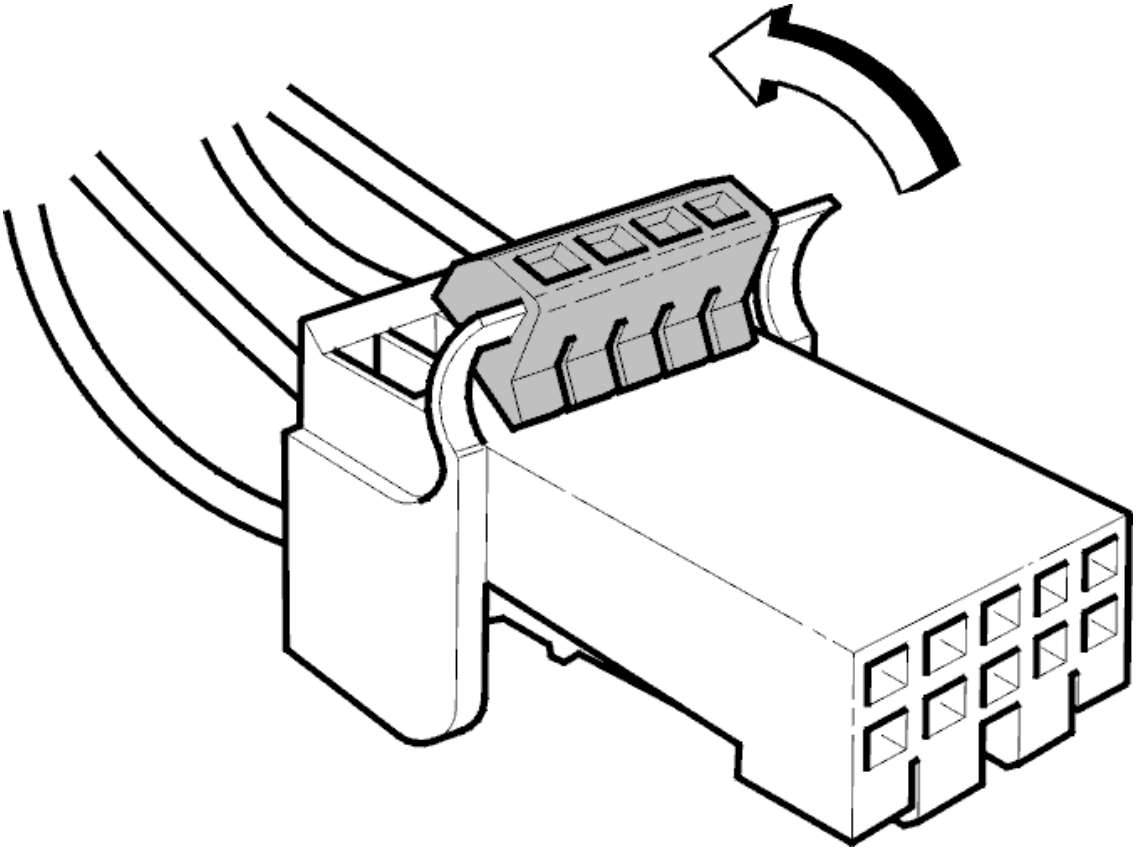

Fig. 143: Closing Housing
Courtesy of VOLVO CARS CORPORATION

When the secondary catch is closed a click is often heard.

If it cannot be closed this might be because the cable terminal is not completely inserted in the cavity.

INSTALLING COMPONENTS

TESTING THE STOP LAMP

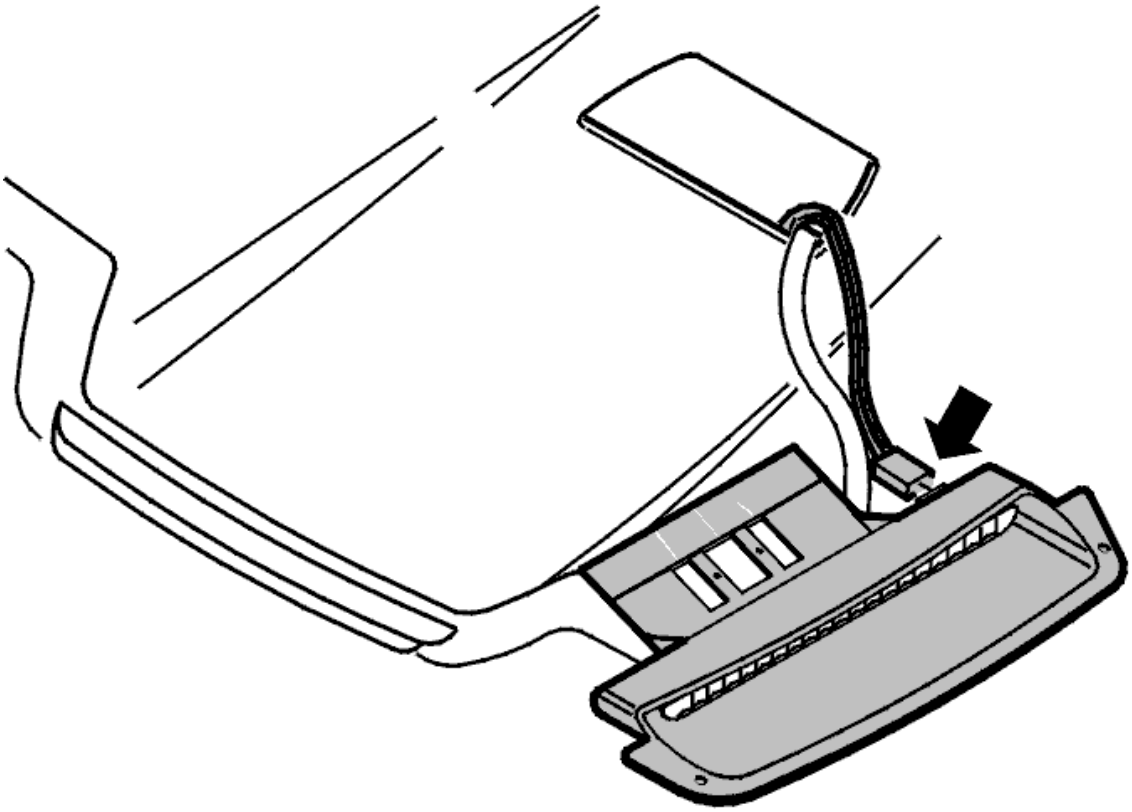

Fig. 144: Connecting Stop Lamp
Courtesy of VOLVO CARS CORPORATION

Connect a new stop lamp.

Check its function.

Disconnect it.

REMOVING THE BACKING

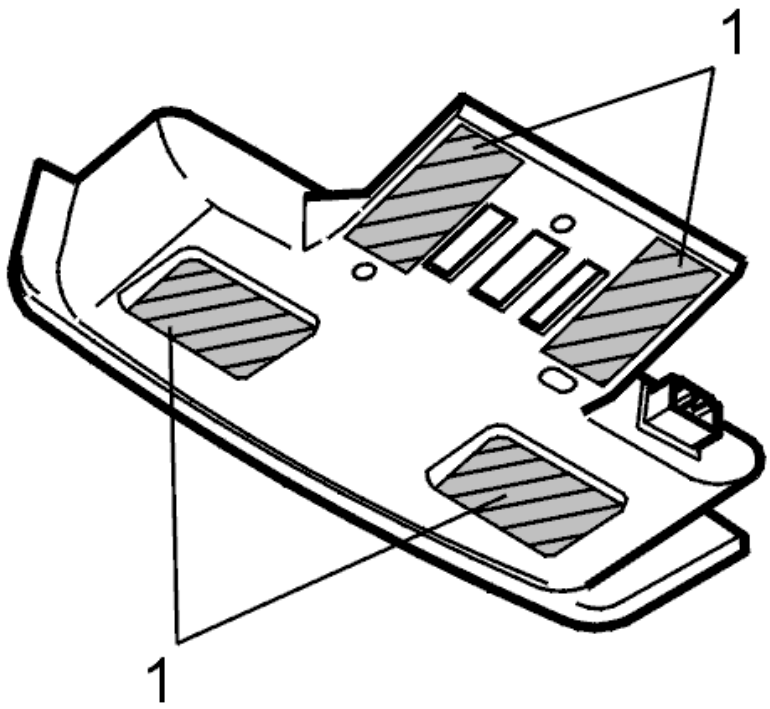

Fig. 145: Double Sided Adhesive Backing
Courtesy of VOLVO CARS CORPORATION

Remove the backing (1) from the double-sided adhesive tape on the stop lamp.

INSTALLING THE STOP LAMP

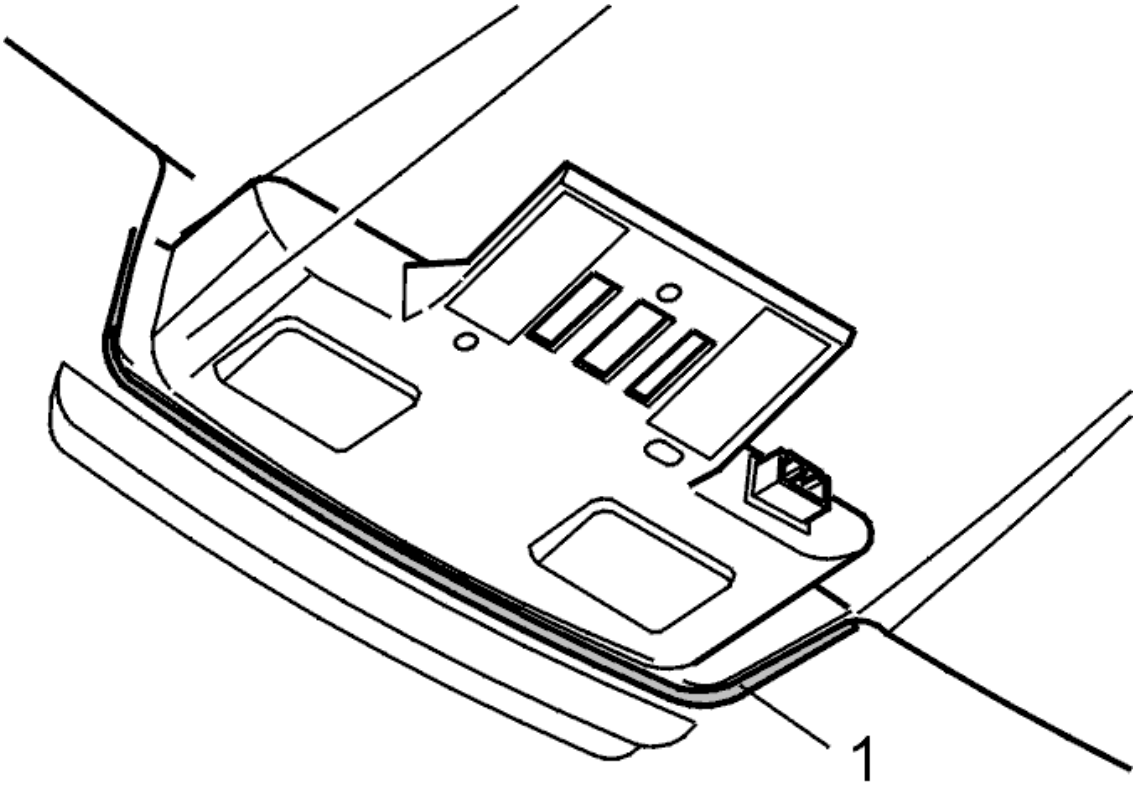

Fig. 146: Identifying Stop Lamp Positioned On Headlining With Bevel
Courtesy of VOLVO CARS CORPORATION

Position the stop lamp on the headlining with the bevel (1)**against** the headlining.**Do not** allow the double-sided adhesive tape touch the headlining.

NOTE: **To avoid squeaking it is important that the stop lamp is correctly positioned on the headlining.**

Press the stop lamp into place on the headlining.

FINISHING WORK

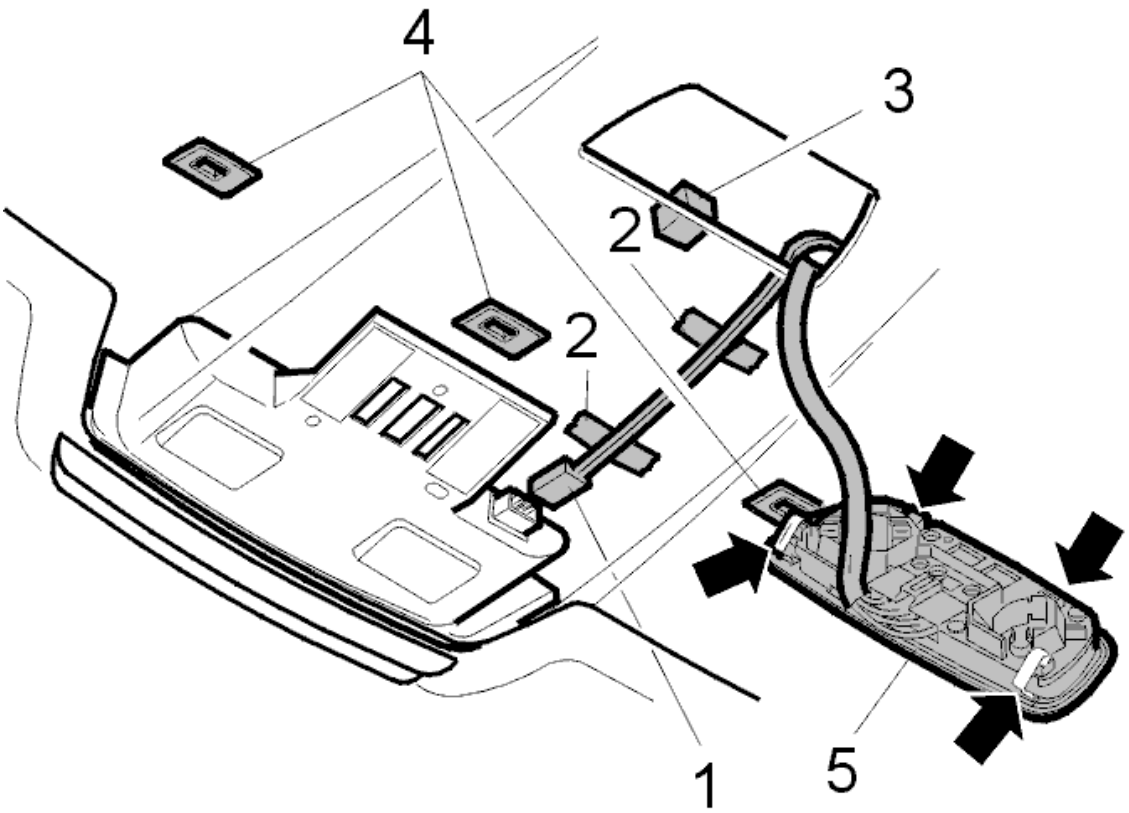

Fig. 147: Identifying Stop Lamp Components
Courtesy of VOLVO CARS CORPORATION

Connect the connector (1) to the stop lamp.

Tape (2) stop lamp wiring to the headlining so that they cannot make a noise.

Install foam rubber (3), just behind the hole for the rear interior lighting. Use contact adhesive, P/N 1161434, if there is too little adhesive left on the foam rubber for it to stick to the headlining.

Install clip (4) in the headlining by pressing straight up and twisting a quarter turn.

Install the interior lighting (5) by pressing straight up.

FUNCTION TEST

CHECKING THE STOP LAMP

Check the function of the stop lamp with the low beam on and the turn signal lamp activated.

Check the function of the interior lighting.

CEM-8D02: STOP LAMPS. FAULTY SIGNAL (2005)

DIAGNOSTIC TROUBLE CODE (DTC) INFORMATION CEM-8D02

Condition

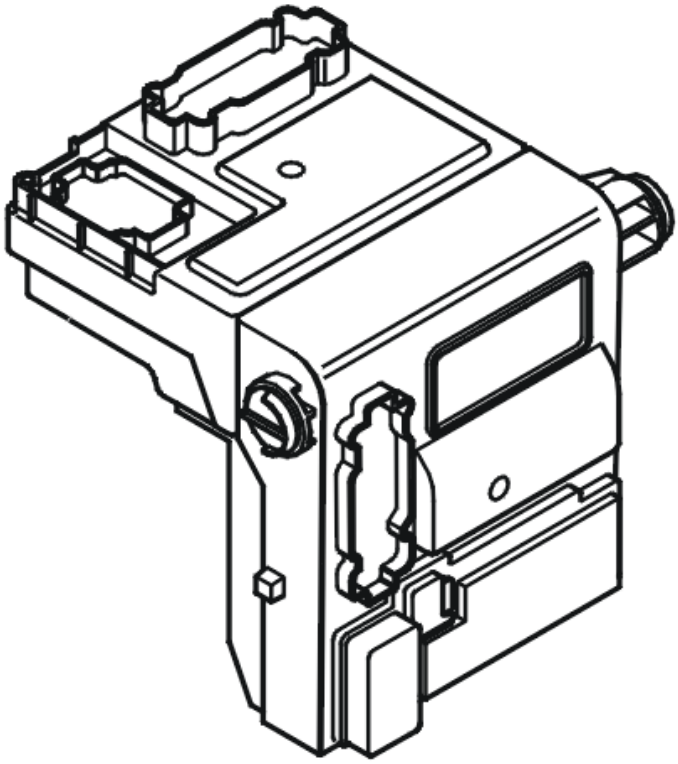

Fig. 148: Identifying Central Electronic Module (CEM)
Courtesy of VOLVO CARS CORPORATION

The central electronic module (CEM) checks the stop lamps.

The diagnostic trouble code (DTC) is stored if the central electronic module (CEM) registers that the signal from the stop lamps is faulty.

The diagnostic trouble code (DTC) can be diagnosed when the stop lamp is active.

Substitute Value

- None.

Possible Source

- Open-circuit in the circuit for the stop lamps.

Fault symptom[s]

- The stop lamp does not light when the brake pedal is depressed.

FAULTY SIGNAL

CHECKING THE STATUS

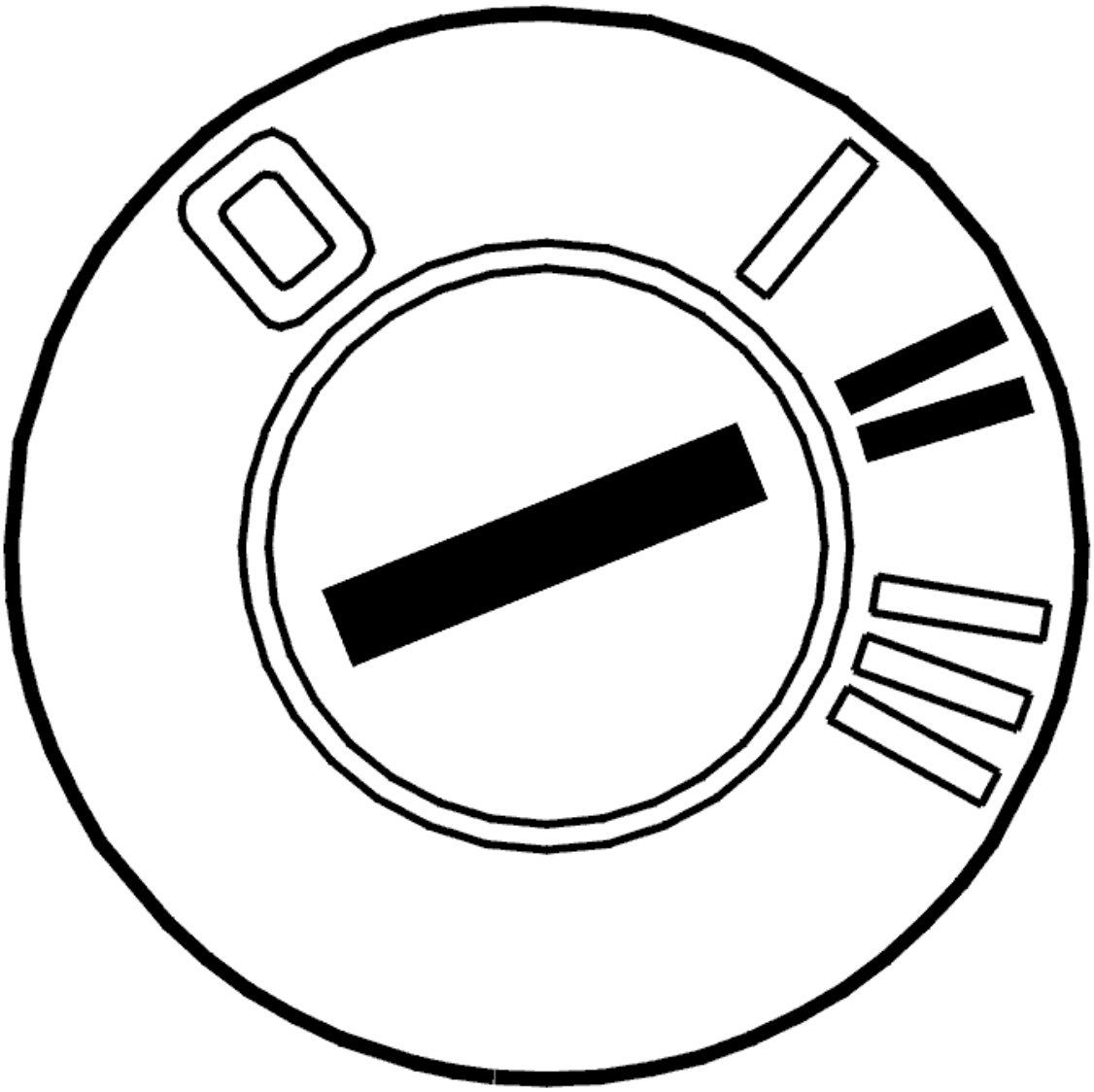

Fig. 149: Identifying Ignition ON
Courtesy of VOLVO CARS CORPORATION

- Ignition on.

  Activate the stop lamp.

  Check if the fault is permanent or intermittent.

  The stop lamp must light on activation.

The fault is permanent if the stop lamp does not activate.

If the stop lamp is activated, this is an indication that the fault was present previously but that it is not active at the moment, i. e. the fault is intermittent.

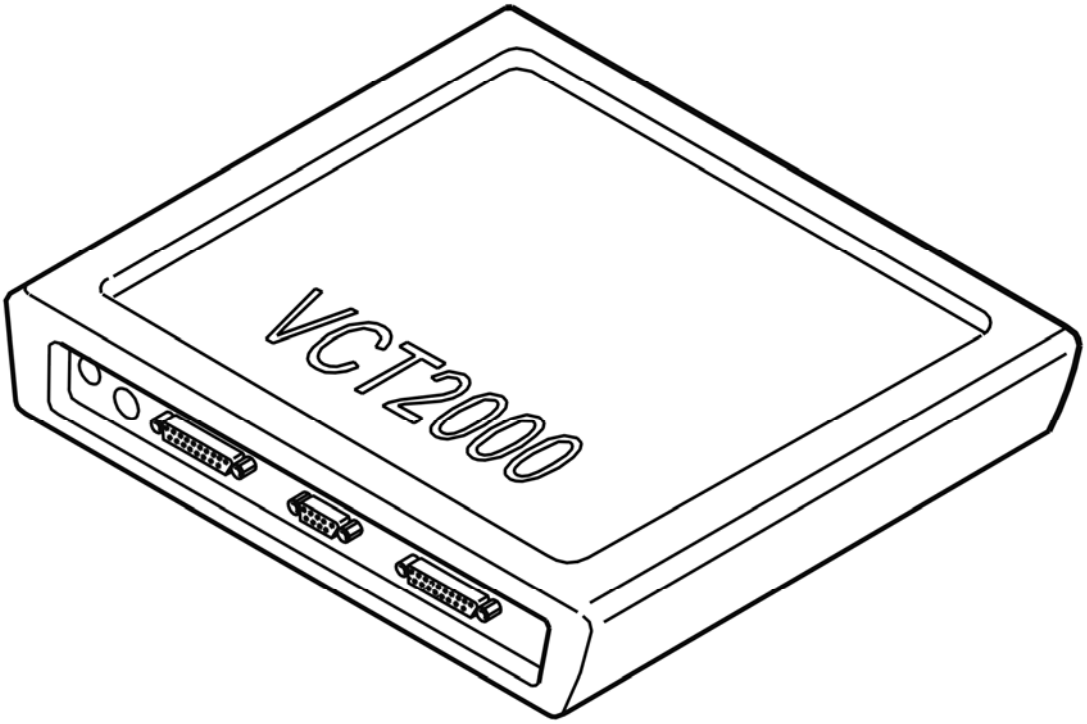

Fig. 150: Identifying VCT2000 Diagnostic Tool Symbol In VIDA
Courtesy of VOLVO CARS CORPORATION

- **Continue**

Refer to **CHECKING COMPONENTS AND WIRING**

CHECKING COMPONENTS AND WIRING

Check the voltage between the left and right-hand stop lamps and the output on the rear electronic module (REM). The voltage must be approximately 12 V when the stop lamp is activated.

Check the control signal cable. Check for an open-circuit. Check for a short-circuit to supply voltage.

Take readings between:

- Rear electronic module (REM) terminal #B3 (#3) and stop lamp terminal #A5.

Check the cable between central electronic module (CEM) terminal #A15 (15) and rear electronic module

(REM) terminal #A18 (18). Check for a short-circuit to supply voltage. Check for an open-circuit.

Remedy as necessary.

Other information

- Central electronic module (CEM): **CONNECTING THE BREAKOUT BOX**
- Rear electronic module (REM): **CONNECTING THE BREAKOUT BOX**
- Central electronic module (CEM):
  - -2004: **SIGNAL SPECIFICATION**
  - 2005-: **SIGNAL SPECIFICATION**
- Rear electronic module (REM): **SIGNAL SPECIFICATION**
- For -2004, see: **CENTRAL ELECTRONIC MODULE (CEM), REPLACING** .
- For 2005-, see: **CENTRAL ELECTRONIC MODULE (CEM), REPLACING** .
- For -2004, see: **RELAY/FUSE BOX CARGO COMPARTMENT/REAR ELECTRONIC MODULE (REM), REPLACING**
- For 2005-, see: **REAR ELECTRONIC MODULE (REM), REPLACING** .
- see **HIGH LEVEL STOP LAMP, REPLACING**
- see **CHECKING WIRING AND TERMINALS**

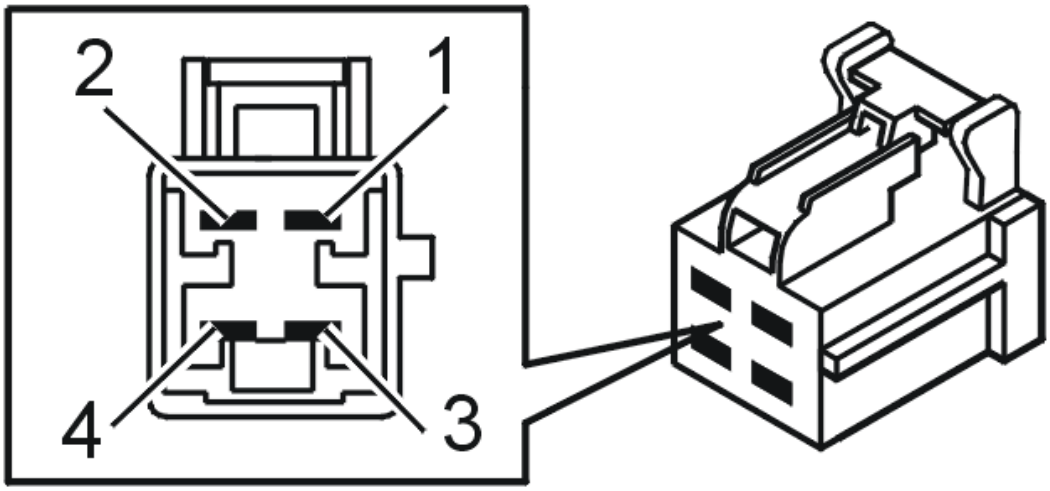

Fig. 151: Identifying 4-Bit Connector
Courtesy of VOLVO CARS CORPORATION

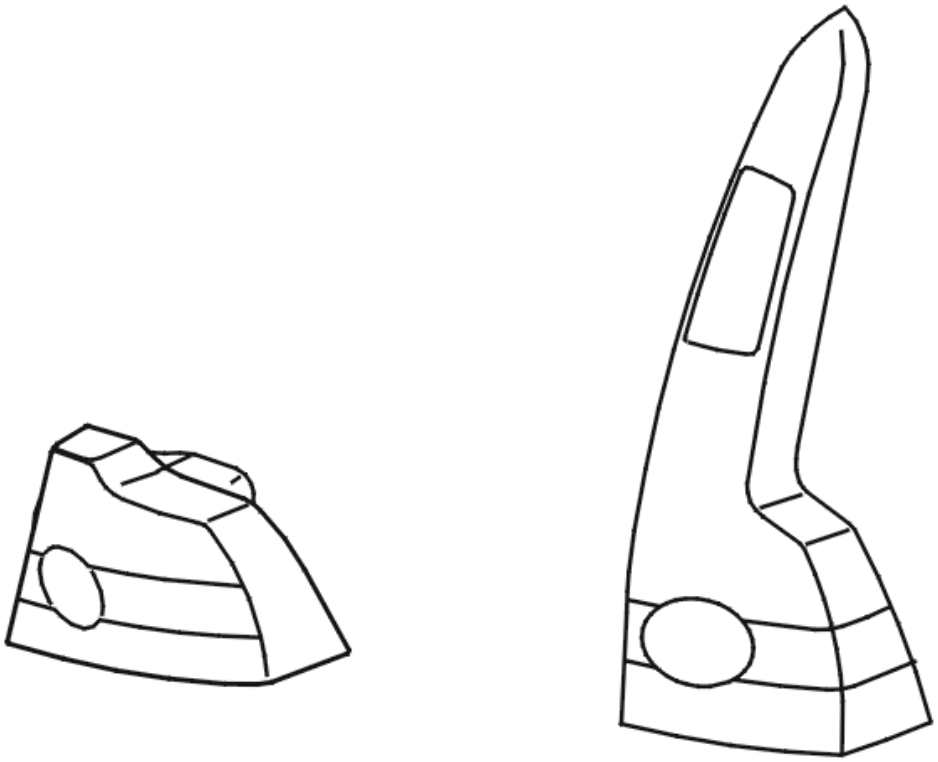

Fig. 152: Identifying Tail Lamps
Courtesy of VOLVO CARS CORPORATION

- **Continue**

  Refer to **VERIFICATION**

VERIFICATION

VERIFICATION

HINT: After carrying out the repair, check that the fault has been remedied.

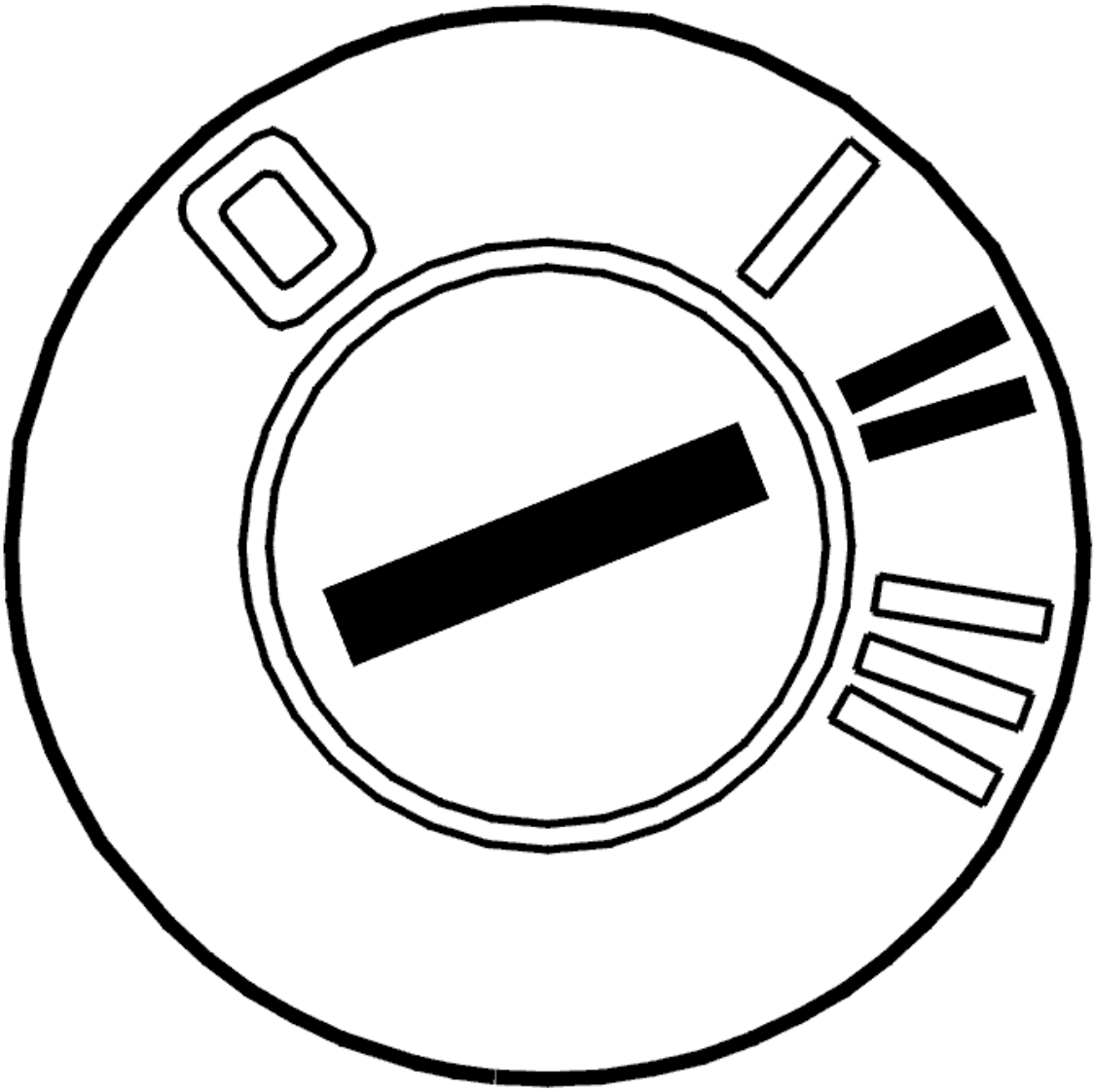

Fig. 153: Identifying Ignition ON
Courtesy of VOLVO CARS CORPORATION

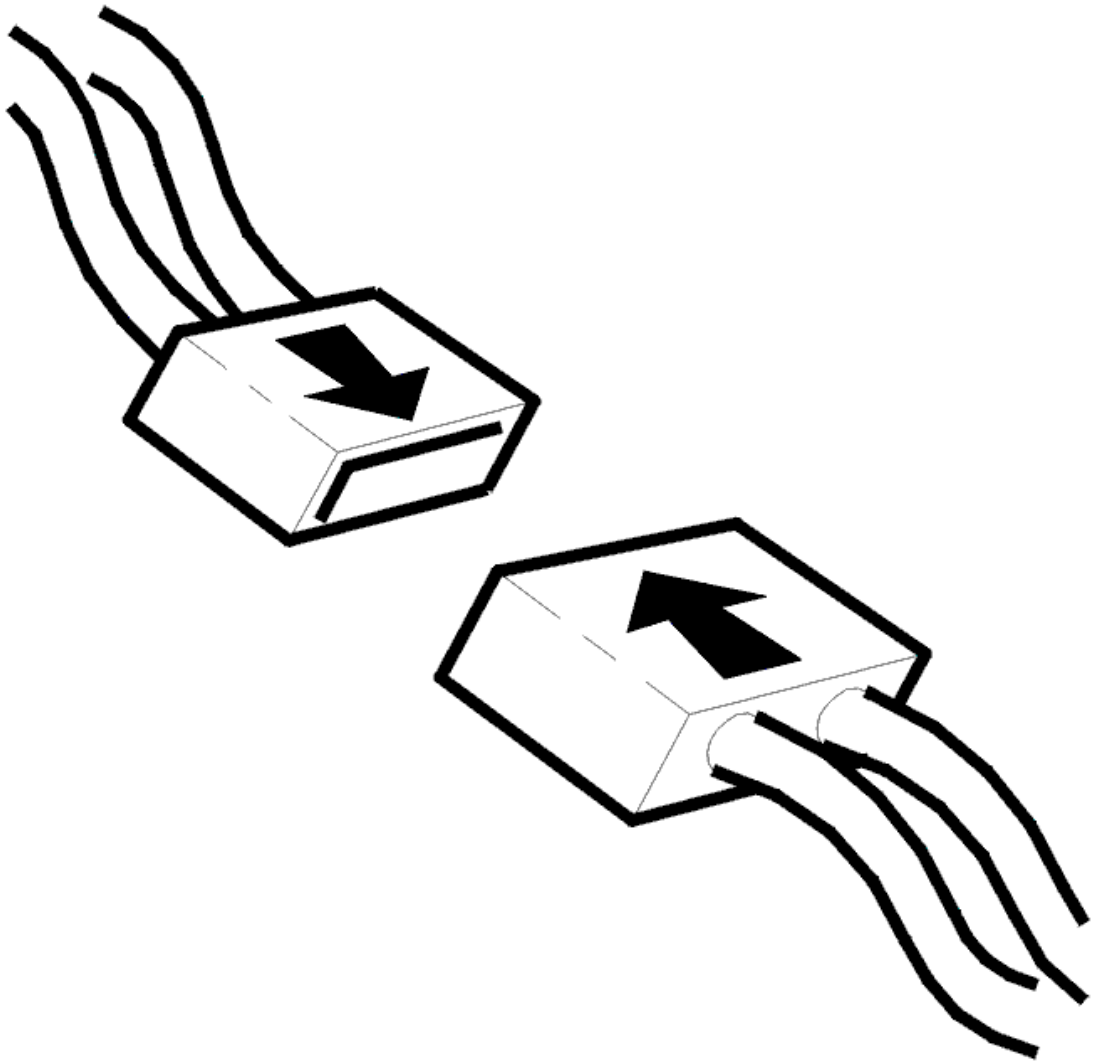

Fig. 154: Connecting Connector
Courtesy of VOLVO CARS CORPORATION

- Ignition off
- Reinstall the connectors, components etc.
- Ignition on
- Activate the stop lamps.

  Check that the stop lamps are working.

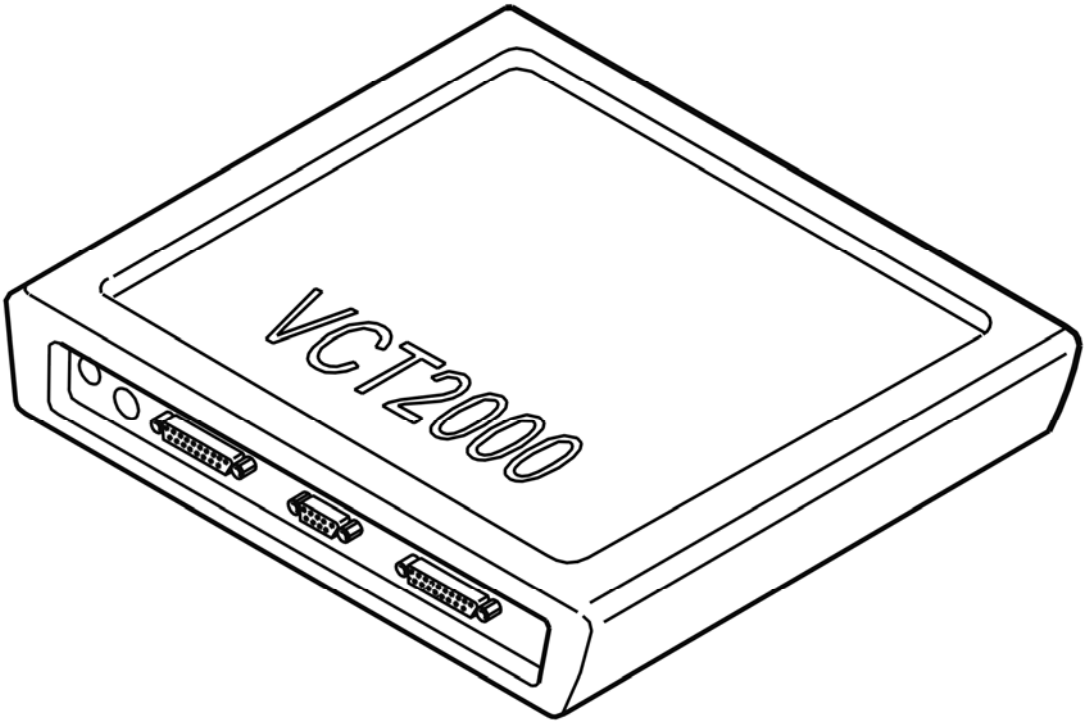

Fig. 155: Identifying VCT2000 Diagnostic Tool Symbol In VIDA
Courtesy of VOLVO CARS CORPORATION

Are the stop lamps working?

- **YES**

  VERIFIED: Troubleshooting has been completed.

- **NO**

  Refer to **INFORMATION**

INFORMATION

FAULT-TRACING INFORMATION

The fault should have been detected and remedied. As this is not the case fault-tracing has failed.

Exit fault-tracing for this diagnostic trouble code (DTC) or make another attempt.

CEM-8D03: BRAKE LIGHT SWITCH INTERNAL FAULT (2005-2012)

DIAGNOSTIC TROUBLE CODE (DTC) INFORMATION CEM-8D03

Condition

The central electronic module (CEM) checks the signal from the stop lamp switch.

The diagnostic trouble code (DTC) is stored if the control module detects that:

- Brake light is activated when Engine control module (ECM) informs that brake pedal is not depressed, and no internal error has been detected of Central electronic module (CEM).

The control module's test for the diagnostic trouble code (DTC) starts in the event of:

- Ignition position I and II, when HS-CAN is activated.

NOTE: The control module can only detect the fault once the test has been started and the diagnostic trouble code (DTC) is stored when the conditions are met.

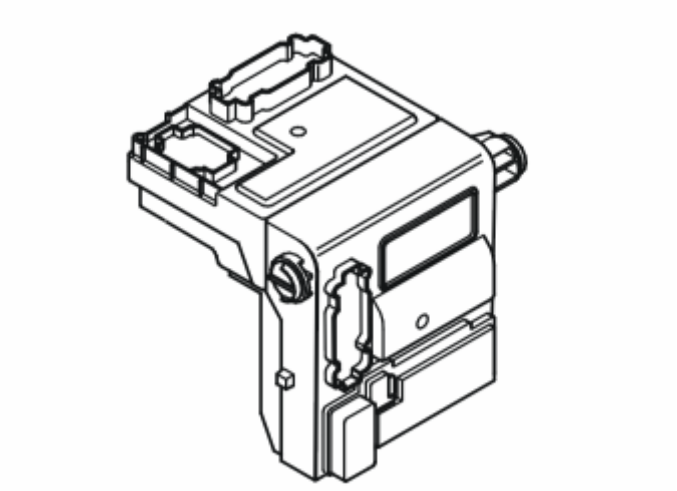

Fig. 156: Identifying Central Electronic Module (CEM)
Courtesy of VOLVO CARS CORPORATION

Substitute Value

- None.

Possible Source

- Internal error in brake light switch or leads.

Fault symptom[s]

- Cruise control/Does not engage
- Cruise control/Disengagement does not work
- Cruise control/Does not remain at set speed/disengages

- Tail light/Brake lights constantly lit

FAULT-TRACING

CHECKING STOP LAMP SWITCH STATUS

NOTE: The following troubleshooting shall not be performed if no symptom (according to trouble code information) is noticed on the vehicle. Then the diagnostic trouble code shall be erased instead.

This diagnostic trouble code indicates that there is a defect in the brake light switch or the leads to the same.

Brake light switch is a switch that controls when the brake lights shall be activated/not activated.

Troubleshoot according to:

1. Check the brake light switch connector for contact resistance and oxidation.

2. Check that the brake light switch is supplied with voltage.

3. Check leads between Central electronic module (CEM) and brake light switch.

If no defect is detected, replace brake light switch.

Remedy as necessary.

Other information

- see **SIGNAL SPECIFICATION**
- see **CHECKING WIRING AND TERMINALS**

- **Continue**

  Refer to **INFORMATION**

INFORMATION

FAULT-TRACING INFORMATION

In case of this defect, troubleshooting is not followed by verification.

The information can be displayed again or the fault-tracing for this fault can be interrupted.

CEM-8D04: INTERNAL FAULT IN CONTROL MODULE (2005-2012)

DIAGNOSTIC TROUBLE CODE (DTC) INFORMATION CEM-8D04

Condition

The central electronic module (CEM) checks the signal from the stop lamp switch.

The diagnostic trouble code (DTC) is stored if the control module detects that:

- Brake light is activated when Engine control module (ECM) informs that brake pedal is not depressed, and Central electronic module (CEM) detects abnormal current to brake light.

The control module's test for the diagnostic trouble code (DTC) starts in the event of:

- Ignition position I and II, when HS-CAN is activated.

NOTE: The control module can only detect the fault once the test has been started and the diagnostic trouble code (DTC) is stored when the conditions are met.

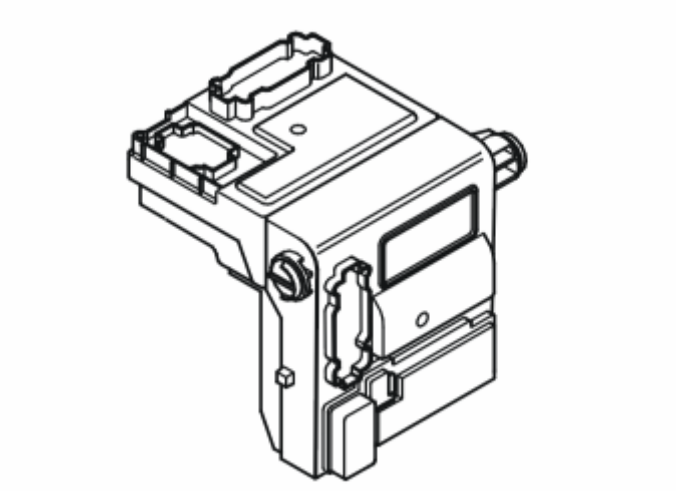

Fig. 157: Identifying Central Electronic Module (CEM)
Courtesy of VOLVO CARS CORPORATION

Substitute Value

- None.

Possible Source

- Internal fault in the central electronic module (CEM).

Fault symptom[s]

- Tail light/Brake lights constantly lit

FAULT-TRACING

REPLACING A COMPONENT

The component has registered an internal fault.

Troubleshoot according to:

1. Check the brake light switch connector for contact resistance and oxidation.

2. Check that the brake light switch is supplied with voltage.

3. Check leads between Central electronic module (CEM) and brake light switch.

If no defect is found and the brake light is on constantly, change Central electronic module (CEM).

NOTE: Central electronic module (CEM) shall not be replaced if the brake lights work correctly. Then the diagnostic trouble code shall be erased instead.

Remedy as necessary.

Other information

- see **CHECKING WIRING AND TERMINALS**
- see **SIGNAL SPECIFICATION**
- **Continue**

  Refer to **INFORMATION**

INFORMATION

FAULT-TRACING INFORMATION

In case of this defect, troubleshooting is not followed by verification.

The information can be displayed again or the fault-tracing for this fault can be interrupted.

CEM-8E01: BACK-UP (REVERSING) LAMP SWITCH. FAULTY SIGNAL (2005-2012)

DIAGNOSTIC TROUBLE CODE (DTC) INFORMATION CEM-8E01

Condition

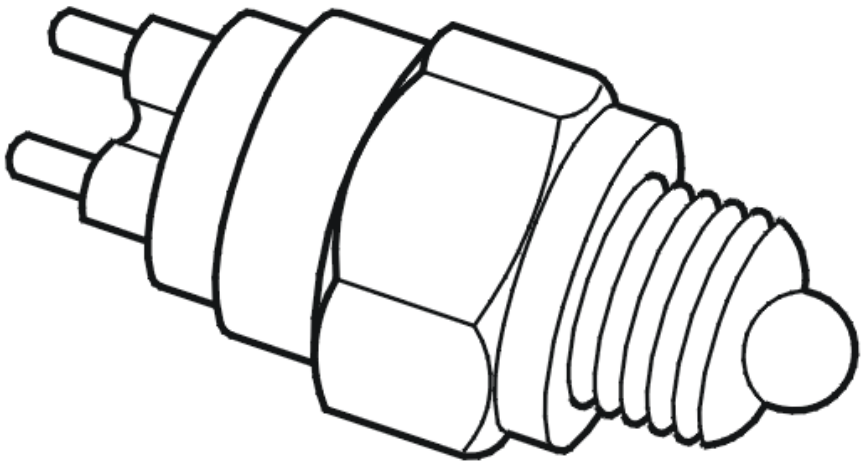

Fig. 158: Identifying Back-Up (Reversing) Lamp Switch
Courtesy of VOLVO CARS CORPORATION

The central electronic module (CEM) checks the back-up (reversing) lamp switch.

The diagnostic trouble code (DTC) is stored if the central electronic module (CEM) registers that the signal in the circuit for the back-up (reversing) lamp switch is too low when gears 1 to 5 are selected and vehicle speed is above 80 km/h.

The diagnostic trouble code (DTC) can be diagnosed when the ignition is switched on.

Substitute Value

- None.

Possible Source

- Damaged back-up (reversing) lamp switch
- Short-circuit to ground in the cable from the back-up (reversing) lamp switch.

Fault symptom[s]

- The back-up (reversing) lamp is constantly lit.

FAULTY SIGNAL

CHECKING THE COMPONENT

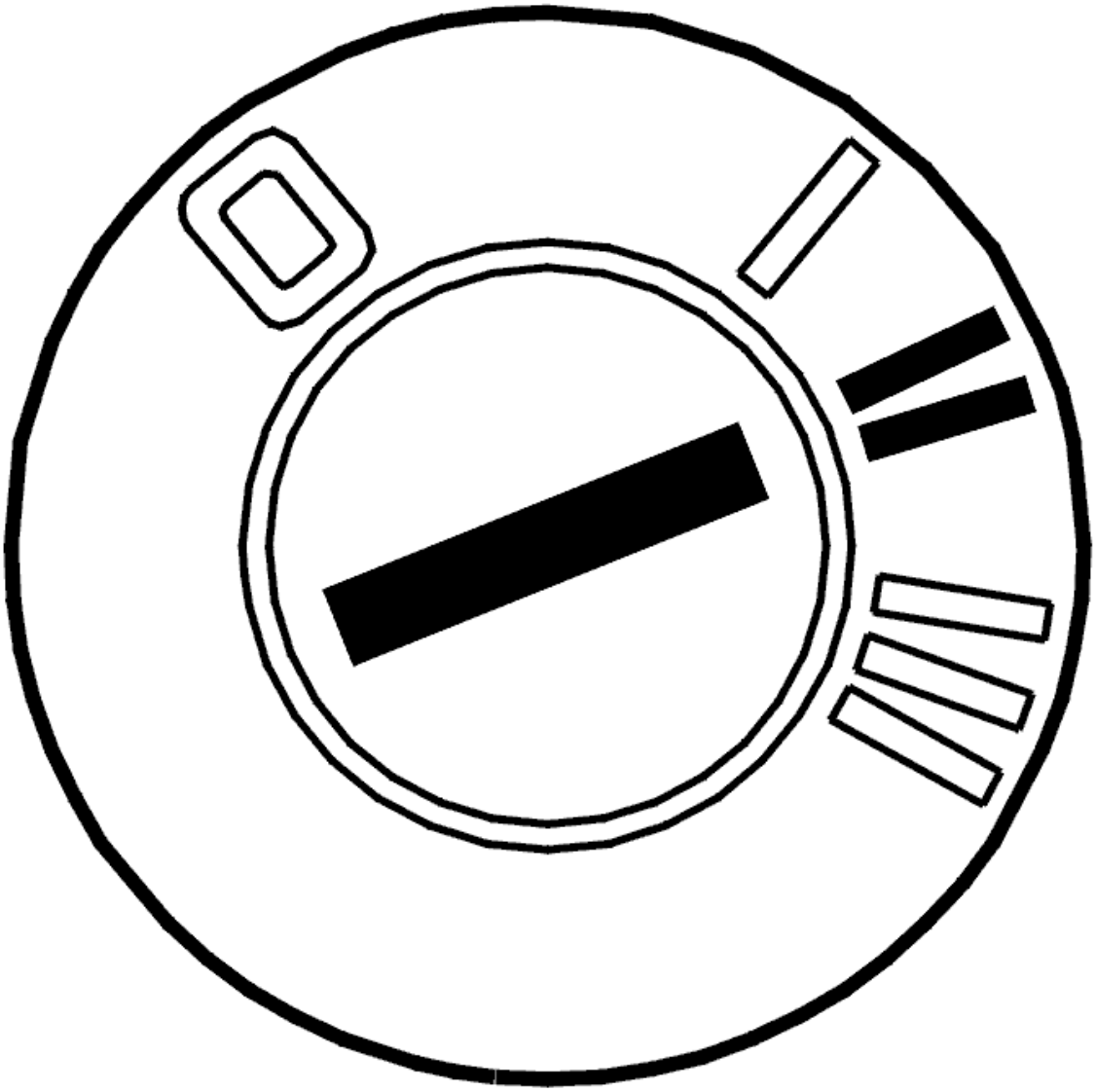

Fig. 159: Identifying Ignition ON
Courtesy of VOLVO CARS CORPORATION

- Ignition on.

  Check that the back-up (reversing) lamp is only lit when back-up (reverse) gear is engaged.

Was a fault detected?

- **YES**

  Refer to **CHECKING COMPONENTS AND WIRING**

- **NO**

  Refer to **CHECKING COMPONENTS AND WIRING**

CHECKING COMPONENTS AND WIRING

Check the cable between the central electronic module (CEM) and the back-up (reversing) lamp switch. Check for an open-circuit. Check for a short-circuit to ground.

Take readings between:

- Central electronic module (CEM) terminal #C34 (34) and back-up (reversing) lamp switch terminal #1 (3/10).

Measure the resistance between back-up (reversing) lamp switch terminals #1 and #2 with gears 1 to 5 engaged. The resistance must be high.

HINT: The back-up (reverse) gear switch should be open in all gear positions except back-up (reverse).

Remedy as necessary.

Other information

- see **CONNECTING THE BREAKOUT BOX**
- -2004: **SIGNAL SPECIFICATION**
- 2005-: **SIGNAL SPECIFICATION**
- see **BACK-UP LAMP SWITCH, REPLACING**
- see **CHECKING WIRING AND TERMINALS**

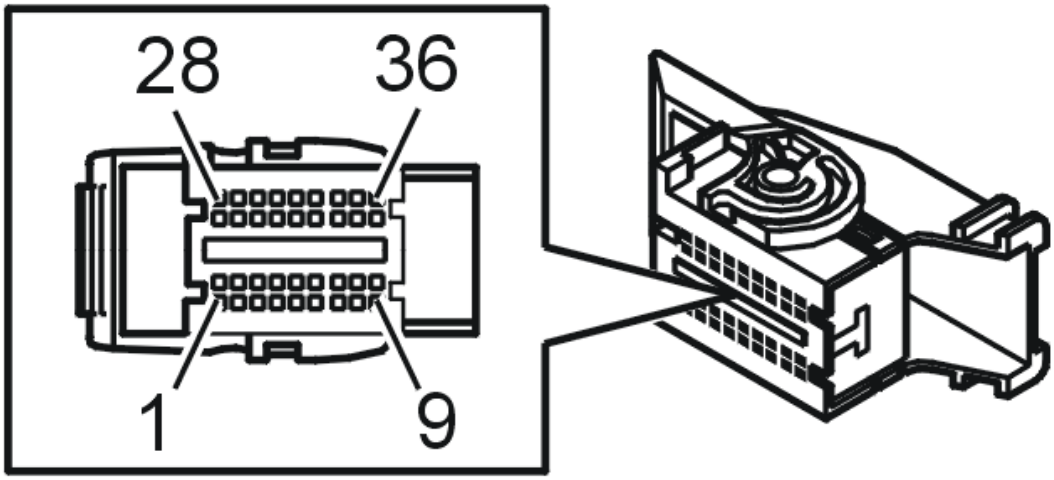

Fig. 160: Identifying Connector C
Courtesy of VOLVO CARS CORPORATION

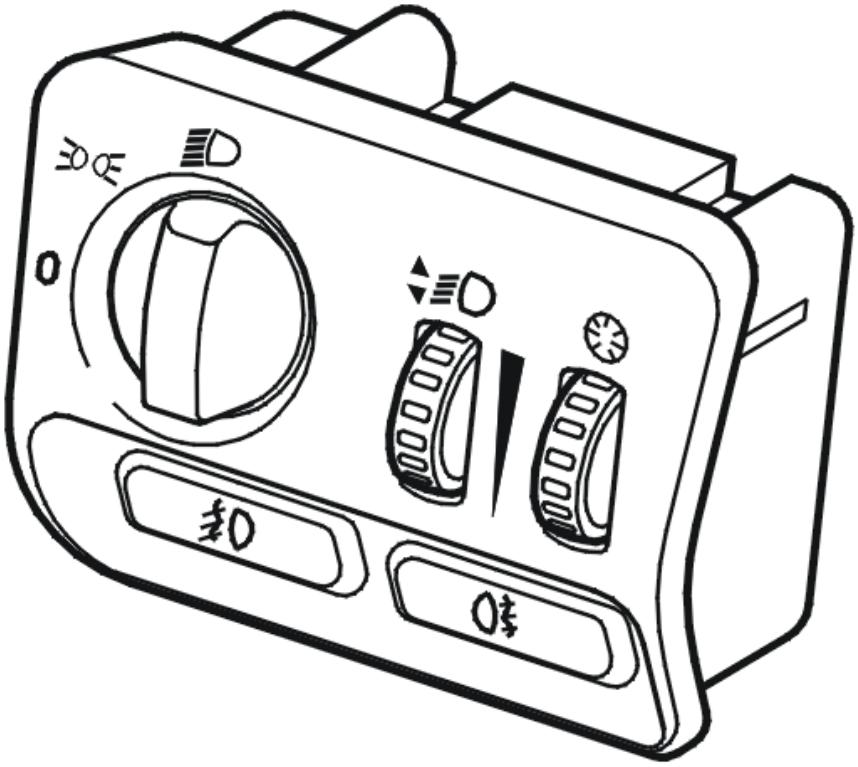

Fig. 161: Identifying Light Switch Module (LSM)
Courtesy of VOLVO CARS CORPORATION

- **Continue**

  Refer to **VERIFICATION**

CHECKING COMPONENTS AND WIRING

Check central electronic module (CEM) connector C. Check for contact resistance and oxidation. Check for damage in particular.

Check the connector on the back-up (reversing) lamp switch. Check for contact resistance and oxidation. Check for damage in particular.

Check the cable between the central electronic module (CEM) and the back-up (reversing) lamp switch. Check for an open-circuit. Check for an intermittent short-circuit to ground.

Take readings between:

- Central electronic module (CEM) terminal #C34 (34) and back-up (reversing) lamp switch terminal #1 (3/10).

Other information

- see **CONNECTING THE BREAKOUT BOX**
- -2004: **SIGNAL SPECIFICATION**
- 2005-: **SIGNAL SPECIFICATION**
- see **BACK-UP LAMP SWITCH, REPLACING**
- see **CHECKING WIRING AND TERMINALS**

- **Continue**

  Refer to **VERIFICATION**

VERIFICATION

VERIFICATION

HINT: After carrying out the repair, check that the fault has been remedied.

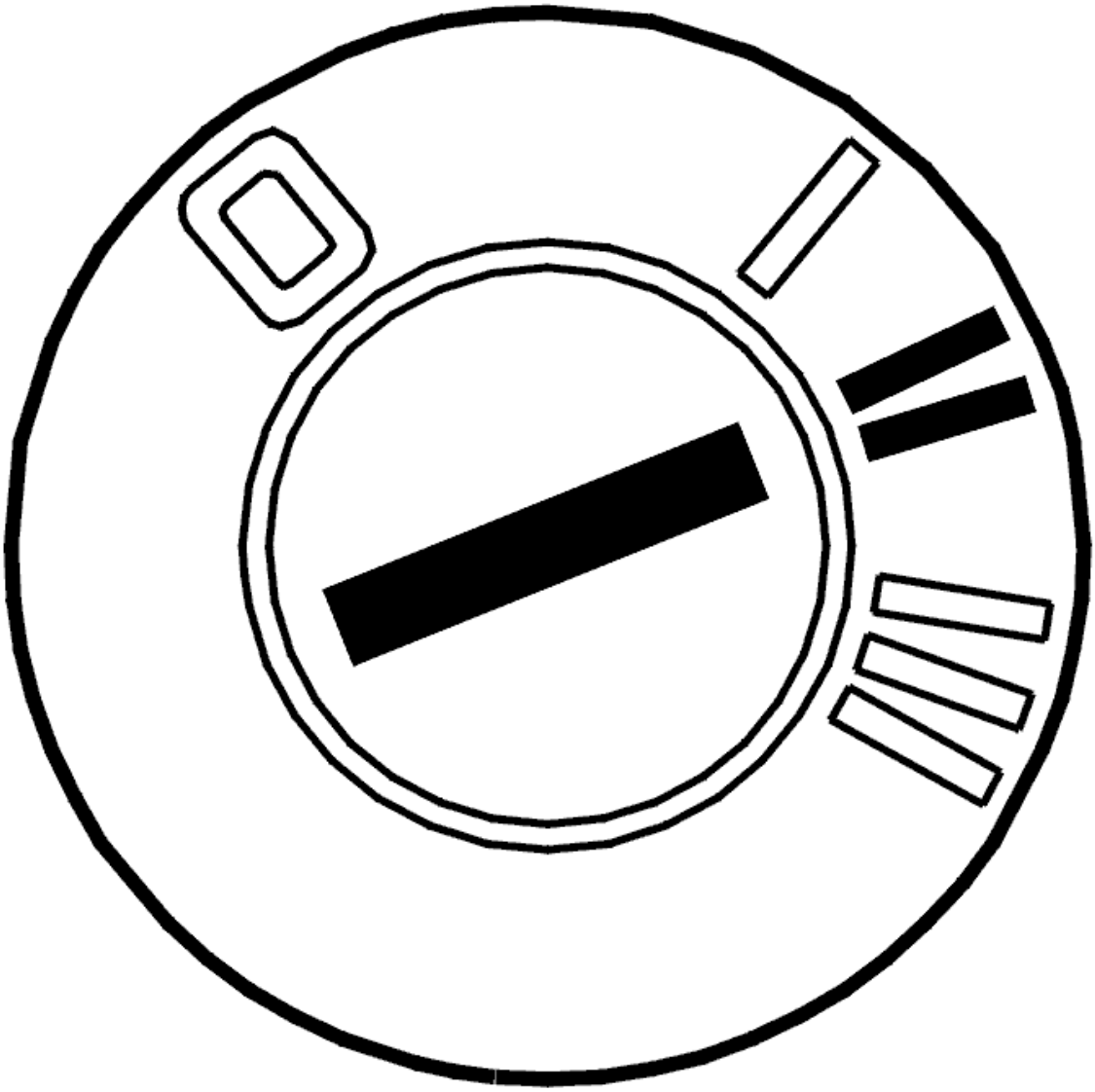

Fig. 162: Identifying Ignition ON
Courtesy of VOLVO CARS CORPORATION

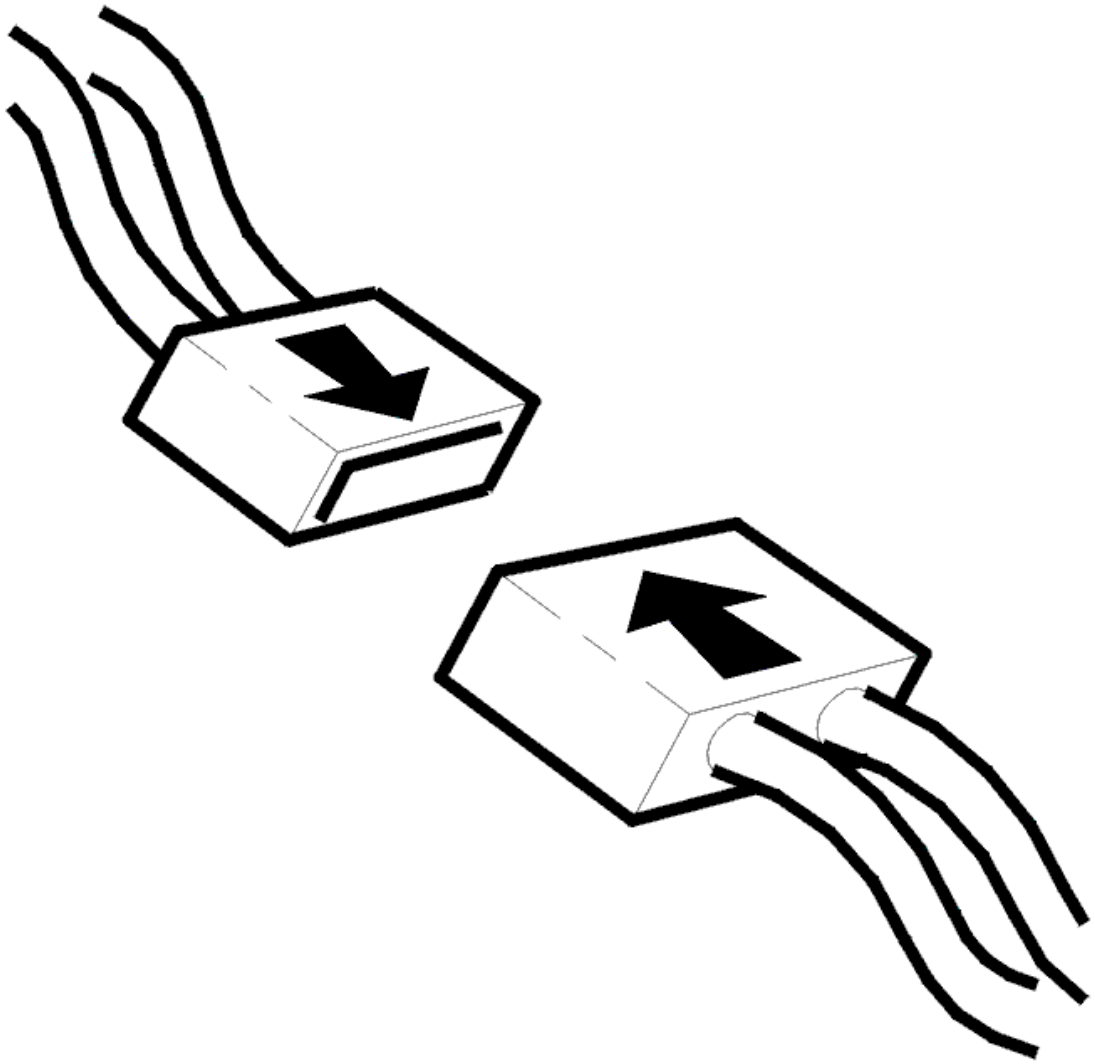

Fig. 163: Connecting Connector
Courtesy of VOLVO CARS CORPORATION

- Ignition off
- Reinstall the connectors, components etc.
- Ignition on.

  The back-up (reversing) lamp should not light with gears 1 to 5 engaged.

Is the function OK?

- **YES**

  VERIFIED: Troubleshooting has been completed.

- **NO**

  Refer to **INFORMATION**

INFORMATION

FAULT-TRACING INFORMATION

The fault should have been detected and remedied. As this is not the case fault-tracing has failed.

Exit fault-tracing for this diagnostic trouble code (DTC) or make another attempt.

CEM-8E01: REVERSING LIGHT. SIGNAL TOO LOW. INTERMITTENT FAULT (2003-2004)

DIAGNOSTIC TROUBLE CODE (DTC) INFORMATION

Condition

Diagnostic trouble code (DTC) CEM-8E01 is stored if the control module registers a low signal from the back-up (reversing) lamp switch when gears 1 to 5 are engaged and vehicle speed exceeds 50 km/h.

Substitute Value

- None.

Possible Source

- Defective back-up (reversing) lamp switch.
- Short-circuit to ground in the cable from the back-up (reversing) lamp switch.

Fault symptom[s]

- The back-up (reversing) lamp is constantly lit.

SIGNAL TOO LOW. INTERMITTENT FAULT

CHECKING WIRING / BACK-UP (REVERSING) LIGHT SWITCH

Check the cable between the central electronic module (CEM) terminal #1A and the back-up (reversing) lamp switch terminal #2 (3/10). Check for an intermittent short-circuit to ground.

Also check the back-up (reversing) lamp switch. Check for an intermittent short-circuit to ground.

Remedy as necessary.

Other information:

- For information on the central electronic module (CEM):
  - For -2004, see: **CENTRAL ELECTRONIC MODULE (CEM), REPLACING**
  - For 2005-, see: **CENTRAL ELECTRONIC MODULE (CEM), REPLACING** .
- To access the back-up (reversing) lamp switch, see **BACK-UP LAMP SWITCH, REPLACING** .

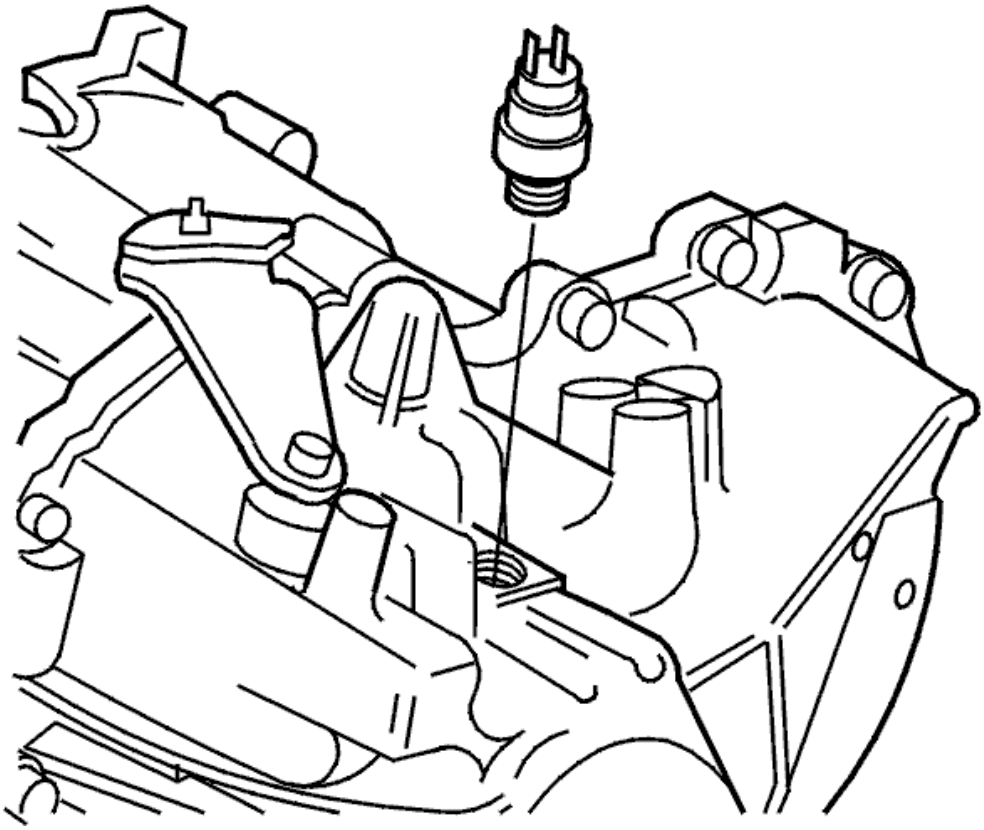

Fig. 164: Back-Up Lamp Switch
Courtesy of VOLVO CARS CORPORATION

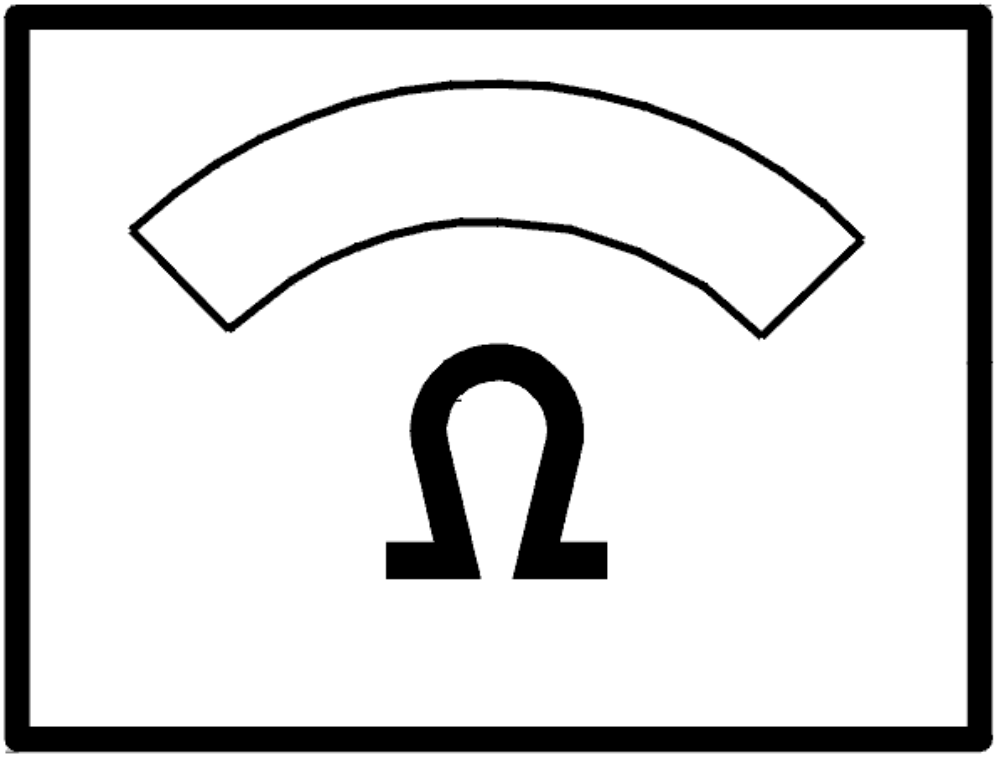

Fig. 165: Identifying Ohm Meter
Courtesy of VOLVO CARS CORPORATION

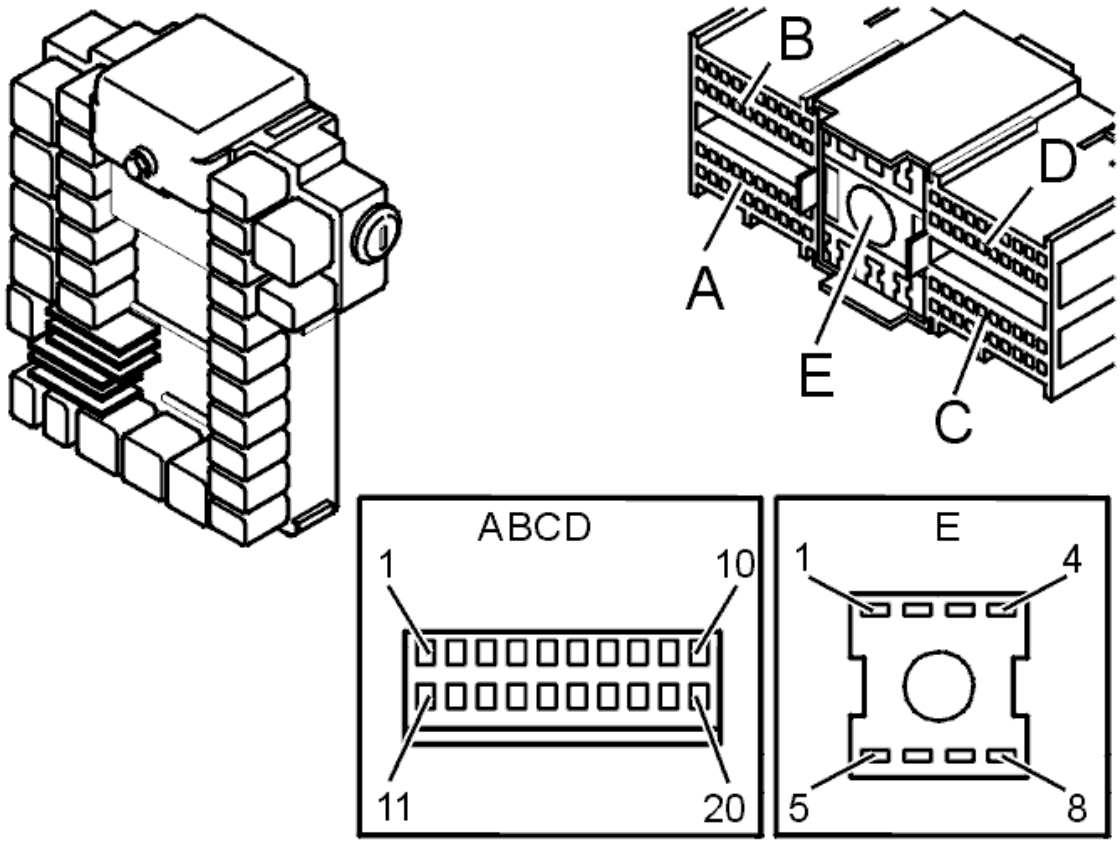

Fig. 166: Ground Terminals
Courtesy of VOLVO CARS CORPORATION

- **Continue**

  Refer to **INFORMATION**

INFORMATION

FAULT-TRACING INFORMATION

If the fault is intermittent, do not verify fault-tracing if the fault does not recur.

It is possible to view the information again, or leave fault-tracing for this diagnostic trouble code (DTC).

CEM-8E01: REVERSING LIGHT. SIGNAL TOO LOW. PERMANENT FAULT (2003-2004)

DIAGNOSTIC TROUBLE CODE (DTC) INFORMATION

see **DIAGNOSTIC TROUBLE CODE (DTC) INFORMATION**

SIGNAL TOO LOW. PERMANENT FAULT

CHECKING BACK-UP (REVERSING) LAMP SWITCH

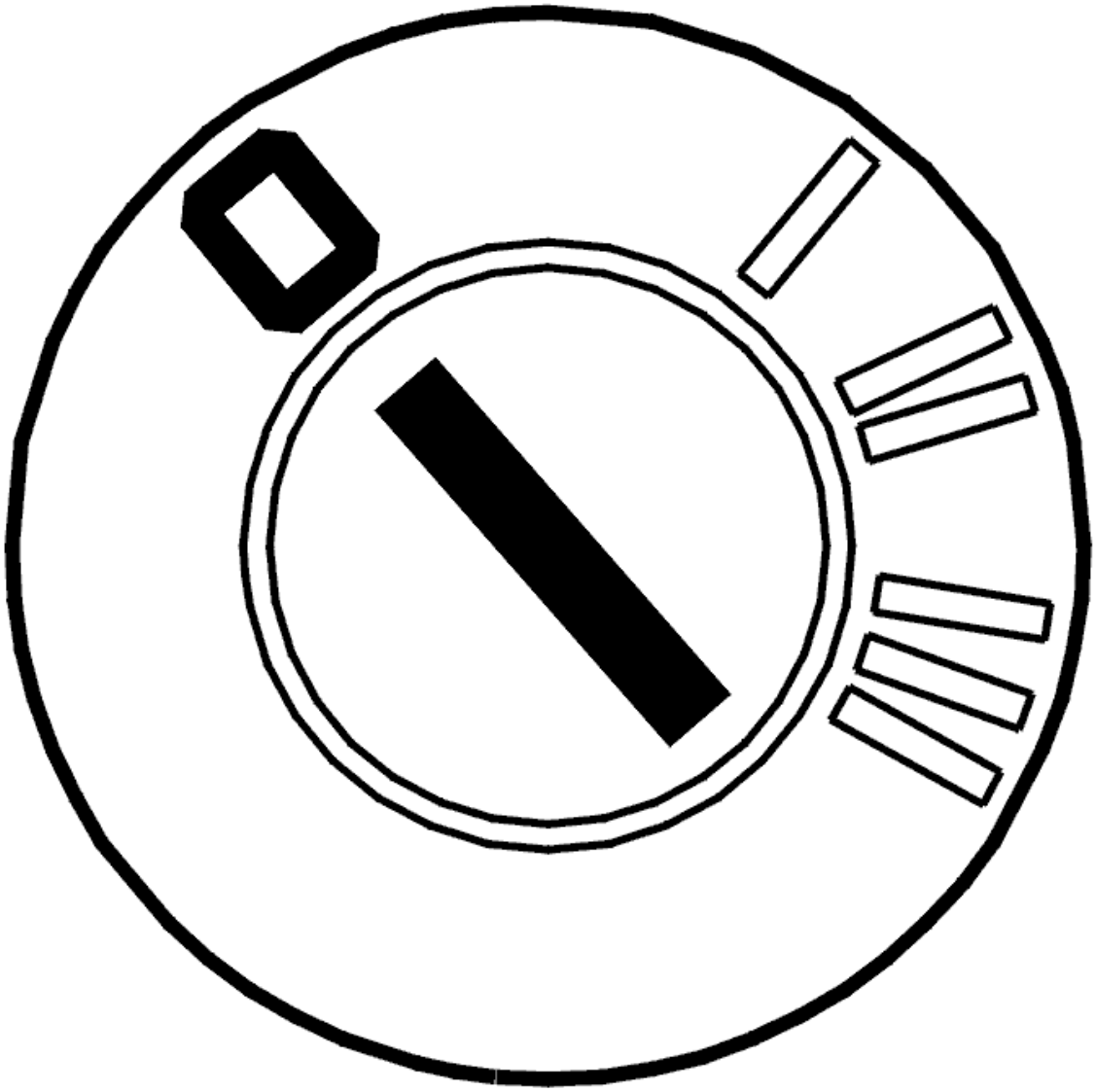

Fig. 167: Identifying Ignition OFF
Courtesy of VOLVO CARS CORPORATION

- Ignition off.

  HINT: Check the back-up (reversing) light switch resistance between connector 54/1 terminal #24 and ground with gears 1 to 5 engaged. Resistance should be high.

  The back-up gear switch should be open in all gear positions except back-up gear.

  Remedy as necessary.

  Other information:

- To access the back-up (reversing) lamp switch, see **BACK-UP LAMP SWITCH, REPLACING** .

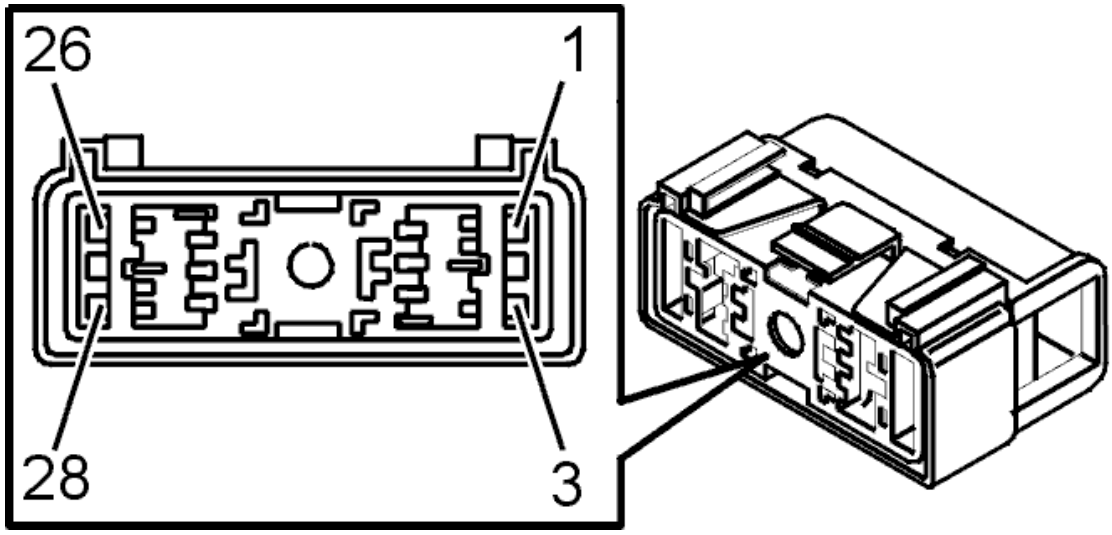

Fig. 168: Identifying Connector Terminals
Courtesy of VOLVO CARS CORPORATION

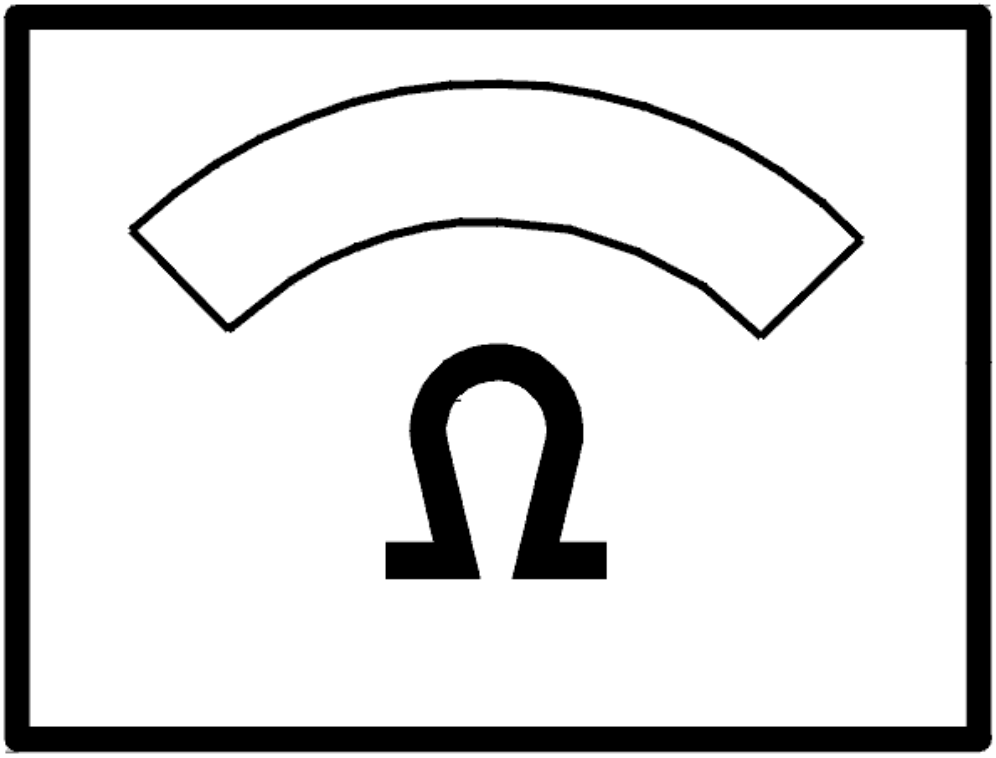

Fig. 169: Identifying Ohm Meter
Courtesy of VOLVO CARS CORPORATION

Was a fault detected?

- **YES**

  Refer to **VERIFICATION**

- **NO**

  Refer to **CHECKING THE CABLE**

CHECKING THE CABLE

Check the cable between the central electronic module (CEM) terminal #1A and the back-up (reversing) lamp

switch terminal #2 (3/10). Check for a short-circuit to ground.

Remedy as necessary.

Other information:

- For information on the central electronic module (CEM):
  - For -2004, see: **CENTRAL ELECTRONIC MODULE (CEM), REPLACING**
  - For 2005-, see: **CENTRAL ELECTRONIC MODULE (CEM), REPLACING** .
- To access the back-up (reversing) lamp switch, see **BACK-UP LAMP SWITCH, REPLACING**
- see **CHECKING WIRING AND TERMINALS** .

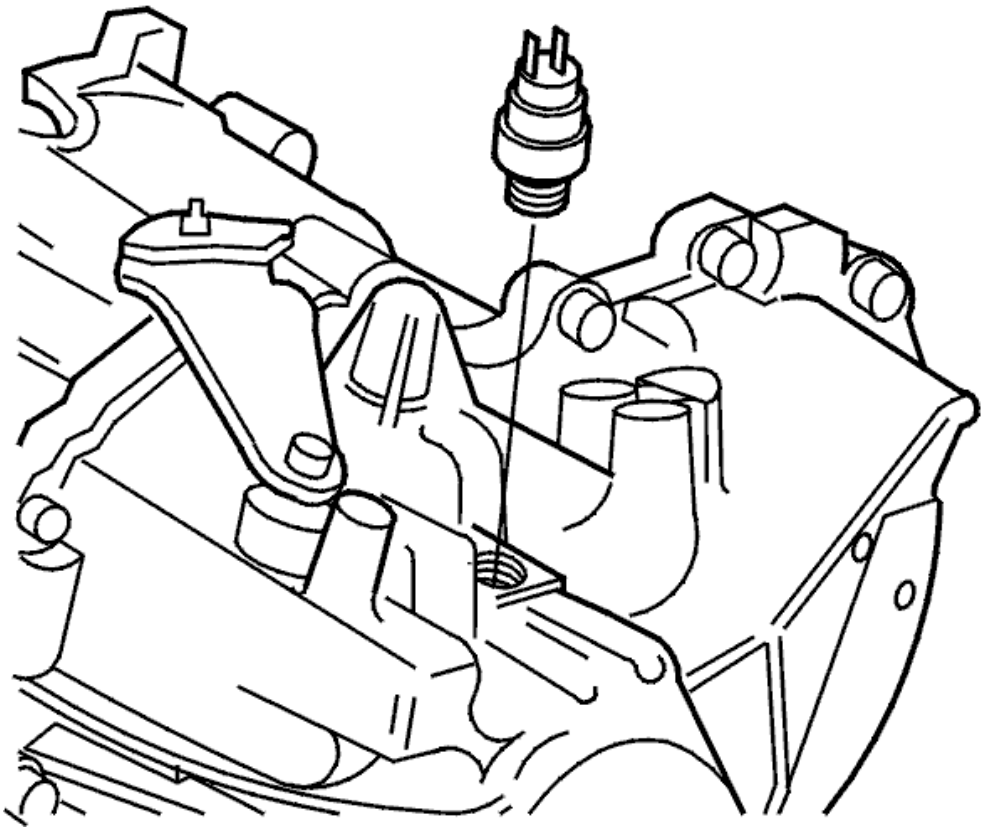

Fig. 170: Back-Up Lamp Switch
Courtesy of VOLVO CARS CORPORATION

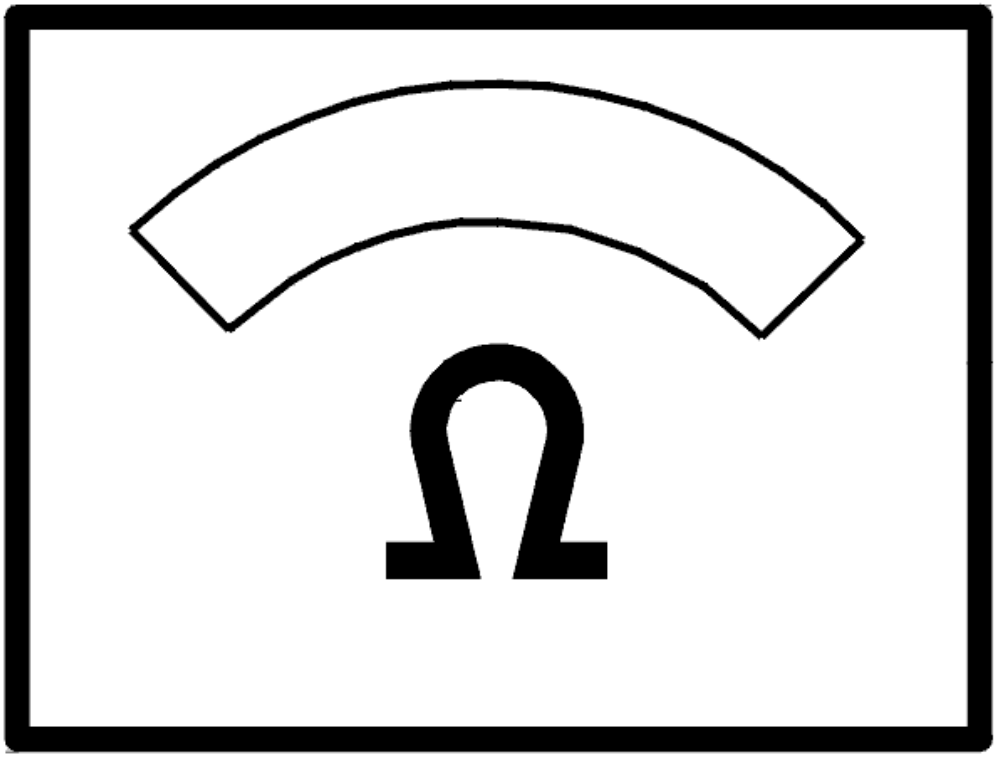

Fig. 171: Identifying Ohm Meter
Courtesy of VOLVO CARS CORPORATION

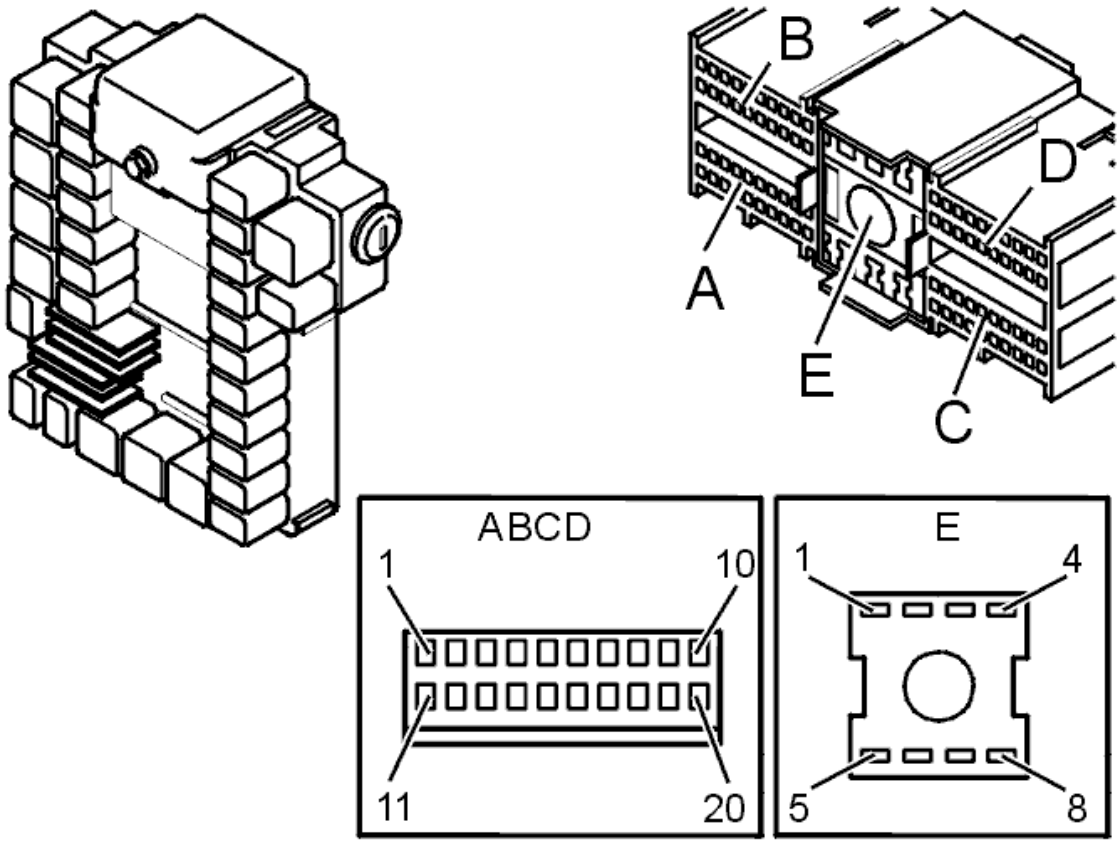

Fig. 172: Ground Terminals
Courtesy of VOLVO CARS CORPORATION

Was a fault detected?

- **YES**

  Refer to **VERIFICATION**

- **NO**

  Refer to **REPLACING THE COMPONENT**

REPLACING THE COMPONENT

Try replacing the back-up (reversing) lamp switch.

Other information:

- To access the back-up (reversing) lamp switch, see **BACK-UP LAMP SWITCH, REPLACING** .

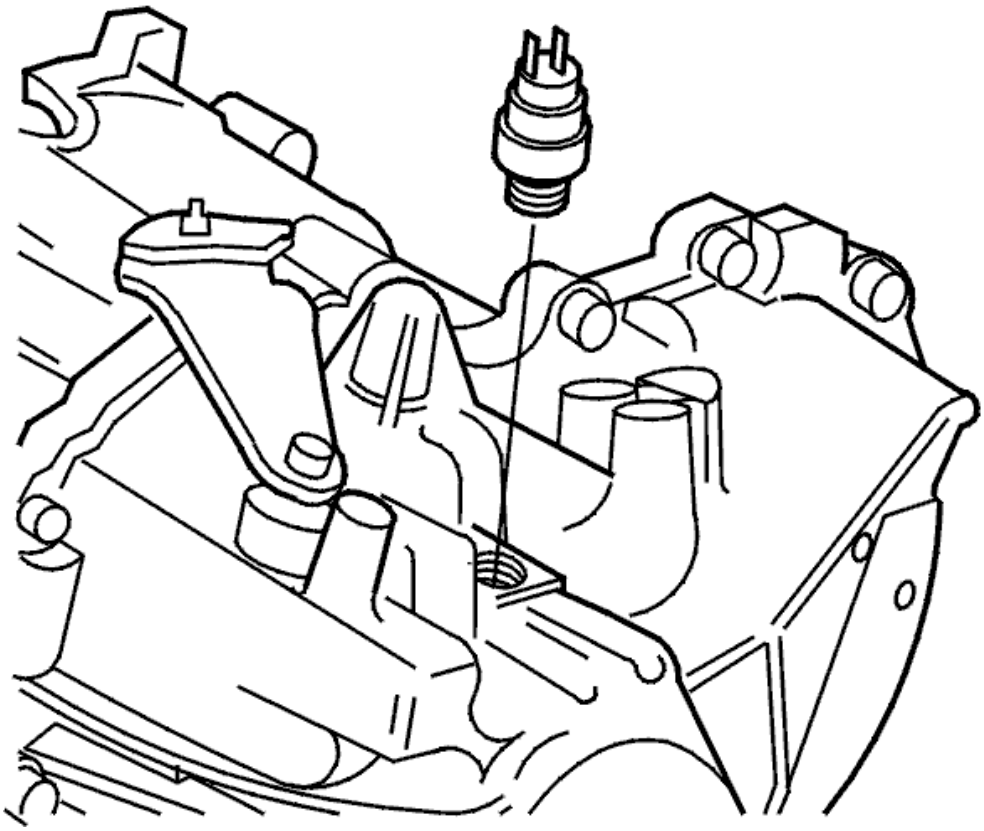

Fig. 173: Back-Up Lamp Switch
Courtesy of VOLVO CARS CORPORATION

- **Continue**

  Refer to **VERIFICATION**

VERIFICATION

VERIFICATION

HINT: After the repair it is necessary to check that the fault has been rectified.

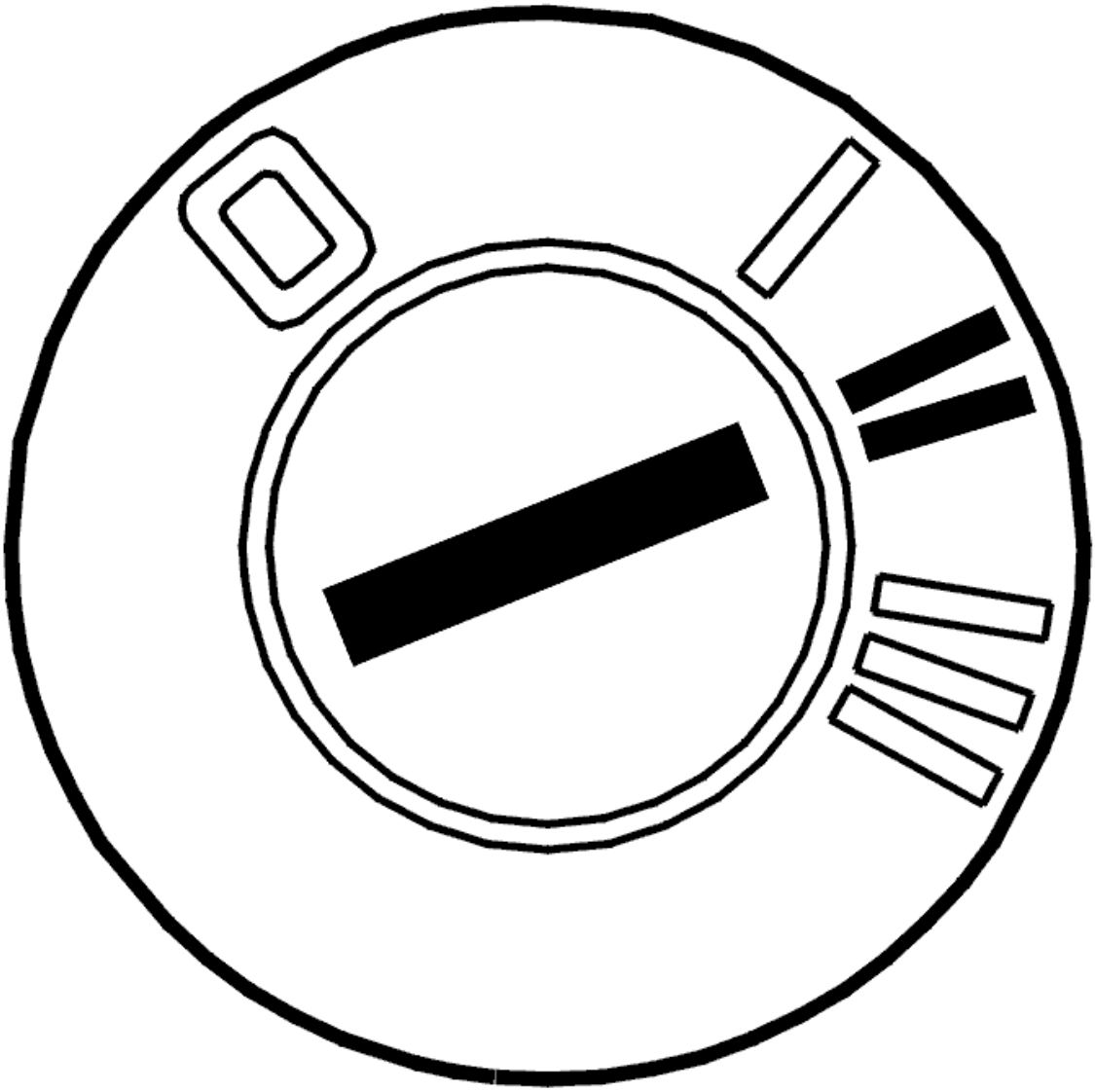

Fig. 174: Identifying Ignition ON
Courtesy of VOLVO CARS CORPORATION

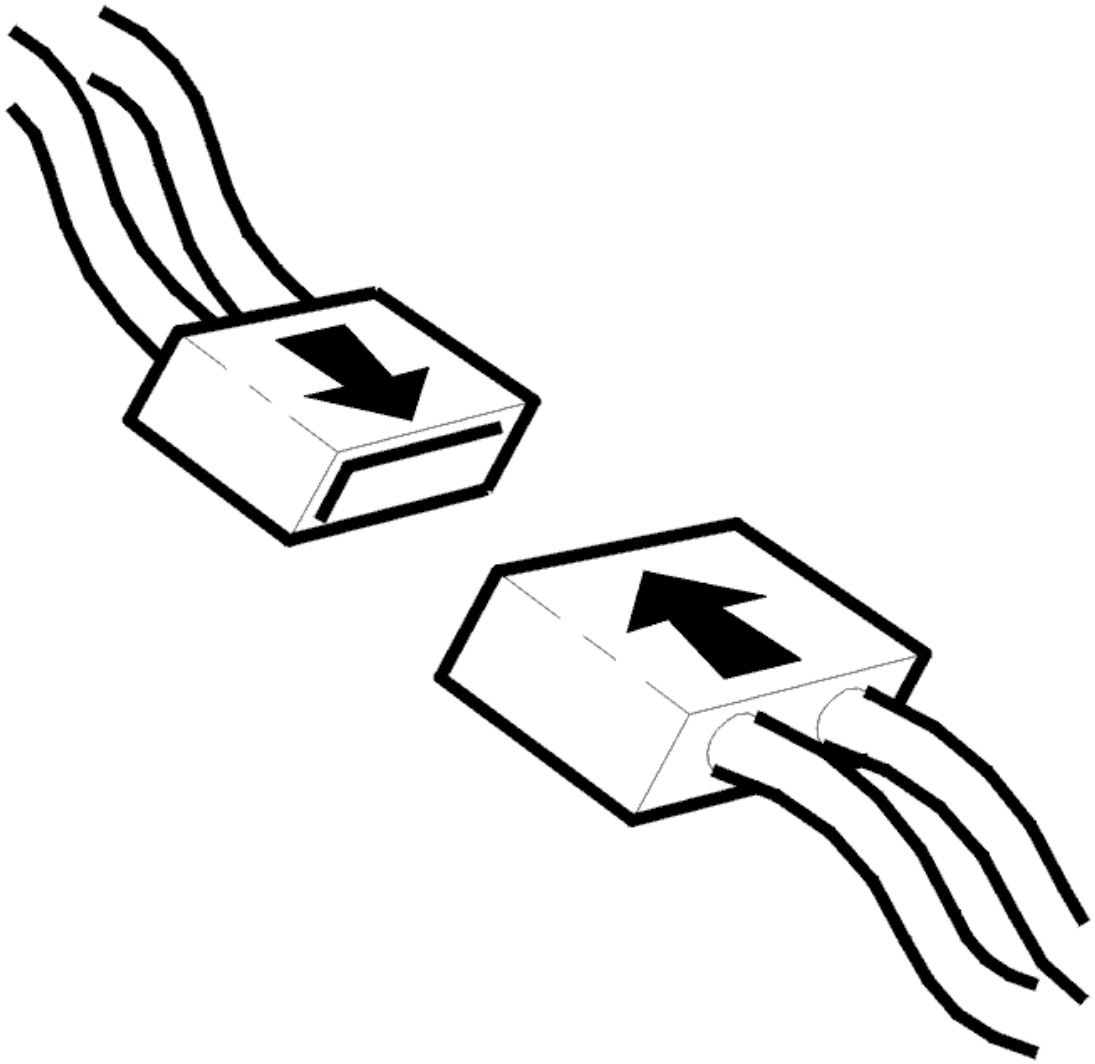

Fig. 175: Connecting Connector
Courtesy of VOLVO CARS CORPORATION

- Ignition off.
- Connect connectors, install components etc.
- Ignition on.

  Reversing light should not come on when gears 1 to 5 are selected.

Does it work?

- **YES**

  VERIFIED: Troubleshooting has been completed.

- **NO**

  Refer to **INFORMATION**

INFORMATION

FAULT-TRACING INFORMATION

The fault should have been detected and remedied. As this is not the case fault-tracing has failed.

Exit fault-tracing for this diagnostic trouble code (DTC) or make another attempt.

CEM-8F01: WARNING FLASHER AND GLOVEBOX LIGHT. SIGNAL TOO LOW. INTERMITTENT FAULT (2003-2004)

DIAGNOSTIC TROUBLE CODE INFORMATION

Condition

Neither warning flasher nor glove compartment light should have to be on to display the diagnostic trouble code. If fault bit in central electronic module (CEM) indicates a fault, diagnostic trouble code CEM-8F01 is displayed.

Possible Source

- The warning flasher or glovebox light is short circuited to ground
- The warning flasher or glovebox light is overheated.

Fault symptom[s]

- Interior lighting does not work.

SIGNAL TOO LOW. INTERMITTENT FAULT.

CHECKING THE WIRE

Check the wire between central electronic module (CEM) 17D and warning flasher 1 (3/6) for an intermittent short circuit to ground as described in, see **SHORT-CIRCUIT TO GROUND, INTERMITTENT FAULTS** and for a loose contact as described in **LOOSE CONNECTIONS (TERMINALS)** .

Additional information:

- For information on the central electronic module (CEM) connector:
  - For -2004, see: **CENTRAL ELECTRONIC MODULE (CEM), REPLACING**
  - For 2005-, see: **CENTRAL ELECTRONIC MODULE (CEM), REPLACING** .
- To connect the test box, see **CONNECTING THE BREAKOUT BOX**

- -2004: **SIGNAL SPECIFICATION**
- 2005-: **SIGNAL SPECIFICATION**

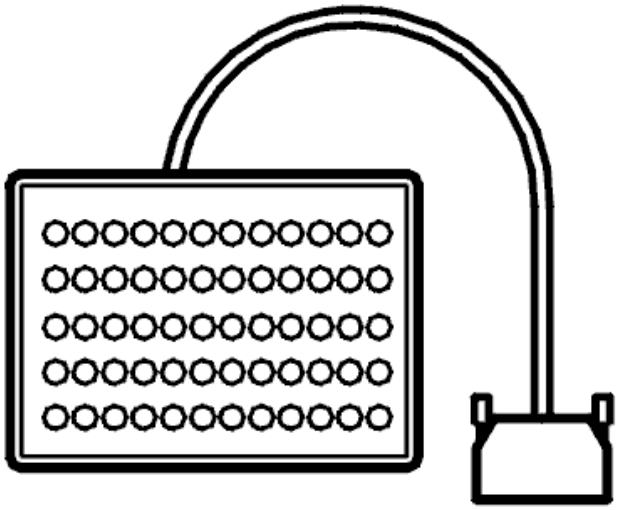

Fig. 176: Breakout Box
Courtesy of VOLVO CARS CORPORATION

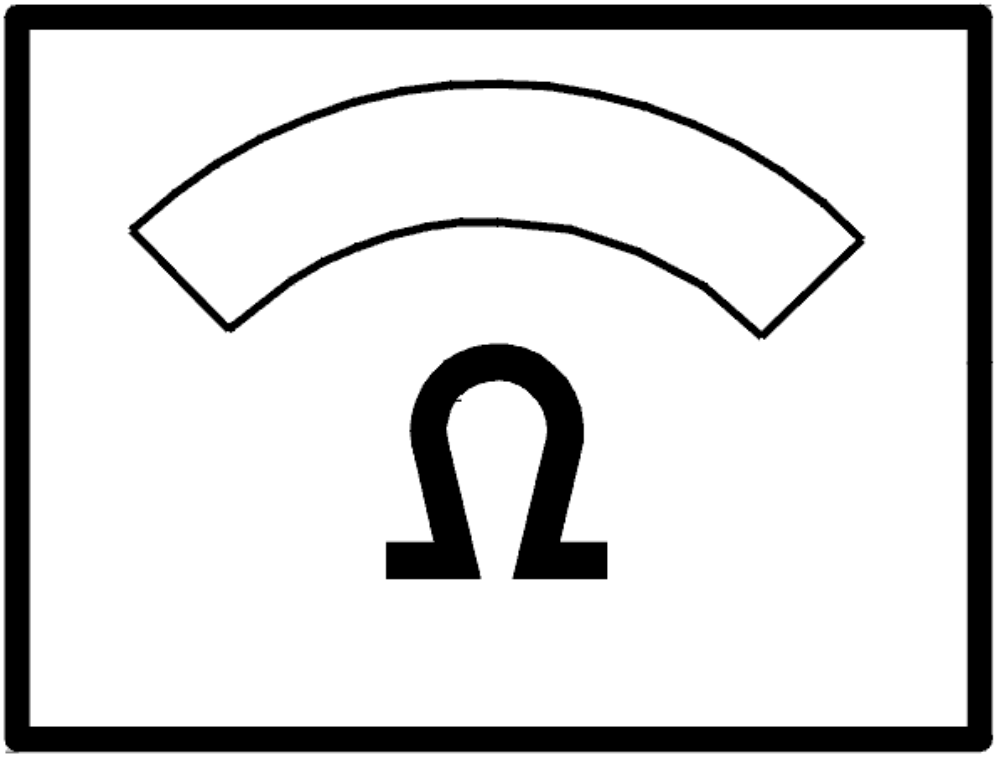

Fig. 177: Identifying Ohm Meter
Courtesy of VOLVO CARS CORPORATION

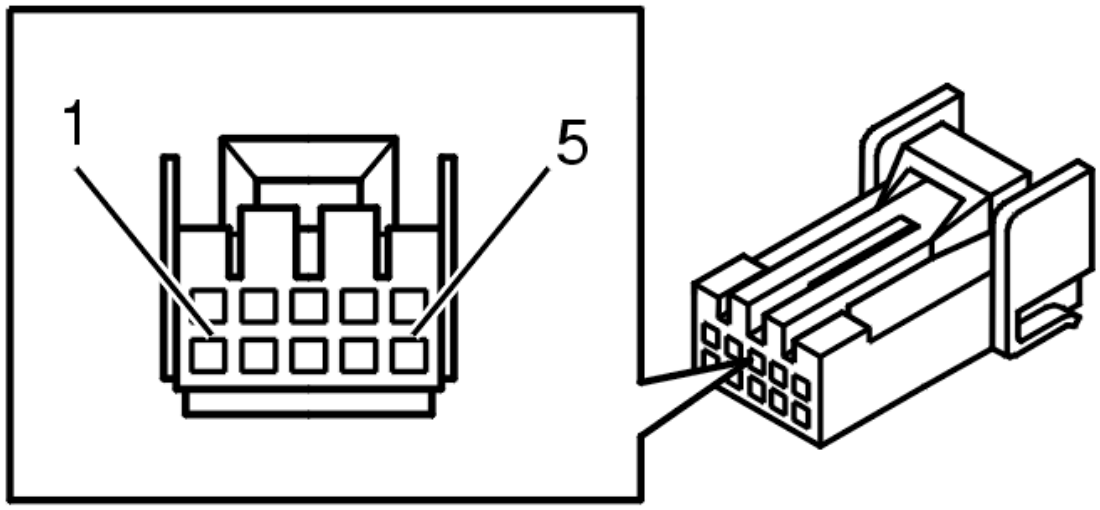

Fig. 178: 10 CD Changer Connector Terminals
Courtesy of VOLVO CARS CORPORATION

CEM-8F01: WARNING FLASHER AND GLOVEBOX LIGHT. SIGNAL TOO LOW. PERMANENT FAULT (2003-2004)

DIAGNOSTIC TROUBLE CODE INFORMATION

see **DIAGNOSTIC TROUBLE CODE INFORMATION**

SIGNAL TOO LOW. PERMANENT FAULT

CHECKING THE CABLE

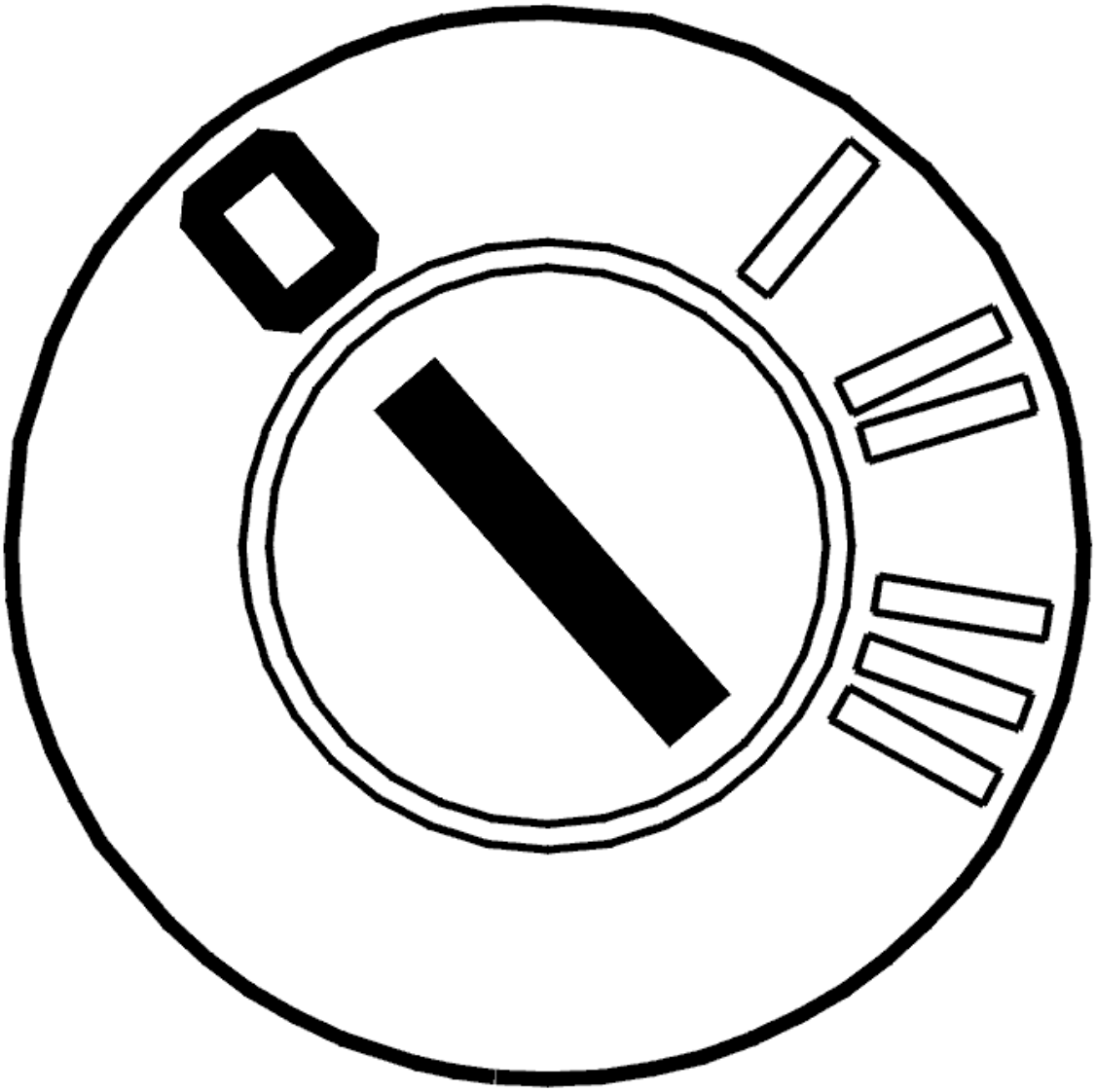

Fig. 179: Identifying Ignition OFF
Courtesy of VOLVO CARS CORPORATION

- Ignition off.

  Check the cable between the central electronic module (CEM) terminal #17D and the hazard warning signal flasher switch terminal #1 (3/6). Check for a short-circuit to ground.

  Remedy as necessary.

  Other information:

  - For information on the central electronic module (CEM) connector:
    - For -2004, see: **CENTRAL ELECTRONIC MODULE (CEM), REPLACING**
    - For 2005-, see: **CENTRAL ELECTRONIC MODULE (CEM), REPLACING** .

- To connect the breakout box, see **CONNECTING THE BREAKOUT BOX**
- -2004: **SIGNAL SPECIFICATION**
- 2005-: **SIGNAL SPECIFICATION**
- see **CHECKING WIRING AND TERMINALS** .

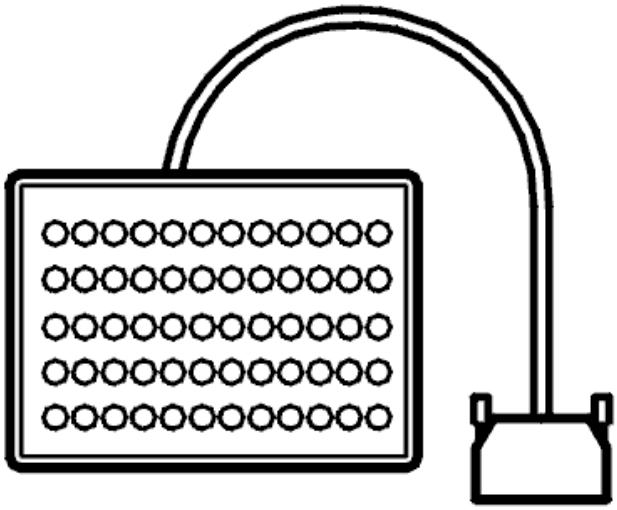

Fig. 180: Breakout Box
Courtesy of VOLVO CARS CORPORATION

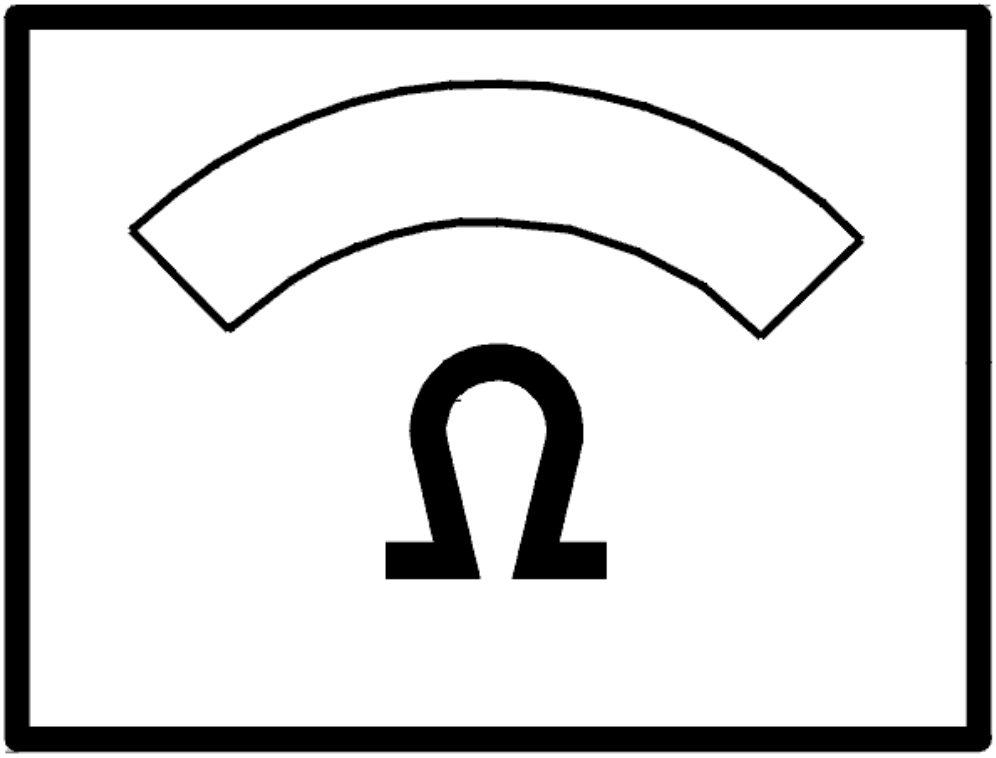

Fig. 181: Identifying Ohm Meter
Courtesy of VOLVO CARS CORPORATION

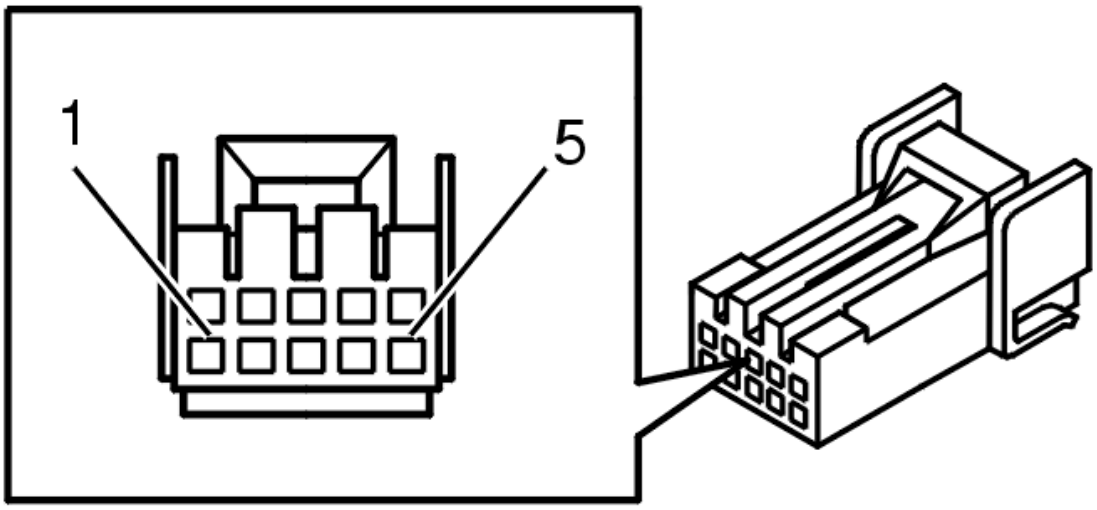

Fig. 182: 10 CD Changer Connector Terminals
Courtesy of VOLVO CARS CORPORATION

Were any faults found?

- **YES**

  Refer to **VERIFICATION**

- **NO**

  Refer to **CHECKING OVERTEMPERATURE**

CHECKING OVERTEMPERATURE

Turn on the hazard warning signal flasher to, see if the switch works.

If the switch does not work, the fault may be due to overheating. Wait approximately 10 min and check whether the fault was due to overheating.

Does the switch work?

- **YES**

  Refer to **VERIFICATION**

- **NO**

  Refer to **REPLACING SWITCH, HAZARD WARNING SIGNAL FLASHER**

REPLACING SWITCH, HAZARD WARNING SIGNAL FLASHER

Replace the switch for the hazard warning signal flasher (3/6). See **SWITCH HAZARD WARNING SIGNAL**

FLASHER, REPLACING .

- **Continue**

  Refer to **VERIFICATION**

VERIFICATION

VERIFICATION

HINT: After the repair it is necessary to check that the fault has been rectified.

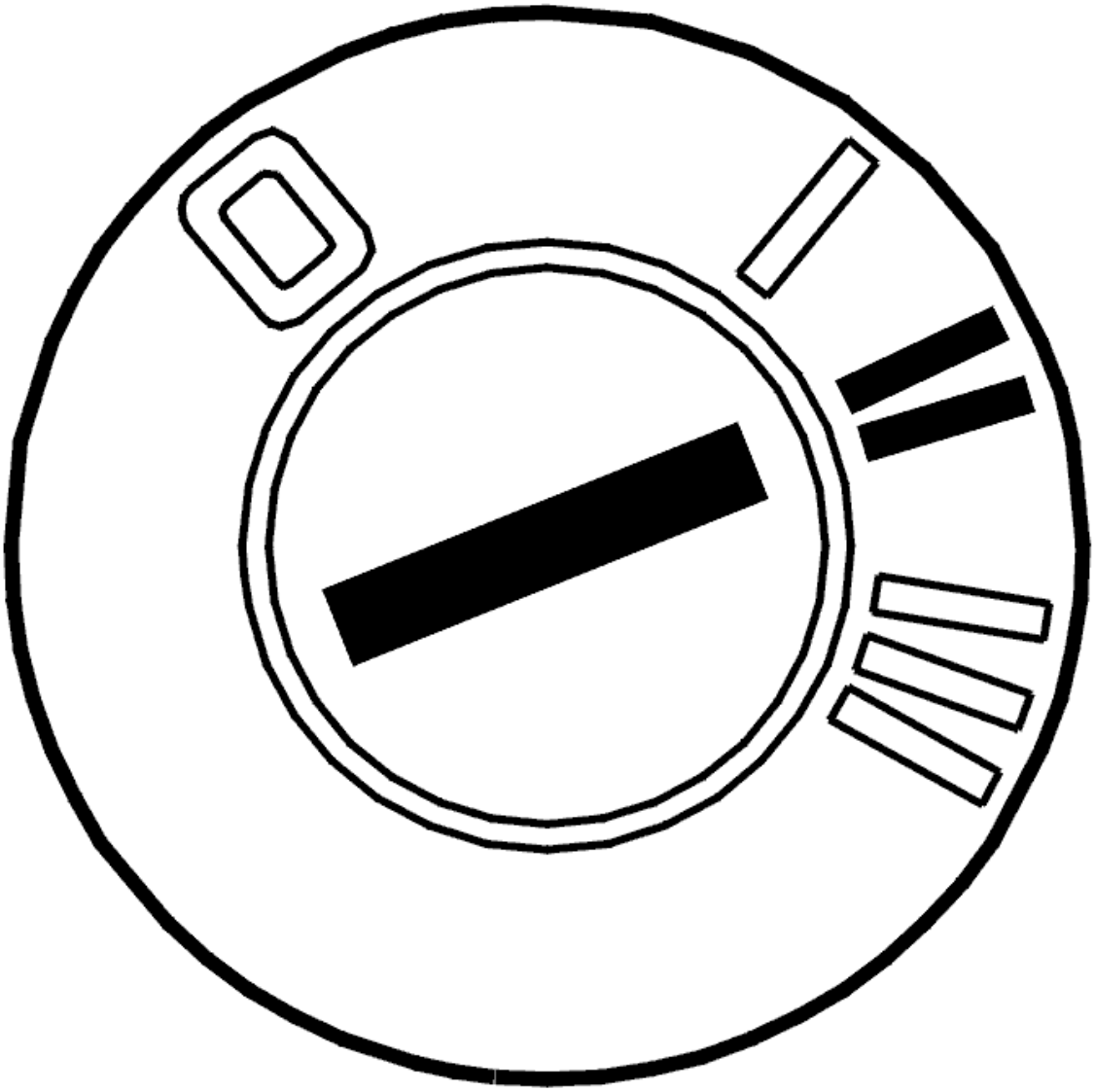

Fig. 183: Identifying Ignition ON
Courtesy of VOLVO CARS CORPORATION

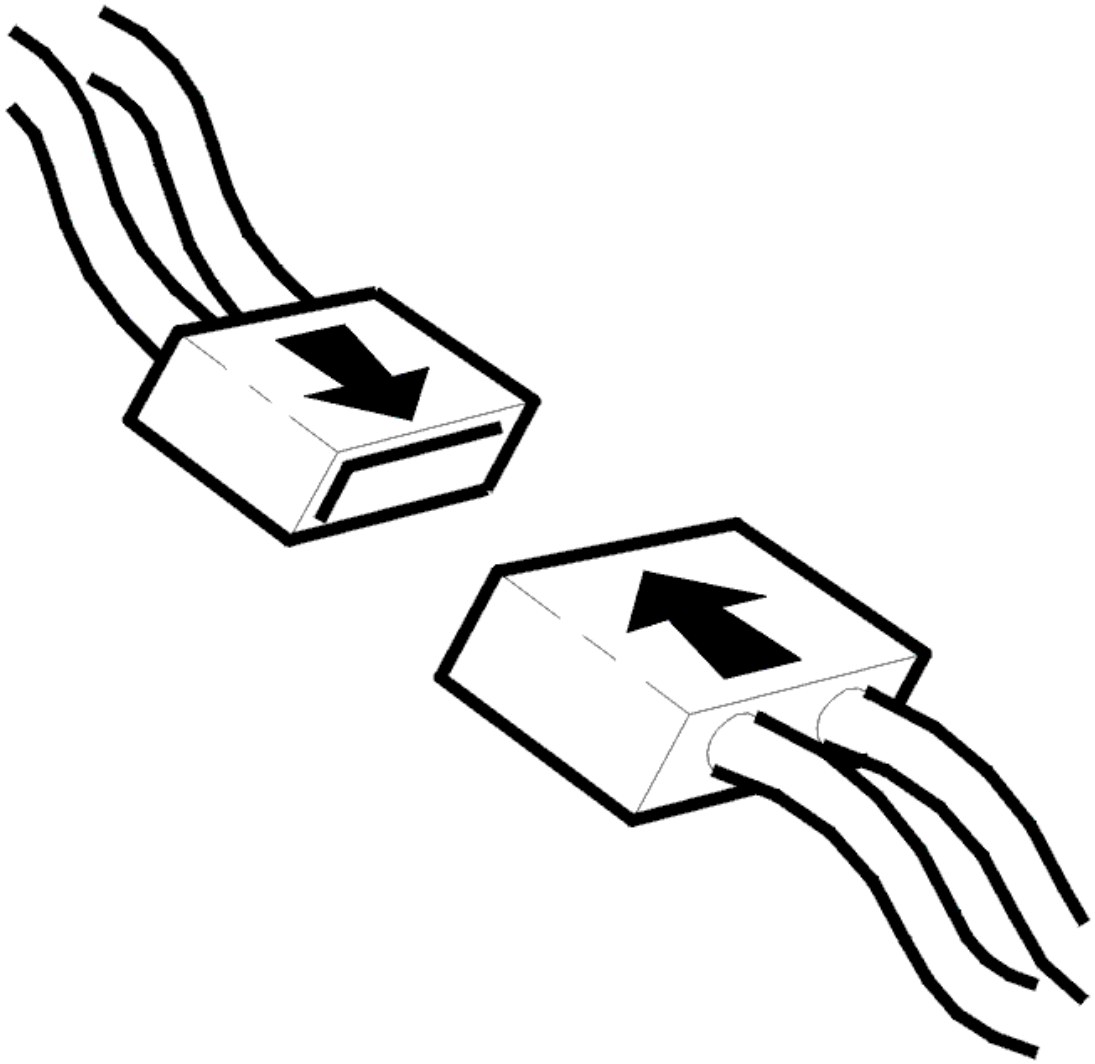

Fig. 184: Connecting Connector
Courtesy of VOLVO CARS CORPORATION

- Ignition off.
- Connect the connectors, install the components, etc.
- Ignition on.

  Read the diagnostic trouble codes.

  If diagnostic trouble code has changed to intermittent status this indicates that the fault is no longer activated.

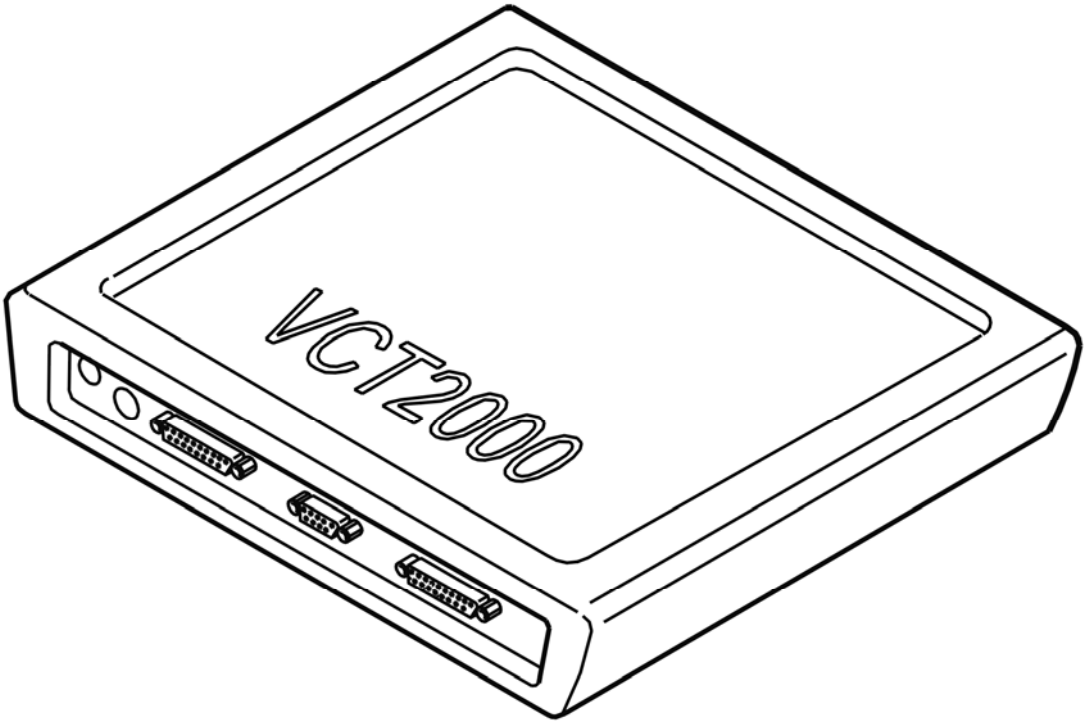

Fig. 185: Identifying VCT2000 Diagnostic Tool Symbol In VIDA
Courtesy of VOLVO CARS CORPORATION

Is the diagnostic trouble code intermittent?

- **YES**

  VERIFIED: Troubleshooting has been completed.

- **NO**

  Refer to **INFORMATION**

INFORMATION

FAULT-TRACING INFORMATION

The fault should have been detected and remedied. As this is not the case fault-tracing has failed.

Exit fault-tracing for this diagnostic trouble code (DTC) or make another attempt.

CEM-8F02: LEFT DIRECTION INDICATOR. SIGNAL TOO LOW. INTERMITTENT FAULT (2003-2004)

DIAGNOSTIC TROUBLE CODE INFORMATION

Condition

If fault bit in central electronic module (CEM) indicates a fault, diagnostic trouble code is displayed.

Possible Source

- The direction indicator is short circuited to ground
- Open circuit in direction indicator circuit
- Faulty shunt.

Fault symptom[s]

Diagnostic trouble code CEM-8F02

- Left flasher is not working.

Diagnostic trouble code CEM-8F03

- Right flasher is not working.

SIGNAL TOO LOW. INTERMITTENT FAULT.

CHECKING THE INDICATOR SHUNT

Check that the direction indicator shunt is fitted correctly.

At the same time check the connections, in particular the relay connection according to the table below, for an intermittent short circuit to voltage supply as described in, see **SHORT-CIRCUIT TO SUPPLY VOLTAGE, INTERMITTENT FAULTS** , contact resistance and oxidation as described in **CONTACT RESISTANCE AND OXIDATION** and a loose contact as described in **LOOSE CONNECTIONS (TERMINALS)** .

Diagnostic trouble code	Relay
CEM-8F02	20/32 3
CEM-8F03	20/34 3

Additional information:

- To replace the shunt for the direction indicator:
  - For -2004, see: **CENTRAL ELECTRONIC MODULE (CEM), REPLACING** .
  - For 2005-, see: **CENTRAL ELECTRONIC MODULE (CEM), REPLACING** .

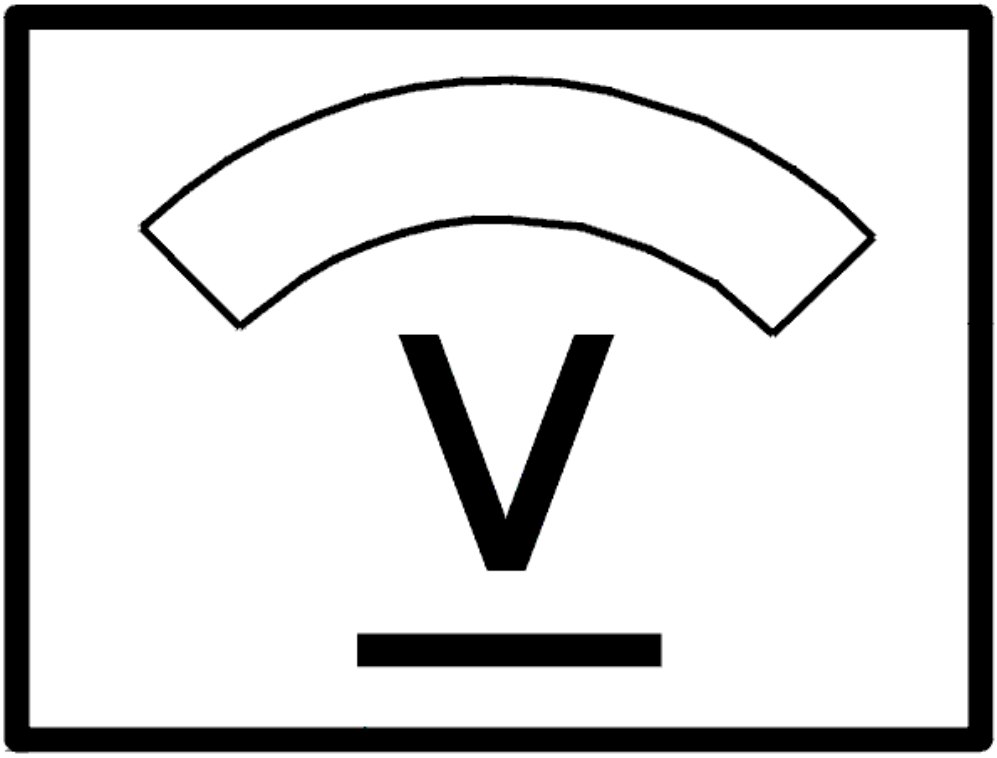

Fig. 186: Identifying Voltage Display
Courtesy of VOLVO CARS CORPORATION

CEM-8F02: LEFT DIRECTION INDICATOR. SIGNAL TOO LOW. PERMANENT FAULT (2003-2004)

DIAGNOSTIC TROUBLE CODE INFORMATION

see **DIAGNOSTIC TROUBLE CODE INFORMATION**

SIGNAL TOO LOW. PERMANENT FAULT

CHECKING THE DIRECTION INDICATOR SHUNT

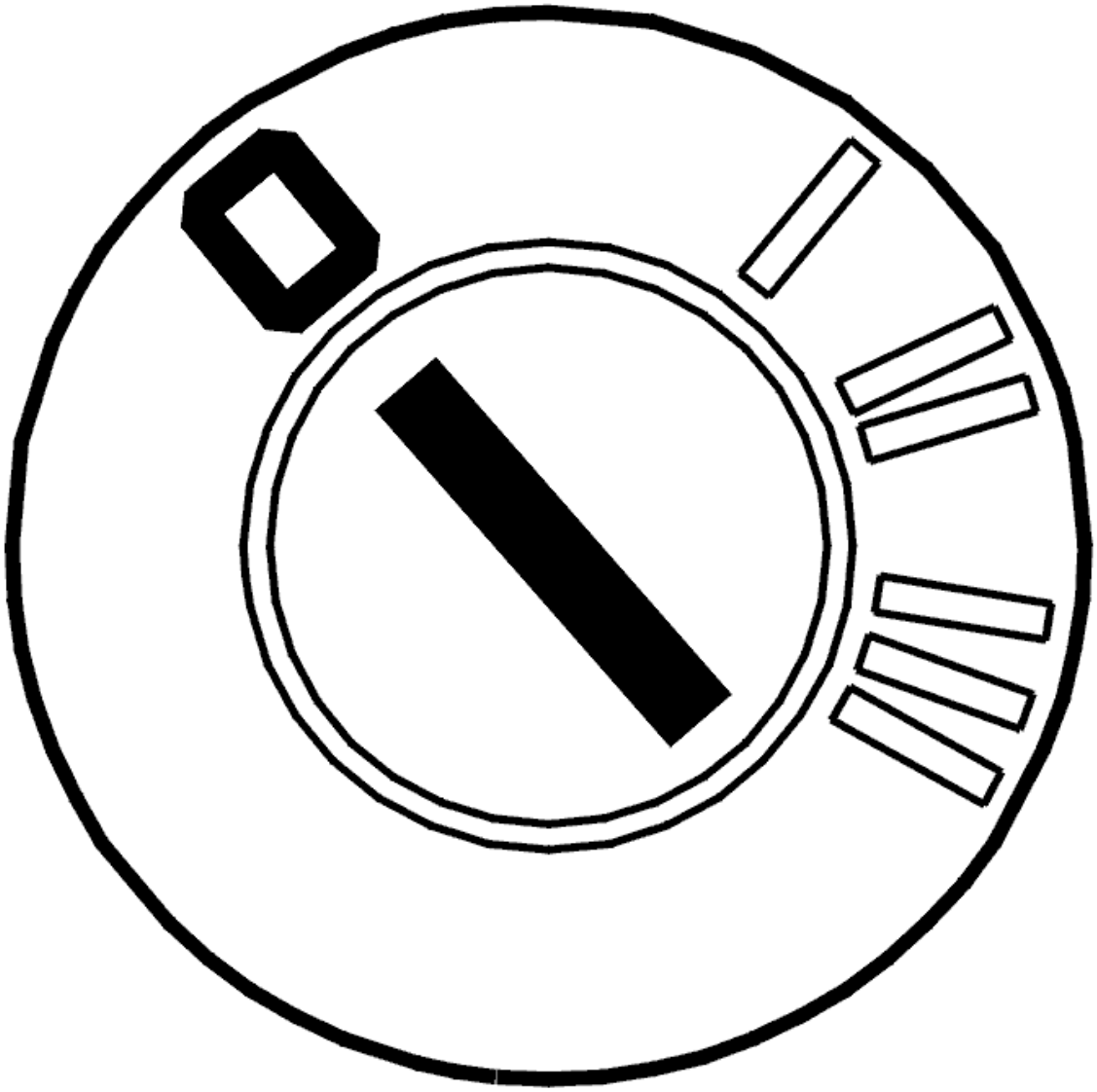

Fig. 187: Identifying Ignition OFF
Courtesy of VOLVO CARS CORPORATION

- Ignition off.

  Check that the shunt for the left/right direction indicator is fitted correctly.

  At the same time check the connection:

  Diagnostic trouble code CEM-8F02

  in particular 20/32 3

  Diagnostic trouble code CEM-8F03

  in particular 20/34 3

for a short circuit to ground as described in, see **SHORT-CIRCUIT TO GROUND, PERMANENT FAULTS** or an open circuit as described in **OPEN-CIRCUIT, PERMANENT FAULTS** .

Additional information:

- To replace shunt:
  - For -2004, see: **CENTRAL ELECTRONIC MODULE (CEM), REPLACING** .
  - For 2005-, see: **CENTRAL ELECTRONIC MODULE (CEM), REPLACING** .

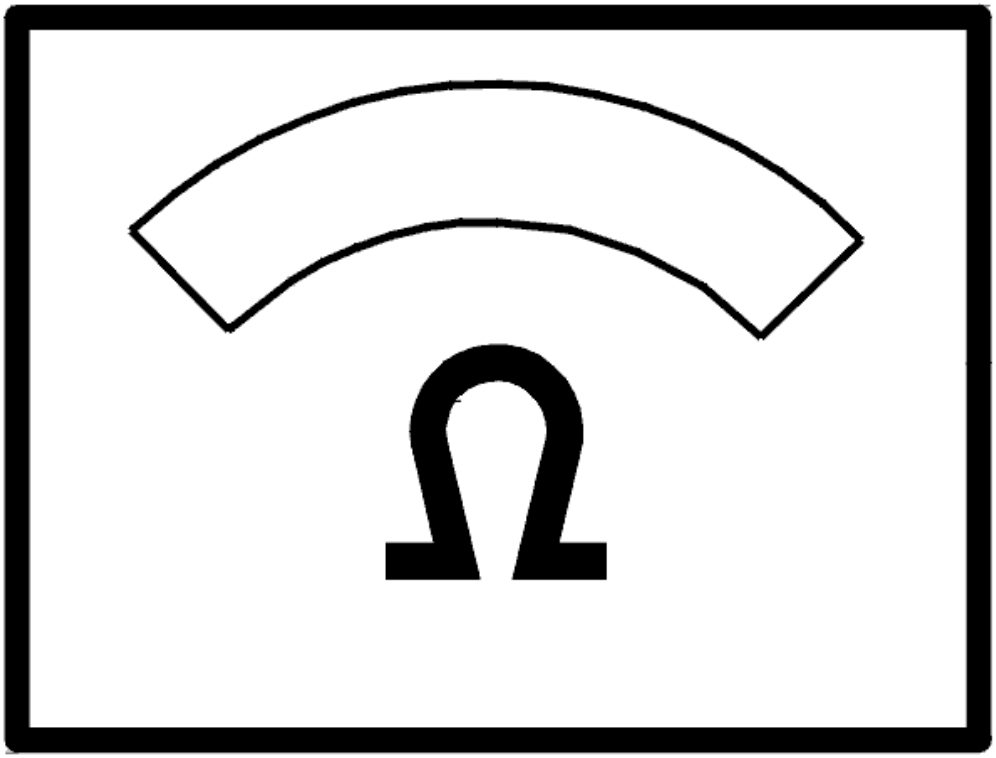

Fig. 188: Identifying Ohm Meter
Courtesy of VOLVO CARS CORPORATION

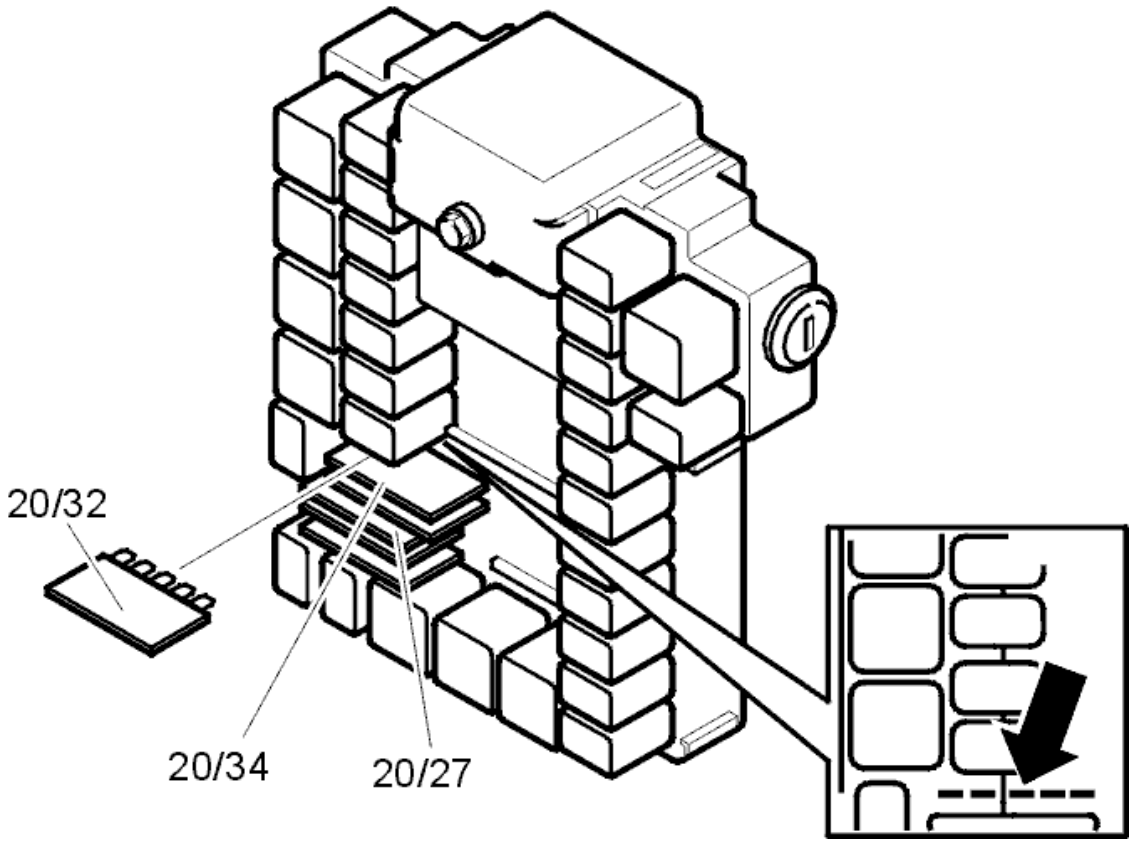

Fig. 189: Identifying Relays And Shunts
Courtesy of VOLVO CARS CORPORATION

Is there a fault?

- **YES**

  Refer to **VERIFICATION**

- **NO**

  Refer to **REPLACING THE COMPONENT**

REPLACING THE COMPONENT

Test by replacing the shunt for the left/right direction indicator.

Additional information:

- To replace the shunt for the left/right direction indicator:
  - For -2004, see: **CENTRAL ELECTRONIC MODULE (CEM), REPLACING** .
  - For 2005-, see: **CENTRAL ELECTRONIC MODULE (CEM), REPLACING** .

- **Continue**

  Refer to **VERIFICATION**

VERIFICATION

VERIFICATION

HINT: After the repair it is necessary to check that the fault has been rectified.

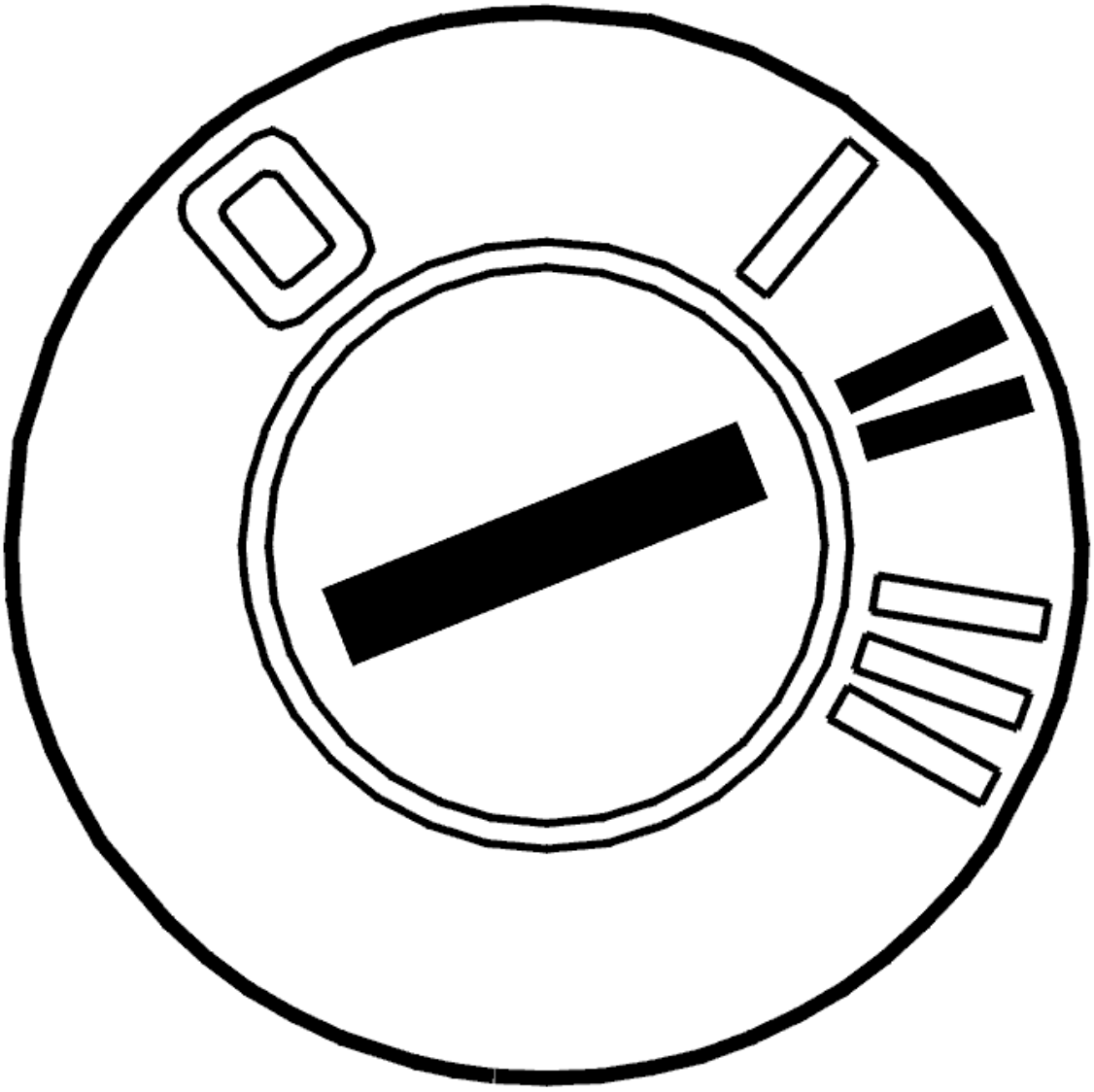

Fig. 190: Identifying Ignition ON
Courtesy of VOLVO CARS CORPORATION

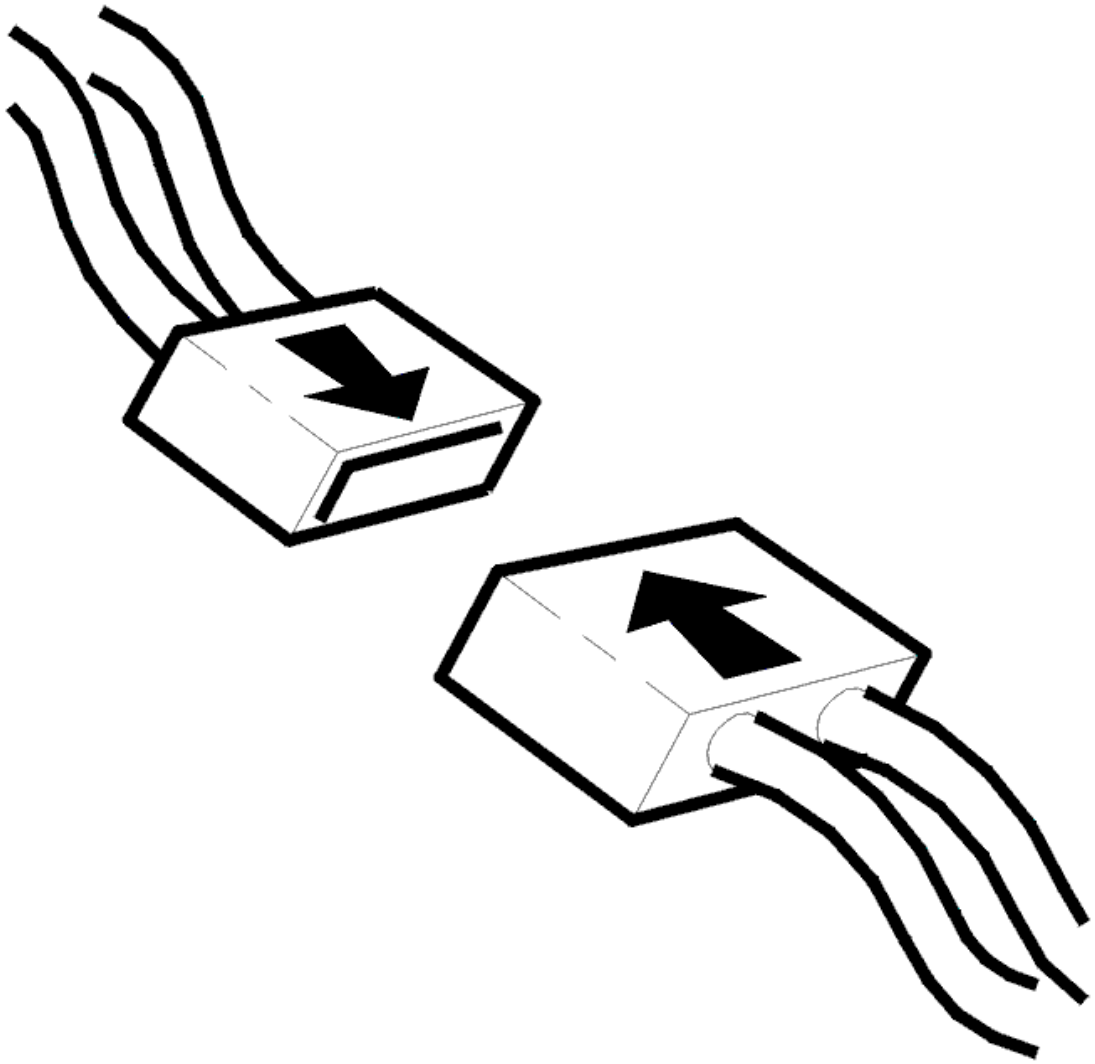

Fig. 191: Connecting Connector
Courtesy of VOLVO CARS CORPORATION

- Ignition off.
- Connect the connectors, install the components, etc.
- Ignition on.

  Read the diagnostic trouble codes.

  If diagnostic trouble code has changed to intermittent status this indicates that the fault is no longer activated.

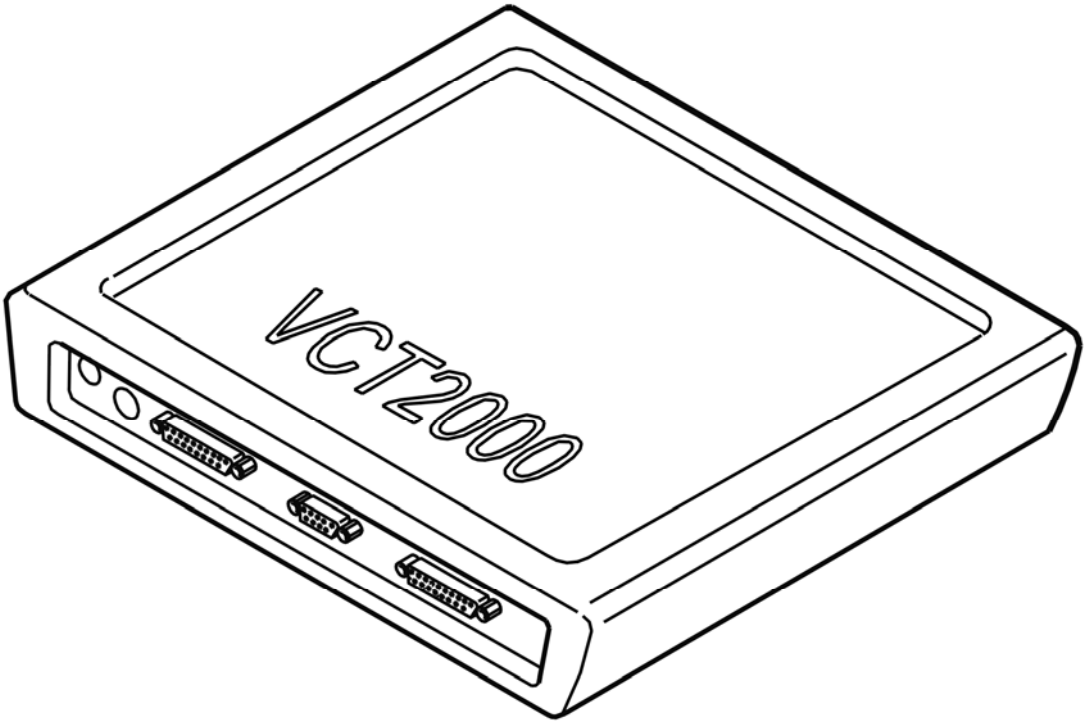

Fig. 192: Identifying VCT2000 Diagnostic Tool Symbol In VIDA
Courtesy of VOLVO CARS CORPORATION

Is the diagnostic trouble code intermittent?

- **YES**

  VERIFIED: Troubleshooting has been completed.

- **NO**

  Refer to **INFORMATION**

INFORMATION

FAULT-TRACING INFORMATION

The fault should have been detected and remedied. As this is not the case fault-tracing has failed.

Exit fault-tracing for this diagnostic trouble code (DTC) or make another attempt.

CEM-8F02: LEFT-HAND TURN SIGNAL LAMP. SIGNAL TOO LOW (2005-2012)

DIAGNOSTIC TROUBLE CODE (DTC) INFORMATION CEM-8F02

Condition

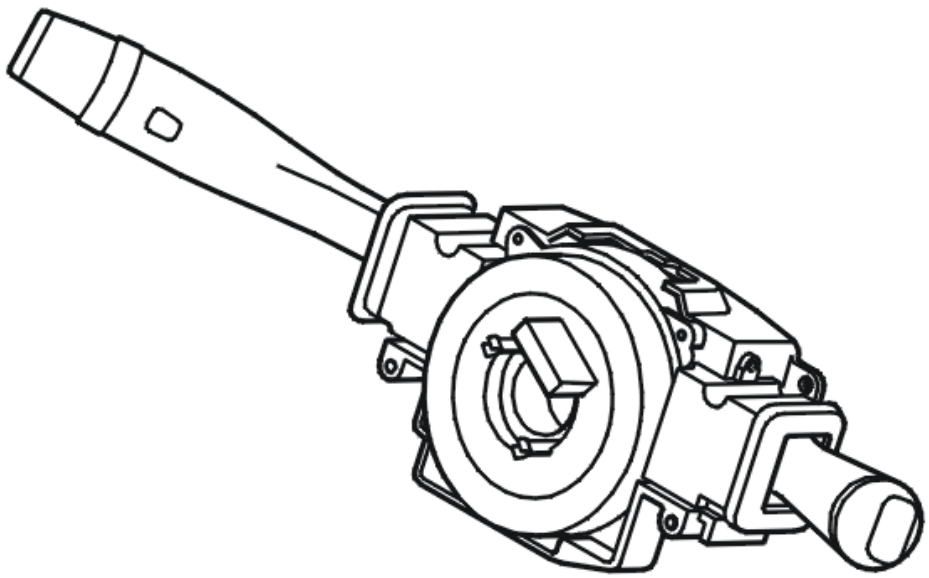

Fig. 193: Identifying Steering Wheel Control Module
Courtesy of VOLVO CARS CORPORATION

The central electronic module (CEM) checks the turn signal lamps.

The diagnostic trouble code (DTC) is stored if the central electronic module (CEM) registers that there is no signal or a low signal in the circuit for the left-hand turn signal lamp.

The diagnostic trouble code (DTC) can be diagnosed when the ignition is switched on.

Substitute Value

- If the fault has been detected in 100 ignition cycles, the output is closed permanently until the diagnostic trouble code is erased (applies from structure week 200539).

Possible Source

- Short-circuit to ground in the circuit for the left-hand turn signal lamp
- Open-circuit in the circuit for the left-hand turn signal lamp.

Fault symptom[s]

- The turn signal lamps do not work.

SIGNAL TOO LOW

CHECKING THE WIRING

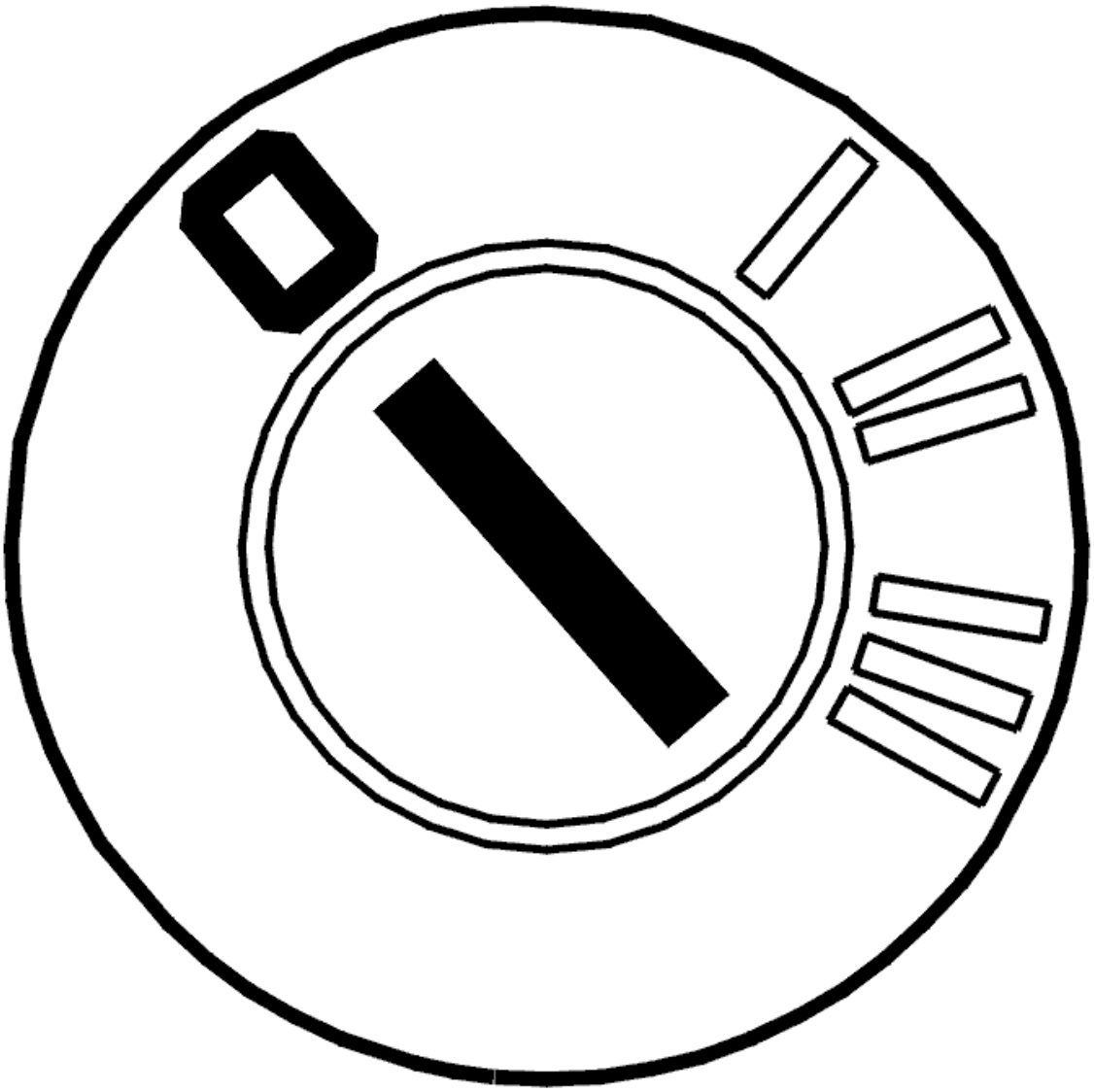

Fig. 194: Identifying Ignition OFF
Courtesy of VOLVO CARS CORPORATION

- Ignition off.

  Check the cable between the central electronic module (CEM) and the left-hand turn signal lamps. Check for an open-circuit. Check for a short-circuit to ground.

Also check the intermediate connectors.

Take readings between:

- Central electronic module (CEM) terminal #A12 (#12) and left front door turn signal lamp terminal #2
- Central electronic module (CEM) terminal #B31 (#31) and left turn signal lamp terminal #1.

Remedy as necessary.

Other information

- see **CONNECTING THE BREAKOUT BOX**
- -2004: **SIGNAL SPECIFICATION**
- 2005-: **SIGNAL SPECIFICATION**
- see **LOCATION OF COMPONENTS**
- see **CHECKING WIRING AND TERMINALS**

- **Continue**

Refer to **VERIFICATION**

VERIFICATION

VERIFICATION

HINT: After carrying out the repair, check that the fault has been remedied.

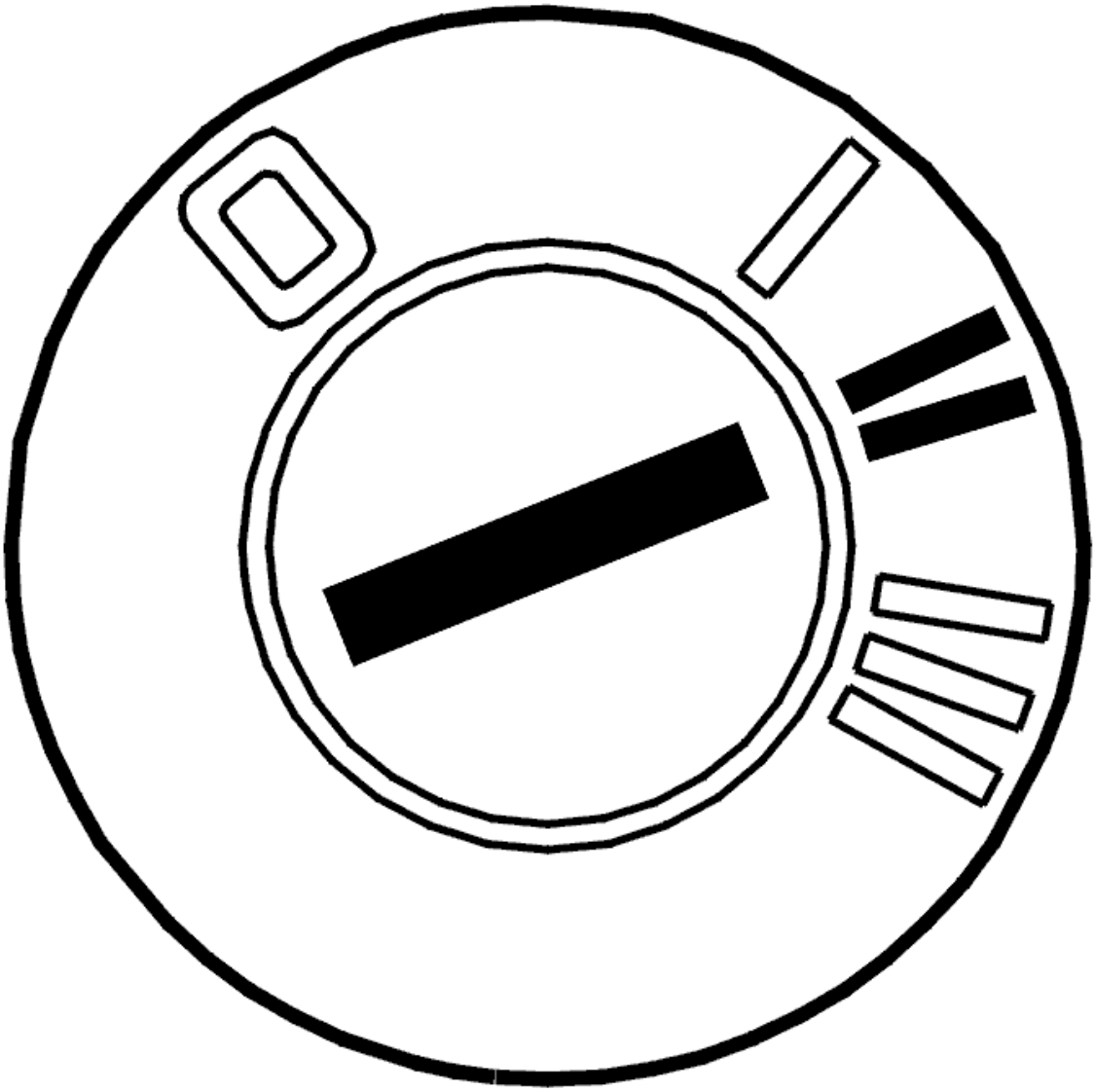

Fig. 195: Identifying Ignition ON
Courtesy of VOLVO CARS CORPORATION

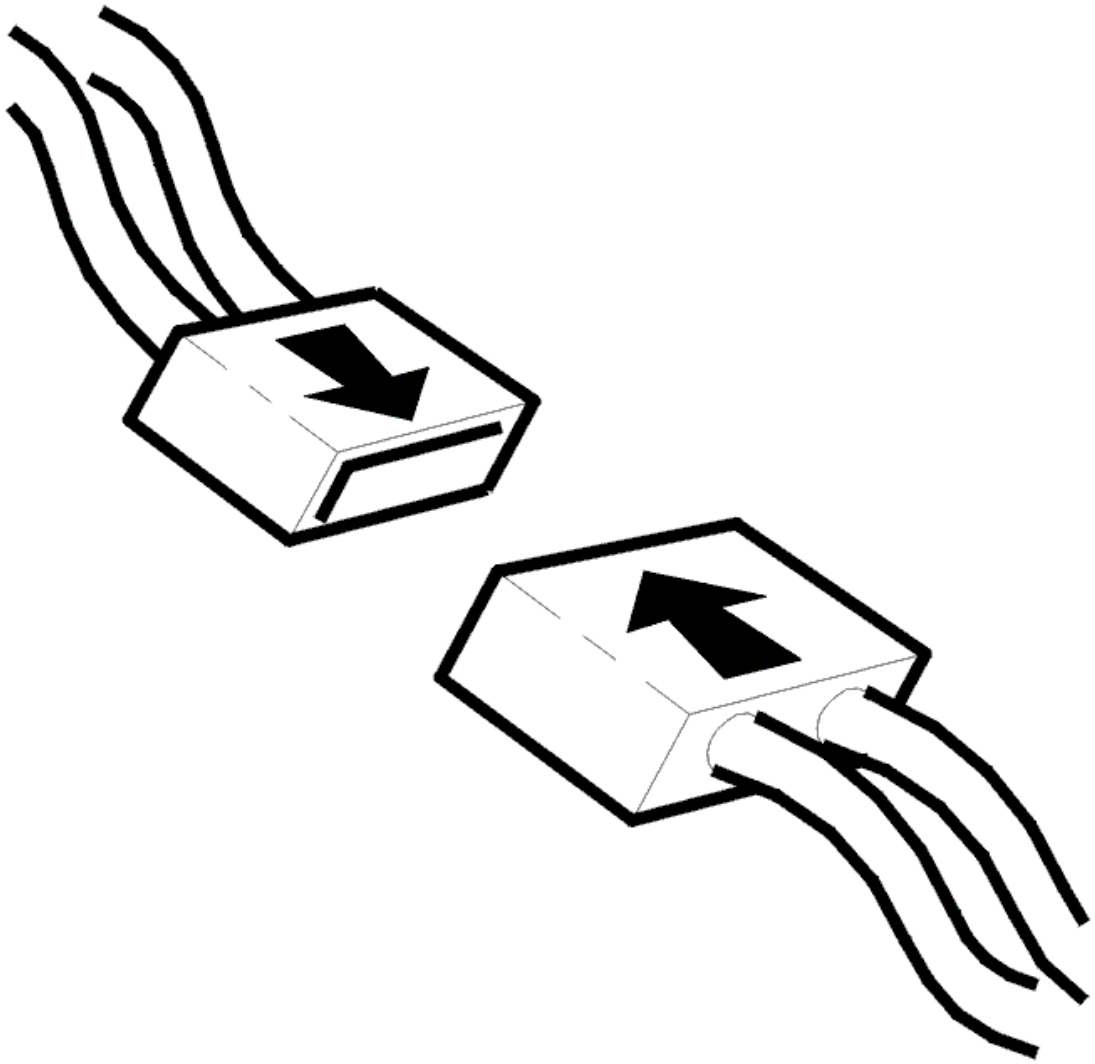

Fig. 196: Connecting Connector
Courtesy of VOLVO CARS CORPORATION

- Ignition off
- Reinstall the connectors, components etc.
- Ignition on.

  Activate the turn signal lamps.

  Check that the turn signal lamps are activated.

Are the turn signal lamps activated?

- **YES**

VERIFIED: Troubleshooting has been completed.

- **NO**

  Refer to **INFORMATION**

INFORMATION

FAULT-TRACING INFORMATION

The fault should have been detected and remedied. As this is not the case fault-tracing has failed.

Exit fault-tracing for this diagnostic trouble code (DTC) or make another attempt.

CEM-8F03: RIGHT-HAND TURN SIGNAL LAMP. SIGNAL TOO LOW (2005-2012)

DIAGNOSTIC TROUBLE CODE (DTC) INFORMATION CEM-8F03

Condition

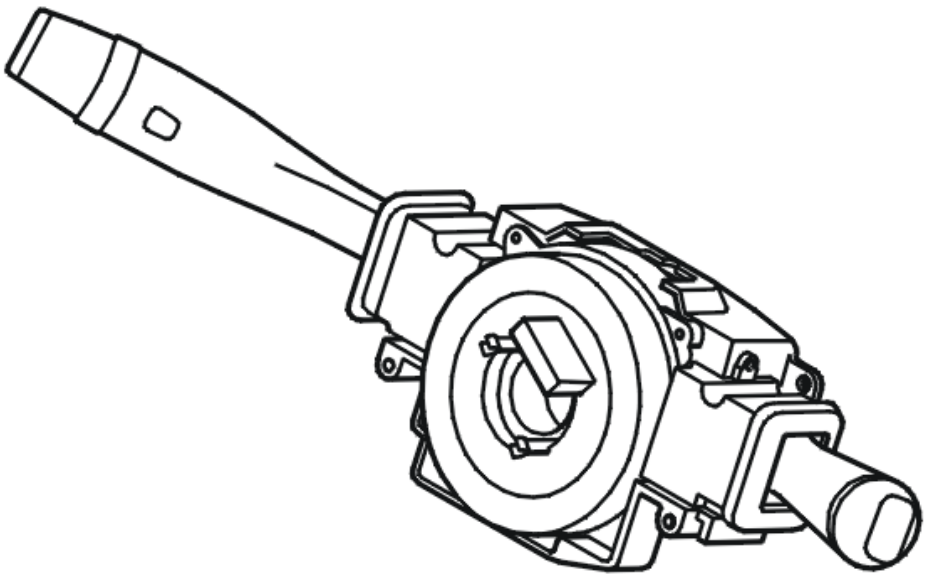

Fig. 197: Identifying Steering Wheel Control Module
Courtesy of VOLVO CARS CORPORATION

The central electronic module (CEM) checks the turn signal lamps.

The diagnostic trouble code (DTC) is stored if the central electronic module (CEM) registers that there is no signal or a low signal in the circuit for the right-hand turn signal lamp.

The diagnostic trouble code (DTC) can be diagnosed when the ignition is switched on.

Substitute Value

- If the fault has been detected in 100 ignition cycles, the output is closed permanently until the diagnostic trouble code is erased (applies from structure week 200539).

Possible Source

- Short-circuit to ground in the circuit for the right-hand turn signal lamp
- Open-circuit in the circuit for the right-hand turn signal lamp.

Fault symptom[s]

- The turn signal lamps do not work.

SIGNAL TOO LOW

CHECKING THE WIRING

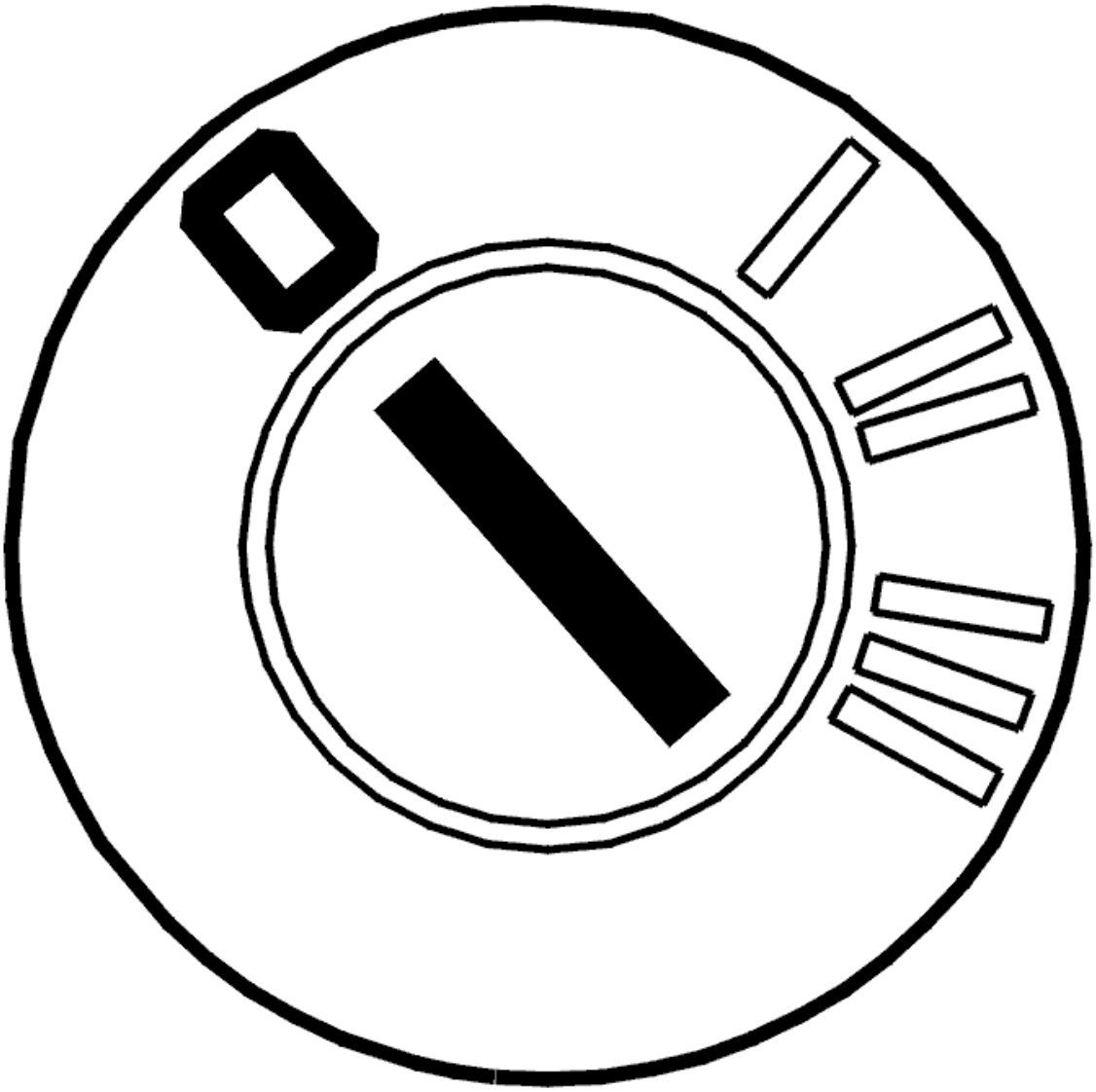

Fig. 198: Identifying Ignition OFF
Courtesy of VOLVO CARS CORPORATION

- Ignition off.

  Check the cable between the central electronic module (CEM) and the right-hand turn signal lamps. Check for an open-circuit. Check for a short-circuit to ground.

  Also check the intermediate connectors.

  Take readings between:

  - Central electronic module (CEM) terminal #A29 (#29) and right front door turn signal lamp terminal #2
  - Central electronic module (CEM) terminal #B32 (#32) and right-hand turn signal lamp terminal #1.

Remedy as necessary.

Other information

- see **CONNECTING THE BREAKOUT BOX**
- -2004: **SIGNAL SPECIFICATION**
- 2005-: **SIGNAL SPECIFICATION**
- see **LOCATION OF COMPONENTS**
- see **CHECKING WIRING AND TERMINALS**

- **Continue**

Refer to **VERIFICATION**

VERIFICATION

VERIFICATION

HINT: After carrying out the repair, check that the fault has been remedied.

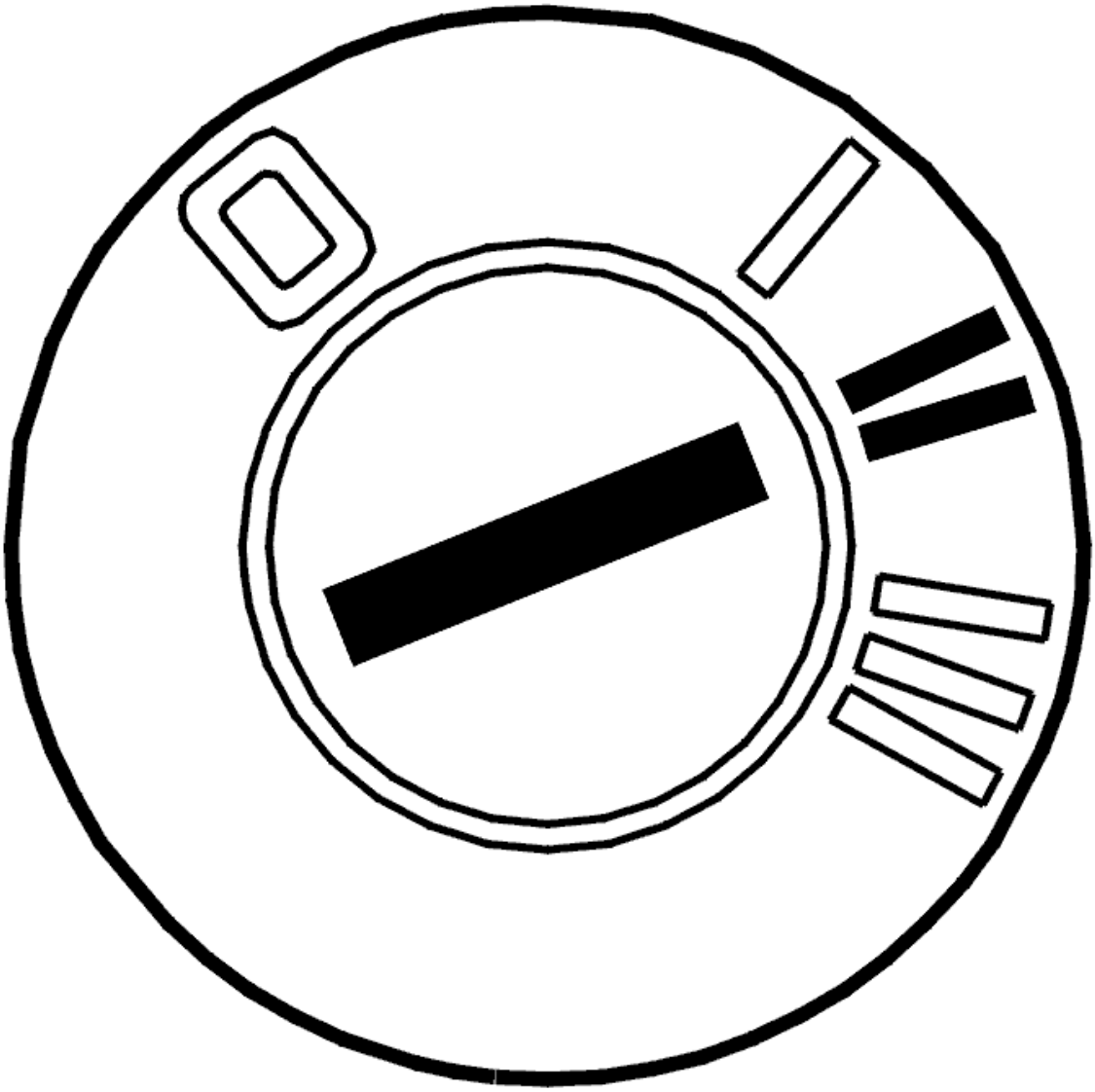

Fig. 199: Identifying Ignition ON
Courtesy of VOLVO CARS CORPORATION

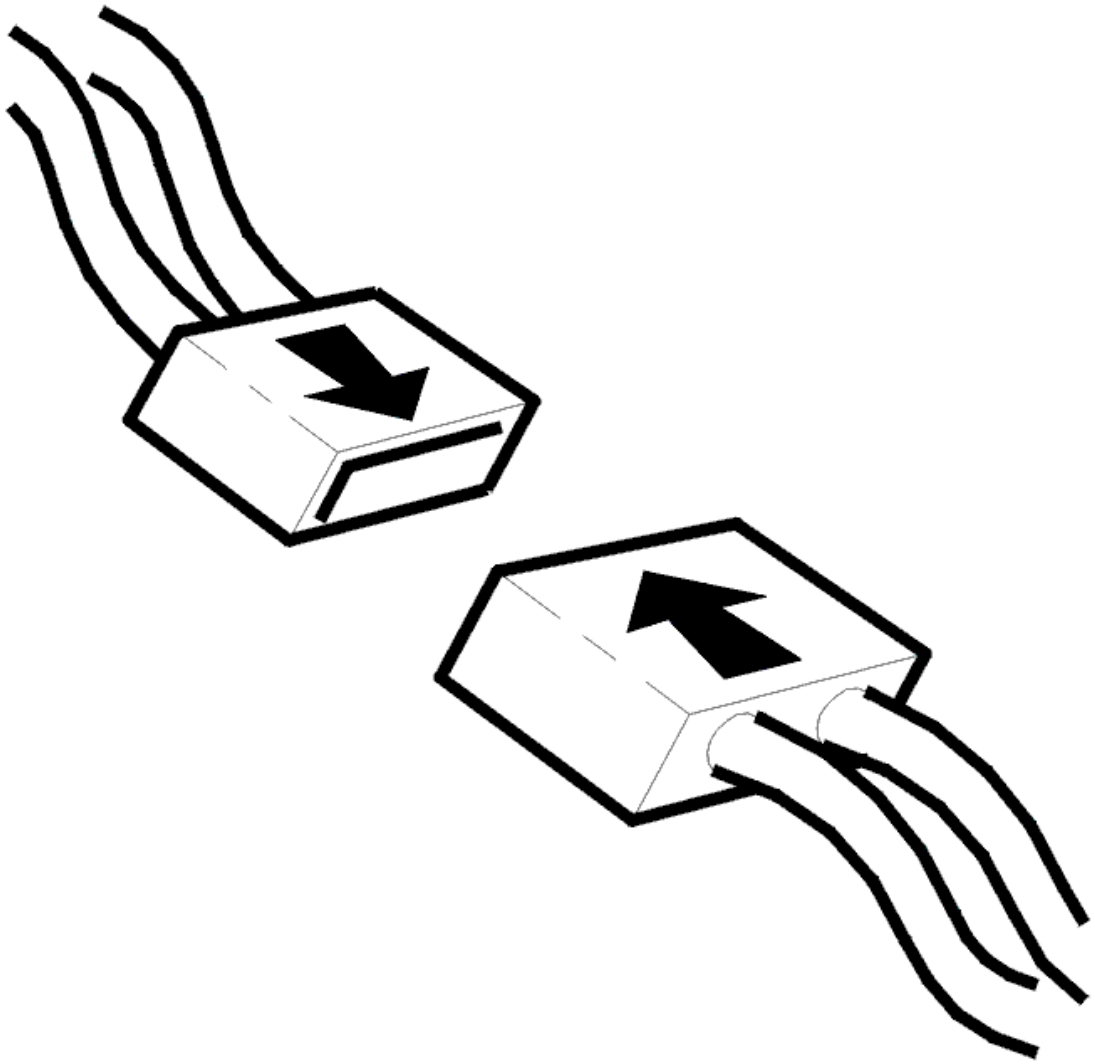

Fig. 200: Connecting Connector
Courtesy of VOLVO CARS CORPORATION

- Ignition off
- Reinstall the connectors, components etc.
- Ignition on.

  Activate the turn signal lamps.

  Check that the turn signal lamps are activated.

Are the turn signal lamps activated?

- **YES**

VERIFIED: Troubleshooting has been completed.

- **NO**

  Refer to **INFORMATION**

INFORMATION

FAULT-TRACING INFORMATION

The fault should have been detected and remedied. As this is not the case fault-tracing has failed.

Exit fault-tracing for this diagnostic trouble code (DTC) or make another attempt.

CEM-8F04: TURN SIGNAL LAMP. FAULTY SIGNAL (2005-2012)

DIAGNOSTIC TROUBLE CODE (DTC) INFORMATION CEM-8F04

Condition

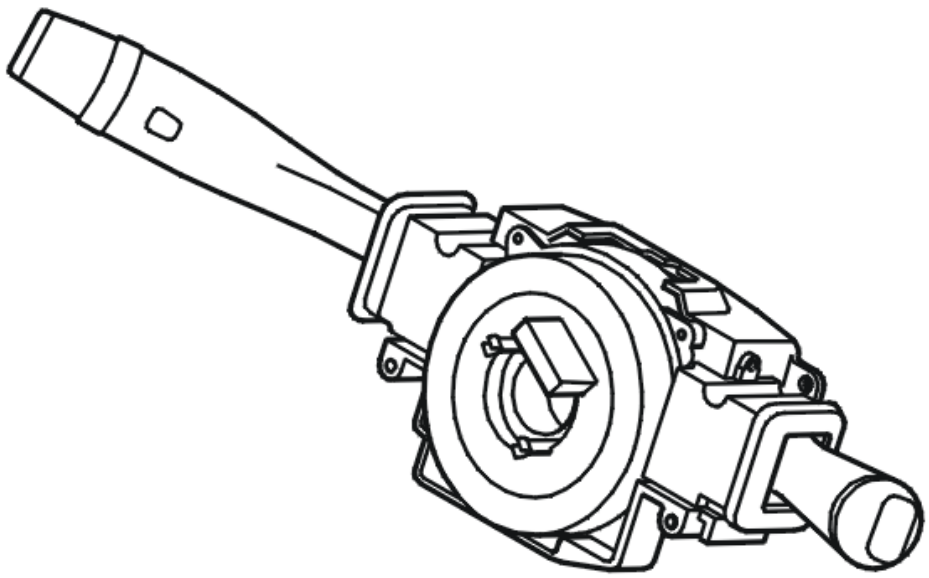

Fig. 201: Identifying Steering Wheel Control Module
Courtesy of VOLVO CARS CORPORATION

The central electronic module (CEM) checks the turn signal lamps.

The diagnostic trouble code (DTC) is stored if the central electronic module (CEM) registers that the signal from the switch for the turn signal lamps is faulty.

The diagnostic trouble code (DTC) can be diagnosed when the ignition is switched on.

Substitute Value

- None.

Possible Source

- Damaged switch for the turn signal lamps
- Internal fault in the steering wheel module (SWM).

Fault symptom[s]

- The turn signal lamps do not work.

FAULTY SIGNAL

CHECKING THE STATUS

If the fault is intermittent, it has been registered previously but is no longer present. Intermittent faults can be caused by interference at start up of the steering wheel module (SWM) or may be a different type of fault which occurs on different occasions. The fault is evaluated depending on how it occurs. If the diagnostic trouble code (DTC) recurs, replace the turn signal lamp switch.

Other information

- see **TURN SIGNAL SWITCH, REPLACING**
- **Continue**

  Refer to **VERIFICATION**

VERIFICATION

VERIFICATION

HINT: After carrying out the repair, check that the fault has been remedied.

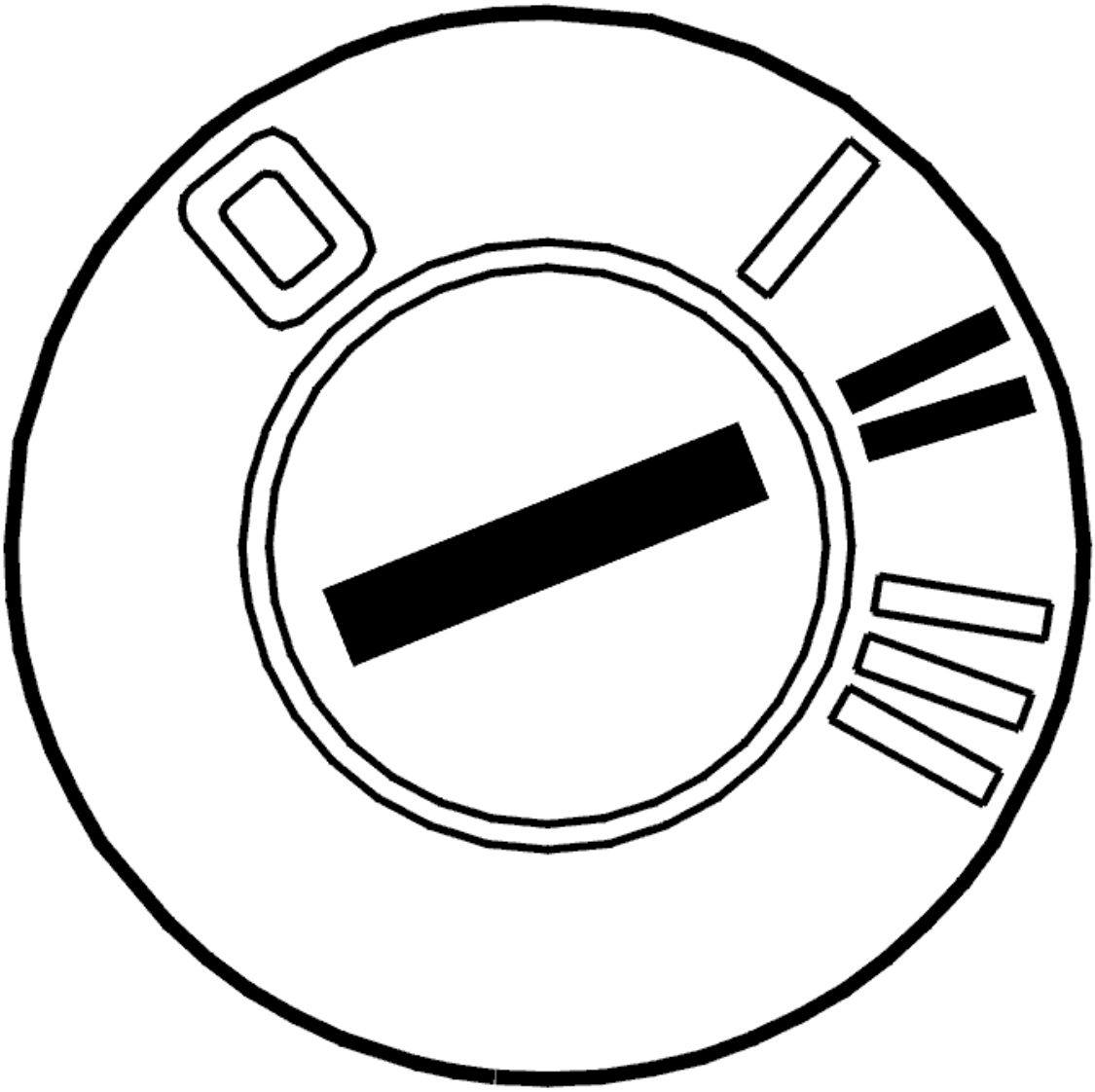

Fig. 202: Identifying Ignition ON
Courtesy of VOLVO CARS CORPORATION

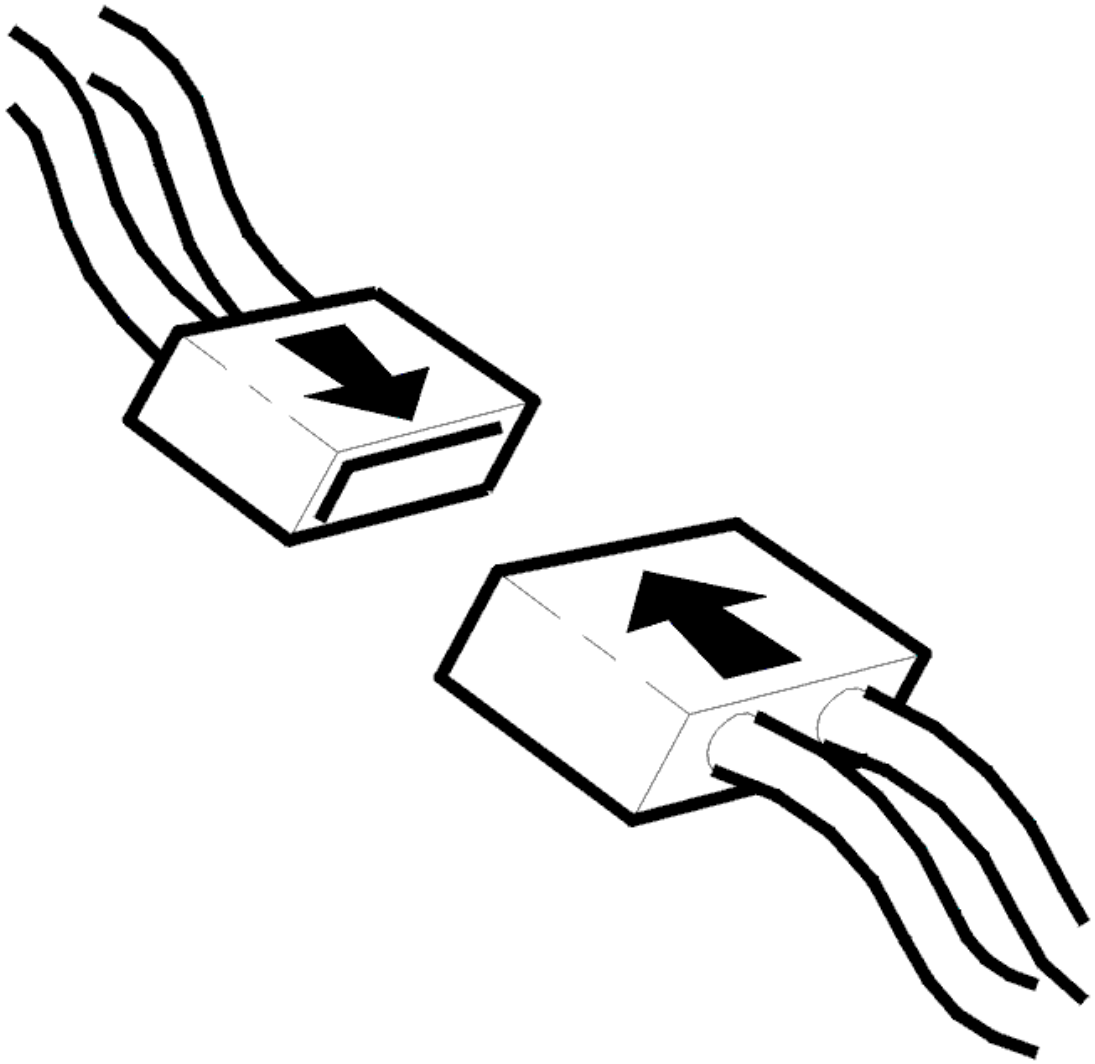

Fig. 203: Connecting Connector
Courtesy of VOLVO CARS CORPORATION

- Ignition off
- Reinstall the connectors, components etc.
- Ignition on.

  Activate the turn signal lamps.

  Check that the turn signal lamps are activated.

Are the turn signal lamps activated?

- **YES**

VERIFIED: Troubleshooting has been completed.

- **NO**

  Refer to **INFORMATION**

INFORMATION

FAULT-TRACING INFORMATION

The fault should have been detected and remedied. As this is not the case fault-tracing has failed.

Exit fault-tracing for this diagnostic trouble code (DTC) or make another attempt.

CEM-8F05: SWITCH, HAZARD WARNING SIGNAL FLASHERS. ACTIVATED TOO LONG (2005-2012)

DIAGNOSTIC TROUBLE CODE (DTC) INFORMATION CEM-8F05

Condition

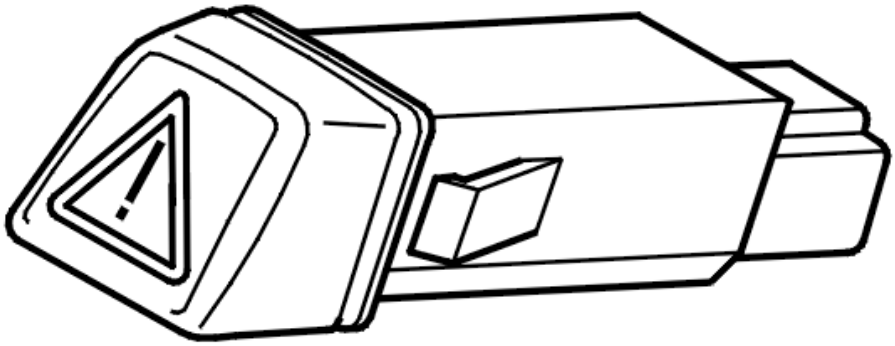

Fig. 204: Identifying Switch For Hazard Warning Signal Flasher
Courtesy of VOLVO CARS CORPORATION

The central electronic module (CEM) checks the signal from the hazard warning signal flasher switch.

The diagnostic trouble code (DTC) is stored if the central electronic module (CEM) registers that the switch for the hazard warning signal flashers has been active for more than 1 minute.

The diagnostic trouble code (DTC) can be diagnosed when the ignition is switched on.

Substitute Value

- None.

Possible Source

- The switch for the hazard warning signal flasher has jammed in one position
- Damaged switch for the hazard warning signal flasher.

Fault symptom[s]

- The hazard warning signal flashers are not functioning.

ACTIVATED TOO LONG

CHECKING THE CONTROL

The diagnostic trouble code (DTC) is stored when a button or switch has been depressed for a long time.

If the fault is intermittent, it has been registered previously but is no longer present. Intermittent faults can be caused by interference at start up or can be a different type of fault which occurs on different occasions. The fault is evaluated depending on how it occurs.

Check that the button or switch does not stick in the activated position.

Remedy as necessary.

Other information

see **SWITCH HAZARD WARNING SIGNAL FLASHER, REPLACING**

- **Continue**

  Refer to **VERIFICATION**

VERIFICATION

VERIFICATION

HINT: After carrying out the repair, check that the fault has been remedied.

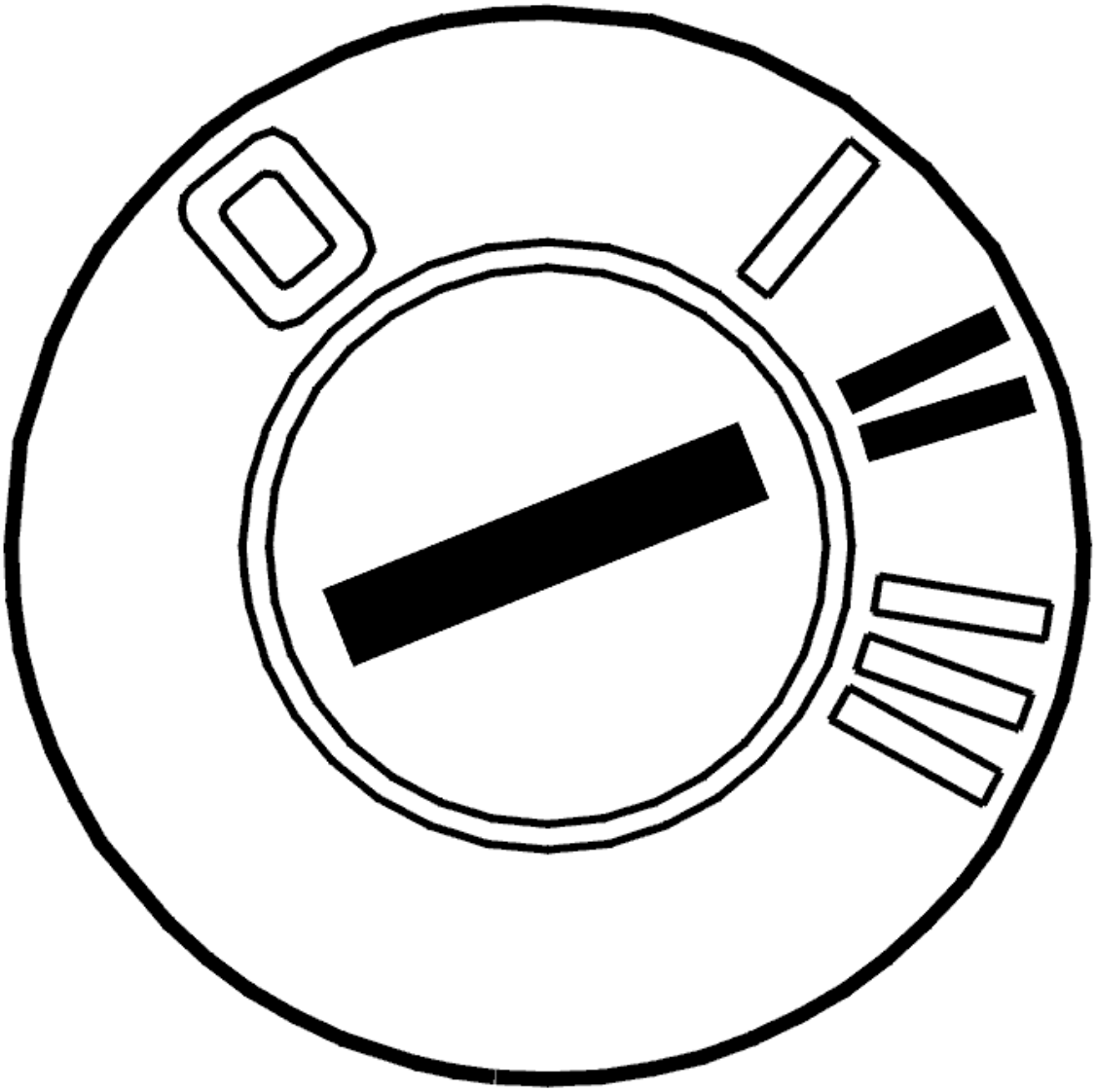

Fig. 205: Identifying Ignition ON
Courtesy of VOLVO CARS CORPORATION

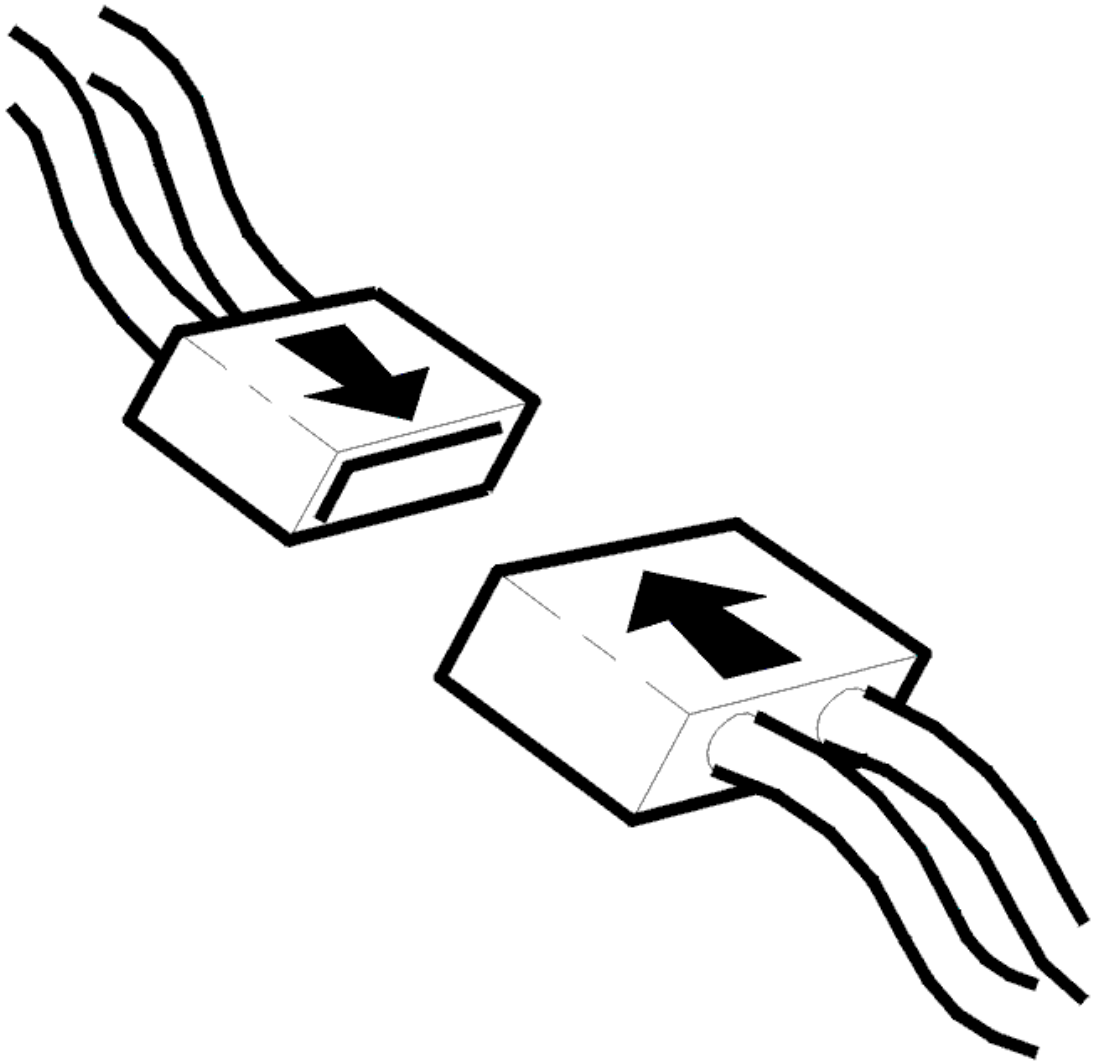

Fig. 206: Connecting Connector
Courtesy of VOLVO CARS CORPORATION

- Ignition off
- Reinstall the connectors, components etc.
- Ignition on.

  Switch on the hazard warning signal flasher. Check that the switch is working.

Is the function OK?

- **YES**

  VERIFIED: Troubleshooting has been completed.

- **NO**

  Refer to **INFORMATION**

INFORMATION

FAULT-TRACING INFORMATION

The fault should have been detected and remedied. As this is not the case fault-tracing has failed.

Exit fault-tracing for this diagnostic trouble code (DTC) or make another attempt.

CEM-8F06: SWITCH, HAZARD WARNING SIGNAL FLASHERS. SIGNAL MISSING (2005-2012)

DIAGNOSTIC TROUBLE CODE (DTC) INFORMATION CEM-8F06

Condition

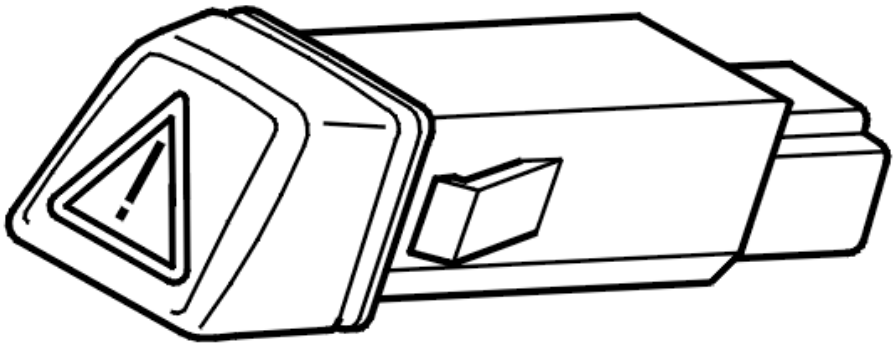

Fig. 207: Identifying Switch For Hazard Warning Signal Flasher
Courtesy of VOLVO CARS CORPORATION

The central electronic module (CEM) checks the signal from the hazard warning signal flasher switch.

The diagnostic trouble code (DTC) is stored if the central electronic module (CEM) registers that there is no signal from the switch for the hazard warning signal flasher.

The diagnostic trouble code (DTC) can be diagnosed when the ignition is switched on.

Substitute Value

- None.

Possible Source

- Open-circuit in the circuit for the switch for the hazard warning signal flasher.

Fault symptom[s]

- The hazard warning signal flashers are not functioning.

SIGNAL MISSING

CHECKING THE WIRING

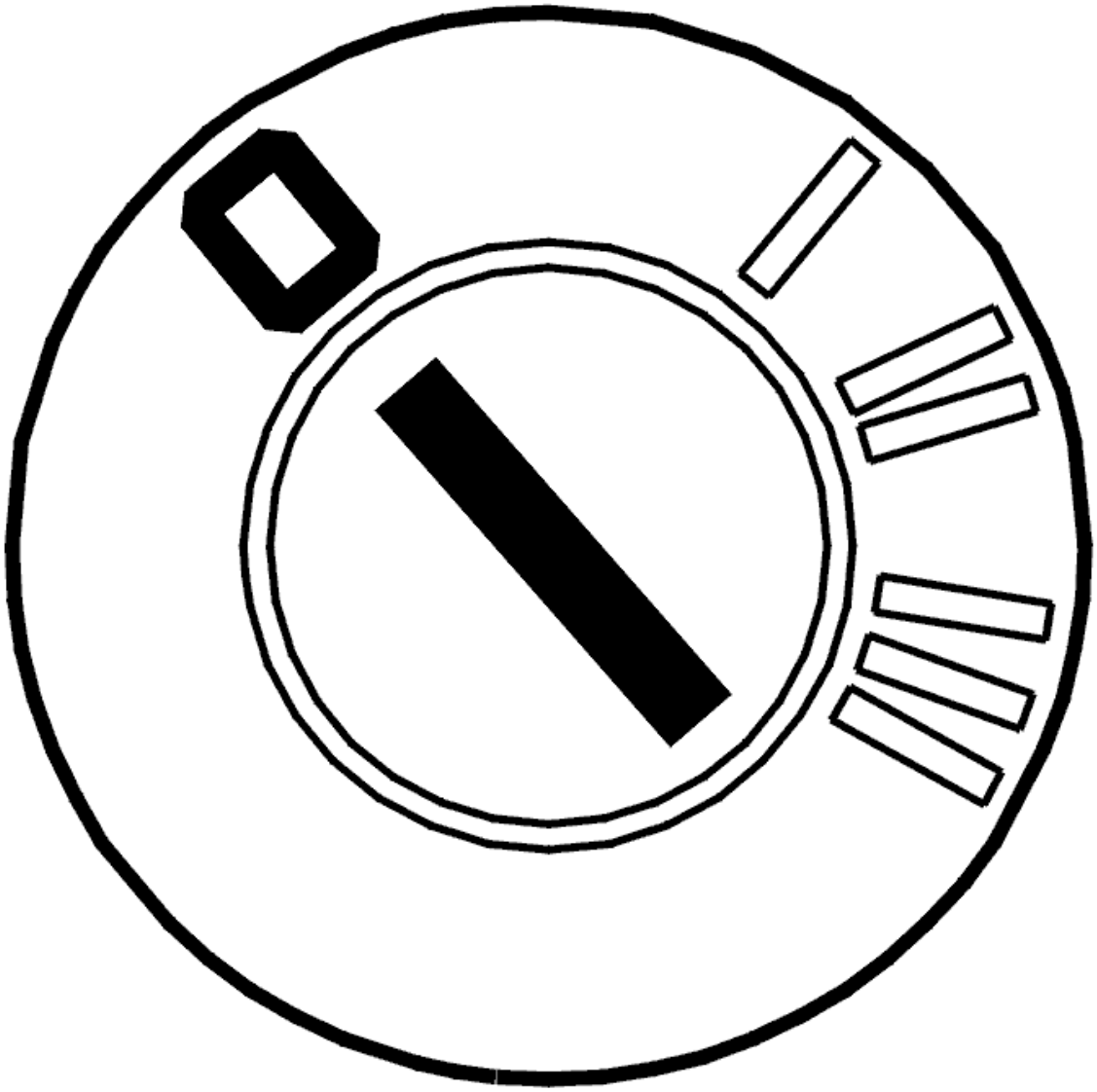

Fig. 208: Identifying Ignition OFF
Courtesy of VOLVO CARS CORPORATION

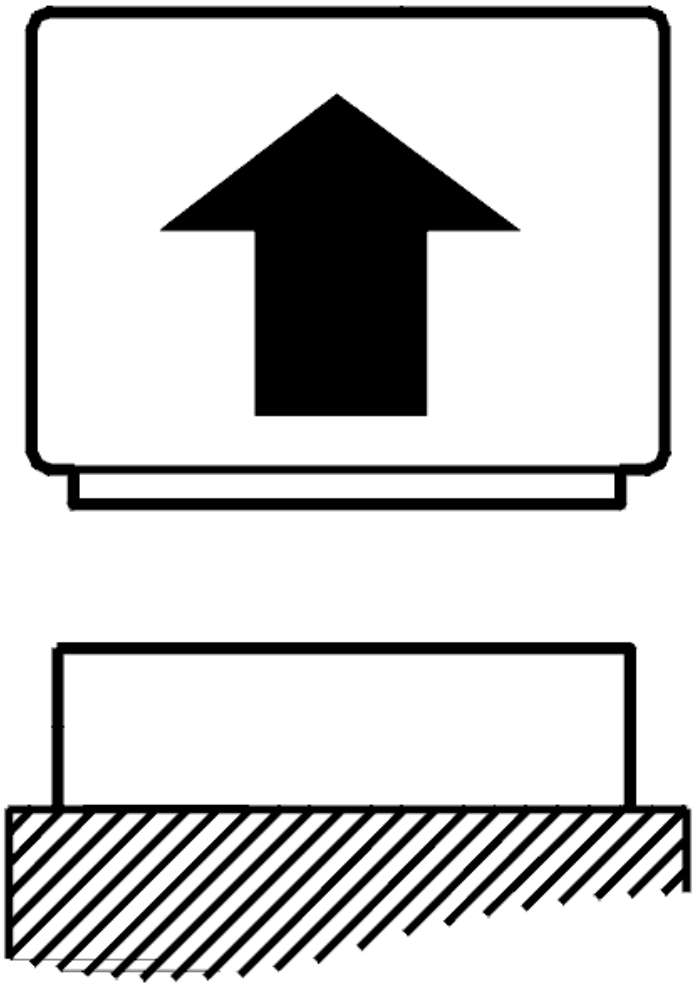

Fig. 209: Disconnecting Connector
Courtesy of VOLVO CARS CORPORATION

- Ignition off.

  If the fault is intermittent, it has been registered previously but is no longer present. Intermittent faults can be caused by interference at start up or can be a different type of fault which occurs on different occasions. The fault is evaluated depending on how it occurs.

  Check the cable between the central electronic module (CEM) and the switch for the hazard warning signal flasher. Check for an open-circuit.

  Take readings between:

  - Central electronic module (CEM) terminal #D14 (14) and terminal #1 on the switch for the hazard warning signal flasher.

Remedy as necessary.

Other information

- see **CONNECTING THE BREAKOUT BOX**
- -2004: **SIGNAL SPECIFICATION**
- 2005-: **SIGNAL SPECIFICATION**
- see **LOCATION OF COMPONENTS**
- see **SWITCH HAZARD WARNING SIGNAL FLASHER, REPLACING**
- see **CHECKING WIRING AND TERMINALS**

- **Continue**

Refer to **VERIFICATION**

VERIFICATION

VERIFICATION

HINT: After carrying out the repair, check that the fault has been remedied.

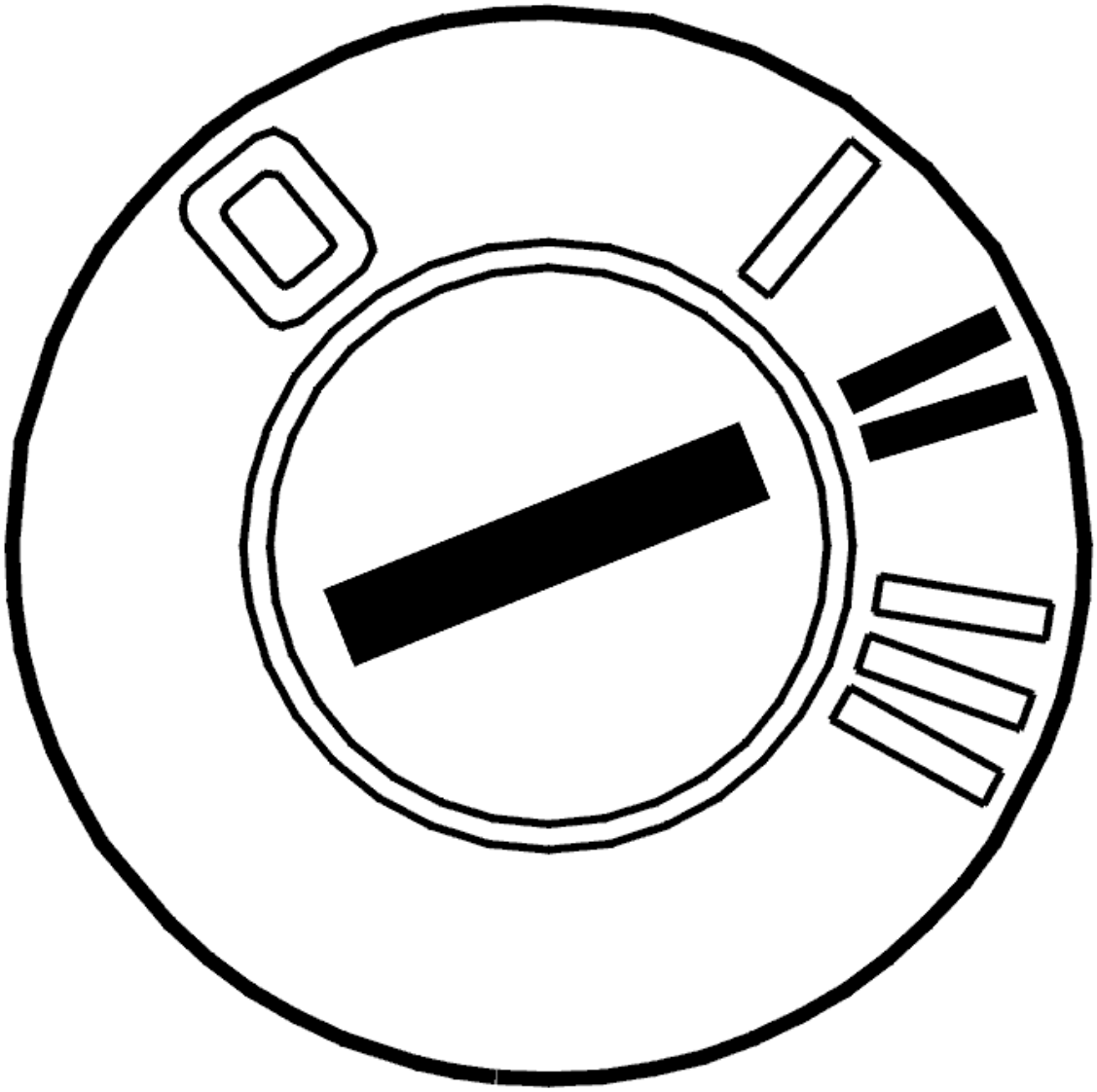

Fig. 210: Identifying Ignition ON
Courtesy of VOLVO CARS CORPORATION

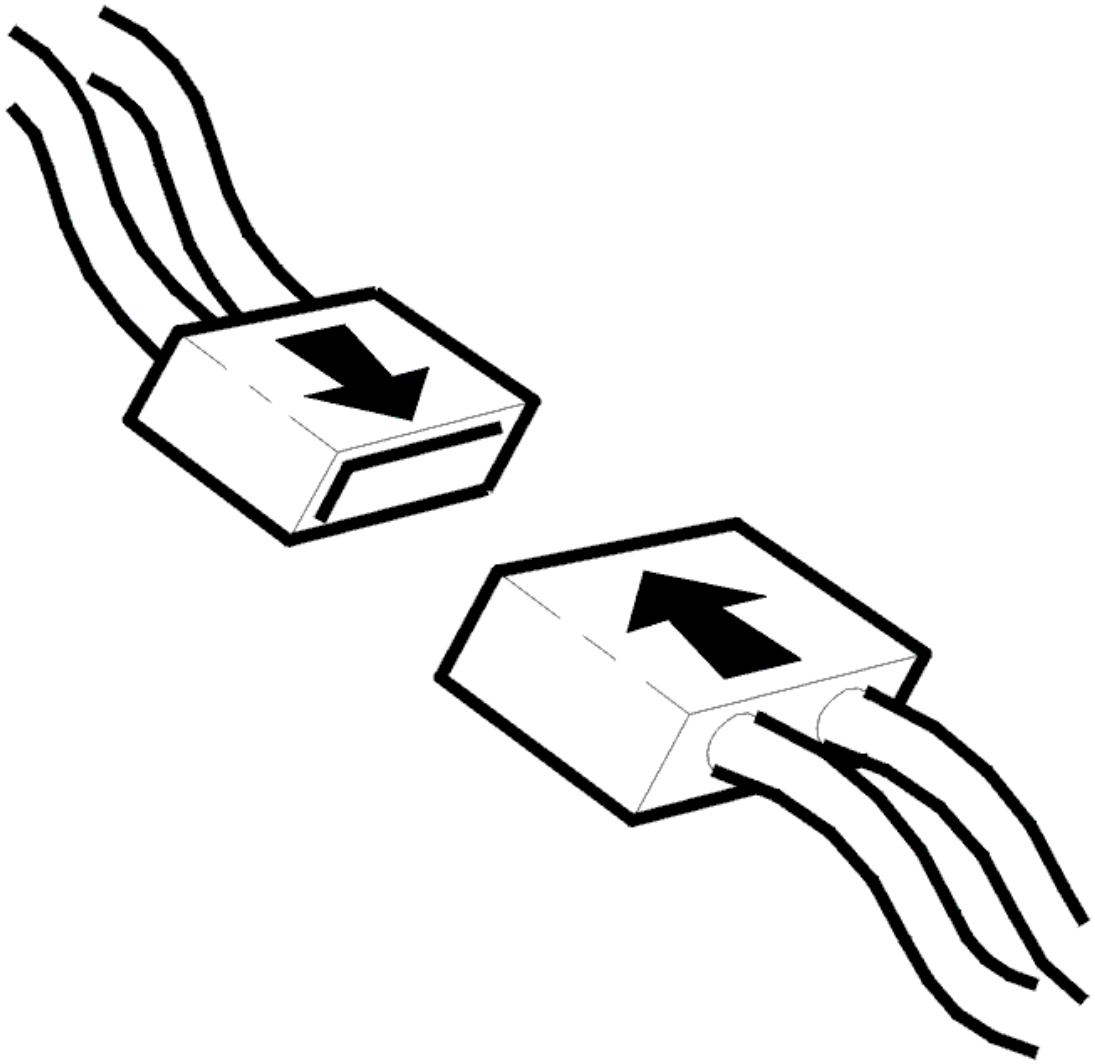

Fig. 211: Connecting Connector
Courtesy of VOLVO CARS CORPORATION

- Ignition off
- Reinstall the connectors, components etc.
- Ignition on.

  Switch on the hazard warning signal flasher. Check that the switch is working.

Is the function OK?

- **YES**

  VERIFIED: Troubleshooting has been completed.

- **NO**

  Refer to **INFORMATION**

INFORMATION

FAULT-TRACING INFORMATION

The fault should have been detected and remedied. As this is not the case fault-tracing has failed.

Exit fault-tracing for this diagnostic trouble code (DTC) or make another attempt.

CEM-8F07: SWITCH, HAZARD WARNING SIGNAL FLASHERS. SIGNAL TOO LOW (2005-2012)

DIAGNOSTIC TROUBLE CODE (DTC) INFORMATION CEM-8F07

Condition

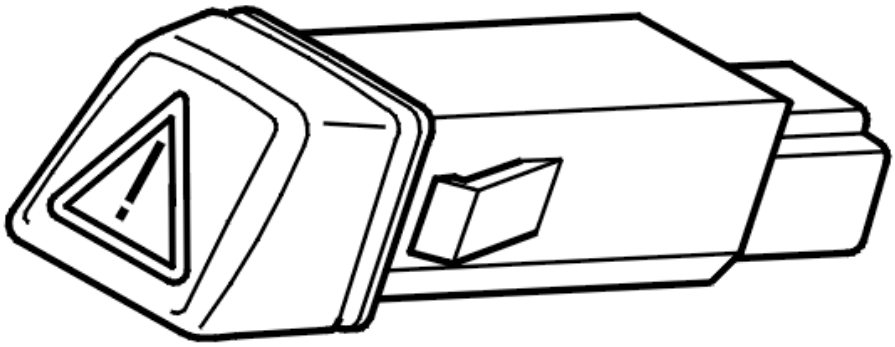

Fig. 212: Identifying Switch For Hazard Warning Signal Flasher
Courtesy of VOLVO CARS CORPORATION

The central electronic module (CEM) checks the signal from the hazard warning signal flasher switch.

The diagnostic trouble code (DTC) is stored if the central electronic module (CEM) registers that the signal from the switch for the hazard warning signal flasher is too low.

The diagnostic trouble code (DTC) can be diagnosed when the ignition is switched on.

Substitute Value

- If the fault has been detected in 100 ignition cycles, the output is closed permanently until the diagnostic trouble code is erased (applies from structure week 200539).

Possible Source

- Short-circuit to ground in the circuit for the switch for the hazard warning signal flasher
- Overheated switch for the hazard warning signal flasher.

Fault symptom[s]

- The hazard warning signal flashers are not functioning.

SIGNAL TOO LOW

CHECKING THE WIRING

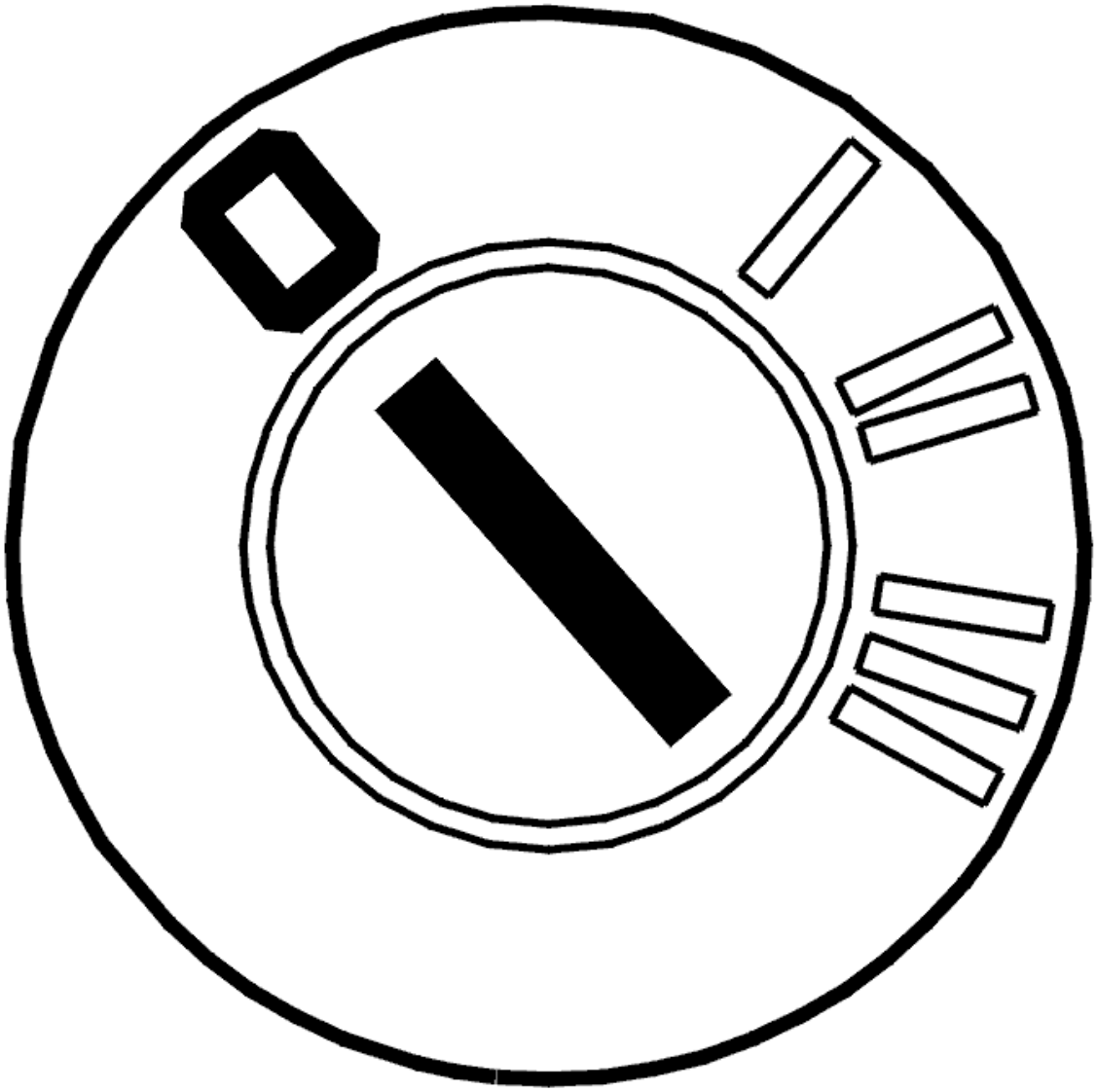

Fig. 213: Identifying Ignition OFF
Courtesy of VOLVO CARS CORPORATION

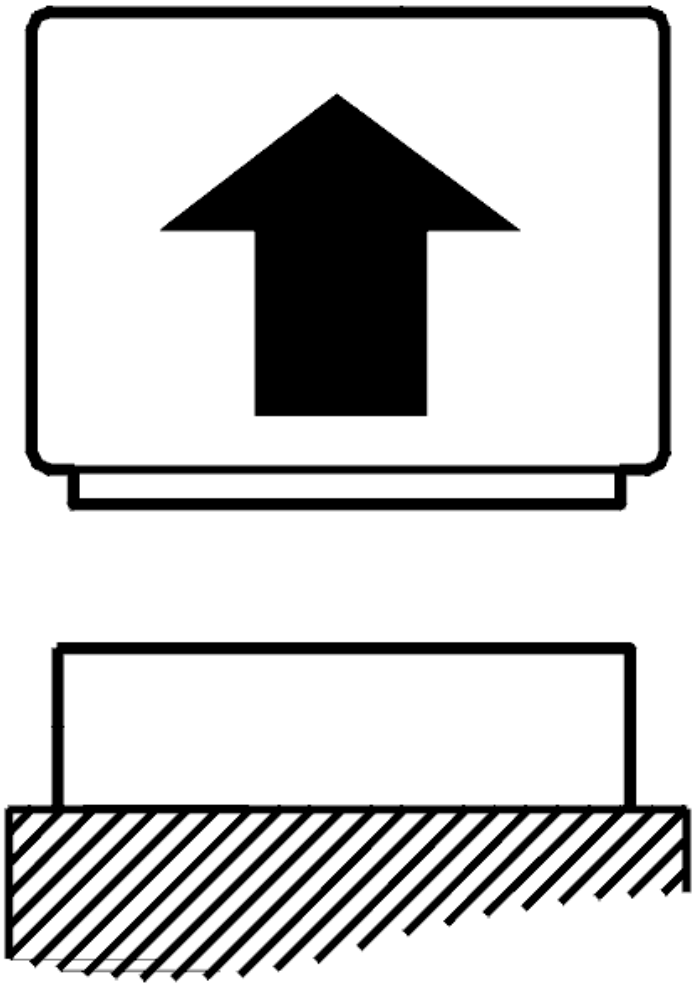

Fig. 214: Disconnecting Connector
Courtesy of VOLVO CARS CORPORATION

- Ignition off.

  If the fault is intermittent, it has been registered previously but is no longer present. Intermittent faults can be caused by interference at start up or can be a different type of fault which occurs on different occasions. The fault is evaluated depending on how it occurs.

  Check the cable between the central electronic module (CEM) and the switch for the hazard warning signal flasher. Check for a short-circuit to ground.

  Take readings between:

  - Central electronic module (CEM) terminal #D14 (14) and terminal #1 on the switch for the hazard warning signal flasher.

Remedy as necessary.

Other information

- see **CONNECTING THE BREAKOUT BOX**
- -2004: **SIGNAL SPECIFICATION**
- 2005-: **SIGNAL SPECIFICATION**
- see **LOCATION OF COMPONENTS**
- see **SWITCH HAZARD WARNING SIGNAL FLASHER, REPLACING**
- see **CHECKING WIRING AND TERMINALS**

Was a fault detected?

- **YES**

  Refer to **VERIFICATION**

- **NO**

  Refer to **CHECKING OVER TEMPERATURE**

CHECKING OVER TEMPERATURE

Turn on the hazard warning signal flasher to, see if the switch works.

If the switch does not work, the fault may be due to overheating.

Wait approximately 10 minutes. Check whether the fault was due to overheating.

Remedy as necessary.

Other information

- see **SWITCH HAZARD WARNING SIGNAL FLASHER, REPLACING**

- **Continue**

  Refer to **VERIFICATION**

VERIFICATION

VERIFICATION

HINT: After carrying out the repair, check that the fault has been remedied.

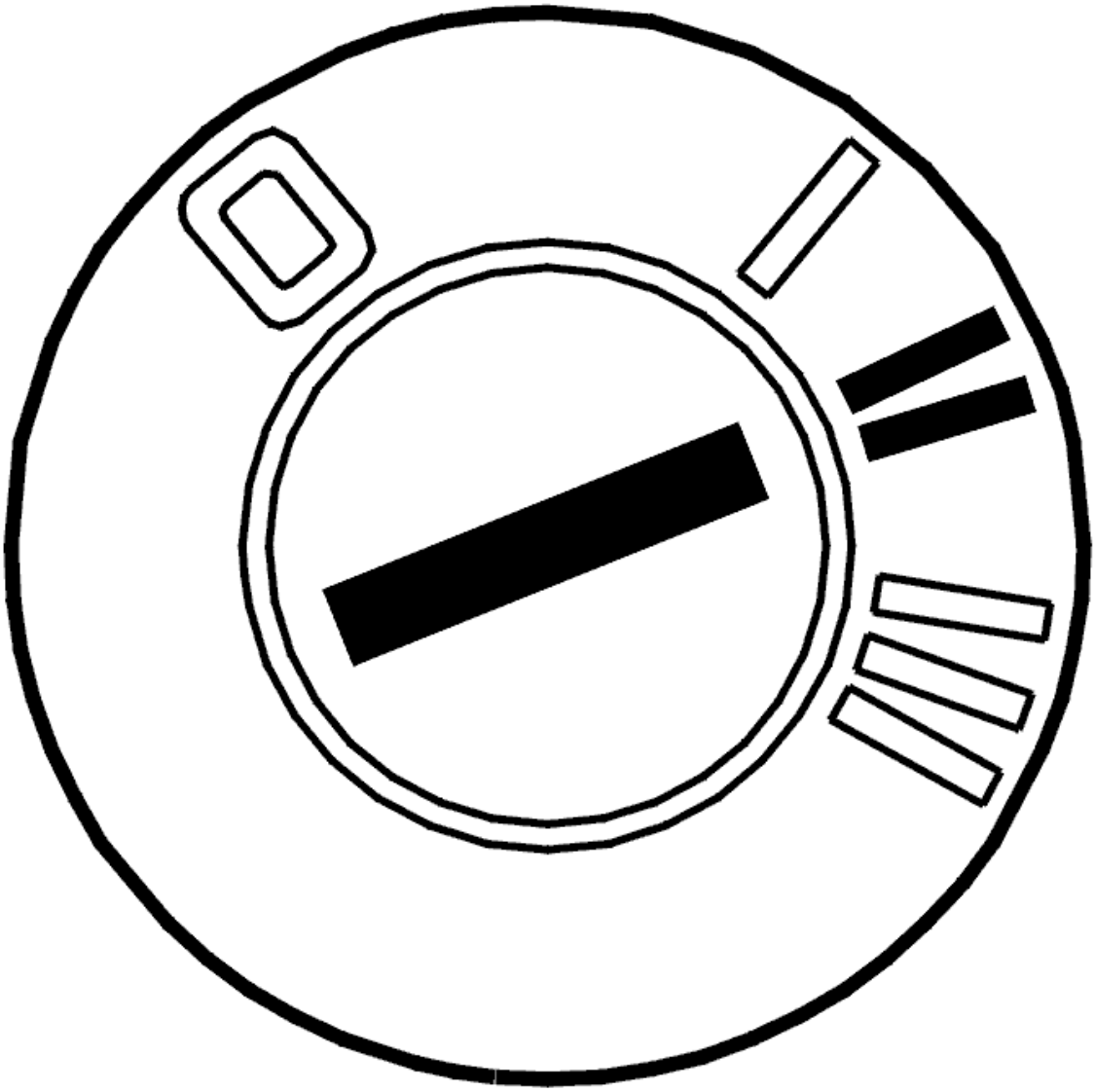

Fig. 215: Identifying Ignition ON
Courtesy of VOLVO CARS CORPORATION

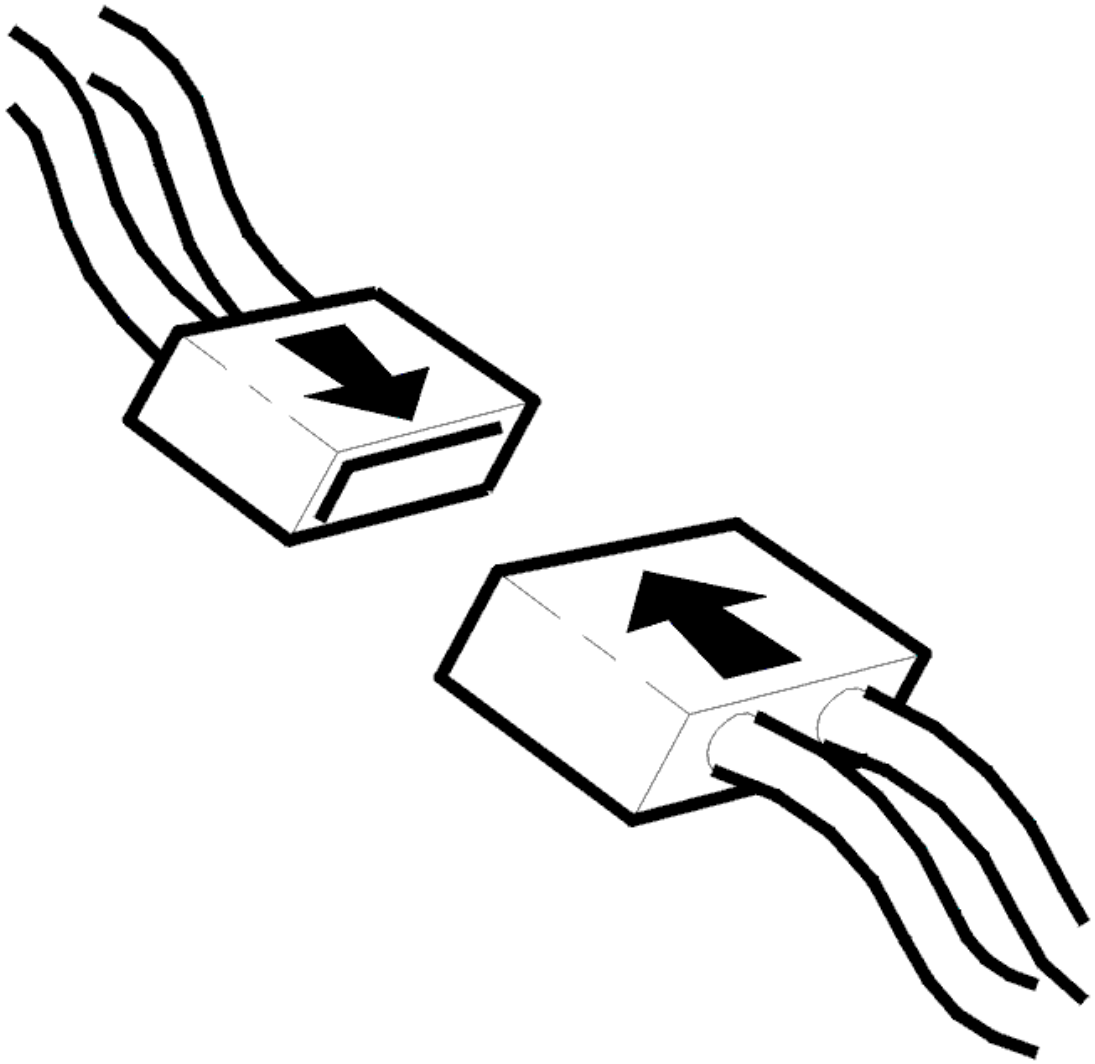

Fig. 216: Connecting Connector
Courtesy of VOLVO CARS CORPORATION

- Ignition off
- Reinstall the connectors, components etc.
- Ignition on.

  Switch on the hazard warning signal flasher. Check that the switch is working.

Is the function OK?

- **YES**

  VERIFIED: Troubleshooting has been completed.

- **NO**

  Refer to **INFORMATION**

INFORMATION

FAULT-TRACING INFORMATION

The fault should have been detected and remedied. As this is not the case fault-tracing has failed.

Exit fault-tracing for this diagnostic trouble code (DTC) or make another attempt.

CEM-8F08: ENGINE CONTROL MODULE (ECM). SIGNAL TOO LOW (2005-2012)

DIAGNOSTIC TROUBLE CODE (DTC) INFORMATION CEM-8F08

Condition

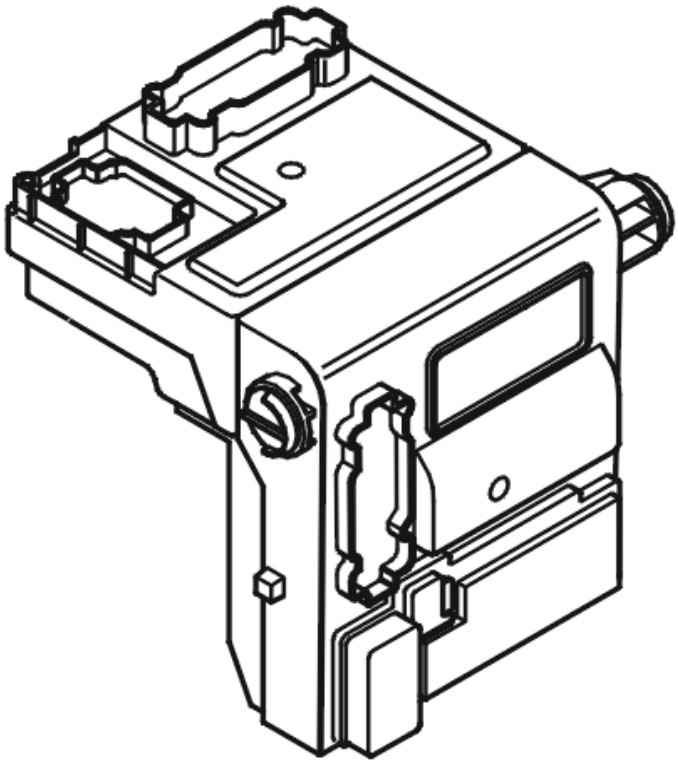

Fig. 217: Identifying Central Electronic Module (CEM)
Courtesy of VOLVO CARS CORPORATION

The central electronic module (CEM) checks the re-engagement signal from the driver circuit to the wake-up

signal for the engine control module (ECM) and to the hazard warning signal flasher. Both functions are controlled by the same driver circuit in the central electronic module (CEM) but can only be re-engaged once.

The diagnostic trouble code (DTC) is stored if the central electronic module (CEM) registers that the wake-up signal to the engine control module (ECM) is too low.

The diagnostic trouble code (DTC) can be detected when the ignition is on and when the lamp in the switch for the hazard warning signal flasher is not lit.

Substitute Value

- If the fault has been detected in 100 ignition cycles, the output is closed permanently until the diagnostic trouble code is erased (applies from structure week 200539).

Possible Source

- Short-circuit to ground in the signal cable for the wake-up signal to the engine control module (ECM).

Fault symptom[s]

- The starter motor turns but the engine does not start.

SIGNAL TOO LOW

CHECKING THE STATUS

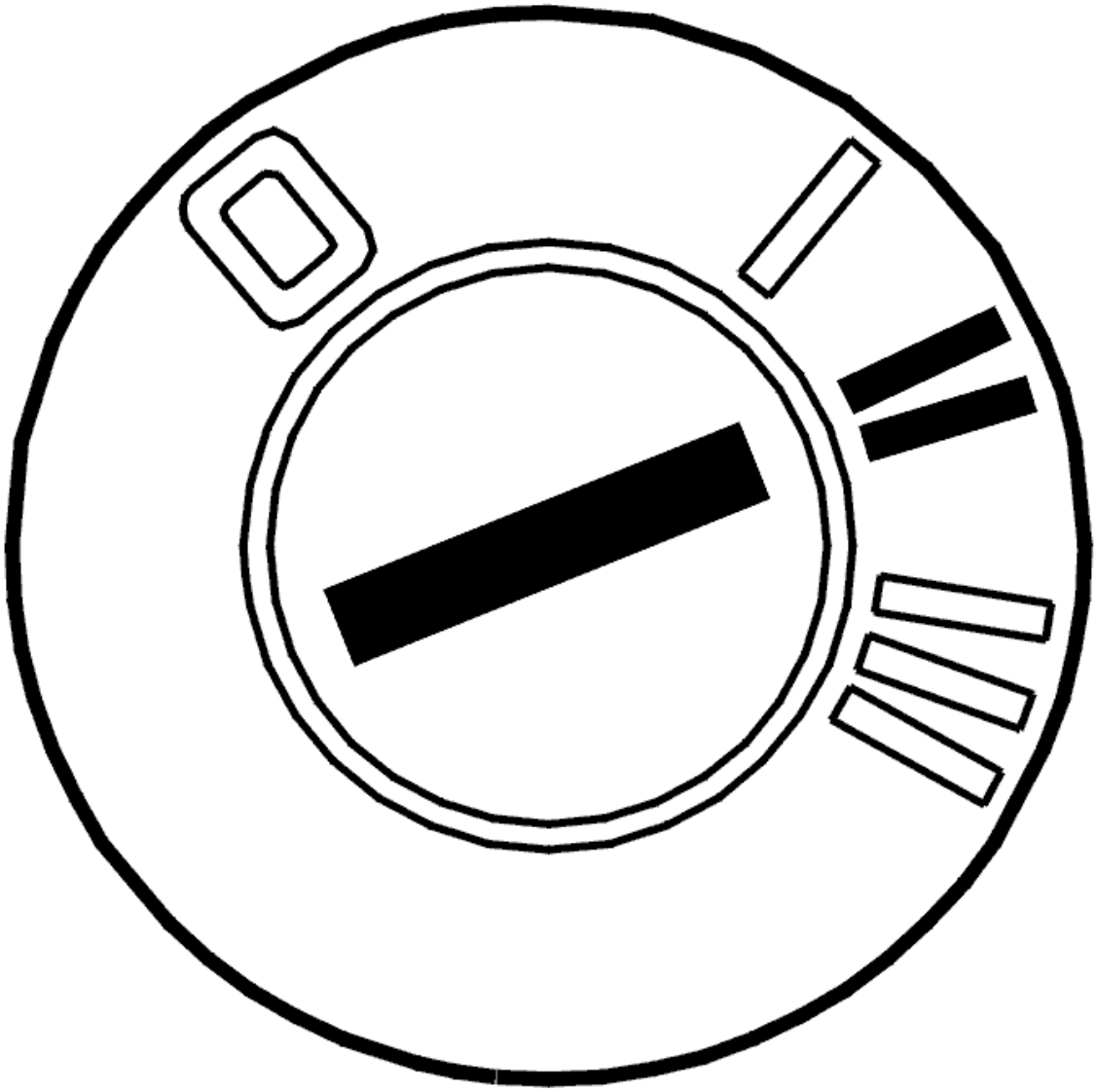

Fig. 218: Identifying Ignition ON
Courtesy of VOLVO CARS CORPORATION

- Ignition on.

  Read off the status of the waking signal for the engine control module (ECM).

  Change the ignition key position from position I to II.

  Check if the fault is permanent or intermittent.

  The status of the wake-up signal for the engine control module (ECM) must change when changing the ignition key position.

  If the status of the waking signal for the engine control module (ECM) does not change, the fault is permanent.

If the status of the waking signal for the engine control module (ECM) changes, this is an indication that the fault was present previously but that it is not active at the moment, i. e. the fault is intermittent.

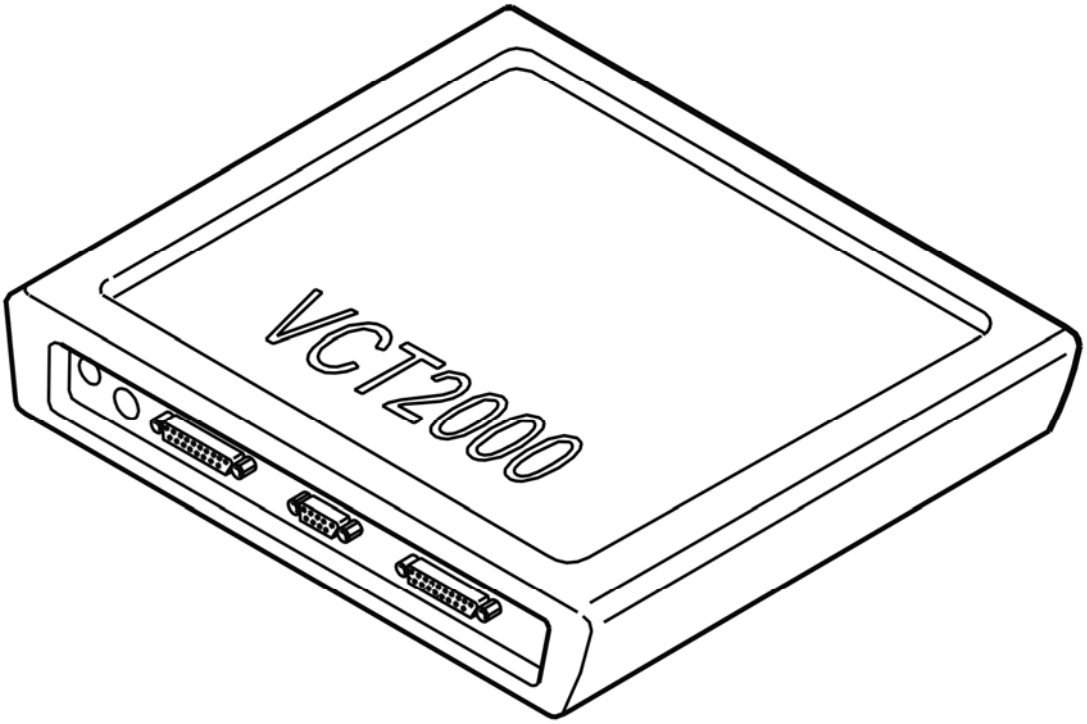

Fig. 219: Identifying VCT2000 Diagnostic Tool Symbol In VIDA
Courtesy of VOLVO CARS CORPORATION

- **Continue**

  Refer to **CHECKING COMPONENTS AND WIRING**

CHECKING COMPONENTS AND WIRING

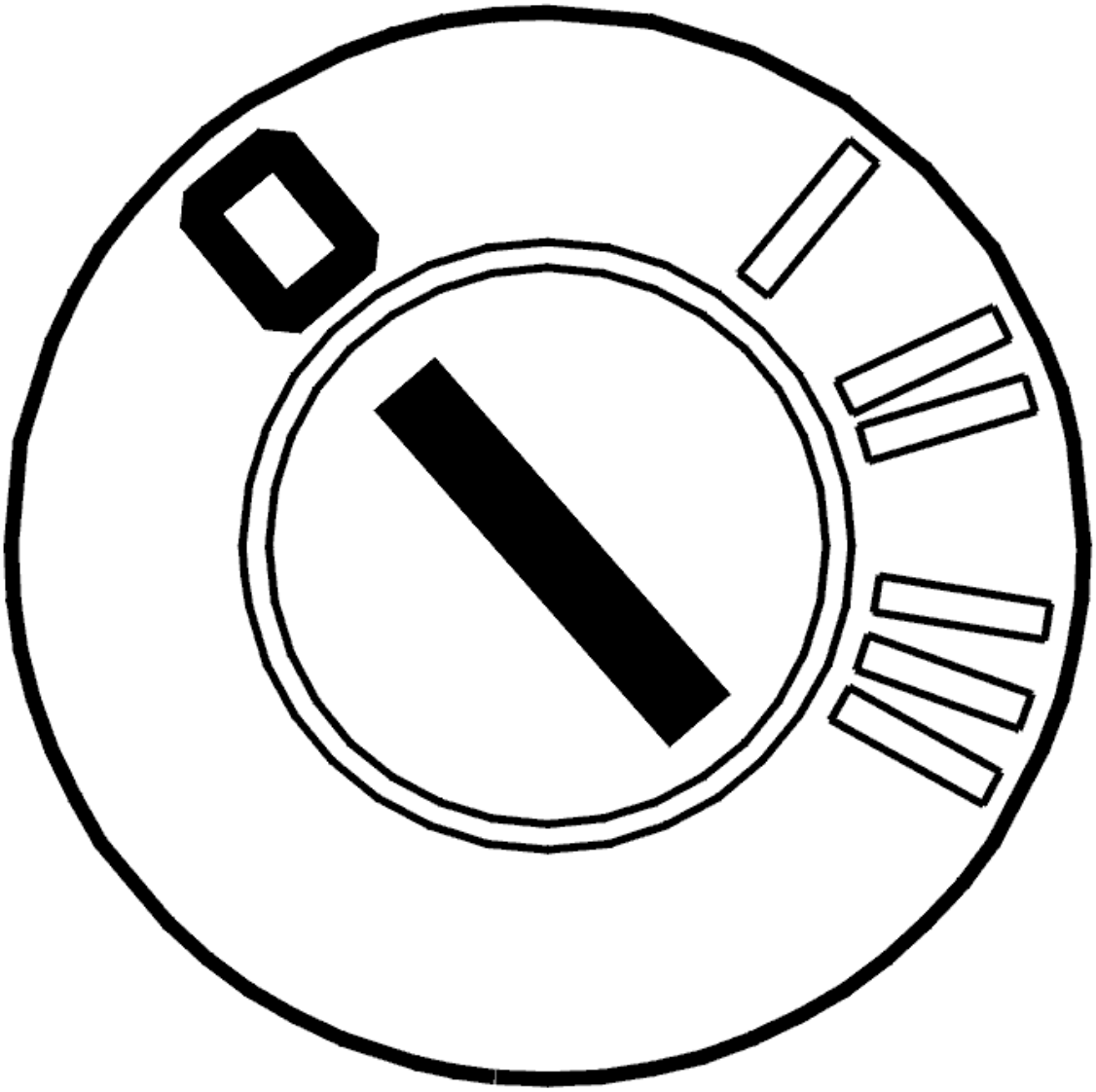

Fig. 220: Identifying Ignition OFF
Courtesy of VOLVO CARS CORPORATION

- Ignition off.

  Check central electronic module (CEM) connector terminal C and engine control module (ECM) connector B. Check for contact resistance. Check for oxidation. Check for damage. Check for loose connections. Also check the intermediate connectors.

  Check the signal cable. Check for a short-circuit to ground.

  Take readings between:

  - Central electronic module (CEM) terminal #C15 (#15) and engine control module (ECM) terminal #B27.

Remedy as necessary.

Other information

- see **CONNECTING THE BREAKOUT BOX**
- -2004: **SIGNAL SPECIFICATION**
- 2005-: **SIGNAL SPECIFICATION**
- For -2004, see: **CENTRAL ELECTRONIC MODULE (CEM), REPLACING** .
- For 2005-, see: **CENTRAL ELECTRONIC MODULE (CEM), REPLACING** .
- see **ENGINE CONTROL MODULE (ECM), REPLACING**
- see **CHECKING WIRING AND TERMINALS**

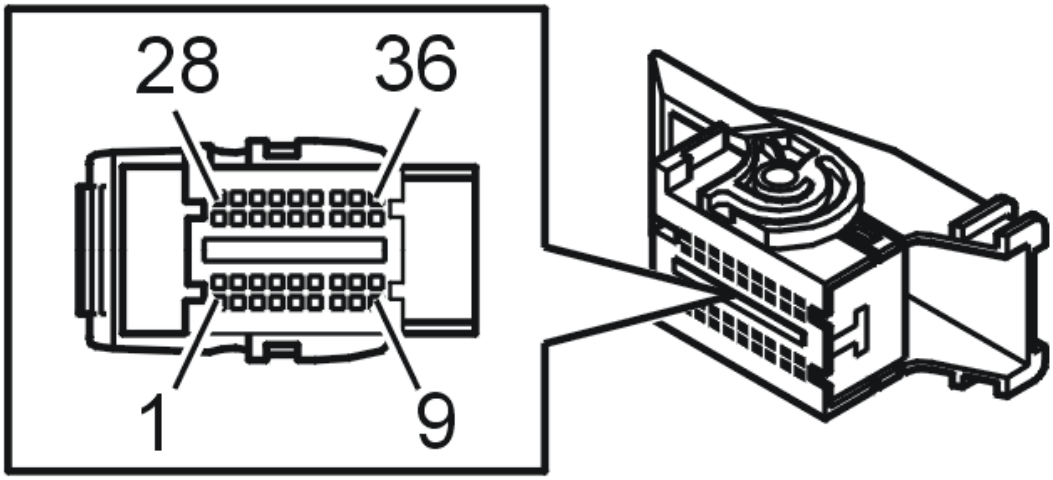

Fig. 221: Identifying Connector C
Courtesy of VOLVO CARS CORPORATION

- **Continue**

Refer to **VERIFICATION**

VERIFICATION

VERIFICATION

HINT: After carrying out the repair, check that the fault has been remedied.

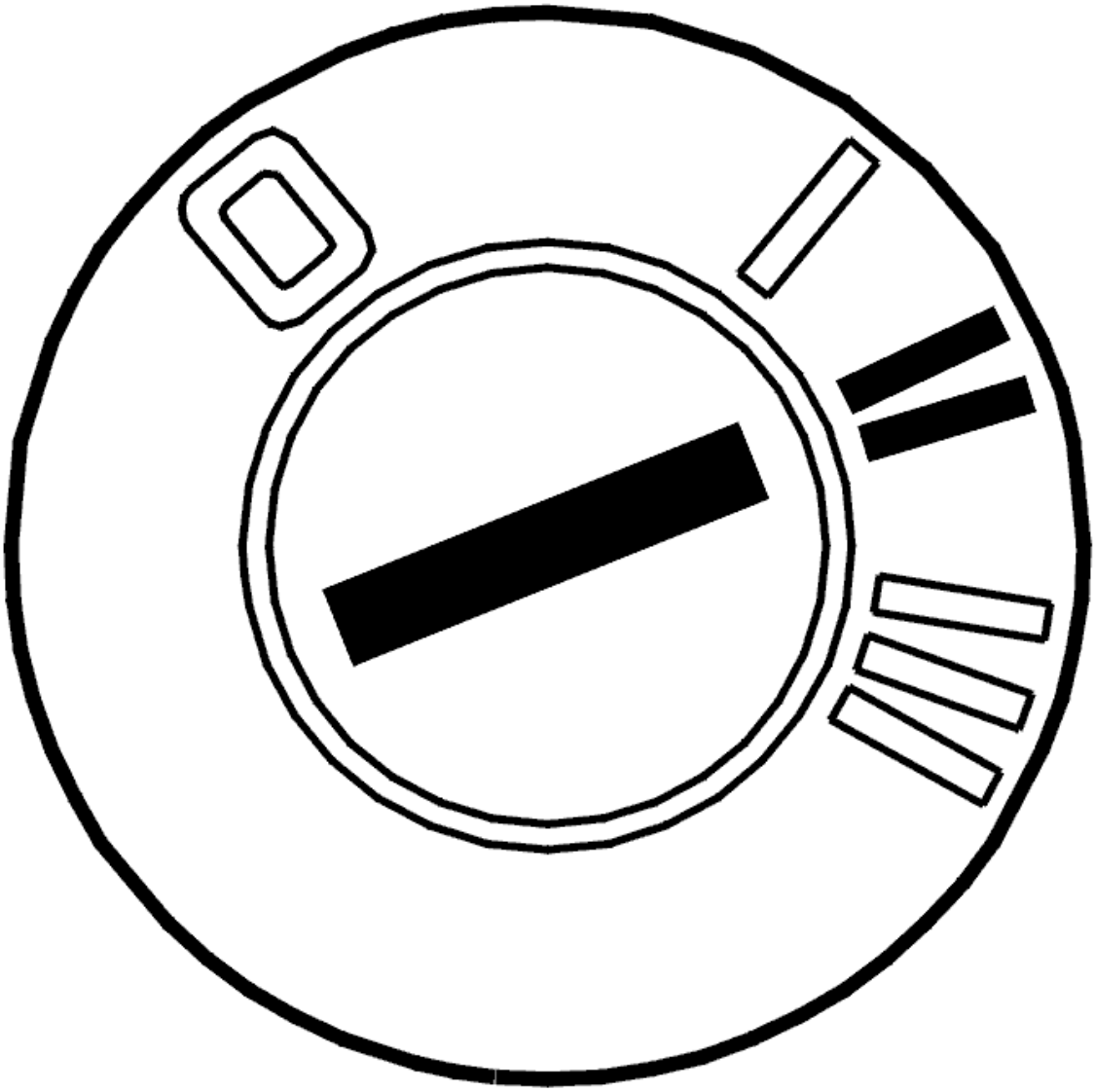

Fig. 222: Identifying Ignition ON
Courtesy of VOLVO CARS CORPORATION

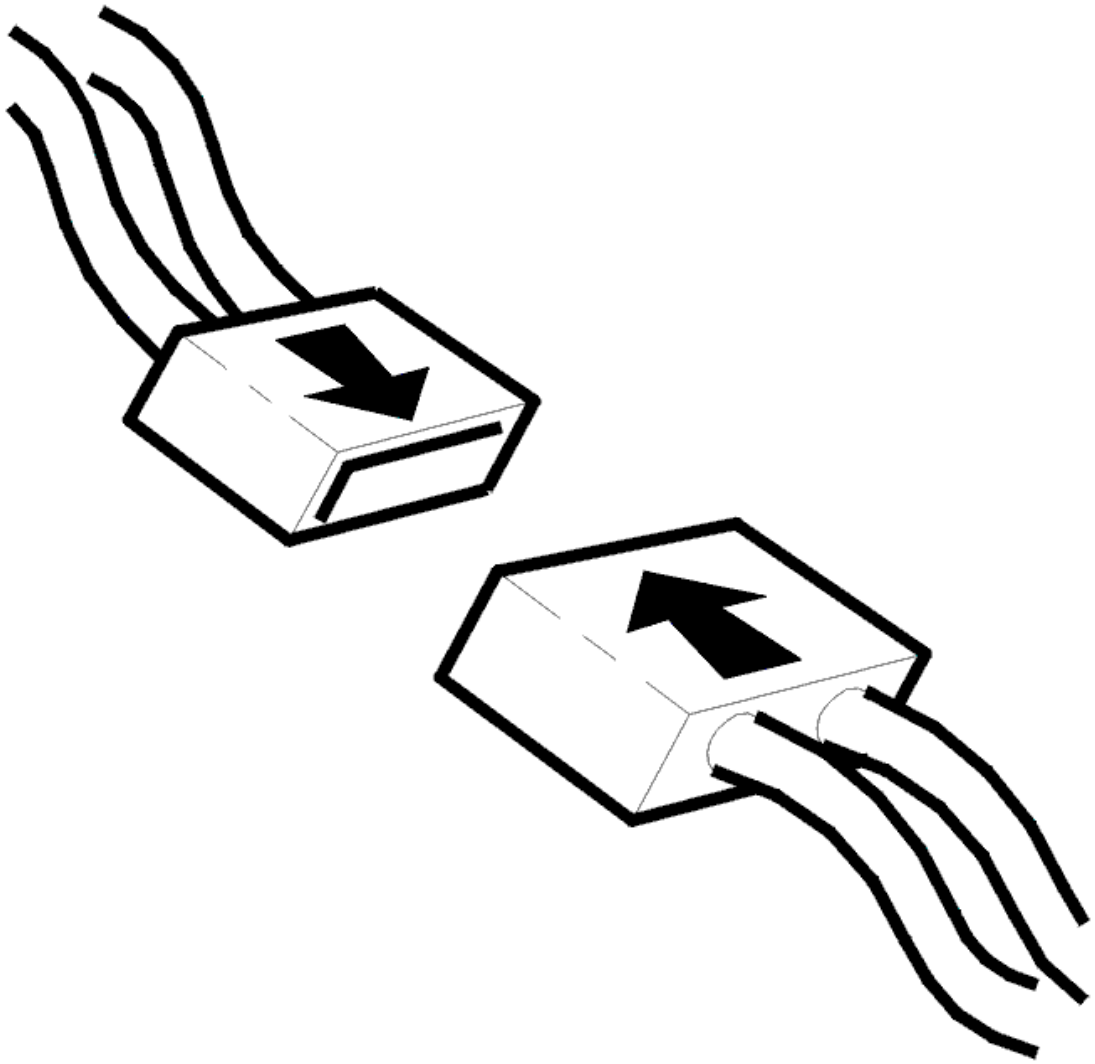

Fig. 223: Connecting Connector
Courtesy of VOLVO CARS CORPORATION

- Ignition off
- Reinstall the connectors, components etc.
- Ignition on.

  Read off the status using the VCT2000 (or appropriate scan tool).

  Activate and deactivate the function.

  Check that the function is OK.

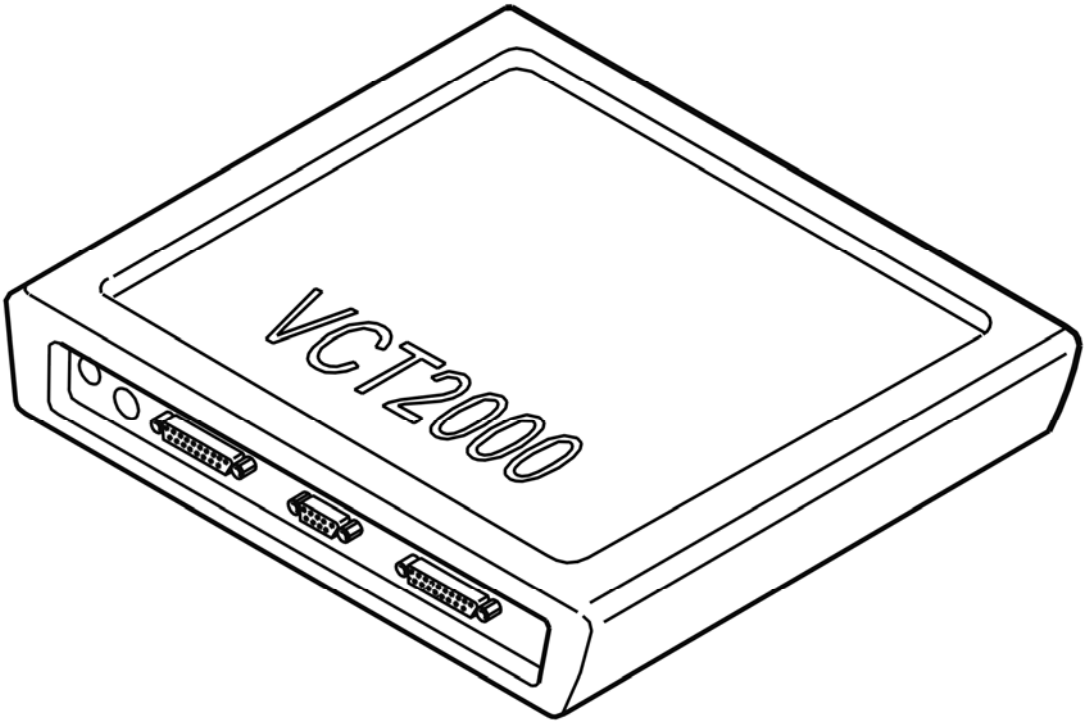

Fig. 224: Identifying VCT2000 Diagnostic Tool Symbol In VIDA
Courtesy of VOLVO CARS CORPORATION

Is the function OK?

- **YES**

  VERIFIED: Troubleshooting has been completed.

- **NO**

  Refer to **INFORMATION**

INFORMATION

FAULT-TRACING INFORMATION

The fault should have been detected and remedied. As this is not the case fault-tracing has failed.

Exit fault-tracing for this diagnostic trouble code (DTC) or make another attempt.

CEM-8F09: ENGINE CONTROL MODULE (ECM). SIGNAL TOO HIGH (2005-2012)

DIAGNOSTIC TROUBLE CODE (DTC) INFORMATION CEM-8F09

Condition

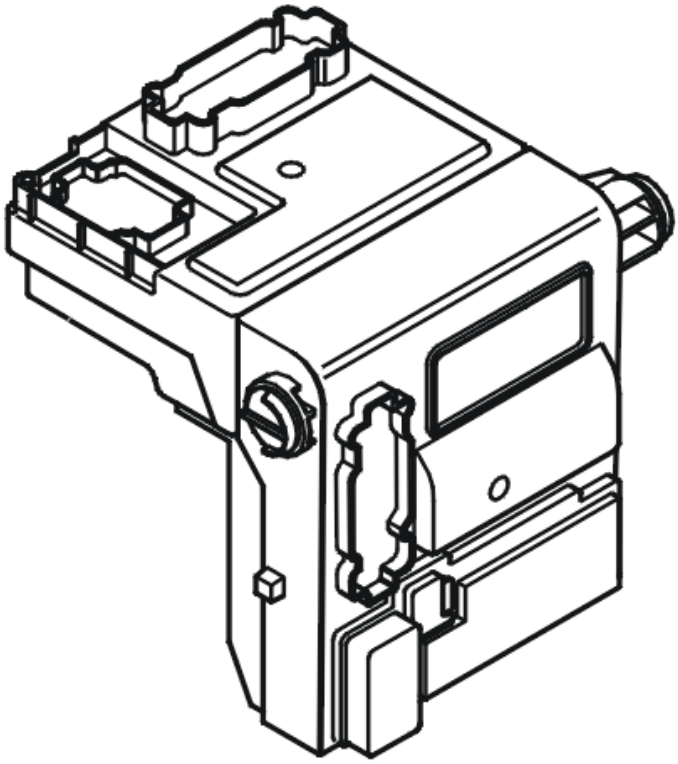

Fig. 225: Identifying Central Electronic Module (CEM)
Courtesy of VOLVO CARS CORPORATION

The central electronic module (CEM) checks the re-engagement signal from the driver circuit to the wake-up signal for the engine control module (ECM) and to the hazard warning signal flasher. Both functions are controlled by the same driver circuit in the central electronic module (CEM) but can only be re-engaged once.

The diagnostic trouble code (DTC) is stored if the central electronic module (CEM) registers that the wake-up signal to the engine control module (ECM) is too high.

The diagnostic trouble code (DTC) can be detected when the ignition is on and when the lamp in the switch for the hazard warning signal flasher is not lit.

Substitute Value

- None.

Possible Source

- Open-circuit in the signal cable for the engine control module (ECM).

Fault symptom[s]

- The starter motor turns but the engine does not start.

SIGNAL TOO HIGH

CHECKING THE STATUS

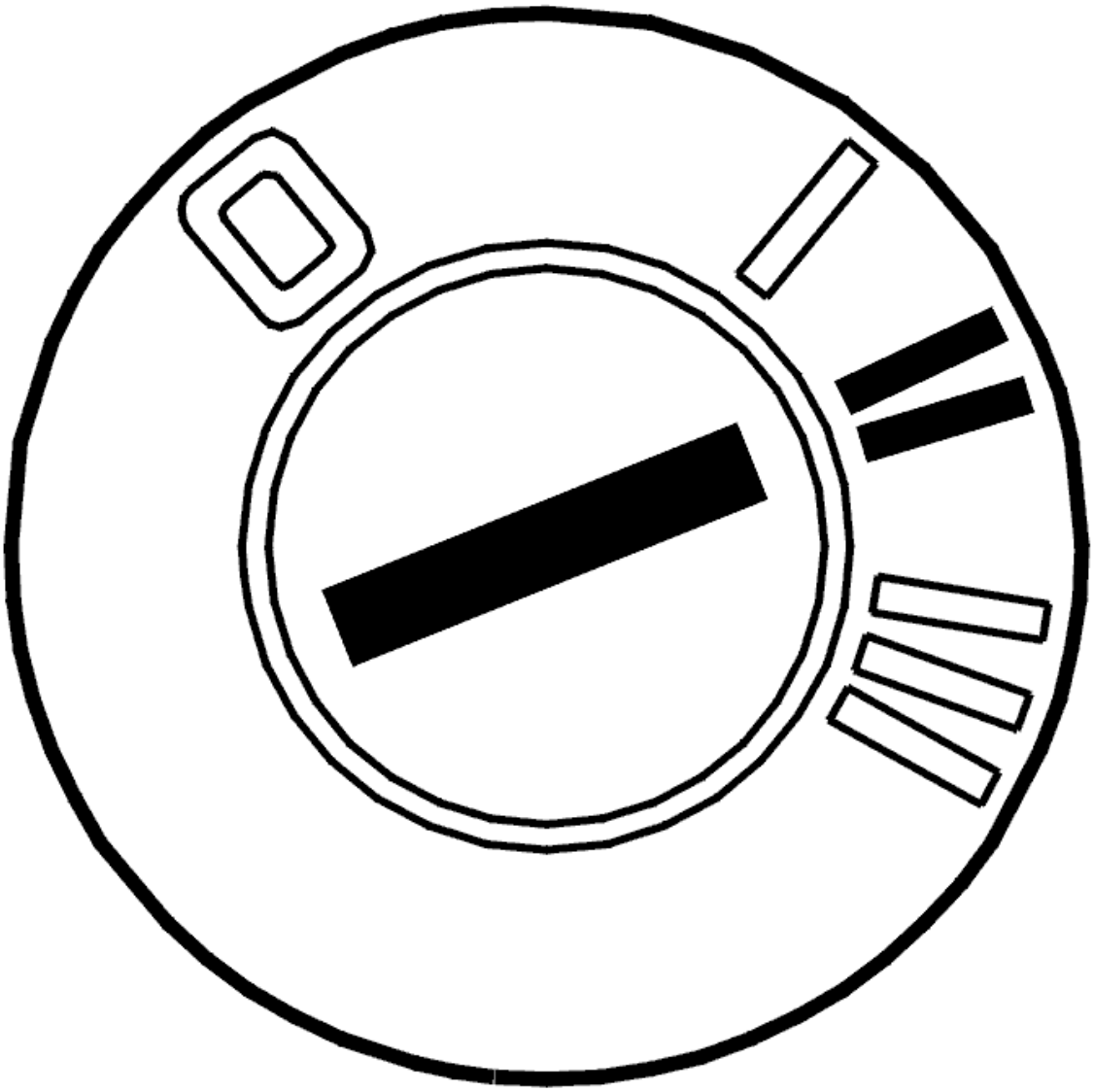

Fig. 226: Identifying Ignition ON
Courtesy of VOLVO CARS CORPORATION

- Ignition on.

  Read off the status of the waking signal for the engine control module (ECM).

  Change the ignition key position from position I to II.

Check if the fault is permanent or intermittent.

The status of the wake-up signal for the engine control module (ECM) must change when changing the ignition key position.

If the status of the waking signal for the engine control module (ECM) does not change, the fault is permanent.

If the status of the waking signal for the engine control module (ECM) changes, this is an indication that the fault was present previously but that it is not active at the moment, i. e. the fault is intermittent.

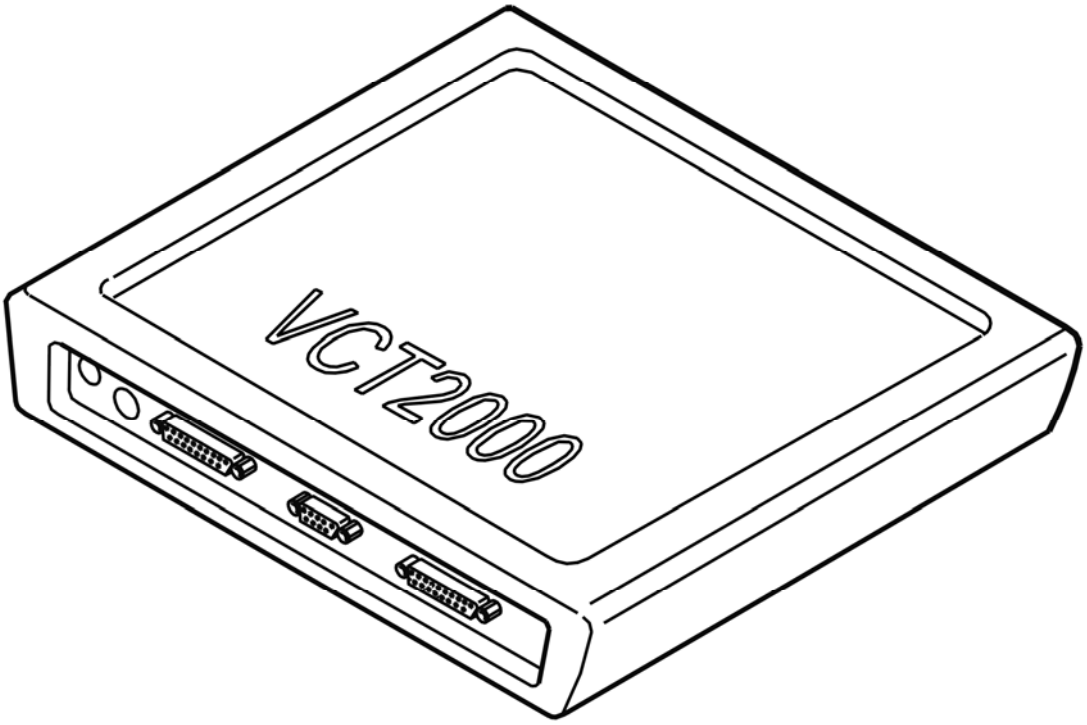

Fig. 227: Identifying VCT2000 Diagnostic Tool Symbol In VIDA
Courtesy of VOLVO CARS CORPORATION

- **Continue**

Refer to **CHECKING COMPONENTS AND WIRING**

CHECKING COMPONENTS AND WIRING

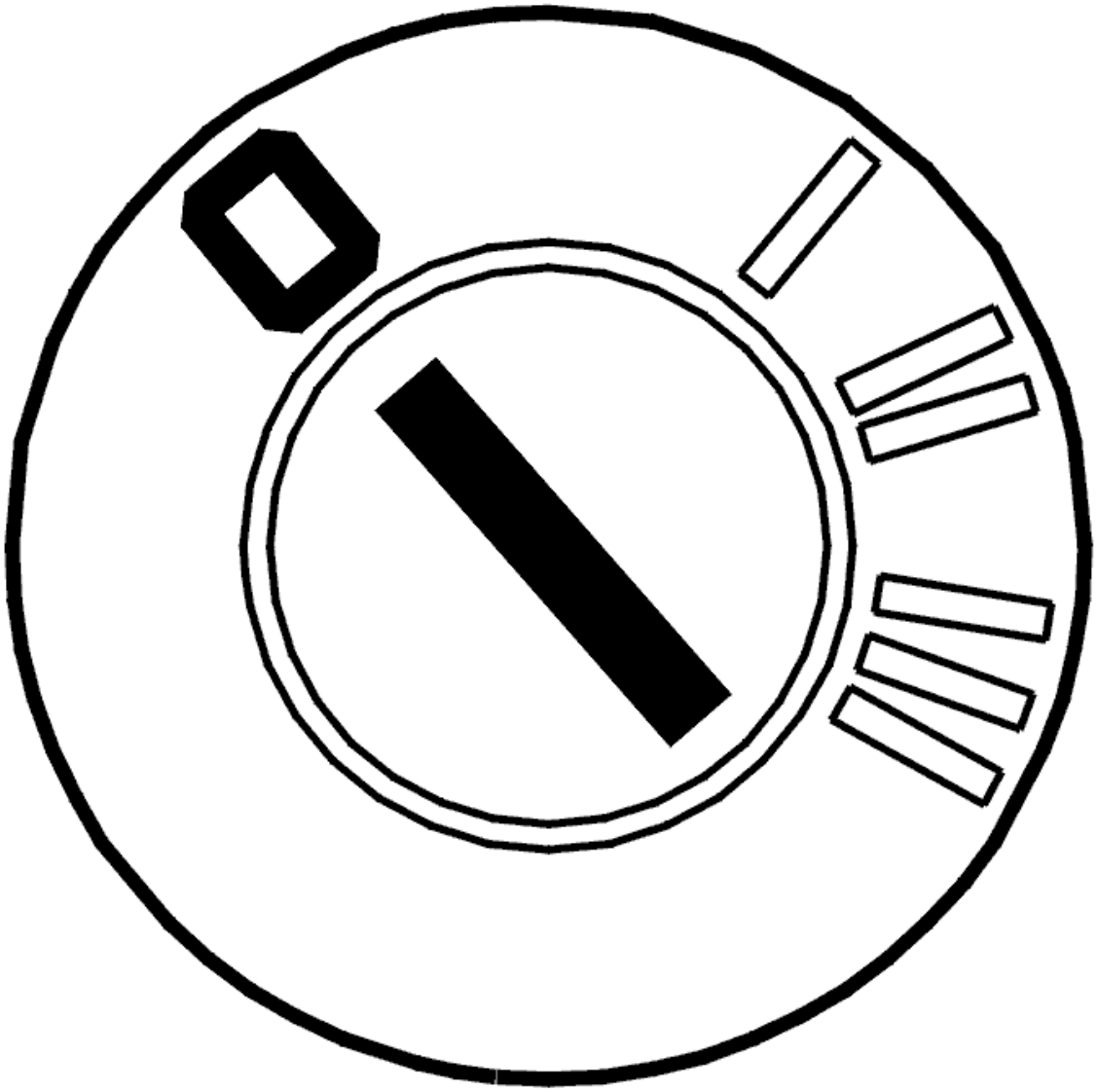

Fig. 228: Identifying Ignition OFF
Courtesy of VOLVO CARS CORPORATION

- Ignition off.

  Check central electronic module (CEM) connector terminal C and engine control module (ECM) connector B. Check for contact resistance. Check for oxidation. Check for damage. Check for loose connections. Also check the intermediate connectors.

  Check the signal cable. Check for an open-circuit.

  Take readings between:

  - Central electronic module (CEM) terminal #C15 (#15) and engine control module (ECM) terminal #B27.

Remedy as necessary.

Other information

- see **CONNECTING THE BREAKOUT BOX**
- -2004: **SIGNAL SPECIFICATION**
- 2005-: **SIGNAL SPECIFICATION**
- For -2004, see: **CENTRAL ELECTRONIC MODULE (CEM), REPLACING** .
- For 2005-, see: **CENTRAL ELECTRONIC MODULE (CEM), REPLACING** .
- see **ENGINE CONTROL MODULE (ECM), REPLACING**
- see **CHECKING WIRING AND TERMINALS**

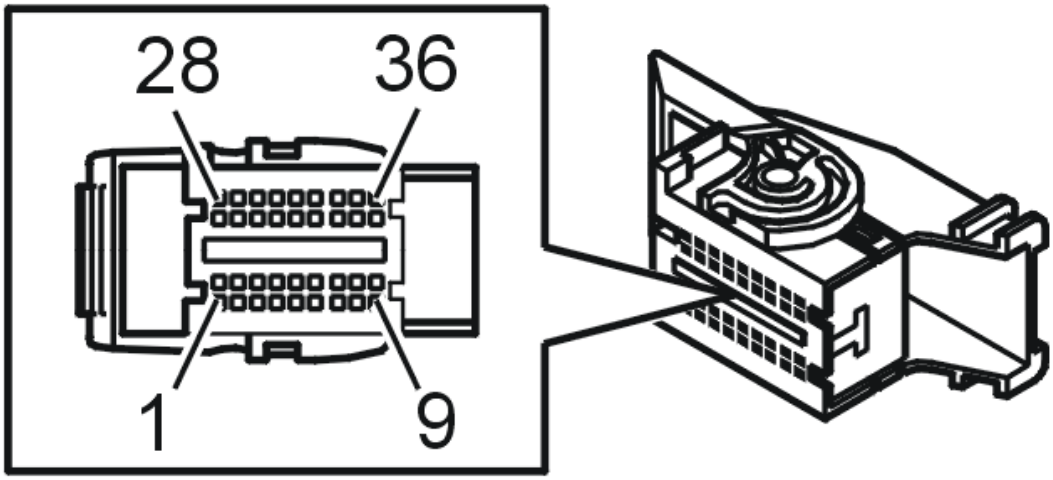

Fig. 229: Identifying Connector C
Courtesy of VOLVO CARS CORPORATION

- **Continue**

Refer to **VERIFICATION**

VERIFICATION

VERIFICATION

HINT: After carrying out the repair, check that the fault has been remedied.

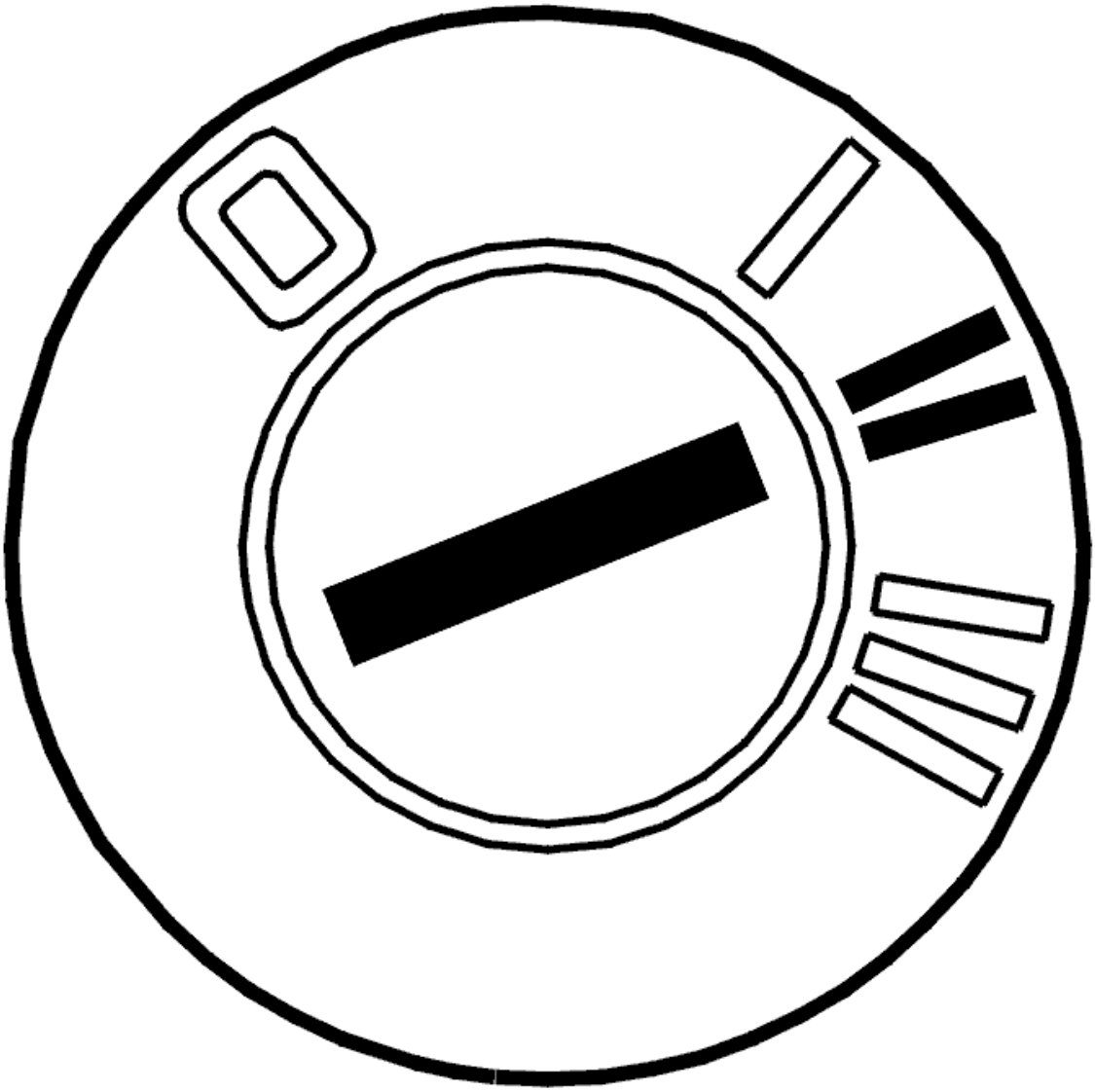

Fig. 230: Identifying Ignition ON
Courtesy of VOLVO CARS CORPORATION

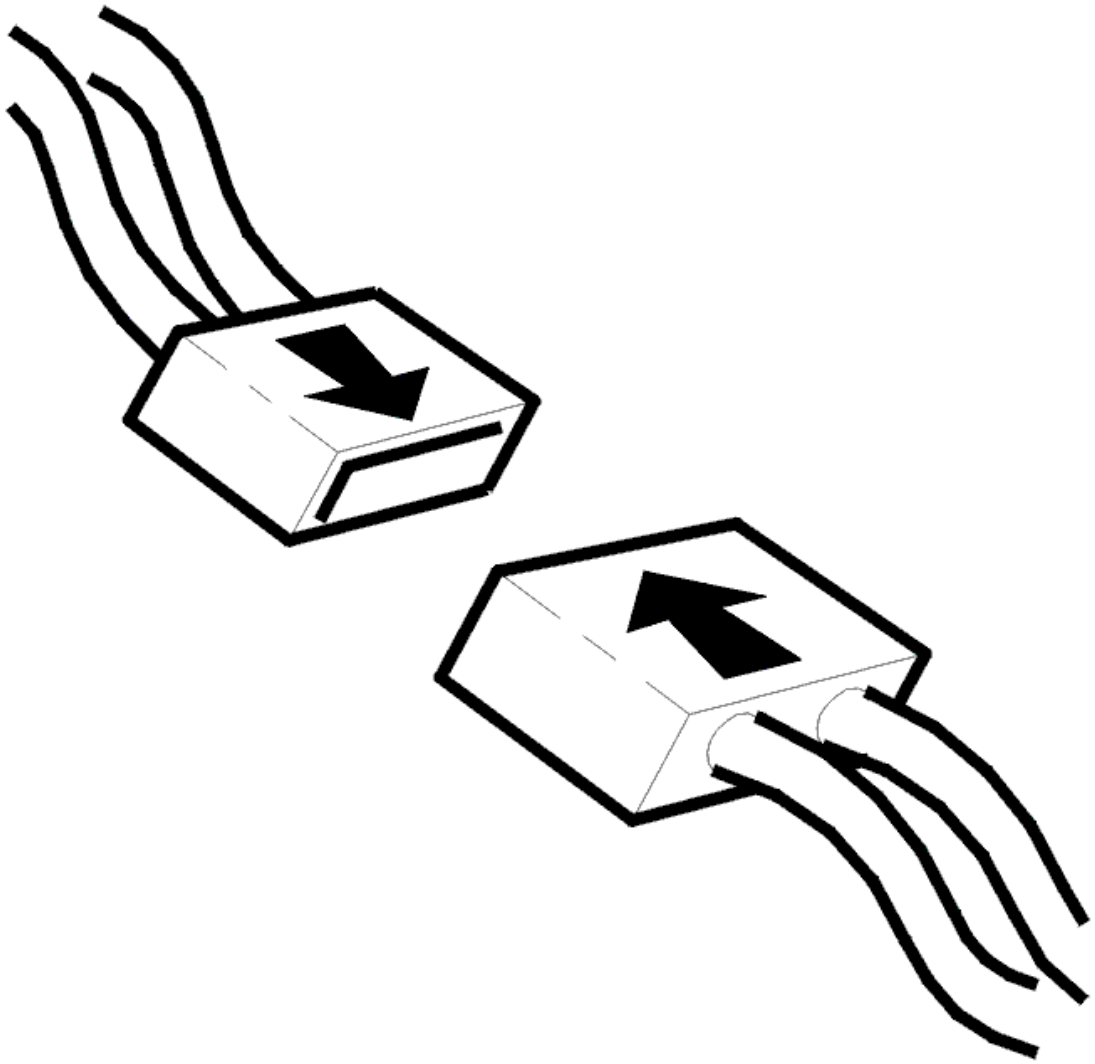

Fig. 231: Connecting Connector
Courtesy of VOLVO CARS CORPORATION

- Ignition off
- Reinstall the connectors, components etc.
- Ignition on.

  Read off the status using the VCT2000 (or appropriate scan tool).

  Activate and deactivate the function.

  Check that the function is OK.

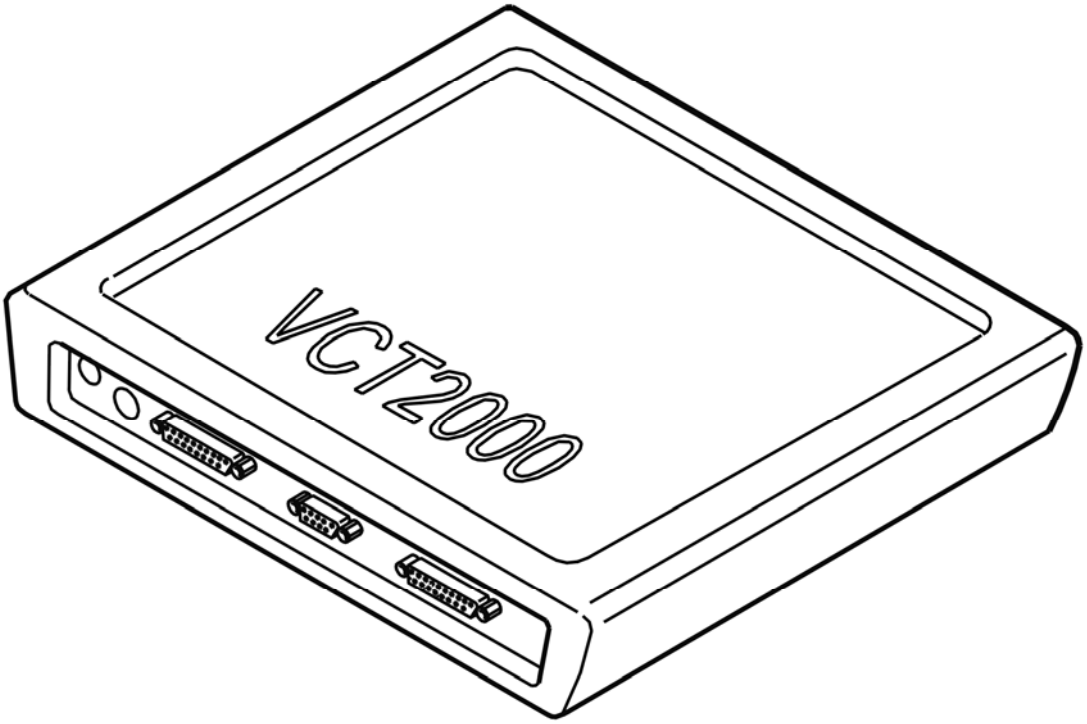

Fig. 232: Identifying VCT2000 Diagnostic Tool Symbol In VIDA
Courtesy of VOLVO CARS CORPORATION

Is the function OK?

- **YES**

  VERIFIED: Troubleshooting has been completed.

- **NO**

  Refer to **INFORMATION**

INFORMATION

FAULT-TRACING INFORMATION

The fault should have been detected and remedied. As this is not the case fault-tracing has failed.

Exit fault-tracing for this diagnostic trouble code (DTC) or make another attempt.

CEM-8F11: CEM HEADLAMP BEAM HEIGHT CONTROL. SIGNAL TOO HIGH (2005-2012)

DIAGNOSTIC TROUBLE CODE (DTC) INFORMATION CEM-8F11

Condition

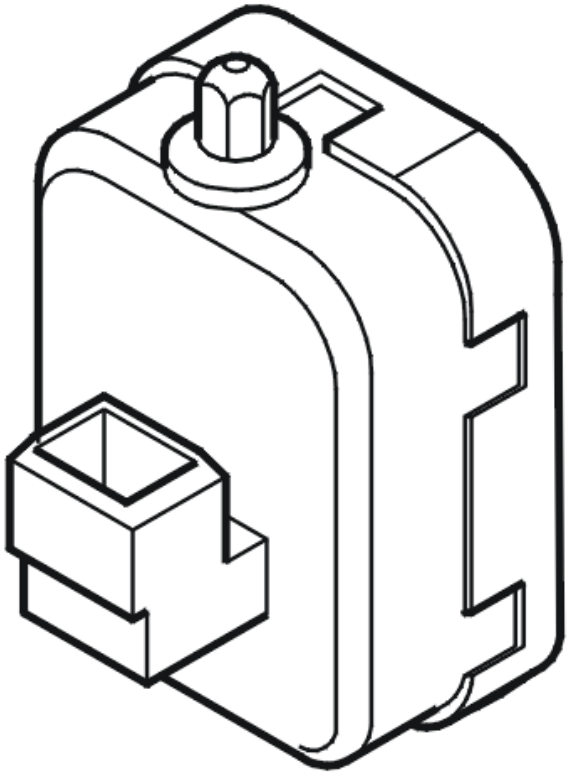

Fig. 233: Identifying Headlamp Beam Height Control Unit
Courtesy of VOLVO CARS CORPORATION

The central electronic module (CEM) checks the signal for the headlamp beam height control.

The diagnostic trouble code (DTC) is stored if the central electronic module (CEM) detects that the voltage to headlamp beam height control exceeds 90% of the supply voltage.

The diagnostic trouble code (DTC) can be diagnosed at ignition switch position II.

Substitute Value

- If the fault has been detected in 100 ignition cycles, the output is closed permanently until the diagnostic trouble code is erased (applies from structure week 200539).

Possible Source

- Damaged actuator motor for headlamp beam height control
- Short-circuit to supply voltage in signal cable.

Fault symptom[s]

- Incorrect setting for low beam.

SIGNAL TOO HIGH

CHECKING THE WIRING

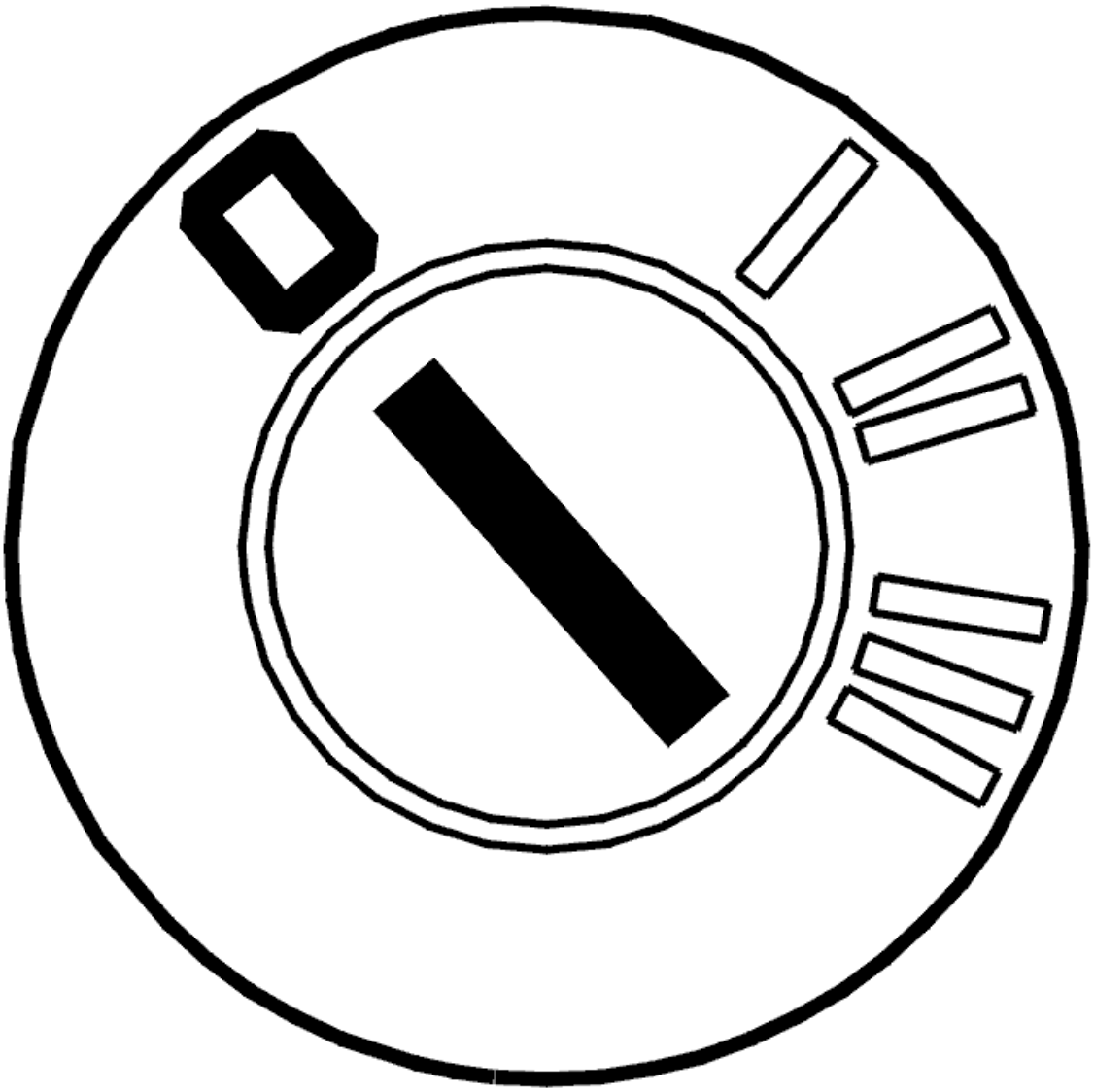

Fig. 234: Identifying Ignition OFF
Courtesy of VOLVO CARS CORPORATION

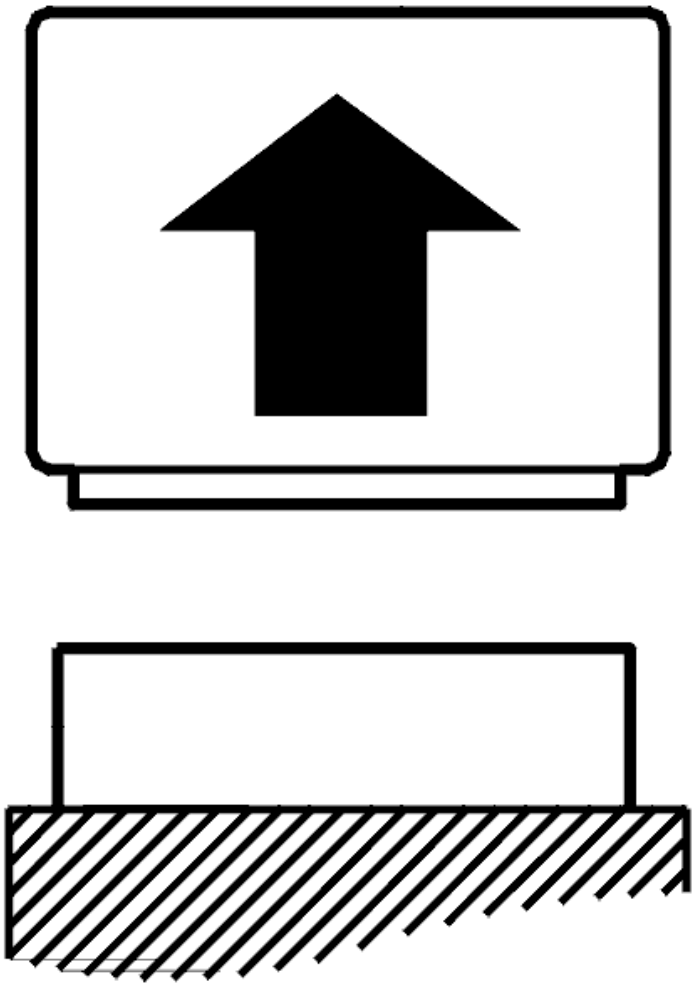

Fig. 235: Disconnecting Connector
Courtesy of VOLVO CARS CORPORATION

- Ignition off
- Disconnect central electronic module (CEM) connector C.

  Check the signal cable. Check for a short-circuit to supply voltage.

  Take readings between:

  - Central electronic module (CEM) terminal #C12 (#12) and left headlamp alignment motor terminal #2
  - Central electronic module (CEM) terminal #C11 (#11) and right headlamp alignment motor terminal #2.

If no fault was found, replace the actuator motor for headlamp beam height control.

Remedy as necessary.

Other information

- see **CONNECTING THE BREAKOUT BOX**
- -2004: **SIGNAL SPECIFICATION**
- 2005-: **SIGNAL SPECIFICATION**
- see **LOCATION OF COMPONENTS**
- see **SWITCHES LIGHTS, REPLACING**
- see **CHECKING WIRING AND TERMINALS**

- **Continue**

Refer to **VERIFICATION**

VERIFICATION

VERIFICATION

HINT: After carrying out the repair, check that the fault has been remedied.

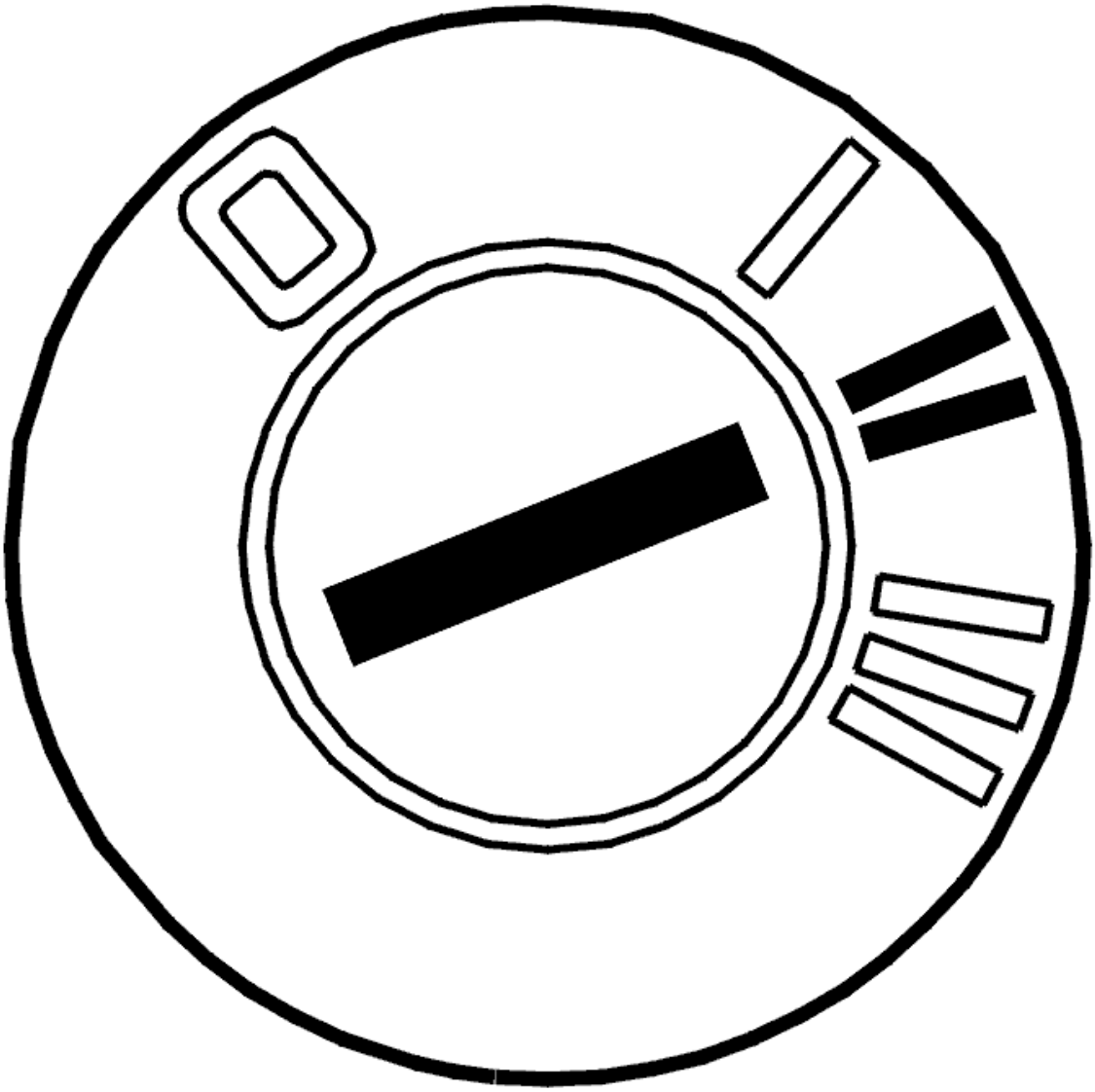

Fig. 236: Identifying Ignition ON
Courtesy of VOLVO CARS CORPORATION

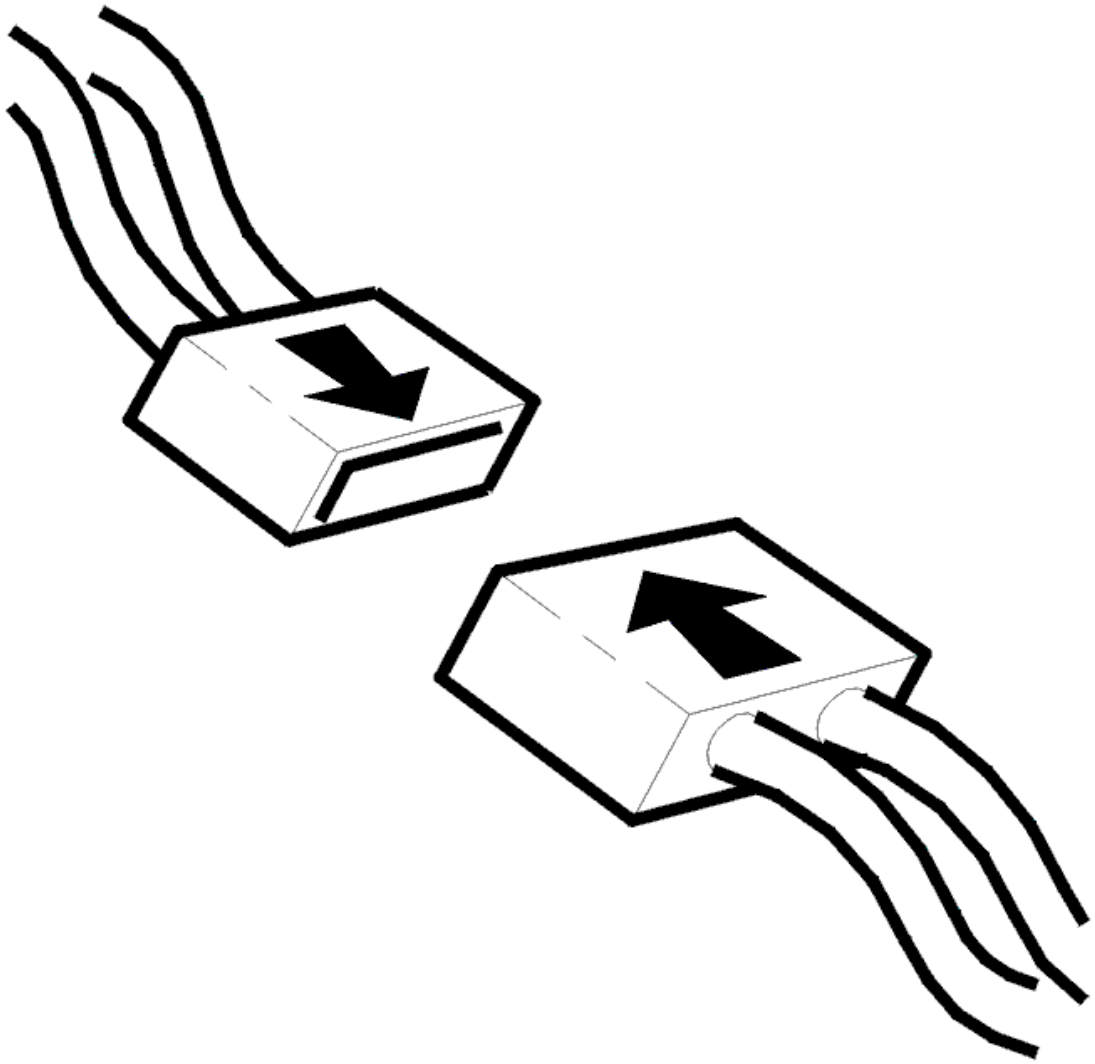

Fig. 237: Connecting Connector
Courtesy of VOLVO CARS CORPORATION

- Ignition off
- Reinstall the connectors, components etc.
- Ignition on.

  Adjust the beam length between maximum and minimum.

  Check that the beam length changes.

Does the beam length change?

- **YES**

VERIFIED: Troubleshooting has been completed.

- **NO**

  Refer to **INFORMATION**

INFORMATION

FAULT-TRACING INFORMATION

The fault should have been detected and remedied. As this is not the case fault-tracing has failed.

Exit fault-tracing for this diagnostic trouble code (DTC) or make another attempt.

CEM-8F11: LIGHT WIDTH CONTROL. SIGNAL TOO HIGH. INTERMITTENT FAULT (2003-2004)

DIAGNOSTIC TROUBLE CODE INFORMATION

Condition

If voltage in the lighting control exceeds 90% of the voltage in central electronic module (CEM), diagnostic trouble code CEM-8F11 is set.

Substitute Value

- None.

Possible Source

- Defective light width control actuator.
- Signal wire short circuited to voltage supply.

Fault symptom[s]

- Beam setting adjustment does not work.

SIGNAL TOO HIGH. INTERMITTENT FAULT

CHECKING THE WIRING

Check the wire between central electronic module #9A and light width control actuator 6/38 LH, and 6/39 RH actuator #2 for a short circuit to voltage supply as described in, see **SHORT-CIRCUIT TO SUPPLY VOLTAGE, INTERMITTENT FAULTS** .

Do the necessary corrective action

Additional information:

- For information on the central electronic module (CEM):
  - For -2004, see: **CENTRAL ELECTRONIC MODULE (CEM), REPLACING**
  - For 2005-, see: **CENTRAL ELECTRONIC MODULE (CEM), REPLACING** .

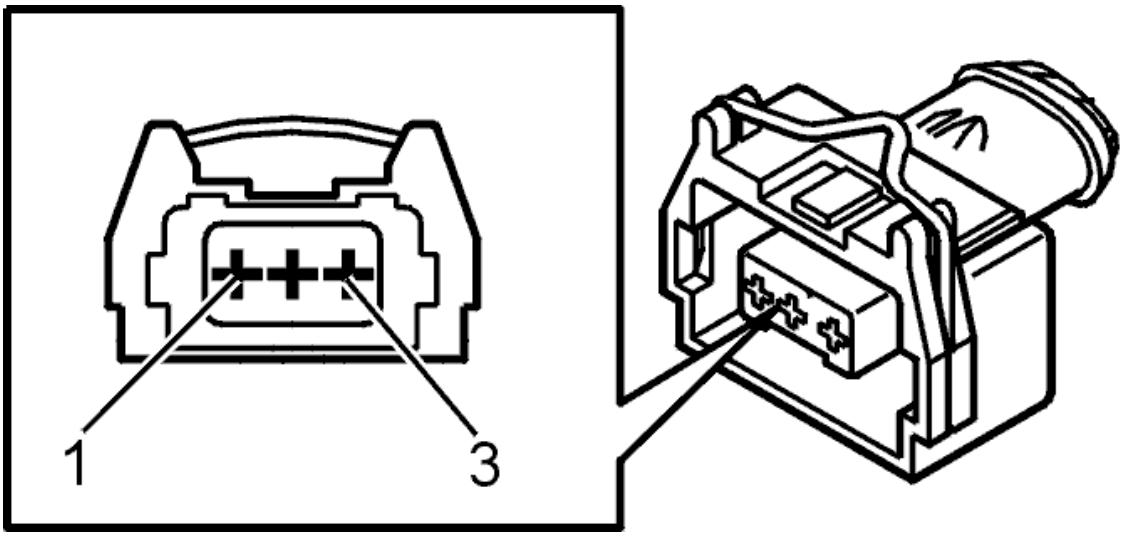

Fig. 238: Identifying Connector Terminals
Courtesy of VOLVO CARS CORPORATION

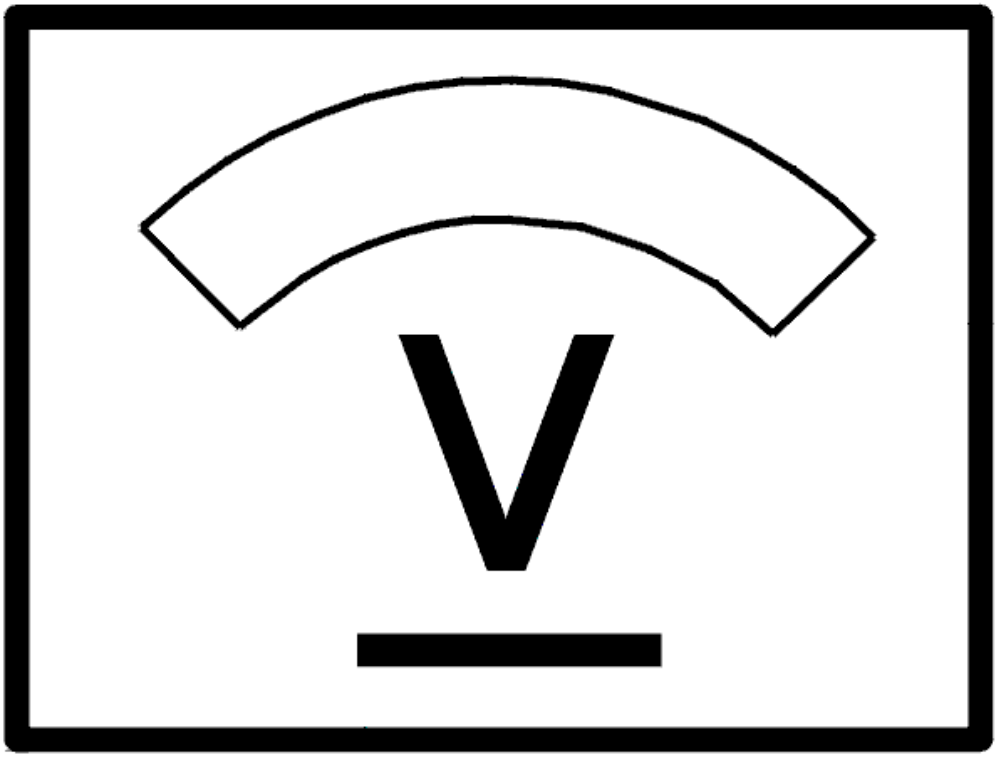

Fig. 239: Identifying Voltage Display
Courtesy of VOLVO CARS CORPORATION

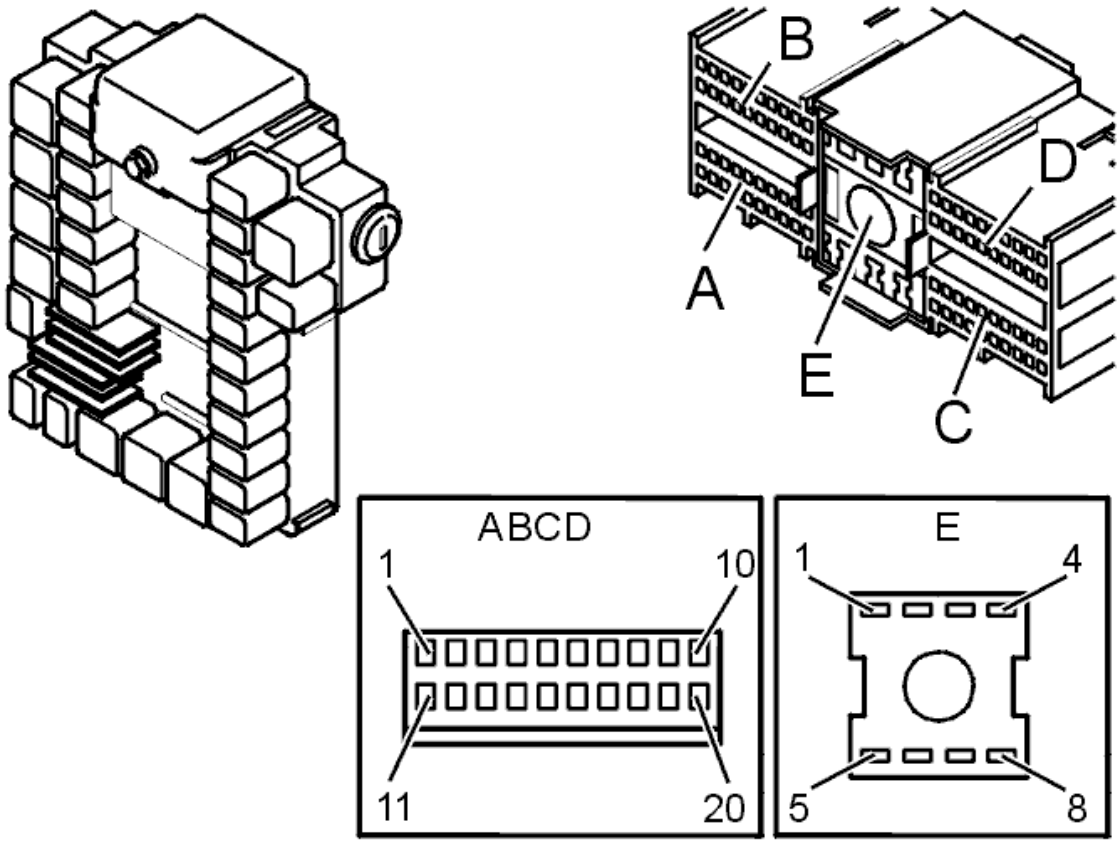

Fig. 240: Ground Terminals
Courtesy of VOLVO CARS CORPORATION

- **Continue**

  Refer to **INFORMATION**

INFORMATION

FAULT-TRACING INFORMATION

If the fault is intermittent, do not verify fault-tracing if the fault does not recur.

It is possible to view the information again, or leave fault-tracing for this diagnostic trouble code (DTC).

CEM-8F11: LIGHT WIDTH CONTROL. SIGNAL TOO HIGH. PERMANENT FAULT (2003-2004)

DIAGNOSTIC TROUBLE CODE INFORMATION

see **DIAGNOSTIC TROUBLE CODE INFORMATION**

SIGNAL TOO HIGH. PERMANENT FAULT

CHECKING THE WIRING

Check the wire between central electronic module #9A and light width control actuator 6/38 LH, and 6/39 RH actuator #2 for a short circuit to voltage supply as described in, see **SHORT-CIRCUIT TO SUPPLY VOLTAGE. PERMANENT FAULTS** .

Do the necessary corrective action

Additional information:

- For information on the central electronic module (CEM):
  - For -2004, see: **CENTRAL ELECTRONIC MODULE (CEM), REPLACING**
  - For 2005-, see: **CENTRAL ELECTRONIC MODULE (CEM), REPLACING** .

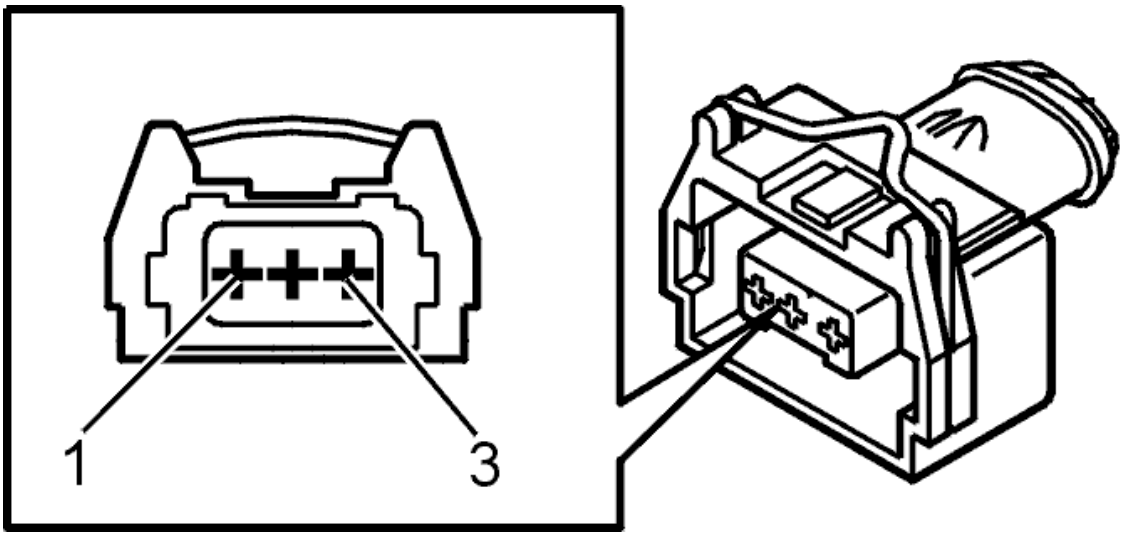

Fig. 241: Identifying Connector Terminals
Courtesy of VOLVO CARS CORPORATION

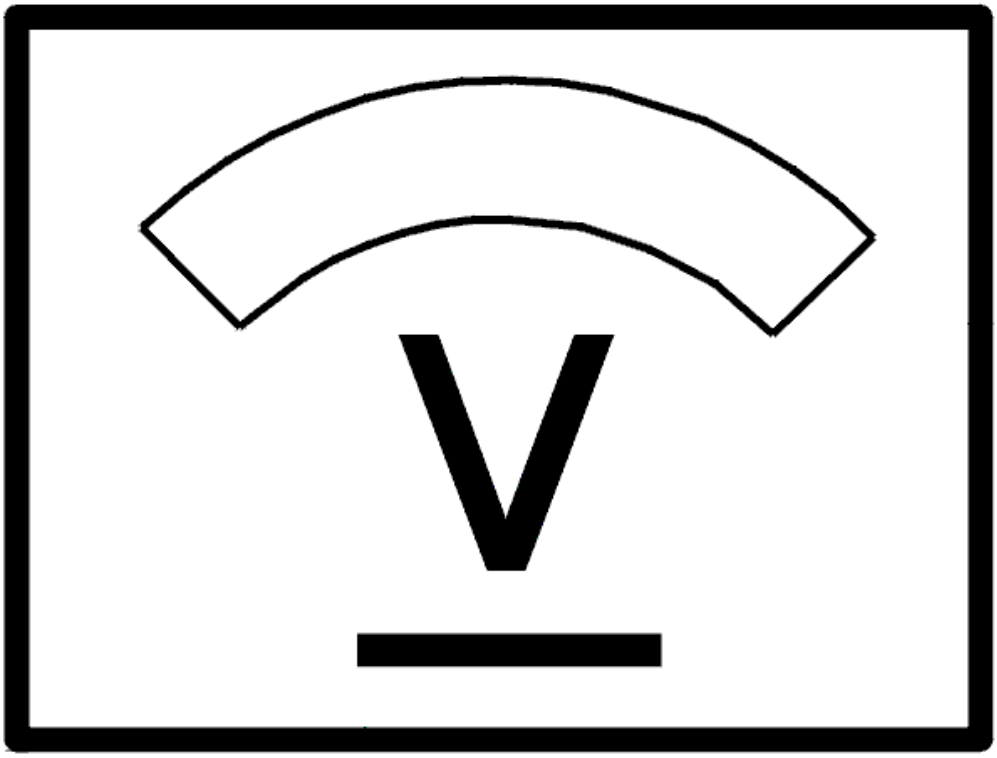

Fig. 242: Identifying Voltage Display
Courtesy of VOLVO CARS CORPORATION

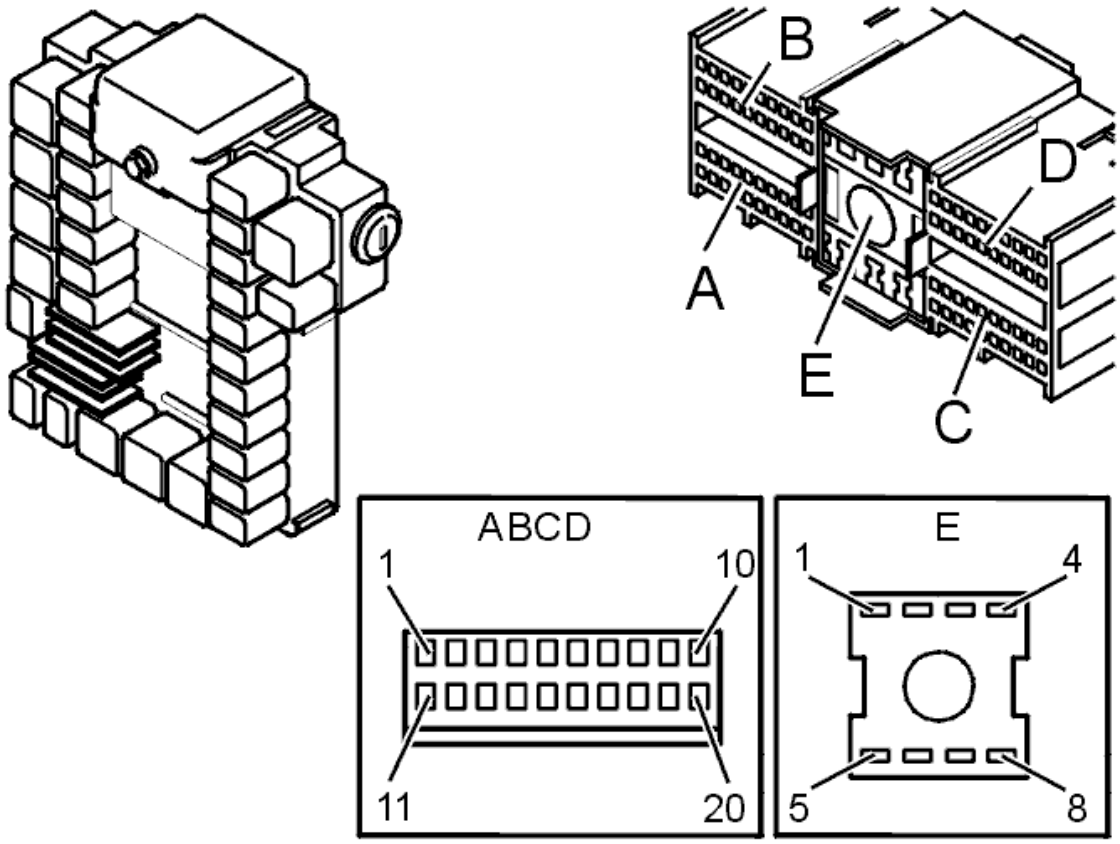

Fig. 243: Ground Terminals
Courtesy of VOLVO CARS CORPORATION

Is there a fault?

- **YES**

  Refer to **VERIFICATION**

- **NO**

  Refer to **INFORMATION**

VERIFICATION

VERIFICATION

HINT: After the repair it is necessary to check that the fault has been rectified.

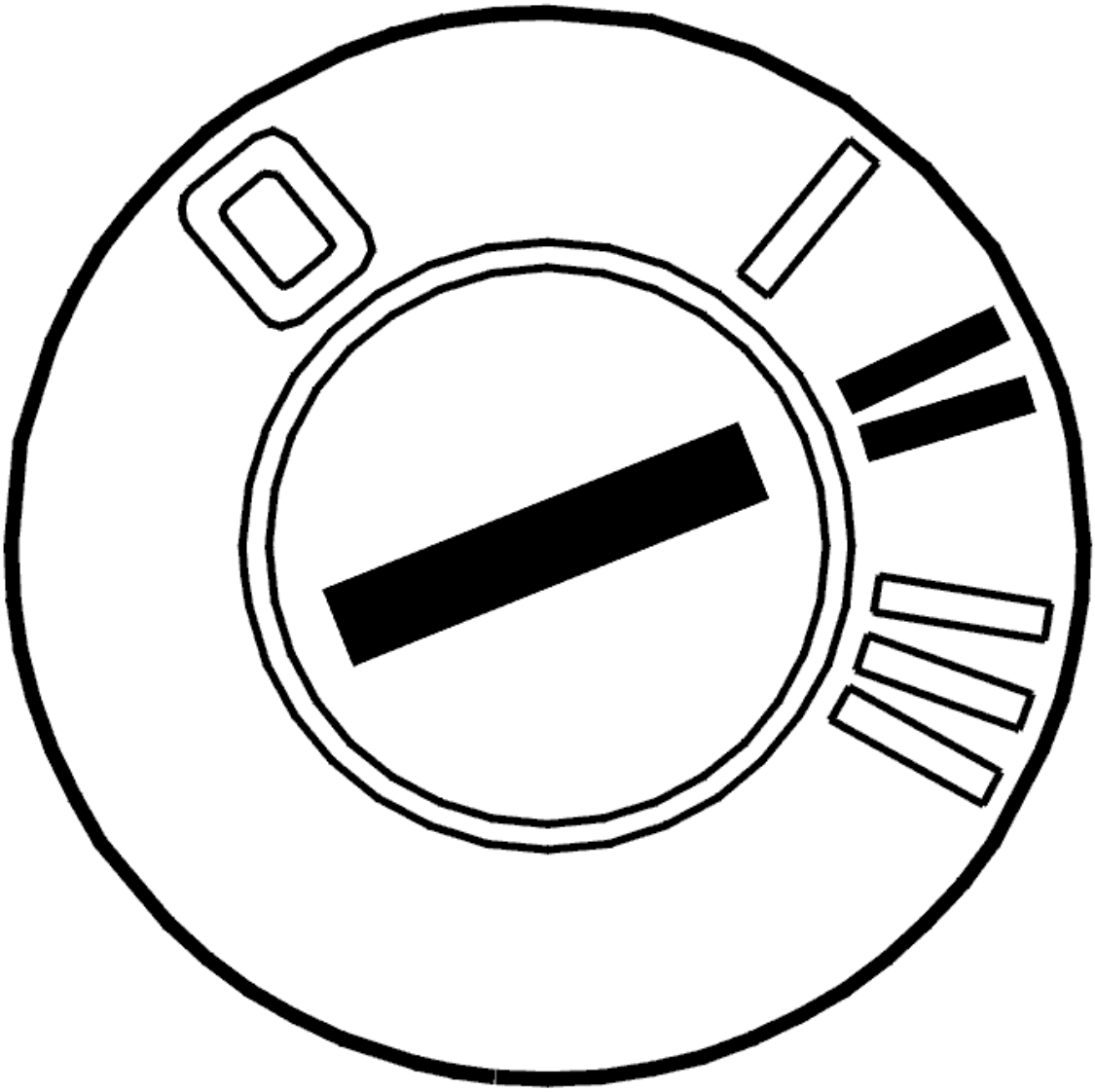

Fig. 244: Identifying Ignition ON
Courtesy of VOLVO CARS CORPORATION

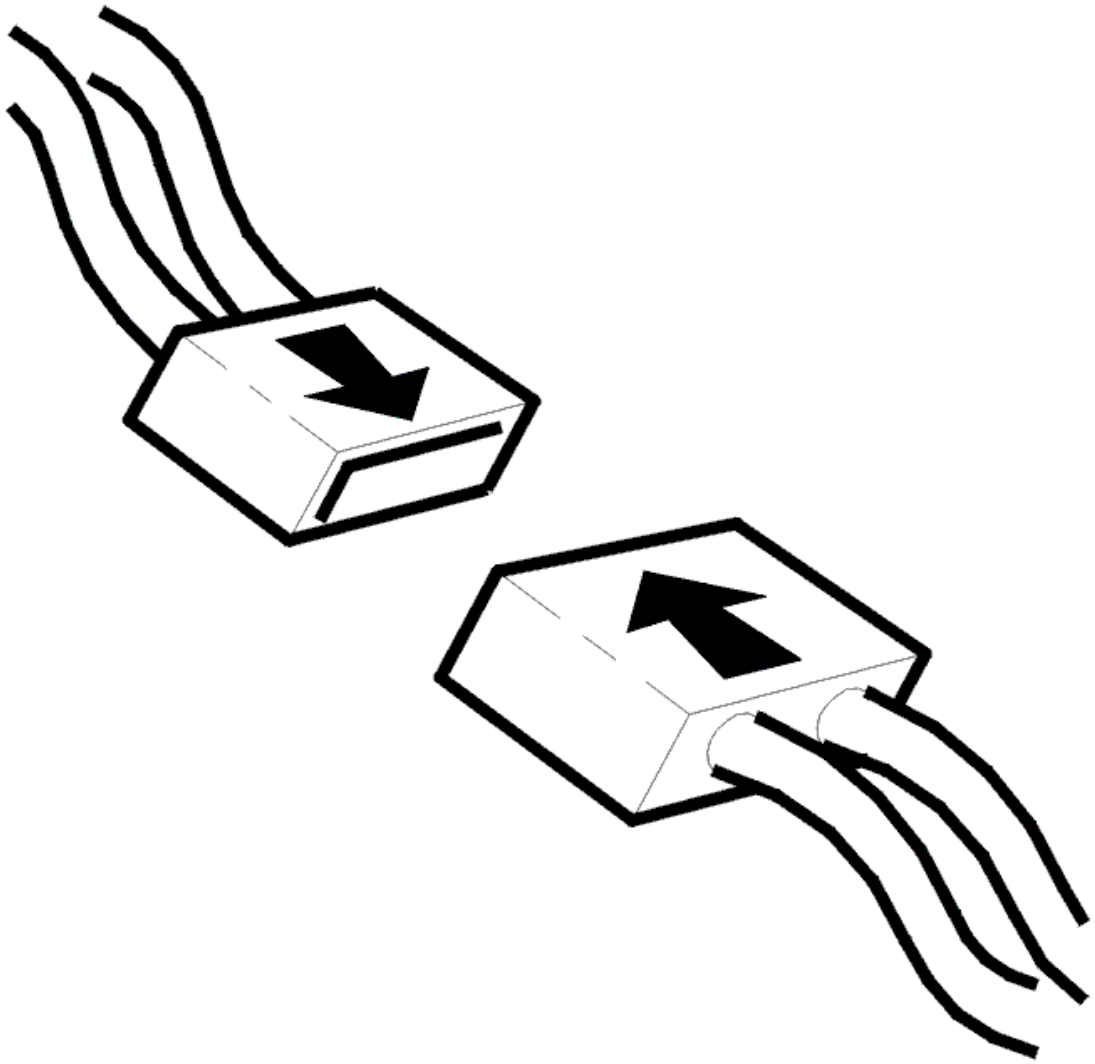

Fig. 245: Connecting Connector
Courtesy of VOLVO CARS CORPORATION

- Ignition off.
- Connect connectors, install components etc.
- Ignition on.

  Turn up and down and, see if the light changes.

Does it work?

- **YES**

  VERIFIED: Troubleshooting has been completed.

- **NO**

  Refer to **INFORMATION**

INFORMATION

FAULT-TRACING INFORMATION

The fault should have been detected and remedied. As this is not the case fault-tracing has failed.

Exit fault-tracing for this diagnostic trouble code (DTC) or make another attempt.

CEM-8F12: BEAM SETTING CONTROL. SIGNAL TOO LOW. INTERMITTENT FAULT (2003-2004)

DIAGNOSTIC TROUBLE CODE INFORMATION

Condition

If voltage in lighting control is less than 10% of voltage in central electronic module (CEM), diagnostic trouble code CEM-8F12 is set.

Substitute Value

- None.

Possible Source

- Defective beam setting control actuator.
- Defective contact.
- Open circuit in wire or short circuit to ground.

Fault symptom[s]

- Beam setting adjustment does not work.

SIGNAL TOO LOW. INTERMITTENT FAULT

CHECKING THE WIRES AND CONTACTS

Check wiring between central electronic module (CEM) #9A and beam setting control #2 (6/38) for LH and (6/39) for RH actuator, for an intermittent short circuit to ground, as described in, see **SHORT-CIRCUIT TO GROUND, INTERMITTENT FAULTS** .

Also check wiring between central electronic module (CEM) #8A and beam setting control #3 (6/38) for LH and (6/39) for RH actuator an for intermittent open circuit, as described in, see **OPEN-CIRCUIT,**

INTERMITTENT FAULTS .

Do the necessary corrective action

Additional information:

- For information on the central electronic module (CEM):
  - For -2004, see: **CENTRAL ELECTRONIC MODULE (CEM), REPLACING**
  - For 2005-, see: **CENTRAL ELECTRONIC MODULE (CEM), REPLACING** .

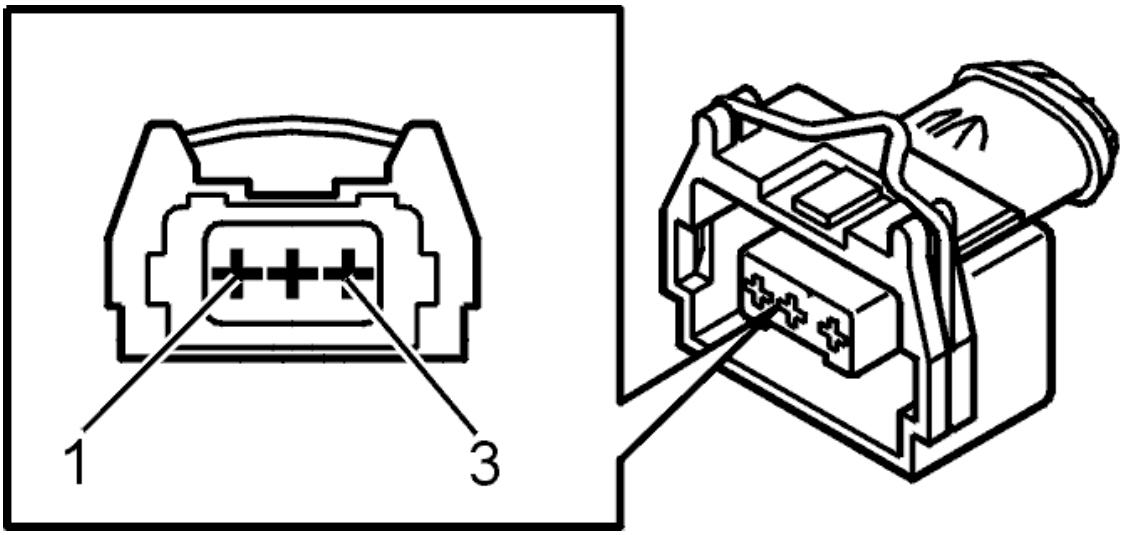

Fig. 246: Identifying Connector Terminals
Courtesy of VOLVO CARS CORPORATION

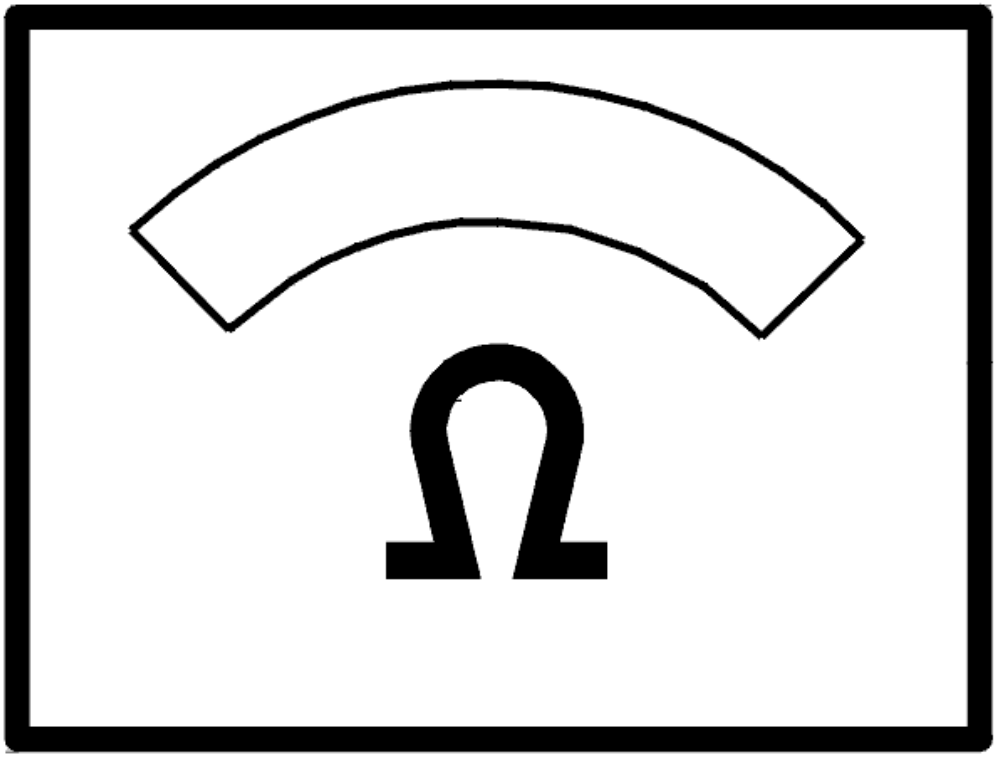

Fig. 247: Identifying Ohm Meter
Courtesy of VOLVO CARS CORPORATION

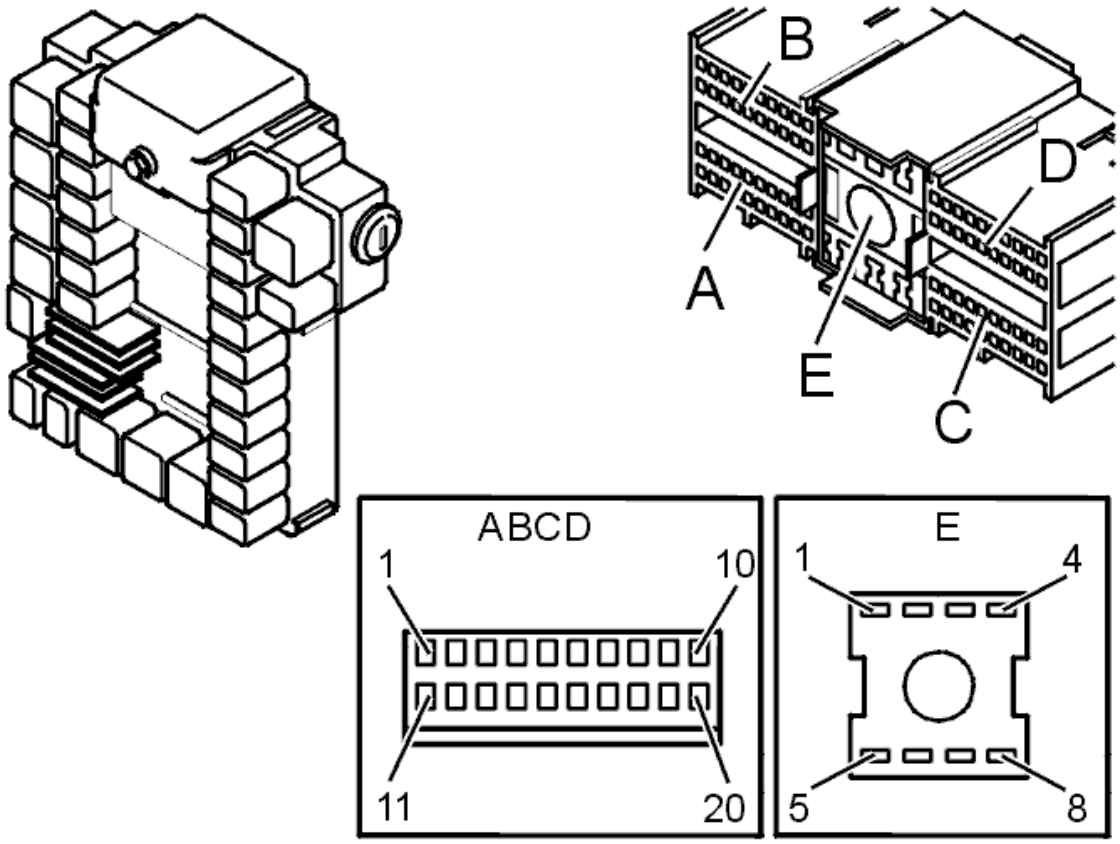

Fig. 248: Ground Terminals
Courtesy of VOLVO CARS CORPORATION

- **Continue**

  Refer to **INFORMATION**

INFORMATION

FAULT-TRACING INFORMATION

If the fault is intermittent, do not verify fault-tracing if the fault does not recur.

It is possible to view the information again, or leave fault-tracing for this diagnostic trouble code (DTC).

CEM-8F12: BEAM SETTING CONTROL. SIGNAL TOO LOW. PERMANENT FAULT (2003-2004)

DIAGNOSTIC TROUBLE CODE INFORMATION

see **DIAGNOSTIC TROUBLE CODE INFORMATION**

SIGNAL TOO LOW. PERMANENT FAULT

CHECKING COMPONENT AND CONTACTS

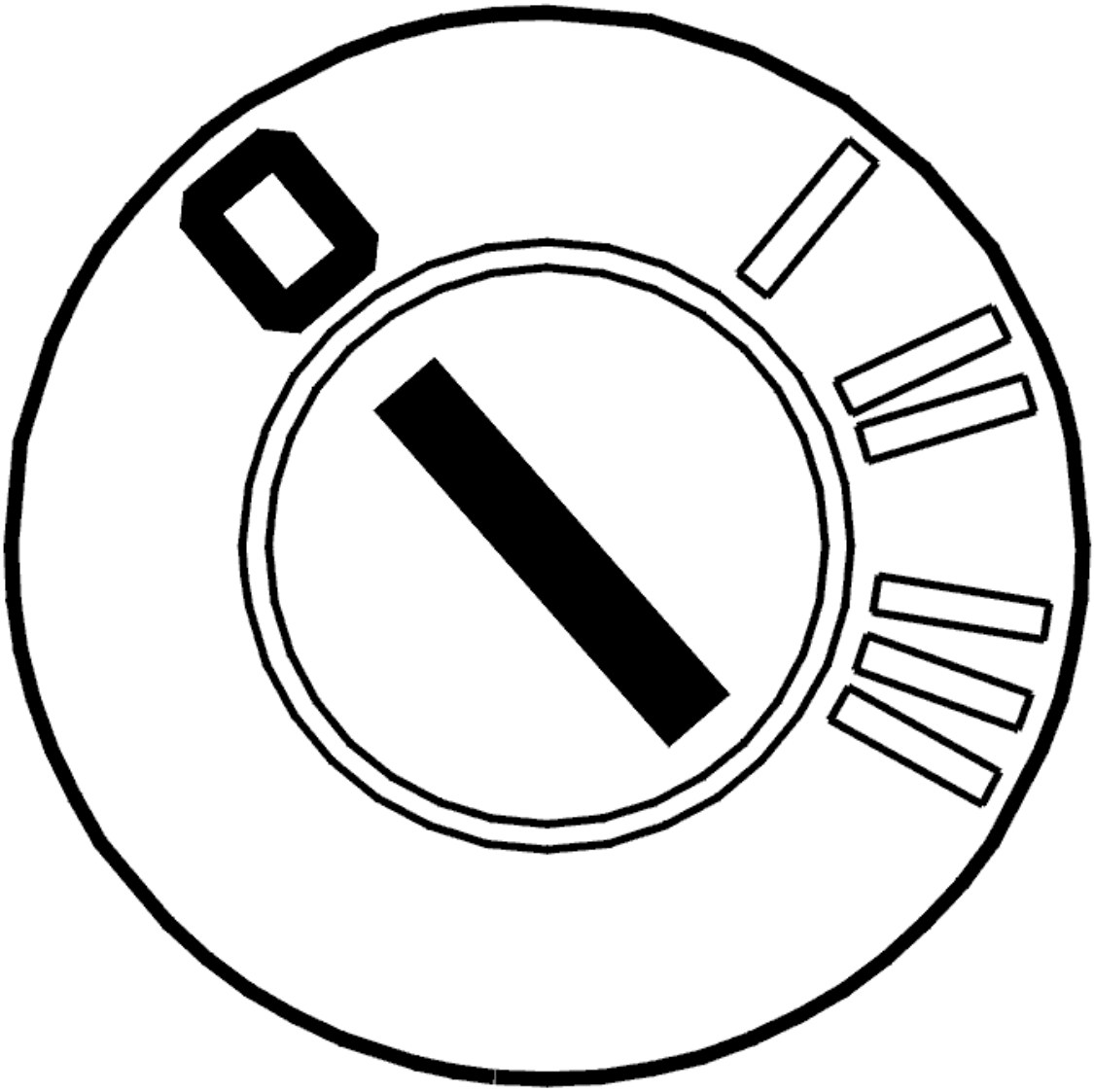

Fig. 249: Identifying Ignition OFF
Courtesy of VOLVO CARS CORPORATION

- Ignition off.
- Remove switch 6/38 for LH and 6/39 for RH actuator.

  Check connector for oxidation as described in, see **CONTACT RESISTANCE AND OXIDATION** .

  Also check connectors 54/4 and 54/3LG.

  Do the necessary corrective action.

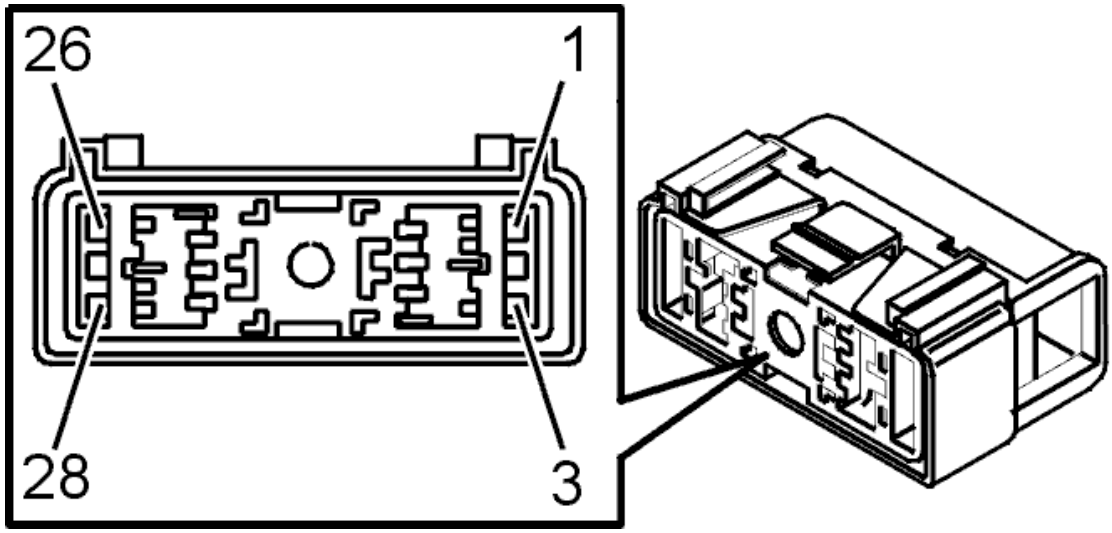

Fig. 250: Identifying Connector Terminals
Courtesy of VOLVO CARS CORPORATION

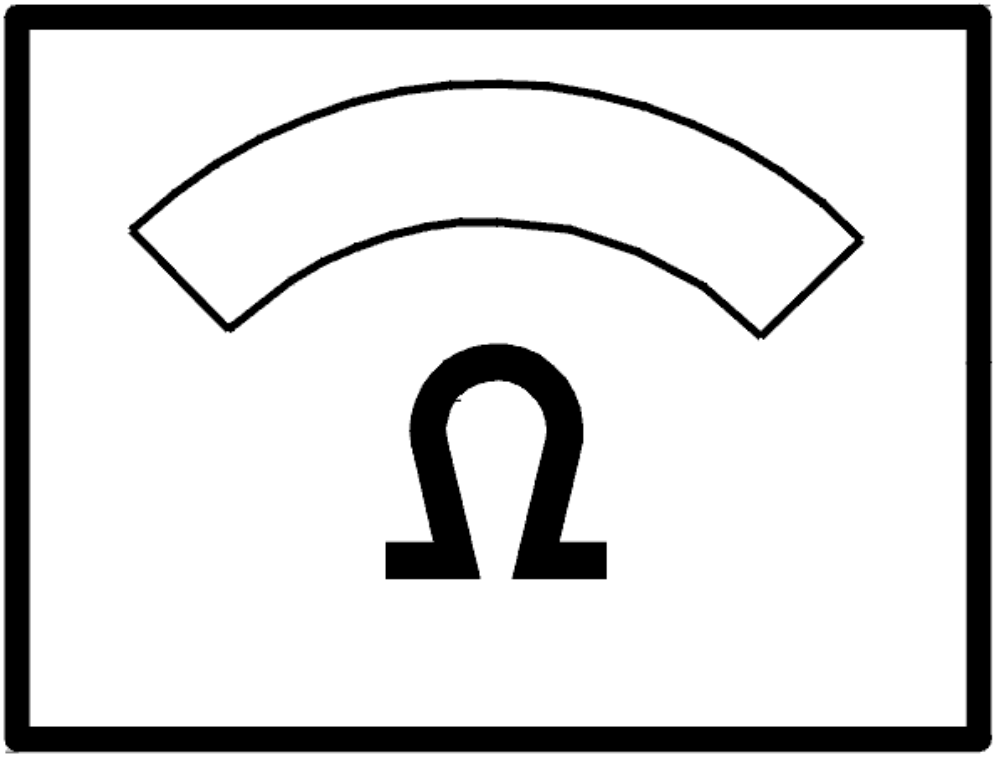

Fig. 251: Identifying Ohm Meter
Courtesy of VOLVO CARS CORPORATION

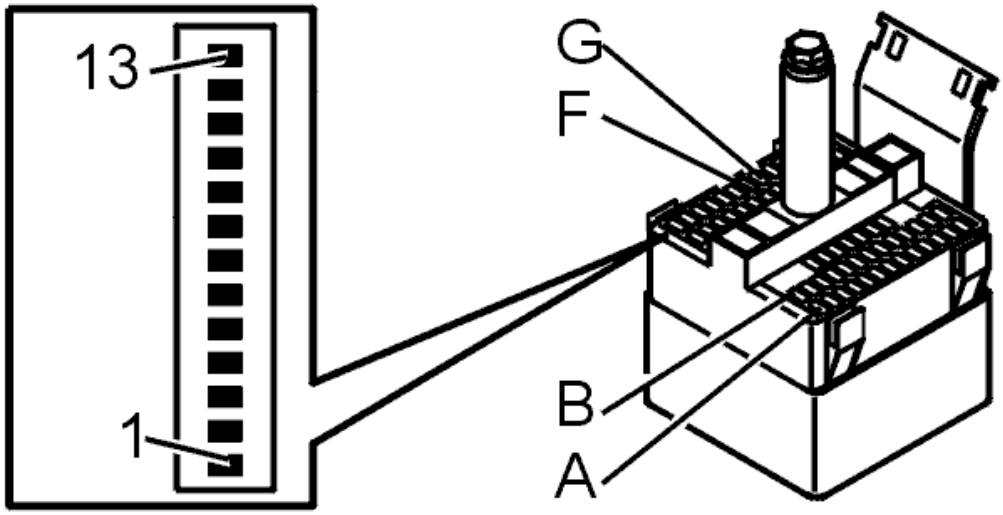

Fig. 252: Identifying Connector Terminals
Courtesy of VOLVO CARS CORPORATION

Is there a fault?

- **YES**

  Refer to **VERIFICATION**

- **NO**

  Refer to **CHECKING THE WIRING**

CHECKING THE WIRING

Check wiring between central electronic module (CEM) #9A and beam setting control module #2 (6/38) for LH and (6/39) for RH actuator, for short circuit to ground, as described in, see **SHORT-CIRCUIT TO GROUND, PERMANENT FAULTS** .

Check wiring between central electronic module (CEM) #9A and beam setting control #2 (6/38) for LH and (6/39) for RH actuator for an open circuit, as described in, see **OPEN-CIRCUIT, PERMANENT FAULTS** .

Do the necessary corrective action.

Additional information:

- For information on the central electronic module (CEM):
  - For -2004, see: **CENTRAL ELECTRONIC MODULE (CEM), REPLACING**
  - For 2005-, see: **CENTRAL ELECTRONIC MODULE (CEM), REPLACING** .

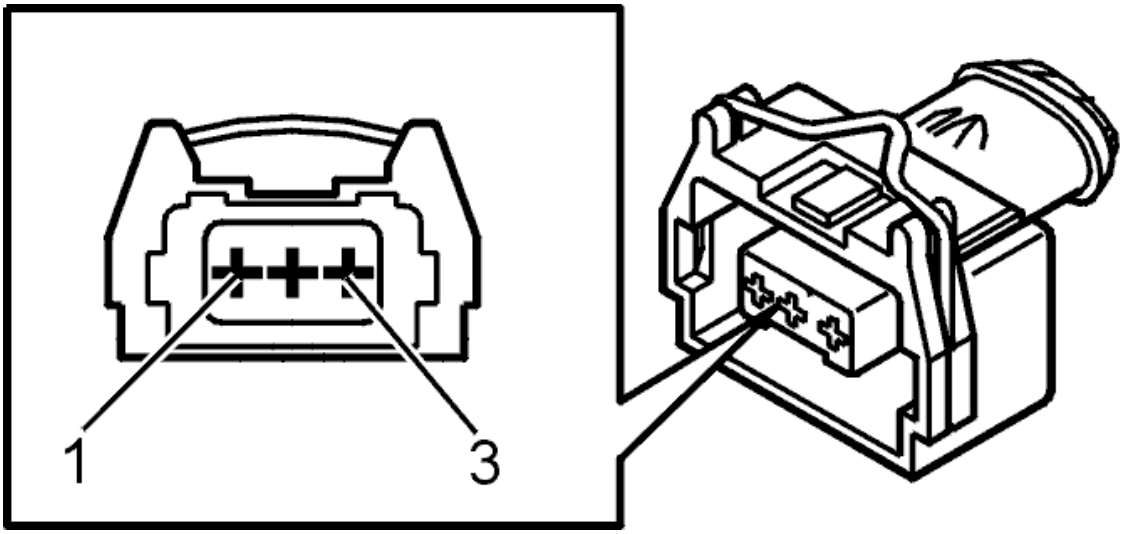

Fig. 253: Identifying Connector Terminals
Courtesy of VOLVO CARS CORPORATION

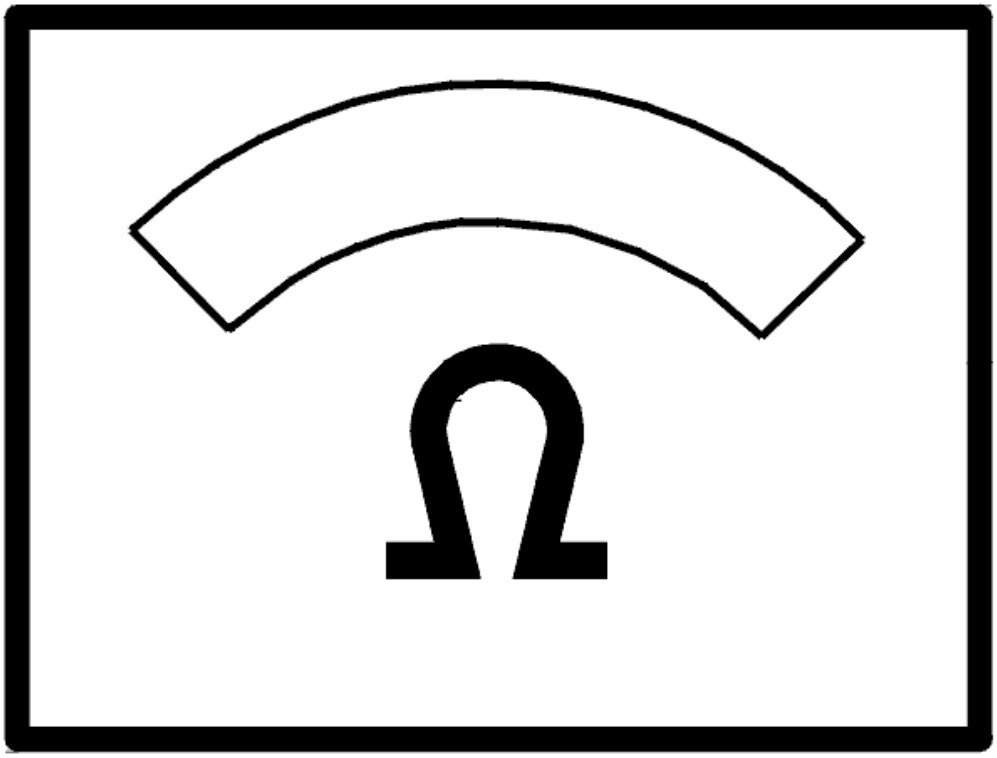

Fig. 254: Identifying Ohm Meter
Courtesy of VOLVO CARS CORPORATION

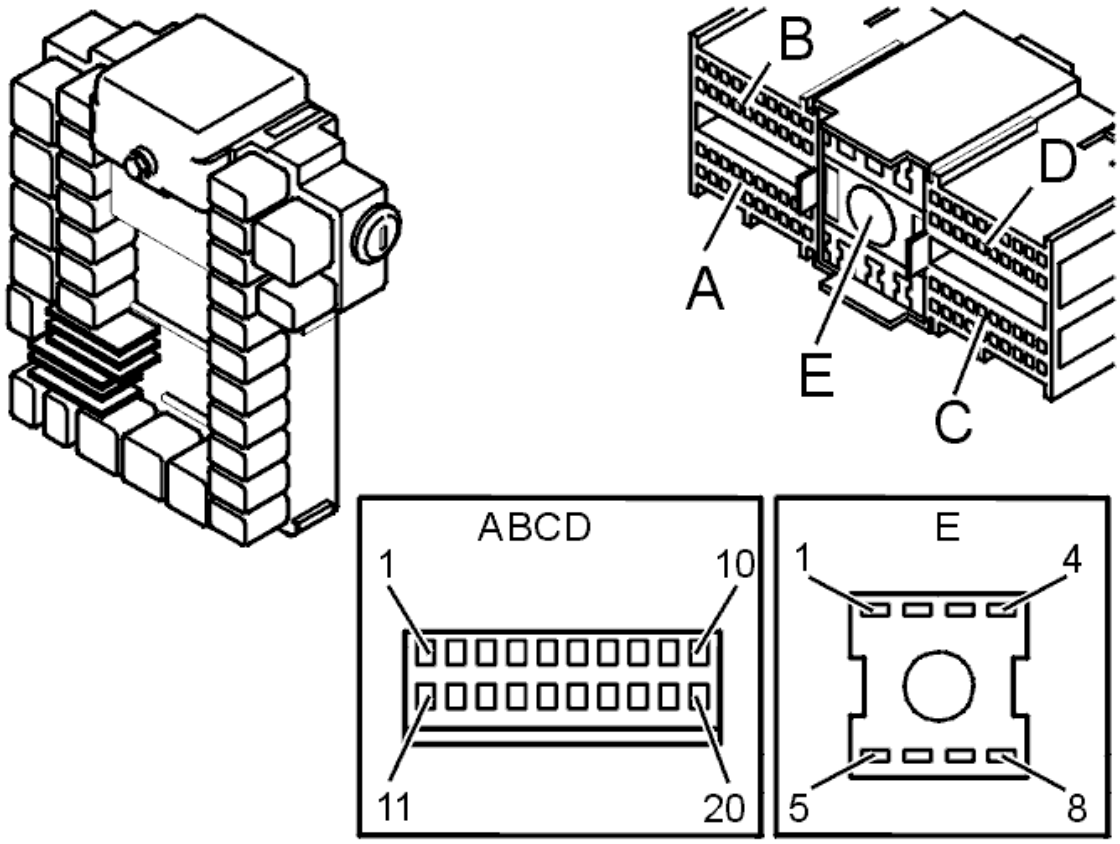

Fig. 255: Ground Terminals
Courtesy of VOLVO CARS CORPORATION

Is there a fault?

- **YES**

  Refer to **VERIFICATION**

- **NO**

  Refer to **INFORMATION**

VERIFICATION

VERIFICATION

HINT: After the repair it is necessary to check that the fault has been rectified.

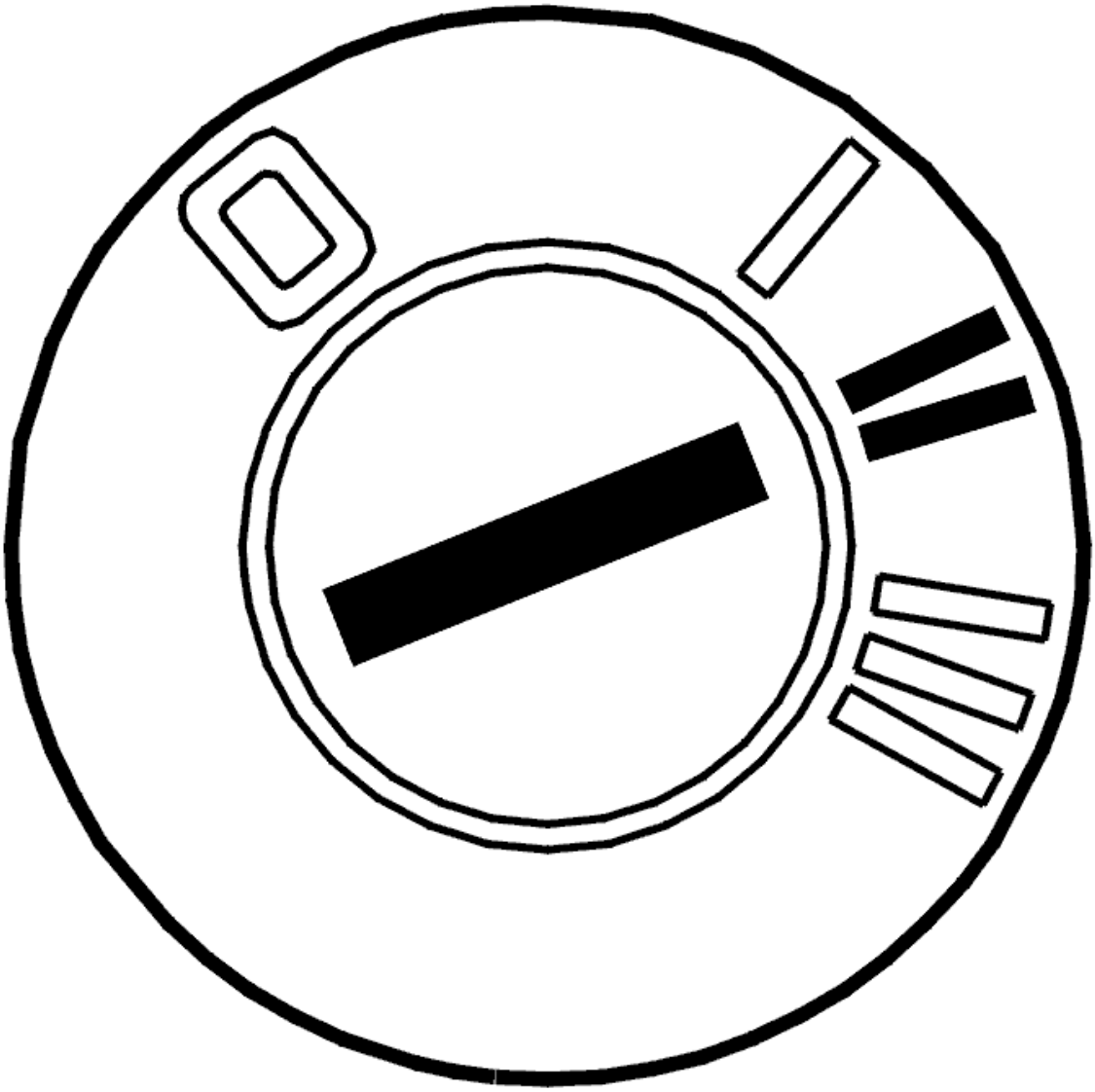

Fig. 256: Identifying Ignition ON
Courtesy of VOLVO CARS CORPORATION

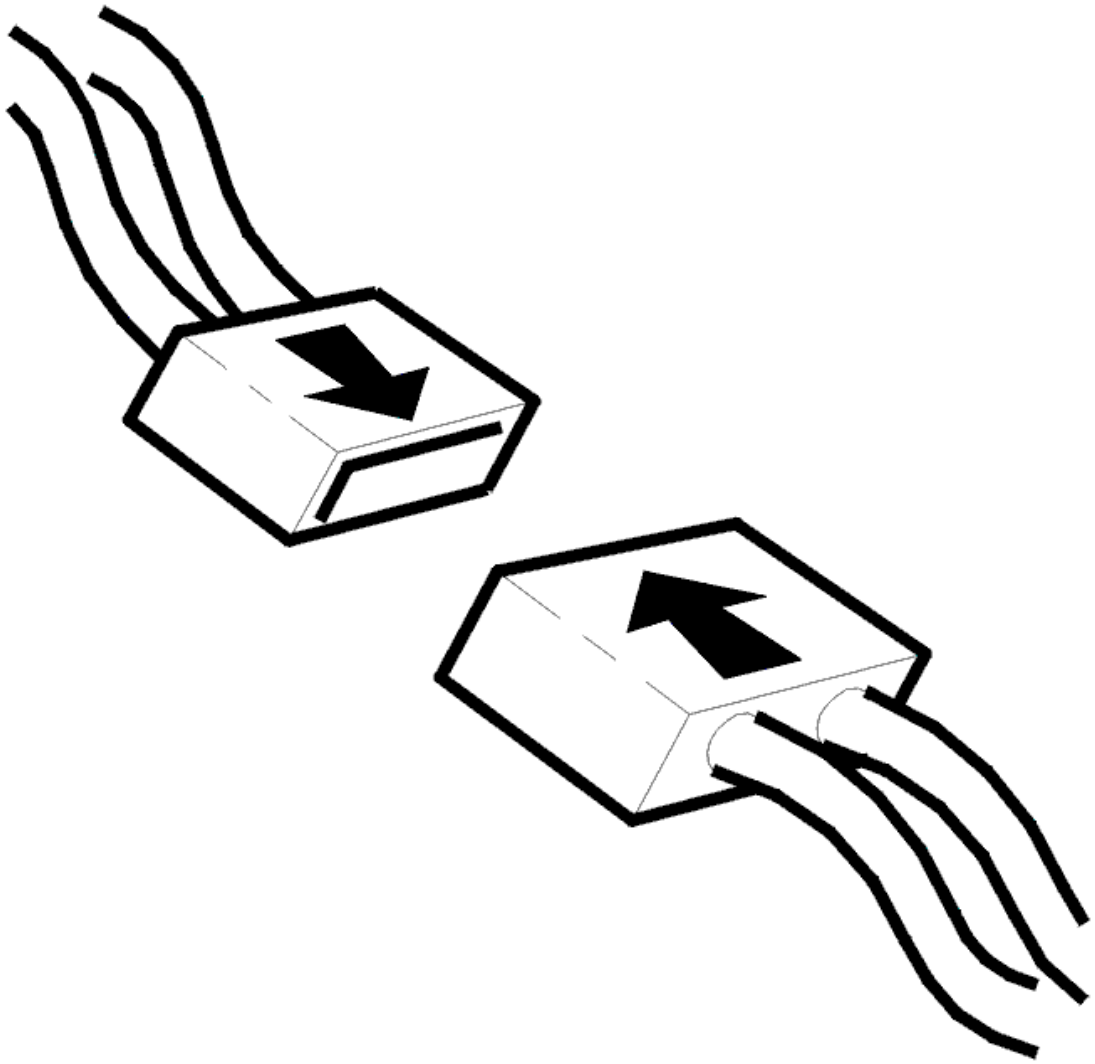

Fig. 257: Connecting Connector
Courtesy of VOLVO CARS CORPORATION

- Ignition off.
- Connect connectors, install components etc.
- Ignition on.

  Turn up and down and, see if the light changes.

Does it work?

- **YES**

  VERIFIED: Troubleshooting has been completed.

- **NO**

  Refer to **INFORMATION**

INFORMATION

FAULT-TRACING INFORMATION

The fault should have been detected and remedied. As this is not the case fault-tracing has failed.

Exit fault-tracing for this diagnostic trouble code (DTC) or make another attempt.

CEM-8F12: CEM HEADLAMP BEAM HEIGHT CONTROL. SIGNAL TOO LOW (2005-2012)

DIAGNOSTIC TROUBLE CODE (DTC) INFORMATION CEM-8F12

Condition

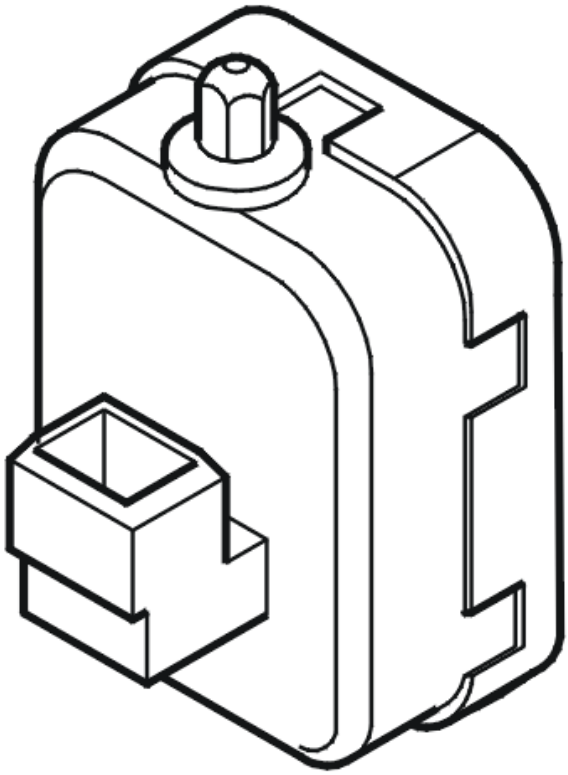

Fig. 258: Identifying Headlamp Beam Height Control Unit
Courtesy of VOLVO CARS CORPORATION

The central electronic module (CEM) checks the signal for the headlamp beam height control.

The diagnostic trouble code (DTC) is stored if the central electronic module (CEM) detects that the voltage to the headlamp beam height control is below 10% of the supply voltage.

The diagnostic trouble code (DTC) can be diagnosed at ignition switch position II.

Substitute Value

- None.

Possible Source

- Damaged actuator motor for headlamp beam height control
- Open-circuit in the cable or short-circuit to ground.

Fault symptom[s]

- Incorrect setting for low beam.

SIGNAL TOO LOW

CHECKING THE WIRING

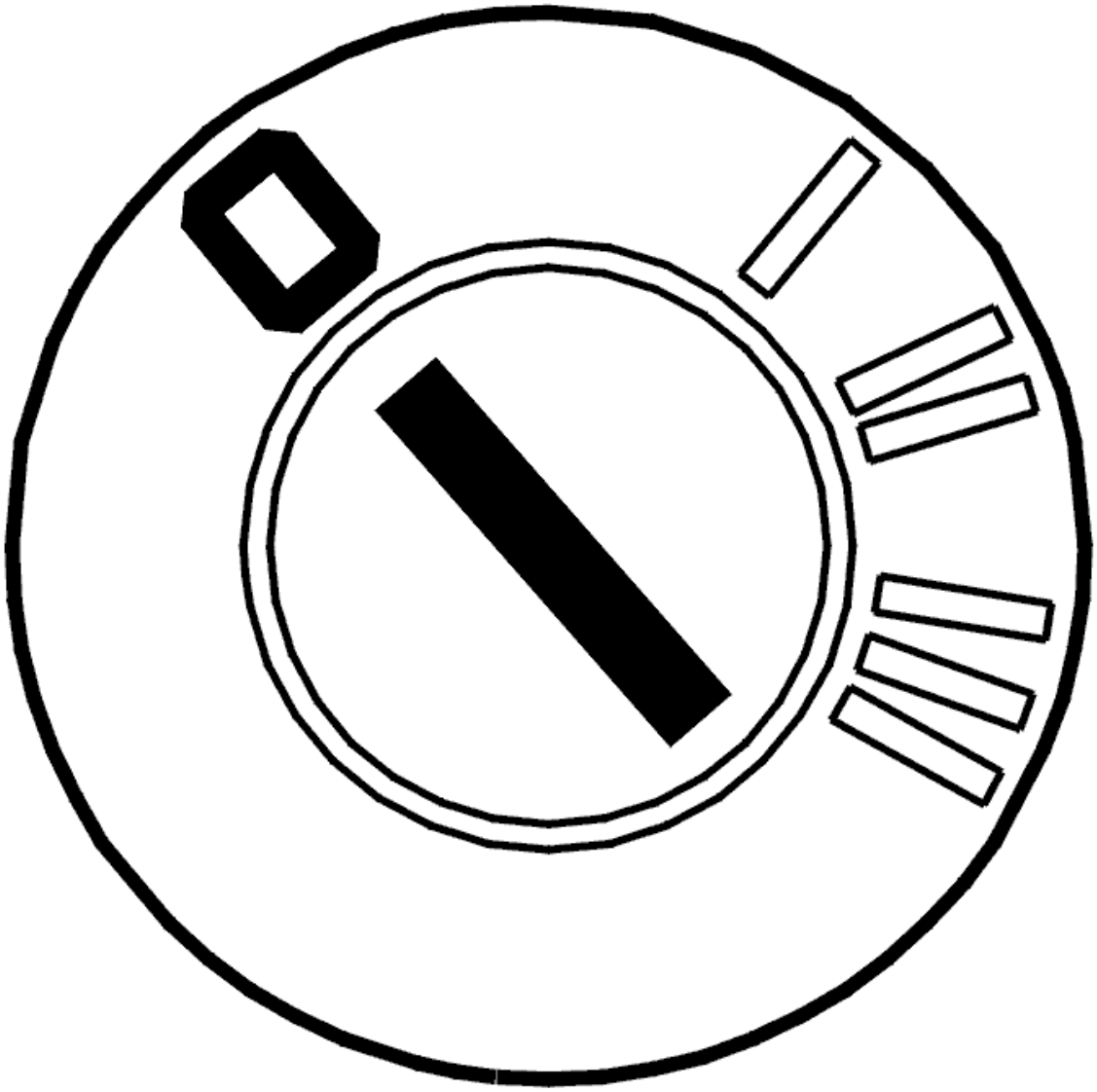

Fig. 259: Identifying Ignition OFF
Courtesy of VOLVO CARS CORPORATION

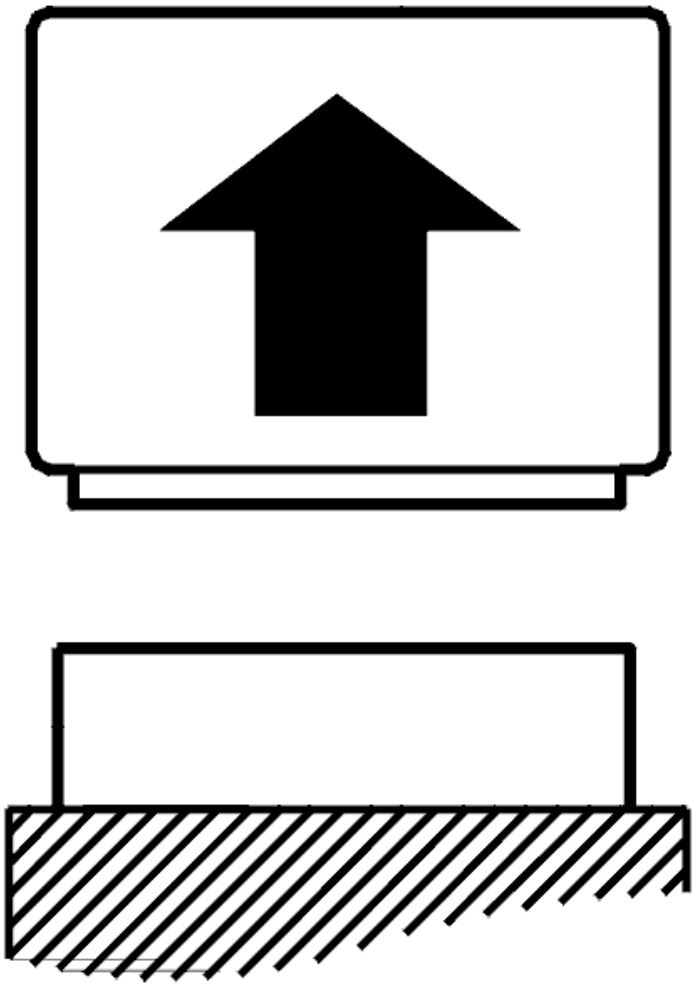

Fig. 260: Disconnecting Connector
Courtesy of VOLVO CARS CORPORATION

- Ignition off
- Disconnect central electronic module (CEM) connector C.

  Check the signal cable. Check for an open-circuit. Check for a short-circuit to ground.

  Take readings between:

  - Central electronic module (CEM) terminal #C12 (#12) and left headlamp alignment motor terminal #2
  - Central electronic module (CEM) terminal #C11 (#11) and right headlamp alignment motor terminal #2.

If no fault was found, replace the actuator motor for headlamp beam height control.

Remedy as necessary.

Other information

- see **CONNECTING THE BREAKOUT BOX**
- -2004: **SIGNAL SPECIFICATION**
- 2005-: **SIGNAL SPECIFICATION**
- see **LOCATION OF COMPONENTS**
- see **SWITCHES LIGHTS, REPLACING**
- see **CHECKING WIRING AND TERMINALS**

- **Continue**

Refer to **VERIFICATION**

VERIFICATION

VERIFICATION

HINT: After carrying out the repair, check that the fault has been remedied.

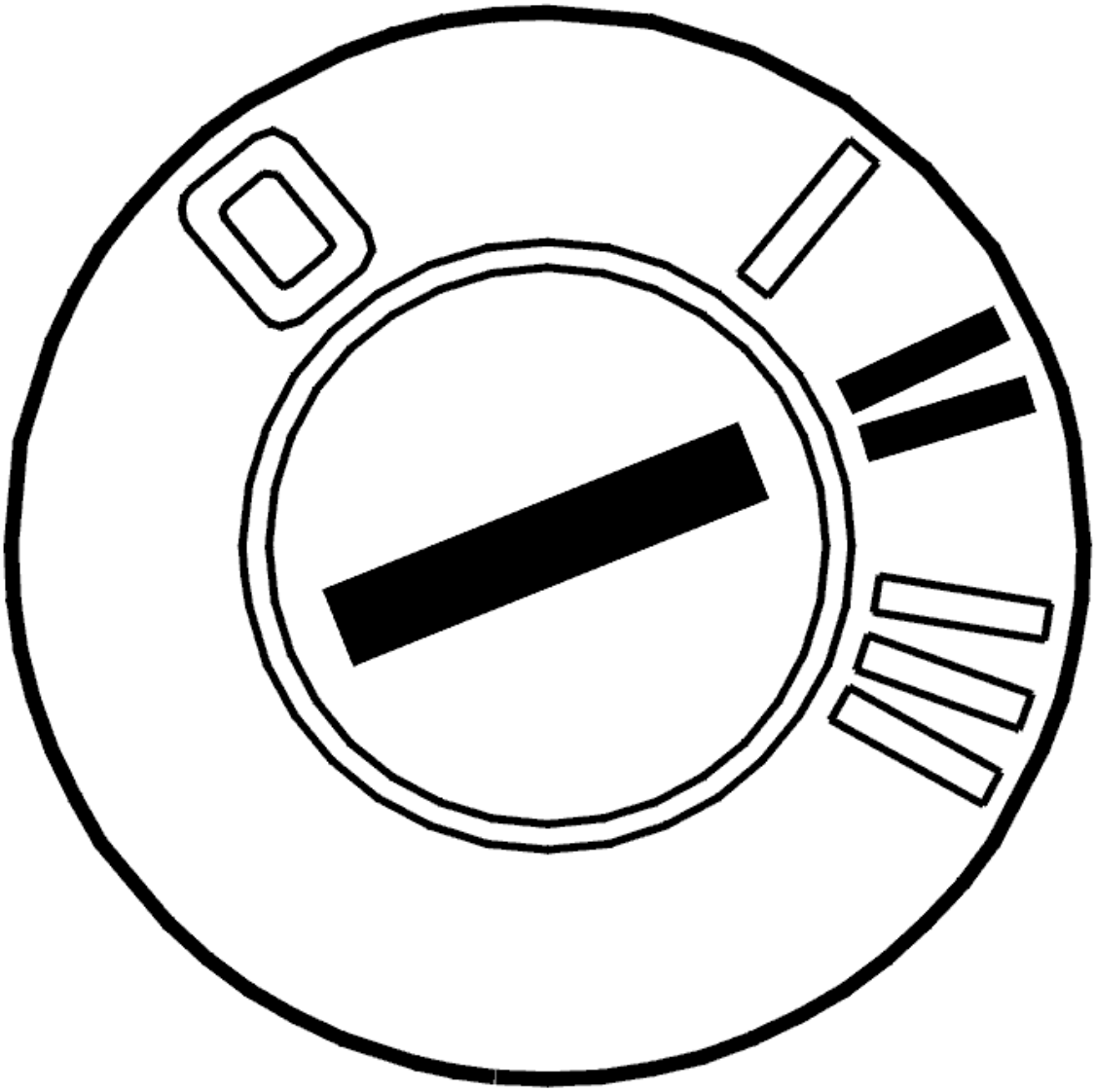

Fig. 261: Identifying Ignition ON
Courtesy of VOLVO CARS CORPORATION

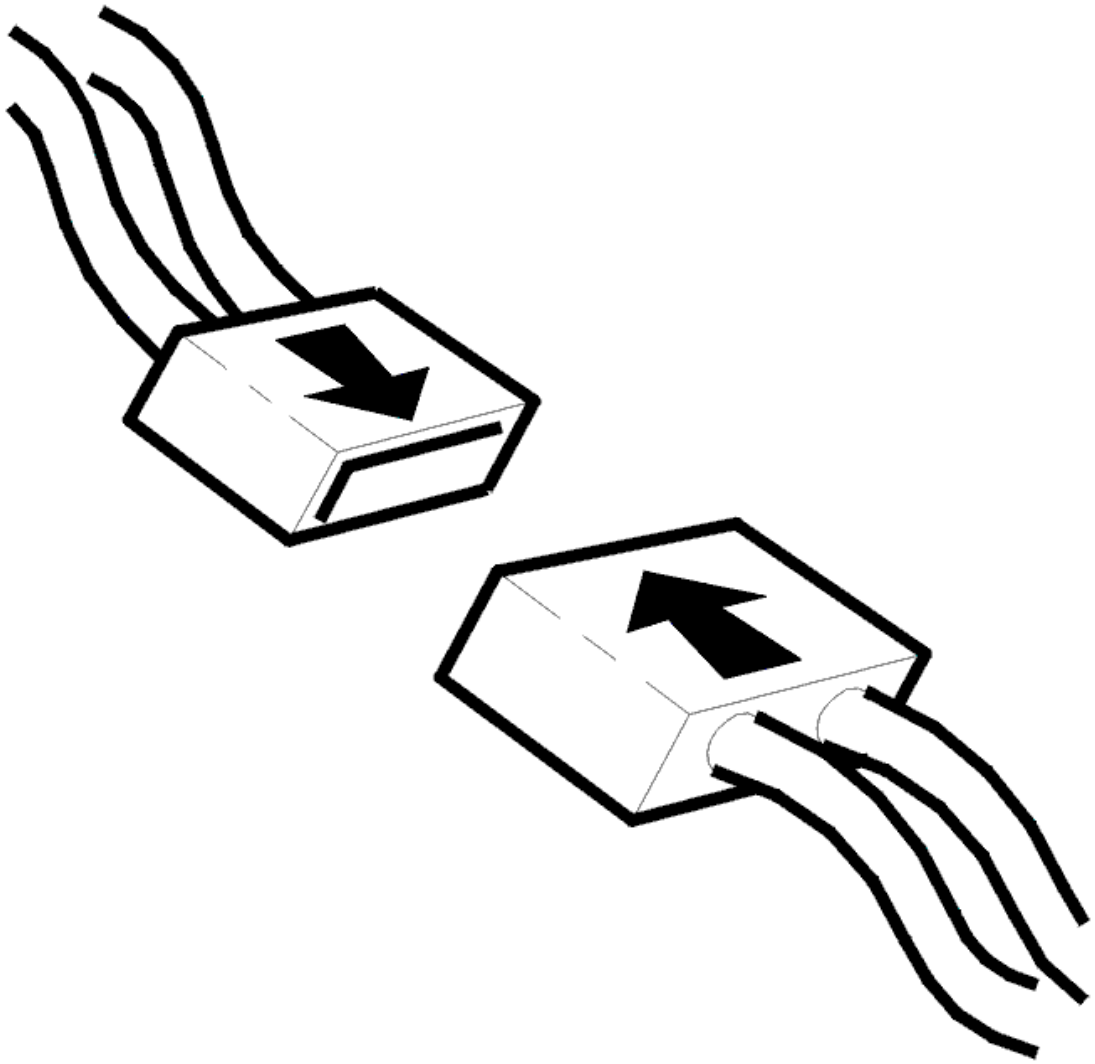

Fig. 262: Connecting Connector
Courtesy of VOLVO CARS CORPORATION

- Ignition off
- Reinstall the connectors, components etc.
- Ignition on.

  Adjust the beam length between maximum and minimum.

  Check that the beam length changes.

Does the beam length change?

- **YES**

VERIFIED: Troubleshooting has been completed.

- **NO**

  Refer to **INFORMATION**

INFORMATION

FAULT-TRACING INFORMATION

The fault should have been detected and remedied. As this is not the case fault-tracing has failed.

Exit fault-tracing for this diagnostic trouble code (DTC) or make another attempt.

CEM-8F13: LIGHT WIDTH CONTROL. SIGNAL TOO HIGH. INTERMITTENT FAULT (2003-2004)

DIAGNOSTIC TROUBLE CODE INFORMATION

Condition

If the voltage in the central electronic module (CEM) exceeds 10 V for at least 1 second, diagnostic trouble code CEM-8F13 is set.

Substitute Value

- None.

Possible Source

- Defective light switch module (LSM).
- Signal wire short circuited to voltage supply.

Fault symptom[s]

- Beam setting adjustment does not work.

SIGNAL TOO HIGH. INTERMITTENT FAULT

CHECKING SIGNAL WIRES

Check the wire between light switch module (LSM) #3 (3/111) and central electronic module #18A for a short circuit to voltage supply as described in, see **SHORT-CIRCUIT TO SUPPLY VOLTAGE, INTERMITTENT FAULTS** .

Additional information:

- For information on the central electronic module (CEM):
  - For -2004, see: **CENTRAL ELECTRONIC MODULE (CEM), REPLACING**
  - For 2005-, see: **CENTRAL ELECTRONIC MODULE (CEM), REPLACING** .

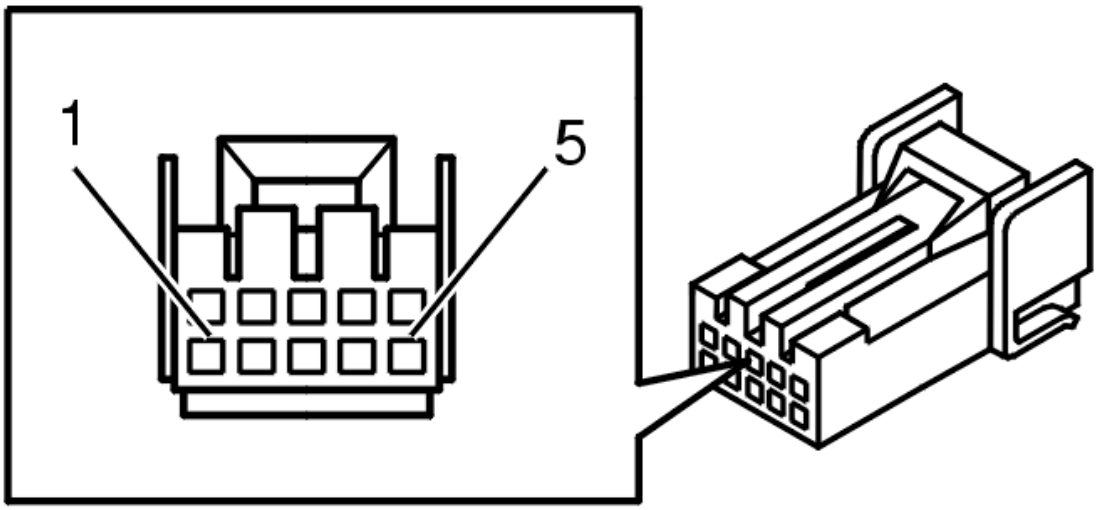

Fig. 263: 10 CD Changer Connector Terminals
Courtesy of VOLVO CARS CORPORATION

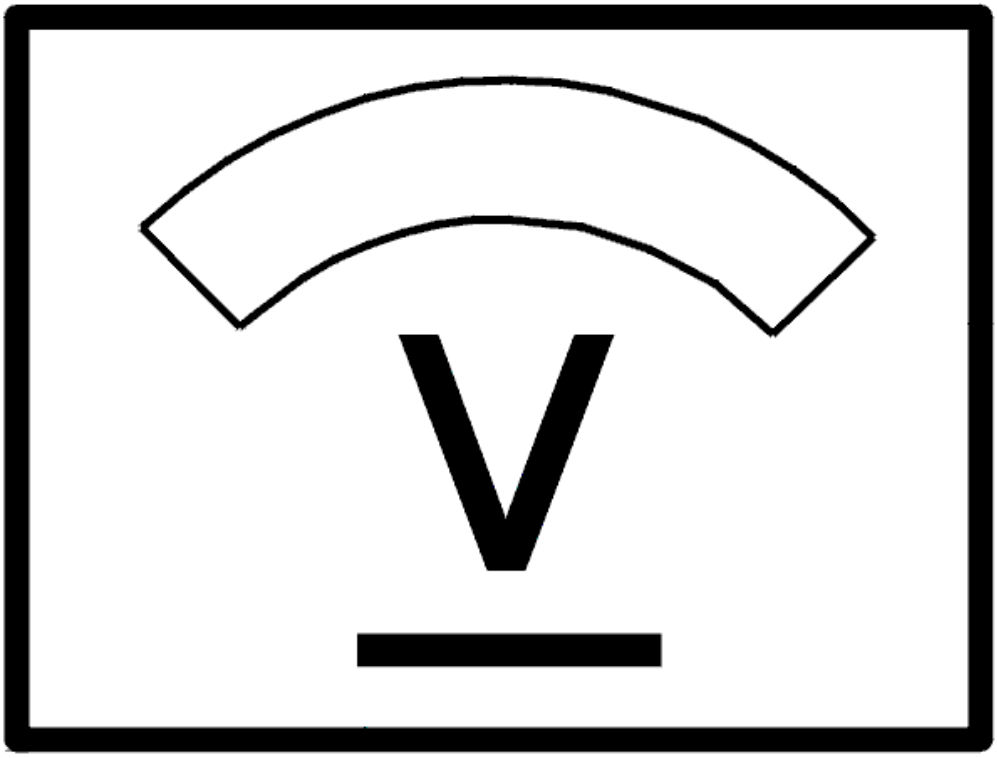

Fig. 264: Identifying Voltage Display
Courtesy of VOLVO CARS CORPORATION

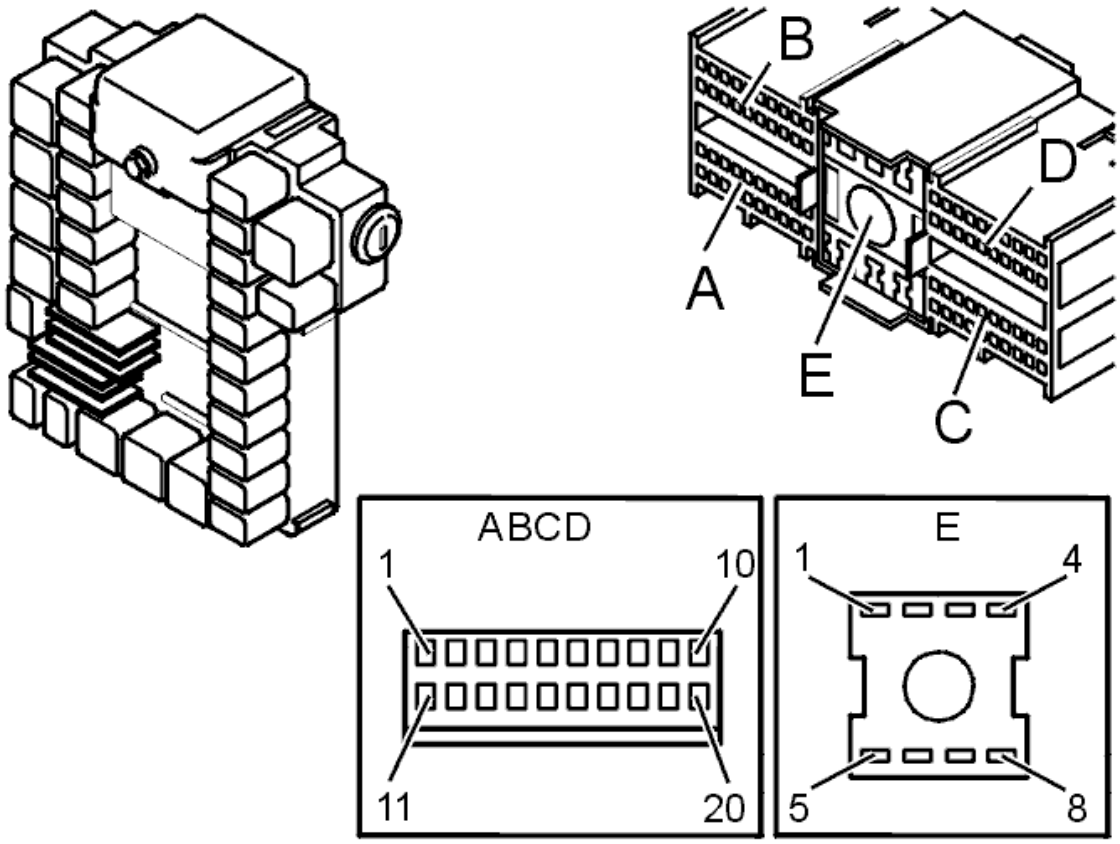

Fig. 265: Ground Terminals
Courtesy of VOLVO CARS CORPORATION

- **Continue**

  Refer to **INFORMATION**

INFORMATION

FAULT-TRACING INFORMATION

If the fault is intermittent, do not verify fault-tracing if the fault does not recur.

It is possible to view the information again, or leave fault-tracing for this diagnostic trouble code (DTC).

CEM-8F13: LIGHT WIDTH CONTROL. SIGNAL TOO HIGH. PERMANENT FAULT (2003-2004)

DIAGNOSTIC TROUBLE CODE INFORMATION

see **DIAGNOSTIC TROUBLE CODE INFORMATION**

SIGNAL TOO HIGH. PERMANENT FAULT

CHECKING THE COMPONENT

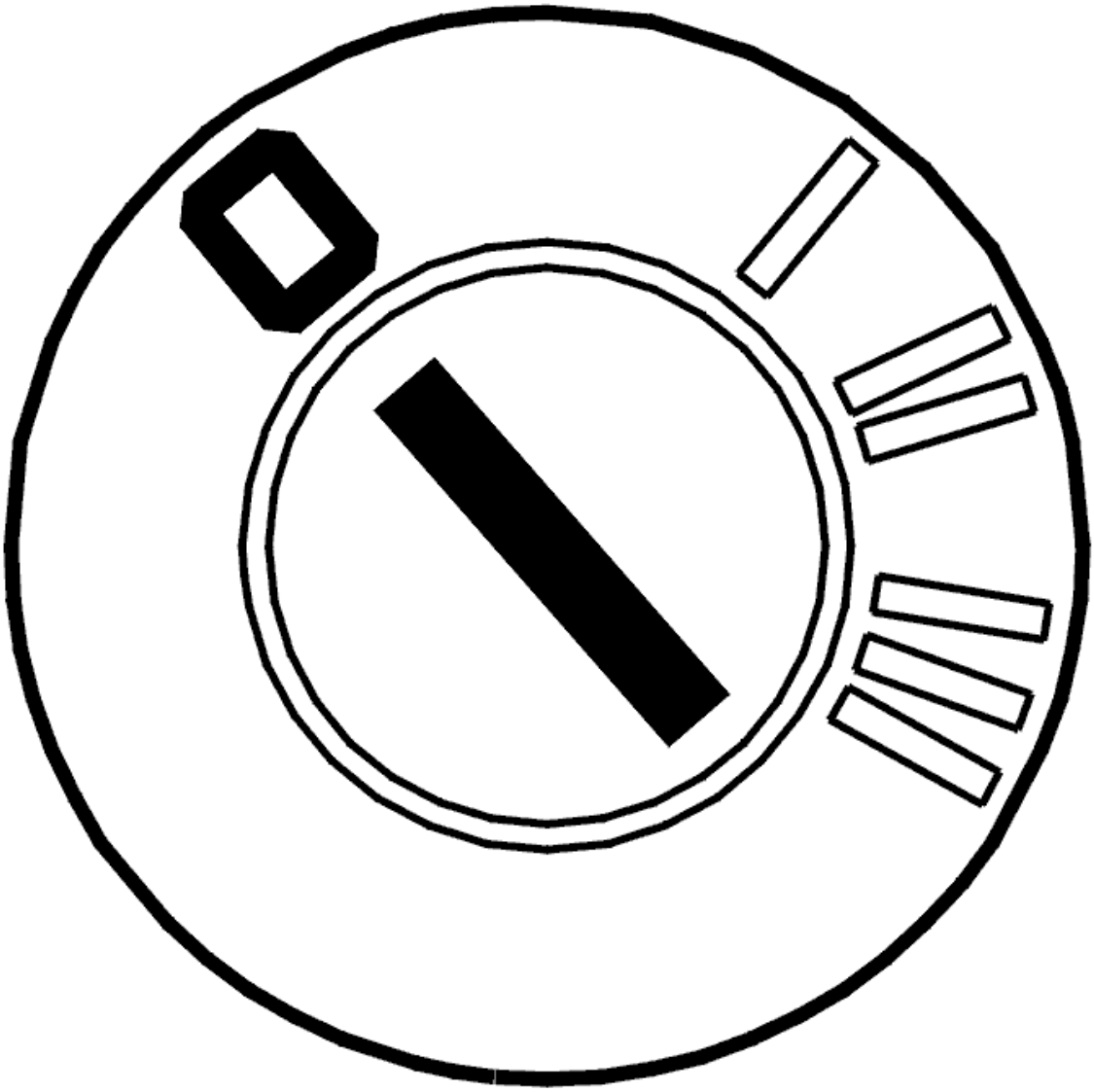

Fig. 266: Identifying Ignition OFF
Courtesy of VOLVO CARS CORPORATION

- Ignition off
- Remove the light switch module (LSM).

  Check the Light Switch Module (LSM) and the connector (3/111).

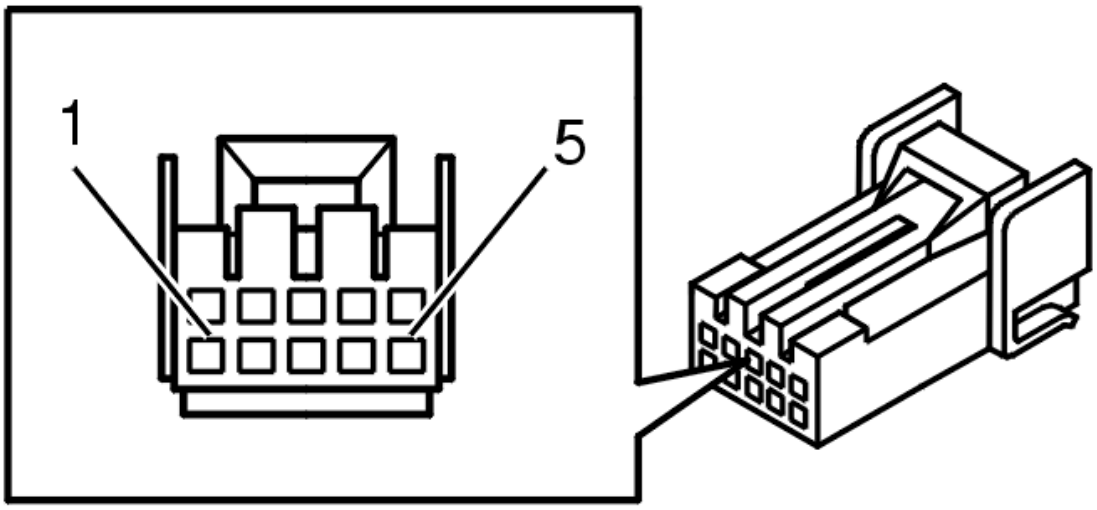

Fig. 267: 10 CD Changer Connector Terminals
Courtesy of VOLVO CARS CORPORATION

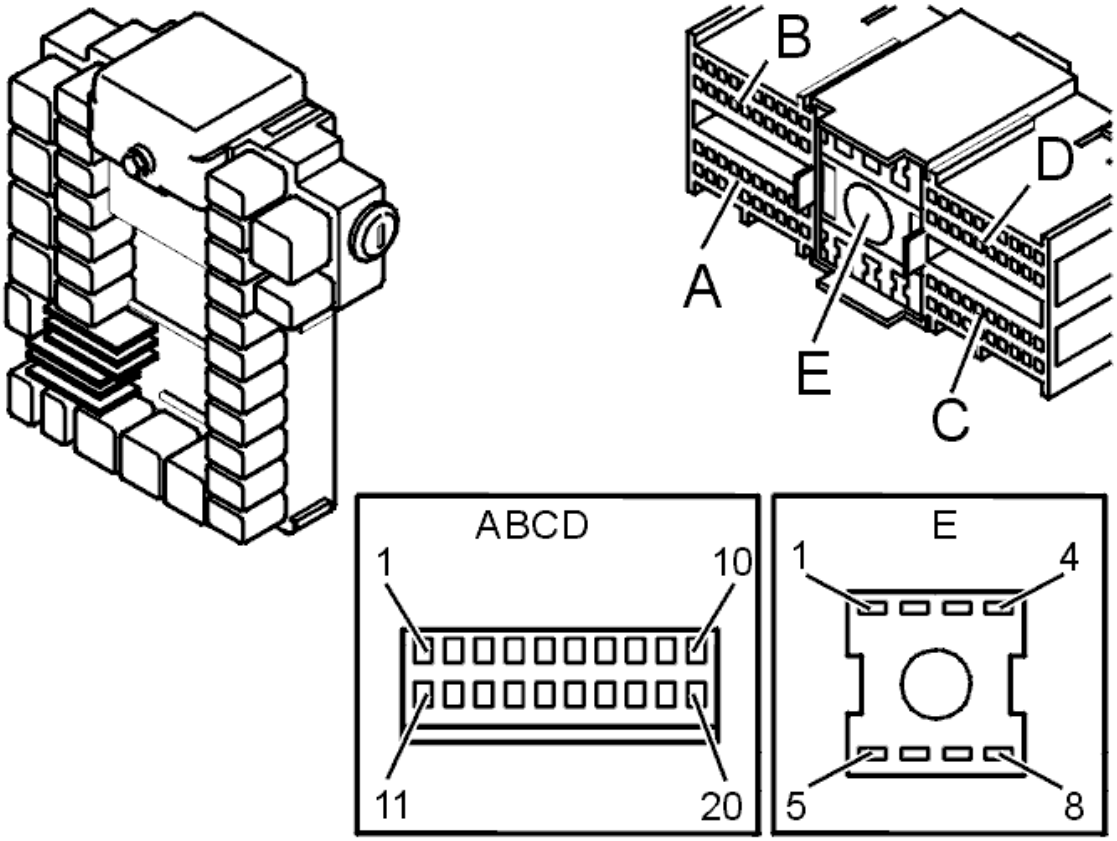

Fig. 268: Ground Terminals
Courtesy of VOLVO CARS CORPORATION

Was a fault detected?

- **YES**

Refer to **VERIFICATION**

- **NO**

  Refer to **CHECKING THE SIGNAL CABLE**

CHECKING THE SIGNAL CABLE

Check the cable between the light switch module (LSM) terminal #3 (3/111) and central electronic module (CEM) terminal #18A. Check for a short-circuit to supply voltage.

Remedy as necessary.

Other information:

- For information on the central electronic module (CEM):
  - For -2004, see: **CENTRAL ELECTRONIC MODULE (CEM), REPLACING**
  - For 2005-, see: **CENTRAL ELECTRONIC MODULE (CEM), REPLACING** .
- To replace the light switch module (LSM), see **SWITCHES LIGHTS, REPLACING**
- see **CHECKING WIRING AND TERMINALS** .

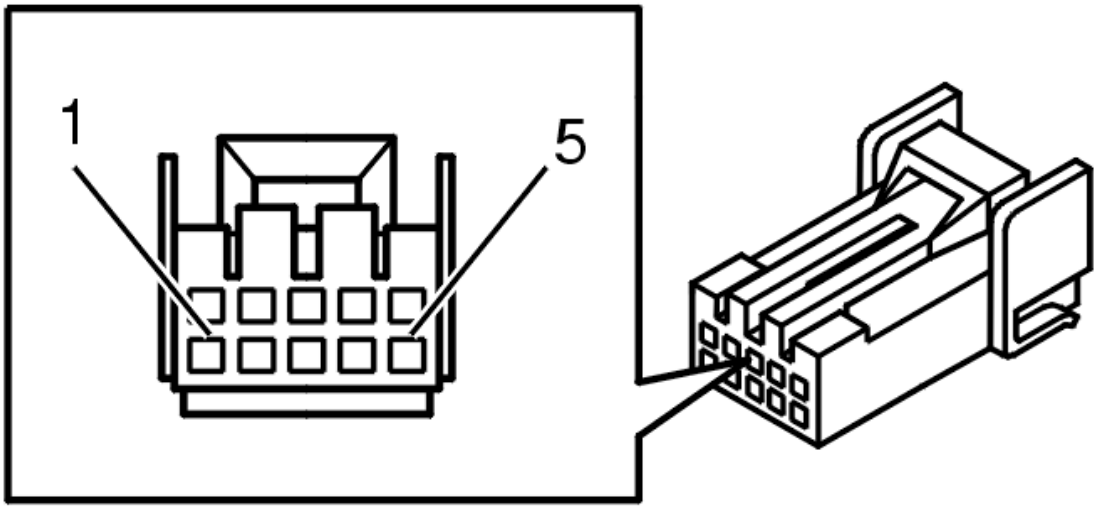

Fig. 269: 10 CD Changer Connector Terminals
Courtesy of VOLVO CARS CORPORATION

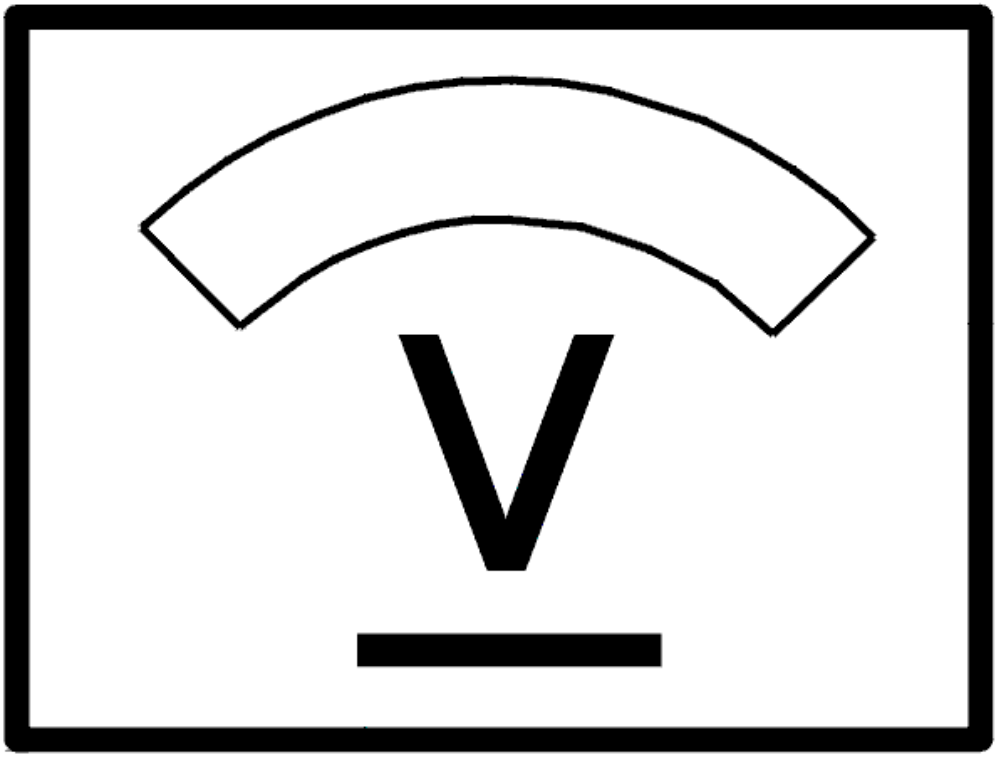

Fig. 270: Identifying Voltage Display
Courtesy of VOLVO CARS CORPORATION

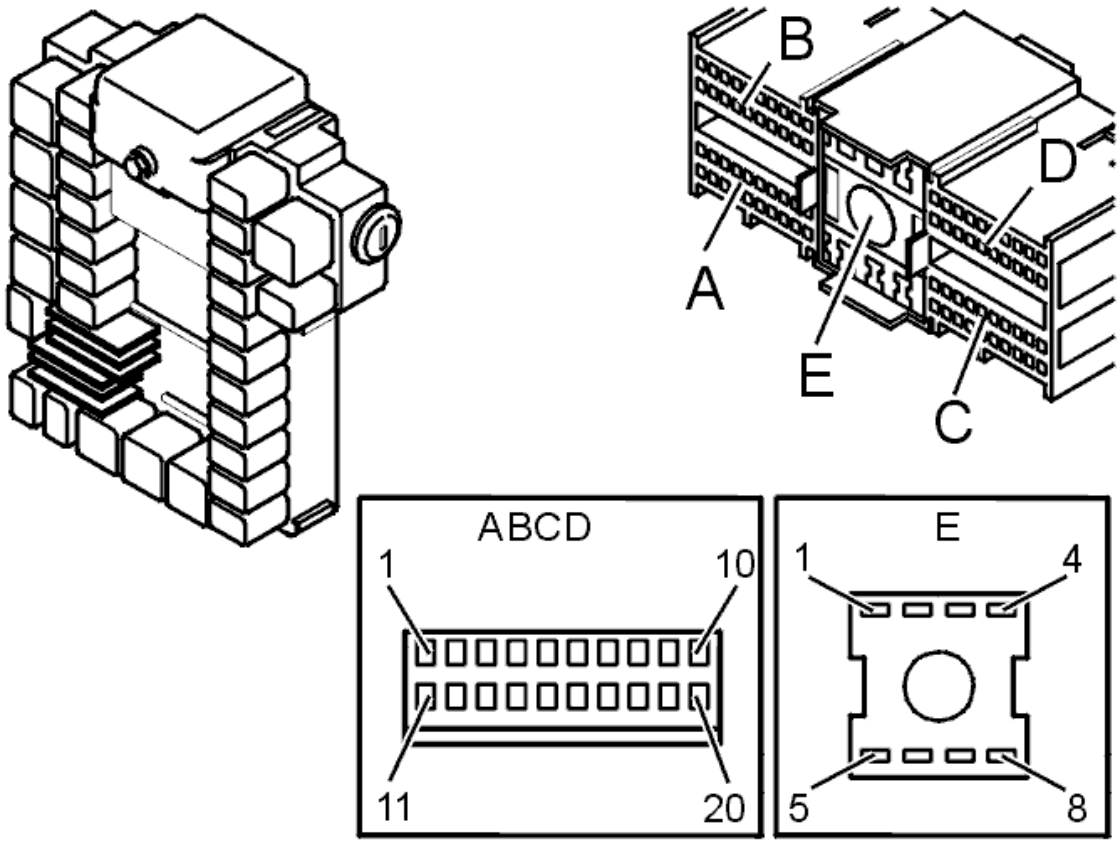

Fig. 271: Ground Terminals
Courtesy of VOLVO CARS CORPORATION

Was a fault detected?

- **YES**

  Refer to **VERIFICATION**

- **NO**

  Refer to **INFORMATION**

VERIFICATION

VERIFICATION

HINT: After the repair it is necessary to check that the fault has been rectified.

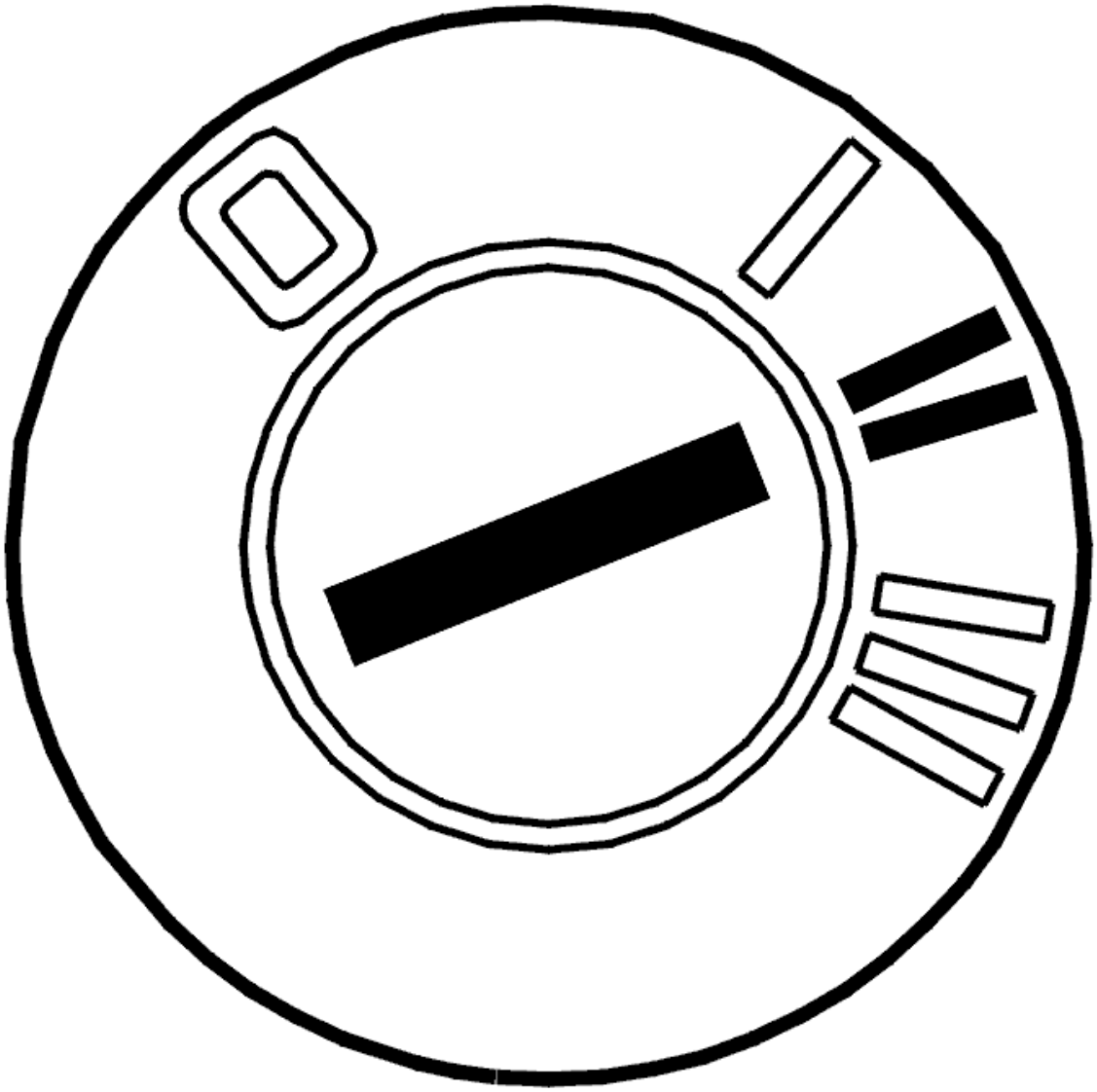

Fig. 272: Identifying Ignition ON
Courtesy of VOLVO CARS CORPORATION

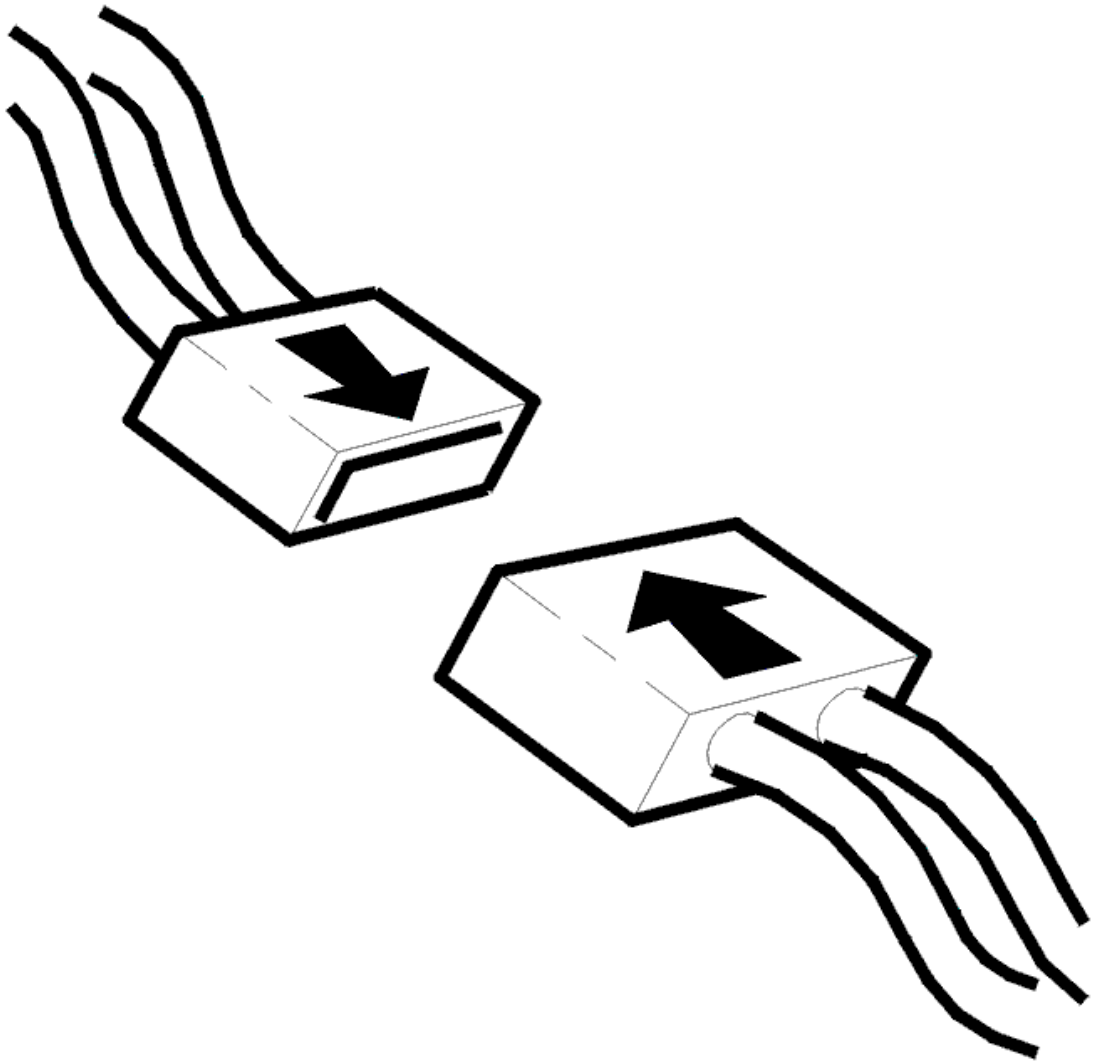

Fig. 273: Connecting Connector
Courtesy of VOLVO CARS CORPORATION

- Ignition off.
- Connect connectors, install components etc.
- Ignition on.

  Turn up and down and, see if the light changes.

Does it work?

- **YES**

  VERIFIED: Troubleshooting has been completed.

- **NO**

  Refer to **INFORMATION**

INFORMATION

FAULT-TRACING INFORMATION

The fault should have been detected and remedied. As this is not the case fault-tracing has failed.

Exit fault-tracing for this diagnostic trouble code (DTC) or make another attempt.

CEM-8F13: LSM HEADLAMP BEAM HEIGHT CONTROL. SIGNAL TOO HIGH (2005-2012)

DIAGNOSTIC TROUBLE CODE (DTC) INFORMATION CEM-8F13

Condition

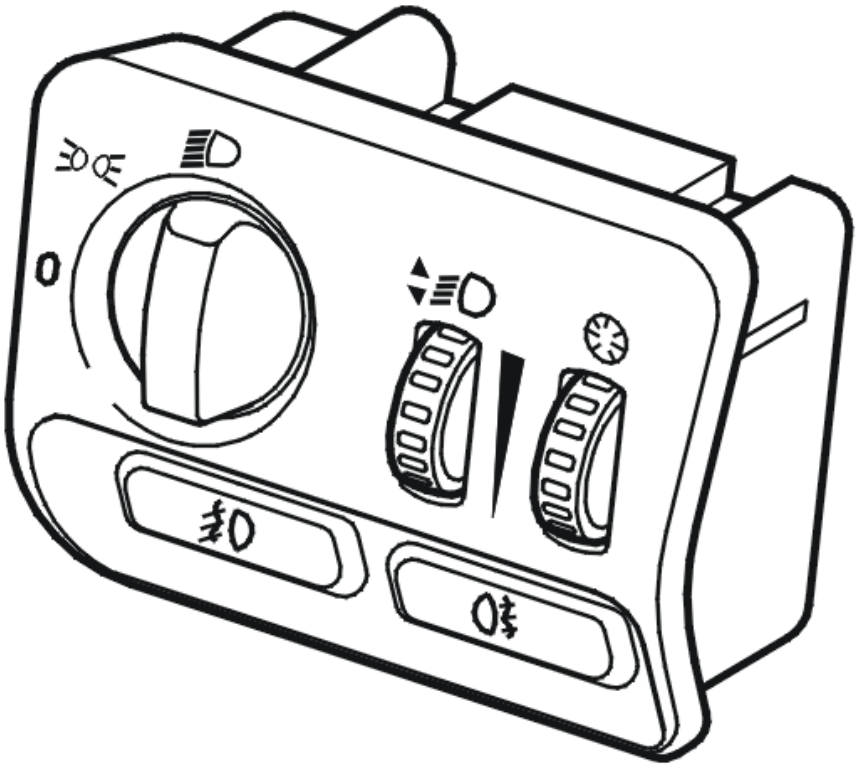

Fig. 274: Identifying Light Switch Module (LSM)
Courtesy of VOLVO CARS CORPORATION

The central electronic module (CEM) communicates with the light switch module (LSM).

The diagnostic trouble code (DTC) is stored if the central electronic module (CEM) receives information from the light switch module (LSM) indicating that the signal from the headlamp beam height control is too high.

The diagnostic trouble code (DTC) can be diagnosed at ignition switch position II.

Substitute Value

- None.

Possible Source

- Damaged controller in the light switch module (LSM).

Fault symptom[s]

- Beam height control does not function.

SIGNAL TOO HIGH

REPLACING THE COMPONENT

The central electronic module (CEM) has registered an internal fault in the light switch module (LSM).

If the fault is intermittent, it has been registered previously but is no longer present. Intermittent faults can be caused by interference at start up of the central electronic module (CEM) or may be a different type of fault which occurs on different occasions. The fault is evaluated depending on how it occurs. If the fault recurs, replace the light switch module (LSM).

see **SWITCHES LIGHTS, REPLACING**

Remedy as necessary.

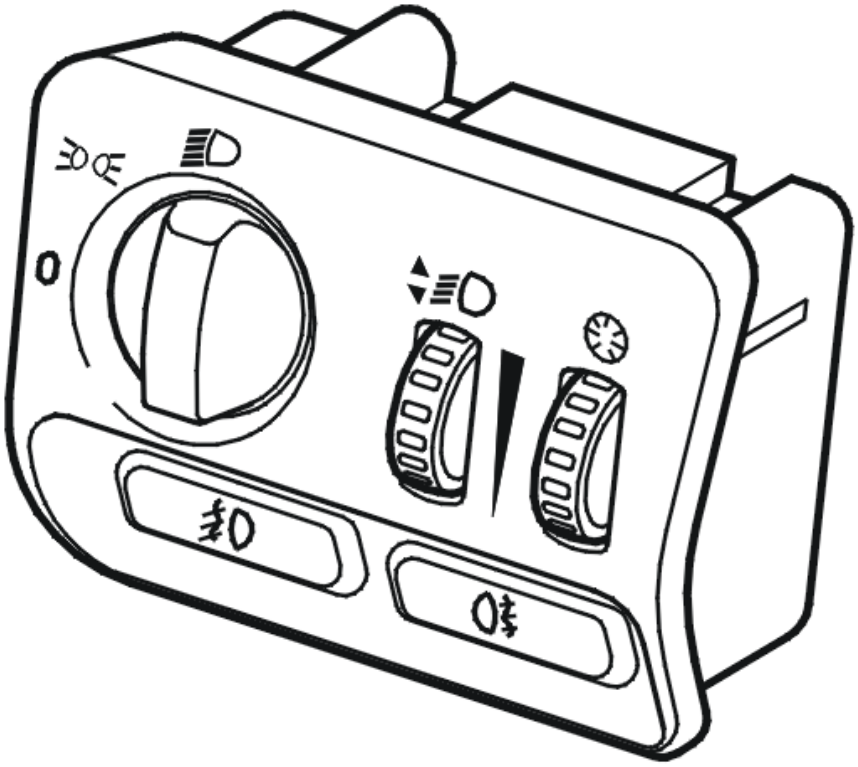

Fig. 275: Identifying Light Switch Module (LSM)
Courtesy of VOLVO CARS CORPORATION

- **Continue**

  Refer to **INFORMATION**

INFORMATION

FAULT-TRACING INFORMATION

In case of this defect, troubleshooting is not followed by verification.

The information can be displayed again or the fault-tracing for this fault can be interrupted.

CEM-8F14: LIGHT WIDTH CONTROL. SIGNAL TOO HIGH. INTERMITTENT FAULT (2003-2004)

DIAGNOSTIC TROUBLE CODE INFORMATION

Condition

If the voltage in the central electronic module (CEM) exceeds 10 V for at least 1 second, diagnostic trouble

code CEM-8F14 is set.

Substitute Value

- None.

Possible Source

- Fault in light switch module (LSM).
- Defective connector to light switch module (LSM).
- Open circuit in wire.

Fault symptom[s]

- Beam setting adjustment does not work.

SIGNAL TOO HIGH. INTERMITTENT FAULT

CHECKING SIGNAL WIRES

Check the wire between light switch module (LSM) #3 (3/111) and central electronic module #18A for an open circuit as described in, see **OPEN-CIRCUIT, INTERMITTENT FAULTS** .

Additional information:

- For information on the central electronic module (CEM):
  - For -2004, see: **CENTRAL ELECTRONIC MODULE (CEM), REPLACING**
  - For 2005-, see: **CENTRAL ELECTRONIC MODULE (CEM), REPLACING** .

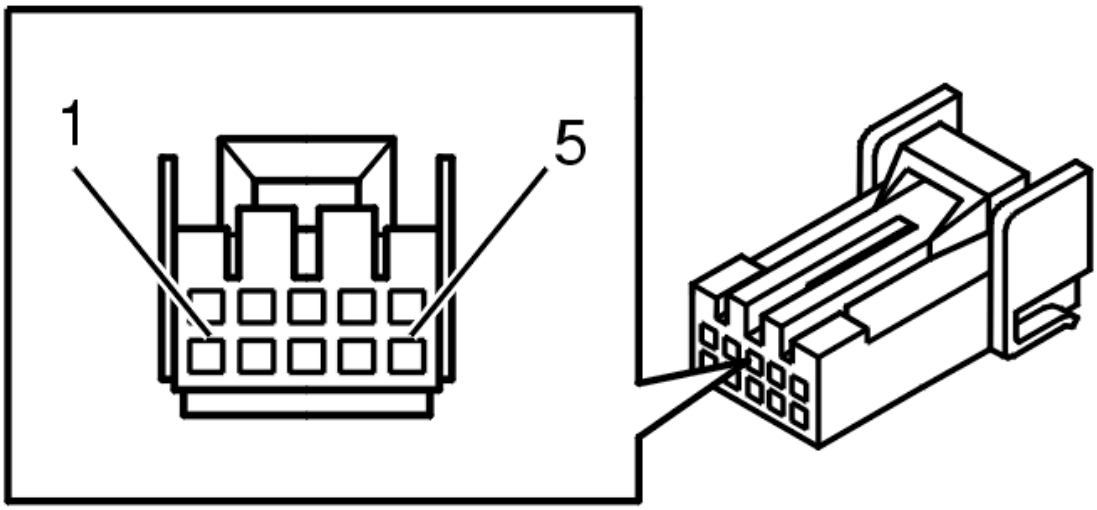

Fig. 276: 10 CD Changer Connector Terminals
Courtesy of VOLVO CARS CORPORATION

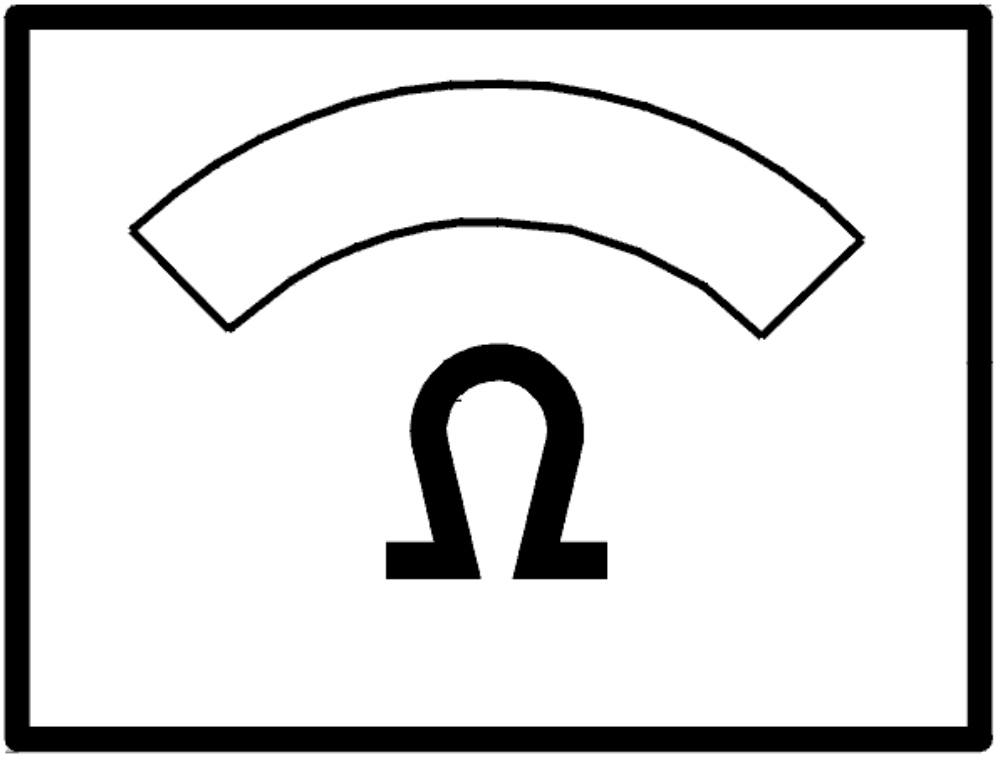

Fig. 277: Identifying Ohm Meter
Courtesy of VOLVO CARS CORPORATION

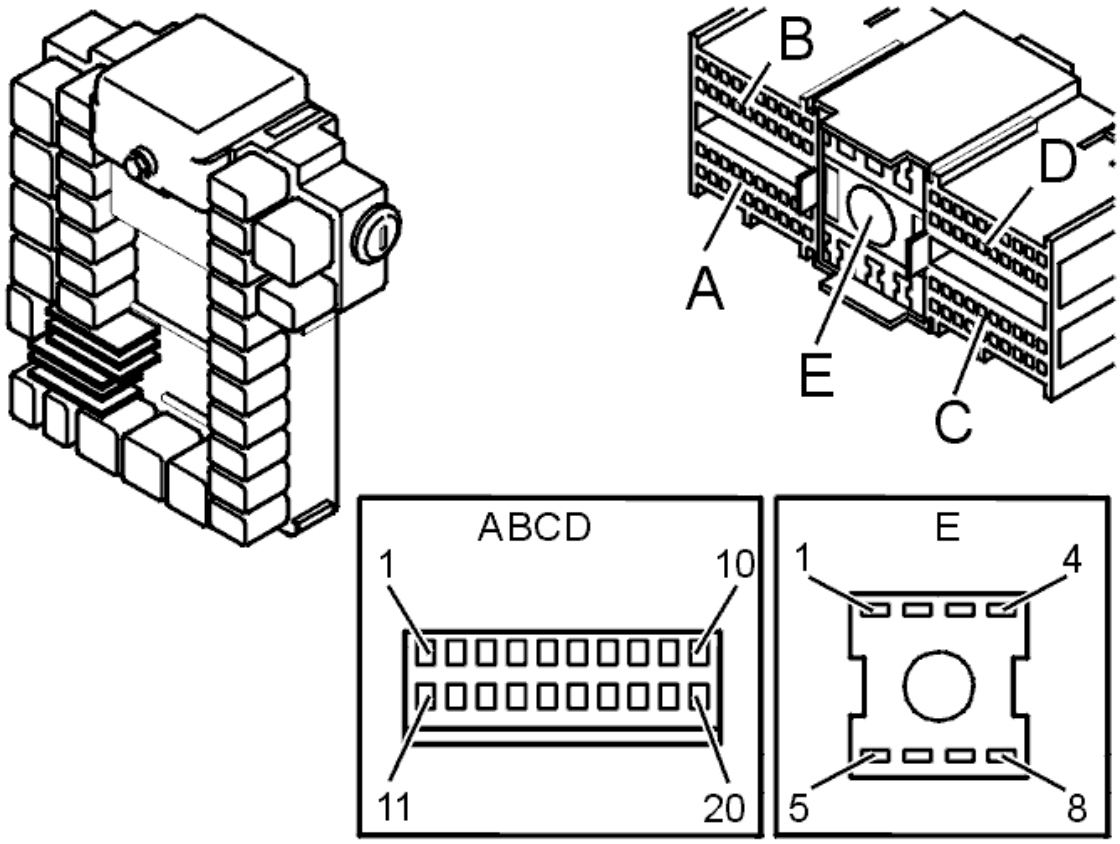

Fig. 278: Ground Terminals
Courtesy of VOLVO CARS CORPORATION

- **Continue**

  Refer to **INFORMATION**

INFORMATION

FAULT-TRACING INFORMATION

If the fault is intermittent, do not verify fault-tracing if the fault does not recur.

It is possible to view the information again, or leave fault-tracing for this diagnostic trouble code (DTC).

CEM-8F14: LIGHT WIDTH CONTROL. SIGNAL TOO HIGH. PERMANENT FAULT (2003-2004)

DIAGNOSTIC TROUBLE CODE INFORMATION

see **DIAGNOSTIC TROUBLE CODE INFORMATION**

SIGNAL TOO HIGH. PERMANENT FAULT

CHECKING THE COMPONENT

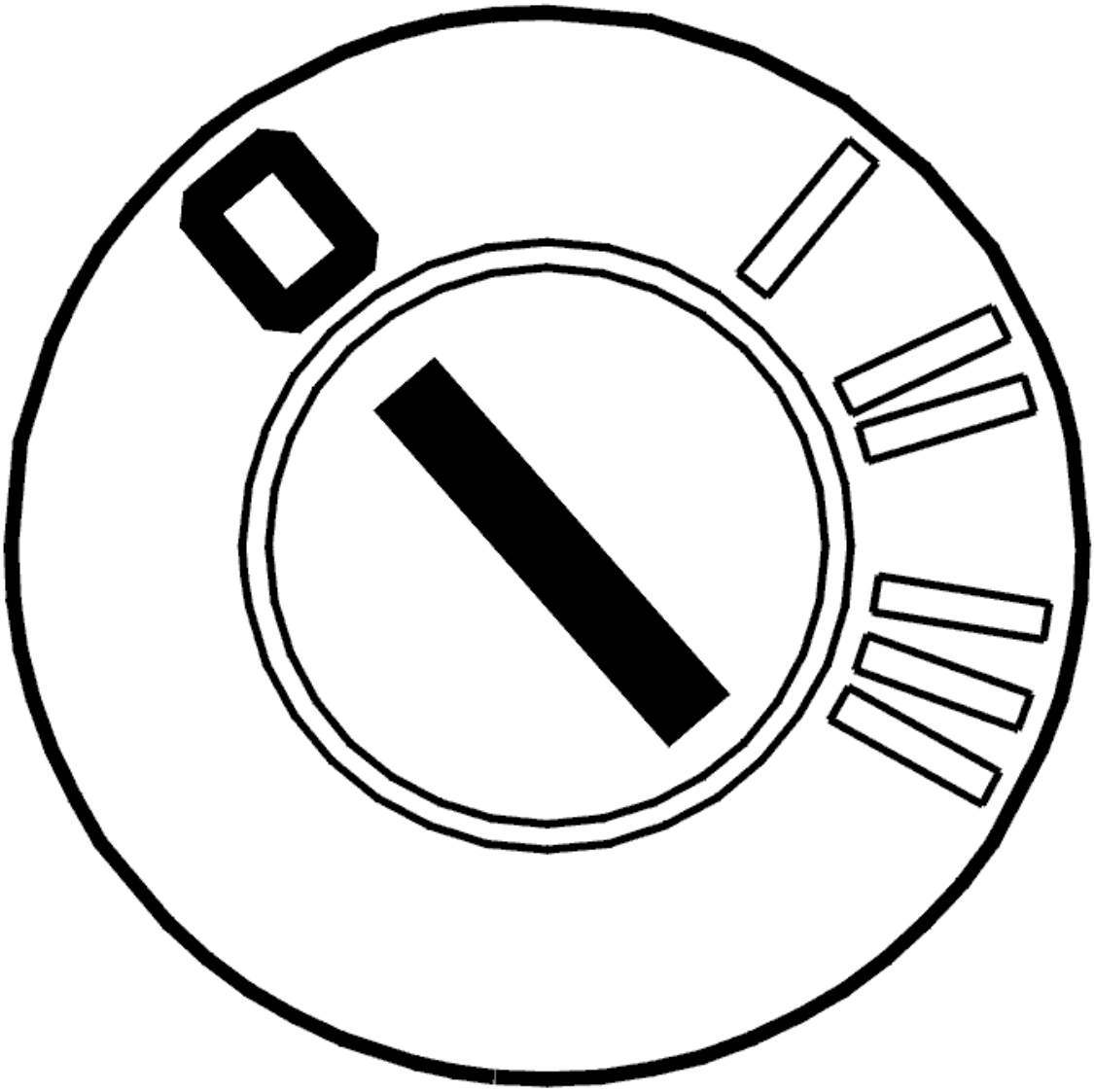

Fig. 279: Identifying Ignition OFF
Courtesy of VOLVO CARS CORPORATION

- Ignition off
- Remove the light switch module (LSM).

  Check the Light Switch Module (LSM) and the connector.

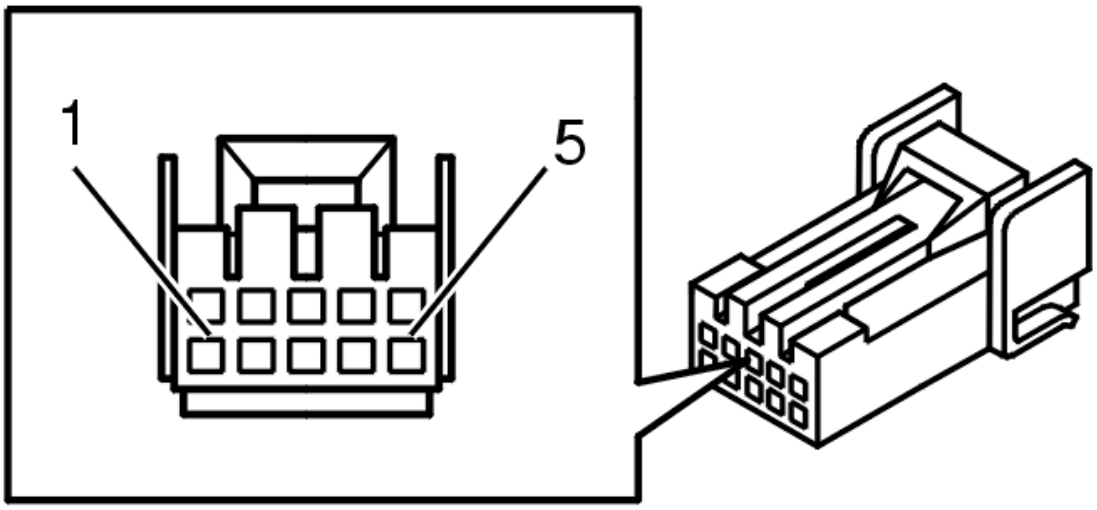

Fig. 280: 10 CD Changer Connector Terminals
Courtesy of VOLVO CARS CORPORATION

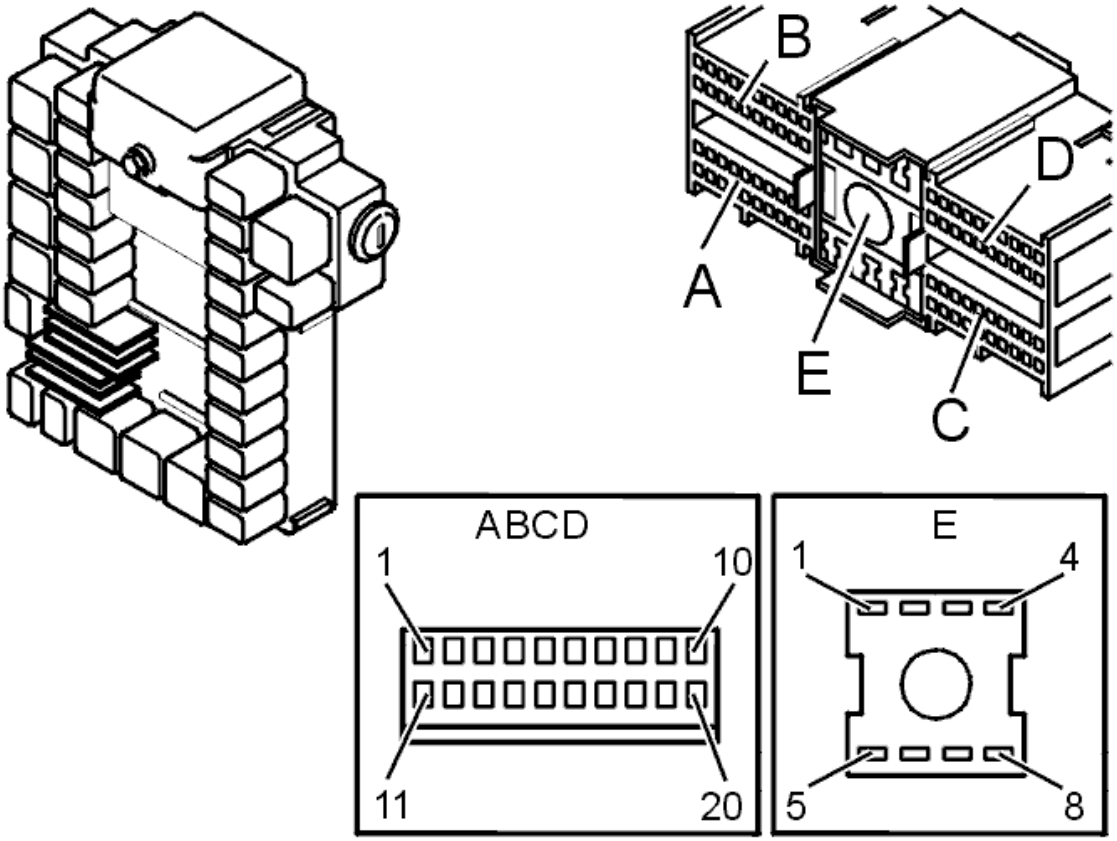

Fig. 281: Ground Terminals
Courtesy of VOLVO CARS CORPORATION

Was a fault detected?

- **YES**

Refer to **VERIFICATION**

- **NO**

  Refer to **CHECKING THE SIGNAL CABLE**

CHECKING THE SIGNAL CABLE

Check the cable between light switch module (LSM) terminal #3 (3/111) and central electronic module (CEM) terminal #18A. Check for an open-circuit.

Remedy as necessary.

Other information:

- For information on the central electronic module (CEM):
  - For -2004, see: **CENTRAL ELECTRONIC MODULE (CEM), REPLACING**
  - For 2005-, see: **CENTRAL ELECTRONIC MODULE (CEM), REPLACING** .
- To replace the light switch module (LSM), see **SWITCHES LIGHTS, REPLACING**
- see **CHECKING WIRING AND TERMINALS** .

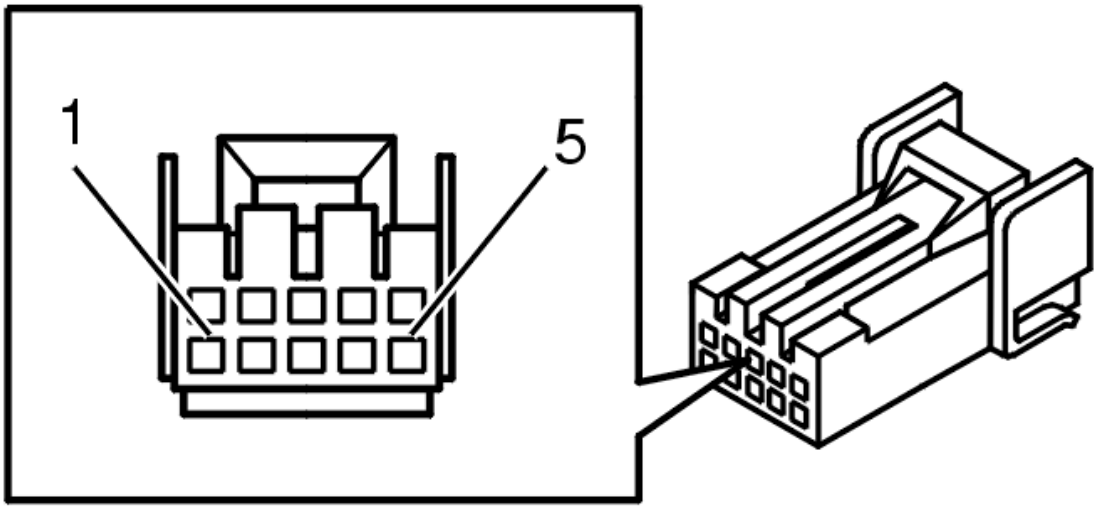

Fig. 282: 10 CD Changer Connector Terminals
Courtesy of VOLVO CARS CORPORATION

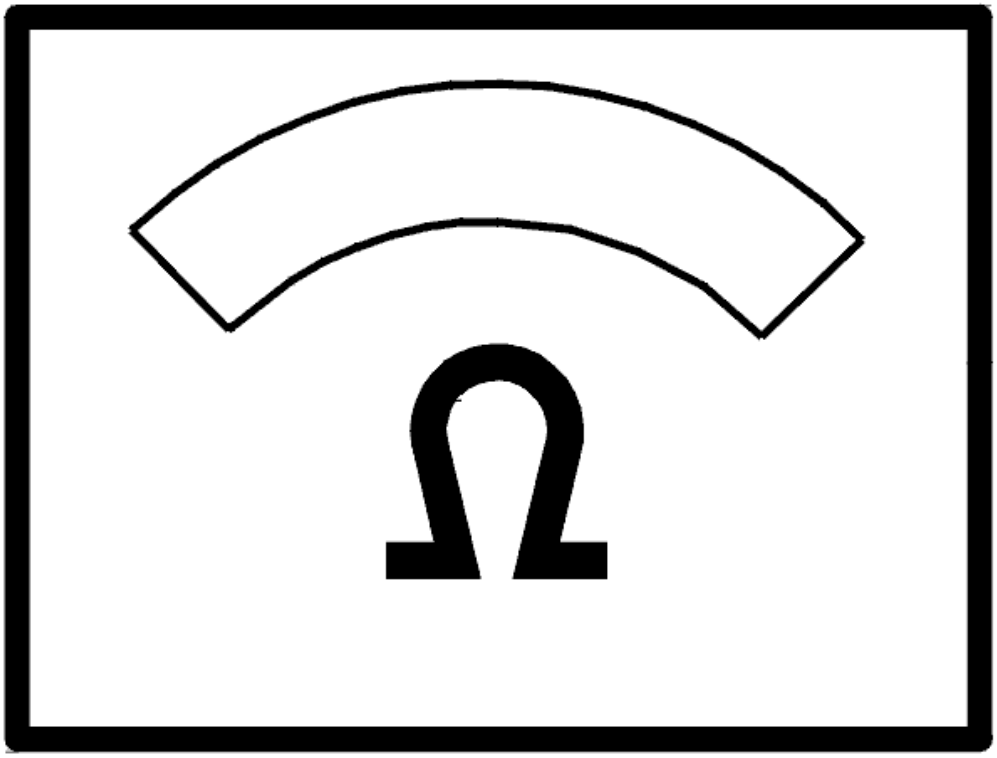

Fig. 283: Identifying Ohm Meter
Courtesy of VOLVO CARS CORPORATION

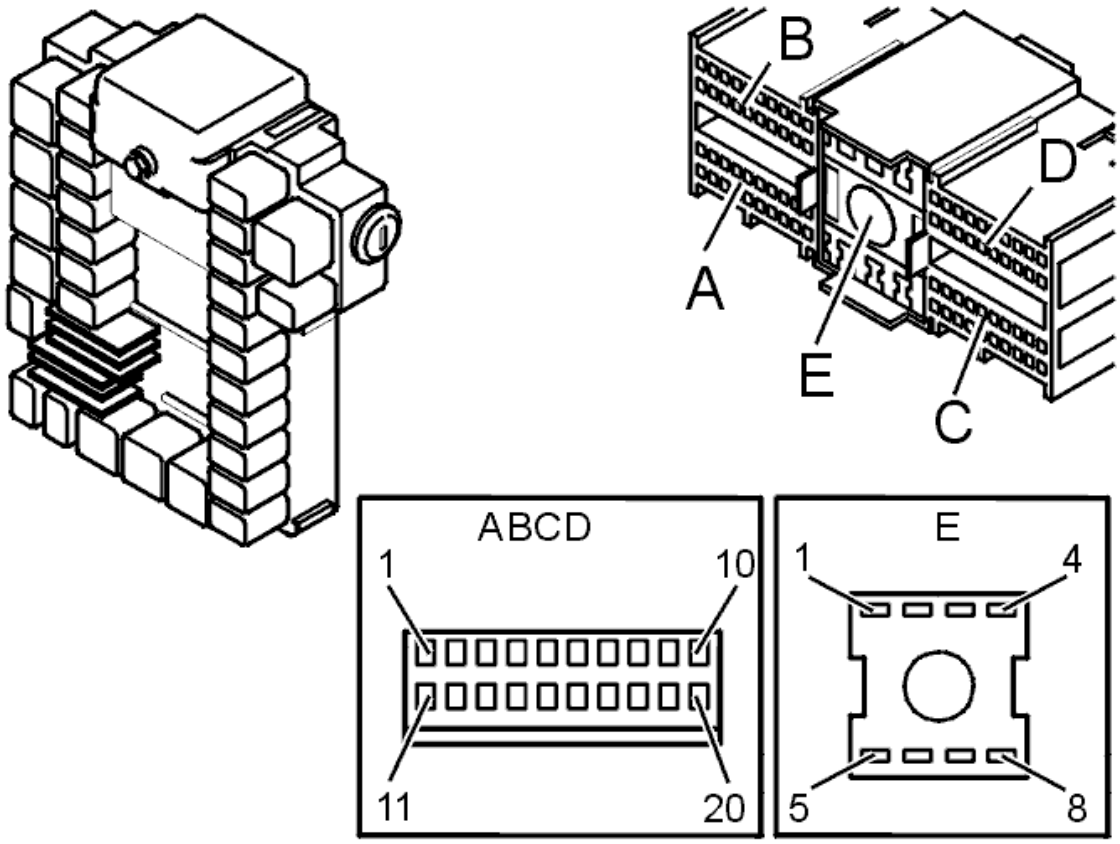

Fig. 284: Ground Terminals
Courtesy of VOLVO CARS CORPORATION

Was a fault detected?

- **YES**

  Refer to **VERIFICATION**

- **NO**

  Refer to **INFORMATION**

VERIFICATION

VERIFICATION

HINT: After the repair it is necessary to check that the fault has been rectified.

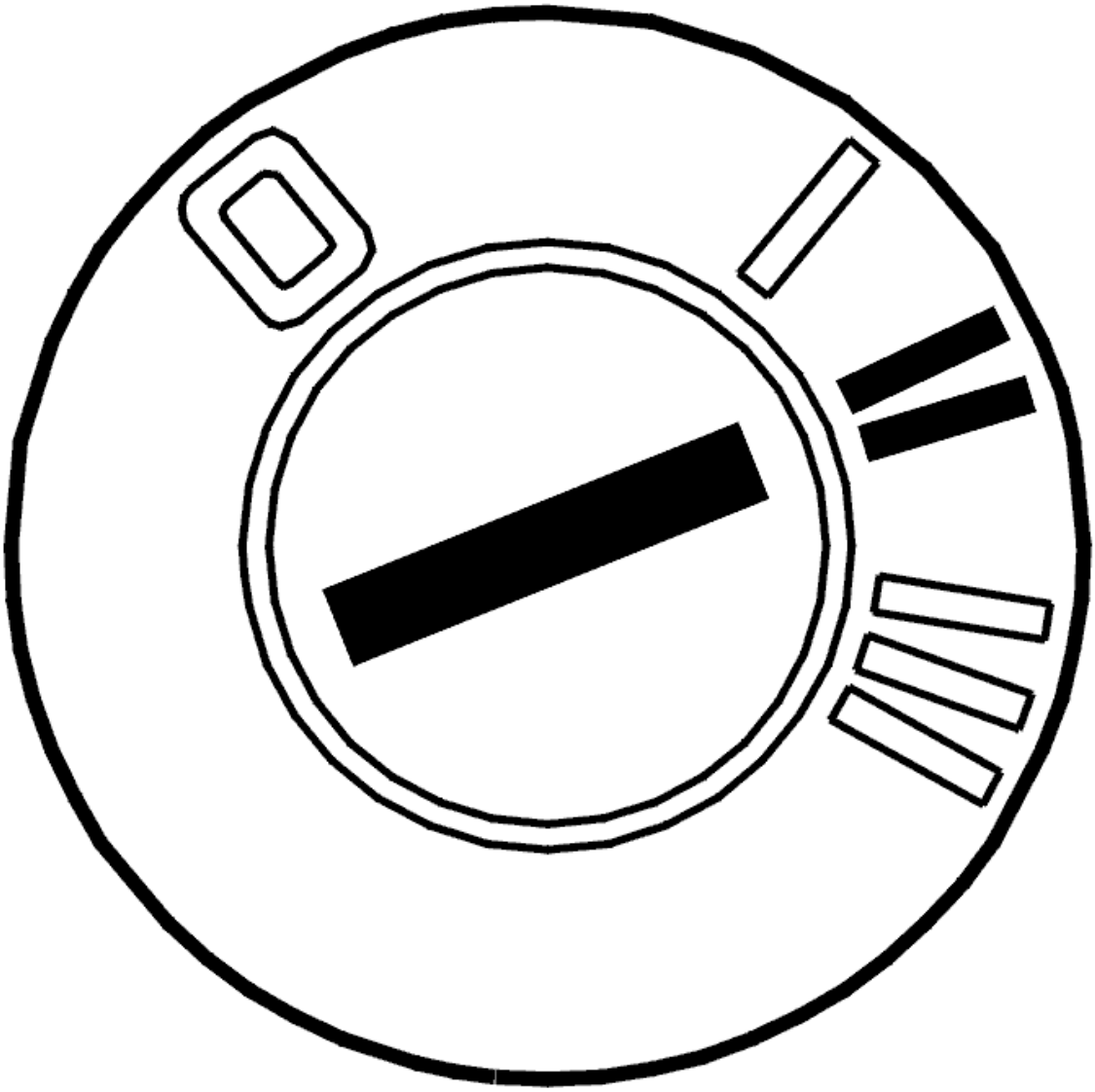

Fig. 285: Identifying Ignition ON
Courtesy of VOLVO CARS CORPORATION

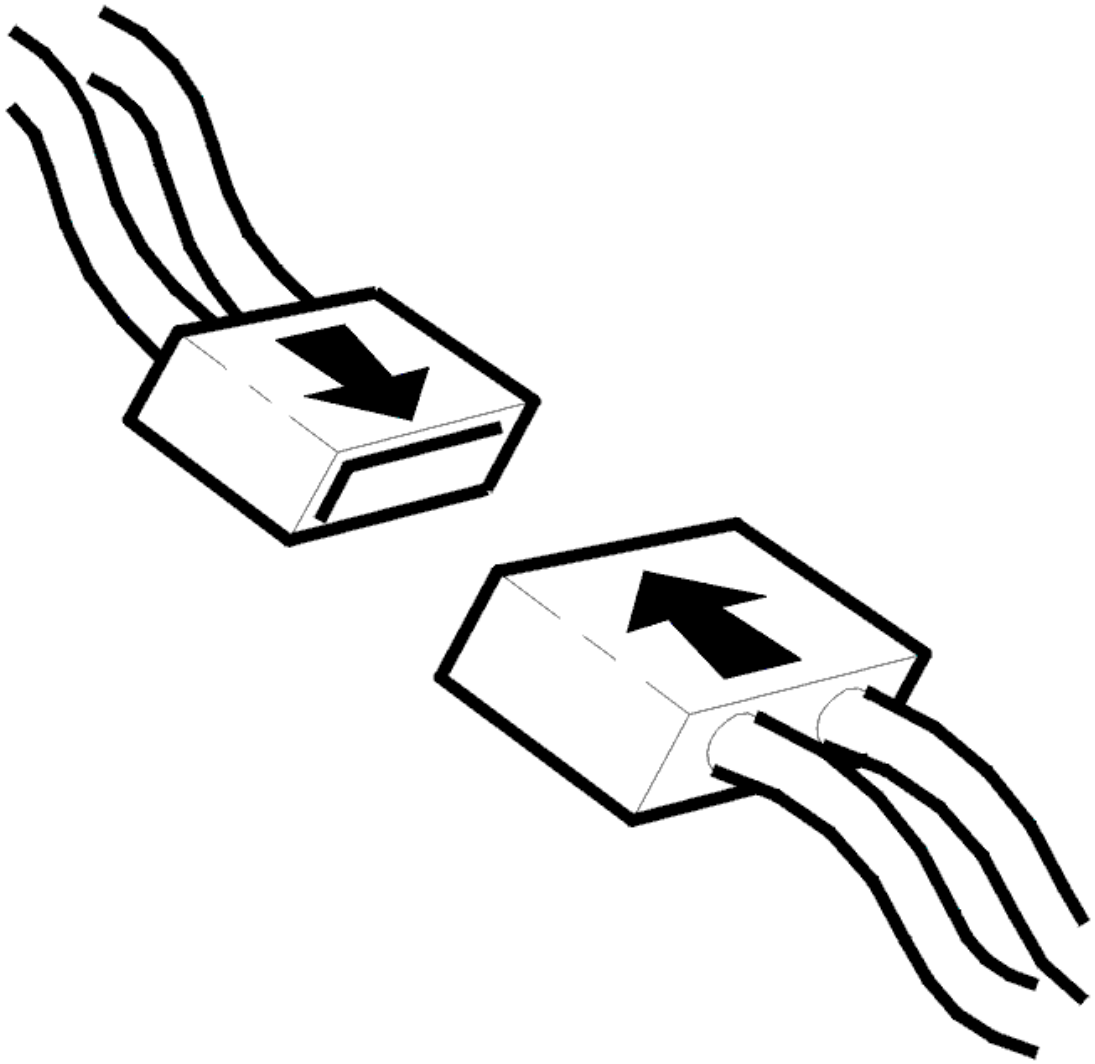

Fig. 286: Connecting Connector
Courtesy of VOLVO CARS CORPORATION

- Ignition off.
- Connect connectors, install components etc.
- Ignition on.

  Turn up and down and, see if the light changes.

Does it work?

- **YES**

  VERIFIED: Troubleshooting has been completed.

- **NO**

  Refer to **INFORMATION**

INFORMATION

FAULT-TRACING INFORMATION

The fault should have been detected and remedied. As this is not the case fault-tracing has failed.

Exit fault-tracing for this diagnostic trouble code (DTC) or make another attempt.

CEM-8F14: LSM HEADLAMP BEAM HEIGHT CONTROL. SIGNAL TOO LOW (2005-2012)

DIAGNOSTIC TROUBLE CODE (DTC) INFORMATION CEM-8F14

Condition

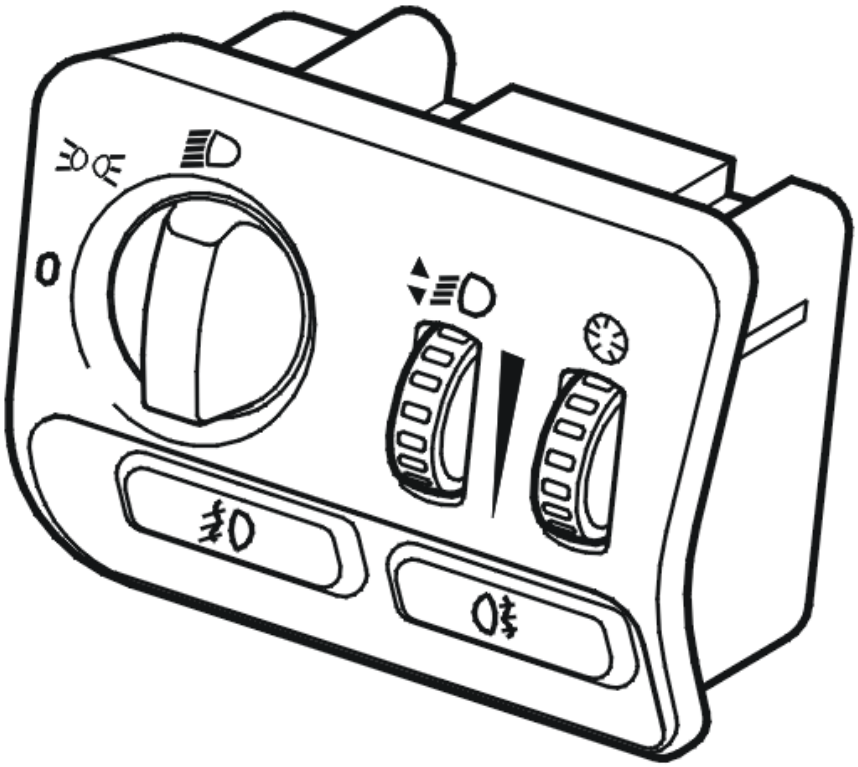

Fig. 287: Identifying Light Switch Module (LSM)
Courtesy of VOLVO CARS CORPORATION

The central electronic module (CEM) communicates with the light switch module (LSM).

The diagnostic trouble code (DTC) is stored if the central electronic module (CEM) receives information from the light switch module (LSM) indicating that the signal from the headlamp beam height control is too low.

The diagnostic trouble code (DTC) can be diagnosed at ignition switch position II.

Substitute Value

- None.

Possible Source

- Damaged controller in the light switch module (LSM).

Fault symptom[s]

- Beam height control does not function.

SIGNAL TOO LOW

REPLACING THE COMPONENT

The central electronic module (CEM) has registered an internal fault in the light switch module (LSM).

If the fault is intermittent, it has been registered previously but is no longer present. Intermittent faults can be caused by interference at start up of the central electronic module (CEM) or may be a different type of fault which occurs on different occasions. The fault is evaluated depending on how it occurs. If the fault recurs, replace the light switch module (LSM).

see **SWITCHES LIGHTS, REPLACING**

Remedy as necessary.

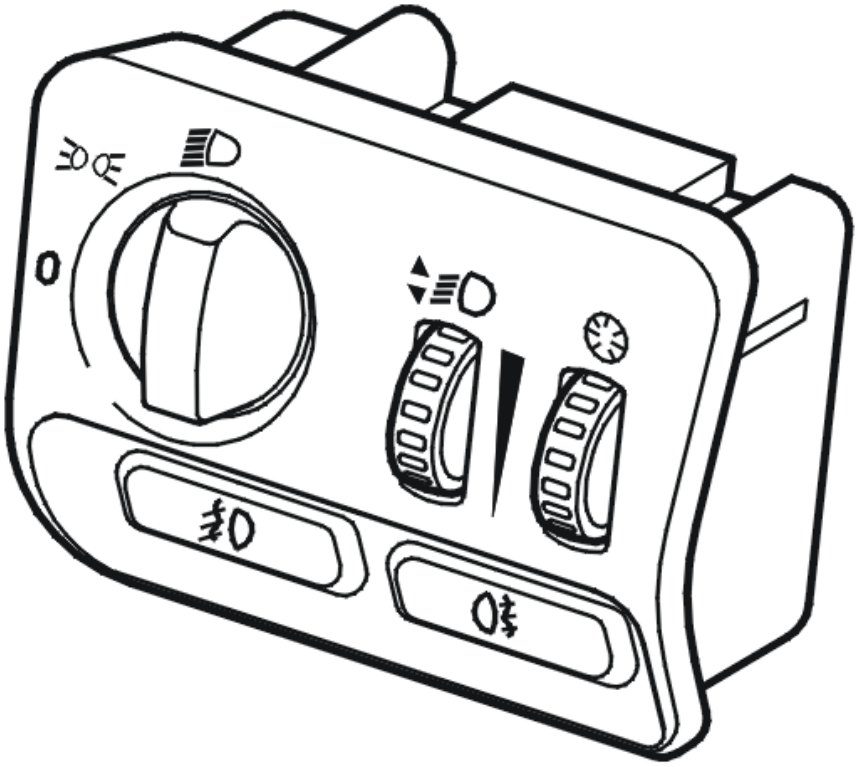

Fig. 288: Identifying Light Switch Module (LSM)
Courtesy of VOLVO CARS CORPORATION

- **Continue**

  Refer to **INFORMATION**

INFORMATION

FAULT-TRACING INFORMATION

In case of this defect, troubleshooting is not followed by verification.

The information can be displayed again or the fault-tracing for this fault can be interrupted.

CEM-8F15: XENON LAMP LEFT. FAULTY SIGNAL (2003-2004)

DIAGNOSTIC TROUBLE CODE (DTC) INFORMATION

Condition

The central electronic module checks the signal from the left Xenon lamp.

Diagnostic trouble code (DTC) CEM-8F15 is stored in the central electronic module if the central electronic

module registers a fault in the actuator motor for the left xenon lamp.

Diagnostic trouble code (DTC) CEM-8F15 can be detected with the ignition on and switching between low and high beam.

Substitute Value

- None.

Possible Source

- The actuator motor in the xenon lamp housing has jammed
- Defective actuator motor in the xenon lamp housing.

Fault symptom[s]

- The low beam is constantly lit
- The high beam is constantly lit
- The road surface is not illuminated.
- Headlights/Headlight aim is off

FAULTY SIGNAL

CHECKING THE STATUS

Check if the fault is permanent or intermittent by switching between high and low beam.

If the left xenon lamp does not switch between the high and low beam it means that the fault is permanent.

If the left xenon lamp switches between high and low beam it indicates that the fault was present previously but is no longer active, intermittent fault.

Is the fault permanent?

- **YES**

  Refer to **REPLACING THE COMPONENT**

- **NO**

  Refer to **VERIFICATION**

REPLACING THE COMPONENT

The diagnostic trouble code (DTC) indicates that the actuator motor in the left Xenon lamp is defective.

Replace the left lamp housing.

Other information:

- To replace the lamp housing, see **LIGHTING - REMOVAL, REPLACEMENT AND INSTALLATION** .
- **Continue**

  Refer to **VERIFICATION**

VERIFICATION

VERIFICATION

HINT: After carrying out the repair, check that the fault has been remedied.

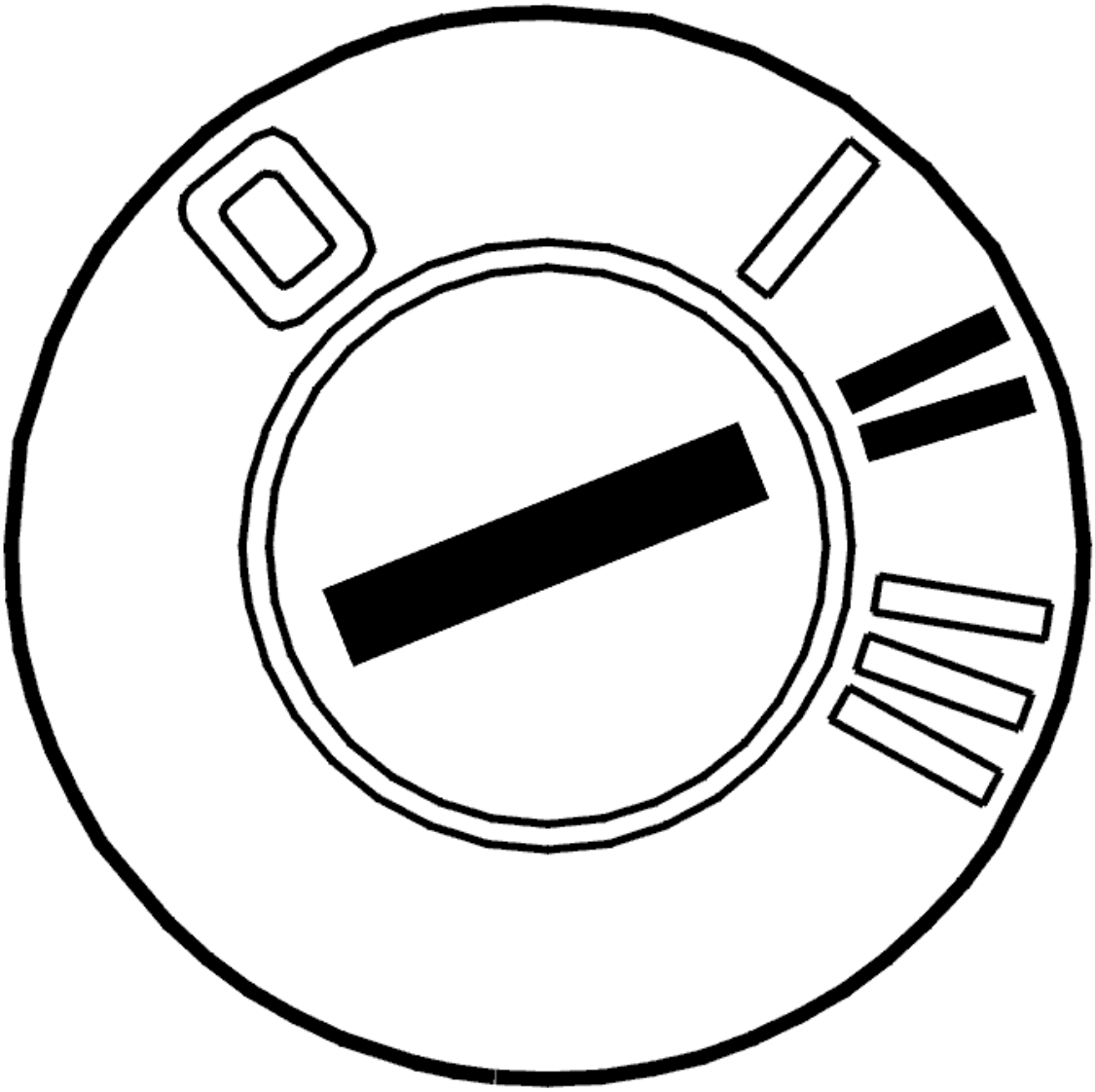

Fig. 289: Identifying Ignition ON
Courtesy of VOLVO CARS CORPORATION

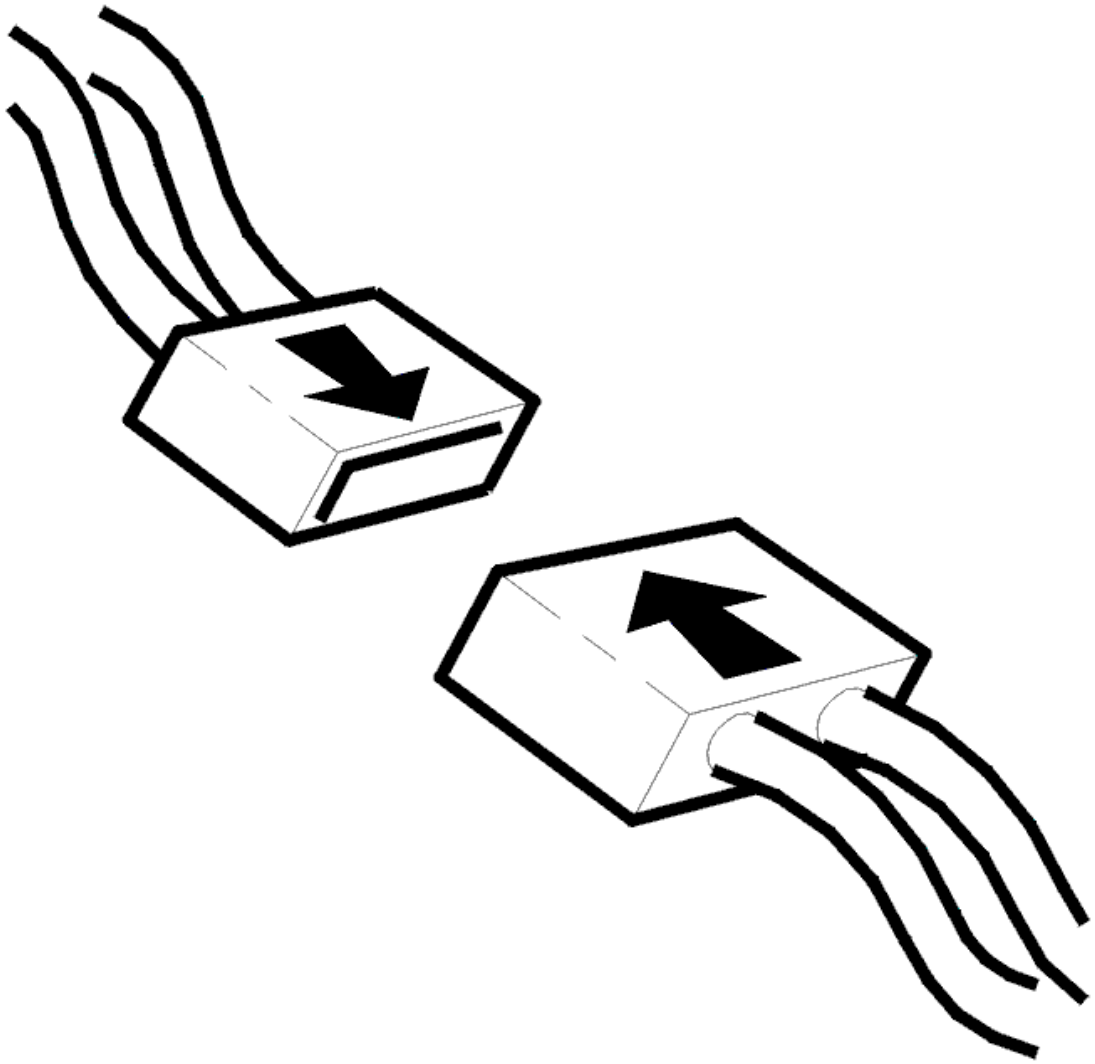

Fig. 290: Connecting Connector
Courtesy of VOLVO CARS CORPORATION

- Ignition off
- Reinstall the connectors, components etc.
- Ignition on.

  Switch on the lighting and shift between high and low beam.

Do the xenon lamps switch between high and low beam?

- **YES**

  VERIFIED: Troubleshooting has been completed.

- **NO**

  Refer to **INFORMATION**

INFORMATION

FAULT-TRACING INFORMATION

The fault should have been detected and remedied. As this is not the case fault-tracing has failed.

Exit fault-tracing for this diagnostic trouble code (DTC) or make another attempt.

CEM-8F15: XENON LAMP LEFT. FAULTY SIGNAL (2005-2012)

DIAGNOSTIC TROUBLE CODE (DTC) INFORMATION CEM-8F15

Condition

The central electronic module (CEM) checks the signal from the left-hand Xenon lamp.

The diagnostic trouble code (DTC) is stored if the central electronic module (CEM) registers a fault in the left-hand Xenon bulb.

The diagnostic trouble code (DTC) can be detected with the ignition on and when switching between low and high beam.

The diagnostic trouble code (DTC) can be diagnosed at ignition switch position II.

Substitute Value

- Shortest headlamp range will be used.

Possible Source

- The actuator motor in the xenon lamp housing has jammed
- Damaged actuator motor in the xenon lamp housing.

Fault symptom[s]

- The low beam is constantly lit
- The high beam is constantly lit
- The road surface is not illuminated.
- Headlights/Headlight aim is off

FAULTY SIGNAL

CHECKING THE STATUS

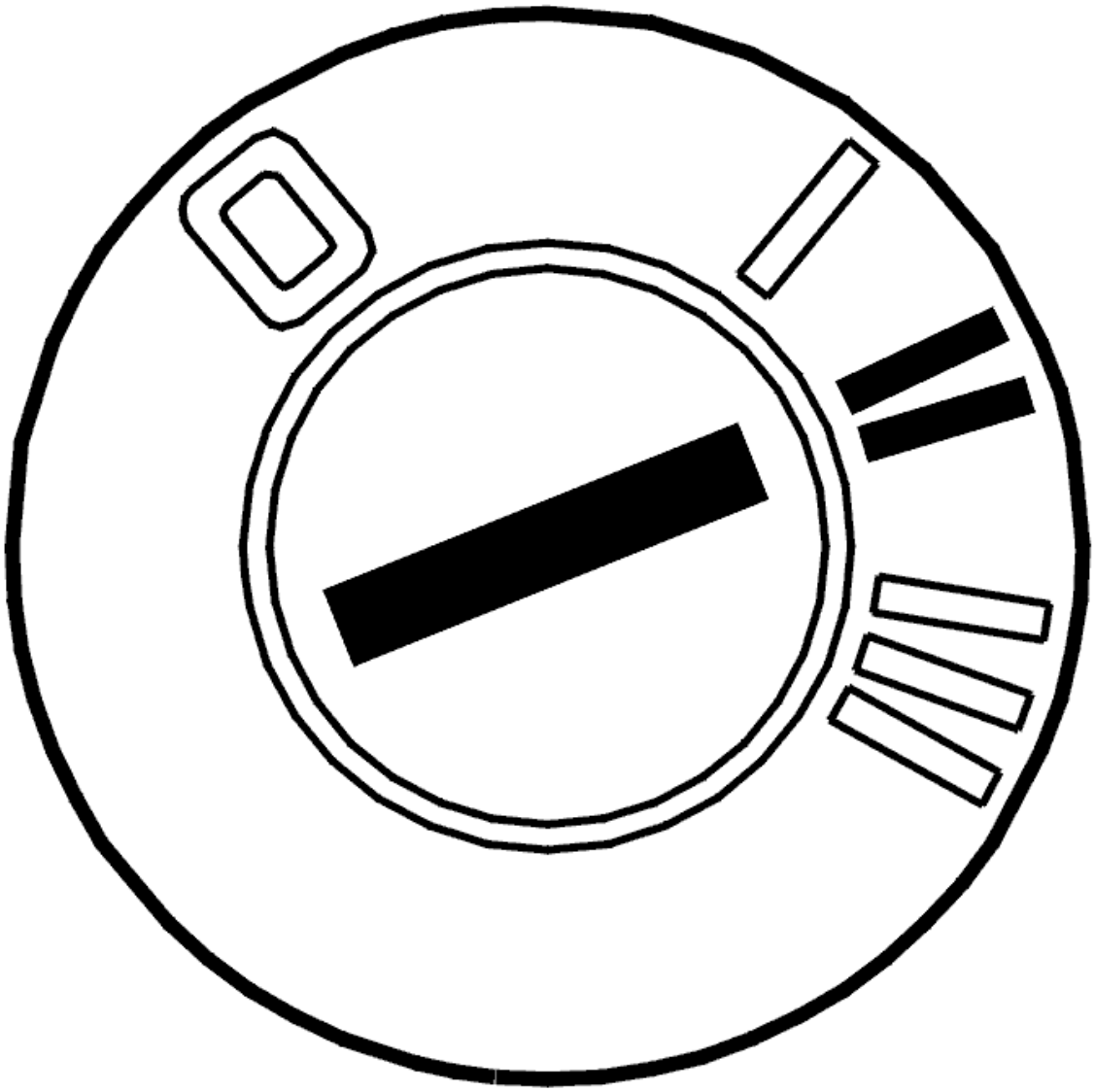

Fig. 291: Identifying Ignition ON
Courtesy of VOLVO CARS CORPORATION

- Ignition on.
- Switch between high and low beam.

  If the left-hand Xenon lamp does not switch between high and low beam, the fault is permanent.

  If the left-hand Xenon lamp switches between high and low beam, the fault was present previously but is no longer active, intermittent fault.

Do the xenon lamps switch between high and low beam?

- **YES**

OKAY: Troubleshooting has been completed.

- **NO**

  Refer to **REPLACING A COMPONENT**

REPLACING A COMPONENT

The diagnostic trouble code (DTC) indicates that the actuator motor in the left Xenon lamp is damaged.

Remedy as necessary.

Other information

- see **CONNECTING THE BREAKOUT BOX**
- -2004: **SIGNAL SPECIFICATION**
- 2005-: **SIGNAL SPECIFICATION**
- see **LIGHTING - REMOVAL, REPLACEMENT AND INSTALLATION**
- see **CHECKING WIRING AND TERMINALS**

- **Continue**

  Refer to **VERIFICATION**

VERIFICATION

VERIFICATION

HINT: After carrying out the repair, check that the fault has been remedied.

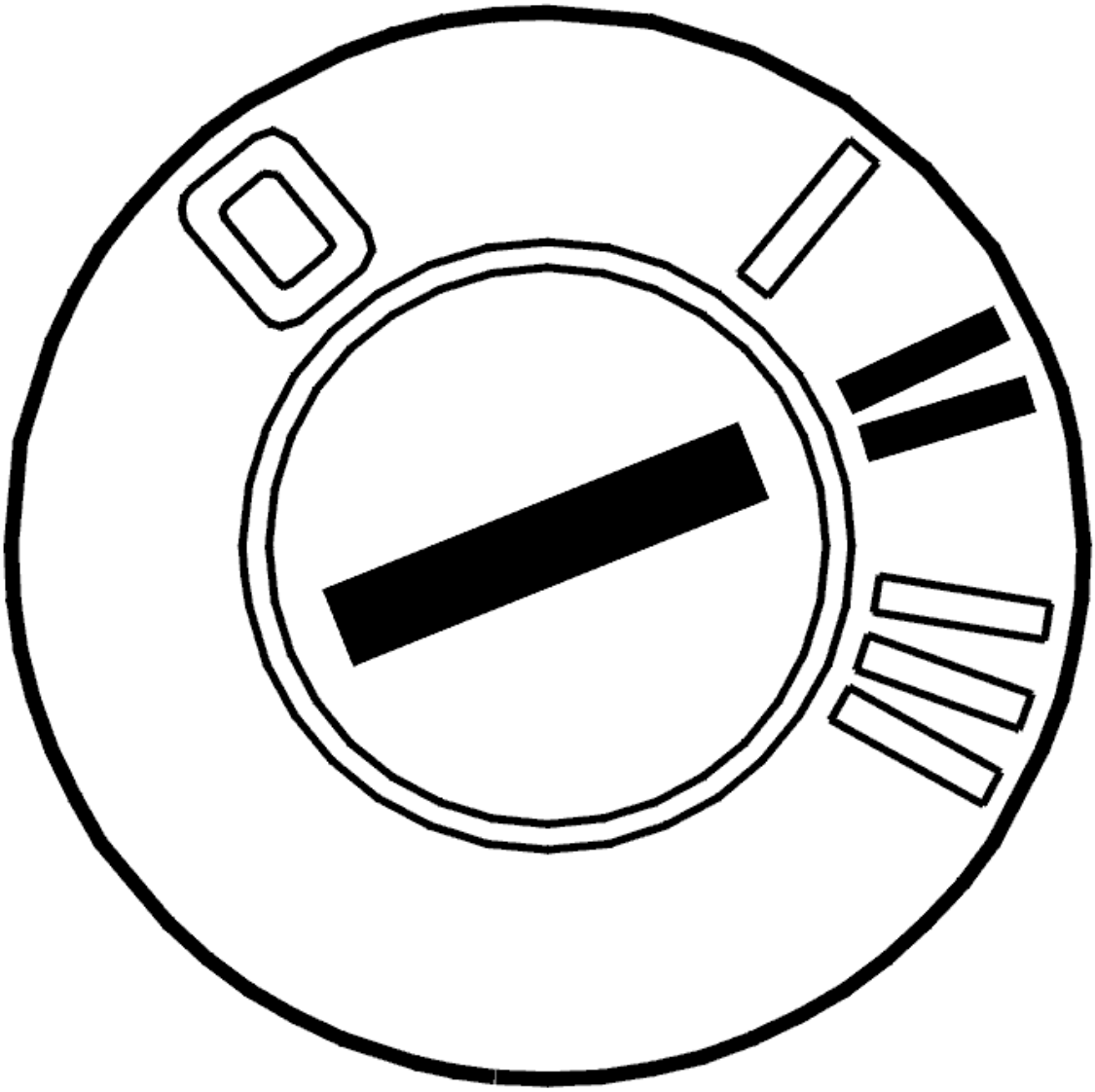

Fig. 292: Identifying Ignition ON
Courtesy of VOLVO CARS CORPORATION

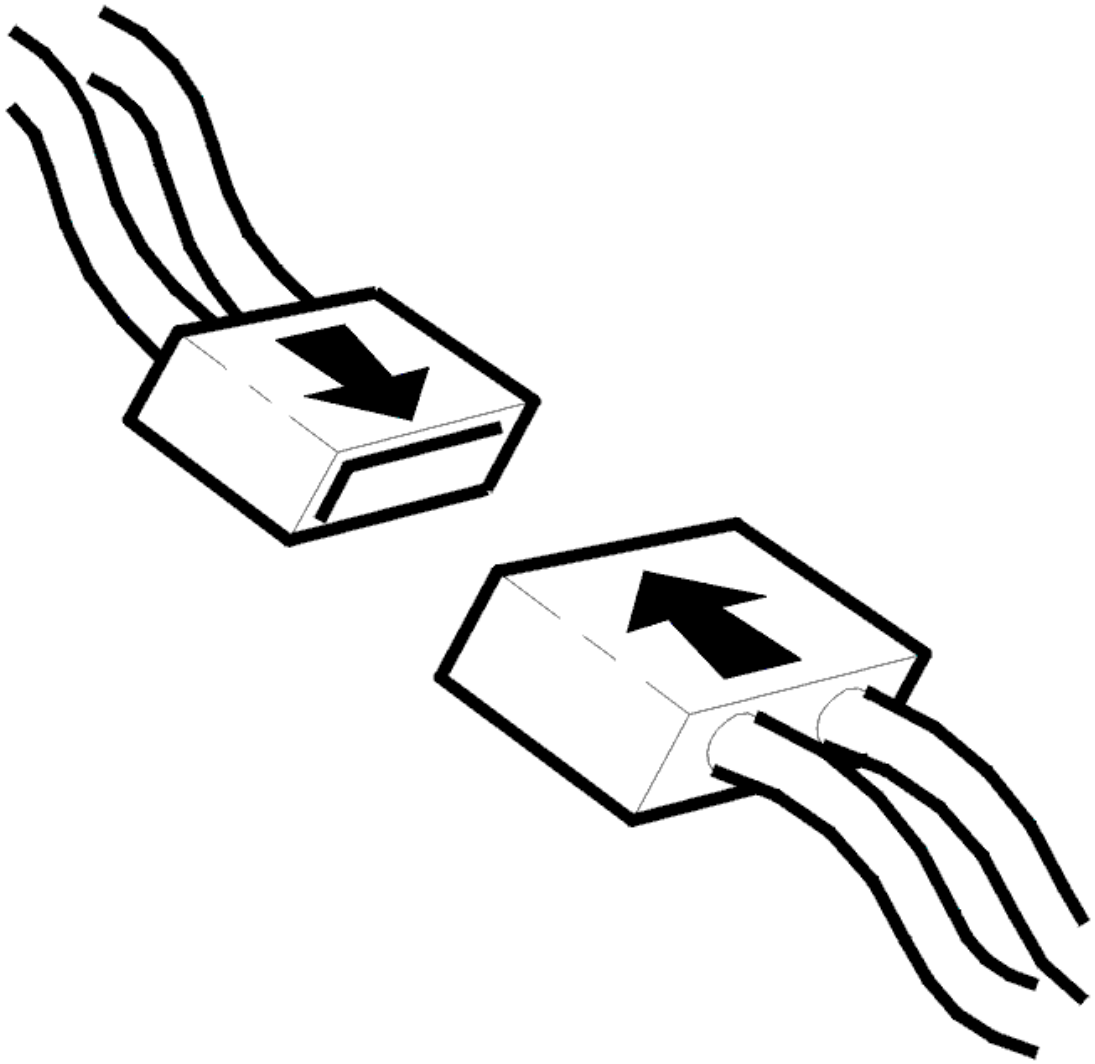

Fig. 293: Connecting Connector
Courtesy of VOLVO CARS CORPORATION

- Ignition off
- Reinstall the connectors, components etc.
- Ignition on.

  Switch between high and low beam.

Is the function OK?

- **YES**

  VERIFIED: Troubleshooting has been completed.

- **NO**

  Refer to **INFORMATION**

INFORMATION

FAULT-TRACING INFORMATION

The fault should have been detected and remedied. As this is not the case fault-tracing has failed.

Exit fault-tracing for this diagnostic trouble code (DTC) or make another attempt.

CEM-8F16: XENON LAMP LEFT. SIGNAL TOO LOW (2005-2012)

DIAGNOSTIC TROUBLE CODE (DTC) INFORMATION CEM-8F16

Condition

The central electronic module (CEM) checks the signal from the left-hand Xenon lamp.

The diagnostic trouble code (DTC) is stored if the central electronic module (CEM) registers that the signal from the left-hand Xenon bulb is too low.

The diagnostic trouble code (DTC) can be diagnosed at ignition switch position II.

Substitute Value

- Shortest headlamp range will be used.

Possible Source

- Short-circuit to ground in the signal cable
- The actuator motor in the xenon lamp housing has jammed
- Damaged actuator motor in the xenon lamp housing.

Fault symptom[s]

- The low beam is constantly lit
- The high beam is constantly lit
- The road surface is not illuminated.
- Headlights/Headlight aim is off

SIGNAL TOO LOW

CHECKING THE STATUS

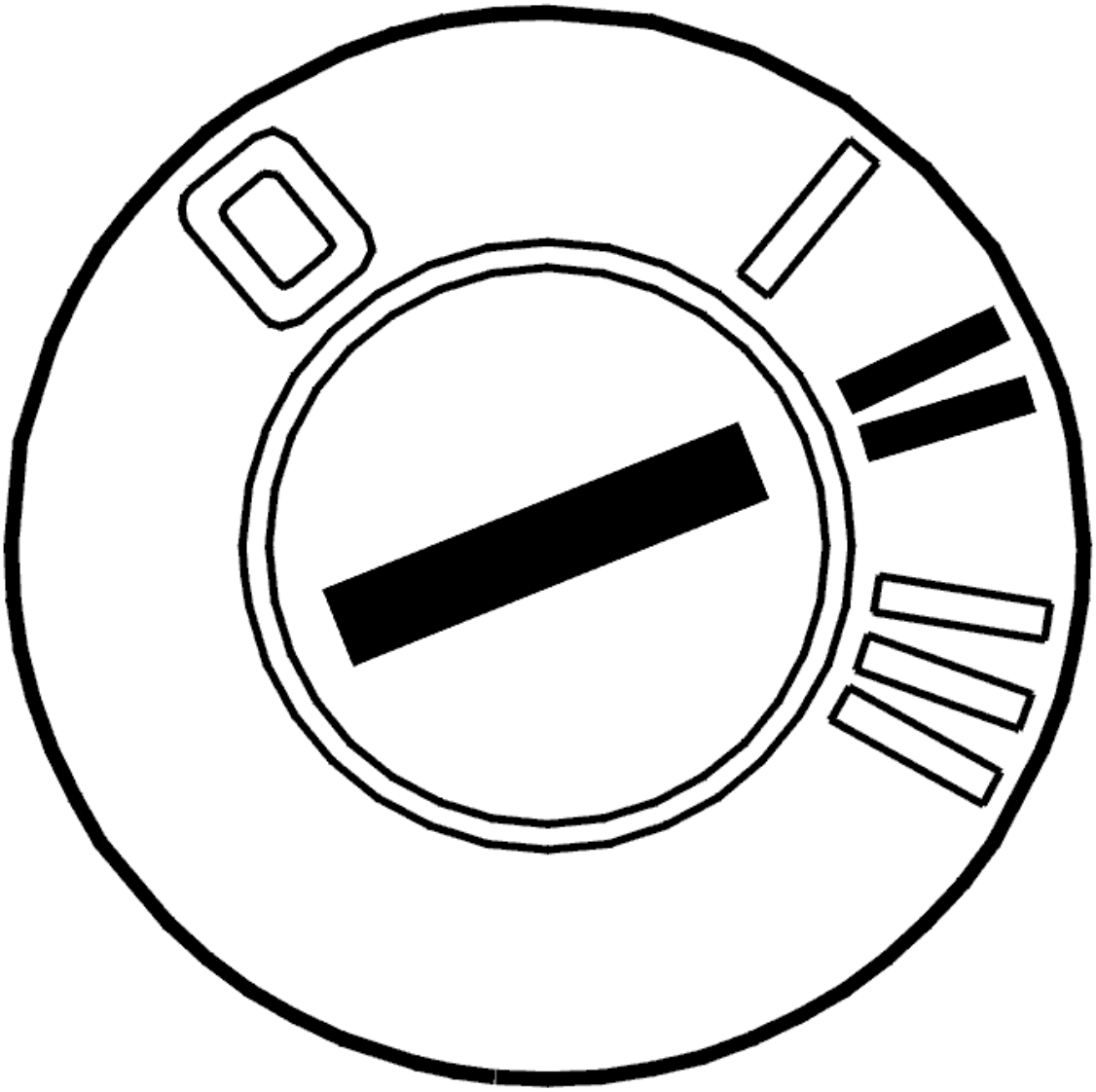

Fig. 294: Identifying Ignition ON
Courtesy of VOLVO CARS CORPORATION

- Ignition on.
- Switch between high and low beam.

  If the left-hand Xenon lamp does not switch between high and low beam, the fault is permanent.

  If the left-hand Xenon lamp switches between high and low beam, the fault was present previously but is no longer active, intermittent fault.

- **Continue**

  Refer to **CHECKING COMPONENTS AND WIRING**

CHECKING COMPONENTS AND WIRING

Check the signal cable between the central electronic module (CEM) and the actuating motor in the left Xenon headlamp for short circuit to ground.

If no fault is found, replace the left headlamp.

Remedy as necessary.

Other information

- see **CONNECTING THE BREAKOUT BOX**
- -2004: **SIGNAL SPECIFICATION**
- 2005-: **SIGNAL SPECIFICATION**
- see **LIGHTING - REMOVAL, REPLACEMENT AND INSTALLATION**
- see **CHECKING WIRING AND TERMINALS**

- **Continue**

  Refer to **VERIFICATION**

VERIFICATION

VERIFICATION

HINT: After carrying out the repair, check that the fault has been remedied.

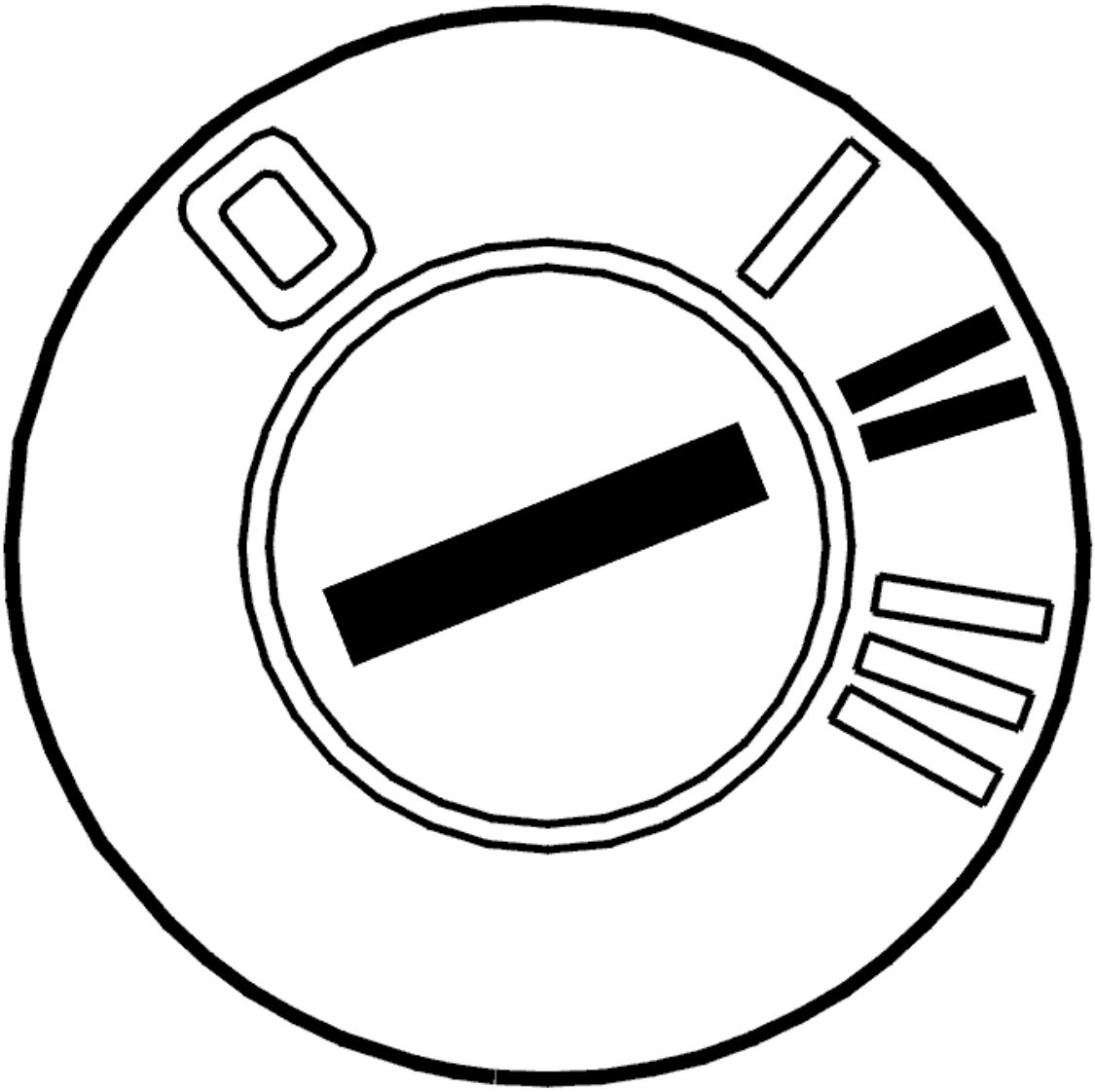

Fig. 295: Identifying Ignition ON
Courtesy of VOLVO CARS CORPORATION

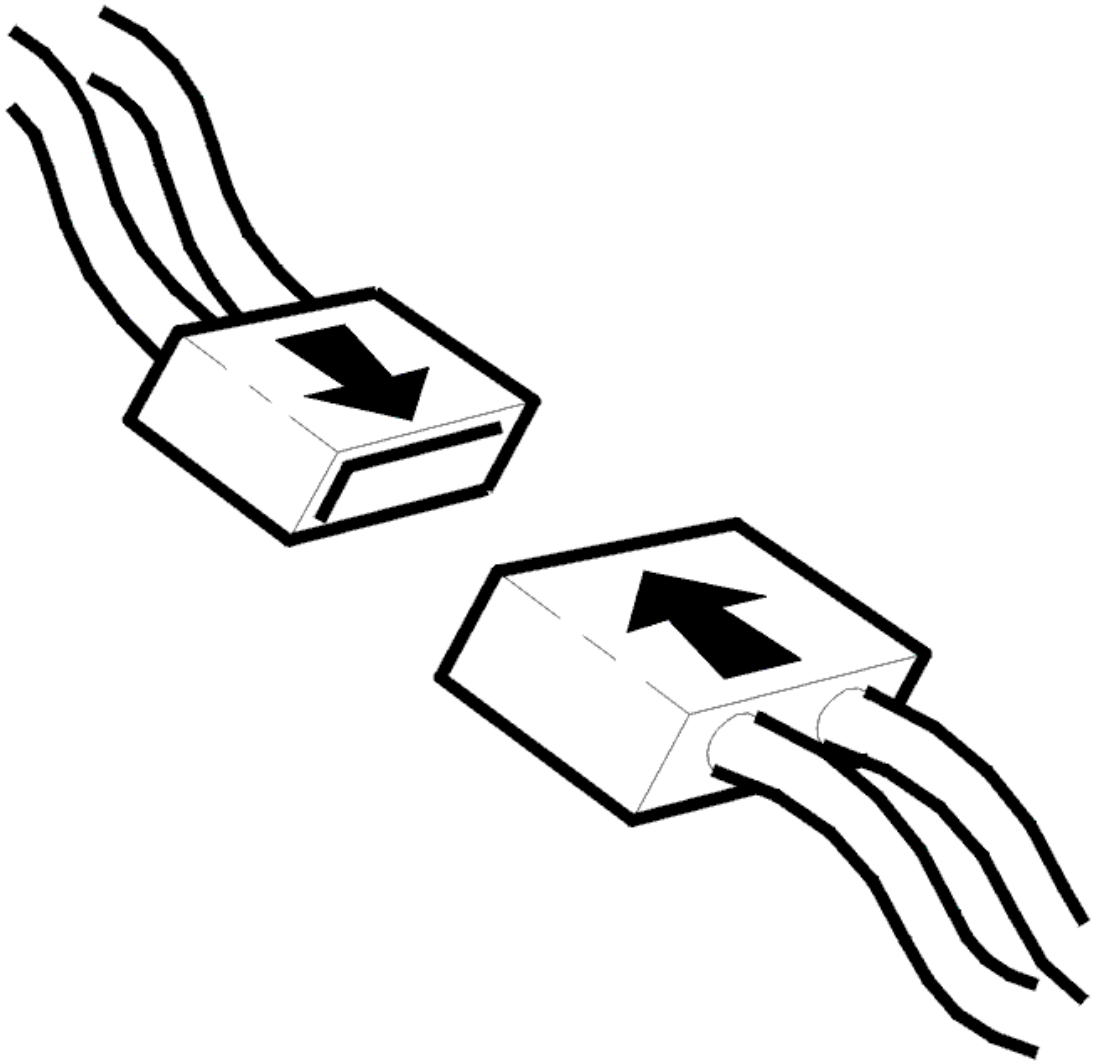

Fig. 296: Connecting Connector
Courtesy of VOLVO CARS CORPORATION

- Ignition off
- Reinstall the connectors, components etc.
- Ignition on.

  Switch between high and low beam.

Is the function OK?

- **YES**

  VERIFIED: Troubleshooting has been completed.

- **NO**

  Refer to **INFORMATION**

INFORMATION

FAULT-TRACING INFORMATION

The fault should have been detected and remedied. As this is not the case fault-tracing has failed.

Exit fault-tracing for this diagnostic trouble code (DTC) or make another attempt.

CEM-8F16: XENON LAMP LEFT. SIGNAL TOO LOW (2003-2004)

DIAGNOSTIC TROUBLE CODE (DTC) INFORMATION

Condition

The central electronic module checks the signal from the left Xenon lamp.

Diagnostic trouble code (DTC) CEM-8F16 is stored in the central electrical module if the central electronic module registers too low a signal from the left Xenon lamp.

Diagnostic trouble code (DTC) CEM-8F16 can be detected when the ignition is on for at least 10 seconds and the battery voltage is > 10.5 volts.

Substitute Value

- None.

Possible Source

- Short-circuit to ground in the signal cable
- The actuator motor in the xenon lamp housing has jammed
- Defective actuator motor in the xenon lamp housing.

Fault symptom[s]

- The low beam is constantly lit
- The high beam is constantly lit
- The road surface is not illuminated.
- Headlights/Headlight aim is off

SIGNAL TOO LOW

CHECKING THE STATUS

Check if the fault is permanent or intermittent by switching between high and low beam.

If the left xenon lamp does not switch between the high and low beam it means that the fault is permanent.

If the left xenon lamp switches between high and low beam it indicates that the fault was present previously but is no longer active, intermittent fault.

- **Continue**

  Refer to **CHECKING COMPONENTS AND WIRING**

CHECKING COMPONENTS AND WIRING

Check the cable between the central electronic module (CEM) terminal #A2 and the left lamp housing terminal #5A (10/1). Check for a short-circuit to ground.

Replace the left-hand lamp housing if no fault is found.

Other information

- To connect the breakout box, see **CONNECTING THE BREAKOUT BOX**
- To access or replace the lamp housing, see **LIGHTING - REMOVAL, REPLACEMENT AND INSTALLATION**
- -2004: **SIGNAL SPECIFICATION**
- 2005-: **SIGNAL SPECIFICATION**
- see **CHECKING WIRING AND TERMINALS** .

- **Continue**

  Refer to **VERIFICATION**

VERIFICATION

VERIFICATION

HINT: After carrying out the repair, check that the fault has been remedied.

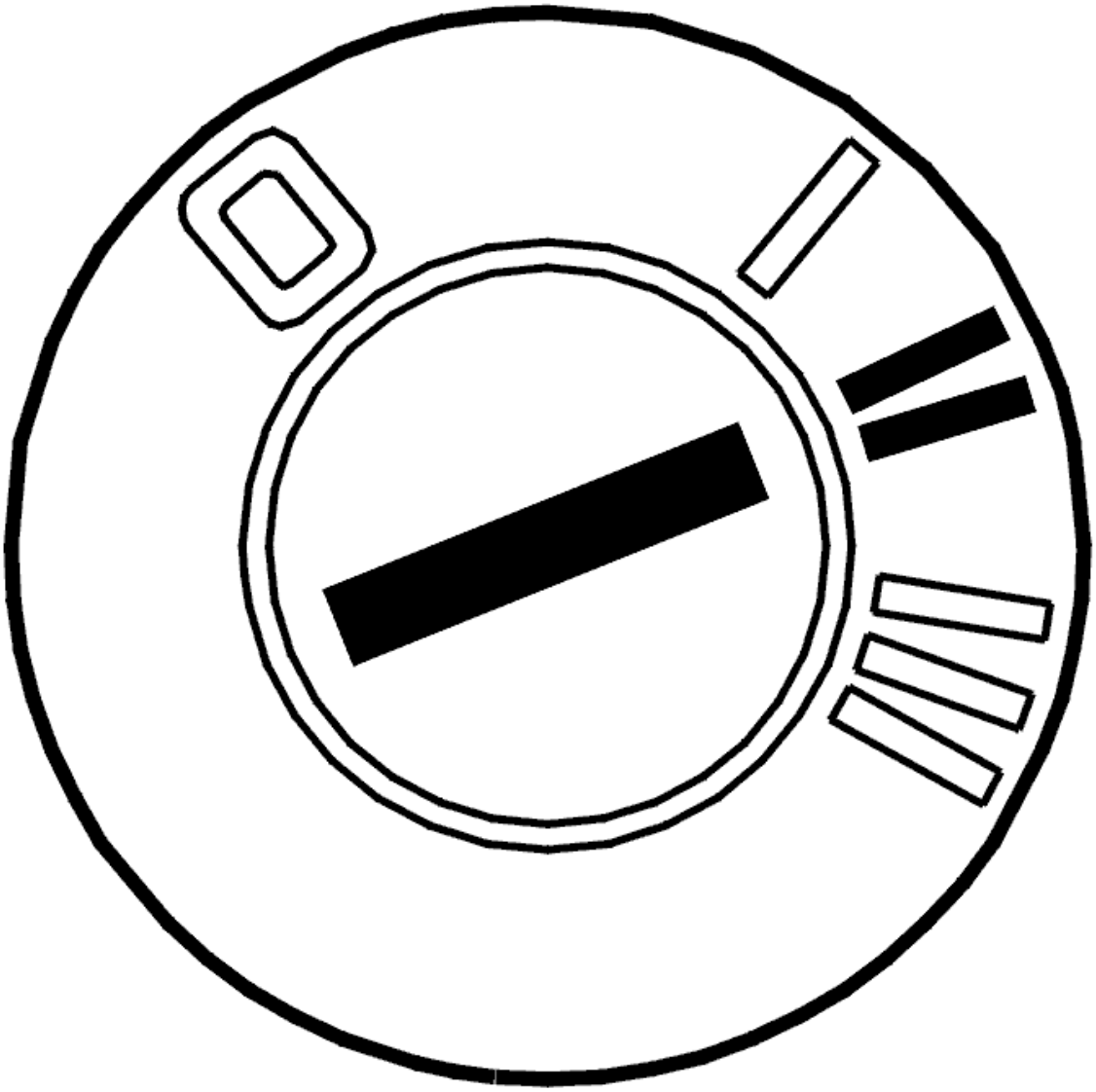

Fig. 297: Identifying Ignition ON
Courtesy of VOLVO CARS CORPORATION

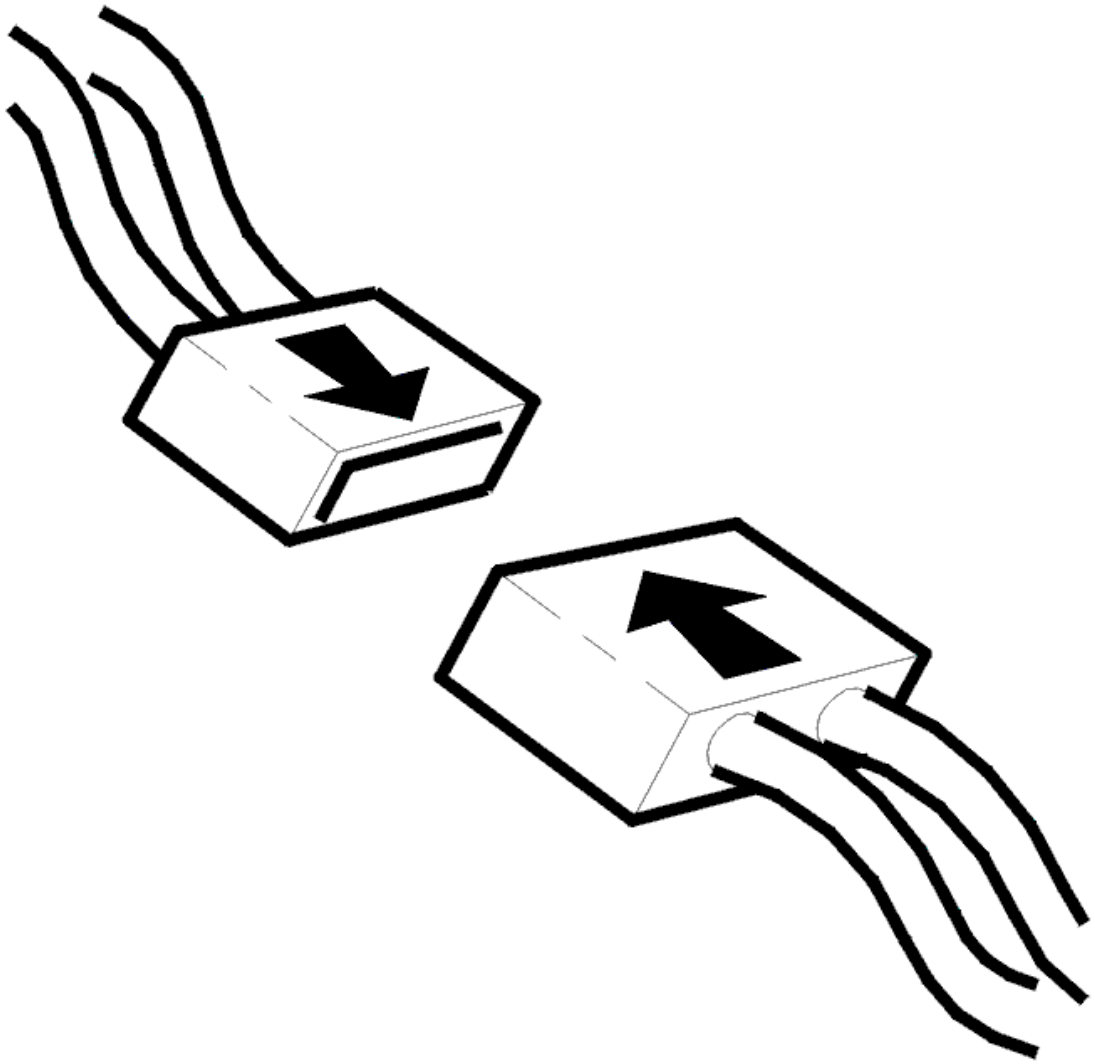

Fig. 298: Connecting Connector
Courtesy of VOLVO CARS CORPORATION

- Ignition off
- Reinstall the connectors, components etc.
- Ignition on.

  Switch on the lighting and shift between high and low beam.

Do the xenon lamps switch between high and low beam?

- **YES**

  VERIFIED: Troubleshooting has been completed.

- **NO**

  Refer to **INFORMATION**

INFORMATION

FAULT-TRACING INFORMATION

The fault should have been detected and remedied. As this is not the case fault-tracing has failed.

Exit fault-tracing for this diagnostic trouble code (DTC) or make another attempt.

CEM-8F17: XENON LAMP LEFT. FAULTY SIGNAL (2005-2012)

DIAGNOSTIC TROUBLE CODE (DTC) INFORMATION CEM-8F17

Condition

The central electronic module (CEM) checks the signal from the left-hand Xenon lamp.

The diagnostic trouble code (DTC) is stored if the central electronic module (CEM) registers that the signal from the left-hand Xenon bulb is faulty.

The diagnostic trouble code (DTC) can be detected when the ignition has been on for at least 10 seconds and the battery voltage is above 10.5 V.

The diagnostic trouble code (DTC) can be diagnosed at ignition switch position II.

Substitute Value

- Shortest headlamp range will be used.

Possible Source

- Damaged gas discharge lamp module (GDL).

Fault symptom[s]

- The low beam is constantly lit
- The high beam is constantly lit
- The road surface is not illuminated.
- Headlights/Headlight aim is off

FAULTY SIGNAL

CHECKING THE STATUS

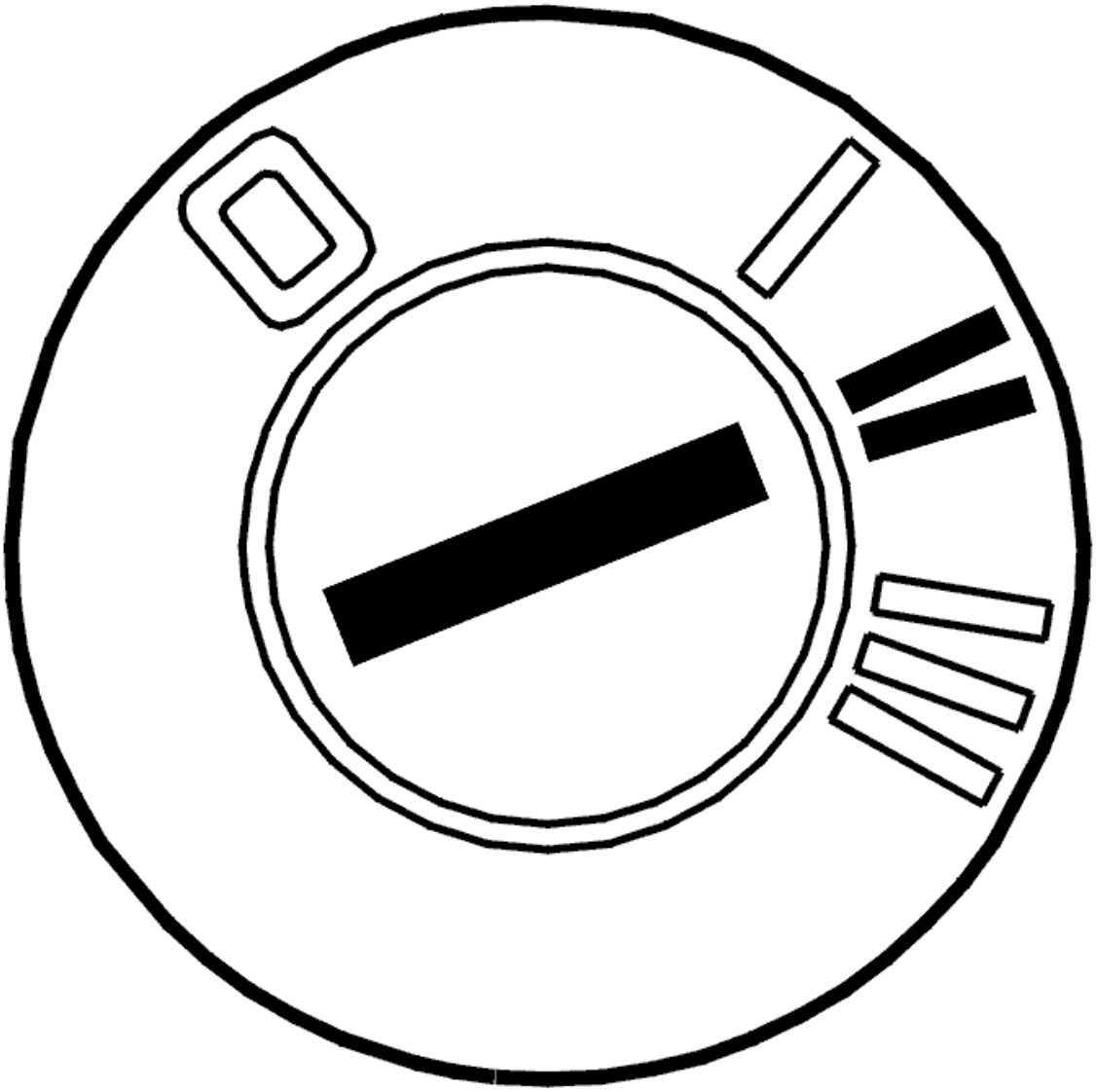

Fig. 299: Identifying Ignition ON
Courtesy of VOLVO CARS CORPORATION

- Ignition on.
- Switch between high and low beam.

  If the left-hand Xenon lamp does not switch between high and low beam, the fault is permanent.

  If the left-hand Xenon lamp switches between high and low beam, the fault was present previously but is no longer active, intermittent fault.

- **Continue**

  Refer to **CHECKING COMPONENTS AND WIRING**

CHECKING COMPONENTS AND WIRING

Check the power supply and grounding point for the actuating motor in the left headlamp.

If no fault is found, replace the left headlamp.

Remedy as necessary.

Other information

- see **CONNECTING THE BREAKOUT BOX**
- -2004: **SIGNAL SPECIFICATION**
- 2005-: **SIGNAL SPECIFICATION**
- see **LIGHTING - REMOVAL, REPLACEMENT AND INSTALLATION**
- see **CHECKING WIRING AND TERMINALS**

- **Continue**

  Refer to **VERIFICATION**

VERIFICATION

VERIFICATION

HINT: After carrying out the repair, check that the fault has been remedied.

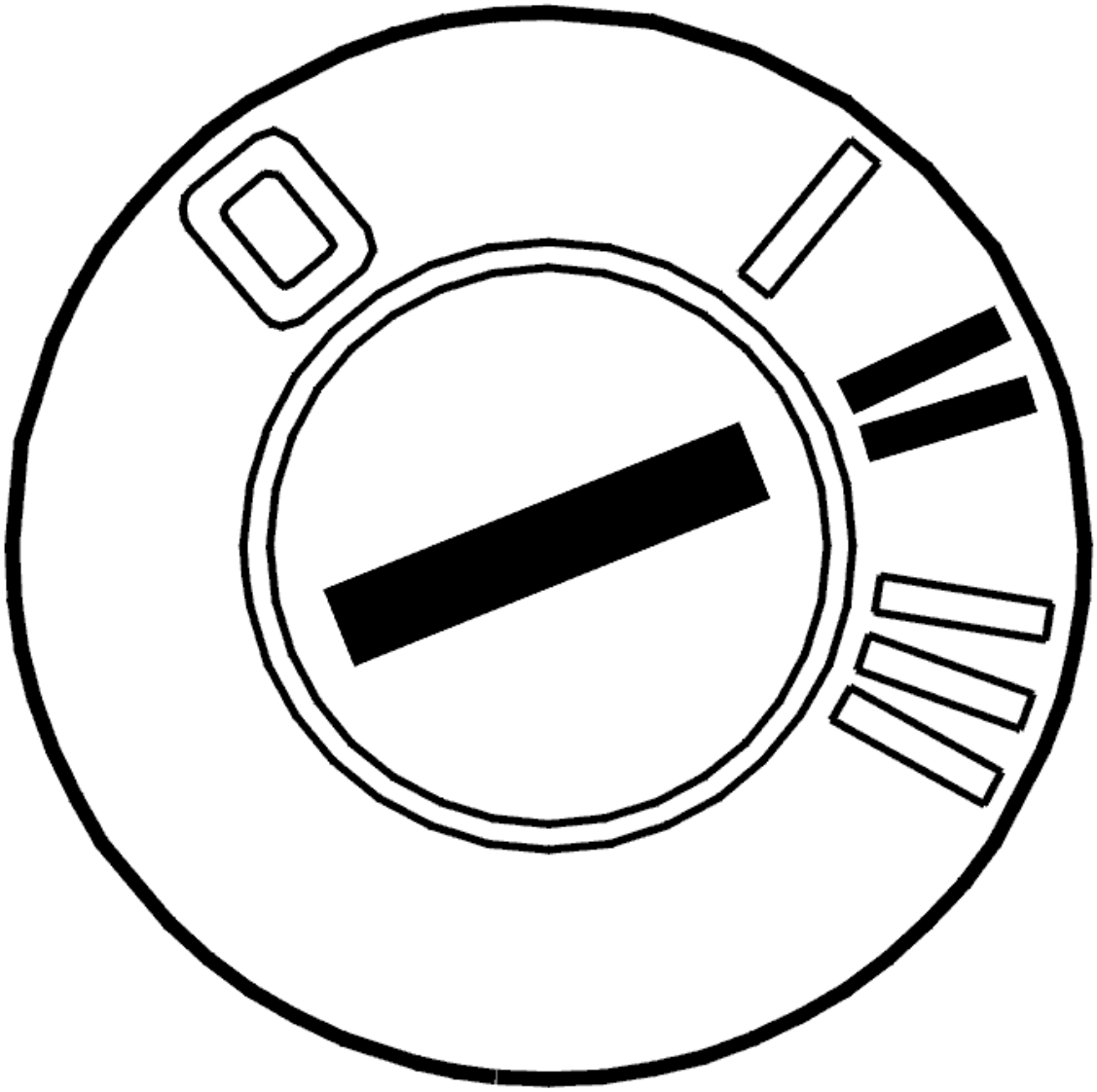

Fig. 300: Identifying Ignition ON
Courtesy of VOLVO CARS CORPORATION

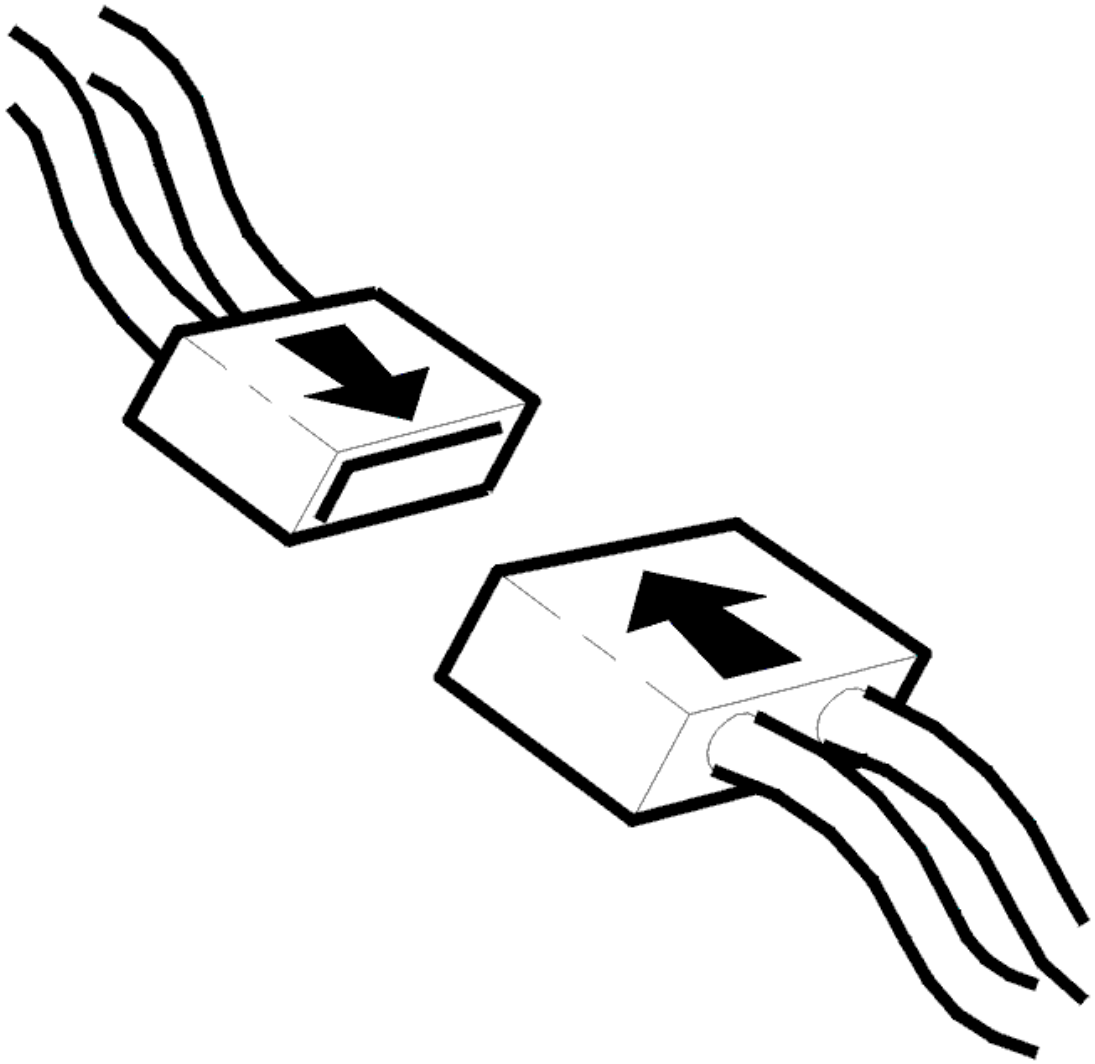

Fig. 301: Connecting Connector
Courtesy of VOLVO CARS CORPORATION

- Ignition off
- Reinstall the connectors, components etc.
- Ignition on.

  Switch between high and low beam.

Is the function OK?

- **YES**

  VERIFIED: Troubleshooting has been completed.

- **NO**

  Refer to **INFORMATION**

INFORMATION

FAULT-TRACING INFORMATION

The fault should have been detected and remedied. As this is not the case fault-tracing has failed.

Exit fault-tracing for this diagnostic trouble code (DTC) or make another attempt.

CEM-8F17: XENON LAMP LEFT. FAULTY SIGNAL (2003-2004)

DIAGNOSTIC TROUBLE CODE (DTC) INFORMATION

Condition

The central electronic module checks the signal from the left Xenon lamp.

Diagnostic trouble code (DTC) REM-8F17 is stored in the central electronic module if the central electronic module registers a faulty signal from the left Xenon lamp.

Diagnostic trouble code (DTC) CEM-8F17 can be detected when the ignition is on for at least 10 seconds and the battery voltage is > 10.5 volts.

Substitute Value

- None.

Possible Source

- Defective control box for the Xenon lamp.

Fault symptom[s]

- The low beam is constantly lit
- The high beam is constantly lit
- The road surface is not illuminated.
- Headlights/Headlight aim is off

FAULTY SIGNAL

CHECKING THE STATUS

Check if the fault is permanent or intermittent by switching between high and low beam.

If the left xenon lamp does not switch between the high and low beam it means that the fault is permanent.

If the left xenon lamp switches between high and low beam it indicates that the fault was present previously but is no longer active, intermittent fault.

Is the fault permanent?

- **YES**

  Refer to **REPLACING THE COMPONENT**

- **NO**

  Refer to **VERIFICATION**

REPLACING THE COMPONENT

The diagnostic trouble code (DTC) indicates that the control module in the left Xenon lamp is defective.

Replace the left lamp housing.

Other information:

- To replace the lamp housing, see **LIGHTING - REMOVAL, REPLACEMENT AND INSTALLATION** .

- **Continue**

  Refer to **VERIFICATION**

VERIFICATION

VERIFICATION

HINT: After carrying out the repair, check that the fault has been remedied.

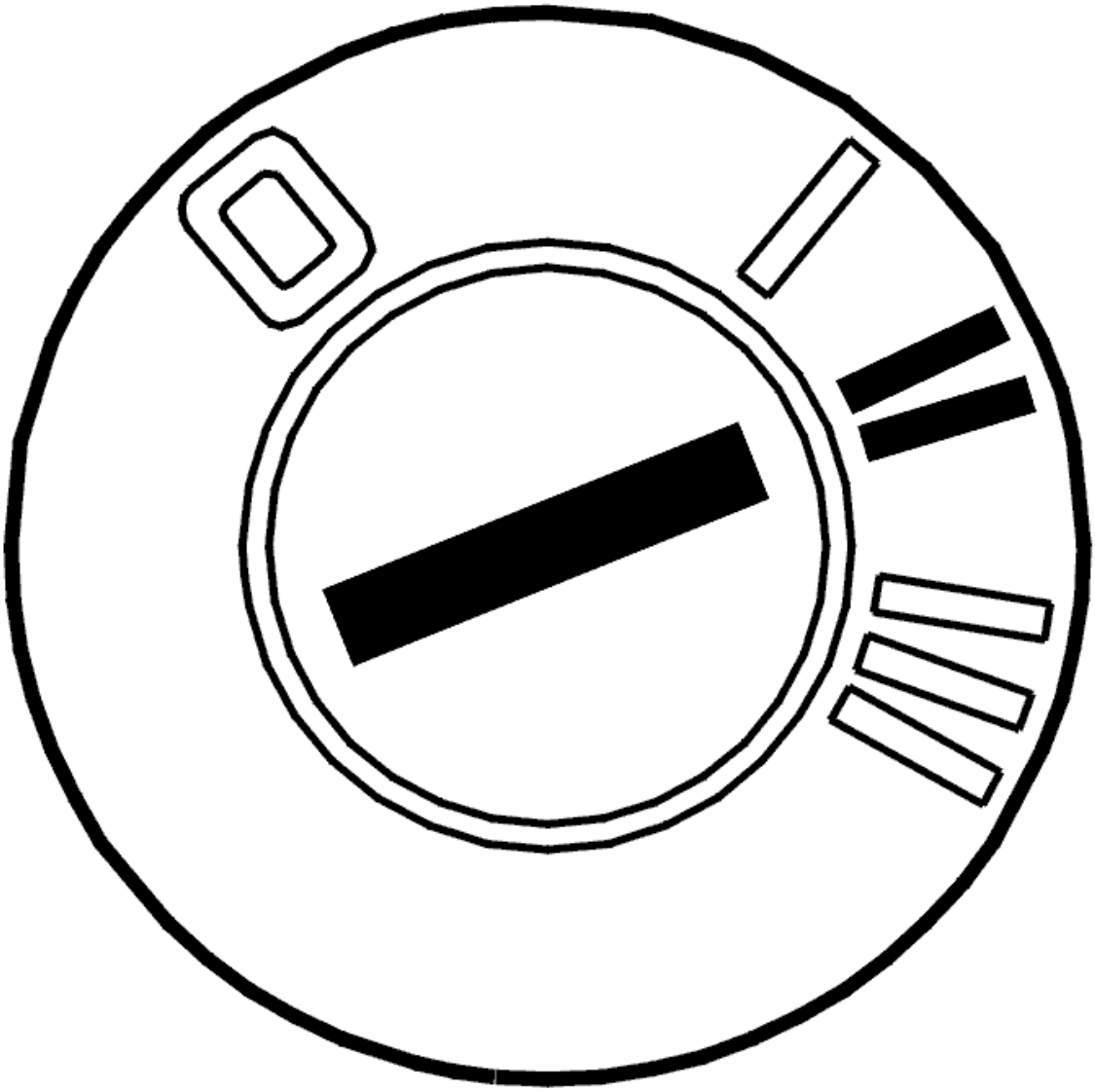

Fig. 302: Identifying Ignition ON
Courtesy of VOLVO CARS CORPORATION

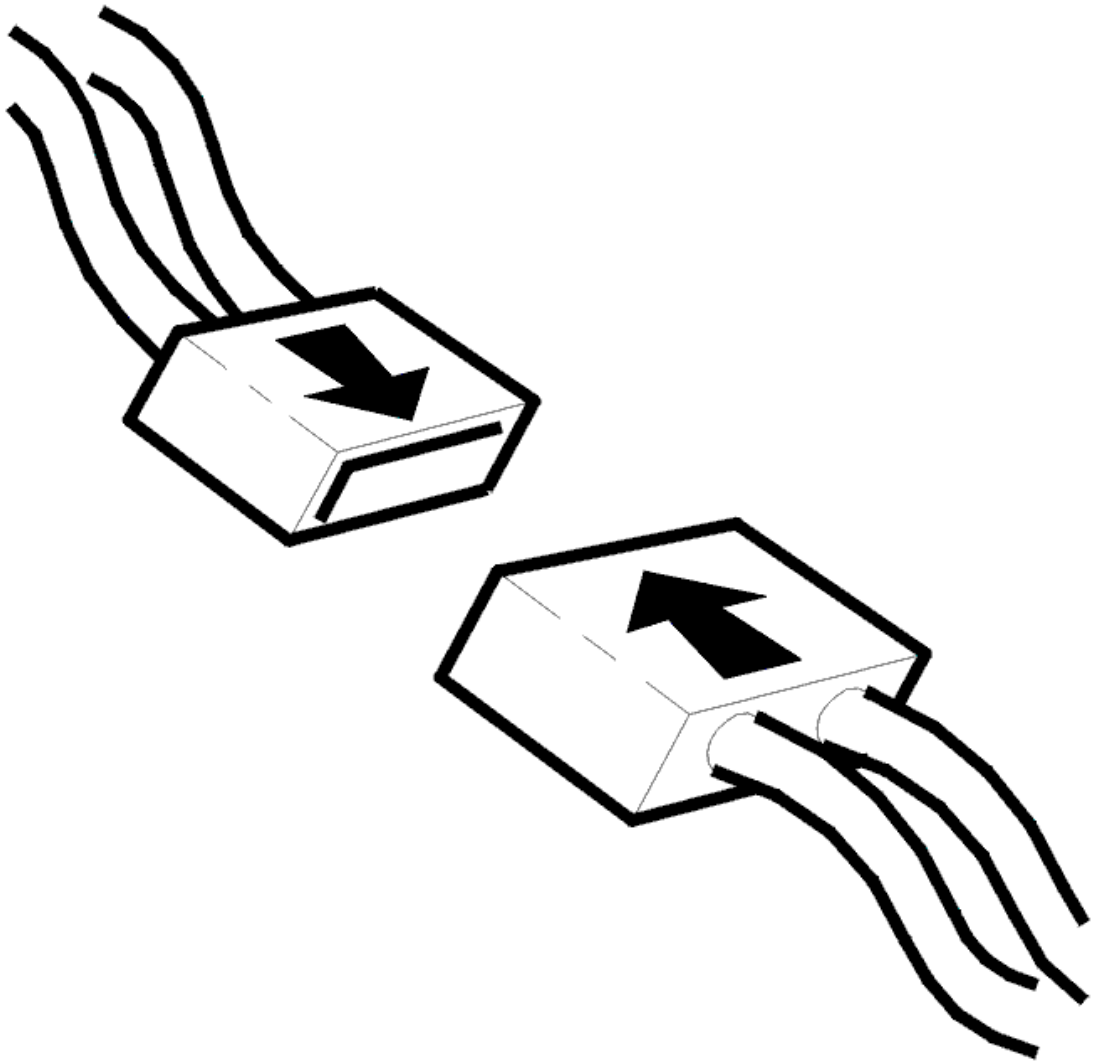

Fig. 303: Connecting Connector
Courtesy of VOLVO CARS CORPORATION

- Ignition off
- Reinstall the connectors, components etc.
- Ignition on.

  Switch on the lighting and shift between high and low beam.

Do the xenon lamps switch between high and low beam?

- **YES**

  VERIFIED: Troubleshooting has been completed.

- **NO**

  Refer to **INFORMATION**

INFORMATION

FAULT-TRACING INFORMATION

The fault should have been detected and remedied. As this is not the case fault-tracing has failed.

Exit fault-tracing for this diagnostic trouble code (DTC) or make another attempt.

CEM-8F18: XENON LAMP LEFT. SIGNAL TOO HIGH / SIGNAL MISSING (2003-2004)

DIAGNOSTIC TROUBLE CODE (DTC) INFORMATION

Condition

The central electronic module checks the signal from the left Xenon lamp.

Diagnostic trouble code (DTC) CEM-8F18 is stored in the central electrical module if the central electronic module registers too high a signal from the left Xenon lamp.

Diagnostic trouble code (DTC) CEM-8F18 can be detected when the ignition is on for at least 10 seconds and the battery voltage is > 10.5 volts.

Substitute Value

- None.

Possible Source

- Short-circuit to supply voltage in the signal cable
- Open-circuit in the signal cable
- The actuator motor in the xenon lamp housing has jammed
- Defective actuator motor in the xenon lamp housing.

Fault symptom[s]

- The low beam is constantly lit
- The high beam is constantly lit
- The road surface is not illuminated.
- Headlights/Headlight aim is off

SIGNAL TOO HIGH / SIGNAL MISSING

CHECKING THE STATUS

Check if the fault is permanent or intermittent by switching between high and low beam.

If the left xenon lamp does not switch between the high and low beam it means that the fault is permanent.

If the left xenon lamp switches between high and low beam it indicates that the fault was present previously but is no longer active, intermittent fault.

- **Continue**

  Refer to **CHECKING COMPONENTS AND WIRING**

CHECKING COMPONENTS AND WIRING

Check the cable between the central electronic module (CEM) terminal #A2 and the left lamp housing terminal #5A (10/1). Check for an open-circuit. Check for a short-circuit to supply voltage.

HINT: The actuator motor is supplied with voltage via the parking lamp circuit. If the parking lamp does not function carry out the following checks:

Check the main fuse, passenger compartment fuse and relay for the parking lamps.

Check that the left parking lamp bulb is intact.

Check the cable between the passenger compartment fuse and lamp housing terminal #2A. Check the cable between lamp housing terminal #1A and the ground terminal. Check for an open-circuit.

Replace the lamp housing if no fault is found.

Other information:

- To connect the breakout box, see **CONNECTING THE BREAKOUT BOX**
- To access or replace the lamp housing, see **LIGHTING - REMOVAL, REPLACEMENT AND INSTALLATION**
- -2004: **SIGNAL SPECIFICATION**
- 2005-: **SIGNAL SPECIFICATION**
- see **CHECKING WIRING AND TERMINALS** .

- **Continue**

  Refer to **VERIFICATION**

VERIFICATION

VERIFICATION

HINT: After carrying out the repair, check that the fault has been remedied.

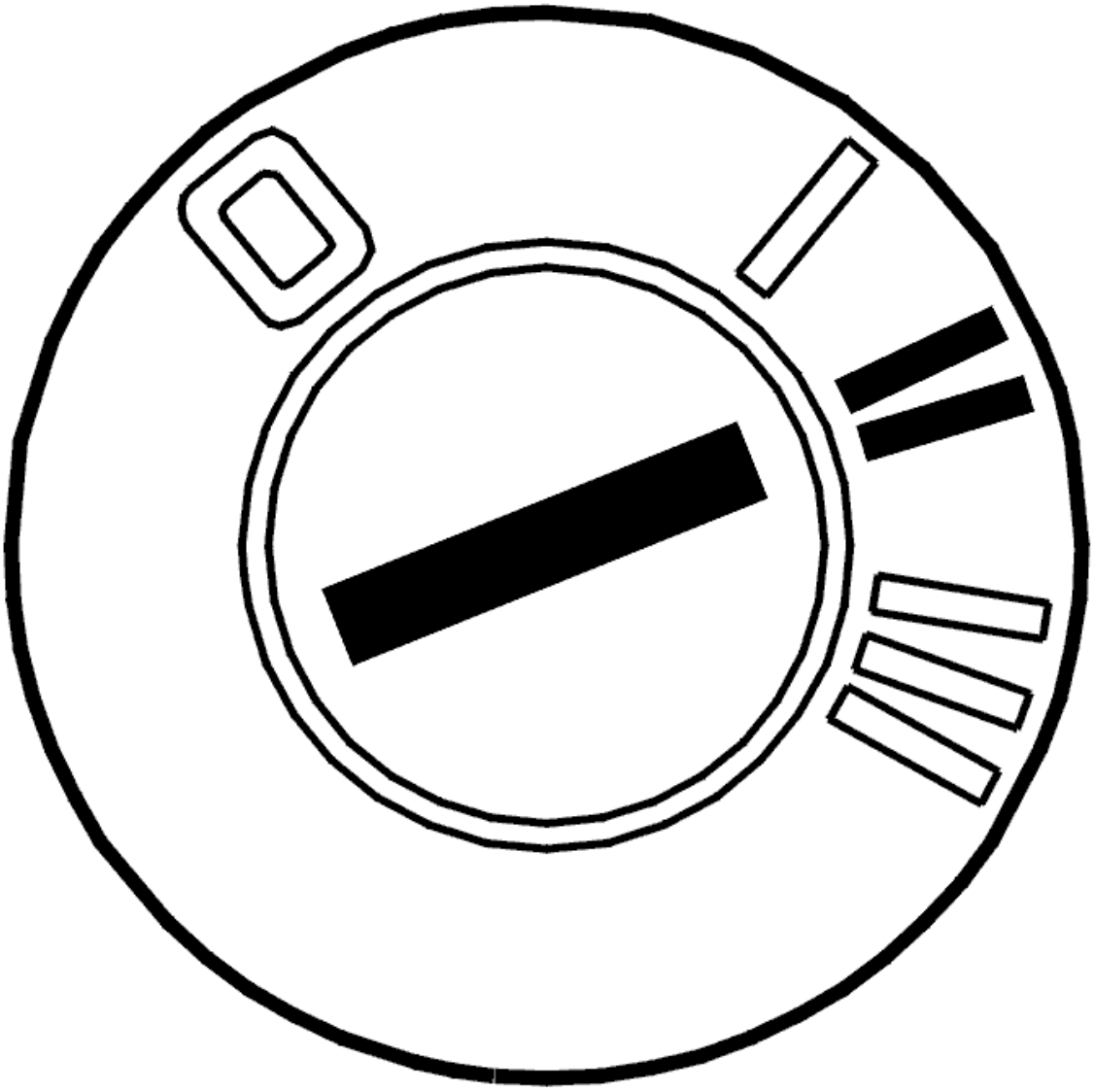

Fig. 304: Identifying Ignition ON
Courtesy of VOLVO CARS CORPORATION

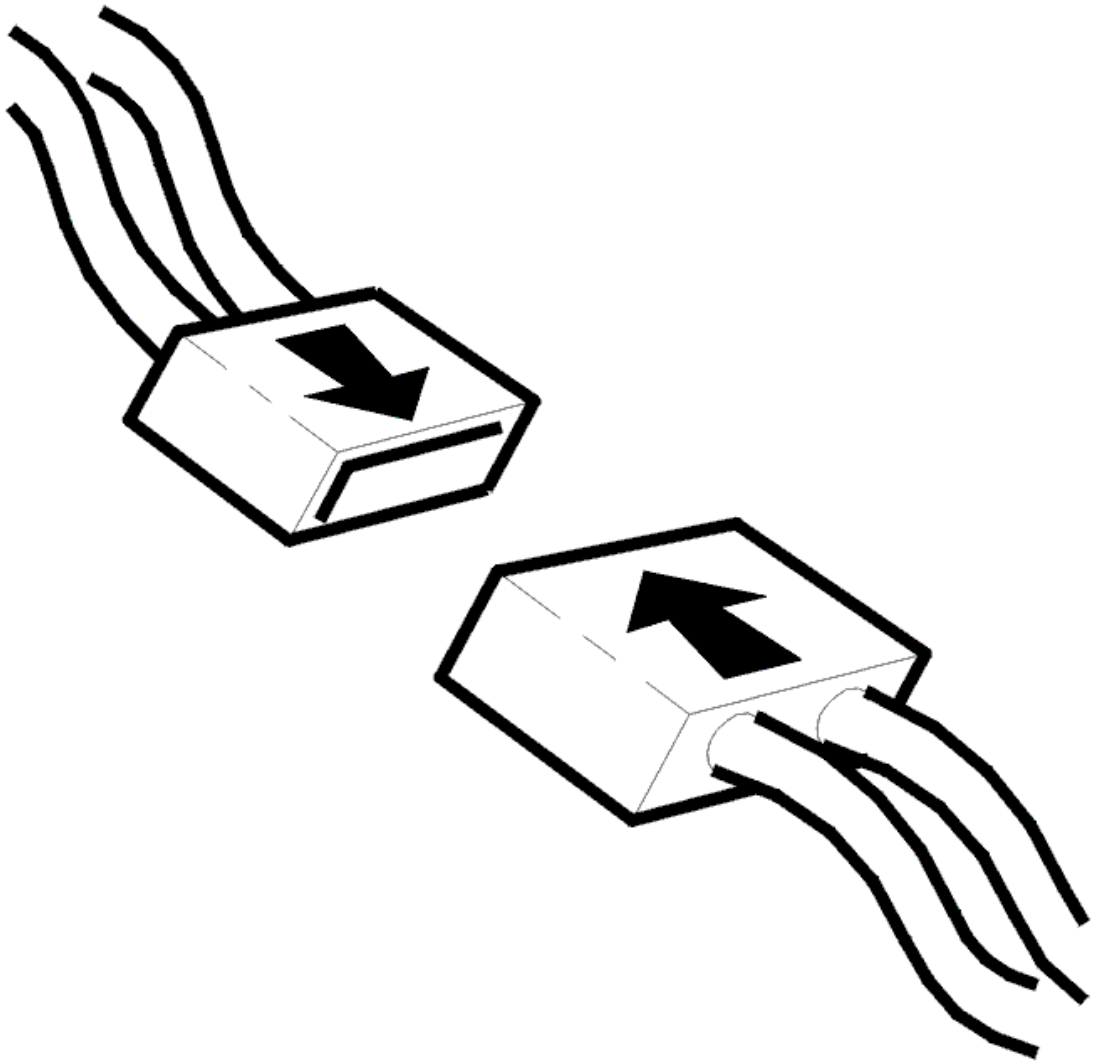

Fig. 305: Connecting Connector
Courtesy of VOLVO CARS CORPORATION

- Ignition off
- Reinstall the connectors, components etc.
- Ignition on.

  Switch on the lighting and shift between high and low beam.

Do the xenon lamps switch between high and low beam?

- **YES**

  VERIFIED: Troubleshooting has been completed.

- **NO**

  Refer to **INFORMATION**

INFORMATION

FAULT-TRACING INFORMATION

The fault should have been detected and remedied. As this is not the case fault-tracing has failed.

Exit fault-tracing for this diagnostic trouble code (DTC) or make another attempt.

CEM-8F18: XENON LAMP LEFT. SIGNAL TOO HIGH / SIGNAL MISSING (2005-2012)

DIAGNOSTIC TROUBLE CODE (DTC) INFORMATION CEM-8F18

Condition

The central electronic module (CEM) checks the signal from the left-hand Xenon lamp.

The diagnostic trouble code (DTC) is stored if the central electronic module (CEM) registers that the signal from the left-hand Xenon bulb is too high.

The diagnostic trouble code (DTC) can be detected when the ignition has been on for at least 10 seconds and the battery voltage is above 10.5 V.

The diagnostic trouble code (DTC) can be diagnosed at ignition switch position II.

Substitute Value

- Shortest headlamp range will be used.

Possible Source

- Short-circuit to supply voltage in the signal cable
- Open-circuit in the signal cable
- The actuator motor in the xenon lamp housing has jammed
- Damaged actuator motor in the xenon lamp housing.

Fault symptom[s]

- The low beam is constantly lit
- The high beam is constantly lit
- The road surface is not illuminated.

- Headlights/Headlight aim is off

SIGNAL TOO HIGH / SIGNAL MISSING

CHECKING THE STATUS

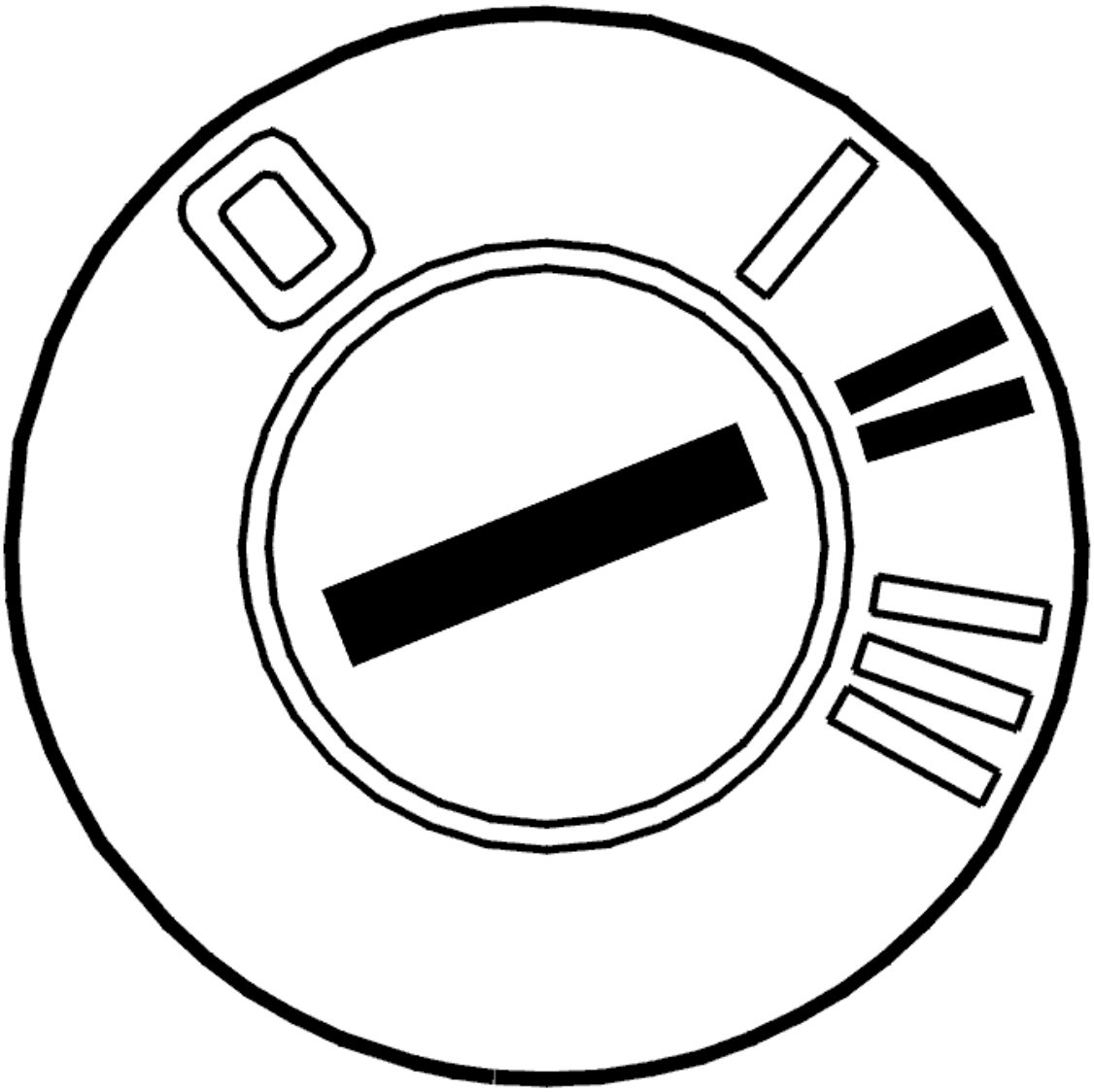

Fig. 306: Identifying Ignition ON
Courtesy of VOLVO CARS CORPORATION

- Ignition on.
- Switch between high and low beam.

  If the left-hand Xenon lamp does not switch between high and low beam, the fault is permanent.

  If the left-hand Xenon lamp switches between high and low beam, the fault was present previously but is

no longer active, intermittent fault.

- **Continue**

  Refer to **CHECKING COMPONENTS AND WIRING**

CHECKING COMPONENTS AND WIRING

Check the signal cable between the central electronic module (CEM) and the actuating motor in the left Xenon lamp for open circuit and short circuit to supply voltage.

If no fault is found, replace the left headlamp.

Remedy as necessary.

Other information

- see **CONNECTING THE BREAKOUT BOX**
- -2004: **SIGNAL SPECIFICATION**
- 2005-: **SIGNAL SPECIFICATION**
- see **LIGHTING - REMOVAL, REPLACEMENT AND INSTALLATION**
- see **CHECKING WIRING AND TERMINALS**

- **Continue**

  Refer to **VERIFICATION**

VERIFICATION

VERIFICATION

HINT: After carrying out the repair, check that the fault has been remedied.

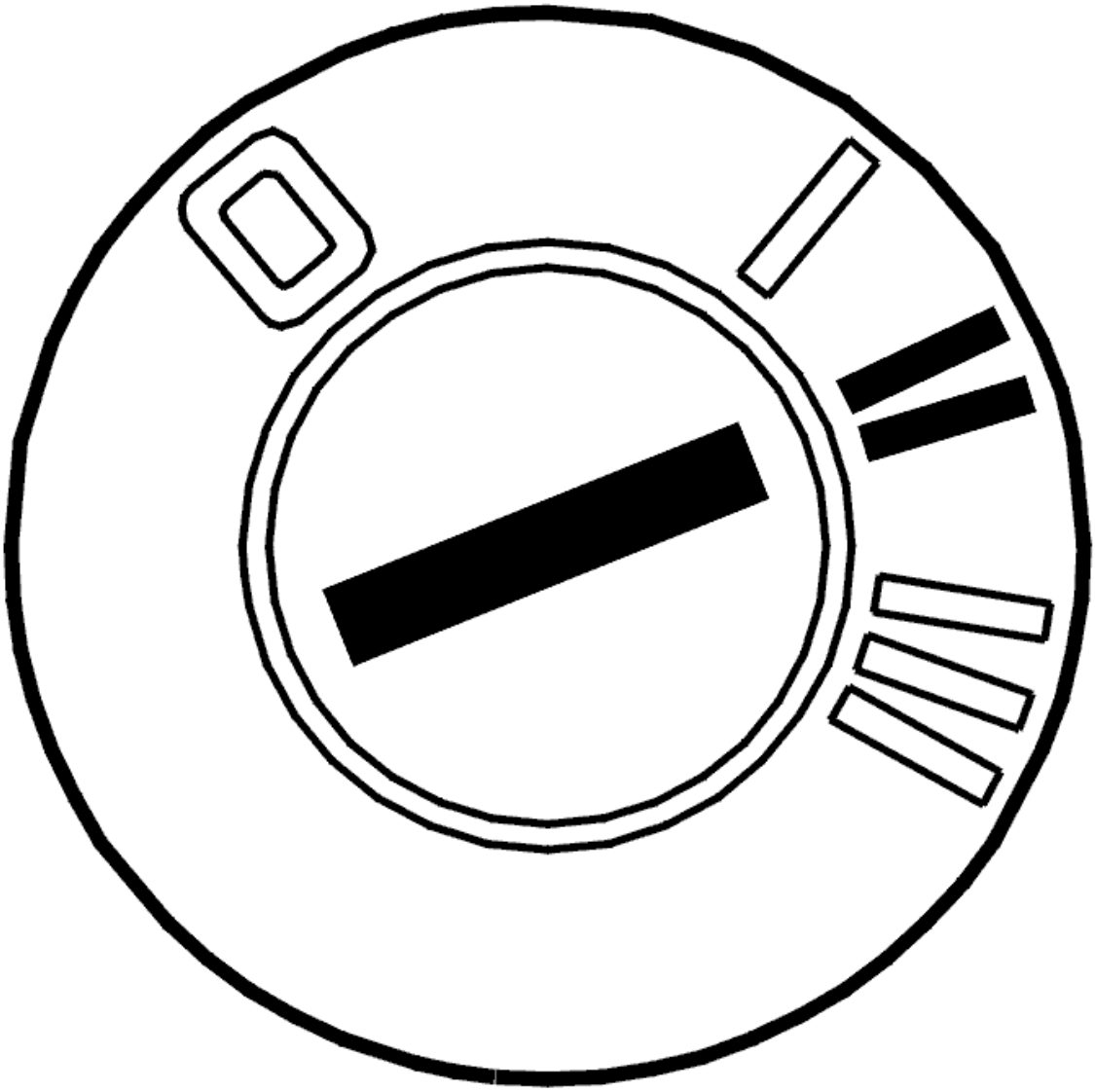

Fig. 307: Identifying Ignition ON
Courtesy of VOLVO CARS CORPORATION

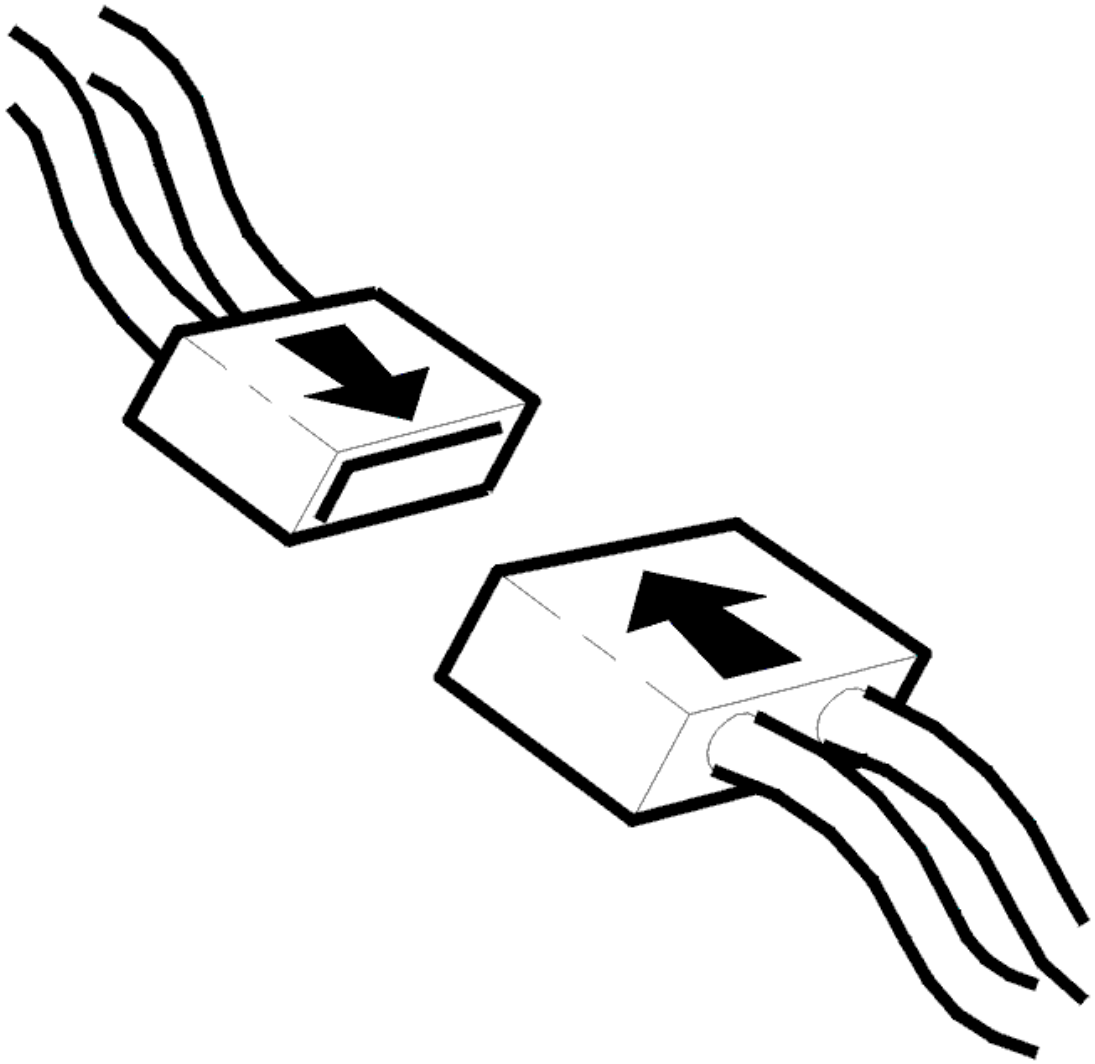

Fig. 308: Connecting Connector
Courtesy of VOLVO CARS CORPORATION

- Ignition off
- Reinstall the connectors, components etc.
- Ignition on.

  Switch between high and low beam.

Is the function OK?

- **YES**

  VERIFIED: Troubleshooting has been completed.

- **NO**

  Refer to **INFORMATION**

INFORMATION

FAULT-TRACING INFORMATION

The fault should have been detected and remedied. As this is not the case fault-tracing has failed.

Exit fault-tracing for this diagnostic trouble code (DTC) or make another attempt.

CEM-8F19: XENON LAMP RIGHT. FAULTY SIGNAL (2003-2004)

DIAGNOSTIC TROUBLE CODE (DTC) INFORMATION

Condition

The central electronic module checks the signal from the right Xenon lamp.

Diagnostic trouble code (DTC) CEM-8F19 is stored in the central electronic module if the central electronic module registers a fault in the actuator motor for the right xenon lamp.

Diagnostic trouble code (DTC) CEM-8F19 can be detected with the ignition on and switching between low and high beam.

Substitute Value

- None.

Possible Source

- The actuator motor in the xenon lamp housing has jammed
- Defective actuator motor in the xenon lamp housing.

Fault symptom[s]

- The low beam is constantly lit
- The high beam is constantly lit
- The road surface is not illuminated.
- Headlights/Headlight aim is off

FAULTY SIGNAL

CHECKING THE STATUS

Check if the fault is permanent or intermittent by switching between high and low beam.

If the right xenon lamp does not switch between the high and low beam it means that the fault is permanent.

If the right xenon lamp switches between high and low beam it indicates that the fault was present previously but is no longer active, intermittent fault.

Is the fault permanent?

- **YES**

  Refer to **REPLACING THE COMPONENT**

- **NO**

  Refer to **VERIFICATION**

REPLACING THE COMPONENT

The diagnostic trouble code (DTC) indicates that the actuator motor in the right Xenon lamp is defective.

Replace the right lamp housing.

Other information:

- To replace the lamp housing, see **LIGHTING - REMOVAL, REPLACEMENT AND INSTALLATION** .

- **Continue**

  Refer to **VERIFICATION**

VERIFICATION

VERIFICATION

HINT: After carrying out the repair, check that the fault has been remedied.

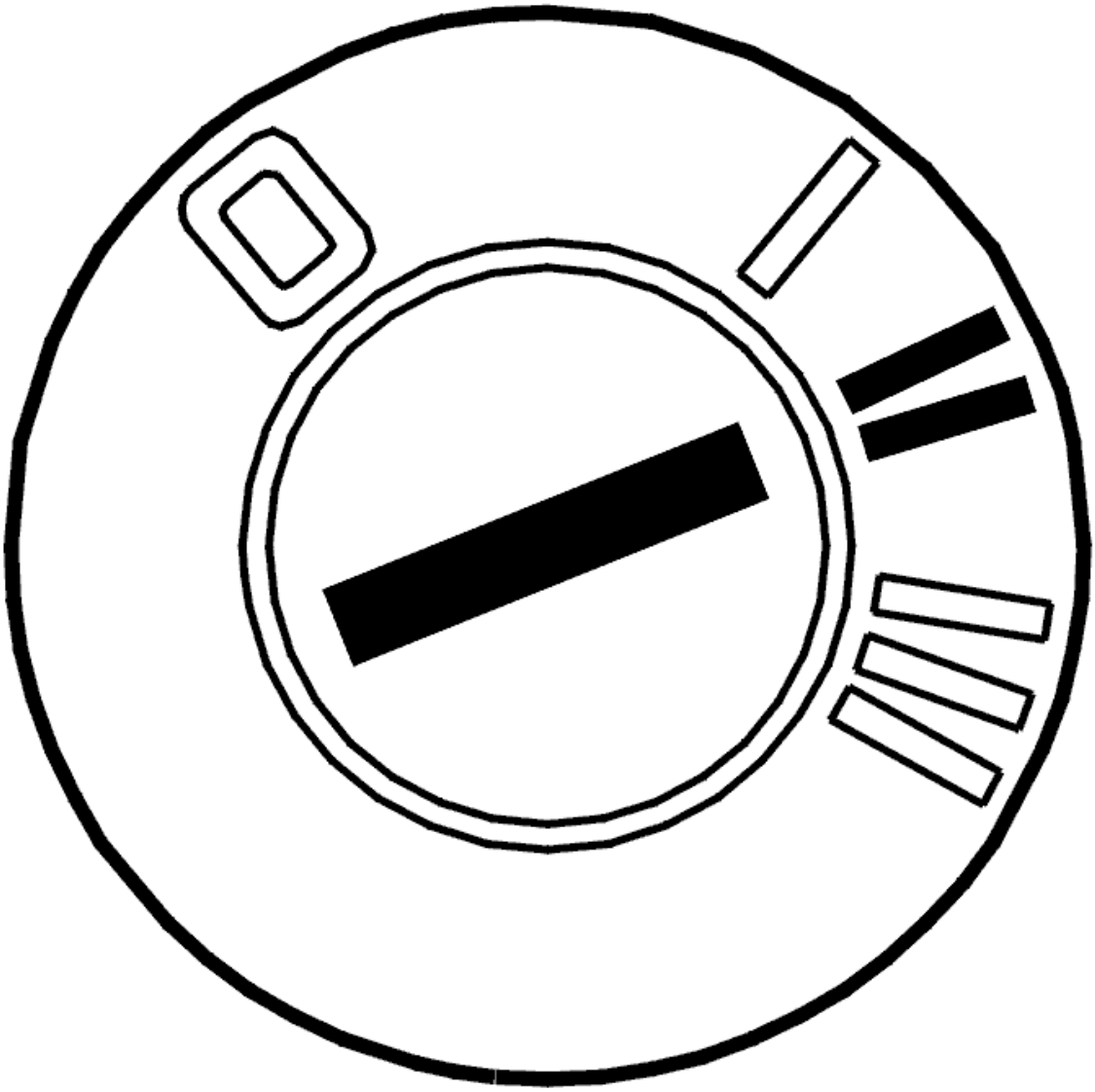

Fig. 309: Identifying Ignition ON
Courtesy of VOLVO CARS CORPORATION

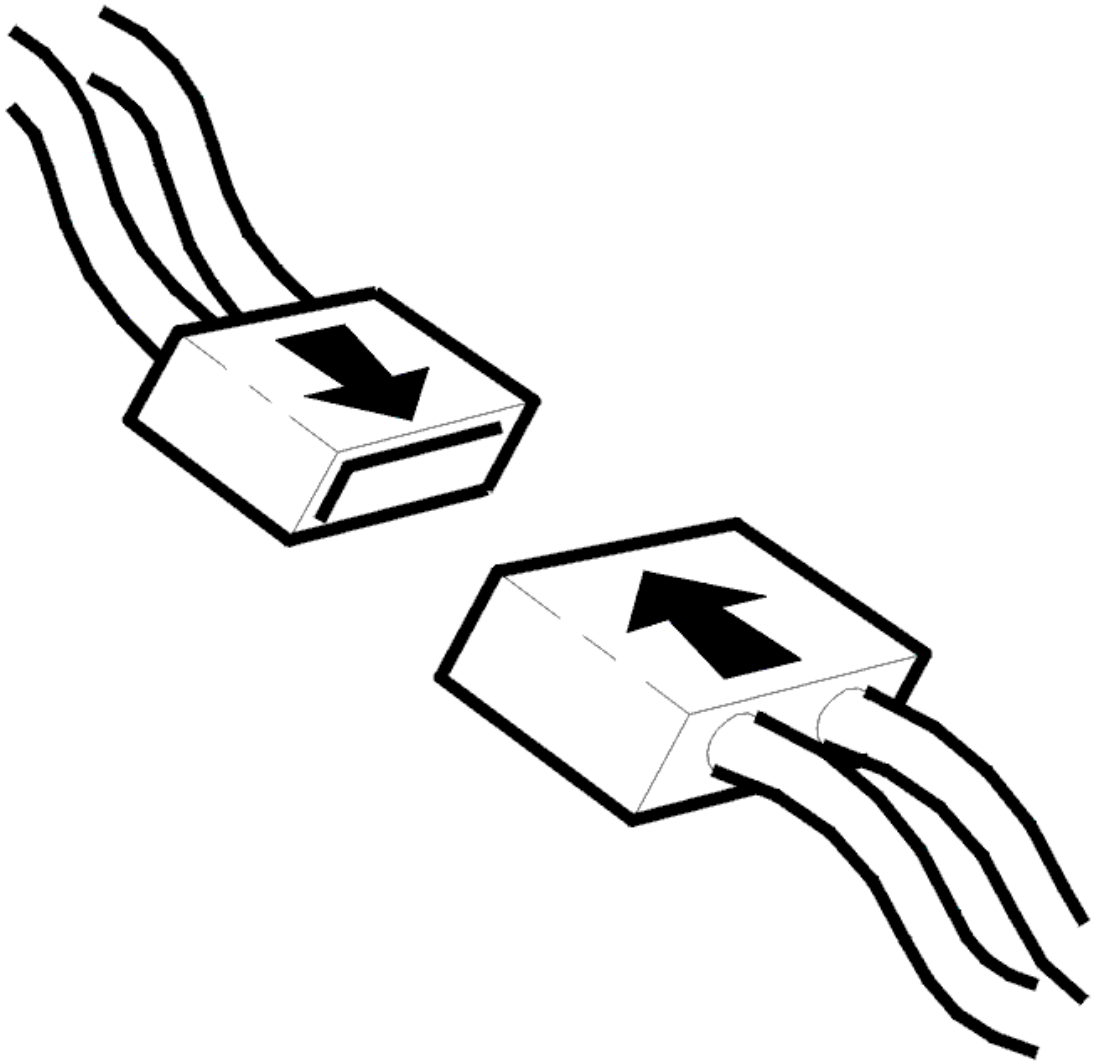

Fig. 310: Connecting Connector
Courtesy of VOLVO CARS CORPORATION

- Ignition off
- Reinstall the connectors, components etc.
- Ignition on.

  Switch on the lighting and shift between high and low beam.

Do the xenon lamps switch between high and low beam?

- **YES**

  VERIFIED: Troubleshooting has been completed.

- **NO**

  Refer to **INFORMATION**

INFORMATION

FAULT-TRACING INFORMATION

The fault should have been detected and remedied. As this is not the case fault-tracing has failed.

Exit fault-tracing for this diagnostic trouble code (DTC) or make another attempt.

CEM-8F19: XENON LAMP RIGHT. FAULTY SIGNAL (2005-2012)

DIAGNOSTIC TROUBLE CODE (DTC) INFORMATION CEM-8F19

Condition

The central electronic module (CEM) checks the signal from the right-hand Xenon lamp.

The diagnostic trouble code (DTC) is stored if the central electronic module (CEM) registers a fault in the right-hand Xenon bulb.

The diagnostic trouble code (DTC) can be detected with the ignition on and when switching between low and high beam.

The diagnostic trouble code (DTC) can be diagnosed at ignition switch position II.

Substitute Value

- Shortest headlamp range will be used.

Possible Source

- The actuator motor in the xenon lamp housing has jammed
- Damaged actuator motor in the xenon lamp housing.

Fault symptom[s]

- The low beam is constantly lit
- The high beam is constantly lit
- The road surface is not illuminated.
- Headlights/Headlight aim is off

FAULTY SIGNAL

CHECKING THE STATUS

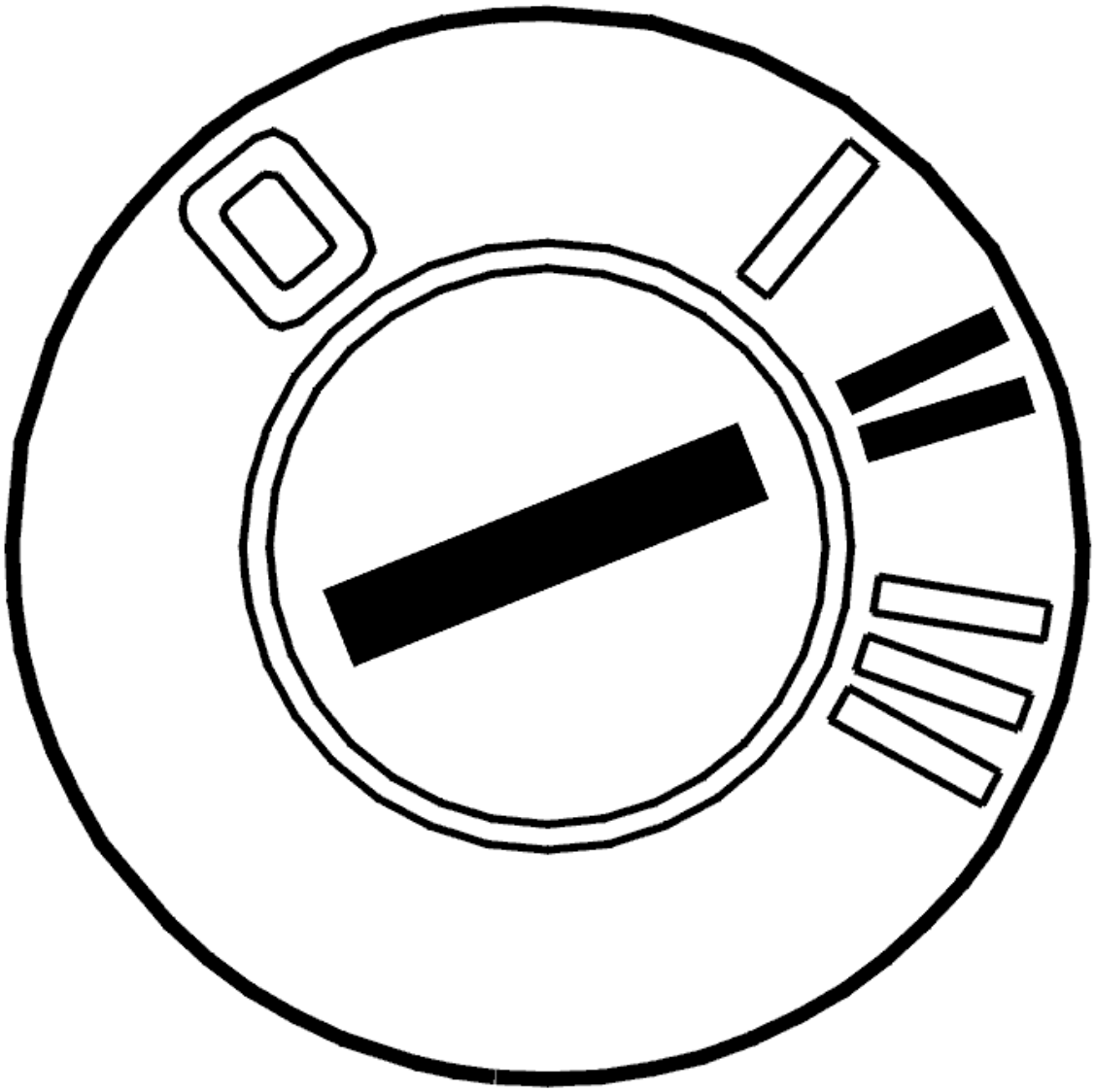

Fig. 311: Identifying Ignition ON
Courtesy of VOLVO CARS CORPORATION

- Ignition on.
- Switch between high and low beam.

  If the right-hand Xenon lamp does not switch between high and low beam, the fault is permanent.

  If the right-hand xenon lamp switches between high and low beam, the fault was present previously but is no longer active, intermittent fault.

- **Continue**

  Refer to **CHECKING COMPONENTS AND WIRING**

CHECKING COMPONENTS AND WIRING

The diagnostic trouble code (DTC) indicates that the actuator motor in the right Xenon lamp is damaged.

Remedy as necessary.

Other information

- see **CONNECTING THE BREAKOUT BOX**
- -2004: **SIGNAL SPECIFICATION**
- 2005-: **SIGNAL SPECIFICATION**
- see **LIGHTING - REMOVAL, REPLACEMENT AND INSTALLATION**
- see **CHECKING WIRING AND TERMINALS**

- **Continue**

  Refer to **VERIFICATION**

VERIFICATION

VERIFICATION

HINT: After carrying out the repair, check that the fault has been remedied.

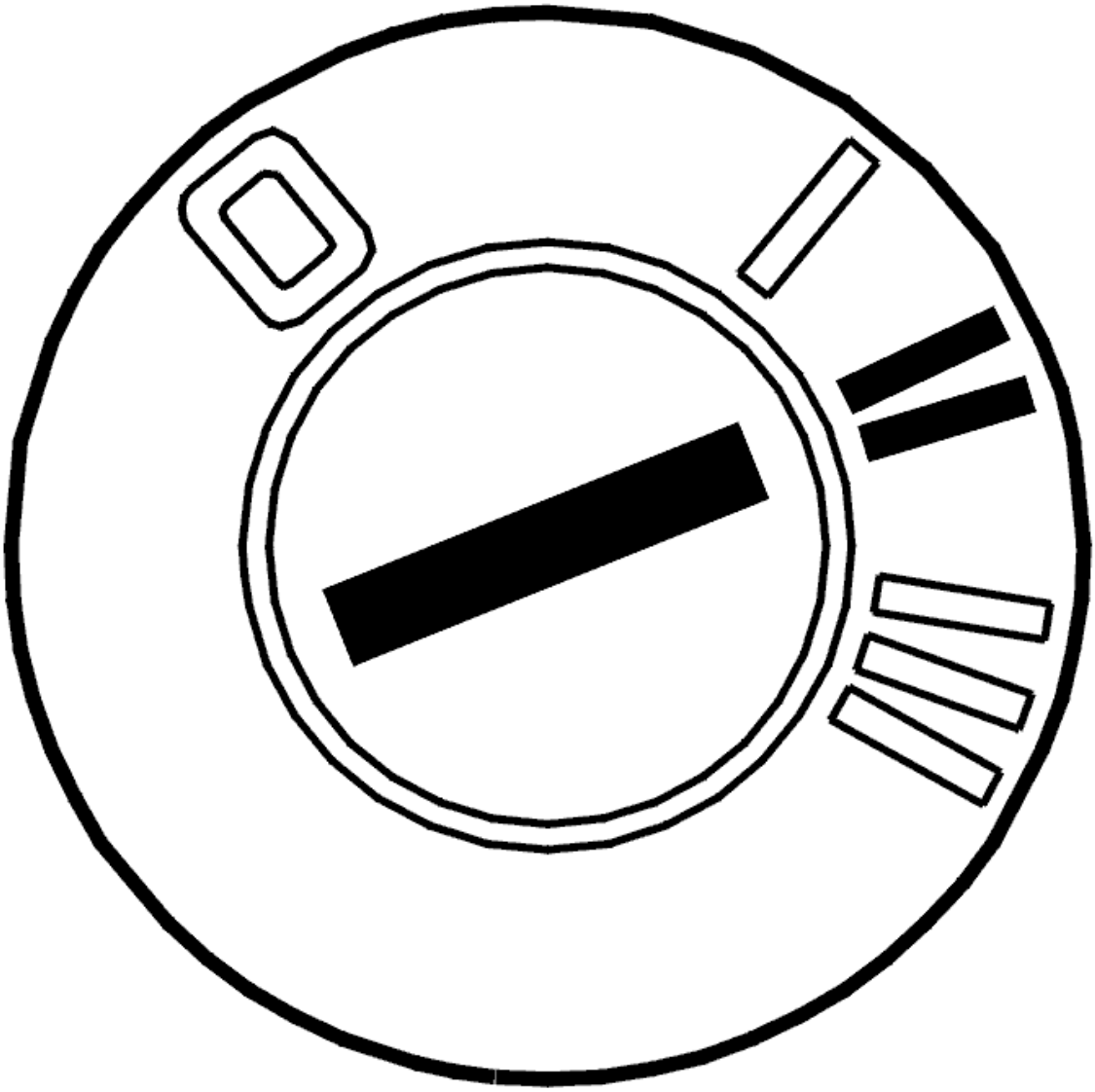

Fig. 312: Identifying Ignition ON
Courtesy of VOLVO CARS CORPORATION

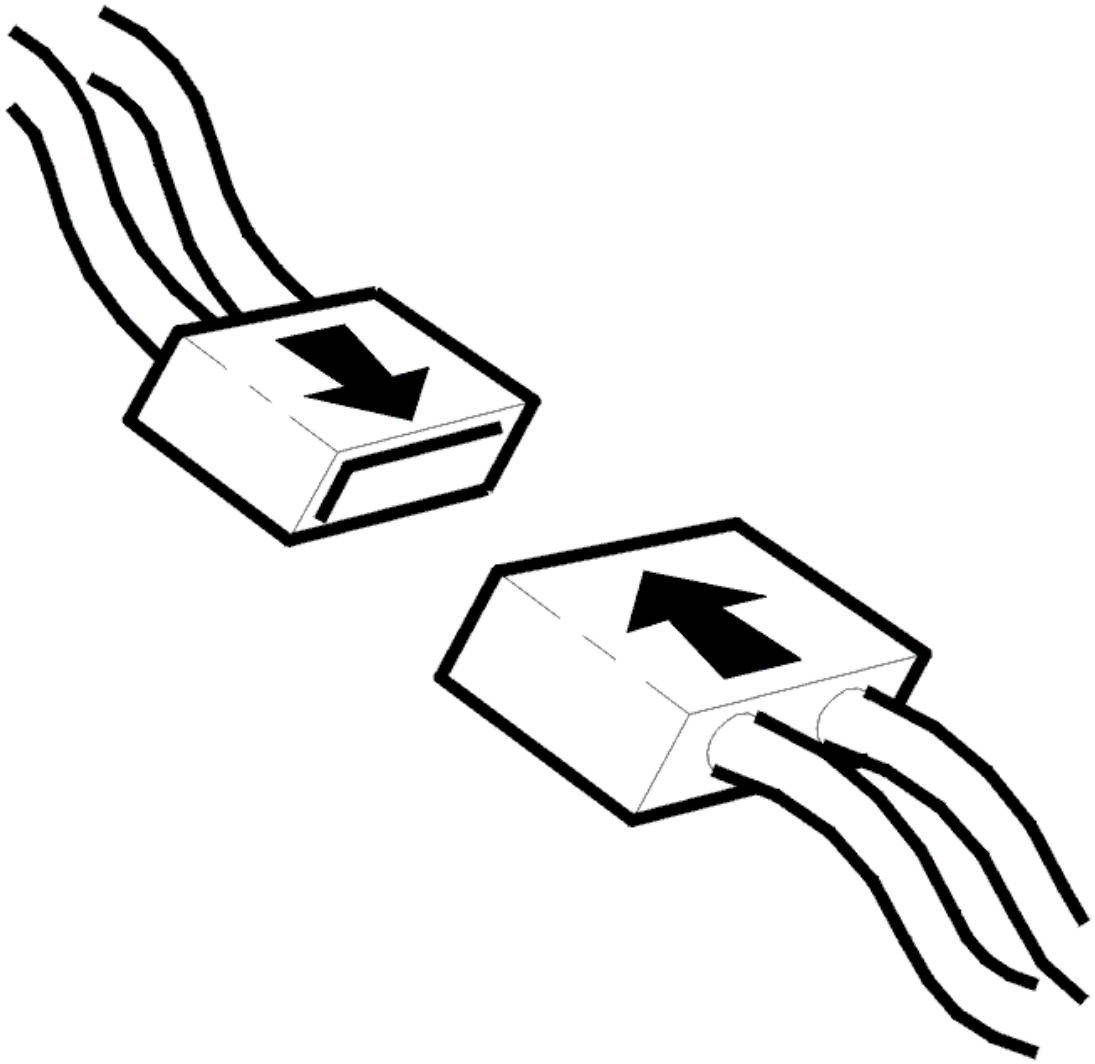

Fig. 313: Connecting Connector
Courtesy of VOLVO CARS CORPORATION

- Ignition off
- Reinstall the connectors, components etc.
- Ignition on.

  Switch between high and low beam.

Is the function OK?

- **YES**

  VERIFIED: Troubleshooting has been completed.

- **NO**

  Refer to **INFORMATION**

INFORMATION

FAULT-TRACING INFORMATION

The fault should have been detected and remedied. As this is not the case fault-tracing has failed.

Exit fault-tracing for this diagnostic trouble code (DTC) or make another attempt.

CEM-8F1A: XENON LAMP RIGHT. SIGNAL TOO LOW (2005-2012)

DIAGNOSTIC TROUBLE CODE (DTC) INFORMATION CEM-8F1A

Condition

The central electronic module (CEM) checks the signal from the right-hand Xenon lamp.

The diagnostic trouble code (DTC) is stored if the central electronic module (CEM) registers that the signal from the right-hand Xenon bulb is too low.

The diagnostic trouble code (DTC) can be diagnosed at ignition switch position II.

Substitute Value

- Shortest headlamp range will be used.

Possible Source

- Short-circuit to ground in the signal cable
- The actuator motor in the xenon lamp housing has jammed
- Damaged actuator motor in the xenon lamp housing.

Fault symptom[s]

- The low beam is constantly lit
- The high beam is constantly lit
- The road surface is not illuminated.
- Headlights/Headlight aim is off

SIGNAL TOO LOW

CHECKING THE STATUS

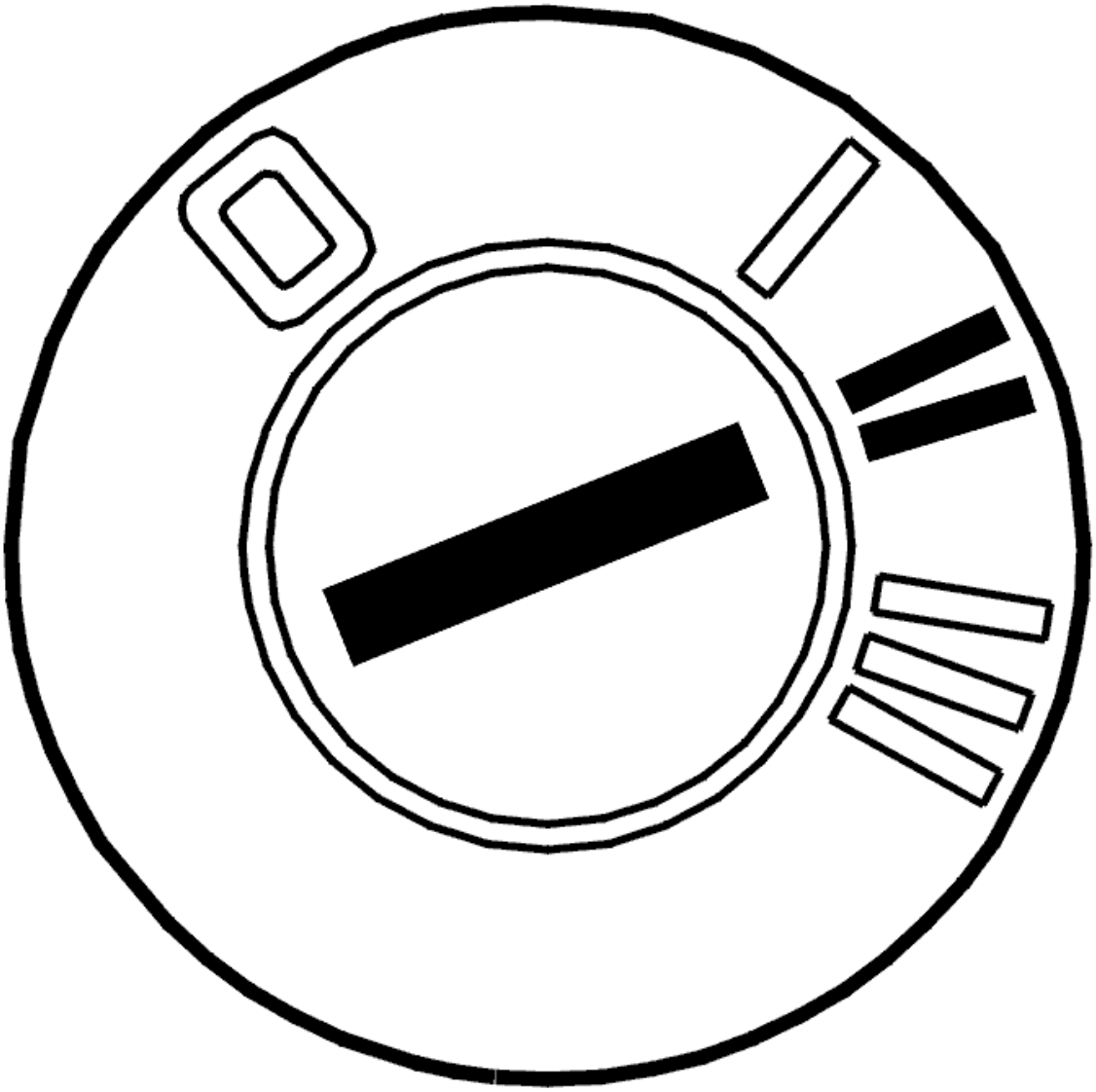

Fig. 314: Identifying Ignition ON
Courtesy of VOLVO CARS CORPORATION

- Ignition on.
- Switch between high and low beam.

  If the right-hand Xenon lamp does not switch between high and low beam, the fault is permanent.

  If the right-hand xenon lamp switches between high and low beam, the fault was present previously but is no longer active, intermittent fault.

- **Continue**

  Refer to **CHECKING COMPONENTS AND WIRING**

CHECKING COMPONENTS AND WIRING

Check the signal cable between the central electronic module (CEM) and the actuating motor in the right Xenon headlamp for short circuit to ground.

If no fault is found, replace the right headlamp.

Remedy as necessary.

Other information

- see **CONNECTING THE BREAKOUT BOX**
- -2004: **SIGNAL SPECIFICATION**
- 2005-: **SIGNAL SPECIFICATION**
- see **LIGHTING - REMOVAL, REPLACEMENT AND INSTALLATION**
- see **CHECKING WIRING AND TERMINALS**

- **Continue**

  Refer to **VERIFICATION**

VERIFICATION

VERIFICATION

HINT: After carrying out the repair, check that the fault has been remedied.

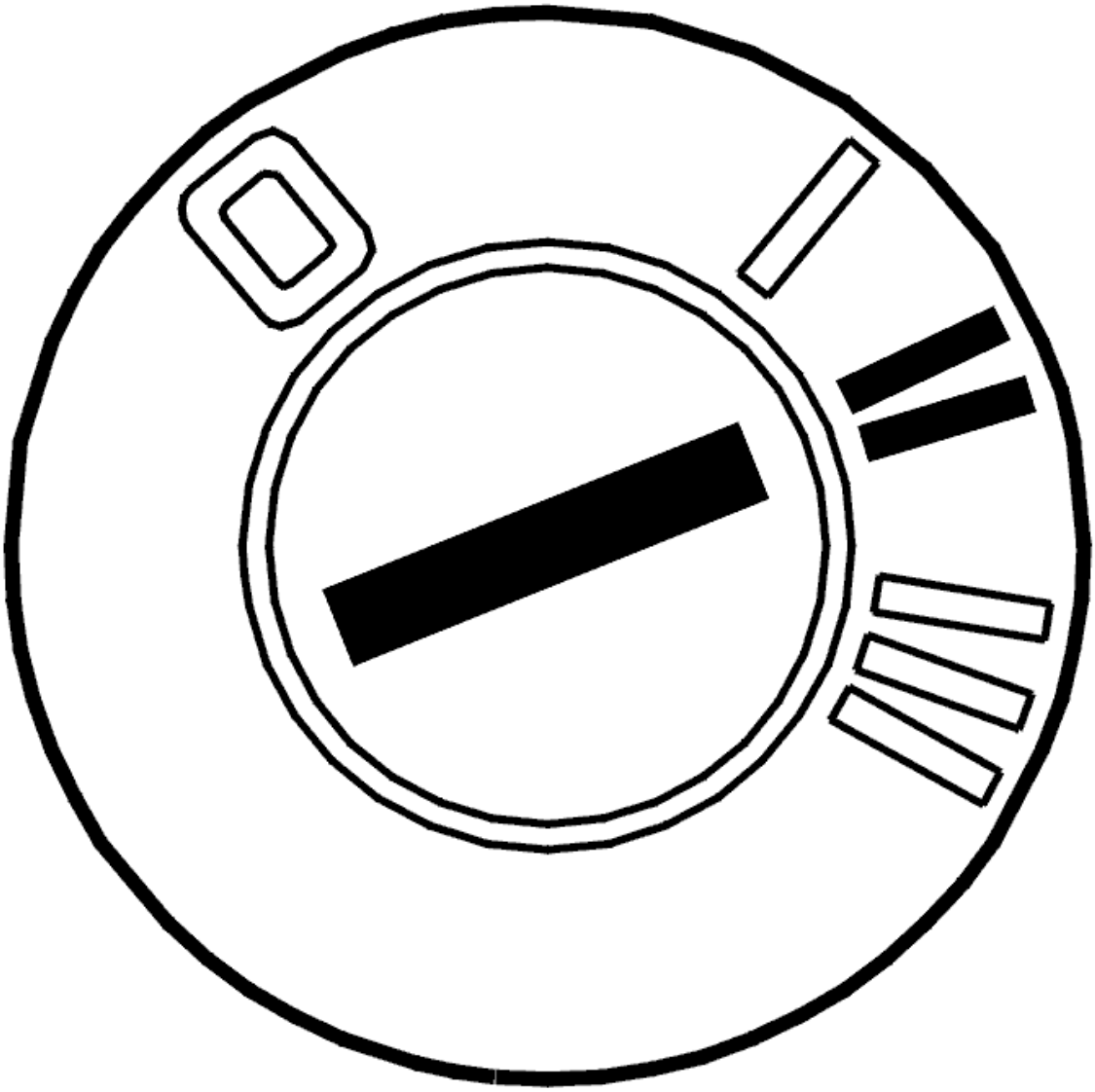

Fig. 315: Identifying Ignition ON
Courtesy of VOLVO CARS CORPORATION

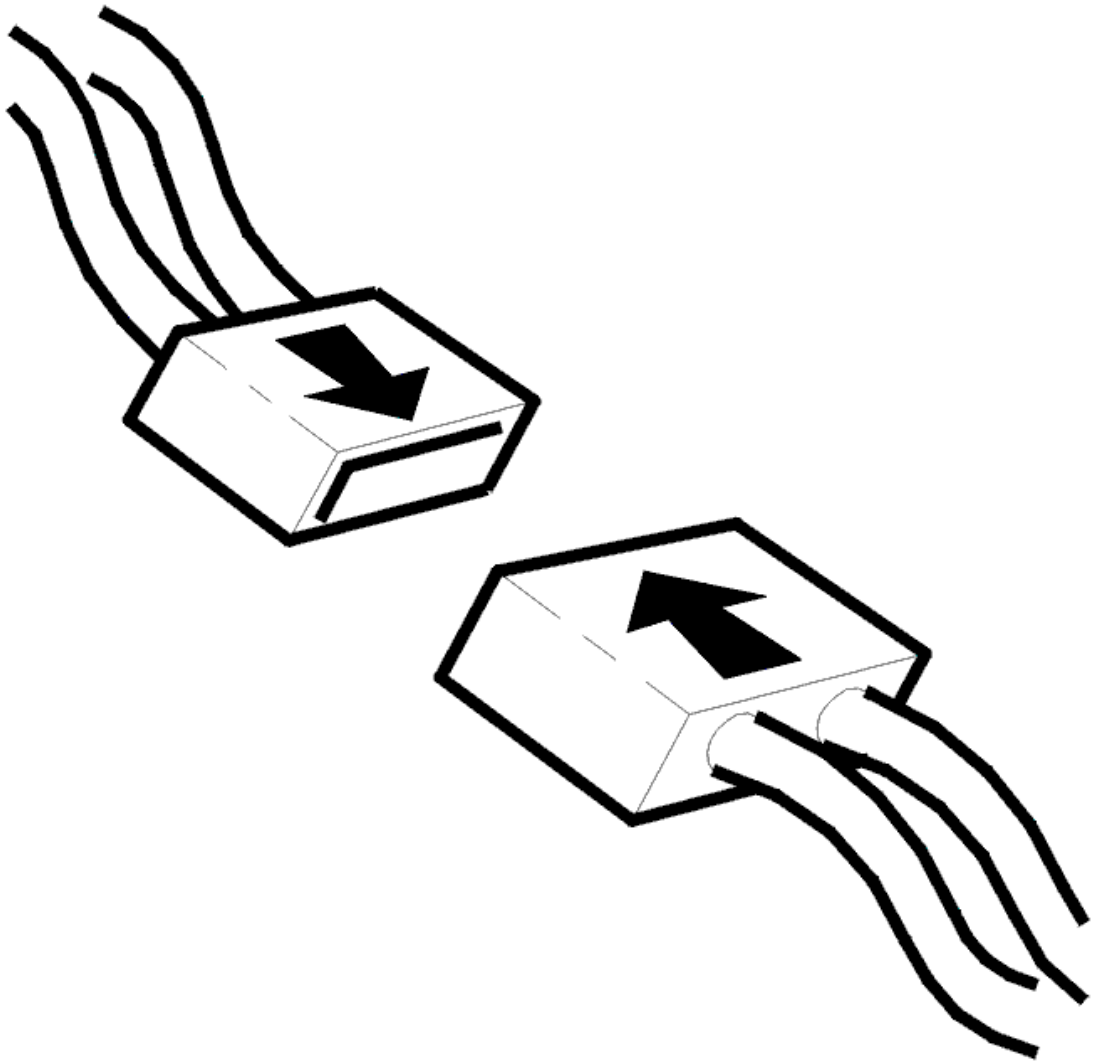

Fig. 316: Connecting Connector
Courtesy of VOLVO CARS CORPORATION

- Ignition off
- Reinstall the connectors, components etc.
- Ignition on.

  Switch between high and low beam.

Is the function OK?

- **YES**

  VERIFIED: Troubleshooting has been completed.

- **NO**

  Refer to **INFORMATION**

INFORMATION

FAULT-TRACING INFORMATION

The fault should have been detected and remedied. As this is not the case fault-tracing has failed.

Exit fault-tracing for this diagnostic trouble code (DTC) or make another attempt.

CEM-8F1A: XENON LAMP RIGHT. SIGNAL TOO LOW (2003-2004)

DIAGNOSTIC TROUBLE CODE (DTC) INFORMATION

Condition

The central electronic module checks the signal from the right Xenon lamp.

Diagnostic trouble code (DTC) CEM-8F1A is stored in the central electrical module if the central electronic module registers too low a signal from the right Xenon lamp.

Diagnostic trouble code (DTC) CEM-8F1A can be detected when the ignition is on for at least 10 seconds and the battery voltage is > 10.5 volts.

Substitute Value

- None.

Possible Source

- Short-circuit to ground in the signal cable
- The actuator motor in the xenon lamp housing has jammed
- Defective actuator motor in the xenon lamp housing.

Fault symptom[s]

- The low beam is constantly lit
- The high beam is constantly lit
- The road surface is not illuminated.
- Headlights/Headlight aim is off

SIGNAL TOO LOW

CHECKING THE STATUS

Check if the fault is permanent or intermittent by switching between high and low beam.

If the right xenon lamp does not switch between the high and low beam it means that the fault is permanent.

If the right xenon lamp switches between high and low beam it indicates that the fault was present previously but is no longer active, intermittent fault.

- **Continue**

  Refer to **CHECKING COMPONENTS AND WIRING**

CHECKING COMPONENTS AND WIRING

Check the cable between the central electronic module (CEM) terminal #D11 and the right lamp housing terminal #5A (10/2). Check for a short-circuit to ground.

Replace the right lamp housing if no fault is found.

Other information

- To connect the breakout box, see **CONNECTING THE BREAKOUT BOX**
- To access or replace the lamp housing, see **LIGHTING - REMOVAL, REPLACEMENT AND INSTALLATION**
- -2004: **SIGNAL SPECIFICATION**
- 2005-: **SIGNAL SPECIFICATION**
- see **CHECKING WIRING AND TERMINALS** .

- **Continue**

  Refer to **VERIFICATION**

VERIFICATION

VERIFICATION

HINT: After carrying out the repair, check that the fault has been remedied.

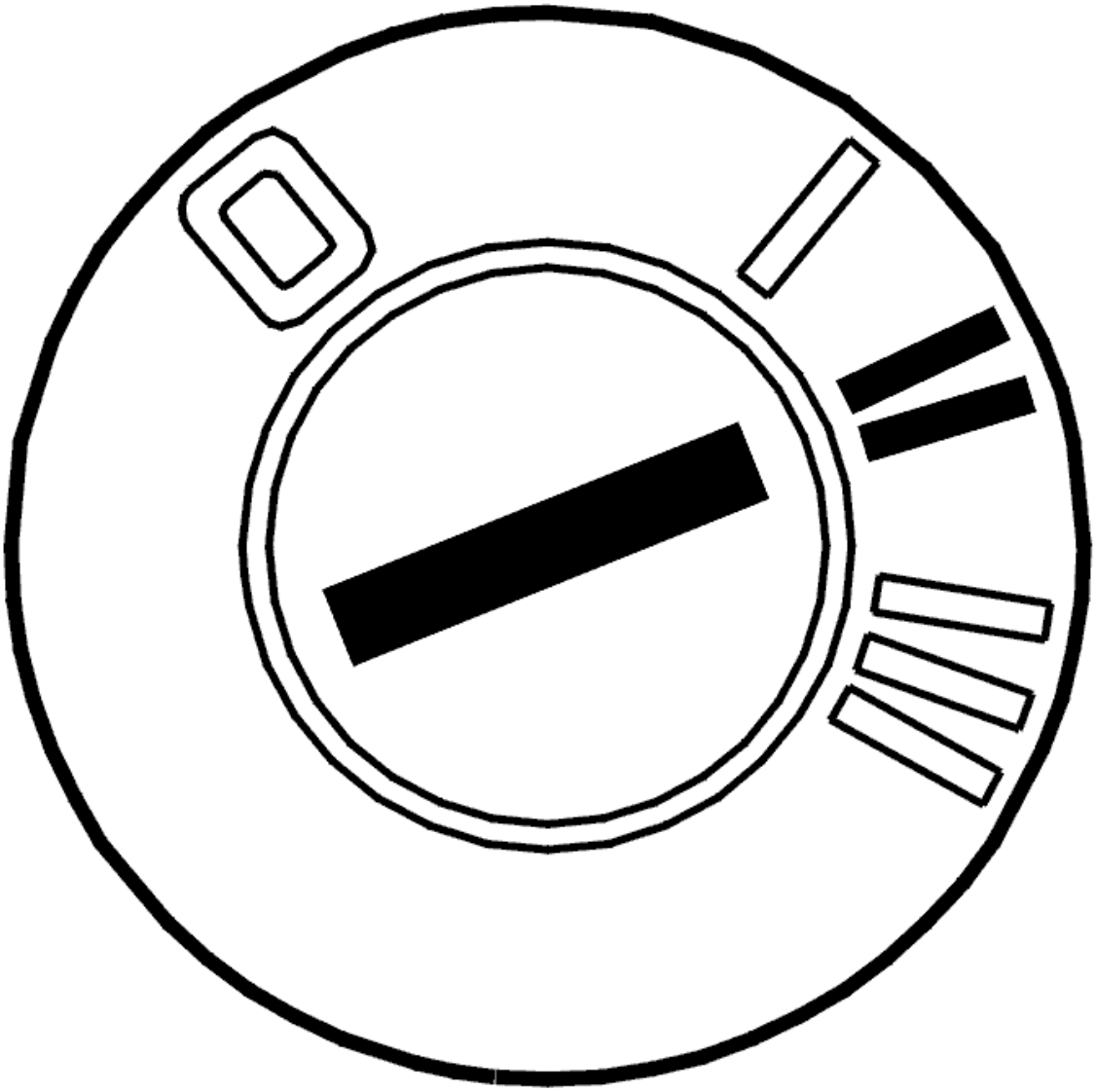

Fig. 317: Identifying Ignition ON
Courtesy of VOLVO CARS CORPORATION

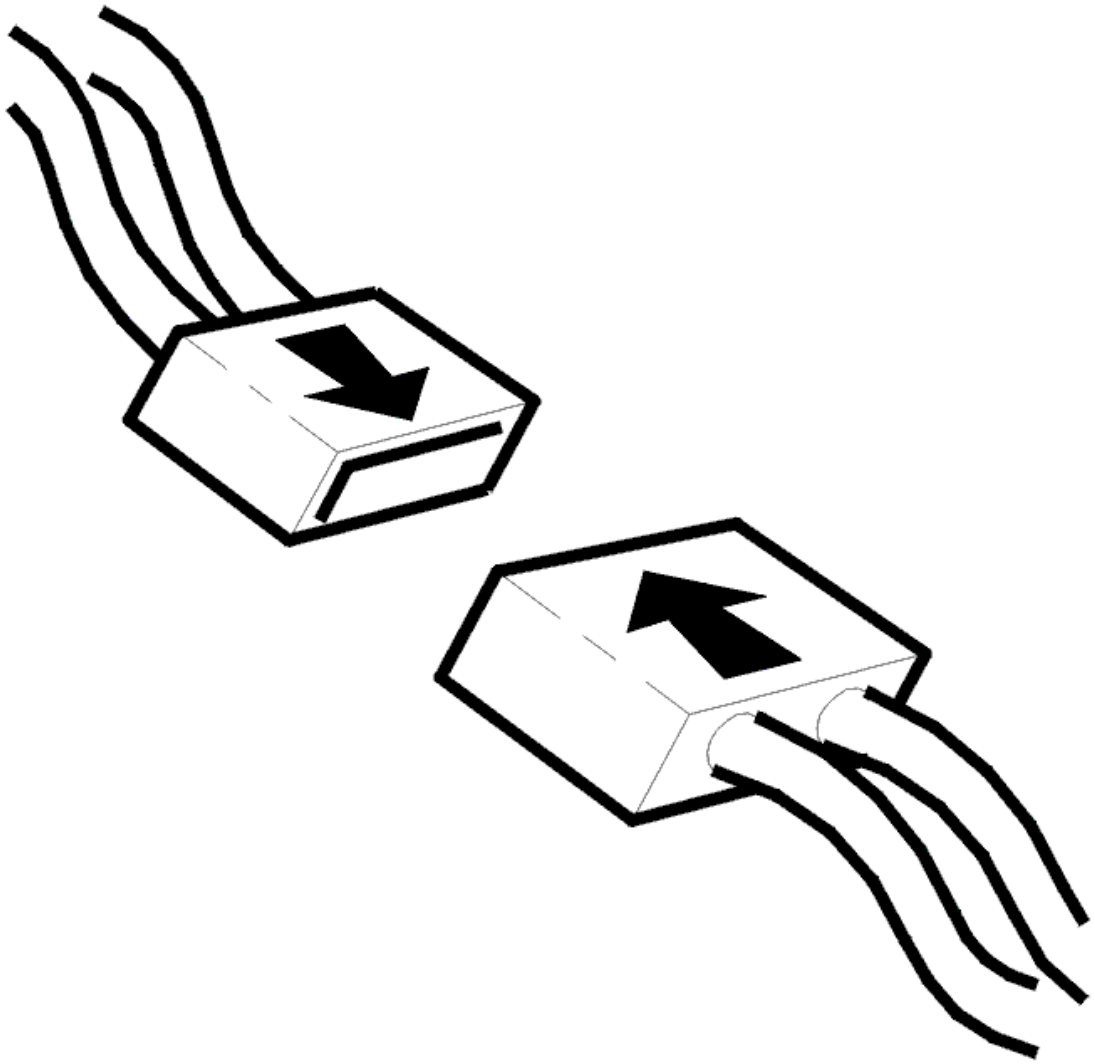

Fig. 318: Connecting Connector
Courtesy of VOLVO CARS CORPORATION

- Ignition off
- Reinstall the connectors, components etc.
- Ignition on.

  Switch on the lighting and shift between high and low beam.

Do the xenon lamps switch between high and low beam?

- **YES**

  VERIFIED: Troubleshooting has been completed.

- **NO**

  Refer to **INFORMATION**

INFORMATION

FAULT-TRACING INFORMATION

The fault should have been detected and remedied. As this is not the case fault-tracing has failed.

Exit fault-tracing for this diagnostic trouble code (DTC) or make another attempt.

CEM-8F1B: XENON LAMP RIGHT FAULTY SIGNAL (2005-2012)

DIAGNOSTIC TROUBLE CODE (DTC) INFORMATION CEM-8F1B

Condition

The central electronic module (CEM) checks the signal from the right-hand Xenon lamp.

The diagnostic trouble code (DTC) is stored if the central electronic module (CEM) registers that the signal from the right-hand Xenon bulb is faulty.

The diagnostic trouble code (DTC) can be detected when the ignition has been on for at least 10 seconds and the battery voltage is above 10.5 V.

The diagnostic trouble code (DTC) can be diagnosed at ignition switch position II.

Substitute Value

- Shortest headlamp range will be used.

Possible Source

- Damaged gas discharge lamp module (GDL).

Fault symptom[s]

- The low beam is constantly lit
- The high beam is constantly lit
- The road surface is not illuminated.
- Headlights/Headlight aim is off

FAULTY SIGNAL

CHECKING THE STATUS

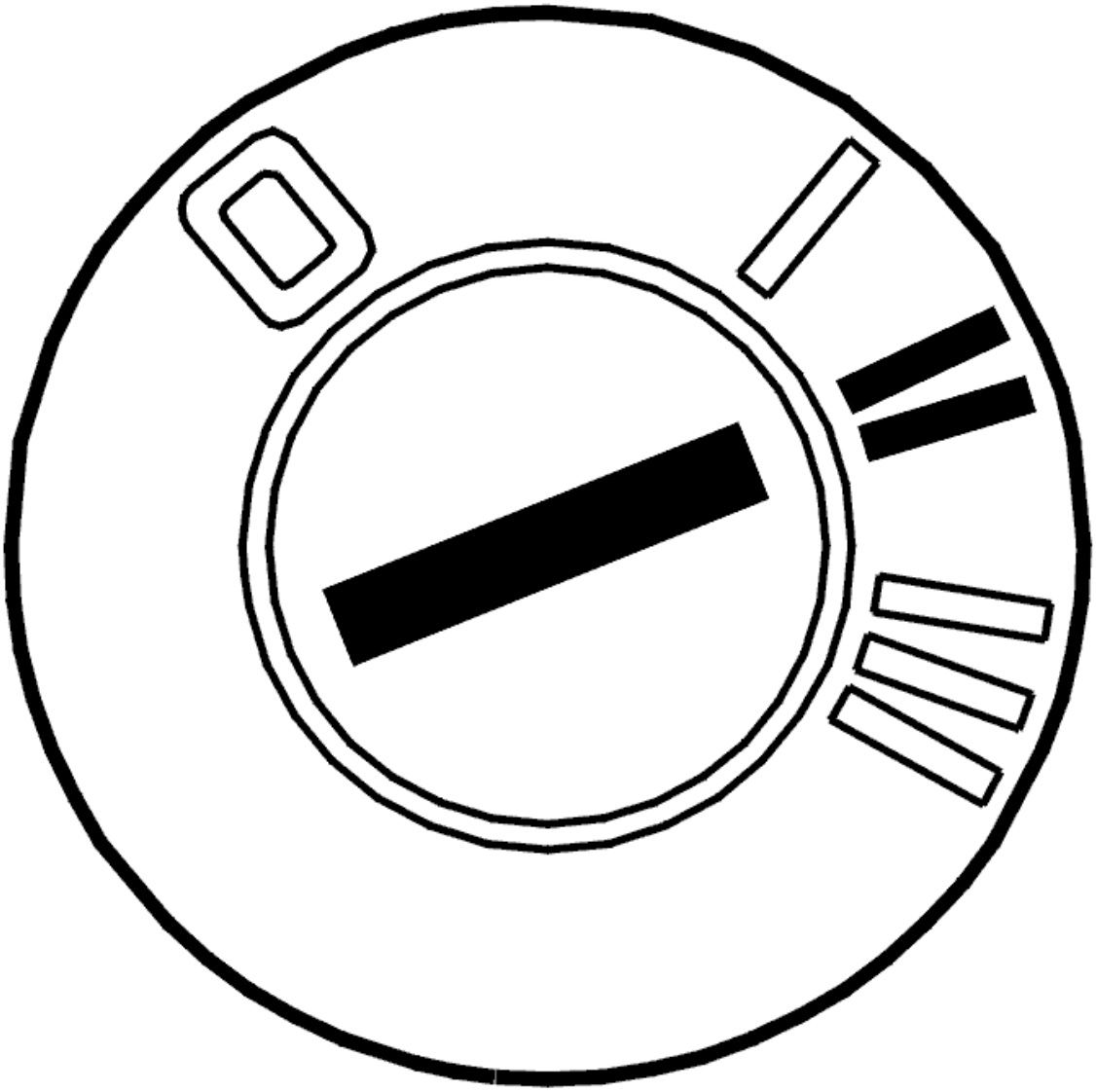

Fig. 319: Identifying Ignition ON
Courtesy of VOLVO CARS CORPORATION

- Ignition on.
- Switch between high and low beam.

  If the right-hand Xenon lamp does not switch between high and low beam, the fault is permanent.

  If the right-hand xenon lamp switches between high and low beam, the fault was present previously but is no longer active, intermittent fault.

- **Continue**

  Refer to **CHECKING COMPONENTS AND WIRING**

CHECKING COMPONENTS AND WIRING

Check the power supply and grounding point for the actuating motor in the right headlamp.

If no fault is found, replace the right headlamp.

Remedy as necessary.

Other information

- see **CONNECTING THE BREAKOUT BOX**
- -2004: **SIGNAL SPECIFICATION**
- 2005-: **SIGNAL SPECIFICATION**
- see **LIGHTING - REMOVAL, REPLACEMENT AND INSTALLATION**
- see **CHECKING WIRING AND TERMINALS**

- **Continue**

  Refer to **VERIFICATION**

VERIFICATION

VERIFICATION

HINT: After carrying out the repair, check that the fault has been remedied.

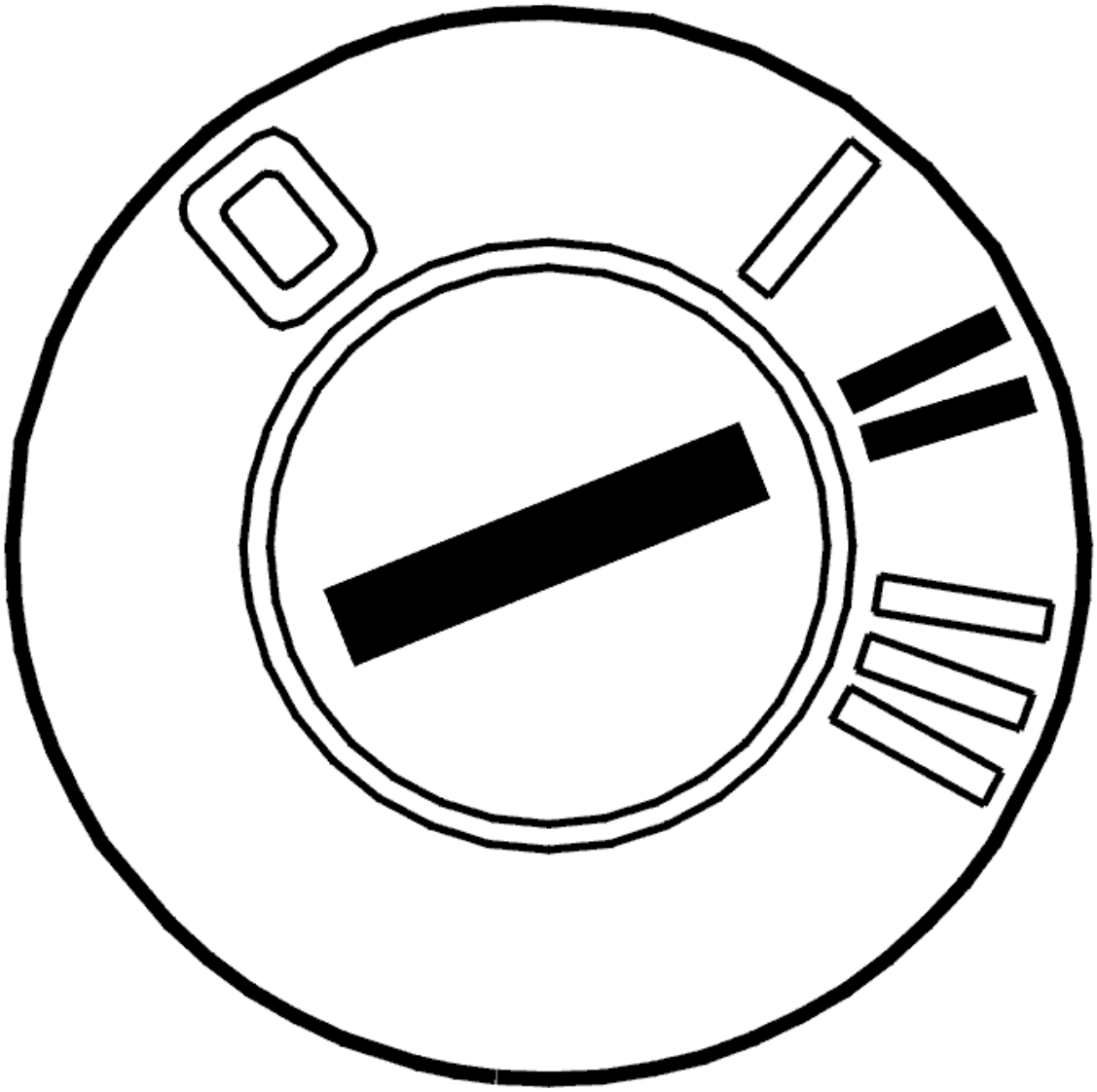

Fig. 320: Identifying Ignition ON
Courtesy of VOLVO CARS CORPORATION

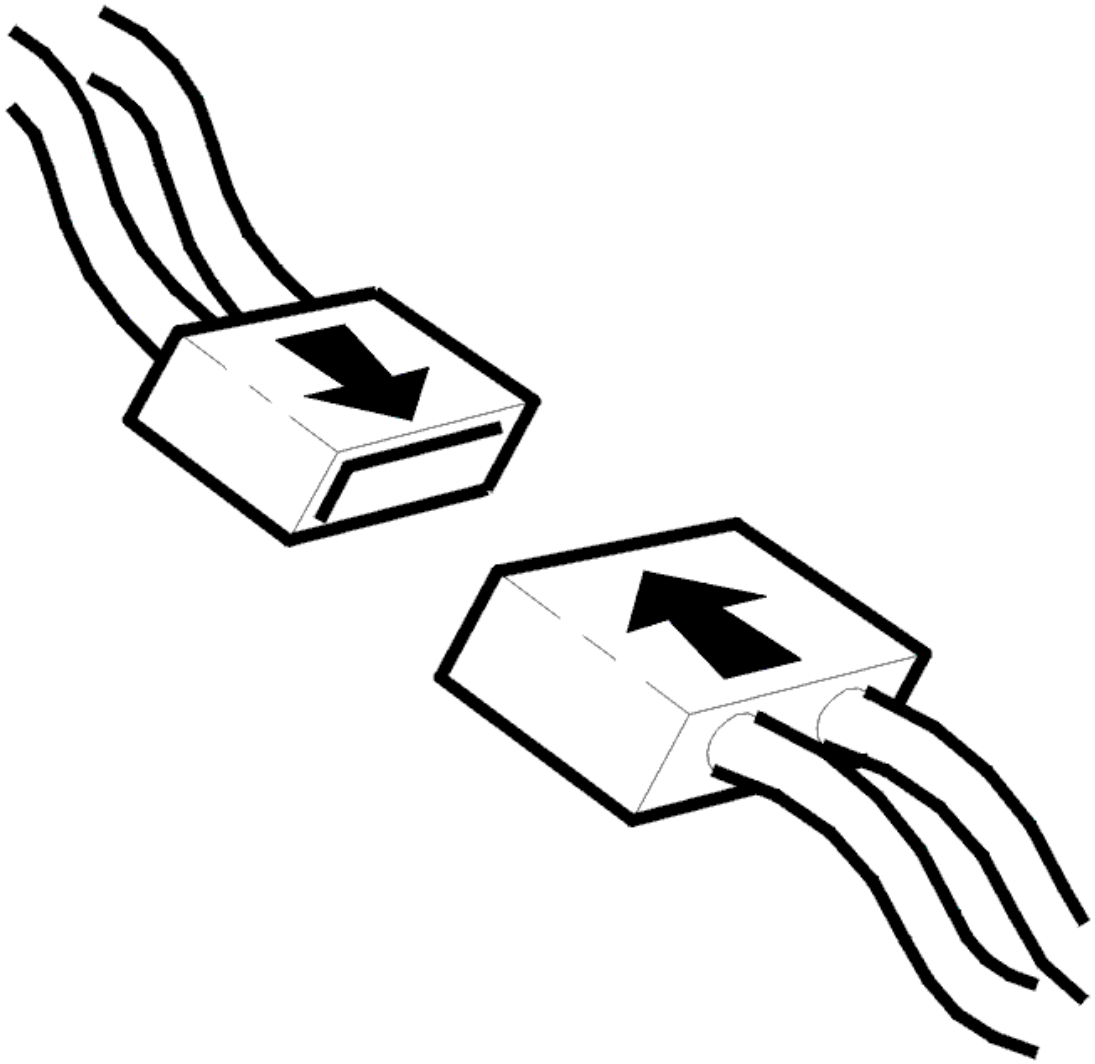

Fig. 321: Connecting Connector
Courtesy of VOLVO CARS CORPORATION

- Ignition off
- Reinstall the connectors, components etc.
- Ignition on.

  Switch between high and low beam.

Is the function OK?

- **YES**

  VERIFIED: Troubleshooting has been completed.

- **NO**

  Refer to **INFORMATION**

INFORMATION

FAULT-TRACING INFORMATION

The fault should have been detected and remedied. As this is not the case fault-tracing has failed.

Exit fault-tracing for this diagnostic trouble code (DTC) or make another attempt.

CEM-8F1B: XENON LAMP RIGHT FAULTY SIGNAL (2003-2004)

DIAGNOSTIC TROUBLE CODE (DTC) INFORMATION

Condition

The central electronic module checks the signal from the right Xenon lamp.

Diagnostic trouble code (DTC) REM-8F1B is stored in the central electronic module if the central electronic module registers a faulty signal from the right Xenon lamp.

Diagnostic trouble code (DTC) CEM-8F1B can be detected when the ignition is on for at least 10 seconds and the battery voltage is > 10.5 volts.

Substitute Value

- None.

Possible Source

- Defective control box for the Xenon lamp.

Fault symptom[s]

- The low beam is constantly lit
- The high beam is constantly lit
- The road surface is not illuminated.
- Headlights/Headlight aim is off

FAULTY SIGNAL

CHECKING THE STATUS

Check if the fault is permanent or intermittent by switching between high and low beam.

If the right xenon lamp does not switch between the high and low beam it means that the fault is permanent.

If the right xenon lamp switches between high and low beam it indicates that the fault was present previously but is no longer active, intermittent fault.

Is the fault permanent?

- **YES**

  Refer to **REPLACING THE COMPONENT**

- **NO**

  Refer to **VERIFICATION**

REPLACING THE COMPONENT

The diagnostic trouble code (DTC) indicates that the control module in the right Xenon lamp is defective.

Replace the right lamp housing.

Other information:

- To replace the lamp housing, see **LIGHTING - REMOVAL, REPLACEMENT AND INSTALLATION** .

- **Continue**

  Refer to **VERIFICATION**

VERIFICATION

VERIFICATION

HINT: After carrying out the repair, check that the fault has been remedied.

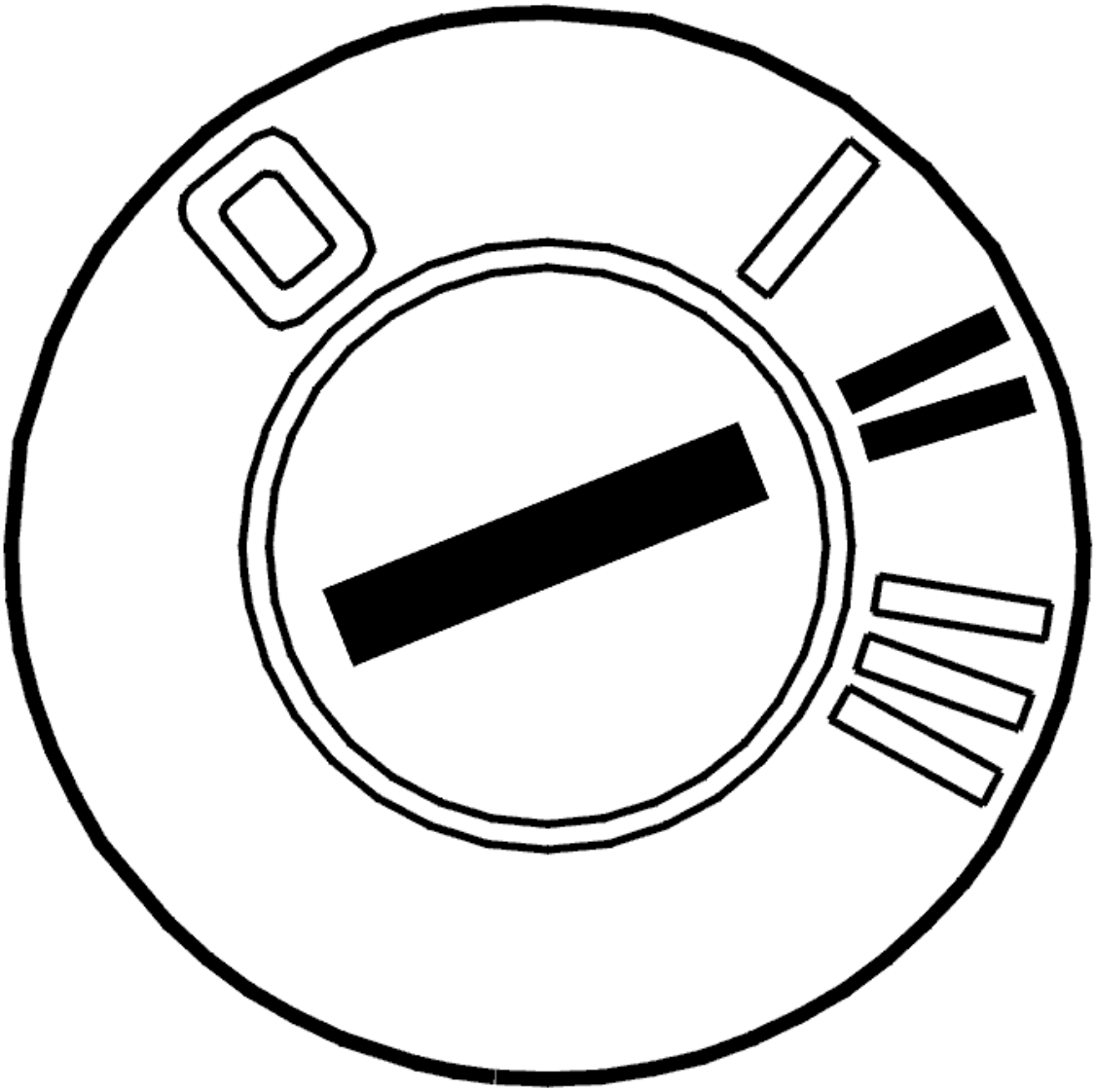

Fig. 322: Identifying Ignition ON
Courtesy of VOLVO CARS CORPORATION

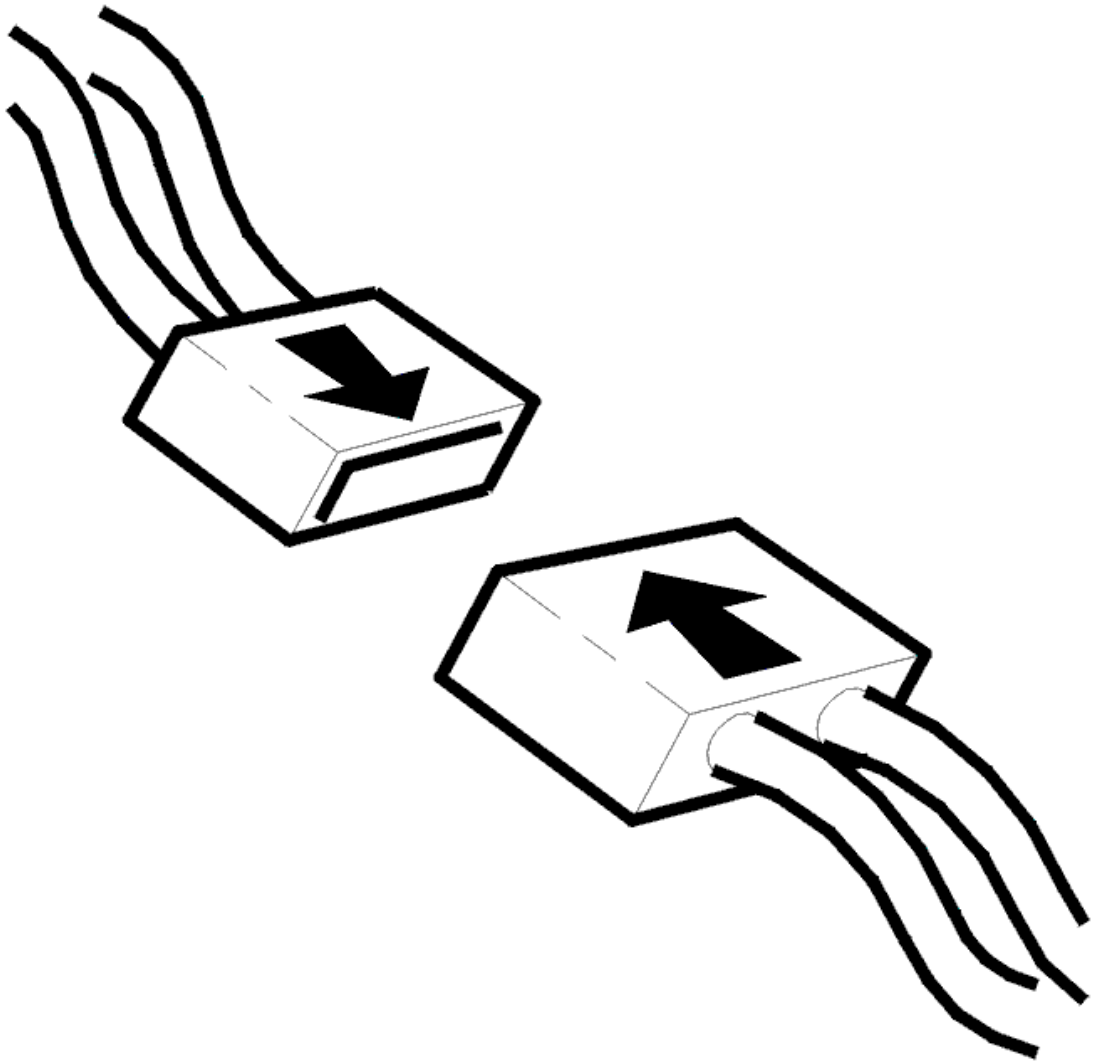

Fig. 323: Connecting Connector
Courtesy of VOLVO CARS CORPORATION

- Ignition off
- Reinstall the connectors, components etc.
- Ignition on.

  Switch on the lighting and shift between high and low beam.

Do the xenon lamps switch between high and low beam?

- **YES**

  VERIFIED: Troubleshooting has been completed.

- **NO**

  Refer to **INFORMATION**

INFORMATION

FAULT-TRACING INFORMATION

The fault should have been detected and remedied. As this is not the case fault-tracing has failed.

Exit fault-tracing for this diagnostic trouble code (DTC) or make another attempt.

CEM-8F1C: XENON LAMP RIGHT. SIGNAL TOO HIGH / SIGNAL MISSING (2005-2012)

DIAGNOSTIC TROUBLE CODE (DTC) INFORMATION CEM-8F1C

Condition

The central electronic module (CEM) checks the signal from the right-hand Xenon lamp.

The diagnostic trouble code (DTC) is stored if the central electronic module (CEM) registers that the signal from the right-hand Xenon bulb is too high.

The diagnostic trouble code (DTC) can be detected when the ignition has been on for at least 10 seconds and the battery voltage is above 10.5 V.

The diagnostic trouble code (DTC) can be diagnosed at ignition switch position II.

Substitute Value

- Shortest headlamp range will be used.

Possible Source

- Short-circuit to supply voltage in the signal cable
- Open-circuit in the signal cable
- The actuator motor in the xenon lamp housing has jammed
- Damaged actuator motor in the xenon lamp housing.
- Headlights/Headlight aim is off

Fault symptom[s]

- The low beam is constantly lit
- The high beam is constantly lit

- The road surface is not illuminated.
- Headlights/Headlight aim is off

SIGNAL TOO HIGH / SIGNAL MISSING

CHECKING THE STATUS

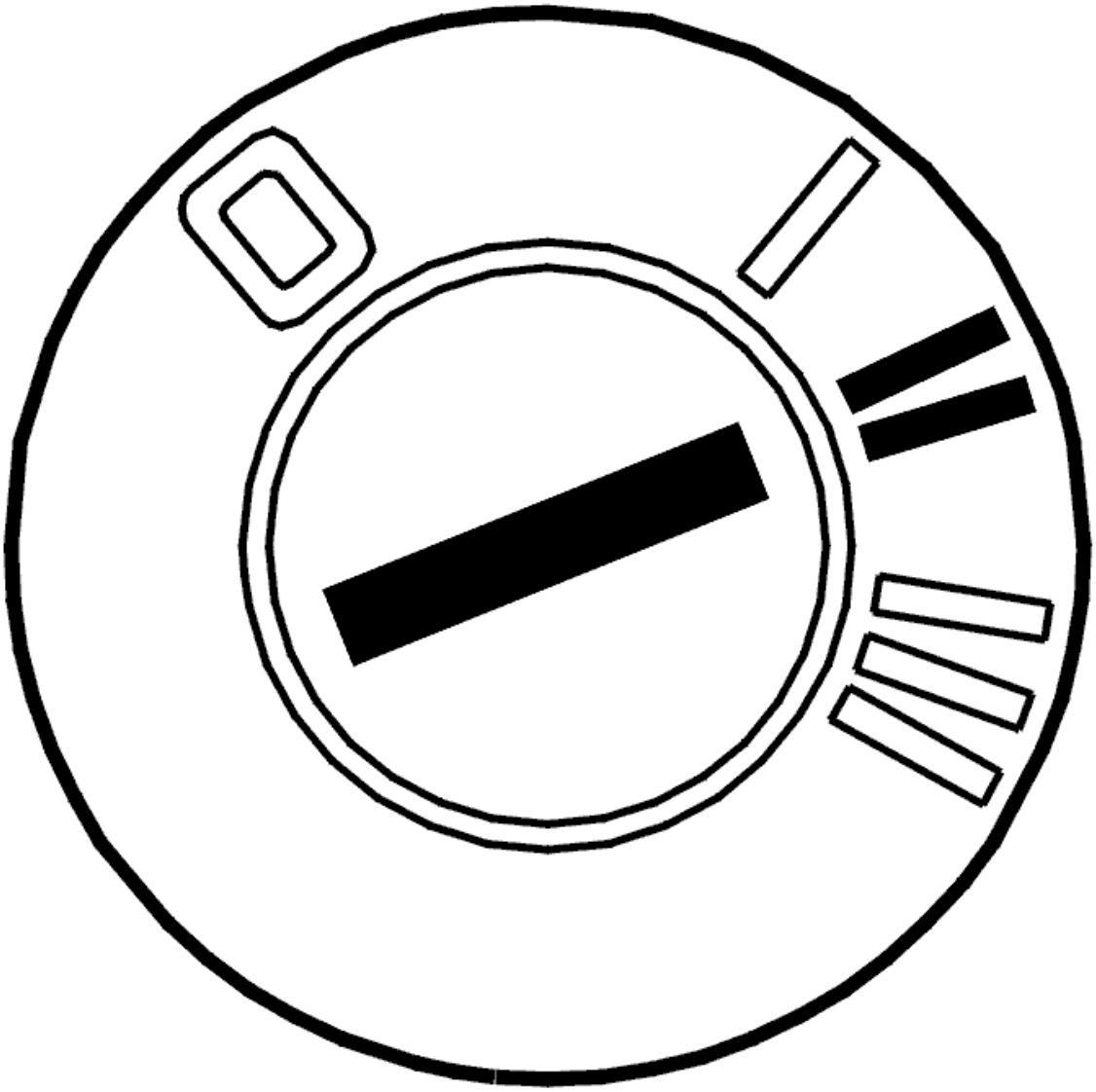

Fig. 324: Identifying Ignition ON
Courtesy of VOLVO CARS CORPORATION

- Ignition on.
- Switch between high and low beam.

  If the right-hand Xenon lamp does not switch between high and low beam, the fault is permanent.

If the right-hand xenon lamp switches between high and low beam, the fault was present previously but is no longer active, intermittent fault.

- **Continue**

  Refer to **CHECKING COMPONENTS AND WIRING**

CHECKING COMPONENTS AND WIRING

Check the signal cable between the central electronic module (CEM) and the actuating motor in the right Xenon lamp for open circuit and short circuit to supply voltage.

If no fault is found, replace the right headlamp.

Remedy as necessary.

Other information

- see **CONNECTING THE BREAKOUT BOX**
- -2004: **SIGNAL SPECIFICATION**
- 2005-: **SIGNAL SPECIFICATION**
- see **LIGHTING - REMOVAL, REPLACEMENT AND INSTALLATION**
- see **CHECKING WIRING AND TERMINALS**

- **Continue**

  Refer to **VERIFICATION**

VERIFICATION

VERIFICATION

HINT: After carrying out the repair, check that the fault has been remedied.

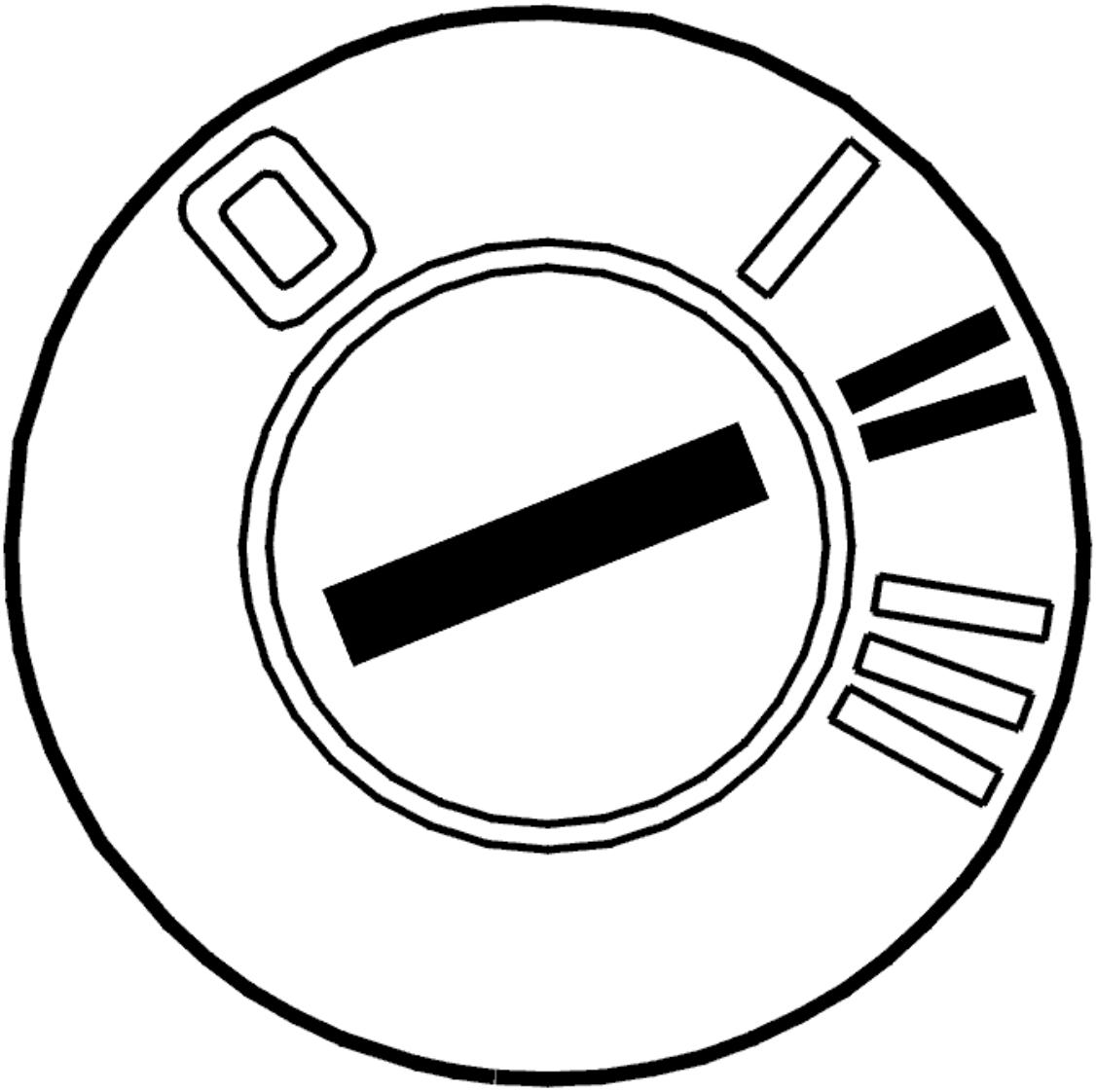

Fig. 325: Identifying Ignition ON
Courtesy of VOLVO CARS CORPORATION

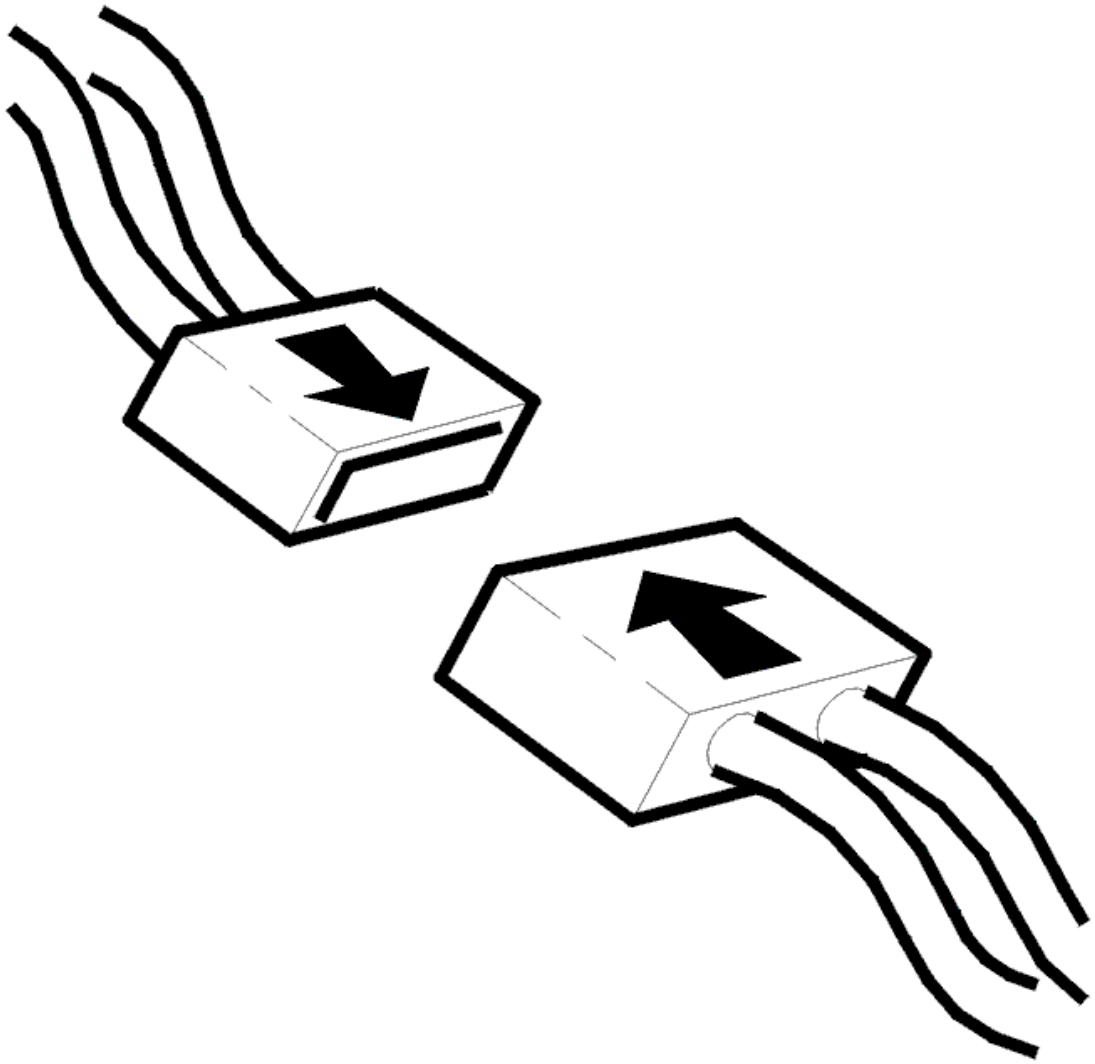

Fig. 326: Connecting Connector
Courtesy of VOLVO CARS CORPORATION

- Ignition off
- Reinstall the connectors, components etc.
- Ignition on.

  Switch between high and low beam.

Is the function OK?

- **YES**

  VERIFIED: Troubleshooting has been completed.

- **NO**

  Refer to **INFORMATION**

INFORMATION

FAULT-TRACING INFORMATION

The fault should have been detected and remedied. As this is not the case fault-tracing has failed.

Exit fault-tracing for this diagnostic trouble code (DTC) or make another attempt.

CEM-8F1C: XENON LAMP RIGHT. SIGNAL TOO HIGH / SIGNAL MISSING (2003-2004)

DIAGNOSTIC TROUBLE CODE (DTC) INFORMATION

Condition

The central electronic module checks the signal from the right Xenon lamp.

Diagnostic trouble code (DTC) CEM-8F1C is stored in the central electrical module if the central electronic module registers too high a signal from the right Xenon lamp.

Diagnostic trouble code (DTC) CEM-8F1C can be detected when the ignition is on for at least 10 seconds and the battery voltage is > 10.5 volts.

Substitute Value

- None.

Possible Source

- Short-circuit to supply voltage in the signal cable
- Open-circuit in the signal cable
- The actuator motor in the xenon lamp housing has jammed
- Defective actuator motor in the xenon lamp housing.

Fault symptom[s]

- The low beam is constantly lit
- The high beam is constantly lit
- The road surface is not illuminated.
- Headlights/Headlight aim is off

SIGNAL TOO HIGH / SIGNAL MISSING

CHECKING THE STATUS

Check if the fault is permanent or intermittent by switching between high and low beam.

If the right xenon lamp does not switch between the high and low beam it means that the fault is permanent.

If the right xenon lamp switches between high and low beam it indicates that the fault was present previously but is no longer active, intermittent fault.

- **Continue**

  Refer to **CHECKING COMPONENTS AND WIRING**

CHECKING COMPONENTS AND WIRING

Check the cable between Central electronic module (CEM) #D11 and right light housing #C1 (10/2) for open circuit as well as short-circuiting to voltage.

HINT: The actuator motor is supplied with voltage via the parking lamp circuit. If the parking lamp does not function carry out the following checks:

Check the main fuse, passenger compartment fuse and relay for the parking lamps.

Check that the right parking lamp bulb is intact.

Check the cable between passenger compartment fuse and light housing #A3 as well as light housing #4A and ground connection for open circuit.

Replace the right lamp housing if no fault is found.

Other information

- To connect the breakout box, see **CONNECTING THE BREAKOUT BOX**
- To access or replace the lamp housing, see **LIGHTING - REMOVAL, REPLACEMENT AND INSTALLATION**
- -2004: **SIGNAL SPECIFICATION**
- 2005-: **SIGNAL SPECIFICATION**
- see **CHECKING WIRING AND TERMINALS** .

- **Continue**

  Refer to **VERIFICATION**

VERIFICATION

VERIFICATION

HINT: After carrying out the repair, check that the fault has been remedied.

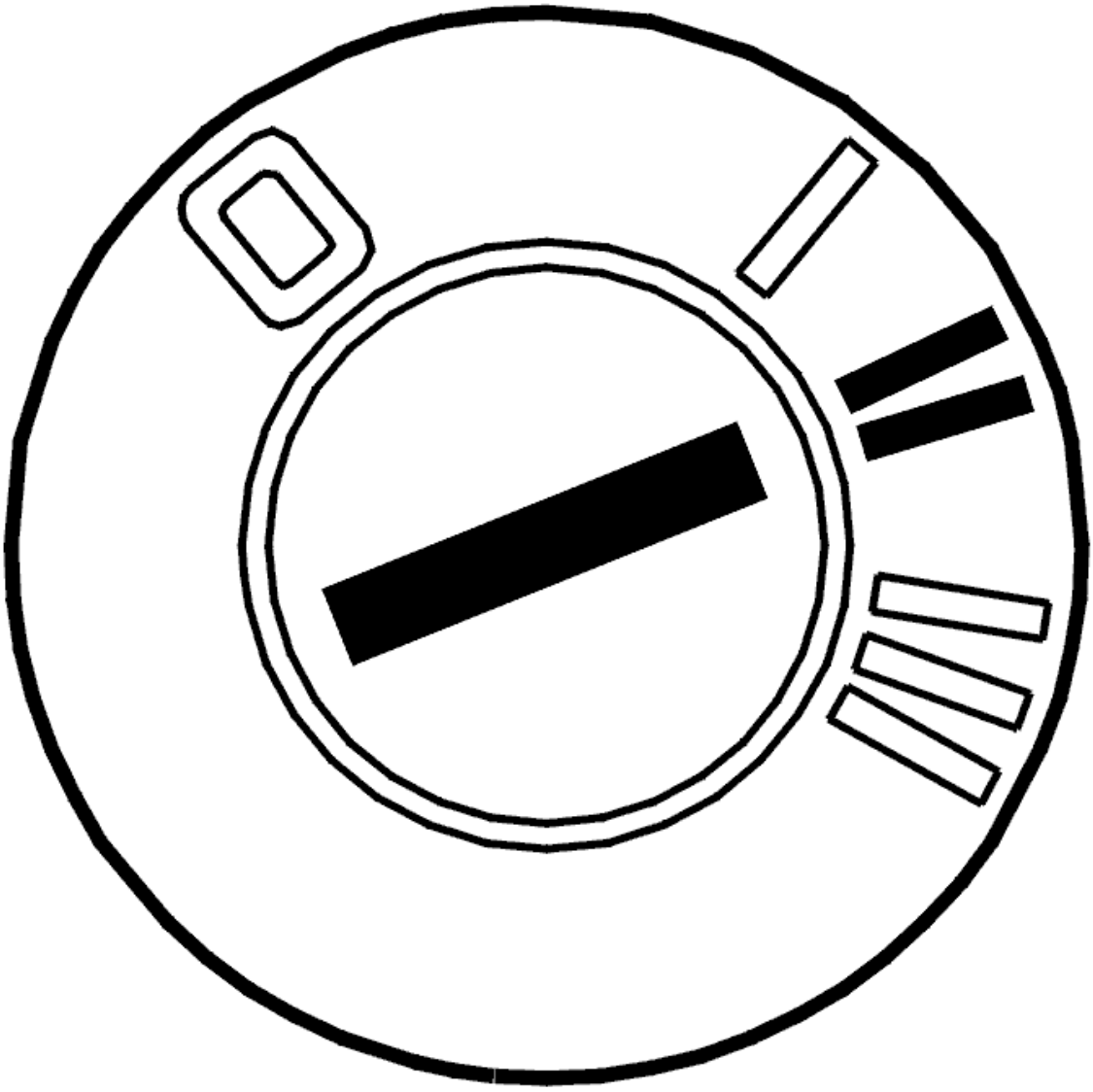

Fig. 327: Identifying Ignition ON
Courtesy of VOLVO CARS CORPORATION

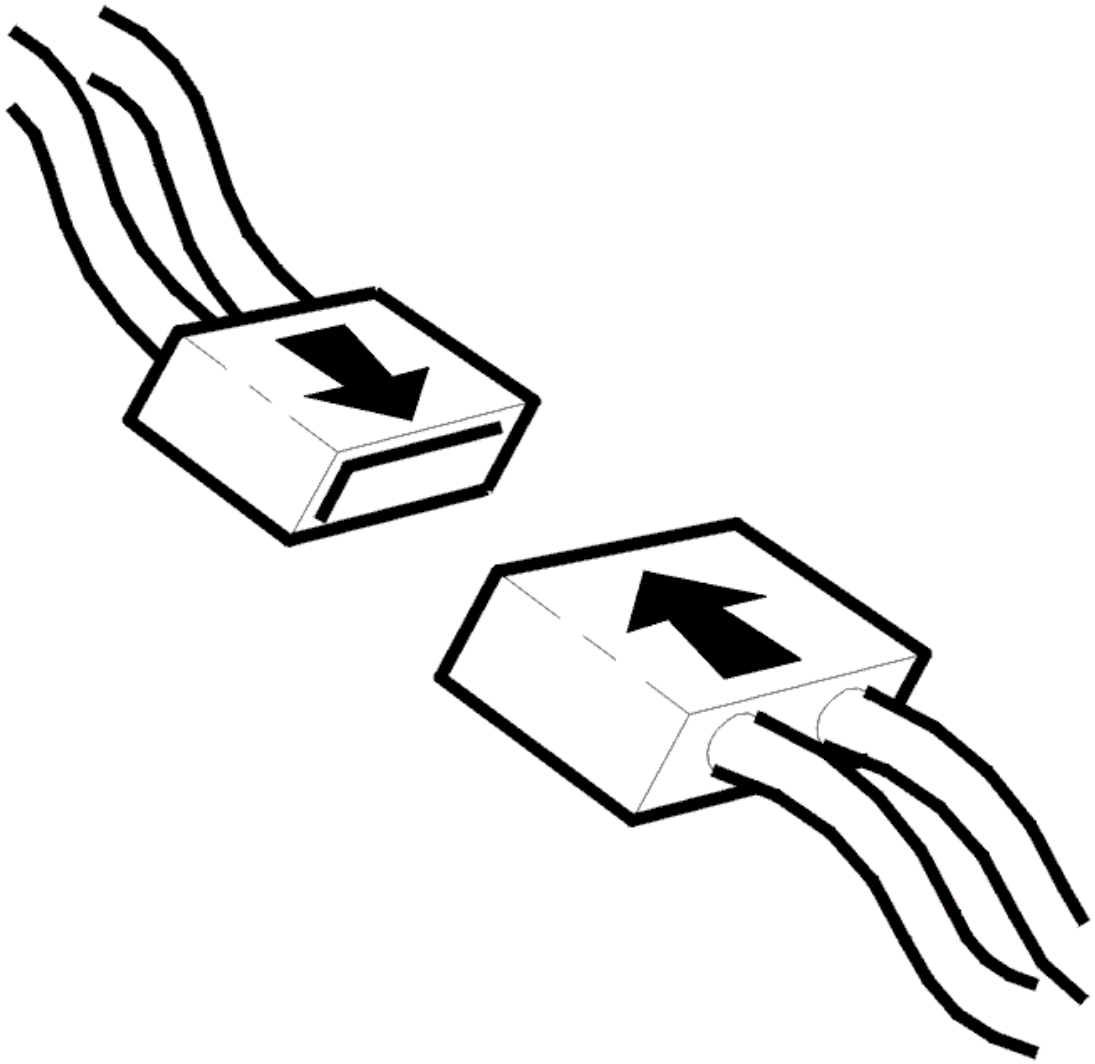

Fig. 328: Connecting Connector
Courtesy of VOLVO CARS CORPORATION

- Ignition off
- Reinstall the connectors, components etc.
- Ignition on.

  Switch on the lighting and shift between high and low beam.

Do the xenon lamps switch between high and low beam?

- **YES**

  VERIFIED: Troubleshooting has been completed.

- **NO**

  Refer to **INFORMATION**

INFORMATION

FAULT-TRACING INFORMATION

The fault should have been detected and remedied. As this is not the case fault-tracing has failed.

Exit fault-tracing for this diagnostic trouble code (DTC) or make another attempt.

CEM-8F1D: X-SUPPLY RELAY CIRCUIT. SHORT-CIRCUIT TO SUPPLY VOLTAGE (2005-2012)

DIAGNOSTIC TROUBLE CODE (DTC) INFORMATION CEM-8F1D

Condition

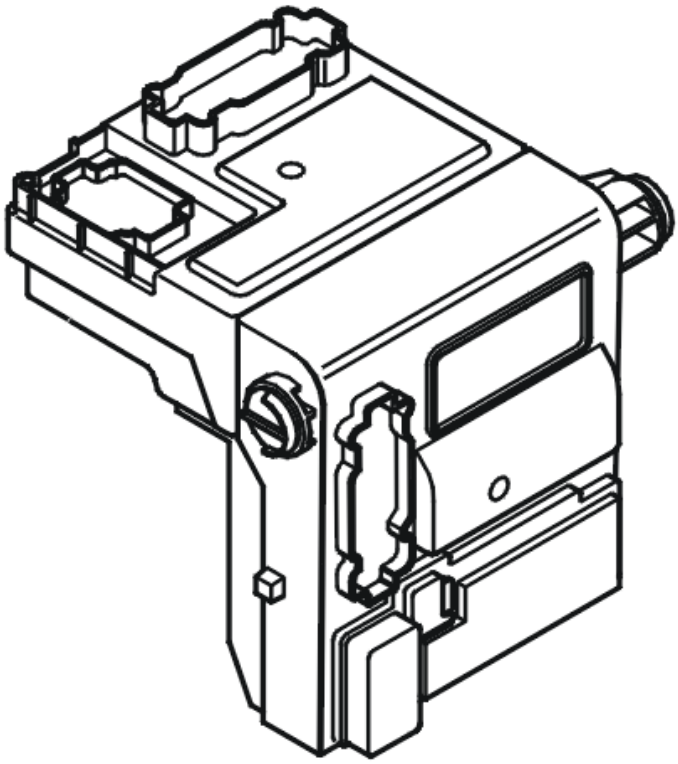

Fig. 329: Identifying Central Electronic Module (CEM)
Courtesy of VOLVO CARS CORPORATION

The central electronic module (CEM) checks the voltage on the driver circuits for the 15-supply and headlamp

range adjustment. This is achieved by a common re-activation of the drive circuit.

The diagnostic trouble code (DTC) is stored if the central electronic module (CEM) registers from the re-engagement signal that there is a short-circuit to supply voltage in the output from one of the drive circuits.

The diagnostic trouble code (DTC) can be detected at ignition position 0 and I.

Substitute Value

- None.

Possible Source

- Short-circuit to supply voltage in the signal cable.

Fault symptom[s]

- Beam height control does not function.
- Automatic headlamp range control is not functioning.
- Incorrect setting for low beam.

SHORT-CIRCUIT TO SUPPLY VOLTAGE

CHECKING THE WIRING

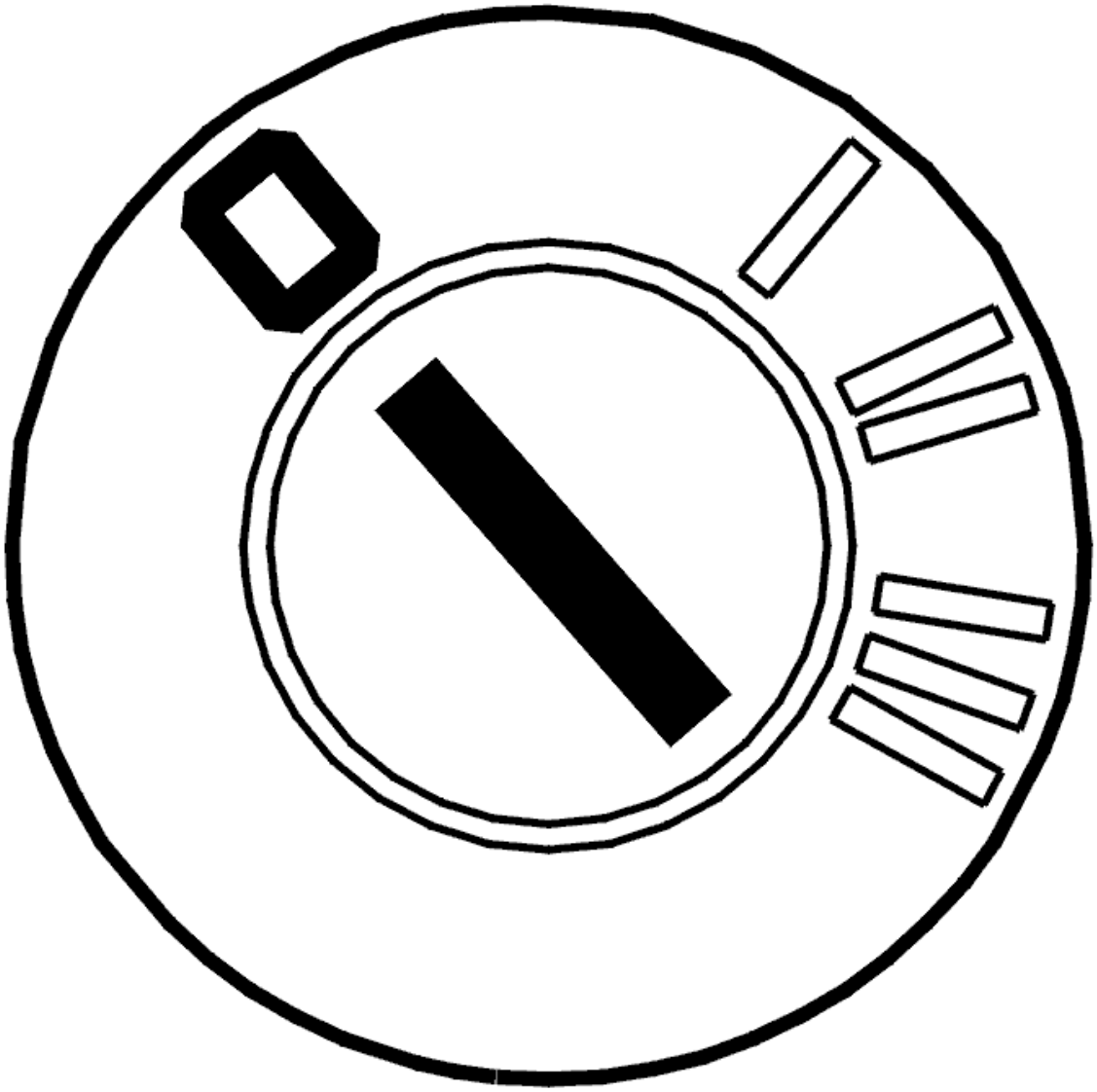

Fig. 330: Identifying Ignition OFF
Courtesy of VOLVO CARS CORPORATION

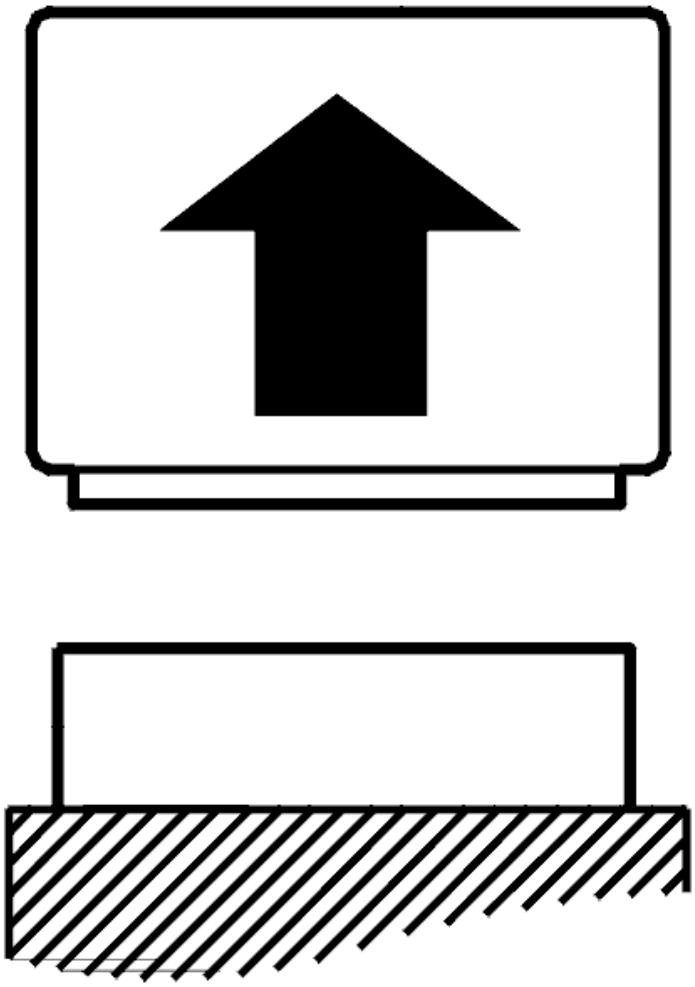

Fig. 331: Disconnecting Connector
Courtesy of VOLVO CARS CORPORATION

- Ignition off
- Disconnect central electronic module (CEM) connector C.

  Check the signal cable. Check for a short-circuit to supply voltage.

  Take readings between:

  - Central electronic module (CEM) terminal #C12 (#12) and left headlamp alignment motor terminal #2
  - Central electronic module (CEM) terminal #C11 (#11) and right headlamp alignment motor terminal #2.

Remedy as necessary.

Other information

- see **CONNECTING THE BREAKOUT BOX**
- -2004: **SIGNAL SPECIFICATION**
- 2005-: **SIGNAL SPECIFICATION**
- see **LOCATION OF COMPONENTS**
- see **CHECKING WIRING AND TERMINALS**

- **Continue**

Refer to **VERIFICATION**

VERIFICATION

VERIFICATION

HINT: After carrying out the repair, check that the fault has been remedied.

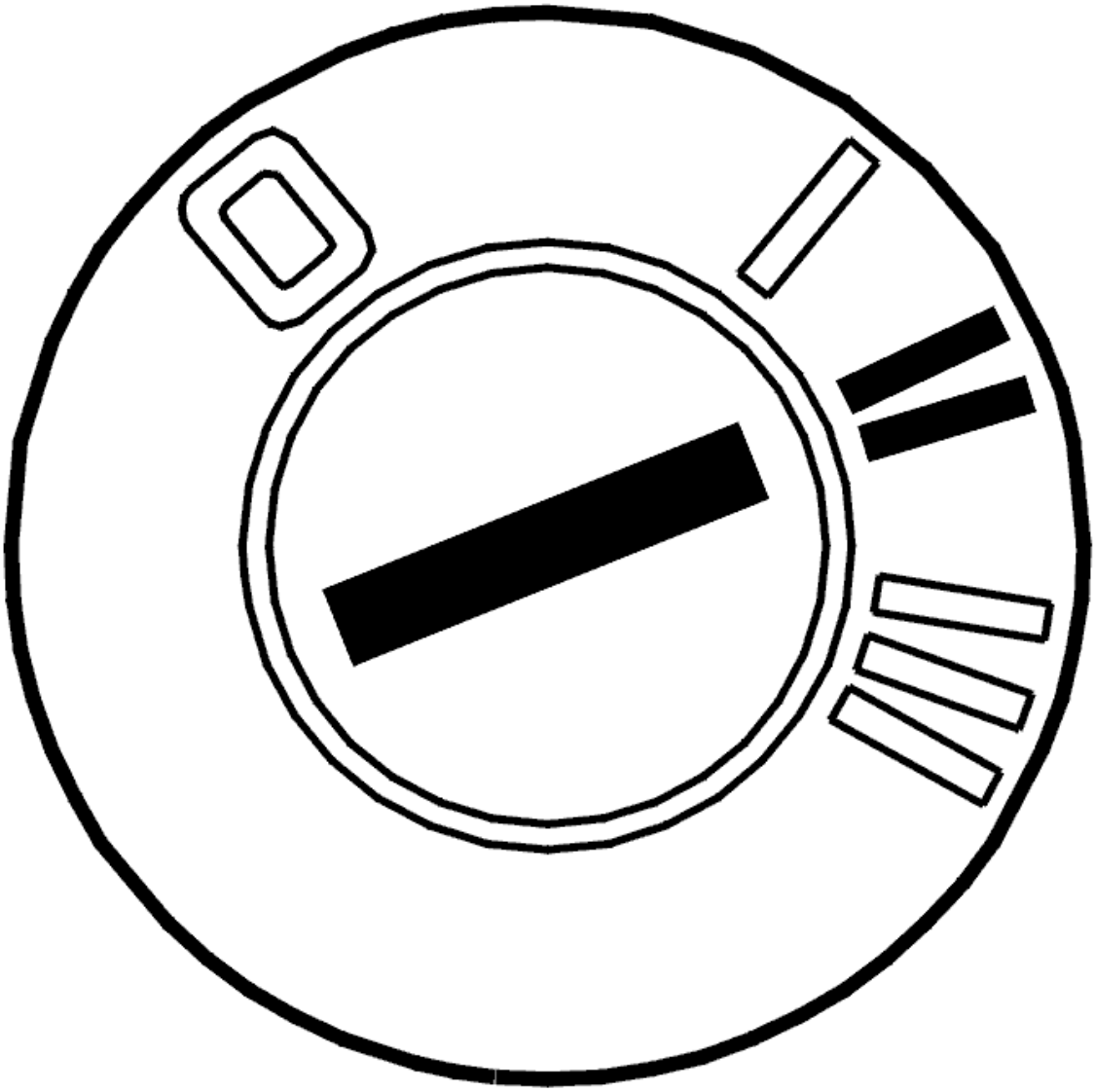

Fig. 332: Identifying Ignition ON
Courtesy of VOLVO CARS CORPORATION

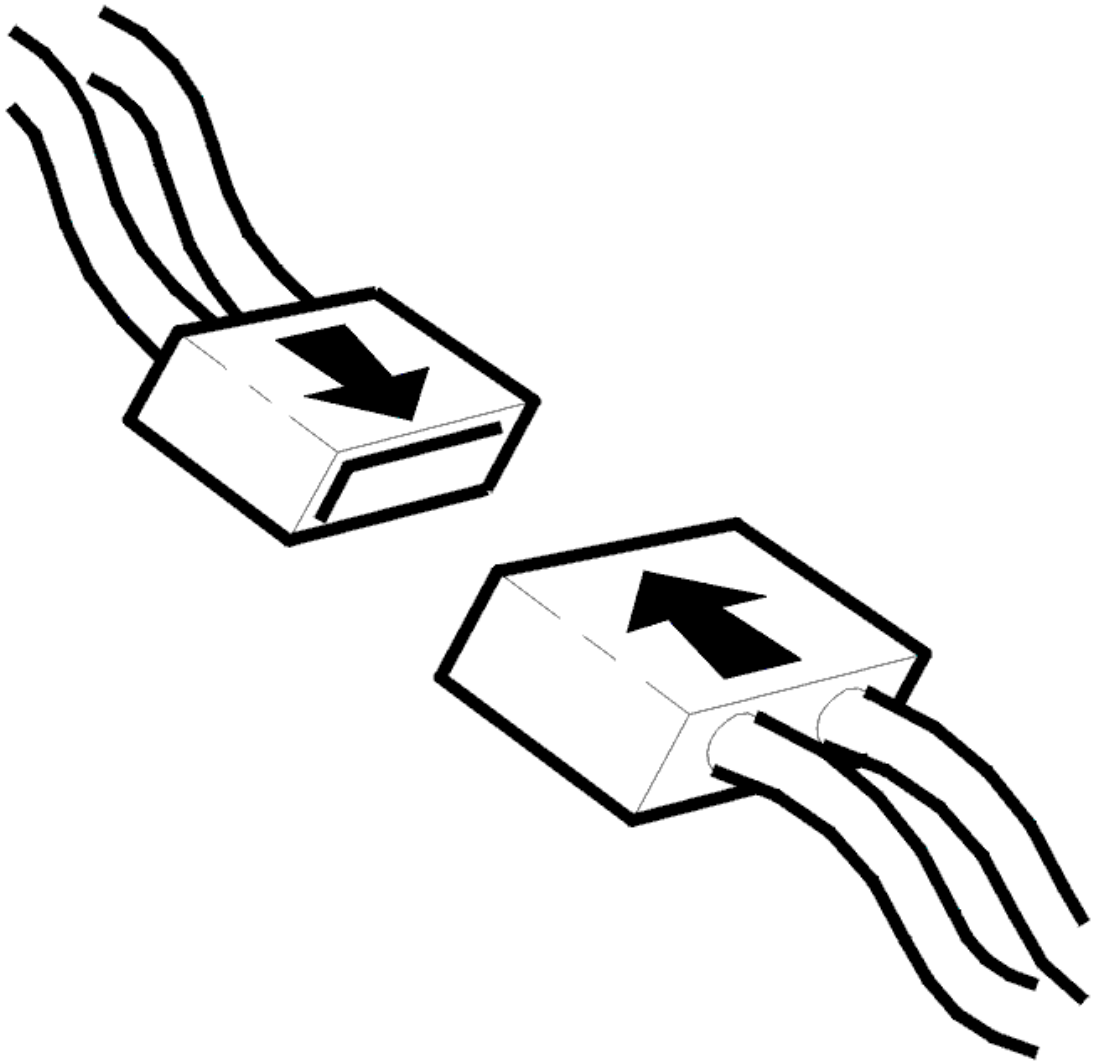

Fig. 333: Connecting Connector
Courtesy of VOLVO CARS CORPORATION

- Ignition off
- Reinstall the connectors, components etc.
- Ignition on.

  Adjust the beam length between maximum and minimum.

  Check that the beam length changes.

Does the beam length change?

- **YES**

VERIFIED: Troubleshooting has been completed.

- **NO**

  Refer to **INFORMATION**

INFORMATION

FAULT-TRACING INFORMATION

The fault should have been detected and remedied. As this is not the case fault-tracing has failed.

Exit fault-tracing for this diagnostic trouble code (DTC) or make another attempt.

CEM-8F21: WINDSHIELD WIPER. FAULTY SIGNAL (2005-2012)

DIAGNOSTIC TROUBLE CODE (DTC) INFORMATION CEM-8F21

Condition

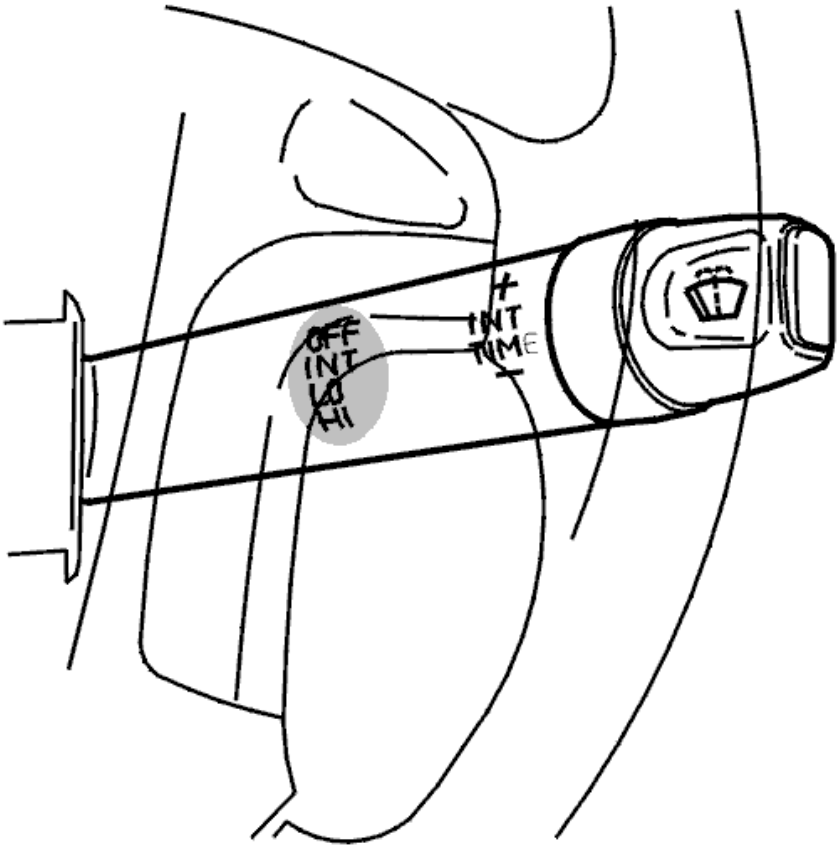

Fig. 334: Identifying Windshield Wiper Lever
Courtesy of VOLVO CARS CORPORATION

The central electronic module (CEM) checks the windshield wipers.

The diagnostic trouble code (DTC) is stored if the central electronic module registers that the signal on the signal cable for the windshield wiper lever is too high or missing.

The diagnostic trouble code (DTC) can be diagnosed when the ignition is switched on.

Substitute Value

- None.

Possible Source

- Short-circuit to supply voltage in the signal cable
- Open-circuit in the signal cable.

Fault symptom[s]

- The windshield wipers are not working.

FAULTY SIGNAL

REPLACING THE COMPONENT

The central electronic module (CEM) has registered a faulty signal in the signal cable from the windshield wiper.

If the fault is intermittent, it has been registered previously but is no longer present. Intermittent faults can be caused by interference at start up of the steering wheel module (SWM) or may be a different type of fault which occurs on different occasions. The fault is evaluated depending on how it occurs. If the fault recurs, replace the windshield wiper.

see **WASHER / WIPER SWITCH, REPLACING**

Remedy as necessary.

- **Continue**

  Refer to **VERIFICATION**

INFORMATION

FAULT-TRACING INFORMATION

The fault should have been detected and remedied. As this is not the case fault-tracing has failed.

Exit fault-tracing for this diagnostic trouble code (DTC) or make another attempt.

VERIFICATION

VERIFICATION

HINT: After carrying out the repair, check that the fault has been remedied.

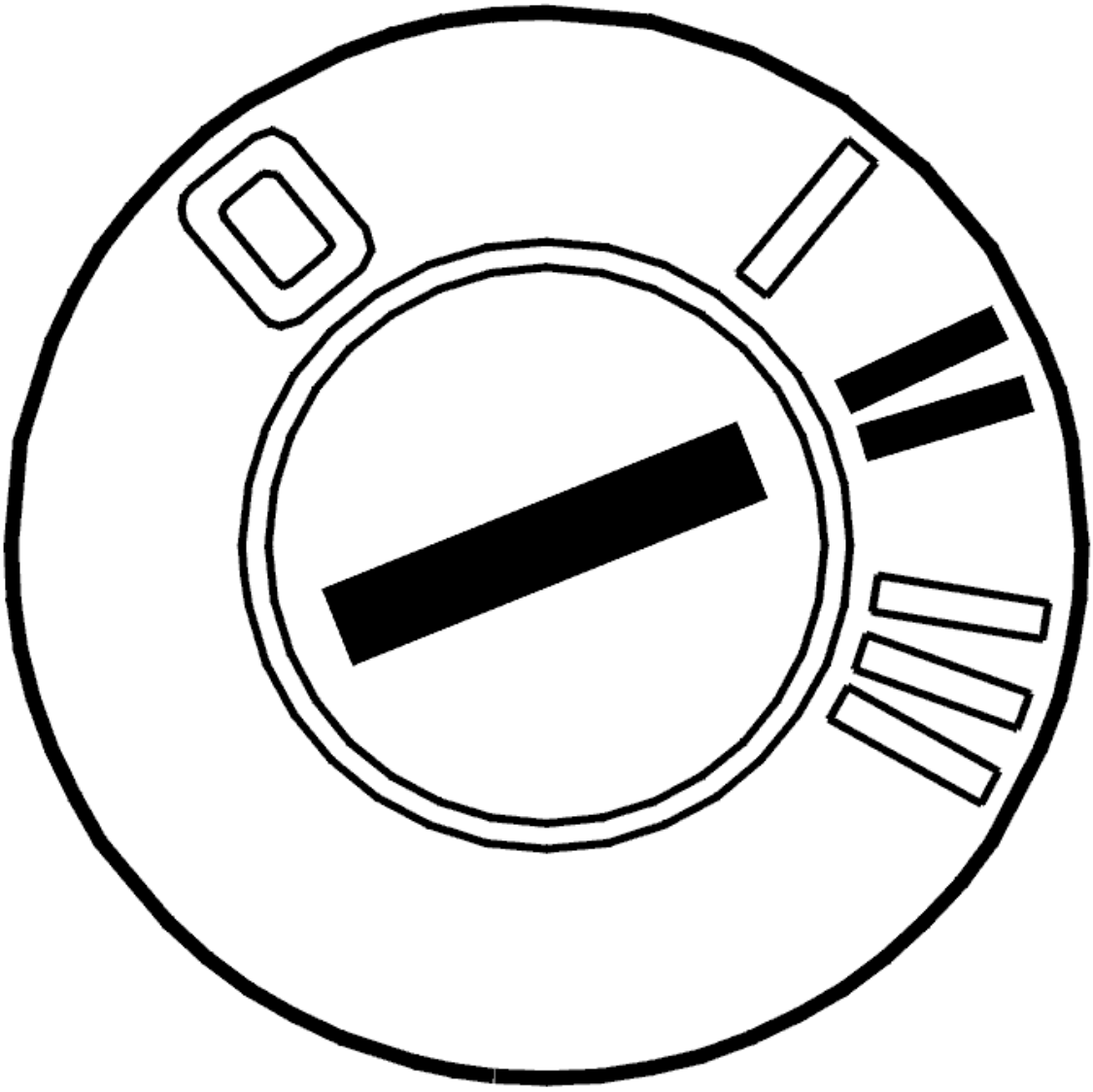

Fig. 335: Identifying Ignition ON
Courtesy of VOLVO CARS CORPORATION

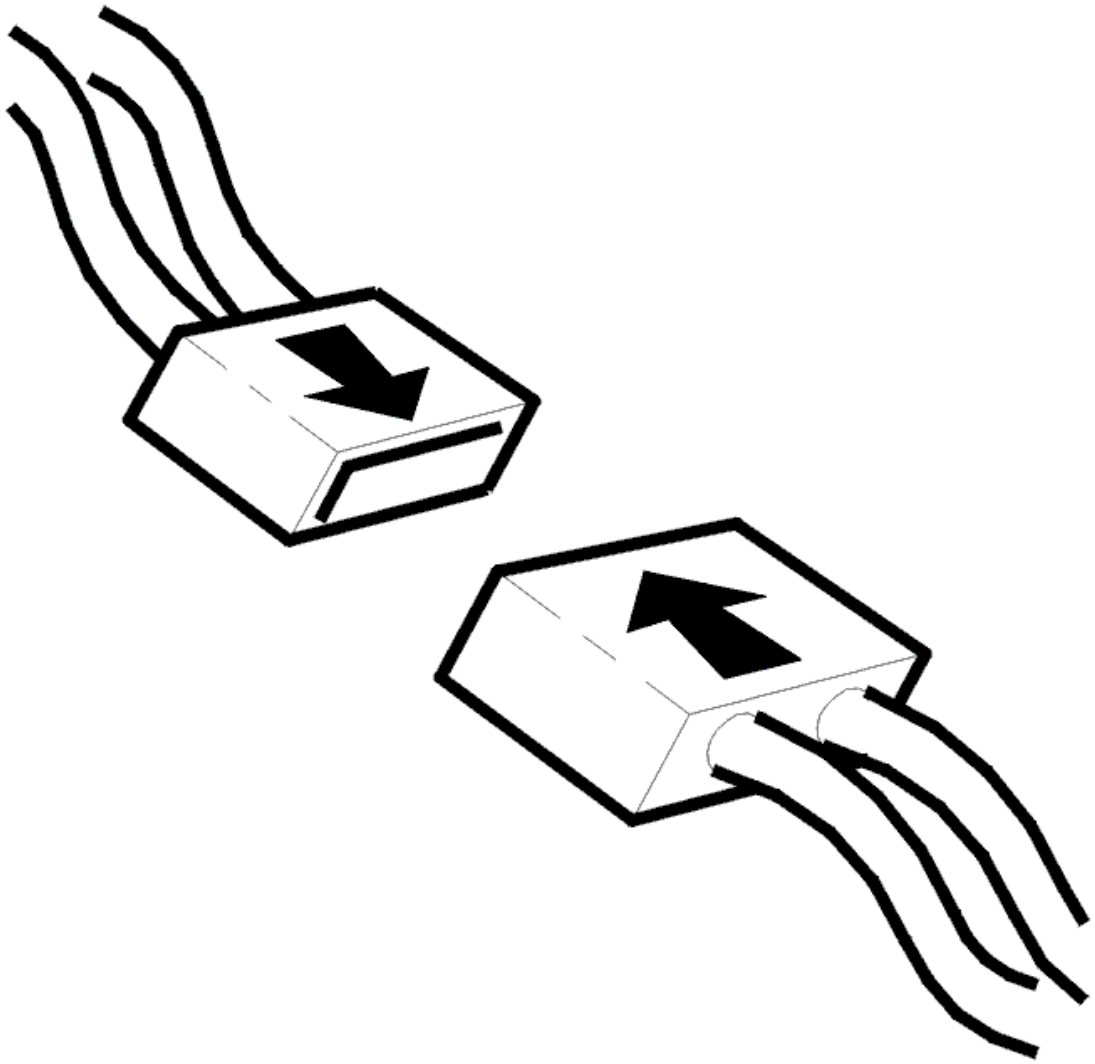

Fig. 336: Connecting Connector
Courtesy of VOLVO CARS CORPORATION

- Ignition off
- Reinstall the connectors, components etc.
- Ignition on.

  Activate the windshield wipers.

  Check that the windshield wipers are activated.

Are the windshield wipers working?

- **YES**

VERIFIED: Troubleshooting has been completed.

- **NO**

  Refer to **INFORMATION**

CEM-8F21: WIPERS. SIGNAL TOO HIGH/SIGNAL MISSING. INTERMITTENT FAULT (2003-2004)

DIAGNOSTIC TROUBLE CODE INFORMATION

Condition

If windscreen wiper is in its rest position (home position) but wiper switch is in an activated position (that is, one of the positions for full/half-speed, intermittent or single sweep wipe), diagnostic trouble code CEM 8F21 is displayed.

Substitute Value

Only low wiper speed works.

Possible Source

- Short circuit to voltage supply or open circuit on switch which indicates operation/ rest position
- Defective windscreen wiper lever
- Defective fuse 11C/22.

Fault symptom[s]

- Wiper only works on lowest speed

SIGNAL TOO HIGH/SIGNAL MISSING. INTERMITTENT FAULT

CHECKING THE WIRES

Check the wire between central electronic module (CEM) 4D and steering wheel module (SWM) 21 (3/130).

Trouble-shoot for an intermittent short circuit to voltage supply as described in, see **SHORT-CIRCUIT TO SUPPLY VOLTAGE, INTERMITTENT FAULTS** and for an open circuit as described in **OPEN-CIRCUIT, INTERMITTENT FAULTS** .

Do the necessary corrective action.

Additional information

- To connect the test box, see **CONNECTING THE BREAKOUT BOX** .

- -2004: **SIGNAL SPECIFICATION**
- 2005-: **SIGNAL SPECIFICATION**

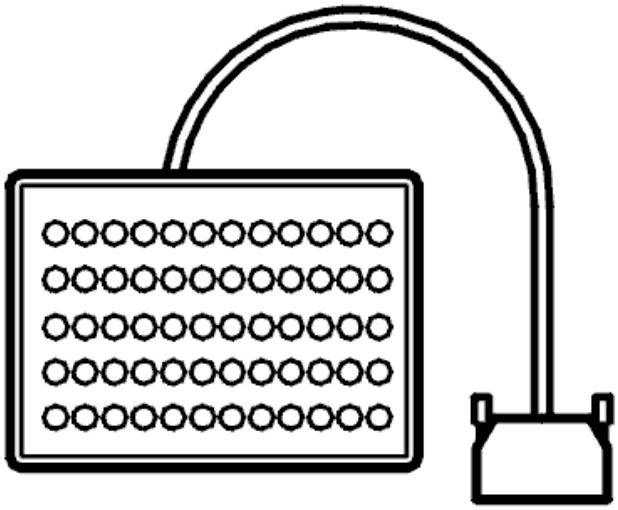

Fig. 337: Breakout Box
Courtesy of VOLVO CARS CORPORATION

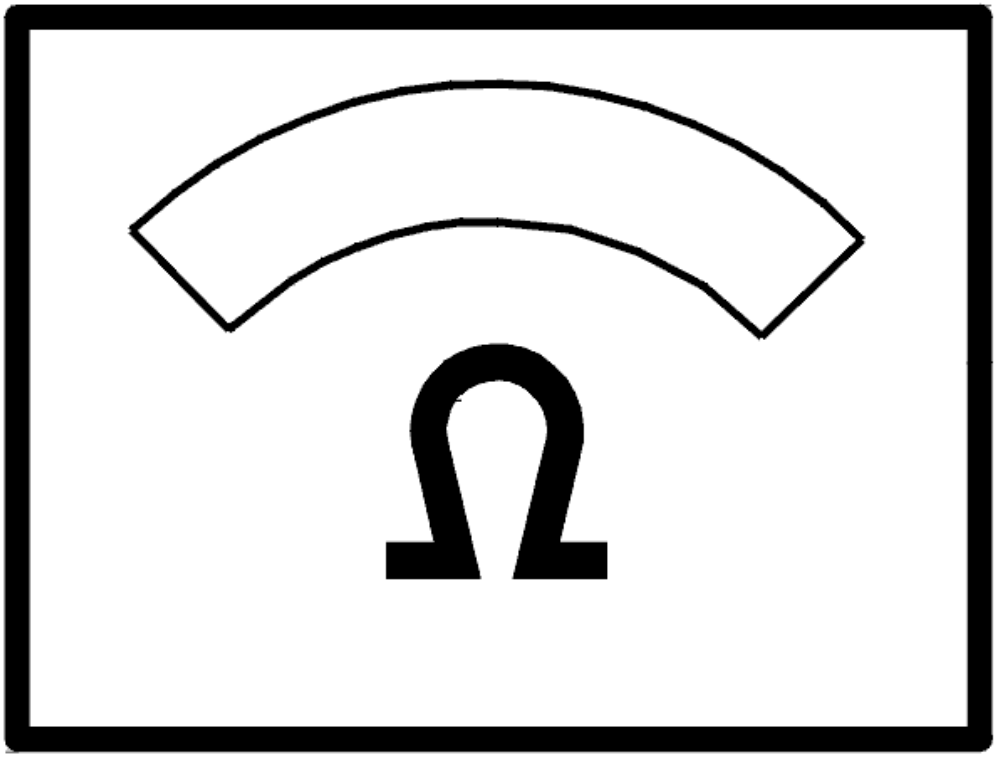

Fig. 338: Identifying Ohm Meter
Courtesy of VOLVO CARS CORPORATION

CEM-8F21: WIPERS. SIGNAL TOO HIGH/SIGNAL MISSING. PERMANENT FAULT (2003-2004)

DIAGNOSTIC TROUBLE CODE INFORMATION

see **DIAGNOSTIC TROUBLE CODE INFORMATION**

SIGNAL TOO LOW. PERMANENT FAULT

CHECKING THE CABLE

Check the cable between central electronic module (CEM) terminal #4D and steering wheel module (SWM)

(3/130) terminal #21.

Fault-trace for a short-circuit to ground.

Remedy as necessary.

Other information

- To connect the breakout box, see **CONNECTING THE BREAKOUT BOX**
- -2004: **SIGNAL SPECIFICATION**
- 2005-: **SIGNAL SPECIFICATION**
- see **CHECKING WIRING AND TERMINALS** .

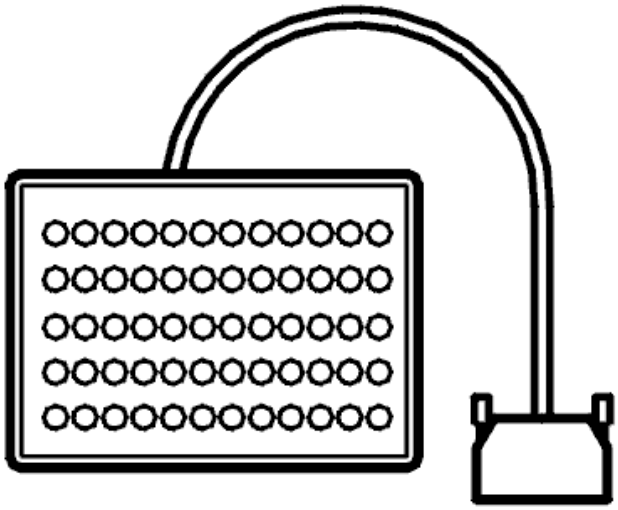

Fig. 339: Breakout Box
Courtesy of VOLVO CARS CORPORATION

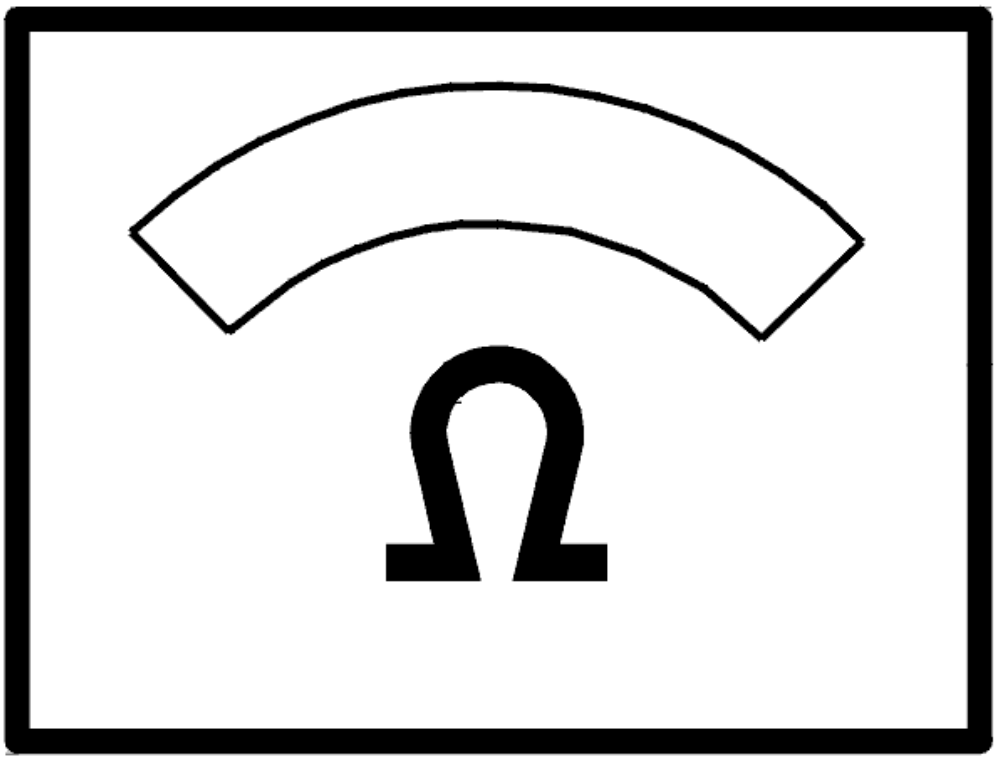

Fig. 340: Identifying Ohm Meter
Courtesy of VOLVO CARS CORPORATION

Was a fault detected?

- **YES**

  Refer to **VERIFICATION**

- **NO**

  Refer to **REPLACING WIPER / WASHER SWITCH**

REPLACING WIPER / WASHER SWITCH

Replace wiper / washer switch. See **WASHER / WIPER SWITCH, REPLACING** .

- **Continue**

  Refer to **VERIFICATION**

VERIFICATION

HINT: After carrying out the repair, check that the fault has been remedied.

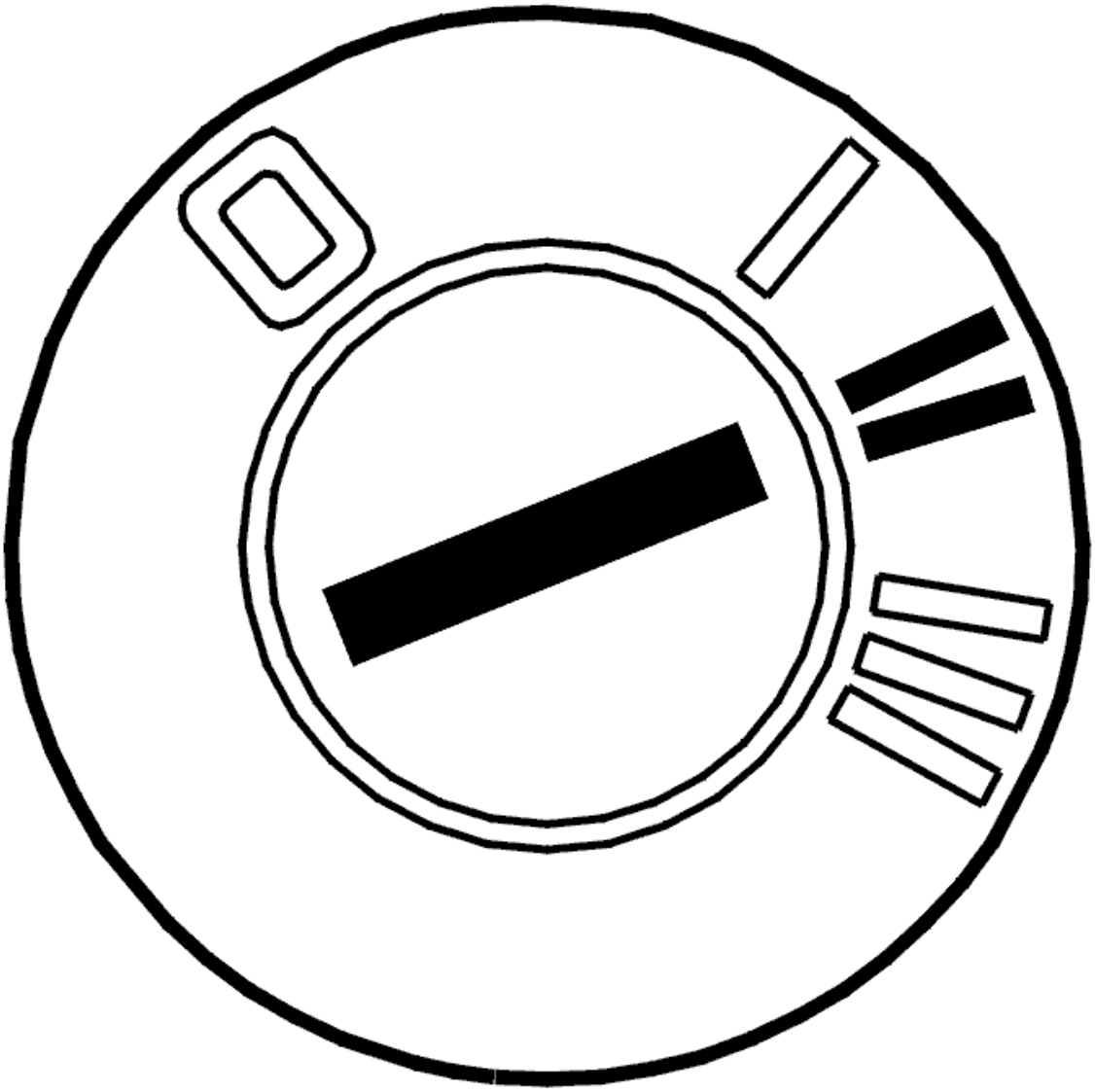

Fig. 341: Identifying Ignition ON
Courtesy of VOLVO CARS CORPORATION

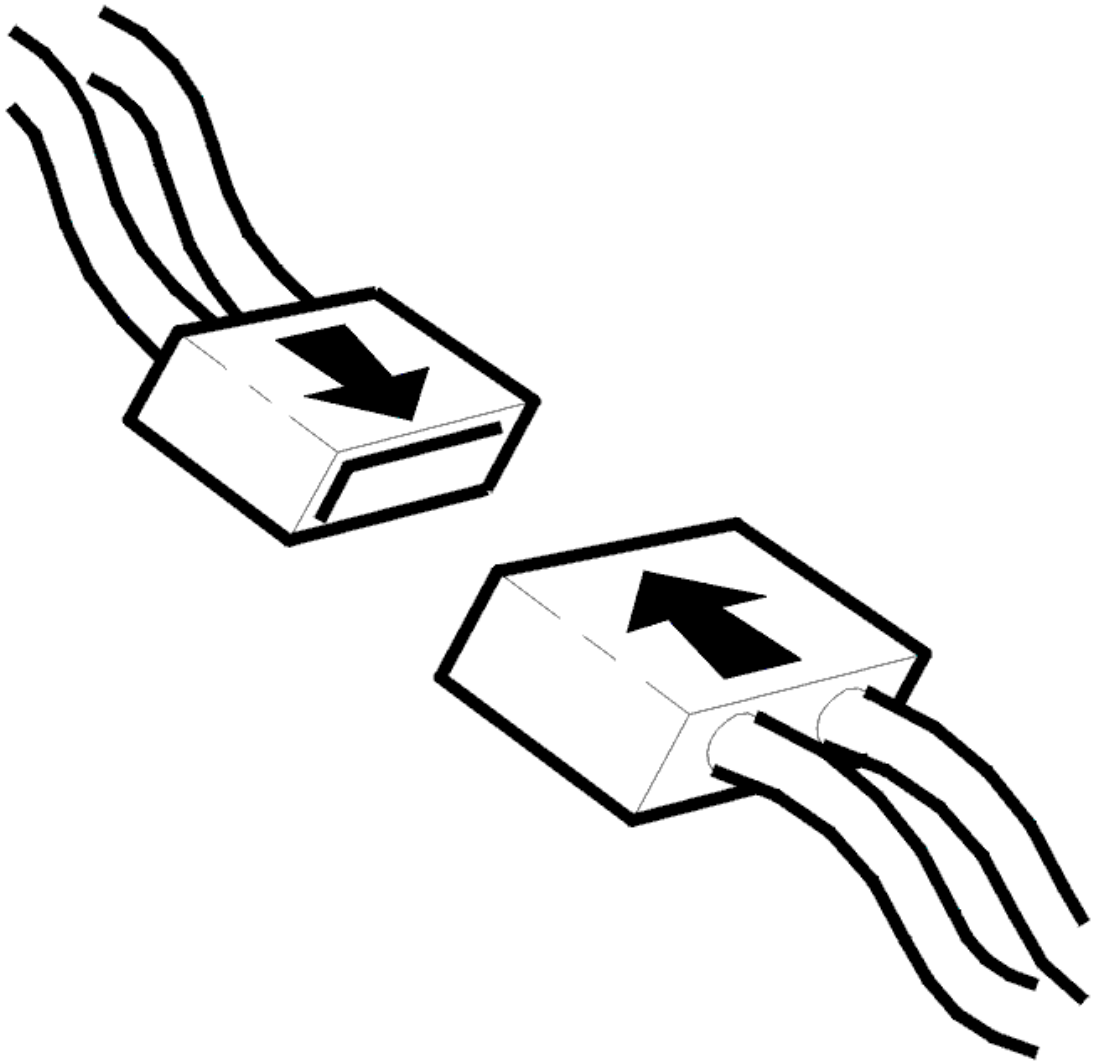

Fig. 342: Connecting Connector
Courtesy of VOLVO CARS CORPORATION

- Ignition off
- Reinstall the connectors, components etc.
- Ignition on.

  Check that no windshield wiper function is activated and read off all the values from the control module.

  Read off the values.

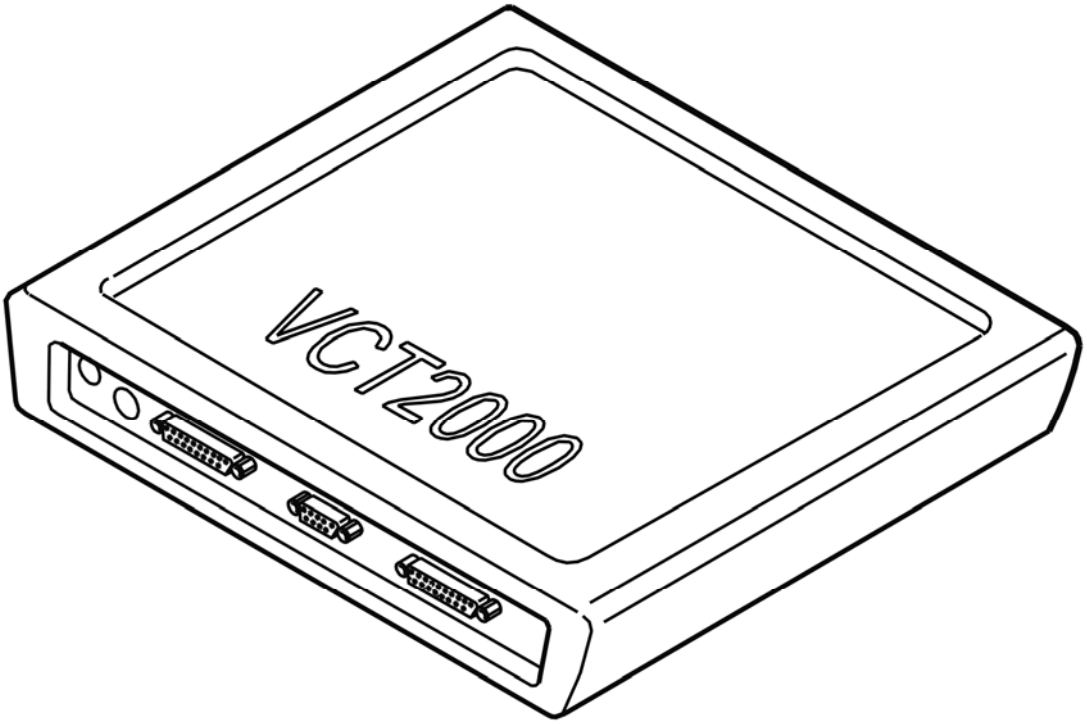

Fig. 343: Identifying VCT2000 Diagnostic Tool Symbol In VIDA
Courtesy of VOLVO CARS CORPORATION

Are all windshield wiper functions switched off?

- **YES**

  OKAY: Troubleshooting has been completed.

- **NO**

  Refer to **INFORMATION**

INFORMATION

FAULT-TRACING INFORMATION

The fault should have been detected and remedied. As this is not the case fault-tracing has failed.

Exit fault-tracing for this diagnostic trouble code (DTC) or make another attempt.

CEM-8F22: WINDSHIELD WIPER. SIGNAL TOO LOW (2005-2012)

DIAGNOSTIC TROUBLE CODE (DTC) INFORMATION CEM-8F22

Condition

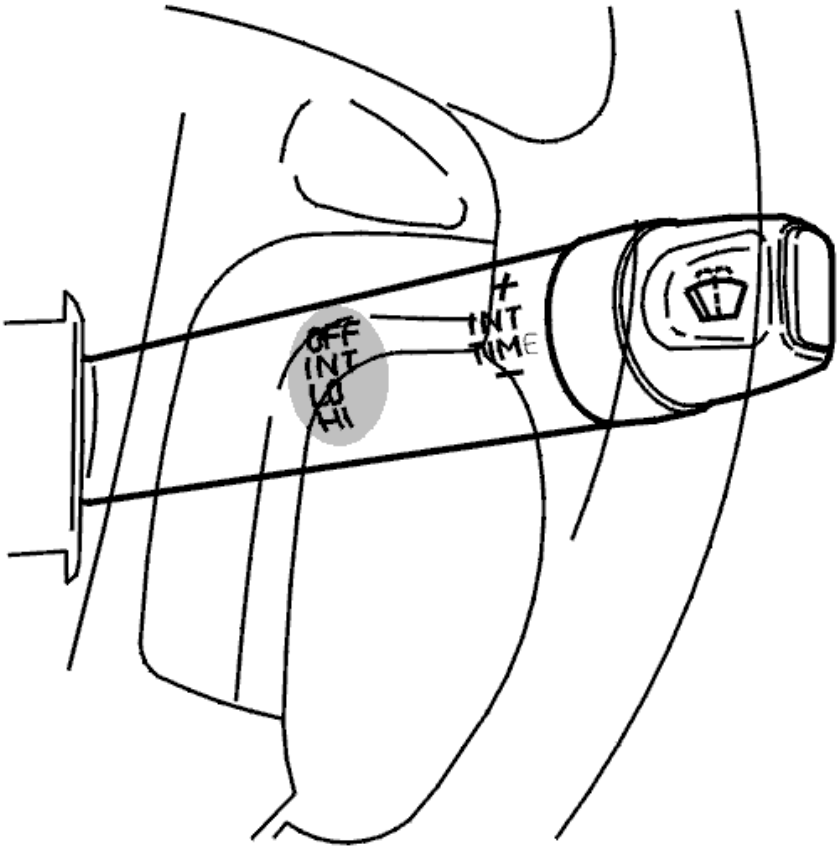

Fig. 344: Identifying Windshield Wiper Lever
Courtesy of VOLVO CARS CORPORATION

The central electronic module (CEM) checks the windshield wipers.

The diagnostic trouble code (DTC) is stored if the central electronic module (CEM) registers that the signal for the windshield wiper lever is too low.

The diagnostic trouble code (DTC) can be diagnosed when the ignition is switched on.

Substitute Value

- None.

Possible Source

- Short-circuit to ground in the signal cable.

Fault symptom[s]

- The windshield wipers are not working.

SIGNAL TOO LOW

REPLACING THE COMPONENT

The central electronic module (CEM) has registered that the signal in the signal cable from the windshield wiper lever is too low.

If the fault is intermittent, it has been registered previously but is no longer present. Intermittent faults can be caused by interference at start up of the steering wheel module (SWM) or may be a different type of fault which occurs on different occasions. The fault is evaluated depending on how it occurs. If the fault recurs, replace the windshield wiper.

see **WASHER / WIPER SWITCH, REPLACING**

Remedy as necessary.

- **Continue**

  Refer to **VERIFICATION**

INFORMATION

FAULT-TRACING INFORMATION

The fault should have been detected and remedied. As this is not the case fault-tracing has failed.

Exit fault-tracing for this diagnostic trouble code (DTC) or make another attempt.

VERIFICATION

VERIFICATION

HINT: After carrying out the repair, check that the fault has been remedied.

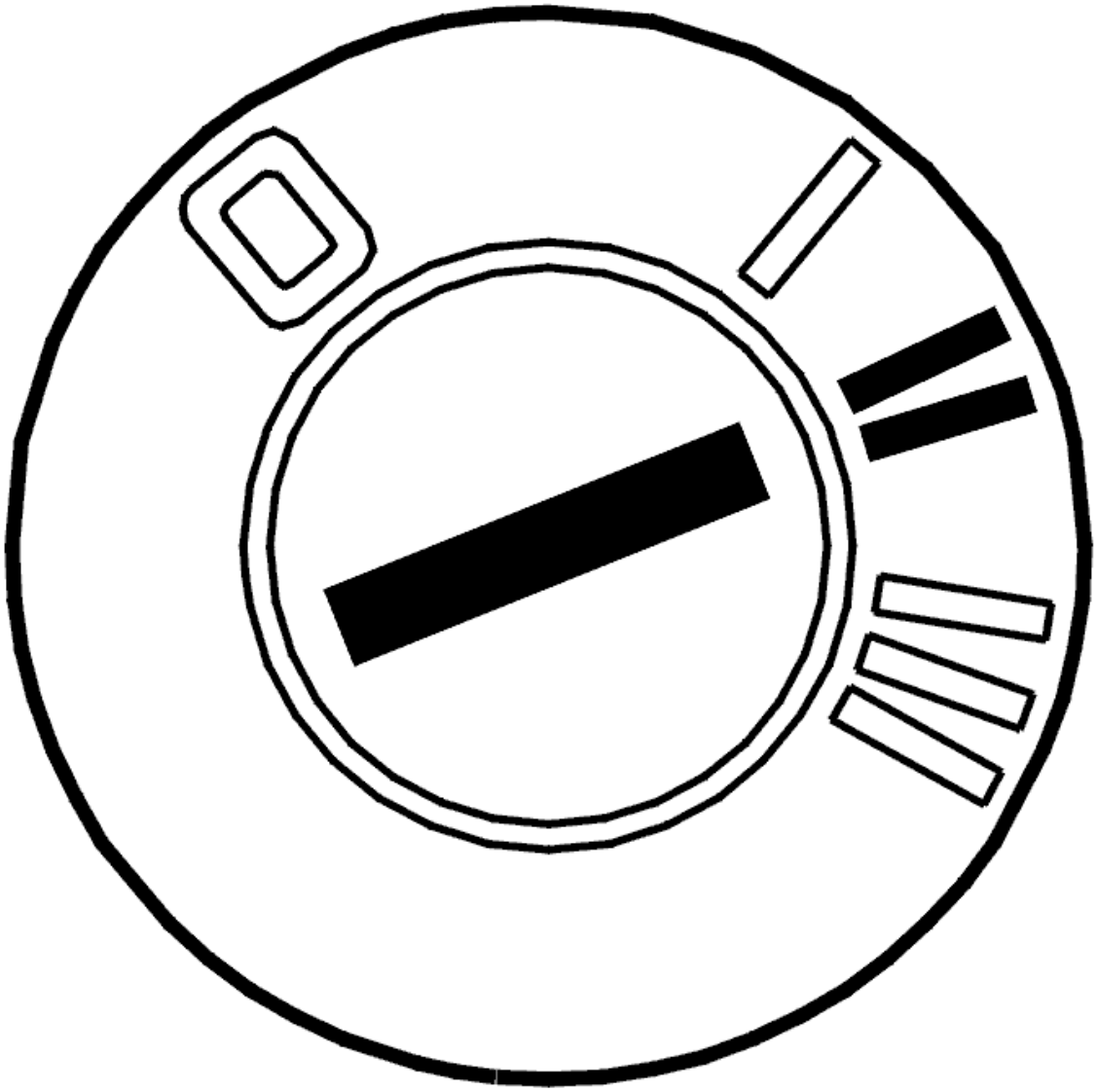

Fig. 345: Identifying Ignition ON
Courtesy of VOLVO CARS CORPORATION

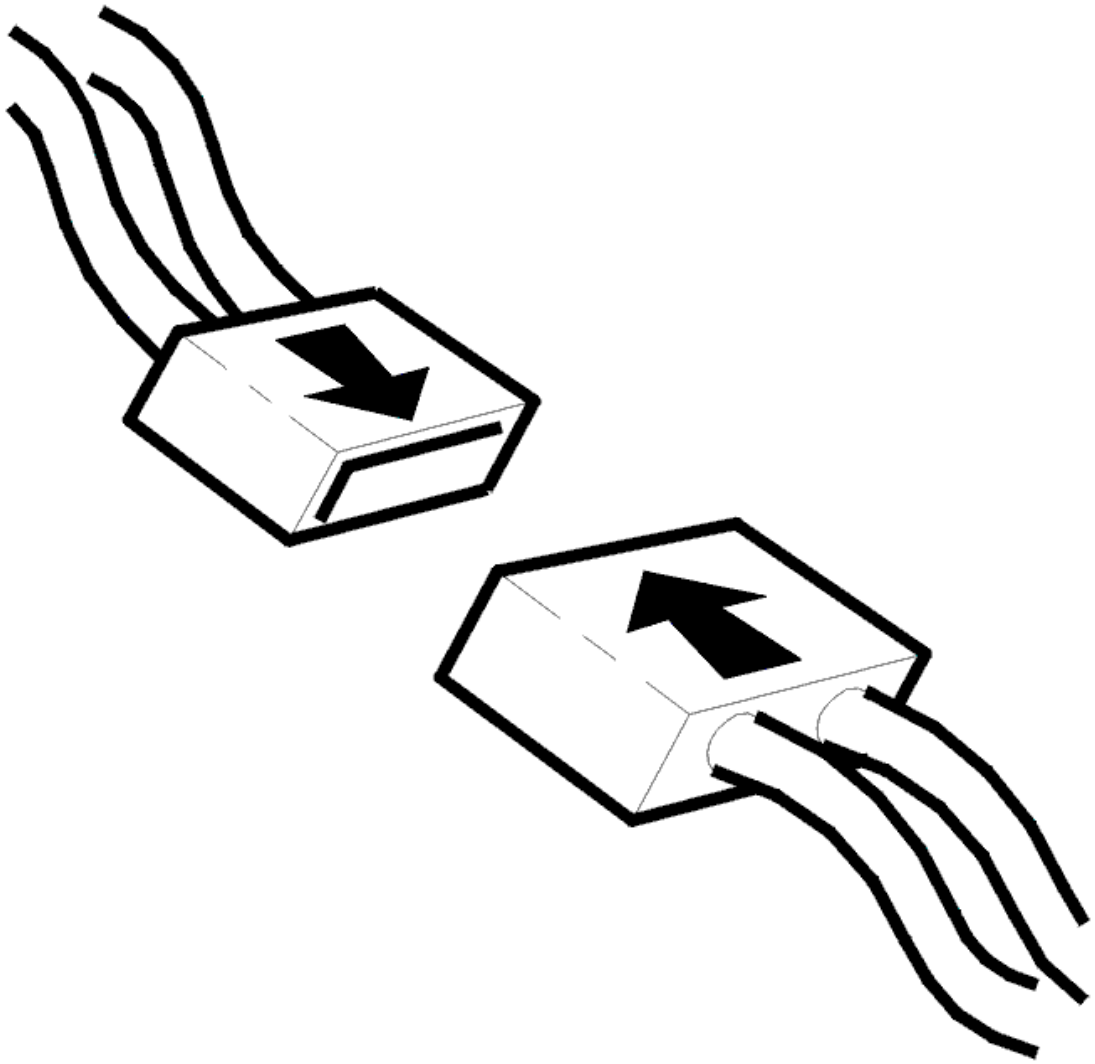

Fig. 346: Connecting Connector
Courtesy of VOLVO CARS CORPORATION

- Ignition off
- Reinstall the connectors, components etc.
- Ignition on.

  Activate the windshield wipers.

  Check that the windshield wipers are activated.

Are the windshield wipers working?

- **YES**

VERIFIED: Troubleshooting has been completed.

- **NO**

  Refer to **INFORMATION**

CEM-8F22: WIPERS. SIGNAL TOO LOW. INTERMITTENT FAULT (2003-2004)

DIAGNOSTIC TROUBLE CODE INFORMATION

Condition

If windscreen wiper is in its operating position (position on windscreen) but wiper switch is not in an activated position (that is, one of the positions for full/half-speed, intermittent or single sweep wipe), diagnostic trouble code CEM 8F22 is displayed.

Substitute Value

Only low wiper speed works.

Possible Source

- Short circuit to ground on switch which indicates operation/rest position
- Defective windscreen wiper lever
- Defective fuse 11C/22.

Fault symptom[s]

- Wiper only works on lowest speed

SIGNAL TOO LOW. INTERMITTENT FAULT

CHECKING THE WIRES

Check the wire between central electronic module (CEM) 4D and steering wheel module (SWM) 21 (3/130).

Trouble-shoot for an intermittent short circuit to ground as described in, see **SHORT-CIRCUIT TO GROUND, INTERMITTENT FAULTS** .

Do the necessary corrective action.

Additional information

- To connect the test box, see **CONNECTING THE BREAKOUT BOX** .
- -2004: **SIGNAL SPECIFICATION**
- 2005-: **SIGNAL SPECIFICATION**

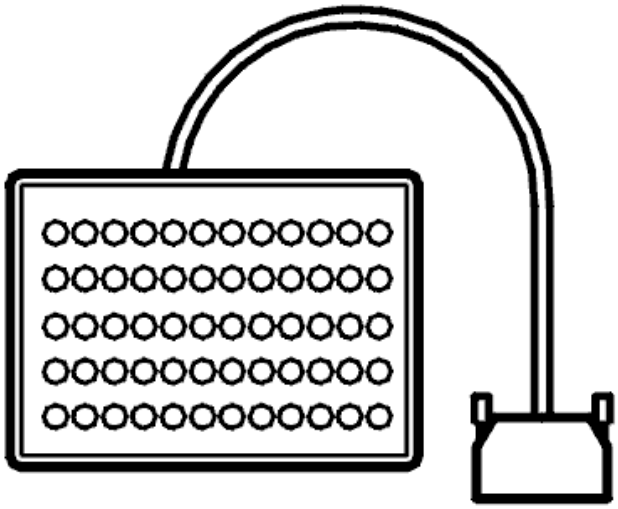

Fig. 347: Breakout Box
Courtesy of VOLVO CARS CORPORATION

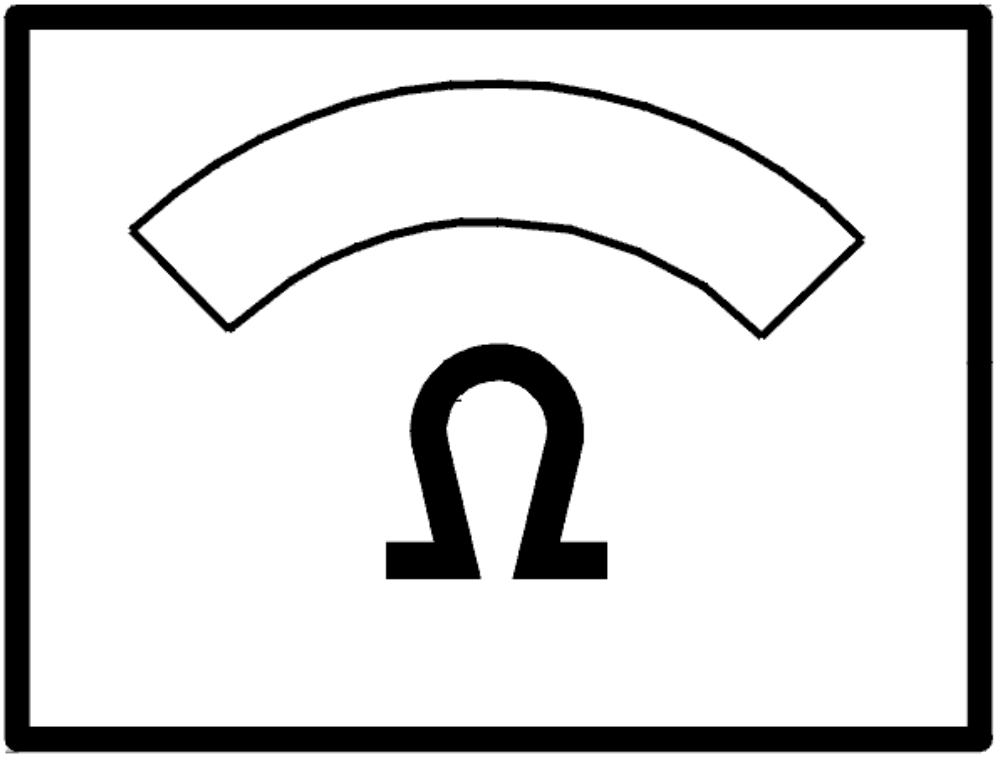

Fig. 348: Identifying Ohm Meter
Courtesy of VOLVO CARS CORPORATION

CEM-8F22: WIPERS. SIGNAL TOO LOW. PERMANENT FAULT (2003-2004)

DIAGNOSTIC TROUBLE CODE INFORMATION

see **DIAGNOSTIC TROUBLE CODE INFORMATION**

SIGNAL TOO HIGH OR SIGNAL MISSING. PERMANENT FAULT

CHECKING THE CABLE

Check the cable between central electronic module (CEM) terminal #4D and steering wheel module (SWM) (3/130) terminal #21.

Check for a short-circuit to supply voltage. Check for an open-circuit.

Remedy as necessary.

Other information

- To connect the breakout box, see **CONNECTING THE BREAKOUT BOX**
- -2004: **SIGNAL SPECIFICATION**
- 2005-: **SIGNAL SPECIFICATION**
- see **CHECKING WIRING AND TERMINALS**

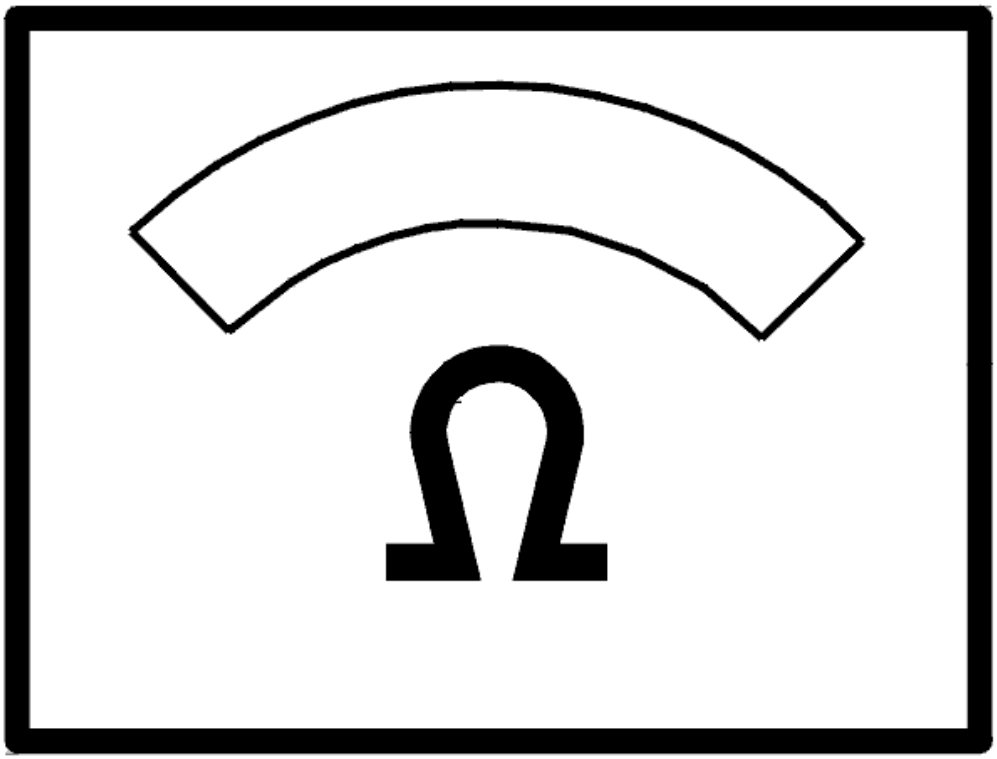

Fig. 349: Identifying Ohm Meter
Courtesy of VOLVO CARS CORPORATION

Was a fault detected?

- **YES**

  Refer to **VERIFICATION**

- **NO**

  Refer to **REPLACING WIPER / WASHER SWITCH**

REPLACING WIPER / WASHER SWITCH

Replace wiper / washer switch. See **WASHER / WIPER SWITCH, REPLACING** .

- **Continue**

  Refer to **VERIFICATION**

VERIFICATION

HINT: After carrying out the repair, check that the fault has been remedied.

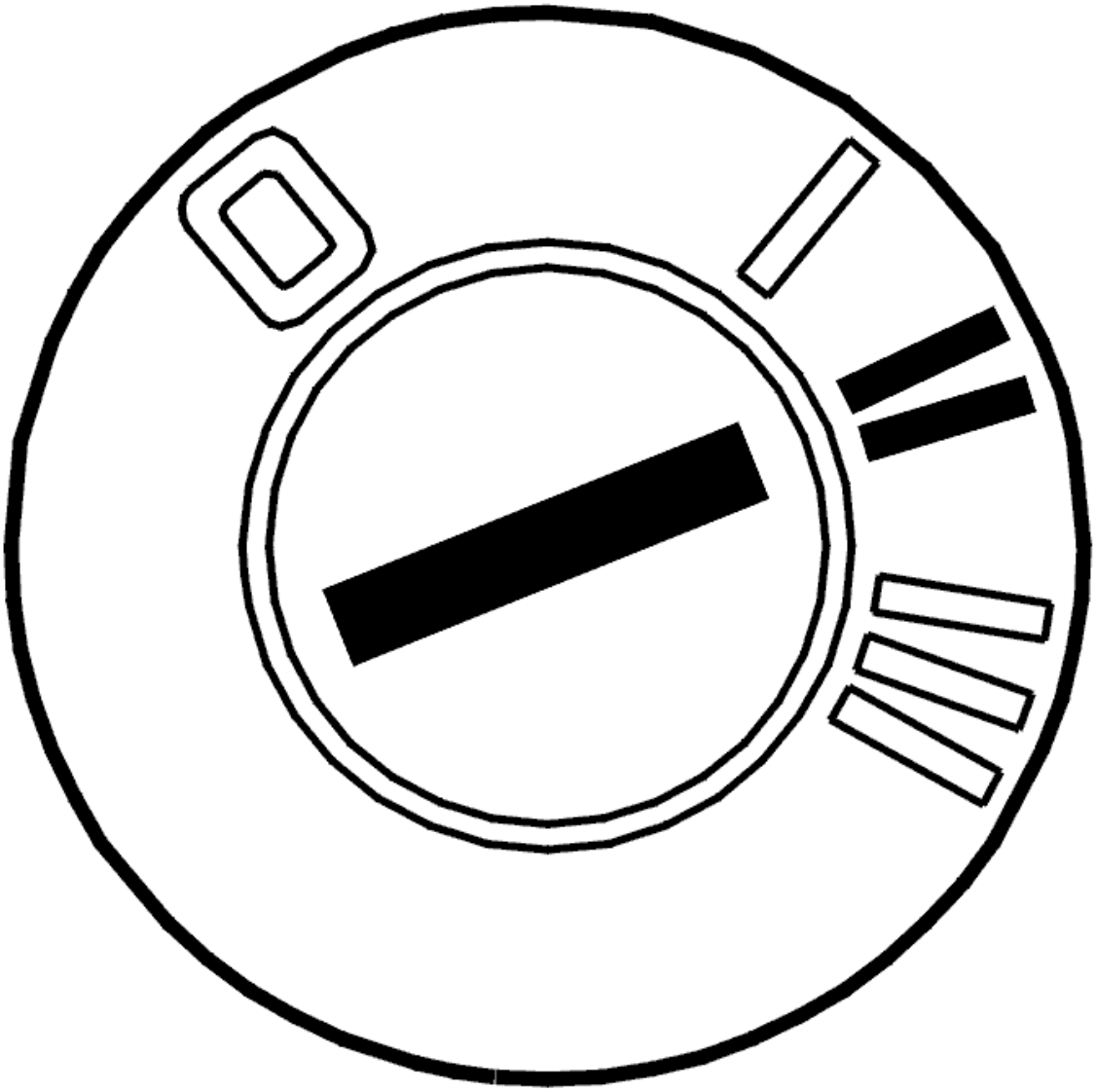

Fig. 350: Identifying Ignition ON
Courtesy of VOLVO CARS CORPORATION

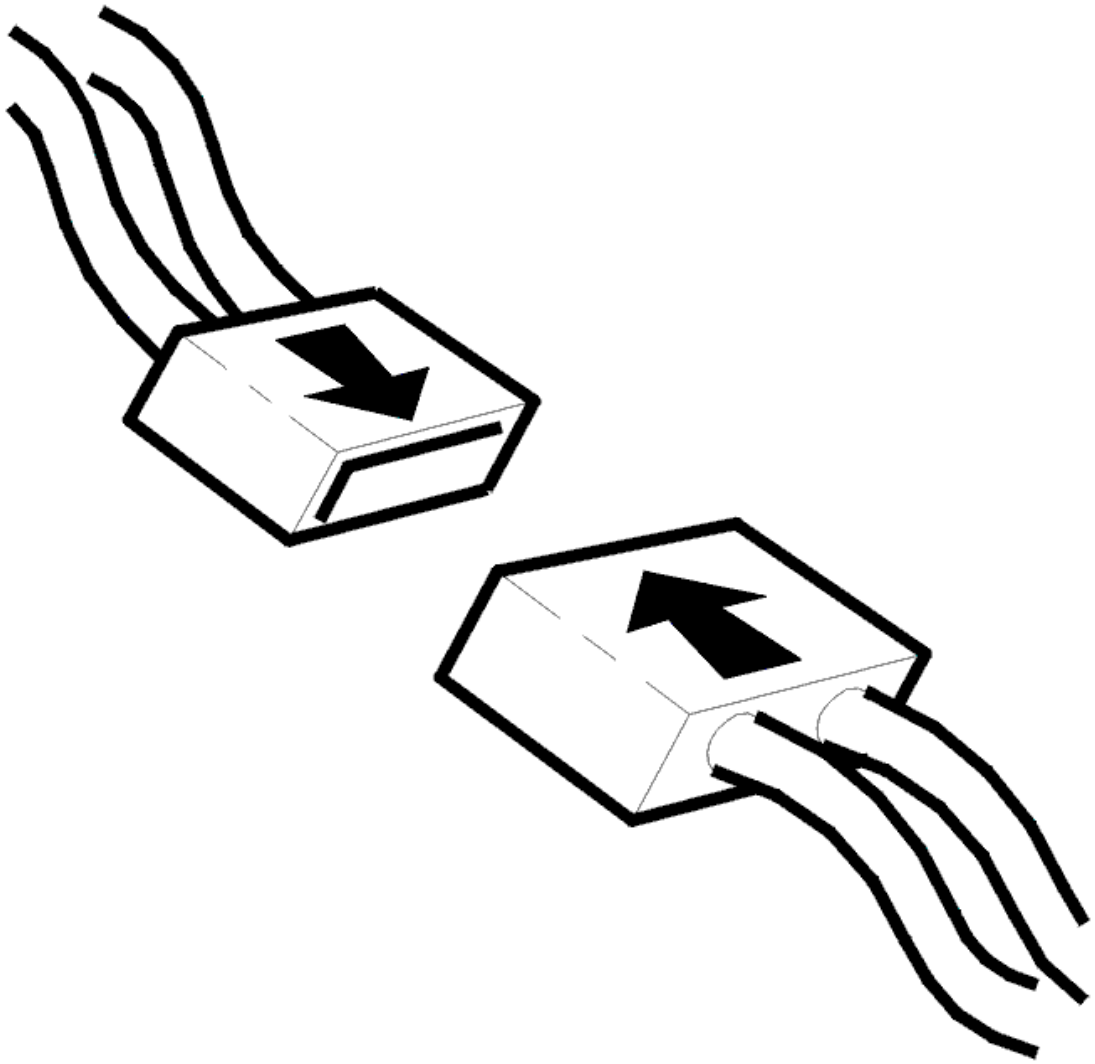

Fig. 351: Connecting Connector
Courtesy of VOLVO CARS CORPORATION

- Ignition off
- Reinstall the connectors, components etc.
- Ignition on.

  Check that no windshield wiper function is activated and read off all the values from the control module.

  Read off the values.

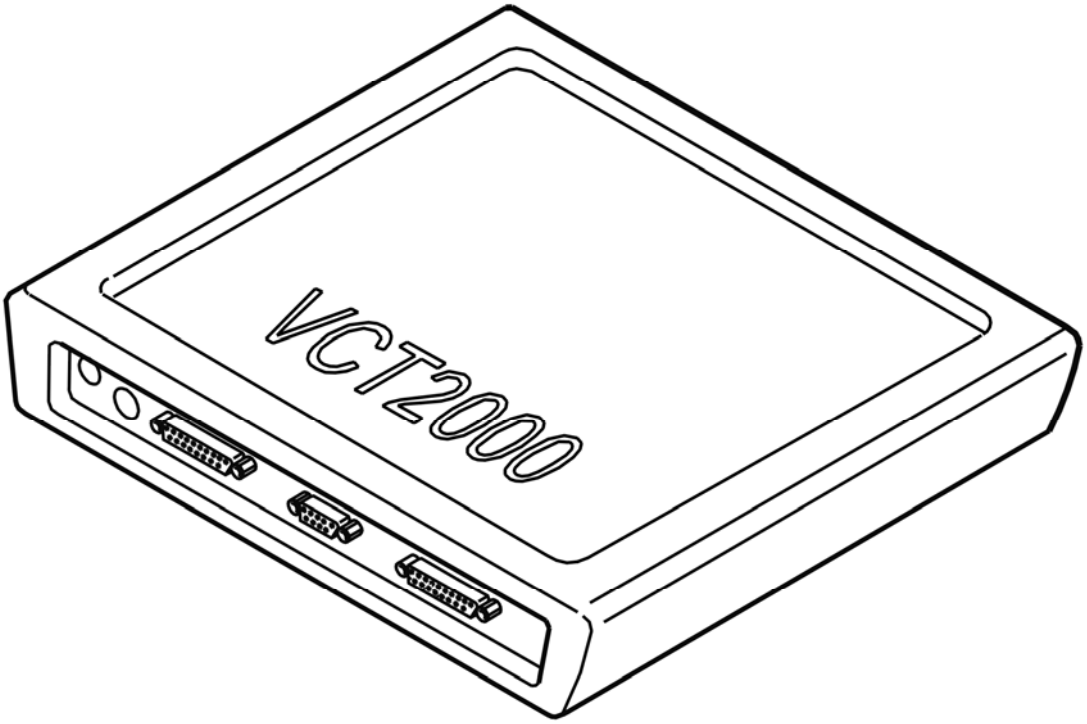

Fig. 352: Identifying VCT2000 Diagnostic Tool Symbol In VIDA
Courtesy of VOLVO CARS CORPORATION

Are all windshield wiper functions switched off?

- **YES**

  OKAY: Troubleshooting has been completed.

- **NO**

  Refer to **INFORMATION**

INFORMATION

FAULT-TRACING INFORMATION

The fault should have been detected and remedied. As this is not the case fault-tracing has failed.

Exit fault-tracing for this diagnostic trouble code (DTC) or make another attempt.

CEM-8F23: RELAY, WINDSHIELD WIPER. SIGNAL TOO HIGH (2005-2012)

DIAGNOSTIC TROUBLE CODE (DTC) INFORMATION CEM-8F23

Condition

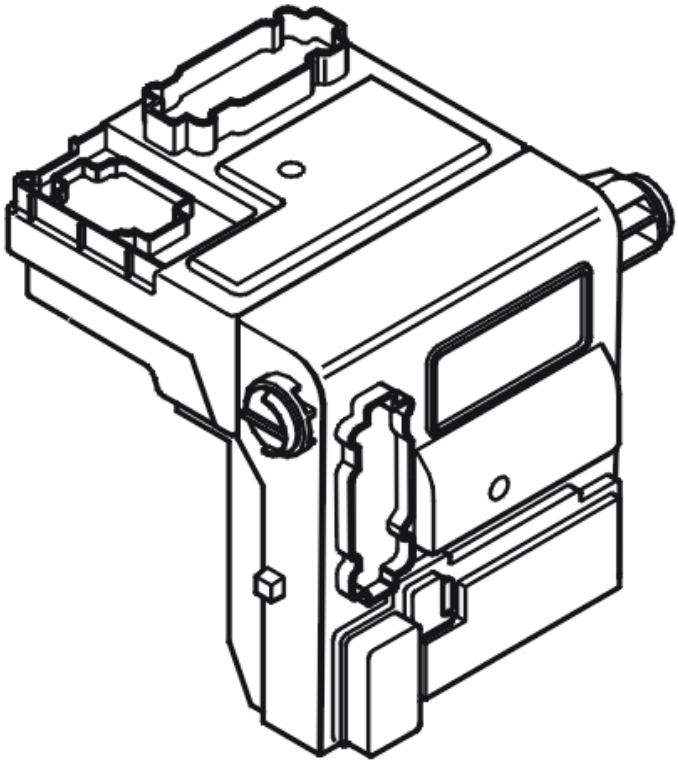

Fig. 353: Identifying Central Electronic Module (CEM)
Courtesy of VOLVO CARS CORPORATION

The central electronic module (CEM) checks the windshield wipers.

The diagnostic trouble code (DTC) is stored if the central electronic module (CEM) registers that the signal at the relay coil is too high when the windshield wipers are activated.

The diagnostic trouble code (DTC) can be diagnosed when the ignition is switched on.

Substitute Value

- None.

Possible Source

- Short-circuit to supply voltage in the relay coil.

Fault symptom[s]

- The windshield wipers are not working.

SIGNAL TOO HIGH

CHECKING THE COMPONENT

Replace relay 2/91.

Activate the relay for windshield wipers on.

If the function is OK, the cause of the fault was a damaged relay (short-circuit in the relay).

Was a fault detected?

- **YES**

  Refer to **VERIFICATION**

- **NO**

  Refer to **CHECKING FUSEBOX**

CHECKING FUSEBOX

Remove windshield wiper relay 2/91 from the fusebox base.

Check the relay coil driver circuit for a short-circuit to supply voltage. Take a voltmeter reading between terminal #2 and ground in the relay base.

The voltage between terminal #2 and ground must be approximately 0 V.

Remedy as necessary.

Other information

- see **CHECKING WIRING AND TERMINALS**

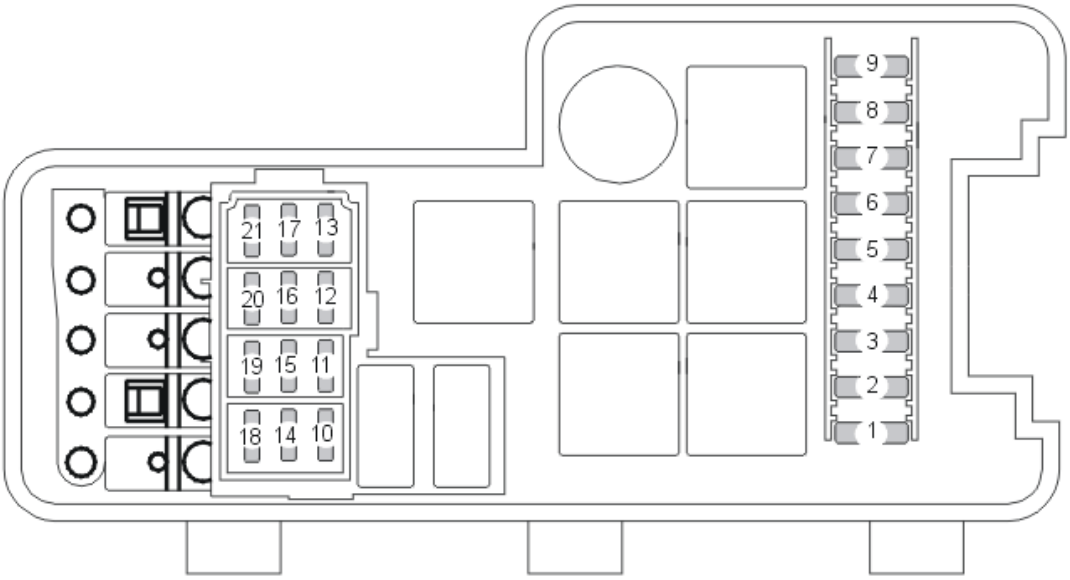

Fig. 354: Identifying Fusebox
Courtesy of VOLVO CARS CORPORATION

Was a fault detected?

- **YES**

  Refer to **VERIFICATION**

- **NO**

  Refer to **CHECKING THE COMPONENT**

CHECKING THE WIRING

Check the cable between windshield wiper relay base terminal #2 and central electronic module (CEM) terminal #C4. Check for a short-circuit to supply voltage.

Remedy as necessary.

Replace the fusebox if no fault is found.

Other information

- see **CHECKING WIRING AND TERMINALS**
- **Continue**

  Refer to **VERIFICATION**

VERIFICATION

VERIFICATION

HINT: After carrying out the repair, check that the fault has been remedied.

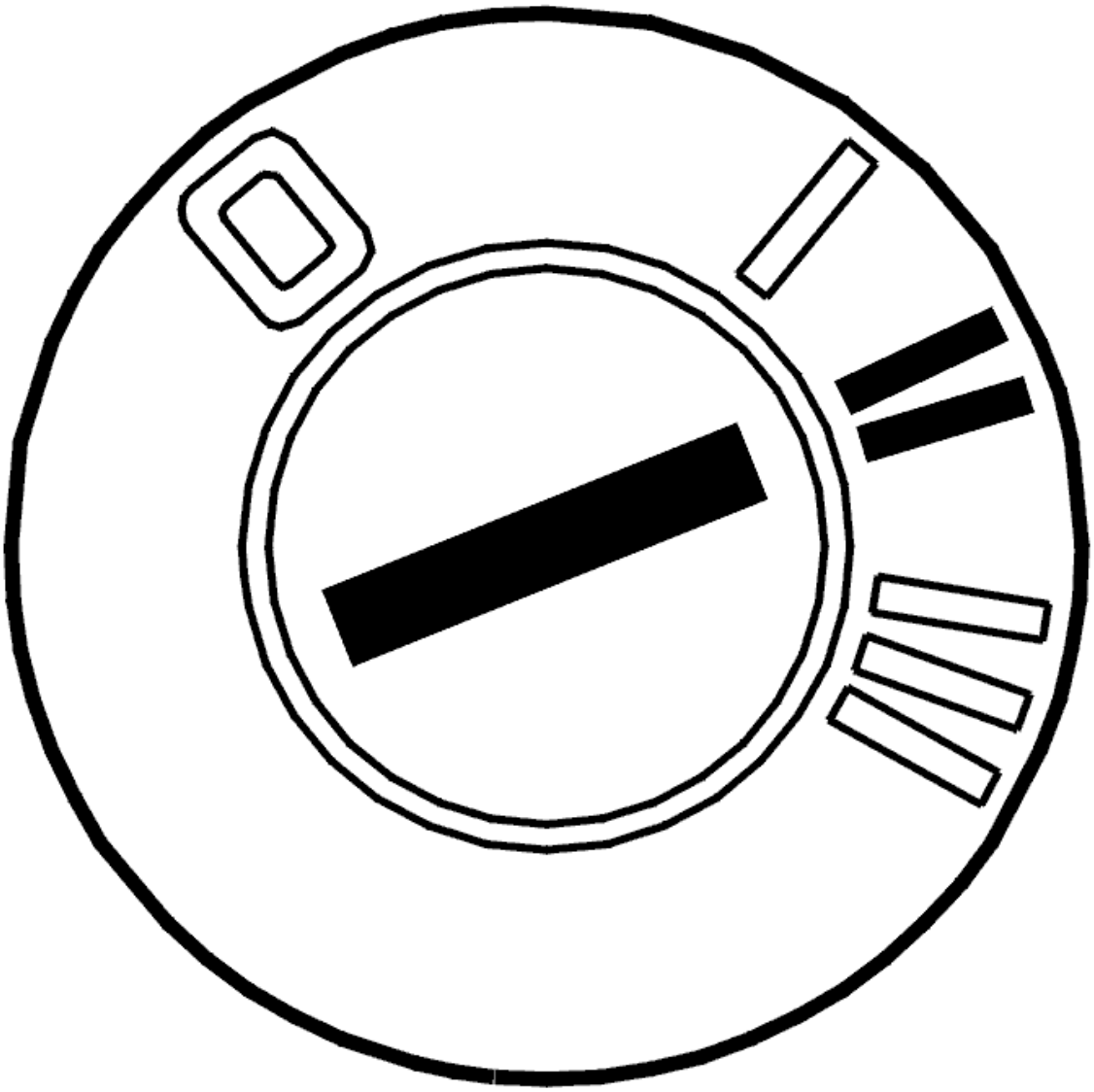

Fig. 355: Identifying Ignition ON
Courtesy of VOLVO CARS CORPORATION

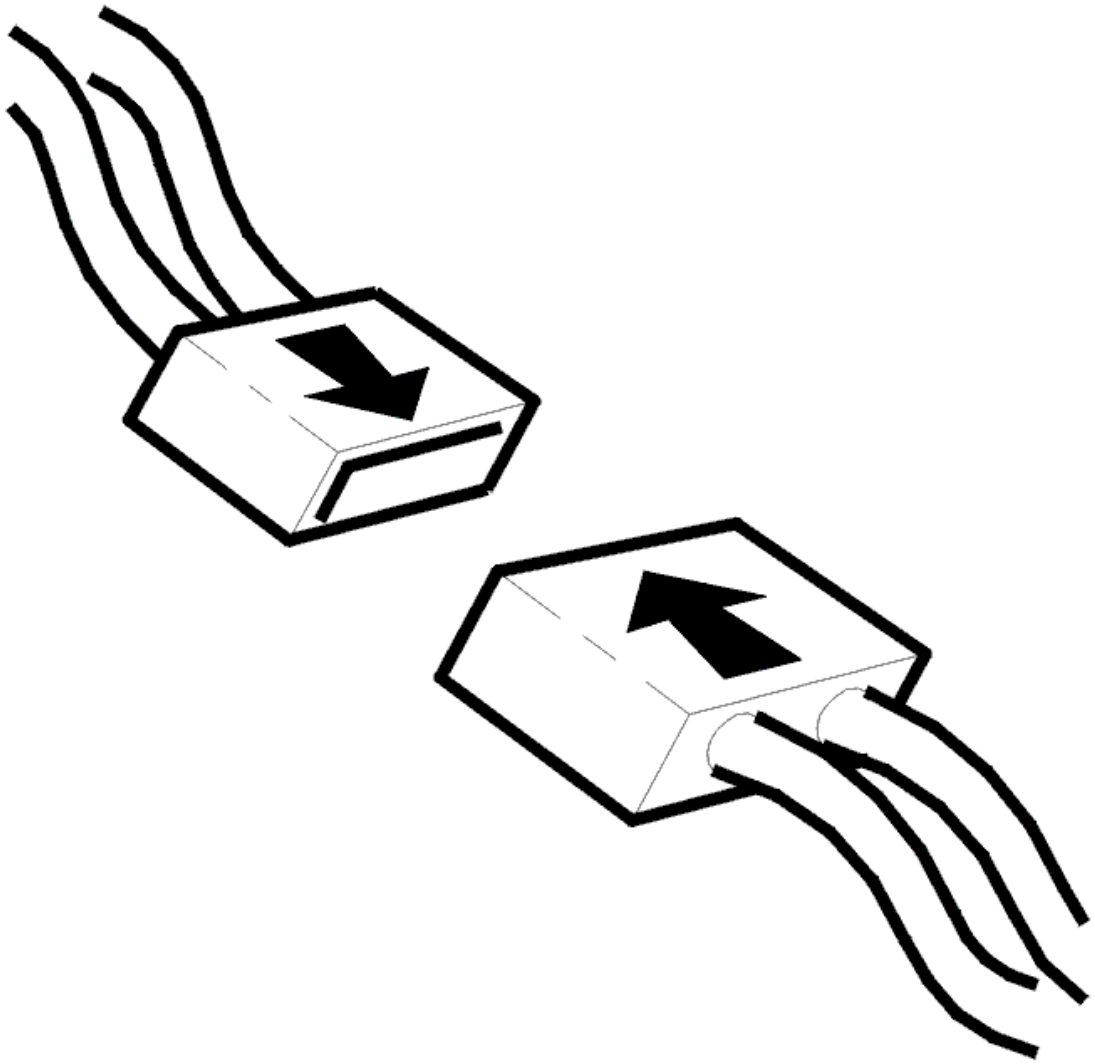

Fig. 356: Connecting Connector
Courtesy of VOLVO CARS CORPORATION

- Ignition off
- Reinstall the connectors, components etc.
- Ignition on.

  Activate the windshield wipers.

  Check that the windshield wipers work in all positions.

Are the windshield wipers working?

- **YES**

VERIFIED: Troubleshooting has been completed.

- **NO**

  Refer to **INFORMATION**

INFORMATION

FAULT-TRACING INFORMATION

The fault should have been detected and remedied. As this is not the case fault-tracing has failed.

Exit fault-tracing for this diagnostic trouble code (DTC) or make another attempt.

CEM-8F23: RELAY, WINDSHIELD WIPER. SIGNAL TOO HIGH. INTERMITTENT FAULT (2003-2004)

DIAGNOSTIC TROUBLE CODE INFORMATION

Condition

If the control unit registers signal too high in the relay coil (2/91) when the windscreen wiper relay is activated diagnostic trouble code CEM-8F23 will be set.

Substitute Value

- None.

Possible Source

- Defective relay (short circuit in the relay coil) which means that the windscreen wipers cannot be operated.

Fault symptom[s]

- Windscreen wiper motor does not work.

SIGNAL TOO HIGH. INTERMITTENT FAULT

CHECKING THE WIRING

Check the relay coil driver circuit for an intermittent short-circuit to supply voltage by taking a voltmeter reading between terminal #2 and ground in the relay base for relay 2/91.

HINT: The voltage between terminal #2 and ground should be approximately 0 volt.

Other information:

- see **CHECKING WIRING AND TERMINALS** .

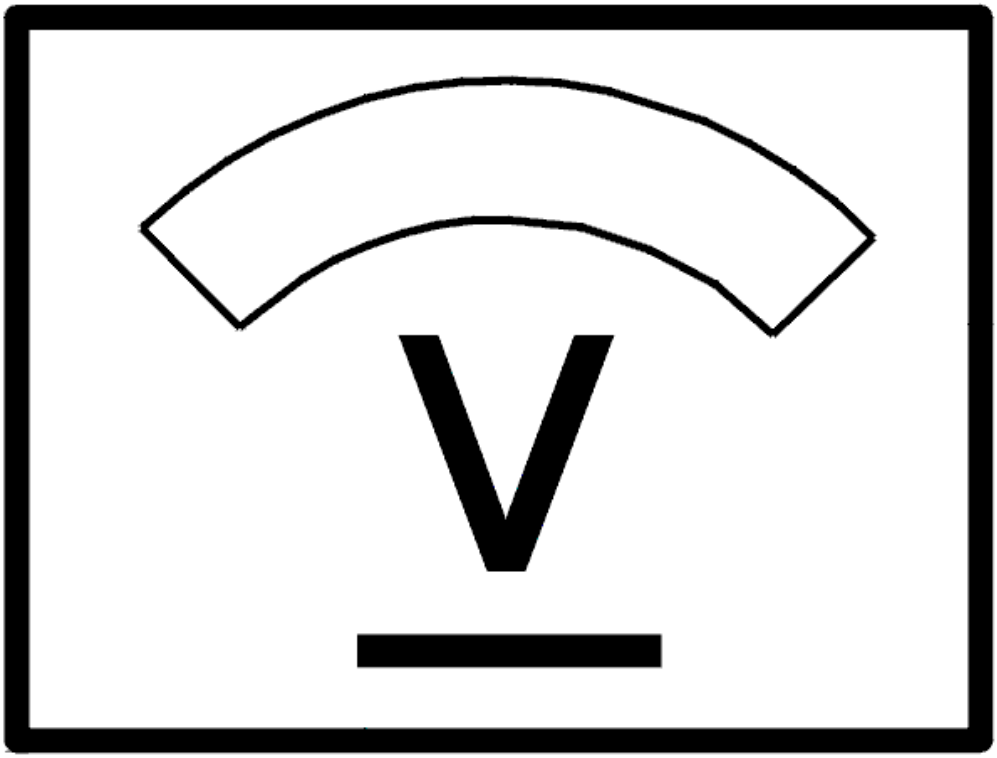

Fig. 357: Identifying Voltage Display
Courtesy of VOLVO CARS CORPORATION

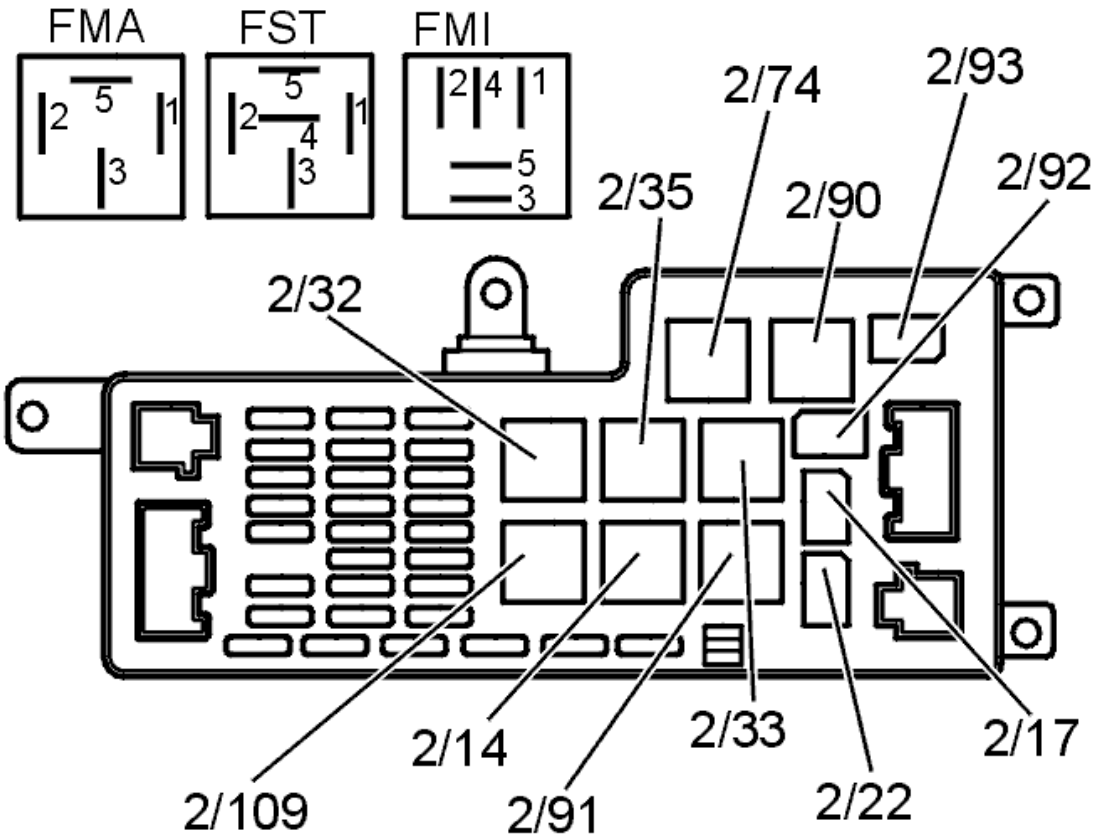

Fig. 358: Identifying Connectors
Courtesy of VOLVO CARS CORPORATION

- **Continue**

  Refer to **INFORMATION**

INFORMATION

FAULT-TRACING INFORMATION

If the fault is intermittent, do not verify fault-tracing if the fault does not recur.

It is possible to view the information again, or leave fault-tracing for this diagnostic trouble code (DTC).

CEM-8F23: RELAY, WINDSHIELD WIPER. SIGNAL TOO HIGH. PERMANENT FAULT (2003-2004)

DIAGNOSTIC TROUBLE CODE INFORMATION

see **DIAGNOSTIC TROUBLE CODE INFORMATION**

SIGNAL TOO HIGH. PERMANENT FAULT

CHECKING AND REPLACING THE COMPONENT

Replace the relay, 2/91.

Activate the relay for windshield wipers on.

If the function is OK, the cause of the fault was a defective relay (short-circuit in the relay).

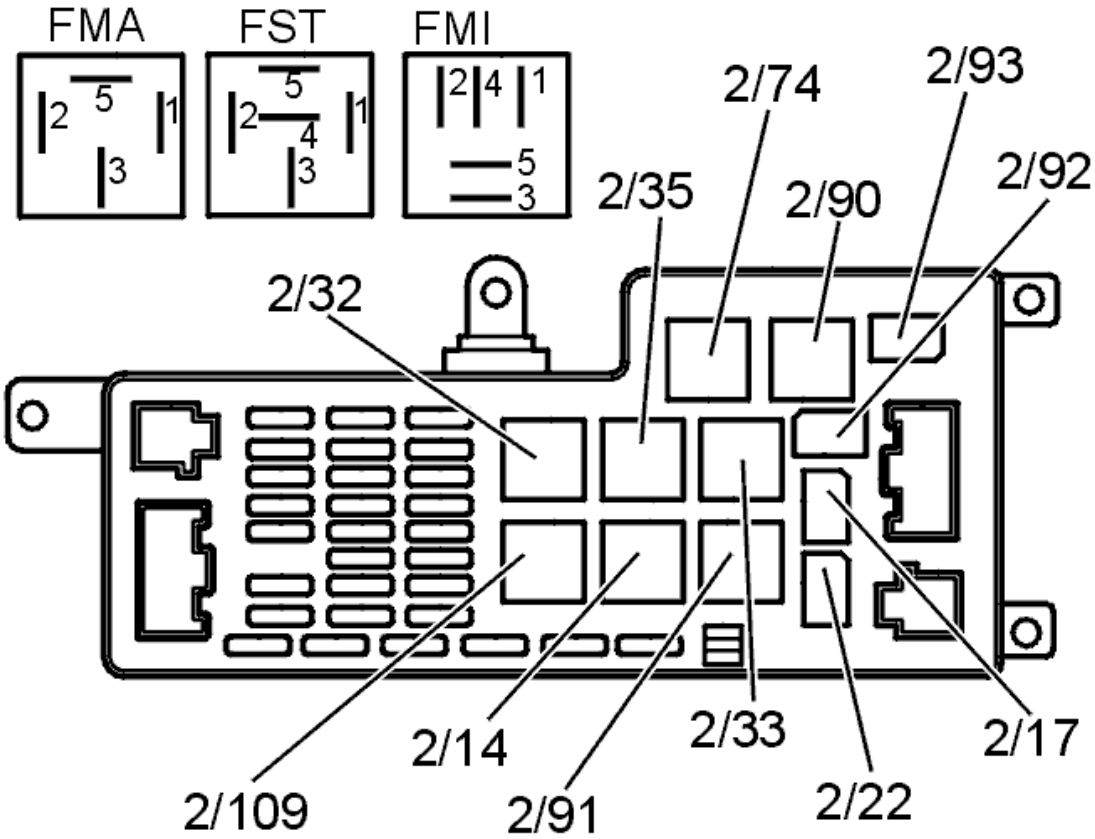

Fig. 359: Identifying Connectors
Courtesy of VOLVO CARS CORPORATION

Was a fault detected?

- **YES**

  Troubleshooting has been completed.

- **NO**

  Refer to **CHECKING THE FUSEBOX**

CHECKING THE FUSEBOX

Remove windshield wiper relay 2/91 from the fusebox base.

Check the relay coil driver circuit for a short-circuit to supply voltage. Take a voltmeter reading between terminal #2 and ground in the relay base.

The voltage between terminal #2 and ground should be approximately 0 volt.

Other information:

- see **CHECKING WIRING AND TERMINALS** .

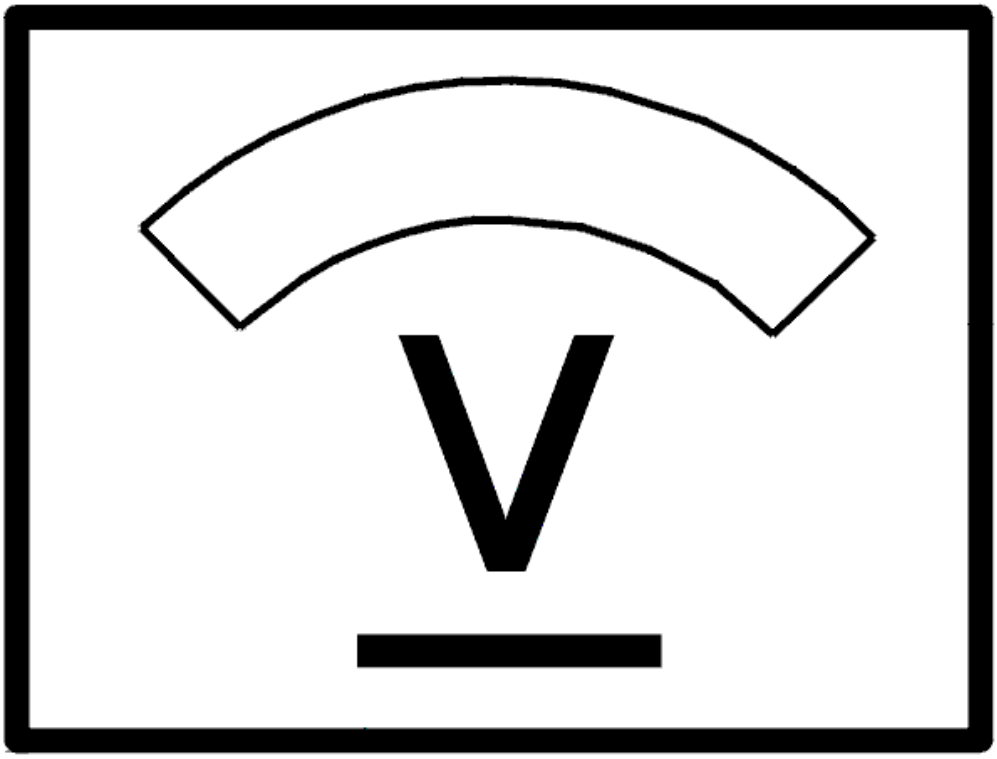

Fig. 360: Identifying Voltage Display
Courtesy of VOLVO CARS CORPORATION

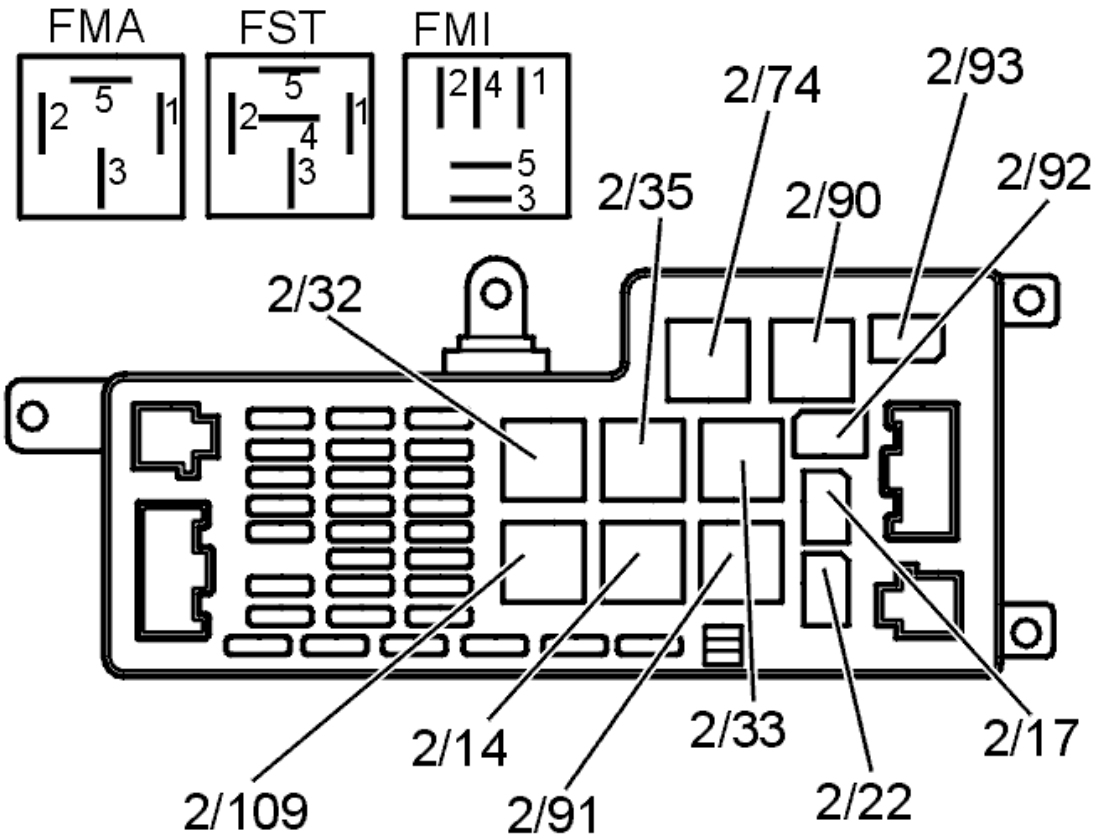

Fig. 361: Identifying Connectors
Courtesy of VOLVO CARS CORPORATION

Was the function OK?

- **YES**

  Refer to **VERIFICATION**

- **NO**

  Refer to **CHECKING THE CABLE**

CHECKING THE CABLE

Check the cable between windshield wiper relay base terminal #2 and central electronic module (CEM) terminal #A13. Check for a short-circuit to supply voltage.

Remedy as necessary.

Replace the fusebox if no fault is found.

Other information:

- see **CHECKING WIRING AND TERMINALS** .

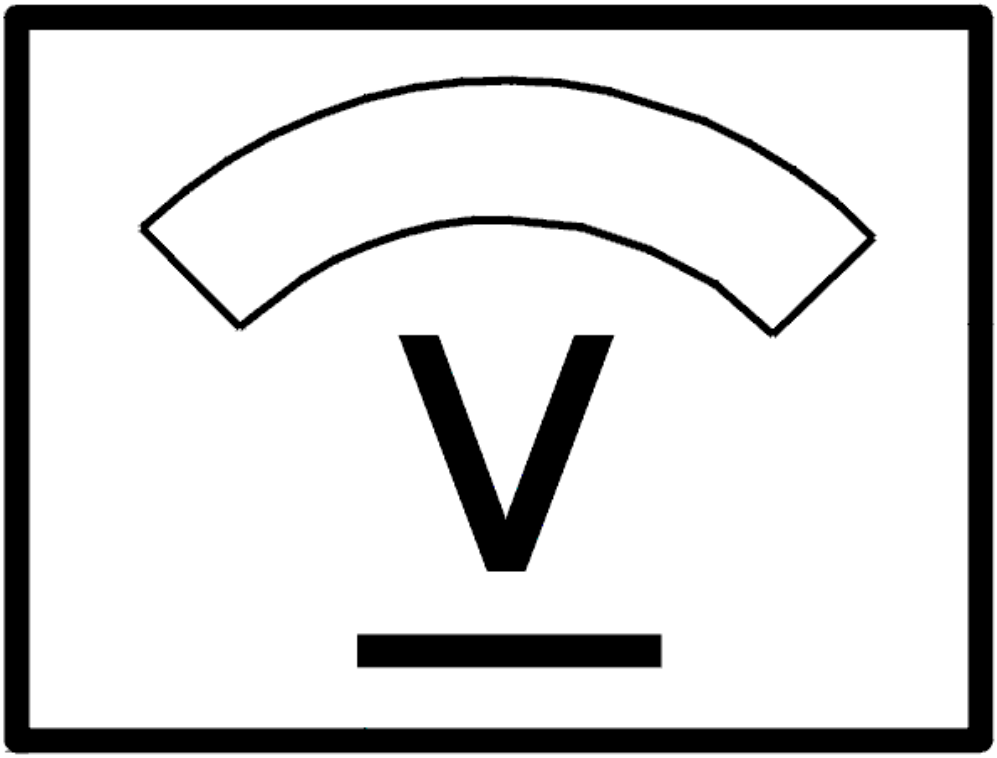

Fig. 362: Identifying Voltage Display
Courtesy of VOLVO CARS CORPORATION

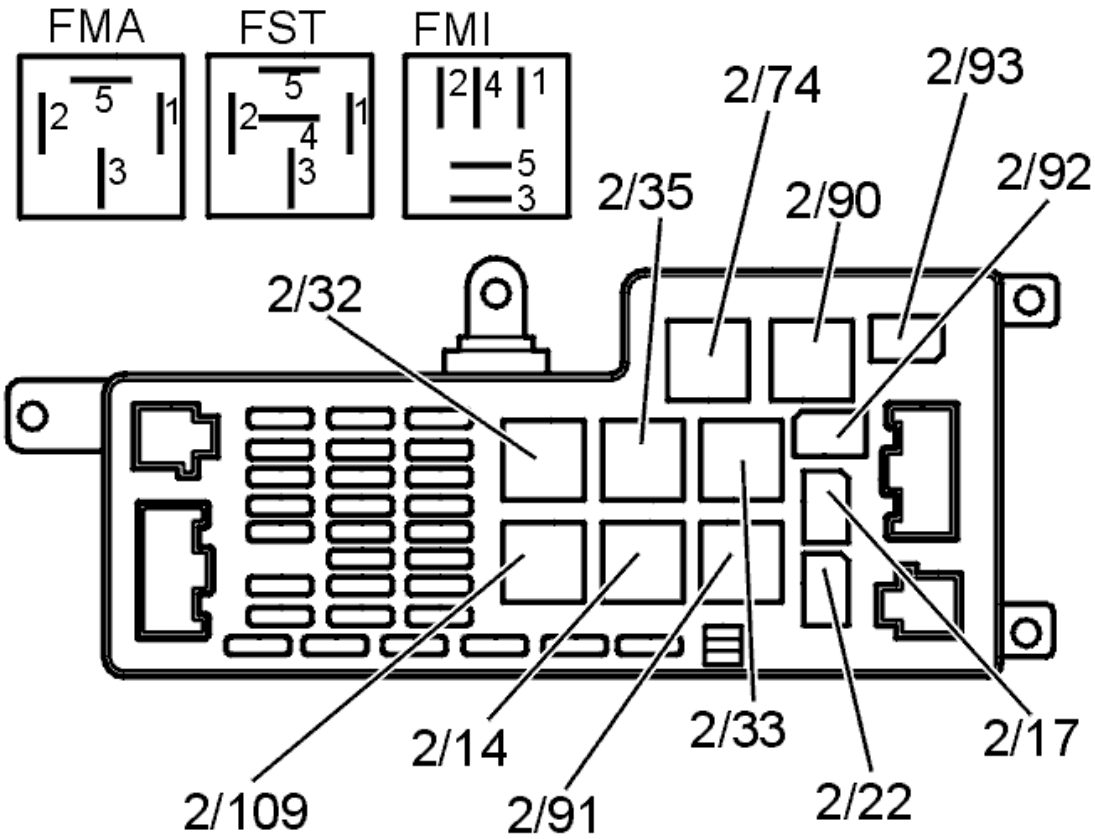

Fig. 363: Identifying Connectors
Courtesy of VOLVO CARS CORPORATION

- **Continue**

  Refer to **VERIFICATION**

VERIFICATION

VERIFICATION

HINT: After the repair it is necessary to check that the fault has been rectified.

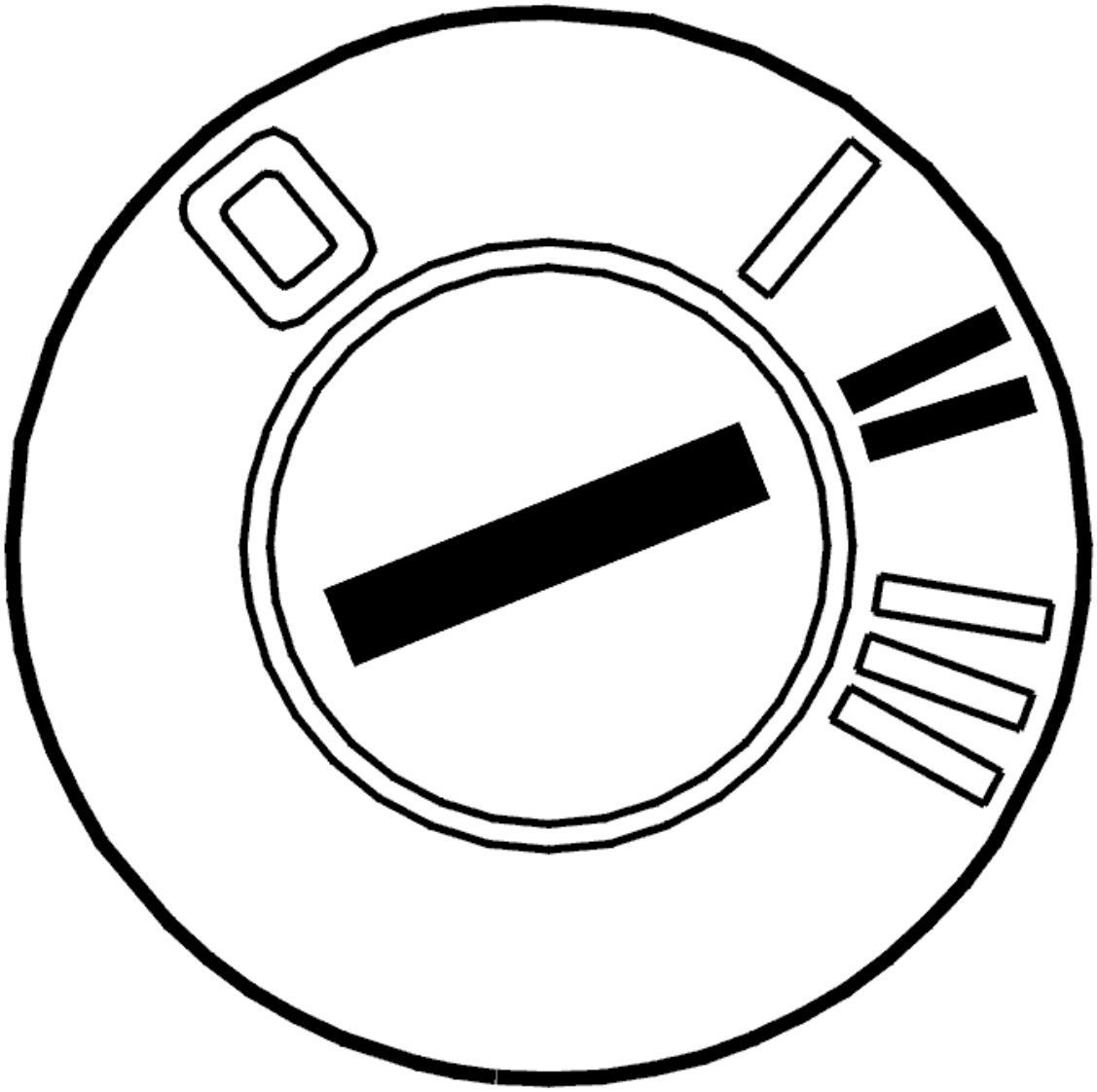

Fig. 364: Identifying Ignition ON
Courtesy of VOLVO CARS CORPORATION

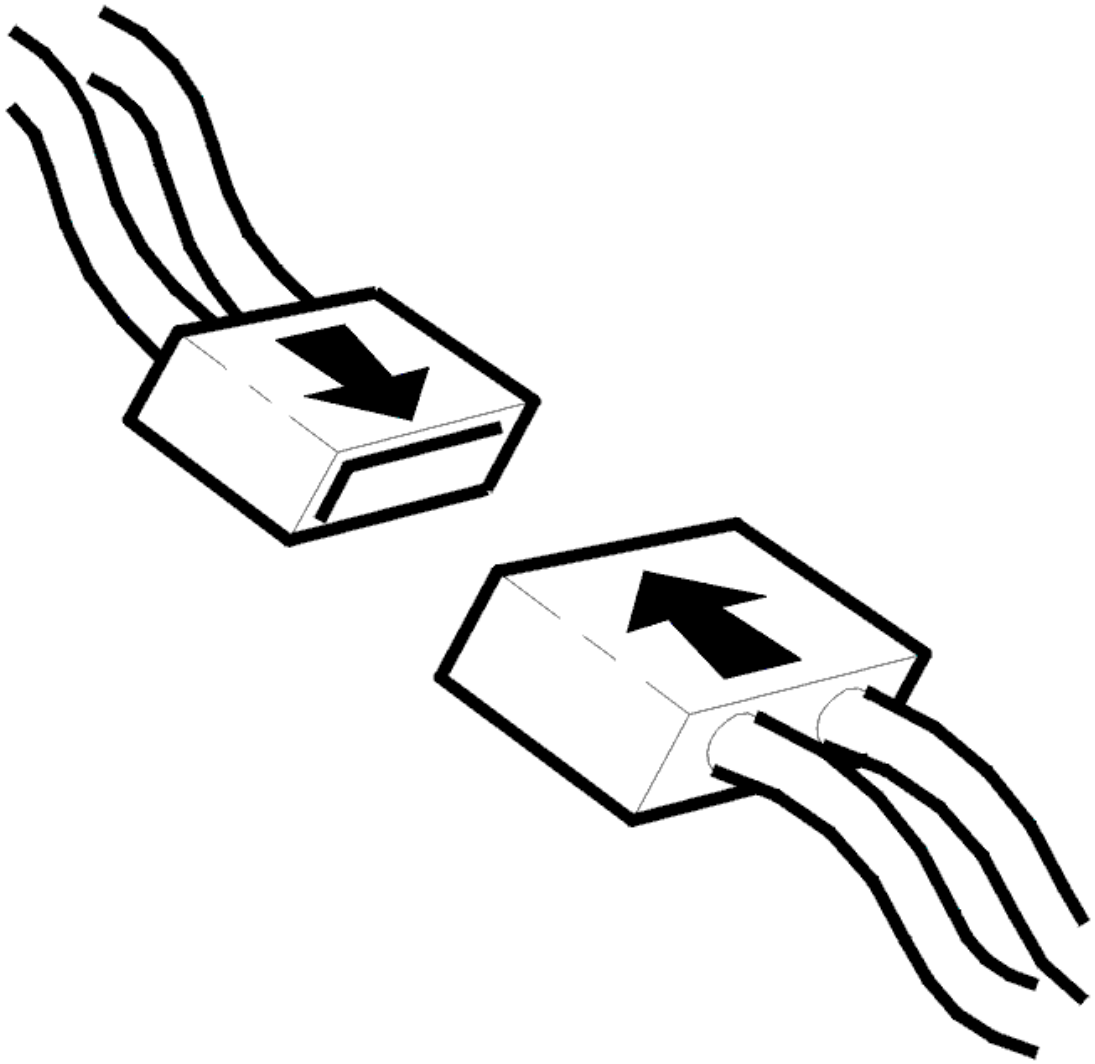

Fig. 365: Connecting Connector
Courtesy of VOLVO CARS CORPORATION

- Ignition off.
- Connect connectors, install components etc.
- Ignition on.

  Activate the relay, windscreen wiper on.

Does it work?

- **YES**

  VERIFIED: Troubleshooting has been completed.

- **NO**

  Refer to **INFORMATION**

INFORMATION

FAULT-TRACING INFORMATION

The fault should have been detected and remedied. As this is not the case fault-tracing has failed.

Exit fault-tracing for this diagnostic trouble code (DTC) or make another attempt.

CEM-8F25: RELAY, WINDSHIELD WIPER. SIGNAL TOO LOW (2005-2012)

DIAGNOSTIC TROUBLE CODE (DTC) INFORMATION CEM-8F25

Condition

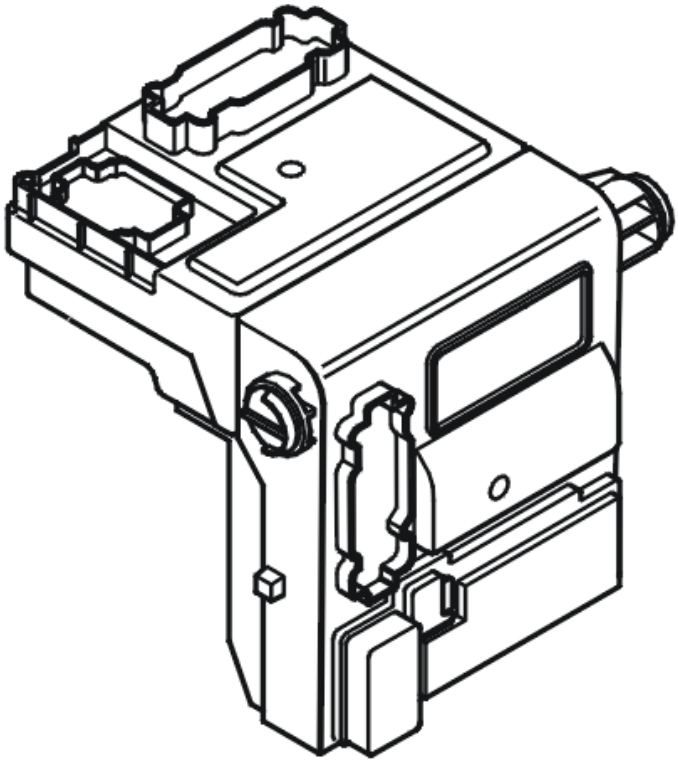

Fig. 366: Identifying Central Electronic Module (CEM)
Courtesy of VOLVO CARS CORPORATION

The central electronic module (CEM) checks the windshield wipers.

The diagnostic trouble code (DTC) is stored if the central electronic module (CEM) registers that the signal at the relay coil is too low when the windshield wipers are activated.

The diagnostic trouble code (DTC) can be diagnosed when the ignition is switched on.

Substitute Value

- None.

Possible Source

- Short-circuit to ground in the relay coil.

Fault symptom[s]

- The windshield wipers are not working.

SIGNAL TOO LOW

CHECKING THE COMPONENT

Check that the fuse for the intermittent relay, windshield wipers is intact.

Replace relay 2/91.

Activate the relay for windshield wipers on.

If the function is OK the cause of the fault was a damaged relay (open-circuit in the relay).

Was the function OK?

- **YES**

  Refer to **VERIFICATION**

- **NO**

  Refer to **CHECKING FUSEBOX**

CHECKING FUSEBOX

Remove windshield wiper relay 2/91 from the fusebox base.

Check the relay base terminals. Check for contact resistance and oxidation.

Check the cable between relay base 2/91 terminal #2 and central electronic module (CEM) terminal #C4 (4). Check for an open-circuit.

Reinstall and activate the relay.

Remedy as necessary.

Other information

- see **CHECKING WIRING AND TERMINALS**

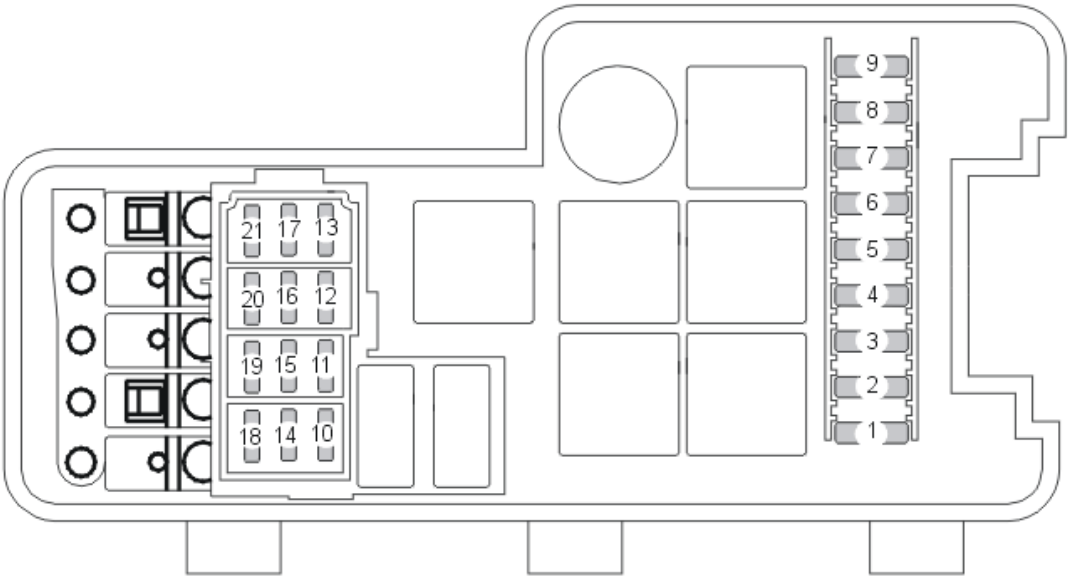

Fig. 367: Identifying Fusebox
Courtesy of VOLVO CARS CORPORATION

Was the function OK?

- **YES**

  Refer to **VERIFICATION**

- **NO**

  Refer to **CHECKING THE WIRING**

CHECKING THE WIRING

Remove windshield wiper relay 2/91 from the fusebox base.

Check the cable between relay base terminal #2 and ground. Check for a short-circuit to ground.

Remedy as necessary.

Replace the fusebox if no fault is found.

Other information

- see **CHECKING WIRING AND TERMINALS**
- **Continue**

  Refer to **VERIFICATION**

VERIFICATION

VERIFICATION

HINT: After carrying out the repair, check that the fault has been remedied.

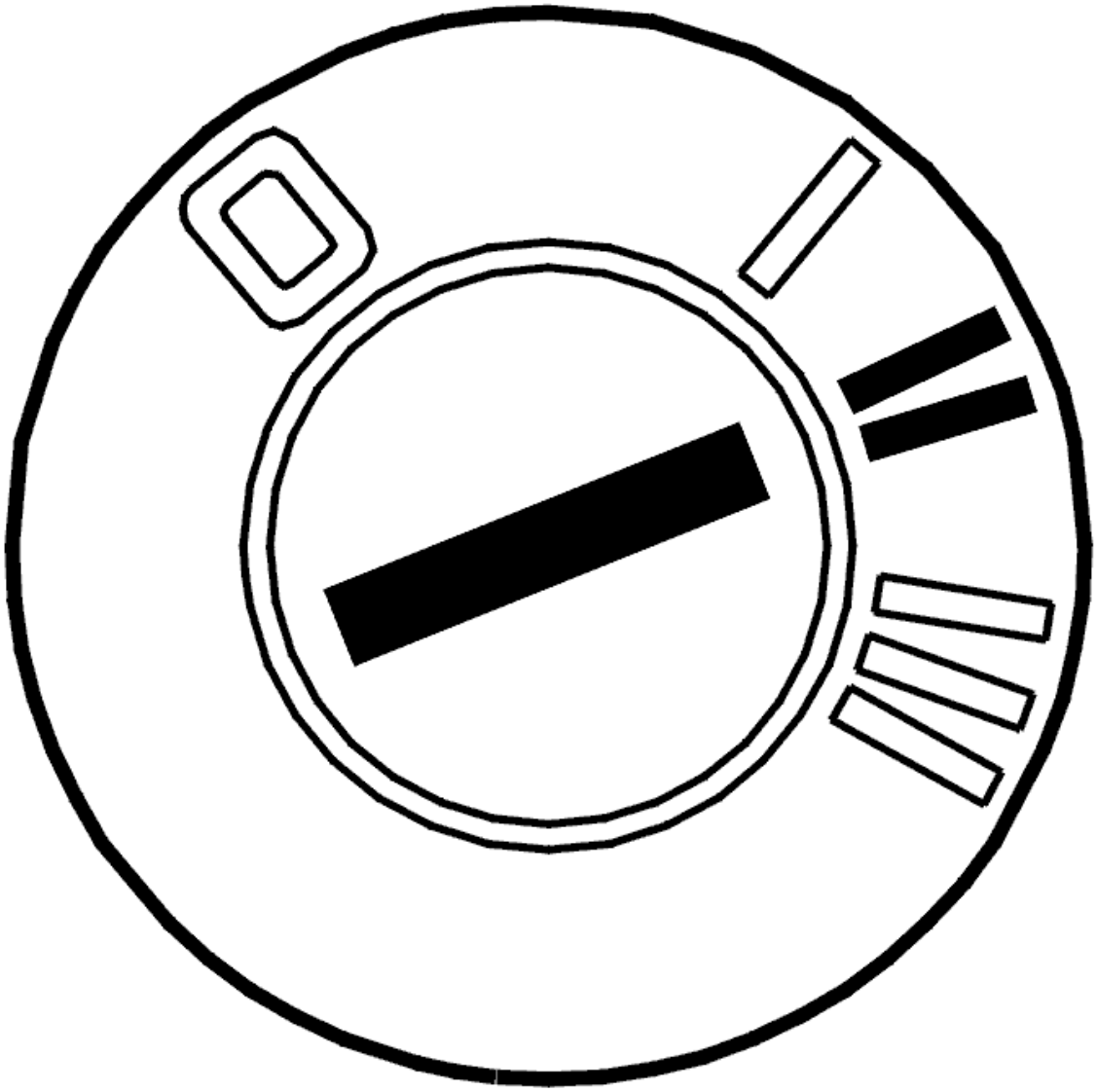

Fig. 368: Identifying Ignition ON
Courtesy of VOLVO CARS CORPORATION

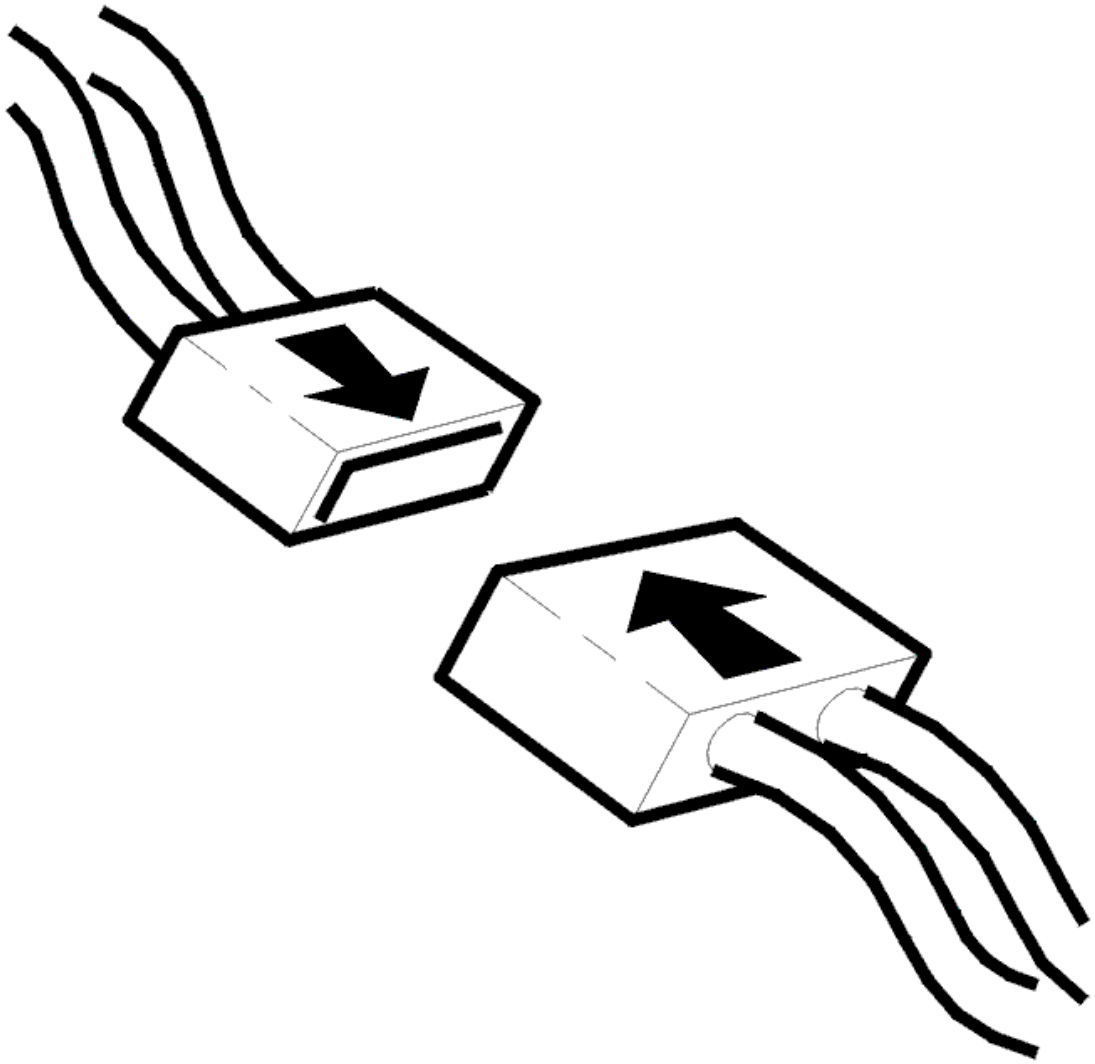

Fig. 369: Connecting Connector
Courtesy of VOLVO CARS CORPORATION

- Ignition off
- Reinstall the connectors, components etc.
- Ignition on.

  Activate the windshield wipers.

  Check that the windshield wipers work in all positions.

Are the windshield wipers working?

- **YES**

VERIFIED: Troubleshooting has been completed.

- **NO**

  Refer to **INFORMATION**

INFORMATION

FAULT-TRACING INFORMATION

The fault should have been detected and remedied. As this is not the case fault-tracing has failed.

Exit fault-tracing for this diagnostic trouble code (DTC) or make another attempt.

CEM-8F25: RELAY, WINDSHIELD WIPER. SIGNAL TOO LOW. INTERMITTENT FAULT (2003-2004)

DIAGNOSTIC TROUBLE CODE INFORMATION

Condition

If the control unit registers signal too low in the relay coil (2/91) when the windscreen wiper relay is activated diagnostic trouble code CEM-8F25 will be set.

Substitute Value

- None.

Possible Source

- Defective relay (short circuit in relay coil).
- Relay is not installed.
- Open circuit in wire.
- Wire short circuited to ground.

Fault symptom[s]

- Windscreen wiper motor does not work.

SIGNAL TOO LOW. INTERMITTENT FAULT

CHECKING THE WIRING

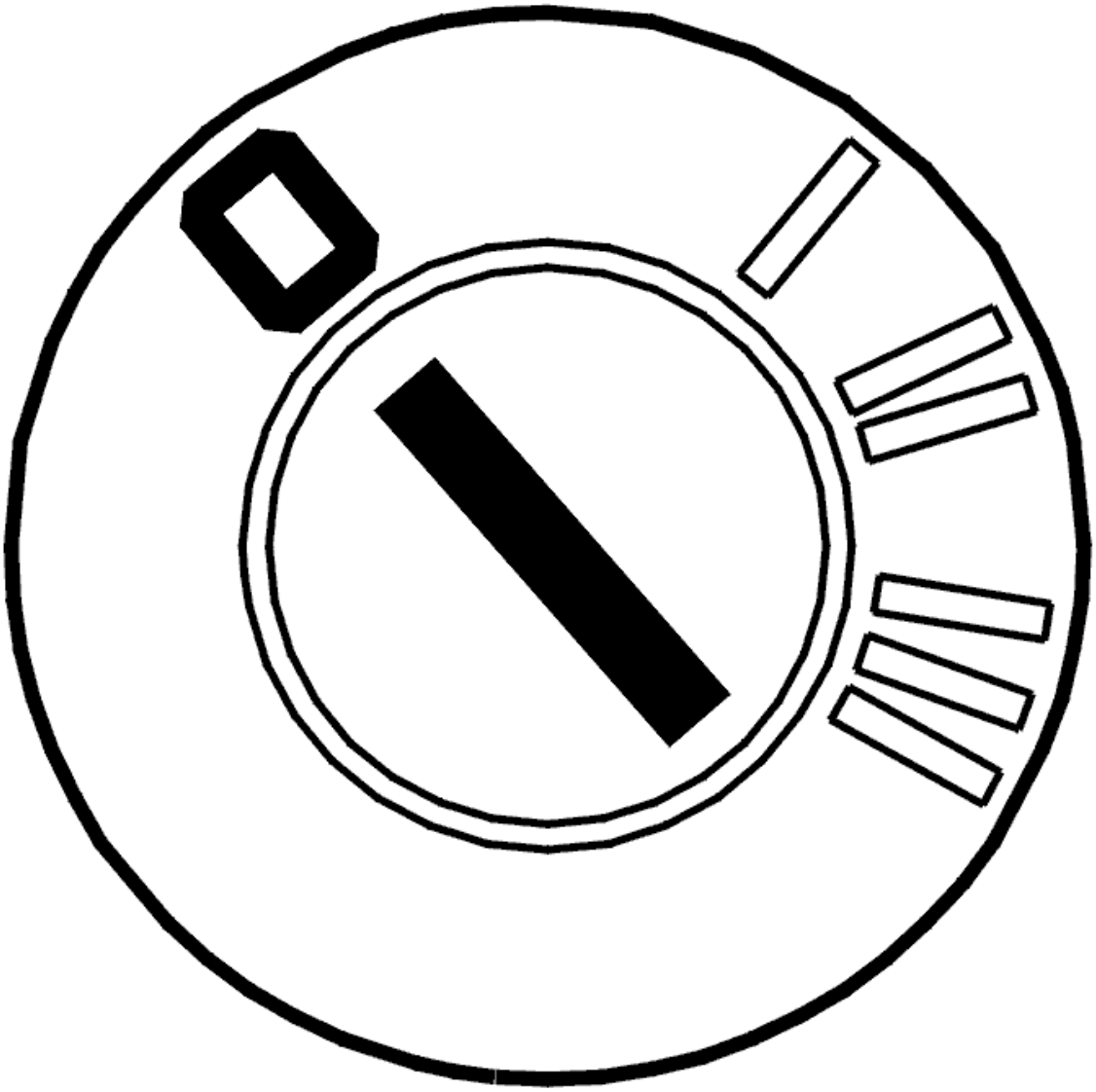

Fig. 370: Identifying Ignition OFF
Courtesy of VOLVO CARS CORPORATION

- Ignition off
- Remove windshield wiper relay 2/91 from the base.

  Check the cable resistance between relay base terminal #2 and ground. Check for a short-circuit to ground.

  Check the relay base switch. Check for contact resistance and oxidation.

  Check the cable between relay base 2/91 terminal #2 and central electronic module (CEM) terminal #13. Check for an open-circuit.

  Remedy as necessary.

Other information:

- see **CHECKING WIRING AND TERMINALS**

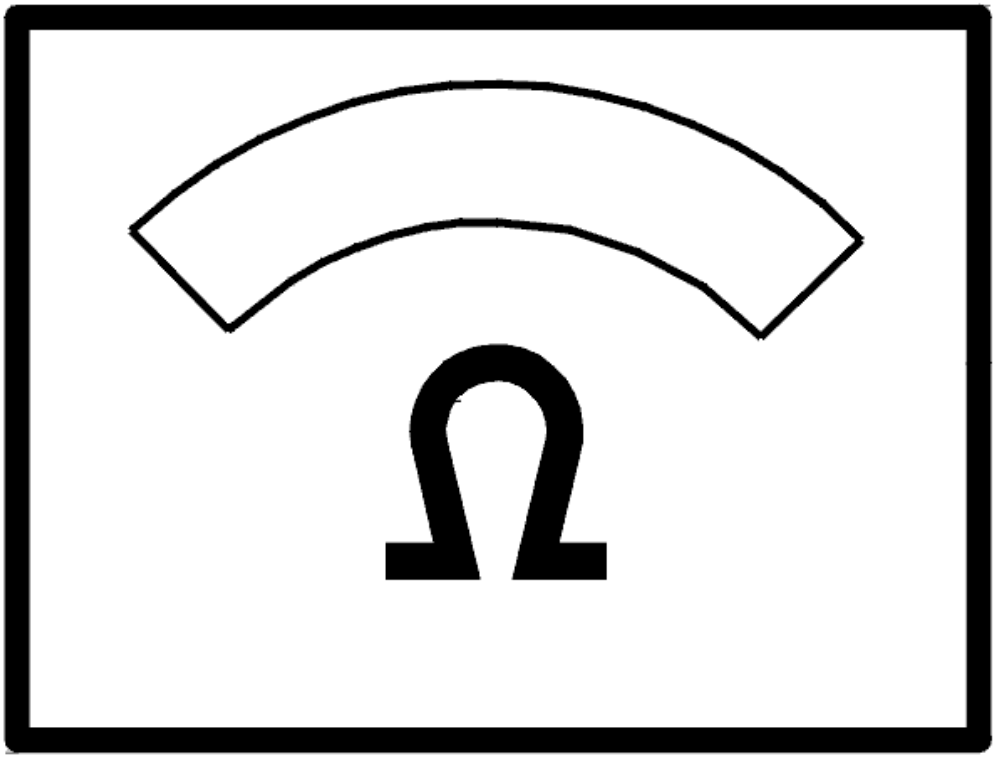

Fig. 371: Identifying Ohm Meter
Courtesy of VOLVO CARS CORPORATION

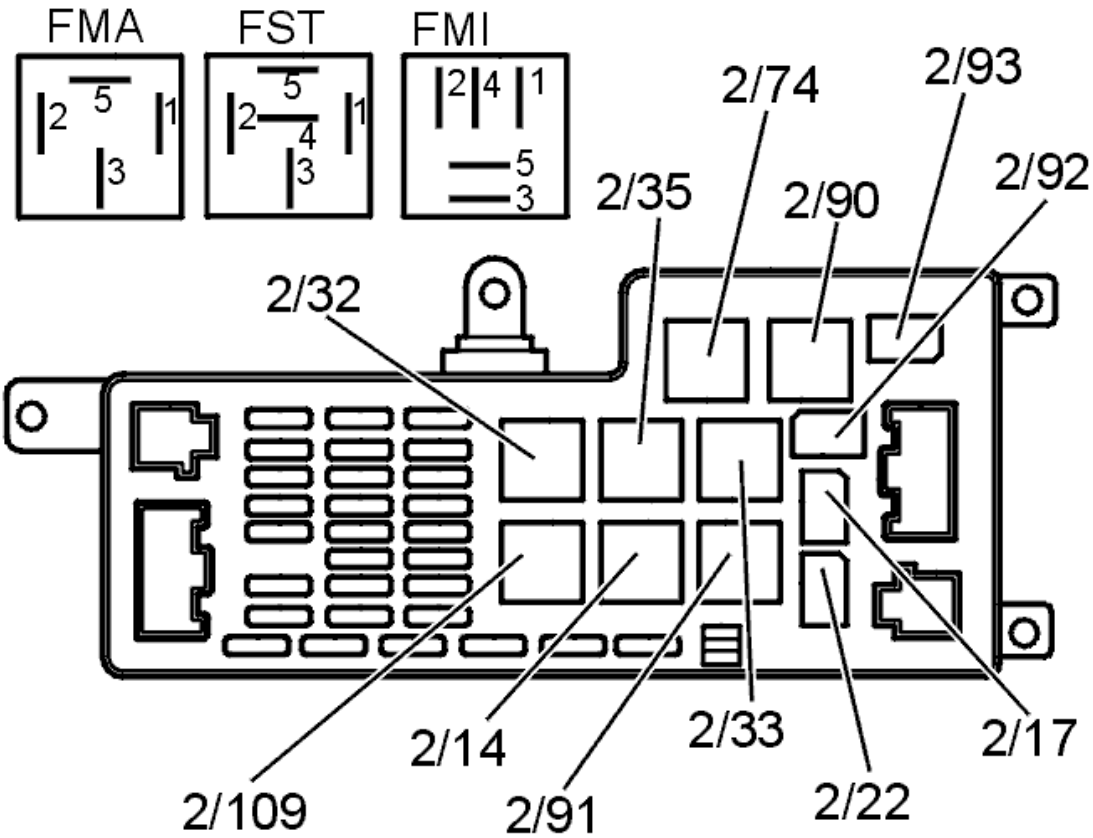

Fig. 372: Identifying Connectors
Courtesy of VOLVO CARS CORPORATION

- **Continue**

  Refer to **INFORMATION**

INFORMATION

FAULT-TRACING INFORMATION

If the fault is intermittent, do not verify fault-tracing if the fault does not recur.

It is possible to view the information again, or leave fault-tracing for this diagnostic trouble code (DTC).

CEM-8F25: RELAY, WINDSHIELD WIPER. SIGNAL TOO LOW. PERMANENT FAULT (2003-2004)

DIAGNOSTIC TROUBLE CODE INFORMATION

see **DIAGNOSTIC TROUBLE CODE INFORMATION**

SIGNAL TOO LOW. PERMANENT FAULT

CHECKING AND REPLACING THE COMPONENT

Replace the relay, 2/91.

Activate the relay for windshield wipers on.

If the function is OK the cause of the fault was a defective relay (open-circuit in the relay coil).

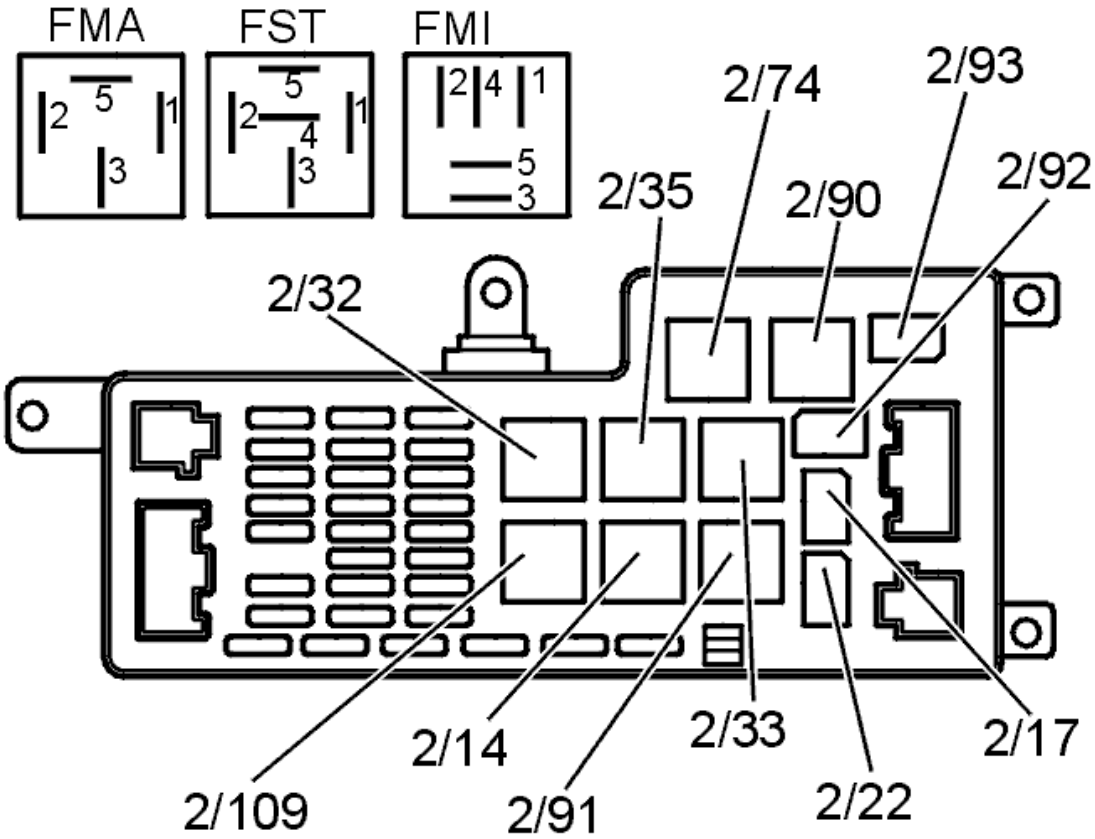

Fig. 373: Identifying Connectors
Courtesy of VOLVO CARS CORPORATION

Was the function OK?

- **YES**

  OKAY: Troubleshooting has been completed.

- **NO**

  Refer to **CHECKING THE CABLES FROM THE FUSEBOX TO THE CENTRAL ELECTRONIC MODULE (CEM)**

CHECKING THE CABLES FROM THE FUSEBOX TO THE CENTRAL ELECTRONIC MODULE (CEM)

Remove windshield wiper relay 2/91 from the fusebox base.

Check the relay base terminals. Check for contact resistance and oxidation.

Check the cable between relay base 2/91 terminal #2 and central electronic module (CEM) terminal #13. Check for an open-circuit.

Install the relay.

Activate the relay.

Other information:

- To connect the breakout box, see **CONNECTING THE BREAKOUT BOX**
- -2004: **SIGNAL SPECIFICATION**
- 2005-: **SIGNAL SPECIFICATION**
- see **CHECKING WIRING AND TERMINALS** .

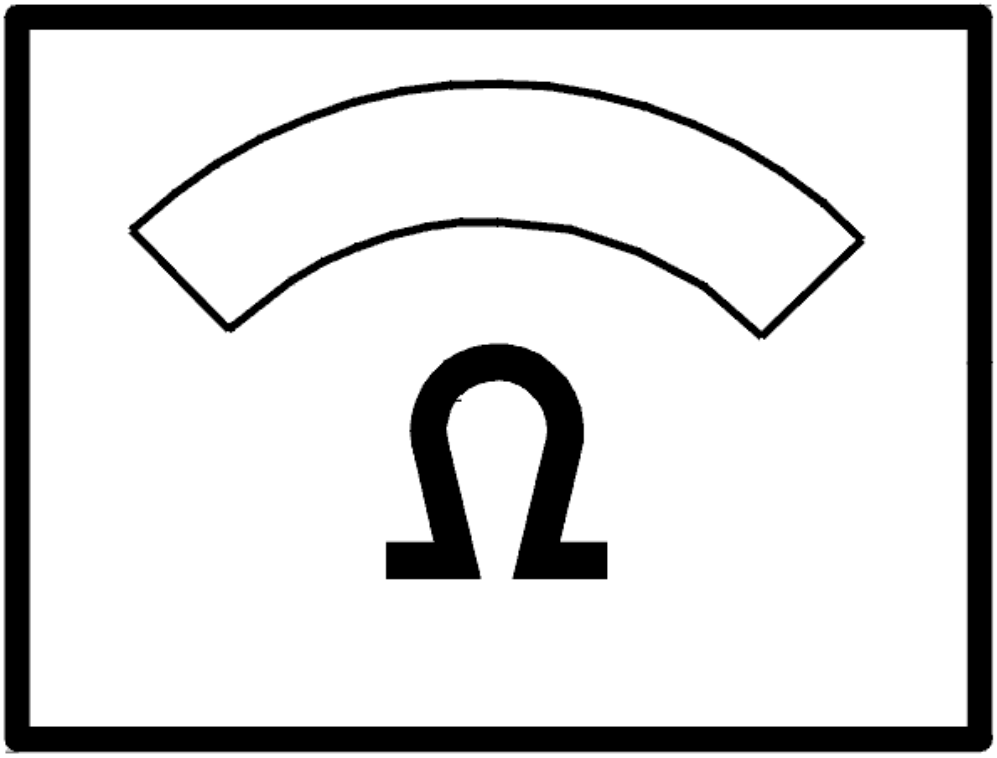

Fig. 374: Identifying Ohm Meter
Courtesy of VOLVO CARS CORPORATION

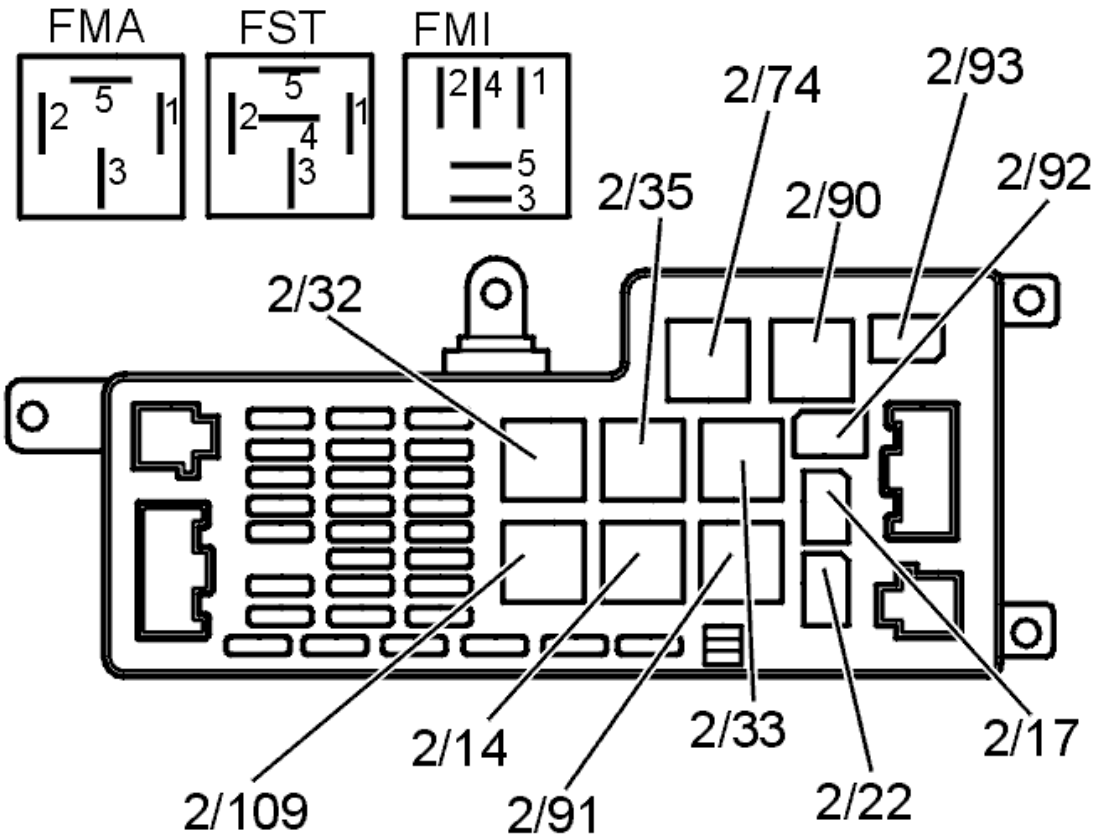

Fig. 375: Identifying Connectors
Courtesy of VOLVO CARS CORPORATION

Was the function OK?

- **YES**

  Refer to **VERIFICATION**

- **NO**

  Refer to **CHECKING THE CABLE FOR A SHORT-CIRCUIT TO GROUND**

CHECKING THE CABLE FOR A SHORT-CIRCUIT TO GROUND

Remove windshield wiper relay 2/91 from the fusebox base.

Check the cable between relay base terminal #2 and ground. Check for a short-circuit to ground.

Remedy as necessary.

Replace the fusebox if no fault is found.

Other information:

- To access or replace the fusebox, see **INTEGRATED RELAY / FUSEBOX IN ENGINE COMPARTMENT**
- To connect the breakout box, see **CONNECTING THE BREAKOUT BOX**
- -2004: **SIGNAL SPECIFICATION**
- 2005-: **SIGNAL SPECIFICATION**
- see **CHECKING WIRING AND TERMINALS** .

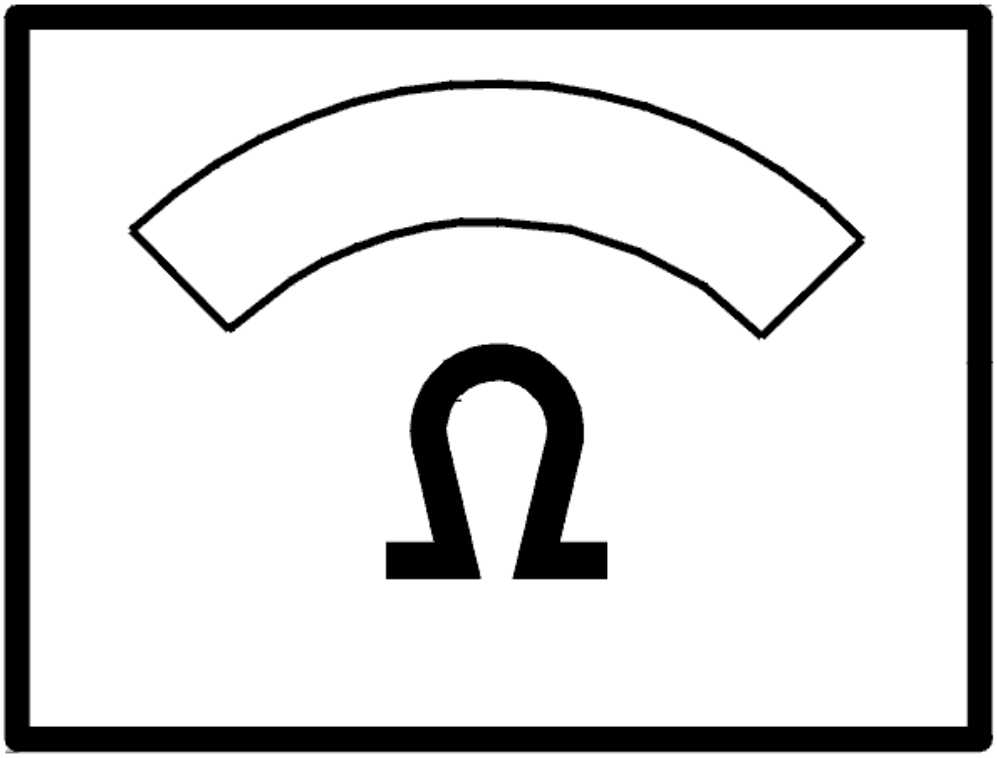

Fig. 376: Identifying Ohm Meter
Courtesy of VOLVO CARS CORPORATION

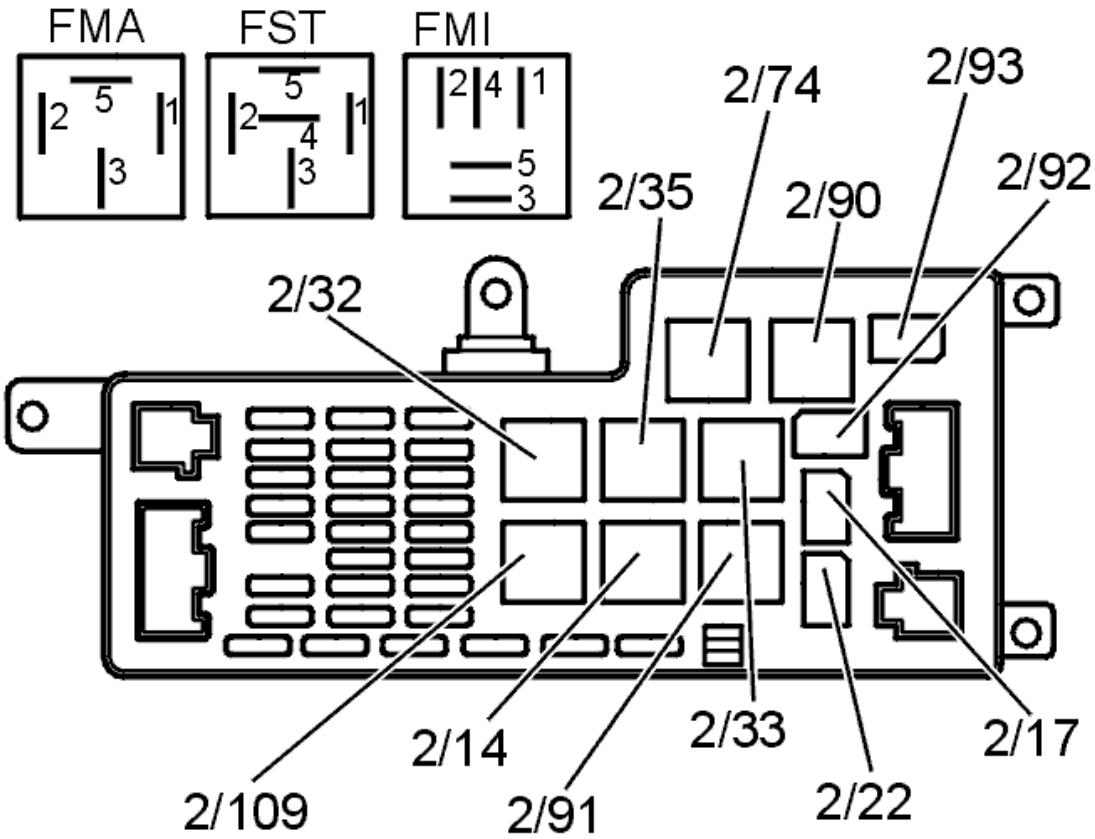

Fig. 377: Identifying Connectors
Courtesy of VOLVO CARS CORPORATION

- **Continue**

  Refer to **VERIFICATION**

VERIFICATION

VERIFICATION

HINT: After the repair it is necessary to check that the fault has been rectified.

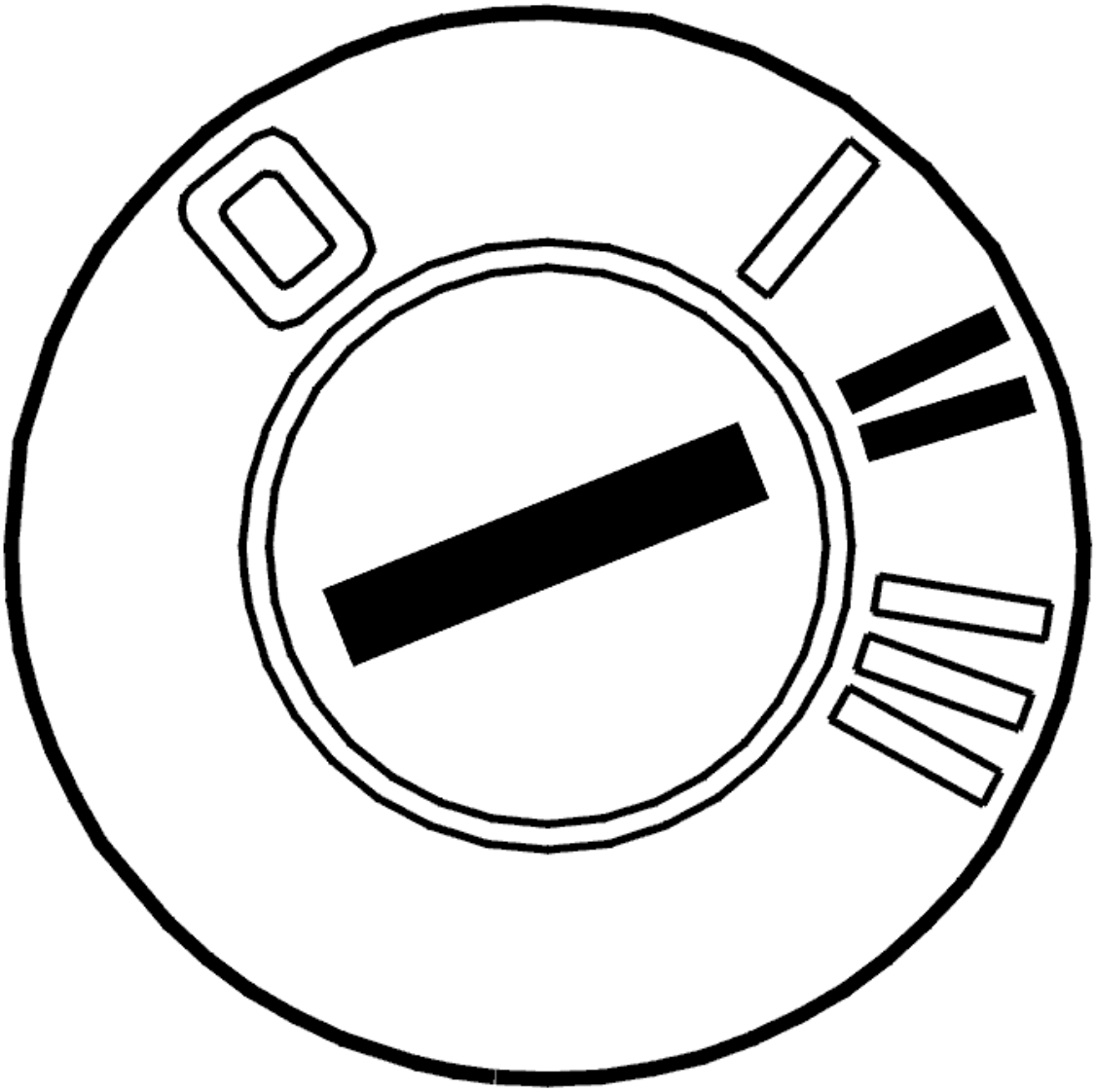

Fig. 378: Identifying Ignition ON
Courtesy of VOLVO CARS CORPORATION

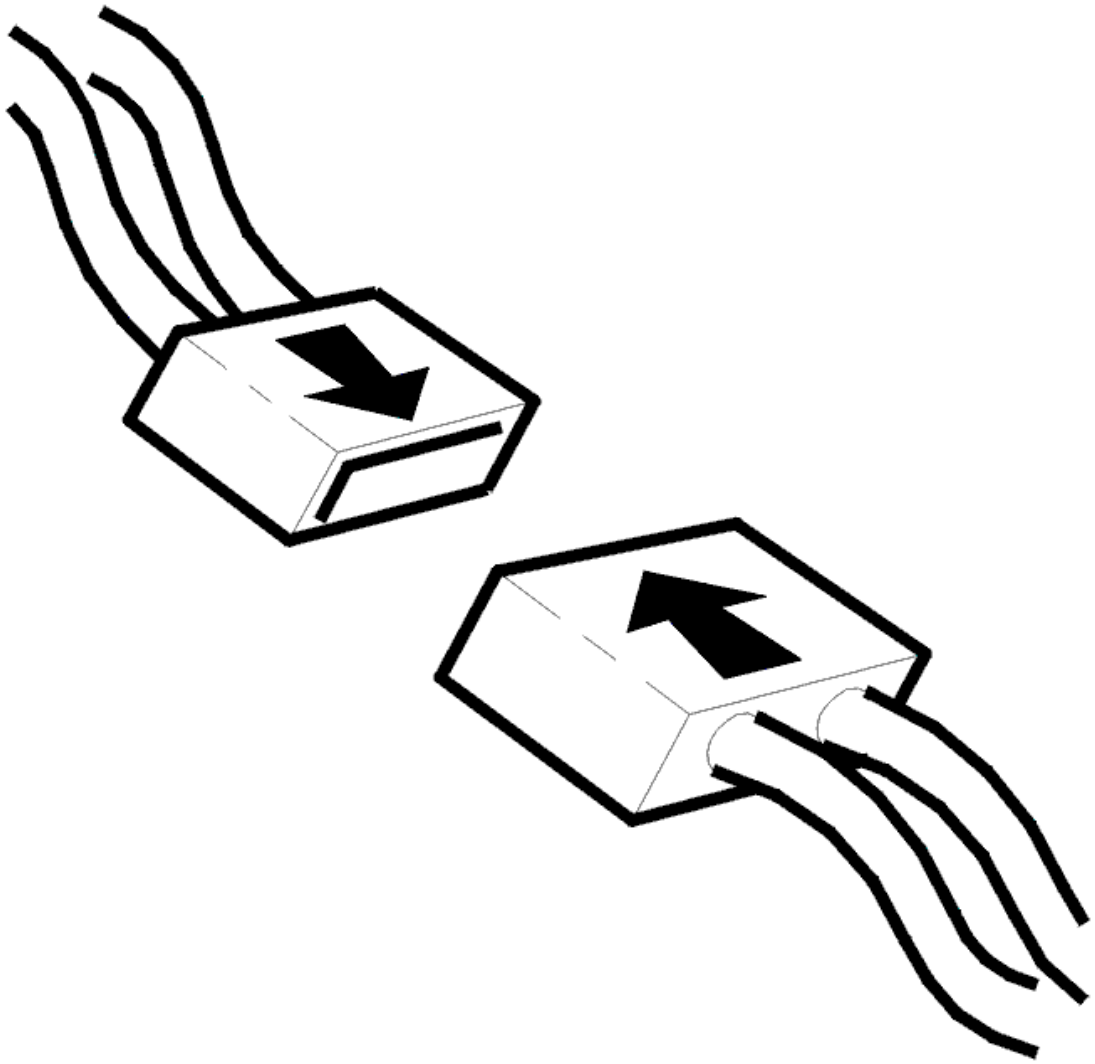

Fig. 379: Connecting Connector
Courtesy of VOLVO CARS CORPORATION

- Ignition off.
- Connect connectors, install components etc.
- Ignition on.

  Activate the relay, windscreen wiper on.

Does it work?

- **YES**

  VERIFIED: Troubleshooting has been completed.

- **NO**

  Refer to **INFORMATION**

INFORMATION

FAULT-TRACING INFORMATION

The fault should have been detected and remedied. As this is not the case fault-tracing has failed.

Exit fault-tracing for this diagnostic trouble code (DTC) or make another attempt.

RELAY AND FUSEBOX ENGINE COMPARTMENT, REPLACING

- See **INTEGRATED RELAY / FUSEBOX IN ENGINE COMPARTMENT** .

ELECTRICAL

Cables And Fuses - Diagnostic Trouble Codes and Associated Procedures

AEM-1A01: POWER SUPPLY. SIGNAL TOO LOW. INTERMITTENT FAULT (2003-2011)

DIAGNOSTIC TROUBLE CODE (DTC) INFORMATION

Condition

Diagnostic trouble code (DTC) AEM-1A01 is stored if the control module registers that the power supply to the auxiliary electronic module differs by more than two volts from the power supply to the central electronic module.

The diagnostic trouble code (DTC) can be diagnosed when the ignition is on.

Substitute Value

- None.

Possible Source

- Open-circuit or short-circuit to ground in the 30-supply to the accessory electronic module
- Contact resistance, oxidation or loose connections in the 30-supply to the accessory electronic module.

Fault symptom[s]

- Accessories connected to the control module do not function.

SIGNAL TOO LOW

CHECKING THE POWER SUPPLY

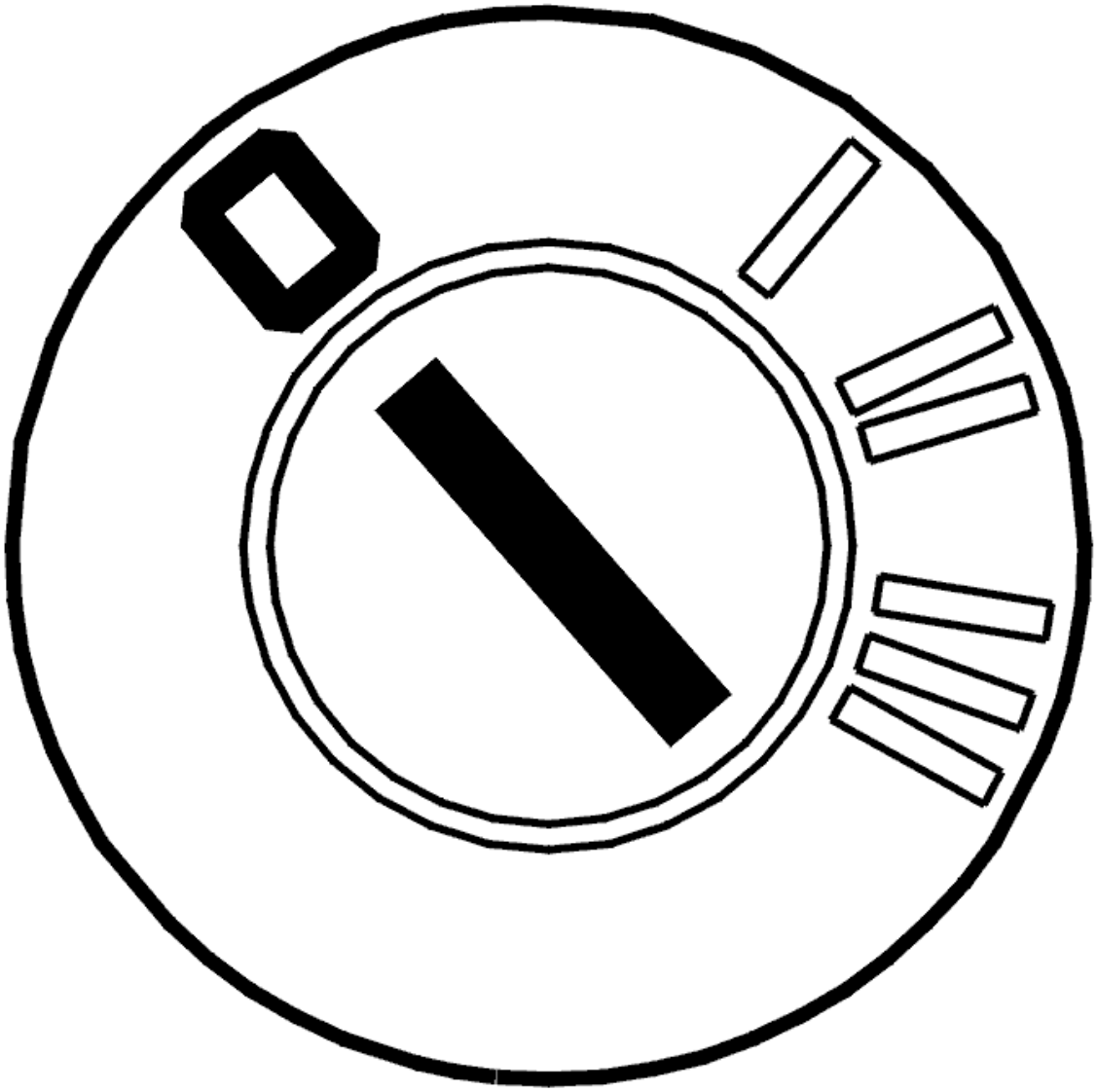

Fig. 1: Identifying Ignition OFF
Courtesy of VOLVO CARS CORPORATION

- Ignition off.

  Check the voltage to ground at the following points:

  Rear main fuse.

  Rear fuse.

  The voltage must be at least battery voltage minus 3 V.

  Check that the fuses are intact.

  Remedy as necessary.

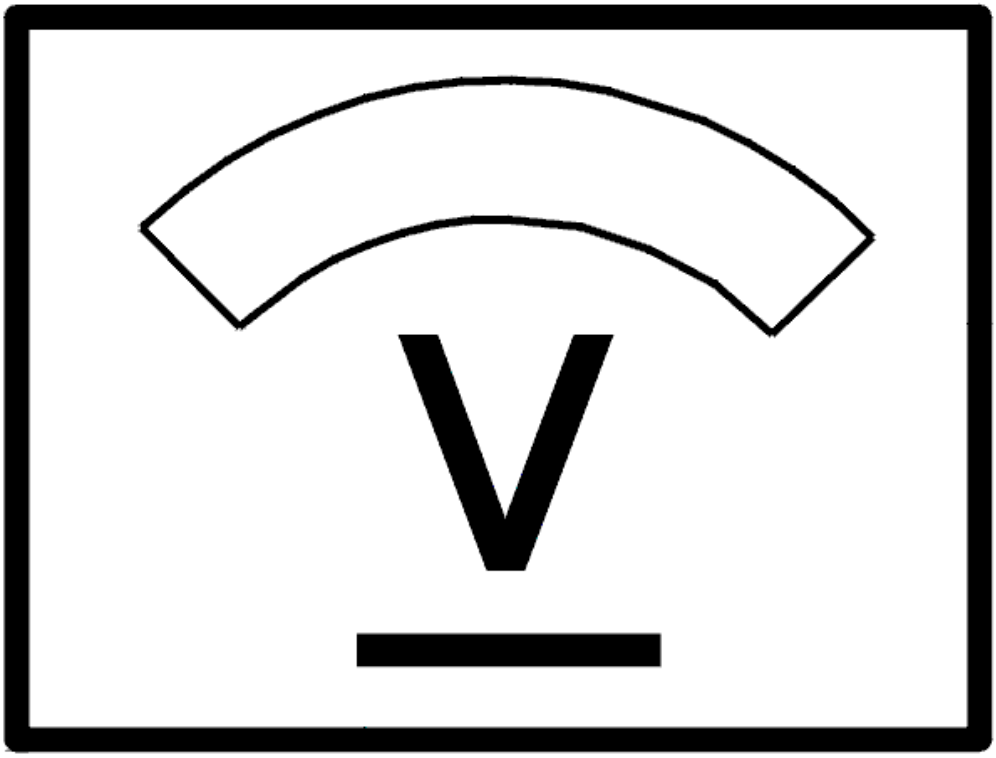

Fig. 2: Identifying Voltage Display
Courtesy of VOLVO CARS CORPORATION

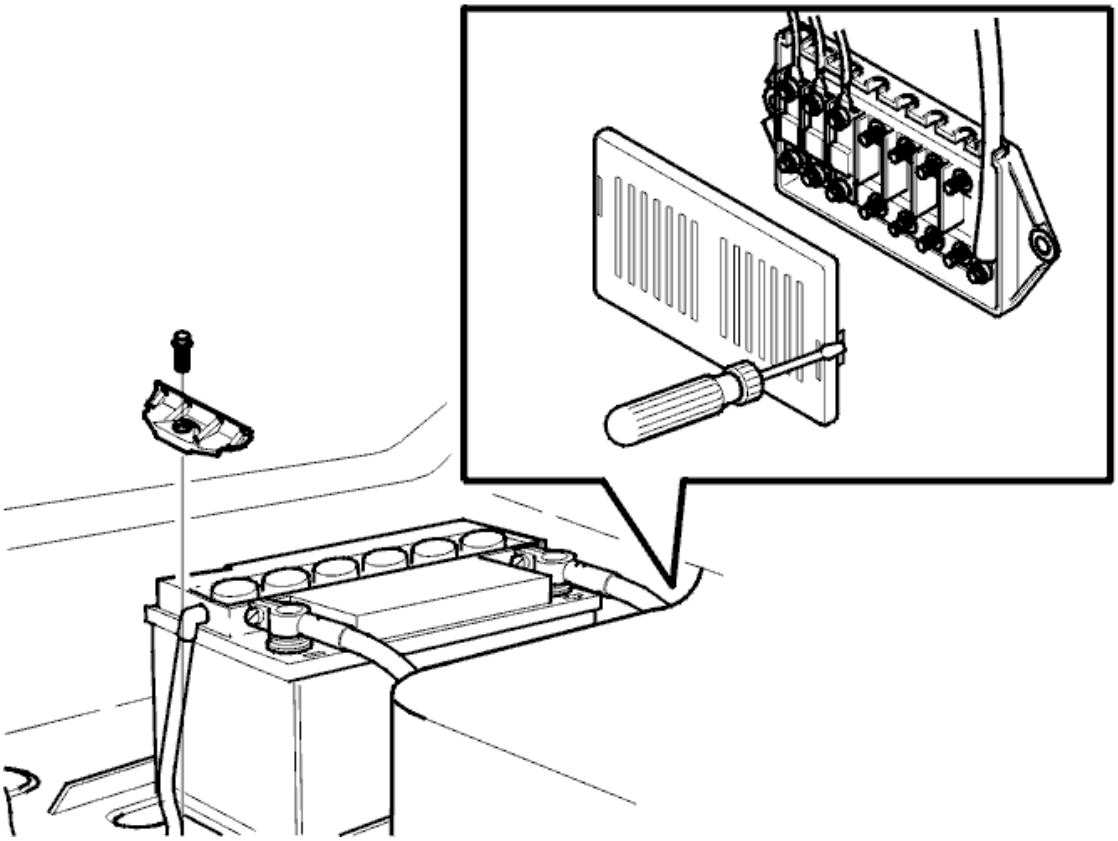

Fig. 3: Battery And Cargo Compartment Main Fuse
Courtesy of VOLVO CARS CORPORATION

Was the fault found?

- **YES**

  Refer to **VERIFICATION**

- **NO**

  Refer to **CHECKING THE POWER SUPPLY AND GROUND ON THE ACCESSORY ELECTRONIC MODULE (AEM)**

CHECKING THE POWER SUPPLY AND GROUND ON THE ACCESSORY ELECTRONIC MODULE (AEM)

Check the power supply to the Accessory Electronic Module (AEM). Check between the breakout box terminals for the power supply (#52) and ground (#51). The voltage must be at least battery voltage minus 3 V.

Check the control module connector. Check for contact resistance and oxidation. Check for loose connections. Check for damage carefully.

Check the wiring between the Accessory Electronic Module (AEM) (breakout box for ground terminal #51) and ground. Check for an open-circuit.

Remedy as necessary.

Other information:

- To connect the breakout box, see **CONNECTING THE BREAKOUT BOX. ACCESSORY ELECTRONIC MODULE**
- To access or replace the Accessory Electronic Module (AEM) and connector, see **ACCESSORY ELECTRONIC MODULE (AEM), REPLACING**
- For information about signals, see **SIGNAL DESCRIPTION. ACCESSORY ELECTRONIC MODULE (AEM)**
- To fault-trace wiring and terminals, see **CHECKING WIRING AND TERMINALS**

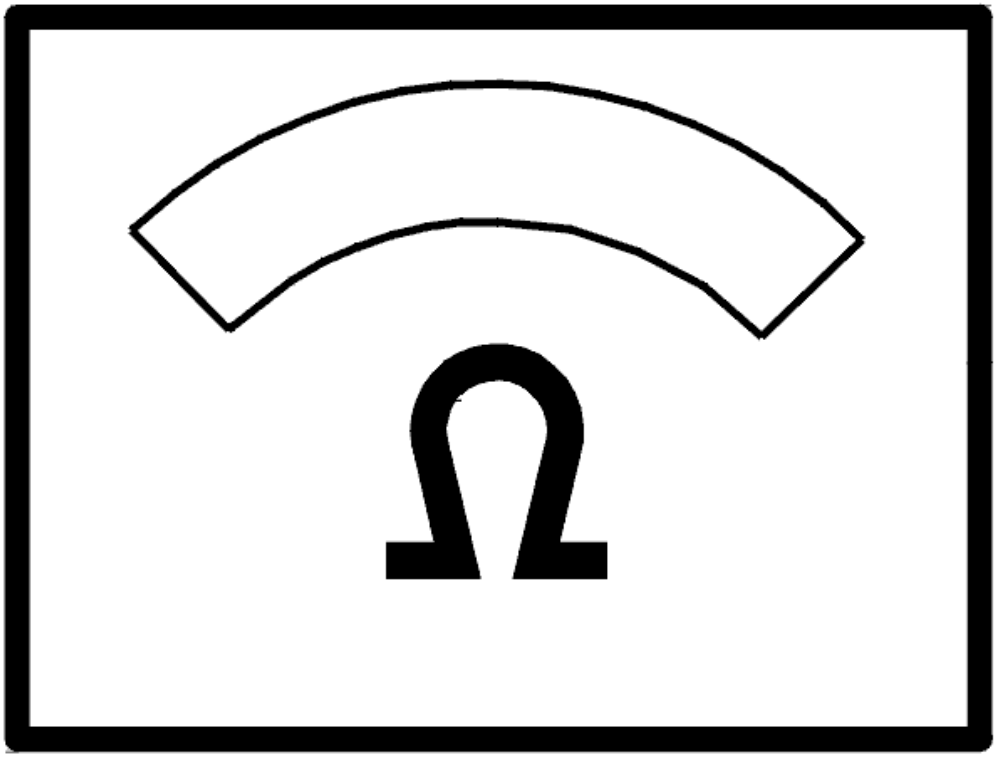

Fig. 4: Identifying Ohm Meter
Courtesy of VOLVO CARS CORPORATION

- **Continue**

  Refer to **VERIFICATION**

VERIFICATION

VERIFICATION

HINT: After carrying out the repair, check that the fault has been remedied.

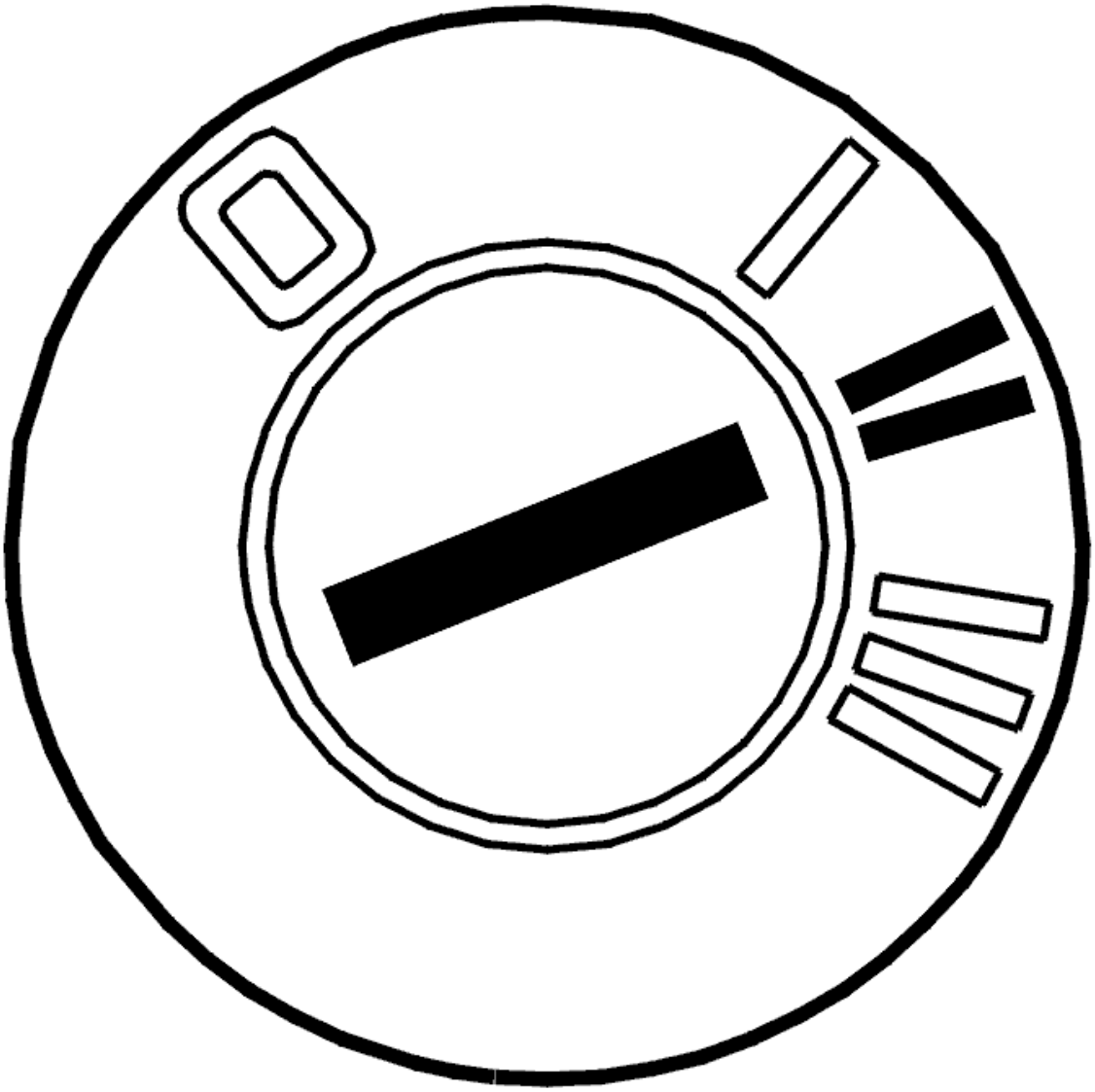

Fig. 5: Identifying Ignition ON
Courtesy of VOLVO CARS CORPORATION

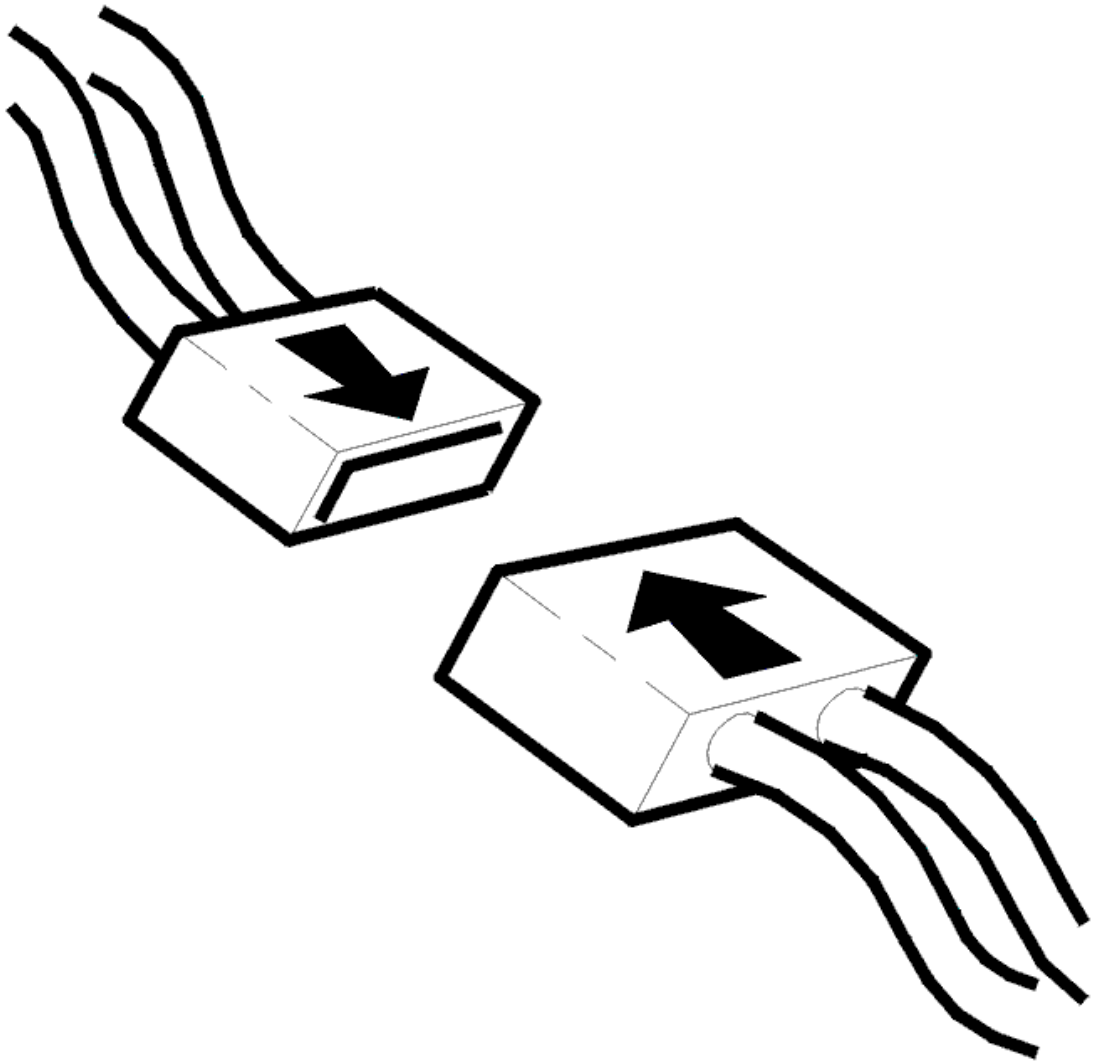

Fig. 6: Connecting Connector
Courtesy of VOLVO CARS CORPORATION

- Ignition off
- Reconnect the components, connectors etc.
- Ignition on.

  Read off the power supply for the accessory electronic module using the VCT2000 (or appropriate scan tool).

  The voltage must be at least battery voltage minus three volts.

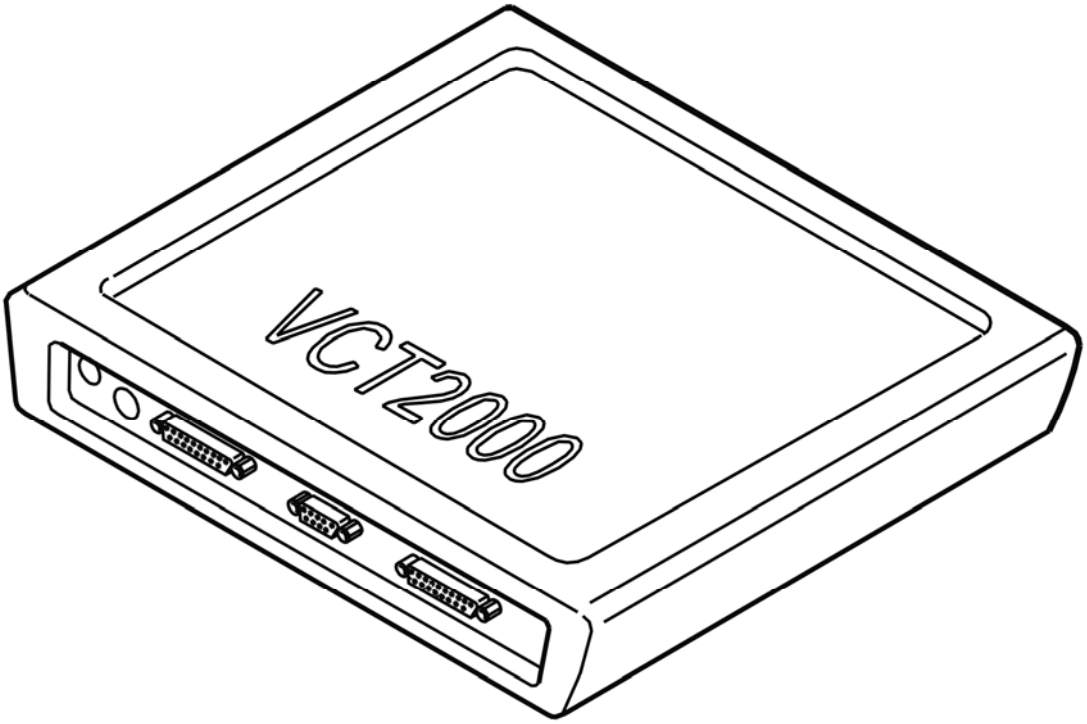

Fig. 7: Identifying VCT2000 Diagnostic Tool Symbol In VIDA
Courtesy of VOLVO CARS CORPORATION

Is the voltage OK?

- **YES**

  VERIFIED: Troubleshooting has been completed.

- **NO**

  Refer to **INFORMATION**

INFORMATION

FAULT-TRACING INFORMATION

The fault should have been detected and remedied. As this is not the case fault-tracing has failed.

Exit fault-tracing for this diagnostic trouble code (DTC) or make another attempt.

AEM-1D01: CONTROL MODULE. INTERNAL FAULT. INTERMITTENT FAULT (2003-2011)

DIAGNOSTIC TROUBLE CODE (DTC) INFORMATION AEM-1D01

Condition

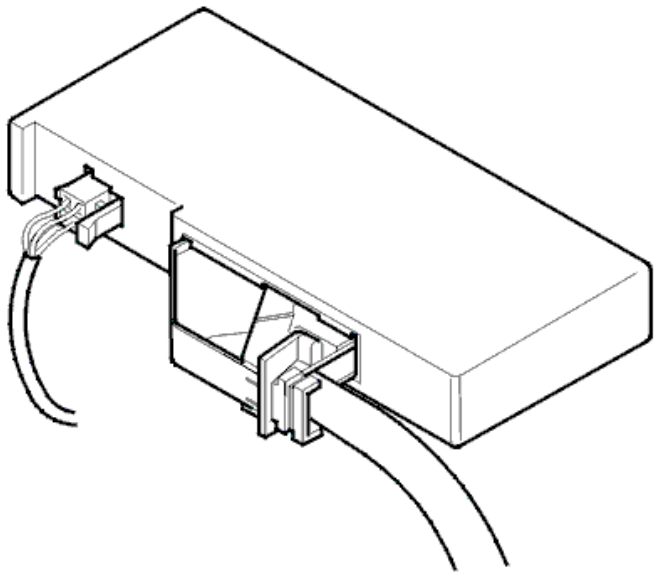

Fig. 8: Accessory Electronic Module
Courtesy of VOLVO CARS CORPORATION

The diagnostic trouble code (DTC) is stored if the control module registers an internal fault.

The diagnostic trouble code (DTC) can be diagnosed when the ignition is off. Therefore the ignition must be switched on again so that the diagnostic trouble code (DTC) can be read off.

Substitute Value

- None.

Possible Source

- Internal fault in the control module.

Fault symptom[s]

- Accessories connected to the control module do not function.

INTERNAL FAULT

REPLACING THE ACCESSORY ELECTRONIC MODULE (AEM)

The Accessory Electronic Module (AEM) has registered an internal fault.

If the fault is intermittent, it has been registered previously but is no longer present. Intermittent faults can occur for a number of different reasons. The fault is evaluated depending on how it occurs. Replace the Accessory Electronic Module (AEM) if the fault recurs.

Replace the Accessory Electronic Module (AEM) if the fault is permanent. See **ACCESSORY ELECTRONIC MODULE (AEM), REPLACING** .

Remedy as necessary.

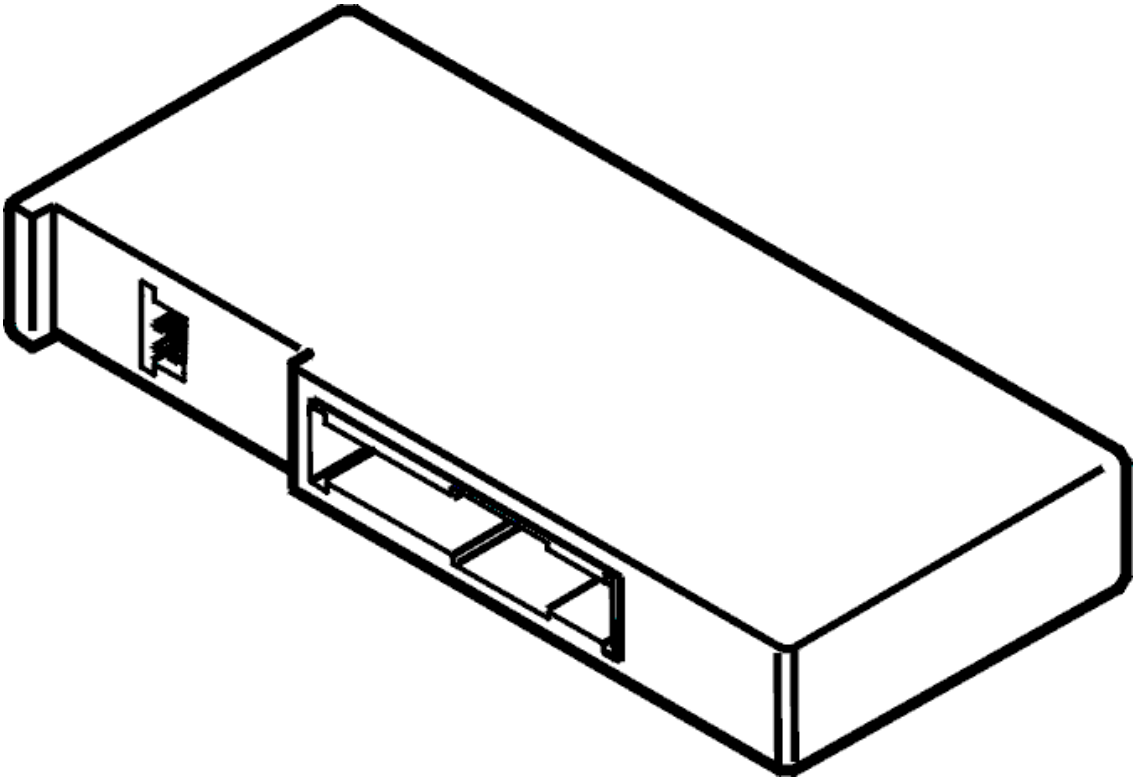

Fig. 9: Identifying Accessory Electronic Module (AEM)
Courtesy of VOLVO CARS CORPORATION

AEM-1D02: CONTROL MODULE, SOFTWARE. INTERNAL FAULT. INTERMITTENT FAULT (2003-2011)

DIAGNOSTIC TROUBLE CODE (DTC) INFORMATION AEM-1D02

Condition

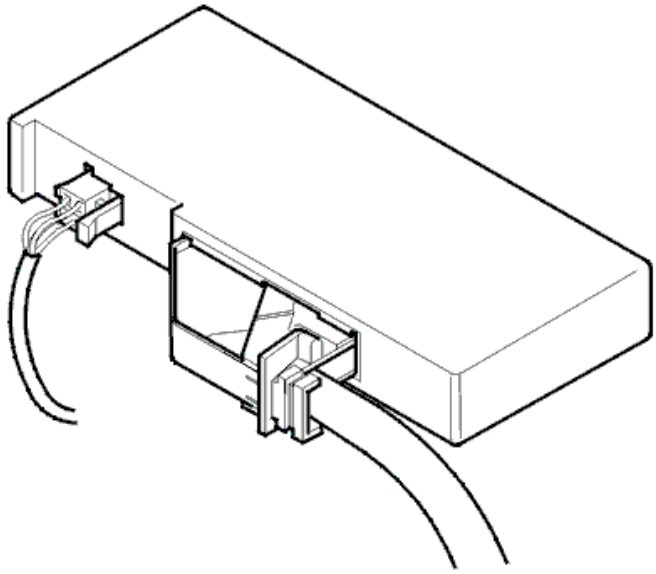

Fig. 10: Accessory Electronic Module
Courtesy of VOLVO CARS CORPORATION

The diagnostic trouble code (DTC) is stored if the control module registers a fault in the software.

The diagnostic trouble code (DTC) can be diagnosed when the ignition is on.

Substitute Value

- None.

Possible Source

- Internal fault in the control module.

Fault symptom[s]

- Accessories connected to the control module do not function.

INTERNAL FAULT

RELOADING THE SOFTWARE IN THE CONTROL MODULE

The control module has registered an internal fault in the software.

Remedy the fault by reloading the software. First download the software for the accessory electronic module. Then download the software for the connected accessories.

AEM-1D03: CONTROL MODULE NOT FULLY PROGRAMMED. INTERNAL

FAULT. INTERMITTENT FAULT (2003-2011)

DIAGNOSTIC TROUBLE CODE (DTC) INFORMATION AEM-1D03

Condition

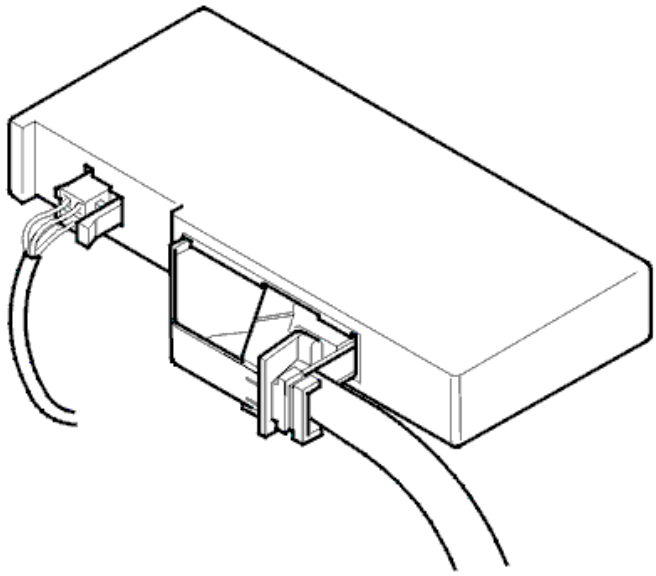

Fig. 11: Accessory Electronic Module
Courtesy of VOLVO CARS CORPORATION

The diagnostic trouble code (DTC) is stored if the control module registers that the programming is faulty or incomplete.

The diagnostic trouble code (DTC) can be diagnosed when the ignition is on.

Substitute Value

- None.

Possible Source

- Software download not complete.

Fault symptom[s]

- Accessories connected to the control module do not function.

INTERNAL FAULT

RELOADING THE SOFTWARE IN THE CONTROL MODULE

The control module has registered an internal fault in the software.

Remedy the fault by reloading the software. First download the software for the accessory electronic module. Then download the software for the connected accessories.

AEM-1D07: CONTROL MODULE. INTERNAL FAULT. INTERMITTENT FAULT (2003-2011)

DIAGNOSTIC TROUBLE CODE (DTC) INFORMATION AEM-1D07

Condition

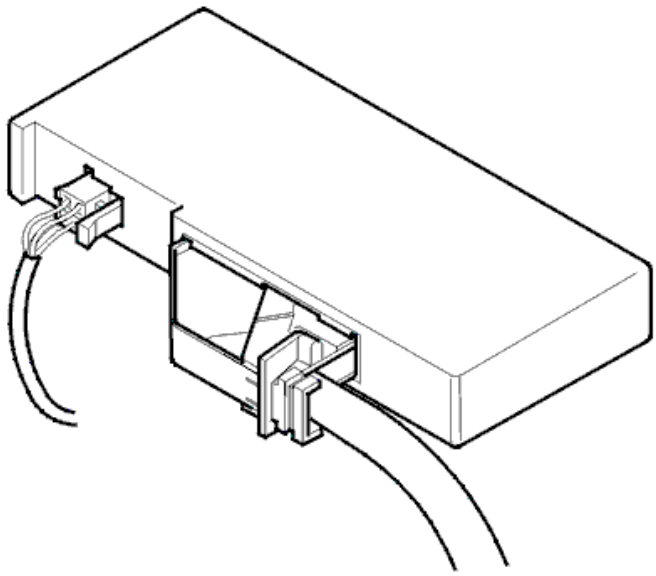

Fig. 12: Accessory Electronic Module
Courtesy of VOLVO CARS CORPORATION

The diagnostic trouble code (DTC) is stored if the control module registers an internal fault.

The diagnostic trouble code (DTC) can be diagnosed when the ignition is off. Therefore the ignition must be switched on again so that the diagnostic trouble code (DTC) can be read off.

Substitute Value

- None.

Possible Source

- Internal fault in the control module.

Fault symptom[s]

- Accessories connected to the control module do not function.

INTERNAL FAULT

REPLACING THE ACCESSORY ELECTRONIC MODULE (AEM)

The Accessory Electronic Module (AEM) has registered an internal fault.

If the fault is intermittent, it has been registered previously but is no longer present. Intermittent faults can occur for a number of different reasons. The fault is evaluated depending on how it occurs. Replace the Accessory Electronic Module (AEM) if the fault recurs.

Replace the Accessory Electronic Module (AEM) if the fault is permanent. See **ACCESSORY ELECTRONIC MODULE (AEM), REPLACING** .

Remedy as necessary.

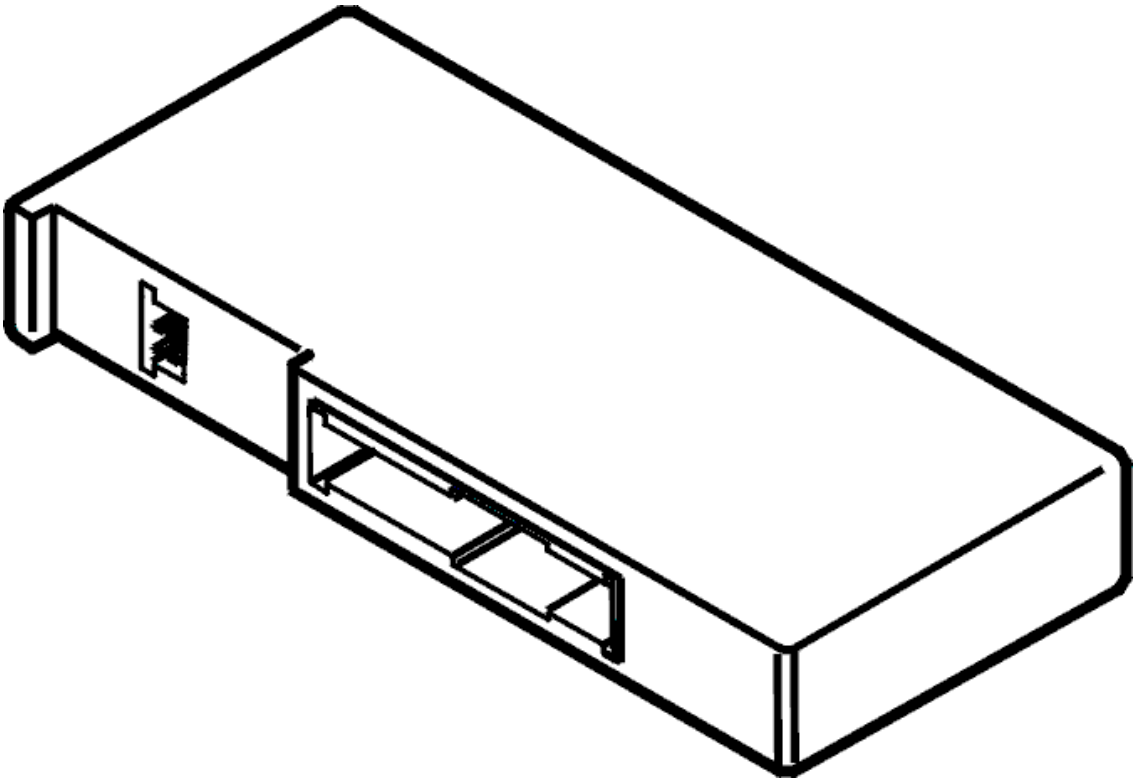

Fig. 13: Identifying Accessory Electronic Module (AEM)
Courtesy of VOLVO CARS CORPORATION

AEM-1D08: CONTROL MODULE. INTERNAL FAULT. INTERMITTENT FAULT (2003-2011)

DIAGNOSTIC TROUBLE CODE (DTC) INFORMATION AEM-1D08

Condition

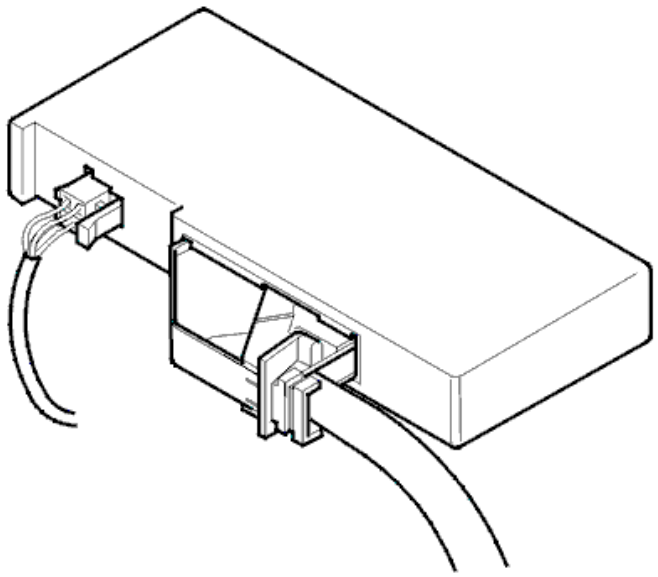

Fig. 14: Accessory Electronic Module
Courtesy of VOLVO CARS CORPORATION

The diagnostic trouble code (DTC) is stored if the control module registers an internal fault.

The diagnostic trouble code (DTC) can be diagnosed when the ignition is on.

Substitute Value

- None.

Possible Source

- Internal fault in the control module.

Fault symptom[s]

- Accessories connected to the control module do not function.

INTERNAL FAULT

REPLACING THE ACCESSORY ELECTRONIC MODULE (AEM)

The Accessory Electronic Module (AEM) has registered an internal fault.

If the fault is intermittent, it has been registered previously but is no longer present. Intermittent faults can occur for a number of different reasons. The fault is evaluated depending on how it occurs. Replace the Accessory Electronic Module (AEM) if the fault recurs.

Replace the Accessory Electronic Module (AEM) if the fault is permanent. See **ACCESSORY ELECTRONIC MODULE (AEM), REPLACING** .

Remedy as necessary.

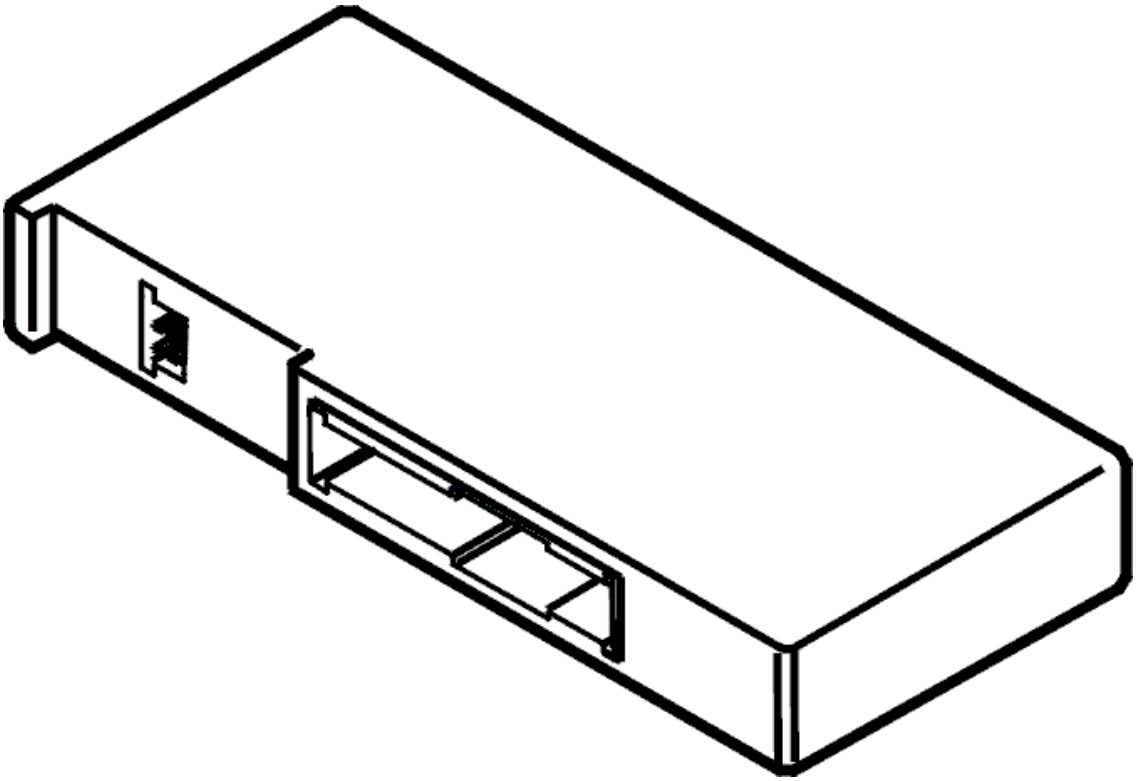

Fig. 15: Identifying Accessory Electronic Module (AEM)
Courtesy of VOLVO CARS CORPORATION

AEM-1D0A: CONTROL MODULE. INTERNAL FAULT. INTERMITTENT FAULT (2003-2011)

DIAGNOSTIC TROUBLE CODE (DTC) INFORMATION AEM-1D0A

Condition

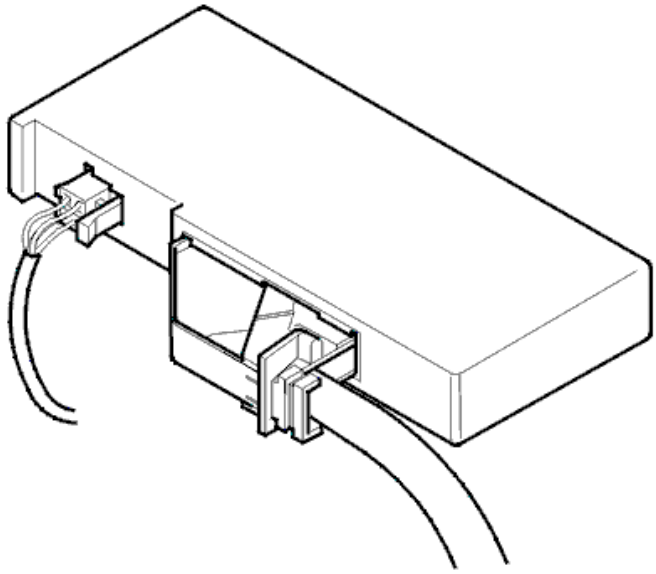

Fig. 16: Accessory Electronic Module
Courtesy of VOLVO CARS CORPORATION

The diagnostic trouble code (DTC) is stored if the control module registers an internal fault.

The diagnostic trouble code (DTC) can be diagnosed when the ignition is off. Therefore the ignition must be switched on again so that the diagnostic trouble code (DTC) can be read off.

Substitute Value

- None.

Possible Source

- Internal fault in the control module.

Fault symptom[s]

- Accessories connected to the control module do not function.

INTERNAL FAULT

REPLACING THE ACCESSORY ELECTRONIC MODULE (AEM)

The Accessory Electronic Module (AEM) has registered an internal fault.

If the fault is intermittent, it has been registered previously but is no longer present. Intermittent faults can occur for a number of different reasons. The fault is evaluated depending on how it occurs. Replace the Accessory Electronic Module (AEM) if the fault recurs.

Replace the Accessory Electronic Module (AEM) if the fault is permanent. See **ACCESSORY ELECTRONIC MODULE (AEM), REPLACING** .

Remedy as necessary.

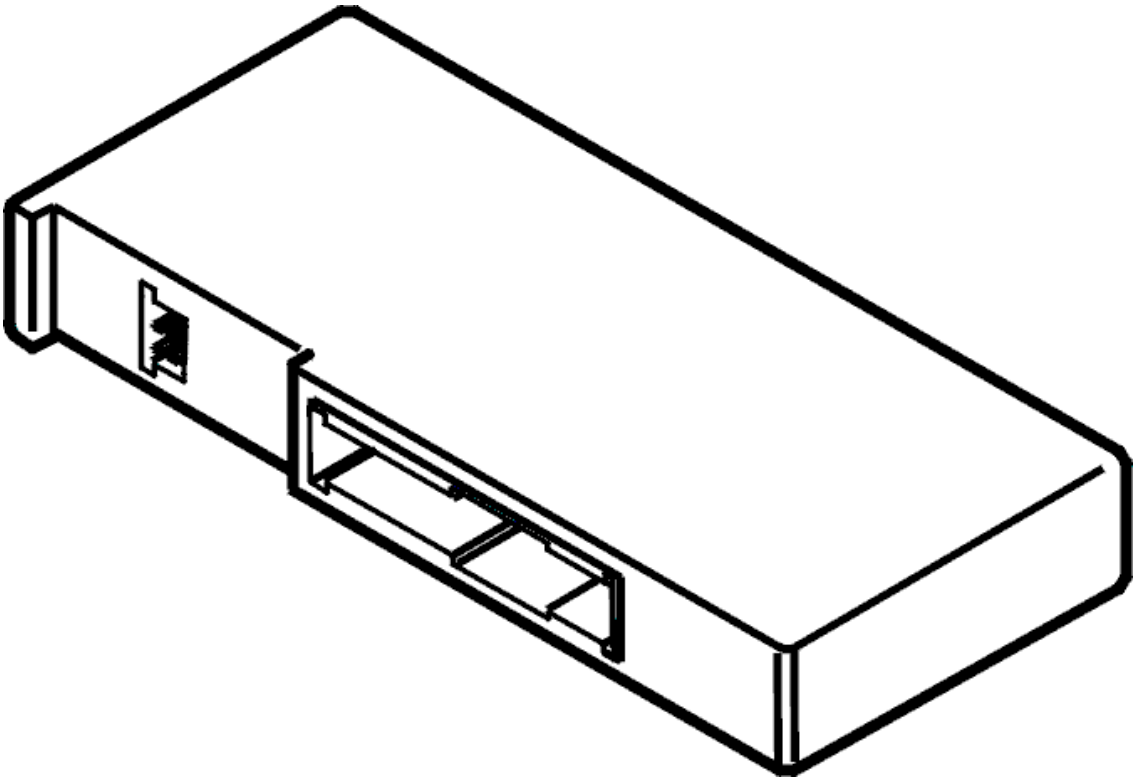

Fig. 17: Identifying Accessory Electronic Module (AEM)
Courtesy of VOLVO CARS CORPORATION

AEM-5F10: RELAY, ENGINE BLOCK HEATER. SIGNAL TOO LOW. INTERMITTENT FAULT (2003-2011)

DIAGNOSTIC TROUBLE CODE (DTC) INFORMATION

Condition

Diagnostic trouble code (DTC) AEM-5F10 is stored if the control module registers that the signal is too low in the signal cable to the relay for the electrical engine block heater.

Diagnostic trouble codes (DTCs) can be diagnosed when the ignition is on and the relay for the electrical engine block heater is activated.

Substitute Value

- The relay for the electrical engine block heater shuts down until the next time the ignition is switched on.

Possible Source

- Short-circuit to ground in the signal cable to the relay for the electrical engine block heater
- Defective relay for the electrical engine block heater.

Fault symptom[s]

- Poor heating in the passenger compartment.

SIGNAL TOO LOW

CHECKING COMPONENTS AND WIRING

Check the signal cable to the relay for the electric engine block heater. Check between accessory control module terminal #B5 and the connector for the relay. Check for a short-circuit to ground.

Remedy as necessary.

Other information:

- To connect the breakout box, see **CONNECTING THE BREAKOUT BOX. ACCESSORY ELECTRONIC MODULE**
- To access or replace the Accessory Electronic Module (AEM) and connector, see **ACCESSORY ELECTRONIC MODULE (AEM), REPLACING**
- For information about signals, see **SIGNAL DESCRIPTION. ACCESSORY ELECTRONIC MODULE (AEM)**
- To access and replace the relay for the electric engine block heater, see **RELAY ELECTRICAL ENGINE BLOCK HEATER, REPLACING**
- To fault-trace wiring and terminals, see **CHECKING WIRING AND TERMINALS**

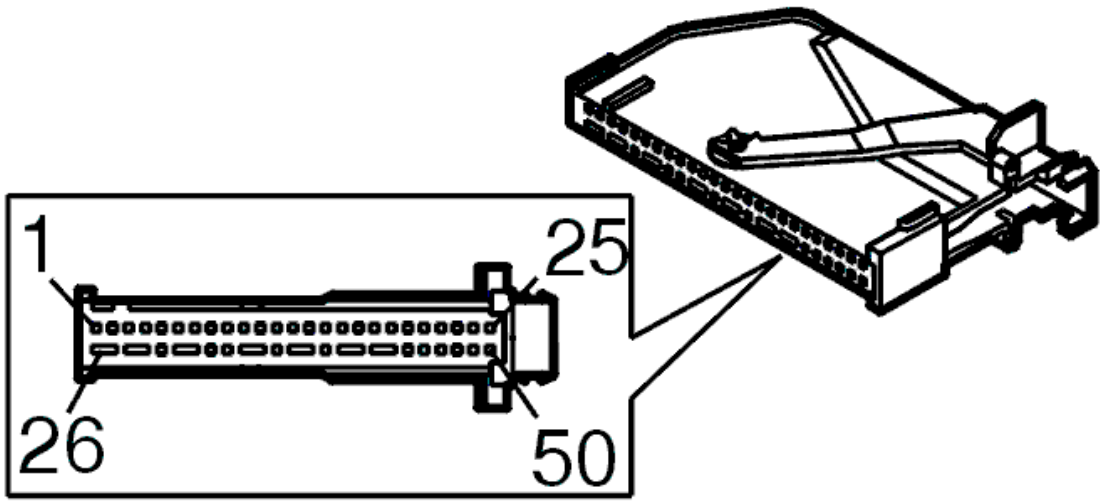

Fig. 18: Accessory Electronic Module Ground Terminals

Courtesy of VOLVO CARS CORPORATION

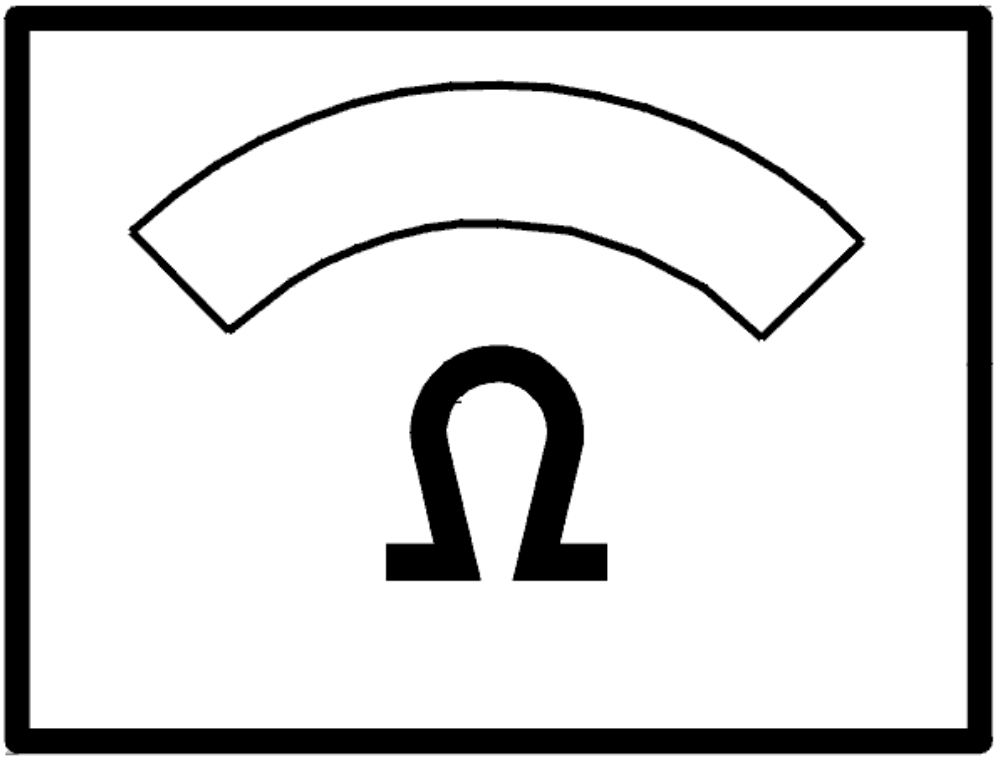

Fig. 19: Identifying Ohm Meter
Courtesy of VOLVO CARS CORPORATION

- **Continue**

  Refer to **VERIFICATION**

VERIFICATION

VERIFICATION

HINT: After carrying out the repair, check that the fault has been remedied.

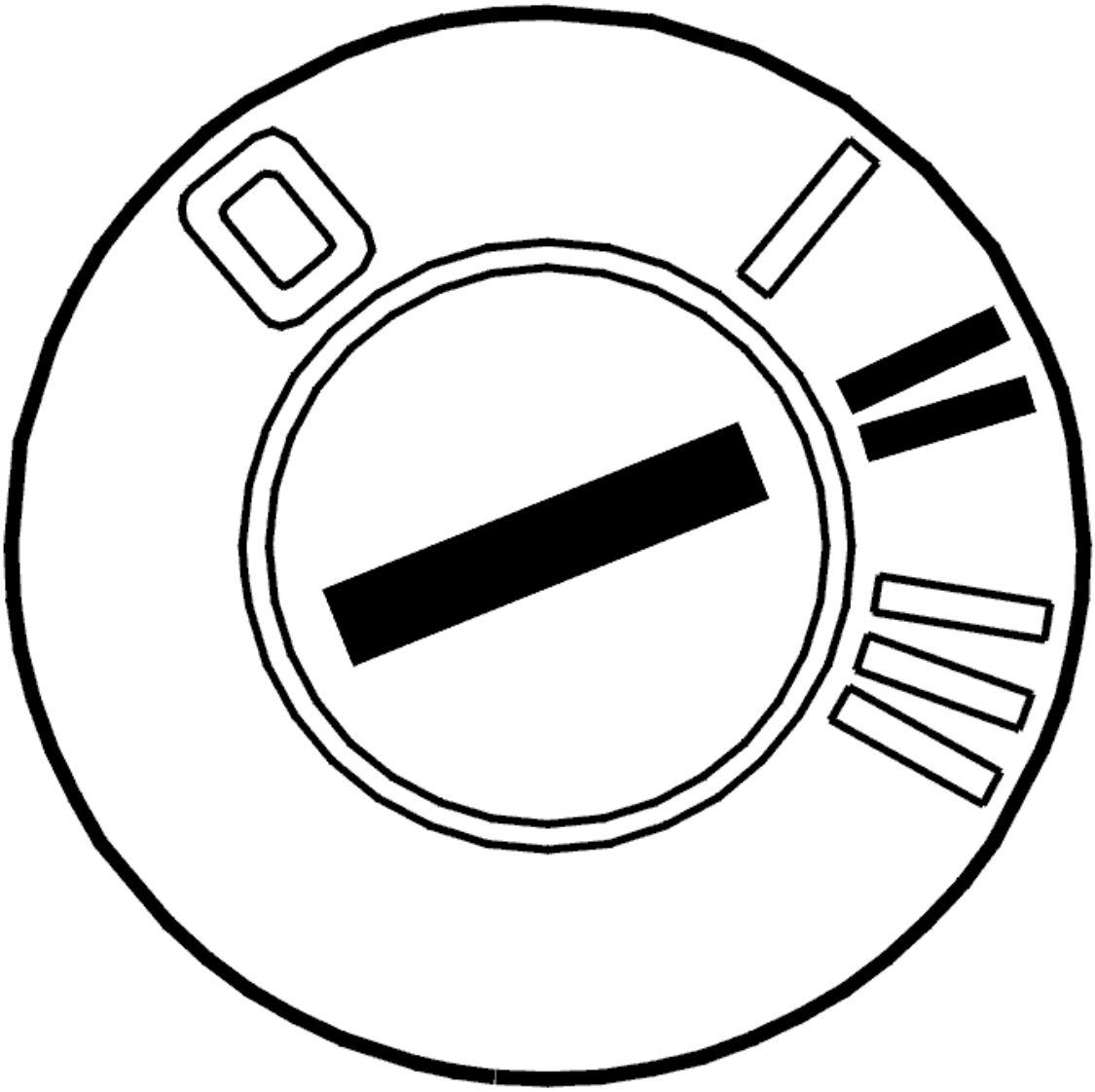

Fig. 20: Identifying Ignition ON
Courtesy of VOLVO CARS CORPORATION

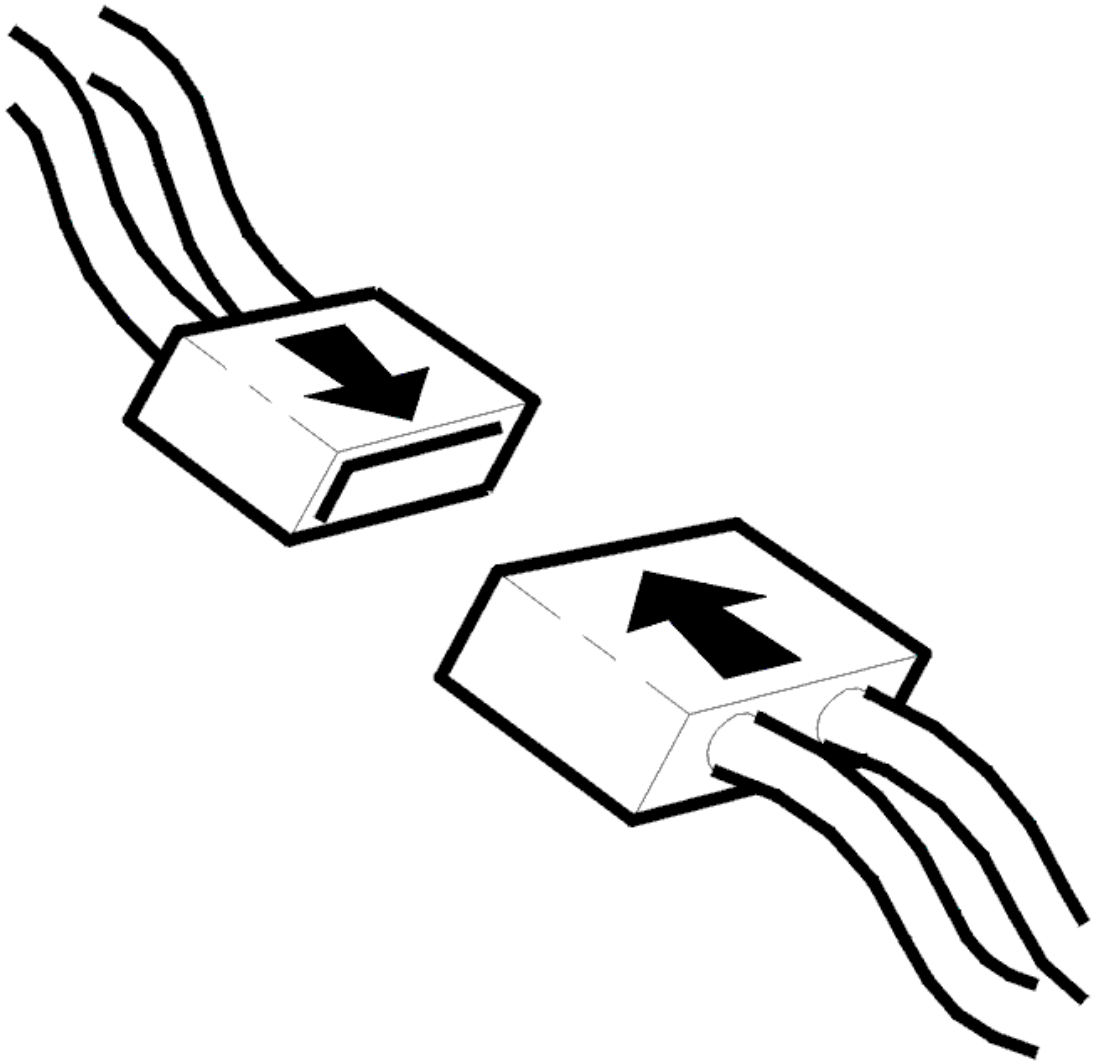

Fig. 21: Connecting Connector
Courtesy of VOLVO CARS CORPORATION

- Ignition off
- Reconnect the components, connectors etc.
- Ignition on.

  Check the function of the electric engine block heater.

Does the system function?

- **YES**

  VERIFIED: Troubleshooting has been completed.

- **NO**

  Refer to **INFORMATION**

INFORMATION

FAULT-TRACING INFORMATION

The fault should have been detected and remedied. As this is not the case fault-tracing has failed.

Exit fault-tracing for this diagnostic trouble code (DTC) or make another attempt.

AEM-5F11: RELAY, ENGINE BLOCK HEATER. SIGNAL TOO HIGH OR SIGNAL MISSING. INTERMITTENT FAULT (2003-2011)

DIAGNOSTIC TROUBLE CODE (DTC) INFORMATION

Condition

Diagnostic trouble code (DTC) AEM-5F11 is stored if the control module registers that the signal is too high or if there is an open-circuit in the cable to the relay for the electrical engine block heater.

The diagnostic trouble code (DTC) can be diagnosed when the ignition is on and the relay for the electrical engine block heater is not activated.

Substitute Value

- The relay for the electrical engine block heater is switched off.

Possible Source

- Short-circuit to supply voltage in the signal cable for the relay for the electrical engine block heater
- Open-circuit in the signal cable for the relay for the electrical engine block heater
- Open-circuit in the ground cable for the relay for the electrical engine block heater
- Defective relay for the electrical engine block heater.

Fault symptom[s]

- Poor heating in the passenger compartment.

SIGNAL TOO HIGH / SIGNAL MISSING

CHECKING COMPONENTS AND WIRING

Check the signal cable for the relay for the electric engine block heater. Check between accessory control module terminal #B5 and the connector for the relay. Check for a short-circuit to supply voltage. Check for an

open-circuit.

Check the ground lead for the relay for the electric engine block heater. Check between accessory control module terminal #B4 and the connector for the relay. Check for an open-circuit.

Remedy as necessary.

Other information:

- To connect the breakout box, see **CONNECTING THE BREAKOUT BOX. ACCESSORY ELECTRONIC MODULE**
- To access or replace the Accessory Electronic Module (AEM) and connector, see **ACCESSORY ELECTRONIC MODULE (AEM), REPLACING**
- For information about signals, see **SIGNAL DESCRIPTION. ACCESSORY ELECTRONIC MODULE (AEM)**
- To access and replace the relay for the electric engine block heater, see **RELAY ELECTRICAL ENGINE BLOCK HEATER, REPLACING**
- To fault-trace wiring and terminals, see **CHECKING WIRING AND TERMINALS**

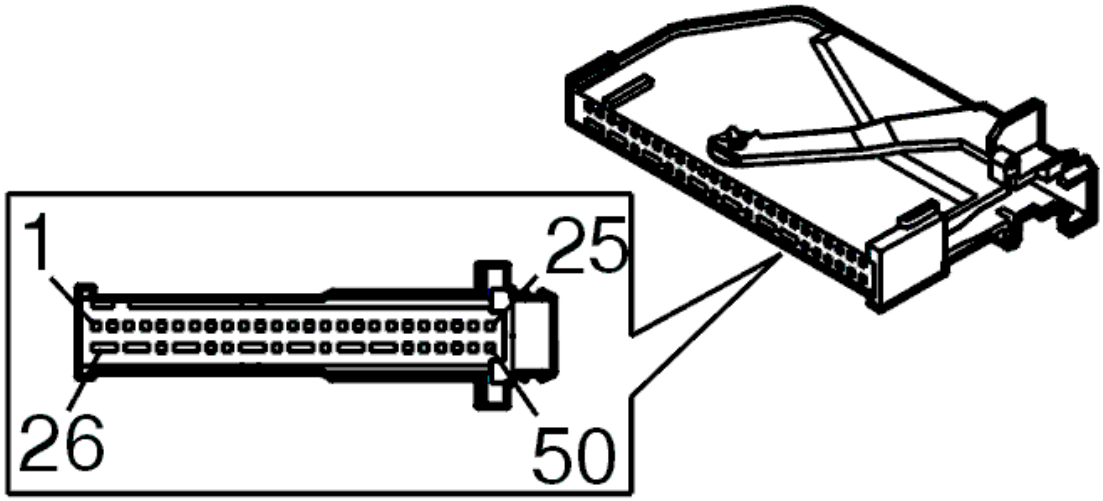

Fig. 22: Accessory Electronic Module Ground Terminals
Courtesy of VOLVO CARS CORPORATION

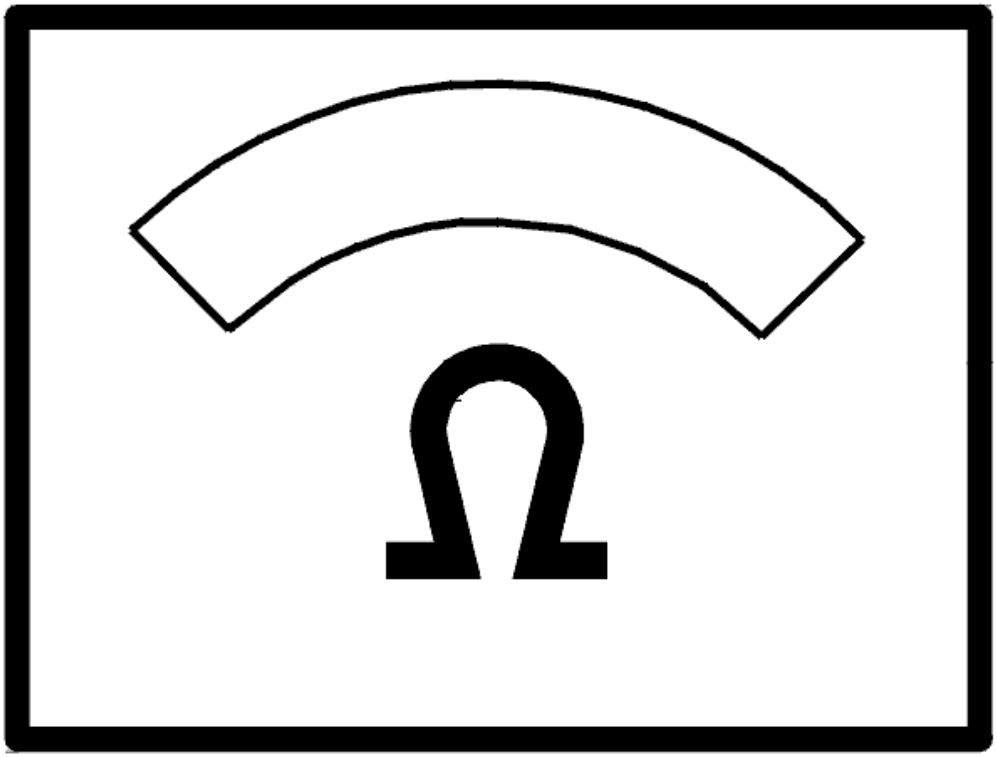

Fig. 23: Identifying Ohm Meter
Courtesy of VOLVO CARS CORPORATION

- **Continue**

  Refer to **VERIFICATION**

VERIFICATION

VERIFICATION

HINT: After carrying out the repair, check that the fault has been remedied.

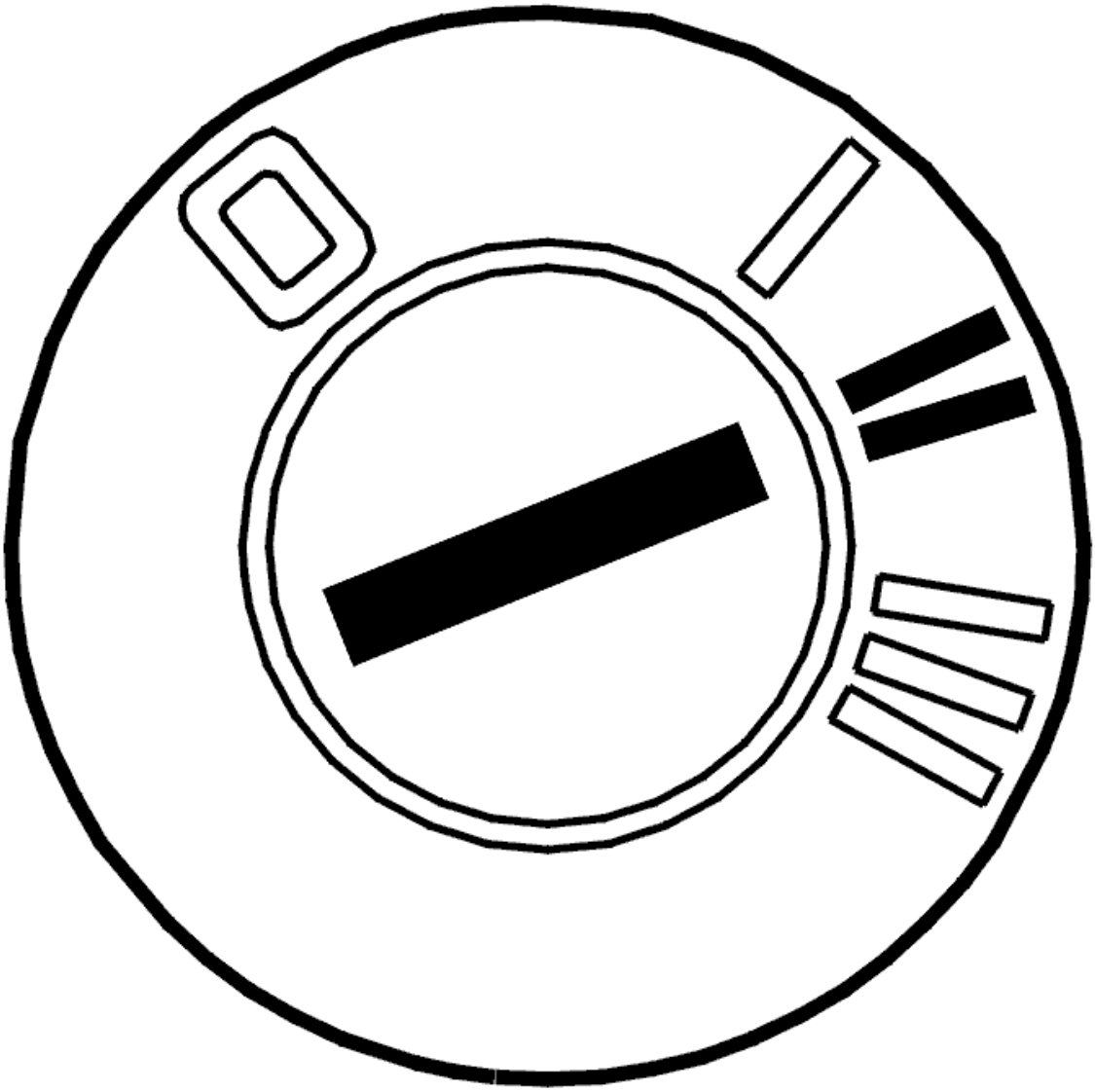

Fig. 24: Identifying Ignition ON
Courtesy of VOLVO CARS CORPORATION

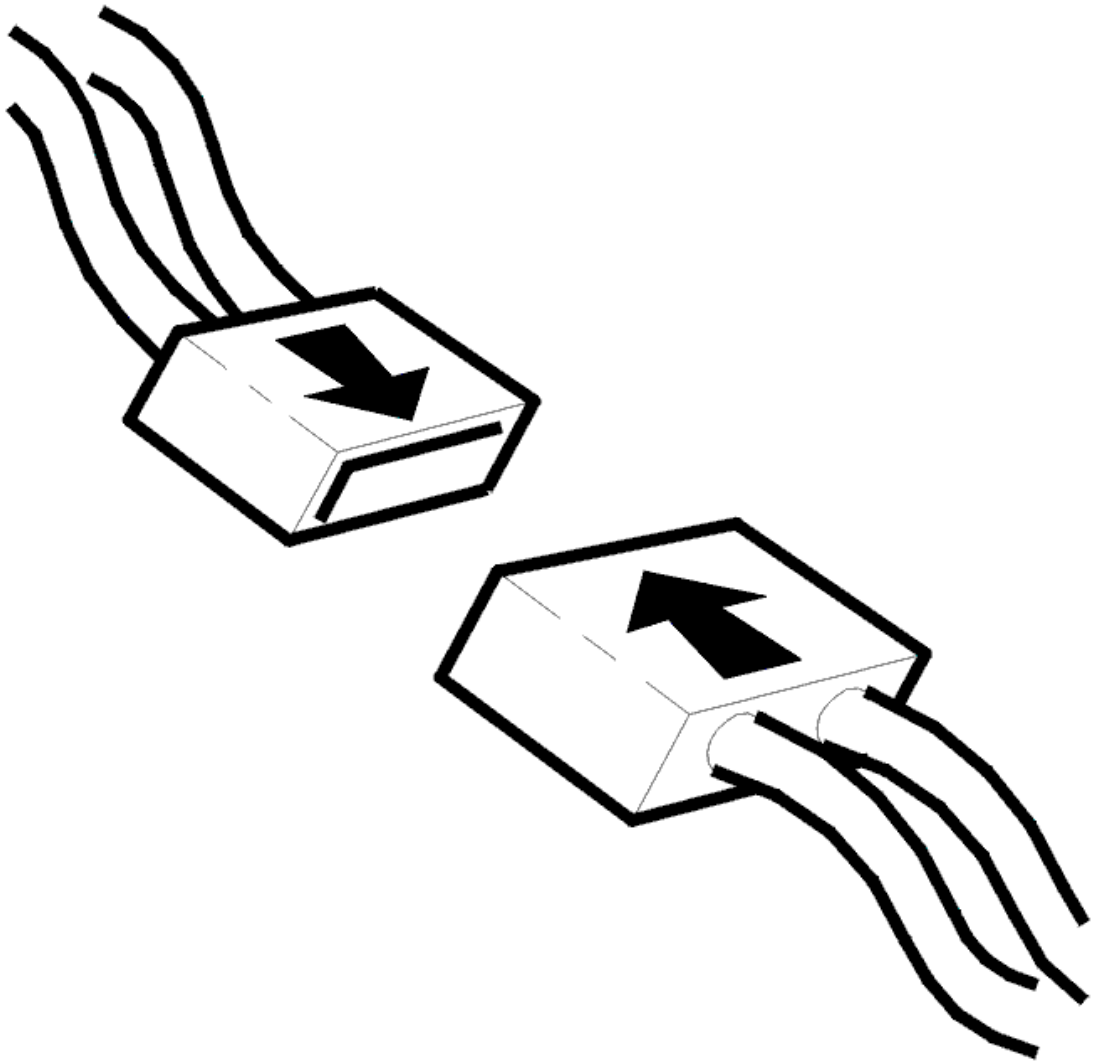

Fig. 25: Connecting Connector
Courtesy of VOLVO CARS CORPORATION

- Ignition off
- Reconnect the components, connectors etc.
- Ignition on.

  Check the function of the electric engine block heater.

Does the system function?

- **YES**

  VERIFIED: Troubleshooting has been completed.

- **NO**

  Refer to **INFORMATION**

INFORMATION

FAULT-TRACING INFORMATION

The fault should have been detected and remedied. As this is not the case fault-tracing has failed.

Exit fault-tracing for this diagnostic trouble code (DTC) or make another attempt.

AEM-6C50: ALARM OUTPUT P0. SIGNAL TOO LOW OR SIGNAL MISSING. INTERMITTENT FAULT (2003-2011)

DIAGNOSTIC TROUBLE CODE (DTC) INFORMATION AEM-6C50

Condition

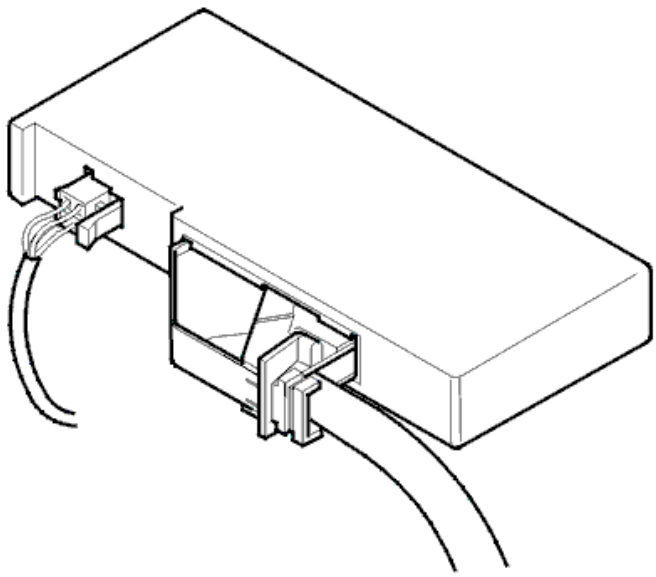

Fig. 26: Accessory Electronic Module
Courtesy of VOLVO CARS CORPORATION

The diagnostic trouble code (DTC) is stored if the control module registers that the signal is too low or there is an open-circuit in the signal cable for alarm output P0.

The diagnostic trouble code (DTC) can be diagnosed when the ignition is on and alarm output P0 is not activated.

Substitute Value

- None.

Possible Source

- Short-circuit to ground in the signal cable for alarm output P0
- Open-circuit in the signal cable for alarm output P0
- Damaged alarm.

Fault symptom[s]

- The alarm does not function at all.

SIGNAL TOO LOW OR SIGNAL MISSING

CHECKING COMPONENTS AND WIRING

Check the signal cable for alarm output P0. Check between accessory control module terminal #B15 and the alarm unit connector. Check for a short-circuit to ground. Check for an open-circuit.

Remedy as necessary.

Other information:

- To connect the breakout box, see **CONNECTING THE BREAKOUT BOX. ACCESSORY ELECTRONIC MODULE**
- To access or replace the Accessory Electronic Module (AEM) and connector, see **ACCESSORY ELECTRONIC MODULE (AEM), REPLACING**
- For information about signals, see **SIGNAL DESCRIPTION. ACCESSORY ELECTRONIC MODULE (AEM)**
- To fault-trace wiring and terminals, see **CHECKING WIRING AND TERMINALS**

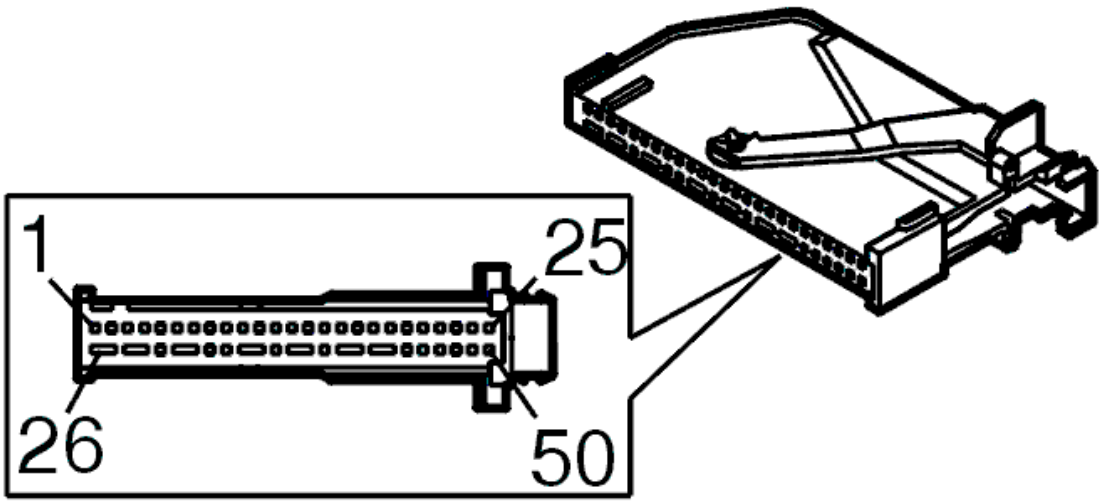

Fig. 27: Accessory Electronic Module Ground Terminals
Courtesy of VOLVO CARS CORPORATION

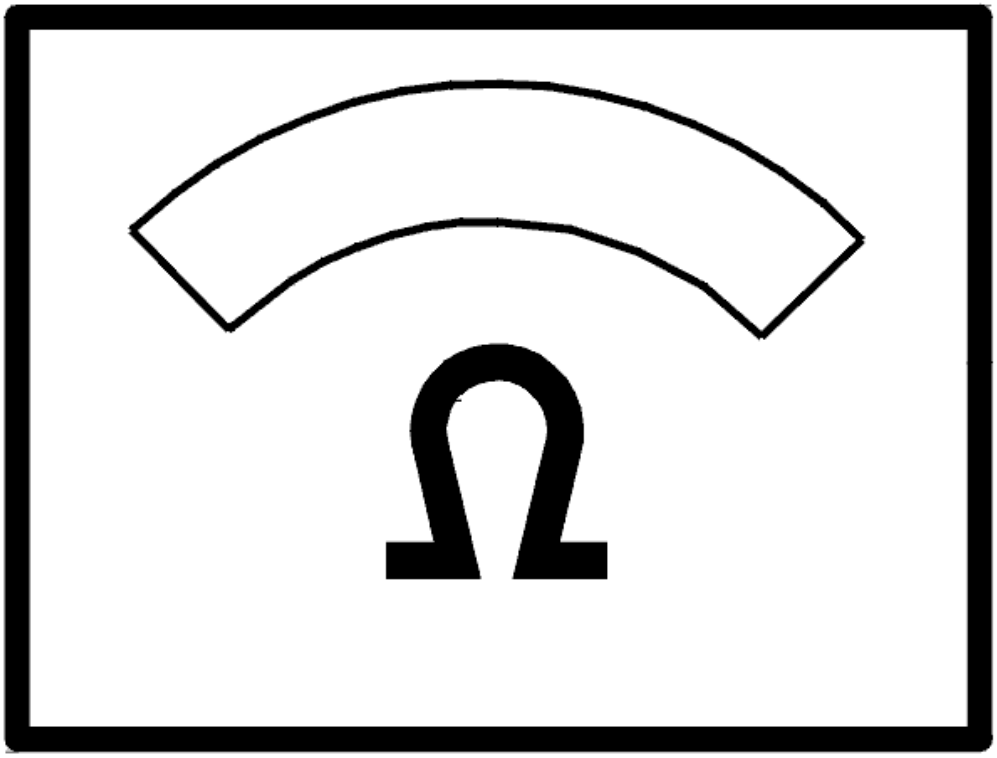

Fig. 28: Identifying Ohm Meter
Courtesy of VOLVO CARS CORPORATION

- **Continue**

  Refer to **VERIFICATION**

VERIFICATION

VERIFICATION

HINT: After carrying out the repair, check that the fault has been remedied.

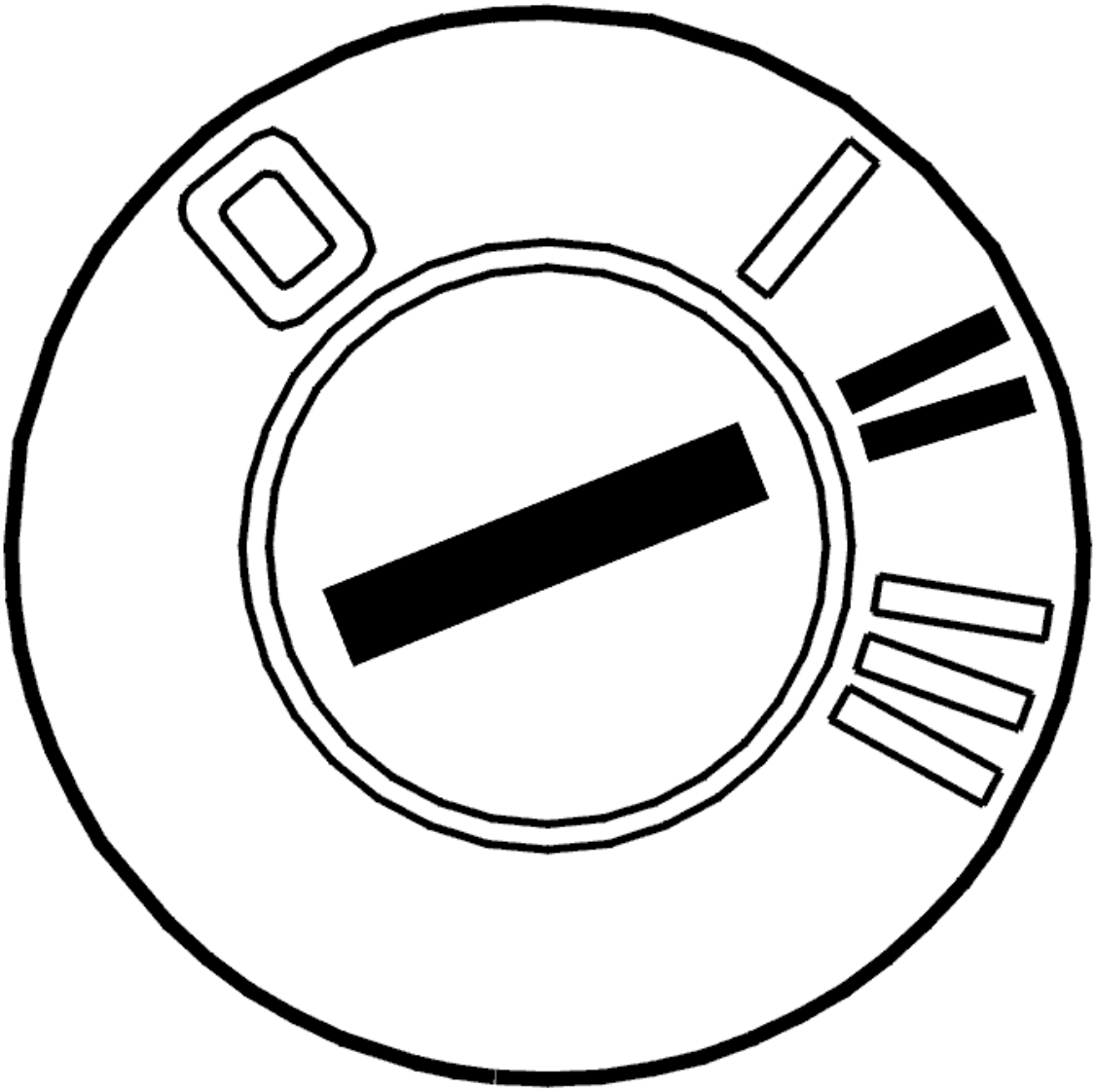

Fig. 29: Identifying Ignition ON
Courtesy of VOLVO CARS CORPORATION

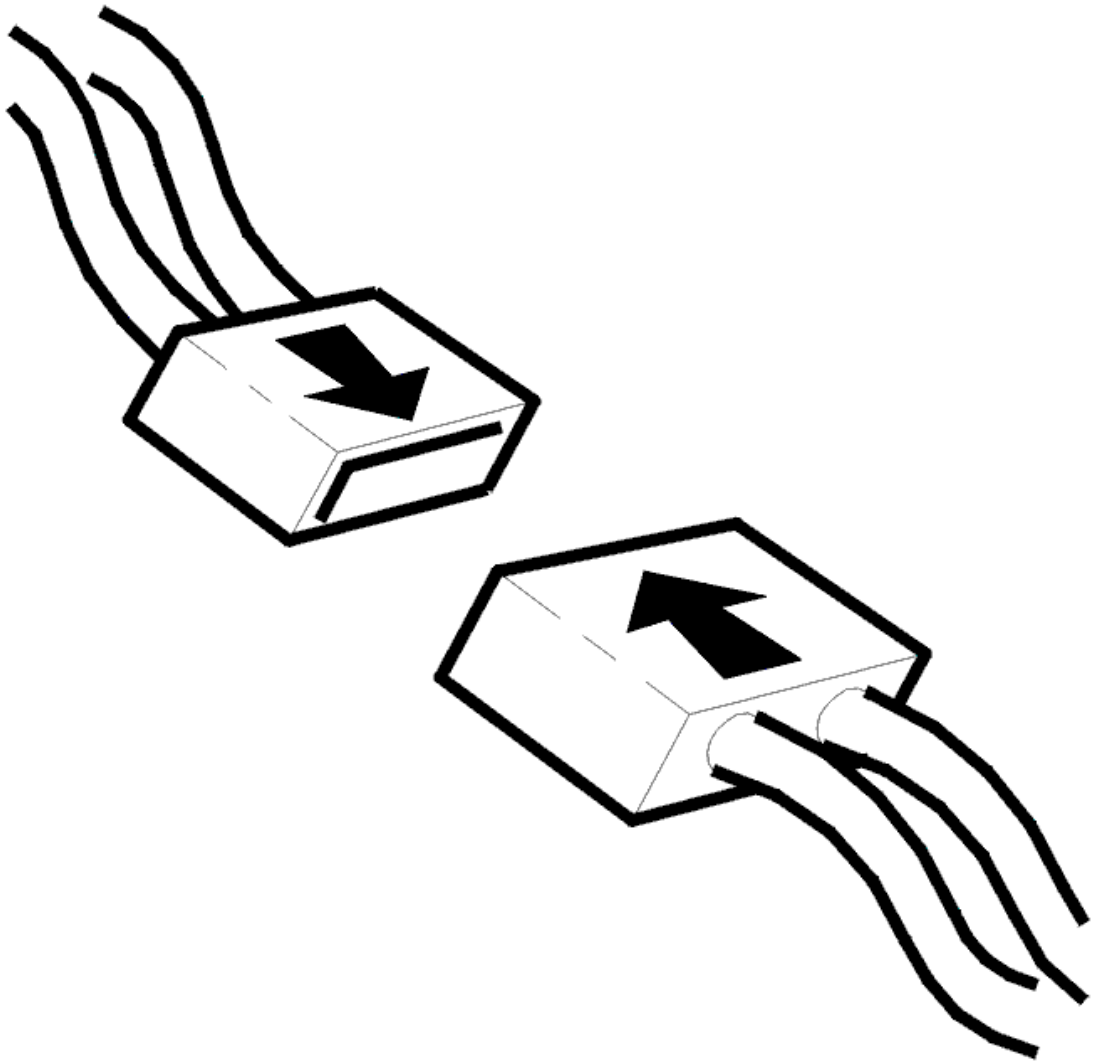

Fig. 30: Connecting Connector
Courtesy of VOLVO CARS CORPORATION

- Ignition off
- Reconnect the components, connectors etc.
- Ignition on.

  Check the function of the alarm by activating it appropriately.

Does the system function?

- **YES**

  VERIFIED: Troubleshooting has been completed.

- **NO**

  Refer to **INFORMATION**

INFORMATION

FAULT-TRACING INFORMATION

The fault should have been detected and remedied. As this is not the case fault-tracing has failed.

Exit fault-tracing for this diagnostic trouble code (DTC) or make another attempt.

AEM-6C51: ALARM OUTPUT P0. SIGNAL TOO HIGH. INTERMITTENT FAULT (2003-2011)

DIAGNOSTIC TROUBLE CODE (DTC) INFORMATION AEM-6C51

Condition

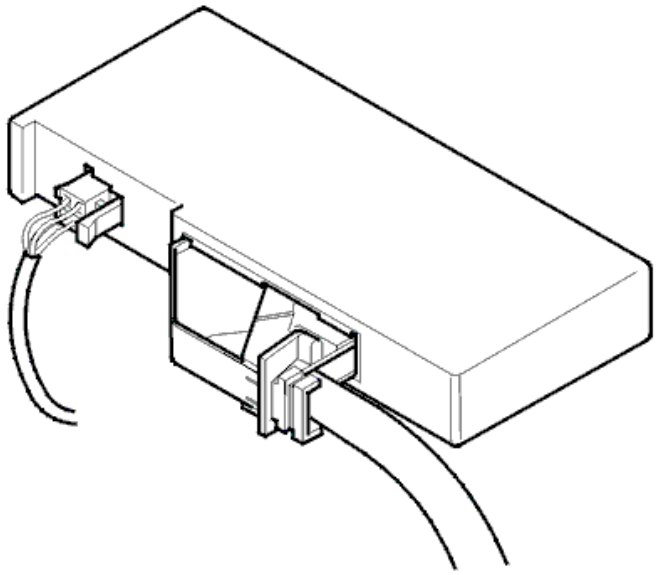

Fig. 31: Accessory Electronic Module
Courtesy of VOLVO CARS CORPORATION

The diagnostic trouble code (DTC) is stored if the control module registers that the signal is too high on the signal cable for alarm output P0.

The diagnostic trouble code (DTC) can be diagnosed when the ignition is on and alarm output P0 is activated.

Substitute Value

- None.

Possible Source

- Short-circuit to supply voltage in the signal cable for alarm output P0
- Damaged alarm.

Fault symptom[s]

- The alarm does not function at all.

SIGNAL TOO HIGH

CHECKING COMPONENTS AND WIRING

Check the signal cable for alarm output P0. Check between accessory control module terminal #B15 and the alarm unit connector. Check for a short-circuit to supply voltage.

Remedy as necessary.

Other information:

- To connect the breakout box, see **CONNECTING THE BREAKOUT BOX. ACCESSORY ELECTRONIC MODULE**
- To access or replace the Accessory Electronic Module (AEM) and connector, see **ACCESSORY ELECTRONIC MODULE (AEM), REPLACING**
- For information about signals, see **SIGNAL DESCRIPTION. ACCESSORY ELECTRONIC MODULE (AEM)**
- To fault-trace wiring and terminals, see **CHECKING WIRING AND TERMINALS**

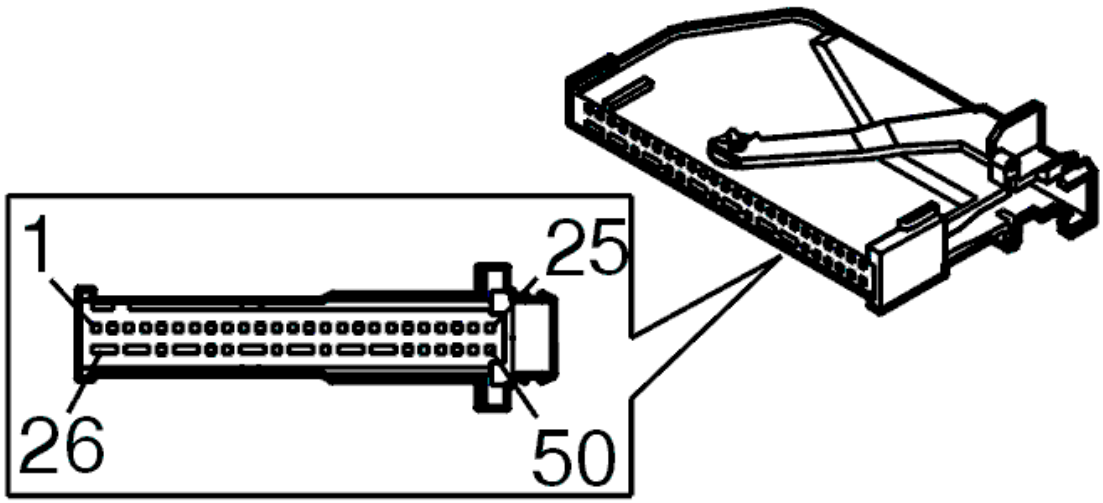

Fig. 32: Accessory Electronic Module Ground Terminals

Courtesy of VOLVO CARS CORPORATION

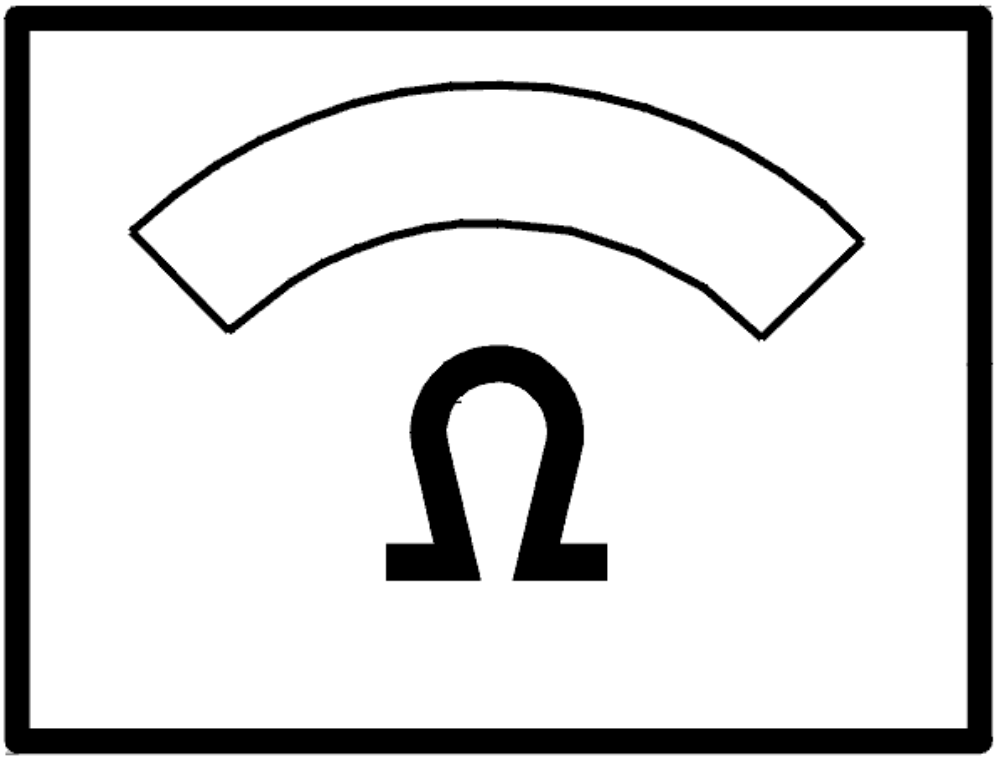

Fig. 33: Identifying Ohm Meter
Courtesy of VOLVO CARS CORPORATION

- **Continue**

  Refer to **VERIFICATION**

VERIFICATION

VERIFICATION

HINT: After carrying out the repair, check that the fault has been remedied.

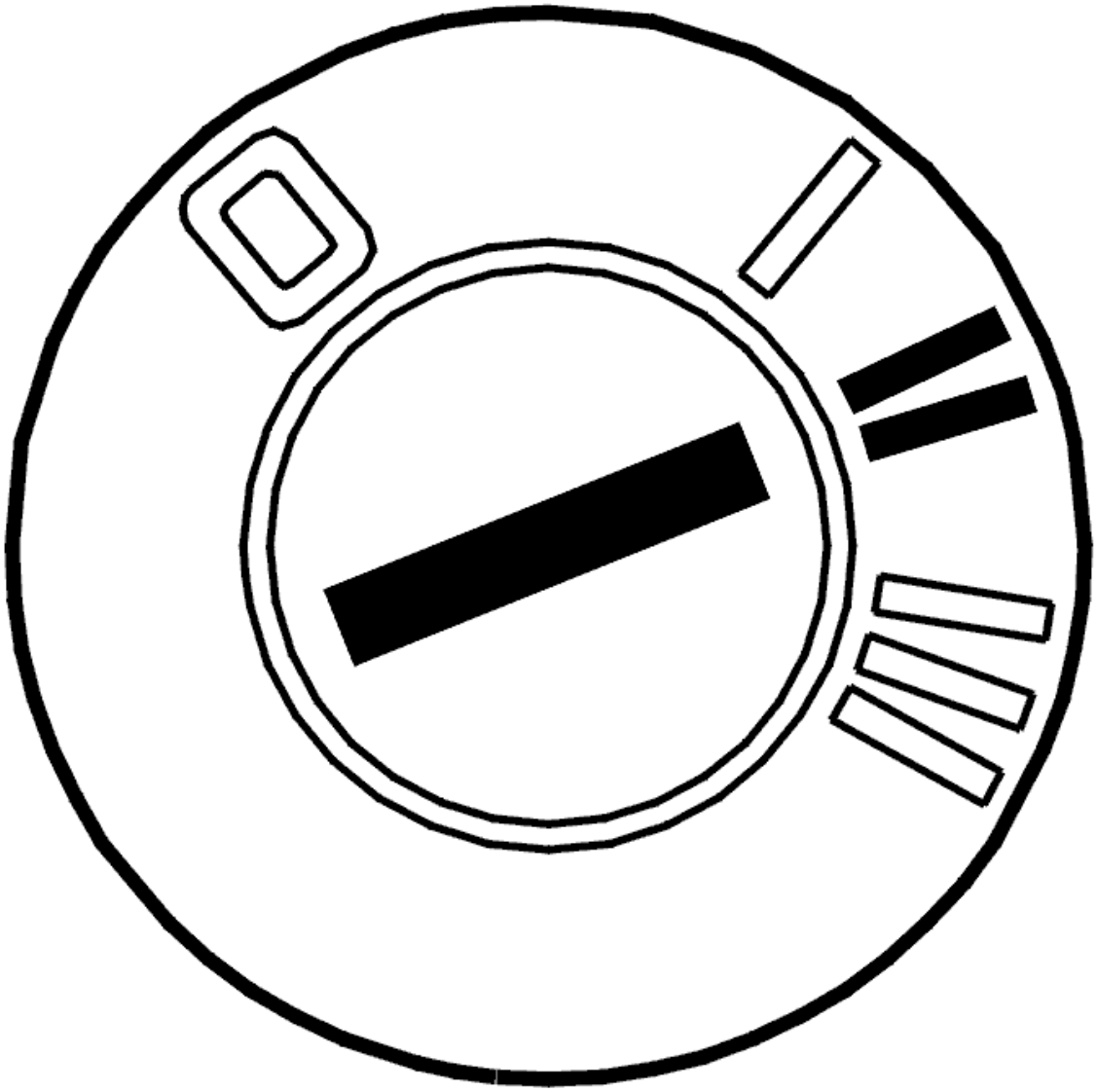

Fig. 34: Identifying Ignition ON
Courtesy of VOLVO CARS CORPORATION

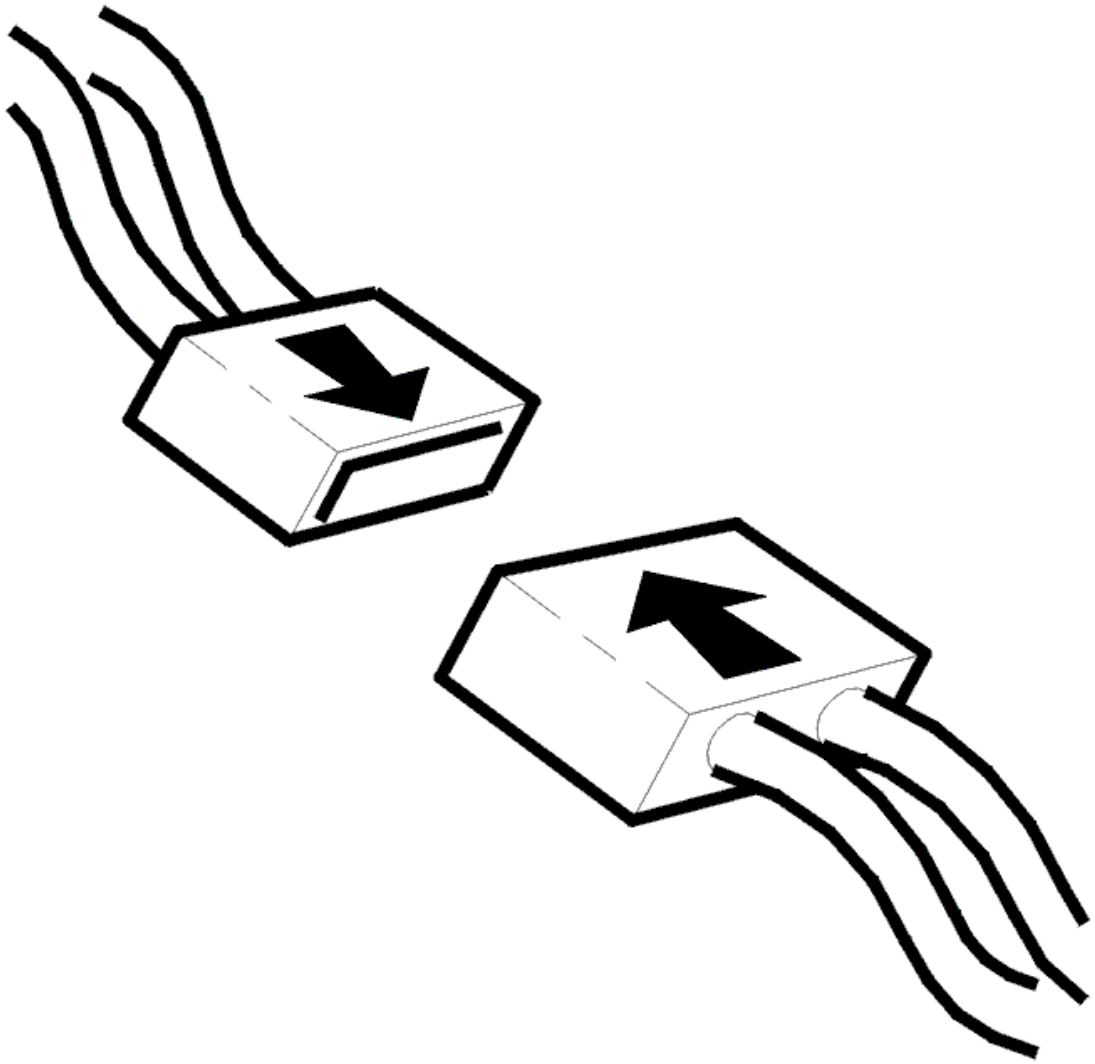

Fig. 35: Connecting Connector
Courtesy of VOLVO CARS CORPORATION

- Ignition off
- Reconnect the components, connectors etc.
- Ignition on.

  Check the function of the alarm by activating it appropriately.

Does the system function?

- **YES**

  VERIFIED: Troubleshooting has been completed.

- **NO**

  Refer to **INFORMATION**

INFORMATION

FAULT-TRACING INFORMATION

The fault should have been detected and remedied. As this is not the case fault-tracing has failed.

Exit fault-tracing for this diagnostic trouble code (DTC) or make another attempt.

AEM-6C52: ALARM OUTPUT P1. SIGNAL TOO LOW OR SIGNAL MISSING. INTERMITTENT FAULT (2003-2011)

DIAGNOSTIC TROUBLE CODE (DTC) INFORMATION AEM-6C52

Condition

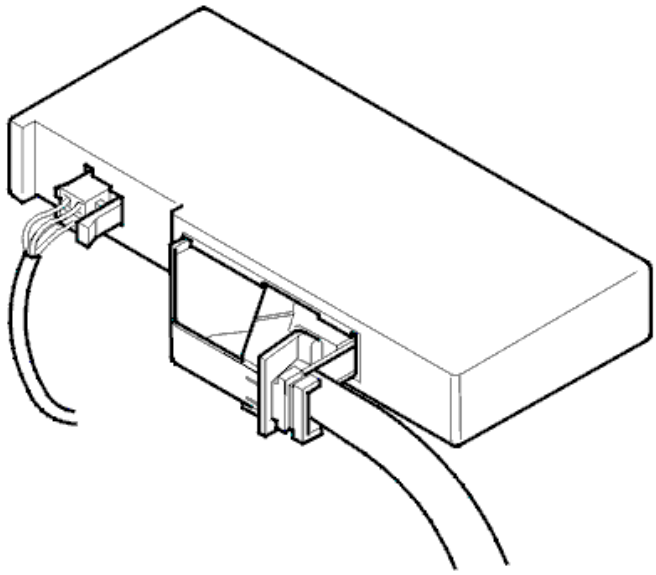

Fig. 36: Accessory Electronic Module
Courtesy of VOLVO CARS CORPORATION

The diagnostic trouble code (DTC) is stored if the control module registers that the signal is too low or there is an open-circuit in the signal cable for alarm output P1.

The diagnostic trouble code (DTC) can be diagnosed when the ignition is on and alarm output P1 is not activated.

Substitute Value

- None.

Possible Source

- Short-circuit to ground in the signal cable for alarm output P1
- Open-circuit in the signal cable for alarm output P1
- Damaged alarm.

Fault symptom[s]

- The alarm does not function at all.

SIGNAL TOO LOW OR SIGNAL MISSING

CHECKING COMPONENTS AND WIRING

Check the signal cable for alarm output P1. Check between accessory control module terminal #B16 and the alarm unit connector. Check for a short-circuit to ground. Check for an open-circuit.

Remedy as necessary.

Other information:

- To connect the breakout box, see **CONNECTING THE BREAKOUT BOX. ACCESSORY ELECTRONIC MODULE**
- To access or replace the Accessory Electronic Module (AEM) and connector, see **ACCESSORY ELECTRONIC MODULE (AEM), REPLACING**
- For information about signals, see **SIGNAL DESCRIPTION. ACCESSORY ELECTRONIC MODULE (AEM)**
- To fault-trace wiring and terminals, see **CHECKING WIRING AND TERMINALS**

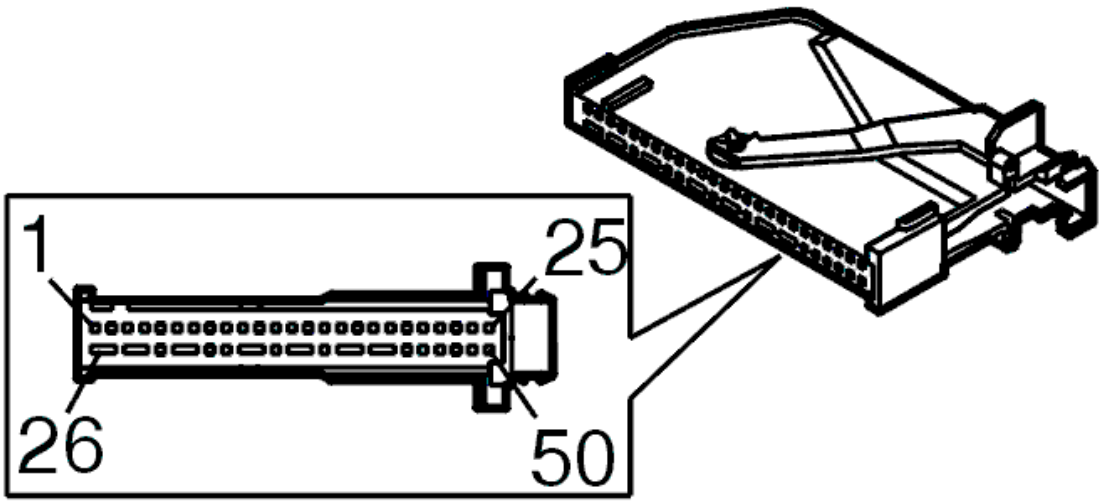

Fig. 37: Accessory Electronic Module Ground Terminals
Courtesy of VOLVO CARS CORPORATION

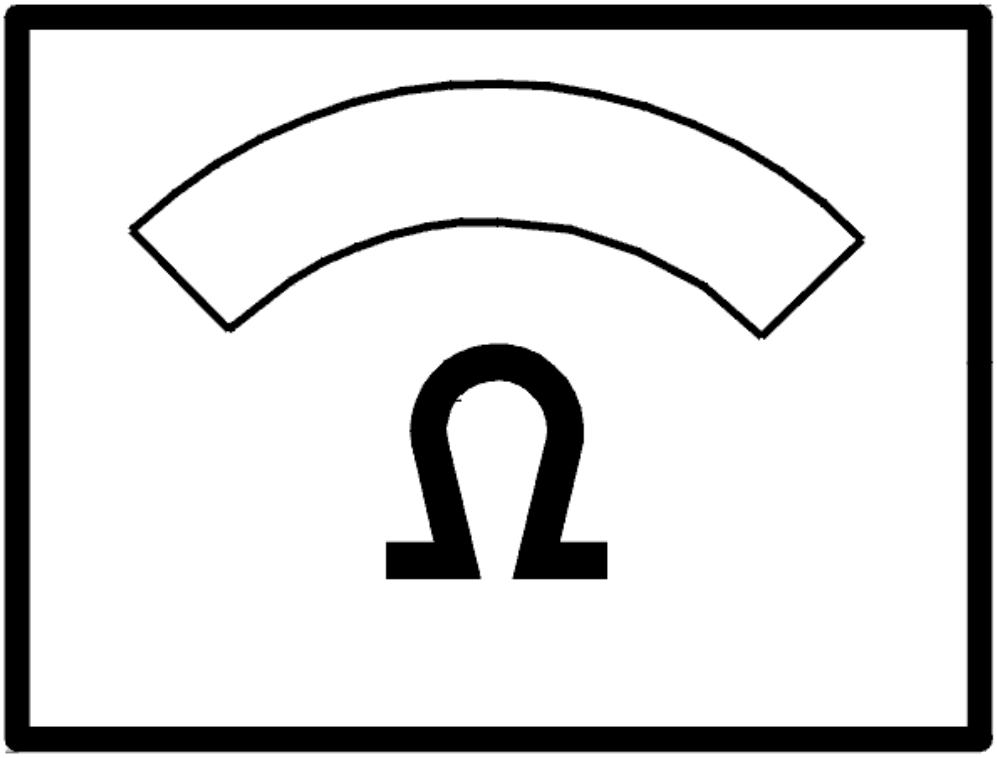

Fig. 38: Identifying Ohm Meter
Courtesy of VOLVO CARS CORPORATION

- **Continue**

  Refer to **VERIFICATION**

VERIFICATION

VERIFICATION

HINT: After carrying out the repair, check that the fault has been remedied.

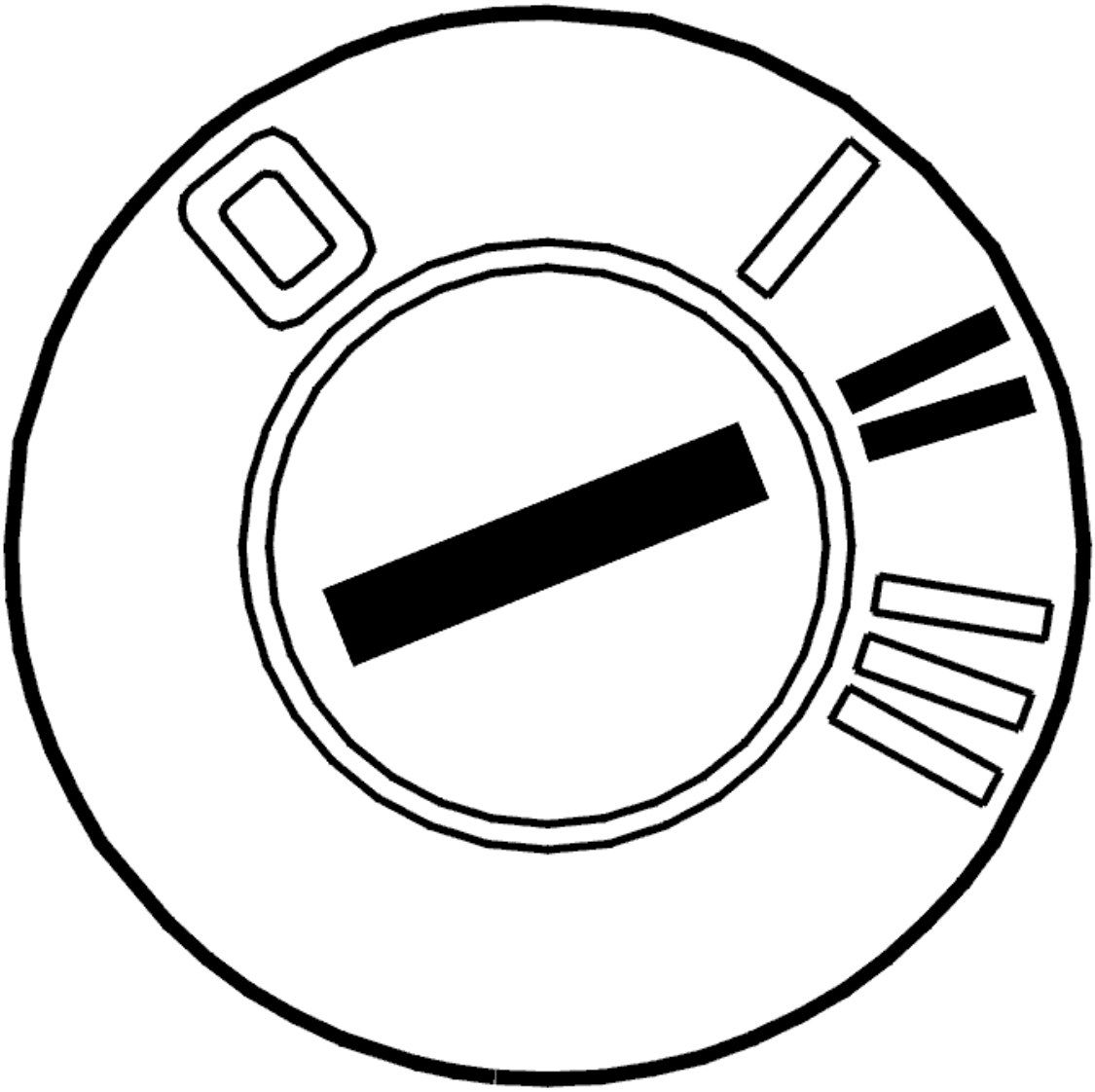

Fig. 39: Identifying Ignition ON
Courtesy of VOLVO CARS CORPORATION

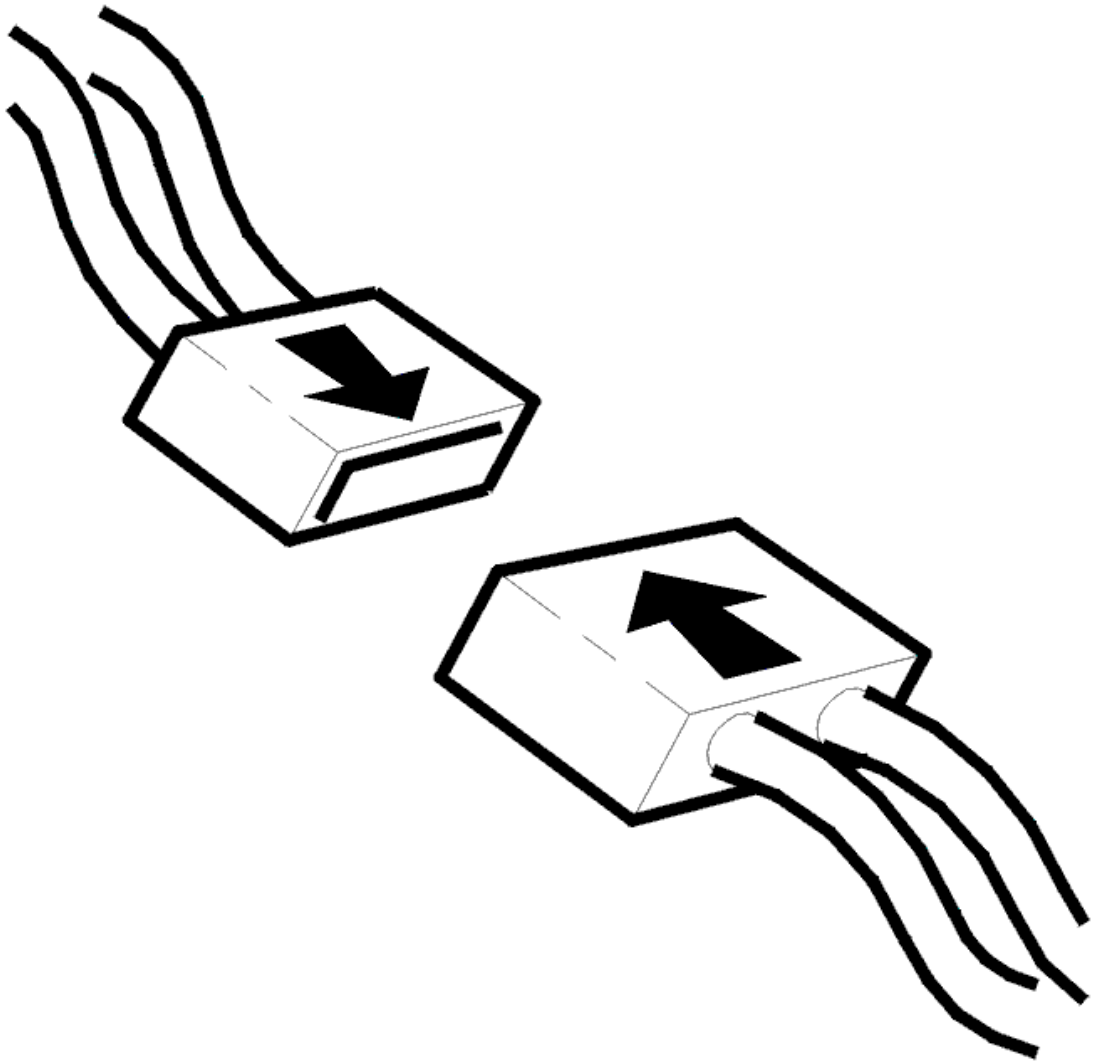

Fig. 40: Connecting Connector
Courtesy of VOLVO CARS CORPORATION

- Ignition off
- Reconnect the components, connectors etc.
- Ignition on.

  Check the function of the alarm by activating it appropriately.

Does the system function?

- **YES**

  VERIFIED: Troubleshooting has been completed.

- **NO**

  Refer to **INFORMATION**

INFORMATION

FAULT-TRACING INFORMATION

The fault should have been detected and remedied. As this is not the case fault-tracing has failed.

Exit fault-tracing for this diagnostic trouble code (DTC) or make another attempt.

AEM-6C53: ALARM OUTPUT P1. SIGNAL TOO HIGH. INTERMITTENT FAULT (2003-2011)

DIAGNOSTIC TROUBLE CODE (DTC) INFORMATION AEM-6C53

Condition

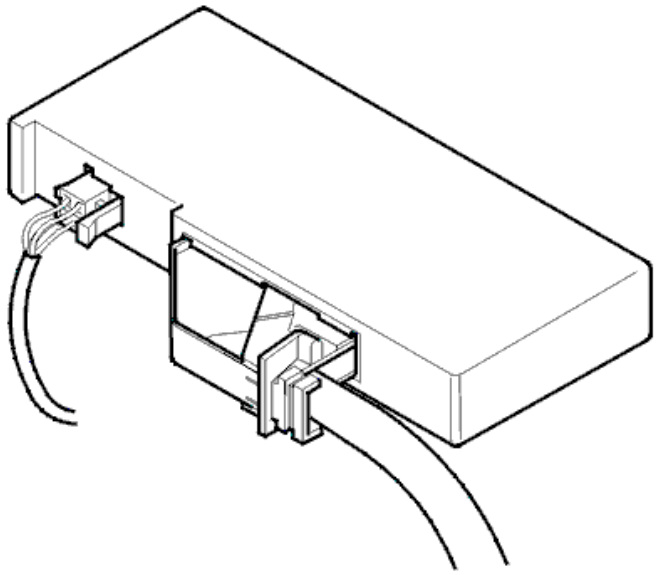

Fig. 41: Accessory Electronic Module
Courtesy of VOLVO CARS CORPORATION

The diagnostic trouble code (DTC) is stored if the control module registers that the signal is too high on the signal cable for alarm output P1.

The diagnostic trouble code (DTC) can be diagnosed when the ignition is on and alarm output P1 is activated.

Substitute Value

- None.

Possible Source

- Short-circuit to supply voltage in the signal cable for alarm output P1
- Damaged alarm.

Fault symptom[s]

- The alarm does not function at all.

SIGNAL TOO HIGH

CHECKING COMPONENTS AND WIRING

Check the signal cable for alarm output P1. Check between accessory control module terminal #B16 and the alarm unit connector. Check for a short-circuit to supply voltage.

Remedy as necessary.

Other information:

- To connect the breakout box, see **CONNECTING THE BREAKOUT BOX. ACCESSORY ELECTRONIC MODULE**
- To access or replace the Accessory Electronic Module (AEM) and connector, see **ACCESSORY ELECTRONIC MODULE (AEM), REPLACING**
- For information about signals, see **SIGNAL DESCRIPTION. ACCESSORY ELECTRONIC MODULE (AEM)**
- To fault-trace wiring and terminals, see **CHECKING WIRING AND TERMINALS**

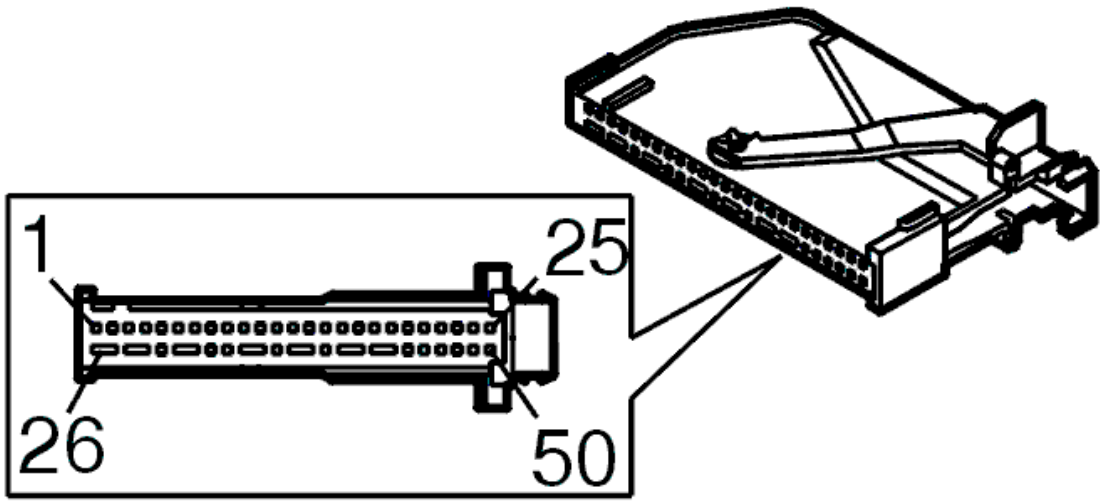

Fig. 42: Accessory Electronic Module Ground Terminals

Courtesy of VOLVO CARS CORPORATION

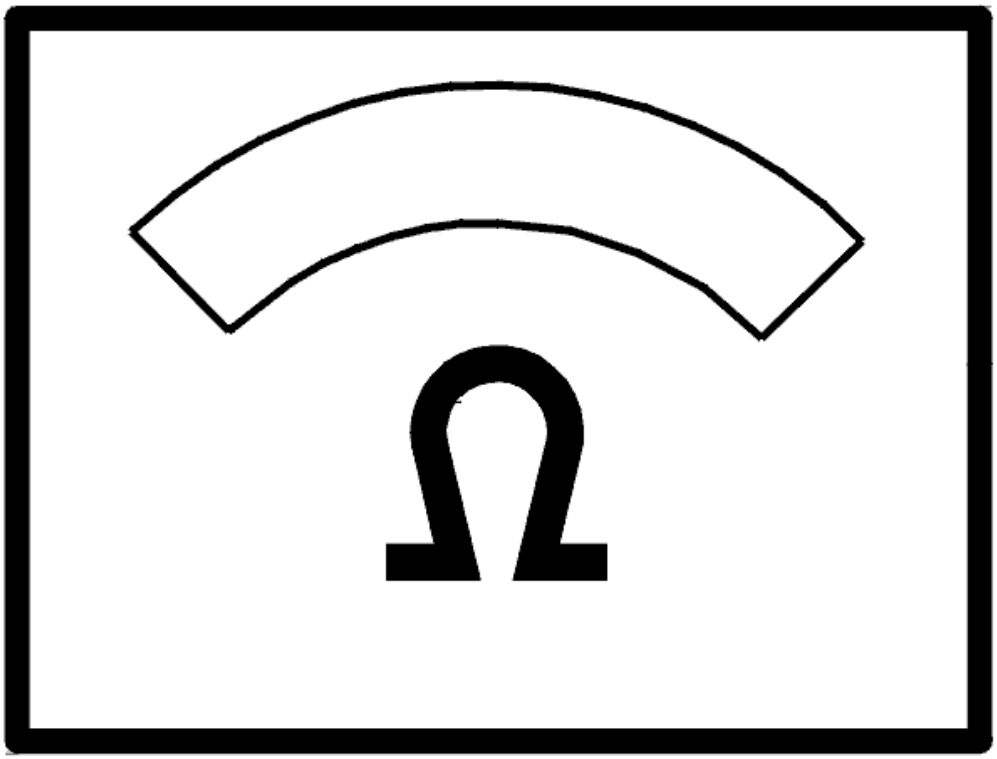

Fig. 43: Identifying Ohm Meter
Courtesy of VOLVO CARS CORPORATION

- **Continue**

  Refer to **VERIFICATION**

VERIFICATION

VERIFICATION

HINT: After carrying out the repair, check that the fault has been remedied.

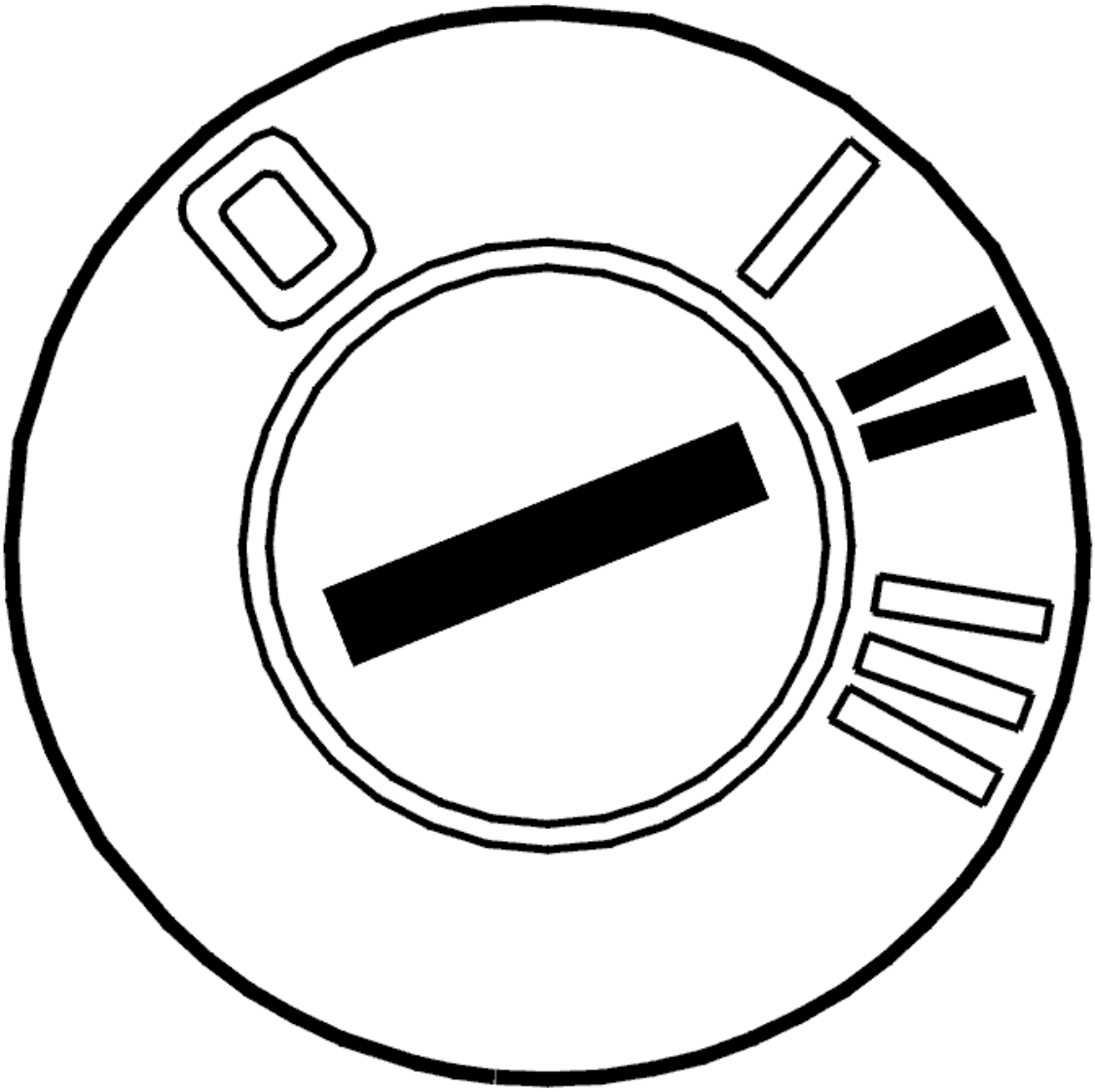

Fig. 44: Identifying Ignition ON
Courtesy of VOLVO CARS CORPORATION

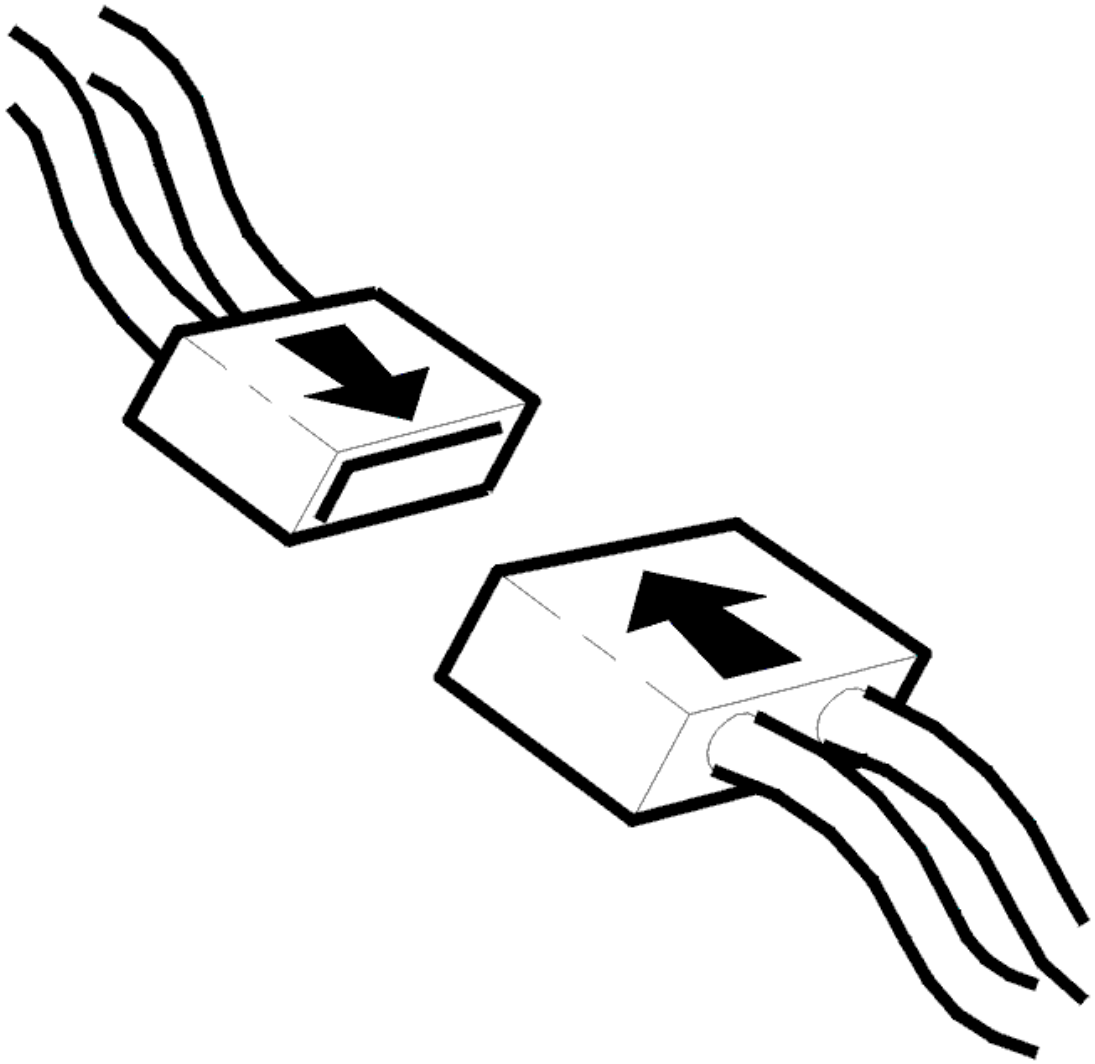

Fig. 45: Connecting Connector
Courtesy of VOLVO CARS CORPORATION

- Ignition off
- Reconnect the components, connectors etc.
- Ignition on.

  Check the function of the alarm by activating it appropriately.

Does the system function?

- **YES**

  VERIFIED: Troubleshooting has been completed.

- **NO**

  Refer to **INFORMATION**

INFORMATION

FAULT-TRACING INFORMATION

The fault should have been detected and remedied. As this is not the case fault-tracing has failed.

Exit fault-tracing for this diagnostic trouble code (DTC) or make another attempt.

AEM-6C54: ALARM OUTPUT S0. SIGNAL TOO LOW OR SIGNAL MISSING. INTERMITTENT FAULT (2003-2011)

DIAGNOSTIC TROUBLE CODE (DTC) INFORMATION AEM-6C54

Condition

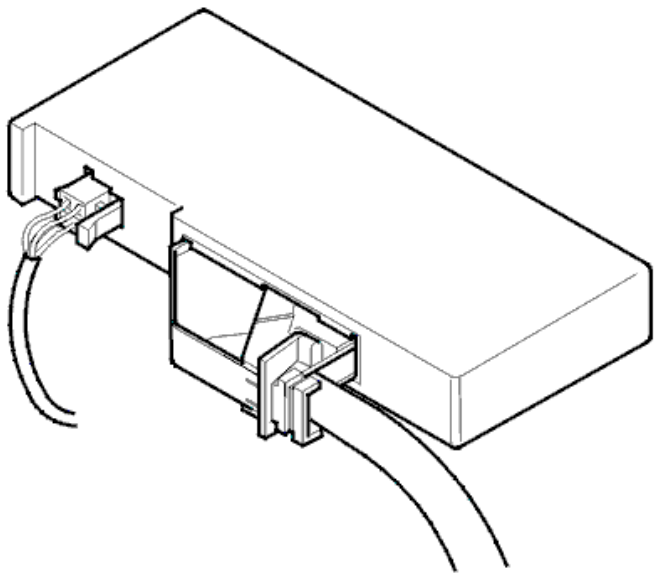

Fig. 46: Accessory Electronic Module
Courtesy of VOLVO CARS CORPORATION

The diagnostic trouble code (DTC) is stored if the control module registers that the signal is too low or there is an open-circuit in the signal cable for alarm output S0.

The diagnostic trouble code (DTC) can be diagnosed when the ignition is on and alarm output S0 is not activated.

Substitute Value

- None.

Possible Source

- Short-circuit to ground in signal cable alarm output S0
- Open-circuit in signal cable alarm output S0
- Damaged alarm.

Fault symptom[s]

- The alarm does not function at all.

SIGNAL TOO LOW OR SIGNAL MISSING

CHECKING COMPONENTS AND WIRING

Check the signal cable for the alarm output S0. Check between accessory control module terminal #B33 and the alarm unit connector. Check for a short-circuit to ground. Check for an open-circuit.

Remedy as necessary.

Other information:

- To connect the breakout box, see **CONNECTING THE BREAKOUT BOX. ACCESSORY ELECTRONIC MODULE**
- To access or replace the Accessory Electronic Module (AEM) and connector, see **ACCESSORY ELECTRONIC MODULE (AEM), REPLACING**
- For information about signals, see **SIGNAL DESCRIPTION. ACCESSORY ELECTRONIC MODULE (AEM)**
- To fault-trace wiring and terminals, see **CHECKING WIRING AND TERMINALS**

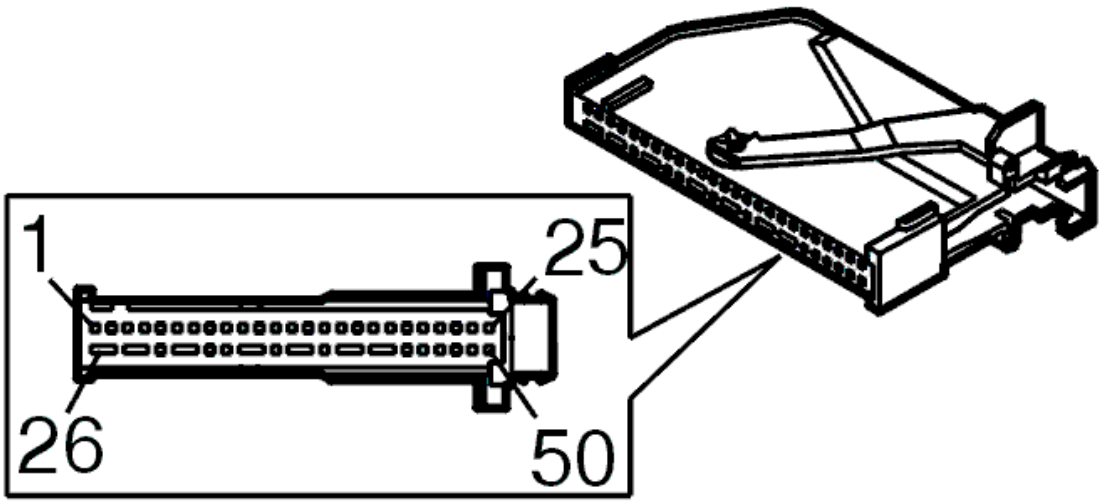

Fig. 47: Accessory Electronic Module Ground Terminals
Courtesy of VOLVO CARS CORPORATION

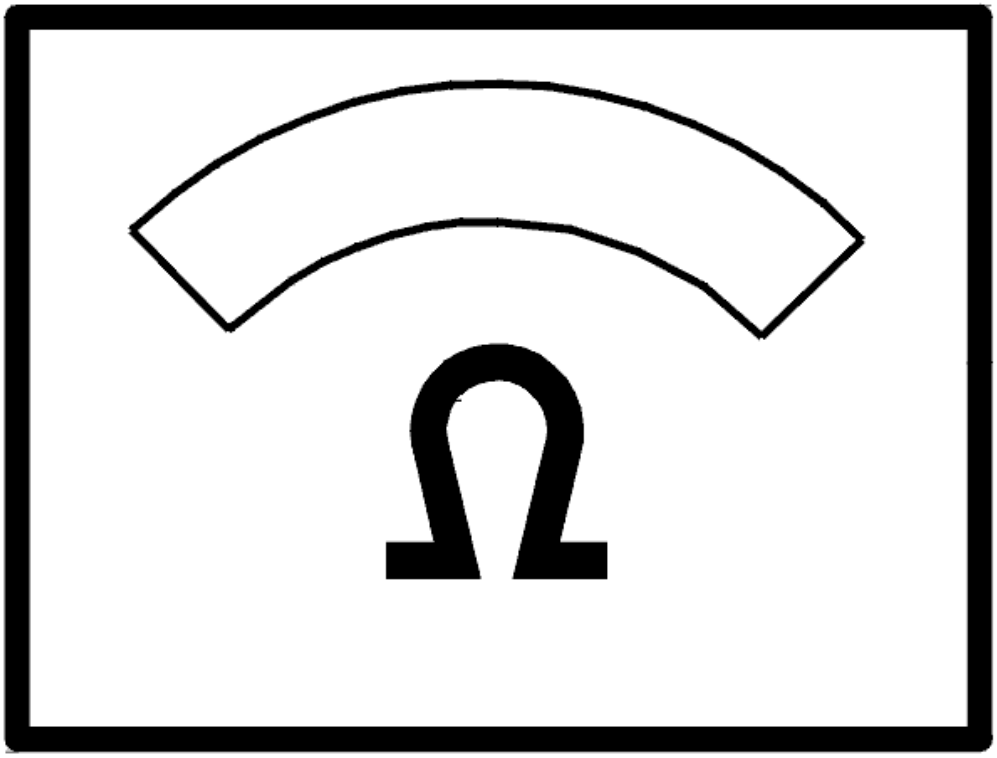

Fig. 48: Identifying Ohm Meter
Courtesy of VOLVO CARS CORPORATION

- **Continue**

  Refer to **VERIFICATION**

VERIFICATION

HINT: After carrying out the repair, check that the fault has been remedied.

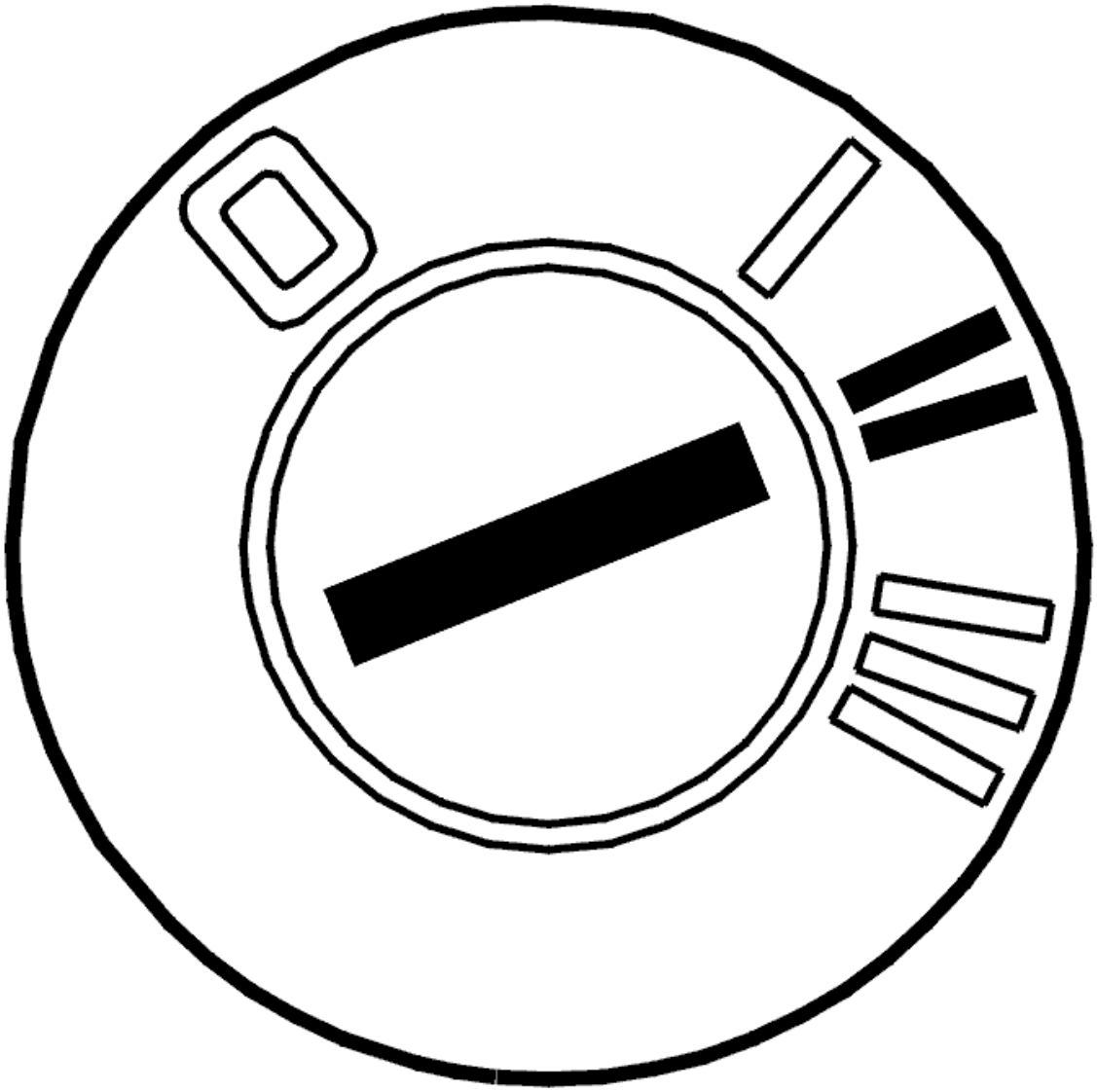

Fig. 49: Identifying Ignition ON
Courtesy of VOLVO CARS CORPORATION

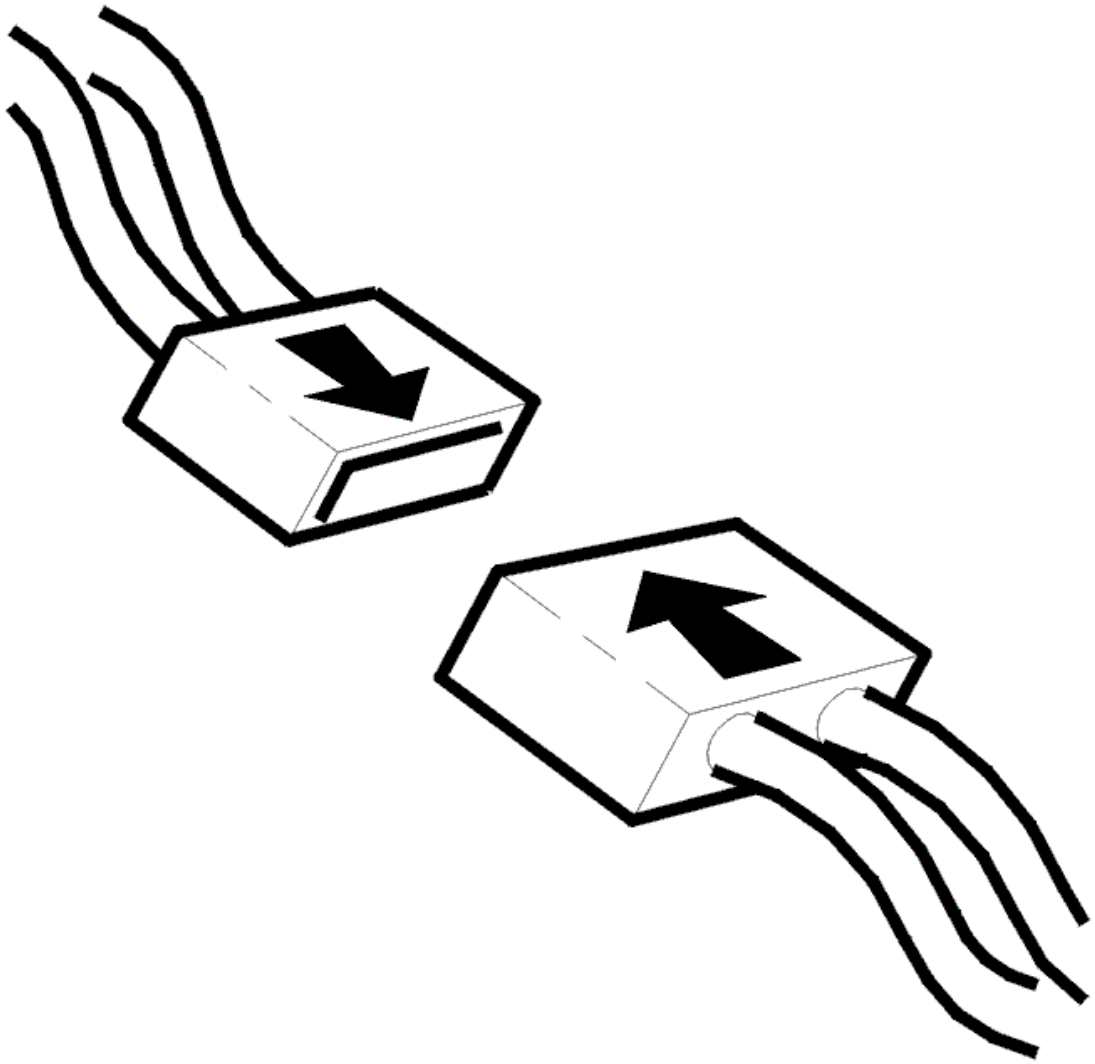

Fig. 50: Connecting Connector
Courtesy of VOLVO CARS CORPORATION

- Ignition off
- Reconnect the components, connectors etc.
- Ignition on.

  Check the function of the alarm by activating it appropriately.

Does the system function?

- **YES**

  VERIFIED: Troubleshooting has been completed.

- **NO**

  Refer to **INFORMATION**

INFORMATION

FAULT-TRACING INFORMATION

The fault should have been detected and remedied. As this is not the case fault-tracing has failed.

Exit fault-tracing for this diagnostic trouble code (DTC) or make another attempt.

AEM-6C55: ALARM OUTPUT S0. SIGNAL TOO HIGH. INTERMITTENT FAULT (2003-2011)

DIAGNOSTIC TROUBLE CODE (DTC) INFORMATION AEM-6C55

Condition

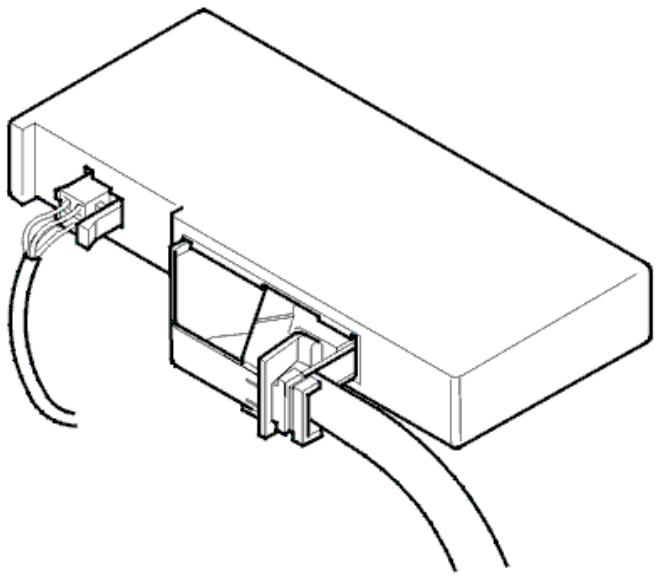

Fig. 51: Accessory Electronic Module
Courtesy of VOLVO CARS CORPORATION

The diagnostic trouble code (DTC) is stored if the control module registers that the signal is too high on the signal cable for alarm output S0.

The diagnostic trouble code (DTC) can be diagnosed when the ignition is switched on and alarm output S0 is activated.

Substitute Value

- None.

Possible Source

- Short-circuit to supply voltage in signal cable alarm output S0
- Damaged alarm.

Fault symptom[s]

- The alarm does not function at all.

SIGNAL TOO HIGH

CHECKING COMPONENTS AND WIRING

Check the signal cable for alarm output S0. Check between the accessory control module terminal #B33 and the alarm unit connector. Check for a short-circuit to supply voltage.

Remedy as necessary.

Other information:

- To connect the breakout box, see **CONNECTING THE BREAKOUT BOX. ACCESSORY ELECTRONIC MODULE**
- To access or replace the Accessory Electronic Module (AEM) and connector, see **ACCESSORY ELECTRONIC MODULE (AEM), REPLACING**
- For information about signals, see **SIGNAL DESCRIPTION. ACCESSORY ELECTRONIC MODULE (AEM)**
- To fault-trace wiring and terminals, see **CHECKING WIRING AND TERMINALS**

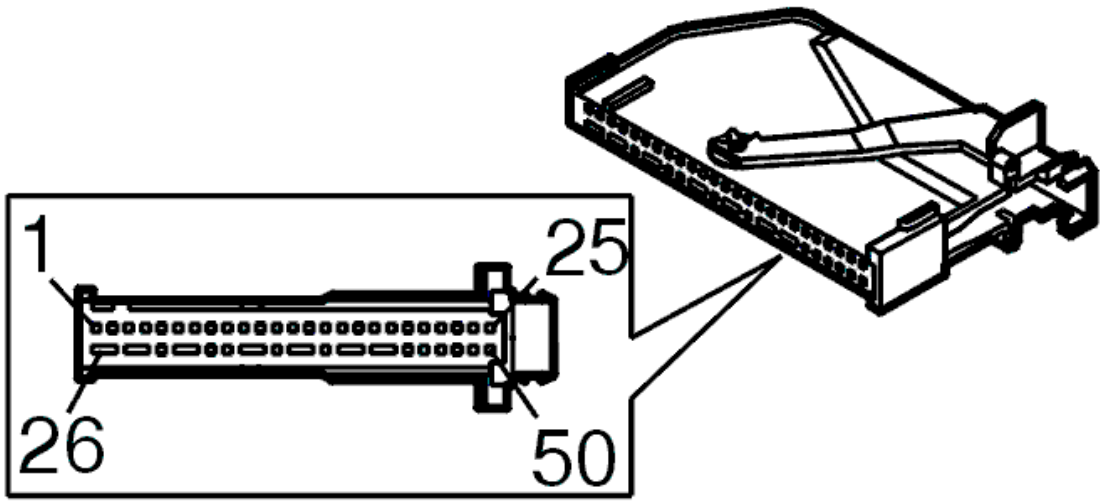

Fig. 52: Accessory Electronic Module Ground Terminals

Courtesy of VOLVO CARS CORPORATION

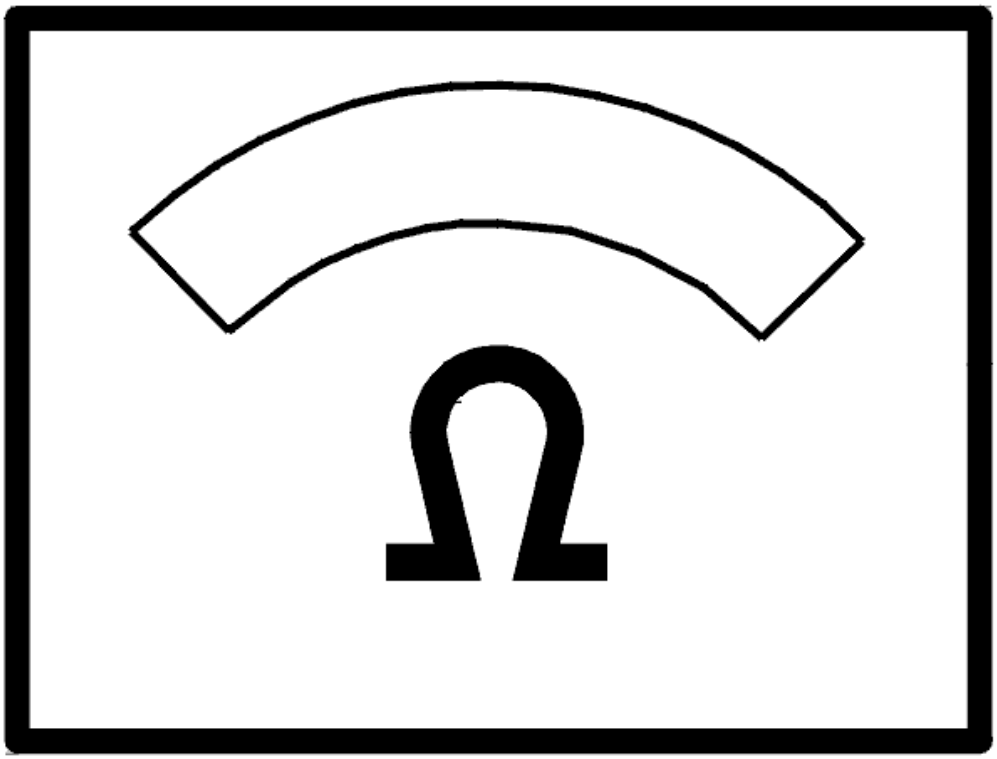

Fig. 53: Identifying Ohm Meter
Courtesy of VOLVO CARS CORPORATION

- **Continue**

  Refer to **VERIFICATION**

VERIFICATION

VERIFICATION

HINT: After carrying out the repair, check that the fault has been remedied.

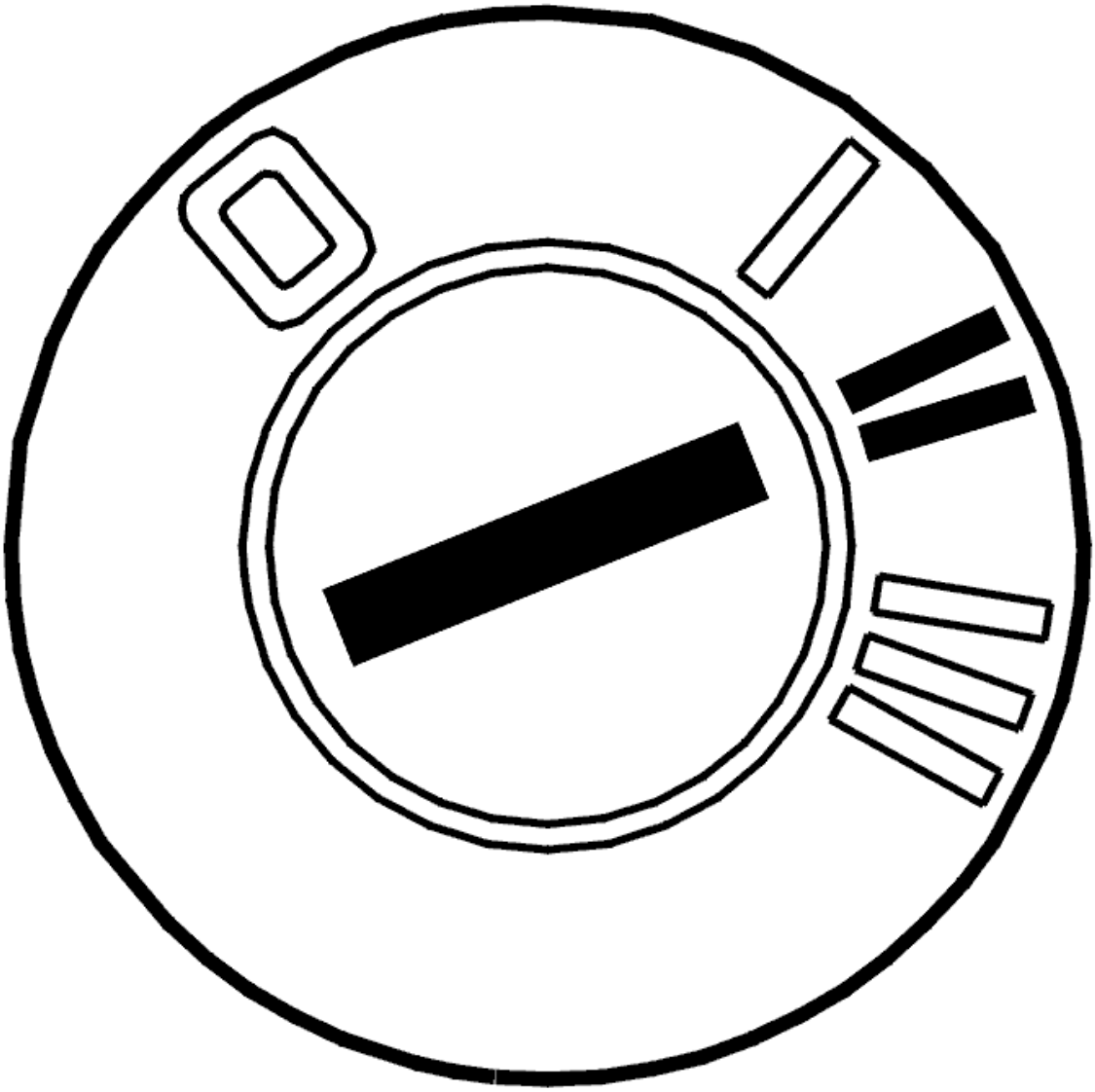

Fig. 54: Identifying Ignition ON
Courtesy of VOLVO CARS CORPORATION

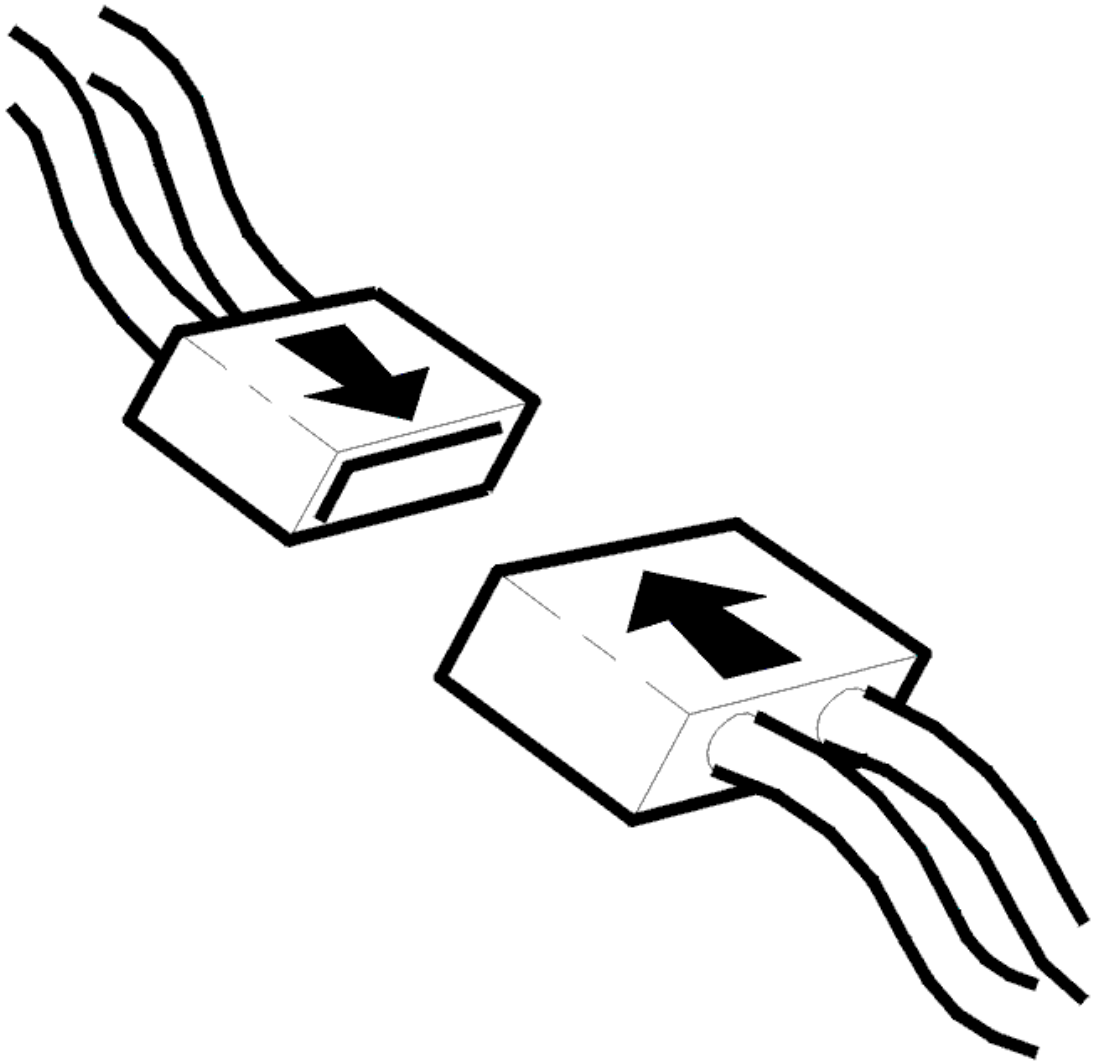

Fig. 55: Connecting Connector
Courtesy of VOLVO CARS CORPORATION

- Ignition off
- Reconnect the components, connectors etc.
- Ignition on.

  Check the function of the alarm by activating it appropriately.

Does the system function?

- **YES**

  VERIFIED: Troubleshooting has been completed.

- **NO**

  Refer to **INFORMATION**

INFORMATION

FAULT-TRACING INFORMATION

The fault should have been detected and remedied. As this is not the case fault-tracing has failed.

Exit fault-tracing for this diagnostic trouble code (DTC) or make another attempt.

AEM-6C56: ALARM OUTPUT S1. SIGNAL TOO LOW. INTERMITTENT FAULT (2003-2011)

DIAGNOSTIC TROUBLE CODE (DTC) INFORMATION AEM-6C56

Condition

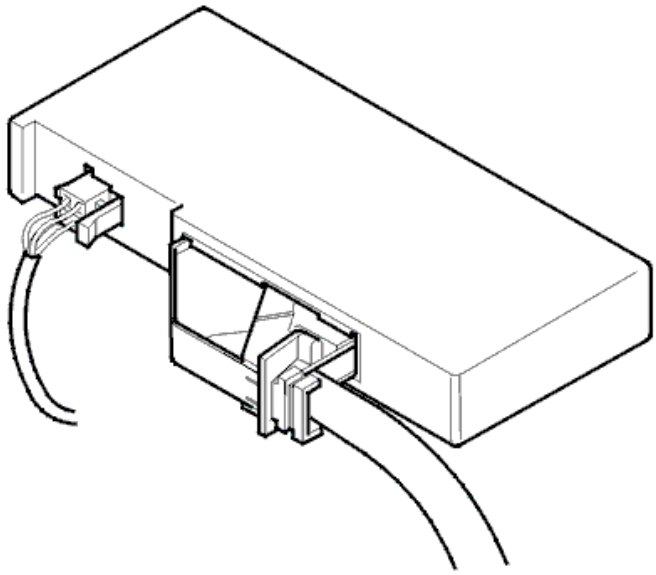

Fig. 56: Accessory Electronic Module
Courtesy of VOLVO CARS CORPORATION

The diagnostic trouble code (DTC) is stored if the control module registers that the signal is too low on the signal cable for alarm output S1.

The diagnostic trouble code (DTC) can be diagnosed when the ignition is switched on and alarm output S1 is activated.

Substitute Value

- Alarm output S1 is switched off until the next time the ignition is switched on.

Possible Source

- Short-circuit to ground in signal cable alarm output S1
- Damaged alarm.

Fault symptom[s]

- The alarm does not function at all.

SIGNAL TOO LOW

CHECKING COMPONENTS AND WIRING

Check the signal cable for the alarm output S1. Check between accessory control module terminal #B34 and the alarm unit connector. Check for a short-circuit to ground.

Remedy as necessary.

Other information:

- To connect the breakout box, see **CONNECTING THE BREAKOUT BOX. ACCESSORY ELECTRONIC MODULE**
- To access or replace the Accessory Electronic Module (AEM) and connector, see **ACCESSORY ELECTRONIC MODULE (AEM), REPLACING**
- For information about signals, see **SIGNAL DESCRIPTION. ACCESSORY ELECTRONIC MODULE (AEM)**
- To fault-trace wiring and terminals, see **CHECKING WIRING AND TERMINALS**

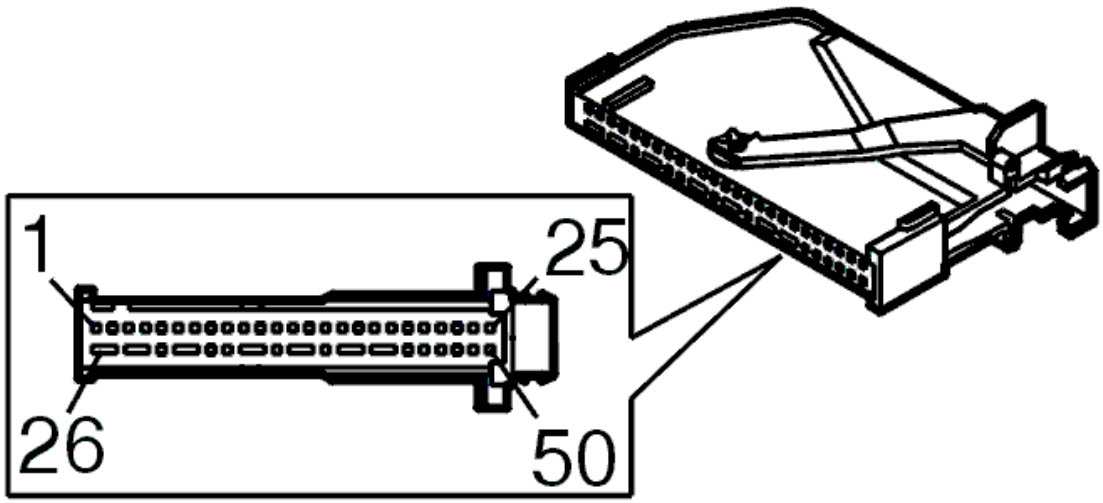

Fig. 57: Accessory Electronic Module Ground Terminals

Courtesy of VOLVO CARS CORPORATION

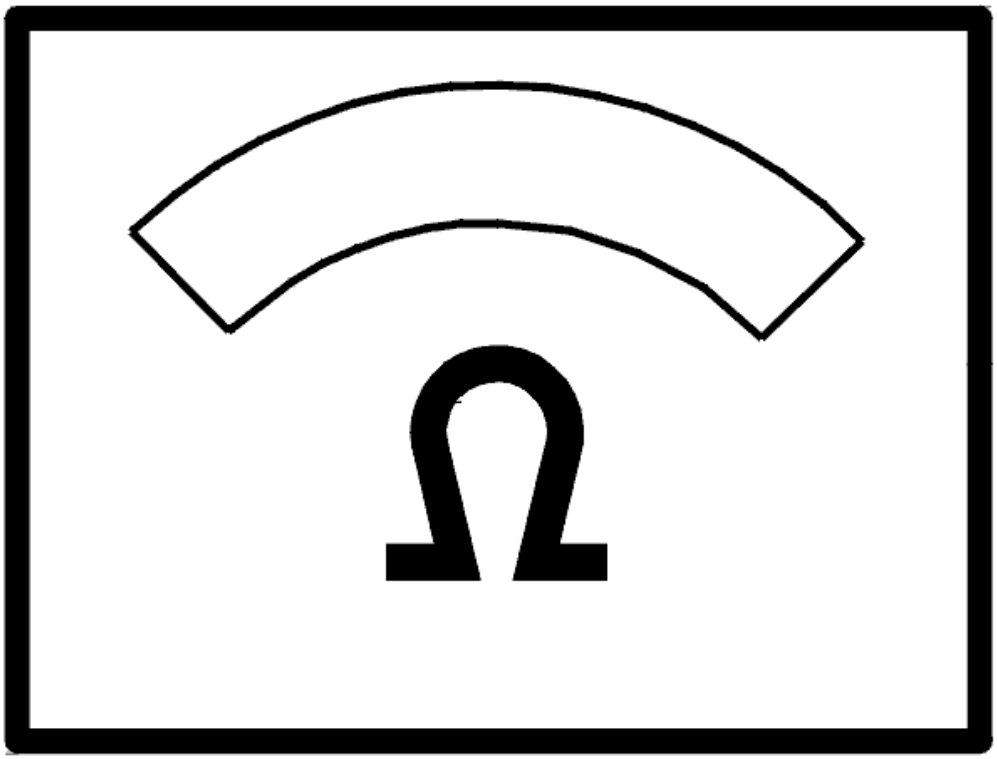

Fig. 58: Identifying Ohm Meter
Courtesy of VOLVO CARS CORPORATION

- **Continue**

  Refer to **VERIFICATION**

VERIFICATION

VERIFICATION

HINT: After carrying out the repair, check that the fault has been remedied.

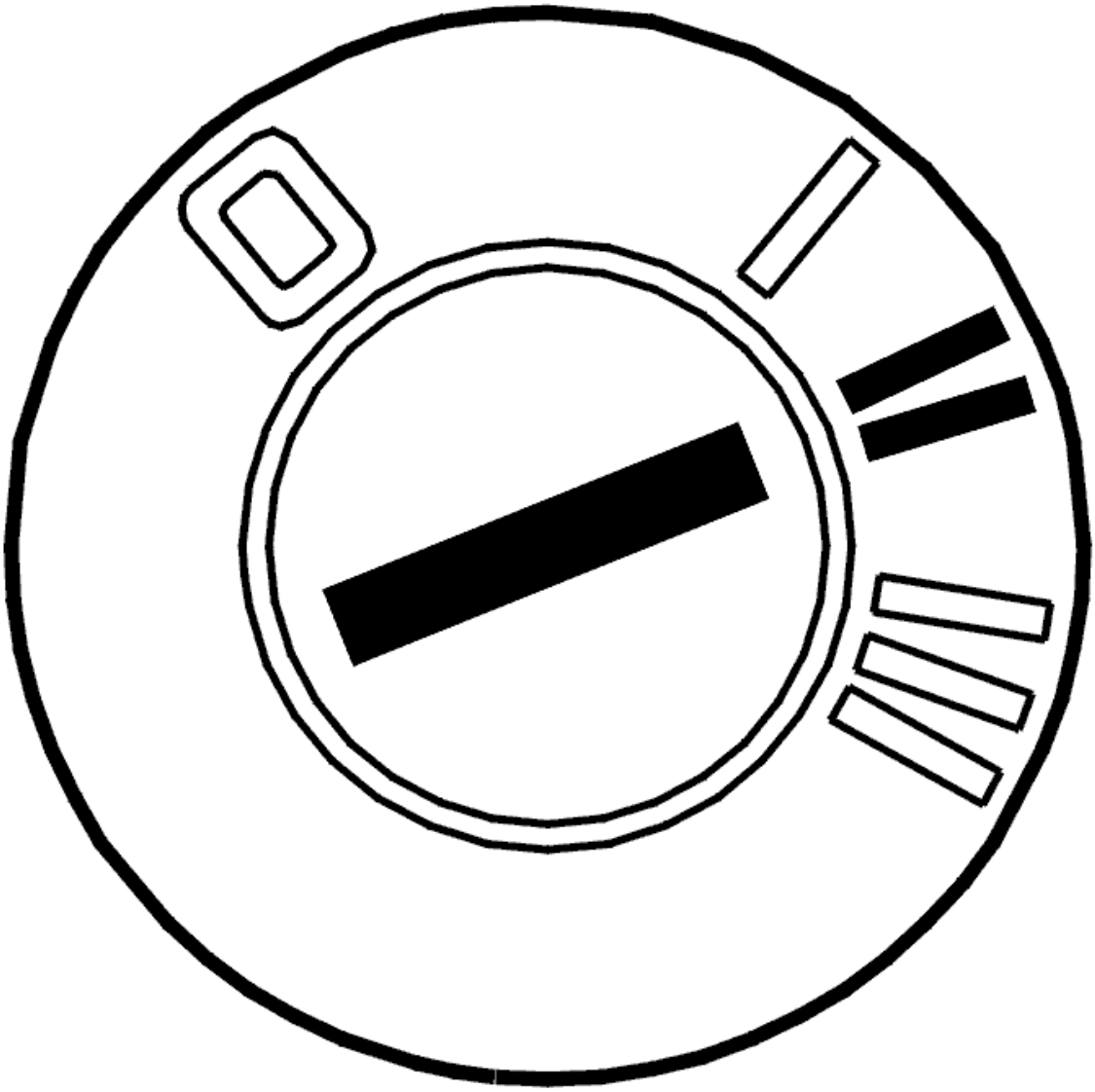

Fig. 59: Identifying Ignition ON
Courtesy of VOLVO CARS CORPORATION

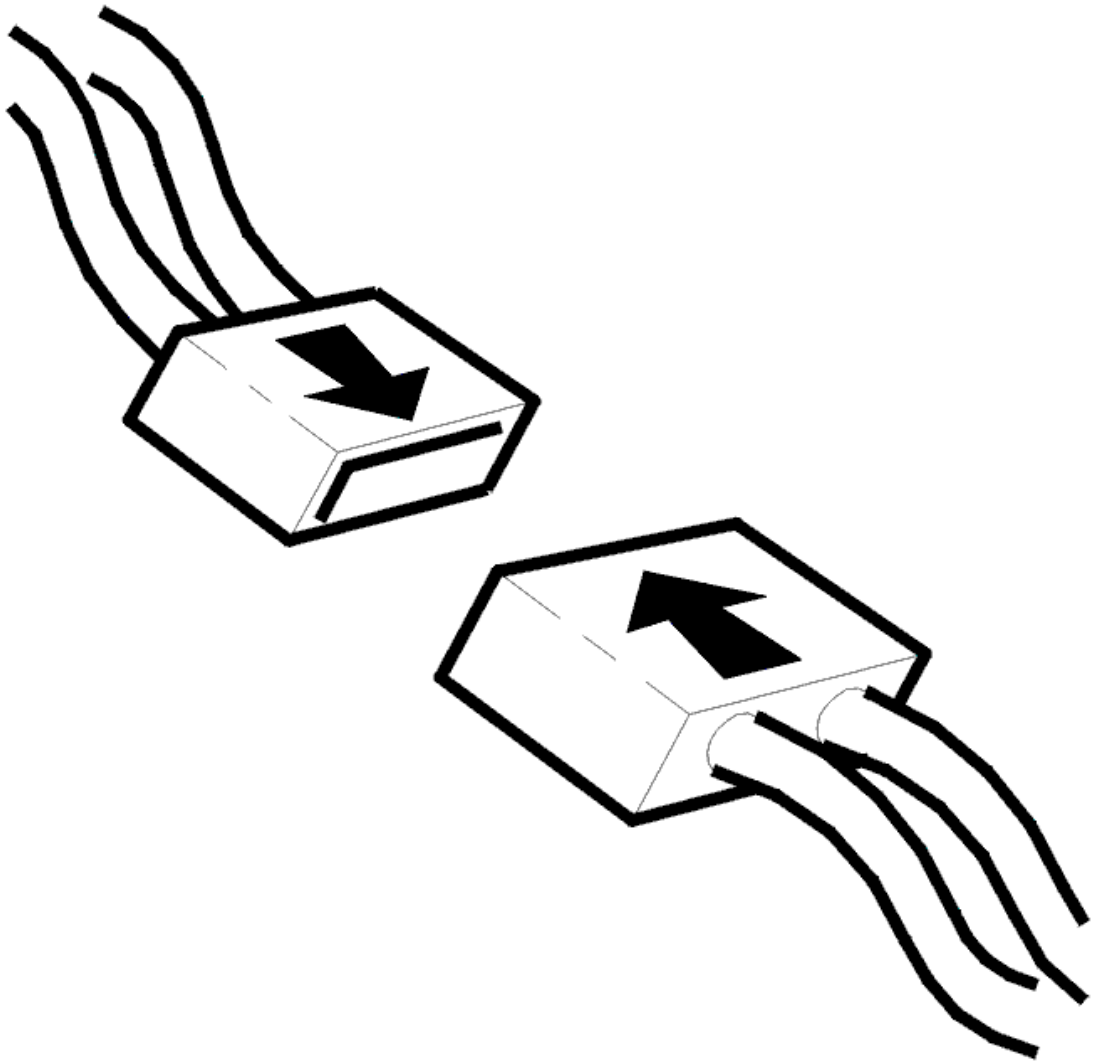

Fig. 60: Connecting Connector
Courtesy of VOLVO CARS CORPORATION

- Ignition off
- Reconnect the components, connectors etc.
- Ignition on.

  Check the function of the alarm by activating it appropriately.

Does the system function?

- **YES**

  VERIFIED: Troubleshooting has been completed.

- **NO**

  Refer to **INFORMATION**

INFORMATION

FAULT-TRACING INFORMATION

The fault should have been detected and remedied. As this is not the case fault-tracing has failed.

Exit fault-tracing for this diagnostic trouble code (DTC) or make another attempt.

AEM-6C57: ALARM OUTPUT S1. SIGNAL TOO HIGH OR SIGNAL MISSING. INTERMITTENT FAULT (2003-2011)

DIAGNOSTIC TROUBLE CODE (DTC) INFORMATION AEM-6C57

Condition

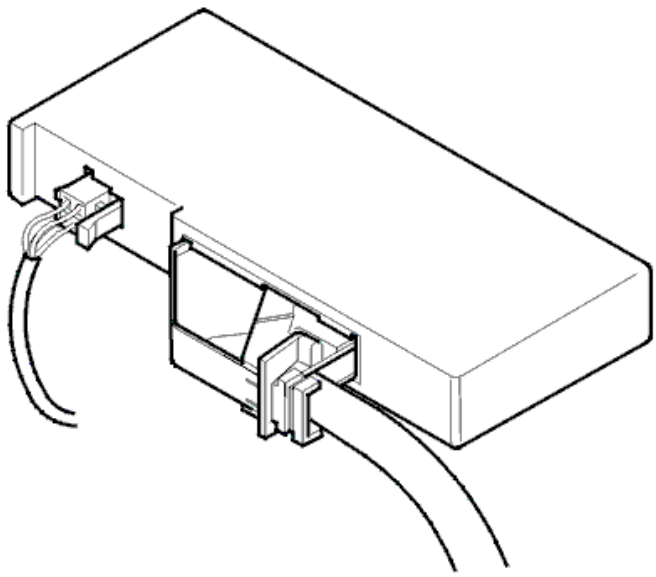

Fig. 61: Accessory Electronic Module
Courtesy of VOLVO CARS CORPORATION

The diagnostic trouble code (DTC) is stored if the control module registers that the signal is too high or there is an open-circuit in the signal cable for alarm output S1.

The diagnostic trouble code (DTC) can be diagnosed when the ignition is switched on and alarm output S1 is not activated.

Substitute Value

- None.

Possible Source

- Short-circuit to supply voltage in signal cable alarm output S1
- Open-circuit in signal cable alarm output S1
- Damaged alarm.

Fault symptom[s]

- The alarm does not function at all.

SIGNAL TOO HIGH / SIGNAL MISSING

CHECKING COMPONENTS AND WIRING

Check the signal cable for the alarm output S1. Check between accessory control module terminal #B34 and the alarm unit connector. Check for a short-circuit to ground. Check for an open-circuit.

Remedy as necessary.

Other information:

- To connect the breakout box, see **CONNECTING THE BREAKOUT BOX. ACCESSORY ELECTRONIC MODULE**
- To access or replace the Accessory Electronic Module (AEM) and connector, see **ACCESSORY ELECTRONIC MODULE (AEM), REPLACING**
- For information about signals, see **SIGNAL DESCRIPTION. ACCESSORY ELECTRONIC MODULE (AEM)**
- To fault-trace wiring and terminals, see **CHECKING WIRING AND TERMINALS**

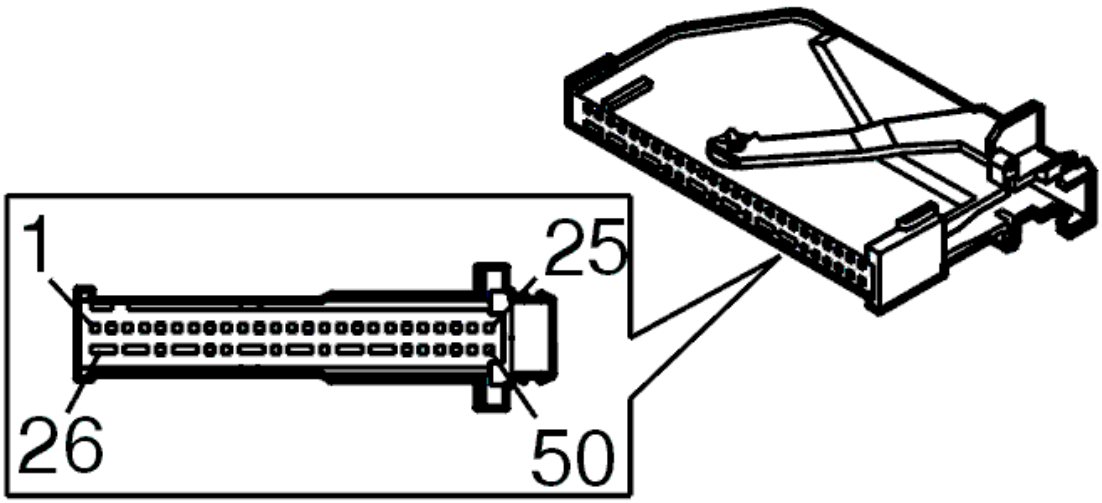

Fig. 62: Accessory Electronic Module Ground Terminals
Courtesy of VOLVO CARS CORPORATION

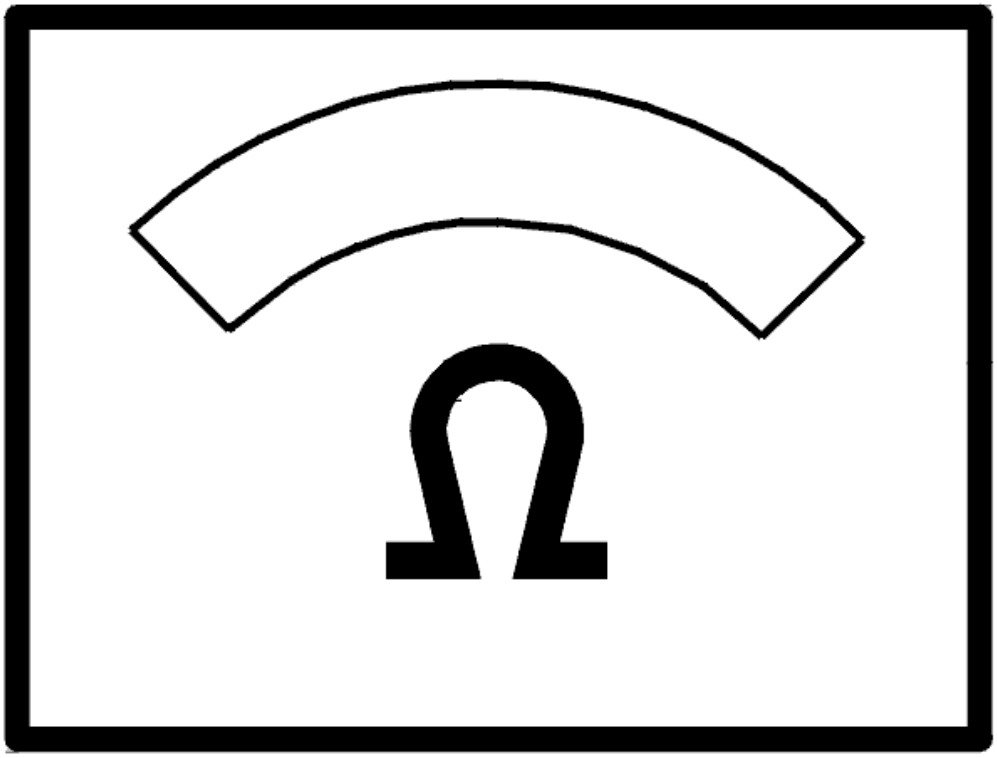

Fig. 63: Identifying Ohm Meter
Courtesy of VOLVO CARS CORPORATION

- **Continue**

  Refer to **VERIFICATION**

VERIFICATION

VERIFICATION

HINT: After carrying out the repair, check that the fault has been remedied.

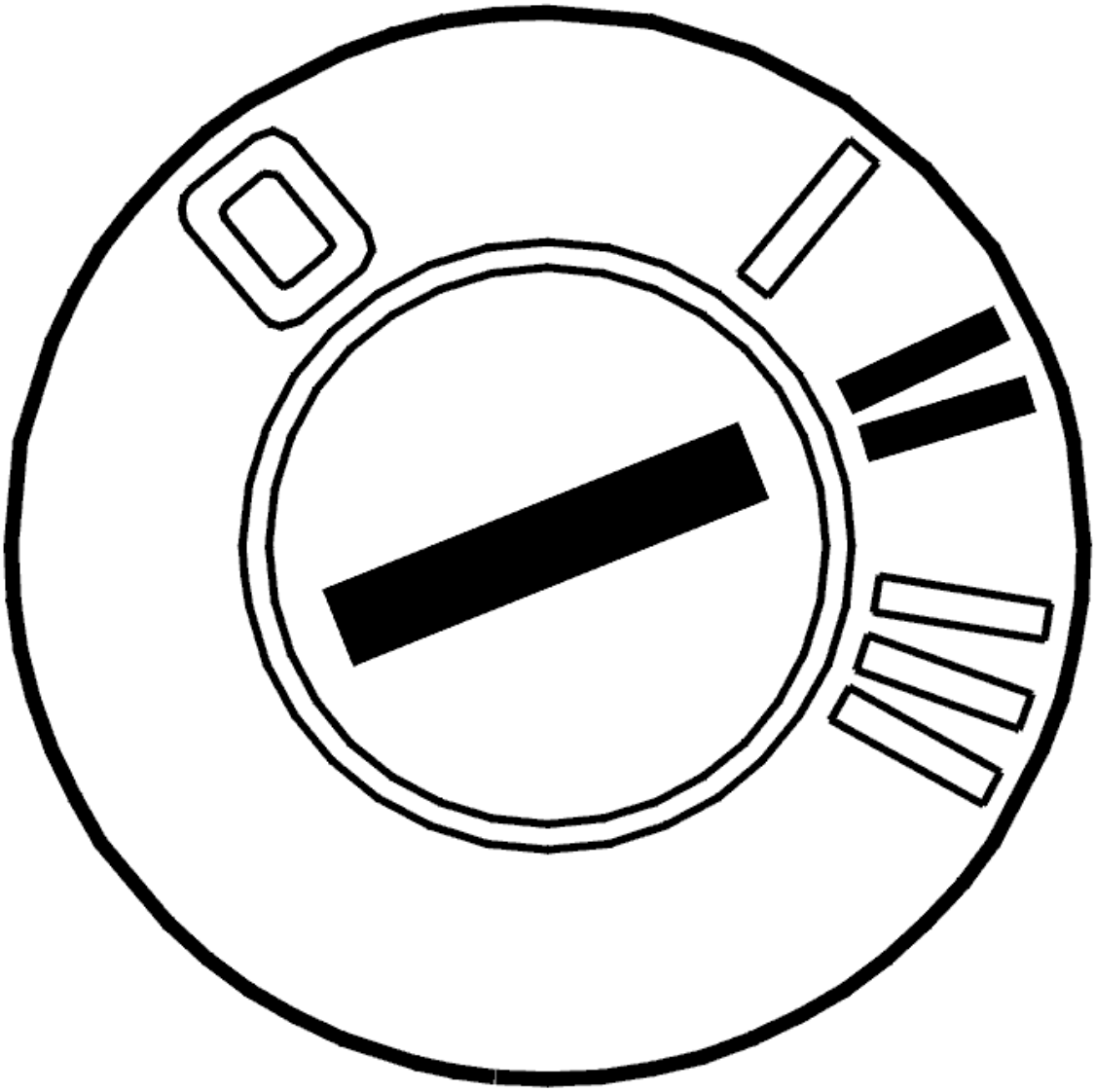

Fig. 64: Identifying Ignition ON
Courtesy of VOLVO CARS CORPORATION

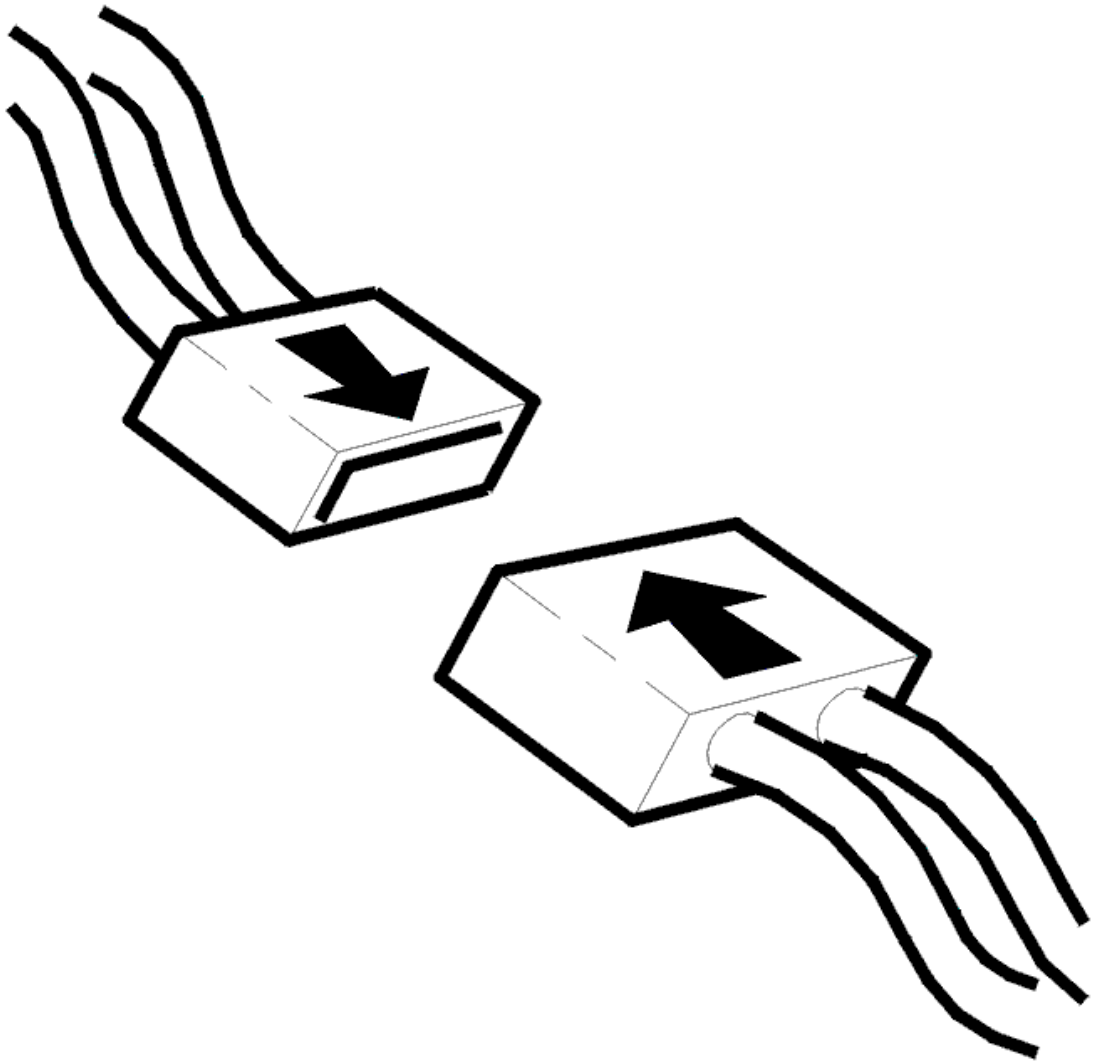

Fig. 65: Connecting Connector
Courtesy of VOLVO CARS CORPORATION

- Ignition off
- Reconnect the components, connectors etc.
- Ignition on.

  Check the function of the alarm by activating it appropriately.

Does the system function?

- **YES**

  VERIFIED: Troubleshooting has been completed.

- **NO**

  Refer to **INFORMATION**

INFORMATION

FAULT-TRACING INFORMATION

The fault should have been detected and remedied. As this is not the case fault-tracing has failed.

Exit fault-tracing for this diagnostic trouble code (DTC) or make another attempt.

AEM-7A10: CARPHONE MUTE SIGNAL. SIGNAL TOO LOW. INTERMITTENT FAULT (2003-2011)

DIAGNOSTIC TROUBLE CODE (DTC) INFORMATION

Condition

Diagnostic trouble code (DTC) AEM-7A10 is stored if the control module registers that the signal is too low or there is an open-circuit in the signal cable (carphone mute) for the radio.

The diagnostic trouble code (DTC) can be diagnosed when the ignition is on and the signal cable (carphone mute) is not activated.

Substitute Value

- None.

Possible Source

- Short-circuit to ground in the signal cable (carphone mute) for the radio
- Open-circuit in the signal cable (carphone mute) for the radio
- Defective radio.

Fault symptom[s]

- Carphone mute on the radio does not function.

SIGNAL TOO LOW

CHECKING COMPONENTS AND WIRING

Check the signal cable (carphone mute). Check between accessory control module terminal #B12 and the radio connector. Check for a short-circuit to ground.

Remedy as necessary.

Other information:

- To connect the breakout box, see **CONNECTING THE BREAKOUT BOX. ACCESSORY ELECTRONIC MODULE**
- To access or replace the Accessory Electronic Module (AEM) and connector, see **ACCESSORY ELECTRONIC MODULE (AEM), REPLACING**
- For information about signals, see **SIGNAL DESCRIPTION. ACCESSORY ELECTRONIC MODULE (AEM)**
- To fault-trace wiring and terminals, see **CHECKING WIRING AND TERMINALS**

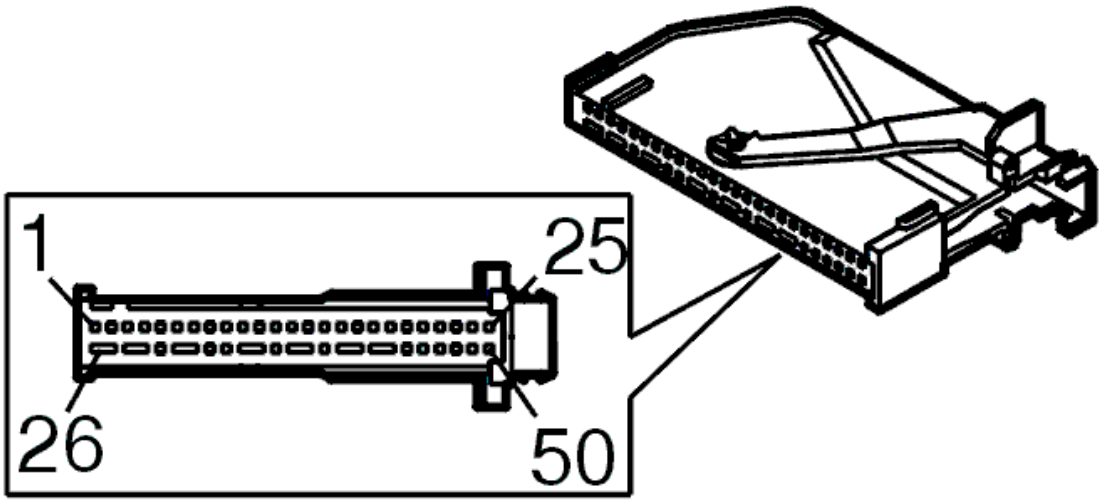

Fig. 66: Accessory Electronic Module Ground Terminals
Courtesy of VOLVO CARS CORPORATION

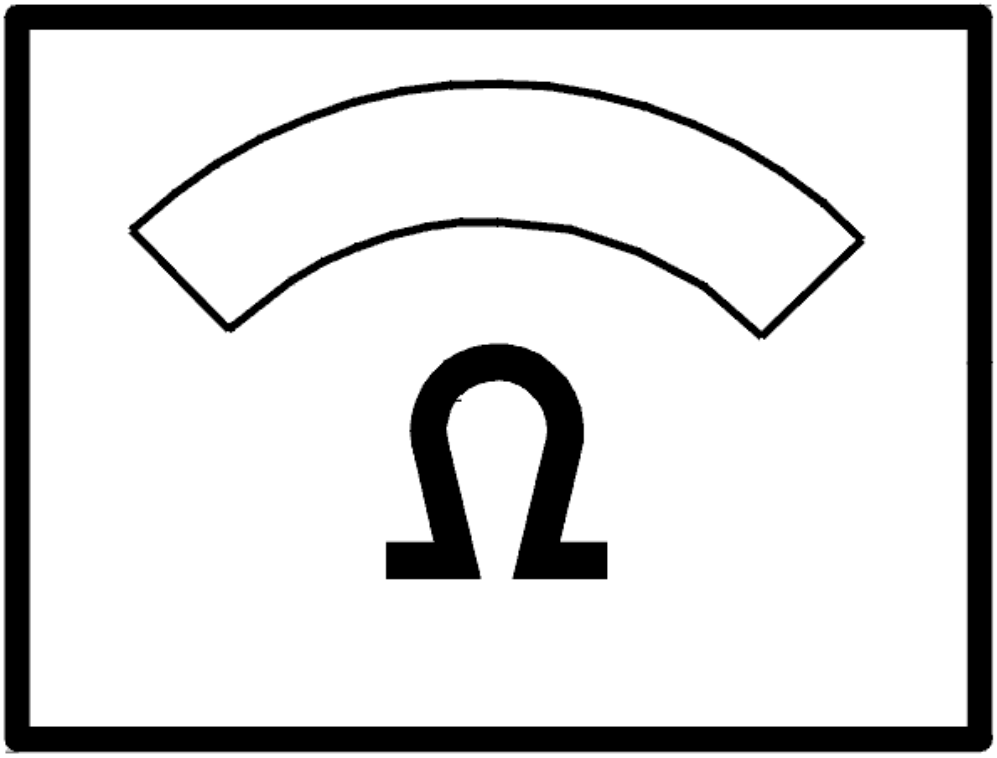

Fig. 67: Identifying Ohm Meter
Courtesy of VOLVO CARS CORPORATION

- **Continue**

  Refer to **VERIFICATION**

VERIFICATION

VERIFICATION

HINT: After carrying out the repair, check that the fault has been remedied.

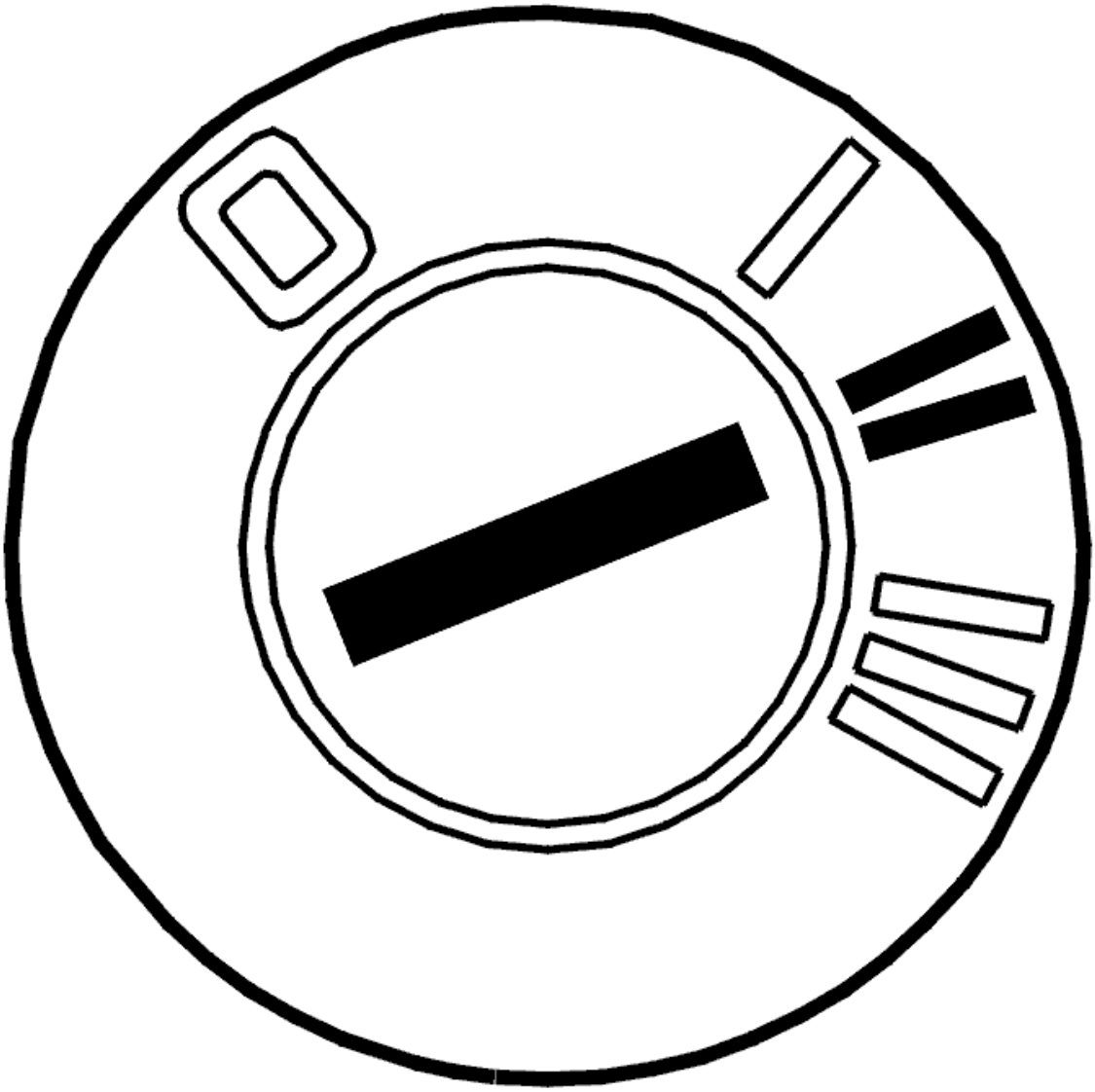

Fig. 68: Identifying Ignition ON
Courtesy of VOLVO CARS CORPORATION

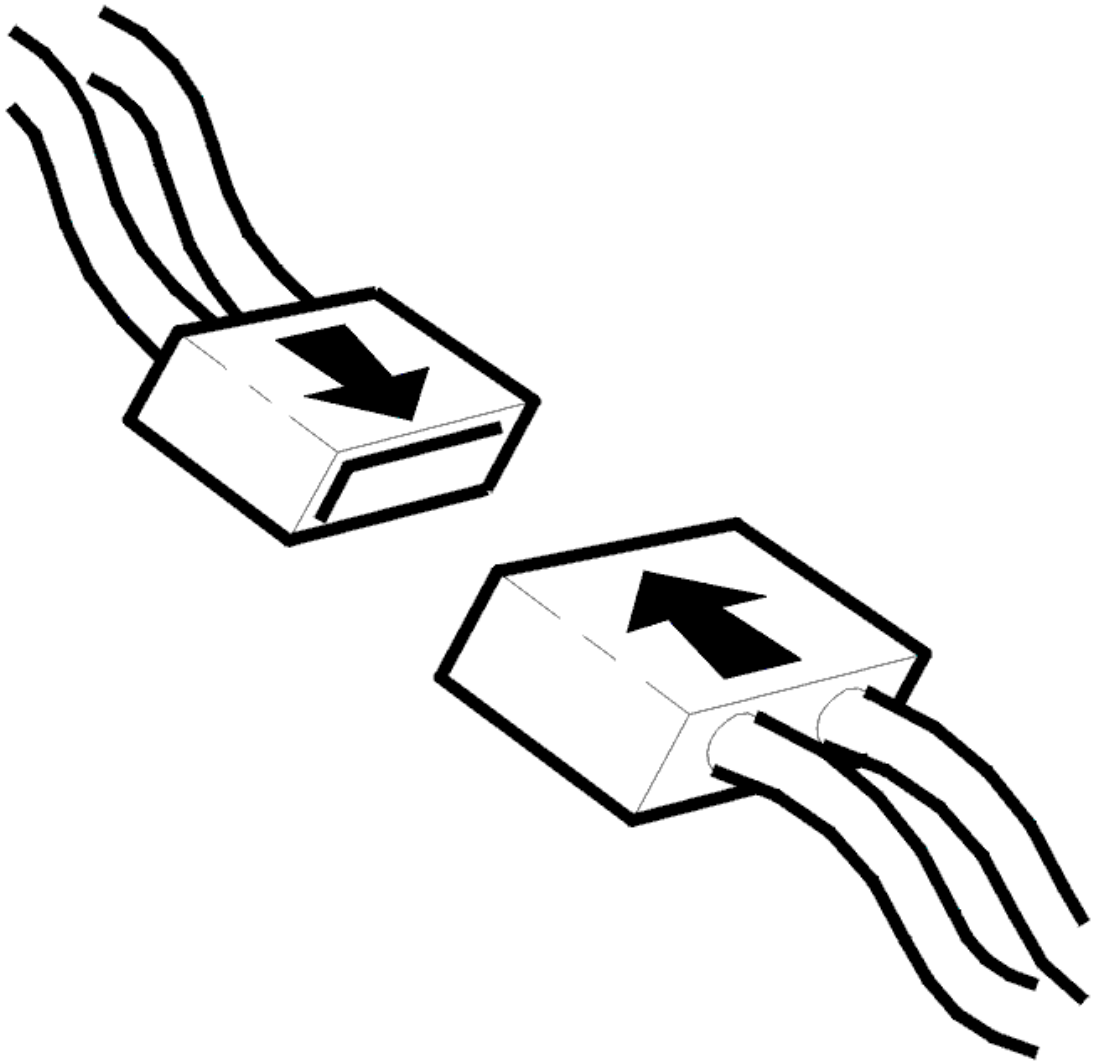

Fig. 69: Connecting Connector
Courtesy of VOLVO CARS CORPORATION

- Ignition off
- Reconnect the components, connectors etc.
- Ignition on.

If the car is equipped with an original Volvo radio, check the carphone mute function in the accessory electronic module using the VCT2000 (or appropriate scan tool) while the radio is on.

If the car is not equipped with an original Volvo radio, the carphone mute function is tested by making a call to the carphone while the radio is on.

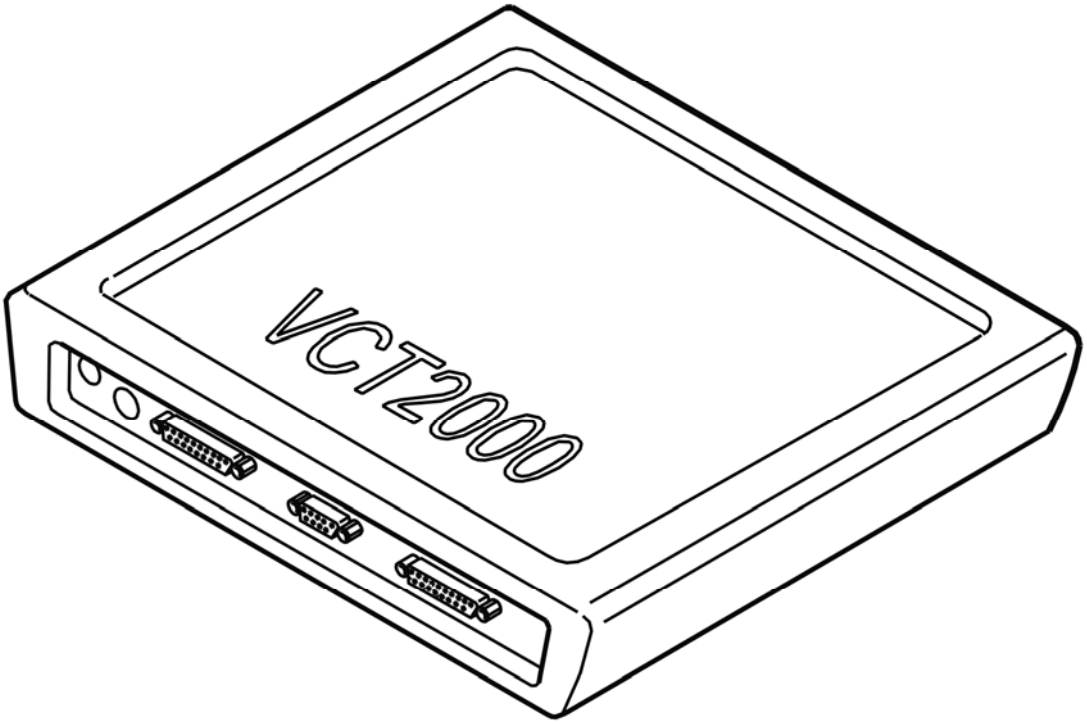

Fig. 70: Identifying VCT2000 Diagnostic Tool Symbol In VIDA
Courtesy of VOLVO CARS CORPORATION

Does the system function?

- **YES**

  VERIFIED: Troubleshooting has been completed.

- **NO**

  Refer to **INFORMATION**

INFORMATION

FAULT-TRACING INFORMATION

The fault should have been detected and remedied. As this is not the case fault-tracing has failed.

Exit fault-tracing for this diagnostic trouble code (DTC) or make another attempt.

AEM-7A11: CARPHONE MUTE SIGNAL. SIGNAL TOO HIGH OR SIGNAL MISSING. INTERMITTENT FAULT (2003-2011)

DIAGNOSTIC TROUBLE CODE (DTC) INFORMATION

Condition

Diagnostic trouble code (DTC) AEM-7A11 is stored if the control module registers that the signal is too high in the signal cable (carphone mute) for the radio.

The diagnostic trouble code (DTC) can be diagnosed when the ignition is on and the signal cable (carphone mute) is activated.

Substitute Value

- None.

Possible Source

- Short-circuit to supply voltage in the signal cable (carphone mute) for the radio
- Defective radio.

Fault symptom[s]

- Carphone mute on the radio does not function.

SIGNAL TOO HIGH / SIGNAL MISSING

CHECKING COMPONENTS AND WIRING

Check the signal cable (carphone mute). Check between accessory control module terminal #B12 and the radio connector. Check for a short-circuit to supply voltage. Check for an open-circuit.

Remedy as necessary.

Other information:

- To connect the breakout box, see **CONNECTING THE BREAKOUT BOX. ACCESSORY ELECTRONIC MODULE**
- To access or replace the Accessory Electronic Module (AEM) and connector, see **ACCESSORY ELECTRONIC MODULE (AEM), REPLACING**
- For information about signals, see **SIGNAL DESCRIPTION. ACCESSORY ELECTRONIC MODULE (AEM)**
- To fault-trace wiring and terminals, see **CHECKING WIRING AND TERMINALS**

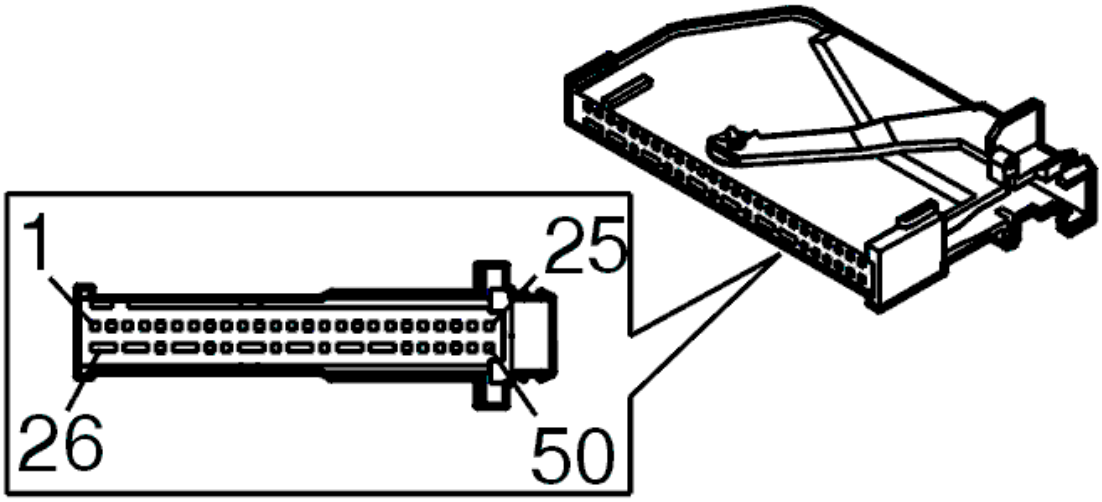

Fig. 71: Accessory Electronic Module Ground Terminals
Courtesy of VOLVO CARS CORPORATION

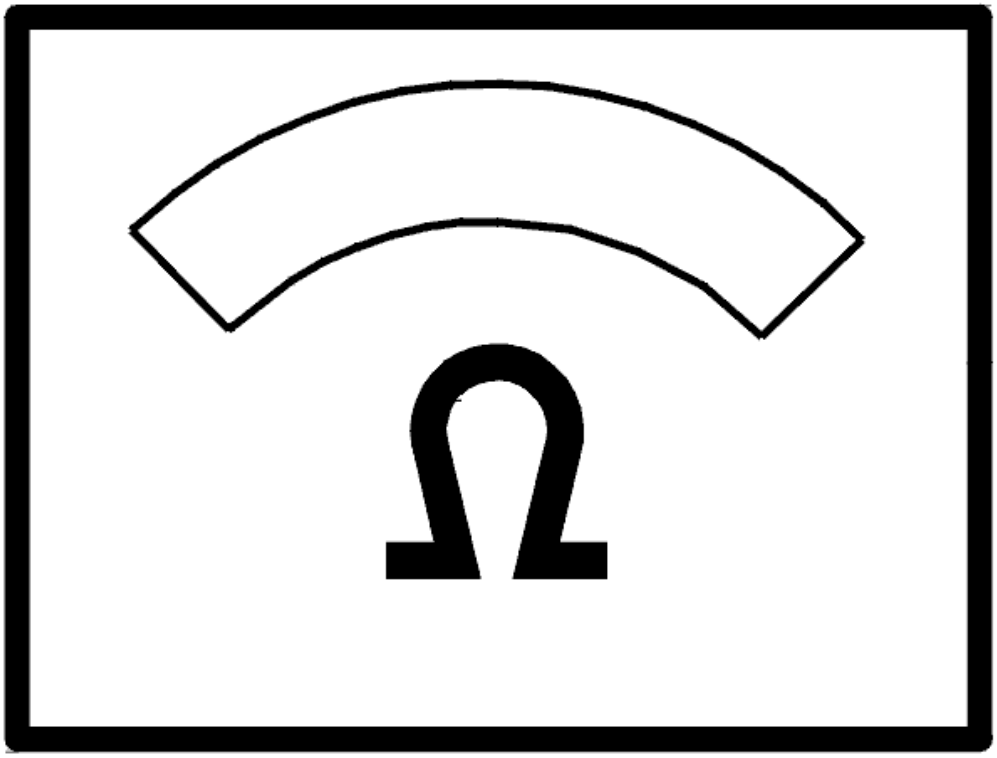

Fig. 72: Identifying Ohm Meter
Courtesy of VOLVO CARS CORPORATION

- **Continue**

  Refer to **VERIFICATION**

VERIFICATION

VERIFICATION

HINT: After carrying out the repair, check that the fault has been remedied.

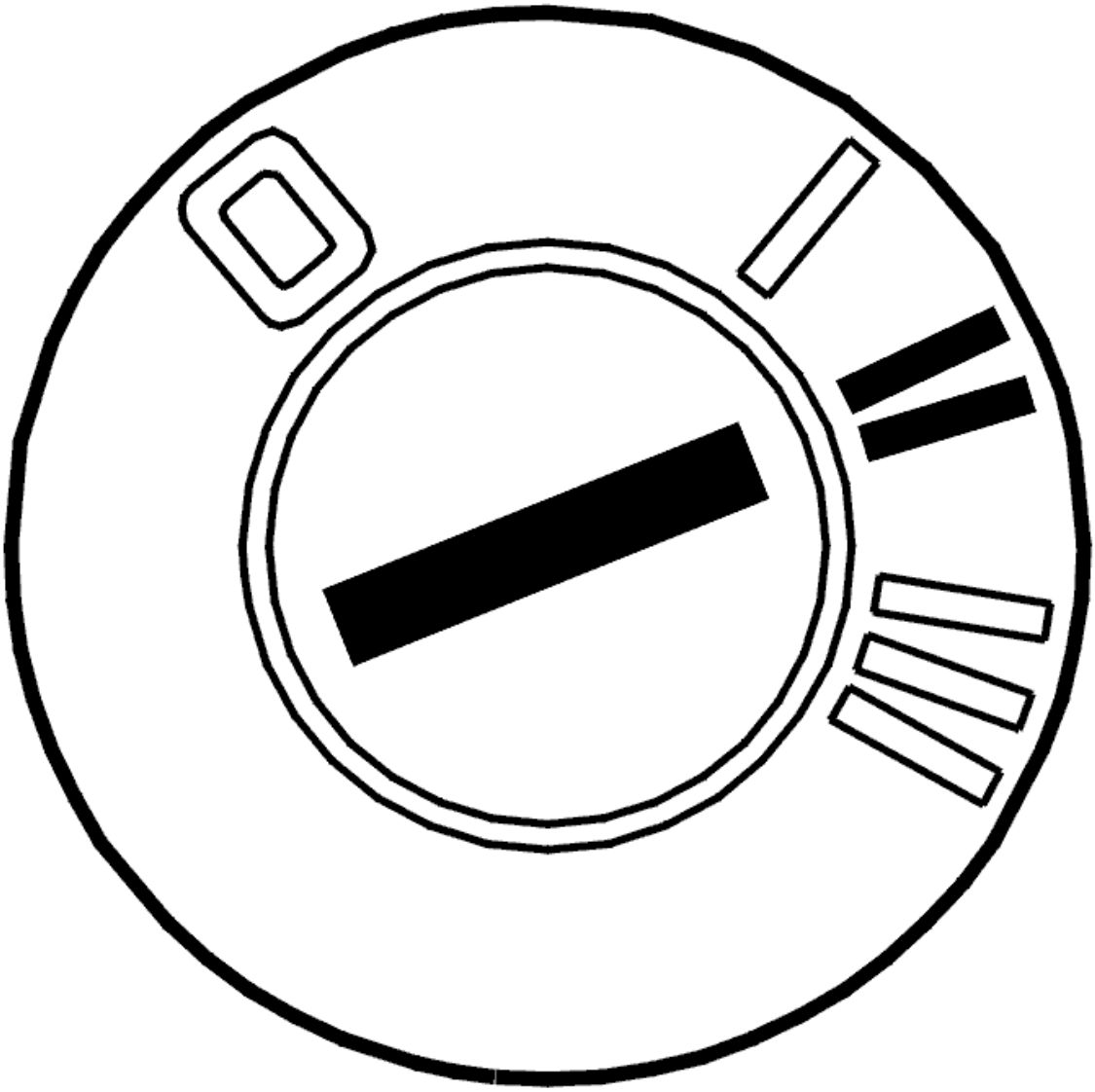

Fig. 73: Identifying Ignition ON
Courtesy of VOLVO CARS CORPORATION

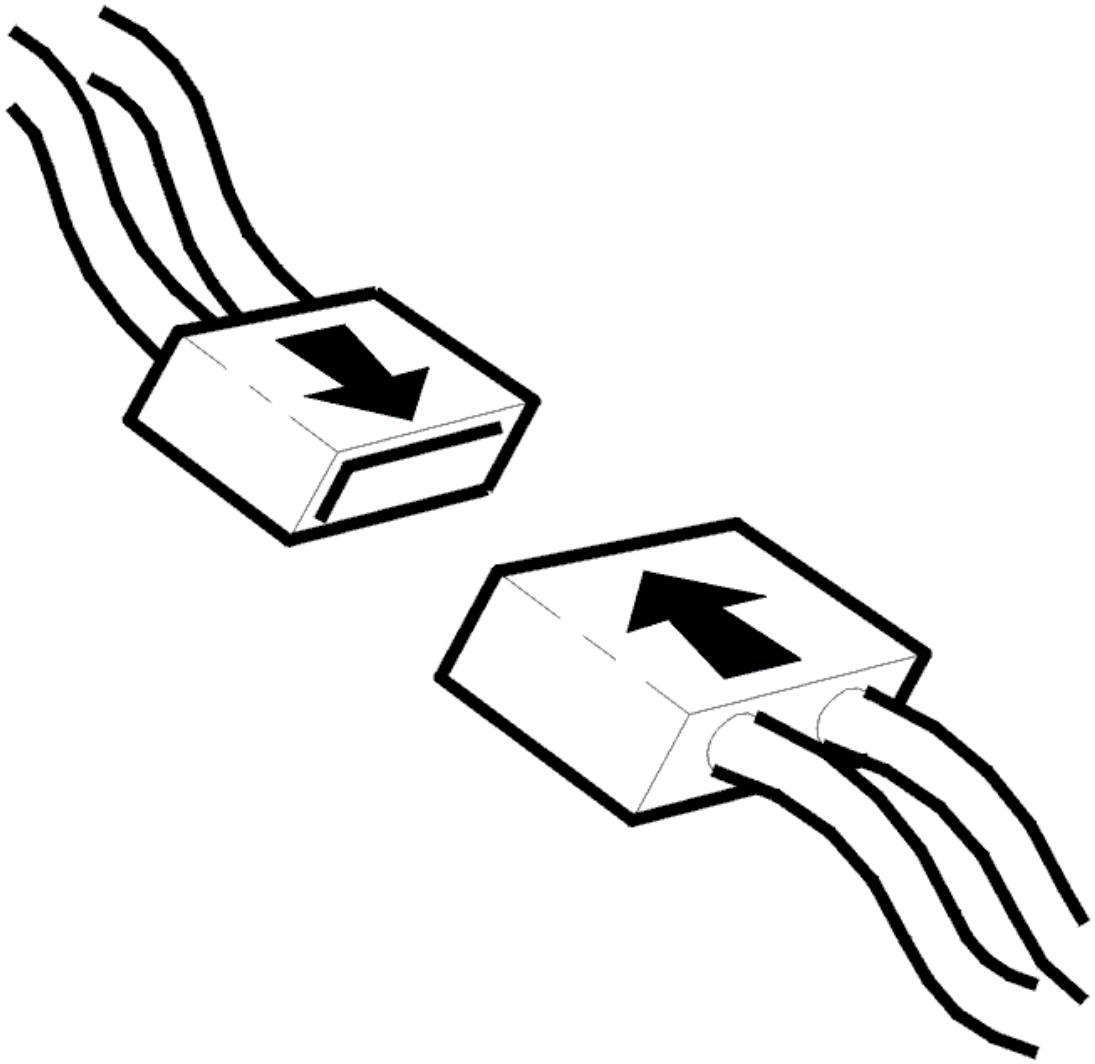

Fig. 74: Connecting Connector
Courtesy of VOLVO CARS CORPORATION

- Ignition off
- Reconnect the components, connectors etc.
- Ignition on.

If the car is equipped with an original Volvo radio, check the carphone mute function in the accessory electronic module using the VCT2000 (or appropriate scan tool) while the radio is on.

If the car is not equipped with an original Volvo radio, the carphone mute function is tested by making a call to the carphone while the radio is on.

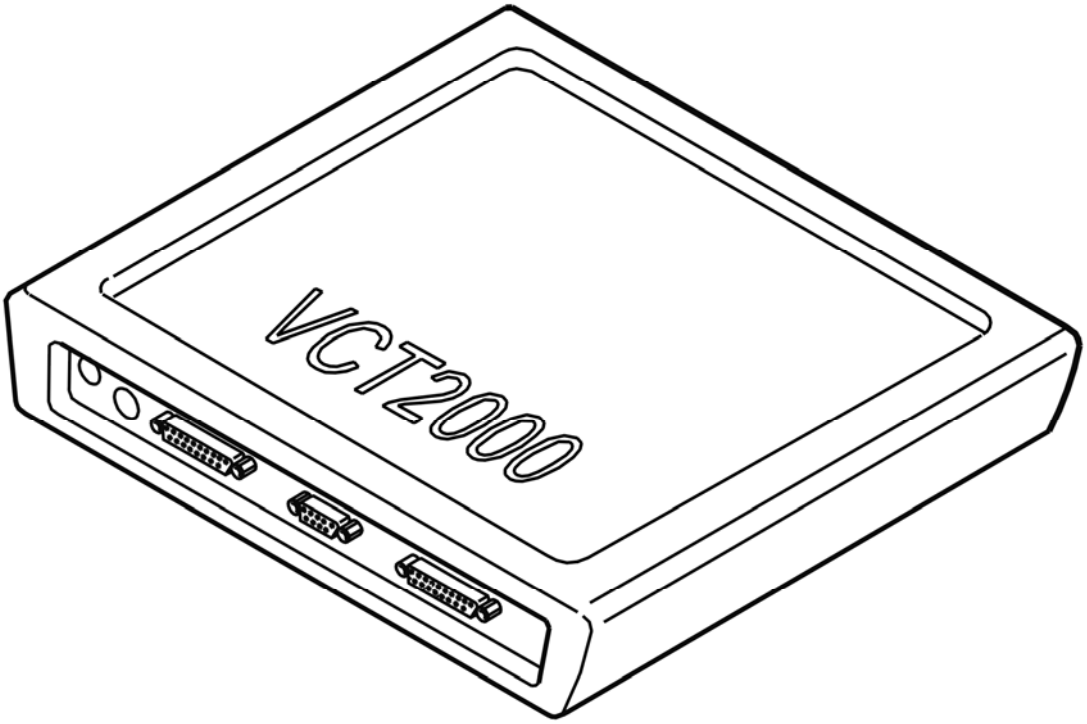

Fig. 75: Identifying VCT2000 Diagnostic Tool Symbol In VIDA
Courtesy of VOLVO CARS CORPORATION

Does the system function?

- **YES**

  VERIFIED: Troubleshooting has been completed.

- **NO**

  Refer to **INFORMATION**

INFORMATION

FAULT-TRACING INFORMATION

The fault should have been detected and remedied. As this is not the case fault-tracing has failed.

Exit fault-tracing for this diagnostic trouble code (DTC) or make another attempt.

AEM-E001: CONTROL MODULE COMMUNICATION. FAULTY COMMUNICATION (2003-2004)

DIAGNOSTIC TROUBLE CODE (DTC) INFORMATION AEM-E001

Condition

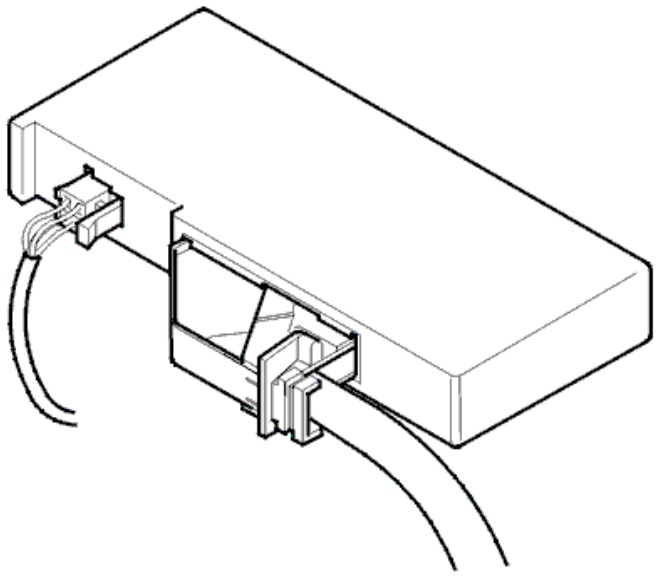

Fig. 76: Accessory Electronic Module
Courtesy of VOLVO CARS CORPORATION

The control modules transmit and receive information via a standardized serial communication method - CAN (Control Area Network). The diagnostic trouble code (DTC) is stored if the control module registers serious interference (CAN communication blocked).

NOTE: **In the event of system communication problems, it is not possible to communicate with the control module. Therefore it will only be possible to read off the fault if it is intermittent.**

Substitute Value

- The control module shuts itself off ("bus-off").

  HINT: The control module will remain shut off until the power supply is broken (15, 30, X). When the power supply is connected the control module will make a new attempt to communicate.

Possible Source

- Short-circuit between the control area network (CAN) wiring
- Open-circuit in the control area network (CAN) wiring
- Internal fault in the control module
- Internal fault in another control module in the same part of the control area network (CAN).

Fault symptom[s]

- Accessories connected to the control module do not function.

FAULTY COMMUNICATION

see **FAULTY COMMUNICATION**

AEM-E001: CONTROL MODULE COMMUNICATION. FAULTY COMMUNICATION (2005-2011)

DIAGNOSTIC TROUBLE CODE (DTC) INFORMATION AEM-E001

see **DIAGNOSTIC TROUBLE CODE (DTC) INFORMATION AEM-E001**

SIGNAL MISSING

GENERAL INFORMATION

NOTE: Illustrations shown are only examples.

For general information about CAN-troubleshooting, see **GENERAL INFORMATION ABOUT FAULT-TRACING IN THE CAN NETWORK**

- General about CAN-related diagnostic trouble codes.

  CEM-DF01 - DF17 can only be stored in Central electronic module (CEM). These diagnostic trouble codes are stored when an electric fault is detected in CAN-lines. Start with these diagnostic trouble codes first.

  CEM-1AXX only stored in Central electronic module (CEM). One diagnostic trouble code for every control module on the CAN-net. These diagnostic trouble codes indicate that Central electronic module (CEM) does not receive any reply from other control modules.

  XXX-E000 (HS-CAN)/E001 (LS-CAN) can be stored in all CAN-connected control modules. These diagnostic trouble codes indicate that the control module has detected interference on the CAN-net.

  XXX-E003 can be stored in all CAN-connected control modules except in Central electronic module (CEM). The control modules on the CAN-net listen for a message (identity number) that is sent out at regular intervals from Central electronic module (CEM). This diagnostic trouble code indicates that the control module has not received any identity number, or that the expected number is not correct. Interference on the CAN-net can also store this diagnostic trouble code.

  NOTE: In case of CAN-related faults, it is likely that a combination of above diagnostic trouble codes occur.

NOTE: **After fault with control modules that interfere with communication, other control modules may remain in Limp-Home (that is, they work with reduced functionality) even when the ignition has been turned off and on a few times. For certain faults in the CAN-net where control modules have stopped communicating, it may help to disconnect/reconnect the battery to "restart" the control module/CAN-net.**

If diagnostic trouble codes (DTCs) for communication faults can be read off from a control module, the fault is probably intermittent.

Intermittent fault in the voltage supply and ground to a control module on the CAN network results in the Central electronic module (CEM) storing a diagnostic trouble code (DTC) for an open-circuit in communication with the control module where the voltage supply does not work. There will probably not be a diagnostic trouble code (DTC) in the control module where the open-circuit in the voltage supply occurred as the control module cannot store a diagnostic trouble code (DTC) when it is not supplied with power.

NOTE: **Central electronic module (CEM) should not be replaced in case of CAN-fault, unless troubleshooting reveals that Central electronic module (CEM) has an internal fault.**

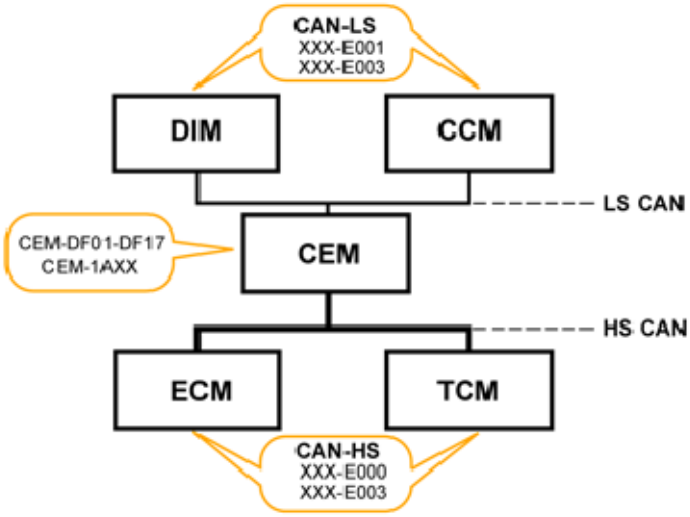

Fig. 77: High-Speed CAN And Low-Speed CAN Communication Diagram
Courtesy of VOLVO CARS CORPORATION

- **Continue**

Refer to **CHECKING RESISTANCE IN CAN-NET**

CHECKING RESISTANCE IN CAN-NET

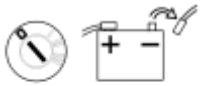

Fig. 78: Ignition Off And Disconnecting Battery Negative Lead
Courtesy of VOLVO CARS CORPORATION

- Ignition off
- Disconnect the battery negative lead
- Connect OBDII-Box **(951 3015)** to the diagnostics socket.

For general information about CAN-troubleshooting, see **GENERAL INFORMATION ABOUT FAULT-TRACING IN THE CAN NETWORK**

Measure resistance between the following connections on the OBDII-box/diagnostics socket.

- #3 and #11. The resistance should be approx. 55 - 65 ohms.
- If resistance is approx. 120 ohms, this indicates open circuit in the circuit so that only one terminating resistor (120 ohms) has been measured.
- If resistance is above 1 kohms this indicates open circuit/high contact resistance somewhere in the circuit.
- If resistance is below 55 ohms this indicates short-circuiting/contact resistance between the CAN-lines somewhere in the circuit.

HINT: For LS-CAN, terminating resistors are located in Upper electronic module (UEM) and Rear electronic module (REM).

Twist the cable harness and wiggle connectors where they can be accessed along the cable harness during every measurement, and note if the resistance changes to detect intermittent short-circuits or open circuit.

NOTE: **Resistance measurement measures only main lines in the CAN-net (in circuit where both terminating resistors are found), not branches to certain control modules. Open circuit on branching without a terminating resistor cannot be detected with this measurement. However, short-circuiting on a branch can be detected. To measure resistance in the CAN-net to control modules located in a branching of their own, the measurement shall be done against the CAN-net at that control module. The values shall be as above.**

NOTE: **After fault with control modules that interfere with communication, other control modules may remain in Limp-Home (that is, they work with reduced functionality) even when the ignition has been turned off and on a few times. For certain faults in the CAN-net where control modules have stopped communicating, it may help to disconnect/reconnect the battery**

to "restart" the control module/CAN-net.

Remedy as necessary.

Other information

- see **BATTERY, DISCONNECTING**
- see **CHECKING WIRING AND TERMINALS**

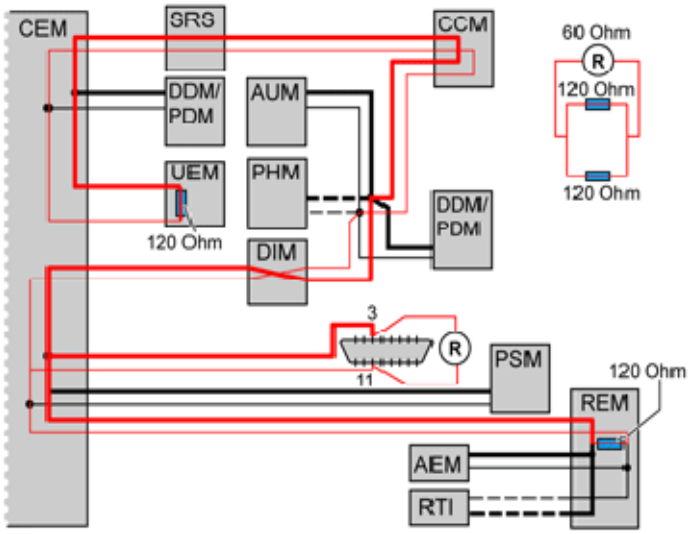

Fig. 79: Checking Resistance In CAN Lines
Courtesy of VOLVO CARS CORPORATION

Was a fault detected?

- **YES**

  Refer to **VERIFICATION**

- **NO**

  Refer to **CHECKING SHORT-CIRCUITING TO GROUND/VOLTAGE IN CAN-NET**

CHECKING THE AMOUNT OF TRAFFIC ON THE LS-CAN

Fig. 80: Identifying Ignition On Position
Courtesy of VOLVO CARS CORPORATION

- Connect the battery
- Ignition on.
- Connect OBDII-Box **(951 3015)** to the diagnostics socket.

For general information about CAN-troubleshooting, see **GENERAL INFORMATION ABOUT FAULT-TRACING IN THE CAN NETWORK**

Faults in the CAN network may be due to a control module sending faulty messages that disrupt normal communication. When messages are sent incorrectly, this results in a considerable increase in the amount of traffic on the CAN network. The load can be checked by reading the average value of the voltage on the CAN cables in relation to ground.

Measure voltage between the following connections on the OBDII-box/diagnostics socket.

- #3 and #4 (ground). The voltage should be approx:2, 8 - 3, 2 V.
- #11 and #4 (ground). The voltage should be approx:1, 8 - 2, 2 V.
- #3 and #11. The voltage shall be between approx. 0.55-1.4 V. The voltage shall normally be between 0.55 - 0.90 V. A higher voltage may indicate increased traffic on the CAN-net. In case of fault in communication/too high traffic on the CAN-net, the voltage is considerably higher than the above stated values.

NOTE: After fault with control modules that interfere with communication, other control modules may remain in Limp-Home even when the ignition has been turned off and on a few times. For certain faults in the CAN-net where control modules have stopped communicating, it may help to disconnect/reconnect the battery to "restart" the control module/CAN-net.

HINT: DiCE can be used as fault detection tool if fault is suspected on the CAN-net that cannot be detected with normal troubleshooting. Interference, intermittent faults, faulty messages on the CAN-net etc., are examples of such faults. The tool registers fault messages used on the CAN-net. Fault messages may be caused by short intermittent malfunctions on the CAN-net or by a control module sending fault messages. See tools:951 3010 as well as associated TJ 20402.

- Ignition on.
- Connect DiCE to the diagnostics socket.
- Note the blue LED-indicator. The indicator flashes to show detection of fault messages.

NOTE: Certain interference may occur without any real fault

Cable fault

- Shake the cables lightly and pull lightly on the connections during the check to locate any fault. Note the blue LED-indicator.

"Chatting" control modules

- "Chatting" control modules may be difficult to find and troubleshooting may take time. Let the vehicle stand with DiCE connected for an extended time period. Afterwards, activate functions to provoke a malfunction. It may take up to several hours before the fault messages are sent. When the indicator starts to flash, remove the fuse for one control module at a time until the indicator stops flashing. When the indicator stops flashing, restore the fuse for the relevant control module and check that the indicator starts to flash again. Then it is likely that the problem is identified.

Remedy wiring as necessary.

Other information

- see **BATTERY, DISCONNECTING**
- see **TROUBLESHOOTING USING DICE ERROR FRAME FINDER**
- see **CHECKING WIRING AND TERMINALS**

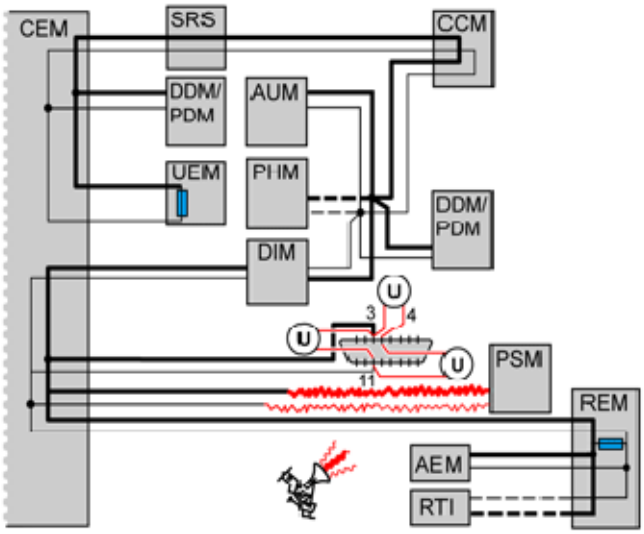

Fig. 81: Checking Amount Of Traffic On LS-CAN
Courtesy of VOLVO CARS CORPORATION

Was a fault detected?

- **YES**

  Refer to **IDENTIFYING A CONTROL MODULE IN THE CAN NETWORK**

- **NO**

  Refer to **CHECKING VOLTAGE-DROP IN CABLE FOR CAN-H AND CAN-L, RESPECTIVELY**

IDENTIFYING A CONTROL MODULE IN THE CAN NETWORK

Fig. 82: Identifying Ignition On Position
Courtesy of VOLVO CARS CORPORATION

For general information about CAN-troubleshooting, see **GENERAL INFORMATION ABOUT FAULT-TRACING IN THE CAN NETWORK**

HINT: DiCE can be used as fault detection tool if fault is suspected on the CAN-net that cannot be detected with normal troubleshooting. Interference, intermittent faults, faulty messages on the CAN-net (chattering control modules) etc., are examples of such faults. The tool registers fault messages used on the CAN-net. Fault messages may be caused by short intermittent malfunctions on the CAN-net or by a control module sending fault messages. See tools:951 3010 (memory card) as well as associated TJ 20402. If the load on the CAN network is too high, this may be due to a control module transmitting faulty messages on the CAN network. This is called a disruptive control module. The fault may also be due to an intermittent short-circuit to supply voltage or ground in one of the CAN cables. This results in the control modules on the CAN network starting to send faulty messages. The fault may occur without any of the control modules storing a diagnostic trouble code (DTC). The voltage can be measured between the CAN cables in order to check the load on the CAN network.

NOTE: **It is not necessarily the control module that has set the diagnostic trouble code that communicates incorrectly. Faulty messages can come from any control module in the same section of the CAN network. However, faulty communication in one network cannot affect the communication on the other network. In other words, faulty communication on the LS-CAN cannot disrupt communication on the HS-CAN and vice versa.**

- Ignition on.
- Connect OBDII-Box **(951 3015)** to the diagnostics socket.

Check communication/load on CAN-net by measuring voltage between CAN-L and CAN-H. Measure voltage between the following connections on the OBDII-box/diagnostics socket.

- #3 and #11. The average value of the voltage must be approximately 0.6-1.4 V. The voltage shall normally be between 0.55 - 0.90 V. A higher voltage may indicate increased traffic on the CAN-net. In case of fault in communication/too high traffic on the CAN-net, the voltage is considerably higher than the above stated values.

In order to identify which control module has faulty communication, cut the power supply to one control module at a time. Check the voltage in the CAN cables again. The easiest way to cut the power supply is to remove the fuse(s) for the relevant control module. Repeat until the voltage between the CAN wiring drops to the normal level.

NOTE: **When connecting and disconnecting certain control modules, diagnostic trouble codes (DTCs) may be stored in other control modules.**

HINT: When the suspected defective control module has been identified, connect and disconnect the supply voltage to the control module a number of times to verify that the malfunction appears and disappears. Switch off the ignition between each check.

NOTE: **Do not cut the power to the central electronic module (CEM) unless it is the last control module left to check.**

A control module that is communicating incorrectly must be replaced.

NOTE: **After fault with control modules that interfere with communication, other control modules may remain in Limp-Home (that is, they work with reduced functionality) even when the ignition has been turned off and on a few times. For certain faults in the CAN-net where control modules have stopped communicating, it may help to disconnect/reconnect the battery to "restart" the control module/CAN-net.**

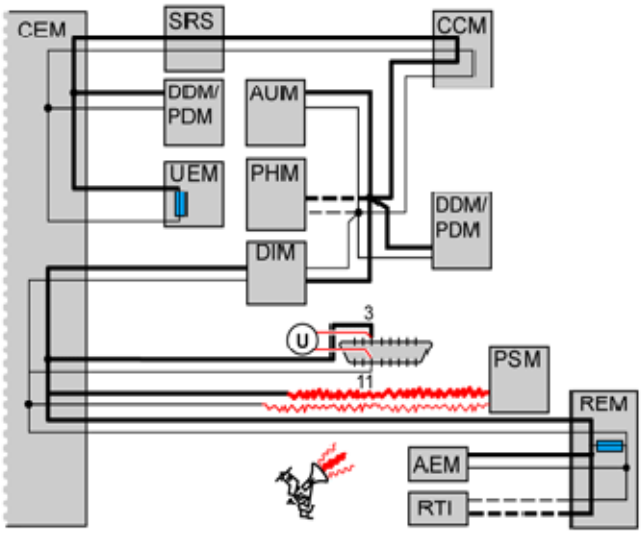

Fig. 83: Checking Communication/Load On CAN-net Between CAN-L And CAN-H
Courtesy of VOLVO CARS CORPORATION

- **Continue**

  Refer to **VERIFICATION**

VERIFICATION

HINT: After rectifying a fault, a verification should be carried out.

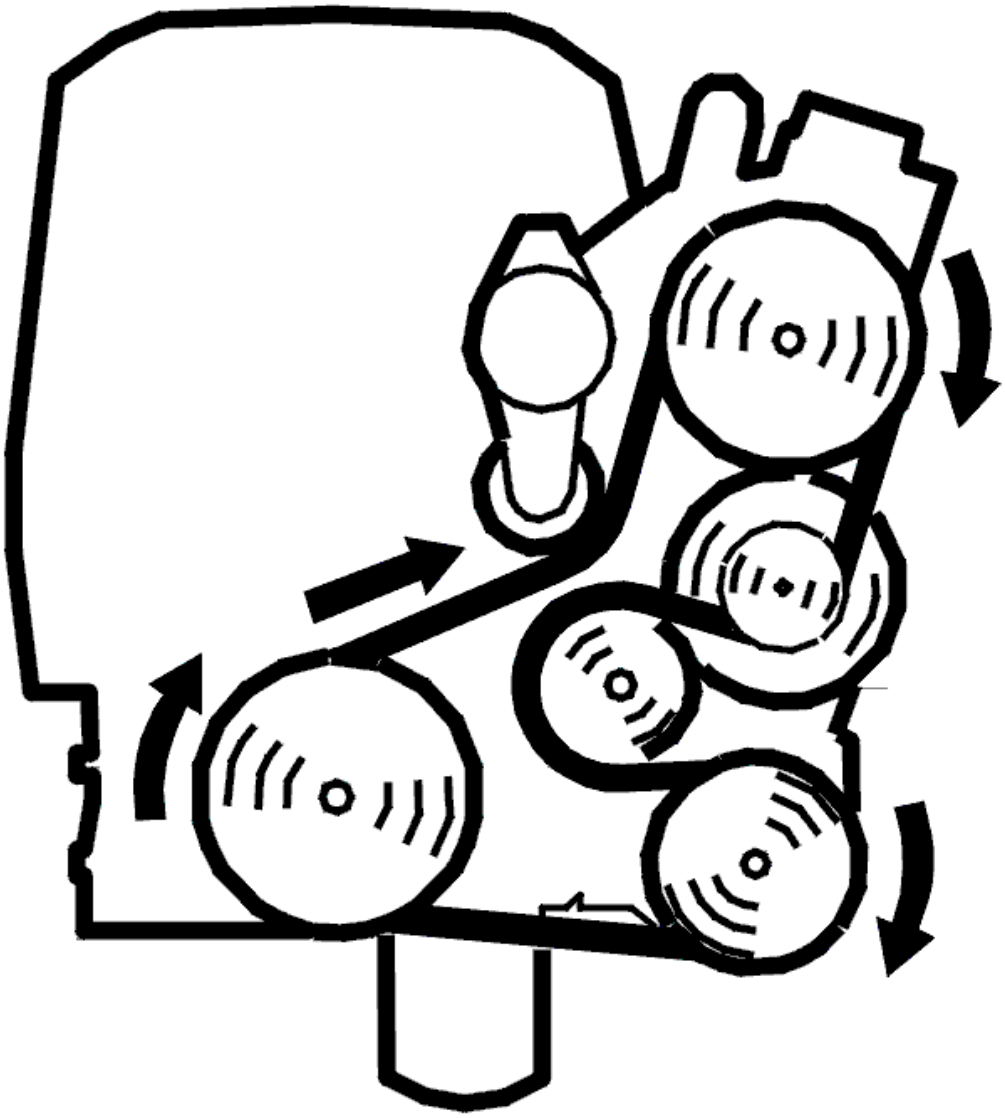

Fig. 84: Belt Routing / Engine Idling - Volvo
Courtesy of VOLVO CARS CORPORATION

Fig. 85: Identifying Ignition On Position
Courtesy of VOLVO CARS CORPORATION

- Reinstall the connectors, components etc.
- Ignition on.

NOTE: **For certain faults in the CAN-net where control modules have stopped communicating, it may help to disconnect/reconnect the battery to "restart" the control module/CAN-net.**

- Erase diagnostic trouble codes (DTCs) in all control modules.
- Ignition off.
- Ignition on.
- Start the vehicle. Allow the vehicle to run for 10 minutes. Start the engine. Allow the engine to run at idle speed for 10 minutes
- Read out the diagnostic trouble codes in the vehicle via the DIAGNOSTICS tab.

Does the diagnostic trouble code (DTC) for faulty communication return?

- **YES**

  Refer to **INFORMATION**

- **NO**

  OKAY: Troubleshooting has been completed.

CHECKING SHORT-CIRCUITING TO GROUND/VOLTAGE IN CAN-NET

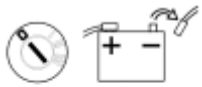

Fig. 86: Ignition Off And Disconnecting Battery Negative Lead
Courtesy of VOLVO CARS CORPORATION

- Ignition off.
- Disconnect the battery negative lead.
- Connect OBDII-Box **(951 3015)** to the diagnostics socket.

  For general information about CAN-troubleshooting, see **GENERAL INFORMATION ABOUT FAULT-TRACING IN THE CAN NETWORK**

  Checking for a short-circuit to ground

  Measure resistance between the following connections on the OBDII-box/diagnostics socket.

  - #3 and #4 (ground). Measurement is shown in the illustration. The resistance should be above 1 kohms.

- #11 and #4 (ground). The resistance should be above 1 kohms.

If resistance is below 1 kohms this indicates short-circuiting between the CAN-line and ground.

Checking for a short-circuit to voltage

Measure resistance between the following connections on the OBDII-box/diagnostics socket.

- #3 and #16 (voltage). Measurement is shown in the illustration. The resistance should be above 1 kohms.
- #11 and #16 (voltage). The resistance should be above 1 kohms.

If resistance is below 1 kohms this indicates short-circuiting between the CAN-line and voltage cable.

Twist the cable harness and wiggle connectors where they can be accessed along the cable harness during every measurement, and note if the resistance changes to detect intermittent short-circuits or open circuit.

HINT: Part the CAN-net at suitable points to decide where a short-circuit may be found.

NOTE: After fault with control modules that interfere with communication, other control modules may remain in Limp-Home (that is, they work with reduced functionality) even when the ignition has been turned off and on a few times. For certain faults in the CAN-net where control modules have stopped communicating, it may help to disconnect/reconnect the battery to "restart" the control module/CAN-net.

Remedy as necessary.

Other information

- see **BATTERY, DISCONNECTING**
- see **CHECKING WIRING AND TERMINALS**

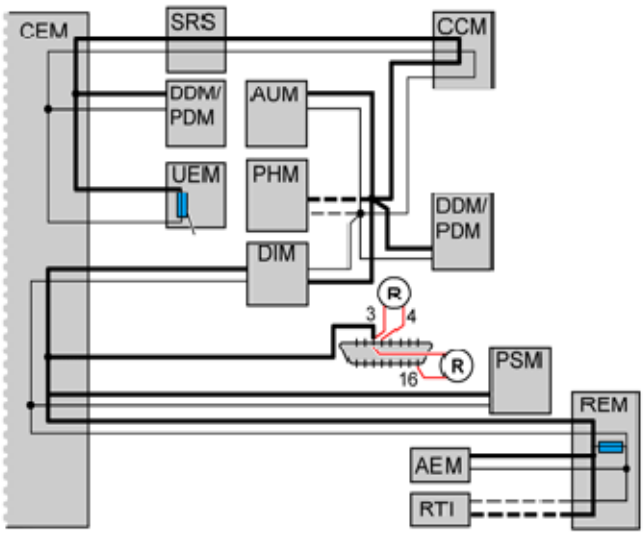

Fig. 87: Checking For Short-Circuiting To Ground/Voltage In CAN-net
Courtesy of VOLVO CARS CORPORATION

Was a fault detected?

- **YES**

  Refer to **VERIFICATION**

- **NO**

  Refer to **CHECKING THE AMOUNT OF TRAFFIC ON THE LS-CAN**

CHECKING VOLTAGE-DROP IN CABLE FOR CAN-H AND CAN-L, RESPECTIVELY

Fig. 88: Identifying Ignition On Position
Courtesy of VOLVO CARS CORPORATION

- Connect the battery.
- Ignition on.
- Connect OBDII-Box **(951 3015)** to the diagnostics socket.

  For general information about CAN-troubleshooting, see **GENERAL INFORMATION ABOUT FAULT-TRACING IN THE CAN NETWORK**

  In principle, the voltage measured in each cable in the CAN-net shall be the same at each control module

in the network. This means that the voltage-drop in the cable for CAN-H and CAN-L, respectively, between the control modules should be very low. If there is a voltage-difference in the CAN-lines between the diagnostics socket/Central electronic module (CEM) and a control module due to, e. g., contact resistance in a connector or branching, communication may be lost/interfered with. Check if there is voltage-drop in the cable for CAN-H and CAN-L between the diagnostics socket/Central electronic module (CEM) and the control module where there is problem with communication.

Carry out the following:

Measure voltage between the following connections on the OBDII-box/diagnostics socket.

- #3 and corresponding connection on relevant control module for CAN-H. The voltage shall be lower than 50 mV.
- #11 and corresponding connection on relevant control module for CAN-L. The voltage shall be lower than 50 mV.

If voltage is too high, this indicates too high contact resistance in cable, connector, or branching. Check the circuit between the diagnostics socket and control module in question for contact resistance and oxidation.

NOTE: **After fault with control modules that interfere with communication, other control modules may remain in Limp-Home (that is, they work with reduced functionality) even when the ignition has been turned off and on a few times. For certain faults in the CAN-net where control modules have stopped communicating, it may help to disconnect/reconnect the battery to "restart" the control module/CAN-net.**

Remedy wiring as necessary.

Other information

- see **CHECKING WIRING AND TERMINALS**

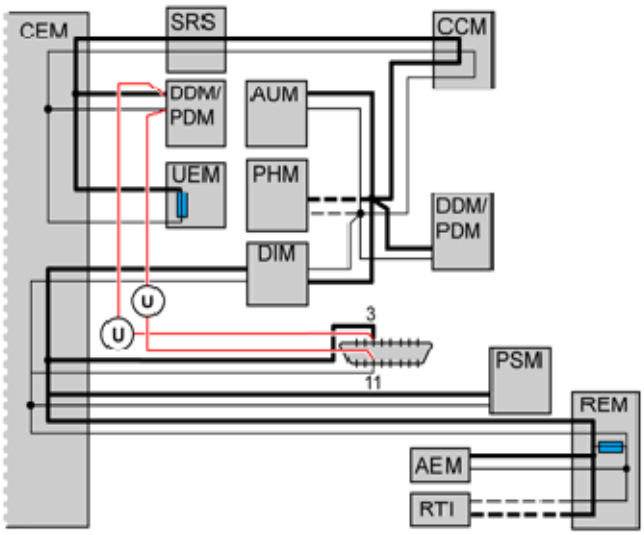

Fig. 89: Checking For Voltage-Drop In Cable For CAN-H And CAN-L
Courtesy of VOLVO CARS CORPORATION

- **Continue**

  Refer to **VERIFICATION**

INFORMATION

FAULT-TRACING INFORMATION

The fault should have been detected and remedied. As this is not the case fault-tracing has failed.

Exit fault-tracing for this diagnostic trouble code (DTC) or make another attempt.

TROUBLESHOOTING USING DICE ERROR FRAME FINDER

Interference, intermittent faults, wrong messages on CAN-net (chattering modules), ground faults, and loose connections, etc., are examples of faults that can be detected using the tool DiCE Error Frame Finder during troubleshooting. The tool registers fault messages used on the CAN-net. Fault messages may be caused by short intermittent malfunctions on the CAN-net or by a control module sending fault messages. DiCE Error Frame Finder can only be used to detect CAN-faults of intermittent nature. If network does not work, use a multimeter to measure. Typical behavior for DiCE Error Frame Finder when a problem has occurred is that the blue LED flashes several times with short pauses, and then stops and then starts flashing again.

- Ignition on.
- Insert special tool 951 3010 in DiCE Error Frame Finder.
- Connect DiCE to the diagnostics socket.
- Note the blue LED-indicator. The indicator flashes to show detection of fault messages.

NOTE: Certain interference may occur without any real fault

1. Firmwire status, green. When the green light flashes with 4 second intervals DiCE is in fault indication mode.
2. CAN HS, yellow. When the yellow light flashes or is on constantly there is a data flow on CAN HS.
3. Fault code indicator, blue. When the blue light flashes with brief flashes DiCE indicates that there are fault code signals on CAN LS or CAN HS.
4. CAN LS, red/orange. When the red/orange light flashes or is on constantly there is a data flow on CAN LS.

Cable fault

- Shake the cables lightly and pull lightly on the connections during the check to locate any fault. Note the blue LED-indicator.

"Chatting" control modules

- "Chatting" control modules may be difficult to find and troubleshooting may take time. Let the vehicle stand with DiCE connected for an extended time period. Afterwards, activate functions to provoke a malfunction. It may take up to several hours before the fault messages are sent. When the indicator starts to flash, remove the fuse for one control module at a time until the indicator stops flashing. When the indicator stops flashing, restore the fuse for the relevant control module and check that the indicator starts to flash again. Then it is likely that the problem is identified.

Remedy wiring as necessary.

Fig. 90: Identifying Buttons And Display Screen On DiCE Error Frame Finder
Courtesy of VOLVO CARS CORPORATION

AEM-E003: CONFIGURATION FAULT. FAULTY CONFIGURATION (2005-2011)

DIAGNOSTIC TROUBLE CODE (DTC) INFORMATION AEM-E003

Condition

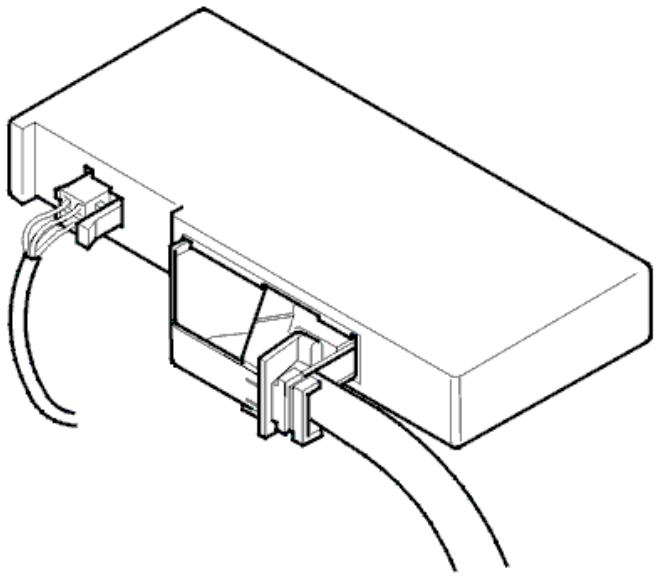

Fig. 91: Accessory Electronic Module
Courtesy of VOLVO CARS CORPORATION

The control module compares its configuration ID with the signal configuration transmitted on the control area network (CAN) by the central electronic module (CEM). If the configuration IDs do not correspond the fault code is stored. The diagnostic trouble code (DTC) is also stored if the communication between the control module and the central electronic module (CEM) is interrupted.

NOTE: **In the event of an open-circuit in both the control area network (CAN) cables, it is not possible to communicate with the control module. Therefore it will only be possible to read off the diagnostic trouble code (DTC) if this type of fault is intermittent. When the diagnostic trouble code (DTC) is stored, the control module responds to the diagnostic command, however normal control area network (CAN) communication does not work. ("Expulsion mode")**

Substitute Value

- None.

Possible Source

- Faulty control area network (CAN) configuration ID. (The node is not intended for this car, for example a used control module with different software/hardware.)
- Open-circuit in the control area network (CAN) wiring between the control module and the central electrical module (CEM).

Fault symptom[s]

- Accessories connected to the control module do not function.

SIGNAL MISSING

see **SIGNAL MISSING**

AEM-E003: CONFIGURATION FAULT. FAULTY CONFIGURATION (2003-2004)

DIAGNOSTIC TROUBLE CODE (DTC) INFORMATION AEM-E003

see **DIAGNOSTIC TROUBLE CODE (DTC) INFORMATION AEM-E003**

FAULTY CONFIGURATION (2003)

GENERAL INFORMATION

In order to check the control area network (CAN) cables, the resistance in the network must be measured. The resistance between the two controller area network (CAN) wiring, with the network connected 60 ohms. The resistance can differ depending on the configuration of the car. Permitted values are 55-65 ohms. This applies to both the high speed side network and the low speed side network.

HINT: Take a copy of the data communication side. Note which diagnostic trouble codes (DTCs) are stored in each control module. This facilitates fault-tracing considerably.

Also check if the diagnostic trouble codes (DTCs) for failed communication are stored in the central electronic module (CEM). If this is the case: first fault-trace according to these diagnostic trouble codes (DTCs).

Other information

- see **GENERAL INFORMATION ABOUT FAULT-TRACING IN THE CAN NETWORK**
- **Continue**

  Refer to **CHECKING THE RESISTANCE OF THE CONTROL AREA NETWORK (CAN) CABLES**

CHECKING THE RESISTANCE OF THE CONTROL AREA NETWORK (CAN) CABLES

- Disconnect the battery negative lead. The power to the network must be cut when taking resistance readings. The reading may otherwise be incorrect.

  NOTE: Also read: BATTERY, DISCONNECTING

- Connect the adapter wiring to the central electronic module (CEM).

HINT: Where a breakout box cannot be used, take readings from the rear of the affected connectors if possible. This prevents terminal pins and socket housings being damaged.

When taking readings on the low speed network

- When taking readings on the low speed network, the adapter wiring should be connected to the central electronic module (CEM) and the readings taken from there. The readings can also be taken in the connector for the power seat module (PSM). The advantage of using the adapter wiring connected to the central electronic module (CEM) is that all control modules can be connected to the network when taking readings and there is access to both the high speed and the low speed networks.

  This resistance reading only measures main arteries in the low speed network, not the junctions for the road traffic information module (RTI), accessory electronic module (AEM), power seat module (PSM), phone module (PHM), audio module (AUM), driver's door module (DDM) and passenger door module (PDM).

When taking readings on the high speed network

- When taking readings on the high speed network, the readings should be taken at the engine control module (ECM) using adapter wiring. The engine control module (ECM) must be connected. This resistance reading only takes readings from the main arteries in the high speed network.

Connect the ohmmeter to the terminals for CAN-L and CAN-H on the relevant network. Work the connectors and twist the cable harness. The resistance must be approximately 60 ohms. Permitted values are 55-65 ohms.

Other information

- see **CONNECTING THE BREAKOUT BOX**
- see **CHECKING WIRING AND TERMINALS**

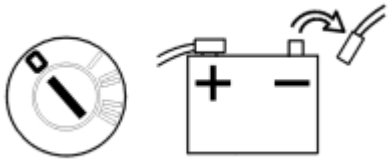

Fig. 92: Identifying Ignition OFF & Negative Battery Cable Disconnected
Courtesy of VOLVO CARS CORPORATION

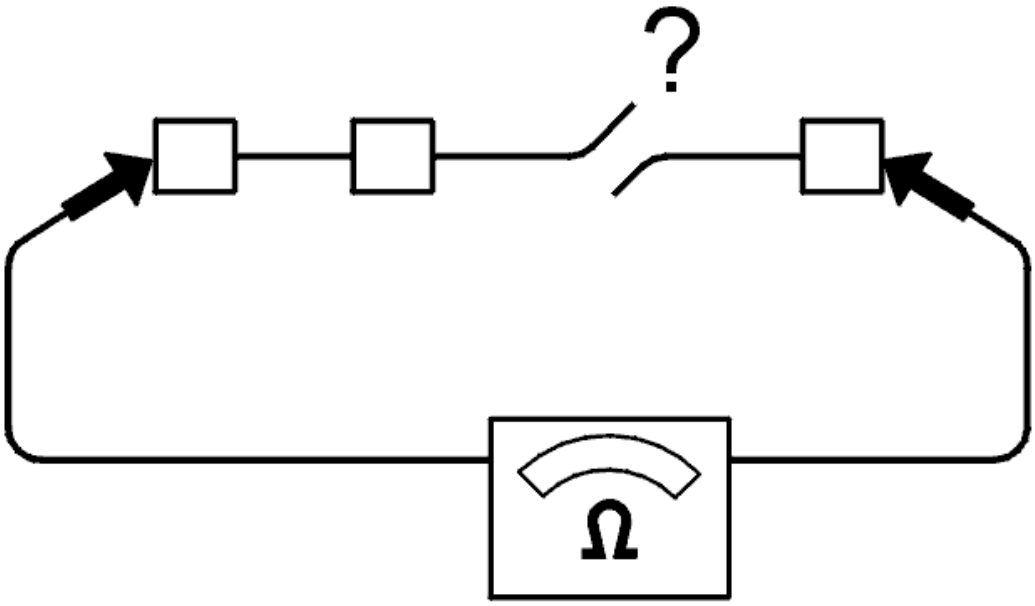

Fig. 93: Checking For Open Circuit
Courtesy of VOLVO CARS CORPORATION

Is the value OK?

- **YES**

  Refer to **CHECKING A SHORT-CIRCUIT IN CAN CABLES**

- **NO**

  Refer to **IDENTIFYING FAULT CAUSES IN THE CAN NETWORK**

CHECKING A SHORT-CIRCUIT IN CAN CABLES

Connect an ohmmeter between the relevant CAN cable (CAN-L and CAN-H) and the power supply, and between the CAN cable and ground. Twist the connectors and turn the cable harness to different positions at each reading to determine any intermittent short-circuits.

Take the following readings:

- The resistance between CAN-L and ground
- The resistance between CAN-L and voltage

- The resistance between CAN-H and ground
- The resistance between CAN-H and voltage.

The resistance must be infinite or very high in all cases (greater than 1 Mohms).

HINT: The reading can be taken from the same connector if the CAN cables, power supply and ground are exposed. If possible, take readings on the rear of the connector to prevent damage to the terminals in the connector. If this is not possible, use the adapter wiring or loose terminal pins to obtain a good contact.

Was a fault detected?

- **YES**

  Refer to **IDENTIFYING FAULT CAUSES IN THE CAN NETWORK**

- **NO**

  Refer to **CHECKING THE TRAFFIC LOAD ON THE CAN CABLES**

CHECKING THE TRAFFIC LOAD ON THE CAN CABLES

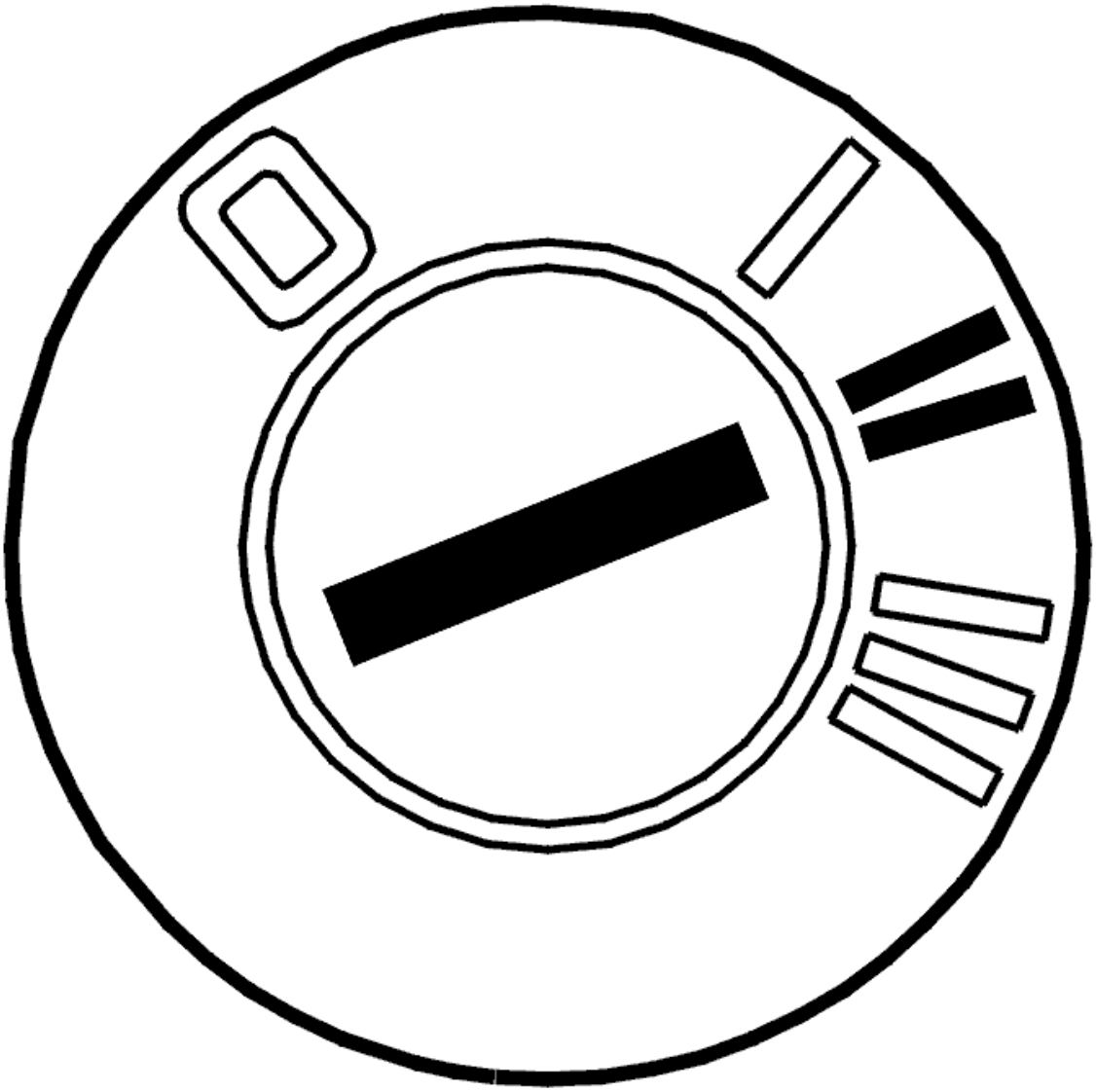

Fig. 94: Identifying Ignition ON
Courtesy of VOLVO CARS CORPORATION

- Connect the battery
- Ignition on

Also read: **BATTERY, DISCONNECTING**

Faults in the CAN network may be due to a control module sending faulty messages that disrupt "normal" communication. When messages are sent incorrectly, this results in a considerable increase in the amount of traffic on the CAN network. Check the load by measuring the average voltage value on the CAN cables in relation to ground.

Connect a voltmeter between CAN-L and ground. The voltage must be approximately 2.3 V.

Then connect a voltmeter between CAN-H and ground. The voltage must be approximately 2.8 V.

HINT: If possible measure from the rear of the affected connectors so that they are not damaged.

Is the value OK?

- **YES**

  Refer to **DOWNLOADING NEW SOFTWARE**

- **NO**

  Refer to **IDENTIFYING A CONTROL MODULE IN THE CAN NETWORK**

IDENTIFYING FAULT CAUSES IN THE CAN NETWORK

- Disconnect a control module that disconnects the CAN network (a control module that has four terminals to the CAN network).

  HINT: For the low speed network, suitable places for disconnecting the network are at the steering wheel module (SWM), the driver information module (DIM) or the climate control module (CCM).

  In the event of a short-circuit between one of the CAN cables and voltage or ground, the fault can be located by disconnecting a control module that disconnects the CAN network. Readings can then be taken to determine on which side of the disconnected control module the fault is located.

  Connect an ohmmeter between the CAN cable and supply voltage or ground. Take readings at both ends of the CAN network where the network is disconnected. Twist and bend the cable harness to locate any intermittent short-circuits. The resistance must be infinite or very high (greater than 1Mohms).

  If a fault can be localized in one direction, disconnect the network at a point further down on the CAN network in the direction in which the fault was discovered and repeat the reading. In this way, try to identify where in the network the fault might be located.

  HINT: A short-circuit between the CAN cables and supply voltage or ground may be in either the wiring or in a control module.

  Rectify the wiring as necessary. Replace the control module if the fault has been localized to a control module.

- **Continue**

  Refer to **VERIFICATION**

IDENTIFYING A CONTROL MODULE IN THE CAN NETWORK

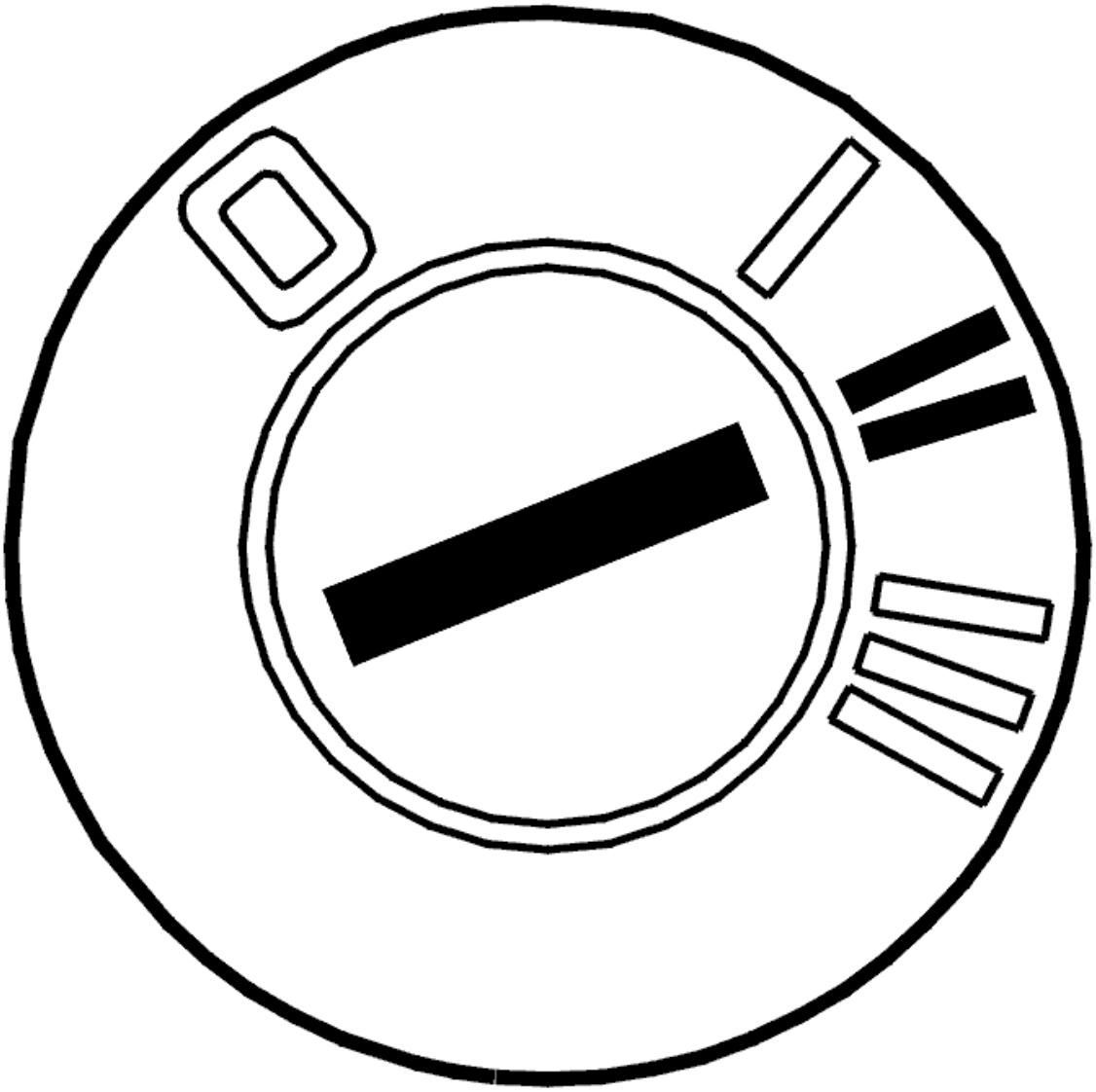

Fig. 95: Identifying Ignition ON
Courtesy of VOLVO CARS CORPORATION

- Connect the battery

  Also read: **BATTERY, DISCONNECTING**

- Ignition on

  If the load on the CAN network is too high, this may be due to a control module sending faulty messages on the CAN network (known as a disruptive control module). The fault may also be due to an intermittent short-circuit to supply voltage or ground in one of the CAN cables. This results in the control modules on the CAN network starting to send faulty messages. The faults can occur without a diagnostic trouble code (DTC) being stored by the control modules. The voltage can be measured between the CAN cables in order to check the load on the CAN network.

Connect a voltmeter between the CAN cables. If the communication on the network is correct, the average voltage value should be approximately 0.5 V (0.4 V to 0.6 V). If there is a fault in the communication, the voltage reading will be approximately 0.7 V or higher.

In order to identify from which control module the faulty communication is being transmitted, cut the supply voltage to one control module at a time and check the voltage in the CAN cables again. The easiest way to cut the supply voltage is to remove a fuse. Repeat until the voltage between the CAN cables drops to approximately 0.5 V.

HINT: When the probable faulty control module has been identified, connect and disconnect the supply voltage to the control module a number of times to verify that the fault appears and disappears.

NOTE: Do not cut the power to the central electronic module (CEM) unless it is the last control module left to check.

The control module that is communicating incorrectly must be replaced. Remedy as necessary.

NOTE: Following a fault involving "disruptive" control modules, other modules may remain in "Limp-Home mode" even after switching the ignition off and on a number of times. To remedy this, disconnect and reconnect the battery negative terminal to restore the control modules to normal function.

Was a fault detected?

- **YES**

  Refer to **VERIFICATION**

- **NO**

  Refer to **DOWNLOADING NEW SOFTWARE**

IDENTIFYING FAULT CAUSES IN THE CAN NETWORK

- Disconnect a control module that disconnects the CAN network (a control module that has four terminals to the CAN network).

  HINT: For the low speed network, suitable places for disconnecting the network are at the steering wheel module (SWM), the driver information module (DIM) or the climate control module (CCM).

  In the event of an open-circuit or a short-circuit between the CAN cables, the fault can be localized by disconnecting a control module that disconnects the CAN network. Readings can then be taken to determine on which side of the disconnected control module the fault is located.

  Connect an ohmmeter between the CAN cables. Take readings at both ends of the CAN network where

the network is disconnected. Twist and bend the cable harness to locate any intermittent short-circuits. The resistance must be 120 ohm.

If a fault can be localized in one direction, disconnect the network at a point further down on the CAN network in the direction in which the fault was discovered and repeat the reading. In this way, try to identify where in the network the fault might be located.

Remedy the cables as necessary.

Was a fault detected?

- **YES**

  Refer to **VERIFICATION**

- **NO**

  Refer to **DOWNLOADING NEW SOFTWARE**

DOWNLOADING NEW SOFTWARE

HINT: If no other faults are found, new software can be downloaded to remedy the fault in the control module which stored the diagnostic trouble code (DTC). Downloading of software must occur after agreement with the customer.

Downloading of software occurs according to the replacement parts catalogue/Index Software components.

HINT: Install a bookmark on this side to continue fault-tracing after downloading new software.

- **Continue**

  Refer to **VERIFICATION**

VERIFICATION

HINT: After carrying out the repair, check that the fault has been remedied.

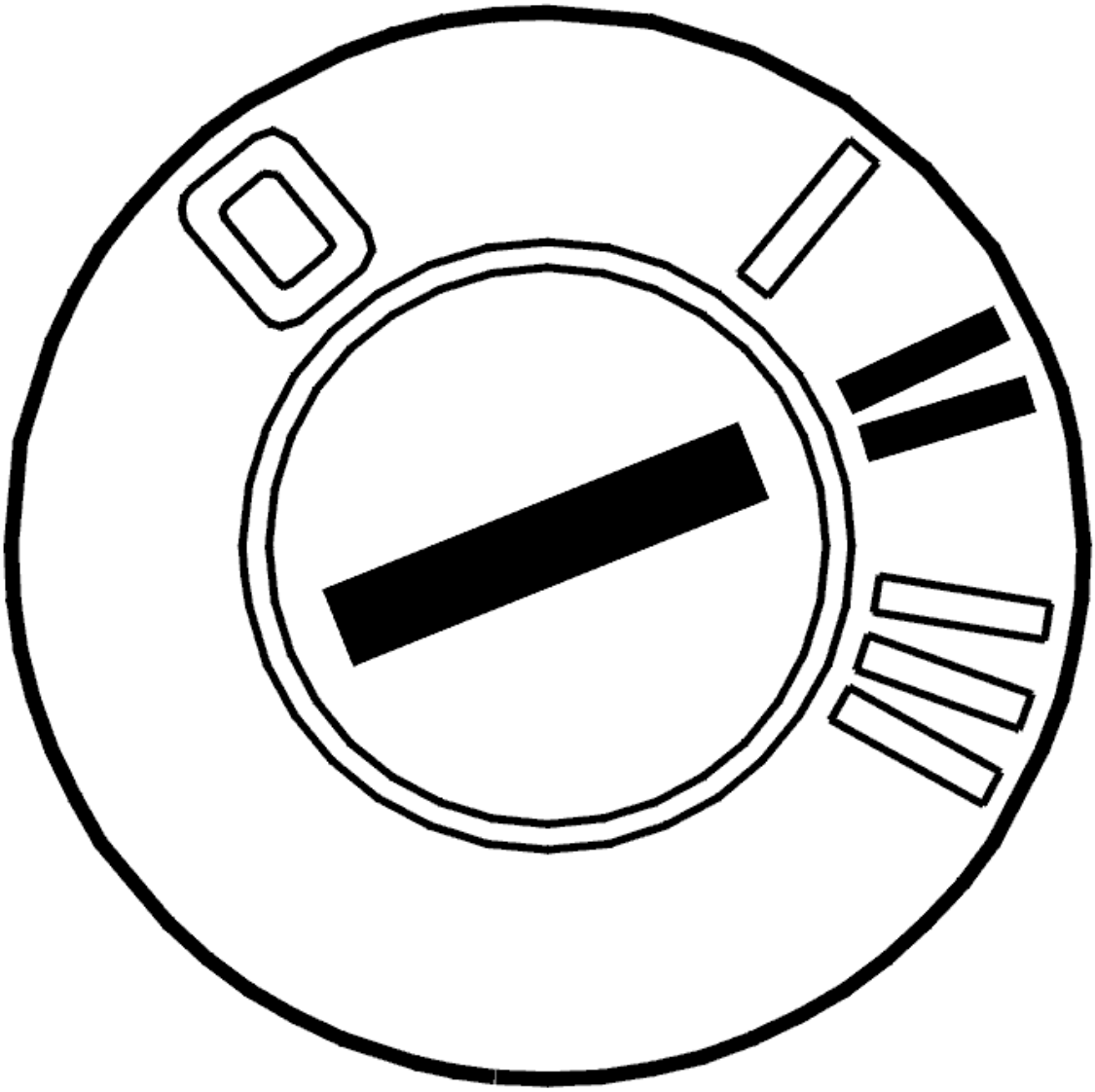

Fig. 96: Identifying Ignition ON
Courtesy of VOLVO CARS CORPORATION

- Reinstall the connectors, components, etc.
- Ignition on
- Erase diagnostic trouble codes using the VCT2000 (or appropriate scan tool)
- Start the car. Allow the car to run for 10 minutes.
- Read off diagnostic trouble codes (DTCs).

Does the diagnostic trouble code (DTC) for a communication fault recur (CEM-1A5X or CEM-1A6X)?

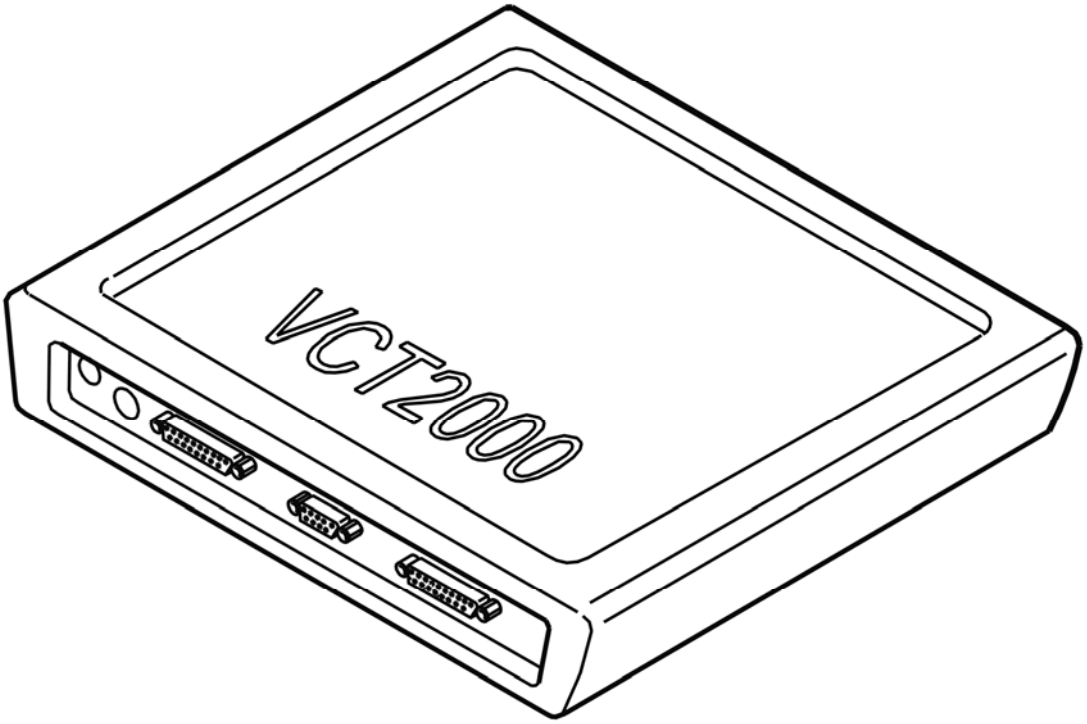

Fig. 97: Identifying VCT2000 Diagnostic Tool Symbol In VIDA
Courtesy of VOLVO CARS CORPORATION

Does the diagnostic trouble code (DTC) recur?

- **YES**

  Refer to **INFORMATION**

- **NO**

  OKAY: Troubleshooting has been completed.

INFORMATION

FAULT-TRACING INFORMATION

The fault should have been detected and remedied. As this is not the case fault-tracing has failed.

Exit fault-tracing for this diagnostic trouble code (DTC) or make another attempt.

FAULTY CONFIGURATION (2004)

GENERAL INFORMATION

In order to check the control area network (CAN) cables, the resistance in the network must be measured. The resistance between the two controller area network (CAN) wiring, with the network connected 60 ohms. The resistance can differ depending on the configuration of the car. Permitted values are 55-65 ohms. This applies to both the high speed side network and the low speed side network.

HINT: Take a copy of the data communication side. Note which diagnostic trouble codes (DTCs) are stored in each control module. This facilitates fault-tracing considerably.

Also check if the diagnostic trouble codes (DTCs) for failed communication are stored in the central electronic module (CEM). If this is the case: first fault-trace according to these diagnostic trouble codes (DTCs).

Other information

- see **GENERAL INFORMATION ABOUT FAULT-TRACING IN THE CAN NETWORK (2004)**
- **Continue**

  Refer to **CHECKING THE RESISTANCE OF THE CONTROL AREA NETWORK (CAN) CABLES**

CHECKING THE RESISTANCE OF THE CONTROL AREA NETWORK (CAN) CABLES

- Disconnect the battery negative lead. The power to the network must be cut when taking resistance readings. The reading may otherwise be incorrect.

  NOTE: Also read: BATTERY, DISCONNECTING

- Connect the adapter wiring to the central electronic module (CEM).

  HINT: Where a breakout box cannot be used, take readings from the rear of the affected connectors if possible. This prevents terminal pins and socket housings being damaged.

  When taking readings on the low speed network

  - When taking readings on the low speed network, the adapter wiring should be connected to the central electronic module (CEM) and the readings taken from there. The readings can also be taken in the connector for the power seat module (PSM). The advantage of using the adapter wiring connected to the central electronic module (CEM) is that all control modules can be connected to the network when taking readings and there is access to both the high speed and the low speed networks.

    This resistance reading only measures main arteries in the low speed network, not the junctions for the road traffic information module (RTI), accessory electronic module (AEM), power seat module (PSM), phone module (PHM), audio module (AUM), driver's door module (DDM) and passenger door module (PDM).

  When taking readings on the high speed network

- When taking readings on the high speed network, the readings should be taken at the engine control module (ECM) using adapter wiring. The engine control module (ECM) must be connected. This resistance reading only takes readings from the main arteries in the high speed network.

Connect the ohmmeter to the terminals for CAN-L and CAN-H on the relevant network. Work the connectors and twist the cable harness. The resistance must be approximately 60 ohms. Permitted values are 55-65 ohms.

Other information

- see **CONNECTING THE BREAKOUT BOX**
- see **CHECKING WIRING AND TERMINALS**

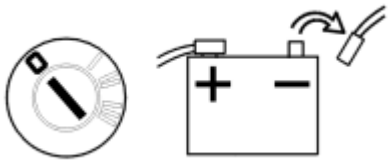

Fig. 98: Identifying Ignition OFF & Negative Battery Cable Disconnected
Courtesy of VOLVO CARS CORPORATION

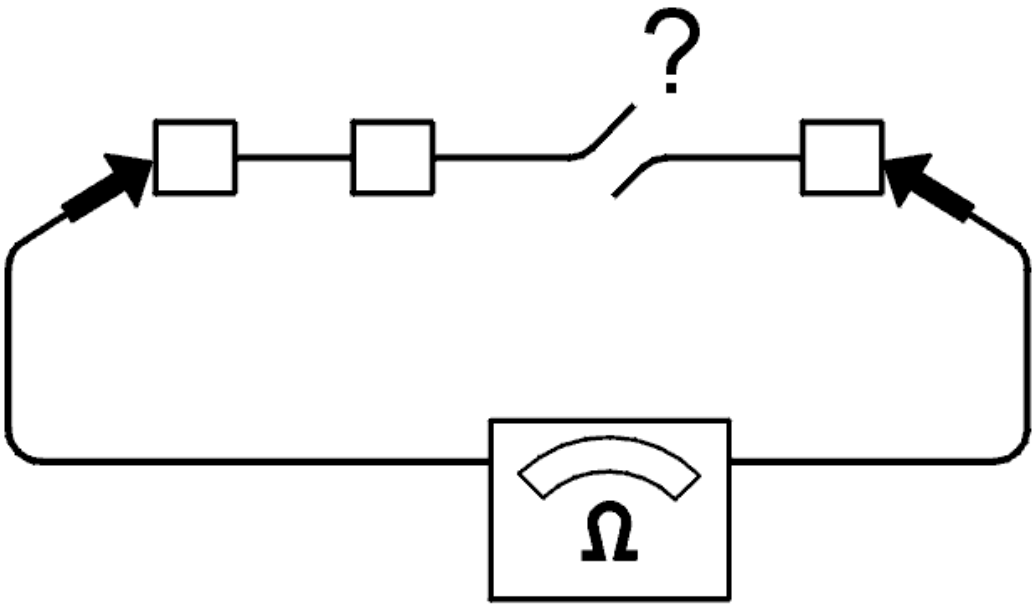

Fig. 99: Checking For Open Circuit

Courtesy of VOLVO CARS CORPORATION

Is the value OK?

- **YES**

  Refer to **CHECKING A SHORT-CIRCUIT IN CAN CABLES**

- **NO**

  Refer to **IDENTIFYING FAULT CAUSES IN THE CAN NETWORK**

CHECKING A SHORT-CIRCUIT IN CAN CABLES

Connect an ohmmeter between the relevant CAN cable (CAN-L and CAN-H) and the power supply, and between the CAN cable and ground. Twist the connectors and turn the cable harness to different positions at each reading to determine any intermittent short-circuits.

Take the following readings:

- The resistance between CAN-L and ground
- The resistance between CAN-L and voltage
- The resistance between CAN-H and ground
- The resistance between CAN-H and voltage.

The resistance must be infinite or very high in all cases (greater than 1 Mohms).

HINT: The reading can be taken from the same connector if the CAN cables, power supply and ground are exposed. If possible, take readings on the rear of the connector to prevent damage to the terminals in the connector. If this is not possible, use the adapter wiring or loose terminal pins to obtain a good contact.

Was a fault detected?

- **YES**

  Refer to **IDENTIFYING FAULT CAUSES IN THE CAN NETWORK**

- **NO**

  Refer to **CHECKING THE TRAFFIC LOAD ON THE CAN CABLES**

CHECKING THE TRAFFIC LOAD ON THE CAN CABLES

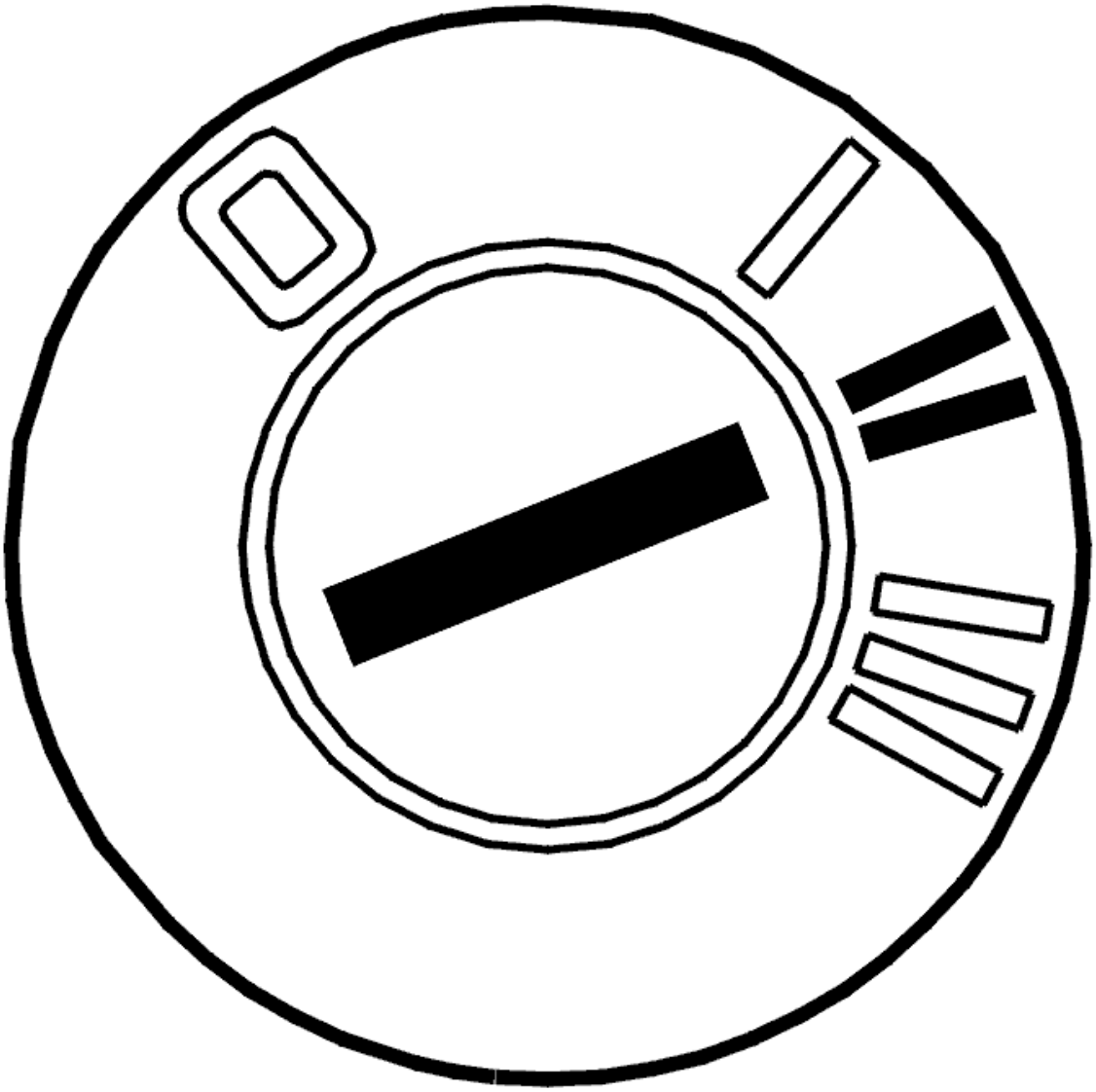

Fig. 100: Identifying Ignition ON
Courtesy of VOLVO CARS CORPORATION

- Connect the battery
- Ignition on

Also read: **BATTERY, DISCONNECTING**

Faults in the CAN network may be due to a control module sending faulty messages that disrupt "normal" communication. When messages are sent incorrectly, this results in a considerable increase in the amount of traffic on the CAN network. Check the load by measuring the average voltage value on the CAN cables in relation to ground.

Connect a voltmeter between CAN-L and ground. The voltage must be approximately 2.3 V.

Then connect a voltmeter between CAN-H and ground. The voltage must be approximately 2.8 V.

HINT: If possible measure from the rear of the affected connectors so that they are not damaged.

Is the value OK?

- **YES**

  Refer to **DOWNLOADING NEW SOFTWARE**

- **NO**

  Refer to **IDENTIFYING A CONTROL MODULE IN THE CAN NETWORK**

IDENTIFYING FAULT CAUSES IN THE CAN NETWORK

- Disconnect a control module that disconnects the CAN network (a control module that has four terminals to the CAN network).

  HINT: For the low speed network, suitable places for disconnecting the network are at the steering wheel module (SWM), the driver information module (DIM) or the climate control module (CCM).

  In the event of a short-circuit between one of the CAN cables and voltage or ground, the fault can be located by disconnecting a control module that disconnects the CAN network. Readings can then be taken to determine on which side of the disconnected control module the fault is located.

  Connect an ohmmeter between the CAN cable and supply voltage or ground. Take readings at both ends of the CAN network where the network is disconnected. Twist and bend the cable harness to locate any intermittent short-circuits. The resistance must be infinite or very high (greater than 1Mohms).

  If a fault can be localized in one direction, disconnect the network at a point further down on the CAN network in the direction in which the fault was discovered and repeat the reading. In this way, try to identify where in the network the fault might be located.

  HINT: A short-circuit between the CAN cables and supply voltage or ground may be in either the wiring or in a control module.

  Rectify the wiring as necessary. Replace the control module if the fault has been localized to a control module.

- **Continue**

  Refer to **VERIFICATION**

IDENTIFYING A CONTROL MODULE IN THE CAN NETWORK

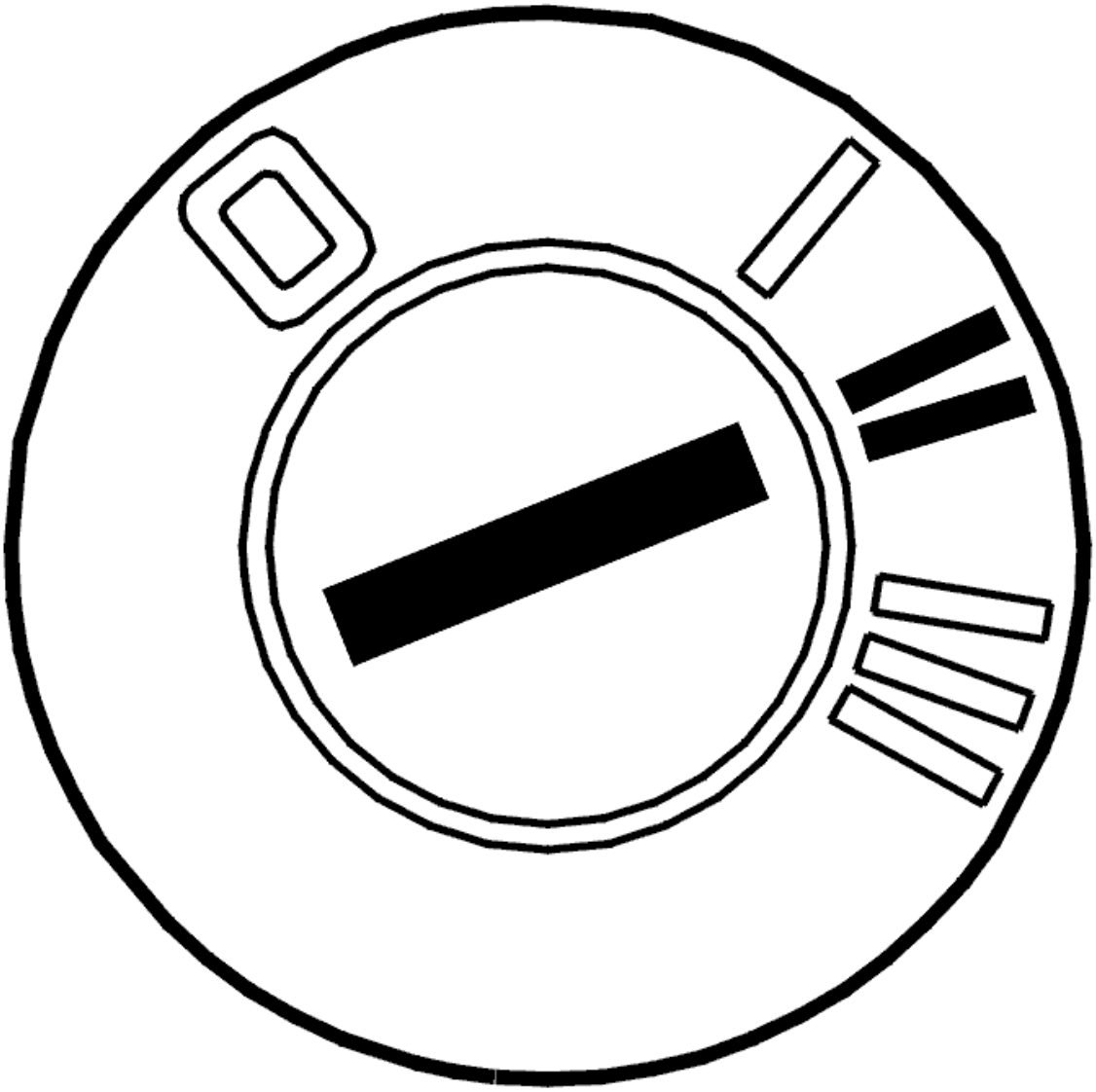

Fig. 101: Identifying Ignition ON
Courtesy of VOLVO CARS CORPORATION

- Connect the battery

  Also read: **BATTERY, DISCONNECTING**

- Ignition on

  If the load on the CAN network is too high, this may be due to a control module sending faulty messages on the CAN network (known as a disruptive control module). The fault may also be due to an intermittent short-circuit to supply voltage or ground in one of the CAN cables. This results in the control modules on the CAN network starting to send faulty messages. The faults can occur without a diagnostic trouble code (DTC) being stored by the control modules. The voltage can be measured between the CAN cables in order to check the load on the CAN network.

Connect a voltmeter between the CAN cables. If the communication on the network is correct, the average voltage value should be approximately 0.5 V (0.4 V to 0.6 V). If there is a fault in the communication, the voltage reading will be approximately 0.7 V or higher.

In order to identify from which control module the faulty communication is being transmitted, cut the supply voltage to one control module at a time and check the voltage in the CAN cables again. The easiest way to cut the supply voltage is to remove a fuse. Repeat until the voltage between the CAN cables drops to approximately 0.5 V.

HINT: When the probable faulty control module has been identified, connect and disconnect the supply voltage to the control module a number of times to verify that the fault appears and disappears.

NOTE: Do not cut the power to the central electronic module (CEM) unless it is the last control module left to check.

The control module that is communicating incorrectly must be replaced. Remedy as necessary.

NOTE: Following a fault involving "disruptive" control modules, other modules may remain in "Limp-Home mode" even after switching the ignition off and on a number of times. To remedy this, disconnect and reconnect the battery negative terminal to restore the control modules to normal function.

Was a fault detected?

- **YES**

  Refer to **VERIFICATION**

- **NO**

  Refer to **DOWNLOADING NEW SOFTWARE**

IDENTIFYING FAULT CAUSES IN THE CAN NETWORK

- Disconnect a control module that disconnects the CAN network (a control module that has four terminals to the CAN network).

  HINT: For the low speed network, suitable places for disconnecting the network are at the steering wheel module (SWM), the driver information module (DIM) or the climate control module (CCM).

  In the event of an open-circuit or a short-circuit between the CAN cables, the fault can be localized by disconnecting a control module that disconnects the CAN network. Readings can then be taken to determine on which side of the disconnected control module the fault is located.

  Connect an ohmmeter between the CAN cables. Take readings at both ends of the CAN network where

the network is disconnected. Twist and bend the cable harness to locate any intermittent short-circuits. The resistance must be 120 ohm.

If a fault can be localized in one direction, disconnect the network at a point further down on the CAN network in the direction in which the fault was discovered and repeat the reading. In this way, try to identify where in the network the fault might be located.

Remedy the cables as necessary.

Was a fault detected?

- **YES**

  Refer to **VERIFICATION**

- **NO**

  Refer to **DOWNLOADING NEW SOFTWARE**

DOWNLOADING NEW SOFTWARE

HINT: If no other faults are found, new software can be downloaded to remedy the fault in the control module which stored the diagnostic trouble code (DTC). Downloading of software must occur after agreement with the customer.

Downloading of software occurs according to the replacement parts catalogue/Index Software components.

HINT: Install a bookmark on this side to continue fault-tracing after downloading new software.

- **Continue**

  Refer to **VERIFICATION**

VERIFICATION

HINT: After carrying out the repair, check that the fault has been remedied.

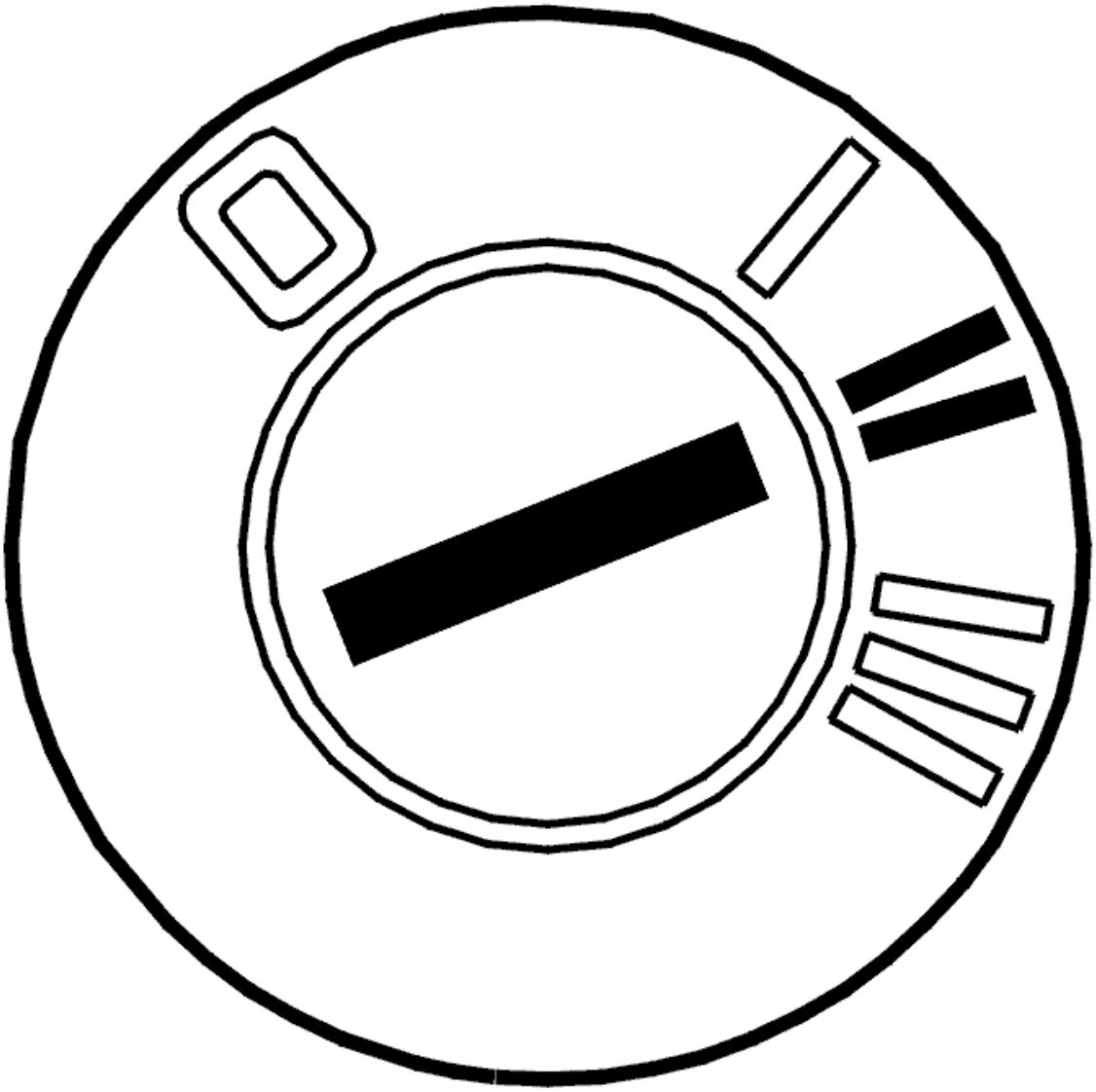

Fig. 102: Identifying Ignition ON
Courtesy of VOLVO CARS CORPORATION

- Reinstall the connectors, components, etc.
- Ignition on
- Erase diagnostic trouble codes using the VCT2000 (or appropriate scan tool)
- Start the car. Allow the car to run for 10 minutes.
- Read off diagnostic trouble codes (DTCs).

Does the diagnostic trouble code (DTC) for a communication fault recur (CEM-1A5X or CEM-1A6X)?

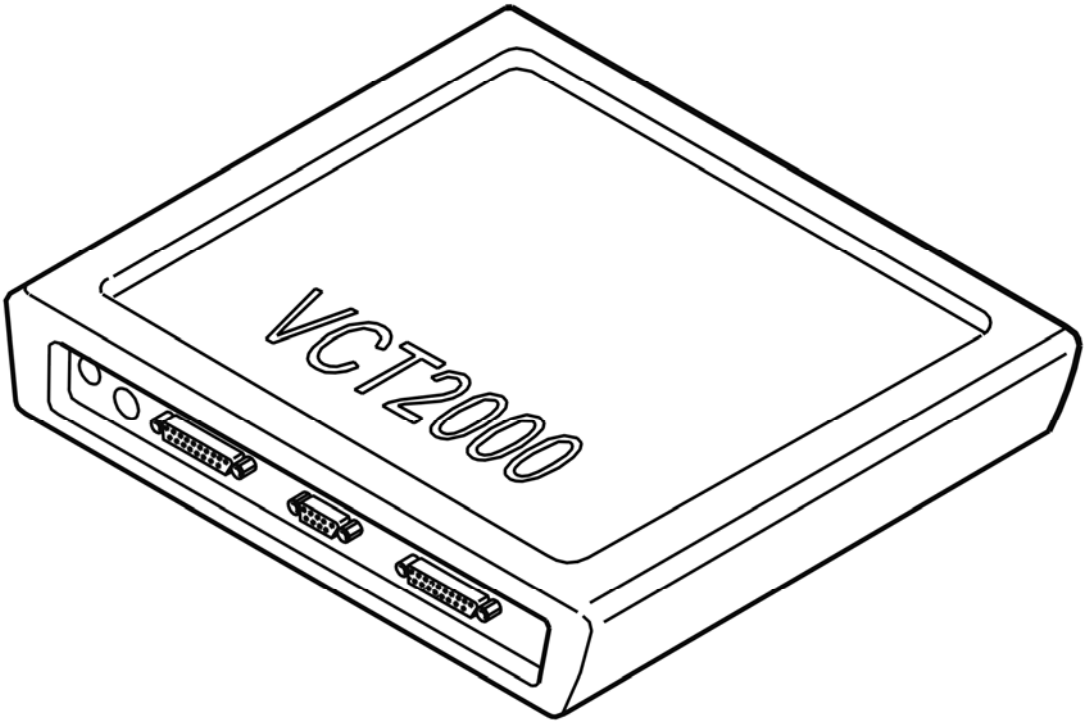

Fig. 103: Identifying VCT2000 Diagnostic Tool Symbol In VIDA
Courtesy of VOLVO CARS CORPORATION

Does the diagnostic trouble code (DTC) recur?

- **YES**

  Refer to **INFORMATION**

- **NO**

  OKAY: Troubleshooting has been completed.

INFORMATION

FAULT-TRACING INFORMATION

The fault should have been detected and remedied. As this is not the case fault-tracing has failed.

Exit fault-tracing for this diagnostic trouble code (DTC) or make another attempt.

AEM-XXXX: UNKNOWN DIAGNOSTIC TROUBLE CODE (DTC) FOR THE CURRENT CONTROL MODULE VERSION (2003-2011)

UNKNOWN DIAGNOSTIC TROUBLE CODE (DTC) FOR THE CURRENT CONTROL MODULE VERSION

READING OFF DIAGNOSTIC TROUBLE CODES (DTC)

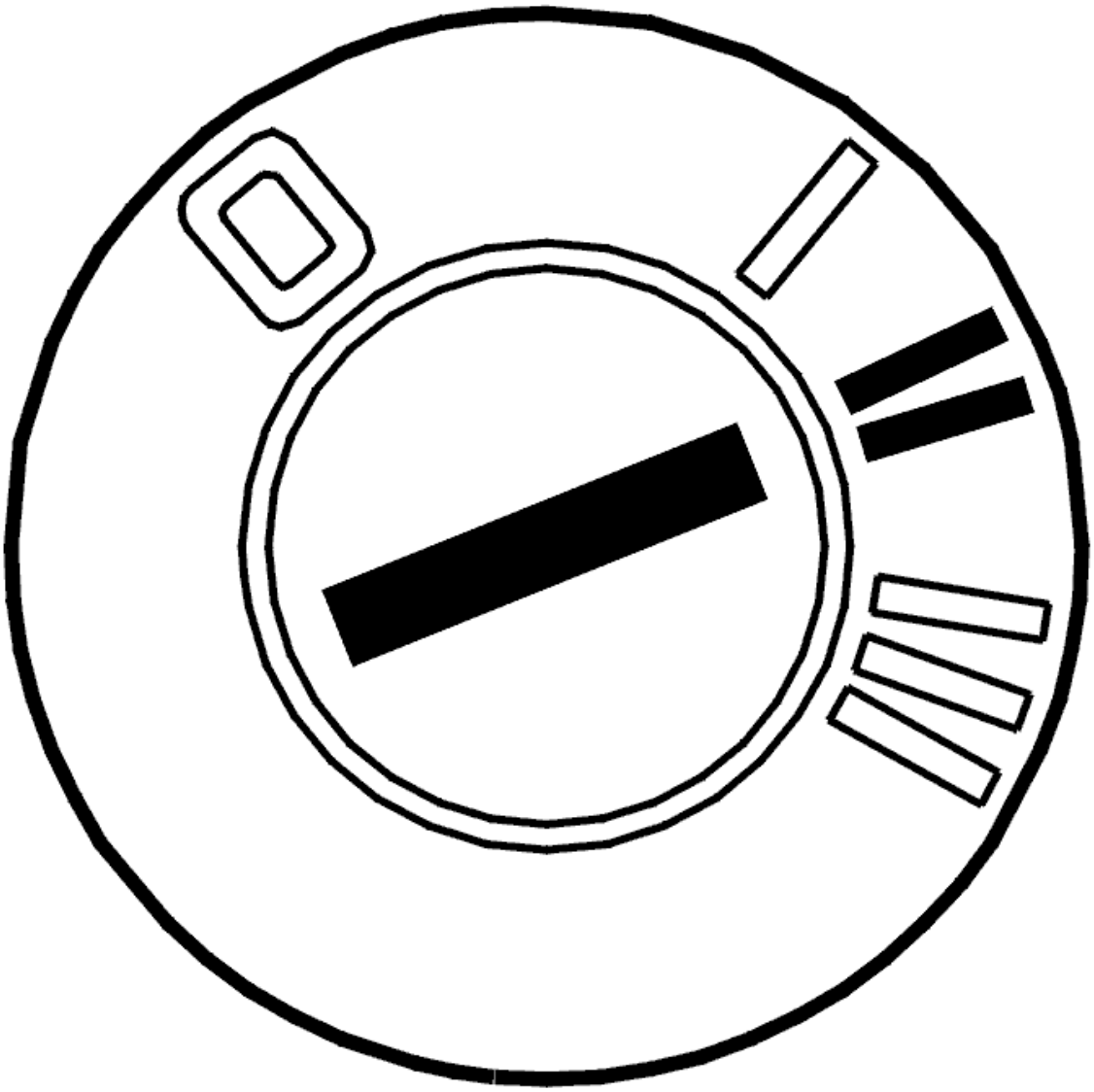

Fig. 104: Identifying Ignition ON
Courtesy of VOLVO CARS CORPORATION

- Ignition on.

  Read off the diagnostic trouble code (DTC) that is stored in the car.

  Make a note of the code for reporting purposes.

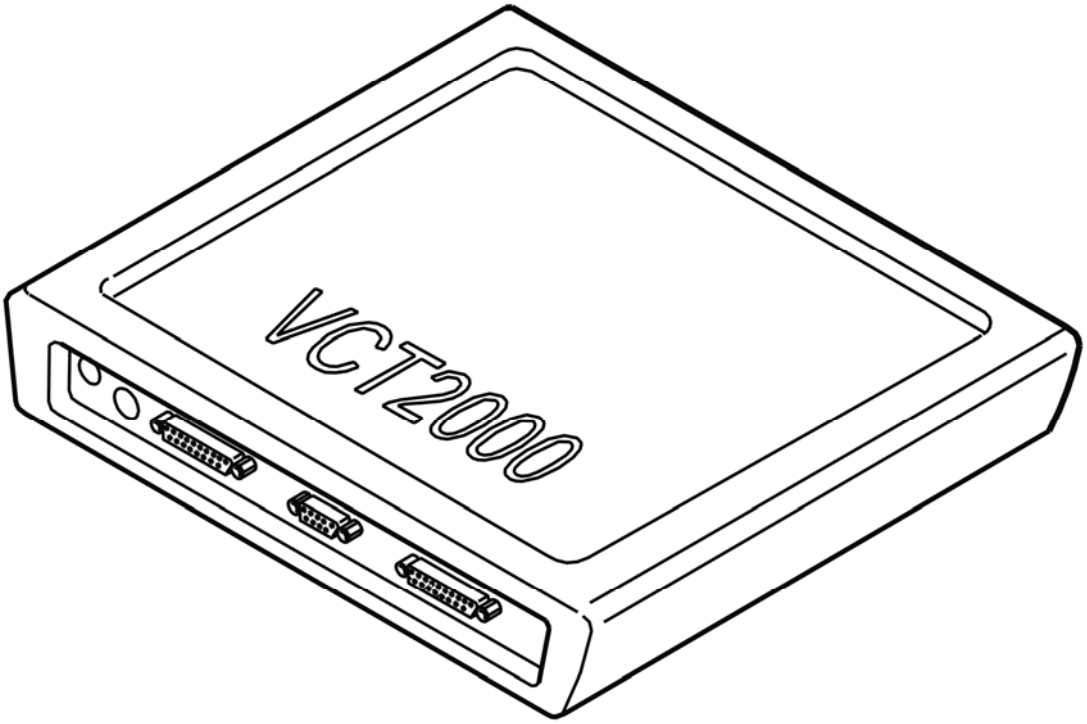

Fig. 105: Identifying VCT2000 Diagnostic Tool Symbol In VIDA
Courtesy of VOLVO CARS CORPORATION

AUU-0001: BATTERY VOLTAGE. ALGORITHM BASED FAILURES (2007-2011)

DIAGNOSTIC TROUBLE CODE (DTC) INFORMATION AUU-0001

Condition

Accessory USB Unit (AUU) checks the voltage feed and compares it with the voltage across the central electronic module (CEM).

The diagnostic trouble code (DTC) is stored if the control module detects that:

- The difference between the voltage of Accessory USB Unit (AUU) and central electronic module (CEM) is greater than 2 V.

The control module's test for the diagnostic trouble code (DTC) starts in the event of:

- Activated control module.
- Battery voltage between 9 - 16 V.

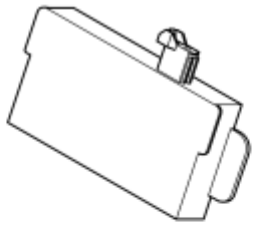

Fig. 106: Identifying Accessory USB Unit (AUU)
Courtesy of VOLVO CARS CORPORATION

Substitute Value

- None.

Possible Source

Signal too high:

- Short-circuit to supply voltage in the cable.

Signal too low:

- Short-circuit to ground in the cable.
- Open-circuit in the power supply cable.

Fault symptom[s]

- USB unit/Does not work

FAULT-TRACING

FAULT-TRACING INFORMATION

Use the following information and general checks during fault-tracing.

NOTE: Check that the fuses are intact. For locations, see the owner's manual, cover for fuse box, fuse ratings or similar.

1. Check, if possible, relevant functions in the vehicle using buttons/controls/test drives to determine the status of the fault.

NOTE: **If the vehicle does not show any of the given symptoms in the diagnostic trouble code information (DTC), this may mean that the fault is intermittent or that the control module is not detecting the fault at this moment.**

2. Use the diagnostic trouble code's **frozen values** , **status identifiers** and **counter** to determine the operating conditions when the fault was detected, the fault's current status and any degree of intermittence of the fault.
3. Check and fault-trace according to **the fault causes** that are specified in the **diagnostic trouble code (DTC) information** .
4. Use **VIDA (Volvo scan tool)** . Read off the parameters, activate components and functions, carry out quick tests and checking routines for the diagnostic trouble codes to identify the fault.
5. Check relevant components according to **Component specifications** .
6. Check relevant signals according to service information for **signal specification** and **breakout box** .

Remedy as necessary.

Other information

- see **SIGNAL SPECIFICATION**
- see **LOCATION OF COMPONENTS**
- see **CHECKING THE SUPPLY VOLTAGE/GROUND TERMINAL**
- see **UNIVERSAL BUS MODULE (USB)**

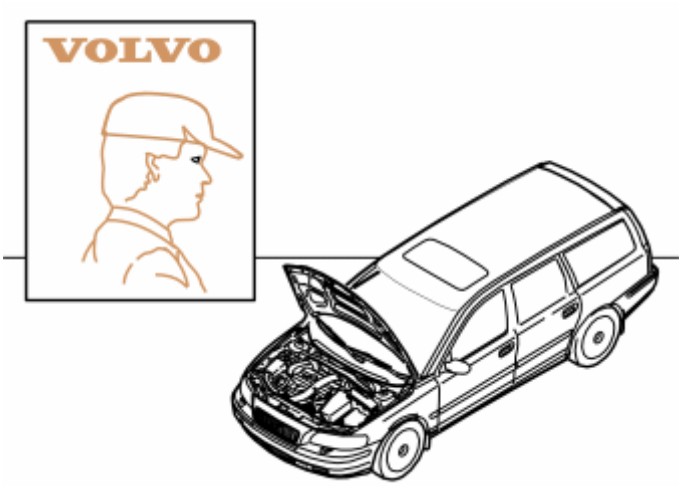

Fig. 107: Identifying VOLVO Certified Service Personnel
Courtesy of VOLVO CARS CORPORATION

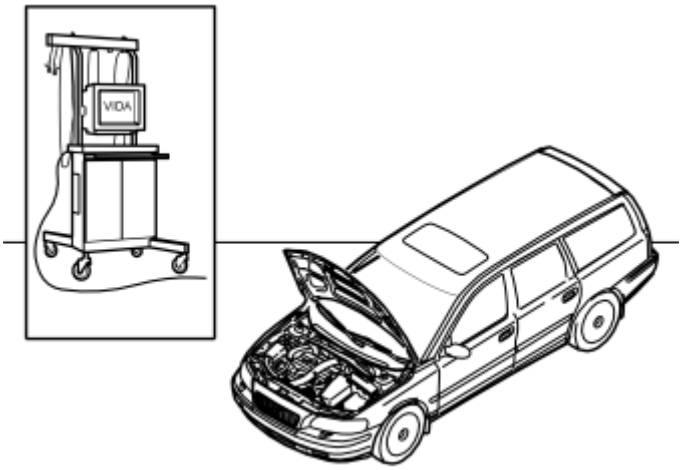

Fig. 108: Identifying VIDA
Courtesy of VOLVO CARS CORPORATION

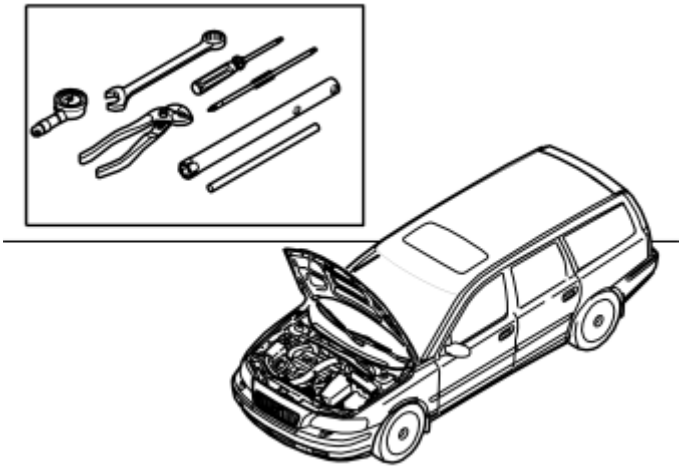

Fig. 109: Identifying Relevant Tools
Courtesy of VOLVO CARS CORPORATION

- **Continue**

  Refer to **INFORMATION**

INFORMATION

FAULT-TRACING INFORMATION

In case of this defect, troubleshooting is not followed by verification.

The information can be displayed again or the fault-tracing for this fault can be interrupted.

AUU-0002: CONTROL MODULE. SYSTEM PROGRAMMING FAILURES

(2007-2011)

DIAGNOSTIC TROUBLE CODE (DTC) INFORMATION AUU-0002

Condition

The control module compares its configuration ID with the signal configuration transmitted on the control area network (CAN) by the central electronic module (CEM).

The diagnostic trouble code (DTC) is stored if the control module detects that:

- The vehicle configuration file has too few parameters.
- Internal fault in the control module.

The control module's test for the diagnostic trouble code (DTC) starts in the event of:

- Ignition on and battery voltage between 9 and 16 V.
- Ignition on for at least 60 seconds.

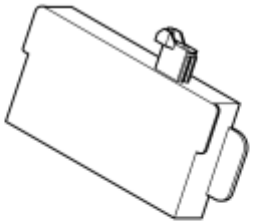

Fig. 110: Identifying Accessory USB Unit (AUU)
Courtesy of VOLVO CARS CORPORATION

Substitute Value

- None.

Possible Source

- Disrupted communication between Accessory USB Unit (AUU) and central electronic module (CEM).
- Incorrect configuration ID (the control module is not intended for this vehicle, for example it is a used control module with different software/hardware).
- An internal program memory fault has occurred.

Fault symptom[s]

- USB unit/Does not work

FAULT-TRACING

FAULTY SOFTWARE

The control module has registered an internal fault.

- Load new software into the control module.

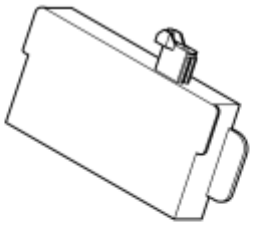

Fig. 111: Identifying Accessory USB Unit (AUU)
Courtesy of VOLVO CARS CORPORATION

- **Continue**

  Refer to **VERIFICATION**

FAULT-TRACING

Remedy in the following order.

1. Replace the control module's MOST-cables and the cables for the USB-port.
2. Load new software into the control module.

Other information:

- see **UNIVERSAL BUS MODULE (USB)**

- **Continue**

  Refer to **VERIFICATION**

FAULT-TRACING

The control module probably has an internal fault.

- Replace control module.

Other information:

- see **UNIVERSAL BUS MODULE (USB)**

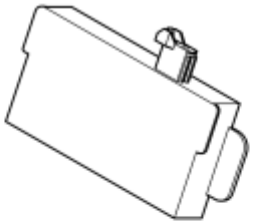

Fig. 112: Identifying Accessory USB Unit (AUU)
Courtesy of VOLVO CARS CORPORATION

- **Continue**

  Refer to **VERIFICATION**

VERIFICATION

VERIFICATION

Read out the control module's id-number using the VCT2000 (or appropriate scan tool).

Fig. 113: Identifying VCT2000 Diagnostic Tool Symbol In VIDA
Courtesy of VOLVO CARS CORPORATION

Could the control module ID be read off?

- **YES**

  OKAY: Troubleshooting has been completed.

- **NO**

  Refer to **FAULT-TRACING**

VERIFICATION

VERIFICATION

Read out the control module's id-number using the VCT2000 (or appropriate scan tool).

Fig. 114: Identifying VCT2000 Diagnostic Tool Symbol In VIDA
Courtesy of VOLVO CARS CORPORATION

Could the control module ID be read off?

- **YES**

  OKAY: Troubleshooting has been completed.

- **NO**

  Refer to **FAULT-TRACING**

CEM-1A03: S-POWER SUPPLY SIGNAL TOO LOW (2005-2011)

DIAGNOSTIC TROUBLE CODE (DTC) INFORMATION CEM-1A03

Condition

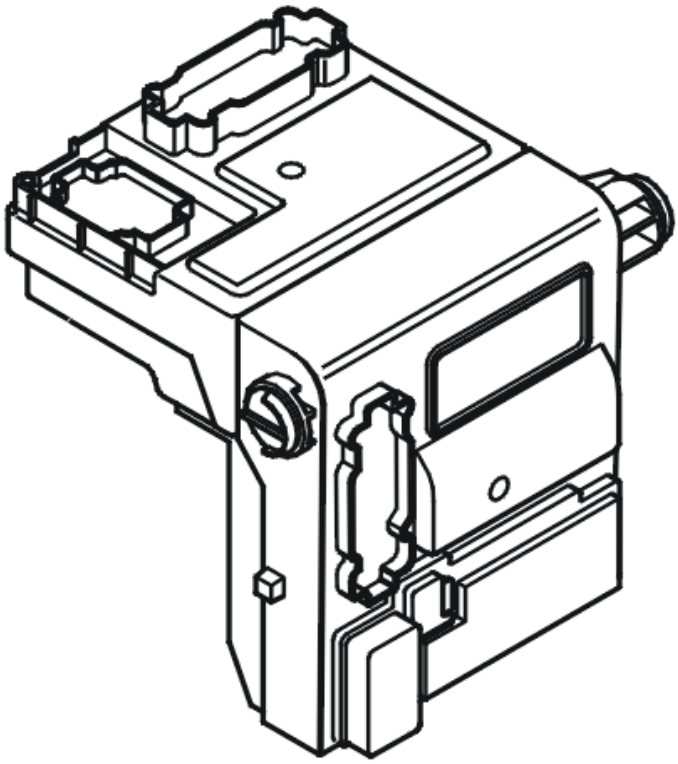

Fig. 115: Identifying Central Electronic Module (CEM)
Courtesy of VOLVO CARS CORPORATION

The central electronic module (CEM) monitors the cable for S-supply from the ignition switch.

The diagnostic trouble code (DTC) is stored if the central electronic module (CEM) registers an open-circuit or a short-circuit to ground in the S-supply.

The diagnostic trouble code (DTC) can be diagnosed in ignition positions I and II.

Substitute Value

- None.

Possible Source

- Contact resistance in the terminals
- Open-circuit or short-circuit to ground in the S-supply
- No communication with the key
- Damaged ignition switch.

Fault symptom[s]

- The starter motor does not turn.

SIGNAL TOO LOW

CHECKING THE CONNECTORS

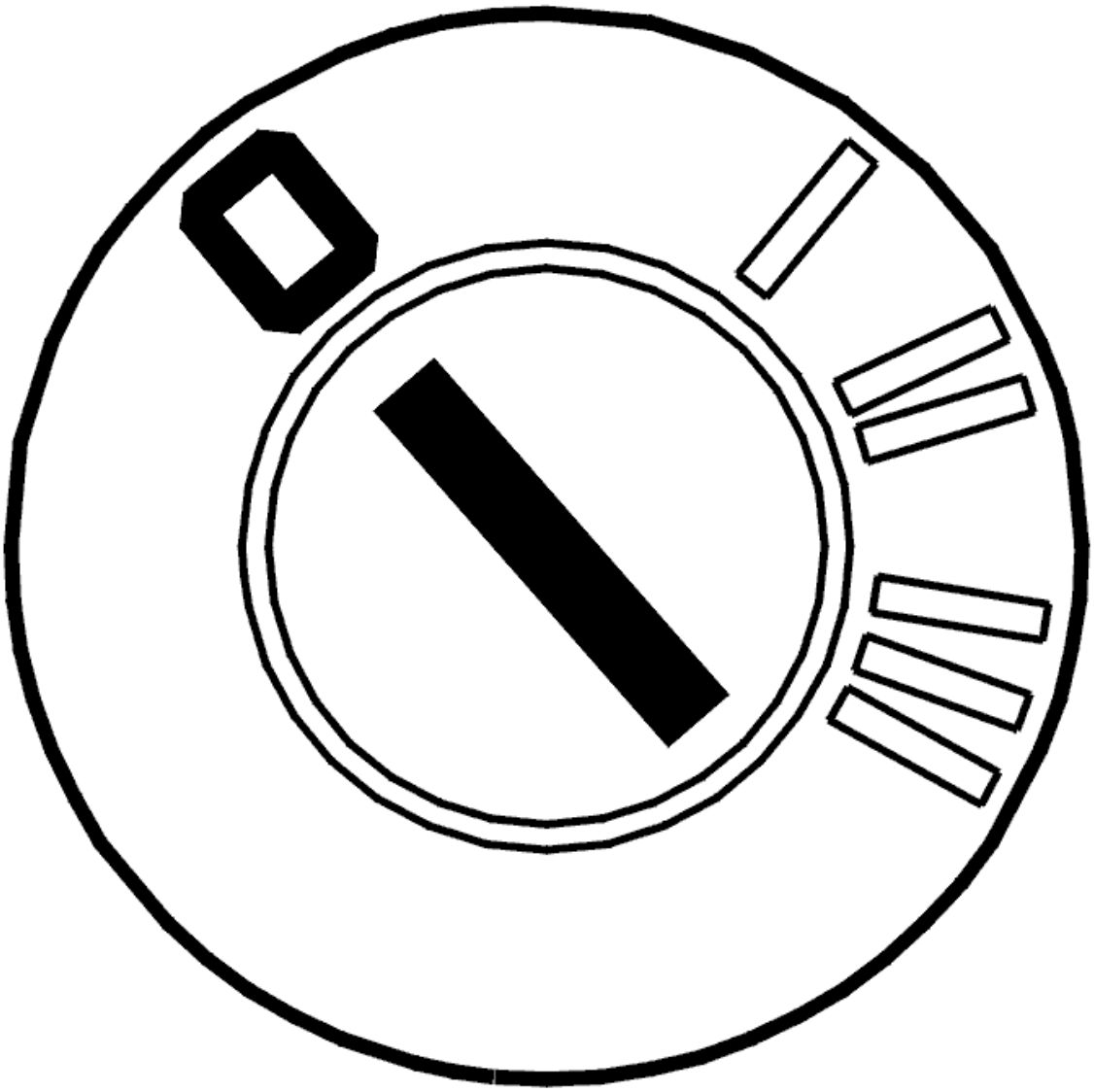

Fig. 116: Identifying Ignition OFF
Courtesy of VOLVO CARS CORPORATION

- Ignition off.

  Check central electronic module (CEM) connector D. Check for contact resistance and oxidation. Check for loose connections. Remedy as necessary.

  Check for any damage.

HINT: If the fault cause is found, reinstall the components, connectors etc.

HINT: If the fault cause was not found, do not reconnect the connector before carrying out further fault-tracing.

Other information:

- To replace the connectors for the central electronic module (CEM):
  - For -2004, see: **CENTRAL ELECTRONIC MODULE (CEM), REPLACING** .
  - For 2005-, see: **CENTRAL ELECTRONIC MODULE (CEM), REPLACING** .
- see **CHECKING WIRING AND TERMINALS**

Was a fault detected?

- **YES**

  Refer to **VERIFICATION**

- **NO**

  Refer to **CHECKING THE COMPONENT AND CABLE**

CHECKING THE COMPONENT AND CABLE

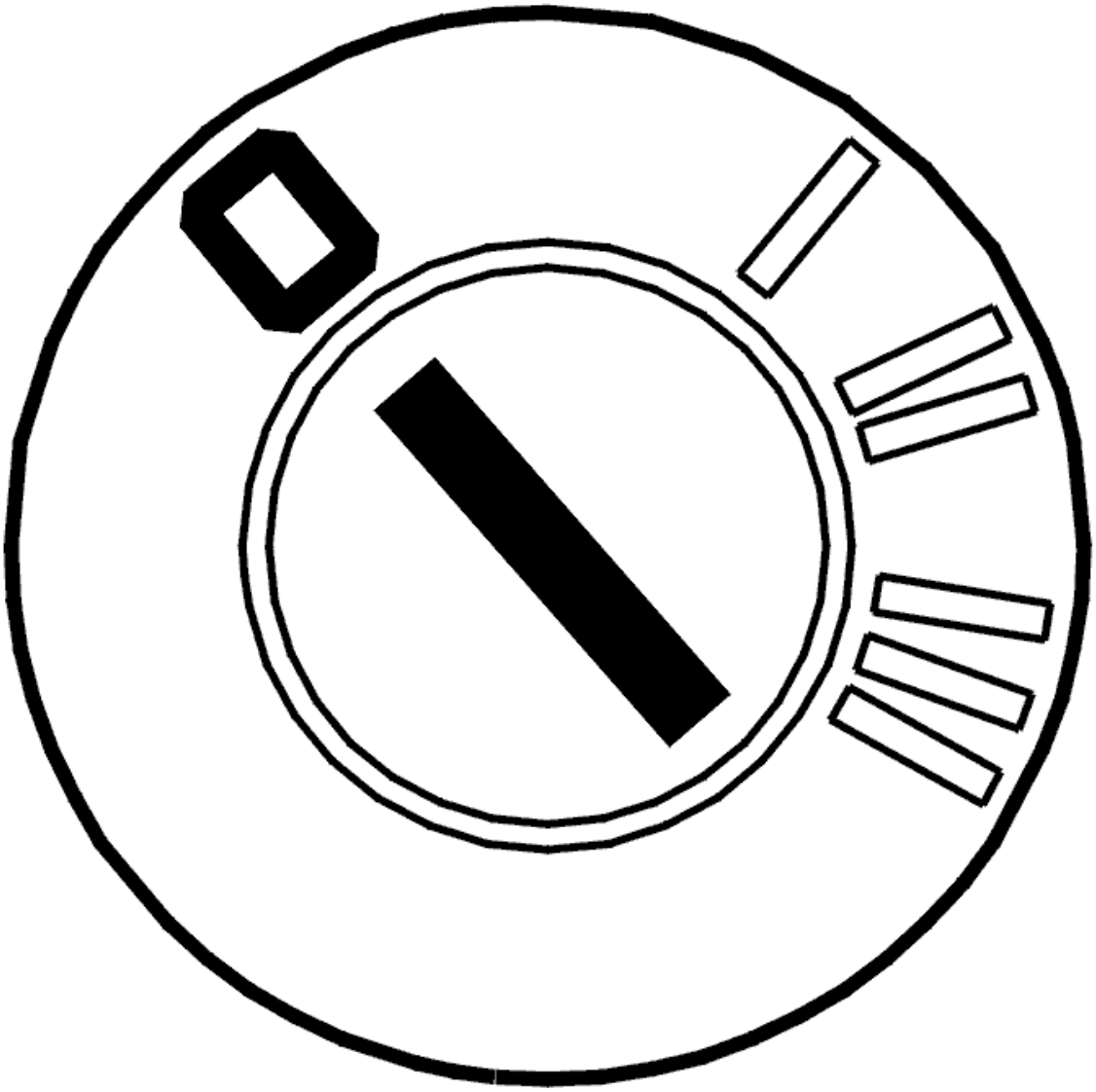

Fig. 117: Identifying Ignition OFF
Courtesy of VOLVO CARS CORPORATION

- Ignition off
- Remove the ignition key.

  Check the cable between central electronic module (CEM) terminal #D15 and ignition switch terminal #S (#3). Check for an open-circuit. Check for a short-circuit to ground.

  The voltage must be battery voltage when the key is in the ignition switch.

  Remedy as necessary.

  Other information:

  - see **CONNECTING THE BREAKOUT BOX**

- -2004: **SIGNAL SPECIFICATION**
- 2005-: **SIGNAL SPECIFICATION**
- For -2004, see: **CENTRAL ELECTRONIC MODULE (CEM), REPLACING** .
- For 2005-, see: **CENTRAL ELECTRONIC MODULE (CEM), REPLACING** .
- see **CHECKING WIRING AND TERMINALS**

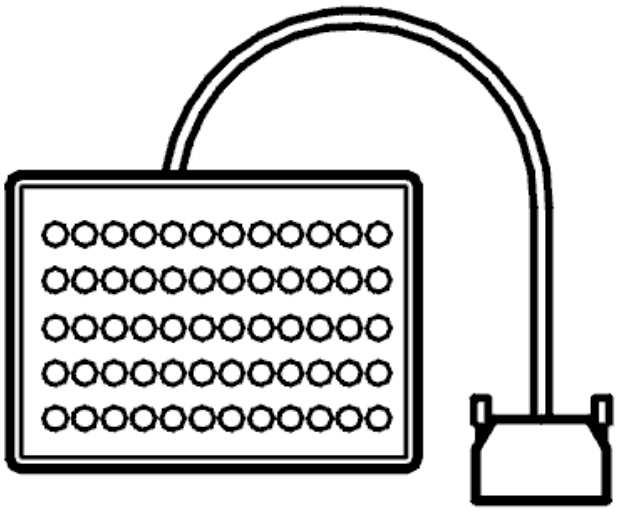

Fig. 118: Breakout Box
Courtesy of VOLVO CARS CORPORATION

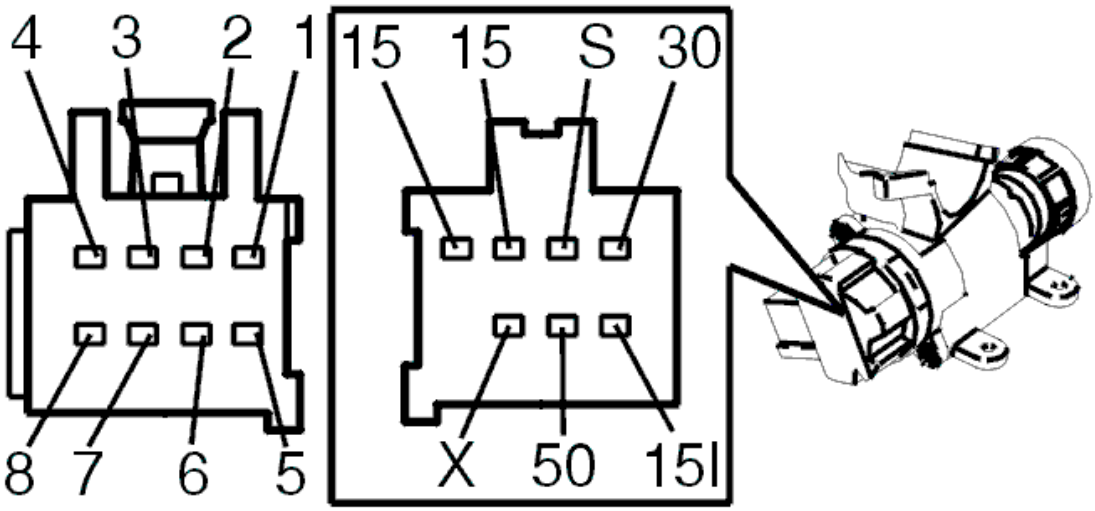

Fig. 119: Identifying Ignition Switch Terminals
Courtesy of VOLVO CARS CORPORATION

Was a fault detected?

- **YES**

  Refer to **VERIFICATION**

- **NO**

  Refer to **REPLACING THE COMPONENT**

REPLACING THE COMPONENT

To replace the connector for the ignition switch, see: **STEERING WHEEL LOCK, REPLACING**

- **Continue**

  Refer to **VERIFICATION**

VERIFICATION

VERIFICATION

HINT: After carrying out the repair, check that the fault has been remedied.

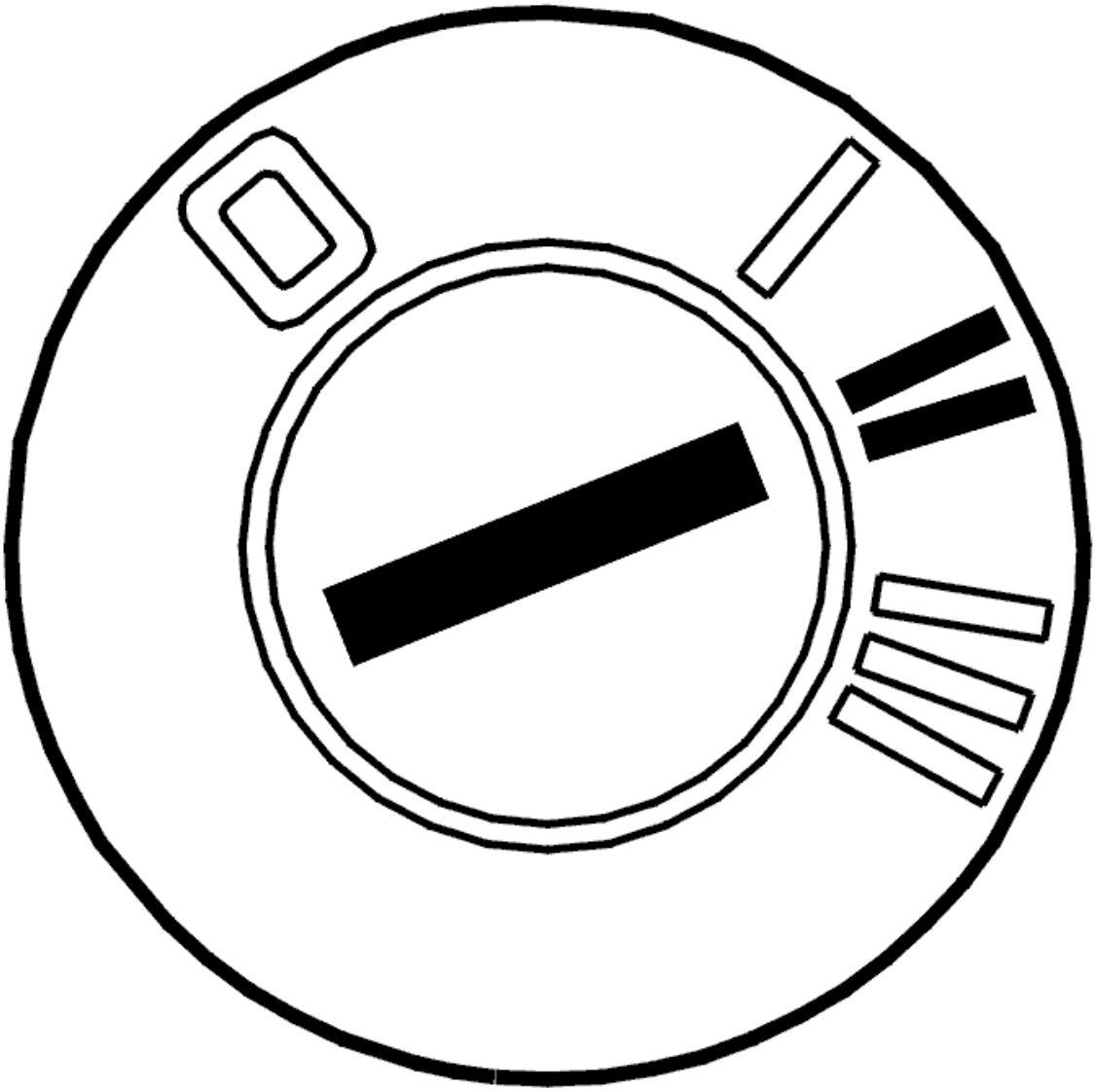

Fig. 120: Identifying Ignition ON
Courtesy of VOLVO CARS CORPORATION

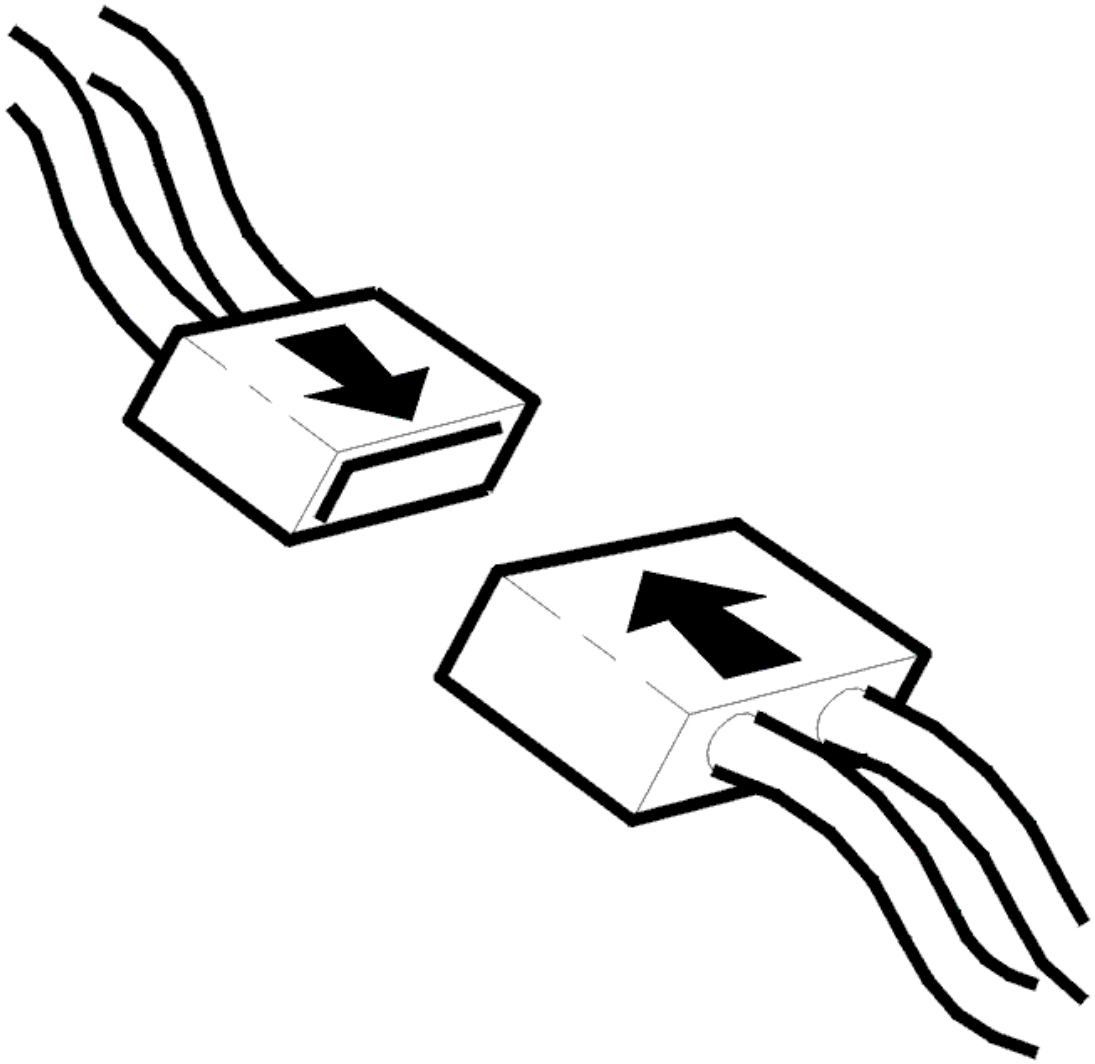

Fig. 121: Connecting Connector
Courtesy of VOLVO CARS CORPORATION

- Ignition off
- Reinstall the connectors, components etc.
- Ignition on.

  Check whether the S-supply is activated.

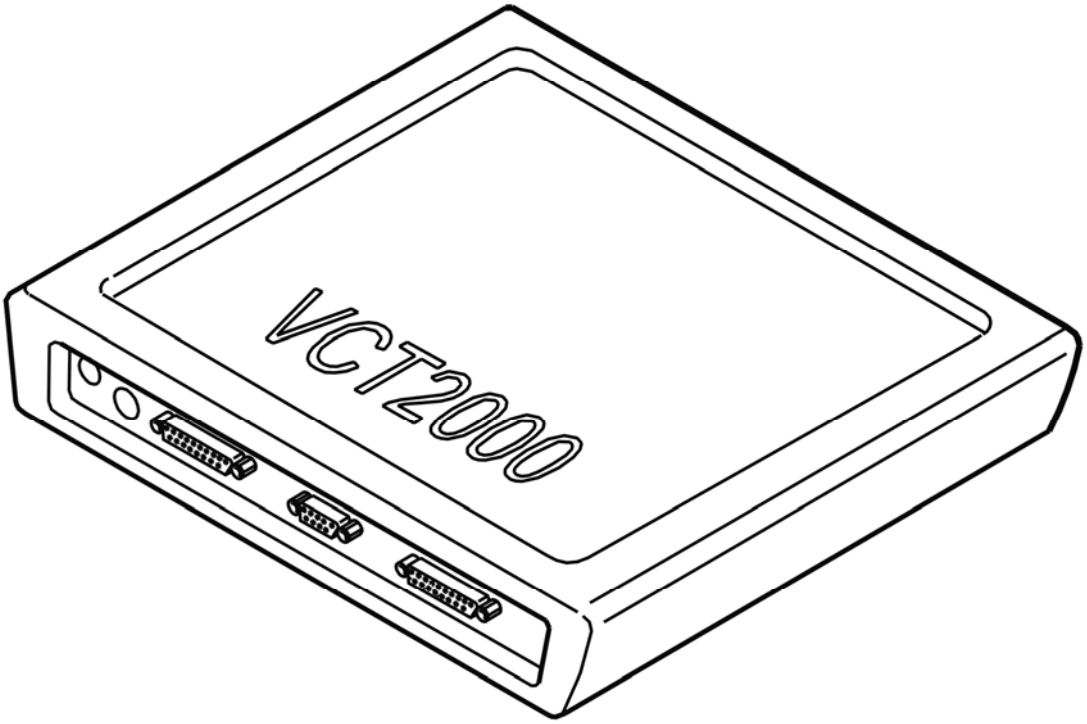

Fig. 122: Identifying VCT2000 Diagnostic Tool Symbol In VIDA
Courtesy of VOLVO CARS CORPORATION

Is the S-supply activated?

- **YES**

  VERIFIED: Troubleshooting has been completed.

- **NO**

  Refer to **INFORMATION**

INFORMATION

FAULT-TRACING INFORMATION

The fault should have been detected and remedied. As this is not the case fault-tracing has failed.

Exit fault-tracing for this diagnostic trouble code (DTC) or make another attempt.

CEM-1A03: S-POWER SUPPLY. SIGNAL TOO LOW. INTERMITTENT FAULT (2003-2004)

DIAGNOSTIC TROUBLE CODE (DTC) INFORMATION

Condition

Diagnostic trouble code (DTC) CEM-1A03 is stored if the control module registers an open-circuit or a short-circuit to ground in the S-supply.

Substitute Value

None

Possible Source

- Contact resistance in terminals.
- Open-circuit or short-circuit to ground in S-supply.
- The key is not recognized.
- Defective ignition switch.

Fault symptom[s]

- The starter motor does not turn.

SIGNAL TOO LOW. INTERMITTENT FAULT

CHECKING THE CONNECTORS

Check the central electronic module (CEM) connector for contact resistance and oxidation and remedy according to **CONTACT RESISTANCE AND OXIDATION** and loose connections according to **LOOSE CONNECTIONS (TERMINALS)** .

Check for damage carefully.

HINT: If the fault cause is found, reinstall the components, connectors etc.

HINT: If the fault cause is not found, do not reinstall the control module before continuing with fault-tracing.

Other information:

- For -2004, see: **CENTRAL ELECTRONIC MODULE (CEM), REPLACING** .
- For 2005-, see: **CENTRAL ELECTRONIC MODULE (CEM), REPLACING** .

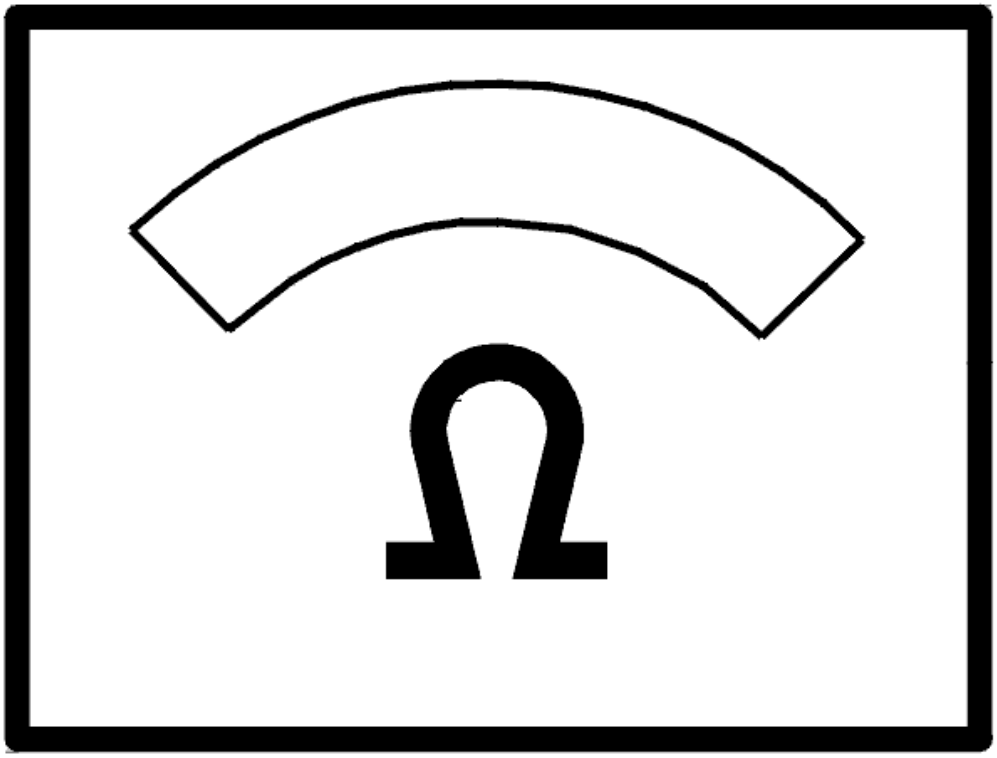

Fig. 123: Identifying Ohm Meter
Courtesy of VOLVO CARS CORPORATION

Was a fault detected?

- **YES**

  OKAY: Troubleshooting has been completed.

- **NO**

  Refer to **CHECKING WIRING**

CHECKING WIRING

Check the cable between central electronic module (CEM) connector #1B and ignition switch S-supply #3 for

an intermittent open-circuit according to **OPEN-CIRCUIT, INTERMITTENT FAULTS** and for a short-circuit to ground according to **SHORT-CIRCUIT TO GROUND, INTERMITTENT FAULTS** .

Other information

- The voltage must be the same as battery voltage if the key is in positions 0, I, II or III.
- For -2004, see: **CENTRAL ELECTRONIC MODULE (CEM), REPLACING** .
- For 2005-, see: **CENTRAL ELECTRONIC MODULE (CEM), REPLACING** .
- To connect the breakout box, see **CONNECTING THE BREAKOUT BOX**
- -2004: **SIGNAL SPECIFICATION**
- 2005-: **SIGNAL SPECIFICATION**

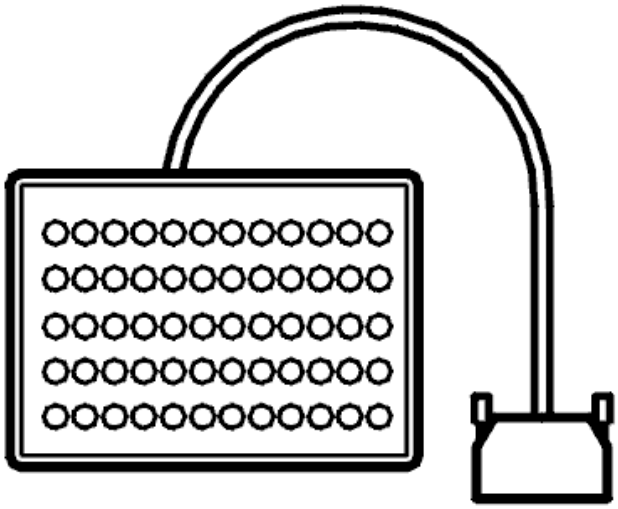

Fig. 124: Breakout Box
Courtesy of VOLVO CARS CORPORATION

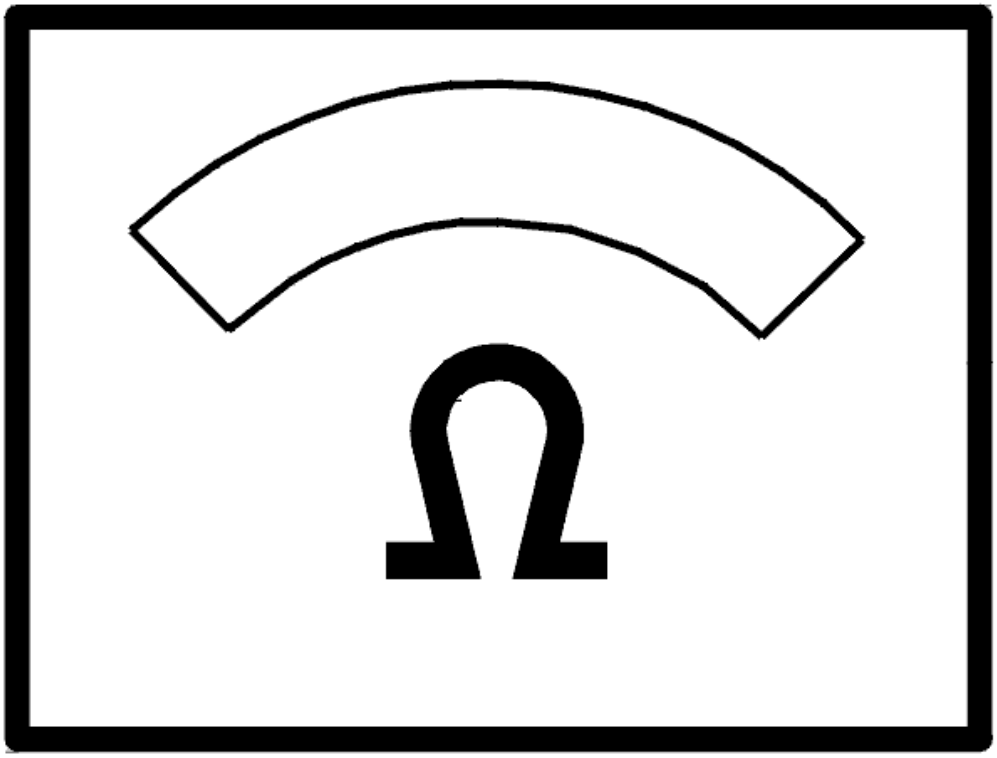

Fig. 125: Identifying Ohm Meter
Courtesy of VOLVO CARS CORPORATION

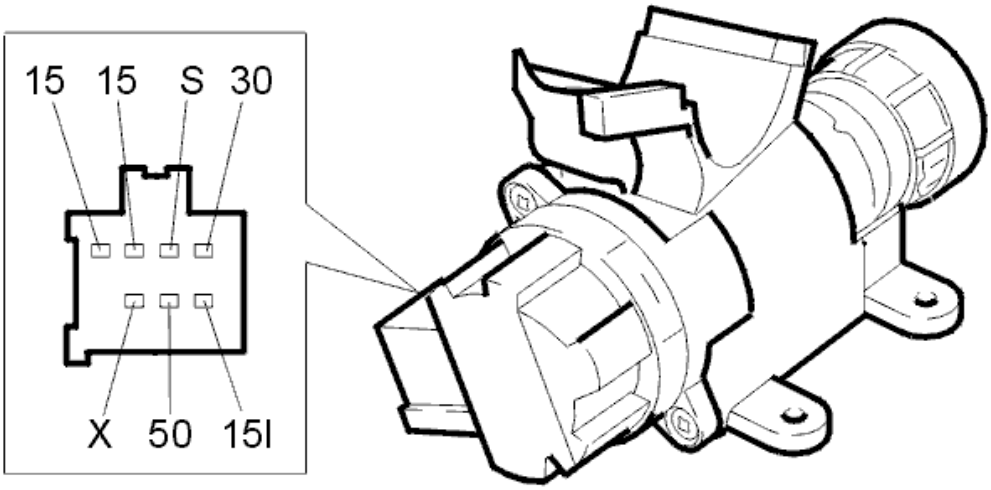

Fig. 126: Identifying Central Electronic Module (CEM) Connector Terminals
Courtesy of VOLVO CARS CORPORATION

CEM-1A03: S-POWER SUPPLY. SIGNAL TOO LOW. PERMANENT FAULT (2003-2004)

DIAGNOSTIC TROUBLE CODE (DTC) INFORMATION

see **DIAGNOSTIC TROUBLE CODE (DTC) INFORMATION**

SIGNAL TOO LOW. PERMANENT FAULT

CHECKING THE CONNECTORS

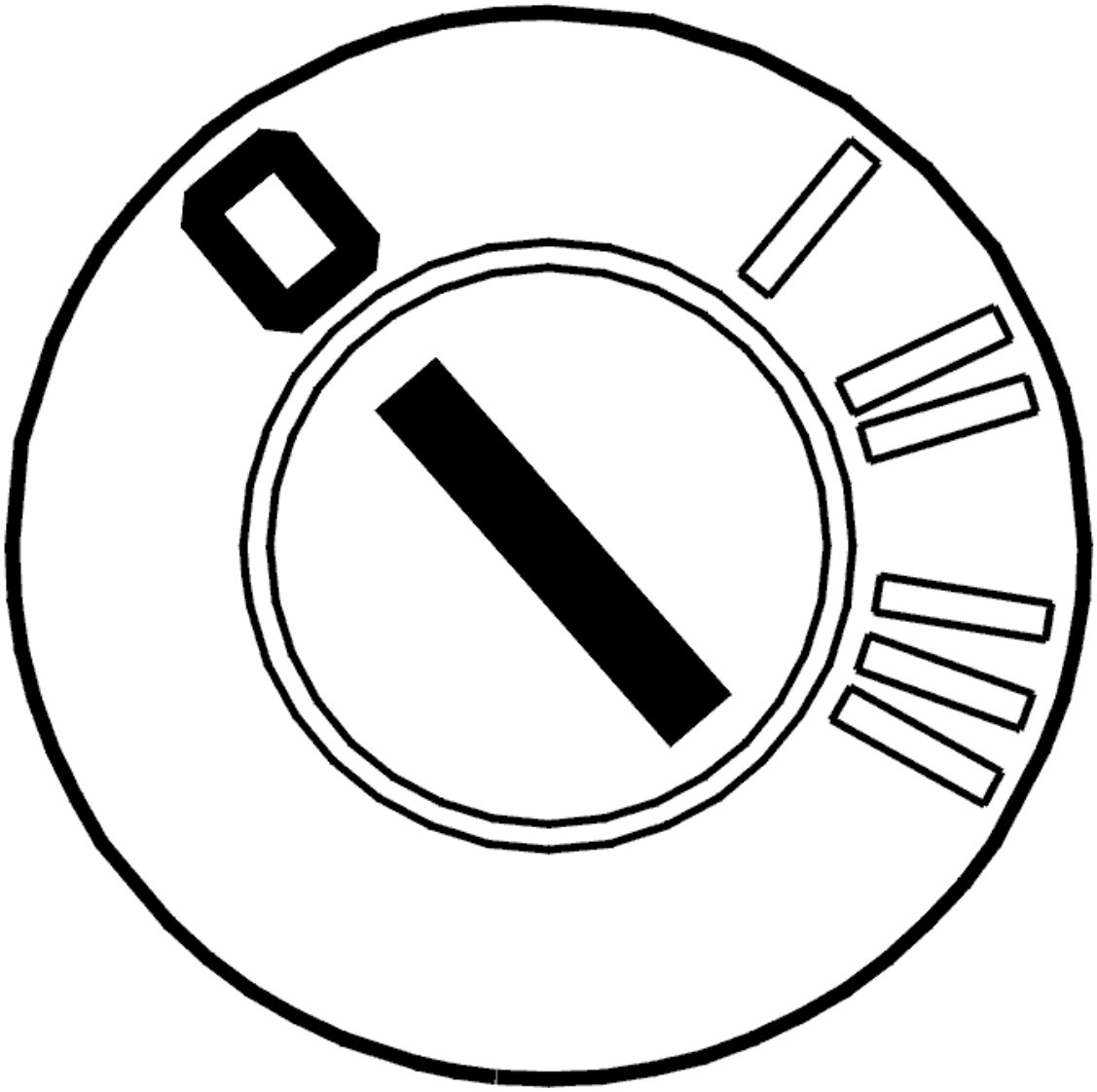

Fig. 127: Identifying Ignition OFF
Courtesy of VOLVO CARS CORPORATION

- Ignition off.

  Check the central electronic module (CEM) connector for contact resistance and oxidation. Remedy if necessary.

  Check for any damage.

  HINT: If the fault cause is found, reinstall the components, connectors etc. If the fault cause is not found, do not reinstall the control module before continuing with fault-tracing.

  Other information:

  - For -2004, see: **CENTRAL ELECTRONIC MODULE (CEM), REPLACING** .

- For 2005-, see: **CENTRAL ELECTRONIC MODULE (CEM), REPLACING** .
- see **CHECKING WIRING AND TERMINALS. PERMANENT FAULT** .

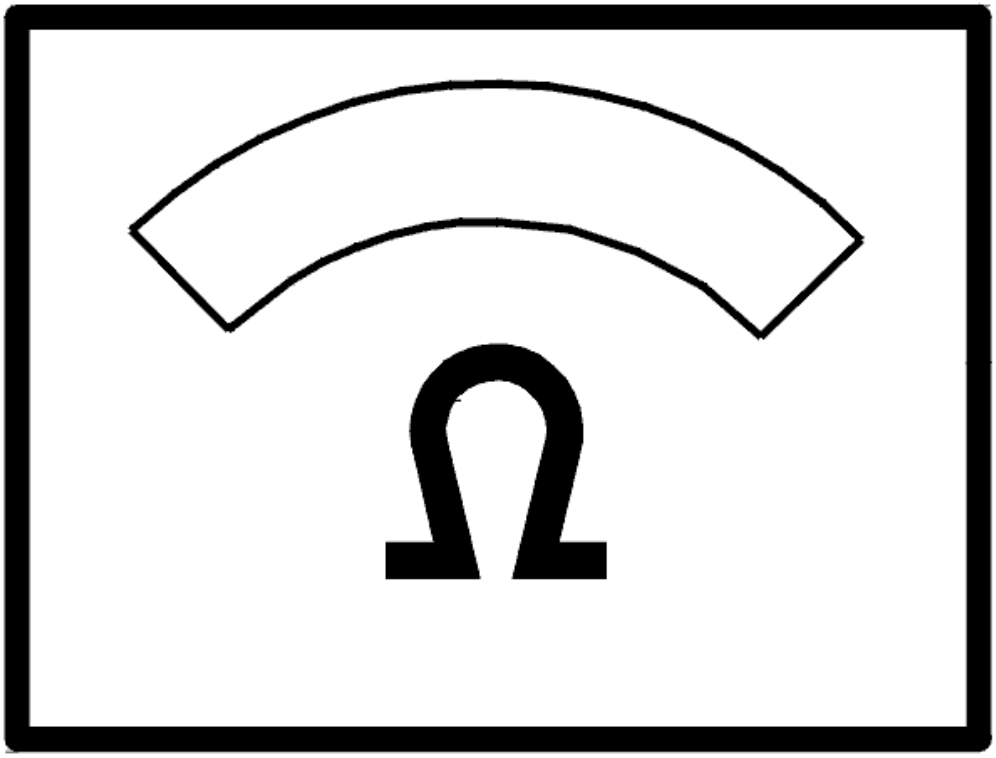

Fig. 128: Identifying Ohm Meter
Courtesy of VOLVO CARS CORPORATION

Was a fault detected?

- **YES**

  Refer to **VERIFICATION**

- **NO**

  Refer to **CHECKING THE COMPONENT AND CABLE**

CHECKING THE COMPONENT AND CABLE

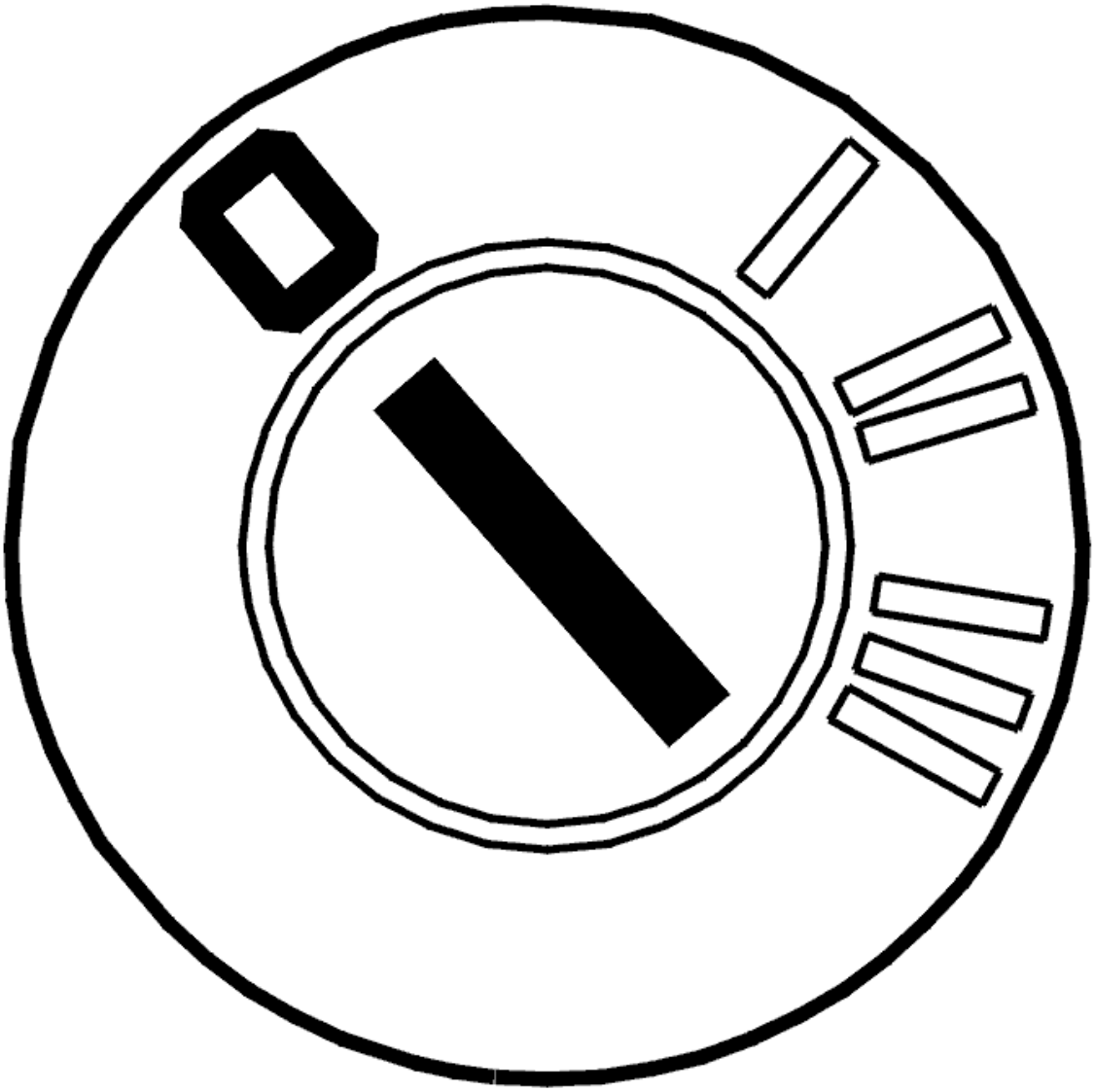

Fig. 129: Identifying Ignition OFF
Courtesy of VOLVO CARS CORPORATION

- Ignition off.

  Check the cable between control module terminal #1B and ignition switch terminal #S (#3). Check for an open-circuit. Check for a short-circuit to ground.

  Remedy as necessary.

  Other information:

  - The voltage must be the same as battery voltage if the key is in position 0, I, II or III
  - For -2004, see: **CENTRAL ELECTRONIC MODULE (CEM), REPLACING** .

- For 2005-, see: **CENTRAL ELECTRONIC MODULE (CEM), REPLACING** .
- To connect the breakout box to the control module, see **CONNECTING THE BREAKOUT BOX**
- -2004: **SIGNAL SPECIFICATION**
- 2005-: **SIGNAL SPECIFICATION**
- see **CHECKING WIRING AND TERMINALS. PERMANENT FAULT** .

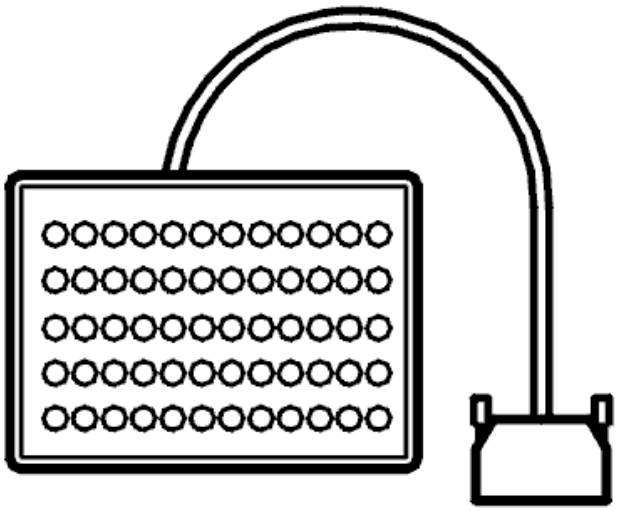

Fig. 130: Breakout Box
Courtesy of VOLVO CARS CORPORATION

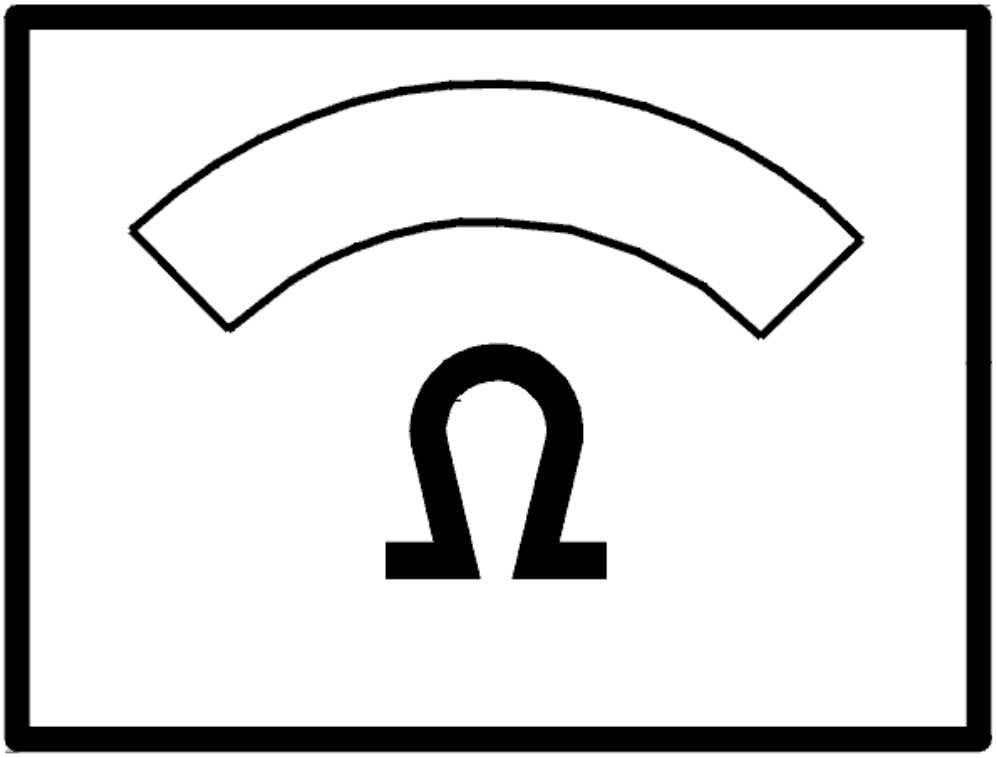

Fig. 131: Identifying Ohm Meter
Courtesy of VOLVO CARS CORPORATION

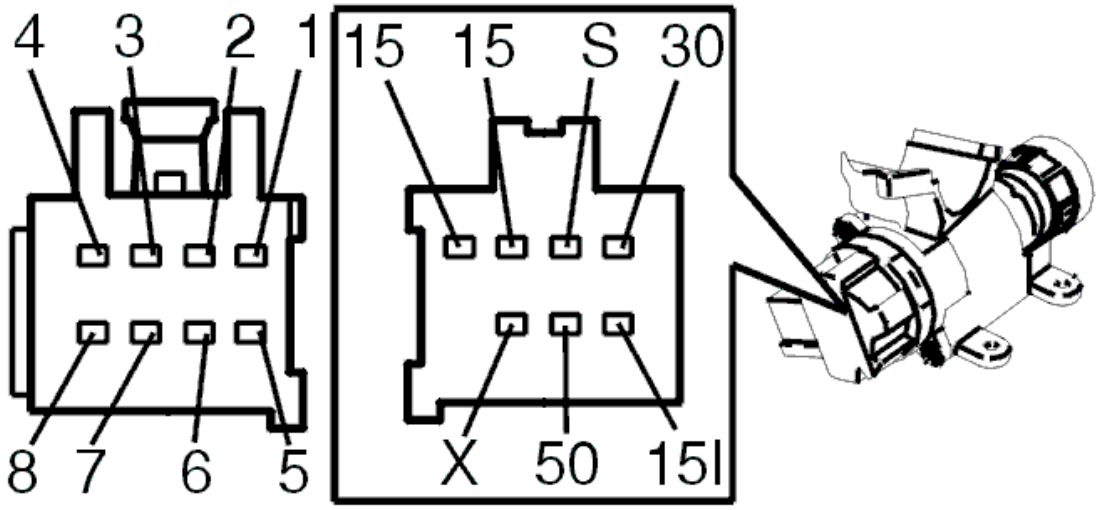

Fig. 132: Identifying Ignition Switch Terminals
Courtesy of VOLVO CARS CORPORATION

Was a fault detected?

- **YES**

  Refer to **VERIFICATION**

- **NO**

  Refer to **REPLACING THE COMPONENT**

REPLACING THE COMPONENT

Try replacing the ignition switch connector according to **STEERING WHEEL LOCK, REPLACING** .

- **Continue**

  Refer to **VERIFICATION**

VERIFICATION

VERIFICATION

HINT: After the repair it is necessary to check that the fault has been rectified.

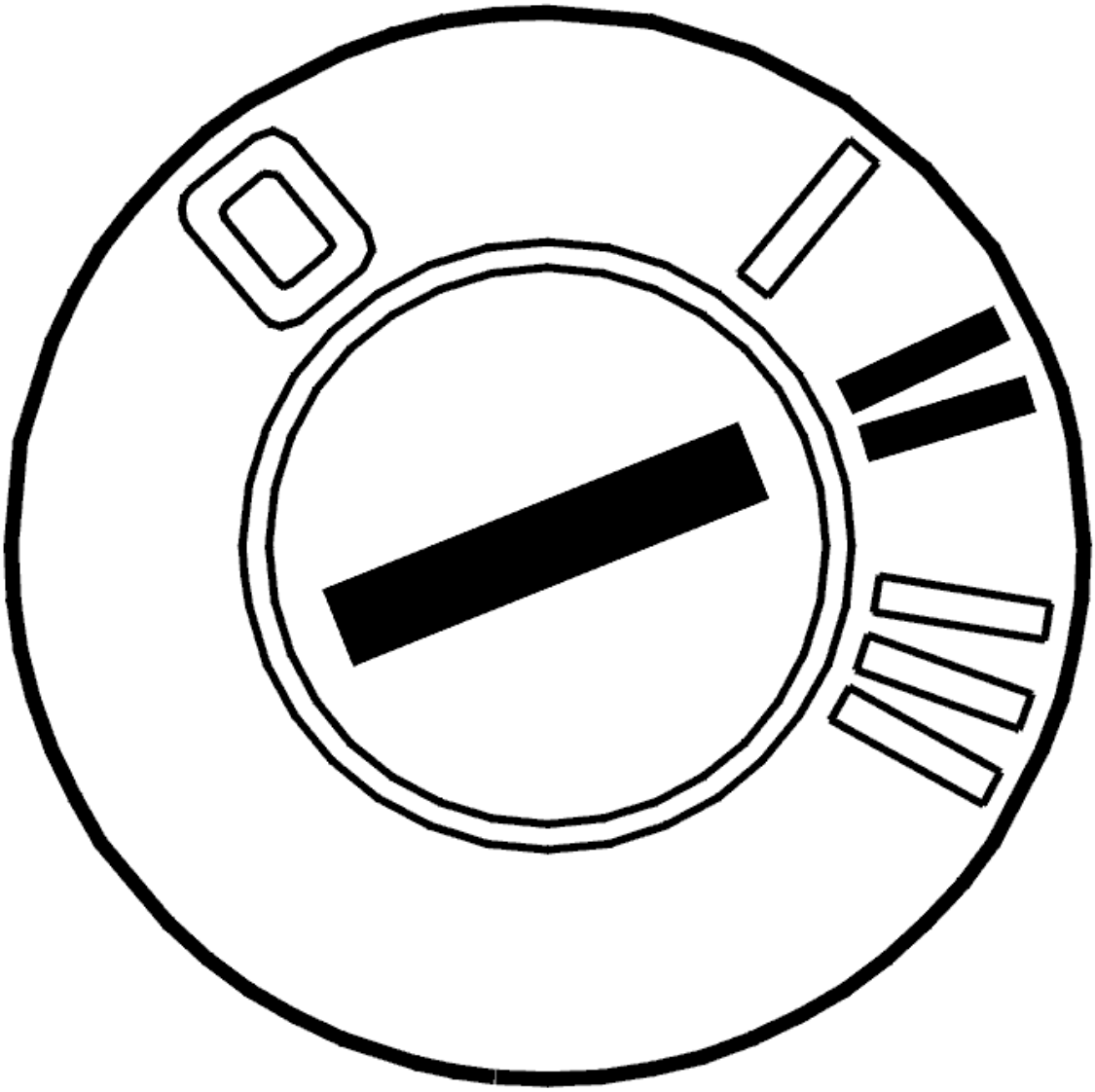

Fig. 133: Identifying Ignition ON
Courtesy of VOLVO CARS CORPORATION

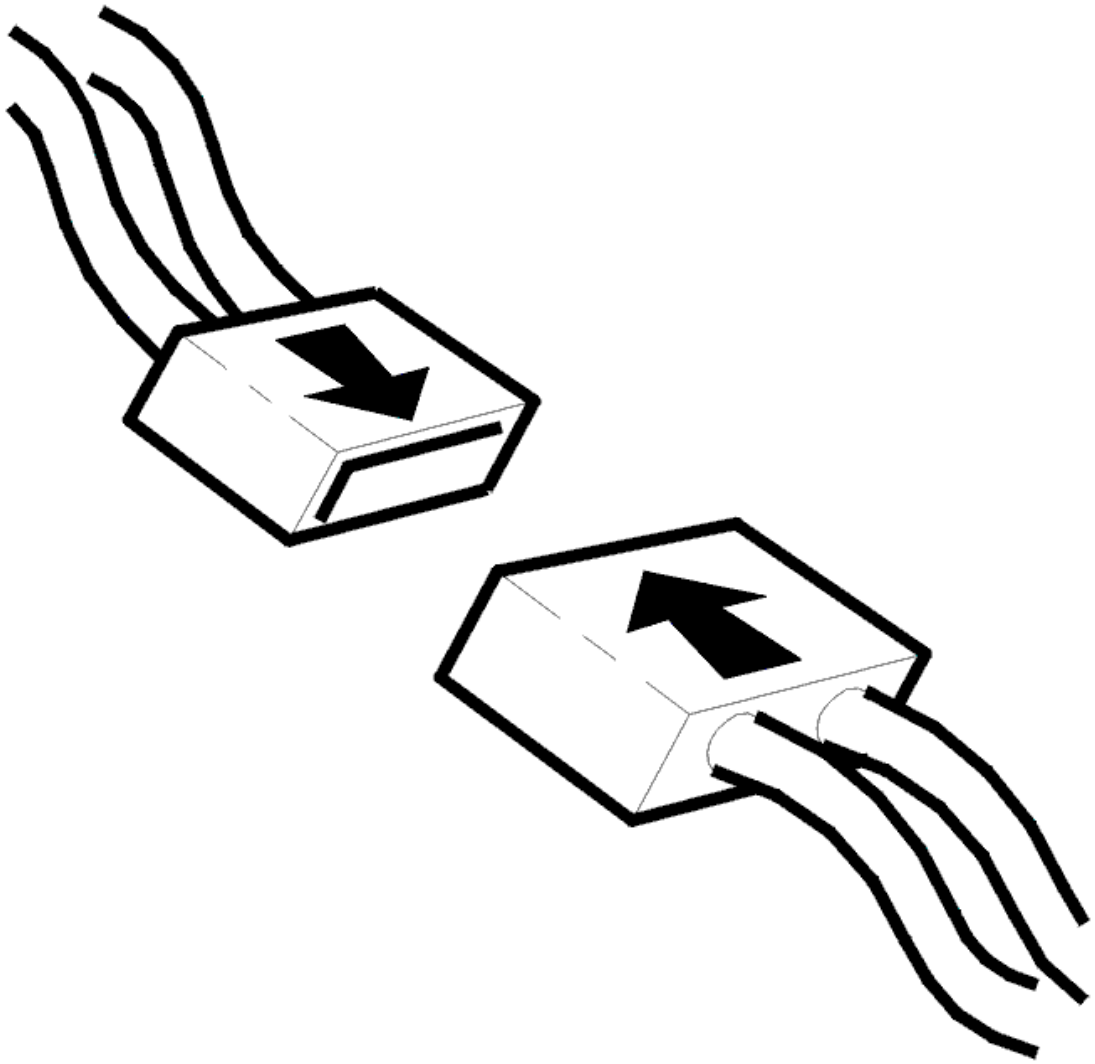

Fig. 134: Connecting Connector
Courtesy of VOLVO CARS CORPORATION

- Ignition off.
- Connect connectors, install components, etc.
- Ignition on.

  Check that S voltage is OK.

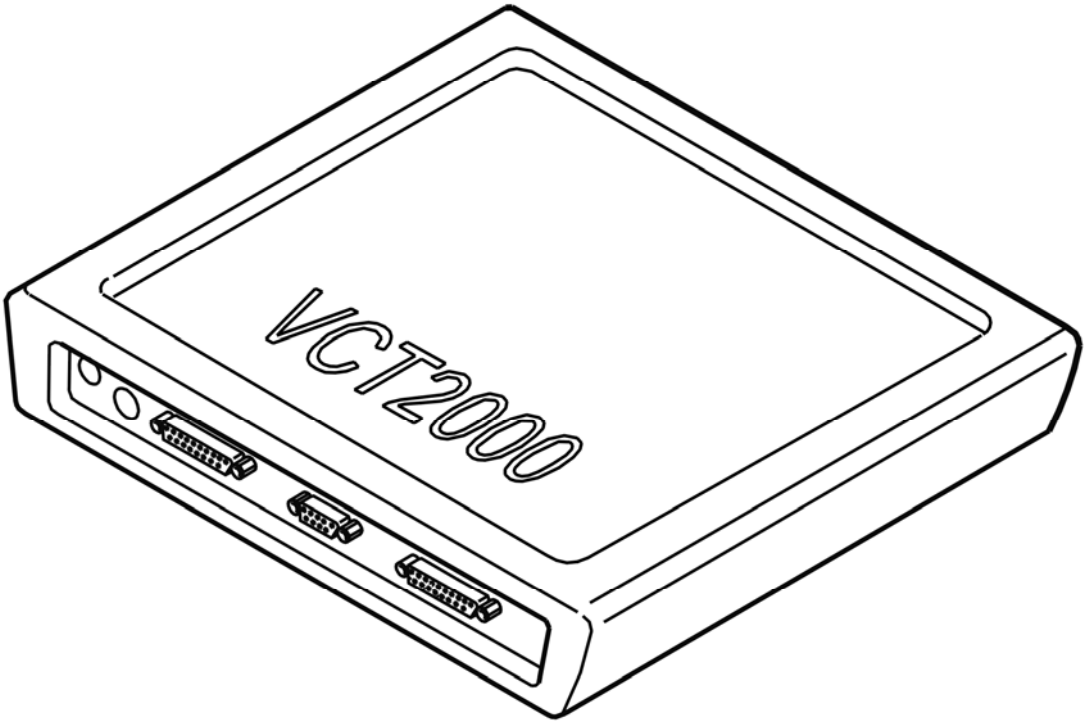

Fig. 135: Identifying VCT2000 Diagnostic Tool Symbol In VIDA
Courtesy of VOLVO CARS CORPORATION

Is voltage on the wire high?

- **YES**

  VERIFIED: Troubleshooting has been completed.

- **NO**

  Refer to **INFORMATION**

INFORMATION

FAULT-TRACING INFORMATION

The fault should have been detected and remedied. As this is not the case fault-tracing has failed.

Exit fault-tracing for this diagnostic trouble code (DTC) or make another attempt.

CEM-1A04: X-POWER SUPPLY. SIGNAL TOO LOW (2005-2011)

DIAGNOSTIC TROUBLE CODE (DTC) INFORMATION CEM-1A04

Condition

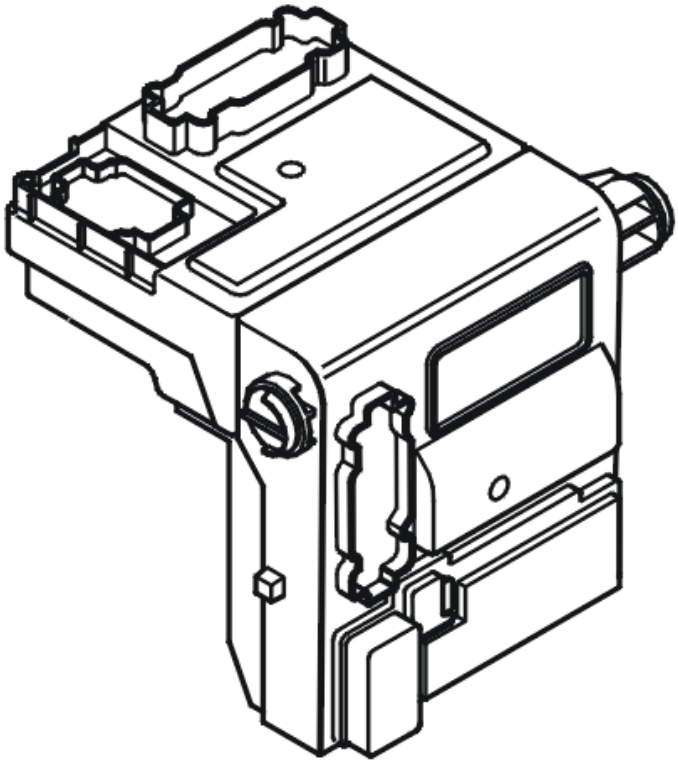

Fig. 136: Identifying Central Electronic Module (CEM)
Courtesy of VOLVO CARS CORPORATION

The central electronic module (CEM) monitors the cable for X-supply from the ignition switch.

The diagnostic trouble code (DTC) is stored if the central electronic module (CEM) registers an open-circuit or a short-circuit to ground in the X-supply.

The diagnostic trouble code (DTC) can be diagnosed at ignition switch position II.

Substitute Value

- None.

Possible Source

- Contact resistance in the terminals
- Open-circuit or short-circuit to ground in the X-supply
- Damaged ignition switch.

Fault symptom[s]

- The blower fan does not operate
- The radio is not working
- The starter motor does not turn.

SIGNAL TOO LOW

CHECKING THE CONNECTORS

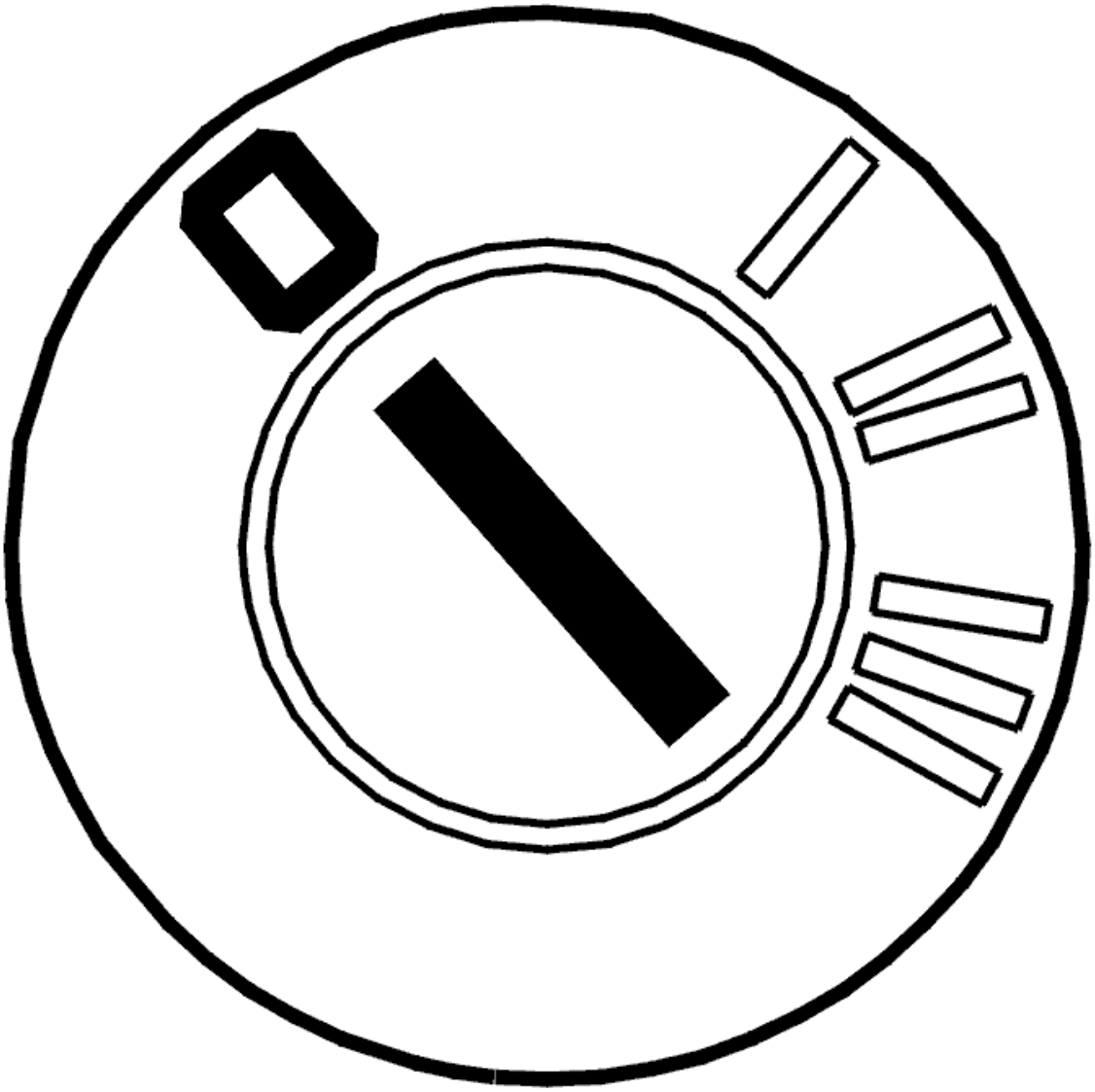

Fig. 137: Identifying Ignition OFF
Courtesy of VOLVO CARS CORPORATION

- Ignition off.

  Check central electronic module (CEM) connector D. Check for contact resistance and oxidation. Remedy as necessary.

Check for any damage.

HINT: If the fault cause is found, reinstall the components, connectors etc.

HINT: If the fault cause was not found, do not reconnect the connector before carrying out further fault-tracing.

Other information:

- For -2004, see: **CENTRAL ELECTRONIC MODULE (CEM), REPLACING** .
- For 2005-, see: **CENTRAL ELECTRONIC MODULE (CEM), REPLACING** .

Was a fault detected?

- **YES**

  Refer to **VERIFICATION**

- **NO**

  Refer to **CHECKING THE COMPONENT AND CABLE**

CHECKING THE COMPONENT AND CABLE

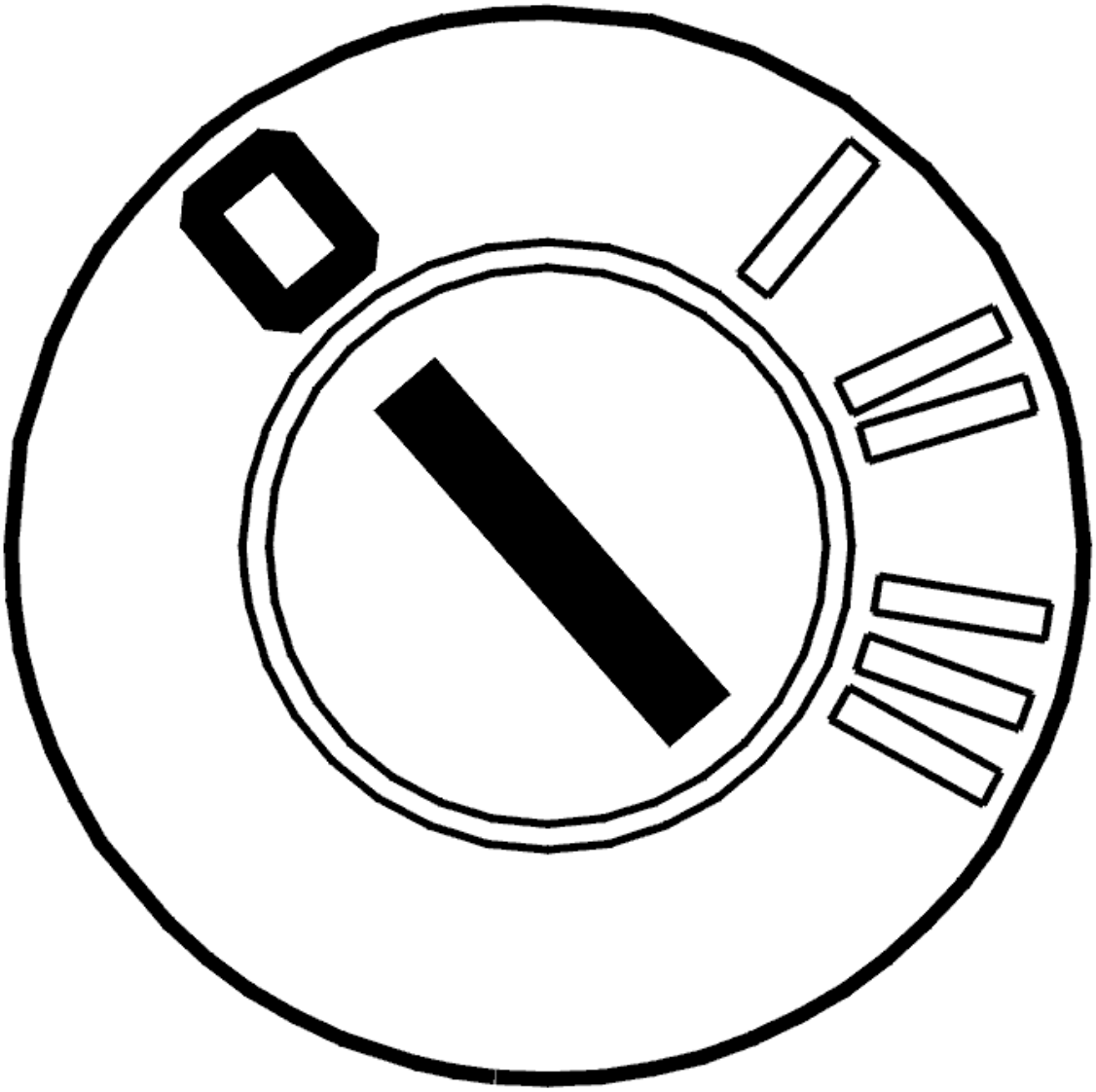

Fig. 138: Identifying Ignition OFF
Courtesy of VOLVO CARS CORPORATION

- Ignition off.

  Check the cable between central electronic module (CEM) connector terminal #D8 and the ignition switch X-supply (terminal #6). Check for an open-circuit. Check for a short-circuit to ground.

  Switch on the ignition. The voltage must be the same as battery voltage if the key is in position I or II.

  Other information:

  - see **CONNECTING THE BREAKOUT BOX**
  - -2004: **SIGNAL SPECIFICATION**
  - 2005-: **SIGNAL SPECIFICATION**

- For -2004, see: **CENTRAL ELECTRONIC MODULE (CEM), REPLACING** .
- For 2005-, see: **CENTRAL ELECTRONIC MODULE (CEM), REPLACING** .
- see **CHECKING WIRING AND TERMINALS**

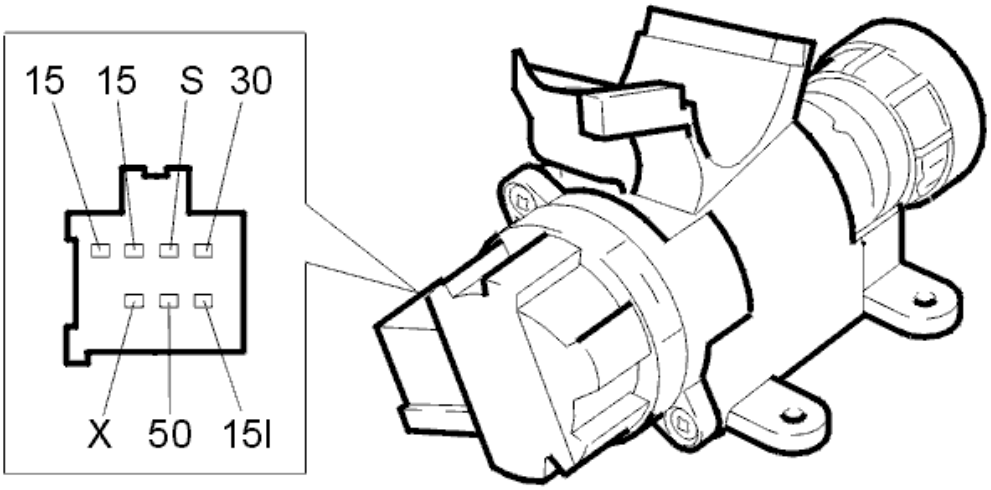

Fig. 139: Identifying Central Electronic Module (CEM) Connector Terminals
Courtesy of VOLVO CARS CORPORATION

Is the voltage OK?

- **YES**

  Refer to **VERIFICATION**

- **NO**

  Refer to **REPLACING THE COMPONENT**

REPLACING THE COMPONENT

To replace the connector for the ignition switch, see: **STEERING WHEEL LOCK, REPLACING**

- **Continue**

Refer to **VERIFICATION**

VERIFICATION

VERIFICATION

HINT: After carrying out the repair, check that the fault has been remedied.

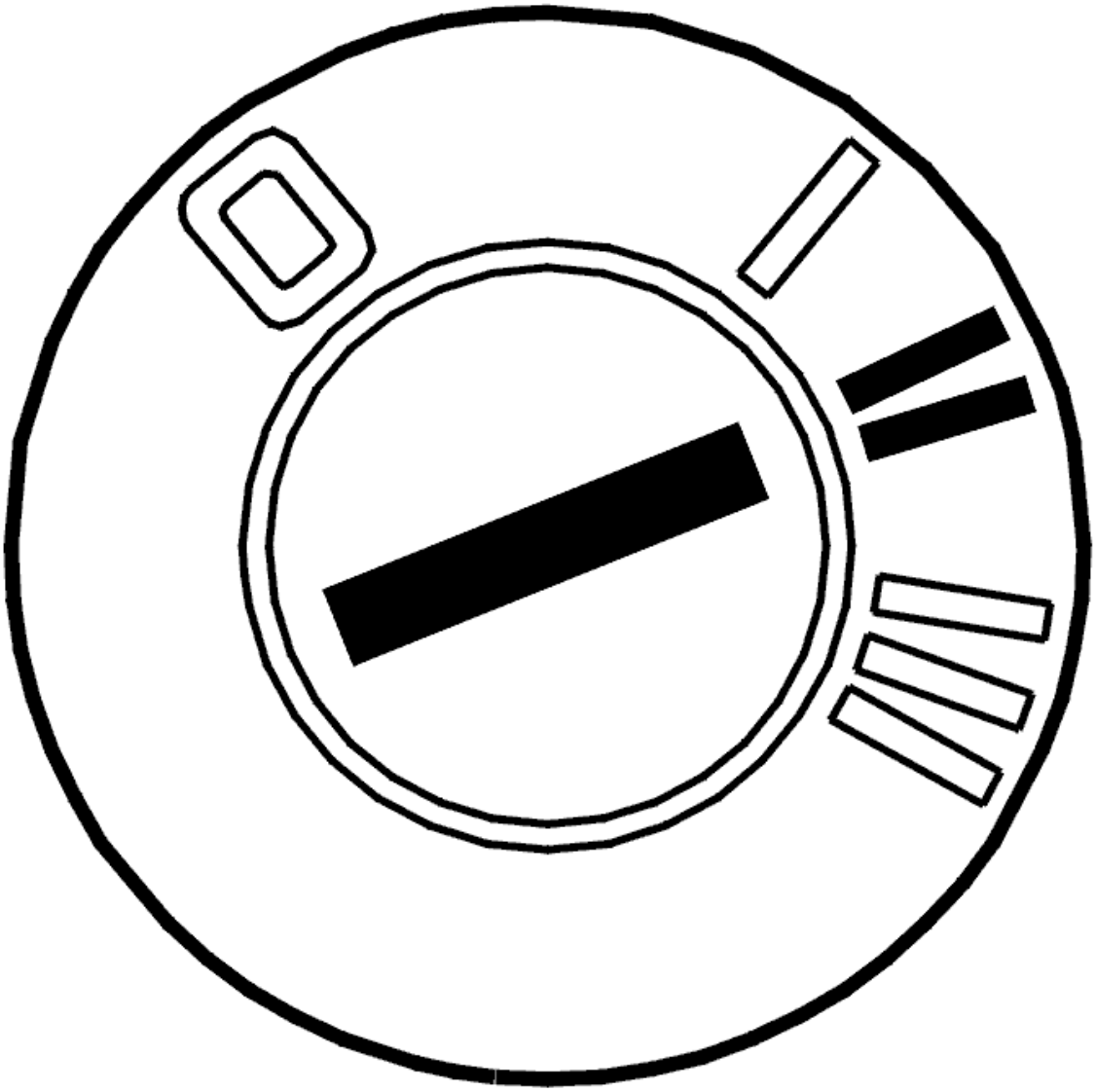

Fig. 140: Identifying Ignition ON
Courtesy of VOLVO CARS CORPORATION

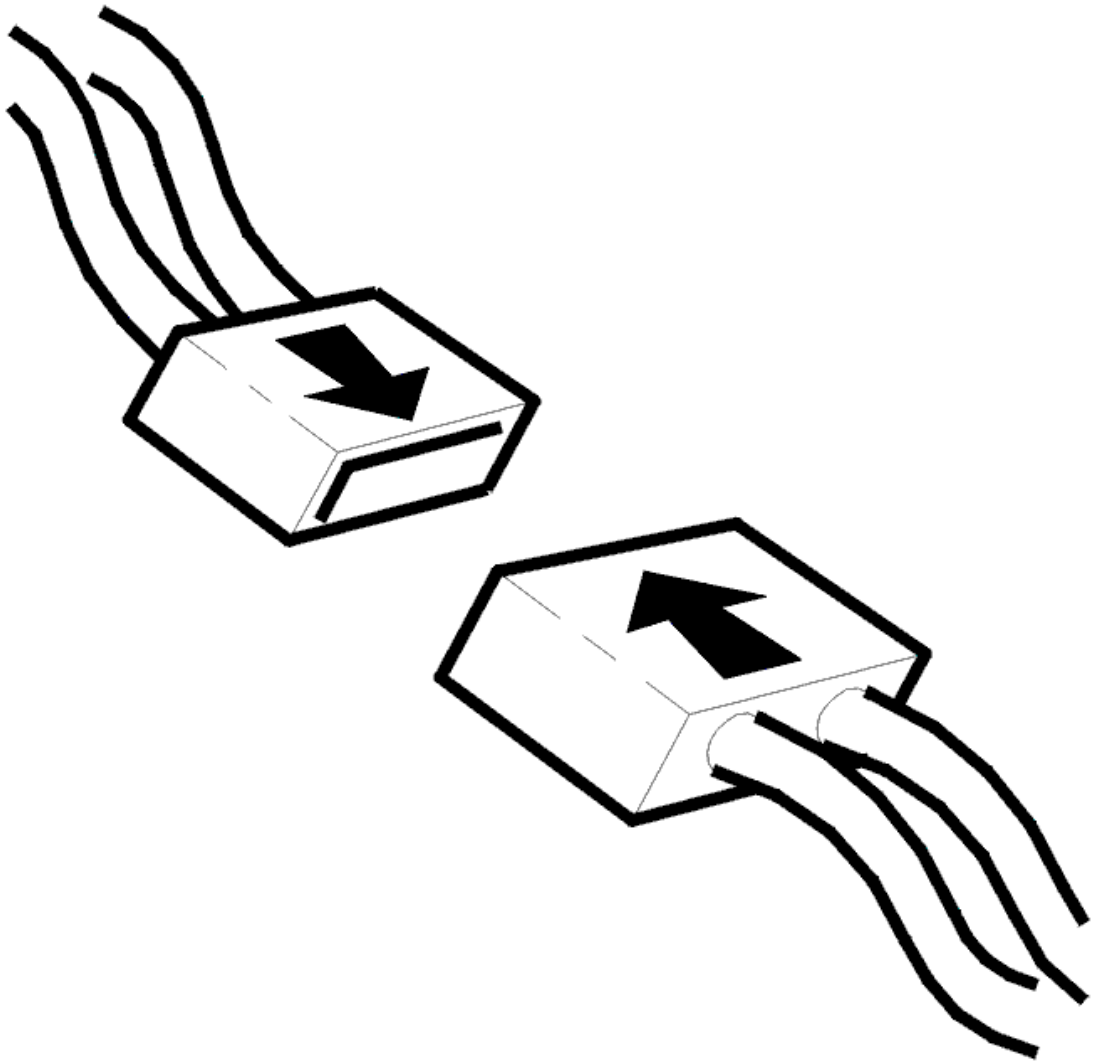

Fig. 141: Connecting Connector
Courtesy of VOLVO CARS CORPORATION

- Ignition off
- Reinstall the connectors, components etc.
- Ignition on.

  Check that the X-supply is OK.

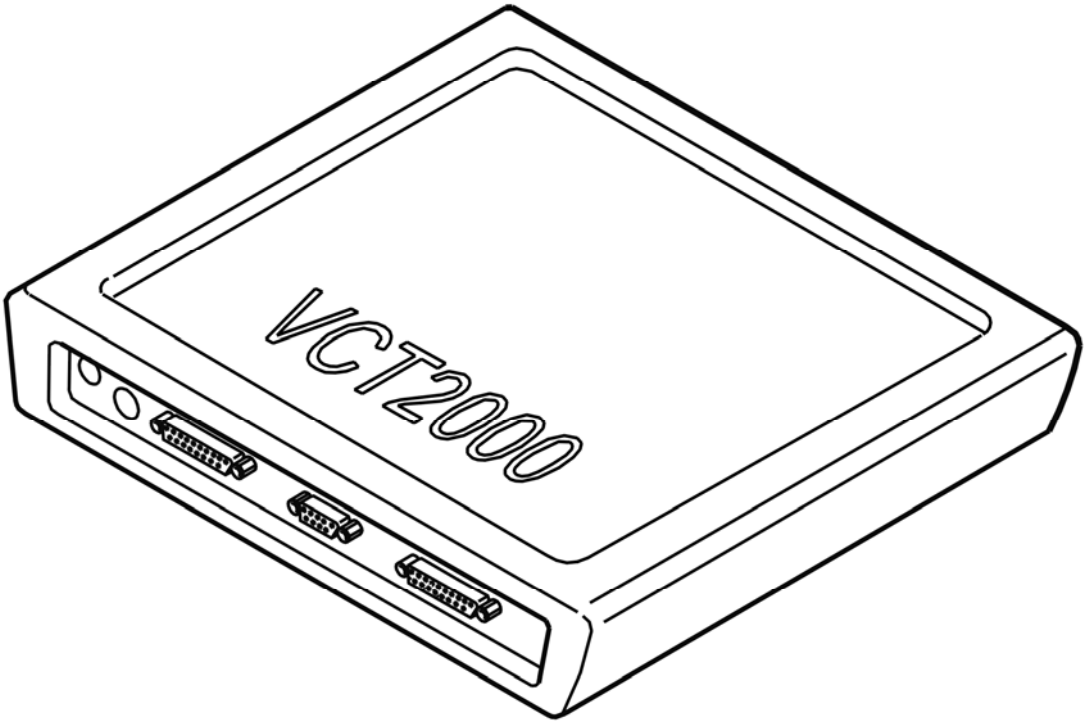

Fig. 142: Identifying VCT2000 Diagnostic Tool Symbol In VIDA
Courtesy of VOLVO CARS CORPORATION

Is the voltage high on the cable?

- **YES**

  VERIFIED: Troubleshooting has been completed.

- **NO**

  Refer to **INFORMATION**

INFORMATION

FAULT-TRACING INFORMATION

The fault should have been detected and remedied. As this is not the case fault-tracing has failed.

Exit fault-tracing for this diagnostic trouble code (DTC) or make another attempt.

CEM-1A04: X-POWER SUPPLY. SIGNAL TOO LOW. INTERMITTENT FAULT (2003-2004)

DIAGNOSTIC TROUBLE CODE (DTC) INFORMATION

Condition

Diagnostic trouble code (DTC) CEM-1A04 is stored if the central electronic module (CEM) registers an open-circuit or a short-circuit to ground in the X-supply.

Substitute Value

None

Possible Source

- Contact resistance in terminals.
- Open-circuit or short-circuit to ground in X-supply.
- Defective ignition switch.

Fault symptom[s]

- Blower fan not operating.
- The radio is not working.
- The starter motor does not turn.

SIGNAL TOO LOW. INTERMITTENT FAULT

CHECKING THE CONNECTORS

Check the central electronic module (CEM) connector. Check for contact resistance and oxidation according to **CONTACT RESISTANCE AND OXIDATION** . Check for loose connections according to **LOOSE CONNECTIONS (TERMINALS)** .

Check for any damage.

HINT: If the fault cause is found, reinstall the components, connectors etc.

HINT: If the fault cause is not found, do not reinstall the central electronic module (CEM) before continuing with fault-tracing.

Other information:

- For -2004, see: **CENTRAL ELECTRONIC MODULE (CEM), REPLACING** .
- For 2005-, see: **CENTRAL ELECTRONIC MODULE (CEM), REPLACING** .

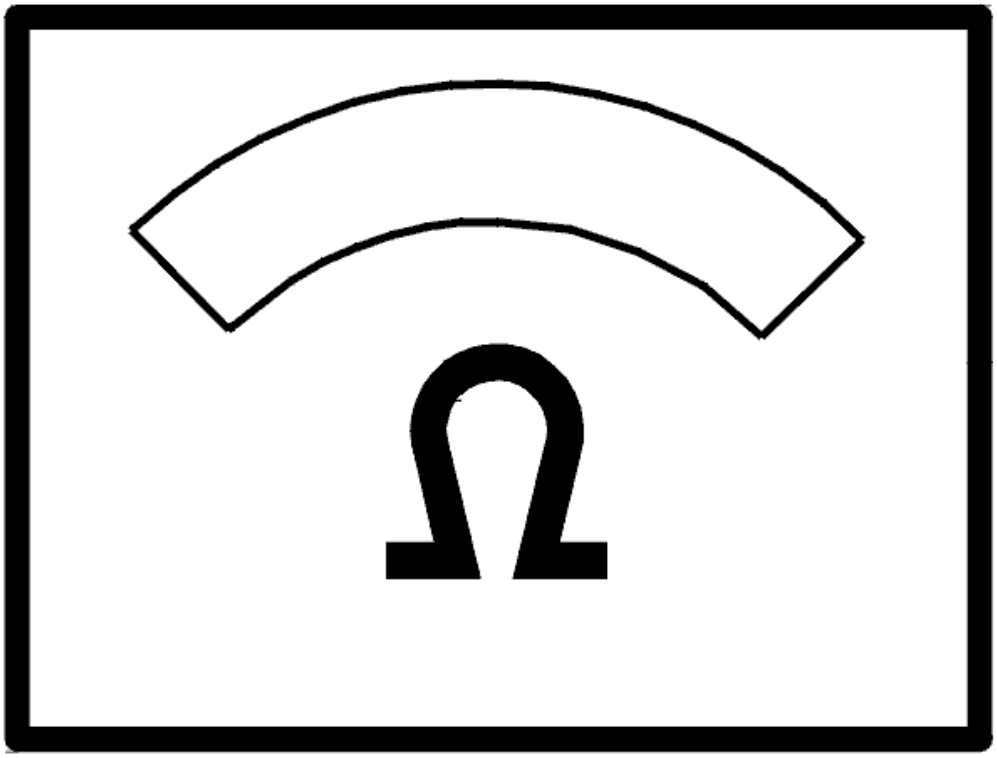

Fig. 143: Identifying Ohm Meter
Courtesy of VOLVO CARS CORPORATION

Was a fault detected?

- **YES**

  OKAY: Troubleshooting has been completed.

- **NO**

  Refer to **CHECKING THE CABLE**

CHECKING THE CABLE

Check the cable between central electronic module connector terminal #2B and the ignition switch connector

terminal #x. Check for an open-circuit according to **OPEN-CIRCUIT, INTERMITTENT FAULTS** . Check for a short-circuit to ground according to **SHORT-CIRCUIT TO GROUND, INTERMITTENT FAULTS** .

Other information

- The voltage must be the same as battery voltage if the key is in positions I or II
- For -2004, see: **CENTRAL ELECTRONIC MODULE (CEM), REPLACING** .
- For 2005-, see: **CENTRAL ELECTRONIC MODULE (CEM), REPLACING** .
- To connect the breakout box to the control module, see **CONNECTING THE BREAKOUT BOX**
- -2004: **SIGNAL SPECIFICATION**
- 2005-: **SIGNAL SPECIFICATION**

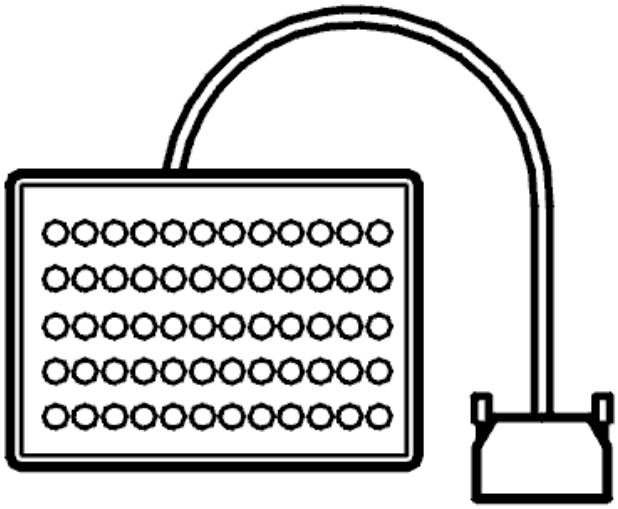

Fig. 144: Breakout Box
Courtesy of VOLVO CARS CORPORATION

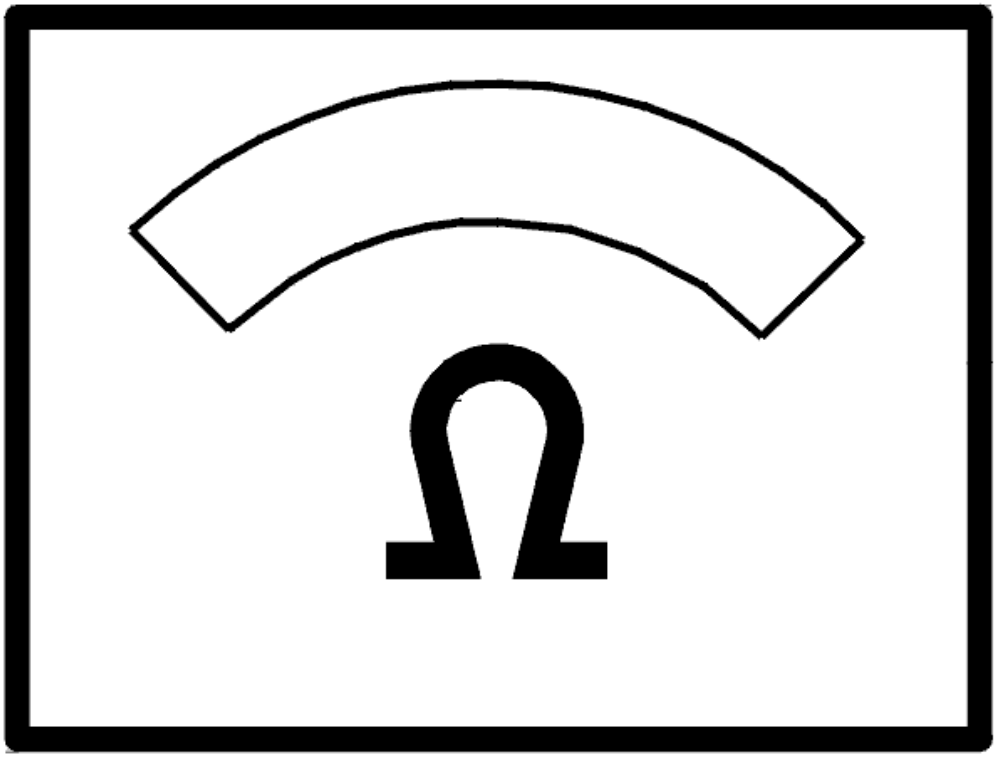

Fig. 145: Identifying Ohm Meter
Courtesy of VOLVO CARS CORPORATION

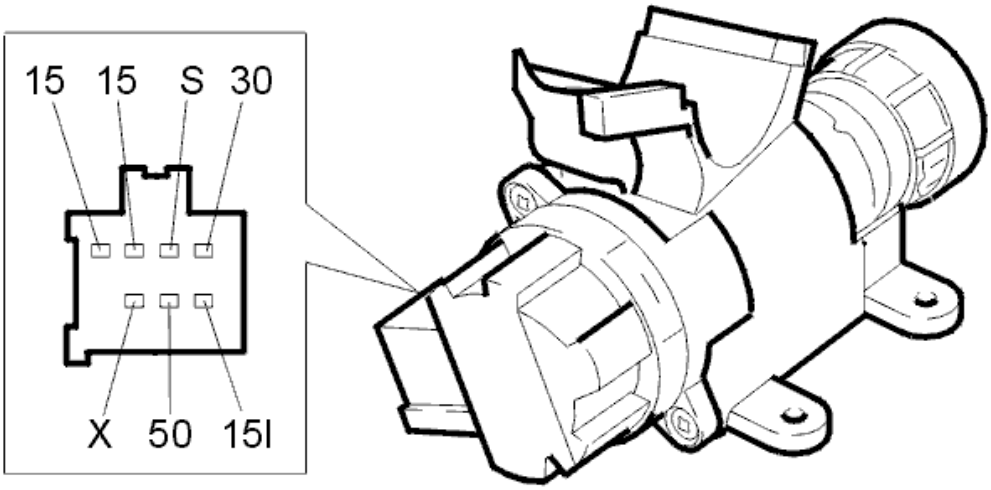

Fig. 146: Identifying Central Electronic Module (CEM) Connector Terminals
Courtesy of VOLVO CARS CORPORATION

CEM-1A04: X-POWER SUPPLY. SIGNAL TOO LOW. PERMANENT FAULT (2003-2004)

DIAGNOSTIC TROUBLE CODE (DTC) INFORMATION

see **DIAGNOSTIC TROUBLE CODE (DTC) INFORMATION**

SIGNAL TOO LOW. PERMANENT FAULT

CHECKING THE CONNECTORS

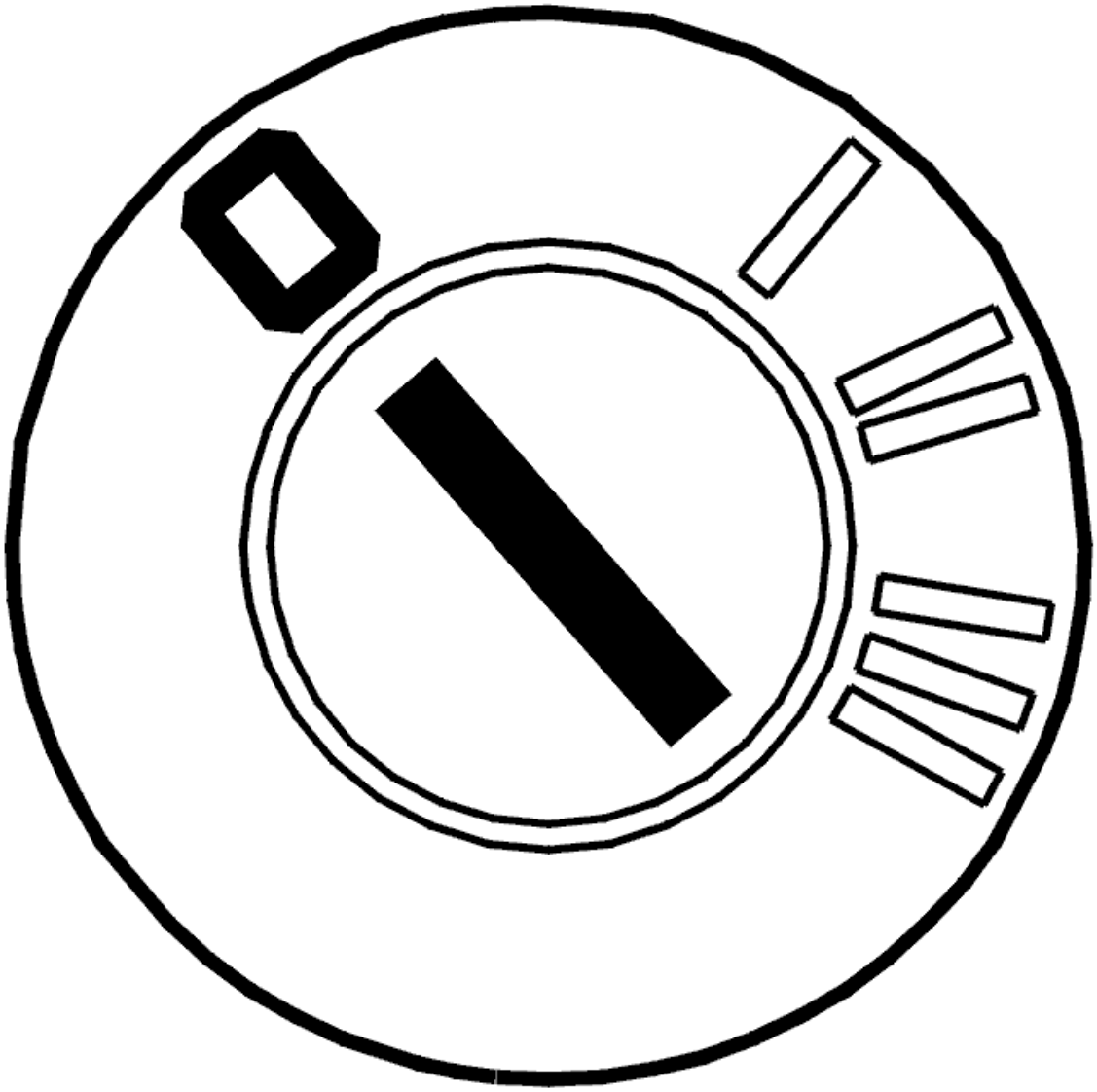

Fig. 147: Identifying Ignition OFF
Courtesy of VOLVO CARS CORPORATION

- Ignition off.

  Check the central electronic module (CEM) connector for contact resistance and oxidation. Remedy if necessary.

  Check for any damage.

  HINT: If the fault cause is found, reinstall the components, connectors etc. If the fault cause is not found, do not reinstall the control module before continuing with fault-tracing.

  Other information:

  - For -2004, see: **CENTRAL ELECTRONIC MODULE (CEM), REPLACING** .

- For 2005-, see: **CENTRAL ELECTRONIC MODULE (CEM), REPLACING** .

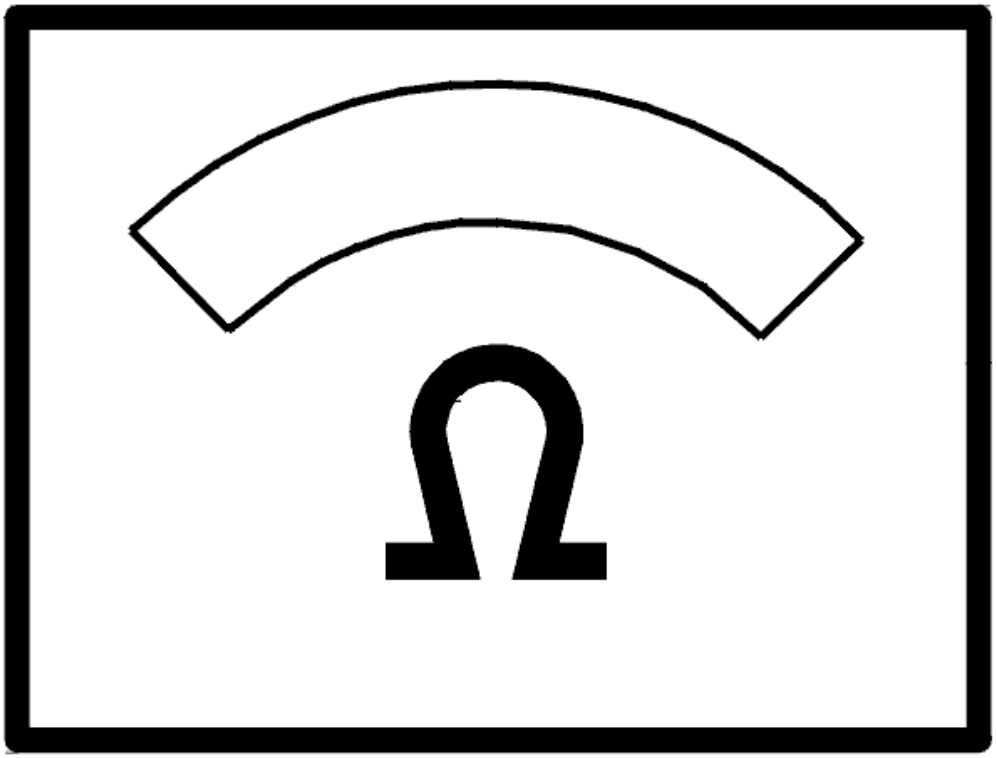

Fig. 148: Identifying Ohm Meter
Courtesy of VOLVO CARS CORPORATION

Was a fault detected?

- **YES**

  Refer to **VERIFICATION**

- **NO**

  Refer to **CHECKING THE COMPONENT AND CABLE**

CHECKING THE COMPONENT AND CABLE

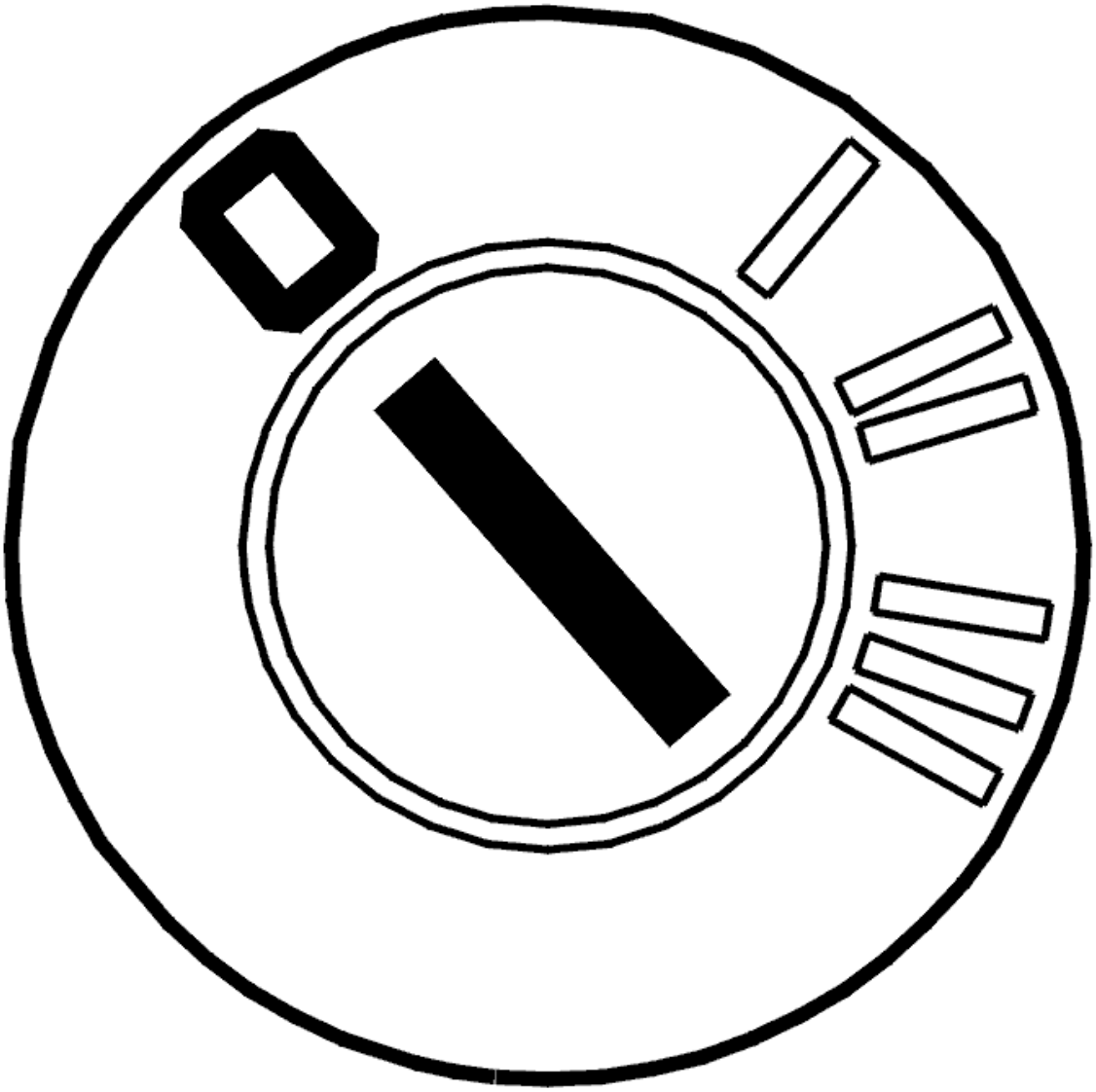

Fig. 149: Identifying Ignition OFF
Courtesy of VOLVO CARS CORPORATION

- Ignition off.

  Check the cable between central electronic module (CEM) connector terminal #2B and the ignition switch X-supply (terminal #6). Check for an open-circuit. Check for a short-circuit to ground.

  Other information:

  - The voltage must be the same as battery voltage if the key is in position I or II
  - For -2004, see: **CENTRAL ELECTRONIC MODULE (CEM), REPLACING** .
  - For 2005-, see: **CENTRAL ELECTRONIC MODULE (CEM), REPLACING** .
  - To connect the breakout box to the control module, see **CONNECTING THE BREAKOUT BOX**
  - -2004: **SIGNAL SPECIFICATION**

- 2005-: **SIGNAL SPECIFICATION**
- see **CHECKING WIRING AND TERMINALS** .

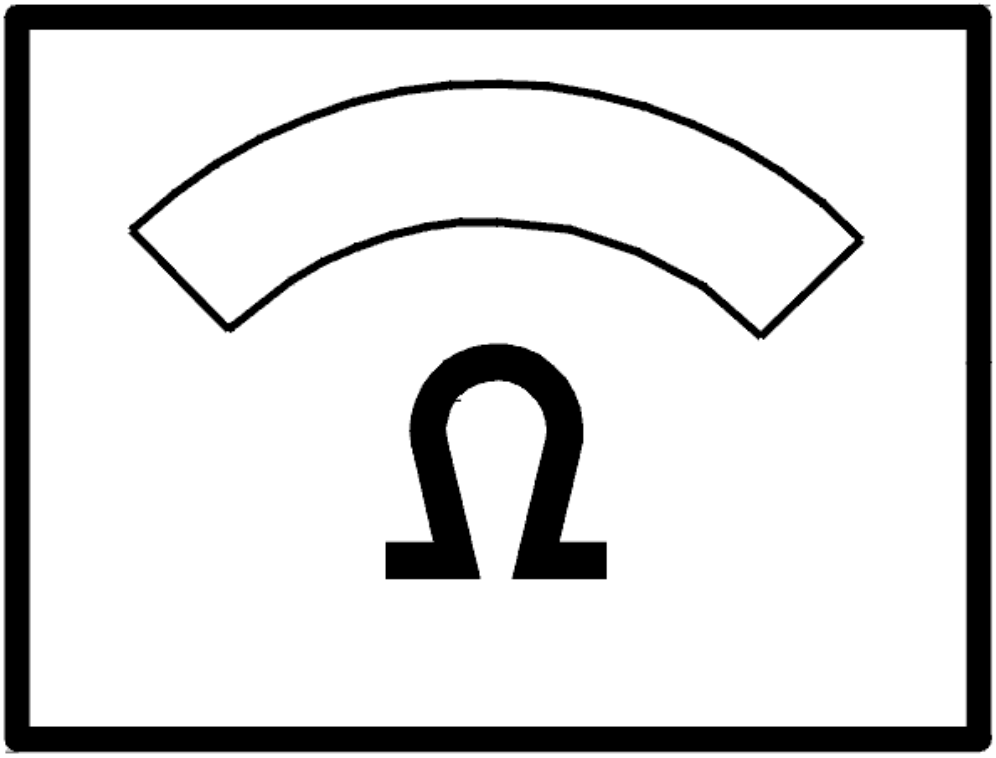

Fig. 150: Identifying Ohm Meter
Courtesy of VOLVO CARS CORPORATION

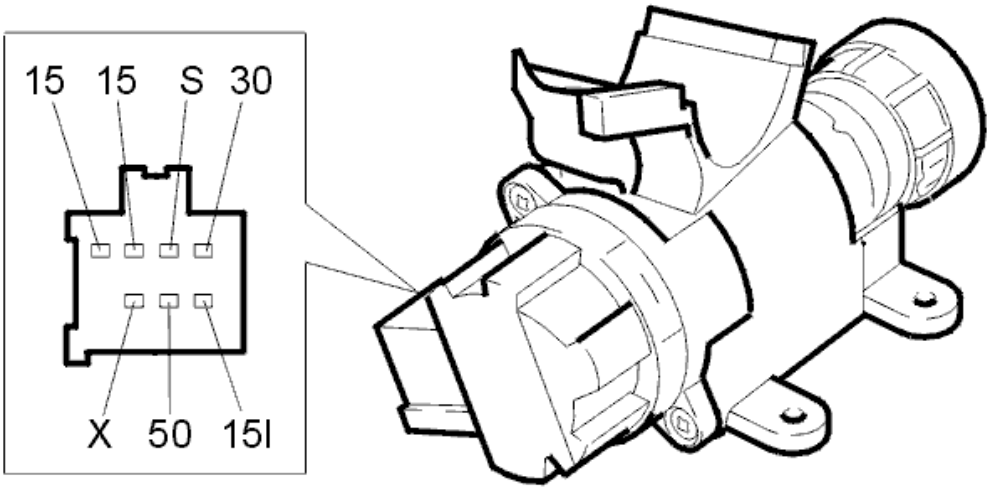

Fig. 151: Identifying Central Electronic Module (CEM) Connector Terminals
Courtesy of VOLVO CARS CORPORATION

Is the voltage the same as battery voltage?

- **YES**

  Refer to **VERIFICATION**

- **NO**

  Refer to **REPLACING THE COMPONENT**

REPLACING THE COMPONENT

Try replacing the ignition switch connector according to **STEERING WHEEL LOCK, REPLACING** .

- **Continue**

  Refer to **VERIFICATION**

VERIFICATION

VERIFICATION

HINT: After the repair it is necessary to check that the fault has been rectified.

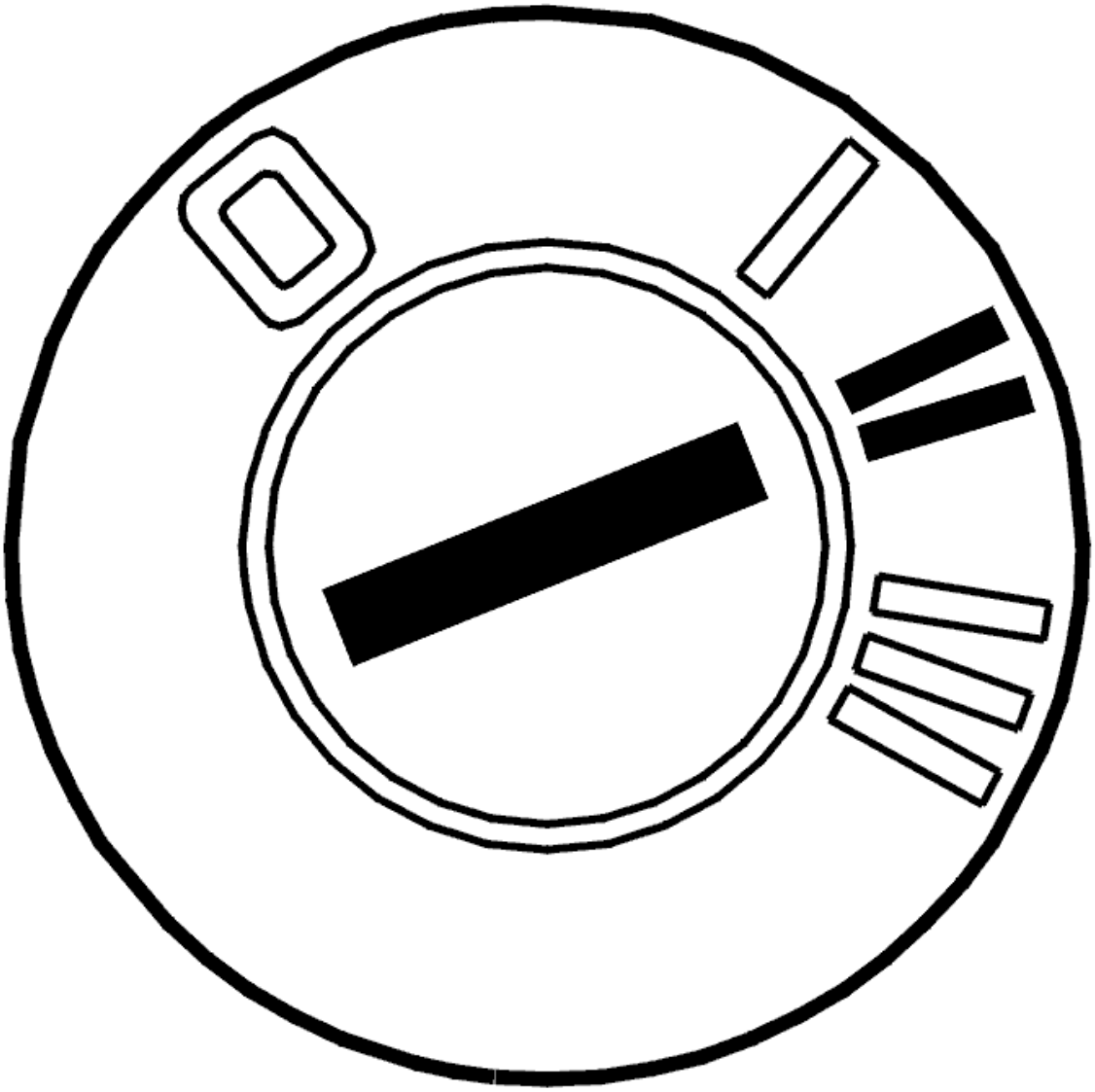

Fig. 152: Identifying Ignition ON
Courtesy of VOLVO CARS CORPORATION

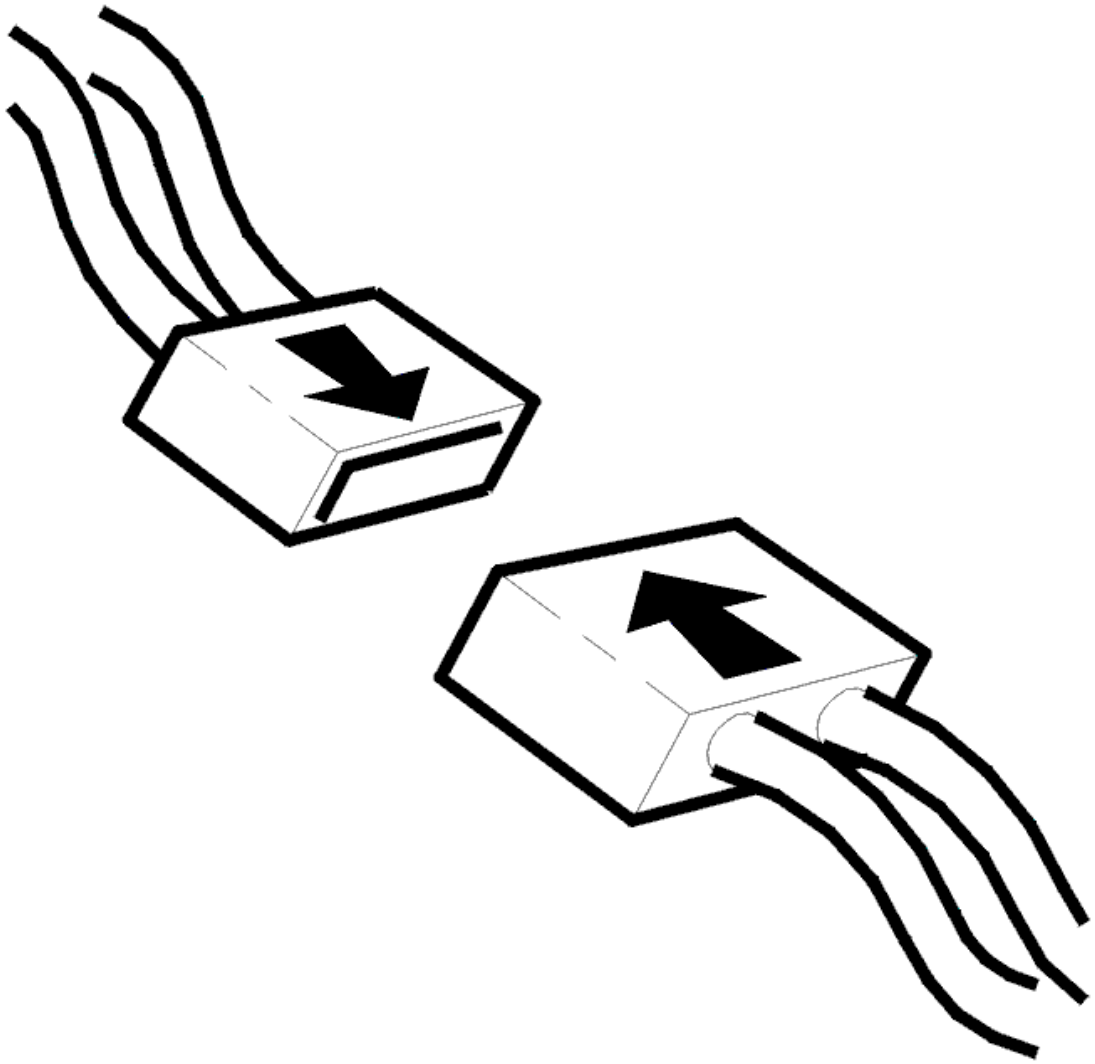

Fig. 153: Connecting Connector
Courtesy of VOLVO CARS CORPORATION

- Ignition off.
- Connect connectors, install components, etc.
- Ignition on.

  Check that X-voltage is OK.

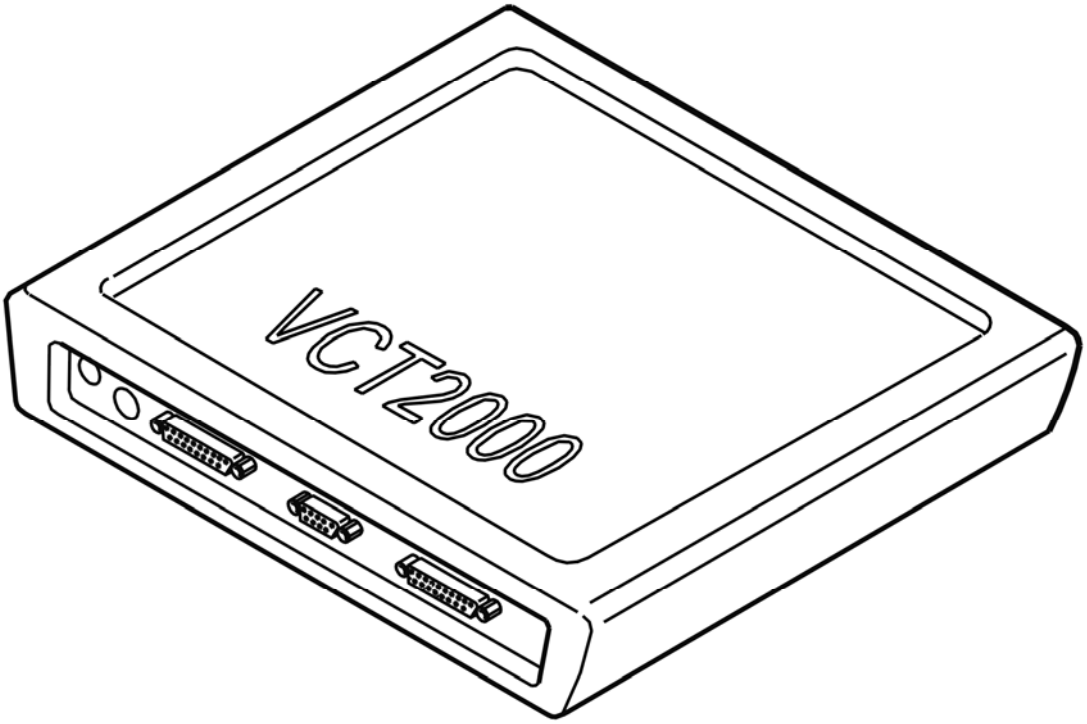

Fig. 154: Identifying VCT2000 Diagnostic Tool Symbol In VIDA
Courtesy of VOLVO CARS CORPORATION

Is voltage on the wire high?

- **YES**

  VERIFIED: Troubleshooting has been completed.

- **NO**

  Refer to **INFORMATION**

INFORMATION

FAULT-TRACING INFORMATION

The fault should have been detected and remedied. As this is not the case fault-tracing has failed.

Exit fault-tracing for this diagnostic trouble code (DTC) or make another attempt.

CEM-1A05: X-POWER SUPPLY SIGNAL TOO HIGH (2005-2011)

DIAGNOSTIC TROUBLE CODE (DTC) INFORMATION CEM-1A05

Condition

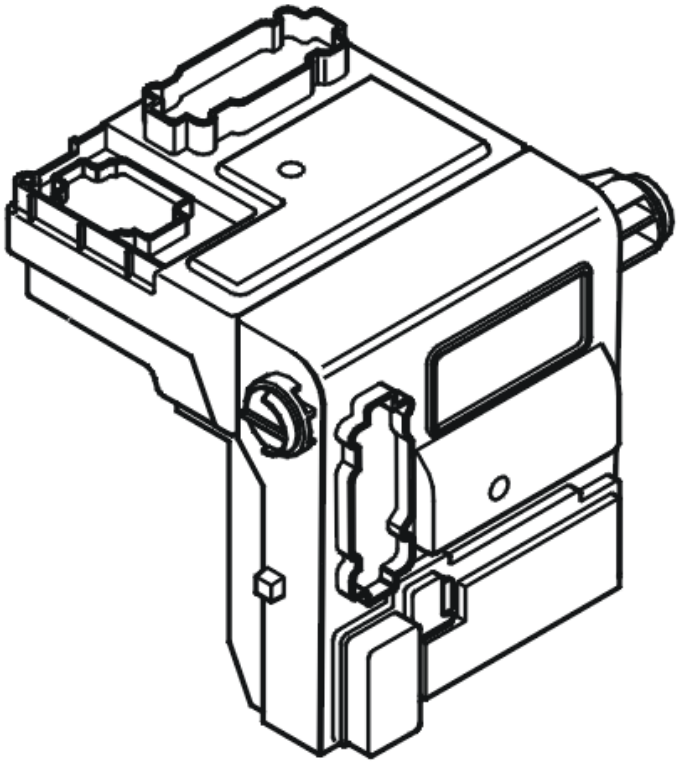

Fig. 155: Identifying Central Electronic Module (CEM)
Courtesy of VOLVO CARS CORPORATION

The central electronic module (CEM) monitors the cable for X-supply from the ignition switch.

The diagnostic trouble code (DTC) is stored if the central electronic module (CEM) registers a short-circuit to supply voltage in the cable for the X-supply.

The diagnostic trouble code (DTC) can be diagnosed at ignition switch position III (start attempt).

Substitute Value

- None.

Possible Source

- Short-circuit to supply voltage in the cable for the X-supply
- Damaged ignition switch.

Fault symptom[s]

- The battery discharges.

SIGNAL TOO HIGH

CHECKING THE CONNECTORS

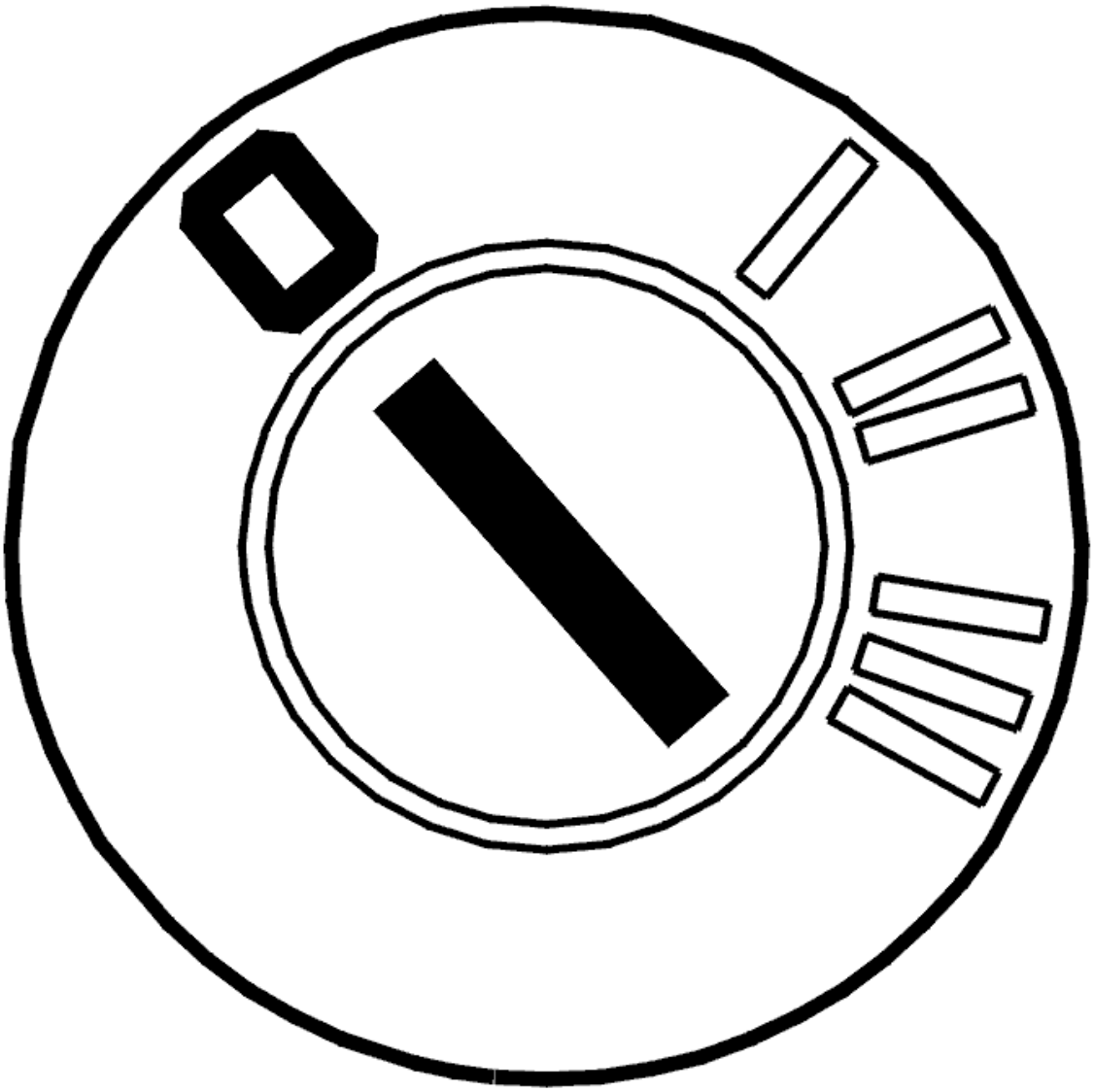

Fig. 156: Identifying Ignition OFF
Courtesy of VOLVO CARS CORPORATION

- Ignition off.

  Check central electronic module (CEM) connector D. Check for damage. Remedy as necessary.

  HINT: If the fault cause is found, reinstall the components, connectors etc.

  HINT: If the fault cause was not found, do not reconnect the connector before carrying out further

fault-tracing.

Other information:

- For -2004, see: **CENTRAL ELECTRONIC MODULE (CEM), REPLACING** .
- For 2005-, see: **CENTRAL ELECTRONIC MODULE (CEM), REPLACING** .
- see **CHECKING WIRING AND TERMINALS**

Was a fault detected?

- **YES**

  Refer to **VERIFICATION**

- **NO**

  Refer to **CHECKING THE COMPONENT AND CABLE**

CHECKING THE COMPONENT AND CABLE

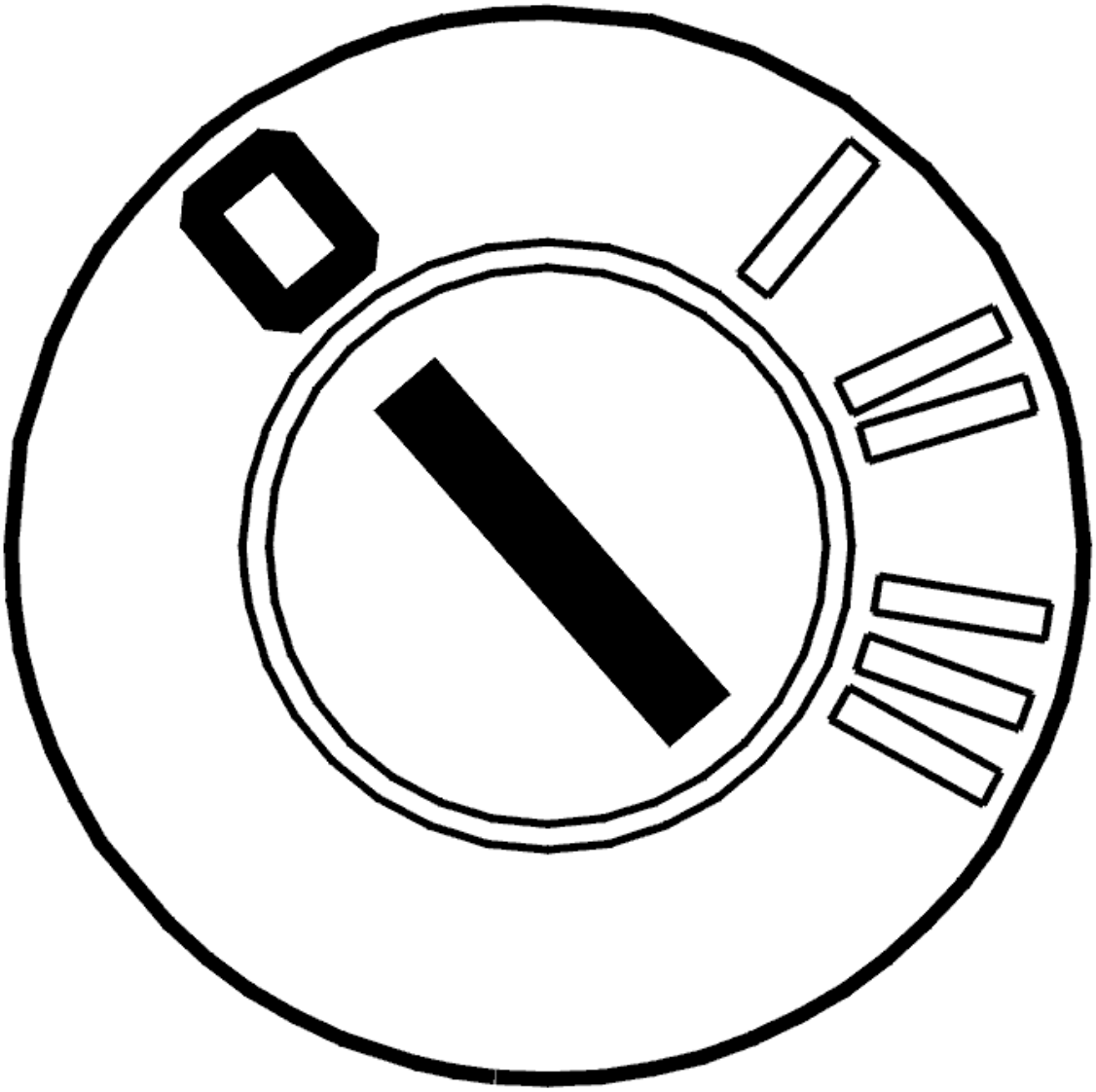

Fig. 157: Identifying Ignition OFF
Courtesy of VOLVO CARS CORPORATION

- Ignition off.

  Check the cable between central electronic module (CEM) connector terminal #D8 and the ignition switch X-supply (terminal #6). Check for a short-circuit to supply voltage.

  The voltage must be 0 V if the key is in position 0 or III.

  Other information:

  - see **CONNECTING THE BREAKOUT BOX**
  - -2004: **SIGNAL SPECIFICATION**
  - 2005-: **SIGNAL SPECIFICATION**

- For -2004, see: **CENTRAL ELECTRONIC MODULE (CEM), REPLACING** .
- For 2005-, see: **CENTRAL ELECTRONIC MODULE (CEM), REPLACING** .
- see **CHECKING WIRING AND TERMINALS**

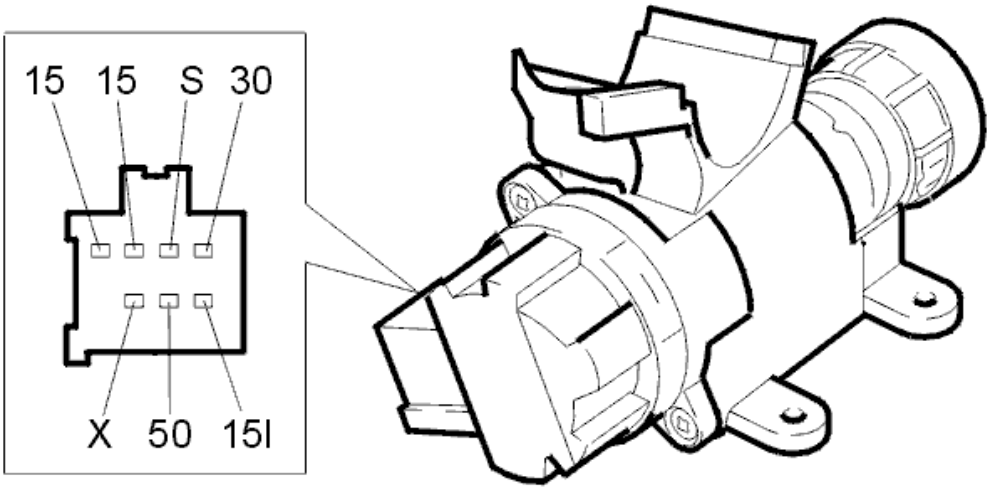

Fig. 158: Identifying Central Electronic Module (CEM) Connector Terminals
Courtesy of VOLVO CARS CORPORATION

Were any faults found in the cable?

- **YES**

  Refer to **VERIFICATION**

- **NO**

  Refer to **REPLACING THE COMPONENT**

REPLACING THE COMPONENT

To replace the connector for the ignition switch, see: **STEERING WHEEL LOCK, REPLACING**

- **Continue**

Refer to **VERIFICATION**

VERIFICATION

VERIFICATION

HINT: After the repair it is necessary to check that the fault has been rectified.

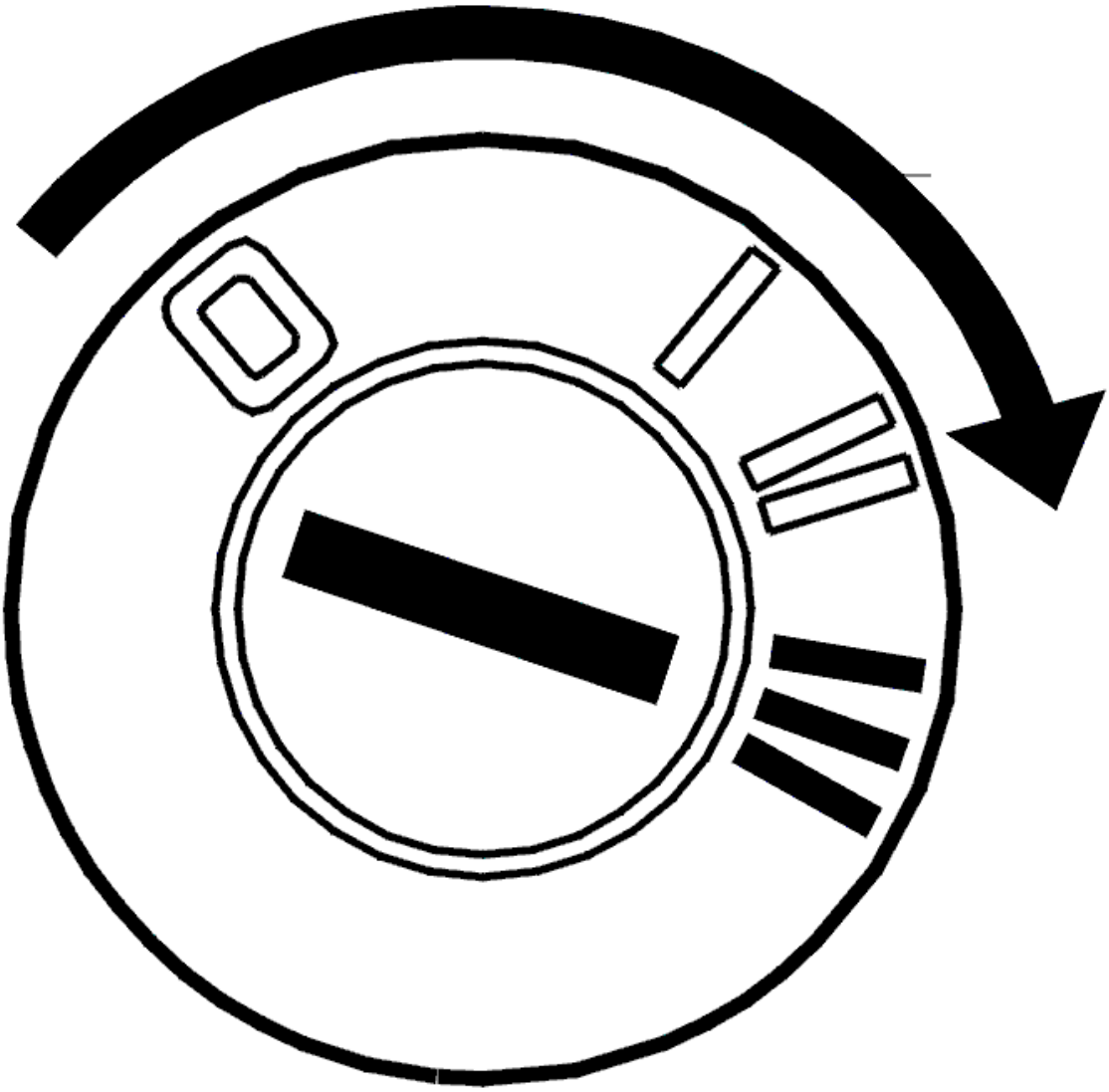

Fig. 159: Identifying Engine START Position
Courtesy of VOLVO CARS CORPORATION

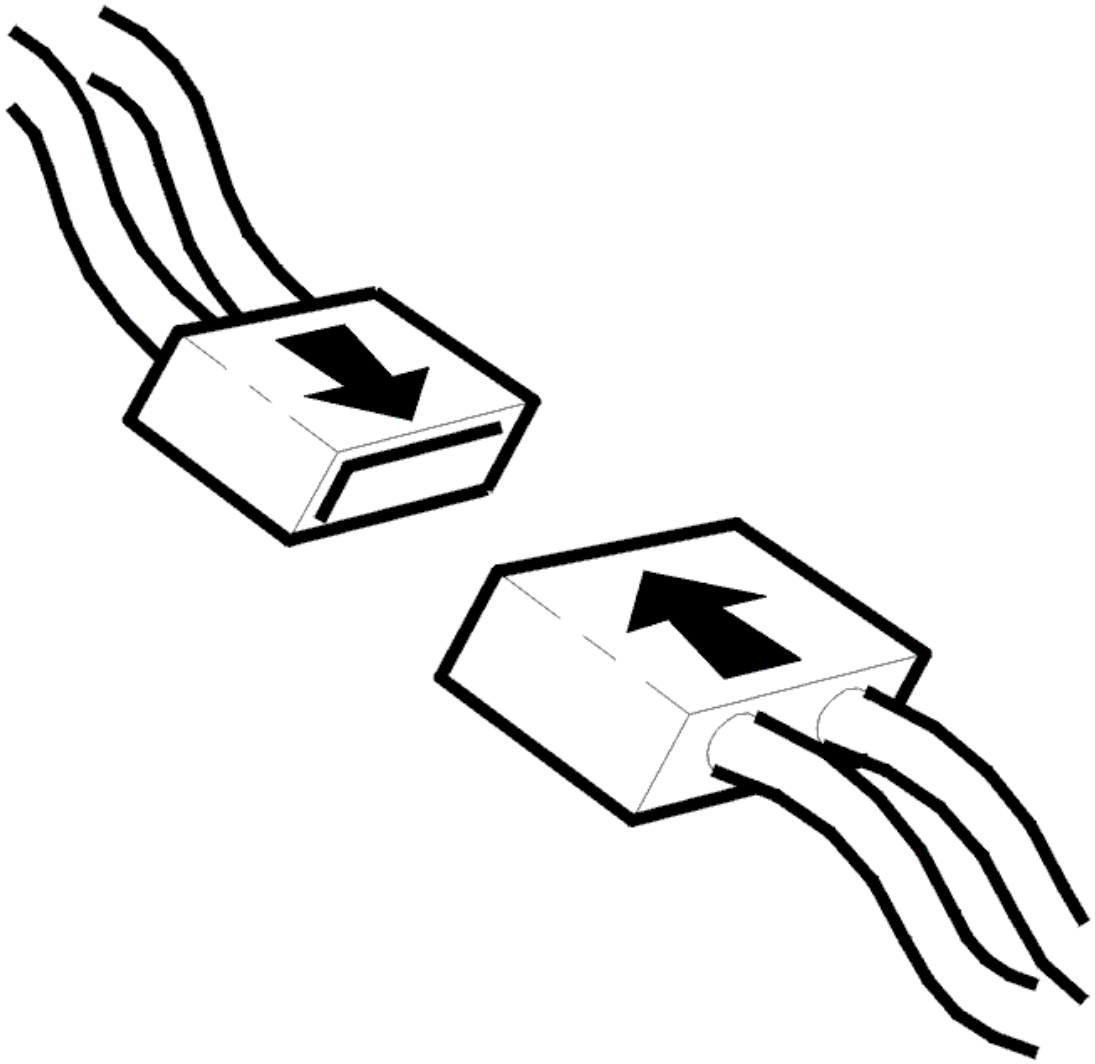

Fig. 160: Connecting Connector
Courtesy of VOLVO CARS CORPORATION

- Ignition off.
- Connect connectors, install components, etc.
- Key in position III.

Check that X-voltage is OK.

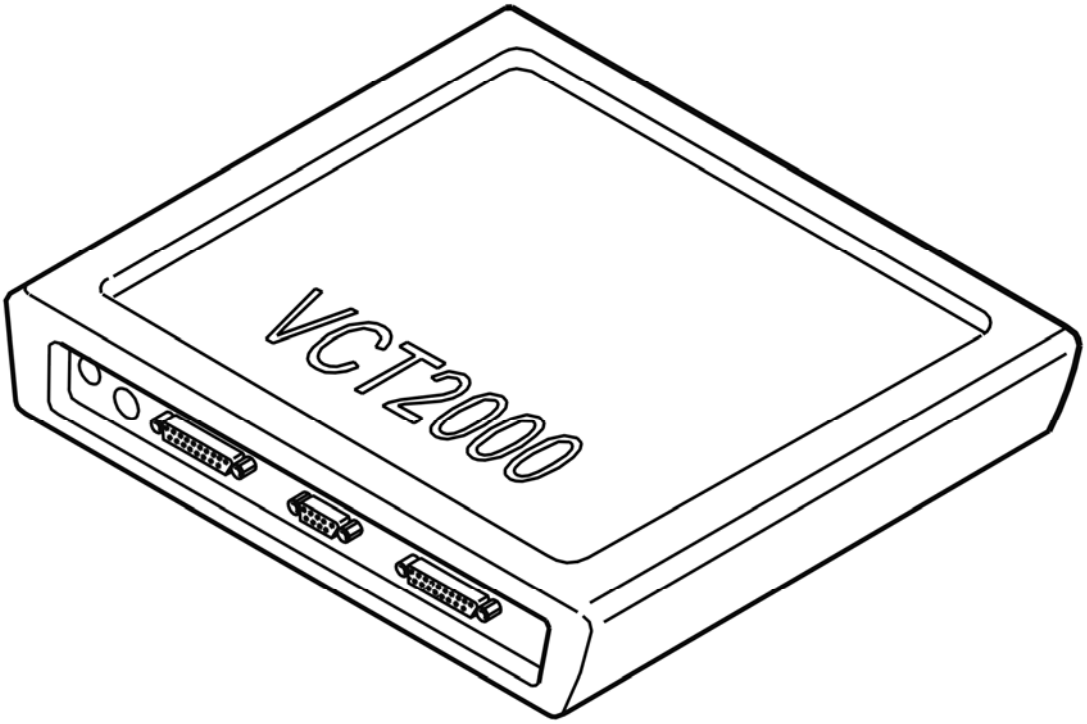

Fig. 161: Identifying VCT2000 Diagnostic Tool Symbol In VIDA
Courtesy of VOLVO CARS CORPORATION

Is voltage on the wire low?

- **YES**

  VERIFIED: Troubleshooting has been completed.

- **NO**

  Refer to **INFORMATION**

INFORMATION

FAULT-TRACING INFORMATION

The fault should have been detected and remedied. As this is not the case fault-tracing has failed.

Exit fault-tracing for this diagnostic trouble code (DTC) or make another attempt.

CEM-1A05: 30 POWER SUPPLY. SIGNAL TOO LOW. INTERMITTENT FAULT (2003-2004)

DIAGNOSTIC TROUBLE CODE (DTC) INFORMATION

Condition

Diagnostic trouble code (DTC) CEM-1C05 is stored if the central electronic module (CEM) registers that the 30-supply to central electronic module (CEM) terminals #3E and #6E is low.

Substitute Value

None.

Possible Source

- Contact resistance or loose connections in the terminals
- Low battery voltage, poor battery or the battery needs charging
- Defective generator (GEN).

Fault symptom[s]

- The "Generator not charging" warning lamp is lit with the engine running
- The headlamp bulbs blow
- The "Generator not charging" warning lamp is not lit when the ignition is switched on
- Low rotation speed in the starter motor
- The electrolyte in battery boils with the engine running
- The battery discharges.

SIGNAL TOO LOW. INTERMITTENT FAULT

CHECKING WIRE BETWEEN BATTERY AND ALTERNATOR.

Check the wire between alternator 1A and starter motor 1 (red/green wire and flat pin) for an open circuit as described in, see **OPEN-CIRCUIT, INTERMITTENT FAULTS** , and for a short circuit to ground as described in **SHORT-CIRCUIT TO GROUND, INTERMITTENT FAULTS** .

Also check the wire between starter motor 1 and battery positive terminal in the same way.

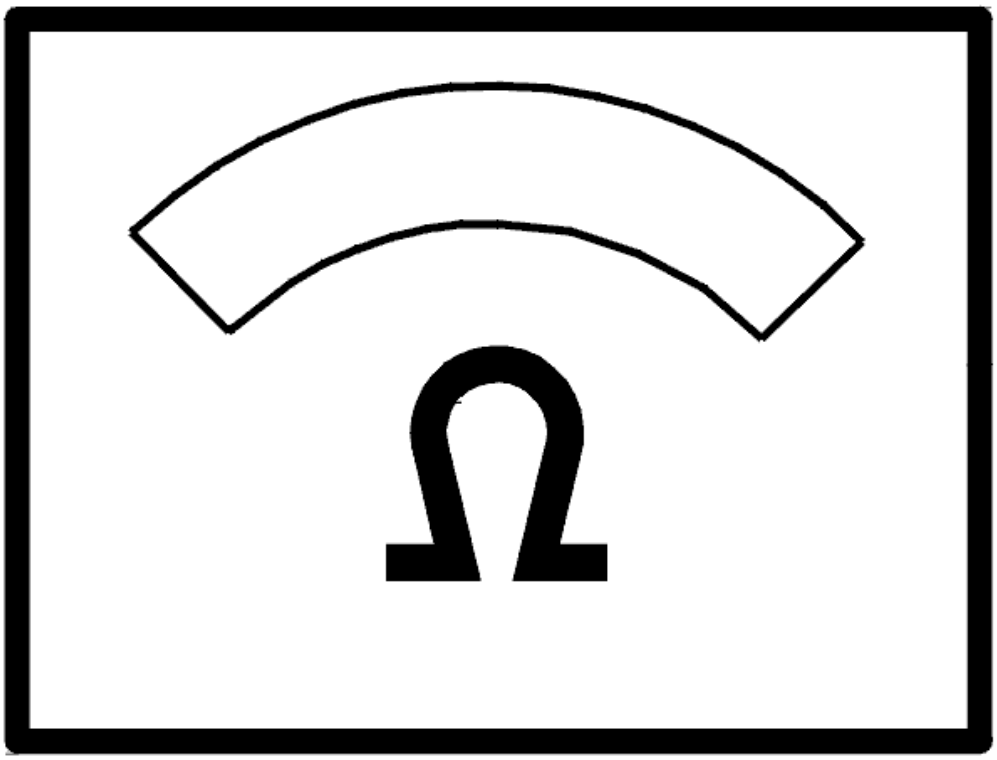

Fig. 162: Identifying Ohm Meter
Courtesy of VOLVO CARS CORPORATION

Is there a fault?

- **YES**

  Refer to **INFORMATION**

- **NO**

  Refer to **CHECKING THE WIRES AND CONNECTORS**

CHECKING THE WIRES AND CONNECTORS

Check wires and connectors between central electronic module (CEM) 6E and battery for an intermittent open

circuit as described in, see **OPEN-CIRCUIT, INTERMITTENT FAULTS** and for a loose contact as described in **LOOSE CONNECTIONS (TERMINALS)** . Check especially for any damage.

Check wires between central electronic module (CEM) 1E and ground point/ground on left A-pillar for an open circuit as described in, see **OPEN-CIRCUIT, INTERMITTENT FAULTS** . Check especially for any damage.

Do the necessary corrective action.

Additional information

- For -2004, see: **CENTRAL ELECTRONIC MODULE (CEM), REPLACING** .
- For 2005-, see: **CENTRAL ELECTRONIC MODULE (CEM), REPLACING** .
- To connect a test box, see **CONNECTING THE BREAKOUT BOX**

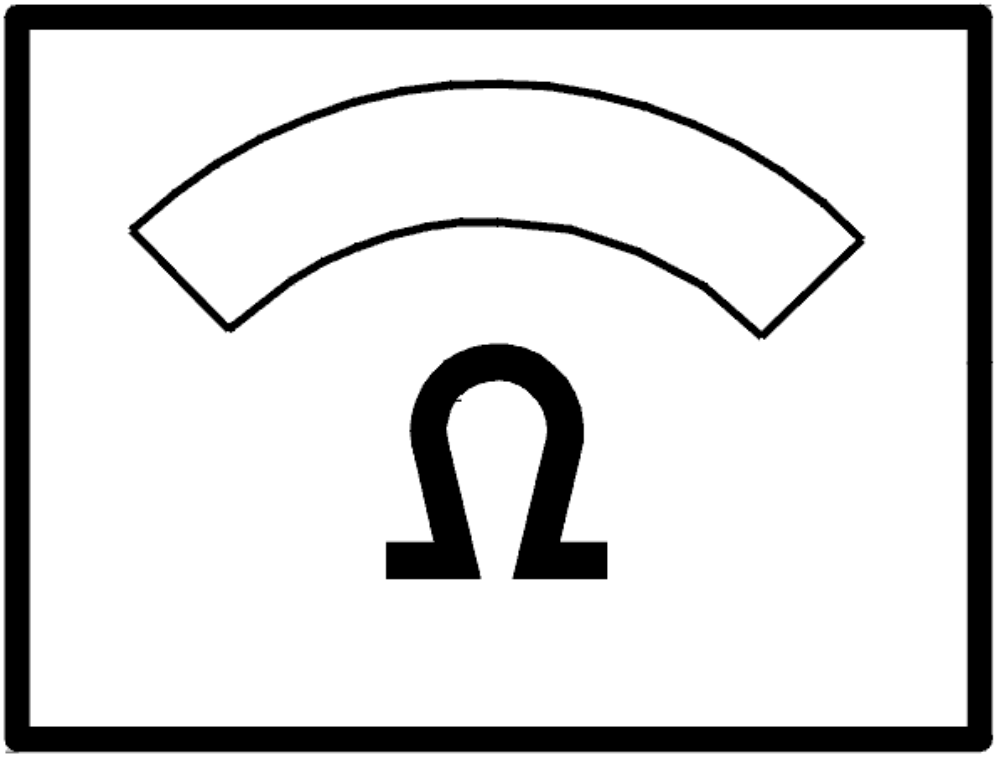

Fig. 163: Identifying Ohm Meter
Courtesy of VOLVO CARS CORPORATION

- **Continue**

  Refer to **INFORMATION**

INFORMATION

FAULT-TRACING INFORMATION

If the fault is intermittent, do not verify fault-tracing if the fault does not recur.

It is possible to view the information again, or leave fault-tracing for this diagnostic trouble code (DTC).

CEM-1A05: 30 POWER SUPPLY. SIGNAL TOO LOW. PERMANENT FAULT (2003-2004)

DIAGNOSTIC TROUBLE CODE (DTC) INFORMATION

see **DIAGNOSTIC TROUBLE CODE (DTC) INFORMATION**

SIGNAL TOO LOW. PERMANENT FAULT

CHECKING THE CABLE BETWEEN THE BATTERY AND THE GENERATOR (GEN)

Check that the battery is charged.

Charge the battery if necessary.

Check the cable between generator (GEN) terminal #1A and starter motor terminal #1 (the red / green flat pin cable). Check for an open-circuit. Check for a short-circuit to ground. Also check the cable between starter motor terminal #1 and the battery positive terminal in the same way.

Other information:

- see **CHECKING WIRING AND TERMINALS** .

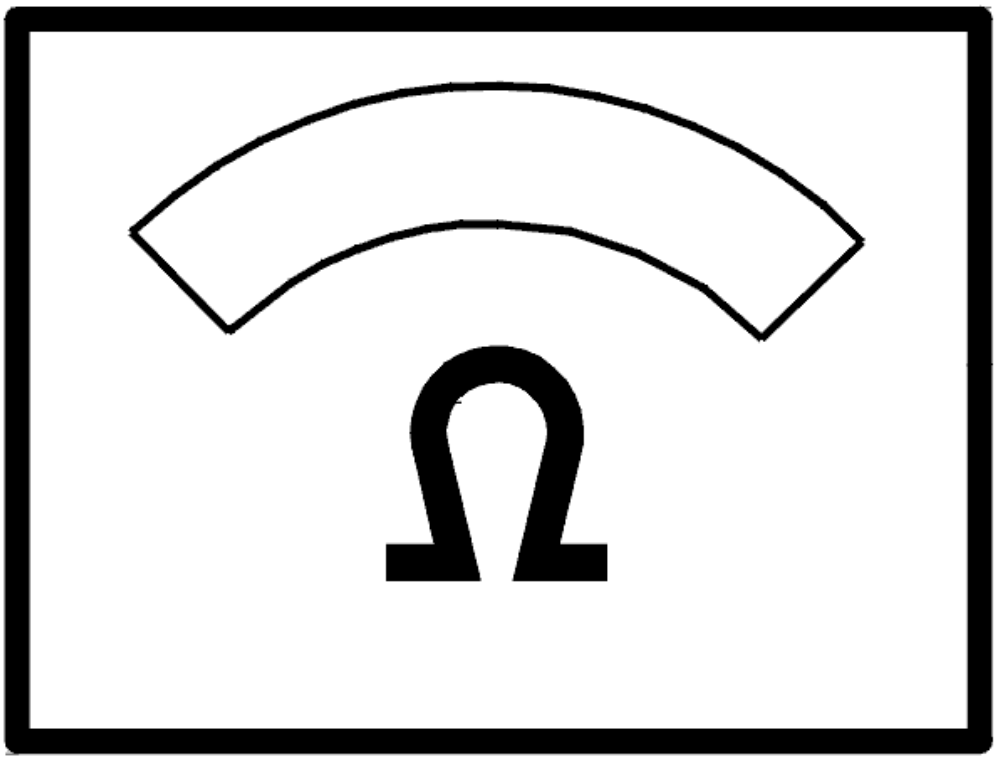

Fig. 164: Identifying Ohm Meter
Courtesy of VOLVO CARS CORPORATION

Was a fault detected?

- **YES**

  Refer to **VERIFICATION**

- **NO**

  Refer to **CHECKING THE POWER SUPPLY**

CHECKING THE POWER SUPPLY

Check the voltage to ground at the following points:

- main fuse 11A/2
- fuse 11C/32.

The voltage must be at least battery voltage minus three volts.

Check for contact resistance and oxidation at the fuses.

Remedy as necessary.

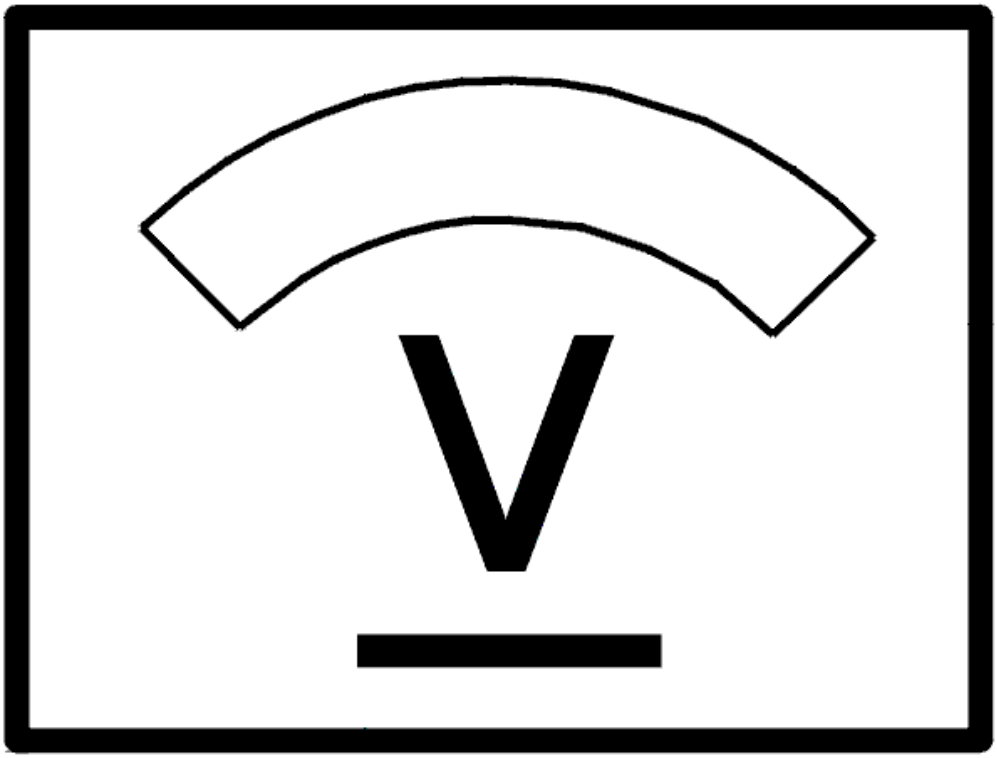

Fig. 165: Identifying Voltage Display
Courtesy of VOLVO CARS CORPORATION

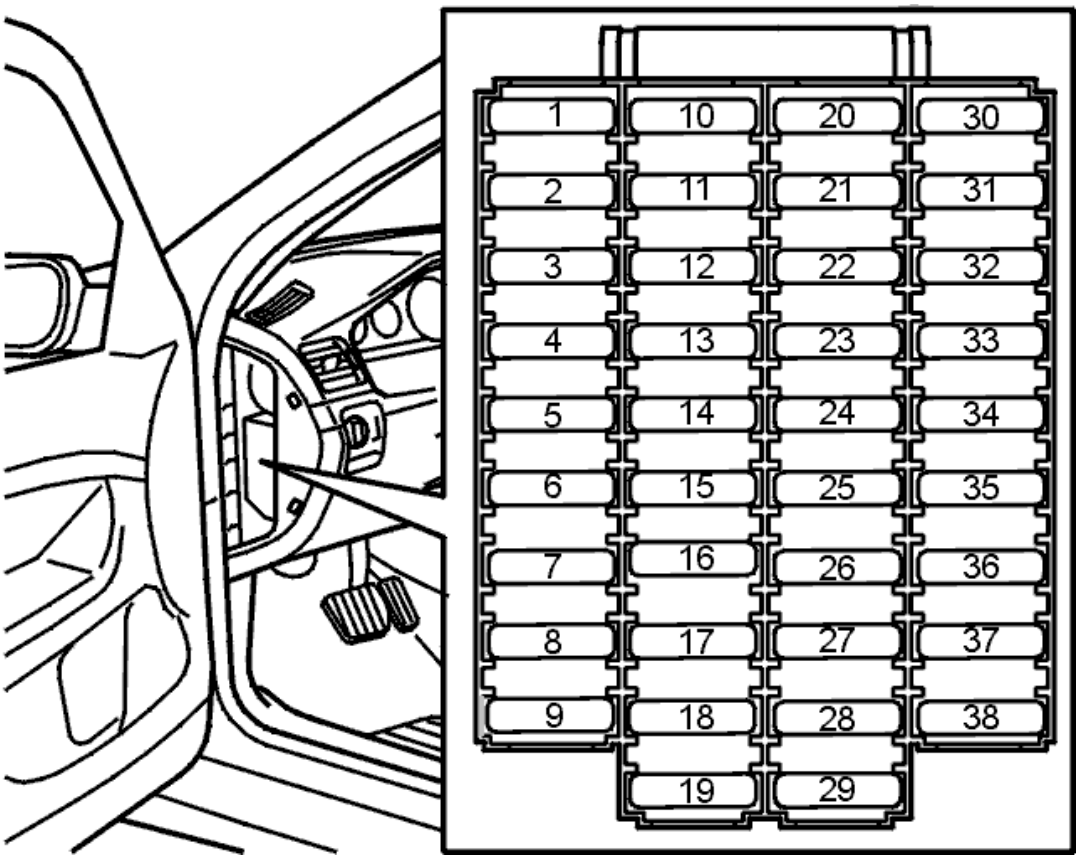

Fig. 166: Fuse Holder (Passenger Compartment)
Courtesy of VOLVO CARS CORPORATION

Was a fault detected?

- **YES**

  Refer to **VERIFICATION**

- **NO**

  Refer to **CHECKING THE POWER SUPPLY AND GROUND TERMINALS**

CHECKING THE POWER SUPPLY AND GROUND TERMINALS

Check connector 54/3. Check for contact resistance and oxidation. Check for damage carefully.

Check the voltage to ground at control module connector terminal #6E. The voltage must be at least battery voltage minus three volts.

Check the central electronic module (CEM) connector. Check for contact resistance and oxidation. Check for damage carefully.

Check the wiring between control module terminal #1E and ground: left A-post for loose connections.

Other information

- For -2004, see: **CENTRAL ELECTRONIC MODULE (CEM), REPLACING** .
- For 2005-, see: **CENTRAL ELECTRONIC MODULE (CEM), REPLACING** .
- To connect the breakout box, see **CONNECTING THE BREAKOUT BOX**
- see **CHECKING WIRING AND TERMINALS** .

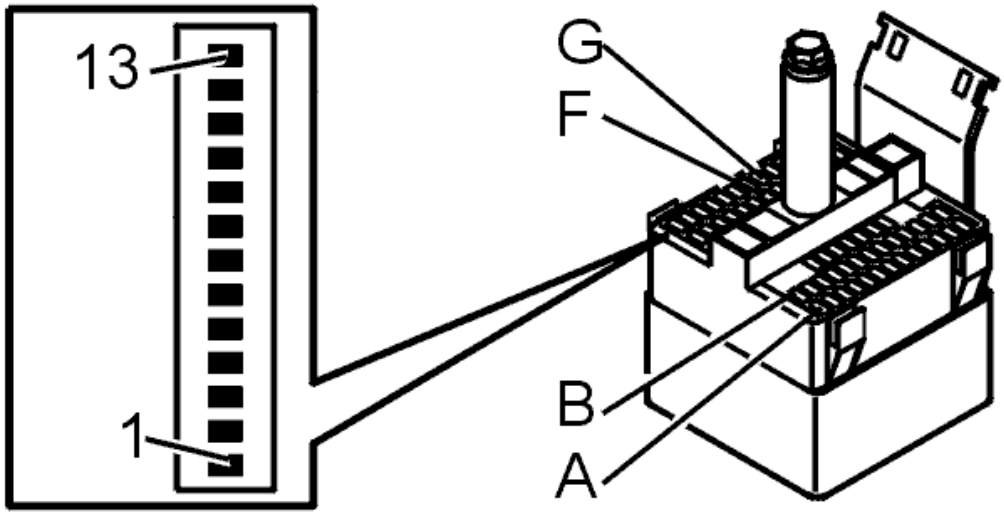

Fig. 167: Identifying Connector Terminals
Courtesy of VOLVO CARS CORPORATION

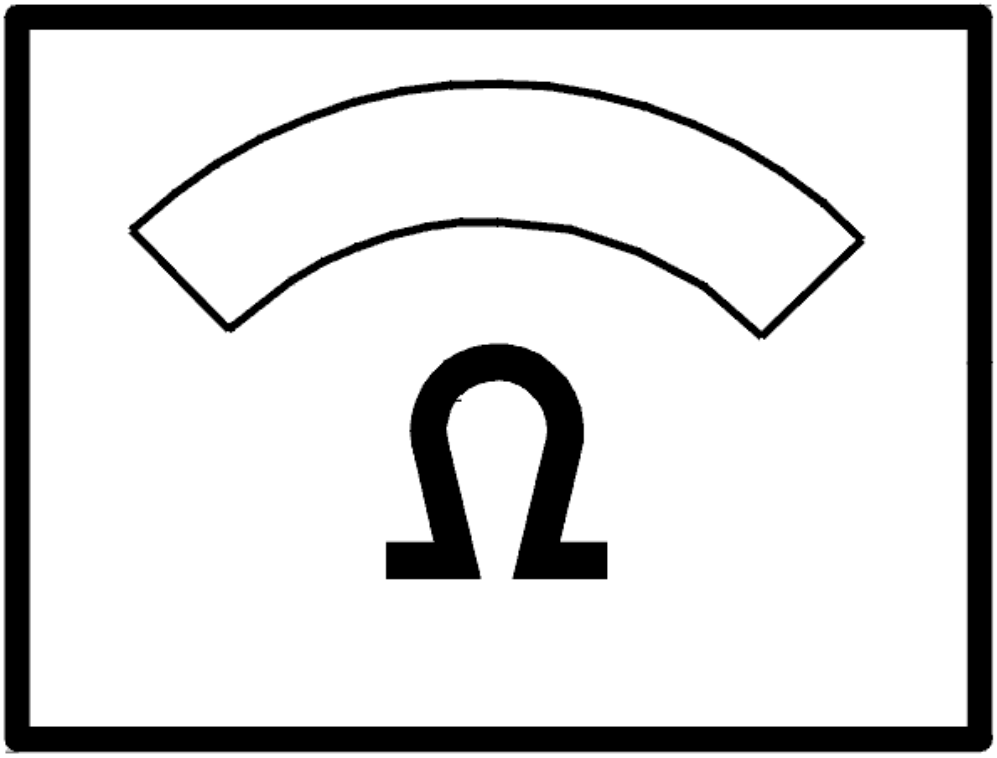

Fig. 168: Identifying Ohm Meter
Courtesy of VOLVO CARS CORPORATION

Was a fault detected?

- **YES**

  Refer to **VERIFICATION**

- **NO**

  Refer to **CHECKING THE BATTERY**

CHECKING THE BATTERY

Check the condition of the battery.

Is the battery OK?

- **YES**

  Refer to **CHECKING THE GENERATOR (GEN)**

- **NO**

  Refer to **BATTERY**

BATTERY

Replace the battery.

Other information

- When replacing the battery, see **BATTERY, DISCONNECTING** .

- **Continue**

  Refer to **VERIFICATION**

CHECKING THE GENERATOR (GEN)

Check that the generator (GEN) is working correctly.

Try a new generator (GEN).

- For B5xx4T, see **GENERATOR (GEN), REPLACING** .
- For B6xx4T, - 2004, see **GENERATOR (GEN), REPLACING** .
- For B6xx4T, 2005 -, see **GENERATOR (GEN), REPLACING** .
- For B8444S, 2005 -, see **GENERATOR (GEN), REPLACEMENT** .

- **Continue**

  Refer to **VERIFICATION**

VERIFICATION

VERIFICATION

HINT: After the repair it is necessary to check that the fault has been rectified.

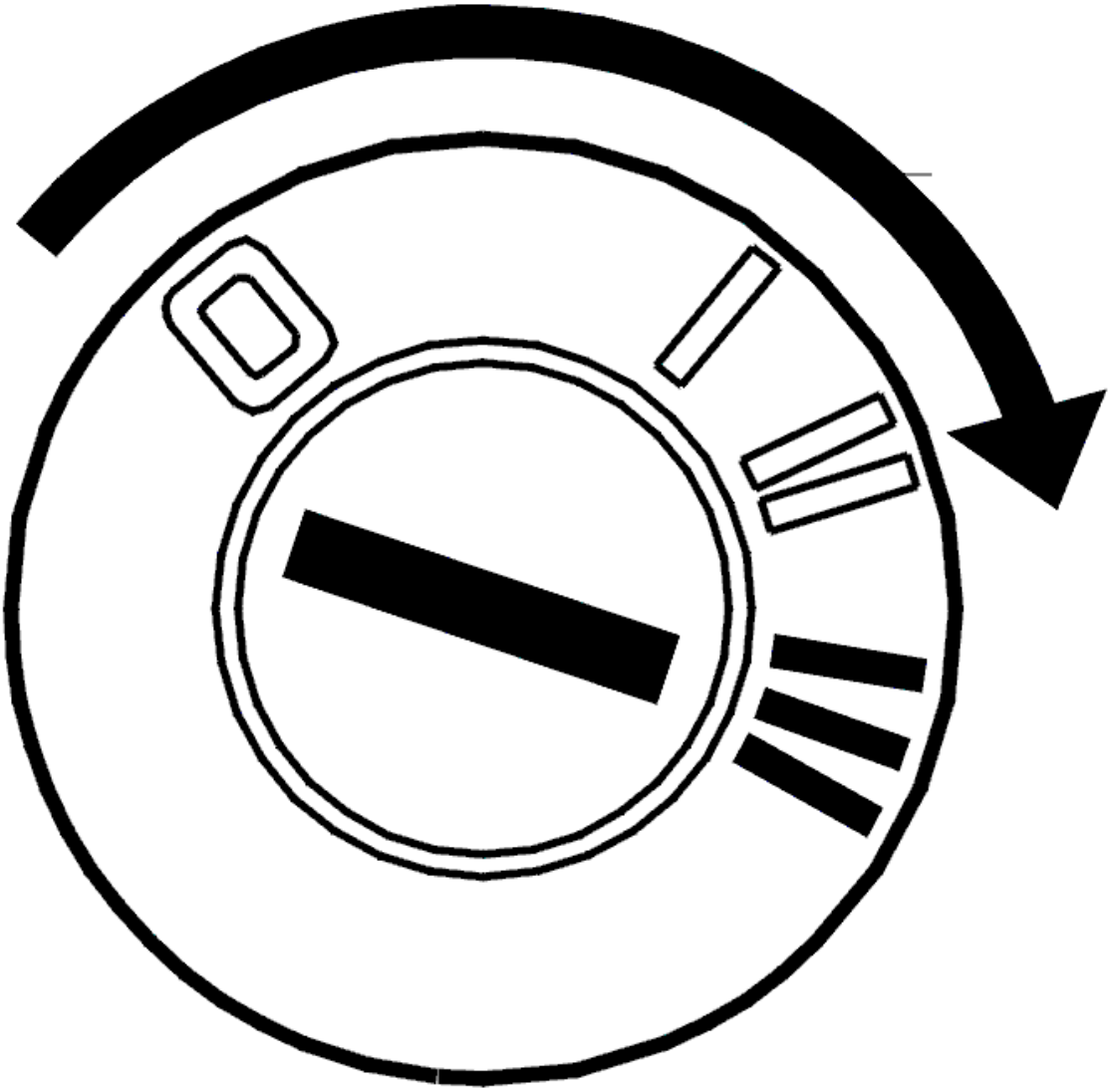

Fig. 169: Identifying Engine START Position
Courtesy of VOLVO CARS CORPORATION

- Ignition off.
- Connect connectors, install components, etc.
- Charge the battery.
- Start the vehicle and let it remain idle for at least 5 minutes.

  Read the power supply to the central electronic module (CEM). Voltage should be at least battery voltage minus three volts.

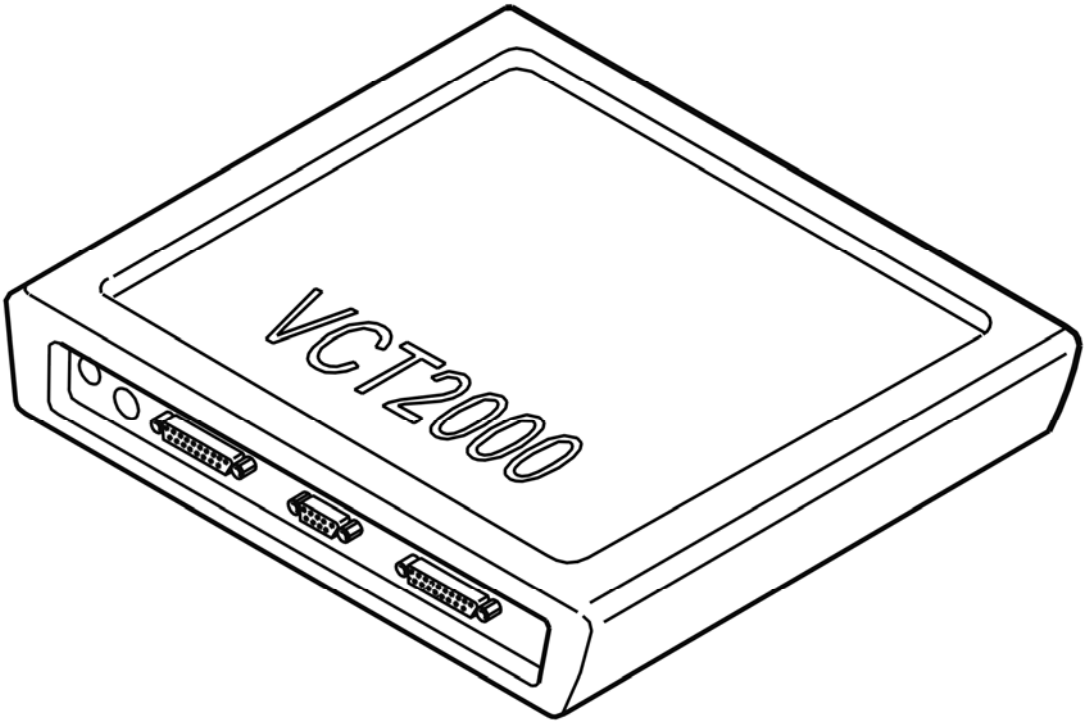

Fig. 170: Identifying VCT2000 Diagnostic Tool Symbol In VIDA
Courtesy of VOLVO CARS CORPORATION

Is voltage OK?

- **YES**

  VERIFIED: Troubleshooting has been completed.

- **NO**

  Refer to **INFORMATION**

INFORMATION

FAULT-TRACING INFORMATION

The fault should have been detected and remedied. As this is not the case fault-tracing has failed.

Exit fault-tracing for this diagnostic trouble code (DTC) or make another attempt.

CEM-1A05: X-POWER SUPPLY. SIGNAL TOO HIGH. INTERMITTENT FAULT (2003-2004)

DIAGNOSTIC TROUBLE CODE (DTC) INFORMATION

Condition

Diagnostic trouble code (DTC) CEM-1A05 is stored if the central electronic module (CEM) registers a short-circuit to supply voltage in the X-supply.

Substitute Value

None

Possible Source

- Short-circuit to supply voltage in X-supply.
- Defective ignition switch.

Fault symptom[s]

- The starter motor does not turn.

SIGNAL TOO HIGH. INTERMITTENT FAULT

CHECKING THE CONNECTORS

Check the central electronic module (CEM) connector for contact resistance and oxidation and remedy according to **CONTACT RESISTANCE AND OXIDATION** and loose connections according to **LOOSE CONNECTIONS (TERMINALS)** .

Check for damage carefully.

HINT: If the fault cause is found, reinstall the components, connectors etc.

HINT: If the fault cause is not found, do not reinstall the central electronic module (CEM) before continuing with fault-tracing.

Other information:

- For -2004, see: **CENTRAL ELECTRONIC MODULE (CEM), REPLACING** .
- For 2005-, see: **CENTRAL ELECTRONIC MODULE (CEM), REPLACING** .

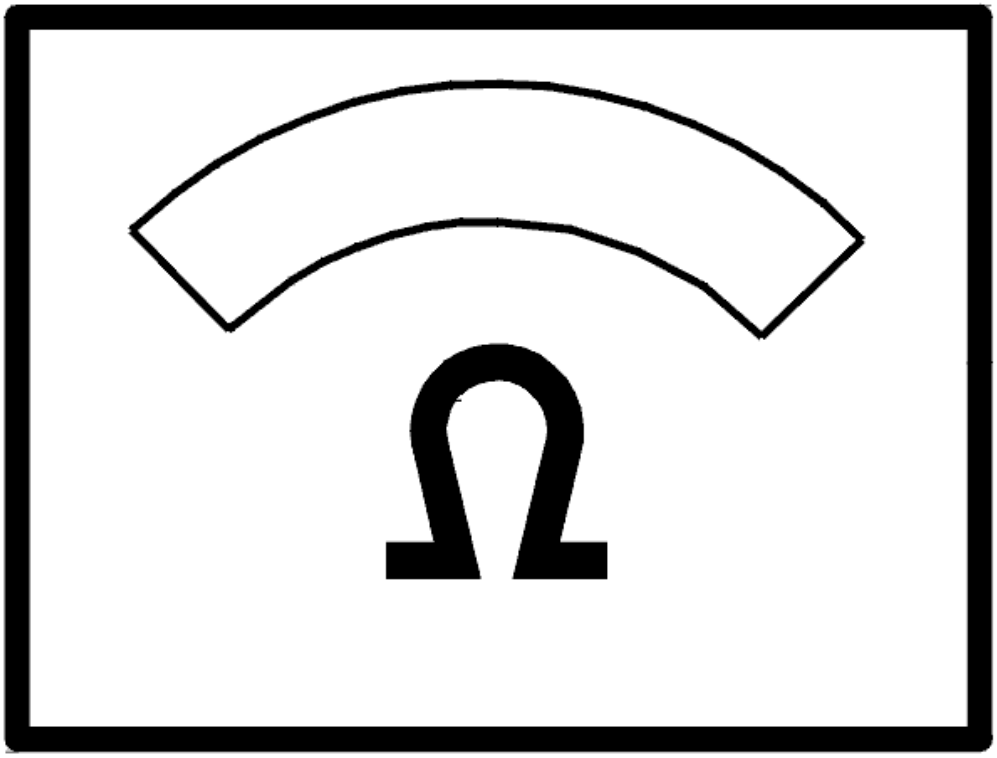

Fig. 171: Identifying Ohm Meter
Courtesy of VOLVO CARS CORPORATION

Was a fault detected?

- **YES**

  OKAY: Troubleshooting has been completed.

- **NO**

  Refer to **CHECKING WIRING**

CHECKING WIRING

Check the cable between central electronic module (CEM) connector #2B and ignition switch connector X-

supply #6 for an intermittent open-circuit according to **OPEN-CIRCUIT, INTERMITTENT FAULTS** and for a short-circuit to supply voltage according to **SHORT-CIRCUIT TO SUPPLY VOLTAGE, INTERMITTENT FAULTS** .

Other information

- The voltage must be 0 V if the key is in position 0 or III.
- For -2004, see: **CENTRAL ELECTRONIC MODULE (CEM), REPLACING** .
- For 2005-, see: **CENTRAL ELECTRONIC MODULE (CEM), REPLACING** .
- To connect the breakout box, see **CONNECTING THE BREAKOUT BOX**
- -2004: **SIGNAL SPECIFICATION**
- 2005-: **SIGNAL SPECIFICATION**

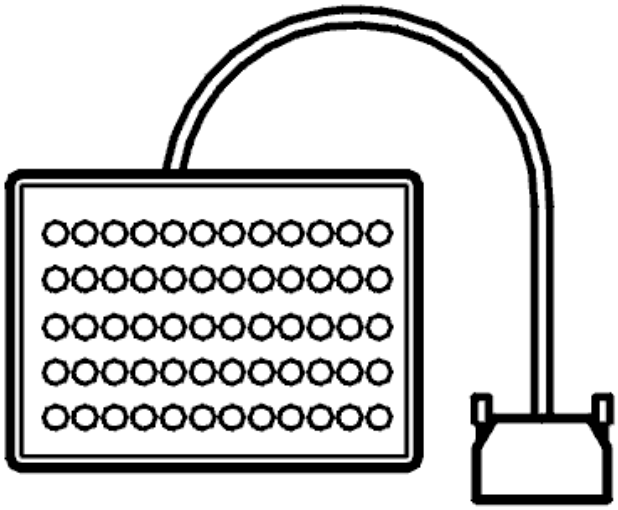

Fig. 172: Breakout Box
Courtesy of VOLVO CARS CORPORATION

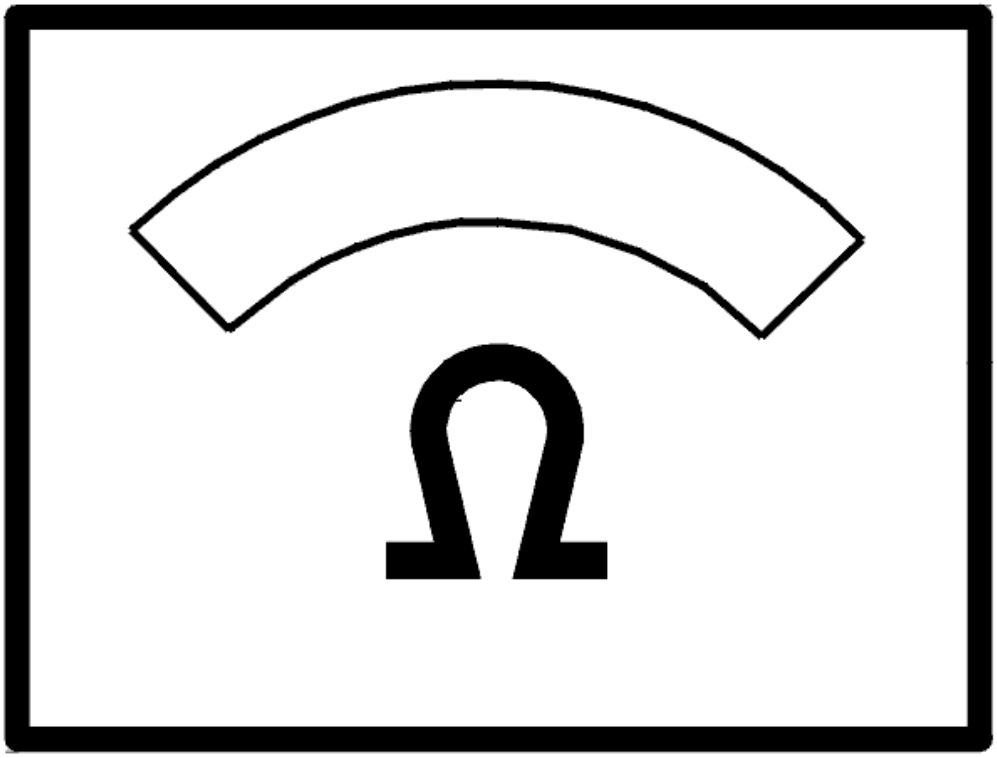

Fig. 173: Identifying Ohm Meter
Courtesy of VOLVO CARS CORPORATION

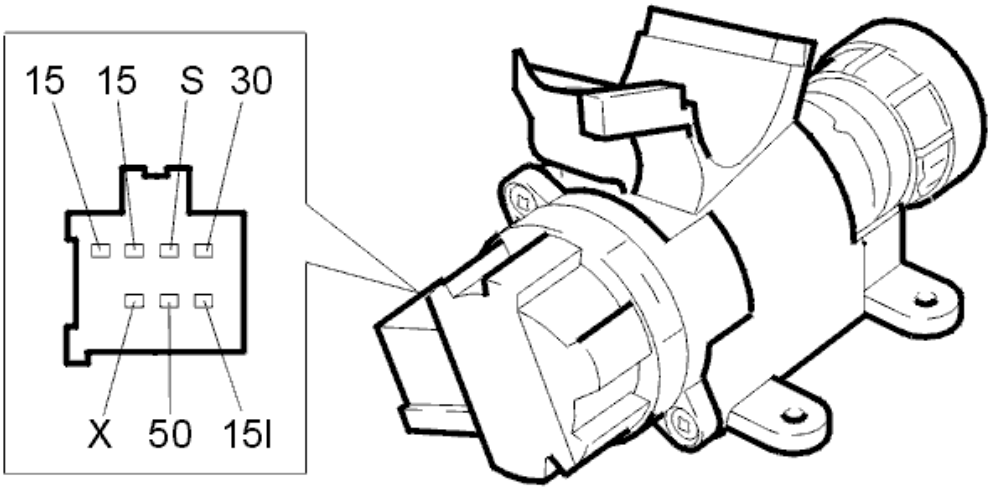

Fig. 174: Identifying Central Electronic Module (CEM) Connector Terminals
Courtesy of VOLVO CARS CORPORATION

CEM-1A05: X-POWER SUPPLY. SIGNAL TOO HIGH. PERMANENT FAULT (2003-2004)

DIAGNOSTIC TROUBLE CODE (DTC) INFORMATION

see **DIAGNOSTIC TROUBLE CODE (DTC) INFORMATION**

SIGNAL TOO HIGH. PERMANENT FAULT

CHECKING THE CONNECTORS

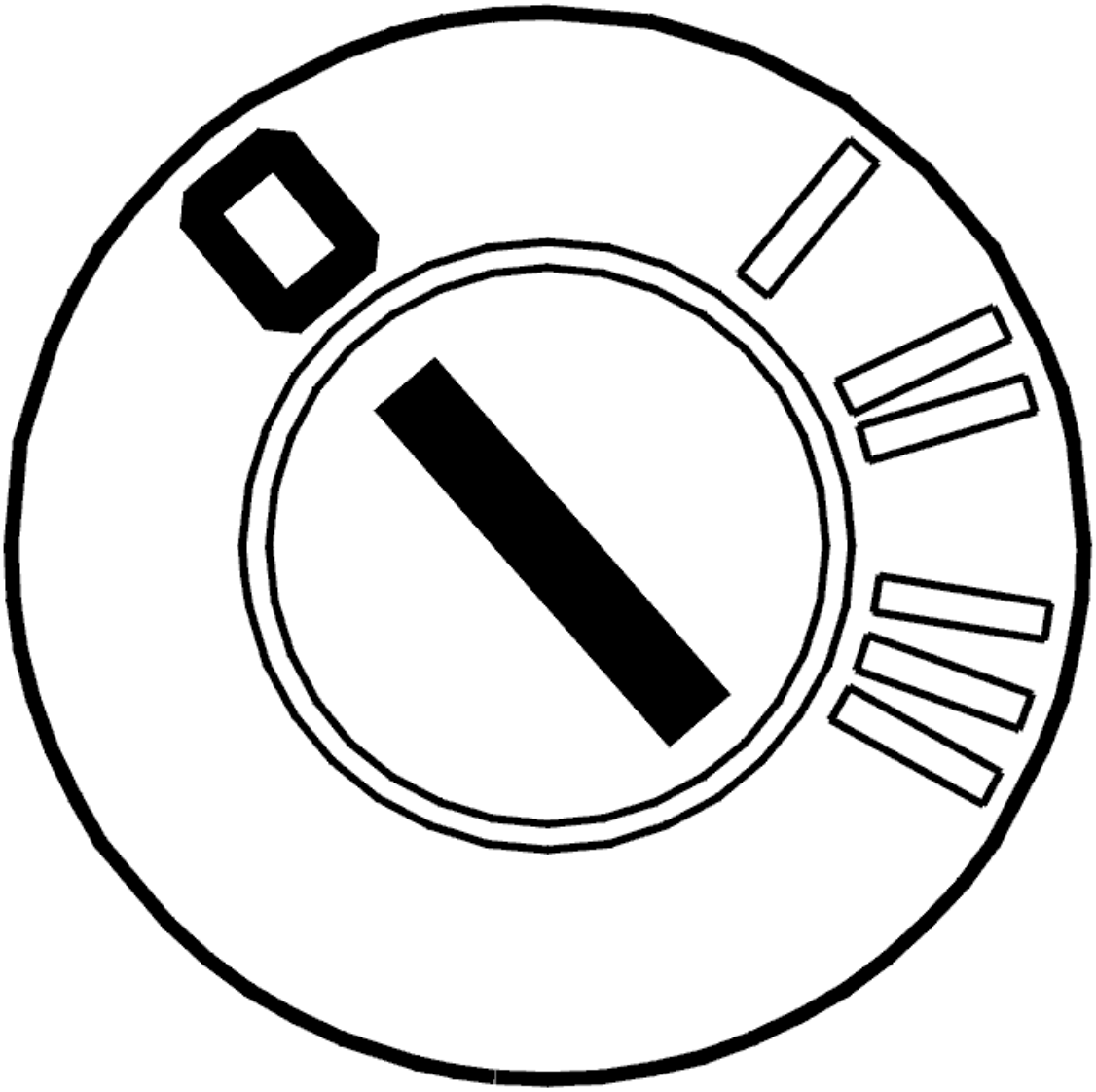

Fig. 175: Identifying Ignition OFF
Courtesy of VOLVO CARS CORPORATION

- Ignition off.

  Check the central electronic module (CEM) connector for contact resistance and oxidation. Remedy if necessary.

  Check for any damage.

  HINT: If the fault cause is found, reinstall the components, connectors etc. If the fault cause is not found, do not reinstall the control module before continuing with fault-tracing.

  Other information:

  - For -2004, see: **CENTRAL ELECTRONIC MODULE (CEM), REPLACING** .

- For 2005-, see: **CENTRAL ELECTRONIC MODULE (CEM), REPLACING** .
- see **CHECKING WIRING AND TERMINALS** .

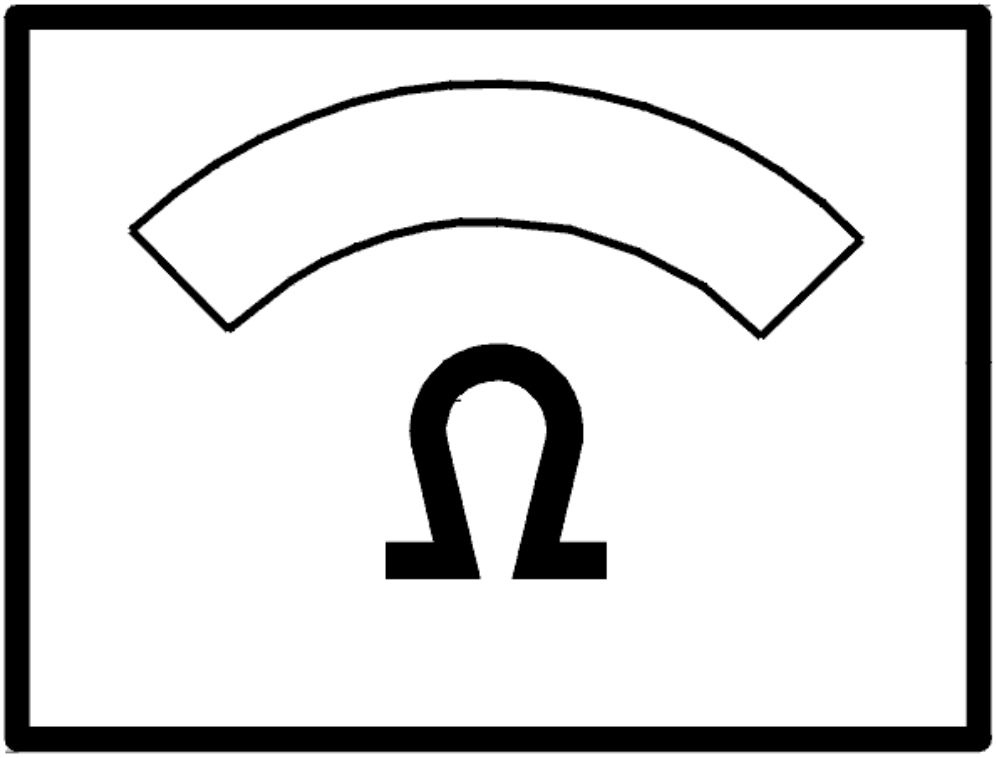

Fig. 176: Identifying Ohm Meter
Courtesy of VOLVO CARS CORPORATION

Was a fault detected?

- **YES**

  Refer to **VERIFICATION**

- **NO**

  Refer to **CHECKING THE COMPONENT AND CABLE**

CHECKING THE COMPONENT AND CABLE

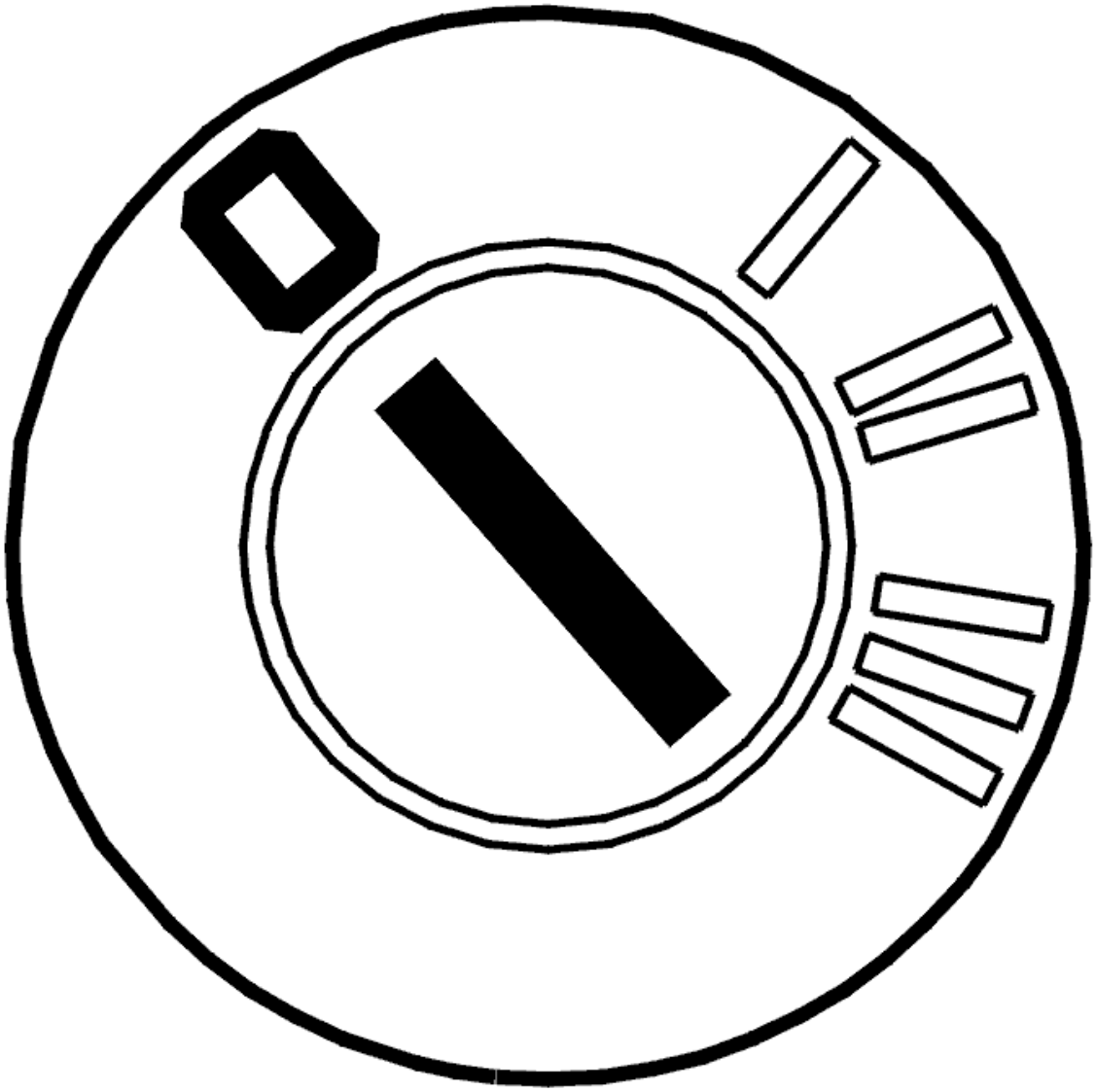

Fig. 177: Identifying Ignition OFF
Courtesy of VOLVO CARS CORPORATION

- Ignition off.

  Check the cable between central electronic module (CEM) connector terminal #2B and ignition switch connector X-supply (terminal #6). Check for a short-circuit to supply voltage. Check for an open-circuit.

  Other information:

  - The voltage must be 0 V if the key is in position 0 or III
  - For -2004, see: **CENTRAL ELECTRONIC MODULE (CEM), REPLACING** .
  - For 2005-, see: **CENTRAL ELECTRONIC MODULE (CEM), REPLACING** .

- To connect the breakout box to the control module, see **CONNECTING THE BREAKOUT BOX**
- -2004: **SIGNAL SPECIFICATION**
- 2005-: **SIGNAL SPECIFICATION**
- see **CHECKING WIRING AND TERMINALS** .

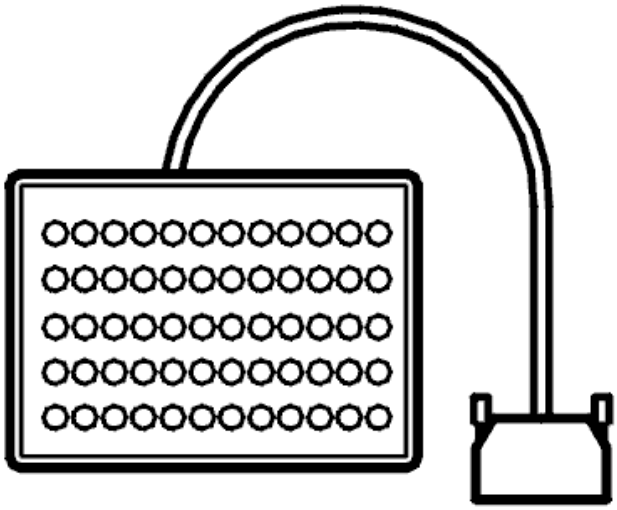

Fig. 178: Breakout Box
Courtesy of VOLVO CARS CORPORATION

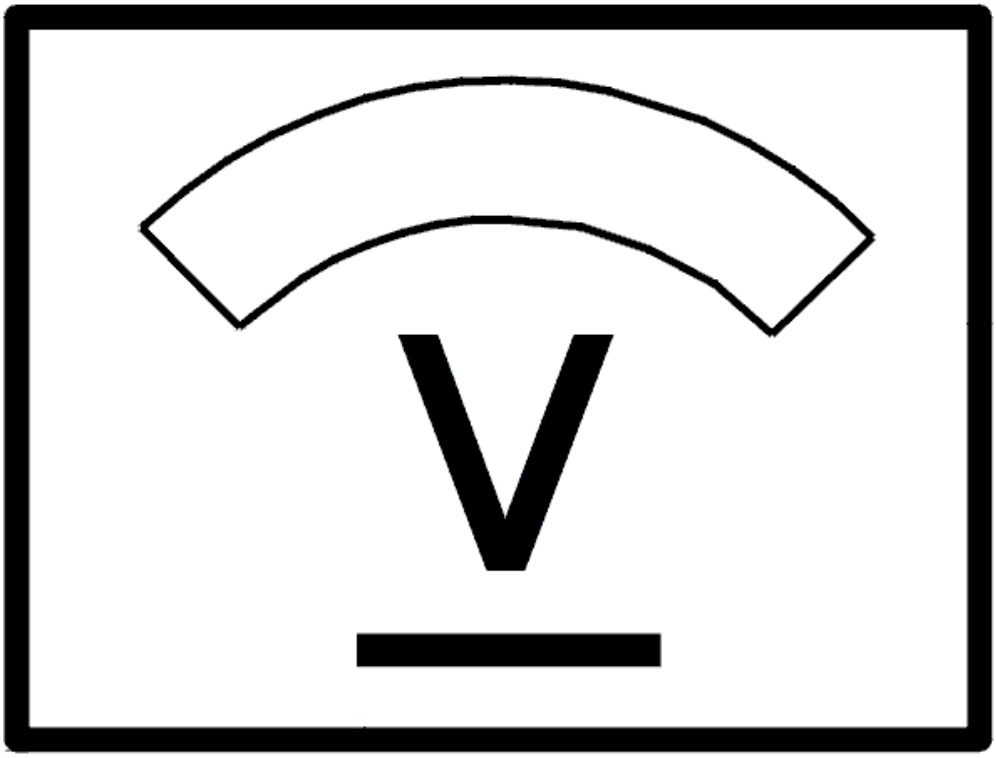

Fig. 179: Identifying Voltage Display
Courtesy of VOLVO CARS CORPORATION

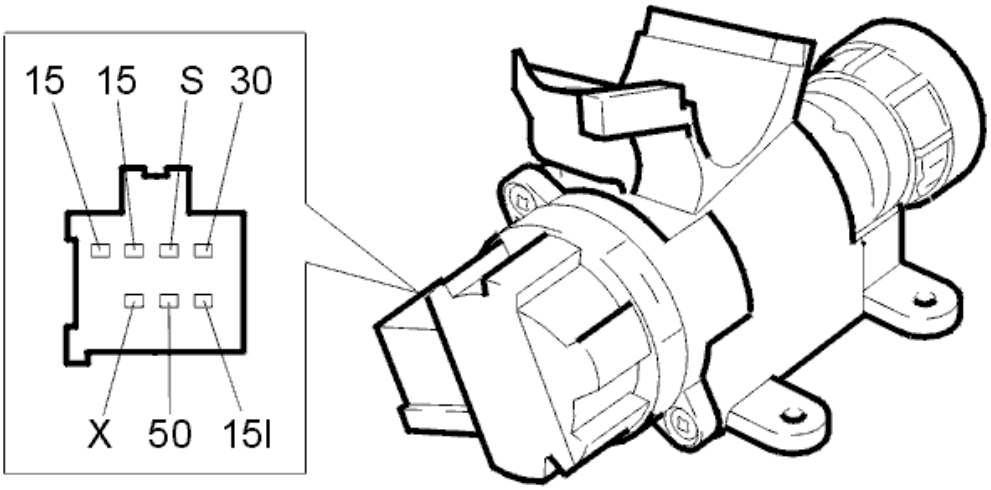

Fig. 180: Identifying Central Electronic Module (CEM) Connector Terminals
Courtesy of VOLVO CARS CORPORATION

Were any faults found in the cable?

- **YES**

  Refer to **VERIFICATION**

- **NO**

  Refer to **REPLACING THE COMPONENT**

REPLACING THE COMPONENT

Try replacing the ignition switch connector according to **STEERING WHEEL LOCK, REPLACING** .

- **Continue**

  Refer to **VERIFICATION**

VERIFICATION

VERIFICATION

HINT: After the repair it is necessary to check that the fault has been rectified.

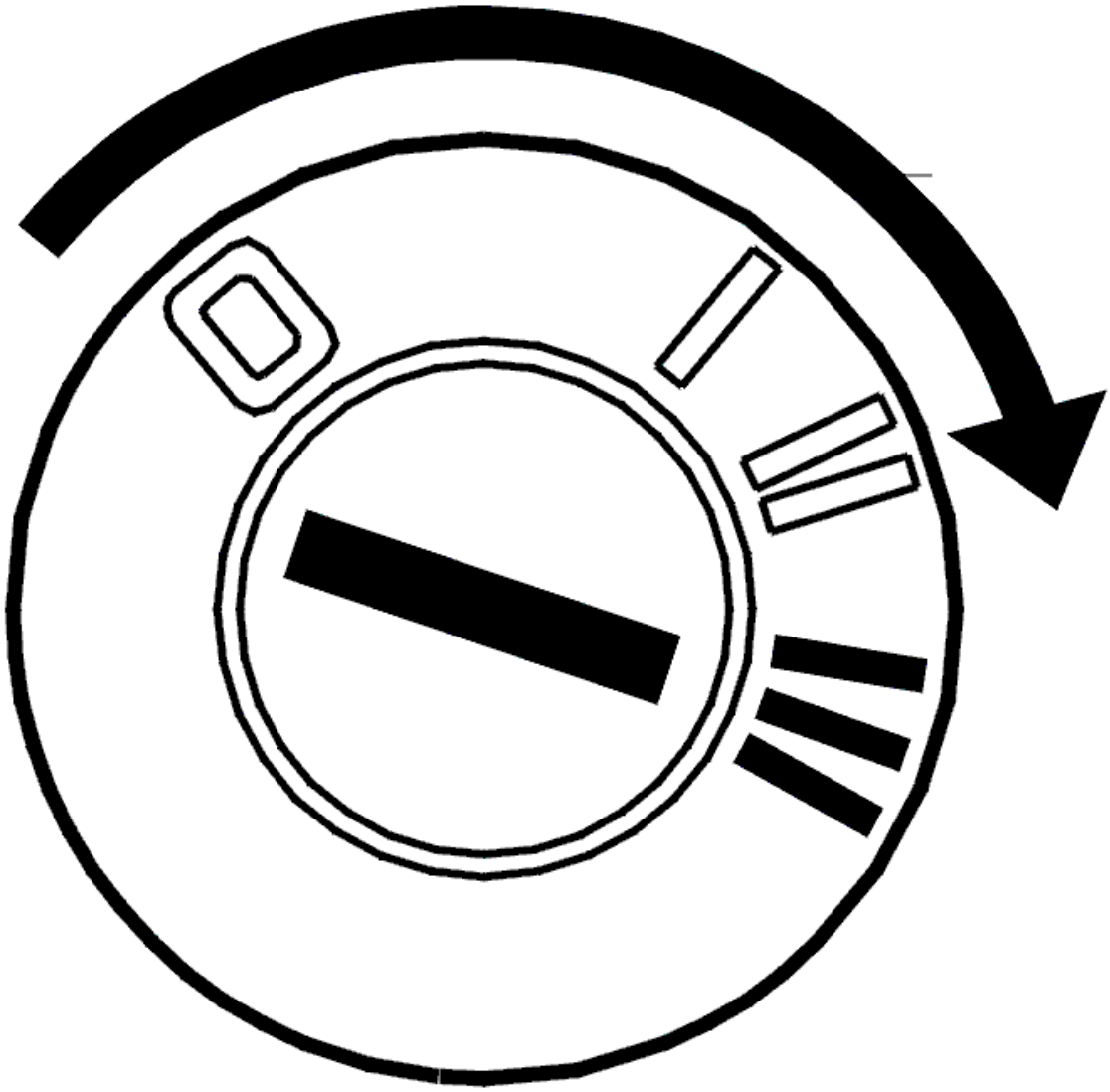

Fig. 181: Identifying Engine START Position
Courtesy of VOLVO CARS CORPORATION

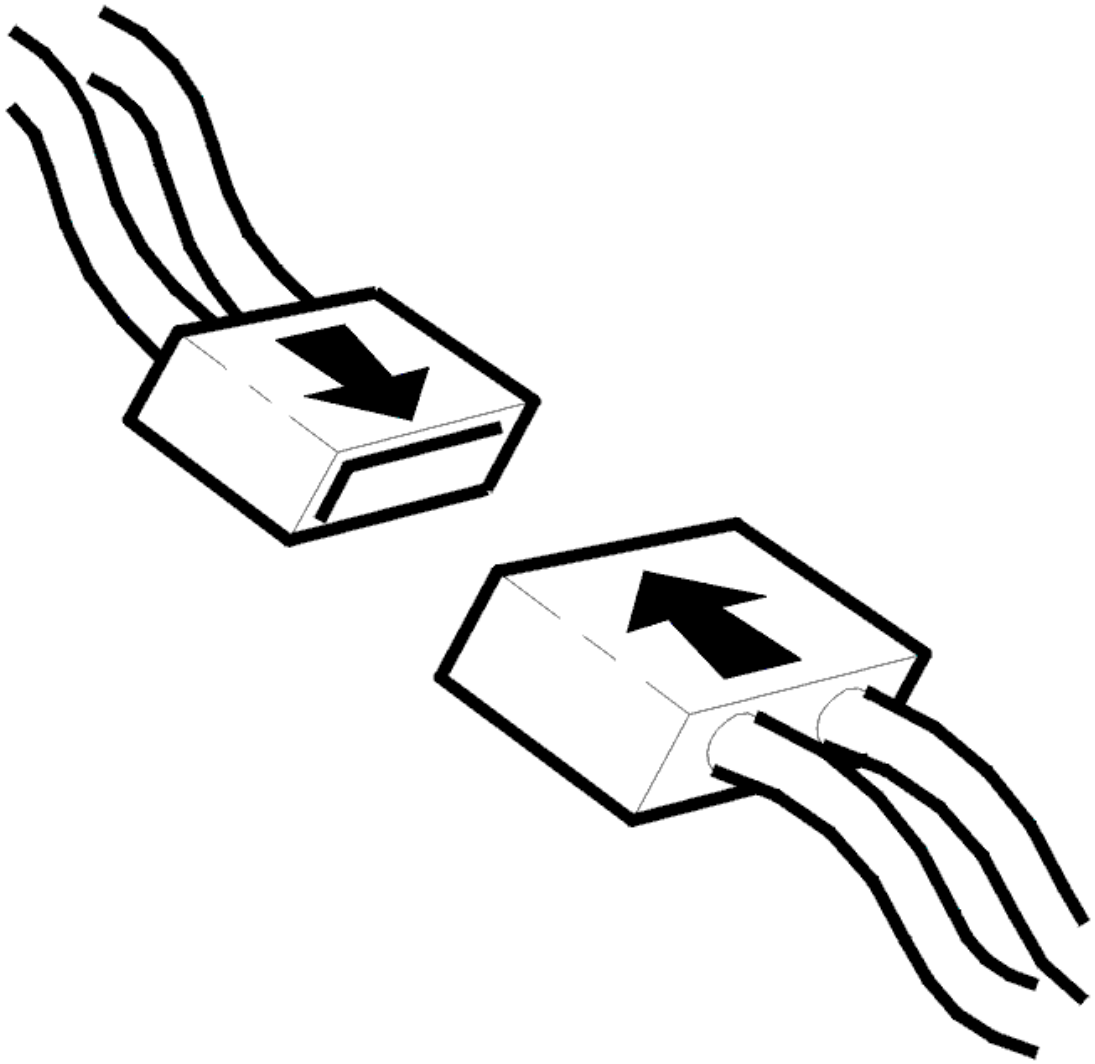

Fig. 182: Connecting Connector
Courtesy of VOLVO CARS CORPORATION

- Ignition off.
- Connect connectors, install components, etc.
- Key in position III.

Check that X-voltage is OK.

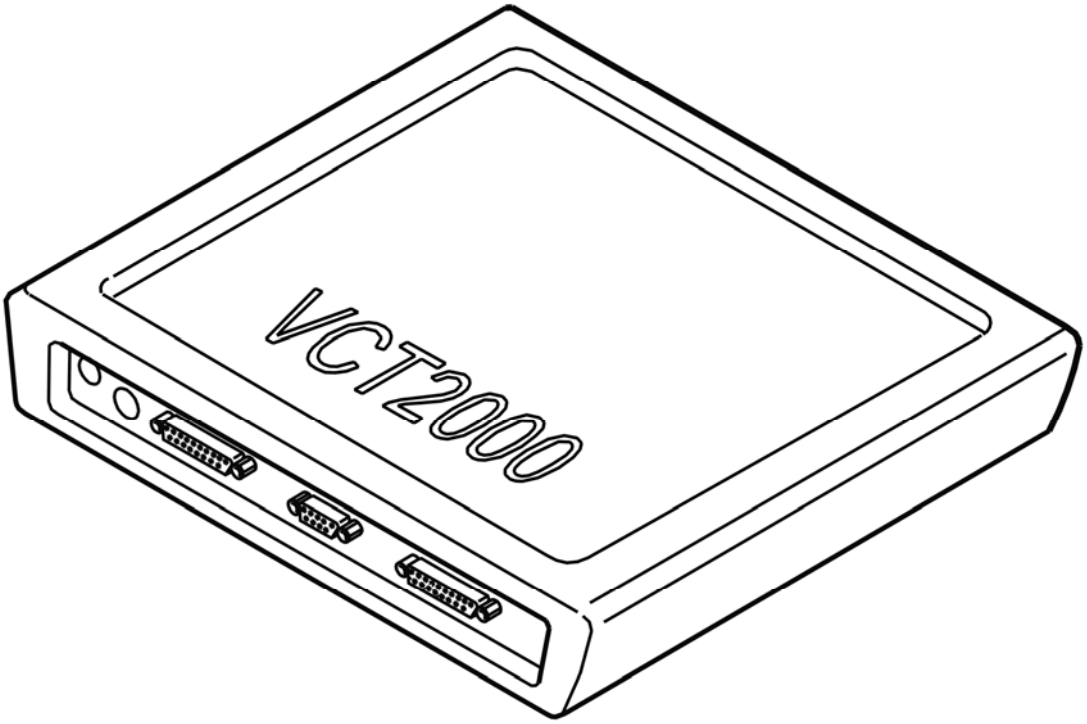

Fig. 183: Identifying VCT2000 Diagnostic Tool Symbol In VIDA
Courtesy of VOLVO CARS CORPORATION

Is voltage on the wire low?

- **YES**

  VERIFIED: Troubleshooting has been completed.

- **NO**

  Refer to **INFORMATION**

INFORMATION

FAULT-TRACING INFORMATION

The fault should have been detected and remedied. As this is not the case fault-tracing has failed.

Exit fault-tracing for this diagnostic trouble code (DTC) or make another attempt.

CEM-1A06: 15-POWER SUPPLY. SIGNAL TOO LOW (2005-2011)

DIAGNOSTIC TROUBLE CODE (DTC) INFORMATION CEM-1A06

Condition

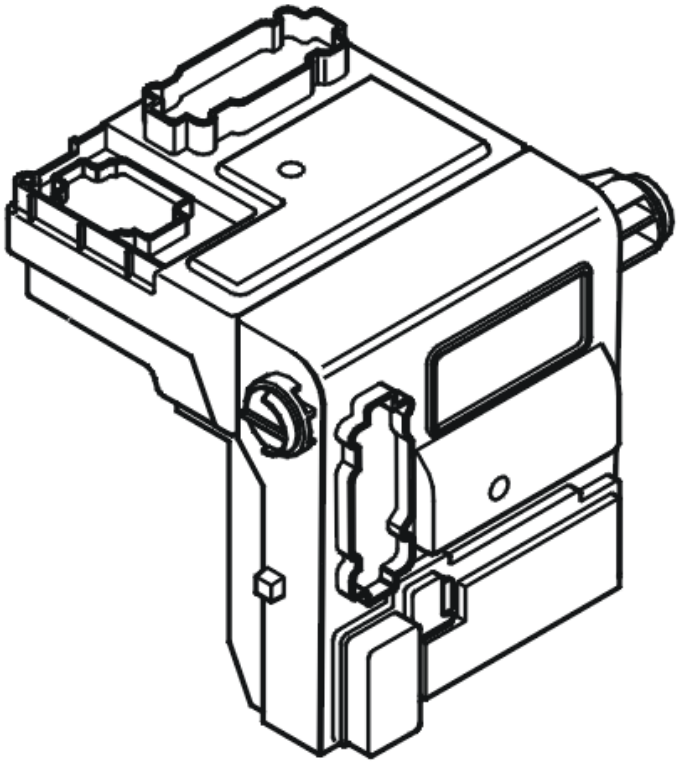

Fig. 184: Identifying Central Electronic Module (CEM)
Courtesy of VOLVO CARS CORPORATION

The central electronic module (CEM) monitors the cable for 15-supply from the ignition switch.

The diagnostic trouble code (DTC) is stored if the central electronic module (CEM) registers an open-circuit in the cable for 15-supply or a short-circuit to ground in the cable.

The diagnostic trouble code (DTC) can be diagnosed at ignition switch position III (start attempt).

Substitute Value

- None.

Possible Source

- Open-circuit in the 15-supply cable
- Short-circuit to ground in the 15-supply cable
- Damaged ignition switch.

Fault symptom[s]

- The windshield wipers are not working.
- The starter motor does not turn.

SIGNAL TOO LOW

CHECKING THE CONNECTORS

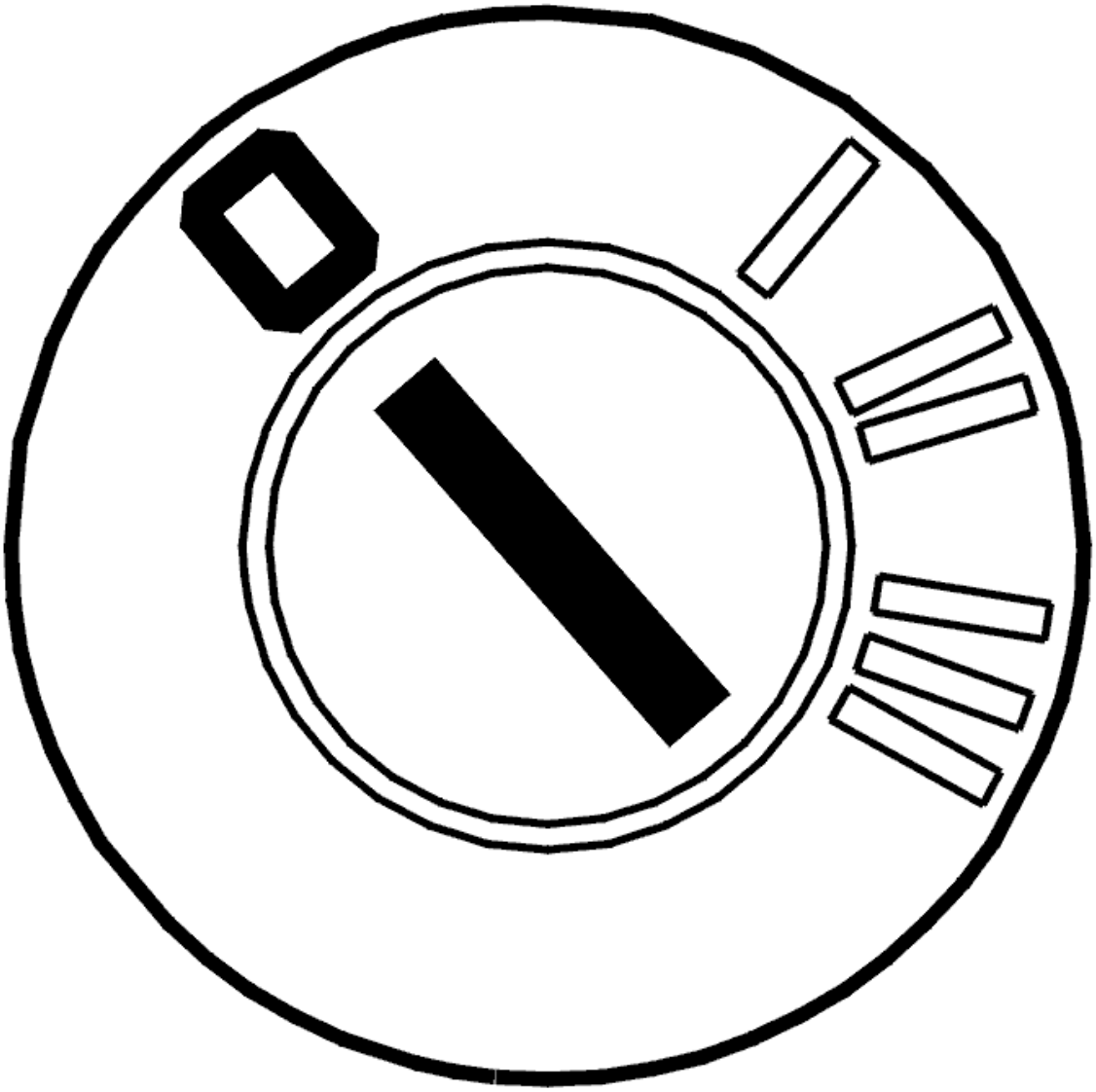

Fig. 185: Identifying Ignition OFF
Courtesy of VOLVO CARS CORPORATION

- Ignition off.

  Check central electronic module (CEM) connector D. Check for contact resistance and oxidation. Remedy as necessary.

Check for any damage.

HINT: If the fault cause is found, reinstall the components, connectors etc.

HINT: If the fault cause was not found, do not reconnect the connector before carrying out further fault-tracing.

Other information:

- For -2004, see: **CENTRAL ELECTRONIC MODULE (CEM), REPLACING** .
- For 2005-, see: **CENTRAL ELECTRONIC MODULE (CEM), REPLACING** .
- see **CHECKING WIRING AND TERMINALS**

Was a fault detected?

- **YES**

  Refer to **VERIFICATION**

- **NO**

  Refer to **CHECKING THE COMPONENT AND CABLE**

CHECKING THE COMPONENT AND CABLE

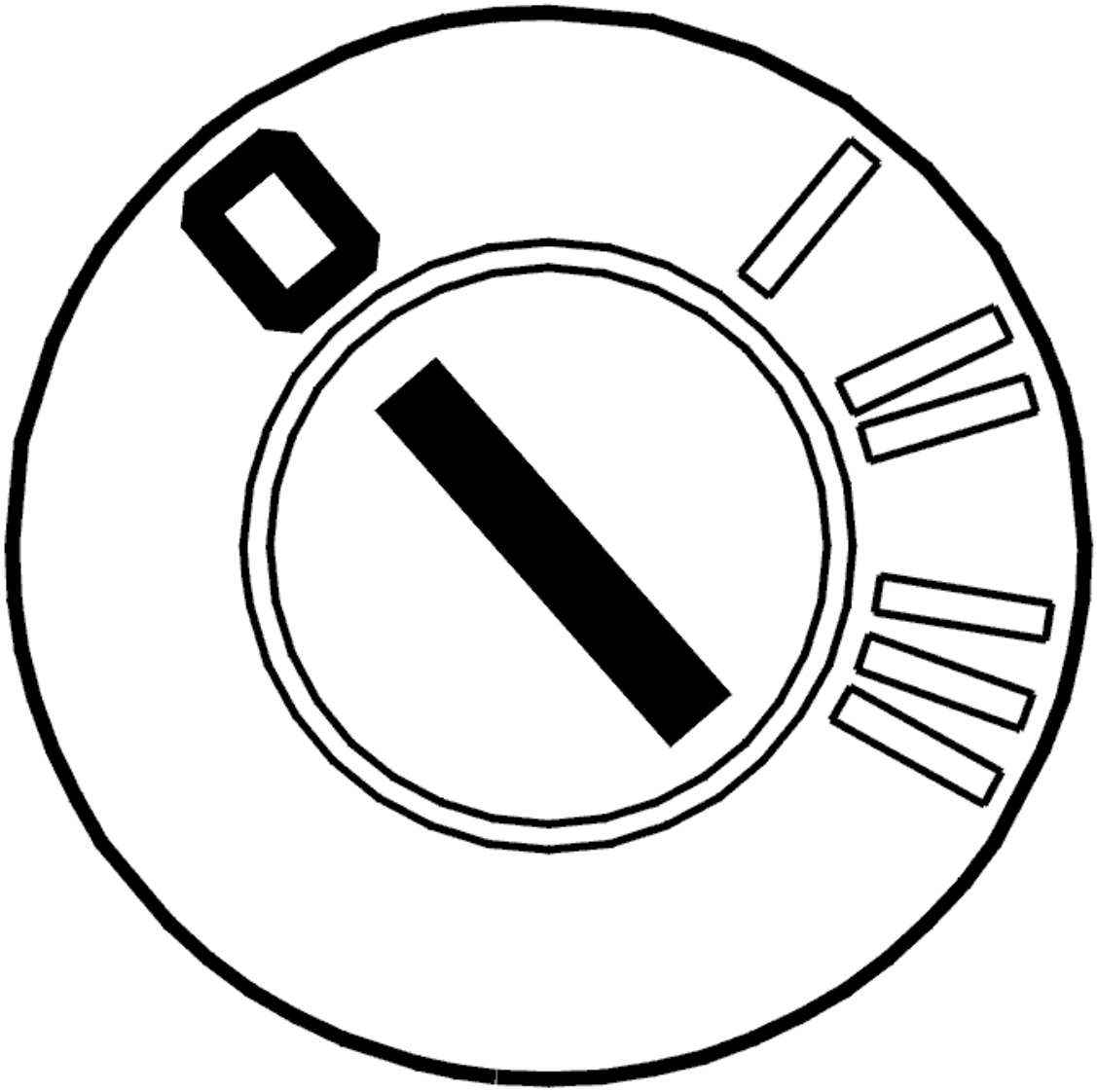

Fig. 186: Identifying Ignition OFF
Courtesy of VOLVO CARS CORPORATION

- Ignition off.

  Check the cable between central electronic module (CEM) connector terminal #D16 and ignition switch connector terminal #15A (#1). Check for an open-circuit. Check for a short-circuit to ground.

  The voltage must be the same as battery voltage if the key is in position I or III.

  Remedy as necessary.

  Other information:

  - see **CONNECTING THE BREAKOUT BOX**
  - -2004: **SIGNAL SPECIFICATION**

- 2005-: **SIGNAL SPECIFICATION**
- For -2004, see: **CENTRAL ELECTRONIC MODULE (CEM), REPLACING** .
- For 2005-, see: **CENTRAL ELECTRONIC MODULE (CEM), REPLACING** .
- see **CHECKING WIRING AND TERMINALS**

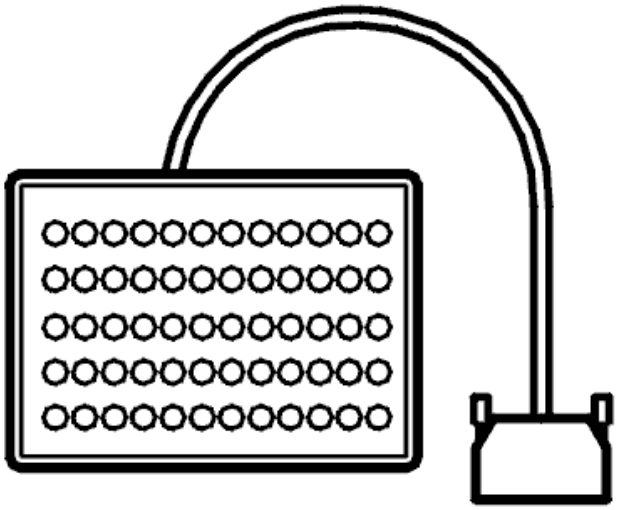

Fig. 187: Breakout Box
Courtesy of VOLVO CARS CORPORATION

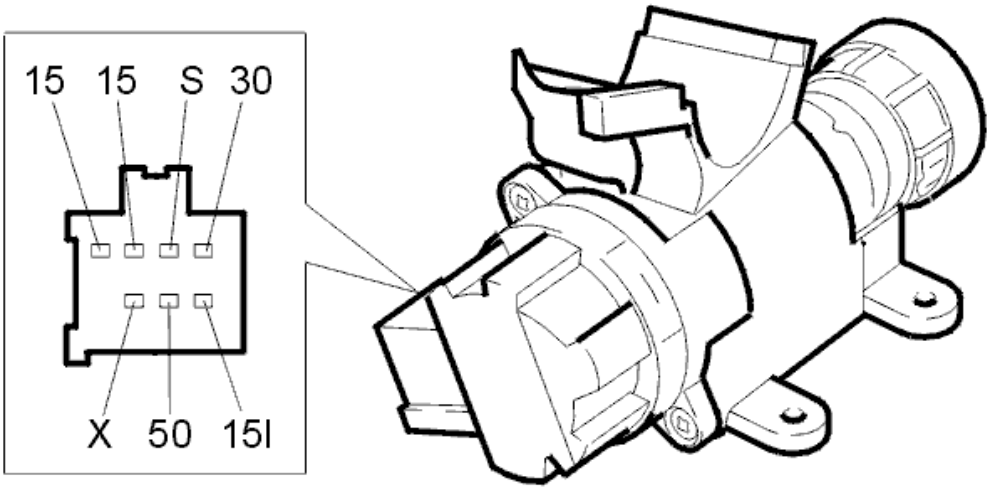

Fig. 188: Identifying Central Electronic Module (CEM) Connector Terminals
Courtesy of VOLVO CARS CORPORATION

Is the voltage the same as battery voltage?

- **YES**

  Refer to **VERIFICATION**

- **NO**

  Refer to **REPLACING THE COMPONENT**

REPLACING THE COMPONENT

To replace the connector for the ignition switch, see: **STEERING WHEEL LOCK, REPLACING**

- **Continue**

  Refer to **VERIFICATION**

VERIFICATION

VERIFICATION

HINT: After the repair it is necessary to check that the fault has been rectified.

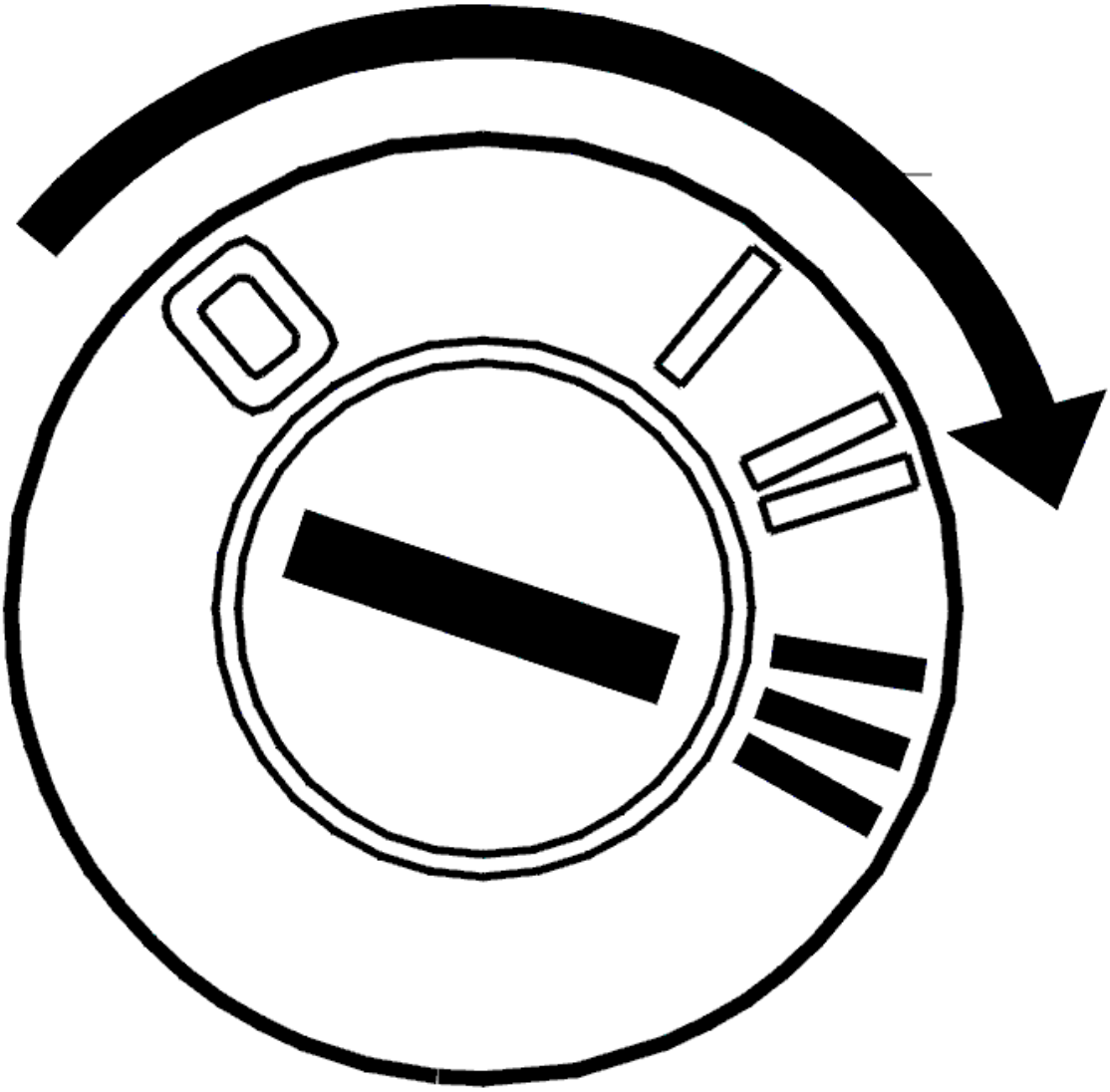

Fig. 189: Identifying Engine START Position
Courtesy of VOLVO CARS CORPORATION

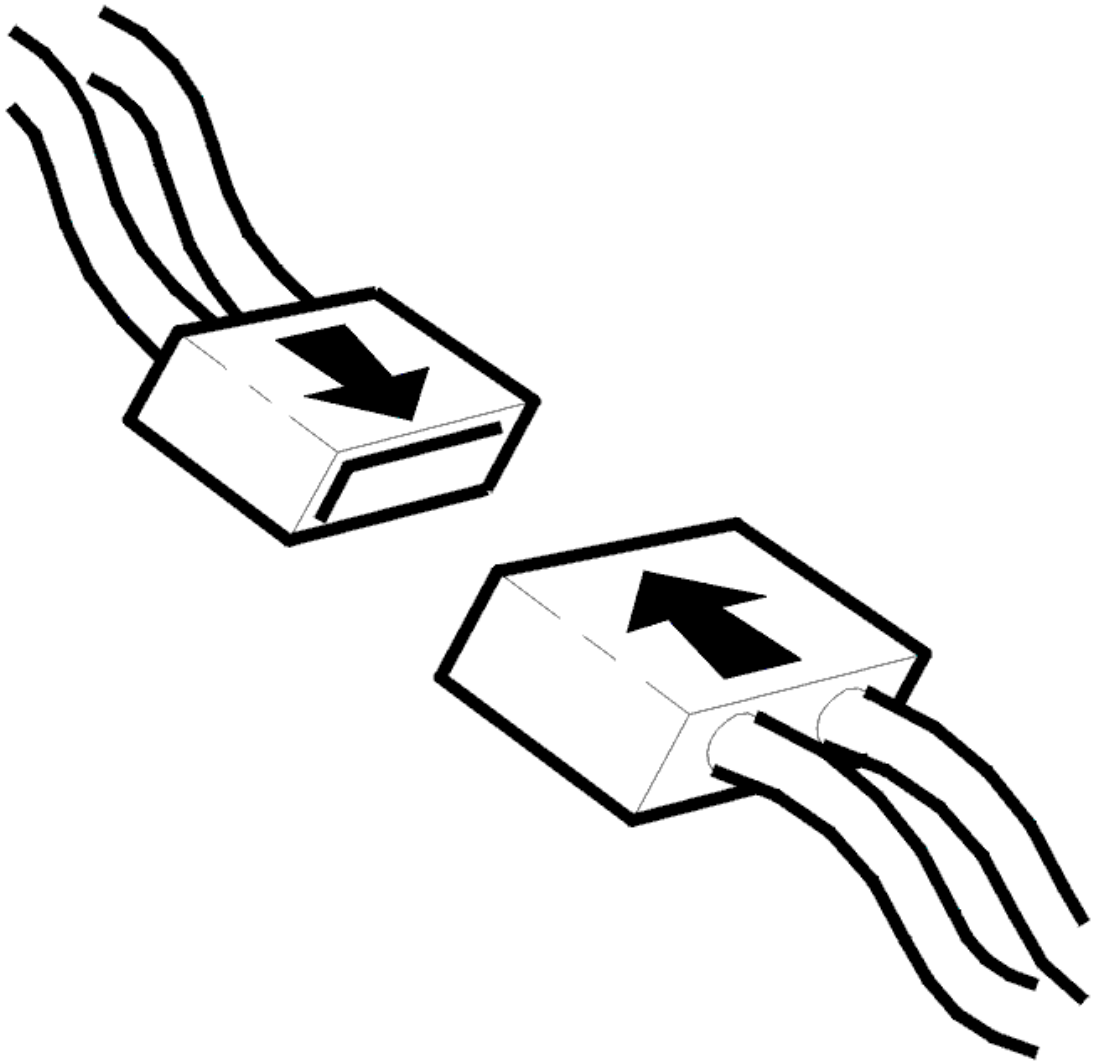

Fig. 190: Connecting Connector
Courtesy of VOLVO CARS CORPORATION

- Ignition off.
- Connect connectors, install components, etc.
- Key in position III.

Check that 15 voltage is OK.

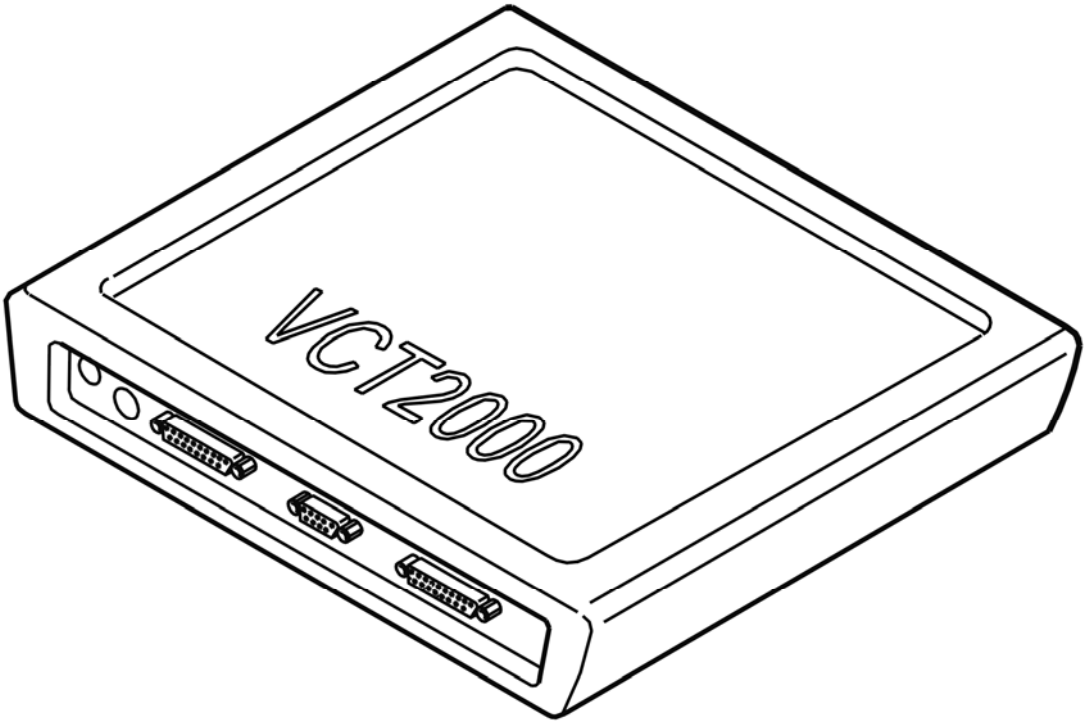

Fig. 191: Identifying VCT2000 Diagnostic Tool Symbol In VIDA
Courtesy of VOLVO CARS CORPORATION

Is voltage on the wire high?

- **YES**

  VERIFIED: Troubleshooting has been completed.

- **NO**

  Refer to **INFORMATION**

INFORMATION

FAULT-TRACING INFORMATION

The fault should have been detected and remedied. As this is not the case fault-tracing has failed.

Exit fault-tracing for this diagnostic trouble code (DTC) or make another attempt.

CEM-1A06: 15-POWER SUPPLY. SIGNAL TOO LOW. INTERMITTENT FAULT (2003-2004)

DIAGNOSTIC TROUBLE CODE (DTC) INFORMATION

Condition

Diagnostic trouble code (DTC) CEM-1A06 is stored if the central electronic module (CEM) registers open-circuit in the 15-supply.

Substitute Value

None

Possible Source

- Contact resistance in terminals.
- Open-circuit or short-circuit to ground in 15-supply.
- Defective ignition switch.

Fault symptom[s]

- Windshield wiper motor does not operate.
- The starter motor does not turn.

SIGNAL TOO LOW. INTERMITTENT FAULT

CHECKING THE CONNECTORS

Check the central electronic module (CEM) connector for contact resistance and oxidation and remedy according to **CONTACT RESISTANCE AND OXIDATION** and loose connections according to **LOOSE CONNECTIONS (TERMINALS)** .

Check for damage carefully.

HINT: If the fault cause is found, reinstall the components, connectors etc.

HINT: If the fault cause is not found, do not reinstall the central electronic module (CEM) before continuing with fault-tracing.

Other information:

- For -2004, see: **CENTRAL ELECTRONIC MODULE (CEM), REPLACING** .
- For 2005-, see: **CENTRAL ELECTRONIC MODULE (CEM), REPLACING** .

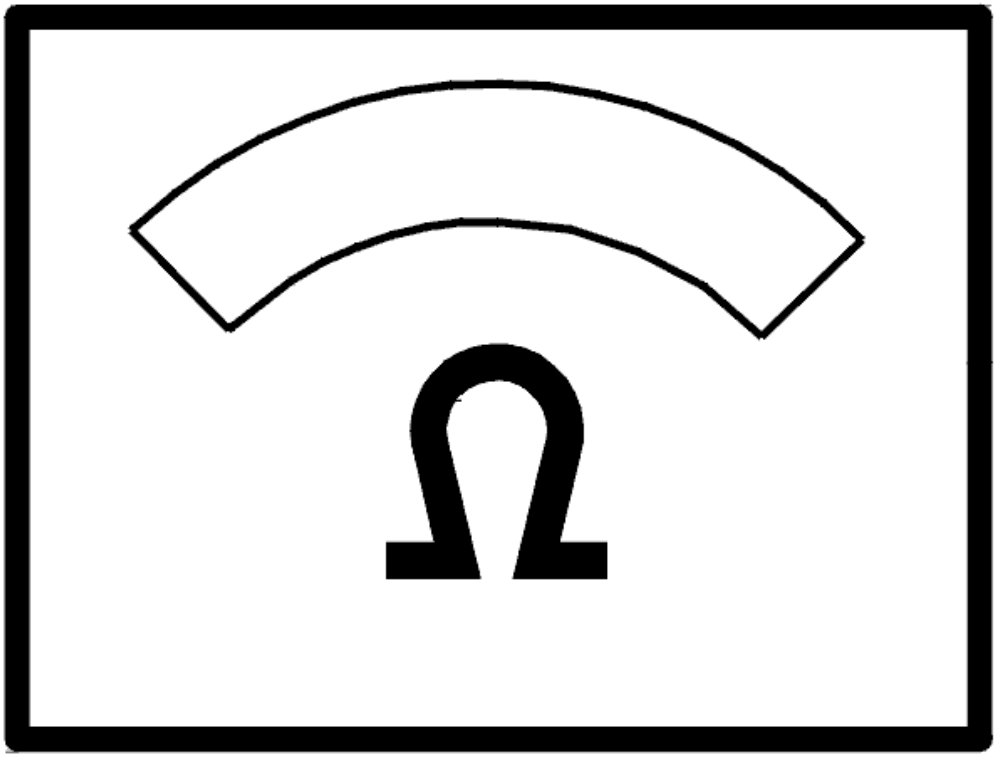

Fig. 192: Identifying Ohm Meter
Courtesy of VOLVO CARS CORPORATION

Was a fault detected?

- **YES**

  OKAY: Troubleshooting has been completed.

- **NO**

  Refer to **CHECKING WIRING**

CHECKING WIRING

Check the cable between central electronic module (CEM) connector #3B and ignition switch connector 15A #1

for an intermittent open-circuit according to **OPEN-CIRCUIT, INTERMITTENT FAULTS** and for a short-circuit to ground according to **SHORT-CIRCUIT TO GROUND, INTERMITTENT FAULTS** .

Other information

- The voltage must be the same as battery voltage if the key is in positions II or III.
- For -2004, see: **CENTRAL ELECTRONIC MODULE (CEM), REPLACING** .
- For 2005-, see: **CENTRAL ELECTRONIC MODULE (CEM), REPLACING** .
- To connect the breakout box, see **CONNECTING THE BREAKOUT BOX**
- -2004: **SIGNAL SPECIFICATION**
- 2005-: **SIGNAL SPECIFICATION**

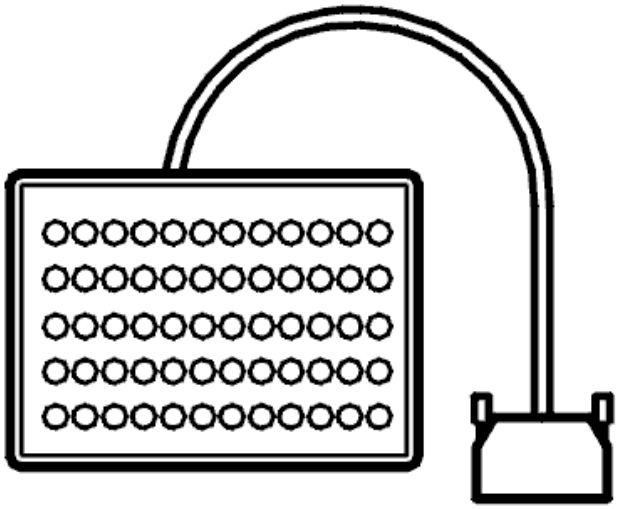

Fig. 193: Breakout Box
Courtesy of VOLVO CARS CORPORATION

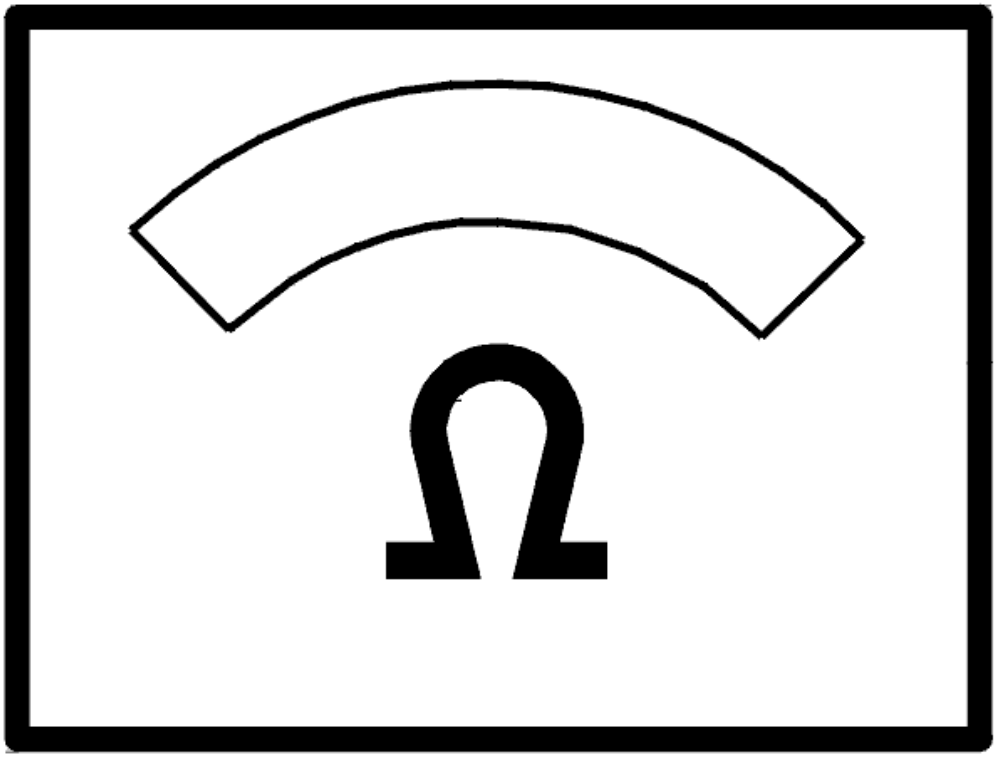

Fig. 194: Identifying Ohm Meter
Courtesy of VOLVO CARS CORPORATION

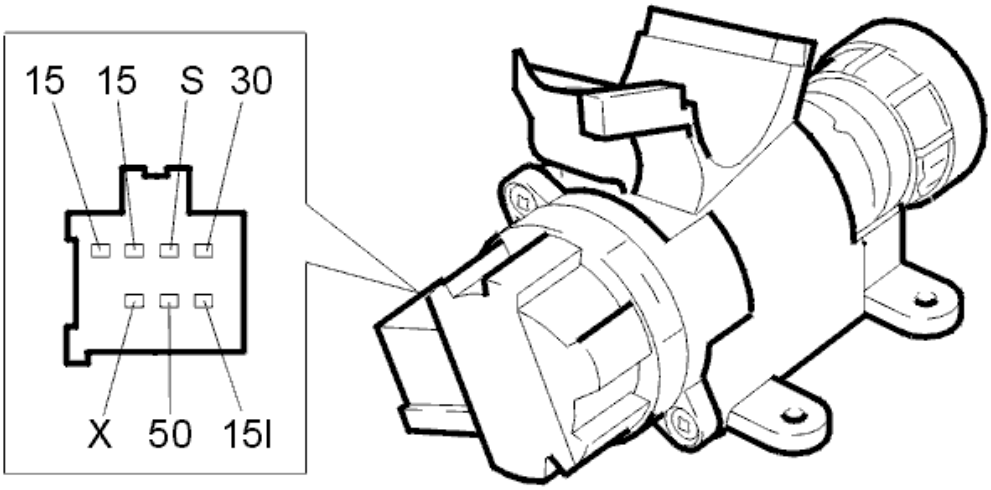

Fig. 195: Identifying Central Electronic Module (CEM) Connector Terminals
Courtesy of VOLVO CARS CORPORATION

CEM-1A06: 15-POWER SUPPLY. SIGNAL TOO LOW. PERMANENT FAULT (2003-2004)

DIAGNOSTIC TROUBLE CODE (DTC) INFORMATION

see **DIAGNOSTIC TROUBLE CODE (DTC) INFORMATION**

SIGNAL TOO LOW. PERMANENT FAULT

CHECKING THE CONNECTORS

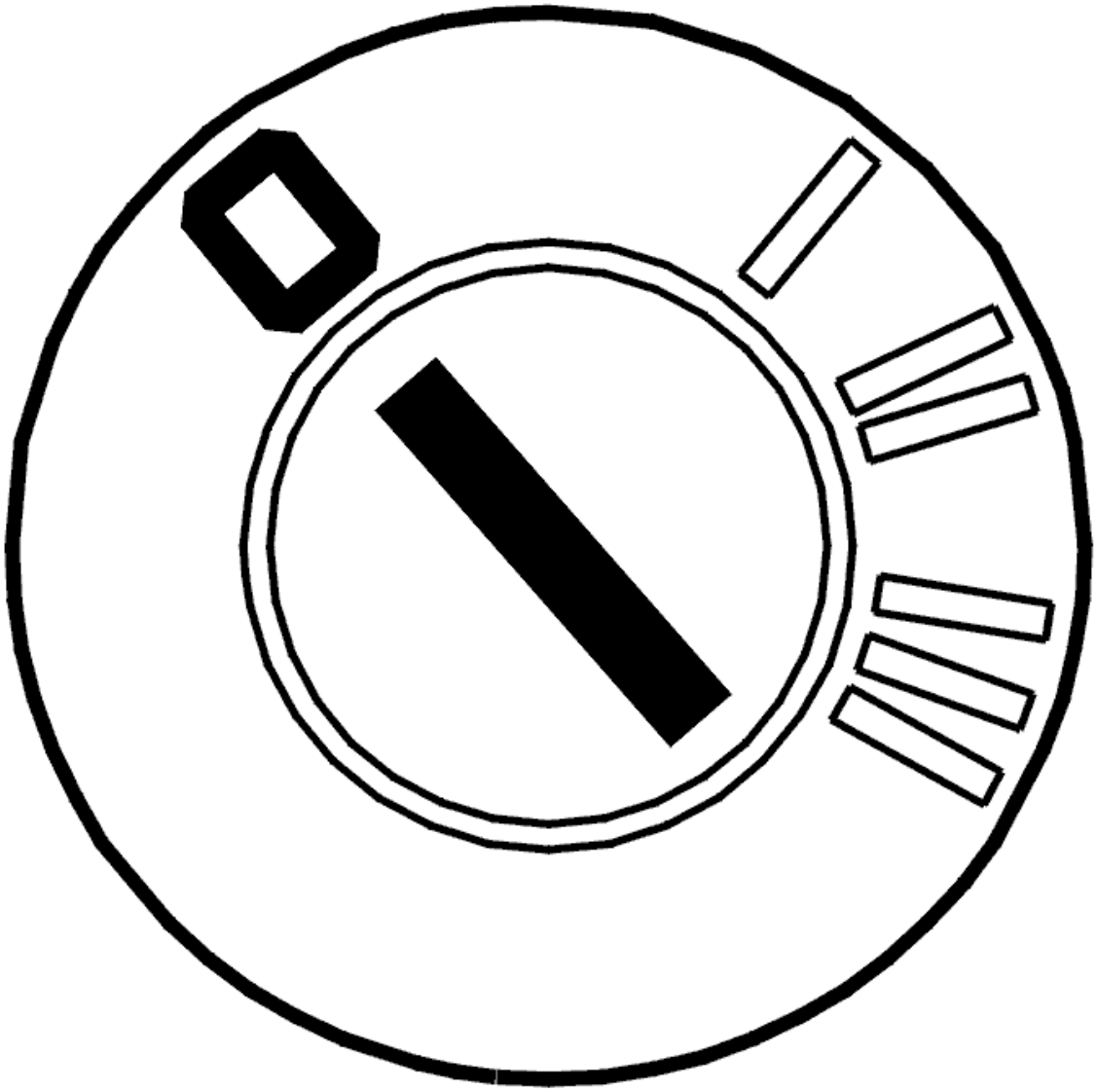

Fig. 196: Identifying Ignition OFF
Courtesy of VOLVO CARS CORPORATION

- Ignition off.

  Check the central electronic module (CEM) connector for contact resistance and oxidation. Remedy if necessary.

  Check for any damage.

  HINT: If the fault cause is found, reinstall the components, connectors etc. If the fault cause is not found, do not reinstall the control module before continuing with fault-tracing.

  Other information:

  - For -2004, see: **CENTRAL ELECTRONIC MODULE (CEM), REPLACING** .

- For 2005-, see: **CENTRAL ELECTRONIC MODULE (CEM), REPLACING** .
- see **CHECKING WIRING AND TERMINALS** .

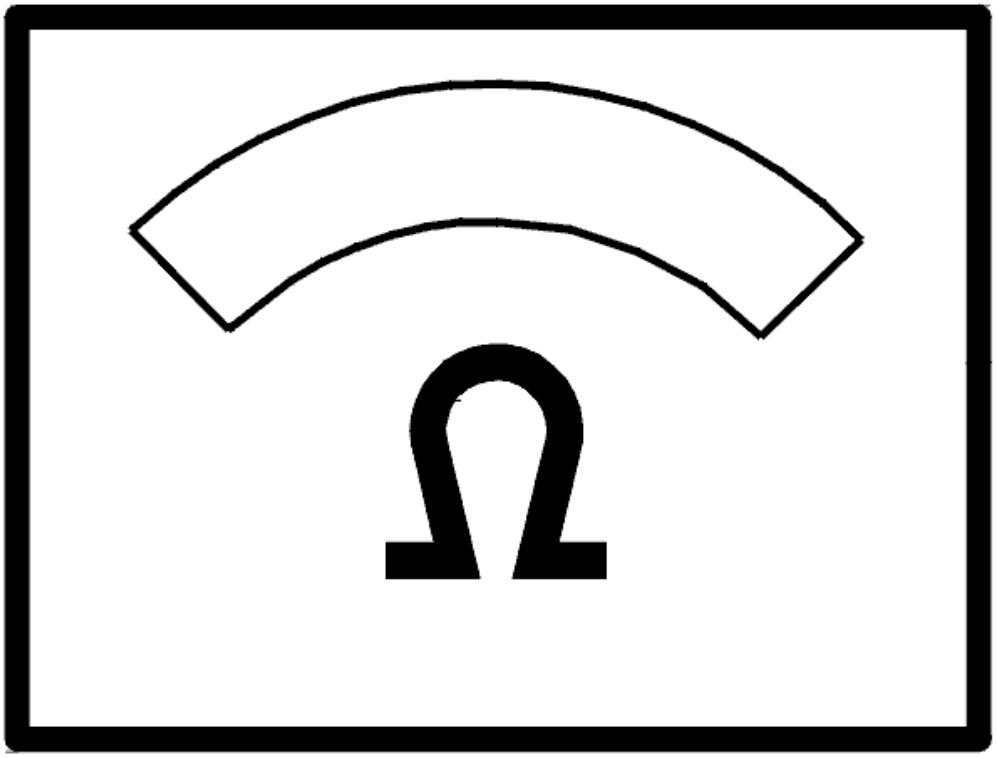

Fig. 197: Identifying Ohm Meter
Courtesy of VOLVO CARS CORPORATION

Was a fault detected?

- **YES**

  Refer to **VERIFICATION**

- **NO**

  Refer to **CHECKING THE COMPONENT AND CABLE**

CHECKING THE COMPONENT AND CABLE

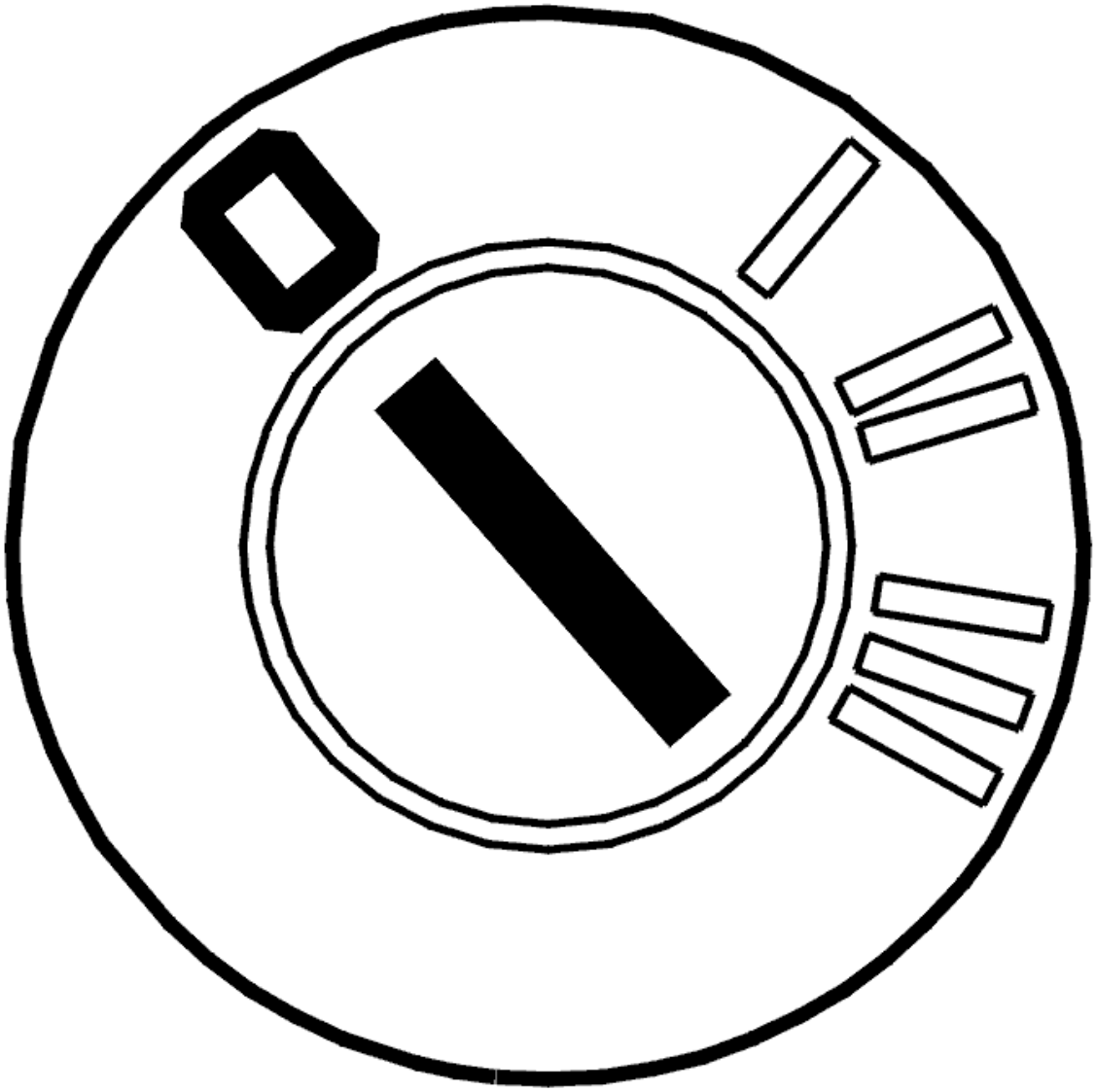

Fig. 198: Identifying Ignition OFF
Courtesy of VOLVO CARS CORPORATION

- Ignition off.

  Check the cable between central electronic module (CEM) connector terminal #3B and ignition switch connector 15A terminal #1. Check for an open-circuit. Check for a short-circuit to ground.

  Other information:

  - The voltage must be the same as battery voltage if the key is in position II or III
  - For -2004, see: **CENTRAL ELECTRONIC MODULE (CEM), REPLACING** .
  - For 2005-, see: **CENTRAL ELECTRONIC MODULE (CEM), REPLACING** .

- To connect the breakout box to the control module, see **CONNECTING THE BREAKOUT BOX**
- -2004: **SIGNAL SPECIFICATION**
- 2005-: **SIGNAL SPECIFICATION**
- see **CHECKING WIRING AND TERMINALS** .

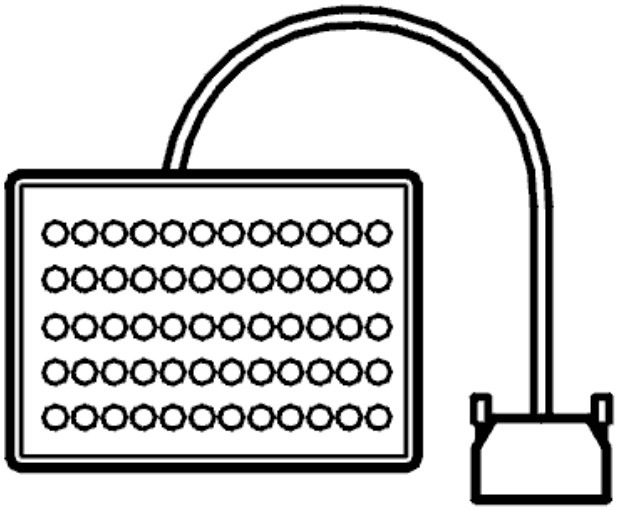

Fig. 199: Breakout Box
Courtesy of VOLVO CARS CORPORATION

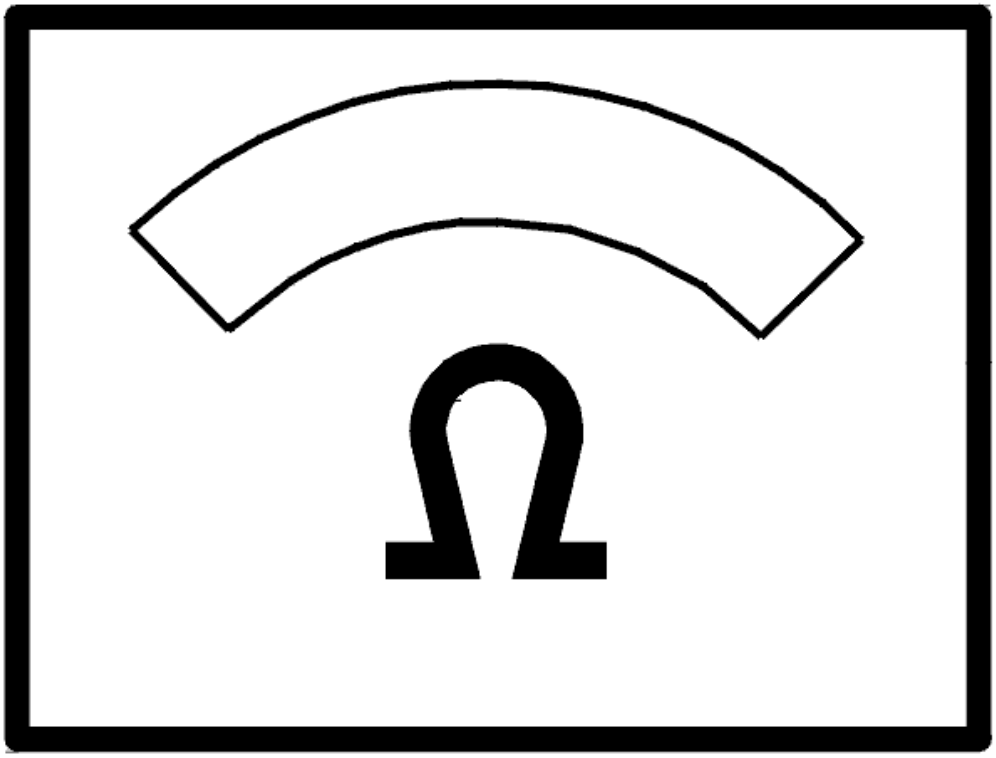

Fig. 200: Identifying Ohm Meter
Courtesy of VOLVO CARS CORPORATION

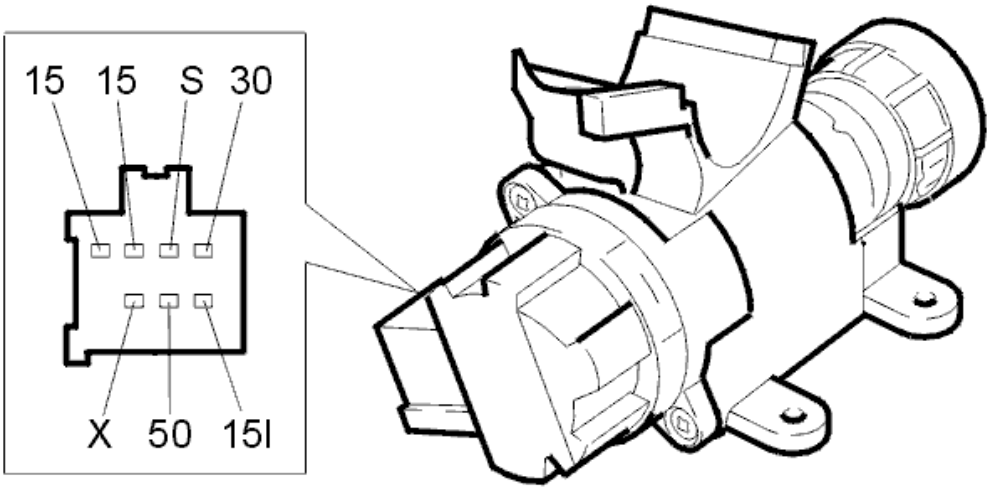

Fig. 201: Identifying Central Electronic Module (CEM) Connector Terminals
Courtesy of VOLVO CARS CORPORATION

Is the voltage the same as battery voltage?

- **YES**

  Refer to **VERIFICATION**

- **NO**

  Refer to **REPLACING THE COMPONENT**

REPLACING THE COMPONENT

Try replacing the ignition switch connector according to **STEERING WHEEL LOCK, REPLACING** .

- **Continue**

  Refer to **VERIFICATION**

VERIFICATION

VERIFICATION

HINT: After the repair it is necessary to check that the fault has been rectified.

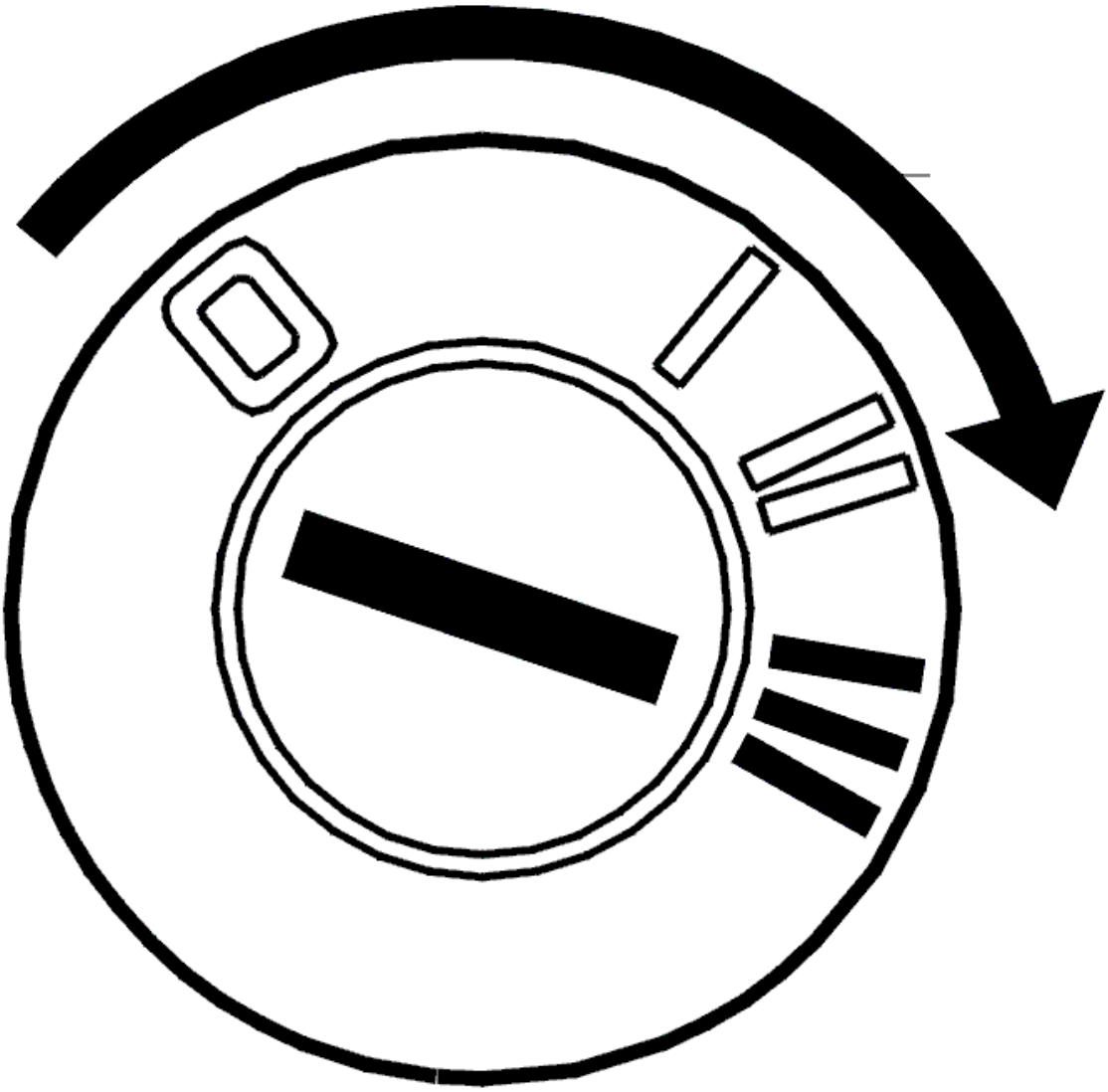

Fig. 202: Identifying Engine START Position
Courtesy of VOLVO CARS CORPORATION

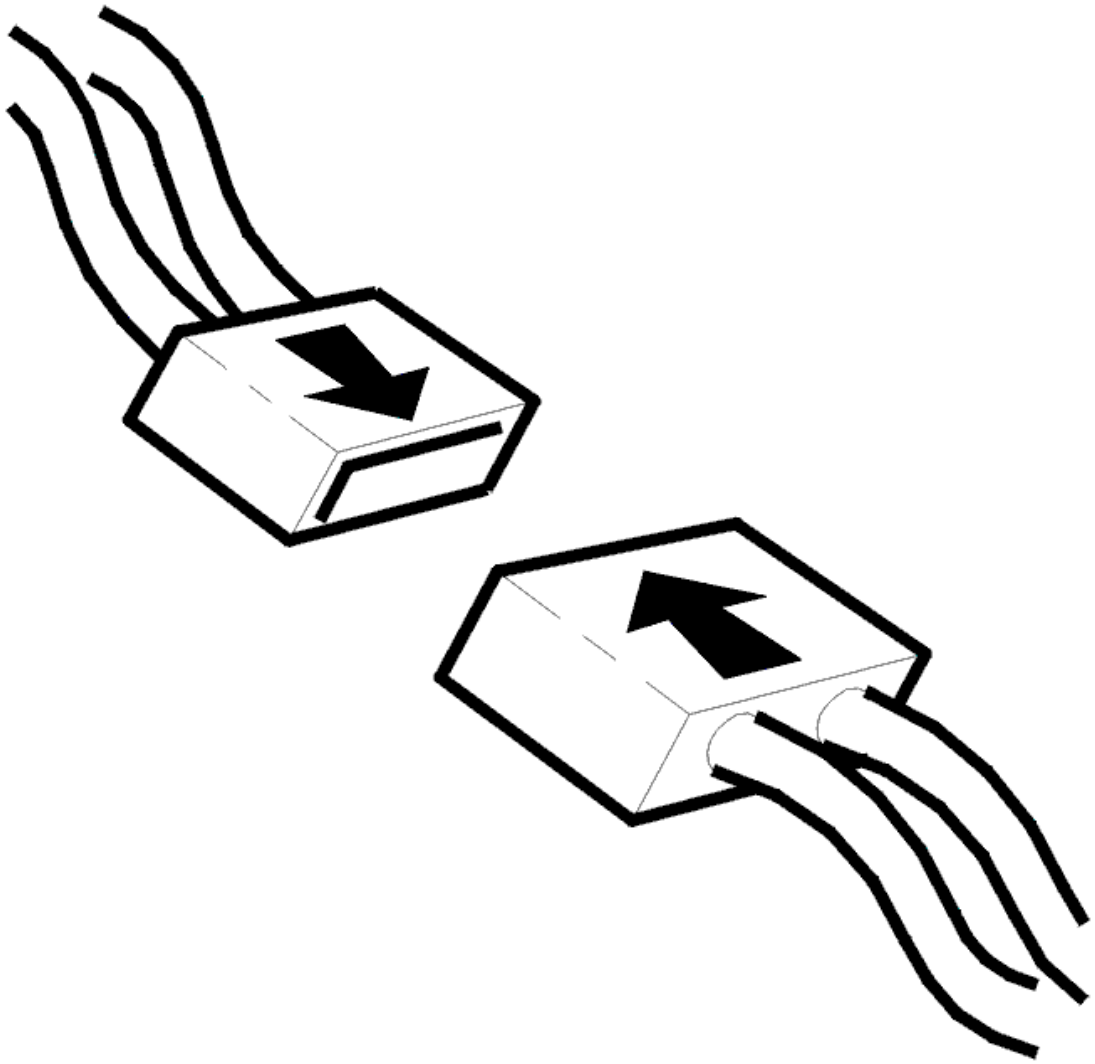

Fig. 203: Connecting Connector
Courtesy of VOLVO CARS CORPORATION

- Ignition off.
- Connect connectors, install components, etc.
- Key in position III.

  Check that 15 voltage is OK.

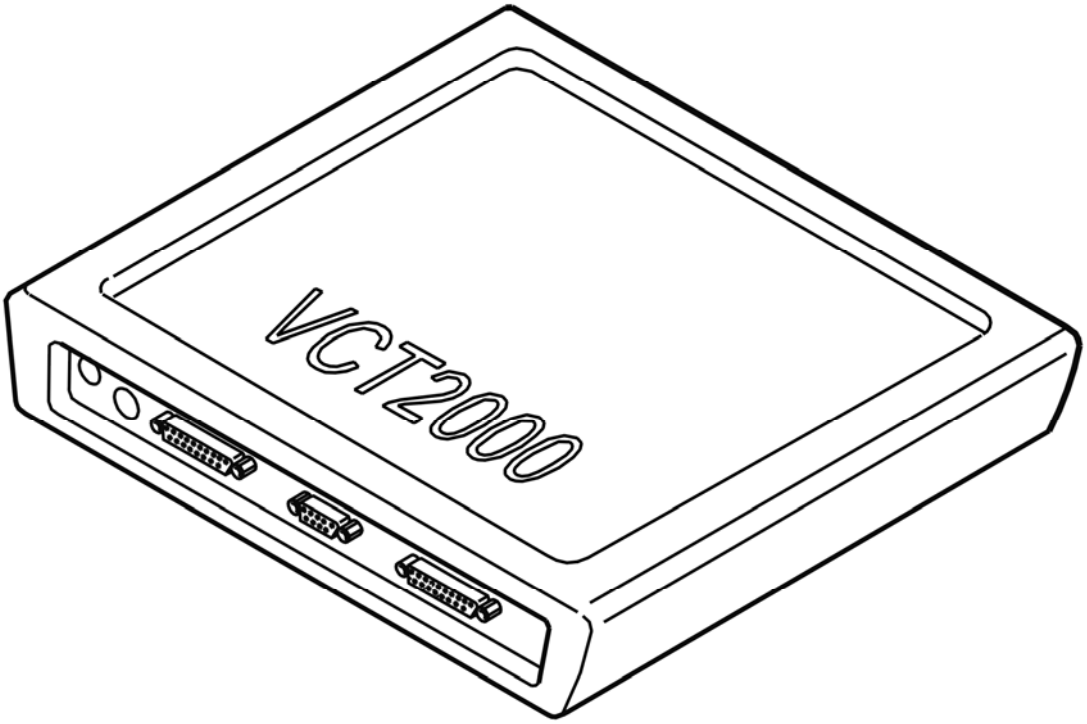

Fig. 204: Identifying VCT2000 Diagnostic Tool Symbol In VIDA
Courtesy of VOLVO CARS CORPORATION

Is voltage on the wire high?

- **YES**

  VERIFIED: Troubleshooting has been completed.

- **NO**

  Refer to **INFORMATION**

INFORMATION

FAULT-TRACING INFORMATION

The fault should have been detected and remedied. As this is not the case fault-tracing has failed.

Exit fault-tracing for this diagnostic trouble code (DTC) or make another attempt.

CEM-1A07: 15-POWER SUPPLY. SIGNAL TOO HIGH (2005-2011)

DIAGNOSTIC TROUBLE CODE (DTC) INFORMATION CEM-1A07

Condition

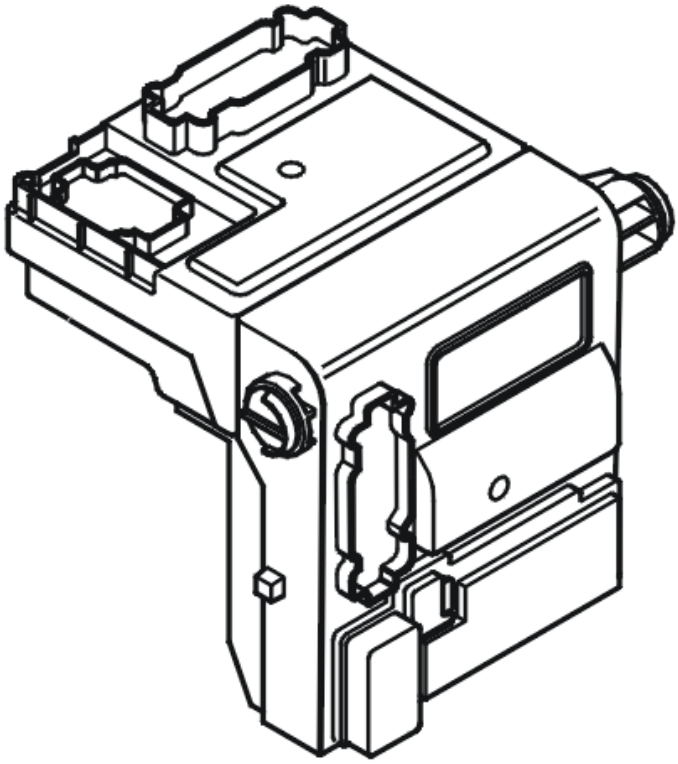

Fig. 205: Identifying Central Electronic Module (CEM)
Courtesy of VOLVO CARS CORPORATION

The central electronic module (CEM) monitors the cable for 15-supply from the ignition switch.

The diagnostic trouble code (DTC) is stored if the central electronic module (CEM) registers a short-circuit to supply voltage in the cable for the 15-supply.

The diagnostic trouble code (DTC) can be diagnosed at ignition switch position 0.

Substitute Value

- None.

Possible Source

- Short-circuit to supply voltage in the 15-supply cable from the ignition switch
- Damaged ignition switch.

Fault symptom[s]

- The starter motor does not turn.
- The battery discharges.

SIGNAL TOO HIGH

CHECKING THE CONNECTORS

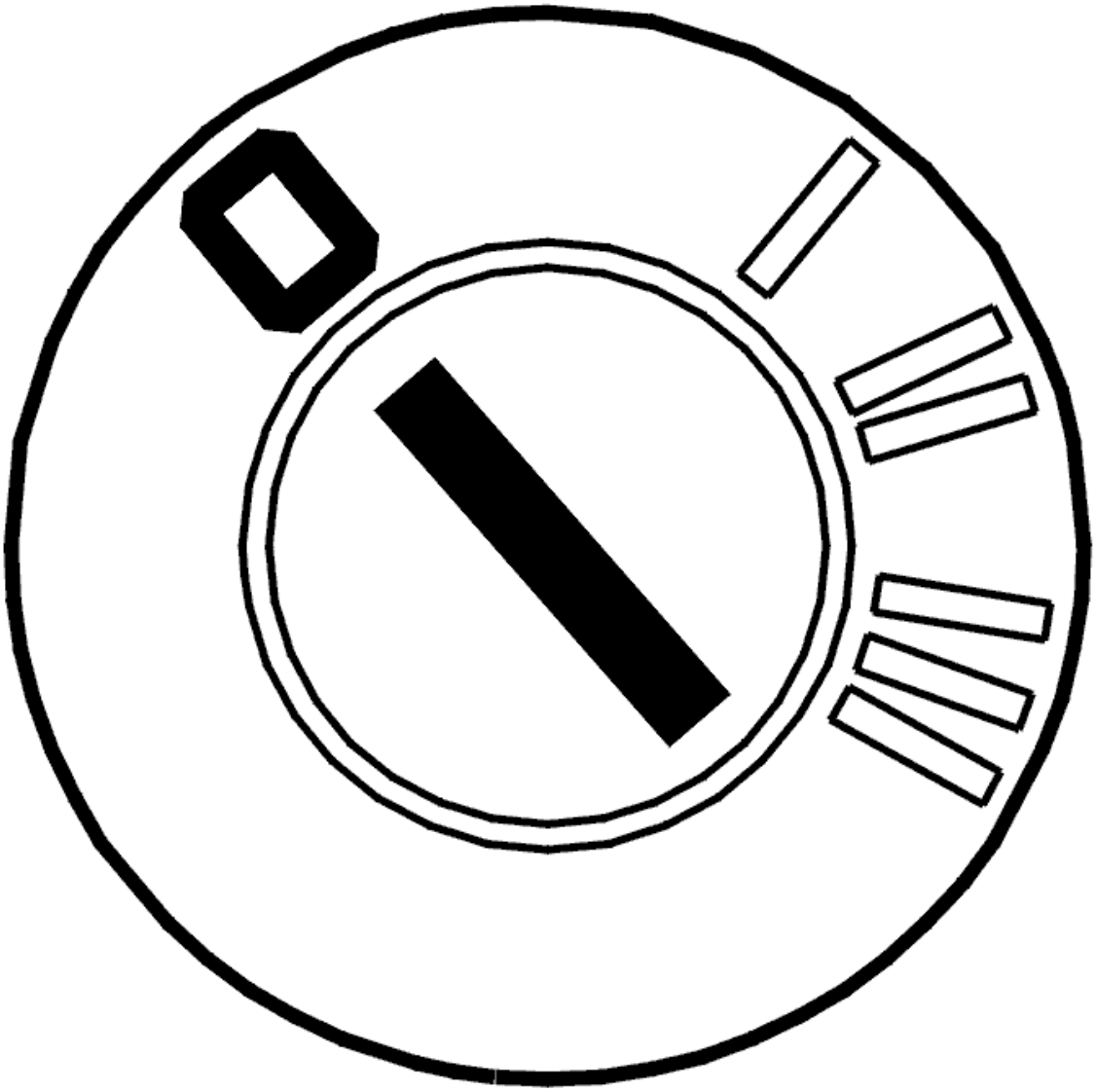

Fig. 206: Identifying Ignition OFF
Courtesy of VOLVO CARS CORPORATION

- Ignition off.

  Check central electronic module (CEM) connector D. Check for contact resistance and oxidation. Remedy as necessary.

Check for any damage.

HINT: If the fault cause is found, reinstall the components, connectors etc.

HINT: If the fault cause was not found, do not reconnect the connector before carrying out further fault-tracing.

Other information:

- For -2004, see: **CENTRAL ELECTRONIC MODULE (CEM), REPLACING** .
- For 2005-, see: **CENTRAL ELECTRONIC MODULE (CEM), REPLACING** .
- see **CHECKING WIRING AND TERMINALS**

Was a fault detected?

- **YES**

  Refer to **VERIFICATION**

- **NO**

  Refer to **CHECKING THE COMPONENT AND CABLE**

CHECKING THE COMPONENT AND CABLE

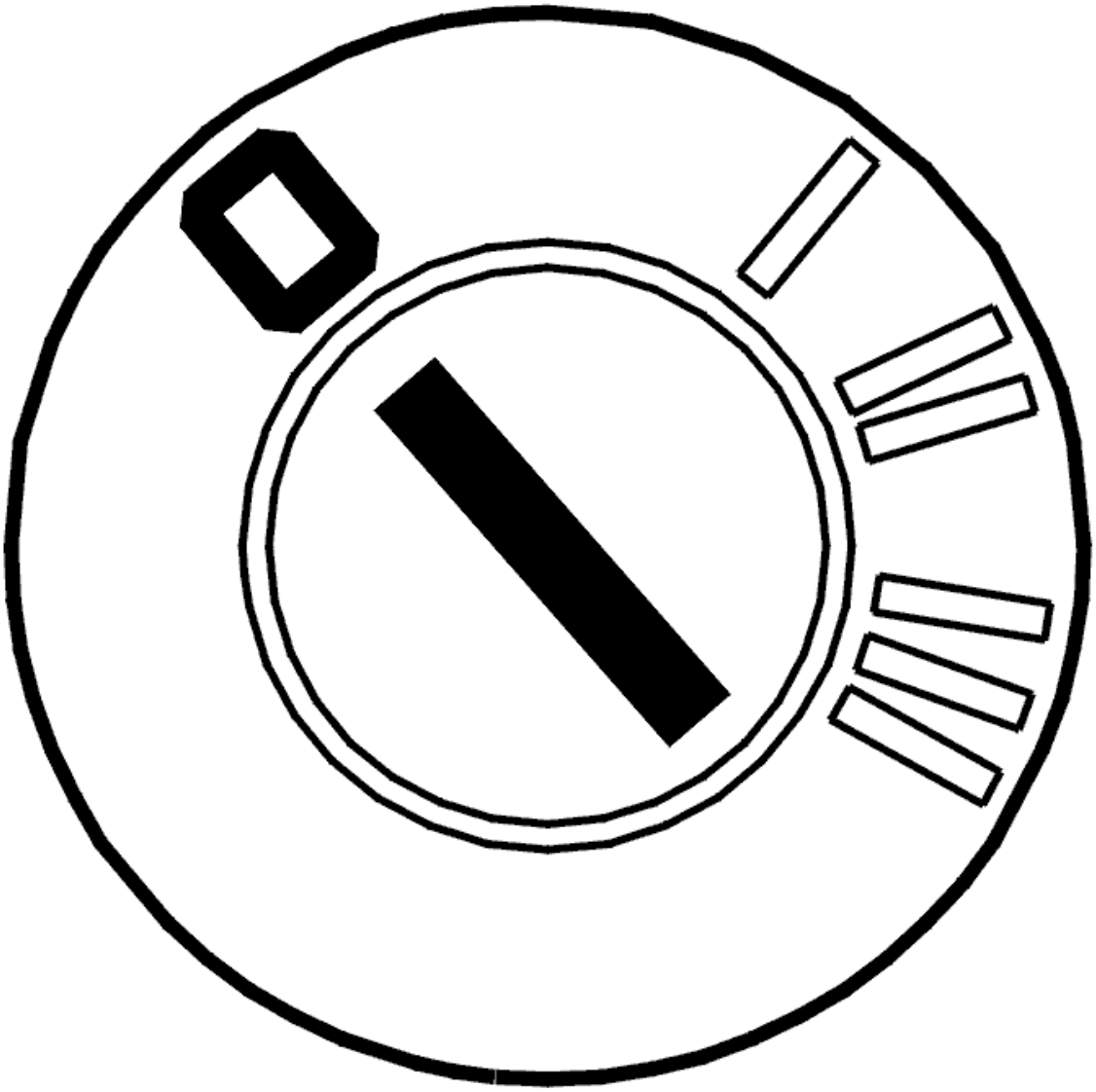

Fig. 207: Identifying Ignition OFF
Courtesy of VOLVO CARS CORPORATION

- Ignition off.

  Check the cable between central electronic module (CEM) connector terminal #D16 and ignition switch connector terminal #1. Check for a short-circuit to supply voltage.

  The voltage must be 0 V if the key is in position 0 or I.

  Other information:

  - see **CONNECTING THE BREAKOUT BOX**
  - -2004: **SIGNAL SPECIFICATION**
  - 2005-: **SIGNAL SPECIFICATION**

- For -2004, see: **CENTRAL ELECTRONIC MODULE (CEM), REPLACING** .
- For 2005-, see: **CENTRAL ELECTRONIC MODULE (CEM), REPLACING** .
- see **CHECKING WIRING AND TERMINALS**

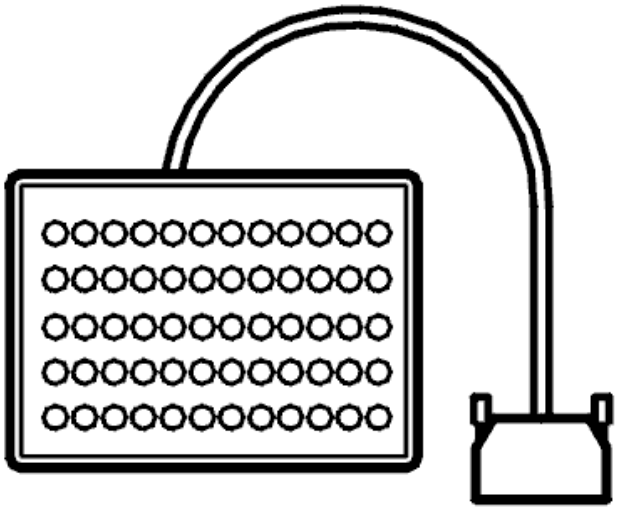

Fig. 208: Breakout Box
Courtesy of VOLVO CARS CORPORATION

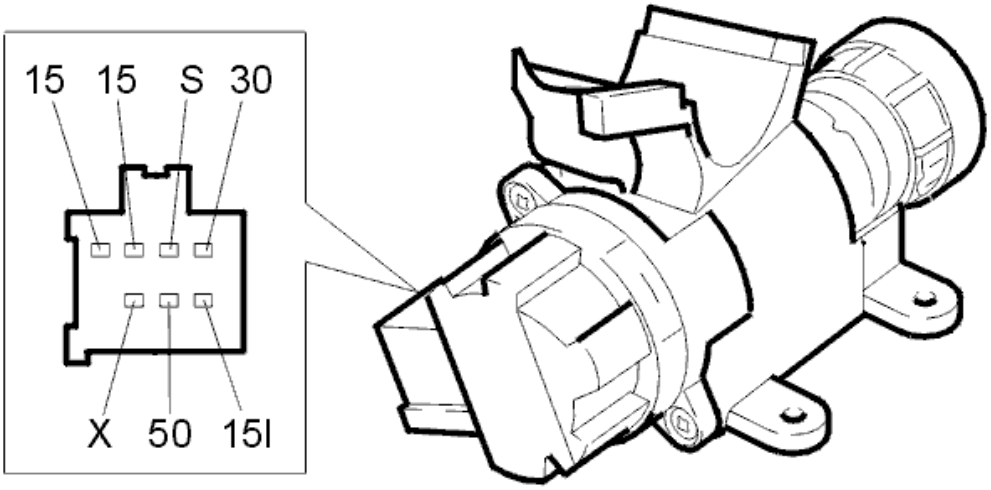

Fig. 209: Identifying Central Electronic Module (CEM) Connector Terminals

Courtesy of VOLVO CARS CORPORATION

Were any faults found in the cable?

- **YES**

  Refer to **VERIFICATION**

- **NO**

  Refer to **REPLACING THE COMPONENT**

REPLACING THE COMPONENT

To replace the connector for the ignition switch, see: **STEERING WHEEL LOCK, REPLACING**

- **Continue**

  Refer to **VERIFICATION**

VERIFICATION

VERIFICATION

HINT: After the repair it is necessary to check that the fault has been rectified.

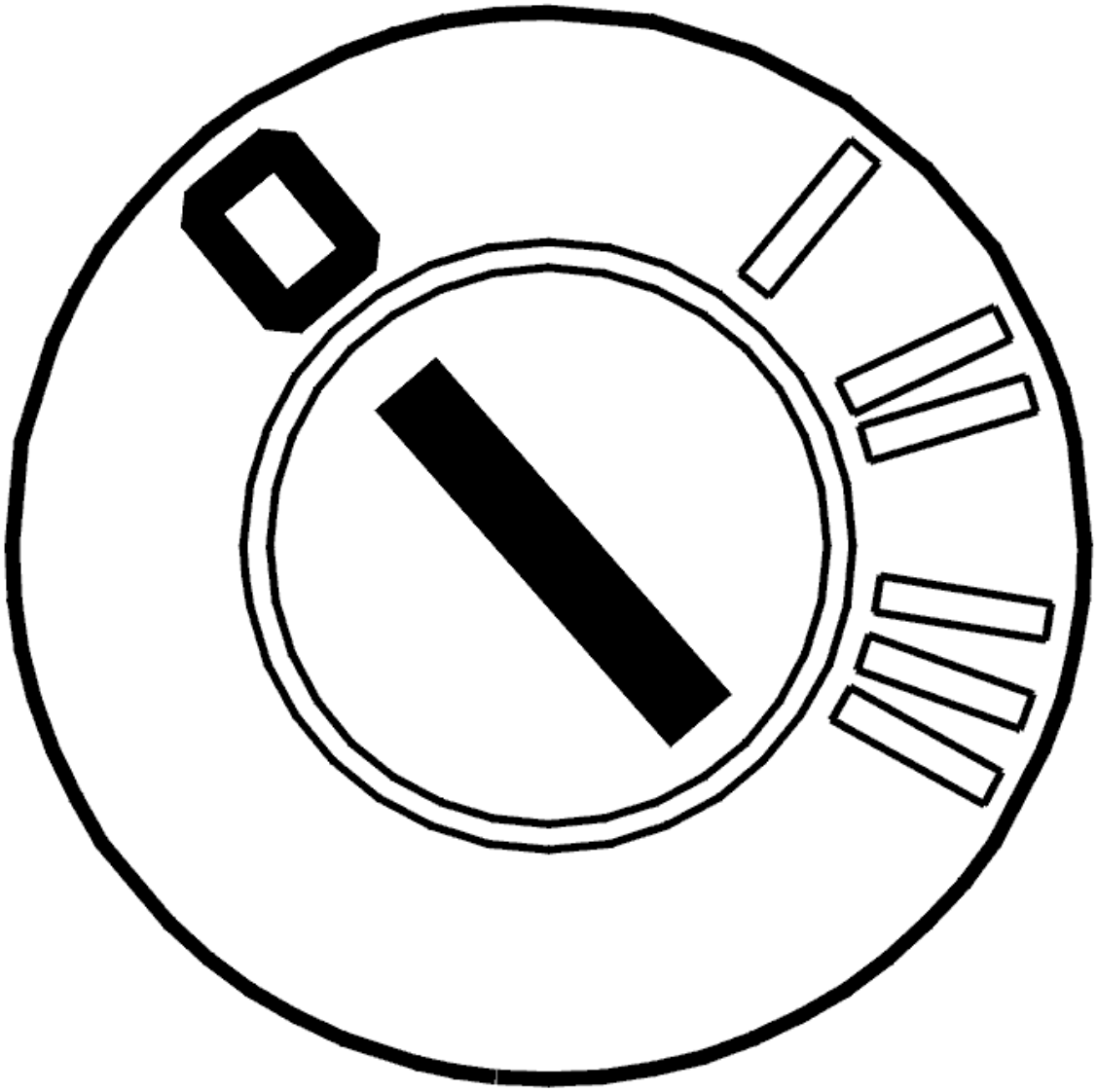

Fig. 210: Identifying Ignition OFF
Courtesy of VOLVO CARS CORPORATION

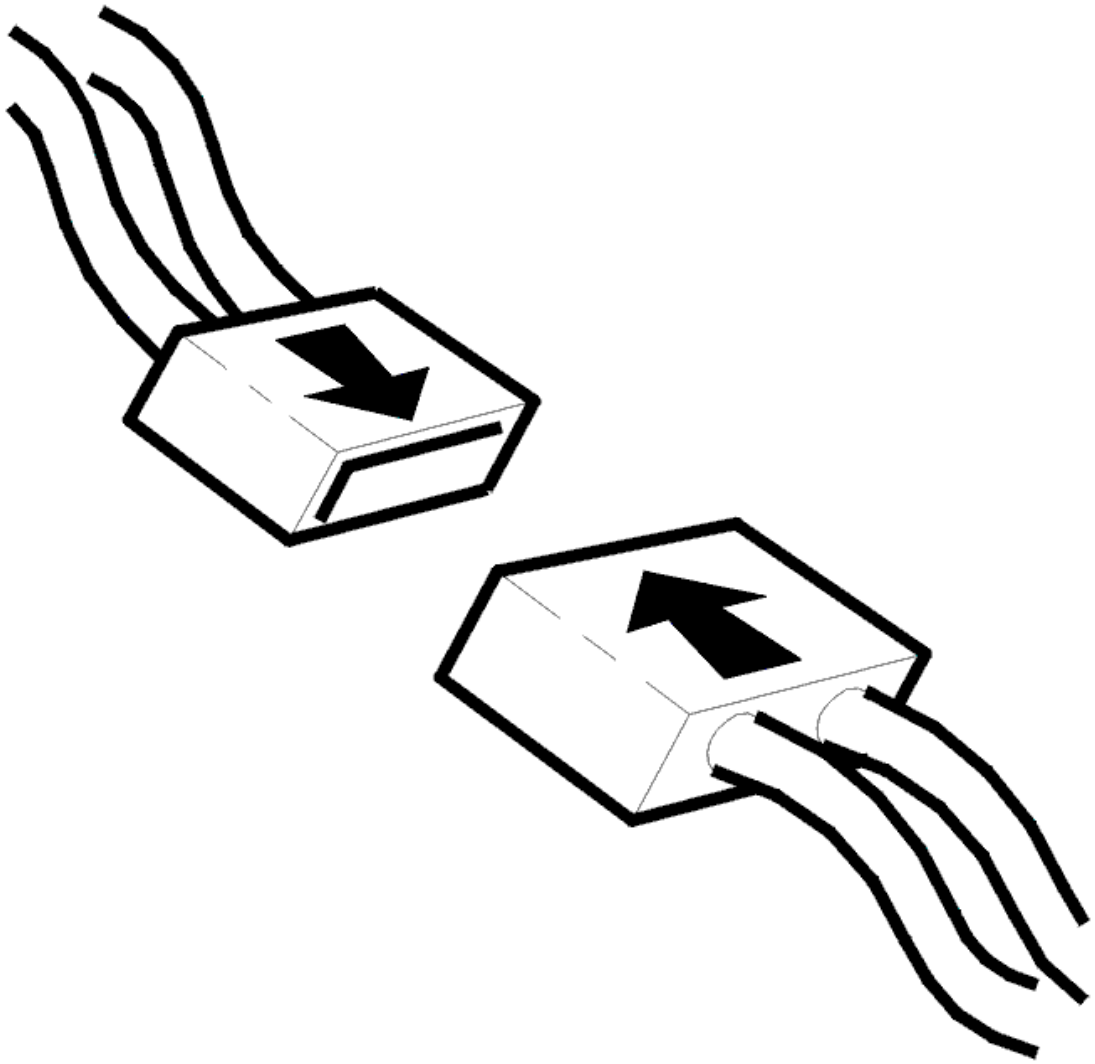

Fig. 211: Connecting Connector
Courtesy of VOLVO CARS CORPORATION

- Ignition off.
- Connect connectors, install components, etc.
- Ignition off.

  Check that 15 voltage is OK.

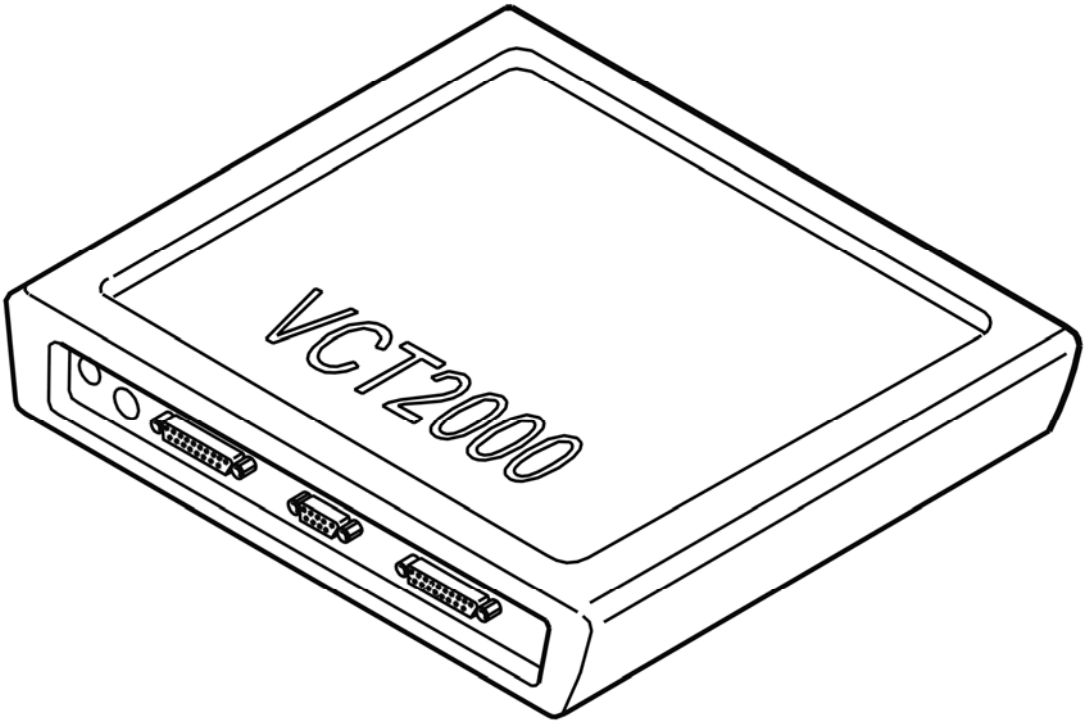

Fig. 212: Identifying VCT2000 Diagnostic Tool Symbol In VIDA
Courtesy of VOLVO CARS CORPORATION

Is voltage on the wire low?

- **YES**

  VERIFIED: Troubleshooting has been completed.

- **NO**

  Refer to **INFORMATION**

INFORMATION

FAULT-TRACING INFORMATION

The fault should have been detected and remedied. As this is not the case fault-tracing has failed.

Exit fault-tracing for this diagnostic trouble code (DTC) or make another attempt.

CEM-1A07: 15-POWER SUPPLY. SIGNAL TOO HIGH. INTERMITTENT FAULT (2003-2004)

DIAGNOSTIC TROUBLE CODE (DTC) INFORMATION

Condition

Diagnostic trouble code (DTC) CEM-1A07 is stored if the central electronic module (CEM) registers a short-circuit to supply voltage in the 15-supply.

Substitute Value

None

Possible Source

- Short-circuit to supply voltage in 15-supply.
- Defective ignition switch.

Fault symptom[s]

- Windshield wiper motor does not operate.
- The starter motor does not turn.

SIGNAL TOO HIGH. INTERMITTENT FAULT

CHECKING THE CONNECTORS

Check the central electronic module (CEM) connector for contact resistance and oxidation and remedy according to **CONTACT RESISTANCE AND OXIDATION** and loose connections according to **LOOSE CONNECTIONS (TERMINALS)** .

Check for damage carefully.

HINT: If the fault cause is found, reinstall the components, connectors etc.

HINT: If the fault cause is not found, do not reinstall the central electronic module (CEM) before continuing with fault-tracing.

Other information:

- For -2004, see: **CENTRAL ELECTRONIC MODULE (CEM), REPLACING** .
- For 2005-, see: **CENTRAL ELECTRONIC MODULE (CEM), REPLACING** .

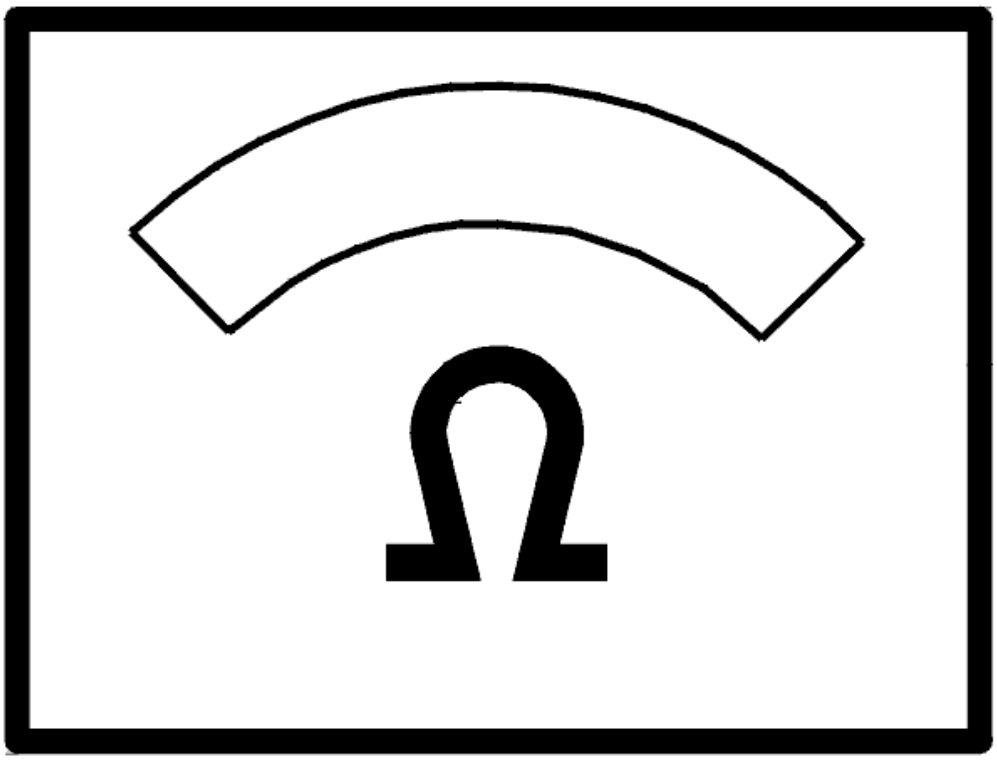

Fig. 213: Identifying Ohm Meter
Courtesy of VOLVO CARS CORPORATION

Was a fault detected?

- **YES**

  OKAY: Troubleshooting has been completed.

- **NO**

  Refer to **CHECKING WIRING**

CHECKING WIRING

Check the cable between central electronic module (CEM) connector #3B and ignition switch connector 15A #1

for an intermittent open-circuit according to **OPEN-CIRCUIT, INTERMITTENT FAULTS** and for a short-circuit to supply voltage according to **SHORT-CIRCUIT TO SUPPLY VOLTAGE, INTERMITTENT FAULTS** .

Other information

- The voltage must be 0 V if the key is in position 0 or I.
- For -2004, see: **CENTRAL ELECTRONIC MODULE (CEM), REPLACING** .
- For 2005-, see: **CENTRAL ELECTRONIC MODULE (CEM), REPLACING** .
- To connect the breakout box, see **CONNECTING THE BREAKOUT BOX**
- -2004: **SIGNAL SPECIFICATION**
- 2005-: **SIGNAL SPECIFICATION**

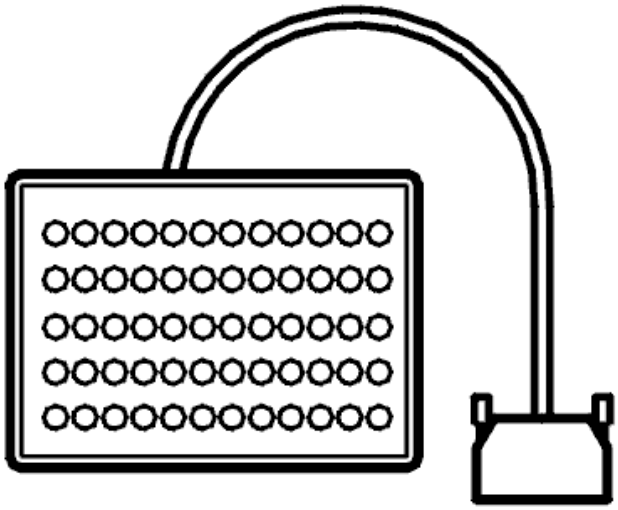

Fig. 214: Breakout Box
Courtesy of VOLVO CARS CORPORATION

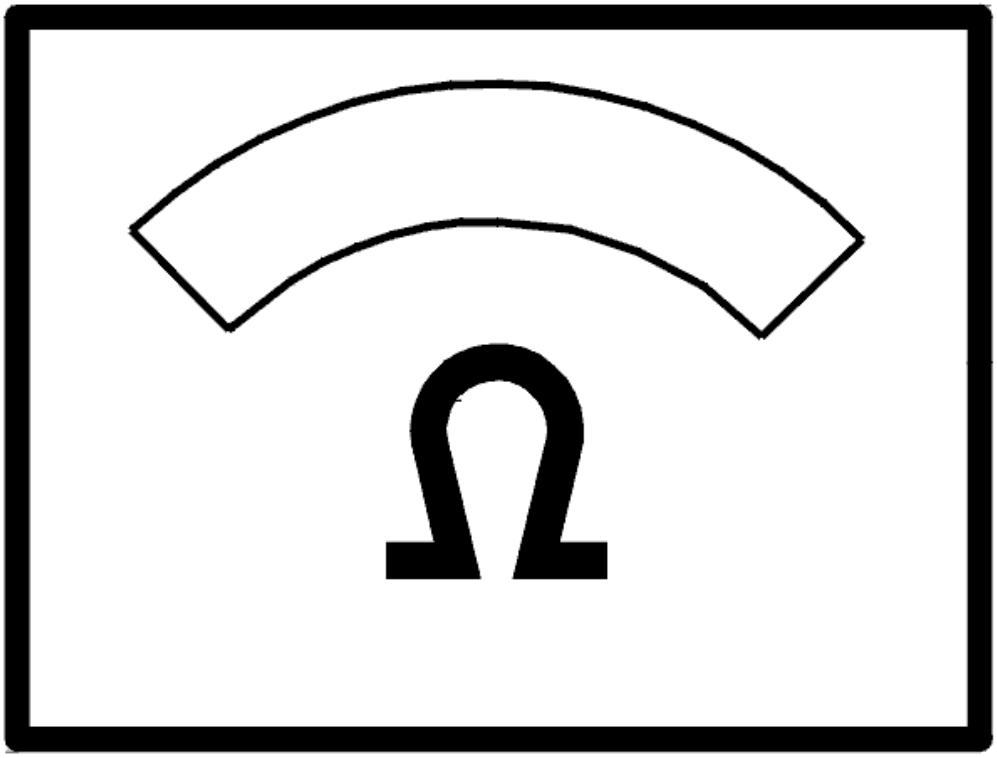

Fig. 215: Identifying Ohm Meter
Courtesy of VOLVO CARS CORPORATION

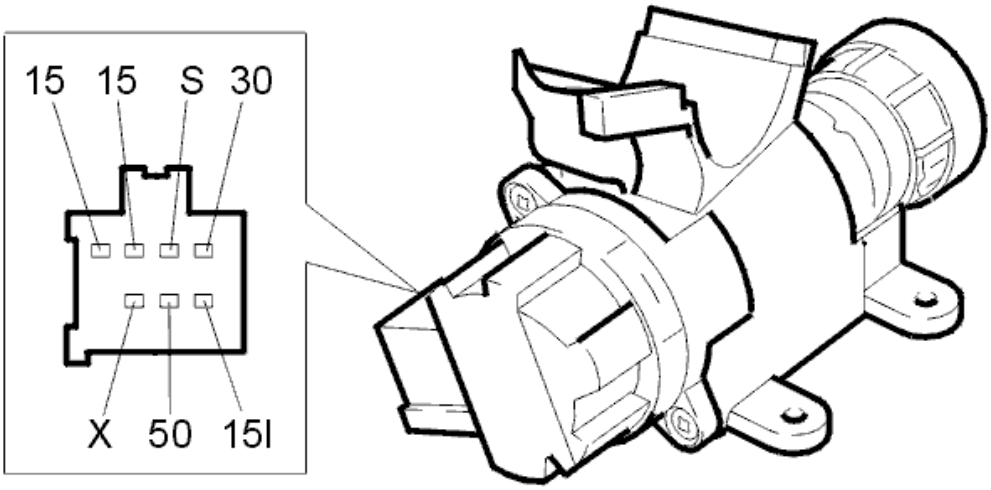

Fig. 216: Identifying Central Electronic Module (CEM) Connector Terminals
Courtesy of VOLVO CARS CORPORATION

CEM-1A07: 15-POWER SUPPLY. SIGNAL TOO HIGH. PERMANENT FAULT (2003-2004)

DIAGNOSTIC TROUBLE CODE (DTC) INFORMATION

see **DIAGNOSTIC TROUBLE CODE (DTC) INFORMATION**

SIGNAL TOO HIGH. PERMANENT FAULT

CHECKING THE CONNECTORS

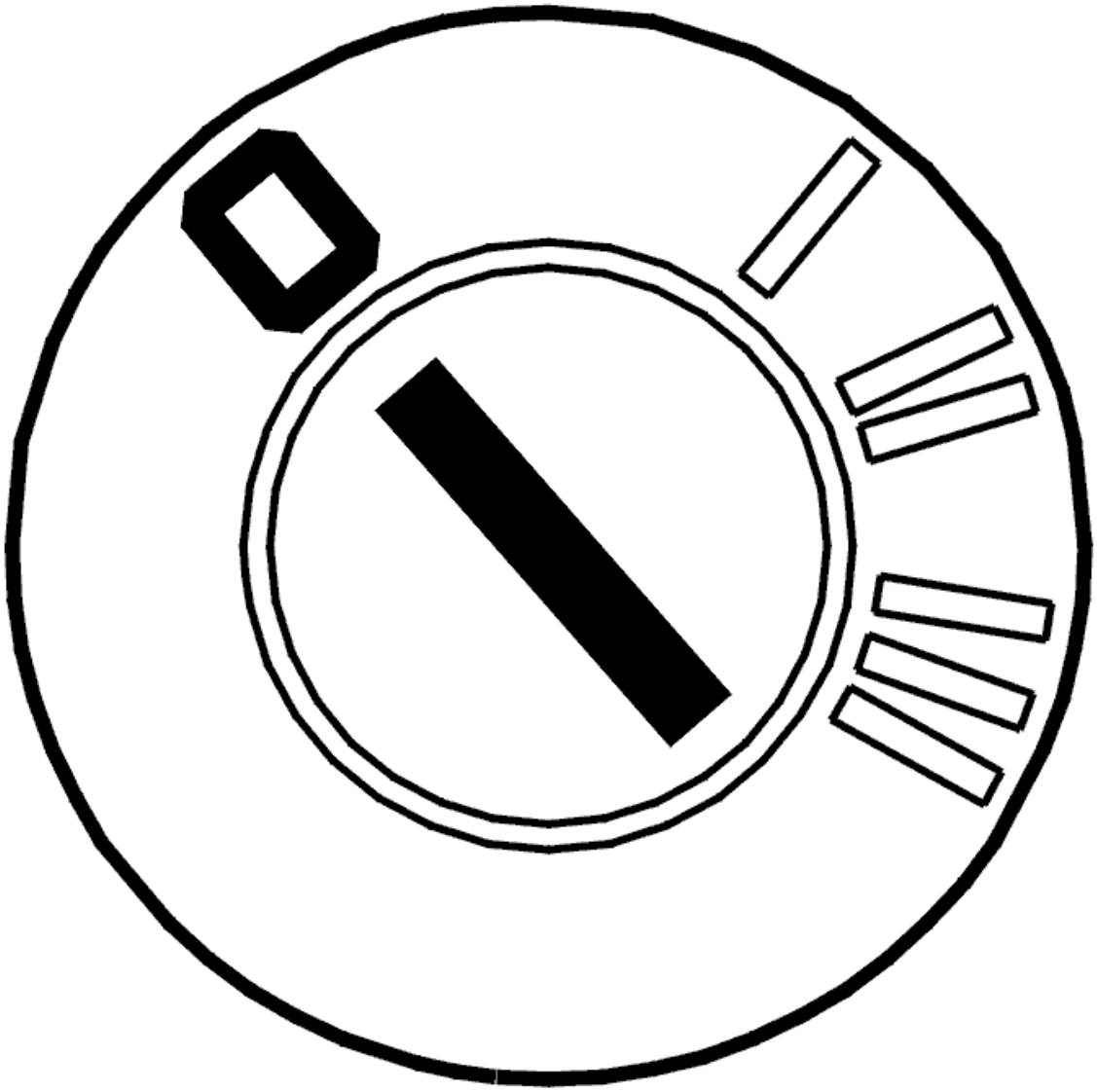

Fig. 217: Identifying Ignition OFF
Courtesy of VOLVO CARS CORPORATION

- Ignition off.

  Check the central electronic module (CEM) connector for contact resistance and oxidation. Remedy if necessary.

  Check for any damage.

  HINT: If the fault cause is found, reinstall the components, connectors etc. If the fault cause is not found, do not reinstall the control module before continuing with fault-tracing.

  Other information:

  - For -2004, see: **CENTRAL ELECTRONIC MODULE (CEM), REPLACING** .

- For 2005-, see: **CENTRAL ELECTRONIC MODULE (CEM), REPLACING** .
- see **CHECKING WIRING AND TERMINALS** .

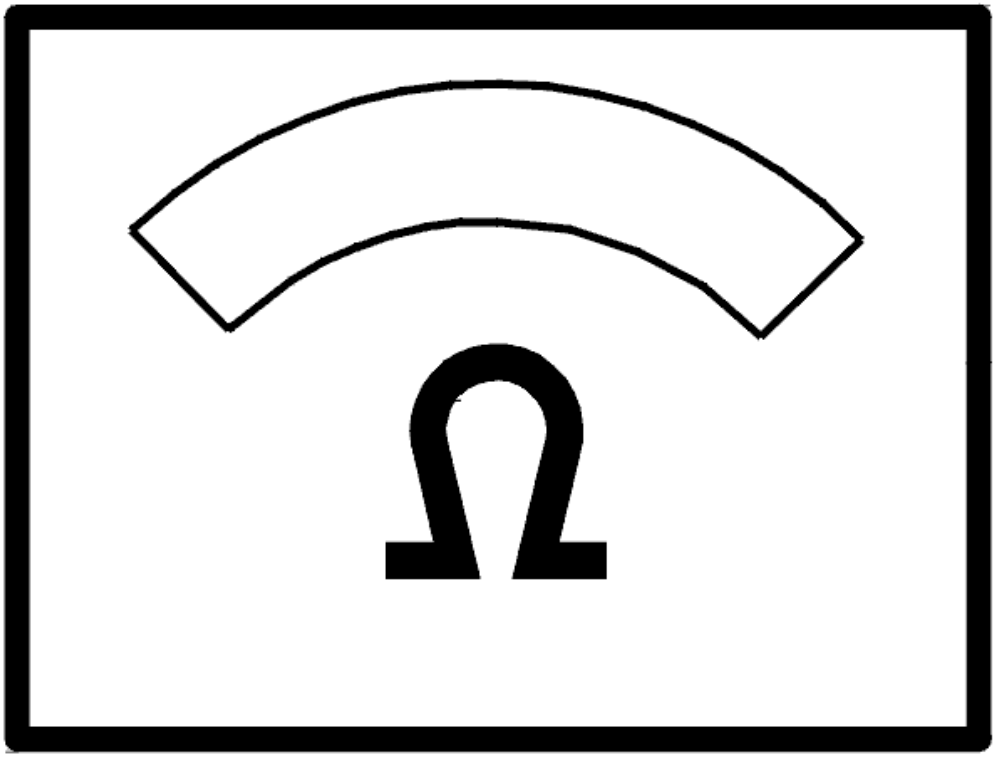

Fig. 218: Identifying Ohm Meter
Courtesy of VOLVO CARS CORPORATION

Was a fault detected?

- **YES**

  Refer to **VERIFICATION**

- **NO**

  Refer to **CHECKING THE COMPONENT AND CABLE**

CHECKING THE COMPONENT AND CABLE

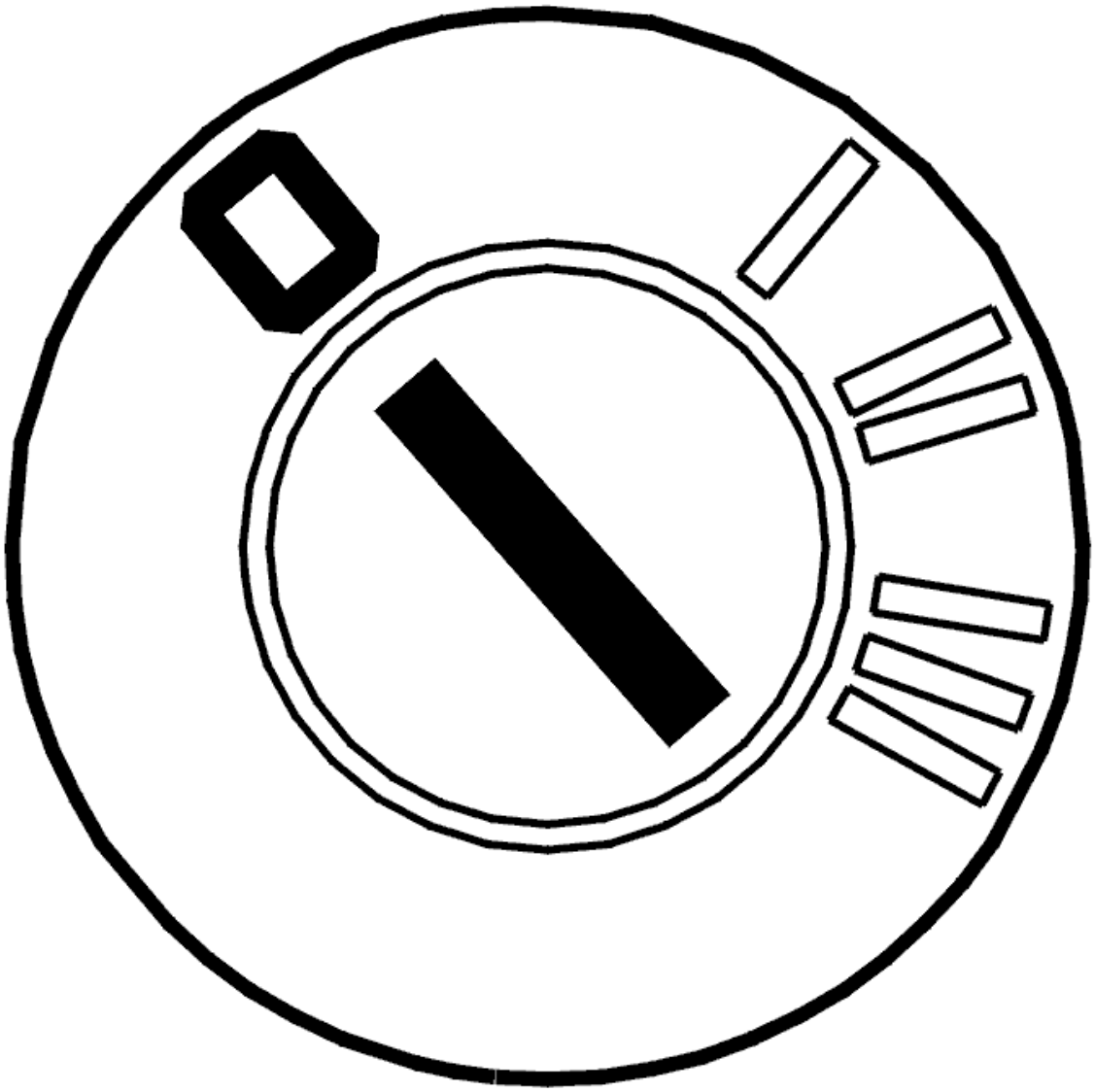

Fig. 219: Identifying Ignition OFF
Courtesy of VOLVO CARS CORPORATION

- Ignition off.

  Check the cable between central electronic module (CEM) connector terminal #3B and ignition switch connector 15A terminal #1. Check for a short-circuit to supply voltage. Check for an open-circuit.

  Other information:

  - The voltage must be 0 V if the key is in position 0 or I
  - For -2004, see: **CENTRAL ELECTRONIC MODULE (CEM), REPLACING** .
  - For 2005-, see: **CENTRAL ELECTRONIC MODULE (CEM), REPLACING** .

- To connect the breakout box to the control module, see **CONNECTING THE BREAKOUT BOX**
- -2004: **SIGNAL SPECIFICATION**
- 2005-: **SIGNAL SPECIFICATION**
- see **CHECKING WIRING AND TERMINALS** .

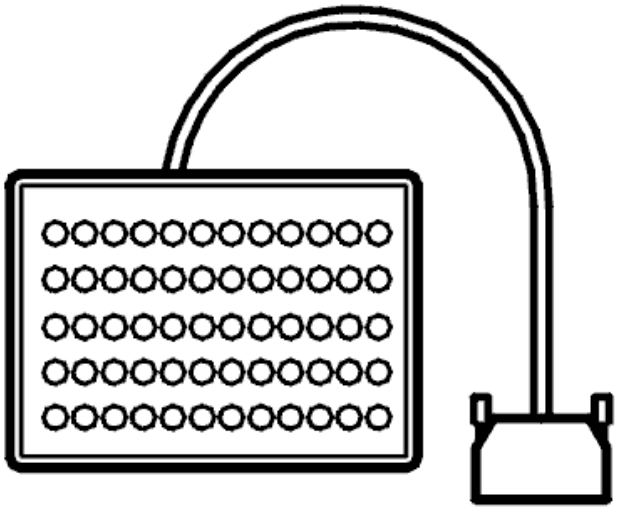

Fig. 220: Breakout Box
Courtesy of VOLVO CARS CORPORATION

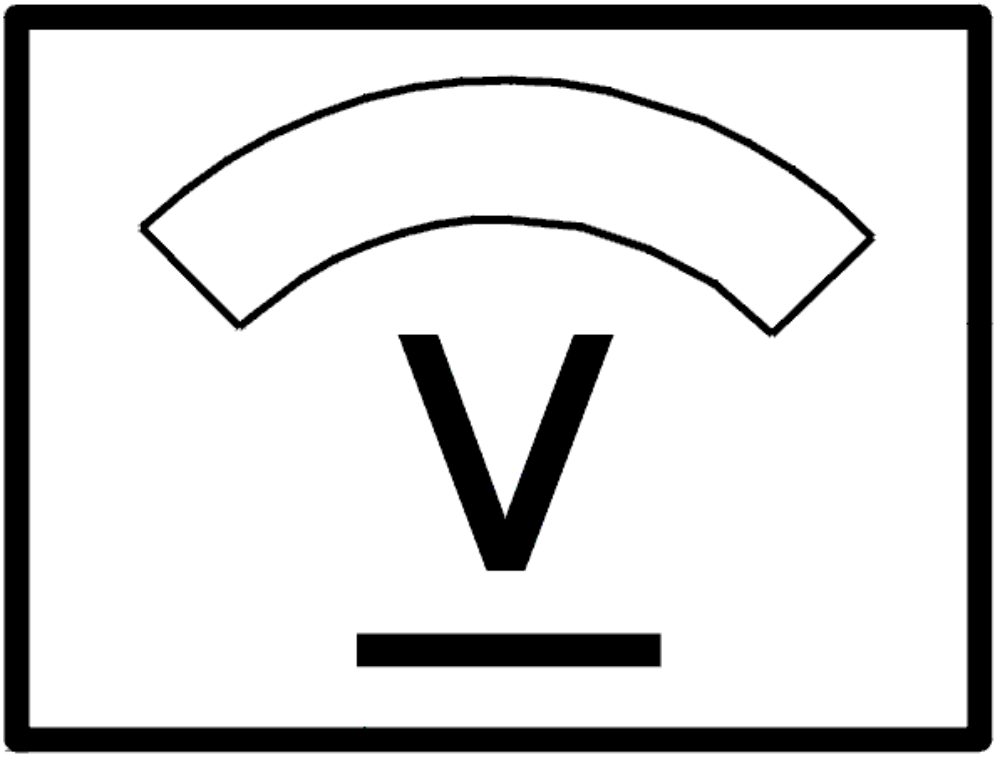

Fig. 221: Identifying Voltage Display
Courtesy of VOLVO CARS CORPORATION

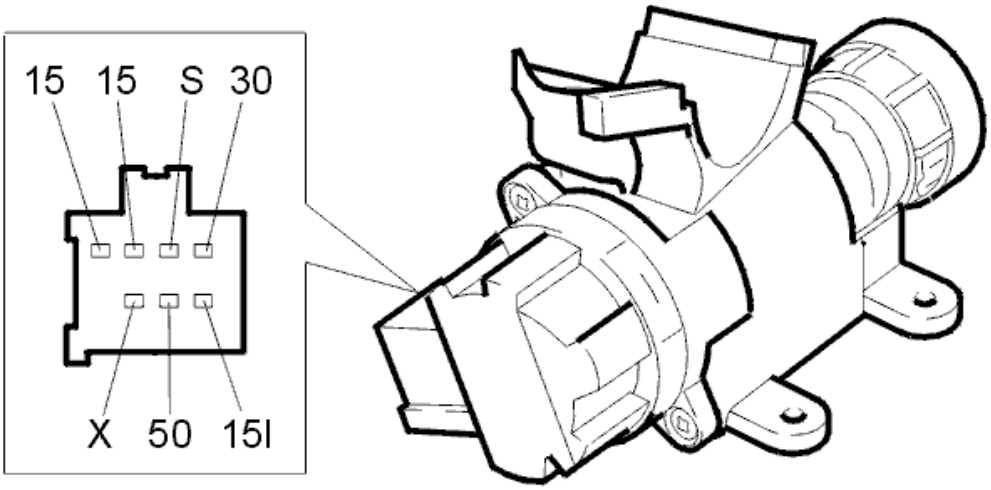

Fig. 222: Identifying Central Electronic Module (CEM) Connector Terminals
Courtesy of VOLVO CARS CORPORATION

Were any faults found in the cable?

- **YES**

  Refer to **VERIFICATION**

- **NO**

  Refer to **REPLACING THE COMPONENT**

REPLACING THE COMPONENT

Try replacing the ignition switch connector according to **STEERING WHEEL LOCK, REPLACING** .

- **Continue**

  Refer to **VERIFICATION**

VERIFICATION

VERIFICATION

HINT: After the repair it is necessary to check that the fault has been rectified.

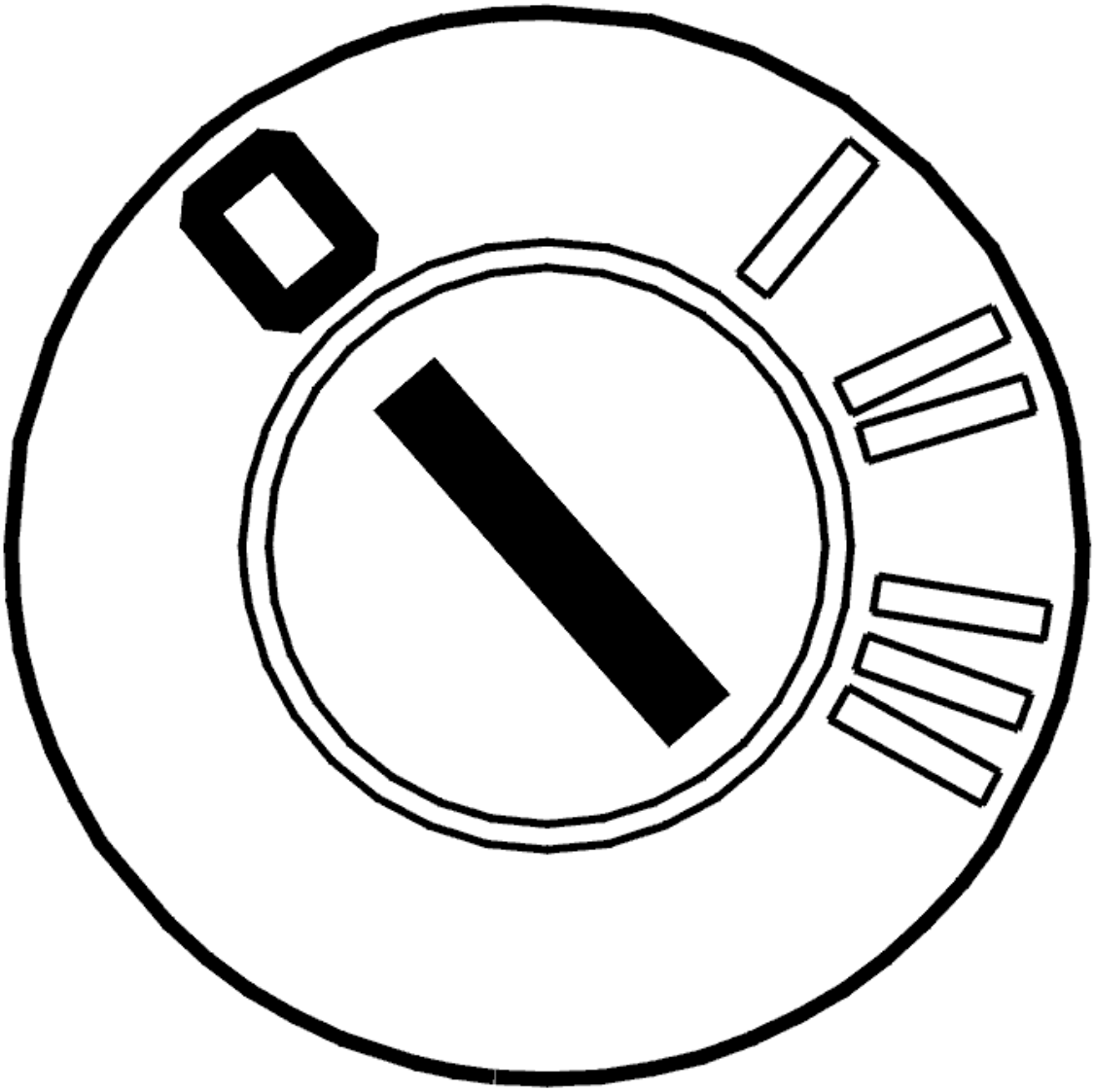

Fig. 223: Identifying Ignition OFF
Courtesy of VOLVO CARS CORPORATION

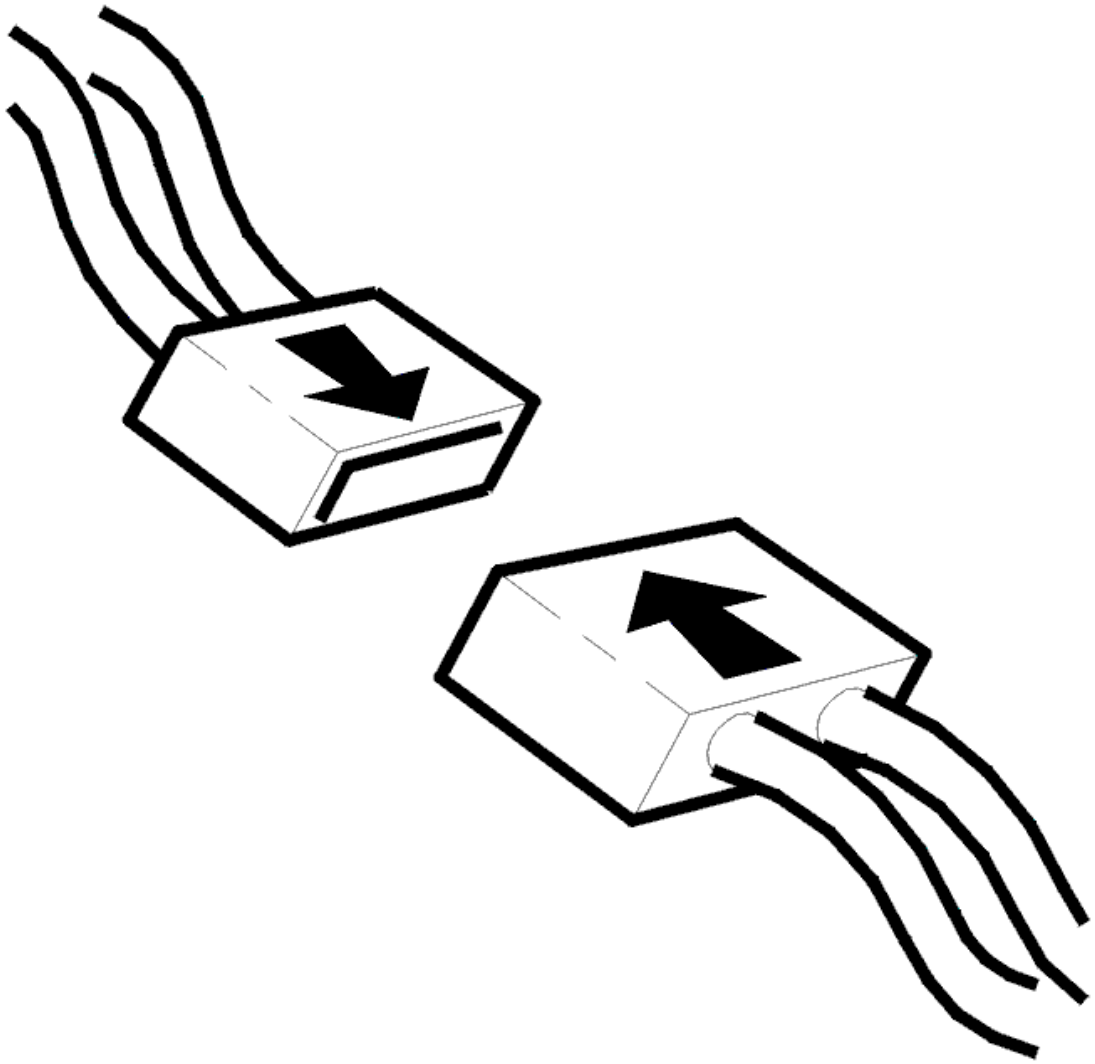

Fig. 224: Connecting Connector
Courtesy of VOLVO CARS CORPORATION

- Ignition off.
- Connect connectors, install components, etc.
- Ignition off.

  Check that 15 voltage is OK.

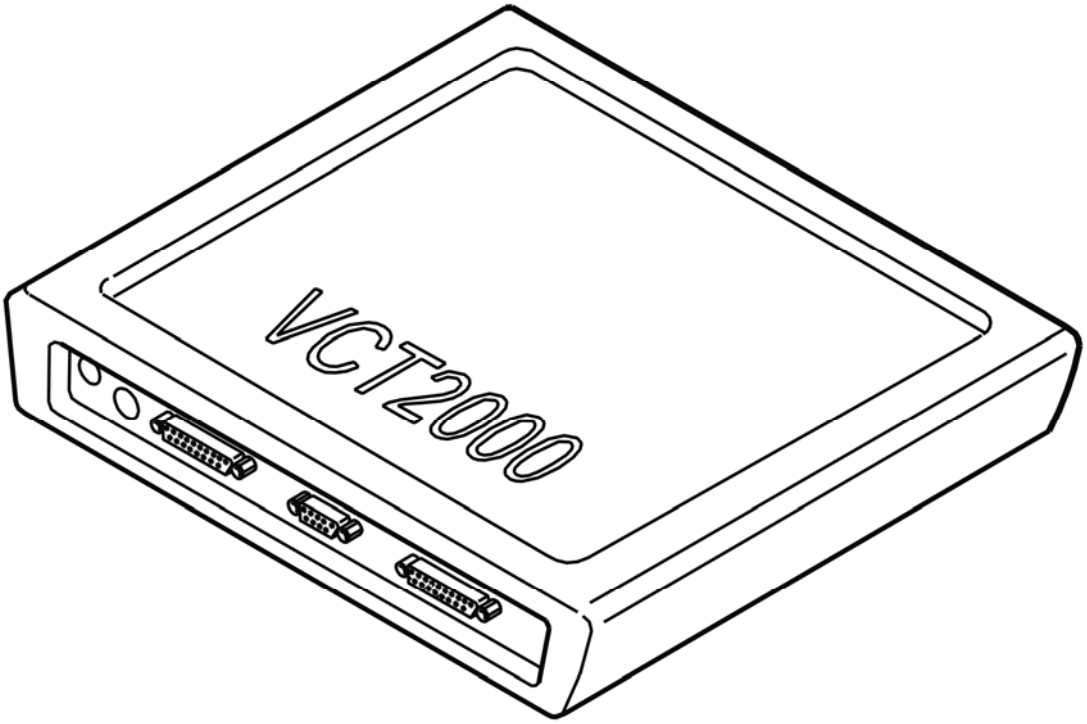

Fig. 225: Identifying VCT2000 Diagnostic Tool Symbol In VIDA
Courtesy of VOLVO CARS CORPORATION

Is voltage on the wire low?

- **YES**

  VERIFIED: Troubleshooting has been completed.

- **NO**

  Refer to **INFORMATION**

INFORMATION

FAULT-TRACING INFORMATION

The fault should have been detected and remedied. As this is not the case fault-tracing has failed.

Exit fault-tracing for this diagnostic trouble code (DTC) or make another attempt.

CEM-1A08: 50-POWER SUPPLY. SIGNAL MISSING (2005-2011)

DIAGNOSTIC TROUBLE CODE (DTC) INFORMATION CEM-1A08

Condition

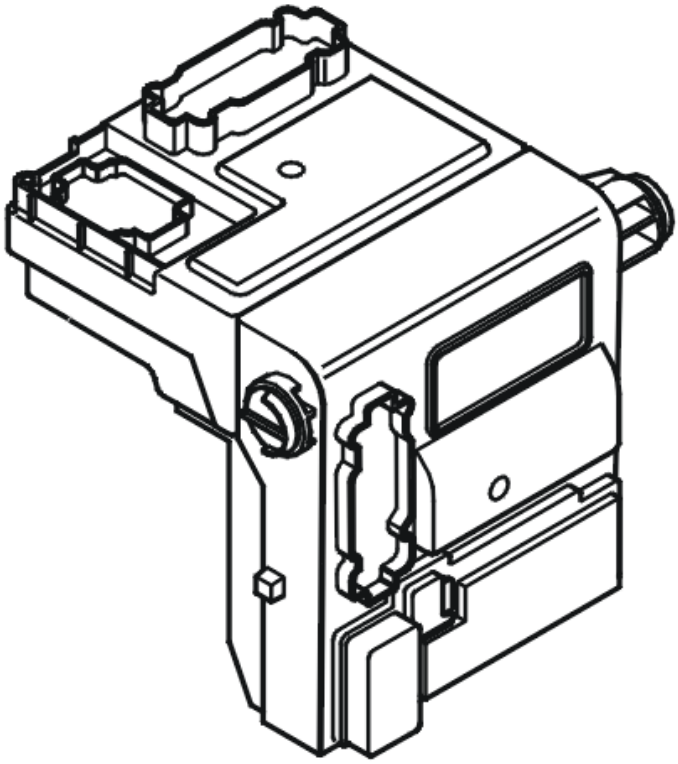

Fig. 226: Identifying Central Electronic Module (CEM)
Courtesy of VOLVO CARS CORPORATION

The central electronic module (CEM) monitors the cable for 50-supply from the ignition switch.

The diagnostic trouble code (DTC) is stored if the central electronic module (CEM) registers an open-circuit in the cable for the 50-supply.

The diagnostic trouble code (DTC) can be diagnosed at ignition switch position III (start attempt).

Substitute Value

- None.

Possible Source

- Open-circuit in the 50-supply cable
- Damaged ignition switch.

Fault symptom[s]

- The starter motor does not turn.

SIGNAL MISSING

CHECKING THE CONNECTORS

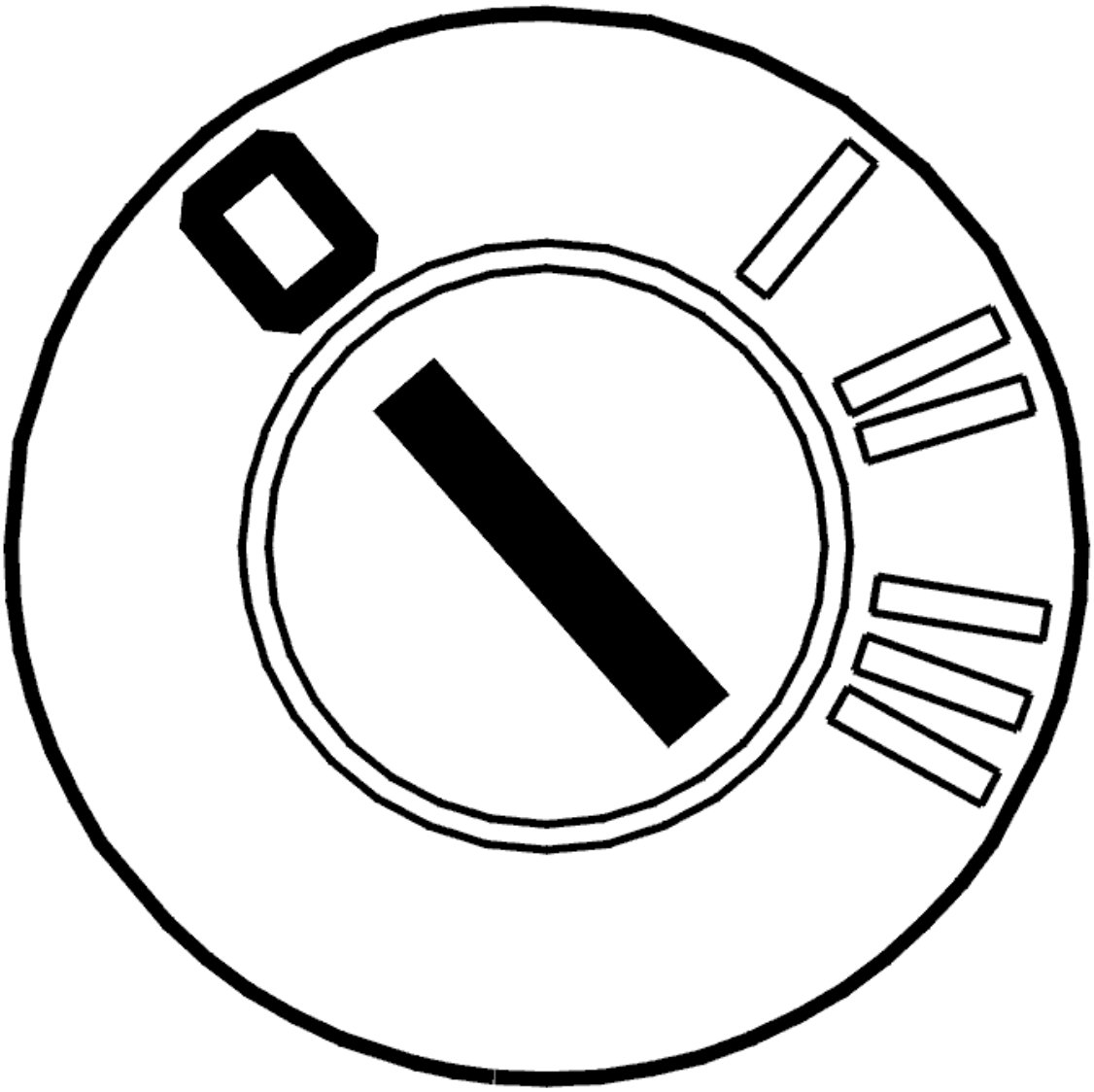

Fig. 227: Identifying Ignition OFF
Courtesy of VOLVO CARS CORPORATION

- Ignition off.

  Check central electronic module (CEM) connector D. Check for contact resistance and oxidation. Remedy as necessary.

  Check for any damage.

HINT: If the fault cause is found, reinstall the components, connectors etc.

HINT: If the fault cause was not found, do not reconnect the connector before carrying out further fault-tracing.

Other information:

- For -2004, see: **CENTRAL ELECTRONIC MODULE (CEM), REPLACING** .
- For 2005-, see: **CENTRAL ELECTRONIC MODULE (CEM), REPLACING** .
- see **CHECKING WIRING AND TERMINALS**

Was a fault detected?

- **YES**

  Refer to **VERIFICATION**

- **NO**

  Refer to **CHECKING THE COMPONENT AND CABLE**

CHECKING THE COMPONENT AND CABLE

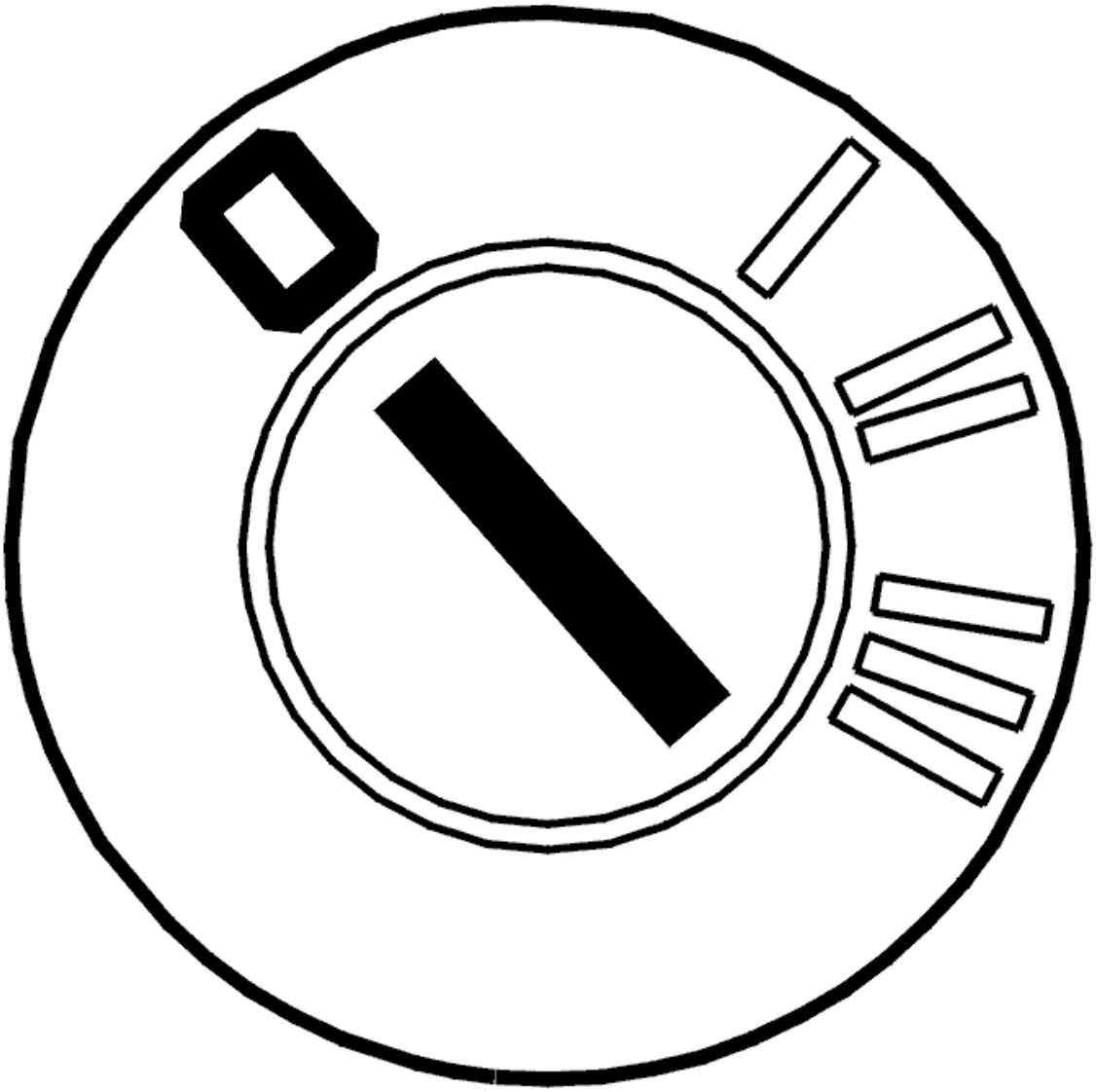

Fig. 228: Identifying Ignition OFF
Courtesy of VOLVO CARS CORPORATION

- Ignition off.

  Check the cable between central electronic module (CEM) connector terminal #D60 and the 50-supply to ignition switch connector terminal #7. Check for an open-circuit. Check for a short-circuit to ground.

  The voltage must be battery voltage when the key is in the ignition position III.

  Other information:

  - see **CONNECTING THE BREAKOUT BOX**
  - -2004: **SIGNAL SPECIFICATION**
  - 2005-: **SIGNAL SPECIFICATION**

- For -2004, see: **CENTRAL ELECTRONIC MODULE (CEM), REPLACING** .
- For 2005-, see: **CENTRAL ELECTRONIC MODULE (CEM), REPLACING** .
- see **CHECKING WIRING AND TERMINALS**

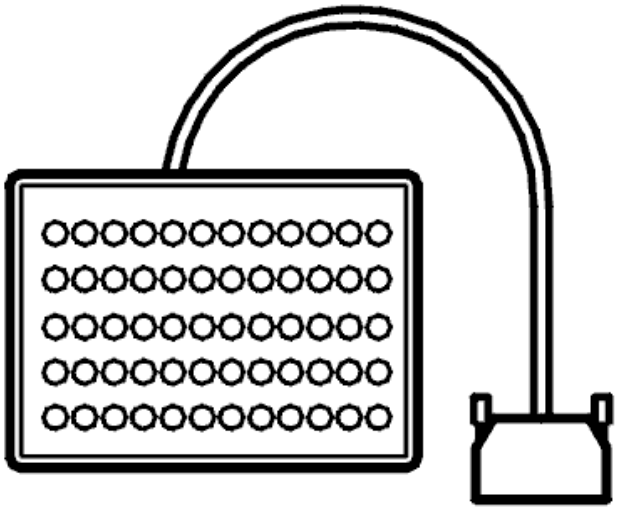

Fig. 229: Breakout Box
Courtesy of VOLVO CARS CORPORATION

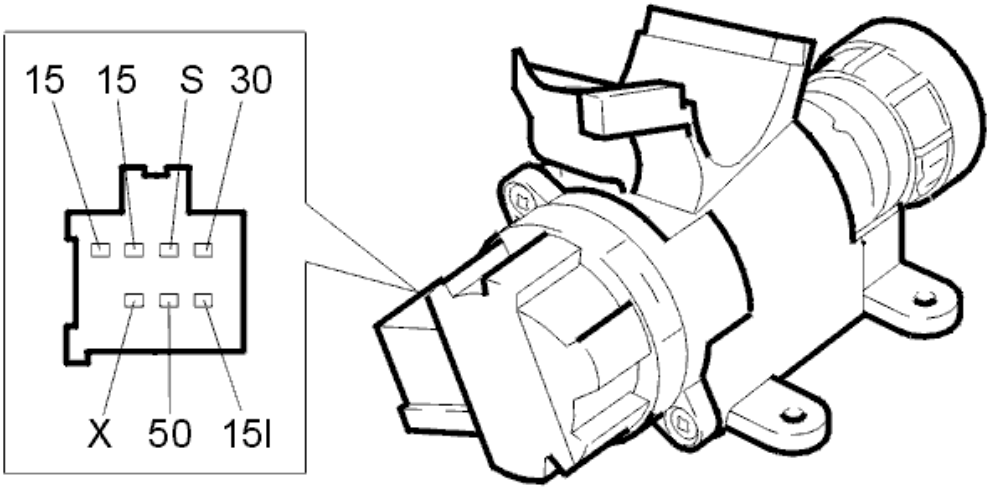

Fig. 230: Identifying Central Electronic Module (CEM) Connector Terminals

Courtesy of VOLVO CARS CORPORATION

Is the voltage the same as battery voltage?

- **YES**

  Refer to **VERIFICATION**

- **NO**

  Refer to **REPLACING THE COMPONENT**

REPLACING THE COMPONENT

To replace the connector for the ignition switch, see: **STEERING WHEEL LOCK, REPLACING**

- **Continue**

  Refer to **VERIFICATION**

VERIFICATION

VERIFICATION

HINT: After the repair it is necessary to check that the fault has been rectified.

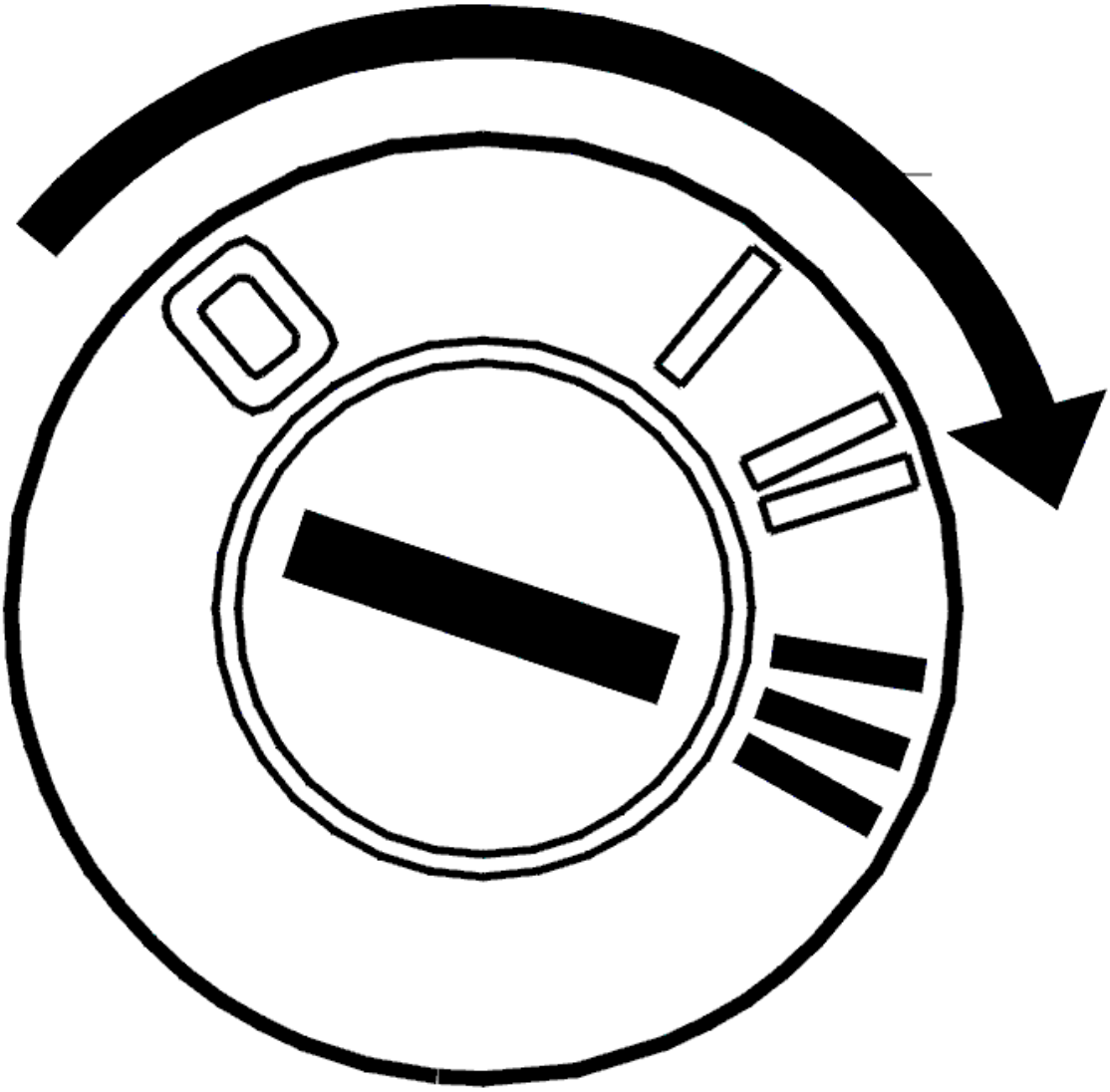

Fig. 231: Identifying Engine START Position
Courtesy of VOLVO CARS CORPORATION

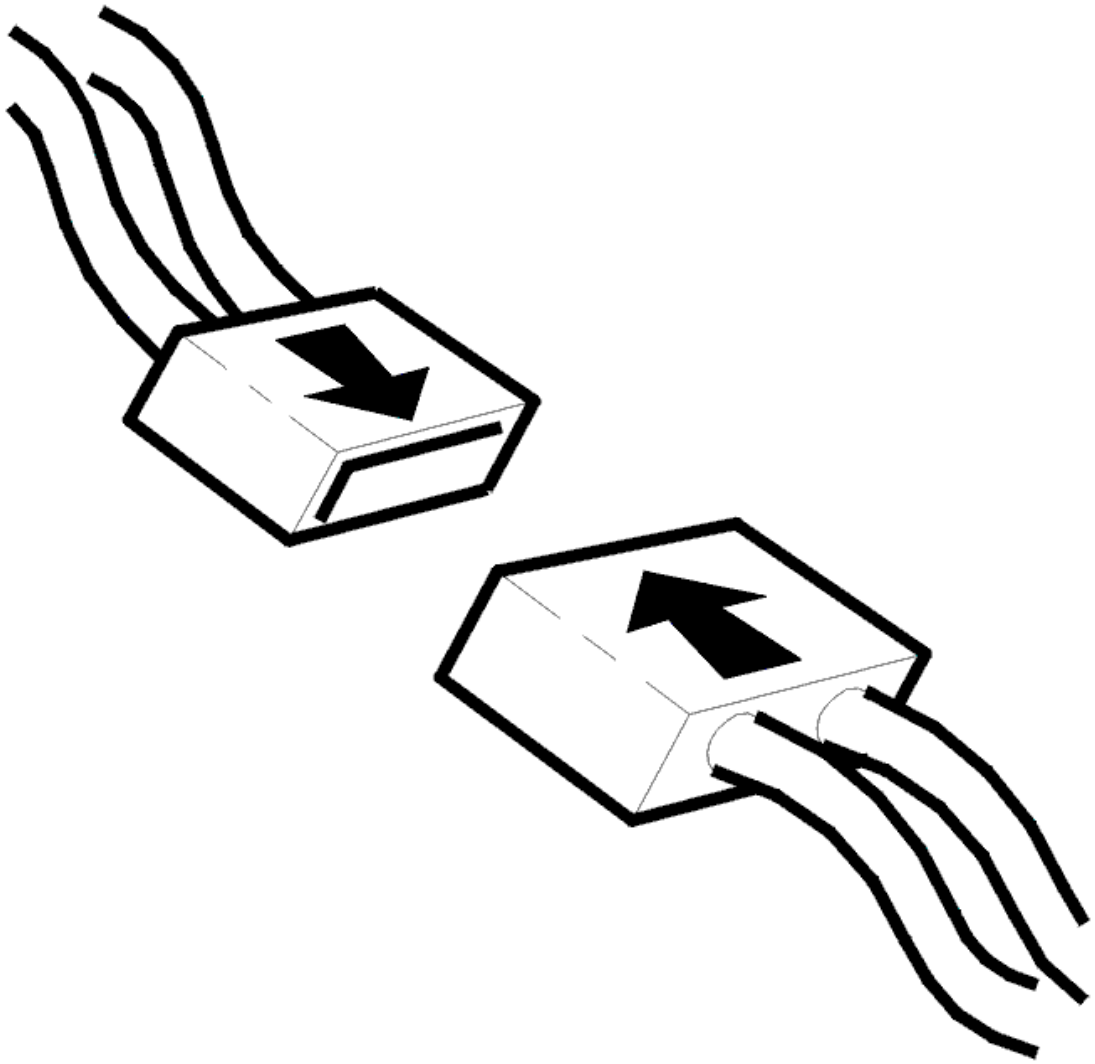

Fig. 232: Connecting Connector
Courtesy of VOLVO CARS CORPORATION

- Ignition off.
- Connect connectors, install components, etc.
- Ignition in starting position.

  Check that 50 voltage is OK.

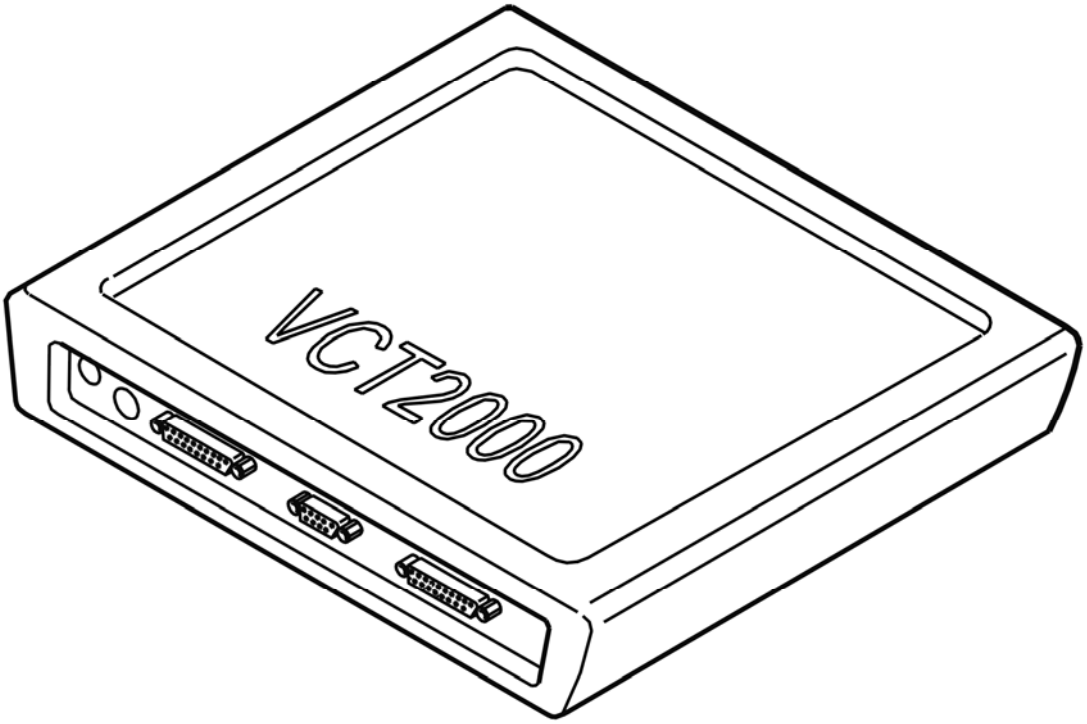

Fig. 233: Identifying VCT2000 Diagnostic Tool Symbol In VIDA
Courtesy of VOLVO CARS CORPORATION

Is voltage on the wire high?

- **YES**

  VERIFIED: Troubleshooting has been completed.

- **NO**

  Refer to **INFORMATION**

INFORMATION

FAULT-TRACING INFORMATION

The fault should have been detected and remedied. As this is not the case fault-tracing has failed.

Exit fault-tracing for this diagnostic trouble code (DTC) or make another attempt.

CEM-1A08: 50-POWER SUPPLY. SIGNAL MISSING. INTERMITTENT FAULT (2003-2004)

DIAGNOSTIC TROUBLE CODE (DTC) INFORMATION

Condition

Diagnostic trouble code (DTC) CEM-1A08 is stored if the central electronic module (CEM) registers an open-circuit or a short-circuit to ground in the 50-supply.

Substitute Value

None

Possible Source

- Contact resistance in terminals.
- Open-circuit or short-circuit to ground in 50-supply.
- Starter relay not active.
- Defective ignition switch.

Fault symptom[s]

- The starter motor does not turn.

SIGNAL MISSING. INTERMITTENT FAULT

CHECKING THE CONNECTORS

Check connector 54/3 and the connector for the central electronic module (CEM) for contact resistance and oxidation according to **CONTACT RESISTANCE AND OXIDATION** . Check for loose connections according to **LOOSE CONNECTIONS (TERMINALS)** . Remedy if necessary.

Check for any damage.

HINT: If the fault cause is found, reinstall the components, connectors etc.

HINT: If the fault cause is not found, do not reinstall the central electronic module (CEM) before continuing with fault-tracing.

Other information:

- For -2004, see: **CENTRAL ELECTRONIC MODULE (CEM), REPLACING** .
- For 2005-, see: **CENTRAL ELECTRONIC MODULE (CEM), REPLACING** .
- To connect the breakout box to the control module, see **CONNECTING THE BREAKOUT BOX**
- -2004: **SIGNAL SPECIFICATION**
- 2005-: **SIGNAL SPECIFICATION**

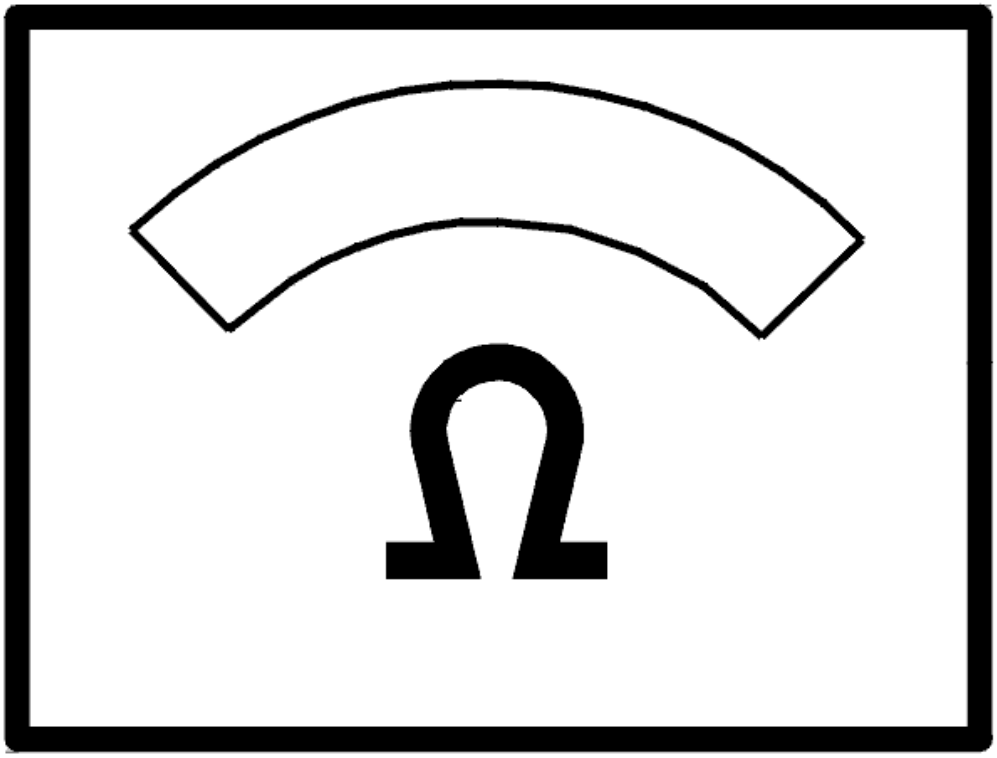

Fig. 234: Identifying Ohm Meter
Courtesy of VOLVO CARS CORPORATION

Was a fault detected?

- **YES**

  OKAY: Troubleshooting has been completed.

- **NO**

  Refer to **CHECKING THE CABLE**

CHECKING THE CABLE

Check the cable between central electronic module connector terminal #20A and the ignition switch connector

terminal #50. Check for an open-circuit according to **OPEN-CIRCUIT, INTERMITTENT FAULTS** . Check for a short-circuit to ground according to **SHORT-CIRCUIT TO GROUND, INTERMITTENT FAULTS** .

Other information

- The voltage must be the same as battery voltage if the key is in position III
- For -2004, see: **CENTRAL ELECTRONIC MODULE (CEM), REPLACING** .
- For 2005-, see: **CENTRAL ELECTRONIC MODULE (CEM), REPLACING** .
- To connect the breakout box, see **CONNECTING THE BREAKOUT BOX**
- -2004: **SIGNAL SPECIFICATION**
- 2005-: **SIGNAL SPECIFICATION**

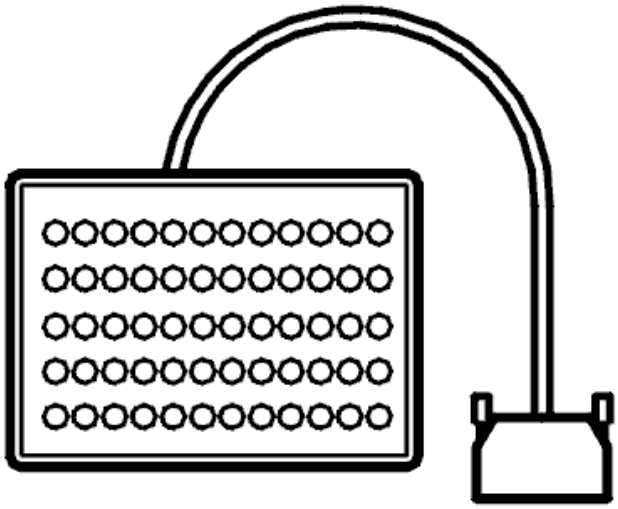

Fig. 235: Breakout Box
Courtesy of VOLVO CARS CORPORATION

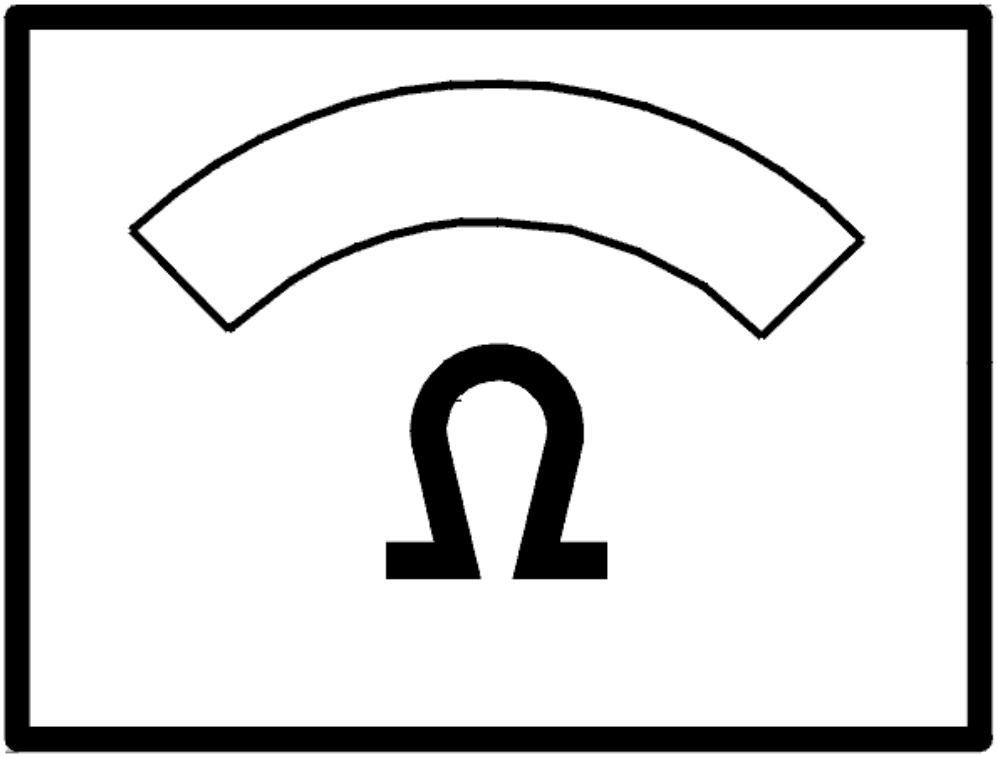

Fig. 236: Identifying Ohm Meter
Courtesy of VOLVO CARS CORPORATION

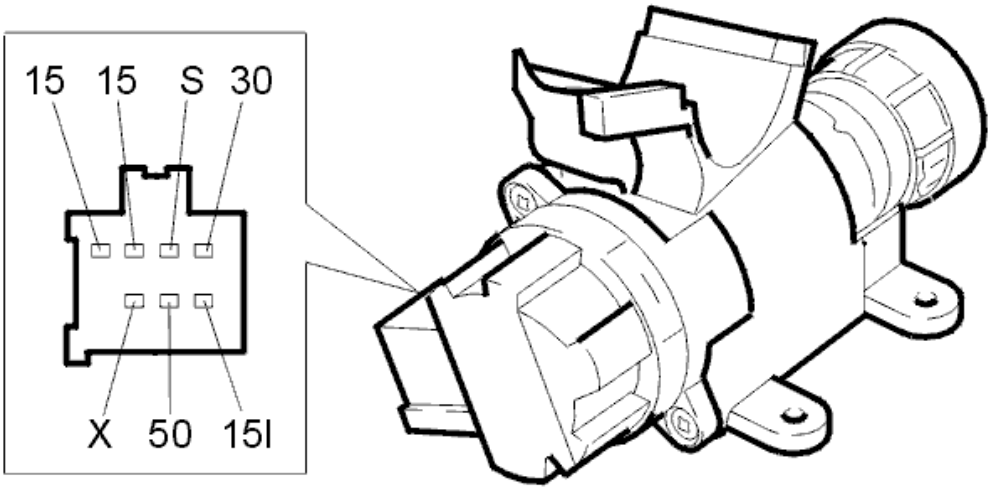

Fig. 237: Identifying Central Electronic Module (CEM) Connector Terminals
Courtesy of VOLVO CARS CORPORATION

CEM-1A08: 50-POWER SUPPLY. SIGNAL MISSING. PERMANENT FAULT (2003-2004)

DIAGNOSTIC TROUBLE CODE (DTC) INFORMATION

see **DIAGNOSTIC TROUBLE CODE (DTC) INFORMATION**

SIGNAL MISSING. PERMANENT FAULT

CHECKING THE CONNECTORS

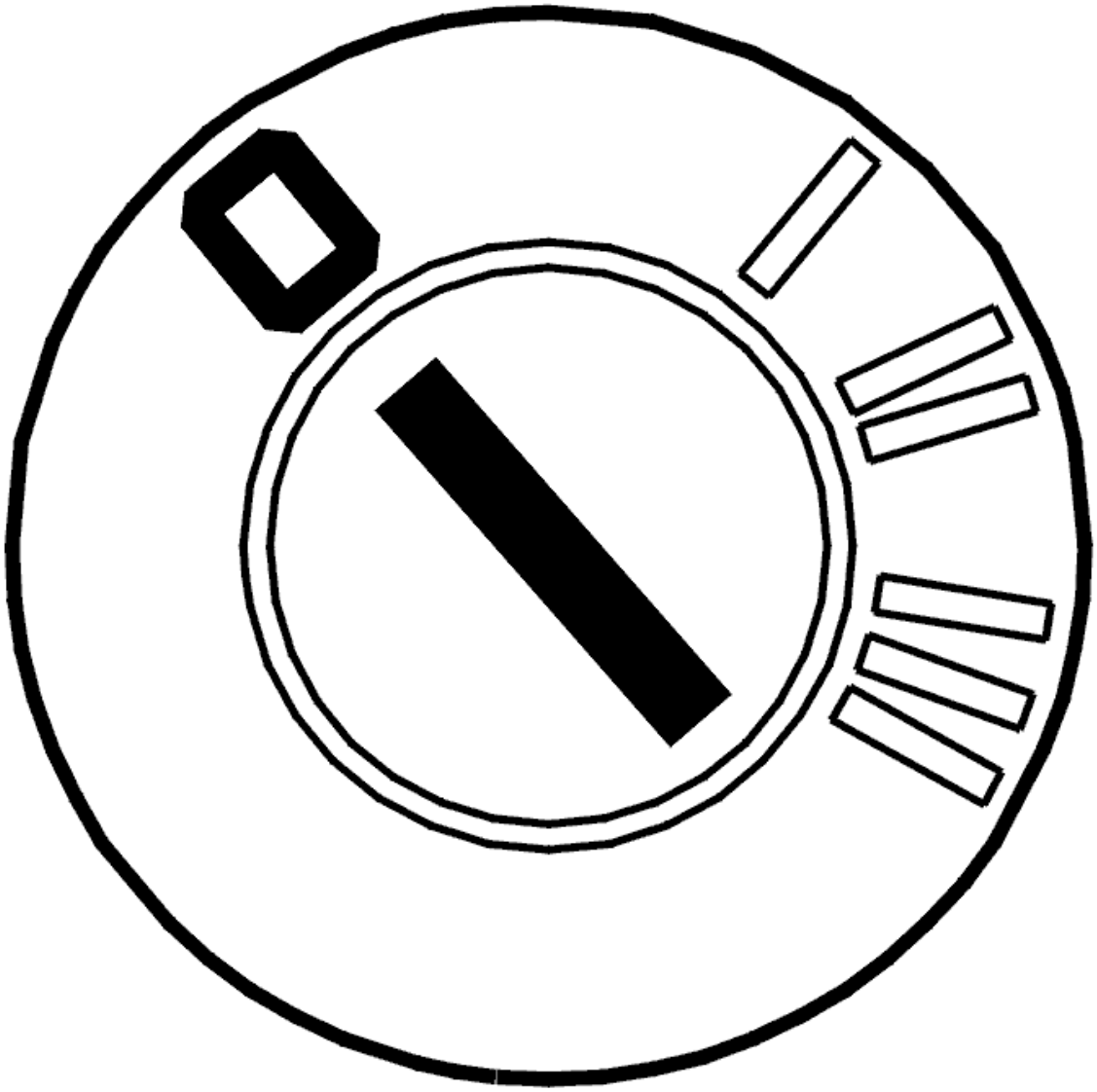

Fig. 238: Identifying Ignition OFF
Courtesy of VOLVO CARS CORPORATION

- Ignition off.

  Check connector 54/3 and the connector for the central electronic module (CEM). Check for contact resistance and oxidation. Remedy if necessary.

  Check for any damage.

  HINT: If the fault cause is found, reinstall the components, connectors etc. If the fault cause is not found, do not reinstall the central electronic module (CEM) before continuing with fault-tracing.

  Other information:

  - For -2004, see: **CENTRAL ELECTRONIC MODULE (CEM), REPLACING** .

- For 2005-, see: **CENTRAL ELECTRONIC MODULE (CEM), REPLACING** .
- see **CHECKING WIRING AND TERMINALS** .

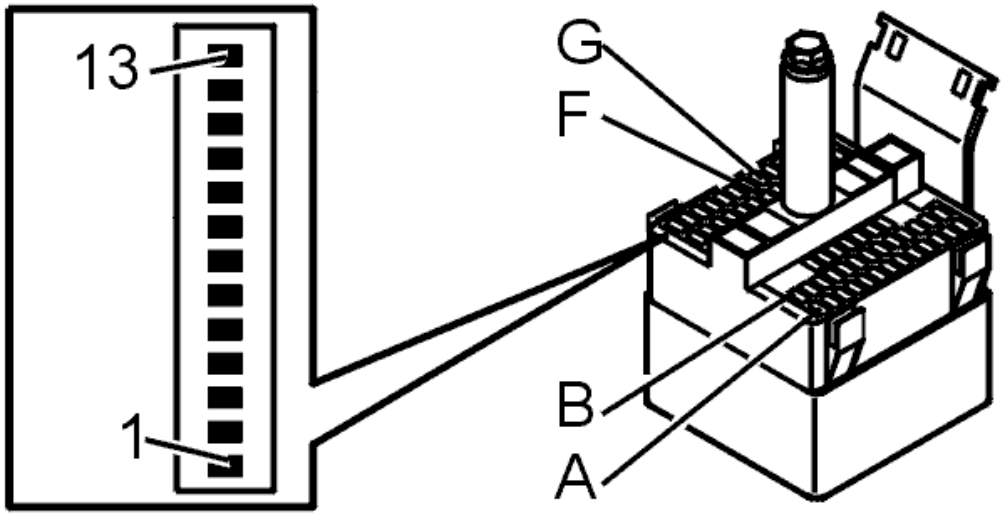

Fig. 239: Identifying Connector Terminals
Courtesy of VOLVO CARS CORPORATION

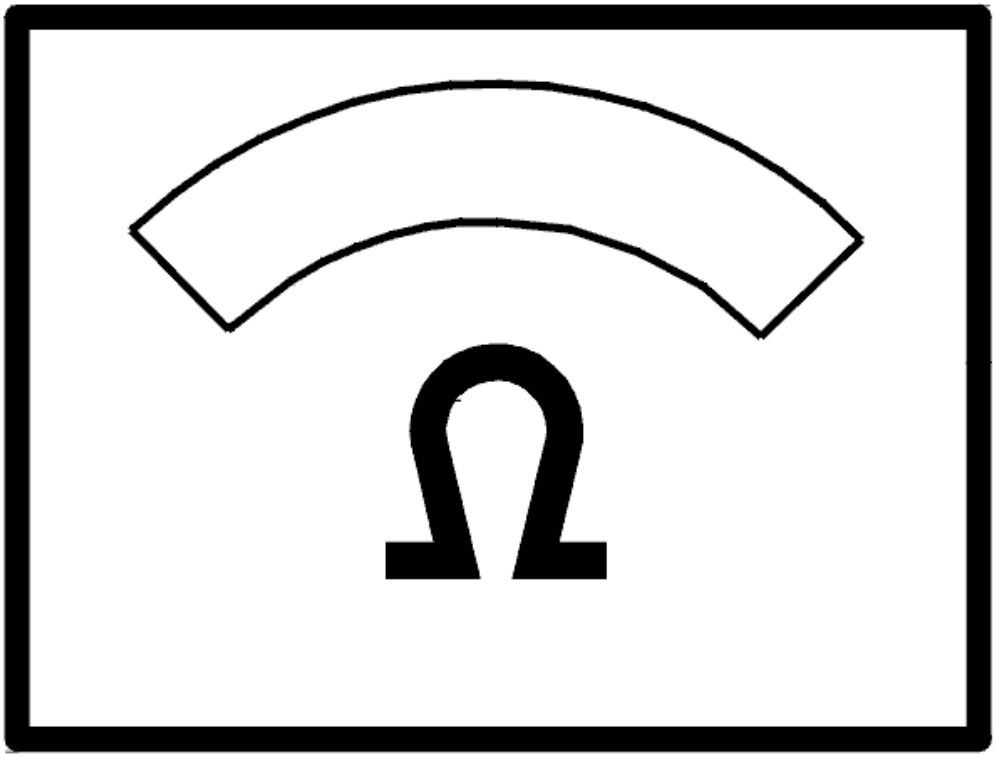

Fig. 240: Identifying Ohm Meter
Courtesy of VOLVO CARS CORPORATION

Was a fault detected?

- **YES**

  Refer to **VERIFICATION**

- **NO**

  Refer to **CHECKING THE COMPONENT AND CABLE**

CHECKING THE COMPONENT AND CABLE

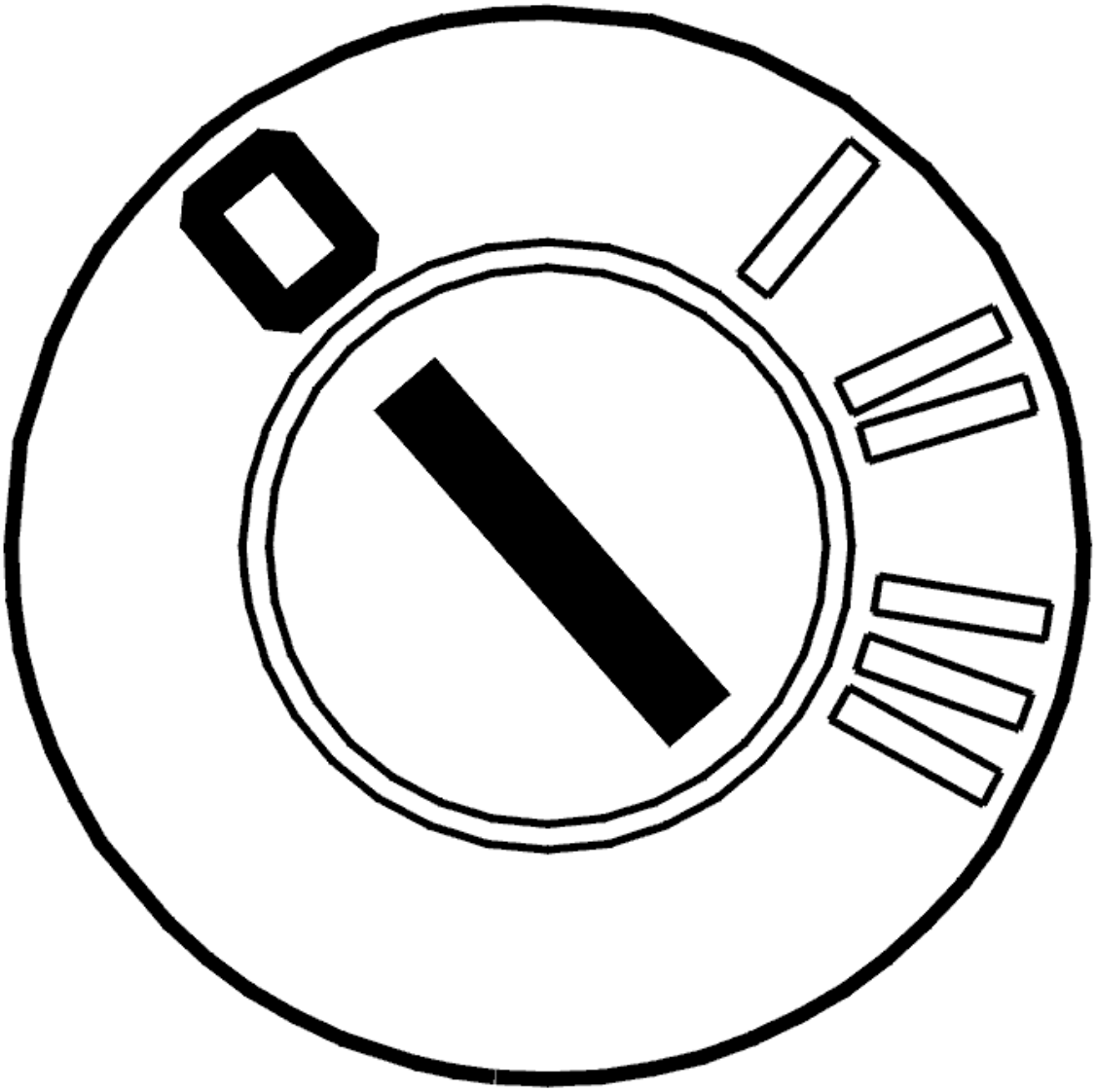

Fig. 241: Identifying Ignition OFF
Courtesy of VOLVO CARS CORPORATION

- Ignition off.

  Check the cable between central electronic module (CEM) connector terminal #20A and the ignition switch 50-supply connector terminal #7. Check for an open-circuit. Check for a short-circuit to ground.

  Other information:

  - The voltage must be the same as battery voltage if the key is in position III
  - For -2004, see: **CENTRAL ELECTRONIC MODULE (CEM), REPLACING** .
  - For 2005-, see: **CENTRAL ELECTRONIC MODULE (CEM), REPLACING** .
  - To connect the breakout box to the control module, see **CONNECTING THE BREAKOUT BOX**
  - -2004: **SIGNAL SPECIFICATION**

- 2005-: **SIGNAL SPECIFICATION**
- see **CHECKING WIRING AND TERMINALS** .

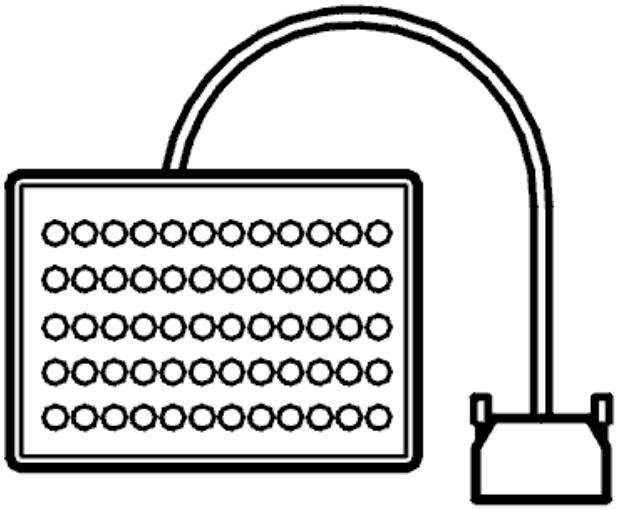

Fig. 242: Breakout Box
Courtesy of VOLVO CARS CORPORATION

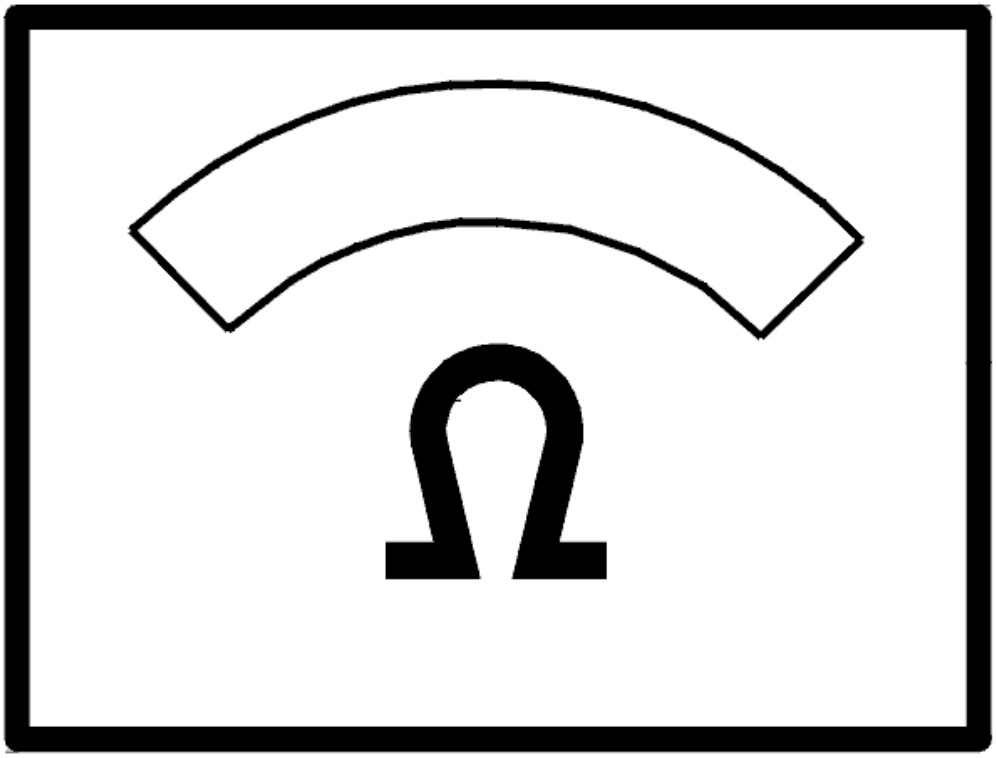

Fig. 243: Identifying Ohm Meter
Courtesy of VOLVO CARS CORPORATION

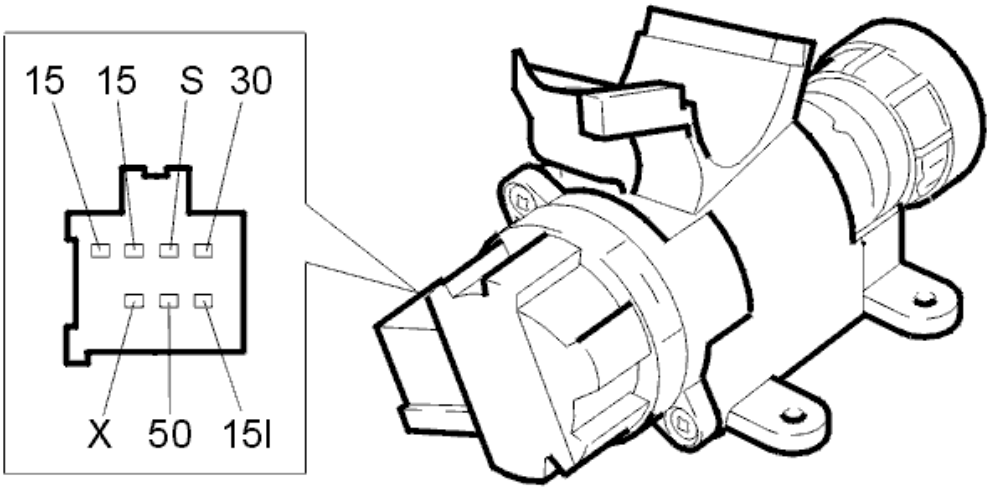

Fig. 244: Identifying Central Electronic Module (CEM) Connector Terminals
Courtesy of VOLVO CARS CORPORATION

Is the voltage the same as battery voltage?

- **YES**

  Refer to **VERIFICATION**

- **NO**

  Refer to **REPLACING THE COMPONENT**

REPLACING THE COMPONENT

Try replacing the ignition switch connector according to **STEERING WHEEL LOCK, REPLACING** .

- **Continue**

  Refer to **VERIFICATION**

VERIFICATION

VERIFICATION

HINT: After the repair it is necessary to check that the fault has been rectified.

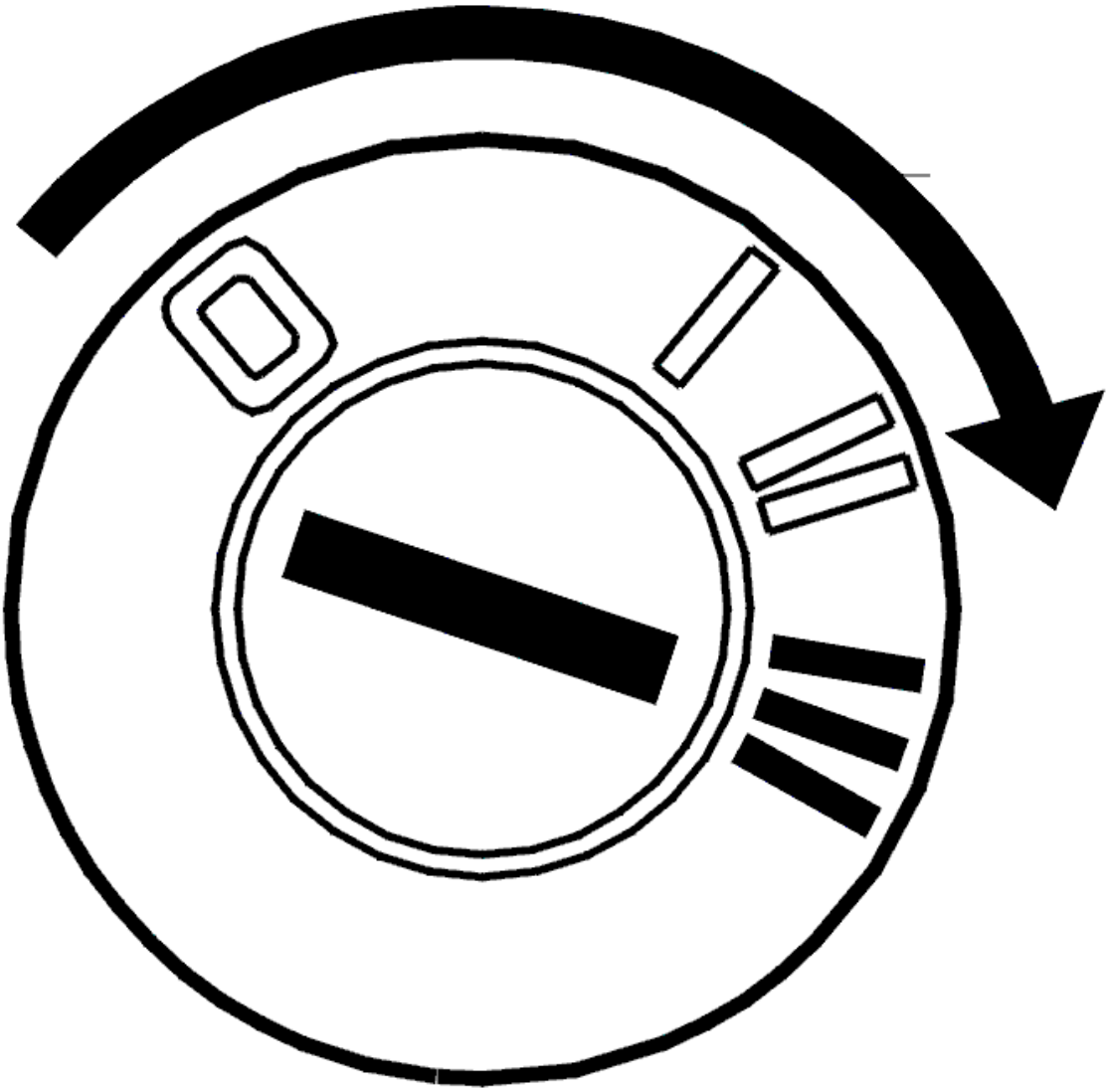

Fig. 245: Identifying Engine START Position
Courtesy of VOLVO CARS CORPORATION

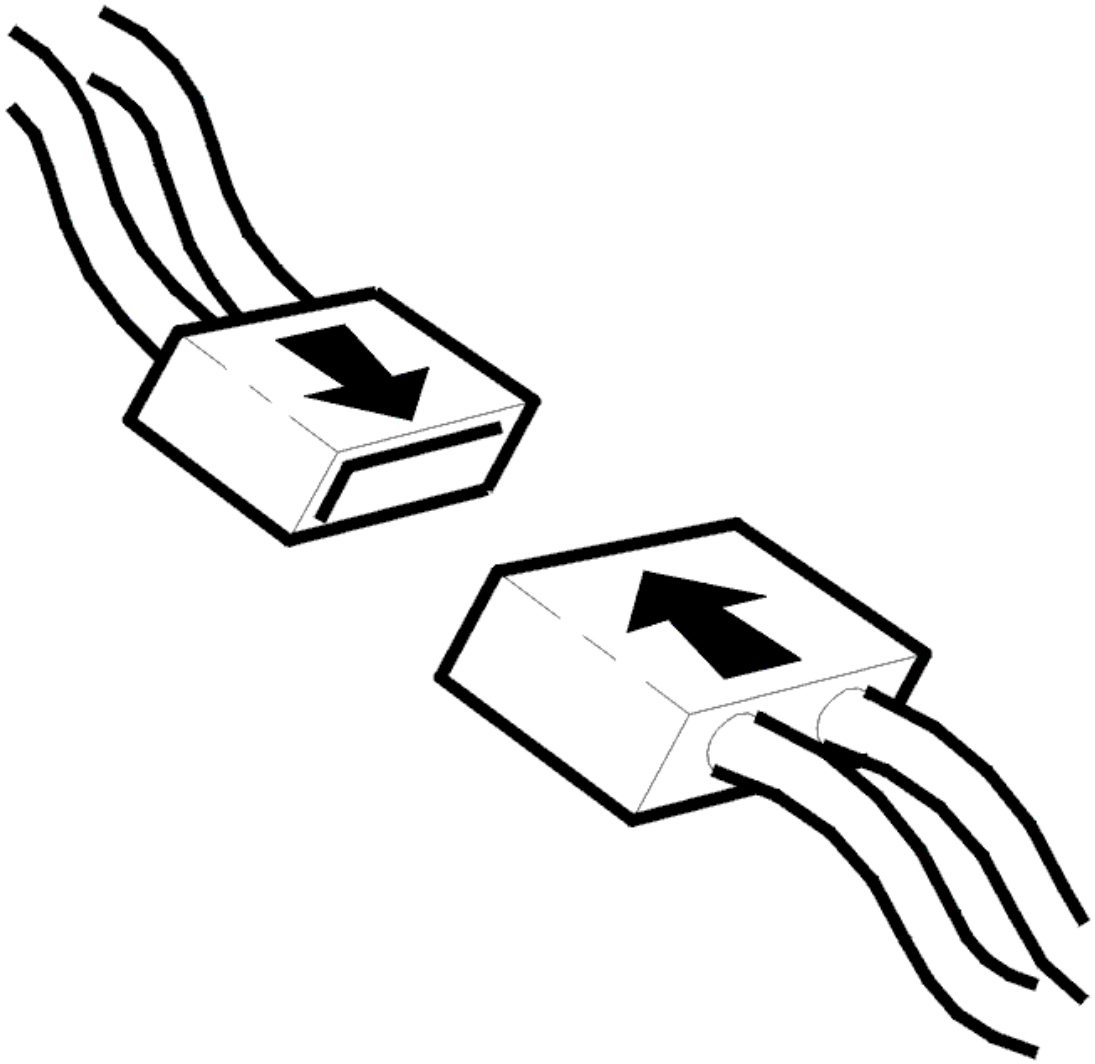

Fig. 246: Connecting Connector
Courtesy of VOLVO CARS CORPORATION

- Ignition off.
- Connect connectors, install components, etc.
- Ignition in starting position.

  Check that 50 voltage is OK.

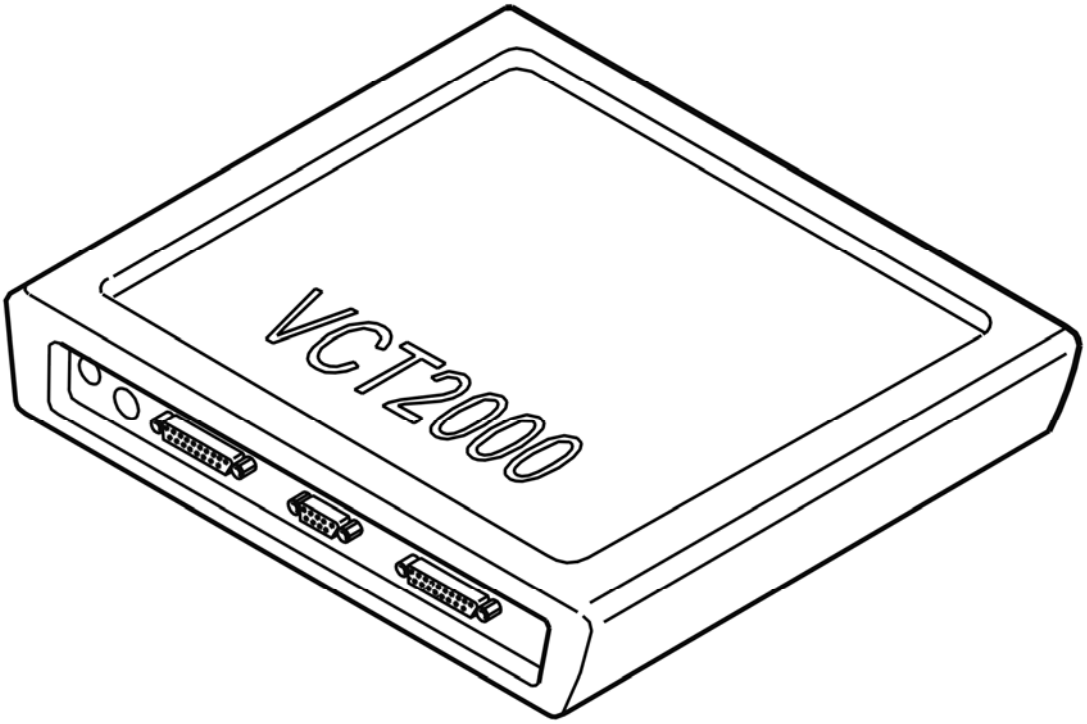

Fig. 247: Identifying VCT2000 Diagnostic Tool Symbol In VIDA
Courtesy of VOLVO CARS CORPORATION

Is voltage on the wire high?

- **YES**

  VERIFIED: Troubleshooting has been completed.

- **NO**

  Refer to **INFORMATION**

INFORMATION

FAULT-TRACING INFORMATION

The fault should have been detected and remedied. As this is not the case fault-tracing has failed.

Exit fault-tracing for this diagnostic trouble code (DTC) or make another attempt.

CEM-1A09: 50-POWER SUPPLY. SIGNAL TOO HIGH (2005-2011)

DIAGNOSTIC TROUBLE CODE (DTC) INFORMATION CEM-1A09

Condition

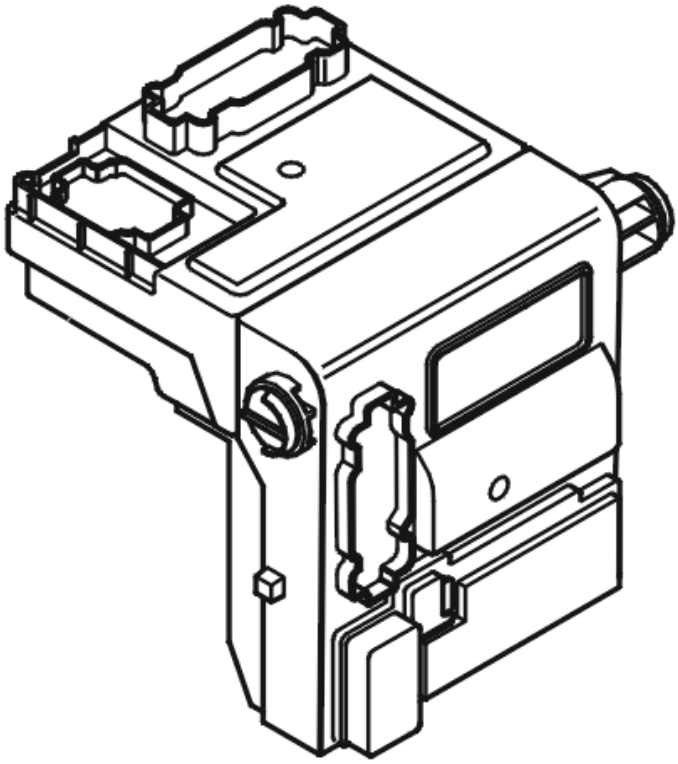

Fig. 248: Identifying Central Electronic Module (CEM)
Courtesy of VOLVO CARS CORPORATION

The central electronic module (CEM) monitors the cable for 50-supply from the ignition switch.

The diagnostic trouble code (DTC) is stored if the central electronic module (CEM) registers a short-circuit to supply voltage in the cable for the 50-supply.

The diagnostic trouble code (DTC) can be diagnosed at ignition switch position III (start attempt).

Substitute Value

- None.

Possible Source

- Short-circuit to supply voltage in the 50-supply cable
- Damaged ignition switch.

Fault symptom[s]

- The starter motor turns but the engine does not start.

SIGNAL TOO HIGH

CHECKING THE CONNECTORS

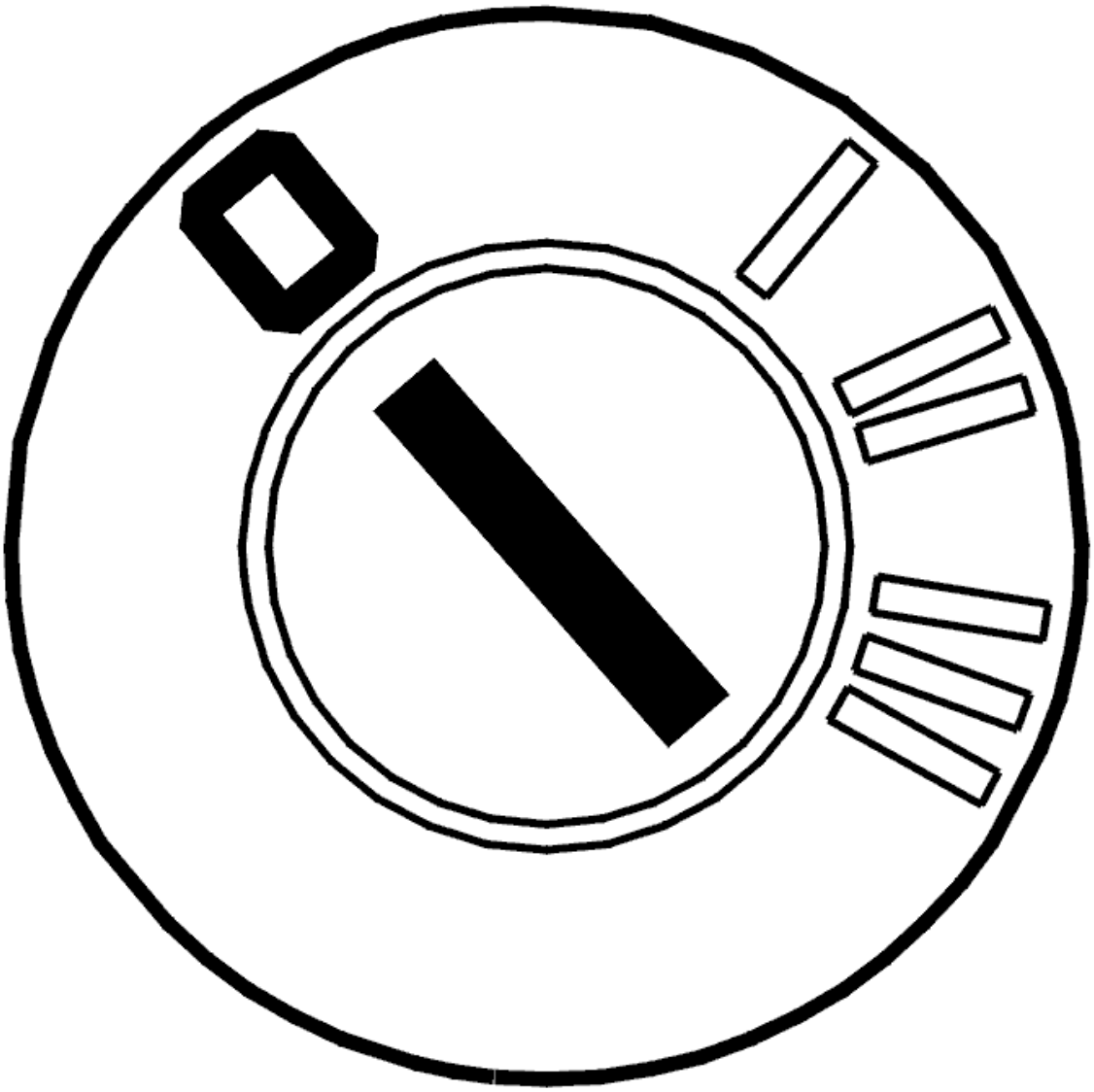

Fig. 249: Identifying Ignition OFF
Courtesy of VOLVO CARS CORPORATION

- Ignition off.

  Check central electronic module (CEM) connector D. Check for contact resistance and oxidation. Remedy as necessary.

  Check for any damage.

HINT: If the fault cause is found, reinstall the components, connectors etc.

HINT: If the fault cause was not found, do not reconnect the connector before carrying out further fault-tracing.

Other information:

- For -2004, see: **CENTRAL ELECTRONIC MODULE (CEM), REPLACING** .
- For 2005-, see: **CENTRAL ELECTRONIC MODULE (CEM), REPLACING** .
- see **CHECKING WIRING AND TERMINALS**

Was a fault detected?

- **YES**

  Refer to **VERIFICATION**

- **NO**

  Refer to **CHECKING THE COMPONENT AND CABLE**

CHECKING THE COMPONENT AND CABLE

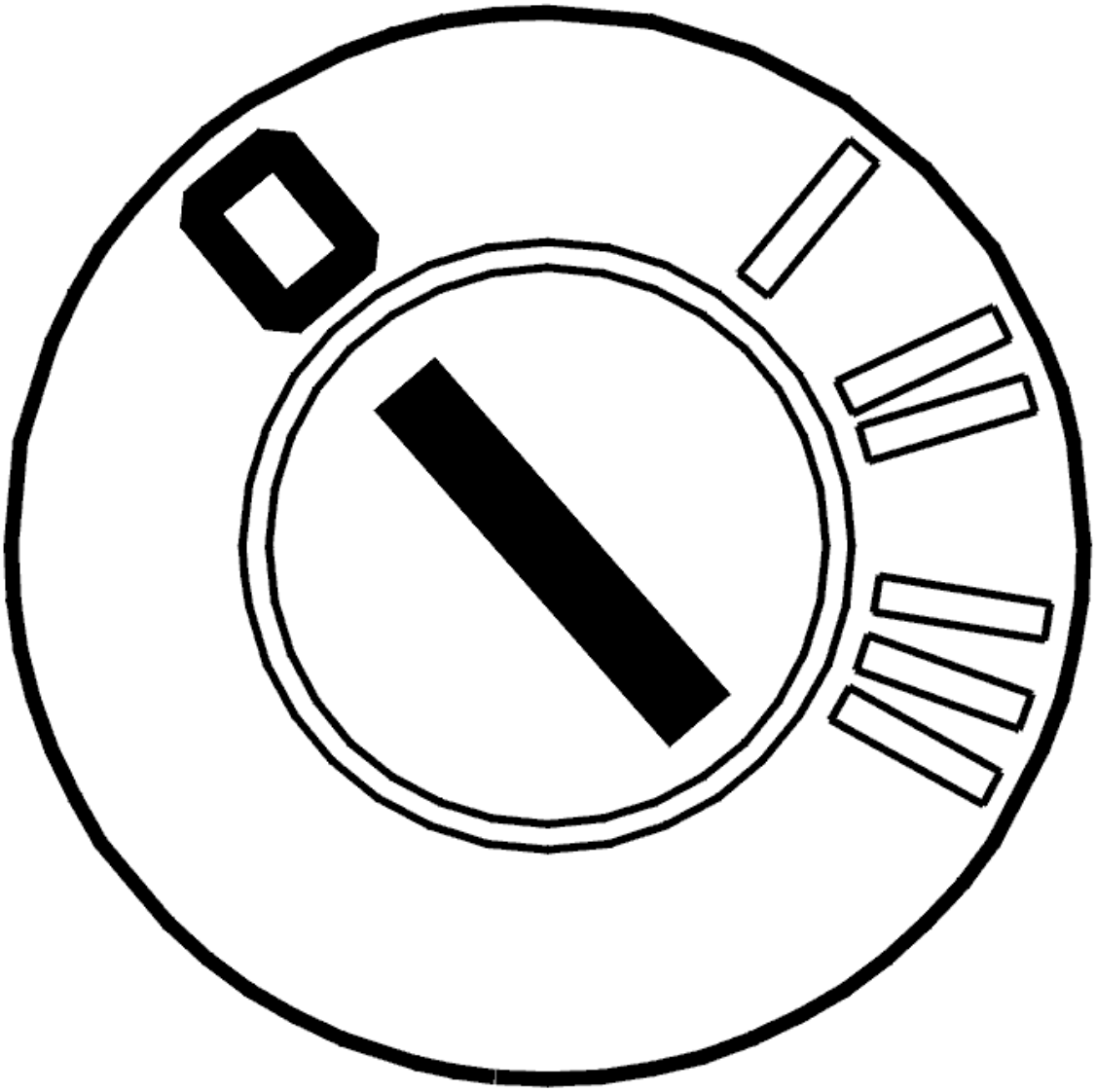

Fig. 250: Identifying Ignition OFF
Courtesy of VOLVO CARS CORPORATION

- Ignition off.

  Check the cable between central electronic module (CEM) connector terminal #D60 and ignition switch connector terminal #7. Check for a short-circuit to supply voltage.

  The voltage must be 0 V if the key is in position 0, I or II.

  Other information:

  - see **CONNECTING THE BREAKOUT BOX**
  - -2004: **SIGNAL SPECIFICATION**
  - 2005-: **SIGNAL SPECIFICATION**

- For -2004, see: **CENTRAL ELECTRONIC MODULE (CEM), REPLACING** .
- For 2005-, see: **CENTRAL ELECTRONIC MODULE (CEM), REPLACING** .
- see **CHECKING WIRING AND TERMINALS**

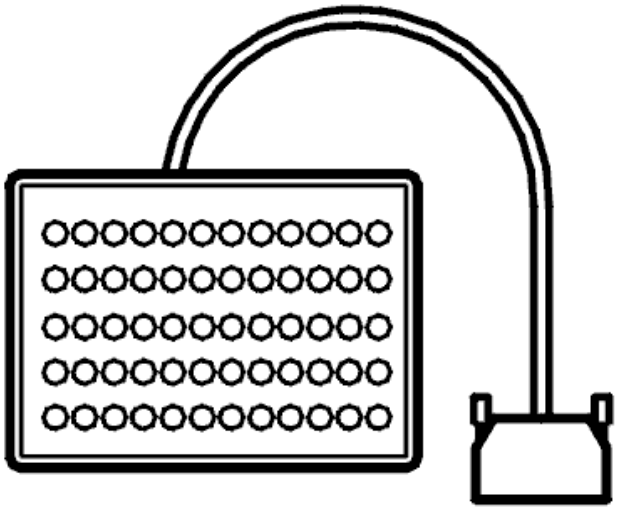

Fig. 251: Breakout Box
Courtesy of VOLVO CARS CORPORATION

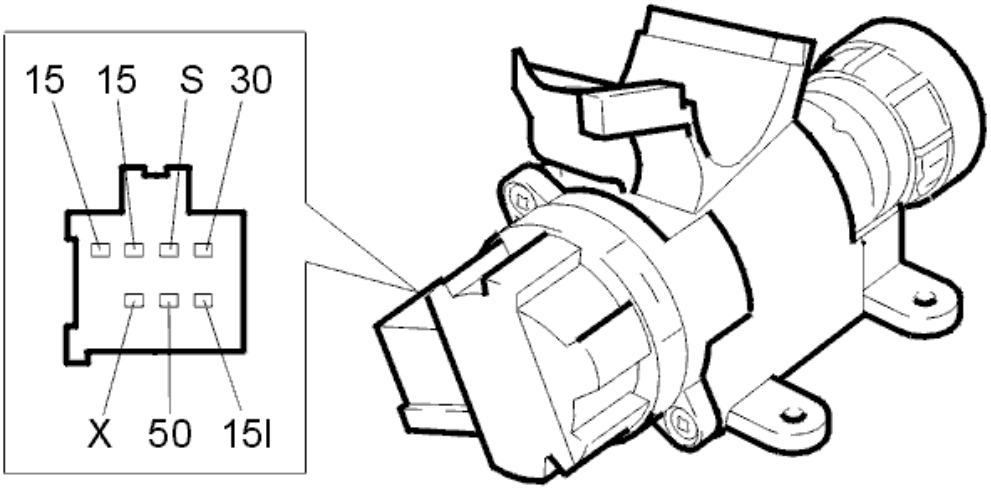

Fig. 252: Identifying Central Electronic Module (CEM) Connector Terminals

Courtesy of VOLVO CARS CORPORATION

Were any faults found in the cable?

- **YES**

  Refer to **VERIFICATION**

- **NO**

  Refer to **REPLACING THE COMPONENT**

REPLACING THE COMPONENT

To replace the connector for the ignition switch, see: **STEERING WHEEL LOCK, REPLACING**

- **Continue**

  Refer to **VERIFICATION**

VERIFICATION

VERIFICATION

HINT: After carrying out the repair, check that the fault has been remedied.

Fig. 253: Identifying Ignition Position I
Courtesy of VOLVO CARS CORPORATION

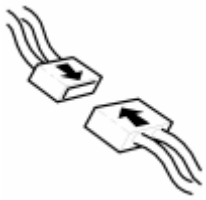

Fig. 254: Identifying Connector(s) Reinstallation
Courtesy of VOLVO CARS CORPORATION

- Ignition off.
- Reinstall the connectors, components etc.
- Turn the ignition key to position I.

Fig. 255: Identifying VCT2000 Diagnostic Tool Symbol In VIDA
Courtesy of VOLVO CARS CORPORATION

Is the voltage OK?

- **YES**

  VERIFIED: Troubleshooting has been completed.

- **NO**

  Refer to **INFORMATION**

INFORMATION

FAULT-TRACING INFORMATION

The fault should have been detected and remedied. As this is not the case fault-tracing has failed.

Exit fault-tracing for this diagnostic trouble code (DTC) or make another attempt.

CEM-1A09: 50-POWER SUPPLY. SIGNAL TOO HIGH. INTERMITTENT FAULT (2003-2004)

DIAGNOSTIC TROUBLE CODE (DTC) INFORMATION

Condition

Diagnostic trouble code (DTC) CEM-1A09 is stored if the central electronic module (CEM) registers a short-circuit to supply voltage in the 50-supply for more than two seconds.

Substitute Value

None

Possible Source

- Short-circuit to supply voltage in 50-supply for more than two seconds.
- Defective ignition switch.

Fault symptom[s]

- The starter motor does not turn.

SIGNAL TOO HIGH. INTERMITTENT FAULT

CHECKING THE CONNECTORS

Check connector 54/3R and the connector for the central electronic module (CEM) for contact resistance and oxidation and remedy according to **CONTACT RESISTANCE AND OXIDATION** and loose connections according to **LOOSE CONNECTIONS (TERMINALS)** .

Check for damage carefully.

HINT: If the fault cause is found, reinstall the components, connectors etc.

HINT: If the fault cause is not found, do not reinstall the central electronic module (CEM) before continuing with fault-tracing.

Other information:

- For -2004, see: **CENTRAL ELECTRONIC MODULE (CEM), REPLACING** .
- For 2005-, see: **CENTRAL ELECTRONIC MODULE (CEM), REPLACING** .

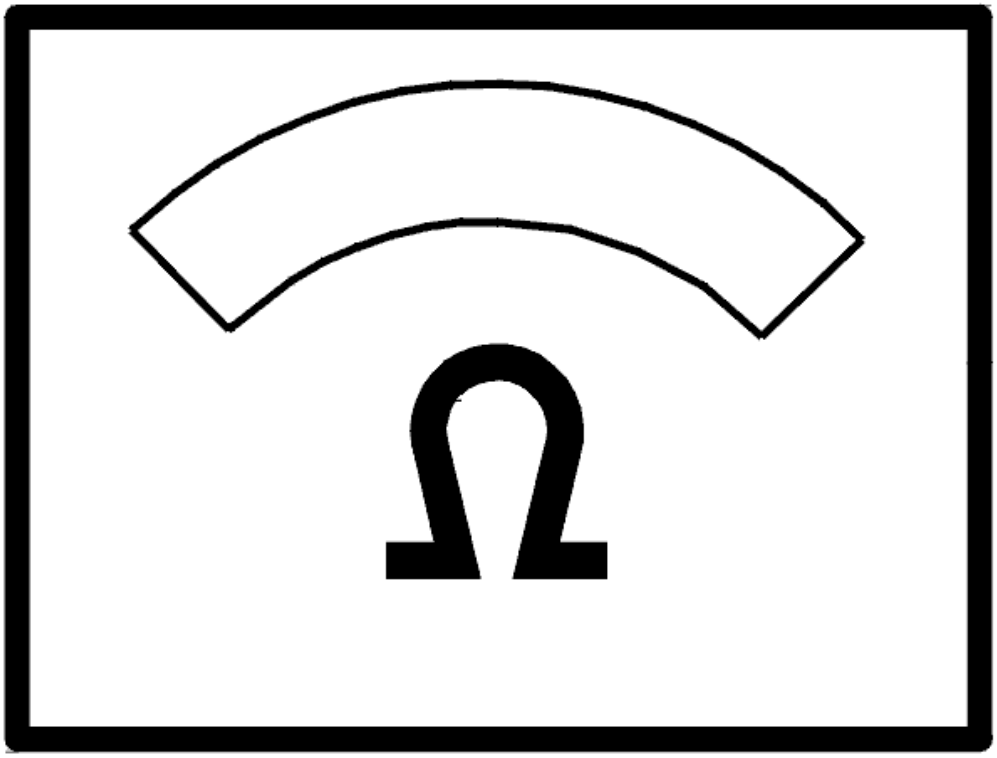

Fig. 256: Identifying Ohm Meter
Courtesy of VOLVO CARS CORPORATION

Was a fault detected?

- **YES**

  OKAY: Troubleshooting has been completed.

- **NO**

  Refer to **CHECKING WIRING**

CHECKING WIRING

Check the cable between central electronic module (CEM) connector #20A and ignition switch connector #50

for an intermittent open-circuit according to **OPEN-CIRCUIT, INTERMITTENT FAULTS** and for a short-circuit to supply voltage according to **SHORT-CIRCUIT TO SUPPLY VOLTAGE, INTERMITTENT FAULTS** .

Other information

- The voltage must be 0 V if the key is in position 0, I or II.
- For -2004, see: **CENTRAL ELECTRONIC MODULE (CEM), REPLACING** .
- For 2005-, see: **CENTRAL ELECTRONIC MODULE (CEM), REPLACING** .
- To connect the breakout box, see **CONNECTING THE BREAKOUT BOX**
- -2004: **SIGNAL SPECIFICATION**
- 2005-: **SIGNAL SPECIFICATION**

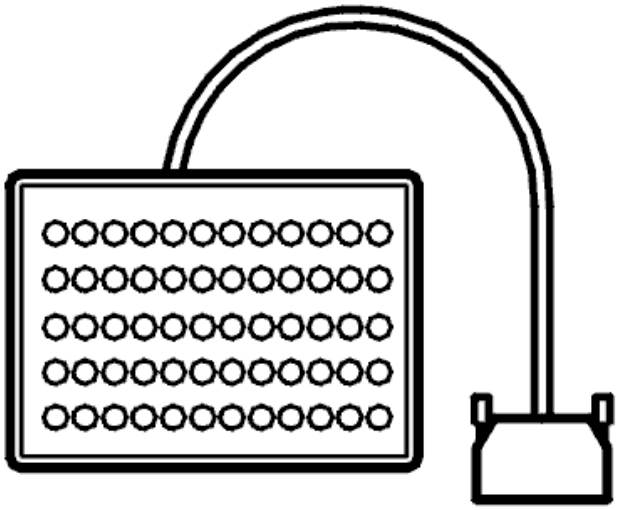

Fig. 257: Breakout Box
Courtesy of VOLVO CARS CORPORATION

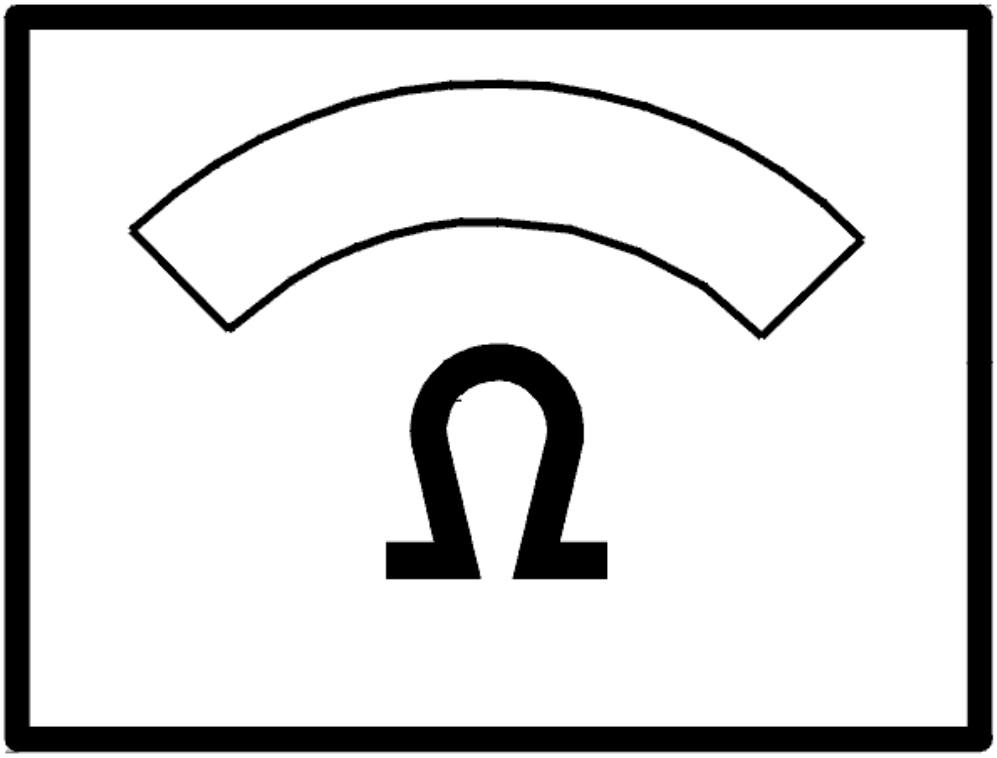

Fig. 258: Identifying Ohm Meter
Courtesy of VOLVO CARS CORPORATION

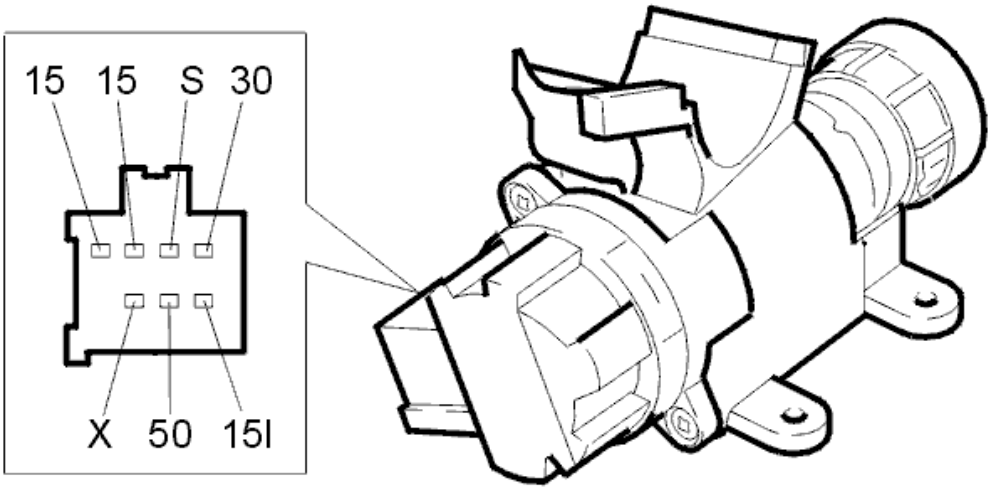

Fig. 259: Identifying Central Electronic Module (CEM) Connector Terminals
Courtesy of VOLVO CARS CORPORATION

CEM-1A09: 50-POWER SUPPLY. SIGNAL TOO HIGH. PERMANENT FAULT (2003-2004)

DIAGNOSTIC TROUBLE CODE (DTC) INFORMATION

see **DIAGNOSTIC TROUBLE CODE (DTC) INFORMATION**

SIGNAL TOO HIGH. PERMANENT FAULT

CHECKING THE CONNECTORS

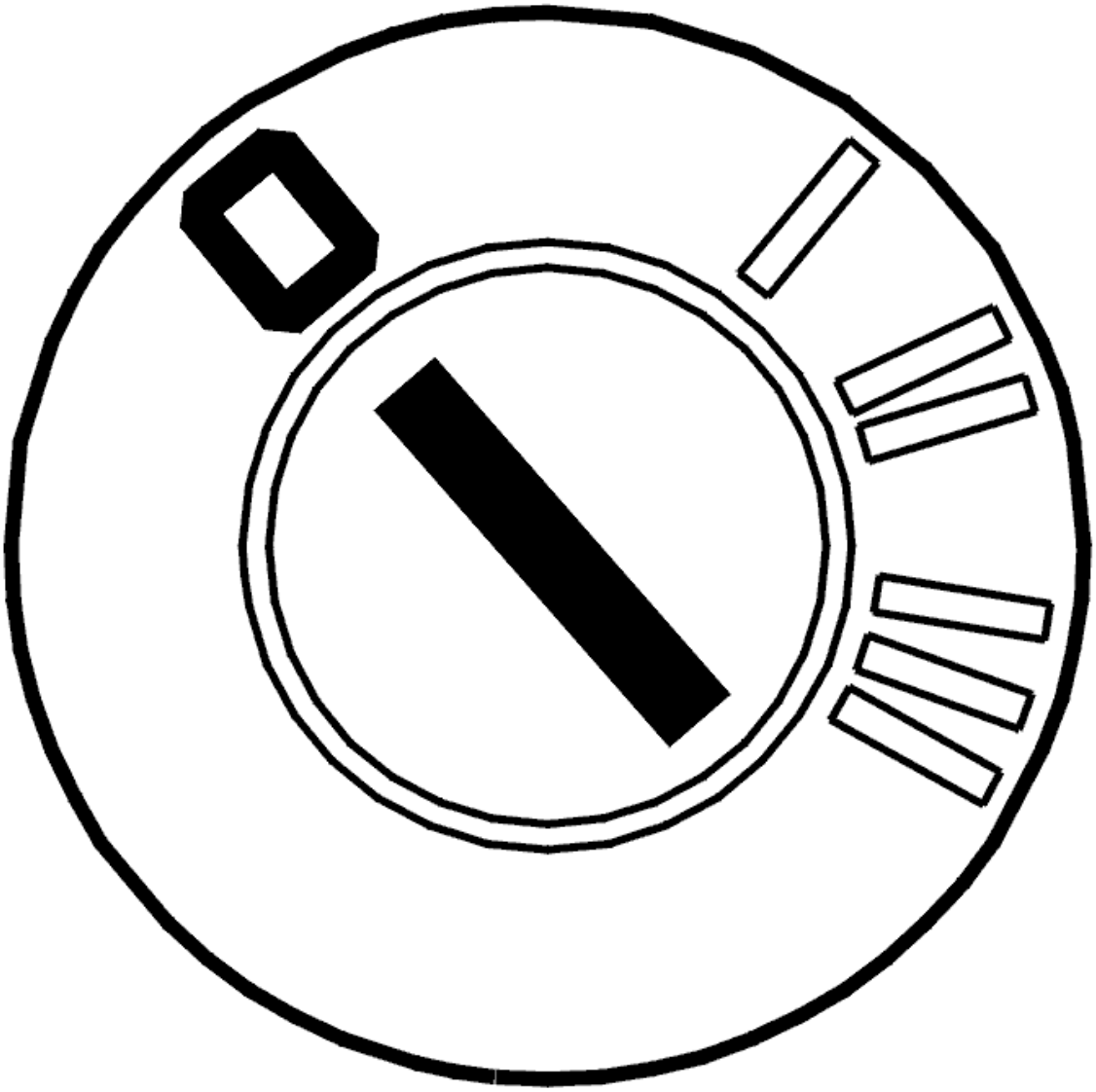

Fig. 260: Identifying Ignition OFF
Courtesy of VOLVO CARS CORPORATION

- Ignition off.

  Check the central electronic module (CEM) connector for contact resistance and oxidation. Remedy if necessary.

  Check for any damage.

  HINT: If the fault cause is found, reinstall the components, connectors etc. If the fault cause is not found, do not reinstall the central electronic module (CEM) before continuing with fault-tracing.

  Other information:

  - For -2004, see: **CENTRAL ELECTRONIC MODULE (CEM), REPLACING** .

- For 2005-, see: **CENTRAL ELECTRONIC MODULE (CEM), REPLACING** .
- see **CHECKING WIRING AND TERMINALS** .

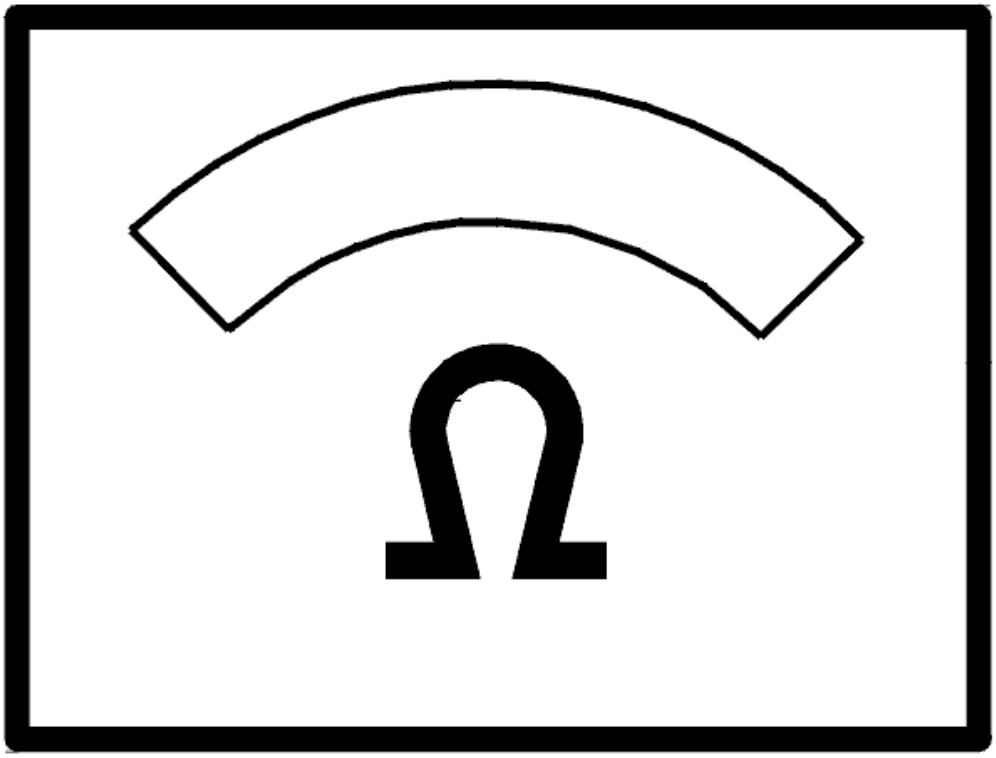

Fig. 261: Identifying Ohm Meter
Courtesy of VOLVO CARS CORPORATION

Was a fault detected?

- **YES**

  Refer to **VERIFICATION**

- **NO**

  Refer to **CHECKING THE COMPONENT AND CABLE**

CHECKING THE COMPONENT AND CABLE

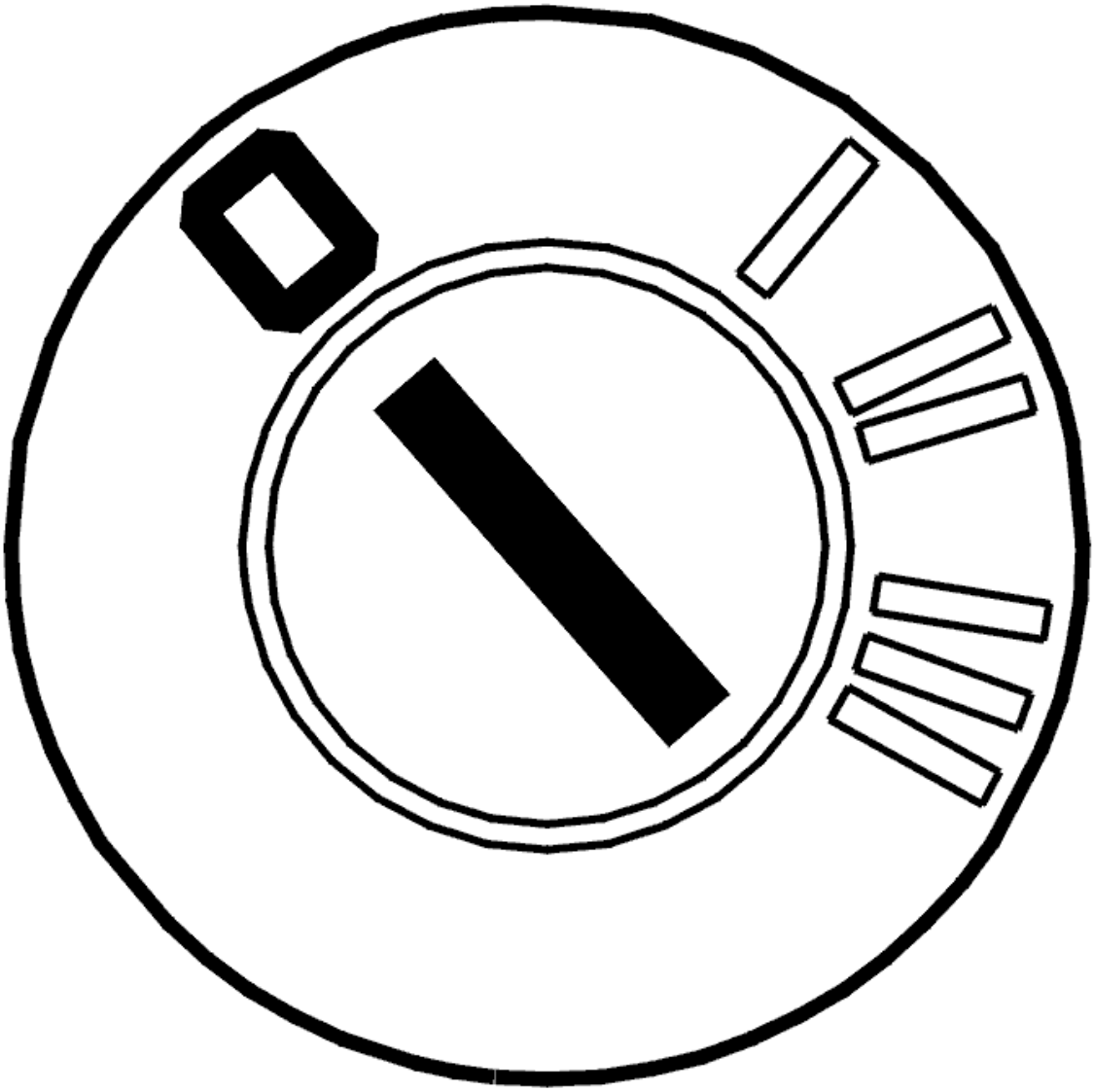

Fig. 262: Identifying Ignition OFF
Courtesy of VOLVO CARS CORPORATION

- Ignition off.

  Check the cable between central electronic module (CEM) connector terminal #20A and ignition switch connector terminal #50. Check for a short-circuit to supply voltage. Check for an open-circuit.

  Other information:

  - The voltage must be 0 V if the key is in position 0, I or II
  - For -2004, see: **CENTRAL ELECTRONIC MODULE (CEM), REPLACING** .
  - For 2005-, see: **CENTRAL ELECTRONIC MODULE (CEM), REPLACING** .

- To connect the breakout box to the control module, see **CONNECTING THE BREAKOUT BOX**
- -2004: **SIGNAL SPECIFICATION**
- 2005-: **SIGNAL SPECIFICATION**
- see **CHECKING WIRING AND TERMINALS** .

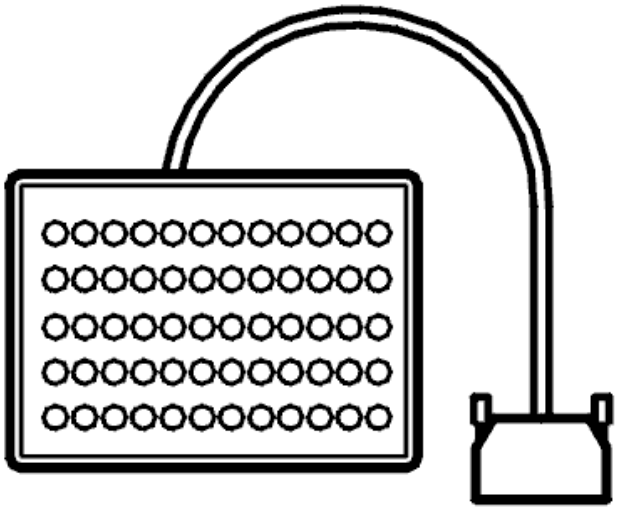

Fig. 263: Breakout Box
Courtesy of VOLVO CARS CORPORATION

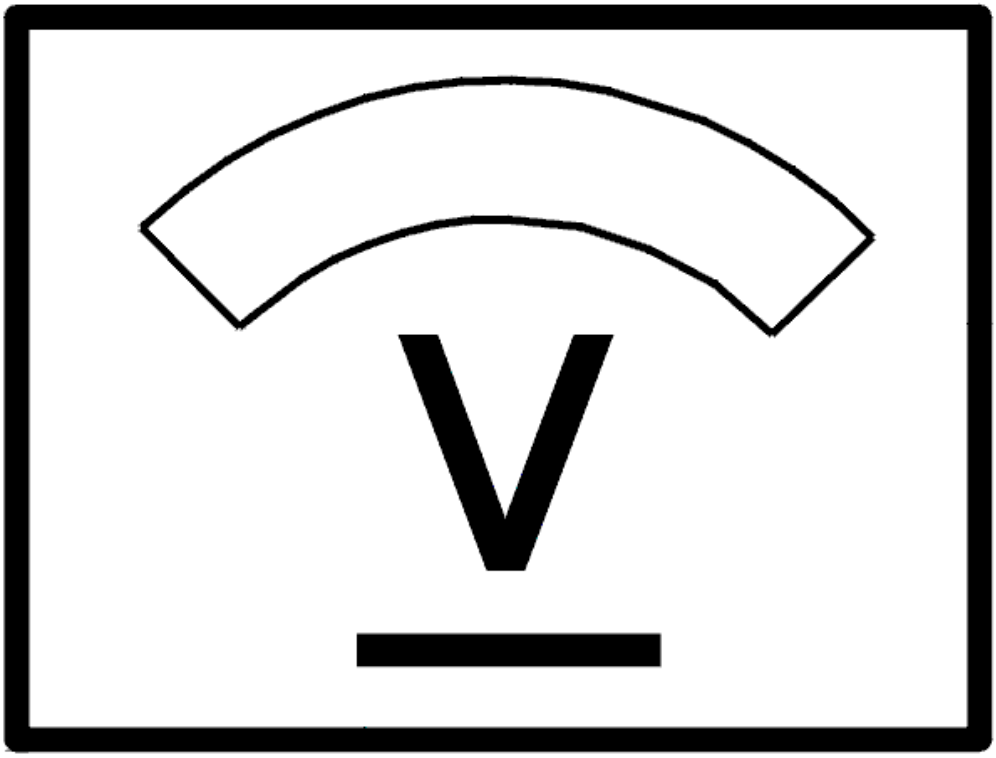

Fig. 264: Identifying Voltage Display
Courtesy of VOLVO CARS CORPORATION

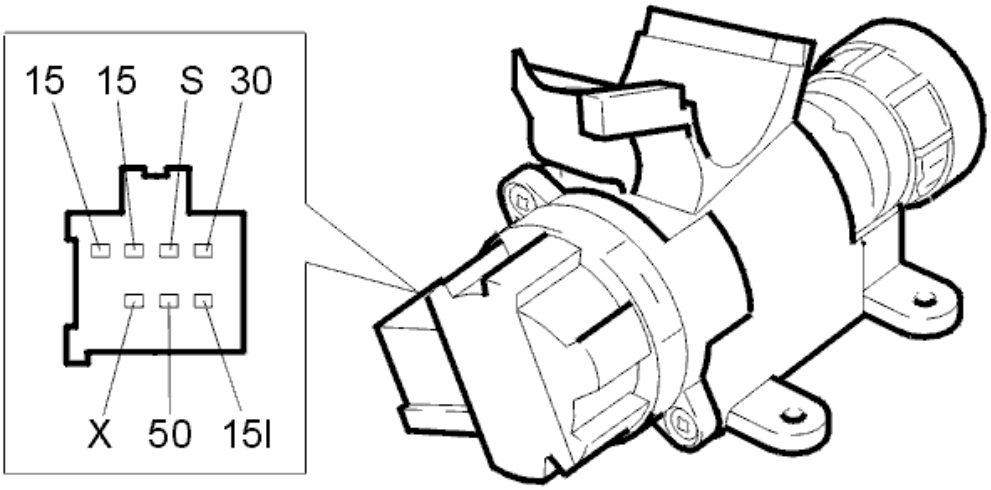

Fig. 265: Identifying Central Electronic Module (CEM) Connector Terminals
Courtesy of VOLVO CARS CORPORATION

Were any faults found in the cable?

- **YES**

  Refer to **VERIFICATION**

- **NO**

  Refer to **REPLACING THE COMPONENT**

REPLACING THE COMPONENT

Try replacing the ignition switch connector according to **STEERING WHEEL LOCK, REPLACING** .

- **Continue**

  Refer to **VERIFICATION**

VERIFICATION

VERIFICATION

HINT: After carrying out the repair, check that the fault has been remedied.

Fig. 266: Identifying Ignition Position I
Courtesy of VOLVO CARS CORPORATION

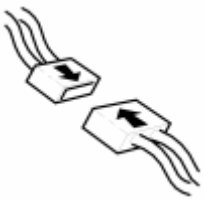

Fig. 267: Identifying Connector(s) Reinstallation
Courtesy of VOLVO CARS CORPORATION

- Ignition off.
- Reinstall the connectors, components etc.
- Turn the ignition key to position I.

Fig. 268: Identifying VCT2000 Diagnostic Tool Symbol In VIDA
Courtesy of VOLVO CARS CORPORATION

Is the voltage OK?

- **YES**

  VERIFIED: Troubleshooting has been completed.

- **NO**

  Refer to **INFORMATION**

INFORMATION

FAULT-TRACING INFORMATION

The fault should have been detected and remedied. As this is not the case fault-tracing has failed.

Exit fault-tracing for this diagnostic trouble code (DTC) or make another attempt.

CEM-1A21: INCREASED POWER SUPPLY RELAY. SIGNAL TOO HIGH. INTERMITTENT FAULT (2003-2004)

DIAGNOSTIC TROUBLE CODE (DTC) INFORMATION

Condition

Diagnostic trouble code (DTC) CEM-1A21 is stored if the central electronic module (CEM) registers a short-circuit to supply voltage in the relay driver for relay 2/29 for extended X-supply.

Substitute Value

None

Possible Source

- Incorrectly installed relay.
- Contact resistance in relay terminals.

Fault symptom[s]

- Power seat does not operate at all.
- No gauges working.
- The instrument lighting does not operate.

SIGNAL TOO HIGH. INTERMITTENT FAULT.

CHECKING THE RELAY

Check that relay 2/29 is installed correctly.

At the same time check relay connection for contact resistance and oxidation as described in, see **CONTACT RESISTANCE AND OXIDATION** , and for a loose contact as described in **LOOSE CONNECTIONS (TERMINALS)** .

Additional information

- For -2004, see: **CENTRAL ELECTRONIC MODULE (CEM), REPLACING** .
- For 2005-, see: **CENTRAL ELECTRONIC MODULE (CEM), REPLACING** .

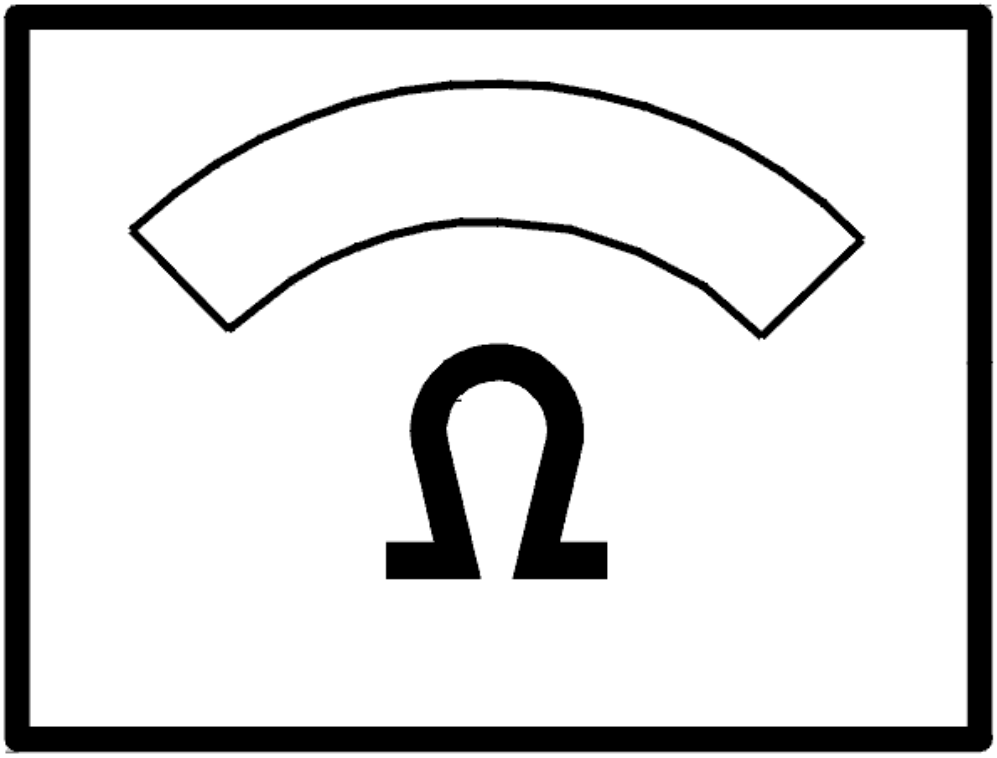

Fig. 269: Identifying Ohm Meter
Courtesy of VOLVO CARS CORPORATION

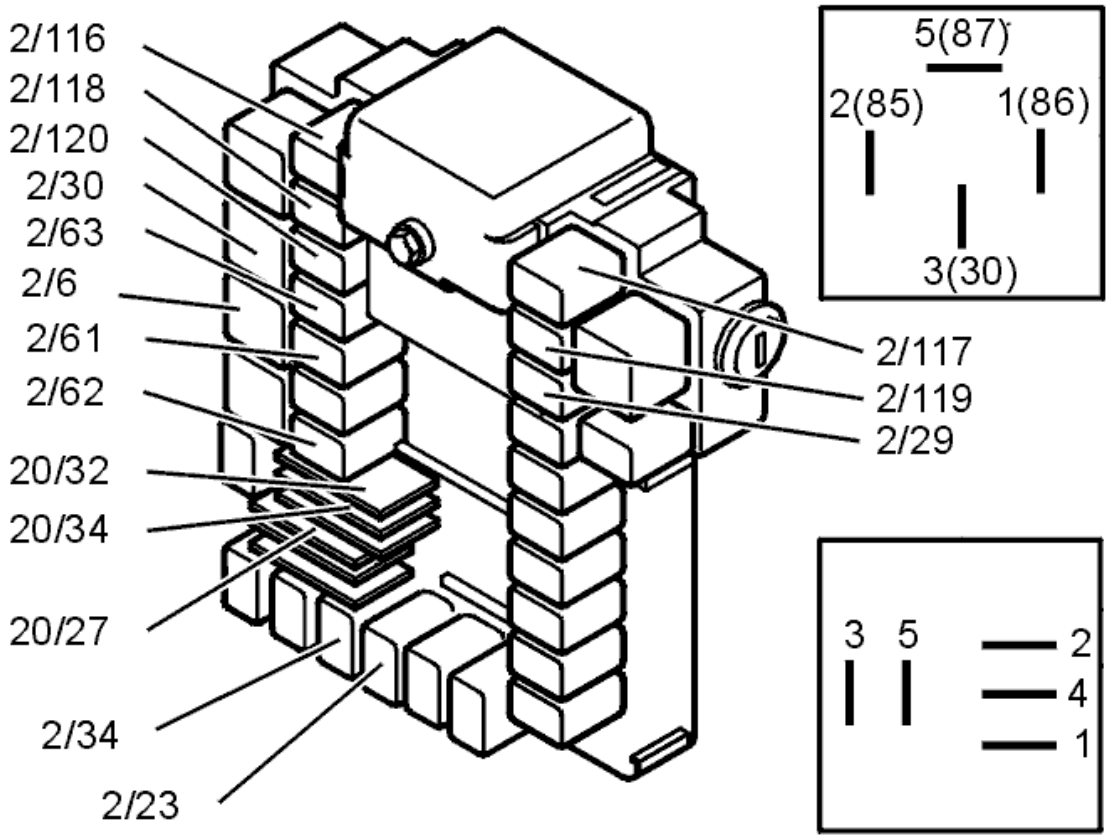

Fig. 270: Identifying Relays
Courtesy of VOLVO CARS CORPORATION

Is there a fault?

- **YES**

  OKAY: Troubleshooting has been completed.

- **NO**

  Refer to **REPLACEMENT OF COMPONENT**

REPLACEMENT OF COMPONENT

Replace relay as described in:

- For -2004, see: **CENTRAL ELECTRONIC MODULE (CEM), REPLACING** .
- For 2005-, see: **CENTRAL ELECTRONIC MODULE (CEM), REPLACING** .

CEM-1A21: INCREASED POWER SUPPLY RELAY. SIGNAL TOO HIGH. PERMANENT FAULT (2003-2004)

DIAGNOSTIC TROUBLE CODE (DTC) INFORMATION

see **DIAGNOSTIC TROUBLE CODE (DTC) INFORMATION**

SIGNAL TOO HIGH. PERMANENT FAULT

CHECKING THE RELAY

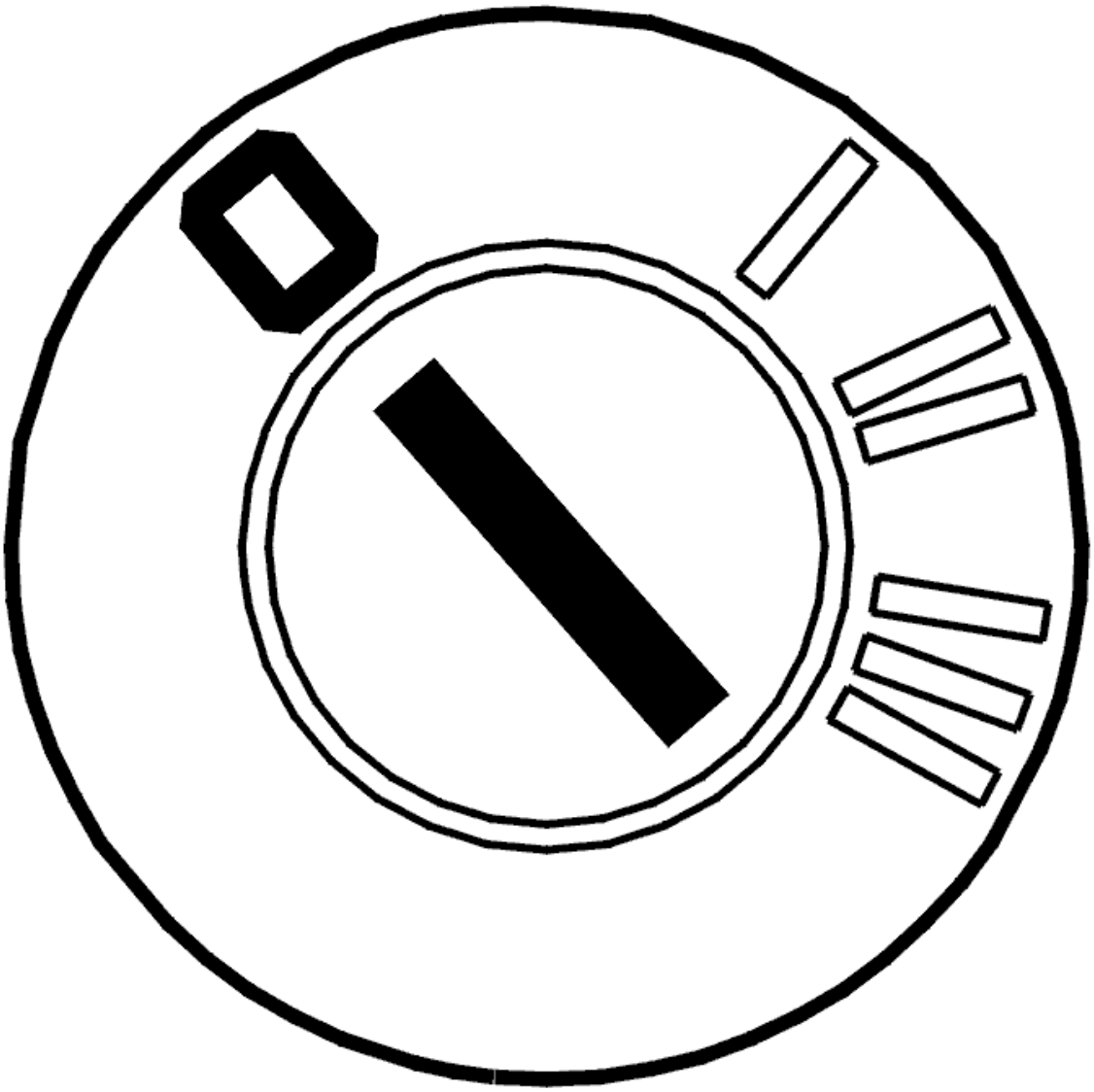

Fig. 271: Identifying Ignition OFF
Courtesy of VOLVO CARS CORPORATION

- Ignition off.

  Check that relay 2/29 is installed correctly. At the same time check relay connection for contact resistance and oxidation as described in, see **CONTACT RESISTANCE AND OXIDATION** .

Additional information

- For interior relay unit:
  - For -2004, see: **CENTRAL ELECTRONIC MODULE (CEM), REPLACING** .
  - For 2005-, see: **CENTRAL ELECTRONIC MODULE (CEM), REPLACING** .

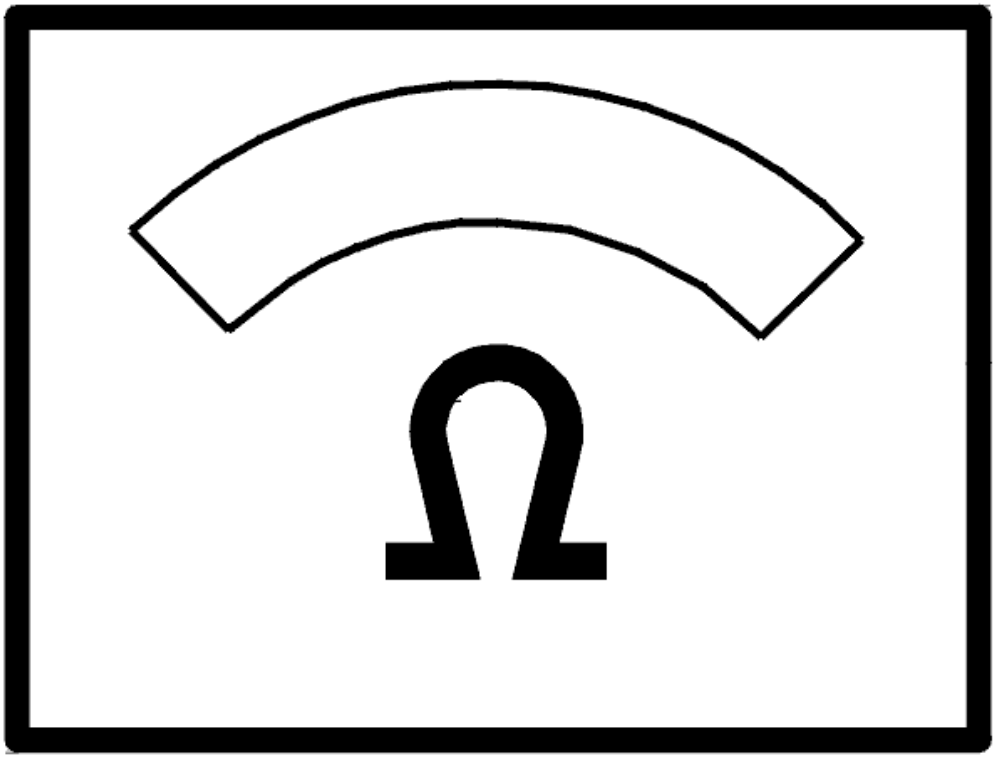

Fig. 272: Identifying Ohm Meter
Courtesy of VOLVO CARS CORPORATION

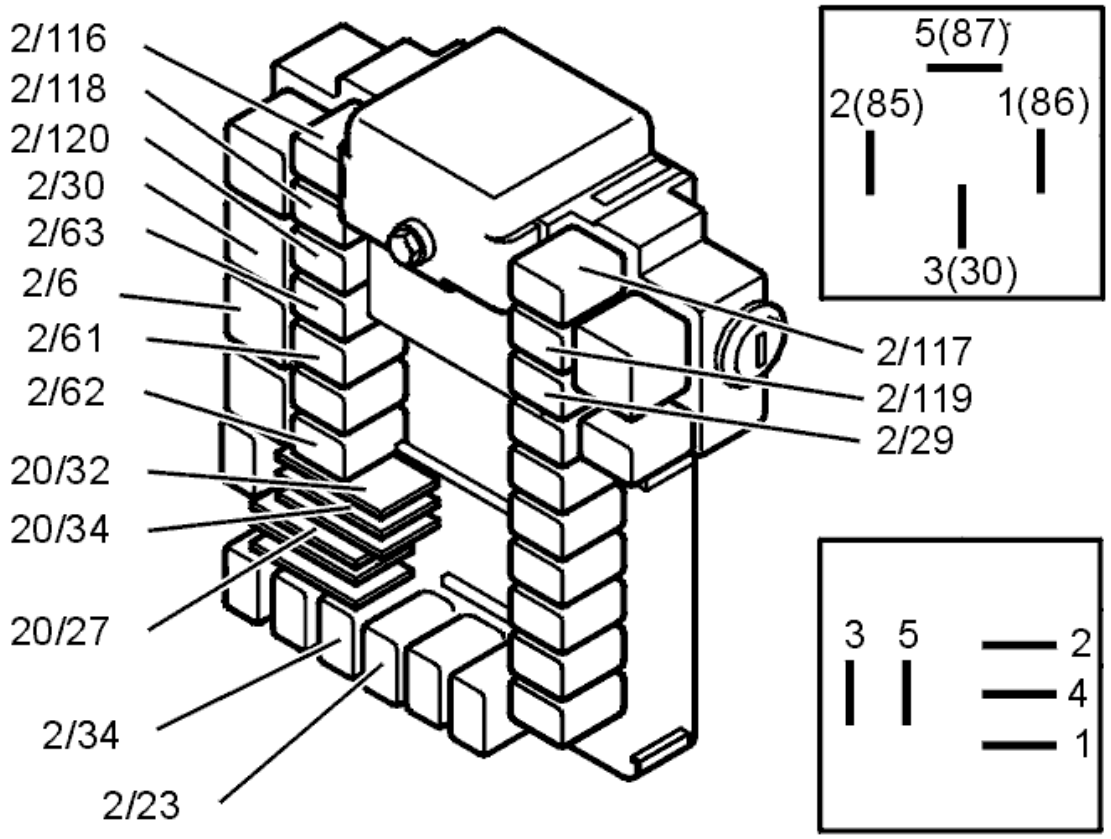

Fig. 273: Identifying Relays
Courtesy of VOLVO CARS CORPORATION

Is there a fault?

- **YES**

  Refer to **VERIFICATION**

- **NO**

  Refer to **REPLACING THE COMPONENT**

REPLACING THE COMPONENT

Replace the relay.

Additional information

- For interior relay unit:
  - For -2004, see: **CENTRAL ELECTRONIC MODULE (CEM), REPLACING** .
  - For 2005-, see: **CENTRAL ELECTRONIC MODULE (CEM), REPLACING** .

- **Continue**

  Refer to **VERIFICATION**

VERIFICATION

VERIFICATION

HINT: After carrying out the repair, check that the fault has been remedied.

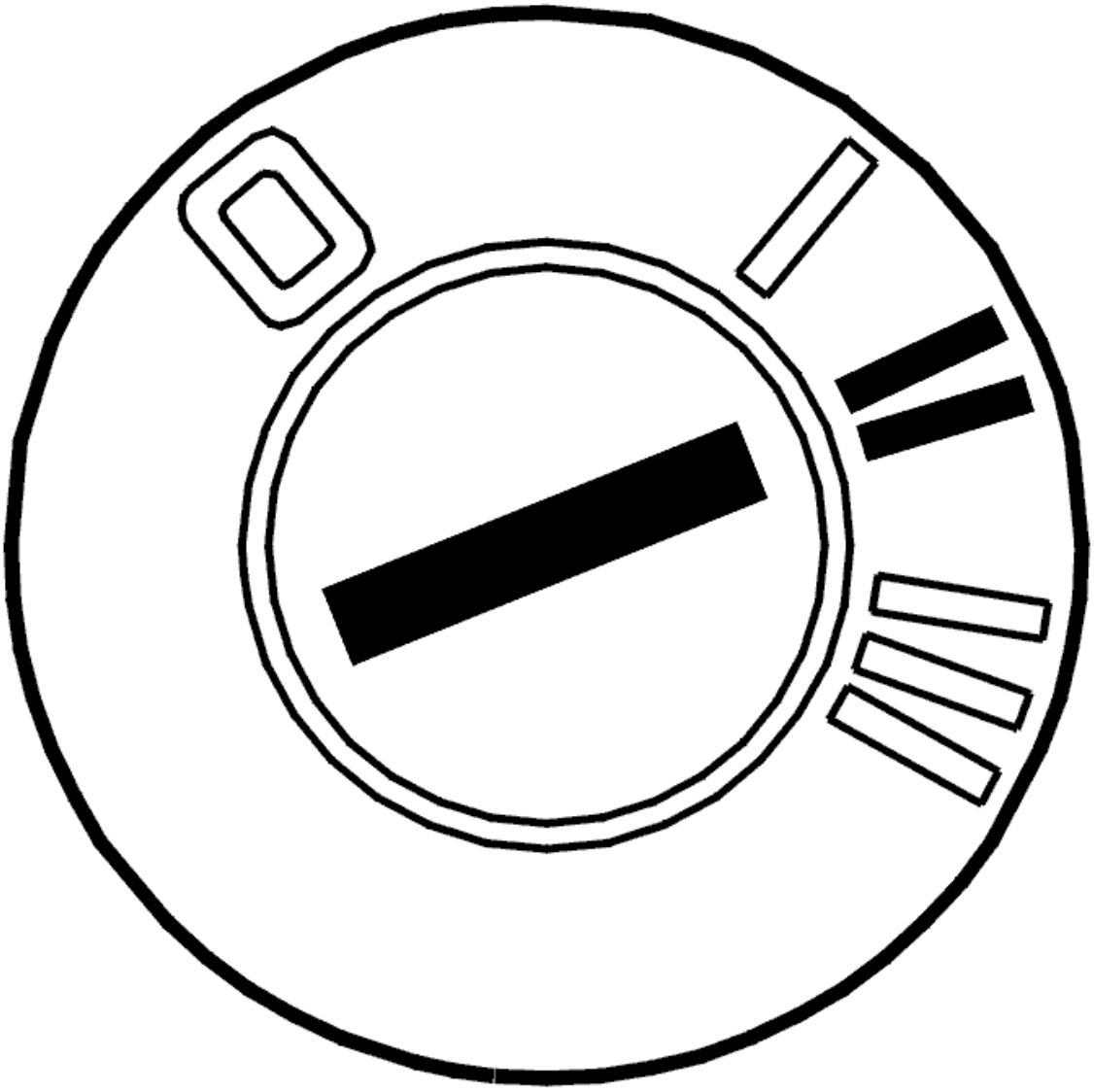

Fig. 274: Identifying Ignition ON
Courtesy of VOLVO CARS CORPORATION

- Ignition off
- Reinstall the connectors, components etc.

- Ignition on.

  Use the VCT2000 (or appropriate scan tool) to activate and deactivate the relay.

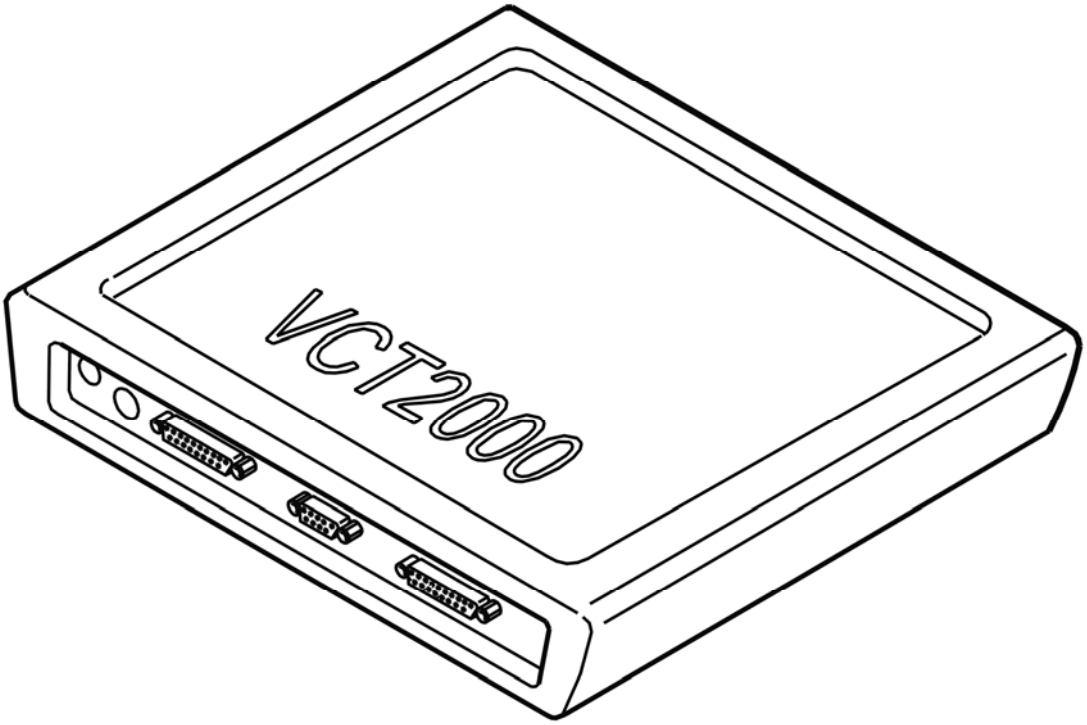

Fig. 275: Identifying VCT2000 Diagnostic Tool Symbol In VIDA
Courtesy of VOLVO CARS CORPORATION

Did the relay click?

- **YES**

  VERIFIED: Troubleshooting has been completed.

- **NO**

  Refer to **INFORMATION**

INFORMATION

FAULT-TRACING INFORMATION

The fault should have been detected and remedied. As this is not the case fault-tracing has failed.

Exit fault-tracing for this diagnostic trouble code (DTC) or make another attempt.

CEM-1A23: INCREASED POWER SUPPLY RELAY. NO SIGNAL. INTERMITTENT FAULT (2003-2004)

DIAGNOSTIC TROUBLE CODE (DTC) INFORMATION

Condition

Diagnostic trouble code (DTC) CEM-1A23 is stored if the central electronic module (CEM) registers an open-circuit in the signal cable to relay 2/29 for extended X-supply or that the relay has been incorrectly installed.

Substitute Value

None

Possible Source

- Incorrectly installed relay.
- Contact resistance in the relay terminal.

Fault symptom[s]

- Power seat does not operate at all.
- The instrument lighting does not operate.
- No instruments operating.

SIGNAL MISSING. INTERMITTENT FAULT.

CHECKING THE RELAY

Check that relay 2/29 is installed correctly.

At the same time check relay connection for contact resistance and oxidation as described in, see **CONTACT RESISTANCE AND OXIDATION** , and for a loose contact as described in **LOOSE CONNECTIONS (TERMINALS)** .

Additional information

- For interior main relay unit:
  - For -2004, see: **CENTRAL ELECTRONIC MODULE (CEM), REPLACING** .
  - For 2005-, see: **CENTRAL ELECTRONIC MODULE (CEM), REPLACING** .

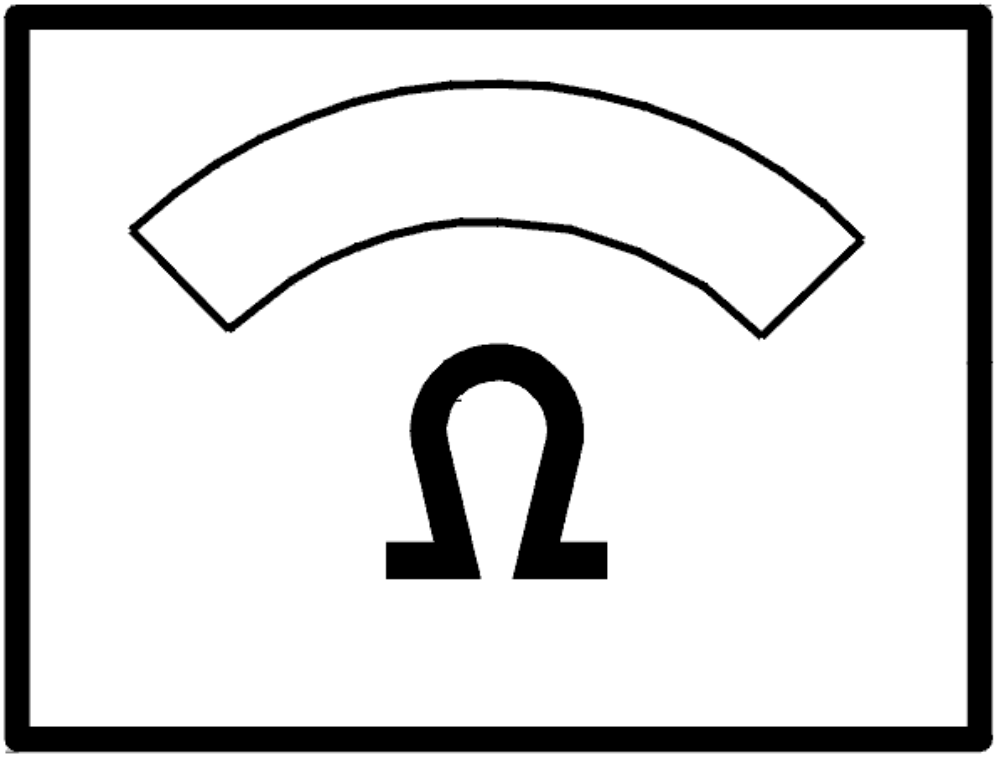

Fig. 276: Identifying Ohm Meter
Courtesy of VOLVO CARS CORPORATION

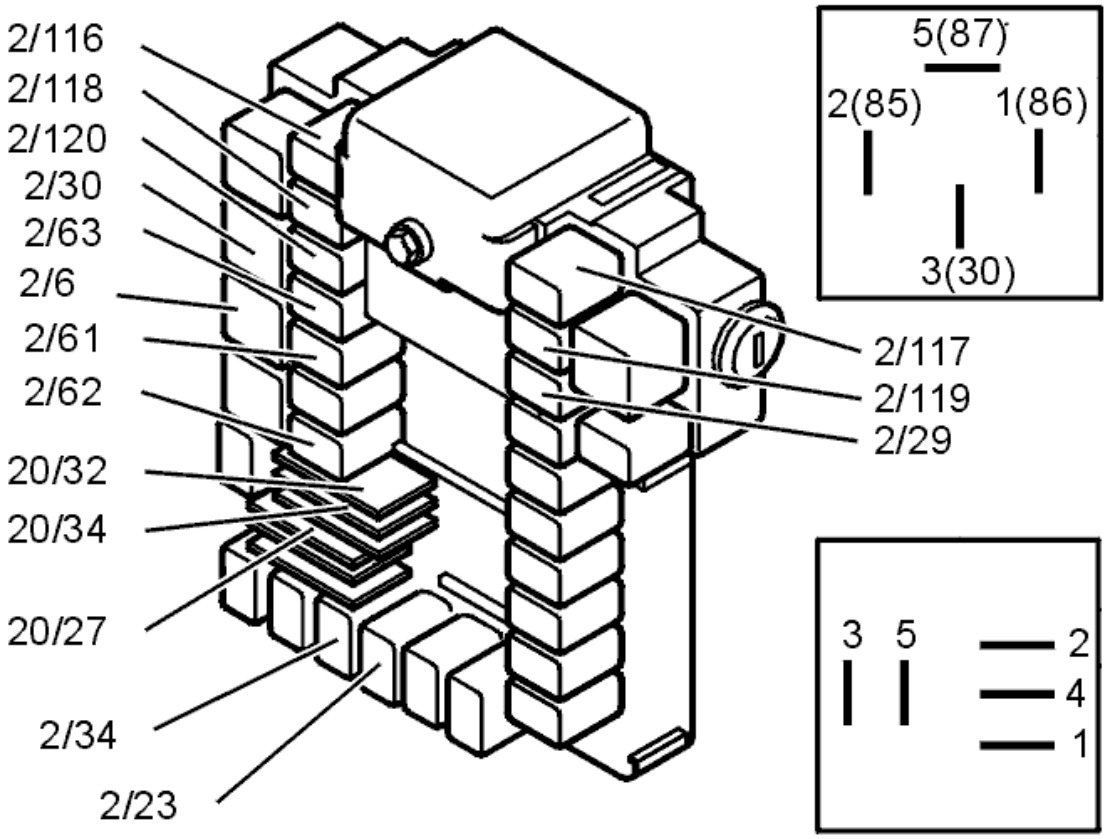

Fig. 277: Identifying Relays
Courtesy of VOLVO CARS CORPORATION

Is there a fault?

- **YES**

  OKAY: Troubleshooting has been completed.

- **NO**

  Refer to **REPLACEMENT OF COMPONENT**

REPLACEMENT OF COMPONENT

Replace the relay.

Additional information

- For interior main relay unit:
  - For -2004, see: **CENTRAL ELECTRONIC MODULE (CEM), REPLACING** .
  - For 2005-, see: **CENTRAL ELECTRONIC MODULE (CEM), REPLACING** .

CEM-1A23: INCREASED POWER SUPPLY RELAY. NO SIGNAL. PERMANENT FAULT (2003-2004)

DIAGNOSTIC TROUBLE CODE (DTC) INFORMATION

see **DIAGNOSTIC TROUBLE CODE (DTC) INFORMATION**

SIGNAL MISSING. PERMANENT FAULT

CHECKING THE RELAY

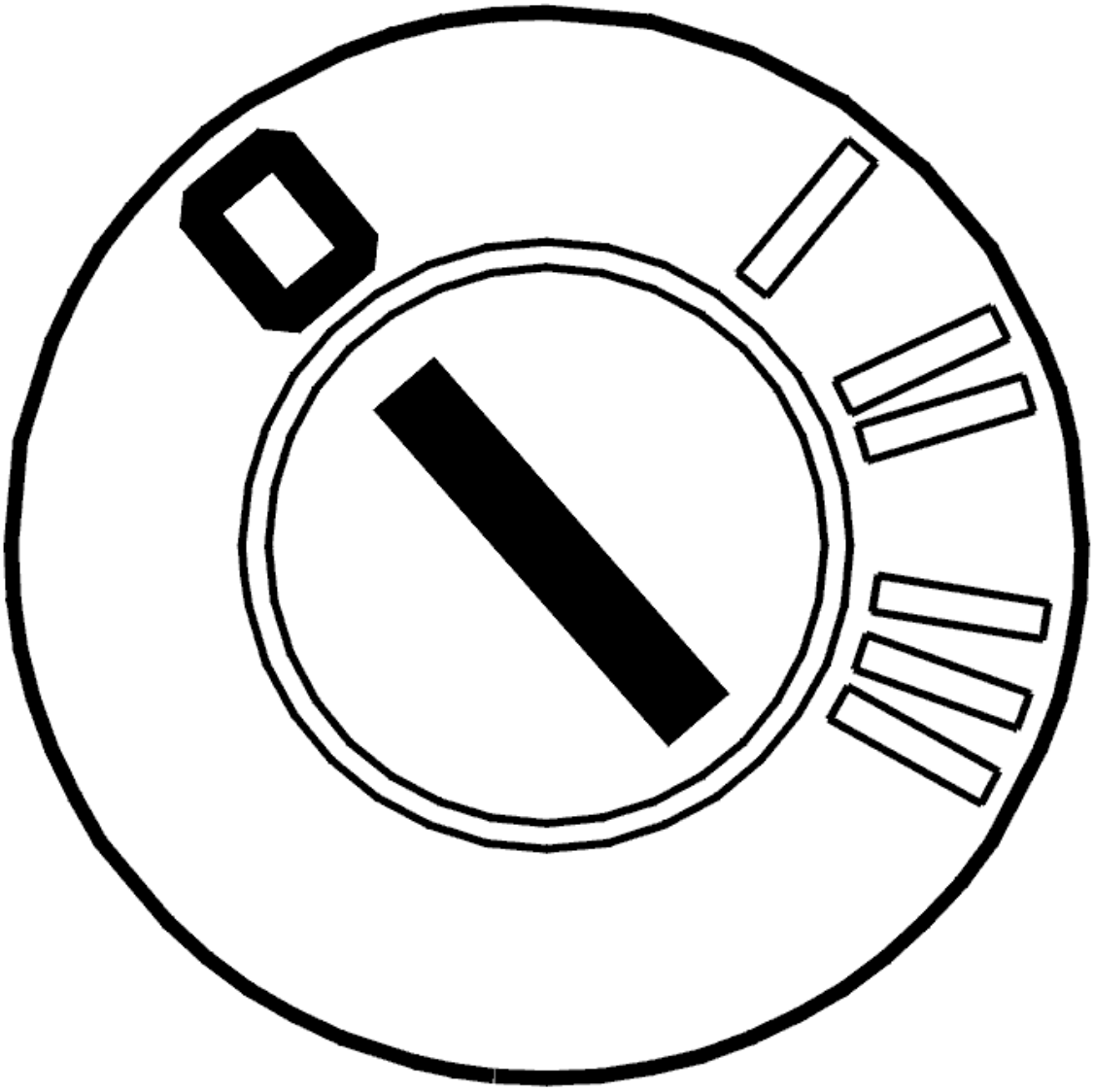

Fig. 278: Identifying Ignition OFF
Courtesy of VOLVO CARS CORPORATION

- Ignition off.

Check that relay 2/29 is correctly installed. At the same time, check the relay terminal for contact resistance and oxidation according to **CONTACT RESISTANCE AND OXIDATION** .

Other information

- For relays in the passenger compartment:
  - For -2004, see: **CENTRAL ELECTRONIC MODULE (CEM), REPLACING** .
  - For 2005-, see: **CENTRAL ELECTRONIC MODULE (CEM), REPLACING** .

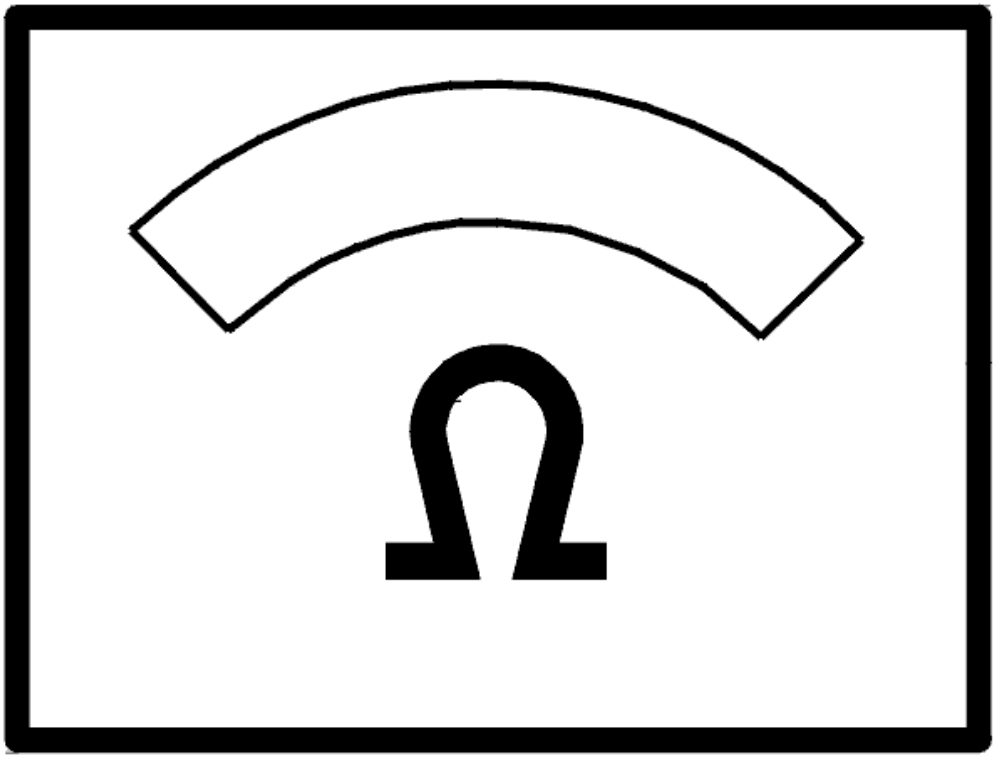

Fig. 279: Identifying Ohm Meter
Courtesy of VOLVO CARS CORPORATION

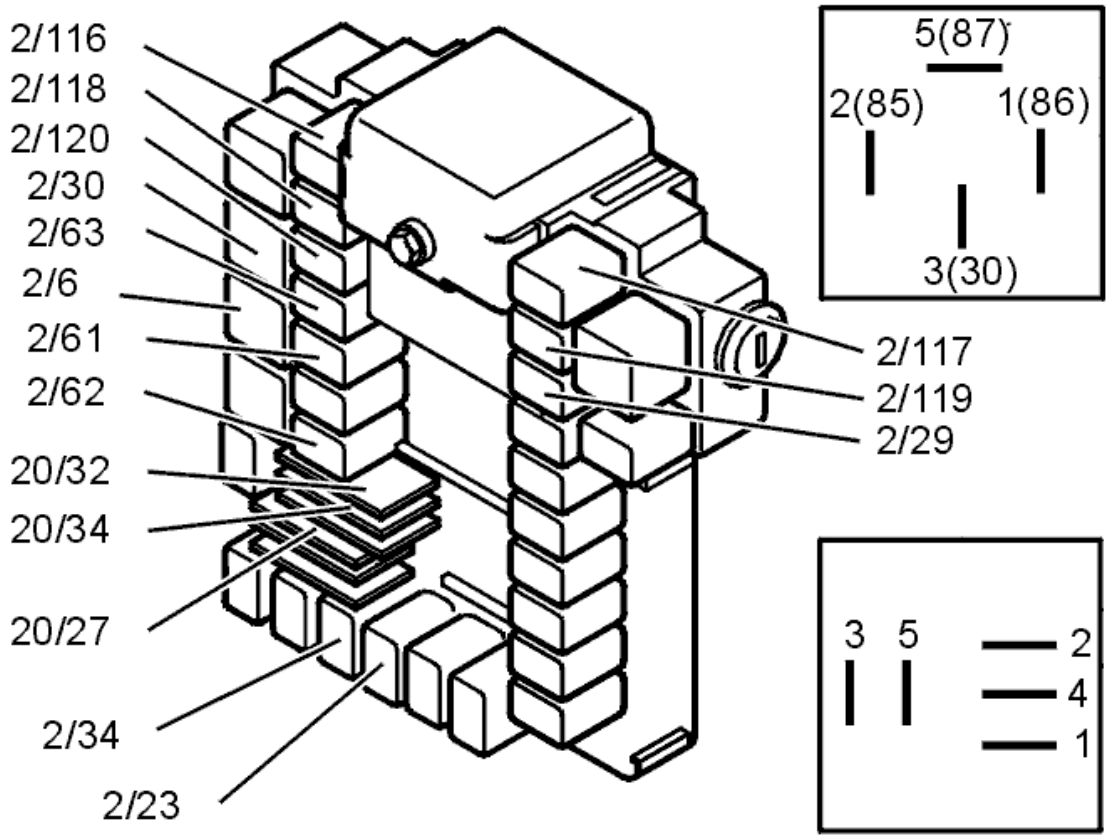

Fig. 280: Identifying Relays
Courtesy of VOLVO CARS CORPORATION

Was a fault detected?

- **YES**

  Refer to **VERIFICATION**

- **NO**

  Refer to **REPLACING THE COMPONENT**

REPLACING THE COMPONENT

To replace the relays in the passenger compartment:

- For -2004, see: **CENTRAL ELECTRONIC MODULE (CEM), REPLACING** .
- For 2005-, see: **CENTRAL ELECTRONIC MODULE (CEM), REPLACING** .

- **Continue**

  Refer to **VERIFICATION**

VERIFICATION

VERIFICATION

HINT: After carrying out the repair, check that the fault has been remedied.

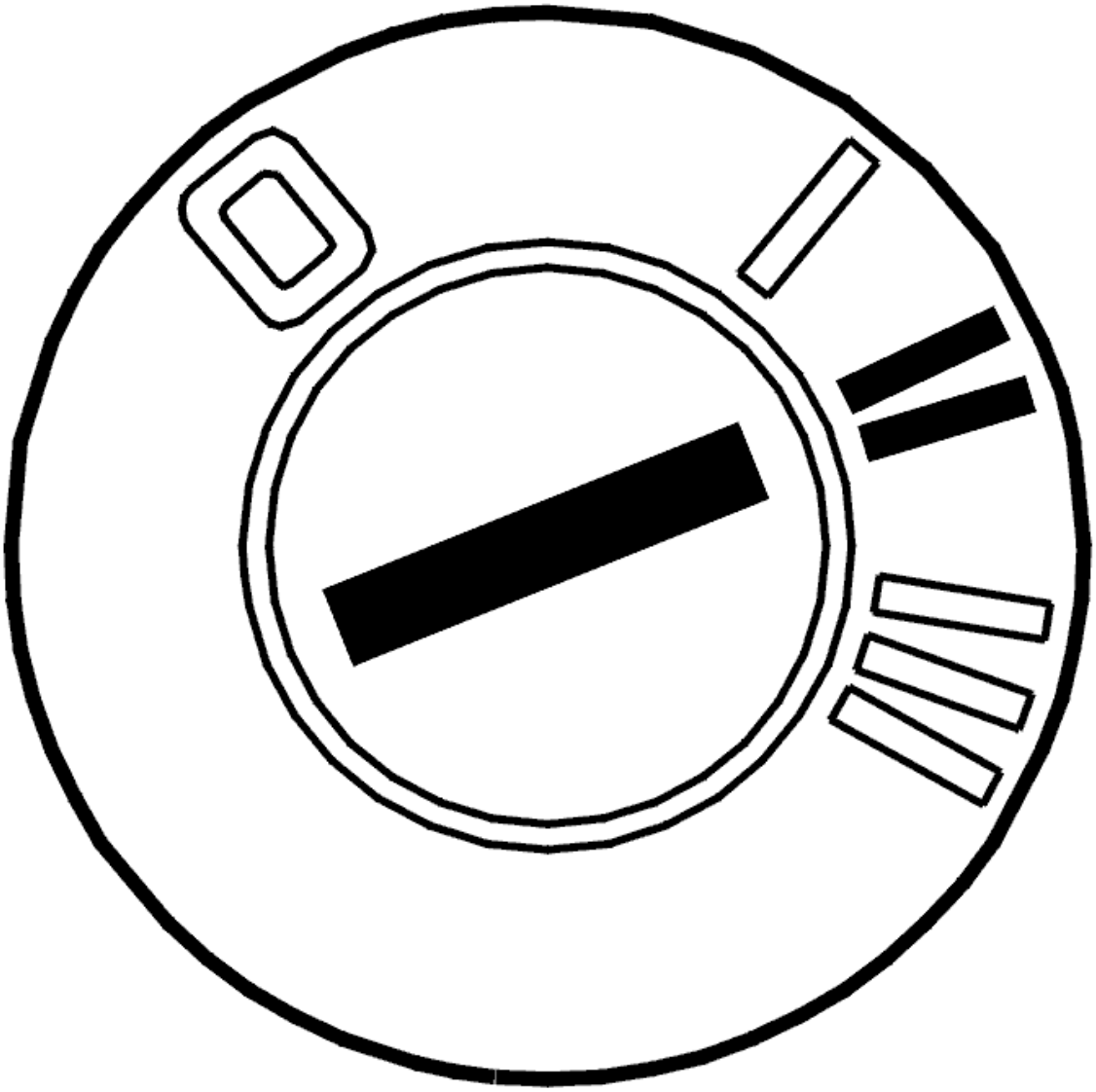

Fig. 281: Identifying Ignition ON
Courtesy of VOLVO CARS CORPORATION

- Ignition off
- Reinstall the connectors, components etc.
- Ignition on.

Use the VCT2000 (or appropriate scan tool) to activate and deactivate the relay.

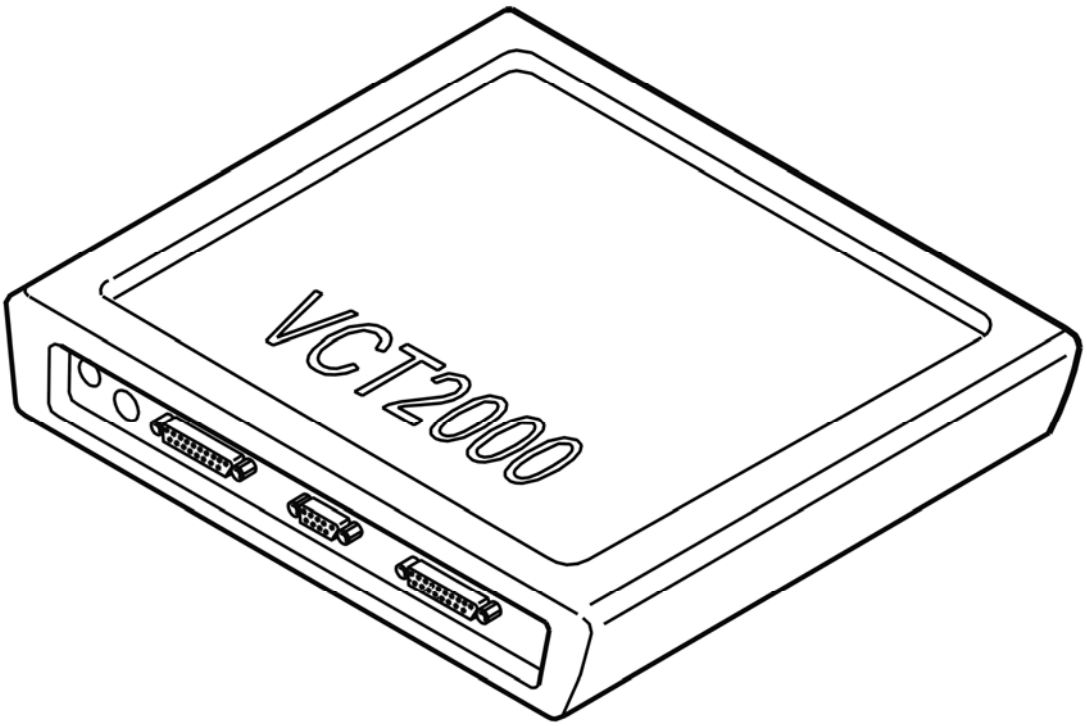

Fig. 282: Identifying VCT2000 Diagnostic Tool Symbol In VIDA
Courtesy of VOLVO CARS CORPORATION

Did the relay click?

- **YES**

  VERIFIED: Troubleshooting has been completed.

- **NO**

  Refer to **INFORMATION**

INFORMATION

FAULT-TRACING INFORMATION

The fault should have been detected and remedied. As this is not the case fault-tracing has failed.

Exit fault-tracing for this diagnostic trouble code (DTC) or make another attempt.

CEM-1A24: RELAY EXT X2-POWER SUPPLY. SIGNAL TOO HIGH. INTERMITTENT FAULT (4T65 AWD; AW50/51 AWD; AW55-50/51SN; 2003-

2004)

DIAGNOSTIC TROUBLE CODE (DTC) INFORMATION

Condition

Diagnostic trouble code (DTC) CEM-1A24 is stored if the central electronic module (CEM) registers a short-circuit to supply voltage in the relay driver for relay 2/101 for automatic transmission extended X-supply.

Substitute Value

None

Possible Source

- Incorrectly installed relay.

Fault symptom[s]

- No shifting.

SIGNAL TOO HIGH. INTERMITTENT FAULT

CHECKING THE RELAY

Check that relay 2/101 is correctly installed.

Also check the relay terminals for contact resistance and oxidation according to **CONTACT RESISTANCE AND OXIDATION** and loose connections according to **LOOSE CONNECTIONS (TERMINALS)** .

Other information

- For the relay box in the passenger compartment:
  - For -2004, see: **CENTRAL ELECTRONIC MODULE (CEM), REPLACING** .
  - For 2005-, see: **CENTRAL ELECTRONIC MODULE (CEM), REPLACING** .

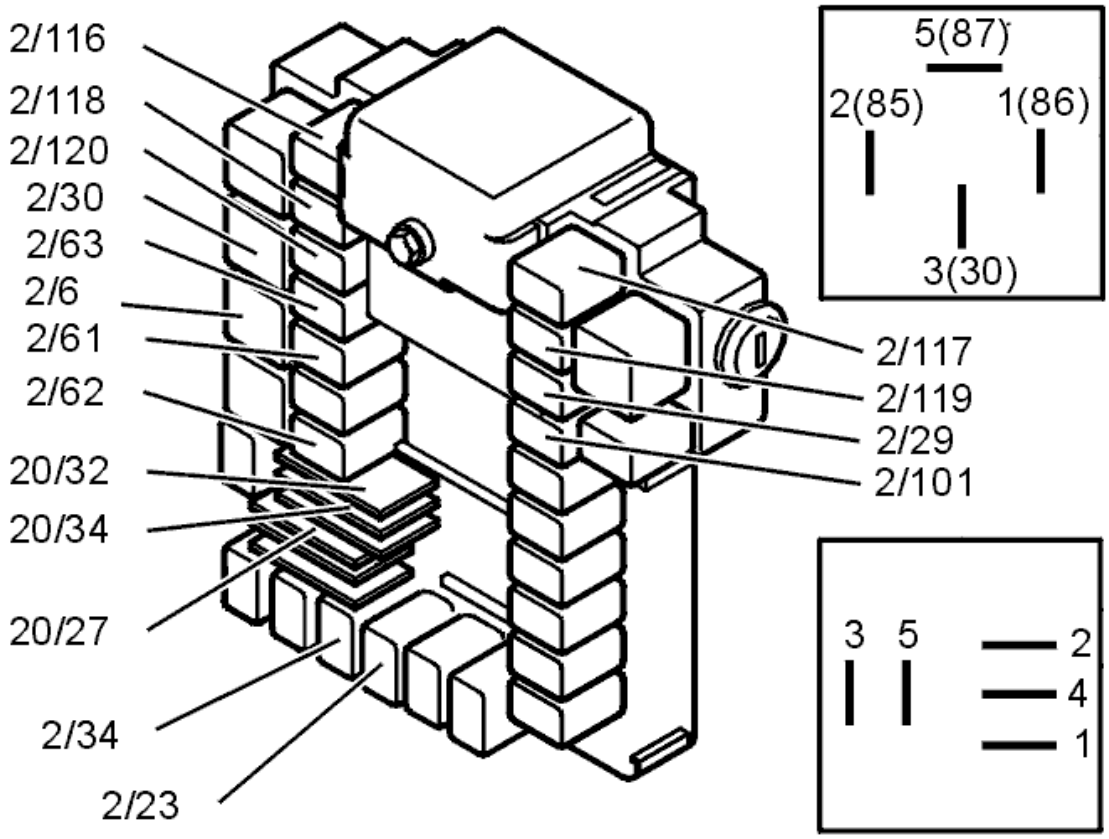

Fig. 283: Identifying Relays
Courtesy of VOLVO CARS CORPORATION

Was a fault detected?

- **YES**

  OKAY: Troubleshooting has been completed.

- **NO**

  Refer to **REPLACING COMPONENT**

REPLACING COMPONENT

Replace the relay according to:

- For -2004, see: **CENTRAL ELECTRONIC MODULE (CEM), REPLACING** .
- For 2005-, see: **CENTRAL ELECTRONIC MODULE (CEM), REPLACING** .

- **Continue**

  Refer to **CHECKING THE RELAY**

INFORMATION

FAULT-TRACING INFORMATION

If the fault is intermittent, do not verify fault-tracing if the fault does not recur.

It is possible to view the information again, or leave fault-tracing for this diagnostic trouble code (DTC).

CEM-1A24: RELAY EXT X2-POWER SUPPLY. SIGNAL TOO HIGH. PERMANENT FAULT (4T65 AWD; AW50/51 AWD; AW55-50/51SN; 2003-2004)

DIAGNOSTIC TROUBLE CODE (DTC) INFORMATION

see **DIAGNOSTIC TROUBLE CODE (DTC) INFORMATION**

SIGNAL TOO HIGH. PERMANENT FAULT

CHECKING THE RELAY

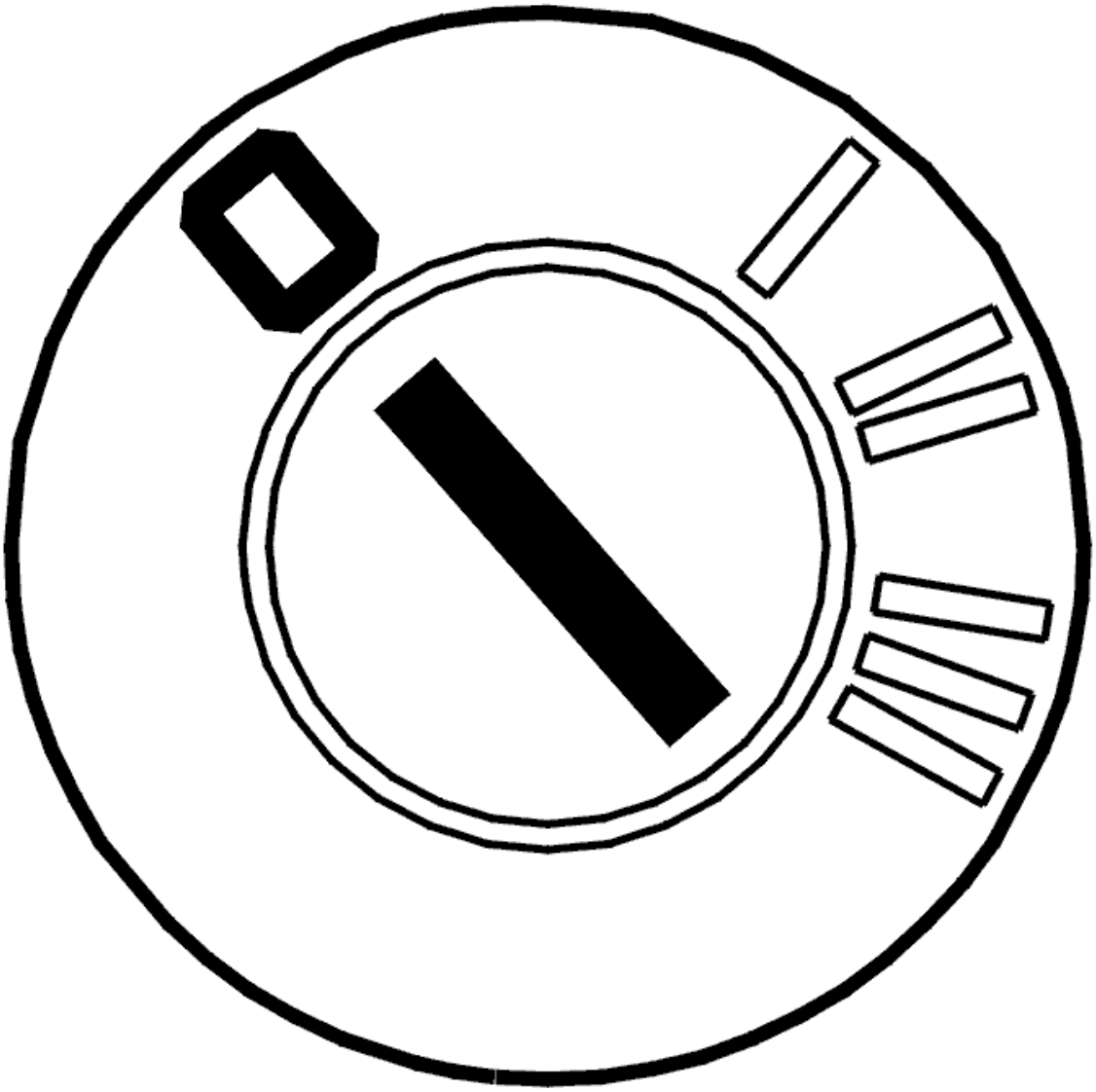

Fig. 284: Identifying Ignition OFF
Courtesy of VOLVO CARS CORPORATION

- Ignition off.

  Check that relay 2/101 is correctly installed. Also check the relay terminals for contact resistance and oxidation according to **CONTACT RESISTANCE AND OXIDATION** .

  Other information

  - For relays in the passenger compartment:
    - For -2004, see: **CENTRAL ELECTRONIC MODULE (CEM), REPLACING** .
    - For 2005-, see: **CENTRAL ELECTRONIC MODULE (CEM), REPLACING** .

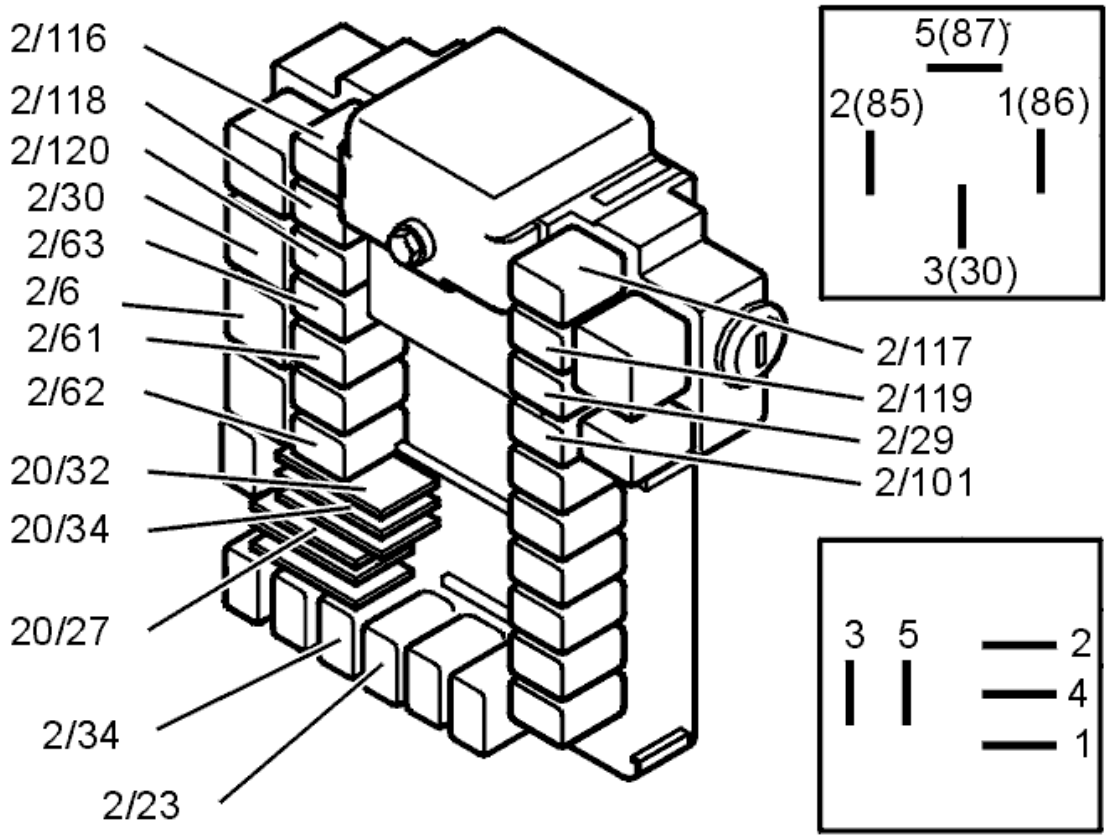

Fig. 285: Identifying Relays
Courtesy of VOLVO CARS CORPORATION

Was a fault detected?

- **YES**

  Refer to **VERIFICATION**

- **NO**

  Refer to **REPLACING THE COMPONENT**

REPLACING THE COMPONENT

Replace the relay.

Other information

- For relays in the passenger compartment:
  - For -2004, see: **CENTRAL ELECTRONIC MODULE (CEM), REPLACING** .
  - For 2005-, see: **CENTRAL ELECTRONIC MODULE (CEM), REPLACING** .

- **Continue**

  Refer to **VERIFICATION**

VERIFICATION

VERIFICATION

HINT: After carrying out the repair, check that the fault has been remedied.

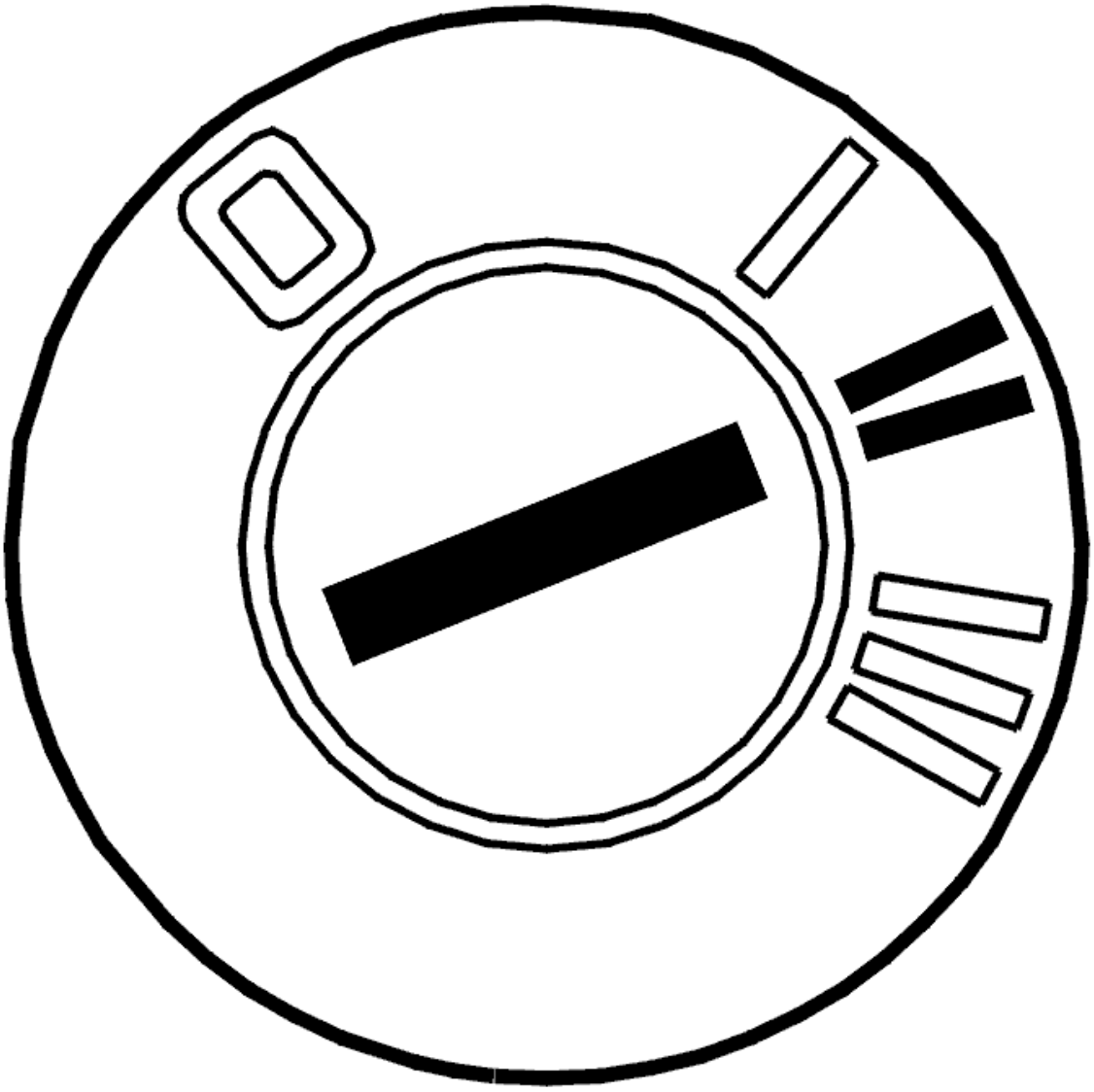

Fig. 286: Identifying Ignition ON
Courtesy of VOLVO CARS CORPORATION

- Ignition off
- Reinstall the connectors, components etc.

- Ignition on.

  Use the VCT2000 (or appropriate scan tool) to activate and deactivate the relay.

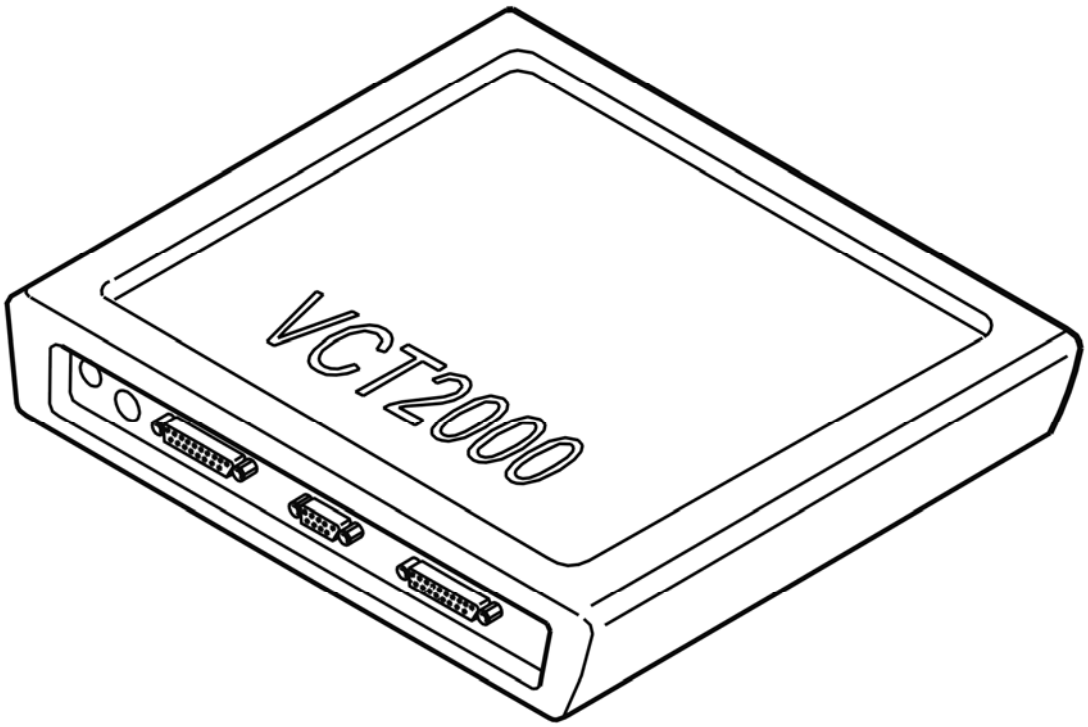

Fig. 287: Identifying VCT2000 Diagnostic Tool Symbol In VIDA
Courtesy of VOLVO CARS CORPORATION

Did the relay click?

- **YES**

  VERIFIED: Troubleshooting has been completed.

- **NO**

  Refer to **INFORMATION**

INFORMATION

FAULT-TRACING INFORMATION

The fault should have been detected and remedied. As this is not the case fault-tracing has failed.

Exit fault-tracing for this diagnostic trouble code (DTC) or make another attempt.

CEM-1A25: RELAY EXT X2-POWER SUPPLY. SIGNAL TOO LOW. INTERMITTENT FAULT (4T65 AWD; AW50/51 AWD; AW55-50/51SN; 2003-2004)

DIAGNOSTIC TROUBLE CODE (DTC) INFORMATION

Condition

Diagnostic trouble code (DTC) CEM-1A25 is stored if the central electronic module (CEM) registers an open-circuit or a short-circuit to ground in the signal cable to relay 2/101 for automatic transmission extended X-supply or that the relay has been incorrectly installed.

Substitute Value

None

Possible Source

- Incorrectly installed relay.
- Contact resistance in the relay terminal.

Fault symptom[s]

- No shifting.

SIGNAL TOO LOW. INTERMITTENT FAULT

CHECKING THE RELAY

Check that relay 2/101 is correctly installed.

Also check the relay terminals for contact resistance and oxidation according to **CONTACT RESISTANCE AND OXIDATION** and loose connections according to **LOOSE CONNECTIONS (TERMINALS)** .

Other information

- For the relay box in the passenger compartment:
  - For -2004, see: **CENTRAL ELECTRONIC MODULE (CEM), REPLACING** .
  - For 2005-, see: **CENTRAL ELECTRONIC MODULE (CEM), REPLACING** .

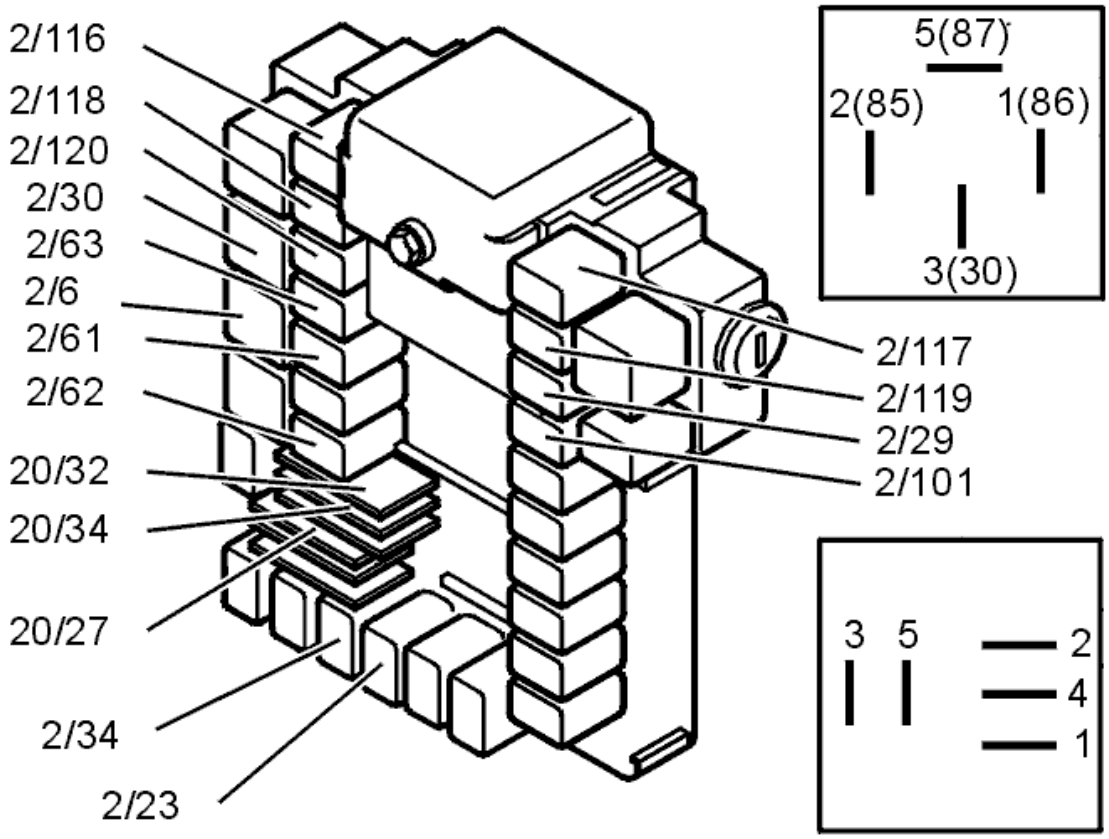

Fig. 288: Identifying Relays
Courtesy of VOLVO CARS CORPORATION

Was a fault detected?

- **YES**

  OKAY: Troubleshooting has been completed.

- **NO**

  Refer to **REPLACING COMPONENT**

REPLACING COMPONENT

Replace the relay.

Other information

- For the relay box in the passenger compartment:
  - For -2004, see: **CENTRAL ELECTRONIC MODULE (CEM), REPLACING** .
  - For 2005-, see: **CENTRAL ELECTRONIC MODULE (CEM), REPLACING** .

- **Continue**

  Refer to **INFORMATION**

INFORMATION

FAULT-TRACING INFORMATION

If the fault is intermittent, do not verify fault-tracing if the fault does not recur.

It is possible to view the information again, or leave fault-tracing for this diagnostic trouble code (DTC).

CEM-1A25: RELAY EXT X2-POWER SUPPLY. SIGNAL TOO LOW. PERMANENT FAULT (4T65 AWD; AW50/51 AWD; AW55-50/51SN; 2003-2004)

DIAGNOSTIC TROUBLE CODE (DTC) INFORMATION

see **DIAGNOSTIC TROUBLE CODE (DTC) INFORMATION**

SIGNAL TOO LOW. PERMANENT FAULT

CHECKING THE RELAY

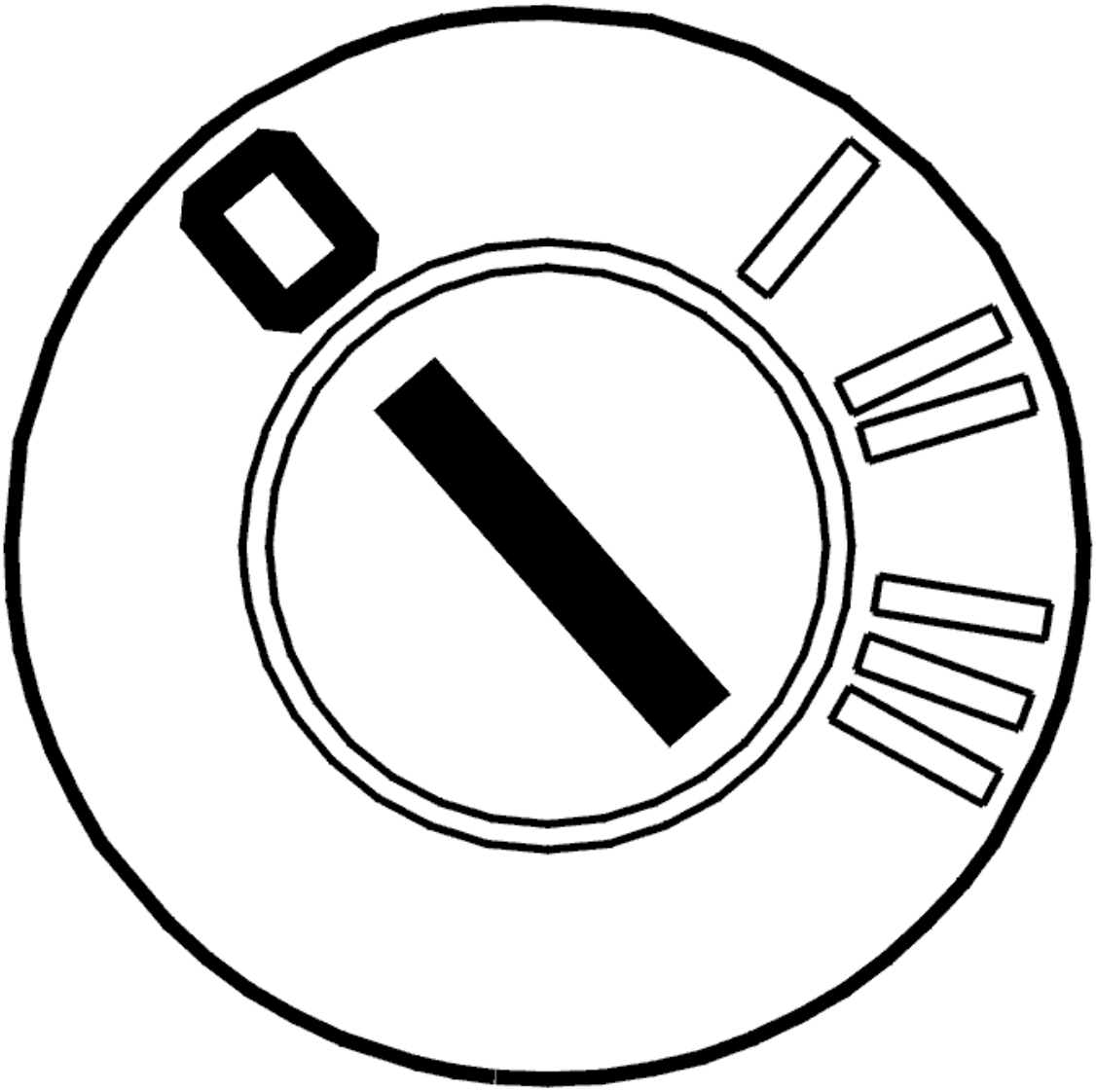

Fig. 289: Identifying Ignition OFF
Courtesy of VOLVO CARS CORPORATION

- Ignition off.

  Check that relay 2/101 is correctly installed. Also check the relay terminals for contact resistance and oxidation according to **CONTACT RESISTANCE AND OXIDATION** .

  Other information

  - To replace relays in the passenger compartment:
    - For -2004, see: **CENTRAL ELECTRONIC MODULE (CEM), REPLACING** .
    - For 2005-, see: **CENTRAL ELECTRONIC MODULE (CEM), REPLACING** .

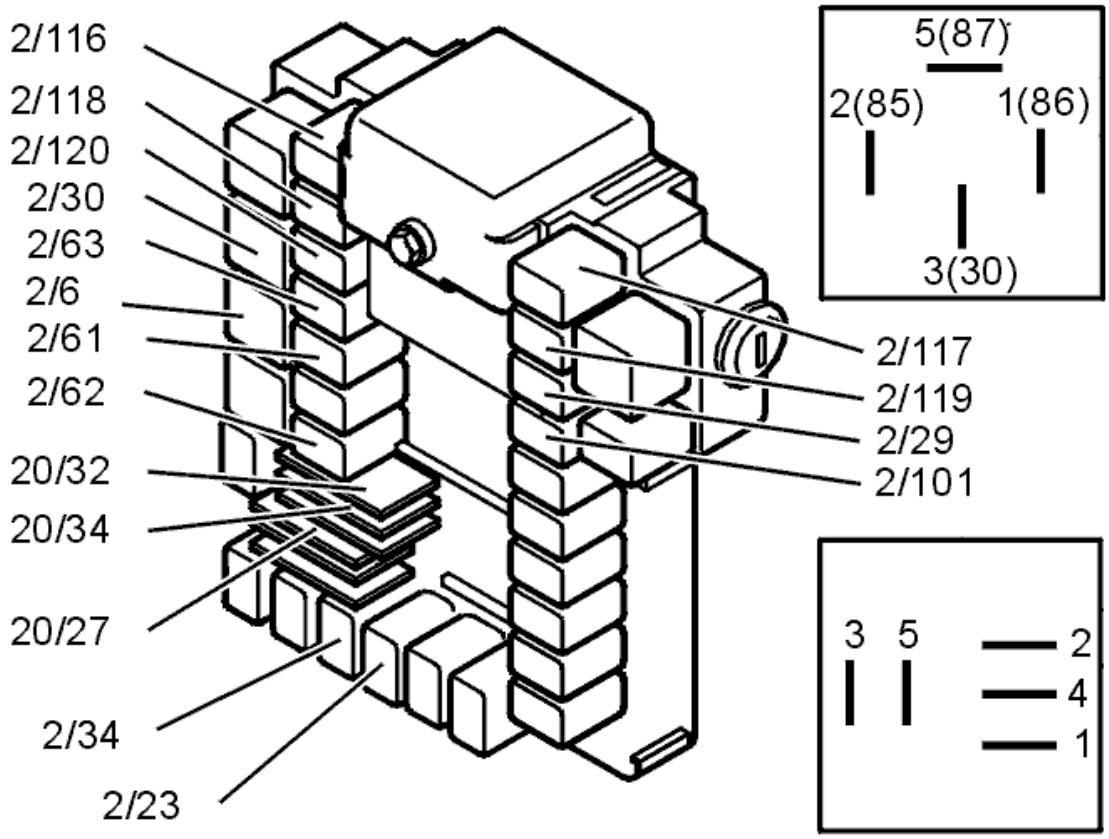

Fig. 290: Identifying Relays
Courtesy of VOLVO CARS CORPORATION

Was a fault detected?

- **YES**

  Refer to **VERIFICATION**

- **NO**

  Refer to **REPLACING THE COMPONENT**

REPLACING THE COMPONENT

To replace relays in the passenger compartment:

- For -2004, see: **CENTRAL ELECTRONIC MODULE (CEM), REPLACING** .
- For 2005-, see: **CENTRAL ELECTRONIC MODULE (CEM), REPLACING** .

- **Continue**

  Refer to **VERIFICATION**

VERIFICATION

VERIFICATION

HINT: After carrying out the repair, check that the fault has been remedied.

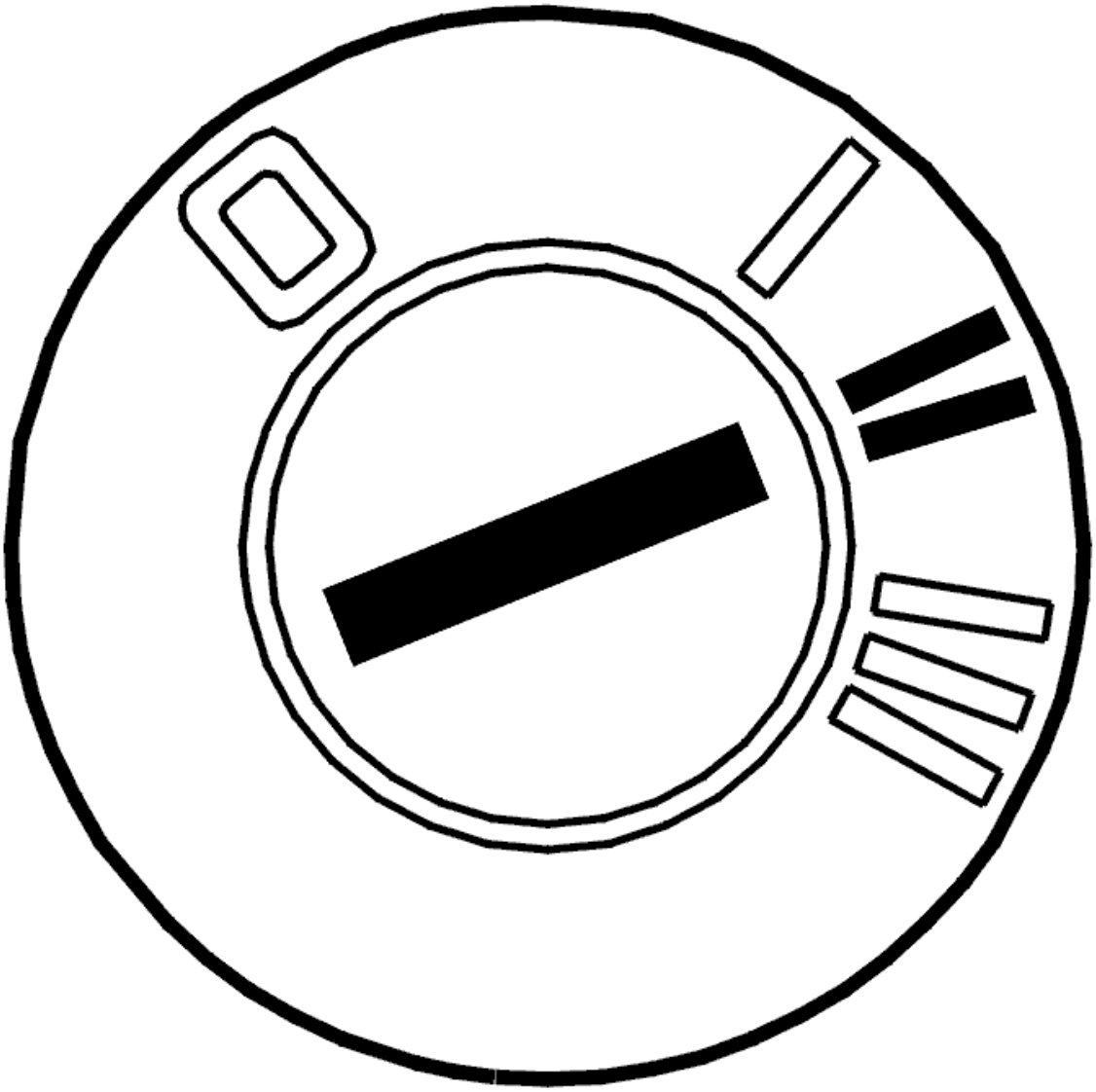

Fig. 291: Identifying Ignition ON
Courtesy of VOLVO CARS CORPORATION

- Ignition off
- Reinstall the connectors, components etc.
- Ignition on.

Use the VCT2000 (or appropriate scan tool) to activate and deactivate the relay.

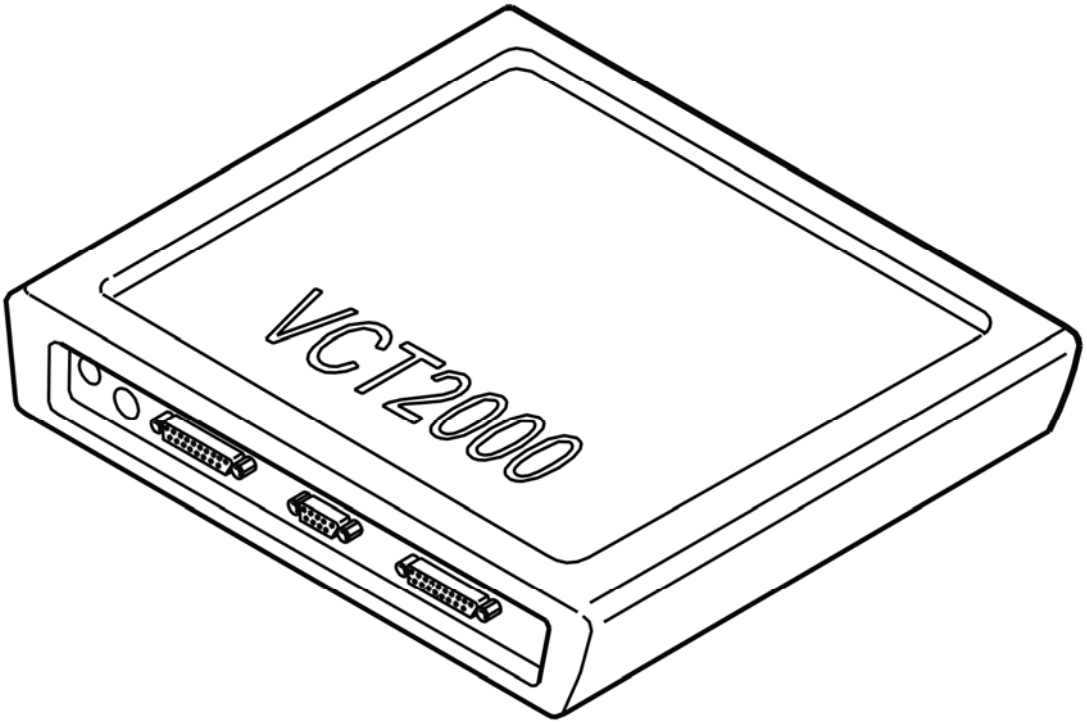

Fig. 292: Identifying VCT2000 Diagnostic Tool Symbol In VIDA
Courtesy of VOLVO CARS CORPORATION

Did the relay click?

- **YES**

  VERIFIED: Troubleshooting has been completed.

- **NO**

  Refer to **INFORMATION**

INFORMATION

FAULT-TRACING INFORMATION

The fault should have been detected and remedied. As this is not the case fault-tracing has failed.

Exit fault-tracing for this diagnostic trouble code (DTC) or make another attempt.

CEM-1A41: REAL TIME CLOCK. FAULTY SIGNAL (2005)

DIAGNOSTIC TROUBLE CODE (DTC) INFORMATION CEM-1A41

Condition

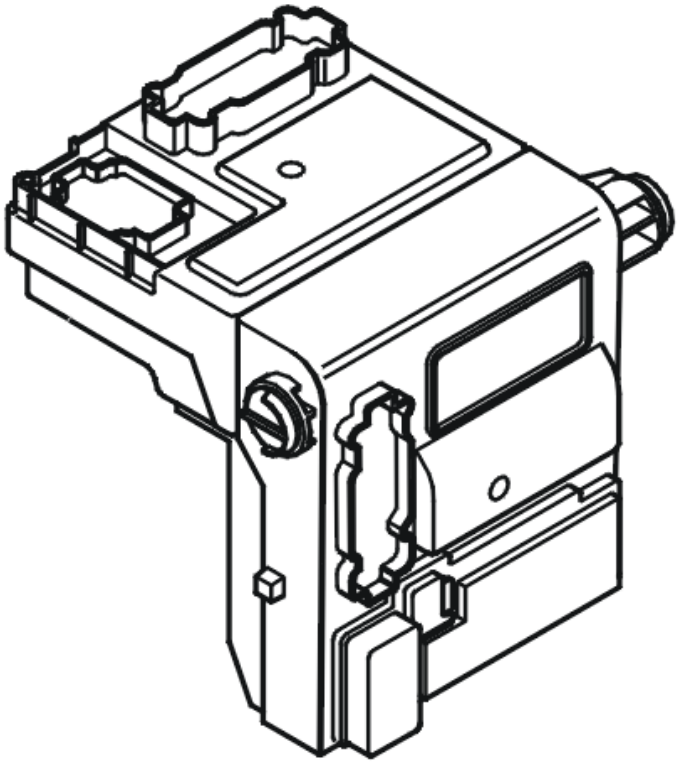

Fig. 293: Identifying Central Electronic Module (CEM)
Courtesy of VOLVO CARS CORPORATION

The central electronic module (CEM) has an internal clock which starts when the control module is powered for the first time in the factory. The time is kept from the time the internal timer circuit started.

The diagnostic trouble code (DTC) is stored if the central electronic module (CEM) registers that the real time clock has stopped.

The diagnostic trouble code (DTC) can be diagnosed when the ignition is switched on and when the test is run at least once a minute.

Substitute Value

- None.

Possible Source

- Internal fault in the central electronic module (CEM).

Fault symptom[s]

- The parking heater does not operate.
- The clock in the information module is not working

FAULTY SIGNAL

REPLACING THE CONTROL MODULE

The diagnostic trouble code (DTC) indicates an internal fault in the central electronic module (CEM) which means that the control module needs to be replaced.

Read off the customer parameters from the control module before it is replaced. Use the VCT2000 (or appropriate scan tool). Make a note of the values.

- For -2004, see: **CENTRAL ELECTRONIC MODULE (CEM), REPLACING** .
- For 2005-, see: **CENTRAL ELECTRONIC MODULE (CEM), REPLACING** .

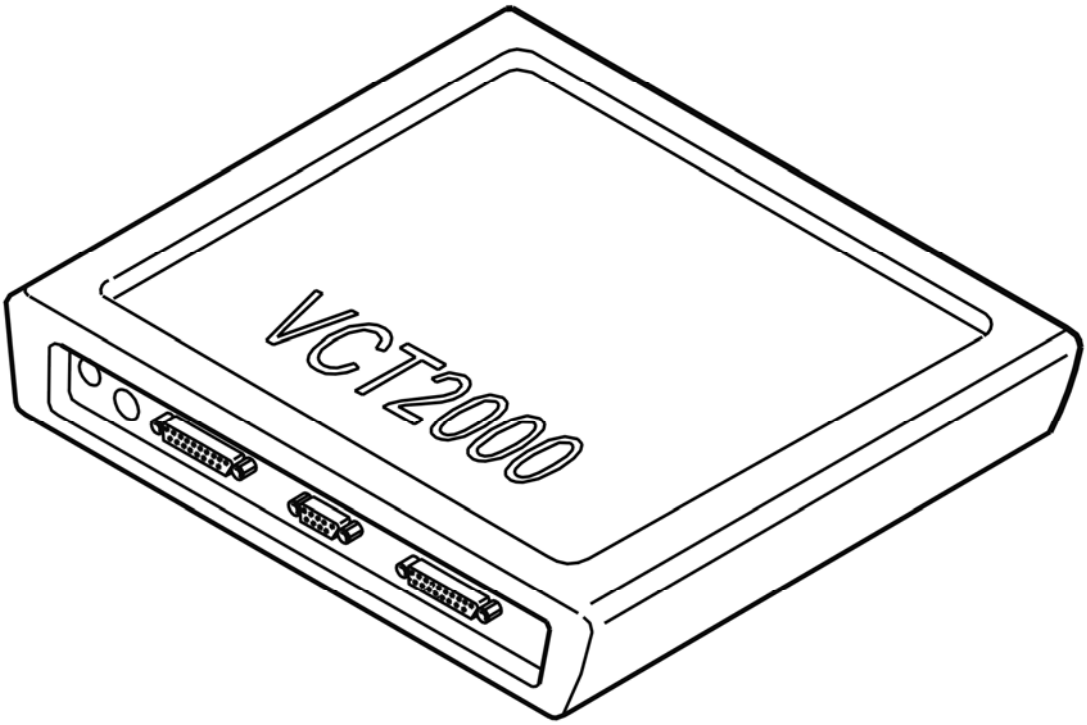

Fig. 294: Identifying VCT2000 Diagnostic Tool Symbol In VIDA
Courtesy of VOLVO CARS CORPORATION

CEM-1A41: REAL TIME CLOCK. INTERNAL FAULT. INTERMITTENT FAULT (2003-2004)

DIAGNOSTIC TROUBLE CODE (DTC) INFORMATION

Condition

Diagnostic trouble code (DTC) CEM-1A41 is stored if the central electronic module (CEM) registers that the real time clock (RTC) has stopped.

Substitute Value

- None.

Possible Source

- Internal fault in the central electronic module (CEM).

Fault symptom[s]

- The parking heater does not operate.
- The clock in the information module is not working.

INTERNAL FAULT. INTERMITTENT FAULT

FAULT-TRACING INFORMATION

The diagnostic trouble code (DTC) indicates that the control module has previously registered an intermittent fault, but that the fault is no longer present.

CEM-1A41: REAL TIME CLOCK. INTERNAL FAULT. PERMANENT FAULT (2003-2004)

DIAGNOSTIC TROUBLE CODE (DTC) INFORMATION

see **DIAGNOSTIC TROUBLE CODE (DTC) INFORMATION**

INTERNAL FAULT. PERMANENT FAULT

REPLACING THE CONTROL MODULE

The diagnostic trouble code (DTC) indicates an internal fault in the central electronic module (CEM) which means that the control module needs to be replaced.

Read off the customer parameters from the control module before it is replaced. Use the VCT2000 (or appropriate scan tool). Make a note of the values.

Other information

- For -2004, see: **CENTRAL ELECTRONIC MODULE (CEM), REPLACING** .

- For 2005-, see: **CENTRAL ELECTRONIC MODULE (CEM), REPLACING** .

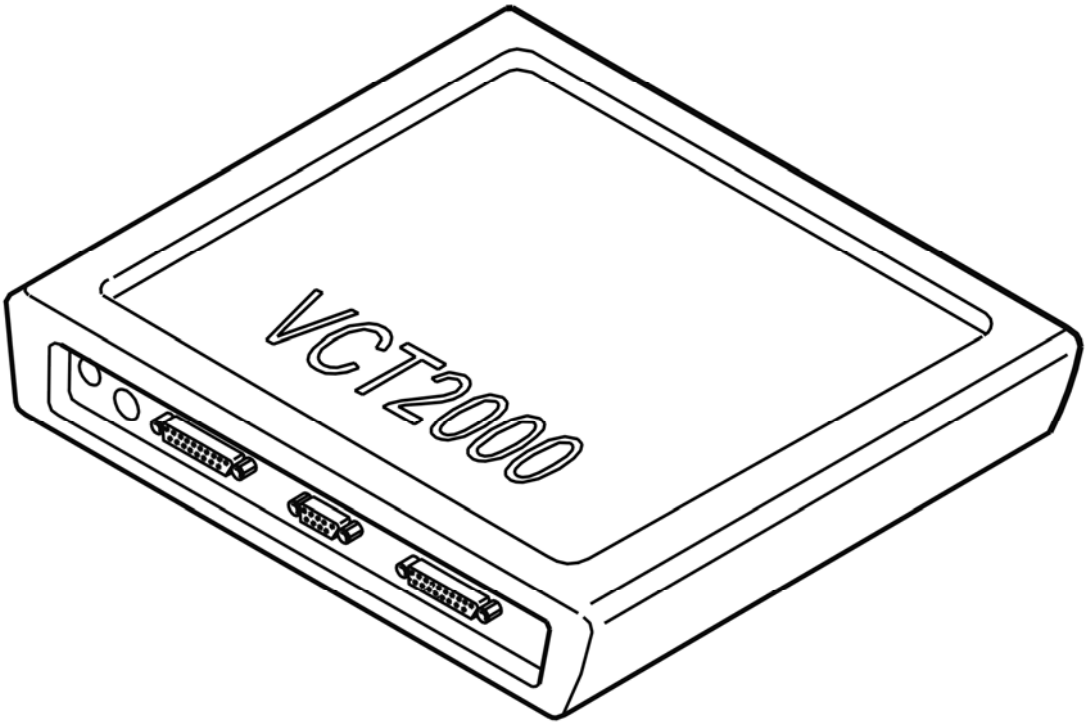

Fig. 295: Identifying VCT2000 Diagnostic Tool Symbol In VIDA
Courtesy of VOLVO CARS CORPORATION

CEM-1A42: REAL TIME CLOCK. FAULTY SIGNAL (2005)

DIAGNOSTIC TROUBLE CODE (DTC) INFORMATION CEM-1A42

Condition

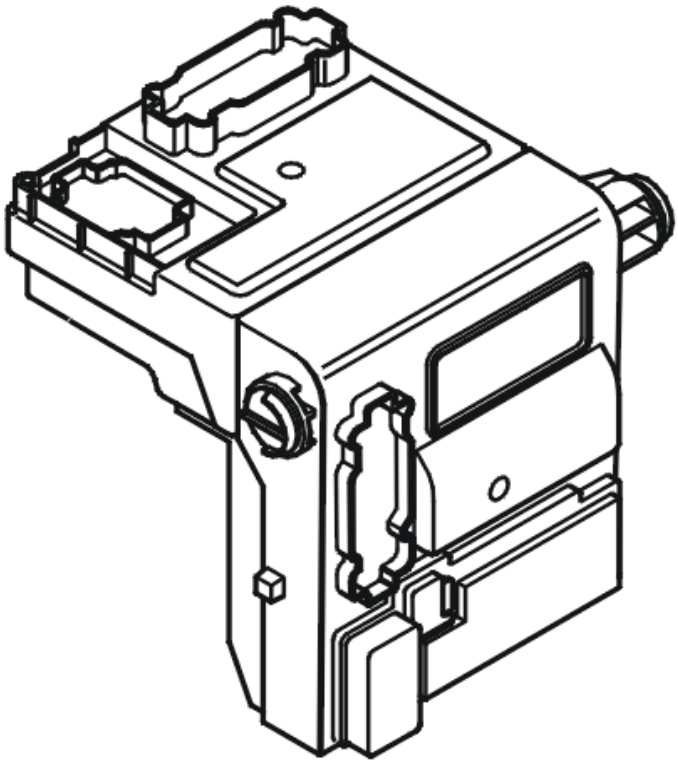

Fig. 296: Identifying Central Electronic Module (CEM)
Courtesy of VOLVO CARS CORPORATION

The central electronic module (CEM) has an internal clock which starts when the control module is powered for the first time in the factory. The time is kept from the time the internal timer circuit started.

The diagnostic trouble code (DTC) is stored if the central electronic module (CEM) registers that the real time clock is giving an incorrect value.

The diagnostic trouble code (DTC) can be diagnosed when the ignition is switched on and when the test is run at least once a minute.

Substitute Value

- None.

Possible Source

- Internal fault in the central electronic module (CEM).

Fault symptom[s]

- The parking heater does not operate.

- The clock in the information module is not working

FAULTY SIGNAL

see **FAULTY SIGNAL**

CEM-1A42: REAL TIME CLOCK. INTERNAL FAULT. INTERMITTENT FAULT (2003-2004)

DIAGNOSTIC TROUBLE CODE (DTC) INFORMATION

Condition

Diagnostic trouble code (DTC) CEM-1A42 is stored if central electronic module (CEM) registers that the real time clock (RTC) is giving an incorrect value.

Substitute Value

- None.

Possible Source

- Internal fault in the central electronic module (CEM).

Fault symptom[s]

- The parking heater does not operate.
- The clock in the information module is not working.

INTERNAL FAULT. INTERMITTENT FAULT

see **INTERNAL FAULT. INTERMITTENT FAULT**

CEM-1A42: REAL TIME CLOCK. INTERNAL FAULT. PERMANENT FAULT (2003-2004)

DIAGNOSTIC TROUBLE CODE (DTC) INFORMATION

see **DIAGNOSTIC TROUBLE CODE (DTC) INFORMATION**

INTERNAL FAULT. PERMANENT FAULT

see **INTERNAL FAULT. PERMANENT FAULT**

CEM-1A51: COMMUNICATION WITH THE SUPPLEMENTAL RESTRAINT

SYSTEM MODULE (SRS). SIGNAL MISSING (2003-2004)

DIAGNOSTIC TROUBLE CODE (DTC) INFORMATION CEM-1A51

Condition

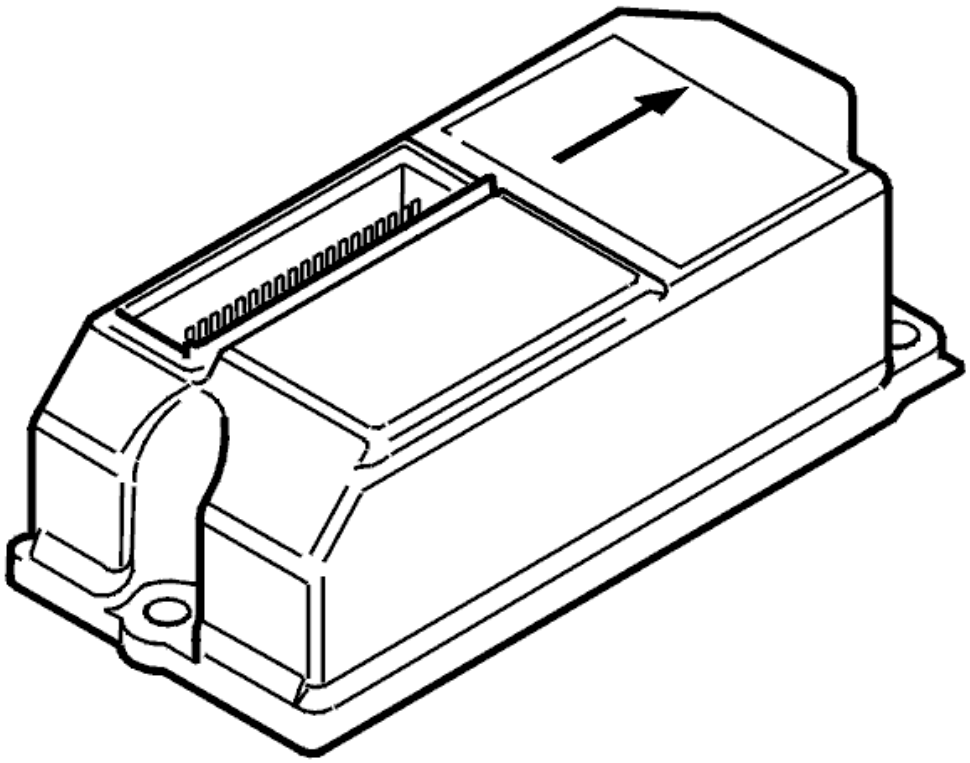

Fig. 297: Identifying SRS Control Module
Courtesy of VOLVO CARS CORPORATION

Diagnostic trouble codes (DTCs) are stored if the central electronic module (CEM) registers that communication with the supplementary restraint system (SRS) control module is not operating.

NOTE: **In the event of CEM-1A5X diagnostic trouble codes (DTCs), the central electronic module (CEM) must not be replaced as the diagnostic trouble code (DTC) indicates a communication fault in the Control area network**

Substitute Value

None.

Possible Source

- No power supply to SRS control module

- Open-circuit in the ground lead to the SRS control module
- Contact resistance in the terminals
- Open-circuit in the wiring for the CAN low speed network to the SRS control module
- The SRS control module is not intended for this car (for example a used control module with different software/hardware).

HINT: If several diagnostic trouble codes (DTCs) are stored in the central electronic module (CEM) for communication faults with other control modules in the low speed network, this indicates a common fault in the Control area network.

Fault symptom[s]

- The SRS indicator lamp is lit.

SIGNAL MISSING

CHECKING THE FUNCTION OF THE SUPPLEMENTAL RESTRAINT SYSTEM MODULE (SRS)

Check the power supply to the control module by turning the ignition to position II.

The SRS (supplemental restraint system) indicator lamp in the driver information module (DIM) must light. The lamp must go out after approximately 7 seconds.

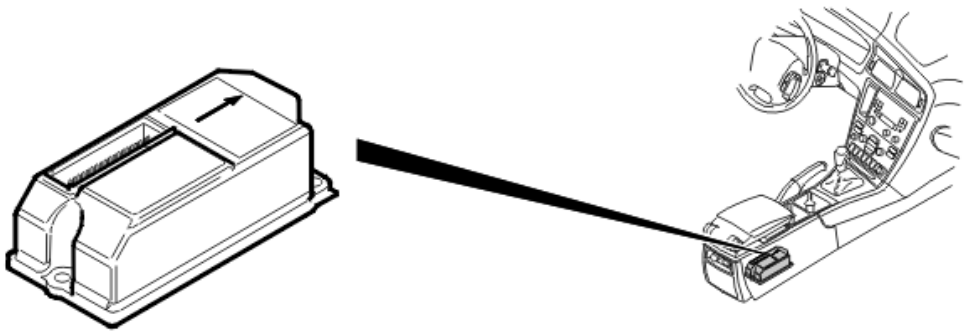

Fig. 298: Locating SRS Control Module
Courtesy of VOLVO CARS CORPORATION

Does the warning lamp go out?

- **YES**

  Refer to **CHECKING COMMUNICATION WITH THE SUPPLEMENTAL RESTRAINT SYSTEM MODULE (SRS)**

- **NO**

Refer to **CHECKING THE POWER SUPPLY AND GROUND FOR THE SUPPLEMENTAL RESTRAINT SYSTEM MODULE (SRS)**

CHECKING THE POWER SUPPLY AND GROUND FOR THE SUPPLEMENTAL RESTRAINT SYSTEM MODULE (SRS)

Checking the power supply

- Check the fuse in the passenger compartment fusebox for the supplemental restraint system module (SRS).

NOTE: If a fuse is blown, check the circuit after the fuse before replacing the fuse. Check for a short-circuit to ground. Then replace the fuse.

- Check the power supply cable between the X-supply from the ignition switch and the supplemental restraint system module (SRS). Check for an open-circuit
- Check the power supply cable between the 15-supply and the supplemental restraint system module (SRS). Check for an open-circuit. Check for a short-circuit to ground.

Checking the ground terminal

- The supplemental restraint system module (SRS) is grounded when it is screwed into place in the car.

  The resistance between the control module casing and the ground terminal must be 0 ohms.

Remedy as necessary

Other information

- To access and replace the supplemental restraint system module (SRS) and connector, see **SUPPLEMENTAL RESTRAINT SYSTEM MODULE (SRS), REPLACING**
- For model year 2003-2004, see **CONNECTING THE BREAKOUT BOX** .
- For model year 2005-, see **CONNECTING THE BREAKOUT BOX** .
- With the ignition off and the supplemental restraint system module (SRS) installed, the resistance between the control module casing and the ground terminal must be approximately 0 ohms.
- For other values, see **SIGNAL SPECIFICATION**
- For information about checking the wiring, see **CHECKING WIRING AND TERMINALS**

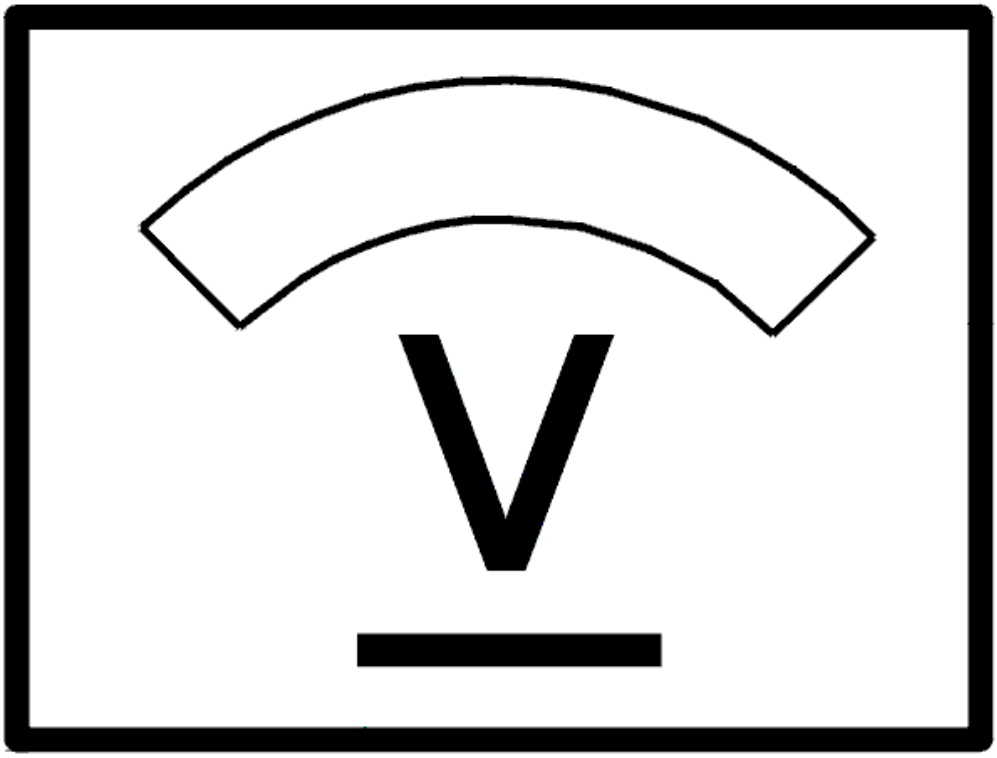

Fig. 299: Identifying Voltage Display
Courtesy of VOLVO CARS CORPORATION

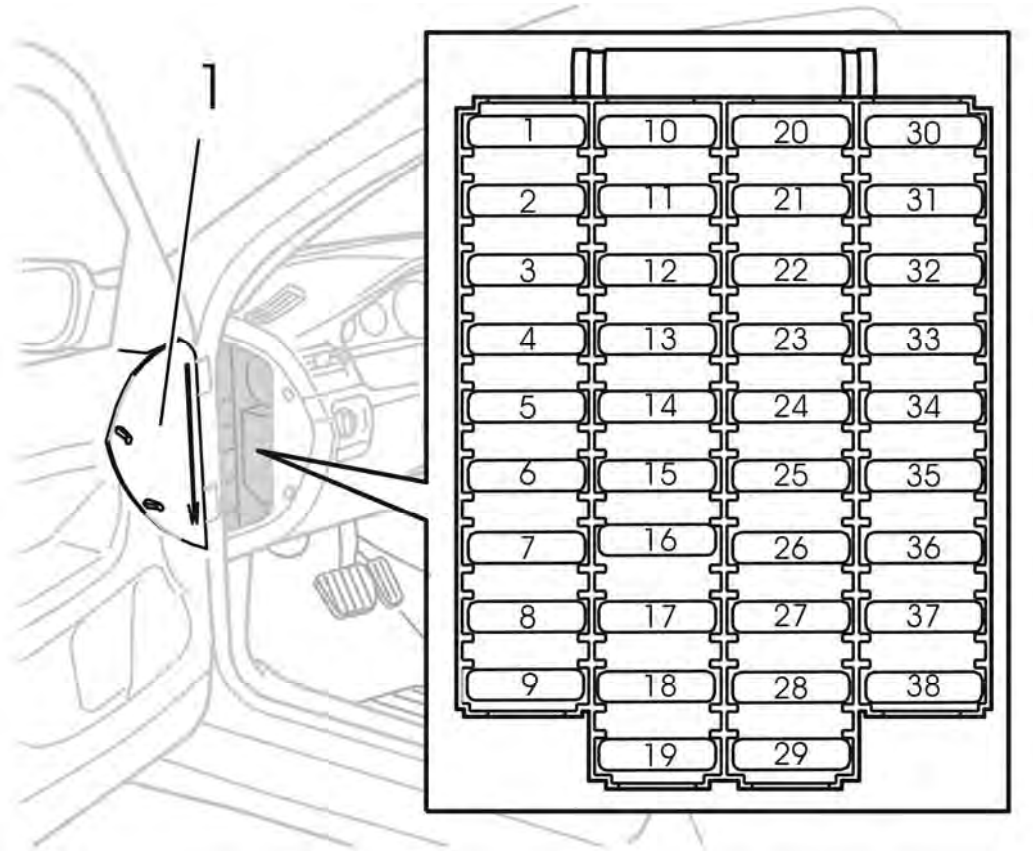

Fig. 300: Identifying Breakout Box
Courtesy of VOLVO CARS CORPORATION

Was a fault detected?

- **YES**

  Refer to **CHECKING THE FUNCTION OF THE SUPPLEMENTAL RESTRAINT SYSTEM MODULE (SRS)**

- **NO**

  Refer to **SIGNAL MISSING**

CHECKING COMMUNICATION WITH THE SUPPLEMENTAL RESTRAINT SYSTEM MODULE (SRS)

HINT: The CAN communication with the control module is probably OK if the control module ID can be read off. In that case the fault is probably intermittent and will then be more difficult to trace.

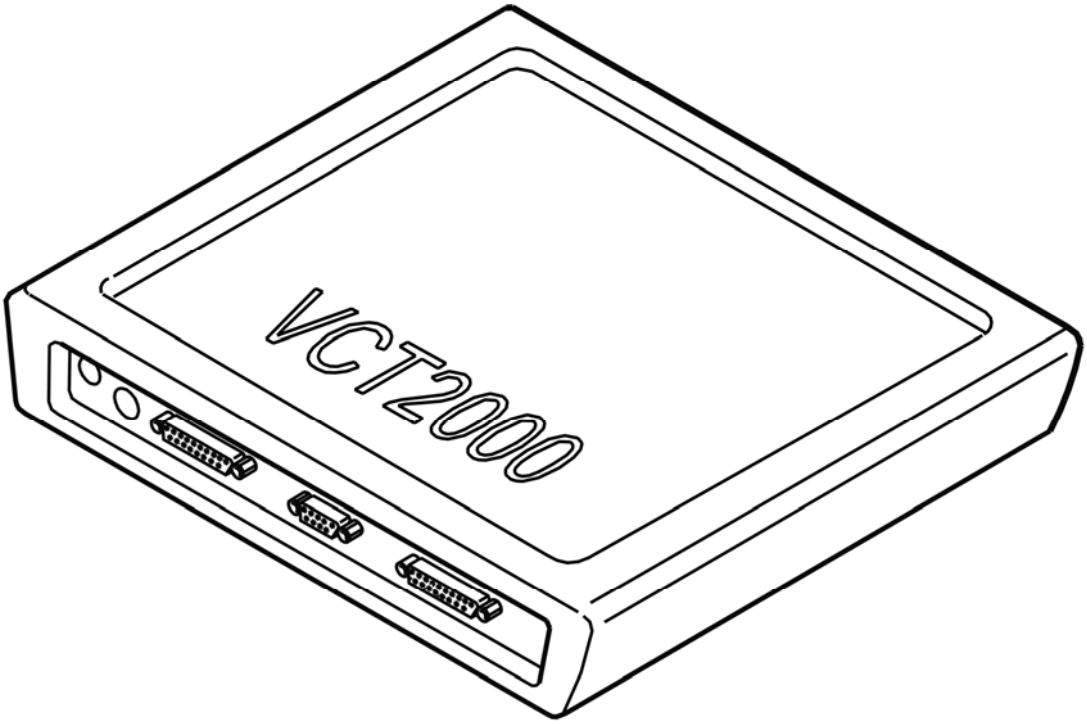

Fig. 301: Identifying VCT2000 Diagnostic Tool Symbol In VIDA
Courtesy of VOLVO CARS CORPORATION

- Try to communicate with the supplemental restraint system module (SRS) by reading off the control module ID using the VCT2000 (or appropriate scan tool)
- **Continue**

  Refer to **SIGNAL MISSING**

CHECKING THE FUNCTION OF THE SUPPLEMENTAL RESTRAINT SYSTEM MODULE (SRS)

HINT: After carrying out the repair, check that the fault has been remedied.

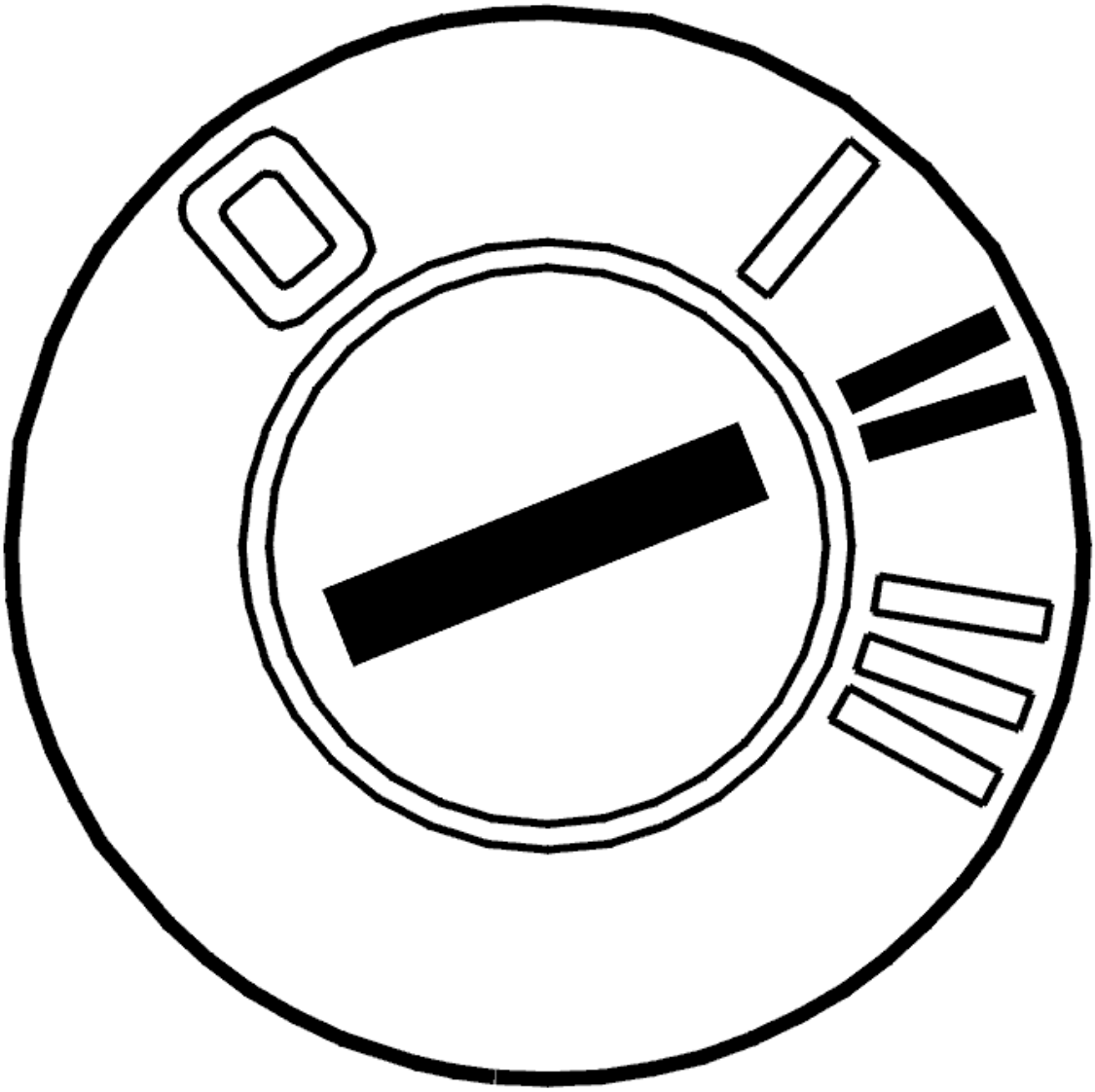

Fig. 302: Identifying Ignition ON
Courtesy of VOLVO CARS CORPORATION

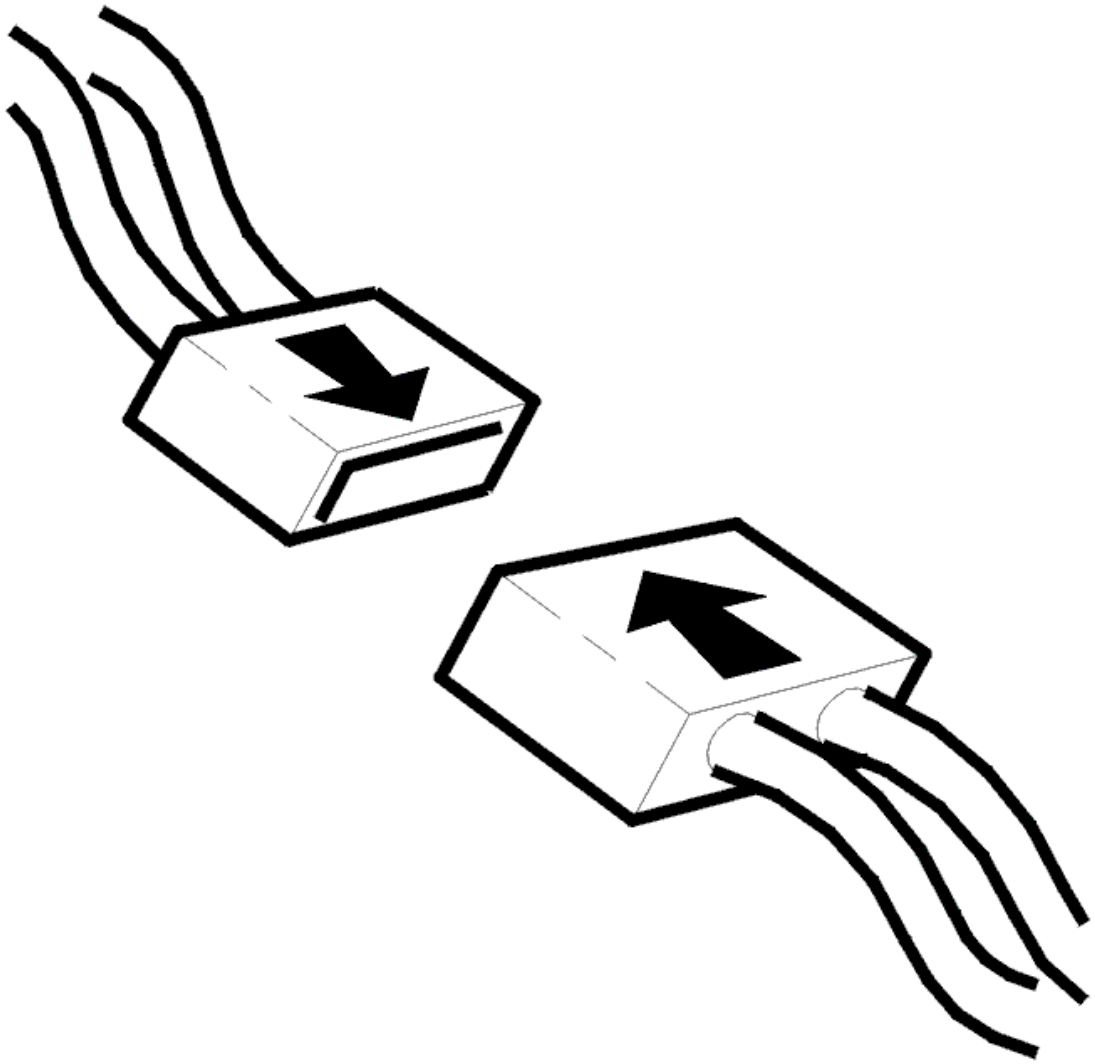

Fig. 303: Connecting Connector
Courtesy of VOLVO CARS CORPORATION

- Ignition off
- Reconnect the connectors. Reinstall the components
- Ignition on.

  Check the power supply to the control module by turning the ignition to position II.

  The indicator lamp in the driver information module (DIM) must light up. The lamp must go out after approximately 7 seconds.

Does the indicator lamp go out?

- **YES**

OKAY: Troubleshooting has been completed.

- **NO**

  Refer to **INFORMATION**

SIGNAL MISSING

GENERAL INFORMATION

HINT: For general information about fault-tracing the control area network (CAN), see the linked document below. See GENERAL INFORMATION ABOUT FAULT-TRACING IN THE CAN NETWORK (2005-2011)

In order to check the control area network (CAN) cables, the resistance in the network must be measured. The resistance between the two CAN cables, with the network connected, must be 60ohms in both the high speed network and the low speed network.

NOTE: **Resistance will only be 60 ohms if the main artery of the CAN network is whole and the network is connected. If the main artery of the CAN network is split somewhere and a reading is taken between the CAN cables, resistance will be 120 ohms.**

If diagnostic trouble codes (DTCs) can be read off from the relevant control module, the fault is probably intermittent. The locations that must be checked in the event of a fault in the low speed network are the junctions behind the central electronic module (CEM) and the audio module (AUM) as well as the cable harness behind the Audio module (AUM).

Intermittent fault in the current supply to the actual control module is indicated by the DTC in the Central electronic module (CEM) (CEM-1A5X or CEM-1A6X). There is probably no diagnostic trouble code (DTC) in the relevant control module as the control module cannot store a diagnostic trouble code (DTC) when it is without power.

- **Continue**

  Refer to **CHECKING THE RESISTANCE OF THE CONTROL AREA NETWORK (CAN) CABLES**

CHECKING THE RESISTANCE OF THE CONTROL AREA NETWORK (CAN) CABLES

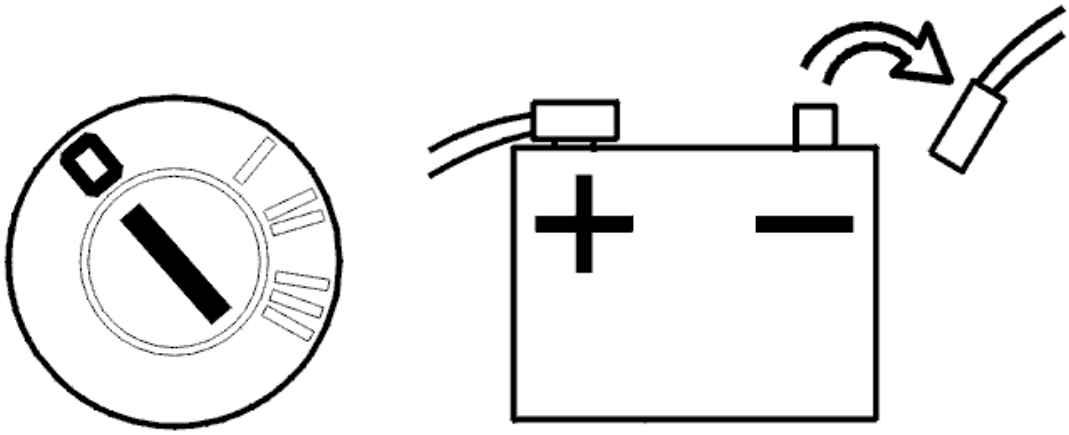

Fig. 304: Identifying Ignition In Off Position And Disconnecting Negative Cable From Battery
Courtesy of VOLVO CARS CORPORATION

- Disconnect the battery negative lead. The network must not be powered when taking resistance readings. Otherwise an incorrect value may be obtained.
- Connect the adapter wiring to the central electronic module (CEM).

  HINT: Where a breakout box cannot be used, take readings from the rear of the affected connectors if possible. This prevents terminal pins and socket housings being damaged.

  When taking readings on the low speed network

  - When taking readings on the low speed network the adapter wiring should be connected to the Central electronic module (CEM) and readings taken from there. Readings can even be taken in the connector for the Power seat module (PSM). The advantage of the adapter wiring to the Central electronic module (CEM) is that all control module can be connected in the network when taking readings and access can be gained to both the high speed and low speed networks.

    The resistance reading only measures the main arteries in the low speed network, not the junctions that exist for different control modules.

  When taking readings on the high speed network

  - When taking readings on the high speed network the adapter wiring should be connected to the Engine control module (ECM) and readings taken from there. The Engine control module (ECM) must be connected. This resistance reading only measures the main arteries in the high speed network.

  Connect an ohmmeter to the terminals for CAN-L and CAN-H on the relevant network. Turn the contacts and turn the cable harness. Resistance must be approximately 60 ohms.

NOTE: **Resistance will only be 60 ohms if the main artery of the CAN network is whole and the network is connected. If the main artery of the CAN network is split somewhere and a reading is taken between the CAN cables, resistance will be 120 ohms.**

Other information

- see **BATTERY, DISCONNECTING**
- see **CONNECTING THE BREAKOUT BOX**
- see **CHECKING WIRING AND TERMINALS**

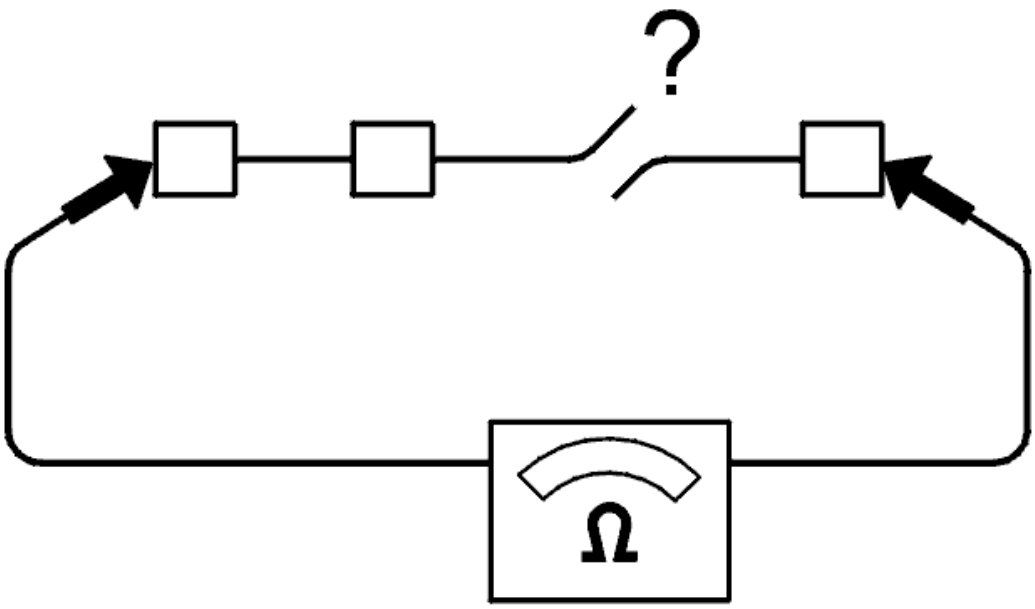

Fig. 305: Checking For Open Circuit
Courtesy of VOLVO CARS CORPORATION

Is the value OK?

- **YES**

  Refer to **CHECKING A SHORT-CIRCUIT IN CAN CABLES**

- **NO**

  Refer to **IDENTIFYING FAULT CAUSES IN THE CAN NETWORK**

CHECKING A SHORT-CIRCUIT IN CAN CABLES

Connect an ohmmeter between respective CAN cable and voltage supply and between the CAN cables and ground. Turn the contacts and turn the cable harness. The resistance must be infinite or very high.

HINT: Readings can be taken from one and the same connector if the CAN wiring, voltage supply and ground is pre-routed. If possible, measure from the rear of the affected connectors in order to minimize any damage and future loose connections. If this is not possible, use the adapter wiring or loose terminal pin for good contact.

Was a fault detected?

- **YES**

  Refer to **IDENTIFYING FAULT CAUSES IN THE CAN NETWORK**

- **NO**

  Refer to **CHECKING THE TRAFFIC LOAD ON THE CAN CABLES**

CHECKING THE TRAFFIC LOAD ON THE CAN CABLES

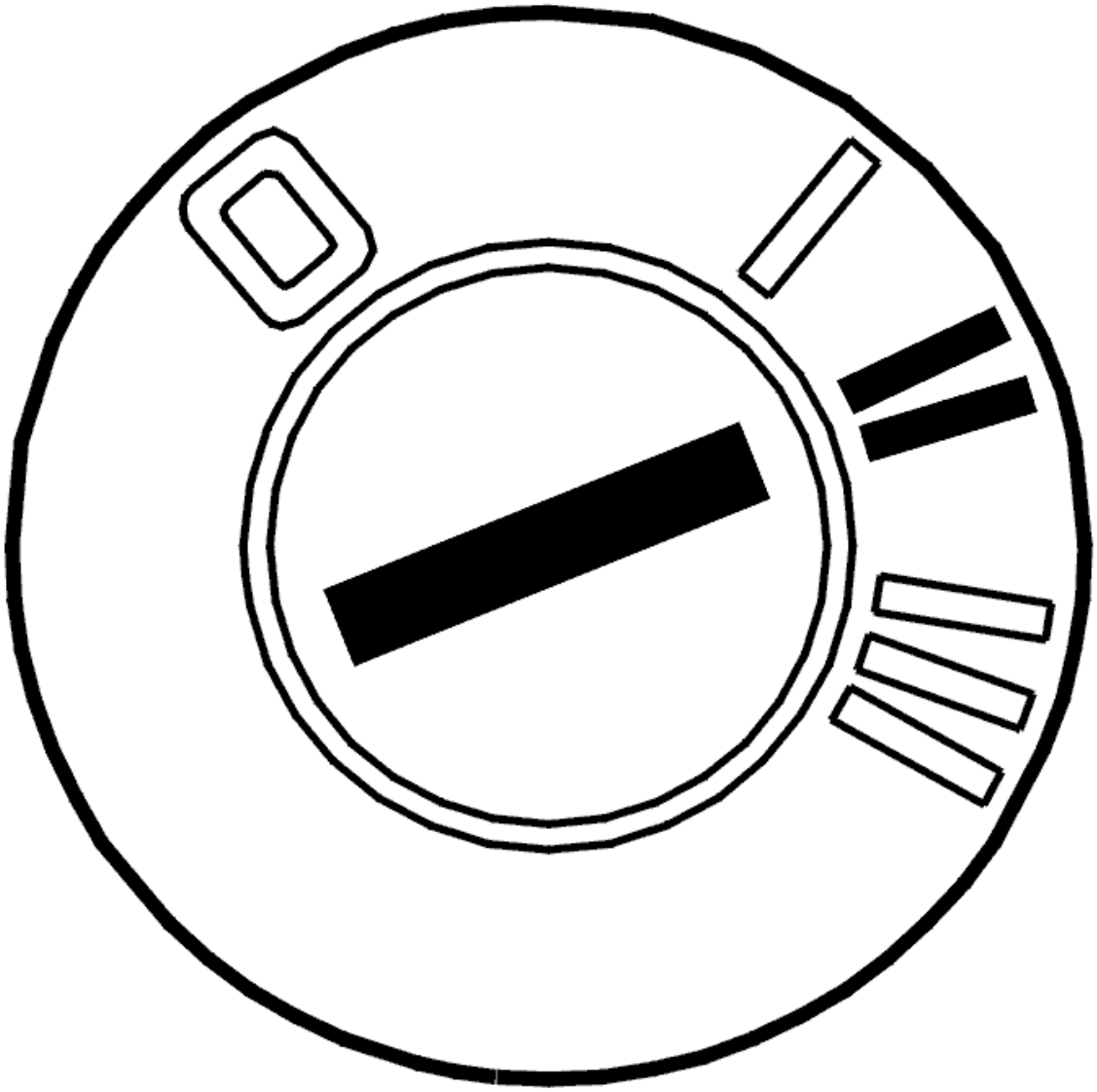

Fig. 306: Identifying Ignition ON
Courtesy of VOLVO CARS CORPORATION

- Connect the battery.
- Ignition on.

Faults in the CAN network may be due to a control module sending faulty messages that disrupt normal communication. When messages are sent incorrectly, this results in a considerable increase in the amount of traffic on the CAN network. The load can be checked by reading the average value of the voltage on the CAN cables in relation to ground.

The following applies for model year -2004:

Connect a voltmeter between CAN-L and ground. The voltage shall be approx. 2.3 V.

Then connect a voltmeter between CAN-H and ground. The voltage shall be approx. 2.8 V.

The following applies for model year 2004-:

Connect a voltmeter between CAN-L and ground. The voltage should be approx: V

Connect a voltmeter between CAN-H and ground. The voltage should be approx: V

NOTE: **For vehicles of later model years, normal voltage values lie within a specific interval due to increased traffic between the control modules on the CAN network upon update of the electrical system.**

HINT: If possible, measure from the rear of the affected connectors so that they are not damaged.

Other information

- see **BATTERY, DISCONNECTING**

Is the value OK?

- **YES**

  Refer to **INFORMATION**

- **NO**

  Refer to **IDENTIFYING A CONTROL MODULE IN THE CAN NETWORK**

IDENTIFYING FAULT CAUSES IN THE CAN NETWORK

- Disconnect a control module that disconnects the CAN network (a control module that has four terminals to the CAN network).

  HINT: For the low speed network, suitable places for disconnecting the network are at the steering wheel module (SWM), the driver information module (DIM) or the climate control module (CCM).

  In the event of an short-circuit between on of the CAN cables and voltage or ground, the fault can be localized disconnecting a control module that splits the CAN network. Readings can then be taken to determine on which side the fault is on the disconnected control module.

  Connect an ohmmeter between the CAN cable and voltage supply respectively ground. Take readings from both ends of the CAN networks at the network junction. Twist and bend the cable harness to find any intermittent short-circuits. The resistance must be infinite or very high (more than 1 Mohms).

  If a fault can be localized in one direction, split the network at a point further on in the CAN network in the direction that the fault was discovered and take a new reading. Try to locate the fault in this way.

  HINT: A short-circuit between the CAN cables and supply voltage or ground may be in either the wiring or in a control module.

Remedy the cables as necessary. If a fault is found on one control module, replace the control module.

- **Continue**

  Refer to **VERIFICATION**

IDENTIFYING A CONTROL MODULE IN THE CAN NETWORK

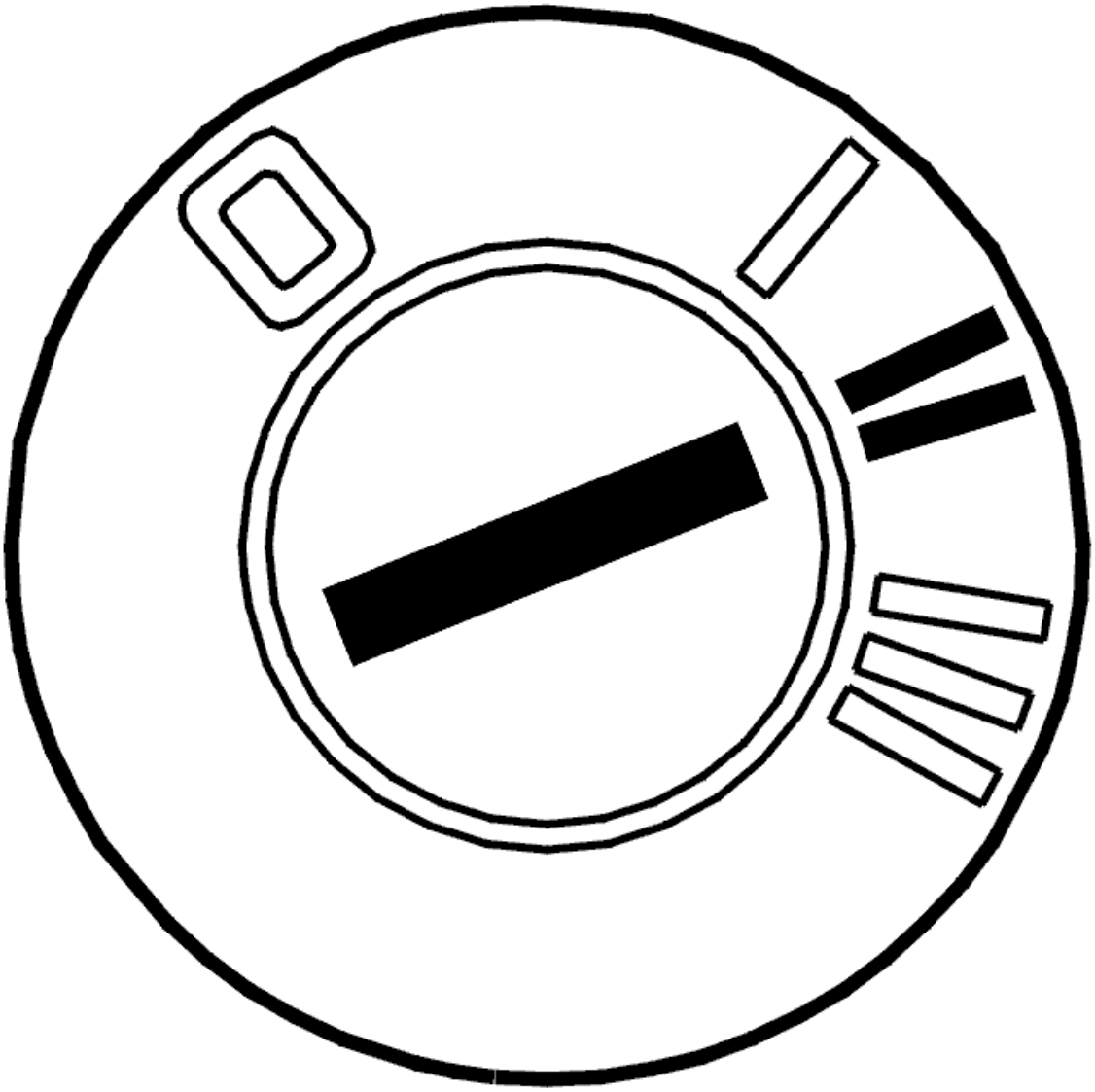

Fig. 307: Identifying Ignition ON
Courtesy of VOLVO CARS CORPORATION

- Connect the battery.
- Ignition on.

  If the load on the CAN network is too high, this may be due to a control module transmitting faulty messages on the CAN network. This is called a disruptive control module. The fault may also be due to

an intermittent short-circuit to supply voltage or ground in one of the CAN cables. This results in the control modules on the CAN network starting to send faulty messages. The fault may occur without any of the control modules storing a diagnostic trouble code (DTC). The voltage can be measured between the CAN cables in order to check the load on the CAN network.

The following applies for model year -2004:

Connect a voltmeter between the CAN cables. In the event of correct communication on the network, the average value of the voltage must be approximately 0.5 V (0.4 V to 0.6 V).

The following applies for model year 2004-:The following applies for model year 2004-:

Connect a voltmeter between the CAN cables. During correct CAN network communication, voltage should be about 0.6-1.4 V.

NOTE: For vehicles of later model years, the normal voltage value is slightly higher due to increased traffic between the control modules on the CAN network upon update of the electrical system.

In the event of a communication fault the voltage is significantly higher than the above specified values. In order to identify which control module has faulty communication, cut the power supply to one control module at a time. Check the voltage in the CAN cables again. The easiest way to cut the power supply is to remove the fuse(s) for the relevant control module. Repeat until the voltage between the CAN wiring drops to the normal level.

HINT: When the probable faulty control module has been identified, connect and disconnect the supply voltage to the control module a number of times to verify that the fault appears and disappears.

NOTE: Do not cut the power to the central electronic module (CEM) unless it is the last control module left to check.

The control module that is communicating incorrectly must be replaced. Remedy as necessary.

NOTE: After a fault with "interfering" control modules, other control modules may remain in "Limp-Home mode" even when the ignition has been switched off and on several times. To remedy this, disconnect and reconnect the battery negative terminal to restore the control modules to normal function.

Other information

- see **BATTERY, DISCONNECTING**

- **Continue**

Refer to **VERIFICATION**

IDENTIFYING FAULT CAUSES IN THE CAN NETWORK

- Disconnect a control module that disconnects the CAN network (a control module that has four terminals to the CAN network).

  HINT: For the low speed network, suitable places for disconnecting the network are at the steering wheel module (SWM), the driver information module (DIM) or the climate control module (CCM).

  In the event of an open-circuit on, or short-circuit between the CAN cables, the fault can be localized by disconnecting a control module that splits the CAN network. Readings can then be taken to determine on which side the fault is on the disconnected control module.

  Connect an ohmmeter between the CAN cables. Take readings from both ends of the CAN networks at the network junction. Twist and bend the cable harness to find any intermittent short-circuits. Resistance should be 120 ohms.

  If a fault can be localized in one direction, split the network at a point further on in the CAN network in the direction that the fault was discovered and take a new reading. Try to locate the fault in this way.

  Remedy the cables as necessary.

- **Continue**

  Refer to **VERIFICATION**

VERIFICATION

HINT: After rectifying a fault, a verification should be carried out.

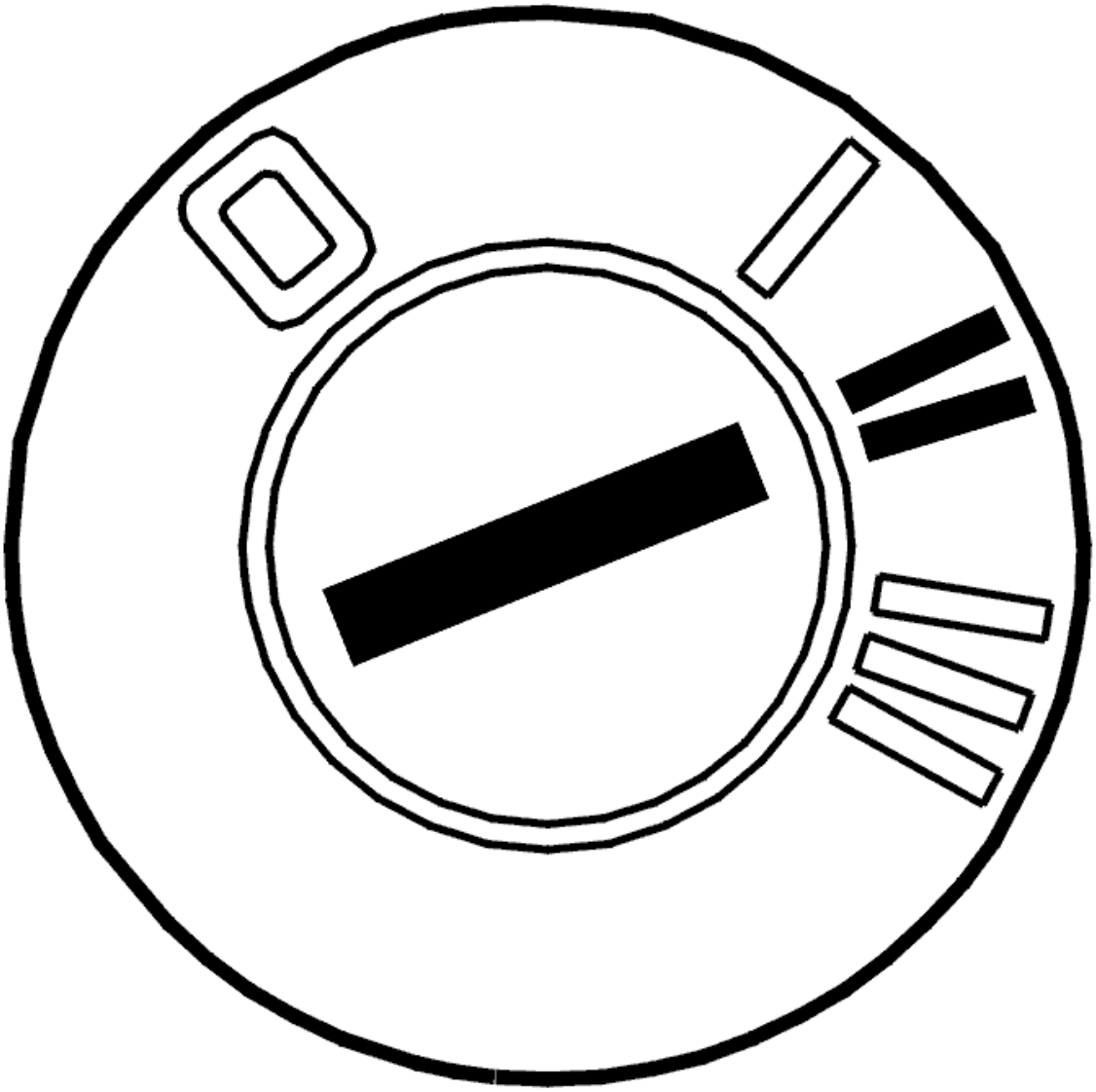

Fig. 308: Identifying Ignition ON
Courtesy of VOLVO CARS CORPORATION

- Reinstall the connectors, components etc.
- Ignition on.
- Erase diagnostic trouble codes using the VCT2000 (or appropriate scan tool).
- Start the car. Allow the vehicle to run for 10 minutes.
- Read off diagnostic trouble codes (DTCs).

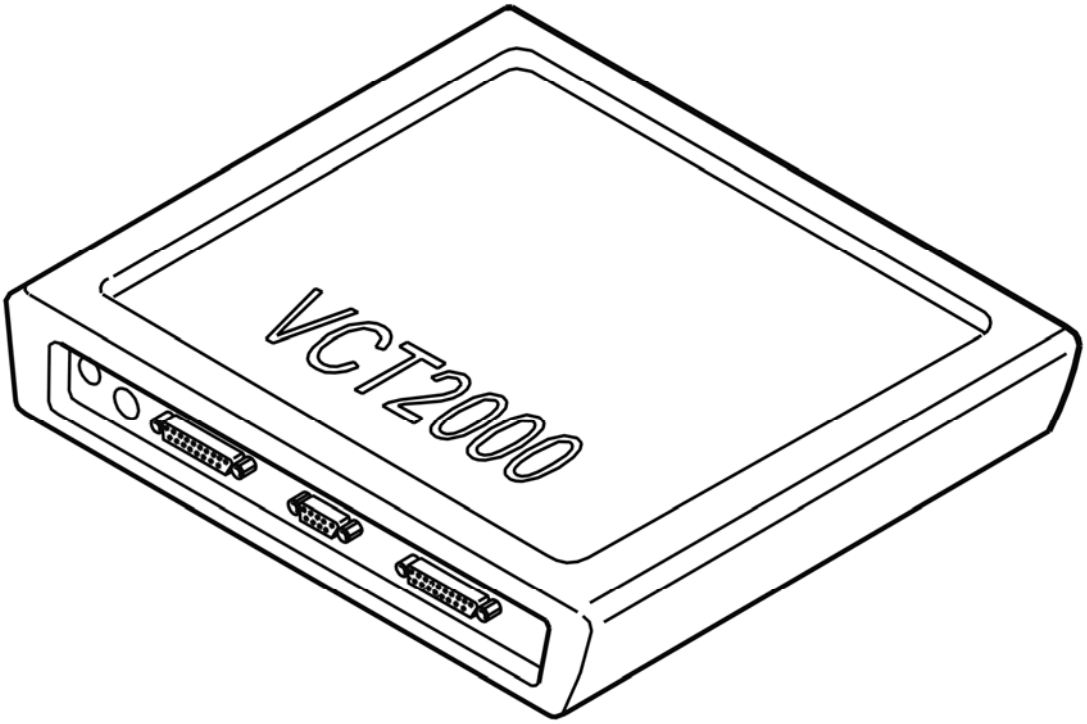

Fig. 309: Identifying VCT2000 Diagnostic Tool Symbol In VIDA
Courtesy of VOLVO CARS CORPORATION

Does the diagnostic trouble code (DTC) for a communication fault recur (CEM-1A5X or CEM-1A6X)?

- **YES**

  Refer to **INFORMATION**

- **NO**

  OKAY: Troubleshooting has been completed.

INFORMATION

FAULT-TRACING INFORMATION

Verification shows that the fault is no longer present. The diagnostic trouble code (DTC) was probably caused by an intermittent fault.

Fault-tracing for this diagnostic trouble code (DTC) is not followed by a verification.

You can view the information again or exit fault-tracing for this diagnostic trouble code (DTC).

INFORMATION

FAULT-TRACING INFORMATION

The fault should have been detected and remedied. As this is not the case fault-tracing has failed.

Exit fault-tracing for this diagnostic trouble code (DTC) or make another attempt.

SIGNAL SPECIFICATION

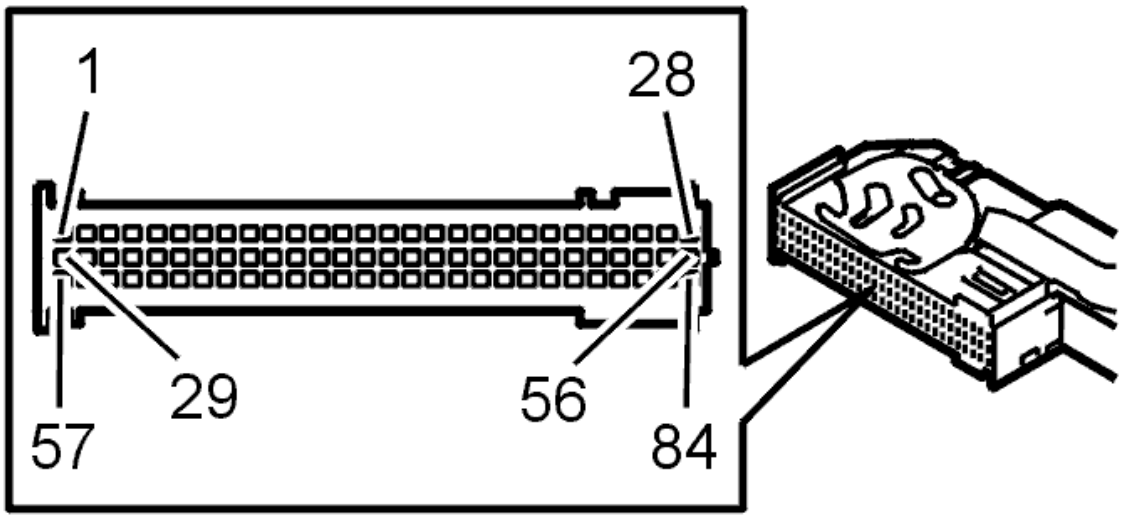

Fig. 310: Control Module Terminals
Courtesy of VOLVO CARS CORPORATION

NOTE: **It is important to connect the breakout box and check the ground terminals before taking readings.**

Two breakout boxes are required to take readings from the SRS control module.

NOTE: **The terminals for connector C are split between breakout boxes 1 and 2.**

From model year 2003, the connectors are numbered 1-84.

- Terminals #1A-#28A correspond to terminals #1-#28
- Terminals #1B-#28B correspond to terminals #29-#56
- #1C-#28C correspond to #57-#84

BREAKOUT BOX 1

Breakout box	Terminal control module -02	Terminal control module 03-	Function	Other
1	#1A	#1	Signal ground	-

2	#2A	#2	Signal ground	-
3	#3A	#3	Front left side impact protection (SIPS) bag (-)	Monitoring signal at normal status. Ignition pulse on deployment.
4	#4A	#4	Front left side impact protection (SIPS) bag (+)	Monitoring signal at normal status. Ignition pulse on deployment.
5	#5A	#5	Front left seat belt tensioner (+)	Monitoring signal at normal status. Ignition pulse on deployment.
6	#6A	#6	Belt tensioner, front left (-)	Monitoring signal at normal status. Ignition pulse on deployment.
7	#7A	#7	-	-
8	#8A	#8	Side impact sensor, left front	-
9	#9A	#9	Side impact sensor, left front	-
10	#10A	#10	-	-
11	#11A	#11	-	-
12	#12A	#12	-	-
13	#13A	#13	-	-
14	#14A	#14	-	-
15	#15A	#15	Belt tensioner, rear left (-)	Monitoring signal at normal status. Ignition pulse on deployment.
16	#16A	#16	Belt tensioner, rear left (+)	Monitoring signal at normal status. Ignition pulse on deployment.
17	#17A	#17	Rear center seat belt tensioner (+)	Monitoring signal at normal status. Ignition pulse on deployment. Replaced by pin 24C from VIN 116811.
18	#18A	#18	Rear center seat belt tensioner (-)	Monitoring signal at normal position. Ignition pulse on deployment. Replaced by pin 23C from chassis number 116811 inclusive.
19	#19A	#19	-	-
20	#20A	#20	-	-
21	#21A	#21	Left inflatable curtain (+)	Monitoring signal at normal status. Ignition pulse on deployment.

22	#22A	#22	Left inflatable curtain (-)	Monitoring signal at normal status. Ignition pulse on deployment.
23	#23A	#23	-	-
24	#24A	#24	-	-
25	#25A	#25	-	-
26	#26A	#26	-	-
27	#27A	#27	Side impact sensor, rear left	-
28	#28A	#28	Side impact sensor, rear left	-
29	#1B	#29	-	-
30	#2B	#30	Collision signal	Signal to the central electronic module (CEM)
31	#3B	#31	-	-
32	#4B	#32	SRS warning lamp	Activated
33	#5B	#33	SRS warning lamp	Deactivated
34	#6B	#34	Switch (+)	-
35	#7B	#35	Driver airbag, stage 1 (-)	Monitoring signal at normal status. Ignition pulse on deployment.
36	#8B	#36	Driver airbag, stage 1 (+)	Monitoring signal at normal status. Ignition pulse on deployment.
37	#9B	#37	Driver airbag, stage 2 (+)	Monitoring signal at normal status. Ignition pulse on deployment.
38	#10B	#38	Driver airbag, stage 2 (-)	Monitoring signal at normal status. Ignition pulse on deployment.
39	#11B	#39	Passenger airbag, stage 1 (-)	Monitoring signal at normal status. Ignition pulse on deployment.
40	#12B	#40	Passenger airbag, stage 1 (+)	Monitoring signal at normal status. Ignition pulse on deployment.
41	#13B	#41	Passenger airbag, stage 2 (+)	Monitoring signal at normal status. Ignition pulse on deployment.
42	#14B	#42	Passenger airbag, stage 2 (-)	Monitoring signal at normal status. Ignition pulse on deployment.
43	#15B	#43	Switch (-)	-

44	#16B	#44	-	-
45	#17B	#45	-	-
46	#18B	#46	-	-
47	#19B	#47	-	-
48	#20B	#48	-	-
49	#21B	#49	-	-
50	#22B	#50	-	-
51	#23B	#51	Control modules communication cable (CAN H)	U=2.5-3.5 V
52	#24B	#52	Control modules communication cable (CAN H)	U=2.5-3.5 V
53	#25B	#53	Control modules communication cable (CAN L)	U=1.5-2.5 V
54	#26B	#54	Control modules communication cable (CAN L)	U=1.5-2.5 V
55	#27B	#55	X-feed voltage from the ignition switch (ignition switch pos. I and II)	Battery voltage approximately 12 V
56	#28B	#56	15-feed voltage (ignition switch pos. II and III)	Battery voltage approximately 12 V
57	#1C	#57	-	-
58	#2C	#58	-	-
59	#3C	#59	Side airbag, front right (-)	Monitoring signal at normal status. Ignition pulse on deployment.
60	#4C	#60	Front right side impact protection (SIPS) bag (+)	Monitoring signal at normal status. Ignition pulse on deployment.

BREAKOUT BOX 2

Breakout box	Terminal control module -02	Terminal control module 03-	Function	Other
1	#5C	#61	Front right seat belt tensioner (+)	Monitoring signal at normal status. Ignition pulse on deployment.
2	#6C	#62	Front right seat belt tensioner (-)	-
3	#7C	#63	-	-
4	#8C	#64	Side impact sensor, right front	-

5	#9C	#65	Side impact sensor, right front	-
6	#10C	#66	-	-
7	#11C	#67	-	-
8	#12C	#68	-	-
9	#13C	#69	-	-
10	#14C	#70	-	-
11	#15C	#71	Rear right seat belt tensioner (-)	Monitoring signal at normal status. Ignition pulse on deployment.
12	#16C	#72	Rear right seat belt tensioner (+)	Monitoring signal at normal status. Ignition pulse on deployment.
13	#17C	#73	-	-
14	#18C	#74	-	-
15	#19C	#75	-	-
16	#20C	#76	-	-
17	#21C	#77	Right inflatable curtain (+)	Monitoring signal at normal status. Ignition pulse on deployment.
18	#22C	#78	Right inflatable curtain (-)	Monitoring signal at normal status. Ignition pulse on deployment.
19	#23C	#79	Rear center seat belt tensioner (-)	Monitoring signal at normal status. Ignition pulse on deployment. Replaces pin 18A from VIN 116811.
20	#24C	#80	Rear center seat belt tensioner (+)	Monitoring signal at normal status. Ignition pulse on deployment. Replaces pin 17A from VIN 116811.
21	#25C	#81	-	-
22	#26C	#82	-	-
23	#27C	#83	Side impact sensor, right rear	-
24	#28C	#84	Side impact sensor, right rear	-

CEM-1A51: COMMUNICATION WITH THE SUPPLEMENTAL RESTRAINT SYSTEM MODULE (SRS). SIGNAL MISSING (2005-2011)

DIAGNOSTIC TROUBLE CODE (DTC) INFORMATION CEM-1A51

Condition

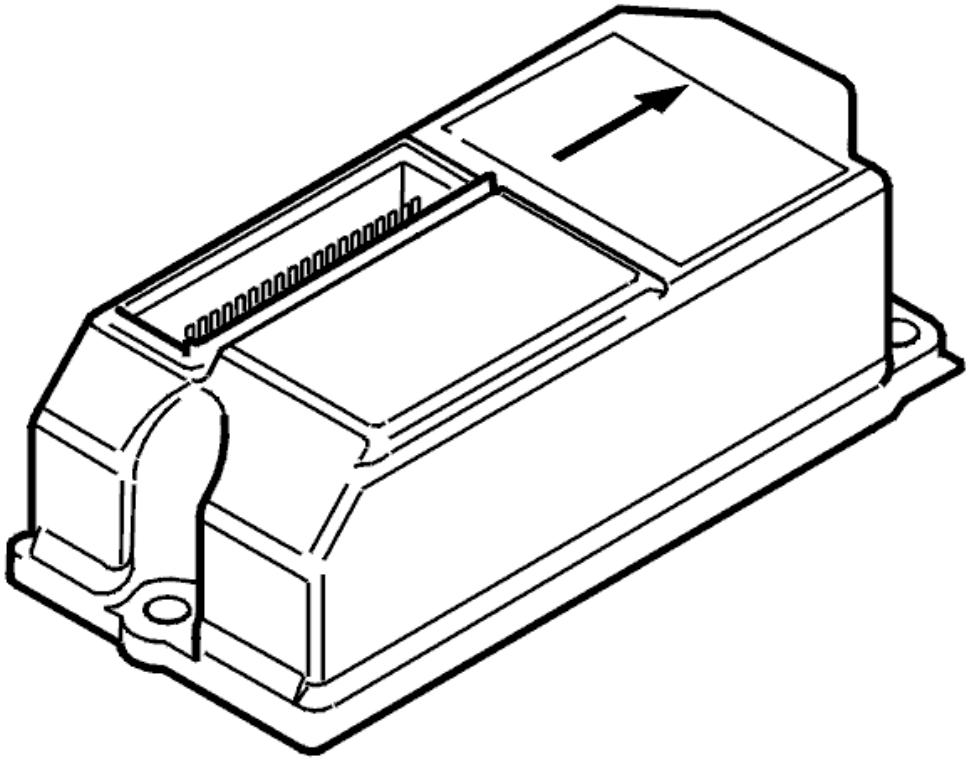

Fig. 311: Identifying SRS Control Module
Courtesy of VOLVO CARS CORPORATION

The diagnostic trouble code (DTC) is stored if the central electronic module (CEM) registers that communication with the supplementary restraint system (SRS) control module is not operating.

The diagnostic trouble code (DTC) can be diagnosed when the ignition has been on for more than 10 seconds.

NOTE: **In the event of CEM-1A5X diagnostic trouble codes (DTCs), the central electronic module (CEM) must not be replaced as the diagnostic trouble code (DTC) indicates a communication fault in the controller area network (CAN)**

Substitute Value

- None.

Possible Source

- No power supply to SRS control module
- Open-circuit in the ground lead for the supplemental restraint system module (SRS)
- Contact resistance in the terminals

- Open-circuit in the wiring for the CAN low speed network to the SRS control module
- The supplemental restraint system module (SRS) is not intended for this vehicle (for example a used control module with different software/hardware).

HINT: If several diagnostic trouble codes (DTCs) are stored in the central electronic module (CEM) for communication faults with other control modules in the low speed network, this indicates a common fault in the controller area network (CAN).

Fault symptom[s]

- The SRS indicator lamp is lit.

SIGNAL MISSING

CHECKING THE POWER SUPPLY FOR THE SUPPLEMENTAL RESTRAINT SYSTEM MODULE (SRS)

Check the power supply to the control module by turning the ignition key to ignition position II.

The SRS (supplemental restraint system) indicator lamp in the driver information module (DIM) must light. The lamp must go out after a few seconds.

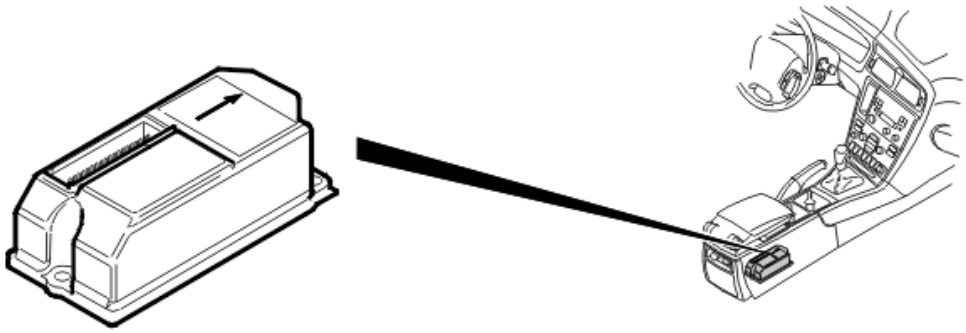

Fig. 312: Locating SRS Control Module
Courtesy of VOLVO CARS CORPORATION

Does the warning lamp go out?

- **YES**

  Refer to **CHECKING COMMUNICATION WITH THE SUPPLEMENTAL RESTRAINT SYSTEM MODULE (SRS)**

- **NO**

  Refer to **CHECKING THE POWER SUPPLY AND GROUND FOR THE SUPPLEMENTAL RESTRAINT SYSTEM MODULE (SRS)**

CHECKING THE POWER SUPPLY AND GROUND FOR THE SUPPLEMENTAL RESTRAINT SYSTEM MODULE (SRS)

Check that the fuse for the control module is intact.

Check the power supply and ground terminal for the supplemental restraint system module (SRS).

NOTE: The supplemental restraint system module (SRS) is powered via two power inputs. Check that the control module is powered in all ignition positions according to the instructions below.

Remedy as necessary

Other information

- see **CHECKING THE SUPPLY VOLTAGE/GROUND TERMINAL**
- see **CHECKING WIRING AND TERMINALS**

Was a fault detected?

- **YES**

  Refer to **CHECKING THE FUNCTION OF THE SUPPLEMENTAL RESTRAINT SYSTEM MODULE (SRS)**

- **NO**

  Refer to **SIGNAL MISSING**

CHECKING COMMUNICATION WITH THE SUPPLEMENTAL RESTRAINT SYSTEM MODULE (SRS)

HINT: The CAN communication with the control module is probably OK if the control module ID can be read off. In that case the fault is probably intermittent and will then be more difficult to trace.

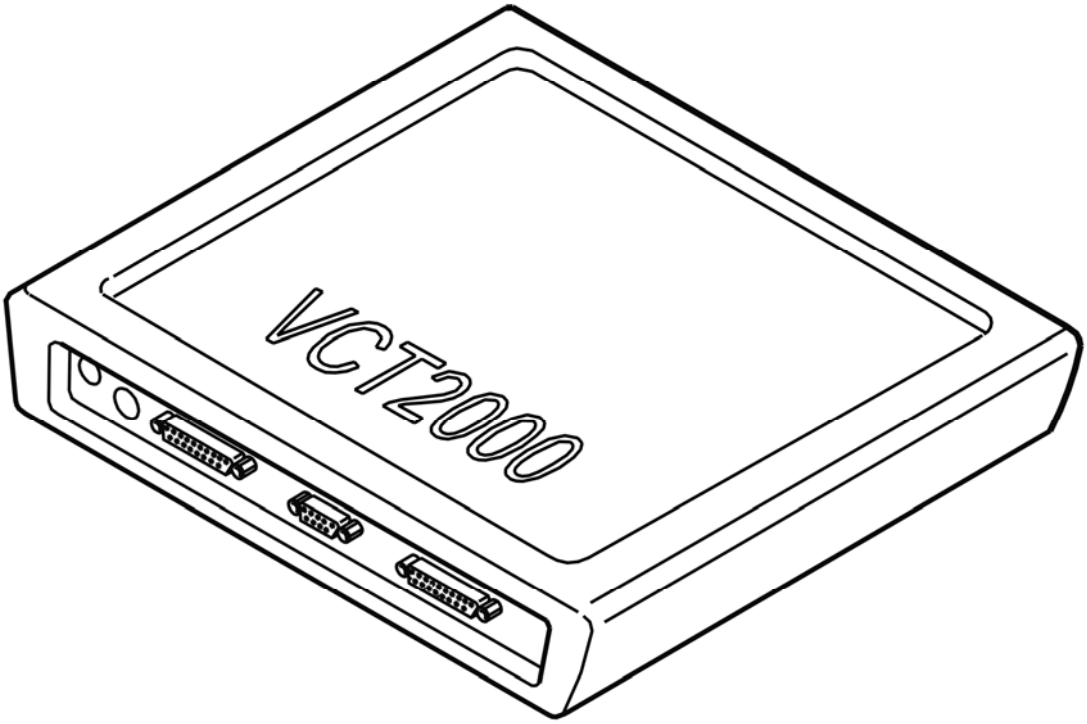

Fig. 313: Identifying VCT2000 Diagnostic Tool Symbol In VIDA
Courtesy of VOLVO CARS CORPORATION

- Try to communicate with the supplemental restraint system module (SRS) by reading off the control module ID using the VCT2000 (or appropriate scan tool)
- **Continue**

  Refer to **SIGNAL MISSING**

CHECKING THE FUNCTION OF THE SUPPLEMENTAL RESTRAINT SYSTEM MODULE (SRS)

HINT: After carrying out the repair, check that the fault has been remedied.

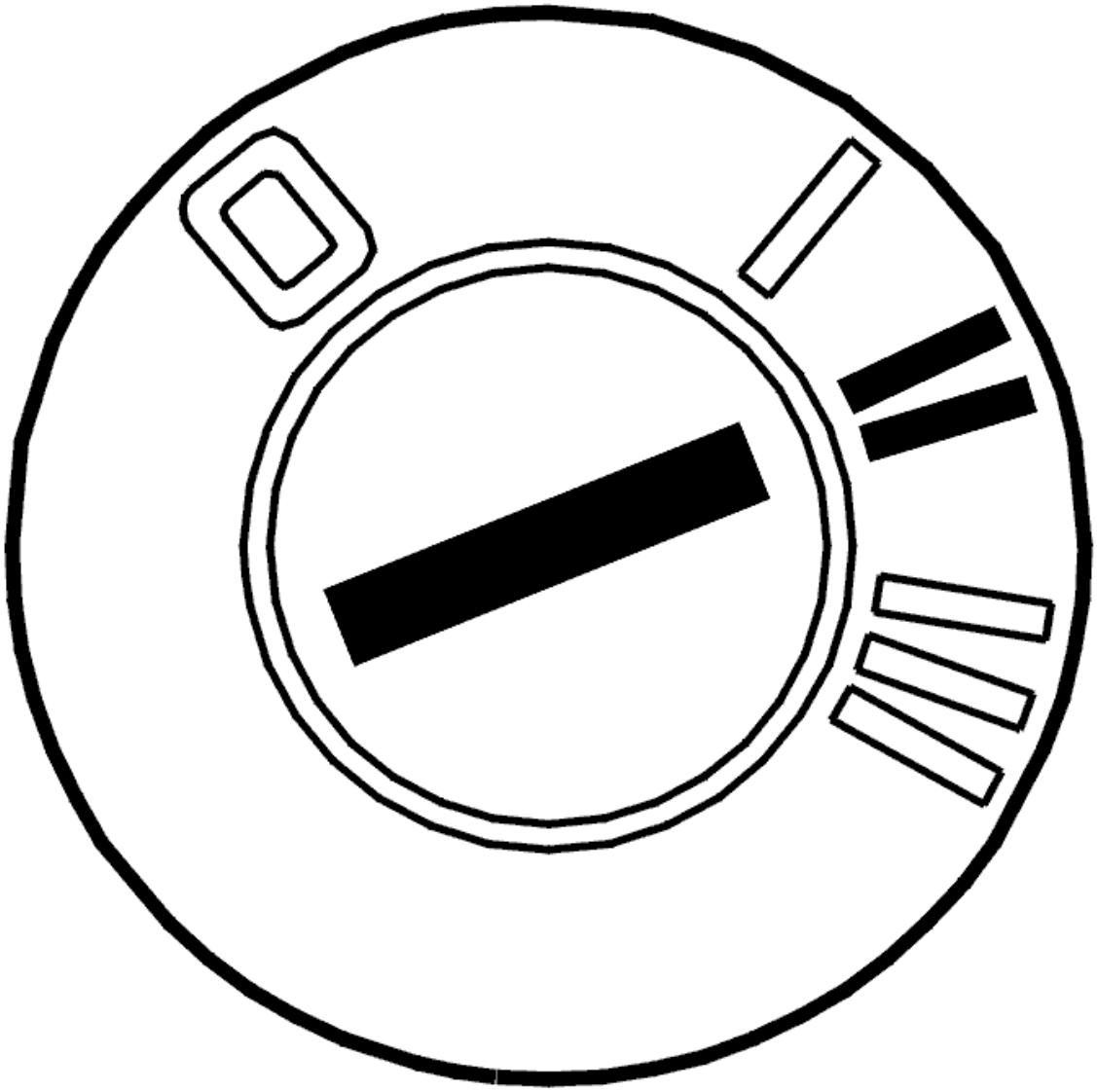

Fig. 314: Identifying Ignition ON
Courtesy of VOLVO CARS CORPORATION

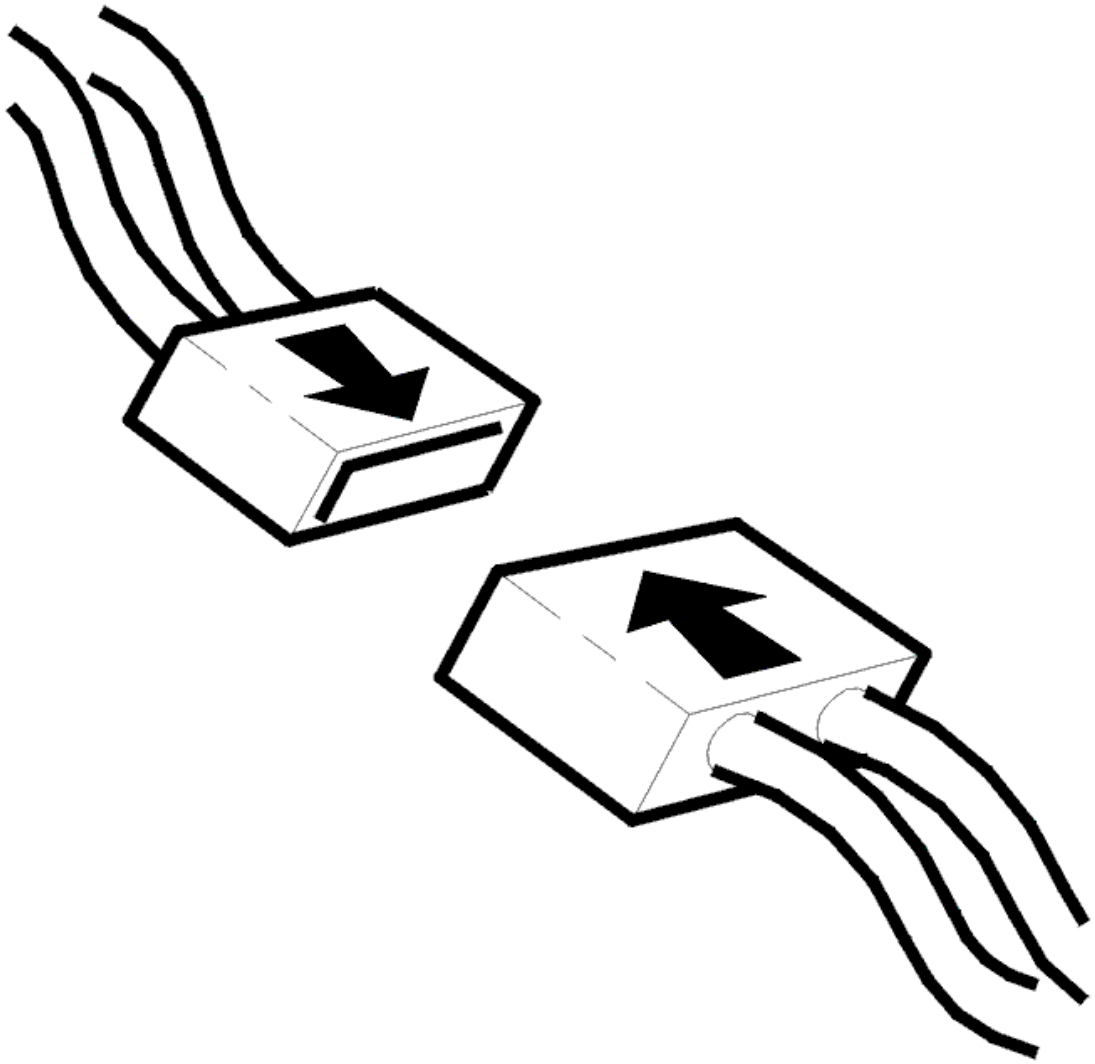

Fig. 315: Connecting Connector
Courtesy of VOLVO CARS CORPORATION

- Ignition off
- Reconnect the connectors. Reinstall the components
- Ignition on.

  Check the power supply to the control module by turning the ignition key to ignition position II.

  The indicator lamp in the driver information module (DIM) must light up. The lamp must go out after a few seconds.

Does the indicator lamp go out?

- **YES**

OKAY: Troubleshooting has been completed.

- **NO**

  Refer to **INFORMATION**

SIGNAL MISSING

GENERAL INFORMATION

NOTE: Illustrations shown are only examples.

For general information about CAN-troubleshooting, see **GENERAL INFORMATION ABOUT FAULT-TRACING IN THE CAN NETWORK**

- General about CAN-related diagnostic trouble codes.

  CEM-DF01 - DF17 can only be stored in Central electronic module (CEM). These diagnostic trouble codes are stored when an electric fault is detected in CAN-lines. Start with these diagnostic trouble codes first.

  CEM-1AXX only stored in Central electronic module (CEM). One diagnostic trouble code for every control module on the CAN-net. These diagnostic trouble codes indicate that Central electronic module (CEM) does not receive any reply from other control modules.

  XXX-E000 (HS-CAN)/E001 (LS-CAN) can be stored in all CAN-connected control modules. These diagnostic trouble codes indicate that the control module has detected interference on the CAN-net.

  XXX-E003 can be stored in all CAN-connected control modules except in Central electronic module (CEM). The control modules on the CAN-net listen for a message (identity number) that is sent out at regular intervals from Central electronic module (CEM). This diagnostic trouble code indicates that the control module has not received any identity number, or that the expected number is not correct. Interference on the CAN-net can also store this diagnostic trouble code.

  NOTE: In case of CAN-related faults, it is likely that a combination of above diagnostic trouble codes occur.

  NOTE: After fault with control modules that interfere with communication, other control modules may remain in Limp-Home (that is, they work with reduced functionality) even when the ignition has been turned off and on a few times. For certain faults in the CAN-net where control modules have stopped communicating, it may help to disconnect/reconnect the battery to "restart" the control module/CAN-net.

  If diagnostic trouble codes (DTCs) for communication faults can be read off from a control module, the fault is probably intermittent.

Intermittent fault in the voltage supply and ground to a control module on the CAN network results in the Central electronic module (CEM) storing a diagnostic trouble code (DTC) for an open-circuit in communication with the control module where the voltage supply does not work. There will probably not be a diagnostic trouble code (DTC) in the control module where the open-circuit in the voltage supply occurred as the control module cannot store a diagnostic trouble code (DTC) when it is not supplied with power.

NOTE: **Central electronic module (CEM) should not be replaced in case of CAN-fault, unless troubleshooting reveals that Central electronic module (CEM) has an internal fault.**

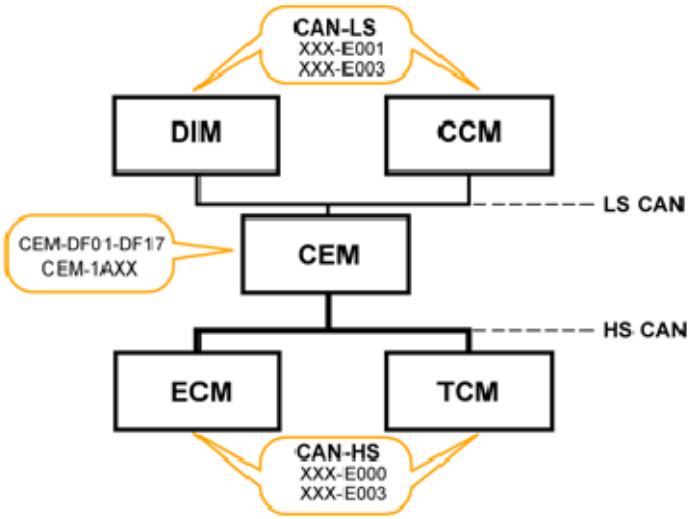

Fig. 316: High-Speed CAN And Low-Speed CAN Communication Diagram
Courtesy of VOLVO CARS CORPORATION

- **Continue**

Refer to **CHECKING RESISTANCE IN CAN-NET**

CHECKING RESISTANCE IN CAN-NET

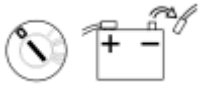

Fig. 317: Ignition Off And Disconnecting Battery Negative Lead
Courtesy of VOLVO CARS CORPORATION

- Ignition off
- Disconnect the battery negative lead
- Connect OBDII-Box **(951 3015)** to the diagnostics socket.

For general information about CAN-troubleshooting, see **GENERAL INFORMATION ABOUT FAULT-TRACING IN THE CAN NETWORK**

Measure resistance between the following connections on the OBDII-box/diagnostics socket.

- #3 and #11. The resistance should be approx. 55 - 65 ohms.
- If resistance is approx. 120 ohms, this indicates open circuit in the circuit so that only one terminating resistor (120 ohms) has been measured.
- If resistance is above 1 kohms this indicates open circuit/high contact resistance somewhere in the circuit.
- If resistance is below 55 ohms this indicates short-circuiting/contact resistance between the CAN-lines somewhere in the circuit.

HINT: For LS-CAN, terminating resistors are located in Upper electronic module (UEM) and Rear electronic module (REM).

Twist the cable harness and wiggle connectors where they can be accessed along the cable harness during every measurement, and note if the resistance changes to detect intermittent short-circuits or open circuit.

NOTE: **Resistance measurement measures only main lines in the CAN-net (in circuit where both terminating resistors are found), not branches to certain control modules. Open circuit on branching without a terminating resistor cannot be detected with this measurement. However, short-circuiting on a branch can be detected. To measure resistance in the CAN-net to control modules located in a branching of their own, the measurement shall be done against the CAN-net at that control module. The values shall be as above.**

NOTE: **After fault with control modules that interfere with communication, other control modules may remain in Limp-Home (that is, they work with reduced functionality) even when the ignition has been turned off and on a few times. For certain faults in the CAN-net where control modules have stopped communicating, it may help to disconnect/reconnect the battery to "restart" the control module/CAN-net.**

Remedy as necessary.

Other information

- see **BATTERY, DISCONNECTING**
- see **CHECKING WIRING AND TERMINALS**

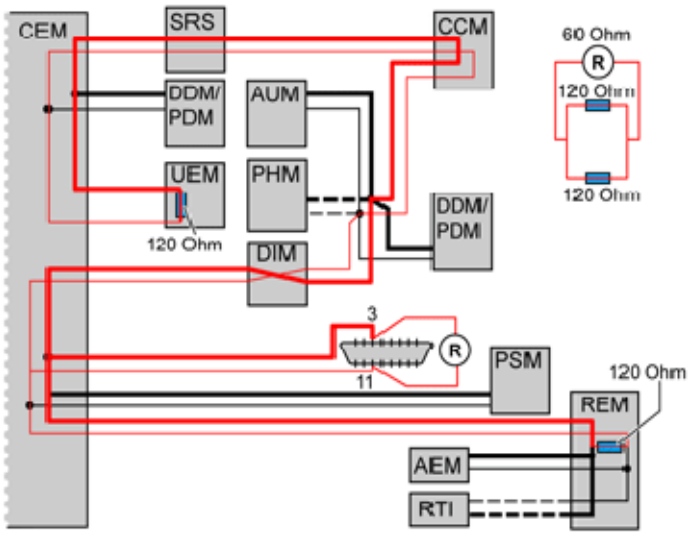

Fig. 318: Checking Resistance In CAN Lines
Courtesy of VOLVO CARS CORPORATION

Was a fault detected?

- **YES**

  Refer to **VERIFICATION**

- **NO**

  Refer to **CHECKING SHORT-CIRCUITING TO GROUND/VOLTAGE IN CAN-NET**

CHECKING THE AMOUNT OF TRAFFIC ON THE LS-CAN

Fig. 319: Identifying Ignition On Position
Courtesy of VOLVO CARS CORPORATION

- Connect the battery
- Ignition on.
- Connect OBDII-Box **(951 3015)** to the diagnostics socket.

  For general information about CAN-troubleshooting, see **GENERAL INFORMATION ABOUT FAULT-TRACING IN THE CAN NETWORK**

  Faults in the CAN network may be due to a control module sending faulty messages that disrupt normal

communication. When messages are sent incorrectly, this results in a considerable increase in the amount of traffic on the CAN network. The load can be checked by reading the average value of the voltage on the CAN cables in relation to ground.

Measure voltage between the following connections on the OBDII-box/diagnostics socket.

- #3 and #4 (ground). The voltage should be approx:2, 8 - 3, 2 V.
- #11 and #4 (ground). The voltage should be approx:1, 8 - 2, 2 V.
- #3 and #11. The voltage shall be between approx. 0.55-1.4 V. The voltage shall normally be between 0.55 - 0.90 V. A higher voltage may indicate increased traffic on the CAN-net. In case of fault in communication/too high traffic on the CAN-net, the voltage is considerably higher than the above stated values.

NOTE: After fault with control modules that interfere with communication, other control modules may remain in Limp-Home even when the ignition has been turned off and on a few times. For certain faults in the CAN-net where control modules have stopped communicating, it may help to disconnect/reconnect the battery to "restart" the control module/CAN-net.

HINT: DiCE can be used as fault detection tool if fault is suspected on the CAN-net that cannot be detected with normal troubleshooting. Interference, intermittent faults, faulty messages on the CAN-net etc., are examples of such faults. The tool registers fault messages used on the CAN-net. Fault messages may be caused by short intermittent malfunctions on the CAN-net or by a control module sending fault messages. See tools:951 3010 as well as associated TJ 20402.

- Ignition on.
- Connect DiCE to the diagnostics socket.
- Note the blue LED-indicator. The indicator flashes to show detection of fault messages.

NOTE: Certain interference may occur without any real fault

Cable fault

- Shake the cables lightly and pull lightly on the connections during the check to locate any fault. Note the blue LED-indicator.

"Chatting" control modules

- "Chatting" control modules may be difficult to find and troubleshooting may take time. Let the vehicle stand with DiCE connected for an extended time period. Afterwards, activate functions to provoke a malfunction. It may take up to several hours before the fault messages are sent. When the indicator starts to flash, remove the fuse for one control module at a time until the indicator stops flashing. When the indicator stops flashing, restore the fuse for the relevant control module and check that the indicator starts to flash again. Then it is likely that the problem is identified.

Remedy wiring as necessary.

Other information

- see **BATTERY, DISCONNECTING**
- see **TROUBLESHOOTING USING DICE ERROR FRAME FINDER**
- see **CHECKING WIRING AND TERMINALS**

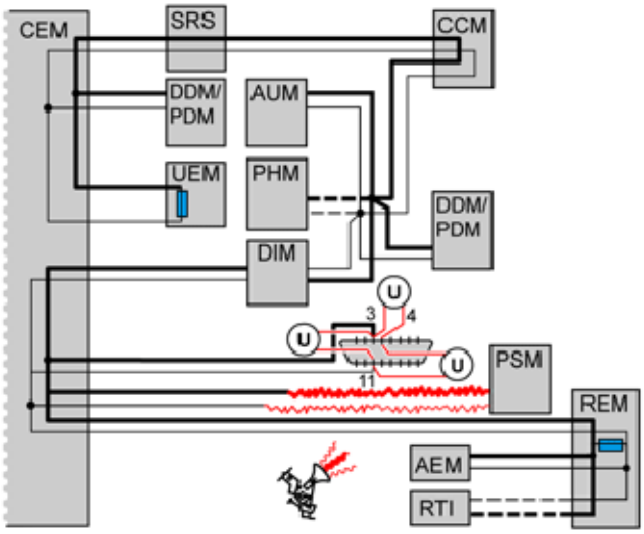

Fig. 320: Checking Amount Of Traffic On LS-CAN
Courtesy of VOLVO CARS CORPORATION

Was a fault detected?

- **YES**

  Refer to **IDENTIFYING A CONTROL MODULE IN THE CAN NETWORK**

- **NO**

  Refer to **CHECKING VOLTAGE-DROP IN CABLE FOR CAN-H AND CAN-L, RESPECTIVELY**

IDENTIFYING A CONTROL MODULE IN THE CAN NETWORK

Fig. 321: Identifying Ignition On Position
Courtesy of VOLVO CARS CORPORATION

For general information about CAN-troubleshooting, see **GENERAL INFORMATION ABOUT FAULT-**

TRACING IN THE CAN NETWORK

HINT: DiCE can be used as fault detection tool if fault is suspected on the CAN-net that cannot be detected with normal troubleshooting. Interference, intermittent faults, faulty messages on the CAN-net (chattering control modules) etc., are examples of such faults. The tool registers fault messages used on the CAN-net. Fault messages may be caused by short intermittent malfunctions on the CAN-net or by a control module sending fault messages. See tools:951 3010 (memory card) as well as associated TJ 20402. If the load on the CAN network is too high, this may be due to a control module transmitting faulty messages on the CAN network. This is called a disruptive control module. The fault may also be due to an intermittent short-circuit to supply voltage or ground in one of the CAN cables. This results in the control modules on the CAN network starting to send faulty messages. The fault may occur without any of the control modules storing a diagnostic trouble code (DTC). The voltage can be measured between the CAN cables in order to check the load on the CAN network.

NOTE: **It is not necessarily the control module that has set the diagnostic trouble code that communicates incorrectly. Faulty messages can come from any control module in the same section of the CAN network. However, faulty communication in one network cannot affect the communication on the other network. In other words, faulty communication on the LS-CAN cannot disrupt communication on the HS-CAN and vice versa.**

- Ignition on.
- Connect OBDII-Box **(951 3015)** to the diagnostics socket.

Check communication/load on CAN-net by measuring voltage between CAN-L and CAN-H. Measure voltage between the following connections on the OBDII-box/diagnostics socket.

- #3 and #11. The average value of the voltage must be approximately 0.6-1.4 V. The voltage shall normally be between 0.55 - 0.90 V. A higher voltage may indicate increased traffic on the CAN-net. In case of fault in communication/too high traffic on the CAN-net, the voltage is considerably higher than the above stated values.

In order to identify which control module has faulty communication, cut the power supply to one control module at a time. Check the voltage in the CAN cables again. The easiest way to cut the power supply is to remove the fuse(s) for the relevant control module. Repeat until the voltage between the CAN wiring drops to the normal level.

NOTE: **When connecting and disconnecting certain control modules, diagnostic trouble codes (DTCs) may be stored in other control modules.**

HINT: When the suspected defective control module has been identified, connect and disconnect the supply voltage to the control module a number of times to verify that the malfunction appears and disappears. Switch off the ignition between each check.

NOTE: **Do not cut the power to the central electronic module (CEM) unless it is the last control module left to check.**

A control module that is communicating incorrectly must be replaced. See Repairing and installing/Removing, replacing and installing.

NOTE: **After fault with control modules that interfere with communication, other control modules may remain in Limp-Home (that is, they work with reduced functionality) even when the ignition has been turned off and on a few times. For certain faults in the CAN-net where control modules have stopped communicating, it may help to disconnect/reconnect the battery to "restart" the control module/CAN-net.**

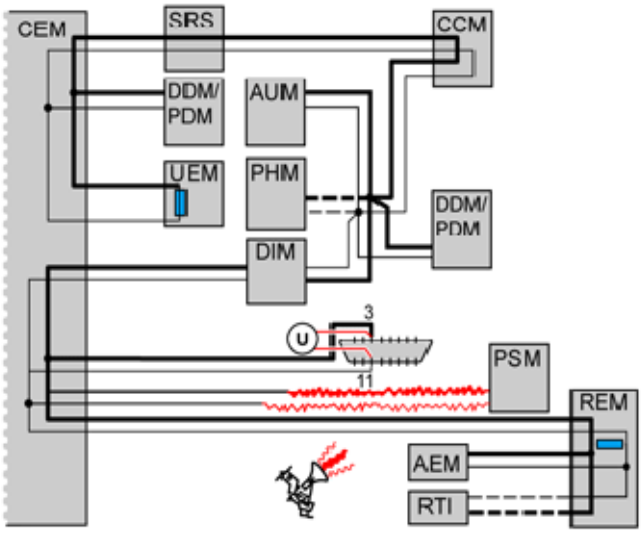

Fig. 322: Checking Communication/Load On CAN-net Between CAN-L And CAN-H
Courtesy of VOLVO CARS CORPORATION

- **Continue**

  Refer to **VERIFICATION**

VERIFICATION

HINT: After rectifying a fault, a verification should be carried out.

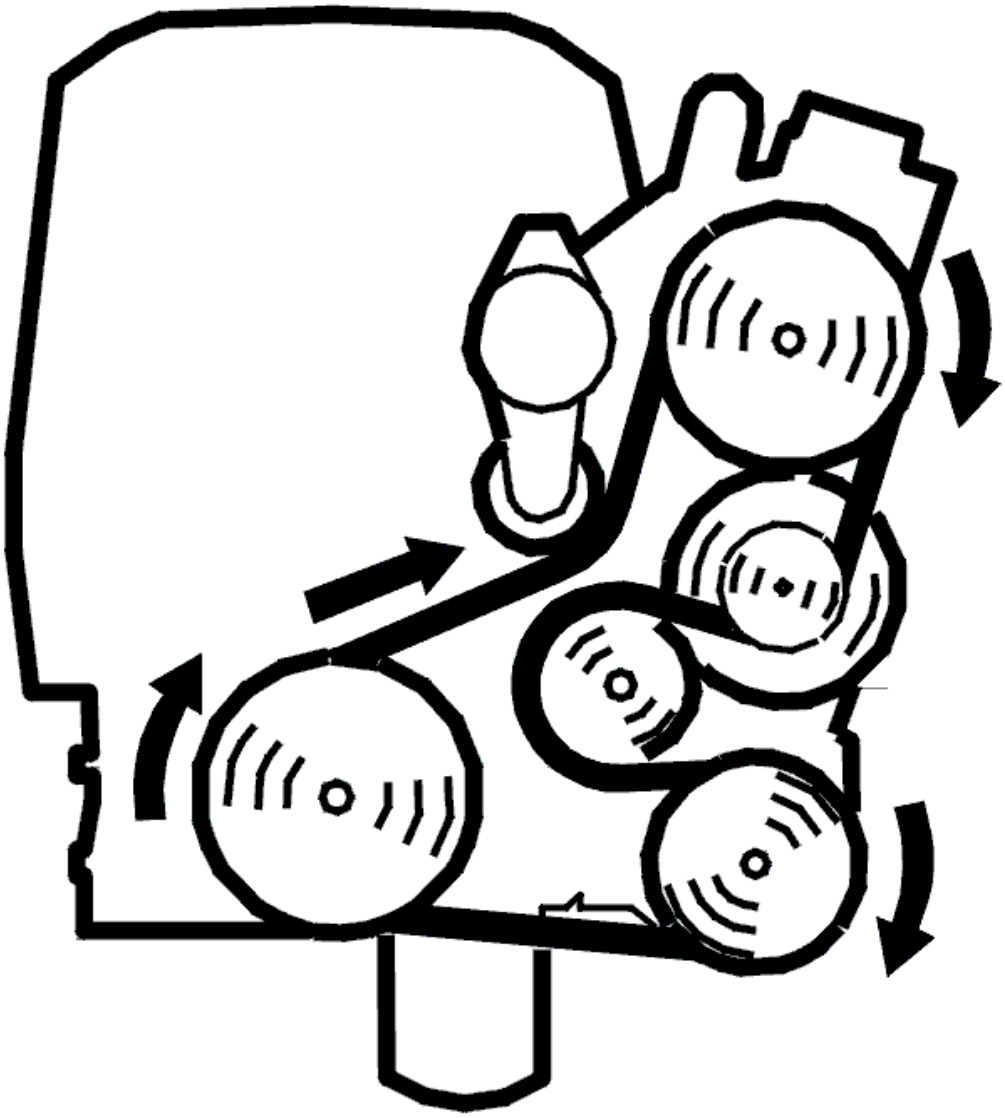

Fig. 323: Belt Routing / Engine Idling - Volvo
Courtesy of VOLVO CARS CORPORATION

Fig. 324: Identifying Ignition On Position
Courtesy of VOLVO CARS CORPORATION

- Reinstall the connectors, components etc.
- Ignition on.

NOTE: **For certain faults in the CAN-net where control modules have stopped communicating, it may help to disconnect/reconnect the battery to "restart" the control module/CAN-net.**

- Erase diagnostic trouble codes (DTCs) in all control modules.
- Ignition off.
- Ignition on.
- Start the vehicle. Allow the vehicle to run for 10 minutes. Start the engine. Allow the engine to run at idle speed for 10 minutes
- Read out the diagnostic trouble codes in the vehicle via the DIAGNOSTICS tab.

Does the diagnostic trouble code (DTC) for faulty communication return?

- **YES**

  Refer to **INFORMATION**

- **NO**

  OKAY: Troubleshooting has been completed.

CHECKING SHORT-CIRCUITING TO GROUND/VOLTAGE IN CAN-NET

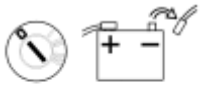

Fig. 325: Ignition Off And Disconnecting Battery Negative Lead
Courtesy of VOLVO CARS CORPORATION

- Ignition off.
- Disconnect the battery negative lead.
- Connect OBDII-Box **(951 3015)** to the diagnostics socket.

  For general information about CAN-troubleshooting, see **GENERAL INFORMATION ABOUT FAULT-TRACING IN THE CAN NETWORK**

  Checking for a short-circuit to ground

  Measure resistance between the following connections on the OBDII-box/diagnostics socket.

  - #3 and #4 (ground). Measurement is shown in the illustration. The resistance should be above 1 kohms.

- #11 and #4 (ground). The resistance should be above 1 kohms.

If resistance is below 1 kohms this indicates short-circuiting between the CAN-line and ground.

Checking for a short-circuit to voltage

Measure resistance between the following connections on the OBDII-box/diagnostics socket.

- #3 and #16 (voltage). Measurement is shown in the illustration. The resistance should be above 1 kohms.
- #11 and #16 (voltage). The resistance should be above 1 kohms.

If resistance is below 1 kohms this indicates short-circuiting between the CAN-line and voltage cable.

Twist the cable harness and wiggle connectors where they can be accessed along the cable harness during every measurement, and note if the resistance changes to detect intermittent short-circuits or open circuit.

HINT: Part the CAN-net at suitable points to decide where a short-circuit may be found.

NOTE: After fault with control modules that interfere with communication, other control modules may remain in Limp-Home (that is, they work with reduced functionality) even when the ignition has been turned off and on a few times. For certain faults in the CAN-net where control modules have stopped communicating, it may help to disconnect/reconnect the battery to "restart" the control module/CAN-net.

Remedy as necessary.

Other information

- see **BATTERY, DISCONNECTING**
- see **CHECKING WIRING AND TERMINALS**

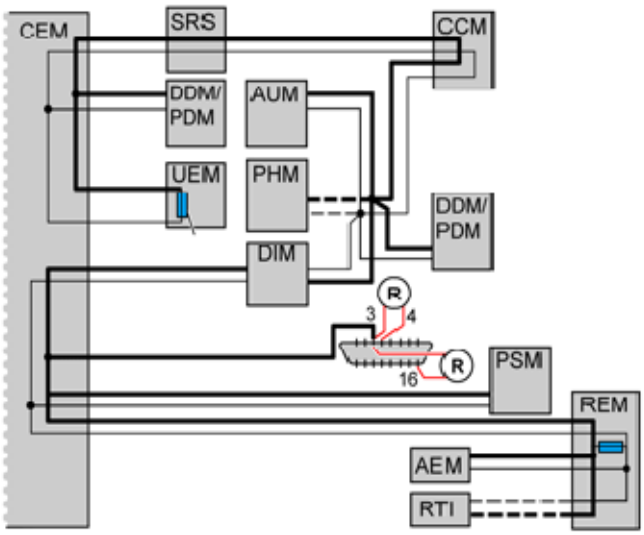

Fig. 326: Checking For Short-Circuiting To Ground/Voltage In CAN-net
Courtesy of VOLVO CARS CORPORATION

Was a fault detected?

- **YES**

  Refer to **VERIFICATION**

- **NO**

  Refer to **CHECKING THE AMOUNT OF TRAFFIC ON THE LS-CAN**

CHECKING VOLTAGE-DROP IN CABLE FOR CAN-H AND CAN-L, RESPECTIVELY

Fig. 327: Identifying Ignition On Position
Courtesy of VOLVO CARS CORPORATION

- Connect the battery.
- Ignition on.
- Connect OBDII-Box **(951 3015)** to the diagnostics socket.

  For general information about CAN-troubleshooting, see **GENERAL INFORMATION ABOUT FAULT-TRACING IN THE CAN NETWORK**

  In principle, the voltage measured in each cable in the CAN-net shall be the same at each control module

in the network. This means that the voltage-drop in the cable for CAN-H and CAN-L, respectively, between the control modules should be very low. If there is a voltage-difference in the CAN-lines between the diagnostics socket/Central electronic module (CEM) and a control module due to, e. g., contact resistance in a connector or branching, communication may be lost/interfered with. Check if there is voltage-drop in the cable for CAN-H and CAN-L between the diagnostics socket/Central electronic module (CEM) and the control module where there is problem with communication.

Carry out the following:

Measure voltage between the following connections on the OBDII-box/diagnostics socket.

- #3 and corresponding connection on relevant control module for CAN-H. The voltage shall be lower than 50 mV.
- #11 and corresponding connection on relevant control module for CAN-L. The voltage shall be lower than 50 mV.

If voltage is too high, this indicates too high contact resistance in cable, connector, or branching. Check the circuit between the diagnostics socket and control module in question for contact resistance and oxidation.

NOTE: **After fault with control modules that interfere with communication, other control modules may remain in Limp-Home (that is, they work with reduced functionality) even when the ignition has been turned off and on a few times. For certain faults in the CAN-net where control modules have stopped communicating, it may help to disconnect/reconnect the battery to "restart" the control module/CAN-net.**

Remedy wiring as necessary.

Other information

- see **CHECKING WIRING AND TERMINALS**

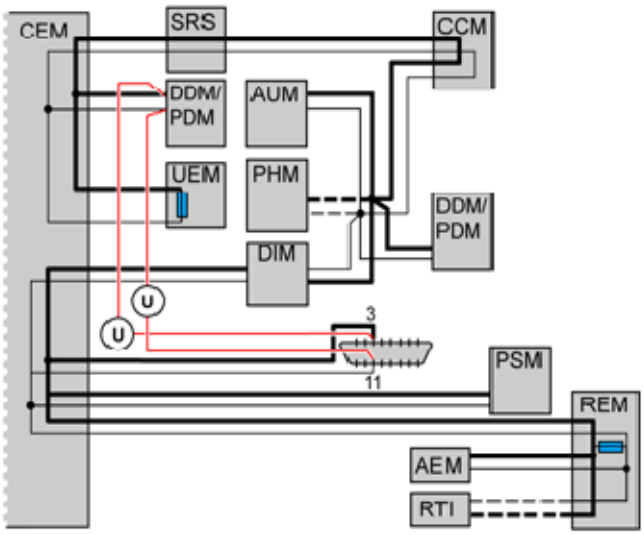

Fig. 328: Checking For Voltage-Drop In Cable For CAN-H And CAN-L
Courtesy of VOLVO CARS CORPORATION

- **Continue**

  Refer to **VERIFICATION**

INFORMATION

FAULT-TRACING INFORMATION

The fault should have been detected and remedied. As this is not the case fault-tracing has failed.

Exit fault-tracing for this diagnostic trouble code (DTC) or make another attempt.

CEM-1A52: COMMUNICATION WITH THE DRIVER DOOR MODULE (DDM). SIGNAL MISSING (2005-2011)

DIAGNOSTIC TROUBLE CODE (DTC) INFORMATION CEM-1A52

Condition

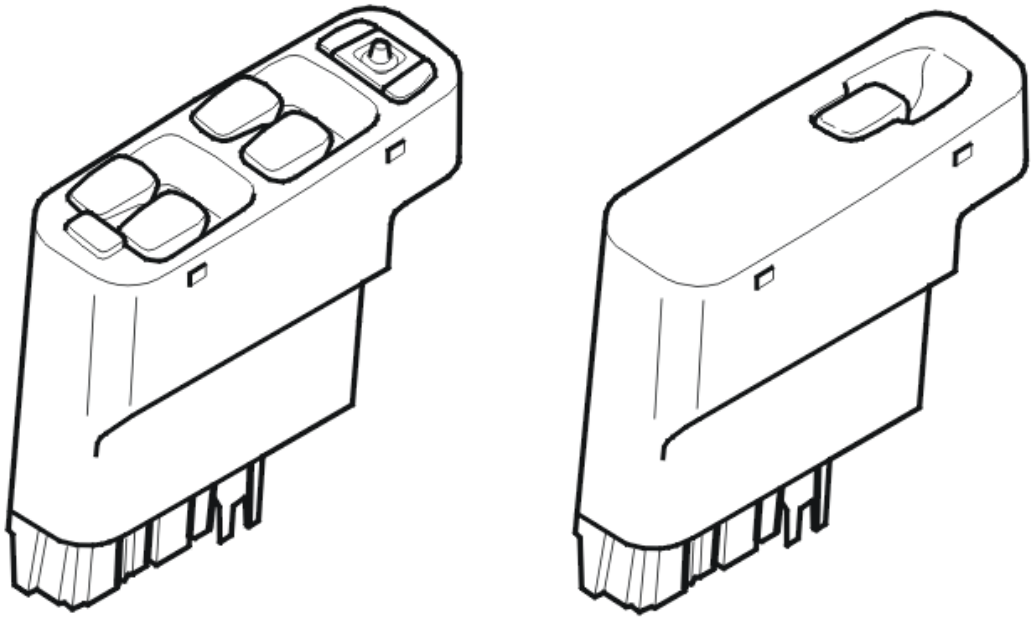

Fig. 329: Identifying Driver's Door Module
Courtesy of VOLVO CARS CORPORATION

The diagnostic trouble code (DTC) is stored if the central electronic module (CEM) registers that communication with the driver's door module (DDM) is not operating.

The diagnostic trouble code (DTC) can be diagnosed when the ignition has been on for more than 10 seconds.

NOTE: **In the event of CEM-1A5X diagnostic trouble codes (DTCs), the central electronic module (CEM) must not be replaced as the diagnostic trouble code (DTC) indicates a communication fault in the controller area network (CAN)**

Substitute Value

- None.

Possible Source

- No power supply to the driver's door module (DDM)
- Open-circuit in the ground lead for the driver's door module (DDM)
- Contact resistance in the terminals
- Open-circuit in the wiring for the CAN low speed network to the driver's door module (DDM)

- The driver door module (DDM) is not intended for this vehicle (for example a used control module with different software/hardware).

HINT: If several diagnostic trouble codes (DTCs) are stored in the central electronic module (CEM) for communication faults with other control modules in the low speed network, this indicates a common fault in the controller area network (CAN).

Fault symptom[s]

- Does not lock / unlock a door.
- The driver's door switch panel does not work.

SIGNAL MISSING

CHECKING THE POWER SUPPLY AND GROUND FOR THE DRIVER DOOR MODULE (DDM)

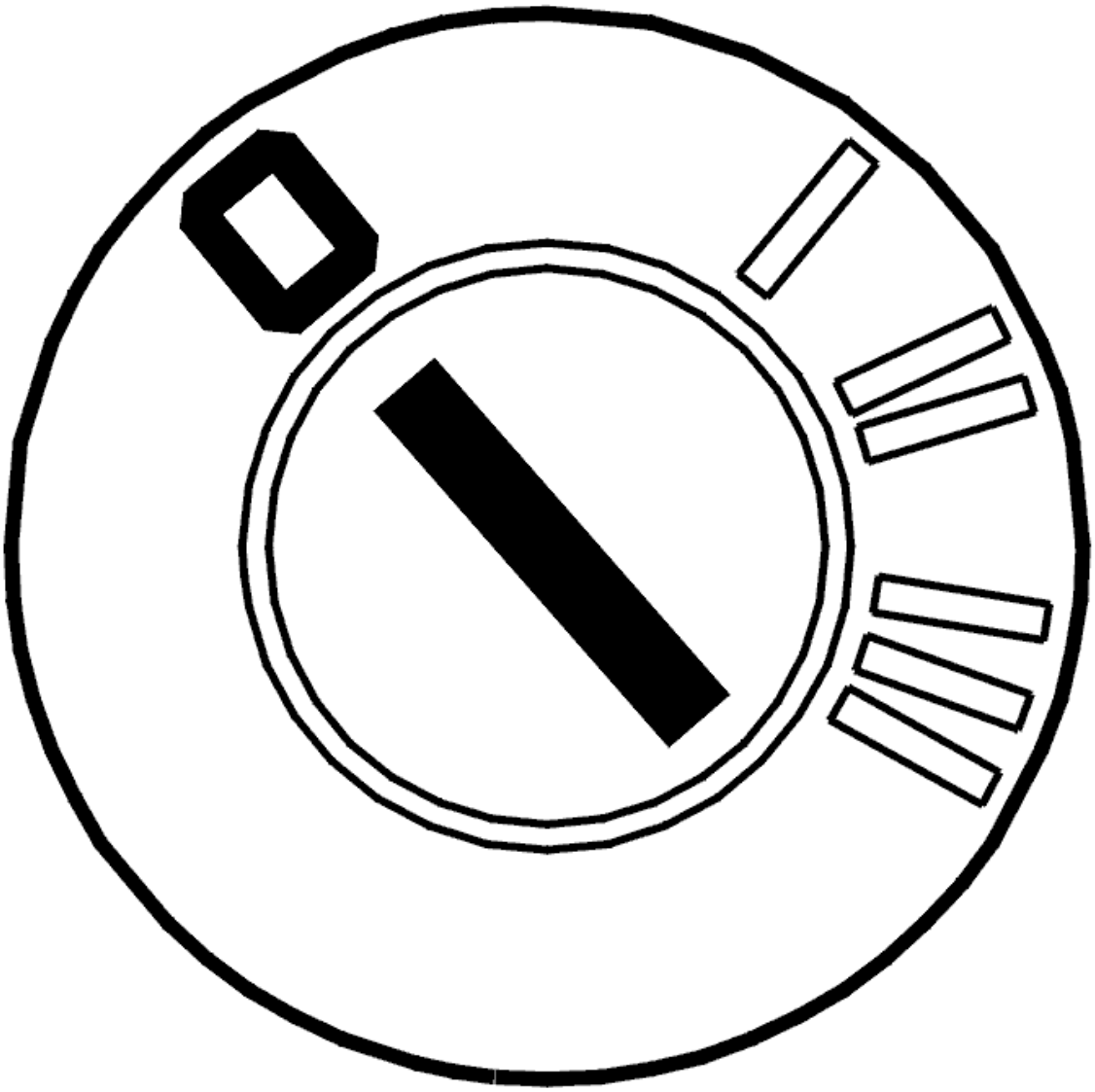

Fig. 330: Identifying Ignition OFF
Courtesy of VOLVO CARS CORPORATION

- Ignition off.

  Check that the fuse for the control module is intact.

  Check the power supply and ground terminal as instructed.

  Other information:

  - see **CHECKING THE POWER SUPPLY AND GROUND TERMINALS**
  - see **CHECKING WIRING AND TERMINALS**

Was a fault detected?

- **YES**

  Refer to **CHECKING THE FUNCTION OF THE DRIVER DOOR MODULE (DDM)**

- **NO**

  Refer to **SIGNAL MISSING**

CHECKING THE COMMUNICATION WITH THE DRIVER DOOR MODULE (DDM)

HINT: The CAN communication with the control module is probably OK if the control module ID can be read off. The fault is probably intermittent and may therefore be difficult to locate.

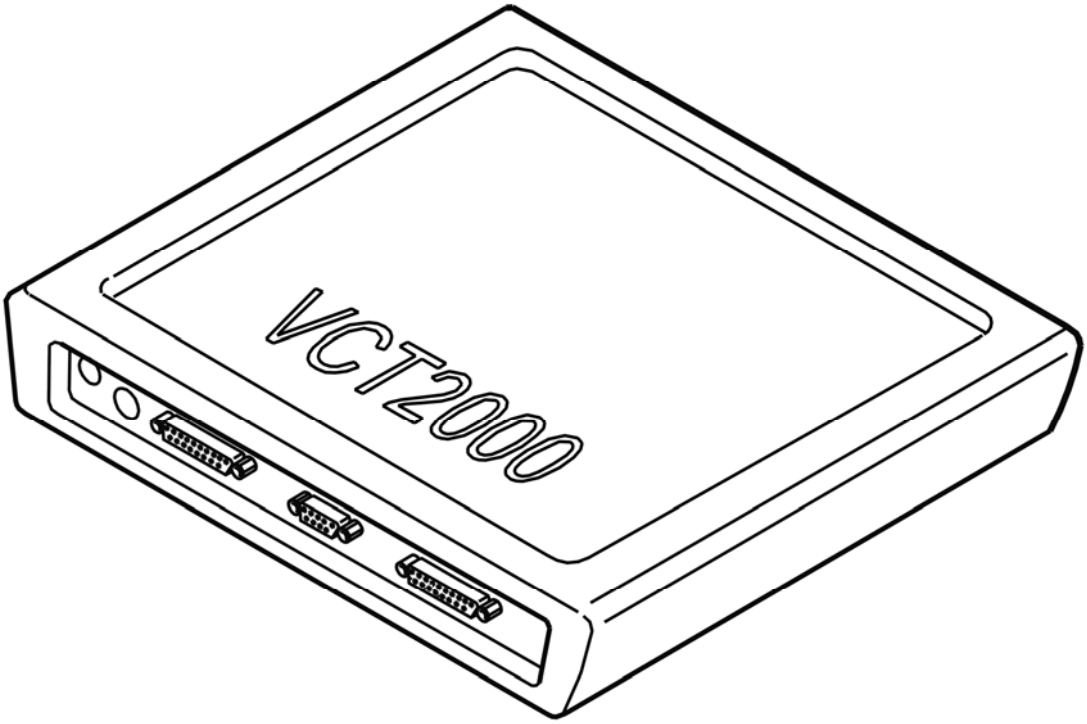

Fig. 331: Identifying VCT2000 Diagnostic Tool Symbol In VIDA
Courtesy of VOLVO CARS CORPORATION

- Ignition on
- Try to communicate with the driver door module (DDM) by reading off the control module ID using the VCT2000 (or appropriate scan tool)

- **Continue**

  Refer to **SIGNAL MISSING**

CHECKING THE FUNCTION OF THE DRIVER DOOR MODULE (DDM)

HINT: After carrying out the repair, check that the fault has been remedied.

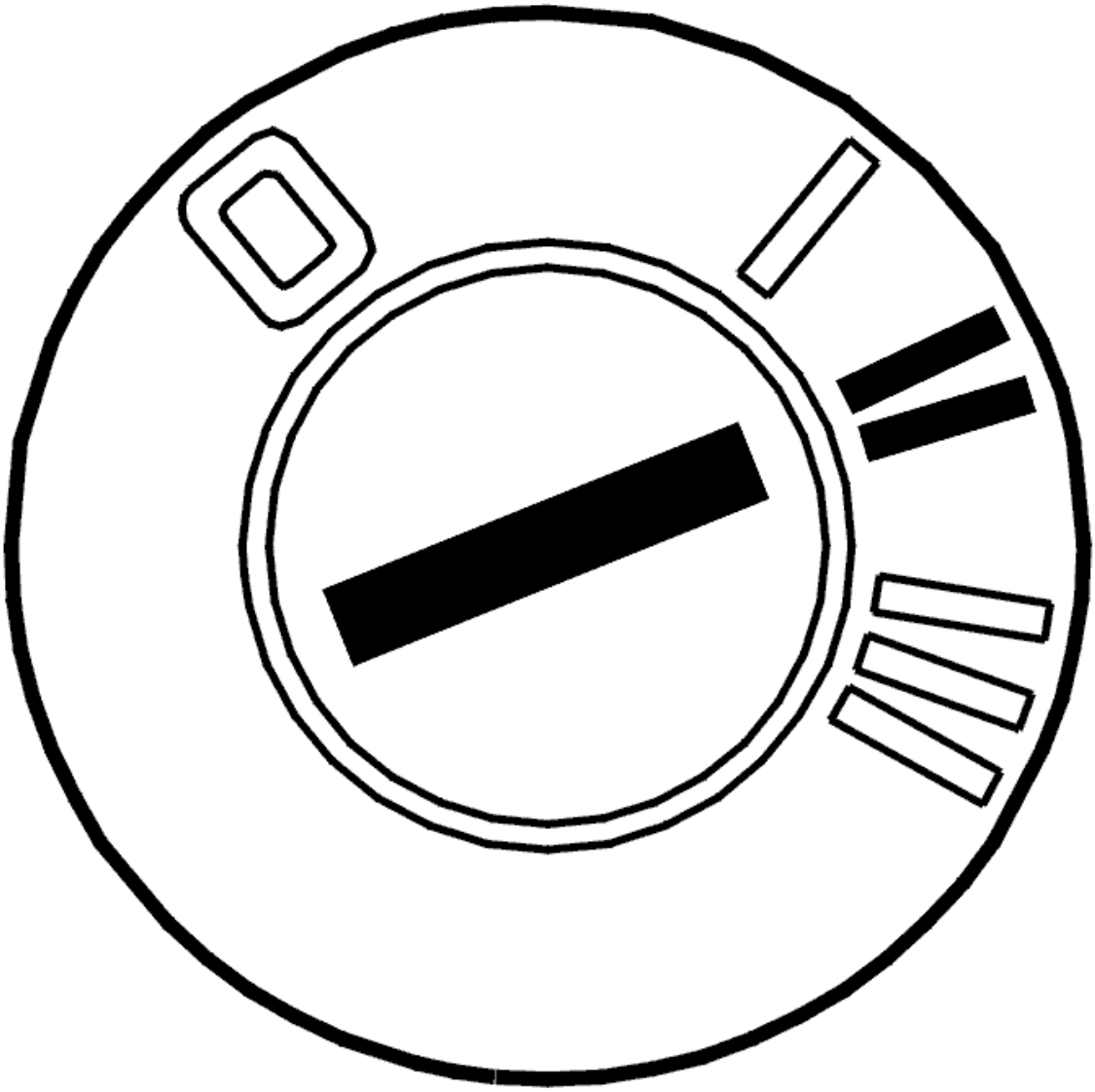

Fig. 332: Identifying Ignition ON
Courtesy of VOLVO CARS CORPORATION

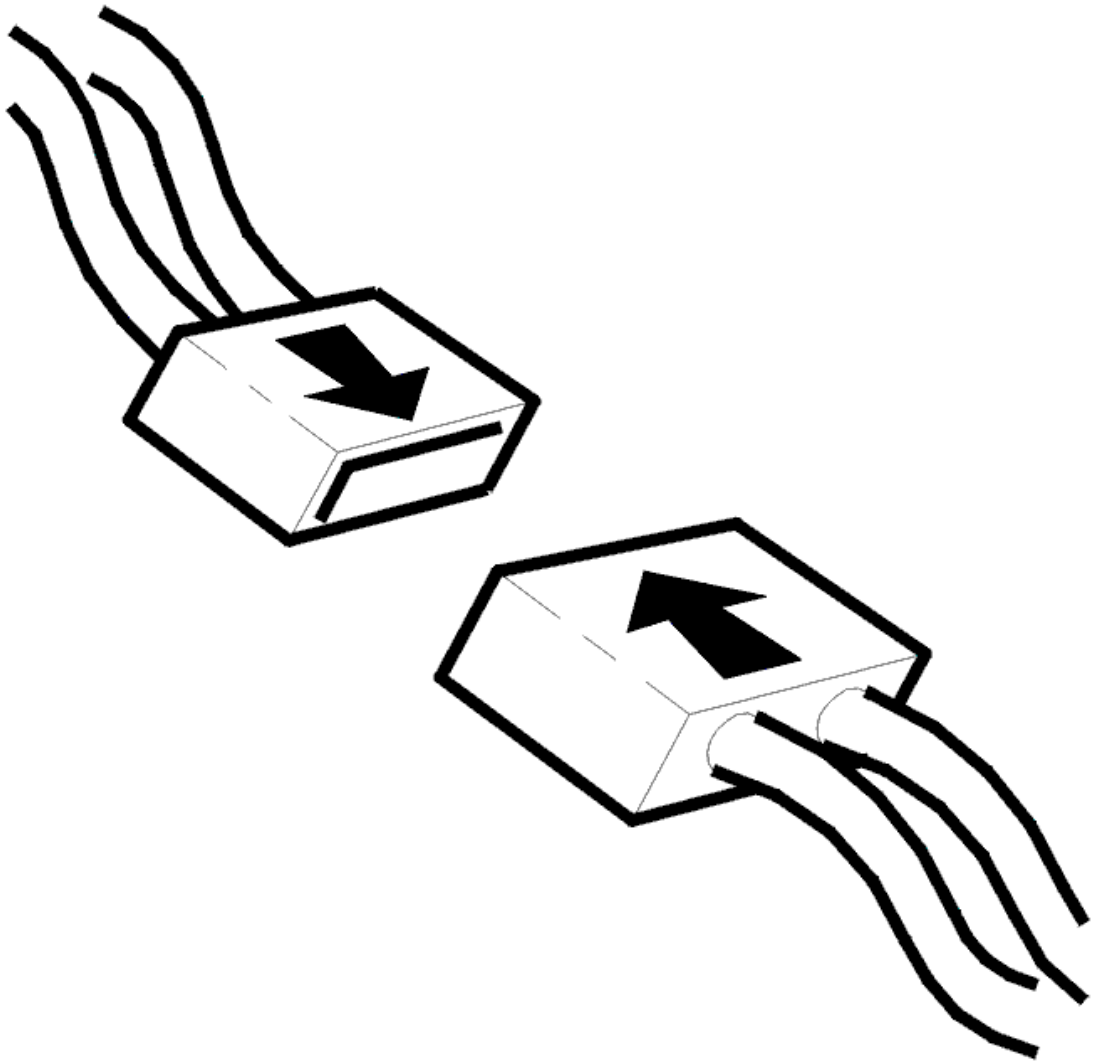

Fig. 333: Connecting Connector
Courtesy of VOLVO CARS CORPORATION

- Ignition off
- Reconnect the connectors. Reinstall the components
- Ignition on.

  Check the function of the control module by pressing the up and down buttons for the power window mechanism. The window must open or close.

  Also activate the central locking buttons. The doors must lock and unlock.

Is the function OK?

- **YES**

OKAY: Troubleshooting has been completed.

- **NO**

  Refer to **INFORMATION**

SIGNAL MISSING

GENERAL INFORMATION

NOTE: Illustrations shown are only examples.

For general information about CAN-troubleshooting, see **GENERAL INFORMATION ABOUT FAULT-TRACING IN THE CAN NETWORK**

- General about CAN-related diagnostic trouble codes.

  CEM-DF01 - DF17 can only be stored in Central electronic module (CEM). These diagnostic trouble codes are stored when an electric fault is detected in CAN-lines. Start with these diagnostic trouble codes first.

  CEM-1AXX only stored in Central electronic module (CEM). One diagnostic trouble code for every control module on the CAN-net. These diagnostic trouble codes indicate that Central electronic module (CEM) does not receive any reply from other control modules.

  XXX-E000 (HS-CAN)/E001 (LS-CAN) can be stored in all CAN-connected control modules. These diagnostic trouble codes indicate that the control module has detected interference on the CAN-net.

  XXX-E003 can be stored in all CAN-connected control modules except in Central electronic module (CEM). The control modules on the CAN-net listen for a message (identity number) that is sent out at regular intervals from Central electronic module (CEM). This diagnostic trouble code indicates that the control module has not received any identity number, or that the expected number is not correct. Interference on the CAN-net can also store this diagnostic trouble code.

  NOTE: In case of CAN-related faults, it is likely that a combination of above diagnostic trouble codes occur.

  NOTE: After fault with control modules that interfere with communication, other control modules may remain in Limp-Home (that is, they work with reduced functionality) even when the ignition has been turned off and on a few times. For certain faults in the CAN-net where control modules have stopped communicating, it may help to disconnect/reconnect the battery to "restart" the control module/CAN-net.

  If diagnostic trouble codes (DTCs) for communication faults can be read off from a control module, the fault is probably intermittent.

Intermittent fault in the voltage supply and ground to a control module on the CAN network results in the Central electronic module (CEM) storing a diagnostic trouble code (DTC) for an open-circuit in communication with the control module where the voltage supply does not work. There will probably not be a diagnostic trouble code (DTC) in the control module where the open-circuit in the voltage supply occurred as the control module cannot store a diagnostic trouble code (DTC) when it is not supplied with power.

NOTE: **Central electronic module (CEM) should not be replaced in case of CAN-fault, unless troubleshooting reveals that Central electronic module (CEM) has an internal fault.**

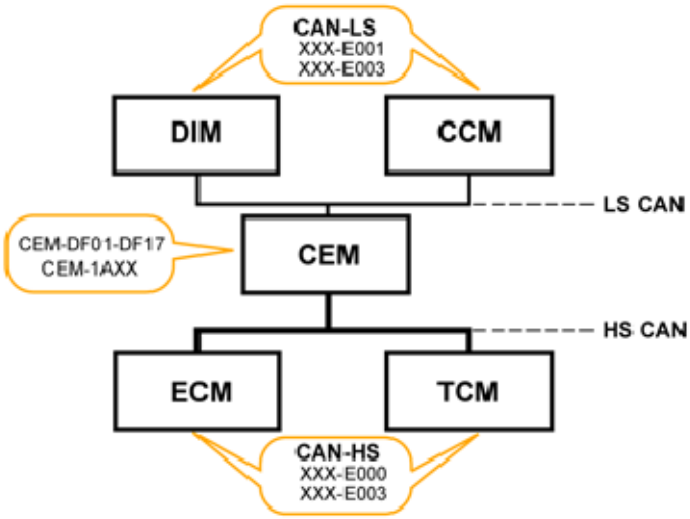

Fig. 334: High-Speed CAN And Low-Speed CAN Communication Diagram
Courtesy of VOLVO CARS CORPORATION

- **Continue**

Refer to **CHECKING RESISTANCE IN CAN-NET**

CHECKING RESISTANCE IN CAN-NET

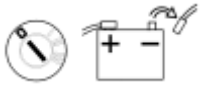

Fig. 335: Ignition Off And Disconnecting Battery Negative Lead
Courtesy of VOLVO CARS CORPORATION

- Ignition off
- Disconnect the battery negative lead
- Connect OBDII-Box **(951 3015)** to the diagnostics socket.

For general information about CAN-troubleshooting, see **GENERAL INFORMATION ABOUT FAULT-TRACING IN THE CAN NETWORK**

Measure resistance between the following connections on the OBDII-box/diagnostics socket.

- #3 and #11. The resistance should be approx. 55 - 65 ohms.
- If resistance is approx. 120 ohms, this indicates open circuit in the circuit so that only one terminating resistor (120 ohms) has been measured.
- If resistance is above 1 kohms this indicates open circuit/high contact resistance somewhere in the circuit.
- If resistance is below 55 ohms this indicates short-circuiting/contact resistance between the CAN-lines somewhere in the circuit.

HINT: For LS-CAN, terminating resistors are located in Upper electronic module (UEM) and Rear electronic module (REM).

Twist the cable harness and wiggle connectors where they can be accessed along the cable harness during every measurement, and note if the resistance changes to detect intermittent short-circuits or open circuit.

NOTE: **Resistance measurement measures only main lines in the CAN-net (in circuit where both terminating resistors are found), not branches to certain control modules. Open circuit on branching without a terminating resistor cannot be detected with this measurement. However, short-circuiting on a branch can be detected. To measure resistance in the CAN-net to control modules located in a branching of their own, the measurement shall be done against the CAN-net at that control module. The values shall be as above.**

NOTE: **After fault with control modules that interfere with communication, other control modules may remain in Limp-Home (that is, they work with reduced functionality) even when the ignition has been turned off and on a few times. For certain faults in the CAN-net where control modules have stopped communicating, it may help to disconnect/reconnect the battery to "restart" the control module/CAN-net.**

Remedy as necessary.

Other information

- see **BATTERY, DISCONNECTING**
- see **CHECKING WIRING AND TERMINALS**

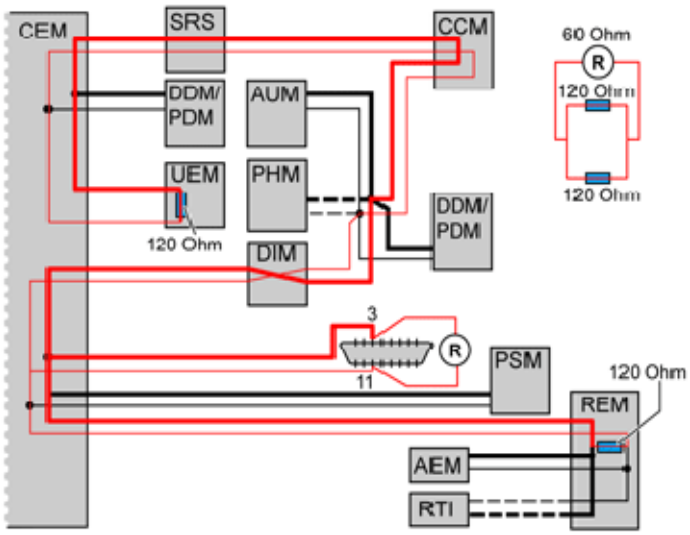

Fig. 336: Checking Resistance In CAN Lines
Courtesy of VOLVO CARS CORPORATION

Was a fault detected?

- **YES**

  Refer to **VERIFICATION**

- **NO**

  Refer to **CHECKING SHORT-CIRCUITING TO GROUND/VOLTAGE IN CAN-NET**

CHECKING THE AMOUNT OF TRAFFIC ON THE LS-CAN

Fig. 337: Identifying Ignition On Position
Courtesy of VOLVO CARS CORPORATION

- Connect the battery
- Ignition on.
- Connect OBDII-Box **(951 3015)** to the diagnostics socket.

  For general information about CAN-troubleshooting, see **GENERAL INFORMATION ABOUT FAULT-TRACING IN THE CAN NETWORK**

  Faults in the CAN network may be due to a control module sending faulty messages that disrupt normal

communication. When messages are sent incorrectly, this results in a considerable increase in the amount of traffic on the CAN network. The load can be checked by reading the average value of the voltage on the CAN cables in relation to ground.

Measure voltage between the following connections on the OBDII-box/diagnostics socket.

- #3 and #4 (ground). The voltage should be approx:2, 8 - 3, 2 V.
- #11 and #4 (ground). The voltage should be approx:1, 8 - 2, 2 V.
- #3 and #11. The voltage shall be between approx. 0.55-1.4 V. The voltage shall normally be between 0.55 - 0.90 V. A higher voltage may indicate increased traffic on the CAN-net. In case of fault in communication/too high traffic on the CAN-net, the voltage is considerably higher than the above stated values.

NOTE: After fault with control modules that interfere with communication, other control modules may remain in Limp-Home even when the ignition has been turned off and on a few times. For certain faults in the CAN-net where control modules have stopped communicating, it may help to disconnect/reconnect the battery to "restart" the control module/CAN-net.

HINT: DiCE can be used as fault detection tool if fault is suspected on the CAN-net that cannot be detected with normal troubleshooting. Interference, intermittent faults, faulty messages on the CAN-net etc., are examples of such faults. The tool registers fault messages used on the CAN-net. Fault messages may be caused by short intermittent malfunctions on the CAN-net or by a control module sending fault messages. See tools:951 3010 as well as associated TJ 20402.

- Ignition on.
- Connect DiCE to the diagnostics socket.
- Note the blue LED-indicator. The indicator flashes to show detection of fault messages.

NOTE: Certain interference may occur without any real fault

Cable fault

- Shake the cables lightly and pull lightly on the connections during the check to locate any fault. Note the blue LED-indicator.

"Chatting" control modules

- "Chatting" control modules may be difficult to find and troubleshooting may take time. Let the vehicle stand with DiCE connected for an extended time period. Afterwards, activate functions to provoke a malfunction. It may take up to several hours before the fault messages are sent. When the indicator starts to flash, remove the fuse for one control module at a time until the indicator stops flashing. When the indicator stops flashing, restore the fuse for the relevant control module and check that the indicator starts to flash again. Then it is likely that the problem is identified.

Remedy wiring as necessary.

Other information

- see **BATTERY, DISCONNECTING**
- see **TROUBLESHOOTING USING DICE ERROR FRAME FINDER**
- see **CHECKING WIRING AND TERMINALS**

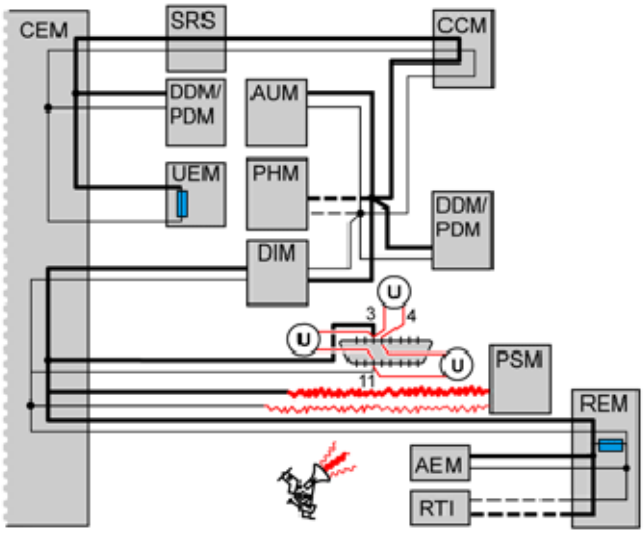

Fig. 338: Checking Amount Of Traffic On LS-CAN
Courtesy of VOLVO CARS CORPORATION

Was a fault detected?

- **YES**

  Refer to **IDENTIFYING A CONTROL MODULE IN THE CAN NETWORK**

- **NO**

  Refer to **CHECKING VOLTAGE-DROP IN CABLE FOR CAN-H AND CAN-L, RESPECTIVELY**

IDENTIFYING A CONTROL MODULE IN THE CAN NETWORK

Fig. 339: Identifying Ignition On Position
Courtesy of VOLVO CARS CORPORATION

For general information about CAN-troubleshooting, see **GENERAL INFORMATION ABOUT FAULT-**

TRACING IN THE CAN NETWORK

HINT: DiCE can be used as fault detection tool if fault is suspected on the CAN-net that cannot be detected with normal troubleshooting. Interference, intermittent faults, faulty messages on the CAN-net (chattering control modules) etc., are examples of such faults. The tool registers fault messages used on the CAN-net. Fault messages may be caused by short intermittent malfunctions on the CAN-net or by a control module sending fault messages. See tools:951 3010 (memory card) as well as associated TJ 20402. If the load on the CAN network is too high, this may be due to a control module transmitting faulty messages on the CAN network. This is called a disruptive control module. The fault may also be due to an intermittent short-circuit to supply voltage or ground in one of the CAN cables. This results in the control modules on the CAN network starting to send faulty messages. The fault may occur without any of the control modules storing a diagnostic trouble code (DTC). The voltage can be measured between the CAN cables in order to check the load on the CAN network.

NOTE: **It is not necessarily the control module that has set the diagnostic trouble code that communicates incorrectly. Faulty messages can come from any control module in the same section of the CAN network. However, faulty communication in one network cannot affect the communication on the other network. In other words, faulty communication on the LS-CAN cannot disrupt communication on the HS-CAN and vice versa.**

- Ignition on.
- Connect OBDII-Box **(951 3015)** to the diagnostics socket.

Check communication/load on CAN-net by measuring voltage between CAN-L and CAN-H. Measure voltage between the following connections on the OBDII-box/diagnostics socket.

- #3 and #11. The average value of the voltage must be approximately 0.6-1.4 V. The voltage shall normally be between 0.55 - 0.90 V. A higher voltage may indicate increased traffic on the CAN-net. In case of fault in communication/too high traffic on the CAN-net, the voltage is considerably higher than the above stated values.

In order to identify which control module has faulty communication, cut the power supply to one control module at a time. Check the voltage in the CAN cables again. The easiest way to cut the power supply is to remove the fuse(s) for the relevant control module. Repeat until the voltage between the CAN wiring drops to the normal level.

NOTE: **When connecting and disconnecting certain control modules, diagnostic trouble codes (DTCs) may be stored in other control modules.**

HINT: When the suspected defective control module has been identified, connect and disconnect the supply voltage to the control module a number of times to verify that the malfunction appears and disappears. Switch off the ignition between each check.

NOTE: **Do not cut the power to the central electronic module (CEM) unless it is the last control module left to check.**

A control module that is communicating incorrectly must be replaced.

NOTE: **After fault with control modules that interfere with communication, other control modules may remain in Limp-Home (that is, they work with reduced functionality) even when the ignition has been turned off and on a few times. For certain faults in the CAN-net where control modules have stopped communicating, it may help to disconnect/reconnect the battery to "restart" the control module/CAN-net.**

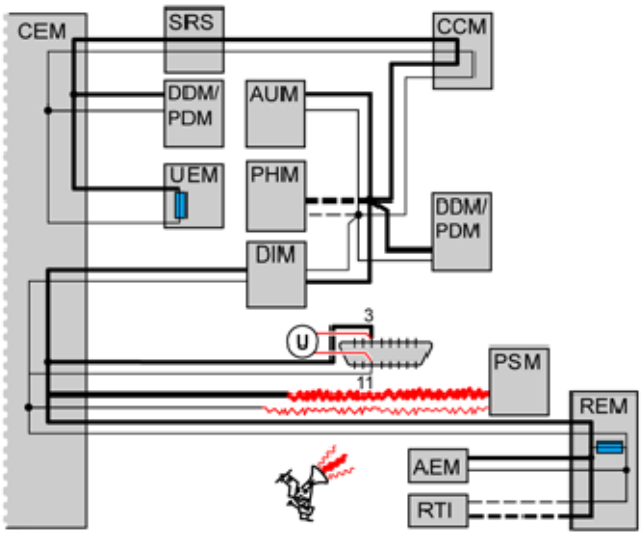

Fig. 340: Checking Communication/Load On CAN-net Between CAN-L And CAN-H
Courtesy of VOLVO CARS CORPORATION

- **Continue**

  Refer to **VERIFICATION**

VERIFICATION

HINT: After rectifying a fault, a verification should be carried out.

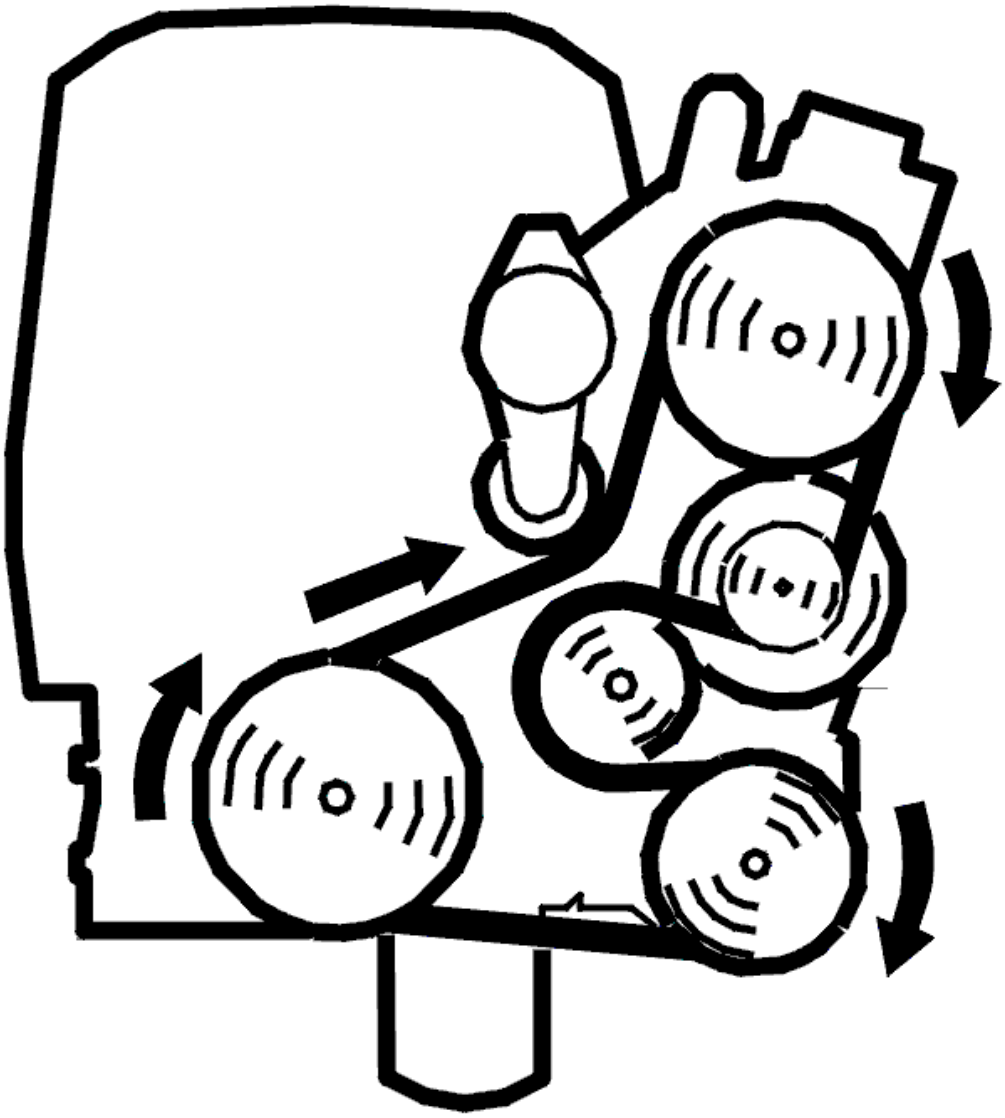

Fig. 341: Belt Routing / Engine Idling - Volvo
Courtesy of VOLVO CARS CORPORATION

Fig. 342: Identifying Ignition On Position
Courtesy of VOLVO CARS CORPORATION

- Reinstall the connectors, components etc.
- Ignition on.

NOTE: **For certain faults in the CAN-net where control modules have stopped communicating, it may help to disconnect/reconnect the battery to "restart" the control module/CAN-net.**

- Erase diagnostic trouble codes (DTCs) in all control modules.
- Ignition off.
- Ignition on.
- Start the vehicle. Allow the vehicle to run for 10 minutes. Start the engine. Allow the engine to run at idle speed for 10 minutes
- Read out the diagnostic trouble codes in the vehicle via the DIAGNOSTICS tab.

Does the diagnostic trouble code (DTC) for faulty communication return?

- **YES**

  Refer to **INFORMATION**

- **NO**

  OKAY: Troubleshooting has been completed.

CHECKING SHORT-CIRCUITING TO GROUND/VOLTAGE IN CAN-NET

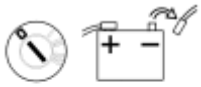

Fig. 343: Ignition Off And Disconnecting Battery Negative Lead
Courtesy of VOLVO CARS CORPORATION

- Ignition off.
- Disconnect the battery negative lead.
- Connect OBDII-Box **(951 3015)** to the diagnostics socket.

  For general information about CAN-troubleshooting, see **GENERAL INFORMATION ABOUT FAULT-TRACING IN THE CAN NETWORK**

  Checking for a short-circuit to ground

  Measure resistance between the following connections on the OBDII-box/diagnostics socket.

  - #3 and #4 (ground). Measurement is shown in the illustration. The resistance should be above 1 kohms.

- #11 and #4 (ground). The resistance should be above 1 kohms.

If resistance is below 1 kohms this indicates short-circuiting between the CAN-line and ground.

Checking for a short-circuit to voltage

Measure resistance between the following connections on the OBDII-box/diagnostics socket.

- #3 and #16 (voltage). Measurement is shown in the illustration. The resistance should be above 1 kohms.
- #11 and #16 (voltage). The resistance should be above 1 kohms.

If resistance is below 1 kohms this indicates short-circuiting between the CAN-line and voltage cable.

Twist the cable harness and wiggle connectors where they can be accessed along the cable harness during every measurement, and note if the resistance changes to detect intermittent short-circuits or open circuit.

HINT: Part the CAN-net at suitable points to decide where a short-circuit may be found.

NOTE: After fault with control modules that interfere with communication, other control modules may remain in Limp-Home (that is, they work with reduced functionality) even when the ignition has been turned off and on a few times. For certain faults in the CAN-net where control modules have stopped communicating, it may help to disconnect/reconnect the battery to "restart" the control module/CAN-net.

Remedy as necessary.

Other information

- see **BATTERY, DISCONNECTING**
- see **CHECKING WIRING AND TERMINALS**

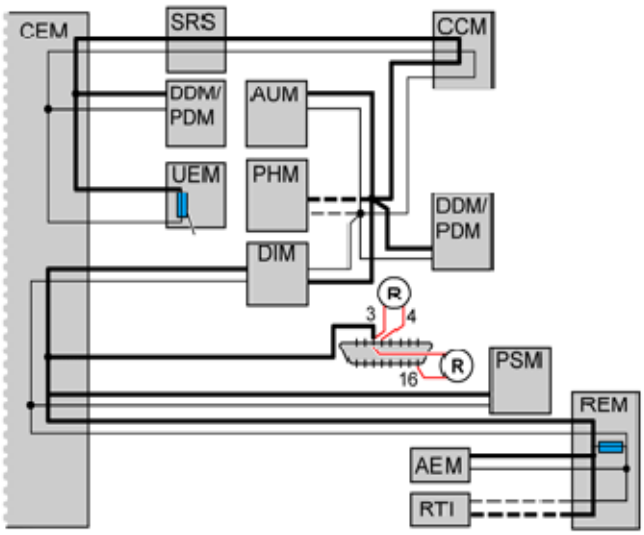

Fig. 344: Checking For Short-Circuiting To Ground/Voltage In CAN-net
Courtesy of VOLVO CARS CORPORATION

Was a fault detected?

- **YES**

  Refer to **VERIFICATION**

- **NO**

  Refer to **CHECKING THE AMOUNT OF TRAFFIC ON THE LS-CAN**

CHECKING VOLTAGE-DROP IN CABLE FOR CAN-H AND CAN-L, RESPECTIVELY

Fig. 345: Identifying Ignition On Position
Courtesy of VOLVO CARS CORPORATION

- Connect the battery.
- Ignition on.
- Connect OBDII-Box **(951 3015)** to the diagnostics socket.

  For general information about CAN-troubleshooting, see **GENERAL INFORMATION ABOUT FAULT-TRACING IN THE CAN NETWORK**

  In principle, the voltage measured in each cable in the CAN-net shall be the same at each control module

in the network. This means that the voltage-drop in the cable for CAN-H and CAN-L, respectively, between the control modules should be very low. If there is a voltage-difference in the CAN-lines between the diagnostics socket/Central electronic module (CEM) and a control module due to, e. g., contact resistance in a connector or branching, communication may be lost/interfered with. Check if there is voltage-drop in the cable for CAN-H and CAN-L between the diagnostics socket/Central electronic module (CEM) and the control module where there is problem with communication.

Carry out the following:

Measure voltage between the following connections on the OBDII-box/diagnostics socket.

- #3 and corresponding connection on relevant control module for CAN-H. The voltage shall be lower than 50 mV.
- #11 and corresponding connection on relevant control module for CAN-L. The voltage shall be lower than 50 mV.

If voltage is too high, this indicates too high contact resistance in cable, connector, or branching. Check the circuit between the diagnostics socket and control module in question for contact resistance and oxidation.

NOTE: **After fault with control modules that interfere with communication, other control modules may remain in Limp-Home (that is, they work with reduced functionality) even when the ignition has been turned off and on a few times. For certain faults in the CAN-net where control modules have stopped communicating, it may help to disconnect/reconnect the battery to "restart" the control module/CAN-net.**

Remedy wiring as necessary.

Other information

- see **CHECKING WIRING AND TERMINALS**

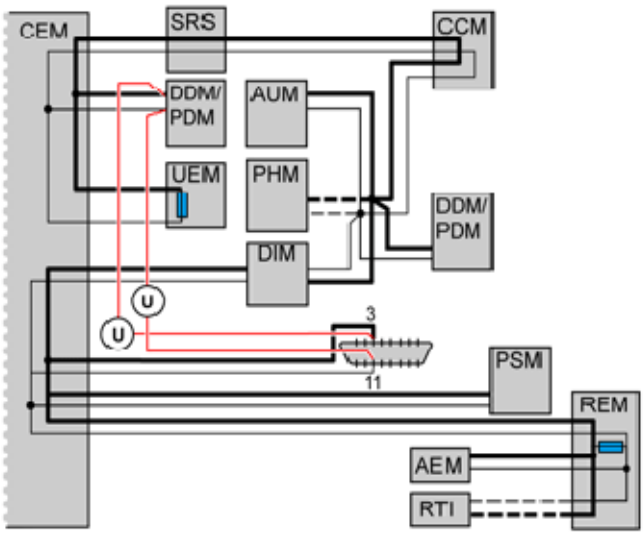

Fig. 346: Checking For Voltage-Drop In Cable For CAN-H And CAN-L
Courtesy of VOLVO CARS CORPORATION

- **Continue**

  Refer to **VERIFICATION**

INFORMATION

FAULT-TRACING INFORMATION

The fault should have been detected and remedied. As this is not the case fault-tracing has failed.

Exit fault-tracing for this diagnostic trouble code (DTC) or make another attempt.

ELECTRICAL

Cables And Fuses - Diagnostic Trouble Codes and Associated Procedures

CEM-DF05: CAN-H, LOW SPEED NETWORK. SIGNAL TOO LOW (2005-2012)

DIAGNOSTIC TROUBLE CODE (DTC) INFORMATION CEM-DF05

Condition

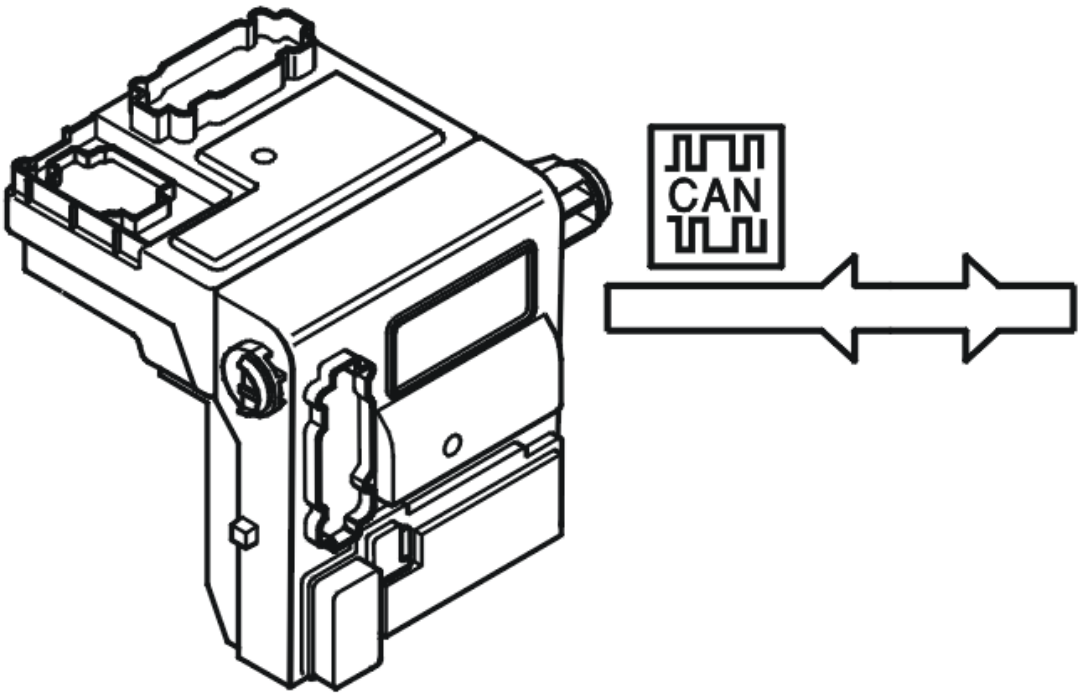

Fig. 1: Identifying Central Electronic Module
Courtesy of VOLVO CARS CORPORATION

The central electronic module (CEM) checks the voltage in the CAN wiring in the low speed network. The diagnostic trouble code (DTC) is stored if the central electronic module (CEM) registers that there is a short-circuit to ground in the CAN H in the low speed network.

NOTE: **If DFxx diagnostic trouble codes (DTCs) are stored the central electronic module (CEM) must not be replaced as the diagnostic trouble code (DTC) indicates a short-circuit in one or more conductors in the Control area network. The central electronic module (CEM) is the only control module that monitors the voltage level in the Control area network wiring. The central electronic module (CEM) is therefore the only control module that can store a diagnostic**

trouble code (DTC) for a short-circuit in one of the cables to ground or supply voltage. Do not replace the central electronic module (CEM) in the event of a CAN fault unless VIDA fault-tracing has indicated that the central electronic module (CEM) has an internal fault.

The diagnostic trouble code (DTC) can be diagnosed when the ignition has been on for more than 10 seconds.

Substitute Value

- None.

Possible Source

- Short-circuit to ground in the low speed network.

Fault symptom[s]

- No gauges working.
- The central locking system does not function at all.

SIGNAL MISSING

see **SIGNAL MISSING**

CEM-DF05: CAN-H, LOW-SPEED NETWORK. SIGNAL TOO LOW. INTERMITTENT FAULT (2003-2004)

DIAGNOSTIC TROUBLE CODE (DTC) INFORMATION CEM-DF05

Condition

Diagnostic trouble codes (DTCs) are stored if the central electronic module (CEM) registers that there is a short-circuit to ground in the CAN H in the low speed network.

NOTE: **In the event of DFxx diagnostic trouble codes (DTCs), the central electronic module (CEM) must not be replace as the diagnostic trouble code (DTC) indicates a short-circuit in one or more conductors in the Control area network The central electronic module (CEM) is the only control module that monitors the voltage level in the Control area network wiring. The central electronic module (CEM) is therefore the only control module that can store a diagnostic trouble code (DTC) for a short-circuit in one of the cables to ground or supply voltage. Do not replace the central electronic module (CEM) in the event of a CAN fault unless VIDA fault-tracing has indicated that the central electronic module (CEM) has an internal fault.**

Substitute Value

None.

Possible Source

- Short-circuit to ground in the low speed network.

Fault symptom[s]

- No gauges working
- The instrument lighting does not operate
- The central locking system does not function at all.

SIGNAL TOO LOW. INTERMITTENT FAULT.

CHECKING CONNECTORS AND BUS WIRE

NOTE: **Remember that the CAN network is only a communications network. There are therefore no fuses, switches and sensors on the CAN bus. Check the resistance as described below (see references).**

NOTE: **To maintain the correct values the battery should be disconnected when measuring resistance.**

Check the bus wire for a short circuit to ground as described in, see **SHORT-CIRCUIT TO GROUND, INTERMITTENT FAULTS** .

Also check the intermediate connectors for contact resistance and oxidation as described in, see **CONTACT RESISTANCE AND OXIDATION** and for a loose contact as described in **LOOSE CONNECTIONS (TERMINALS)** .

HINT: If the fault is found before all the wires below have been checked trouble-shooting is not necessary on the wires.

The following wires and connectors should be checked to locate the short circuit.

Wire between:

- road traffic information module (RTI) 10A and rear electronic module (REM) 15A.

  To connect the test box to the RTI control unit, see **CONNECTING THE BREAKOUT BOX TO THE ROAD TRAFFIC INFORMATION (RTI) CONTROL MODULE**

  To connect the test box to the REM control unit, see **CONNECTING THE BREAKOUT BOX TO THE REAR ELECTRONIC MODULE (REM)**

- rear electronic module (REM) 14A, driver information module (DIM) 8 and intermediate connector

54/40.

To connect the test box to the REM control unit, see **CONNECTING THE BREAKOUT BOX TO THE REAR ELECTRONIC MODULE (REM)**

To connect the test box to the DIM control unit, see **CONNECTING THE DRIVER INFORMATION MODULE (DIM) TEST BOX**

- central electronic module (CEM) 3D and driver information module (DIM) 8.

  To connect the test box to the CEM control unit, see **CONNECTING THE BREAKOUT BOX**

  To connect the test box to the DIM control unit, see **CONNECTING THE DRIVER INFORMATION MODULE (DIM) TEST BOX**

- power seat module (PSM) 2B and driver information module (DIM) 8.

  To connect the test box to the PSM control unit, see **CONNECTING THE BREAKOUT BOX, POWER SEAT MODULE (PSM)**

  To connect the test box to the DIM control unit, see **CONNECTING THE DRIVER INFORMATION MODULE (DIM) TEST BOX**

- driver information module (DIM) 2 and climate control module (CCM) 14A.

  To connect the test box to the DIM control unit, see **CONNECTING THE DRIVER INFORMATION MODULE (DIM) TEST BOX**

  To connect the test box to the CCM control unit, see **CONNECTING THE BREAKOUT BOX**

- audio module (AUM) 7A and climate control module (CCM) 14A.

  To connect the test box to the AUM control unit, see **CONNECTING THE BREAKOUT BOX, AUDIO CONTROL MODULE**

  To connect the test box to the CCM control unit, see **CONNECTING THE BREAKOUT BOX**

- phone module (PHM) 22A and climate control module (CCM) 14A.

  To connect the test box to the PHM control unit, see **CONNECTING THE BREAKOUT BOX, CARPHONE MODULE**

  To connect the test box to the CCM control unit, see **CONNECTING THE BREAKOUT BOX**

- passenger door module (PDM) 2A, climate control module (CCM) 14A and intermediate connector 54/11.

To connect the test box to the PDM/DDM control units, see **CONNECTING THE BREAKOUT BOX**

To connect the test box to the CCM control unit, see **CONNECTING THE BREAKOUT BOX**

- climate control unit (CCM) 13A and steering wheel module (SWM) 9.

  To connect the test box to the CCM control unit, see **CONNECTING THE BREAKOUT BOX**

  To connect the test box to the SWM control unit, see **CONNECTING THE BREAKOUT BOX**

- steering wheel module (SWM) 10 and supplemental restraint system (SRS) 23B.

  To connect the test box to the SWM control unit, see **CONNECTING THE BREAKOUT BOX**

  To connect the test box to the SRS control unit, see **CONNECTING THE BREAKOUT BOX**

- supplemental restraint system (SRS) 24B, upper electronic module (UEM) 3 and intermediate connector 54/13.

  To connect the test box to the SRS control unit, see **CONNECTING THE BREAKOUT BOX**

  To connect the test box to the UEM control unit, see **CONNECTING THE BREAKOUT BOX**

- driver door module (DDM) 2A, upper electronic module (UEM) 3 and intermediate connector 54/10.

  To connect the test box to the DDM/PDM control units, see **CONNECTING THE BREAKOUT BOX**

  To connect the test box to the UEM control unit, see **CONNECTING THE BREAKOUT BOX**

Additional information:

- The voltage should be between approximately 2.0 V and 3.5 V.
-
- To disconnect the battery, see **BATTERY, DISCONNECTING**

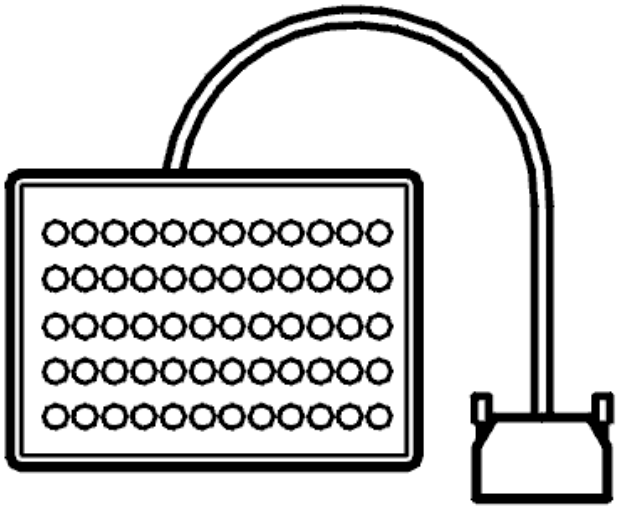

Fig. 2: Identifying Breakout Box
Courtesy of VOLVO CARS CORPORATION

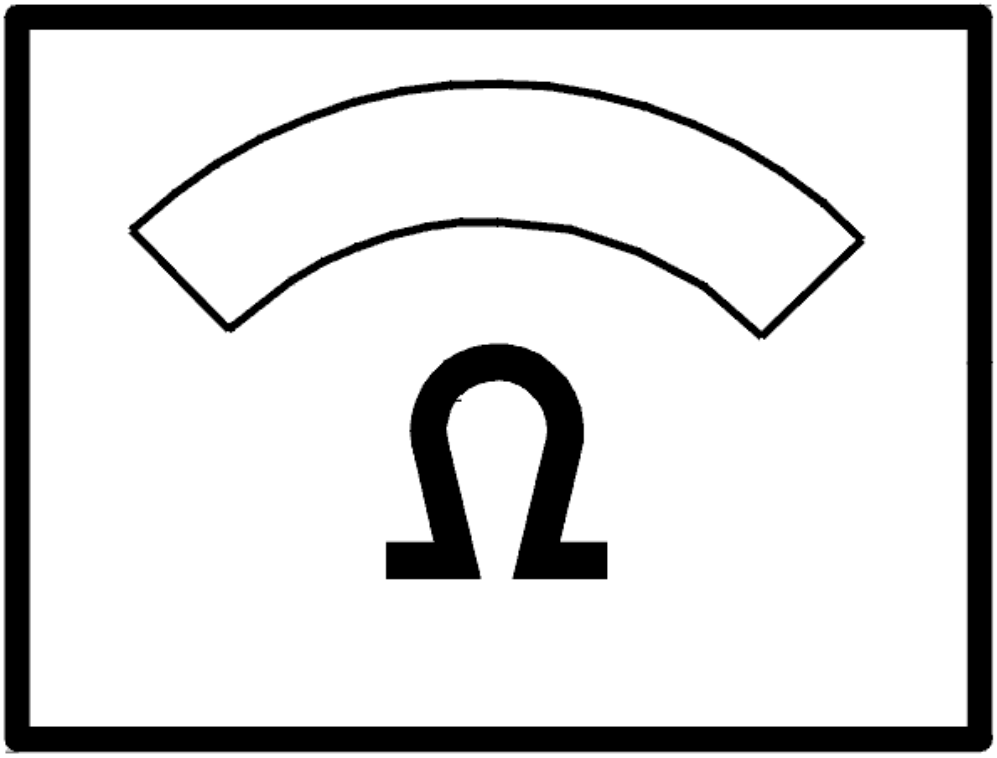

Fig. 3: Identifying Ohms Display
Courtesy of VOLVO CARS CORPORATION

CEM-DF05: CAN-H, LOW-SPEED NETWORK. SIGNAL TOO LOW. PERMANENT FAULT (2003-2004)

DIAGNOSTIC TROUBLE CODE (DTC) INFORMATION CEM-DF05

see **DIAGNOSTIC TROUBLE CODE (DTC) INFORMATION CEM-DF05**

SIGNAL TOO LOW. PERMANENT FAULT

CHECKING CONNECTORS AND BUS WIRE

NOTE: **Remember that the CAN network is only a communications network. There are**

therefore no fuses, switches and sensors on the CAN bus. Check the resistance as described below (see references).

NOTE: To maintain the correct values the battery should be disconnected when measuring resistance.

Check the bus wire for a short circuit to ground as described in, see **SHORT-CIRCUIT TO GROUND, PERMANENT FAULTS** . Also check the intermediate connectors for contact resistance and oxidation as described in **CONTACT RESISTANCE AND OXIDATION** .

The following wires and connectors should be checked to locate the short circuit.

Wire between:

- road traffic information module (RTI) 10A and rear electronic module (REM) 15A.

  To connect the test box to the RTI control unit, see **CONNECTING THE BREAKOUT BOX TO THE ROAD TRAFFIC INFORMATION (RTI) CONTROL MODULE**

  To connect the test box to the REM control unit, see **CONNECTING THE BREAKOUT BOX TO THE REAR ELECTRONIC MODULE (REM)**

- rear electronic module (REM) 14A, driver information module (DIM) 8 and intermediate connector 54/40.

  To connect the test box to the REM control unit, see **CONNECTING THE BREAKOUT BOX TO THE REAR ELECTRONIC MODULE (REM)**

  To connect the test box to the DIM control unit, see **CONNECTING THE DRIVER INFORMATION MODULE (DIM) TEST BOX**

- central electronic module (CEM) 3D and driver information module (DIM) 8.

  To connect the test box to the CEM control unit, see **CONNECTING THE BREAKOUT BOX**

  To connect the test box to the DIM control unit, see **CONNECTING THE DRIVER INFORMATION MODULE (DIM) TEST BOX**

- power seat module (PSM) 2B and driver information module (DIM) 8.

  To connect the test box to the PSM control unit, see **CONNECTING THE BREAKOUT BOX, POWER SEAT MODULE (PSM)**

  To connect the test box to the DIM control unit, see **CONNECTING THE DRIVER INFORMATION MODULE (DIM) TEST BOX**

- driver information module (DIM) 2 and climate control module (CCM) 14A.

To connect the test box to the DIM control unit, see **CONNECTING THE DRIVER INFORMATION MODULE (DIM) TEST BOX**

To connect the test box to the CCM control unit, see **CONNECTING THE BREAKOUT BOX**

- audio module (AUM) 7A and climate control module (CCM) 14A.

  To connect the test box to the AUM control unit, see **CONNECTING THE BREAKOUT BOX, AUDIO CONTROL MODULE**

  To connect the test box to the CCM control unit, see **CONNECTING THE BREAKOUT BOX**

- phone module (PHM) 22A and climate control module (CCM) 14A.

  To connect the test box to the PHM control unit, see **CONNECTING THE BREAKOUT BOX, CARPHONE MODULE**

  To connect the test box to the CCM control unit, see **CONNECTING THE BREAKOUT BOX**

- passenger door module (PDM) 2A, climate control module (CCM) 14A and intermediate connector 54/11.

  To connect the test box to the PDM/DDM control units, see **CONNECTING THE BREAKOUT BOX**

  To connect the test box to the CCM control unit, see **CONNECTING THE BREAKOUT BOX**

- climate control unit (CCM) 13A and steering wheel module (SWM) 9.

  To connect the test box to the CCM control unit, see **CONNECTING THE BREAKOUT BOX**

  To connect the test box to the SWM control unit, see **CONNECTING THE BREAKOUT BOX**

- steering wheel module (SWM) 10 and supplemental restraint system (SRS) 23B.

  To connect the test box to the SWM control unit, see **CONNECTING THE BREAKOUT BOX**

  To connect the test box to the SRS control unit, see **CONNECTING THE BREAKOUT BOX**

- supplemental restraint system (SRS) 24B, upper electronic module (UEM) 3 and intermediate connector 54/13.

  To connect the test box to the SRS control unit, see **CONNECTING THE BREAKOUT BOX**

  To connect the test box to the UEM control unit, see **CONNECTING THE BREAKOUT BOX**

- driver door module (DDM) 2A, upper electronic module (UEM) 3 and intermediate connector 54/10.

To connect the test box to the DDM/PDM control units, see **CONNECTING THE BREAKOUT BOX**

To connect the test box to the UEM control unit, see **CONNECTING THE BREAKOUT BOX**

Additional information

- The voltage should be between approximately 2.0V and 3.5V.
- To disconnect the battery, see **BATTERY, DISCONNECTING**

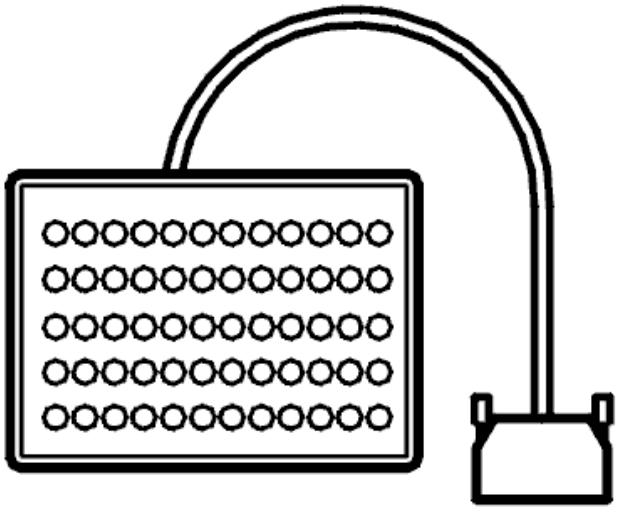

Fig. 4: Identifying Breakout Box
Courtesy of VOLVO CARS CORPORATION

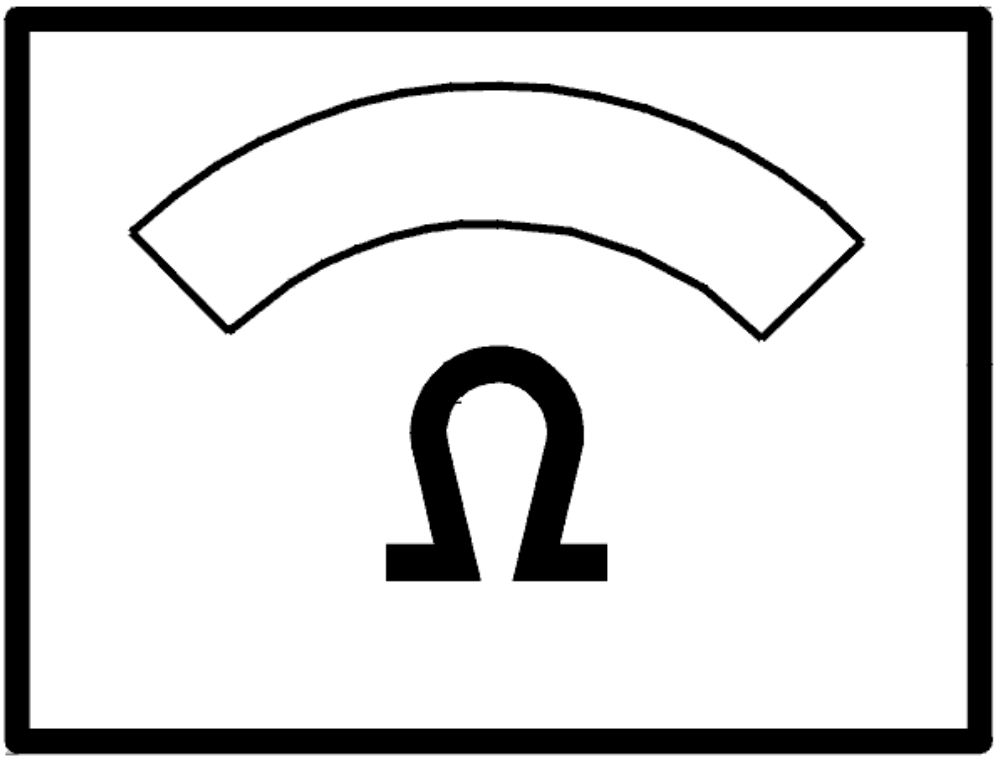

Fig. 5: Identifying Ohms Display
Courtesy of VOLVO CARS CORPORATION

- **Continue**

  Refer to **VERIFICATION**

VERIFICATION

VERIFICATION

HINT: After the repair it is necessary to check that the fault has been rectified.

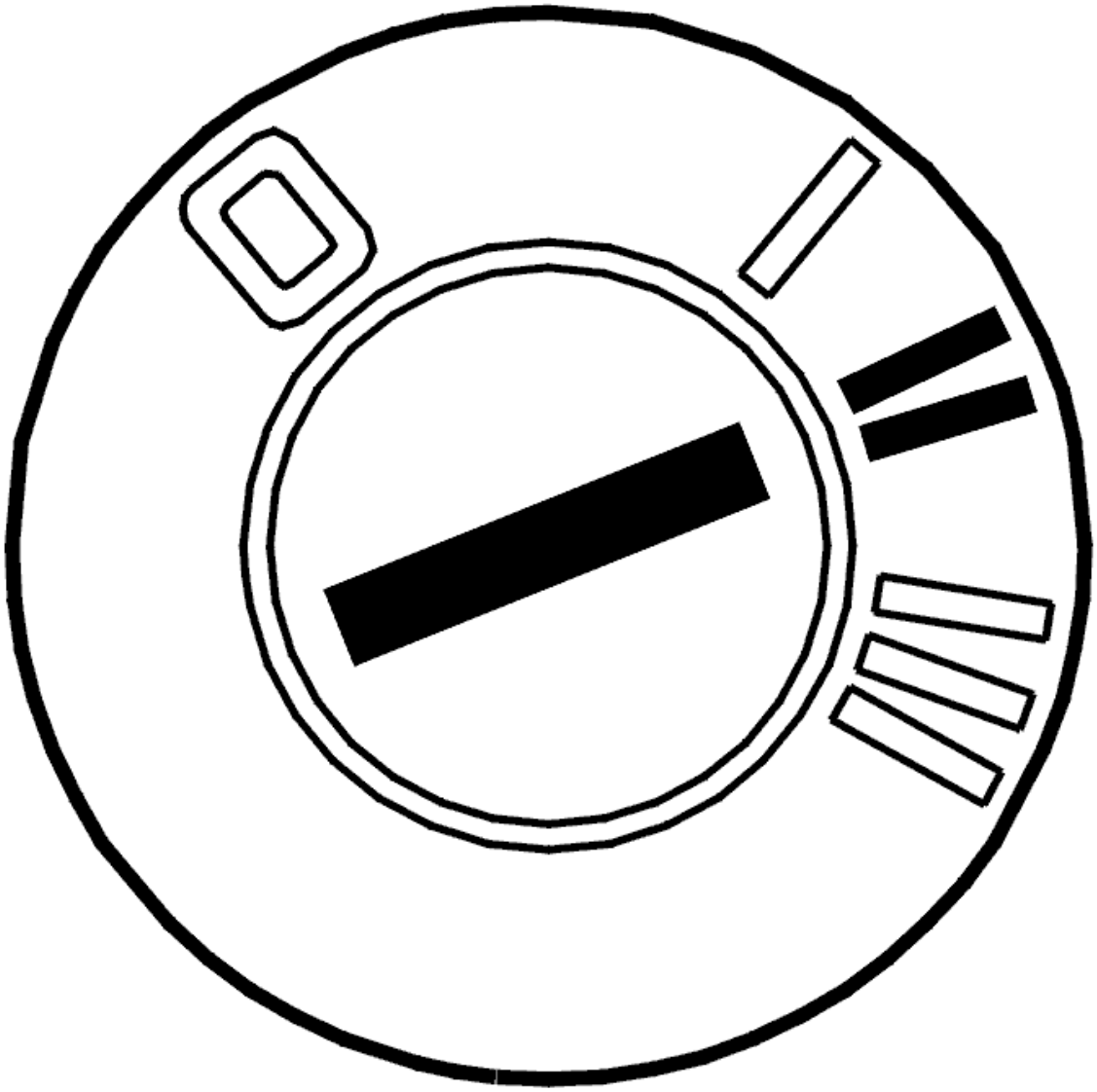

Fig. 6: Identifying Ignition ON
Courtesy of VOLVO CARS CORPORATION

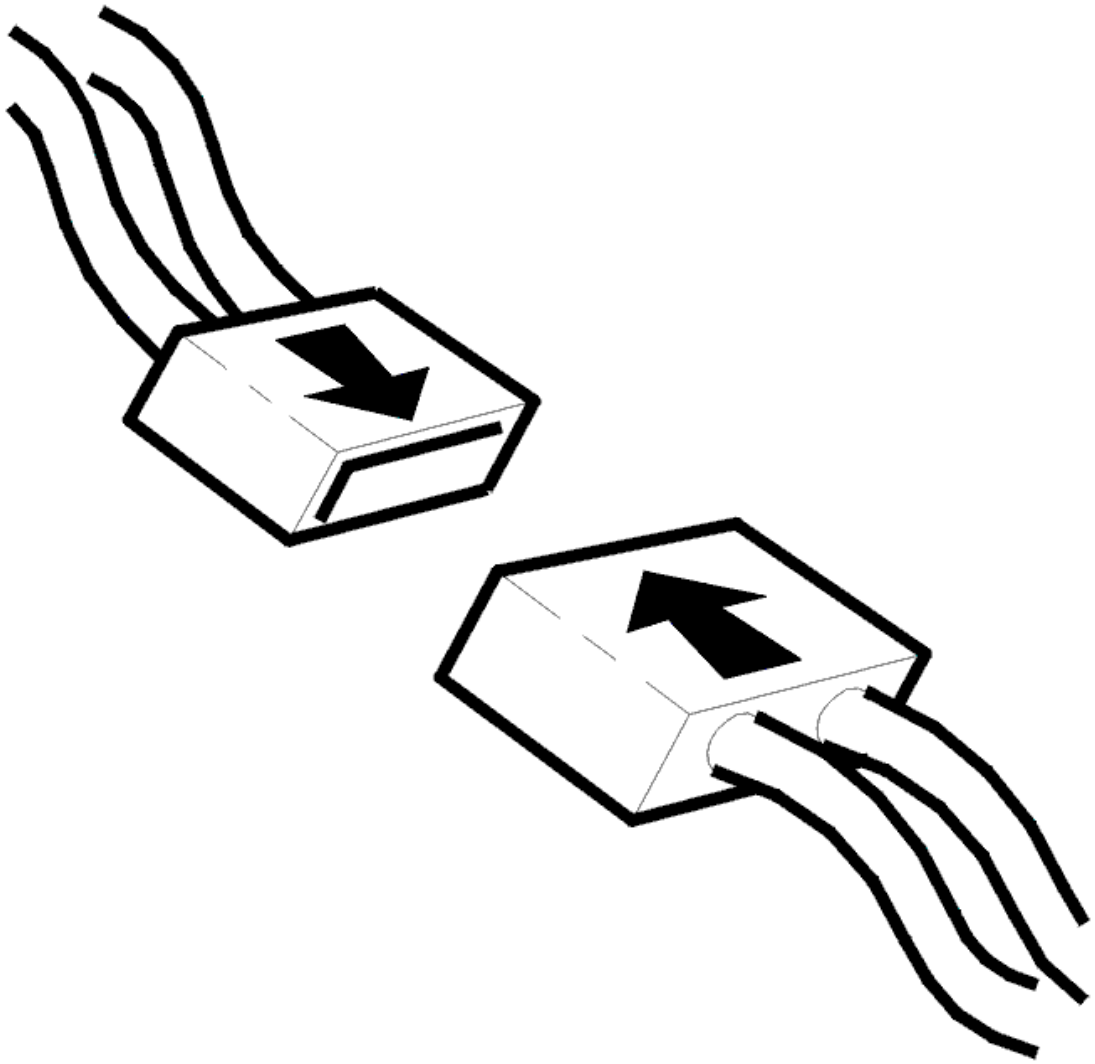

Fig. 7: Identifying Connector(s) Reinstallation
Courtesy of VOLVO CARS CORPORATION

- Ignition off.
- Connect connectors, install components, etc.
- Ignition on for at least 10 seconds.

Check that diagnostic trouble code status is showing Intermittent.

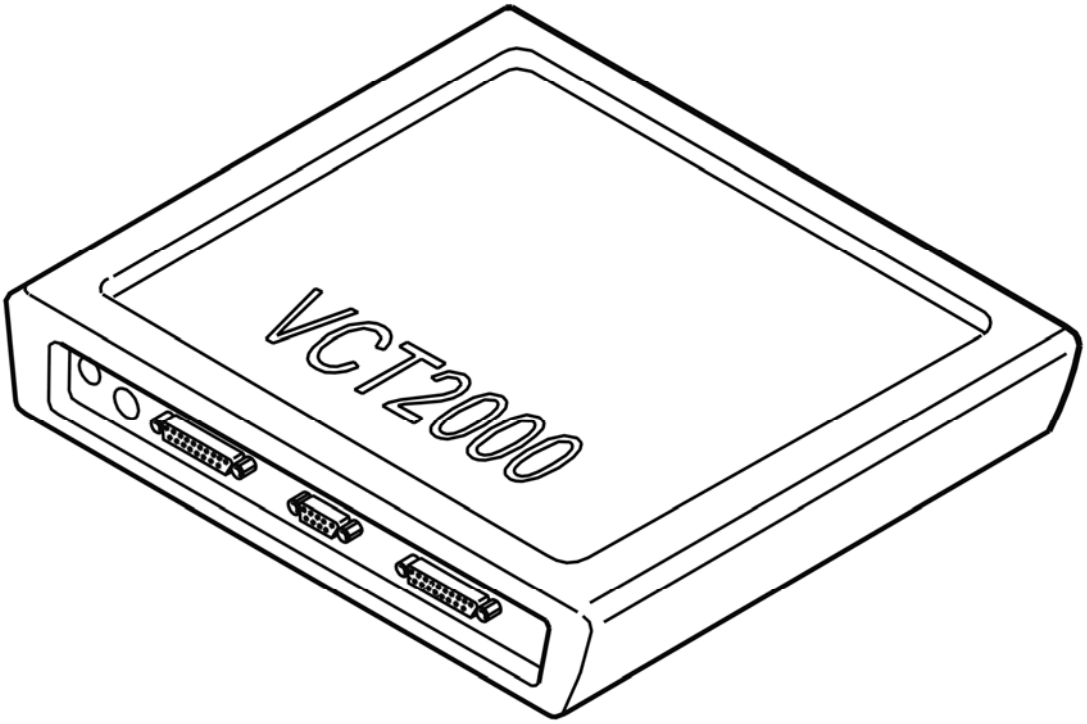

Fig. 8: Identifying VCT2000 Diagnostic Tool Symbol In VIDA
Courtesy of VOLVO CARS CORPORATION

Is the status of the diagnostic trouble code Intermittent?

- **YES**

  VERIFIED: Troubleshooting has been completed.

- **NO**

  Refer to **INFORMATION**

INFORMATION

FAULT-TRACING INFORMATION

The fault should have been detected and remedied. As this is not the case fault-tracing has failed.

Exit fault-tracing for this diagnostic trouble code (DTC) or make another attempt.

CEM-DF06: CAN-L, LOW SPEED NETWORK. SIGNAL TOO HIGH (2005-2012)

DIAGNOSTIC TROUBLE CODE (DTC) INFORMATION CEM-DF06

Condition

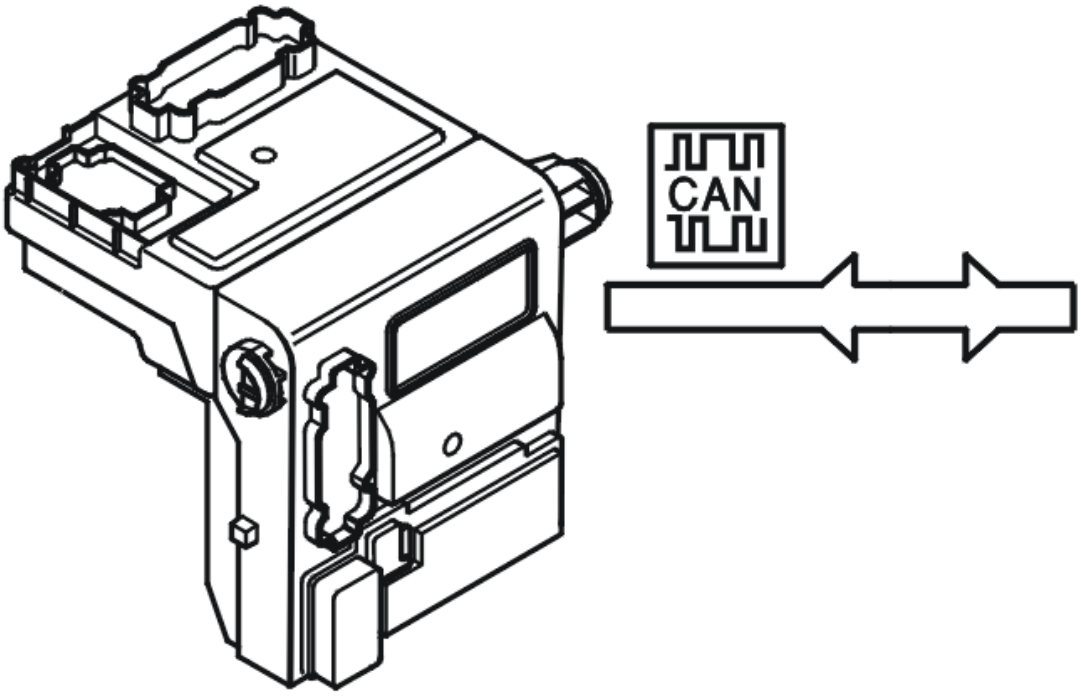

Fig. 9: Identifying Central Electronic Module
Courtesy of VOLVO CARS CORPORATION

The central electronic module (CEM) checks the voltage in the CAN wiring in the low speed network. The diagnostic trouble code (DTC) is stored if the central electronic module (CEM) registers a short-circuit to supply voltage in the CAN L in the low speed network.

NOTE: **If DFxx diagnostic trouble codes (DTCs) are stored the central electronic module (CEM) must not be replaced as the diagnostic trouble code (DTC) indicates a short-circuit in one or more conductors in the Control area network. The central electronic module (CEM) is the only control module that monitors the voltage level in the Control area network wiring. The central electronic module (CEM) is therefore the only control module that can store a diagnostic trouble code (DTC) for a short-circuit in one of the cables to ground or supply voltage. Do not replace the central electronic module (CEM) in the event of a CAN fault unless VIDA fault-tracing has indicated that the central electronic module (CEM) has an internal fault.**

The diagnostic trouble code (DTC) can be diagnosed when the ignition has been on for more than 10 seconds.

Substitute Value

- None.

Possible Source

- Short-circuit to supply voltage in the low speed network.

Fault symptom[s]

- No gauges working.
- The lighting in the instrument panel does not function.
- The central locking system does not function at all.

SIGNAL MISSING

see **SIGNAL MISSING**

CEM-DF06: CAN-L, LOW-SPEED NETWORK. SIGNAL TOO HIGH. INTERMITTENT FAULT (2003-2004)

DIAGNOSTIC TROUBLE CODE (DTC) INFORMATION CEM-DF06

Condition

Diagnostic trouble codes (DTCs) are stored if the central electronic module (CEM) registers that there is a short-circuit to supply voltage in the CAN L in the low speed network.

NOTE: **In the event of DFxx diagnostic trouble codes (DTCs), the central electronic module (CEM) must not be replace as the diagnostic trouble code (DTC) indicates a short-circuit in one or more conductors in the Control area network The central electronic module (CEM) is the only control module that monitors the voltage level in the Control area network wiring. The central electronic module (CEM) is therefore the only control module that can store a diagnostic trouble code (DTC) for a short-circuit in one of the cables to ground or supply voltage. Do not replace the central electronic module (CEM) in the event of a CAN fault unless VIDA fault-tracing has indicated that the central electronic module (CEM) has an internal fault.**

Substitute Value

None.

Possible Source

- Short-circuit to supply voltage in the low speed network.

Fault symptom[s]

- No gauges working
- The lighting in the instrument panel does not function
- The central locking system does not function at all.

SIGNAL TOO HIGH. INTERMITTENT FAULT.

CHECKING CONNECTORS AND BUS WIRE

NOTE: **Remember that the CAN network is only a communications network. There are therefore no fuses, switches and sensors on the CAN bus. Check the resistance as described below (see references).**

NOTE: **To maintain the correct values the battery should be disconnected when measuring resistance.**

Check the bus wire for a short circuit to voltage supply as described in, see **SHORT-CIRCUIT TO SUPPLY VOLTAGE, INTERMITTENT FAULTS** and for an intermittent open circuit as described in **OPEN-CIRCUIT, INTERMITTENT FAULTS** .

When checking for an open circuit, check if possible from the rear of the connector concerned so that it is not damaged.

Also check the intermediate connectors for contact resistance and oxidation as described in, see **CONTACT RESISTANCE AND OXIDATION** and for a loose contact as described in **LOOSE CONNECTIONS (TERMINALS)** .

HINT: If the fault is found before all the wires below have been checked trouble-shooting is not necessary on the wires.

The following wires and connectors should be checked to locate the short circuit.

Wire between:

- road traffic information module (RTI) 22A and rear electronic module (REM) 17A.

  To connect the test box to the RTI control unit, see **CONNECTING THE BREAKOUT BOX TO THE ROAD TRAFFIC INFORMATION (RTI) CONTROL MODULE**

  To connect the test box to the REM control unit, see **CONNECTING THE BREAKOUT BOX TO THE REAR ELECTRONIC MODULE (REM)** .

- rear electronic module (REM) 16A, driver information module (DIM) 9 and intermediate connector 54/40.

  To connect the test box to the REM control unit, see **CONNECTING THE BREAKOUT BOX TO THE REAR ELECTRONIC MODULE (REM)** .

To connect the test box to the DIM control unit, see **CONNECTING THE DRIVER INFORMATION MODULE (DIM) TEST BOX** .

- central electronic module (CEM) 2D and driver information module (DIM) 9.

  To connect the test box to the CEM control unit, see **CONNECTING THE BREAKOUT BOX** .

  To connect the test box to the DIM control unit, see **CONNECTING THE DRIVER INFORMATION MODULE (DIM) TEST BOX** .

- power seat module (PSM) 3B and driver information module (DIM) 9.

  To connect the test box to the PSM control unit, see **CONNECTING THE BREAKOUT BOX, POWER SEAT MODULE (PSM)** .

  To connect the test box to the DIM control unit, see **CONNECTING THE DRIVER INFORMATION MODULE (DIM) TEST BOX**

- driver information module (DIM) 3 and climate control module (CCM) 12A.

  To connect the test box to the DIM control unit, see **CONNECTING THE DRIVER INFORMATION MODULE (DIM) TEST BOX**

  To connect the test box to the CCM control unit, see **CONNECTING THE BREAKOUT BOX**

- audio module (AUM) 8A and climate control module (CCM) 12A.

  To connect the test box to the AUM control unit, see **CONNECTING THE BREAKOUT BOX, AUDIO CONTROL MODULE**

  To connect the test box to the CCM control unit, see **CONNECTING THE BREAKOUT BOX**

- phone module (PHM) 10A and climate control module (CCM) 12A.

  To connect the test box to the PHM control unit, see **CONNECTING THE BREAKOUT BOX, CARPHONE MODULE**

  To connect the test box to the CCM control unit, see **CONNECTING THE BREAKOUT BOX**

- passenger door module (PDM) 3A, climate control module (CCM) 12A and intermediate connector 54/11.

  To connect the test box to the PDM/DDM control units, see **CONNECTING THE BREAKOUT BOX**

  To connect the test box to the CCM control unit, see **CONNECTING THE BREAKOUT BOX**

- climate control module (CCM) 11A and steering wheel module (SWM) 19.

To connect the test box to the CCM control unit, see **CONNECTING THE BREAKOUT BOX**

To connect the test box to the SWM control unit, see **CONNECTING THE BREAKOUT BOX**

- steering wheel module (SWM) 20 and supplemental restraint system (SRS) 25B.

  To connect the test box to the SWM control unit, see **CONNECTING THE BREAKOUT BOX**

  To connect the test box to the SRS control unit, see **CONNECTING THE BREAKOUT BOX**

- supplemental restraint system (SRS) 26B, upper electronic module (UEM) 5 and intermediate connector 54/13.

  To connect the test box to the SRS control unit, see **CONNECTING THE BREAKOUT BOX**

  To connect the test box to the UEM control unit, see **CONNECTING THE BREAKOUT BOX**

- driver door module (DDM) 3A, upper electronic module (UEM) 5 and intermediate connector 54/10.

  To connect the test box to the DDM/PDM control units, see **CONNECTING THE BREAKOUT BOX**

  To connect the test box to the UEM control unit, see **CONNECTING THE BREAKOUT BOX**

Additional information:

- The voltage should be between approximately 1.5 V and 2.5 V.
- To disconnect the battery, see **BATTERY, DISCONNECTING**

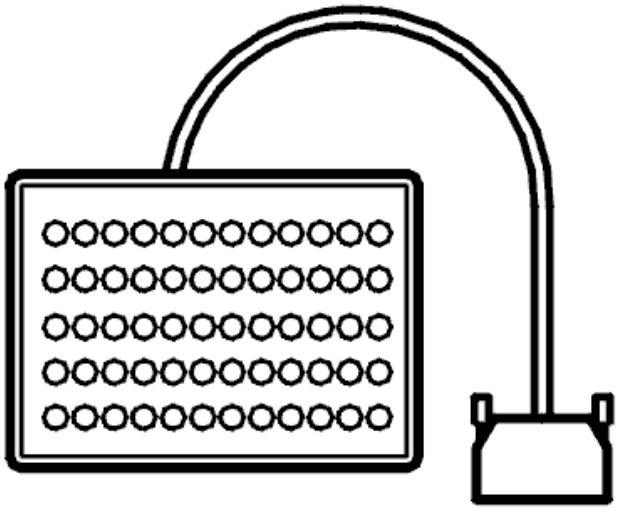

Fig. 10: Identifying Breakout Box
Courtesy of VOLVO CARS CORPORATION

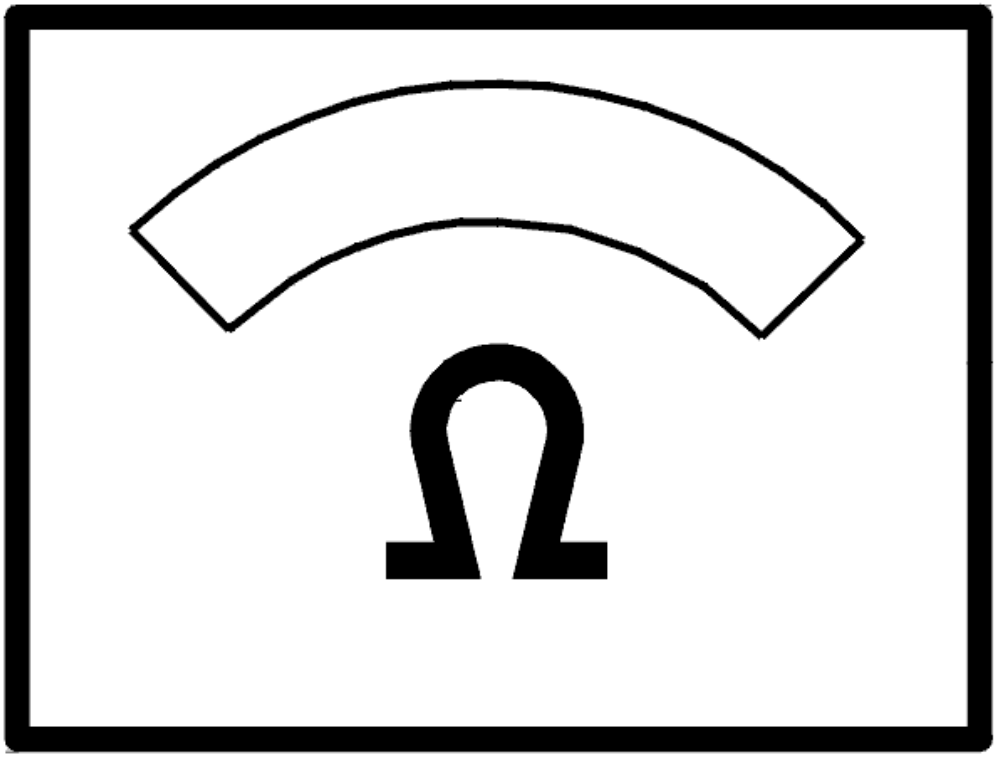

Fig. 11: Identifying Ohms Display
Courtesy of VOLVO CARS CORPORATION

CEM-DF06: CAN-L, LOW-SPEED NETWORK. SIGNAL TOO HIGH. PERMANENT FAULT (2003-2004)

DIAGNOSTIC TROUBLE CODE (DTC) INFORMATION CEM-DF06

see **DIAGNOSTIC TROUBLE CODE (DTC) INFORMATION CEM-DF06**

SIGNAL TOO HIGH. PERMANENT FAULT

CHECKING CONNECTORS AND BUS WIRE

NOTE: **Remember that the CAN network is only a communications network. There are**

therefore no fuses, switches and sensors on the CAN bus. Check the resistance as described below (see references).

NOTE: To maintain the correct values the battery should be disconnected when measuring resistance.

Check the bus wire for a short circuit to voltage supply as described in, see **SHORT-CIRCUIT TO SUPPLY VOLTAGE. PERMANENT FAULTS** and for an open circuit as described in **OPEN-CIRCUIT, PERMANENT FAULTS** .

HINT: When checking for an open circuit, check if possible from the rear of the connector concerned so that it is not damaged.

Also check the intermediate connectors for contact resistance and oxidation as described in, see **CONTACT RESISTANCE AND OXIDATION** .

The following wires and connectors should be checked to locate the short circuit.

Wire between:

- road traffic information module (RTI) 22A and rear electronic module (REM) 17A.

  To connect the test box to the RTI control unit, see **CONNECTING THE BREAKOUT BOX TO THE ROAD TRAFFIC INFORMATION (RTI) CONTROL MODULE**

  To connect the test box to the REM control unit, see **CONNECTING THE BREAKOUT BOX TO THE REAR ELECTRONIC MODULE (REM)** .

- rear electronic module (REM) 16A, driver information module (DIM) 9 and intermediate connector 54/40.

  To connect the test box to the REM control unit, see **CONNECTING THE BREAKOUT BOX TO THE REAR ELECTRONIC MODULE (REM)** .

  To connect the test box to the DIM control unit, see **CONNECTING THE DRIVER INFORMATION MODULE (DIM) TEST BOX** .

- central electronic module (CEM) 2D and driver information module (DIM) 9.

  To connect the test box to the CEM control unit, see **CONNECTING THE BREAKOUT BOX** .

  To connect the test box to the DIM control unit, see **CONNECTING THE DRIVER INFORMATION MODULE (DIM) TEST BOX** .

- power seat module (PSM) 3B and driver information module (DIM) 9.

  To connect the test box to the PSM control unit, see **CONNECTING THE BREAKOUT BOX,**

POWER SEAT MODULE (PSM) .

To connect the test box to the DIM control unit, see **CONNECTING THE DRIVER INFORMATION MODULE (DIM) TEST BOX**

- driver information module (DIM) 3 and climate control module (CCM) 12A.

  To connect the test box to the DIM control unit, see **CONNECTING THE DRIVER INFORMATION MODULE (DIM) TEST BOX**

  To connect the test box to the CCM control unit, see **CONNECTING THE BREAKOUT BOX**

- audio module (AUM) 8A and climate control module (CCM) 12A.

  To connect the test box to the AUM control unit, see **CONNECTING THE BREAKOUT BOX, AUDIO CONTROL MODULE**

  To connect the test box to the CCM control unit, see **CONNECTING THE BREAKOUT BOX**

- phone module (PHM) 10A and climate control module (CCM) 12A.

  To connect the test box to the PHM control unit, see **CONNECTING THE BREAKOUT BOX, CARPHONE MODULE**

  To connect the test box to the CCM control unit, see **CONNECTING THE BREAKOUT BOX**

- passenger door module (PDM) 3A, climate control module (CCM) 12A and intermediate connector 54/11.

  To connect the test box to the PDM/DDM control units, see **CONNECTING THE BREAKOUT BOX**

  To connect the test box to the CCM control unit, see **CONNECTING THE BREAKOUT BOX**

- climate control module (CCM) 11A and steering wheel module (SWM) 19.

  To connect the test box to the CCM control unit, see **CONNECTING THE BREAKOUT BOX**

  To connect the test box to the SWM control unit, see **CONNECTING THE BREAKOUT BOX**

- steering wheel module (SWM) 20 and supplemental restraint system (SRS) 25B.

  To connect the test box to the SWM control unit, see **CONNECTING THE BREAKOUT BOX**

  To connect the test box to the SRS control unit, see **CONNECTING THE BREAKOUT BOX**

- supplemental restraint system (SRS) 26B, upper electronic module (UEM) 5 and intermediate connector 54/13.

To connect the test box to the SRS control unit, see **CONNECTING THE BREAKOUT BOX**

To connect the test box to the UEM control unit, see **CONNECTING THE BREAKOUT BOX**

- driver door module (DDM) 3A, upper electronic module (UEM) 5 and intermediate connector 54/10.

  To connect the test box to the DDM/PDM control units, see **CONNECTING THE BREAKOUT BOX**

  To connect the test box to the UEM control unit, see **CONNECTING THE BREAKOUT BOX**

Additional information

- The voltage should be between approximately 1.5V and 2.5V.
- To disconnect the battery, see **BATTERY, DISCONNECTING**

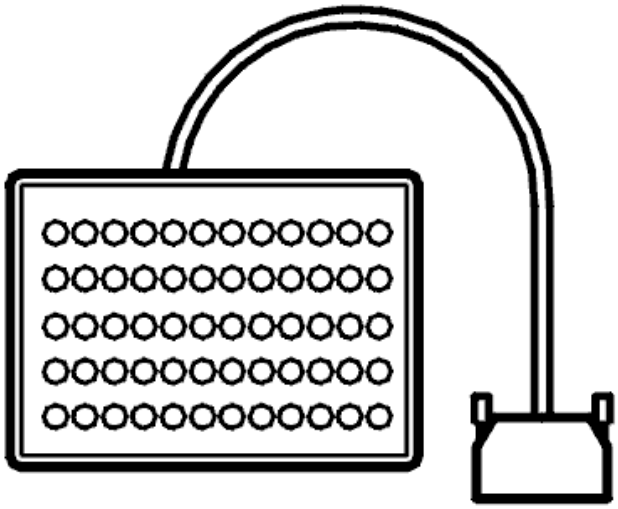

Fig. 12: Identifying Breakout Box
Courtesy of VOLVO CARS CORPORATION

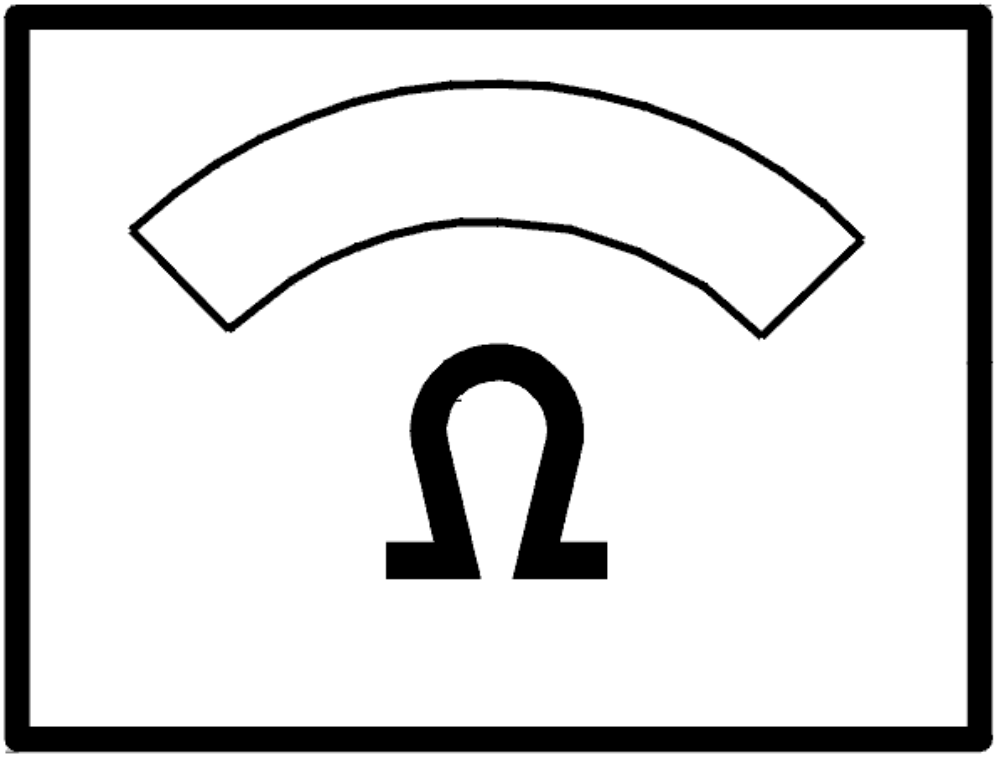

Fig. 13: Identifying Ohms Display
Courtesy of VOLVO CARS CORPORATION

- **Continue**

  Refer to **VERIFICATION**

VERIFICATION

VERIFICATION

HINT: After the repair it is necessary to check that the fault has been rectified.

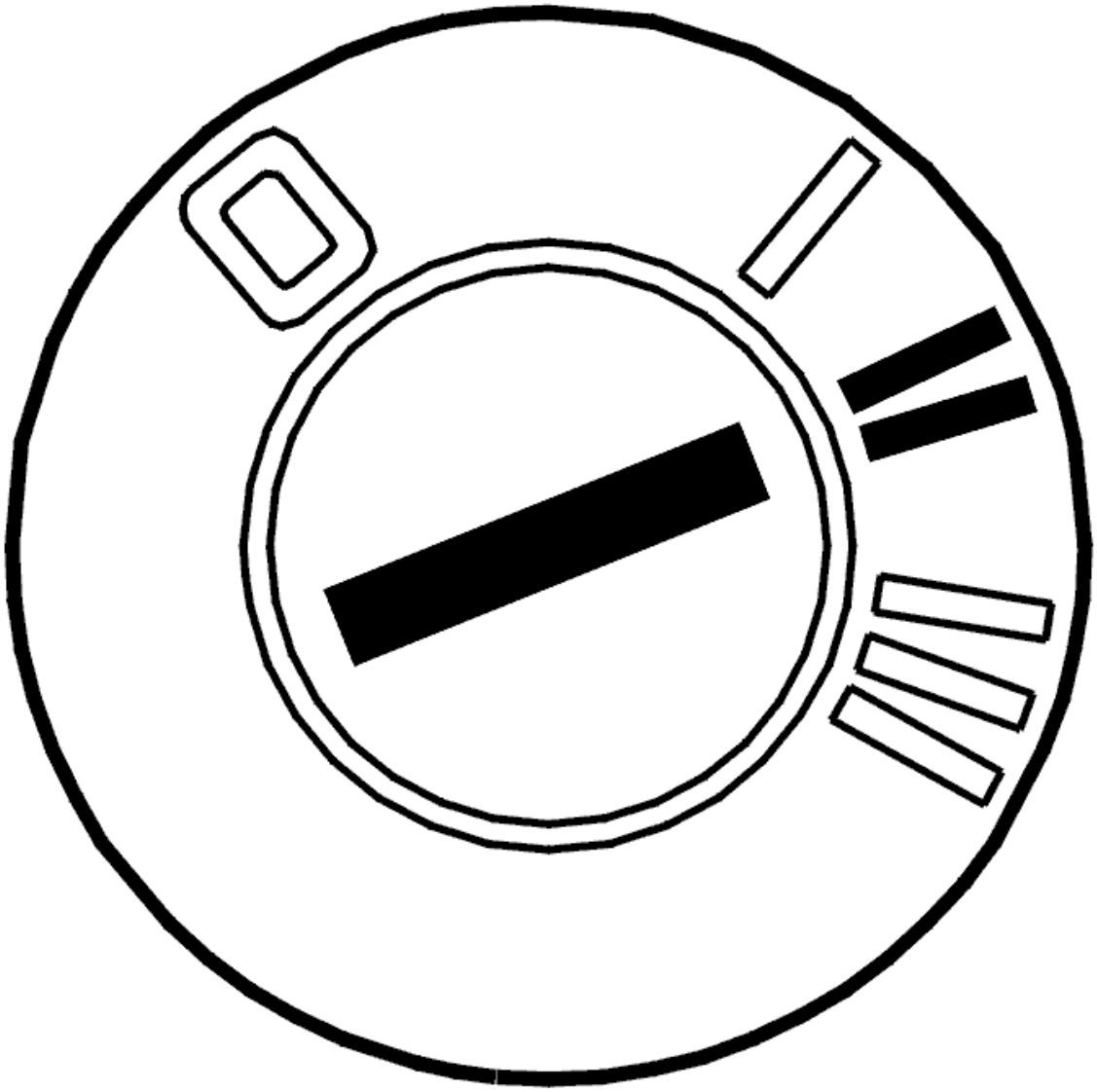

Fig. 14: Identifying Ignition ON
Courtesy of VOLVO CARS CORPORATION

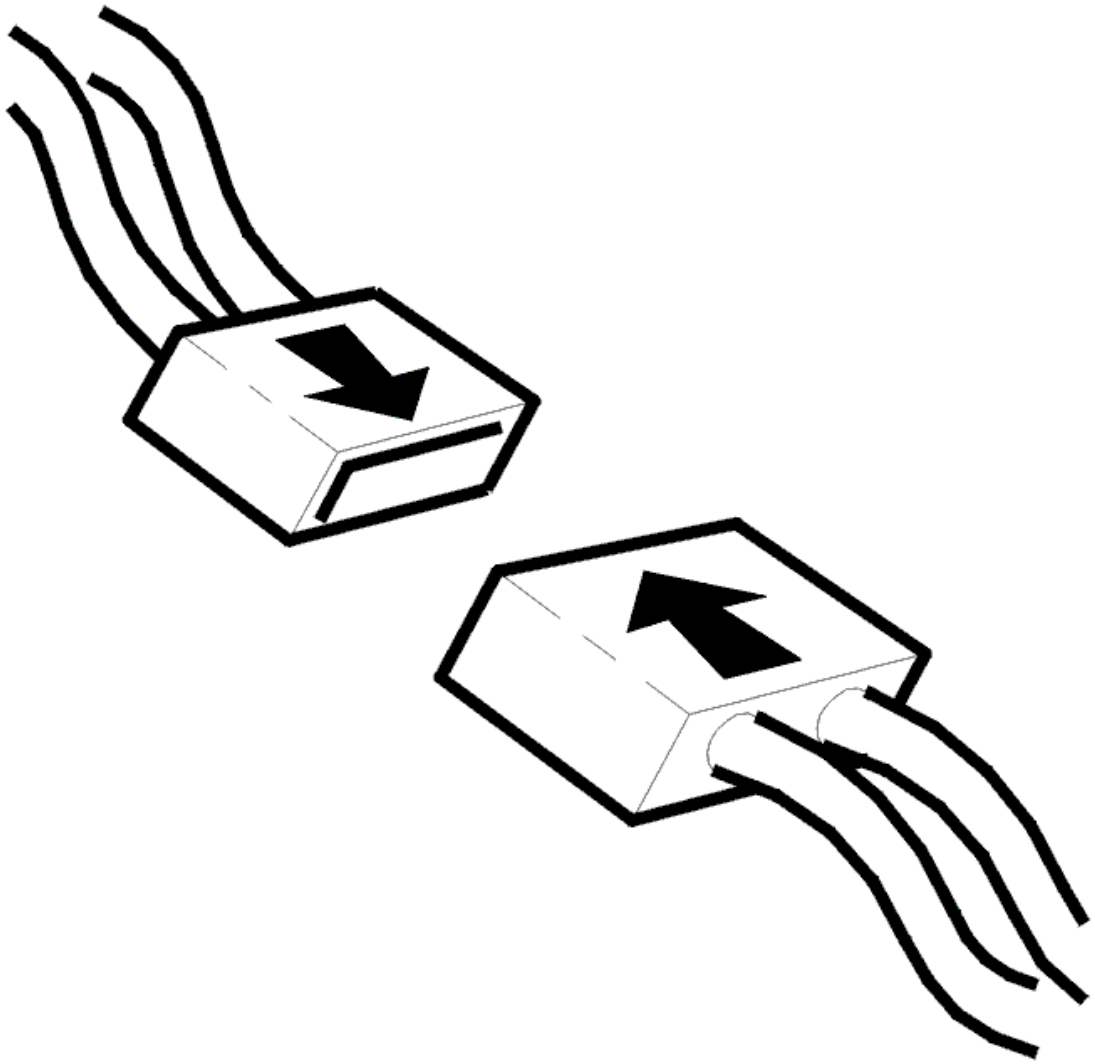

Fig. 15: Identifying Connector(s) Reinstallation
Courtesy of VOLVO CARS CORPORATION

- Ignition off.
- Connect connectors, install components, etc.
- Ignition on for at least 10 seconds.

  Check that diagnostic trouble code status is showing Intermittent.

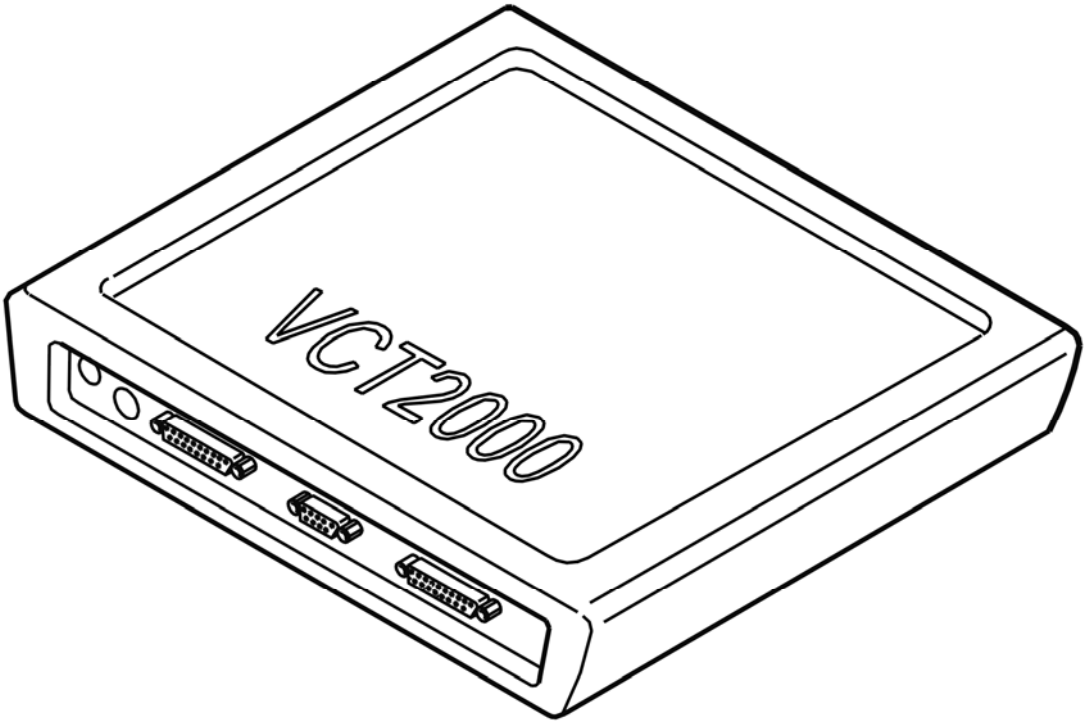

Fig. 16: Identifying VCT2000 Diagnostic Tool Symbol In VIDA
Courtesy of VOLVO CARS CORPORATION

Is the status of the diagnostic trouble code Intermittent?

- **YES**

  VERIFIED: Troubleshooting has been completed.

- **NO**

  Refer to **INFORMATION**

INFORMATION

FAULT-TRACING INFORMATION

The fault should have been detected and remedied. As this is not the case fault-tracing has failed.

Exit fault-tracing for this diagnostic trouble code (DTC) or make another attempt.

CEM-DF07: CAN-H, LOW SPEED NETWORK. FAULTY SIGNAL (2005-2012)

DIAGNOSTIC TROUBLE CODE (DTC) INFORMATION CEM-DF07

Condition

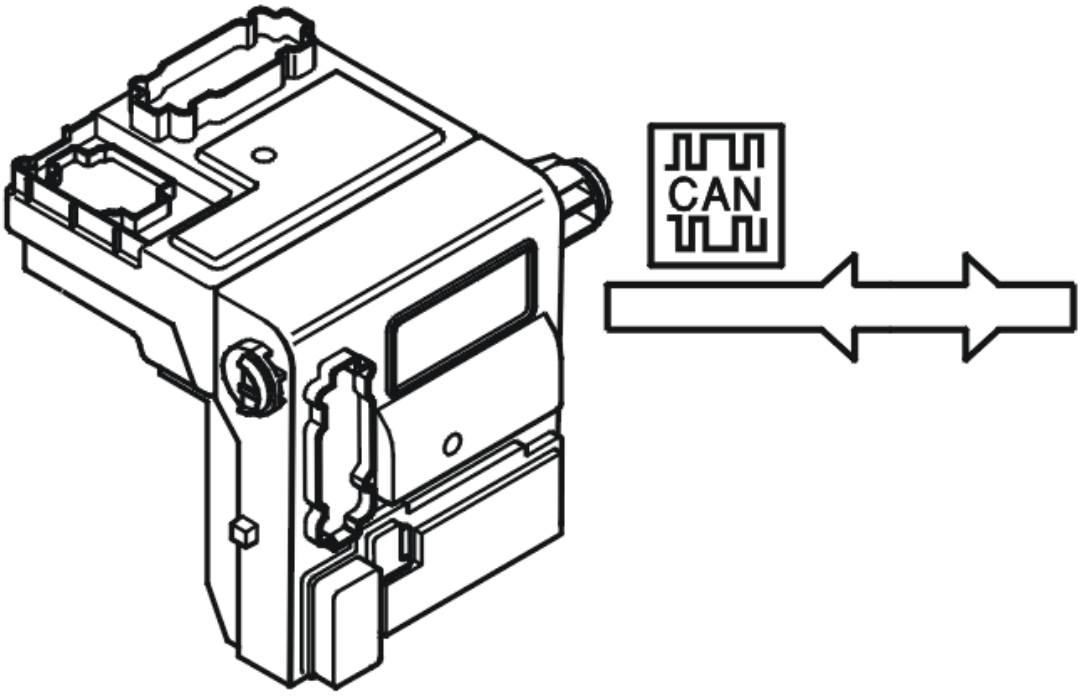

Fig. 17: Identifying Central Electronic Module
Courtesy of VOLVO CARS CORPORATION

The central electronic module (CEM) checks the voltage in CAN L and CAN H on the low speed network. The diagnostic trouble code (DTC) is stored if the central electronic module (CEM) registers a short-circuit between CAN L and CAN H in the low speed network.

The diagnostic trouble code (DTC) can be diagnosed when the ignition has been on for at least 10 seconds.

NOTE: **If DFxx diagnostic trouble codes (DTCs) are stored the central electronic module (CEM) must not be replaced as the diagnostic trouble code (DTC) indicates a short-circuit in one or more conductors in the Control area network. The central electronic module (CEM) is the only control module that monitors the voltage level in the Control area network wiring. The central electronic module (CEM) is therefore the only control module that can store a diagnostic trouble code (DTC) for a short-circuit in one of the cables to ground or supply voltage. Do not replace the central electronic module (CEM) in the event of a CAN fault unless VIDA fault-tracing has indicated that the central electronic module (CEM) has an internal fault.**

The diagnostic trouble code (DTC) can be diagnosed when the ignition has been on for more than 10 seconds.

Substitute Value

- None.

Possible Source

- Short-circuit between CAN L and CAN H in the low speed network.

Fault symptom[s]

- No gauges working.
- The instrument lighting does not operate
- The central locking system does not function at all.

SIGNAL MISSING

see **SIGNAL MISSING**

CEM-DF11: CAN-H, HIGH SPEED NETWORK. SIGNAL MISSING (2005-2012)

DIAGNOSTIC TROUBLE CODE (DTC) INFORMATION CEM-DF11

Condition

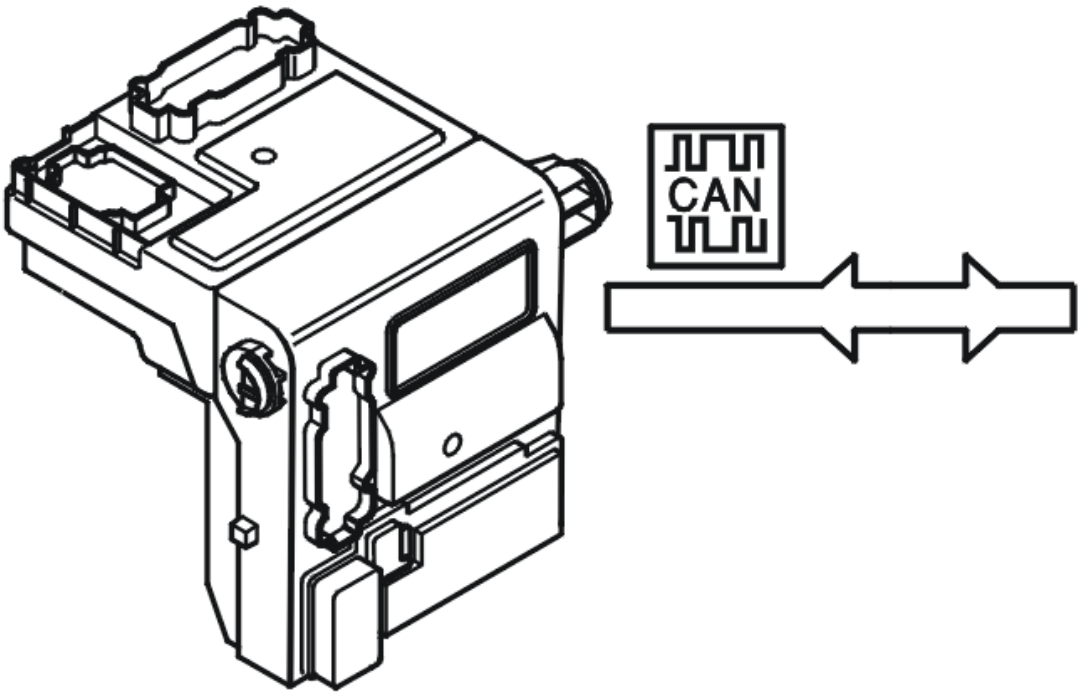

Fig. 18: Identifying Central Electronic Module
Courtesy of VOLVO CARS CORPORATION

The central electronic module (CEM) checks the voltage in the CAN wiring in the high speed network. The diagnostic trouble code (DTC) is stored if the central electronic module (CEM) registers an open-circuit in CAN H or CAN L in the high speed network.

NOTE: **The central electronic module (CEM) is the only control module that monitors the voltage level in the Control area network wiring. The central electronic module (CEM) is the only control module that can directly store diagnostic trouble codes (DTCs) for an open-circuit in these conductors. However other control modules can store diagnostic trouble codes (DTCs) as a result of the open-circuit. Do not replace the central electronic module (CEM) in the event of a CAN fault unless VIDA fault-tracing has indicated that the central electronic module (CEM) has an internal fault.**

The diagnostic trouble code (DTC) can be diagnosed when the ignition has been on for more than 10 seconds.

Substitute Value

- None.

Possible Source

- Open-circuit in one of the control area network (CAN) cables on the high speed network
- Contact resistance in the terminals.

Fault symptom[s]

- The engine does not start.
- Malfunction indicator lamp (MIL) lit.
- Message in the display.

SIGNAL MISSING

GENERAL INFORMATION

NOTE: Figures shown are only examples.

HINT: For general information about CAN-troubleshooting, see

General about CAN-related diagnostic trouble codes.

CEM-DF01 - DF17 can only be stored in Central electronic module (CEM). These diagnostic trouble codes are stored when an electric fault is detected in CAN-lines. Start with these diagnostic trouble codes first.

CEM-1AXX only stored in Central electronic module (CEM). One diagnostic trouble code for every control module on the CAN-net. These diagnostic trouble codes indicate that Central electronic module (CEM) does not receive any reply from other control modules.

XXX-E000 (HS-CAN)/E001 (LS-CAN) can be stored in all CAN-connected control modules. These diagnostic trouble codes indicate that the control module has detected interference on the CAN-net.

XXX-E003 can be stored in all CAN-connected control modules except in Central electronic module (CEM). The control modules on the CAN-net listen for a message (identity number) that is sent out at regular intervals from Central electronic module (CEM). This diagnostic trouble code indicates that the control module has not received any identity number, or that the expected number is not correct. Interference on the CAN-net can also store this diagnostic trouble code.

NOTE: In case of CAN-related faults, it is likely that a combination of above diagnostic trouble codes occur.

NOTE: After fault with control modules that interfere with communication, other control modules may remain in Limp-Home (that is, they work with reduced functionality) even when the ignition has been turned off and on a few times. For certain faults in the CAN-net where control modules have stopped communicating, it may help to disconnect/reconnect the battery to "restart" the control module/CAN-net.

If a communication diagnostic trouble code can be read from the control module, the malfunction is probably intermittent.

Intermittent fault in the voltage supply and ground to a control module on the CAN network results in the Central electronic module (CEM) storing a diagnostic trouble code (DTC) for an open-circuit in communication with the control module where the voltage supply does not work. There will probably not be a diagnostic trouble code (DTC) in the control module where the open-circuit in the voltage supply occurred as the control module cannot store a diagnostic trouble code (DTC) when it is not supplied with power.

NOTE: **Central electronic module (CEM) should not be replaced in case of CAN-fault, unless troubleshooting reveals that Central electronic module (CEM) has an internal fault.**

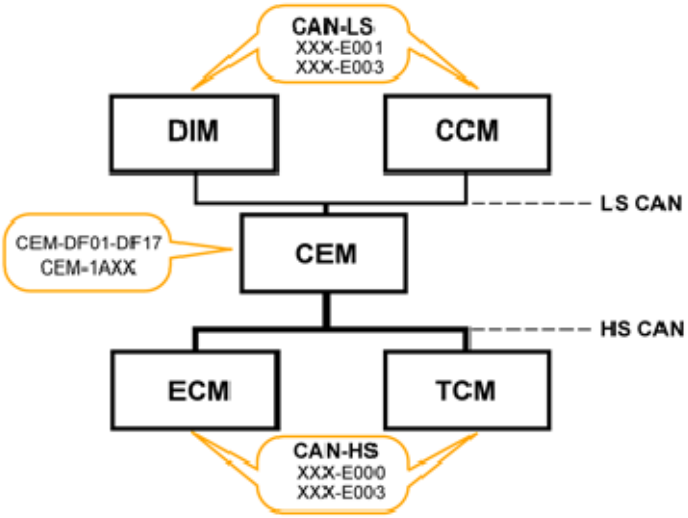

Fig. 19: Identifying High-Speed CAN And Low-Speed CAN Communication Diagram
Courtesy of VOLVO CARS CORPORATION

- **Continue**

  Refer to **CHECKING RESISTANCE IN CAN-NET**

CHECKING RESISTANCE IN CAN-NET

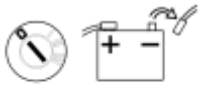

Fig. 20: Identifying Ignition OFF And Disconnected Negative Battery Lead
Courtesy of VOLVO CARS CORPORATION

- Ignition off

- Disconnect the battery negative lead
- Connect OBDII-Box **(951 3015)** to the diagnostics socket.

For general information about CAN-troubleshooting, see

- see **GENERAL INFORMATION ABOUT FAULT-TRACING IN THE CAN NETWORK**

Measure resistance between the following connections on the OBDII-box/diagnostics socket.

- #6 and #14. The resistance should be approx. 55 - 65 ohms.
- If resistance is approx. 120 ohms, this indicates open circuit in the circuit so that only one terminating resistor (120 ohms) has been measured.
- If resistance is above 1 kohms this indicates open circuit/high contact resistance somewhere in the circuit.
- If resistance is below 55 ohms this indicates short-circuiting/contact resistance between the CAN-lines somewhere in the circuit.

HINT: For HS-CAN the terminating resistors are located in Brake control module (BCM) and in Engine control module (ECM).

Twist the cable harness and wiggle connectors where they can be accessed along the cable harness during every measurement, and note if the resistance changes to detect intermittent short-circuits or open circuit.

NOTE: **Resistance measurement measures only main lines in the CAN-net (in circuit where both terminating resistors are found), not branches to certain control modules.**

Open circuit on branching without a terminating resistor cannot be detected with this measurement. However, short-circuiting on a branch can be detected. To measure resistance in the CAN-net to control modules located in a branching of their own, the measurement shall be done against the CAN-net at that control module. The values shall be as above.

NOTE: **After fault with control modules that interfere with communication, other control modules may remain in Limp-Home (that is, they work with reduced functionality) even when the ignition has been turned off and on a few times. For certain faults in the CAN-net where control modules have stopped communicating, it may help to disconnect/reconnect the battery to "restart" the control module/CAN-net.**

Remedy wiring as necessary.

Other information

- see **BATTERY, DISCONNECTING**

- see **CHECKING WIRING AND TERMINALS**

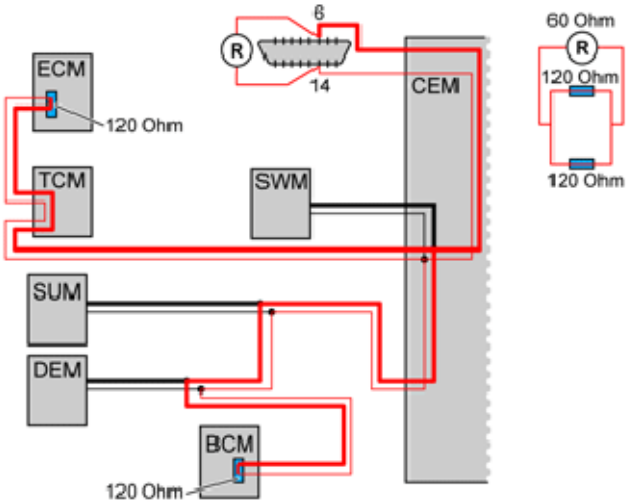

Fig. 21: Identifying HS CAN (High Speed) Component Resistance Measurement
Courtesy of VOLVO CARS CORPORATION

Was a fault detected?

- **YES**

  Refer to **VERIFICATION**

- **NO**

  Refer to **CHECKING SHORT-CIRCUITING TO GROUND/VOLTAGE IN CAN-NET**

CHECKING THE TRAFFIC LOAD ON THE CAN CABLES

Fig. 22: Identifying Ignition ON
Courtesy of VOLVO CARS CORPORATION

- Connect the battery
- Ignition on.
- Connect OBDII-Box **(951 3015)** to the diagnostics socket.

  For general information about CAN-troubleshooting, see

- see **GENERAL INFORMATION ABOUT FAULT-TRACING IN THE CAN NETWORK**

Faults in the CAN network may be due to a control module sending faulty messages that disrupt normal communication. When messages are sent incorrectly, this results in a considerable increase in the amount of traffic on the CAN network. Check the load by measuring the average voltage value on the CAN cables in relation to ground.

Measure voltage between the following connections on the OBDII-box/diagnostics socket.

- #6 and #4 (ground). The voltage should be approx:2, 8 - 3, 2 V.
- #14 and #4 (ground). The voltage should be approx:1, 8 - 2, 2 V.
- #6 and #14. The voltage shall be between approx. 0.55-1.4 V. The voltage shall normally be between 0.55 - 0.90 V. A higher voltage may indicate increased traffic on the CAN-net. In case of fault in communication/too high traffic on the CAN-net, the voltage is considerably higher than the above stated values.

NOTE: After fault with control modules that interfere with communication, other control modules may remain in Limp-Home even when the ignition has been turned off and on a few times. For certain faults in the CAN-net where control modules have stopped communicating, it may help to disconnect/reconnect the battery to "restart" the control module/CAN-net.

HINT: DiCE can be used as fault detection tool if fault is suspected on the CAN-net that cannot be detected with normal troubleshooting. Interference, intermittent faults, faulty messages on the CAN-net etc., are examples of such faults. The tool registers fault messages used on the CAN-net. Fault messages may be caused by short intermittent malfunctions on the CAN-net or by a control module sending fault messages. See tools:951 3010 as well as associated TJ 20402.

- Ignition on.
- Connect DiCE to the diagnostics socket.
- Note the blue LED-indicator. The indicator flashes to show detection of fault messages.

NOTE: Certain interference may occur without any real fault

Cable fault

- Shake the cables lightly and pull lightly on the connections during the check to locate any fault. Note the blue LED-indicator.

"Chatting" control modules

- "Chatting" control modules may be difficult to find and troubleshooting may take time. Let the vehicle stand with DiCE connected for an extended time period. Afterwards, activate functions to provoke a malfunction. It may take up to several hours before the fault messages are sent. When the indicator starts to flash, remove the fuse for one control module at a time until the indicator stops flashing. When the indicator stops flashing, restore the fuse for the relevant control module and

check that the indicator starts to flash again. Then it is likely that the problem is identified.

Remedy wiring as necessary.

Other information

- see **BATTERY, DISCONNECTING**
- see **CHECKING WIRING AND TERMINALS**

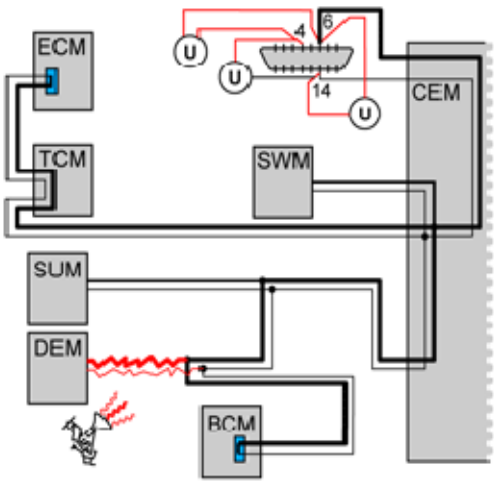

Fig. 23: Identifying Control Modules Interference Diagram
Courtesy of VOLVO CARS CORPORATION

Was a fault detected?

- **YES**

  Refer to **IDENTIFYING A CONTROL MODULE IN THE CAN NETWORK**

- **NO**

  Refer to **CHECKING VOLTAGE-DROP IN CABLE FOR CAN-H AND CAN-L, RESPECTIVELY**

IDENTIFYING A CONTROL MODULE IN THE CAN NETWORK

Fig. 24: Identifying Ignition ON

Courtesy of VOLVO CARS CORPORATION

For general information about CAN-troubleshooting, see

- see **GENERAL INFORMATION ABOUT FAULT-TRACING IN THE CAN NETWORK**

HINT: DiCE can be used as fault detection tool if fault is suspected on the CAN-net that cannot be detected with normal troubleshooting. Interference, intermittent faults, faulty messages on the CAN-net (chattering control modules) etc., are examples of such faults. The tool registers fault messages used on the CAN-net. Fault messages may be caused by short intermittent malfunctions on the CAN-net or by a control module sending fault messages. See tools:951 3010 (memory card) as well as associated TJ 20402.

If the load on the CAN network is too high, this may be due to a control module sending faulty messages on the CAN network (known as a disruptive control module). The fault may also be due to an intermittent short-circuit to supply voltage or ground in one of the CAN cables. This results in the control modules on the CAN network starting to send faulty messages. The faults can occur without a diagnostic trouble code (DTC) being stored by the control modules. The voltage can be measured between the CAN cables in order to check the load on the CAN network.

NOTE: **It is not necessarily the control module(s) that stored the diagnostic trouble code (DTC) that is communicating faultily. Faulty messages can come from any control module in the same section of the CAN network. However, faulty communication in one network cannot affect the communication on the other network. In other words, faulty communication on the LS-CAN cannot disrupt communication on the HS-CAN and vice versa.**

- Ignition on.
- Connect OBDII-Box **(951 3015)** to the diagnostics socket.

Check communication/load on CAN-net by measuring voltage between CAN-L and CAN-H. Measure voltage between the following connections on the OBDII-box/diagnostics socket.

- #6 and #14. The average value of the voltage must be approximately 0.6-1.4 V. The voltage shall normally be between 0.55 - 0.90 V. A higher voltage may indicate increased traffic on the CAN-net. In case of fault in communication/too high traffic on the CAN-net, the voltage is considerably higher than the above stated values.

In order to identify which control module has faulty communication, cut the power supply to one control module at a time. Check the voltage in the CAN cables again. The easiest way to cut the power supply is to remove the fuse(s) for the relevant control module. Repeat until the voltage between the CAN wiring drops to the normal level.

NOTE: **When connecting and disconnecting individual control modules, other diagnostic trouble codes (DTCs) may be stored in certain control modules.**

HINT: When the suspected defective control module has been identified, connect and disconnect the supply voltage to the control module a number of times to verify that the malfunction appears and

disappears. Switch off the ignition between each check.

NOTE: Do not cut the power to the central electronic module (CEM) unless it is the last control module left to check.

A control module that is communicating incorrectly must be replaced. See Repairing and installing/Removing, replacing and installing.

NOTE: After fault with control modules that interfere with communication, other control modules may remain in Limp-Home (that is, they work with reduced functionality) even when the ignition has been turned off and on a few times. For certain faults in the CAN-net where control modules have stopped communicating, it may help to disconnect/reconnect the battery to "restart" the control module/CAN-net.

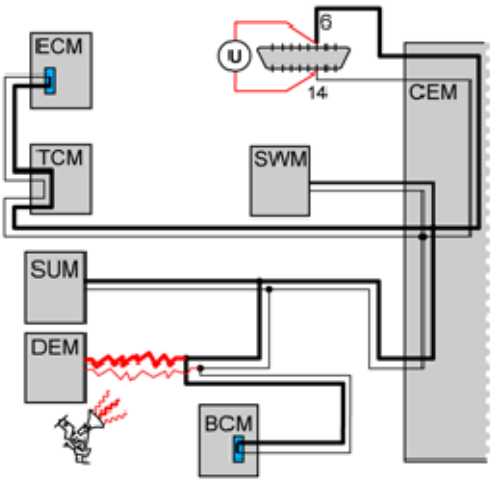

Fig. 25: Identifying Control Modules Interference Diagram
Courtesy of VOLVO CARS CORPORATION

- **Continue**

  Refer to **VERIFICATION**

VERIFICATION

HINT: After rectifying a fault, a verification should be carried out.

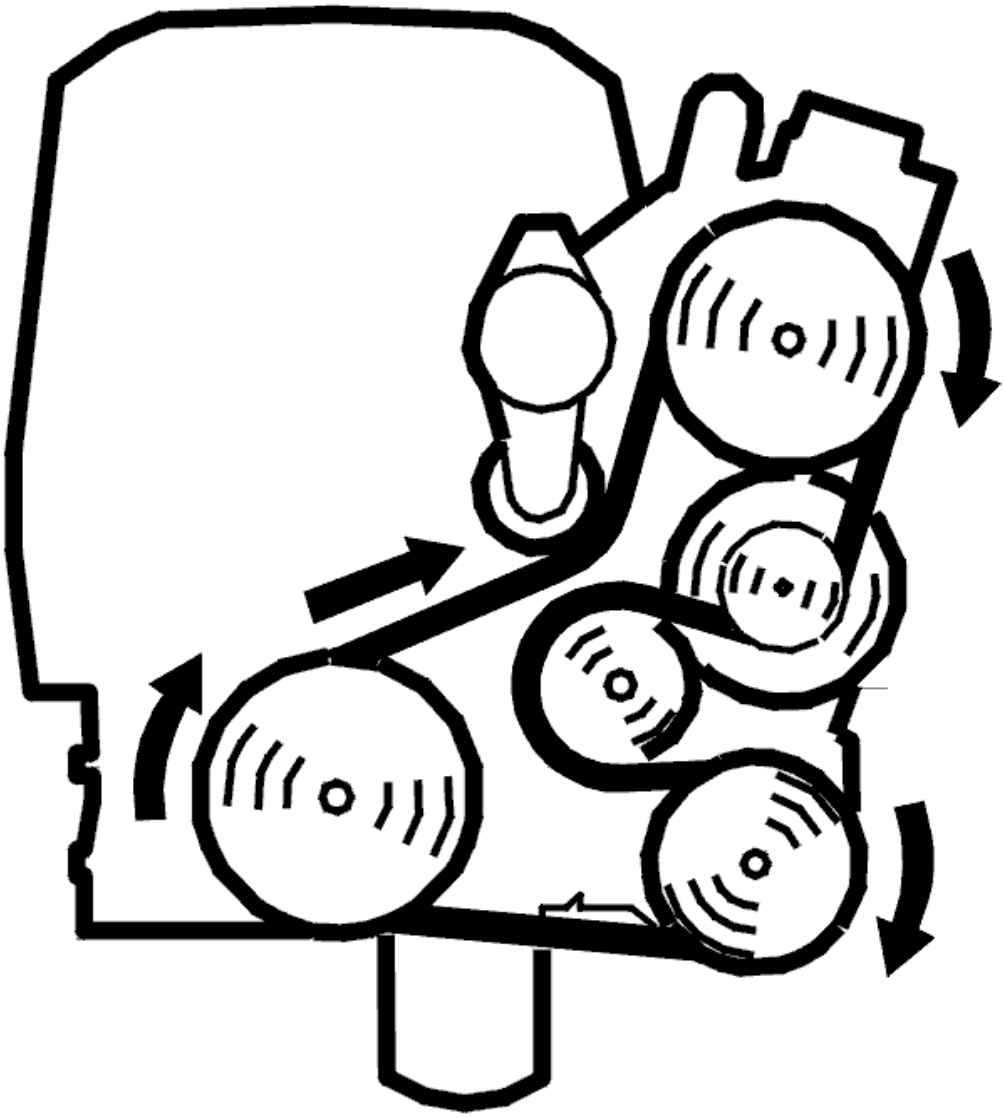

Fig. 26: Identifying Belt Routing
Courtesy of VOLVO CARS CORPORATION

Fig. 27: Identifying Ignition ON
Courtesy of VOLVO CARS CORPORATION

- Reinstall the connectors, components etc.
- Ignition on.

NOTE: **For certain faults in the CAN-net where control modules have stopped communicating, it may help to disconnect/reconnect the battery to "restart" the control module/CAN-net.**

- Erase diagnostic trouble codes (DTCs) in all control modules.
- Ignition off.
- Ignition on.
- Start the vehicle. Allow the vehicle to run for 10 minutes.
- Read out the diagnostic trouble codes in the vehicle via the DIAGNOSTICS tab.

Does the diagnostic trouble code (DTC) for faulty communication return?

- **YES**

  Refer to **INFORMATION**

- **NO**

  OKAY: Troubleshooting has been completed.

CHECKING SHORT-CIRCUITING TO GROUND/VOLTAGE IN CAN-NET

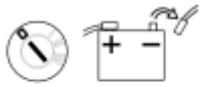

Fig. 28: Identifying Ignition OFF And Disconnected Negative Battery Lead
Courtesy of VOLVO CARS CORPORATION

- Ignition off.
- Disconnect the battery negative lead.
- Connect OBDII-Box **(951 3015)** to the diagnostics socket.

  For general information about CAN-troubleshooting, see

  - see **GENERAL INFORMATION ABOUT FAULT-TRACING IN THE CAN NETWORK**

  Checking for a short-circuit to ground

  Measure resistance between the following connections on the OBDII-box/diagnostics socket.

  - #6 and #4 (ground). Measurement is shown in the figure. The resistance should be above 1 kohms.
  - #14 and #4 (ground). The resistance should be above 1 kohms.

If resistance is below 1 kohms this indicates short-circuiting between the CAN-line and ground.

Checking for a short-circuit to voltage

Measure resistance between the following connections on the OBDII-box/diagnostics socket.

- #6 and #16 (voltage). Measurement is shown in the figure. The resistance should be above 1 kohms.
- #14 and #16 (voltage). The resistance should be above 1 kohms.

If resistance is below 1 kohms this indicates short-circuiting between the CAN-line and voltage cable.

Twist the cable harness and wiggle connectors where they can be accessed along the cable harness during every measurement, and note if the resistance changes to detect intermittent short-circuits or open circuit.

HINT: Part the CAN-net at suitable points to decide where a short-circuit may be found.

NOTE: After fault with control modules that interfere with communication, other control modules may remain in Limp-Home (that is, they work with reduced functionality) even when the ignition has been turned off and on a few times. For certain faults in the CAN-net where control modules have stopped communicating, it may help to disconnect/reconnect the battery to "restart" the control module/CAN-net.

Remedy wiring as necessary.

Other information

- see **BATTERY, DISCONNECTING**
- see **CHECKING WIRING AND TERMINALS**

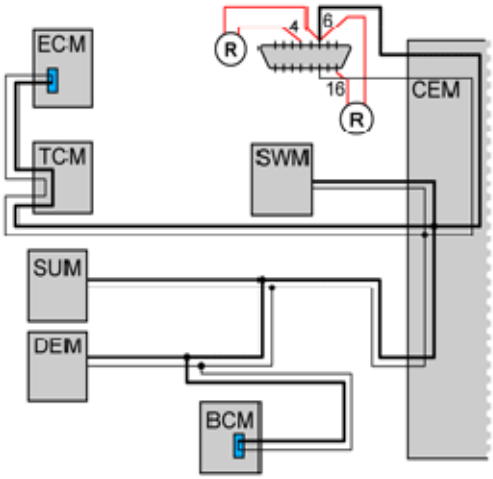

Fig. 29: Identifying Checking For Short-Circuiting To Ground/Voltage In CAN Lines
Courtesy of VOLVO CARS CORPORATION

Was a fault detected?

- **YES**

  Refer to **VERIFICATION**

- **NO**

  Refer to **CHECKING THE TRAFFIC LOAD ON THE CAN CABLES**

CHECKING VOLTAGE-DROP IN CABLE FOR CAN-H AND CAN-L, RESPECTIVELY

Fig. 30: Identifying Ignition ON
Courtesy of VOLVO CARS CORPORATION

- Connect the battery.
- Ignition on.
- Connect OBDII-Box **(951 3015)** to the diagnostics socket.

  For general information about CAN-troubleshooting, see

  - see **GENERAL INFORMATION ABOUT FAULT-TRACING IN THE CAN NETWORK**

  In principle, the voltage measured in each cable in the CAN-net shall be the same at each control module in the network. This means that the voltage-drop in the cable for CAN-H and CAN-L, respectively, between the control modules should be very low. If there is a voltage-difference in the CAN-lines between the diagnostics socket/Central electronic module (CEM) and a control module due to, e. g., contact resistance in a connector or branching, communication may be lost/interfered with.

  Check if there is voltage-drop in the cable for CAN-H and CAN-L between the diagnostics socket/Central electronic module (CEM) and the control module where there is problem with communication.

  Carry out the following:

  Measure voltage between the following connections on the OBDII-box/diagnostics socket.

  - #6 and corresponding connection on relevant control module for CAN-H. The voltage shall be lower than 50 mV.

- #14 and corresponding connection on relevant control module for CAN-L. The voltage shall be lower than 50 mV.

If voltage is too high, this indicates too high contact resistance in cable, connector, or branching. Check the circuit between the diagnostics socket and control module in question for contact resistance and oxidation.

NOTE: **After fault with control modules that interfere with communication, other control modules may remain in Limp-Home (that is, they work with reduced functionality) even when the ignition has been turned off and on a few times. For certain faults in the CAN-net where control modules have stopped communicating, it may help to disconnect/reconnect the battery to "restart" the control module/CAN-net.**

Remedy wiring as necessary.

Other information

- see **CHECKING WIRING AND TERMINALS**

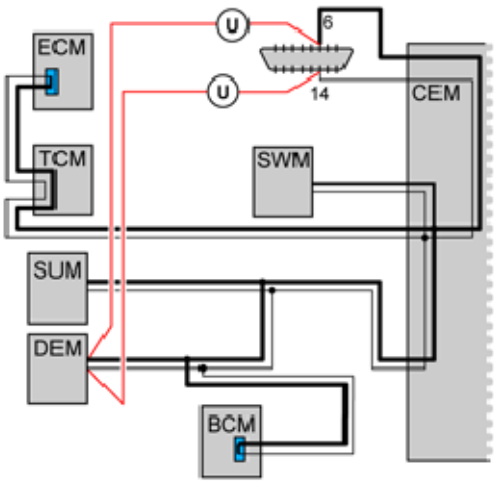

Fig. 31: Identifying Checking For Voltage-Drop In Cable For CAN-H And CAN-L
Courtesy of VOLVO CARS CORPORATION

- **Continue**

Refer to **VERIFICATION**

INFORMATION

FAULT-TRACING INFORMATION

The fault should have been detected and remedied. As this is not the case fault-tracing has failed.

Exit fault-tracing for this diagnostic trouble code (DTC) or make another attempt.

CEM-DF13: CAN-H, HIGH SPEED NETWORK. SIGNAL TOO HIGH (2005-2012)

DIAGNOSTIC TROUBLE CODE (DTC) INFORMATION CEM-DF13

Condition

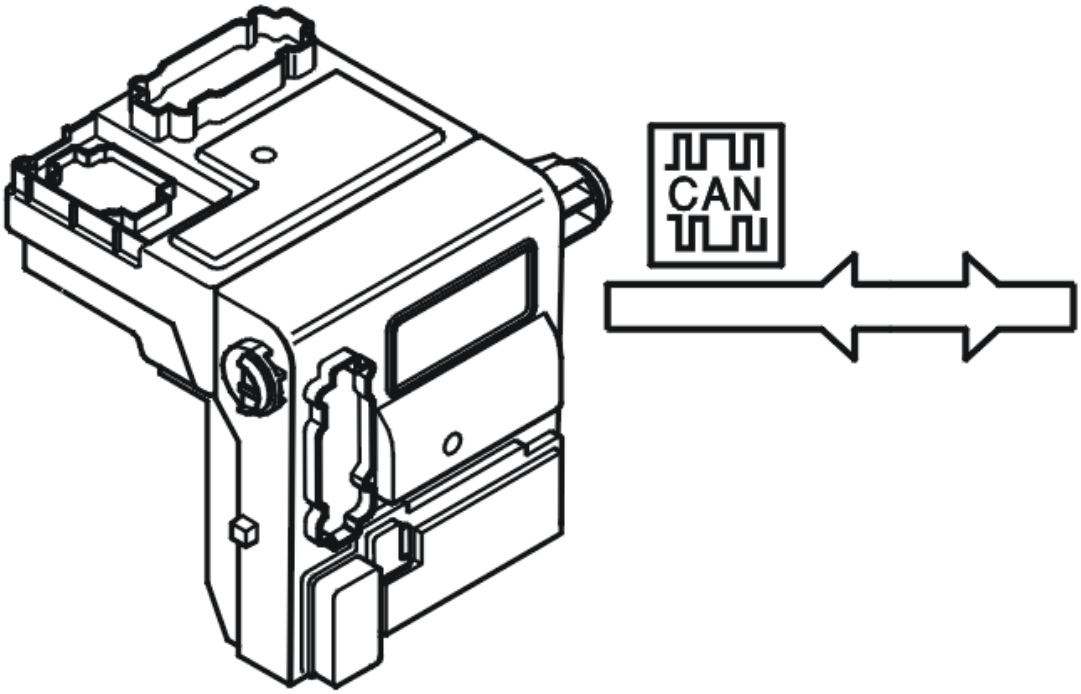

Fig. 32: Identifying Central Electronic Module
Courtesy of VOLVO CARS CORPORATION

The central electronic module (CEM) checks the voltage in the CAN wiring in the high speed network. The diagnostic trouble code (DTC) is stored if the central electronic module (CEM) registers a short-circuit to supply voltage in the CAN H in the high speed network.

NOTE: **If DFxx diagnostic trouble codes (DTCs) are stored the central electronic module (CEM) must not be replaced as the diagnostic trouble code (DTC) indicates a short-circuit in one or more conductors in the Control area network. The central electronic module (CEM) is the only control module that monitors the voltage level in the Control area network wiring. The central electronic module (CEM) is therefore the only control module that can store a diagnostic trouble code (DTC) for a short-circuit in one of the cables to ground or supply**

voltage. Do not replace the central electronic module (CEM) in the event of a CAN fault unless VIDA fault-tracing has indicated that the central electronic module (CEM) has an internal fault.

The diagnostic trouble code (DTC) can be diagnosed when the ignition has been on for more than 10 seconds.

Substitute Value

- None.

Possible Source

- Short-circuit to supply voltage in the high speed network.

Fault symptom[s]

- Poor performance.
- Poor accelerator pedal (AP) response.
- Malfunction indicator lamp (MIL) lit.
- Message in the display.

SIGNAL MISSING

see **SIGNAL MISSING**

CEM-DF13: CAN-H, HIGH-SPEED NETWORK. SIGNAL TOO HIGH. INTERMITTENT FAULT (2003-2004)

DIAGNOSTIC TROUBLE CODE (DTC) INFORMATION CEM-DF13

Condition

Diagnostic trouble codes (DTCs) are stored if the central electronic module (CEM) registers that there is a short-circuit to supply voltage in the CAN H in the high speed network.

NOTE: **In the event of DFxx diagnostic trouble codes (DTCs), the central electronic module (CEM) must not be replace as the diagnostic trouble code (DTC) indicates a short-circuit in one or more conductors in the Control area network The central electronic module (CEM) is the only control module that monitors the voltage level in the Control area network wiring. The central electronic module (CEM) is therefore the only control module that can store a diagnostic trouble code (DTC) for a short-circuit in one of the cables to ground or supply voltage. Do not replace the central electronic module (CEM) in the event of a CAN fault unless VIDA fault-tracing has indicated that the central electronic module (CEM) has an internal fault.**

Substitute Value

The transmission control module (TCM) goes into Limp home mode.

Possible Source

- Short-circuit to supply voltage in the high speed network.

Fault symptom[s]

- Deterioration in performance
- Poor accelerator pedal (AP) response
- Malfunction indicator lamp (MIL) lit
- Message in the display.

SIGNAL TOO HIGH. INTERMITTENT FAULT.

CHECKING CONNECTORS AND BUS WIRE

NOTE: Remember that the CAN network is only a communications network. There are therefore no fuses, switches and sensors on the CAN bus. Check the resistance as described below (see references).

NOTE: To maintain the correct values the battery should be disconnected when measuring resistance.

Check the bus wire for a short circuit to voltage supply as described in, see **SHORT-CIRCUIT TO SUPPLY VOLTAGE, INTERMITTENT FAULTS** and for an intermittent open circuit as described in **OPEN-CIRCUIT, INTERMITTENT FAULTS** .

HINT: When checking for an open circuit, check if possible from the rear of the connector concerned so that it is not damaged.

Also check the intermediate connectors for contact resistance and oxidation as described in, see **CONTACT RESISTANCE AND OXIDATION** and for a loose contact as described in **LOOSE CONNECTIONS (TERMINALS)** .

HINT: If the fault is found before all the wires below have been checked trouble-shooting is not necessary on the wires.

The following wires and connectors should be checked to locate the short circuit.

Wire between:

- electronic throttle module (ETM) 3 and engine control module (ECM) 37A.

electronic throttle module (ETM) 4 and engine control module (ECM) 55A.

To connect the test box to the ETM control unit, see **CONNECTING THE BREAKOUT BOX**

To connect the test box to the ECM control unit, see **CONNECTING THE BREAKOUT BOX**

NOTE: Applies to automatic gear box.

- engine control module (ECM) 13B and transmission control module (TCM) 13B.

  engine control module (ECM) 1B and transmission control module (TCM) 1B.

  To connect the test box to the ECM control unit, see **CONNECTING THE BREAKOUT BOX** .

  To connect the test box to the TCM control unit, see **CONNECTING BREAKOUT BOX, TRANSMISSION CONTROL MODULE (TCM)** (AW) or **CONNECTING THE BREAKOUT BOX** (GM).

NOTE: Applies to automatic gear box.

- transmission control module (TCM) 14B and anti-lock braking system (ABS) 11 (or 19 if the vehicle has a switch button with the text "DSTC" on the center console).

  transmission control module (TCM) 2B and anti-lock braking system (ABS) 10 (or 20 if the vehicle has a switch button with the text "DSTC" on the center console).

  To connect the test box to the TCM control unit, see **CONNECTING BREAKOUT BOX, TRANSMISSION CONTROL MODULE (TCM)** (AW) or **CONNECTING THE BREAKOUT BOX** (GM).

  To connect the test box to the ABS control unit, see **CONNECTING THE ABS BREAKOUT BOX** .

NOTE: Applies to manual gear boxes.

- engine control module (ECM) 13B and anti-lock braking system (ABS) 11 (or 19 if the vehicle has a switch button with the text "DSTC" on the center console).

  engine control module (ECM) 1B and anti-lock braking system (ABS) 10 (or 20 if the vehicle has a switch button with the text "DSTC" on the center console).

  To connect the test box to the ECM control unit, see **CONNECTING THE BREAKOUT BOX**

  To connect the test box to the ABS control unit, see **CONNECTING THE ABS BREAKOUT BOX**

- central electronic module (CEM) 17B and anti-lock braking system (ABS) 11 (or 19 if the vehicle has a switch button with the text "DSTC" on the center console.) Also check intermediate connector 54/3R.

central electronic module (CEM) 18B and anti-lock braking system (ABS) 10 (or 20 if the vehicle has a switch button with the text "DSTC" on the center console.) Also check intermediate connector 54/3R.

To connect the test box to the CEM control unit, see **CONNECTING THE BREAKOUT BOX**

To connect the test box to the DIM control unit, see **CONNECTING THE DRIVER INFORMATION MODULE (DIM) TEST BOX**

Additional information:

- The voltage should be between approximately 1.5 V and 3.5 V.
- To disconnect the battery, see **BATTERY, DISCONNECTING**

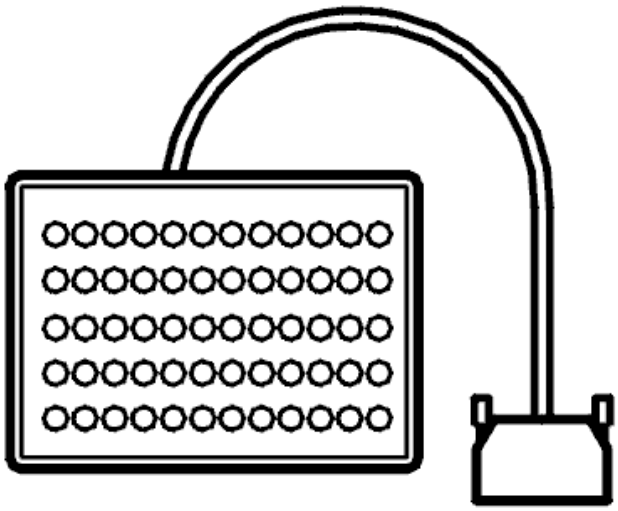

Fig. 33: Identifying Breakout Box
Courtesy of VOLVO CARS CORPORATION

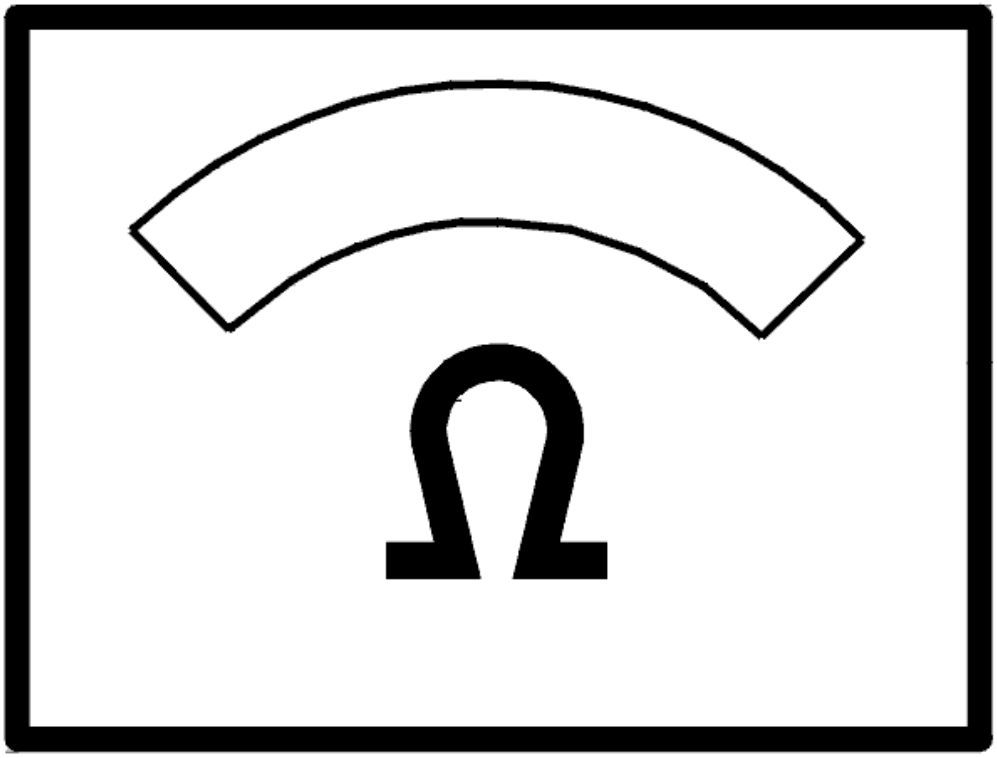

Fig. 34: Identifying Ohms Display
Courtesy of VOLVO CARS CORPORATION

CEM-DF13: CAN-H, HIGH-SPEED NETWORK. SIGNAL TOO HIGH. PERMANENT FAULT (2003-2004)

DIAGNOSTIC TROUBLE CODE (DTC) INFORMATION CEM-DF13

see **DIAGNOSTIC TROUBLE CODE (DTC) INFORMATION CEM-DF13**

SIGNAL TOO HIGH. PERMANENT FAULT

CHECKING CONNECTORS AND BUS WIRE

NOTE: **Remember that the CAN network is only a communications network. There are**

therefore no fuses, switches and sensors on the CAN bus. Check the resistance as described below (see references).

NOTE: To maintain the correct values the battery should be disconnected when measuring resistance.

Check the bus wire for a short circuit to voltage supply as described in, see **SHORT-CIRCUIT TO SUPPLY VOLTAGE. PERMANENT FAULTS** and for an open circuit as described in **OPEN-CIRCUIT, PERMANENT FAULTS** .

HINT: When checking for an open circuit, check if possible from the rear of the connector concerned so that it is not damaged.

Also check the intermediate connectors for contact resistance and oxidation as described in, see **CONTACT RESISTANCE AND OXIDATION** .

The following wires and connectors should be checked to locate the short circuit.

Wire between:

- electronic throttle module (ETM) 3 and engine control module (ECM) 37A.

  electronic throttle module (ETM) 4 and engine control module (ECM) 55A.

  To connect the test box to the ETM control unit, see **CONNECTING THE BREAKOUT BOX**

  To connect the test box to the ECM control unit, see **CONNECTING THE BREAKOUT BOX**

  NOTE: Applies to automatic gear box.

- engine control module (ECM) 13B and transmission control module (TCM) 13B.

  engine control module (ECM) 1B and transmission control module (TCM) 1B.

  To connect the test box to the ECM control unit, see **CONNECTING THE BREAKOUT BOX**

  To connect the test box to the TCM control unit, see **CONNECTING BREAKOUT BOX, TRANSMISSION CONTROL MODULE (TCM)** (AW) or **CONNECTING THE BREAKOUT BOX** (GM).

  NOTE: Applies to automatic gear box.

- transmission control module (TCM) 14B and anti-lock braking system (ABS) 11 (or 19 if the vehicle has a switch button with the text "DSTC" on the center console).

  transmission control module (TCM) 2B and anti-lock braking system (ABS) 10 (or 20 if the vehicle has a

switch button with the text "DSTC" on the center console).

To connect the test box to the TCM control unit, see **CONNECTING BREAKOUT BOX, TRANSMISSION CONTROL MODULE (TCM)** (AW) or **CONNECTING THE BREAKOUT BOX** (GM).

To connect the test box to the ABS control unit, see **CONNECTING THE ABS BREAKOUT BOX**

NOTE: Applies to manual gear box.

- engine control module (ECM) 13B and anti-lock braking system (ABS) 11 (or 19 if the vehicle has a switch button with the text "DSTC" on the center console)

  engine control module (ECM) 1B and anti-lock braking system (ABS) 10 (or 20 if the vehicle has a switch button with the text "DSTC" on the center console).

  To connect the test box to the ECM control unit, see **CONNECTING THE BREAKOUT BOX**

  To connect the test box to the ABS control unit, see **CONNECTING THE ABS BREAKOUT BOX**

- central electronic module (CEM) 17B and anti-lock braking system (ABS) 11 (or 19 if the vehicle has a switch button with the text "DSTC" on the center console.) Also check intermediate connector 54/3R.

  central electronic module (CEM) 18B and anti-lock braking system (ABS) 10 (or 20 if the vehicle has a switch button with the text "DSTC" on the center console.) Also check intermediate connector 54/3R.

  To connect the test box to the CEM control unit, see **CONNECTING THE BREAKOUT BOX**

  To connect the test box to the DIM control unit, see **CONNECTING THE DRIVER INFORMATION MODULE (DIM) TEST BOX**

Additional information

- The voltage should be between approximately 1.5V and 3.5V.
- To disconnect the battery, see **BATTERY, DISCONNECTING**

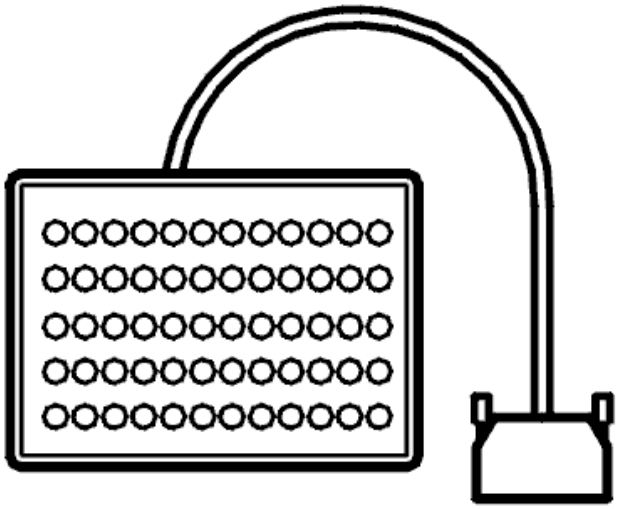

Fig. 35: Identifying Breakout Box
Courtesy of VOLVO CARS CORPORATION

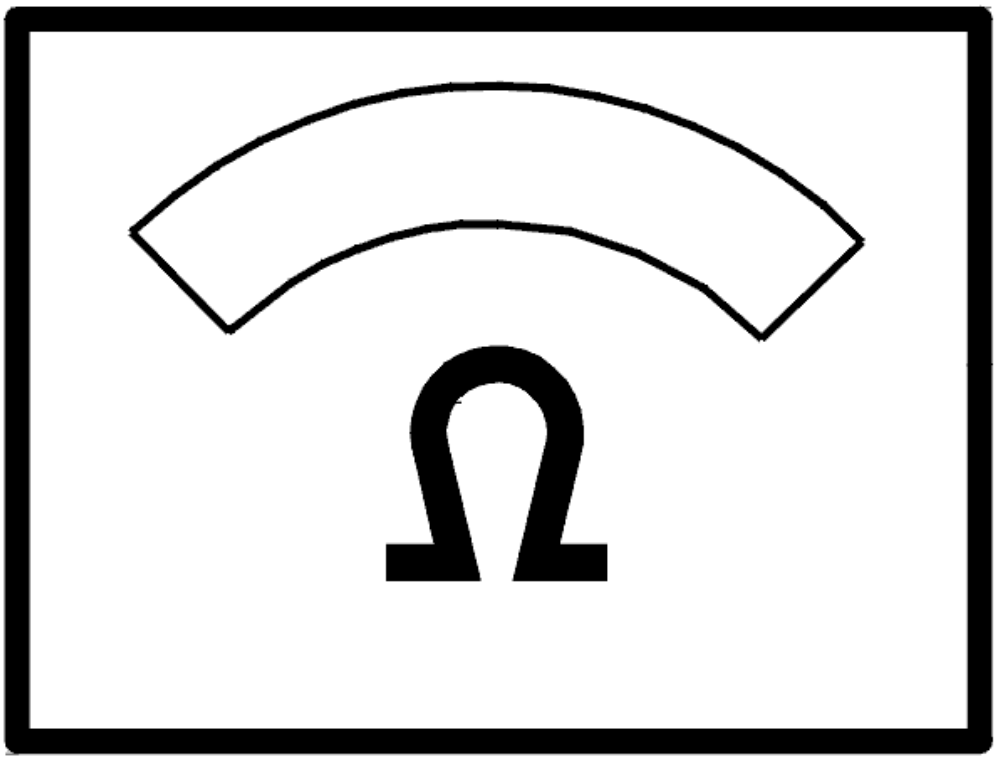

Fig. 36: Identifying Ohms Display
Courtesy of VOLVO CARS CORPORATION

- **Continue**

  Refer to **VERIFICATION**

VERIFICATION

VERIFICATION

HINT: After the repair it is necessary to check that the fault has been rectified.

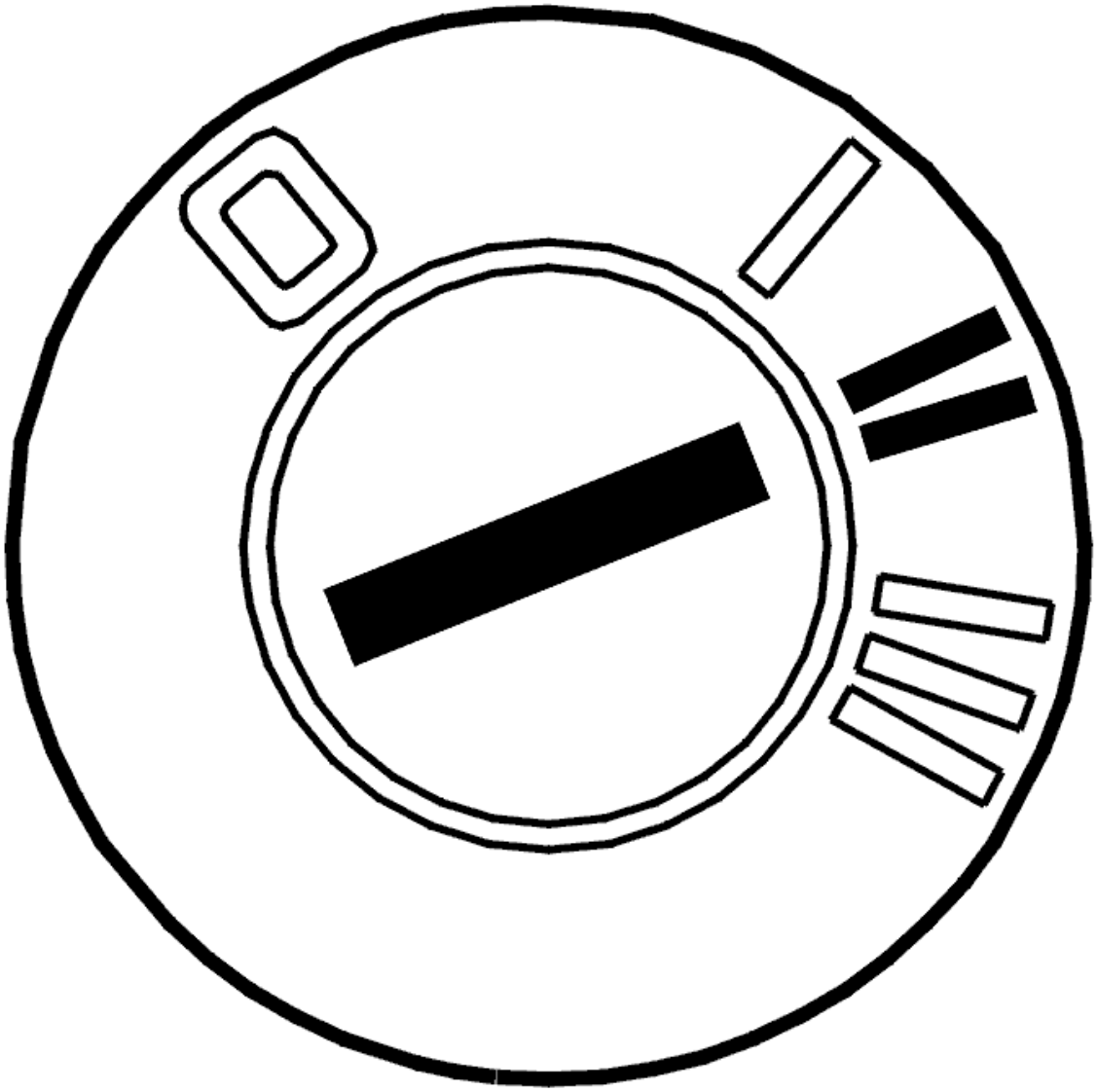

Fig. 37: Identifying Ignition ON
Courtesy of VOLVO CARS CORPORATION

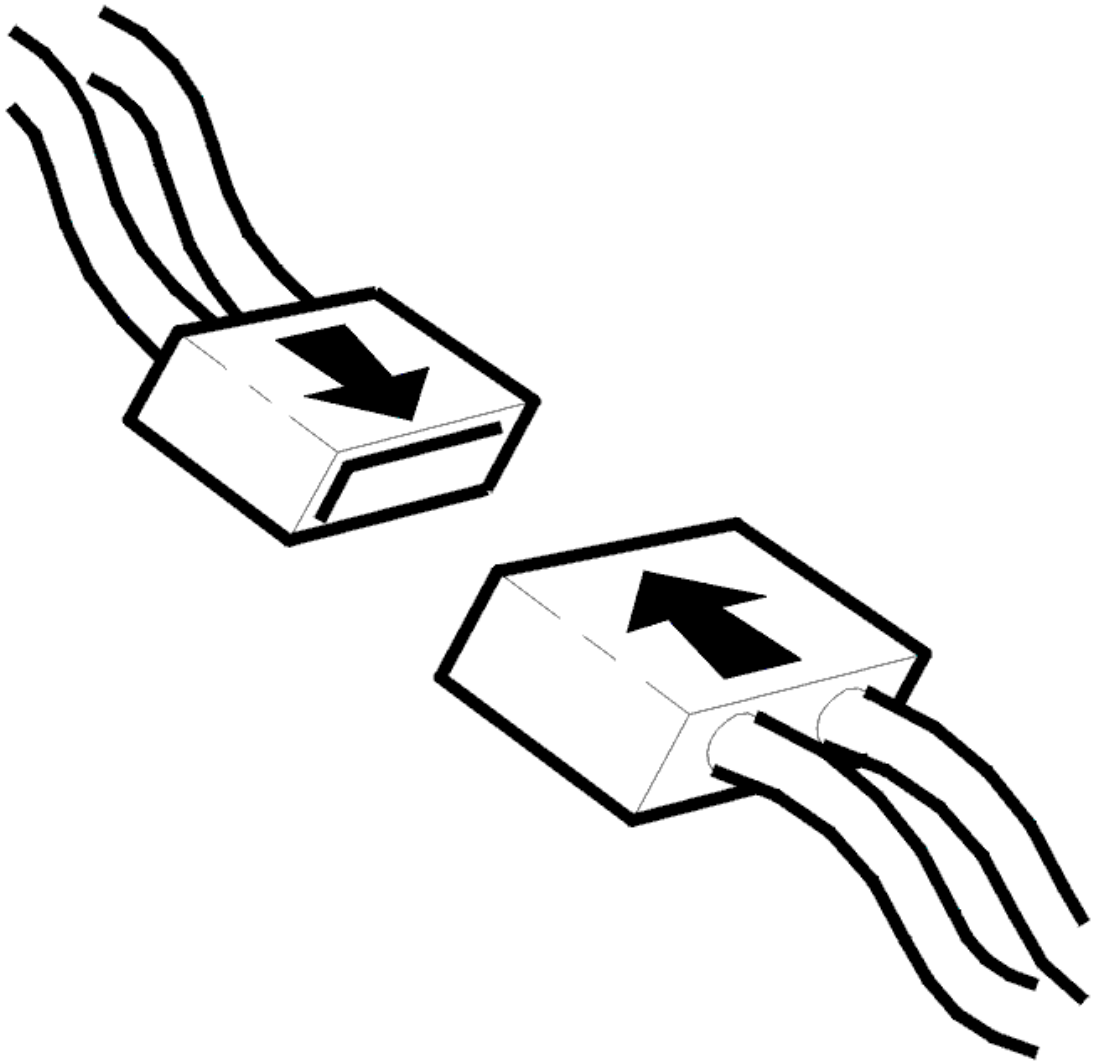

Fig. 38: Identifying Connector(s) Reinstallation
Courtesy of VOLVO CARS CORPORATION

- Ignition off.
- Connect connectors, install components, etc.
- Ignition on for at least 10 seconds.

  Check that diagnostic trouble code status is showing Intermittent.

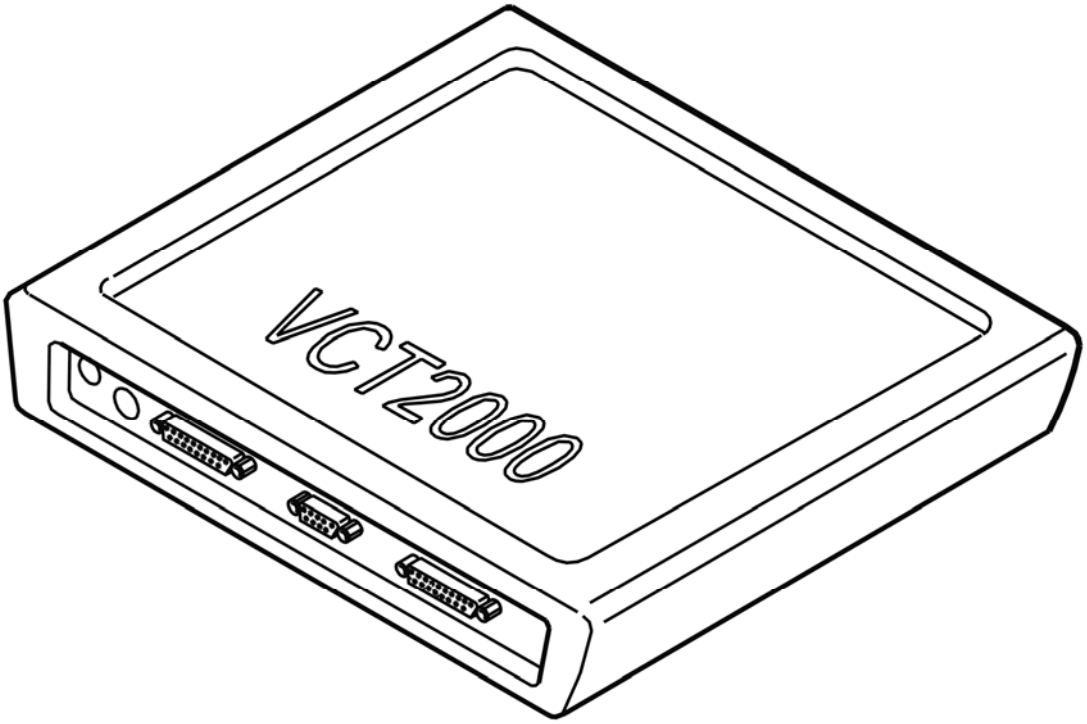

Fig. 39: Identifying VCT2000 Diagnostic Tool Symbol In VIDA
Courtesy of VOLVO CARS CORPORATION

Is the status of the diagnostic trouble code Intermittent?

- **YES**

  VERIFIED: Troubleshooting has been completed.

- **NO**

  Refer to **INFORMATION**

INFORMATION

FAULT-TRACING INFORMATION

The fault should have been detected and remedied. As this is not the case fault-tracing has failed.

Exit fault-tracing for this diagnostic trouble code (DTC) or make another attempt.

CEM-DF14: CAN-L, HIGH SPEED NETWORK. SIGNAL TOO LOW (2005-2012)

DIAGNOSTIC TROUBLE CODE (DTC) INFORMATION CEM-DF14

Condition

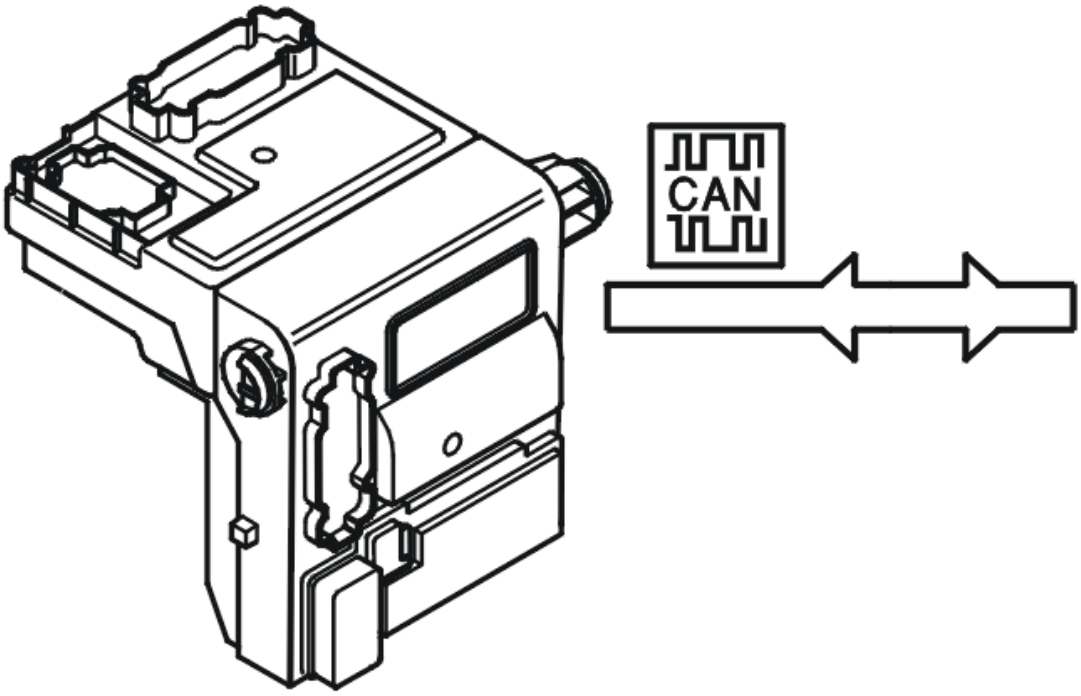

Fig. 40: Identifying Central Electronic Module
Courtesy of VOLVO CARS CORPORATION

The central electronic module (CEM) checks the voltage in the CAN wiring in the high speed network. The diagnostic trouble code (DTC) is stored if the central electronic module (CEM) registers a short-circuit to ground in the CAN L in the high speed network.

NOTE: **If DFxx diagnostic trouble codes (DTCs) are stored the central electronic module (CEM) must not be replaced as the diagnostic trouble code (DTC) indicates a short-circuit in one or more conductors in the Control area network. The central electronic module (CEM) is the only control module that monitors the voltage level in the Control area network wiring. The central electronic module (CEM) is therefore the only control module that can store a diagnostic trouble code (DTC) for a short-circuit in one of the cables to ground or supply voltage. Do not replace the central electronic module (CEM) in the event of a CAN fault unless VIDA fault-tracing has indicated that the central electronic module (CEM) has an internal fault.**

The diagnostic trouble code (DTC) can be diagnosed when the ignition has been on for more than 10 seconds.

Substitute Value

- None.

Possible Source

- Short-circuit to ground in the high speed network.

Fault symptom[s]

- Radio interference.

SIGNAL MISSING

see **SIGNAL MISSING**

CEM-DF14: CAN-L, HIGH-SPEED NETWORK. SIGNAL TOO LOW. INTERMITTENT FAULT (2003-2004)

DIAGNOSTIC TROUBLE CODE (DTC) INFORMATION CEM-DF14

Condition

Diagnostic trouble codes (DTCs) are stored if the central electronic module (CEM) registers that there is a short-circuit to ground in the CAN L in the high speed network.

NOTE: **In the event of DFxx diagnostic trouble codes (DTCs), the central electronic module (CEM) must not be replace as the diagnostic trouble code (DTC) indicates a short-circuit in one or more conductors in the Control area network The central electronic module (CEM) is the only control module that monitors the voltage level in the Control area network wiring. The central electronic module (CEM) is therefore the only control module that can store a diagnostic trouble code (DTC) for a short-circuit in one of the cables to ground or supply voltage. Do not replace the central electronic module (CEM) in the event of a CAN fault unless VIDA fault-tracing has indicated that the central electronic module (CEM) has an internal fault.**

Substitute Value

None.

Possible Source

- Short-circuit to ground in the high speed network.

Fault symptom[s]

- Radio interference.

SIGNAL TOO LOW. INTERMITTENT FAULT

CHECKING CONNECTORS AND BUS WIRE

NOTE: Remember that the CAN network is only a communications network. There are therefore no fuses, switches and sensors on the CAN bus. Check the resistance as described below (see references).

NOTE: To maintain the correct values the battery should be disconnected when measuring resistance.

Check the bus wire for a short circuit to ground as described in, see **SHORT-CIRCUIT TO GROUND, INTERMITTENT FAULTS** .

Also check the intermediate connectors for contact resistance and oxidation as described in, see **CONTACT RESISTANCE AND OXIDATION** and for a loose contact as described in **LOOSE CONNECTIONS (TERMINALS)** .

HINT: If the fault is found before all the wires below have been checked trouble-shooting is not necessary on the wires.

The following wires and connectors should be checked to locate the short circuit.

Wire between:

- electronic throttle module (ETM) 4 and engine control module (ECM) 55A

  electronic throttle module (ETM) 3 and engine control module (ECM) 37A.

  To connect the test box to the ETM control unit, see **CONNECTING THE BREAKOUT BOX**

  To connect the test box to the ECM control unit, see **CONNECTING THE BREAKOUT BOX**

  NOTE: Applies to automatic gear box.

- engine control module (ECM) 1B and transmission control module (TCM) 1B.

  engine control module (ECM) 13B and transmission control module (TCM) 13B.

  To connect the test box to the ECM control unit, see **CONNECTING THE BREAKOUT BOX**

  To connect the test box to the TCM control unit, see **CONNECTING BREAKOUT BOX, TRANSMISSION CONTROL MODULE (TCM)** (AW) or **CONNECTING THE BREAKOUT BOX** (GM).

  NOTE: Applies to automatic gear box.

- transmission control module (TCM) 2B and anti-lock braking system (ABS) 10 (or 20 if the vehicle has a switch button with the text "DSTC" on the center console).

  transmission control module (TCM) 14B and anti-lock braking system (ABS) 11 (or 19 if the vehicle has a switch button with the text "DSTC" on the center console).

  To connect the test box to the TCM control unit, see **CONNECTING BREAKOUT BOX, TRANSMISSION CONTROL MODULE (TCM)** (AW) or **CONNECTING THE BREAKOUT BOX** (GM).

  To connect the test box to the ABS control unit, see **CONNECTING THE ABS BREAKOUT BOX**

  NOTE: Applies to manual gear box.

- engine control module (ECM) 1B and anti-lock braking system (ABS) 10 (or 20 if the vehicle has a switch button with the text "DSTC" on the center console).

  engine control module (ECM) 13B and anti-lock braking system (ABS) 11 (or 19 if the vehicle has a switch button with the text "DSTC" on the center console).

  To connect the test box to the ECM control unit, see **CONNECTING THE BREAKOUT BOX**

  To connect the test box to the ABS control unit, see **CONNECTING THE ABS BREAKOUT BOX**

- central electronic module (CEM) 18B and anti-lock braking system (ABS) 10 (or 20 if the vehicle has a switch button with the text "DSTC" on the center console.) Also check intermediate connector 54/3R.

  central electronic module (CEM) 17B and anti-lock braking system (ABS) 11 (or 19 if the vehicle has a switch button with the text "DSTC" on the center console.) Also check intermediate connector 54/3R.

  To connect the test box to the CEM control unit, see **CONNECTING THE BREAKOUT BOX**

  To connect the test box to the ABS control unit, see **CONNECTING THE ABS BREAKOUT BOX**

Additional information:

- The voltage should be between approximately 1.5 V and 2.5 V.
- To disconnect the battery, see **BATTERY, DISCONNECTING**

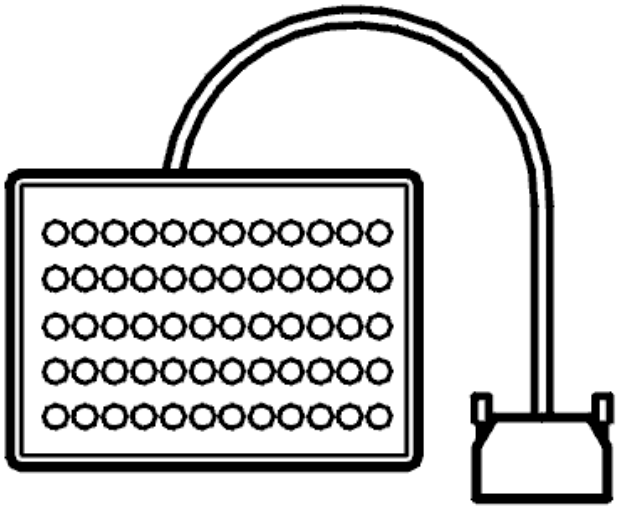

Fig. 41: Identifying Breakout Box
Courtesy of VOLVO CARS CORPORATION

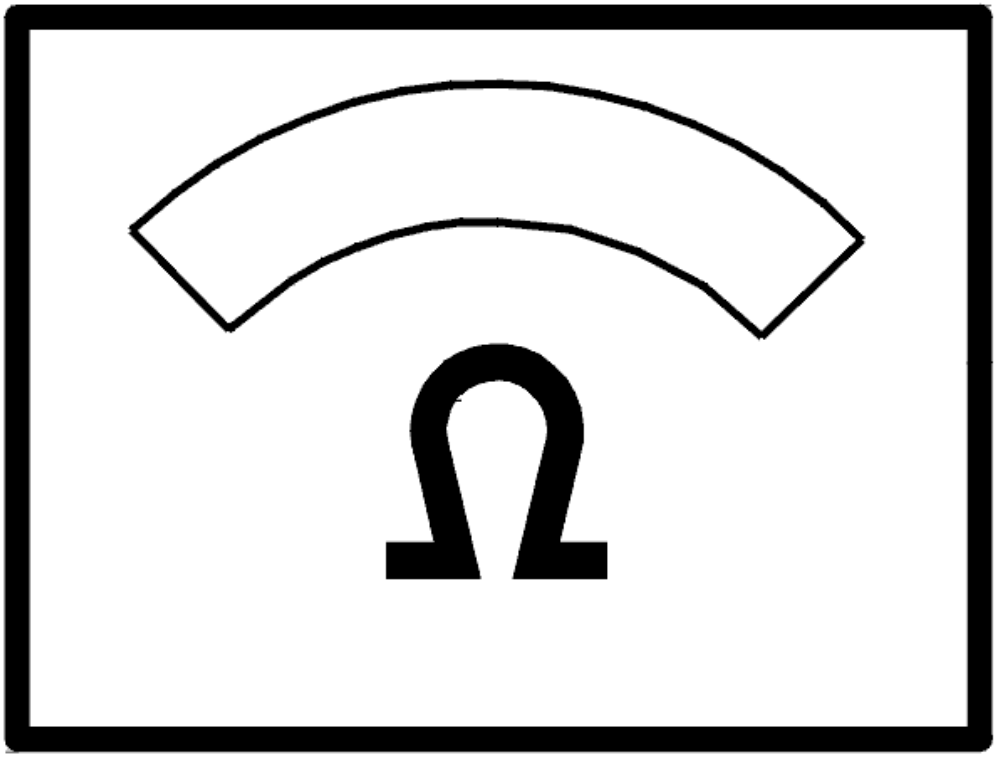

Fig. 42: Identifying Ohms Display
Courtesy of VOLVO CARS CORPORATION

CEM-DF14: CAN-L, HIGH-SPEED NETWORK. SIGNAL TOO LOW. PERMANENT FAULT (2003-2004)

DIAGNOSTIC TROUBLE CODE (DTC) INFORMATION CEM-DF14

see **DIAGNOSTIC TROUBLE CODE (DTC) INFORMATION CEM-DF14**

SIGNAL TOO LOW. PERMANENT FAULT

CHECKING CONNECTORS AND BUS WIRE

NOTE: **Remember that the CAN network is only a communications network. There are**

therefore no fuses, switches and sensors on the CAN bus. Check the resistance as described below (see references).

NOTE: To maintain the correct values the battery should be disconnected when measuring resistance.

Check the bus wire for a short circuit to ground as described in, see **SHORT-CIRCUIT TO GROUND, PERMANENT FAULTS** . Also check the intermediate connectors for contact resistance and oxidation as described in **CONTACT RESISTANCE AND OXIDATION** .

The following wires and connectors should be checked to locate the short circuit.

Wire between:

- electronic throttle module (ETM) 4 and engine control module (ECM) 55A

  electronic throttle module (ETM) 3 and engine control module (ECM) 37A.

  To connect the test box to the ETM control unit, see **CONNECTING THE BREAKOUT BOX**

  To connect the test box to the ECM control unit, see **CONNECTING THE BREAKOUT BOX**

  NOTE: Applies to automatic gear box.

- engine control module (ECM) 1B and transmission control module (TCM) 1B.

  engine control module (ECM) 13B and transmission control module (TCM) 13B.

  To connect the test box to the ECM control unit, see **CONNECTING THE BREAKOUT BOX**

  To connect the test box to the TCM control unit, see **CONNECTING BREAKOUT BOX, TRANSMISSION CONTROL MODULE (TCM)** (AW) or **CONNECTING THE BREAKOUT BOX** (GM).

  NOTE: Applies to automatic gear box.

- transmission control module (TCM) 2B and anti-lock braking system (ABS) 10 (or 20 if the vehicle has a switch button with the text "DSTC" on the center console).

  transmission control module (TCM) 14B and anti-lock braking system (ABS) 11 (or 19 if the vehicle has a switch button with the text "DSTC" on the center console).

  To connect the test box to the TCM control unit, see **CONNECTING BREAKOUT BOX, TRANSMISSION CONTROL MODULE (TCM)** (AW) or **CONNECTING THE BREAKOUT BOX** (GM).

To connect the test box to the ABS control unit, see **CONNECTING THE ABS BREAKOUT BOX**

NOTE: Applies to manual gear box.

- engine control module (ECM) 1B and anti-lock braking system (ABS) 10 (or 20 if the vehicle has a switch button with the text "DSTC" on the center console.)

  engine control module (ECM) 13B and anti-lock braking system (ABS) 11 (or 19 if the vehicle has a switch button with the text "DSTC" on the center console).

  To connect the test box to the ECM control unit, see **CONNECTING THE BREAKOUT BOX**

  To connect the test box to the ABS control unit, see **CONNECTING THE ABS BREAKOUT BOX**

- central electronic module (CEM) 18B and anti-lock braking system (ABS) 10 (or 20 if the vehicle has a switch button with the text "DSTC" on the center console.) Also check intermediate connector 54/3R.

  central electronic module (CEM) 17B and anti-lock braking system (ABS) 11 (or 19 if the vehicle has a switch button with the text "DSTC" on the center console.) Also check intermediate connector 54/3R.

  To connect the test box to the CEM control unit, see **CONNECTING THE BREAKOUT BOX**

  To connect the test box to the ABS control unit, see **CONNECTING THE ABS BREAKOUT BOX**

Additional information

- The voltage should be between approximately 1.5V and 3.5V.
- To disconnect the battery, see **BATTERY, DISCONNECTING**

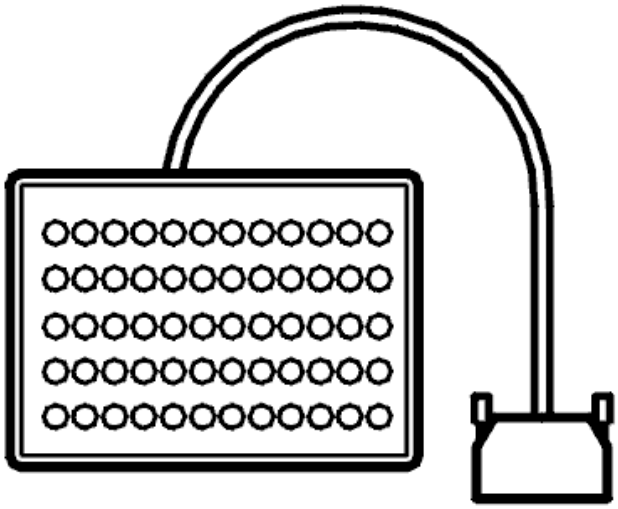

Fig. 43: Identifying Breakout Box
Courtesy of VOLVO CARS CORPORATION

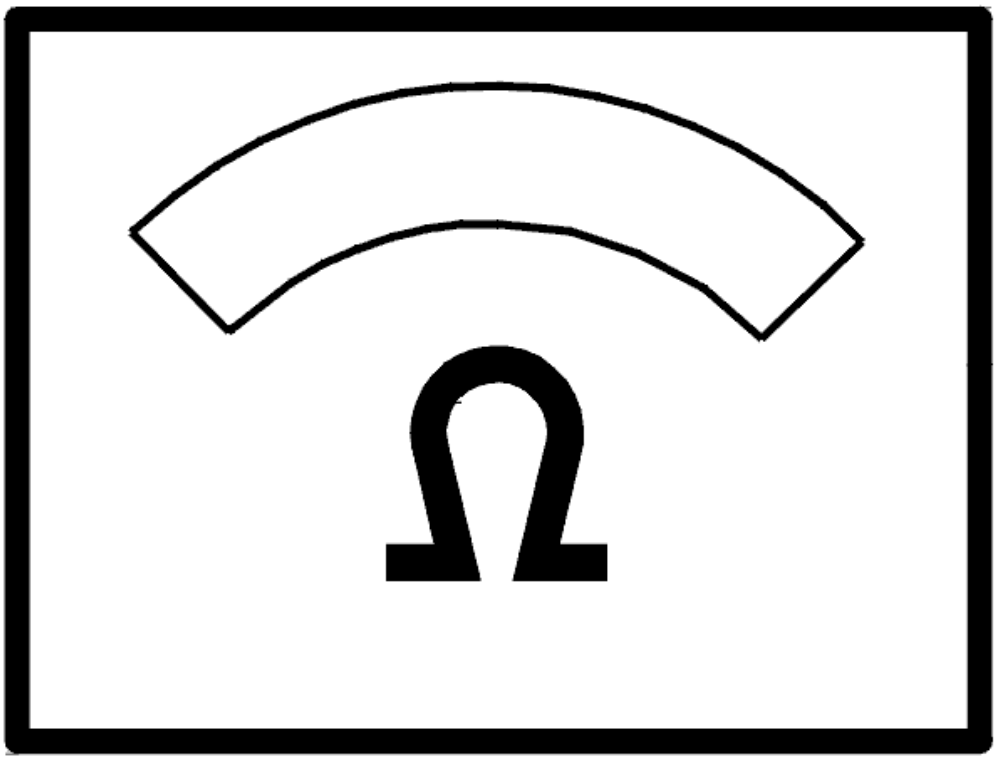

Fig. 44: Identifying Ohms Display
Courtesy of VOLVO CARS CORPORATION

- **Continue**

  Refer to **VERIFICATION**

VERIFICATION

VERIFICATION

HINT: After the repair it is necessary to check that the fault has been rectified.

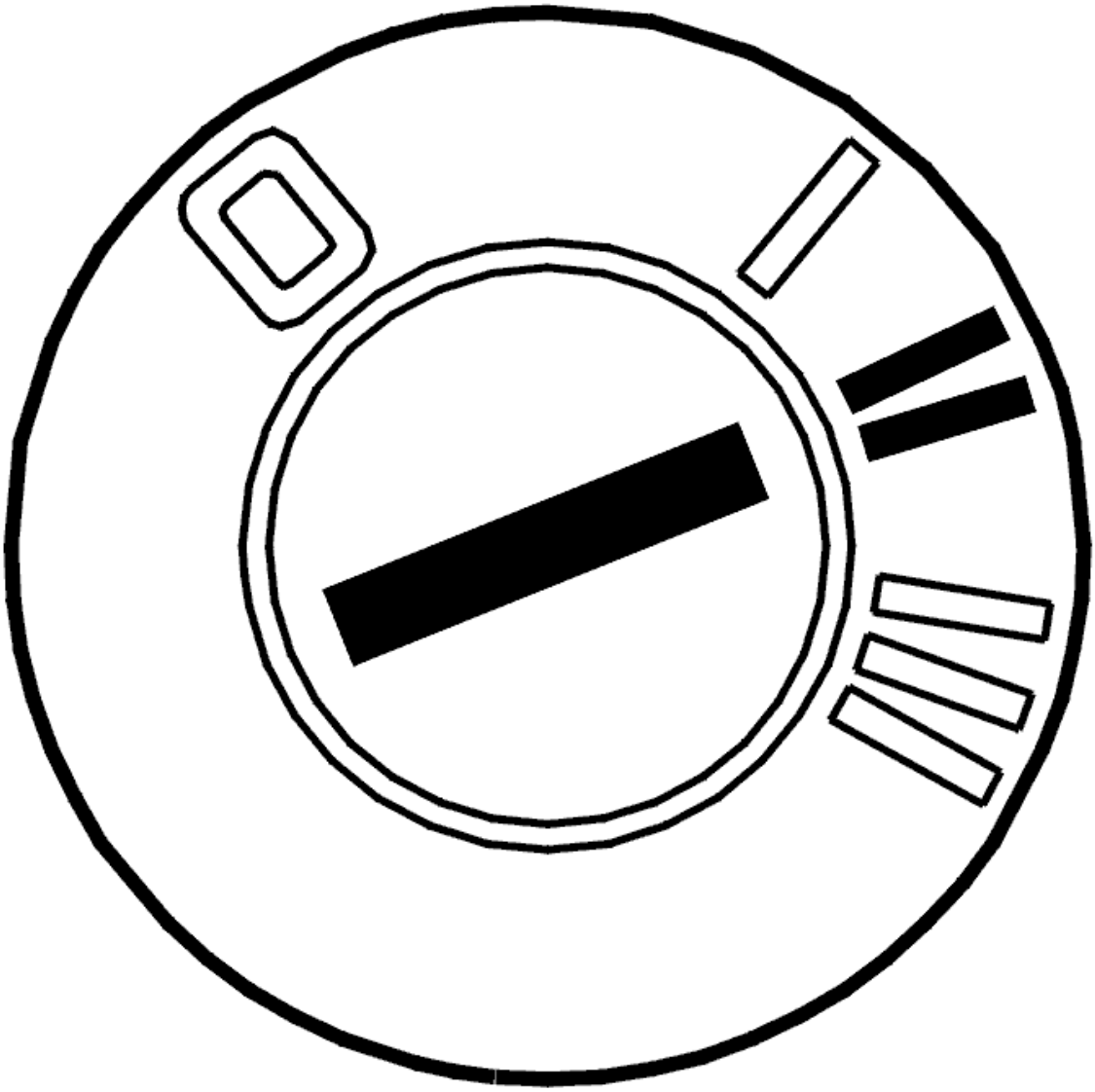

Fig. 45: Identifying Ignition ON
Courtesy of VOLVO CARS CORPORATION

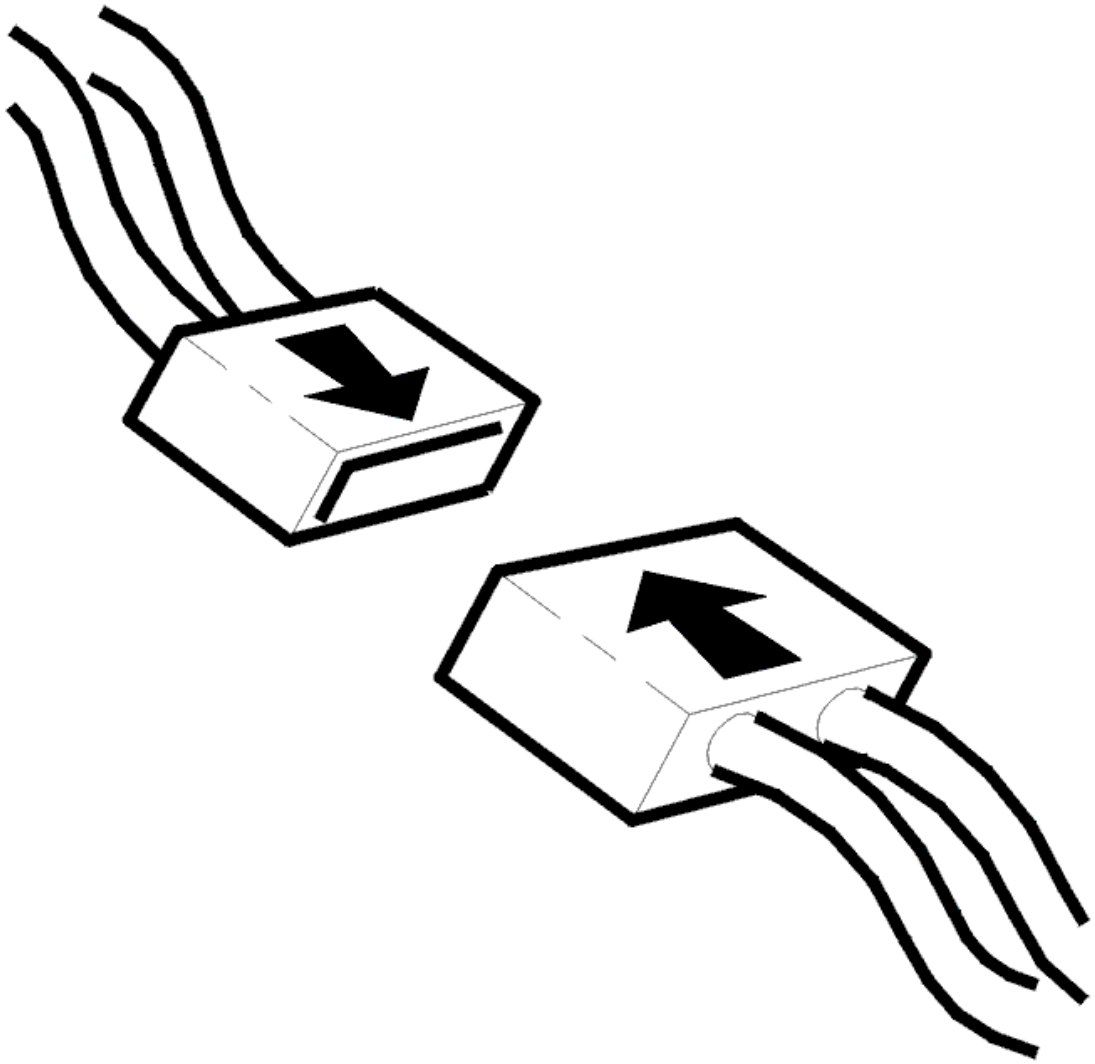

Fig. 46: Identifying Connector(s) Reinstallation
Courtesy of VOLVO CARS CORPORATION

- Ignition off.
- Connect connectors, install components, etc.
- Ignition on for at least 10 seconds.

  Check that diagnostic trouble code status is showing Intermittent.

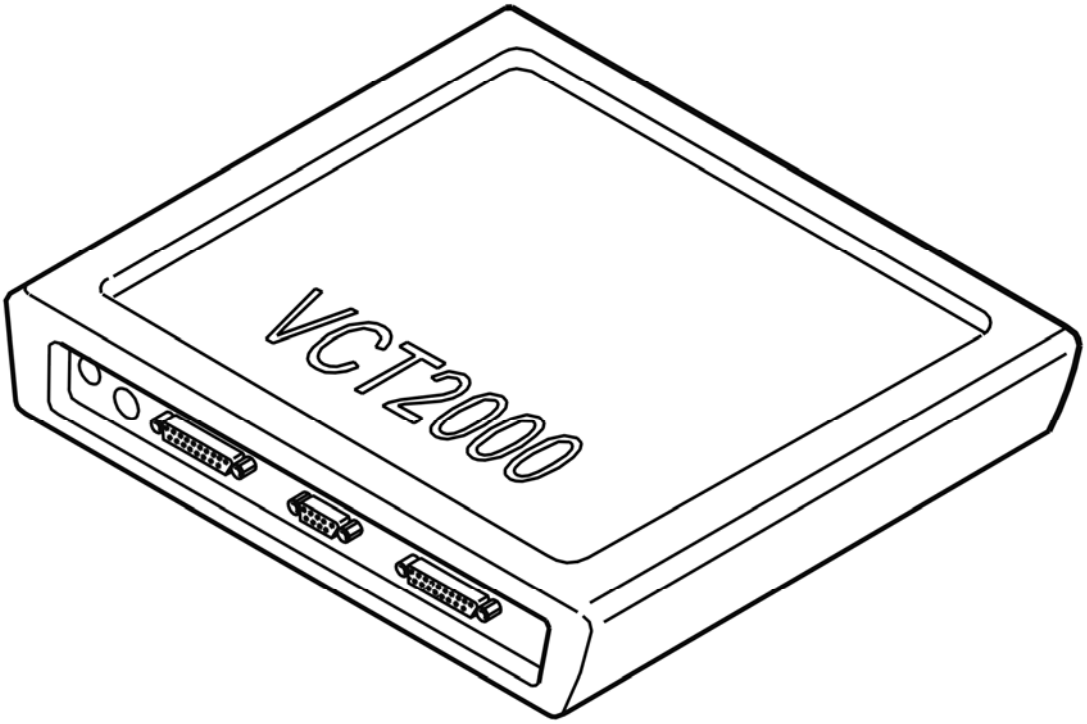

Fig. 47: Identifying VCT2000 Diagnostic Tool Symbol In VIDA
Courtesy of VOLVO CARS CORPORATION

Is the status of the diagnostic trouble code Intermittent?

- **YES**

  VERIFIED: Troubleshooting has been completed.

- **NO**

  Refer to **INFORMATION**

INFORMATION

FAULT-TRACING INFORMATION

The fault should have been detected and remedied. As this is not the case fault-tracing has failed.

Exit fault-tracing for this diagnostic trouble code (DTC) or make another attempt.

CEM-DF15: CAN-H, HIGH SPEED NETWORK. SIGNAL TOO LOW (2005-2012)

DIAGNOSTIC TROUBLE CODE (DTC) INFORMATION CEM-DF15

Condition

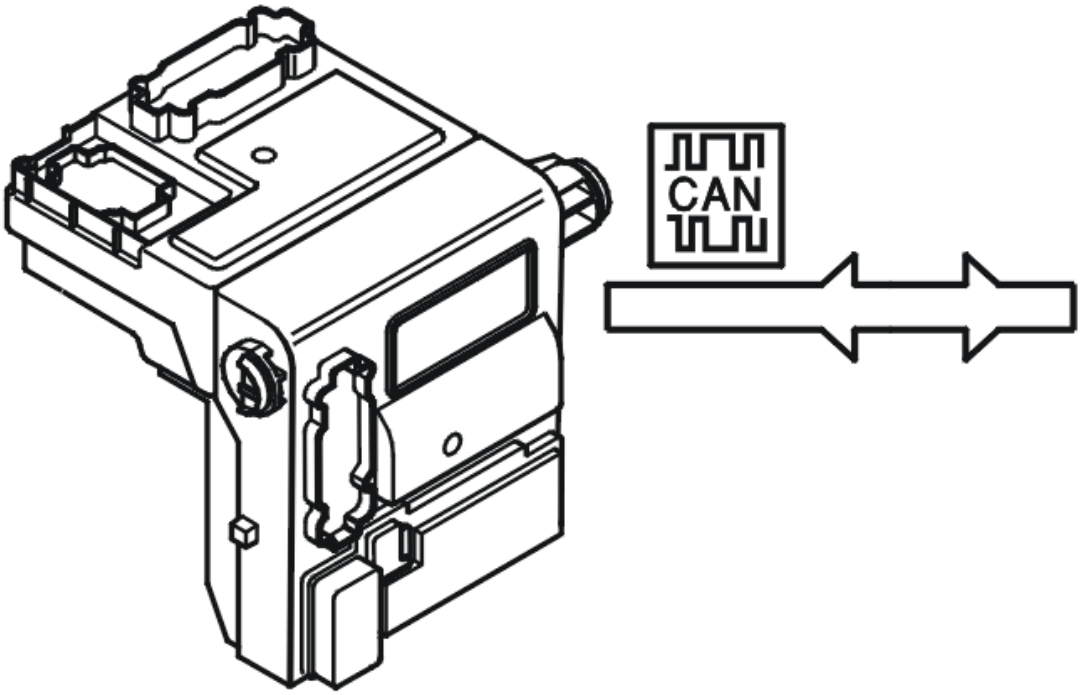

Fig. 48: Identifying Central Electronic Module
Courtesy of VOLVO CARS CORPORATION

The central electronic module (CEM) checks the voltage in the CAN wiring in the high speed network. The diagnostic trouble code (DTC) is stored if the central electronic module (CEM) registers a short-circuit to ground in the CAN H in the high speed network.

NOTE: **If DFxx diagnostic trouble codes (DTCs) are stored the central electronic module (CEM) must not be replaced as the diagnostic trouble code (DTC) indicates a short-circuit in one or more conductors in the Control area network. The central electronic module (CEM) is the only control module that monitors the voltage level in the Control area network wiring. The central electronic module (CEM) is therefore the only control module that can store a diagnostic trouble code (DTC) for a short-circuit in one of the cables to ground or supply voltage. Do not replace the central electronic module (CEM) in the event of a CAN fault unless VIDA fault-tracing has indicated that the central electronic module (CEM) has an internal fault.**

The diagnostic trouble code (DTC) can be diagnosed when the ignition has been on for more than 10 seconds.

Substitute Value

- None.

Possible Source

- Short-circuit to ground in the high speed network.

Fault symptom[s]

- The engine does not start.
- Engine cuts out when running
- Malfunction indicator lamp (MIL) lit.
- Message in the display.

SIGNAL MISSING

see **SIGNAL MISSING**

CEM-DF15: CAN-H, HIGH-SPEED NETWORK. SIGNAL TOO LOW. INTERMITTENT FAULT (2003-2004)

DIAGNOSTIC TROUBLE CODE (DTC) INFORMATION CEM-DF15

Condition

Diagnostic trouble codes (DTCs) are stored if the central electronic module (CEM) registers that there is a short-circuit to ground in the CAN H in the high speed network.

NOTE: **In the event of DFxx diagnostic trouble codes (DTCs), the central electronic module (CEM) must not be replace as the diagnostic trouble code (DTC) indicates a short-circuit in one or more conductors in the Control area network The central electronic module (CEM) is the only control module that monitors the voltage level in the Control area network wiring. The central electronic module (CEM) is therefore the only control module that can store a diagnostic trouble code (DTC) for a short-circuit in one of the cables to ground or supply voltage. Do not replace the central electronic module (CEM) in the event of a CAN fault unless VIDA fault-tracing has indicated that the central electronic module (CEM) has an internal fault.**

Substitute Value

None.

Possible Source

- Short-circuit to ground in the high speed network.

Fault symptom[s]

- The starter motor turns but the engine does not start
- The engine cuts out
- Malfunction indicator lamp (MIL) lit
- Message in the display.

SIGNAL TOO LOW. INTERMITTENT FAULT.

CHECKING CONNECTORS AND BUS WIRE

NOTE: Remember that the CAN network is only a communications network. There are therefore no fuses, switches and sensors on the CAN bus. Check the resistance as described below (see references).

NOTE: To maintain the correct values the battery should be disconnected when measuring resistance.

Check the bus wire for a short circuit to ground as described in, see **SHORT-CIRCUIT TO GROUND, INTERMITTENT FAULTS** .

Also check the intermediate connectors for contact resistance and oxidation as described in, see **CONTACT RESISTANCE AND OXIDATION** and for a loose contact as described in **LOOSE CONNECTIONS (TERMINALS)** .

HINT: If the fault is found before all the wires below have been checked trouble-shooting is not necessary on the wires.

The following wires and connectors should be checked to locate the short circuit.

Wire between:

- electronic throttle module (ETM) 3 and engine control module (ECM) 37A.

  To connect the test box to the ETM control unit, see **CONNECTING THE BREAKOUT BOX**

  To connect the test box to the ECM control unit, see **CONNECTING THE BREAKOUT BOX**

  NOTE: Applies to automatic gear box.

- engine control module (ECM) 13B and transmission control module (TCM) 13B.

  To connect the test box to the ECM control unit, see **CONNECTING THE BREAKOUT BOX**

To connect the test box to the TCM control unit, see **CONNECTING BREAKOUT BOX, TRANSMISSION CONTROL MODULE (TCM)** (AW) or **CONNECTING THE BREAKOUT BOX** (GM).

NOTE: Applies to automatic gear box.

- transmission control module (TCM) 14B and anti-lock braking system (ABS) 11 (or 19 if the vehicle has a switch button with the text "DSTC" on the center console).

  To connect the test box to the TCM control unit, see **CONNECTING BREAKOUT BOX, TRANSMISSION CONTROL MODULE (TCM)** (AW) or **CONNECTING THE BREAKOUT BOX** (GM).

  To connect the test box to the ABS control unit, see **CONNECTING THE ABS BREAKOUT BOX**

NOTE: Applies to manual gear box.

- engine control module (ECM) 13B and anti-lock braking system (ABS) 11 (or 19 if the vehicle has a switch button with the text "DSTC" on the center console).

  To connect the test box to the ECM control unit, see **CONNECTING THE BREAKOUT BOX**

  To connect the test box to the ABS control unit, see **CONNECTING THE ABS BREAKOUT BOX**

- central electronic module (CEM) 17B and anti-lock braking system (ABS) 11 (or 19 if the vehicle has a switch button with the text "DSTC" on the center console.) Also check intermediate connector 54/3R.

  To connect the test box to the CEM control unit, see **CONNECTING THE BREAKOUT BOX**

  To connect the test box to the ABS control unit, see **CONNECTING THE ABS BREAKOUT BOX**

Additional information:

- The voltage should be between approximately 2.0 V and 3.5 V.
- To disconnect the battery, see **BATTERY, DISCONNECTING**

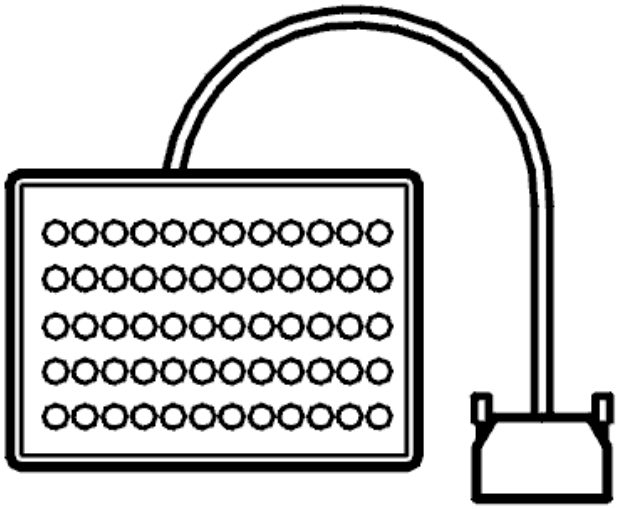

Fig. 49: Identifying Breakout Box
Courtesy of VOLVO CARS CORPORATION

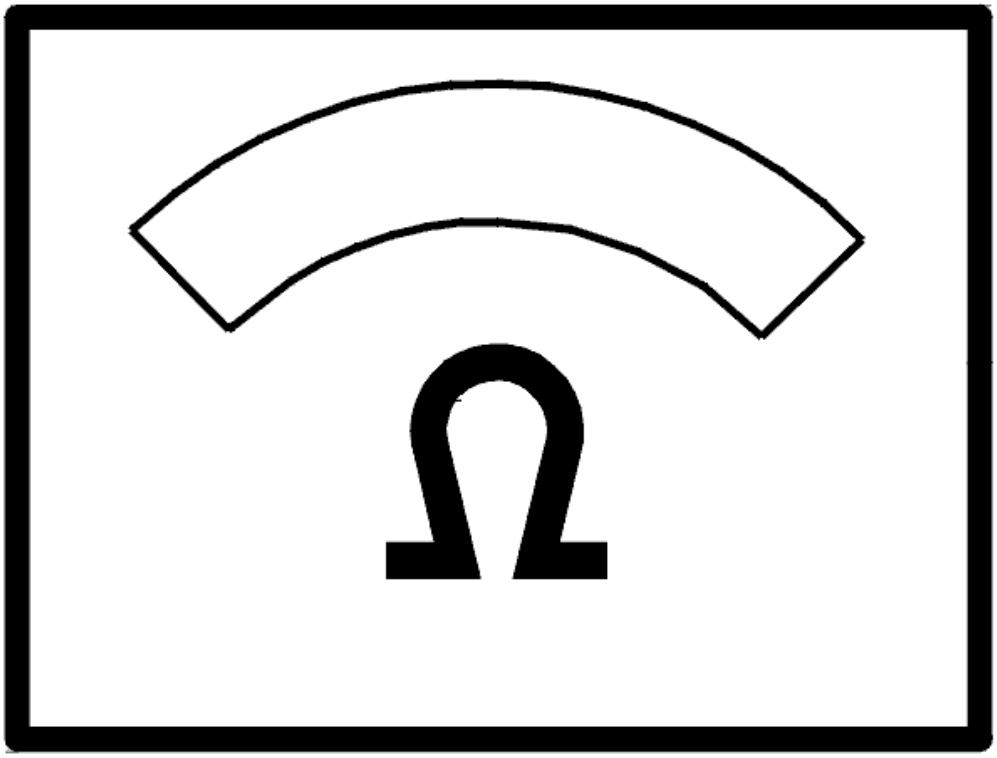

Fig. 50: Identifying Ohms Display
Courtesy of VOLVO CARS CORPORATION

CEM-DF15: CAN-H, HIGH-SPEED NETWORK. SIGNAL TOO LOW. PERMANENT FAULT (2003-2004)

DIAGNOSTIC TROUBLE CODE (DTC) INFORMATION CEM-DF15

see **DIAGNOSTIC TROUBLE CODE (DTC) INFORMATION CEM-DF15**

SIGNAL TOO LOW. PERMANENT FAULT

CHECKING CONNECTORS AND BUS WIRE

NOTE: **Remember that the CAN network is only a communications network. There are**

therefore no fuses, switches and sensors on the CAN bus. Check the resistance as described below (see references).

NOTE: To maintain the correct values the battery should be disconnected when measuring resistance.

Check the bus wire for a short circuit to ground as described in, see **SHORT-CIRCUIT TO GROUND, PERMANENT FAULTS** . Also check the intermediate connectors for contact resistance and oxidation as described in **CONTACT RESISTANCE AND OXIDATION** .

The following wires and connectors should be checked to locate the short circuit.

Wire between:

- electronic throttle module (ETM) 3 and engine control module (ECM) 37A.

  To connect the test box to the ETM control unit, see **CONNECTING THE BREAKOUT BOX**

  To connect the test box to the ECM control unit, see **CONNECTING THE BREAKOUT BOX**

  NOTE: Applies to automatic gear box.

- engine control module (ECM) 13B and transmission control module (TCM) 13B.

  To connect the test box to the ECM control unit, see **CONNECTING THE BREAKOUT BOX**

  To connect the test box to the TCM control unit, see **CONNECTING BREAKOUT BOX, TRANSMISSION CONTROL MODULE (TCM)** (AW) or **CONNECTING THE BREAKOUT BOX** (GM).

  NOTE: Applies to automatic gear box.

- transmission control module (TCM) 14B and anti-lock braking system (ABS) 11 (or 19 if the vehicle has a switch button with the text "DSTC" on the center console).

  To connect the test box to the TCM control unit, see **CONNECTING BREAKOUT BOX, TRANSMISSION CONTROL MODULE (TCM)** (AW) or **CONNECTING THE BREAKOUT BOX** (GM).

  To connect the test box to the ABS control unit, see **CONNECTING THE ABS BREAKOUT BOX**

  NOTE: Applies to manual gear box.

- engine control module (ECM) 13B and anti-lock braking system (ABS) 11 (or 19 if the vehicle has a switch button with the text "DSTC" on the center console).

To connect the test box to the ECM control unit, see **CONNECTING THE BREAKOUT BOX**

To connect the test box to the ABS control unit, see **CONNECTING THE ABS BREAKOUT BOX**

- central electronic module (CEM) 17B and anti-lock braking system (ABS) 11 (or 19 if the vehicle has a switch button with the text "DSTC" on the center console.) Also check intermediate connector 54/3R.

  To connect the test box to the CEM control unit, see **CONNECTING THE BREAKOUT BOX**

  To connect the test box to the ABS control unit, see **CONNECTING THE ABS BREAKOUT BOX**

Additional information

- The voltage should be between approximately 2.0V and 3.5V.
- To disconnect the battery, see **BATTERY, DISCONNECTING**

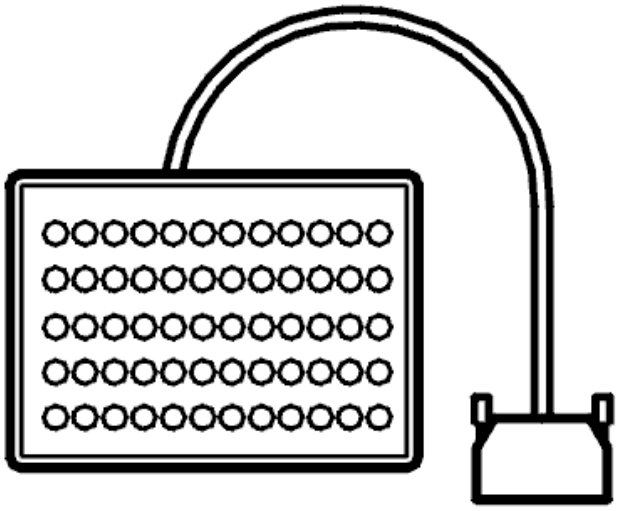

Fig. 51: Identifying Breakout Box
Courtesy of VOLVO CARS CORPORATION

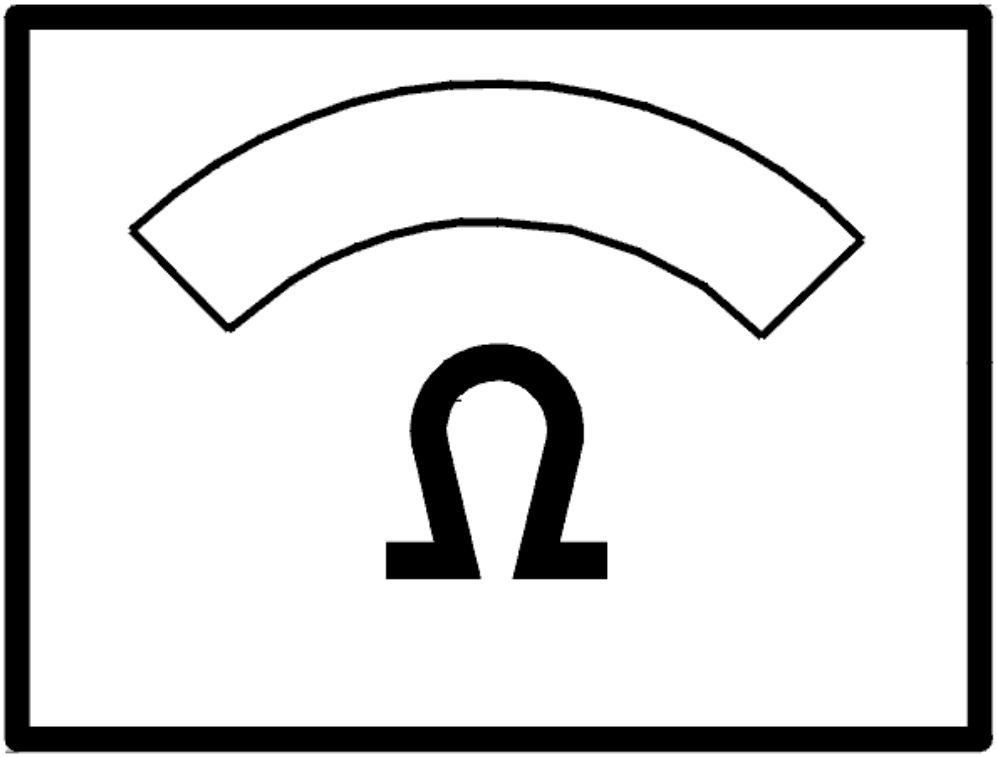

Fig. 52: Identifying Ohms Display
Courtesy of VOLVO CARS CORPORATION

- **Continue**

  Refer to **VERIFICATION**

VERIFICATION

VERIFICATION

HINT: After the repair it is necessary to check that the fault has been rectified.

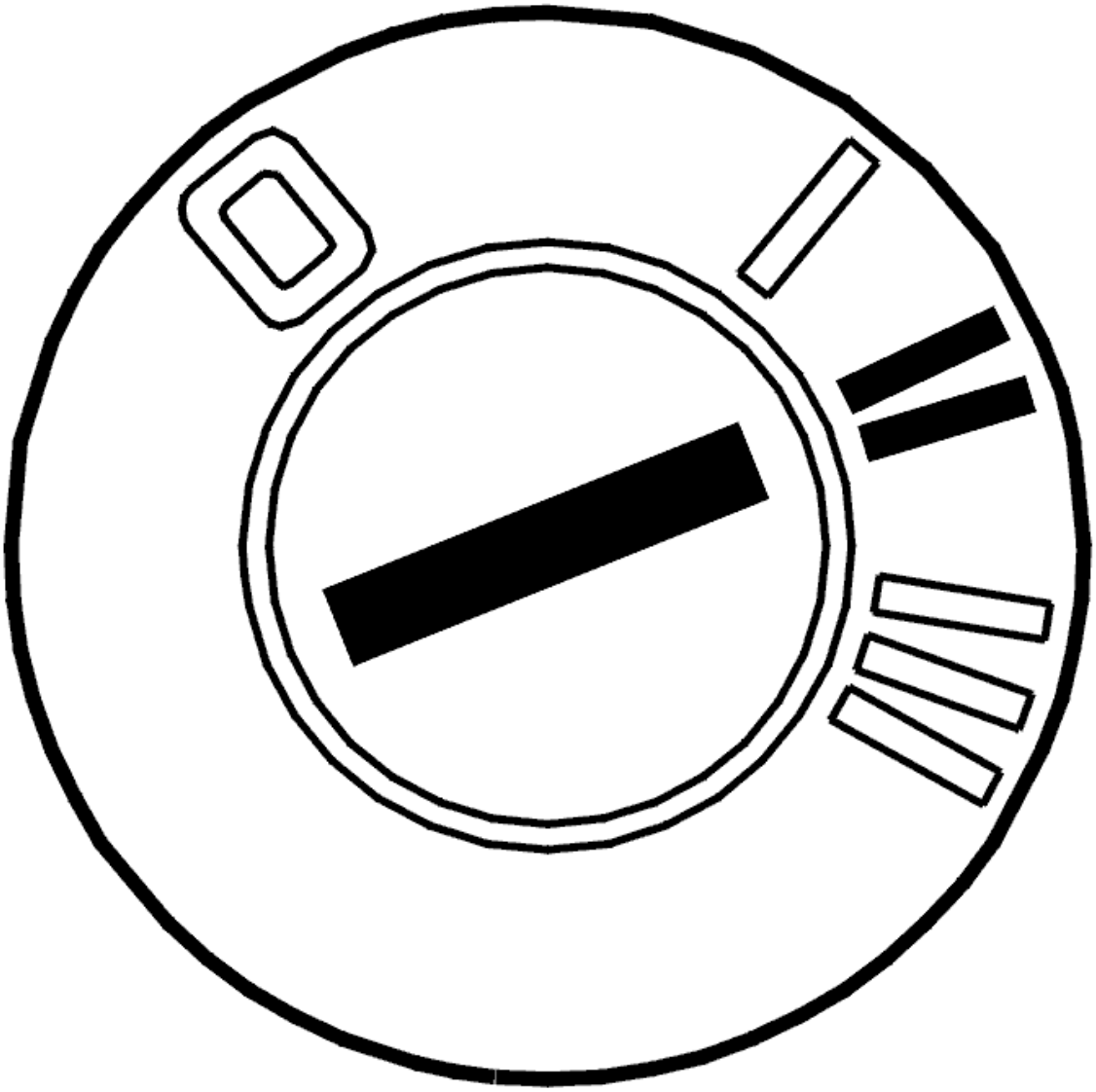

Fig. 53: Identifying Ignition ON
Courtesy of VOLVO CARS CORPORATION

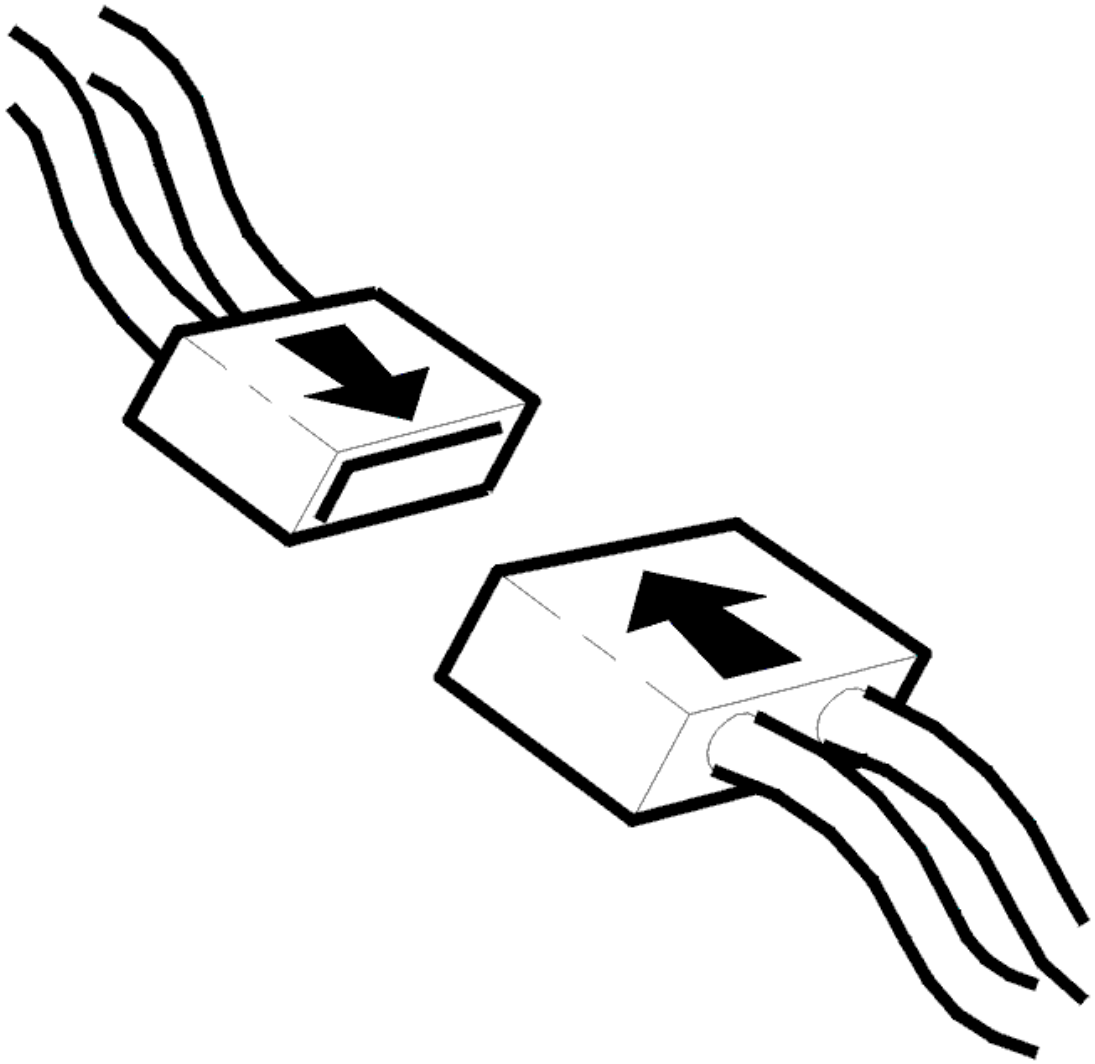

Fig. 54: Identifying Connector(s) Reinstallation
Courtesy of VOLVO CARS CORPORATION

- Ignition off.
- Connect connectors, install components, etc.
- Ignition on for at least 10 seconds.

Check that diagnostic trouble code status is showing Intermittent.

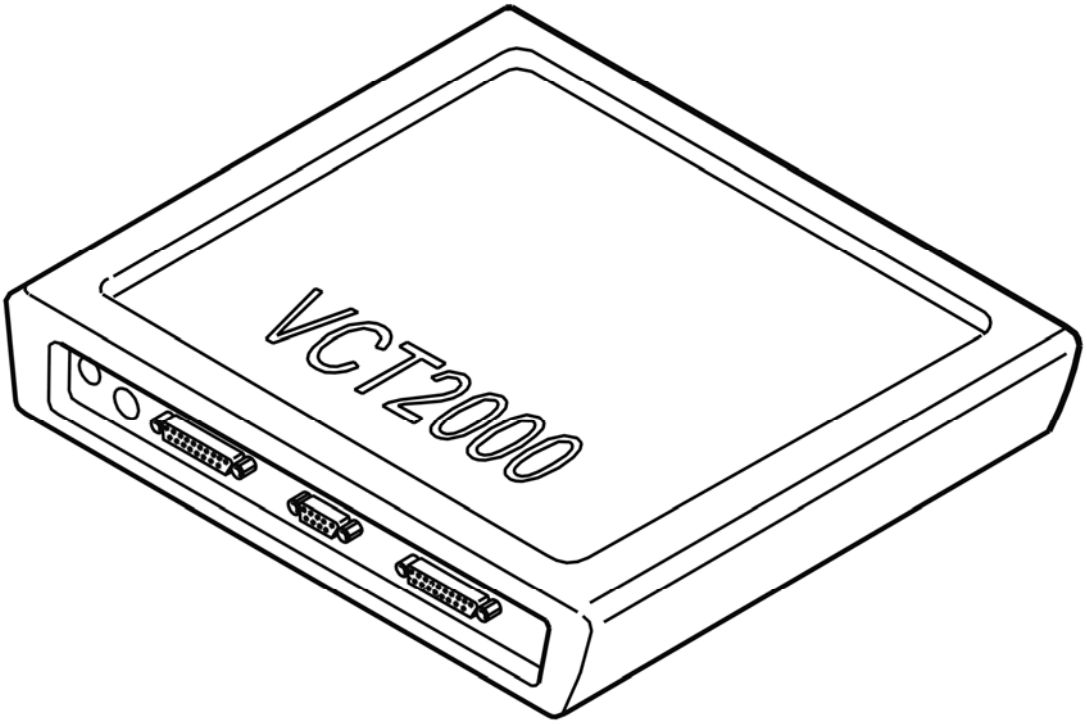

Fig. 55: Identifying VCT2000 Diagnostic Tool Symbol In VIDA
Courtesy of VOLVO CARS CORPORATION

Is the status of the diagnostic trouble code Intermittent?

- **YES**

  VERIFIED: Troubleshooting has been completed.

- **NO**

  Refer to **INFORMATION**

INFORMATION

FAULT-TRACING INFORMATION

The fault should have been detected and remedied. As this is not the case fault-tracing has failed.

Exit fault-tracing for this diagnostic trouble code (DTC) or make another attempt.

CEM-DF16: CAN-L, HIGH SPEED NETWORK. SIGNAL TOO HIGH (2005-2012)

DIAGNOSTIC TROUBLE CODE (DTC) INFORMATION CEM-DF16

Condition

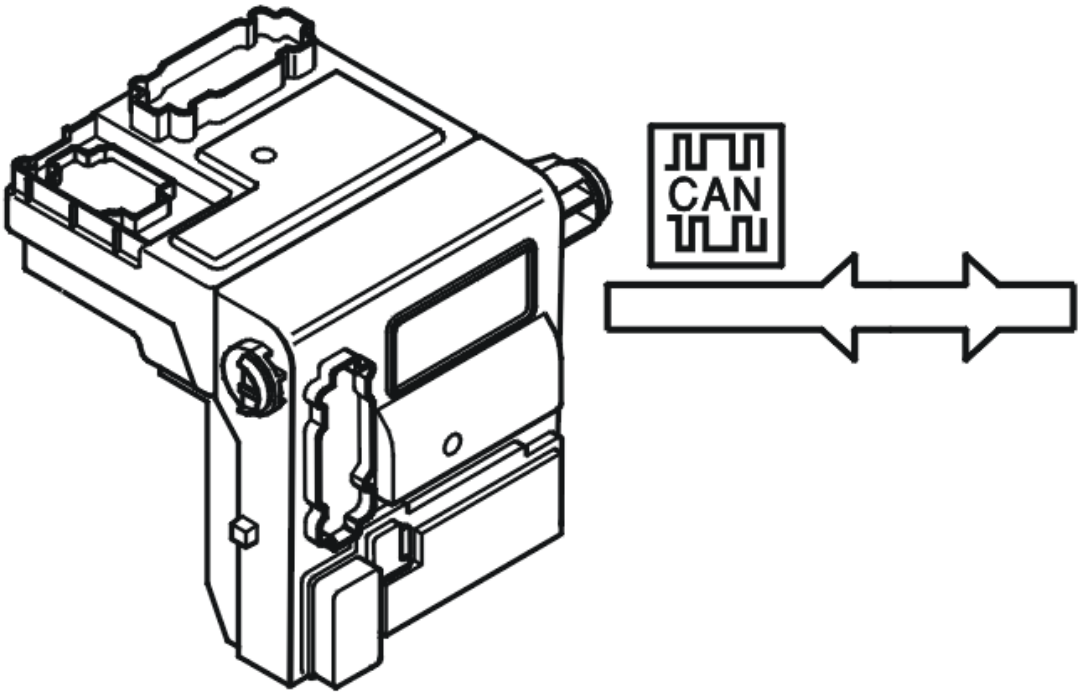

Fig. 56: Identifying Central Electronic Module
Courtesy of VOLVO CARS CORPORATION

The central electronic module (CEM) checks the voltage in the CAN wiring in the high speed network. The diagnostic trouble code (DTC) is stored if the central electronic module (CEM) registers a short-circuit to supply voltage in the CAN L in the high speed network.

NOTE: **If DFxx diagnostic trouble codes (DTCs) are stored the central electronic module (CEM) must not be replaced as the diagnostic trouble code (DTC) indicates a short-circuit in one or more conductors in the Control area network. The central electronic module (CEM) is the only control module that monitors the voltage level in the Control area network wiring. The central electronic module (CEM) is therefore the only control module that can store a diagnostic trouble code (DTC) for a short-circuit in one of the cables to ground or supply voltage. Do not replace the central electronic module (CEM) in the event of a CAN fault unless VIDA fault-tracing has indicated that the central electronic module (CEM) has an internal fault.**

The diagnostic trouble code (DTC) can be diagnosed when the ignition has been on for more than 10 seconds.

Substitute Value

- None.

Possible Source

- Short-circuit to supply voltage in the high speed network.

Fault symptom[s]

- The engine does not start.
- Engine cuts out when running
- Malfunction indicator lamp (MIL) lit.
- Message in the display.

SIGNAL MISSING

see **SIGNAL MISSING**

CEM-DF16: CAN-L, HIGH-SPEED NETWORK. SIGNAL TOO HIGH. INTERMITTENT FAULT (2003-2004)

DIAGNOSTIC TROUBLE CODE (DTC) INFORMATION CEM-DF16

Condition

Diagnostic trouble codes (DTCs) are stored if the central electronic module (CEM) registers that there is a short-circuit to supply voltage in the CAN L in the high speed network.

NOTE: **In the event of DFxx diagnostic trouble codes (DTCs), the central electronic module (CEM) must not be replace as the diagnostic trouble code (DTC) indicates a short-circuit in one or more conductors in the Control area network The central electronic module (CEM) is the only control module that monitors the voltage level in the Control area network wiring. The central electronic module (CEM) is therefore the only control module that can store a diagnostic trouble code (DTC) for a short-circuit in one of the cables to ground or supply voltage. Do not replace the central electronic module (CEM) in the event of a CAN fault unless VIDA fault-tracing has indicated that the central electronic module (CEM) has an internal fault.**

Substitute Value

None.

Possible Source

- Short-circuit to supply voltage in the high speed network.

Fault symptom[s]

- The starter motor turns but the engine does not start
- The engine cuts out
- Malfunction indicator lamp (MIL) lit
- Message in the display.

SIGNAL TOO HIGH. INTERMITTENT FAULT.

CHECKING CONNECTORS AND BUS WIRE

NOTE: Remember that the CAN network is only a communications network. There are therefore no fuses, switches and sensors on the CAN bus. Check the resistance as described below (see references).

NOTE: To maintain the correct values the battery should be disconnected when measuring resistance.

Check the bus wire for a short circuit to voltage supply as described in, see **SHORT-CIRCUIT TO SUPPLY VOLTAGE, INTERMITTENT FAULTS** and for an intermittent open circuit as described in **OPEN-CIRCUIT, INTERMITTENT FAULTS** .

HINT: When checking for an open circuit, check if possible from the rear of the connector concerned so that it is not damaged.

Also check the intermediate connectors for contact resistance and oxidation as described in, see **CONTACT RESISTANCE AND OXIDATION** and for a loose contact as described in **LOOSE CONNECTIONS (TERMINALS)** .

HINT: If the fault is found before all the wires below have been checked trouble-shooting is not necessary on the wires.

The following wires and connectors should be checked to locate the short circuit.

Wire between:

- electronic throttle module (ETM) 4 and engine control module (ECM) 55A.

  To connect the test box to the ETM control unit, see **CONNECTING THE BREAKOUT BOX**

  To connect the test box to the ECM control unit, see **CONNECTING THE BREAKOUT BOX**

  NOTE: Applies to automatic gear box.

- engine control module (ECM) 1B and transmission control module (TCM) 1B.

  To connect the test box to the ECM control unit, see **CONNECTING THE BREAKOUT BOX**

  To connect the test box to the TCM control unit, see **CONNECTING BREAKOUT BOX, TRANSMISSION CONTROL MODULE (TCM)** (AW) or **CONNECTING THE BREAKOUT BOX** (GM).

  NOTE: Applies to automatic gear box.

- transmission control module (TCM) 2B and anti-lock braking system (ABS) 10 (or 20 if the vehicle has a switch button with the text "DSTC" on the center console).

  To connect the test box to the TCM control unit, see **CONNECTING BREAKOUT BOX, TRANSMISSION CONTROL MODULE (TCM)** (AW) or **CONNECTING THE BREAKOUT BOX** (GM).

  To connect the test box to the ABS control unit, see **CONNECTING THE ABS BREAKOUT BOX**

  NOTE: Applies to manual gear box.

- engine control module (ECM) 1B and anti-lock braking system (ABS) 10 (or 20 if the vehicle has a switch button with the text "DSTC" on the center console).

  To connect the test box to the ECM control unit, see **CONNECTING THE BREAKOUT BOX**

  To connect the test box to the ABS control unit, see **CONNECTING THE ABS BREAKOUT BOX**

- central electronic module (CEM) 18B and anti-lock braking system (ABS) 10 (or 20 if the vehicle has a switch button with the text "DSTC" on the center console.) Also check intermediate connector 54/3R.

  To connect the test box to the CEM control unit, see **CONNECTING THE BREAKOUT BOX**

  To connect the test box to the ABS control unit, see **CONNECTING THE ABS BREAKOUT BOX**

Additional information:

- The voltage should be between approximately 1.5 V and 2.5 V.
- To disconnect the battery, see **BATTERY, DISCONNECTING**

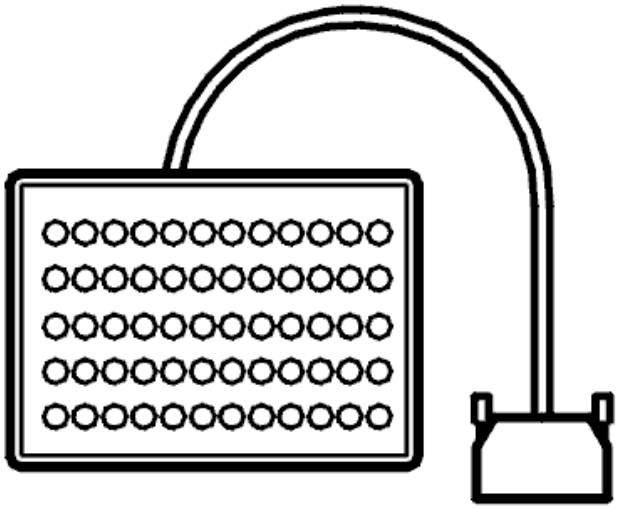

Fig. 57: Identifying Breakout Box
Courtesy of VOLVO CARS CORPORATION

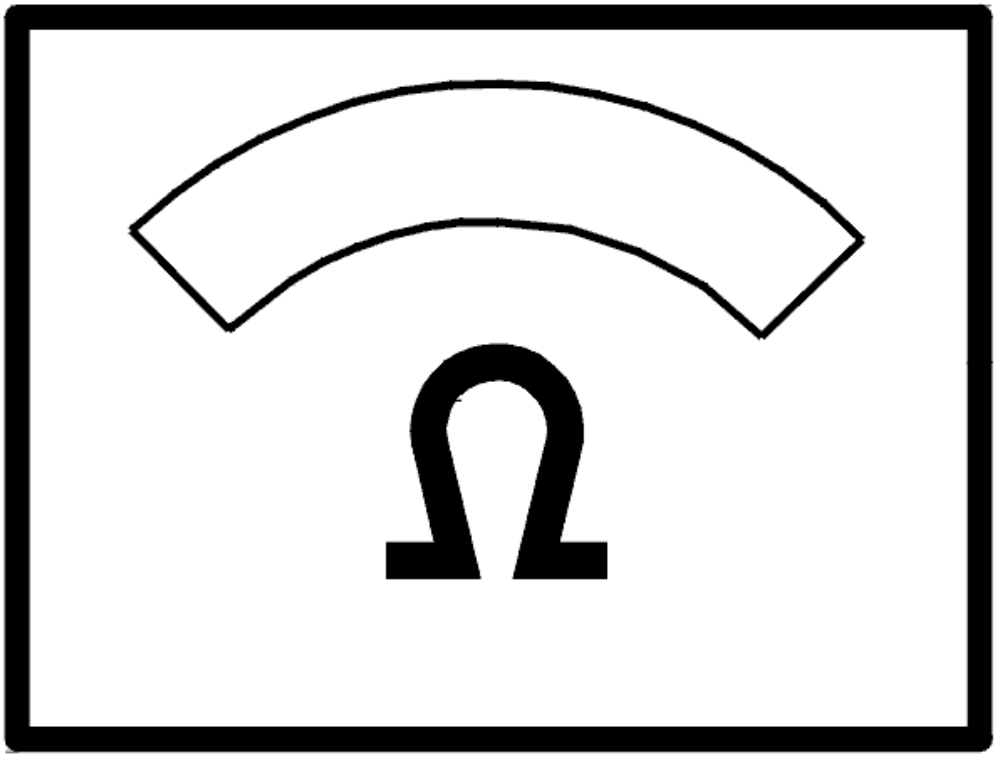

Fig. 58: Identifying Ohms Display
Courtesy of VOLVO CARS CORPORATION

CEM-DF16: CAN-L, HIGH-SPEED NETWORK. SIGNAL TOO HIGH. PERMANENT FAULT (2003-2004)

DIAGNOSTIC TROUBLE CODE (DTC) INFORMATION CEM-DF16

see **DIAGNOSTIC TROUBLE CODE (DTC) INFORMATION CEM-DF16**

SIGNAL TOO HIGH. PERMANENT FAULT

CHECKING CONNECTORS AND BUS WIRE

NOTE: **Remember that the CAN network is only a communications network. There are**

therefore no fuses, switches and sensors on the CAN bus. Check the resistance as described below (see references).

NOTE: To maintain the correct values the battery should be disconnected when measuring resistance.

Check the bus wire for a short circuit to voltage supply as described in, see **SHORT-CIRCUIT TO SUPPLY VOLTAGE. PERMANENT FAULTS** and for an open circuit as described in **OPEN-CIRCUIT, PERMANENT FAULTS** .

HINT: When checking for an open circuit, check if possible from the rear of the connector concerned so that it is not damaged.

Also check the intermediate connectors for contact resistance and oxidation as described in, see **CONTACT RESISTANCE AND OXIDATION** .

The following wires and connectors should be checked to locate the short circuit.

Wire between:

- electronic throttle module (ETM) 4 and engine control module (ECM) 55A.

  To connect the test box to the ETM control unit, see **CONNECTING THE BREAKOUT BOX**

  To connect the test box to the ECM control unit, see **CONNECTING THE BREAKOUT BOX**

  NOTE: Applies to automatic gear box.

- engine control module (ECM) 1B and transmission control module (TCM) 1B.

  To connect the test box to the ECM control unit, see **CONNECTING THE BREAKOUT BOX**

  To connect the test box to the TCM control unit, see **CONNECTING BREAKOUT BOX, TRANSMISSION CONTROL MODULE (TCM)** (AW) or **CONNECTING THE BREAKOUT BOX** (GM).

  NOTE: Applies to automatic gear box.

- transmission control module (TCM) 2B and anti-lock braking system (ABS) 10 (or 20 if the vehicle has a switch button with the text "DSTC" on the center console).

  To connect the test box to the TCM control unit, see **CONNECTING BREAKOUT BOX, TRANSMISSION CONTROL MODULE (TCM)** (AW) or **CONNECTING THE BREAKOUT BOX** (GM).

  To connect the test box to the ABS control unit, see **CONNECTING THE ABS BREAKOUT BOX**

NOTE: Applies to manual gear box.

- engine control module (ECM) 1B and anti-lock braking system (ABS) 10 (or 20 if the vehicle has a switch button with the text "DSTC" on the center console).

  To connect the test box to the ECM control unit, see **CONNECTING THE BREAKOUT BOX**

  To connect the test box to the ABS control unit, see **CONNECTING THE ABS BREAKOUT BOX**

- central electronic module (CEM) 18B and anti-lock braking system (ABS) 10 (or 20 if the vehicle has a switch button with the text "DSTC" on the center console.) Also check intermediate connector 54/3R.

  To connect the test box to the CEM control unit, see **CONNECTING THE BREAKOUT BOX**

  To connect the test box to the ABS control unit, see **CONNECTING THE ABS BREAKOUT BOX**

Additional information

- The voltage should be between approximately 1.5V and 2.5V.
- To disconnect the battery, see **BATTERY, DISCONNECTING**

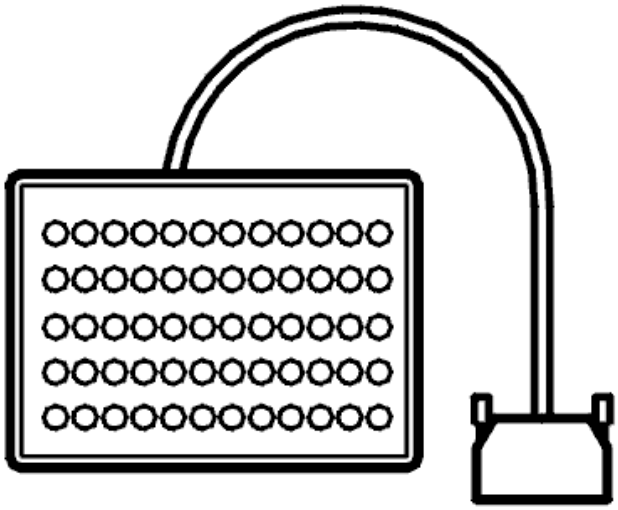

Fig. 59: Identifying Breakout Box
Courtesy of VOLVO CARS CORPORATION

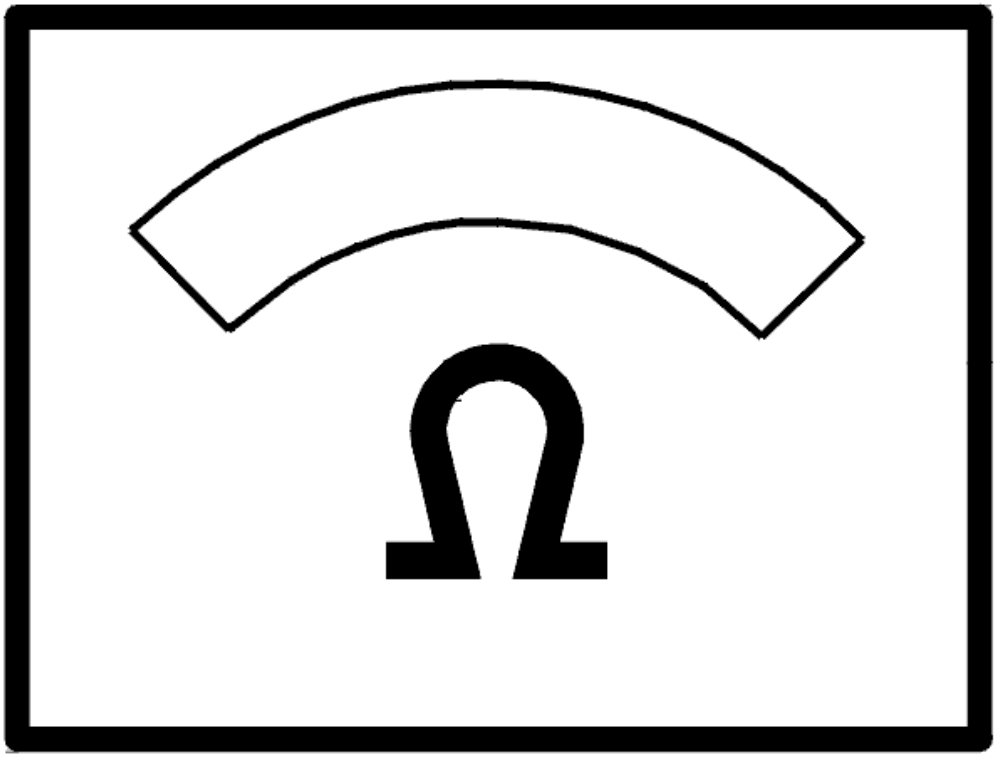

Fig. 60: Identifying Ohms Display
Courtesy of VOLVO CARS CORPORATION

- **Continue**

  Refer to **VERIFICATION**

VERIFICATION

VERIFICATION

HINT: After the repair it is necessary to check that the fault has been rectified.

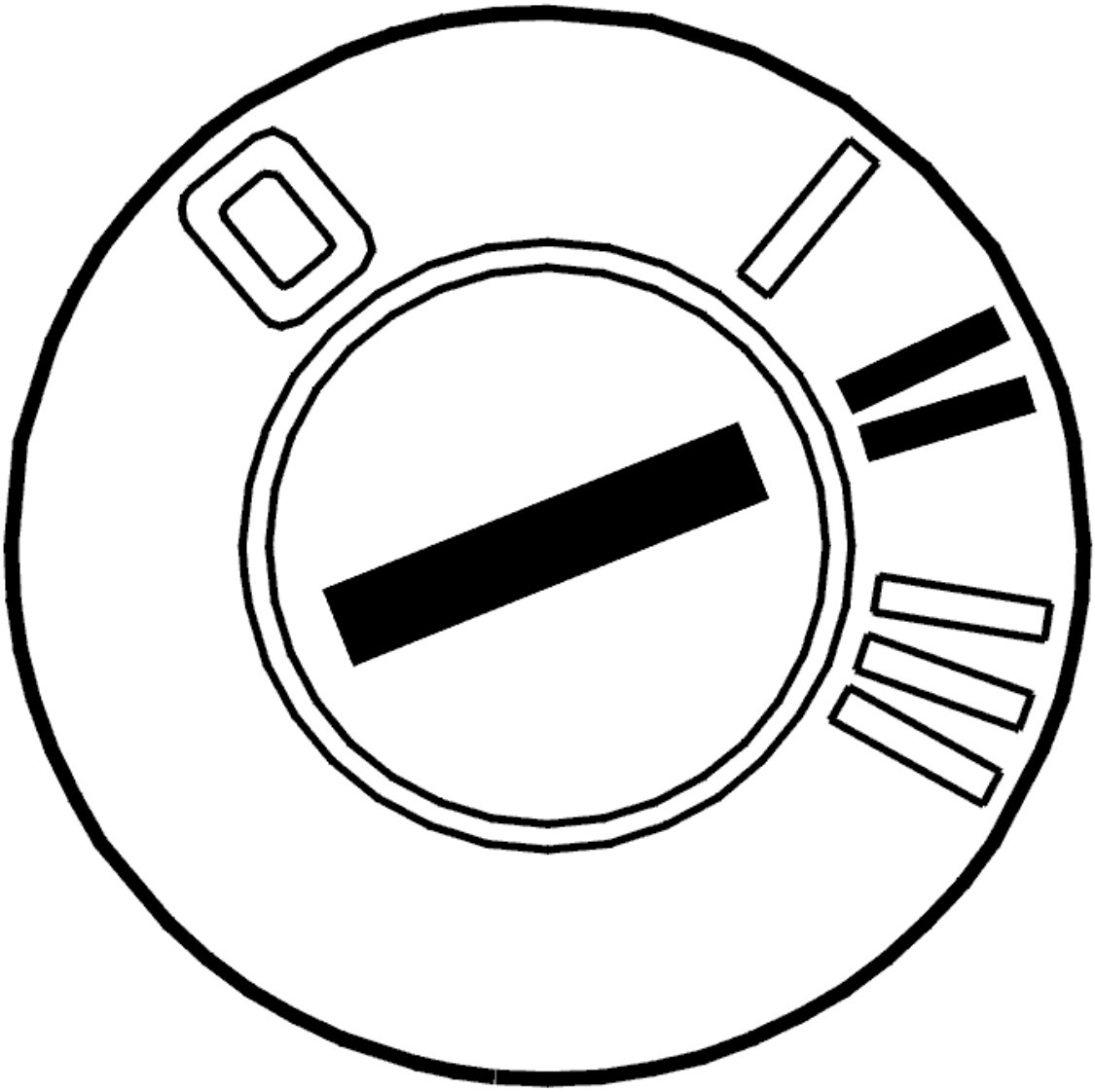

Fig. 61: Identifying Ignition ON
Courtesy of VOLVO CARS CORPORATION

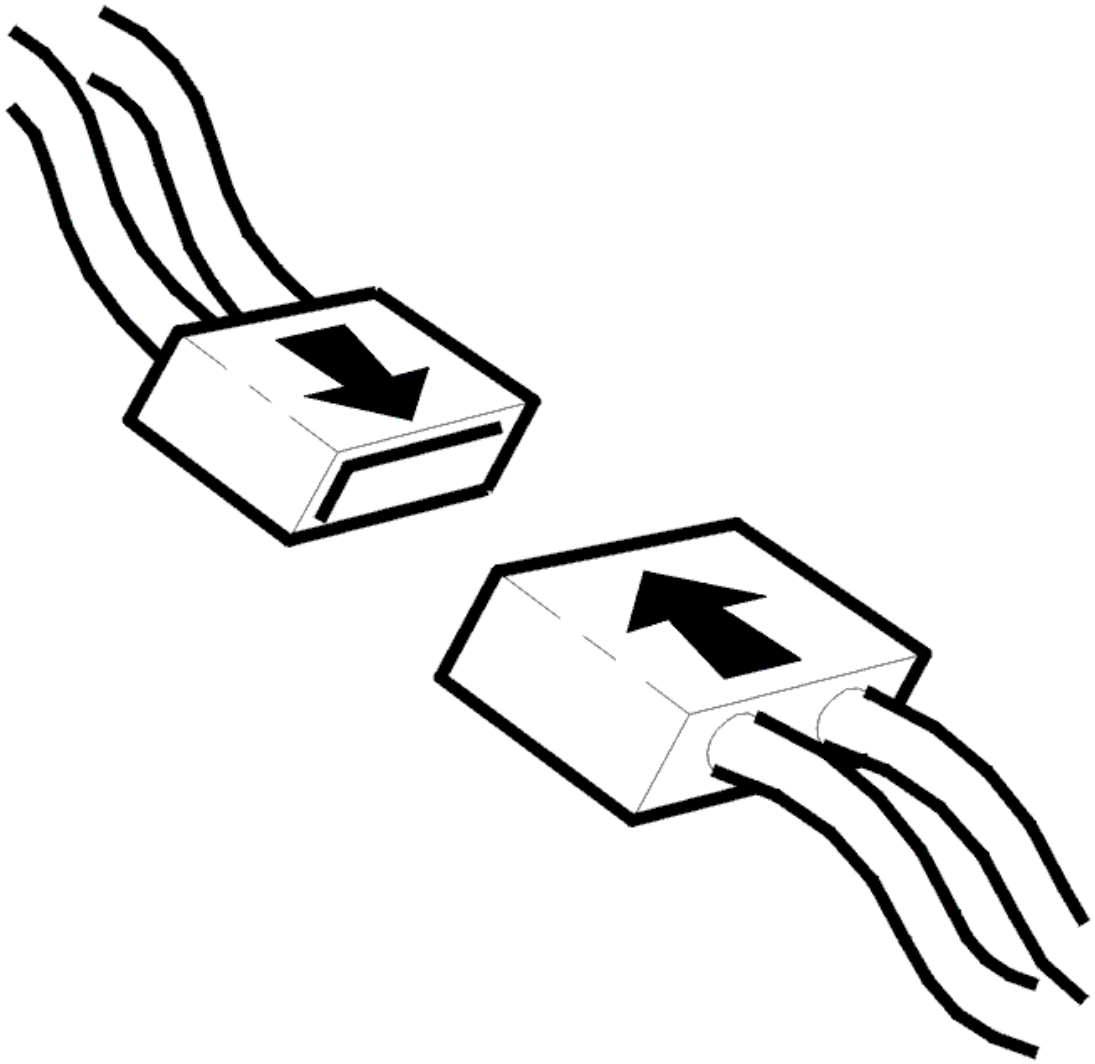

Fig. 62: Identifying Connector(s) Reinstallation
Courtesy of VOLVO CARS CORPORATION

- Ignition off.
- Connect connectors, install components, etc.
- Ignition on for at least 10 seconds.

Check that diagnostic trouble code status is showing Intermittent.

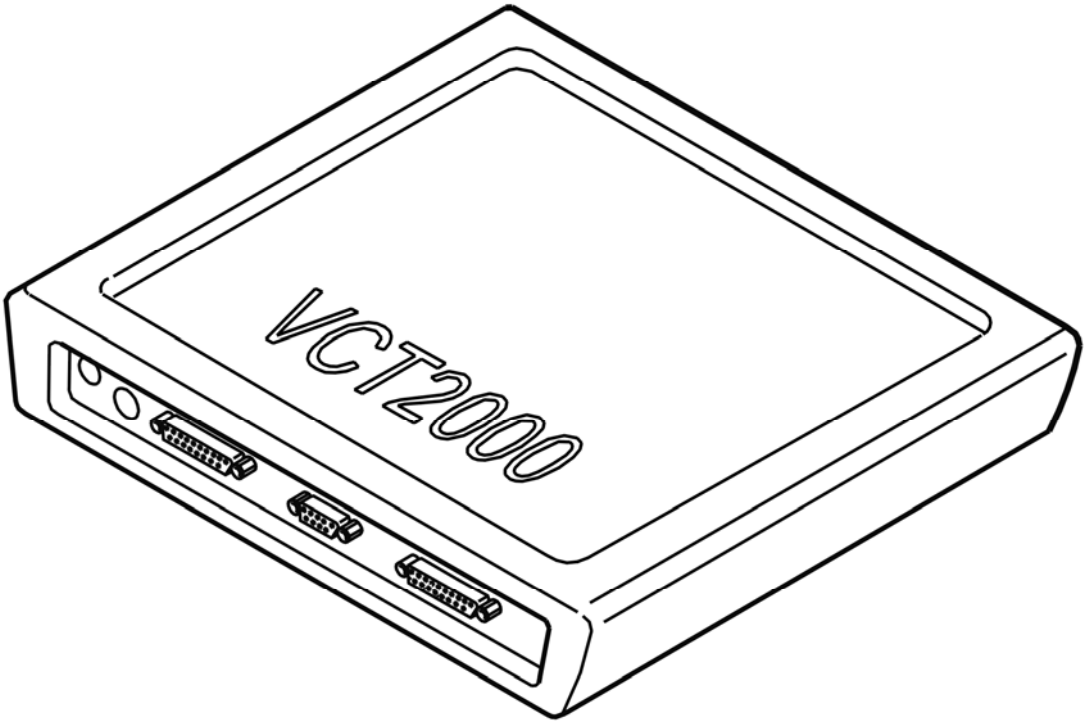

Fig. 63: Identifying VCT2000 Diagnostic Tool Symbol In VIDA
Courtesy of VOLVO CARS CORPORATION

Is the status of the diagnostic trouble code Intermittent?

- **YES**

  VERIFIED: Troubleshooting has been completed.

- **NO**

  Refer to **INFORMATION**

INFORMATION

FAULT-TRACING INFORMATION

The fault should have been detected and remedied. As this is not the case fault-tracing has failed.

Exit fault-tracing for this diagnostic trouble code (DTC) or make another attempt.

CEM-DF17: CAN-H, HIGH SPEED NETWORK. FAULTY SIGNAL (2005-2012)

DIAGNOSTIC TROUBLE CODE (DTC) INFORMATION CEM-DF17

Condition

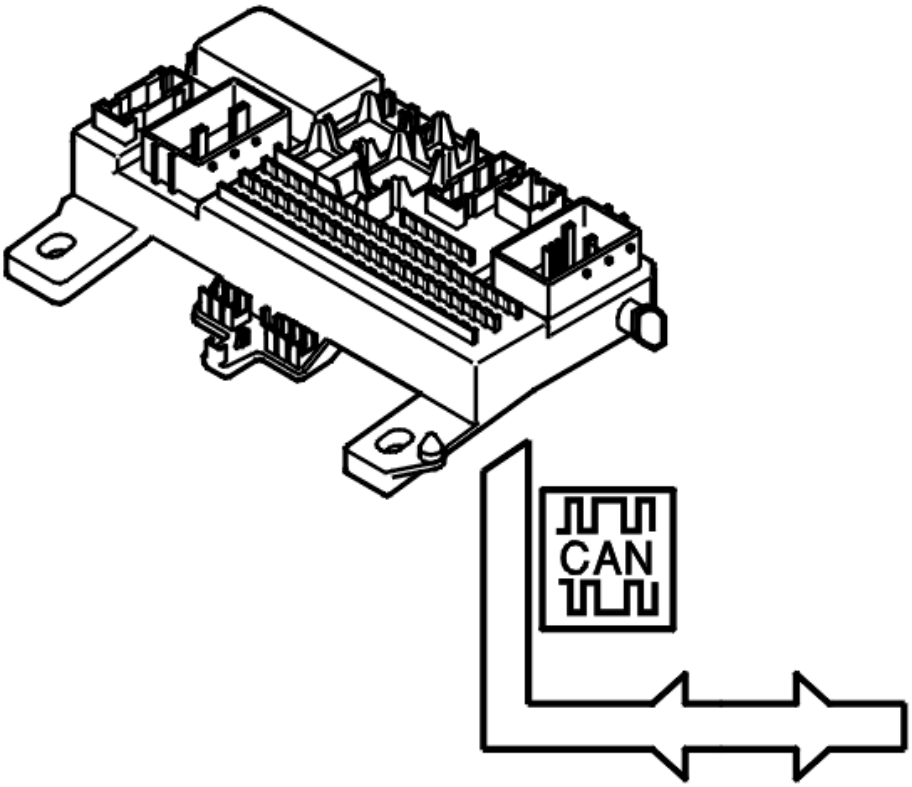

Fig. 64: Identifying Central Electronic Module
Courtesy of VOLVO CARS CORPORATION

The central electronic module (CEM) checks the voltage in CAN L and CAN H on the high speed network. The diagnostic trouble code (DTC) is stored if the central electronic module (CEM) registers a short-circuit between CAN L and CAN H in the high speed network.

NOTE: **If DFxx diagnostic trouble codes (DTCs) are stored the central electronic module (CEM) must not be replaced as the diagnostic trouble code (DTC) indicates a short-circuit in one or more conductors in the Control area network. The central electronic module (CEM) is the only control module that monitors the voltage level in the Control area network wiring. The central electronic module (CEM) is therefore the only control module that can store a diagnostic trouble code (DTC) for a short-circuit in one of the cables to ground or supply voltage. Do not replace the central electronic module (CEM) in the event of a CAN fault unless VIDA fault-tracing has indicated that the central electronic module (CEM) has an internal fault.**

The diagnostic trouble code (DTC) can be diagnosed when the ignition has been on for more than 10 seconds.

Substitute Value

- None.

Possible Source

- Short-circuit between CAN L and CAN H in the high speed network.

Fault symptom[s]

- The engine does not start.
- The engine cuts out when driving.
- Malfunction indicator lamp (MIL) lit.
- Message in the display.

SIGNAL MISSING

see **SIGNAL MISSING**

CEM-E000: CONTROL MODULE COMMUNICATION (2005-2012)

DIAGNOSTIC TROUBLE CODE (DTC) INFORMATION CEM-E000

Condition

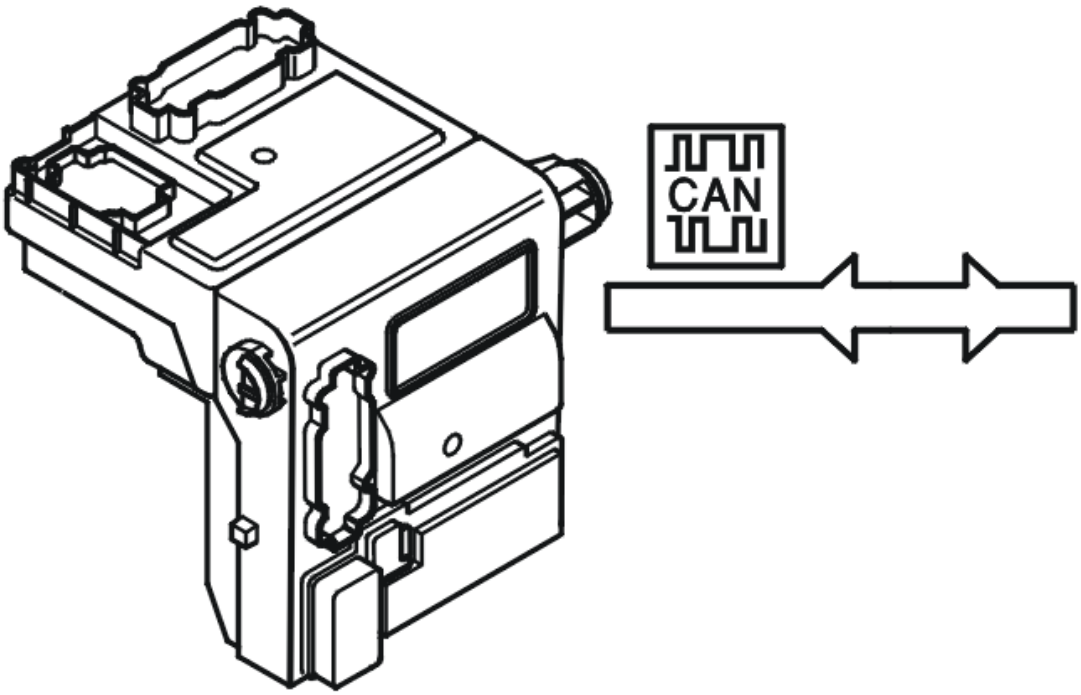

Fig. 65: Identifying Central Electronic Module
Courtesy of VOLVO CARS CORPORATION

The control modules transmit and receive information via a standardized serial communication method - CAN (Control Area Network). The diagnostic trouble code (DTC) is stored if the control module registers serious interference on the high speed network (CAN communication blocked).

NOTE: **In the event of system communication problems, it is not possible to communicate with the control module. Therefore it will only be possible to read off the diagnostic trouble code (DTC) if this type of fault is intermittent.**

The diagnostic trouble code (DTC) can be diagnosed when the HS CAN is active.

Substitute Value

- The control module shuts itself off ("bus-off").

HINT: The control module will remain shut off until the power supply is broken (15, 30, X). When the power supply is connected the control module will make a new attempt to communicate.

Possible Source

- Short-circuit between the control area network (CAN) wiring

- Open-circuit in one of the control area network (CAN) cables
- Internal fault in another control module in the same part of the control area network (CAN)
- Internal fault in the control module.

Fault symptom[s]

- The starter motor turns but the engine does not start.
- The speedometer does not operate.
- Tachometer not working.
- Engine coolant temperature (ECT) gauge does not function.
- Cruise control does not function at all.
- Jerky operation.

CEM-E000: CONTROL MODULE COMMUNICATION (B8444S; 2005-2011)

TROUBLESHOOTING

see **TROUBLESHOOTING**

CEM-E000: CONTROL MODULE COMMUNICATION. FAULTY COMMUNICATION (2003-2004)

DIAGNOSTIC TROUBLE CODE (DTC) INFORMATION CEM-E000

Condition

The control modules transmit and receive information via a standardized serial communication method - CAN (Control Area Network). The diagnostic trouble code (DTC) is stored if the control module registers serious interference on the high speed network (CAN communication blocked).

NOTE: In the event of system communication problems, it is not possible to communicate with the control module. Therefore it will only be possible to read off the diagnostic trouble code (DTC) if the fault is intermittent.

Substitute Value

- The control module shuts itself off ("bus-off").

  HINT: The control module will remain shut off until the power supply is broken (15, 30, X). When the power supply is connected the control module will make a new attempt to communicate.

Possible Source

- Short-circuit between the control area network (CAN) wiring

- Open-circuit in the control area network (CAN) wiring
- Internal fault in the control module
- Internal fault in another control module in the same part of the control area network (CAN).

Fault symptom[s]

- The starter motor turns but the engine does not start
- The speedometer does not operate
- Tachometer not working
- Engine coolant temperature (ECT) gauge does not function
- Cruise control does not work at all
- Jerky operation.

FAULTY COMMUNICATION

see **FAULTY COMMUNICATION**

CEM-E001: CONTROL MODULE COMMUNICATION (2005-2012)

DIAGNOSTIC TROUBLE CODE (DTC) INFORMATION CEM-E001

Condition

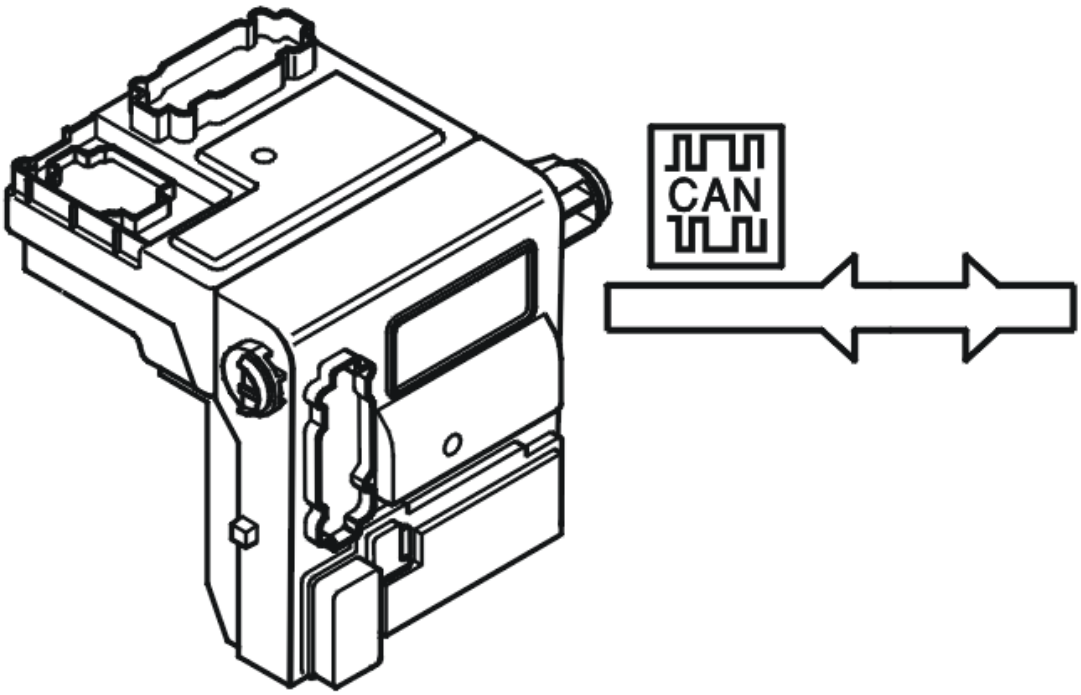

Fig. 66: Identifying Central Electronic Module
Courtesy of VOLVO CARS CORPORATION

The control modules transmit and receive information via a standardized serial communication method - CAN (Control Area Network). The diagnostic trouble code (DTC) is stored if the control module registers serious interference on the low speed network (CAN communication blocked).

Substitute Value

- The control module shuts itself off ("bus-off").

  HINT: The control module will remain shut off until the power supply is broken (15, 30, X). When the power supply is connected the control module will make a new attempt to communicate.

Possible Source

- Short-circuit between the control area network (CAN) wiring
- Open-circuit in one of the control area network (CAN) cables
- Internal fault in the control module
- Internal fault in another control module in the same part of the control area network (CAN).

Fault symptom[s]

- No gauges are working
- The instrument lighting does not operate
- Cannot be controlled with the remote control.

SIGNAL MISSING

see **SIGNAL MISSING**

CEM-E001: CONTROL MODULE COMMUNICATION. FAULTY COMMUNICATION (2003-2004)

DIAGNOSTIC TROUBLE CODE (DTC) INFORMATION CEM-E001

Condition

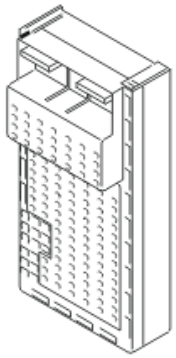

Fig. 67: Central Electronic Module Control module
Courtesy of VOLVO CARS CORPORATION

The control modules transmit and receive information via a standardized serial communication method - CAN (Controller Area Network). The diagnostic trouble code (DTC) is stored if the control module registers serious interference on the low speed network (CAN communication blocked).

NOTE: In the event of system communication problems, it is not possible to communicate with the control module. Therefore it will only be possible to read off the fault if it is intermittent.

Substitute Value

- The control module shuts itself off ("bus-off").

  HINT: The control module will remain shut off until the power supply is broken (15, 30, X). When the power supply is connected the control module will make a new attempt to communicate.

Possible Source

- Short-circuit between Control area network (CAN) wiring
- Open-circuit in the control area network (CAN) wiring
- Internal fault in the control module
- Internal fault in another control module in the same part of the Control area network (CAN).

Fault symptom[s]

- No gauges are working
- The instrument lighting does not operate
- Cannot be controlled with the remote control.

FAULTY COMMUNICATION

see **FAULTY COMMUNICATION**

CEM-XXXX: UNKNOWN DIAGNOSTIC TROUBLE CODE (DTC) FOR THE CURRENT CONTROL MODULE VERSION (2003-2012)

UNKNOWN DIAGNOSTIC TROUBLE CODE (DTC) FOR THE CURRENT CONTROL MODULE VERSION

READING OFF DIAGNOSTIC TROUBLE CODES (DTCS)

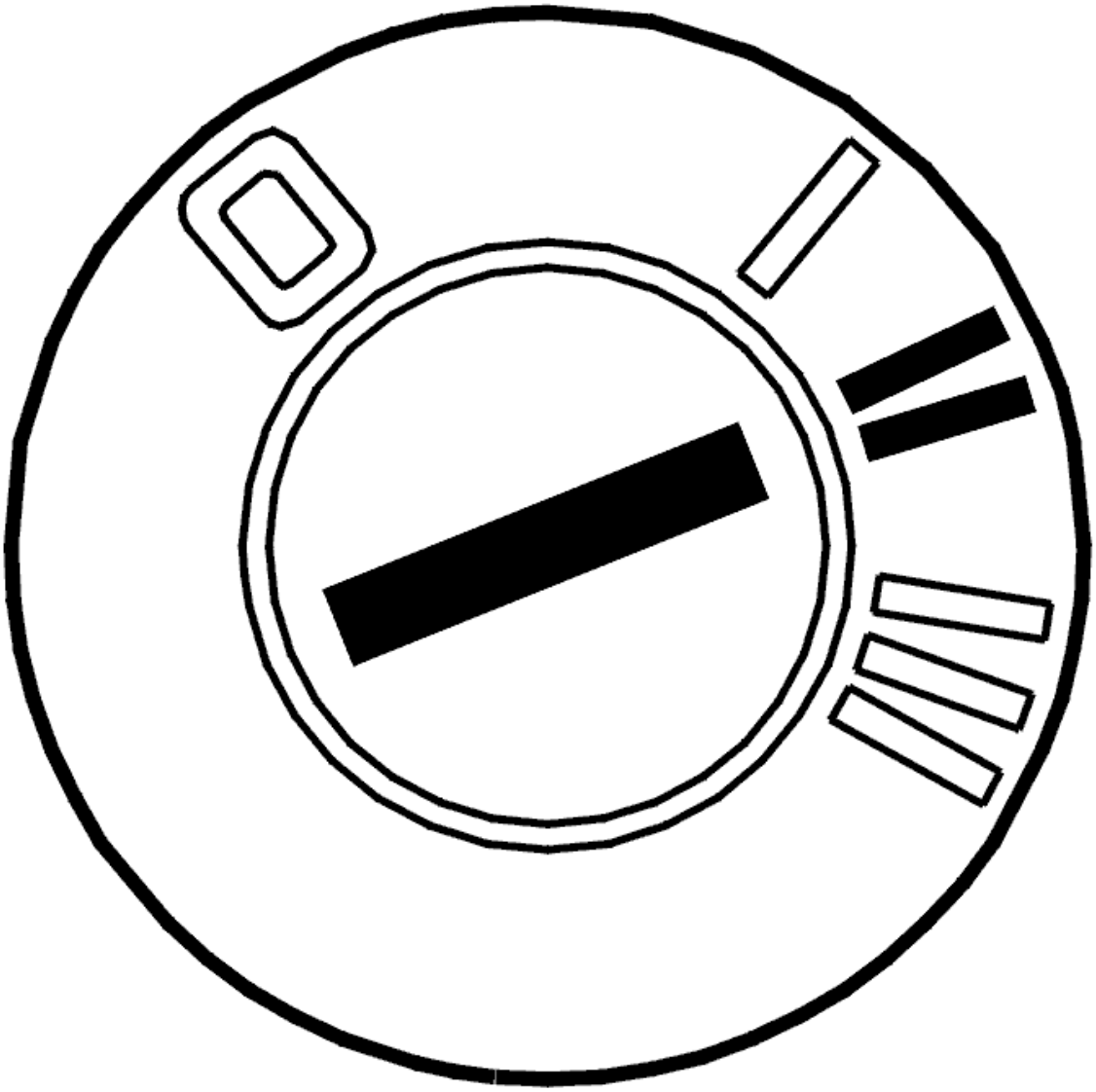

Fig. 68: Identifying Ignition ON
Courtesy of VOLVO CARS CORPORATION

- Ignition on.

  Read off the diagnostic trouble code (DTC) that is stored in the car.

  Make a note of the code. Report the code to VIDA customer support.

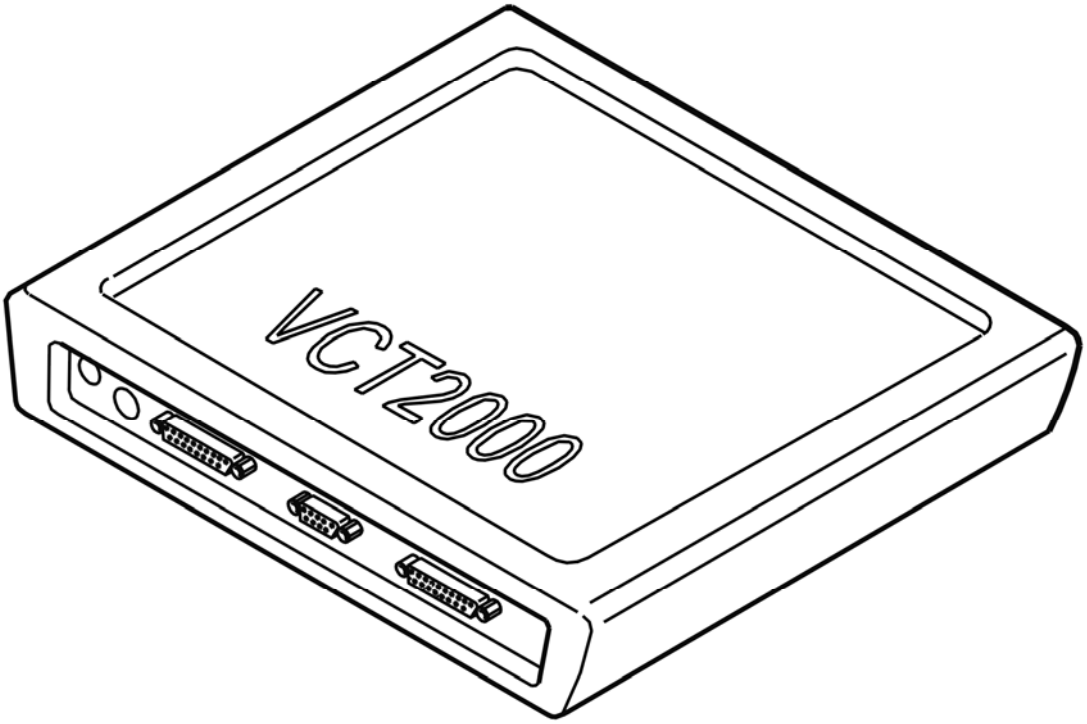

Fig. 69: Identifying VCT2000 Diagnostic Tool Symbol In VIDA
Courtesy of VOLVO CARS CORPORATION

REM-1A01: 30-POWER SUPPLY. SIGNAL TOO LOW. INTERMITTENT FAULT (2003-2004)

DIAGNOSTIC TROUBLE CODE INFORMATION

Condition

If the control unit registers that the power supply to the rear electronic module (REM) is more than three volts below the power supply to the central electronic module (CEM), the diagnostic trouble code is displayed.

Substitute Value

None

Possible Source

- Open circuit or short circuit to ground on 30 supply to rear electronic module (REM)
- Contact resistance, oxidation or loose contact on 30 supply to rear electronic module (REM).

Fault symptom[s]

- Boot lighting is faint
- Rear lights do not work
- Central locking does not work on rear doors and boot lid
- Heated rear window does not work.

SIGNAL TOO LOW. INTERMITTENT FAULT

CHECKING WIRING AND CONNECTORS

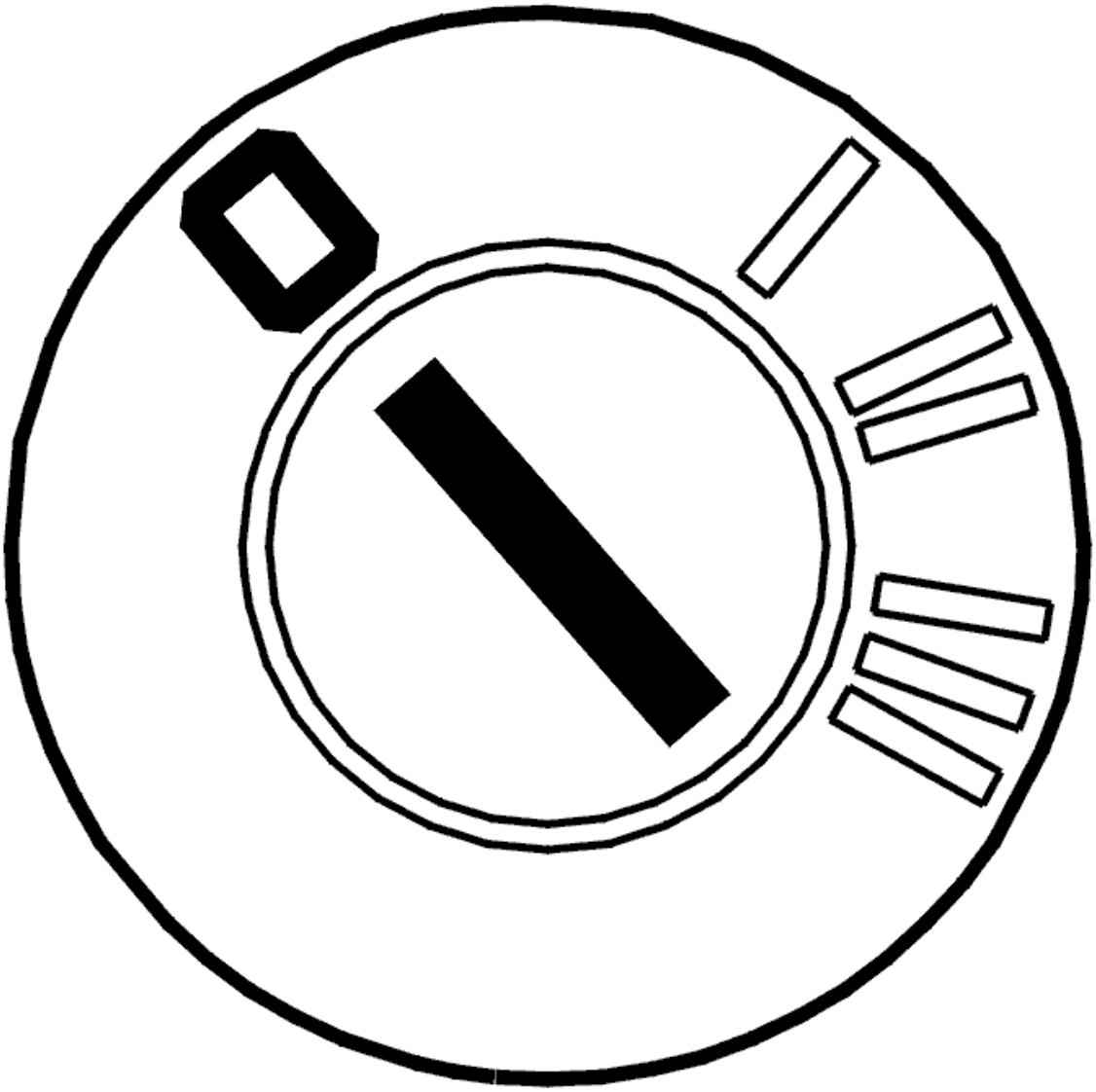

Fig. 70: Identifying Ignition OFF
Courtesy of VOLVO CARS CORPORATION

- Ignition off.

  Check the wiring and connectors between rear control module terminal #B26 (#E6) and the battery.

Check for an intermittent open-circuit. Check for loose connections. Check for contact resistance and oxidation. Check for damage carefully.

Check the wiring between rear control module terminal #B21 (#E1) and the ground terminal. Check for an open-circuit. Check for damage carefully.

Remedy as necessary.

Other information:

- To access the rear control module connector, see **RELAY/FUSE BOX CARGO COMPARTMENT/REAR ELECTRONIC MODULE (REM), REPLACING**
- To connect the breakout box, see **CONNECTING THE BREAKOUT BOX**
- see **CHECKING WIRING AND TERMINALS** .

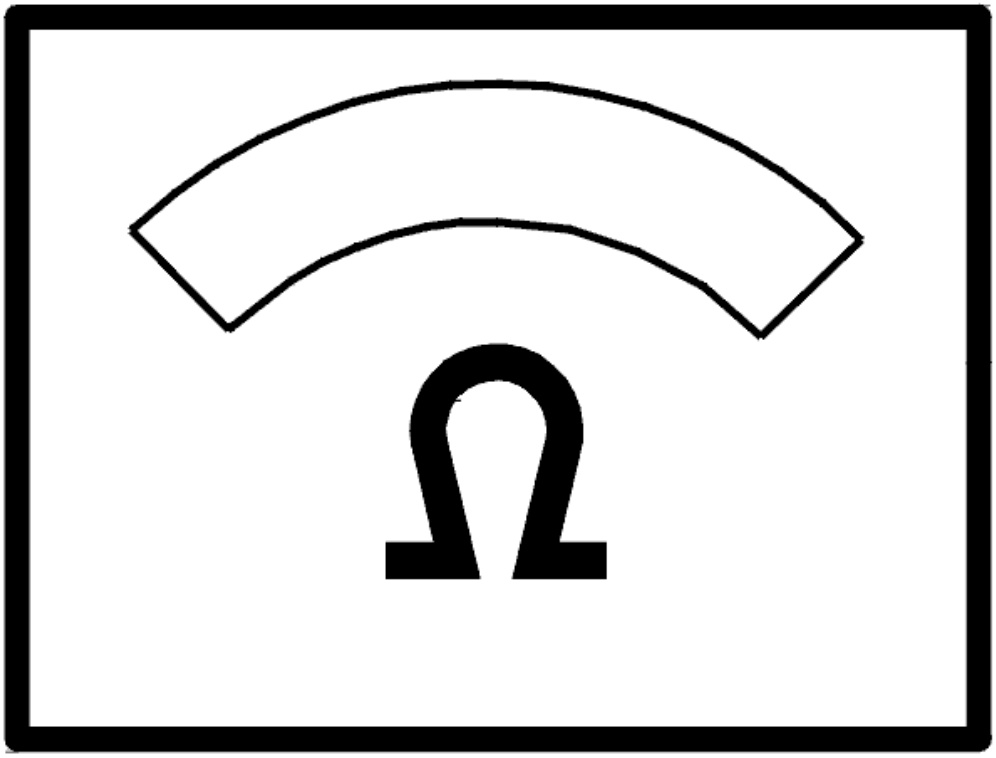

Fig. 71: Identifying Ohms Display
Courtesy of VOLVO CARS CORPORATION

- **Continue**

  Refer to **INFORMATION**

INFORMATION

FAULT-TRACING INFORMATION

If the fault is intermittent, do not verify fault-tracing if the fault does not recur.

It is possible to view the information again, or leave fault-tracing for this diagnostic trouble code (DTC).

REM-1A01: 30-POWER SUPPLY. SIGNAL TOO LOW. PERMANENT FAULT (2003-2004)

DIAGNOSTIC TROUBLE CODE INFORMATION

see **DIAGNOSTIC TROUBLE CODE INFORMATION**

SIGNAL TOO LOW. PERMANENT FAULT

CHECKING THE POWER SUPPLY

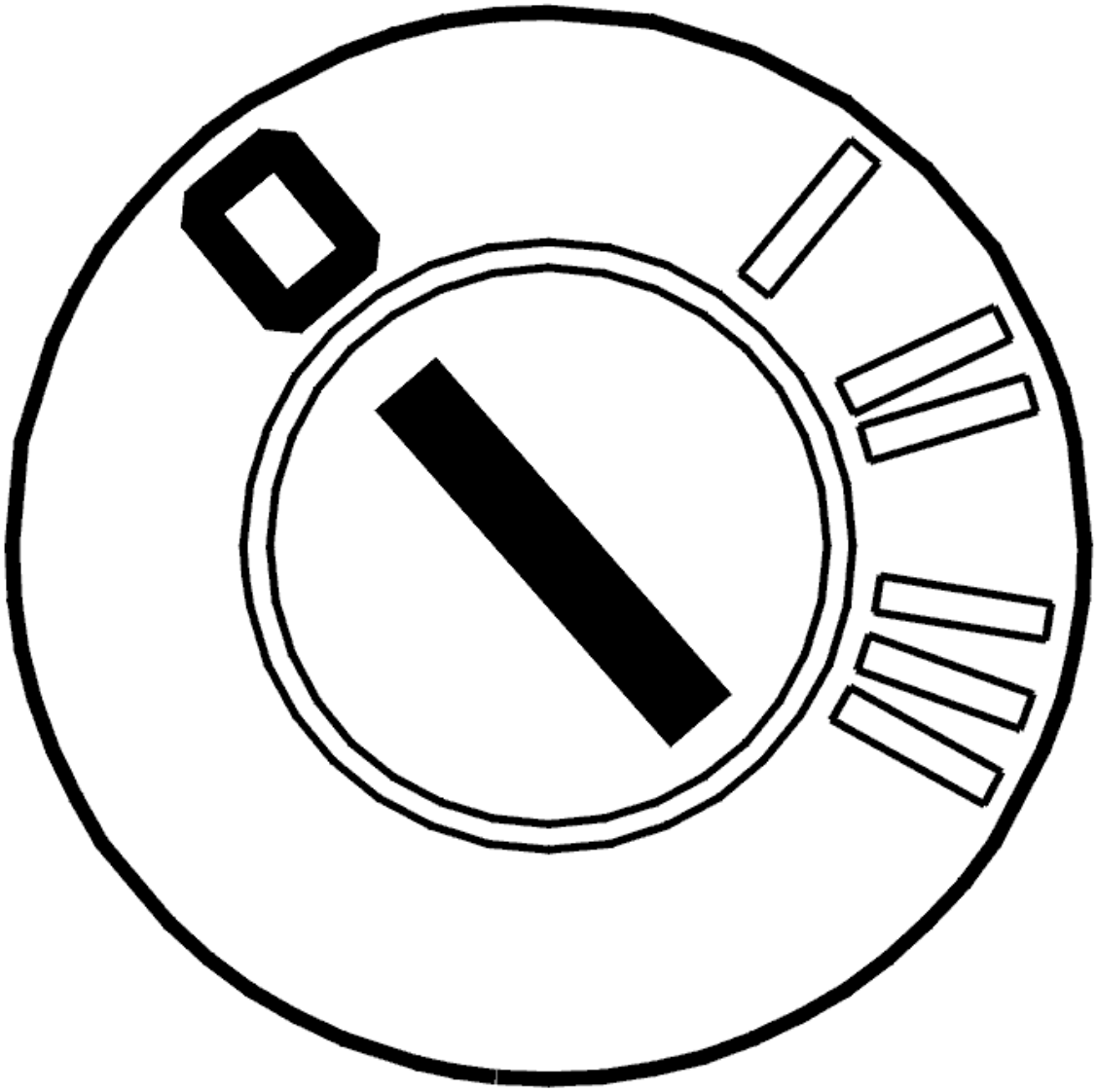

Fig. 72: Identifying Ignition OFF
Courtesy of VOLVO CARS CORPORATION

- Ignition off.

  Check the voltage to ground at the following points:

  Main fuse rear no. 1 (11E7)

  Rear fuse no. 1 (11D1)

  The voltage must be at least battery voltage minus 3 V.

  Check that the fuses are intact.

  Remedy as necessary.

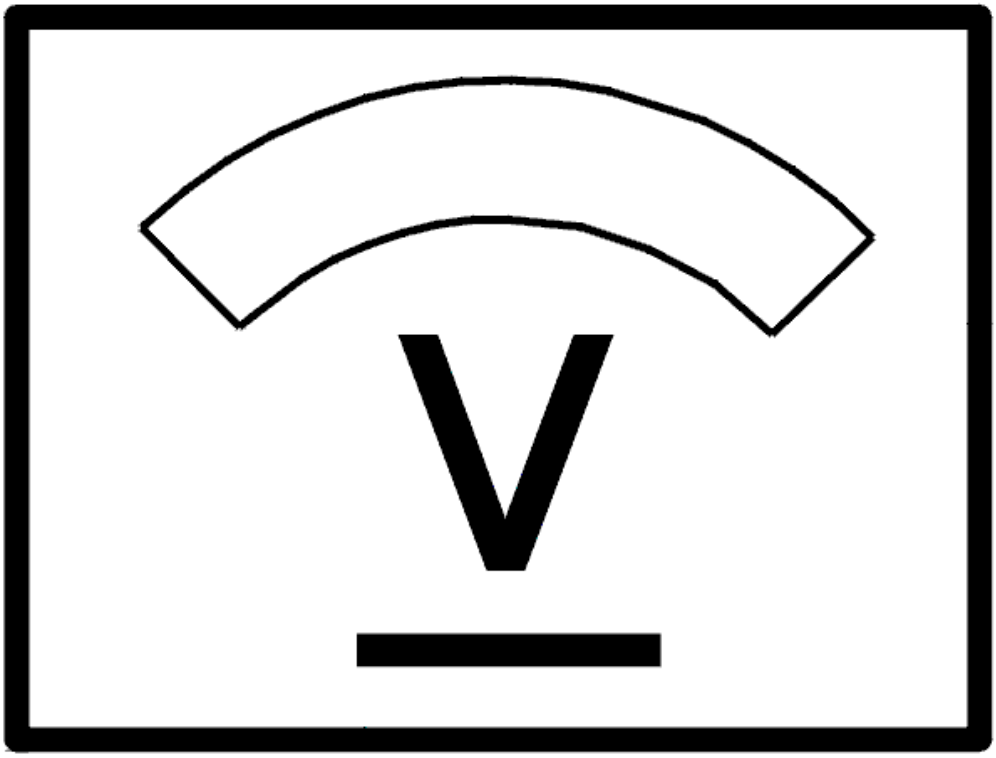

Fig. 73: Identifying Voltage Display
Courtesy of VOLVO CARS CORPORATION

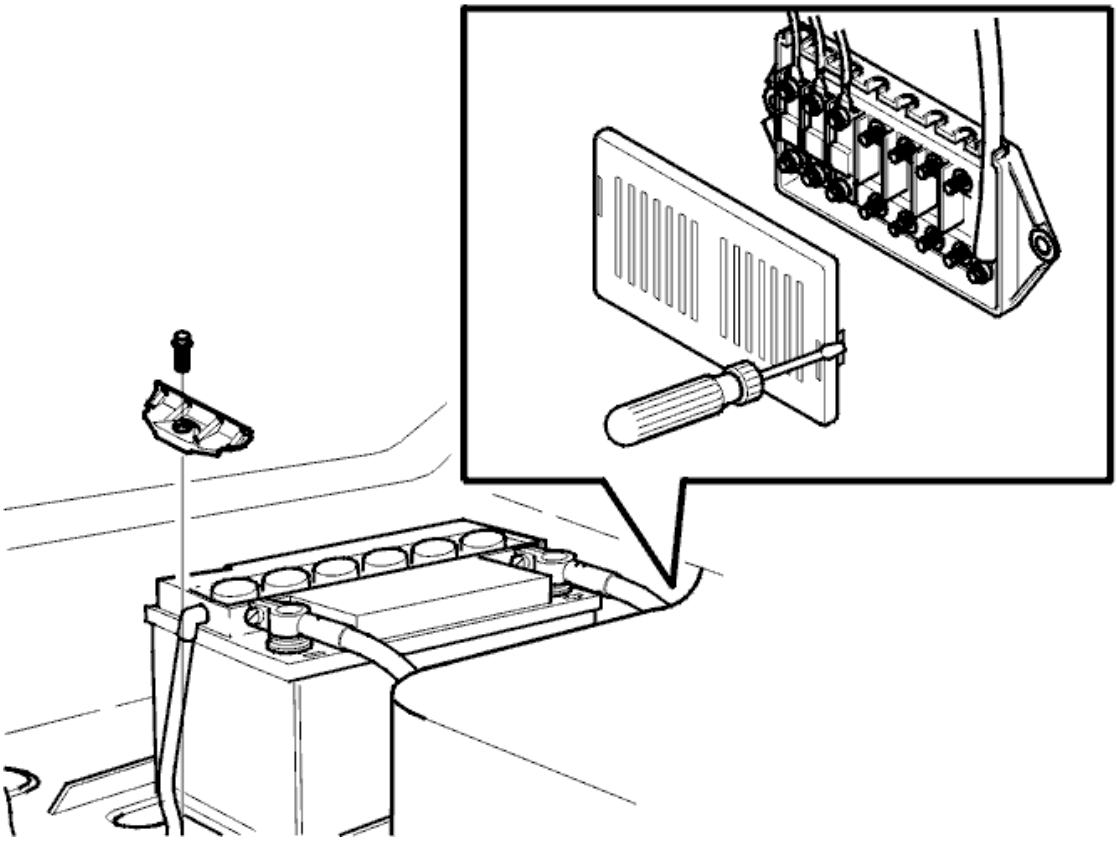

Fig. 74: Identifying Battery And Cargo Compartment Main Fuse
Courtesy of VOLVO CARS CORPORATION

Was the fault found?

- **YES**

  Refer to **VERIFICATION**

- **NO**

  Refer to **CHECKING THE POWER SUPPLY AND GROUND AT THE REAR CONTROL MODULE**

CHECKING THE POWER SUPPLY AND GROUND AT THE REAR CONTROL MODULE

Check the voltage to ground at rear control module terminal #B26 (#E6). The voltage must be at least battery voltage minus 3 V.

Check the control module connector. Check for contact resistance and oxidation. Check for loose connections. Check for damage carefully.

Check the wiring between rear control module terminal #B21 (#E1) and the ground terminal. Check for an open-circuit.

Remedy as necessary.

Other information:

- To access the rear control module connector, see **RELAY/FUSE BOX CARGO COMPARTMENT/REAR ELECTRONIC MODULE (REM), REPLACING**
- To connect the breakout box, see **CONNECTING THE BREAKOUT BOX**
- see **CHECKING WIRING AND TERMINALS** .

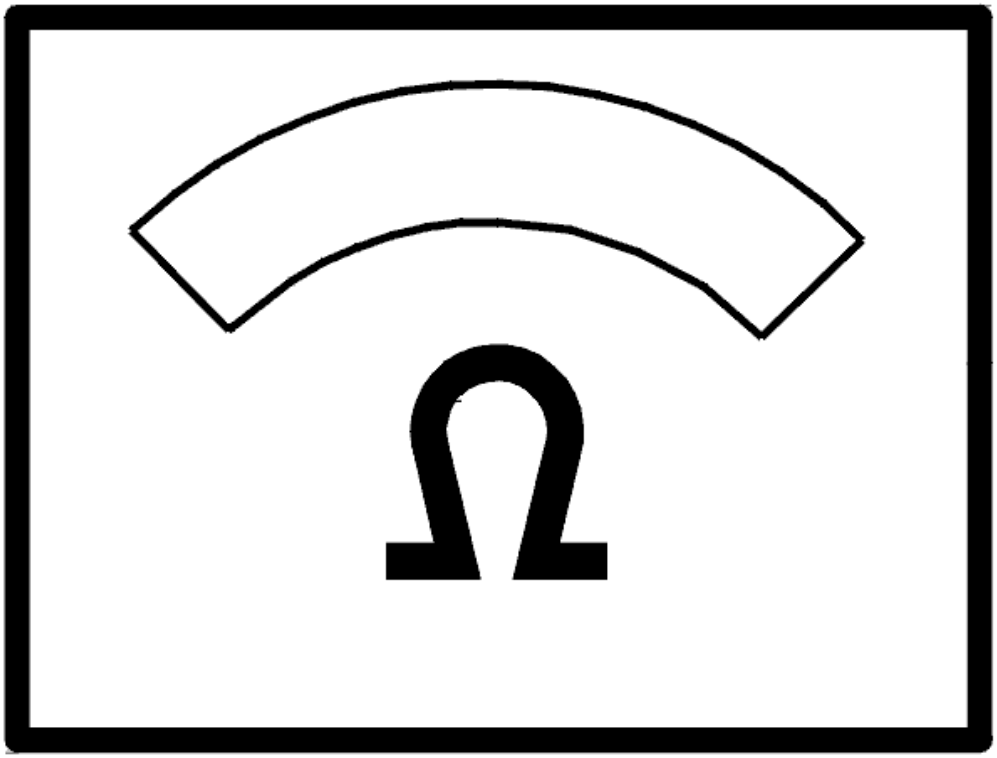

Fig. 75: Identifying Ohms Display
Courtesy of VOLVO CARS CORPORATION

- **Continue**

  Refer to **VERIFICATION**

VERIFICATION

VERIFICATION

HINT: After the repair it is necessary to check that the fault has been rectified.

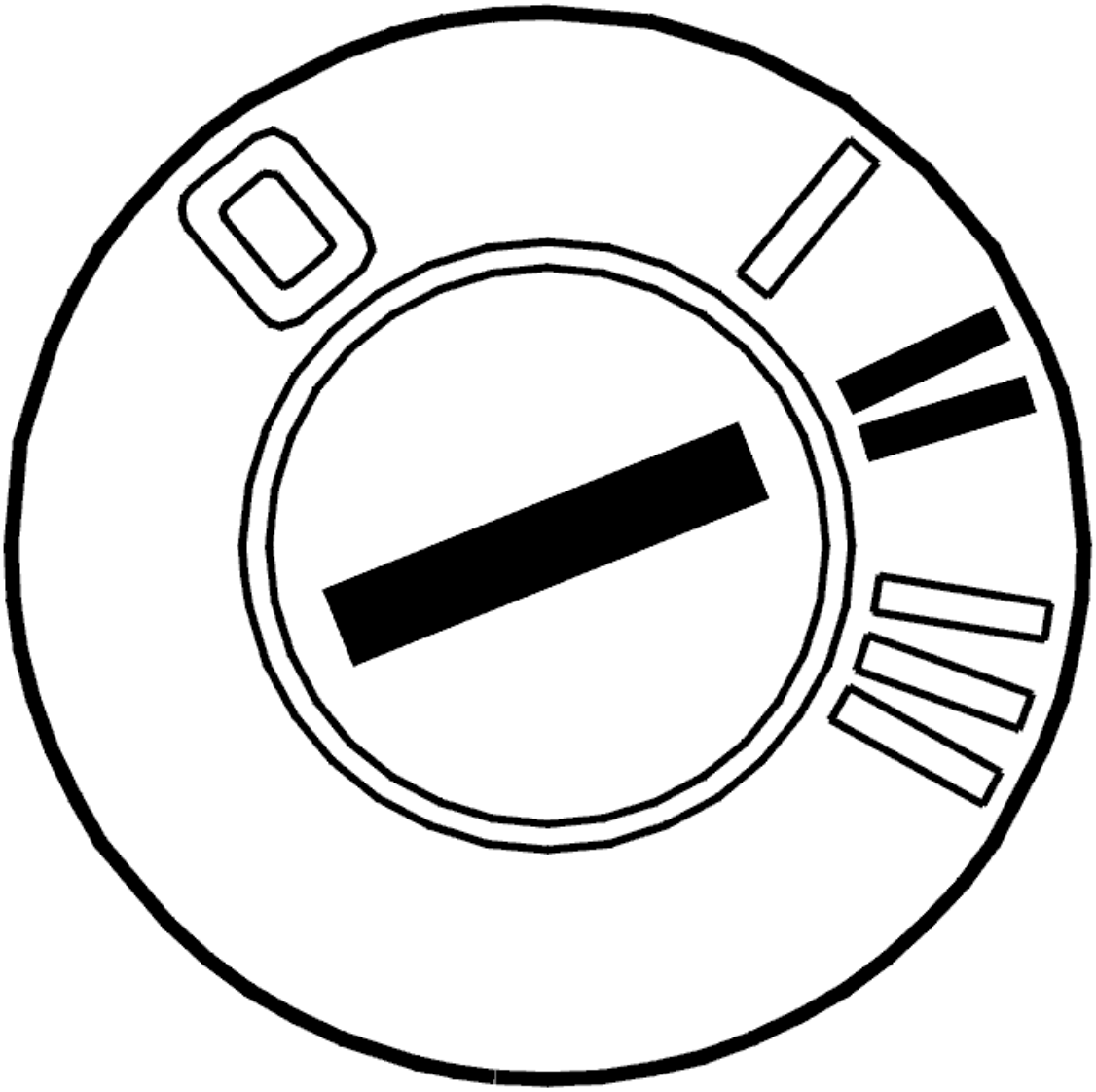

Fig. 76: Identifying Ignition ON
Courtesy of VOLVO CARS CORPORATION

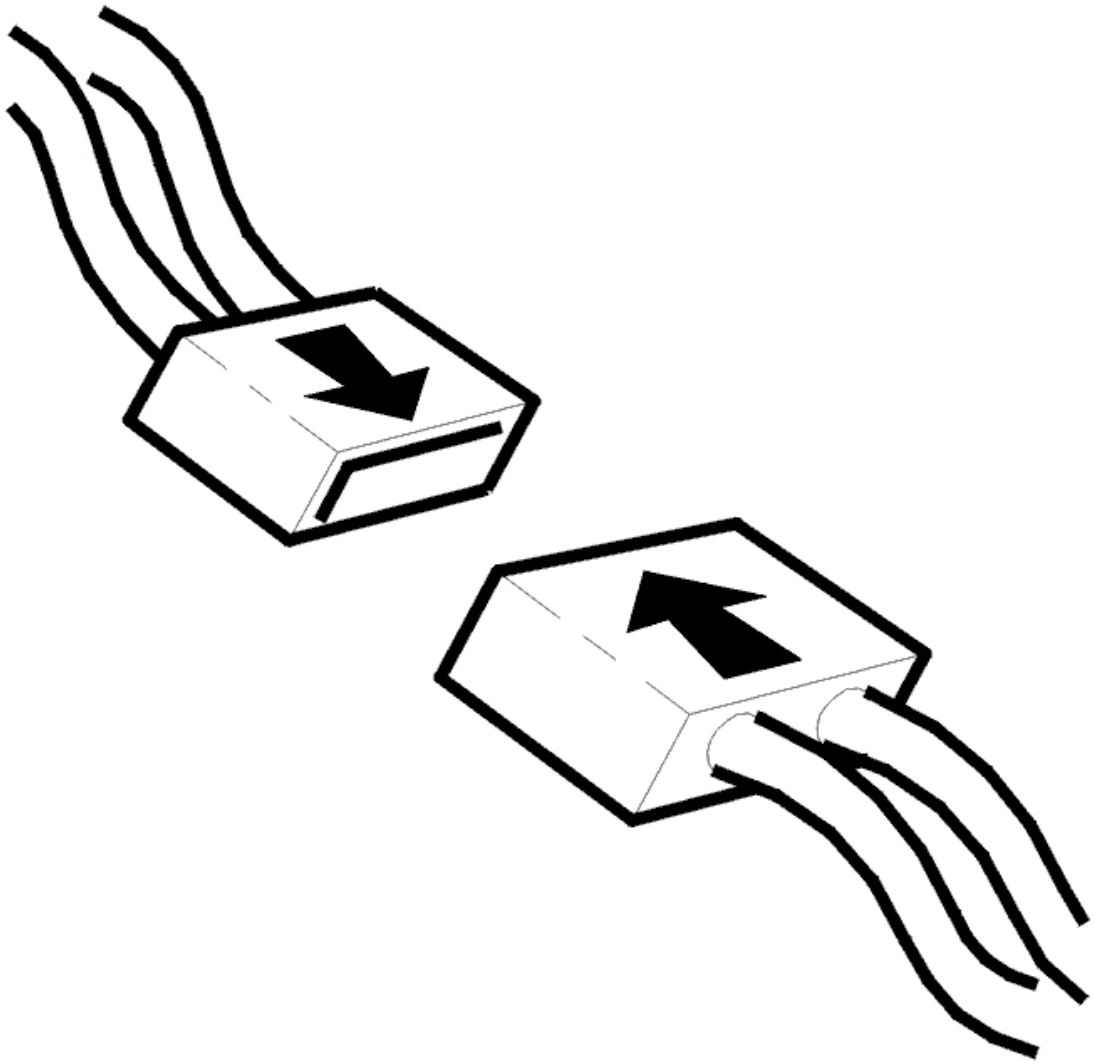

Fig. 77: Identifying Connector(s) Reinstallation
Courtesy of VOLVO CARS CORPORATION

- Ignition off.
- Install the components, connect the connectors, etc.
- Ignition on.

  Read the excitation voltage to rear electronic module (REM).

  Voltage should be at least battery voltage minus three volts.

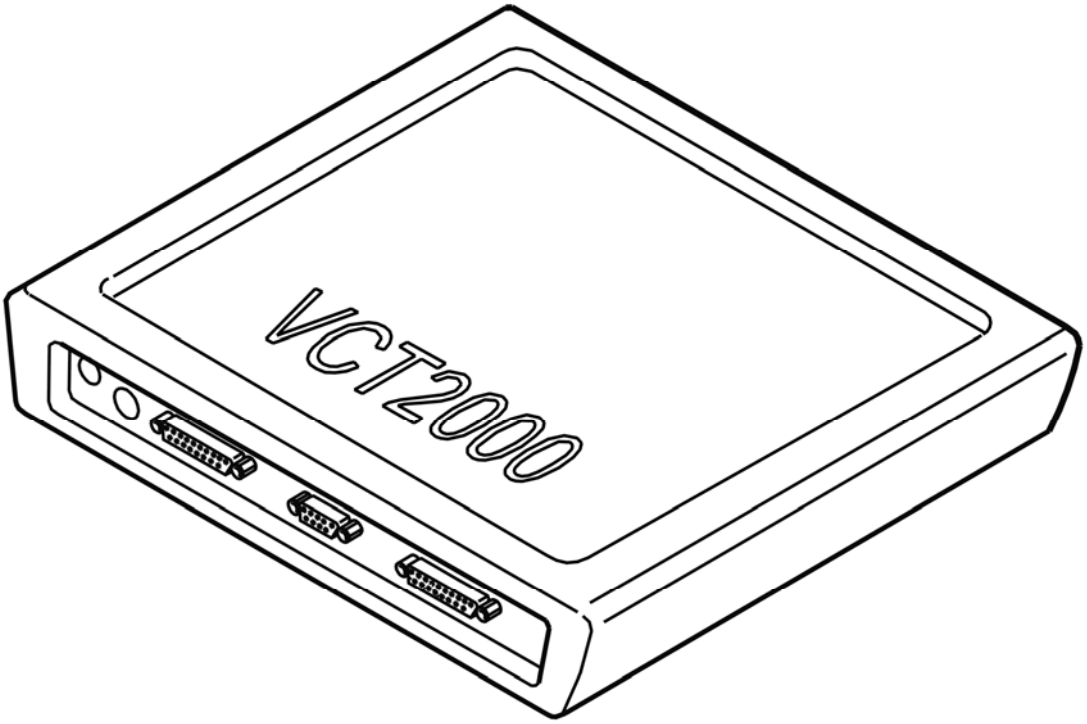

Fig. 78: Identifying VCT2000 Diagnostic Tool Symbol In VIDA
Courtesy of VOLVO CARS CORPORATION

Is voltage OK?

- **YES**

  VERIFIED: Troubleshooting has been completed.

- **NO**

  Refer to **INFORMATION**

INFORMATION

FAULT-TRACING INFORMATION

The fault should have been detected and remedied. As this is not the case fault-tracing has failed.

Exit fault-tracing for this diagnostic trouble code (DTC) or make another attempt.

REM-1A02: RELAY, EXTENDED POWER SUPPLY. SIGNAL TOO HIGH. INTERMITTENT FAULT (2003-2004)

DIAGNOSTIC TROUBLE CODE (DTC) INFORMATION REM-1A02

Condition

The rear electronic module (REM) checks the output signal to the relay coil for relay, extended power supply.

Diagnostic trouble code (DTC) REM-1A02 is stored if the rear electronic module (REM) registers that the output signal to the relay coil is too high.

Diagnostic trouble code (DTC) REM-1A02 can be detected when activating the relay.

Substitute Value

None

Possible Source

- Short-circuit to supply voltage in the relay circuit
- Defective relay.

Fault symptom[s]

- The tailgate wiper does not return to the start position.

SIGNAL TOO HIGH. INTERMITTENT FAULT

REPLACING THE COMPONENT

Replace relay 2/72.

Other information:

- To access the integrated relay / fusebox in the cargo compartment, see **RELAY/FUSE BOX CARGO COMPARTMENT/REAR ELECTRONIC MODULE (REM), REPLACING** .

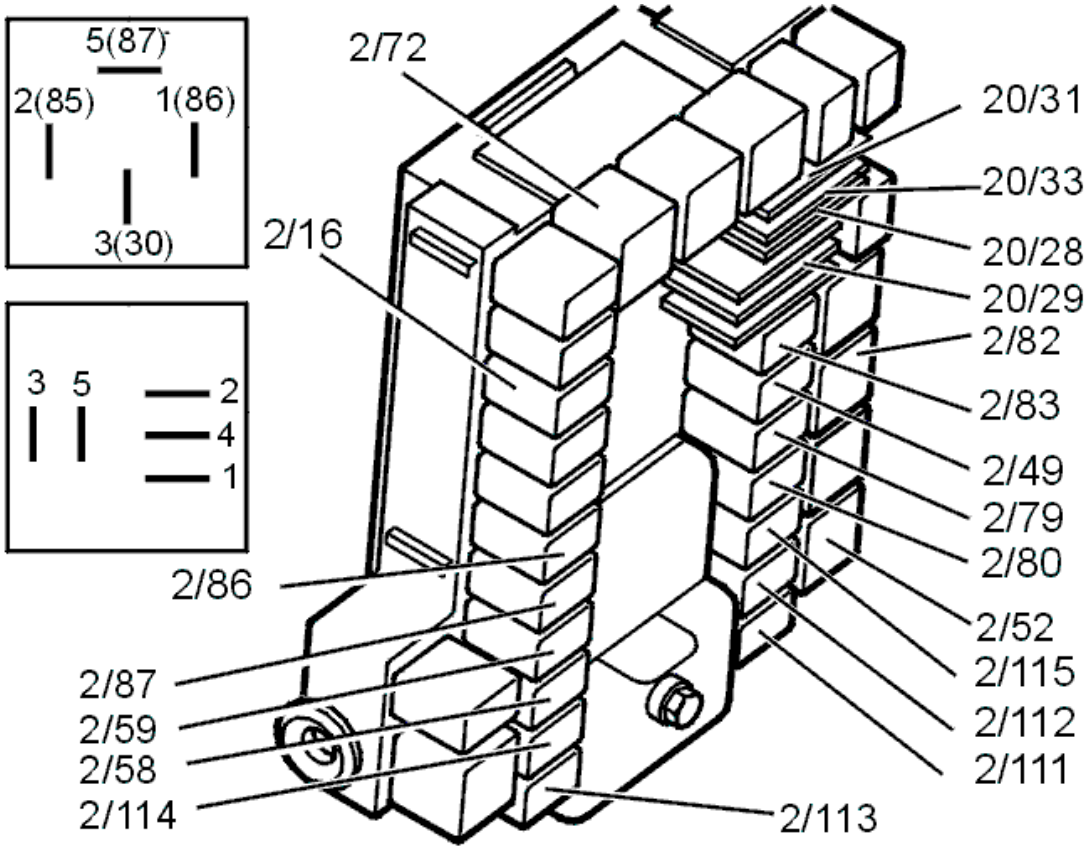

Fig. 79: Identifying Relays And Terminals
Courtesy of VOLVO CARS CORPORATION

- **Continue**

  Refer to **INFORMATION**

INFORMATION

FAULT-TRACING INFORMATION

If the fault is intermittent, do not verify fault-tracing if the fault does not recur.

It is possible to view the information again, or leave fault-tracing for this diagnostic trouble code (DTC).

REM-1A02: RELAY, EXTENDED POWER SUPPLY. SIGNAL TOO HIGH. PERMANENT FAULT (2003-2004)

DIAGNOSTIC TROUBLE CODE (DTC) INFORMATION REM-1A02

see **DIAGNOSTIC TROUBLE CODE (DTC) INFORMATION REM-1A02**

SIGNAL TOO HIGH. PERMANENT FAULT

REPLACING THE COMPONENT

Replace relay 2/72.

Other information:

- To access the integrated relay / fusebox in the cargo compartment, see **RELAY/FUSE BOX CARGO COMPARTMENT/REAR ELECTRONIC MODULE (REM), REPLACING** .

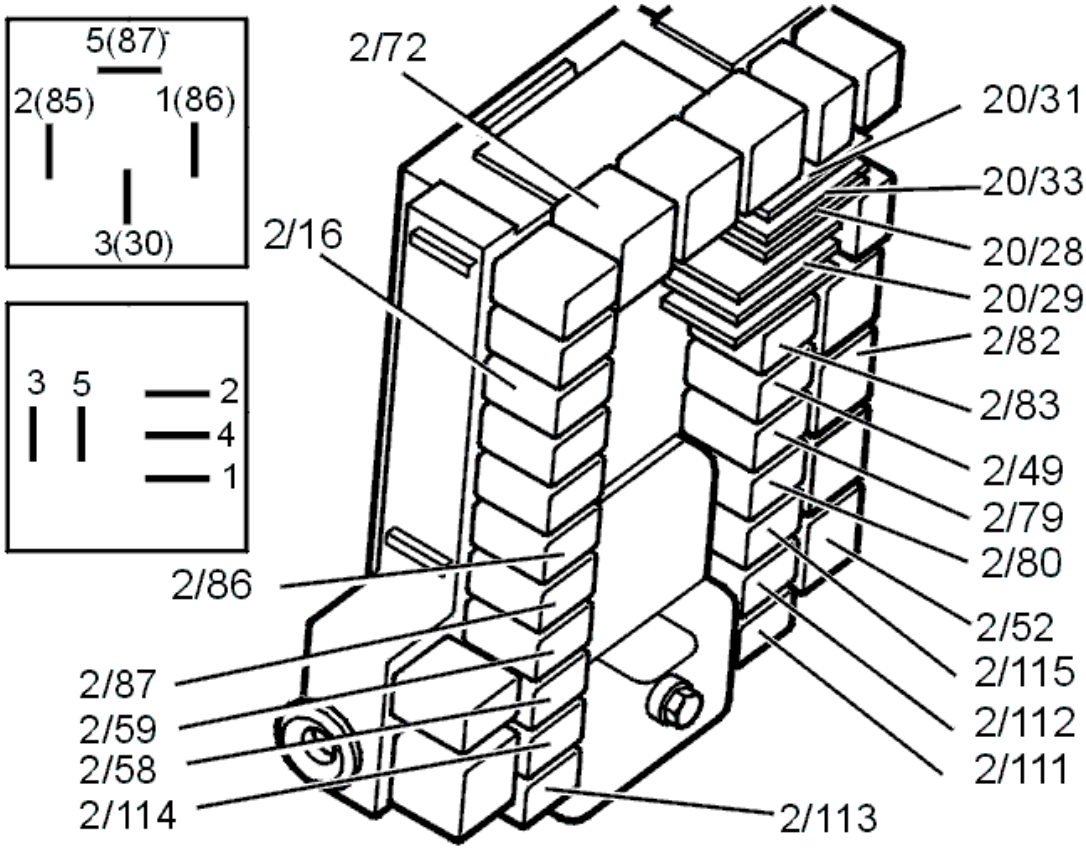

Fig. 80: Identifying Relays And Terminals
Courtesy of VOLVO CARS CORPORATION

- **Continue**

  Refer to **VERIFICATION**

VERIFICATION

VERIFICATION

HINT: After the repair it is necessary to check that the fault has been rectified.

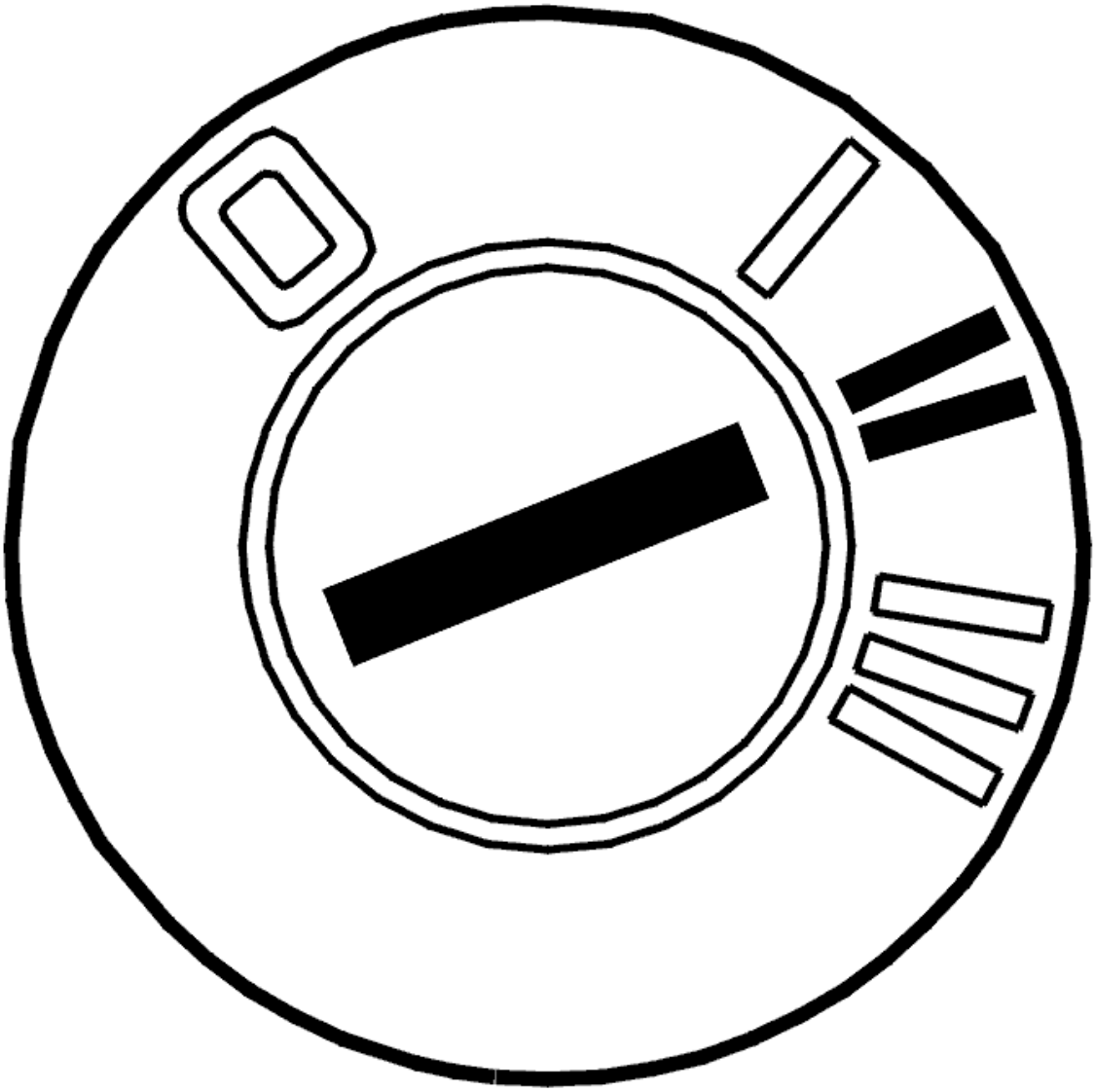

Fig. 81: Identifying Ignition ON
Courtesy of VOLVO CARS CORPORATION

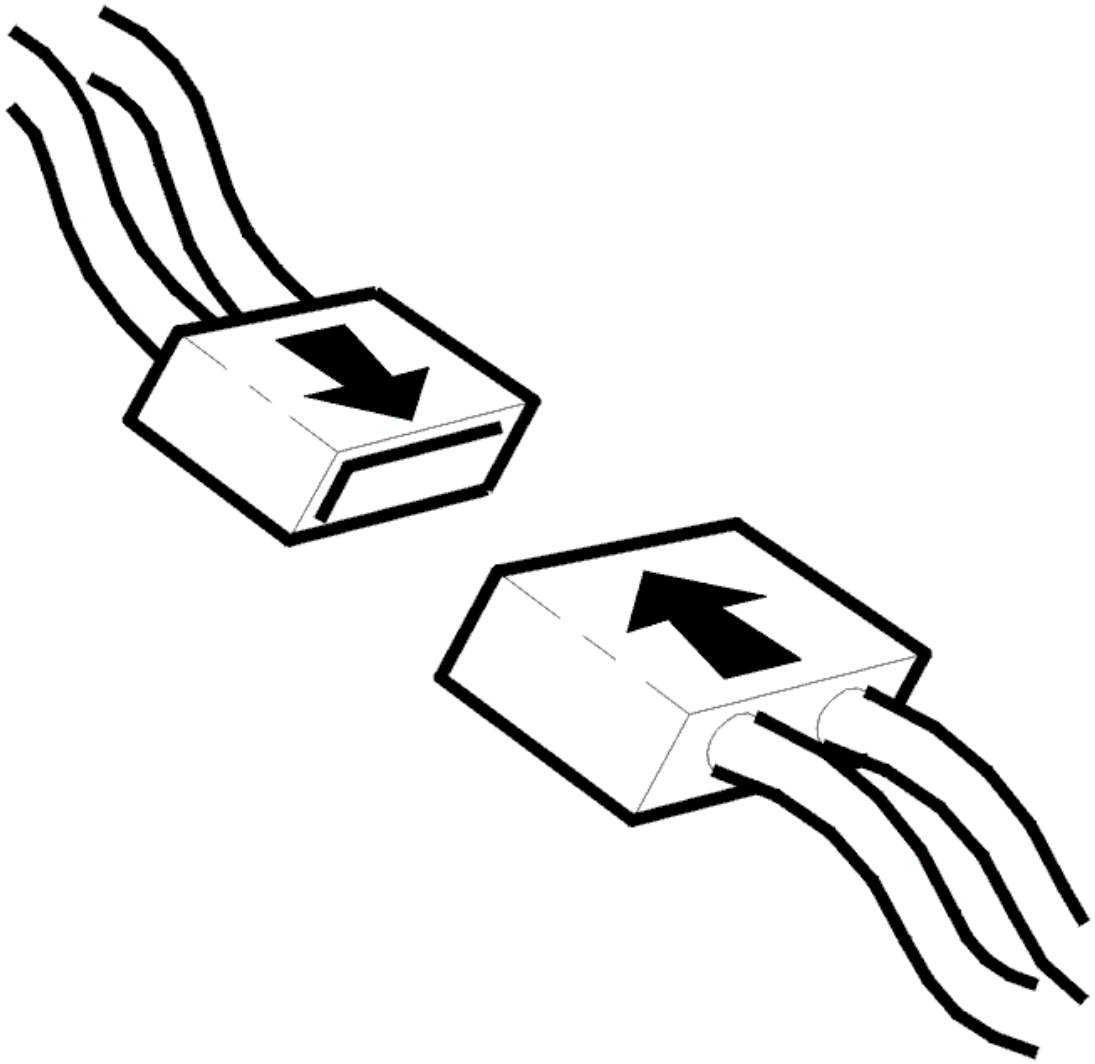

Fig. 82: Identifying Connector(s) Reinstallation
Courtesy of VOLVO CARS CORPORATION

- Ignition off.
- Install the components, connect the connectors, etc.
- Ignition on.

  Read the status of the diagnostic trouble code.

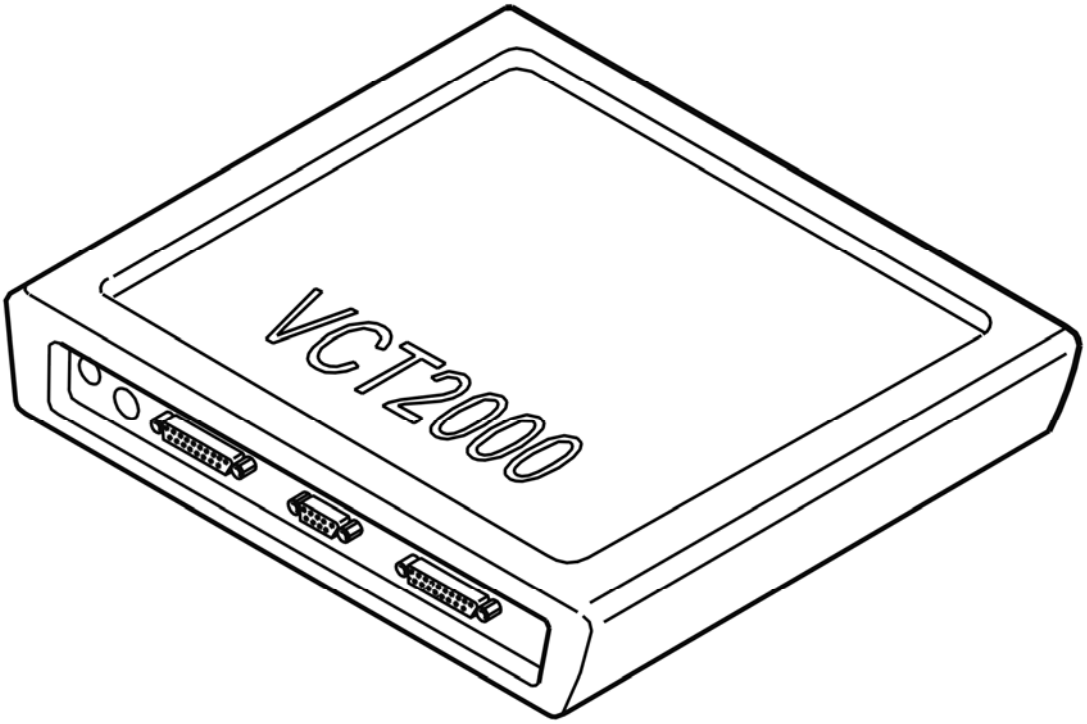

Fig. 83: Identifying VCT2000 Diagnostic Tool Symbol In VIDA
Courtesy of VOLVO CARS CORPORATION

Is the status intermittent?

- **YES**

  VERIFIED: Troubleshooting has been completed.

- **NO**

  Refer to **INFORMATION**

INFORMATION

FAULT-TRACING INFORMATION

The fault should have been detected and remedied. As this is not the case fault-tracing has failed.

Exit fault-tracing for this diagnostic trouble code (DTC) or make another attempt.

REM-1A03: RELAY, EXTENDED POWER SUPPLY. SIGNAL TOO LOW. INTERMITTENT FAULT (2003-2004)

DIAGNOSTIC TROUBLE CODE (DTC) INFORMATION REM-1A03

Condition

The rear electronic module (REM) checks the output signal to the relay coil for relay, extended power supply.

Diagnostic trouble code (DTC) REM-1A03 is stored if the rear electronic module (REM) registers that the output signal to the relay coil is too low or missing.

Diagnostic trouble code (DTC) REM-1A03 can be detected when the relay driver is not activated.

Substitute Value

None

Possible Source

- Relay missing
- Defective relay
- Contact resistance in the relay base.

Fault symptom[s]

- The tailgate wiper does not return to the start position.

SIGNAL TOO LOW. INTERMITTENT FAULT

REPLACING THE COMPONENT

Remove relay 2/72 and check the relay base switches for contact resistance and oxidation according to **CHECKING WIRING AND TERMINALS. INTERMITTENT FAULTS** .

Install the relay.

Other information:

- To access the integrated relay / fusebox in the cargo compartment, see **RELAY/FUSE BOX CARGO COMPARTMENT/REAR ELECTRONIC MODULE (REM), REPLACING** .

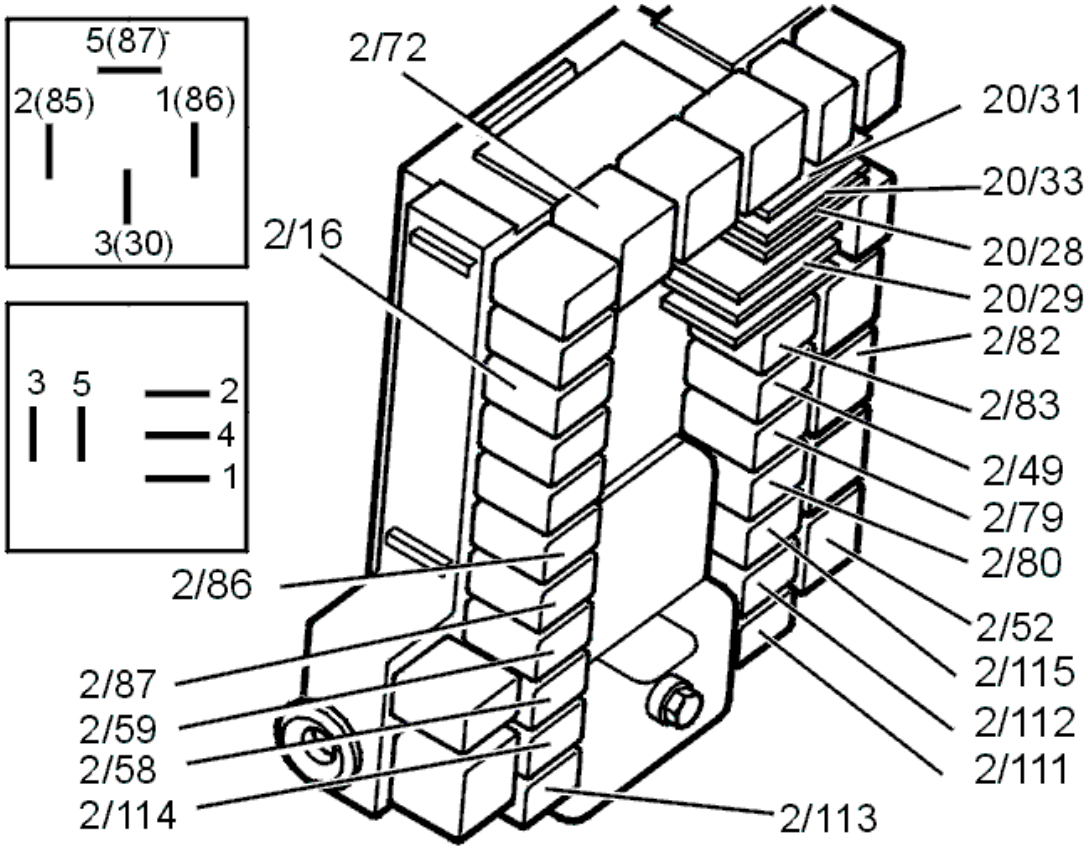

Fig. 84: Identifying Relays And Terminals
Courtesy of VOLVO CARS CORPORATION

- **Continue**

  Refer to **INFORMATION**

INFORMATION

FAULT-TRACING INFORMATION

If the fault is intermittent, do not verify fault-tracing if the fault does not recur.

It is possible to view the information again, or leave fault-tracing for this diagnostic trouble code (DTC).

REM-1A03: RELAY, EXTENDED POWER SUPPLY. SIGNAL TOO LOW. PERMANENT FAULT (2003-2004)

DIAGNOSTIC TROUBLE CODE (DTC) INFORMATION REM-1A03

see **DIAGNOSTIC TROUBLE CODE (DTC) INFORMATION REM-1A03**

SIGNAL TOO LOW. PERMANENT FAULT

REPLACING THE COMPONENT

Remove relay 2/72 and check the relay base switches for contact resistance and oxidation according to **CHECKING WIRING AND TERMINALS. PERMANENT FAULT** .

Install a new relay.

Other information:

- To access the integrated relay / fusebox in the cargo compartment, see **RELAY/FUSE BOX CARGO COMPARTMENT/REAR ELECTRONIC MODULE (REM), REPLACING** .

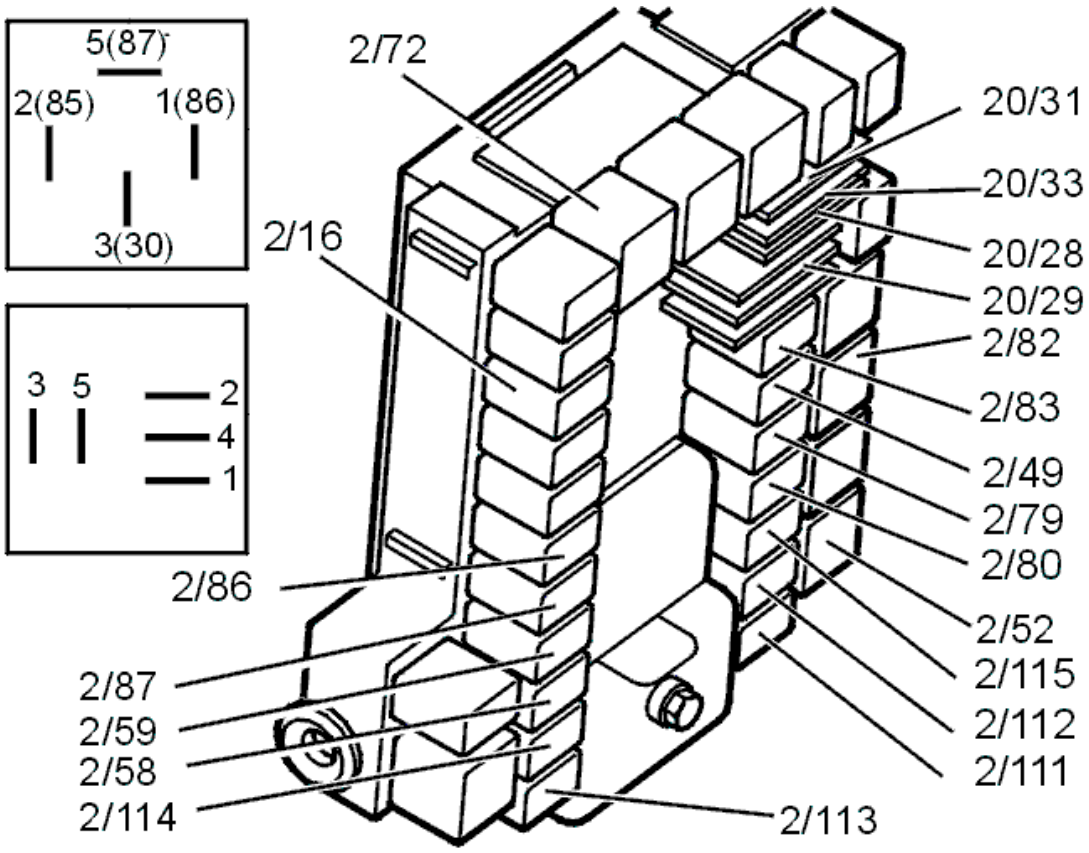

Fig. 85: Identifying Relays And Terminals
Courtesy of VOLVO CARS CORPORATION

- **Continue**

  Refer to **VERIFICATION**

VERIFICATION

VERIFICATION

HINT: After the repair it is necessary to check that the fault has been rectified.

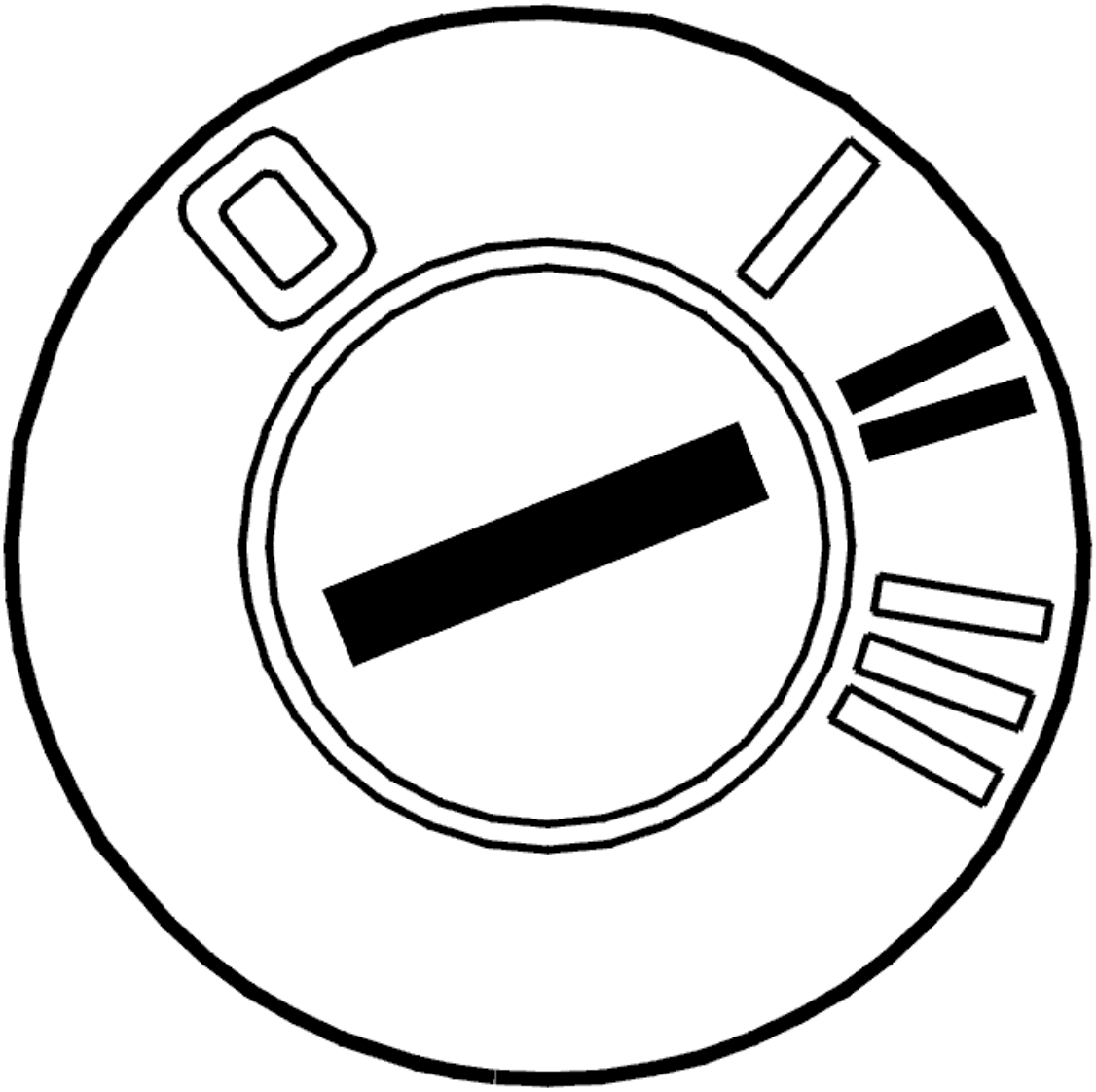

Fig. 86: Identifying Ignition ON
Courtesy of VOLVO CARS CORPORATION

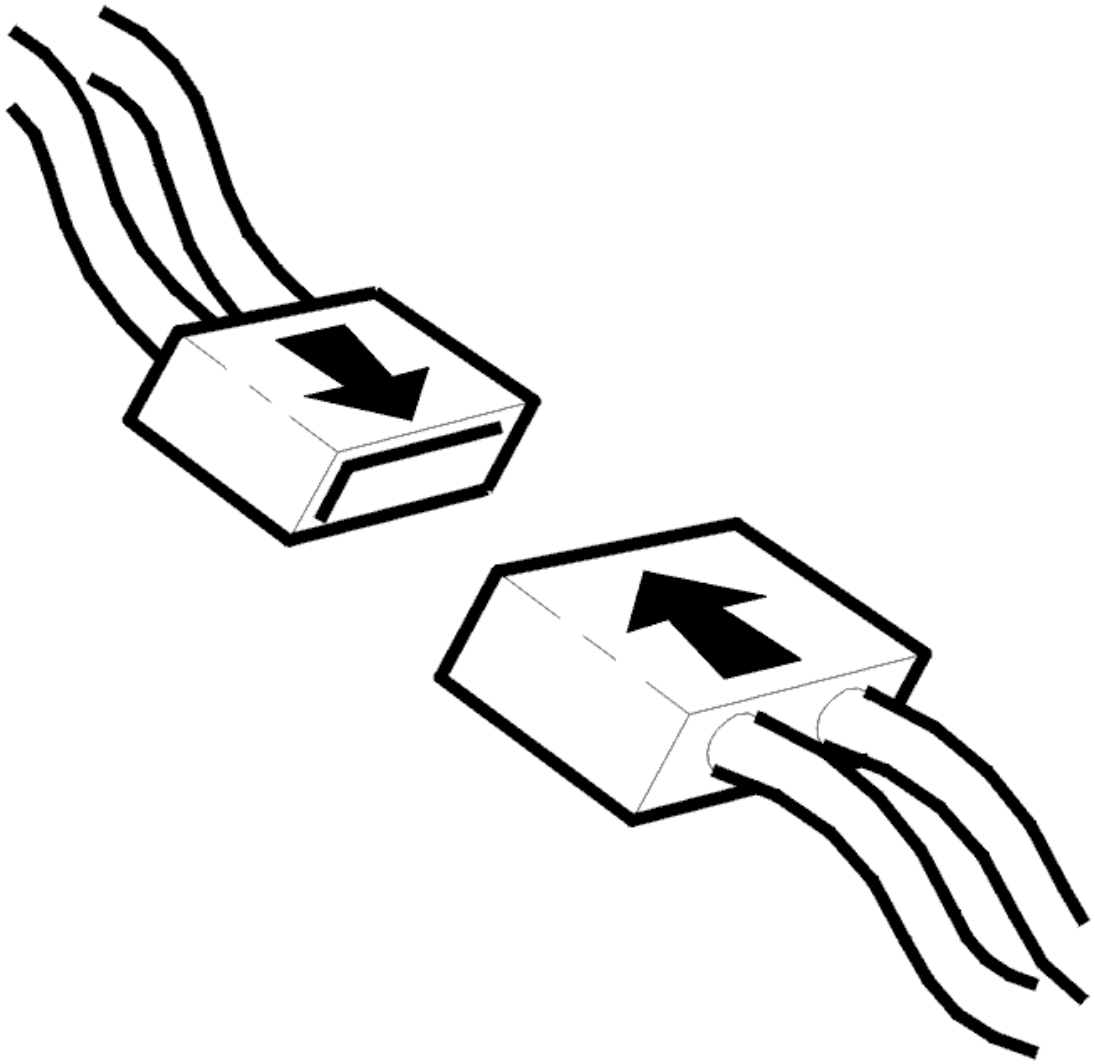

Fig. 87: Identifying Connector(s) Reinstallation
Courtesy of VOLVO CARS CORPORATION

- Ignition off.
- Install the components, connect the connectors, etc.
- Ignition on.

  Read the status of the diagnostic trouble code.

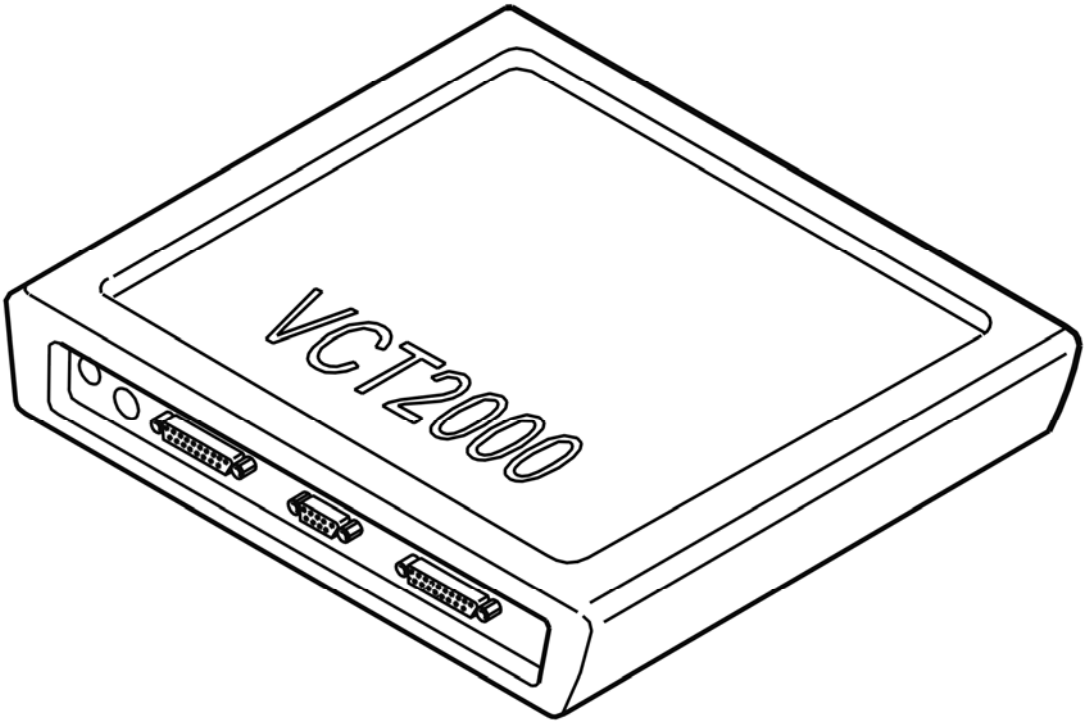

Fig. 88: Identifying VCT2000 Diagnostic Tool Symbol In VIDA
Courtesy of VOLVO CARS CORPORATION

Is the status intermittent?

- **YES**

  VERIFIED: Troubleshooting has been completed.

- **NO**

  Refer to **INFORMATION**

INFORMATION

FAULT-TRACING INFORMATION

The fault should have been detected and remedied. As this is not the case fault-tracing has failed.

Exit fault-tracing for this diagnostic trouble code (DTC) or make another attempt.

REM-1A04: RELAY, 15I POWER SUPPLY. SIGNAL TOO HIGH (2003-2004)

DIAGNOSTIC TROUBLE CODE (DTC) INFORMATION

Condition

The diagnostic trouble code (DTC) is stored if the control module registers a high signal from the status flag when activating the relay guide for the 15I supply relay.

Diagnostic trouble code (DTC) REM-1A04 can be detected at ignition on.

Substitute Value

- None.

Possible Source

- The relay guide for relay 2/52 is short-circuited to battery voltage.

Fault symptom[s]

- Anti-spin warning lamp lit.

SIGNAL TOO HIGH

CHECKING COMPONENTS AND WIRING

Check the cable between rear electronic module terminal #D2(terminal #B02) and "15I supply" relay 2/52 terminal #2. Check for a short-circuit to supply voltage.

Check the relay terminal, in particular relay guide 2/52 terminal #2, for a short-circuit to supply voltage.

Remedy as necessary.

Try a new relay if no faults are found.

Other information:

- To connect the breakout box, see **CONNECTING THE BREAKOUT BOX**
- For information about signals, see **SIGNAL SPECIFICATION**
- When the relay is installed and activated, the voltage at the relay guide must be 0 V
- see **CHECKING WIRING AND TERMINALS** .

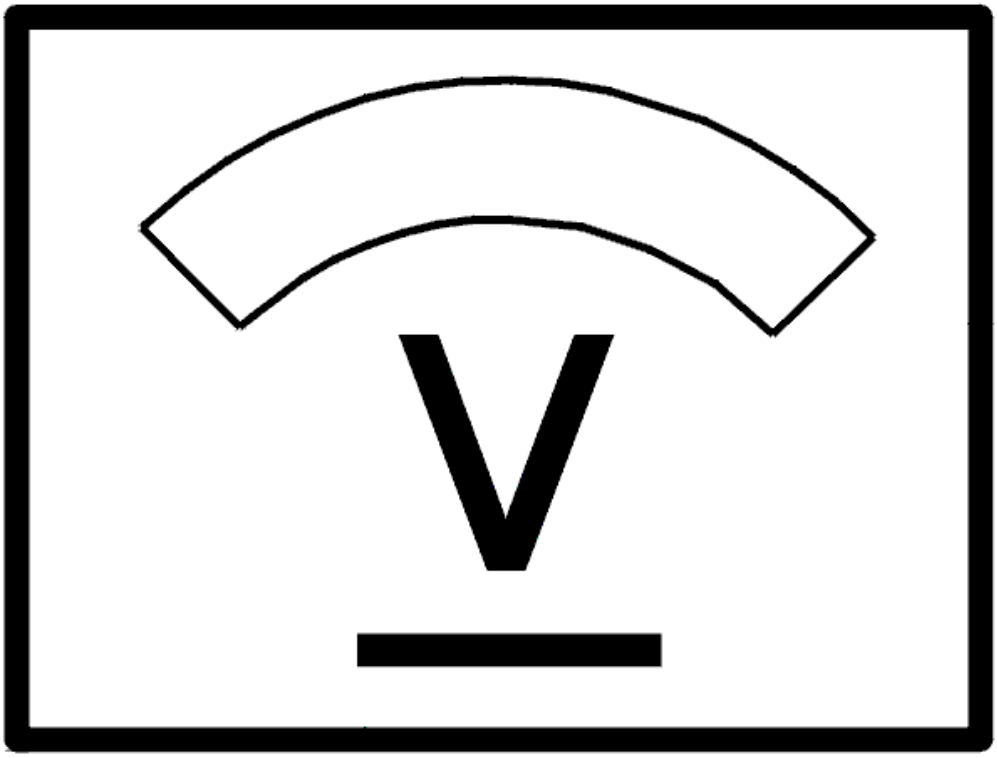

Fig. 89: Identifying Voltage Display
Courtesy of VOLVO CARS CORPORATION

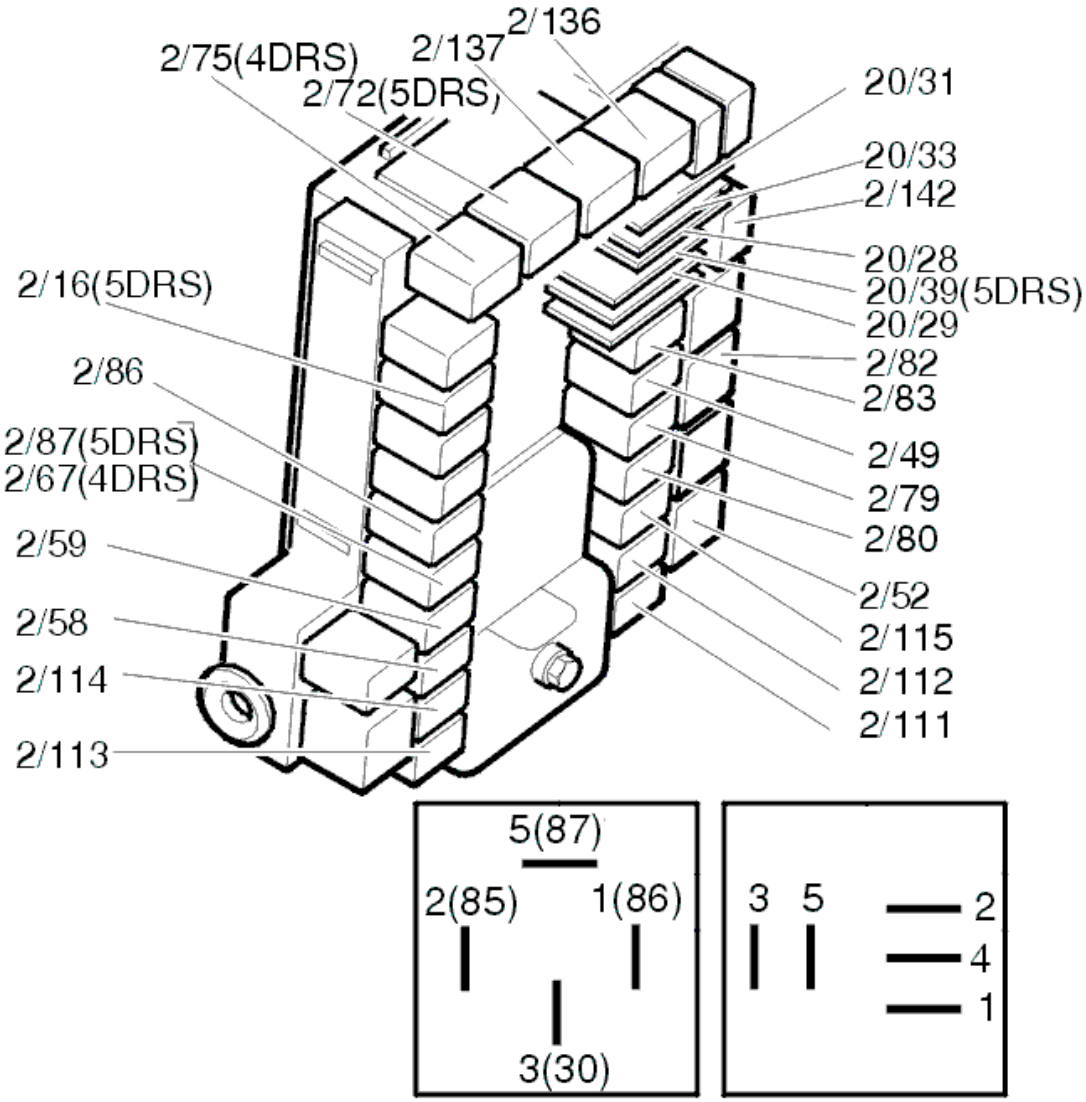

Fig. 90: Identifying Relays
Courtesy of VOLVO CARS CORPORATION

- **Continue**

  Refer to **VERIFICATION**

VERIFICATION

VERIFICATION

HINT: After carrying out the repair, check that the fault has been remedied.

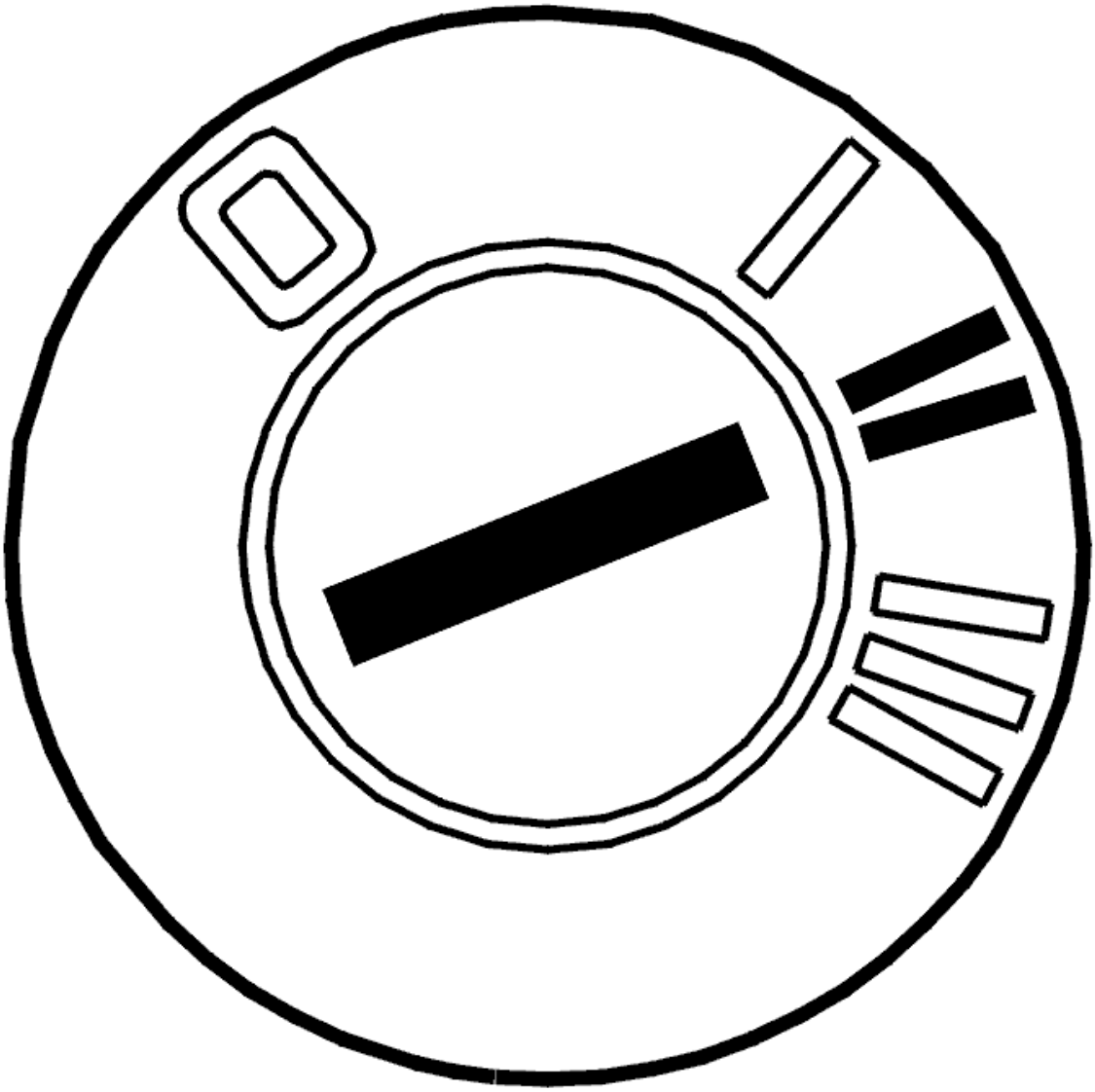

Fig. 91: Identifying Ignition ON
Courtesy of VOLVO CARS CORPORATION

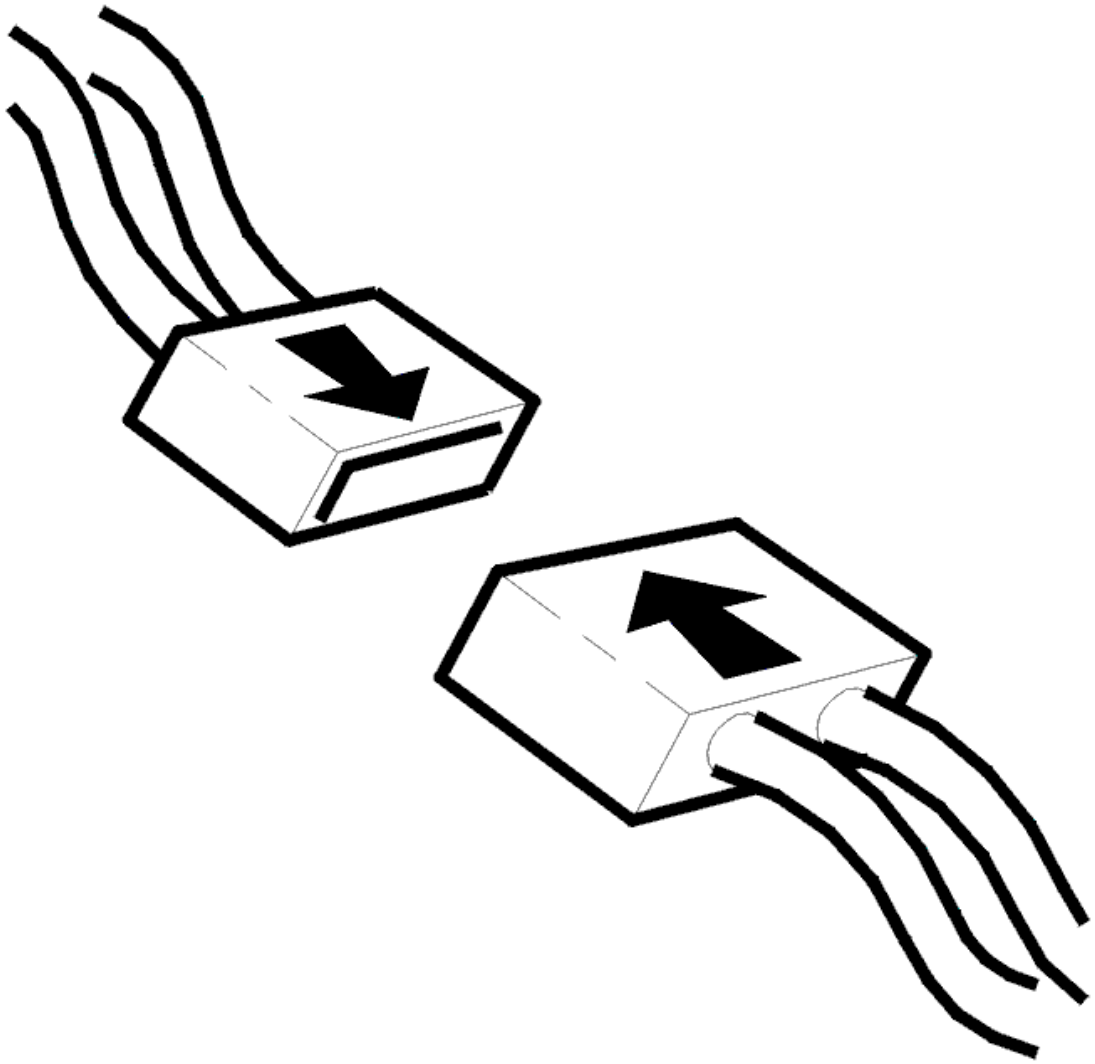

Fig. 92: Identifying Connector(s) Reinstallation
Courtesy of VOLVO CARS CORPORATION

- Ignition off
- Reinstall the connectors, components etc.
- Ignition on.

  Activate and deactivate the relay.

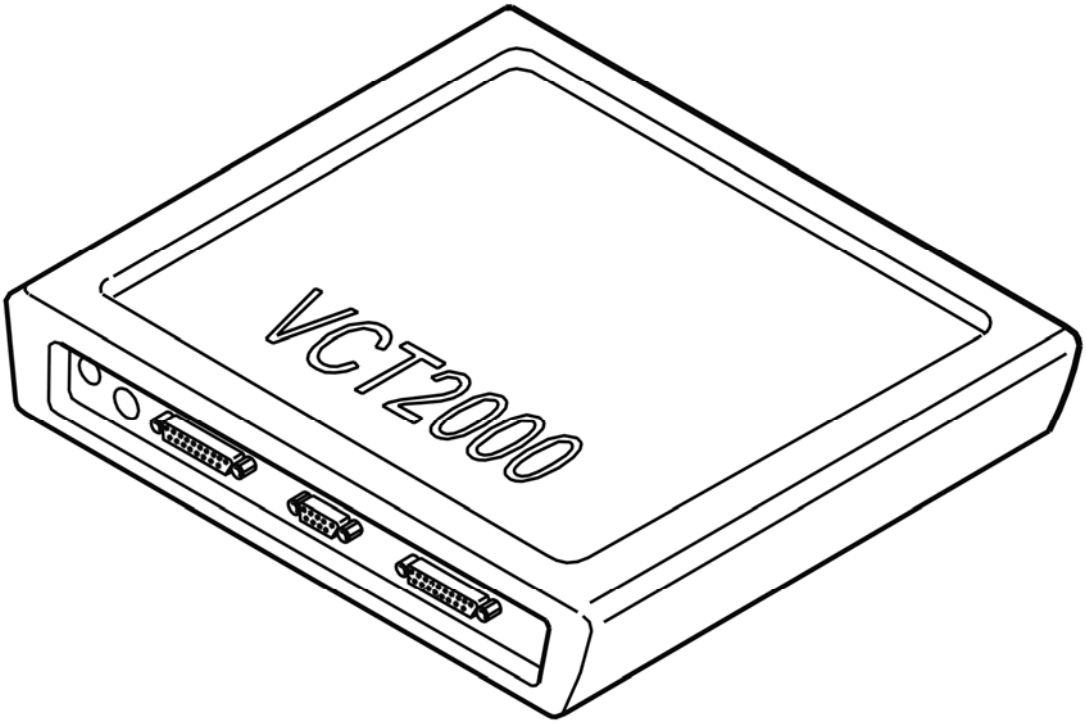

Fig. 93: Identifying VCT2000 Diagnostic Tool Symbol In VIDA
Courtesy of VOLVO CARS CORPORATION

Is there a click in the relay at activation and deactivation?

- **YES**

  VERIFIED: Troubleshooting has been completed.

- **NO**

  Refer to **INFORMATION**

INFORMATION

FAULT-TRACING INFORMATION

The fault should have been detected and remedied. As this is not the case fault-tracing has failed.

Exit fault-tracing for this diagnostic trouble code (DTC) or make another attempt.

REM-1A05: RELAY, 15I POWER SUPPLY. SIGNAL TOO LOW (2003-2004)

DIAGNOSTIC TROUBLE CODE (DTC) INFORMATION

Condition

The diagnostic trouble code (DTC) is stored if the control module registers an open-circuit from the status flag when the relay guide for relay 15I-supply is not activated.

Diagnostic trouble code (DTC) REM-1A05 can be detected at ignition on.

Substitute Value

- None.

Possible Source

- Open-circuit in the relay guide for relay 2/52
- Relay 2/52 not installed.

Fault symptom[s]

- Anti-spin warning lamp lit.

SIGNAL TOO LOW

CHECKING COMPONENTS AND WIRING

Check that the "15I supply" relay 2/52 is intact. Check that the relay is correctly installed.

Check that fuse 11D/5 is intact.

Check the cable between fuse 11D/5 and "15I supply" relay 2/52 #1. Check the cable between the rear electrical module terminal #D2 (#B02) and "15I supply" relay 2/52 #2. Check for an open-circuit.

Check the relay terminals. Check for an open-circuit.

Remedy as necessary.

Try a new relay if no faults are found.

Other information:

- To connect the breakout box, see **CONNECTING THE BREAKOUT BOX**
- For information about signals, see **SIGNAL SPECIFICATION**
- When the relay is installed and activated, the voltage at the relay guide must be 12 V
- see **CHECKING WIRING AND TERMINALS** .

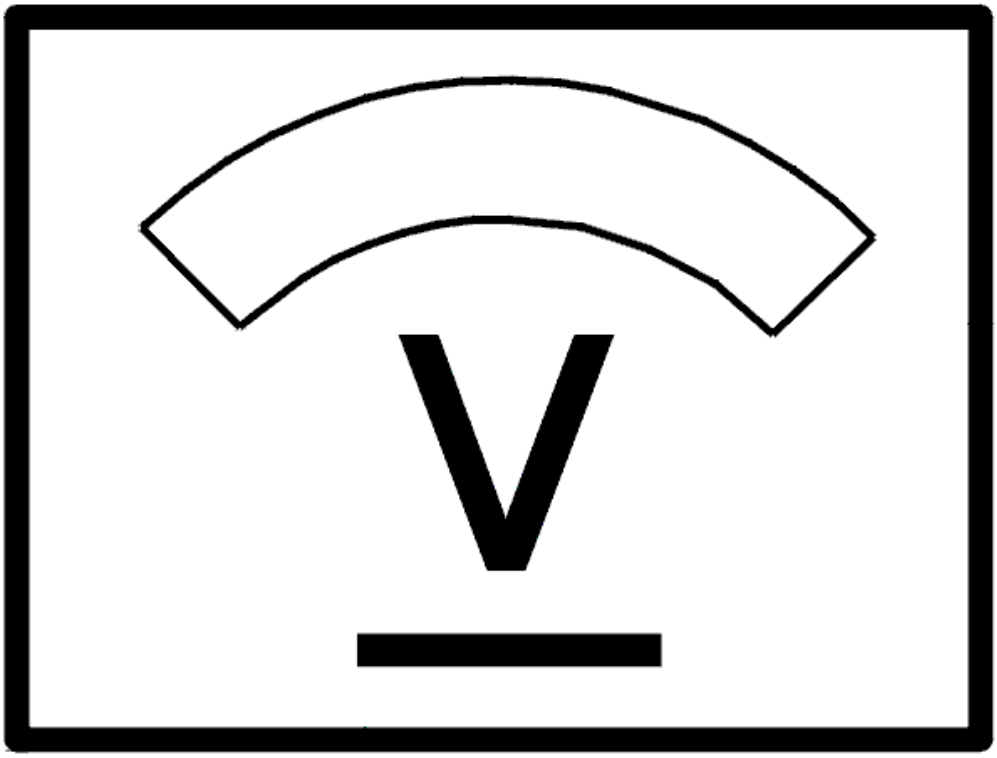

Fig. 94: Identifying Voltage Display
Courtesy of VOLVO CARS CORPORATION

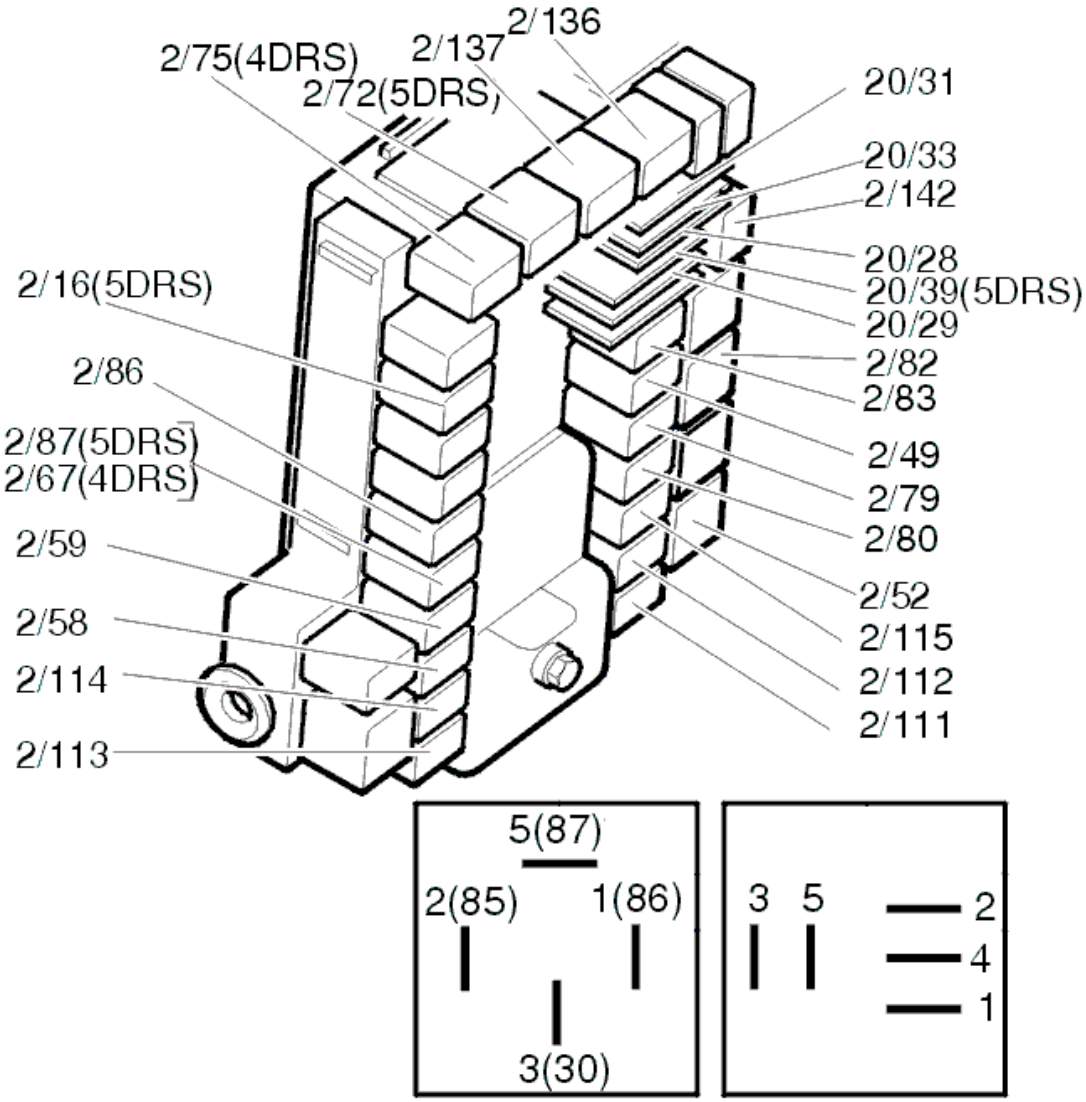

Fig. 95: Identifying Relays
Courtesy of VOLVO CARS CORPORATION

- **Continue**

  Refer to **VERIFICATION**

VERIFICATION

VERIFICATION

HINT: After carrying out the repair, check that the fault has been remedied.

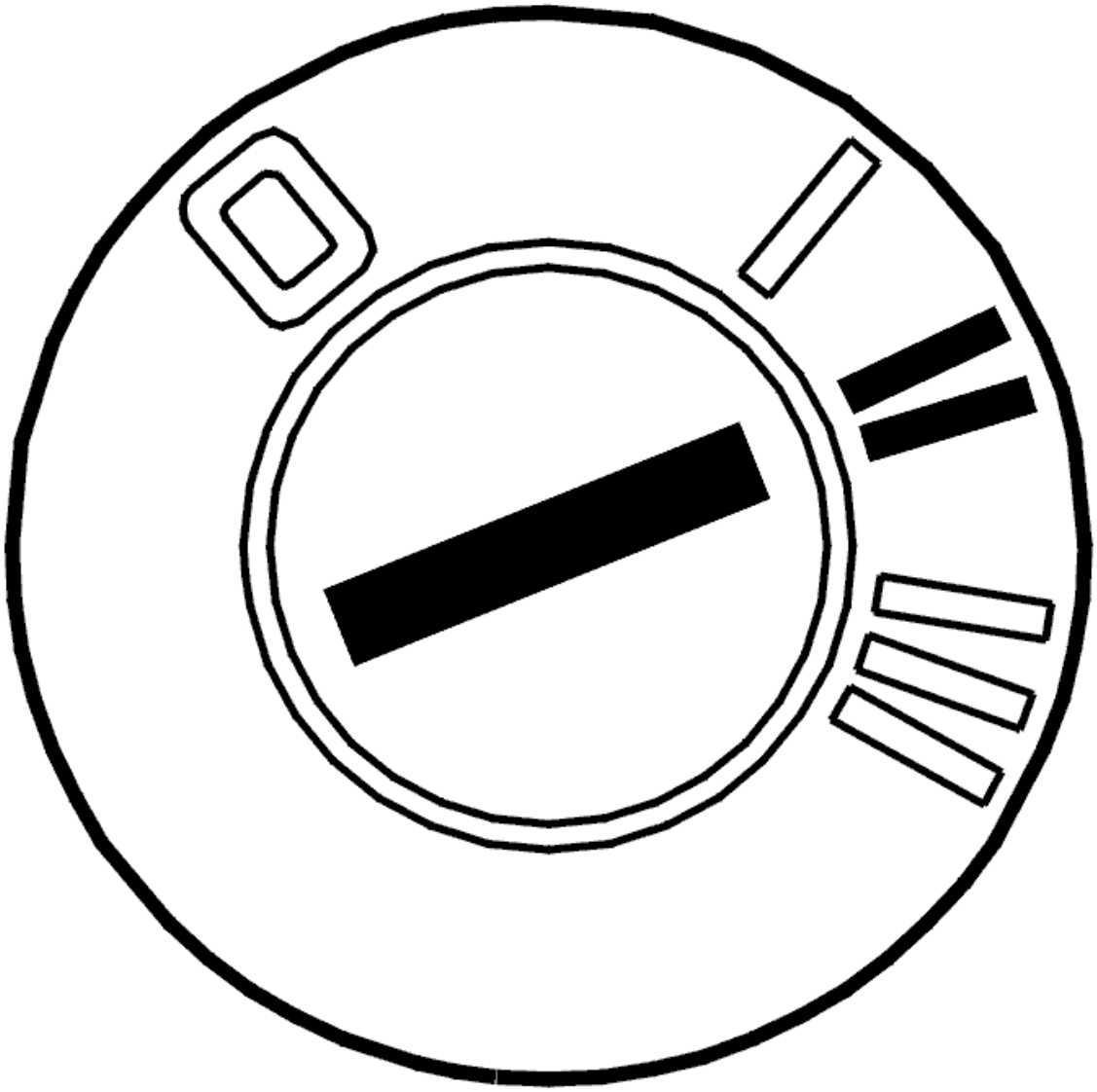

Fig. 96: Identifying Ignition ON
Courtesy of VOLVO CARS CORPORATION

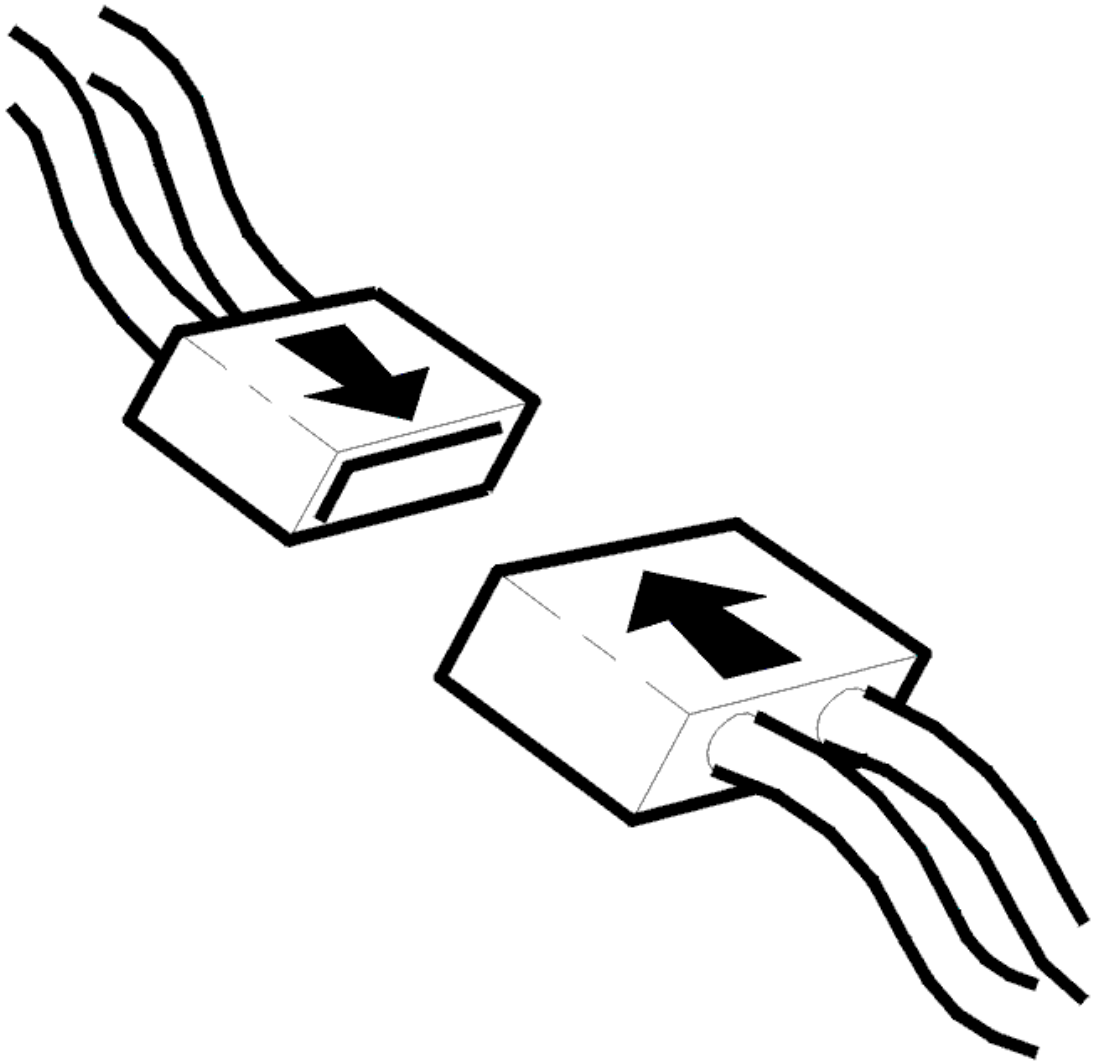

Fig. 97: Identifying Connector(s) Reinstallation
Courtesy of VOLVO CARS CORPORATION

- Ignition off
- Reinstall the connectors, components etc.
- Ignition on.

  Activate and deactivate the relay.

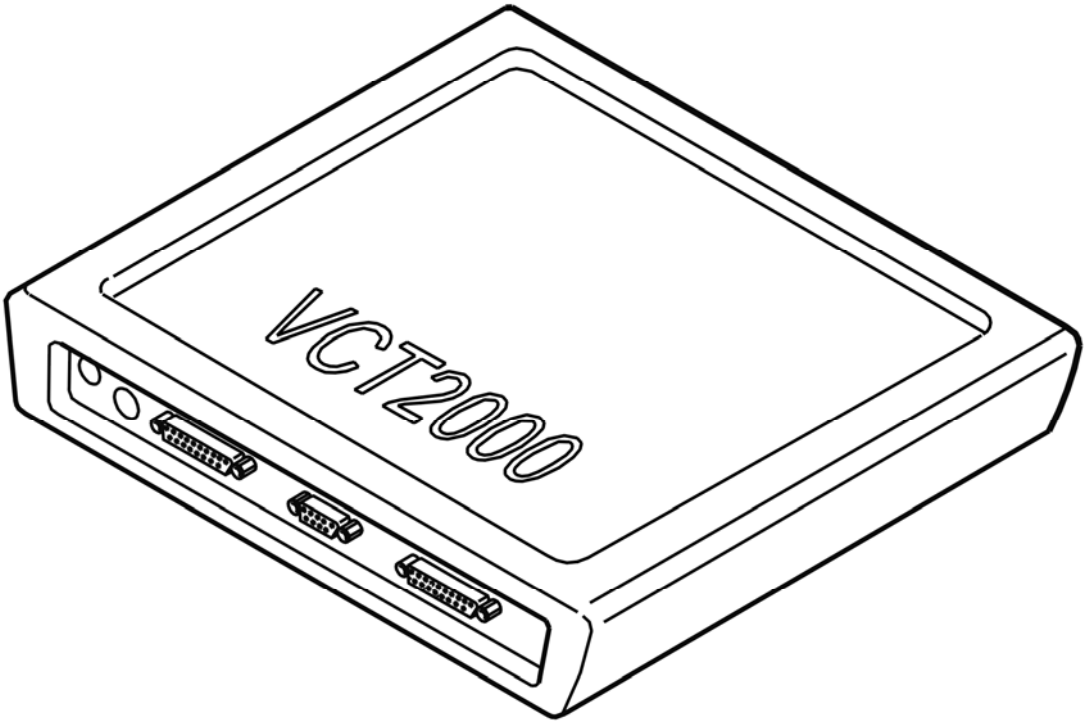

Fig. 98: Identifying VCT2000 Diagnostic Tool Symbol In VIDA
Courtesy of VOLVO CARS CORPORATION

Is there a click in the relay at activation and deactivation?

- **YES**

  VERIFIED: Troubleshooting has been completed.

- **NO**

  Refer to **INFORMATION**

INFORMATION

FAULT-TRACING INFORMATION

The fault should have been detected and remedied. As this is not the case fault-tracing has failed.

Exit fault-tracing for this diagnostic trouble code (DTC) or make another attempt.

REM-1D01: CONTROL MODULE. INTERNAL FAULT (2005-2012)

DIAGNOSTIC TROUBLE CODE (DTC) INFORMATION REM-1D01

Condition

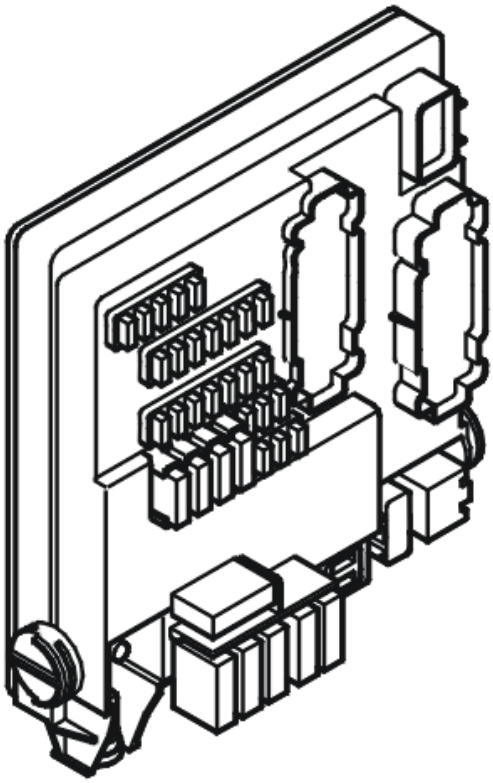

Fig. 99: Identifying Central Electronic Module (CEM)
Courtesy of VOLVO CARS CORPORATION

The diagnostic trouble code (DTC) is stored if the rear electronic module (REM) registers an internal fault.

The diagnostic trouble code (DTC) can be diagnosed when the ignition is switched on.

Substitute Value

- None.

Possible Source

- Internal fault in the control module.

Fault symptom[s]

- The fuel gauge does not work
- No locking/unlocking of the tailgate
- Does not lock / unlock the fuel tank filler cap.

INTERNAL FAULT

REPLACING THE COMPONENT

The rear electronic module (REM) has registered an internal fault.

If the fault is intermittent, it has been registered previously but is no longer present. Intermittent faults can be caused by interference at start up of the rear electronic module (REM) or may be a different type of fault which occurs on different occasions. The fault is evaluated depending on how it occurs. Replace the rear electronic module (REM) if the fault recurs.

Replace the rear electronic module (REM) in the event of a permanent fault.

Remedy as necessary.

Other information

- For -2004, see: **RELAY/FUSE BOX CARGO COMPARTMENT/REAR ELECTRONIC MODULE (REM), REPLACING**
- For 2005-, see: **REAR ELECTRONIC MODULE (REM), REPLACING** .

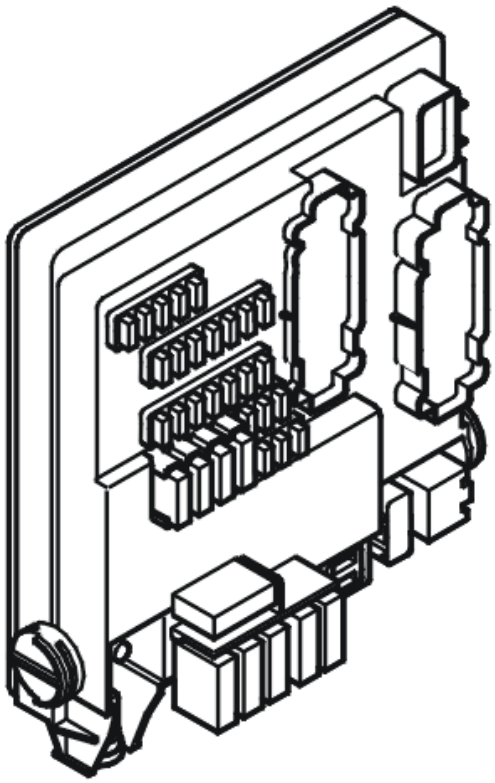

Fig. 100: Identifying Central Electronic Module (CEM)
Courtesy of VOLVO CARS CORPORATION

- **Continue**

  Refer to **INFORMATION**

INFORMATION

FAULT-TRACING INFORMATION

In case of this defect, troubleshooting is not followed by verification.

The information can be displayed again or the fault-tracing for this fault can be interrupted.

REM-1D01: CONTROL MODULE. INTERNAL FAULT. PERMANENT FAULT (2003-2004)

DIAGNOSTIC TROUBLE CODE (DTC) INFORMATION

Condition

Diagnostic trouble code (DTC) REM-1D01 is stored if the control module registers an internal fault.

Substitute Value

None

Possible Source

- Internal fault in the control module.

Fault symptom[s]

- The fuel gauge does not work.
- Does not lock / unlock the tailgate.
- Does not lock / unlock the fuel tank filler cap.

INTERNAL FAULT. PERMANENT FAULT

REPLACING THE COMPONENT

HINT: The rear control module has registered an internal fault.

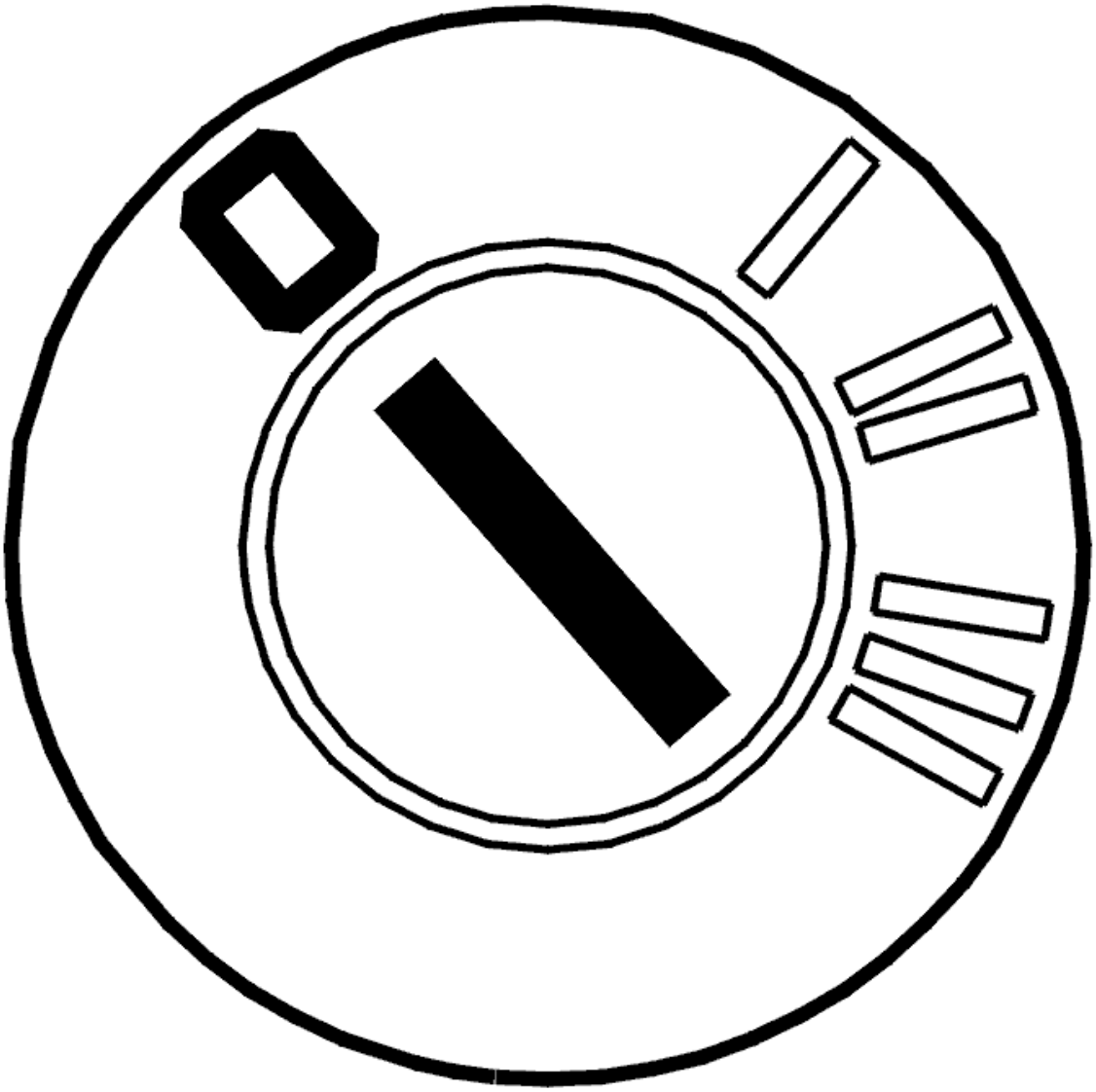

Fig. 101: Identifying Ignition OFF
Courtesy of VOLVO CARS CORPORATION

- Ignition off
- Replace the rear control module.

NOTE: **A new control module is delivered without software. The control module must be programmed when it has been replaced.**

Other information:

- To access and replace the rear electronic module, see **RELAY/FUSE BOX CARGO COMPARTMENT/REAR ELECTRONIC MODULE (REM), REPLACING** .

REM-1D01: CONTROL UNIT. INTERNAL FAULT. INTERMITTENT FAULT

(2003-2004)

DIAGNOSTIC TROUBLE CODE (DTC) INFORMATION

see **DIAGNOSTIC TROUBLE CODE (DTC) INFORMATION**

INTERNAL FAULT. INTERMITTENT FAULT

FAULT-TRACING INFORMATION

The diagnostic trouble code (DTC) indicates that the control module has previously registered an intermittent fault, but that the fault is no longer present.

REM-1D02: CONTROL MODULE. INTERNAL FAULT (2005-2012)

DIAGNOSTIC TROUBLE CODE (DTC) INFORMATION REM-1D02

Condition

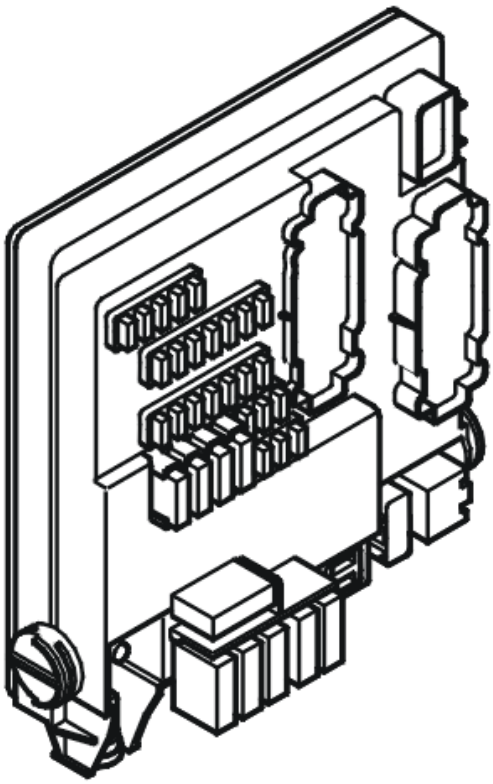

Fig. 102: Identifying Central Electronic Module (CEM)
Courtesy of VOLVO CARS CORPORATION

The diagnostic trouble code (DTC) is stored if the rear electronic module (REM) registers an internal fault.

The diagnostic trouble code (DTC) can be diagnosed when the ignition is switched on.

Substitute Value

- None.

Possible Source

- Internal fault in the control module.

Fault symptom[s]

- The fuel gauge does not work.
- No locking/unlocking of the tailgate
- Does not lock / unlock the fuel tank filler cap.

INTERNAL FAULT

REPLACING THE COMPONENT

The rear electronic module (REM) has registered an internal fault.

If the fault is intermittent, it has been registered previously but is no longer present. Intermittent faults can be caused by interference at start up of the rear electronic module (REM) or may be a different type of fault which occurs on different occasions. The fault is evaluated depending on how it occurs. Replace the rear electronic module (REM) if the fault recurs.

Replace the rear electronic module (REM) in the event of a permanent fault.

Remedy as necessary.

Other information

- For -2004, see: **RELAY/FUSE BOX CARGO COMPARTMENT/REAR ELECTRONIC MODULE (REM), REPLACING**
- For 2005-, see: **REAR ELECTRONIC MODULE (REM), REPLACING** .

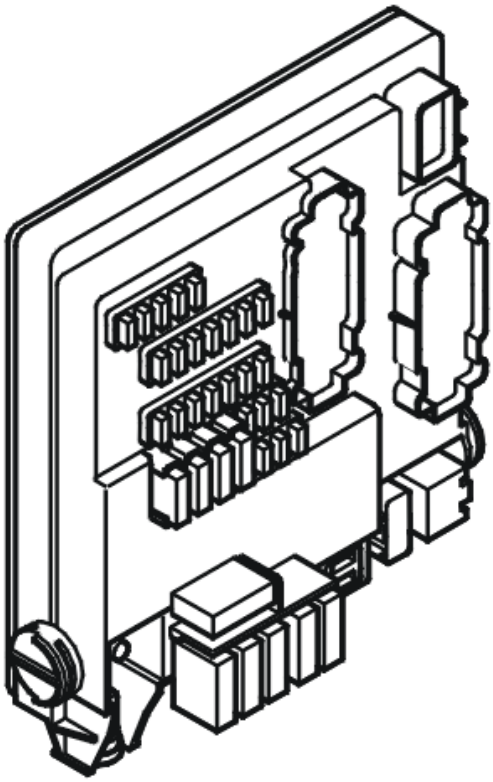

Fig. 103: Identifying Central Electronic Module (CEM)
Courtesy of VOLVO CARS CORPORATION

- **Continue**

  Refer to **INFORMATION**

INFORMATION

FAULT-TRACING INFORMATION

In case of this defect, troubleshooting is not followed by verification.

The information can be displayed again or the fault-tracing for this fault can be interrupted.

REM-1D02: CONTROL UNIT SOFTWARE. INTERNAL FAULT. INTERMITTENT FAULT (2003-2004)

DIAGNOSTIC TROUBLE CODE INFORMATION

Condition

If control unit registers a fault in the software, the diagnostic trouble code is displayed.

Substitute Value

None

Possible Source

- Internal fault in control unit.

Fault symptom[s]

- Fuel gauge does not work
- Boot lid will not open/lock
- Filler cap will not open/lock.

INTERNAL FAULT. INTERMITTENT FAULT

see **INTERNAL FAULT. INTERMITTENT FAULT**

REM-1D02: CONTROL UNIT SOFTWARE. INTERNAL FAULT. PERMANENT FAULT (2003-2004)

DIAGNOSTIC TROUBLE CODE INFORMATION

see **DIAGNOSTIC TROUBLE CODE INFORMATION**

INTERNAL FAULT. PERMANENT FAULT

ORDERING SOFTWARE

The control module has registered an internal fault in the software.

The control module can be programmed using new software. The software must be replaced to remedy the fault.

Order software according to the table below.

XC90	9438285

PROGRAMMING THE CONTROL MODULE

Programming can be carried out when the software has been delivered.

Program the control module according to the table below.

XC90	9438285

REM-1D03: CONTROL MODULE, NOT FULLY PROGRAMMED INTERNAL FAULT (2005-2012)

DIAGNOSTIC TROUBLE CODE (DTC) INFORMATION REM-1D03

Condition

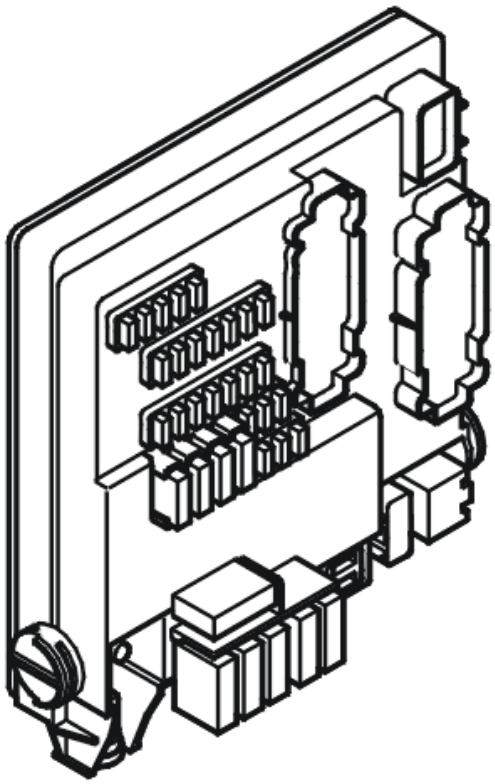

Fig. 104: Identifying Central Electronic Module (CEM)
Courtesy of VOLVO CARS CORPORATION

The diagnostic trouble code (DTC) is stored if the rear electronic module (REM) registers that the programming is faulty or incomplete.

The diagnostic trouble code (DTC) can be diagnosed when the ignition is switched on.

Substitute Value

- None.

Possible Source

- Internal fault in the control module.

Fault symptom[s]

- The fuel gauge does not work
- No locking/unlocking of the tailgate
- Does not lock / unlock the fuel tank filler cap.

INTERNAL FAULT

REPLACING SOFTWARE

The rear electronic module (REM) has registered an internal fault in the software.

If the fault is intermittent, it has been registered previously but is no longer present. Intermittent faults can be caused by interference at start up of the rear electronic module (REM) or may be a different type of fault which occurs on different occasions. The fault is evaluated depending on how it occurs. Replace the software for the rear electronic module (REM) if the fault recurs.

Replace the software for the rear electronic module (REM) in the event of a permanent fault.

Remedy as necessary.

Other information

- For -2004, see: **RELAY/FUSE BOX CARGO COMPARTMENT/REAR ELECTRONIC MODULE (REM), REPLACING**
- For 2005-, see: **REAR ELECTRONIC MODULE (REM), REPLACING** .

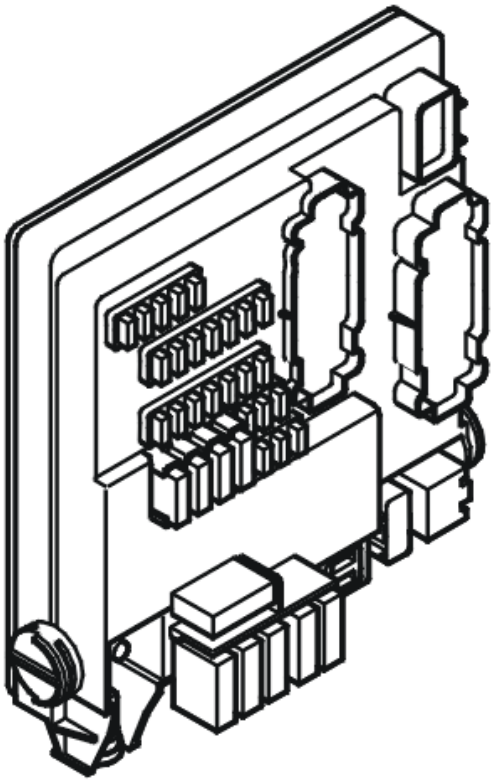

Fig. 105: Identifying Central Electronic Module (CEM)
Courtesy of VOLVO CARS CORPORATION

- **Continue**

  Refer to **INFORMATION**

INFORMATION

FAULT-TRACING INFORMATION

In case of this defect, troubleshooting is not followed by verification.

The information can be displayed again or the fault-tracing for this fault can be interrupted.

REM-1D03: CONTROL UNIT NOT FULLY PROGRAMMED. INTERNAL FAULT. INTERMITTENT FAULT (2003-2004)

DIAGNOSTIC TROUBLE CODE INFORMATION

Condition

If the control unit registers a fault or is not fully programmed, the diagnostic trouble code is displayed.

Substitute Value

None

Possible Source

- Internal fault.

Fault symptom[s]

- Fuel gauge does not work
- Boot lid will not open/lock
- Filler cap will not open/lock.

INTERNAL FAULT. INTERMITTENT FAULT

see **INTERNAL FAULT. INTERMITTENT FAULT**

REM-1D03: CONTROL UNIT NOT FULLY PROGRAMMED. INTERNAL FAULT. PERMANENT FAULT (2003-2004)

DIAGNOSTIC TROUBLE CODE INFORMATION

see **DIAGNOSTIC TROUBLE CODE INFORMATION**

INTERNAL FAULT. PERMANENT FAULT

INTERNAL FAULT. PERMANENT FAULT

ORDERING SOFTWARE

The control module has registered an internal fault in the software.

The control module can be programmed using new software. The software must be replaced to remedy the fault.

Order software according to the table below.

XC90	9438285

- **Continue**

  Refer to **PROGRAMMING THE CONTROL MODULE**

PROGRAMMING THE CONTROL MODULE

Programming can be carried out when the software has been delivered.

Program the control module according to the table below.

XC90	9438285

REM-1D07: CONTROL MODULE. INTERNAL FAULT (2005-2012)

DIAGNOSTIC TROUBLE CODE (DTC) INFORMATION REM-1D07

Condition

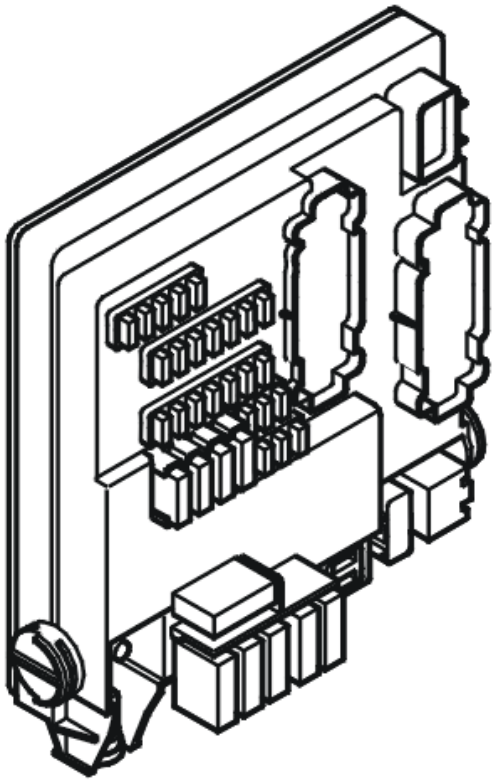

Fig. 106: Identifying Central Electronic Module (CEM)
Courtesy of VOLVO CARS CORPORATION

The diagnostic trouble code (DTC) is stored if the rear electronic module (REM) registers an internal fault.

The diagnostic trouble code (DTC) can be diagnosed when the ignition is switched on.

Substitute Value

- None.

Possible Source

- Internal fault in the control module.

Fault symptom[s]

- The fuel gauge does not work
- No locking/unlocking of the tailgate
- Does not lock / unlock the fuel tank filler cap.

INTERNAL FAULT

REPLACING THE COMPONENT

The rear electronic module (REM) has registered an internal fault.

If the fault is intermittent, it has been registered previously but is no longer present. Intermittent faults can be caused by interference at start up of the rear electronic module (REM) or may be a different type of fault which occurs on different occasions. The fault is evaluated depending on how it occurs. Replace the rear electronic module (REM) if the fault recurs.

Replace the rear electronic module (REM) in the event of a permanent fault.

Remedy as necessary.

Other information

- For -2004, see: **RELAY/FUSE BOX CARGO COMPARTMENT/REAR ELECTRONIC MODULE (REM), REPLACING**
- For 2005-, see: **REAR ELECTRONIC MODULE (REM), REPLACING** .

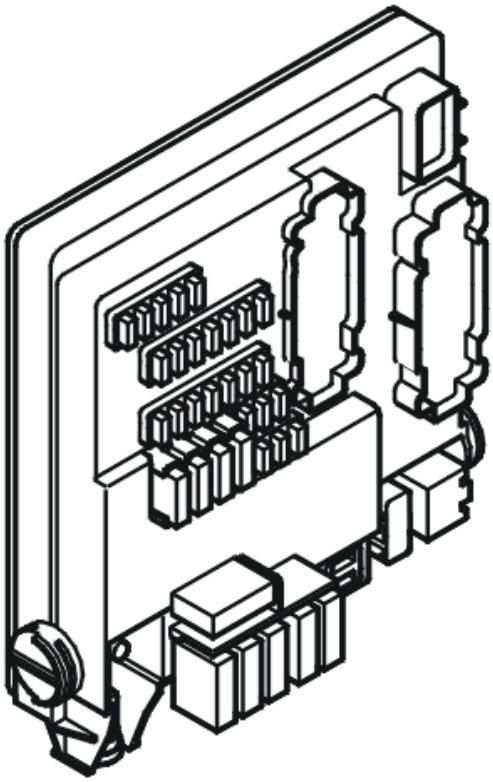

Fig. 107: Identifying Central Electronic Module (CEM)
Courtesy of VOLVO CARS CORPORATION

- **Continue**

  Refer to **INFORMATION**

INFORMATION

FAULT-TRACING INFORMATION

In case of this defect, troubleshooting is not followed by verification.

The information can be displayed again or the fault-tracing for this fault can be interrupted.

REM-1D07: CONTROL MODULE. INTERNAL FAULT. PERMANENT FAULT (2003-2004)

DIAGNOSTIC TROUBLE CODE INFORMATION

Condition

If the control unit registers a fault in ROM the diagnostic trouble code is displayed.

Substitute Value

None

Possible Source

- Internal fault in control unit.

Fault symptom[s]

- Fuel gauge does not work
- Boot lid will not open/lock
- Filler cap will not open/lock.

INTERNAL FAULT. PERMANENT FAULT

REPLACING THE COMPONENT

HINT: The rear control module has registered an internal fault.

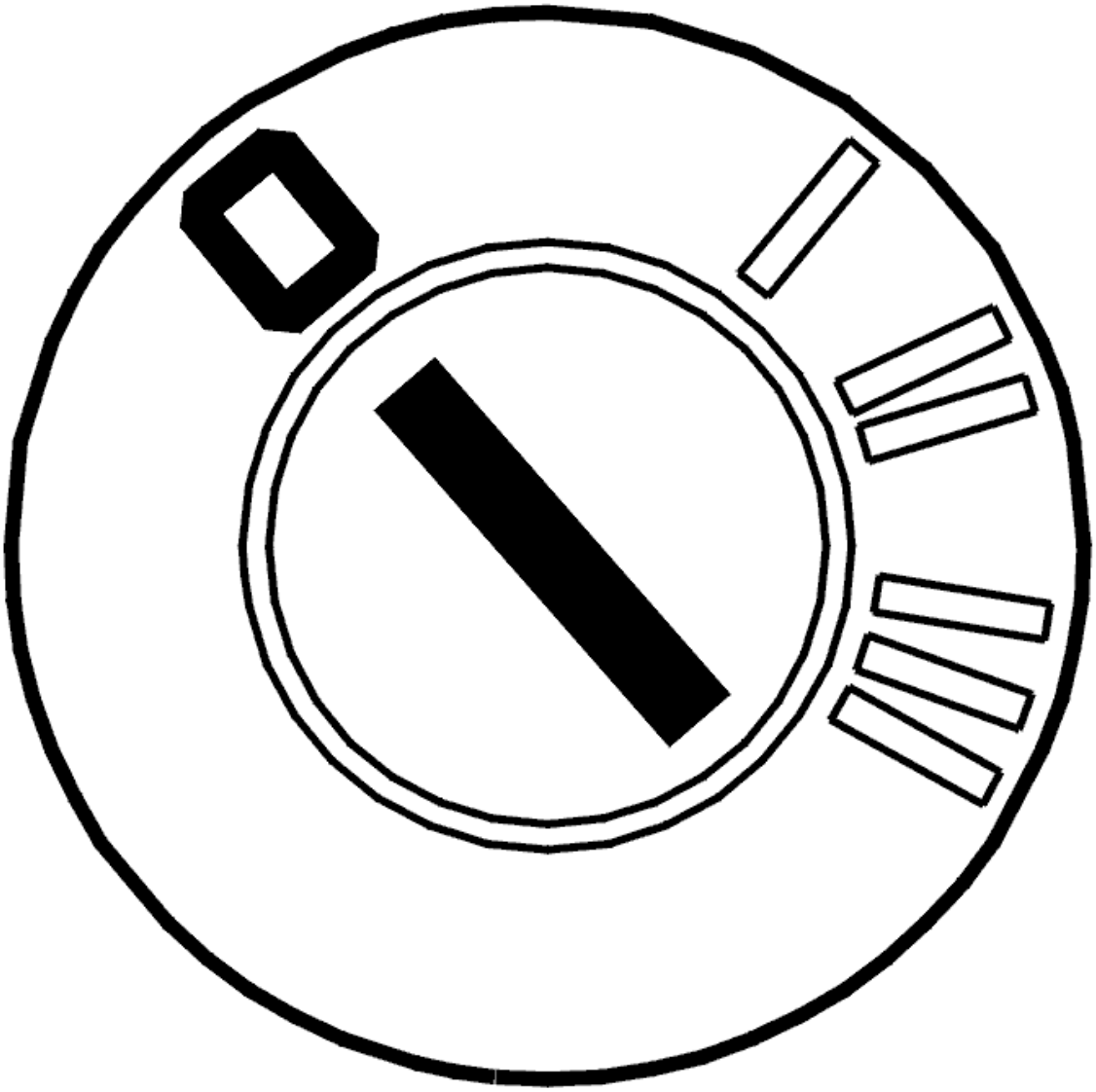

Fig. 108: Identifying Ignition OFF
Courtesy of VOLVO CARS CORPORATION

- Ignition off
- Replace the rear control module.

NOTE: **A new control module is delivered without software. The control module must be programmed when it has been replaced.**

Other information:

- To access and replace the rear electronic module, see **RELAY/FUSE BOX CARGO COMPARTMENT/REAR ELECTRONIC MODULE (REM), REPLACING** .

REM-1D07: CONTROL UNIT. INTERNAL FAULT. INTERMITTENT FAULT

(2003-2004)

DIAGNOSTIC TROUBLE CODE INFORMATION

see **DIAGNOSTIC TROUBLE CODE INFORMATION**

INTERNAL FAULT. INTERMITTENT FAULT

see **INTERNAL FAULT. INTERMITTENT FAULT**

REM-1D08: CONTROL MODULE. INTERNAL FAULT (2005-2012)

DIAGNOSTIC TROUBLE CODE (DTC) INFORMATION REM-1D08

Condition

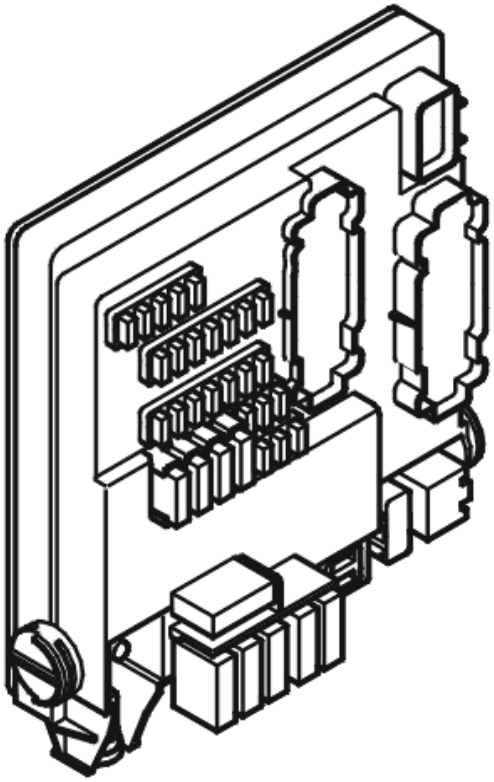

Fig. 109: Identifying Central Electronic Module (CEM)
Courtesy of VOLVO CARS CORPORATION

The diagnostic trouble code (DTC) is stored if the rear electronic module (REM) registers an internal fault.

The diagnostic trouble code (DTC) can be diagnosed when the ignition is switched on.

Substitute Value

- None.

Possible Source

- Internal fault in the control module.

Fault symptom[s]

- The fuel gauge does not work
- No locking/unlocking of the tailgate
- Does not lock / unlock the fuel tank filler cap.

INTERNAL FAULT

REPLACING THE COMPONENT

The rear electronic module (REM) has registered an internal fault.

If the fault is intermittent, it has been registered previously but is no longer present. Intermittent faults can be caused by interference at start up of the rear electronic module (REM) or may be a different type of fault which occurs on different occasions. The fault is evaluated depending on how it occurs. Replace the rear electronic module (REM) if the fault recurs.

Replace the rear electronic module (REM) in the event of a permanent fault.

Remedy as necessary.

Other information

- For -2004, see: **RELAY/FUSE BOX CARGO COMPARTMENT/REAR ELECTRONIC MODULE (REM), REPLACING**
- For 2005-, see: **REAR ELECTRONIC MODULE (REM), REPLACING** .

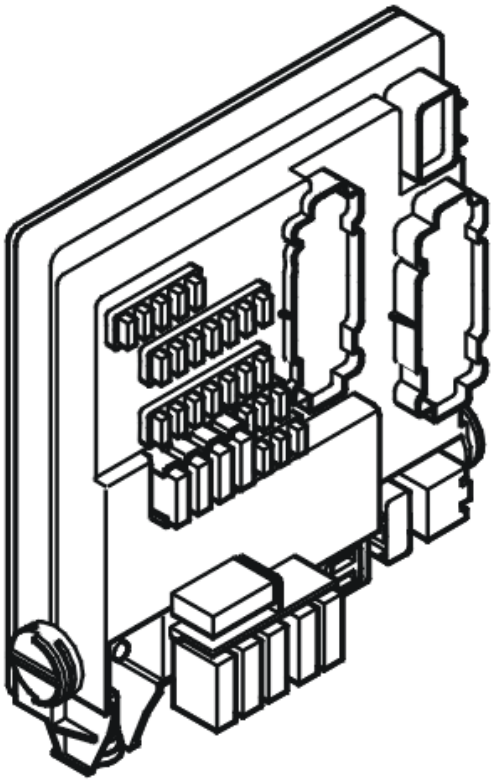

Fig. 110: Identifying Central Electronic Module (CEM)
Courtesy of VOLVO CARS CORPORATION

- **Continue**

  Refer to **INFORMATION**

INFORMATION

FAULT-TRACING INFORMATION

In case of this defect, troubleshooting is not followed by verification.

The information can be displayed again or the fault-tracing for this fault can be interrupted.

REM-1D0A: CONTROL MODULE. INTERNAL FAULT (2005-2012)

DIAGNOSTIC TROUBLE CODE (DTC) INFORMATION REM-1D0A

Condition

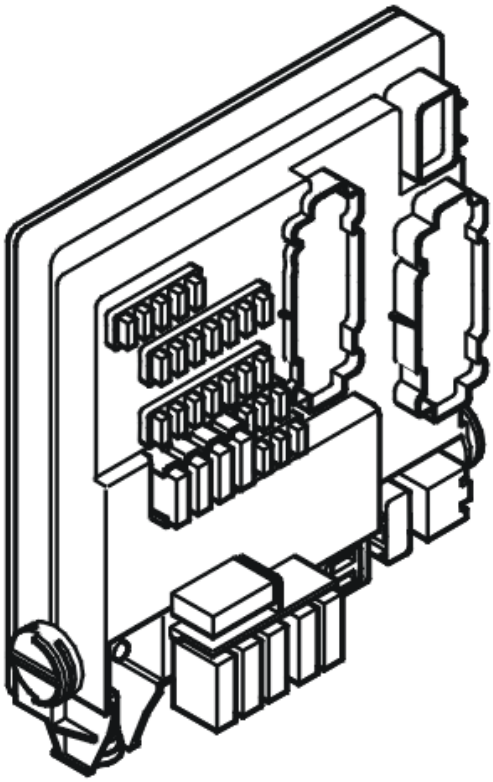

Fig. 111: Identifying Central Electronic Module (CEM)
Courtesy of VOLVO CARS CORPORATION

The diagnostic trouble code (DTC) is stored if the rear electronic module (REM) registers an internal fault.

The diagnostic trouble code (DTC) can be diagnosed when the ignition is switched on.

Substitute Value

- None.

Possible Source

- Internal fault in the control module.

Fault symptom[s]

- The fuel gauge does not work
- No locking/unlocking of the tailgate
- Does not lock / unlock the fuel tank filler cap.

INTERNAL FAULT

REPLACING THE COMPONENT

The rear electronic module (REM) has registered an internal fault.

If the fault is intermittent, it has been registered previously but is no longer present. Intermittent faults can be caused by interference at start up of the rear electronic module (REM) or may be a different type of fault which occurs on different occasions. The fault is evaluated depending on how it occurs. Replace the rear electronic module (REM) if the fault recurs.

Replace the rear electronic module (REM) in the event of a permanent fault.

Remedy as necessary.

Other information

- For -2004, see: **RELAY/FUSE BOX CARGO COMPARTMENT/REAR ELECTRONIC MODULE (REM), REPLACING**
- For 2005-, see: **REAR ELECTRONIC MODULE (REM), REPLACING** .

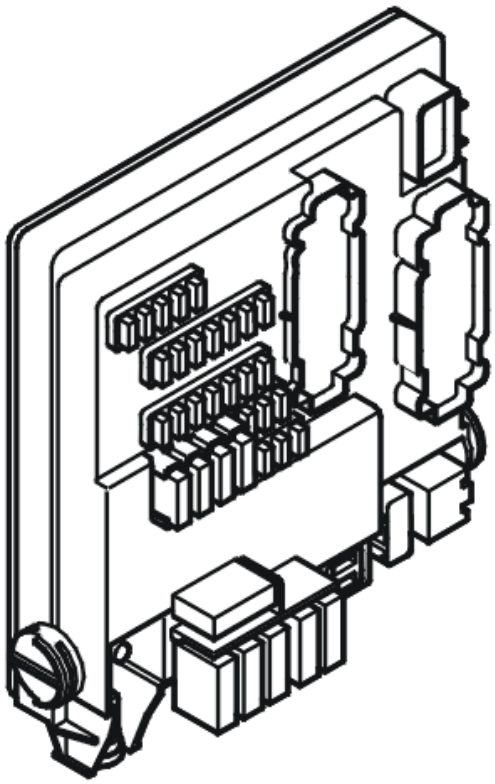

Fig. 112: Identifying Central Electronic Module (CEM)
Courtesy of VOLVO CARS CORPORATION

- **Continue**

Refer to **INFORMATION**

INFORMATION

FAULT-TRACING INFORMATION

In case of this defect, troubleshooting is not followed by verification.

The information can be displayed again or the fault-tracing for this fault can be interrupted.

REM-1F8C: TRAILER FOGLIGHT DRIVER, SIGNAL OR TEMPERATURE TOO HIGH (2006-2012)

DIAGNOSTIC TROUBLE CODE (DTC) INFORMATION REM-1F8C

Condition

The Rear electronic module (REM) checks the voltage supply to the fog lamp via the trailer connector.

The diagnostic trouble code (DTC) is stored if the control module detects that the output has a short-circuit to supply voltage or if the driver stage has a too high a temperature.

The diagnostic trouble code (DTC) can be diagnosed in ignition positions I or II.

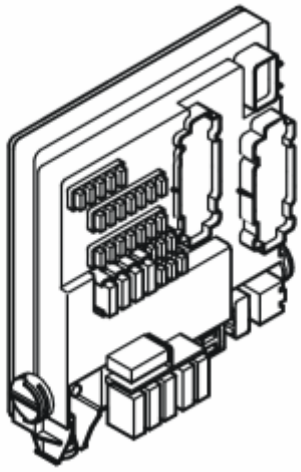

Fig. 113: Identifying Rear Electronic Module (REM)
Courtesy of VOLVO CARS CORPORATION

Substitute Value

- The control module deactivates the output.
- If the fault has been detected in 100 ignition cycles, the output is closed permanently until the diagnostic trouble code is erased (applies from structure week 200539).

Possible Source

- Short-circuit to supply voltage in the signal cable.
- Internal fault in Rear electronic module (REM).

Fault symptom[s]

- Rear fog lamps lit constantly
- Rear fog lamp not working

SIGNAL TOO HIGH OR TEMPERATURE TOO HIGH

CHECKING THE WIRING

Fig. 114: Identifying Ignition ON
Courtesy of VOLVO CARS CORPORATION

- Ignition on.

  Erase diagnostic trouble codes by clicking the VCT2000 symbol.

  NOTE: Note any other diagnostic trouble codes (DTCs) that are in the control module, before the diagnostic trouble codes (DTCs) are erased, in order to carry out other fault-traces.

  Activate the rear fog lamp using the switch on the Light switch module (LSM).

  The fog lamp relay clicks when it is deactivated.

  If a clicking sound can be heard, the circuit up to the Rear electronic module (REM) is fault free.

  Deactivate the rear fog lamp.

  Measure the voltage between the lead for voltage feed and a safe grounding point.

  The voltage must be 0 V.

  Check the connectors between the Rear electronic module (REM) and the Trailer module (TRM). Check for contact resistance and oxidation. Check for loose connections.

  Remedy as necessary.

Other information

- see **CHECKING WIRING AND TERMINALS**

Fig. 115: Identifying VCT2000 Diagnostic Tool Symbol In VIDA
Courtesy of VOLVO CARS CORPORATION

Was a fault detected?

- **YES**

  Refer to **VERIFICATION**

- **NO**

  Refer to **INFORMATION**

VERIFICATION

VERIFICATION

HINT: After carrying out the repair, check that the fault has been remedied.

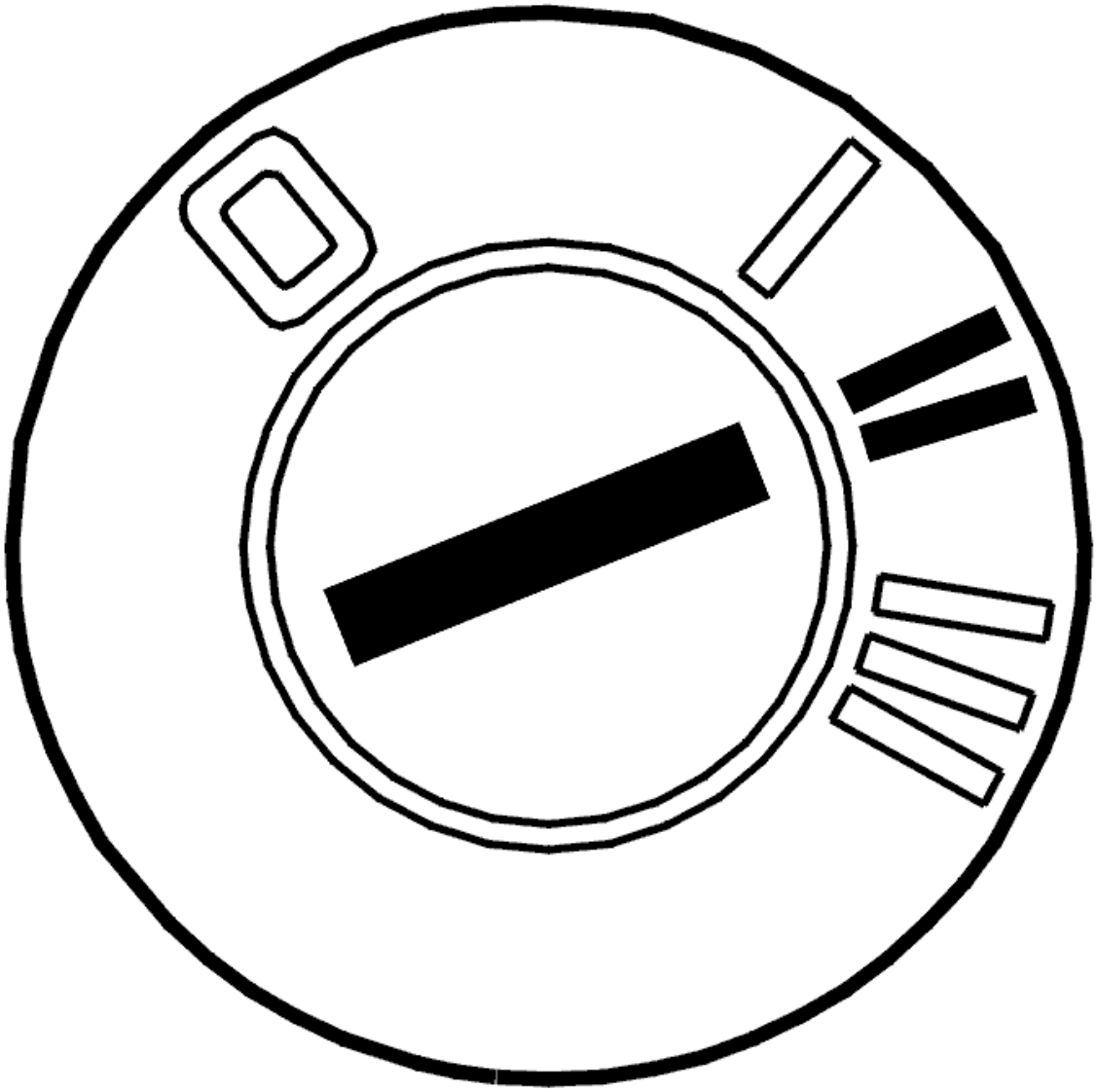

Fig. 116: Identifying Ignition ON
Courtesy of VOLVO CARS CORPORATION

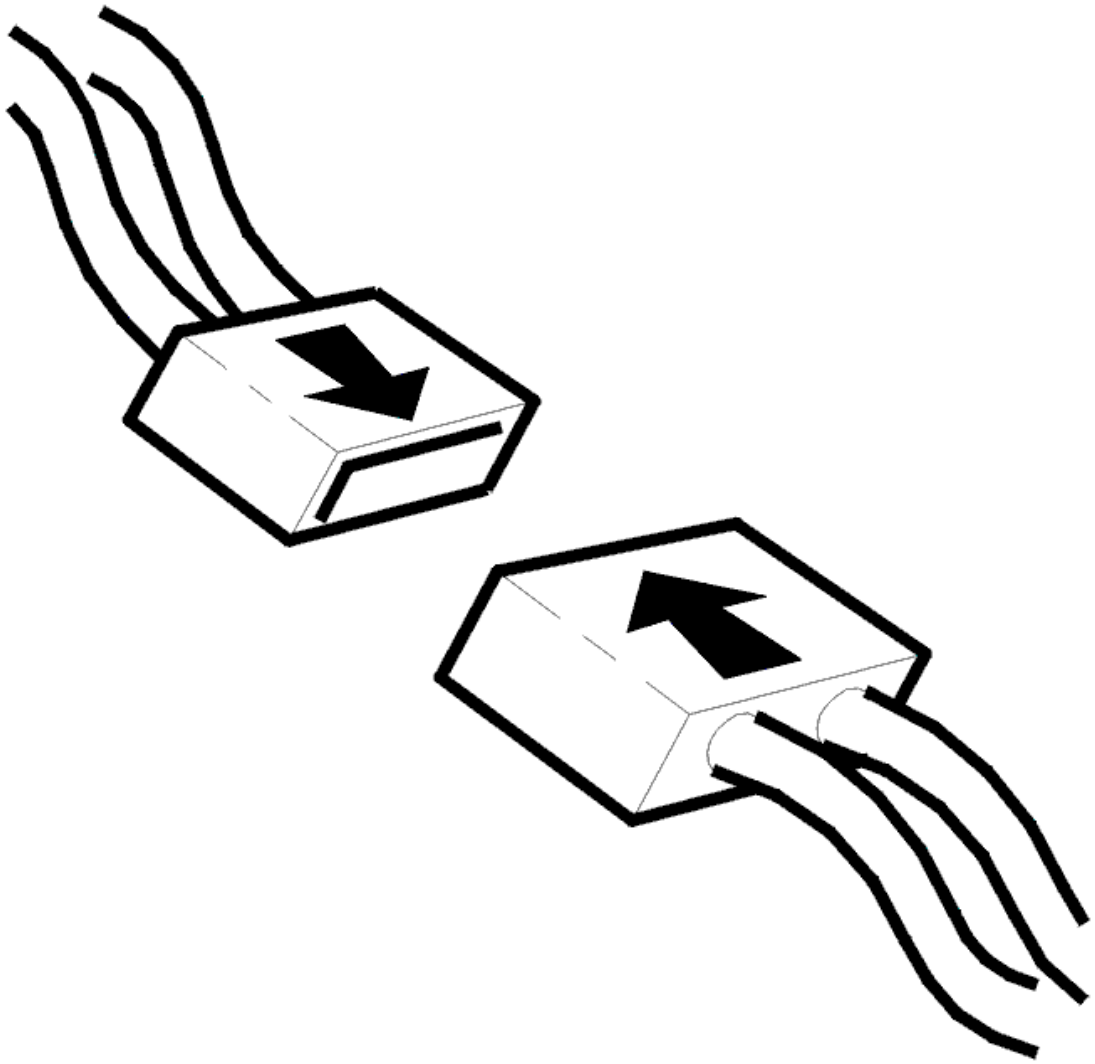

Fig. 117: Identifying Connector(s) Reinstallation
Courtesy of VOLVO CARS CORPORATION

- Switch off the ignition. Wait at least 15 seconds
- Reinstall the connectors, components etc.
- Read off the diagnostic trouble codes (DTCs) by clicking on the VCT2000 symbol.

  Check that the diagnostic trouble code (DTC) for too high voltage is not stored again.

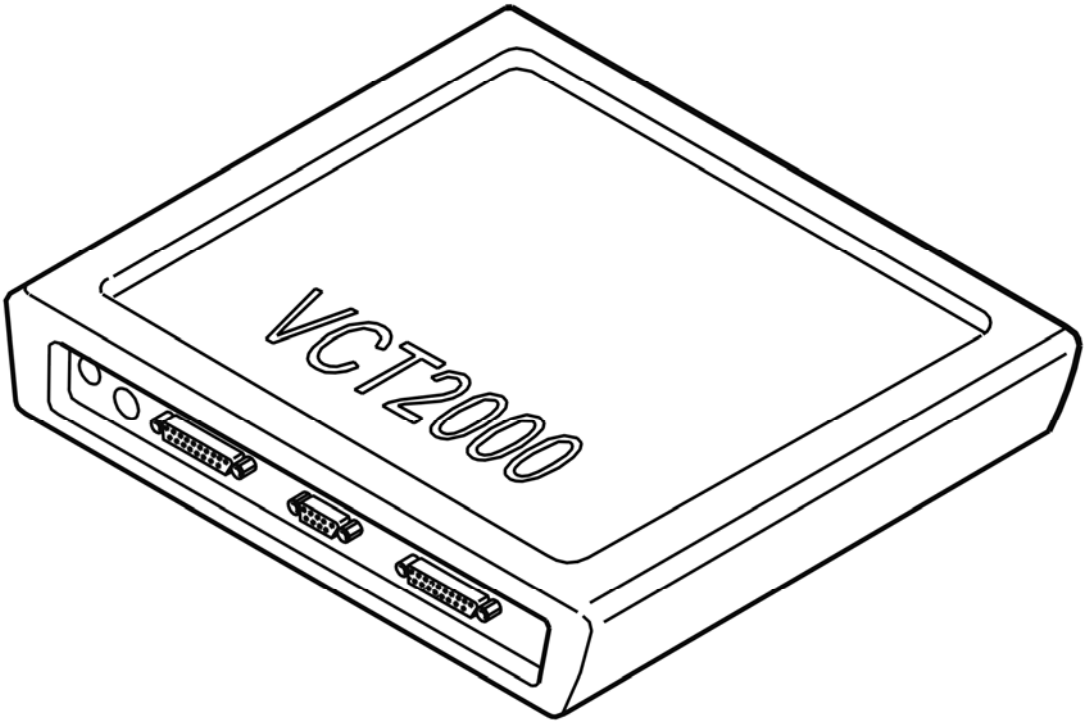

Fig. 118: Identifying VCT2000 Diagnostic Tool Symbol In VIDA
Courtesy of VOLVO CARS CORPORATION

Does the diagnostic trouble code (DTC) recur?

- **YES**

  Refer to **INFORMATION**

- **NO**

  VERIFIED: Troubleshooting has been completed.

INFORMATION

FAULT-TRACING INFORMATION

The fault should have been detected and remedied. As this is not the case fault-tracing has failed.

Exit fault-tracing for this diagnostic trouble code (DTC) or make another attempt.

REM-3C01: RELAY, PREHEATING THE DIESEL FILTER. SIGNAL TOO HIGH (2003-2004)

DIAGNOSTIC TROUBLE CODE (DTC) INFORMATION

Condition

Diagnostic trouble code (DTC) REM-3C01 is stored if the rear electronic module registers that the signal from the relay coil is too high.

Diagnostic trouble code (DTC) REM-3C01 can be diagnosed when the ignition is on.

Substitute Value

- None.

Possible Source

- Defective relay (short-circuit in the relay coil).

Fault symptom[s]

- The engine fails to start
- The engine is difficult to start.

SIGNAL TOO HIGH

CHECKING COMPONENTS AND WIRING

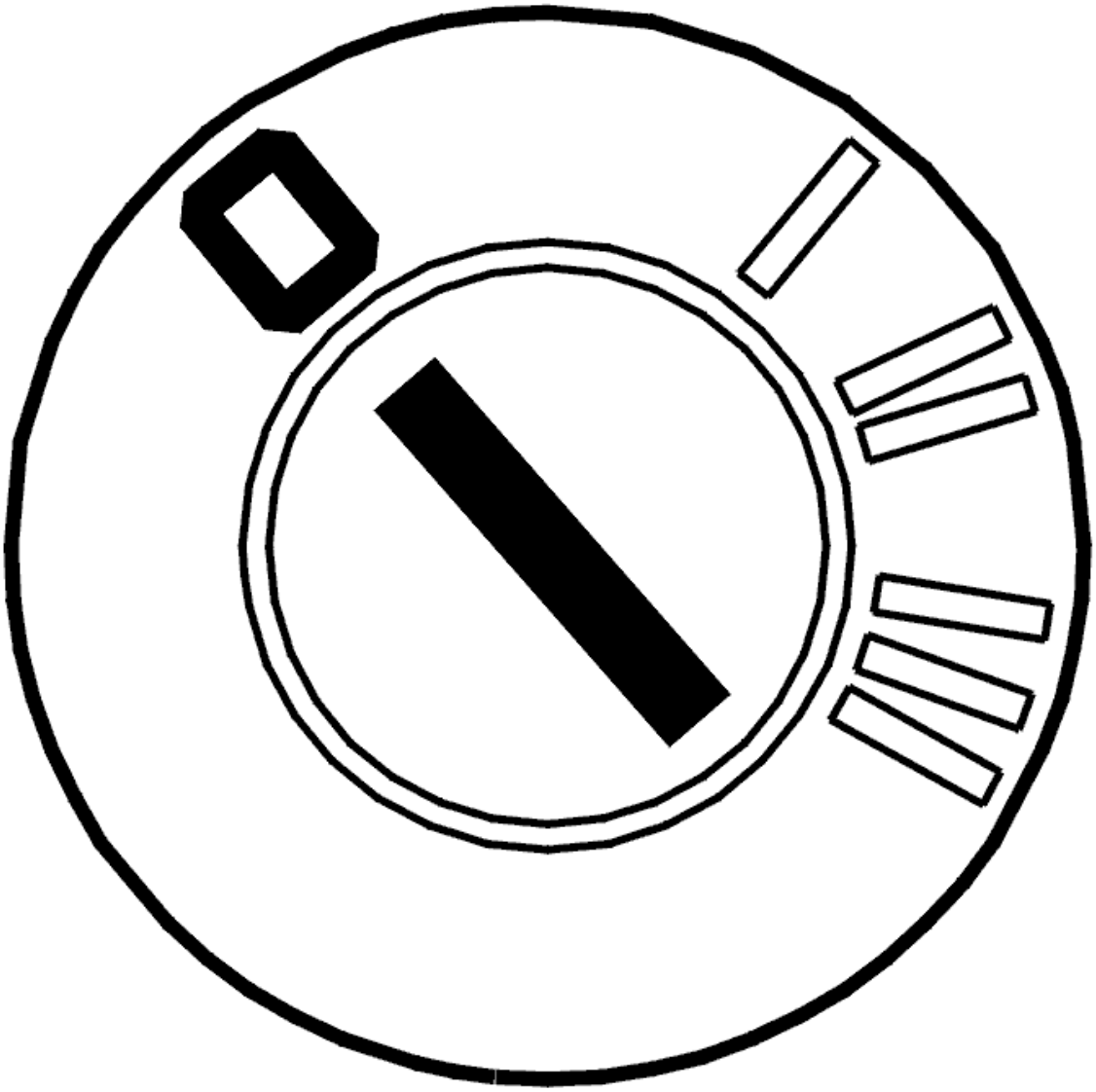

Fig. 119: Identifying Ignition OFF
Courtesy of VOLVO CARS CORPORATION

Check relay 2/142 for damage.

Check the signal cable between relay 2/142 terminal #2 and connector terminal #1 (thermostat 8/85) on the diesel filter. Check the signal cable between connector terminal #2 (thermostat 8/85) on the diesel filter and rear electronic module terminal #D16 (#B16). Check for a short-circuit to supply voltage.

Remedy as necessary.

Other information:

- To fault-trace wiring and terminals, see **CHECKING WIRING AND TERMINALS**
- To connect the breakout box, see **CONNECTING THE BREAKOUT BOX**

- For information about signals, see **SIGNAL SPECIFICATION**
- To access and replace the relay, see **RELAY/FUSE BOX CARGO COMPARTMENT/REAR ELECTRONIC MODULE (REM), REPLACING**

- **Continue**

  Refer to **VERIFICATION**

VERIFICATION

VERIFICATION

HINT: After carrying out the repair, check that the fault has been remedied.

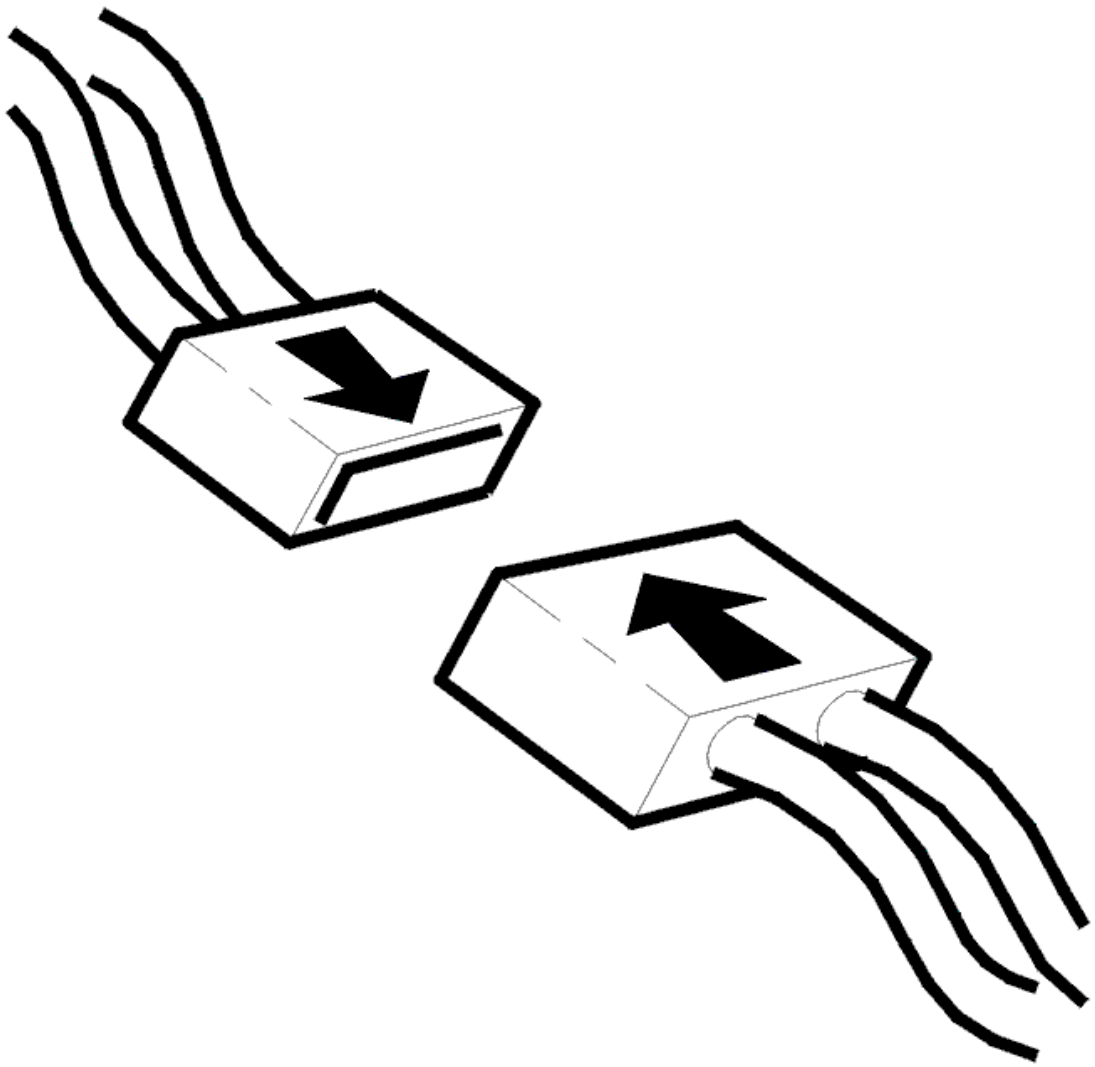

Fig. 120: Identifying Connector(s) Reinstallation
Courtesy of VOLVO CARS CORPORATION

- Ignition off
- Reinstall the connectors, components etc.

  This type of fault cannot be accurately verified electronically. Check that the connectors and components are installed and, if possible, that the symptoms are no longer present.

Is everything correctly installed?

- **YES**

  VERIFIED: Troubleshooting has been completed.

- **NO**

  Refer to **INFORMATION**

INFORMATION

FAULT-TRACING INFORMATION

The fault should have been detected and remedied. As this is not the case fault-tracing has failed.

Exit fault-tracing for this diagnostic trouble code (DTC) or make another attempt.

REM-4A31: FUEL LEVEL SENSOR. FAULTY SIGNAL. INTERMITTENT FAULT (2003-2004)

DIAGNOSTIC TROUBLE CODE INFORMATION

Condition

If the control unit registers that, when engine is running, the fuel level in the left tank half is more than 2 liters and unchanged for 100km (60 miles), the diagnostic trouble code is displayed.

Substitute Value

Fuel gauge is reset.

Possible Source

- Defective sensor (left side).

Fault symptom[s]

- Trip computer indicates too soon that fuel tank is empty
- Fuel gauge does not work.

FAULTY SIGNAL. INTERMITTENT FAULT

CHECKING WIRING AND CONNECTORS

Check the rear electronic module (REM) and fuel level sensor connectors. Check for contact resistance and oxidation. Check for loose connections.

Check the signal cable between control module terminal #2A and fuel level sensor connector terminal #5. Check for an intermittent open-circuit. Check for an intermittent short-circuit to supply voltage.

Check the ground lead between control module terminal #10A and fuel level sensor connector terminal #6. Check for an intermittent open-circuit.

Other information:

- For information about signals and other values, see **SIGNAL SPECIFICATION**
- To connect the breakout box, see **CONNECTING THE BREAKOUT BOX**
- To access the rear electronic module (REM), see **RELAY/FUSE BOX CARGO COMPARTMENT/REAR ELECTRONIC MODULE (REM), REPLACING**
- To access the fuel level sensor (left-hand side), see **LEVEL SENSOR FUEL TANK LEFT, REPLACING**
- see **CHECKING WIRING AND TERMINALS** .

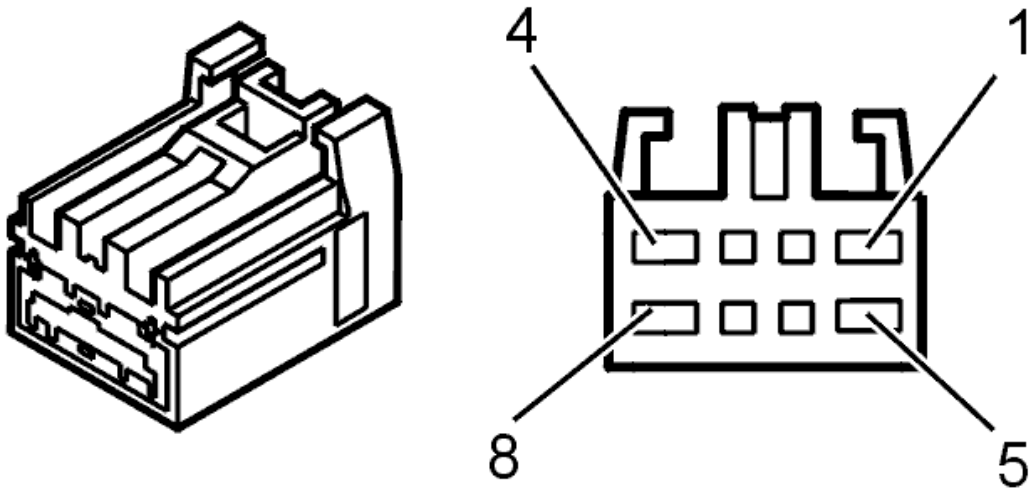

Fig. 121: Identifying Fuel Level Sensor Connector Terminals
Courtesy of VOLVO CARS CORPORATION

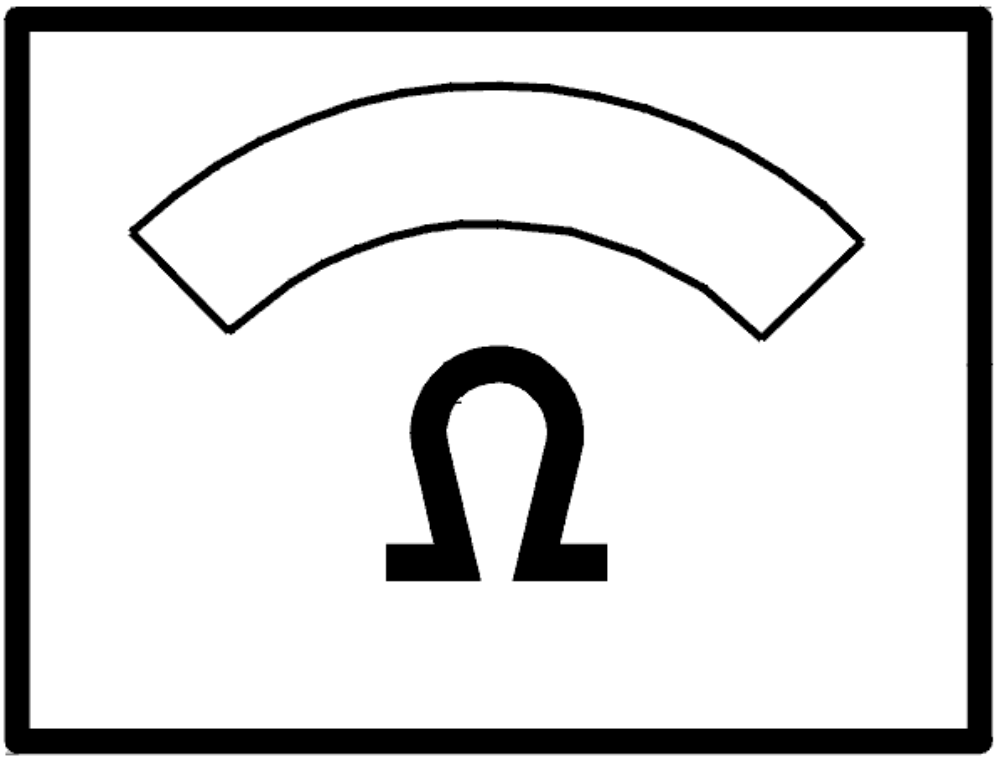

Fig. 122: Identifying Ohms Display
Courtesy of VOLVO CARS CORPORATION

- **Continue**

  Refer to **INFORMATION**

INFORMATION

FAULT-TRACING INFORMATION

If the fault is intermittent, do not verify fault-tracing if the fault does not recur.

It is possible to view the information again, or leave fault-tracing for this diagnostic trouble code (DTC).

REM-4A31: FUEL LEVEL SENSOR. FAULTY SIGNAL. PERMANENT FAULT

(2003-2004)

DIAGNOSTIC TROUBLE CODE INFORMATION

see **DIAGNOSTIC TROUBLE CODE INFORMATION**

FAULTY SIGNAL. PERMANENT FAULT

REPLACING THE COMPONENT

Replace the fuel level sensor (left-hand side). See **LEVEL SENSOR FUEL TANK LEFT, REPLACING** .

- **Continue**

  Refer to **VERIFICATION**

VERIFICATION

VERIFICATION

HINT: After the repair it is necessary to check that the fault has been rectified.

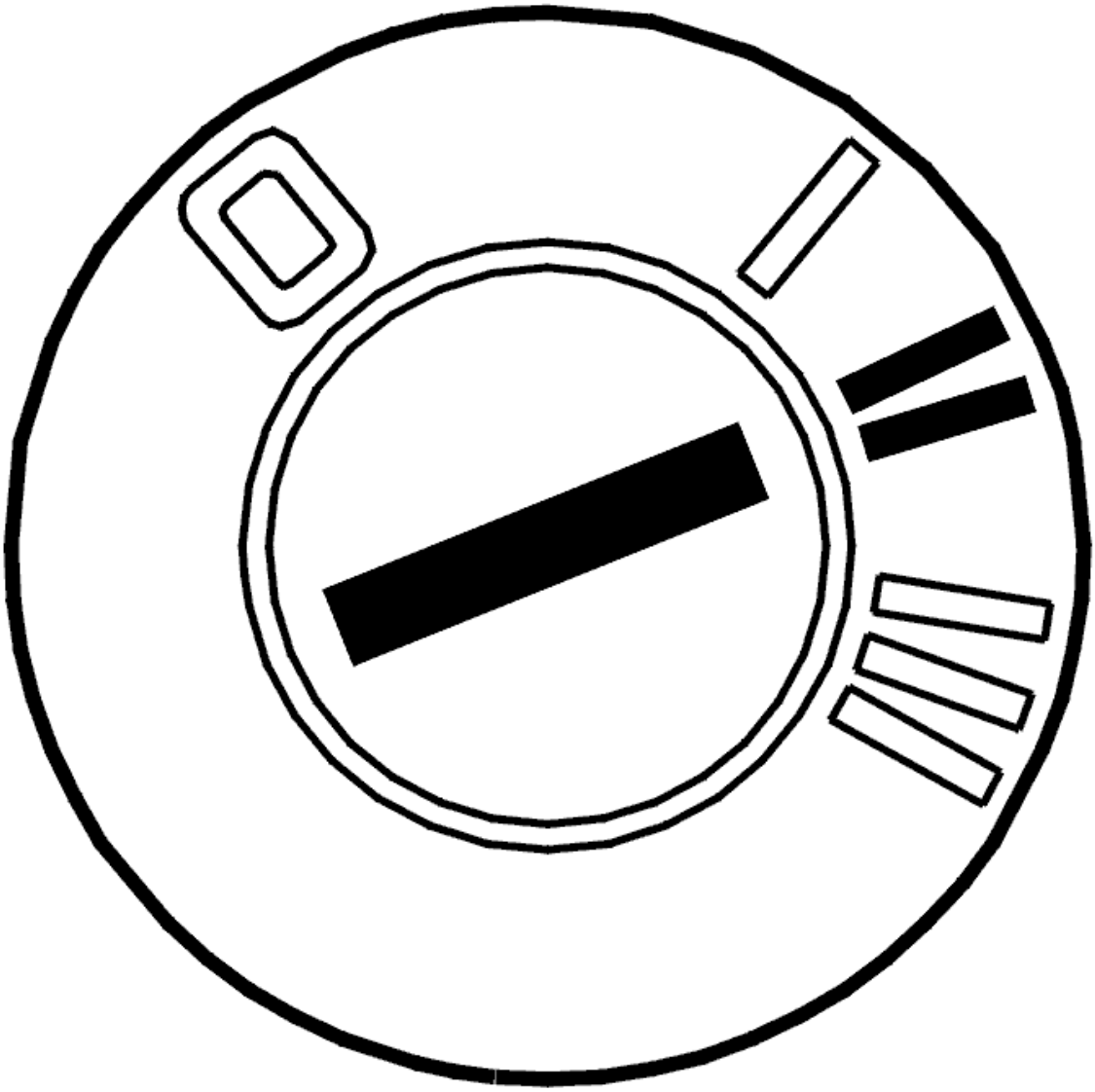

Fig. 123: Identifying Ignition ON
Courtesy of VOLVO CARS CORPORATION

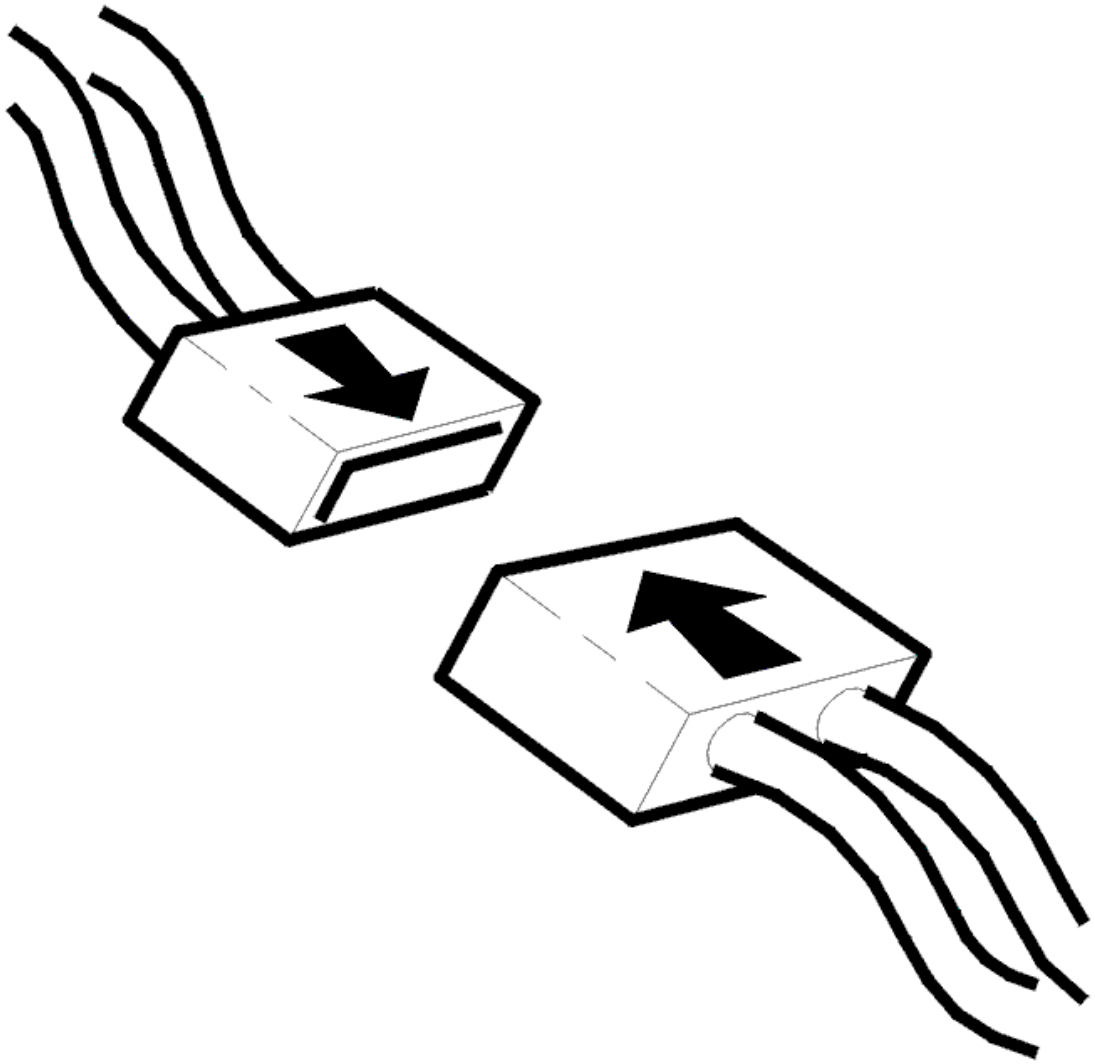

Fig. 124: Identifying Connector(s) Reinstallation
Courtesy of VOLVO CARS CORPORATION

- Ignition off.
- Install the components, connect the connectors, etc.
- Make sure there are more than two liters of fuel in the left tank half.
- Ignition on.

  Read the fuel level in the left tank half.

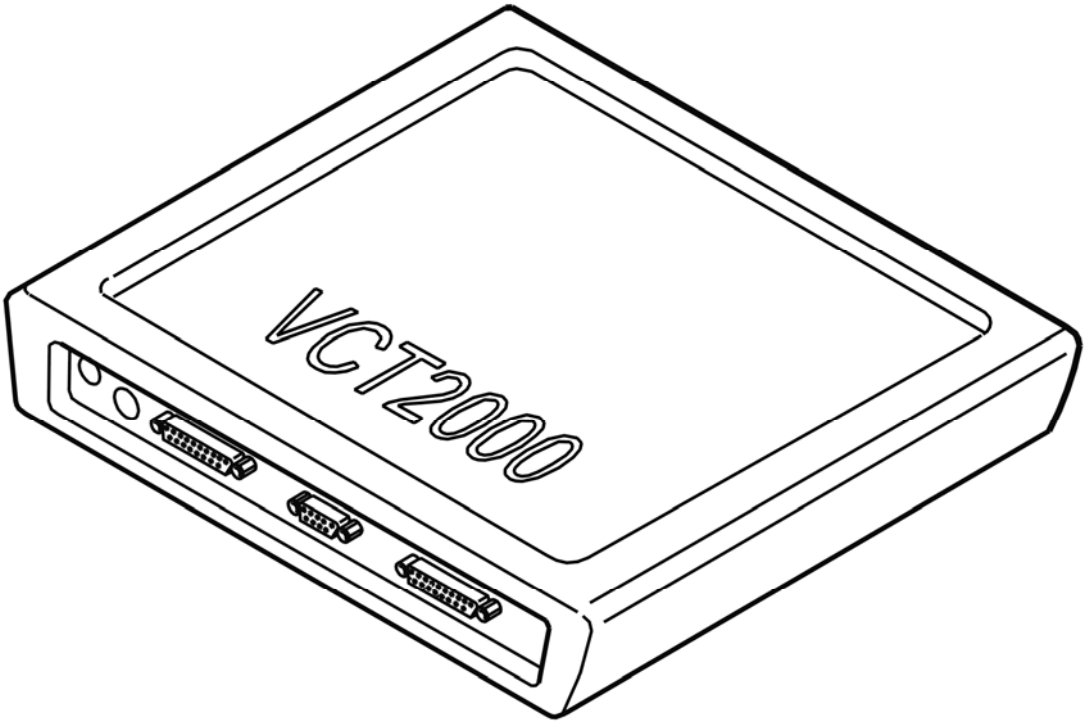

Fig. 125: Identifying VCT2000 Diagnostic Tool Symbol In VIDA
Courtesy of VOLVO CARS CORPORATION

Is the value normal?

- **YES**

  VERIFIED: Troubleshooting has been completed.

- **NO**

  Refer to **INFORMATION**

INFORMATION

FAULT-TRACING INFORMATION

The fault should have been detected and remedied. As this is not the case fault-tracing has failed.

Exit fault-tracing for this diagnostic trouble code (DTC) or make another attempt.

REM-4A33: FUEL LEVEL SENSOR. SIGNAL TOO HIGH OR SIGNAL MISSING. INTERMITTENT FAULT (2003-2004)

DIAGNOSTIC TROUBLE CODE INFORMATION

Condition

If control unit registers that, with ignition on, A/D input is higher than 4 V, the diagnostic trouble code is displayed.

Substitute Value

Fuel gauge is reset.

Possible Source

- Left fuel gauge sensor has an open circuit or short circuited to battery voltage.

Fault symptom[s]

- Trip computer indicates too soon that fuel tank is empty
- Fuel gauge does not work.

SIGNAL TOO HIGH OR SIGNAL MISSING. INTERMITTENT FAULT

CHECKING WIRING AND CONNECTORS

Check the rear electronic module (REM) and fuel level sensor connectors. Check for loose connections. Check for contact resistance and oxidation.

Check the cables between fuel level sensor connector terminal #5 and breakout box terminal #A02 (#A2). Check for an intermittent open-circuit. Check for an intermittent short-circuit to ground. Check for an intermittent short-circuit to supply voltage.

Check the ground lead between breakout box terminal #A10 (#A10) and fuel level sensor connector terminal #6. Check for an intermittent open-circuit.

Other information:

- For further information about signals and other values, see **SIGNAL SPECIFICATION**
- To connect the breakout box, see **CONNECTING THE BREAKOUT BOX**
- To access the rear electronic module (REM), see **RELAY/FUSE BOX CARGO COMPARTMENT/REAR ELECTRONIC MODULE (REM), REPLACING**
- To access the fuel level sensors, see **LEVEL SENSOR FUEL TANK LEFT, REPLACING** or **LEVEL SENSOR, FUEL TANK, RIGHT-HAND/FUEL TANK, REPLACING**
- see **CHECKING WIRING AND TERMINALS** .

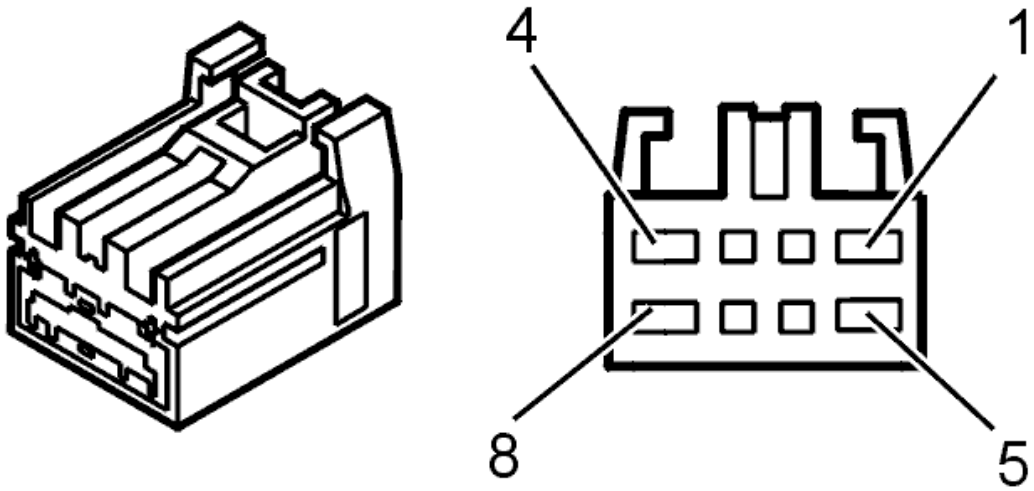

Fig. 126: Identifying Fuel Level Sensor Connector Terminals
Courtesy of VOLVO CARS CORPORATION

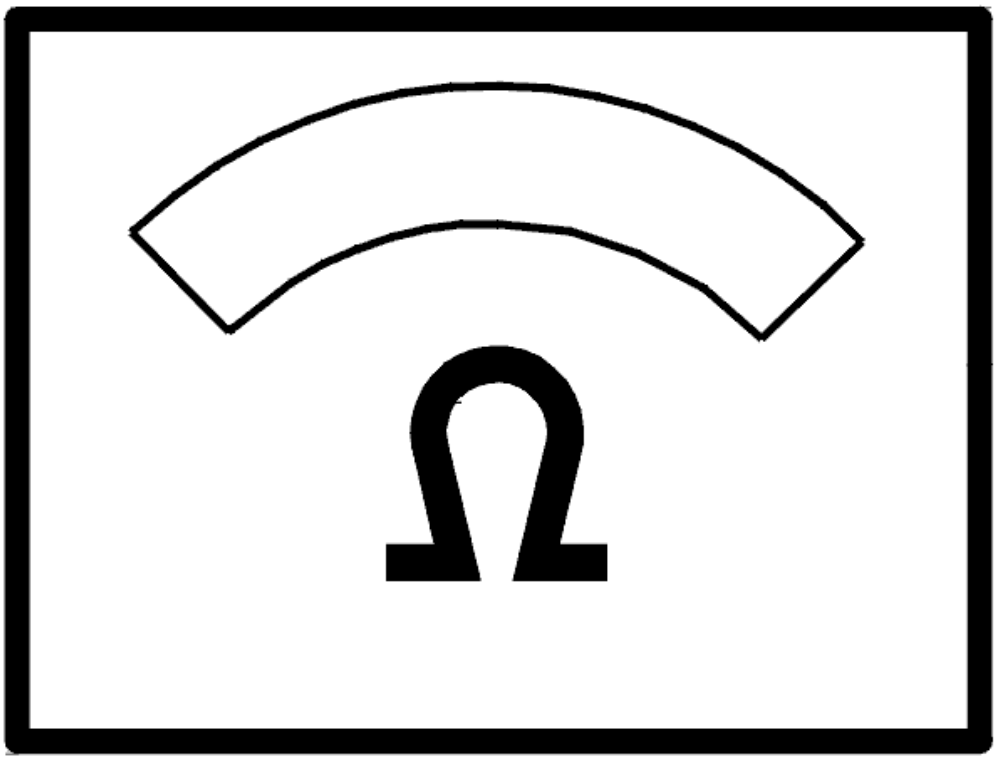

Fig. 127: Identifying Ohms Display
Courtesy of VOLVO CARS CORPORATION

- **Continue**

  Refer to **INFORMATION**

INFORMATION

FAULT-TRACING INFORMATION

If the fault is intermittent, do not verify fault-tracing if the fault does not recur.

It is possible to view the information again, or leave fault-tracing for this diagnostic trouble code (DTC).

REM-4A33: FUEL LEVEL SENSOR. SIGNAL TOO HIGH OR SIGNAL

MISSING. PERMANENT FAULT (2003-2004)

DIAGNOSTIC TROUBLE CODE INFORMATION

see **DIAGNOSTIC TROUBLE CODE INFORMATION**

SIGNAL TOO HIGH OR SIGNAL MISSING. PERMANENT FAULT

CHECKING THE COMPONENT, WIRING AND CONNECTORS

Check the resistance of the fuel level sensor (left-hand side). The resistance across each sensor may vary between 12 ohms (full fuel tank) and 383 ohms (empty fuel tank).

HINT: The resistance of the fuel level sensor (left-hand side) can be measured between fuel level sensor connector terminals #5 and #6.

Check the cables between fuel level sensor connector terminal #5 and breakout box terminal #A02 (#A2). Check for a short-circuit to ground. Check for an open-circuit. Check for a short-circuit to supply voltage.

Check the ground lead between breakout box terminal #A10 (#A10) and fuel level sensor connector terminal #6. Check for an open-circuit.

Remedy as necessary.

Other information:

- For further information about signals and other values, see **SIGNAL SPECIFICATION**
- To connect the breakout box, see **CONNECTING THE BREAKOUT BOX**
- To access the rear electronic module (REM), see **RELAY/FUSE BOX CARGO COMPARTMENT/REAR ELECTRONIC MODULE (REM), REPLACING**
- To access the fuel level sensor (left-hand side), see **LEVEL SENSOR FUEL TANK LEFT, REPLACING**
- see **CHECKING WIRING AND TERMINALS** .

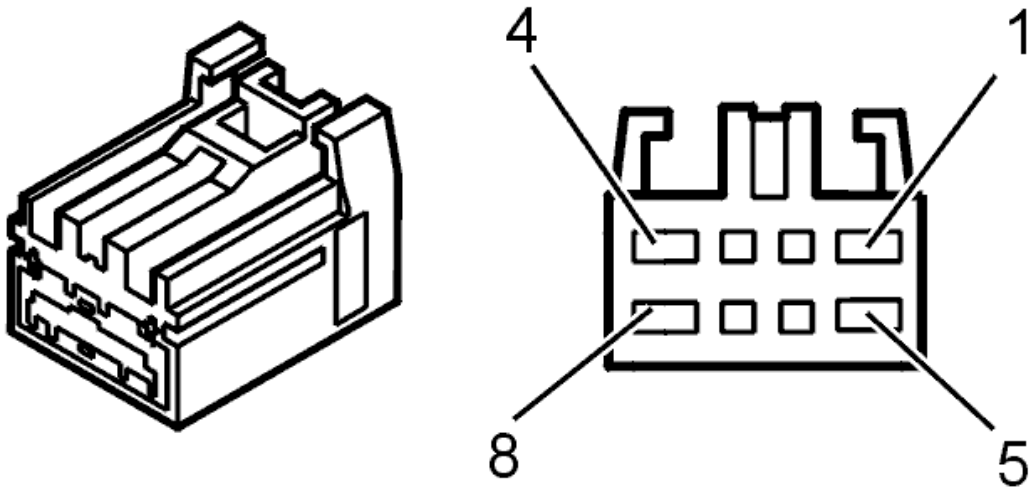

Fig. 128: Identifying Fuel Level Sensor Connector Terminals
Courtesy of VOLVO CARS CORPORATION

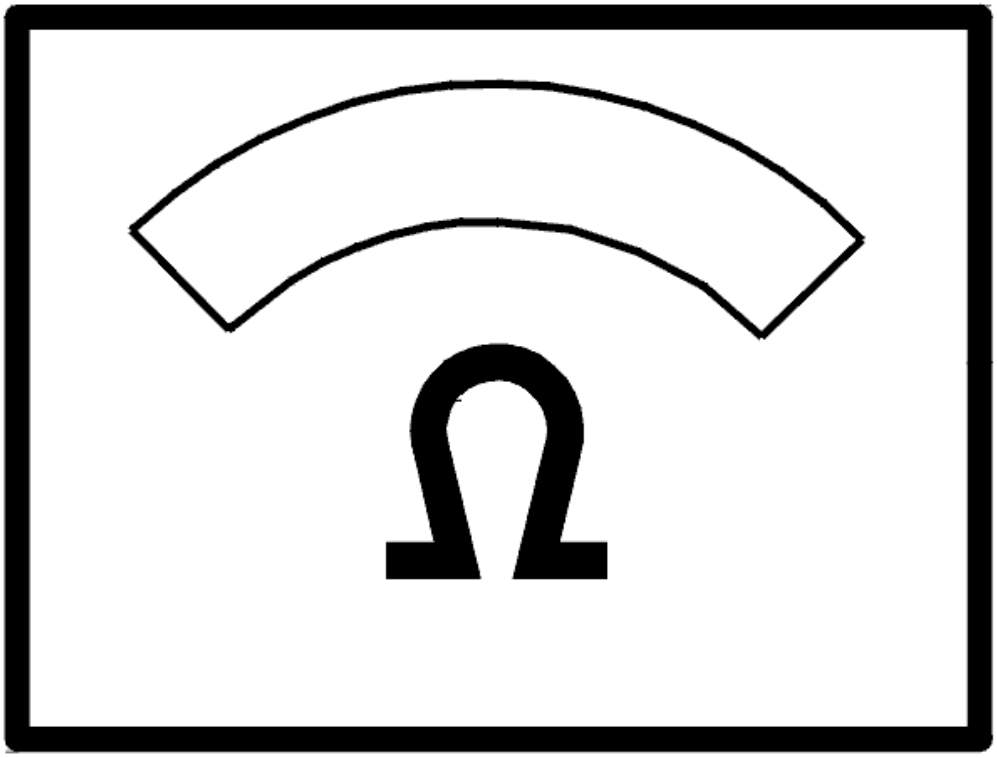

Fig. 129: Identifying Ohms Display
Courtesy of VOLVO CARS CORPORATION

- **Continue**

  Refer to **VERIFICATION**

VERIFICATION

VERIFICATION

HINT: After the repair it is necessary to check that the fault has been rectified.

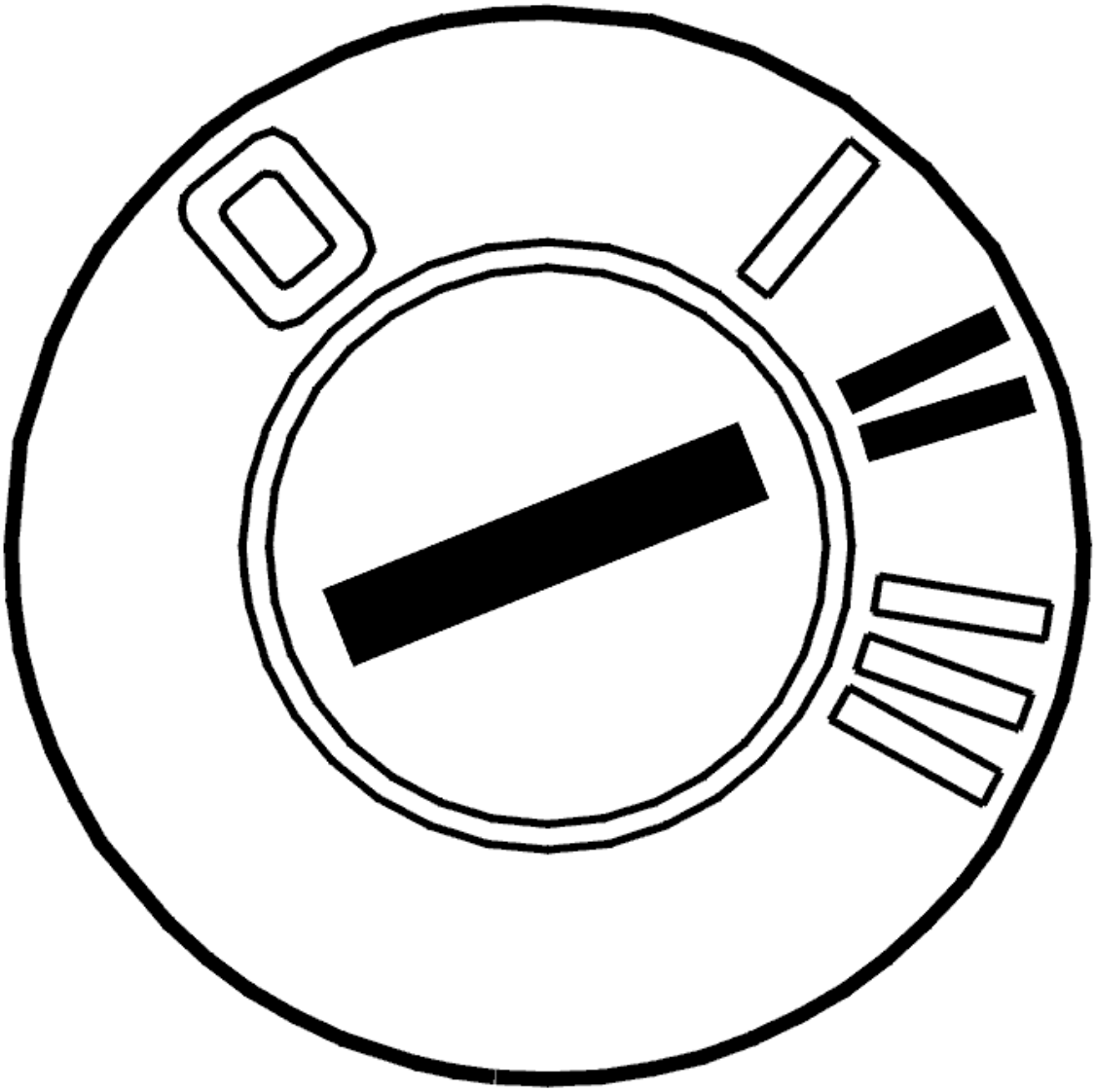

Fig. 130: Identifying Ignition ON
Courtesy of VOLVO CARS CORPORATION

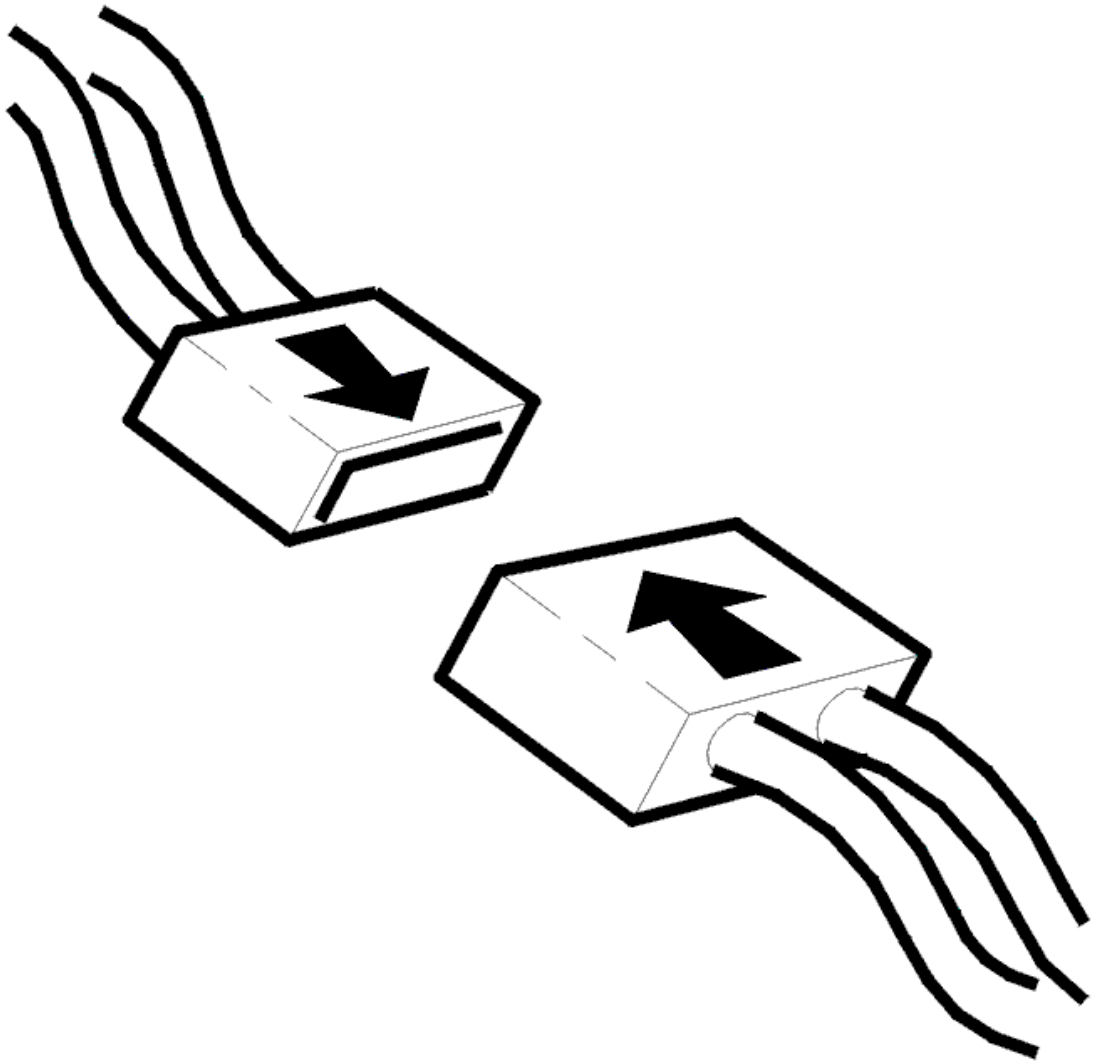

Fig. 131: Identifying Connector(s) Reinstallation
Courtesy of VOLVO CARS CORPORATION

- Ignition off.
- Install the components, connect the connectors, etc.
- Make sure there are more than two liters of fuel in the left tank half.
- Ignition on.

  Read the fuel level in the left tank half.

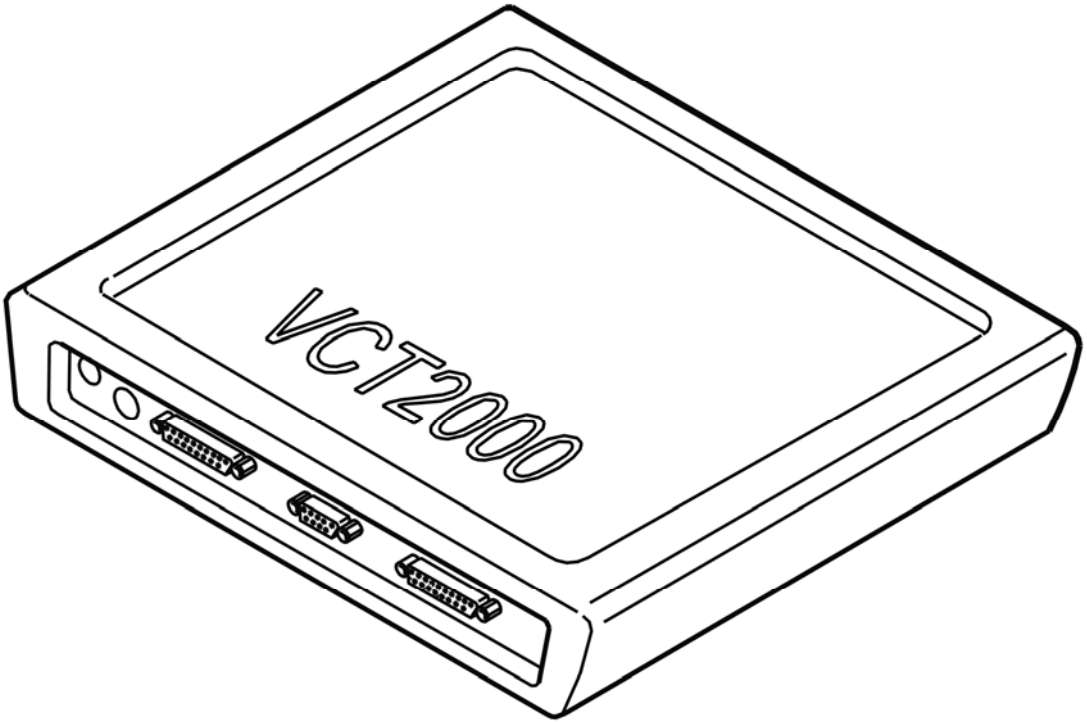

Fig. 132: Identifying VCT2000 Diagnostic Tool Symbol In VIDA
Courtesy of VOLVO CARS CORPORATION

Is the value normal?

- **YES**

  VERIFIED: Troubleshooting has been completed.

- **NO**

  Refer to **INFORMATION**

INFORMATION

FAULT-TRACING INFORMATION

The fault should have been detected and remedied. As this is not the case fault-tracing has failed.

Exit fault-tracing for this diagnostic trouble code (DTC) or make another attempt.

REM-4A34: FUEL LEVEL SENSOR. SIGNAL TOO LOW. INTERMITTENT FAULT (2003-2004)

DIAGNOSTIC TROUBLE CODE INFORMATION

Condition

If control unit registers that, with ignition on, A/D input is less than 0.4V, the diagnostic trouble code is displayed.

Substitute Value

Fuel gauge is reset.

Possible Source

- Left fuel gauge sensor short circuited to ground.

Fault symptom[s]

- Trip computer indicates too soon that fuel tank is empty
- Fuel gauge does not work.

SIGNAL TOO LOW. INTERMITTENT FAULT

CHECKING WIRING AND CONNECTORS

Check the cables between fuel level sensor connector terminal #5 and breakout box terminal #A02 (#A2). Check for an intermittent short-circuit to ground. Check for an intermittent open-circuit.

Check the ground lead between breakout box terminal #A10 (#A10) and fuel level sensor connector terminal #6. Check for an intermittent open-circuit.

Other information:

- For further information about signals and other values, see **SIGNAL SPECIFICATION**
- To connect the breakout box, see **CONNECTING THE BREAKOUT BOX**
- To access the rear electronic module (REM), see **RELAY/FUSE BOX CARGO COMPARTMENT/REAR ELECTRONIC MODULE (REM), REPLACING**
- To access the fuel level sensor (left-hand side), see **LEVEL SENSOR FUEL TANK LEFT, REPLACING**
- see **CHECKING WIRING AND TERMINALS** .

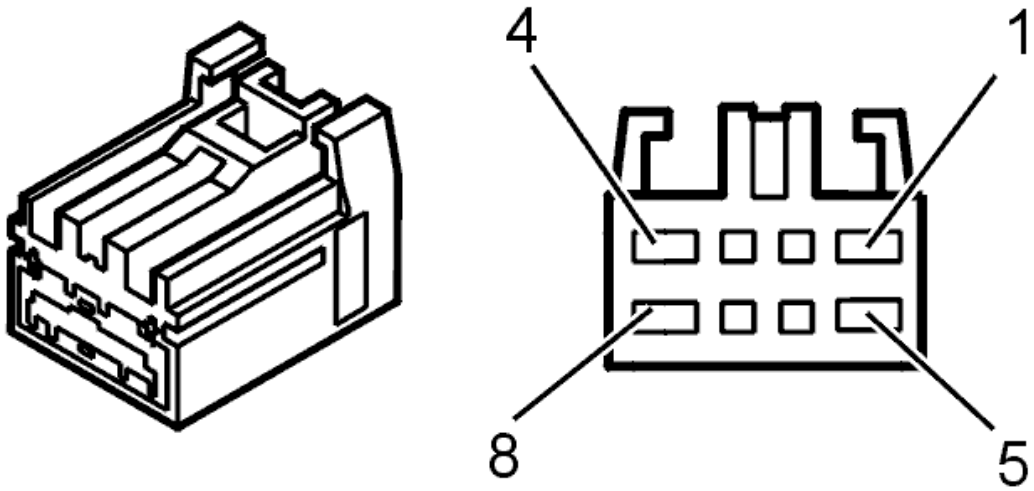

Fig. 133: Identifying Fuel Level Sensor Connector Terminals
Courtesy of VOLVO CARS CORPORATION

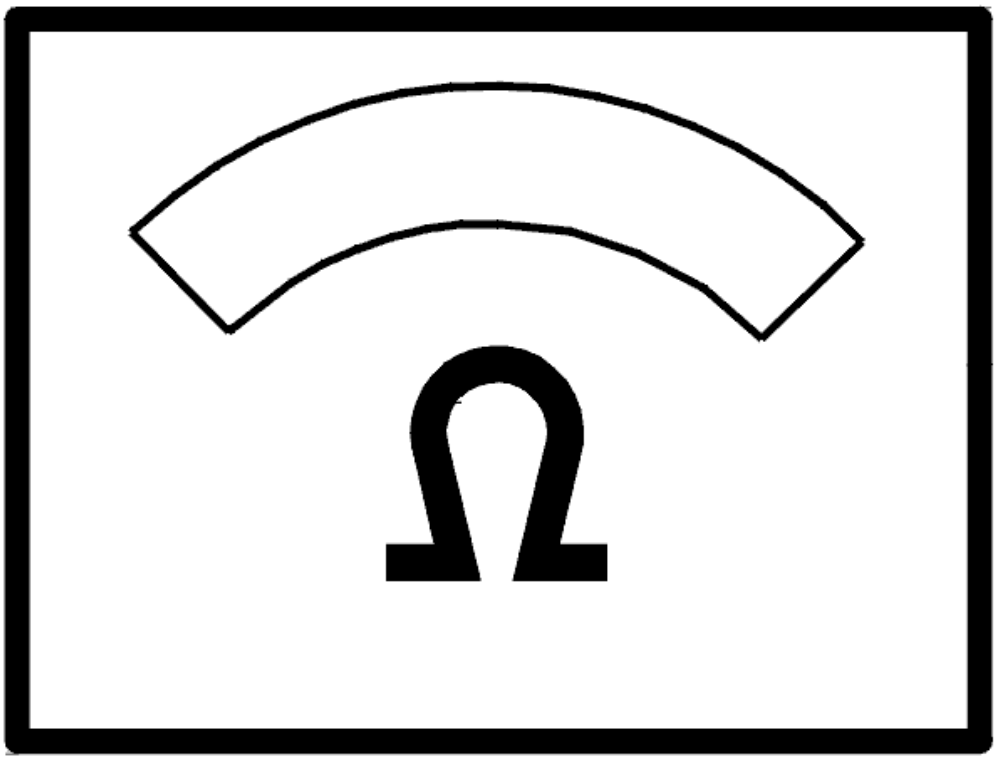

Fig. 134: Identifying Ohms Display
Courtesy of VOLVO CARS CORPORATION

- **Continue**

  Refer to **INFORMATION**

INFORMATION

FAULT-TRACING INFORMATION

If the fault is intermittent, do not verify fault-tracing if the fault does not recur.

It is possible to view the information again, or leave fault-tracing for this diagnostic trouble code (DTC).

REM-4A34: FUEL LEVEL SENSOR. SIGNAL TOO LOW. PERMANENT FAULT

(2003-2004)

DIAGNOSTIC TROUBLE CODE INFORMATION

see **DIAGNOSTIC TROUBLE CODE INFORMATION**

SIGNAL TOO LOW. PERMANENT FAULT

CHECKING WIRING AND CONNECTORS

Check the resistance of the fuel level sensor (left-hand side). The resistance across each sensor may vary between 12 ohms (full fuel tank) and 383 ohms (empty fuel tank).

HINT: The resistance of the fuel level sensor (left-hand side) can be measured between fuel level sensor connector terminals #5 and #6.

Check the cables between fuel level sensor connector terminal #5 and breakout box terminal #A02 (#A2). Check for a short-circuit to ground. Check for an open-circuit.

Check the ground lead between breakout box terminal #A10 (#A10) and fuel level sensor connector terminal #6. Check for an open-circuit.

Remedy as necessary.

Other information:

- For further information about signals and other values, see **SIGNAL SPECIFICATION**
- To access the rear electronic module (REM), see **RELAY/FUSE BOX CARGO COMPARTMENT/REAR ELECTRONIC MODULE (REM), REPLACING**
- To connect the breakout box, see **CONNECTING THE BREAKOUT BOX**
- To access the fuel level sensor (left-hand side), see **LEVEL SENSOR FUEL TANK LEFT, REPLACING**
- see **CHECKING WIRING AND TERMINALS** .

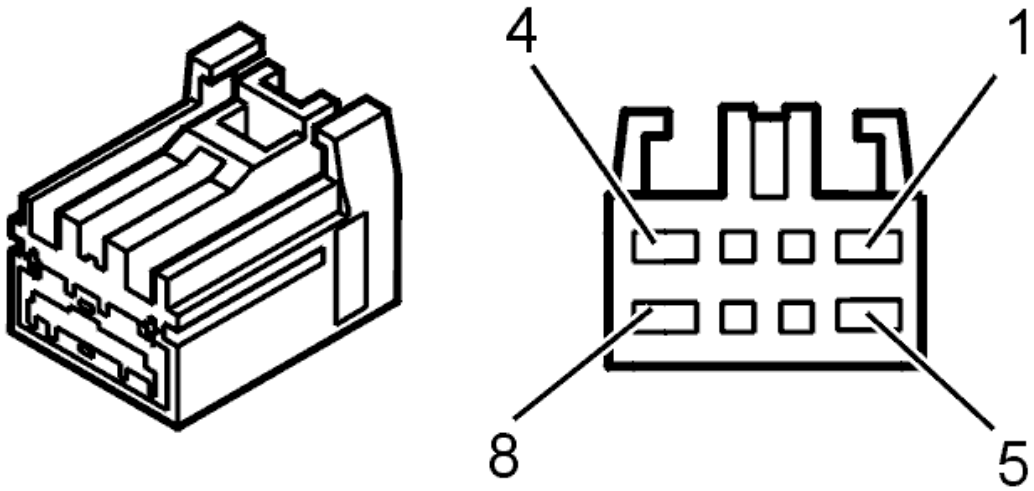

Fig. 135: Identifying Fuel Level Sensor Connector Terminals
Courtesy of VOLVO CARS CORPORATION

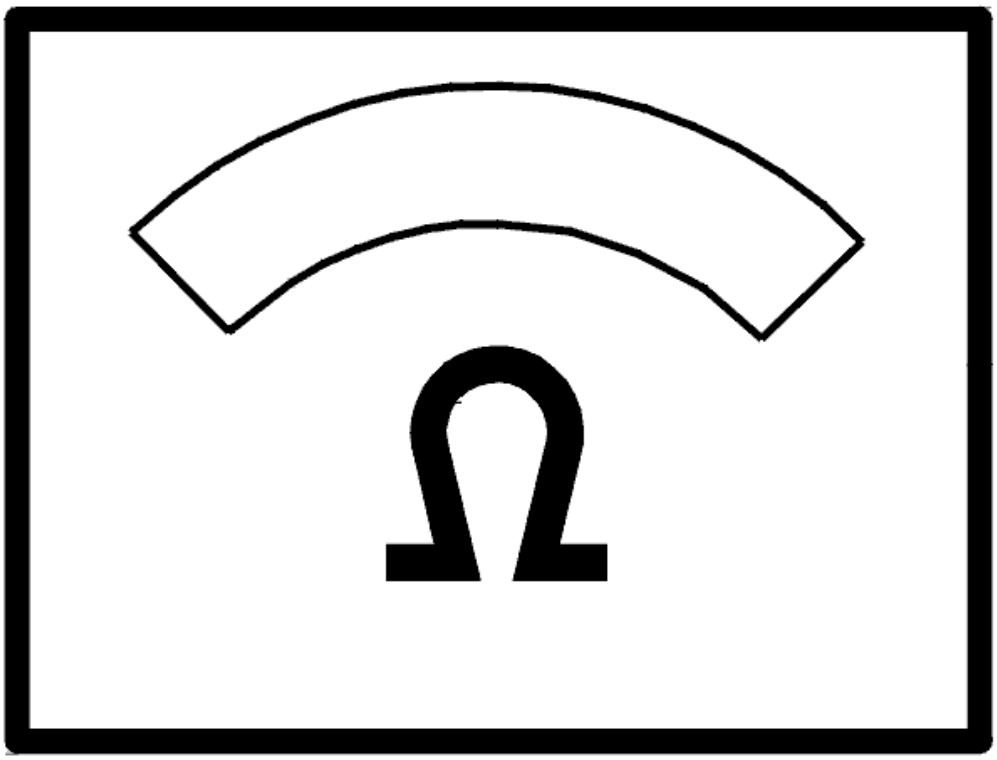

Fig. 136: Identifying Ohms Display
Courtesy of VOLVO CARS CORPORATION

- **Continue**

  Refer to **VERIFICATION**

VERIFICATION

VERIFICATION

HINT: After the repair it is necessary to check that the fault has been rectified.

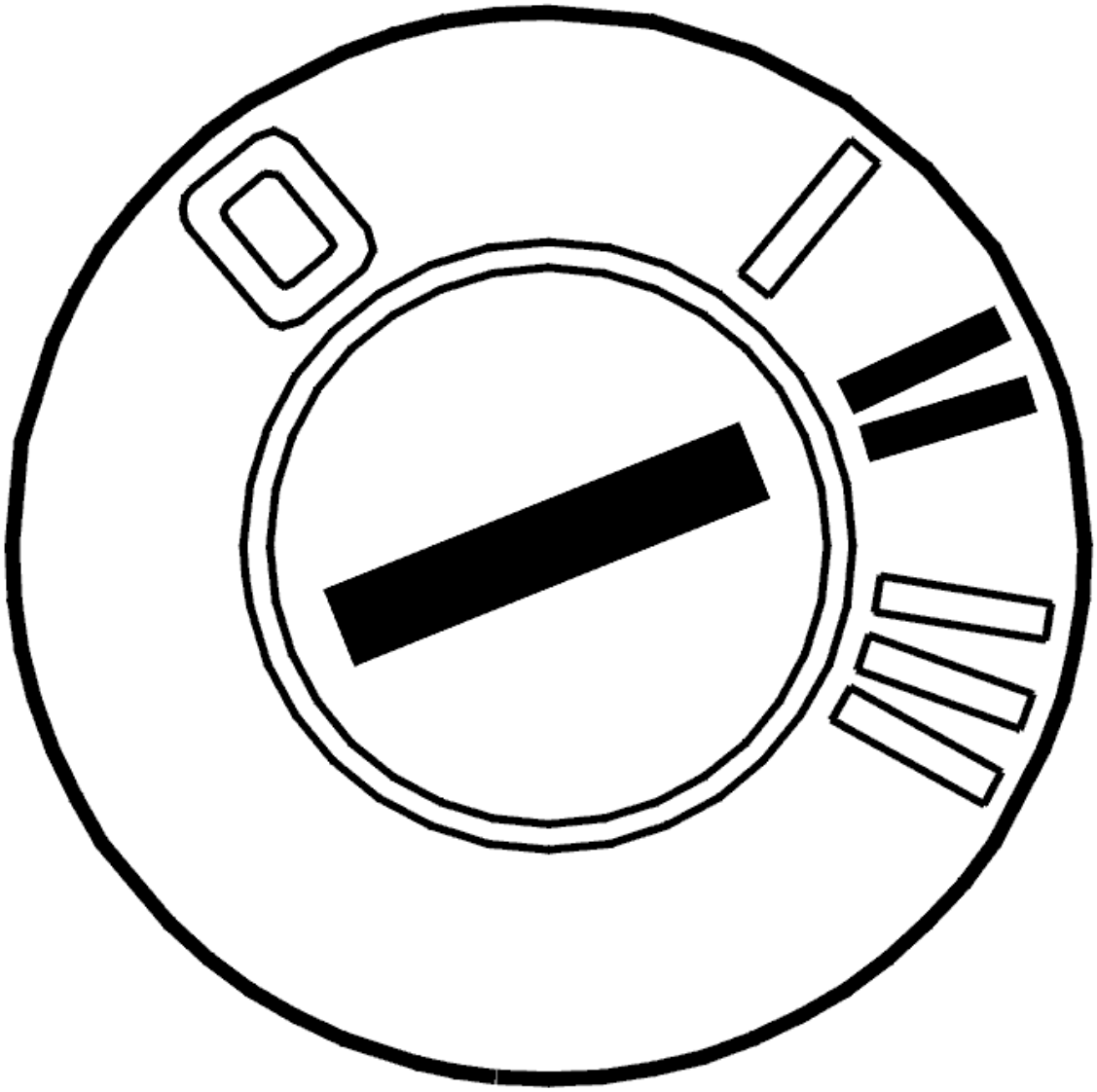

Fig. 137: Identifying Ignition ON
Courtesy of VOLVO CARS CORPORATION

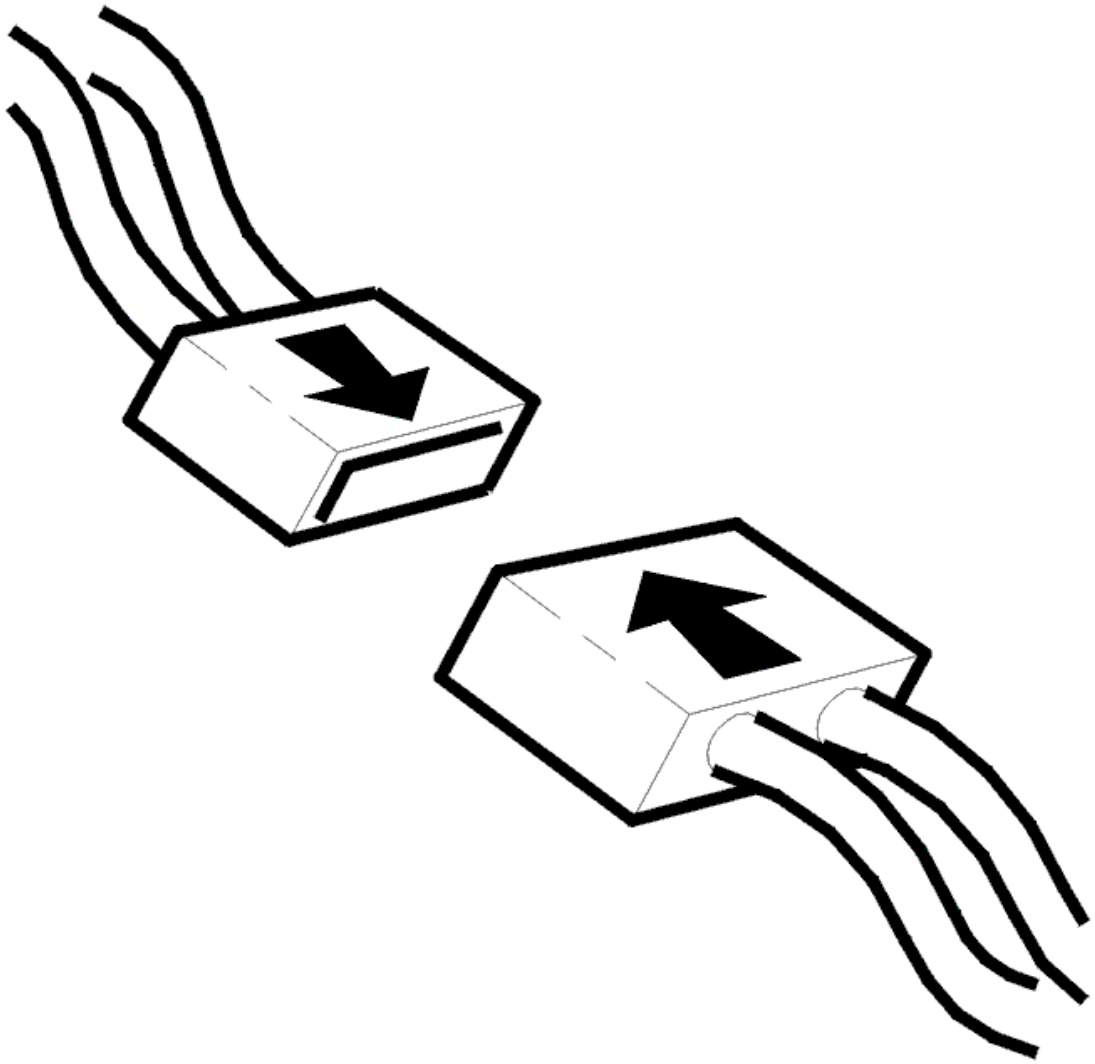

Fig. 138: Identifying Connector(s) Reinstallation
Courtesy of VOLVO CARS CORPORATION

- Ignition off.
- Install the components, connect the connectors, etc.
- Make sure there are more than two liters of fuel in the left tank half.
- Ignition on.

  Read the fuel level in the left tank half.

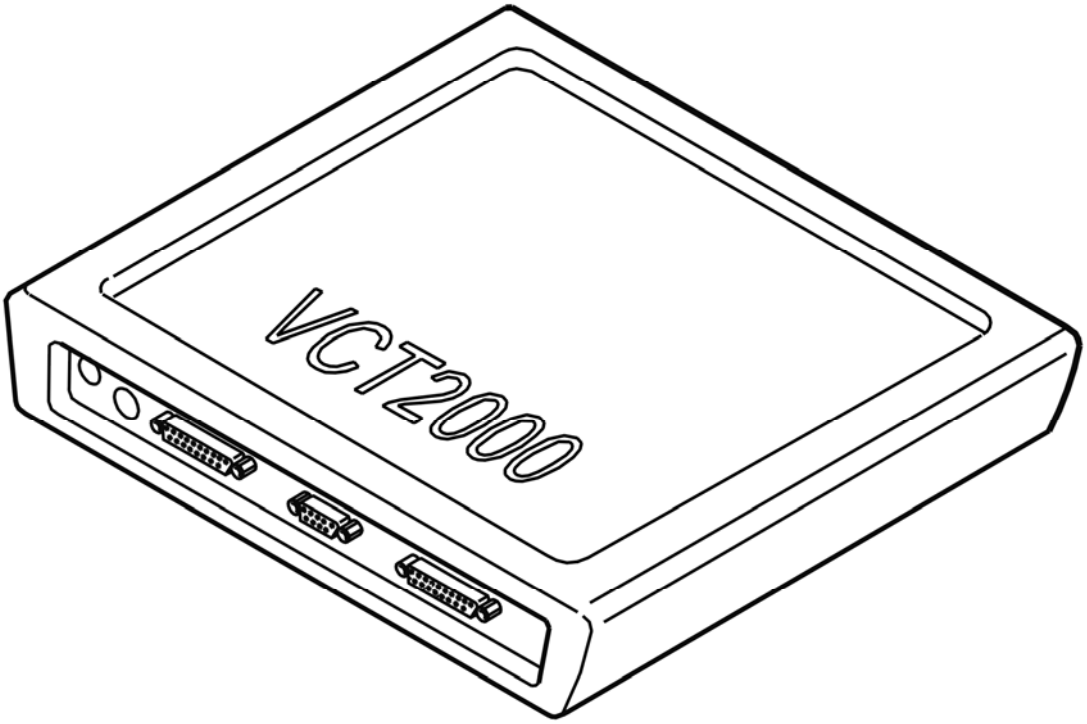

Fig. 139: Identifying VCT2000 Diagnostic Tool Symbol In VIDA
Courtesy of VOLVO CARS CORPORATION

Is the value normal?

- **YES**

  VERIFIED: Troubleshooting has been completed.

- **NO**

  Refer to **INFORMATION**

INFORMATION

FAULT-TRACING INFORMATION

The fault should have been detected and remedied. As this is not the case fault-tracing has failed.

Exit fault-tracing for this diagnostic trouble code (DTC) or make another attempt.

REM-4A35: FUEL LEVEL SENSOR. FAULTY SIGNAL. INTERMITTENT FAULT (2003-2004)

DIAGNOSTIC TROUBLE CODE INFORMATION

Condition

If the control unit registers that, when engine is running, the fuel level in the right tank half is more than 2 liters and unchanged for 100km (60 miles), the diagnostic trouble code is displayed.

Substitute Value

Fuel gauge is reset.

Possible Source

- Defective sensor (right side).

Fault symptom[s]

- Trip computer indicates too soon that fuel tank is empty
- Fuel gauge does not work.

FAULTY SIGNAL. INTERMITTENT FAULT

CHECKING WIRING AND CONNECTORS

Check the rear electronic module (REM) and fuel level sensor connectors. Check for contact resistance and oxidation. Check for loose connections.

Check the signal cable between control module terminal #8A and fuel level sensor connector terminal #7. Check for an intermittent open-circuit. Check for an intermittent short-circuit to supply voltage.

Check the ground lead between control module terminal #10A and fuel level sensor connector terminal #6. Check for an intermittent open-circuit.

Check the cables between the left and right fuel level sensors. Check for an intermittent open-circuit.

Other information:

- For further information about signals and other values, see **SIGNAL SPECIFICATION**
- To connect the breakout box, see **CONNECTING THE BREAKOUT BOX**
- To access the rear electronic module (REM), see **RELAY/FUSE BOX CARGO COMPARTMENT/REAR ELECTRONIC MODULE (REM), REPLACING**
- To access the fuel level sensor (left-hand side), see **LEVEL SENSOR FUEL TANK LEFT, REPLACING**
- To access the fuel level sensor (right-hand side), see **LEVEL SENSOR, FUEL TANK, RIGHT-HAND/FUEL TANK, REPLACING**
- see **CHECKING WIRING AND TERMINALS** .

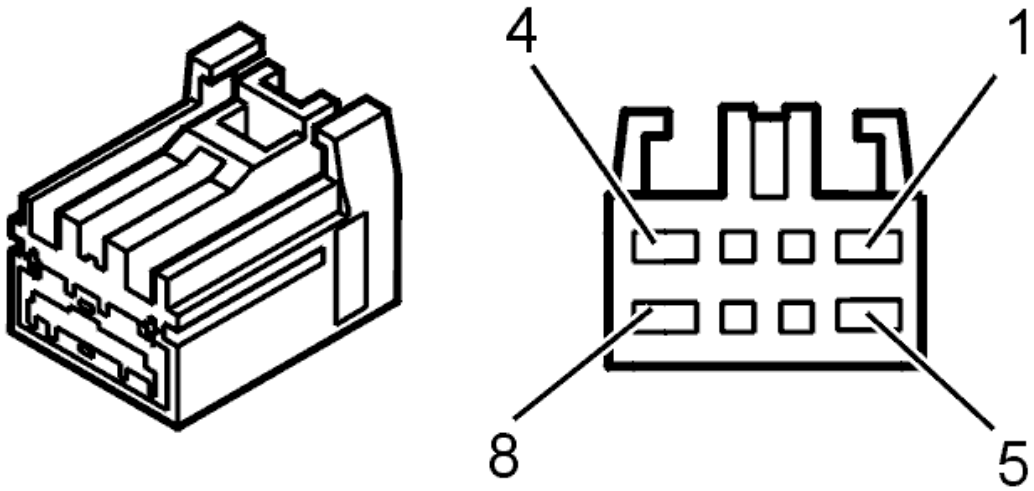

Fig. 140: Identifying Fuel Level Sensor Connector Terminals
Courtesy of VOLVO CARS CORPORATION

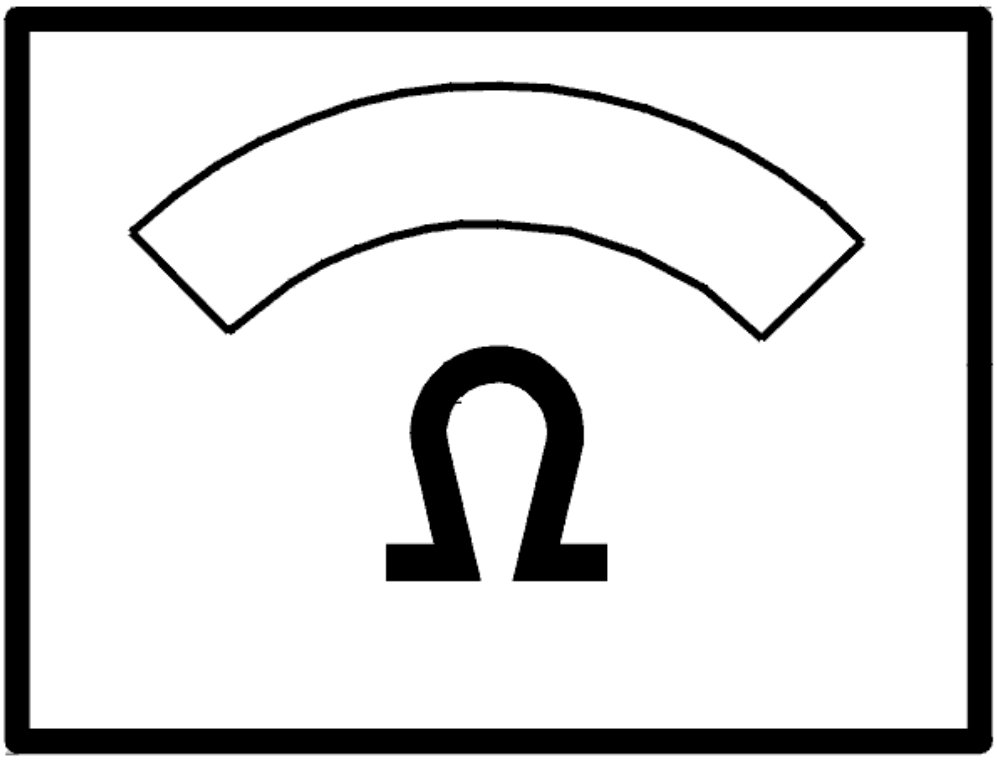

Fig. 141: Identifying Ohms Display
Courtesy of VOLVO CARS CORPORATION

- **Continue**

  Refer to **INFORMATION**

INFORMATION

FAULT-TRACING INFORMATION

If the fault is intermittent, do not verify fault-tracing if the fault does not recur.

It is possible to view the information again, or leave fault-tracing for this diagnostic trouble code (DTC).

REM-4A35: FUEL LEVEL SENSOR. FAULTY SIGNAL. PERMANENT FAULT

(2003-2004)

DIAGNOSTIC TROUBLE CODE INFORMATION

see **DIAGNOSTIC TROUBLE CODE INFORMATION**

FAULTY SIGNAL. PERMANENT FAULT

REPLACING THE COMPONENT

Replace the fuel level sensor (right-hand side). See **LEVEL SENSOR, FUEL TANK, RIGHT-HAND/FUEL TANK, REPLACING** .

- **Continue**

  Refer to **VERIFICATION**

VERIFICATION

VERIFICATION

HINT: After the repair it is necessary to check that the fault has been rectified.

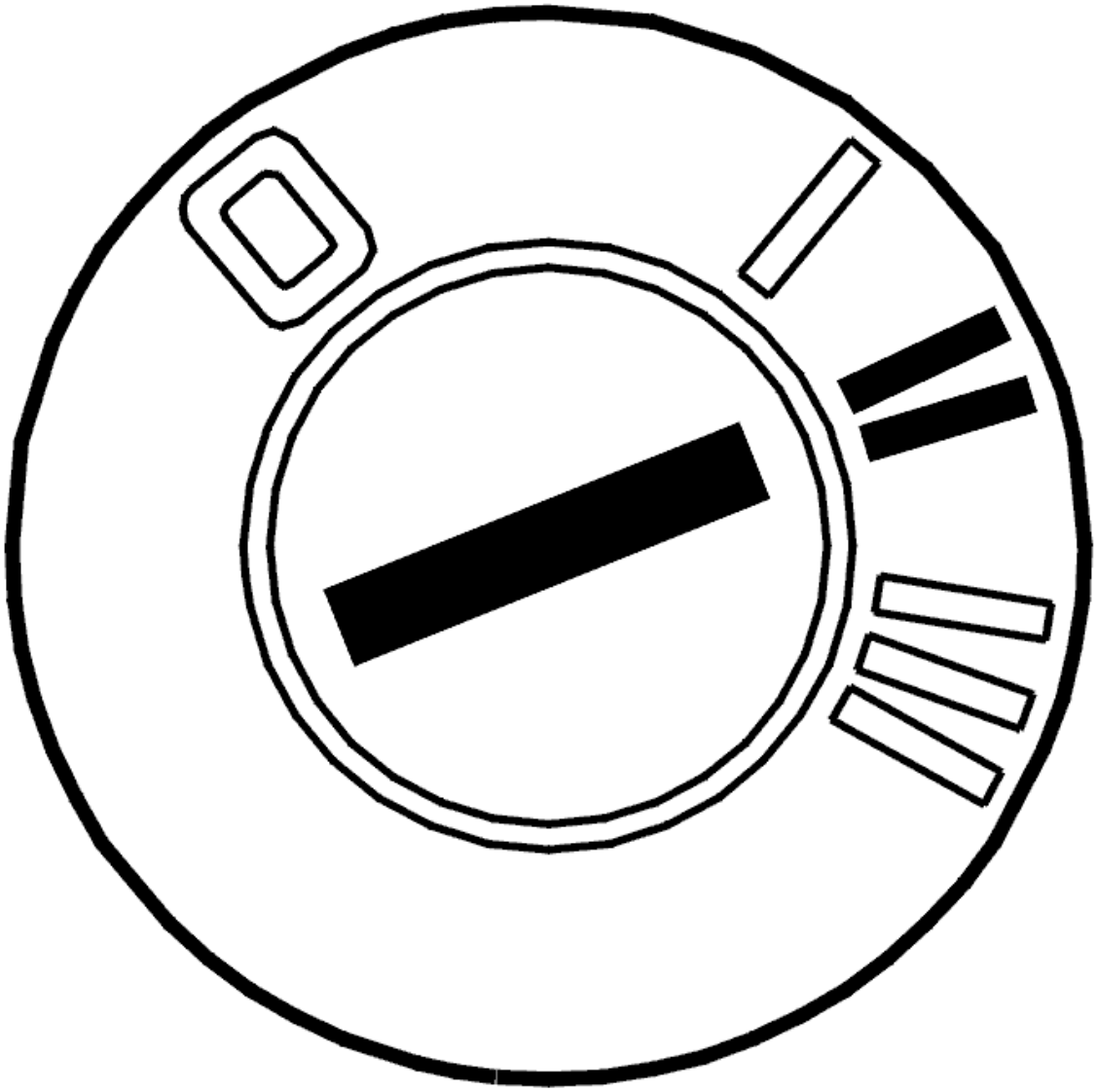

Fig. 142: Identifying Ignition ON
Courtesy of VOLVO CARS CORPORATION

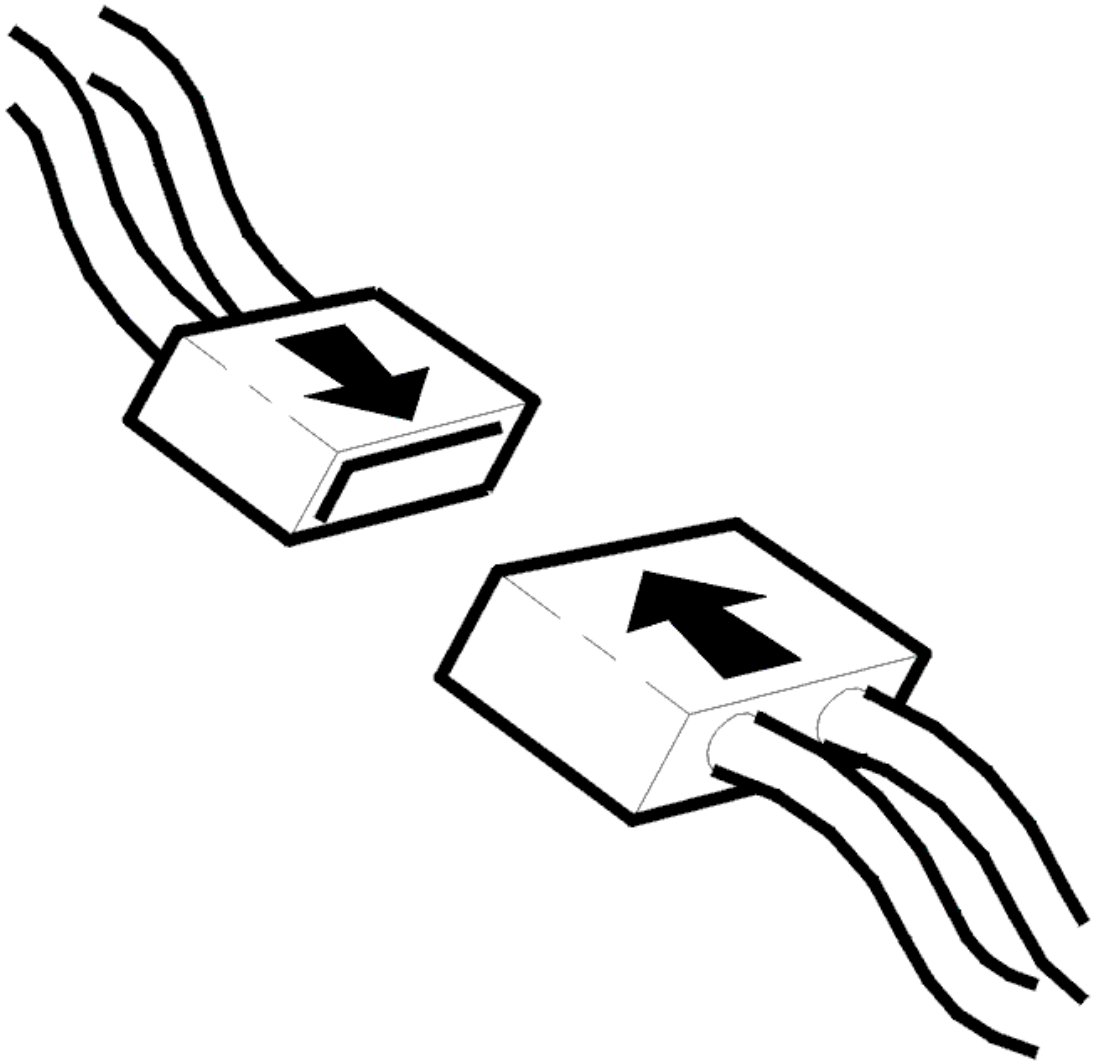

Fig. 143: Identifying Connector(s) Reinstallation
Courtesy of VOLVO CARS CORPORATION

- Ignition off.
- Install the components, connect the connectors, etc.
- Make sure there are more than two liters of fuel in the right tank half.
- Ignition on.

  Read the fuel level in the right tank half.

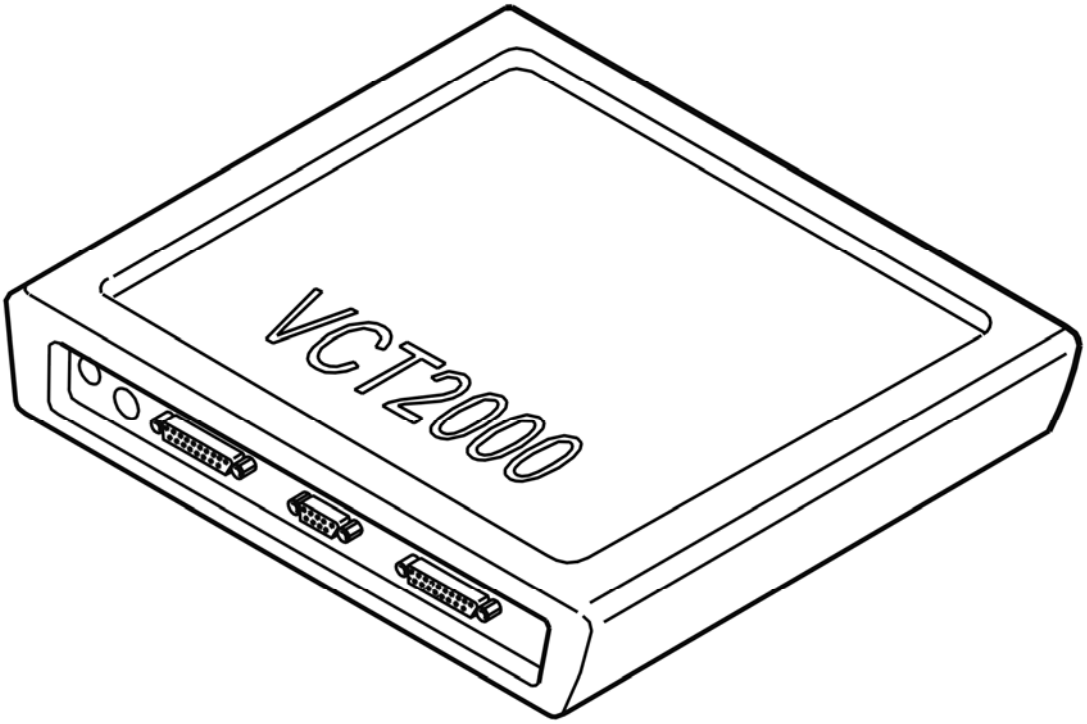

Fig. 144: Identifying VCT2000 Diagnostic Tool Symbol In VIDA
Courtesy of VOLVO CARS CORPORATION

Is the value normal?

- **YES**

  VERIFIED: Troubleshooting has been completed.

- **NO**

  Refer to **INFORMATION**

INFORMATION

FAULT-TRACING INFORMATION

The fault should have been detected and remedied. As this is not the case fault-tracing has failed.

Exit fault-tracing for this diagnostic trouble code (DTC) or make another attempt.

REM-4A37: FUEL LEVEL SENSOR. SIGNAL TOO HIGH OR SIGNAL MISSING. INTERMITTENT FAULT (2003-2004)

DIAGNOSTIC TROUBLE CODE INFORMATION

Condition

If control unit registers that, with ignition on, A/D input is higher than 4 V, the diagnostic trouble code is displayed.

Substitute Value

Fuel gauge is reset.

Possible Source

- Fuel gauge sensor (right side) has an open circuit or short circuited to battery voltage.

Fault symptom[s]

- Trip computer indicates too soon that fuel tank is empty
- Fuel gauge does not work.

SIGNAL TOO HIGH OR SIGNAL MISSING. INTERMITTENT FAULT

CHECKING WIRING AND CONNECTORS

Check the rear electronic module (REM) and fuel level sensor connectors. Check for loose connections. Check for contact resistance and oxidation.

Check the cables between fuel level sensor connector terminal #7 and control module terminal #A08 (#A8). Check for an intermittent open-circuit. Check for an intermittent short-circuit to ground. Check for an intermittent short-circuit to supply voltage.

Check the ground lead between control module terminal #A10 (#A10) and fuel level sensor connector terminal #6. Check for an intermittent open-circuit.

Check the cables between the left and right fuel level sensors. Check for an intermittent open-circuit. Check the terminal pins and connectors. Check for loose connections. Check for contact resistance and oxidation.

Other information:

- For further information about signals and other values, see **SIGNAL SPECIFICATION**
- To connect the breakout box, see **CONNECTING THE BREAKOUT BOX**
- To access the rear electronic module (REM), see **RELAY/FUSE BOX CARGO COMPARTMENT/REAR ELECTRONIC MODULE (REM), REPLACING**
- To access the fuel level sensor (left-hand side), see **LEVEL SENSOR FUEL TANK LEFT, REPLACING**
- To access the fuel level sensor (right-hand side), see **LEVEL SENSOR, FUEL TANK, RIGHT-**

HAND/FUEL TANK, REPLACING .

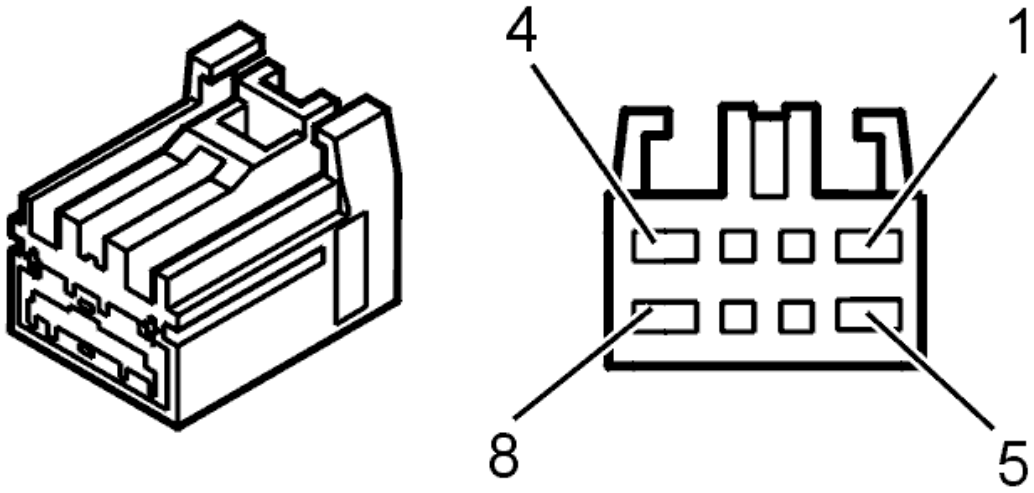

Fig. 145: Identifying Fuel Level Sensor Connector Terminals
Courtesy of VOLVO CARS CORPORATION

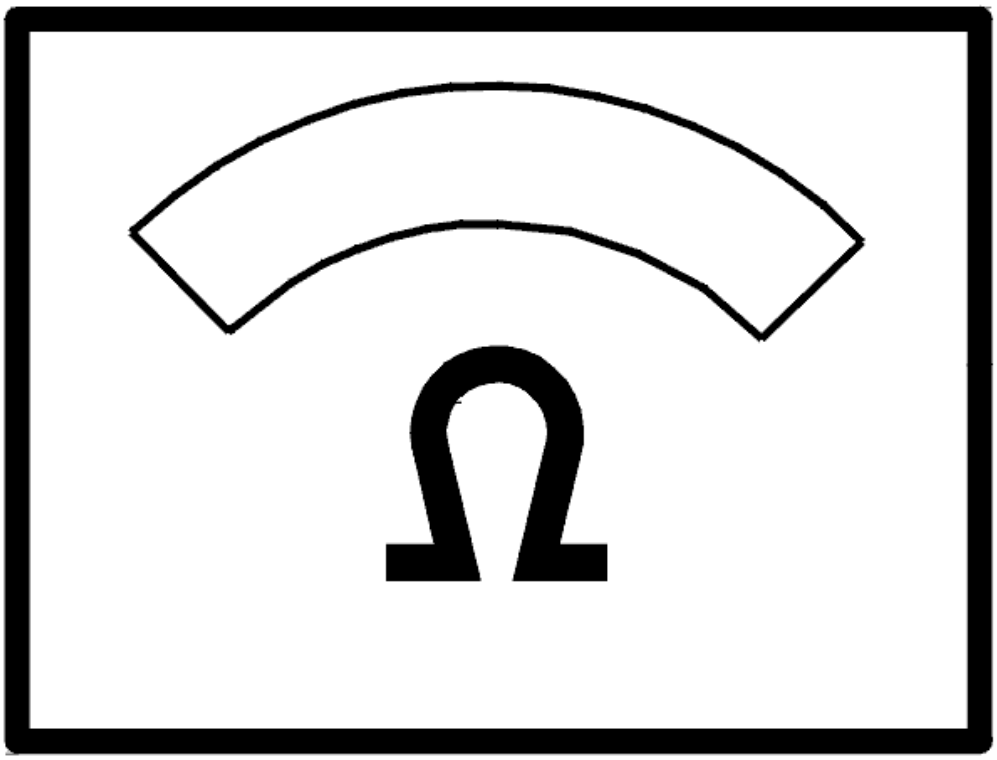

Fig. 146: Identifying Ohms Display
Courtesy of VOLVO CARS CORPORATION

- **Continue**

  Refer to **INFORMATION**

INFORMATION

FAULT-TRACING INFORMATION

If the fault is intermittent, do not verify fault-tracing if the fault does not recur.

It is possible to view the information again, or leave fault-tracing for this diagnostic trouble code (DTC).

REM-4A37: FUEL LEVEL SENSOR. SIGNAL TOO HIGH OR SIGNAL

MISSING. PERMANENT FAULT (2003-2004)

DIAGNOSTIC TROUBLE CODE INFORMATION

see **DIAGNOSTIC TROUBLE CODE INFORMATION**

SIGNAL TOO HIGH OR SIGNAL MISSING. PERMANENT FAULT

CHECKING WIRING AND CONNECTORS

Check the resistance of the fuel level sensor (right-hand side). The resistance across each sensor may vary between 12 ohms (full fuel tank) and 383 ohms (empty fuel tank).

HINT: The resistance of the right-hand side fuel level sensor can be measured between fuel level sensor connector terminals #7 and #6. The resistance of the left-hand side fuel level sensor can be measured between fuel level sensor connector terminals #5 and #6.

Check the cables and connections between connector terminal #7 for the fuel level sensors and rear electronic module (REM) terminal #A08 (#A8). Check for an open-circuit. Check for a short-circuit to ground. Check for a short-circuit to supply voltage.

Check the ground lead between control module terminal #A10 (#A10) and fuel level sensor connector terminal #6. Check for an open-circuit.

Check the cables between the left and right fuel level sensors. Check for an open-circuit.

Remedy as necessary.

Other information:

- For further information about signals and other values, see **SIGNAL SPECIFICATION**
- To connect the breakout box, see **CONNECTING THE BREAKOUT BOX**
- To access the rear electronic module (REM), see **RELAY/FUSE BOX CARGO COMPARTMENT/REAR ELECTRONIC MODULE (REM), REPLACING**
- To access the fuel level sensor (left-hand side), see **LEVEL SENSOR FUEL TANK LEFT, REPLACING**
- To access the fuel level sensor (right-hand side), see **LEVEL SENSOR, FUEL TANK, RIGHT-HAND/FUEL TANK, REPLACING**
- see **CHECKING WIRING AND TERMINALS** .

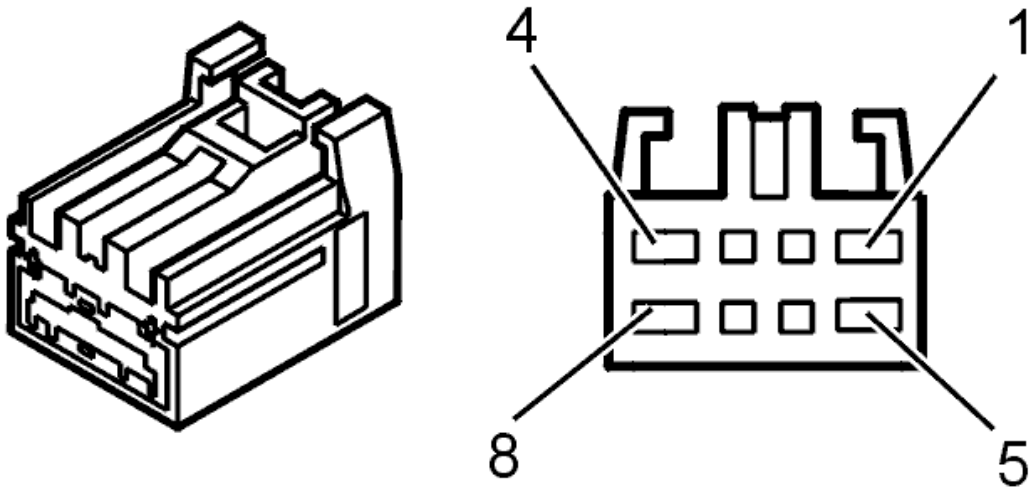

Fig. 147: Identifying Fuel Level Sensor Connector Terminals
Courtesy of VOLVO CARS CORPORATION

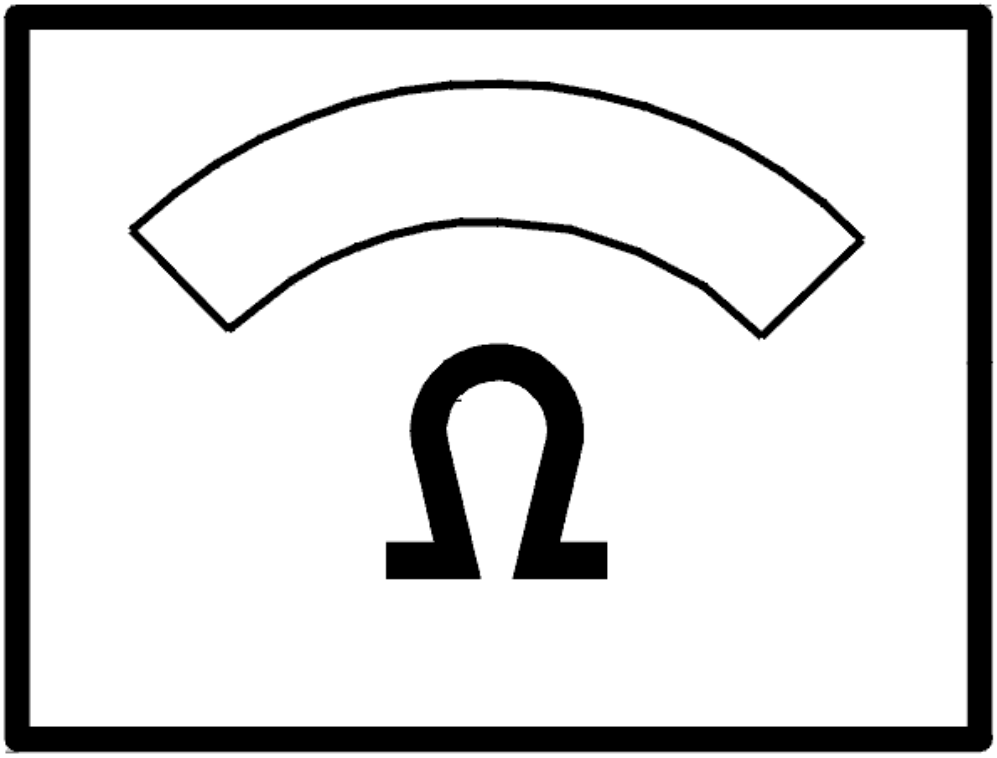

Fig. 148: Identifying Ohms Display
Courtesy of VOLVO CARS CORPORATION

- **Continue**

  Refer to **VERIFICATION**

VERIFICATION

VERIFICATION

HINT: After the repair it is necessary to check that the fault has been rectified.

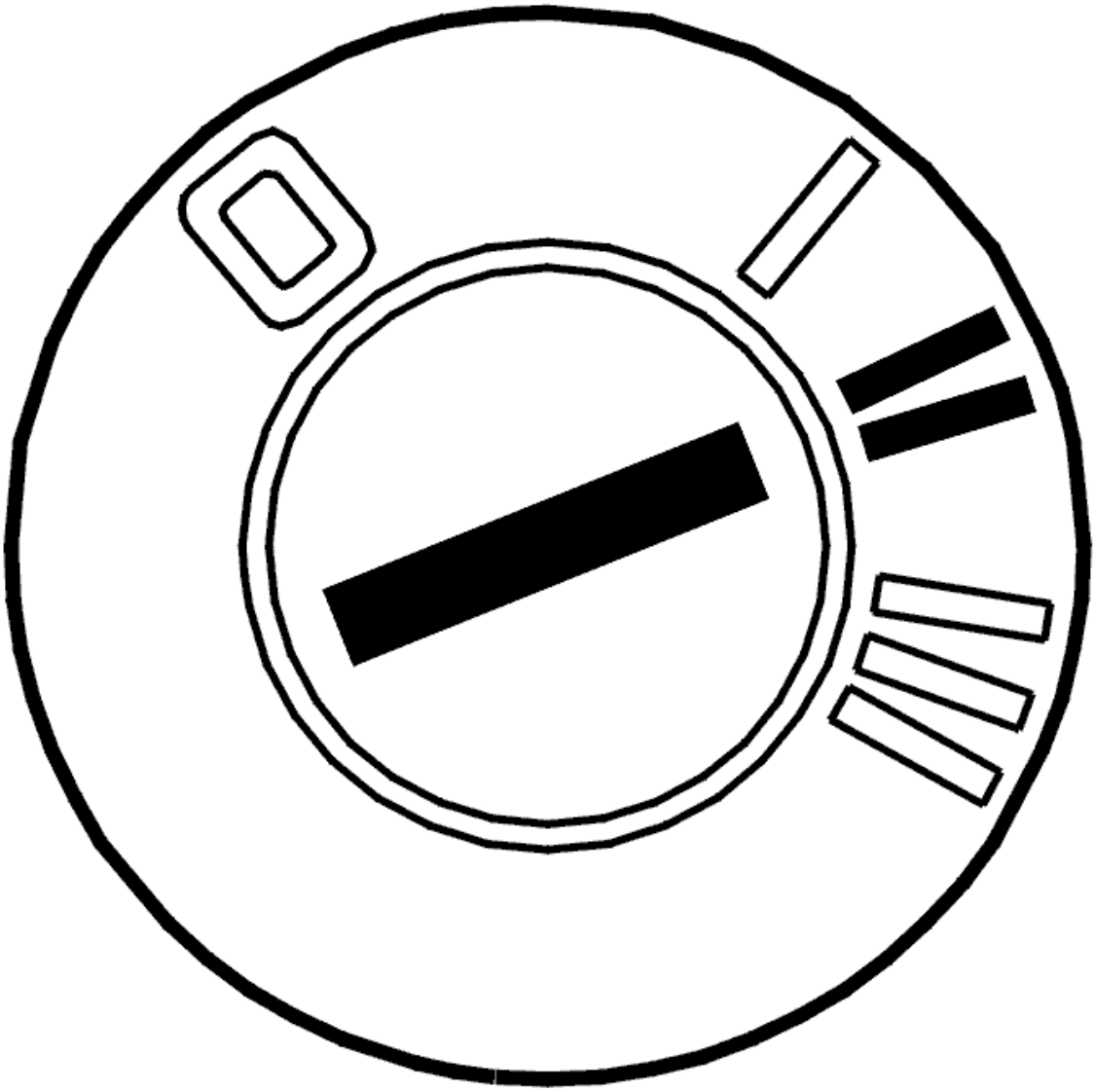

Fig. 149: Identifying Ignition ON
Courtesy of VOLVO CARS CORPORATION

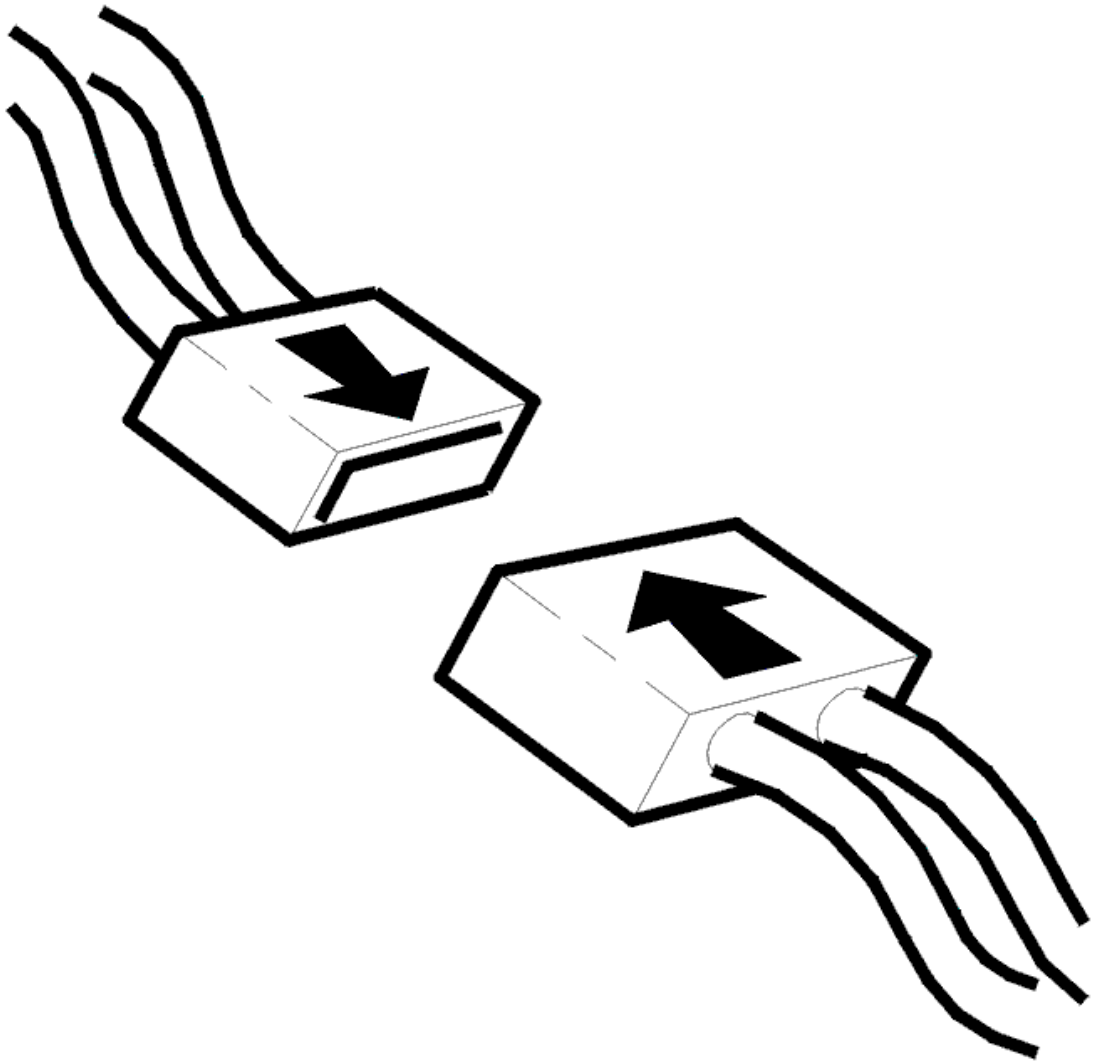

Fig. 150: Identifying Connector(s) Reinstallation
Courtesy of VOLVO CARS CORPORATION

- Ignition off.
- Install the components, connect the connectors, etc.
- Make sure there are more than two liters of fuel in the right tank half.
- Ignition on.

  Read the fuel level in the right tank half.

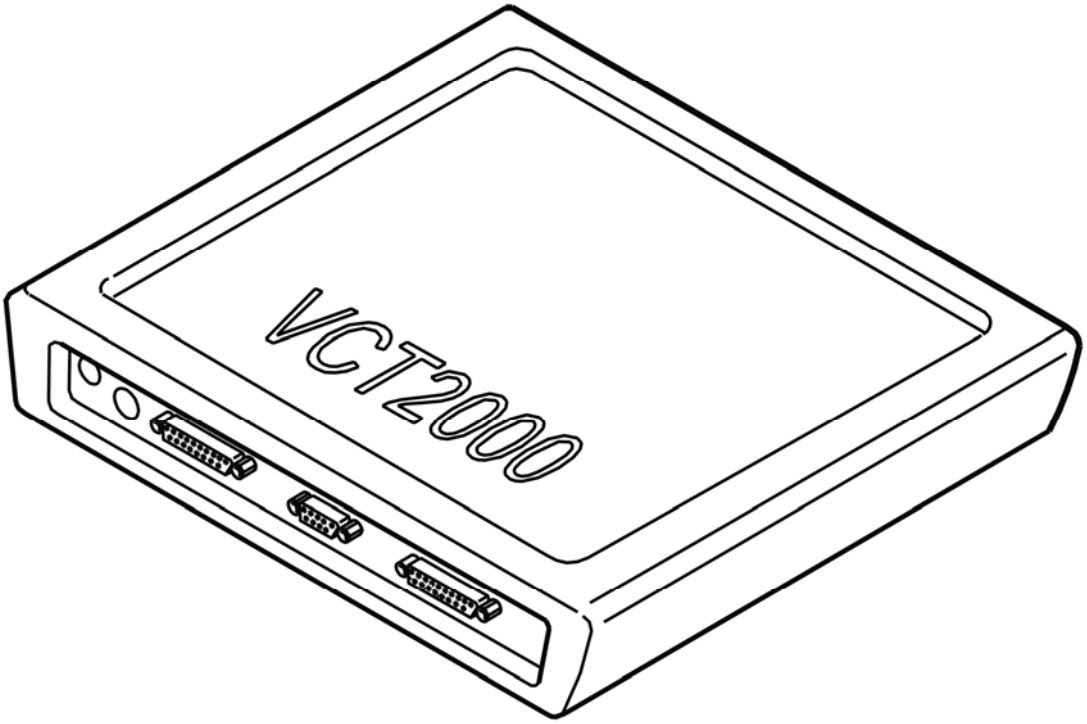

Fig. 151: Identifying VCT2000 Diagnostic Tool Symbol In VIDA
Courtesy of VOLVO CARS CORPORATION

Is the value normal?

- **YES**

  VERIFIED: Troubleshooting has been completed.

- **NO**

  Refer to **INFORMATION**

INFORMATION

FAULT-TRACING INFORMATION

The fault should have been detected and remedied. As this is not the case fault-tracing has failed.

Exit fault-tracing for this diagnostic trouble code (DTC) or make another attempt.

REM-4A38: FUEL LEVEL SENSOR. SIGNAL TOO LOW. INTERMITTENT FAULT (2003-2004)

DIAGNOSTIC TROUBLE CODE INFORMATION

Condition

If control unit registers that, with ignition on, A/D input is less than 0.4V, the diagnostic trouble code is displayed.

Substitute Value

Fuel gauge is reset.

Possible Source

- Fuel gauge sensor (right side) short circuited to ground.

Fault symptom[s]

- Trip computer indicates too soon that fuel tank is empty
- Fuel gauge does not work.

SIGNAL TOO LOW. INTERMITTENT FAULT

CHECKING WIRING AND CONNECTORS

Check the wiring between fuel level sensor connector terminal #7 and the rear electronic module (REM) terminal #A08 (#A8). Check for an intermittent short-circuit to ground. Check for an intermittent open-circuit.

Check the ground lead between control module terminal #A10 (#A10) and fuel level sensor connector terminal #6. Check for an intermittent open-circuit.

Check the cables between the left and right fuel level sensors. Check for an intermittent open-circuit.

Other information:

- For further information about signals and other values, see **SIGNAL SPECIFICATION**
- To connect the breakout box, see **CONNECTING THE BREAKOUT BOX**
- To access the control module, see **RELAY/FUSE BOX CARGO COMPARTMENT/REAR ELECTRONIC MODULE (REM), REPLACING**
- To access the fuel level sensor (left-hand side), see **LEVEL SENSOR FUEL TANK LEFT, REPLACING**
- To access the fuel level sensor (right-hand side), see **LEVEL SENSOR, FUEL TANK, RIGHT-HAND/FUEL TANK, REPLACING**
- see **CHECKING WIRING AND TERMINALS** .

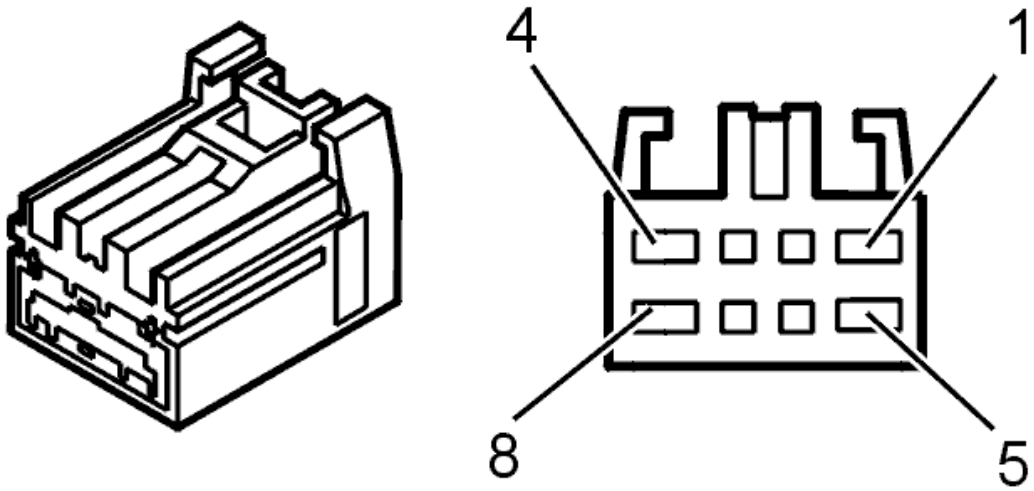

Fig. 152: Identifying Fuel Level Sensor Connector Terminals
Courtesy of VOLVO CARS CORPORATION

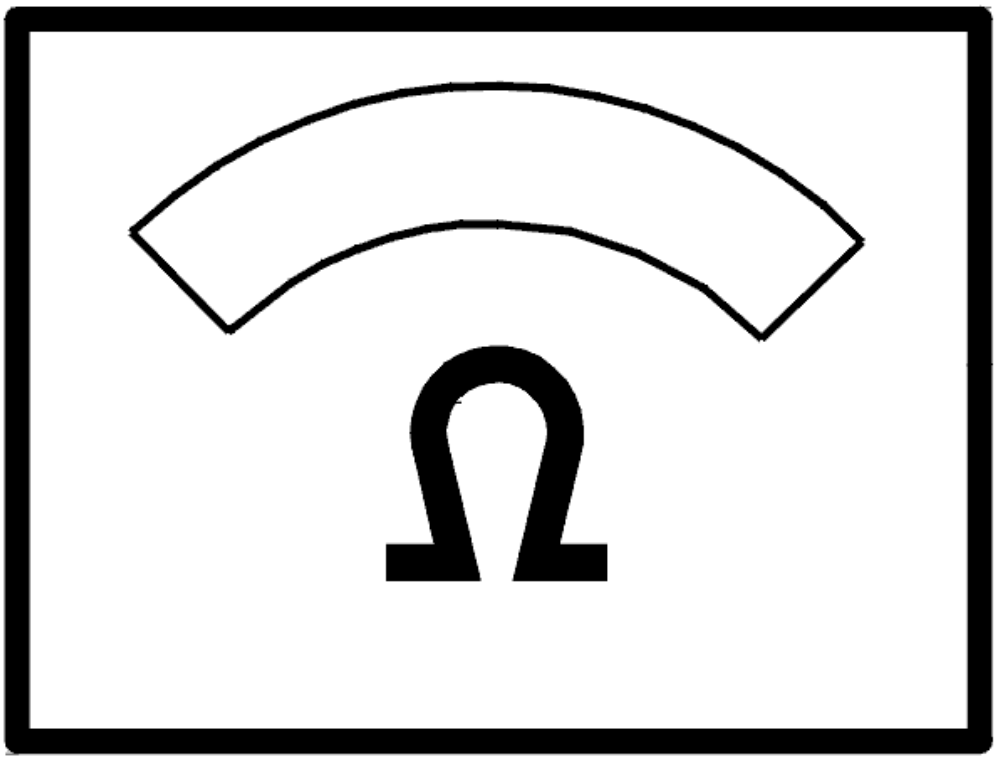

Fig. 153: Identifying Ohms Display
Courtesy of VOLVO CARS CORPORATION

- **Continue**

  Refer to **INFORMATION**

INFORMATION

FAULT-TRACING INFORMATION

If the fault is intermittent, do not verify fault-tracing if the fault does not recur.

It is possible to view the information again, or leave fault-tracing for this diagnostic trouble code (DTC).

REM-4A38: FUEL LEVEL SENSOR. SIGNAL TOO LOW. PERMANENT FAULT

(2003-2004)

DIAGNOSTIC TROUBLE CODE INFORMATION

see **DIAGNOSTIC TROUBLE CODE INFORMATION**

SIGNAL TOO LOW. PERMANENT FAULT

CHECKING WIRING AND CONNECTORS

Check the resistance of the fuel level sensor (right-hand side). The resistance across each sensor may vary between 12 ohms (full fuel tank) and 383 ohms (empty fuel tank).

HINT: The resistance of the right-hand side fuel level sensor can be measured between fuel level sensor connector terminals #7 and #6. The resistance of the left-hand side fuel level sensor can be measured between fuel level sensor connector terminals #5 and #6.

Check the cables between fuel level sensor connector terminal #7 and rear electronic module (REM) terminal #A08 (#A8). Check for a short-circuit to ground. Check for an open-circuit.

Check the ground lead between control module terminal #A10 (#A10) and fuel level sensor connector terminal #6. Check for an open-circuit.

Check the cables between the left and right fuel level sensors. Check for an open-circuit.

Remedy as necessary.

Other information:

- For further information about signals and other values, see **SIGNAL SPECIFICATION**
- To connect the breakout box, see **CONNECTING THE BREAKOUT BOX**
- To access the rear electronic module (REM), see **RELAY/FUSE BOX CARGO COMPARTMENT/REAR ELECTRONIC MODULE (REM), REPLACING**
- To access the fuel level sensor (left-hand side), see **LEVEL SENSOR FUEL TANK LEFT, REPLACING**
- To access the fuel level sensor (right-hand side), see **LEVEL SENSOR, FUEL TANK, RIGHT-HAND/FUEL TANK, REPLACING**
- see **CHECKING WIRING AND TERMINALS** .

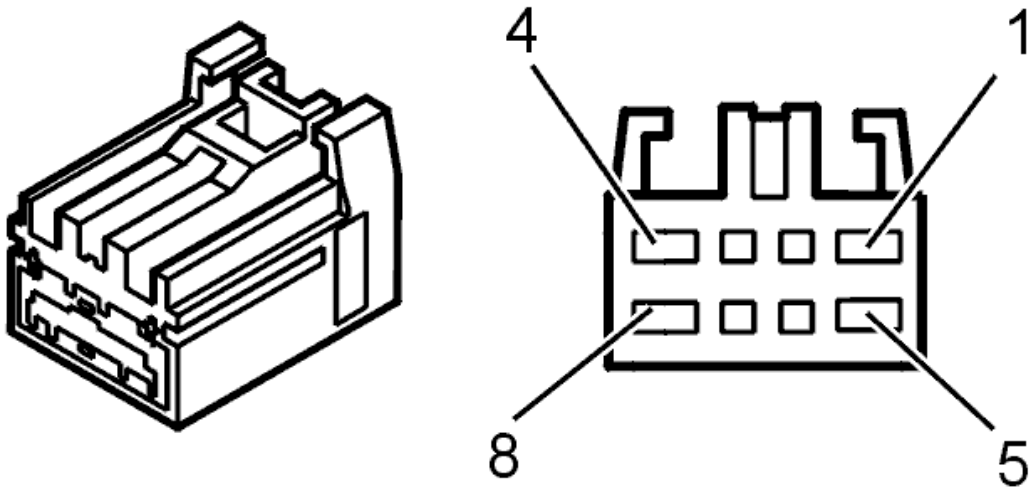

Fig. 154: Identifying Fuel Level Sensor Connector Terminals
Courtesy of VOLVO CARS CORPORATION

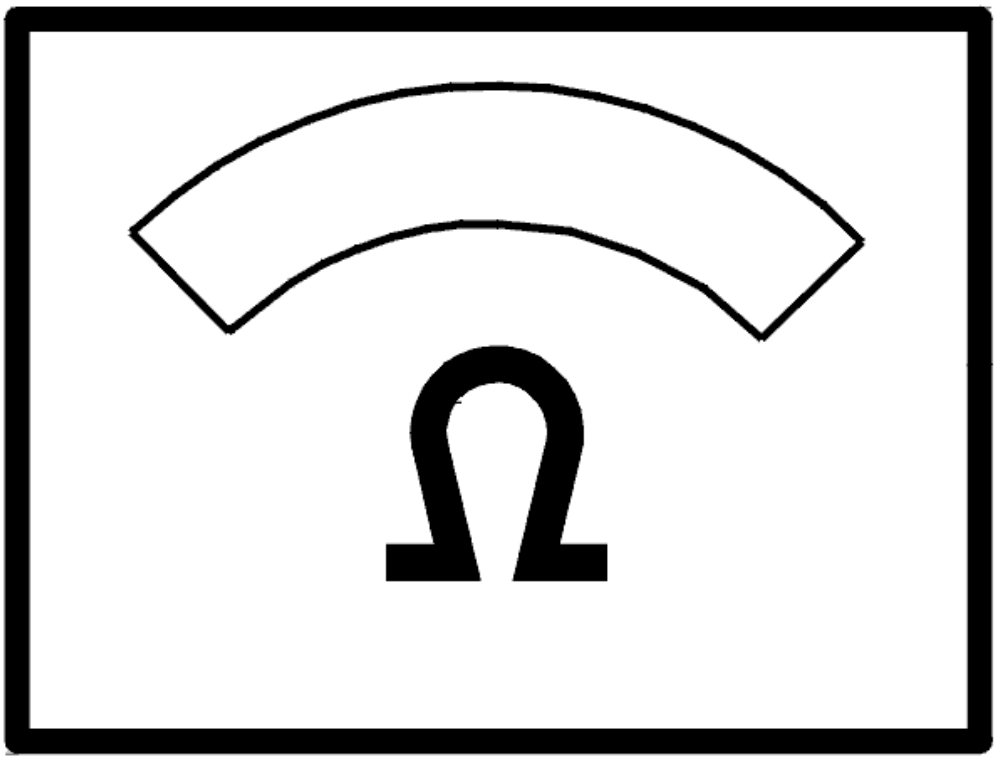

Fig. 155: Identifying Ohms Display
Courtesy of VOLVO CARS CORPORATION

- **Continue**

  Refer to **VERIFICATION**

VERIFICATION

VERIFICATION

HINT: After the repair it is necessary to check that the fault has been rectified.

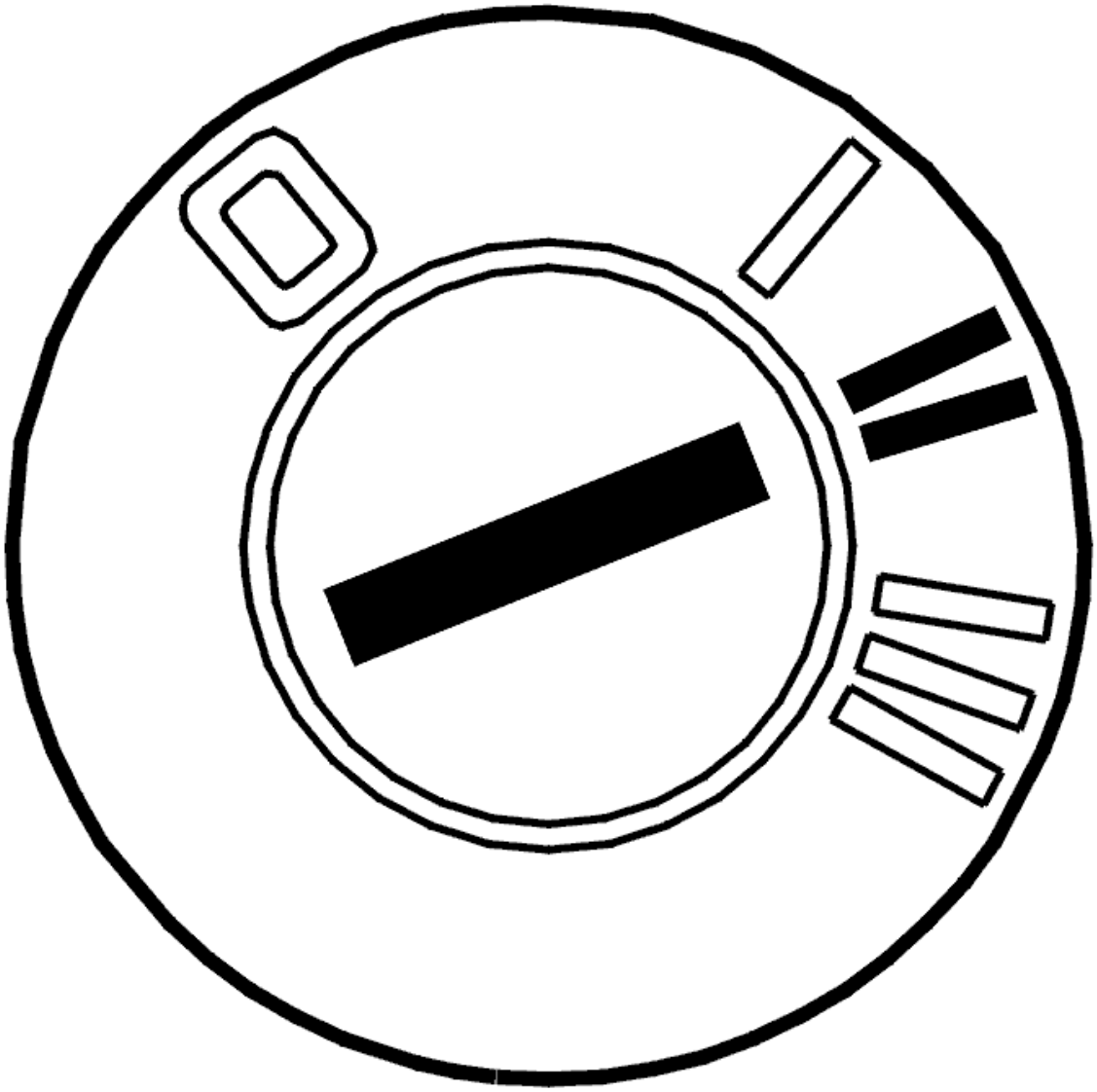

Fig. 156: Identifying Ignition ON
Courtesy of VOLVO CARS CORPORATION

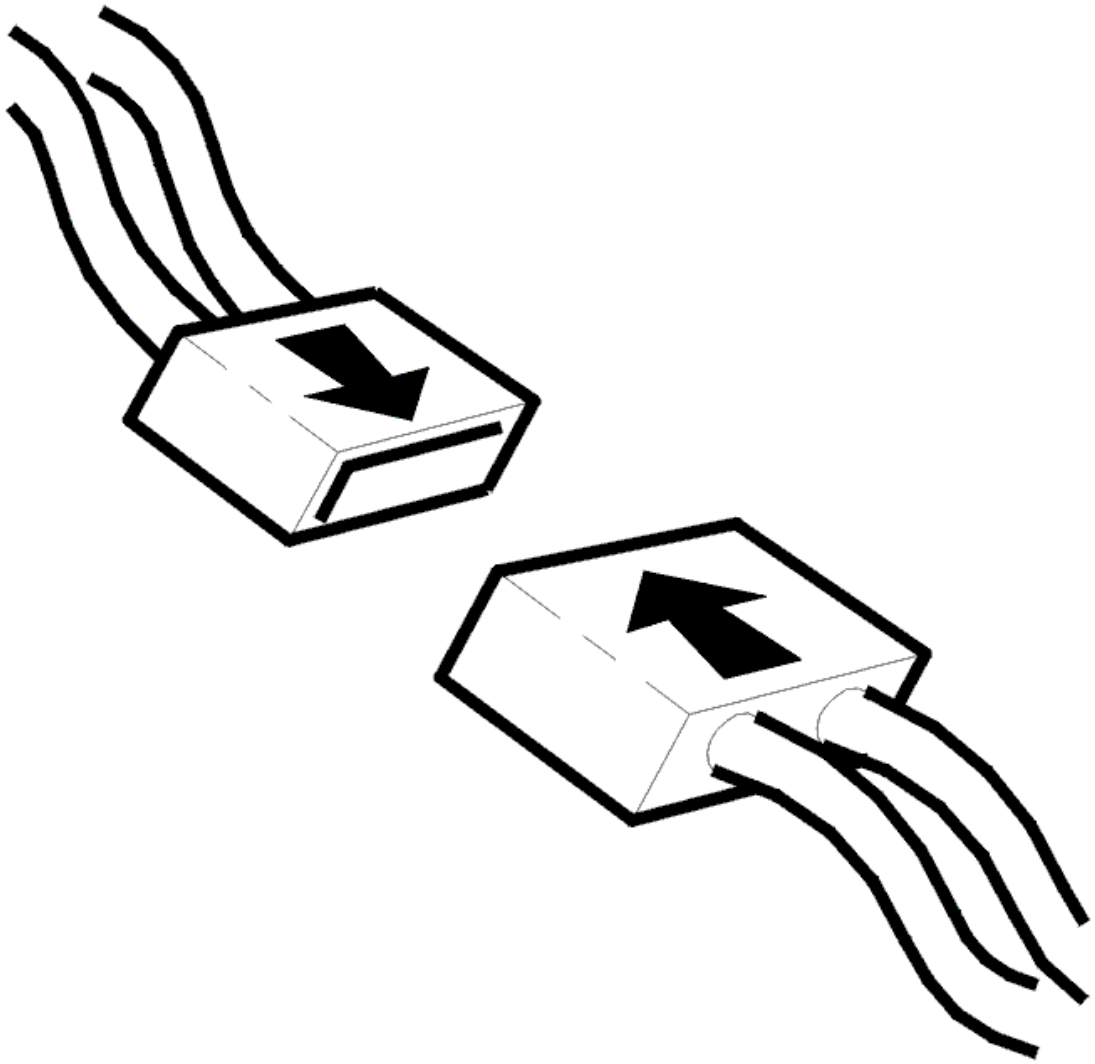

Fig. 157: Identifying Connector(s) Reinstallation
Courtesy of VOLVO CARS CORPORATION

- Ignition off.
- Install the components, connect the connectors, etc.
- Make sure there are more than two liters of fuel in the right tank half.
- Ignition on.

  Read the fuel level in the right tank half.

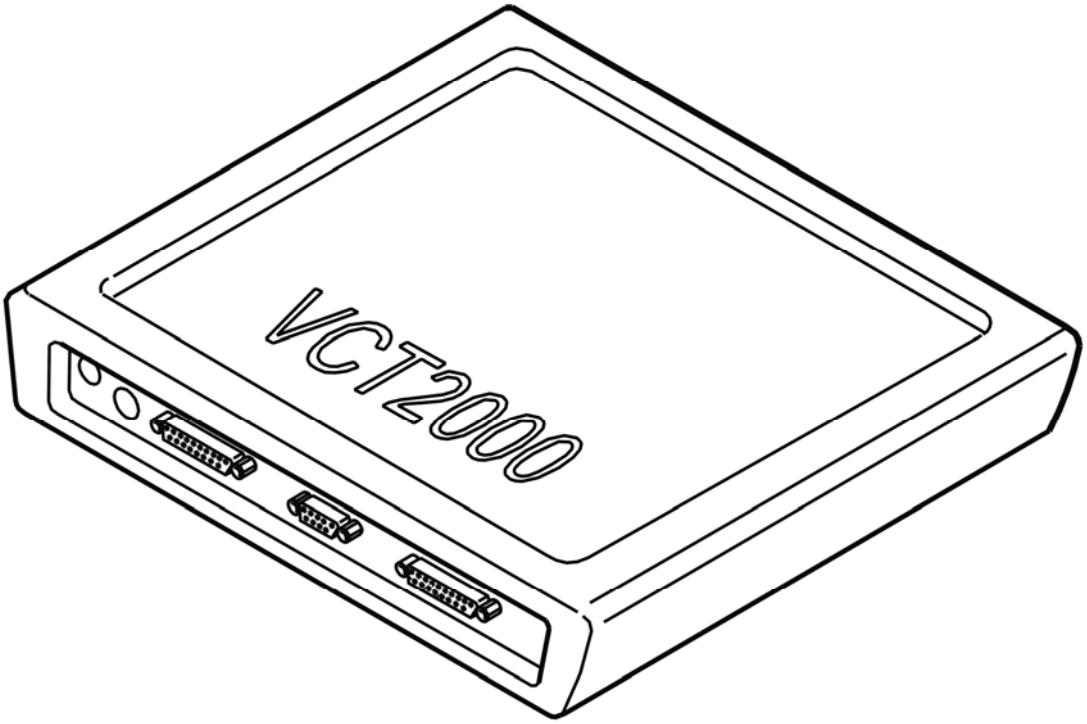

Fig. 158: Identifying VCT2000 Diagnostic Tool Symbol In VIDA
Courtesy of VOLVO CARS CORPORATION

Is the value normal?

- **YES**

  VERIFIED: Troubleshooting has been completed.

- **NO**

  Refer to **INFORMATION**

INFORMATION

FAULT-TRACING INFORMATION

The fault should have been detected and remedied. As this is not the case fault-tracing has failed.

Exit fault-tracing for this diagnostic trouble code (DTC) or make another attempt.

REM-4A40: GAS TEMPERATURE SENSOR. SIGNAL TOO HIGH (2005-2012)

DIAGNOSTIC TROUBLE CODE (DTC) INFORMATION REM-4A40

Condition

The rear electronic module (REM) checks the signal from the gas temperature sensor.

The diagnostic trouble code (DTC) is stored if the rear electronic module (REM) registers that the signal is too high.

The diagnostic trouble code (DTC) can be diagnosed at key position II.

Substitute Value

- The fuel level is set to zero.

Possible Source

- Short-circuit to supply voltage in the signal cable
- Open-circuit in the signal cable.

Fault symptom[s]

- The trip computer displays an empty fuel tank too early
- The fuel gauge indicates zero even though there is fuel in the tank
- The gas level gauge does not work.

SIGNAL TOO HIGH

CHECKING THE WIRING

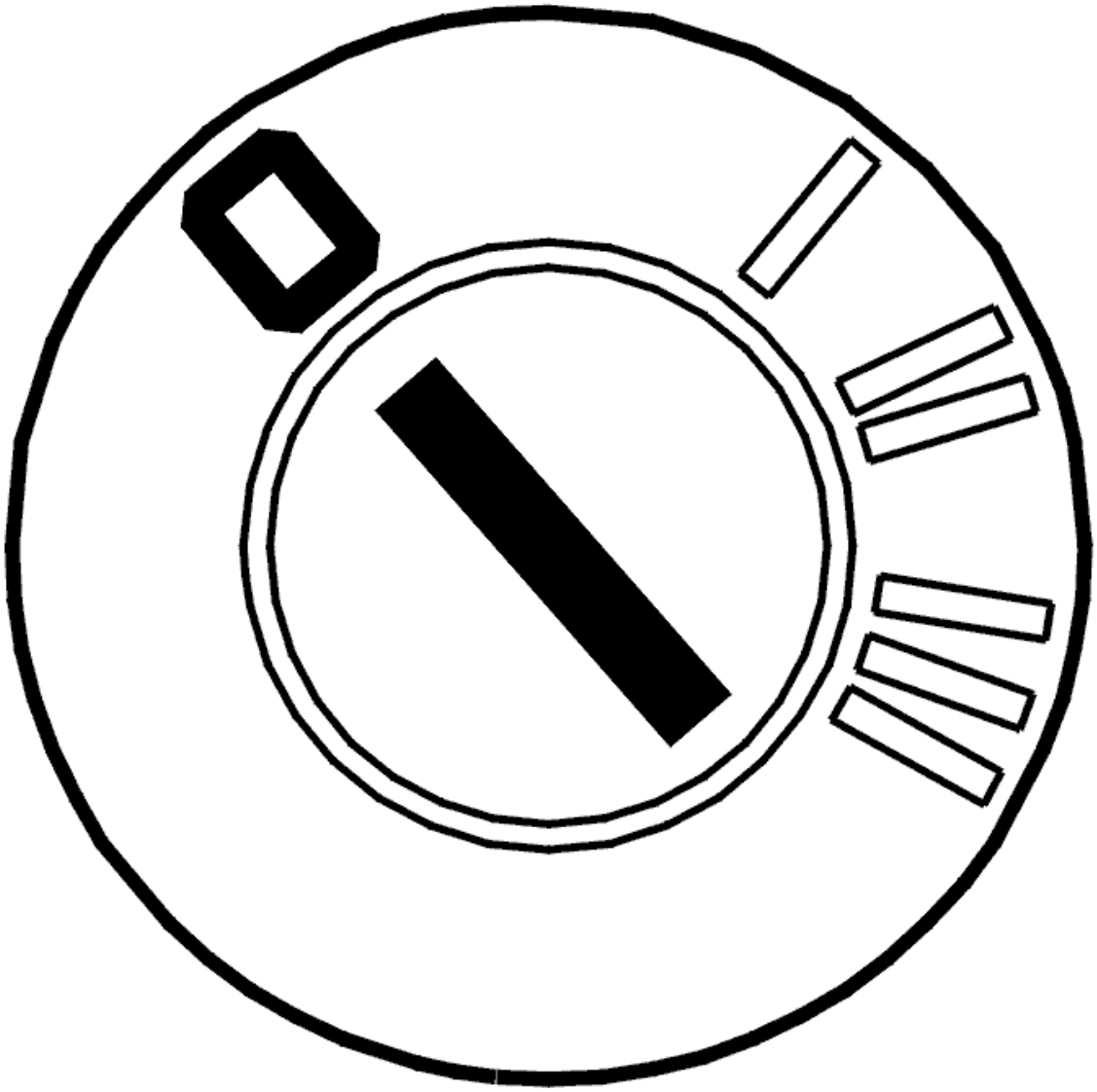

Fig. 159: Identifying Ignition OFF
Courtesy of VOLVO CARS CORPORATION

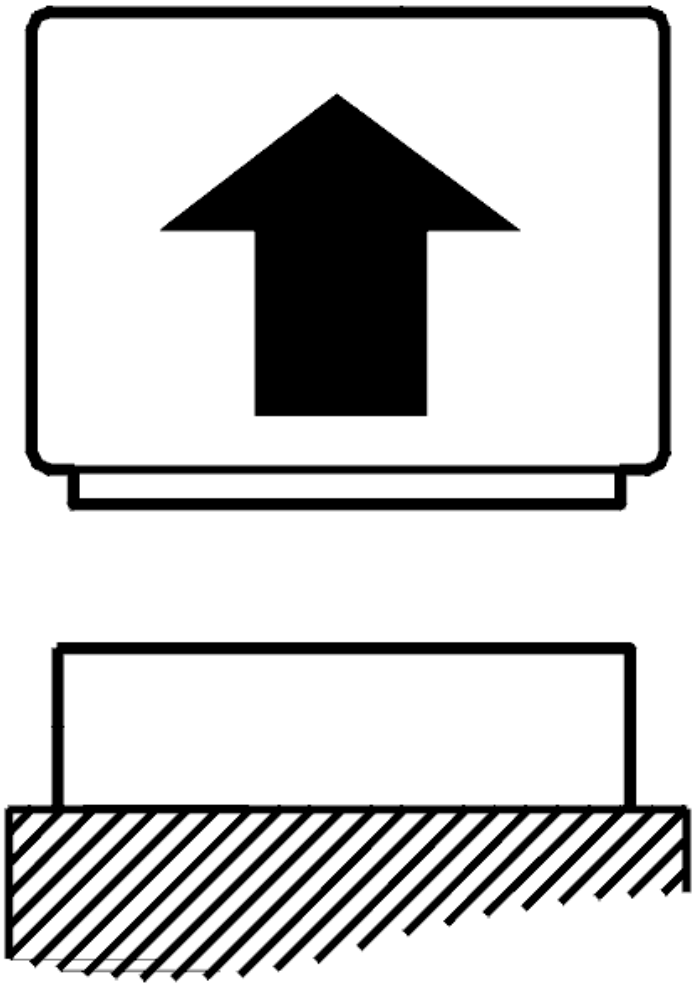

Fig. 160: Identifying Control Module Disconnected
Courtesy of VOLVO CARS CORPORATION

- Ignition off
- Disconnect connector D on the rear electronic module (REM).

  Check the signal cable. Check for an open-circuit. Check for a short-circuit to supply voltage.

  Take readings between:

  - Rear electronic module (REM) terminal #D27 (#27) and gas temperature sensor terminal #3
  - Rear electronic module (REM) terminal #D8 (#8) and gas temperature sensor terminal #4.

  Other information

- see **CONNECTING THE BREAKOUT BOX**
- see **SIGNAL SPECIFICATION**
- see **CHECKING WIRING AND TERMINALS**

- **Continue**

  Refer to **VERIFICATION**

VERIFICATION

VERIFICATION

HINT: After carrying out the repair, check that the fault has been remedied.

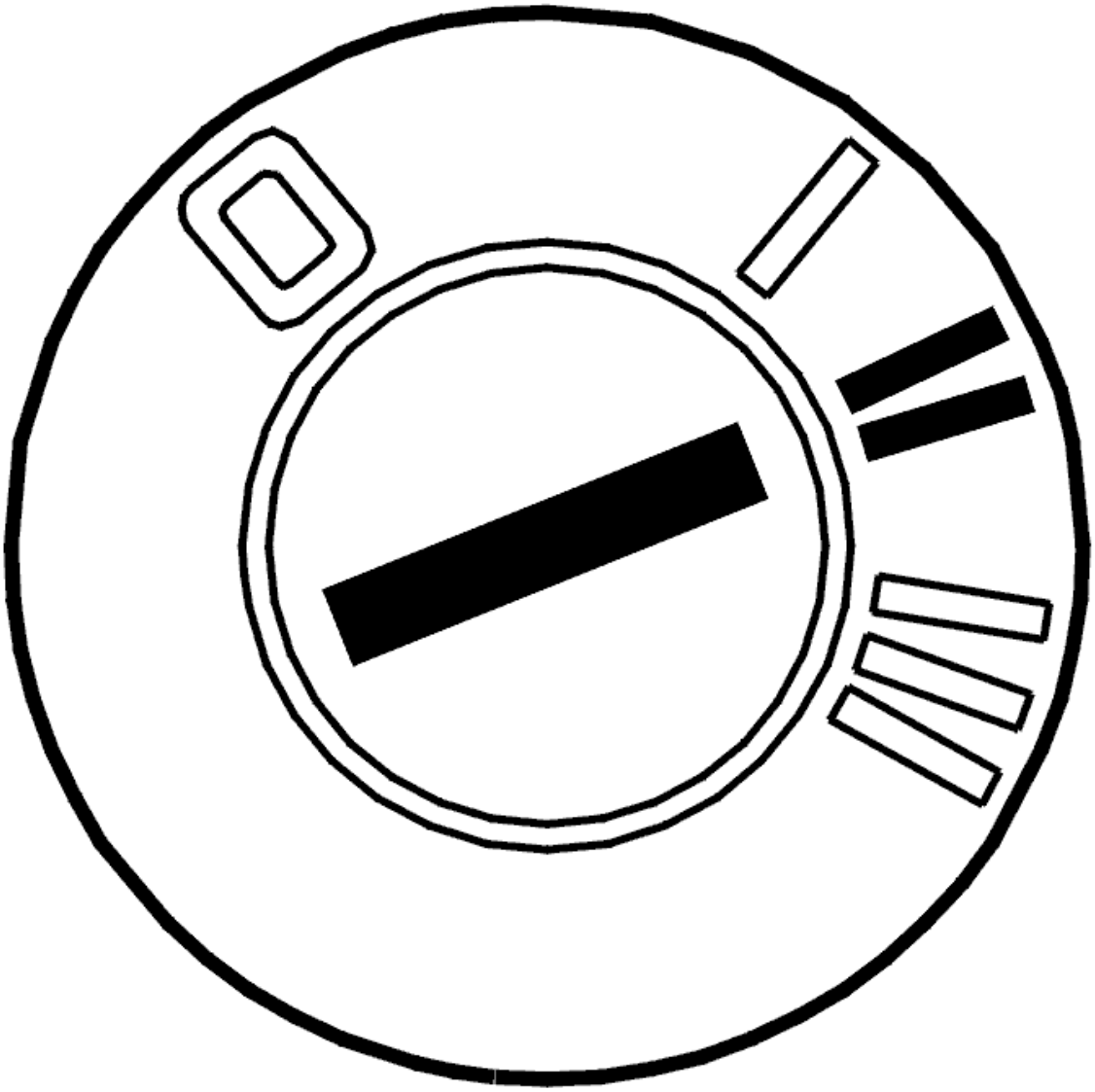

Fig. 161: Identifying Ignition ON

Courtesy of VOLVO CARS CORPORATION

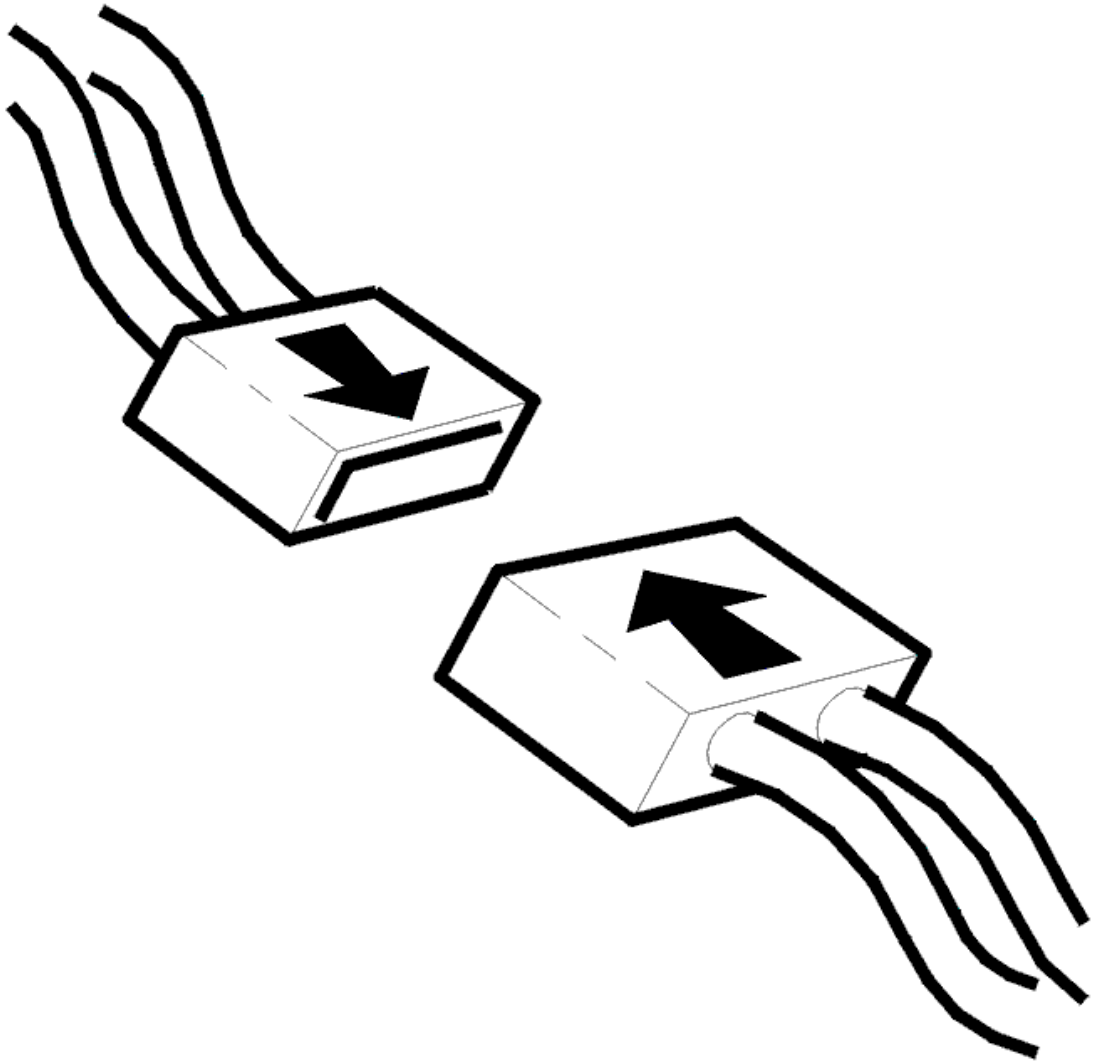

Fig. 162: Identifying Connector(s) Reinstallation
Courtesy of VOLVO CARS CORPORATION

- Ignition off
- Reinstall the connectors, components etc.
- Ignition on.

  Fill up with gas. Check that the level of the fuel gauge changes.

Is the value within its permitted range?

- **YES**

VERIFIED: Troubleshooting has been completed.

- **NO**

  Refer to **INFORMATION**

INFORMATION

FAULT-TRACING INFORMATION

The fault should have been detected and remedied. As this is not the case fault-tracing has failed.

Exit fault-tracing for this diagnostic trouble code (DTC) or make another attempt.

REM-4A41: GAS TEMPERATURE SENSOR. SIGNAL TOO LOW (2005-2012)

DIAGNOSTIC TROUBLE CODE (DTC) INFORMATION REM-4A41

Condition

The rear electronic module (REM) checks the signal from the gas temperature sensor.

The diagnostic trouble code (DTC) is stored if the rear electronic module (REM) registers that the signal is too low.

The diagnostic trouble code (DTC) can be diagnosed at key position II.

Substitute Value

- The fuel level is set to zero.

Possible Source

- Short-circuit to supply voltage in the signal cable
- Open-circuit in the signal cable.

Fault symptom[s]

- The trip computer displays an empty fuel tank too early
- The fuel gauge indicates zero even though there is fuel in the tank
- The gas level gauge does not work.

SIGNAL TOO LOW

CHECKING THE WIRING

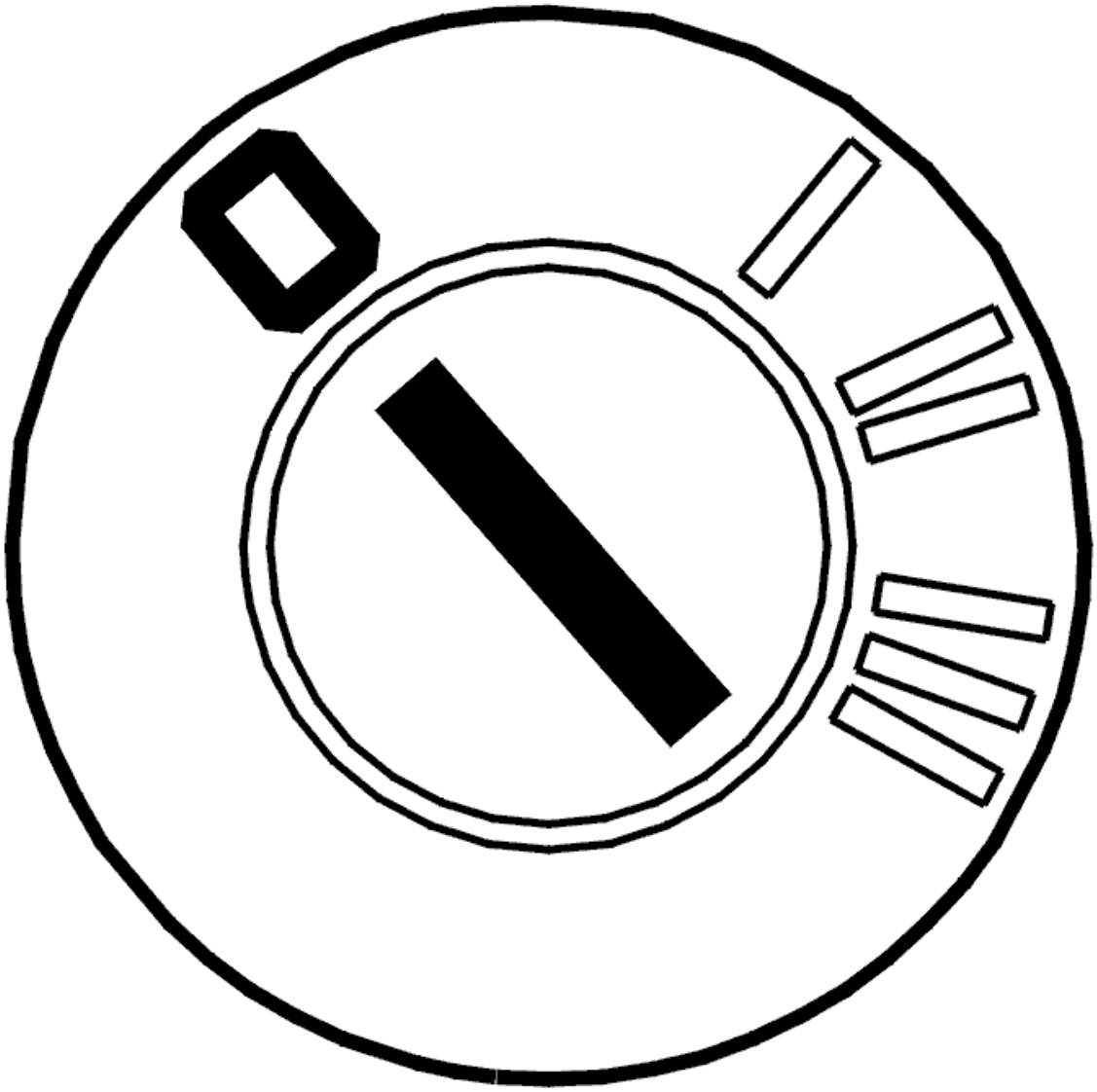

Fig. 163: Identifying Ignition OFF
Courtesy of VOLVO CARS CORPORATION

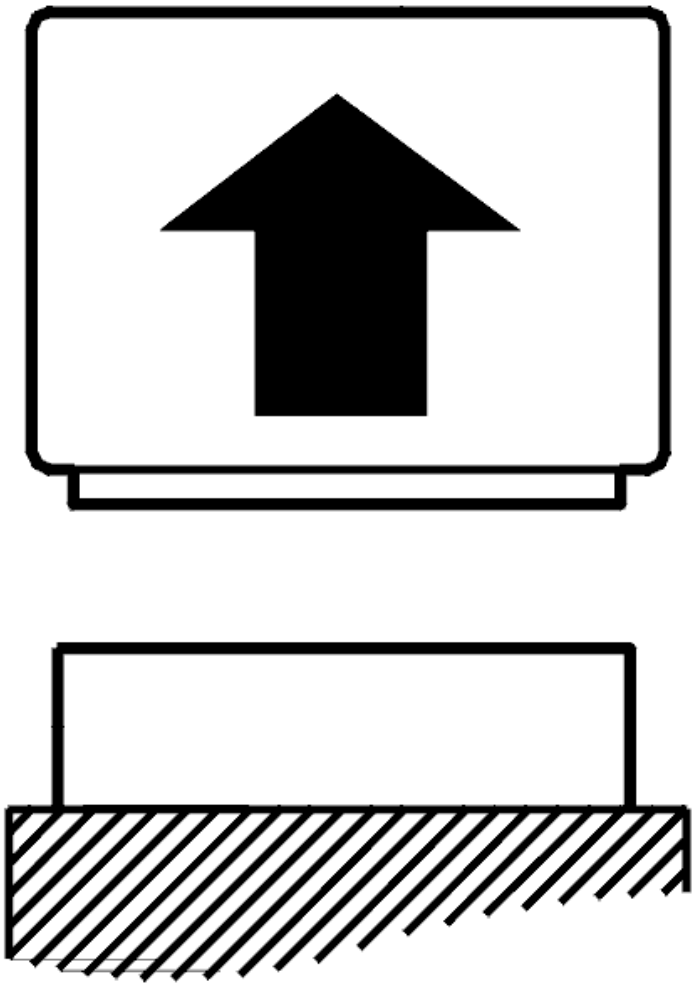

Fig. 164: Identifying Control Module Disconnected
Courtesy of VOLVO CARS CORPORATION

- Ignition off
- Disconnect connector D on the rear electronic module (REM).

  Check the signal cable. Check for a short-circuit to ground.

  Take readings between:

  - Rear electronic module (REM) terminal #D27 (#27) and gas temperature sensor terminal #3.

  Other information

  - see **CONNECTING THE BREAKOUT BOX**

- see **SIGNAL SPECIFICATION**
- see **CHECKING WIRING AND TERMINALS**

- **Continue**

  Refer to **VERIFICATION**

VERIFICATION

VERIFICATION

HINT: After carrying out the repair, check that the fault has been remedied.

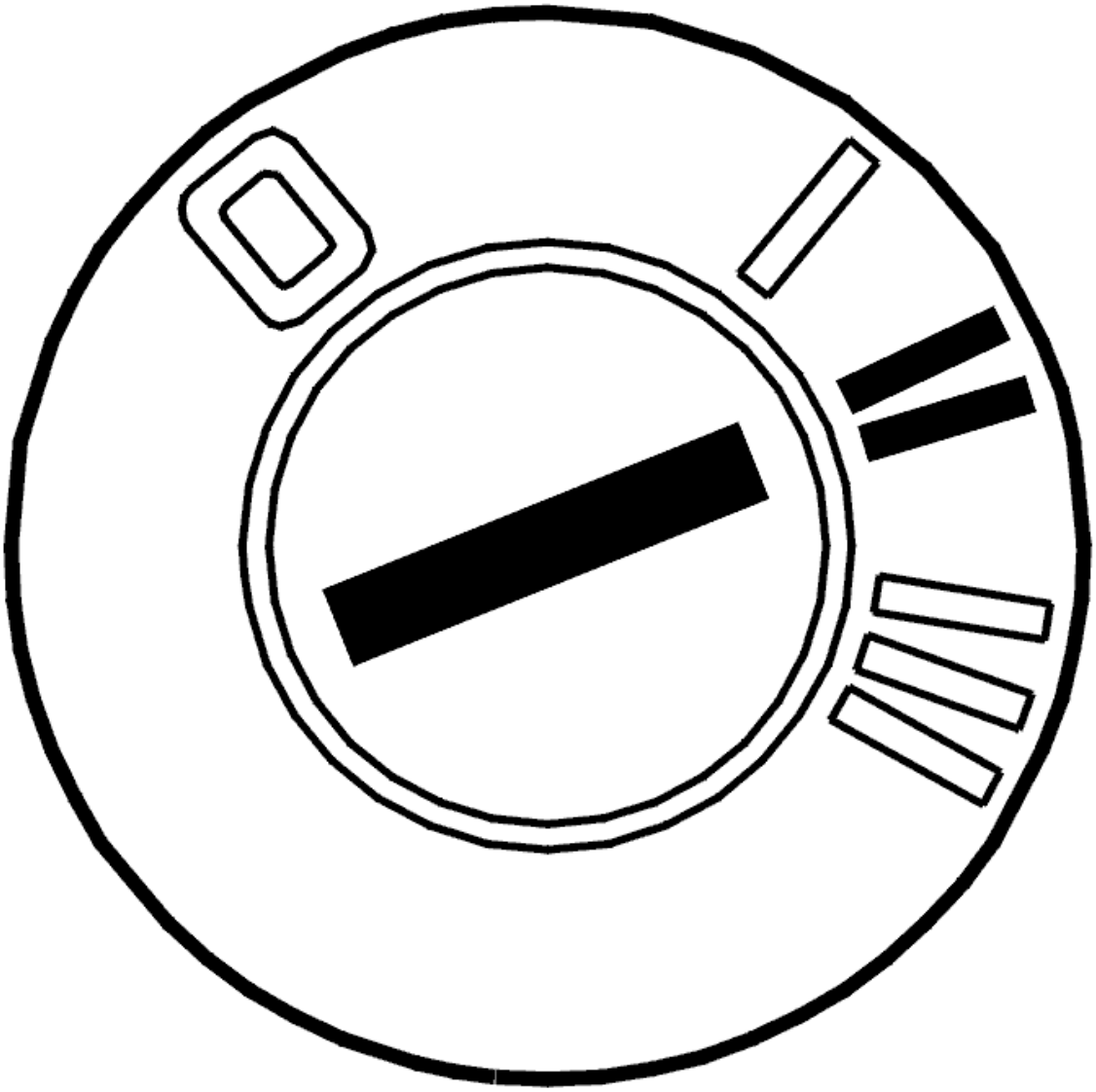

Fig. 165: Identifying Ignition ON
Courtesy of VOLVO CARS CORPORATION

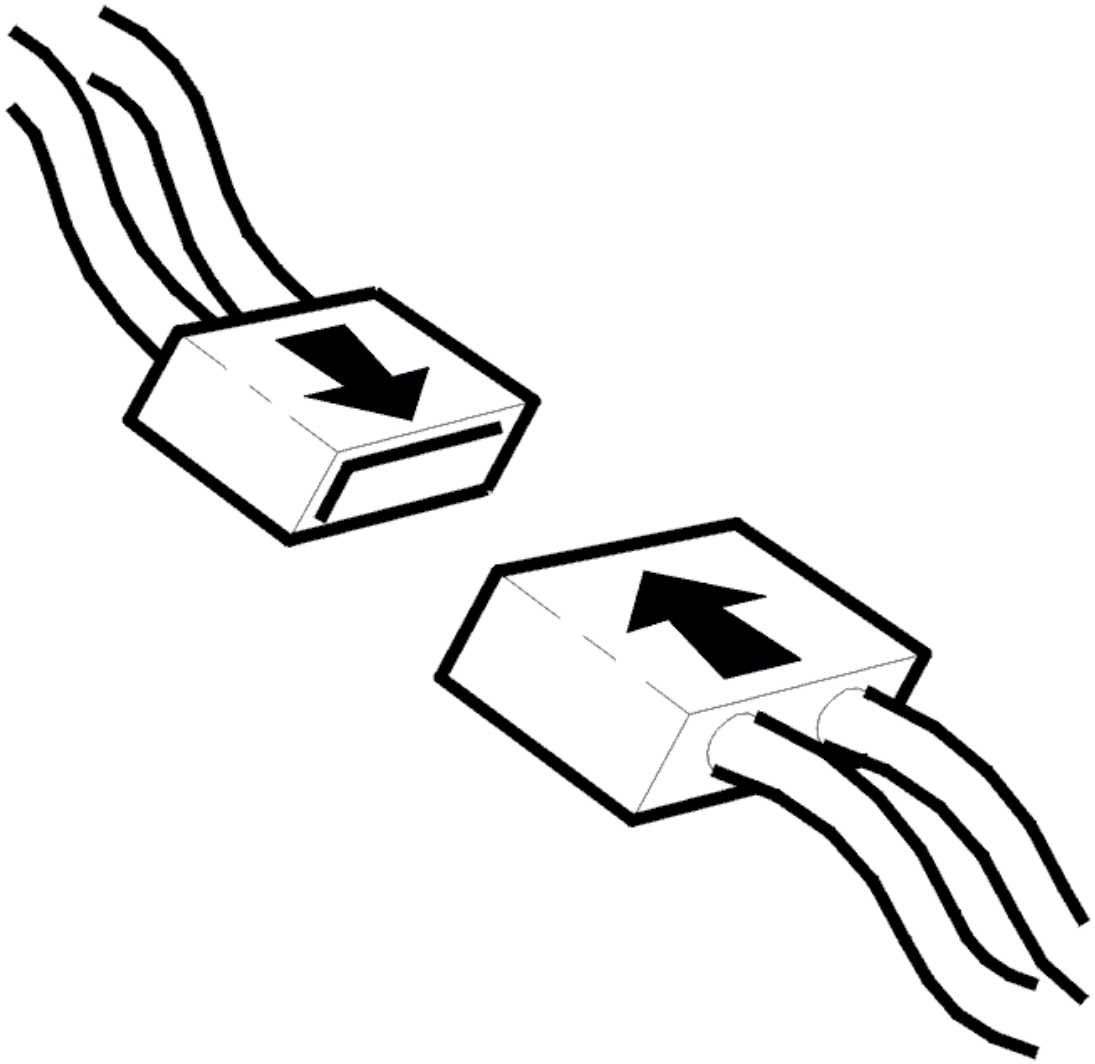

Fig. 166: Identifying Connector(s) Reinstallation
Courtesy of VOLVO CARS CORPORATION

- Ignition off
- Reinstall the connectors, components etc.
- Ignition on.

  Fill up with gas. Check that the level of the fuel gauge changes.

Is the value within its permitted range?

- **YES**

  VERIFIED: Troubleshooting has been completed.

- **NO**

  Refer to **INFORMATION**

INFORMATION

FAULT-TRACING INFORMATION

The fault should have been detected and remedied. As this is not the case fault-tracing has failed.

Exit fault-tracing for this diagnostic trouble code (DTC) or make another attempt.

REM-4A42: GAS PRESSURE SENSOR. SIGNAL TOO HIGH (2005-2012)

DIAGNOSTIC TROUBLE CODE (DTC) INFORMATION REM-4A42

Condition

The rear electronic module (REM) checks the signal from the gas pressure sensor.

The diagnostic trouble code (DTC) is stored if the rear electronic module (REM) registers that the signal is too high.

The diagnostic trouble code (DTC) can be diagnosed at key position II.

Substitute Value

- The fuel level is set to zero.

Possible Source

- Short-circuit to supply voltage in the signal cable.

Fault symptom[s]

- The trip computer displays an empty fuel tank too early
- The fuel gauge indicates zero even though there is fuel in the tank
- The gas level gauge does not work.

SIGNAL TOO HIGH

CHECKING THE WIRING

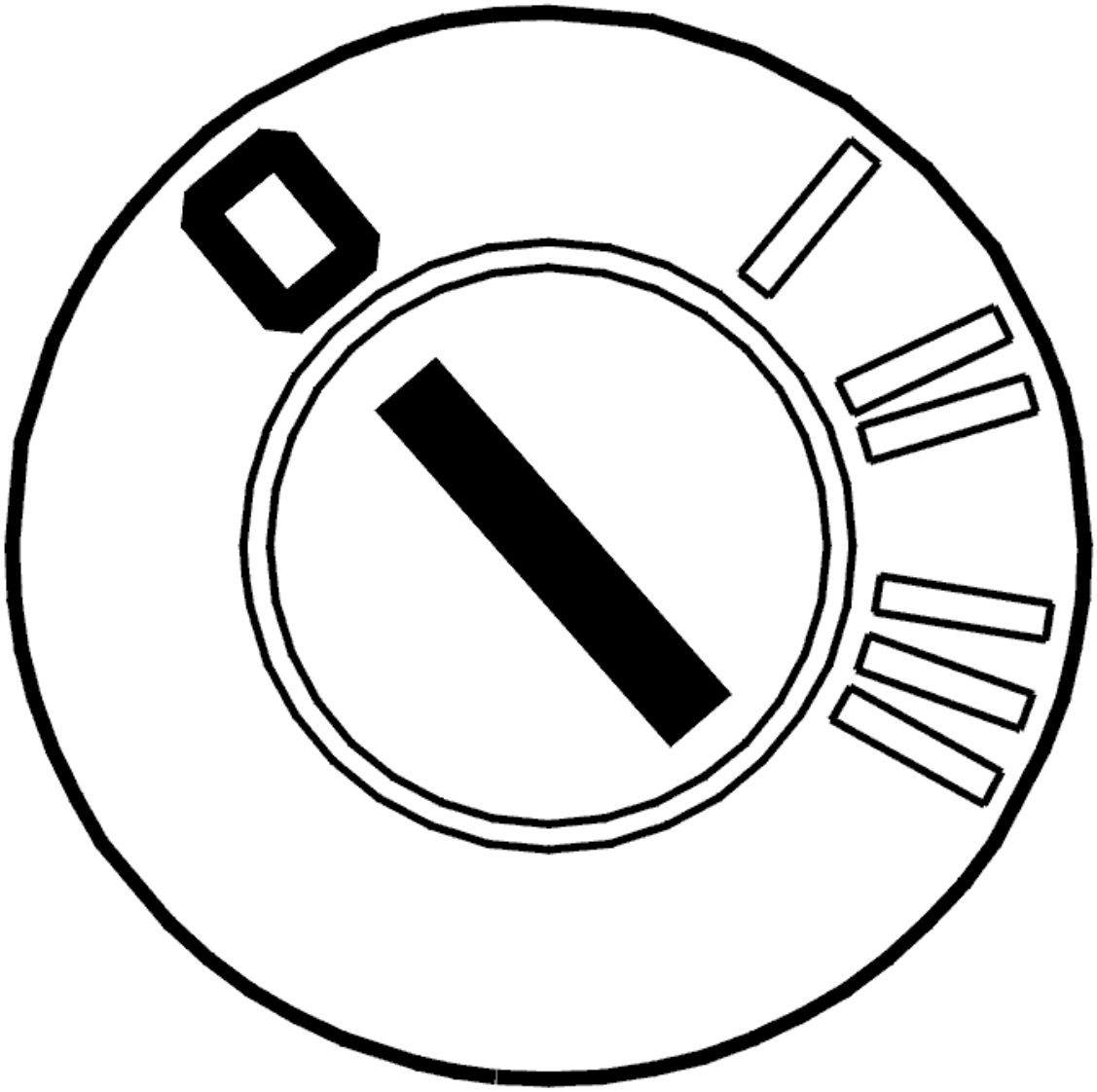

Fig. 167: Identifying Ignition OFF
Courtesy of VOLVO CARS CORPORATION

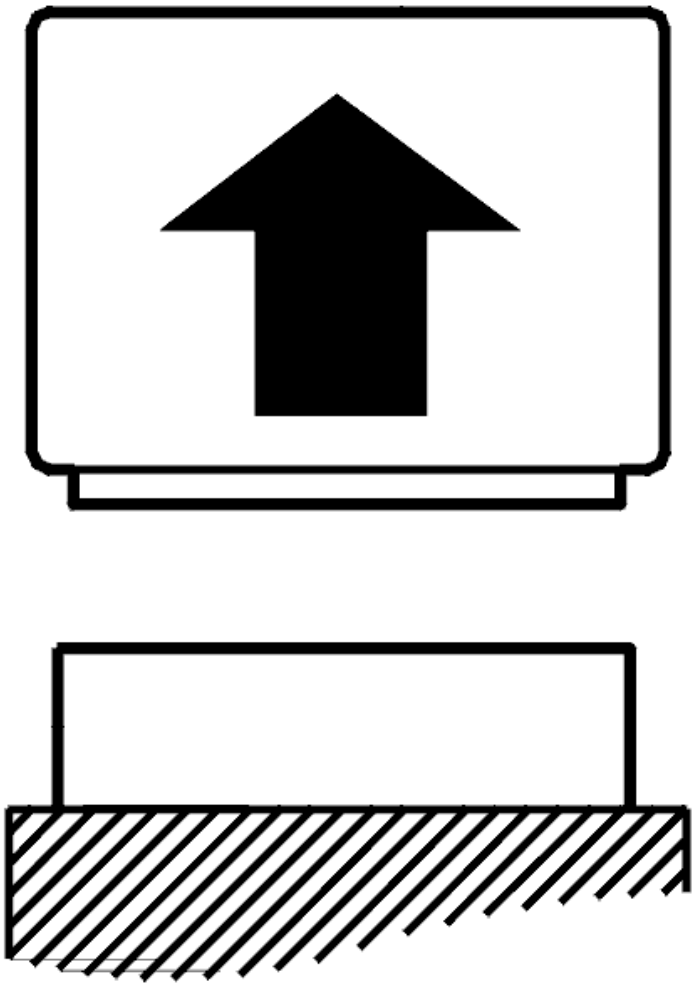

Fig. 168: Identifying Control Module Disconnected
Courtesy of VOLVO CARS CORPORATION

- Ignition off
- Disconnect connector D on the rear electronic module (REM).

  Check the power supply cable. Check for a short-circuit to supply voltage.

  Take readings between:

  - Rear electronic module (REM) terminal #D15 (#15) and gas pressure sensor #2.

  Other information

  - see **CONNECTING THE BREAKOUT BOX**

- see **SIGNAL SPECIFICATION**
- see **CHECKING WIRING AND TERMINALS**

- **Continue**

  Refer to **VERIFICATION**

VERIFICATION

VERIFICATION

HINT: After carrying out the repair, check that the fault has been remedied.

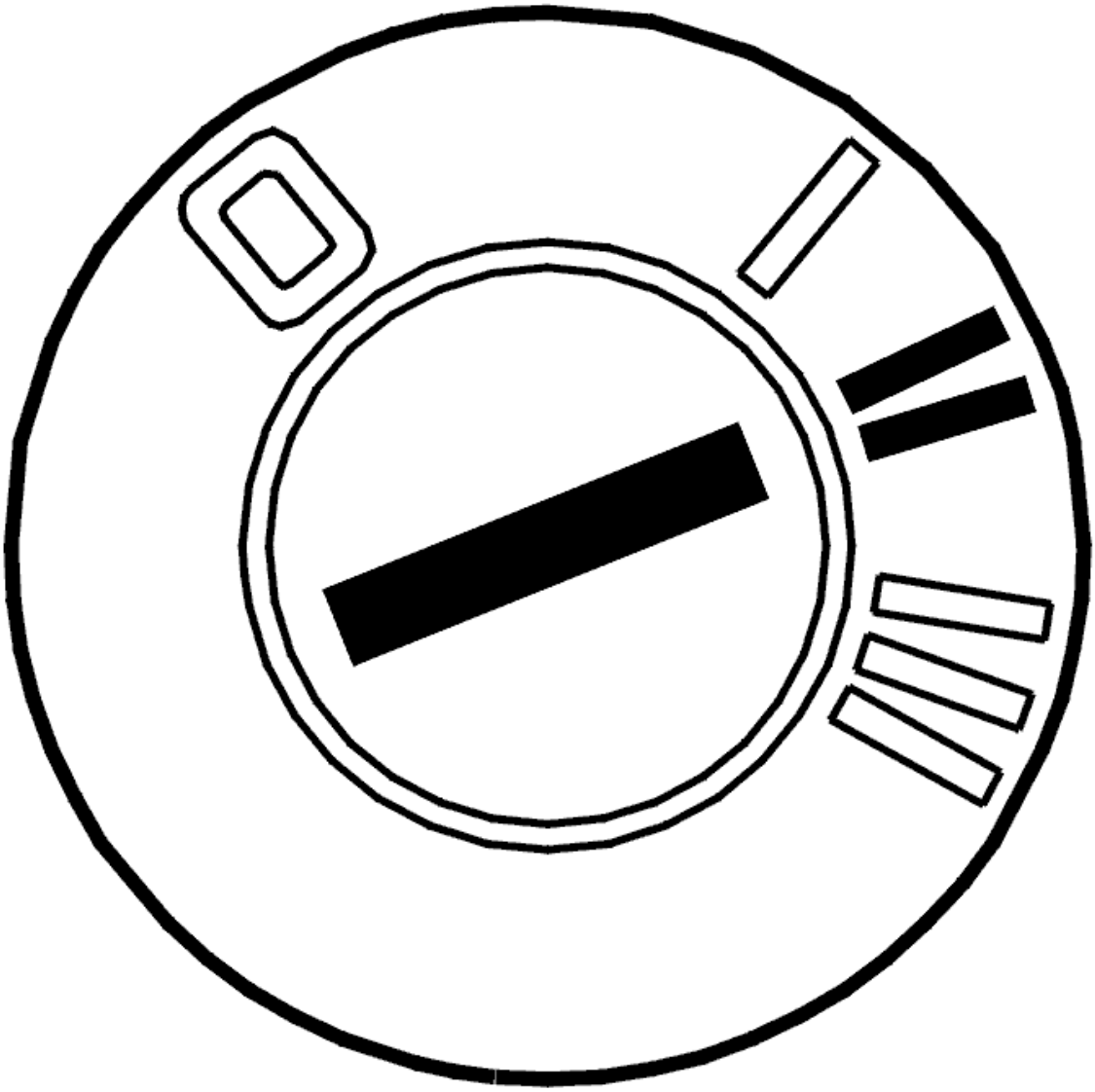

Fig. 169: Identifying Ignition ON
Courtesy of VOLVO CARS CORPORATION

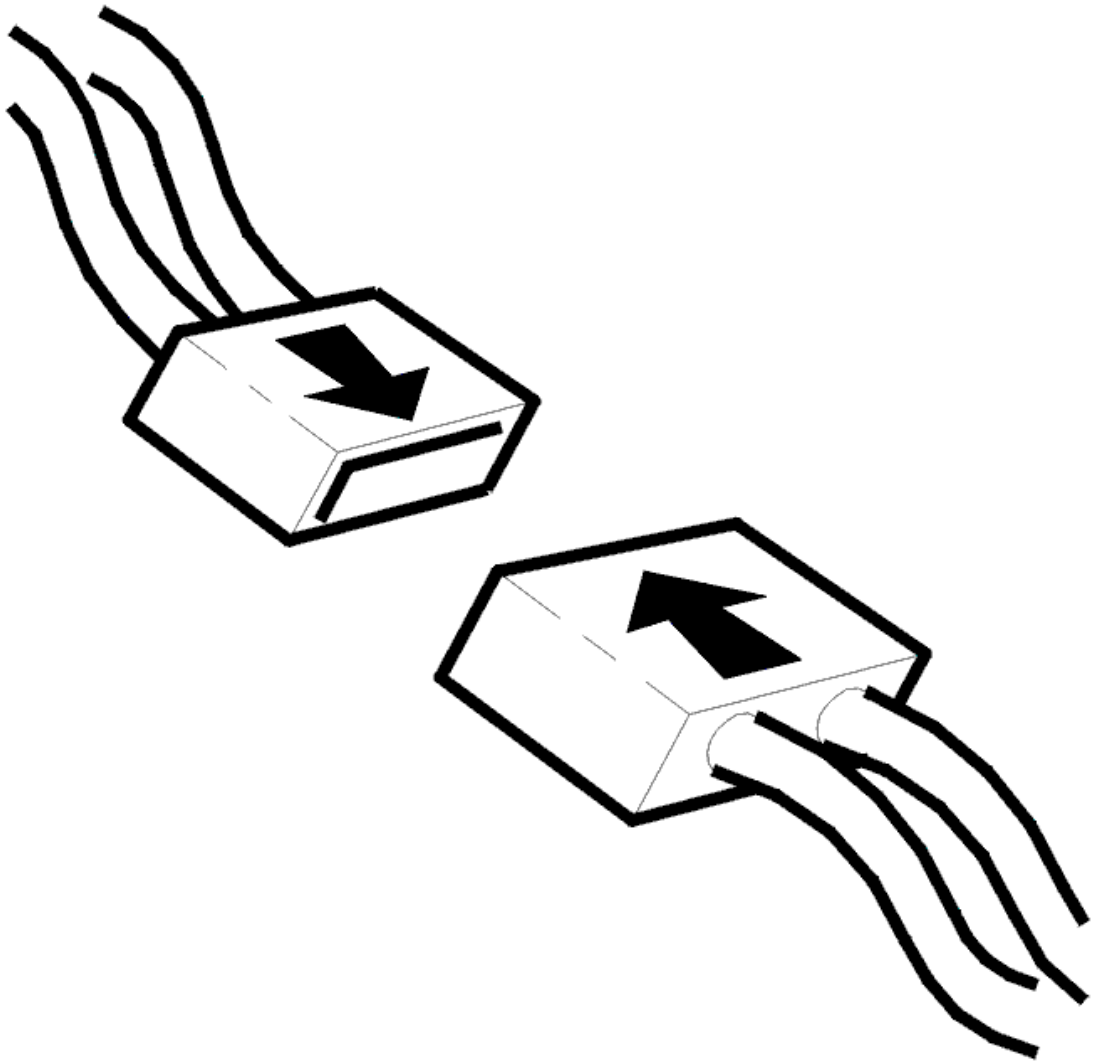

Fig. 170: Identifying Connector(s) Reinstallation
Courtesy of VOLVO CARS CORPORATION

- Ignition off
- Reinstall the connectors, components etc.
- Ignition on.

  Fill up with gas. Check that the level of the fuel gauge changes.

Is the value within its permitted range?

- **YES**

  VERIFIED: Troubleshooting has been completed.

- **NO**

  Refer to **INFORMATION**

INFORMATION

FAULT-TRACING INFORMATION

The fault should have been detected and remedied. As this is not the case fault-tracing has failed.

Exit fault-tracing for this diagnostic trouble code (DTC) or make another attempt.

REM-4A43: GAS PRESSURE SENSOR. SIGNAL TOO LOW (2005-2012)

DIAGNOSTIC TROUBLE CODE (DTC) INFORMATION REM-4A43

Condition

The rear electronic module (REM) checks the signal from the gas pressure sensor.

The diagnostic trouble code (DTC) is stored if the rear electronic module (REM) registers that the signal is too low.

The diagnostic trouble code (DTC) can be diagnosed at key position II.

Substitute Value

- The fuel level is set to zero.

Possible Source

- Short-circuit to supply voltage in the signal cable
- Open-circuit in signal cable to the sensor.

Fault symptom[s]

- The trip computer displays an empty fuel tank too early
- The fuel gauge indicates zero even though there is fuel in the tank
- The gas level gauge does not work.

SIGNAL TOO LOW

CHECKING THE WIRING

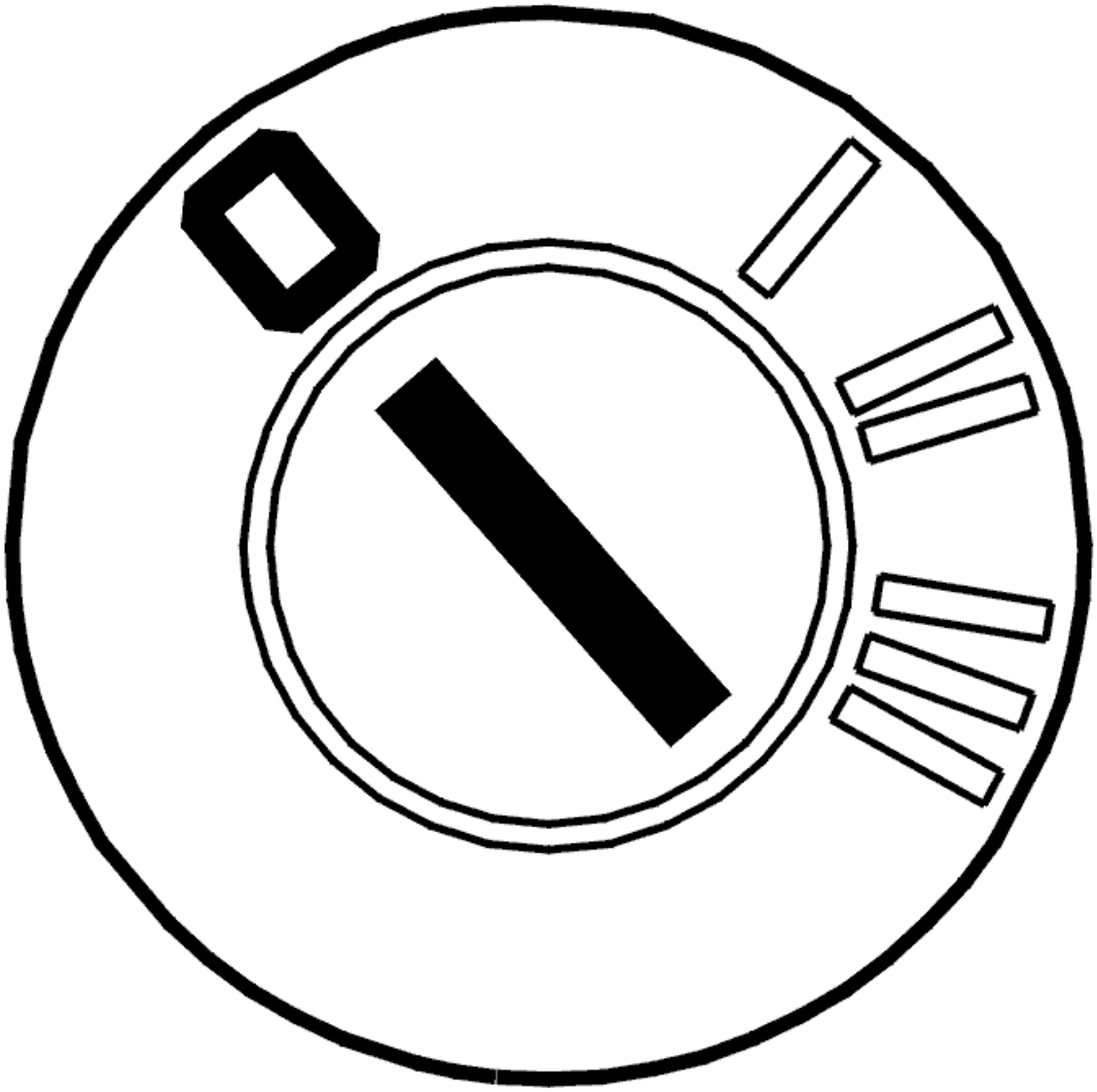

Fig. 171: Identifying Ignition OFF
Courtesy of VOLVO CARS CORPORATION

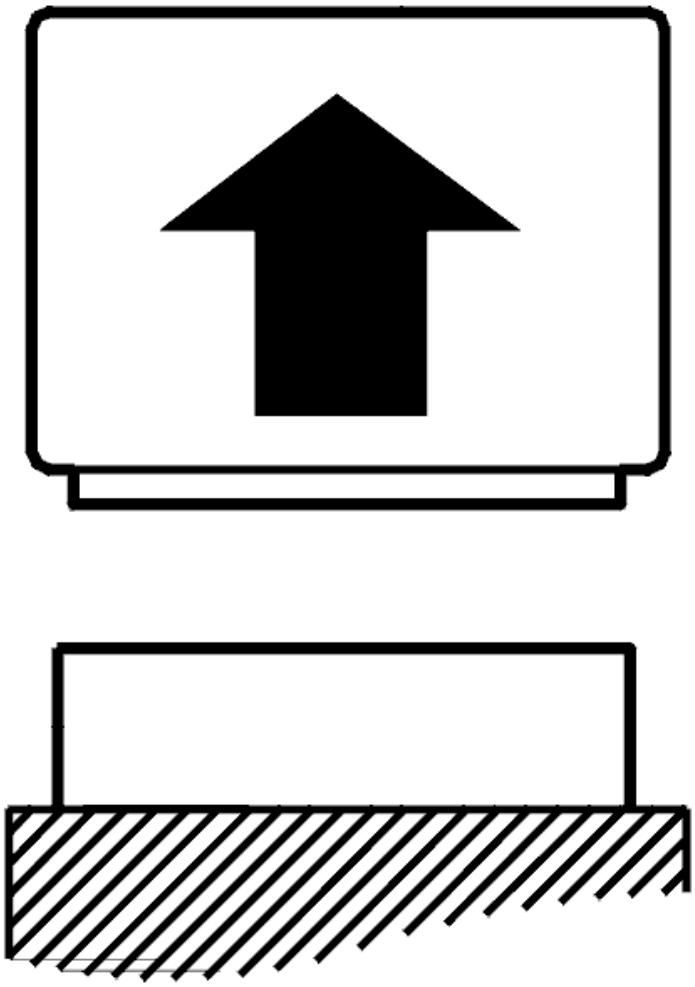

Fig. 172: Identifying Control Module Disconnected
Courtesy of VOLVO CARS CORPORATION

- Ignition off
- Disconnect connector D on the rear electronic module (REM).

  Check the signal cable. Check for an open-circuit. Check for a short-circuit to ground.

  Take readings between:

  - Rear electronic module (REM) terminal #D15 (#15) and gas pressure sensor #2.

  Other information

  - see **CONNECTING THE BREAKOUT BOX**

- see **SIGNAL SPECIFICATION**
- see **CHECKING WIRING AND TERMINALS**

- **Continue**

  Refer to **VERIFICATION**

VERIFICATION

VERIFICATION

HINT: After carrying out the repair, check that the fault has been remedied.

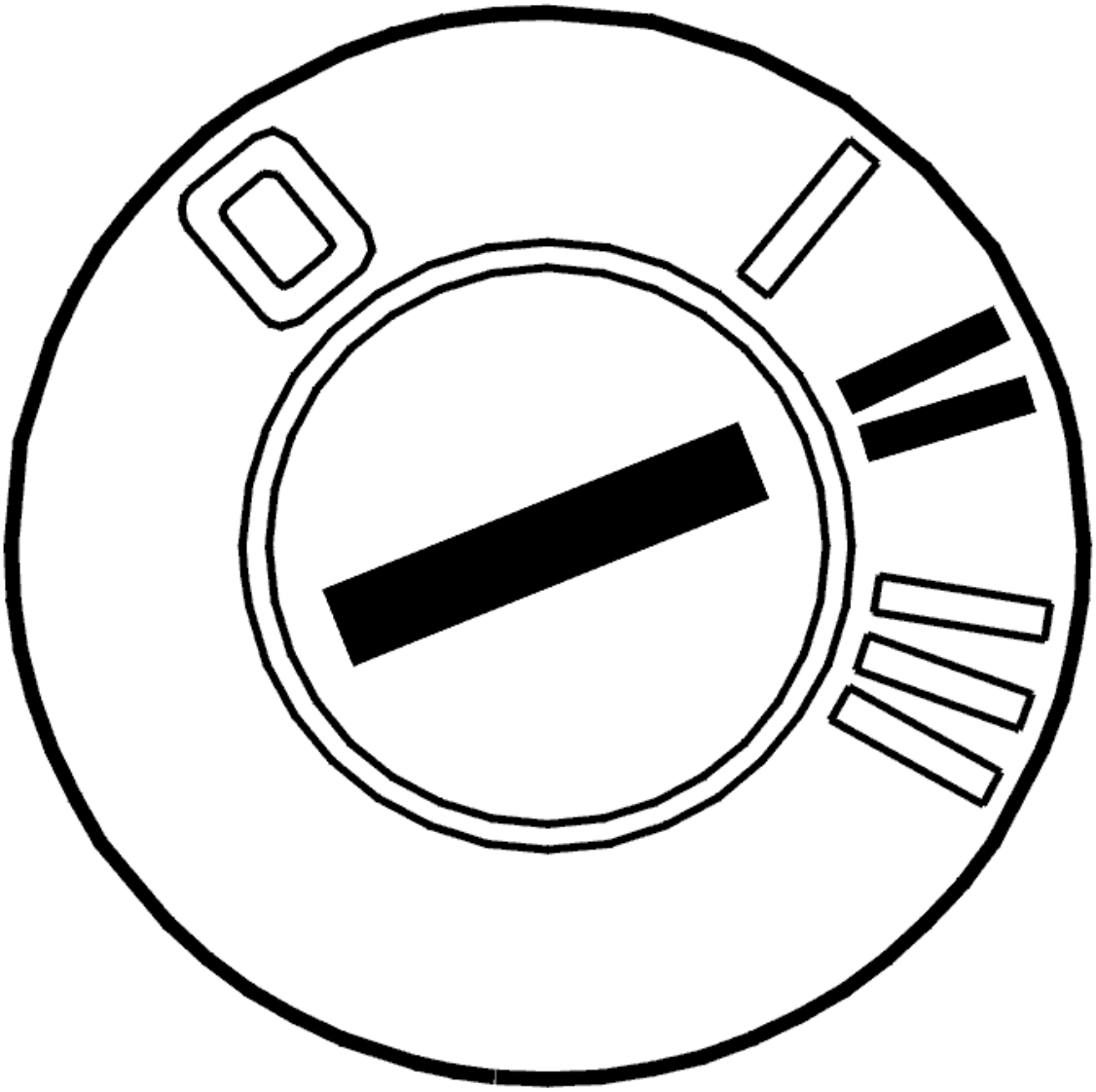

Fig. 173: Identifying Ignition ON
Courtesy of VOLVO CARS CORPORATION

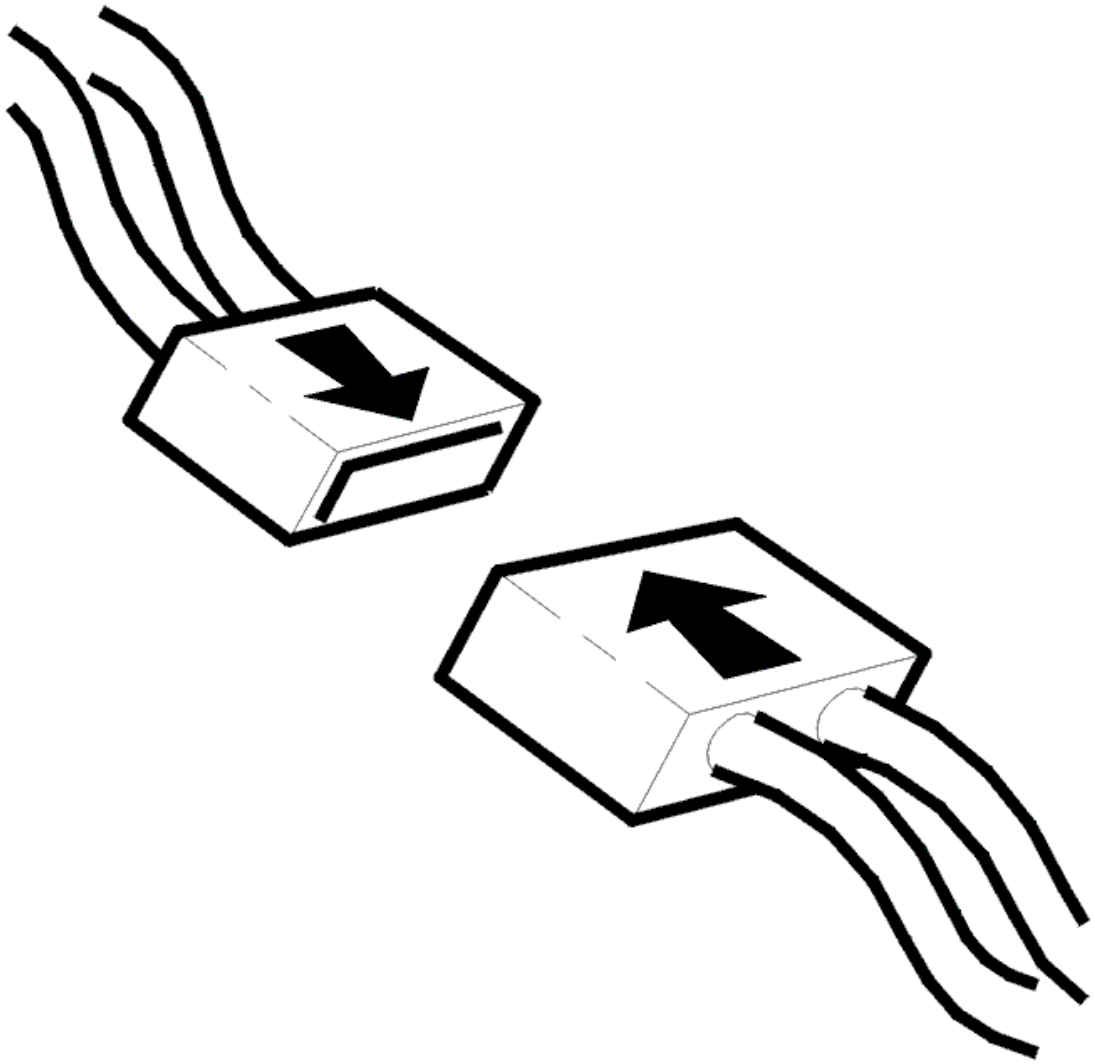

Fig. 174: Identifying Connector(s) Reinstallation
Courtesy of VOLVO CARS CORPORATION

- Ignition off
- Reinstall the connectors, components etc.
- Ignition on.

  Fill with gas. Check the gas lines and terminals for leakage. Check that the gas fuel gauge displays a reasonable value.

Is the value within its permitted range?

- **YES**

  VERIFIED: Troubleshooting has been completed.

- **NO**

  Refer to **INFORMATION**

INFORMATION

FAULT-TRACING INFORMATION

The fault should have been detected and remedied. As this is not the case fault-tracing has failed.

Exit fault-tracing for this diagnostic trouble code (DTC) or make another attempt.

REM-4A44: FUEL LEVEL, GAS. FAULTY SIGNAL (2005-2012)

DIAGNOSTIC TROUBLE CODE (DTC) INFORMATION REM-4A44

Condition

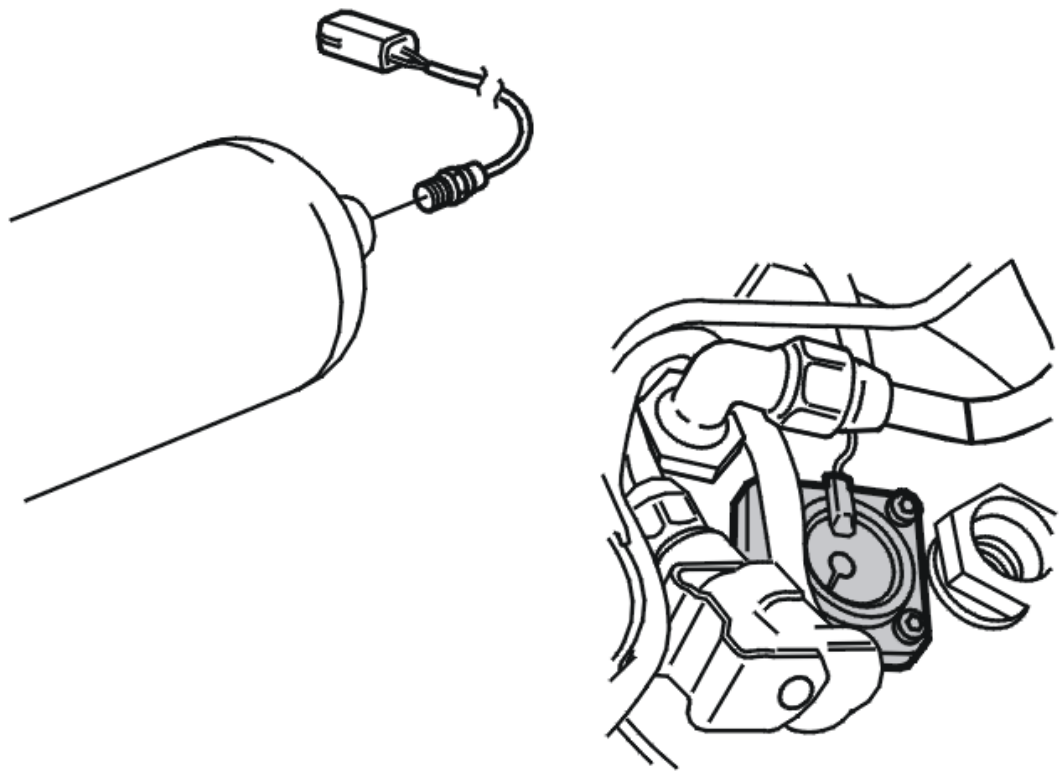

Fig. 175: Identifying Fuel Level Sensor
Courtesy of VOLVO CARS CORPORATION

The rear electronic module (REM) checks the signal from the fuel level sensor for gas.

The diagnostic trouble code (DTC) is stored if the rear electronic module (REM) registers that the level has not changed in 100 km.

The diagnostic trouble code (DTC) can be diagnosed at key position II.

Substitute Value

- The fuel level is set to zero.

Possible Source

- Faulty sensor.

Fault symptom[s]

- The trip computer displays an empty fuel tank too early
- The fuel gauge indicates zero even though there is fuel in the tank
- The gas level gauge does not work.

FAULTY SIGNAL

CHECKING THE STATUS

If the fault is intermittent, it has been registered previously but is no longer present. Intermittent faults may be due to interference at start up of the control module or may be a different type of fault which occurs on different occasions. The fault is evaluated depending on how it occurs.

Replace the fuel level sensor if the fault is permanent.

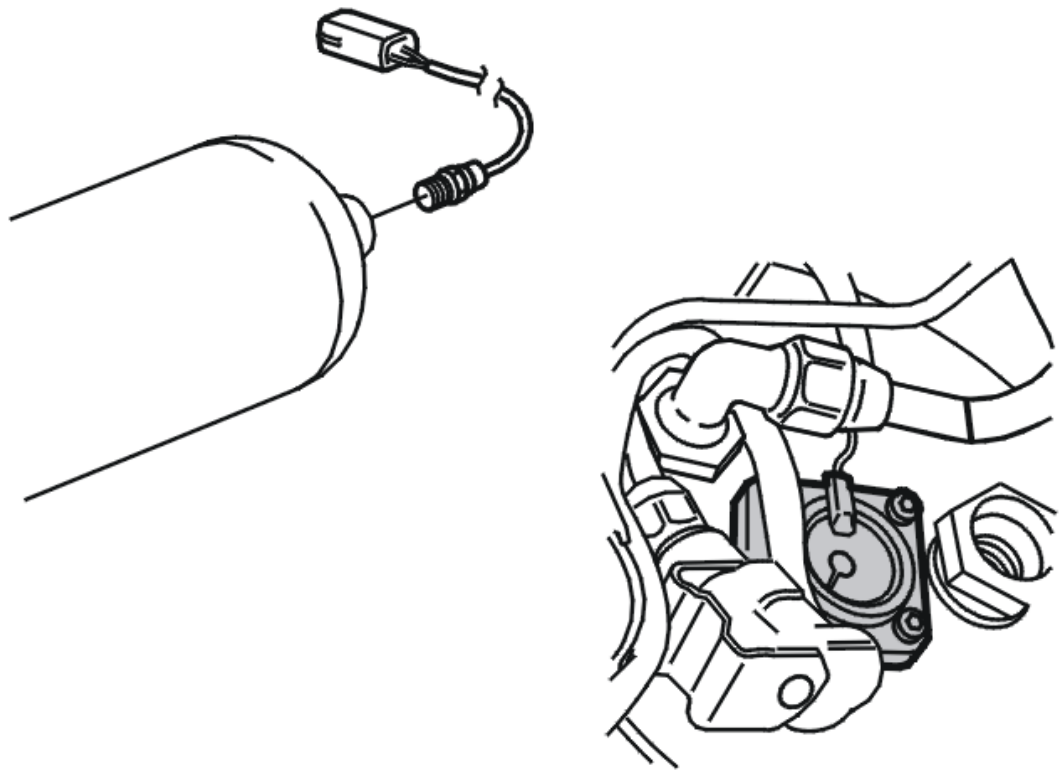

Fig. 176: Identifying Fuel Level Sensor
Courtesy of VOLVO CARS CORPORATION

- **Continue**

  Refer to **REPLACING THE COMPONENT**

REPLACING THE COMPONENT

Replace the fuel level sensor.

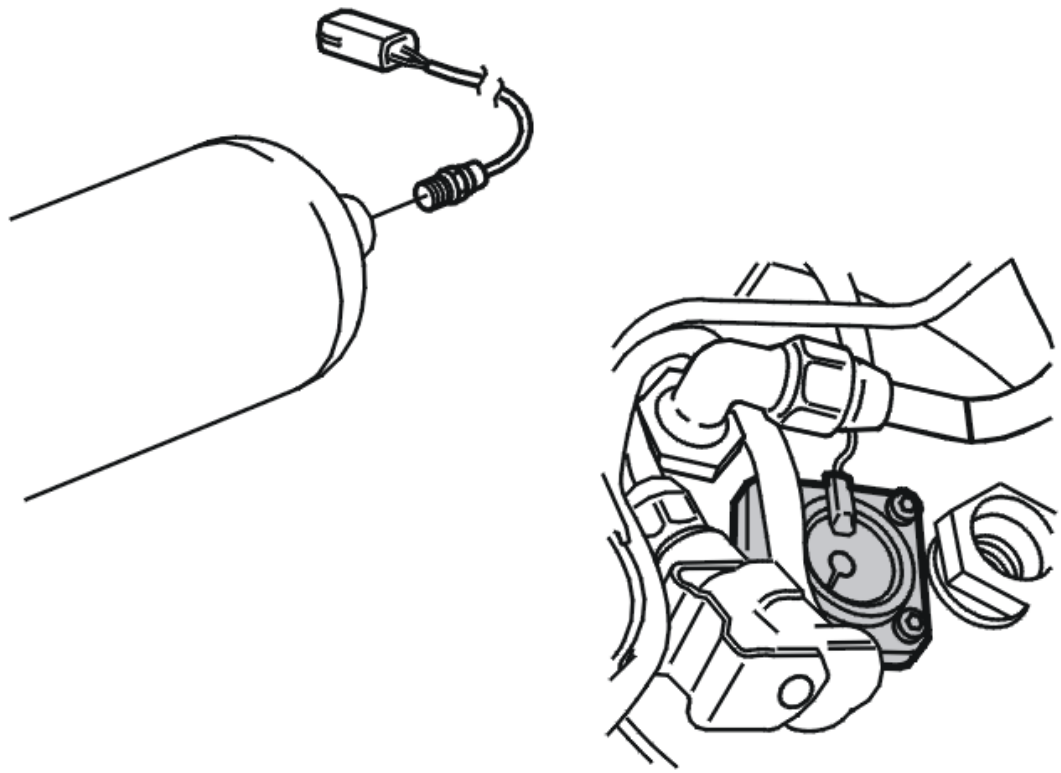

Fig. 177: Identifying Fuel Level Sensor
Courtesy of VOLVO CARS CORPORATION

- **Continue**

  Refer to **VERIFICATION**

VERIFICATION

VERIFICATION

HINT: After carrying out the repair, check that the fault has been remedied.

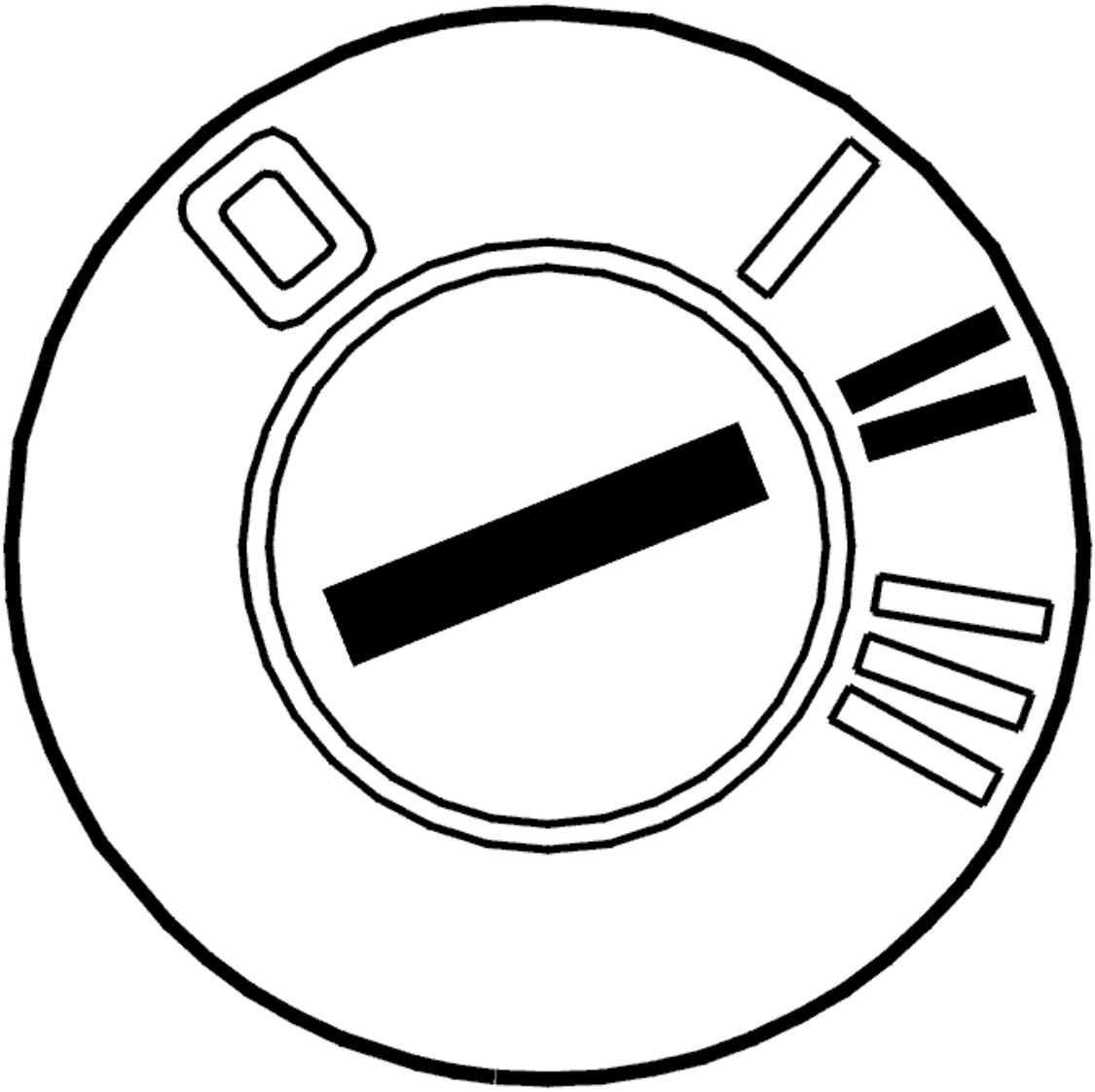

Fig. 178: Identifying Ignition ON
Courtesy of VOLVO CARS CORPORATION

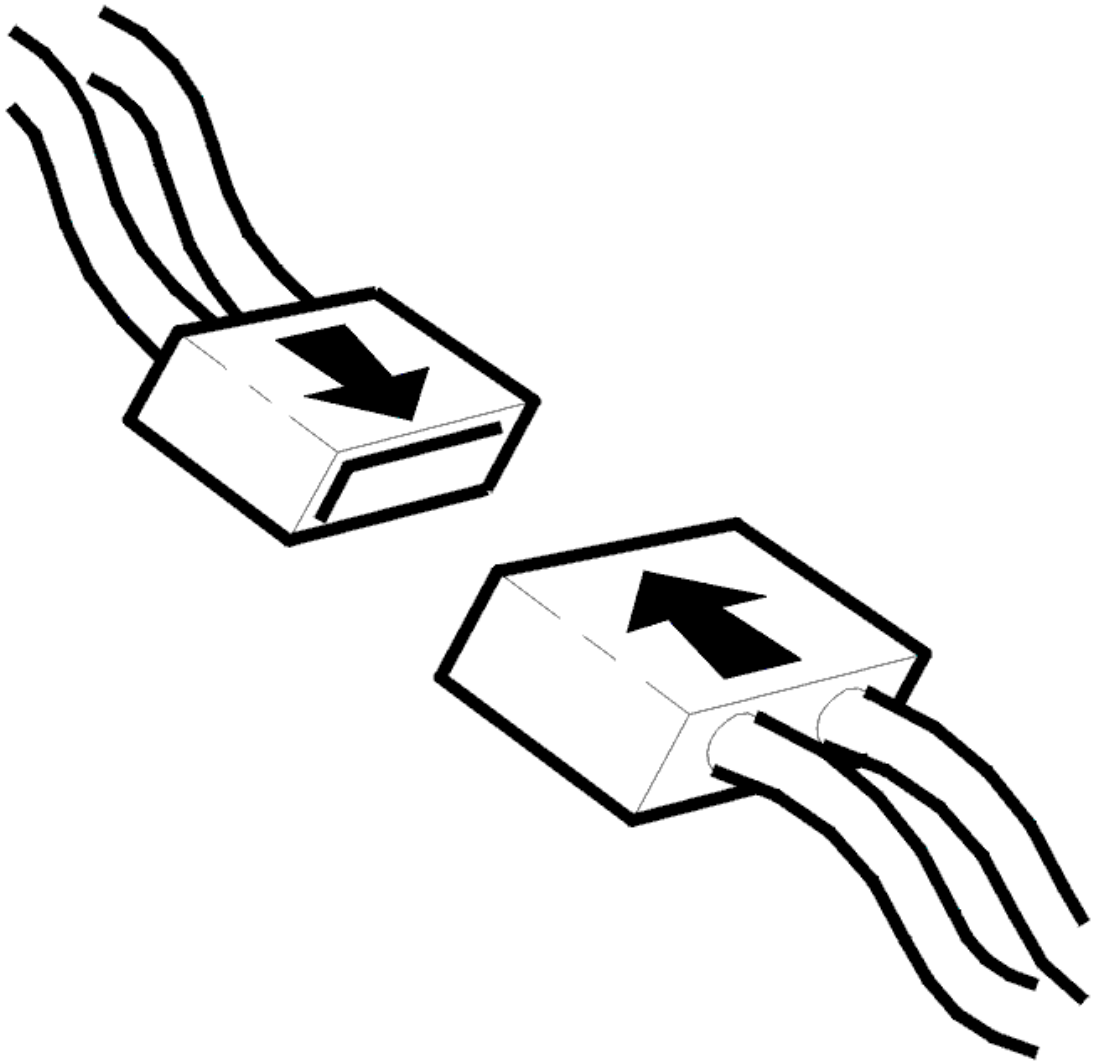

Fig. 179: Identifying Connector(s) Reinstallation
Courtesy of VOLVO CARS CORPORATION

- Ignition off
- Reinstall the connectors, components etc.
- Ignition on.

  Fill up with gas. Check that the level of the fuel gauge changes.

Is the value within its permitted range?

- **YES**

  VERIFIED: Troubleshooting has been completed.

- **NO**

  Refer to **INFORMATION**

INFORMATION

FAULT-TRACING INFORMATION

The fault should have been detected and remedied. As this is not the case fault-tracing has failed.

Exit fault-tracing for this diagnostic trouble code (DTC) or make another attempt.

REM-4A45: FUEL LEVEL, GAS. SIGNAL TOO HIGH (2005-2012)

DIAGNOSTIC TROUBLE CODE (DTC) INFORMATION REM-4A45

Condition

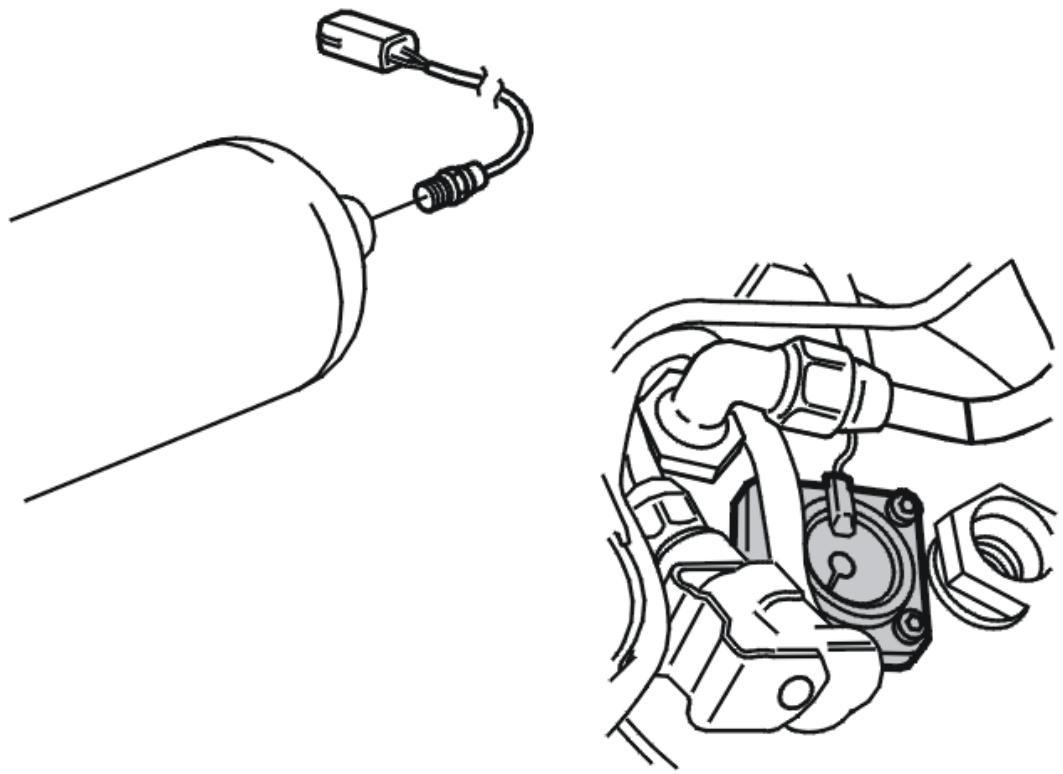

Fig. 180: Identifying Fuel Level Sensor
Courtesy of VOLVO CARS CORPORATION

The rear electronic module (REM) checks the signal from the fuel level sensor for gas.

The diagnostic trouble code (DTC) is stored if the rear electronic module (REM) registers that the signal is too high.

The diagnostic trouble code (DTC) can be diagnosed at key position II.

Substitute Value

- The fuel level is set to zero.

Possible Source

- Short-circuit to supply voltage in the signal cable
- Open-circuit in signal cable to the sensor.

Fault symptom[s]

- The trip computer displays an empty fuel tank too early
- The fuel gauge indicates zero even though there is fuel in the tank
- The gas level gauge does not work.

FAULTY SIGNAL

CHECKING THE STATUS

If the fault is intermittent, it has been registered previously but is no longer present. Intermittent faults may be due to interference at start up of the control module or may be a different type of fault which occurs on different occasions. The fault is evaluated depending on how it occurs.

Replace the fuel level sensor if the fault is permanent.

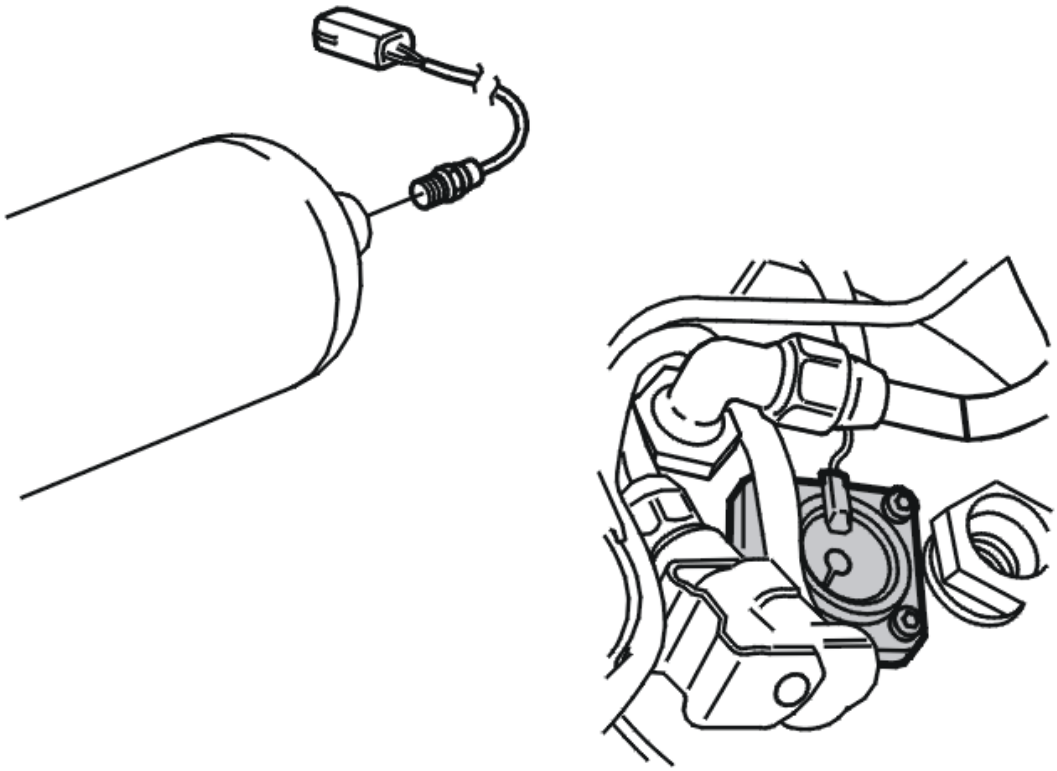

Fig. 181: Identifying Fuel Level Sensor
Courtesy of VOLVO CARS CORPORATION

- **Continue**

  Refer to **REPLACING THE COMPONENT**

REPLACING THE COMPONENT

Replace the fuel level sensor.

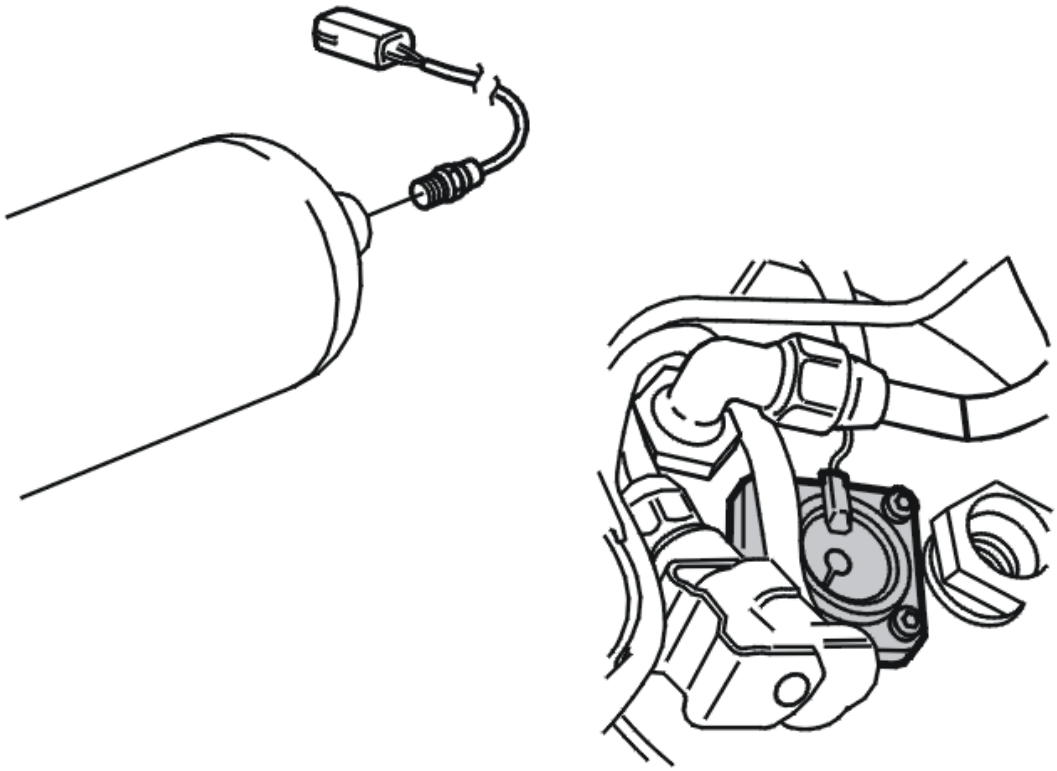

Fig. 182: Identifying Fuel Level Sensor
Courtesy of VOLVO CARS CORPORATION

- **Continue**

  Refer to **VERIFICATION**

VERIFICATION

VERIFICATION

HINT: After carrying out the repair, check that the fault has been remedied.

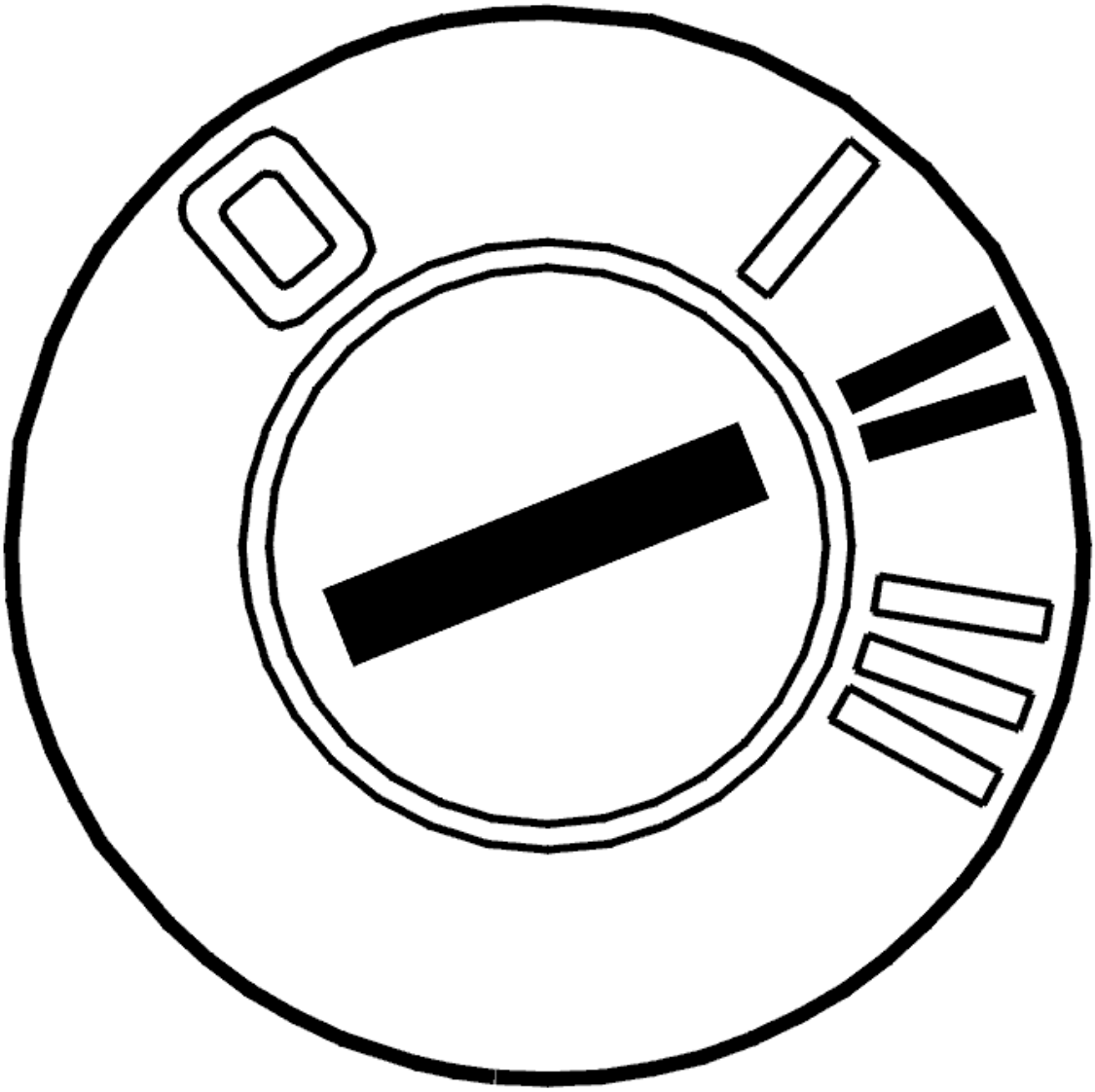

Fig. 183: Identifying Ignition ON
Courtesy of VOLVO CARS CORPORATION

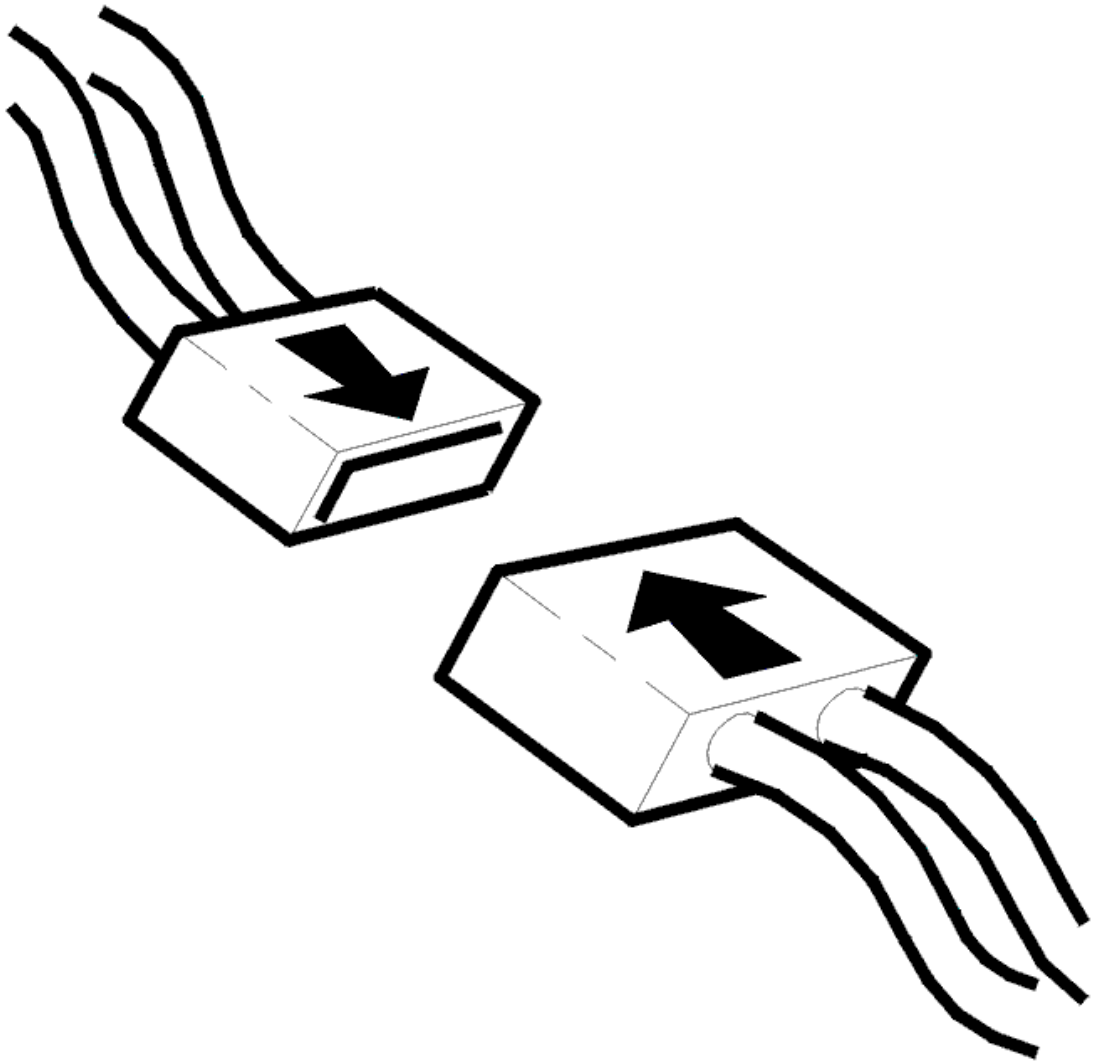

Fig. 184: Identifying Connector(s) Reinstallation
Courtesy of VOLVO CARS CORPORATION

- Ignition off
- Reinstall the connectors, components etc.
- Ignition on.

  Fill up with gas. Check that the level of the fuel gauge changes.

Is the value within its permitted range?

- **YES**

  VERIFIED: Troubleshooting has been completed.

- **NO**

  Refer to **INFORMATION**

INFORMATION

FAULT-TRACING INFORMATION

The fault should have been detected and remedied. As this is not the case fault-tracing has failed.

Exit fault-tracing for this diagnostic trouble code (DTC) or make another attempt.

REM-4A46: FUEL LEVEL, GAS. SIGNAL TOO LOW (2005-2012)

DIAGNOSTIC TROUBLE CODE (DTC) INFORMATION REM-4A46

Condition

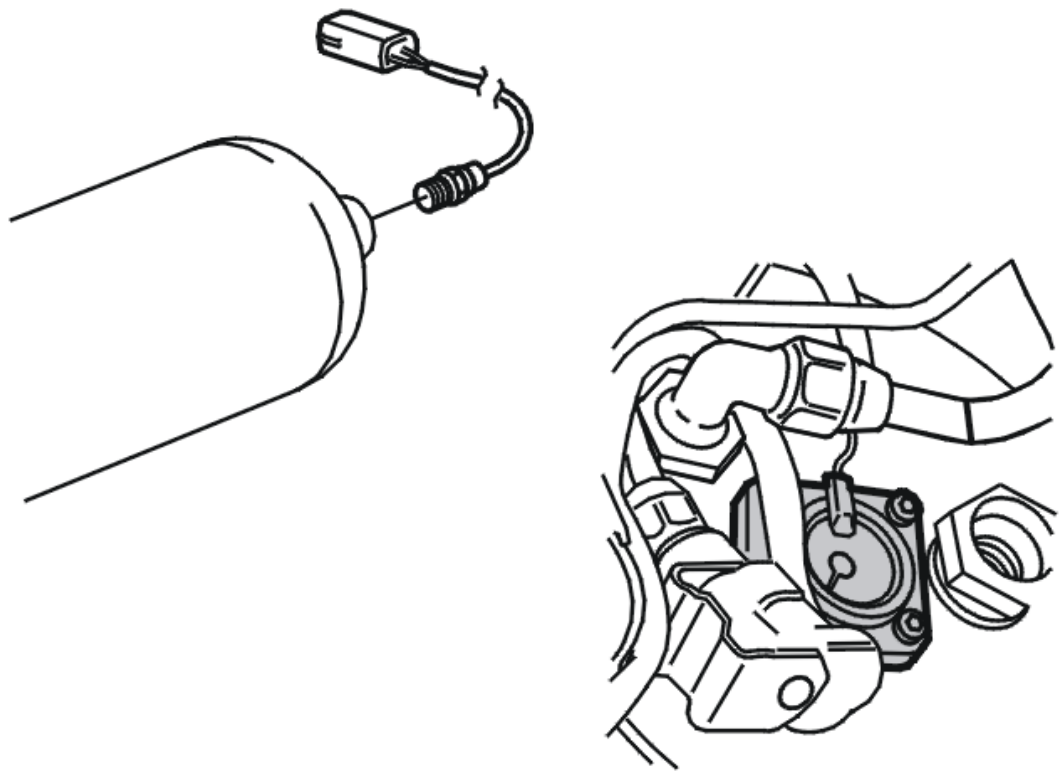

Fig. 185: Identifying Fuel Level Sensor
Courtesy of VOLVO CARS CORPORATION

The rear electronic module (REM) checks the signal from the fuel level sensor for gas.

The diagnostic trouble code (DTC) is stored if the rear electronic module (REM) registers that the signal is too low.

The diagnostic trouble code (DTC) can be diagnosed at key position II.

Substitute Value

- The fuel level is set to zero.

Possible Source

- Short-circuit to ground in the signal cable.

Fault symptom[s]

- The trip computer displays an empty fuel tank too early
- The fuel gauge indicates zero even though there is fuel in the tank
- The gas level gauge does not work.

SIGNAL TOO LOW

CHECKING THE WIRING

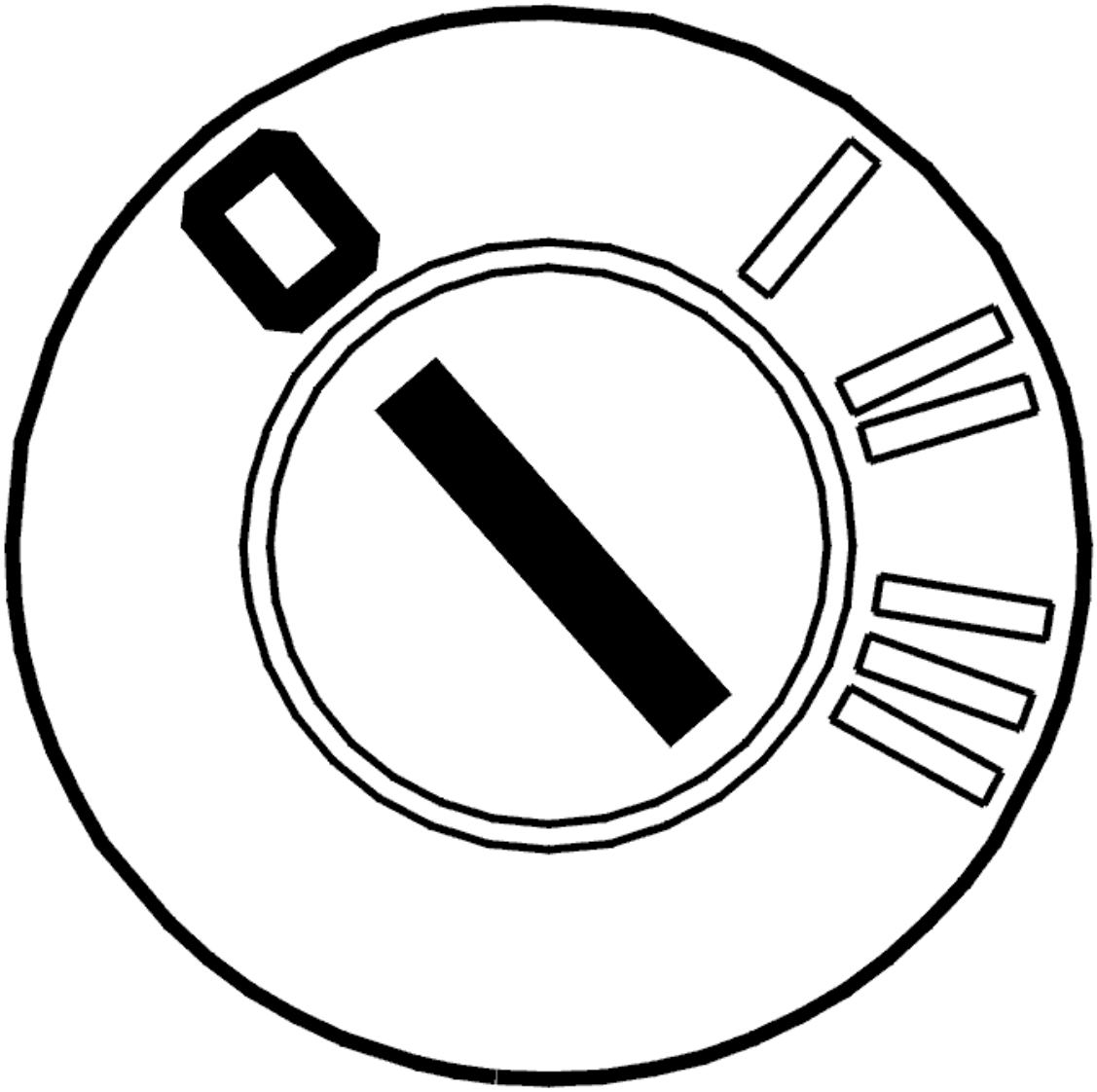

Fig. 186: Identifying Ignition OFF
Courtesy of VOLVO CARS CORPORATION

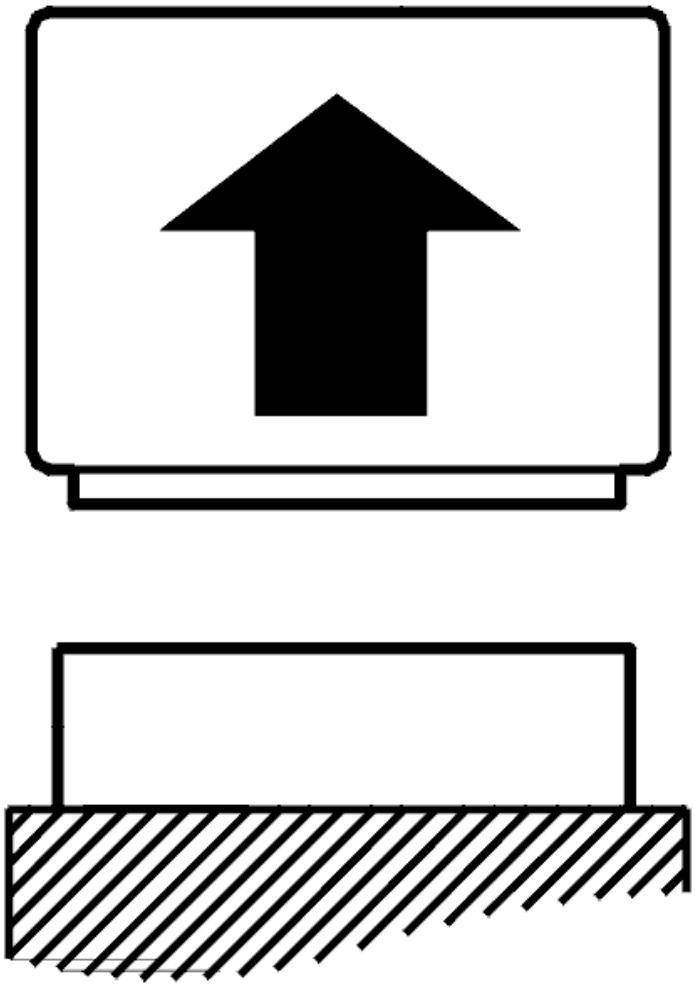

Fig. 187: Identifying Control Module Disconnected
Courtesy of VOLVO CARS CORPORATION

- Ignition off
- Disconnect connector D on the rear electronic module (REM).

  Check the signal cable. Check for an open-circuit. Check for a short-circuit to ground.

  Take readings between:

  - Rear electronic module (REM) terminal #D36 (#36) and gas level sensor terminal #1.

  Other information

  - see **CONNECTING THE BREAKOUT BOX**

- see **SIGNAL SPECIFICATION**
- see **CHECKING WIRING AND TERMINALS**

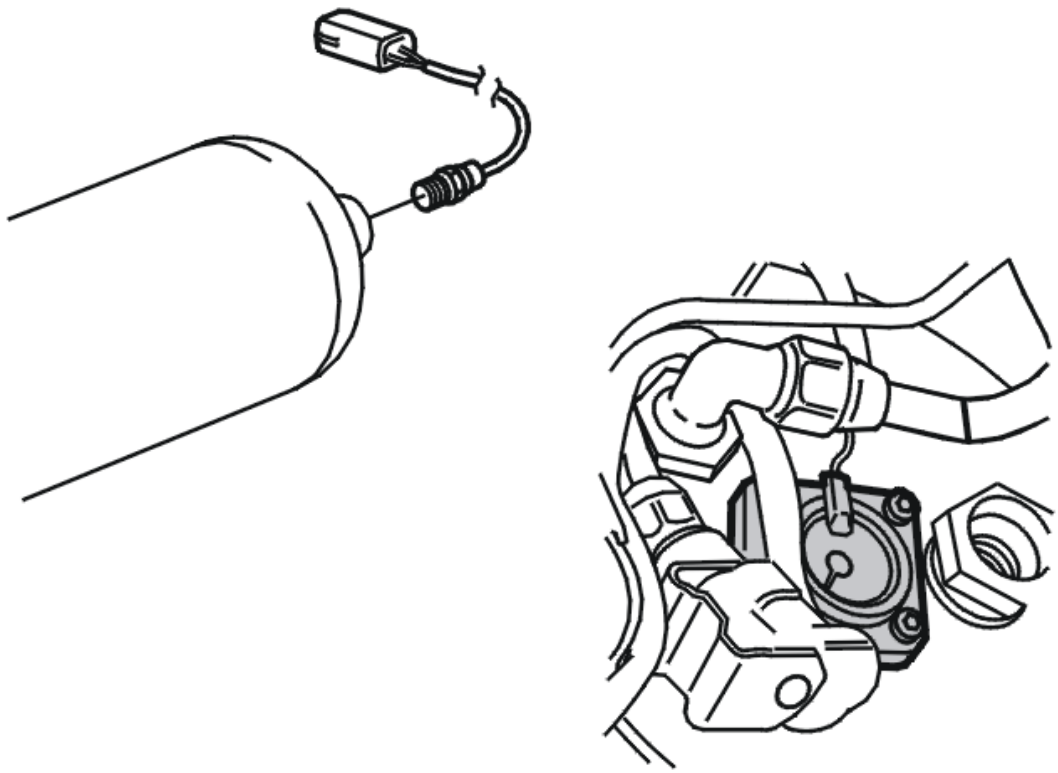

Fig. 188: Identifying Fuel Level Sensor
Courtesy of VOLVO CARS CORPORATION

- **Continue**

  Refer to **VERIFICATION**

VERIFICATION

VERIFICATION

HINT: After carrying out the repair, check that the fault has been remedied.

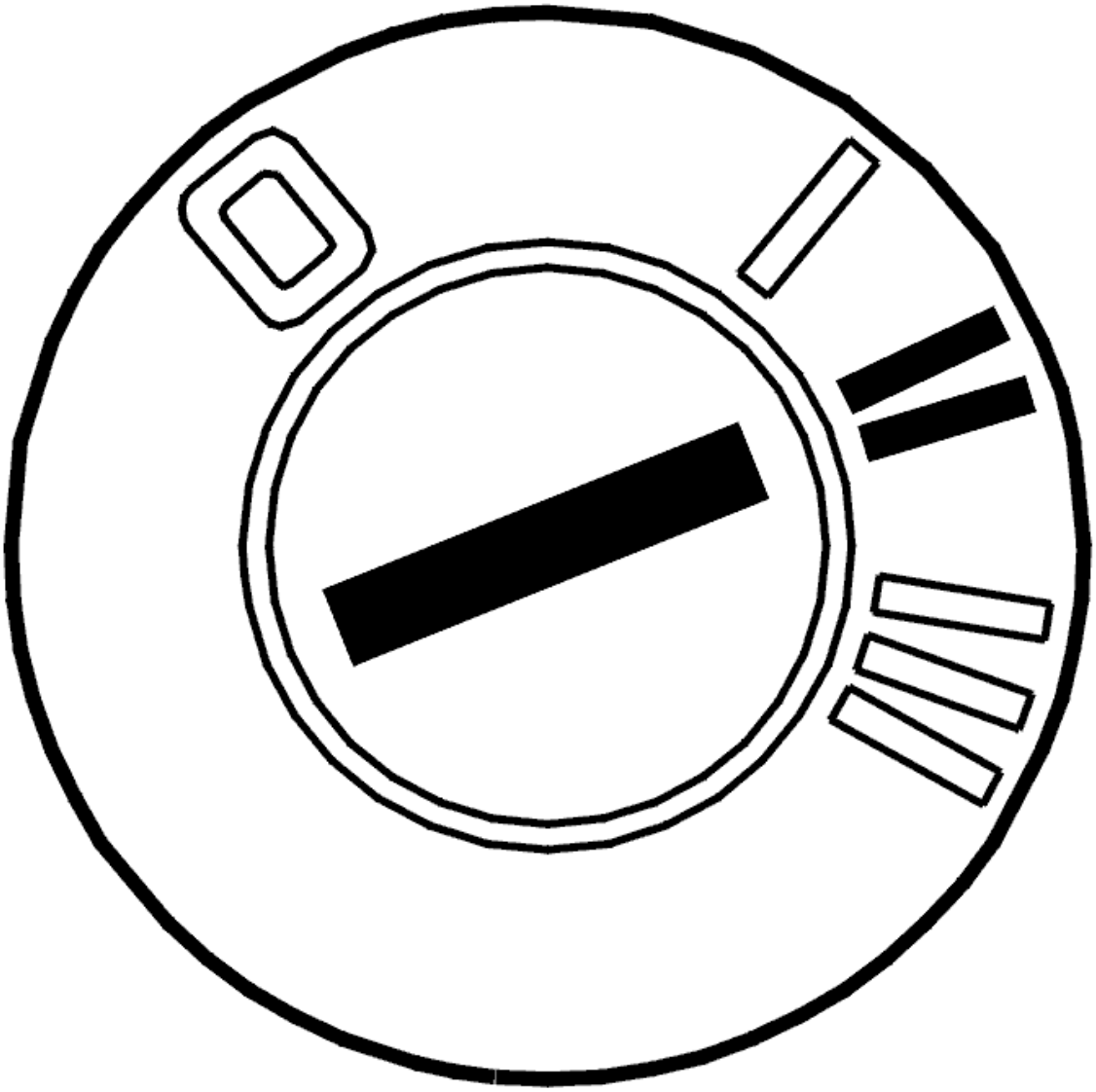

Fig. 189: Identifying Ignition ON
Courtesy of VOLVO CARS CORPORATION

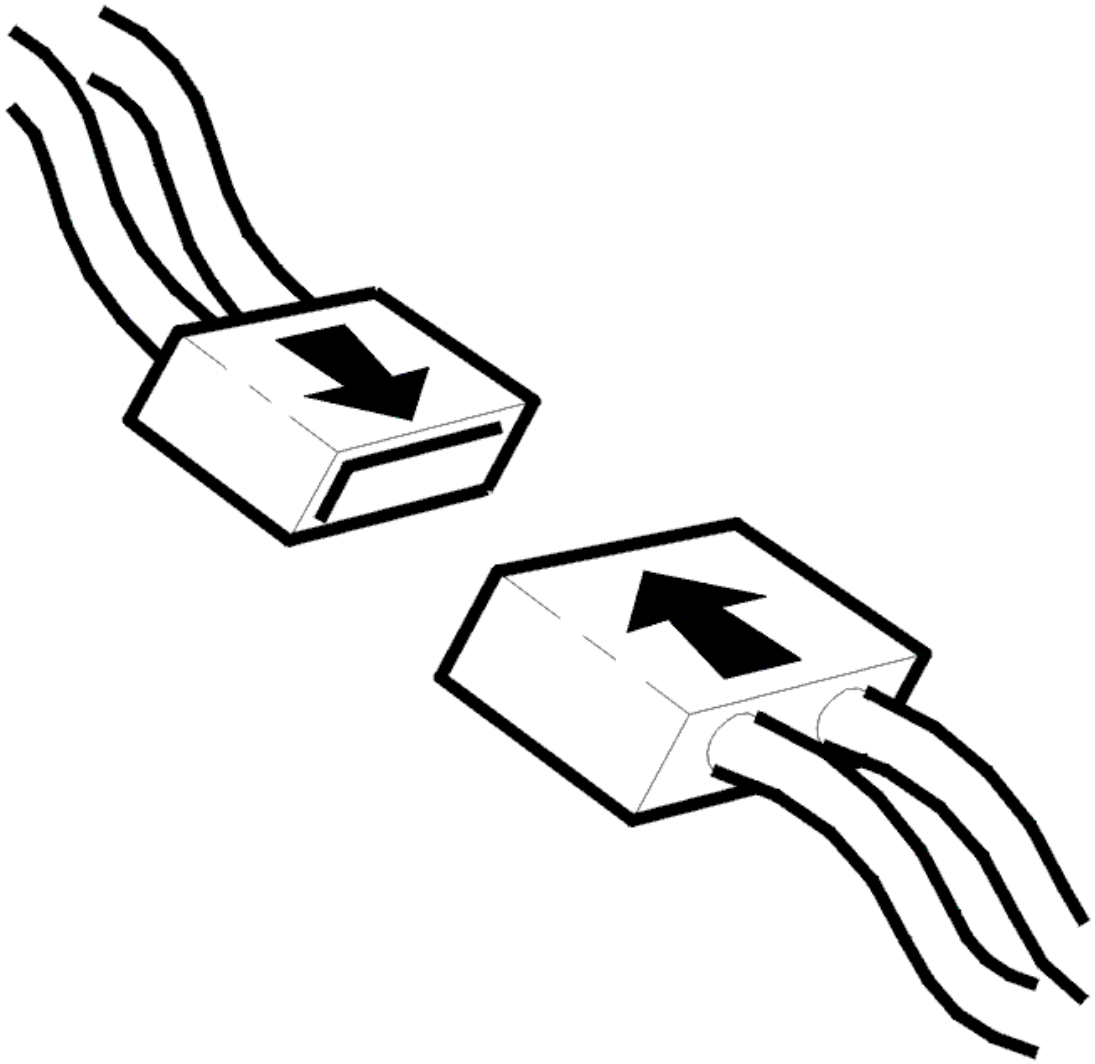

Fig. 190: Identifying Connector(s) Reinstallation
Courtesy of VOLVO CARS CORPORATION

- Ignition off
- Reinstall the connectors, components etc.
- Ignition on.

  Fill up with gas. Check that the level of the fuel gauge changes.

Is the value within its permitted range?

- **YES**

  VERIFIED: Troubleshooting has been completed.

- **NO**

  Refer to **INFORMATION**

INFORMATION

FAULT-TRACING INFORMATION

The fault should have been detected and remedied. As this is not the case fault-tracing has failed.

Exit fault-tracing for this diagnostic trouble code (DTC) or make another attempt.

REM-4A47: FUEL LEVEL, GAS. SIGNAL TOO LOW (2005-2012)

DIAGNOSTIC TROUBLE CODE (DTC) INFORMATION REM-4A47

Condition

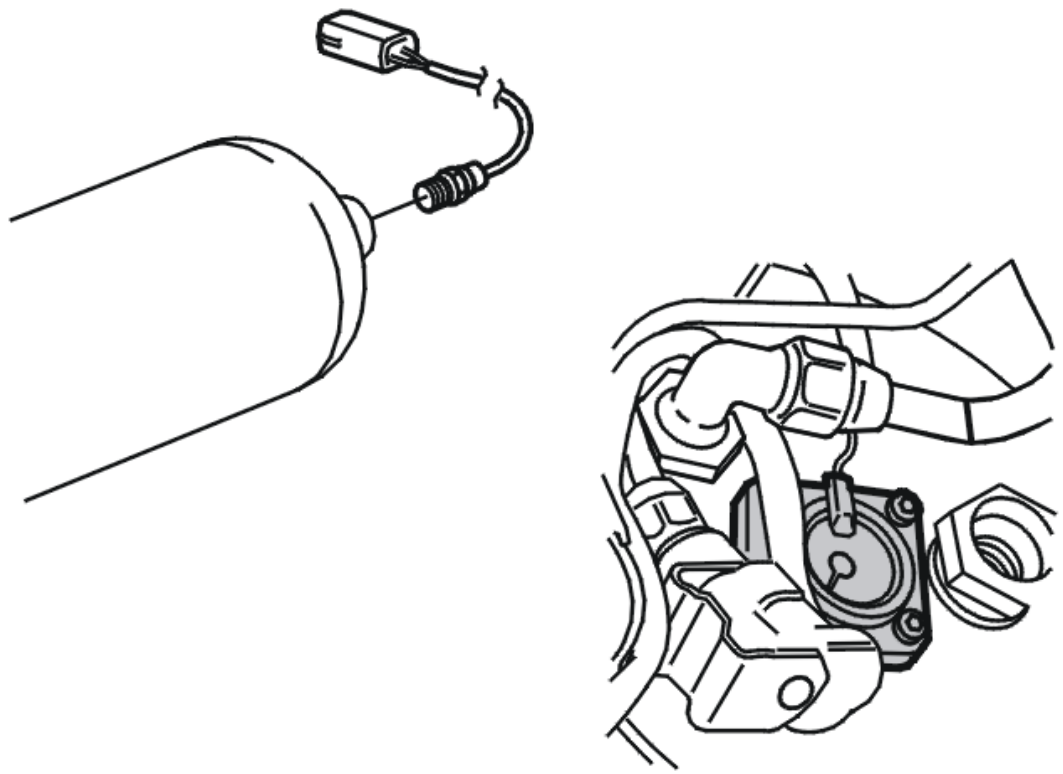

Fig. 191: Identifying Fuel Level Sensor
Courtesy of VOLVO CARS CORPORATION

The rear electronic module (REM) checks the signal from the fuel level sensor for gas.

The diagnostic trouble code (DTC) is stored if the rear electronic module (REM) registers that the signal is too low.

The diagnostic trouble code (DTC) can be diagnosed at key position II.

Substitute Value

- The fuel level is set to zero.

Possible Source

- Short-circuit to ground in the signal cable.

Fault symptom[s]

- The trip computer displays an empty fuel tank too early
- The fuel gauge indicates zero even though there is fuel in the tank
- The gas level gauge does not function
- Automatic headlamp range control is not functioning.

SIGNAL TOO LOW

CHECKING THE WIRING

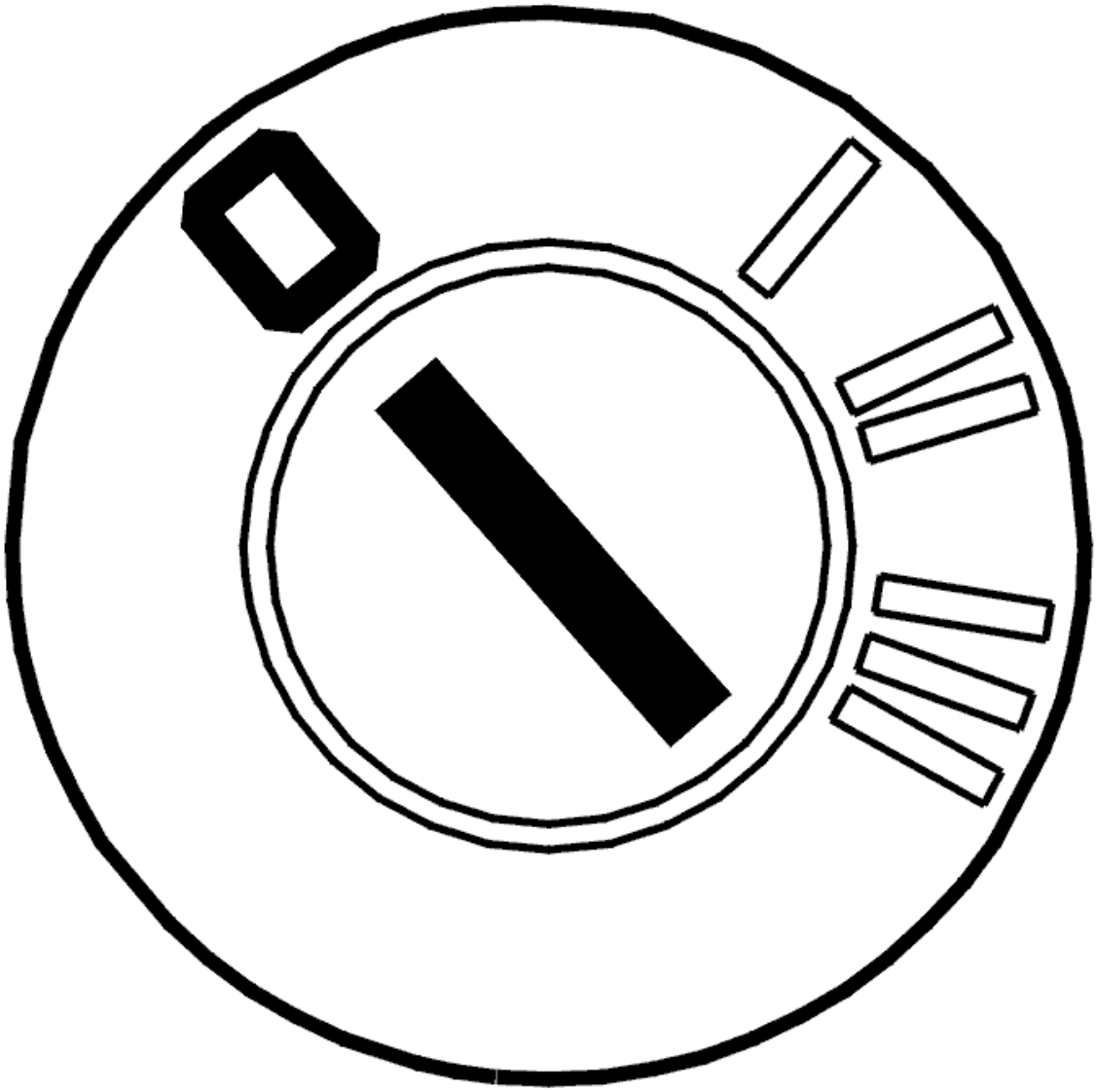

Fig. 192: Identifying Ignition OFF
Courtesy of VOLVO CARS CORPORATION

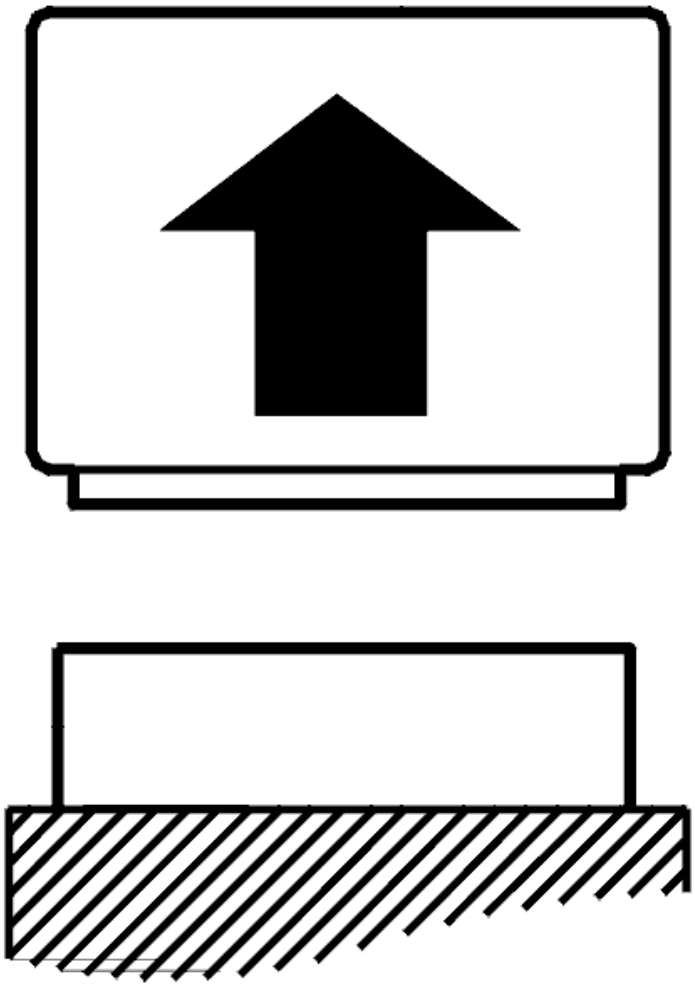

Fig. 193: Identifying Control Module Disconnected
Courtesy of VOLVO CARS CORPORATION

- Ignition off
- Disconnect connector C on the rear electronic module (REM)
- Disconnect connector D on the rear electronic module (REM).

  Check the signal cable. Check for a short-circuit to ground.

  Take readings between:

  - Rear electronic module (REM) terminal #C11 (#51) and terminal #5 on the position sensor for the Xenon lamp
  - Rear electronic module (REM) terminal #D14 (#14) and gas temperature sensor terminal #1.

Other information

- see **CONNECTING THE BREAKOUT BOX**
- see **SIGNAL SPECIFICATION**
- see **CHECKING WIRING AND TERMINALS**

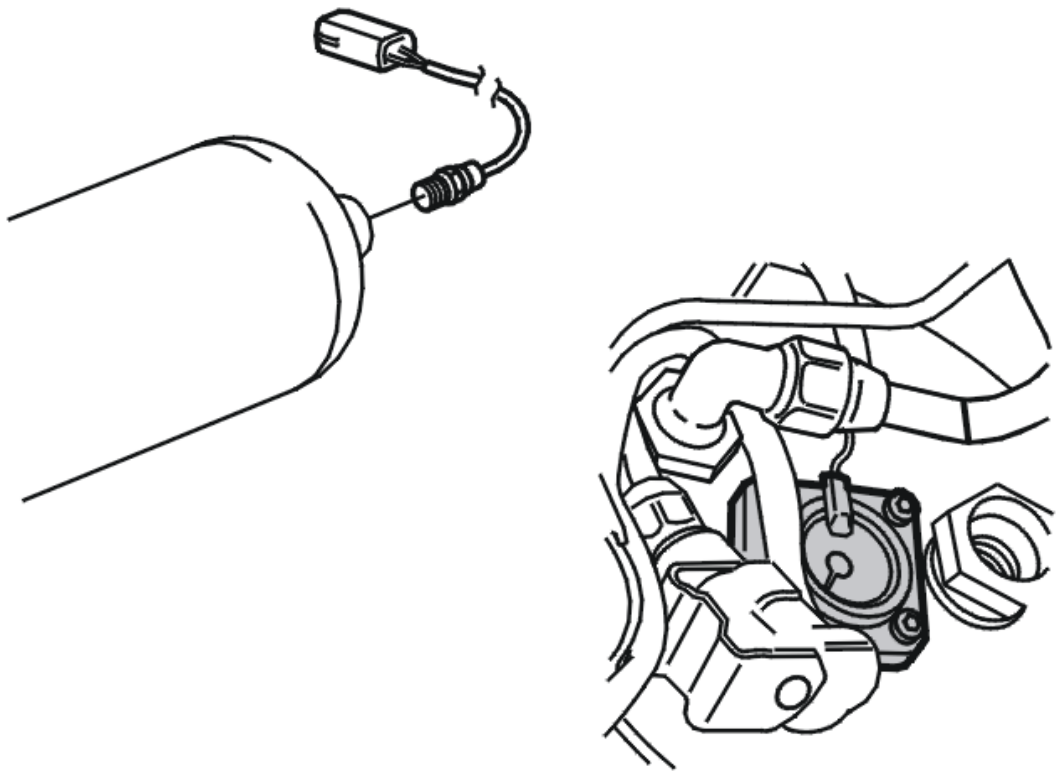

Fig. 194: Identifying Fuel Level Sensor
Courtesy of VOLVO CARS CORPORATION

- **Continue**

  Refer to **VERIFICATION**

VERIFICATION

VERIFICATION

HINT: After carrying out the repair, check that the fault has been remedied.

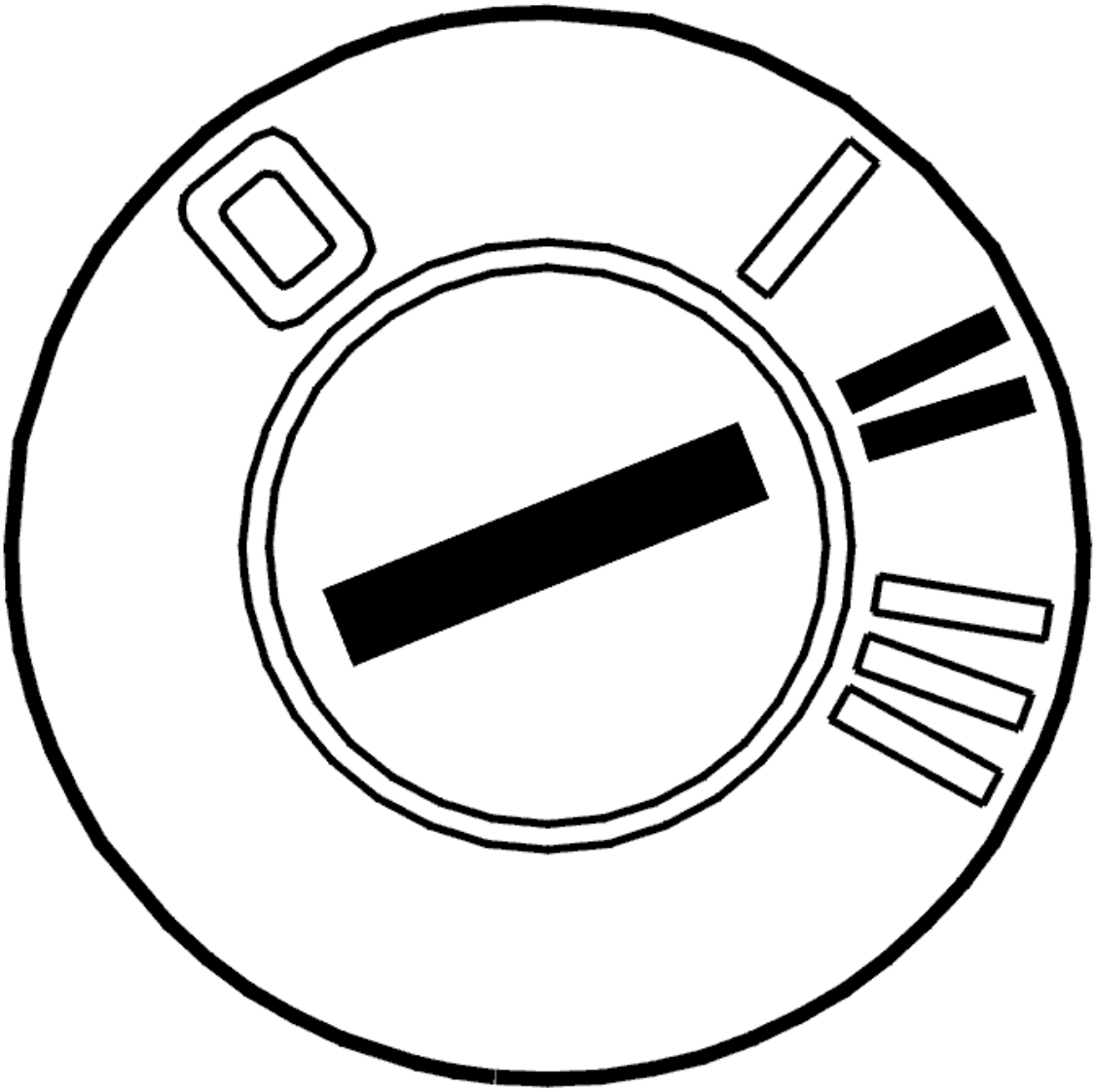

Fig. 195: Identifying Ignition ON
Courtesy of VOLVO CARS CORPORATION

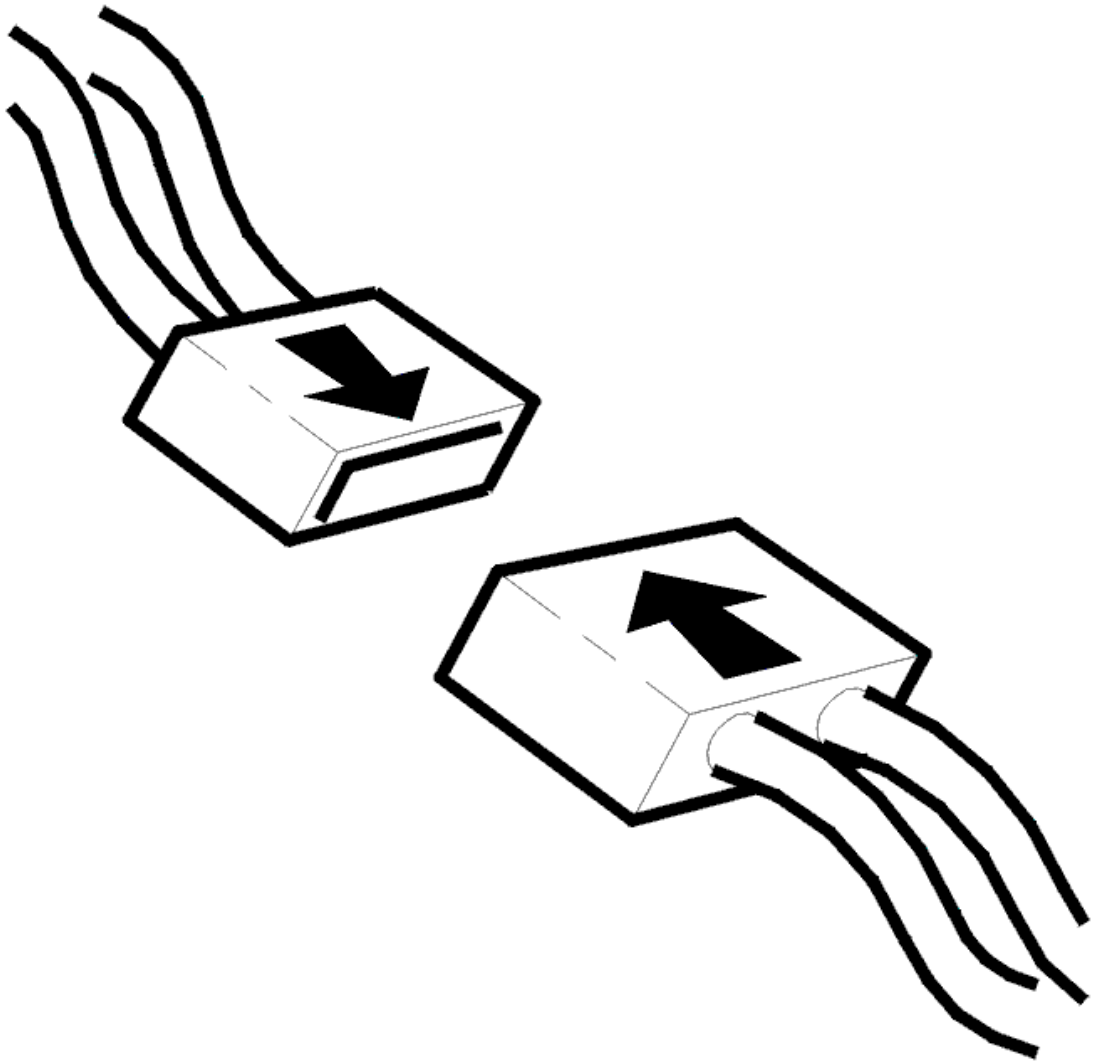

Fig. 196: Identifying Connector(s) Reinstallation
Courtesy of VOLVO CARS CORPORATION

- Ignition off
- Reinstall the connectors, components etc.
- Ignition on.

  Fill up with gas. Check that the level of the fuel gauge changes.

Is the value within its permitted range?

- **YES**

  VERIFIED: Troubleshooting has been completed.

- **NO**

  Refer to **INFORMATION**

INFORMATION

FAULT-TRACING INFORMATION

The fault should have been detected and remedied. As this is not the case fault-tracing has failed.

Exit fault-tracing for this diagnostic trouble code (DTC) or make another attempt.

REM-4A48: FUEL LEVEL, GAS. SIGNAL TOO HIGH (2005-2012)

DIAGNOSTIC TROUBLE CODE (DTC) INFORMATION REM-4A48

Condition

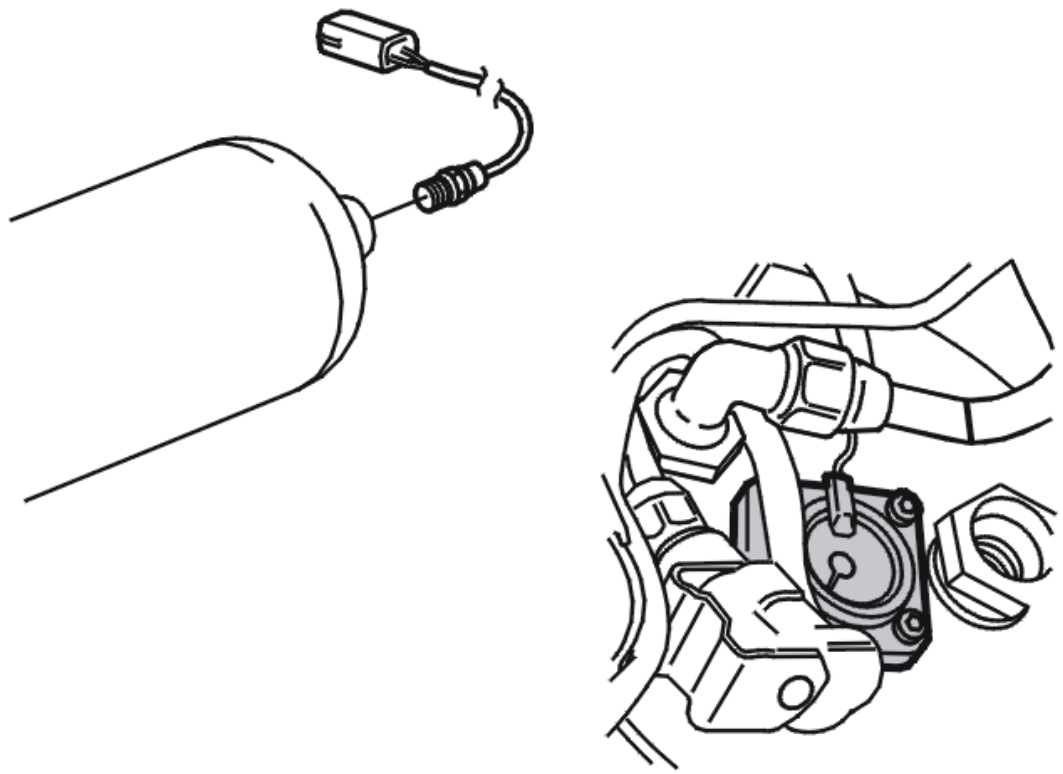

Fig. 197: Identifying Fuel Level Sensor
Courtesy of VOLVO CARS CORPORATION

The rear electronic module (REM) checks the signal from the fuel level sensor for gas.

The diagnostic trouble code (DTC) is stored if the rear electronic module (REM) registers that the signal is too high.

The diagnostic trouble code (DTC) can be diagnosed at key position II.

Substitute Value

- The fuel level is set to zero.

Possible Source

- Short-circuit to supply voltage in the signal cable.

Fault symptom[s]

- The trip computer displays an empty fuel tank too early
- The fuel gauge indicates zero even though there is fuel in the tank
- The gas level gauge does not function
- Automatic headlamp range control is not functioning.

SIGNAL TOO HIGH

CHECKING THE WIRING

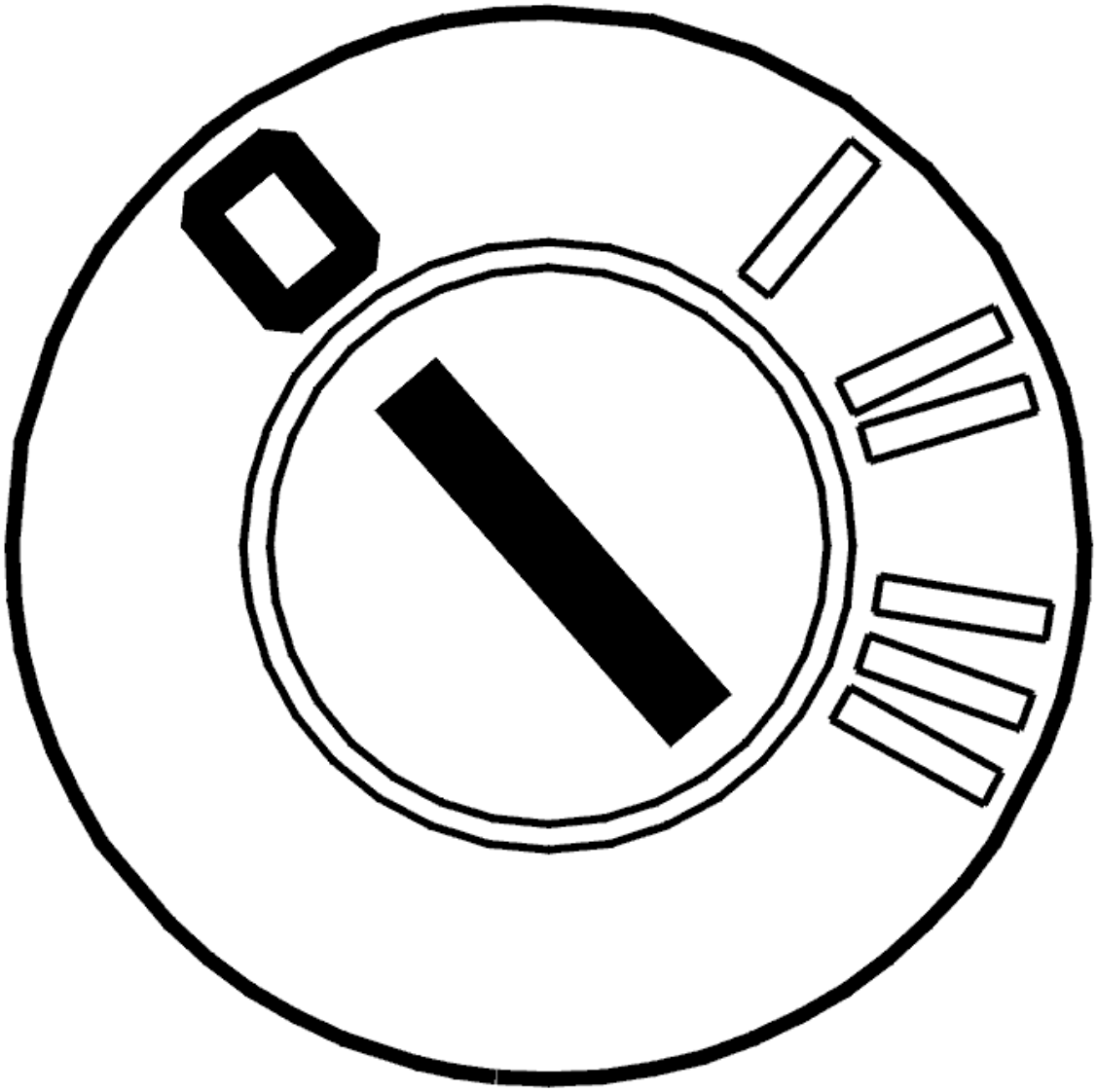

Fig. 198: Identifying Ignition OFF
Courtesy of VOLVO CARS CORPORATION

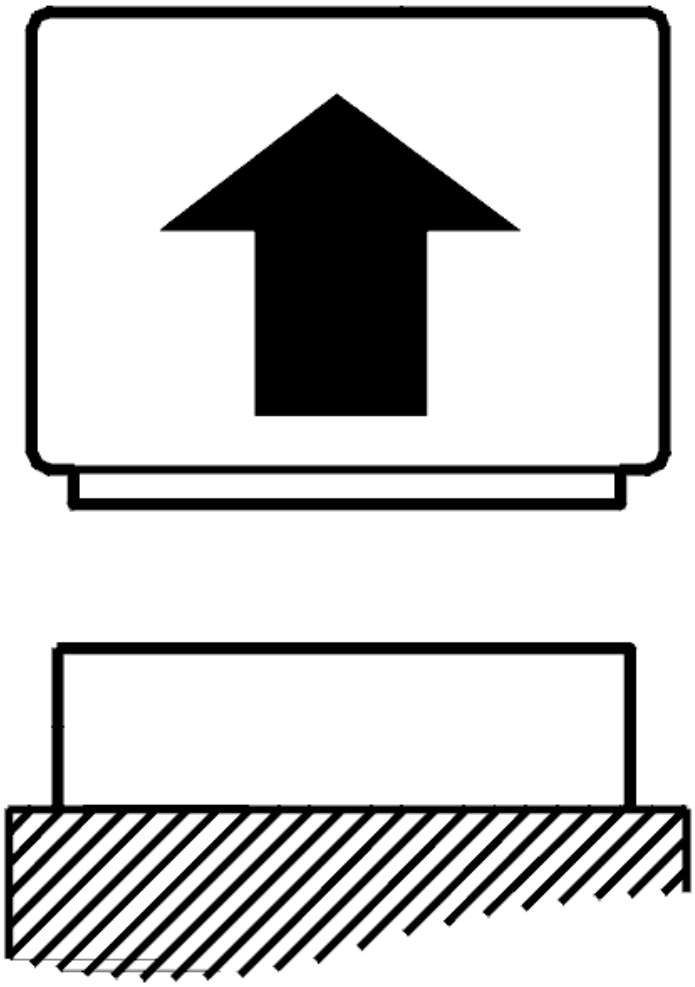

Fig. 199: Identifying Control Module Disconnected
Courtesy of VOLVO CARS CORPORATION

- Ignition off
- Disconnect connector C on the rear electronic module (REM)
- Disconnect connector D on the rear electronic module (REM).

  Check the signal cable. Check for a short-circuit to supply voltage.

  Take readings between:

  - Rear electronic module (REM) terminal #C11 (#51) and terminal #5 on the position sensor for the Xenon lamp
  - Rear electronic module (REM) terminal #D14 (#14) and gas temperature sensor terminal #1.

Other information

- see **CONNECTING THE BREAKOUT BOX**
- see **SIGNAL SPECIFICATION**
- see **CHECKING WIRING AND TERMINALS**

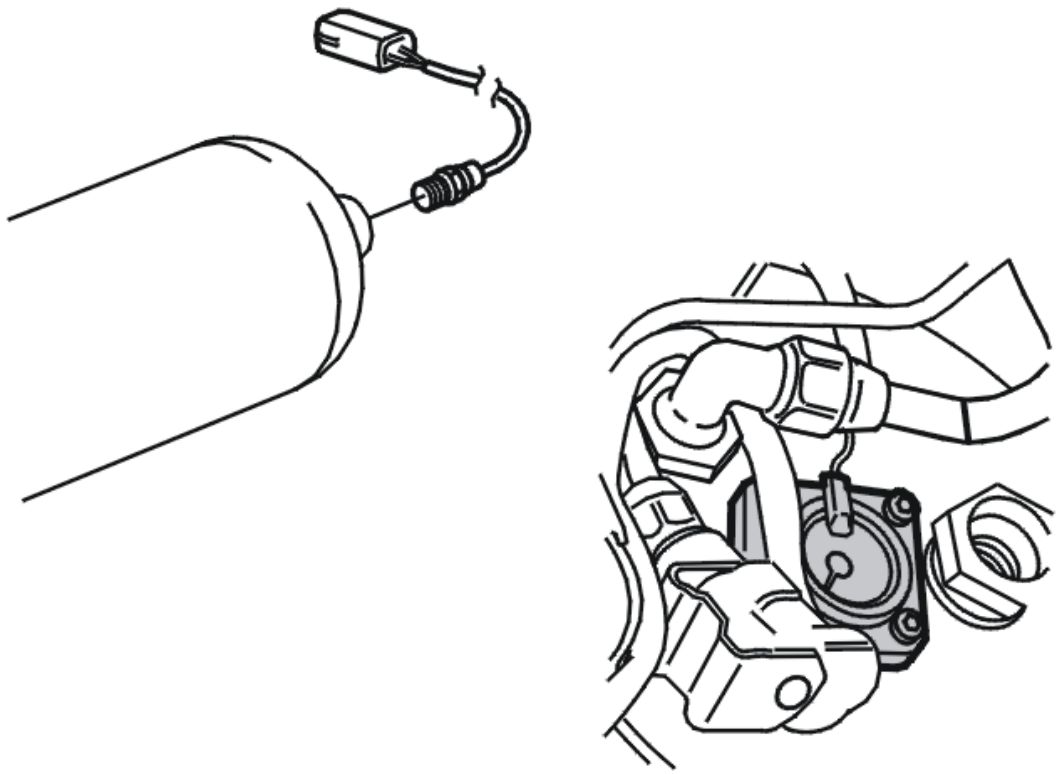

Fig. 200: Identifying Fuel Level Sensor
Courtesy of VOLVO CARS CORPORATION

- **Continue**

  Refer to **VERIFICATION**

VERIFICATION

VERIFICATION

HINT: After carrying out the repair, check that the fault has been remedied.

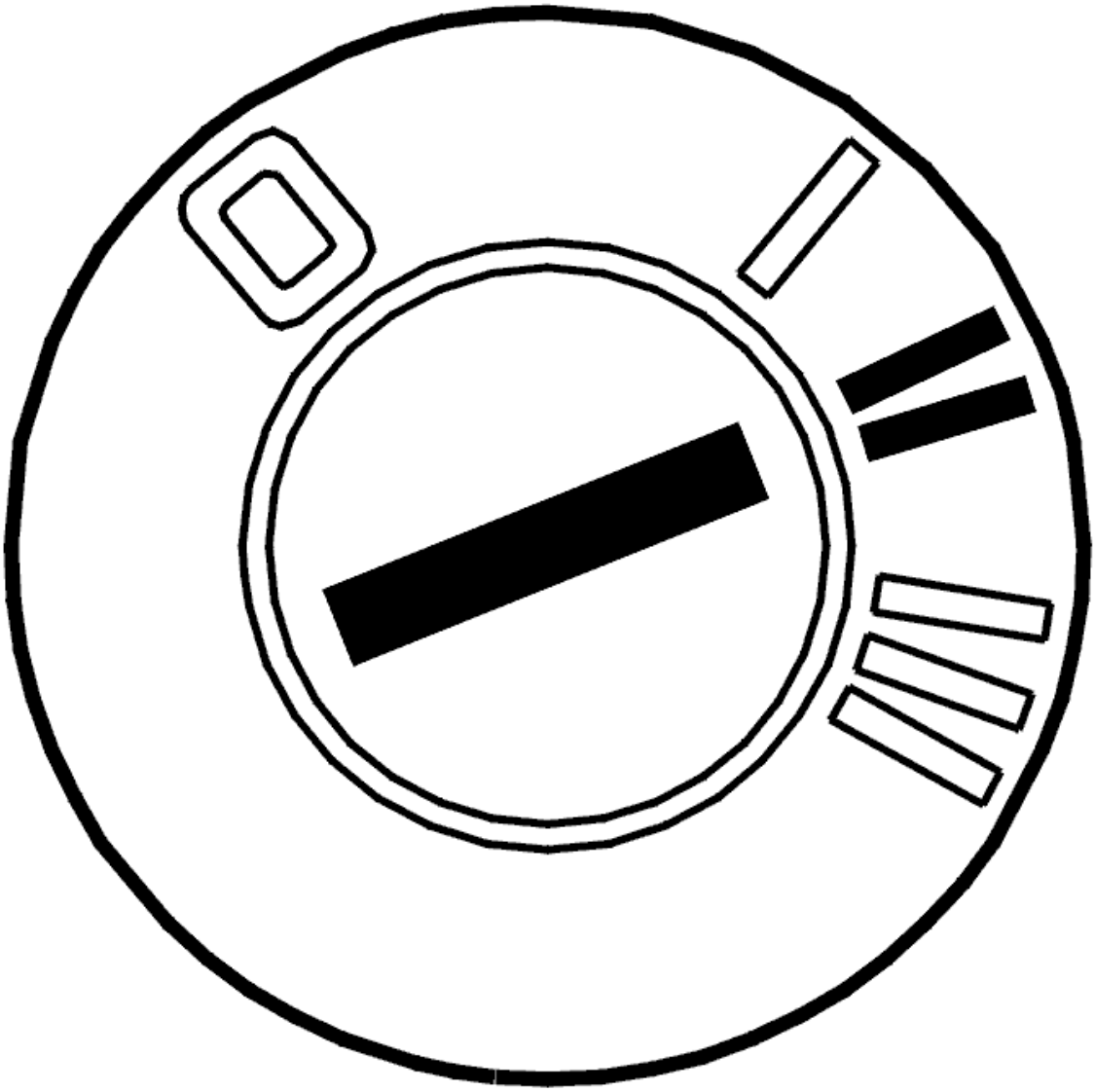

Fig. 201: Identifying Ignition ON
Courtesy of VOLVO CARS CORPORATION

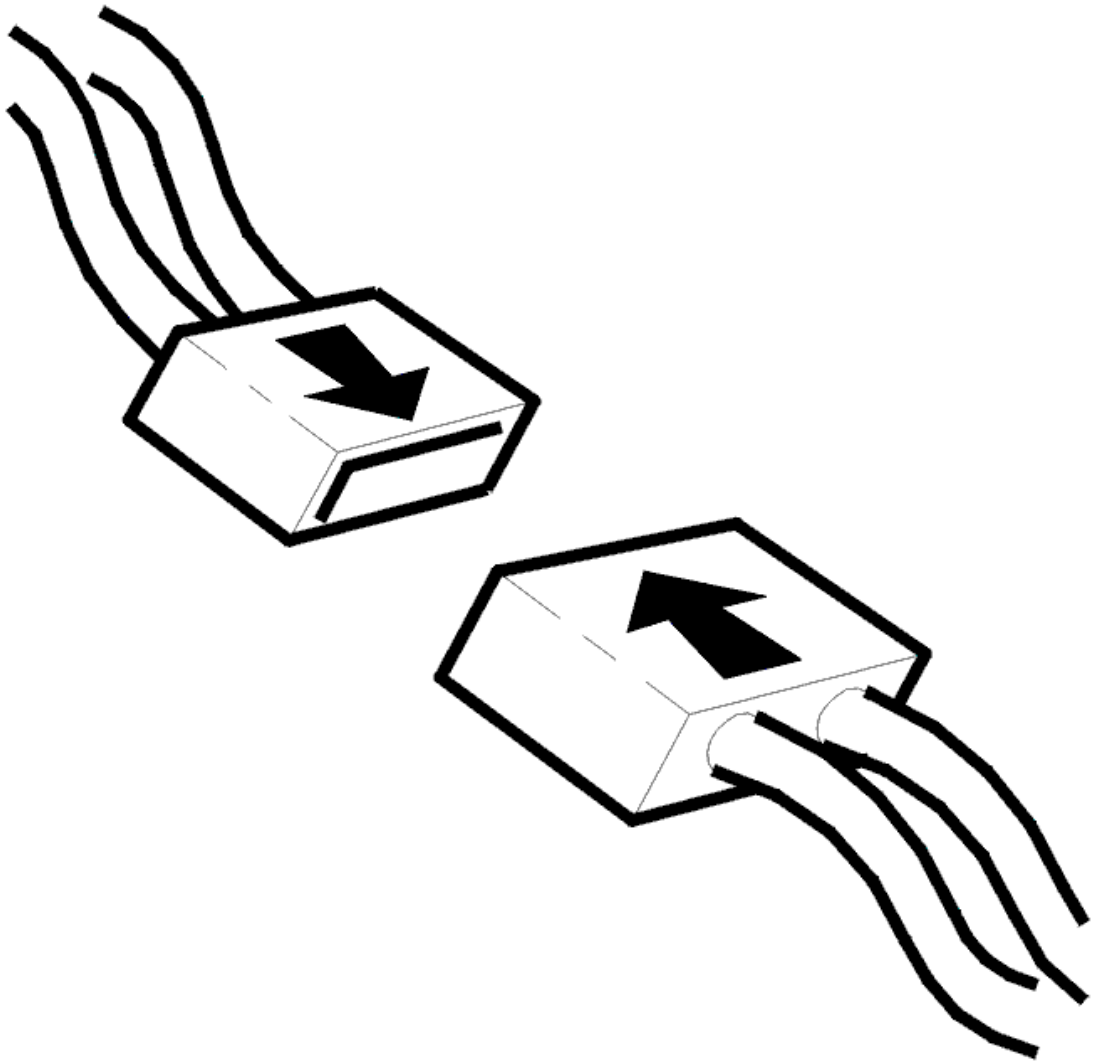

Fig. 202: Identifying Connector(s) Reinstallation
Courtesy of VOLVO CARS CORPORATION

- Ignition off
- Reinstall the connectors, components etc.
- Ignition on.

  Fill up with gas. Check that the level of the fuel gauge changes.

Is the value within its permitted range?

- **YES**

  VERIFIED: Troubleshooting has been completed.

- **NO**

  Refer to **INFORMATION**

INFORMATION

FAULT-TRACING INFORMATION

The fault should have been detected and remedied. As this is not the case fault-tracing has failed.

Exit fault-tracing for this diagnostic trouble code (DTC) or make another attempt.

REM-4F41: COMMUNICATION WITH PARKING ASSISTANCE MODULE (PAM). SIGNAL MISSING (2003-2004)

DIAGNOSTIC TROUBLE CODE (DTC) INFORMATION REM-4F41

Condition

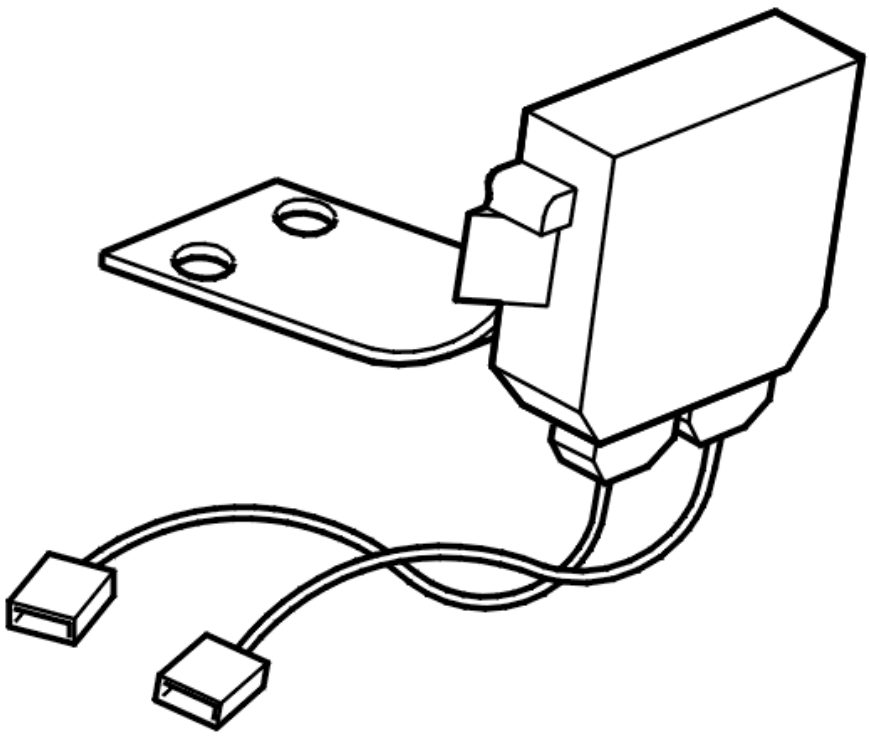

Fig. 203: Identifying Parking Assistance Module (PAM)
Courtesy of VOLVO CARS CORPORATION

The rear electronic module (REM) checks communication with the parking assistance module (PAM).

Diagnostic trouble code (DTC) REM-4F41 is stored if the rear electronic module (REM) registers a fault in the communication with the parking assistance module (PAM).

Diagnostic trouble code (DTC) REM-4F41 can be detected when the ignition is on for 5 seconds.

NOTE: The fault must be corrected and the diagnostic trouble code (DTC) erased before further fault-tracing can be carried out on the parking assistance module (PAM) and its components.

Substitute Value

- None.

Possible Source

- Fault in power supply wiring/fuse for the parking assistance module (PAM)
- Fault in power supply relay for the parking assistance module (PAM)
- Fault in the cable between the parking assistance module (PAM) and rear electronic module (REM)
- Defective communication device, parking assistance module (PAM)
- Defective communication device, rear electronic module (REM).

Fault symptom[s]

- The back-up (reversing) warning system does not function.

SIGNAL MISSING

CHECKING COMPONENTS AND WIRING

NOTE: The fault must be corrected and the diagnostic trouble code (DTC) erased before further fault-tracing can be carried out on the parking assistance module (PAM) and its components.

Check the connections on the rear electronic module (REM) and parking assistance module (PAM). Check for contact resistance, oxidation and damage.

Check the fuse for the back-up warning system.

Check the relay for 15I supply in the rear electronic module (REM).

HINT: In case of a fault in the operation of relay 15I supply, a diagnostic trouble code (DTC) is stored in the rear electronic module (REM).

Check the power supply cable between the fuse for 15I supply and relay #1, between relay #3 and the fuse for the back-up (reversing) warning system, and between fuse and the parking assistance module (PAM) terminal #1. Check for an open-circuit. Check for a short-circuit to ground.

Check the ground lead between parking assistance module (PAM) terminal #8 and the ground terminal. Check for an open-circuit. Check for a short-circuit to supply voltage.

Check the cable between the rear electronic module (REM) connector terminal #8D (#B08) and the parking assistance module (PAM) terminal #12. Check for an open-circuit. Check for a short-circuit to ground.

Try a new parking assistance module (PAM) if no faults were found.

Other information:

- To access or replace the rear electronic module (REM), see **RELAY/FUSE BOX CARGO COMPARTMENT/REAR ELECTRONIC MODULE (REM), REPLACING**
- see **CONNECTING THE BREAKOUT BOX**
- see **SIGNAL SPECIFICATION**
- To access or replace the parking assistance module (PAM), see **PARKING ASSISTANCE MODULE (PAM), REPLACING**
- see **CHECKING WIRING AND TERMINALS**

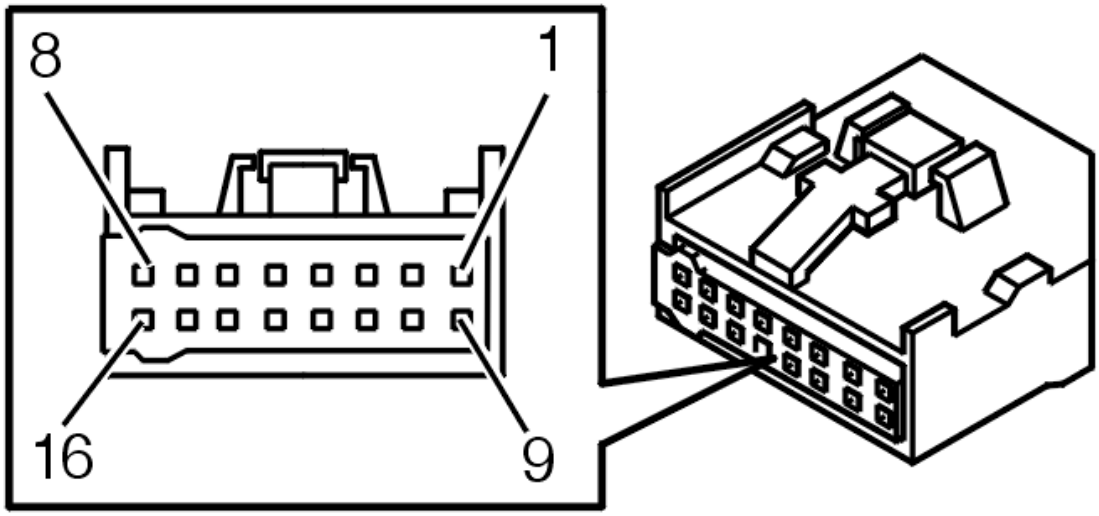

Fig. 204: Identifying Connector Terminals
Courtesy of VOLVO CARS CORPORATION

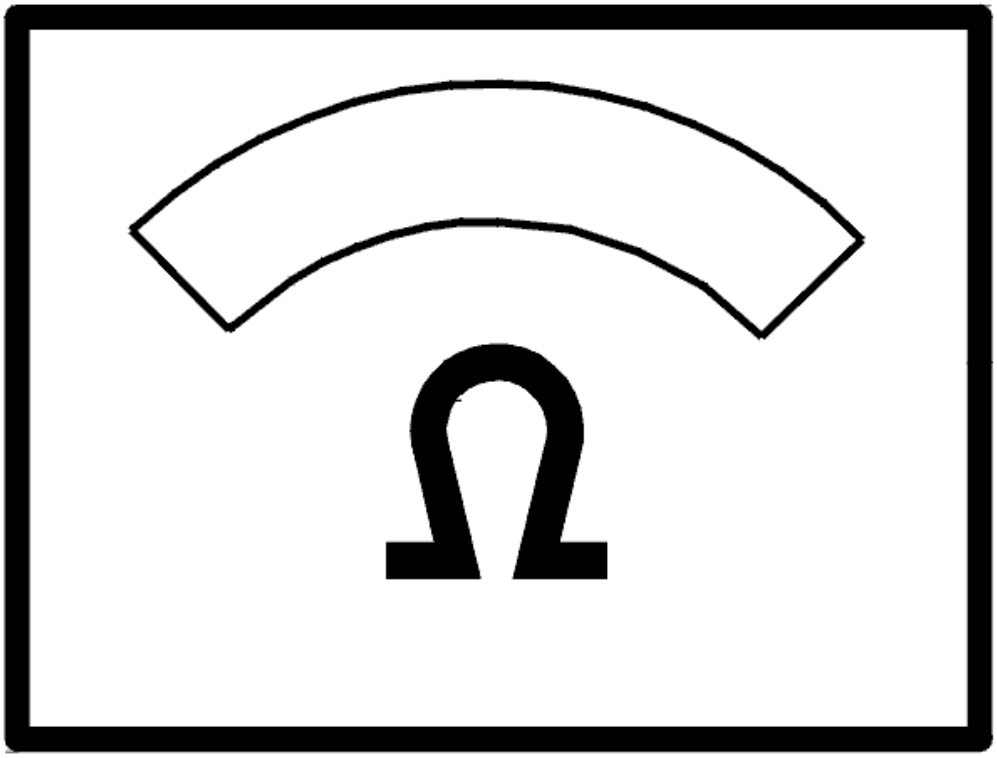

Fig. 205: Identifying Ohms Display
Courtesy of VOLVO CARS CORPORATION

- **Continue**

  Refer to **ERASING DIAGNOSTIC TROUBLE CODE (DTC)**

ERASING DIAGNOSTIC TROUBLE CODE (DTC)

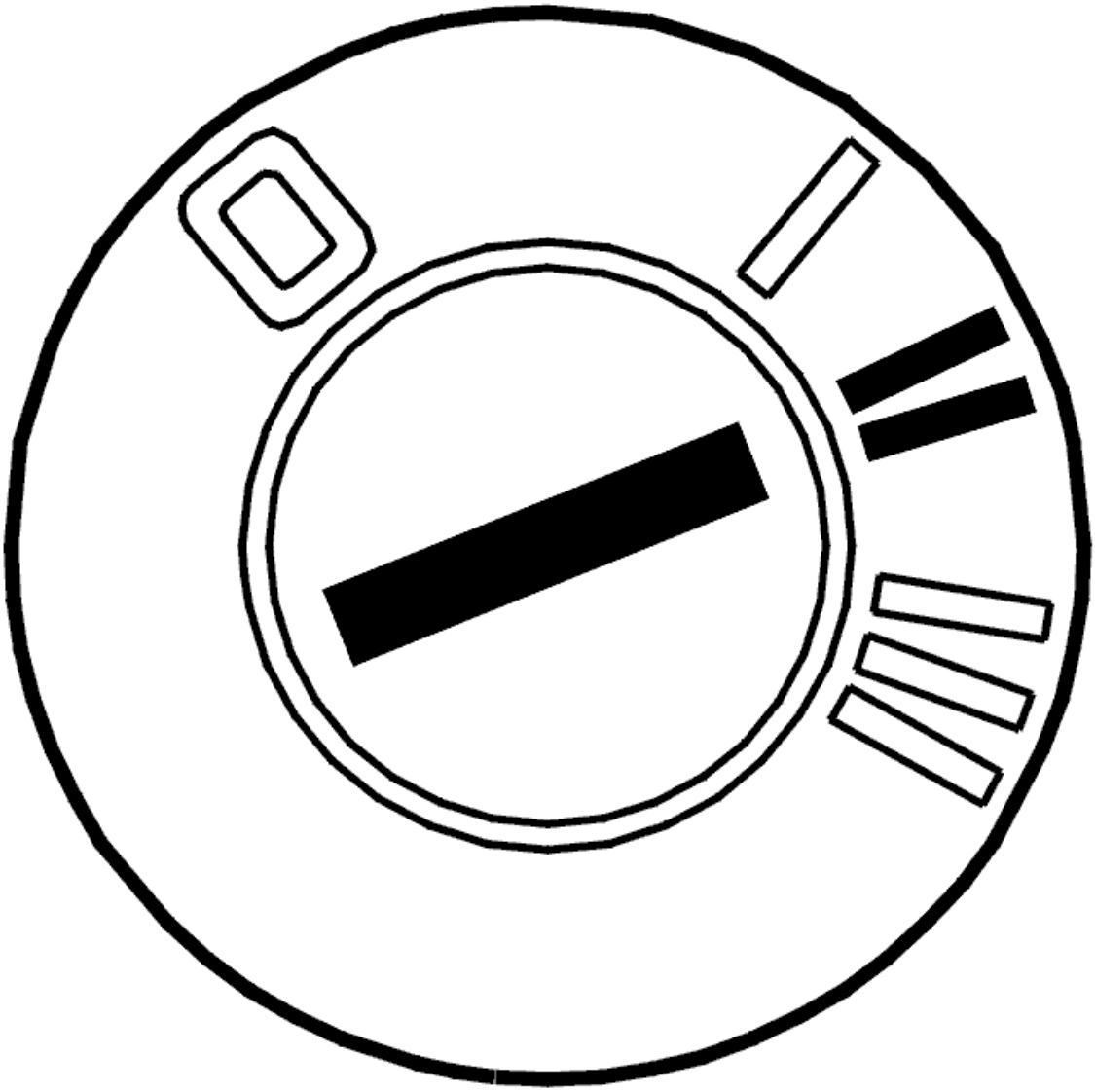

Fig. 206: Identifying Ignition ON
Courtesy of VOLVO CARS CORPORATION

- Switch on the ignition. Wait at least 5 seconds.

  Erase diagnostic trouble code (DTC) REM-4F41 by clicking the VCT2000 symbol.

  This may take up to one minute.

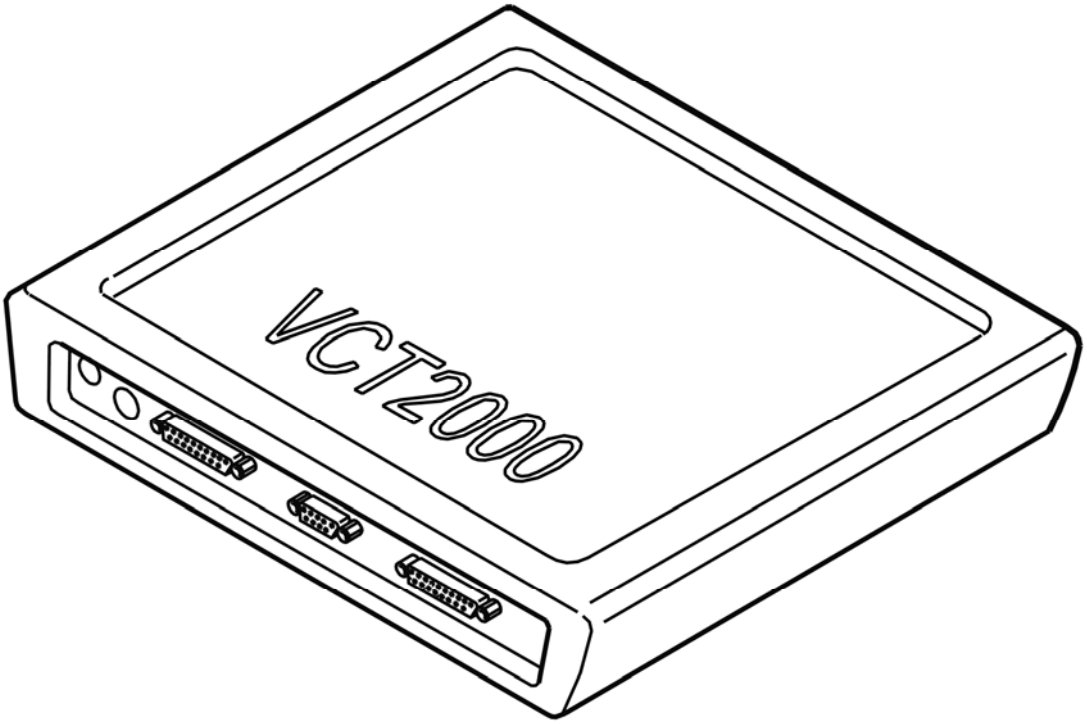

Fig. 207: Identifying VCT2000 Diagnostic Tool Symbol In VIDA
Courtesy of VOLVO CARS CORPORATION

- 0

  Refer to **ERASING DIAGNOSTIC TROUBLE CODE (DTC) COMPLETE**

ERASING DIAGNOSTIC TROUBLE CODE (DTC) COMPLETE

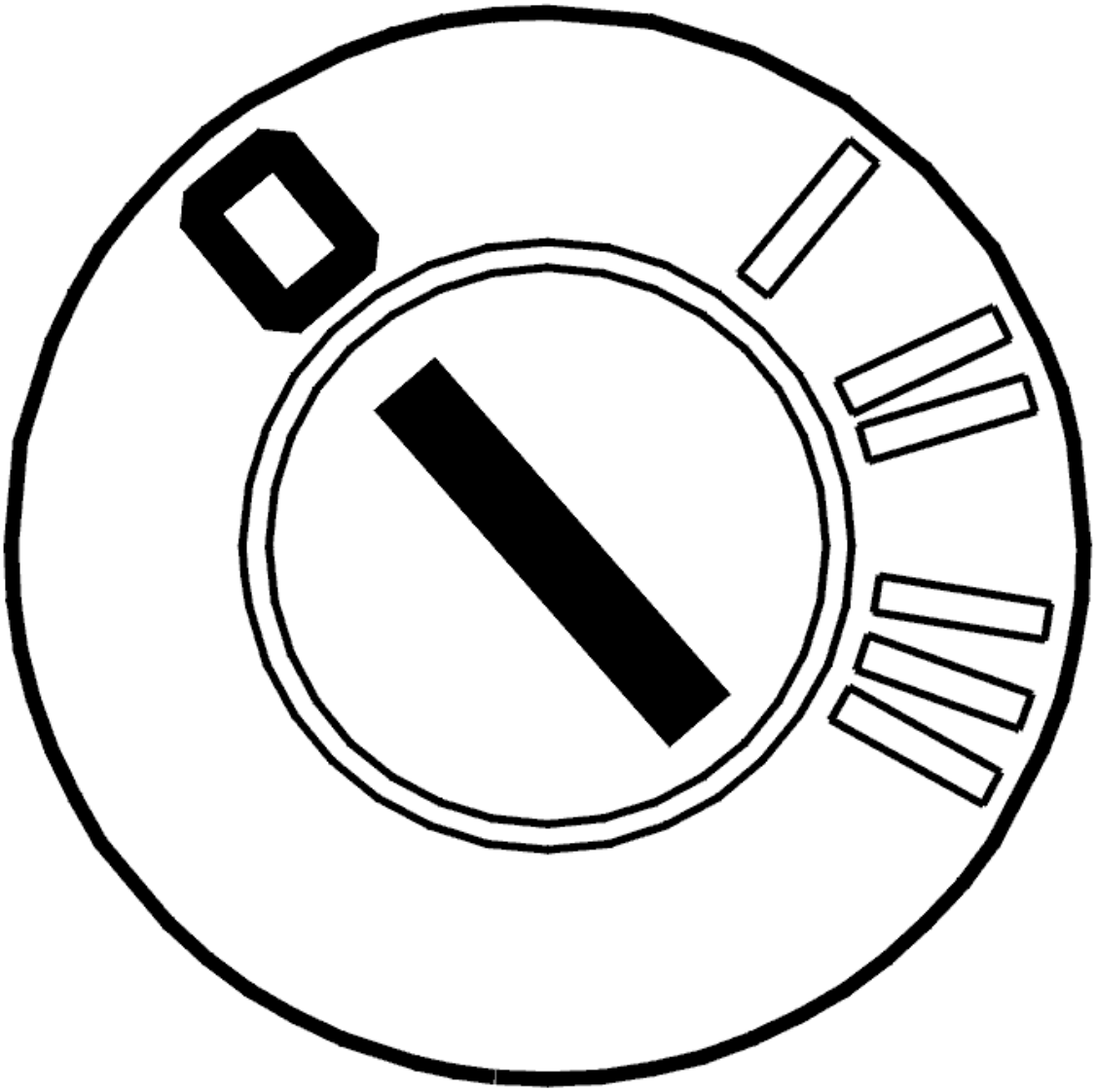

Fig. 208: Identifying Ignition OFF
Courtesy of VOLVO CARS CORPORATION

- Switch off the ignition. Wait at least 15 seconds.
- 0

  Refer to **VERIFICATION**

VERIFICATION

VERIFICATION

HINT: After carrying out the repair, check that the fault has been remedied.

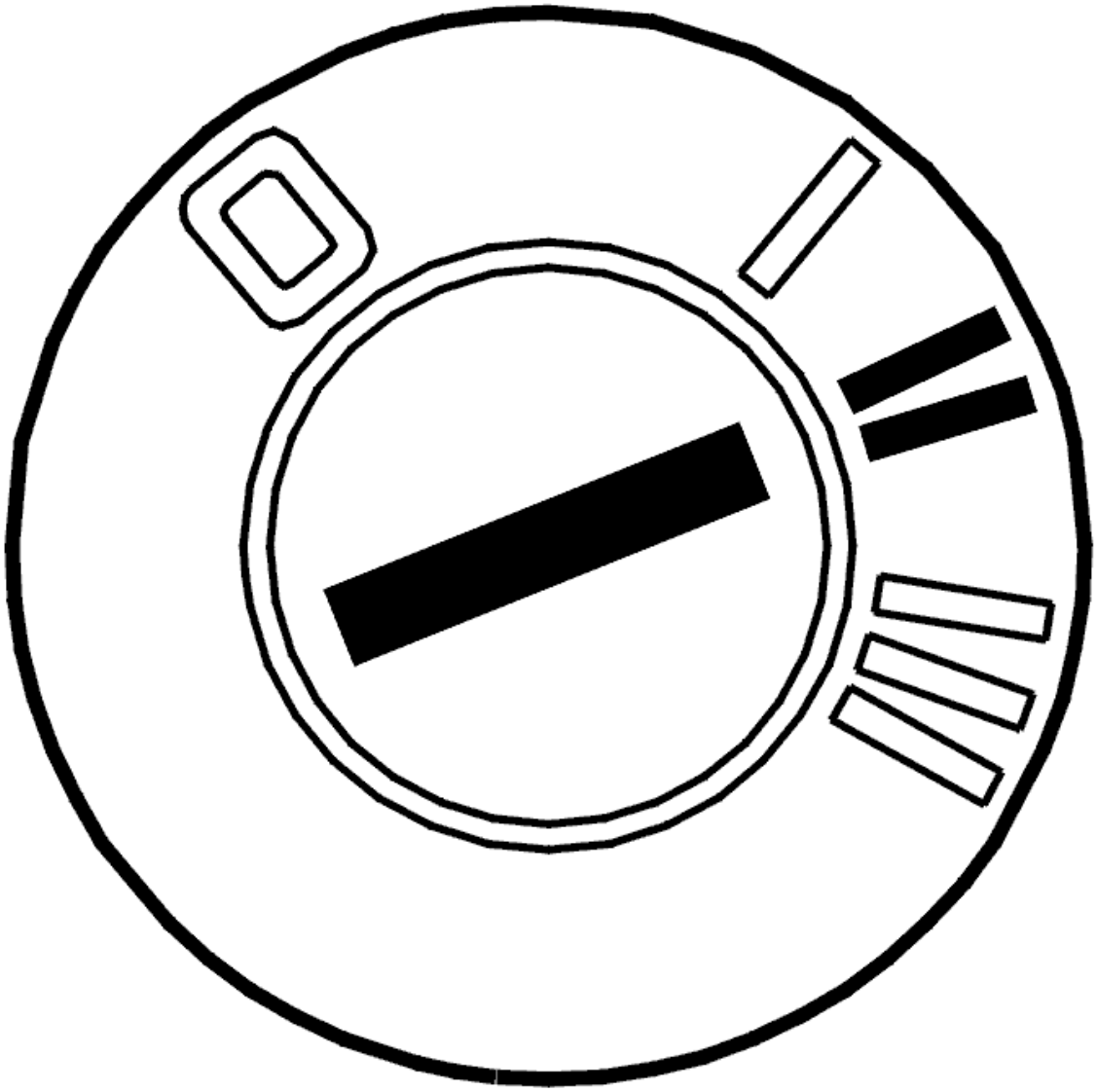

Fig. 209: Identifying Ignition ON
Courtesy of VOLVO CARS CORPORATION

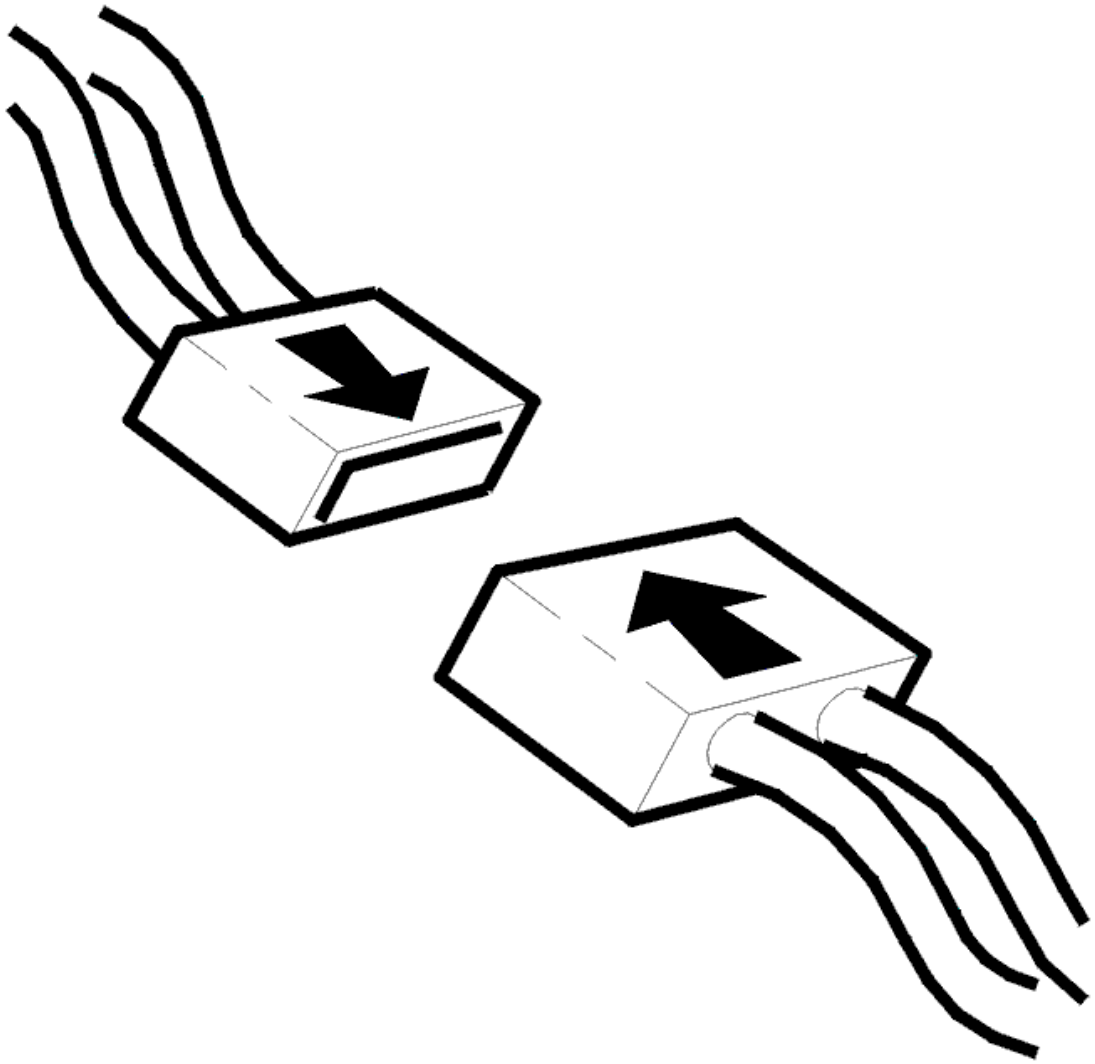

Fig. 210: Identifying Connector(s) Reinstallation
Courtesy of VOLVO CARS CORPORATION

- Switch off the ignition. Wait at least 15 seconds
- Reinstall the connectors, components etc.
- Ignition on for at least 5 seconds
- Move the gear selector lever to back-up (reversing) (R).

  The parking assistance module (PAM) is activated by pressing the switch on the lower section of the climate control module (CCM). Click on the VCT2000 symbol to read off the diagnostic status from the parking assistance module (PAM).

  Check that the parking assistance module (PAM) is active. Check that the sensors are OK.

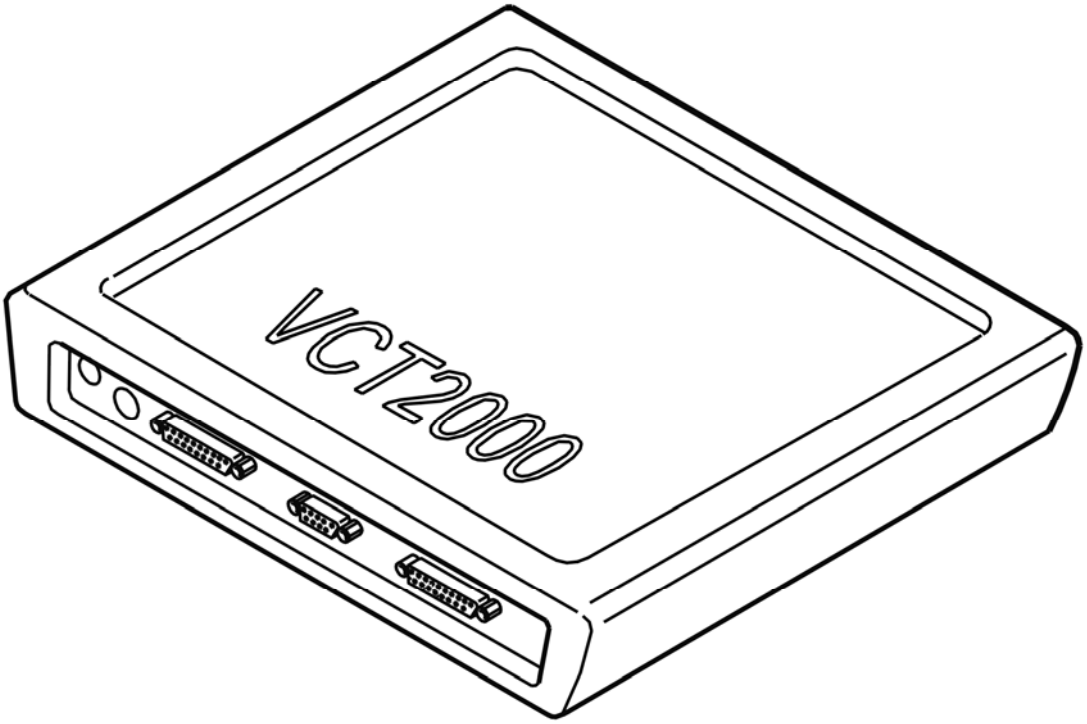

Fig. 211: Identifying VCT2000 Diagnostic Tool Symbol In VIDA
Courtesy of VOLVO CARS CORPORATION

Is the parking assistance module (PAM) active? Are the sensors OK?

- **YES**

  VERIFIED: Troubleshooting has been completed.

- **NO**

  Refer to **INFORMATION**

INFORMATION

FAULT-TRACING INFORMATION

The fault should have been detected and remedied. As this is not the case fault-tracing has failed.

Exit fault-tracing for this diagnostic trouble code (DTC) or make another attempt.

REM-4F42: BACK-UP WARNING SENSOR 1. FAULTY SIGNAL (2003-2004)

DIAGNOSTIC TROUBLE CODE (DTC) INFORMATION REM-4F42

Condition

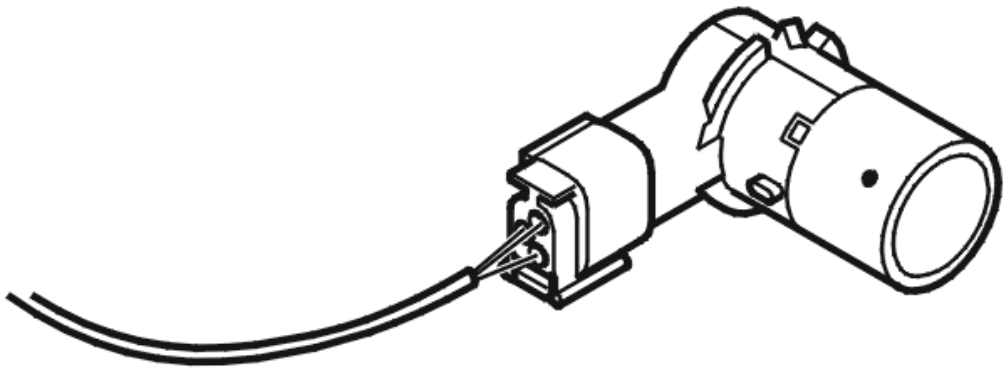

Fig. 212: Identifying Parking Sensor
Courtesy of VOLVO CARS CORPORATION

The rear electronic module (REM) checks diagnosis from the parking assistance module (PAM).

Diagnostic trouble code (DTC) REM-4F42 is stored if parking assistance module (PAM) registers a fault in sensor 1.

Diagnostic trouble code (DTC) REM-4F42 can be detected when the ignition is on for 5 seconds.

Substitute Value

- None.

Possible Source

- Fault in wiring to back-up warning sensor 1
- Back-up warning sensor 1 defective.

Fault symptom[s]

- General warning lamp lit.
- The back-up (reversing) warning system does not function.

FAULTY SIGNAL

CHECKING COMPONENTS AND WIRING

Check the connections on the parking assistance module (PAM) and sensor 1 (outer left). Check for contact resistance and oxidation. Also check intermediate connector.

Check the power supply cable between the connector in the parking assistance module (PAM) terminal #6 and the connector for sensor #1. Check for a short-circuit to ground. Check for an open-circuit.

Check the signal ground cable between the connector in the parking assistance module (PAM) terminal #7 and the connector for sensor #3. Check for a short-circuit to supply voltage. Check for an open-circuit.

Check the signal cable between the connector in the parking assistance module (PAM) terminal #5 and the connector for sensor #2. Check for an open-circuit. Check for a short-circuit to supply voltage. Check for a short-circuit to ground.

Try a new sensor if no fault is found.

Remedy as necessary.

Other information:

- To access or replace the parking assistance module (PAM), see **PARKING ASSISTANCE MODULE (PAM), REPLACING**
- To access or replace the back-up warning sensor, see **REVERSE (REVERSING) WARNING SENSOR (PARKING ASSISTANCE MODULE (PAM), REPLACING**
- To fault-trace the wiring and terminals, see **CHECKING WIRING AND TERMINALS** .

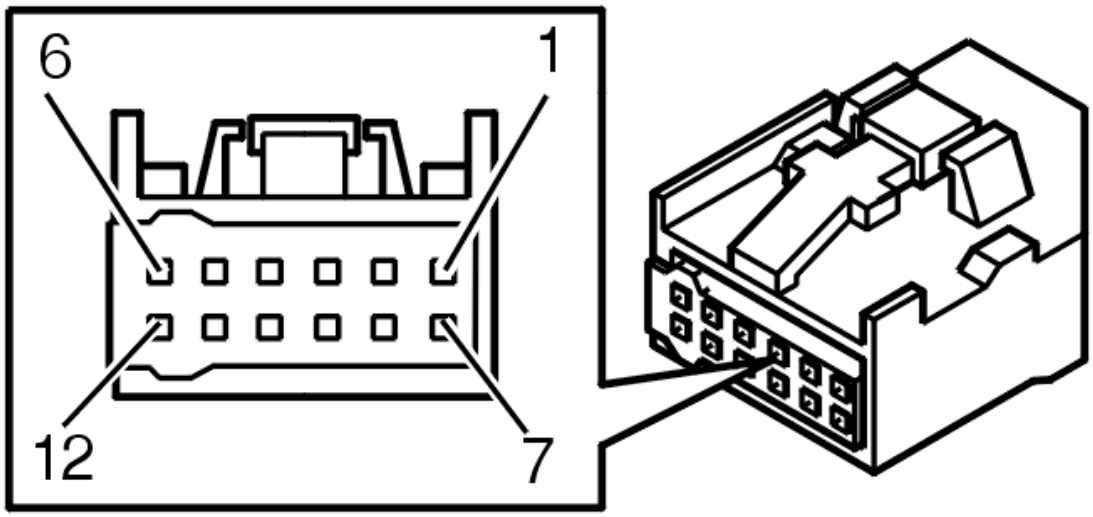

Fig. 213: Identifying Connector Terminals
Courtesy of VOLVO CARS CORPORATION

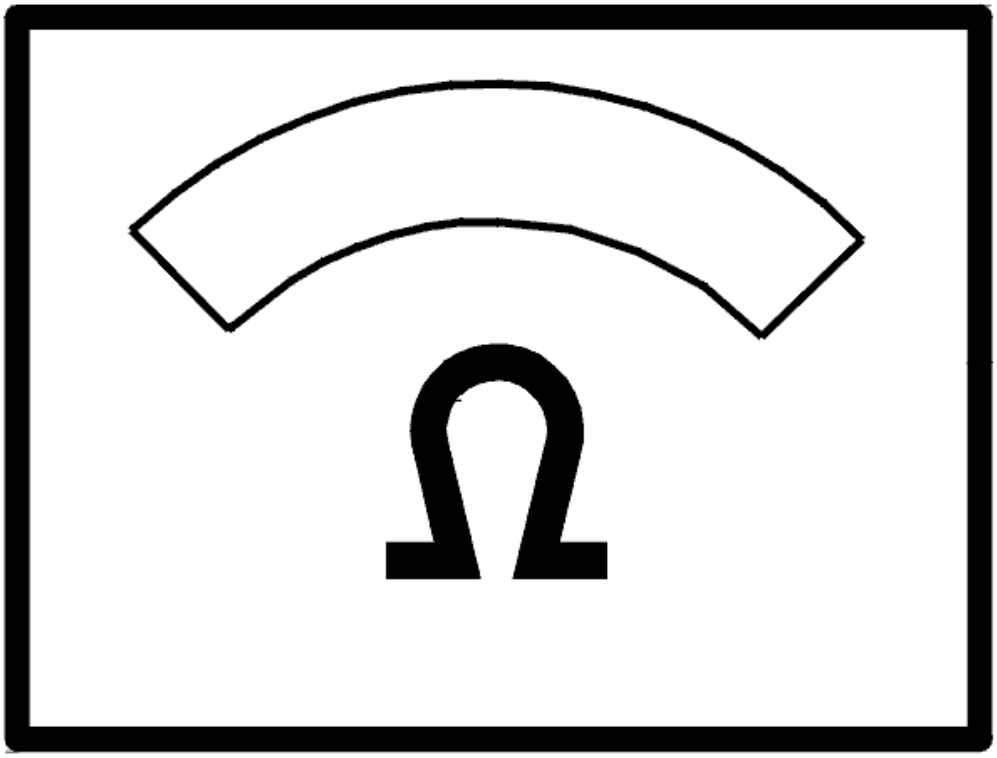

Fig. 214: Identifying Ohms Display
Courtesy of VOLVO CARS CORPORATION

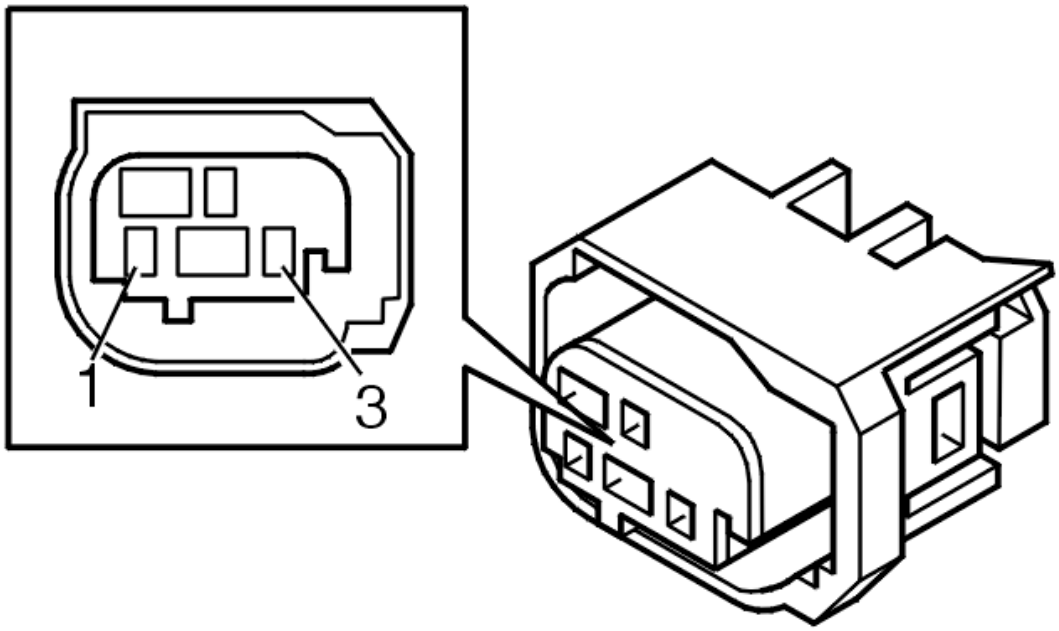

Fig. 215: Identifying Connector Terminals
Courtesy of VOLVO CARS CORPORATION

- **Continue**

  Refer to **VERIFICATION**

VERIFICATION

VERIFICATION

HINT: After carrying out the repair, check that the fault has been remedied.

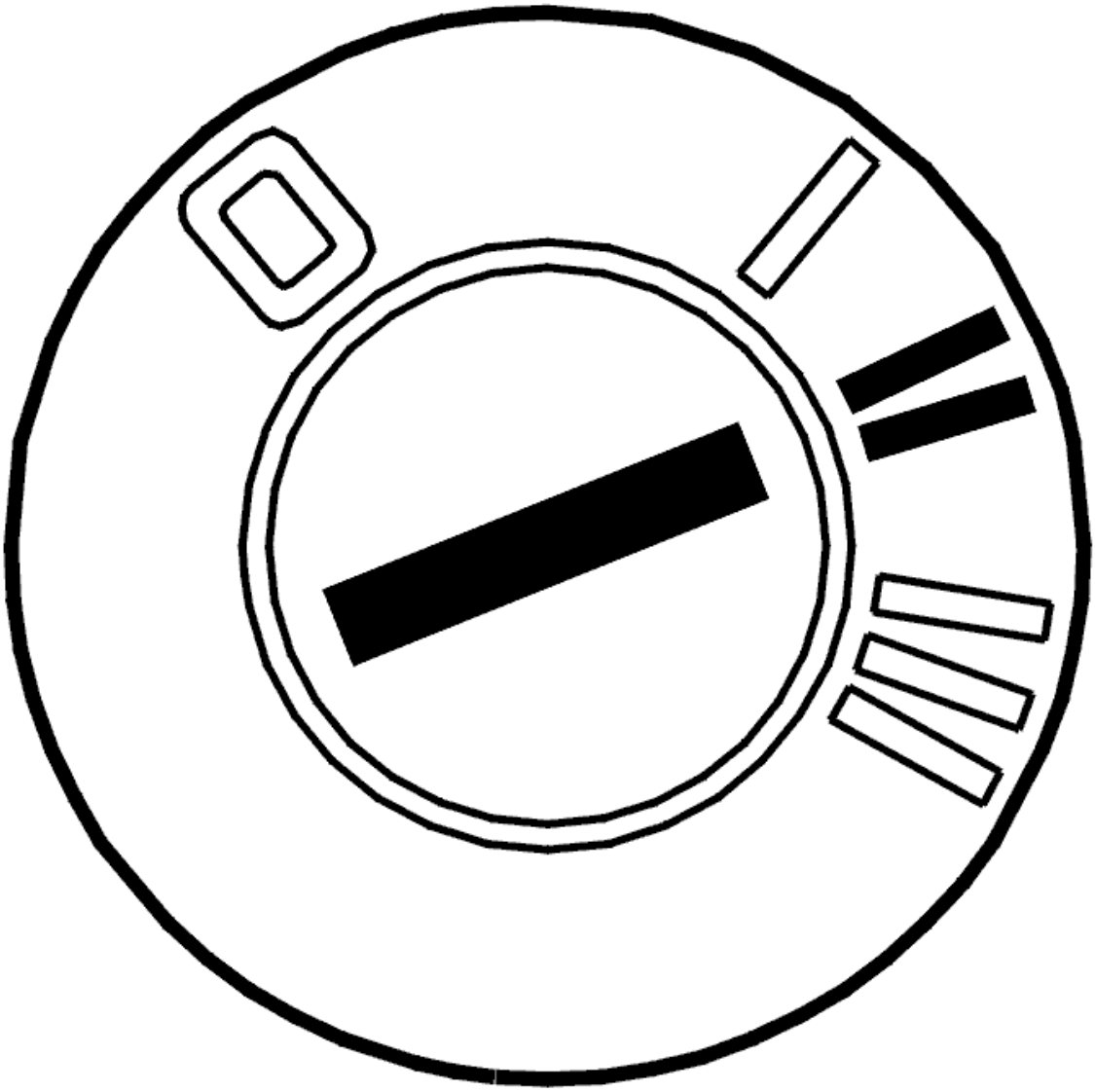

Fig. 216: Identifying Ignition ON
Courtesy of VOLVO CARS CORPORATION

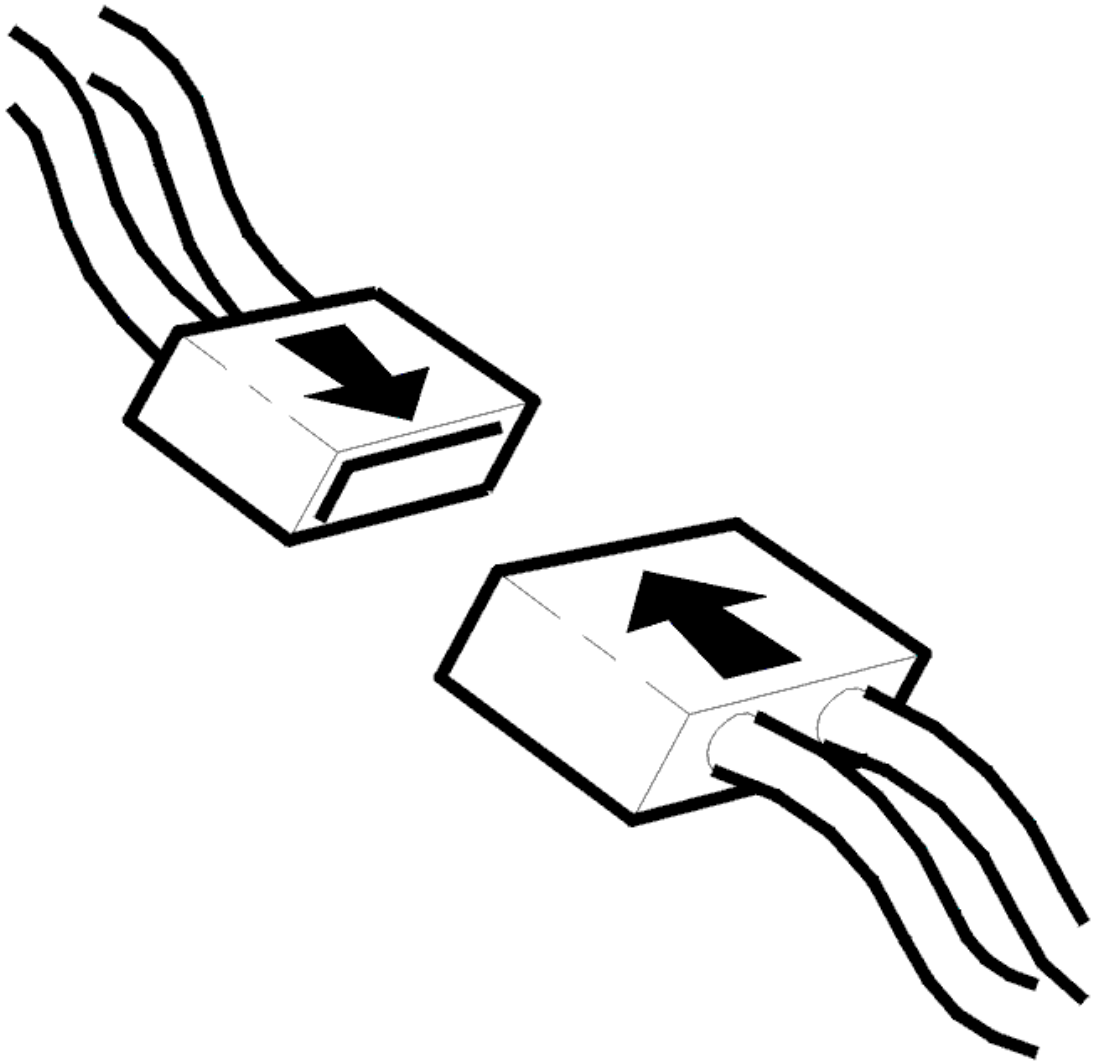

Fig. 217: Identifying Connector(s) Reinstallation
Courtesy of VOLVO CARS CORPORATION

- Switch off the ignition. Wait at least 15 seconds
- Reinstall the connectors, components etc.
- Ignition on for at least 5 seconds
- Move the gear selector lever to back-up (reversing) (R).

  The parking assistance module (PAM) is activated by pressing the switch on the lower section of the climate control module (CCM). Click on the VCT2000 symbol to read off the diagnostic status from the parking assistance module (PAM).

  Check that the parking assistance module (PAM) is active. Check that the sensors are OK.

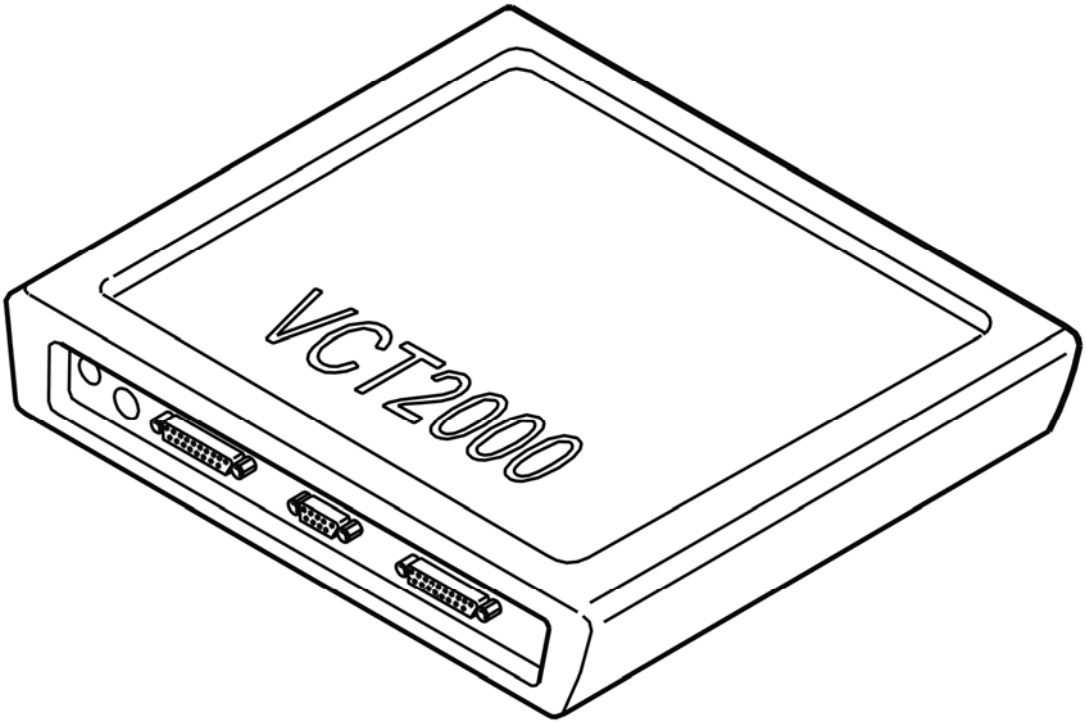

Fig. 218: Identifying VCT2000 Diagnostic Tool Symbol In VIDA
Courtesy of VOLVO CARS CORPORATION

Is the parking assistance module (PAM) active? Are the sensors OK?

- **YES**

  VERIFIED: Troubleshooting has been completed.

- **NO**

  Refer to **INFORMATION**

INFORMATION

FAULT-TRACING INFORMATION

The fault should have been detected and remedied. As this is not the case fault-tracing has failed.

Exit fault-tracing for this diagnostic trouble code (DTC) or make another attempt.

REM-4F42: PARKING SENSOR 1. FAULTY SIGNAL (2005-2012)

DIAGNOSTIC TROUBLE CODE (DTC) INFORMATION REM-4F42 (2005, 2006)

Condition

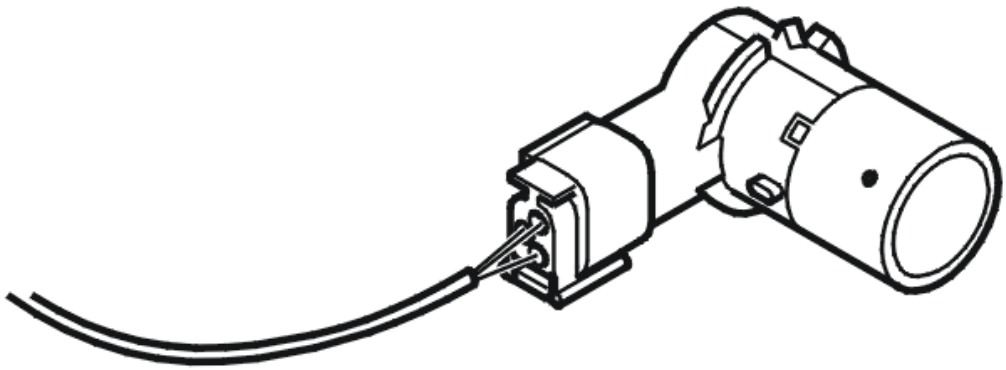

Fig. 219: Identifying Parking Sensor
Courtesy of VOLVO CARS CORPORATION

The rear electronic module (REM) communicates with the parking assistance module (PAM) which checks the signal from parking sensor 1.

The diagnostic trouble code (DTC) is stored if the parking assistance module (PAM) registers a faulty signal from the parking sensor (1).

The diagnostic trouble code (DTC) can be diagnosed at key position II.

Substitute Value

- None.

Possible Source

- Short-circuit to ground or supply voltage in the signal cable between the parking assistance module (PAM) and parking sensor 1
- Short-circuit to ground in the power supply cable between the parking assistance module (PAM) and parking sensor 1

- Short-circuit to supply voltage in the ground lead between the parking assistance module (PAM) and parking sensor 1.

Fault symptom[s]

- The parking assistance system does not operate
- Message in the display.

DIAGNOSTIC TROUBLE CODE (DTC) INFORMATION REM-4F42 (2007-2012)

Condition

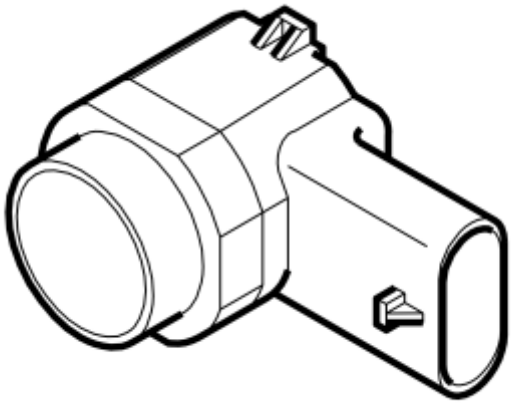

Fig. 220: Identifying Parking Sensor
Courtesy of VOLVO CARS CORPORATION

The rear electronic module (REM) communicates with the parking assistance module (PAM) which checks the signal from parking sensor 1.

The diagnostic trouble code (DTC) is stored if the parking assistance module (PAM) registers a faulty signal from the parking sensor (1).

The diagnostic trouble code (DTC) can be diagnosed at key position II.

Substitute Value

- None.

Possible Source

- Short-circuit to ground or supply voltage in the signal cable between the parking assistance module (PAM) and parking sensor 1
- Short-circuit to ground in the power supply cable between the parking assistance module (PAM) and

parking sensor 1
- Short-circuit to supply voltage in the ground lead between the parking assistance module (PAM) and parking sensor 1.

Fault symptom[s]

- The parking assistance system does not operate
- Message in the display.

FAULTY SIGNAL (2005, 2006)

CHECKING COMPONENTS AND WIRING

CAUTION: Do not touch the terminal pins in the parking assistance module (PAM). There is a risk of static discharge. This could damage the parking assistance module (PAM).

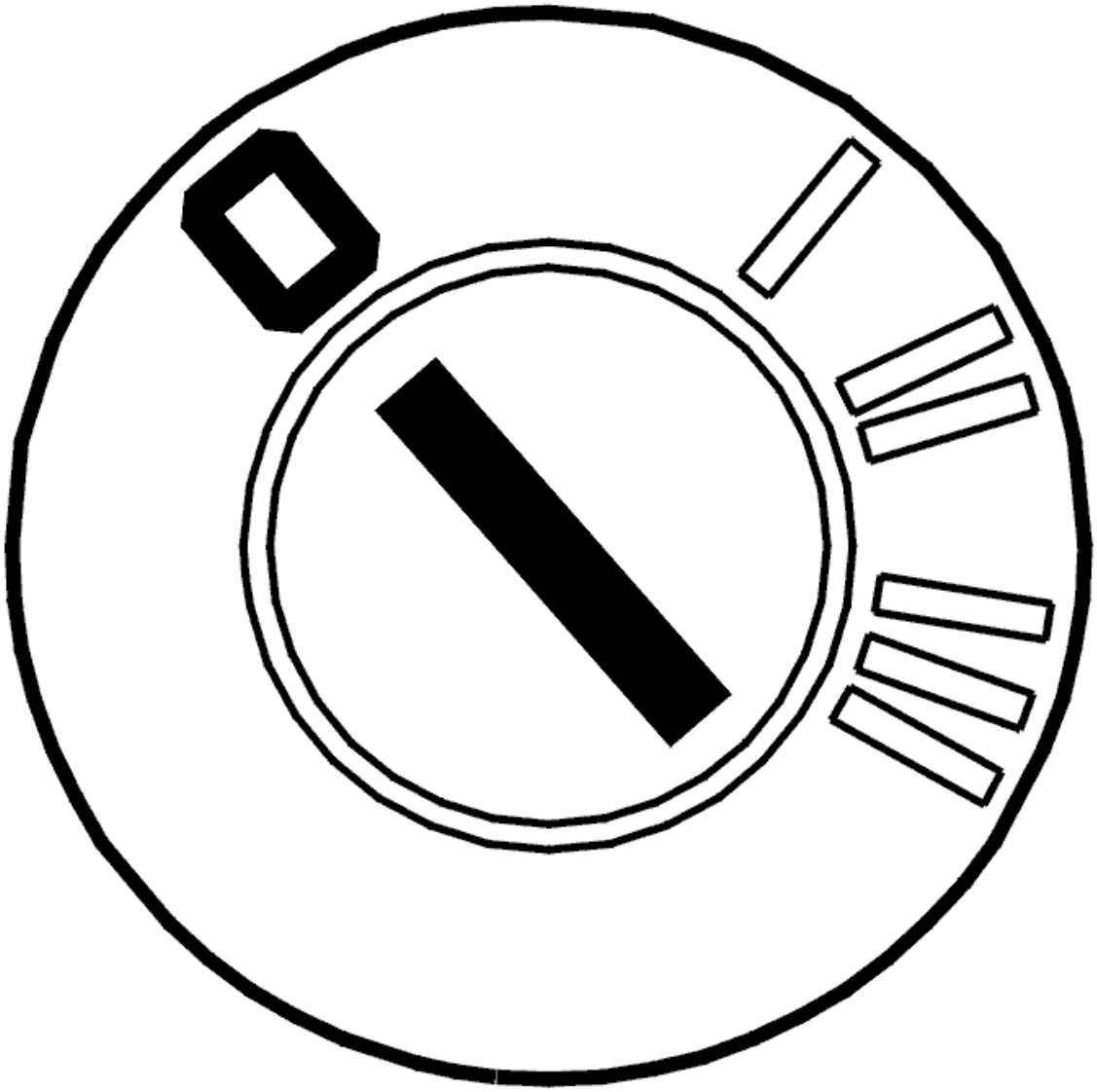

Fig. 221: Identifying Ignition OFF
Courtesy of VOLVO CARS CORPORATION

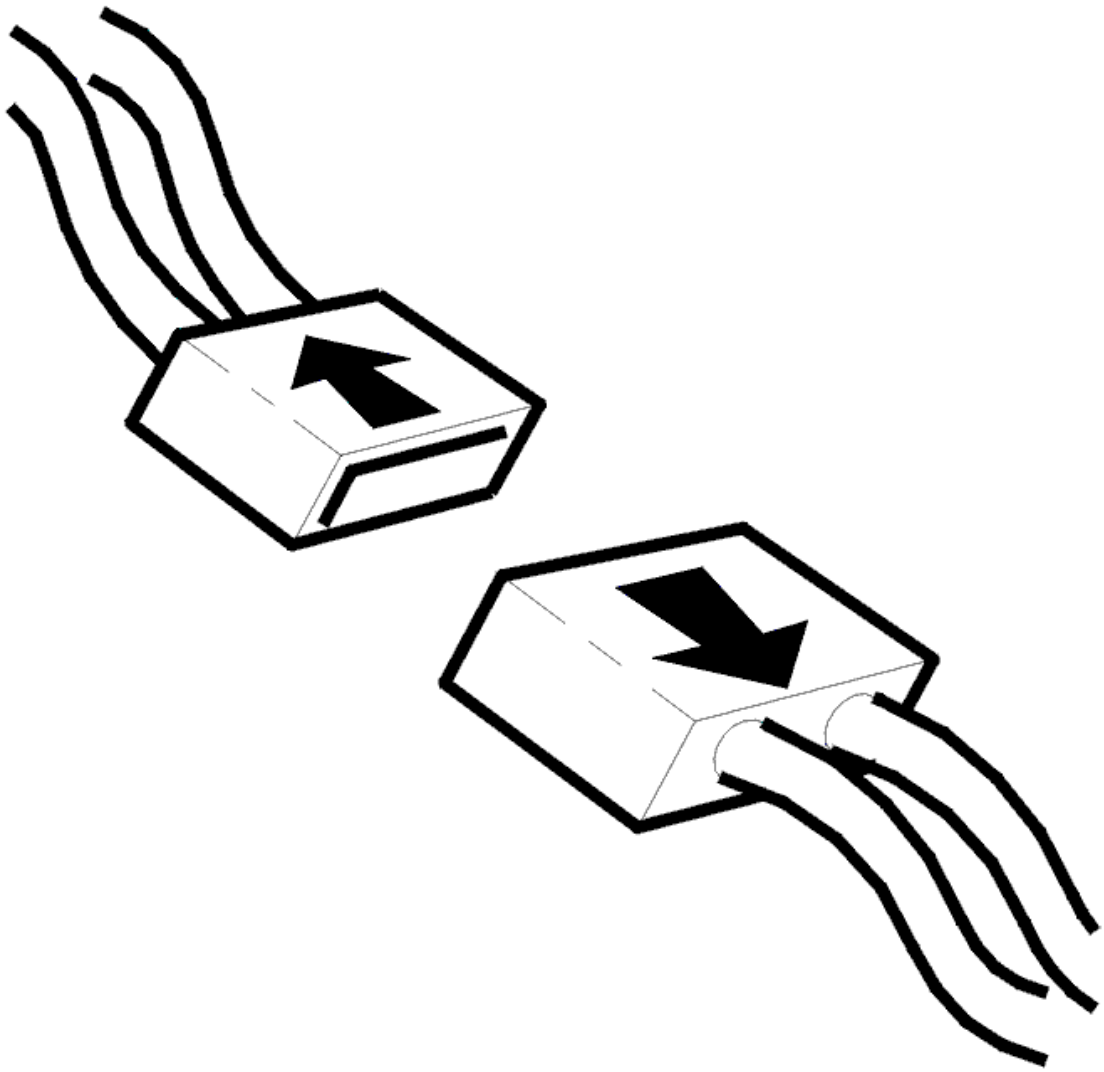

Fig. 222: Identifying Connector(s) Disconnected
Courtesy of VOLVO CARS CORPORATION

- Ignition off.

  Check the connectors for the parking sensor and the Parking Assistance Module (PAM). Check for damage to pins and connections. Also check the other connectors, which connect the cables between the Parking Assistance Module (PAM) and the parking sensor.

  NOTE: The connections on Parking Assistance Module (PAM) that ground/supply voltage, respectively, to parking sensor may differ from vehicle to vehicle. The rear parking sensors are grounded in Parking Assistance Module (PAM) on pins #C1, #C7, #C8, #C9. The rear parking sensors are supplied with voltage by Parking Assistance Module (PAM) on pins #C6, #C10, #C11, #C12. The rear parking sensors' signal lines are connected to Parking Assistance Module (PAM) on pins #C2, #C3, #C4, #C5.

- Check the signal cable between the parking assistance module (PAM) and the parking sensor connector. Check for a short-circuit to supply voltage. Check for a short-circuit to ground.
- Check the power supply lead between the parking assistance module (PAM) and the parking sensor connector. Check for a short-circuit to ground.
- Check the ground lead between the parking assistance module (PAM) and the parking sensor connector. Check for a short-circuit to supply voltage.

Remedy as necessary.

If no fault is found, replace the parking sensor.

Other information

- see **REVERSE (REVERSING) WARNING SENSOR (PARKING ASSISTANCE MODULE (PAM), REPLACING**
- see **CHECKING WIRING AND TERMINALS**

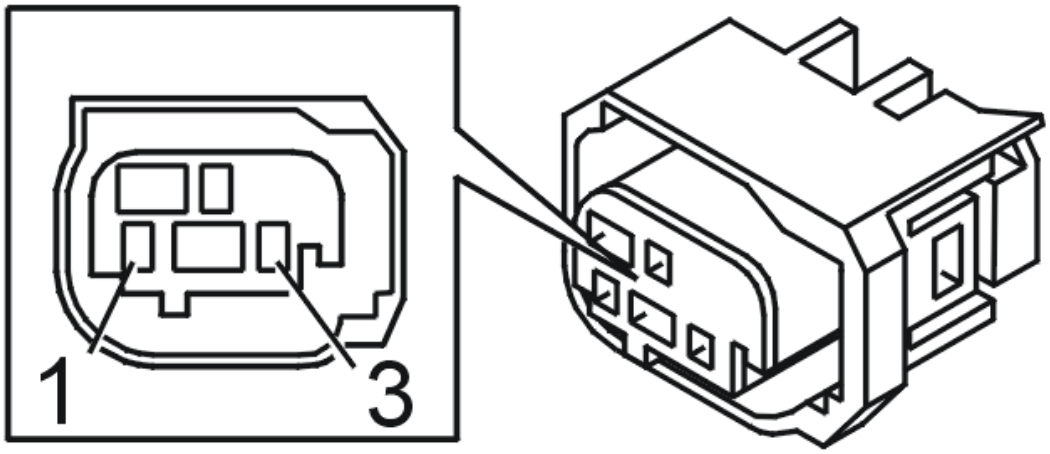

Fig. 223: Identifying Parking Sensor Connector
Courtesy of VOLVO CARS CORPORATION

- **Continue**

  Refer to **VERIFICATION**

VERIFICATION

VERIFICATION

HINT: After carrying out the repair, check that the fault has been remedied.

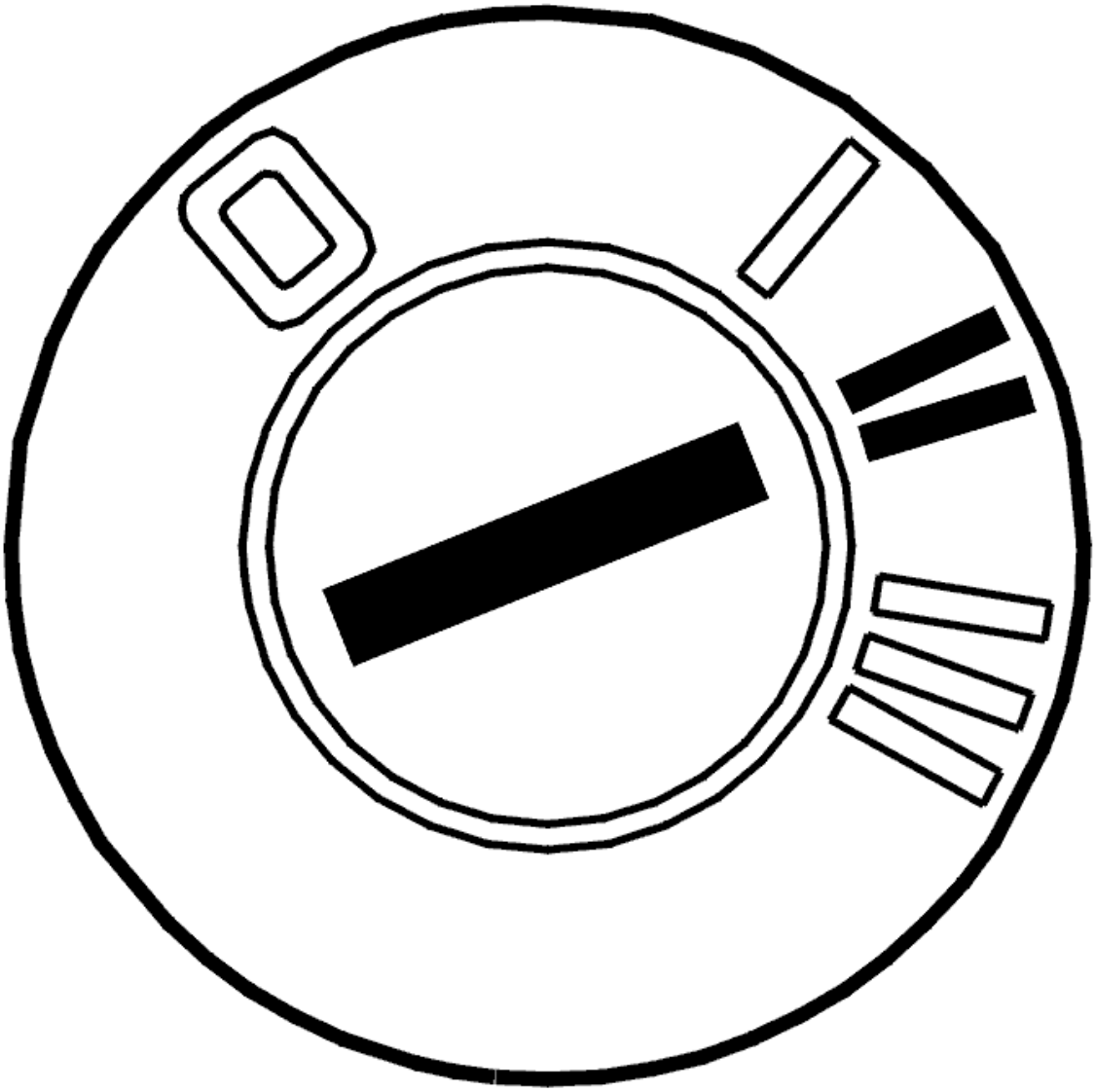

Fig. 224: Identifying Ignition ON
Courtesy of VOLVO CARS CORPORATION

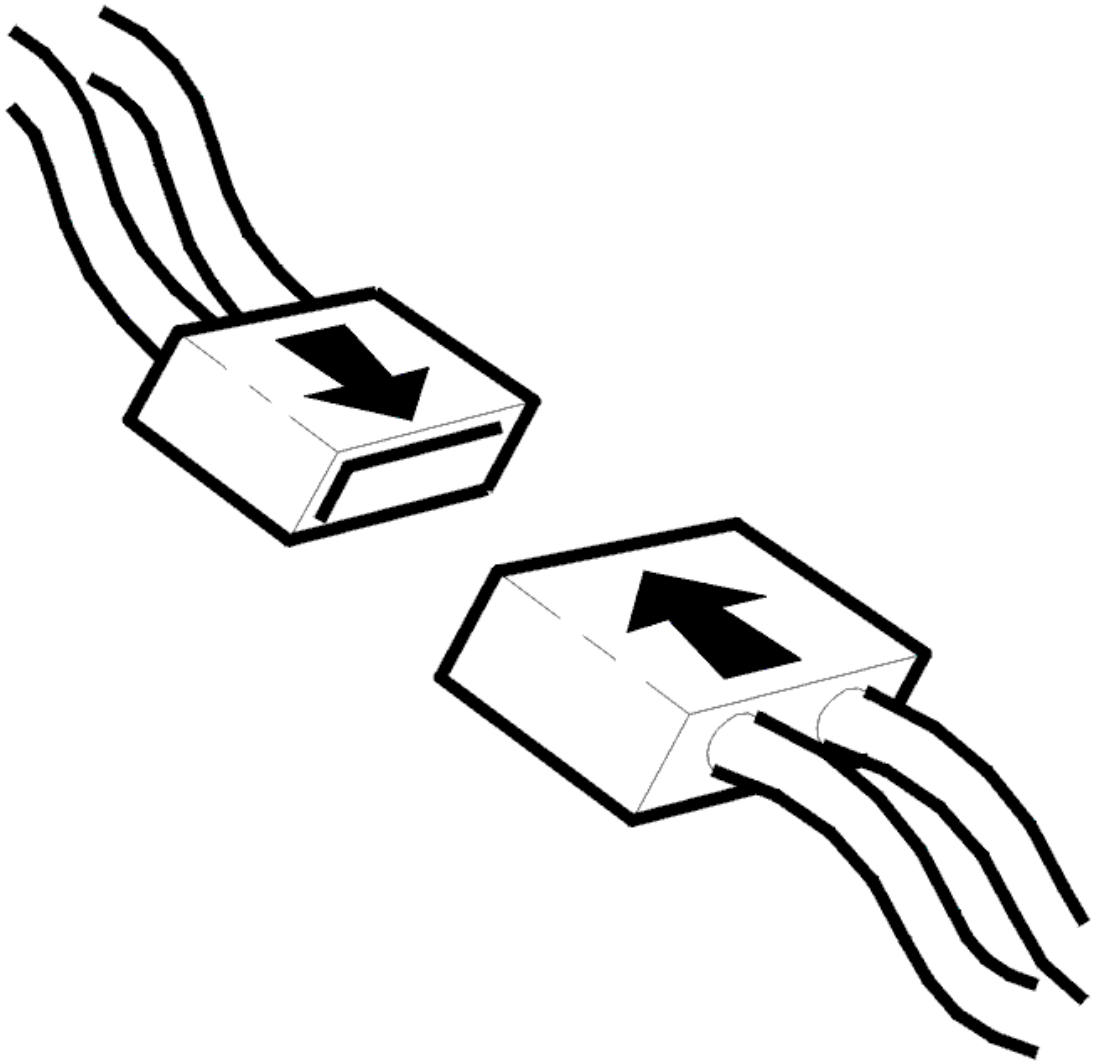

Fig. 225: Identifying Connector(s) Reinstallation
Courtesy of VOLVO CARS CORPORATION

- Switch off the ignition. Wait at least 15 seconds
- Reinstall the connectors, components etc.
- Ignition on for at least 5 seconds
- Move the gear selector lever to back-up (reversing) (R).

  The parking assistance module (PAM) is activated by pressing the switch on the lower section of the climate control module (CCM). Click on the VCT2000 symbol to read off the diagnostic status from the parking assistance module (PAM).

  Check that the parking assistance module (PAM) is active. Check that the sensors are OK.

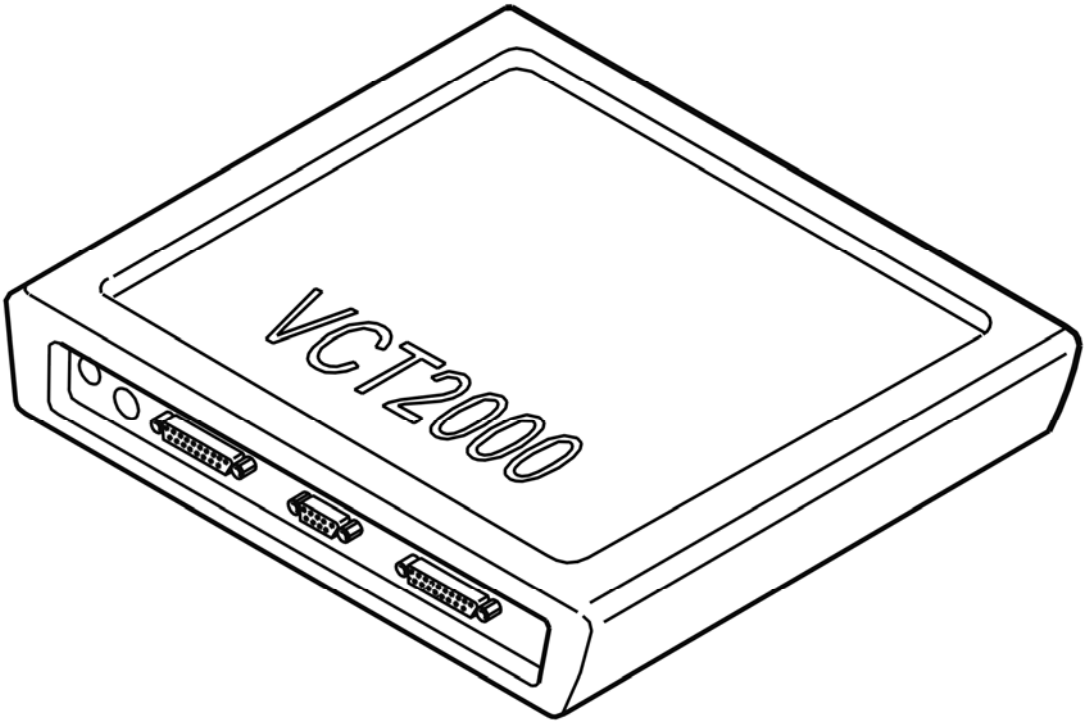

Fig. 226: Identifying VCT2000 Diagnostic Tool Symbol In VIDA
Courtesy of VOLVO CARS CORPORATION

Is the parking assistance module (PAM) active? Are the sensors OK?

- **YES**

  VERIFIED: Troubleshooting has been completed.

- **NO**

  Refer to **INFORMATION**

INFORMATION

FAULT-TRACING INFORMATION

The fault should have been detected and remedied. As this is not the case fault-tracing has failed.

Exit fault-tracing for this diagnostic trouble code (DTC) or make another attempt.

FAULTY SIGNAL (2007-2012)

CHECKING COMPONENTS AND WIRING

CAUTION: Do not touch the terminal pins in the parking assistance module (PAM). There is a risk of static discharge. This could damage the parking assistance module (PAM).

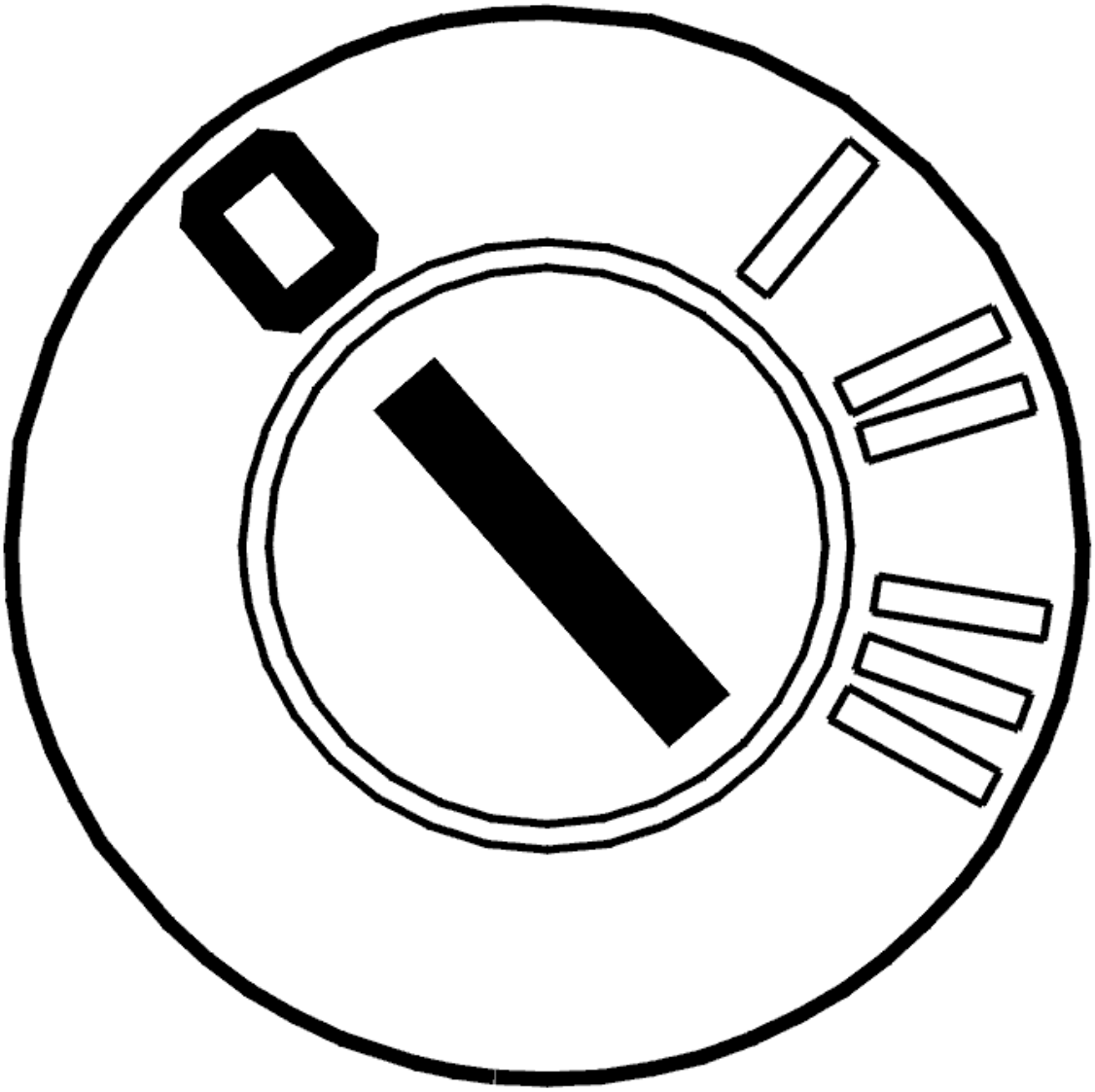

Fig. 227: Identifying Ignition OFF
Courtesy of VOLVO CARS CORPORATION

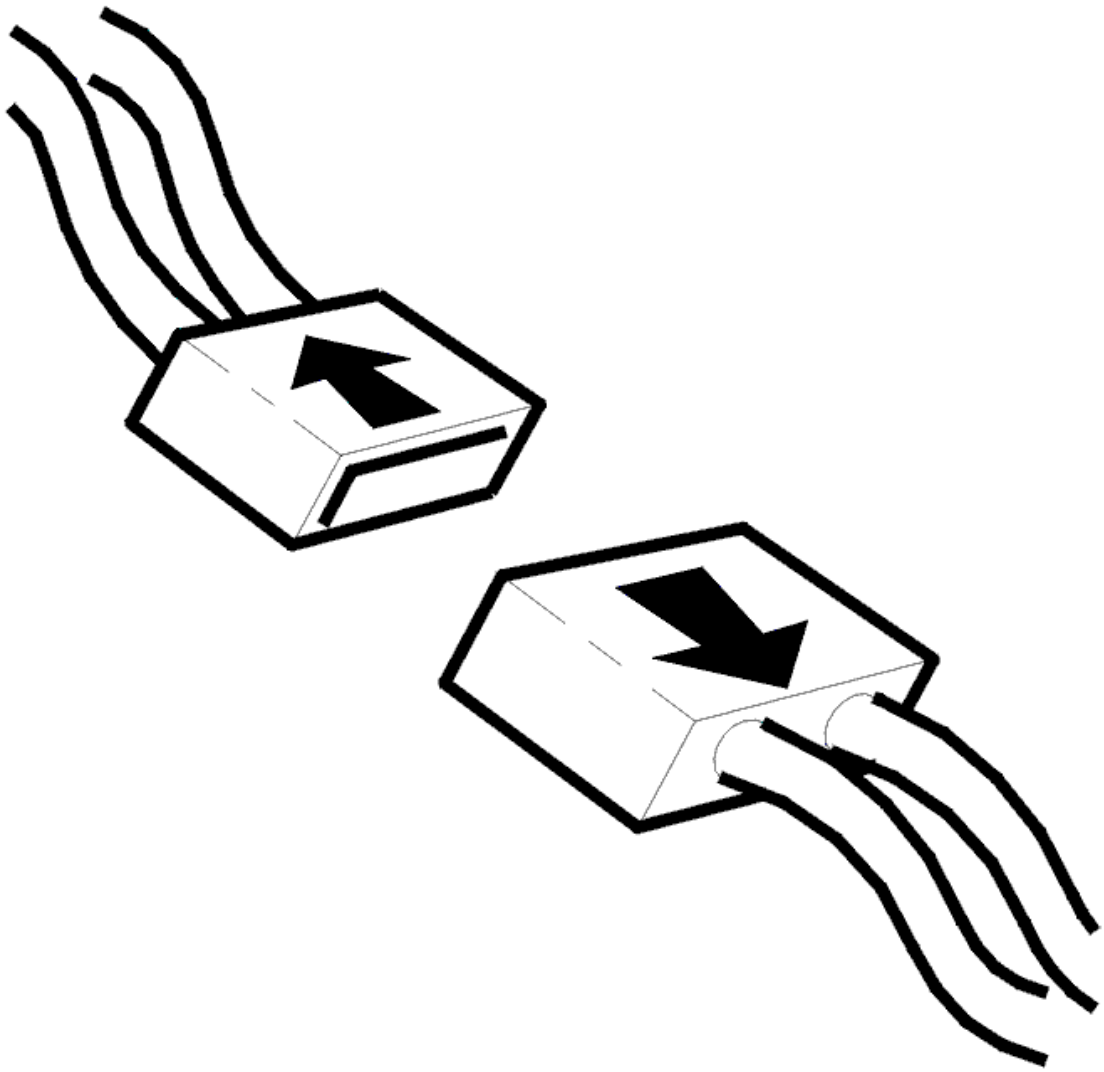

Fig. 228: Identifying Connector(s) Disconnected
Courtesy of VOLVO CARS CORPORATION

- Ignition off.

  Check the connectors for the parking sensor and the Parking Assistance Module (PAM). Check for damage to pins and connections. Also check the other connectors, which connect the cables between the Parking Assistance Module (PAM) and the parking sensor.

  NOTE: **The connections on Parking Assistance Module (PAM) that ground/supply voltage, respectively, to parking sensor may differ from vehicle to vehicle. The rear parking sensors are grounded in Parking Assistance Module (PAM) on pins #C1, #C7, #C8, #C9. The rear parking sensors are supplied with voltage by Parking Assistance Module (PAM) on pins #C6, #C10, #C11, #C12. The rear parking sensors' signal lines are connected to Parking Assistance Module (PAM) on pins #C2, #C3, #C4, #C5.**

- Check the signal cable between the parking assistance module (PAM) and the parking sensor connector. Check for a short-circuit to supply voltage. Check for a short-circuit to ground.
- Check the power supply lead between the parking assistance module (PAM) and the parking sensor connector. Check for a short-circuit to ground.
- Check the ground lead between the parking assistance module (PAM) and the parking sensor connector. Check for a short-circuit to supply voltage.

Remedy as necessary.

If no fault is found, replace the parking sensor.

Other information

- see **REVERSE (REVERSING) WARNING SENSOR (PARKING ASSISTANCE MODULE (PAM), REPLACING**
- see **CHECKING WIRING AND TERMINALS**

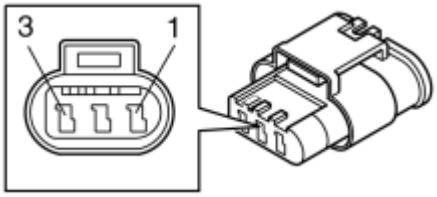

Fig. 229: Identifying Parking Sensor Connector Terminal
Courtesy of VOLVO CARS CORPORATION

- **Continue**

  Refer to **VERIFICATION**

VERIFICATION

VERIFICATION

HINT: After carrying out the repair, check that the fault has been remedied.

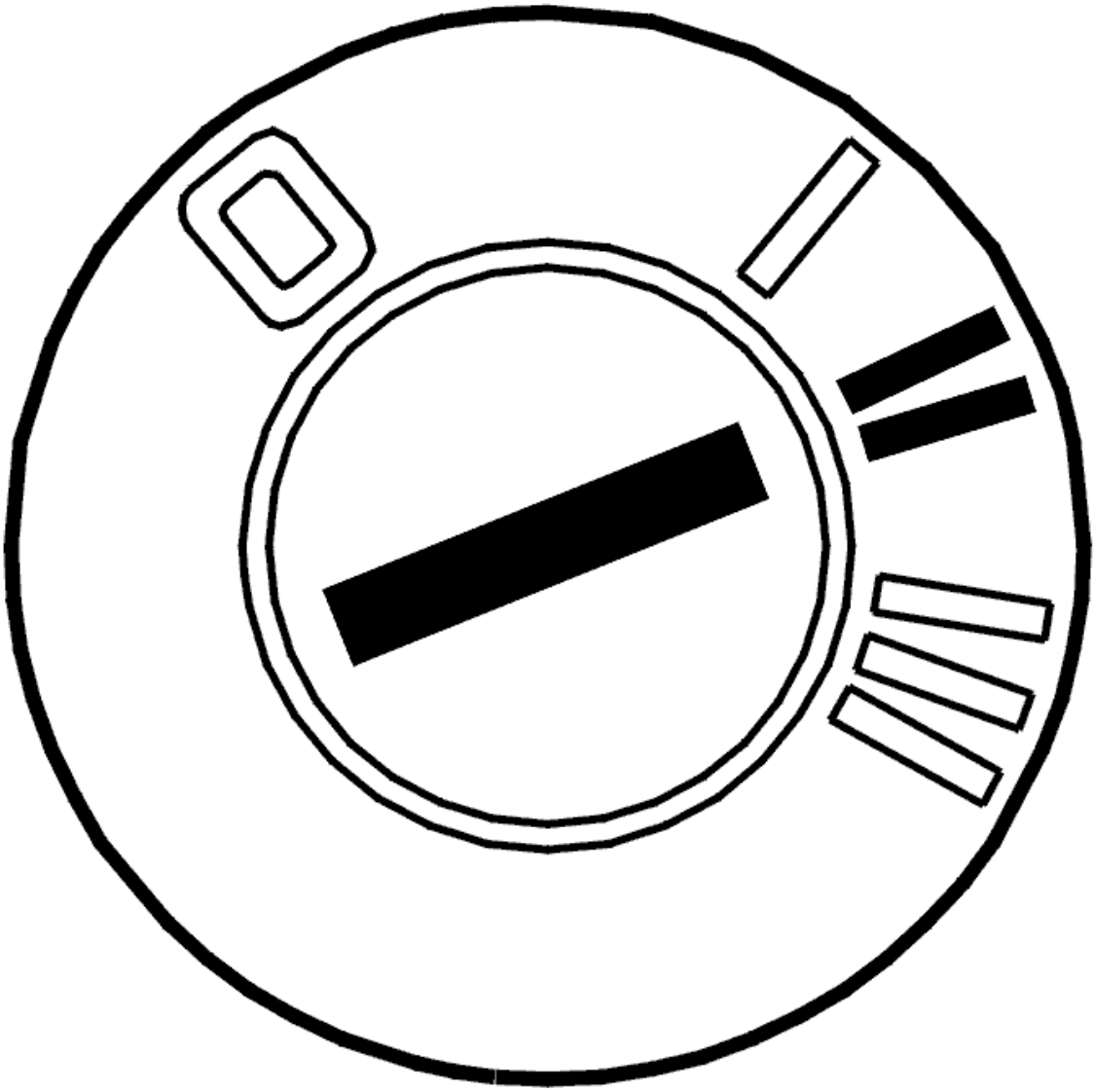

Fig. 230: Identifying Ignition ON
Courtesy of VOLVO CARS CORPORATION

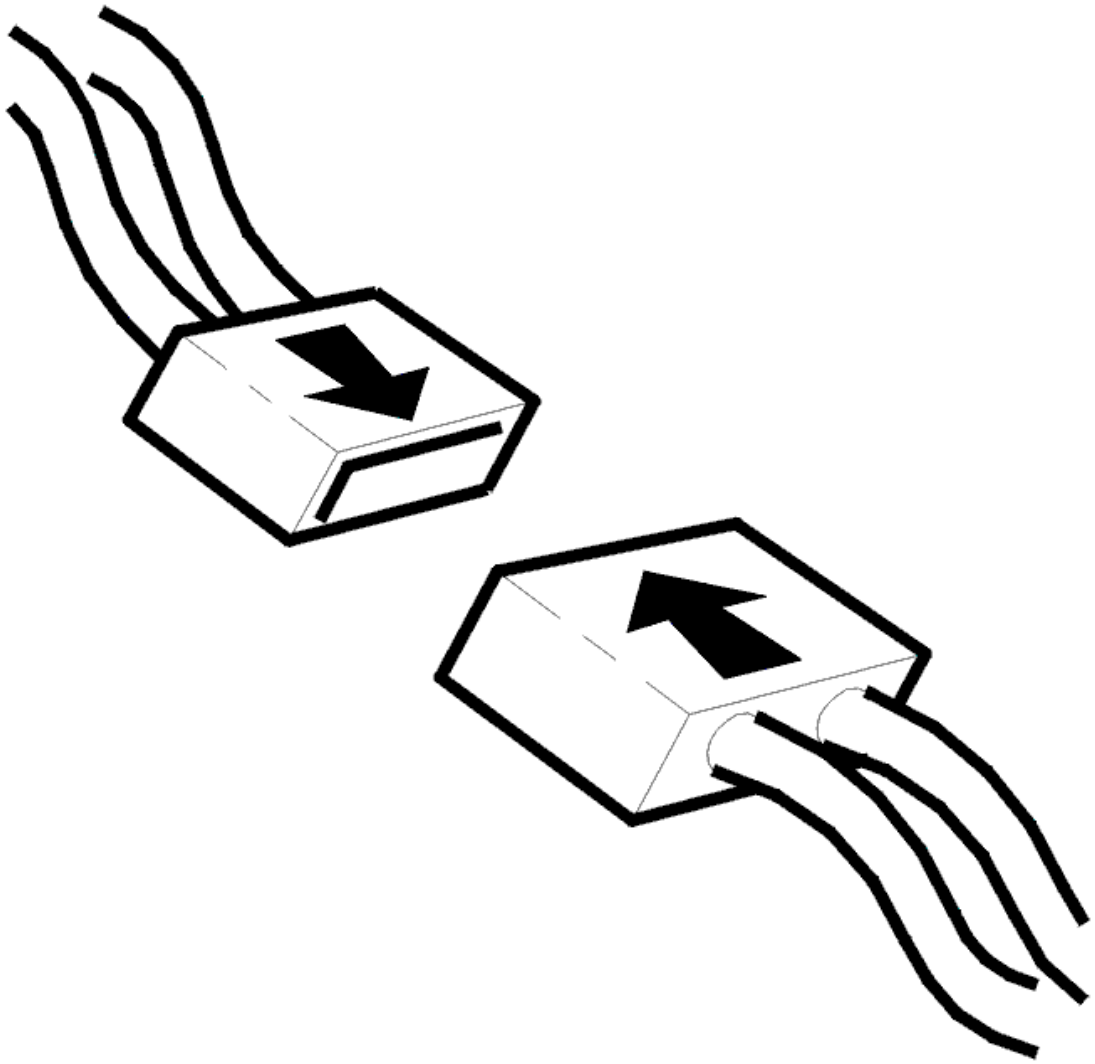

Fig. 231: Identifying Connector(s) Reinstallation
Courtesy of VOLVO CARS CORPORATION

- Switch off the ignition. Wait at least 15 seconds
- Reinstall the connectors, components etc.
- Ignition on for at least 5 seconds
- Move the gear selector lever to back-up (reversing) (R).

  The parking assistance module (PAM) is activated by pressing the switch on the lower section of the climate control module (CCM). Click on the VCT2000 symbol to read off the diagnostic status from the parking assistance module (PAM).

  Check that the parking assistance module (PAM) is active. Check that the sensors are OK.

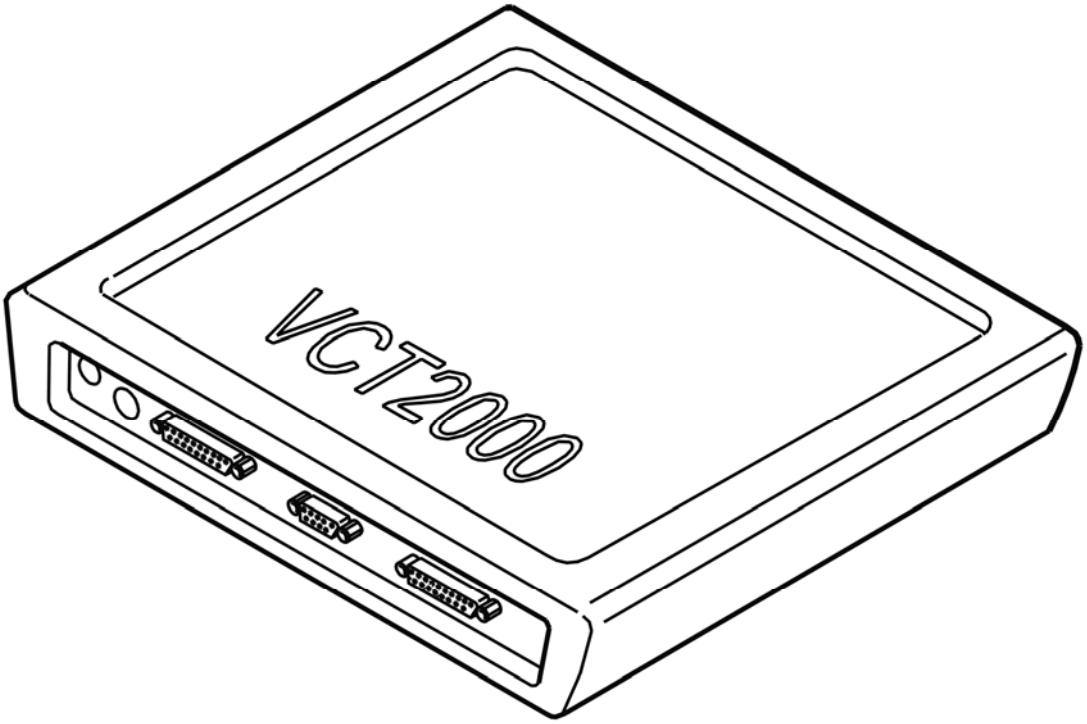

Fig. 232: Identifying VCT2000 Diagnostic Tool Symbol In VIDA
Courtesy of VOLVO CARS CORPORATION

Is the parking assistance module (PAM) active? Are the sensors OK?

- **YES**

  VERIFIED: Troubleshooting has been completed.

- **NO**

  Refer to **INFORMATION**

INFORMATION

FAULT-TRACING INFORMATION

The fault should have been detected and remedied. As this is not the case fault-tracing has failed.

Exit fault-tracing for this diagnostic trouble code (DTC) or make another attempt.

REM-4F43: BACK-UP WARNING SENSOR 2. FAULTY SIGNAL (2003-2004)

DIAGNOSTIC TROUBLE CODE (DTC) INFORMATION REM-4F43

Condition

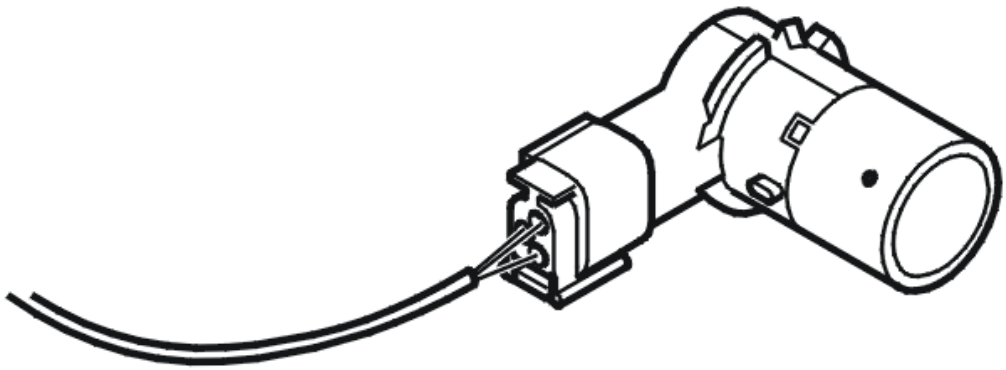

Fig. 233: Identifying Parking Sensor
Courtesy of VOLVO CARS CORPORATION

The rear electronic module (REM) checks diagnosis from the parking assistance module (PAM).

Diagnostic trouble code (DTC) REM-4F43 is stored if parking assistance module (PAM) registers a fault in sensor 2.

Diagnostic trouble code (DTC) REM-4F43 can be detected when the ignition is on for 5 seconds.

Substitute Value

- None.

Possible Source

- Fault in wiring to back-up warning sensor 2
- Back-up warning sensor 2 defective.

Fault symptom[s]

- General warning lamp lit.
- The back-up (reversing) warning system does not function.

FAULTY SIGNAL

CHECKING COMPONENTS AND WIRING

Check the connections on the parking assistance module (PAM) and sensor 2 (inner left). Check for contact resistance and oxidation. Also check intermediate connector.

Check the power supply cable between the connector in the parking assistance module (PAM) terminal #6 and the connector for sensor #1. Check for a short-circuit to ground. Check for an open-circuit.

Check the signal ground cable between the connector in the parking assistance module (PAM) terminal #7 and the connector for sensor #3. Check for a short-circuit to supply voltage. Check for an open-circuit.

Check the signal cable between the connector in the parking assistance module (PAM) terminal #3 and the connector for sensor #2. Check for an open-circuit. Check for a short-circuit to supply voltage. Check for a short-circuit to ground.

Try a new sensor if no fault is found.

Remedy as necessary.

Other information:

- To access or replace the parking assistance module (PAM), see **PARKING ASSISTANCE MODULE (PAM), REPLACING**
- To access or replace the back-up warning sensor, see **REVERSE (REVERSING) WARNING SENSOR (PARKING ASSISTANCE MODULE (PAM), REPLACING**
- To fault-trace the wiring and terminals, see **CHECKING WIRING AND TERMINALS** .

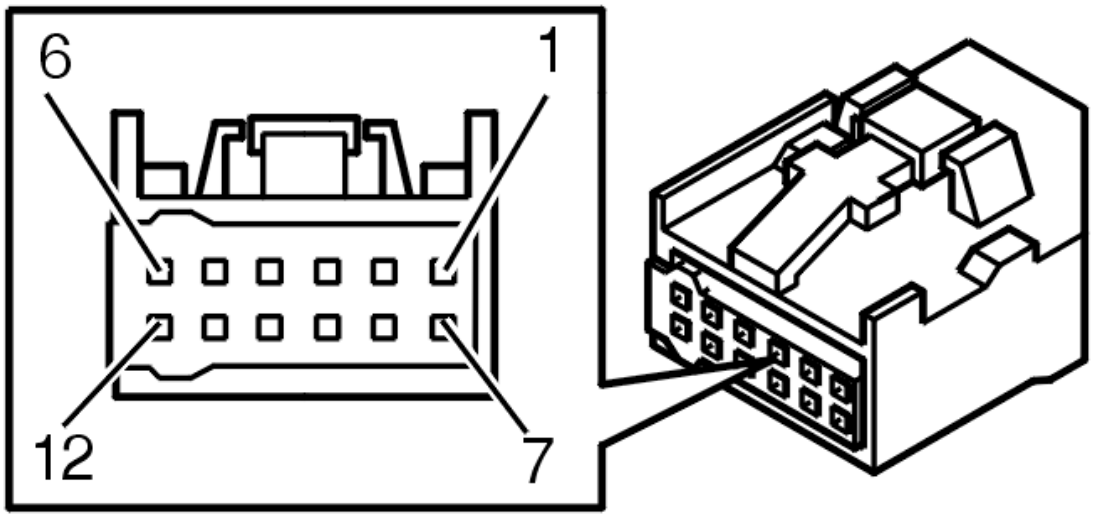

Fig. 234: Identifying Connector Terminals
Courtesy of VOLVO CARS CORPORATION

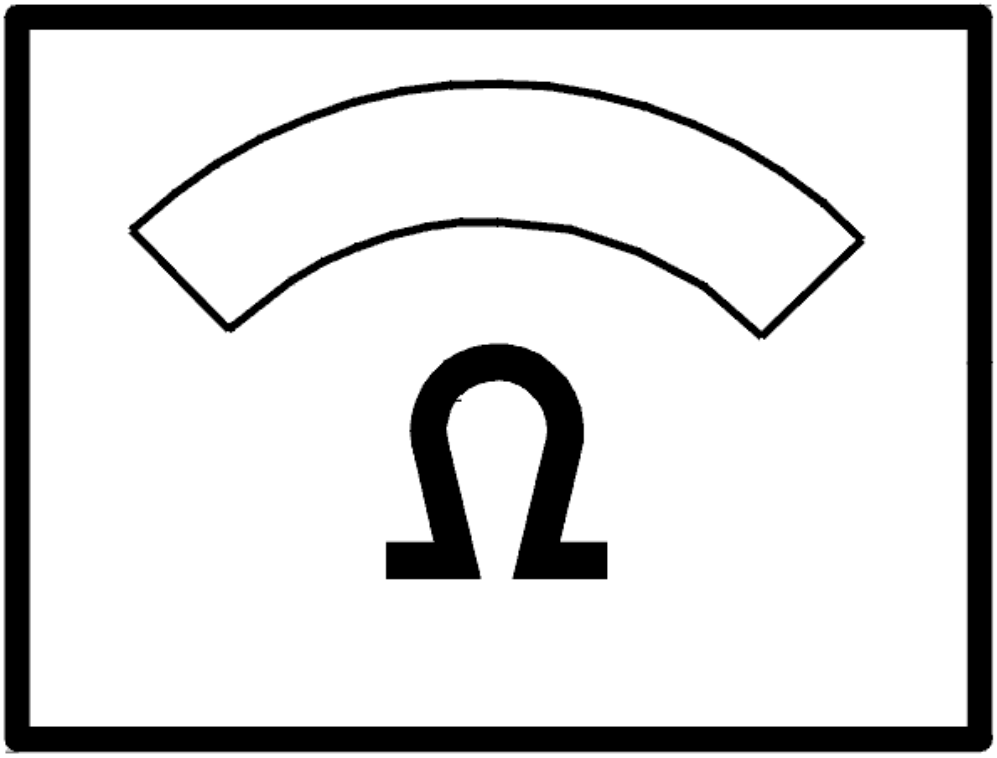

Fig. 235: Identifying Ohms Display
Courtesy of VOLVO CARS CORPORATION

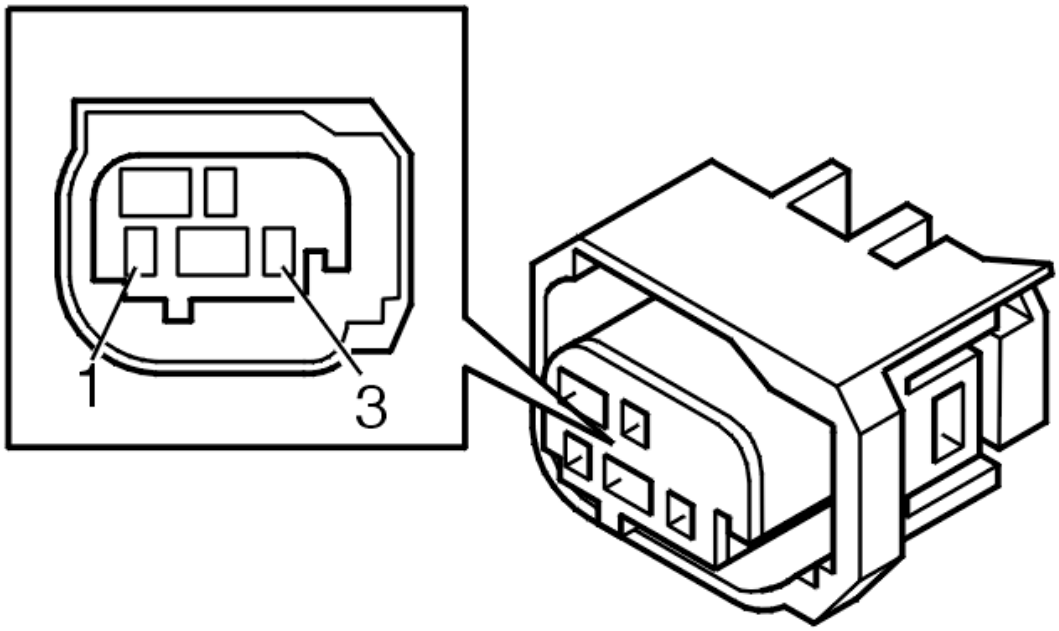

Fig. 236: Identifying Connector Terminals
Courtesy of VOLVO CARS CORPORATION

- **Continue**

  Refer to **VERIFICATION**

VERIFICATION

VERIFICATION

HINT: After carrying out the repair, check that the fault has been remedied.

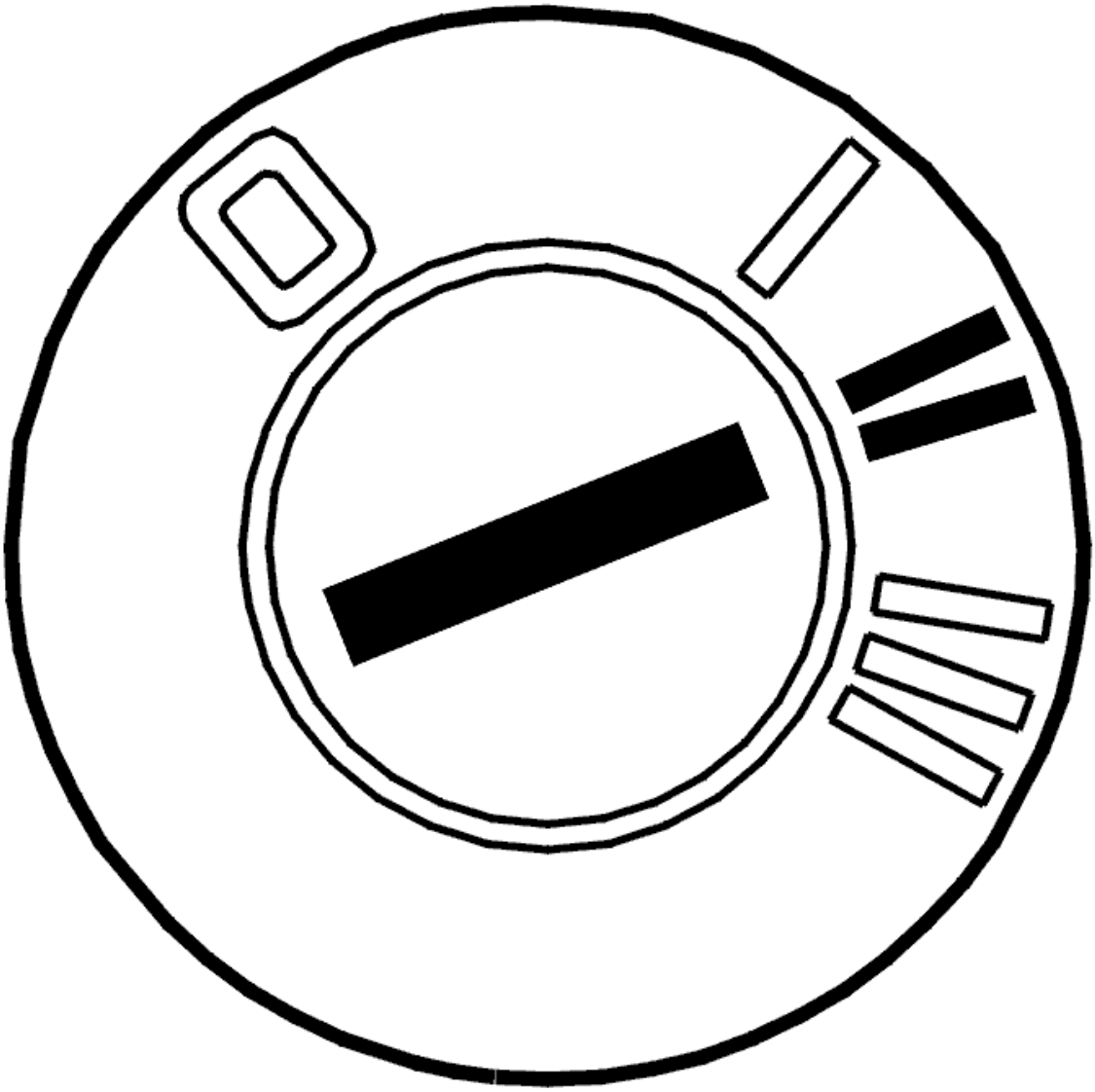

Fig. 237: Identifying Ignition ON
Courtesy of VOLVO CARS CORPORATION

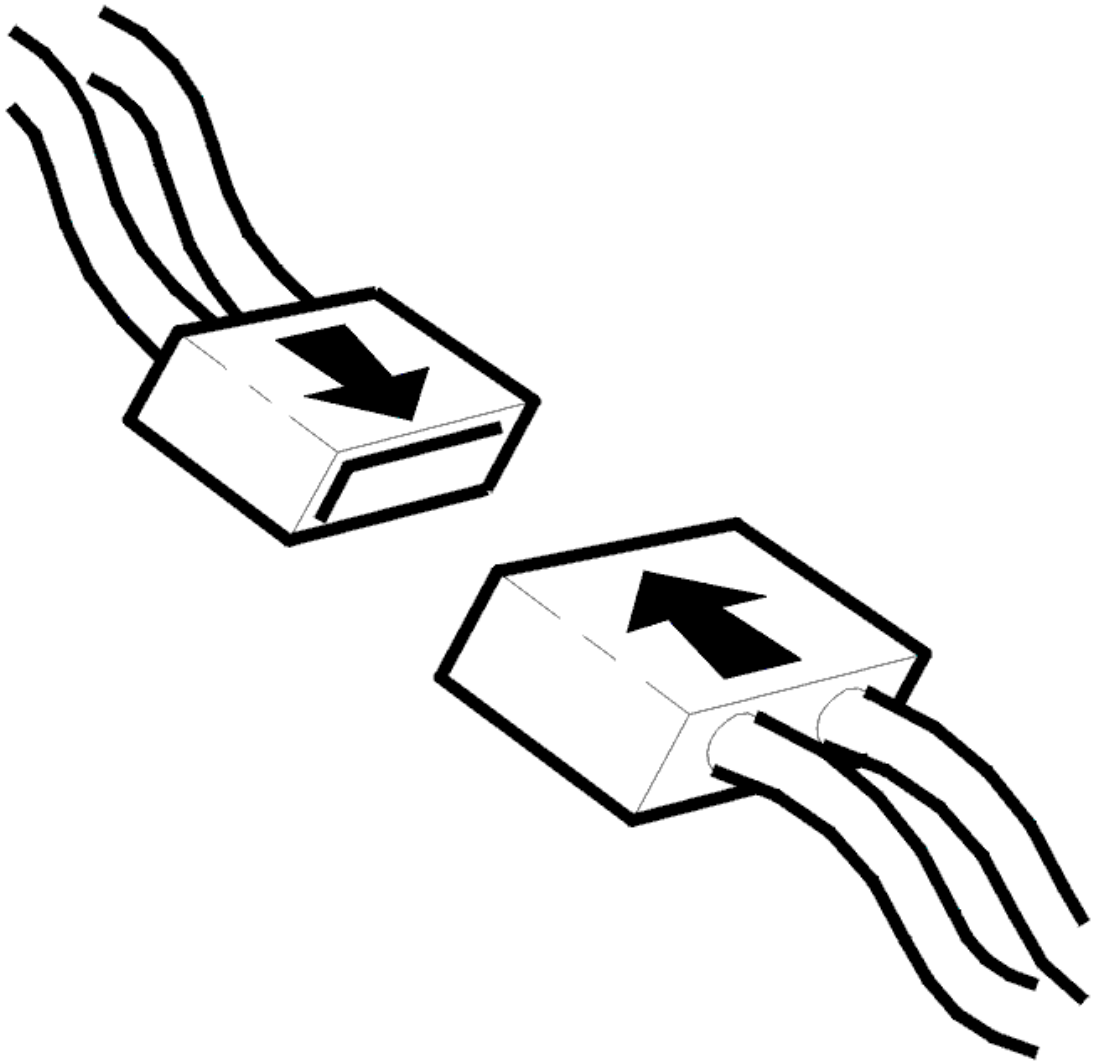

Fig. 238: Identifying Connector(s) Reinstallation
Courtesy of VOLVO CARS CORPORATION

- Switch off the ignition. Wait at least 15 seconds
- Reinstall the connectors, components etc.
- Ignition on for at least 5 seconds
- Move the gear selector lever to back-up (reversing) (R).

  The parking assistance module (PAM) is activated by pressing the switch on the lower section of the climate control module (CCM). Click on the VCT2000 symbol to read off the diagnostic status from the parking assistance module (PAM).

  Check that the parking assistance module (PAM) is active. Check that the sensors are OK.

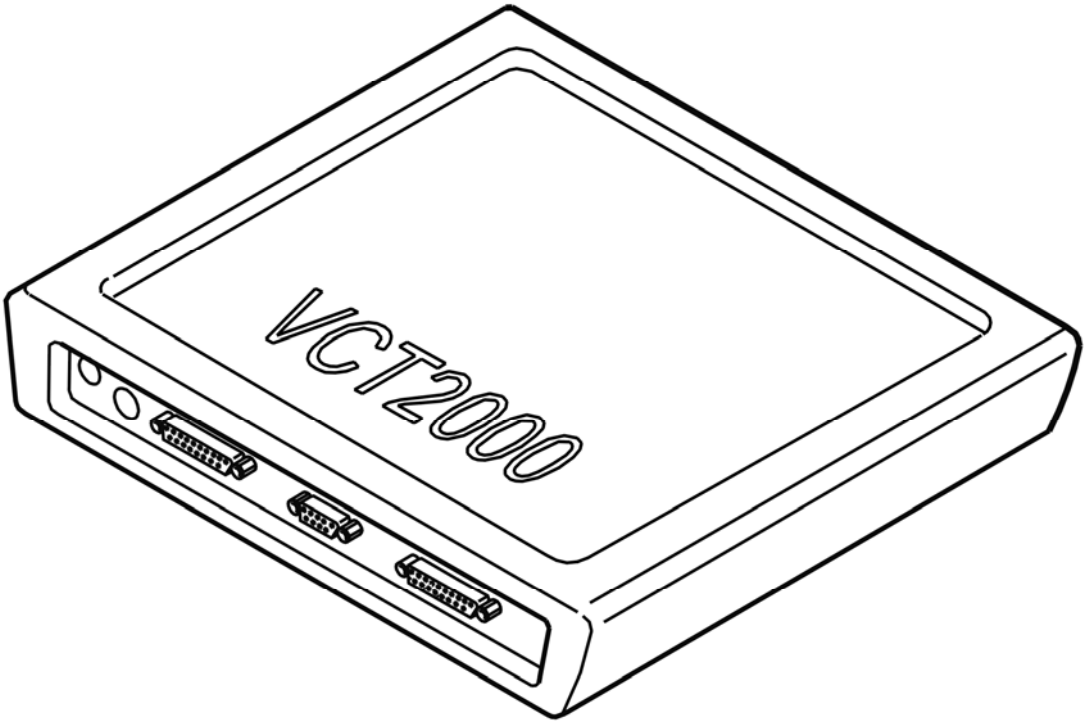

Fig. 239: Identifying VCT2000 Diagnostic Tool Symbol In VIDA
Courtesy of VOLVO CARS CORPORATION

Is the parking assistance module (PAM) active? Are the sensors OK?

- **YES**

  VERIFIED: Troubleshooting has been completed.

- **NO**

  Refer to **INFORMATION**

INFORMATION

FAULT-TRACING INFORMATION

The fault should have been detected and remedied. As this is not the case fault-tracing has failed.

Exit fault-tracing for this diagnostic trouble code (DTC) or make another attempt.

REM-4F43: PARKING SENSOR 2. FAULTY SIGNAL (2005-2012)

DIAGNOSTIC TROUBLE CODE (DTC) INFORMATION REM-4F43 (2005, 2006)

Condition

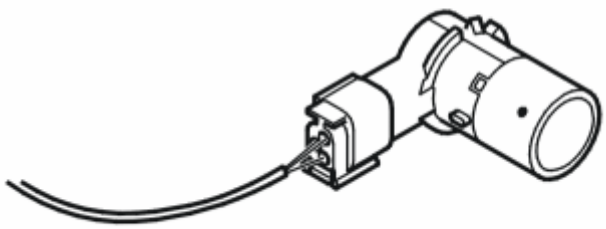

Fig. 240: Identifying Parking Sensor
Courtesy of VOLVO CARS CORPORATION

The rear electronic module (REM) communicates with the parking assistance module (PAM) which checks the signal from parking sensor 2.

The diagnostic trouble code (DTC) is stored if the parking assistance module (PAM) registers a faulty signal from the parking sensor (2).

The diagnostic trouble code (DTC) can be diagnosed at key position II.

Substitute Value

- None.

Possible Source

- Short-circuit to ground or supply voltage in the signal cable between the parking assistance module (PAM) and parking sensor 2
- Short-circuit to ground in the power supply cable between the parking assistance module (PAM) and parking sensor 2
- Short-circuit to supply voltage in the ground lead between the parking assistance module (PAM) and parking sensor 2.

Fault symptom[s]

- The parking assistance system does not operate
- Message in the display.

FAULTY SIGNAL (2005, 2006)

see **FAULTY SIGNAL (2005, 2006)**

DIAGNOSTIC TROUBLE CODE (DTC) INFORMATION REM-4F43 (2007-2012)

Condition

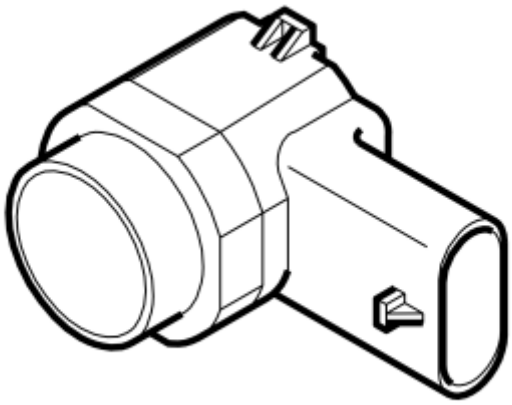

Fig. 241: Identifying Parking Sensor
Courtesy of VOLVO CARS CORPORATION

The rear electronic module (REM) communicates with the parking assistance module (PAM) which checks the signal from parking sensor 2.

The diagnostic trouble code (DTC) is stored if the parking assistance module (PAM) registers a faulty signal from the parking sensor (2).

The diagnostic trouble code (DTC) can be diagnosed at key position II.

Substitute Value

- None.

Possible Source

- Short-circuit to ground or supply voltage in the signal cable between the parking assistance module (PAM) and parking sensor 2
- Short-circuit to ground in the power supply cable between the parking assistance module (PAM) and parking sensor 2
- Short-circuit to supply voltage in the ground lead between the parking assistance module (PAM) and parking sensor 2.

Fault symptom[s]

- The parking assistance system does not operate

- Message in the display.

FAULTY SIGNAL (2007-2012)

see **FAULTY SIGNAL (2007-2012)**

REM-4F44: BACK-UP WARNING SENSOR 3. FAULTY SIGNAL (2003-2004)

DIAGNOSTIC TROUBLE CODE (DTC) INFORMATION REM-4F44

Condition

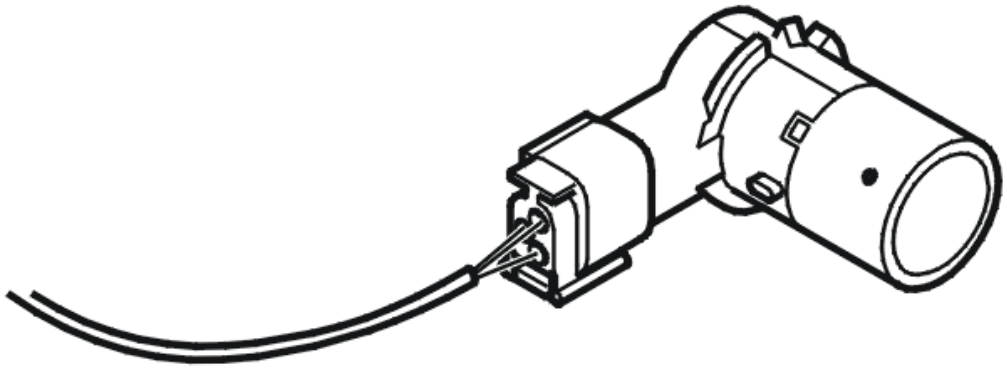

Fig. 242: Identifying Parking Sensor
Courtesy of VOLVO CARS CORPORATION

The rear electronic module (REM) checks diagnosis from the parking assistance module (PAM).

Diagnostic trouble code (DTC) REM-4F44 is stored if parking assistance module (PAM) registers a fault in sensor 3.

Diagnostic trouble code (DTC) REM-4F44 can be detected when the ignition is on for 5 seconds.

Substitute Value

- None.

Possible Source

- Fault in wiring to back-up warning sensor 3
- Back-up warning sensor 3 defective.

Fault symptom[s]

- General warning lamp lit.
- The back-up (reversing) warning system does not function.

FAULTY SIGNAL

CHECKING COMPONENTS AND WIRING

Check the connections on the parking assistance module (PAM) and sensor 3 (inner right). Check for contact resistance and oxidation. Also check intermediate connector.

Check the power supply cable between the connector in the parking assistance module (PAM) terminal #6 and the connector for sensor #1. Check for a short-circuit to ground. Check for an open-circuit.

Check the signal ground cable between the connector in the parking assistance module (PAM) terminal #7 and the connector for sensor #3. Check for a short-circuit to supply voltage. Check for an open-circuit.

Check the signal cable between the connector in the parking assistance module (PAM) terminal #2 and the connector for sensor #2. Check for an open-circuit. Check for a short-circuit to supply voltage. Check for a short-circuit to ground.

Try a new sensor if no fault is found.

Remedy as necessary.

Other information:

- To access or replace the parking assistance module (PAM), see **PARKING ASSISTANCE MODULE (PAM), REPLACING**
- To access or replace the back-up warning sensor, see **REVERSE (REVERSING) WARNING SENSOR (PARKING ASSISTANCE MODULE (PAM), REPLACING**
- To fault-trace the wiring and terminals, see **CHECKING WIRING AND TERMINALS** .

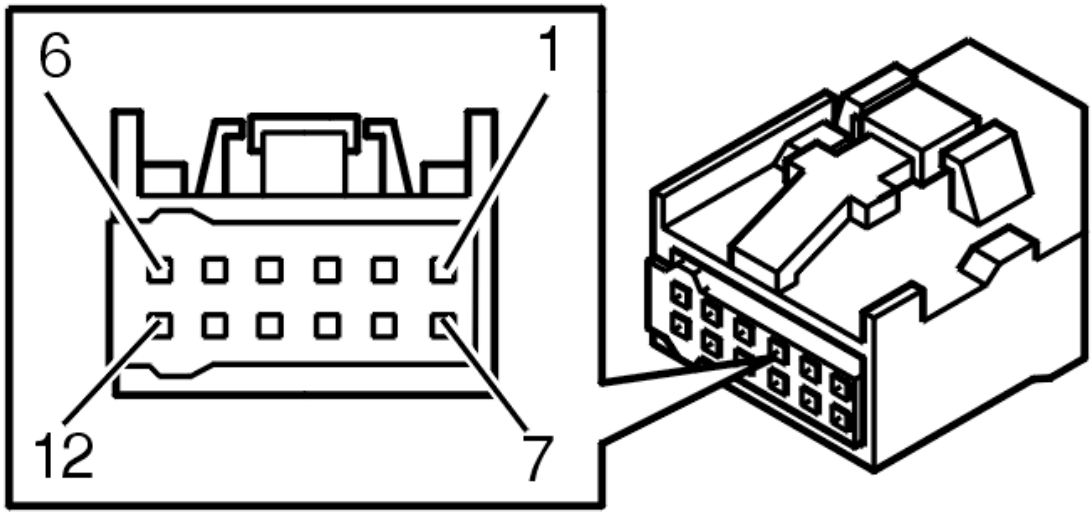

Fig. 243: Identifying Connector Terminals
Courtesy of VOLVO CARS CORPORATION

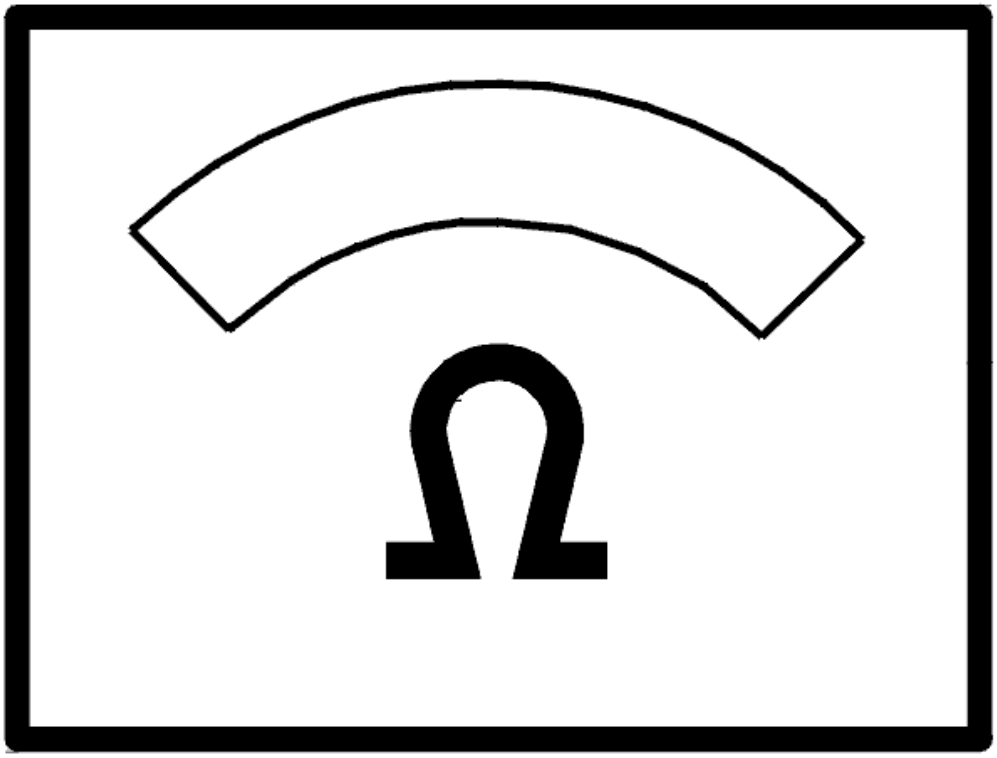

Fig. 244: Identifying Ohms Display
Courtesy of VOLVO CARS CORPORATION

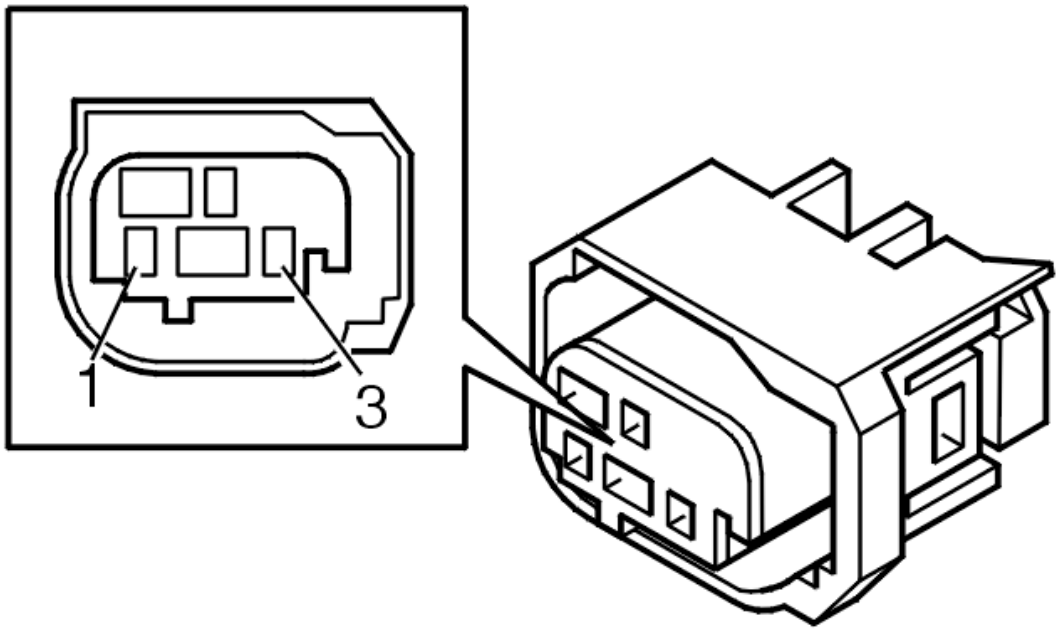

Fig. 245: Identifying Connector Terminals
Courtesy of VOLVO CARS CORPORATION

- **Continue**

  Refer to **VERIFICATION**

VERIFICATION

VERIFICATION

HINT: After carrying out the repair, check that the fault has been remedied.

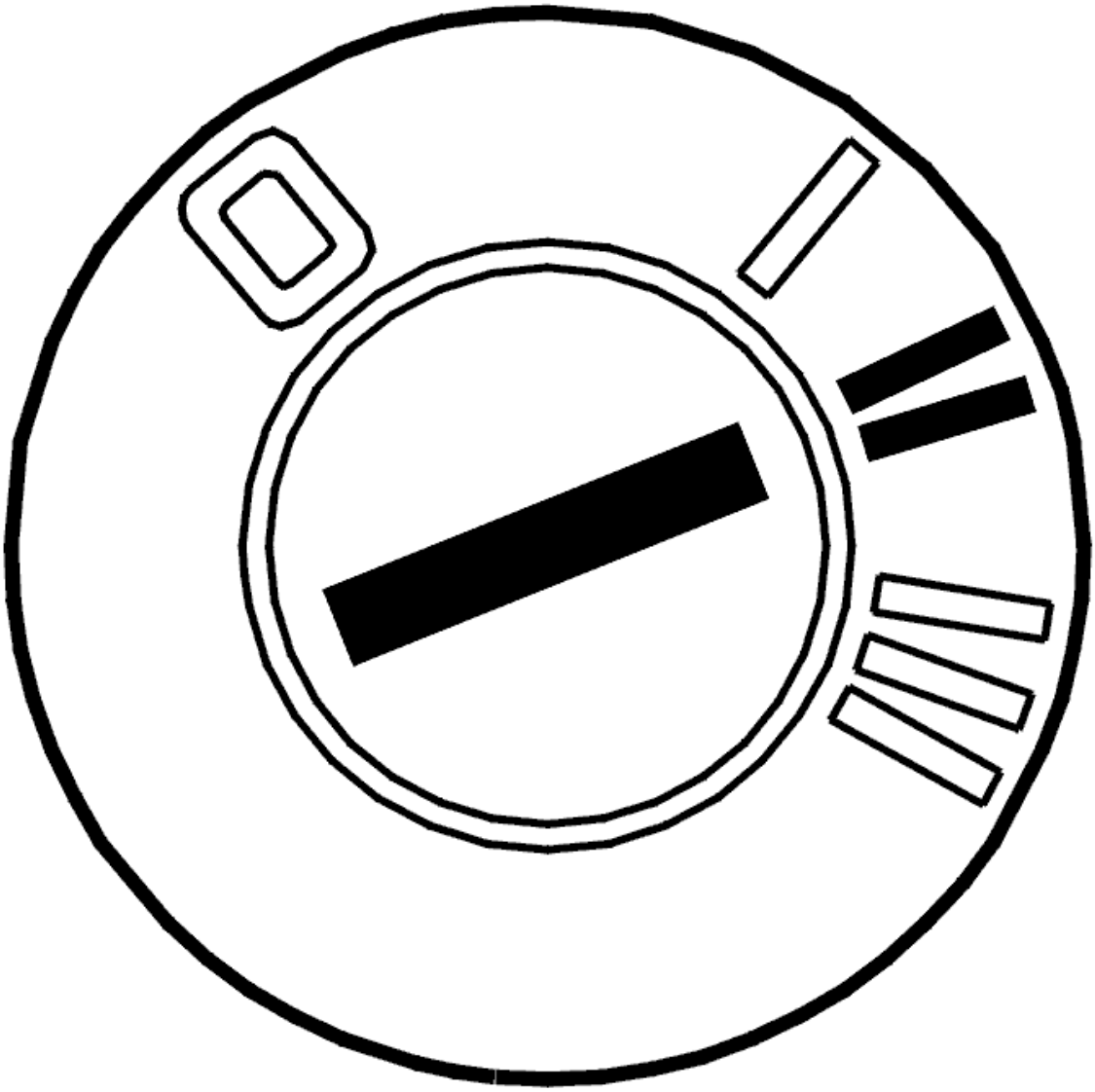

Fig. 246: Identifying Ignition ON
Courtesy of VOLVO CARS CORPORATION

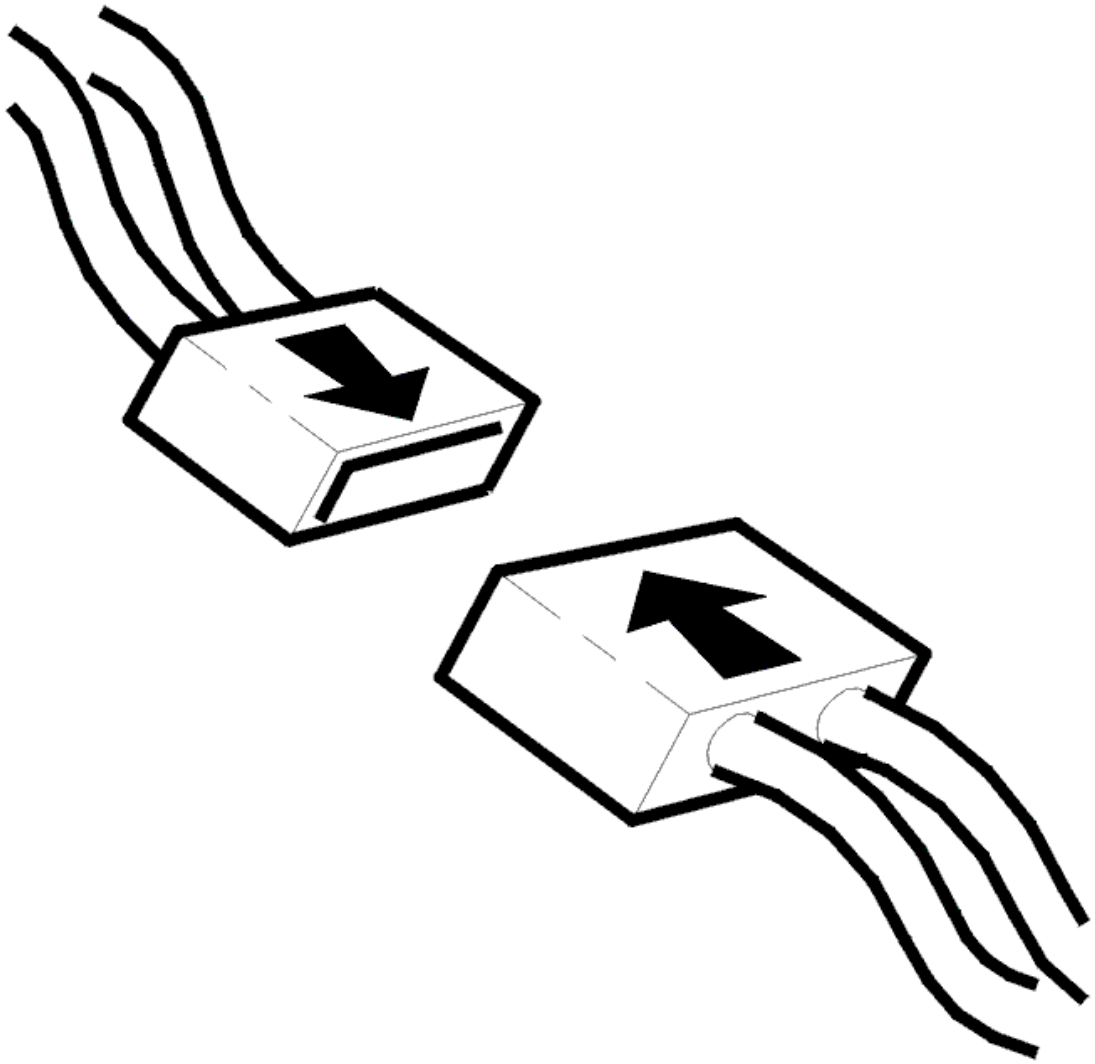

Fig. 247: Identifying Connector(s) Reinstallation
Courtesy of VOLVO CARS CORPORATION

- Switch off the ignition. Wait at least 15 seconds
- Reinstall the connectors, components etc.
- Ignition on for at least 5 seconds
- Move the gear selector lever to back-up (reversing) (R).

  The parking assistance module (PAM) is activated by pressing the switch on the lower section of the climate control module (CCM). Click on the VCT2000 symbol to read off the diagnostic status from the parking assistance module (PAM).

  Check that the parking assistance module (PAM) is active. Check that the sensors are OK.

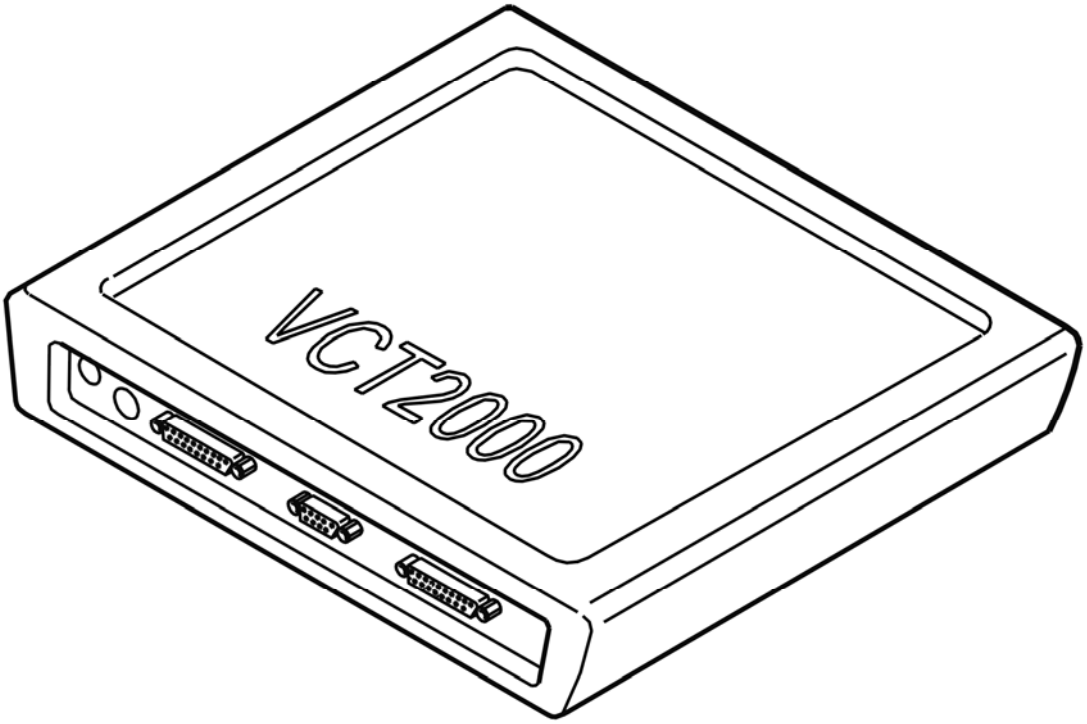

Fig. 248: Identifying VCT2000 Diagnostic Tool Symbol In VIDA
Courtesy of VOLVO CARS CORPORATION

Is the parking assistance module (PAM) active? Are the sensors OK?

- **YES**

  VERIFIED: Troubleshooting has been completed.

- **NO**

  Refer to **INFORMATION**

INFORMATION

FAULT-TRACING INFORMATION

The fault should have been detected and remedied. As this is not the case fault-tracing has failed.

Exit fault-tracing for this diagnostic trouble code (DTC) or make another attempt.

REM-4F44: PARKING SENSOR 3. FAULTY SIGNAL (2005-2012)

DIAGNOSTIC TROUBLE CODE (DTC) INFORMATION REM-4F44 (2005, 2006)

Condition

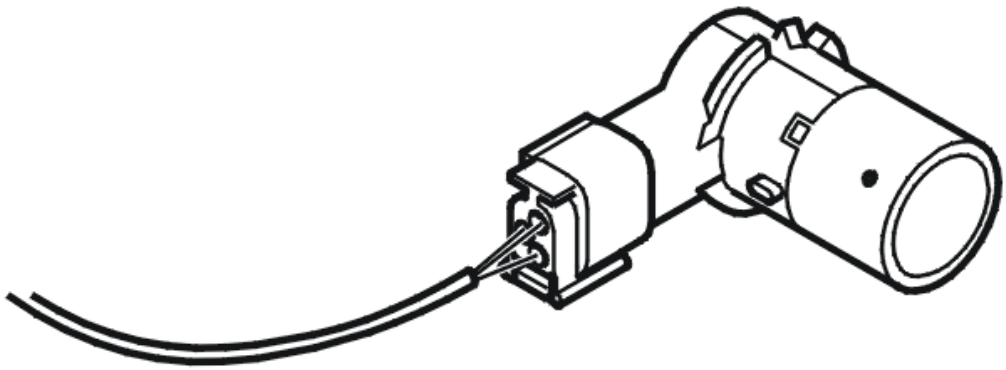

Fig. 249: Identifying Parking Sensor
Courtesy of VOLVO CARS CORPORATION

The rear electronic module (REM) communicates with the parking assistance module (PAM) which checks the signal from parking sensor 3.

The diagnostic trouble code (DTC) is stored if the parking assistance module (PAM) registers a faulty signal from the parking sensor (3).

The diagnostic trouble code (DTC) can be diagnosed at key position II.

Substitute Value

- None.

Possible Source

- Short-circuit to ground or supply voltage in the signal cable between the parking assistance module (PAM) and parking sensor 3
- Short-circuit to ground in the power supply cable between the parking assistance module (PAM) and parking sensor 3

- Short-circuit to supply voltage in the ground lead between the parking assistance module (PAM) and parking sensor 3.

Fault symptom[s]

- The parking assistance system does not operate
- Message in the display.

FAULTY SIGNAL (2005, 2006)

see **FAULTY SIGNAL (2005, 2006)**

DIAGNOSTIC TROUBLE CODE (DTC) INFORMATION REM-4F44 (2007-2012)

Condition

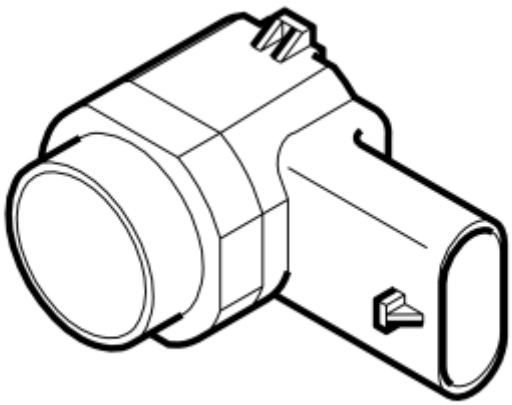

Fig. 250: Identifying Parking Sensor
Courtesy of VOLVO CARS CORPORATION

The rear electronic module (REM) communicates with the parking assistance module (PAM) which checks the signal from parking sensor 3.

The diagnostic trouble code (DTC) is stored if the parking assistance module (PAM) registers a faulty signal from the parking sensor (3).

The diagnostic trouble code (DTC) can be diagnosed at key position II.

Substitute Value

- None.

Possible Source

- Short-circuit to ground or supply voltage in the signal cable between the parking assistance module (PAM) and parking sensor 3
- Short-circuit to ground in the power supply cable between the parking assistance module (PAM) and parking sensor 3
- Short-circuit to supply voltage in the ground lead between the parking assistance module (PAM) and parking sensor 3.

Fault symptom[s]

- The parking assistance system does not operate
- Message in the display.

FAULTY SIGNAL (2007-2012)

see **FAULTY SIGNAL (2007-2012)**

REM-4F45: BACK-UP WARNING SENSOR 4. FAULTY SIGNAL (2003-2004)

DIAGNOSTIC TROUBLE CODE (DTC) INFORMATION REM-4F45

Condition

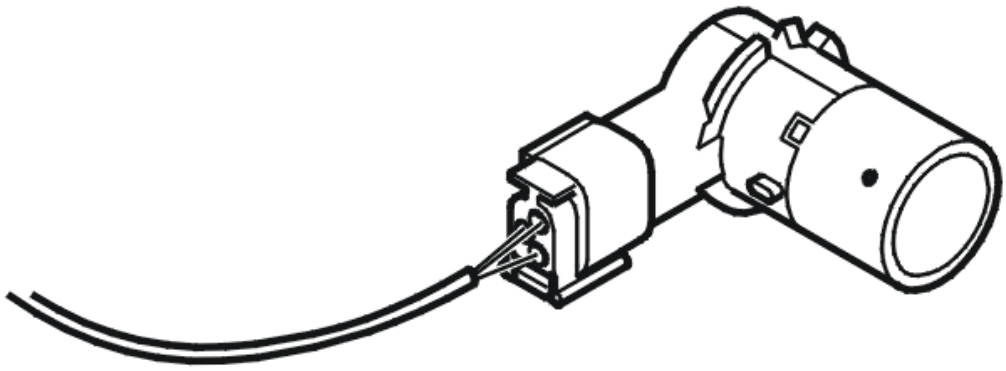

Fig. 251: Identifying Parking Sensor
Courtesy of VOLVO CARS CORPORATION

The rear electronic module (REM) checks diagnosis from the parking assistance module (PAM).

Diagnostic trouble code (DTC) REM-4F45 is stored if parking assistance module (PAM) registers a fault in sensor 4.

Diagnostic trouble code (DTC) REM-4F45 can be detected when the ignition is on for 5 seconds.

Substitute Value

- None.

Possible Source

- Fault in wiring to back-up warning sensor 4
- Back-up warning sensor 4 defective.

Fault symptom[s]

- General warning lamp lit.
- The back-up (reversing) warning system does not function.

FAULTY SIGNAL

CHECKING COMPONENTS AND WIRING

Check the connections on the parking assistance module (PAM) and sensor 4 (outer right). Check for contact resistance and oxidation. Also check intermediate connector.

Check the power supply cable between the connector in the parking assistance module (PAM) terminal #6 and the connector for sensor #1. Check for a short-circuit to ground. Check for an open-circuit.

Check the signal ground cable between the connector in the parking assistance module (PAM) terminal #7 and the connector for sensor #3. Check for a short-circuit to supply voltage. Check for an open-circuit.

Check the signal cable between the connector in the parking assistance module (PAM) terminal #4 and the connector for sensor #2. Check for an open-circuit. Check for a short-circuit to supply voltage. Check for a short-circuit to ground.

Try a new sensor if no fault is found.

Remedy as necessary.

Other information:

- To access or replace the parking assistance module (PAM), see **PARKING ASSISTANCE MODULE (PAM), REPLACING**
- To access or replace the back-up warning sensor, see **REVERSE (REVERSING) WARNING SENSOR (PARKING ASSISTANCE MODULE (PAM), REPLACING**
- To fault-trace the wiring and terminals, see **CHECKING WIRING AND TERMINALS** .

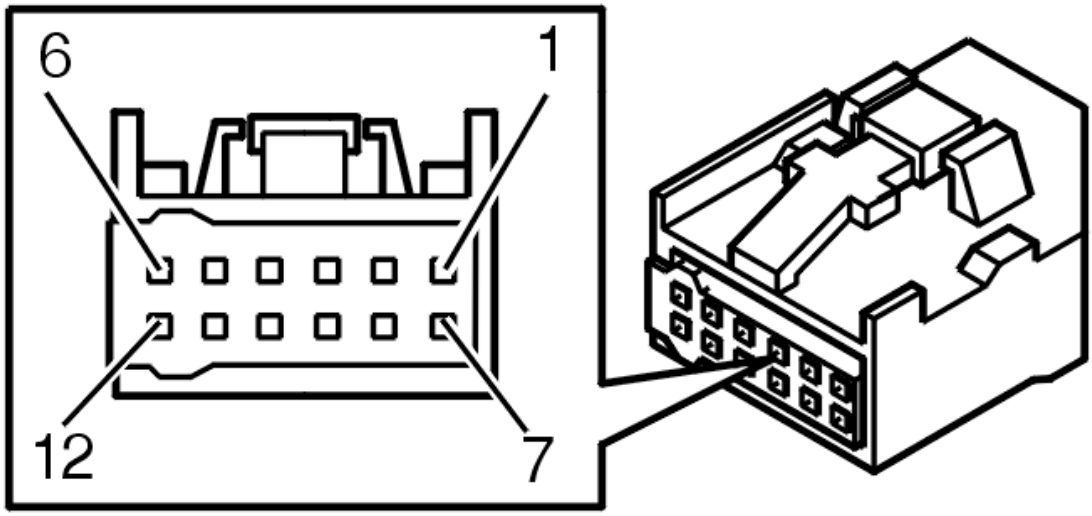

Fig. 252: Identifying Connector Terminals
Courtesy of VOLVO CARS CORPORATION

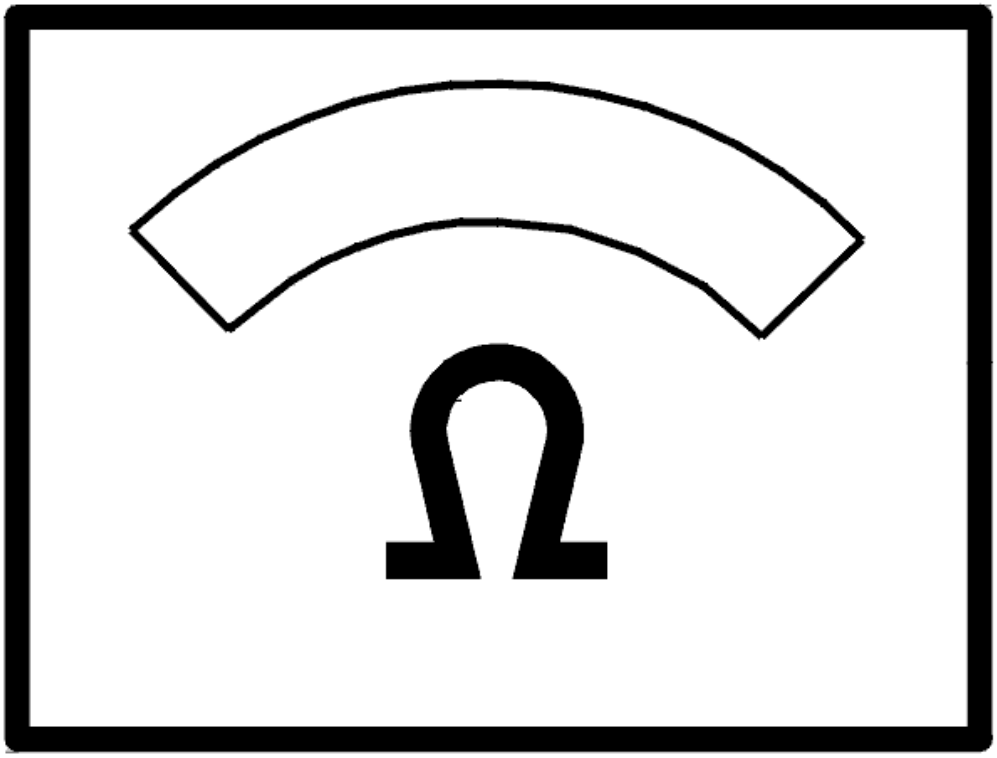

Fig. 253: Identifying Ohms Display
Courtesy of VOLVO CARS CORPORATION

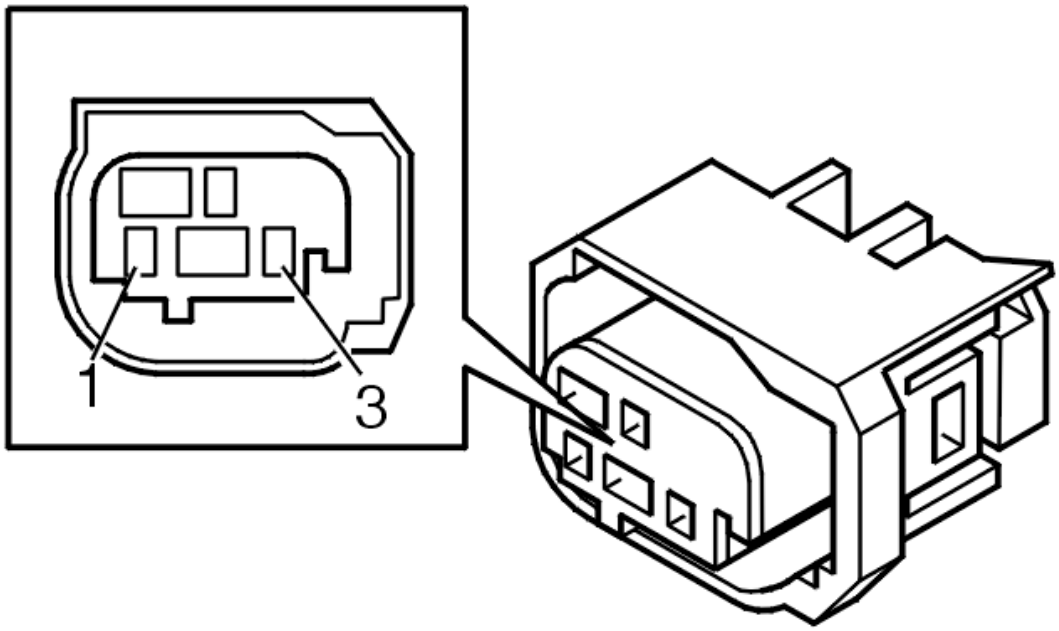

Fig. 254: Identifying Connector Terminals
Courtesy of VOLVO CARS CORPORATION

- **Continue**

  Refer to **VERIFICATION**

VERIFICATION

VERIFICATION

HINT: After carrying out the repair, check that the fault has been remedied.

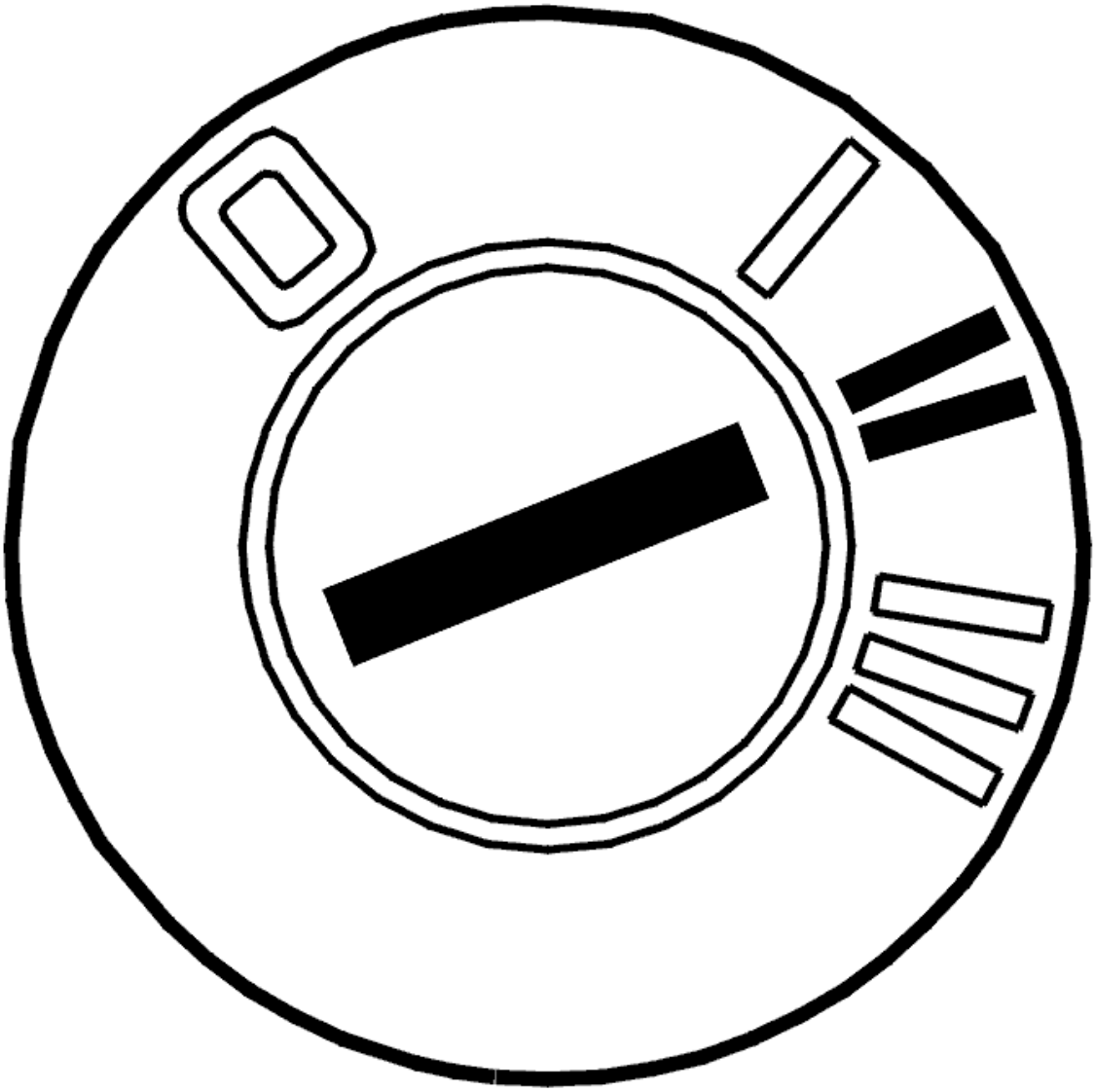

Fig. 255: Identifying Ignition ON
Courtesy of VOLVO CARS CORPORATION

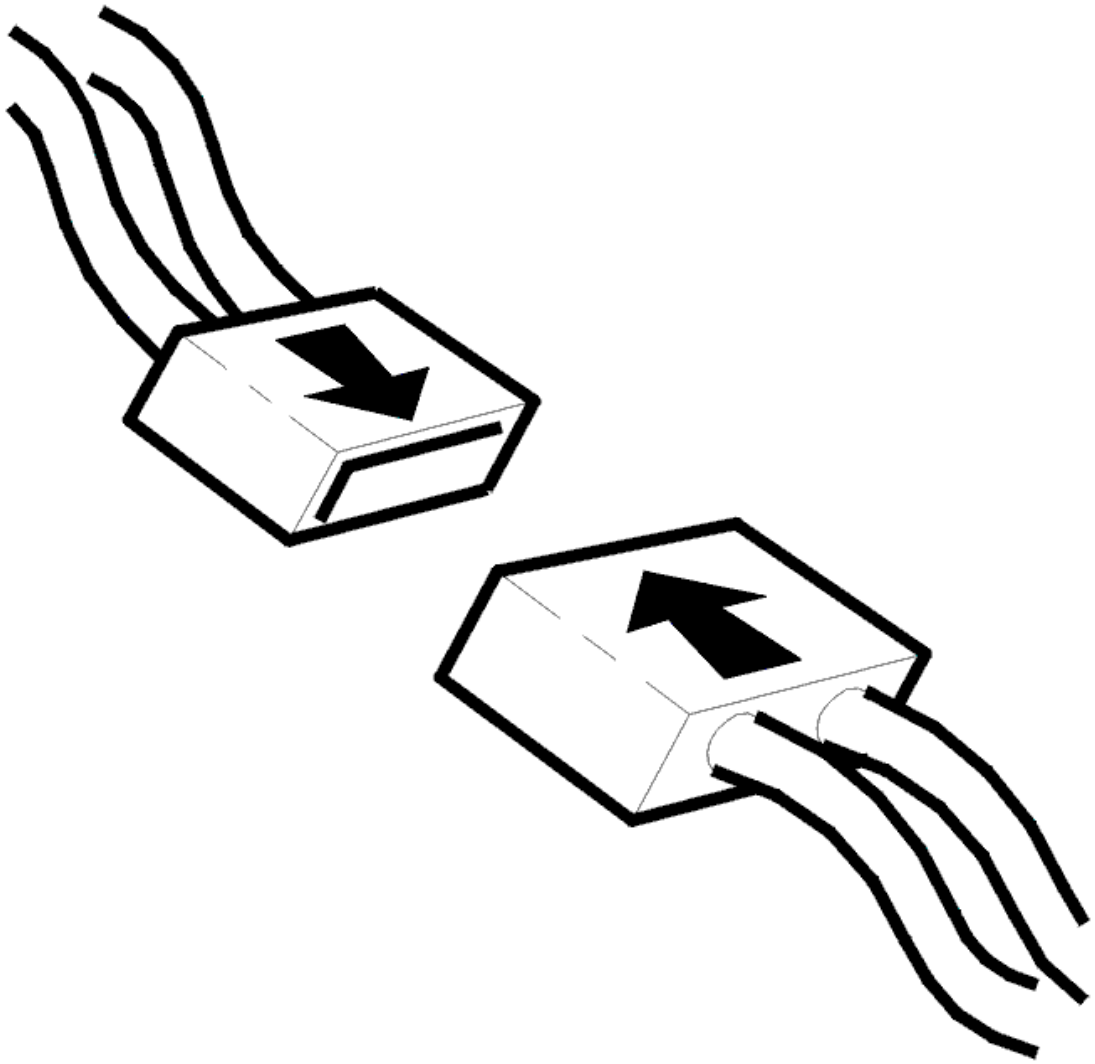

Fig. 256: Identifying Connector(s) Reinstallation
Courtesy of VOLVO CARS CORPORATION

- Switch off the ignition. Wait at least 15 seconds
- Reinstall the connectors, components etc.
- Ignition on for at least 5 seconds
- Move the gear selector lever to back-up (reversing) (R).

  The parking assistance module (PAM) is activated by pressing the switch on the lower section of the climate control module (CCM). Click on the VCT2000 symbol to read off the diagnostic status from the parking assistance module (PAM).

  Check that the parking assistance module (PAM) is active. Check that the sensors are OK.

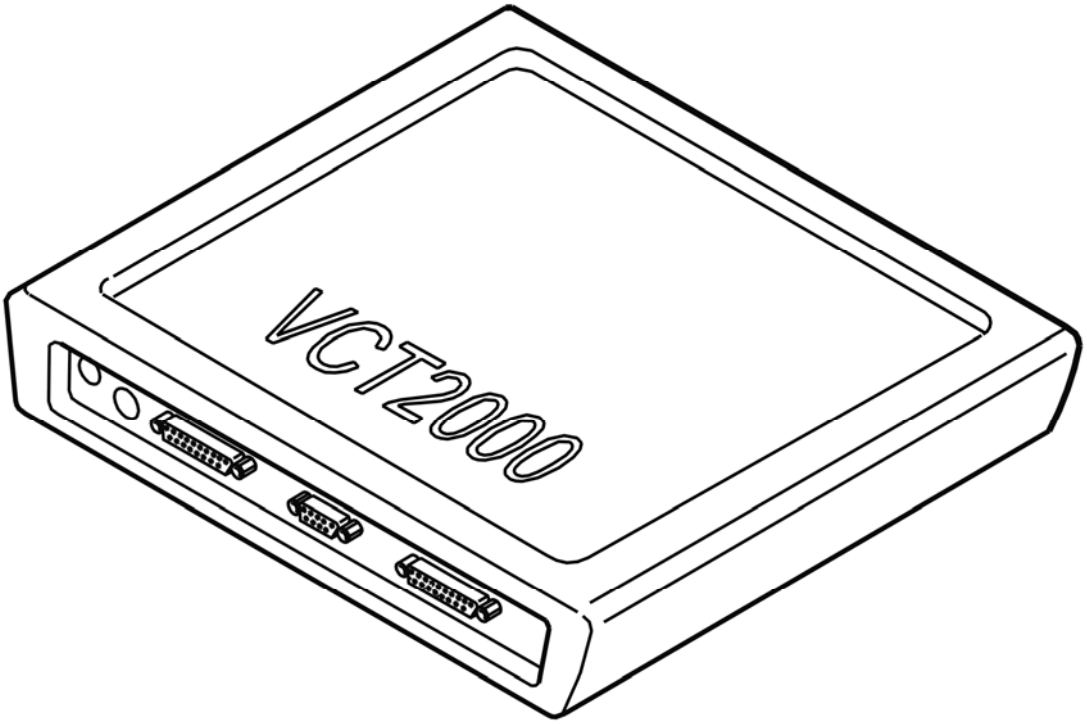

Fig. 257: Identifying VCT2000 Diagnostic Tool Symbol In VIDA
Courtesy of VOLVO CARS CORPORATION

Is the parking assistance module (PAM) active? Are the sensors OK?

- **YES**

  VERIFIED: Troubleshooting has been completed.

- **NO**

  Refer to **INFORMATION**

INFORMATION

FAULT-TRACING INFORMATION

The fault should have been detected and remedied. As this is not the case fault-tracing has failed.

Exit fault-tracing for this diagnostic trouble code (DTC) or make another attempt.

REM-4F45: PARKING SENSOR 4. FAULTY SIGNAL (2005-2012)

DIAGNOSTIC TROUBLE CODE (DTC) INFORMATION REM-4F45 (2005, 2006)

Condition

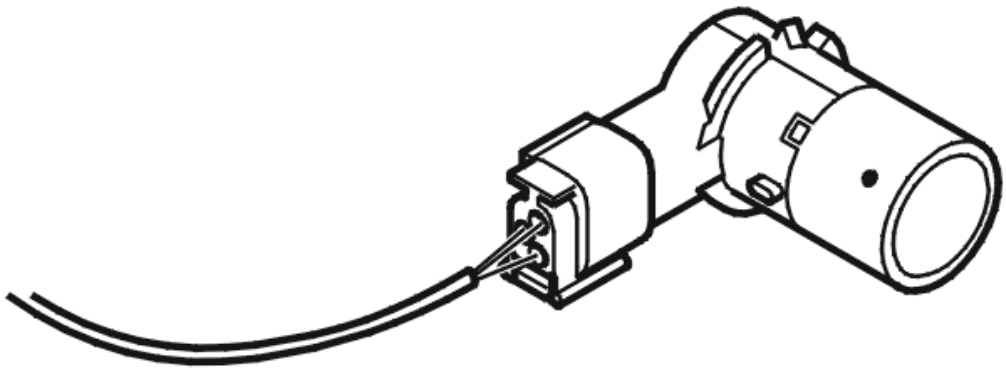

Fig. 258: Identifying Parking Sensor
Courtesy of VOLVO CARS CORPORATION

The rear electronic module (REM) communicates with the parking assistance module (PAM) which checks the signal from parking sensor 4.

The diagnostic trouble code (DTC) is stored if the parking assistance module (PAM) registers a faulty signal from the parking sensor (4).

The diagnostic trouble code (DTC) can be diagnosed at key position II.

Substitute Value

- None.

Possible Source

- Short-circuit to ground or supply voltage in the signal cable between the parking assistance module (PAM) and parking sensor 4
- Short-circuit to ground in the power supply cable between the parking assistance module (PAM) and parking sensor 4

- Short-circuit to supply voltage in the ground lead between the parking assistance module (PAM) and parking sensor 4.

Fault symptom[s]

- The parking assistance system does not operate
- Message in the display.

FAULTY SIGNAL (2005, 2006)

see **FAULTY SIGNAL (2005, 2006)**

DIAGNOSTIC TROUBLE CODE (DTC) INFORMATION REM-4F45 (2007-2012)

Condition

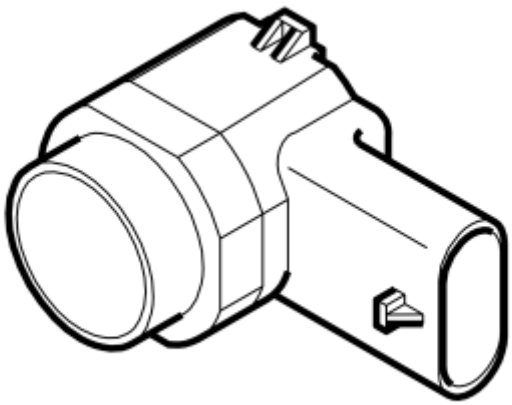

Fig. 259: Identifying Parking Sensor
Courtesy of VOLVO CARS CORPORATION

The rear electronic module (REM) communicates with the parking assistance module (PAM) which checks the signal from parking sensor 4.

The diagnostic trouble code (DTC) is stored if the parking assistance module (PAM) registers a faulty signal from the parking sensor (4).

The diagnostic trouble code (DTC) can be diagnosed at key position II.

Substitute Value

- None.

Possible Source

- Short-circuit to ground or supply voltage in the signal cable between the parking assistance module (PAM) and parking sensor 4
- Short-circuit to ground in the power supply cable between the parking assistance module (PAM) and parking sensor 4
- Short-circuit to supply voltage in the ground lead between the parking assistance module (PAM) and parking sensor 4.

Fault symptom[s]

- The parking assistance system does not operate
- Message in the display.

FAULTY SIGNAL (2007-2012)

see **FAULTY SIGNAL (2007-2012)**

REM-4F46: PARKING SENSOR 5. FAULTY SIGNAL (2005-2012)

DIAGNOSTIC TROUBLE CODE (DTC) INFORMATION REM-4F46 (2005, 2006)

Condition

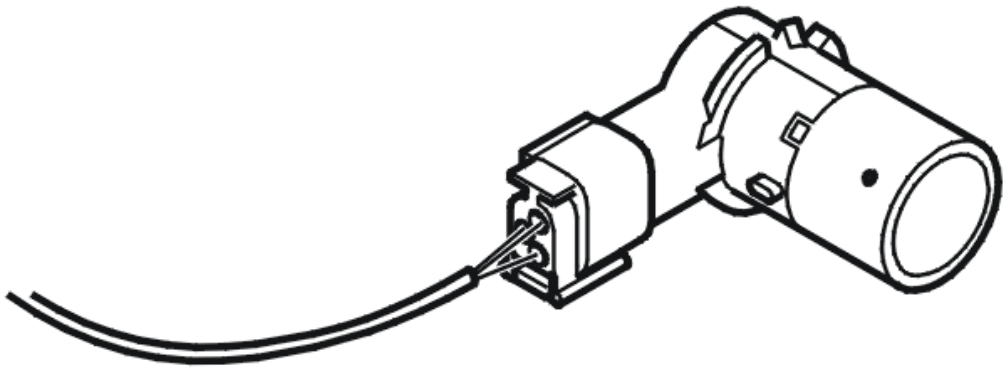

Fig. 260: Identifying Parking Sensor
Courtesy of VOLVO CARS CORPORATION

The rear electronic module (REM) communicates with the parking assistance module (PAM) which checks the signal from parking sensor 5.

The diagnostic trouble code (DTC) is stored if the parking assistance module (PAM) registers a faulty signal from the parking sensor (5).

The diagnostic trouble code (DTC) can be diagnosed at key position II.

Substitute Value

- None.

Possible Source

- Short-circuit to ground or supply voltage in the signal cable between the parking assistance module (PAM) and parking sensor 5
- Short-circuit to ground in the power supply cable between the parking assistance module (PAM) and parking sensor 5
- Short-circuit to supply voltage in the ground lead between the parking assistance module (PAM) and parking sensor 5.

Fault symptom[s]

- The parking assistance system does not operate
- Message in the display.

FAULTY SIGNAL (2005, 2006)

CHECKING COMPONENTS AND WIRING

CAUTION: Do not touch the terminal pins in the parking assistance module (PAM). There is a risk of static discharge. This could damage the parking assistance module (PAM).

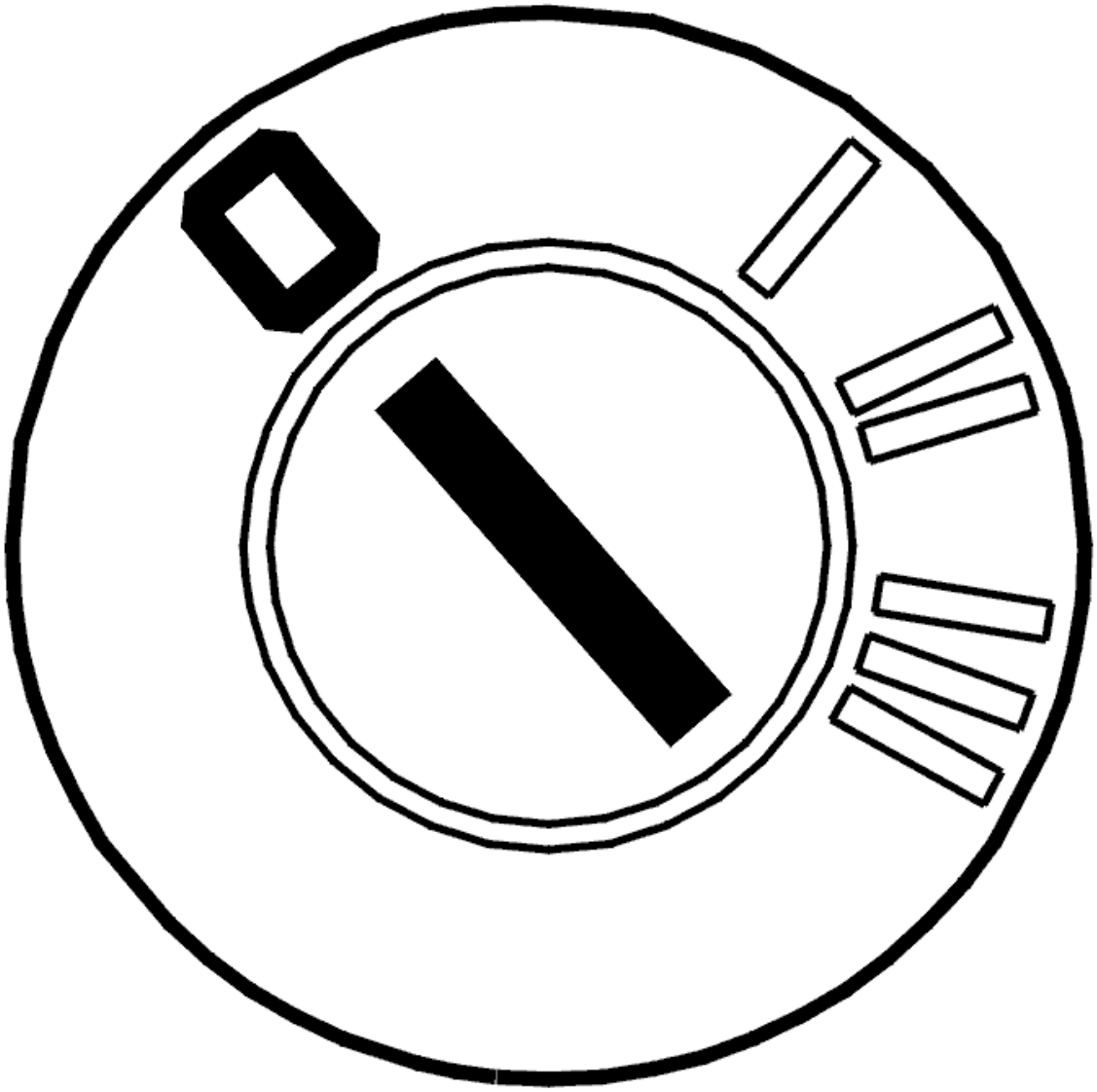

Fig. 261: Identifying Ignition OFF
Courtesy of VOLVO CARS CORPORATION

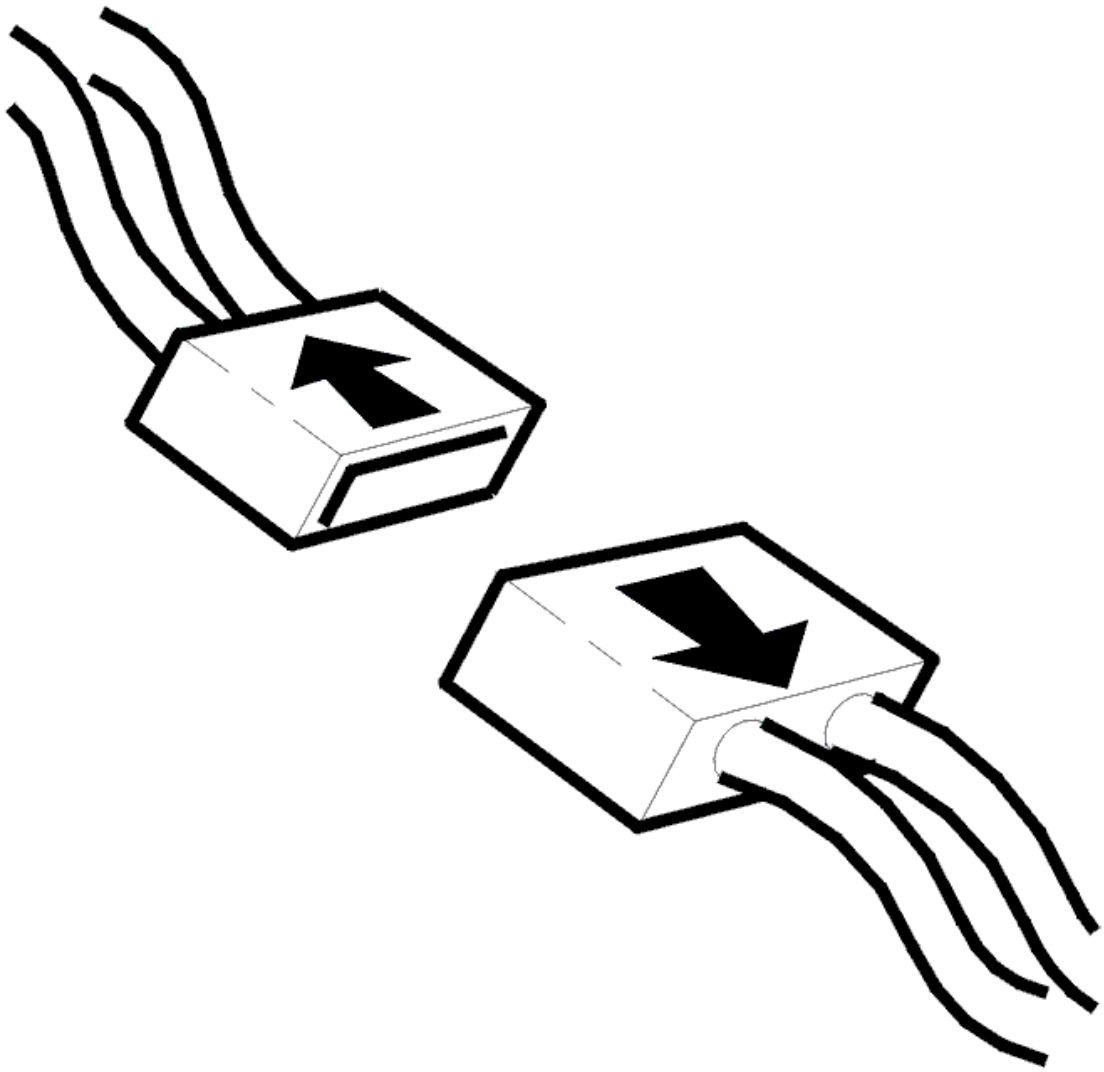

Fig. 262: Identifying Connector(s) Disconnected
Courtesy of VOLVO CARS CORPORATION

- Ignition off.

  Check the connectors for parking sensor 5 (outer right front) and Parking Assistance Module (PAM). Check for damage to pins and connections. Also check the other connectors, which connect the cables between the Parking Assistance Module (PAM) and the parking sensor.

  Check the signal cable between the parking assistance module (PAM) and the parking sensor connector. Check for a short-circuit to supply voltage. Check for a short-circuit to ground.

  Check the cable between:

  - Parking assistance module (PAM) terminal #B5 and parking sensor connector terminal #2.

Check the power supply lead between the parking assistance module (PAM) and the parking sensor connector. Check for a short-circuit to ground.

Check the cable between:

- Parking assistance module (PAM) terminal #B2 and parking sensor connector terminal #1.

Check the ground lead between the parking assistance module (PAM) and the parking sensor connector. Check for a short-circuit to supply voltage.

Check the cable between:

- Parking assistance module (PAM) terminal #B1 and parking sensor connector terminal #3.

Remedy as necessary.

If no fault is found, replace the parking sensor.

Other information

- see **SIGNAL SPECIFICATION**
- For accessing/replacing the front parking assistance sensors, see Installation instructions, Accessories.
- see **CHECKING WIRING AND TERMINALS**

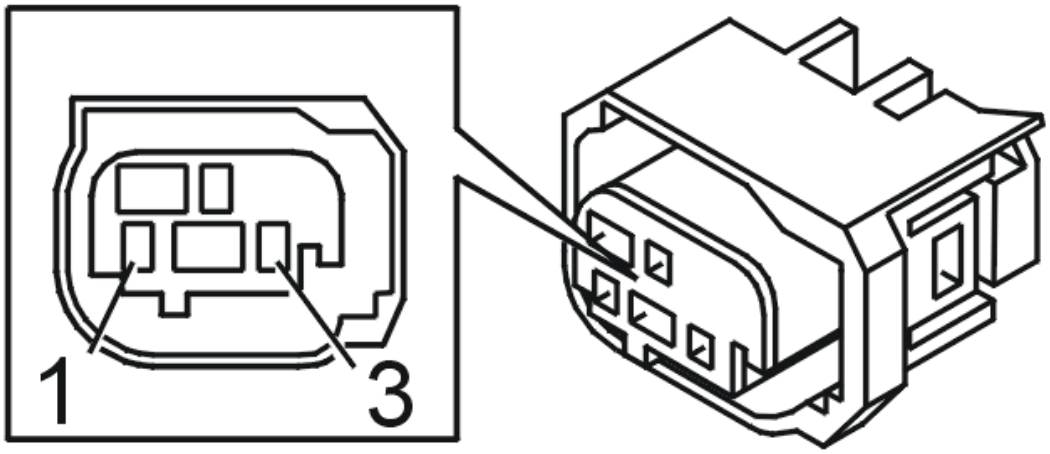

Fig. 263: Identifying Parking Sensor Connector
Courtesy of VOLVO CARS CORPORATION

- **Continue**

Refer to **VERIFICATION**

VERIFICATION

VERIFICATION

HINT: After carrying out the repair, check that the fault has been remedied.

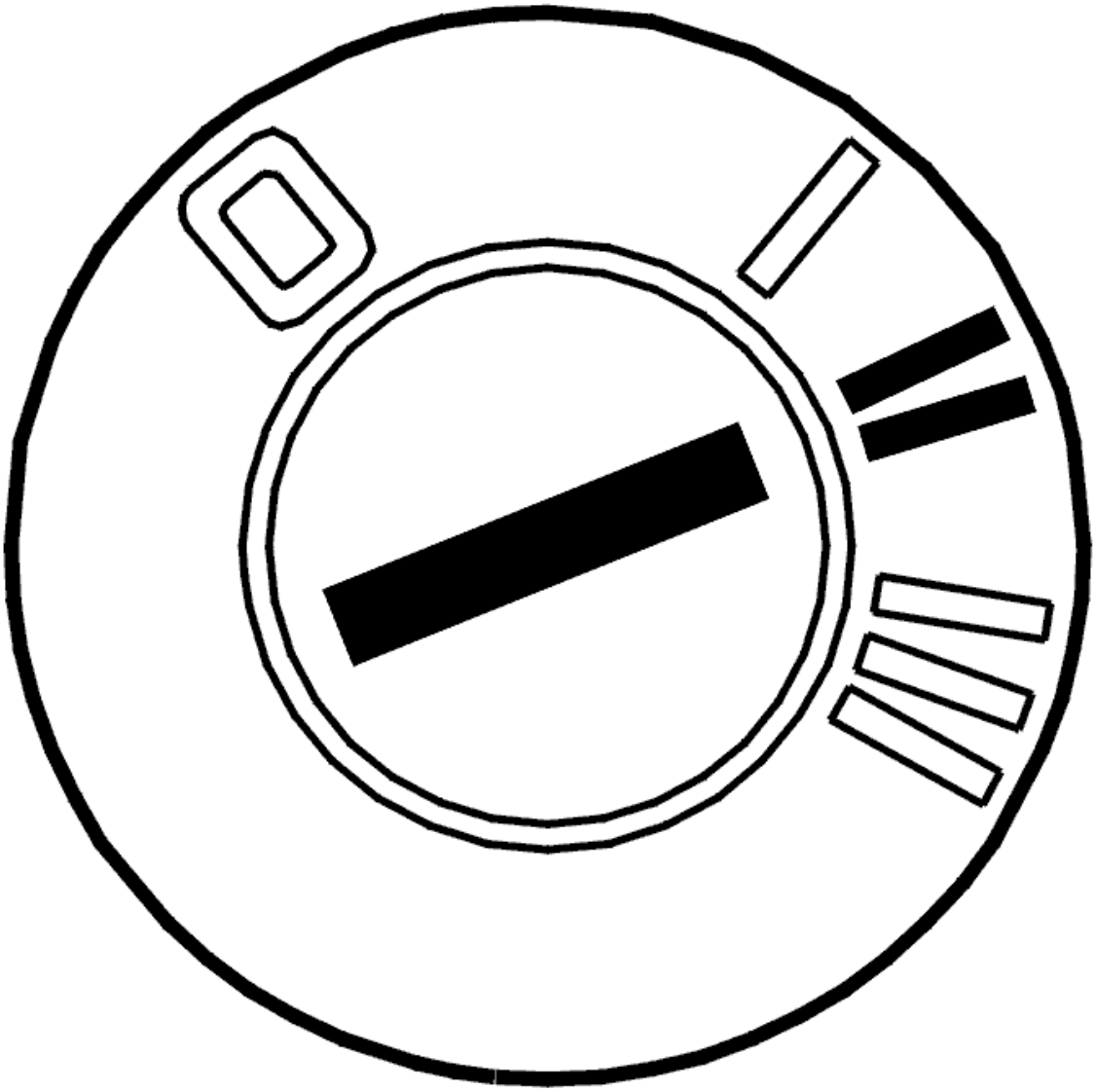

Fig. 264: Identifying Ignition ON
Courtesy of VOLVO CARS CORPORATION

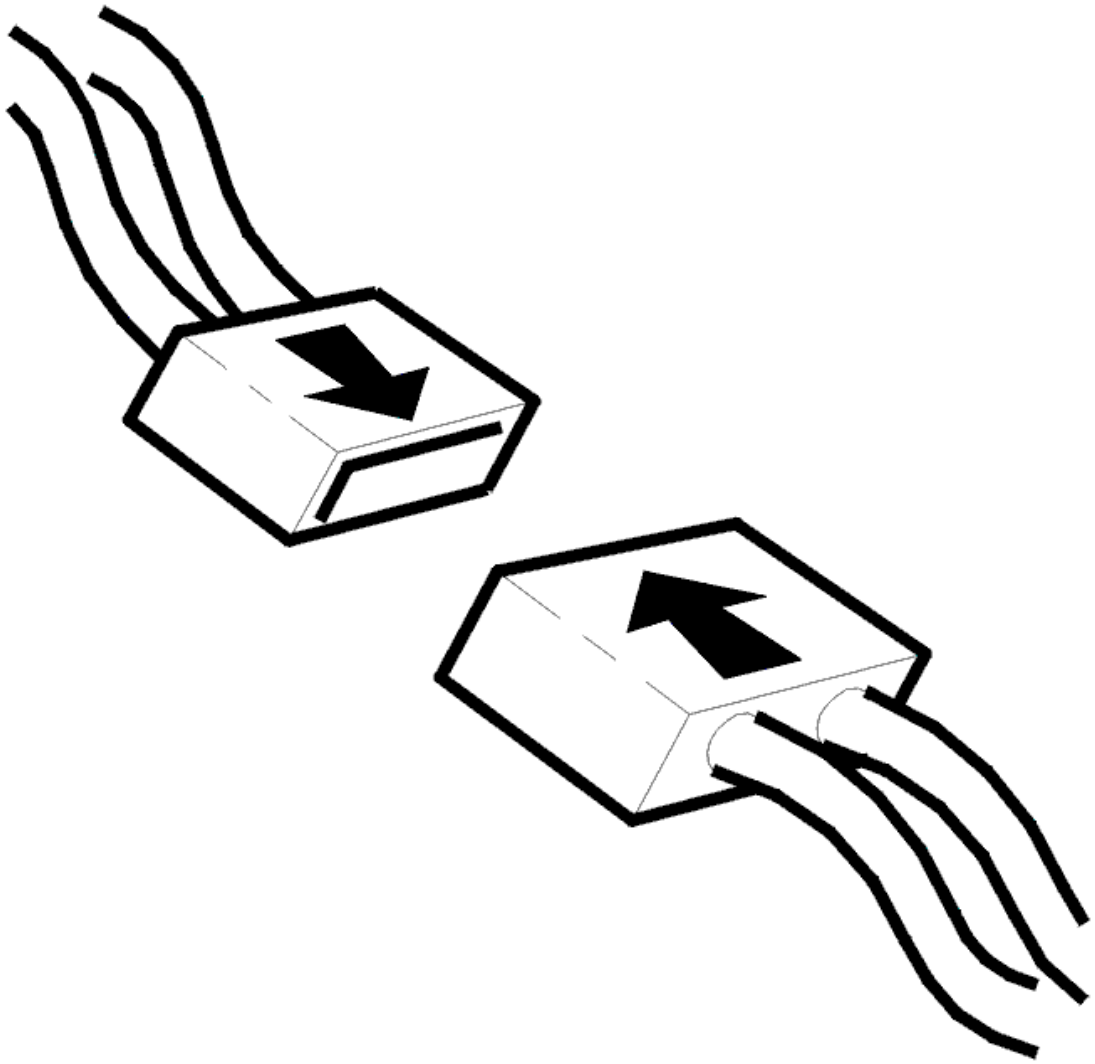

Fig. 265: Identifying Connector(s) Reinstallation
Courtesy of VOLVO CARS CORPORATION

- Switch off the ignition. Wait at least 15 seconds
- Reinstall the connectors, components etc.
- Ignition on for at least 5 seconds
- Move the gear selector lever to back-up (reversing) (R).

  The parking assistance module (PAM) is activated by pressing the switch on the lower section of the climate control module (CCM). Click on the VCT2000 symbol to read off the diagnostic status from the parking assistance module (PAM).

  Check that the parking assistance module (PAM) is active. Check that the sensors are OK.

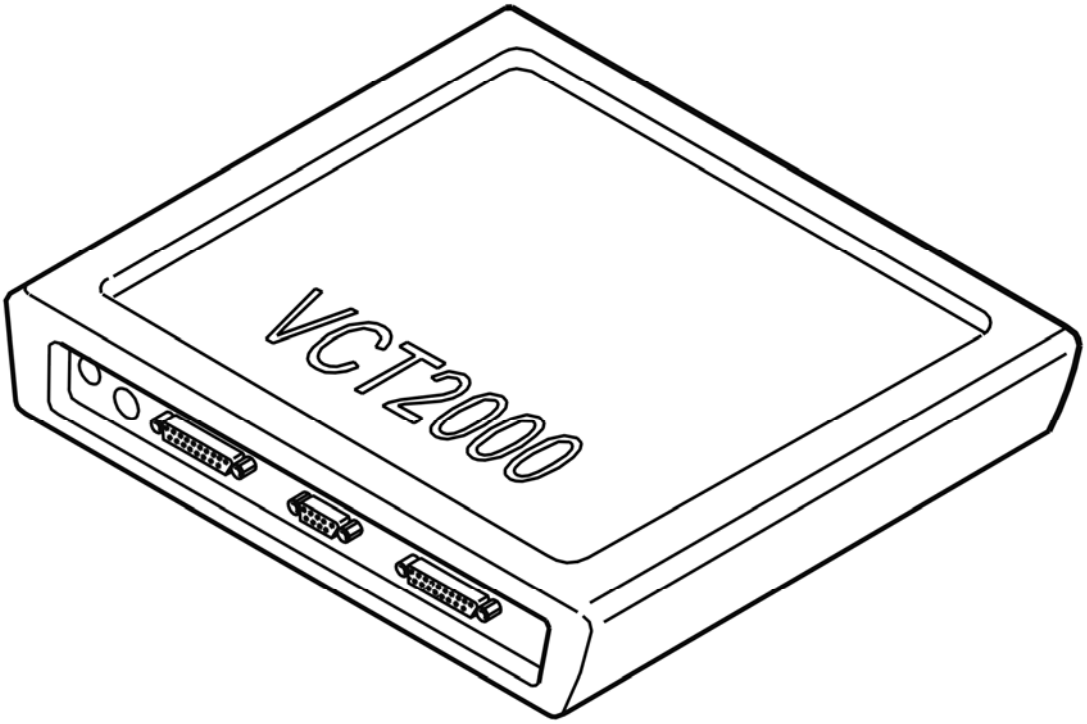

Fig. 266: Identifying VCT2000 Diagnostic Tool Symbol In VIDA
Courtesy of VOLVO CARS CORPORATION

Is the parking assistance module (PAM) active? Are the sensors OK?

- **YES**

  VERIFIED: Troubleshooting has been completed.

- **NO**

  Refer to **INFORMATION**

INFORMATION

FAULT-TRACING INFORMATION

The fault should have been detected and remedied. As this is not the case fault-tracing has failed.

Exit fault-tracing for this diagnostic trouble code (DTC) or make another attempt.

DIAGNOSTIC TROUBLE CODE (DTC) INFORMATION REM-4F46 (2007-2012)

Condition

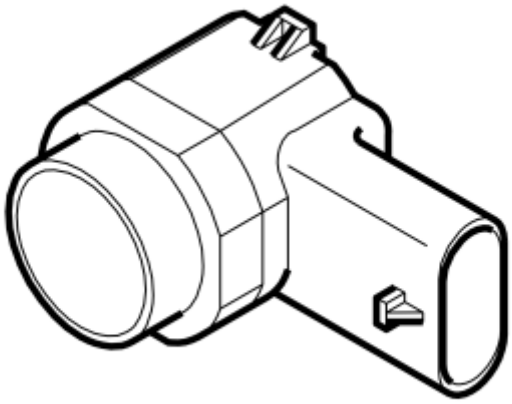

Fig. 267: Identifying Parking Sensor
Courtesy of VOLVO CARS CORPORATION

The rear electronic module (REM) communicates with the parking assistance module (PAM) which checks the signal from parking sensor 5.

The diagnostic trouble code (DTC) is stored if the parking assistance module (PAM) registers a faulty signal from the parking sensor (5).

The diagnostic trouble code (DTC) can be diagnosed at key position II.

Substitute Value

- None.

Possible Source

- Short-circuit to ground or supply voltage in the signal cable between the parking assistance module (PAM) and parking sensor 5
- Short-circuit to ground in the power supply cable between the parking assistance module (PAM) and parking sensor 5
- Short-circuit to supply voltage in the ground lead between the parking assistance module (PAM) and parking sensor 5.

Fault symptom[s]

- The parking assistance system does not operate
- Message in the display.

FAULTY SIGNAL (2007-2012)

CHECKING COMPONENTS AND WIRING

CAUTION: Do not touch the terminal pins in the parking assistance module (PAM). There is a risk of static discharge. This could damage the parking assistance module (PAM).

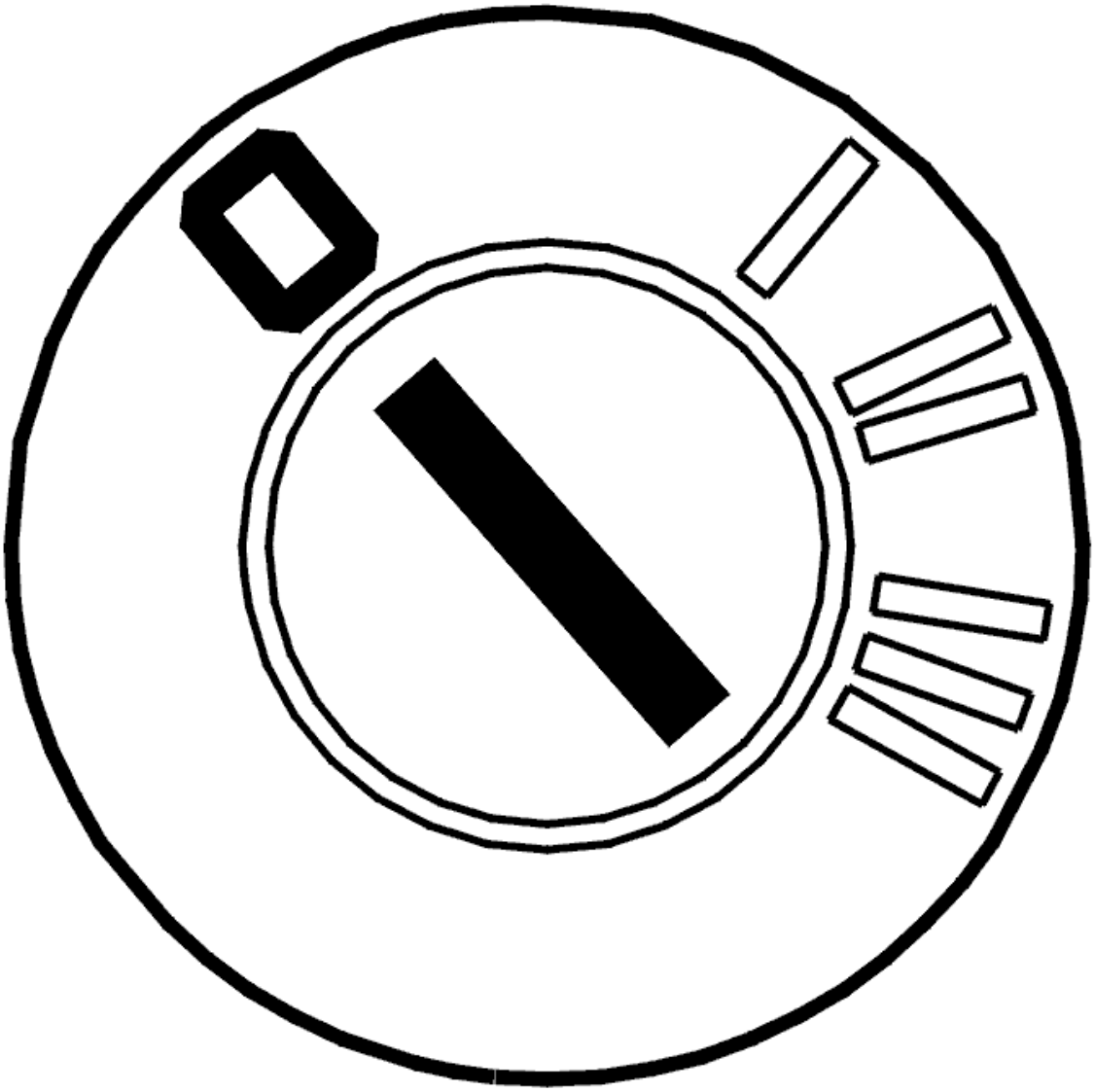

Fig. 268: Identifying Ignition OFF
Courtesy of VOLVO CARS CORPORATION

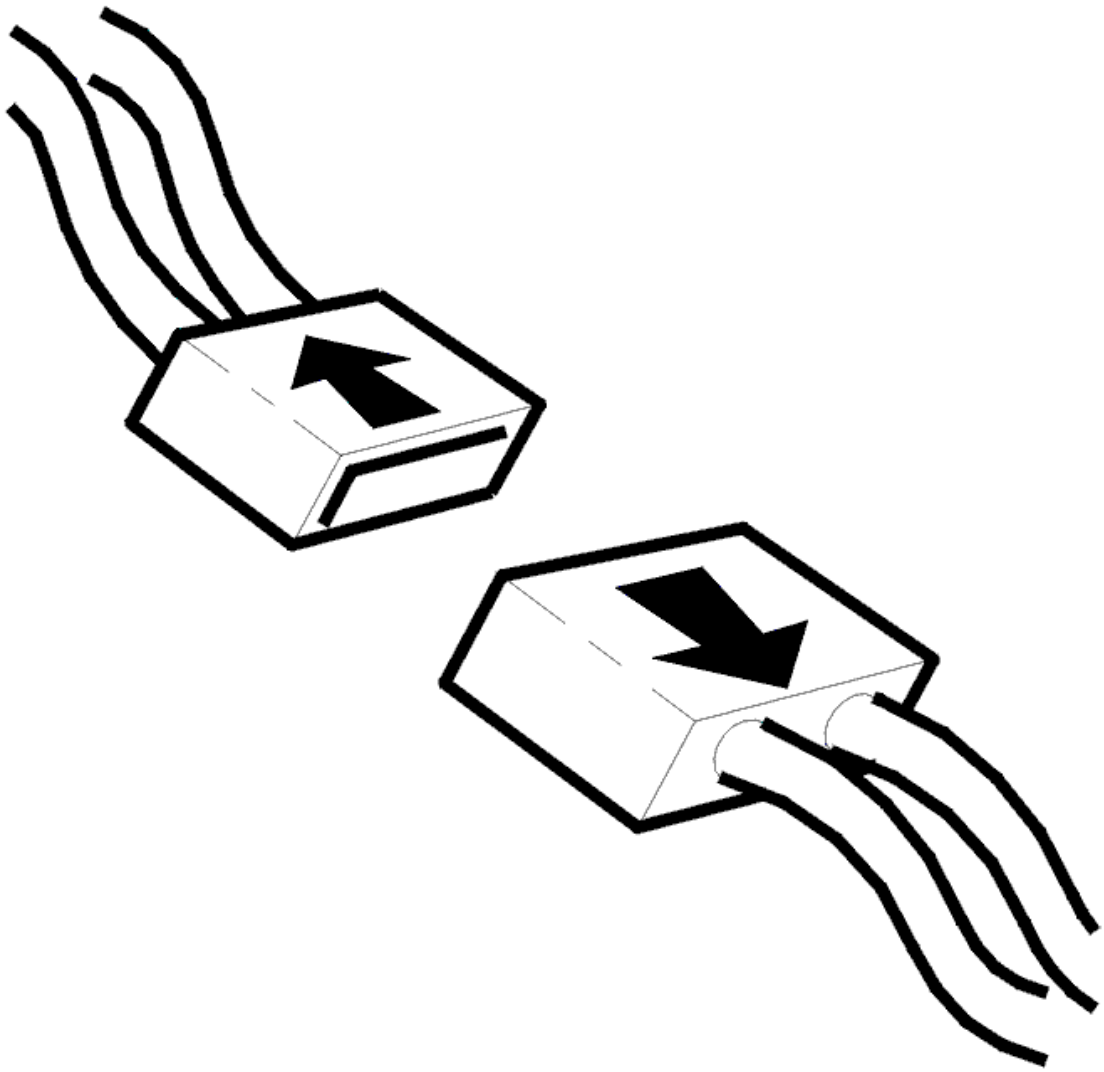

Fig. 269: Identifying Connector(s) Disconnected
Courtesy of VOLVO CARS CORPORATION

- Ignition off.

  Check the connectors for parking sensor 5 (outer right front) and Parking Assistance Module (PAM). Check for damage to pins and connections. Also check the other connectors, which connect the cables between the Parking Assistance Module (PAM) and the parking sensor.

  Check the signal cable between the parking assistance module (PAM) and the parking sensor connector. Check for a short-circuit to supply voltage. Check for a short-circuit to ground.

  Check the cable between:

  - Parking assistance module (PAM) terminal #B5 and parking sensor connector terminal #2.

Check the power supply lead between the parking assistance module (PAM) and the parking sensor connector. Check for a short-circuit to ground.

Check the cable between:

- Parking assistance module (PAM) terminal #B2 and parking sensor connector terminal #1.

Check the ground lead between the parking assistance module (PAM) and the parking sensor connector. Check for a short-circuit to supply voltage.

Check the cable between:

- Parking assistance module (PAM) terminal #B1 and parking sensor connector terminal #3.

Remedy as necessary.

If no fault is found, replace the parking sensor.

Other information

- see **SIGNAL SPECIFICATION**
- For accessing/replacing the front parking assistance sensors, see Installation instructions, Accessories.
- see **CHECKING WIRING AND TERMINALS**

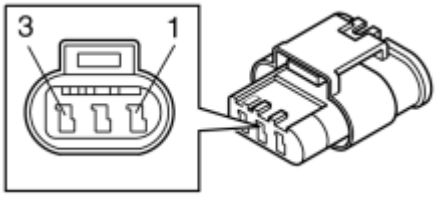

Fig. 270: Identifying Parking Sensor Connector Terminal
Courtesy of VOLVO CARS CORPORATION

- **Continue**

  Refer to **VERIFICATION**

VERIFICATION

VERIFICATION

HINT: After carrying out the repair, check that the fault has been remedied.

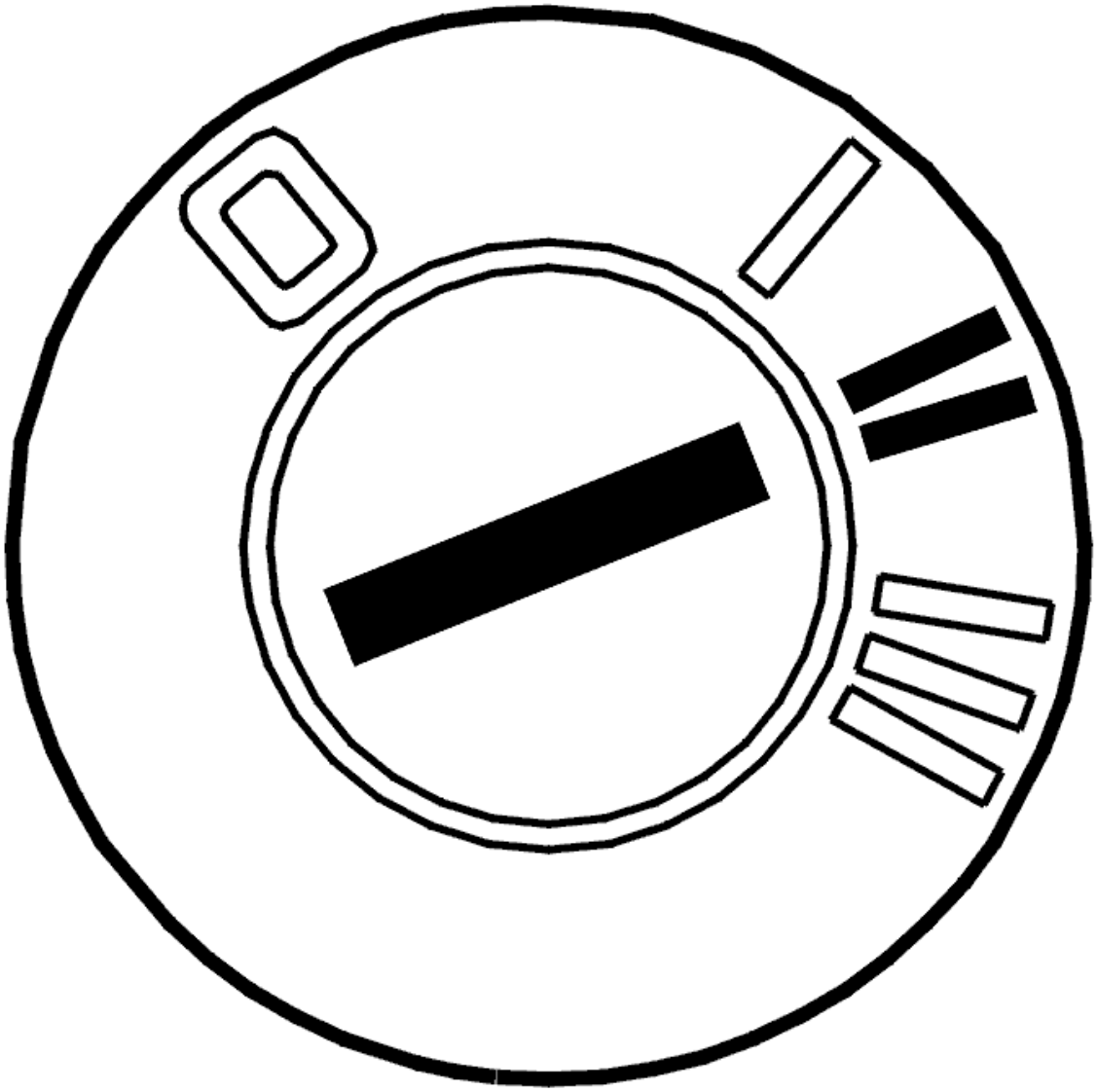

Fig. 271: Identifying Ignition ON
Courtesy of VOLVO CARS CORPORATION

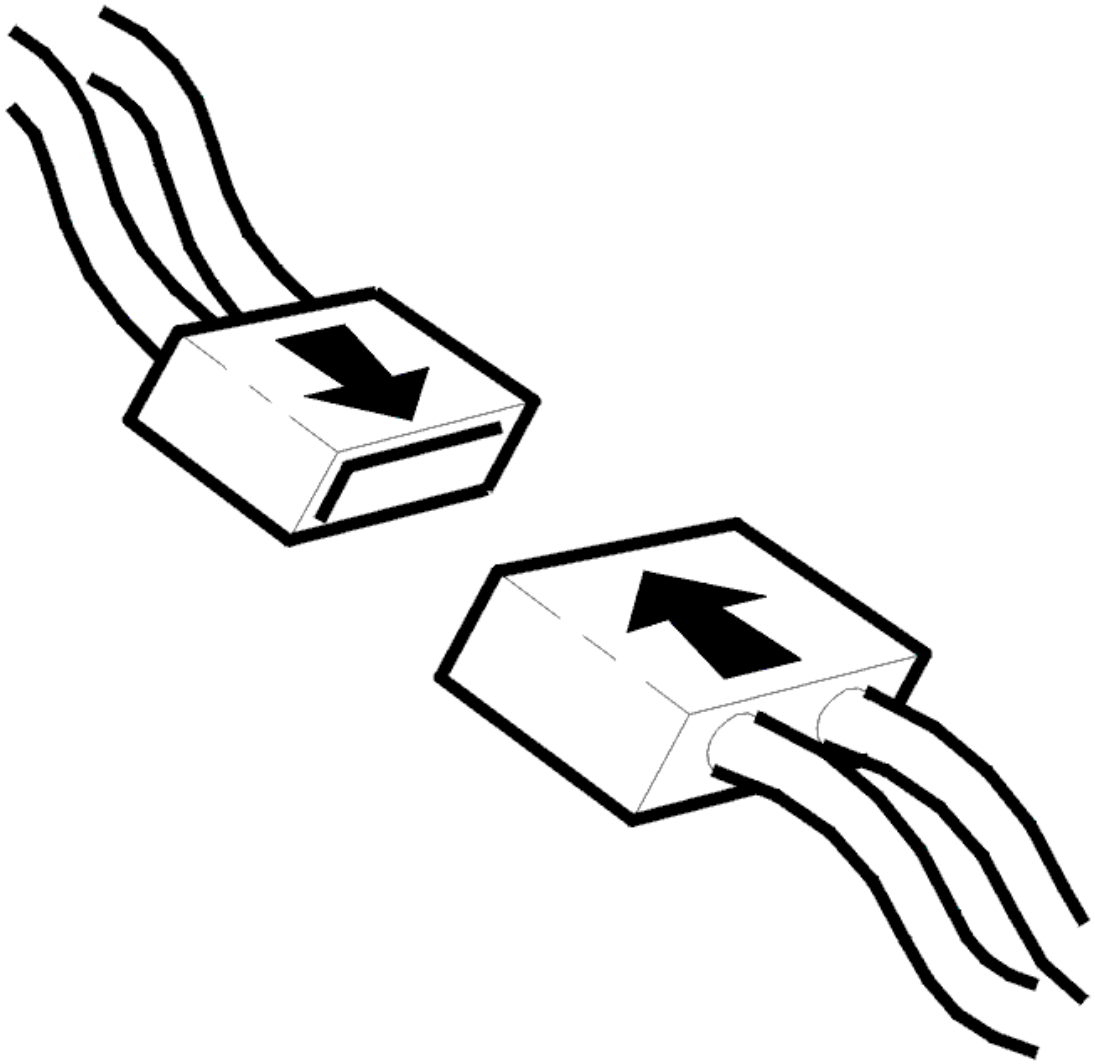

Fig. 272: Identifying Connector(s) Reinstallation
Courtesy of VOLVO CARS CORPORATION

- Switch off the ignition. Wait at least 15 seconds
- Reinstall the connectors, components etc.
- Ignition on for at least 5 seconds
- Move the gear selector lever to back-up (reversing) (R).

  The parking assistance module (PAM) is activated by pressing the switch on the lower section of the climate control module (CCM). Click on the VCT2000 symbol to read off the diagnostic status from the parking assistance module (PAM).

  Check that the parking assistance module (PAM) is active. Check that the sensors are OK.

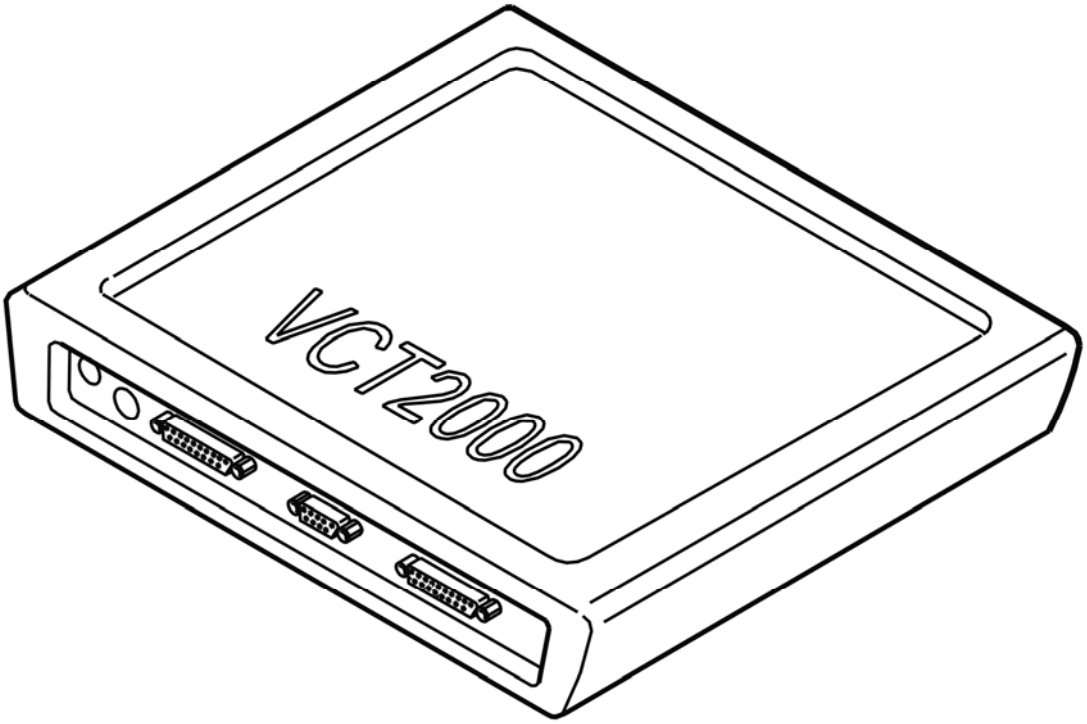

Fig. 273: Identifying VCT2000 Diagnostic Tool Symbol In VIDA
Courtesy of VOLVO CARS CORPORATION

Is the parking assistance module (PAM) active? Are the sensors OK?

- **YES**

  VERIFIED: Troubleshooting has been completed.

- **NO**

  Refer to **INFORMATION**

INFORMATION

FAULT-TRACING INFORMATION

The fault should have been detected and remedied. As this is not the case fault-tracing has failed.

Exit fault-tracing for this diagnostic trouble code (DTC) or make another attempt.

REM-4F47: PARKING SENSOR 6. FAULTY SIGNAL (2005-2012)

DIAGNOSTIC TROUBLE CODE (DTC) INFORMATION REM-4F47 (2005, 2006)

Condition

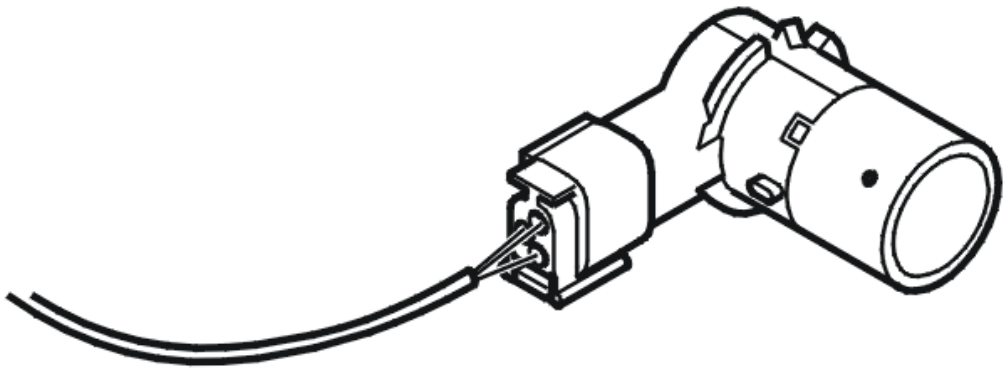

Fig. 274: Identifying Parking Sensor
Courtesy of VOLVO CARS CORPORATION

The rear electronic module (REM) communicates with the parking assistance module (PAM) which checks the signal from parking sensor 6.

The diagnostic trouble code (DTC) is stored if the parking assistance module (PAM) registers a faulty signal from the parking sensor (6).

The diagnostic trouble code (DTC) can be diagnosed at key position II.

Substitute Value

- None.

Possible Source

- Short-circuit to ground or supply voltage in the signal cable between the parking assistance module (PAM) and parking sensor 6
- Short-circuit to ground in the power supply cable between the parking assistance module (PAM) and parking sensor 6

- Short-circuit to supply voltage in the ground lead between the parking assistance module (PAM) and parking sensor 6.

Fault symptom[s]

- The parking assistance system does not operate
- Message in the display.

FAULTY SIGNAL (2005, 2006)

CHECKING COMPONENTS AND WIRING

CAUTION: Do not touch the terminal pins in the parking assistance module (PAM). There is a risk of static discharge. This could damage the parking assistance module (PAM).

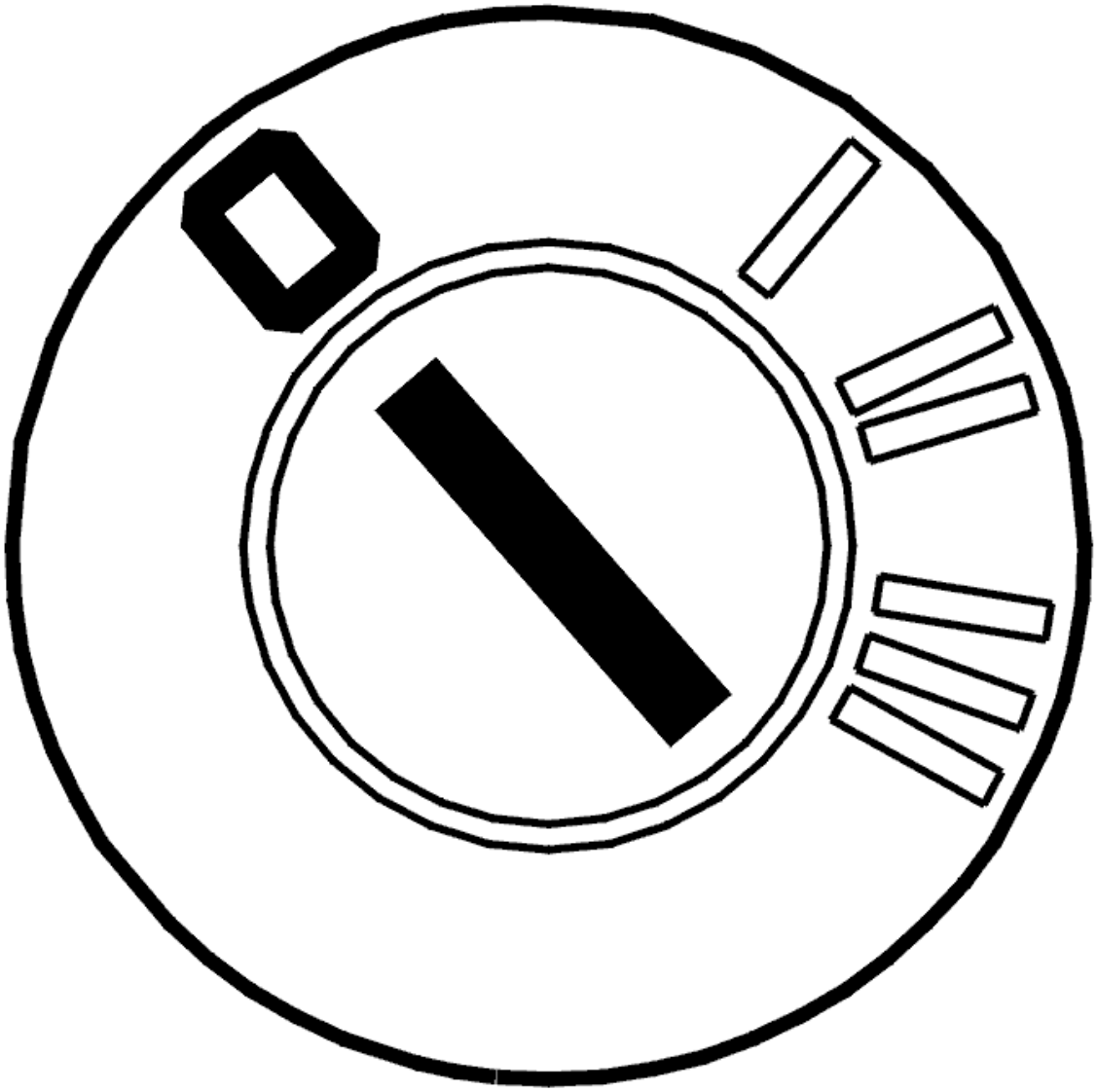

Fig. 275: Identifying Ignition OFF
Courtesy of VOLVO CARS CORPORATION

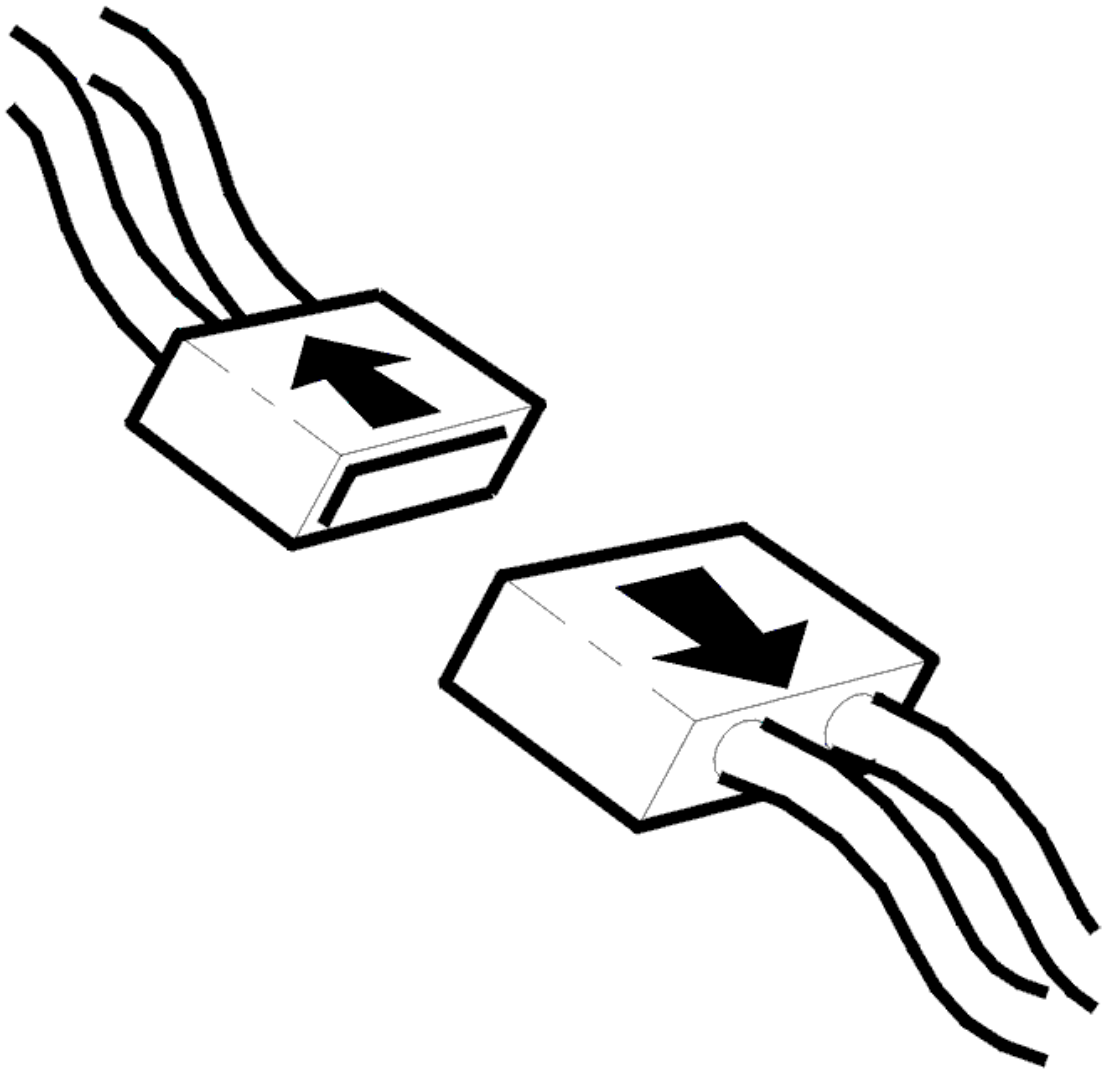

Fig. 276: Identifying Connector(s) Disconnected
Courtesy of VOLVO CARS CORPORATION

- Ignition off.

  Check the connectors for parking sensor 6 (inner right front) and Parking Assistance Module (PAM). Check for damage to pins and connections. Also check the other connectors, which connect the cables between the Parking Assistance Module (PAM) and the parking sensor.

  Check the signal cable between the parking assistance module (PAM) and the parking sensor connector. Check for a short-circuit to supply voltage. Check for a short-circuit to ground.

  Check the cable between:

  - Parking assistance module (PAM) terminal #B6 and parking sensor connector terminal #2.

Check the power supply lead between the parking assistance module (PAM) and the parking sensor connector. Check for a short-circuit to ground.

Check the cable between:

- Parking assistance module (PAM) terminal #B2 and parking sensor connector terminal #1.

Check the ground lead between the parking assistance module (PAM) and the parking sensor connector. Check for a short-circuit to supply voltage.

Check the cable between:

- Parking assistance module (PAM) terminal #B1 and parking sensor connector terminal #3.

Remedy as necessary.

If no fault is found, replace the parking sensor.

Other information

- see **SIGNAL SPECIFICATION**
- For accessing/replacing the front parking assistance sensors, see Installation instructions, Accessories.
- see **CHECKING WIRING AND TERMINALS**

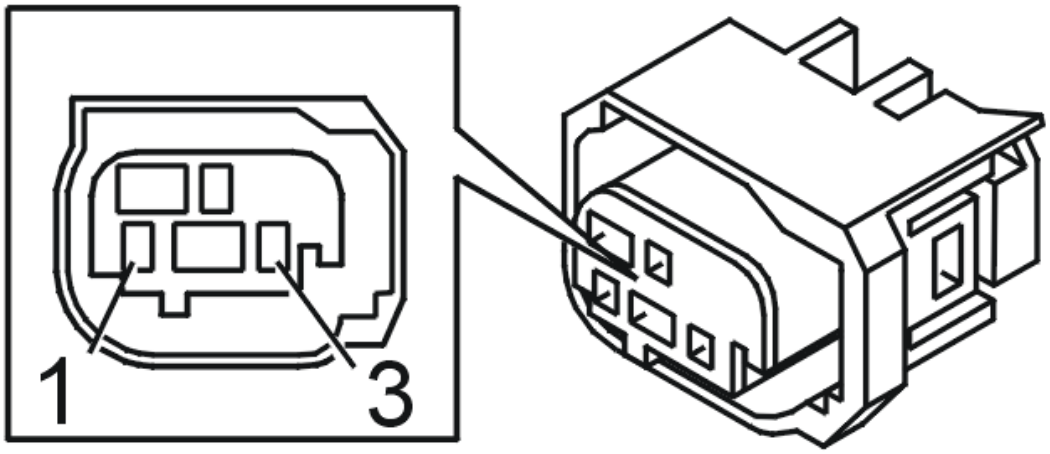

Fig. 277: Identifying Parking Sensor Connector
Courtesy of VOLVO CARS CORPORATION

- **Continue**

Refer to **VERIFICATION**

VERIFICATION

VERIFICATION

HINT: After carrying out the repair, check that the fault has been remedied.

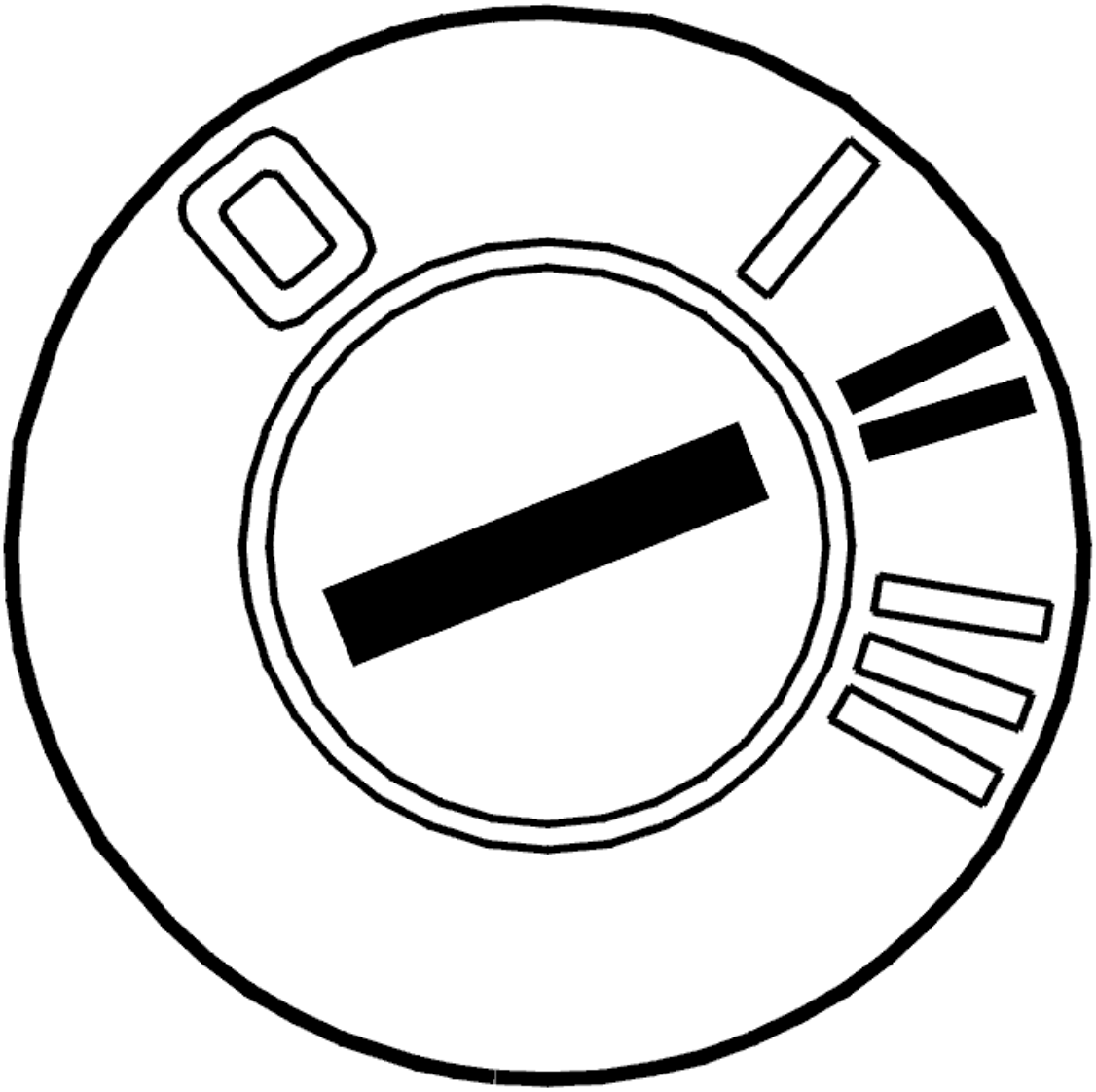

Fig. 278: Identifying Ignition ON
Courtesy of VOLVO CARS CORPORATION

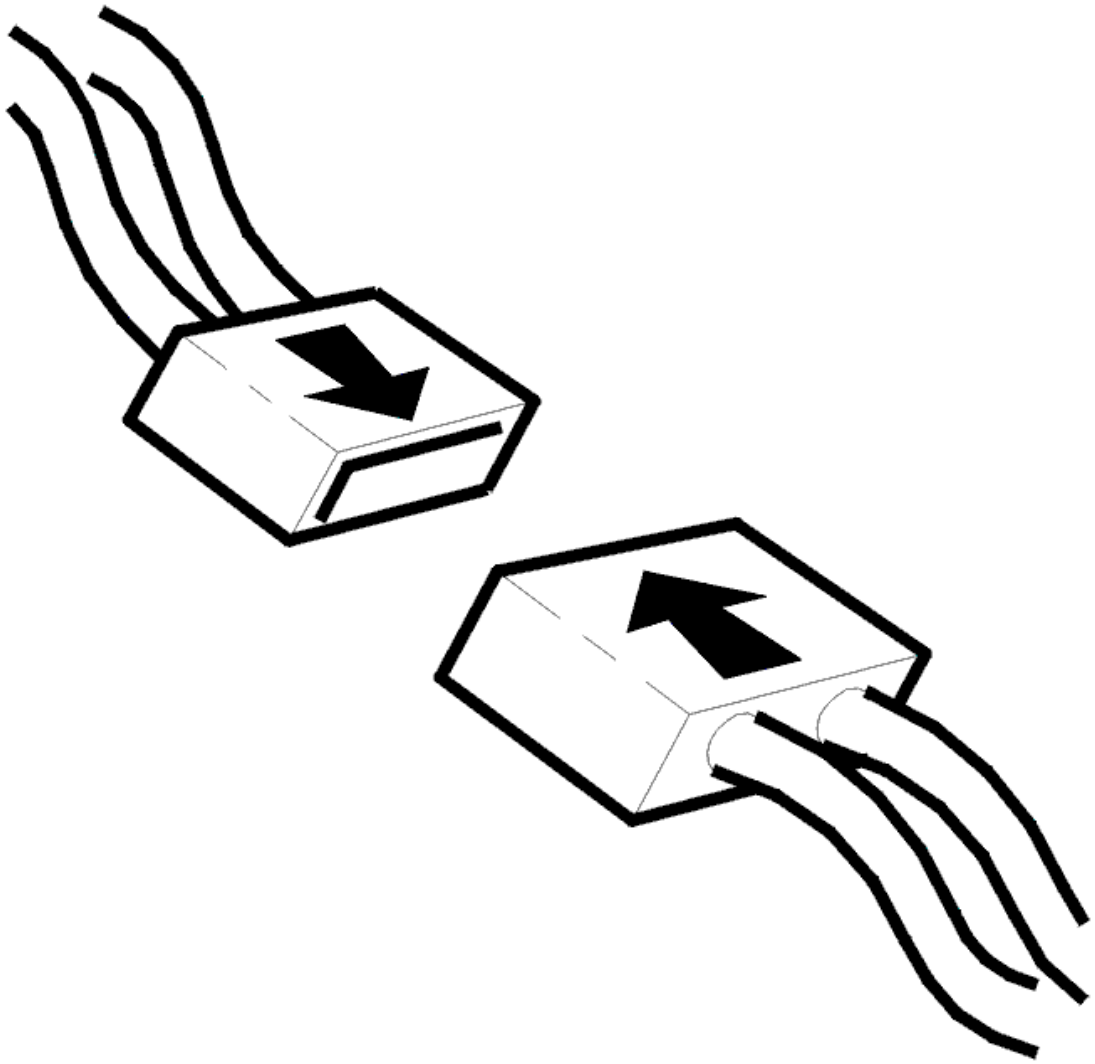

Fig. 279: Identifying Connector(s) Reinstallation
Courtesy of VOLVO CARS CORPORATION

- Switch off the ignition. Wait at least 15 seconds
- Reinstall the connectors, components etc.
- Ignition on for at least 5 seconds
- Move the gear selector lever to back-up (reversing) (R).

  The parking assistance module (PAM) is activated by pressing the switch on the lower section of the climate control module (CCM). Click on the VCT2000 symbol to read off the diagnostic status from the parking assistance module (PAM).

  Check that the parking assistance module (PAM) is active. Check that the sensors are OK.

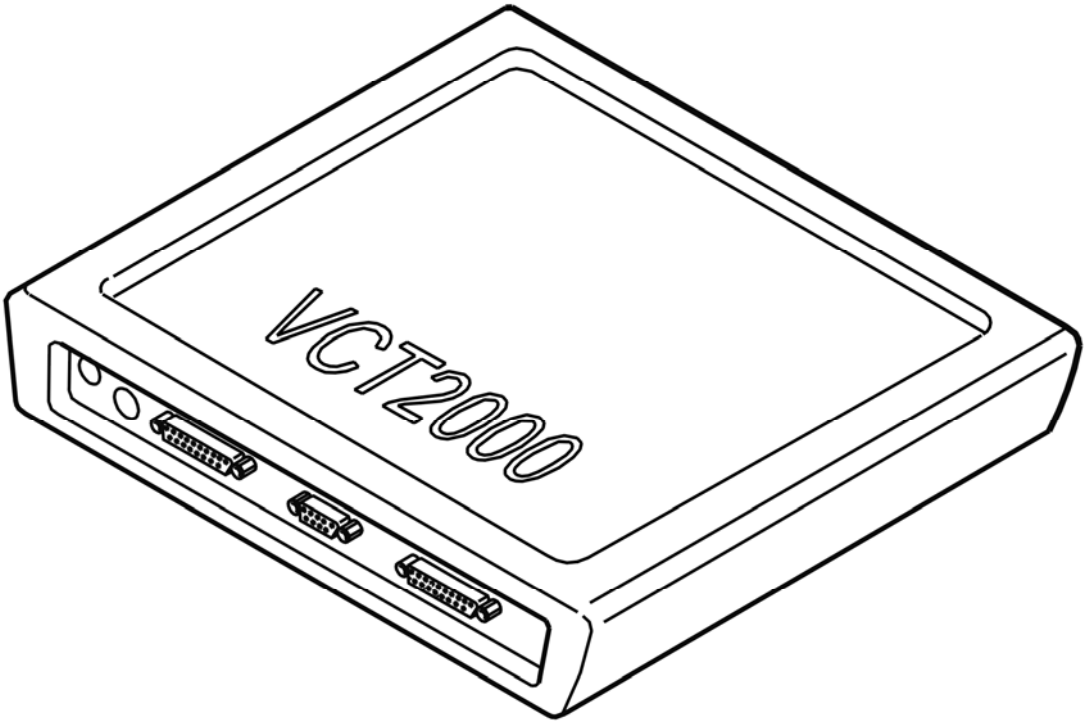

Fig. 280: Identifying VCT2000 Diagnostic Tool Symbol In VIDA
Courtesy of VOLVO CARS CORPORATION

Is the parking assistance module (PAM) active? Are the sensors OK?

- **YES**

  VERIFIED: Troubleshooting has been completed.

- **NO**

  Refer to **INFORMATION**

INFORMATION

FAULT-TRACING INFORMATION

The fault should have been detected and remedied. As this is not the case fault-tracing has failed.

Exit fault-tracing for this diagnostic trouble code (DTC) or make another attempt.

DIAGNOSTIC TROUBLE CODE (DTC) INFORMATION REM-4F47 (2007-2012)

Condition

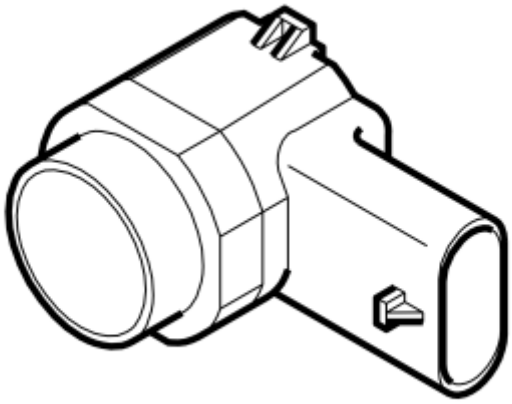

Fig. 281: Identifying Parking Sensor
Courtesy of VOLVO CARS CORPORATION

The rear electronic module (REM) communicates with the parking assistance module (PAM) which checks the signal from parking sensor 6.

The diagnostic trouble code (DTC) is stored if the parking assistance module (PAM) registers a faulty signal from the parking sensor (6).

The diagnostic trouble code (DTC) can be diagnosed at key position II.

Substitute Value

- None.

Possible Source

- Short-circuit to ground or supply voltage in the signal cable between the parking assistance module (PAM) and parking sensor 6
- Short-circuit to ground in the power supply cable between the parking assistance module (PAM) and parking sensor 6
- Short-circuit to supply voltage in the ground lead between the parking assistance module (PAM) and parking sensor 6.

Fault symptom[s]

- The parking assistance system does not operate
- Message in the display.

FAULTY SIGNAL (2007-2012)

CHECKING COMPONENTS AND WIRING

CAUTION: Do not touch the terminal pins in the parking assistance module (PAM). There is a risk of static discharge. This could damage the parking assistance module (PAM).

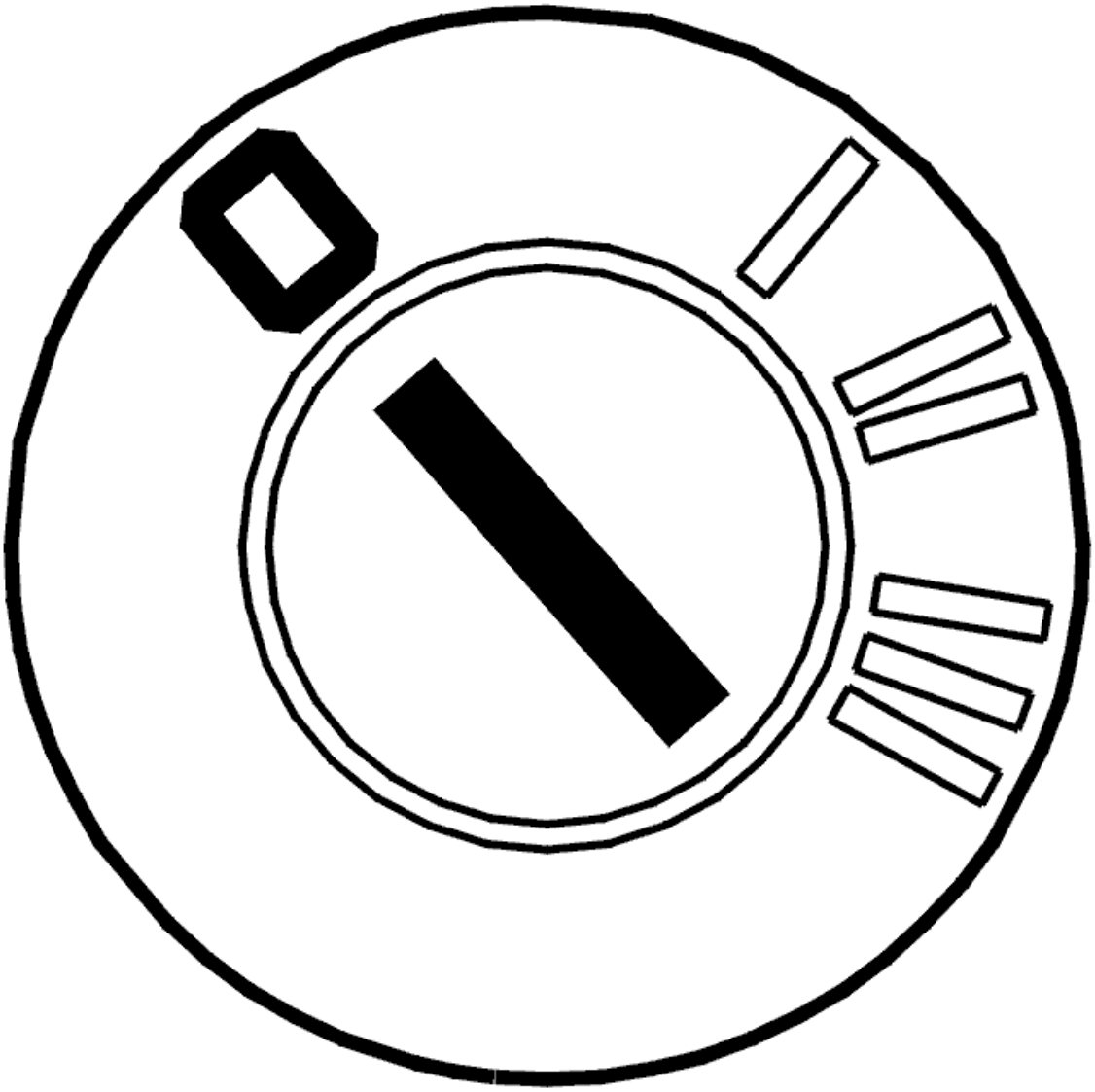

Fig. 282: Identifying Ignition OFF
Courtesy of VOLVO CARS CORPORATION

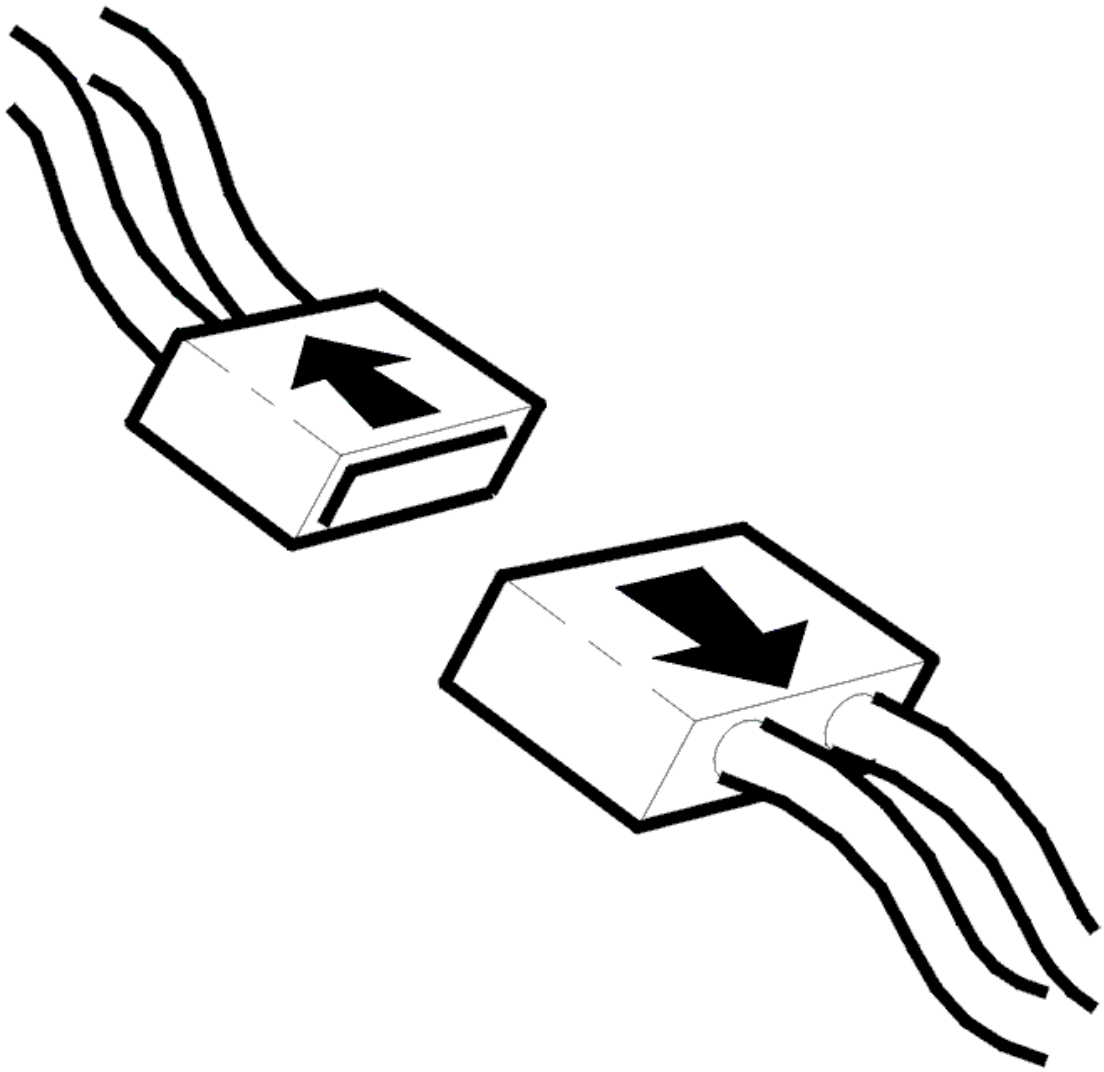

Fig. 283: Identifying Connector(s) Disconnected
Courtesy of VOLVO CARS CORPORATION

- Ignition off.

  Check the connectors for parking sensor 6 (inner right front) and Parking Assistance Module (PAM). Check for damage to pins and connections. Also check the other connectors, which connect the cables between the Parking Assistance Module (PAM) and the parking sensor.

  Check the signal cable between the parking assistance module (PAM) and the parking sensor connector. Check for a short-circuit to supply voltage. Check for a short-circuit to ground.

  Check the cable between:

  - Parking assistance module (PAM) terminal #B6 and parking sensor connector terminal #2.

Check the power supply lead between the parking assistance module (PAM) and the parking sensor connector. Check for a short-circuit to ground.

Check the cable between:

- Parking assistance module (PAM) terminal #B2 and parking sensor connector terminal #1.

Check the ground lead between the parking assistance module (PAM) and the parking sensor connector. Check for a short-circuit to supply voltage.

Check the cable between:

- Parking assistance module (PAM) terminal #B1 and parking sensor connector terminal #3.

Remedy as necessary.

If no fault is found, replace the parking sensor.

Other information

- see **SIGNAL SPECIFICATION**
- For accessing/replacing the front parking assistance sensors, see Installation instructions, Accessories.
- see **CHECKING WIRING AND TERMINALS**

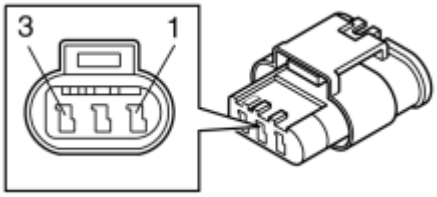

Fig. 284: Identifying Parking Sensor Connector Terminal
Courtesy of VOLVO CARS CORPORATION

- **Continue**

Refer to **VERIFICATION**

VERIFICATION

VERIFICATION

HINT: After carrying out the repair, check that the fault has been remedied.

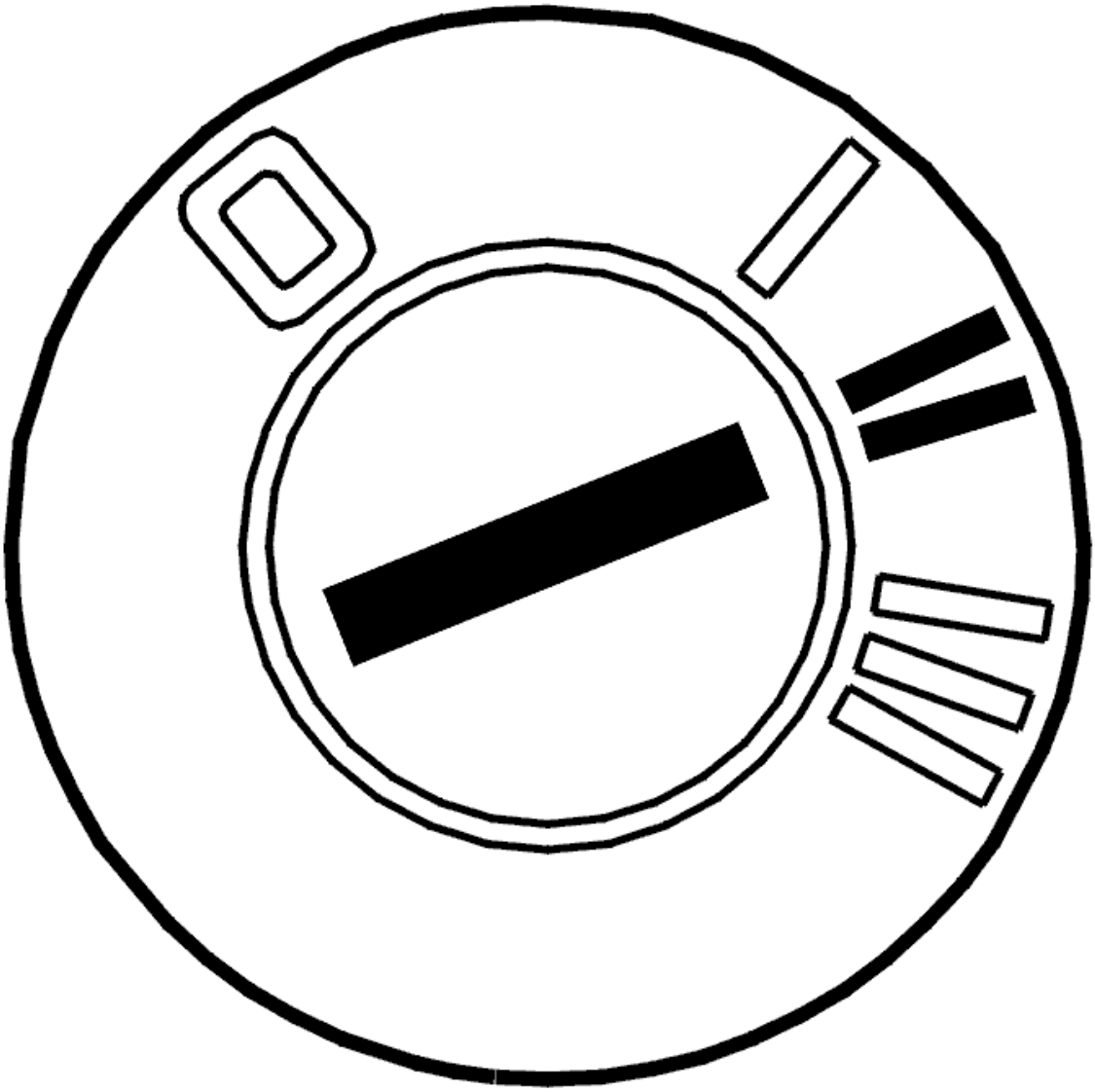

Fig. 285: Identifying Ignition ON
Courtesy of VOLVO CARS CORPORATION

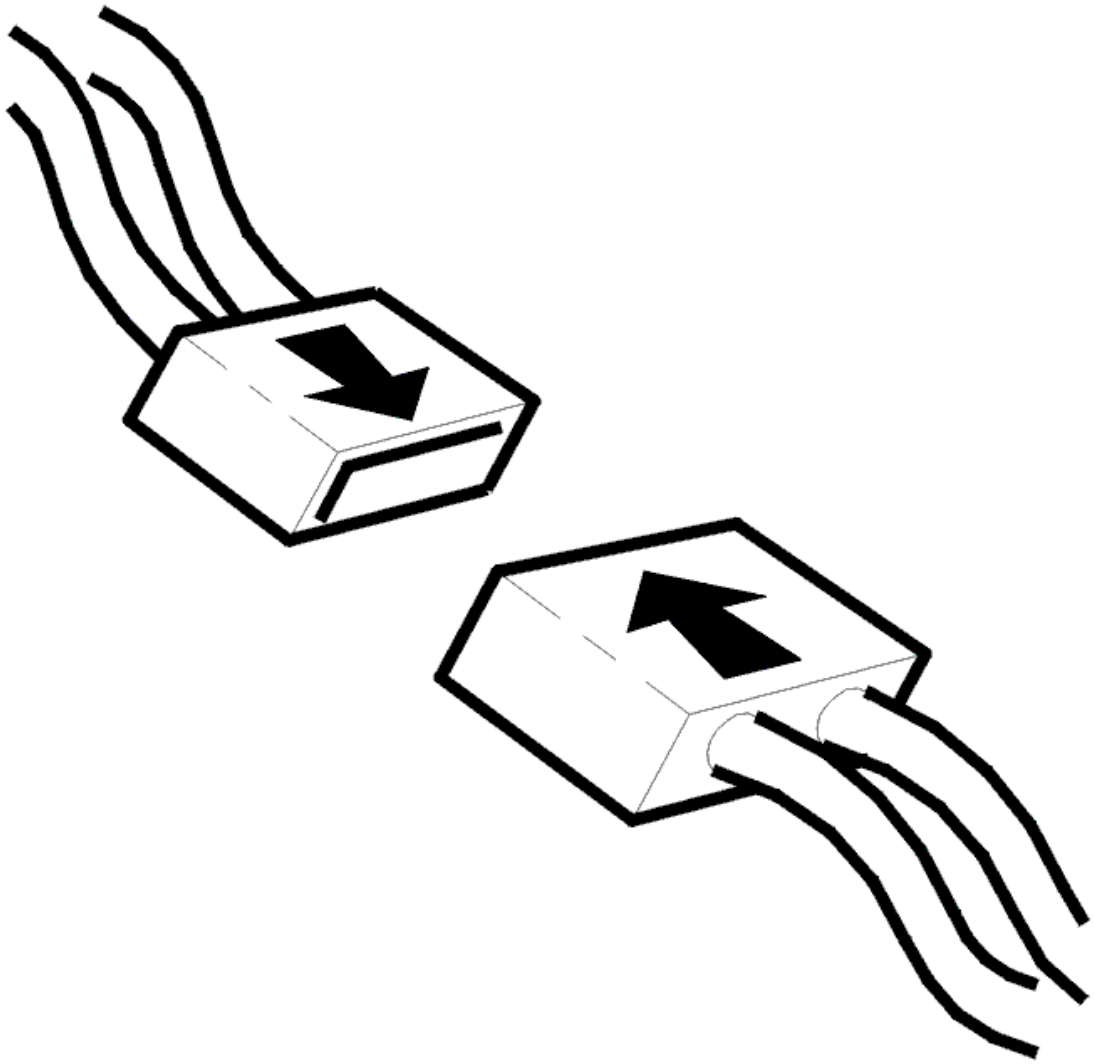

Fig. 286: Identifying Connector(s) Reinstallation
Courtesy of VOLVO CARS CORPORATION

- Switch off the ignition. Wait at least 15 seconds
- Reinstall the connectors, components etc.
- Ignition on for at least 5 seconds
- Move the gear selector lever to back-up (reversing) (R).

  The parking assistance module (PAM) is activated by pressing the switch on the lower section of the climate control module (CCM). Click on the VCT2000 symbol to read off the diagnostic status from the parking assistance module (PAM).

  Check that the parking assistance module (PAM) is active. Check that the sensors are OK.

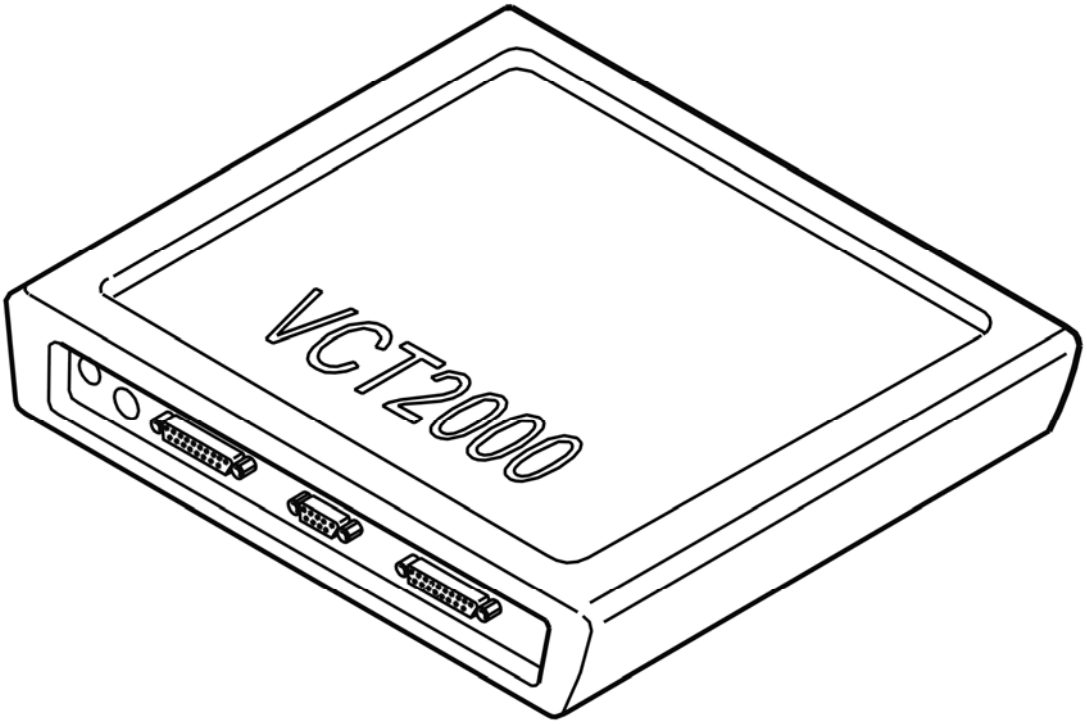

Fig. 287: Identifying VCT2000 Diagnostic Tool Symbol In VIDA
Courtesy of VOLVO CARS CORPORATION

Is the parking assistance module (PAM) active? Are the sensors OK?

- **YES**

  VERIFIED: Troubleshooting has been completed.

- **NO**

  Refer to **INFORMATION**

INFORMATION

FAULT-TRACING INFORMATION

The fault should have been detected and remedied. As this is not the case fault-tracing has failed.

Exit fault-tracing for this diagnostic trouble code (DTC) or make another attempt.

REM-4F48: PARKING SENSOR 7. FAULTY SIGNAL (2005-2012)

DIAGNOSTIC TROUBLE CODE (DTC) INFORMATION REM-4F48 (2005, 2006)

Condition

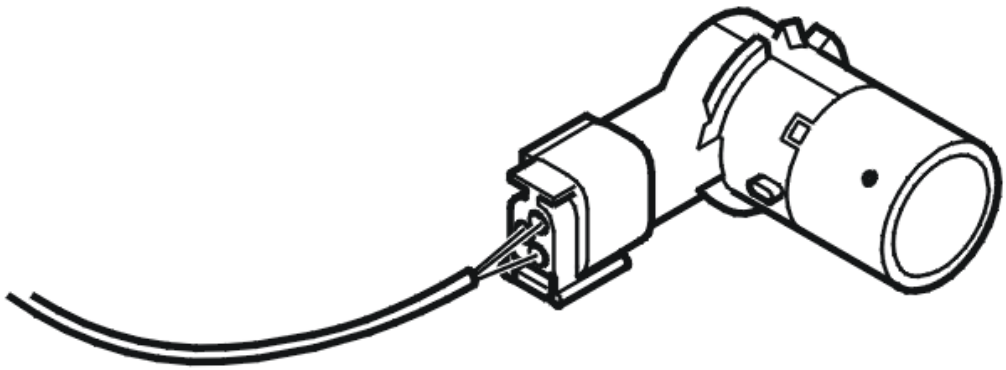

Fig. 288: Identifying Parking Sensor
Courtesy of VOLVO CARS CORPORATION

The rear electronic module (REM) communicates with the parking assistance module (PAM) which checks the signal from parking sensor 7.

The diagnostic trouble code (DTC) is stored if the parking assistance module (PAM) registers a faulty signal from the parking sensor (7).

The diagnostic trouble code (DTC) can be diagnosed at key position II.

Substitute Value

- None.

Possible Source

- Short-circuit to ground or supply voltage in the signal cable between the parking assistance module (PAM) and parking sensor 7
- Short-circuit to ground in the power supply cable between the parking assistance module (PAM) and parking sensor 7

- Short-circuit to supply voltage in the ground lead between the parking assistance module (PAM) and parking sensor 7.

Fault symptom[s]

- The parking assistance system does not operate
- Message in the display.

FAULTY SIGNAL (2005, 2006)

CHECKING COMPONENTS AND WIRING

CAUTION: Do not touch the terminal pins in the parking assistance module (PAM). There is a risk of static discharge. This could damage the parking assistance module (PAM).

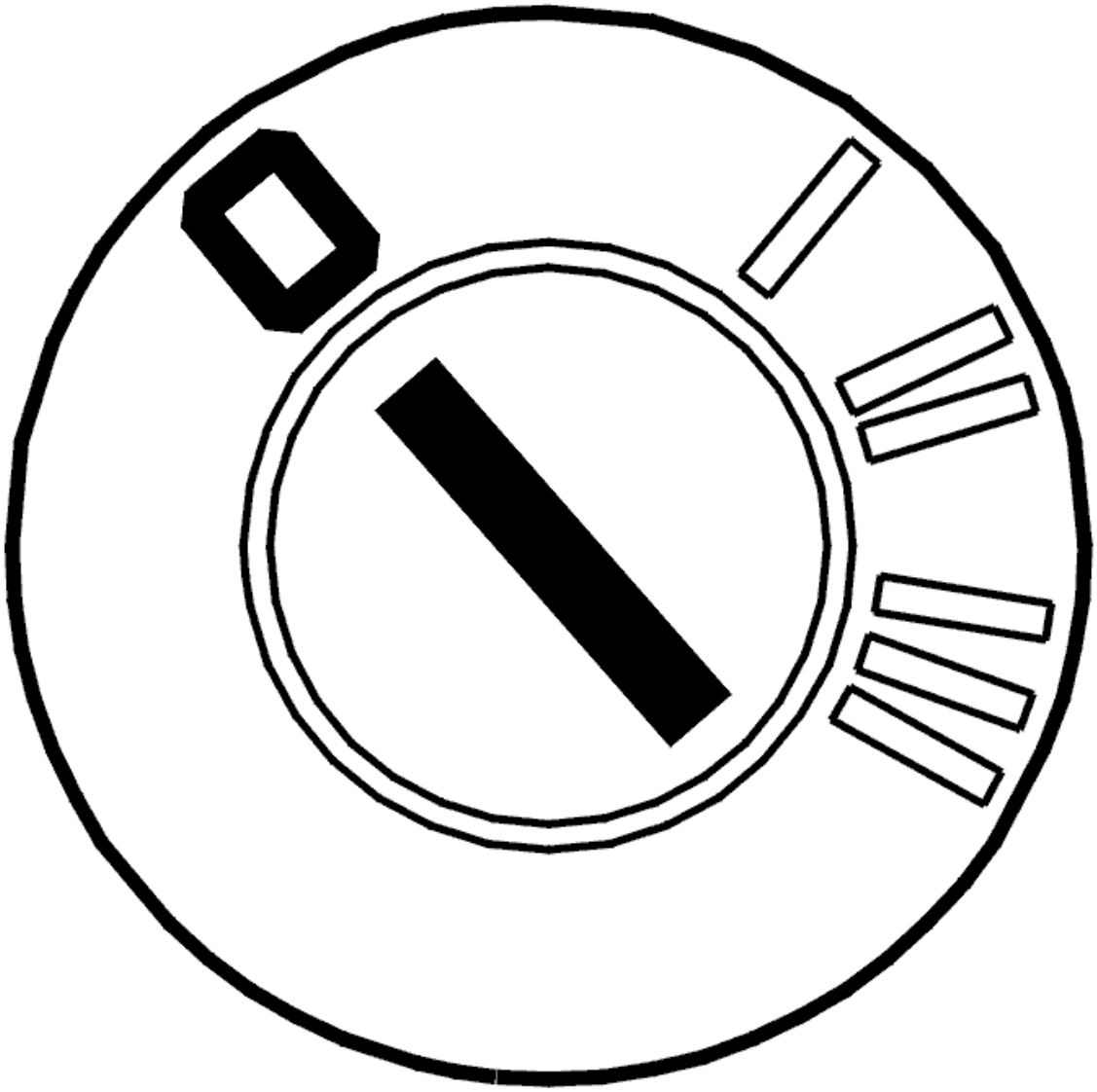

Fig. 289: Identifying Ignition OFF
Courtesy of VOLVO CARS CORPORATION

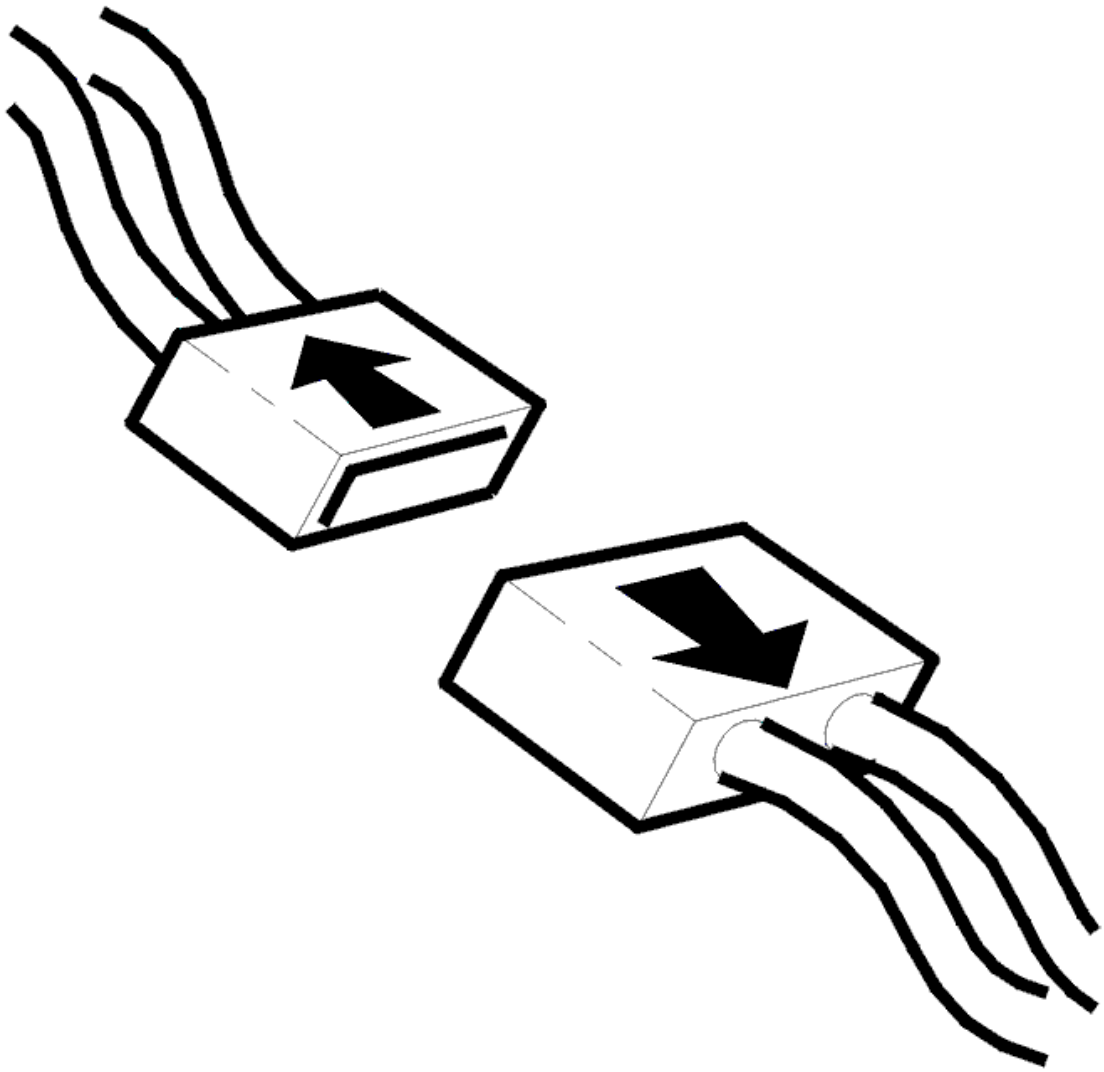

Fig. 290: Identifying Connector(s) Disconnected
Courtesy of VOLVO CARS CORPORATION

- Ignition off.

  Check the connectors for parking sensor 7 (inner left front) and Parking Assistance Module (PAM). Check for damage to pins and connections. Also check the other connectors, which connect the cables between the Parking Assistance Module (PAM) and the parking sensor.

  Check the signal cable between the parking assistance module (PAM) and the parking sensor connector. Check for a short-circuit to supply voltage. Check for a short-circuit to ground.

  Check the cable between:

  - Parking assistance module (PAM) terminal #B7 and parking sensor connector terminal #2.

Check the power supply lead between the parking assistance module (PAM) and the parking sensor connector. Check for a short-circuit to ground.

Check the cable between:

- Parking assistance module (PAM) terminal #B2 and parking sensor connector terminal #1.

Check the ground lead between the parking assistance module (PAM) and the parking sensor connector. Check for a short-circuit to supply voltage.

Check the cable between:

- Parking assistance module (PAM) terminal #B1 and parking sensor connector terminal #3.

Remedy as necessary.

If no fault is found, replace the parking sensor.

Other information

- see **SIGNAL SPECIFICATION**
- For accessing/replacing the front parking assistance sensors, see Installation instructions, Accessories.
- see **CHECKING WIRING AND TERMINALS**

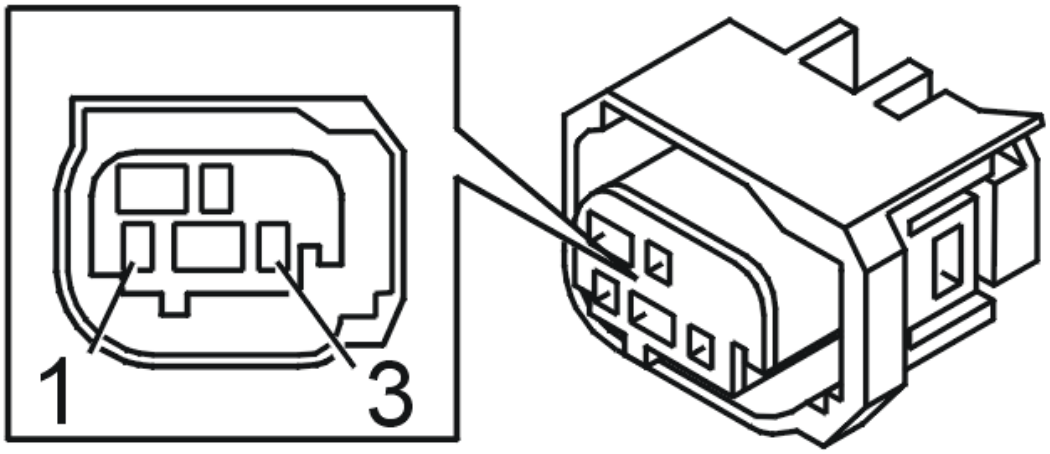

Fig. 291: Identifying Parking Sensor Connector
Courtesy of VOLVO CARS CORPORATION

- **Continue**

Refer to **VERIFICATION**

VERIFICATION

VERIFICATION

HINT: After carrying out the repair, check that the fault has been remedied.

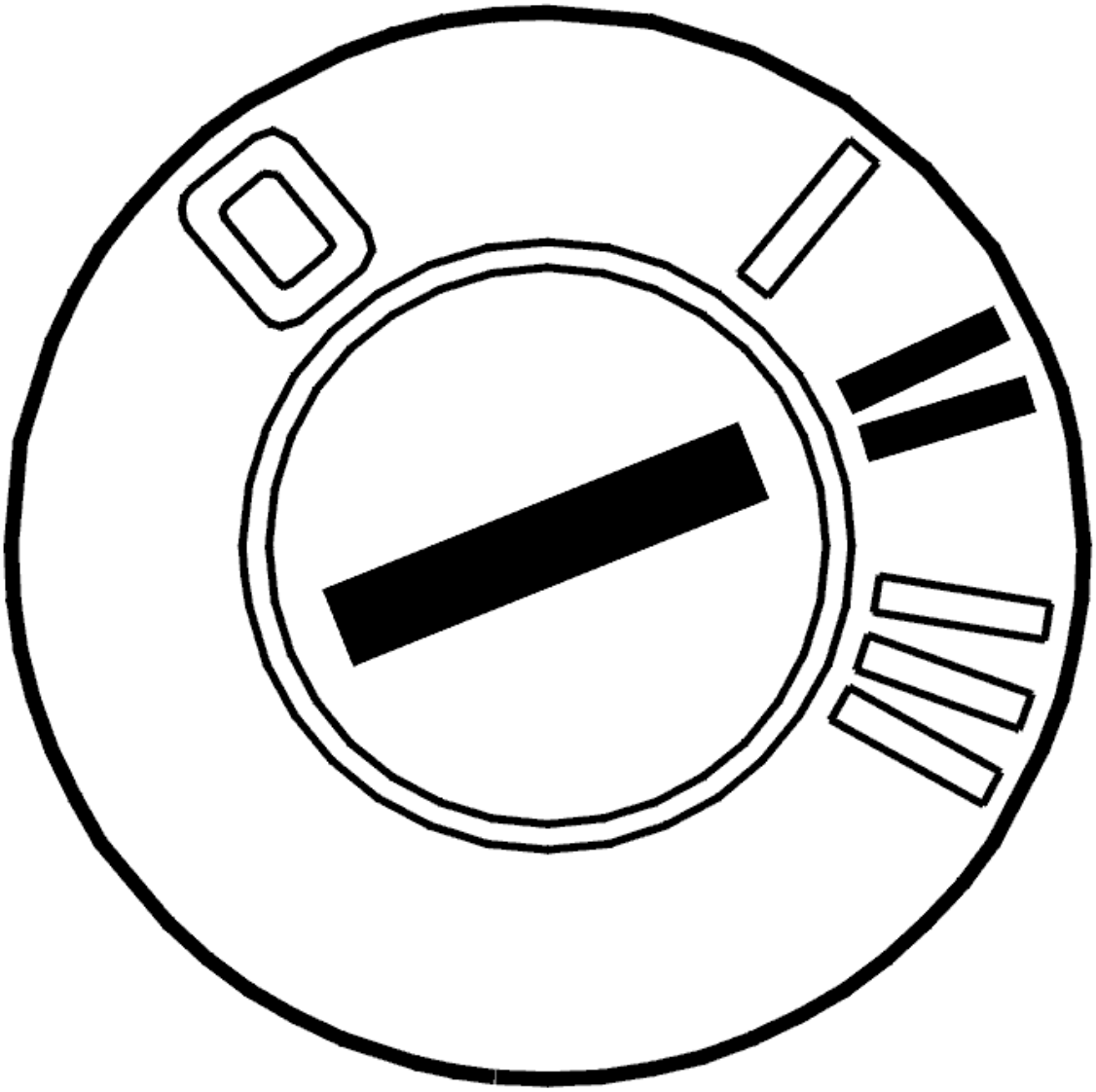

Fig. 292: Identifying Ignition ON
Courtesy of VOLVO CARS CORPORATION

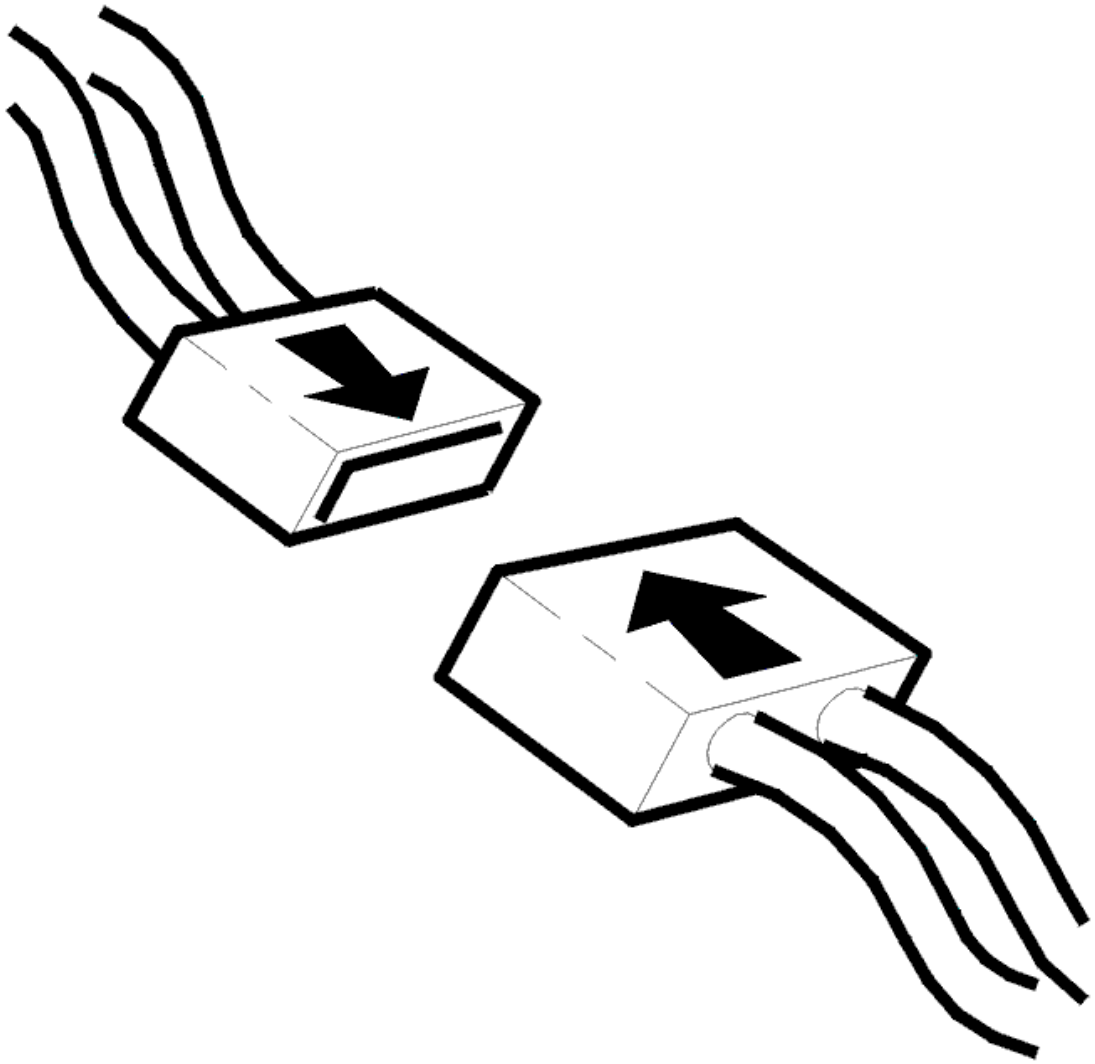

Fig. 293: Identifying Connector(s) Reinstallation
Courtesy of VOLVO CARS CORPORATION

- Switch off the ignition. Wait at least 15 seconds
- Reinstall the connectors, components etc.
- Ignition on for at least 5 seconds
- Move the gear selector lever to back-up (reversing) (R).

  The parking assistance module (PAM) is activated by pressing the switch on the lower section of the climate control module (CCM). Click on the VCT2000 symbol to read off the diagnostic status from the parking assistance module (PAM).

  Check that the parking assistance module (PAM) is active. Check that the sensors are OK.

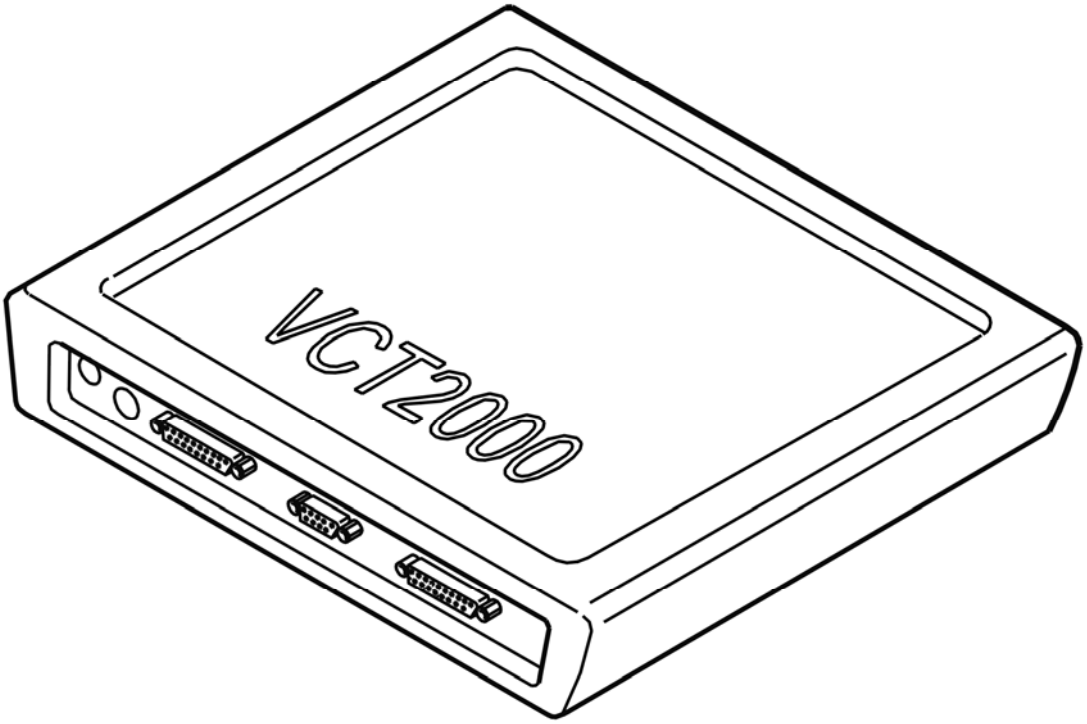

Fig. 294: Identifying VCT2000 Diagnostic Tool Symbol In VIDA
Courtesy of VOLVO CARS CORPORATION

Is the parking assistance module (PAM) active? Are the sensors OK?

- **YES**

  VERIFIED: Troubleshooting has been completed.

- **NO**

  Refer to **INFORMATION**

INFORMATION

FAULT-TRACING INFORMATION

The fault should have been detected and remedied. As this is not the case fault-tracing has failed.

Exit fault-tracing for this diagnostic trouble code (DTC) or make another attempt.

DIAGNOSTIC TROUBLE CODE (DTC) INFORMATION REM-4F48 (2007-2012)

Condition

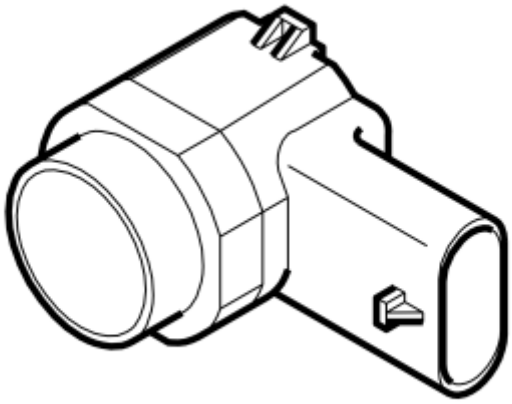

Fig. 295: Identifying Parking Sensor
Courtesy of VOLVO CARS CORPORATION

The rear electronic module (REM) communicates with the parking assistance module (PAM) which checks the signal from parking sensor 7.

The diagnostic trouble code (DTC) is stored if the parking assistance module (PAM) registers a faulty signal from the parking sensor (7).

The diagnostic trouble code (DTC) can be diagnosed at key position II.

Substitute Value

- None.

Possible Source

- Short-circuit to ground or supply voltage in the signal cable between the parking assistance module (PAM) and parking sensor 7
- Short-circuit to ground in the power supply cable between the parking assistance module (PAM) and parking sensor 7
- Short-circuit to supply voltage in the ground lead between the parking assistance module (PAM) and parking sensor 7.

Fault symptom[s]

- The parking assistance system does not operate
- Message in the display.

FAULTY SIGNAL (2007-2012)

CHECKING COMPONENTS AND WIRING

CAUTION: Do not touch the terminal pins in the parking assistance module (PAM). There is a risk of static discharge. This could damage the parking assistance module (PAM).

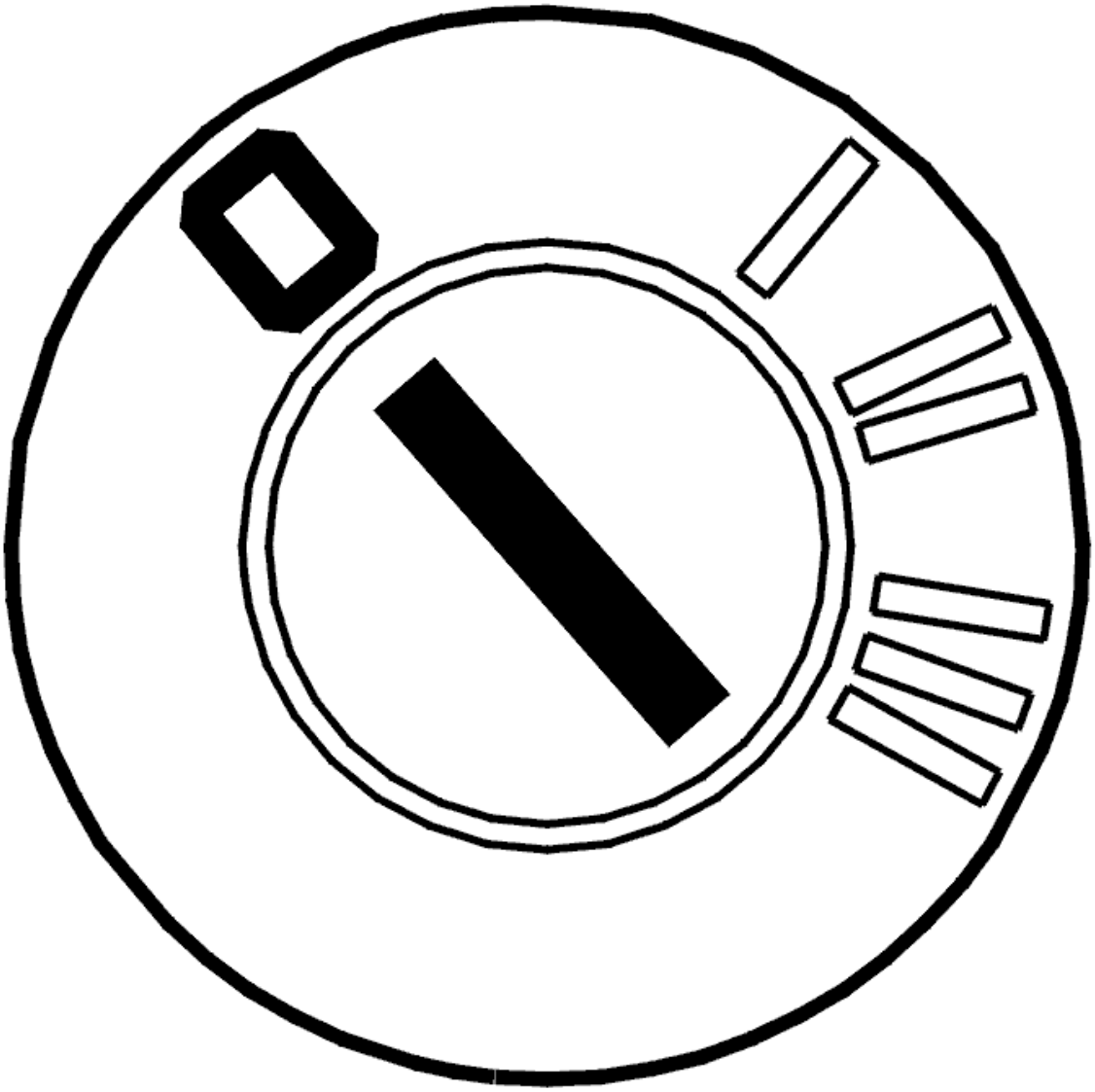

Fig. 296: Identifying Ignition OFF
Courtesy of VOLVO CARS CORPORATION

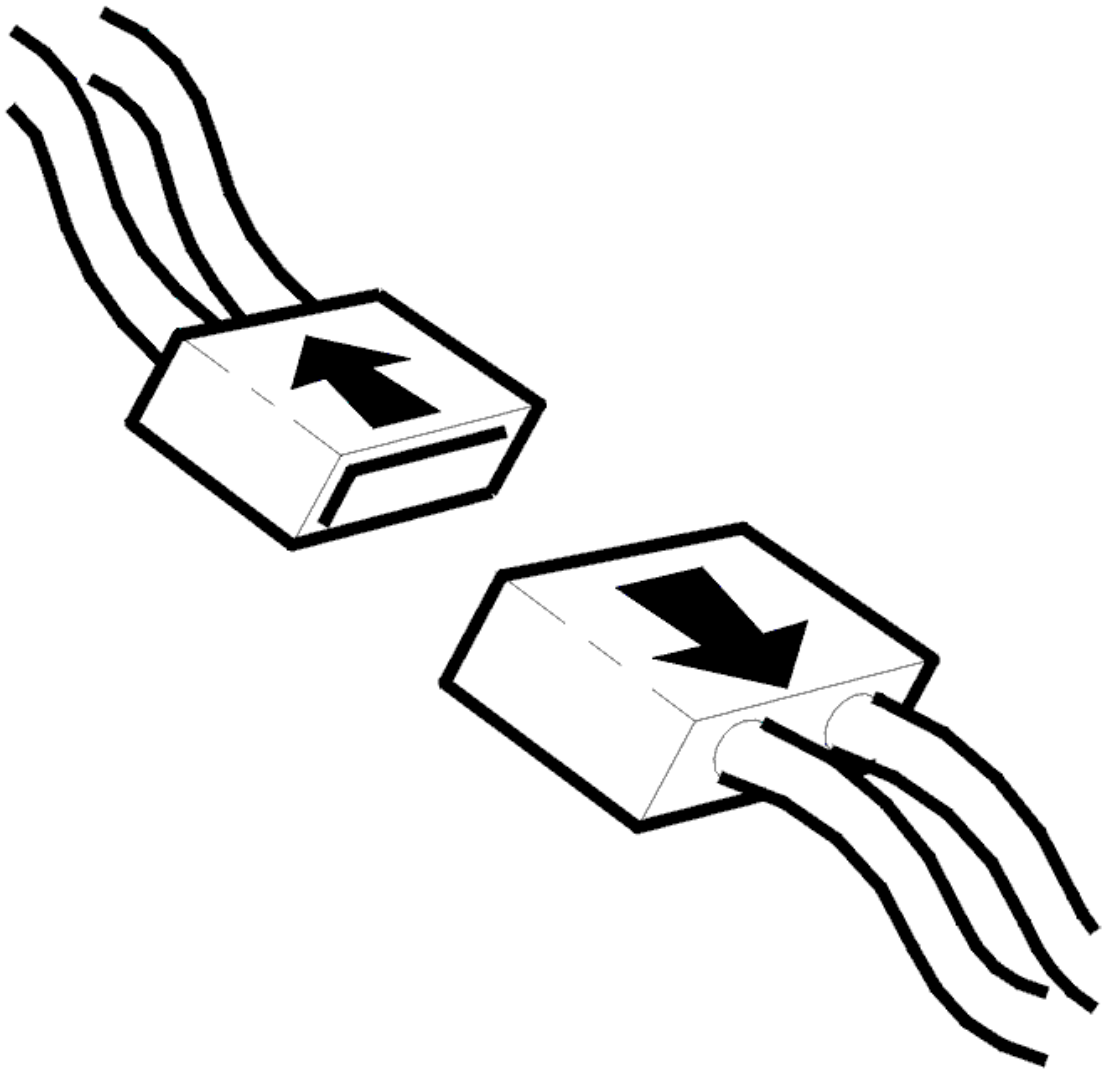

Fig. 297: Identifying Connector(s) Disconnected
Courtesy of VOLVO CARS CORPORATION

- Ignition off.

  Check the connectors for parking sensor 7 (inner left front) and Parking Assistance Module (PAM). Check for damage to pins and connections. Also check the other connectors, which connect the cables between the Parking Assistance Module (PAM) and the parking sensor.

  Check the signal cable between the parking assistance module (PAM) and the parking sensor connector. Check for a short-circuit to supply voltage. Check for a short-circuit to ground.

  Check the cable between:

  - Parking assistance module (PAM) terminal #B7 and parking sensor connector terminal #2.

Check the power supply lead between the parking assistance module (PAM) and the parking sensor connector. Check for a short-circuit to ground.

Check the cable between:

- Parking assistance module (PAM) terminal #B2 and parking sensor connector terminal #1.

Check the ground lead between the parking assistance module (PAM) and the parking sensor connector. Check for a short-circuit to supply voltage.

Check the cable between:

- Parking assistance module (PAM) terminal #B1 and parking sensor connector terminal #3.

Remedy as necessary.

If no fault is found, replace the parking sensor.

Other information

- see **SIGNAL SPECIFICATION**
- For accessing/replacing the front parking assistance sensors, see Installation instructions, Accessories.
- see **CHECKING WIRING AND TERMINALS**

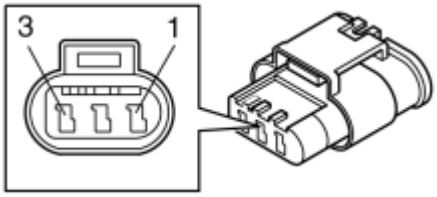

Fig. 298: Identifying Parking Sensor Connector Terminal
Courtesy of VOLVO CARS CORPORATION

- **Continue**

Refer to **VERIFICATION**

VERIFICATION

VERIFICATION

HINT: After carrying out the repair, check that the fault has been remedied.

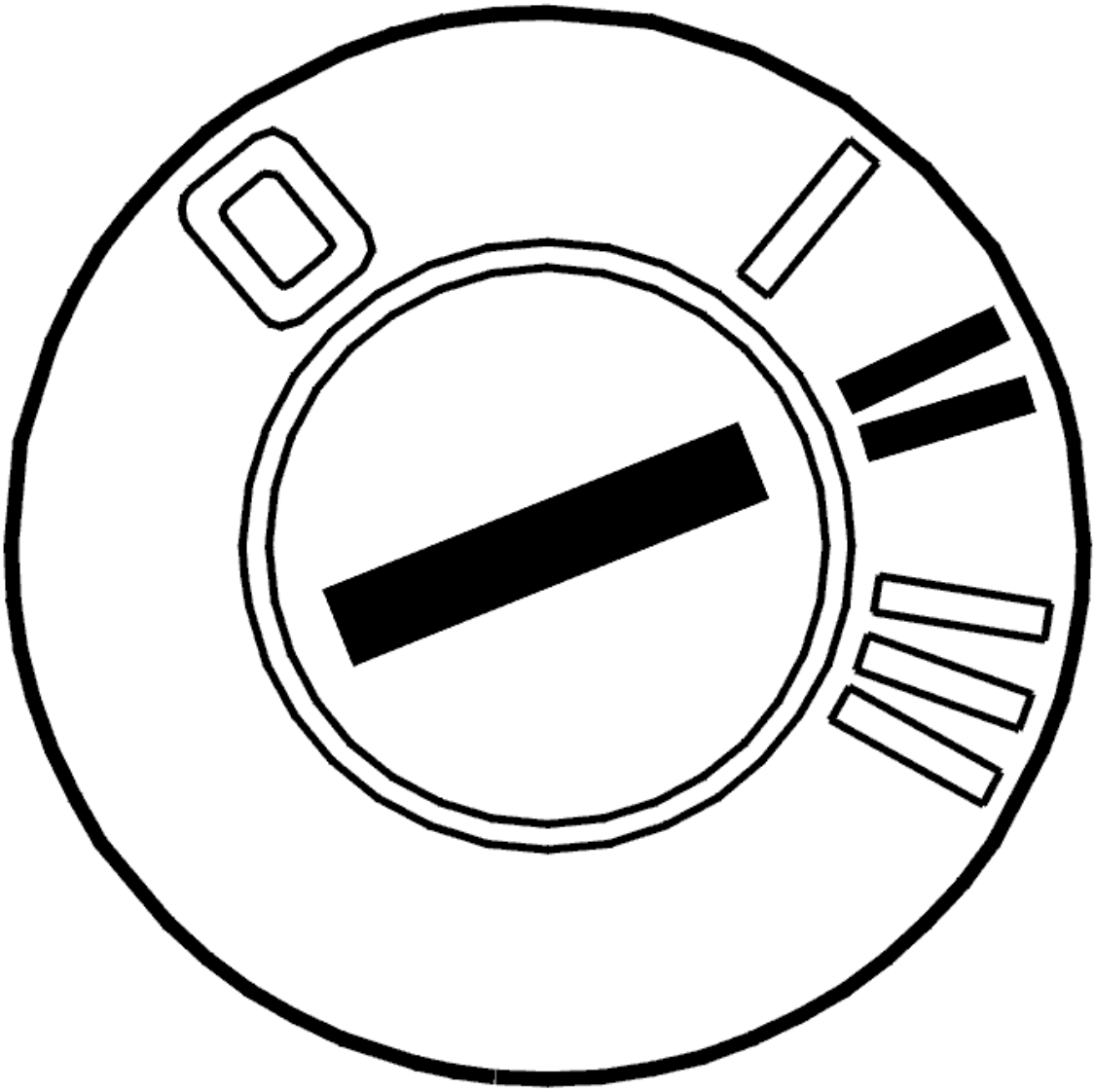

Fig. 299: Identifying Ignition ON
Courtesy of VOLVO CARS CORPORATION

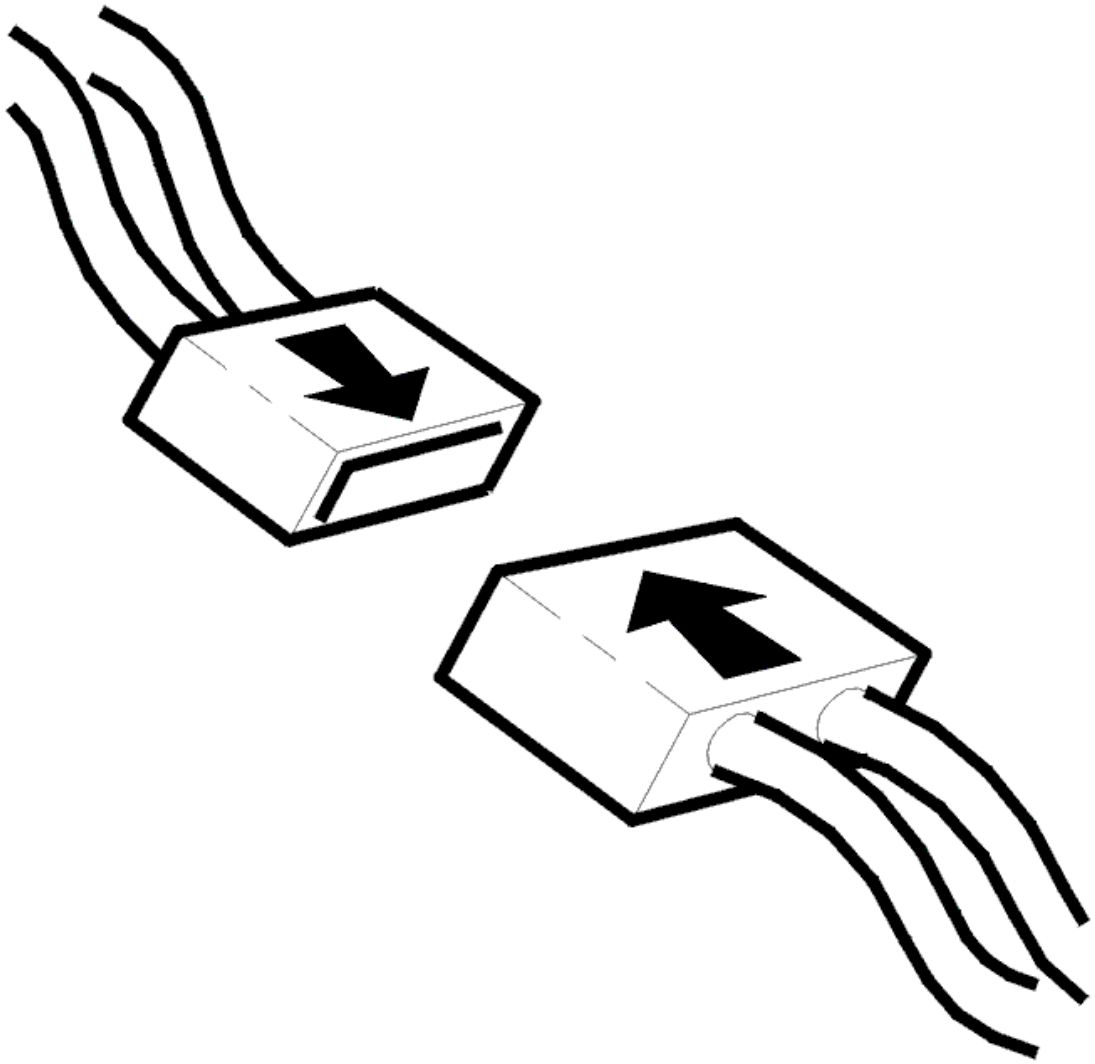

Fig. 300: Identifying Connector(s) Reinstallation
Courtesy of VOLVO CARS CORPORATION

- Switch off the ignition. Wait at least 15 seconds
- Reinstall the connectors, components etc.
- Ignition on for at least 5 seconds
- Move the gear selector lever to back-up (reversing) (R).

  The parking assistance module (PAM) is activated by pressing the switch on the lower section of the climate control module (CCM). Click on the VCT2000 symbol to read off the diagnostic status from the parking assistance module (PAM).

  Check that the parking assistance module (PAM) is active. Check that the sensors are OK.

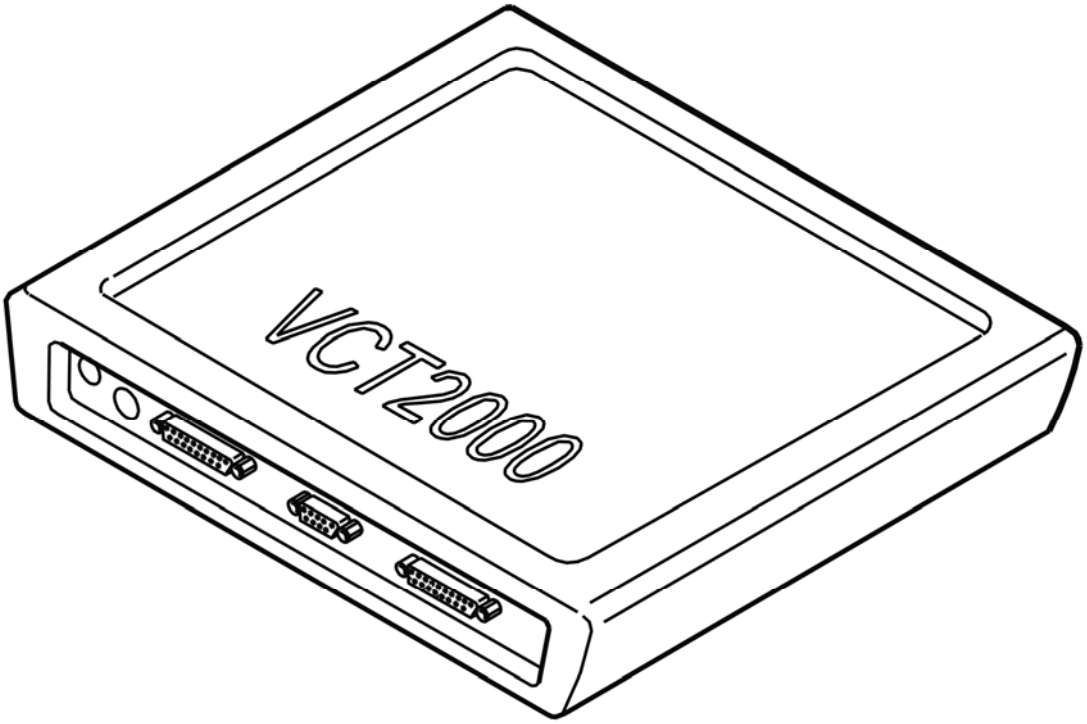

Fig. 301: Identifying VCT2000 Diagnostic Tool Symbol In VIDA
Courtesy of VOLVO CARS CORPORATION

Is the parking assistance module (PAM) active? Are the sensors OK?

- **YES**

  VERIFIED: Troubleshooting has been completed.

- **NO**

  Refer to **INFORMATION**

INFORMATION

FAULT-TRACING INFORMATION

The fault should have been detected and remedied. As this is not the case fault-tracing has failed.

Exit fault-tracing for this diagnostic trouble code (DTC) or make another attempt.

REM-4F49: PARKING SENSOR 8. FAULTY SIGNAL (2005-2012)

DIAGNOSTIC TROUBLE CODE (DTC) INFORMATION REM-4F49 (2005, 2006)

Condition

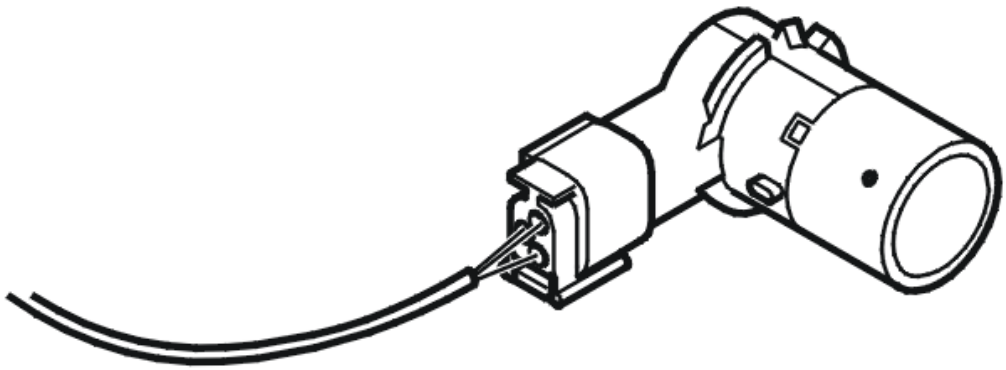

Fig. 302: Identifying Parking Sensor
Courtesy of VOLVO CARS CORPORATION

The rear electronic module (REM) communicates with the parking assistance module (PAM) which checks the signal from parking sensor 8.

The diagnostic trouble code (DTC) is stored if the parking assistance module (PAM) registers a faulty signal from the parking sensor (8).

The diagnostic trouble code (DTC) can be diagnosed at key position II.

Substitute Value

- None.

Possible Source

- Short-circuit to ground or supply voltage in the signal cable between the parking assistance module (PAM) and parking sensor 8
- Short-circuit to ground in the power supply cable between the parking assistance module (PAM) and parking sensor 8

- Short-circuit to supply voltage in the ground lead between the parking assistance module (PAM) and parking sensor 8.

Fault symptom[s]

- The parking assistance system does not operate
- Message in the display.

FAULTY SIGNAL (2005, 2006)

CHECKING COMPONENTS AND WIRING

CAUTION: Do not touch the terminal pins in the parking assistance module (PAM). There is a risk of static discharge. This could damage the parking assistance module (PAM).

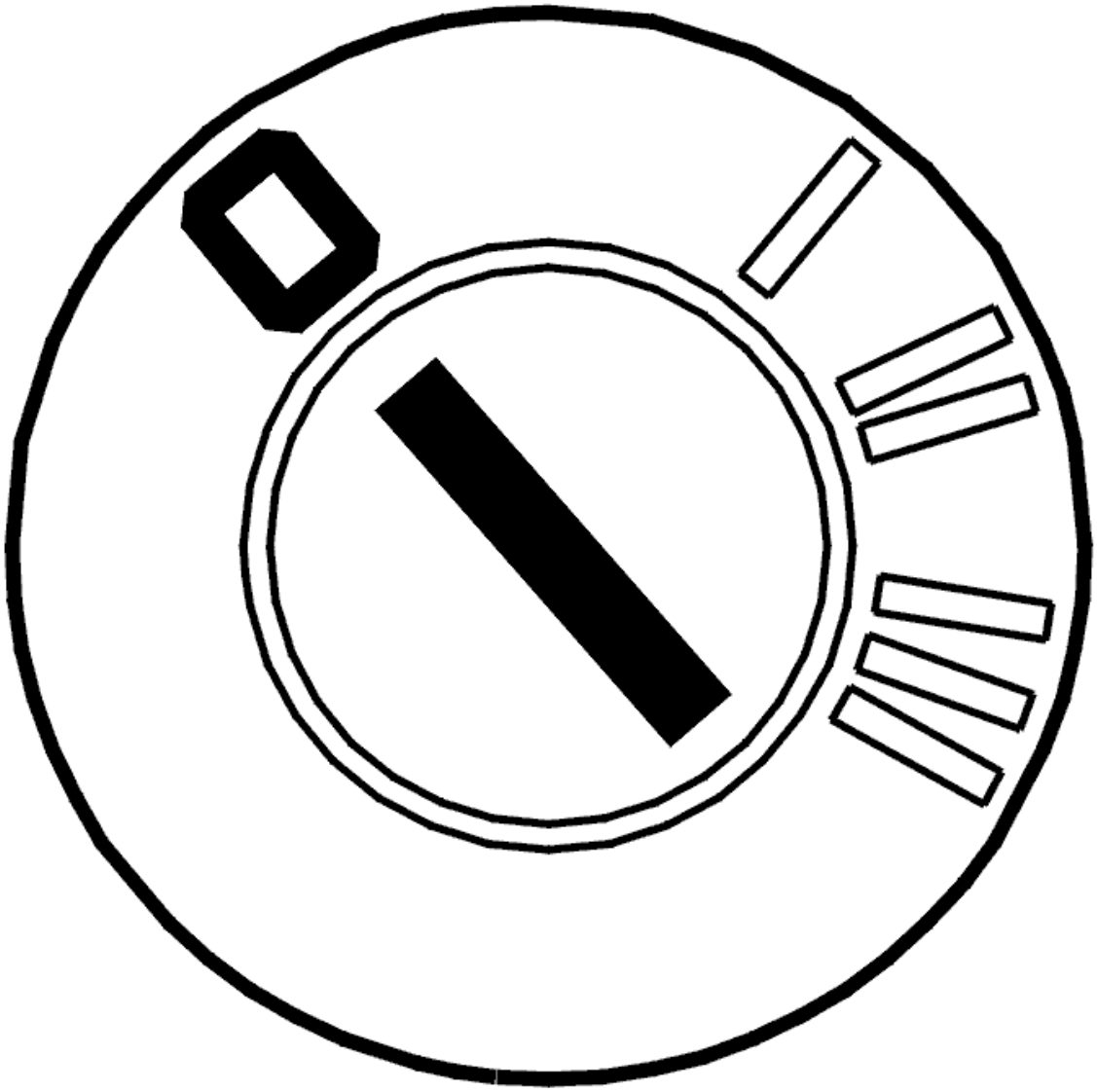

Fig. 303: Identifying Ignition OFF
Courtesy of VOLVO CARS CORPORATION

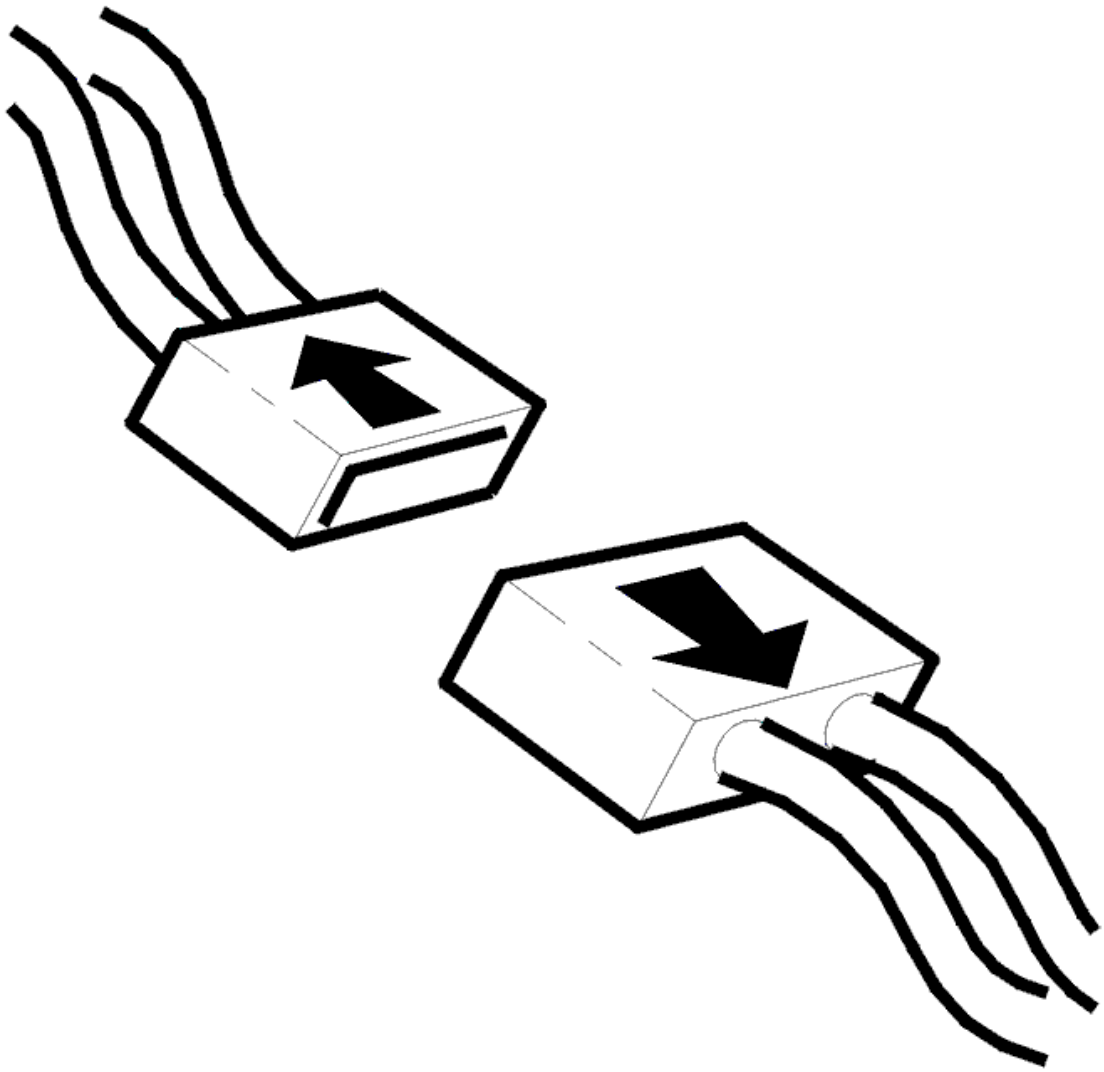

Fig. 304: Identifying Connector(s) Disconnected
Courtesy of VOLVO CARS CORPORATION

- Ignition off.

  Check the connectors for parking sensor 8 (outer left front) and Parking Assistance Module (PAM). Check for damage to pins and connections. Also check the other connectors, which connect the cables between the Parking Assistance Module (PAM) and the parking sensor.

  Check the signal cable between the parking assistance module (PAM) and the parking sensor connector. Check for a short-circuit to supply voltage. Check for a short-circuit to ground.

  Check the cable between:

  - Parking assistance module (PAM) terminal #B8 and parking sensor connector terminal #2.

Check the power supply lead between the parking assistance module (PAM) and the parking sensor connector. Check for a short-circuit to ground.

Check the cable between:

- Parking assistance module (PAM) terminal #B2 and parking sensor connector terminal #1.

Check the ground lead between the parking assistance module (PAM) and the parking sensor connector. Check for a short-circuit to supply voltage.

Check the cable between:

- Parking assistance module (PAM) terminal #B1 and parking sensor connector terminal #3.

Remedy as necessary.

If no fault is found, replace the parking sensor.

Other information

- see **SIGNAL SPECIFICATION**
- For accessing/replacing the front parking assistance sensors, see Installation instructions, Accessories.
- see **CHECKING WIRING AND TERMINALS**

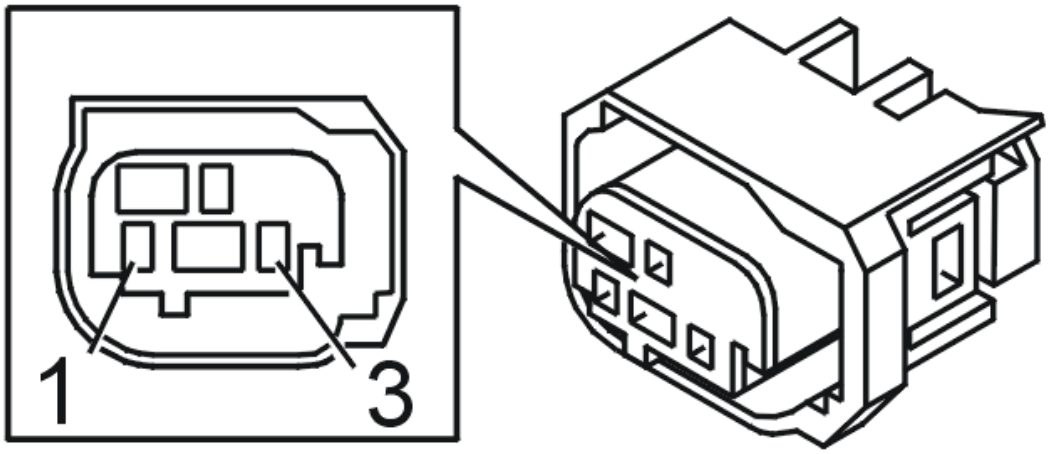

Fig. 305: Identifying Parking Sensor Connector
Courtesy of VOLVO CARS CORPORATION

- **Continue**

Refer to **VERIFICATION**

VERIFICATION

VERIFICATION

HINT: After carrying out the repair, check that the fault has been remedied.

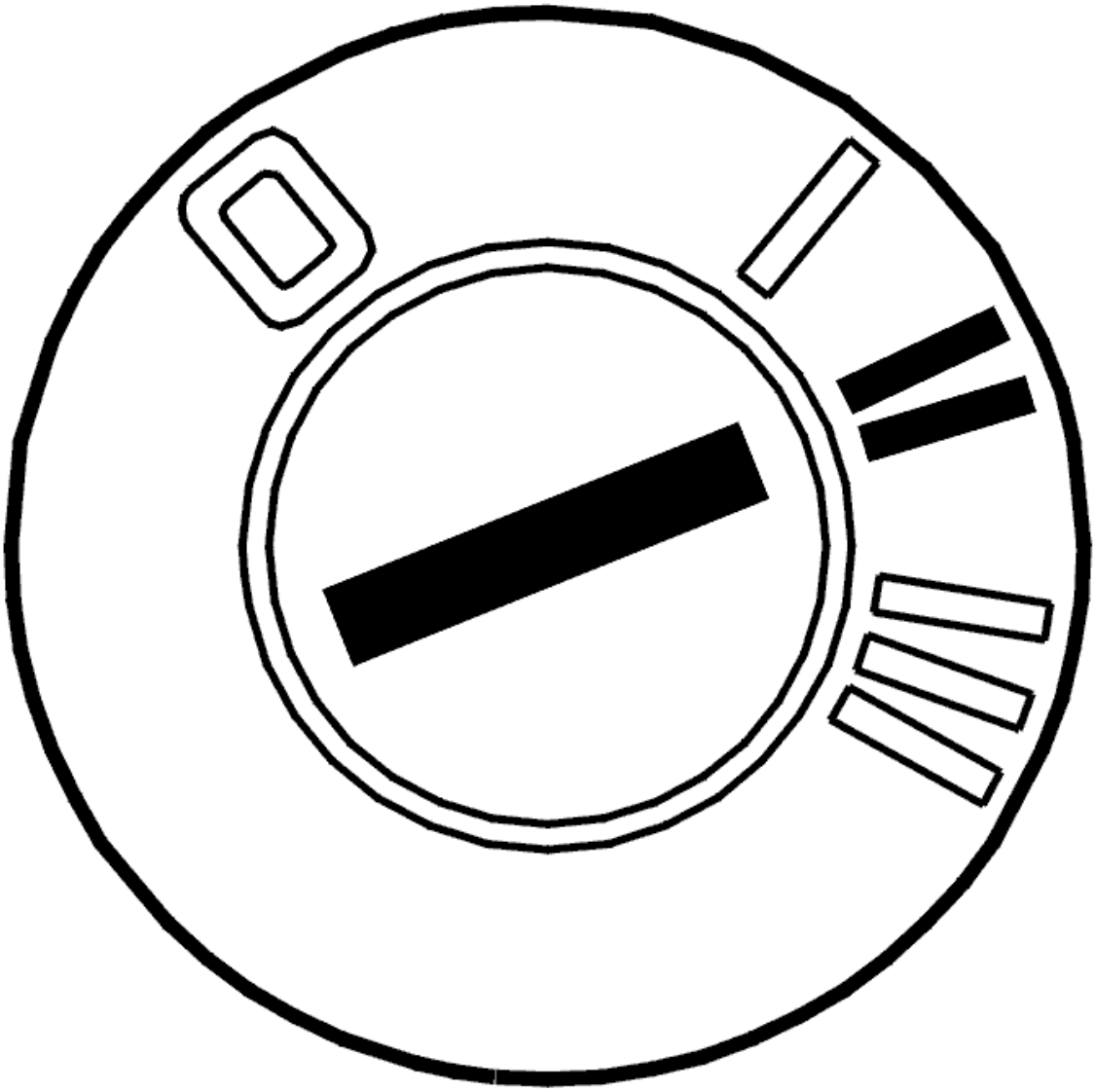

Fig. 306: Identifying Ignition ON
Courtesy of VOLVO CARS CORPORATION

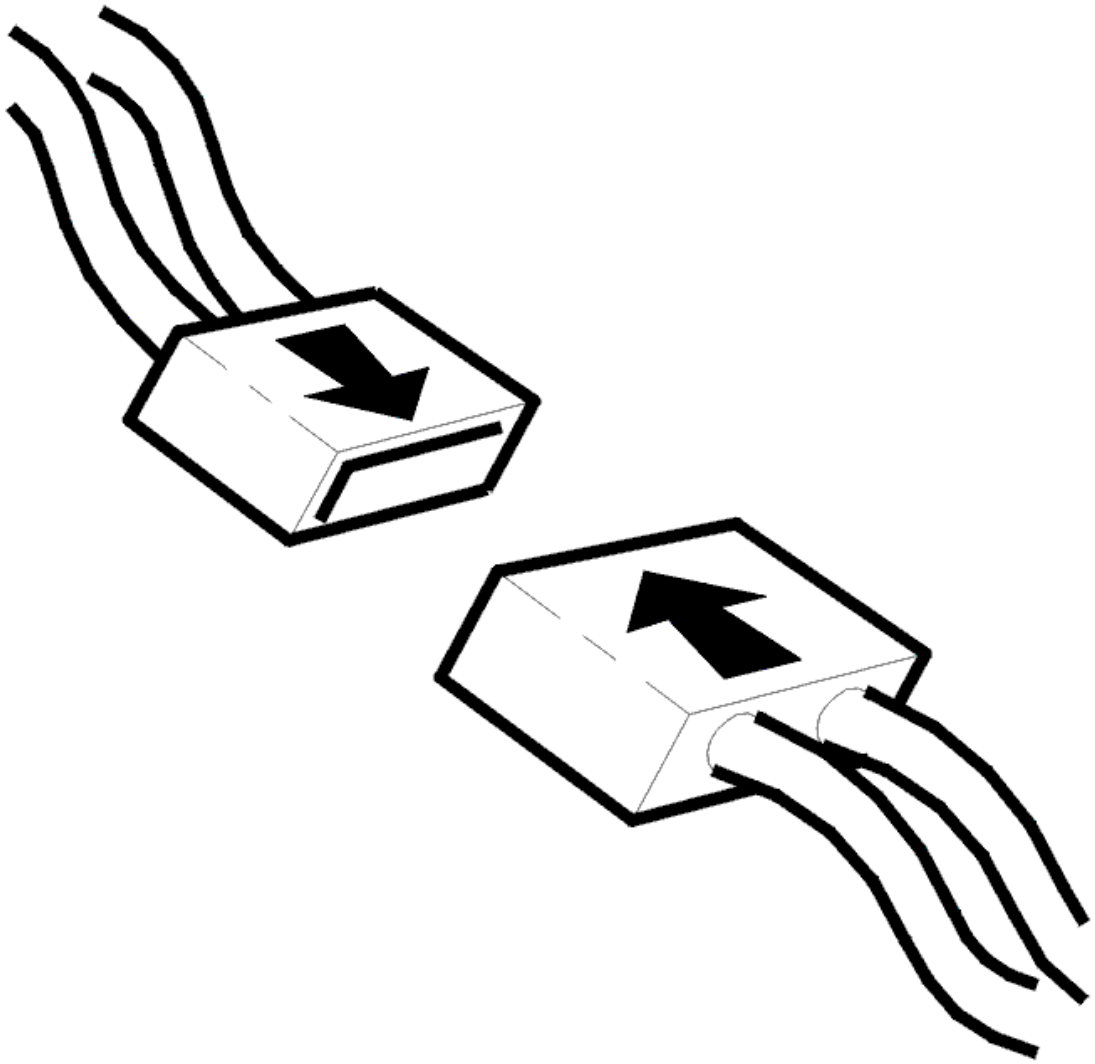

Fig. 307: Identifying Connector(s) Reinstallation
Courtesy of VOLVO CARS CORPORATION

- Switch off the ignition. Wait at least 15 seconds
- Reinstall the connectors, components etc.
- Ignition on for at least 5 seconds
- Move the gear selector lever to back-up (reversing) (R).

  The parking assistance module (PAM) is activated by pressing the switch on the lower section of the climate control module (CCM). Click on the VCT2000 symbol to read off the diagnostic status from the parking assistance module (PAM).

  Check that the parking assistance module (PAM) is active. Check that the sensors are OK.

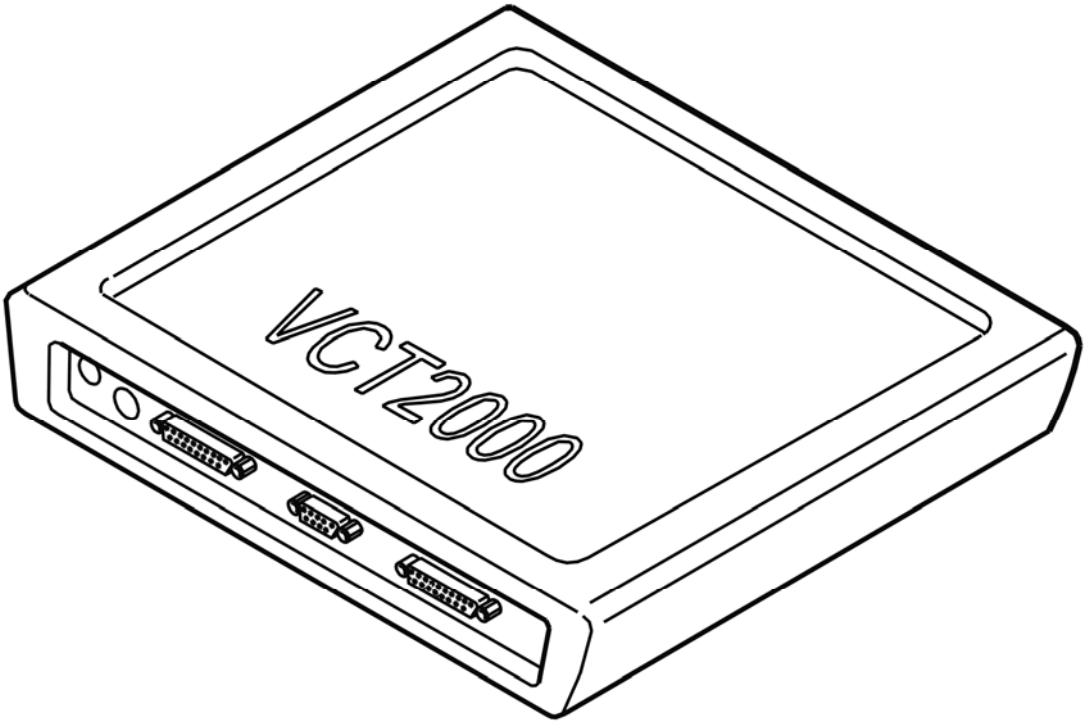

Fig. 308: Identifying VCT2000 Diagnostic Tool Symbol In VIDA
Courtesy of VOLVO CARS CORPORATION

Is the parking assistance module (PAM) active? Are the sensors OK?

- **YES**

  VERIFIED: Troubleshooting has been completed.

- **NO**

  Refer to **INFORMATION**

INFORMATION

FAULT-TRACING INFORMATION

The fault should have been detected and remedied. As this is not the case fault-tracing has failed.

Exit fault-tracing for this diagnostic trouble code (DTC) or make another attempt.

DIAGNOSTIC TROUBLE CODE (DTC) INFORMATION REM-4F49 (2007-2012)

Condition

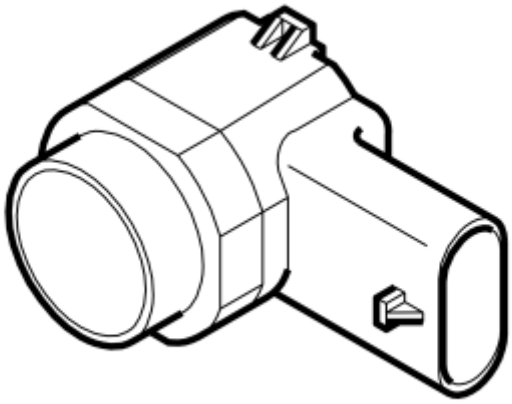

Fig. 309: Identifying Parking Sensor
Courtesy of VOLVO CARS CORPORATION

The rear electronic module (REM) communicates with the parking assistance module (PAM) which checks the signal from parking sensor 8.

The diagnostic trouble code (DTC) is stored if the parking assistance module (PAM) registers a faulty signal from the parking sensor (8).

The diagnostic trouble code (DTC) can be diagnosed at key position II.

Substitute Value

- None.

Possible Source

- Short-circuit to ground or supply voltage in the signal cable between the parking assistance module (PAM) and parking sensor 8
- Short-circuit to ground in the power supply cable between the parking assistance module (PAM) and parking sensor 8
- Short-circuit to supply voltage in the ground lead between the parking assistance module (PAM) and parking sensor 8.

Fault symptom[s]

- The parking assistance system does not operate
- Message in the display.

FAULTY SIGNAL (2007-2012)

CHECKING COMPONENTS AND WIRING

CAUTION: Do not touch the terminal pins in the parking assistance module (PAM). There is a risk of static discharge. This could damage the parking assistance module (PAM).

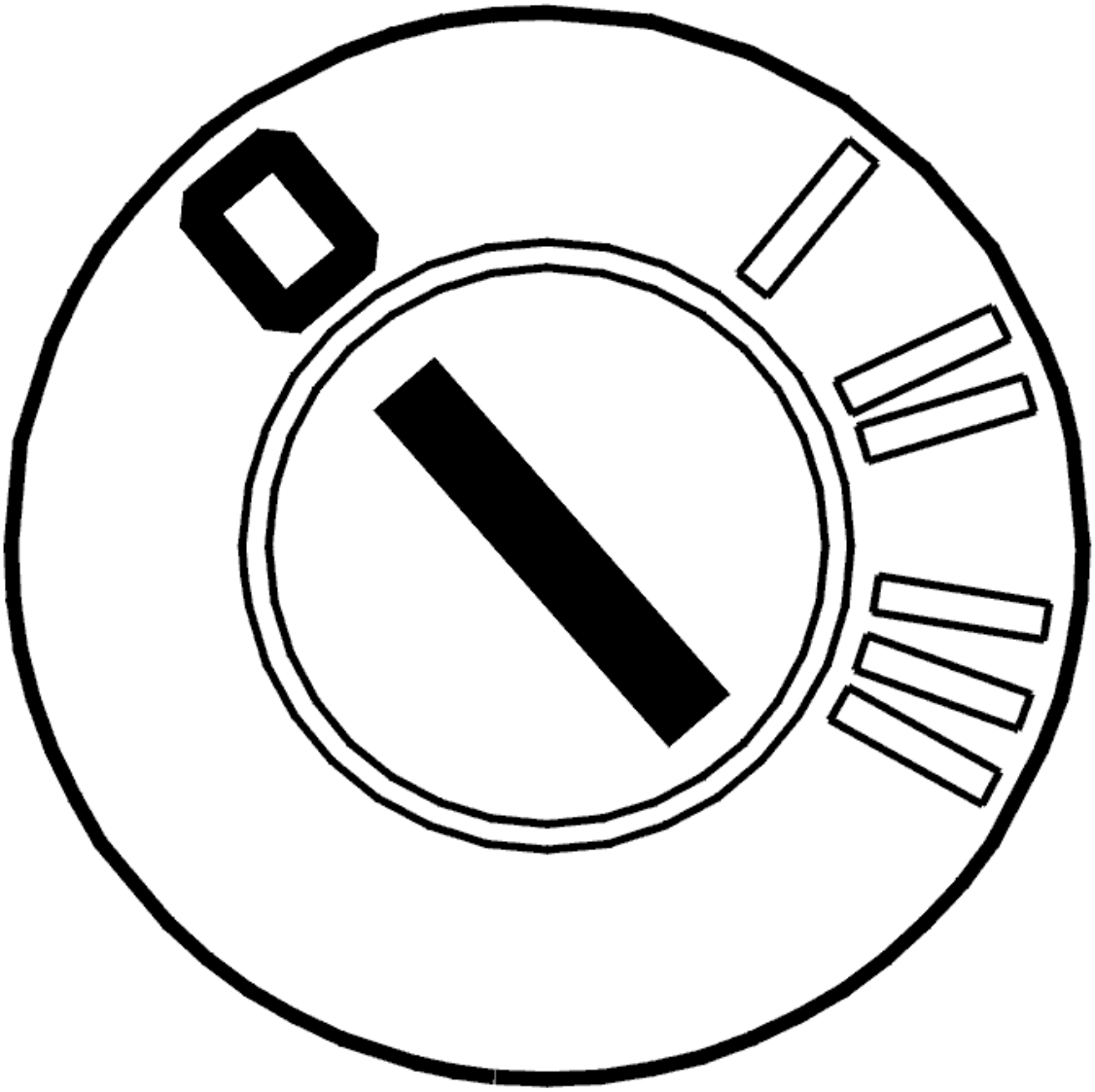

Fig. 310: Identifying Ignition OFF
Courtesy of VOLVO CARS CORPORATION

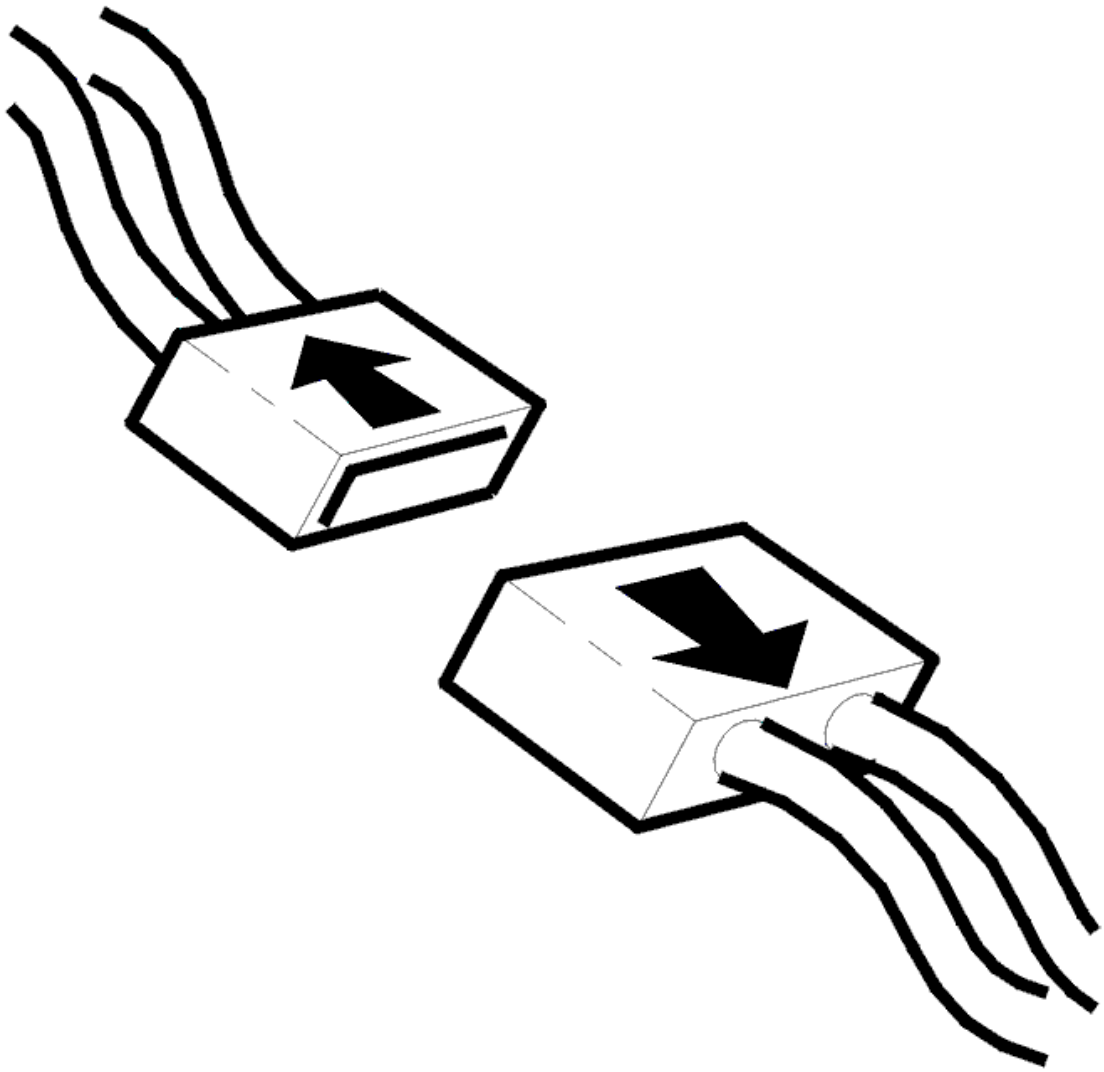

Fig. 311: Identifying Connector(s) Disconnected
Courtesy of VOLVO CARS CORPORATION

- Ignition off.

  Check the connectors for parking sensor 8 (outer left front) and Parking Assistance Module (PAM). Check for damage to pins and connections. Also check the other connectors, which connect the cables between the Parking Assistance Module (PAM) and the parking sensor.

  Check the signal cable between the parking assistance module (PAM) and the parking sensor connector. Check for a short-circuit to supply voltage. Check for a short-circuit to ground.

  Check the cable between:

  - Parking assistance module (PAM) terminal #B8 and parking sensor connector terminal #2.

Check the power supply lead between the parking assistance module (PAM) and the parking sensor connector. Check for a short-circuit to ground.

Check the cable between:

- Parking assistance module (PAM) terminal #B2 and parking sensor connector terminal #1.

Check the ground lead between the parking assistance module (PAM) and the parking sensor connector. Check for a short-circuit to supply voltage.

Check the cable between:

- Parking assistance module (PAM) terminal #B1 and parking sensor connector terminal #3.

Remedy as necessary.

If no fault is found, replace the parking sensor.

Other information

- see **SIGNAL SPECIFICATION**
- For accessing/replacing the front parking assistance sensors, see Installation instructions, Accessories.
- see **CHECKING WIRING AND TERMINALS**

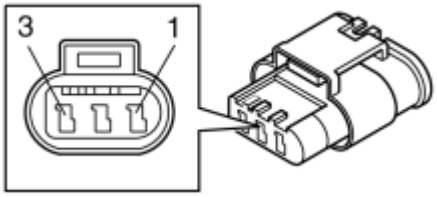

Fig. 312: Identifying Parking Sensor Connector Terminal
Courtesy of VOLVO CARS CORPORATION

- **Continue**

Refer to **VERIFICATION**

VERIFICATION

VERIFICATION

HINT: After carrying out the repair, check that the fault has been remedied.

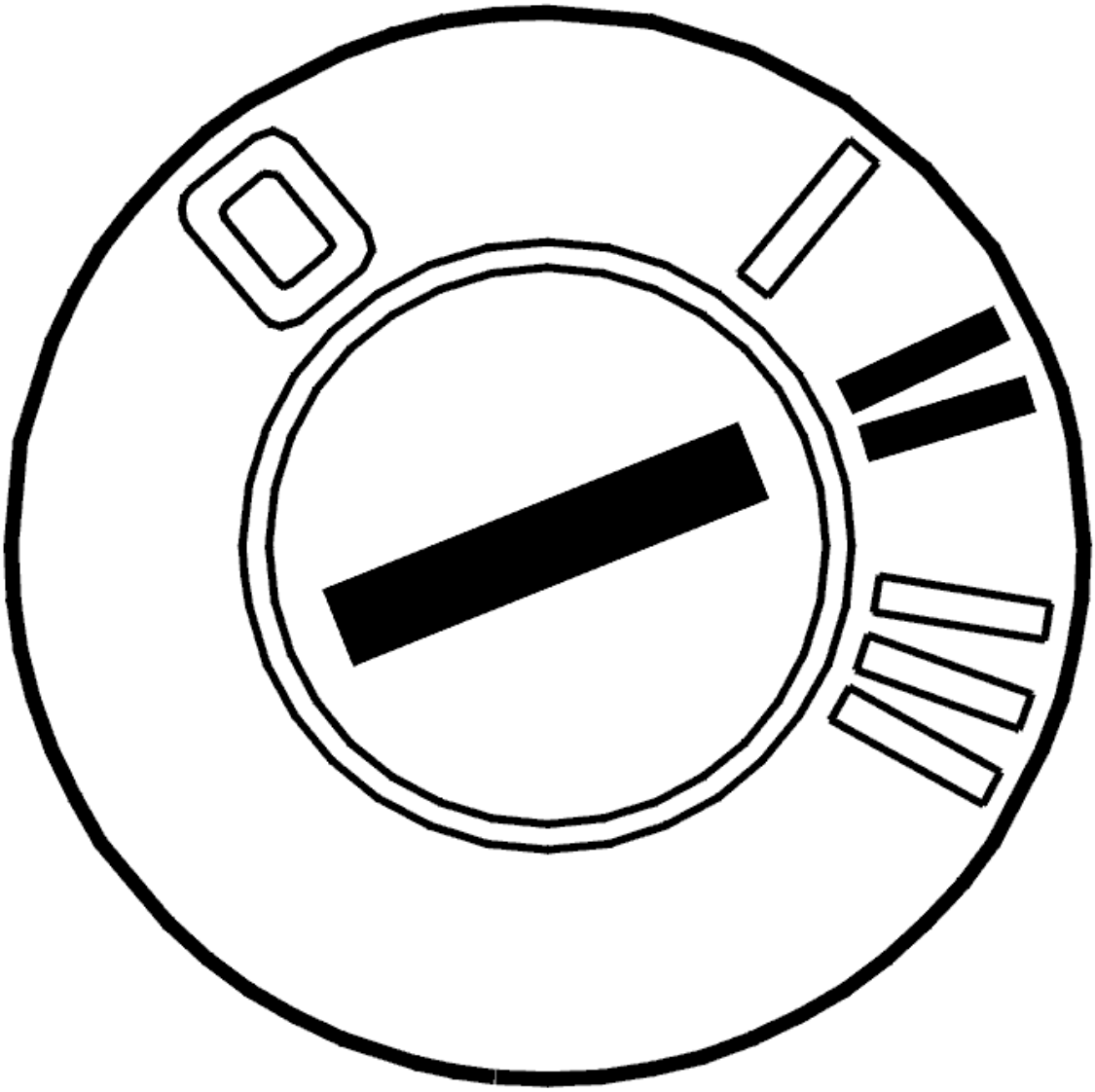

Fig. 313: Identifying Ignition ON
Courtesy of VOLVO CARS CORPORATION

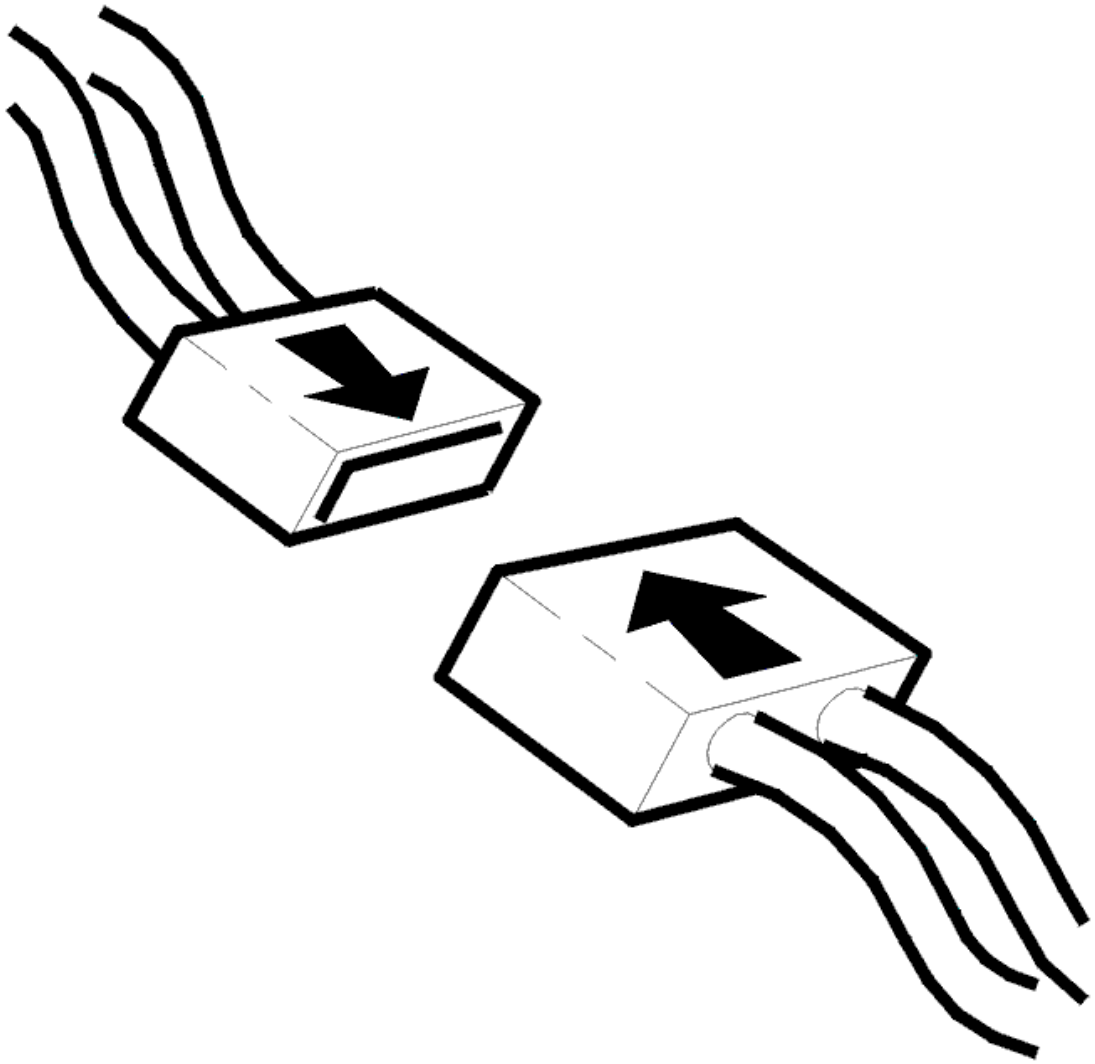

Fig. 314: Identifying Connector(s) Reinstallation
Courtesy of VOLVO CARS CORPORATION

- Switch off the ignition. Wait at least 15 seconds
- Reinstall the connectors, components etc.
- Ignition on for at least 5 seconds
- Move the gear selector lever to back-up (reversing) (R).

  The parking assistance module (PAM) is activated by pressing the switch on the lower section of the climate control module (CCM). Click on the VCT2000 symbol to read off the diagnostic status from the parking assistance module (PAM).

  Check that the parking assistance module (PAM) is active. Check that the sensors are OK.

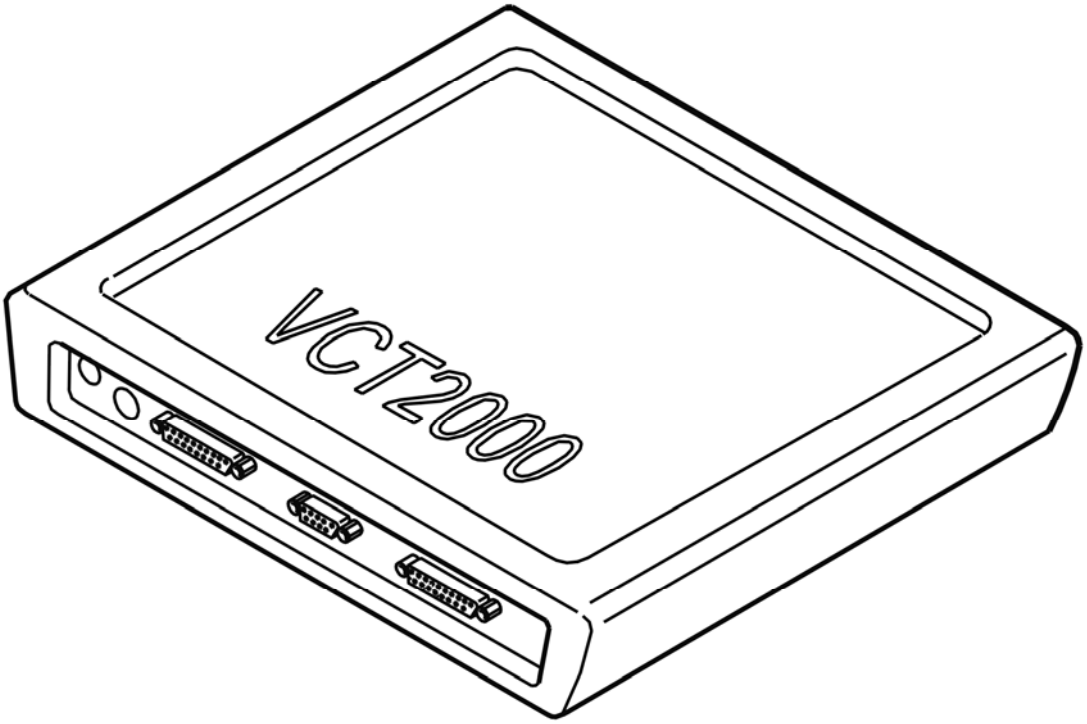

Fig. 315: Identifying VCT2000 Diagnostic Tool Symbol In VIDA
Courtesy of VOLVO CARS CORPORATION

Is the parking assistance module (PAM) active? Are the sensors OK?

- **YES**

  VERIFIED: Troubleshooting has been completed.

- **NO**

  Refer to **INFORMATION**

INFORMATION

FAULT-TRACING INFORMATION

The fault should have been detected and remedied. As this is not the case fault-tracing has failed.

Exit fault-tracing for this diagnostic trouble code (DTC) or make another attempt.

REM-4F4A: PARKING ASSISTANCE MODULE (PAM). FAULTY SIGNAL (2003-2004)

DIAGNOSTIC TROUBLE CODE (DTC) INFORMATION REM-4F4A

Condition

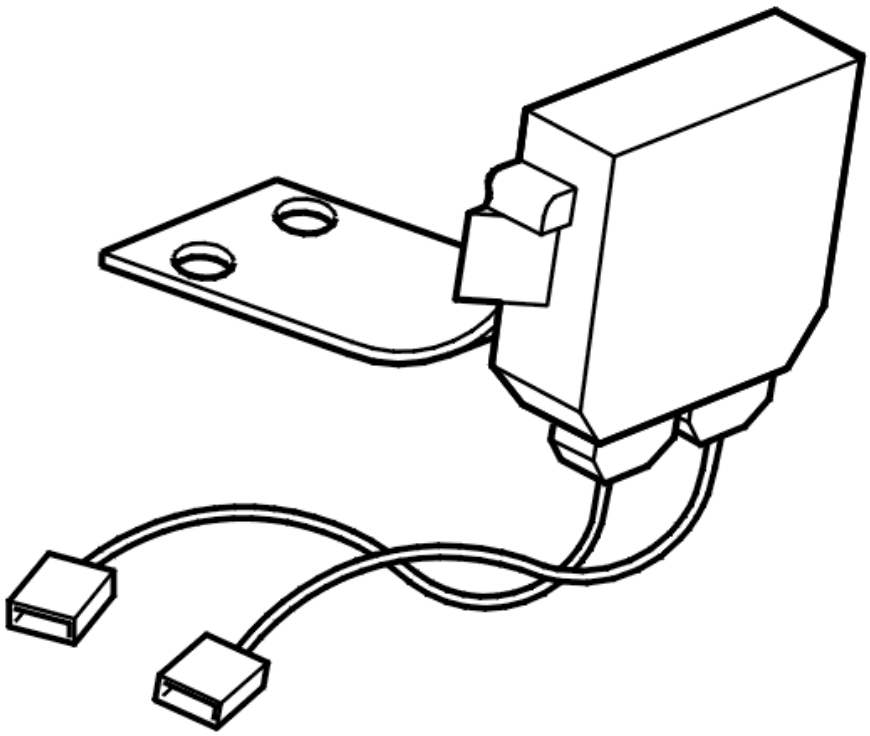

Fig. 316: Identifying Parking Assistance Module (PAM)
Courtesy of VOLVO CARS CORPORATION

The rear electronic module (REM) checks diagnosis from the parking assistance module (PAM).

Diagnostic trouble code (DTC) REM-4F4A is stored if parking assistance module (PAM) registers a fault in the control module.

Diagnostic trouble code (DTC) REM-4F4A can be detected when the ignition is on for 5 seconds.

Substitute Value

- None.

Possible Source

- Defective parking assistance module (PAM).

Fault symptom[s]

- General warning lamp lit.
- The back-up (reversing) warning system does not function.

FAULTY SIGNAL

CHECKING THE COMPONENT

An internal fault has occurred in the parking assistance module (PAM). Check whether the fault is active by activating the back-up warning with the ignition on and back-up gear selected. The fault is permanent if the back-up warning does not work.

Replace parking assistance module (PAM).

Other information:

- To access or replace the parking assistance module (PAM), see **PARKING ASSISTANCE MODULE (PAM), REPLACING** .
- **Continue**

  Refer to **VERIFICATION**

VERIFICATION

VERIFICATION

HINT: After carrying out the repair, check that the fault has been remedied.

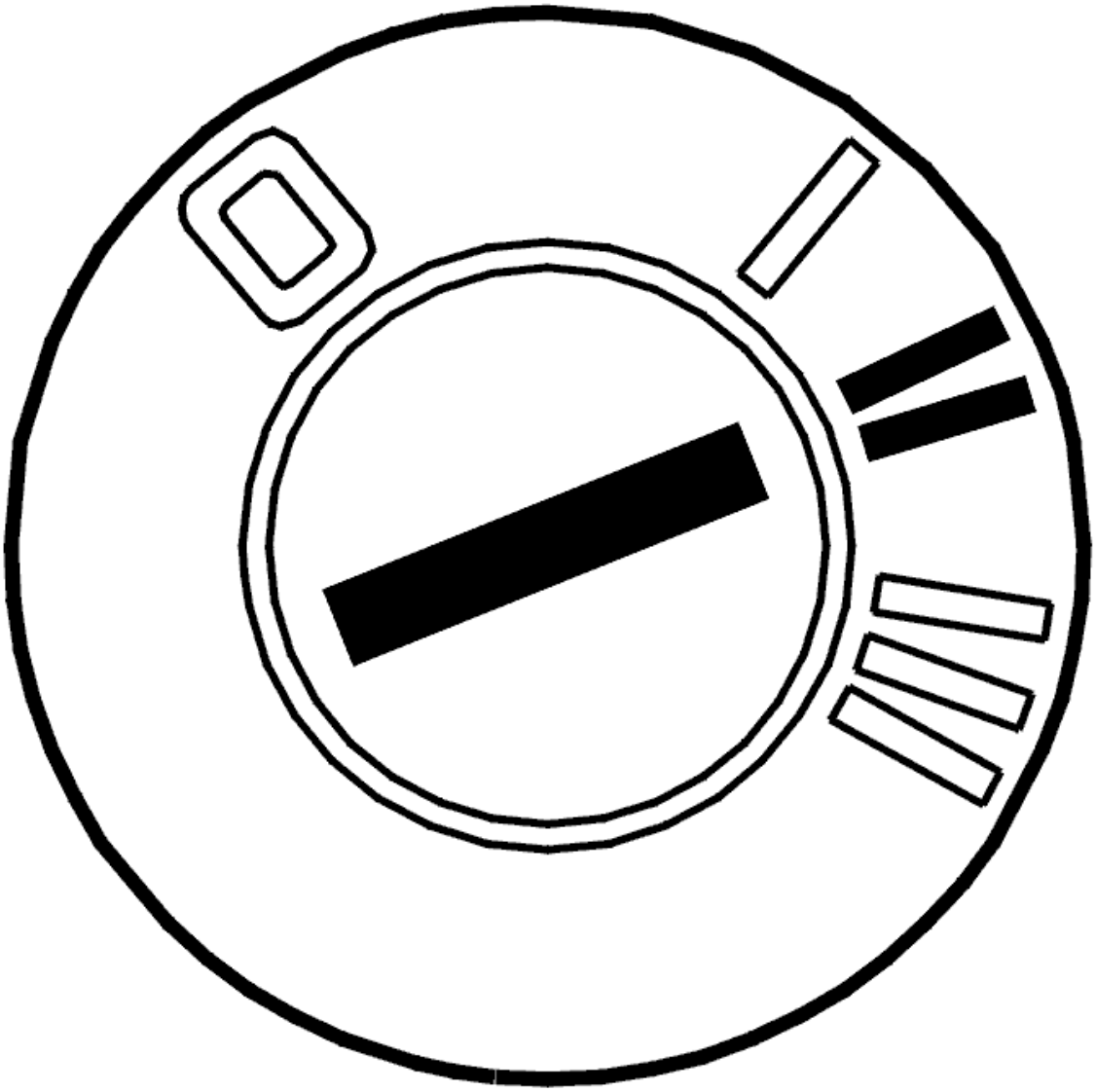

Fig. 317: Identifying Ignition ON
Courtesy of VOLVO CARS CORPORATION

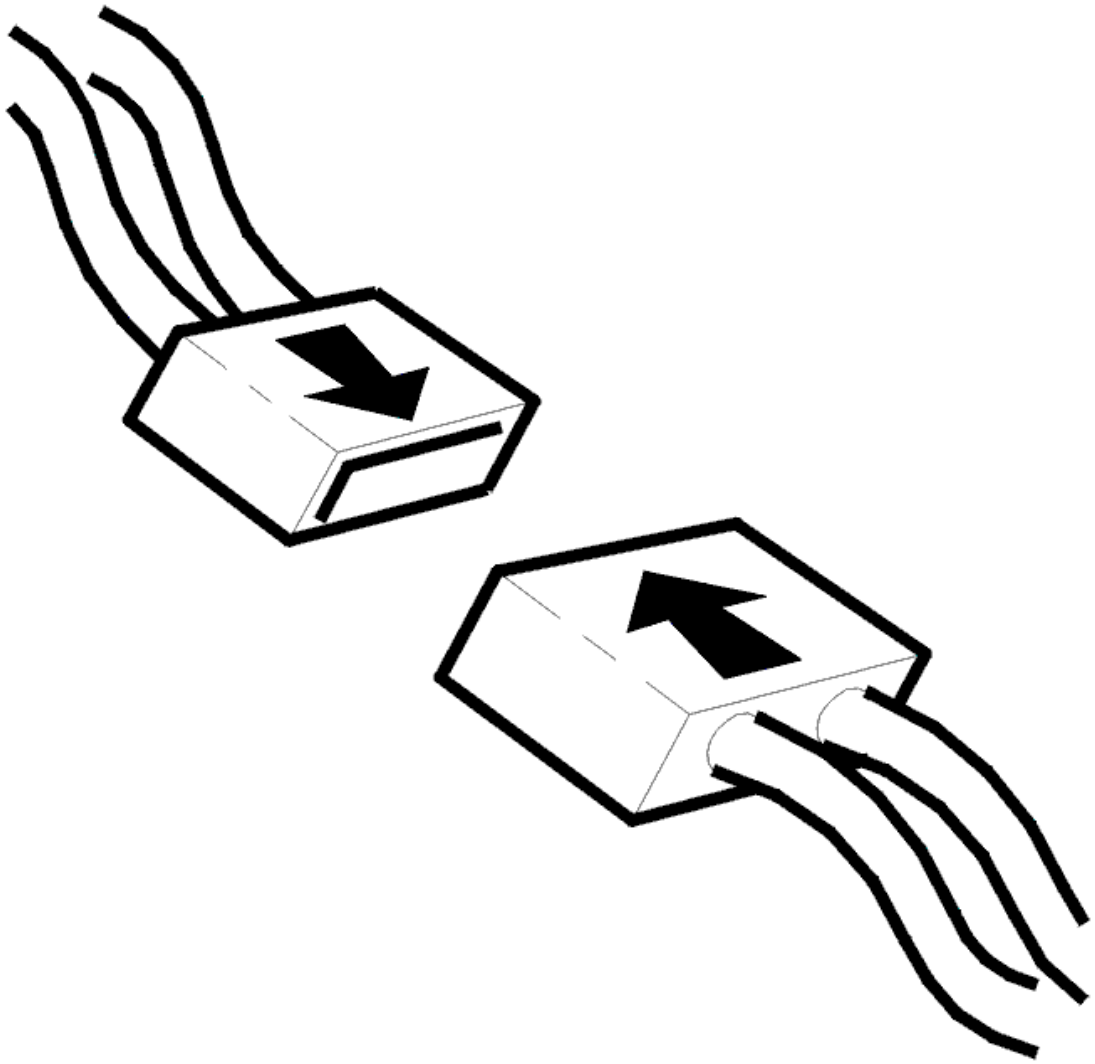

Fig. 318: Identifying Connector(s) Reinstallation
Courtesy of VOLVO CARS CORPORATION

- Switch off the ignition. Wait at least 15 seconds
- Reinstall the connectors, components etc.
- Ignition on for at least 5 seconds
- Move the gear selector lever to back-up (reversing) (R).

  The parking assistance module (PAM) is activated by pressing the switch on the lower section of the climate control module (CCM). Click on the VCT2000 symbol to read off the diagnostic status from the parking assistance module (PAM).

  Check that the parking assistance module (PAM) is active. Check that the sensors are OK.

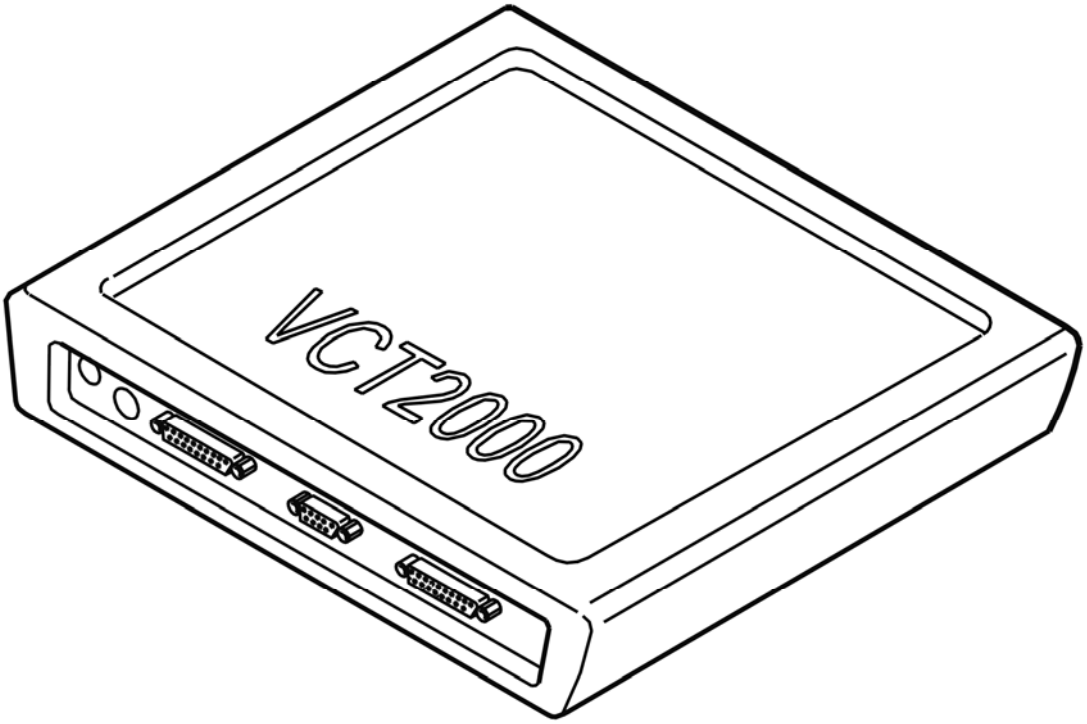

Fig. 319: Identifying VCT2000 Diagnostic Tool Symbol In VIDA
Courtesy of VOLVO CARS CORPORATION

Is the parking assistance module (PAM) active? Are the sensors OK?

- **YES**

  VERIFIED: Troubleshooting has been completed.

- **NO**

  Refer to **INFORMATION**

INFORMATION

FAULT-TRACING INFORMATION

The fault should have been detected and remedied. As this is not the case fault-tracing has failed.

Exit fault-tracing for this diagnostic trouble code (DTC) or make another attempt.

REM-4F4A: PARKING ASSISTANCE MODULE (PAM). FAULTY SIGNAL (2005-2012)

DIAGNOSTIC TROUBLE CODE (DTC) INFORMATION REM-4F4A

Condition

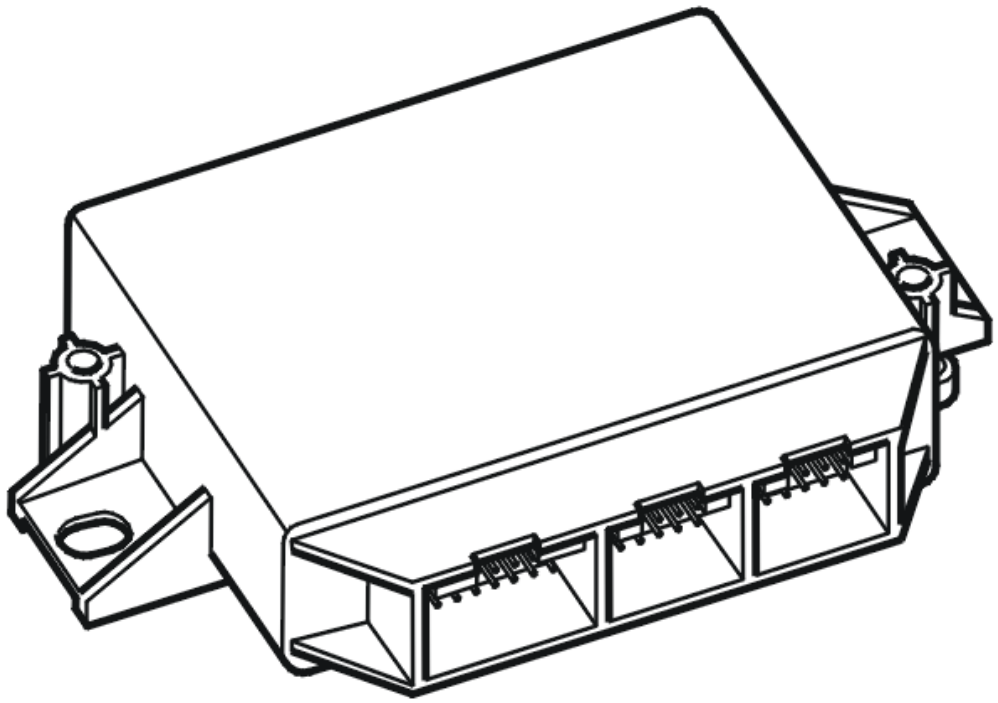

Fig. 320: Identifying Parking Assistance Module
Courtesy of VOLVO CARS CORPORATION

The rear electronic module (REM) communicates with the parking assistance module (PAM).

The diagnostic trouble code (DTC) is stored if the rear electronic module (REM) receives information from the parking assistance module (PAM) indicating an internal fault.

The diagnostic trouble code (DTC) can be diagnosed at key position II.

Substitute Value

- None.

Possible Source

- Internal fault in the parking assistance module (PAM).

Fault symptom[s]

- The parking assistance system does not operate
- Message in the display.

FAULTY SIGNAL

REPLACING THE COMPONENT

The parking assistance module (PAM) has registered an internal fault.

If the fault is intermittent, it has been registered previously but is no longer present. Intermittent faults can be caused by interference at start up of the parking assistance module (PAM) or may be a different type of fault which occurs on different occasions. The fault is evaluated depending on how it occurs. Replace the parking assistance module (PAM) if the fault recurs.

Replace the parking assistance module (PAM) in the event of a permanent fault.

Remedy as necessary.

Other information

- see **PARKING ASSISTANCE MODULE (PAM), REPLACING**

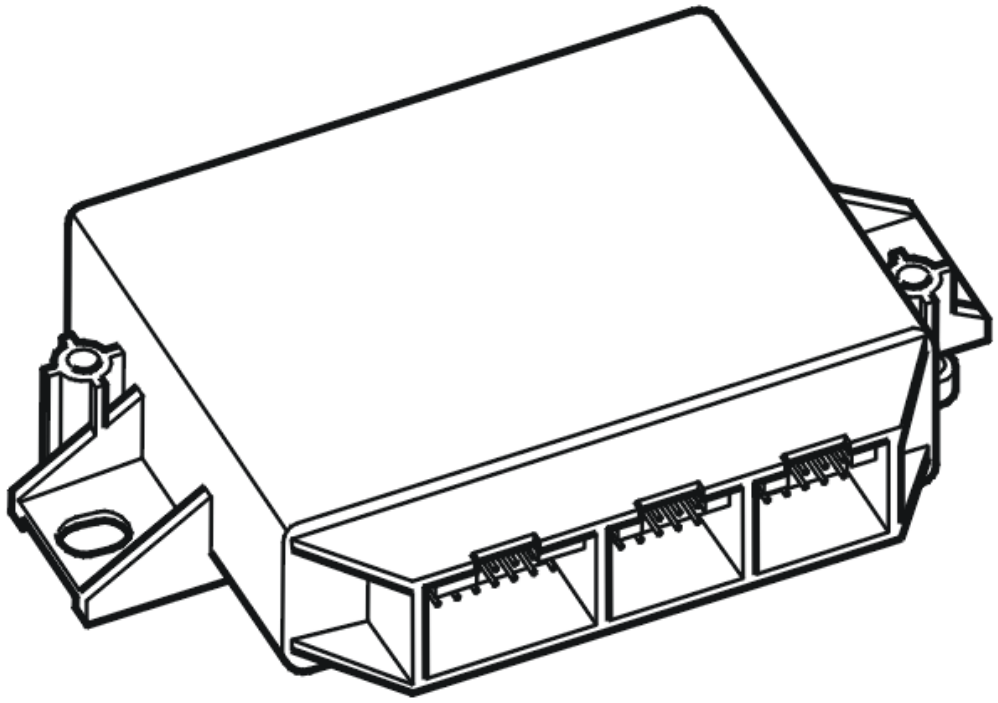

Fig. 321: Identifying Parking Assistance Module

Courtesy of VOLVO CARS CORPORATION

- **Continue**

  Refer to **INFORMATION**

INFORMATION

FAULT-TRACING INFORMATION

In case of this defect, troubleshooting is not followed by verification.

The information can be displayed again or the fault-tracing for this fault can be interrupted.

REM-4F90: SENSOR, SEAT BELT REMINDER. SIGNAL TOO HIGH (2003-2004)

DIAGNOSTIC TROUBLE CODE (DTC) INFORMATION REM-4F90

Condition

The rear electronic module (REM) checks the signal from the sensor, seat belt reminder in the passenger seat.

Diagnostic trouble code (DTC) REM-4F90 is stored if rear electronic module (REM) registers too high a signal from the seat belt reminder sensor.

Diagnostic trouble code (DTC) REM-4F90 can be detected with ignition in positions I or II for at least 3 minutes and battery voltage > 9 volt.

Substitute Value

- None.

Possible Source

- Short-circuit to supply voltage in the signal cable
- Defective sensor, seat belt reminder.

Fault symptom[s]

- General warning lamp lit.

SIGNAL TOO HIGH

CHECKING COMPONENTS AND WIRING

Check the rear electronic module (REM) and seat belt reminder sensor connectors. Check for contact resistance

and oxidation. Check for damage and loose connections. Also check intermediate connector.

Check the signal cable between rear electronic module (REM) terminal #B19 (terminal #A39) and seat belt reminder sensor connector terminal #9. Check for a short-circuit to supply voltage.

Check the signal cable between rear electronic module (REM) terminal #B20 (terminal #A40) and seat belt reminder sensor connector terminal #10. Check for a short-circuit to supply voltage.

Check the seat belt reminder sensor. Measure the resistance between terminals #9 and #10 in the sensor connector.

HINT: The resistance should be above 100 kohms with no passengers and below 10 kohms with passengers.

Remedy as necessary.

Other information:

- To connect the breakout box, see **CONNECTING THE BREAKOUT BOX**
- To access or replace the seat belt reminder sensor, see **VERIFICATION**
- For information about signals, see **SIGNAL SPECIFICATION**
- see **CHECKING WIRING AND TERMINALS** .

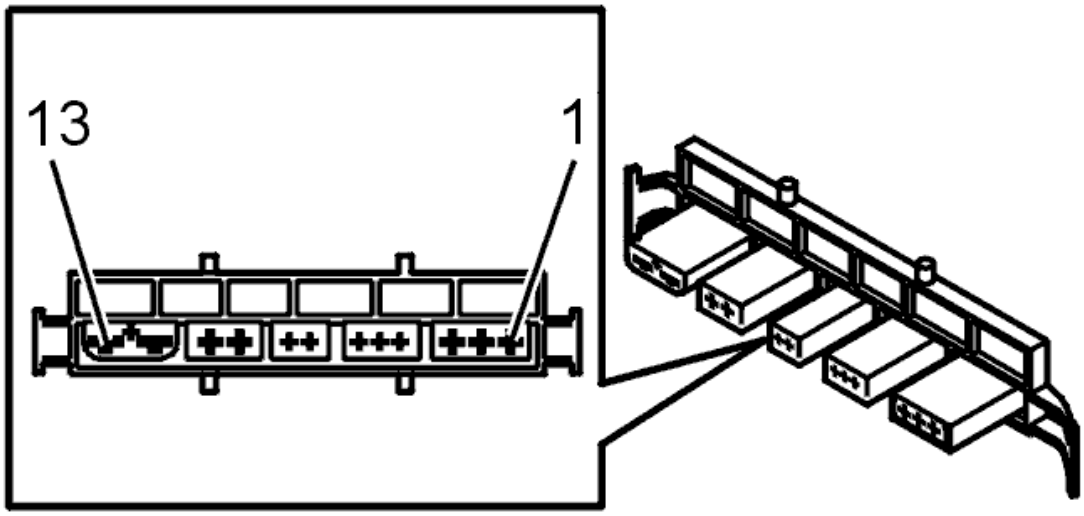

Fig. 322: Identifying Seat Belt Reminder Sensor Connector Terminals
Courtesy of VOLVO CARS CORPORATION

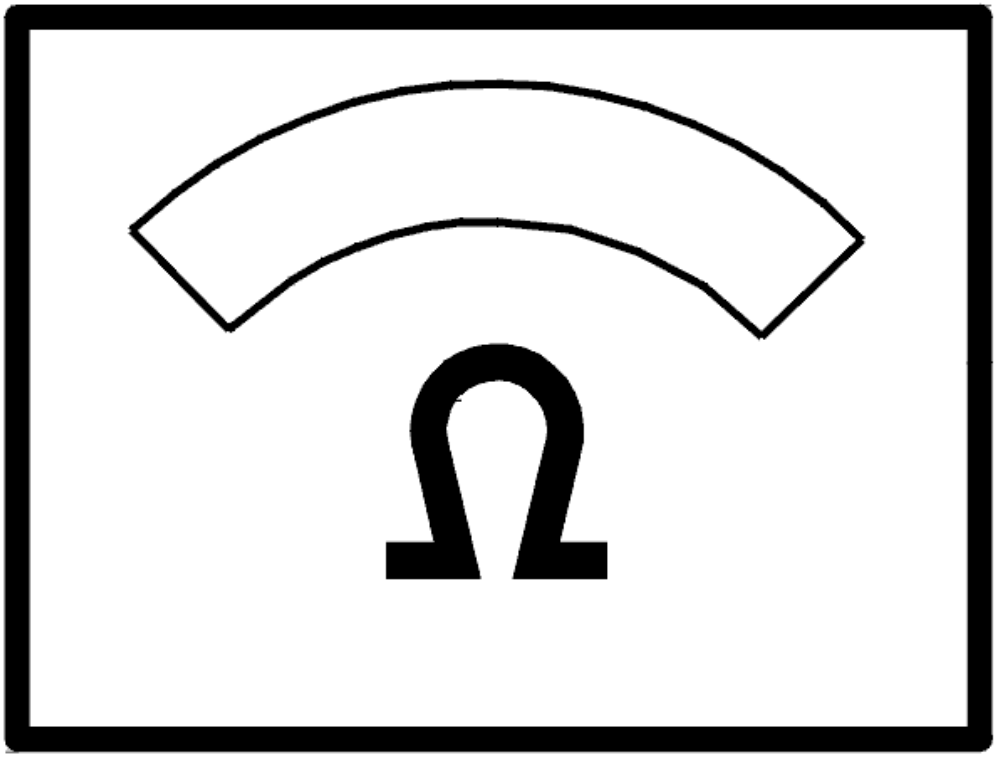

Fig. 323: Identifying Ohms Display
Courtesy of VOLVO CARS CORPORATION

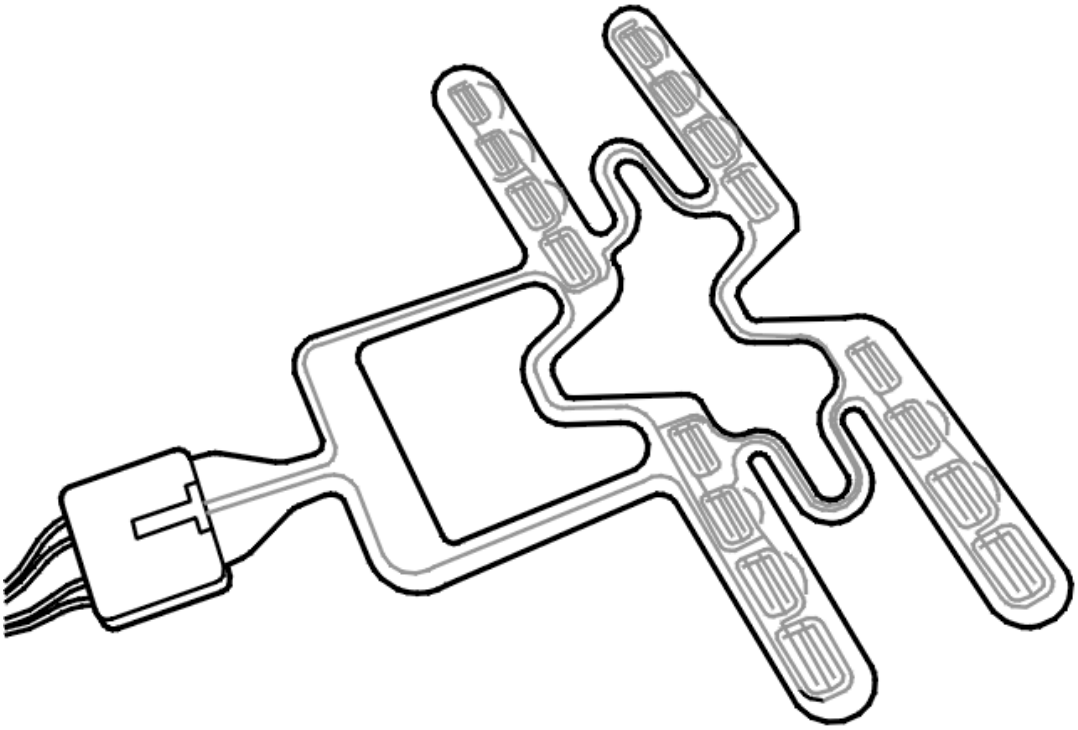

Fig. 324: Identifying Seat Belt Reminder Sensor
Courtesy of VOLVO CARS CORPORATION

- **Continue**

  Refer to **VERIFICATION**

VERIFICATION

VERIFICATION

HINT: After carrying out the repair, check that the fault has been remedied.

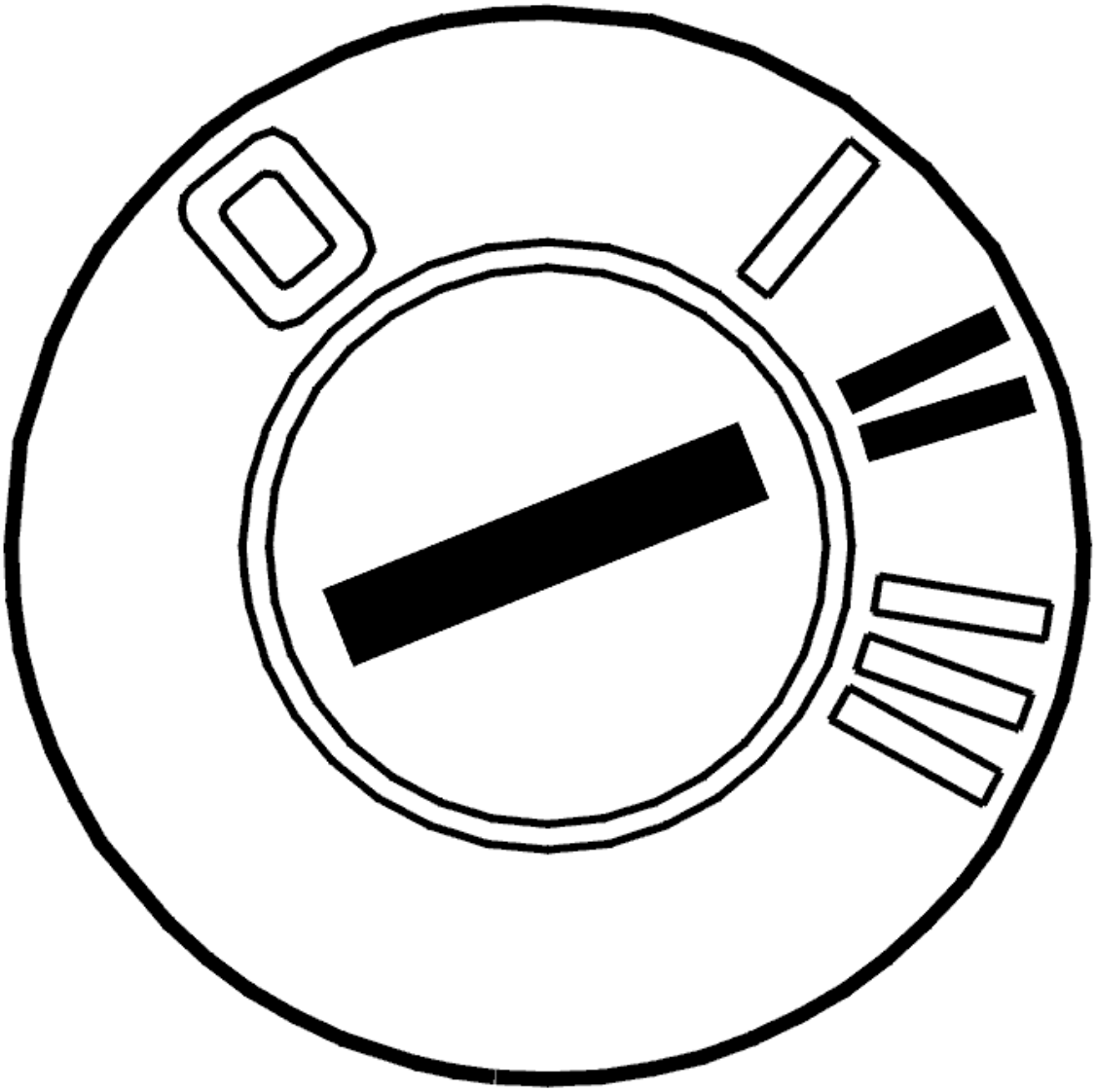

Fig. 325: Identifying Ignition ON
Courtesy of VOLVO CARS CORPORATION

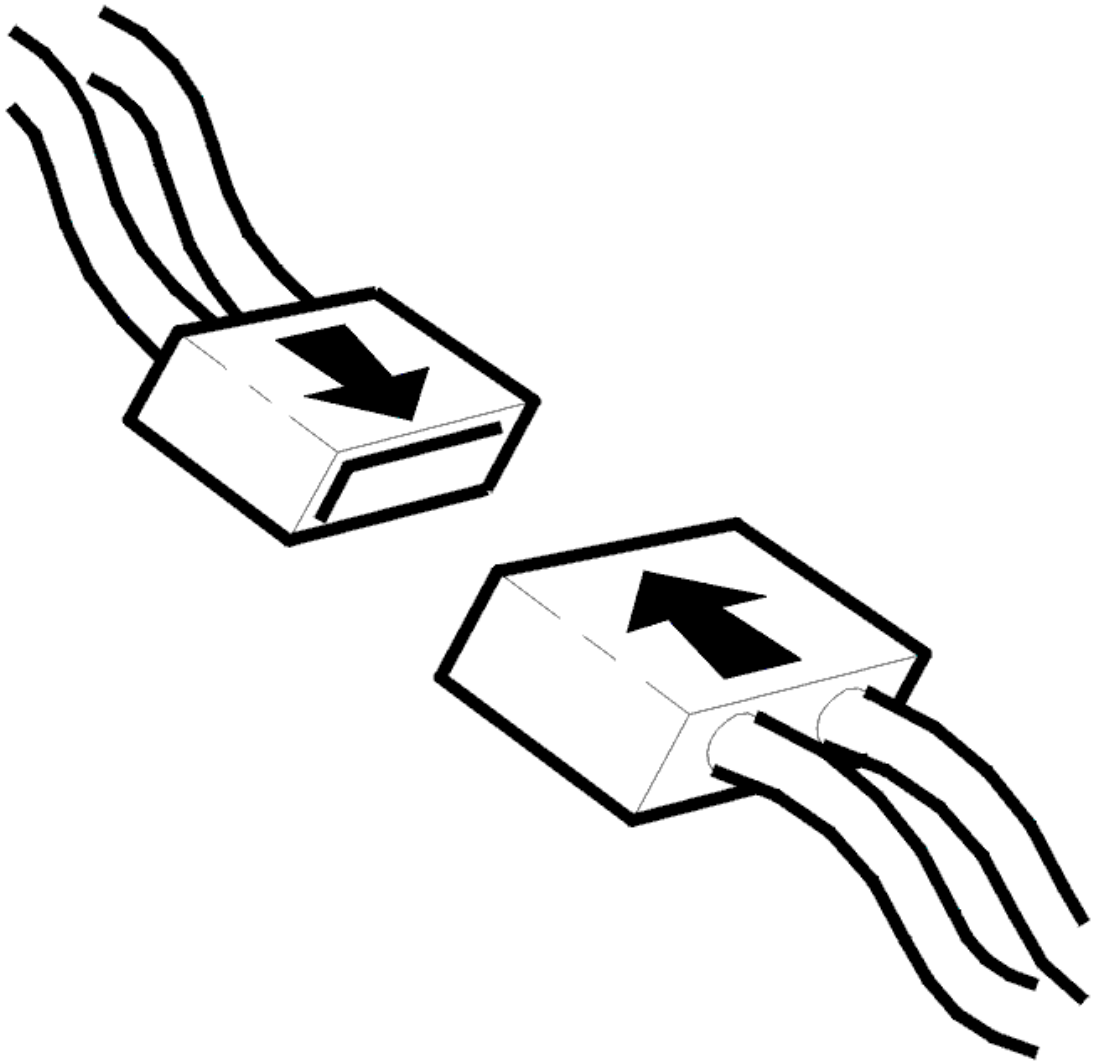

Fig. 326: Identifying Connector(s) Reinstallation
Courtesy of VOLVO CARS CORPORATION

- Ignition off
- Reinstall the connectors, components etc.
- Ignition on.

Read off the status for seat belt reminder sensor by clicking on the VCT2000 symbol.

Check that the sensor changes status with and without a passenger in the passenger seat.

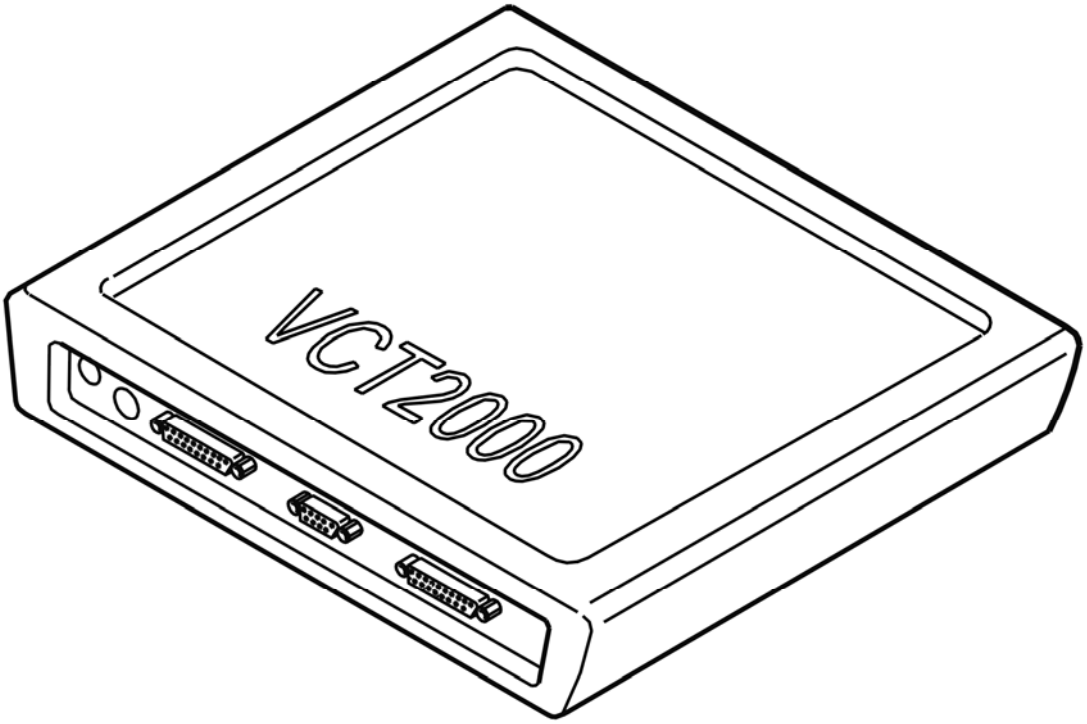

Fig. 327: Identifying VCT2000 Diagnostic Tool Symbol In VIDA
Courtesy of VOLVO CARS CORPORATION

Does the seat belt reminder sensor change status with and without a passenger?

- **YES**

  VERIFIED: Troubleshooting has been completed.

- **NO**

  Refer to **INFORMATION**

INFORMATION

FAULT-TRACING INFORMATION

The fault should have been detected and remedied. As this is not the case fault-tracing has failed.

Exit fault-tracing for this diagnostic trouble code (DTC) or make another attempt.

VERIFICATION

VERIFICATION

HINT: After carrying out the repair, check that the fault has been remedied.

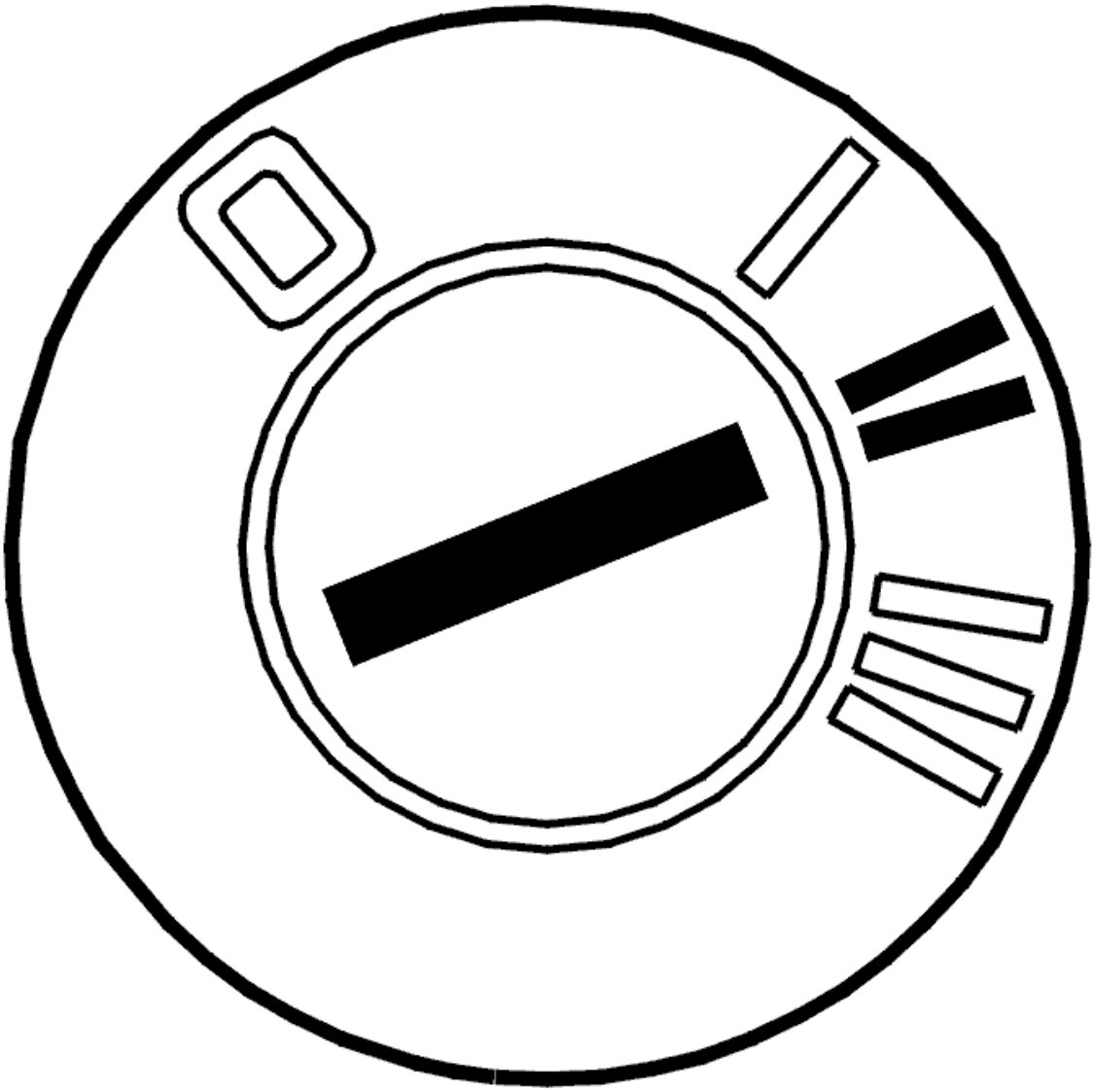

Fig. 328: Identifying Ignition ON
Courtesy of VOLVO CARS CORPORATION

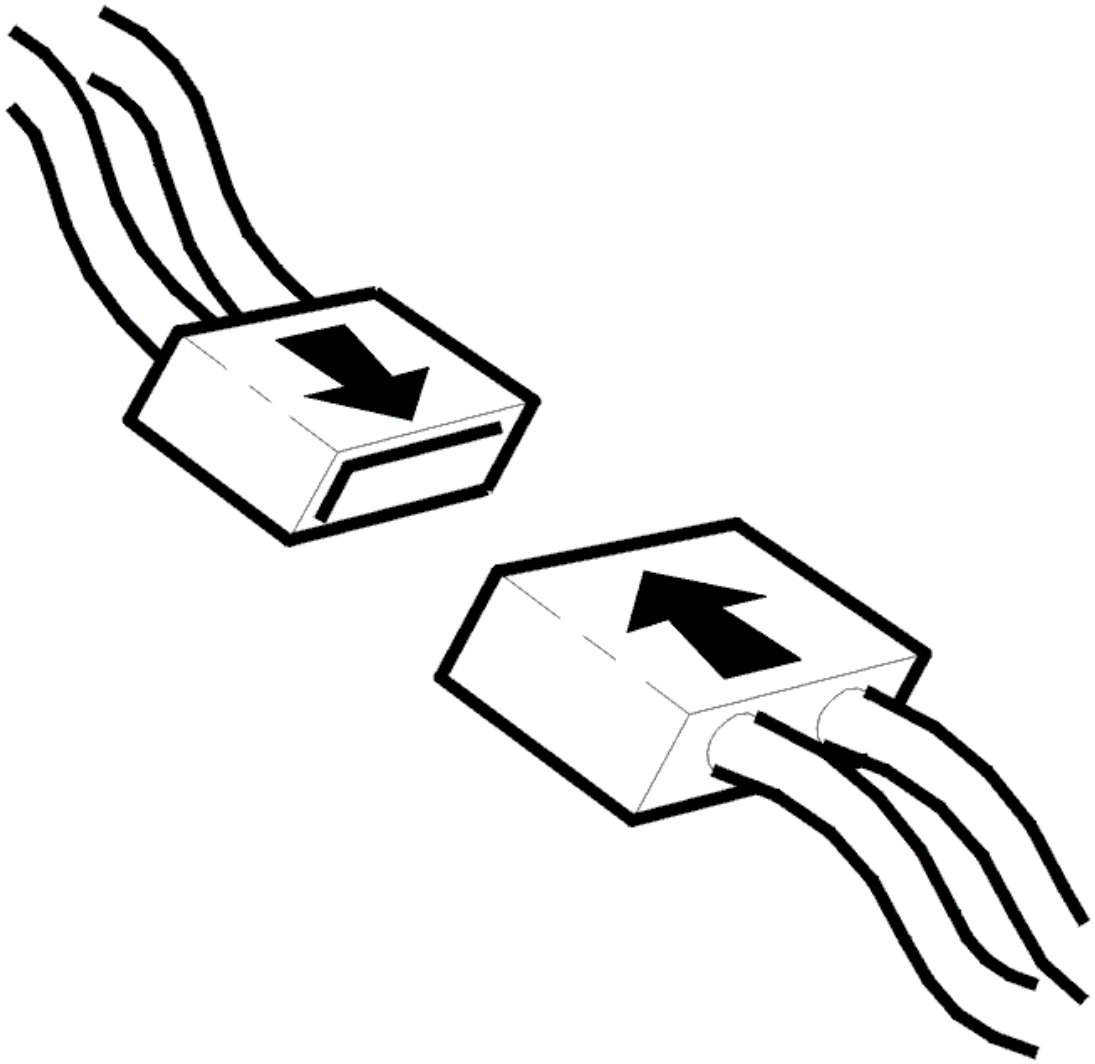

Fig. 329: Identifying Connector(s) Reinstallation
Courtesy of VOLVO CARS CORPORATION

- Ignition off
- Reinstall the connectors, components etc.
- Ignition on.

  Read off the outside temperature in Volts. Check that it matches the value in the table. See **OUTER TEMPERATURE SENSOR** .

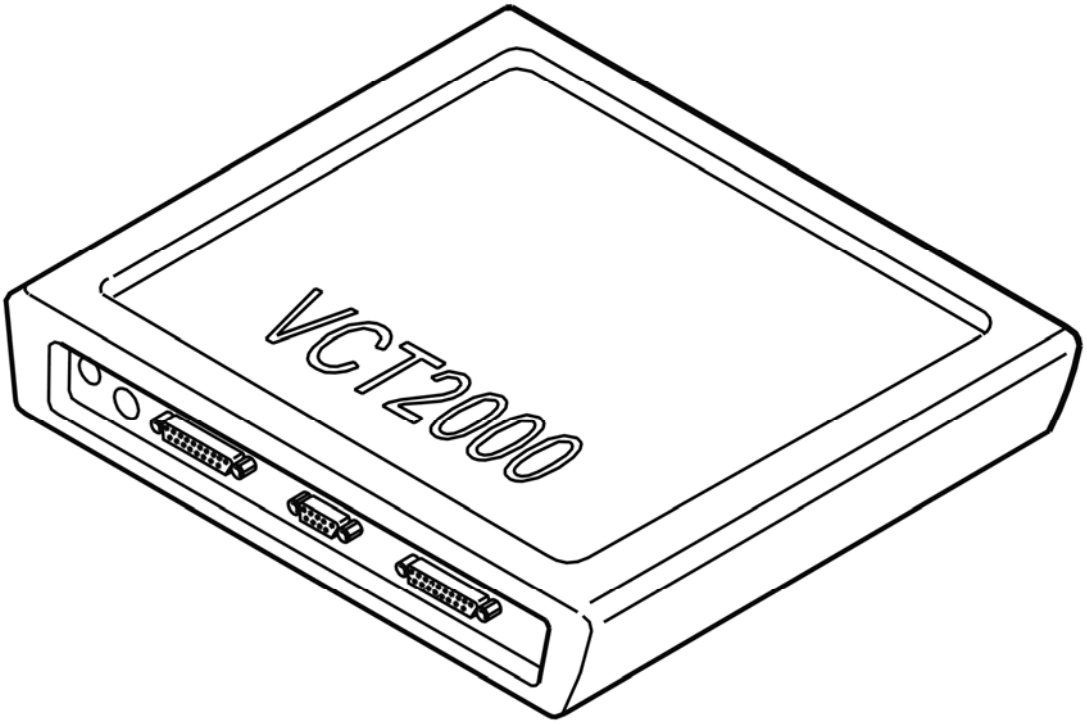

Fig. 330: Identifying VCT2000 Diagnostic Tool Symbol In VIDA
Courtesy of VOLVO CARS CORPORATION

REM-4F91: SENSOR, SEAT BELT REMINDER. SIGNAL TOO LOW (2003-2004)

DIAGNOSTIC TROUBLE CODE (DTC) INFORMATION REM-4F91

Condition

The rear electronic module (REM) checks the signal from the sensor, seat belt reminder in the passenger seat.

Diagnostic trouble code (DTC) REM-4F91 is stored if rear electronic module (REM) registers too low a signal from the seat belt reminder sensor.

Diagnostic trouble code (DTC) REM-4F91 can be detected with ignition in positions I or II for at least 3 minutes and battery voltage > 9 volt.

Substitute Value

- None.

Possible Source

- Short-circuit to ground in the signal cable
- Defective sensor, seat belt reminder.

Fault symptom[s]

- General warning lamp lit.

SIGNAL TOO LOW

CHECKING COMPONENTS AND WIRING

Check the rear electronic module (REM) and seat belt reminder sensor connectors. Check for contact resistance and oxidation. Check for damage and loose connections. Also check intermediate connector.

Check the signal cable between rear electronic module (REM) terminal #B19 (terminal #A39) and seat belt reminder sensor connector terminal #9. Check for a short-circuit to ground.

Check the signal cable between rear electronic module (REM) terminal #B20 (terminal #A40) and seat belt reminder sensor connector terminal #10. Check for a short-circuit to ground.

Check the seat belt reminder sensor. Measure the resistance between terminals #9 and #10 in the sensor connector.

HINT: The resistance should be above 100 kohms with no passengers and below 10 kohms with passengers.

Remedy as necessary.

Other information:

- To connect the breakout box, see **CONNECTING THE BREAKOUT BOX**
- To access or replace the seat belt reminder sensor, see **HEATER PAD BACKREST AND CUSHION, REPLACING** (-2004) or **HEATER PAD BACKREST AND CUSHION, REPLACING** (2005-).
- For information about signals, see **SIGNAL SPECIFICATION**
- see **CHECKING WIRING AND TERMINALS** .

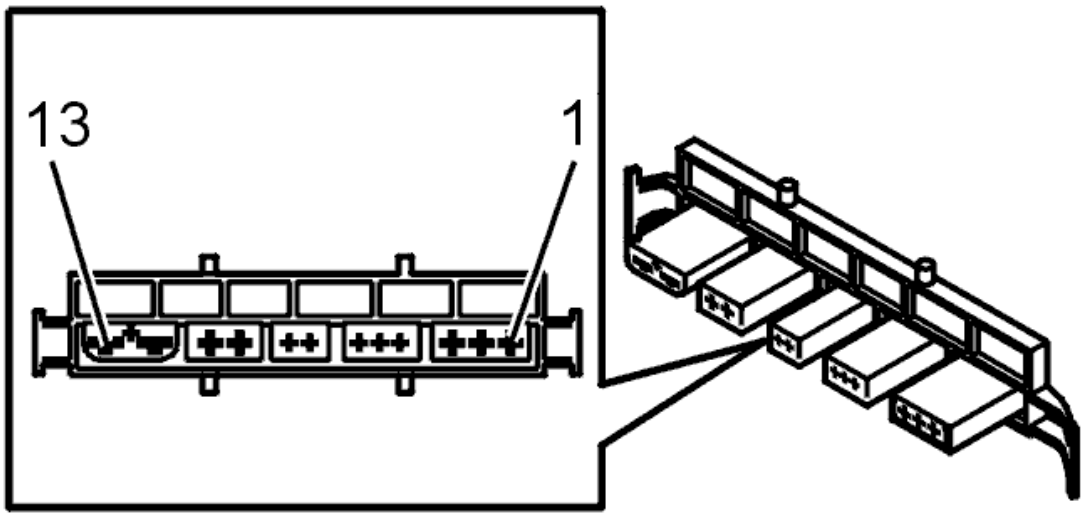

Fig. 331: Identifying Seat Belt Reminder Sensor Connector Terminals
Courtesy of VOLVO CARS CORPORATION

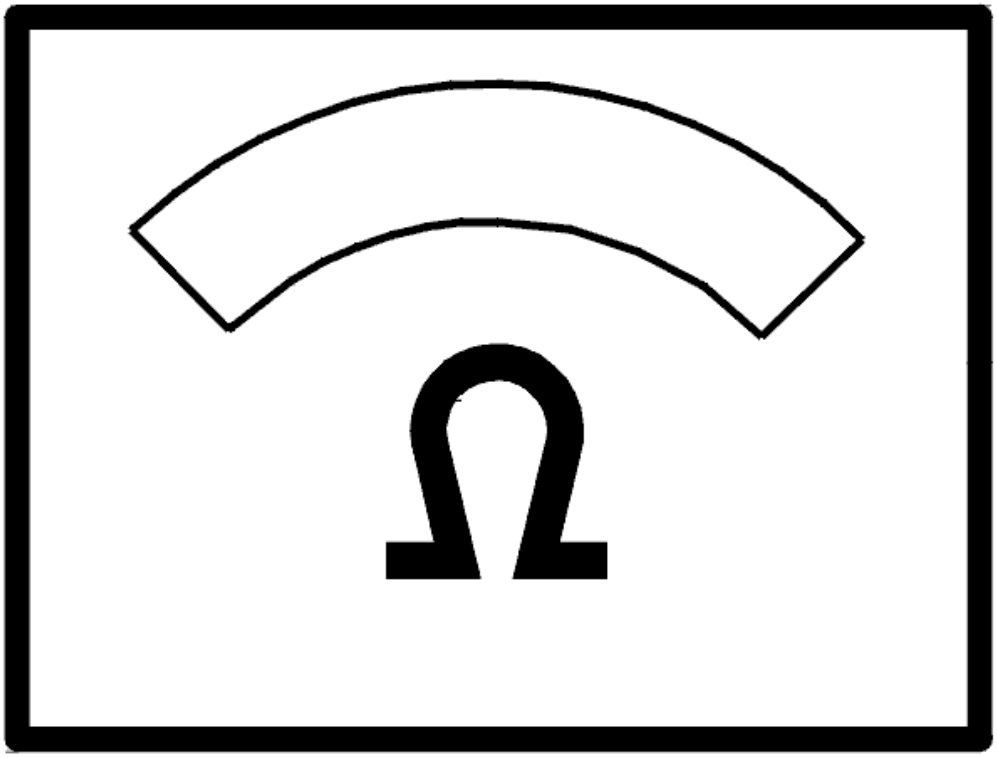

Fig. 332: Identifying Ohms Display
Courtesy of VOLVO CARS CORPORATION

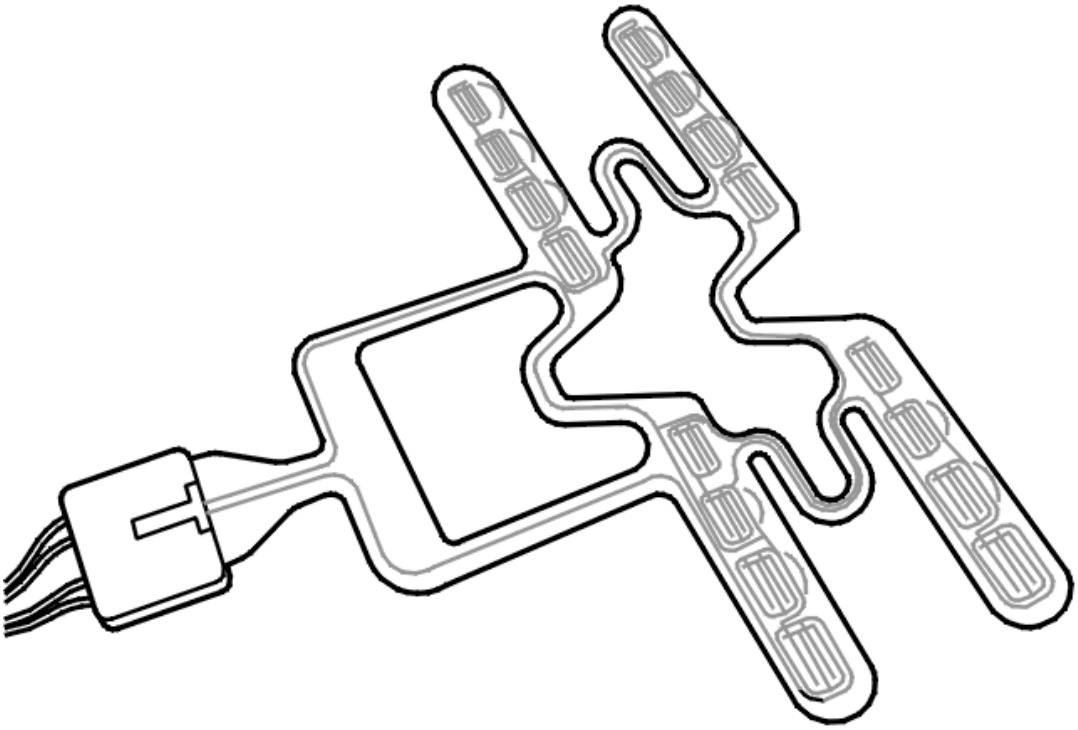

Fig. 333: Identifying Seat Belt Reminder Sensor
Courtesy of VOLVO CARS CORPORATION

- **Continue**

  Refer to **VERIFICATION**

VERIFICATION

VERIFICATION

HINT: After carrying out the repair, check that the fault has been remedied.

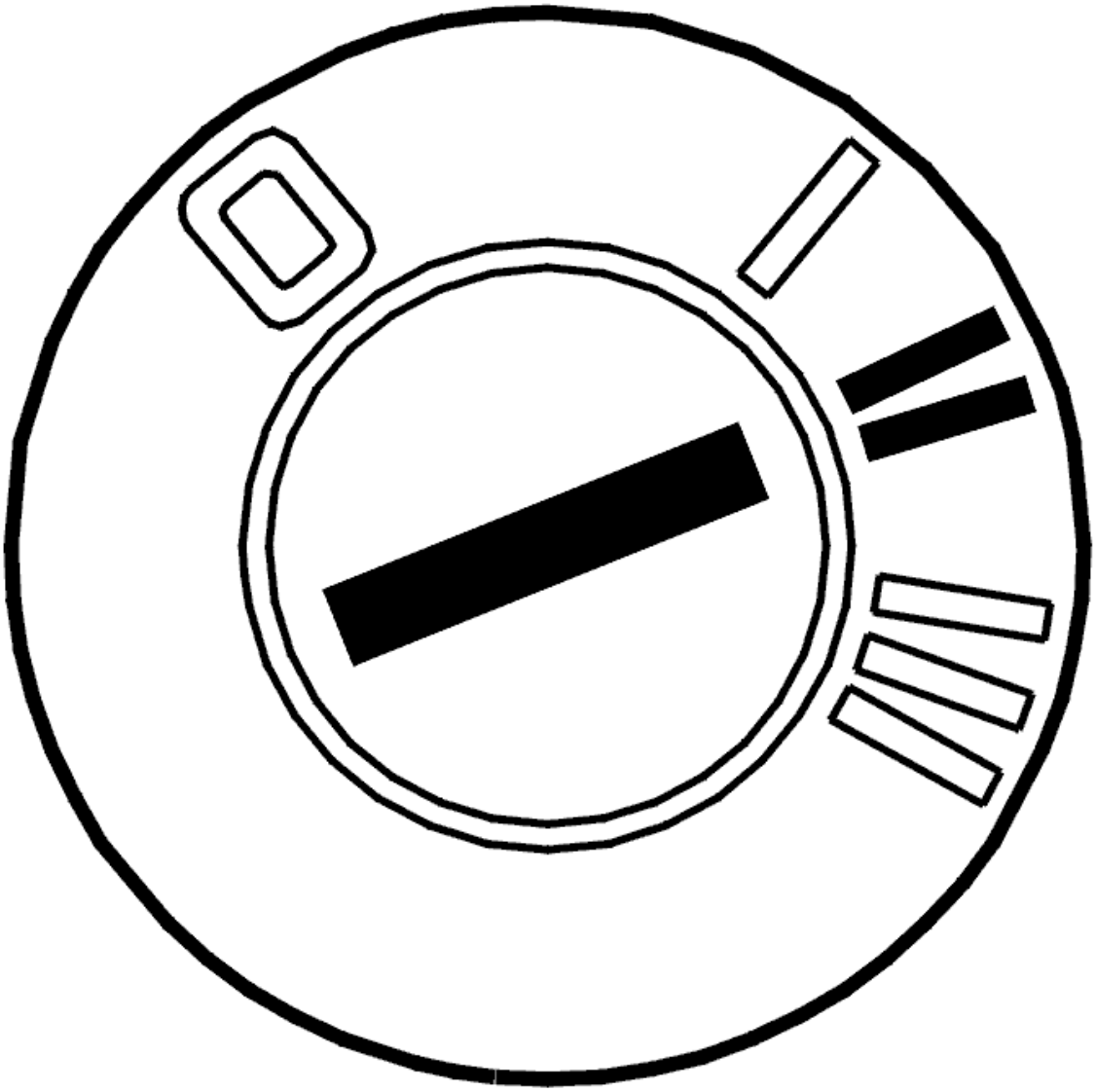

Fig. 334: Identifying Ignition ON
Courtesy of VOLVO CARS CORPORATION

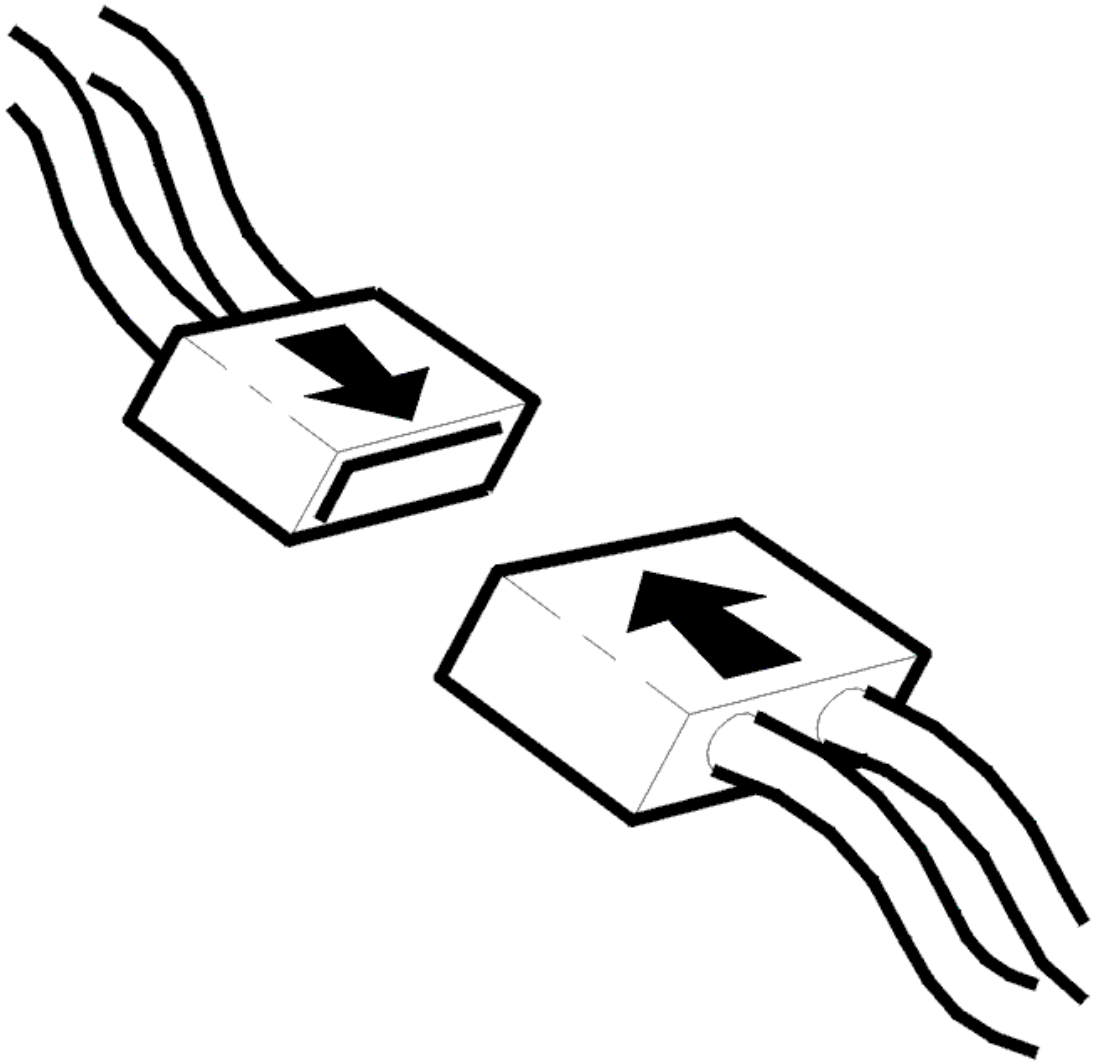

Fig. 335: Identifying Connector(s) Reinstallation
Courtesy of VOLVO CARS CORPORATION

- Ignition off
- Reinstall the connectors, components etc.
- Ignition on.

Read off the status for seat belt reminder sensor by clicking on the VCT2000 symbol.

Check that the sensor changes status with and without a passenger in the passenger seat.

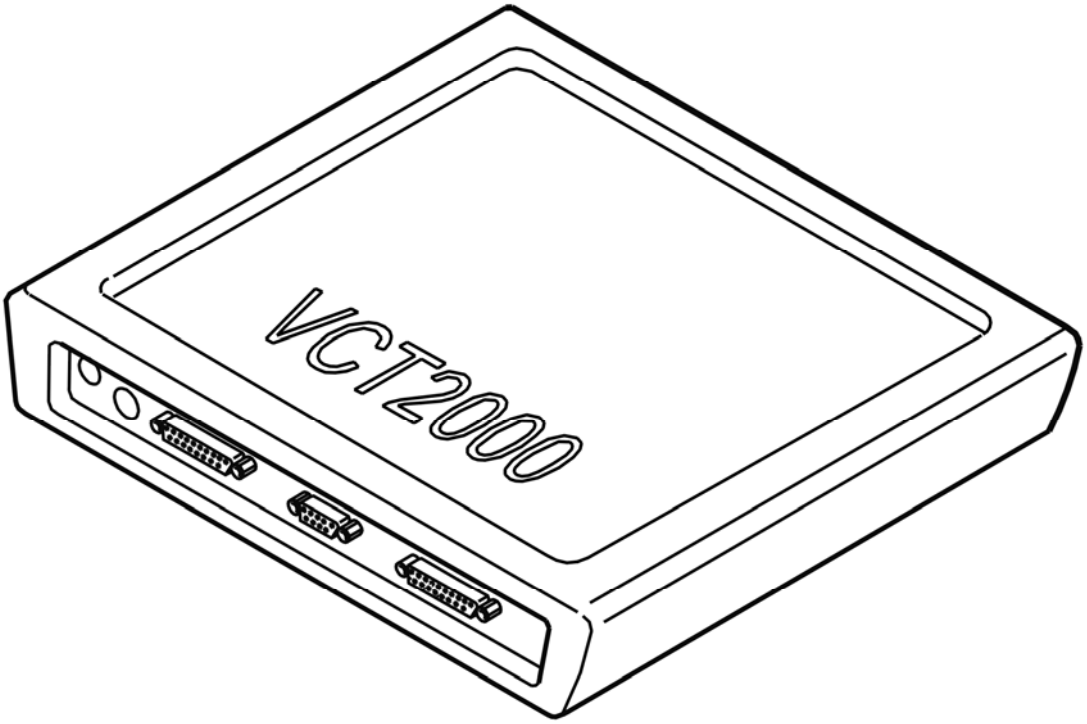

Fig. 336: Identifying VCT2000 Diagnostic Tool Symbol In VIDA
Courtesy of VOLVO CARS CORPORATION

Does the seat belt reminder sensor change status with and without a passenger?

- **YES**

  VERIFIED: Troubleshooting has been completed.

- **NO**

  Refer to **INFORMATION**

INFORMATION

FAULT-TRACING INFORMATION

The fault should have been detected and remedied. As this is not the case fault-tracing has failed.

Exit fault-tracing for this diagnostic trouble code (DTC) or make another attempt.

ELECTRICAL

Cables And Fuses - Diagnostic Trouble Codes and Associated Procedures

REM-8F13: BI-XENON LAMP POSITION SENSOR. CALIBRATION FAULT (2004)

DIAGNOSTIC TROUBLE CODE (DTC) INFORMATION REM-8F13

Condition

The rear electrical module checks if the position sensor for the xenon lamp has been correctly calibrated.

Diagnostic trouble code (DTC) REM-8F13 is stored if the rear electronic module (REM) registers that the position sensor for the xenon lamp has not been correctly calibrated.

Diagnostic trouble code (DTC) REM-8F13 can be detected after calibration has been carried out.

Substitute Value

None.

Possible Source

- The position sensor for the Xenon lamp is incorrectly installed
- The calibration has been run with the vehicle under load or on an uneven surface.

Fault symptom[s]

- The road surface is not illuminated.

CALIBRATION FAULT

CALIBRATING THE COMPONENT

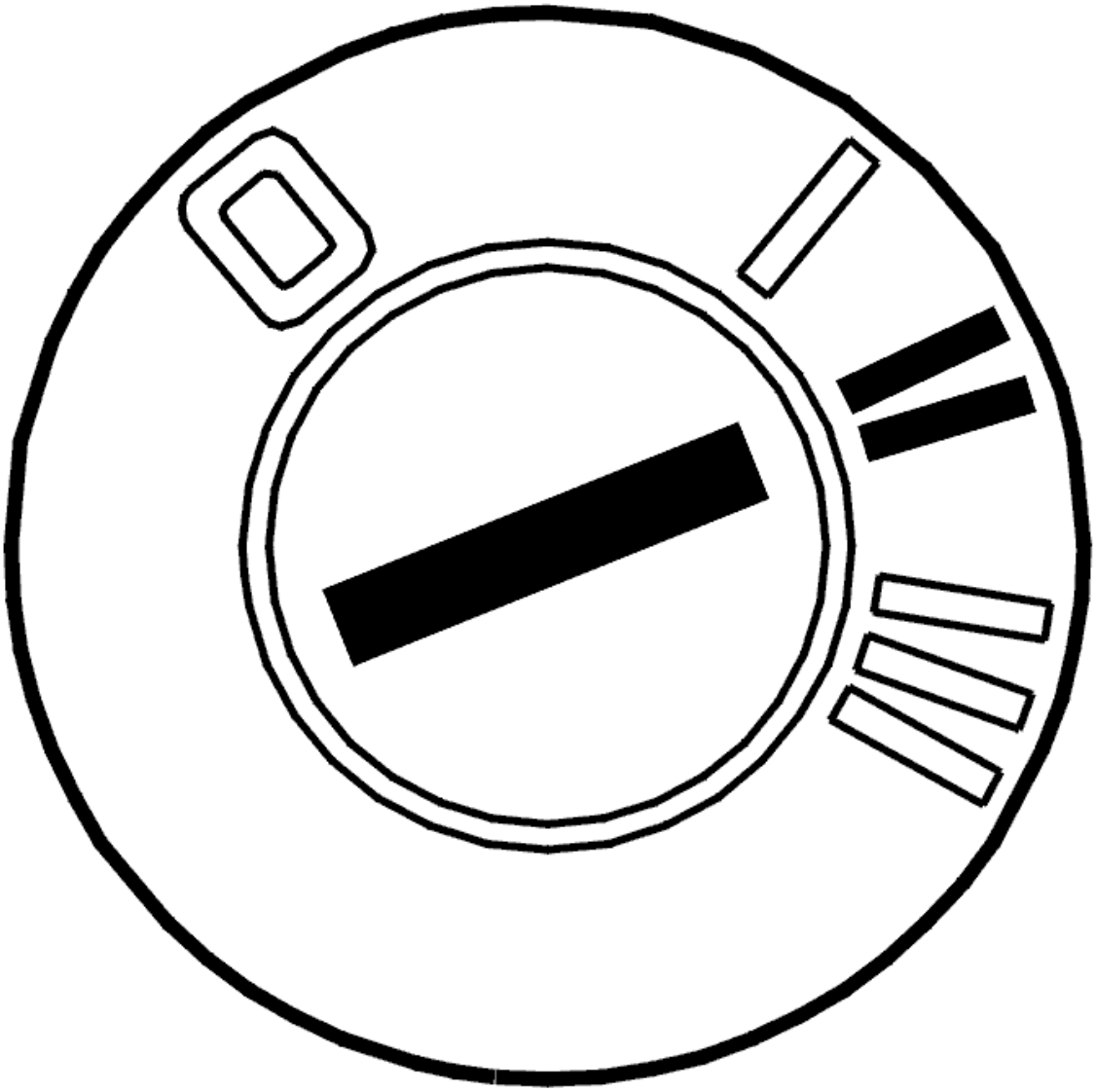

Fig. 1: Identifying Ignition ON
Courtesy of VOLVO CARS CORPORATION

NOTE: **If the vehicle is equipped with Four-C, calibration must be carried out via suspension module (SUM).**

Check that the position sensor for the Bi-Xenon lamps is correctly installed.

Someone must sit in the driver's seat during calibration. The person must weigh at least 75 kg. Ensure that the vehicle is unladen and is on a flat surface.

Calibrate the position sensor for the Bi-Xenon lamps again.

- Ignition on
- Calibrate the position sensor using the VCT2000 (or appropriate scan tool).

Other information

- see **POSITION SENSOR BI-XENON LAMPS, REPLACING**

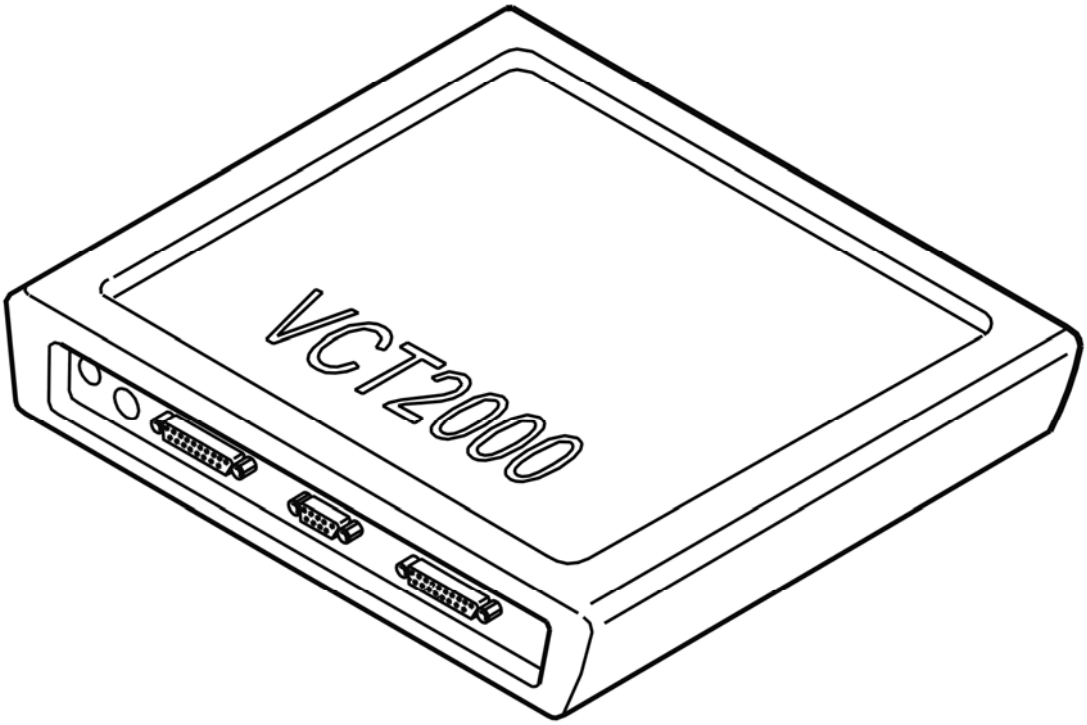

Fig. 2: Identifying VCT2000 Diagnostic Tool Symbol In VIDA
Courtesy of VOLVO CARS CORPORATION

- **Continue**

  Refer to **VERIFICATION**

VERIFICATION

VERIFICATION

HINT: After carrying out the repair, check that the fault has been remedied.

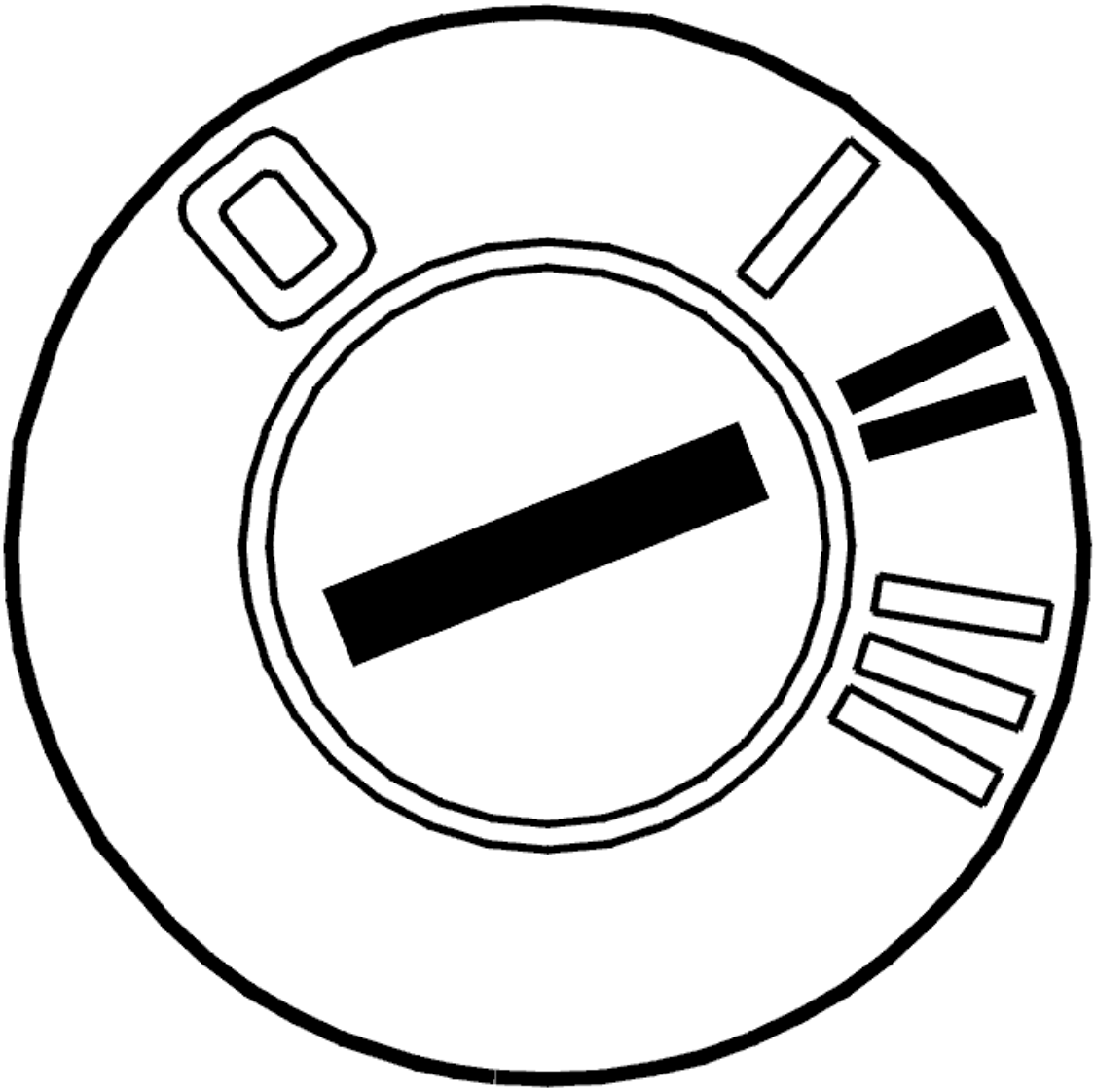

Fig. 3: Identifying Ignition ON
Courtesy of VOLVO CARS CORPORATION

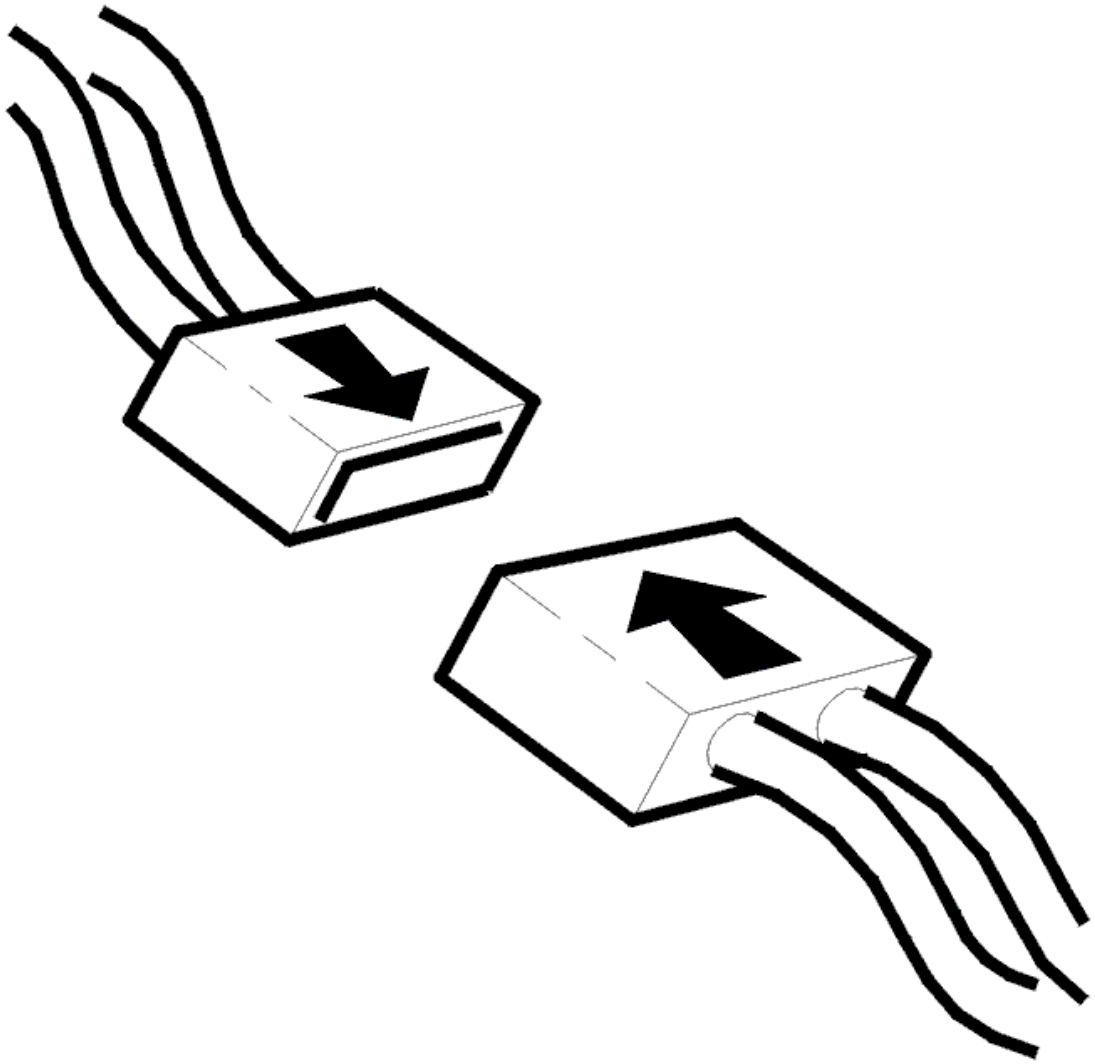

Fig. 4: Identifying Connector(s) Reinstallation
Courtesy of VOLVO CARS CORPORATION

- Ignition off
- Reinstall the connectors, components etc.
- Ignition on.

  Check that the position sensor for the Xenon lamp is calibrated using the VCT2000 (or appropriate scan tool).

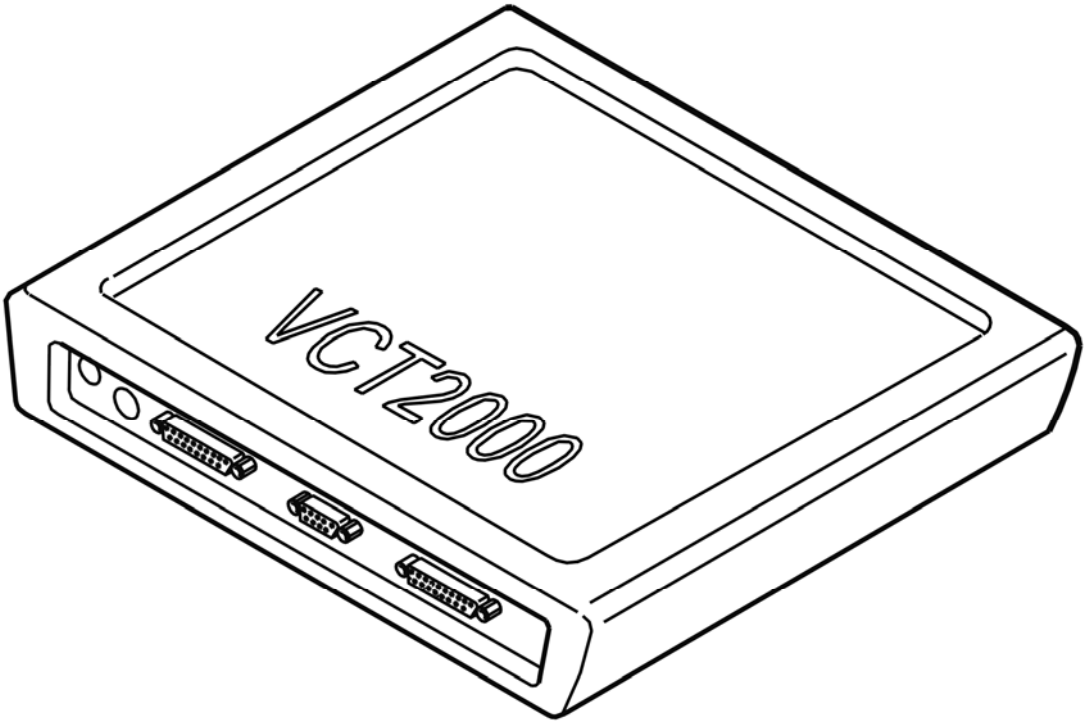

Fig. 5: Identifying VCT2000 Diagnostic Tool Symbol In VIDA
Courtesy of VOLVO CARS CORPORATION

Is the calibration OK?

- **YES**

  VERIFIED: Troubleshooting has been completed.

- **NO**

  Refer to **INFORMATION**

INFORMATION

FAULT-TRACING INFORMATION

The fault should have been detected and remedied. As this is not the case fault-tracing has failed.

Exit fault-tracing for this diagnostic trouble code (DTC) or make another attempt.

REM-8F13: POSITION SENSOR XENON LAMP. CALIBRATION FAULT (2005-2012)

DIAGNOSTIC TROUBLE CODE (DTC) INFORMATION REM-8F13

Condition

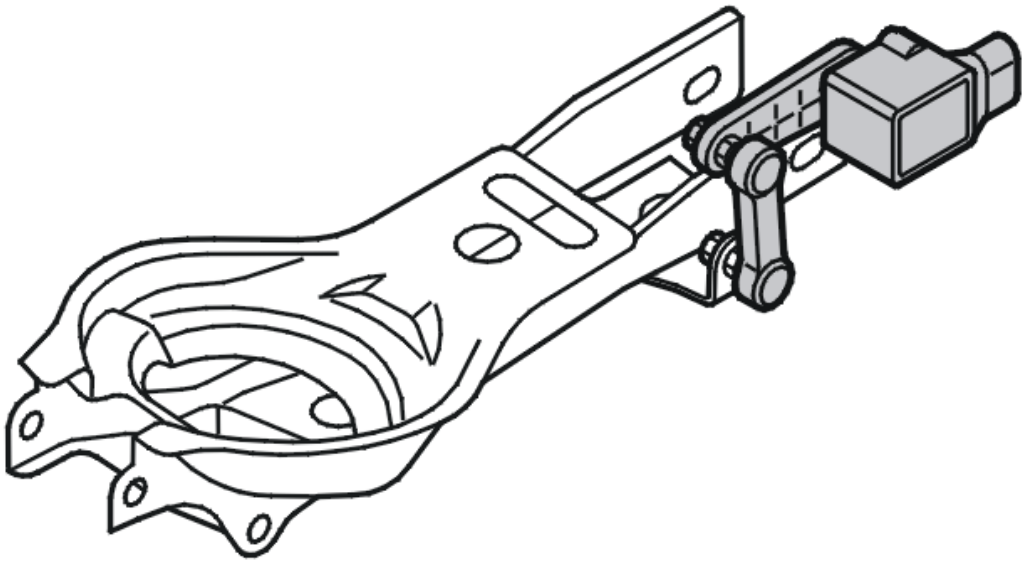

Fig. 6: Identifying Position Sensor For Headlamp
Courtesy of VOLVO CARS CORPORATION

The rear electronic module (REM) checks the signal from the rear position sensor.

The diagnostic trouble code (DTC) is stored if the rear electronic module (REM) registers that the calibration of the position sensor failed.

The diagnostic trouble code (DTC) can be diagnosed at key position II.

Substitute Value

- The shortest headlamp range will be used.

Possible Source

- The calibration of the position sensor failed.

Fault symptom[s]

- Automatic headlamp range control is not functioning.

CALIBRATION FAULT

CALIBRATING THE COMPONENT

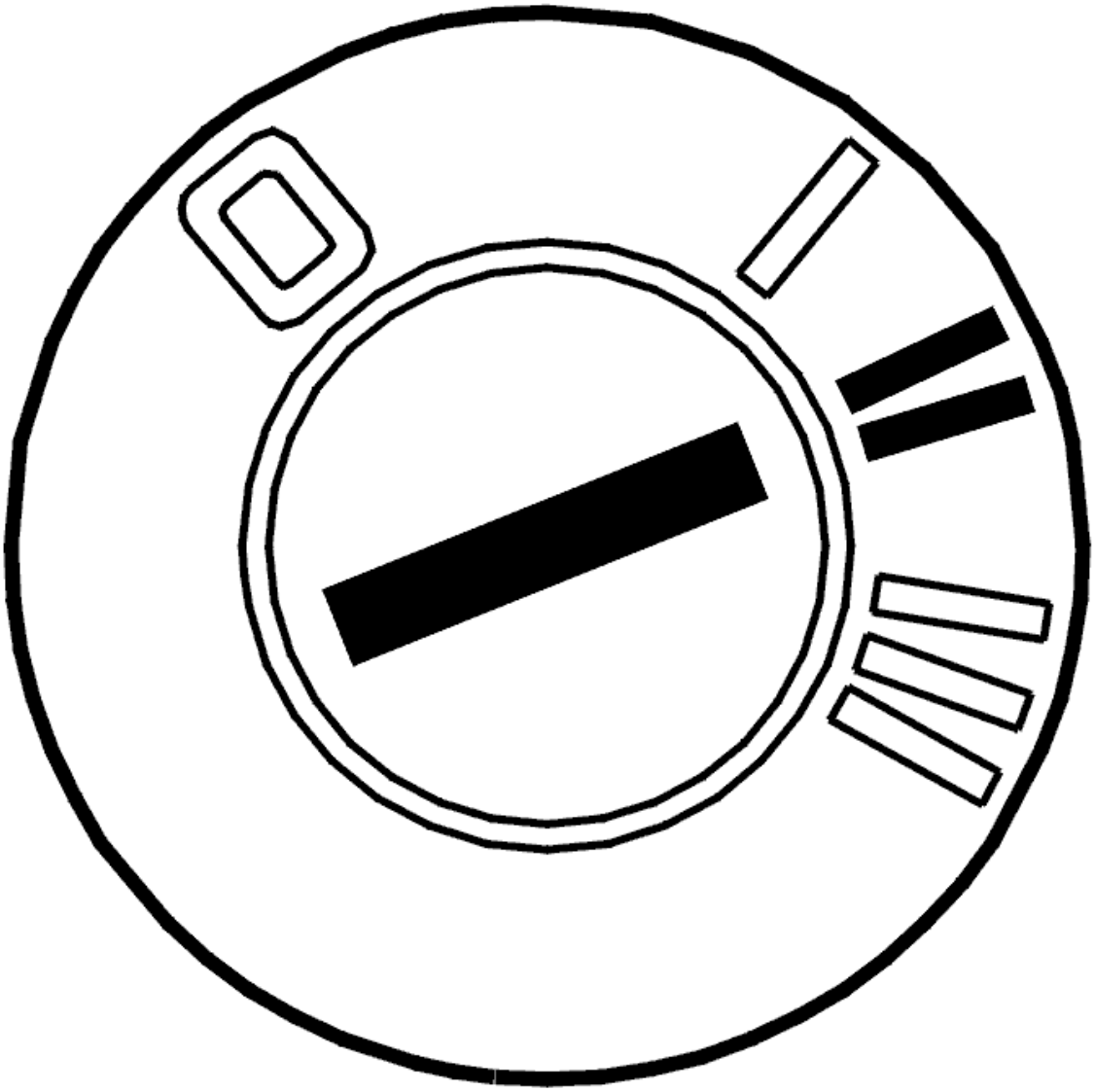

Fig. 7: Identifying Ignition ON
Courtesy of VOLVO CARS CORPORATION

NOTE: If the vehicle is equipped with Four-C, calibration must be carried out via suspension module (SUM).

Check that the position sensor for the Bi-Xenon lamps is correctly installed.

Someone must sit in the driver's seat during calibration. The person must weigh at least 75 kg. Ensure that the

vehicle is unladen and is on a flat surface.

Calibrate the position sensor for the Bi-Xenon lamps again.

- Ignition on
- Calibrate the position sensor using the VCT2000 (or appropriate scan tool).

Other information

- see **POSITION SENSOR BI-XENON LAMPS, REPLACING**

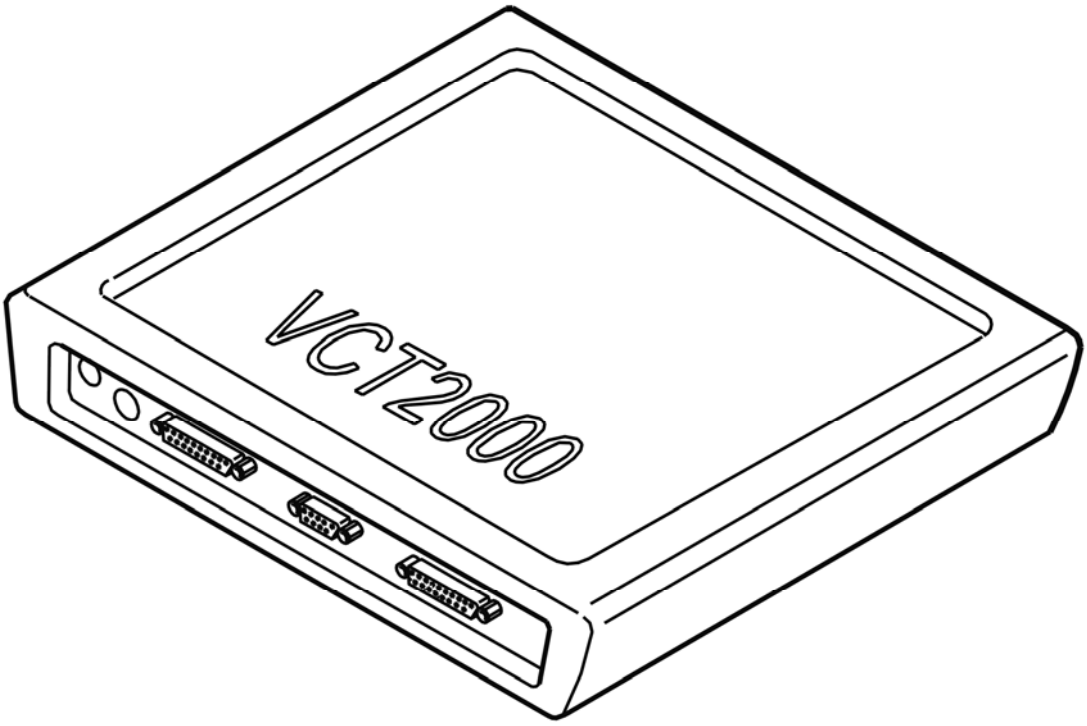

Fig. 8: Identifying VCT2000 Diagnostic Tool Symbol In VIDA
Courtesy of VOLVO CARS CORPORATION

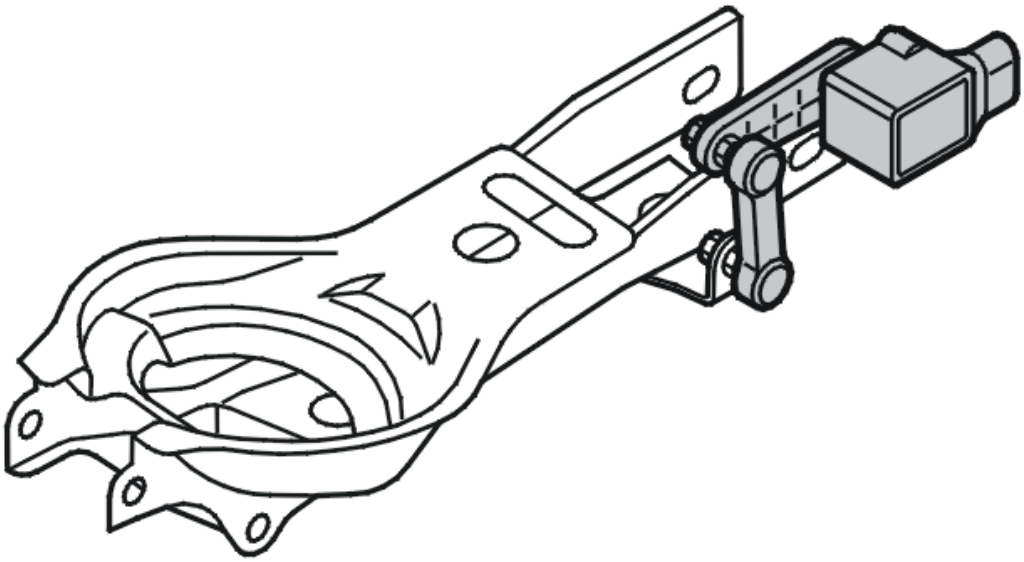

Fig. 9: Identifying Position Sensor For Headlamp
Courtesy of VOLVO CARS CORPORATION

- **Continue**

  Refer to **VERIFICATION**

VERIFICATION

VERIFICATION

HINT: After carrying out the repair, check that the fault has been remedied.

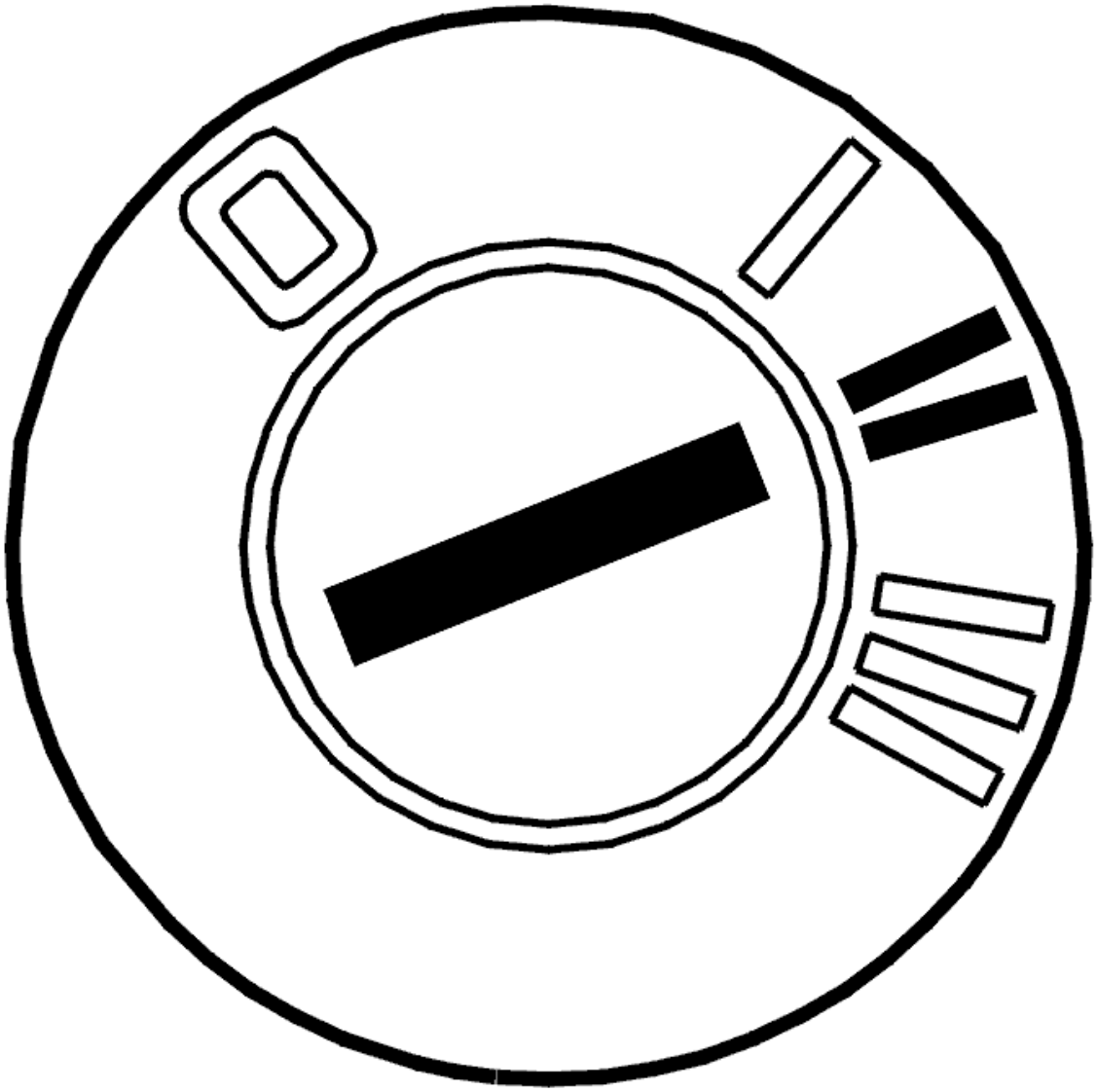

Fig. 10: Identifying Ignition ON
Courtesy of VOLVO CARS CORPORATION

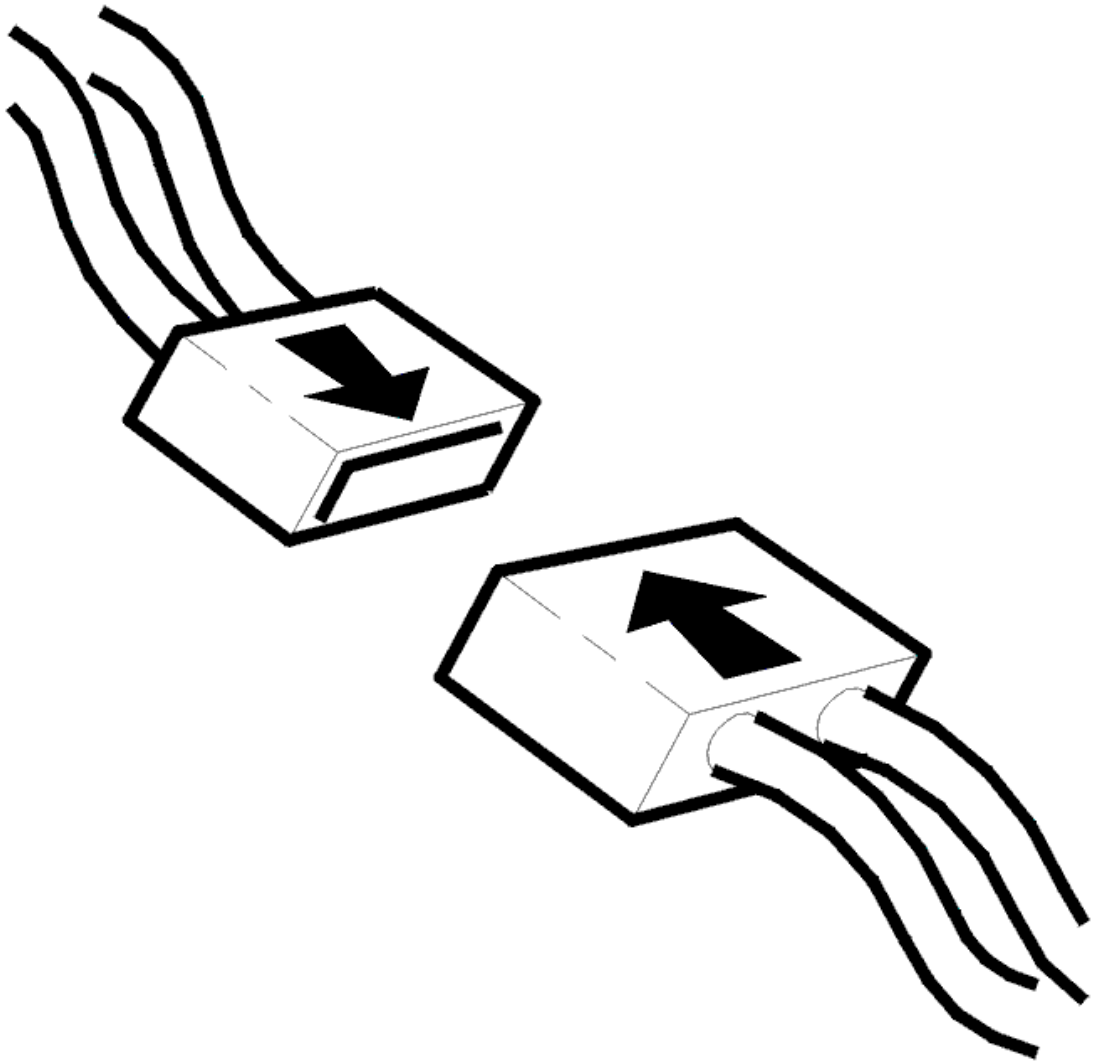

Fig. 11: Identifying Connector(s) Reinstallation
Courtesy of VOLVO CARS CORPORATION

- Ignition off
- Reinstall the connectors, components etc.
- Ignition on.

  Check that the position sensor for the Xenon lamp is calibrated using the VCT2000 (or appropriate scan tool).

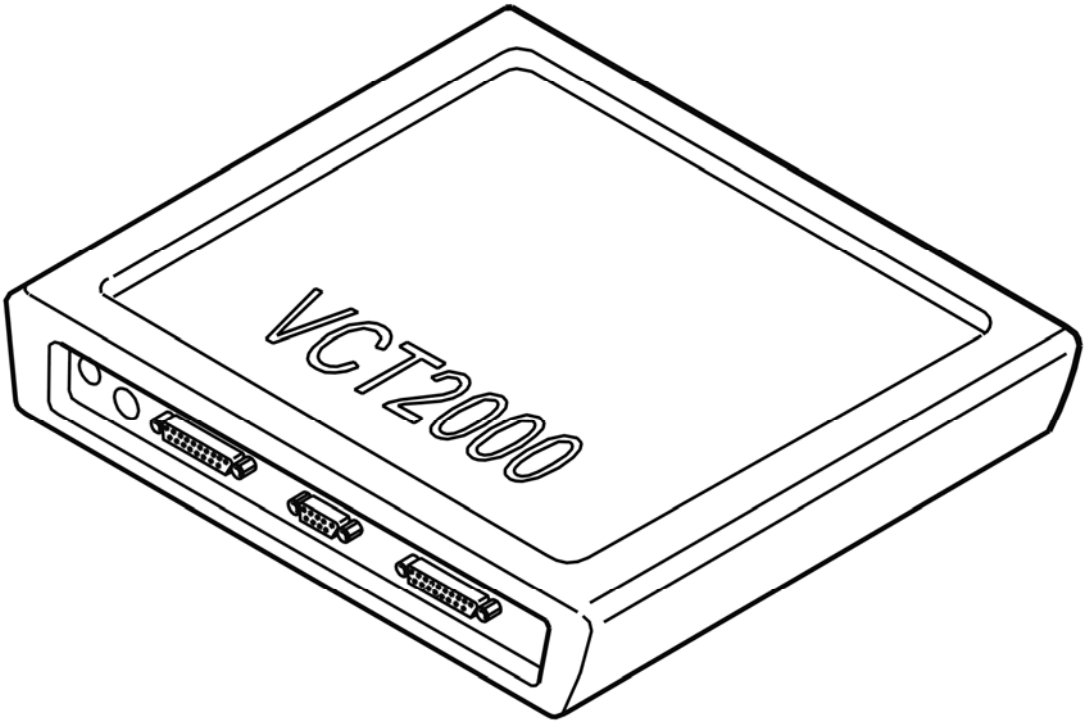

Fig. 12: Identifying VCT2000 Diagnostic Tool Symbol In VIDA
Courtesy of VOLVO CARS CORPORATION

Is the calibration OK?

- **YES**

  VERIFIED: Troubleshooting has been completed.

- **NO**

  Refer to **INFORMATION**

INFORMATION

FAULT-TRACING INFORMATION

The fault should have been detected and remedied. As this is not the case fault-tracing has failed.

Exit fault-tracing for this diagnostic trouble code (DTC) or make another attempt.

CALIBRATION FAULT

CALIBRATING THE COMPONENT

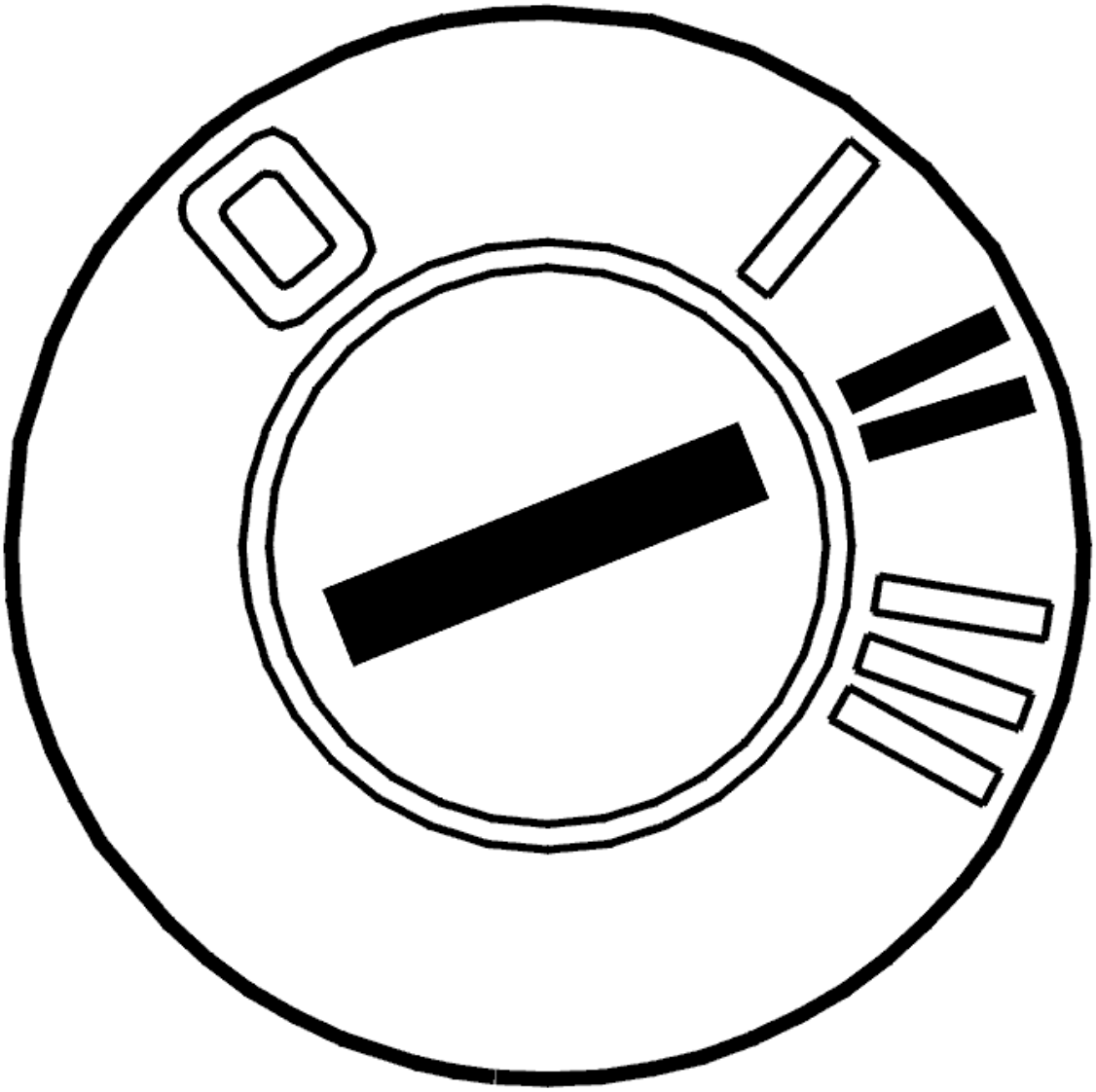

Fig. 13: Identifying Ignition ON
Courtesy of VOLVO CARS CORPORATION

NOTE: If the vehicle is equipped with Four-C, calibration must be carried out via suspension module (SUM).

Check that the position sensor for the Bi-Xenon lamps is correctly installed.

Someone must sit in the driver's seat during calibration. The person must weigh at least 75 kg. Ensure that the vehicle is unladen and is on a flat surface.

Calibrate the position sensor for the Bi-Xenon lamps again.

- Ignition on
- Calibrate the position sensor using the VCT2000 (or appropriate scan tool).

Other information

- see **REPLACING POSITION SENSORS FOR BI-XENON LAMPS**

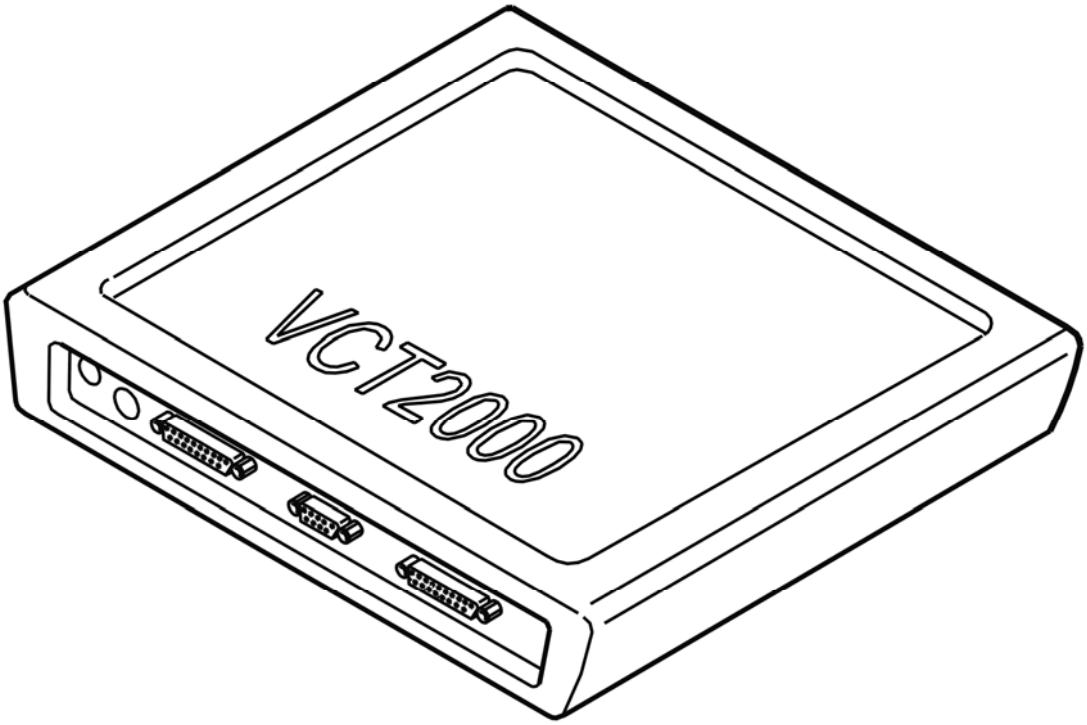

Fig. 14: Identifying VCT2000 Diagnostic Tool Symbol In VIDA
Courtesy of VOLVO CARS CORPORATION

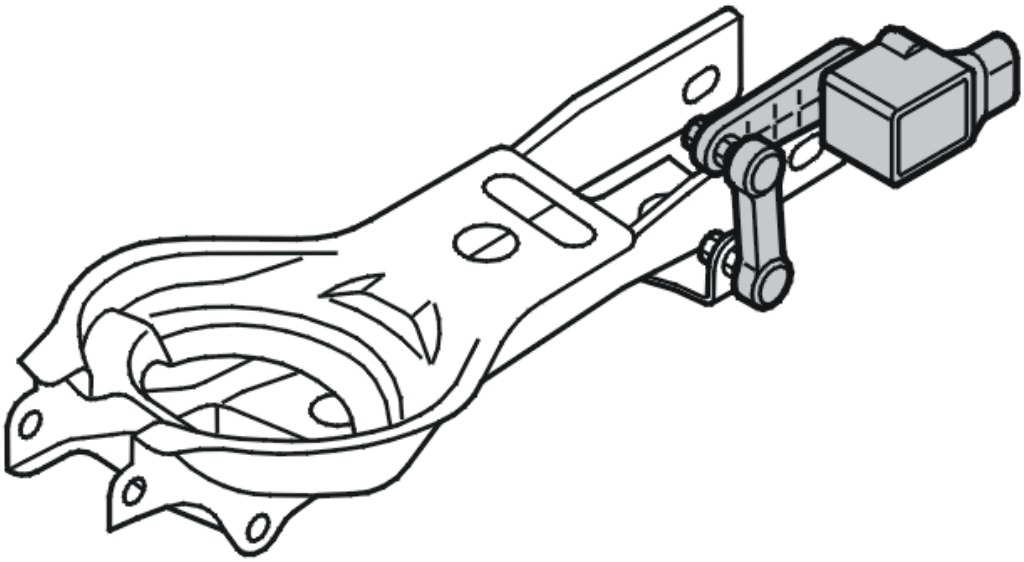

Fig. 15: Identifying Position Sensor For Headlamp
Courtesy of VOLVO CARS CORPORATION

- **Continue**

  see **VERIFICATION**

VERIFICATION

HINT: After carrying out the repair, check that the fault has been remedied.

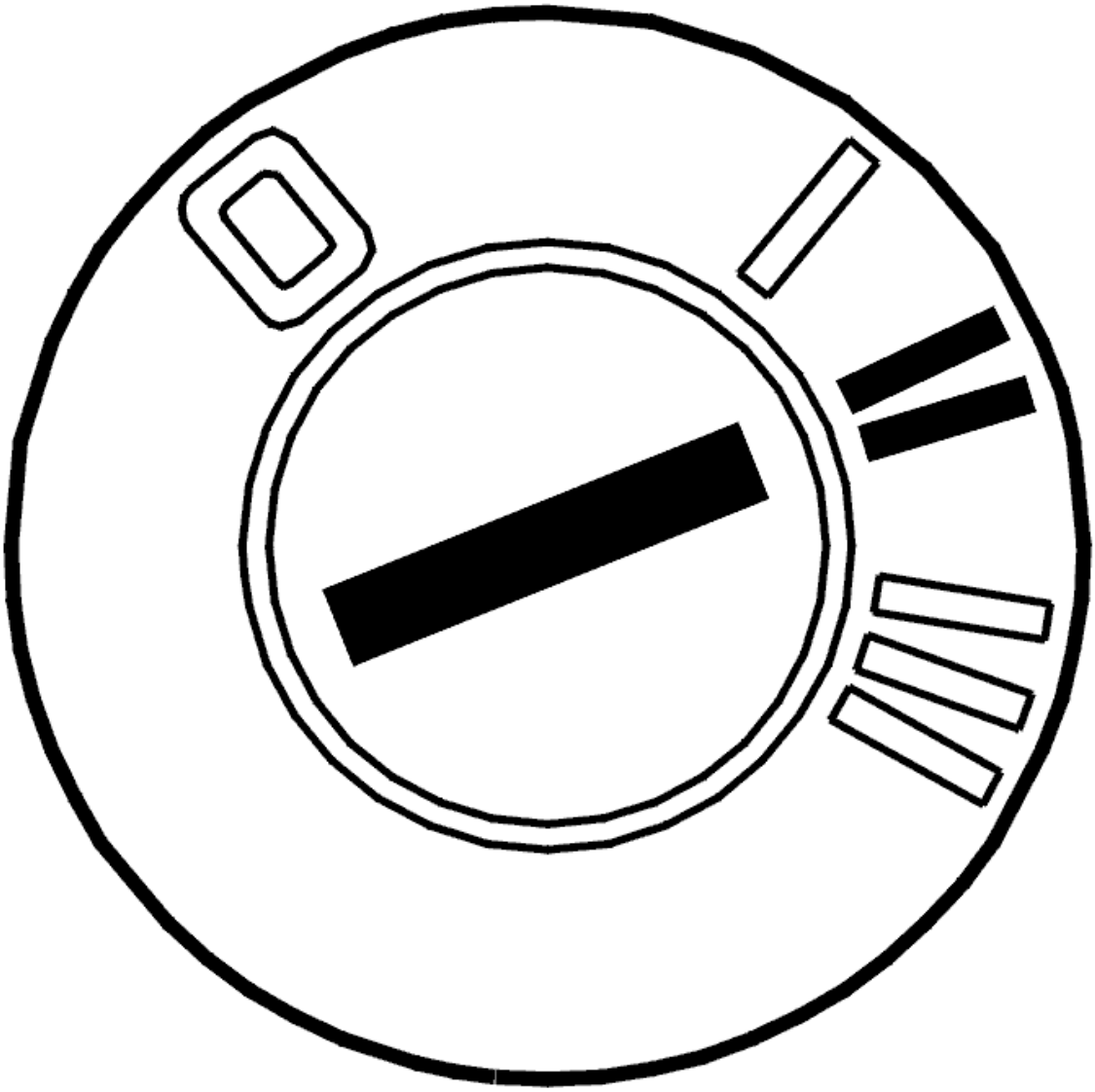

Fig. 16: Identifying Ignition ON
Courtesy of VOLVO CARS CORPORATION

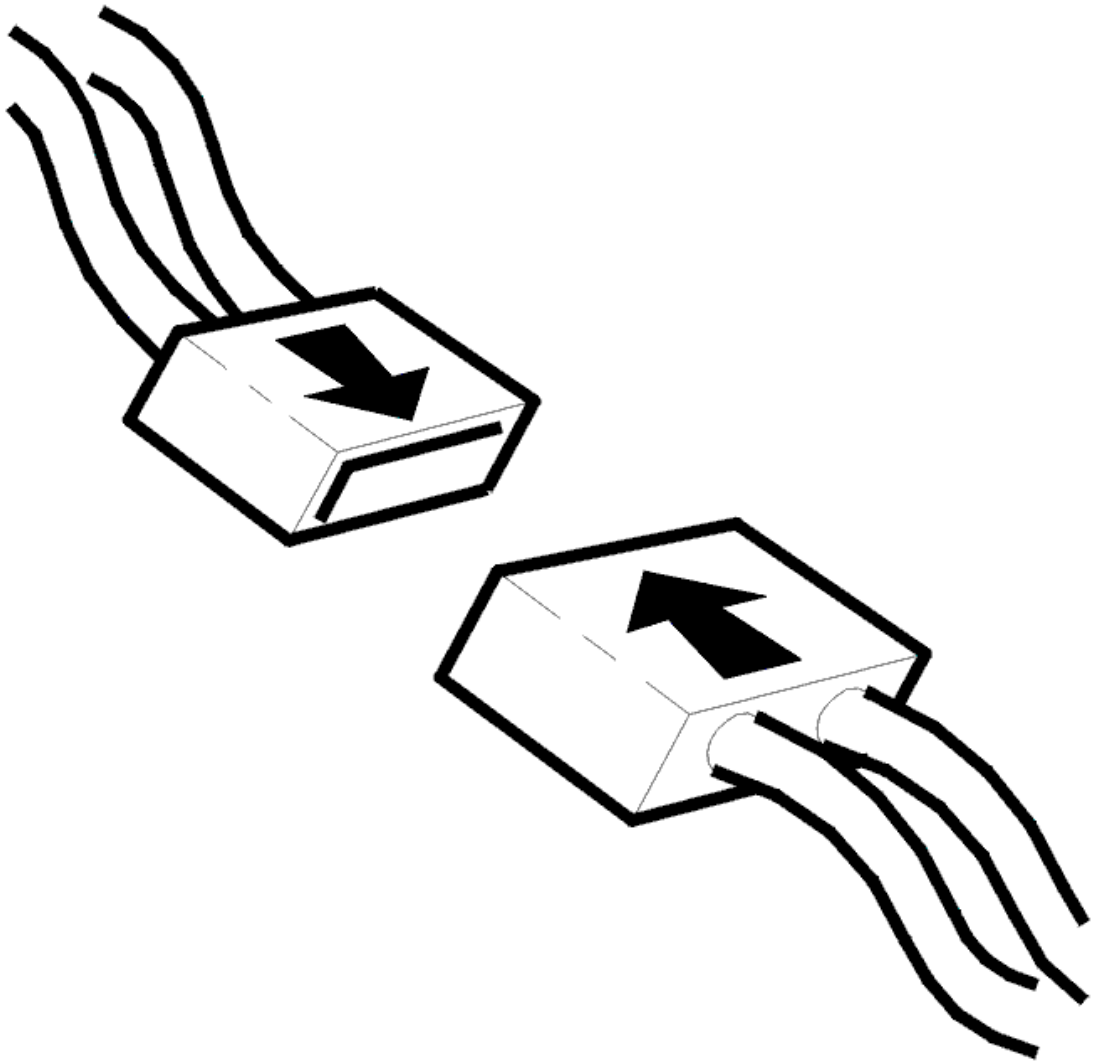

Fig. 17: Identifying Connector(s) Reinstallation
Courtesy of VOLVO CARS CORPORATION

- Ignition off
- Reinstall the connectors, components etc.
- Ignition on.

  Check that the position sensor for the Xenon lamp is calibrated using the VCT2000 (or appropriate scan tool).

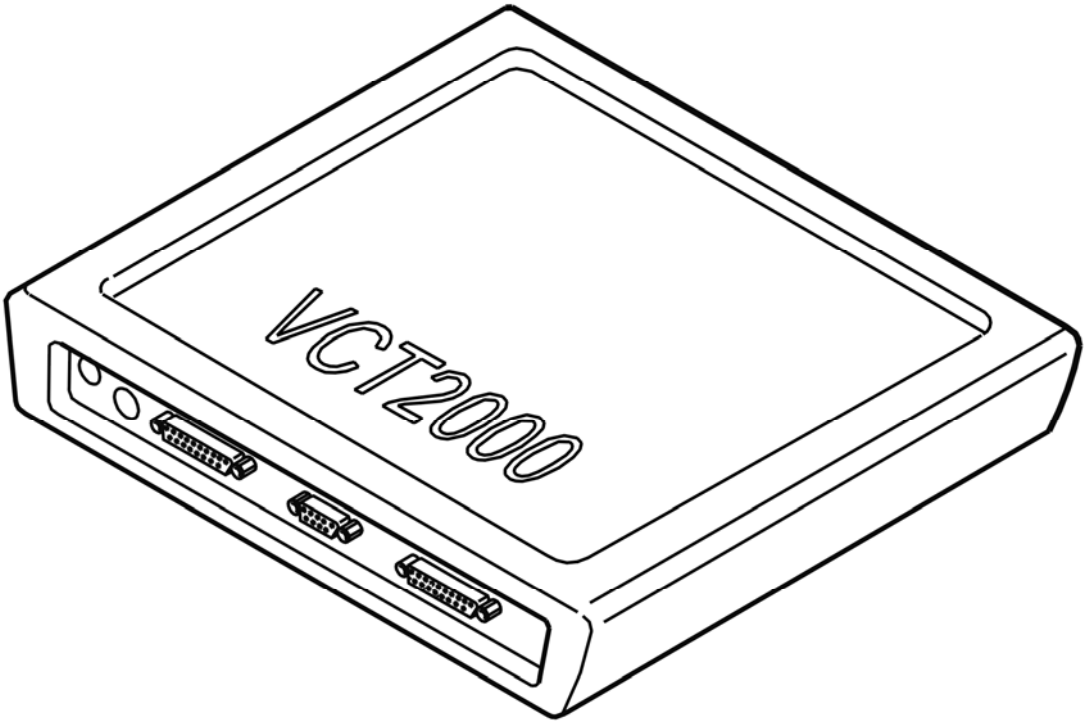

Fig. 18: Identifying VCT2000 Diagnostic Tool Symbol In VIDA
Courtesy of VOLVO CARS CORPORATION

Is the calibration OK?

- **YES**

  VERIFIED: Troubleshooting has been completed.

- **NO**

  Refer to **FAULT-TRACING INFORMATION**

FAULT-TRACING INFORMATION

The fault should have been detected and remedied. As this is not the case fault-tracing has failed.

Exit fault-tracing for this diagnostic trouble code (DTC) or make another attempt.

REM-8F41: TAILGATE WIPER RELAY. SIGNAL TOO HIGH. INTERMITTENT FAULT (2003-2004)

DIAGNOSTIC TROUBLE CODE INFORMATION

Condition

Diagnostic trouble code (DTC) REM-8F41 is stored if the signal across the relay coil (2/16) is too high when the tailgate wiper is activated.

The fuse can blow if relays are activated in the wrong order. This can happen when the key is turned from position I to position II and the wiper arm is activated at the same time.

Substitute Value

None.

Possible Source

- Damaged tailgate wiper fuse.
- Damaged relay (short-circuit in the relay coil).

Fault symptom[s]

- The rear windscreen wiper motor does not operate.

SIGNAL TOO HIGH. INTERMITTENT FAULT

REPLACING COMPONENTS

Check the tailgate wiper fuse; replace as necessary.

Replace relay 2/16.

Other information:

- To access the relay/fuse box in the cargo compartment:**RELAY/FUSE BOX CARGO COMPARTMENT/REAR ELECTRONIC MODULE (REM), REPLACING**

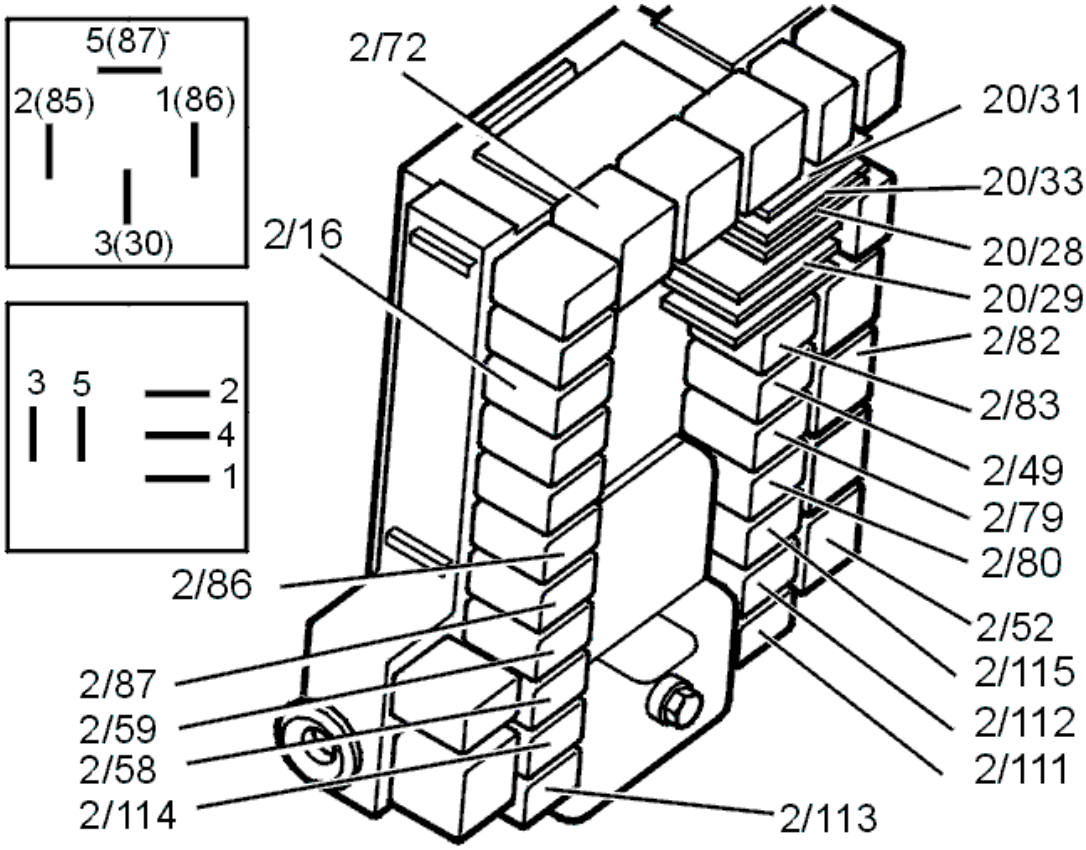

Fig. 19: Identifying Relay / Fuse Box
Courtesy of VOLVO CARS CORPORATION

- **Continue**

  Refer to **INFORMATION**

INFORMATION

FAULT-TRACING INFORMATION

If the fault is intermittent, do not verify fault-tracing if the fault does not recur.

It is possible to view the information again, or leave fault-tracing for this diagnostic trouble code (DTC).

REM-8F41: TAILGATE WIPER RELAY. SIGNAL TOO HIGH. PERMANENT FAULT (2003-2004)

DIAGNOSTIC TROUBLE CODE INFORMATION

see **DIAGNOSTIC TROUBLE CODE INFORMATION**

SIGNAL TOO HIGH. PERMANENT FAULT

REPLACING COMPONENTS

Check the tailgate wiper fuse; replace as necessary.

Replace relay 2/16.

Other information:

- To access the relay/fuse box in the cargo compartment:**RELAY/FUSE BOX CARGO COMPARTMENT/REAR ELECTRONIC MODULE (REM), REPLACING**

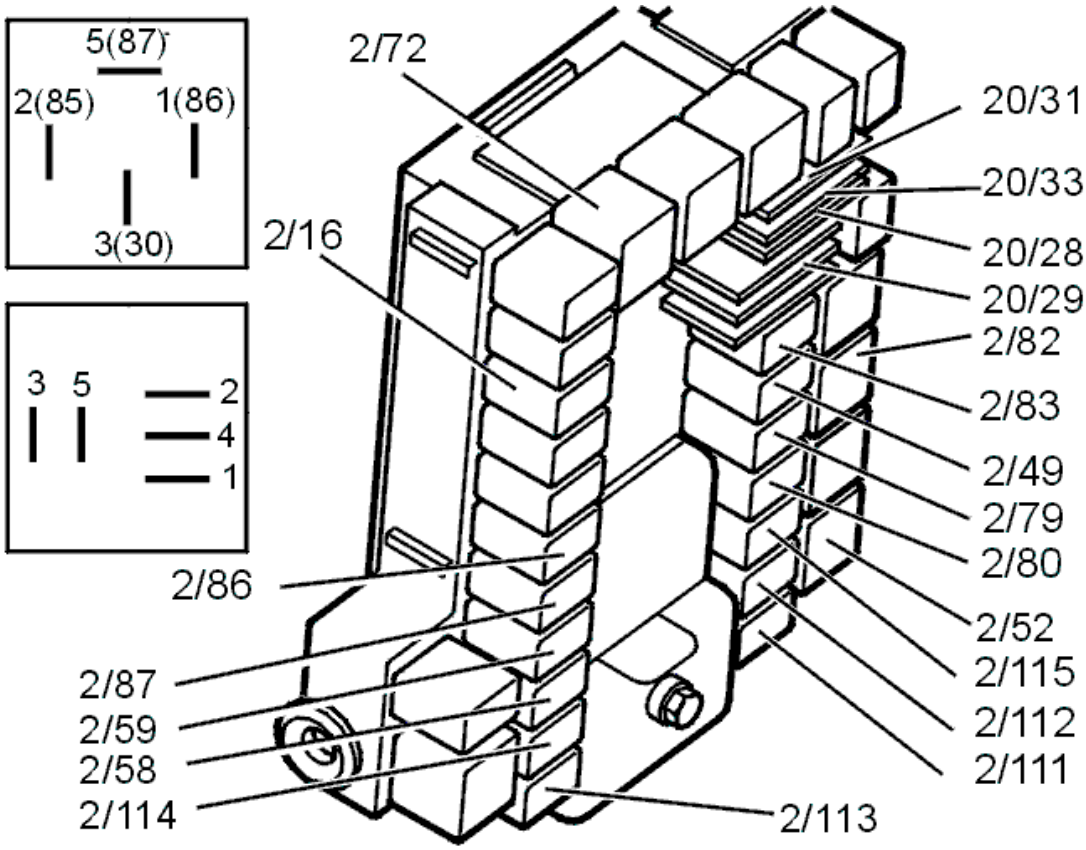

Fig. 20: Identifying Relay / Fuse Box
Courtesy of VOLVO CARS CORPORATION

- **Continue**

  Refer to **VERIFICATION**

VERIFICATION

VERIFICATION

HINT: After carrying out the repair, check that the fault has been remedied.

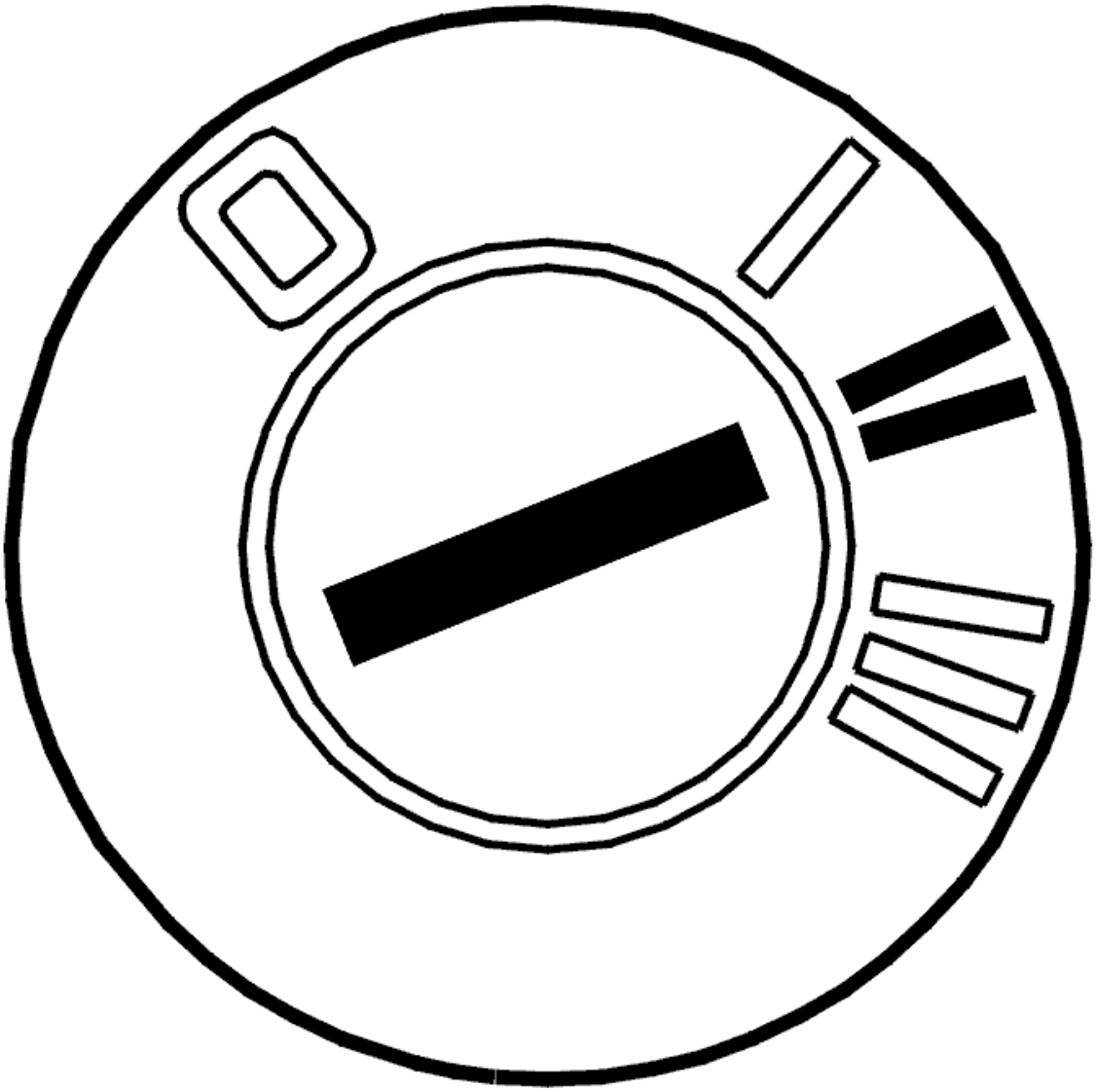

Fig. 21: Identifying Ignition ON
Courtesy of VOLVO CARS CORPORATION

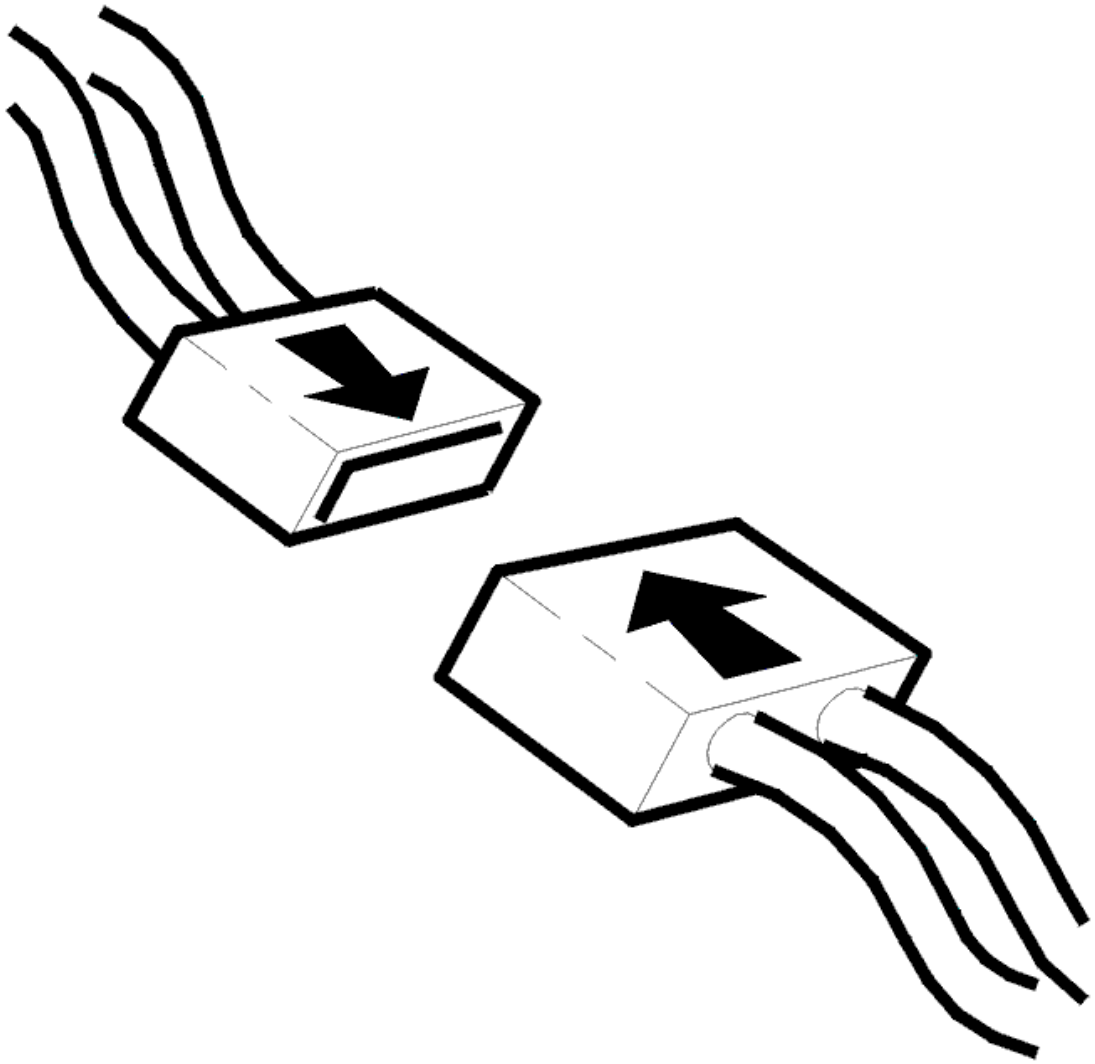

Fig. 22: Identifying Connector(s) Reinstallation
Courtesy of VOLVO CARS CORPORATION

- Ignition off
- Reconnect the components, connectors etc.
- Ignition on
- Activate the relay for the rear wiper motor. tailgate wiper on / intermittent / off.

Does the tailgate wiper operate?

- **YES**

  VERIFIED: Troubleshooting has been completed.

- **NO**

Refer to **INFORMATION**

INFORMATION

FAULT-TRACING INFORMATION

The fault should have been detected and remedied. As this is not the case fault-tracing has failed.

Exit fault-tracing for this diagnostic trouble code (DTC) or make another attempt.

REM-8F43: TAILGATE WIPER RELAY. SIGNAL TOO LOW. INTERMITTENT FAULT (2003-2004)

DIAGNOSTIC TROUBLE CODE INFORMATION

Condition

Diagnostic trouble code (DTC) REM-8F43 is generated if the signal across relay coil (2/16) is missing or too low when the tailgate wiper relay is activated.

The fuse can blow if relays are activated in the wrong order. This can happen when the key is turned from position I to position II and the wiper arm is activated at the same time.

Substitute Value

None.

Possible Source

- Damaged fuse in the tailgate wiper.
- Oxidation in the relay base switches.
- Relay is not fit.

Fault symptom[s]

- The rear windscreen wiper motor does not operate.

SIGNAL TOO LOW. INTERMITTENT FAULT

REPLACING THE COMPONENT

Check the tailgate wiper fuse; replace as necessary.

Remove relay 2/16 and check the relay base switches for contact resistance and oxidation.

Fit the relay.

Other information:

- To access the relay/fuse box in the cargo compartment:**RELAY/FUSE BOX CARGO COMPARTMENT/REAR ELECTRONIC MODULE (REM), REPLACING**
- see **CHECKING WIRING AND TERMINALS. INTERMITTENT FAULTS**

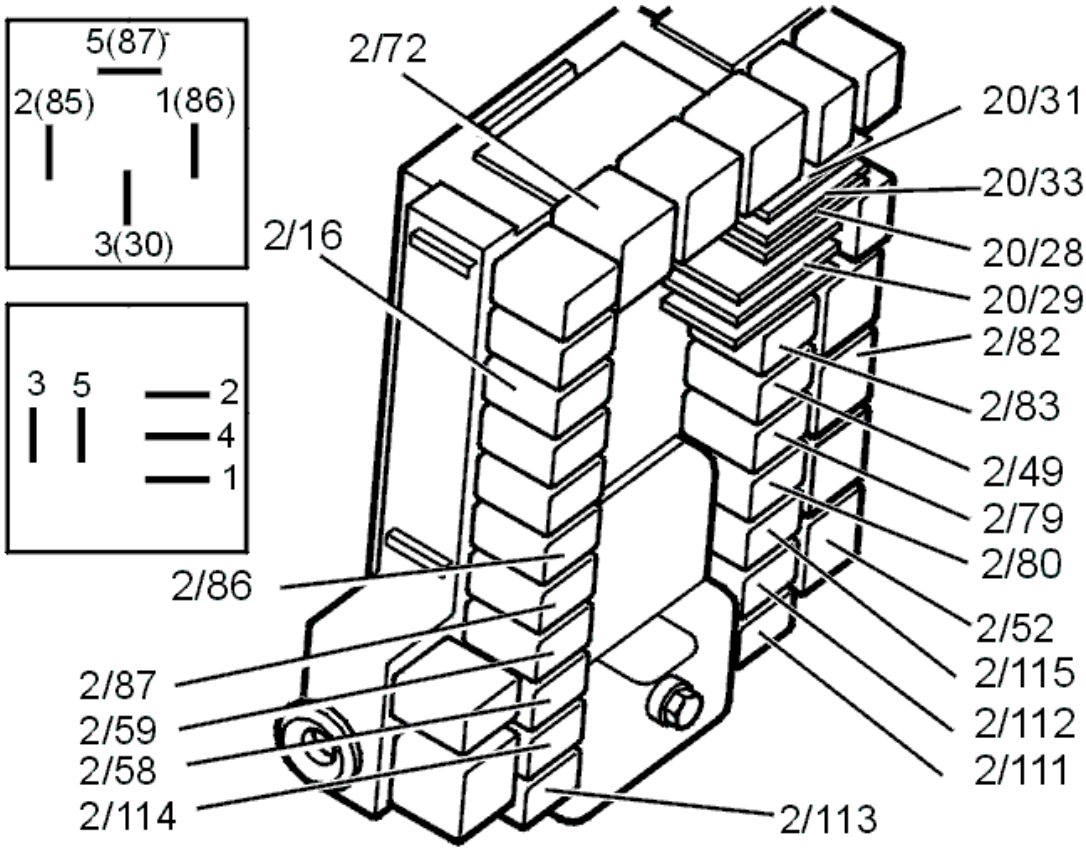

Fig. 23: Identifying Relay / Fuse Box
Courtesy of VOLVO CARS CORPORATION

- **Continue**

  Refer to **INFORMATION**

INFORMATION

FAULT-TRACING INFORMATION

If the fault is intermittent, do not verify fault-tracing if the fault does not recur.

It is possible to view the information again, or leave fault-tracing for this diagnostic trouble code (DTC).

REM-8F43: TAILGATE WIPER RELAY. SIGNAL TOO LOW. PERMANENT FAULT (2003-2004)

DIAGNOSTIC TROUBLE CODE INFORMATION

see **DIAGNOSTIC TROUBLE CODE INFORMATION**

SIGNAL TOO LOW. PERMANENT FAULT

REPLACING THE COMPONENT

Check the tailgate wiper fuse; replace as necessary.

Remove relay 2/16 and check the relay base switches for contact resistance and oxidation.

Fit a new relay.

Other information:

- To access the relay/fuse box in the cargo compartment:**RELAY/FUSE BOX CARGO COMPARTMENT/REAR ELECTRONIC MODULE (REM), REPLACING**
- see **CHECKING WIRING AND TERMINALS. PERMANENT FAULT**

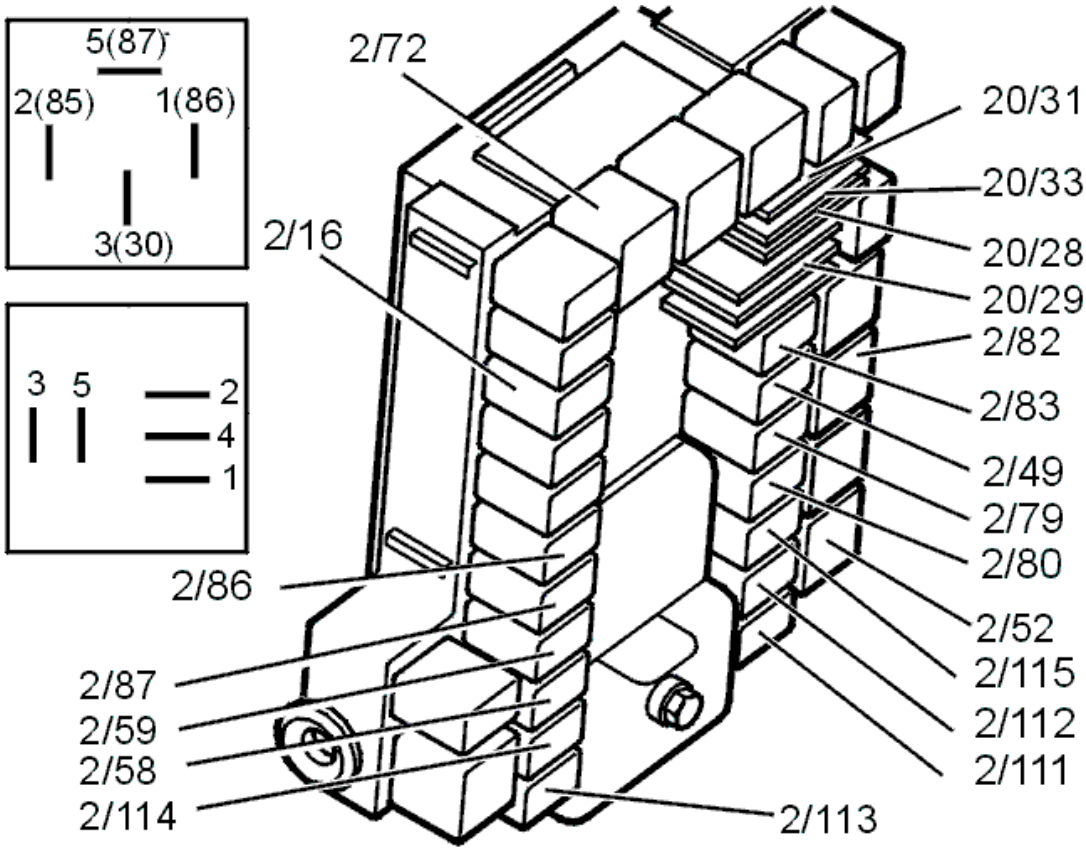

Fig. 24: Identifying Relay / Fuse Box
Courtesy of VOLVO CARS CORPORATION

- **Continue**

  Refer to **VERIFICATION**

VERIFICATION

VERIFICATION

HINT: After carrying out the repair, check that the fault has been remedied.

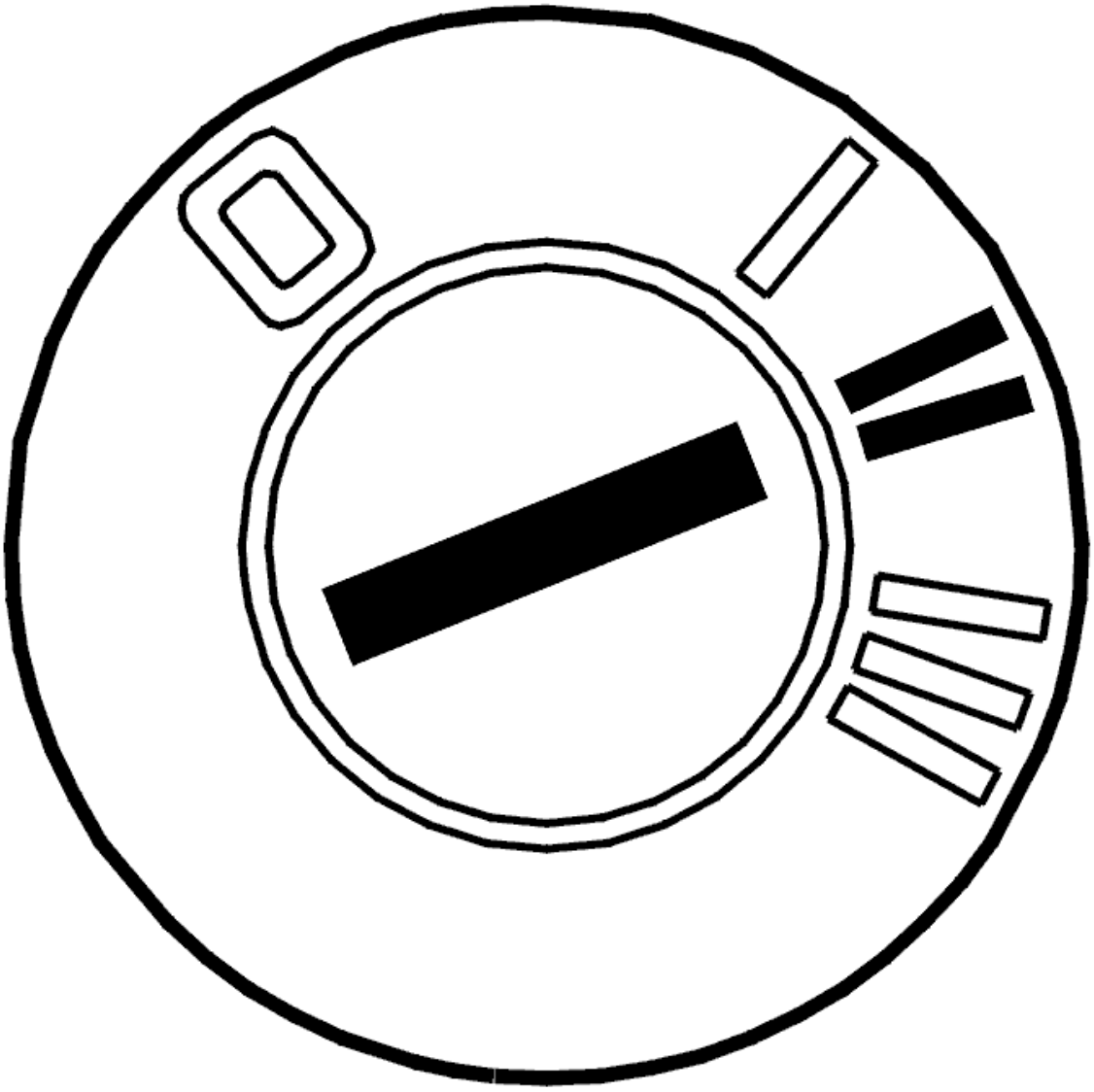

Fig. 25: Identifying Ignition ON
Courtesy of VOLVO CARS CORPORATION

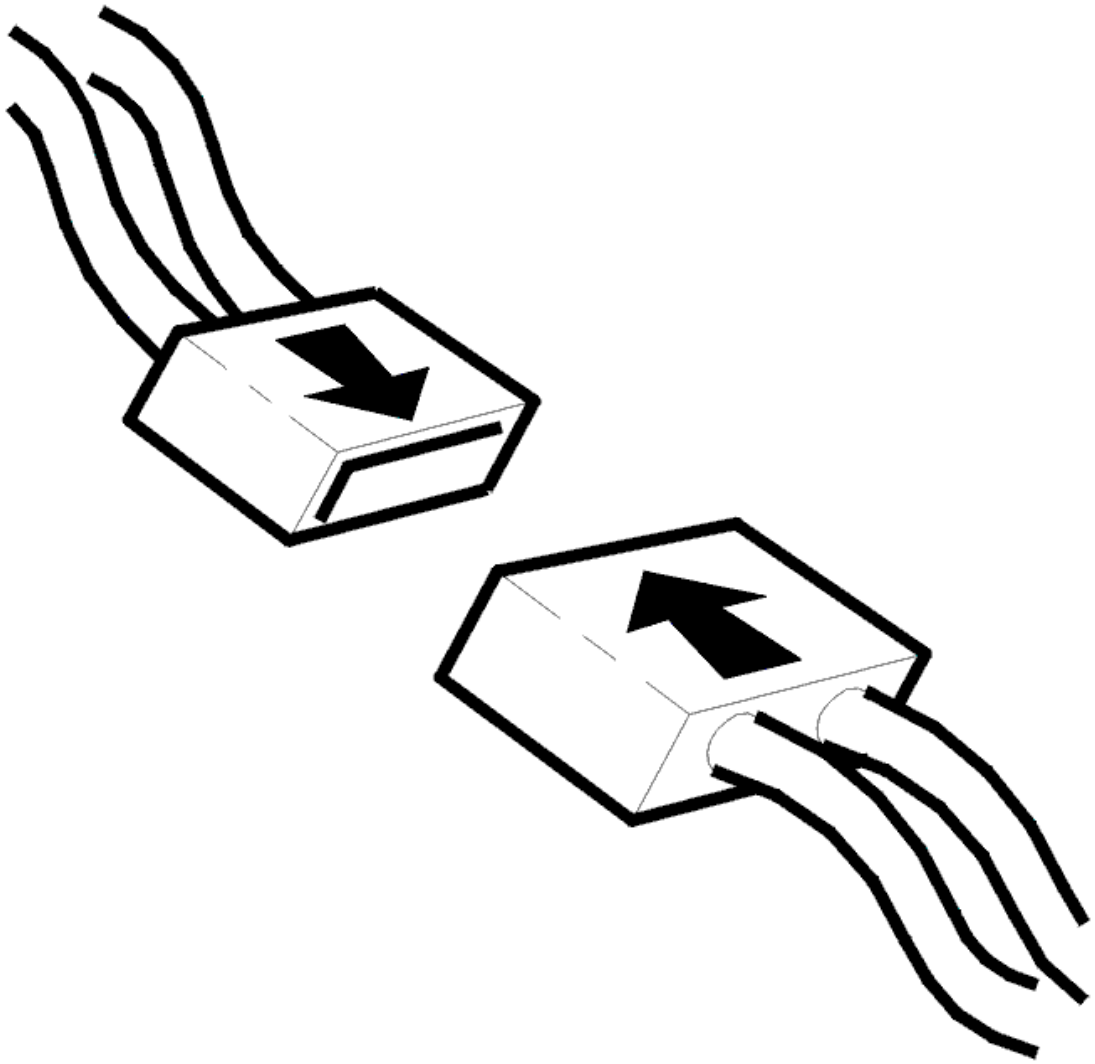

Fig. 26: Identifying Connector(s) Reinstallation
Courtesy of VOLVO CARS CORPORATION

- Ignition off
- Reconnect the components, connectors etc.
- Ignition on
- Activate the relay for the rear wiper motor. tailgate wiper on / intermittent / off.

Does the tailgate wiper operate?

- **YES**

  VERIFIED: Troubleshooting has been completed.

- **NO**

Refer to **INFORMATION**

INFORMATION

FAULT-TRACING INFORMATION

The fault should have been detected and remedied. As this is not the case fault-tracing has failed.

Exit fault-tracing for this diagnostic trouble code (DTC) or make another attempt.

REM-8F61: RELAY, REAR DEMIST. SIGNAL TOO HIGH. INTERMITTENT FAULT (2003-2004)

DIAGNOSTIC TROUBLE CODE INFORMATION

Condition

If control unit registers signal too high from status flag when activating relay control, the diagnostic trouble code is displayed.

Substitute Value

Nothing.

Possible Source

- Relay control to relay 2/82 short circuited to battery voltage.

Fault symptom[s]

- Rear window heating does not work.

SIGNAL TOO HIGH. INTERMITTENT FAULT

CHECKING THE WIRING AND COMPONENT

Check that the "Rear windshield defroster" relay 2/82 is correctly installed.

Check the rear electronic module connector and relay terminal 2/82. Check for contact resistance and oxidation according to **CONTACT RESISTANCE AND OXIDATION** . Check for loose connections according to **LOOSE CONNECTIONS (TERMINALS)** .

Check the cable between rear electronic module terminal #D1 (#B01) and "Rear windshield defroster" relay 2/82 terminal #2. Check for an intermittent short-circuit to supply voltage according to **SHORT-CIRCUIT TO SUPPLY VOLTAGE, INTERMITTENT FAULTS** . Check for an intermittent open-circuit according to **OPEN-CIRCUIT, INTERMITTENT FAULTS** .

Other information:

- For further information about signals and other values, see **SIGNAL SPECIFICATION** .
- To connect the breakout box, see **CONNECTING THE BREAKOUT BOX** .
- When the relay is installed and activated, the voltage at the relay guide should be 0 V.

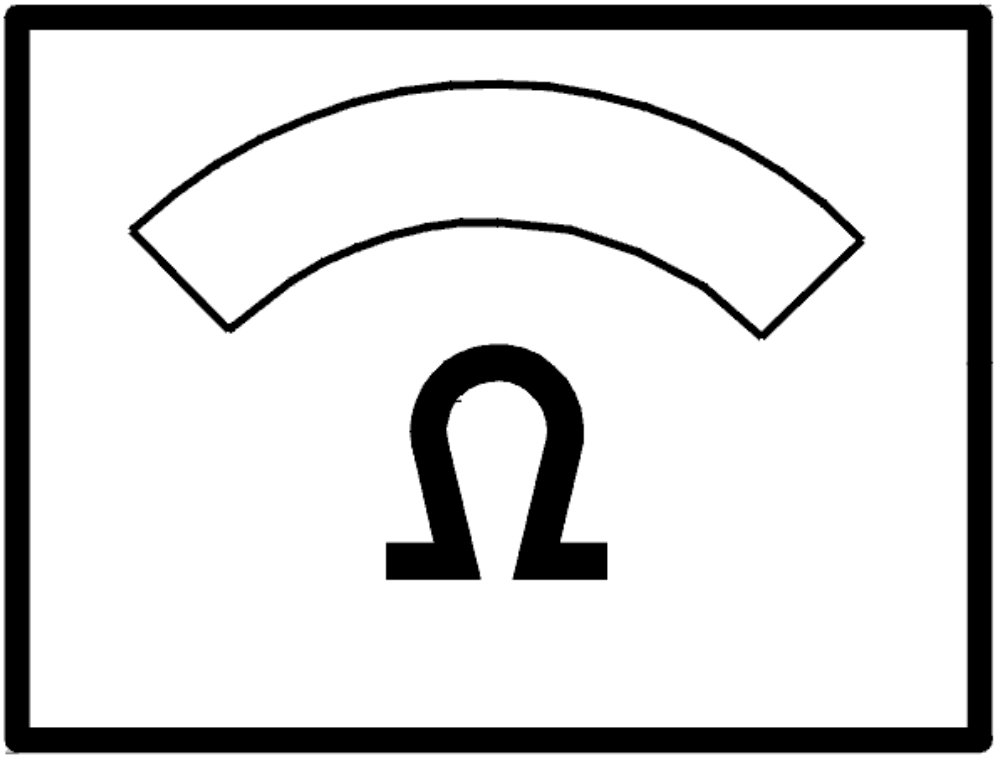

Fig. 27: Identifying Ohms Display
Courtesy of VOLVO CARS CORPORATION

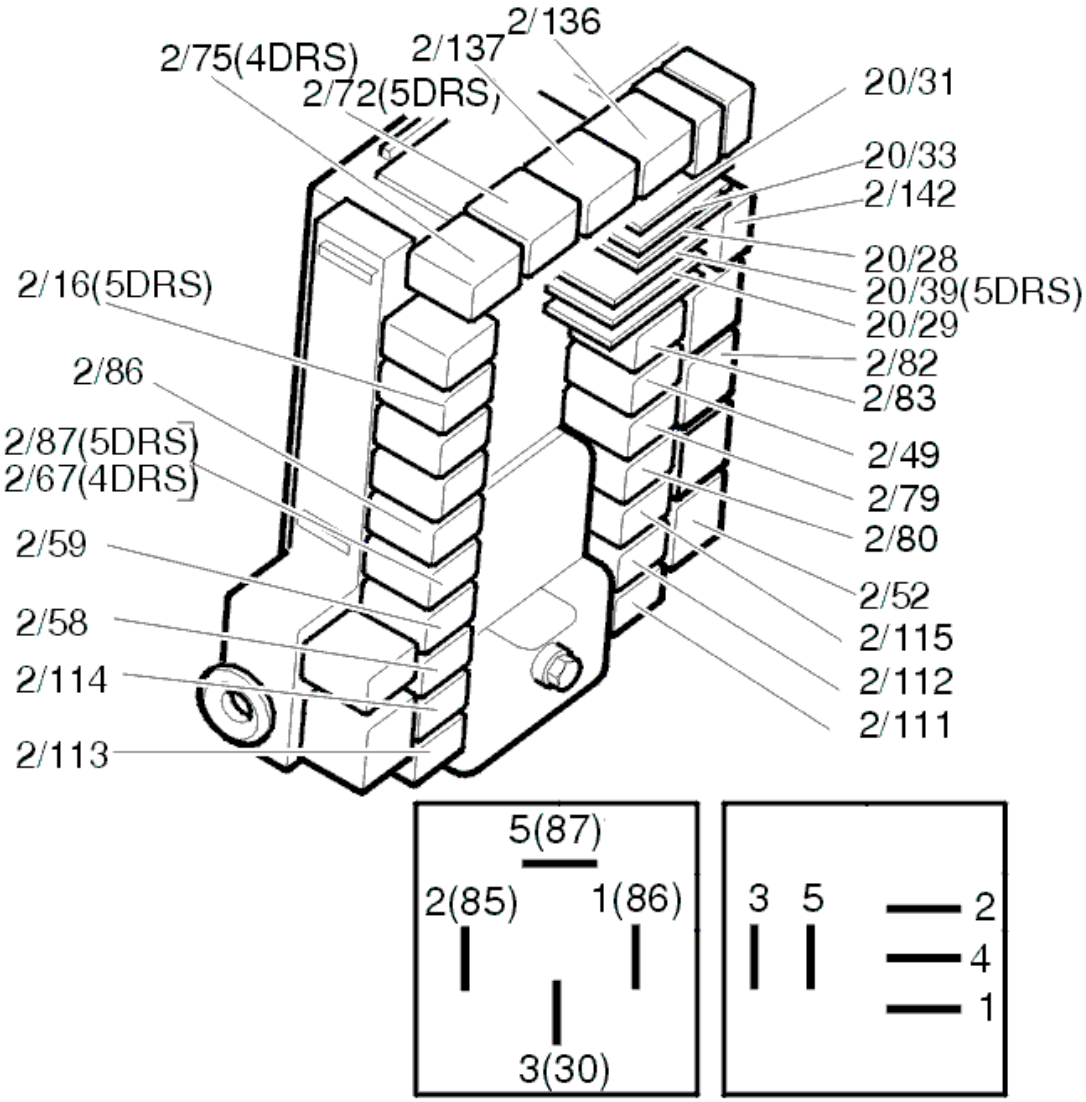

Fig. 28: Identifying Relays And Terminals
Courtesy of VOLVO CARS CORPORATION

- **Continue**

  Refer to **INFORMATION**

INFORMATION

FAULT-TRACING INFORMATION

If the fault is intermittent, do not verify fault-tracing if the fault does not recur.

It is possible to view the information again, or leave fault-tracing for this diagnostic trouble code (DTC).

REM-8F61: RELAY, REAR DEMIST. SIGNAL TOO HIGH. PERMANENT

FAULT (2003-2004)

DIAGNOSTIC TROUBLE CODE INFORMATION

see **DIAGNOSTIC TROUBLE CODE INFORMATION**

SIGNAL TOO HIGH. PERMANENT FAULT

CHECKING THE WIRING AND COMPONENT

Check the cable between rear electronic module terminal #D1 (#B01) and "Rear windshield defroster" relay 2/82 terminal #2 for a short-circuit to supply voltage according to **SHORT-CIRCUIT TO SUPPLY VOLTAGE. PERMANENT FAULTS** .

Check the relay terminal, in particular relay guide 2/82 terminal #2, for a short-circuit to supply voltage according to **SHORT-CIRCUIT TO SUPPLY VOLTAGE. PERMANENT FAULTS** .

Remedy as necessary.

Try a new relay if no faults are found.

Other information:

- For further information about signals and other values, see **SIGNAL SPECIFICATION** .
- To connect the breakout box, see **CONNECTING THE BREAKOUT BOX** .
- When the relay is installed and activated, the voltage at the relay guide should be 0 V.

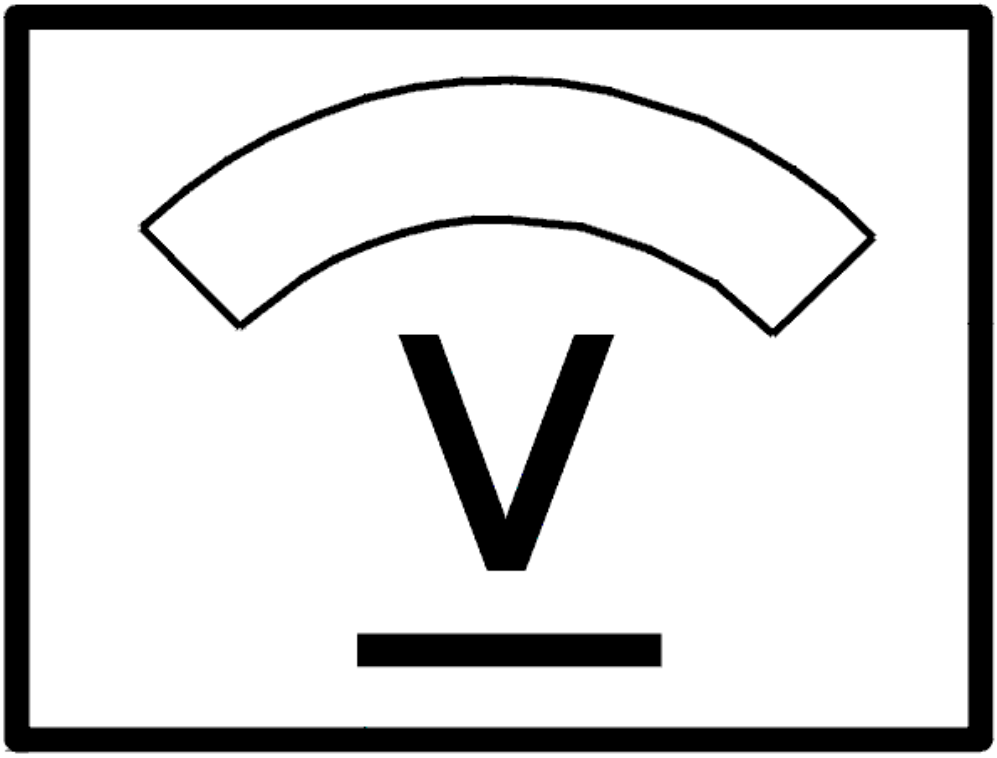

Fig. 29: Identifying Voltage Display
Courtesy of VOLVO CARS CORPORATION

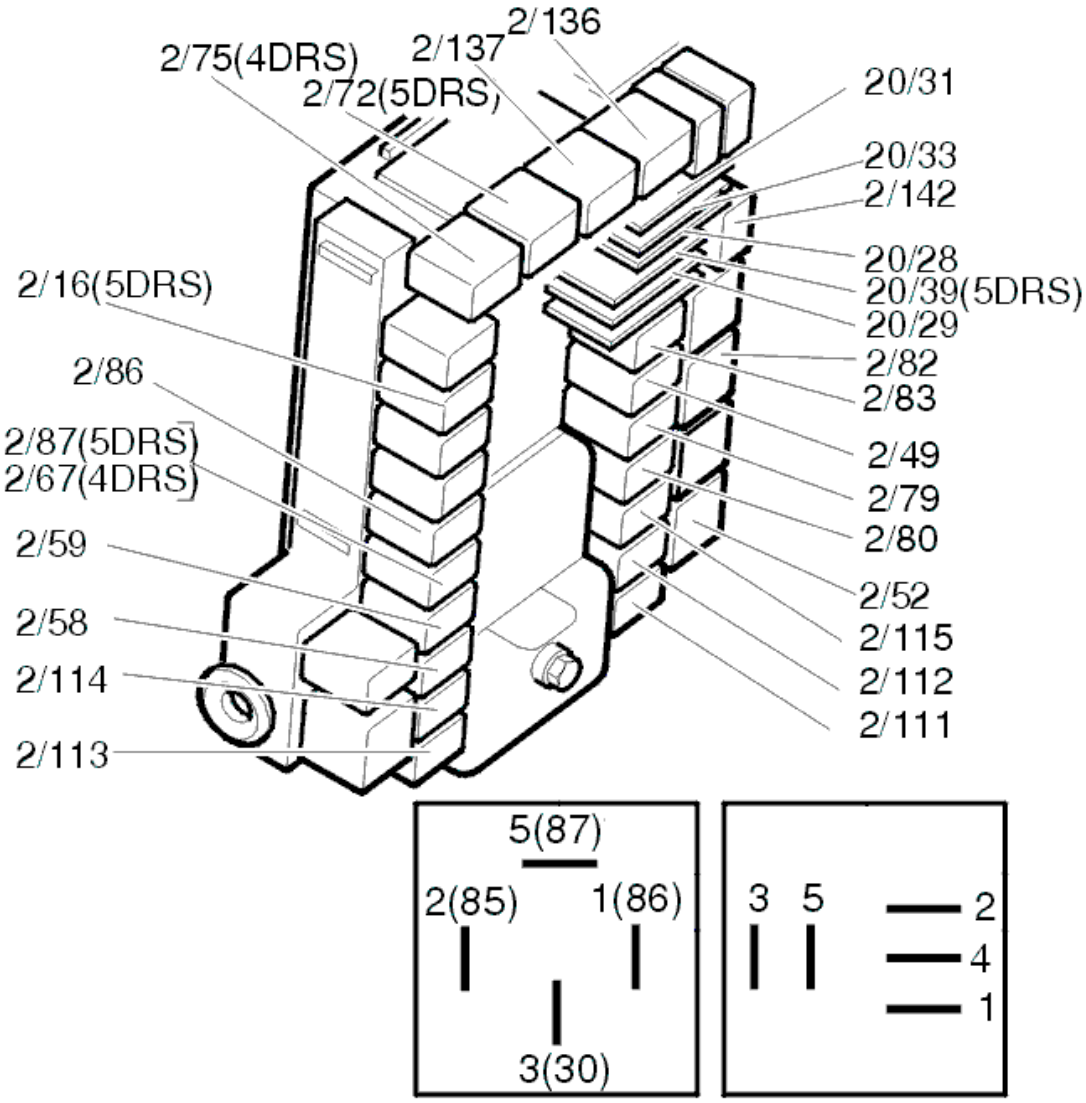

Fig. 30: Identifying Relays And Terminals
Courtesy of VOLVO CARS CORPORATION

- **Continue**

  Refer to **VERIFICATION**

VERIFICATION

VERIFICATION

HINT: After the repair it is necessary to check that the fault has been rectified.

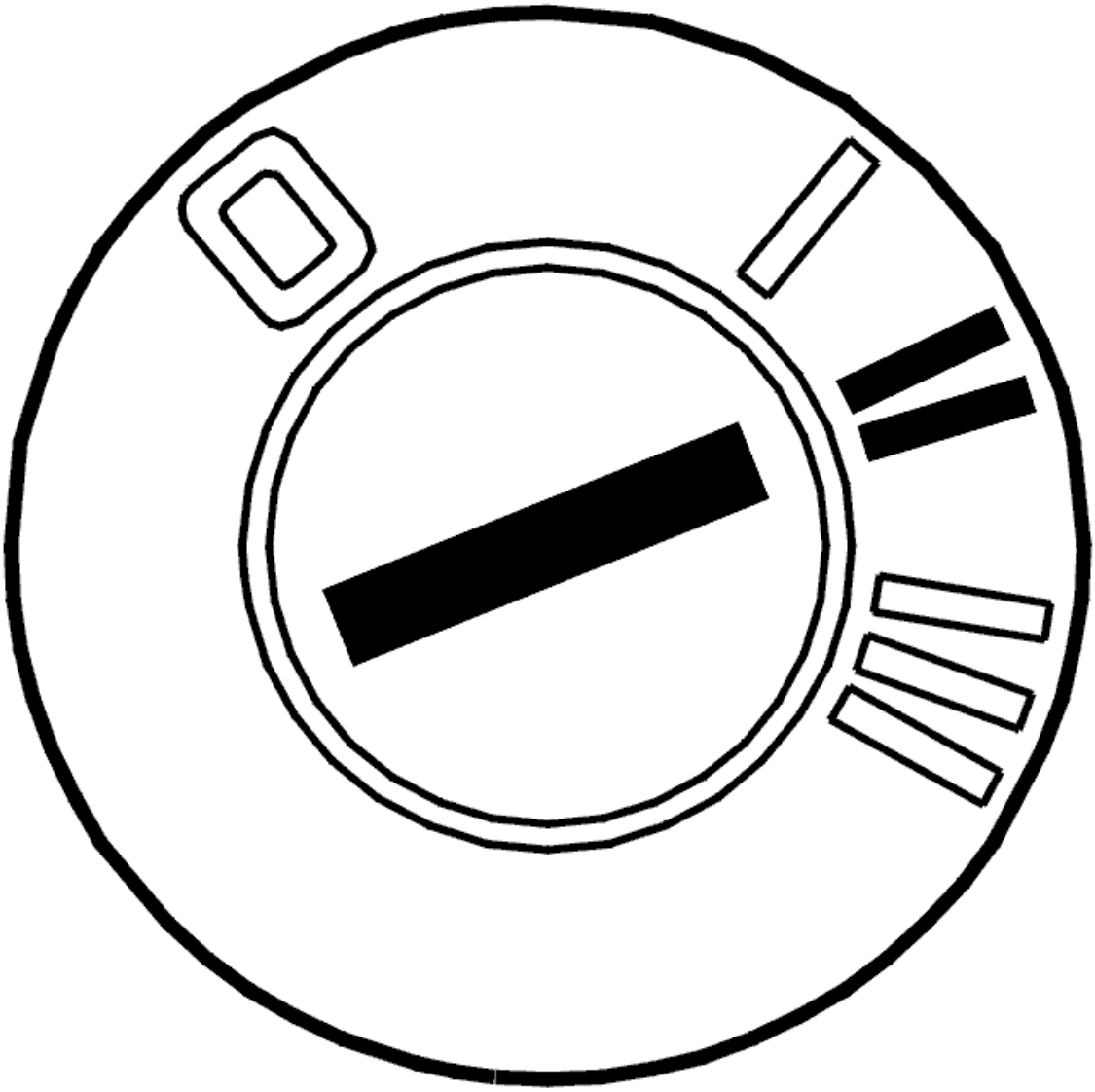

Fig. 31: Identifying Ignition ON
Courtesy of VOLVO CARS CORPORATION

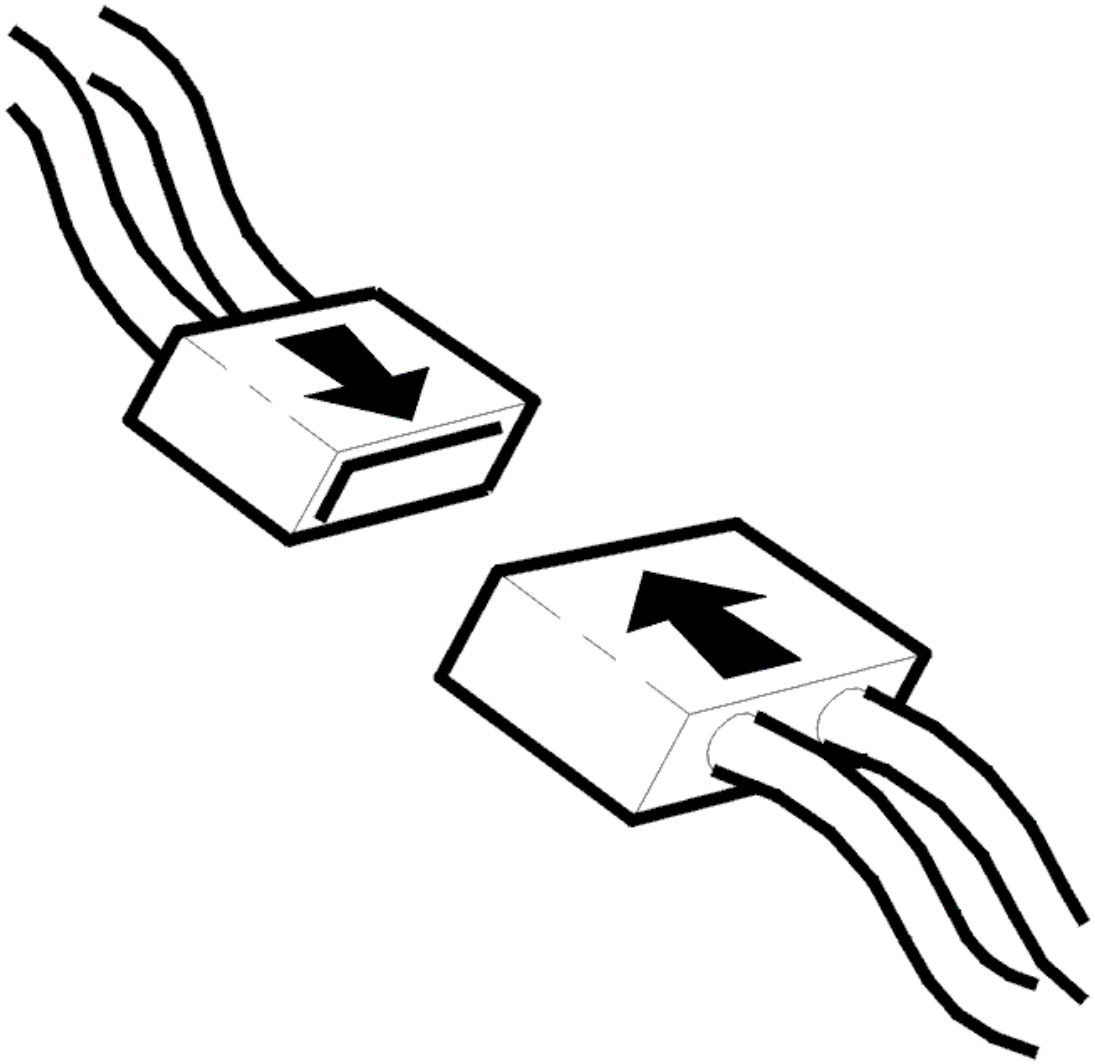

Fig. 32: Identifying Connector(s) Reinstallation
Courtesy of VOLVO CARS CORPORATION

- Ignition off.
- Connect the connectors, install the components, etc.
- Ignition on.

  Activate and de-activate the relay.

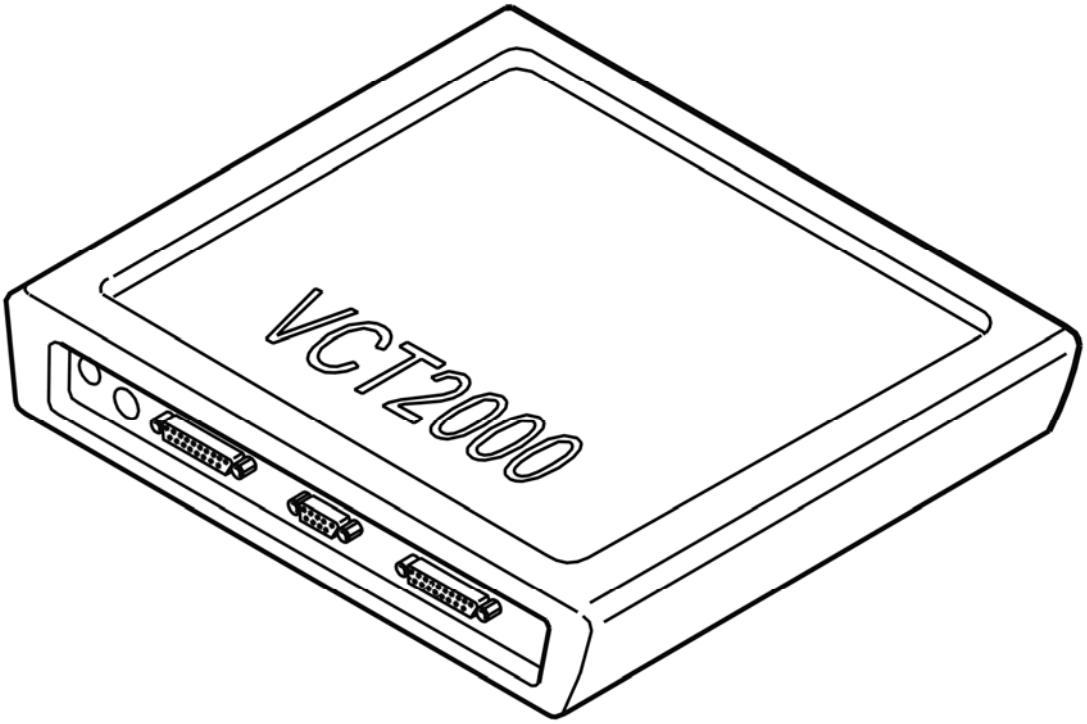

Fig. 33: Identifying VCT2000 Diagnostic Tool Symbol In VIDA
Courtesy of VOLVO CARS CORPORATION

Is there a clicking noise from the relay when activated and deactivated?

- **YES**

  VERIFIED: Troubleshooting has been completed.

- **NO**

  Refer to **INFORMATION**

INFORMATION

FAULT-TRACING INFORMATION

The fault should have been detected and remedied. As this is not the case fault-tracing has failed.

Exit fault-tracing for this diagnostic trouble code (DTC) or make another attempt.

REM-8F63: RELAY, REAR DEMIST. SIGNAL MISSING. INTERMITTENT FAULT (2003-2004)

DIAGNOSTIC TROUBLE CODE INFORMATION

Condition

If control unit registers an open circuit from the status flag when relay control is not activated, the diagnostic trouble code is displayed.

Substitute Value

Nothing.

Possible Source

- Open circuit in relay control to relay 2/82. Relay 2/82 not installed.

Fault symptom[s]

- Heated rear window does not work.

SIGNAL MISSING. INTERMITTENT FAULT

CHECKING THE WIRING AND COMPONENT

Check that the "Rear windshield defroster" relay 2/82 is correctly installed.

Check the rear electronic module connector and relay terminal 2/82. Check for contact resistance and oxidation according to **CONTACT RESISTANCE AND OXIDATION** . Check for loose connections according to **LOOSE CONNECTIONS (TERMINALS)** .

Check the cable between main fuse 11E/5 and "Rear windshield defroster" relay 2/82 terminal #5. Check the cable between main fuse 11D/5 and "Rear windshield defroster" relay 2/82 terminal #1. Check the cable between rear electronic module terminal #D1 (#B01) and "Rear windshield defroster" relay 2/82 terminal #2. Check these cables for an intermittent short-circuit to ground according to **SHORT-CIRCUIT TO GROUND, INTERMITTENT FAULTS** . Check for an intermittent open-circuit according to **OPEN-CIRCUIT, INTERMITTENT FAULTS** .

Other information:

- For further information about signals and other values, see **SIGNAL SPECIFICATION** .
- To connect the breakout box, see **CONNECTING THE BREAKOUT BOX** .
- When the relay is installed and not activated, the voltage at the relay guide should be 12 V.

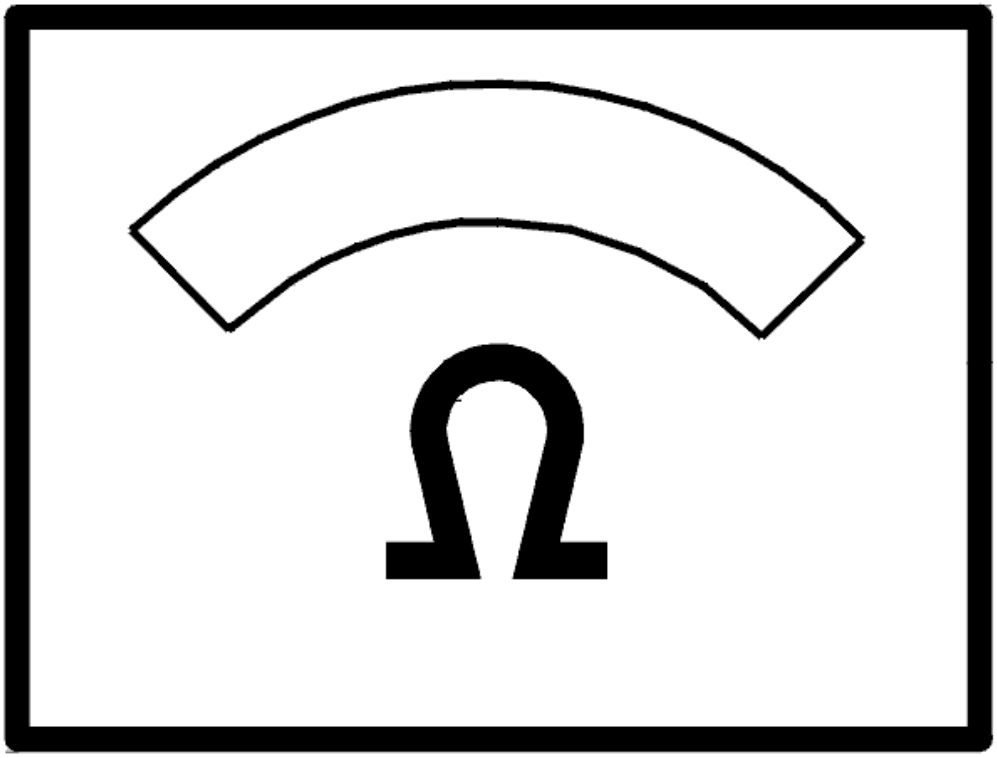

Fig. 34: Identifying Ohms Display
Courtesy of VOLVO CARS CORPORATION

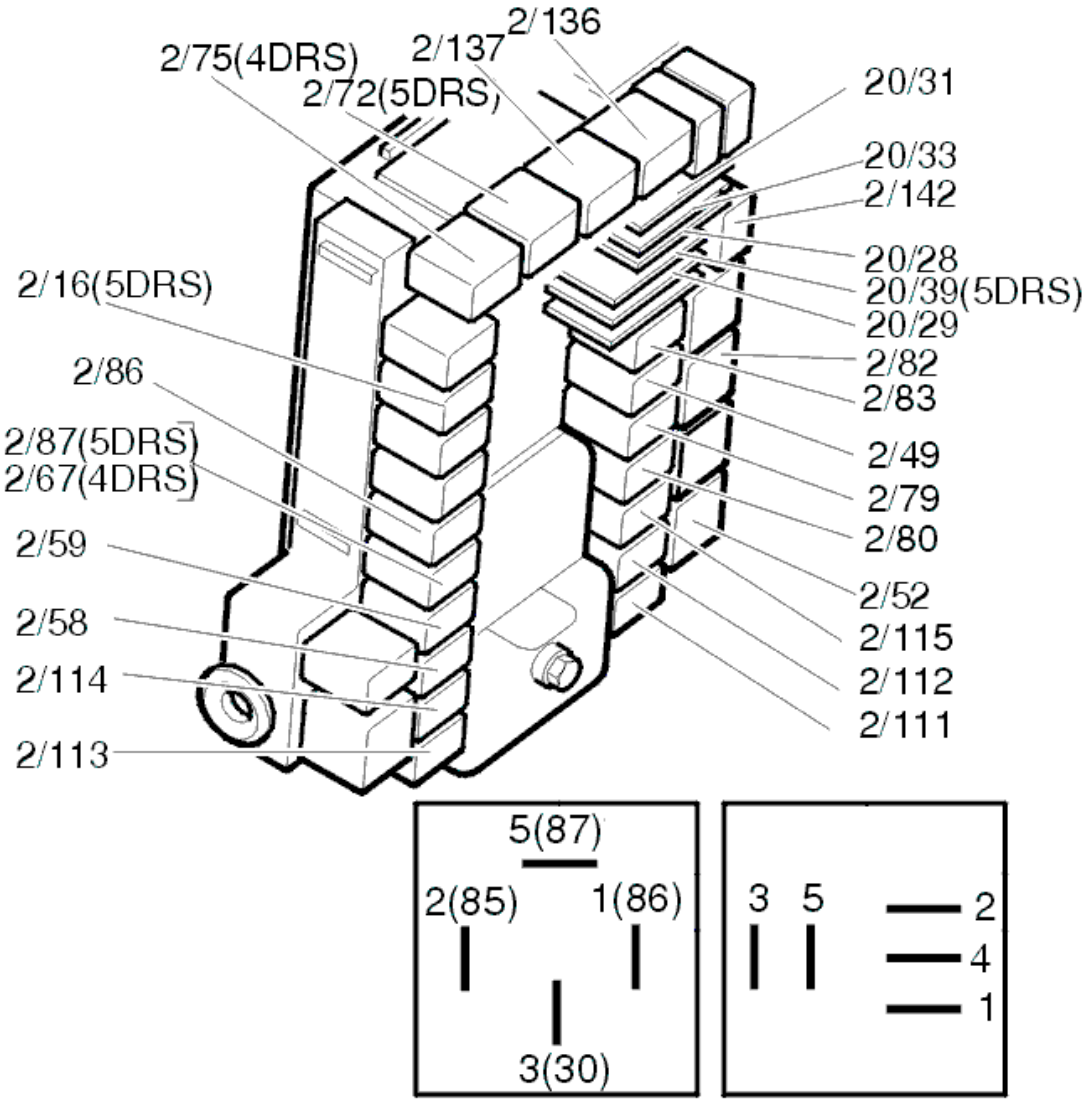

Fig. 35: Identifying Relays And Terminals
Courtesy of VOLVO CARS CORPORATION

- **Continue**

  Refer to **INFORMATION**

INFORMATION

FAULT-TRACING INFORMATION

If the fault is intermittent, do not verify fault-tracing if the fault does not recur.

It is possible to view the information again, or leave fault-tracing for this diagnostic trouble code (DTC).

REM-8F63: RELAY, REAR DEMIST. SIGNAL MISSING. PERMANENT FAULT

(2003-2004)

DIAGNOSTIC TROUBLE CODE INFORMATION

see **DIAGNOSTIC TROUBLE CODE INFORMATION**

SIGNAL MISSING. PERMANENT FAULT

CHECKING THE WIRING AND COMPONENT

Check that the "Rear windshield defroster" relay 2/82 is intact. Check that the relay is correctly installed.

Check that the main fuse 11E/5 and 11D/5 is intact.

Check the cable between main fuse 11E/5 and "Rear windshield defroster" relay 2/82 terminal #5. Check the cable between main fuse 11D/5 and "Rear windshield defroster" relay 2/82 terminal #1. Check the cable between rear electronic module terminal #D1 (terminal #B01) and "Rear windshield defroster" relay 2/82 terminal #2. Check these cables for an open-circuit according to **OPEN-CIRCUIT, PERMANENT FAULTS** .

Check the relay terminal for an open-circuit according to **OPEN-CIRCUIT, PERMANENT FAULTS** .

Remedy as necessary.

Try a new relay if no faults are found.

Other information:

- For further information about signals and other values, see **SIGNAL SPECIFICATION** .
- To connect the breakout box, see **CONNECTING THE BREAKOUT BOX** .
- When the relay is installed and not activated, the voltage at the relay guide should be 12 V.

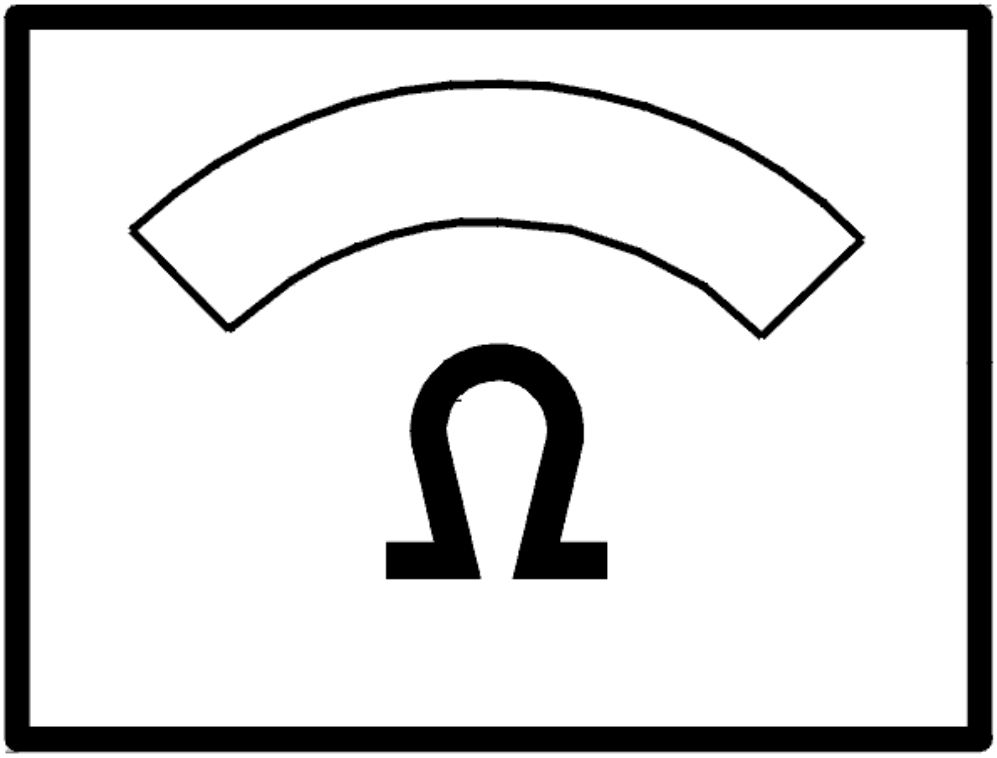

Fig. 36: Identifying Ohms Display
Courtesy of VOLVO CARS CORPORATION

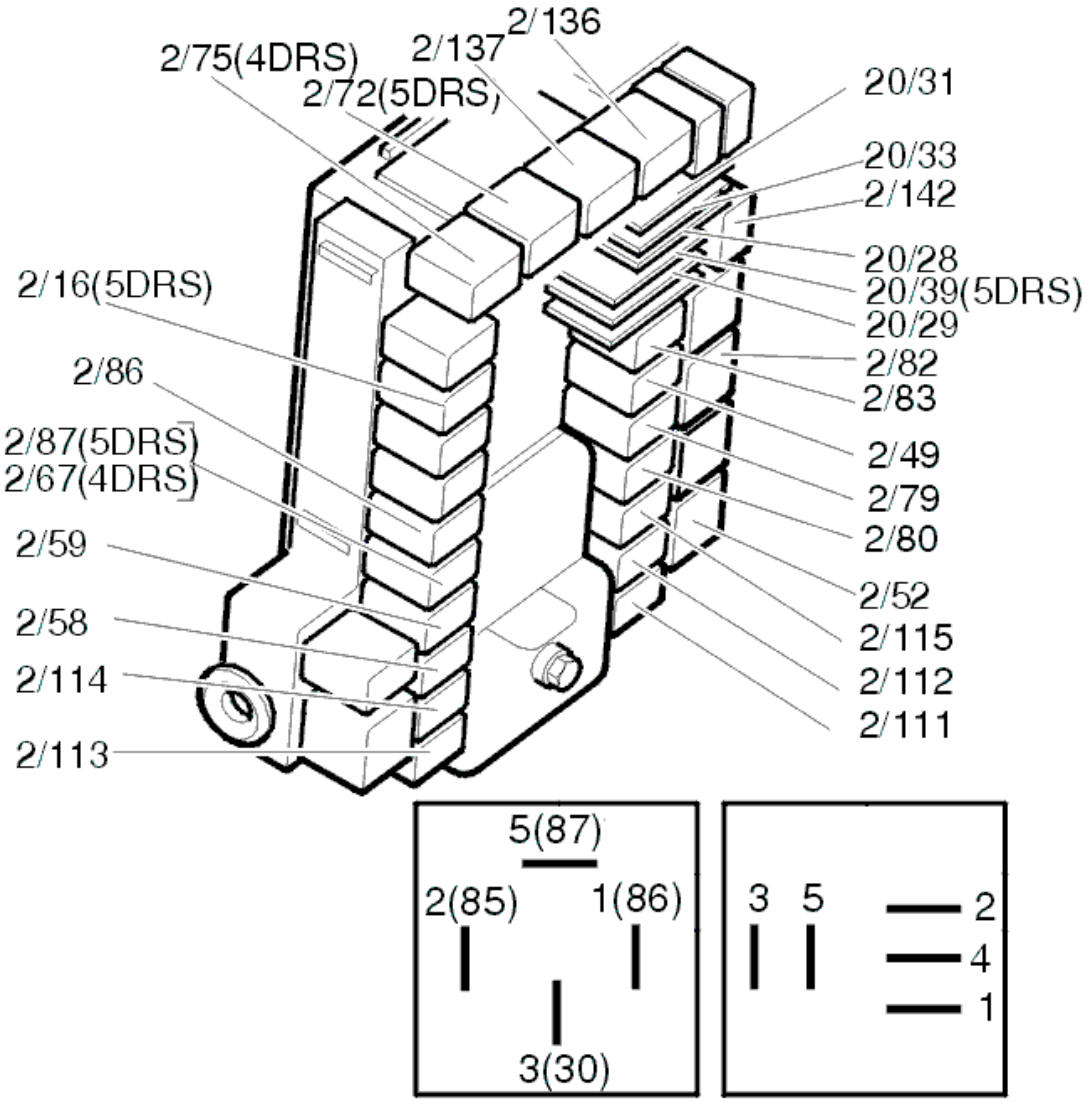

Fig. 37: Identifying Relays And Terminals
Courtesy of VOLVO CARS CORPORATION

- **Continue**

  Refer to **VERIFICATION**

INFORMATION

FAULT-TRACING INFORMATION

The fault should have been detected and remedied. As this is not the case fault-tracing has failed.

Exit fault-tracing for this diagnostic trouble code (DTC) or make another attempt.

VERIFICATION

VERIFICATION

HINT: After the repair it is necessary to check that the fault has been rectified.

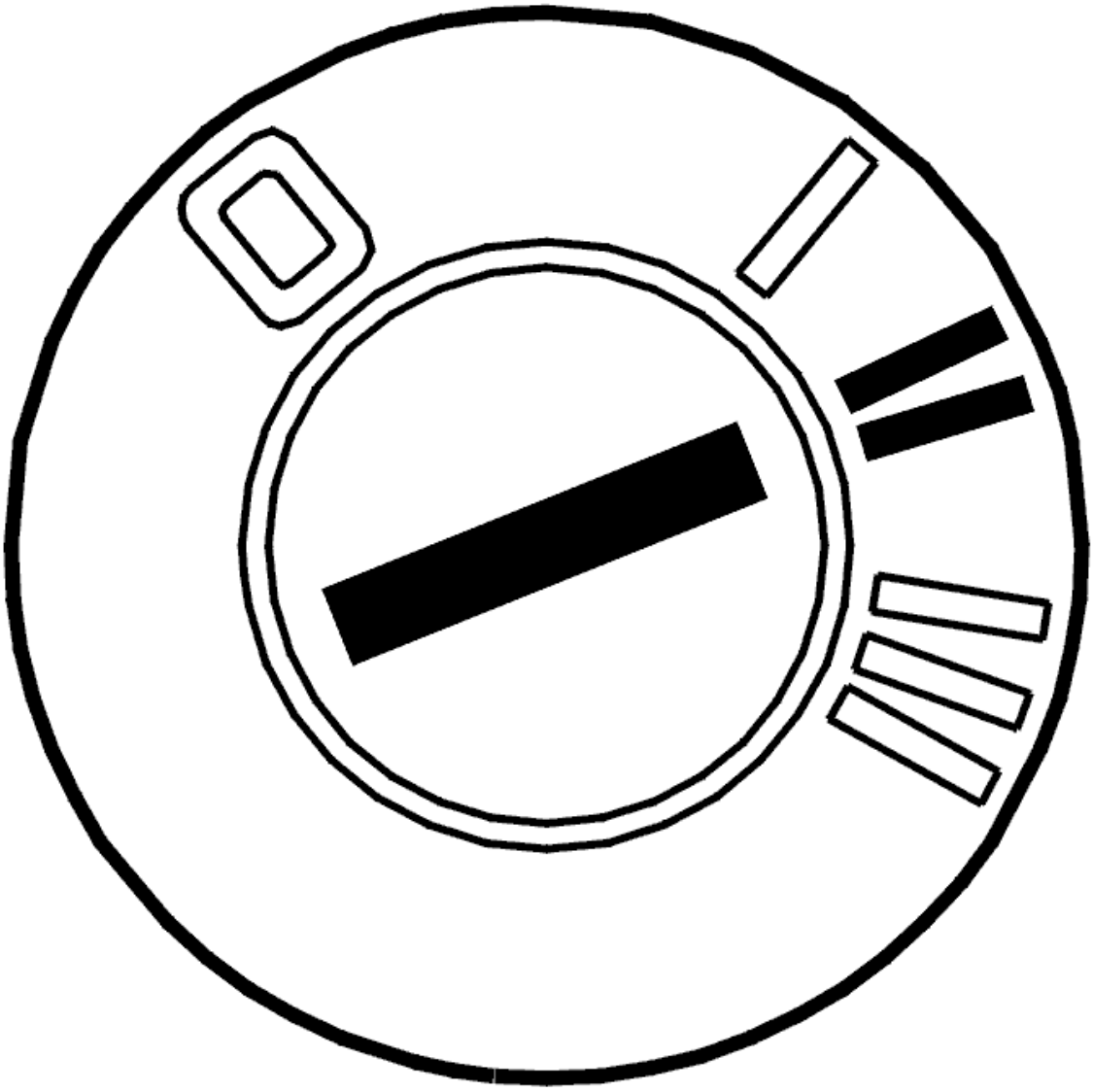

Fig. 38: Identifying Ignition ON
Courtesy of VOLVO CARS CORPORATION

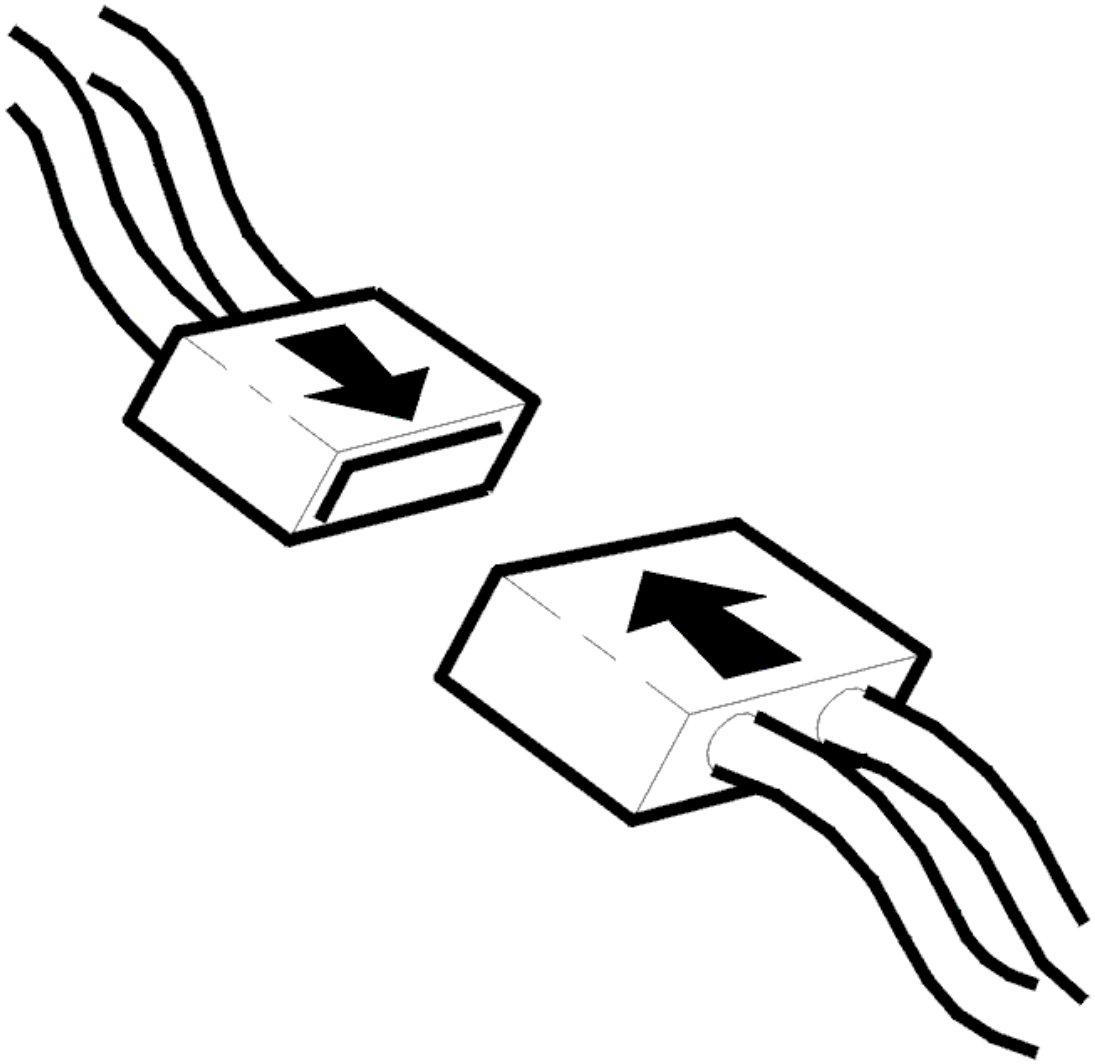

Fig. 39: Identifying Connector(s) Reinstallation
Courtesy of VOLVO CARS CORPORATION

- Ignition off.
- Connect the connectors, install the components, etc.
- Ignition on.

  Activate and de-activate the relay.

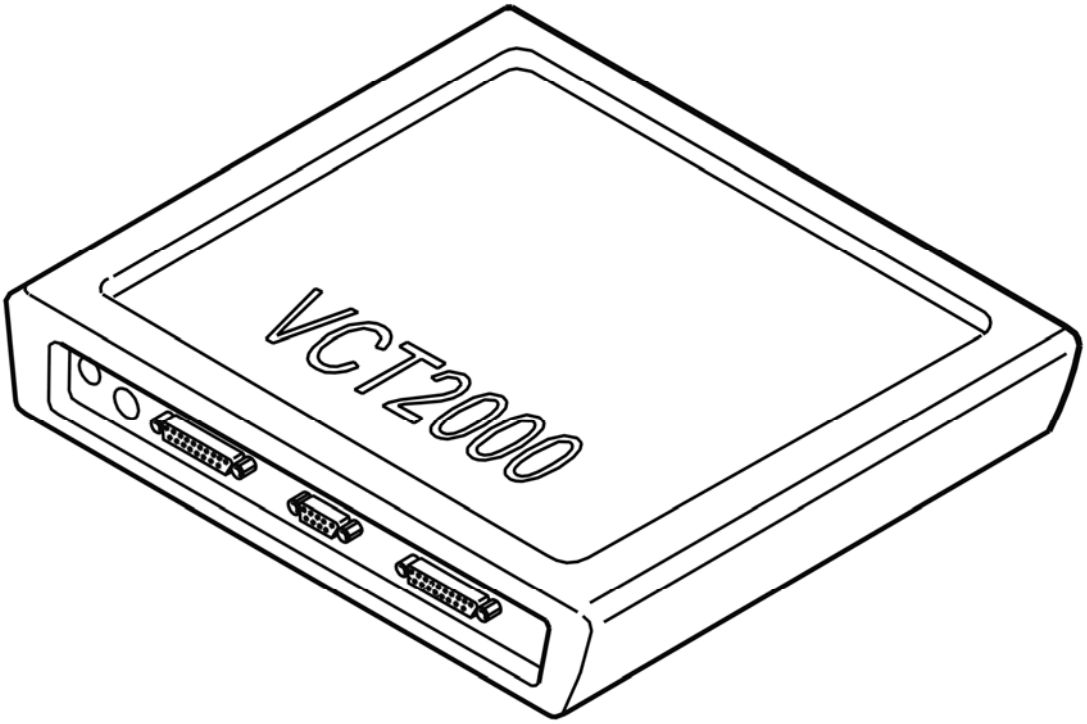

Fig. 40: Identifying VCT2000 Diagnostic Tool Symbol In VIDA
Courtesy of VOLVO CARS CORPORATION

Is there a clicking noise from the relay when activated and deactivated?

- **YES**

  VERIFIED: Troubleshooting has been completed.

- **NO**

  Refer to **INFORMATION**

REM-9F21: CARGO COMPARTMENT LIGHTING. FAULTY SIGNAL (2003-2004)

DIAGNOSTIC TROUBLE CODE (DTC) INFORMATION REM-9F21

Condition

The rear electronic module (REM) checks the cargo compartment lighting in the trunk lid.

Diagnostic trouble code (DTC) REM-9F21 is stored if the rear electronic module (REM) registers that the

signal is too low.

Substitute Value

- None.

Possible Source

- Short-circuit to supply voltage or ground in the cable for the cargo compartment lighting
- Open-circuit in the cable for the cargo compartment lighting
- Defective cargo compartment lighting bulb.

Fault symptom[s]

- The cargo compartment lighting does not function.

FAULTY SIGNAL

CHECKING COMPONENTS AND WIRING

Check that the bulb in the cargo compartment lighting is intact.

Check the connectors on the rear electronic module (REM) and cargo compartment lighting. Check for contact resistance and oxidation. Check for loose connections.

HINT: The voltage between terminals #2 and #4 in the connector for the cargo compartment lighting must be approximately battery voltage when the trunk lid is open.

Check the cable between rear electronic module (REM) connector terminal #2E (#B22) and cargo compartment lighting terminal #2. Check for an open-circuit. Check for a short-circuit to ground.

Check the cable between cargo compartment lighting terminal #4 and ground. Check for an open-circuit. Check for a short-circuit to supply voltage.

Remedy as necessary.

Other information:

- To access the rear electronic module, see **RELAY/FUSE BOX CARGO COMPARTMENT/REAR ELECTRONIC MODULE (REM), REPLACING**
- To connect the breakout box, see **CONNECTING THE BREAKOUT BOX**
- For information about signals, see **SIGNAL SPECIFICATION**
- see **CHECKING WIRING AND TERMINALS** .

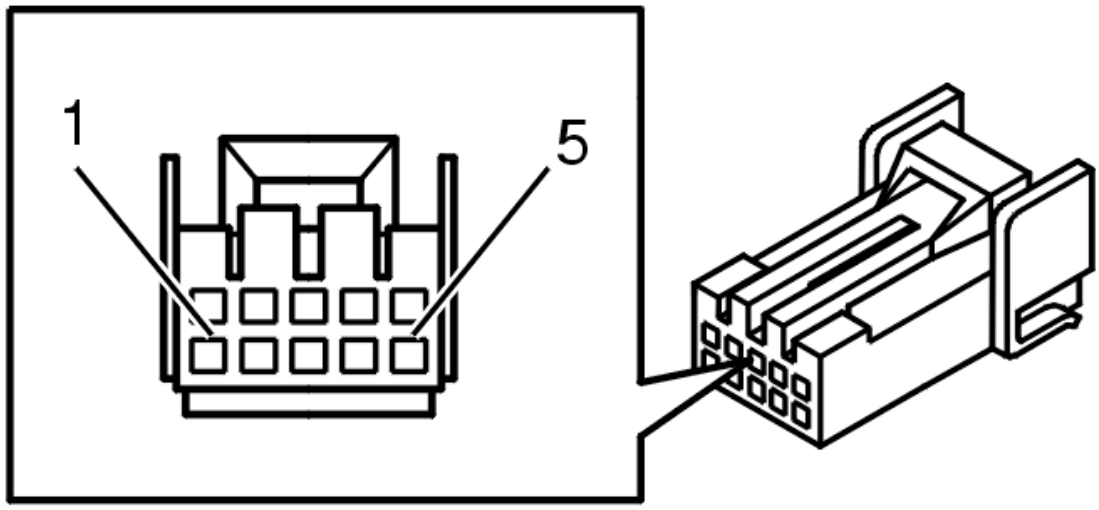

Fig. 41: Identifying 10 Pin Connector Terminals
Courtesy of VOLVO CARS CORPORATION

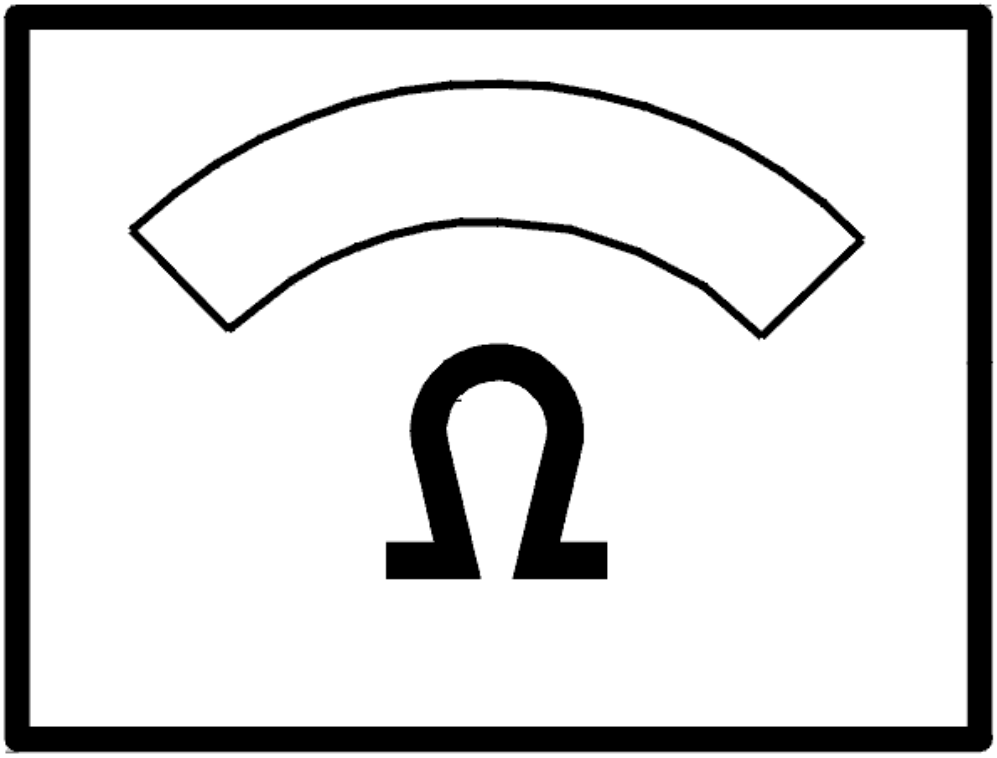

Fig. 42: Identifying Ohms Display
Courtesy of VOLVO CARS CORPORATION

- **Continue**

  Refer to **VERIFICATION**

VERIFICATION

VERIFICATION

HINT: After carrying out the repair, check that the fault has been remedied.

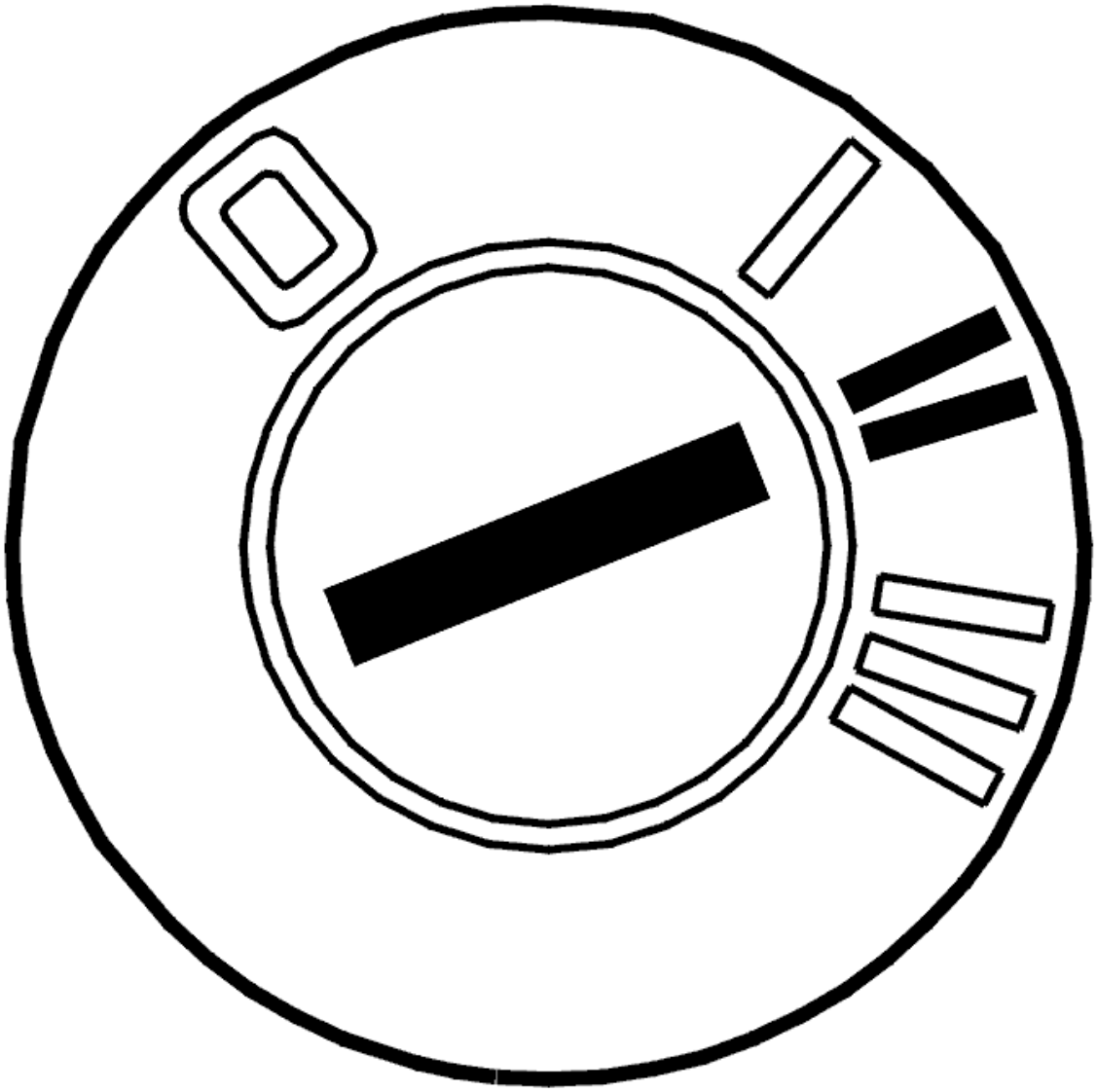

Fig. 43: Identifying Ignition ON
Courtesy of VOLVO CARS CORPORATION

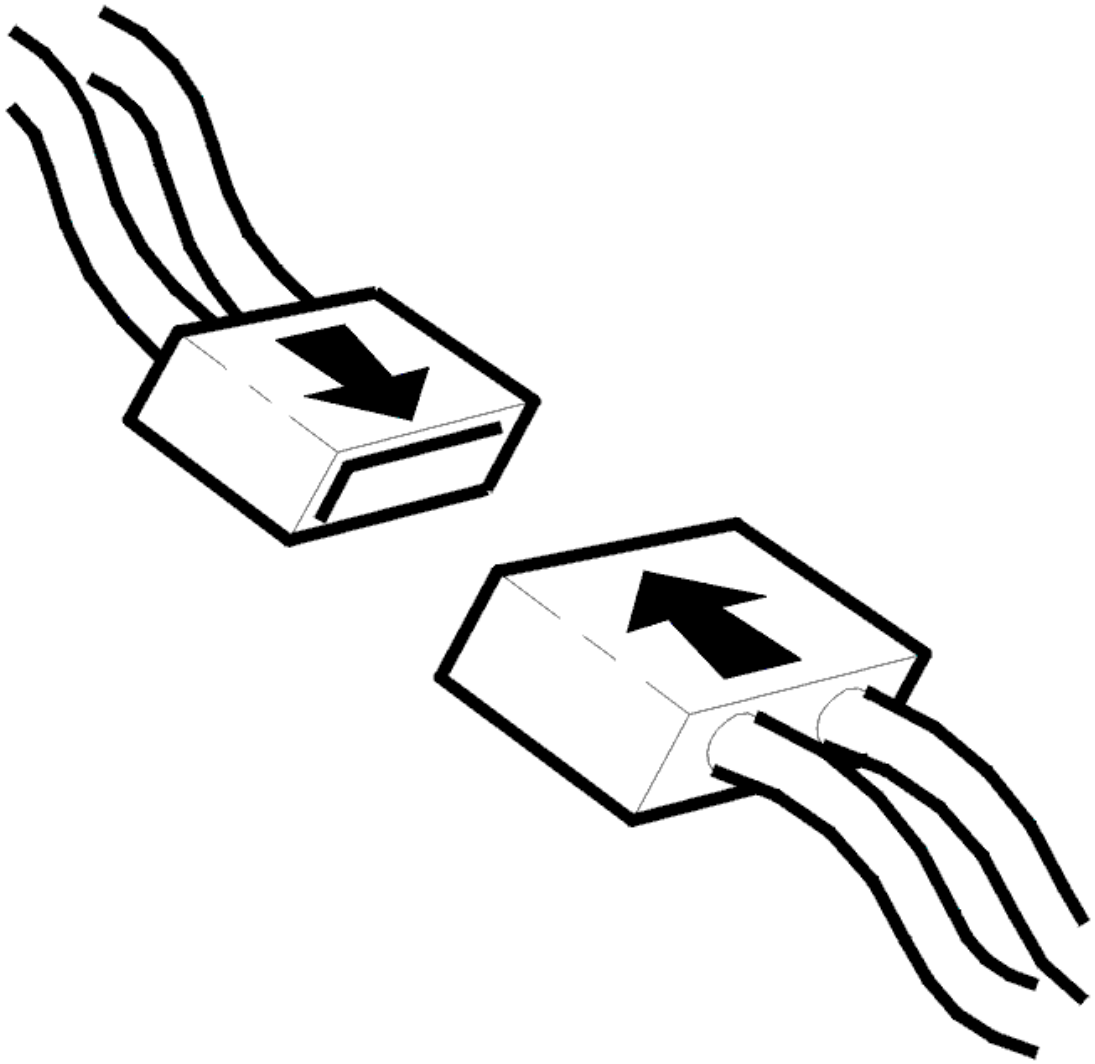

Fig. 44: Identifying Connector(s) Reinstallation
Courtesy of VOLVO CARS CORPORATION

- Ignition off
- Reinstall the connectors, components etc.
- Ignition on.

  Check that the cargo compartment lighting lights when the trunk lid is opened.

Does the cargo compartment lighting light?

- **YES**

  VERIFIED: Troubleshooting has been completed.

- **NO**

  Refer to **INFORMATION**

INFORMATION

FAULT-TRACING INFORMATION

The fault should have been detected and remedied. As this is not the case fault-tracing has failed.

Exit fault-tracing for this diagnostic trouble code (DTC) or make another attempt.

REM-9F21: CARGO COMPARTMENT LIGHTING. SIGNAL TOO LOW (2005-2012)

DIAGNOSTIC TROUBLE CODE (DTC) INFORMATION REM-9F21

Condition

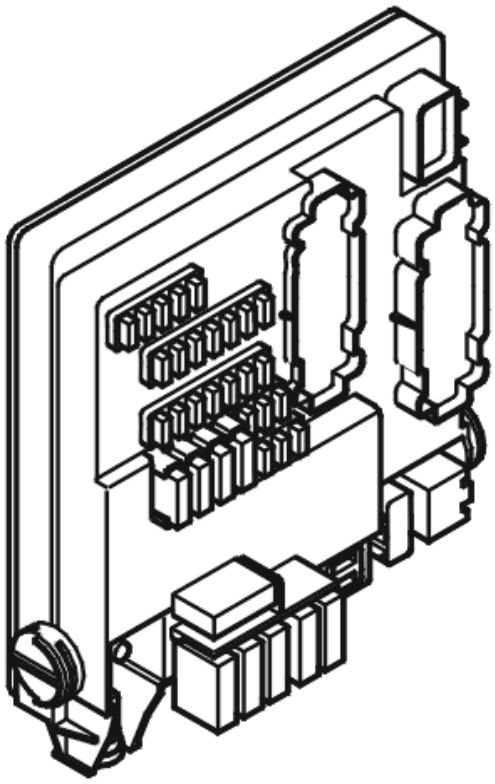

Fig. 45: Identifying Rear Electronic Module (REM)
Courtesy of VOLVO CARS CORPORATION

The rear electronic module (REM) powers the cargo compartment lighting directly via an output.

The diagnostic trouble code (DTC) is stored if the rear electronic module (REM) registers that the signal at the output is too low.

The diagnostic trouble code (DTC) can be diagnosed at key position II.

Substitute Value

- If the fault has been detected in 100 ignition cycles, the output is closed permanently until the diagnostic trouble code is erased (applies from structure week 200539).

Possible Source

- Short-circuit to ground in the signal cable.

Fault symptom[s]

- The cargo compartment lighting does not function.

SIGNAL TOO LOW

CHECKING THE WIRING

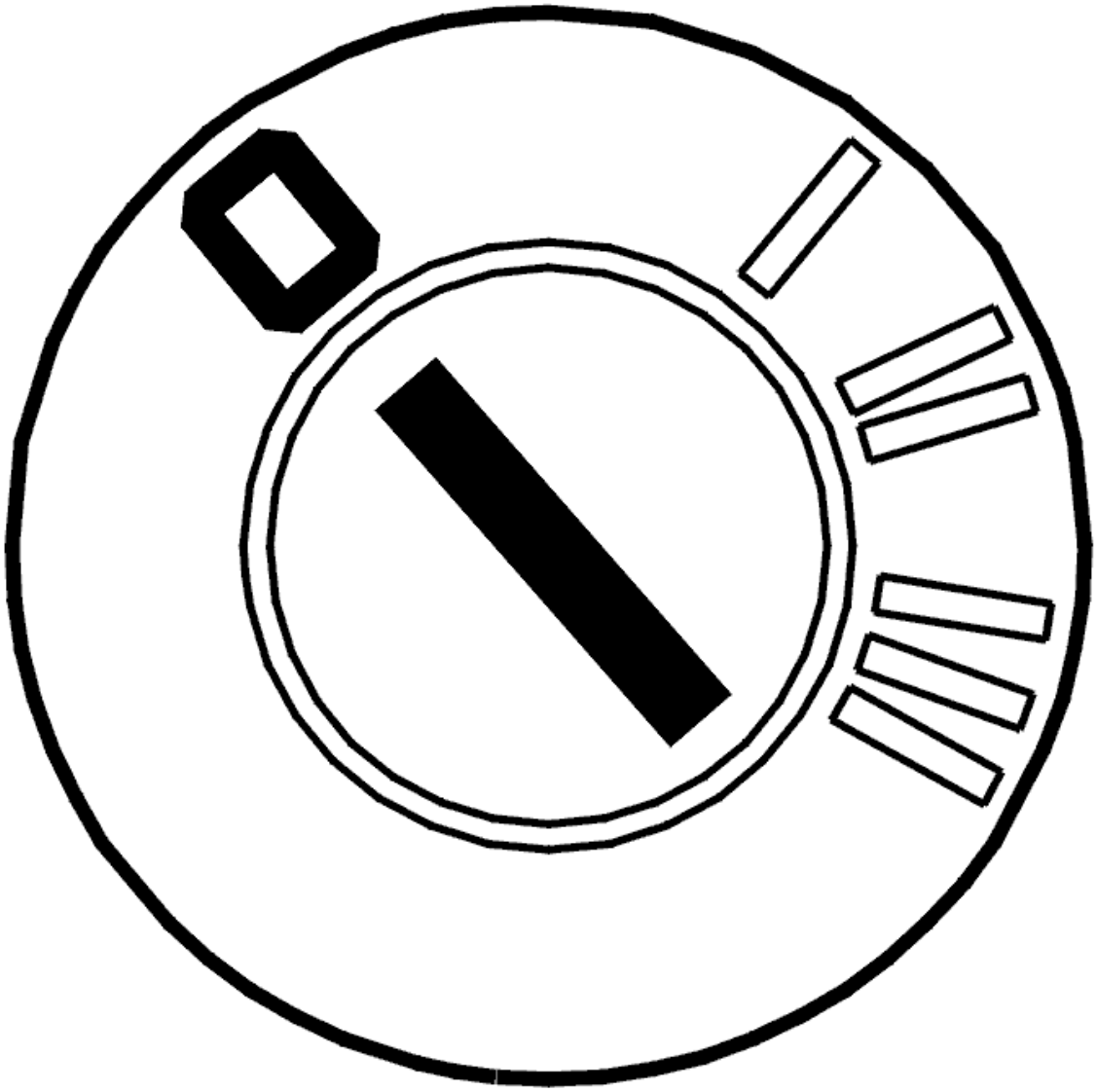

Fig. 46: Identifying Ignition OFF
Courtesy of VOLVO CARS CORPORATION

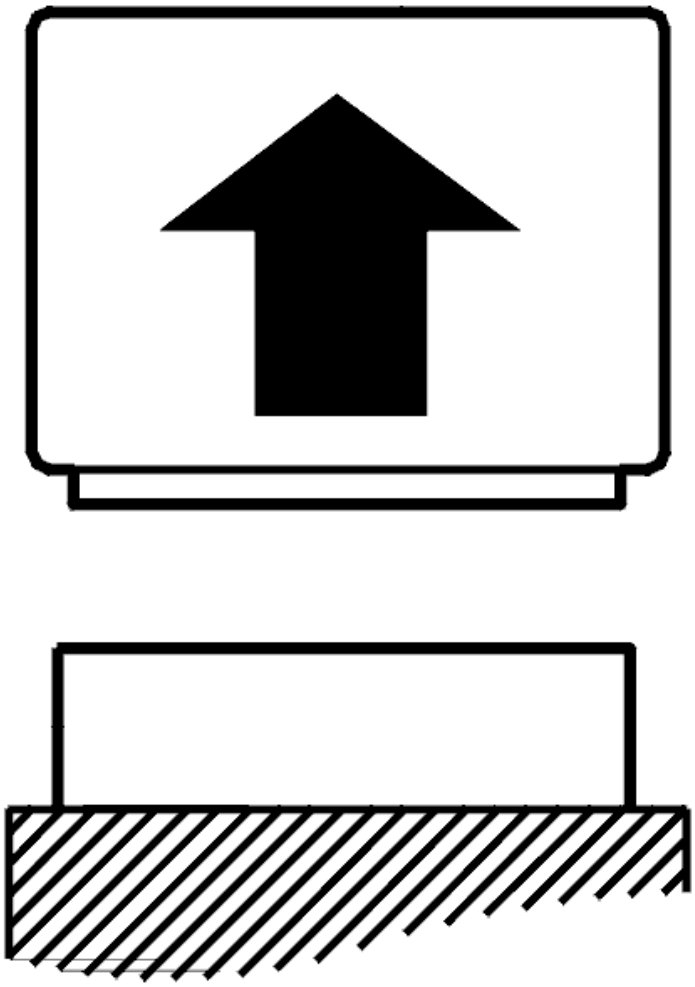

Fig. 47: Identifying Control Module Disconnected
Courtesy of VOLVO CARS CORPORATION

- Ignition off
- Disconnect connectors D and F on the rear electronic module (REM).

  Check the signal cable. Check for a short-circuit to ground.

  Take readings between:

  - Rear electronic module (REM) terminal #F7 (#47) and terminal #2 on the connector for the cargo compartment lamp.

  Remedy as necessary.

  Other information

- see **CONNECTING THE BREAKOUT BOX**
- see **SIGNAL SPECIFICATION**
- see **CHECKING WIRING AND TERMINALS**

- **Continue**

  Refer to **VERIFICATION**

VERIFICATION

VERIFICATION

HINT: After carrying out the repair, check that the fault has been remedied.

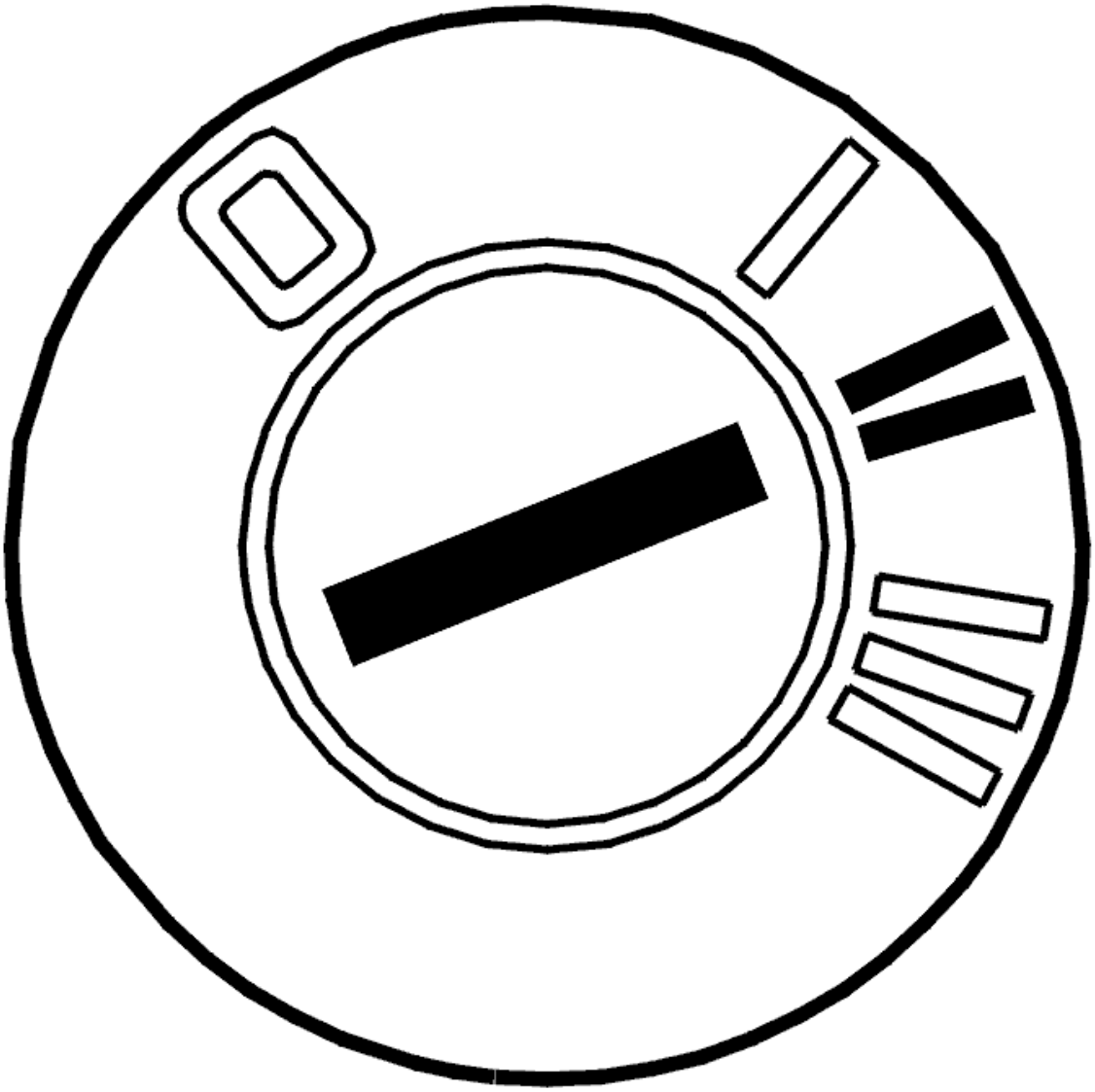

Fig. 48: Identifying Ignition ON

Courtesy of VOLVO CARS CORPORATION

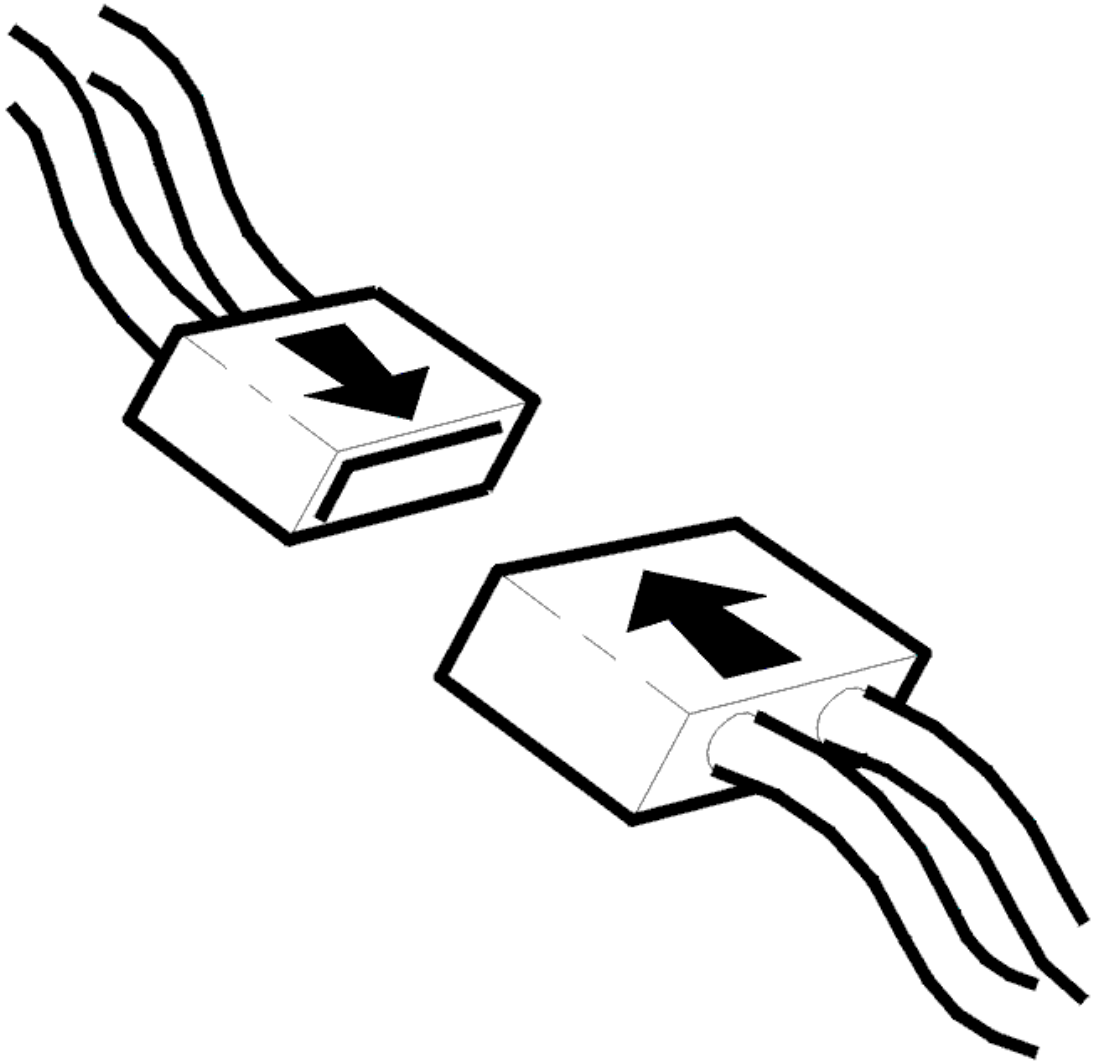

Fig. 49: Identifying Connector(s) Reinstallation
Courtesy of VOLVO CARS CORPORATION

- Ignition off
- Reinstall the connectors, components etc.
- Ignition on.

  Activate the cargo compartment lighting.

  Check that the cargo compartment lighting is activated

Is the cargo compartment lighting activated?

- **YES**

  VERIFIED: Troubleshooting has been completed.

- **NO**

  Refer to **INFORMATION**

INFORMATION

FAULT-TRACING INFORMATION

The fault should have been detected and remedied. As this is not the case fault-tracing has failed.

Exit fault-tracing for this diagnostic trouble code (DTC) or make another attempt.

REM-DD00: LIN COMMUNICATION. COMMUNICATION FAULT (2005-2012)

DIAGNOSTIC TROUBLE CODE (DTC) INFORMATION REM-DD00

Condition

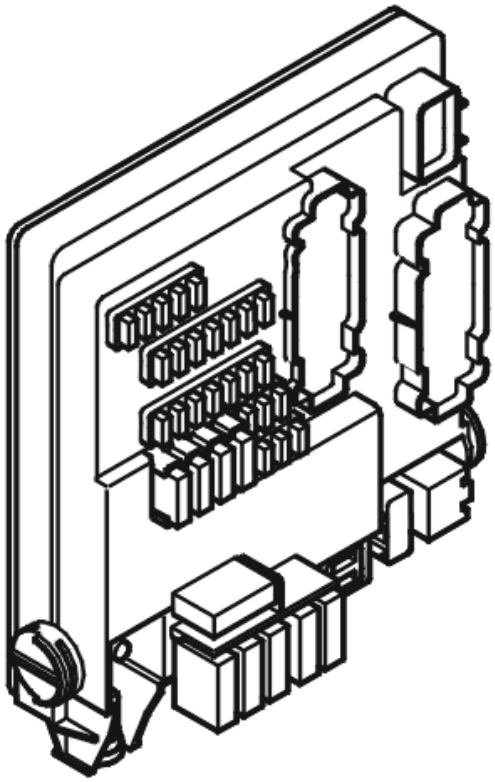

Fig. 50: Identifying Rear Electronic Module (REM)

Courtesy of VOLVO CARS CORPORATION

The rear electronic module (REM) transmits and receives information via a standardized serial communication method - LIN (Local Interconnect Network). The diagnostic trouble code (DTC) is stored if the control module registers serious interference (LIN communication blocked) with the parking assistance module (PAM).

The diagnostic trouble code (DTC) can be detected when the ignition is in position II for at least 10 seconds and the battery voltage is > 10.5 volts.

NOTE: **In the event of REM-DDxx diagnostic trouble codes (DTCs), the rear electronic module (REM) must not be replaced as the diagnostic trouble code (DTC) indicates a short-circuit in one or more conductors in the LIN network. The rear electronic module (REM) is the only control module that monitors the voltage level in the LIN wiring. The rear electronic module (REM) is therefore the only control module that can store a diagnostic trouble code (DTC) for a short-circuit to ground or supply voltage in one of the cables. Do not replace the rear electronic module (REM) in the event of a LIN fault unless VIDA (Volvo scan tool) has indicated that the rear electronic module (REM) has an internal fault.**

Substitute Value

- None.

Possible Source

- Short-circuit between signal cables
- Open-circuit in one of the signal cables
- Internal fault in another control module in the same part of the network.

Fault symptom[s]

- The parking assistance system does not operate.

COMMUNICATION FAULT

CHECKING THE WIRING

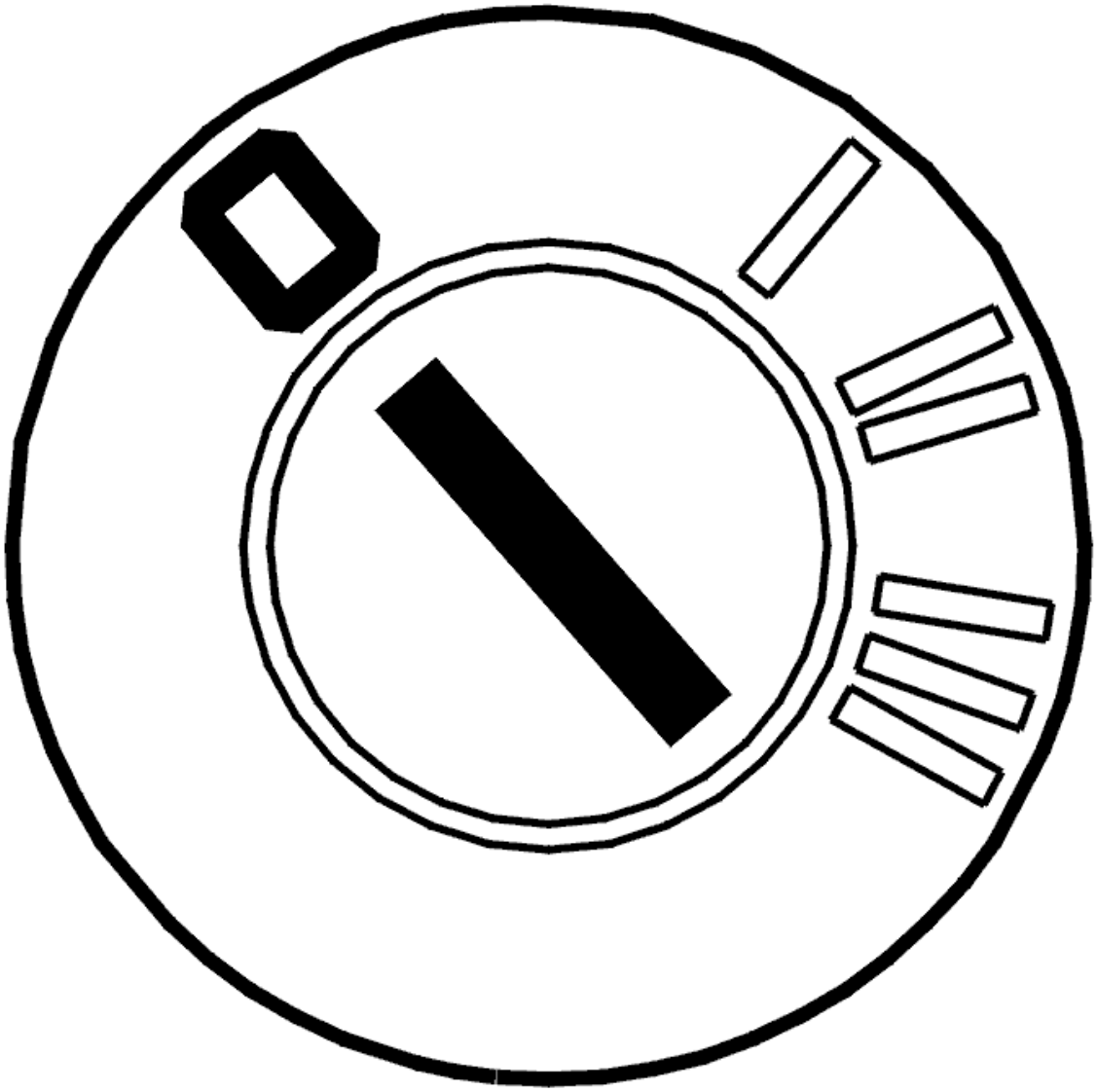

Fig. 51: Identifying Ignition OFF
Courtesy of VOLVO CARS CORPORATION

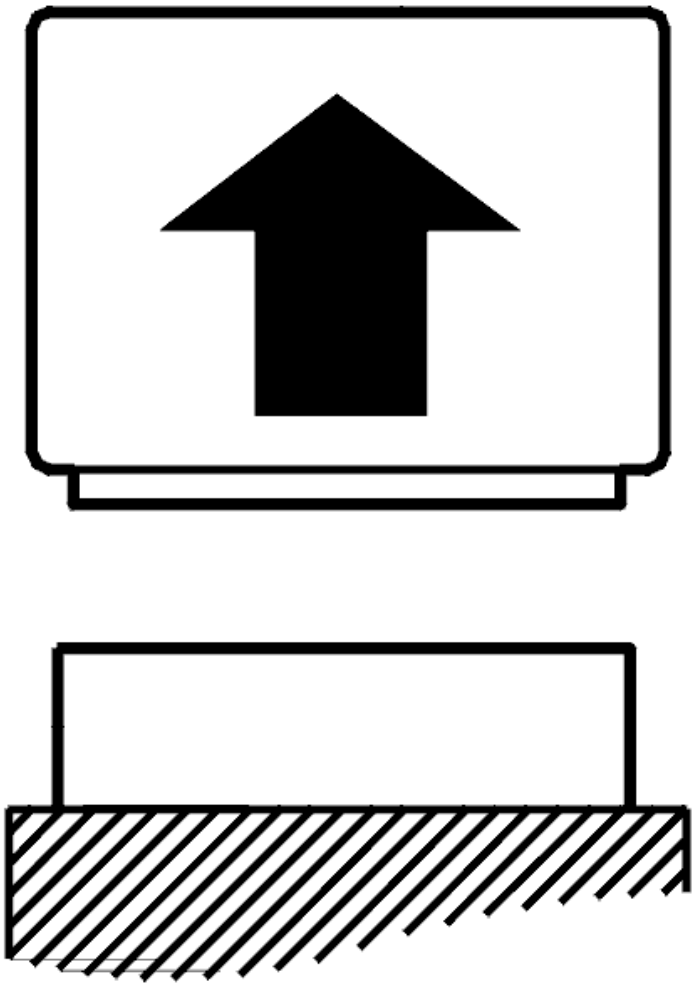

Fig. 52: Identifying Control Module Disconnected
Courtesy of VOLVO CARS CORPORATION

- Ignition off
- Disconnect connector D on the rear electronic module (REM).

  The diagnostic trouble code (DTC) is stored if there is no communication between the rear electronic module (REM) and the parking assistance module (PAM). This may be due to a fault in the signal cable between the control modules or a defective communication device in one or all of the control modules.

  Check the signal cable. Check for an open-circuit. Check for a short-circuit to ground. Check for a short-circuit to supply voltage.

  Take readings between:

  - Rear electronic module (REM) terminal #D32 (#32) and parking assistance module (PAM)

terminal #A12.

Remedy as necessary.

Other information

- see **CONNECTING THE BREAKOUT BOX**
- see **SIGNAL SPECIFICATION**
- see **PARKING ASSISTANCE MODULE (PAM), REPLACING**
- see **CHECKING WIRING AND TERMINALS**

Was a fault detected?

- **YES**

  Refer to **VERIFICATION**

- **NO**

  Refer to **REPLACING THE CONTROL MODULE**

REPLACING THE CONTROL MODULE

Try a new parking assistance module (PAM).

Remedy as necessary.

Other information

- see **PARKING ASSISTANCE MODULE (PAM), REPLACING**

- **Continue**

  Refer to **VERIFICATION**

VERIFICATION

VERIFICATION

HINT: After carrying out the repair, check that the fault has been remedied.

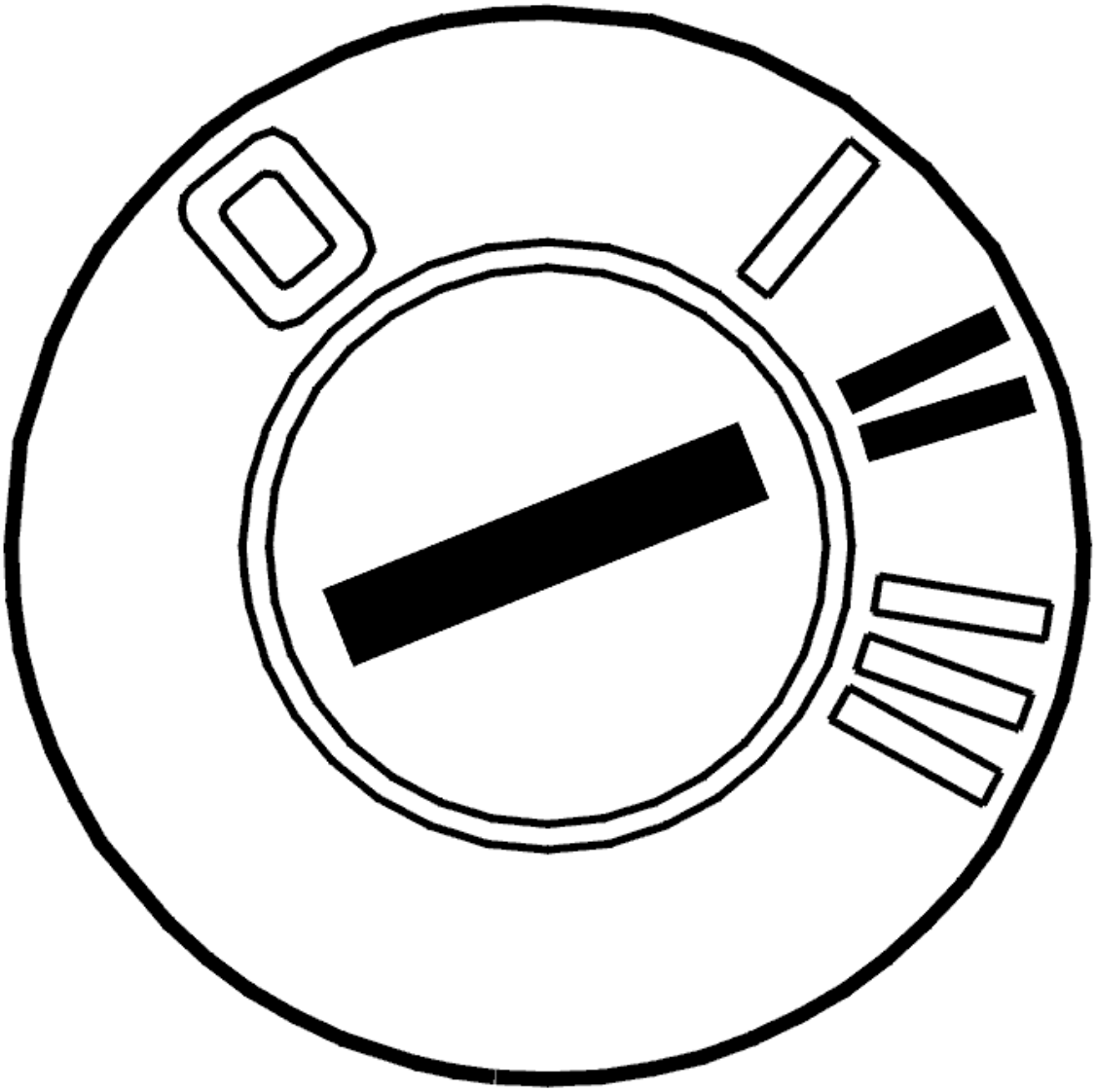

Fig. 53: Identifying Ignition ON
Courtesy of VOLVO CARS CORPORATION

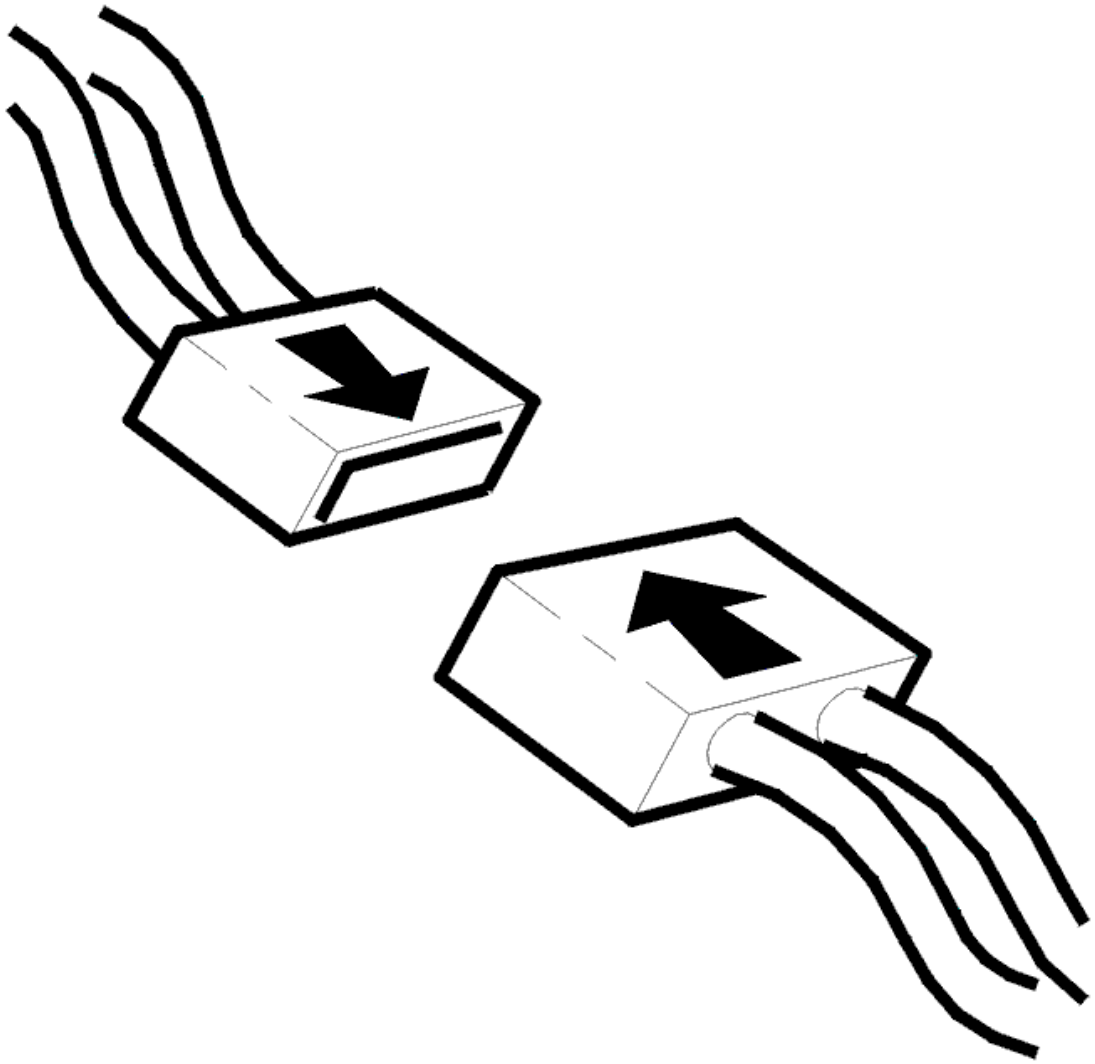

Fig. 54: Identifying Connector(s) Reinstallation
Courtesy of VOLVO CARS CORPORATION

- Switch off the ignition. Wait at least 15 seconds
- Reinstall the connectors, components etc.
- Ignition on for at least 5 seconds
- Move the gear selector lever to back-up (reversing) (R).

  The parking assistance module (PAM) is activated by pressing the switch on the lower section of the climate control module (CCM). Use the VCT2000 (or appropriate scan tool) to read off the diagnostic status from the parking assistance module (PAM).

  Check that the parking assistance module (PAM) is active. Check that the sensors are OK.

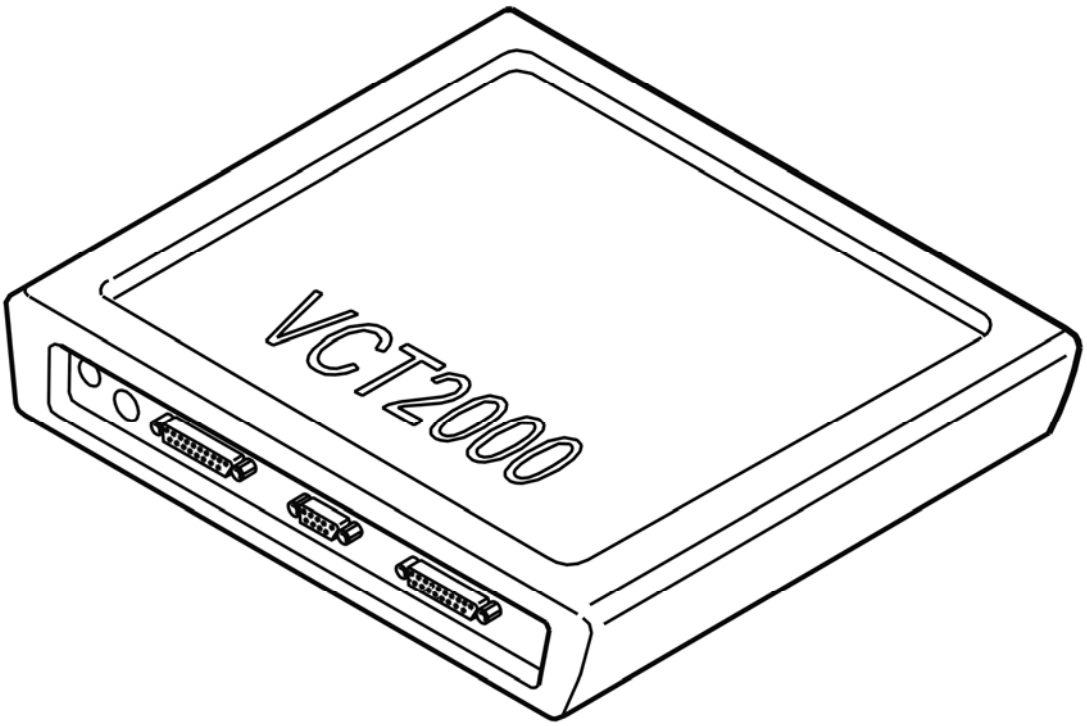

Fig. 55: Identifying VCT2000 Diagnostic Tool Symbol In VIDA
Courtesy of VOLVO CARS CORPORATION

Is the parking assistance module (PAM) active? Are the sensors OK?

- **YES**

  VERIFIED: Troubleshooting has been completed.

- **NO**

  Refer to **INFORMATION**

INFORMATION

FAULT-TRACING INFORMATION

The fault should have been detected and remedied. As this is not the case fault-tracing has failed.

Exit fault-tracing for this diagnostic trouble code (DTC) or make another attempt.

REM-DD01: LIN COMMUNICATION. COMMUNICATION FAULT (2005-2012)

DIAGNOSTIC TROUBLE CODE (DTC) INFORMATION REM-DD01

Condition

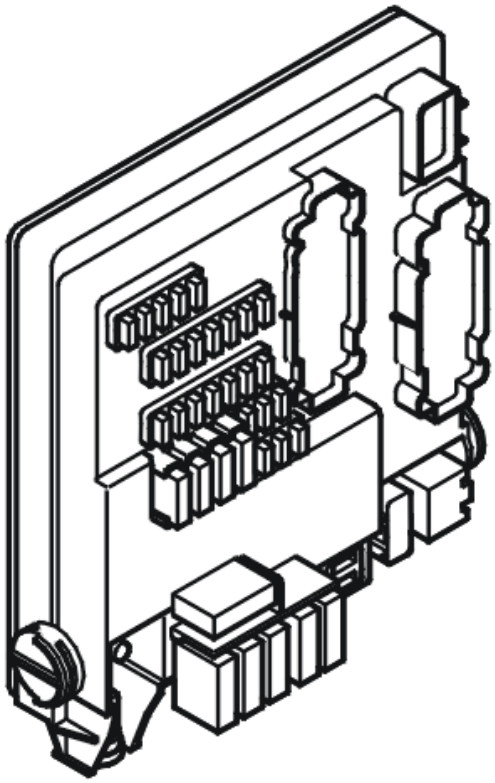

Fig. 56: Identifying Rear Electronic Module (REM)
Courtesy of VOLVO CARS CORPORATION

The rear electronic module (REM) transmits and receives information via a standardized serial communication method - LIN (Local Interconnect Network). The diagnostic trouble code (DTC) is stored if the control module registers serious interference (LIN communication blocked) with the parking assistance module (PAM).

The diagnostic trouble code (DTC) can be detected when the ignition is in position II for at least 10 seconds and the battery voltage is > 10.5 volts.

NOTE: **In the event of REM-DDxx diagnostic trouble codes (DTCs), the rear electronic module (REM) must not be replaced as the diagnostic trouble code (DTC) indicates a short-circuit in one or more conductors in the LIN network. The rear electronic module (REM) is the only control module that monitors the voltage level in the LIN wiring. The rear electronic module (REM) is therefore the only control module that can store a diagnostic trouble code (DTC) for a short-circuit to ground or supply voltage in one of the cables. Do not replace the rear electronic module (REM) in the event of a LIN fault unless VIDA (Volvo scan tool) has indicated that the rear electronic module (REM) has an internal fault.**

Substitute Value

- None.

Possible Source

- Short-circuit between signal cables
- Open-circuit in one of the signal cables
- Internal fault in another control module in the same part of the network.

Fault symptom[s]

- The parking assistance system does not operate.

COMMUNICATION FAULT

CHECKING THE WIRING

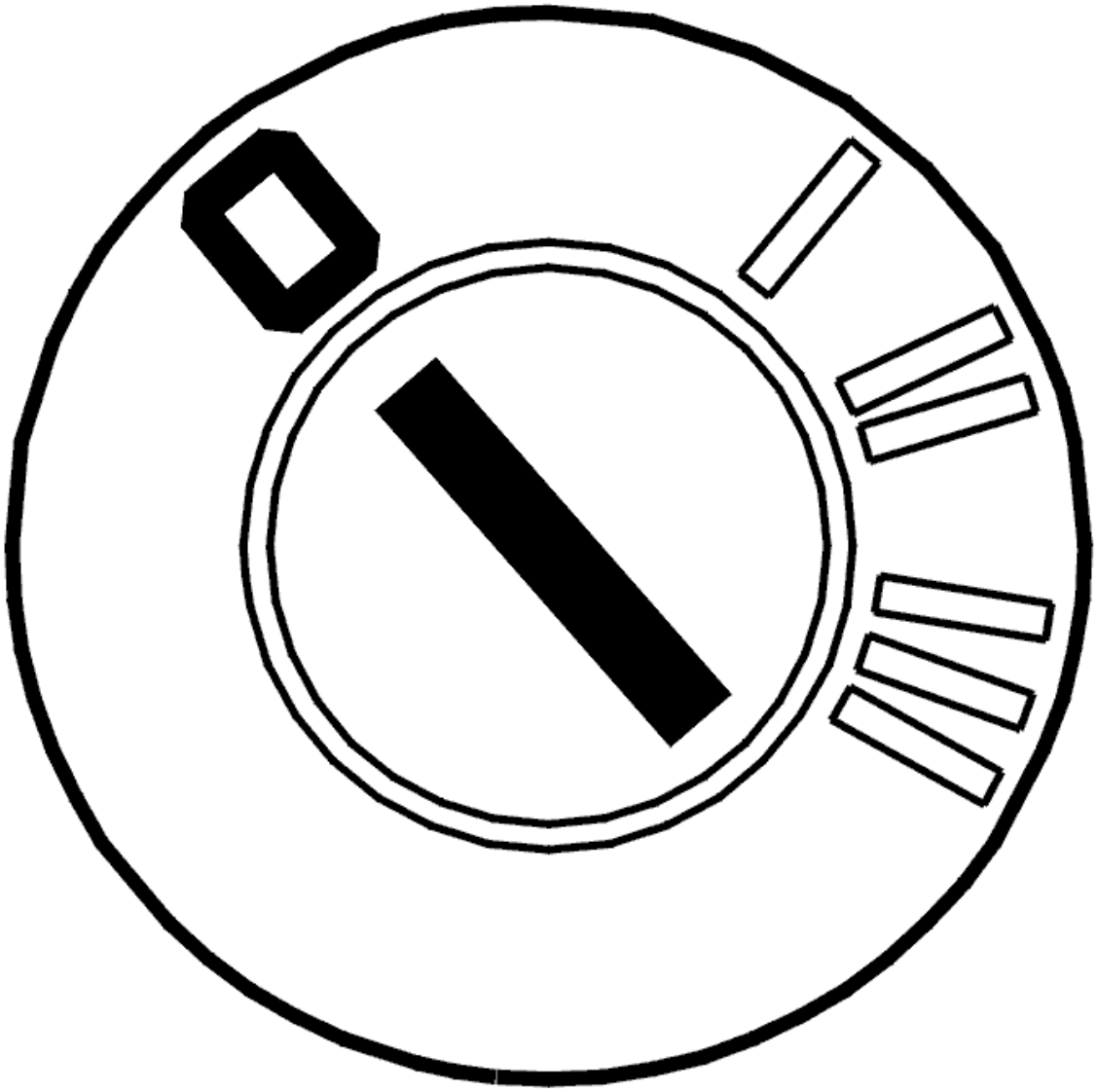

Fig. 57: Identifying Ignition OFF
Courtesy of VOLVO CARS CORPORATION

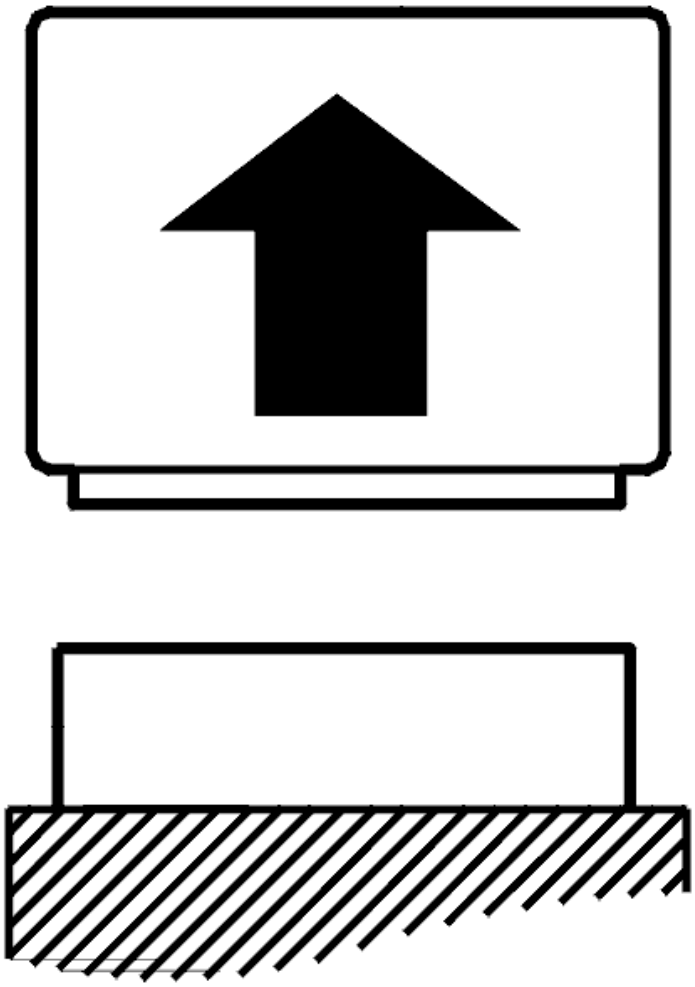

Fig. 58: Identifying Control Module Disconnected
Courtesy of VOLVO CARS CORPORATION

- Ignition off
- Disconnect connector D on the rear electronic module (REM).

  The diagnostic trouble code (DTC) is stored if there is no communication between the rear electronic module (REM) and the parking assistance module (PAM). This may be due to a fault in the signal cable between the control modules or a defective communication device in one or all of the control modules.

  Check the signal cable. Check for an open-circuit. Check for a short-circuit to ground.

  Take readings between:

  - Rear electronic module (REM) terminal #D32 (#32) and parking assistance module (PAM) terminal #A12.

Remedy as necessary.

Other information

- see **CONNECTING THE BREAKOUT BOX**
- see **SIGNAL SPECIFICATION**
- see **PARKING ASSISTANCE MODULE (PAM), REPLACING**
- see **CHECKING WIRING AND TERMINALS**

Was a fault detected?

- **YES**

  Refer to **VERIFICATION**

- **NO**

  Refer to **REPLACING THE CONTROL MODULE**

REPLACING THE CONTROL MODULE

Try a new parking assistance module (PAM).

Remedy as necessary.

Other information

- see **PARKING ASSISTANCE MODULE (PAM), REPLACING**

- **Continue**

  Refer to **VERIFICATION**

VERIFICATION

VERIFICATION

HINT: After carrying out the repair, check that the fault has been remedied.

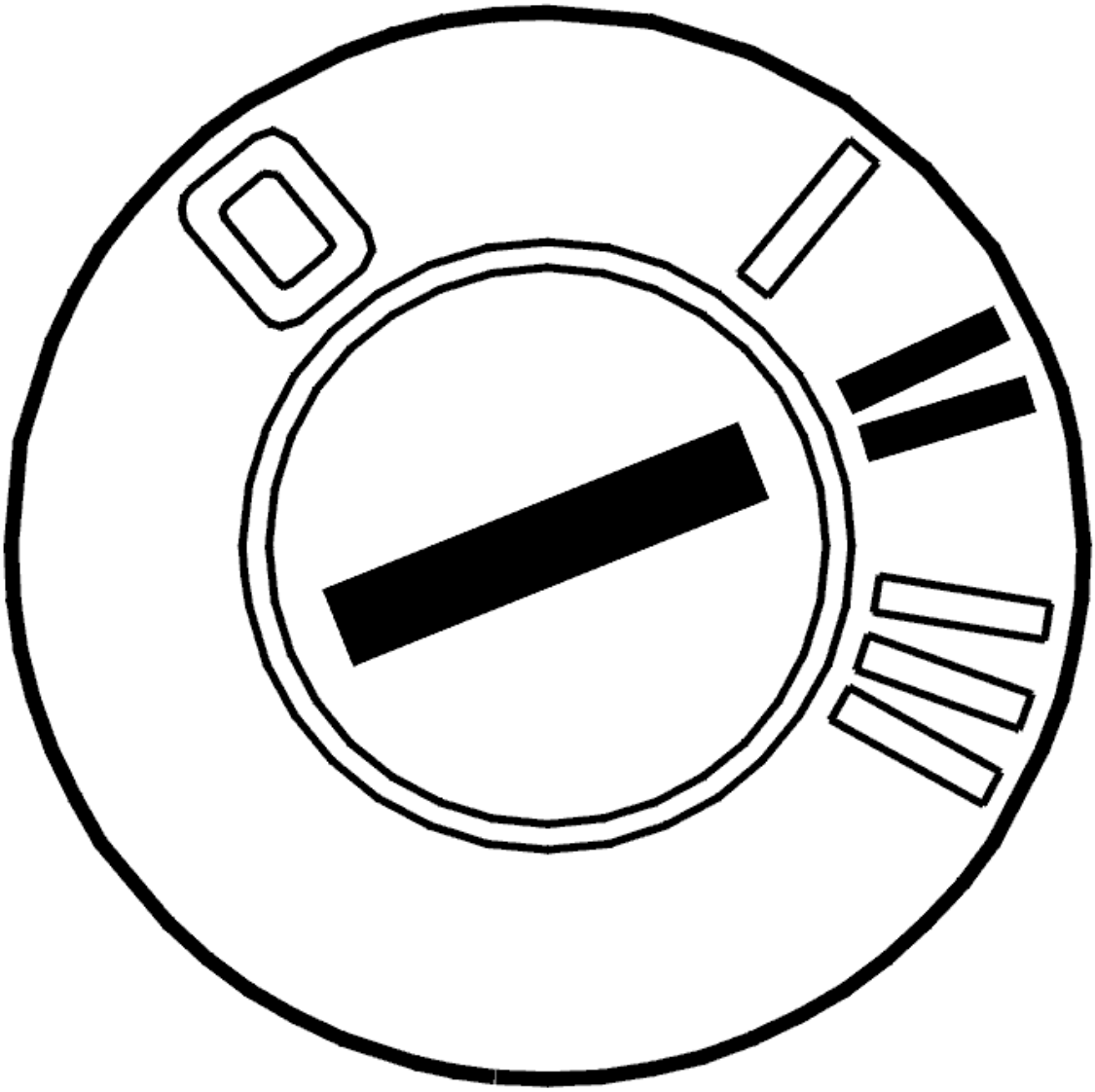

Fig. 59: Identifying Ignition ON
Courtesy of VOLVO CARS CORPORATION

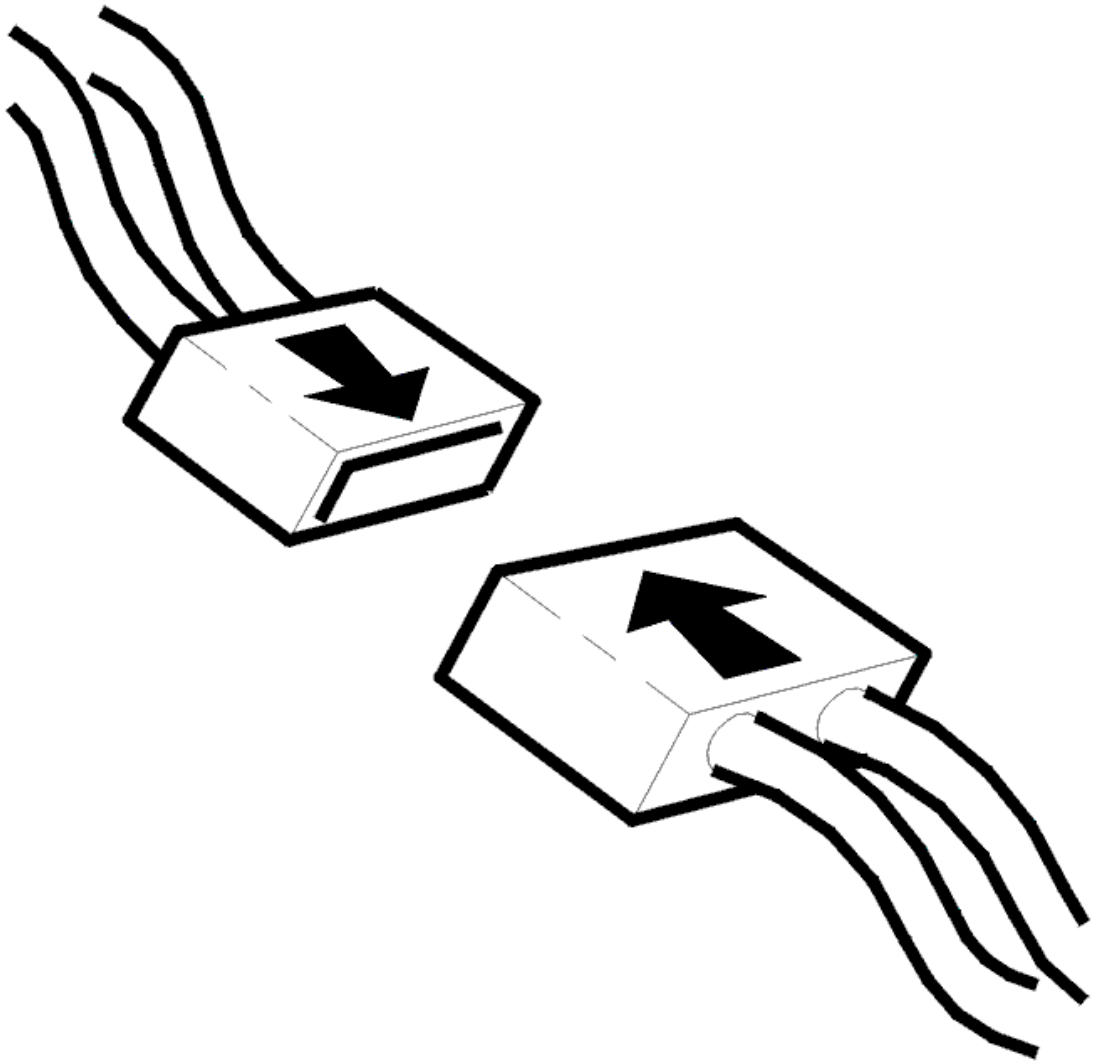

Fig. 60: Identifying Connector(s) Reinstallation
Courtesy of VOLVO CARS CORPORATION

- Switch off the ignition. Wait at least 15 seconds
- Reinstall the connectors, components etc.
- Ignition on for at least 5 seconds
- Move the gear selector lever to back-up (reversing) (R).

  The parking assistance module (PAM) is activated by pressing the switch on the lower section of the climate control module (CCM). Use the VCT2000 (or appropriate scan tool) to read off the diagnostic status from the parking assistance module (PAM).

  Check that the parking assistance module (PAM) is active. Check that the sensors are OK.

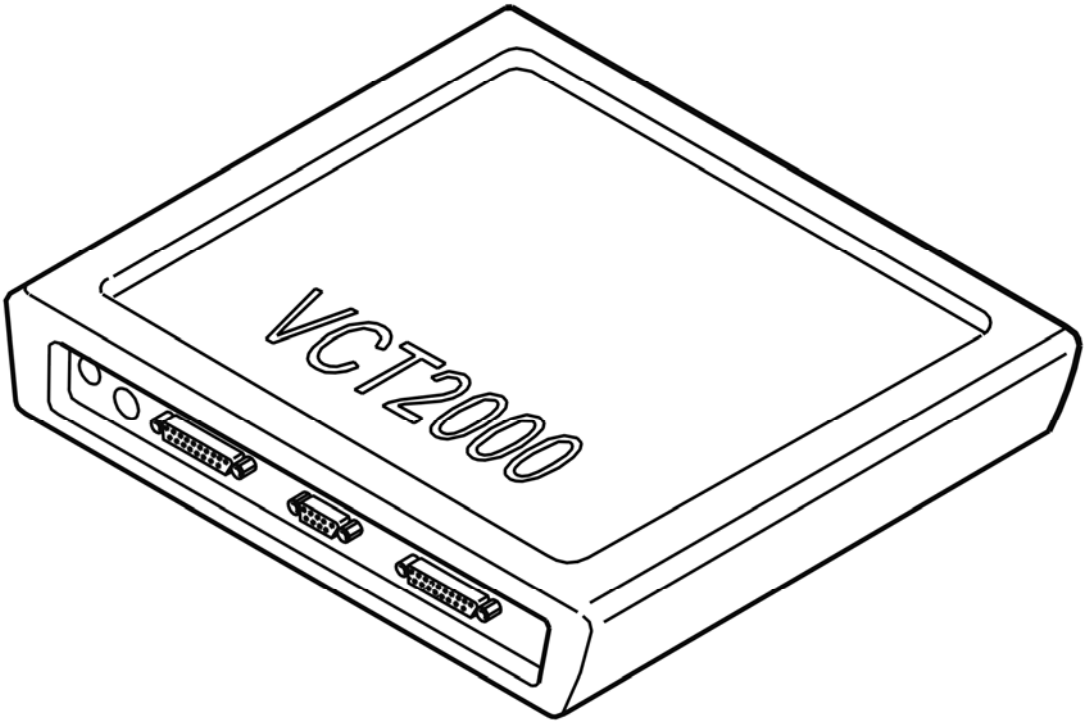

Fig. 61: Identifying VCT2000 Diagnostic Tool Symbol In VIDA
Courtesy of VOLVO CARS CORPORATION

Is the parking assistance module (PAM) active? Are the sensors OK?

- **YES**

  VERIFIED: Troubleshooting has been completed.

- **NO**

  Refer to **INFORMATION**

INFORMATION

FAULT-TRACING INFORMATION

The fault should have been detected and remedied. As this is not the case fault-tracing has failed.

Exit fault-tracing for this diagnostic trouble code (DTC) or make another attempt.

REM-DD02: LIN COMMUNICATION. COMMUNICATION FAULT (2005-2012)

DIAGNOSTIC TROUBLE CODE (DTC) INFORMATION REM-DD02

Condition

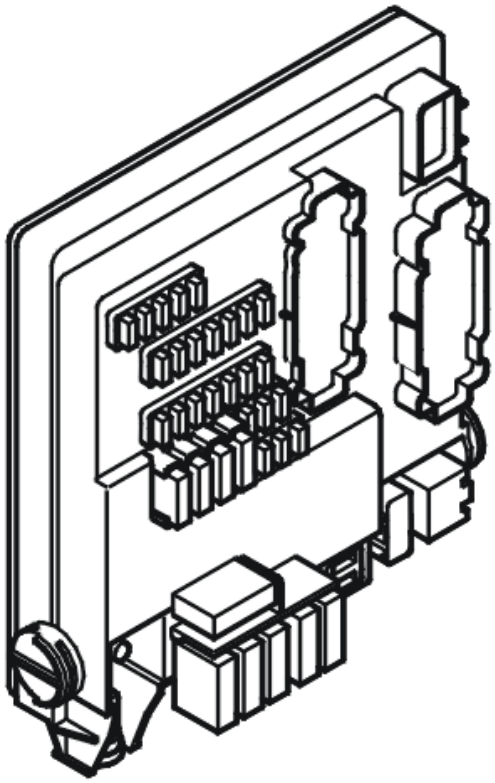

Fig. 62: Identifying Rear Electronic Module (REM)
Courtesy of VOLVO CARS CORPORATION

The rear electronic module (REM) transmits and receives information via a standardized serial communication method - LIN (Local Interconnect Network). The diagnostic trouble code (DTC) is stored if the control module registers serious interference (LIN communication blocked) with the parking assistance module (PAM).

The diagnostic trouble code (DTC) can be detected when the ignition is in position II for at least 10 seconds and the battery voltage is > 10.5 volts.

NOTE: **In the event of REM-DDxx diagnostic trouble codes (DTCs), the rear electronic module (REM) must not be replaced as the diagnostic trouble code (DTC) indicates a short-circuit in one or more conductors in the LIN network. The rear electronic module (REM) is the only control module that monitors the voltage level in the LIN wiring. The rear electronic module (REM) is therefore the only control module that can store a diagnostic trouble code (DTC) for a short-circuit to ground or supply voltage in one of the cables. Do not replace the rear electronic module (REM) in the event of a LIN fault unless VIDA (Volvo scan tool) has indicated that the rear electronic module (REM) has an internal fault.**

Substitute Value

- None.

Possible Source

- Short-circuit between signal cables
- Open-circuit in one of the signal cables
- Internal fault in another control module in the same part of the network.

Fault symptom[s]

- The parking assistance system does not operate.

COMMUNICATION FAULT

CHECKING THE WIRING

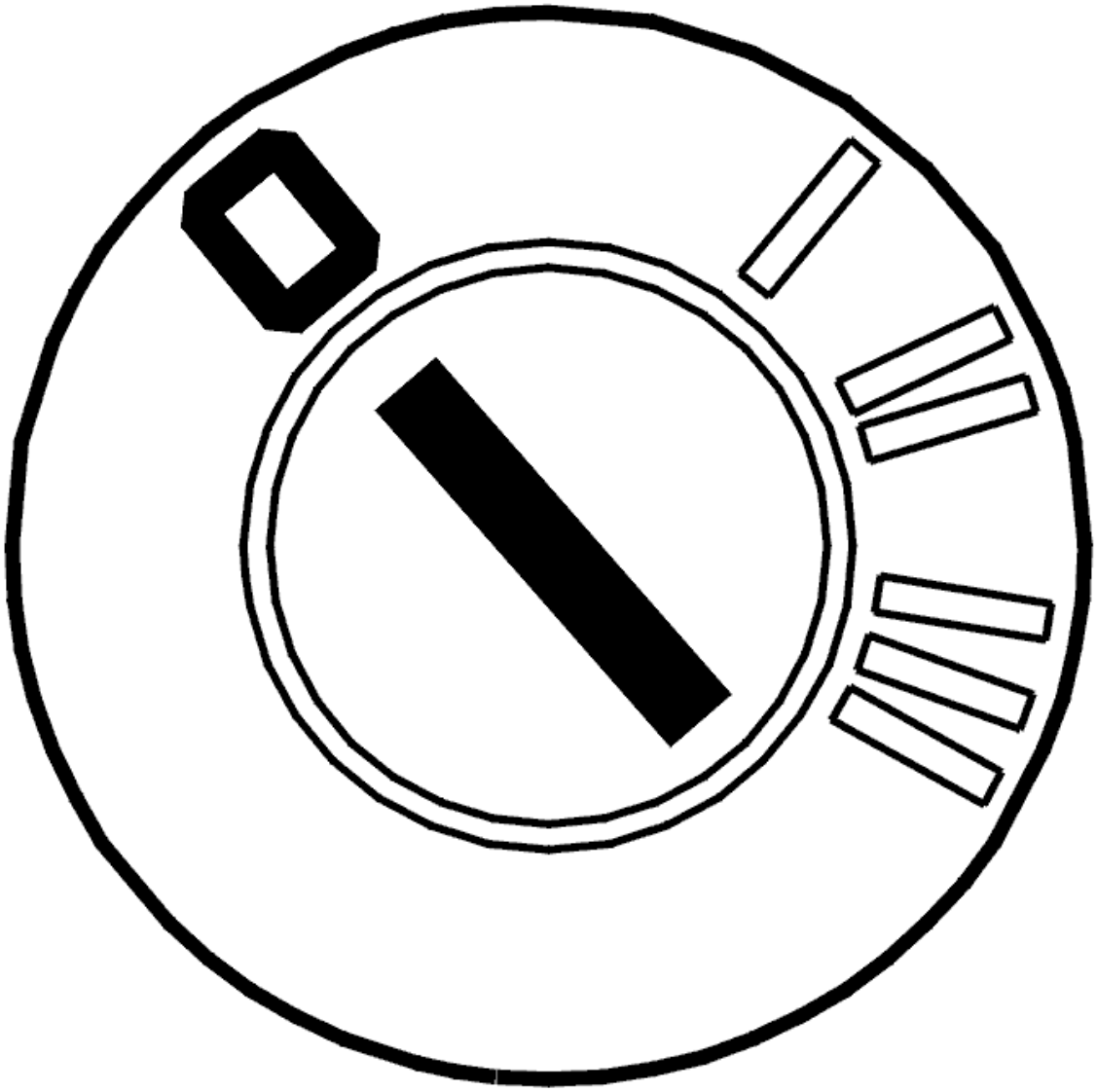

Fig. 63: Identifying Ignition OFF
Courtesy of VOLVO CARS CORPORATION

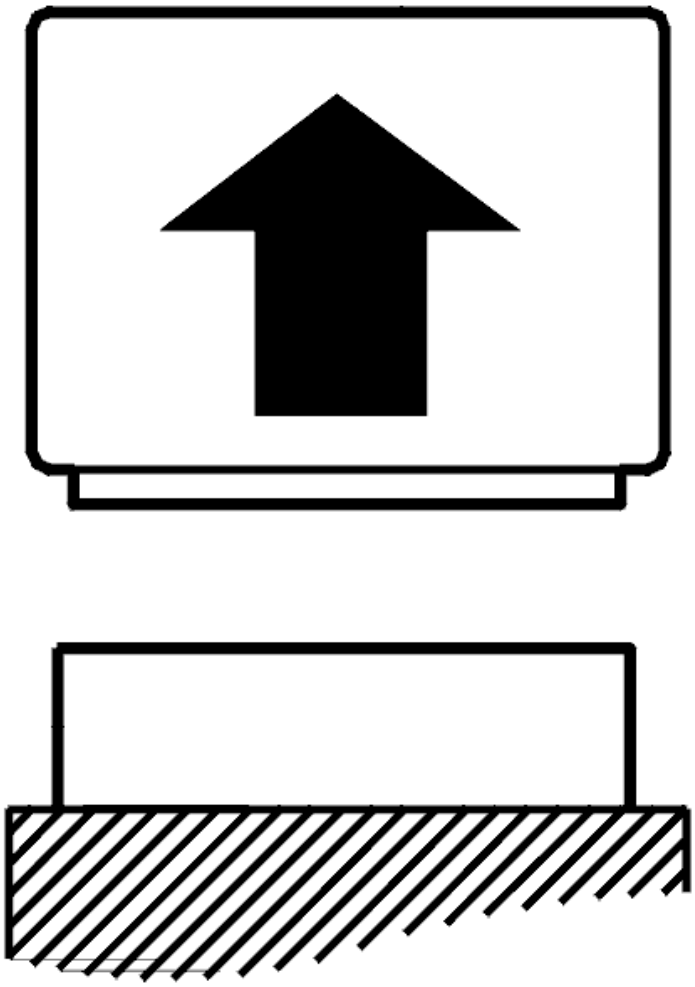

Fig. 64: Identifying Control Module Disconnected
Courtesy of VOLVO CARS CORPORATION

- Ignition off
- Disconnect connector D on the rear electronic module (REM).

  The diagnostic trouble code (DTC) is stored if there is no communication between the rear electronic module (REM) and the parking assistance module (PAM). This may be due to a fault in the signal cable between the control modules or a defective communication device in one or all of the control modules.

  Check the signal cable. Check for an open-circuit. Check for a short-circuit to ground.

  Take readings between:

  - Rear electronic module (REM) terminal #D32 (#32) and parking assistance module (PAM) terminal #A12.

Remedy as necessary.

Other information

- see **CONNECTING THE BREAKOUT BOX**
- see **SIGNAL SPECIFICATION**
- see **PARKING ASSISTANCE MODULE (PAM), REPLACING**
- see **CHECKING WIRING AND TERMINALS**

Was a fault detected?

- **YES**

  Refer to **VERIFICATION**

- **NO**

  Refer to **REPLACING THE CONTROL MODULE**

REPLACING THE CONTROL MODULE

Try a new parking assistance module (PAM).

Remedy as necessary.

Other information

- see **PARKING ASSISTANCE MODULE (PAM), REPLACING**

- **Continue**

  Refer to **VERIFICATION**

VERIFICATION

VERIFICATION

HINT: After carrying out the repair, check that the fault has been remedied.

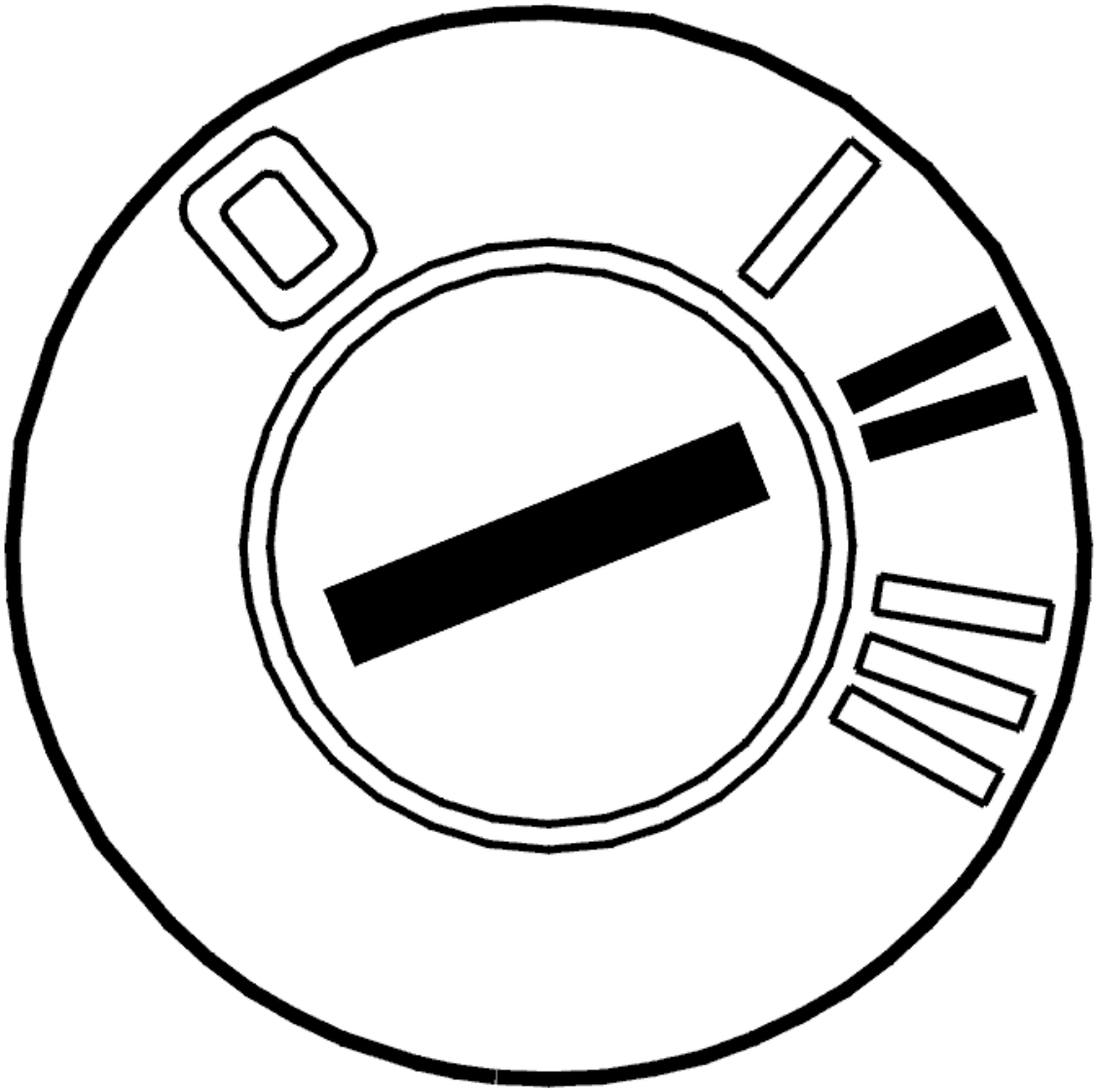

Fig. 65: Identifying Ignition ON
Courtesy of VOLVO CARS CORPORATION

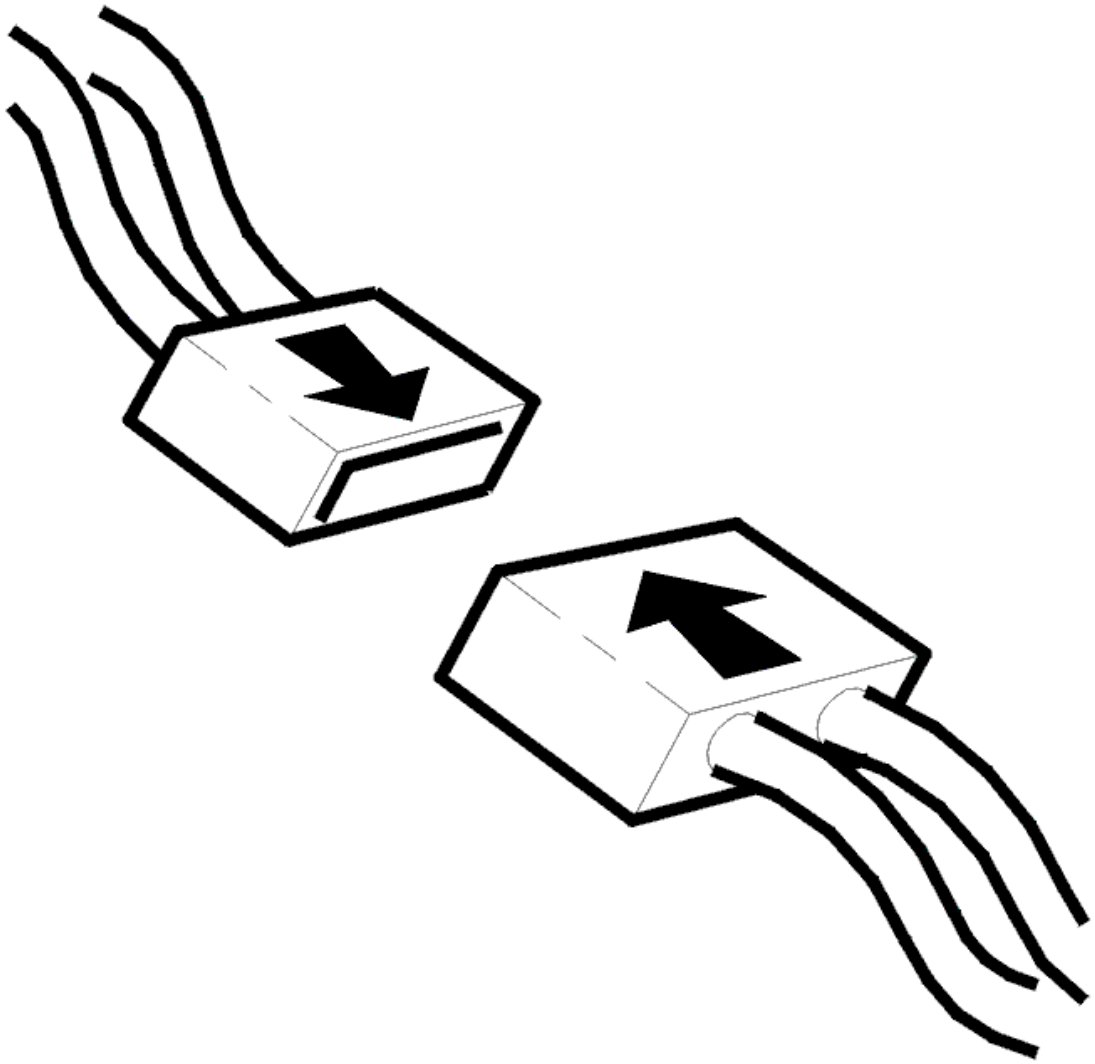

Fig. 66: Identifying Connector(s) Reinstallation
Courtesy of VOLVO CARS CORPORATION

- Switch off the ignition. Wait at least 15 seconds
- Reinstall the connectors, components etc.
- Ignition on for at least 5 seconds
- Move the gear selector lever to back-up (reversing) (R).

The parking assistance module (PAM) is activated by pressing the switch on the lower section of the climate control module (CCM). Use the VCT2000 (or appropriate scan tool) to read off the diagnostic status from the parking assistance module (PAM).

Check that the parking assistance module (PAM) is active. Check that the sensors are OK.

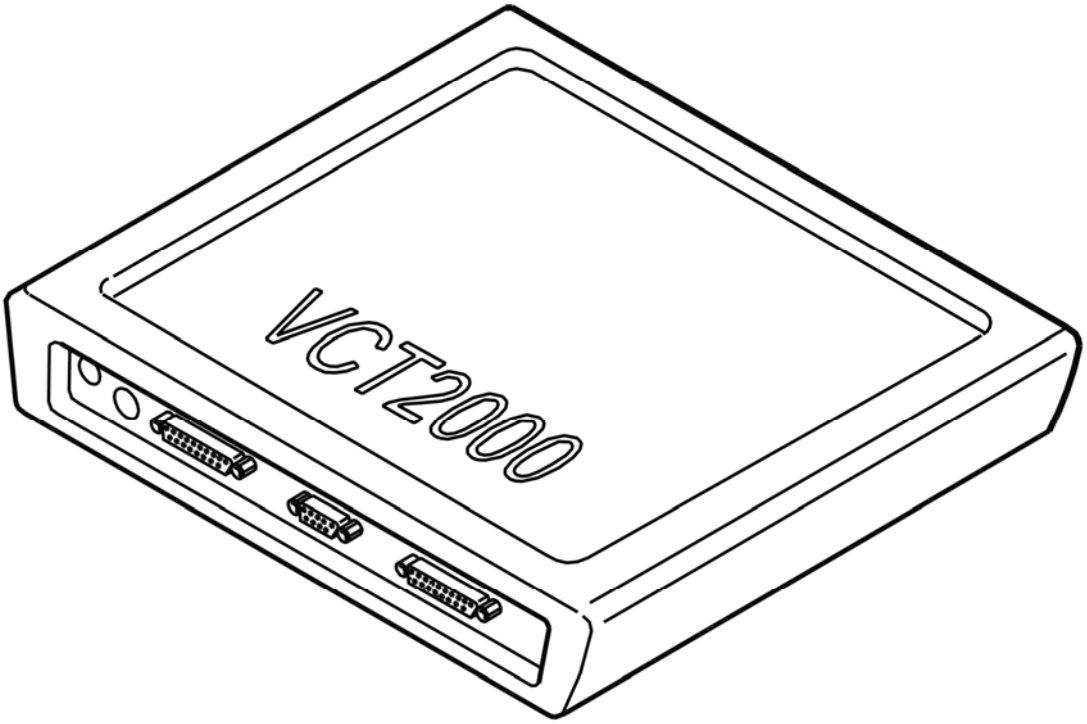

Fig. 67: Identifying VCT2000 Diagnostic Tool Symbol In VIDA
Courtesy of VOLVO CARS CORPORATION

Is the parking assistance module (PAM) active? Are the sensors OK?

- **YES**

  VERIFIED: Troubleshooting has been completed.

- **NO**

  Refer to **INFORMATION**

INFORMATION

FAULT-TRACING INFORMATION

The fault should have been detected and remedied. As this is not the case fault-tracing has failed.

Exit fault-tracing for this diagnostic trouble code (DTC) or make another attempt.

REM-DD10: LIN COMMUNICATION. COMMUNICATION FAULT (2005-2012)

DIAGNOSTIC TROUBLE CODE (DTC) INFORMATION REM-DD10

Condition

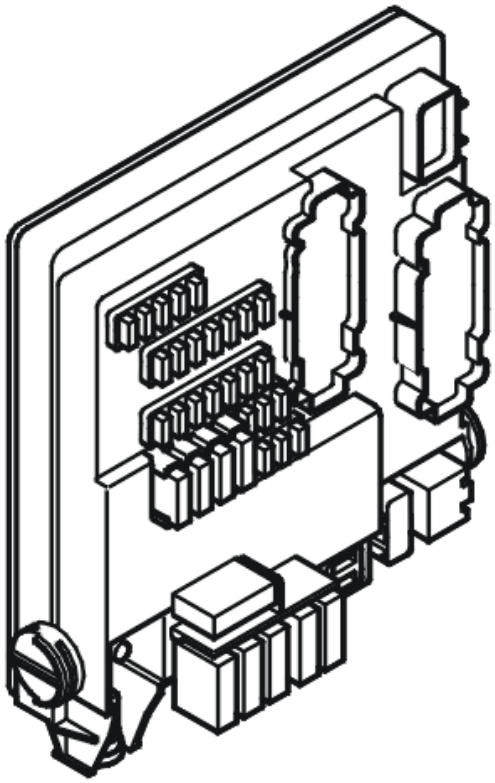

Fig. 68: Identifying Rear Electronic Module (REM)
Courtesy of VOLVO CARS CORPORATION

The rear electronic module (REM) transmits and receives information via a standardized serial communication method - LIN (Local Interconnect Network). The diagnostic trouble code (DTC) is stored if the control module registers serious interference (LIN communication blocked) with the parking assistance module (PAM).

The diagnostic trouble code (DTC) can be detected when the ignition is in position II for at least 10 seconds and the battery voltage is > 10.5 volts.

NOTE: **In the event of REM-DDxx diagnostic trouble codes (DTCs), the rear electronic module (REM) must not be replaced as the diagnostic trouble code (DTC) indicates a short-circuit in one or more conductors in the LIN network. The rear electronic module (REM) is the only control module that monitors the voltage level in the LIN wiring. The rear electronic module (REM) is therefore the only control module that can store a diagnostic trouble code (DTC) for a short-circuit to ground or supply voltage in one of the cables. Do not replace the rear electronic module (REM) in the event of a LIN fault unless VIDA (Volvo scan tool) has indicated that the rear electronic module (REM) has an internal fault.**

Substitute Value

- None.

Possible Source

- Short-circuit between signal cables
- Open-circuit in one of the signal cables
- Internal fault in another control module in the same part of the network.

Fault symptom[s]

- The parking assistance system does not operate.

COMMUNICATION FAULT

CHECKING THE WIRING

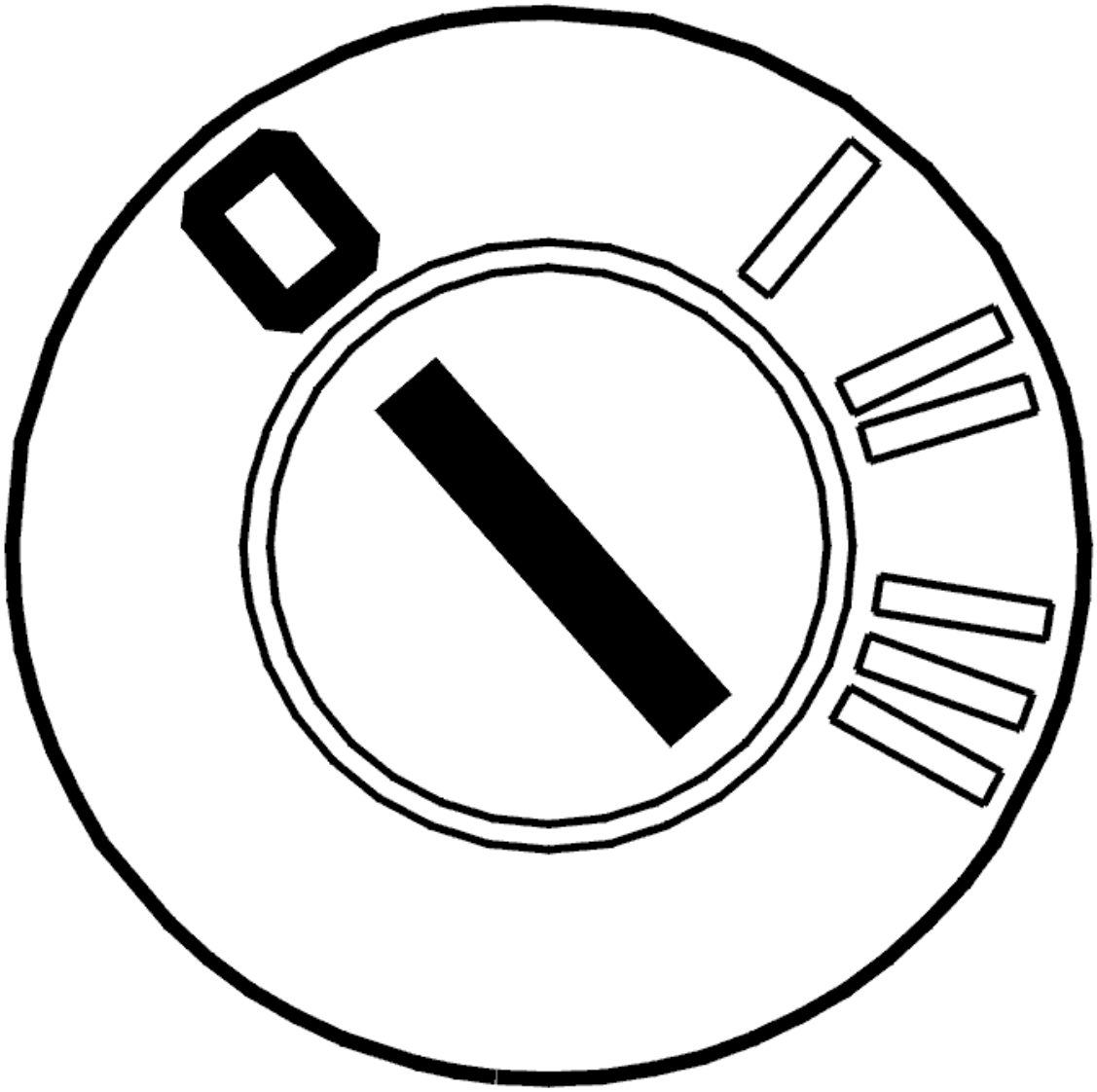

Fig. 69: Identifying Ignition OFF
Courtesy of VOLVO CARS CORPORATION

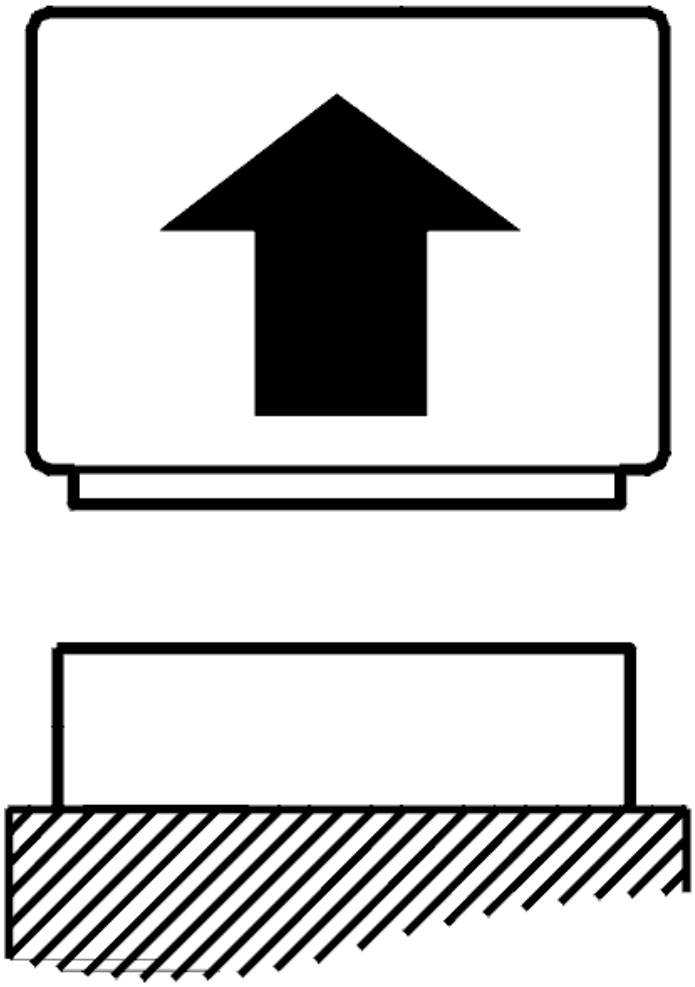

Fig. 70: Identifying Control Module Disconnected
Courtesy of VOLVO CARS CORPORATION

- Ignition off
- Disconnect connector D on the rear electronic module (REM).

  Check that the fuse for the control module is intact.

  The diagnostic trouble code (DTC) is stored if there is no communication between the rear electronic module (REM) and the parking assistance module (PAM). This may be due to a fault in the signal cable between the control modules or a defective communication device in one or all of the control modules.

  Check the signal cable. Check for an open-circuit. Check for a short-circuit to ground.

  Take readings between:

- Rear electronic module (REM) terminal #D32 (#32) and parking assistance module (PAM) terminal #A12.

Remedy as necessary.

Other information

- see **CONNECTING THE BREAKOUT BOX**
- see **SIGNAL SPECIFICATION**
- see **PARKING ASSISTANCE MODULE (PAM), REPLACING**
- see **CHECKING WIRING AND TERMINALS**

Was a fault detected?

- **YES**

  Refer to **VERIFICATION**

- **NO**

  Refer to **REPLACING THE CONTROL MODULE**

REPLACING THE CONTROL MODULE

Try a new parking assistance module (PAM).

Remedy as necessary.

Other information

- see **PARKING ASSISTANCE MODULE (PAM), REPLACING**

- **Continue**

  Refer to **VERIFICATION**

VERIFICATION

VERIFICATION

HINT: After carrying out the repair, check that the fault has been remedied.

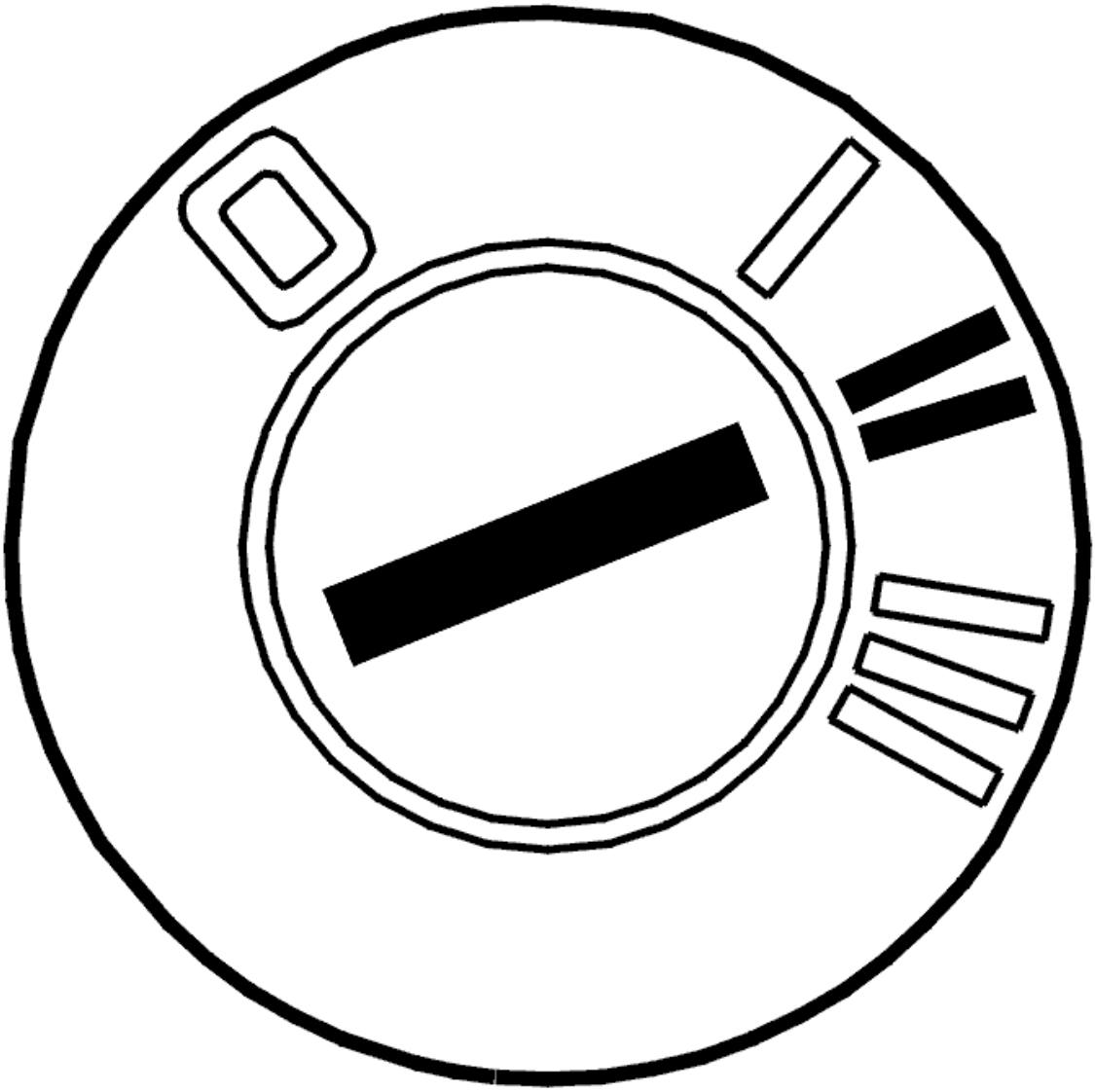

Fig. 71: Identifying Ignition ON
Courtesy of VOLVO CARS CORPORATION

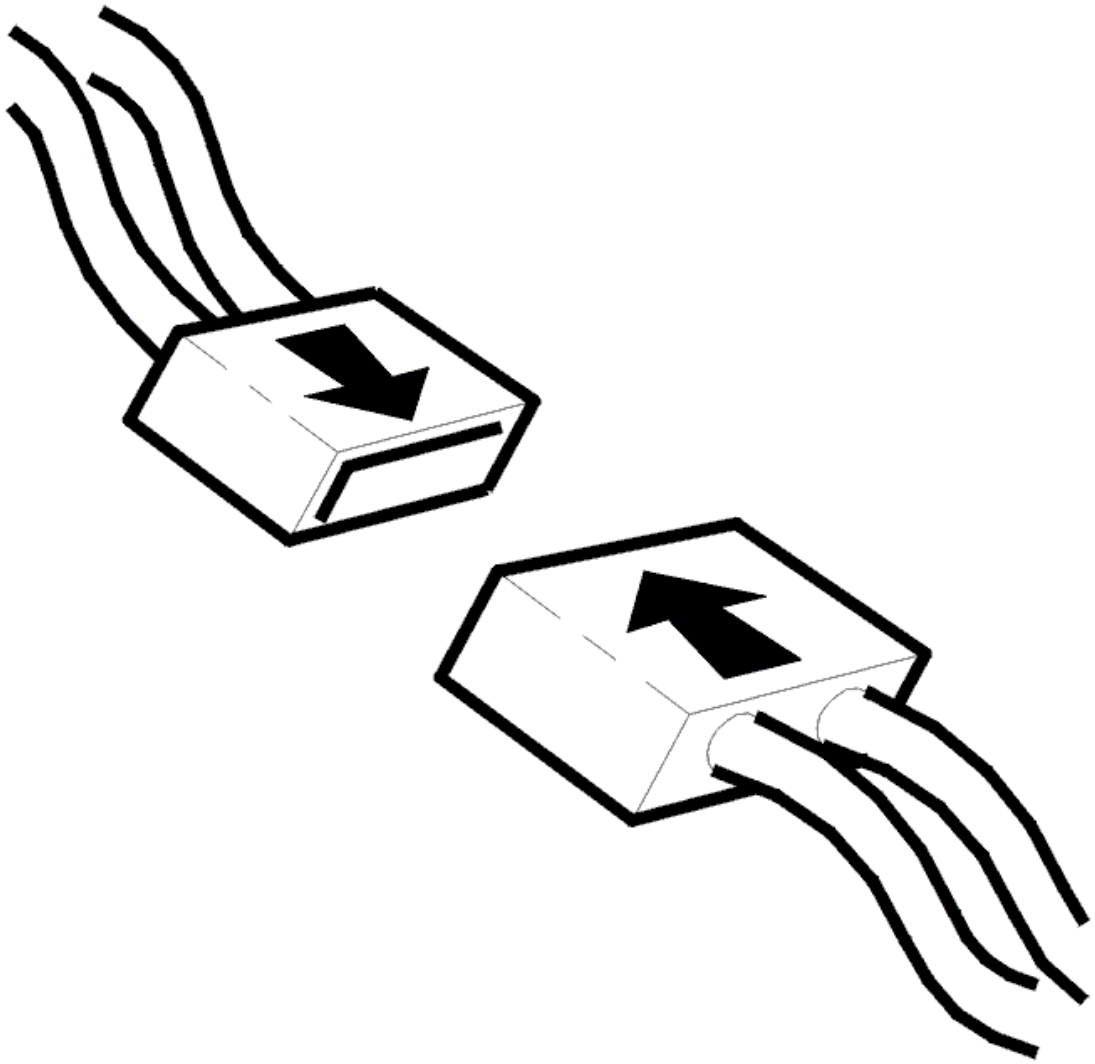

Fig. 72: Identifying Connector(s) Reinstallation
Courtesy of VOLVO CARS CORPORATION

- Switch off the ignition. Wait at least 15 seconds
- Reinstall the connectors, components etc.
- Ignition on for at least 5 seconds
- Move the gear selector lever to back-up (reversing) (R).

  The parking assistance module (PAM) is activated by pressing the switch on the lower section of the climate control module (CCM). Use the VCT2000 (or appropriate scan tool) to read off the diagnostic status from the parking assistance module (PAM).

  Check that the parking assistance module (PAM) is active. Check that the sensors are OK.

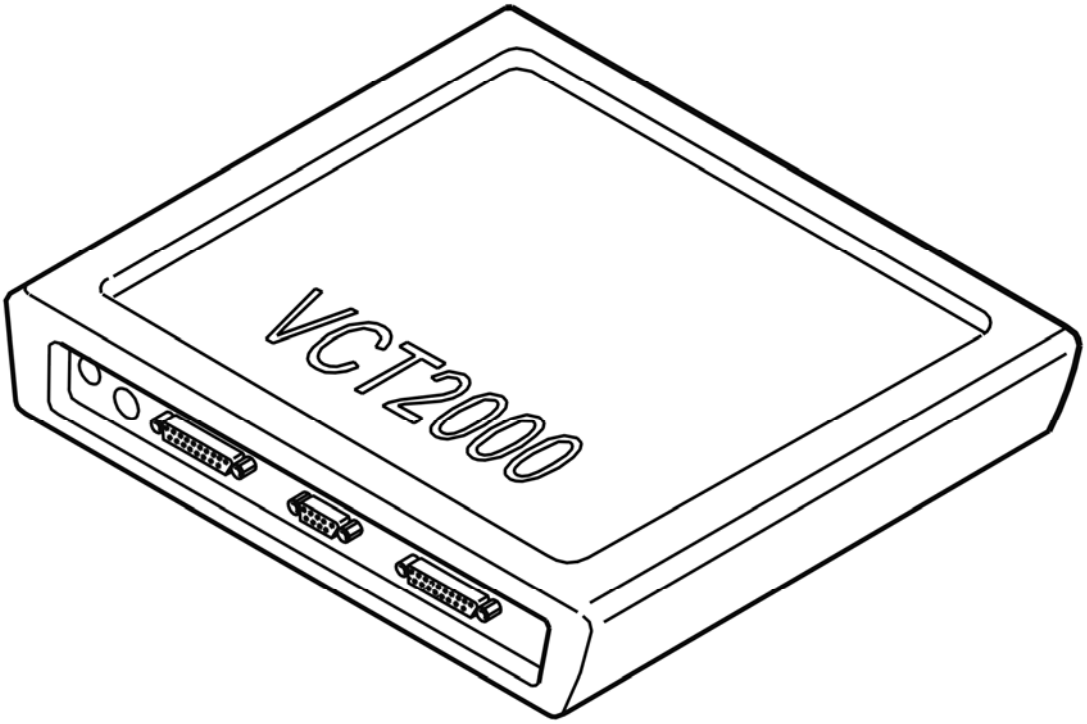

Fig. 73: Identifying VCT2000 Diagnostic Tool Symbol In VIDA
Courtesy of VOLVO CARS CORPORATION

Is the parking assistance module (PAM) active? Are the sensors OK?

- **YES**

  VERIFIED: Troubleshooting has been completed.

- **NO**

  Refer to **INFORMATION**

INFORMATION

FAULT-TRACING INFORMATION

The fault should have been detected and remedied. As this is not the case fault-tracing has failed.

Exit fault-tracing for this diagnostic trouble code (DTC) or make another attempt.

REM-DD20: LEVEL SENSOR ALARM. COMMUNICATION FAULT (2005-2012)

DIAGNOSTIC TROUBLE CODE (DTC) INFORMATION REM-DD20

Condition

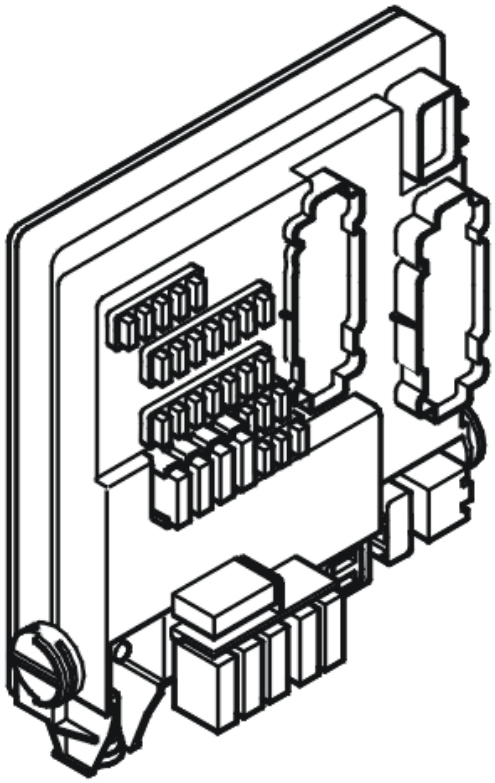

Fig. 74: Identifying Rear Electronic Module (REM)
Courtesy of VOLVO CARS CORPORATION

The Rear electronic module (REM) both transmits and receives information via standard serial communication - Volcano Lite (Volvo CAN based distributed real-time Operative environment). The DTC is stored if the control module registers a serious interruption (e. g. communication blocked) by:

- Inclination Sensor Module (ISM) (for vehicles with structure week -201127)
- Siren (BBS) (for vehicles with structure week 201128-)

The diagnostic trouble code (DTC) can be detected when the ignition is in position II for at least 10 seconds and the battery voltage is > 10.5 volts.

NOTE: **In the event of REM-DDxx diagnostic trouble codes (DTCs), the rear electronic module (REM) must not be replaced as the diagnostic trouble code (DTC) indicates a short-circuit in one or more conductors in the LIN network. The rear electronic module (REM) is the only control module that monitors the voltage level in the LIN wiring. The rear electronic module (REM) is therefore the only control module that can store a diagnostic trouble code (DTC) for a short-circuit to ground or supply voltage in one of the cables. Do not replace the rear electronic module (REM) in the event of a LIN fault unless VIDA (Volvo scan**

tool) has indicated that the rear electronic module (REM) has an internal fault.

Substitute Value

- None.

Possible Source

- Short-circuit between signal cables
- Open-circuit in one of the signal cables
- Internal fault in another control module in the same part of the network.

Fault symptom[s]

- False alarm.

COMMUNICATION FAULT

CHECKING THE WIRING

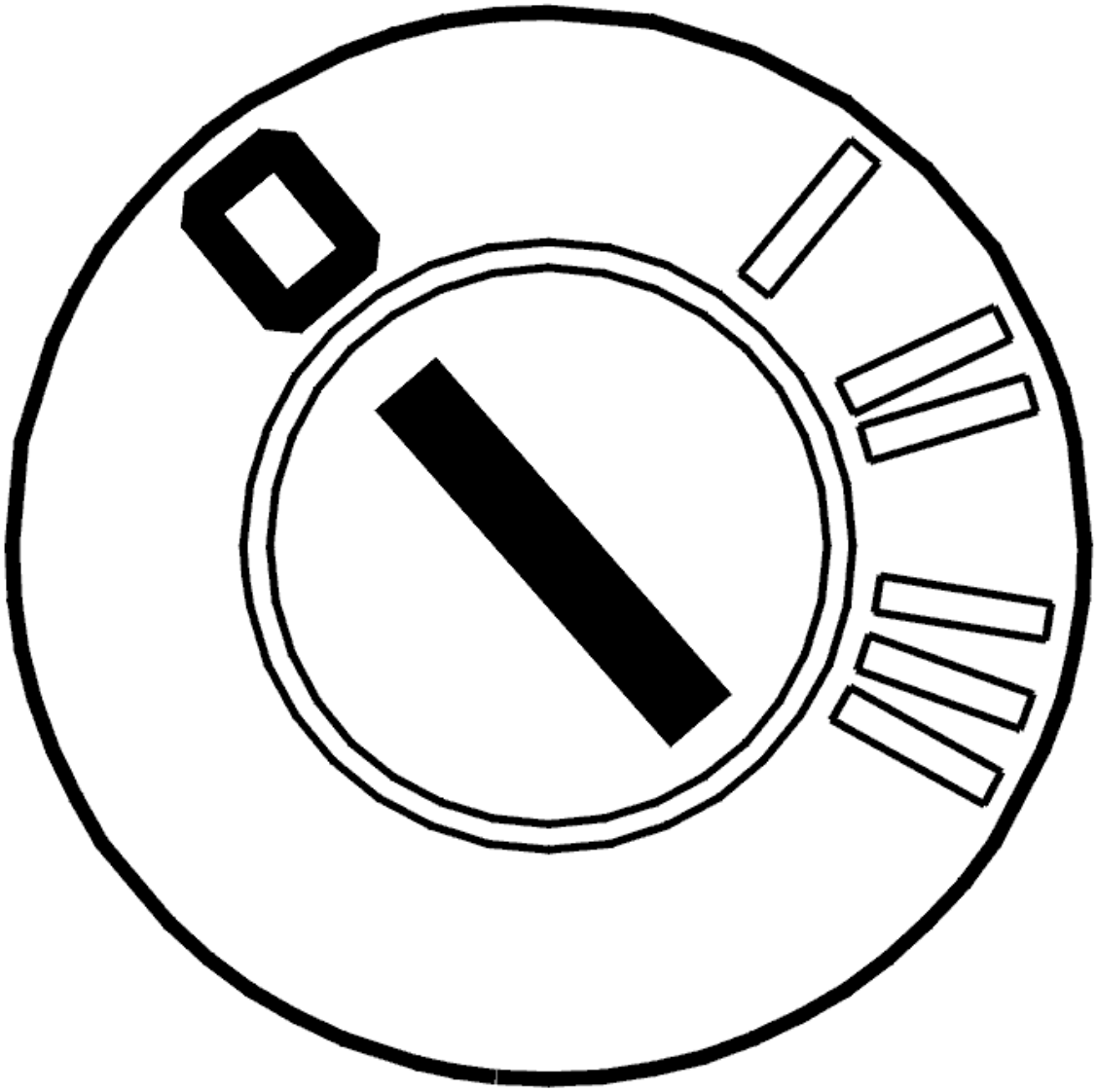

Fig. 75: Identifying Ignition OFF
Courtesy of VOLVO CARS CORPORATION

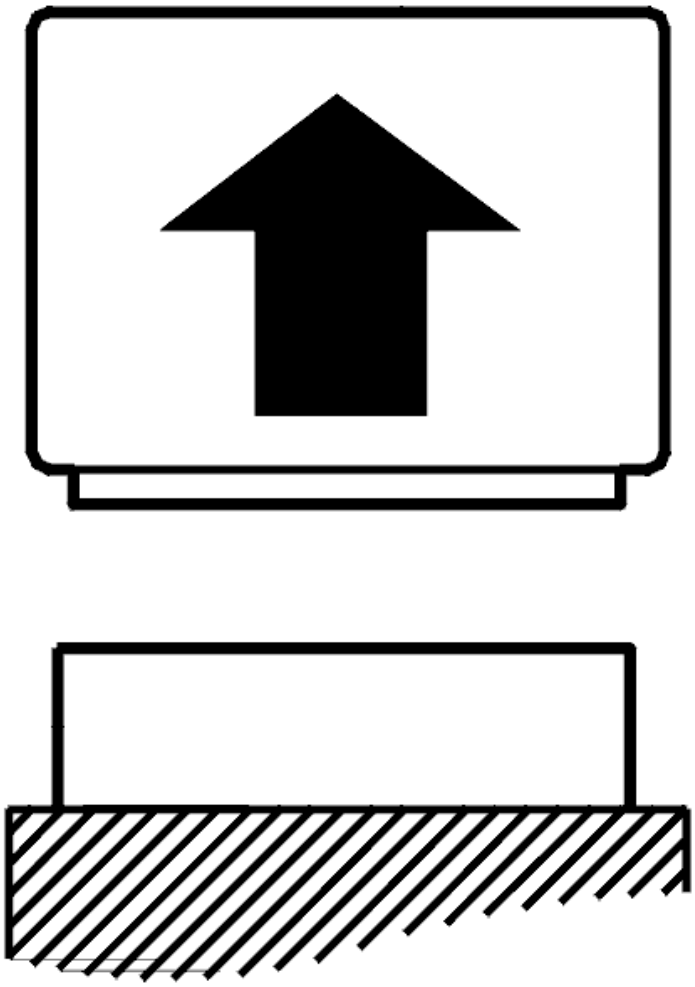

Fig. 76: Identifying Control Module Disconnected
Courtesy of VOLVO CARS CORPORATION

- Ignition off
- Disconnect connector D on the rear electronic module (REM).

  The DTC means that communication does not work between the Rear electronic module (REM) and:

  - Inclination Sensor Module (ISM) (for vehicles with structure week -201127)
  - Siren (BBS) (for vehicles with structure week 201128-)

  This may be due to a fault in the signal cable between the control modules or a defective communication device in one or all of the control modules. Check the signal cable. Check for an open-circuit. Check for a short-circuit to ground. Check for a short-circuit to supply voltage.

Take readings between:

- Rear electronic module (REM) terminal #D26 (#26) and the inclination sensor module (ISM) terminal #2.

Remedy as necessary.

Other information

- see **CONNECTING THE BREAKOUT BOX**
- see **SIGNAL SPECIFICATION**
- see **TILT SENSOR ALARM, REPLACING**
- see **CHECKING WIRING AND TERMINALS**
- see **ANTI-THEFT PROTECTION SIREN**

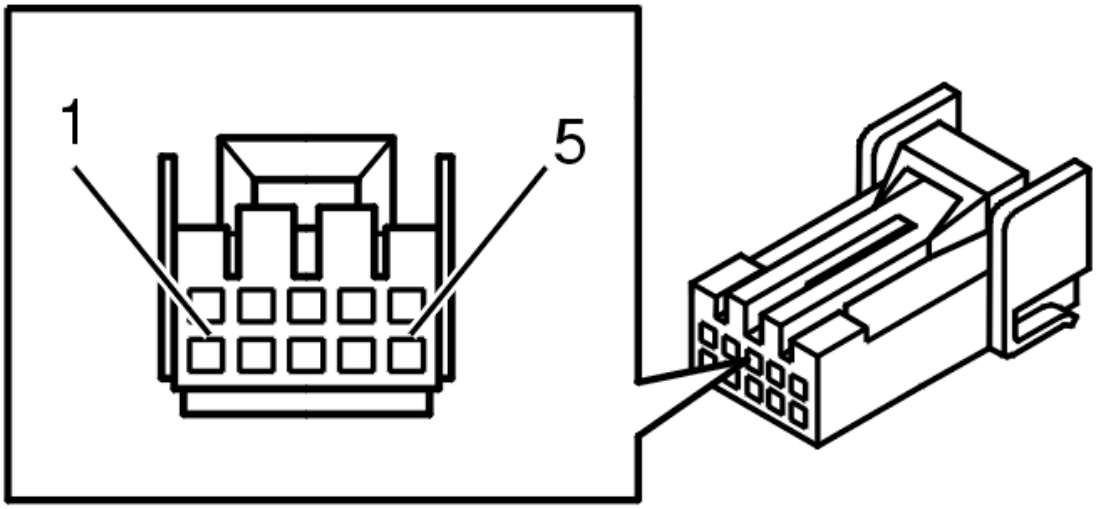

Fig. 77: Identifying 10 Pin Connector Terminals
Courtesy of VOLVO CARS CORPORATION

Was a fault detected?

- **YES**

  Refer to **VERIFICATION**

- **NO**

  Refer to **REPLACING THE CONTROL MODULE**

REPLACING THE CONTROL MODULE

Replace:

- Inclination Sensor Module (ISM) (for vehicles with structure week -201127)
- Siren (BBS) (for vehicles with structure week 201128-)

Other information

- see **TILT SENSOR ALARM, REPLACING**
- see **ANTI-THEFT PROTECTION SIREN**

- **Continue**

  Refer to **VERIFICATION**

VERIFICATION

VERIFICATION

HINT: After carrying out the repair, check that the fault has been remedied.

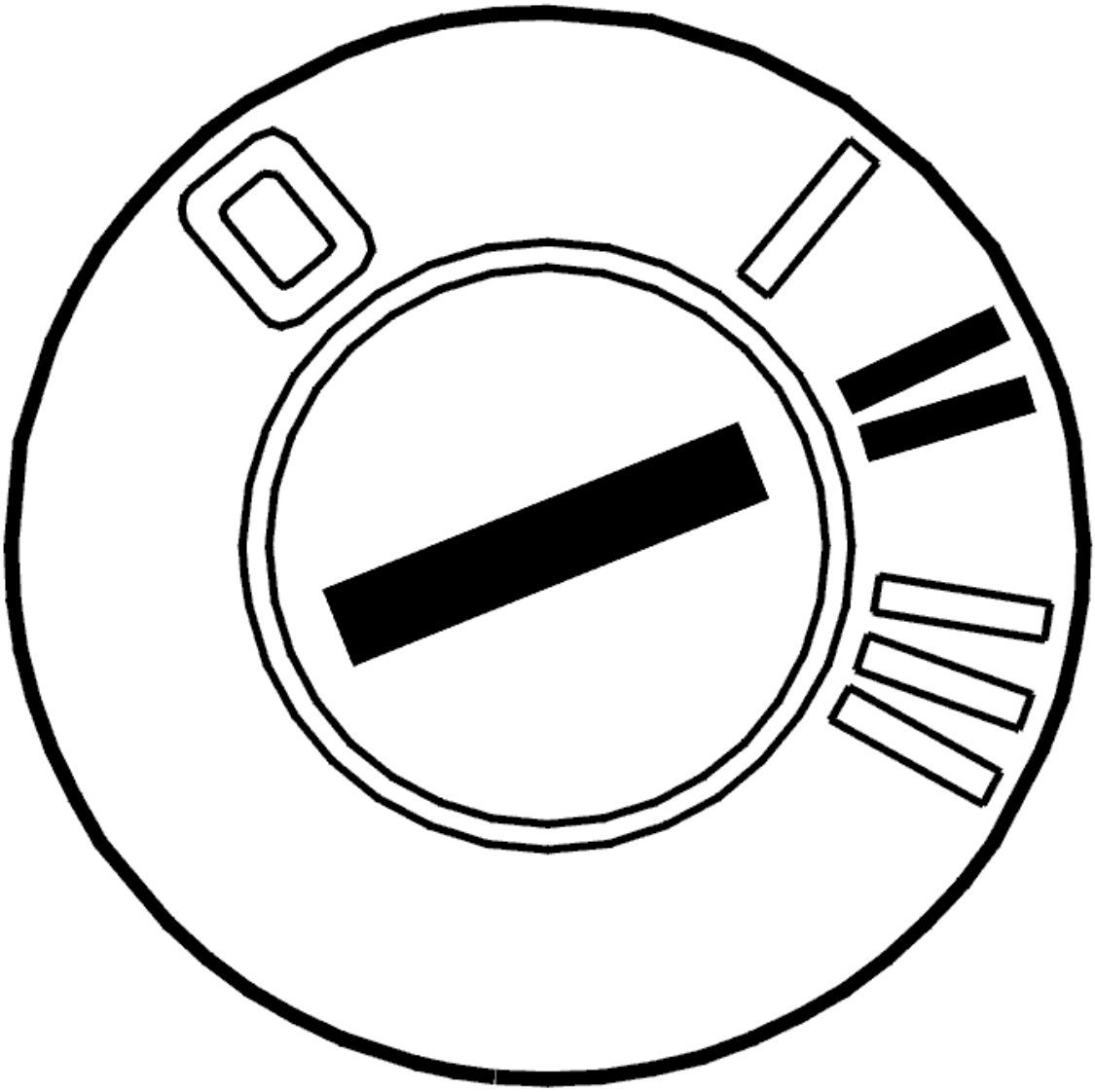

Fig. 78: Identifying Ignition ON
Courtesy of VOLVO CARS CORPORATION

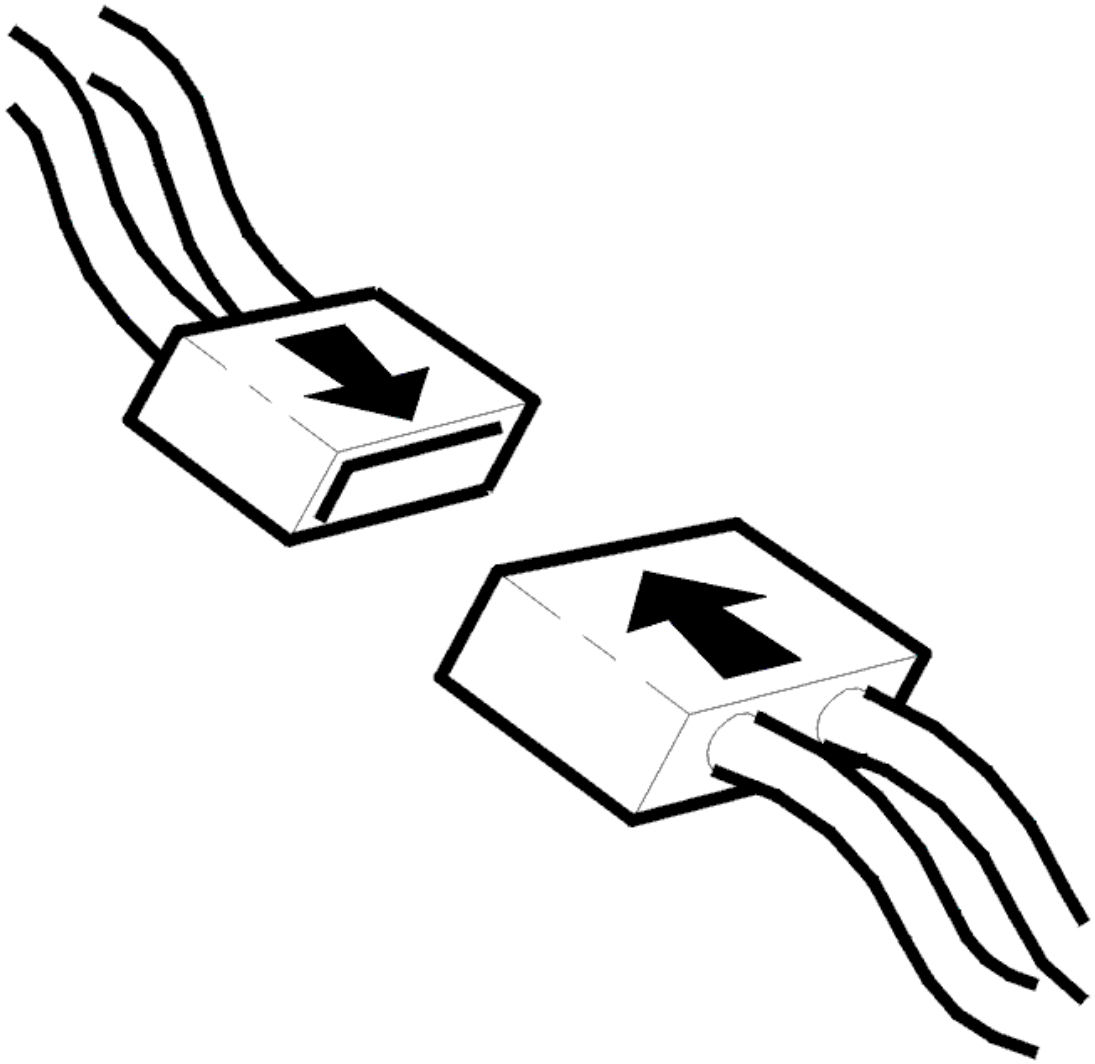

Fig. 79: Identifying Connector(s) Reinstallation
Courtesy of VOLVO CARS CORPORATION

- Ignition off
- Reinstall the connectors, components etc.
- Ignition on.

  Activate the alarm.

  Check that the functions are OK.

Are the functions OK?

- **YES**

VERIFIED: Troubleshooting has been completed.

- **NO**

  Refer to **INFORMATION**

INFORMATION

FAULT-TRACING INFORMATION

The fault should have been detected and remedied. As this is not the case fault-tracing has failed.

Exit fault-tracing for this diagnostic trouble code (DTC) or make another attempt.

REM-DD21: LEVEL SENSOR ALARM. FAULTY SIGNAL (2005-2012)

DIAGNOSTIC TROUBLE CODE (DTC) INFORMATION REM-DD21

Condition

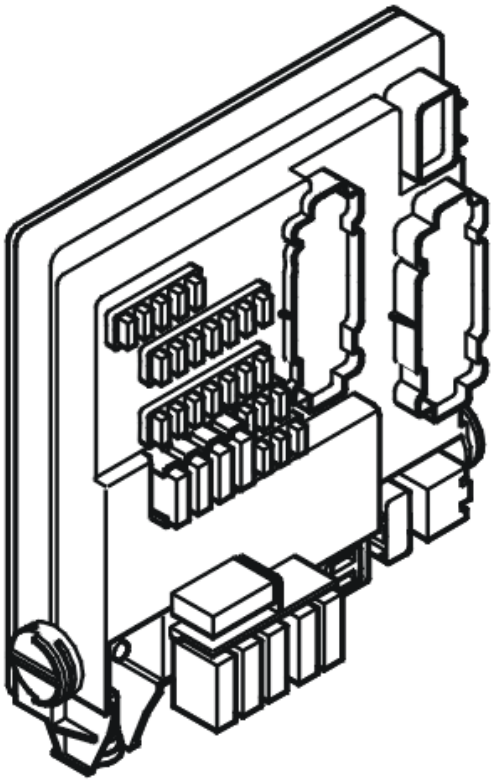

Fig. 80: Identifying Rear Electronic Module (REM)
Courtesy of VOLVO CARS CORPORATION

The Rear electronic module (REM) both transmits and receives information via standard serial communication -

Volcano Lite (Volvo CAN based distributed real-time Operative environment). The DTC is stored if the control module registers a serious interruption (e. g. communication blocked) by:

- Inclination Sensor Module (ISM) (for vehicles with structure week -201127)
- Siren (BBS) (for vehicles with structure week 201128-)

The diagnostic trouble code (DTC) can be detected when the ignition is in position II for at least 10 seconds and the battery voltage is > 10.5 volts.

NOTE: **In the event of REM-DDxx diagnostic trouble codes (DTCs), the rear electronic module (REM) must not be replaced as the diagnostic trouble code (DTC) indicates a short-circuit in one or more conductors in the LIN network. The rear electronic module (REM) is the only control module that monitors the voltage level in the LIN wiring. The rear electronic module (REM) is therefore the only control module that can store a diagnostic trouble code (DTC) for a short-circuit to ground or supply voltage in one of the cables. Do not replace the rear electronic module (REM) in the event of a LIN fault unless VIDA (Volvo scan tool) has indicated that the rear electronic module (REM) has an internal fault.**

Substitute Value

- None.

Possible Source

- Short-circuit between signal cables
- Open-circuit in one of the signal cables
- Internal fault in another control module in the same part of the network.

Fault symptom[s]

- False alarm.

FAULTY SIGNAL

CHECKING THE WIRING

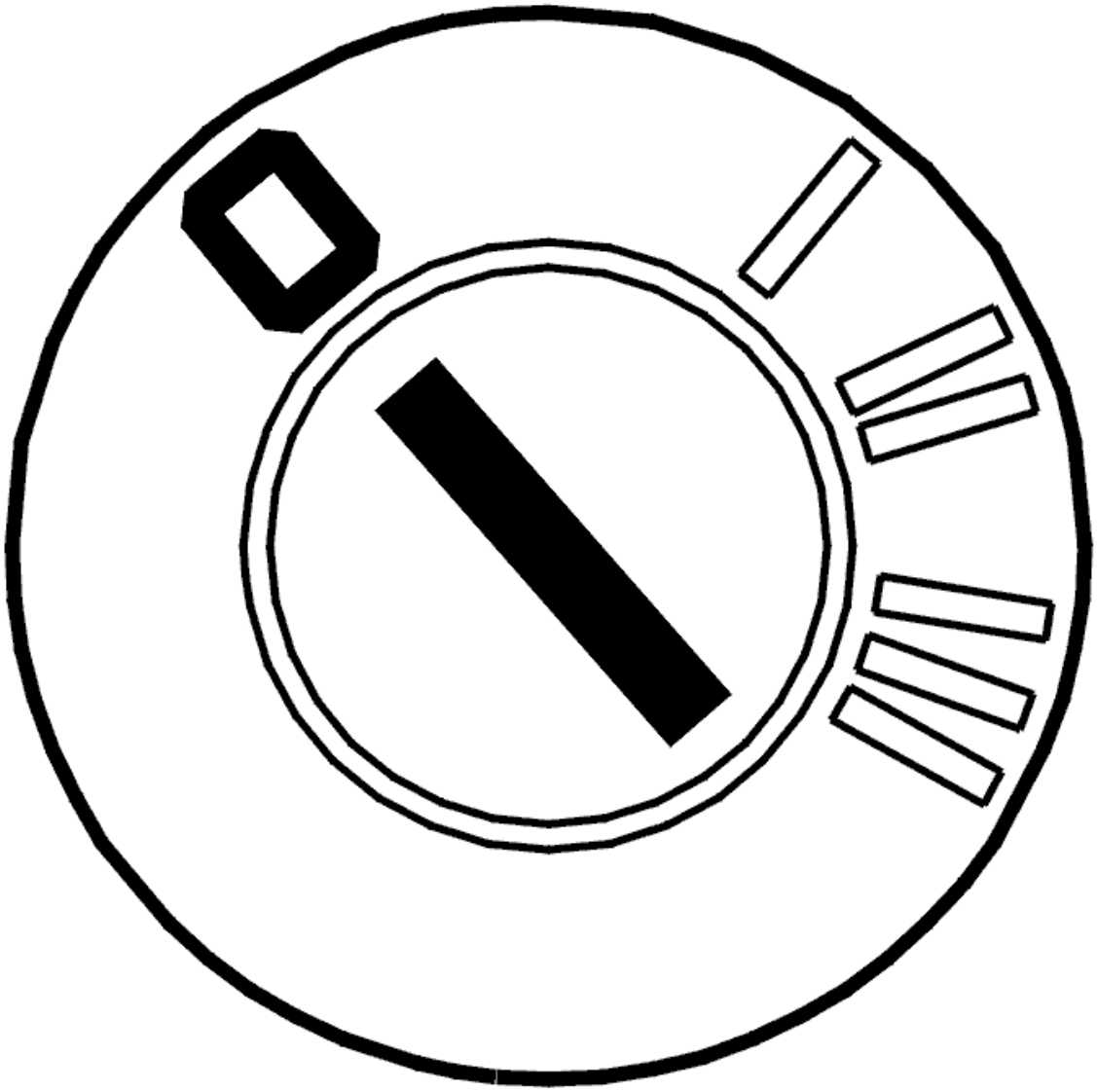

Fig. 81: Identifying Ignition OFF
Courtesy of VOLVO CARS CORPORATION

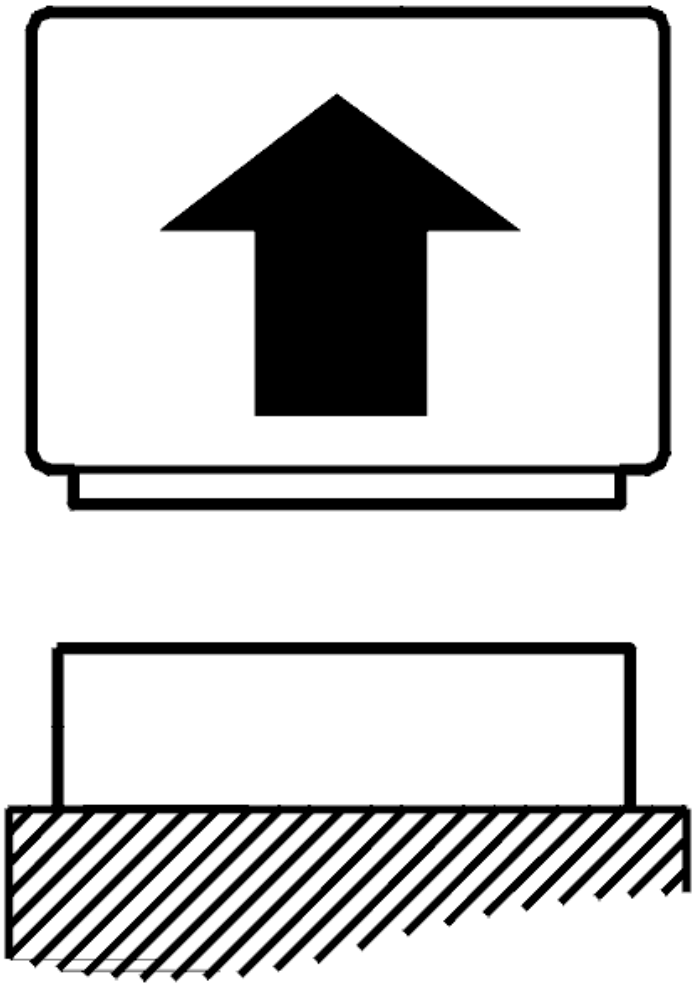

Fig. 82: Identifying Control Module Disconnected
Courtesy of VOLVO CARS CORPORATION

- Ignition off
- Disconnect connector D on the rear electronic module (REM).

  The DTC means that communication does not work between the Rear electronic module (REM) and:

  - Inclination Sensor Module (ISM) (for vehicles with structure week -201127)
  - Siren (BBS) (for vehicles with structure week 201128-)

  This may be due to a fault in the signal cable between the control modules or a defective communication device in one or all of the control modules. Check the signal cable. Check for an open-circuit. Check for a short-circuit to ground. Check for a short-circuit to supply voltage.

Take readings between:

- Rear electronic module (REM) terminal #D26 (#26) and the inclination sensor module (ISM) terminal #2.

Remedy as necessary.

Other information

- see **CONNECTING THE BREAKOUT BOX**
- see **SIGNAL SPECIFICATION**
- see **TILT SENSOR ALARM, REPLACING**
- see **CHECKING WIRING AND TERMINALS**
- see **ANTI-THEFT PROTECTION SIREN**

Was a fault detected?

- **YES**

  Refer to **VERIFICATION**

- **NO**

  Refer to **REPLACING THE CONTROL MODULE**

REPLACING THE CONTROL MODULE

Replace:

- Inclination Sensor Module (ISM) (for vehicles with structure week -201127)
- Siren (BBS) (for vehicles with structure week 201128-)

Other information

- see **TILT SENSOR ALARM, REPLACING**
- see **ANTI-THEFT PROTECTION SIREN**

- **Continue**

  Refer to **VERIFICATION**

VERIFICATION

VERIFICATION

HINT: After carrying out the repair, check that the fault has been remedied.

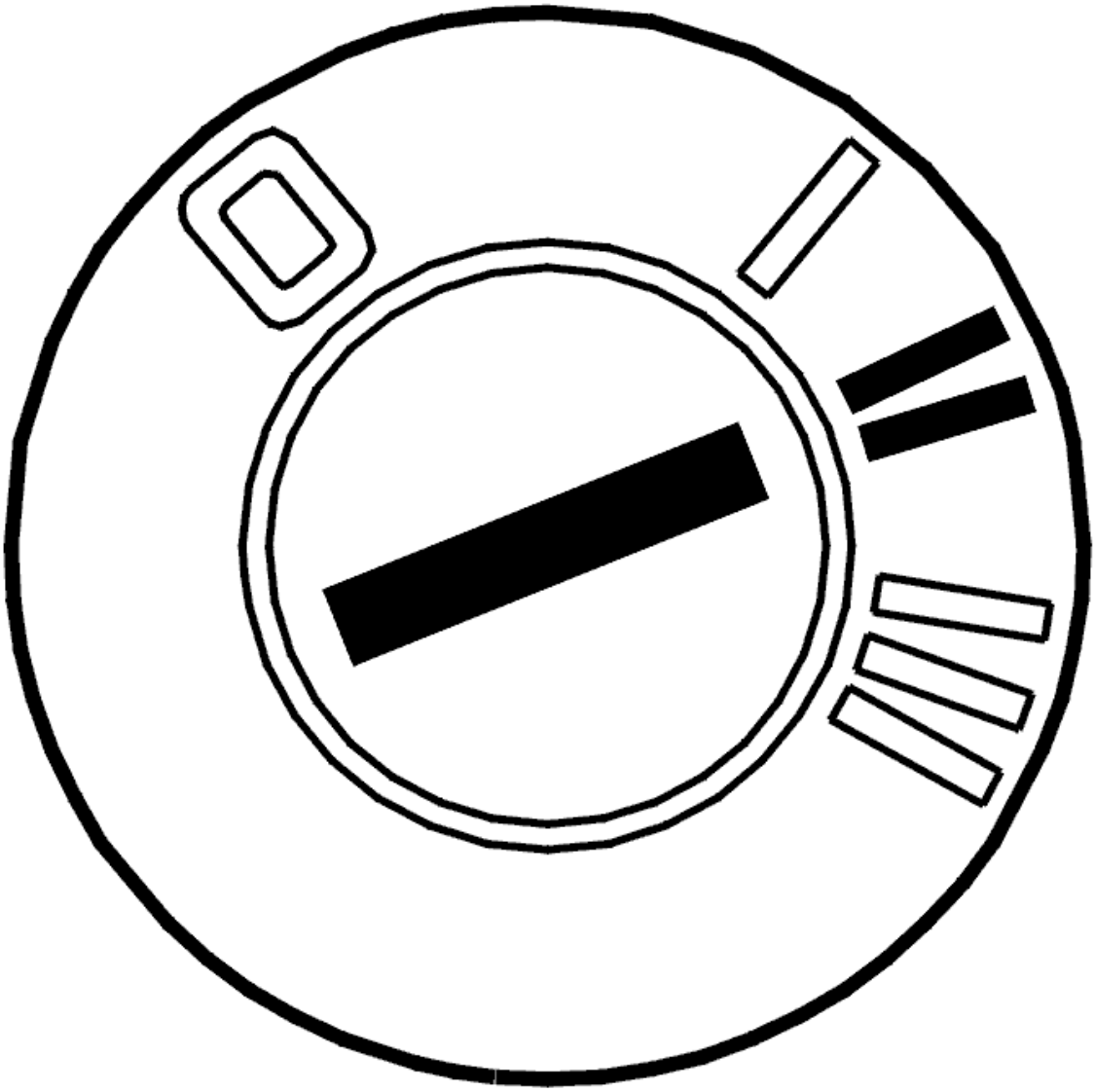

Fig. 83: Identifying Ignition ON
Courtesy of VOLVO CARS CORPORATION

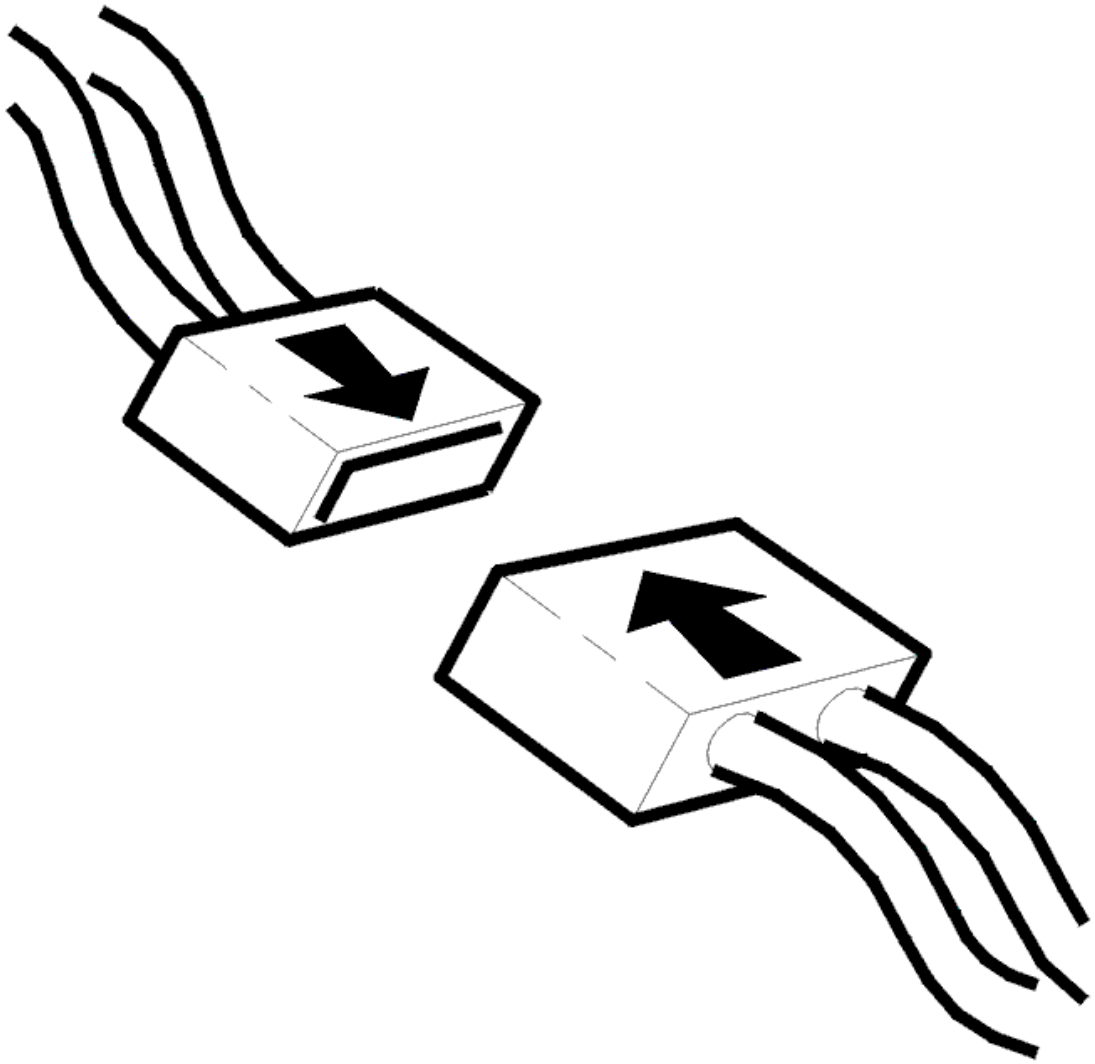

Fig. 84: Identifying Connector(s) Reinstallation
Courtesy of VOLVO CARS CORPORATION

- Ignition off
- Reinstall the connectors, components etc.
- Ignition on.

  Activate the alarm.

  Check that the functions are OK.

Are the functions OK?

- **YES**

VERIFIED: Troubleshooting has been completed.

- **NO**

  Refer to **INFORMATION**

INFORMATION

FAULT-TRACING INFORMATION

The fault should have been detected and remedied. As this is not the case fault-tracing has failed.

Exit fault-tracing for this diagnostic trouble code (DTC) or make another attempt.

REM-DD28: WRONG V-LITE / LIN_L9 CONFIGURATION (2012)

DIAGNOSTIC TROUBLE CODE (DTC) INFORMATION

Condition

The Rear electronic module (REM) receives information about the current vehicle configuration from the Central electronic module (CEM).

The diagnostic trouble code (DTC) is stored if the control module detects that:

- The signal configuration in the Rear electronic module (REM) does not correspond with the car's configuration.

Substitute Value

- None.

Possible Source

- The car has been downloaded with incorrect software in the Rear electronic module (REM).

Fault symptom[s]

- None.

FAULTY CONFIGURATION

FAULTY CONFIGURATION

Fig. 85: Identifying Ignition ON
Courtesy of VOLVO CARS CORPORATION

The incorrect configuration is rectified by downloading new software to the Rear electronic module (REM).

- Load new software into the control module.

Has the fault been remedied?

- **YES**

  OKAY: Troubleshooting has been completed.

- **NO**

  FAULT TRACING FAILED: The fault should have been detected and remedied. As this is not the case fault-tracing has failed. Exit fault-tracing for this diagnostic trouble code (DTC) or make another attempt.

REM-E001: CONTROL MODULE COMMUNICATION. DEFECTIVE COMMUNICATION (2005-2012)

DIAGNOSTIC TROUBLE CODE (DTC) INFORMATION REM-E001

Condition

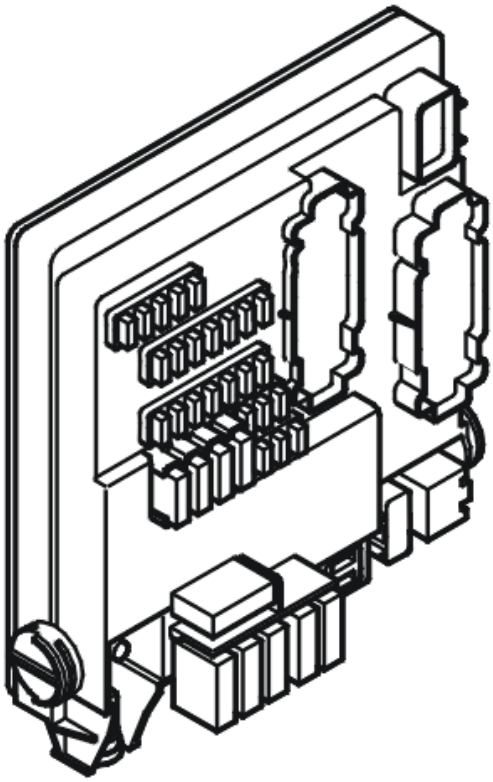

Fig. 86: Identifying Rear Electronic Module (REM)
Courtesy of VOLVO CARS CORPORATION

The control modules transmit and receive information via a standardized serial communication method - CAN (Control Area Network). The diagnostic trouble code (DTC) is stored if the control module registers serious interference (CAN communication blocked).

NOTE: **In the event of system communication problems, it is not possible to communicate with the control module. Therefore it will only be possible to read off the diagnostic trouble code (DTC) if the fault is intermittent.**

Substitute Value

- The control module shuts itself off ("bus-off").

  HINT: The control module will remain shut off until the power supply is broken (15, 30, X). When the power supply is connected the control module will make a new attempt to communicate.

Possible Source

- Short-circuit between the control area network (CAN) wiring
- Open-circuit in the control area network (CAN) wiring
- Internal fault in the control module

- Internal fault in another control module in the same part of the control area network (CAN).

Fault symptom[s]

- The central locking system does not function at all
- The fuel gauge indicates zero even though there is fuel in the tank.
- Rear demist does not operate.
- Retractable headrest not operating.
- Does not lock / unlock the fuel tank filler cap.
- The power window mechanism in the rear door does not operate.
- The tail lamps are not working.

SIGNAL MISSING

see **SIGNAL MISSING**

REM-E001: CONTROL MODULE COMMUNICATION. FAULTY COMMUNICATION (2003-2004)

DIAGNOSTIC TROUBLE CODE (DTC) INFORMATION REM-E001

Condition

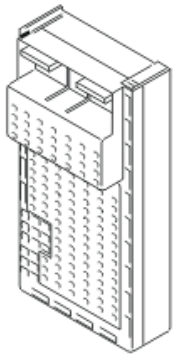

Fig. 87: Central Electronic Module Control module
Courtesy of VOLVO CARS CORPORATION

The control modules transmit and receive information via a standardized serial communication method - CAN (Controller Area Network). The diagnostic trouble code (DTC) is stored if the control module registers serious interference (CAN communication blocked).

NOTE: In the event of system communication problems, it is not possible to communicate with the control module. Therefore it will only be possible to read off the fault if it is intermittent.

Substitute Value

- The control module shuts itself off ("bus-off").

  HINT: The control module will remain shut off until the power supply is broken (15, 30, X). When the power supply is connected the control module will make a new attempt to communicate.

Possible Source

- Short-circuit between the control area network (CAN) wiring
- Open-circuit in the control area network (CAN) wiring
- Internal fault in the control module
- Internal fault in another control module in the same part of the control area network (CAN).

Fault symptom[s]

- The fuel gauge indicates zero even though there is fuel in the tank
- Rear demist does not operate
- Retractable headrest not operating
- No locking/unlocking of rear doors
- No locking or unlocking of the tailgate or trunk lid
- Does not lock / unlock the fuel tank filler cap
- The power window mechanism in the rear door does not operate.

FAULTY COMMUNICATION

see **FAULTY COMMUNICATION**

REM-E003: CONFIGURATION FAULT. FAULTY CONFIGURATION (2003-2004)

DIAGNOSTIC TROUBLE CODE (DTC) INFORMATION REM-E003

Condition

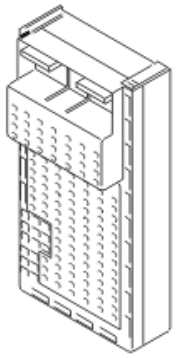

Fig. 88: Central Electronic Module Control module
Courtesy of VOLVO CARS CORPORATION

The control module compares its configuration ID with the signal configuration transmitted on the control area network (CAN) by the central electronic module (CEM). If the configuration IDs do not correspond the fault code is stored. The diagnostic trouble code (DTC) is also stored if the communication between the control module and the central electronic module (CEM) is interrupted.

NOTE: **In the event of open-circuit in both the control area network (CAN) cables, it is not possible to communicate with the control module. Therefore it will only be possible to read off the diagnostic trouble code (DTC) if this type of fault is intermittent. When the diagnostic trouble code (DTC) is stored, the control module responds to the diagnostic command, however normal control area network (CAN) communication does not work. ("Expulsion mode")**

Substitute Value

- None.

Possible Source

- Faulty control area network (CAN) configuration ID. (The node is not intended for this car, for example a used control module with different software/hardware.)
- Open-circuit in the control area network (CAN) wiring between the control module and the central electrical module (CEM).

Fault symptom[s]

- The fuel gauge indicates zero even though there is fuel in the tank
- Rear demist does not operate
- Retractable headrest not operating
- No locking/unlocking of rear doors
- No locking or unlocking of the tailgate or trunk lid
- Does not lock / unlock the fuel tank filler cap

- The power window mechanism in the rear door does not operate.

FAULTY CONFIGURATION (2003)

see **FAULTY CONFIGURATION (2003)**

FAULTY CONFIGURATION (2004)

see **FAULTY CONFIGURATION (2004)**

REM-E003: CONFIGURATION FAULT. FAULTY CONFIGURATION (2005-2012)

DIAGNOSTIC TROUBLE CODE (DTC) INFORMATION REM-E003

Condition

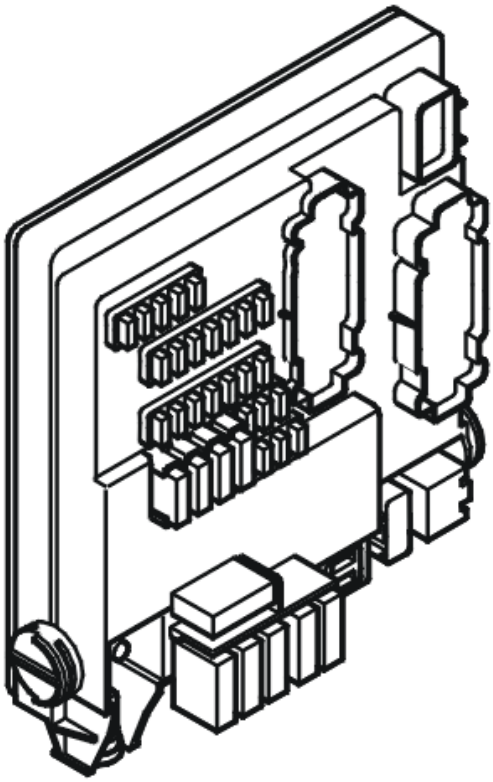

Fig. 89: Identifying Rear Electronic Module (REM)
Courtesy of VOLVO CARS CORPORATION

The control module compares its configuration ID with the signal configuration transmitted on the control area network (CAN) by the central electronic module (CEM). If the configuration IDs do not correspond the fault code is stored. The diagnostic trouble code (DTC) is also stored if the communication between the control

module and the central electronic module (CEM) is or has been interrupted.

NOTE: **In the event of an open-circuit in both the control area network (CAN) cables, it is not possible to communicate with the control module. Therefore it will only be possible to read off the diagnostic trouble code (DTC) if this type of fault is intermittent. When the diagnostic trouble code (DTC) is stored, the control module responds to the diagnostic command, however normal control area network (CAN) communication does not work. ("Expulsion mode")**

Substitute Value

- None.

Possible Source

- Incorrect control area network (CAN) configuration ID (the node is not intended for this car - for example a used control module with different software/hardware)
- Open-circuit in the control area network (CAN) wiring between the control module and the central electrical module (CEM).

Fault symptom[s]

- The central locking system does not function at all.
- The fuel gauge indicates zero even though there is fuel in the tank.
- Rear demist does not operate.
- Retractable headrest not operating.
- Does not lock / unlock the fuel tank filler cap.
- The power window mechanism in the rear door does not operate.
- The tail lamps are not working.

SIGNAL MISSING

see **SIGNAL MISSING**

REM-E010: POWER SUPPLY CONTROL MODULE. SIGNAL TOO LOW (2005-2012)

DIAGNOSTIC TROUBLE CODE (DTC) INFORMATION REM-E010

Condition

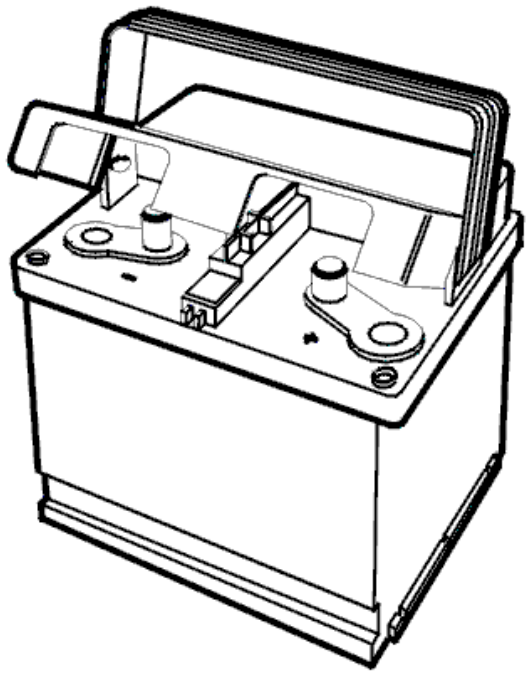

Fig. 90: Identifying Battery
Courtesy of VOLVO CARS CORPORATION

The rear electronic module (REM) compares its supply voltage with the information about the supply voltage to the central electronic module (CEM) transmitted on the CAN network.

The diagnostic trouble code (DTC) is stored if the rear electronic module (REM) registers that its own power supply is more than 3V below the power supply to the central electronic module (CEM).

The diagnostic trouble code (DTC) can be diagnosed when the engine is running.

Substitute Value

- None.

Possible Source

- Half-burned fuse for the rear electronic module (REM)
- Damaged power supply cable to the rear electronic module (REM)
- Loose connections in the ground lead for the rear electronic module (REM)
- Contact resistance or oxidation in the terminals.

Fault symptom[s]

- The central locking system does not function at all.
- The fuel gauge indicates zero even though there is fuel in the tank.

- Rear demist does not operate.
- Retractable headrest not operating.
- Does not lock / unlock the fuel tank filler cap.
- The power window mechanism in the rear door does not operate.
- The tail lamps are not working.

SIGNAL TOO LOW

CHECKING THE POWER SUPPLY

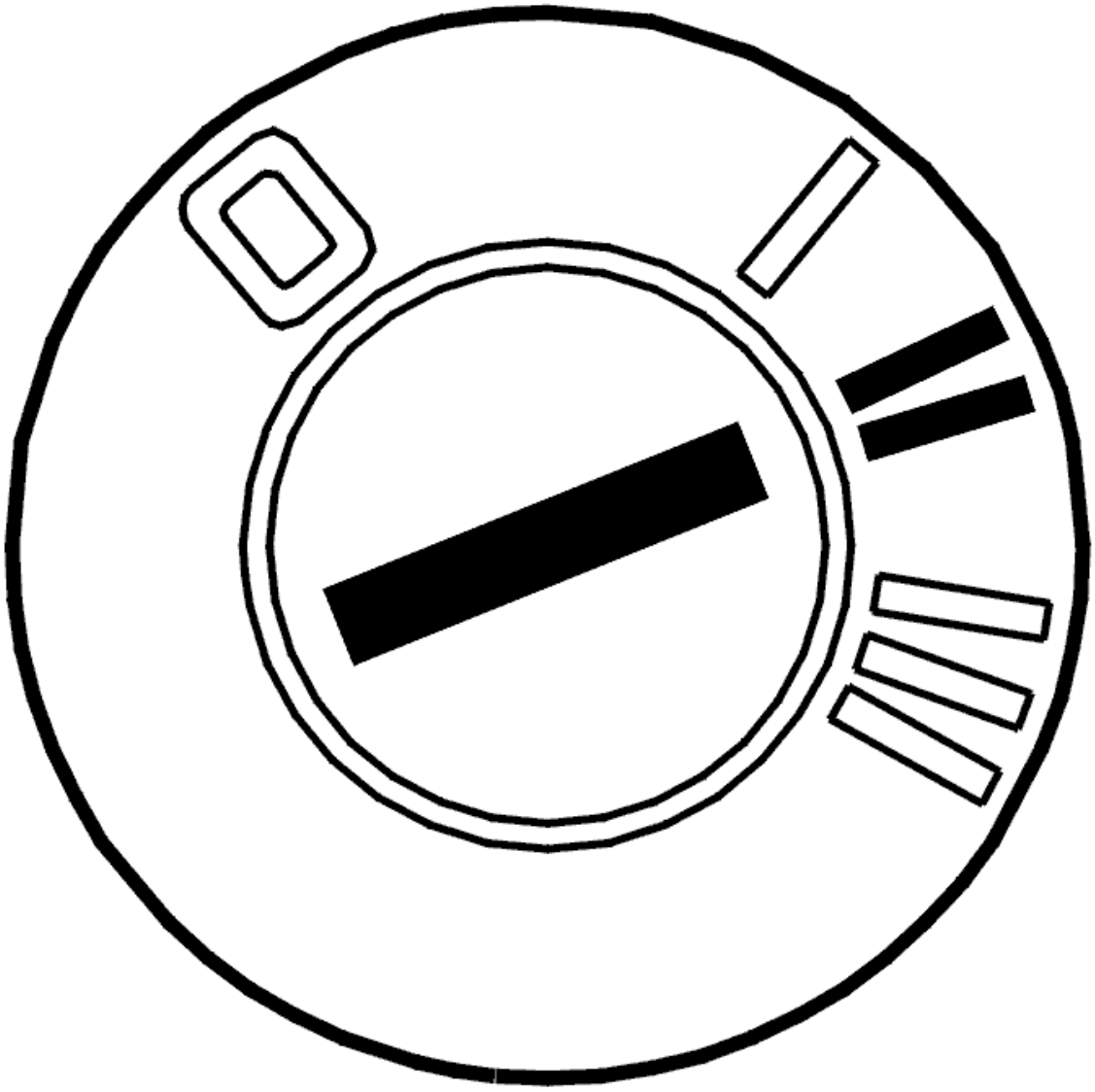

Fig. 91: Identifying Ignition ON
Courtesy of VOLVO CARS CORPORATION

- Ignition on

- Read off the power supply for the rear electronic module (REM) and the central electronic module (CEM).

  The voltage for the rear electronic module (REM) and the central electronic module (CEM) must be approximately the same.

  The fault is permanent if the voltage for the rear electronic module (REM) deviates by more than 3 V from the central electronic module (CEM).

  If the voltage is approximately the same, this indicates an intermittent fault, i. e. the fault was present previously but is not active at the moment.

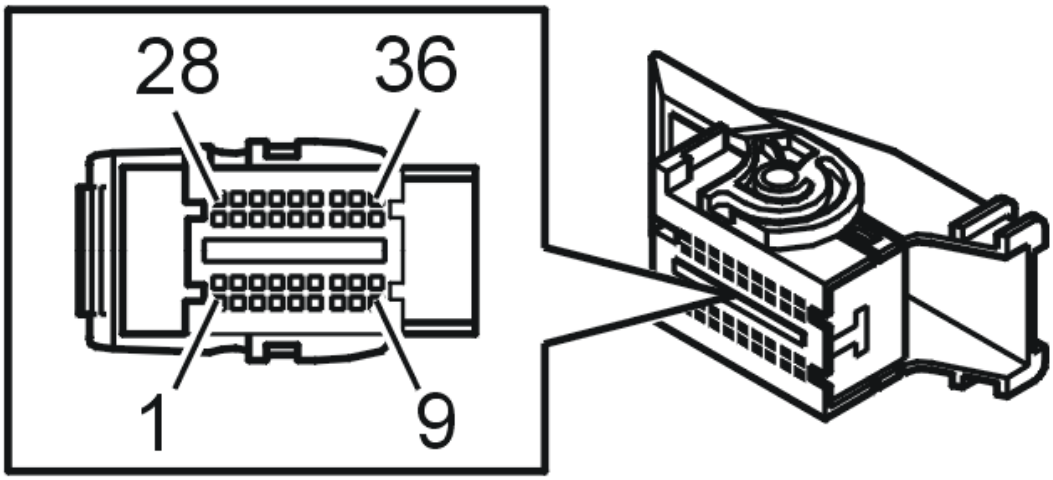

Fig. 92: Identifying Connector C Terminals
Courtesy of VOLVO CARS CORPORATION

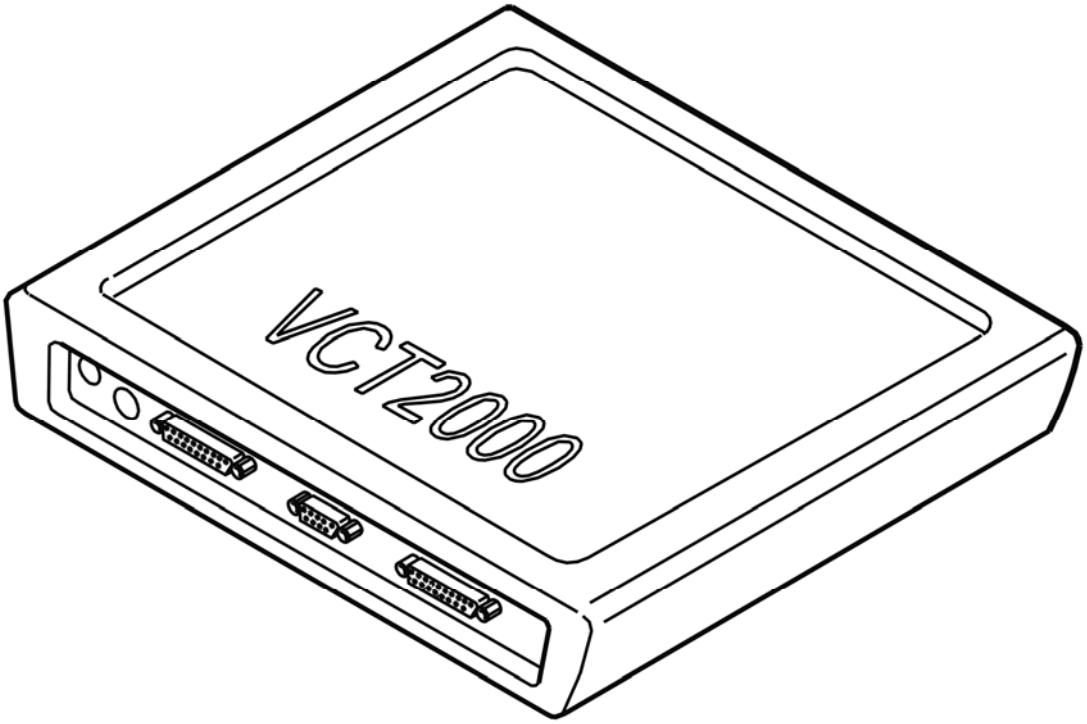

Fig. 93: Identifying VCT2000 Diagnostic Tool Symbol In VIDA
Courtesy of VOLVO CARS CORPORATION

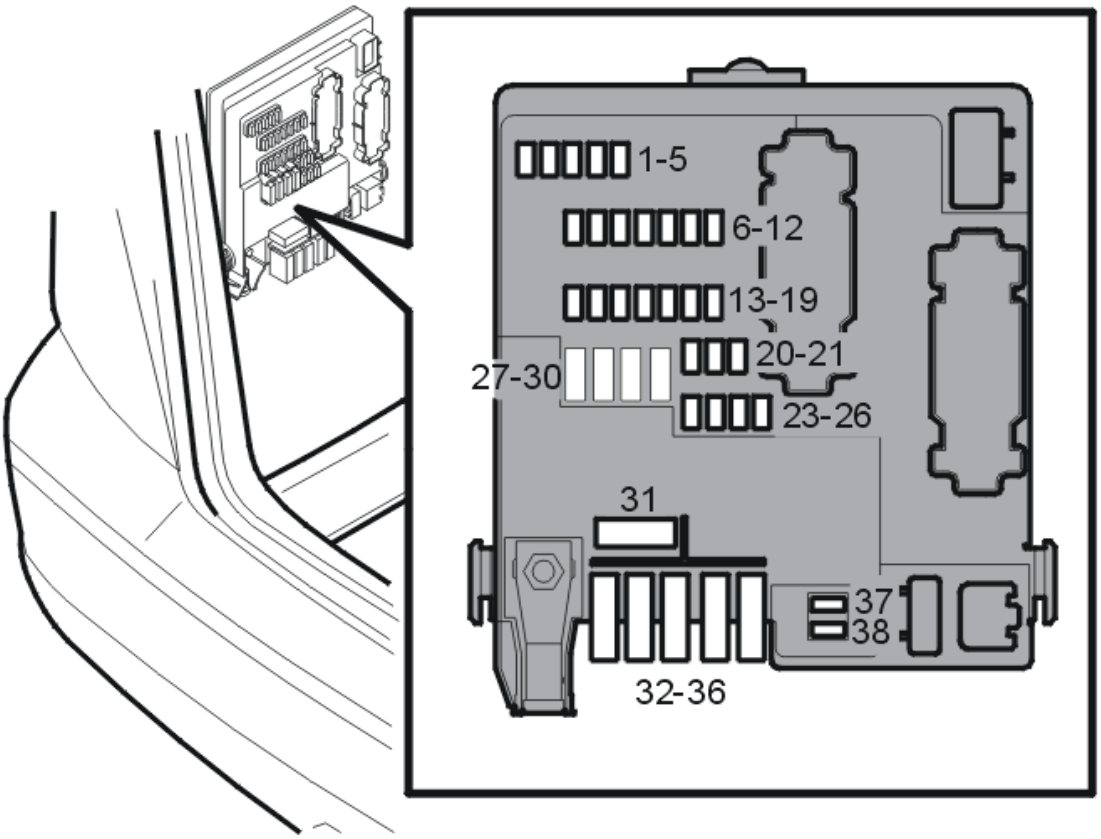

Fig. 94: Locating Rear Electronic Module (REM)
Courtesy of VOLVO CARS CORPORATION

- **Continue**

  Refer to **CHECKING CABLE AND COMPONENT**

CHECKING CABLE AND COMPONENT

Check the connectors for the rear electronic module (REM). Check for contact resistance and oxidation.

Check the terminals for the power supply (30-supply) from the battery to the rear electronic module (REM) (screw terminal). Check for contact resistance and oxidation. Also check the terminals for the fuse to the actual rear electronic module (REM).

Check the ground terminal from the rear electronic module (REM) terminal #12 (#D12) and ground terminal. Check for contact resistance and oxidation.

Remedy as necessary.

Other information

- see **CONNECTING THE BREAKOUT BOX**
- see **SIGNAL SPECIFICATION**

- Disconnecting the rear electronic module (REM): **REAR ELECTRONIC MODULE (REM), REPLACING**
- see **CHECKING WIRING AND TERMINALS**

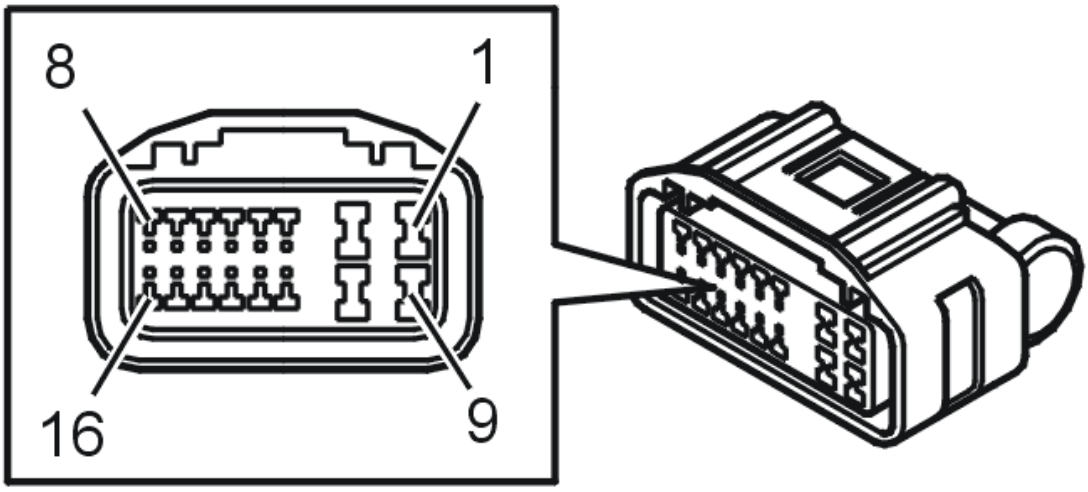

Fig. 95: Identifying Connector Terminals
Courtesy of VOLVO CARS CORPORATION

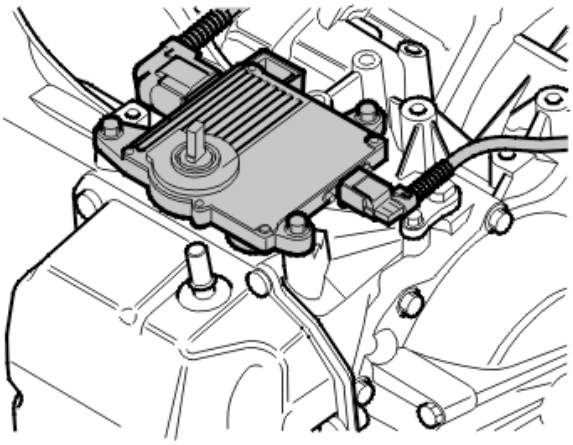

Fig. 96: Identifying Rear Electronic Module (REM)
Courtesy of VOLVO CARS CORPORATION

- **Continue**

  Refer to **VERIFICATION**

VERIFICATION

VERIFICATION

HINT: After carrying out the repair, check that the fault has been remedied.

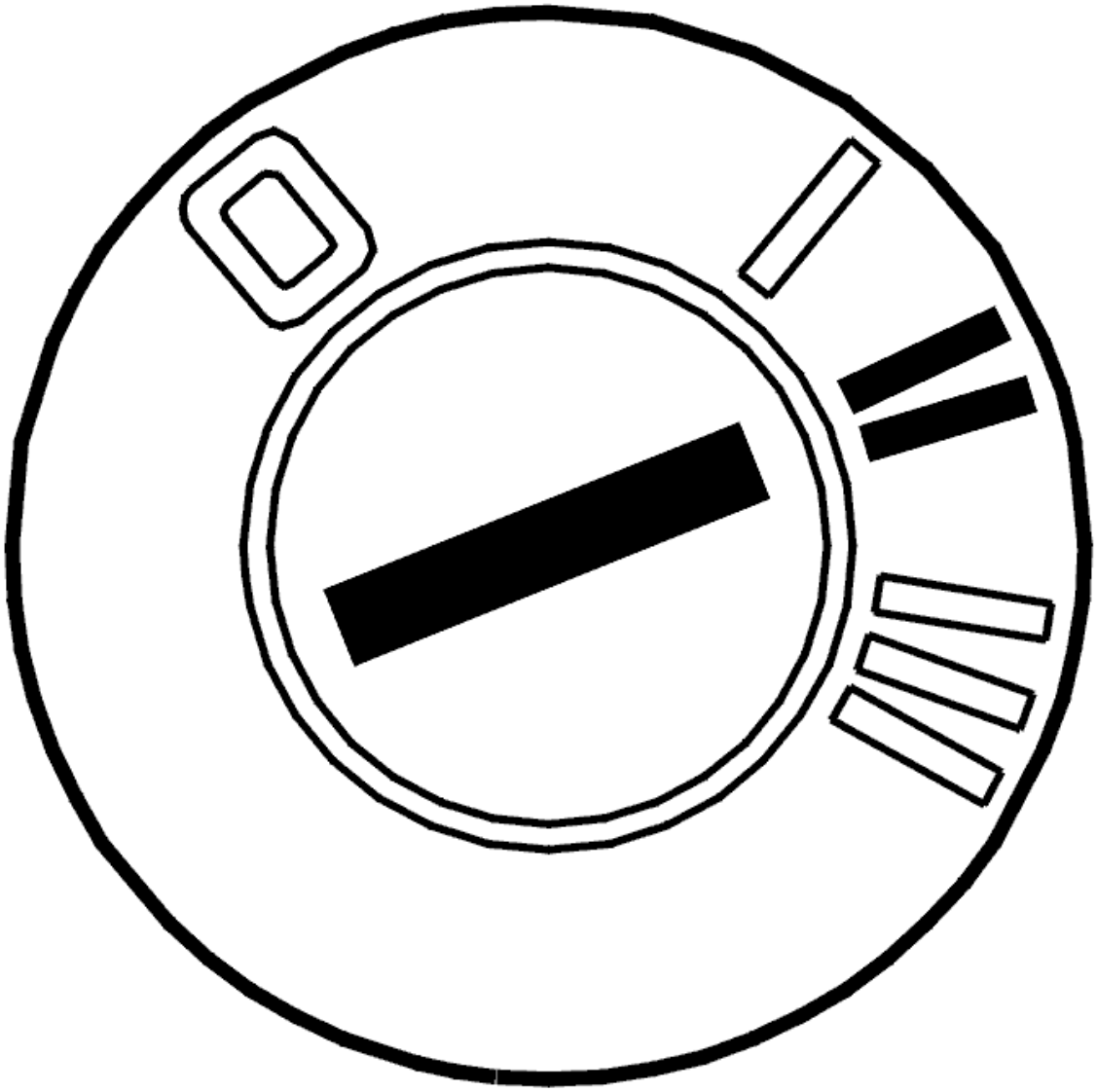

Fig. 97: Identifying Ignition ON
Courtesy of VOLVO CARS CORPORATION

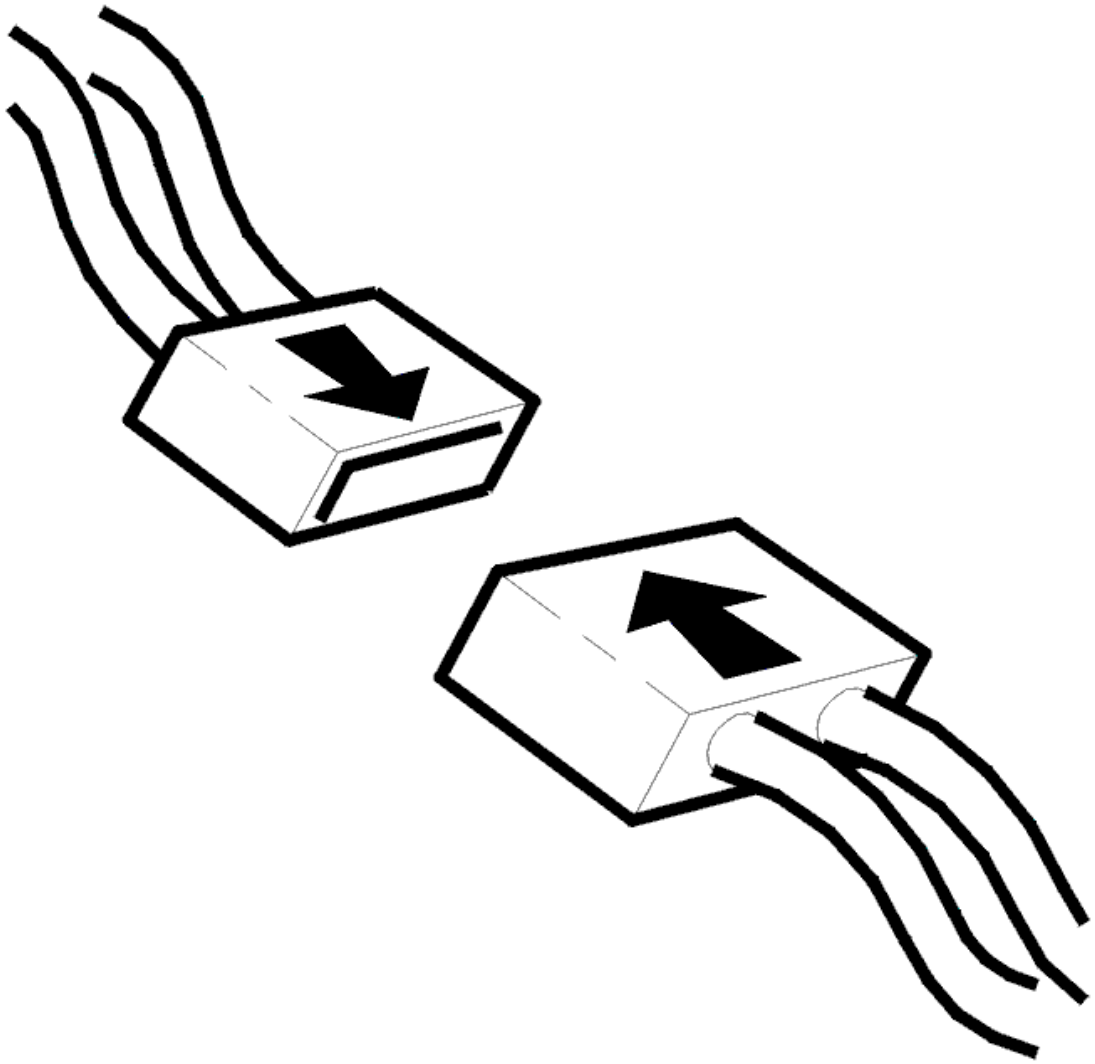

Fig. 98: Identifying Connector(s) Reinstallation
Courtesy of VOLVO CARS CORPORATION

- Ignition off
- Reinstall the connectors, components etc.
- Ignition on
- Read off the power supply for the rear electronic module (REM) and the central electronic module (CEM).

  The voltage for the rear electronic module (REM) and the central electronic module (CEM) must be approximately the same (a maximum difference of 3 V).

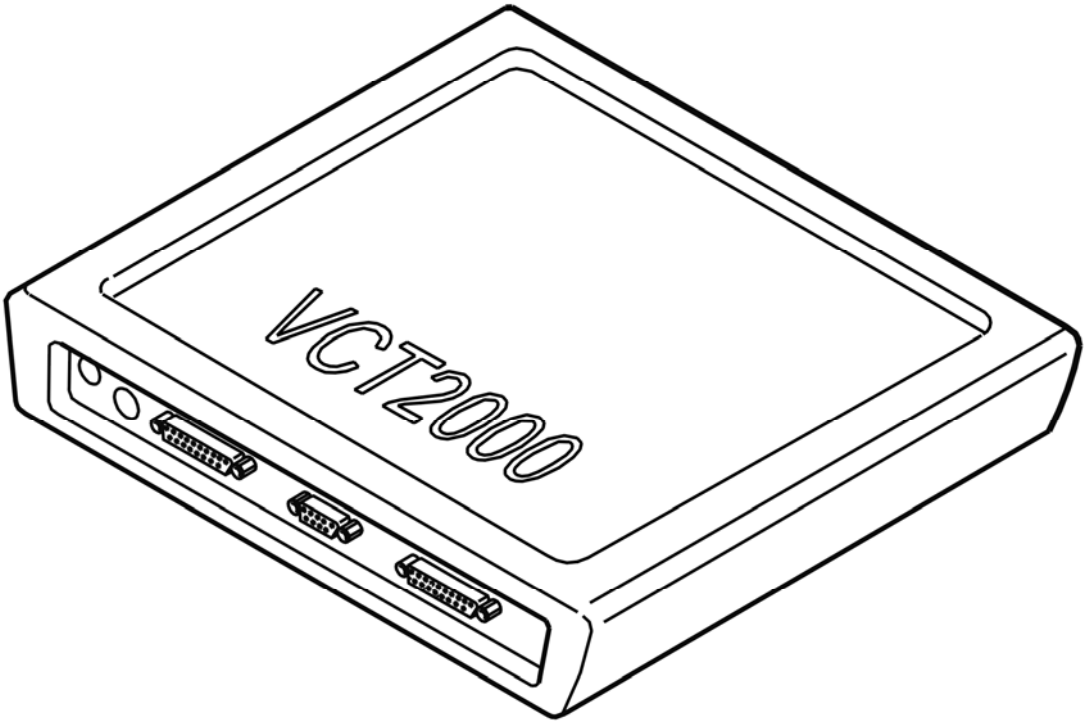

Fig. 99: Identifying VCT2000 Diagnostic Tool Symbol In VIDA
Courtesy of VOLVO CARS CORPORATION

Is the voltage OK?

- **YES**

  VERIFIED: Troubleshooting has been completed.

- **NO**

  Refer to **INFORMATION**

INFORMATION

FAULT-TRACING INFORMATION

The fault should have been detected and remedied. As this is not the case fault-tracing has failed.

Exit fault-tracing for this diagnostic trouble code (DTC) or make another attempt.

REM-XXXX: UNKNOWN DIAGNOSTIC TROUBLE CODE (DTC) FOR THE CURRENT CONTROL MODULE VERSION (2003-2012)

UNKNOWN DIAGNOSTIC TROUBLE CODE (DTC) FOR THE CURRENT CONTROL MODULE VERSION

READING OFF DIAGNOSTIC TROUBLE CODES (DTCS)

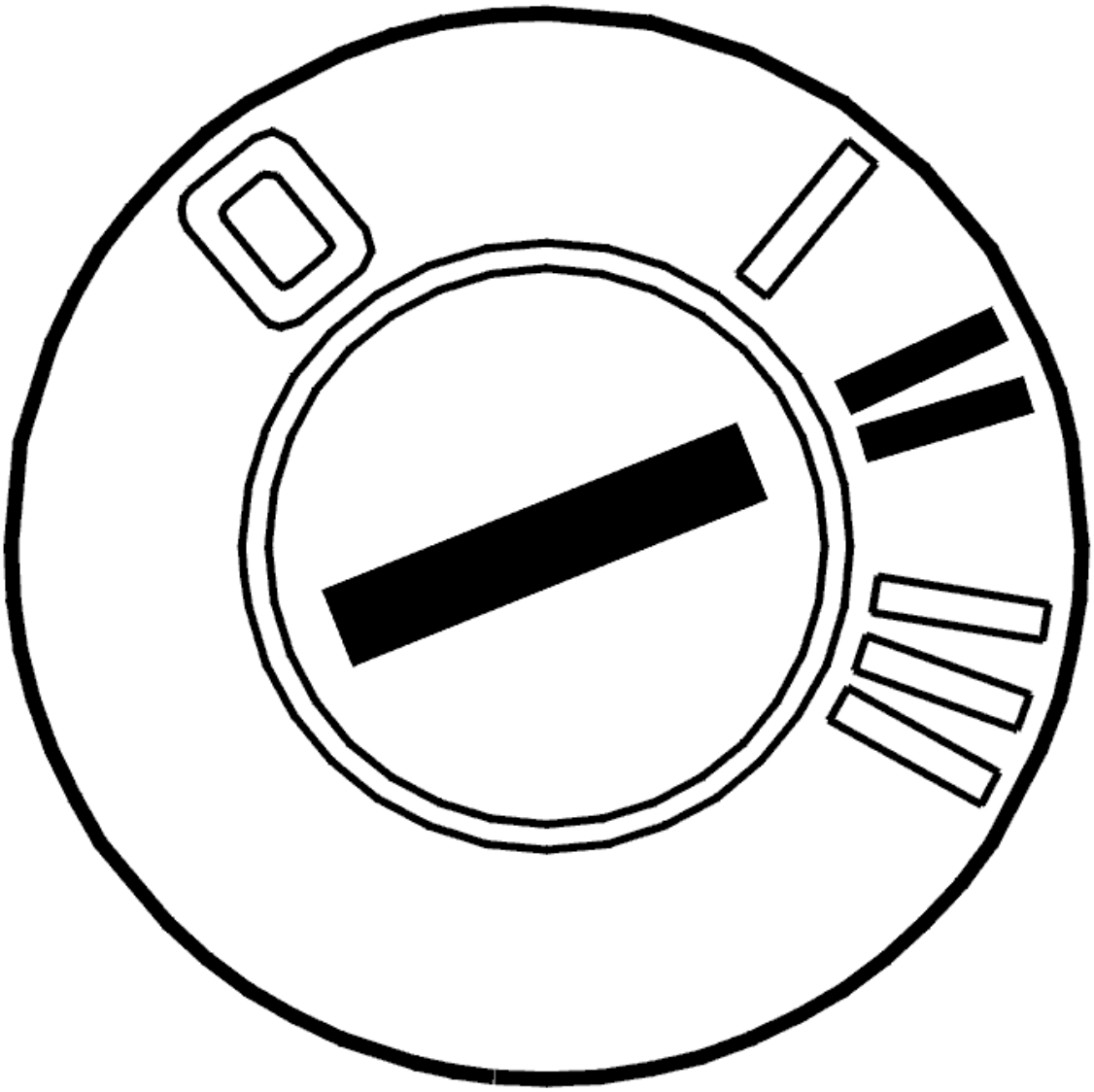

Fig. 100: Identifying Ignition ON
Courtesy of VOLVO CARS CORPORATION

- Ignition on.

  Read off the diagnostic trouble code (DTC) that is stored in the car.

  Make a note of the code for reporting purposes.

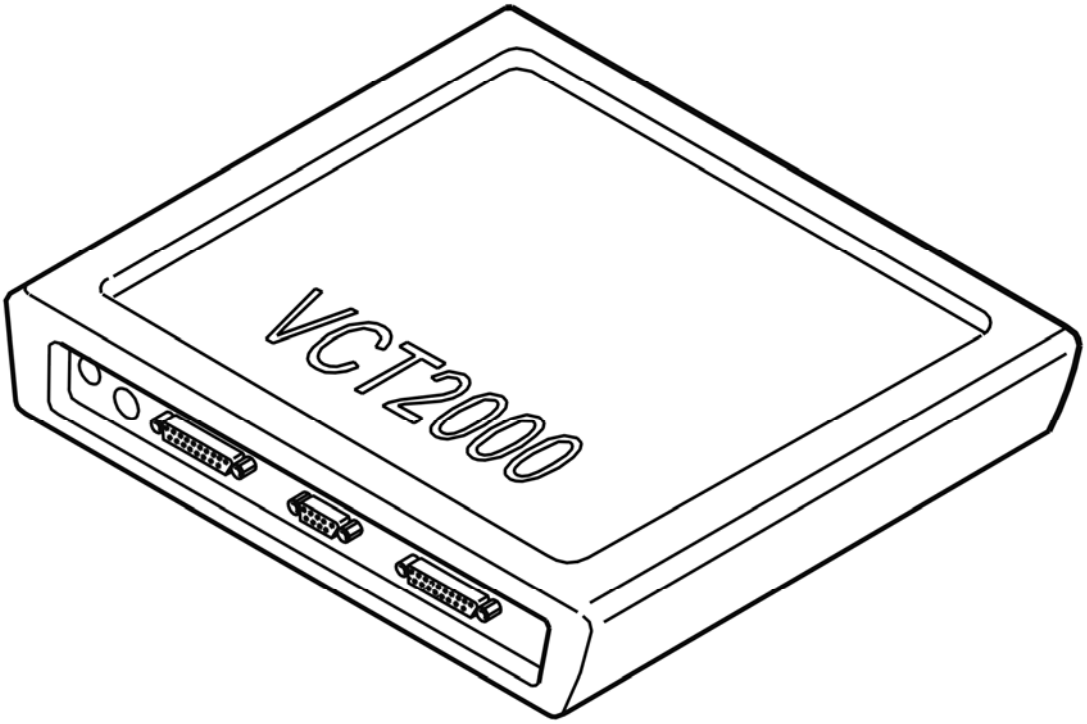

Fig. 101: Identifying VCT2000 Diagnostic Tool Symbol In VIDA
Courtesy of VOLVO CARS CORPORATION

UEM-0004: SIREN. COMMUNICATION FAULT

DIAGNOSTIC TROUBLE CODE (DTC) INFORMATION UEM-0004

Condition

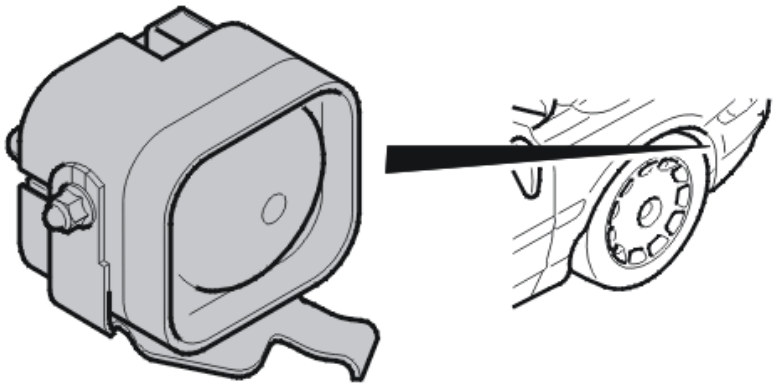

Fig. 102: Locating Siren Control Module
Courtesy of VOLVO CARS CORPORATION

The upper electronic module (UEM) receives information from the siren

If the alarm does not respond to repeated requests from the upper electronic module (UEM), the control module interprets it as a communication fault and the diagnostic trouble code (DTC) is stored.

The diagnostic trouble code (DTC) can be detected 40 seconds after the control module has been initialized.

Substitute Value

- None.

Possible Source

- Open-circuit in UEM_K3 (the serial cable between the upper electronic module (UEM), siren and sun roof)
- Short-circuit to ground in UEM_K3
- Short-circuit to supply voltage in UEM_K3
- Defective siren.

Fault symptom[s]

- Alarm/Arming does not work/No visible indication
- Alarm/Alarm will not set off/No visible and/or audible signal
- Text window and warning symbol/Text message

COMMUNICATION FAULT

CHECKING FOR PERMANENT OR INTERMITTENT FAULTS

Open the driver's door window. Lock the car using the remote control.

Wait 25 seconds until the vehicle has been alarmed. Trigger the alarm by inserting a hand through the window and unlocking the door from the inside using the internal door handle.

NOTE: On vehicles with deadlocks, these must be deactivated first. Press the button for the reduced locking position to activate deadlocks.

The function can be engaged in ignition position I and 0. It can also be engaged after the ignition has been switched off, for up to one minute after the ignition key has been removed from the ignition switch. The switch has an integrated light emitting diode for indicating that the function has been activated. A message also appears in the display in the Driver information module however, not when the key has been removed. The switches may be positioned differently than shown in the image, depending on the vehicle's configuration and equipment.

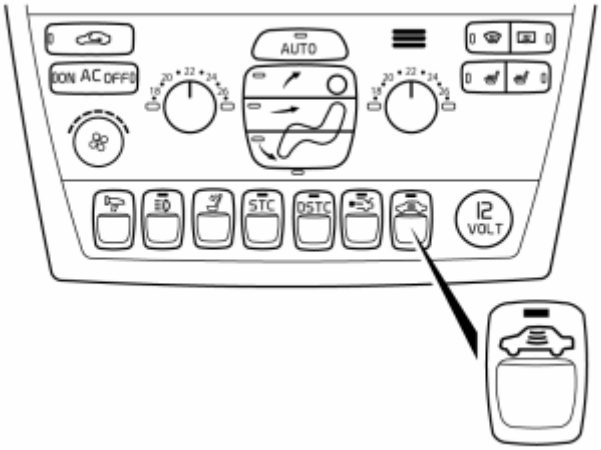

Fig. 103: Identifying Button
Courtesy of VOLVO CARS CORPORATION

Is the siren triggered?

- **YES**

  Refer to **INTERMITTENT FAULT**

- **NO**

  Refer to **CHECKING THE CONNECTORS**

CHECKING THE CONNECTORS

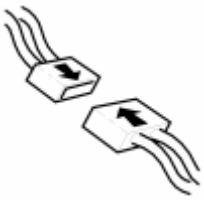

Fig. 104: Identifying Connector(s) Reinstallation
Courtesy of VOLVO CARS CORPORATION

- Check the connectors for the siren, upper electronic control module and cable harness. Check for contact resistance and oxidation.

  In particular, check for any damage

- Reinstall the components, reconnect the connectors etc.

  Open the driver's door window. Lock the car using the remote control.

Wait 25 seconds until the vehicle has been alarmed. Trigger the alarm by inserting a hand through the window and unlocking the door from the inside using the internal door handle.

NOTE: On vehicles with deadlocks, these must be deactivated first. Press the button for the reduced locking position to activate deadlocks.

The function can be engaged in ignition position I and 0. It can also be engaged after the ignition has been switched off, for up to one minute after the ignition key has been removed from the ignition switch. The switch has an integrated light emitting diode for indicating that the function has been activated. A message also appears in the display in the Driver information module however, not when the key has been removed. The switches may be positioned differently than shown in the image, depending on the vehicle's configuration and equipment.

Other information:

- see **SIREN, REPLACING** (for cars with structure week -201127) or, see **ANTI-THEFT PROTECTION SIREN** (for cars with structure week 201128-)
- see **CHECKING WIRING AND TERMINALS** .

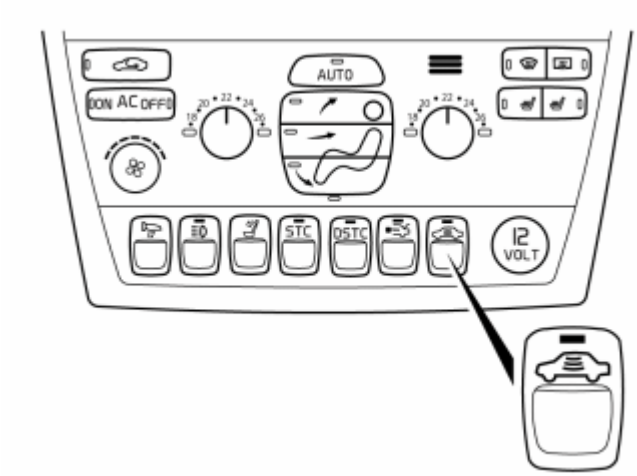

Fig. 105: Identifying Button
Courtesy of VOLVO CARS CORPORATION

Is the siren triggered?

- **YES**

  Refer to **VERIFICATION**

- **NO**

  Refer to **CHECKING FOR OPEN-CIRCUITS AND SHORT-CIRCUITS**

CHECKING FOR OPEN-CIRCUITS AND SHORT-CIRCUITS

Check that the fuses in the fusebox in the passenger compartment are intact.

Check the cable between control module terminal #21 and siren terminal #2. Check for a short-circuit to ground. Check for an open-circuit. Check for a short-circuit to supply voltage.

Check the wiring from the fuse in the passenger compartment to siren connector terminal #1. Check for an open-circuit. Check for a short-circuit to ground.

Other information:

- For further information about signals and other values, see **SIGNAL DESCRIPTION, UPPER ELECTRONIC MODULE (UEM)**
- To connect the breakout box, see **CONNECTING THE BREAKOUT BOX**
- see **SIREN, REPLACING** (for cars with structure week -201127) or, see **ANTI-THEFT PROTECTION SIREN** (for cars with structure week 201128-)
- see **CHECKING WIRING AND TERMINALS** .

Remedy as necessary.

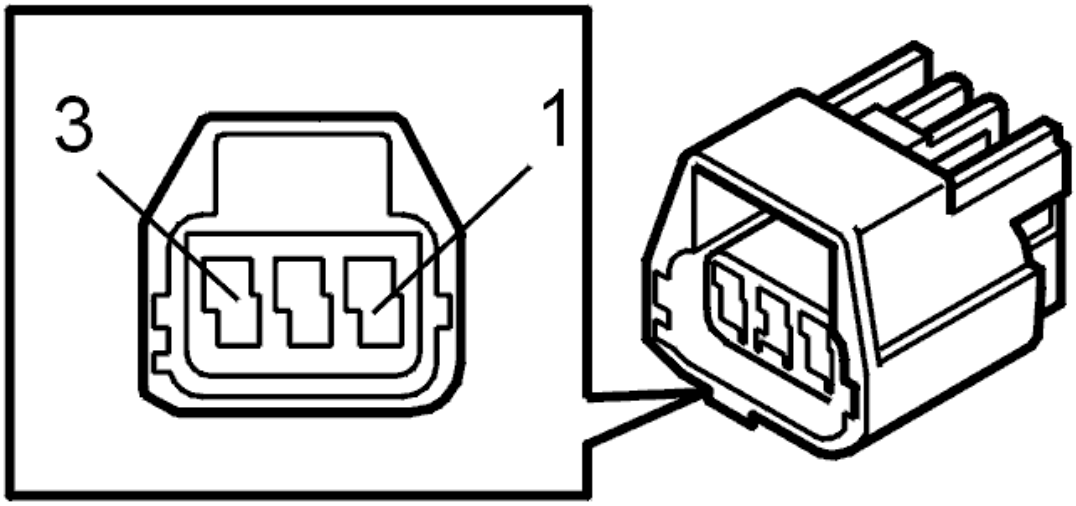

Fig. 106: Identifying Connector Terminals
Courtesy of VOLVO CARS CORPORATION

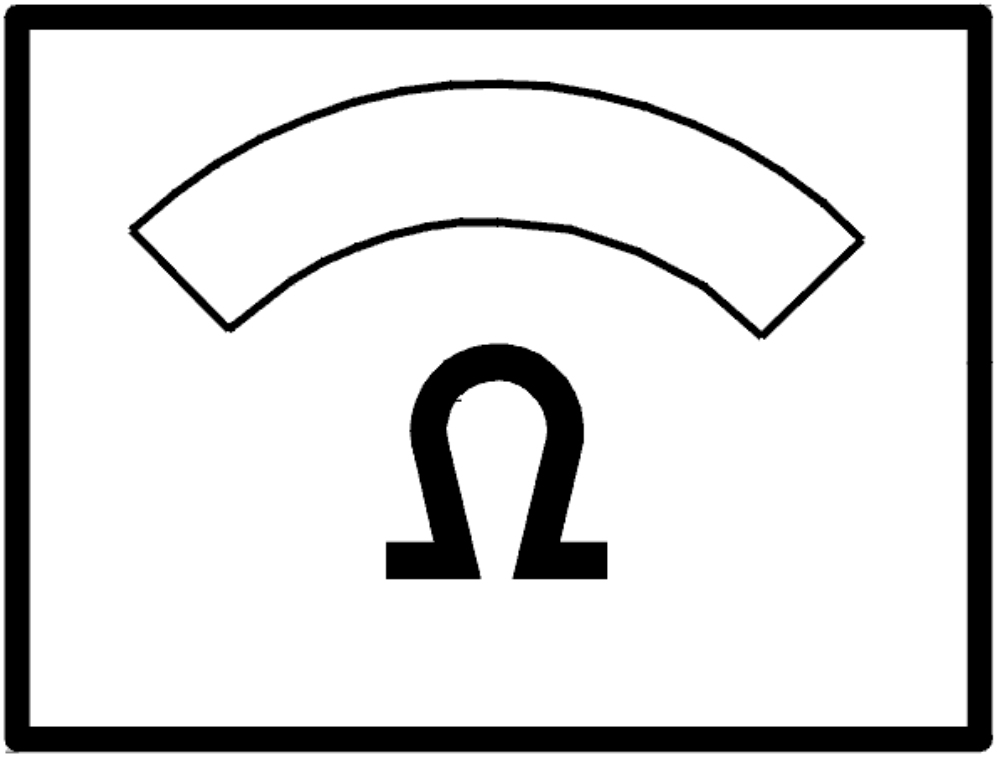

Fig. 107: Identifying Ohms Display
Courtesy of VOLVO CARS CORPORATION

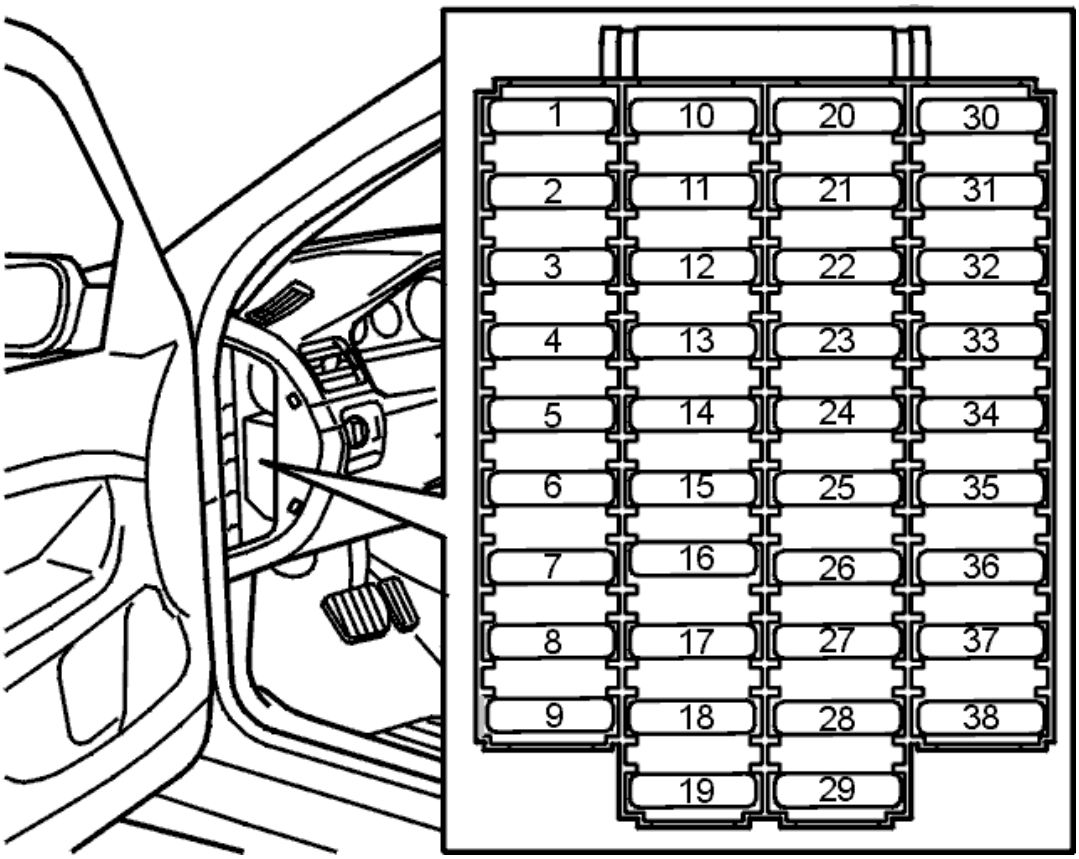

Fig. 108: Locating Fuse Holder (Passenger Compartment)
Courtesy of VOLVO CARS CORPORATION

Was a fault detected?

- **YES**

  Refer to **VERIFICATION**

- **NO**

  Refer to **REPLACING THE COMPONENT**

REPLACING THE COMPONENT

The siren must be configured after replacement. Use the VCT2000 (or appropriate scan tool) for configuration.

- see **SIREN, REPLACING** (for cars with structure week -201127) or, see **ANTI-THEFT PROTECTION SIREN** (for cars with structure week 201128-)

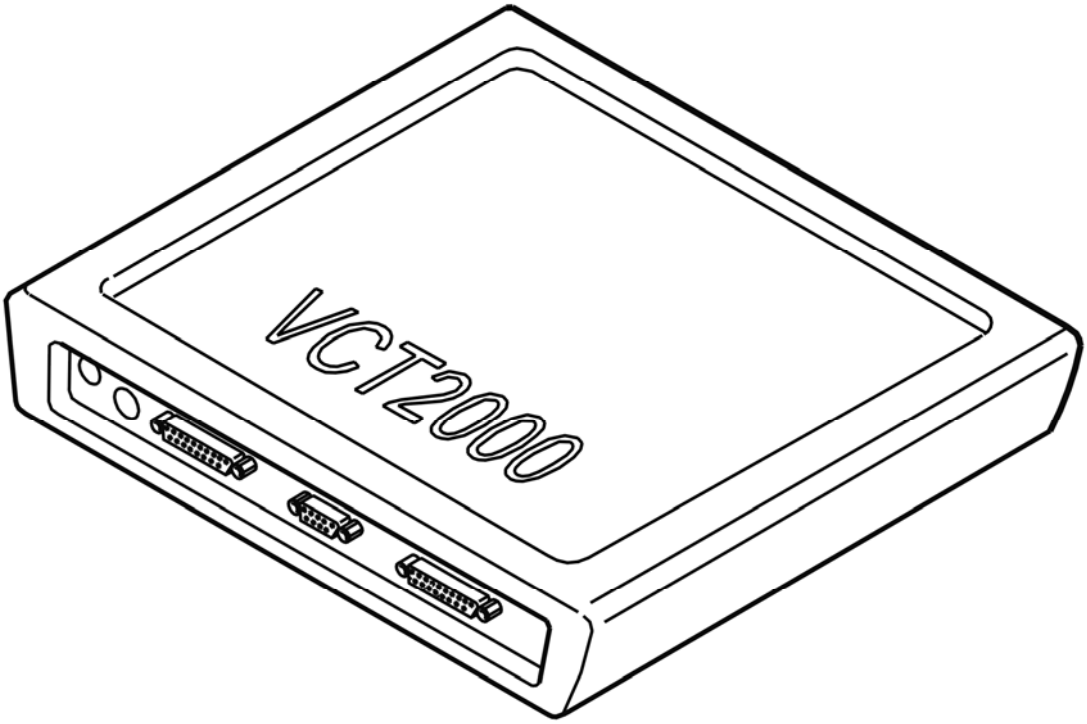

Fig. 109: Identifying VCT2000 Diagnostic Tool Symbol In VIDA
Courtesy of VOLVO CARS CORPORATION

- **Continue**

  Refer to **VERIFICATION**

INTERMITTENT FAULT

Check the connectors for the upper electronic module (UEM) and the siren. Check for contact resistance and oxidation. Check for loose connections.

Check that the fuses in the fusebox in the passenger compartment are intact.

Check the cable between control module terminal #21 and siren terminal #2. Check for an intermittent short-circuit to ground. Check for an intermittent open-circuit. Check for an intermittent short-circuit to supply voltage.

Check the cable between ground terminal 31/94 and siren connector terminal #3. Check for an intermittent open-circuit.

Check the cable between the fuse in the fusebox in the passenger compartment and siren connector terminal #1. Check for an intermittent open-circuit. Check for an intermittent short-circuit to ground.

Try replacing the siren if no fault is found.

Other information:

- For further information about signals and other values, see **SIGNAL DESCRIPTION, UPPER ELECTRONIC MODULE (UEM)**
- To connect the breakout box, see **CONNECTING THE BREAKOUT BOX**
- see **SIREN, REPLACING** (for cars with structure week -201127) or, see **ANTI-THEFT PROTECTION SIREN** (for cars with structure week 201128-)
- see **CHECKING WIRING AND TERMINALS** .

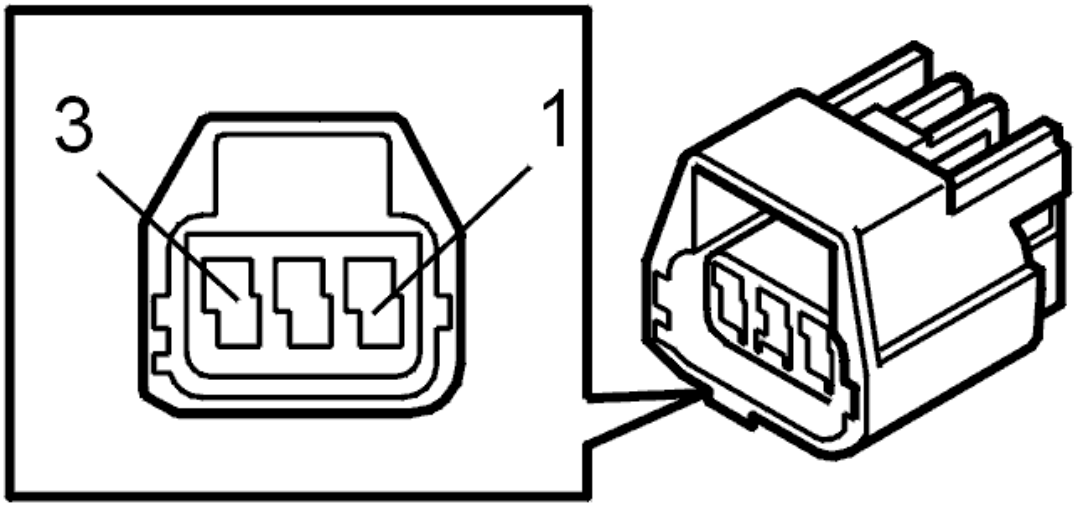

Fig. 110: Identifying Connector Terminals
Courtesy of VOLVO CARS CORPORATION

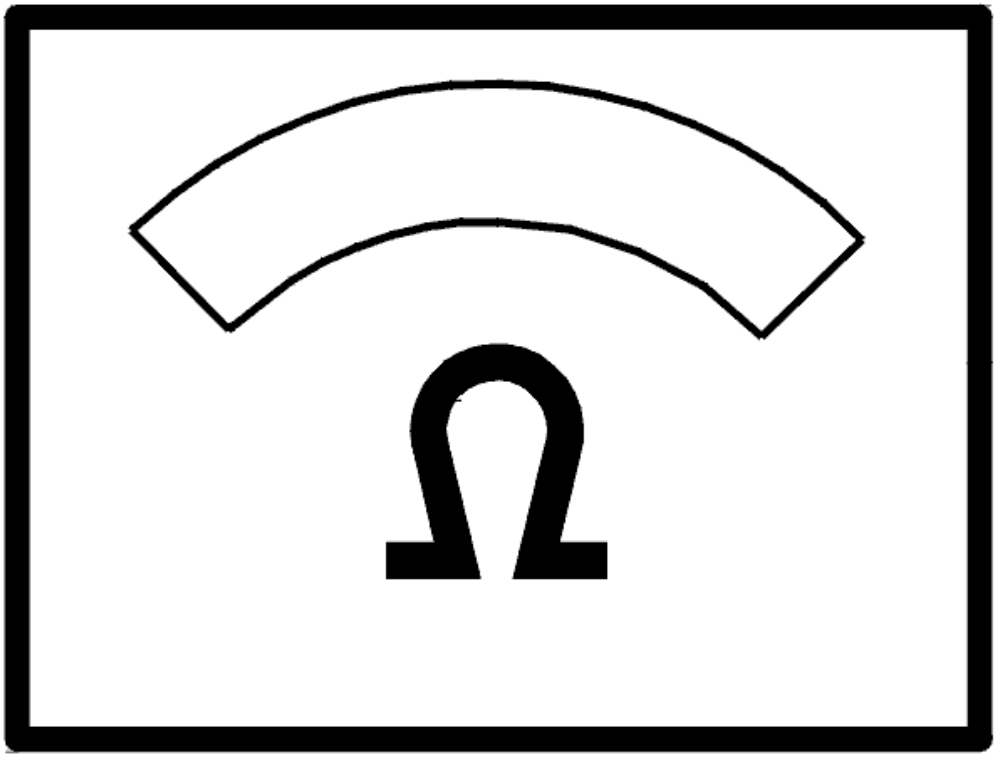

Fig. 111: Identifying Ohms Display
Courtesy of VOLVO CARS CORPORATION

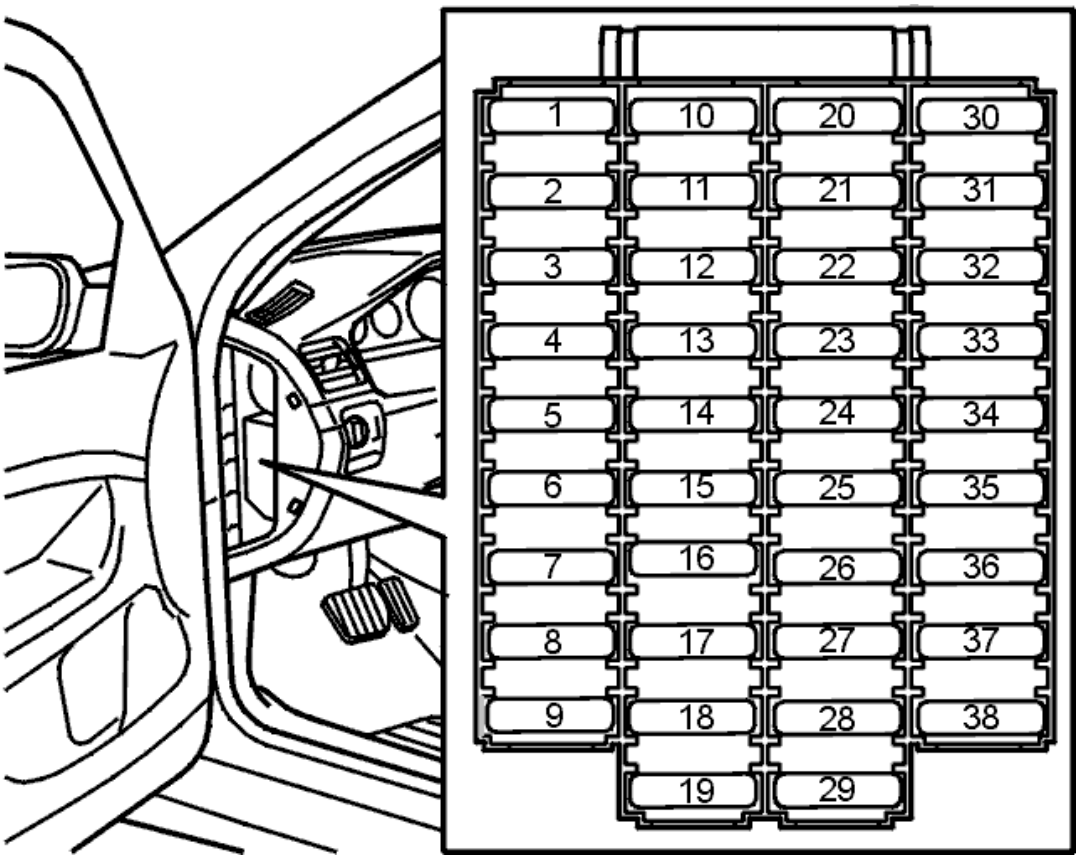

Fig. 112: Locating Fuse Holder (Passenger Compartment)
Courtesy of VOLVO CARS CORPORATION

- **Continue**

  Refer to **INFORMATION**

VERIFICATION

VERIFICATION

HINT: After carrying out the repair, check that the fault has been remedied.

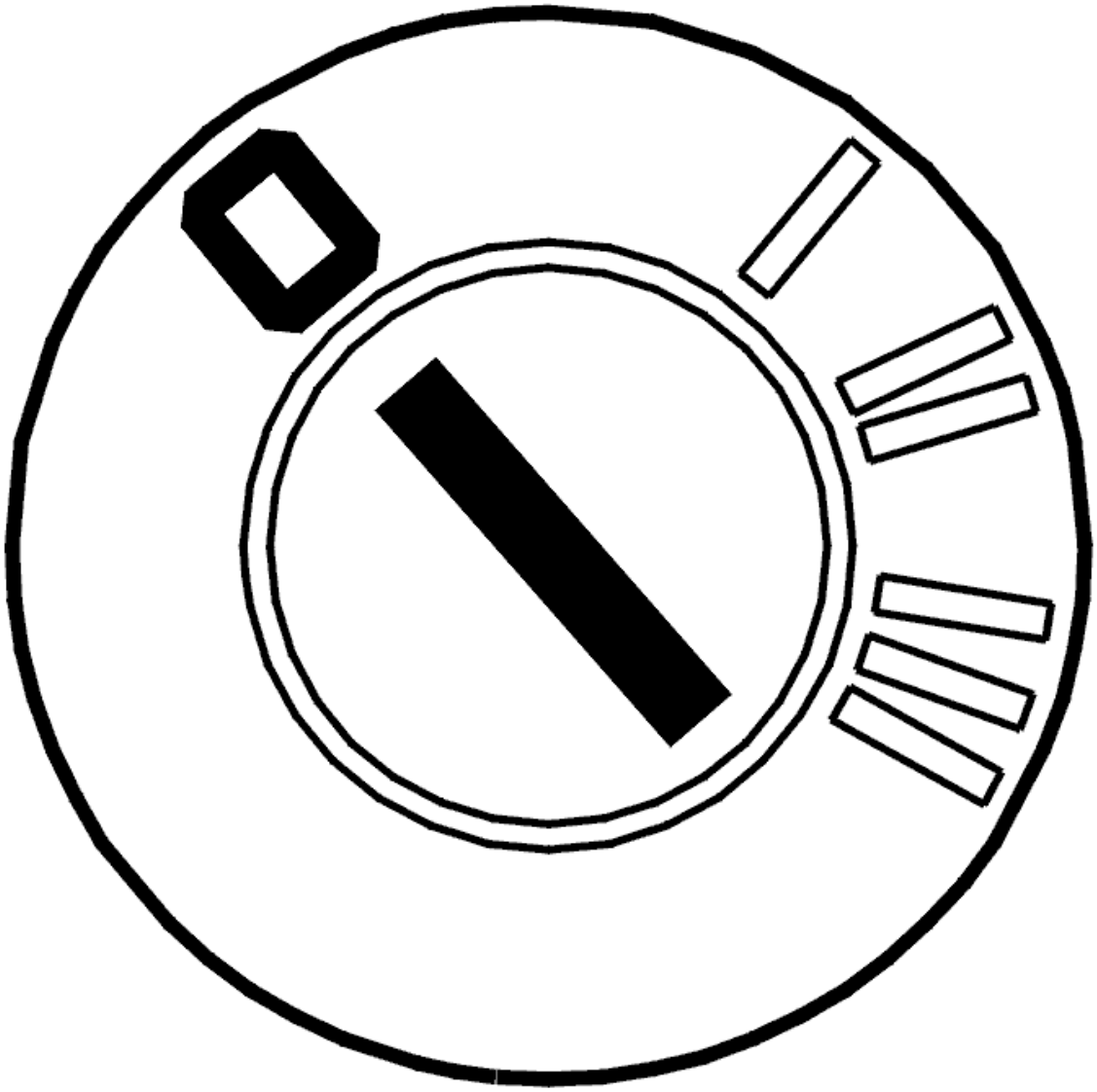

Fig. 113: Identifying Ignition OFF
Courtesy of VOLVO CARS CORPORATION

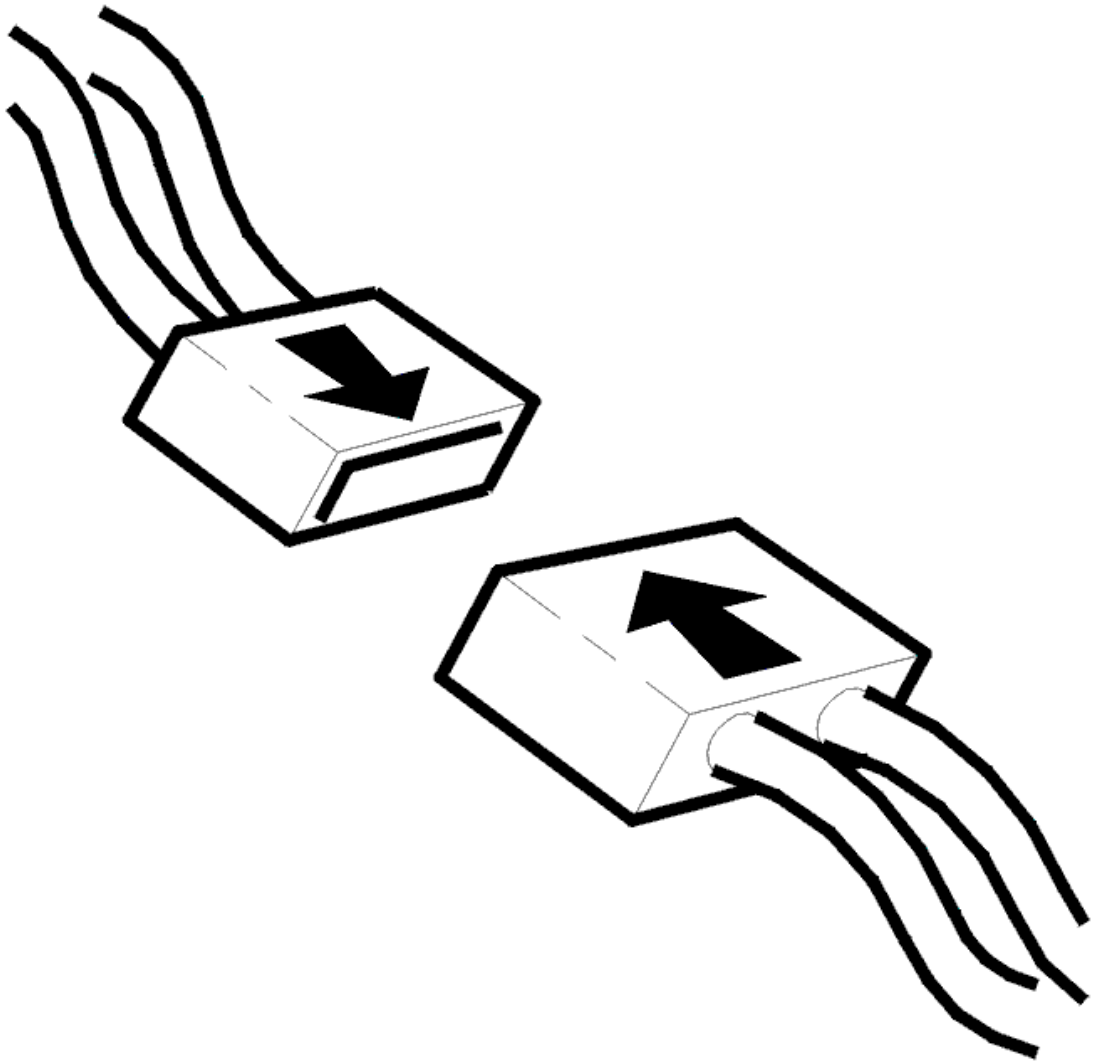

Fig. 114: Identifying Connector(s) Reinstallation
Courtesy of VOLVO CARS CORPORATION

- Ignition off
- Reinstall the connectors, components etc.

  Open the driver's door window. Lock the car using the remote control.

  Wait 25 seconds until the alarm is active. Trigger the alarm by reaching into the car and unlocking the door from the inside using the internal door handle.

Is the function OK?

- **YES**

  VERIFIED: Troubleshooting has been completed.

- **NO**

  Refer to **INFORMATION**

INFORMATION

FAULT-TRACING INFORMATION

The fault should have been detected and remedied. As this is not the case fault-tracing has failed.

Exit fault-tracing for this diagnostic trouble code (DTC) or make another attempt.

INFORMATION

FAULT-TRACING INFORMATION

If the fault is intermittent, do not verify fault-tracing if the fault does not recur.

It is possible to view the information again, or leave fault-tracing for this diagnostic trouble code.

COMMUNICATION FAULT

CHECKING FOR PERMANENT OR INTERMITTENT FAULTS

Open the driver's door window. Lock the car using the remote control.

Wait 25 seconds until the vehicle has been alarmed. Trigger the alarm by inserting a hand through the window and unlocking the door from the inside using the internal door handle.

NOTE: On vehicles with deadlocks, these must be deactivated first. Press the button for the reduced locking position to activate deadlocks.

The function can be engaged in ignition position I and 0. It can also be engaged after the ignition has been switched off, for up to one minute after the ignition key has been removed from the ignition switch. The switch has an integrated light emitting diode for indicating that the function has been activated. A message also appears in the display in the Driver information module however, not when the key has been removed. The switches may be positioned differently than shown in the image, depending on the vehicle's configuration and equipment.

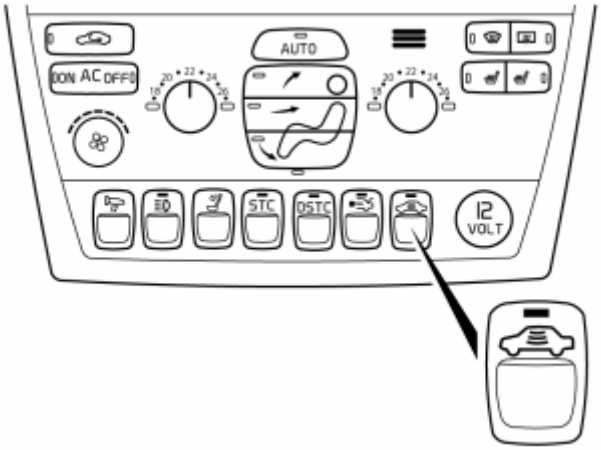

Fig. 115: Identifying Button
Courtesy of VOLVO CARS CORPORATION

Is the siren triggered?

- **YES**

  see **INTERMITTENT FAULT**

- **NO**

  see **CHECKING THE CONNECTORS**

CHECKING THE CONNECTORS

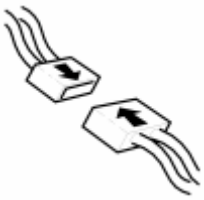

Fig. 116: Identifying Connector(s) Reinstallation
Courtesy of VOLVO CARS CORPORATION

- Check the connectors for the siren, upper electronic control module and cable harness. Check for contact resistance and oxidation.

  In particular, check for any damage

- Reinstall the components, reconnect the connectors etc.

  Open the driver's door window. Lock the car using the remote control.

Wait 25 seconds until the vehicle has been alarmed. Trigger the alarm by inserting a hand through the window and unlocking the door from the inside using the internal door handle.

NOTE: On vehicles with deadlocks, these must be deactivated first. Press the button for the reduced locking position to activate deadlocks.

The function can be engaged in ignition position I and 0. It can also be engaged after the ignition has been switched off, for up to one minute after the ignition key has been removed from the ignition switch. The switch has an integrated light emitting diode for indicating that the function has been activated. A message also appears in the display in the Driver information module however, not when the key has been removed. The switches may be positioned differently than shown in the image, depending on the vehicle's configuration and equipment.

Other information:

- see **SIREN, REPLACING**
- see **CHECKING WIRING AND TERMINALS** .

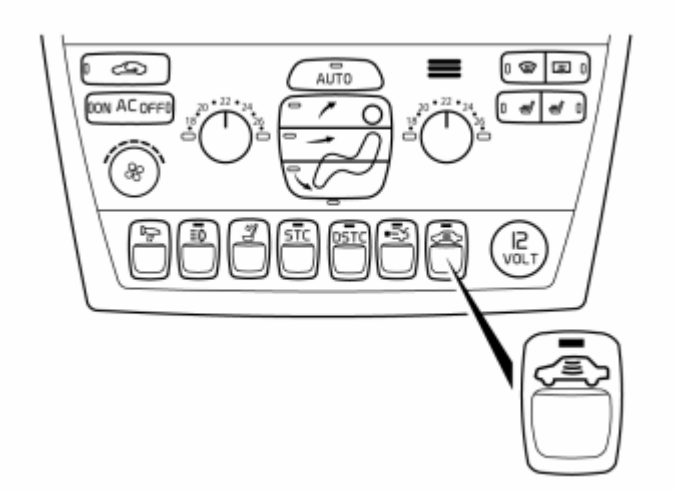

Fig. 117: Identifying Button
Courtesy of VOLVO CARS CORPORATION

Is the siren triggered?

- **YES**

  see **VERIFICATION**

- **NO**

  see **CHECKING FOR OPEN-CIRCUITS AND SHORT-CIRCUITS**

CHECKING FOR OPEN-CIRCUITS AND SHORT-CIRCUITS

Check that the fuses in the fusebox in the passenger compartment are intact.

Check the cable between control module terminal #21 and siren terminal #2. Check for a short-circuit to ground. Check for an open-circuit. Check for a short-circuit to supply voltage.

Check the wiring from the fuse in the passenger compartment to siren connector terminal #1. Check for an open-circuit. Check for a short-circuit to ground.

Other information:

- For further information about signals and other values, see **SIGNAL DESCRIPTION, UPPER ELECTRONIC MODULE (UEM)**
- To connect the breakout box, see **CONNECTING THE BREAKOUT BOX**
- see **SIREN, REPLACING**
- see **CHECKING WIRING AND TERMINALS** .

Remedy as necessary.

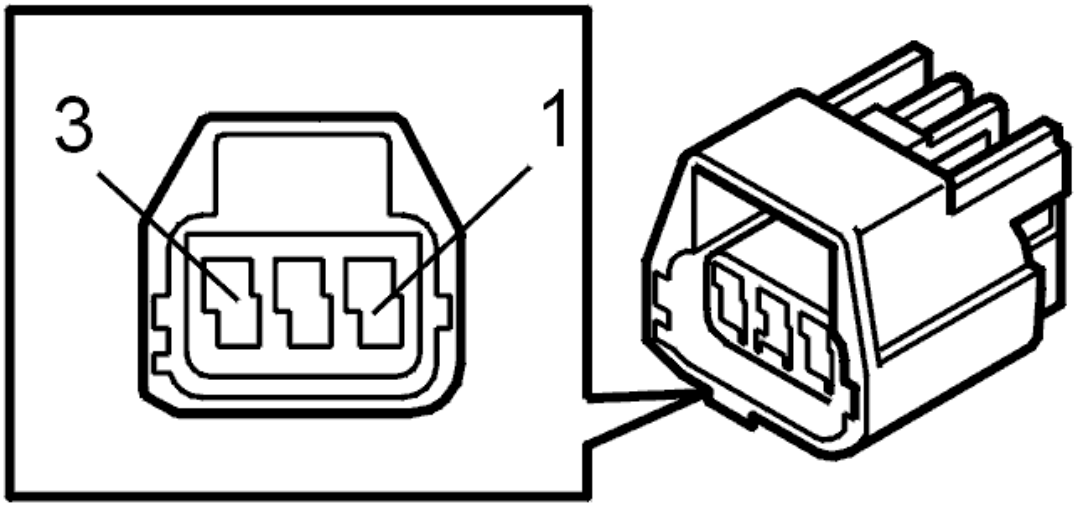

Fig. 118: Identifying Connector Terminals
Courtesy of VOLVO CARS CORPORATION

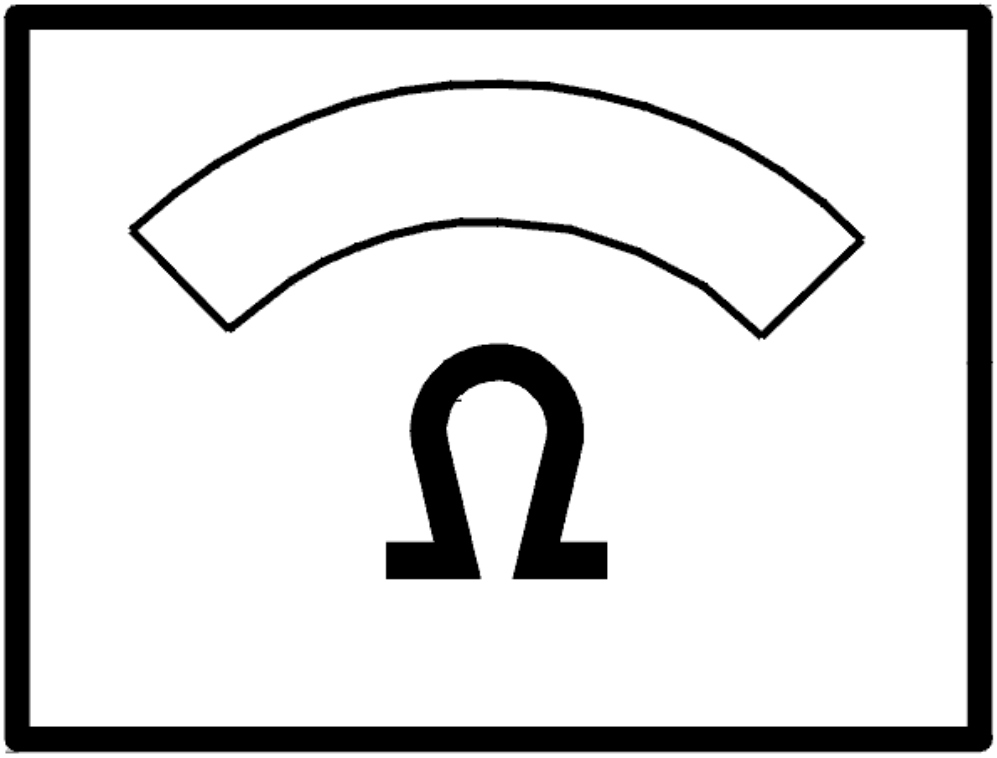

Fig. 119: Identifying Ohms Display
Courtesy of VOLVO CARS CORPORATION

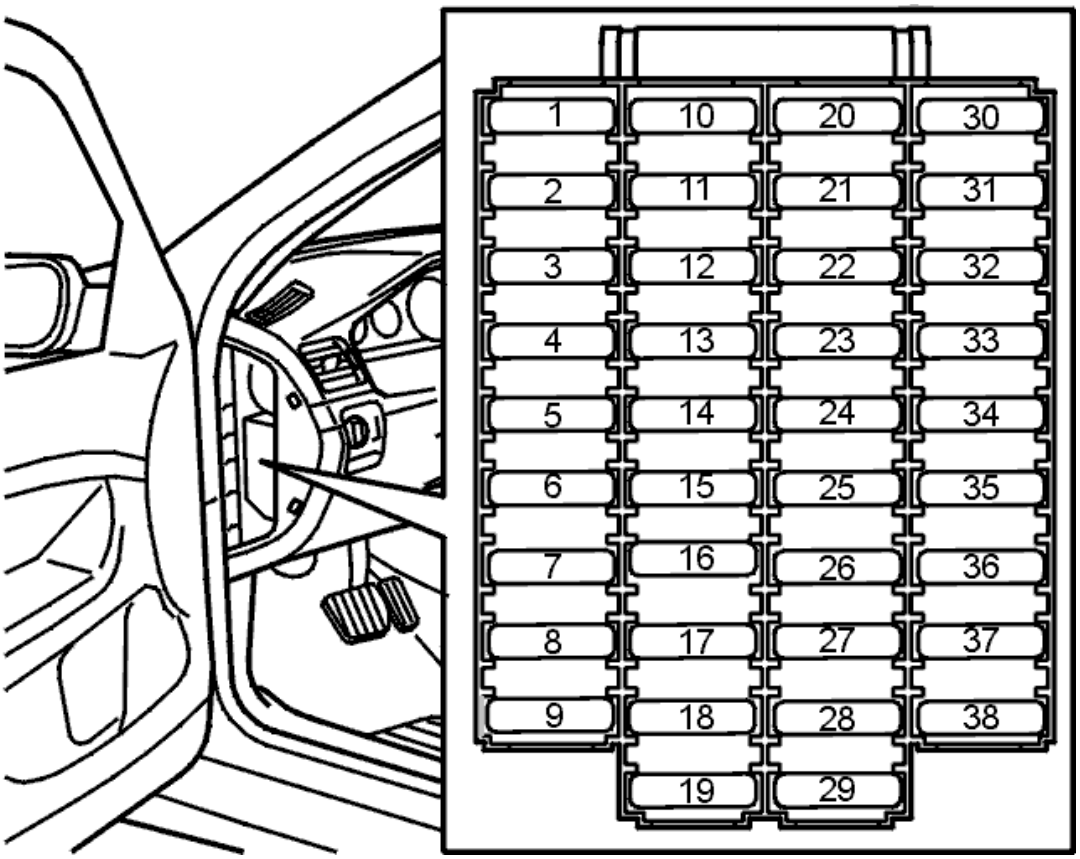

Fig. 120: Locating Fuse Holder (Passenger Compartment)
Courtesy of VOLVO CARS CORPORATION

Was a fault detected?

- **YES**

  see **VERIFICATION**

- **NO**

  see **REPLACING THE COMPONENT**

REPLACING THE COMPONENT

The siren must be configured after replacement. Use the VCT2000 (or appropriate scan tool) for configuration.

- see **SIREN, REPLACING**

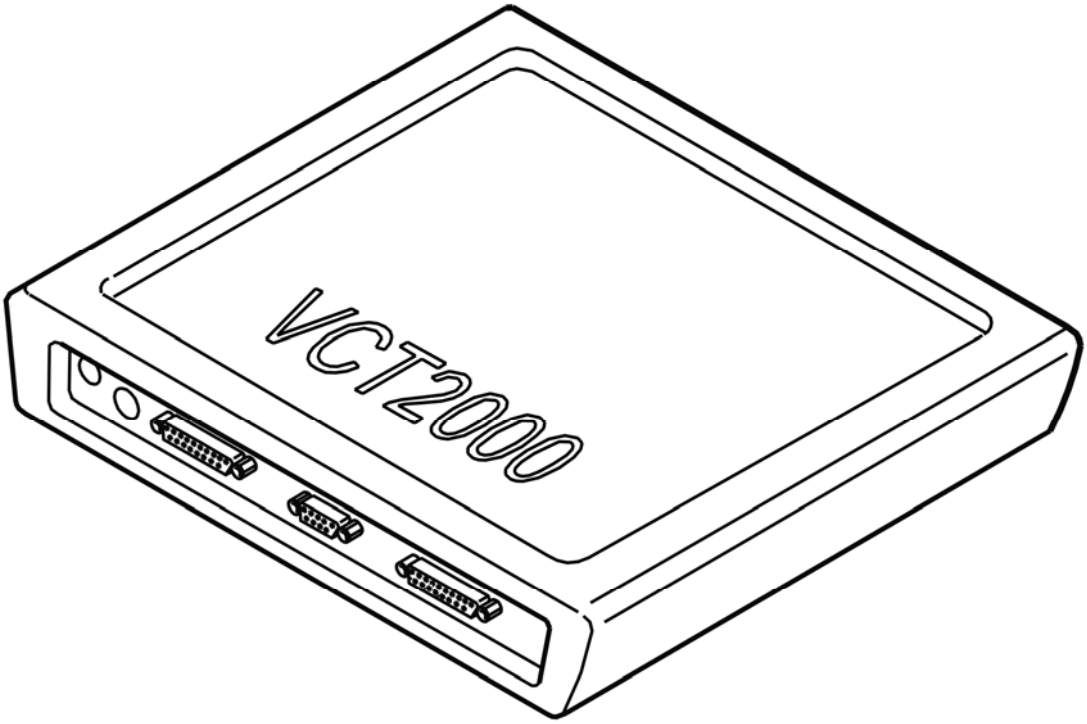

Fig. 121: Identifying VCT2000 Diagnostic Tool Symbol In VIDA
Courtesy of VOLVO CARS CORPORATION

- **Continue**

  see **VERIFICATION**

INTERMITTENT FAULT

Check the connectors for the upper electronic module (UEM) and the siren. Check for contact resistance and oxidation. Check for loose connections.

Check that the fuses in the fusebox in the passenger compartment are intact.

Check the cable between control module terminal #21 and siren terminal #2. Check for an intermittent short-circuit to ground. Check for an intermittent open-circuit. Check for an intermittent short-circuit to supply voltage.

Check the cable between ground terminal 31/94 and siren connector terminal #3. Check for an intermittent open-circuit.

Check the cable between the fuse in the fusebox in the passenger compartment and siren connector terminal #1. Check for an intermittent open-circuit. Check for an intermittent short-circuit to ground.

Try replacing the siren if no fault is found.

Other information:

- For further information about signals and other values, see **SIGNAL DESCRIPTION, UPPER ELECTRONIC MODULE (UEM)**
- To connect the breakout box, see **CONNECTING THE BREAKOUT BOX**
- see **SIREN, REPLACING**
- see **CHECKING WIRING AND TERMINALS** .

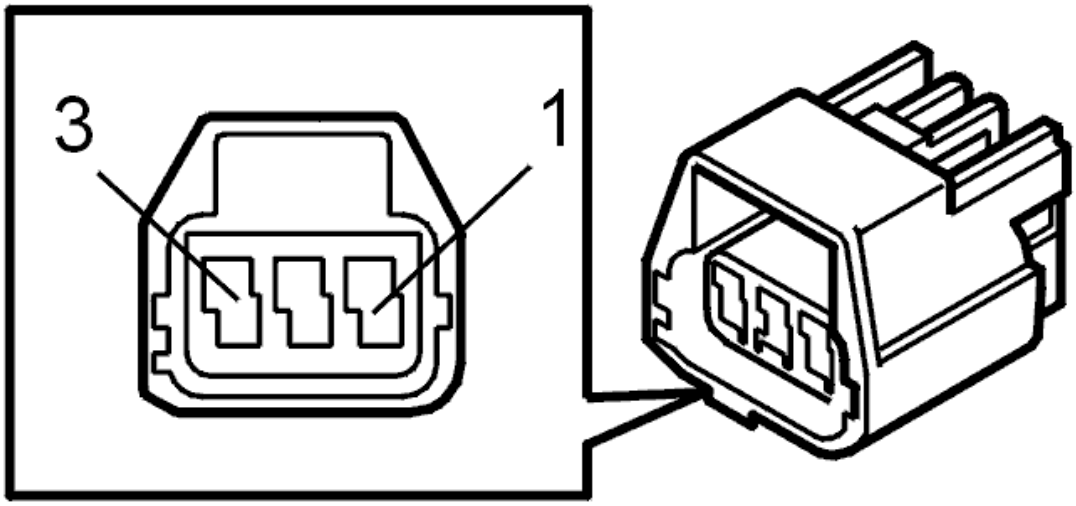

Fig. 122: Identifying Connector Terminals
Courtesy of VOLVO CARS CORPORATION

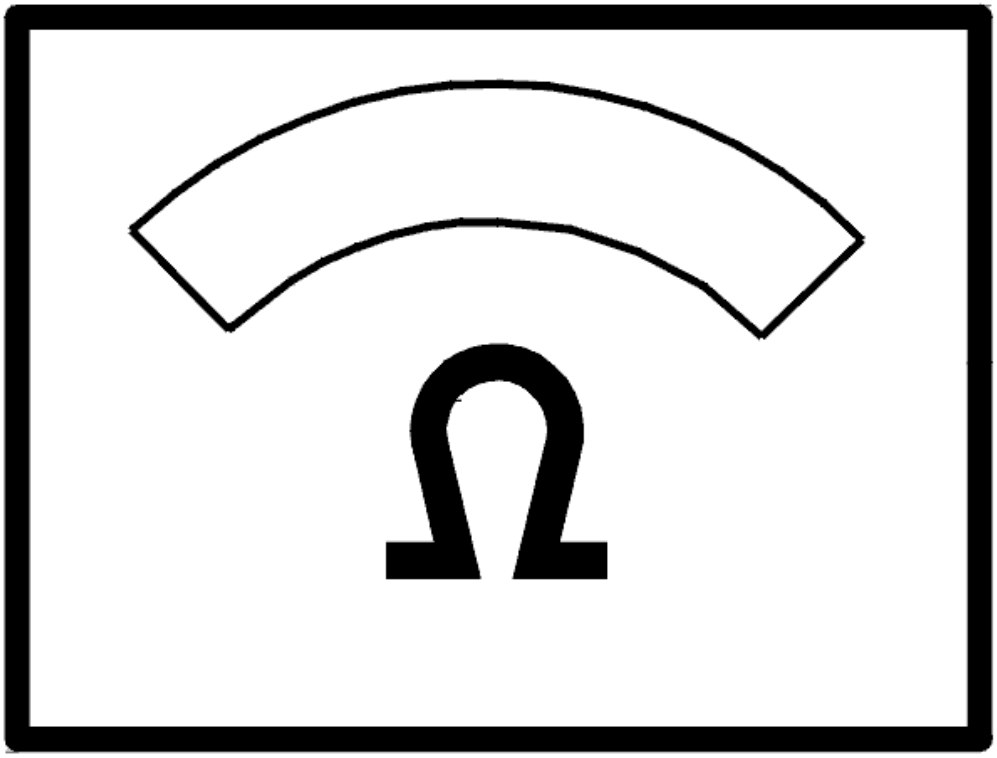

Fig. 123: Identifying Ohms Display
Courtesy of VOLVO CARS CORPORATION

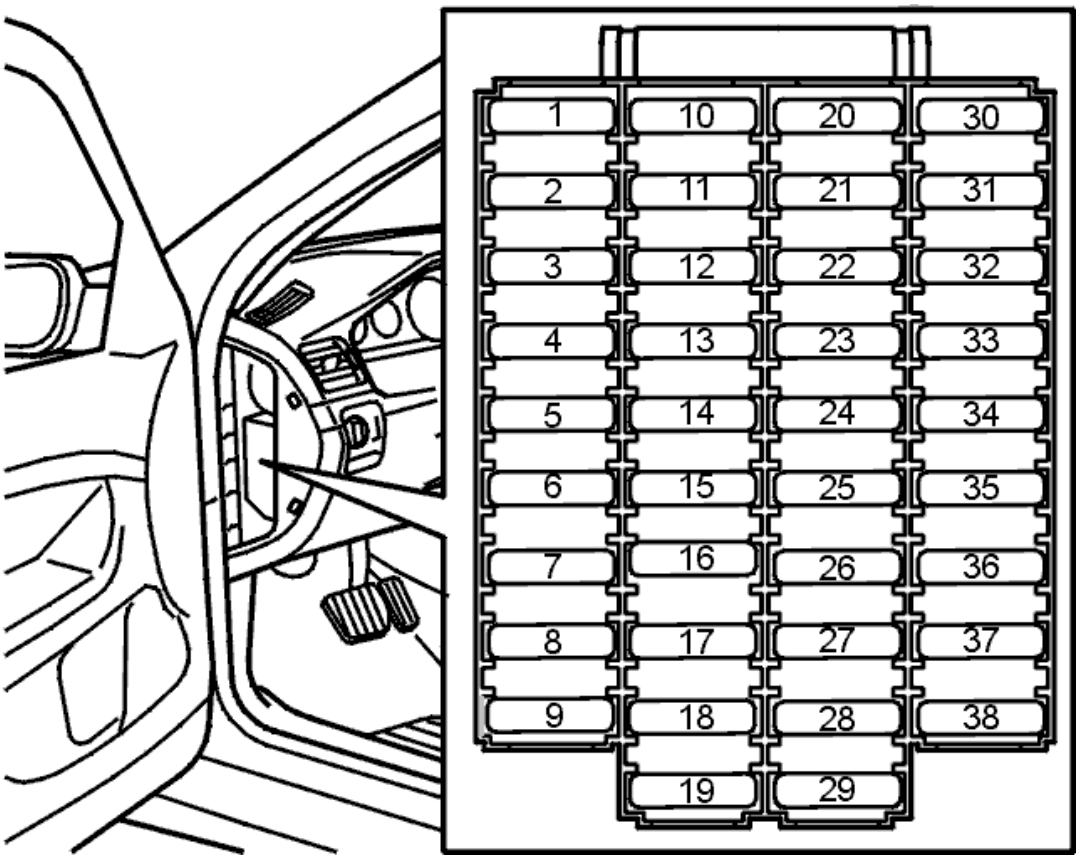

Fig. 124: Locating Fuse Holder (Passenger Compartment)
Courtesy of VOLVO CARS CORPORATION

- **Continue**

  see **FAULT-TRACING INFORMATION**

VERIFICATION

HINT: After carrying out the repair, check that the fault has been remedied.

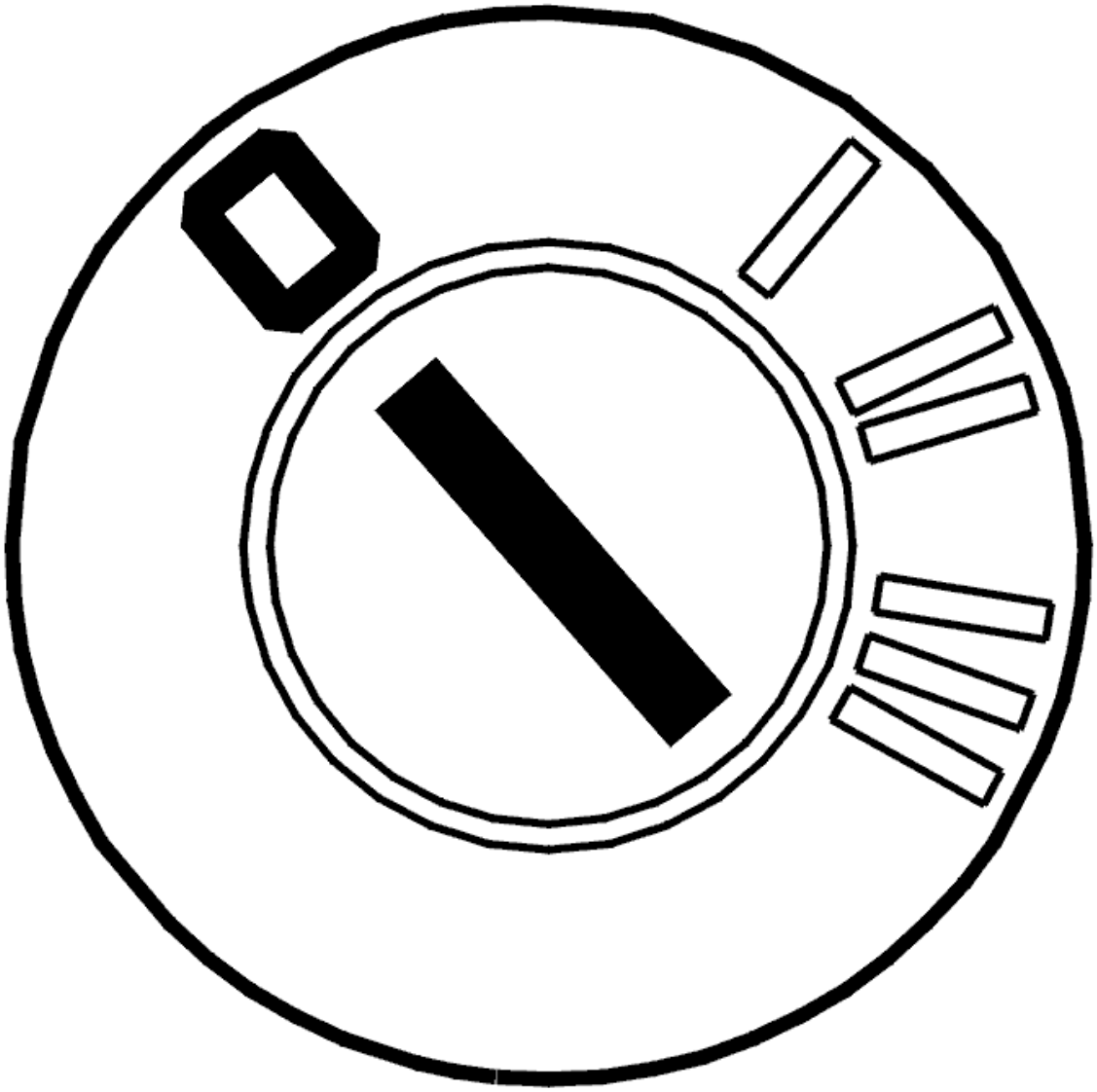

Fig. 125: Identifying Ignition OFF
Courtesy of VOLVO CARS CORPORATION

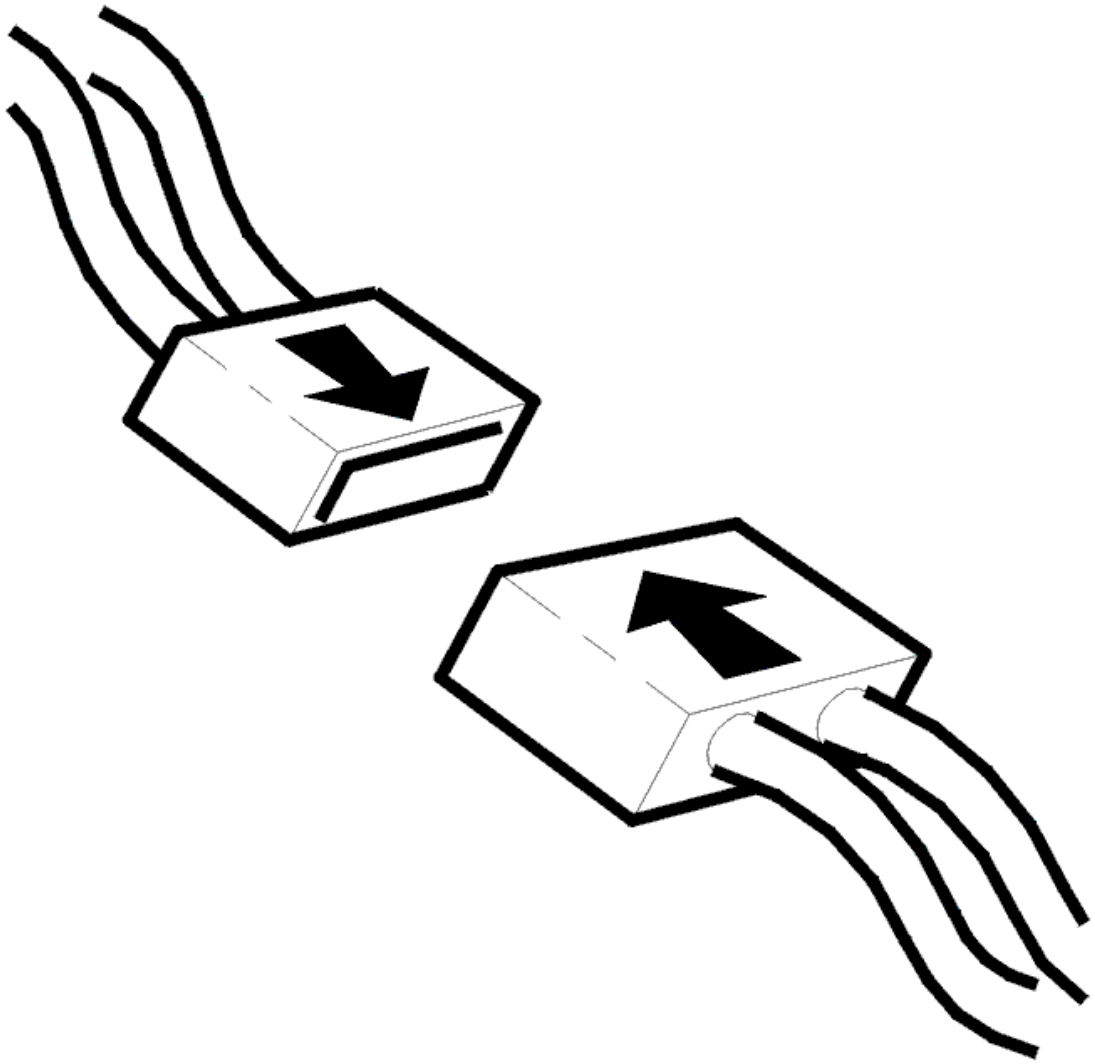

Fig. 126: Identifying Connector(s) Reinstallation
Courtesy of VOLVO CARS CORPORATION

- Ignition off
- Reinstall the connectors, components etc.

  Open the driver's door window. Lock the car using the remote control.

  Wait 25 seconds until the alarm is active. Trigger the alarm by reaching into the car and unlocking the door from the inside using the internal door handle.

Is the function OK?

- **YES**

  VERIFIED: Troubleshooting has been completed.

- **NO**

  Refer to **FAULT-TRACING INFORMATION**

FAULT-TRACING INFORMATION

If the fault is intermittent, do not verify fault-tracing if the fault does not recur.

It is possible to view the information again, or leave fault-tracing for this diagnostic trouble code (DTC).

UEM-0004: SIREN. COMMUNICATION FAULT (2003)

DIAGNOSTIC TROUBLE CODE (DTC) INFORMATION

Condition

If control module receives no response from siren at repeated requests, this is understood as a communication fault and the diagnostic trouble code (DTC) is stored.

Substitute Value

- None.

Possible Source

- Open-circuit on UEM_K3 (serial cable between UEM, siren and sun roof).
- UEM_K3 short-circuit to ground.
- UEM_K3 short-circuit to battery voltage.
- Defect siren.

Fault symptom[s]

- Siren does not work.
- Alarm does not work.

COMMUNICATION FAULT

see **COMMUNICATION FAULT**

UEM-0005: SUN ROOF. COMMUNICATION FAULT (2004-2012)

DIAGNOSTIC TROUBLE CODE (DTC) INFORMATION UEM-0005

Condition

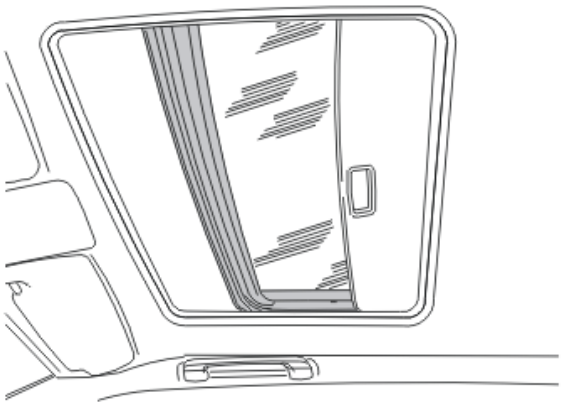

Fig. 127: Identifying Sun Roof
Courtesy of VOLVO CARS CORPORATION

The upper electronic module (UEM) receives information from the sun roof.

If the sun roof does not respond to repeated requests from the upper electronic module (UEM), the control module interprets it as a communication fault and the diagnostic trouble code (DTC) is stored.

The diagnostic trouble code (DTC) can be detected 20 seconds after the control module has been initialized.

Substitute Value

- None.

Possible Source

- Open-circuit in UEM_K3 (the serial cable between the upper electronic module (UEM), siren and sun roof)
- Short-circuit to ground in UEM_K3
- Short-circuit to supply voltage in UEM_K3
- Damaged Sun roof module (SRM).

Fault symptom[s]

- The power sun roof does not operate.

COMMUNICATION FAULT

CHECKING FOR PERMANENT OR INTERMITTENT FAULTS

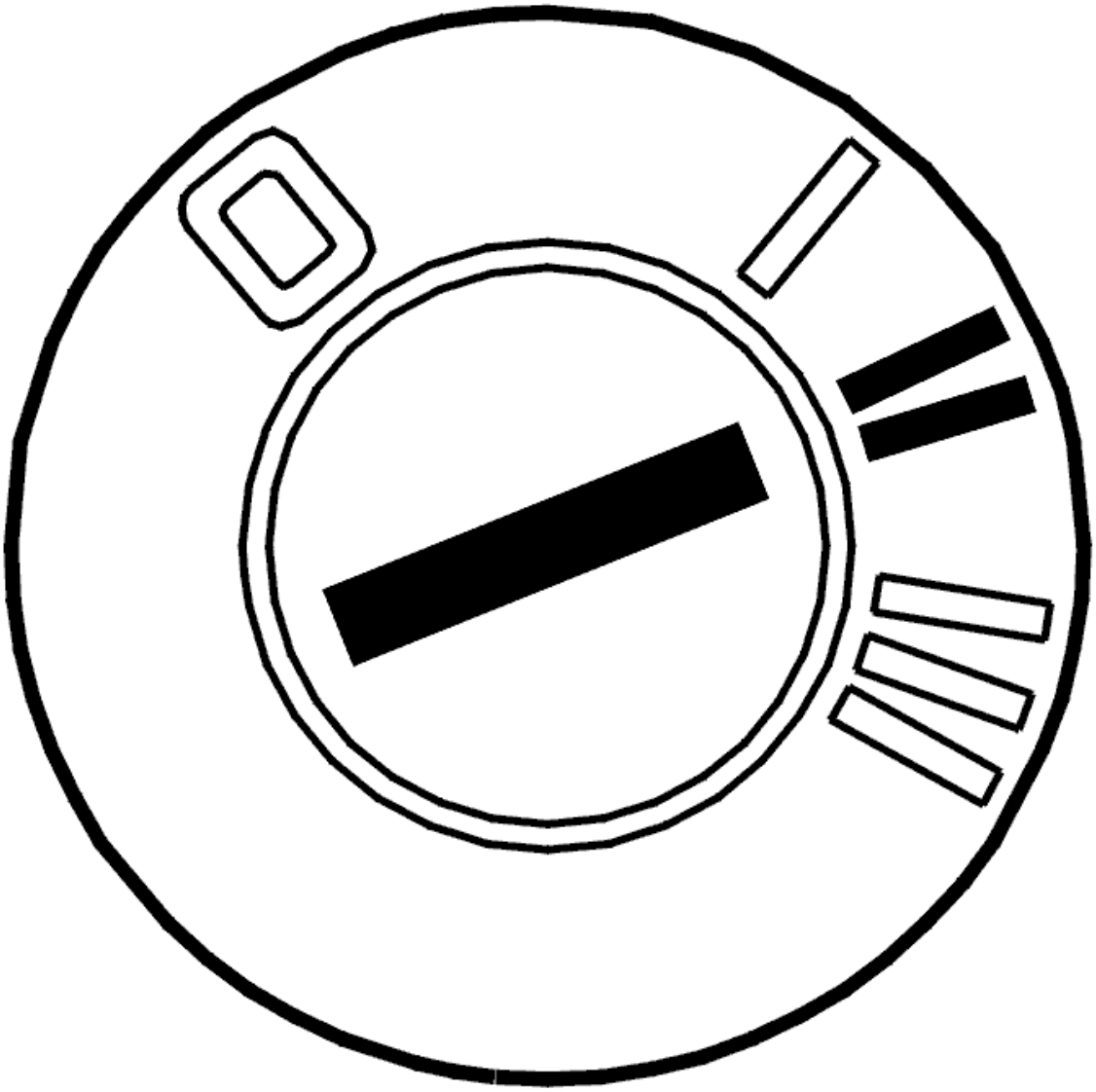

Fig. 128: Identifying Ignition ON
Courtesy of VOLVO CARS CORPORATION

- Ignition on.

  Attempt to operate the sun roof.

Can the sun roof be operated?

- **YES**

  Refer to **INTERMITTENT FAULT**

- **NO**

  Refer to **CHECKING THE CONNECTORS**

CHECKING THE CONNECTORS

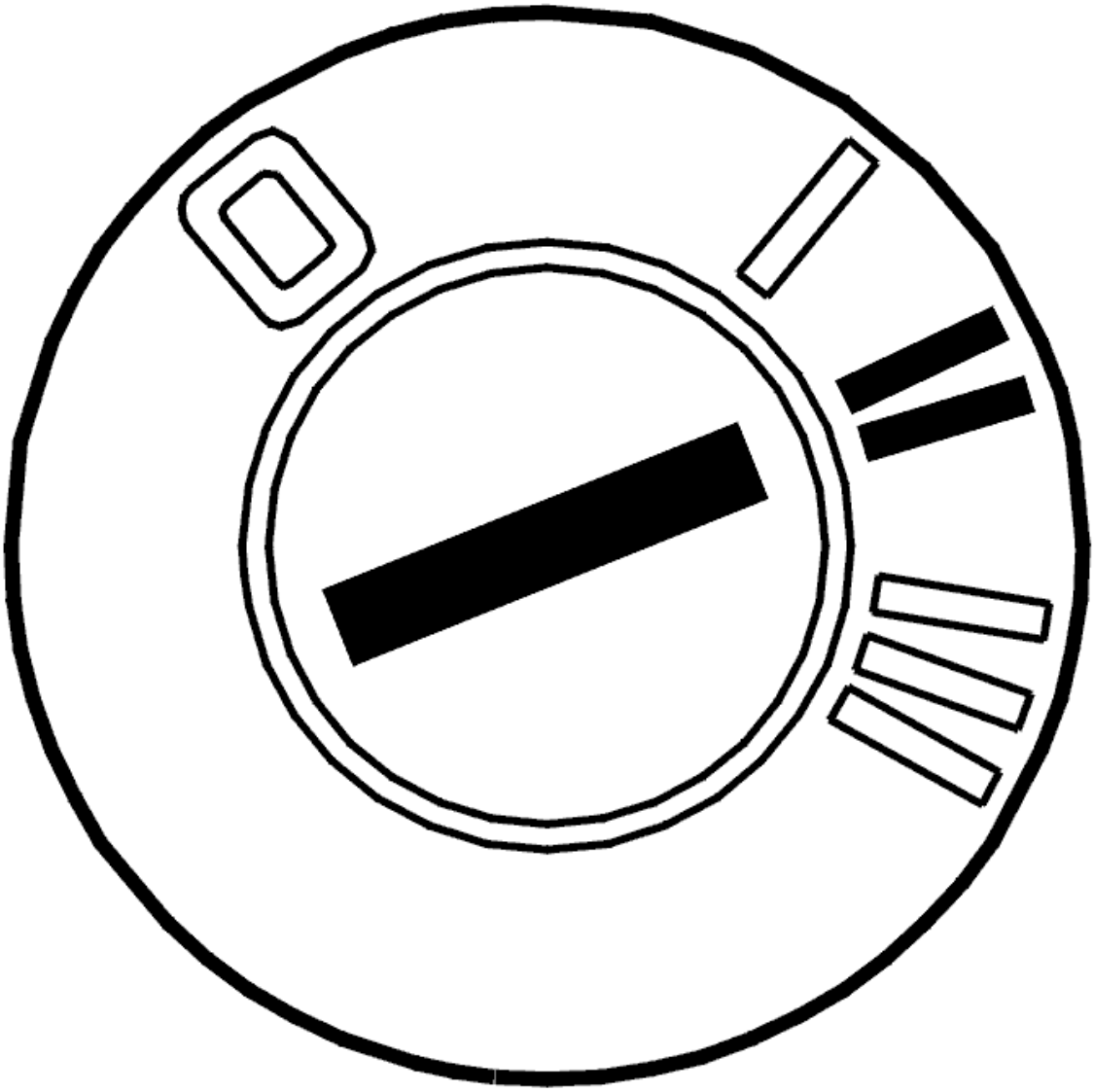

Fig. 129: Identifying Ignition ON
Courtesy of VOLVO CARS CORPORATION

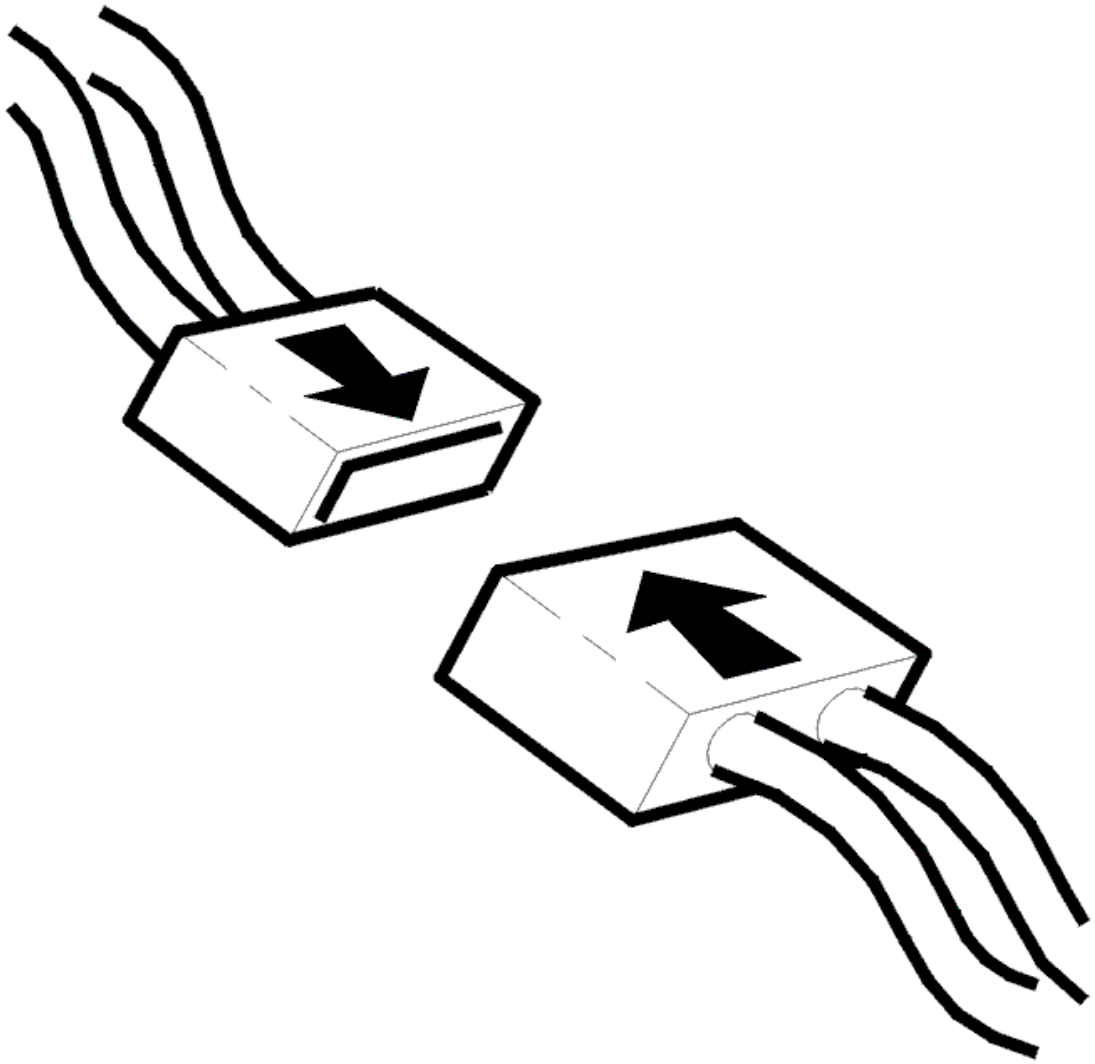

Fig. 130: Identifying Connector(s) Reinstallation
Courtesy of VOLVO CARS CORPORATION

- Ignition off
- Remedy the connectors for the cable harness, sun roof control module and upper electronic module (UEM) for contact resistance and oxidation.

  In particular, check for any damage

- Reinstall the components, reconnect the connectors etc.
- Ignition on.

  Operate the sun roof.

  Other information:

- To access the connector for the upper electronic module (UEM), see **UPPER ELECTRONIC MODULE (UEM)/REARVIEW MIRROR, REPLACING**
- To access the sun roof connector, see **CONTROL MODULE, SUN ROOF, REPLACING**
- see **CHECKING WIRING AND TERMINALS** .

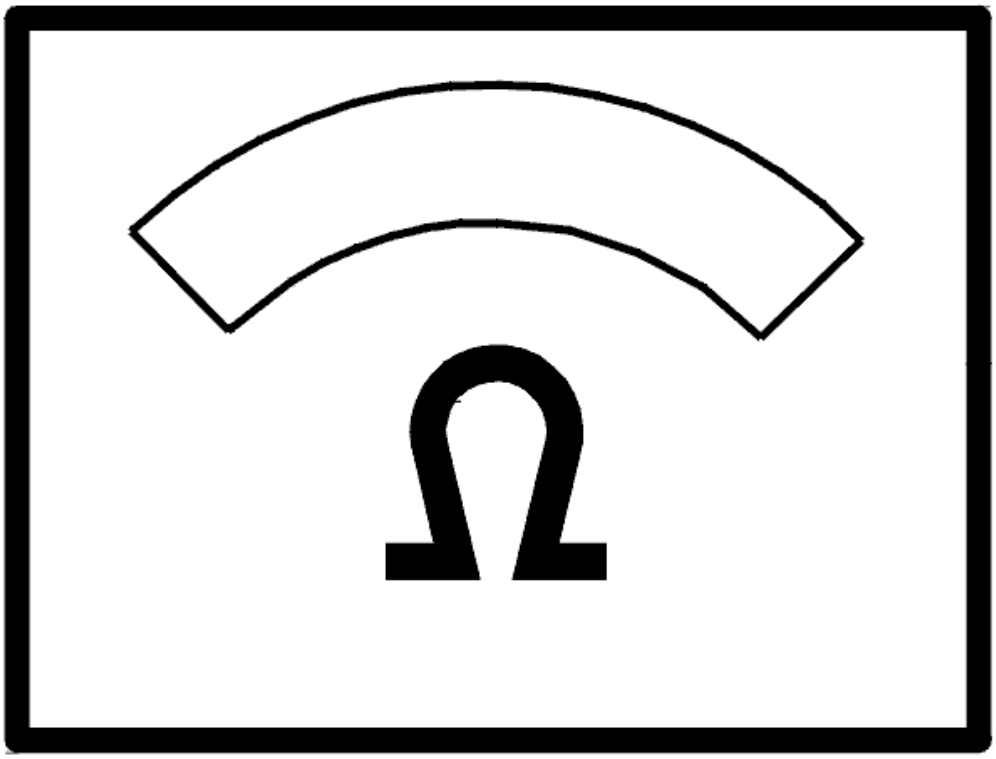

Fig. 131: Identifying Ohms Display
Courtesy of VOLVO CARS CORPORATION

Do the sun roof controls operate?

- **YES**

  Refer to **VERIFICATION**

- **NO**

Refer to **CHECKING FOR OPEN-CIRCUITS AND SHORT-CIRCUITS**

CHECKING FOR OPEN-CIRCUITS AND SHORT-CIRCUITS

Check the cable between the upper electronic module (UEM) terminal #21 and the sun roof module (SRM) terminal #4. Check for a short-circuit to ground. Check for an open-circuit. Check for a short-circuit to supply voltage.

Remedy as necessary.

Other information

- For further information about signals and other values, see **SIGNAL DESCRIPTION, UPPER ELECTRONIC MODULE (UEM)**
- To connect the breakout box, see **CONNECTING THE BREAKOUT BOX**
- To access the sun roof control module, see **CONTROL MODULE, SUN ROOF, REPLACING**
- see **CHECKING WIRING AND TERMINALS** .

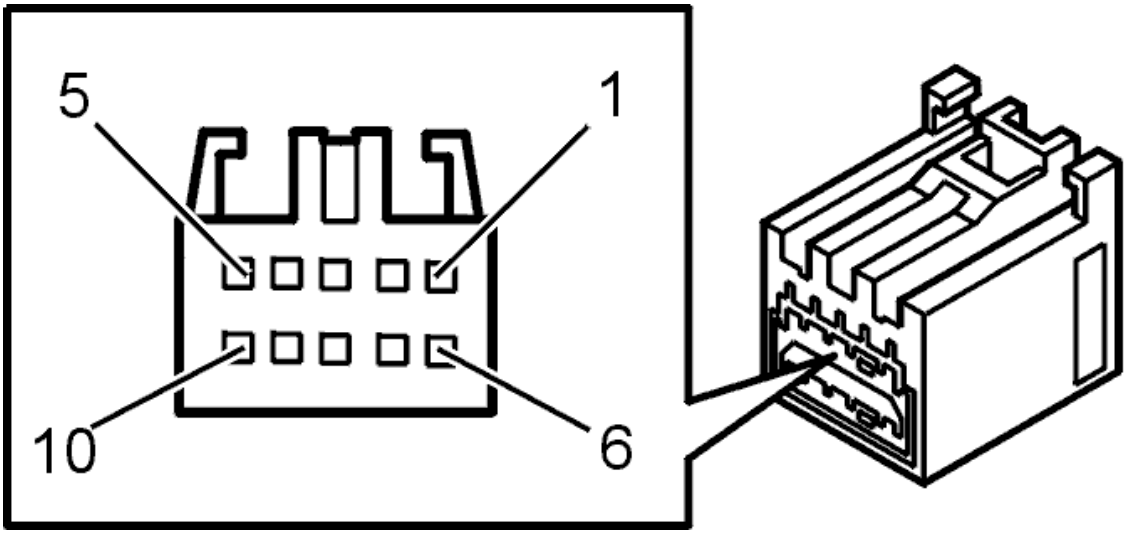

Fig. 132: Identifying Sunroof Module Connector Terminals
Courtesy of VOLVO CARS CORPORATION

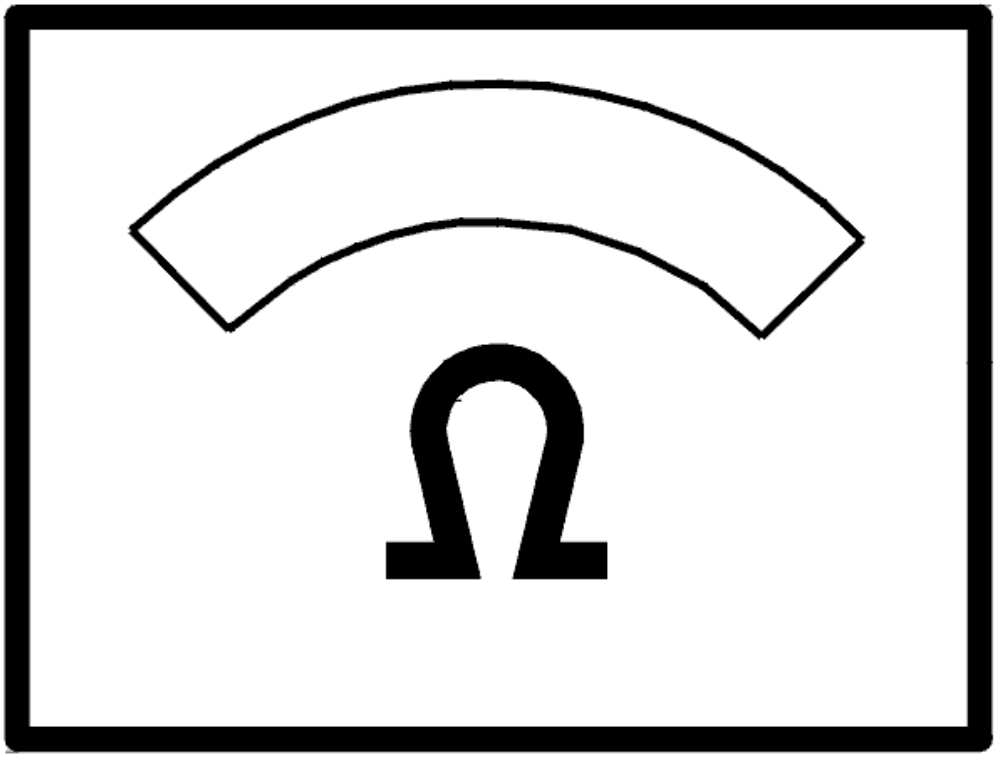

Fig. 133: Identifying Ohms Display
Courtesy of VOLVO CARS CORPORATION

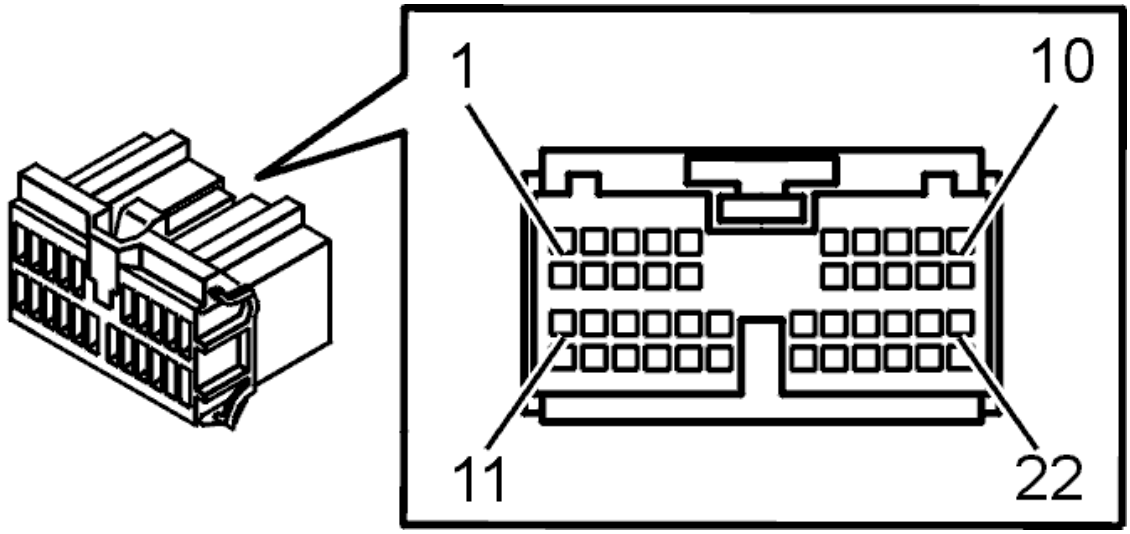

Fig. 134: Identifying Connector Terminals
Courtesy of VOLVO CARS CORPORATION

Was a fault detected?

- **YES**

  Refer to **VERIFICATION**

- **NO**

  FAULT NOT FOUND: Troubleshooting has been completed.

INTERMITTENT FAULT

Check the connectors for the upper electronic module (UEM) and the sun roof module (SRM). Check for contact resistance and oxidation. Check for loose connections.

Check the cable between the upper electronic module (UEM) terminal #21 and the sun roof module (SRM) terminal #4. Check for an intermittent short-circuit to ground. Check for an intermittent open-circuit. Check for an intermittent short-circuit to supply voltage.

Other information:

- For further information about signals and other values, see **SIGNAL DESCRIPTION, UPPER ELECTRONIC MODULE (UEM)**
- To connect the breakout box, see **CONNECTING THE BREAKOUT BOX**
- To access the sun roof control module, see **CONTROL MODULE, SUN ROOF, REPLACING**
- To access the connector for the upper electronic module (UEM), see **UPPER ELECTRONIC MODULE (UEM)/REARVIEW MIRROR, REPLACING**
- see **CHECKING WIRING AND TERMINALS** .

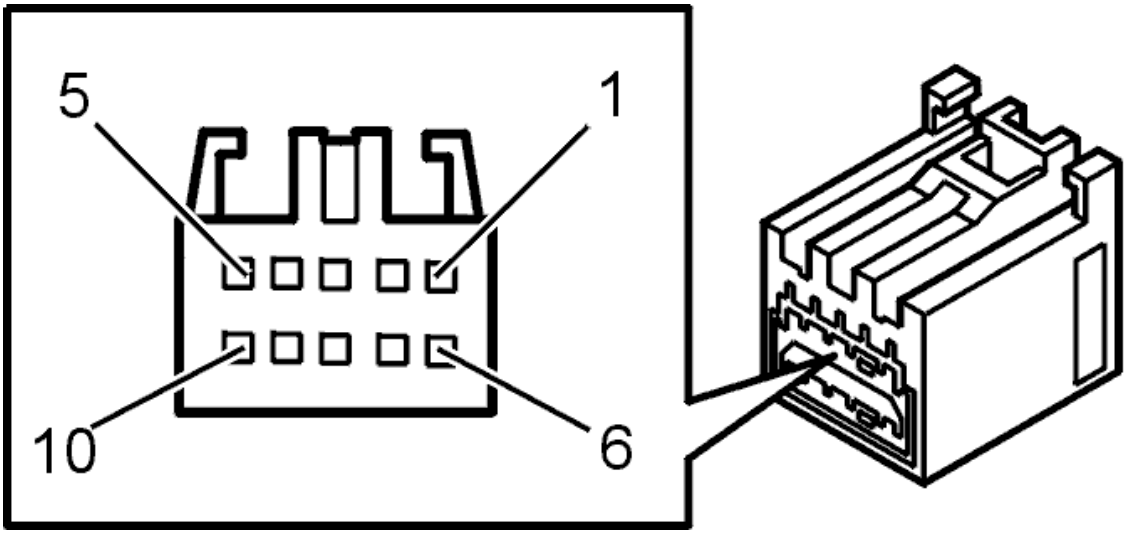

Fig. 135: Identifying Sunroof Module Connector Terminals
Courtesy of VOLVO CARS CORPORATION

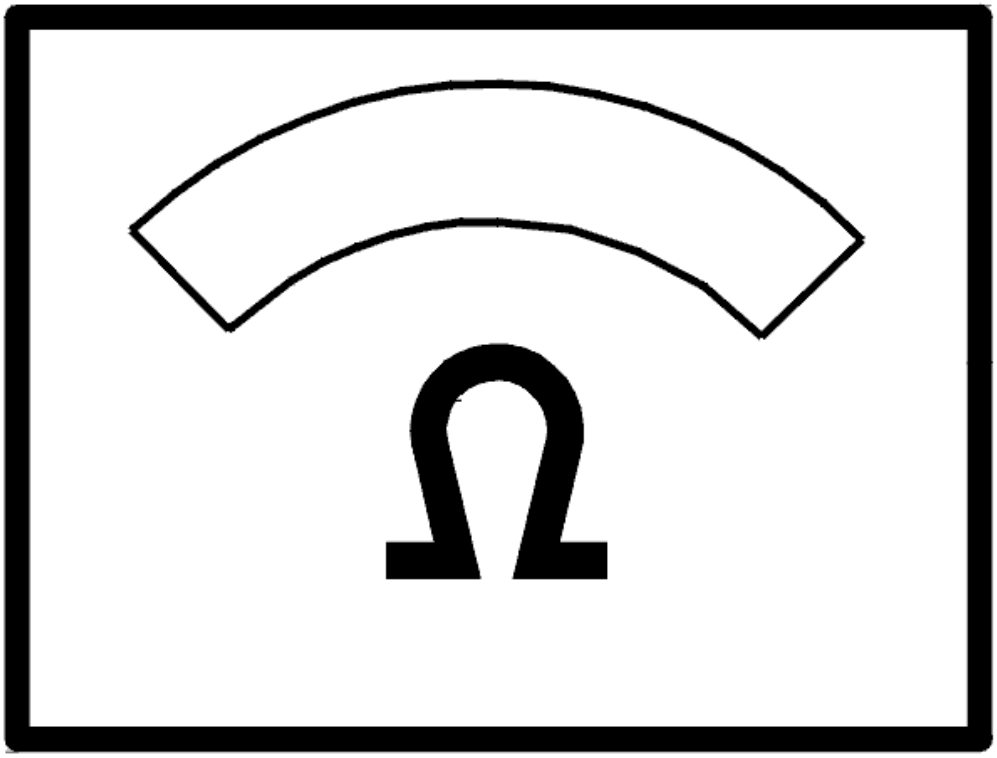

Fig. 136: Identifying Ohms Display
Courtesy of VOLVO CARS CORPORATION

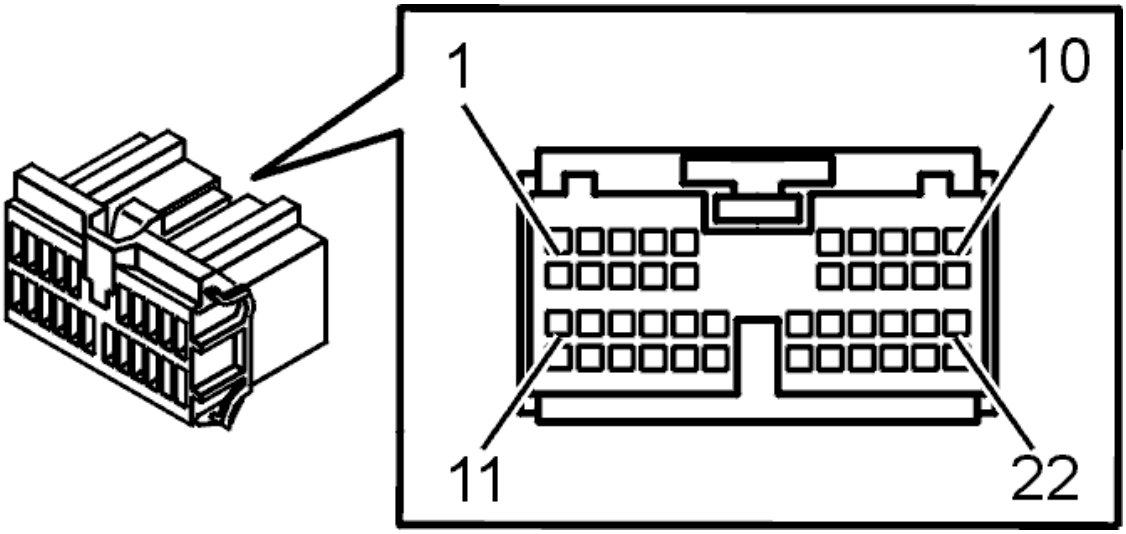

Fig. 137: Identifying Connector Terminals
Courtesy of VOLVO CARS CORPORATION

- **Continue**

  Refer to **INFORMATION**

VERIFICATION

VERIFICATION

HINT: After the repair it is necessary to check that the fault has been rectified.

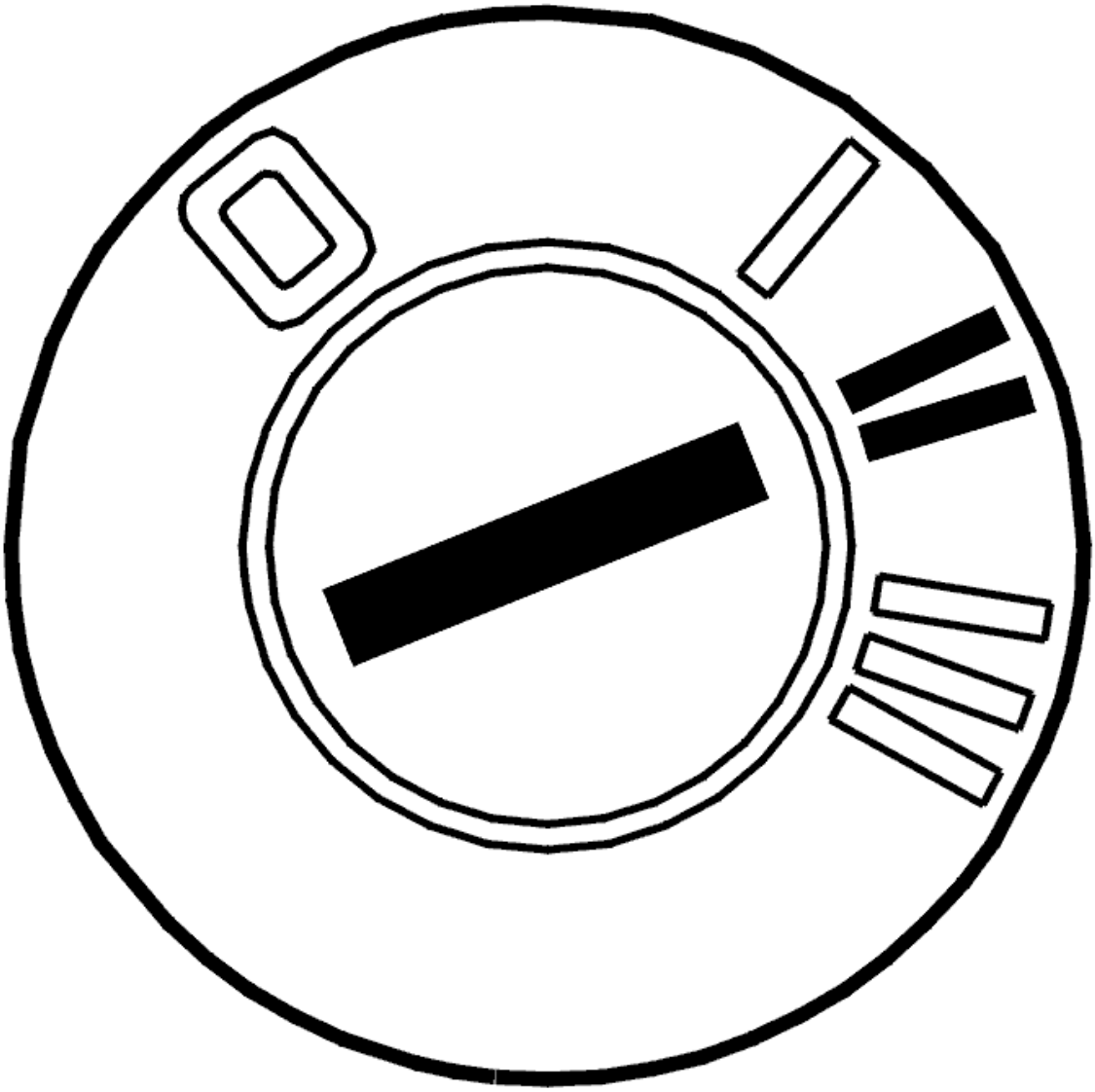

Fig. 138: Identifying Ignition ON
Courtesy of VOLVO CARS CORPORATION

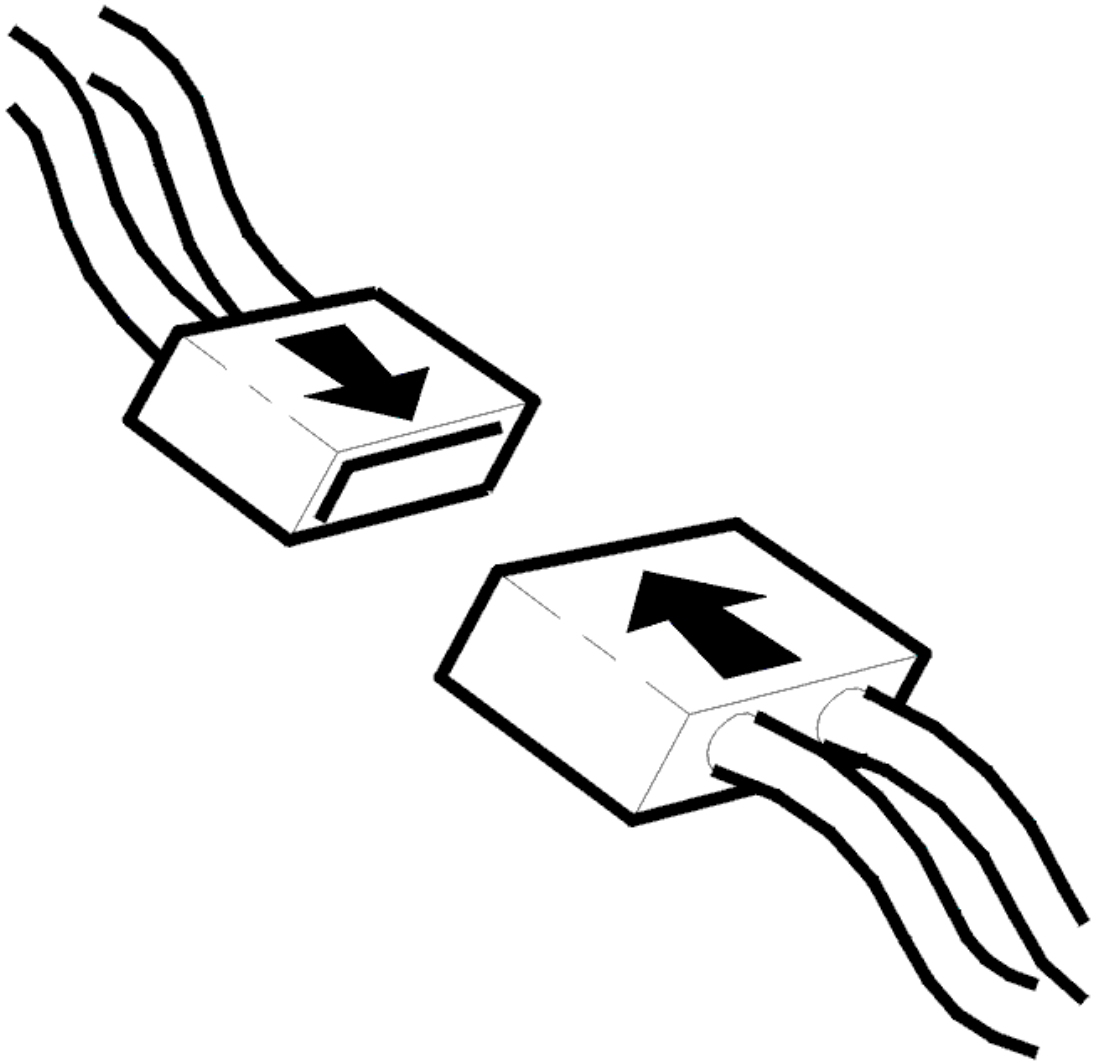

Fig. 139: Identifying Connector(s) Reinstallation
Courtesy of VOLVO CARS CORPORATION

- Ignition off.
- Connect connector, install components etc.
- Ignition on.

  Try to move the sunroof.

Does the sunroof move?

- **YES**

  VERIFIED: Troubleshooting has been completed.

- **NO**

  Refer to **INFORMATION**

INFORMATION

FAULT-TRACING INFORMATION

The fault should have been detected and remedied. As this is not the case fault-tracing has failed.

Exit fault-tracing for this diagnostic trouble code (DTC) or make another attempt.

INFORMATION

FAULT-TRACING INFORMATION

If the fault is intermittent, do not verify fault-tracing if the fault does not recur.

It is possible to view the information again, or leave fault-tracing for this diagnostic trouble code (DTC).

UEM-0005: SUNROOF. COMMUNICATION FAULT (2003)

DIAGNOSTIC TROUBLE CODE INFORMATION

Condition

If the control unit does not get a response from the sunroof after a repeated request, the control unit interprets this as a communication fault and a diagnostic trouble code is set.

Substitute Value

- Nothing.

Possible Source

- Open circuit on UEM_K3 (serial wire between UEM, siren and sunroof).
- UEM_K3 short circuited to ground.
- UEM_K3 short circuited to voltage supply.
- Defective sunroof.

Fault symptom[s]

- Electric sunroof does not work.

COMMUNICATION FAULT

see **COMMUNICATION FAULT**

UEM-0007: READING LAMP. SIGNAL TOO LOW (2003-2012)

DIAGNOSTIC TROUBLE CODE (DTC) INFORMATION UEM-0007

Condition

The upper electronic module (UEM) checks the buttons for the third row reading lamps via a digital input signal. The buttons are connected in parallel and checked via the same signal cable.

Diagnostic trouble code (DTC) UEM-0007 is stored in the control module if the upper electronic module (UEM) registers too low a signal from the buttons in the third row reading lamps.

Diagnostic trouble code (DTC) UEM-0007 can be diagnosed when the ignition is on.

Substitute Value

- None.

Possible Source

- The switch in the third row of reading lamps has jammed in the depressed position
- The signal cable for buttons from the third row of reading lamps is short-circuited to ground.

Fault symptom[s]

- The interior lighting does not work.

SIGNAL TOO LOW

CHECKING FOR A SHORT-CIRCUIT

Check whether the switch for the third row reading lamps has jammed in the depressed position.

Check the signal cable for buttons between the upper electronic module (UEM) terminal #A2 and the switch which is connected to the third row reading lamps. Check for a short-circuit to ground.

Disconnect connectors for the reading lamp module and the upper electronic module (UEM). Measure the resistance over the signal cable between the connectors. If the cable is short-circuited to ground, 0 ohms will be measured.

Remedy as necessary.

Other information:

- To connect the breakout box, see **CONNECTING THE BREAKOUT BOX**

- To access or replace the reading lamp module, see **BULB, READING LAMP, REAR, REPLACING**
- For information about signals, see **SIGNAL DESCRIPTION, UPPER ELECTRONIC MODULE (UEM)**
- To access the connector for the upper electronic module (UEM), see **UPPER ELECTRONIC MODULE (UEM)/REARVIEW MIRROR, REPLACING**
- To fault-trace wiring and terminals, see **CHECKING WIRING AND TERMINALS** .

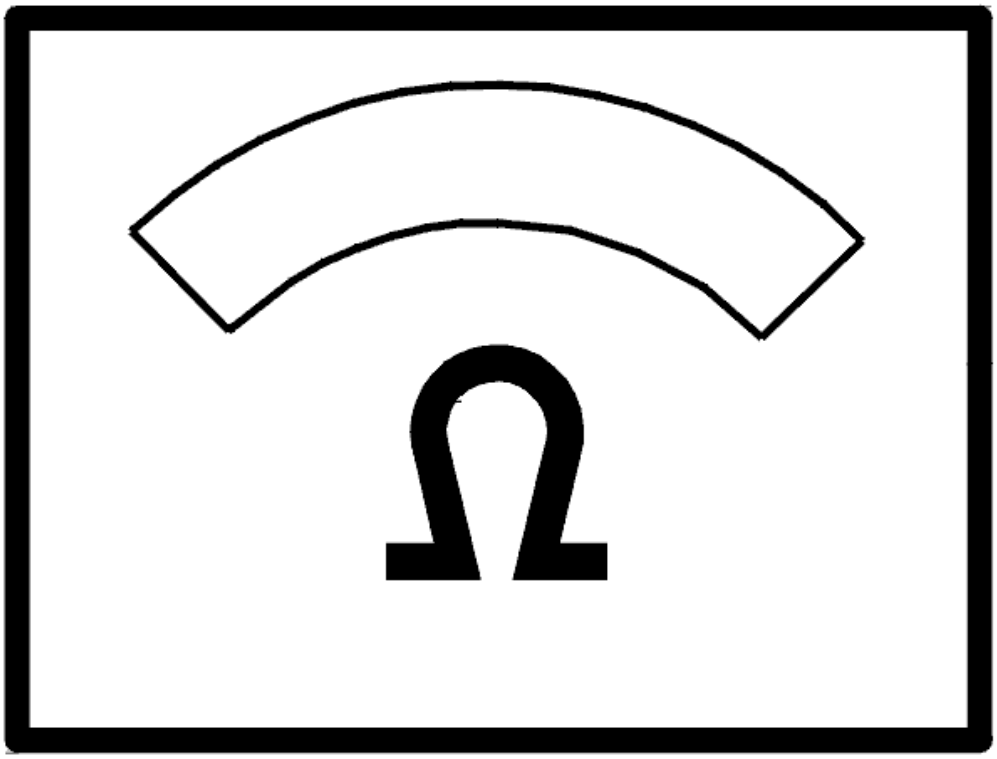

Fig. 140: Identifying Ohms Display
Courtesy of VOLVO CARS CORPORATION

Was a fault detected?

- **YES**

  Refer to **VERIFICATION**

- **NO**

  FAULT NOT FOUND: Troubleshooting has been completed.

VERIFICATION

VERIFICATION

HINT: After carrying out the repair, check that the fault has been remedied.

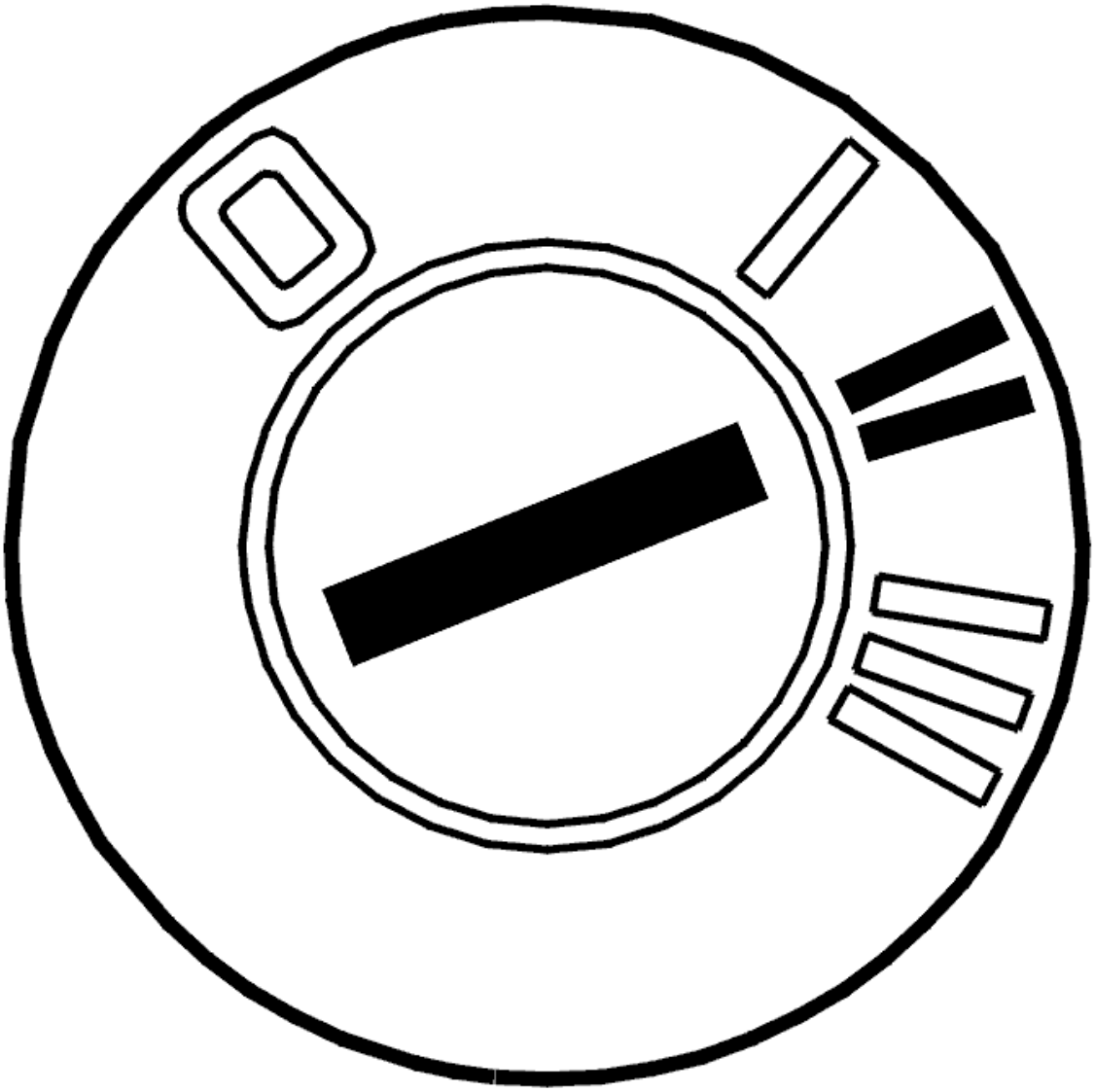

Fig. 141: Identifying Ignition ON
Courtesy of VOLVO CARS CORPORATION

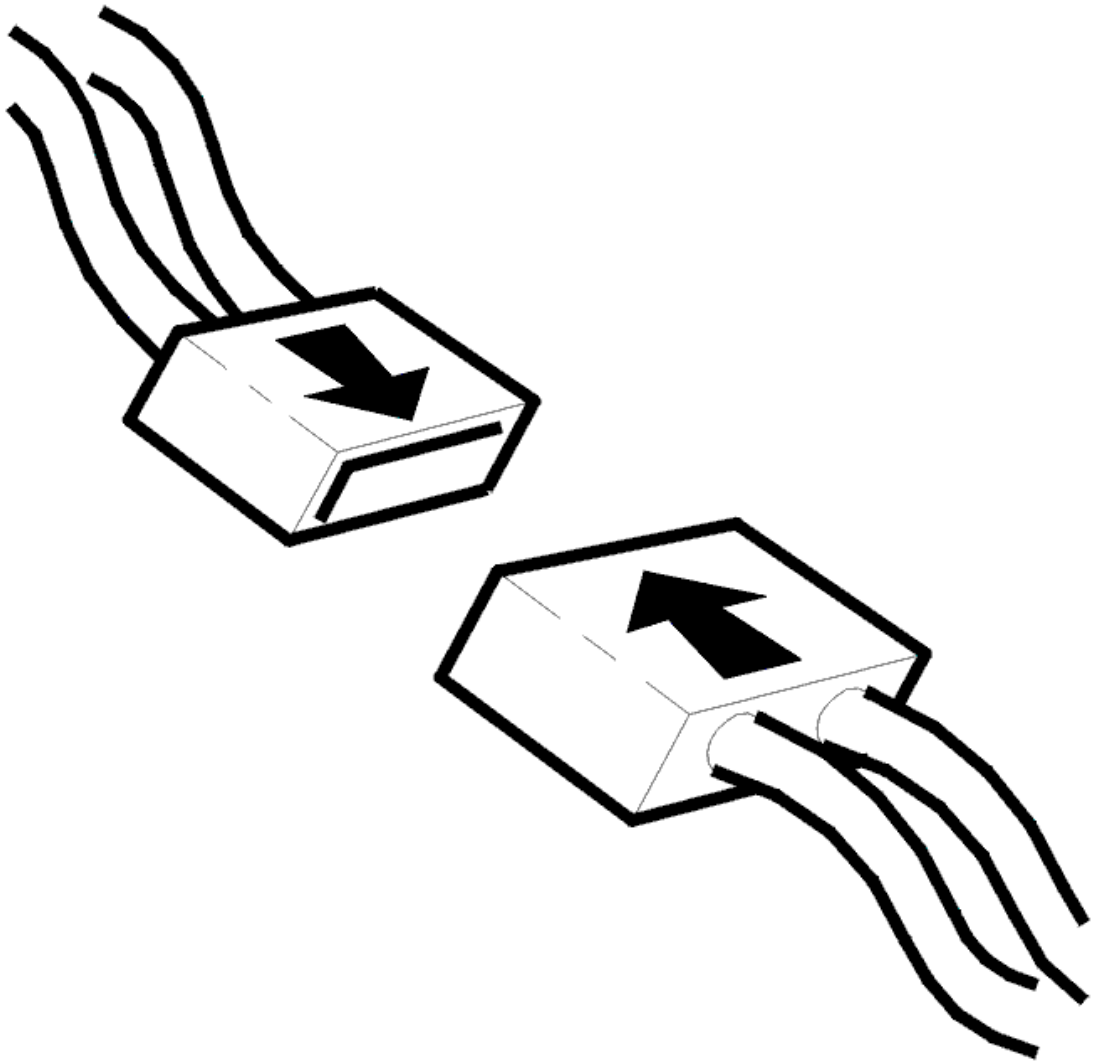

Fig. 142: Identifying Connector(s) Reinstallation
Courtesy of VOLVO CARS CORPORATION

- Ignition off.
- Reinstall the connectors, components etc.
- Ignition on.

  Check that the relevant lamp button and lamp are functioning.

Does the lamp function?

- **YES**

  VERIFIED: Troubleshooting has been completed.

- **NO**

  Refer to **INFORMATION**

INFORMATION

FAULT-TRACING INFORMATION

The fault should have been detected and remedied. As this is not the case fault-tracing has failed.

Exit fault-tracing for this diagnostic trouble code (DTC) or make another attempt.

UEM-0008: READING LAMP. SIGNAL TOO LOW (2003-2012)

DIAGNOSTIC TROUBLE CODE INFORMATION

Condition

If the control unit registers signal too low from the rear right reading lamp, the diagnostic trouble code is displayed.

Substitute Value

- Nothing.

Possible Source

- The switch for the rear right reading lamp has stuck down
- The signal wire for the rear right reading lamp is short circuited to ground.

Fault symptom[s]

- Courtesy lighting does not work.

SIGNAL TOO LOW

CHECKING FOR A SHORT-CIRCUIT

Check that the button has not jammed in its depressed position.

Check the cable from the upper electronic module (UEM) to the rear reading lamp module. Check for a short-circuit to ground.

Remove the connector from the reading lamp module and measure between the connector and the upper electronic module (UEM) as follows.

UEM-0008 Right rear reading lamp

Control module terminal #20 and reading lamp module terminal #6.

UEM-0009 Left rear reading lamp

Control module terminal #20 and reading lamp module terminal #2.

Replace the cable if a fault is found.

Other information:

- For further information about signals and other values, see **SIGNAL DESCRIPTION, UPPER ELECTRONIC MODULE (UEM)**
- To connect the breakout box, see **CONNECTING THE BREAKOUT BOX**
- To access or replace the reading lamp module, see **BULB, READING LAMP, REAR, REPLACING**
- To access the connector for the upper electronic module (UEM), see **UPPER ELECTRONIC MODULE (UEM)/REARVIEW MIRROR, REPLACING**
- see **CHECKING WIRING AND TERMINALS** .

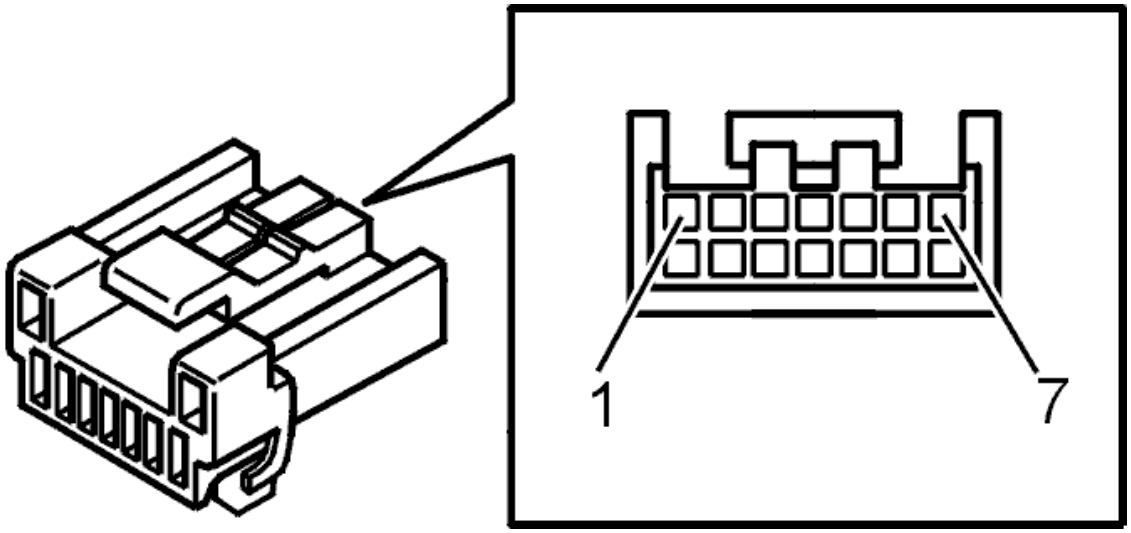

Fig. 143: Identifying Connector Terminals
Courtesy of VOLVO CARS CORPORATION

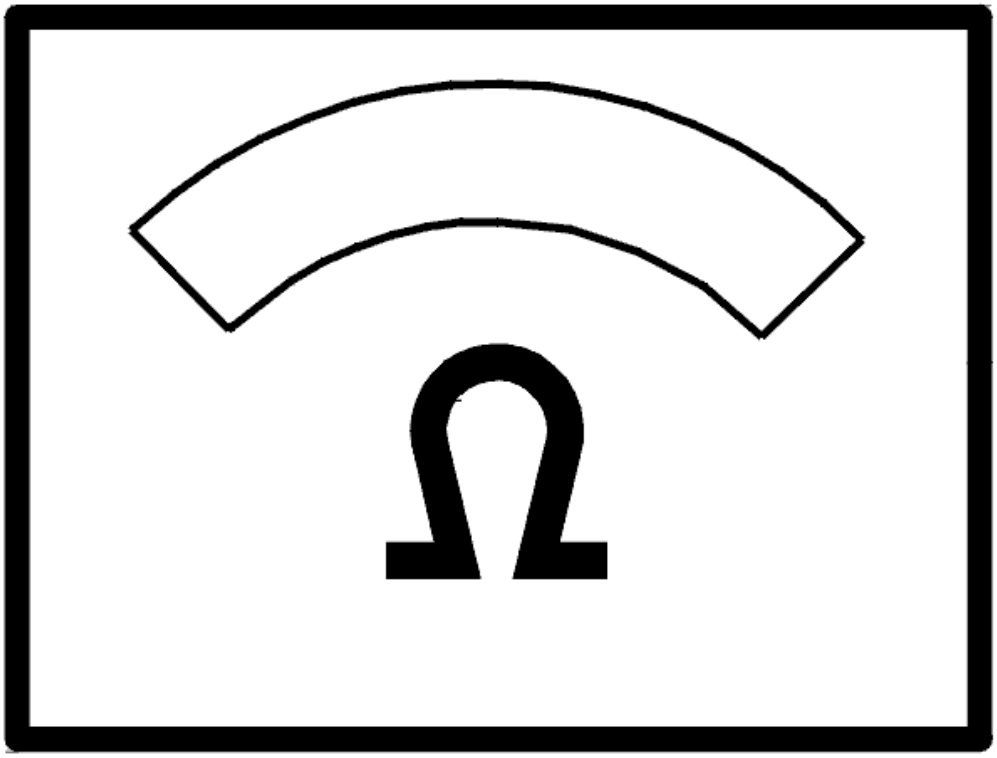

Fig. 144: Identifying Ohms Display
Courtesy of VOLVO CARS CORPORATION

Was a fault detected?

- **YES**

  Refer to **VERIFICATION**

- **NO**

  FAULT NOT FOUND: Troubleshooting has been completed.

VERIFICATION

VERIFICATION

HINT: After carrying out the repair, check that the fault has been remedied.

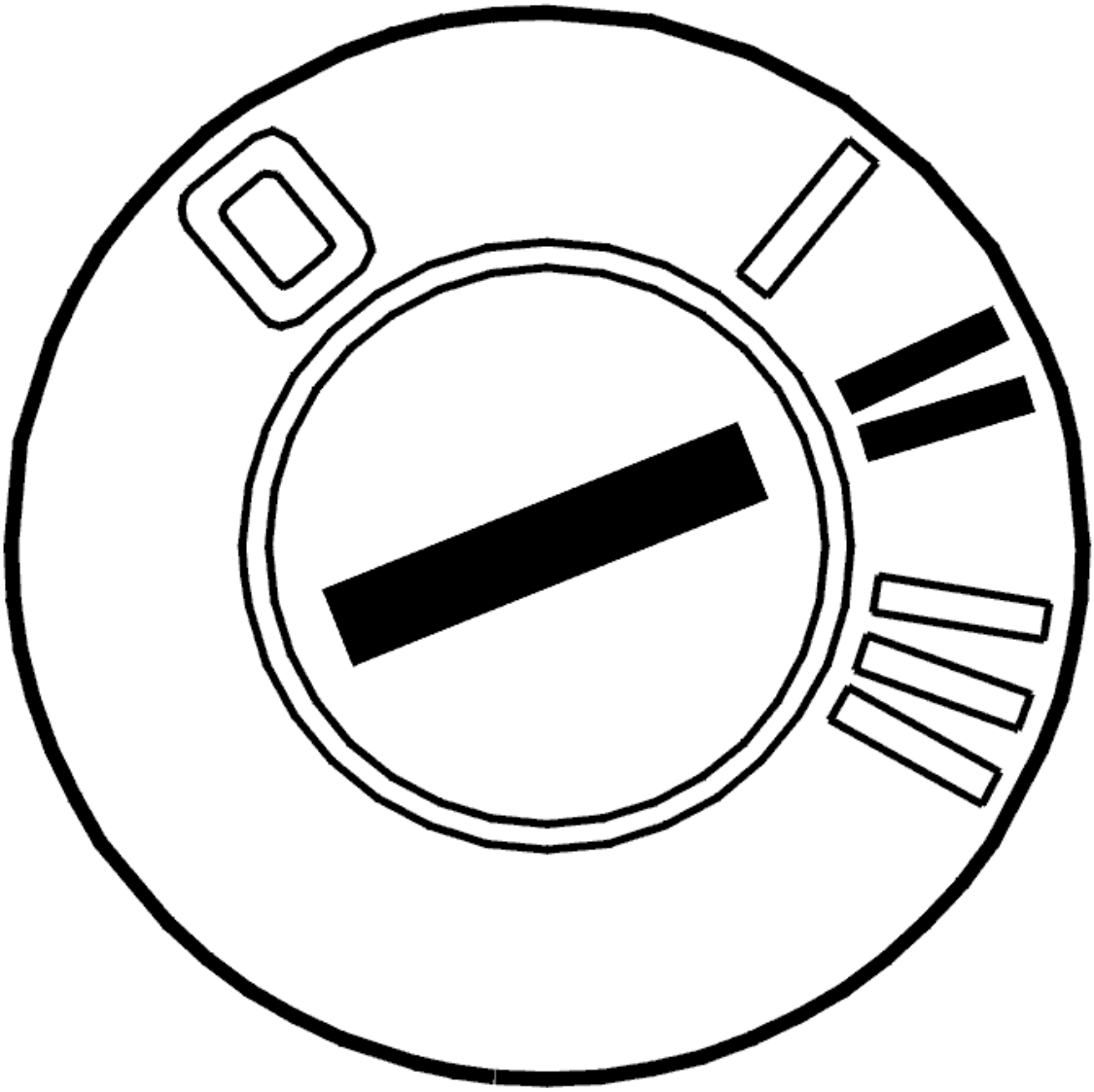

Fig. 145: Identifying Ignition ON
Courtesy of VOLVO CARS CORPORATION

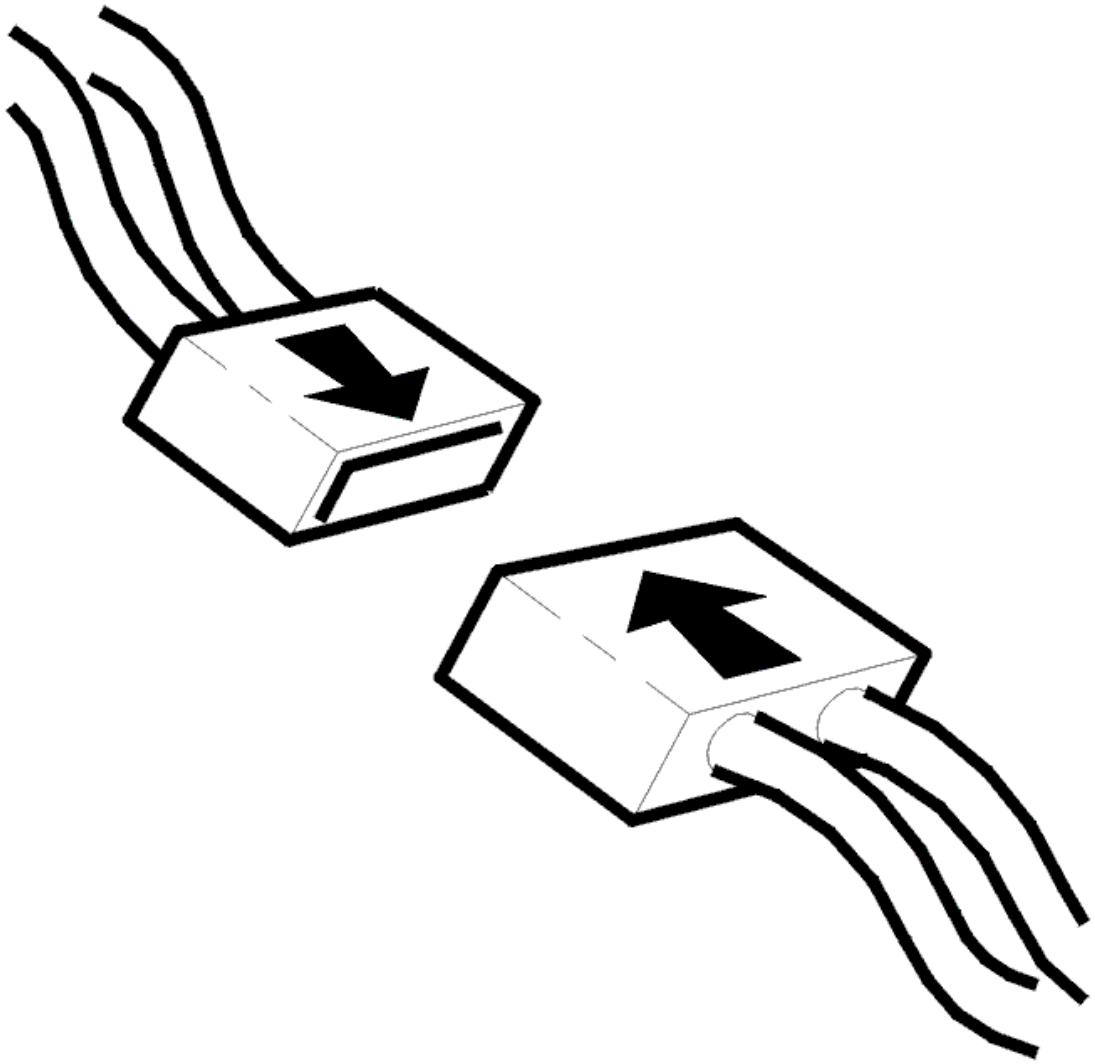

Fig. 146: Identifying Connector(s) Reinstallation
Courtesy of VOLVO CARS CORPORATION

- Ignition off.
- Reinstall the connectors, components etc.
- Ignition on.

  Check that the relevant lamp button and lamp are functioning.

Does the lamp function?

- **YES**

  VERIFIED: Troubleshooting has been completed.

- **NO**

  Refer to **INFORMATION**

INFORMATION

FAULT-TRACING INFORMATION

The fault should have been detected and remedied. As this is not the case fault-tracing has failed.

Exit fault-tracing for this diagnostic trouble code (DTC) or make another attempt.

UEM-0009: READING LAMP. SIGNAL TOO LOW (2003-2012)

DIAGNOSTIC TROUBLE CODE INFORMATION

Condition

If the control unit registers signal too low from the rear left reading lamp, the diagnostic trouble code is displayed.

Substitute Value

- Nothing.

Possible Source

- The switch for the rear left reading lamp has stuck down
- The signal wire for the rear left reading lamp is short circuited to ground.

Fault symptom[s]

- Courtesy lighting does not work.

SIGNAL TOO LOW

see **SIGNAL TOO LOW**

UEM-000A: MOVEMENT SENSOR. COMMUNICATION FAULT (2012)

DIAGNOSTIC TROUBLE CODE INFORMATION

Condition

If the upper electronic module registers that there is no signal on the mass movement sensor supply wire when the alarm is switched off and ignition in position l or ll, diagnostic trouble code UEM-000A is displayed.

Substitute Value

- Nothing.

Possible Source

- A faulty contact at sensor side and/or at control unit side.
- Open circuit on level sensor voltage supply.
- Faulty sensor.

Fault symptom[s]

- No alarm from sensor.

COMMUNICATION FAULT

CHECKING WIRING AND CONNECTORS

Check the voltage supply cable between the upper electronic module (UEM) connector terminal #10 and movement sensor (IMS) connector terminal #1. Check for an open-circuit. Check for an intermittent open-circuit.

Also check both connectors for contact resistance and oxidation.

If no fault was found, try a new sensor.

Other information:

- For further information about signals and other values, see **SIGNAL DESCRIPTION, UPPER ELECTRONIC MODULE (UEM)**
- To connect the breakout box, see **CONNECTING THE BREAKOUT BOX**
- see **REAR INTRUSION SENSOR**
- see **CHECKING WIRING AND TERMINALS** .

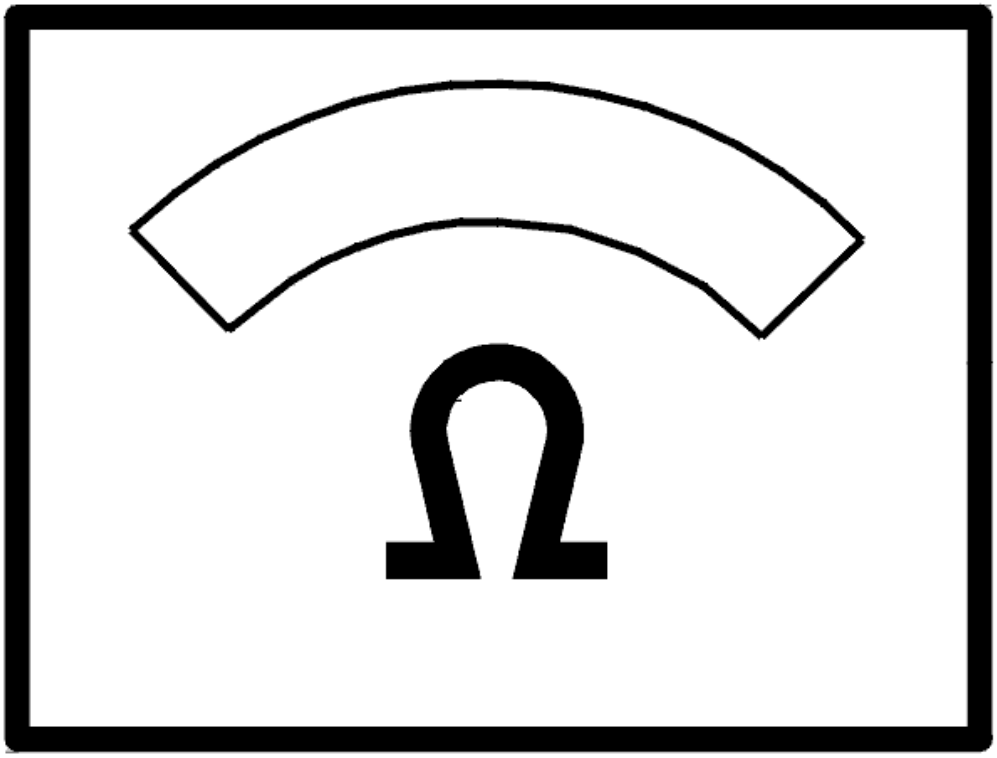

Fig. 147: Identifying Ohms Display
Courtesy of VOLVO CARS CORPORATION

- **Continue**

  Refer to **VERIFICATION**

VERIFICATION

VERIFICATION

HINT: After carrying out the repair, check that the fault has been remedied.

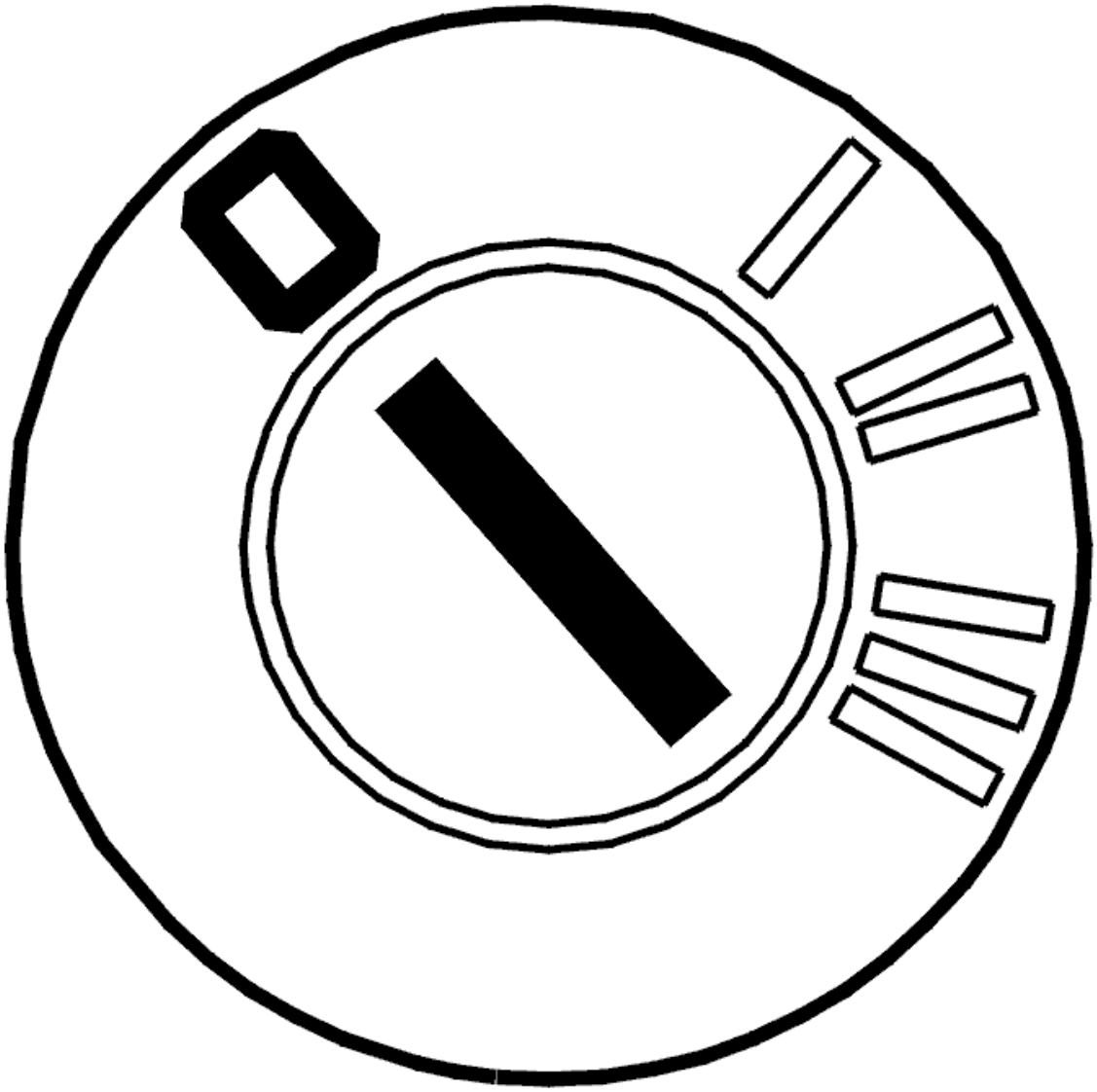

Fig. 148: Identifying Ignition OFF
Courtesy of VOLVO CARS CORPORATION

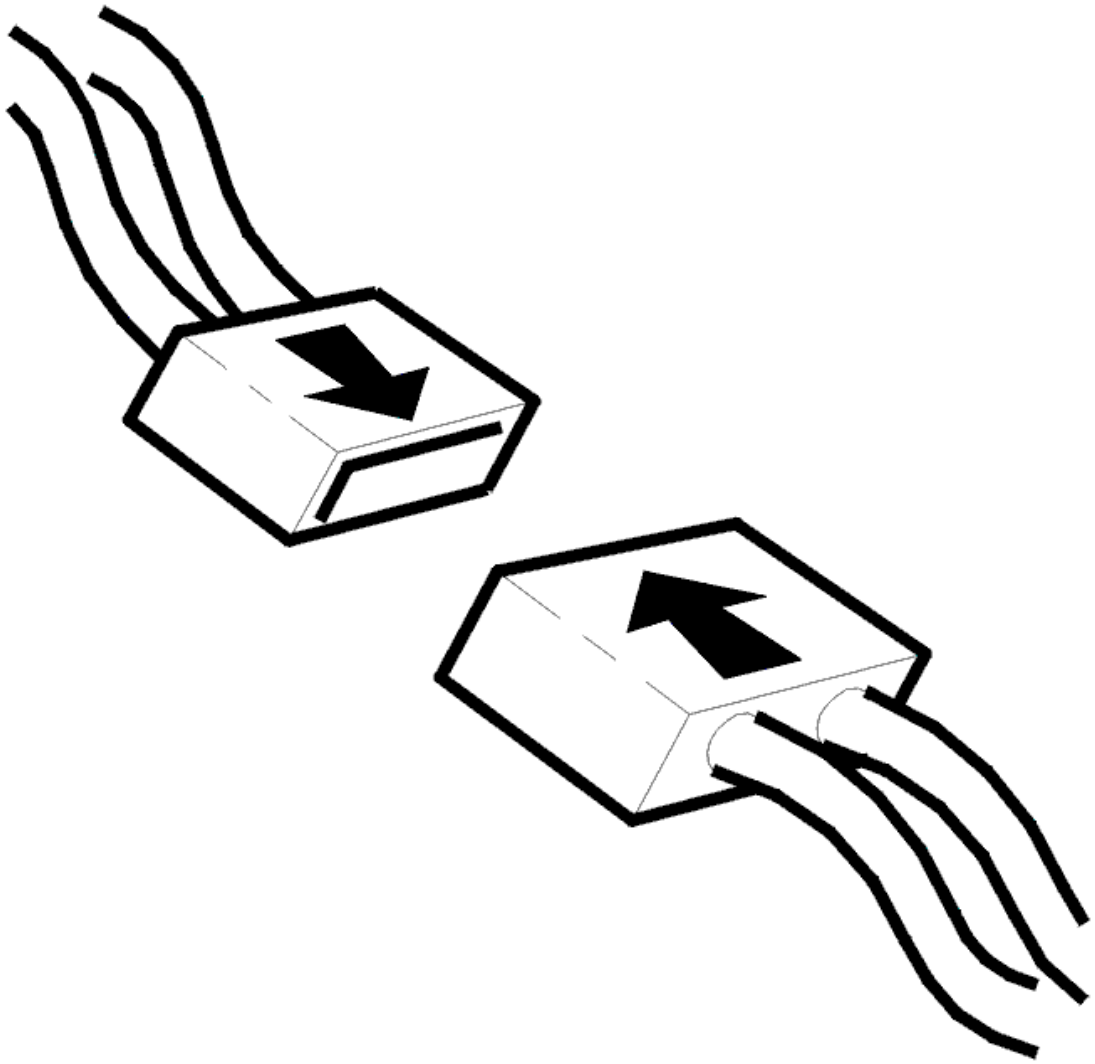

Fig. 149: Identifying Connector(s) Reinstallation
Courtesy of VOLVO CARS CORPORATION

- Ignition off
- Reinstall the connectors, components etc.

  Open the driver's door window. Lock the car using the remote control.

  Wait 25 seconds until the alarm is active. Trigger the alarm by reaching into the car and unlocking the door from the inside using the internal door handle.

Is the function OK?

- **YES**

  VERIFIED: Troubleshooting has been completed.

- **NO**

  Refer to **INFORMATION**

INFORMATION

FAULT-TRACING INFORMATION

The fault should have been detected and remedied. As this is not the case fault-tracing has failed.

Exit fault-tracing for this diagnostic trouble code (DTC) or make another attempt.

UEM-000A: MOVEMENT SENSOR. COMMUNICATION FAULT (2003-2011)

DIAGNOSTIC TROUBLE CODE INFORMATION

Condition

If the upper electronic module registers that there is no signal on the mass movement sensor supply wire when the alarm is switched off and ignition in position l or ll, diagnostic trouble code UEM-000A is displayed.

Substitute Value

- Nothing.

Possible Source

- A faulty contact at sensor side and/or at control unit side.
- Open circuit on level sensor voltage supply.
- Faulty sensor.

Fault symptom[s]

- No alarm from sensor.

COMMUNICATION FAULT

CHECKING WIRING AND CONNECTORS

Check the power supply cable between upper electronic module (UEM) connector terminal #10 and movement sensor connector terminal #1. Check for an intermittent open-circuit. Check for an open-circuit.

Also check both connectors for contact resistance and oxidation.

If no fault was found, try a new sensor.

Other information:

- For further information about signals and other values, see **SIGNAL DESCRIPTION, UPPER ELECTRONIC MODULE (UEM)**
- To connect the breakout box, see **CONNECTING THE BREAKOUT BOX**
- To replace the movement/rear level sensor, see **MASS MOVEMENT SENSOR MODULE (MMS) REAR, REPLACING**
- To replace the movement/front level sensor, see **MASS MOVEMENT SENSOR MODULE (MMS) FRONT, REPLACING**
- see **CHECKING WIRING AND TERMINALS** .

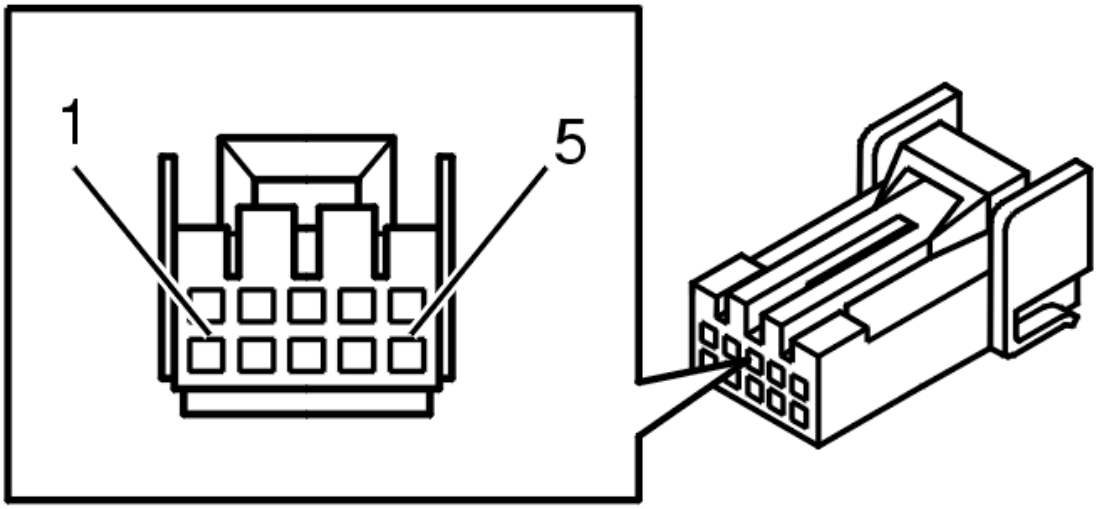

Fig. 150: Identifying 10 Pin Connector Terminals
Courtesy of VOLVO CARS CORPORATION

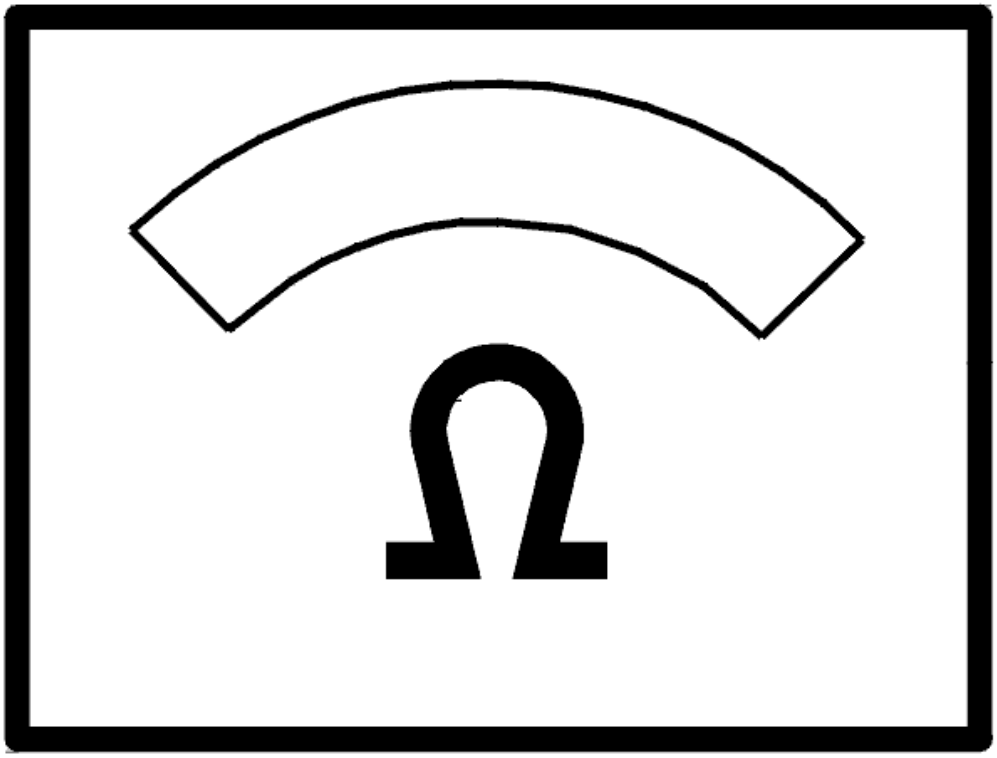

Fig. 151: Identifying Ohms Display
Courtesy of VOLVO CARS CORPORATION

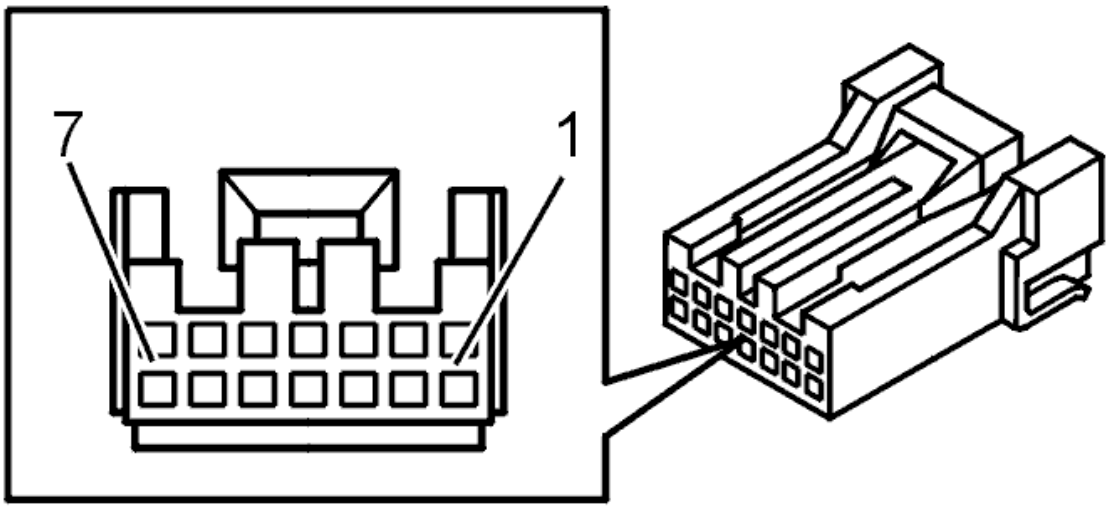

Fig. 152: Identifying Connector Terminals
Courtesy of VOLVO CARS CORPORATION

- **Continue**

  Refer to **VERIFICATION**

VERIFICATION

VERIFICATION

HINT: After carrying out the repair, check that the fault has been remedied.

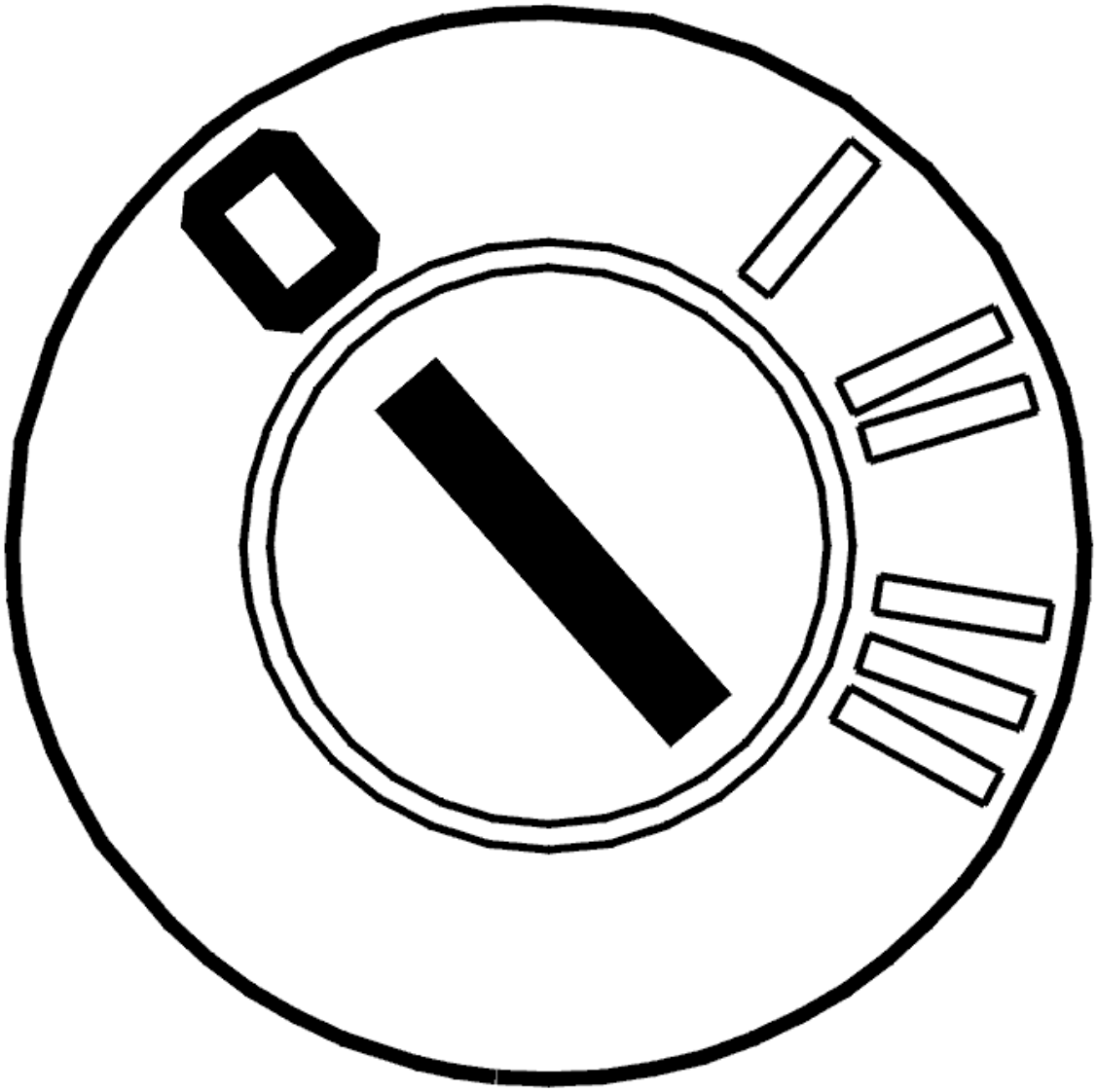

Fig. 153: Identifying Ignition OFF
Courtesy of VOLVO CARS CORPORATION

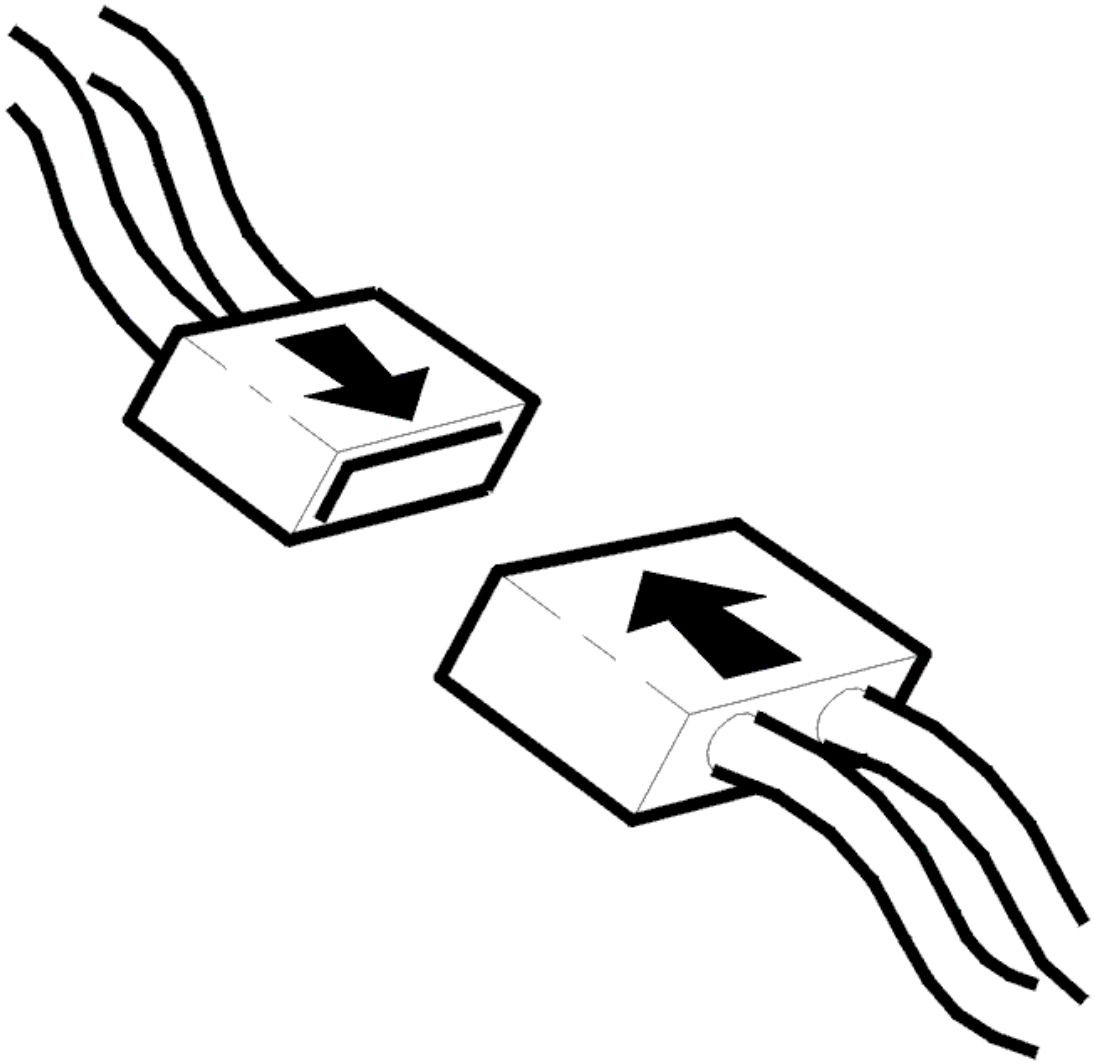

Fig. 154: Identifying Connector(s) Reinstallation
Courtesy of VOLVO CARS CORPORATION

- Ignition off
- Reinstall the connectors, components etc.

  Open the driver's door window. Lock the car using the remote control.

  Wait 25 seconds until the alarm is active. Trigger the alarm by reaching into the car and unlocking the door from the inside using the internal door handle.

Is the function OK?

- **YES**

  VERIFIED: Troubleshooting has been completed.

- **NO**

  Refer to **INFORMATION**

INFORMATION

FAULT-TRACING INFORMATION

The fault should have been detected and remedied. As this is not the case fault-tracing has failed.

Exit fault-tracing for this diagnostic trouble code (DTC) or make another attempt.

DIAGNOSTIC TROUBLE CODE INFORMATION

see **DIAGNOSTIC TROUBLE CODE INFORMATION**

UEM-000B: MOVEMENT SENSOR. SIGNAL TOO LOW (2012)

DIAGNOSTIC TROUBLE CODE INFORMATION

Condition

If the upper electronic module registers too low a signal for the mass movement sensor supply wire when the alarm is set, diagnostic trouble code UEM-000B is displayed.

Substitute Value

- Nothing.

Possible Source

- Sensor power supply short circuited to ground
- Faulty sensor.

Fault symptom[s]

- No alarm from sensor.

SIGNAL TOO LOW

CHECKING WIRING AND CONNECTORS

Check the supply cable between the Upper electronic module (UEM) connector #10 and movement sensor (IMS) connector #1 for a short-circuit to ground and intermittent short-circuit to ground.

If no fault was found, try a new sensor.

Other information:

- For further information about signals and other values, see **SIGNAL DESCRIPTION, UPPER ELECTRONIC MODULE (UEM)**
- To connect the breakout box, see **CONNECTING THE BREAKOUT BOX**
- see **REAR INTRUSION SENSOR**
- see **CHECKING WIRING AND TERMINALS** .

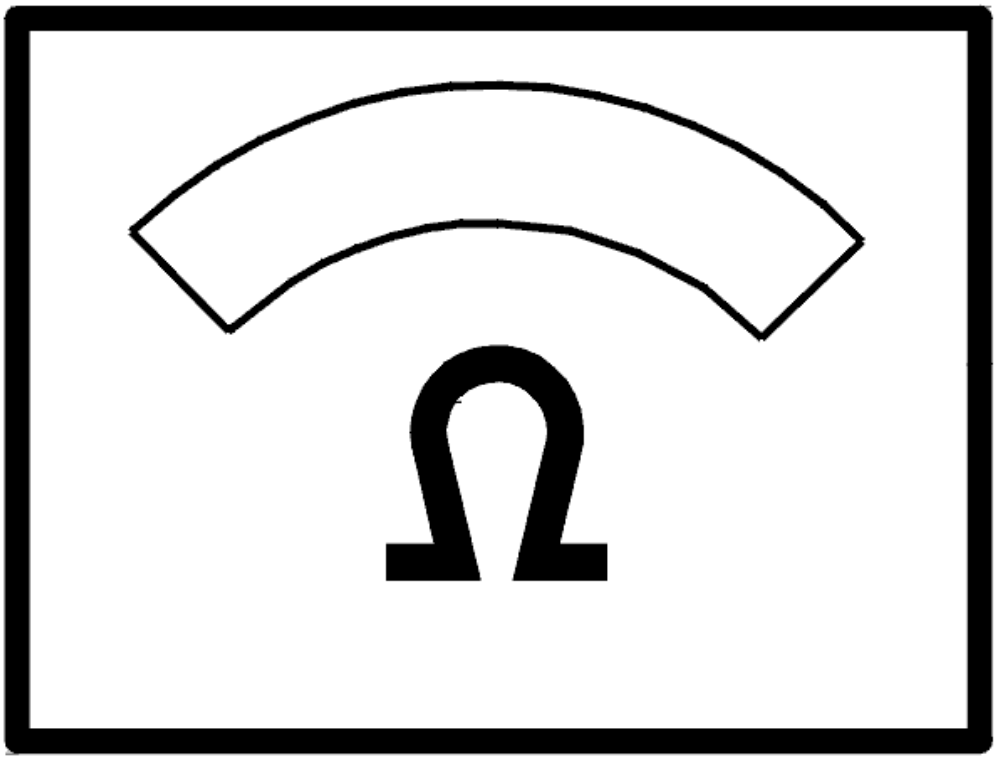

Fig. 155: Identifying Ohms Display
Courtesy of VOLVO CARS CORPORATION

- **Continue**

  Refer to **VERIFICATION**

VERIFICATION

VERIFICATION

HINT: After carrying out the repair, check that the fault has been remedied.

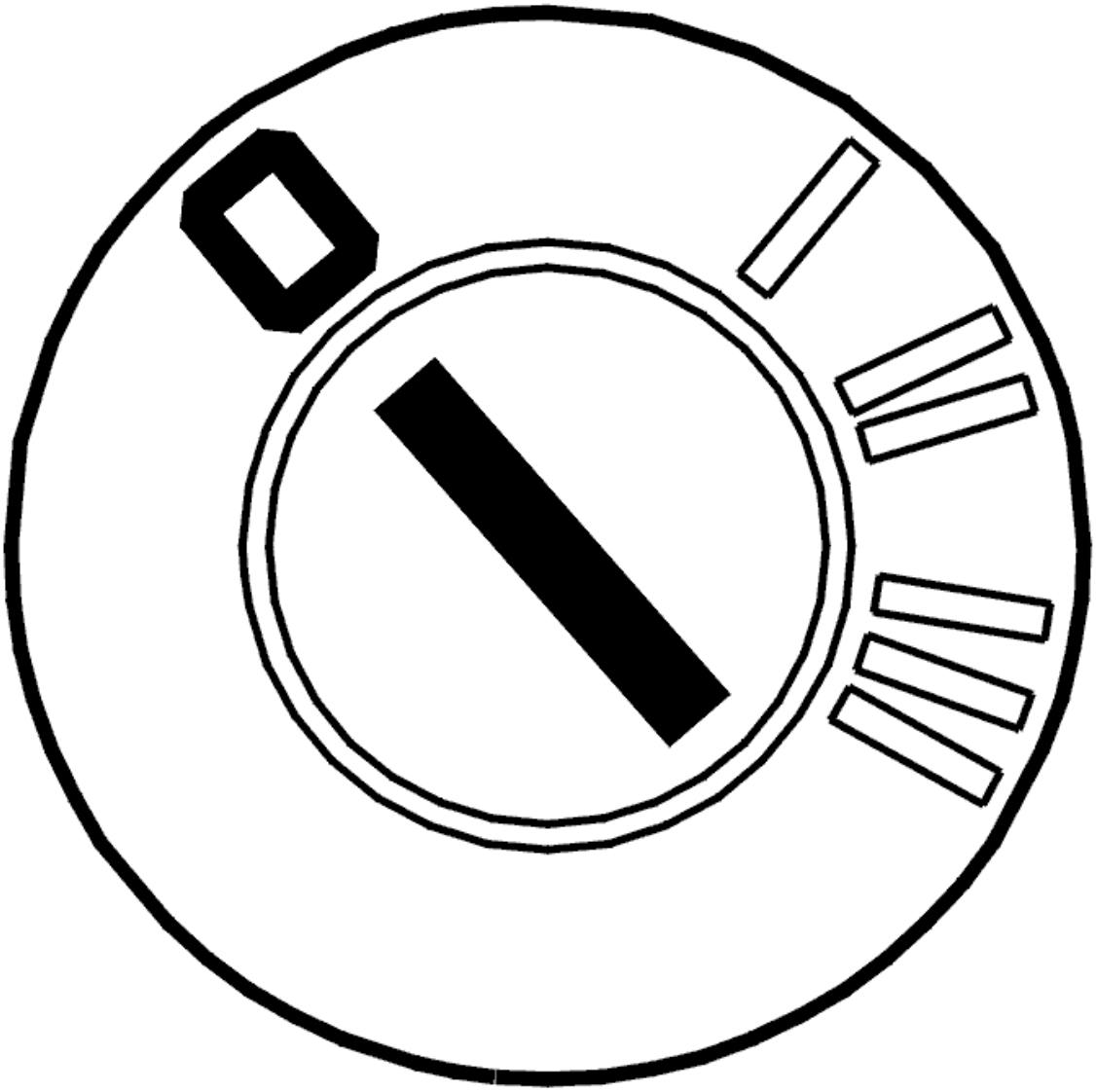

Fig. 156: Identifying Ignition OFF
Courtesy of VOLVO CARS CORPORATION

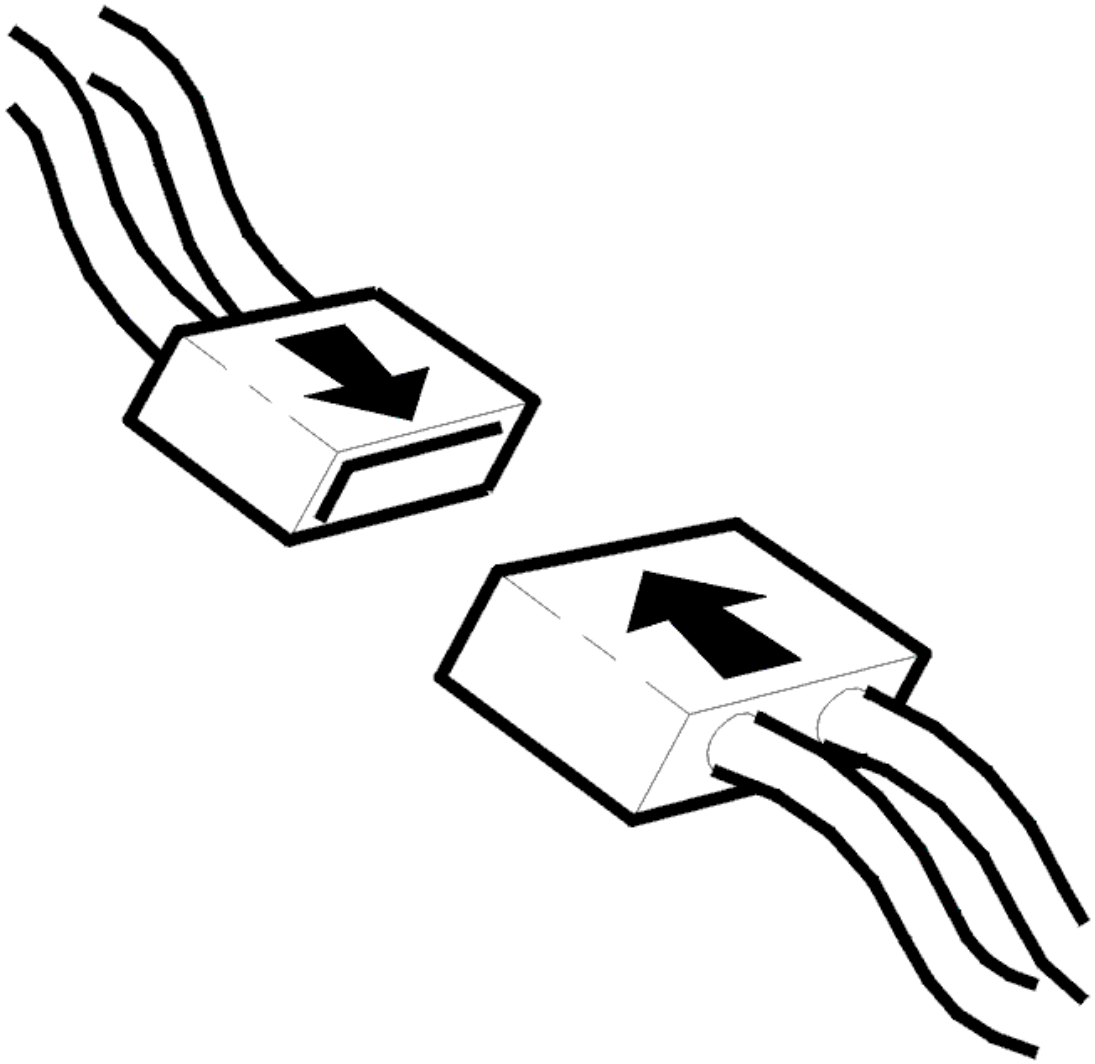

Fig. 157: Identifying Connector(s) Reinstallation
Courtesy of VOLVO CARS CORPORATION

- Ignition off
- Reinstall the connectors, components etc.

  Open the driver's door window. Lock the car using the remote control.

  Wait 25 seconds until the alarm is active. Trigger the alarm by reaching into the car and unlocking the door from the inside using the internal door handle.

Is the function OK?

- **YES**

  VERIFIED: Troubleshooting has been completed.

- **NO**

  Refer to **INFORMATION**

INFORMATION

FAULT-TRACING INFORMATION

The fault should have been detected and remedied. As this is not the case fault-tracing has failed.

Exit fault-tracing for this diagnostic trouble code (DTC) or make another attempt.

UEM-000B: MOVEMENT SENSOR. SIGNAL TOO LOW (2003-2011)

DIAGNOSTIC TROUBLE CODE INFORMATION

see **DIAGNOSTIC TROUBLE CODE INFORMATION**

SIGNAL TOO LOW

CHECKING WIRING AND CONNECTORS

Check the power supply cable between upper electronic module (UEM) connector terminal #10 and mass movement sensor connector terminal #1. Check for a short-circuit to ground. Check for an intermittent short-circuit to ground.

If no fault was found, try a new sensor.

Other information:

- For further information about signals and other values, see **SIGNAL DESCRIPTION, UPPER ELECTRONIC MODULE (UEM)**
- To connect the breakout box, see **CONNECTING THE BREAKOUT BOX**
- To replace the movement/rear level sensor, see **MASS MOVEMENT SENSOR MODULE (MMS) REAR, REPLACING**
- To replace the movement/front level sensor, see **MASS MOVEMENT SENSOR MODULE (MMS) FRONT, REPLACING**
- see **CHECKING WIRING AND TERMINALS** .

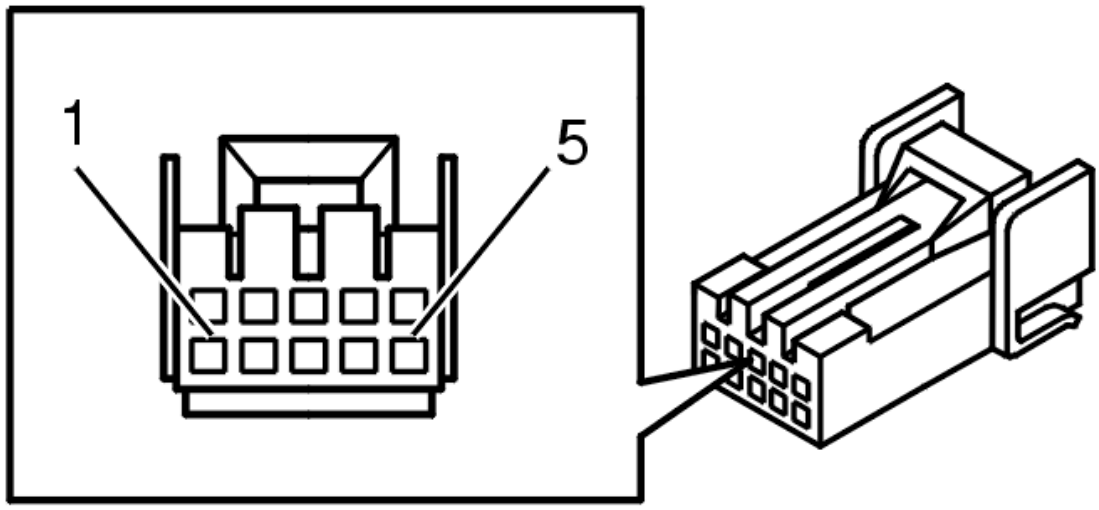

Fig. 158: Identifying 10 Pin Connector Terminals
Courtesy of VOLVO CARS CORPORATION

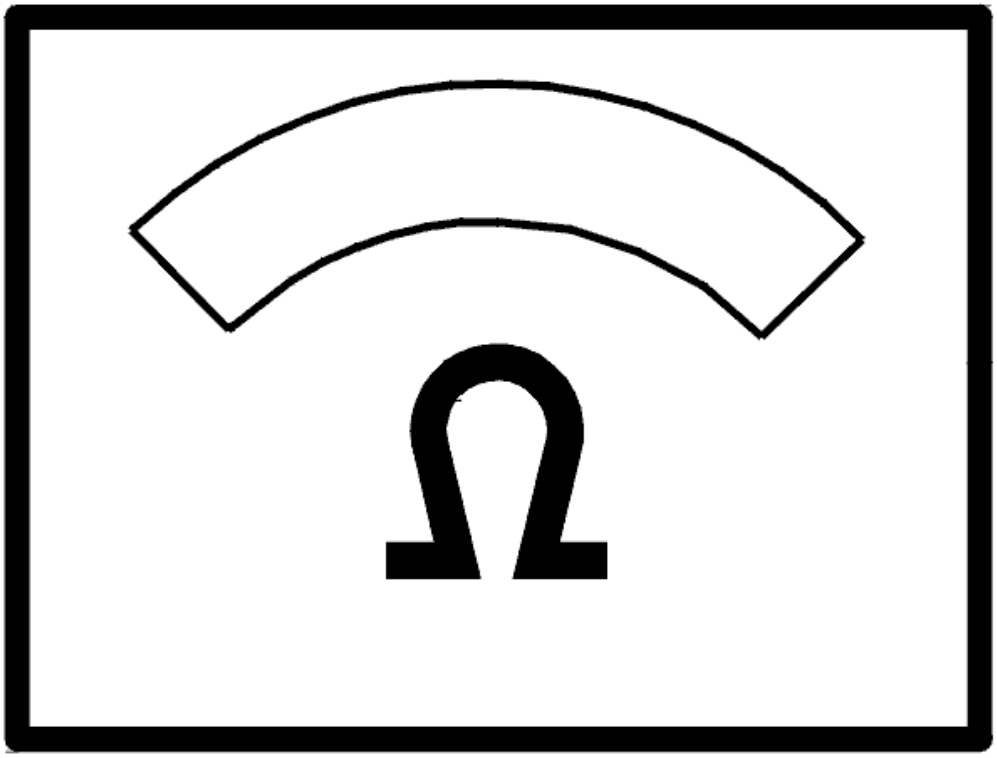

Fig. 159: Identifying Ohms Display
Courtesy of VOLVO CARS CORPORATION

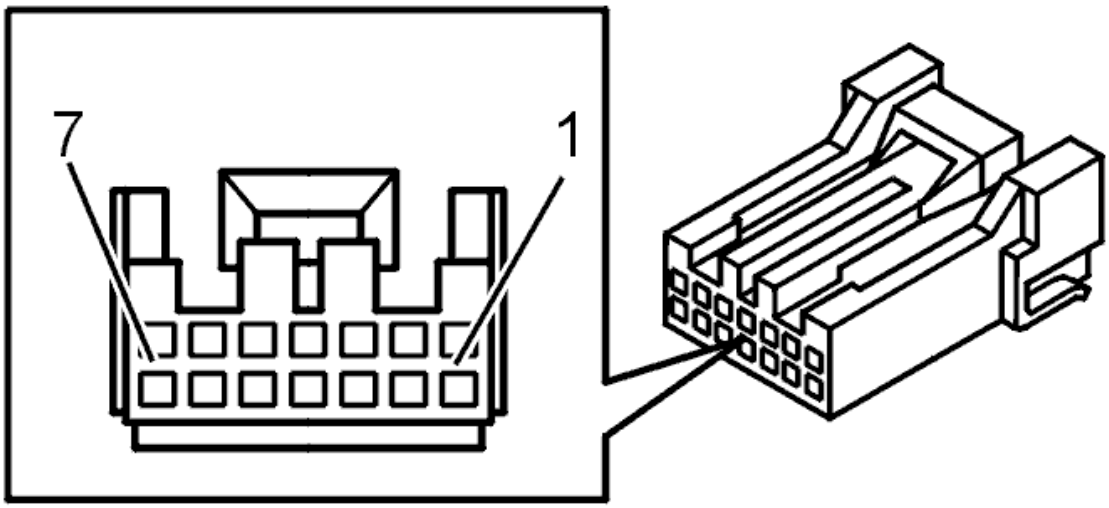

Fig. 160: Identifying Connector Terminals
Courtesy of VOLVO CARS CORPORATION

- **Continue**

  Refer to **VERIFICATION**

VERIFICATION

VERIFICATION

HINT: After carrying out the repair, check that the fault has been remedied.

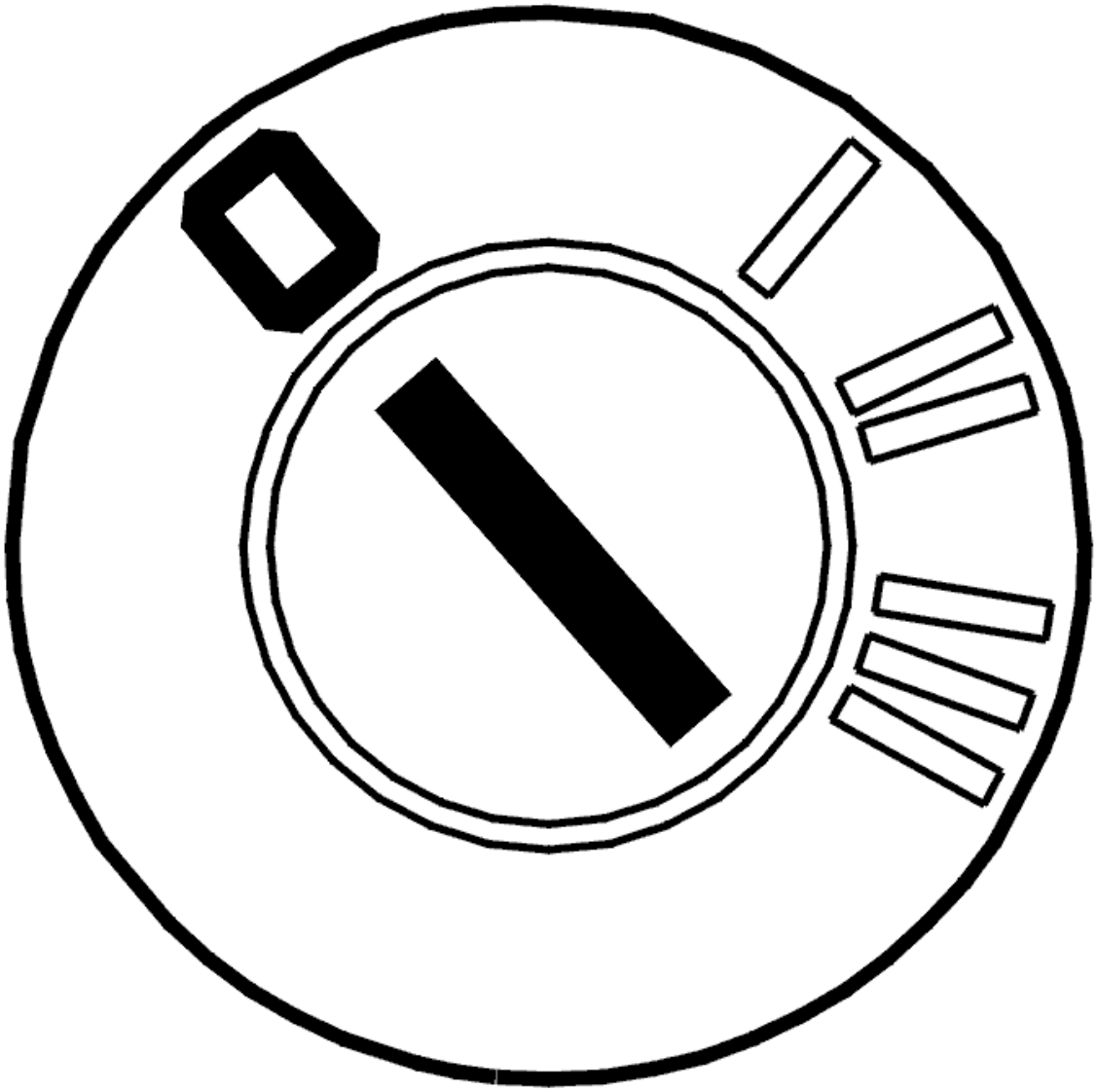

Fig. 161: Identifying Ignition OFF
Courtesy of VOLVO CARS CORPORATION

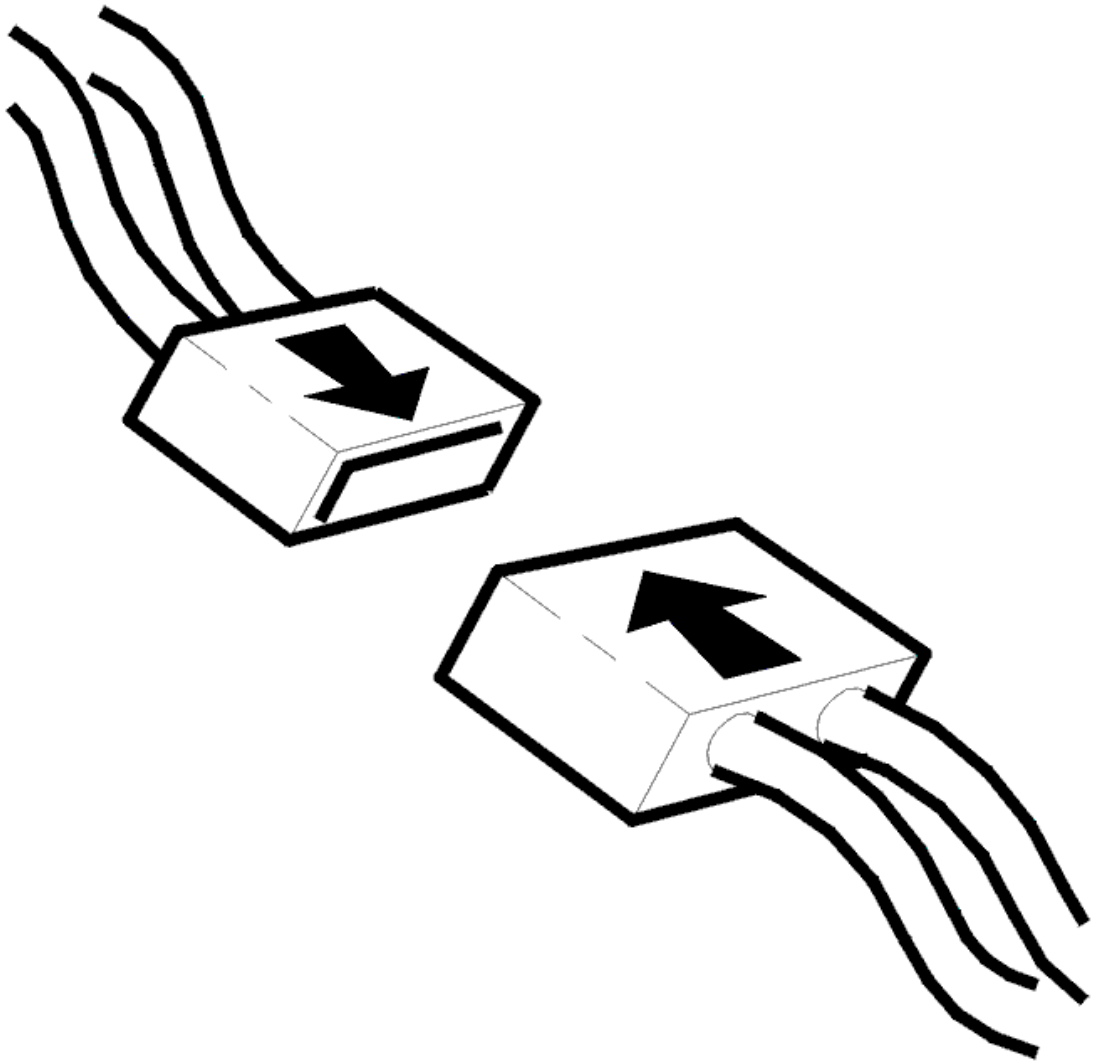

Fig. 162: Identifying Connector(s) Reinstallation
Courtesy of VOLVO CARS CORPORATION

- Ignition off
- Reinstall the connectors, components etc.

  Open the driver's door window. Lock the car using the remote control.

  Wait 25 seconds until the alarm is active. Trigger the alarm by reaching into the car and unlocking the door from the inside using the internal door handle.

Is the function OK?

- **YES**

  VERIFIED: Troubleshooting has been completed.

- **NO**

  Refer to **INFORMATION**

INFORMATION

FAULT-TRACING INFORMATION

The fault should have been detected and remedied. As this is not the case fault-tracing has failed.

Exit fault-tracing for this diagnostic trouble code (DTC) or make another attempt.

UEM-000C: MASS MOVEMENT SENSOR. SIGNAL TOO HIGH (2012)

DIAGNOSTIC TROUBLE CODE (DTC) INFORMATION

Condition

Diagnostic trouble code (DTC) UEM-000C is stored if the upper electronic module registers that the signal in the movement sensor power cable is high when the alarm is deactivated and the ignition is off.

Substitute Value

- None.

Possible Source

- Short-circuit to supply voltage in the power supply cable to the sensor.

Fault symptom[s]

- Does not alarm the sensor.

SIGNAL TOO HIGH

CHECKING WIRING AND CONNECTORS

Check the supply cable between the Upper electronic module (UEM) connector #10 and movement sensor (IMS) connector #1 for a short-circuit to voltage and intermittent short-circuit to voltage.

Other information:

- For further information about signals and other values, see **SIGNAL DESCRIPTION, UPPER ELECTRONIC MODULE (UEM)**
- To connect the breakout box, see **CONNECTING THE BREAKOUT BOX**
- see **REAR INTRUSION SENSOR**

- see **CHECKING WIRING AND TERMINALS** .

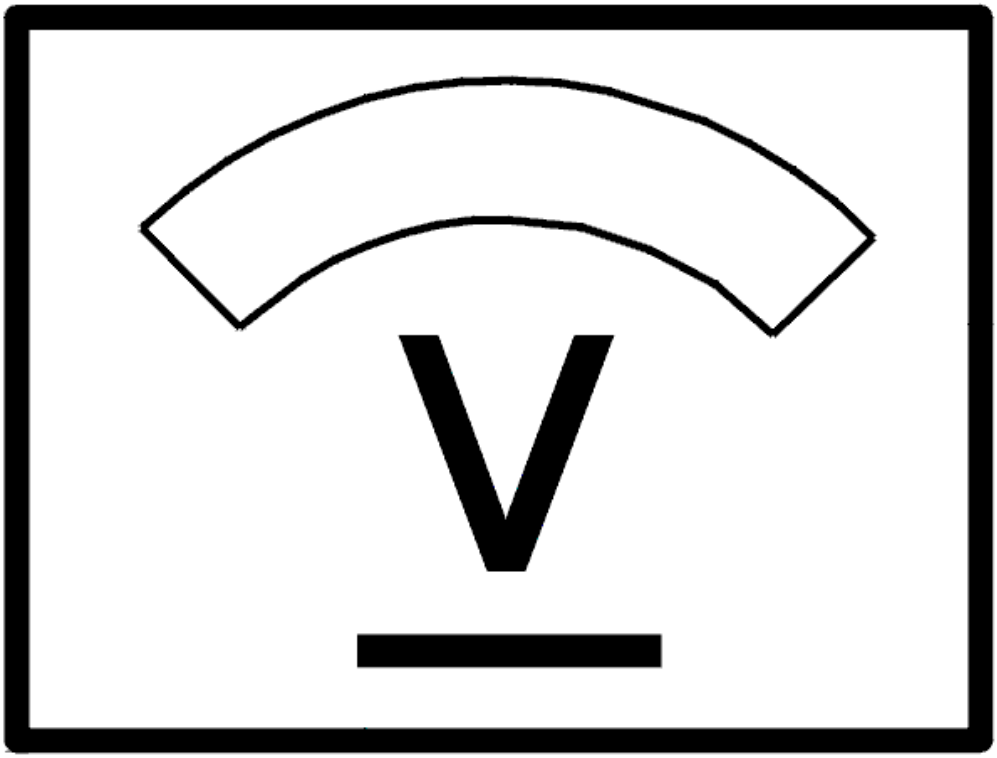

Fig. 163: Identifying Voltage Display
Courtesy of VOLVO CARS CORPORATION

- **Continue**

  Refer to **VERIFICATION**

VERIFICATION

VERIFICATION

HINT: After carrying out the repair, check that the fault has been remedied.

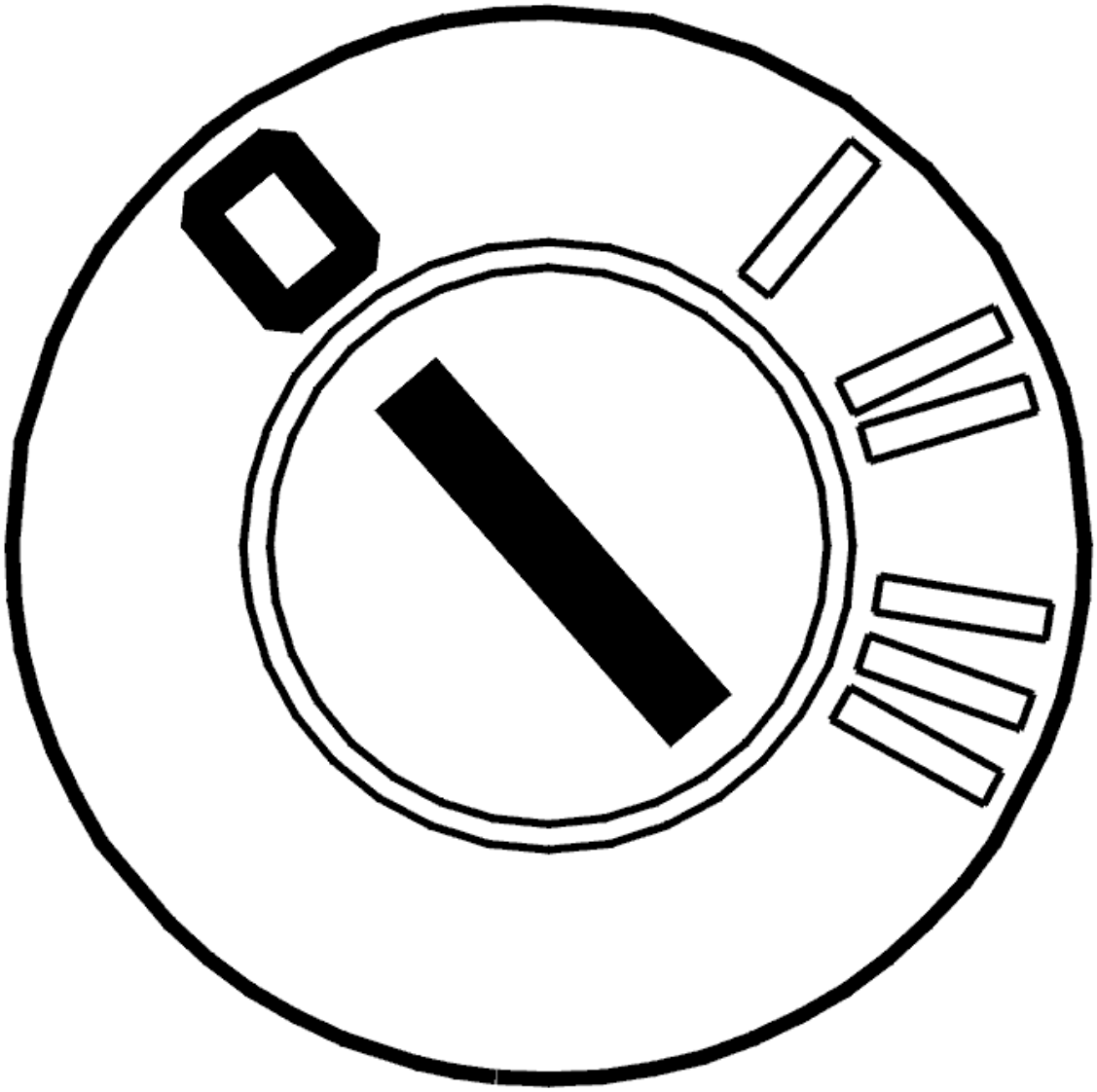

Fig. 164: Identifying Ignition OFF
Courtesy of VOLVO CARS CORPORATION

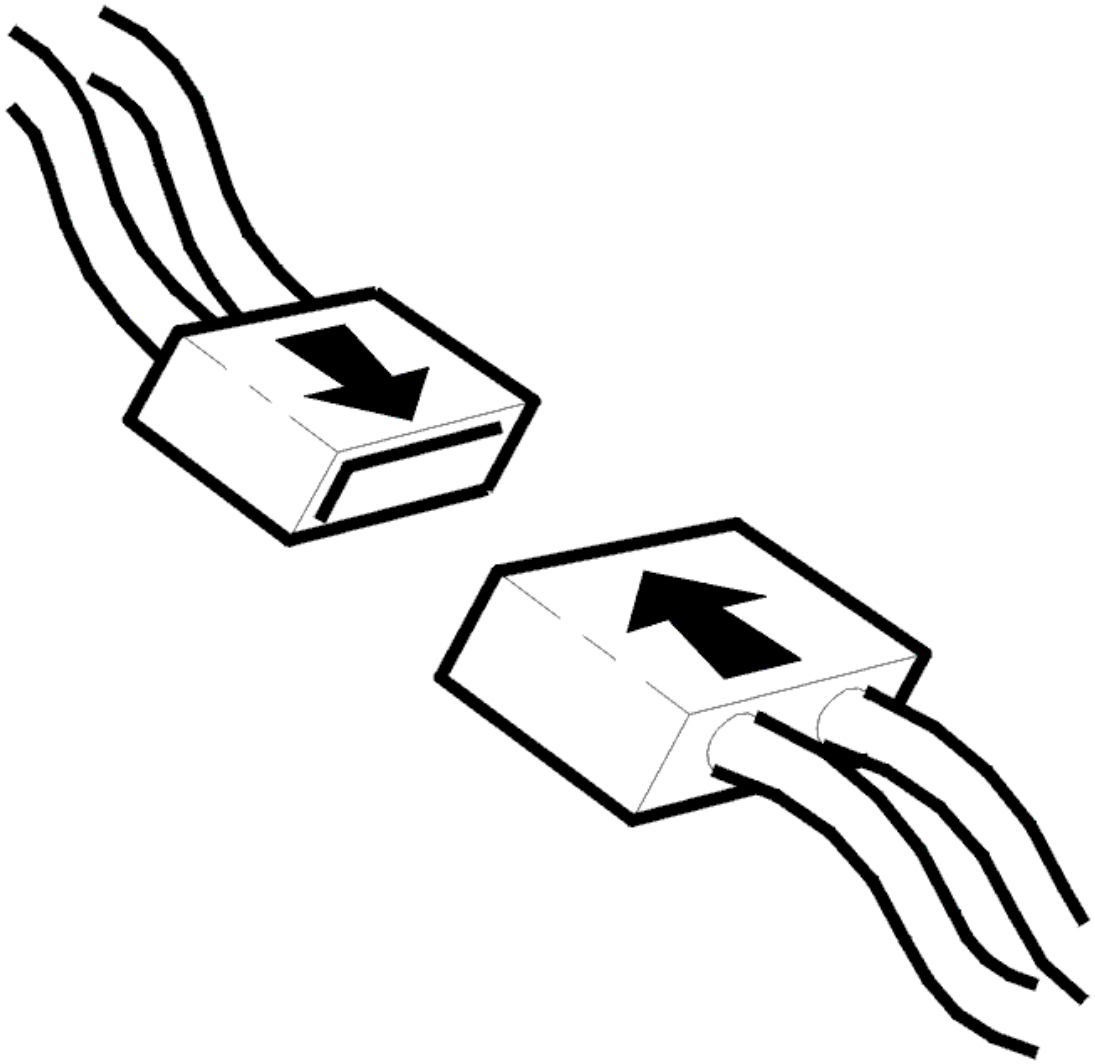

Fig. 165: Identifying Connector(s) Reinstallation
Courtesy of VOLVO CARS CORPORATION

- Ignition off
- Reinstall the connectors, components etc.

  Open the driver's door window. Lock the car using the remote control.

  Wait 25 seconds until the alarm is active. Trigger the alarm by reaching into the car and unlocking the door from the inside using the internal door handle.

Is the function OK?

- **YES**

  VERIFIED: Troubleshooting has been completed.

- **NO**

  Refer to **INFORMATION**

INFORMATION

FAULT-TRACING INFORMATION

The fault should have been detected and remedied. As this is not the case fault-tracing has failed.

Exit fault-tracing for this diagnostic trouble code (DTC) or make another attempt.

UEM-000C: MASS MOVEMENT SENSOR. SIGNAL TOO HIGH (2003-2011)

DIAGNOSTIC TROUBLE CODE (DTC) INFORMATION

see **DIAGNOSTIC TROUBLE CODE (DTC) INFORMATION**

SIGNAL TOO HIGH

CHECKING WIRING AND CONNECTORS

Check the power supply cable between upper electronic module (UEM) connector terminal #10 and mass movement sensor connector terminal #1. Check for a short-circuit to supply voltage. Check for an intermittent short-circuit to supply voltage.

Other information:

- For further information about signals and other values, see **SIGNAL DESCRIPTION, UPPER ELECTRONIC MODULE (UEM)**
- To connect the breakout box, see **CONNECTING THE BREAKOUT BOX**
- To replace the movement/rear level sensor, see **MASS MOVEMENT SENSOR MODULE (MMS) REAR, REPLACING**
- To replace the movement/front level sensor, see **MASS MOVEMENT SENSOR MODULE (MMS) FRONT, REPLACING**
- see **CHECKING WIRING AND TERMINALS** .

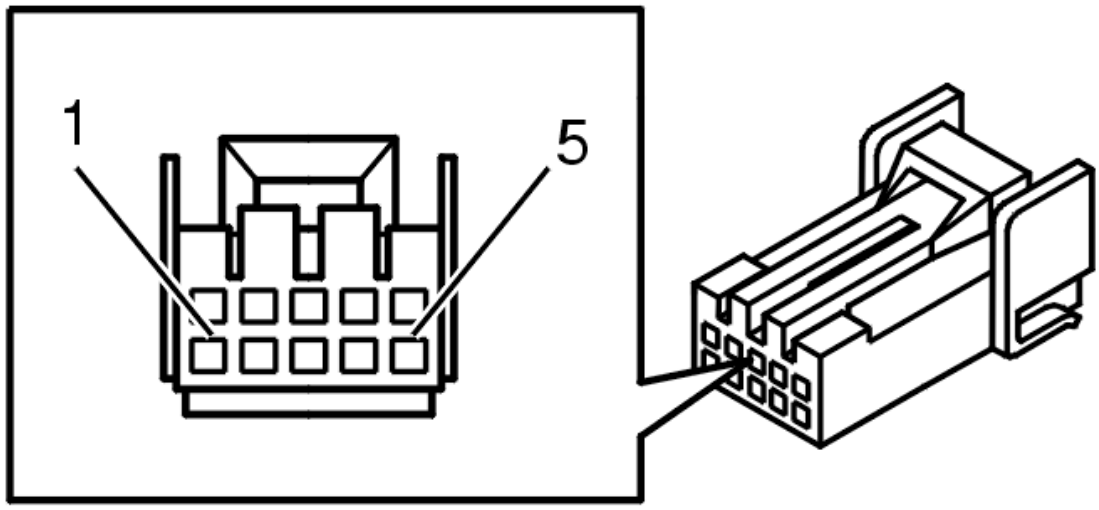

Fig. 166: Identifying 10 Pin Connector Terminals
Courtesy of VOLVO CARS CORPORATION

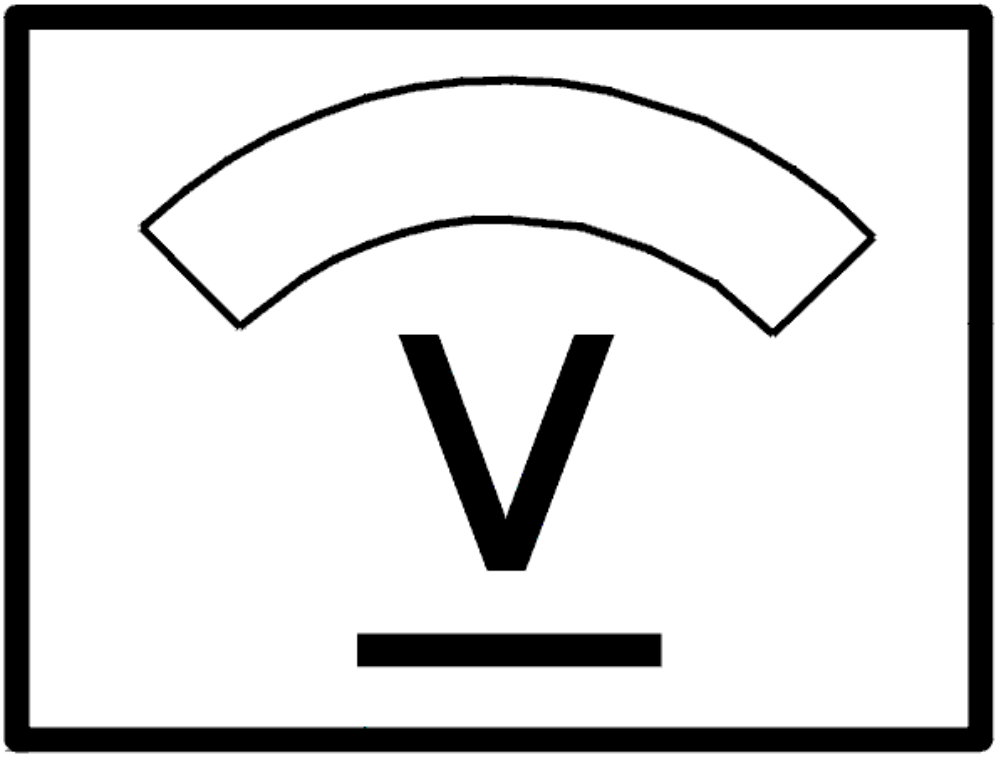

Fig. 167: Identifying Voltage Display
Courtesy of VOLVO CARS CORPORATION

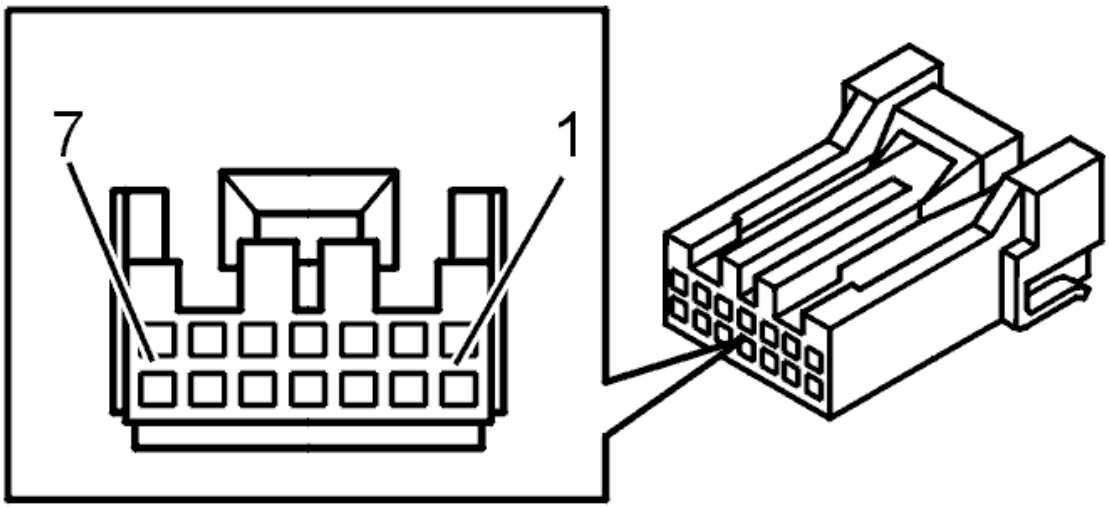

Fig. 168: Identifying Connector Terminals
Courtesy of VOLVO CARS CORPORATION

- **Continue**

  Refer to **VERIFICATION**

VERIFICATION

VERIFICATION

HINT: After carrying out the repair, check that the fault has been remedied.

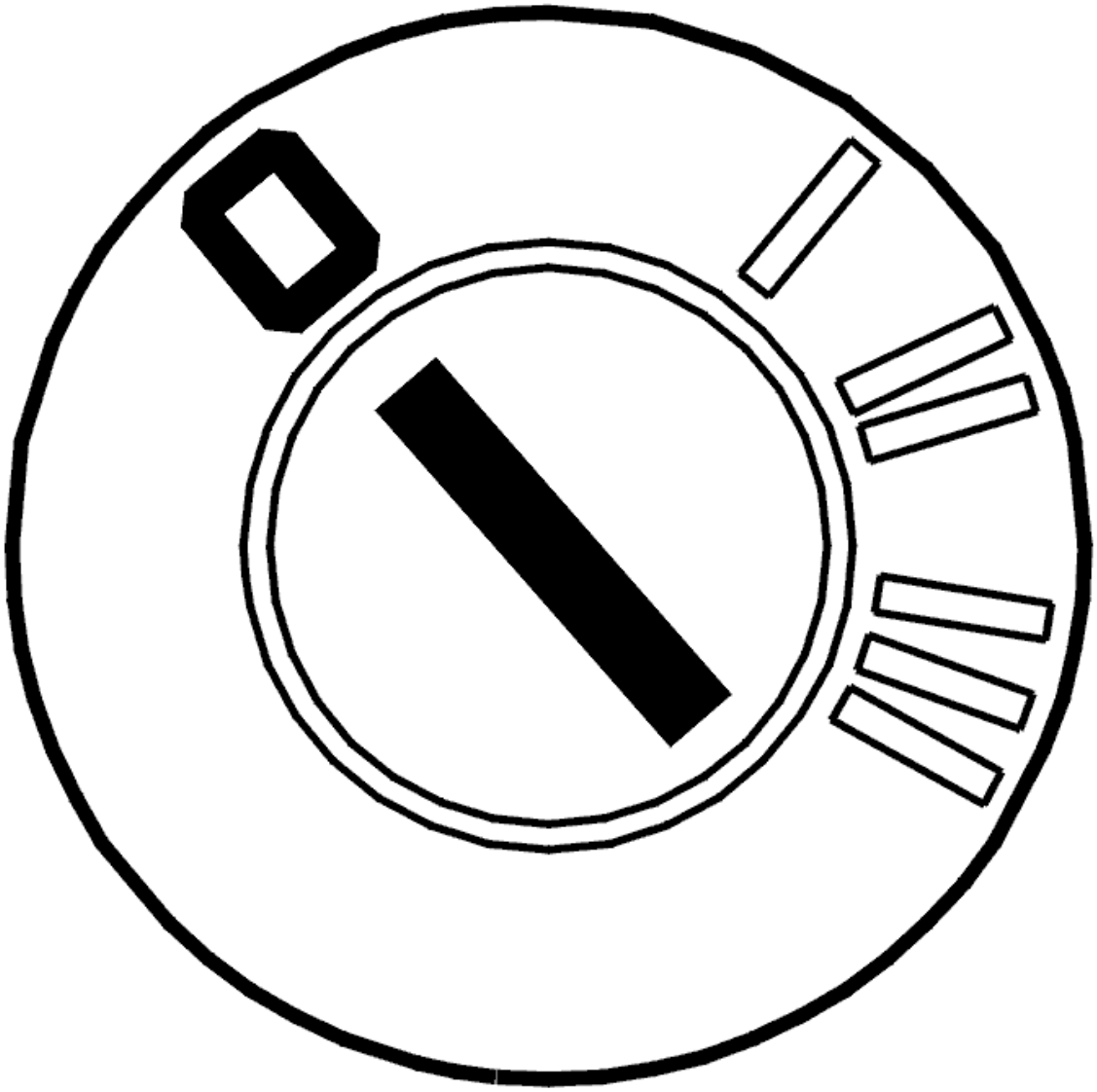

Fig. 169: Identifying Ignition OFF
Courtesy of VOLVO CARS CORPORATION

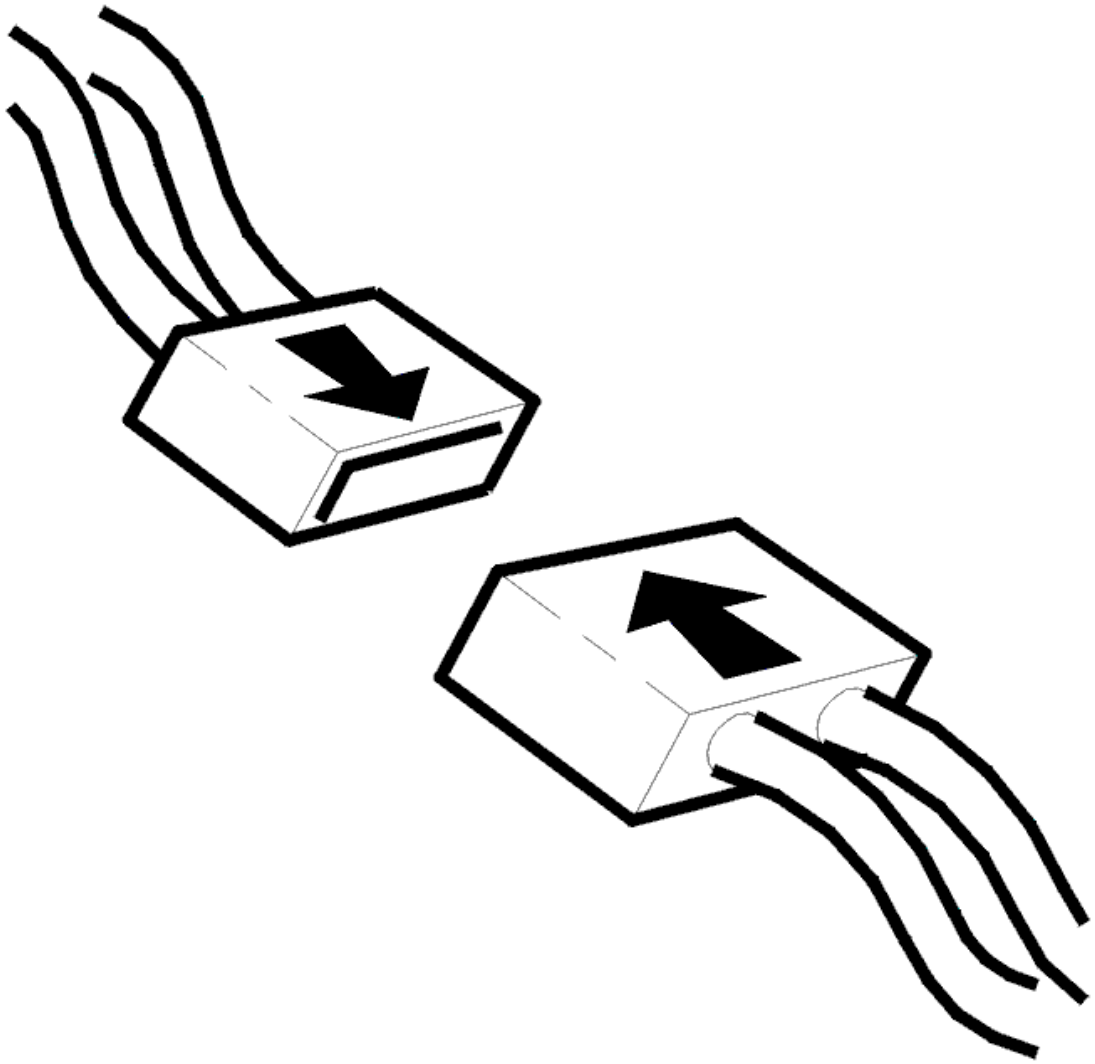

Fig. 170: Identifying Connector(s) Reinstallation
Courtesy of VOLVO CARS CORPORATION

- Ignition off
- Reinstall the connectors, components etc.

  Open the driver's door window. Lock the car using the remote control.

  Wait 25 seconds until the alarm is active. Trigger the alarm by reaching into the car and unlocking the door from the inside using the internal door handle.

Is the function OK?

- **YES**

  VERIFIED: Troubleshooting has been completed.

- **NO**

  Refer to **INFORMATION**

INFORMATION

FAULT-TRACING INFORMATION

The fault should have been detected and remedied. As this is not the case fault-tracing has failed.

Exit fault-tracing for this diagnostic trouble code (DTC) or make another attempt.

UEM-0011: MASS MOVEMENT SENSOR. SIGNAL TOO LOW (2003-2011)

DIAGNOSTIC TROUBLE CODE (DTC) INFORMATION

Condition

Diagnostic trouble code (DTC) UEM-0011 is stored if the upper electronic module registers that the signal in the movement sensor communication cable is low when the alarm is deactivated.

Substitute Value

- None.

Possible Source

- Short-circuit to ground in the sensor communication cable.
- Defective sensor.

Fault symptom[s]

- Does not alarm the sensor.

SIGNAL TOO LOW

CHECKING WIRING AND CONNECTORS

Check the signal cable between upper electronic module (UEM) connector terminal #22 and mass movement sensor (MMS) connector terminal #3. Check for a short-circuit to ground. Check for an intermittent short-circuit to ground.

If no fault was found, try a new sensor.

Other information:

- For further information about signals and other values, see **SIGNAL DESCRIPTION, UPPER**

ELECTRONIC MODULE (UEM)

- To connect the breakout box, see **CONNECTING THE BREAKOUT BOX**
- To replace the movement/rear level sensor, see **MASS MOVEMENT SENSOR MODULE (MMS) REAR, REPLACING**
- see **CHECKING WIRING AND TERMINALS** .

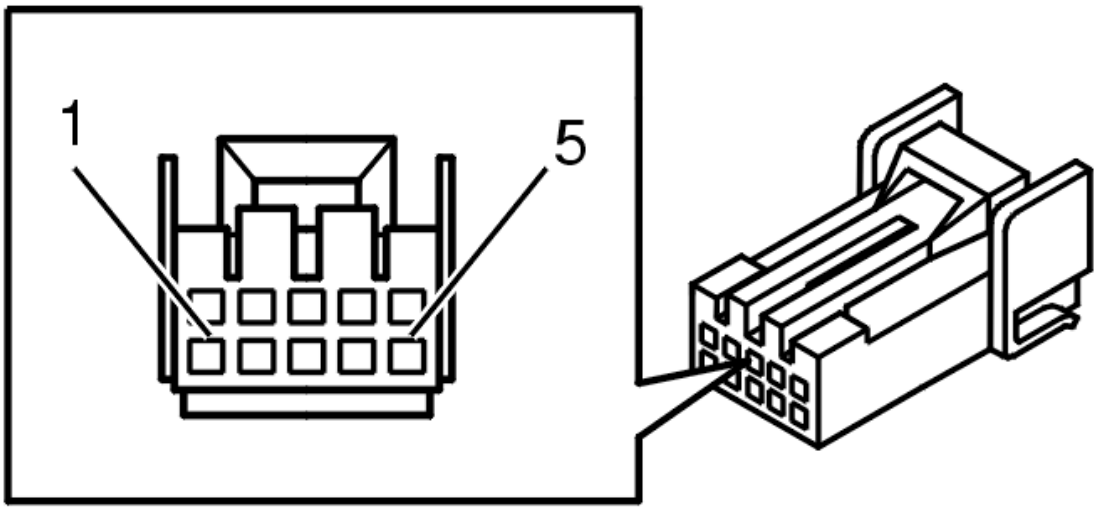

Fig. 171: Identifying 10 Pin Connector Terminals
Courtesy of VOLVO CARS CORPORATION

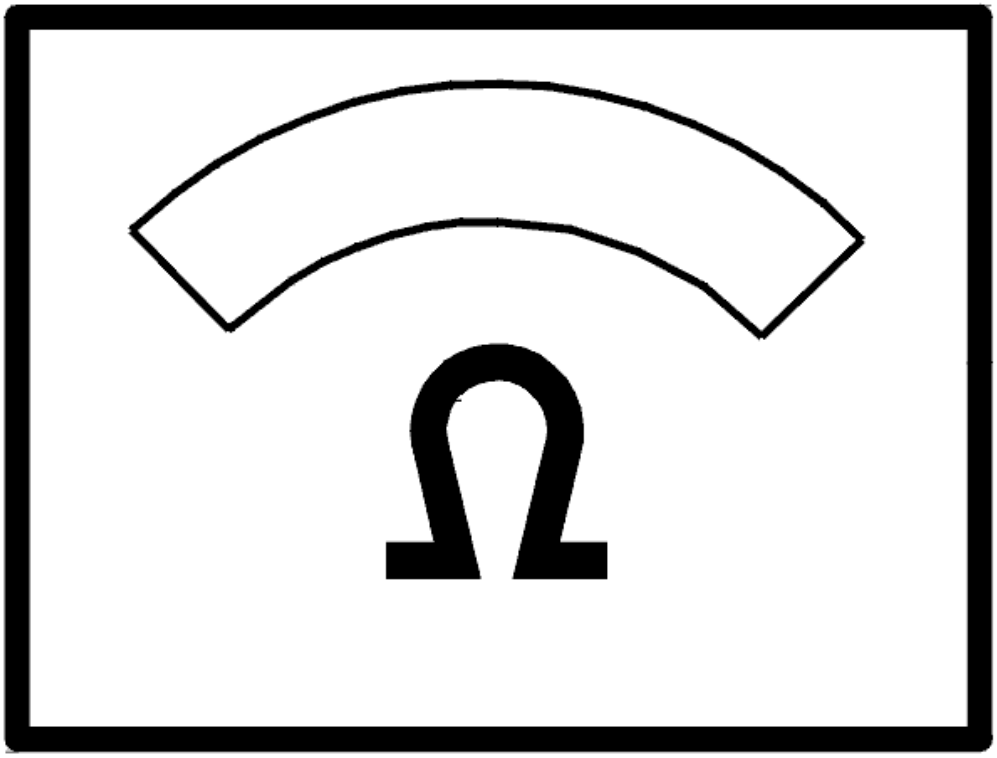

Fig. 172: Identifying Ohms Display
Courtesy of VOLVO CARS CORPORATION

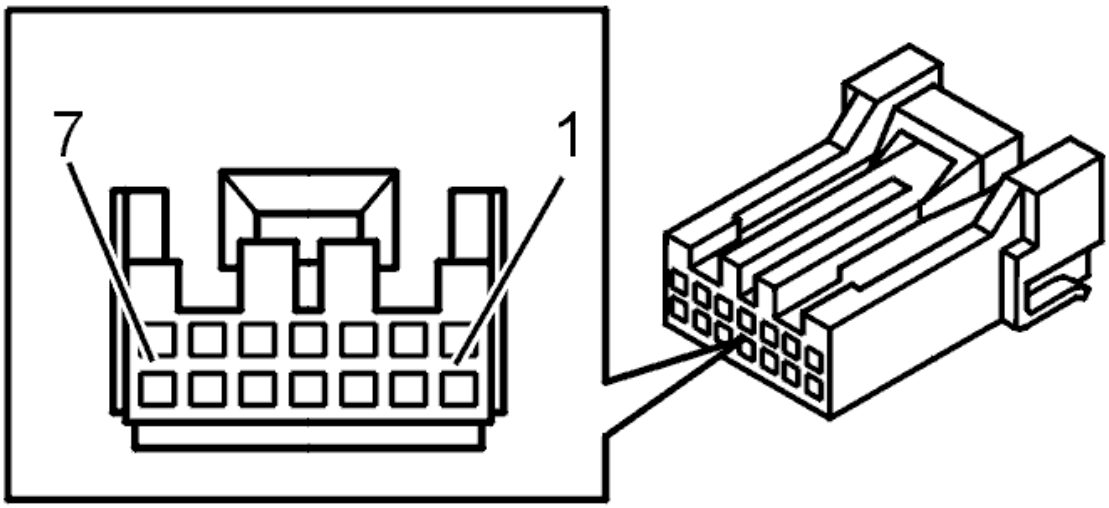

Fig. 173: Identifying Connector Terminals
Courtesy of VOLVO CARS CORPORATION

- **Continue**

  Refer to **VERIFICATION**

VERIFICATION

VERIFICATION

HINT: After carrying out the repair, check that the fault has been remedied.

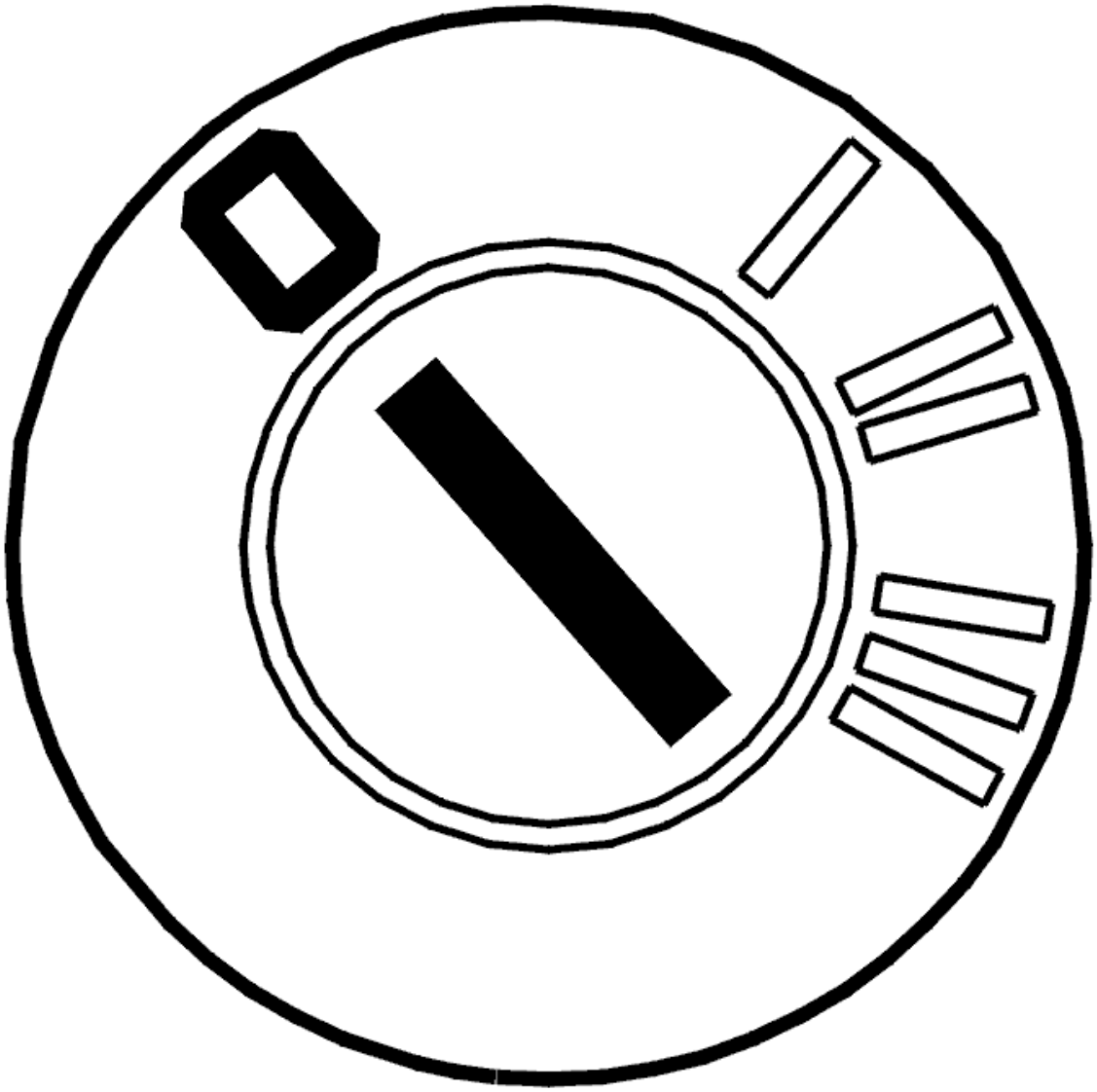

Fig. 174: Identifying Ignition OFF
Courtesy of VOLVO CARS CORPORATION

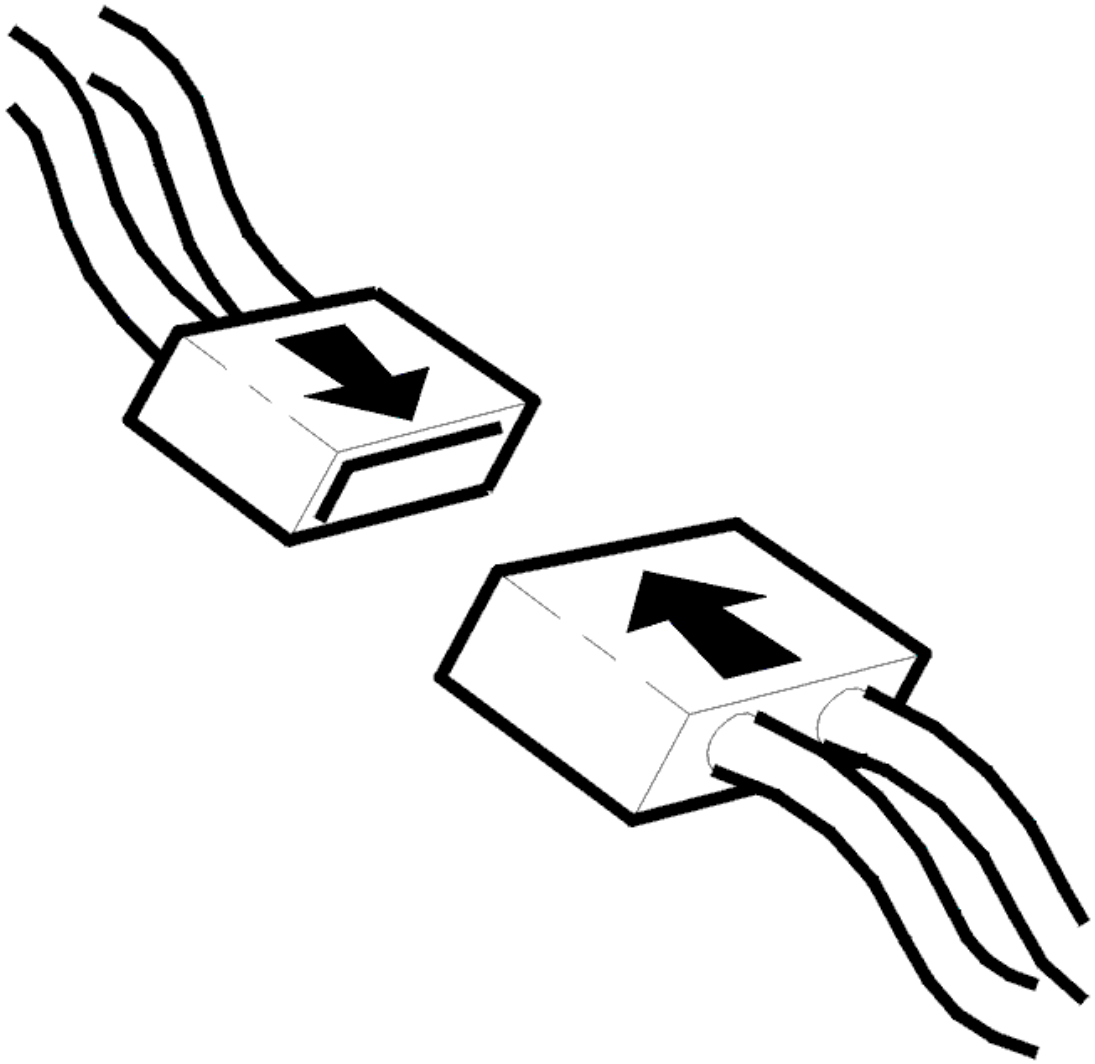

Fig. 175: Identifying Connector(s) Reinstallation
Courtesy of VOLVO CARS CORPORATION

- Ignition off
- Reinstall the connectors, components etc.

  Open the driver's door window. Lock the car using the remote control.

  Wait 25 seconds until the alarm is active. Trigger the alarm by reaching into the car and unlocking the door from the inside using the internal door handle.

Is the function OK?

- **YES**

  VERIFIED: Troubleshooting has been completed.

- **NO**

  Refer to **INFORMATION**

INFORMATION

FAULT-TRACING INFORMATION

The fault should have been detected and remedied. As this is not the case fault-tracing has failed.

Exit fault-tracing for this diagnostic trouble code (DTC) or make another attempt.

UEM-0011: MASS MOVEMENT SENSOR. SIGNAL TOO LOW (2012)

DIAGNOSTIC TROUBLE CODE (DTC) INFORMATION

see **DIAGNOSTIC TROUBLE CODE (DTC) INFORMATION**

SIGNAL TOO LOW

CHECKING WIRING AND CONNECTORS

Check the signal cable between the Upper electronic module (UEM) connector #22 and movement sensor (IMS) connector #3 for a short-circuit to ground and intermittent short-circuit to ground.

If no fault was found, try a new sensor.

Other information:

- For further information about signals and other values, see **SIGNAL DESCRIPTION, UPPER ELECTRONIC MODULE (UEM)**
- To connect the breakout box, see **CONNECTING THE BREAKOUT BOX**
- see **REAR INTRUSION SENSOR**
- see **CHECKING WIRING AND TERMINALS** .

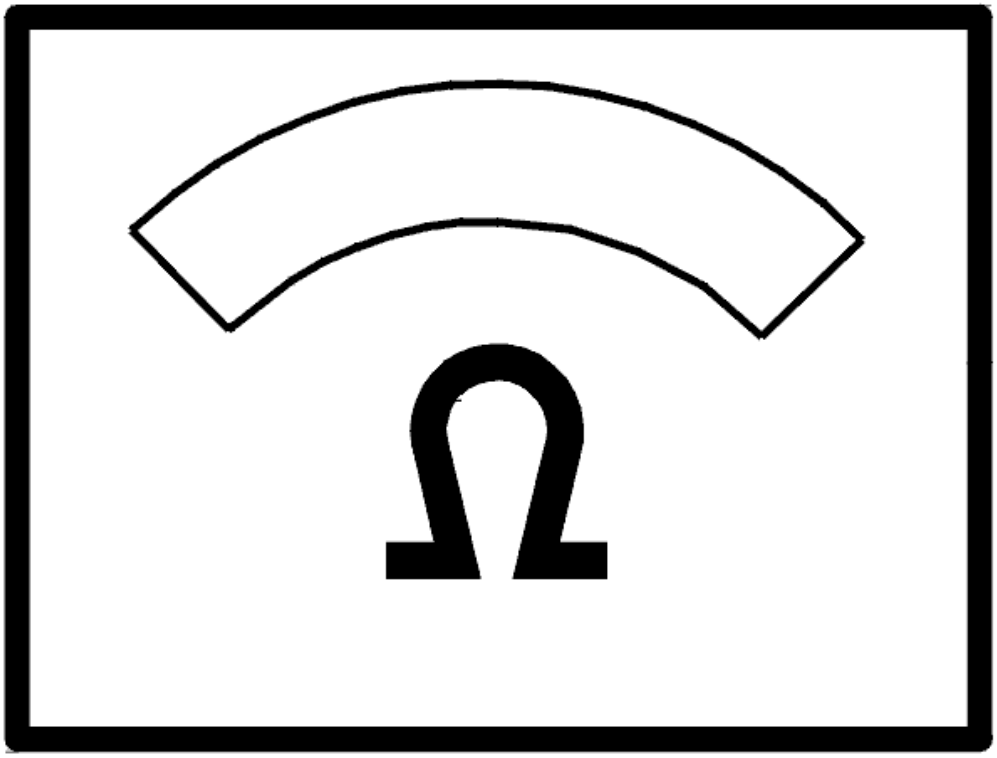

Fig. 176: Identifying Ohms Display
Courtesy of VOLVO CARS CORPORATION

- **Continue**

  Refer to **VERIFICATION**

VERIFICATION

VERIFICATION

HINT: After carrying out the repair, check that the fault has been remedied.

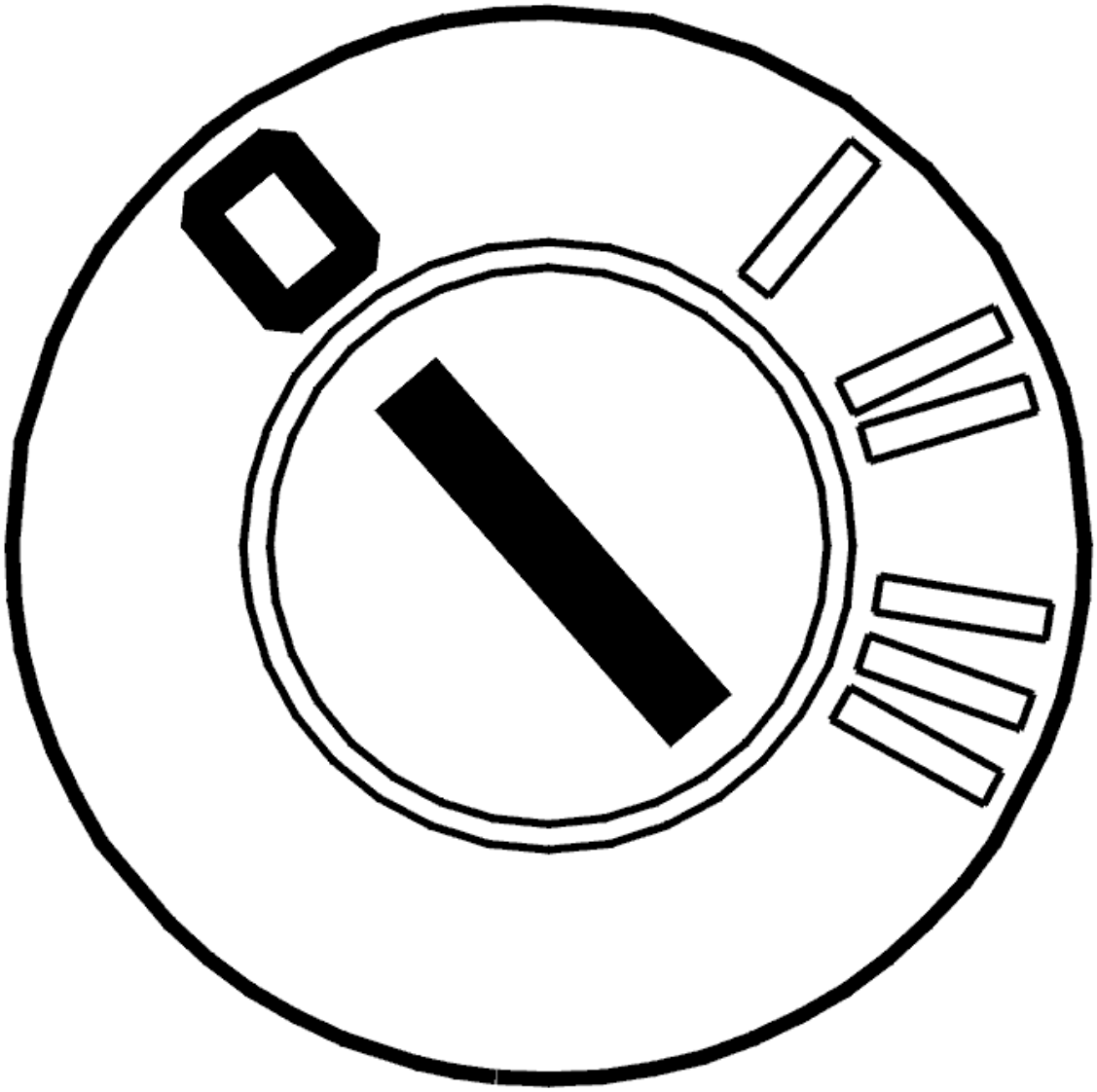

Fig. 177: Identifying Ignition OFF
Courtesy of VOLVO CARS CORPORATION

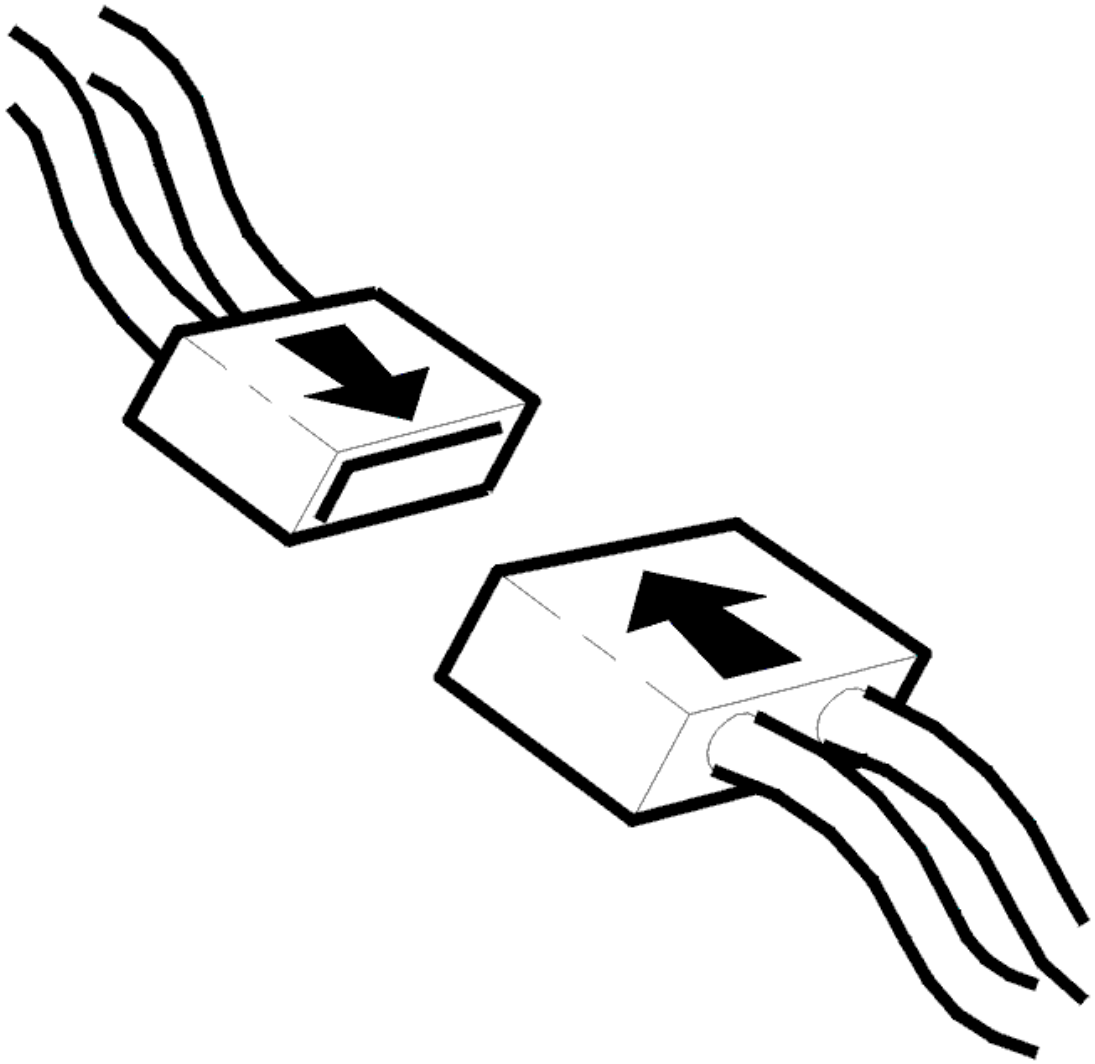

Fig. 178: Identifying Connector(s) Reinstallation
Courtesy of VOLVO CARS CORPORATION

- Ignition off
- Reinstall the connectors, components etc.

  Open the driver's door window. Lock the car using the remote control.

  Wait 25 seconds until the alarm is active. Trigger the alarm by reaching into the car and unlocking the door from the inside using the internal door handle.

Is the function OK?

- **YES**

  VERIFIED: Troubleshooting has been completed.

- **NO**

  Refer to **INFORMATION**

INFORMATION

FAULT-TRACING INFORMATION

The fault should have been detected and remedied. As this is not the case fault-tracing has failed.

Exit fault-tracing for this diagnostic trouble code (DTC) or make another attempt.

UEM-0013: MOVEMENT SENSOR. INTERNAL FAULT (2012)

DIAGNOSTIC TROUBLE CODE (DTC) INFORMATION UEM-0013

Condition

Diagnostic trouble code (DTC) UEM-0013 is stored if diagnostic trouble codes (DTCs) UEM-000A, UEM-000B, UEM-000C, UEM-0011 and UEM-0012 are not stored and the upper electronic module (UEM) registers an internal fault in the movement sensor or registers that there is an open-circuit or high signal in the movement sensor communication cable when the alarm is active.

The DTC indicates that an error has been detected in the rear mass movement sensor (MMS) or interior motion sensor (IMS from and including MY 2012).

Diagnostic trouble code (DTC) UEM-0013 can be diagnosed when the car is locked from the outside using the remote control.

Substitute Value

- None.

Possible Source

- Contact fault on the sensor and/or control module sides
- Open-circuit in the sensor communication cable
- Short-circuit to supply voltage in the sensor communication cable
- Defective sensor.

Fault symptom[s]

- Does not alarm the sensor.

INTERNAL FAULT

CHECKING WIRING AND CONNECTORS

Check the signal cable between the upper electronic module (UEM) connector terminal #22 (22) and movement sensor terminal connector terminal #3. Check for an open-circuit. Check for an intermittent open-circuit.

Also check the relevant connectors. Check for oxidation.

Other information:

- To connect the breakout box: **CONNECTING THE BREAKOUT BOX**
- For information about upper electronic module (UEM) signals:**SIGNAL DESCRIPTION, UPPER ELECTRONIC MODULE (UEM)**
- see **REAR INTRUSION SENSOR**
- see **CHECKING WIRING AND TERMINALS** .

Was a fault detected?

- **YES**

  Refer to **VERIFICATION**

- **NO**

  Refer to **CHECKING WIRING AND CONNECTORS**

CHECKING WIRING AND CONNECTORS

Check the signal cable. Check for a short-circuit to supply voltage. Check for an intermittent short-circuit to supply voltage.

Other information:

- To connect the breakout box: **CONNECTING THE BREAKOUT BOX**
- For information about upper electronic module (UEM) signals:**SIGNAL DESCRIPTION, UPPER ELECTRONIC MODULE (UEM)**
- see **REAR INTRUSION SENSOR**
- see **CHECKING WIRING AND TERMINALS**

Was a fault detected?

- **YES**

  Refer to **VERIFICATION**

- **NO**

Refer to **CHECKING WIRING AND CONNECTORS**

CHECKING WIRING AND CONNECTORS

Check the power supply cable between upper electronic module (UEM) connector terminal #10 and movement sensor connector terminal #1. Check for an open-circuit. Check for a short-circuit to ground. Check for an intermittent open-circuit.

Other information:

- To connect the breakout box: **CONNECTING THE BREAKOUT BOX**
- For information about upper electronic module (UEM) signals:**SIGNAL DESCRIPTION, UPPER ELECTRONIC MODULE (UEM)**
- see **REAR INTRUSION SENSOR**
- see **CHECKING WIRING AND TERMINALS**

Was a fault detected?

- **YES**

  Refer to **VERIFICATION**

- **NO**

  Refer to **CHECKING WIRING AND CONNECTORS**

CHECKING WIRING AND CONNECTORS

Check the ground lead between movement sensor connector terminal #5 and the ground terminal 31/83. Check for an open-circuit. Check for an intermittent open-circuit.

Check in particular intermediate connector (54/13:20) in the cable harness.

If no fault was found, try a new sensor.

Other information:

- To connect the breakout box: **CONNECTING THE BREAKOUT BOX**
- For information about upper electronic module (UEM) signals:**SIGNAL DESCRIPTION, UPPER ELECTRONIC MODULE (UEM)**
- see **REAR INTRUSION SENSOR**
- see **CHECKING WIRING AND TERMINALS**

- **Continue**

  Refer to **VERIFICATION**

VERIFICATION

VERIFICATION

HINT: After carrying out the repair, check that the fault has been remedied.

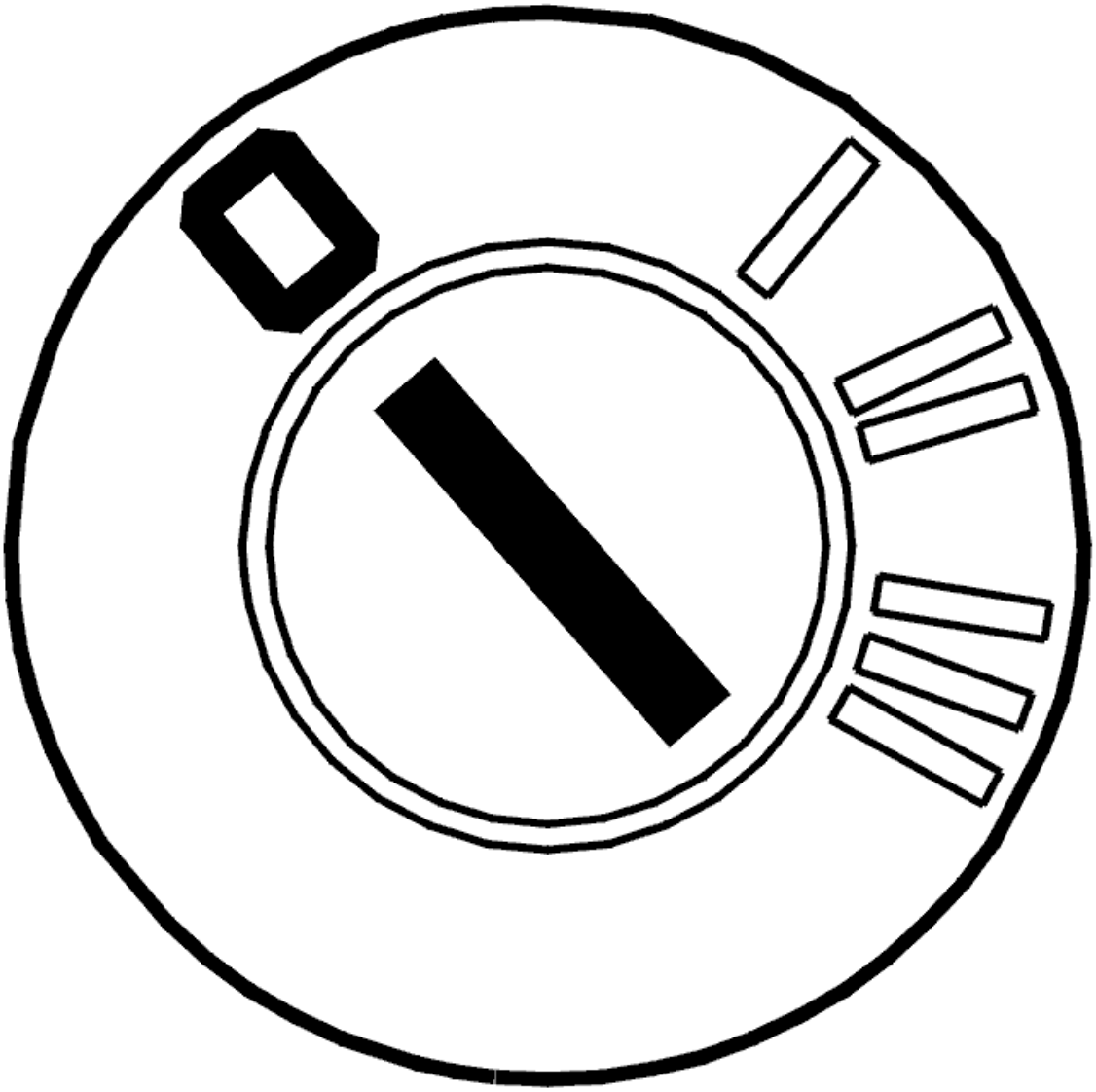

Fig. 179: Identifying Ignition OFF
Courtesy of VOLVO CARS CORPORATION

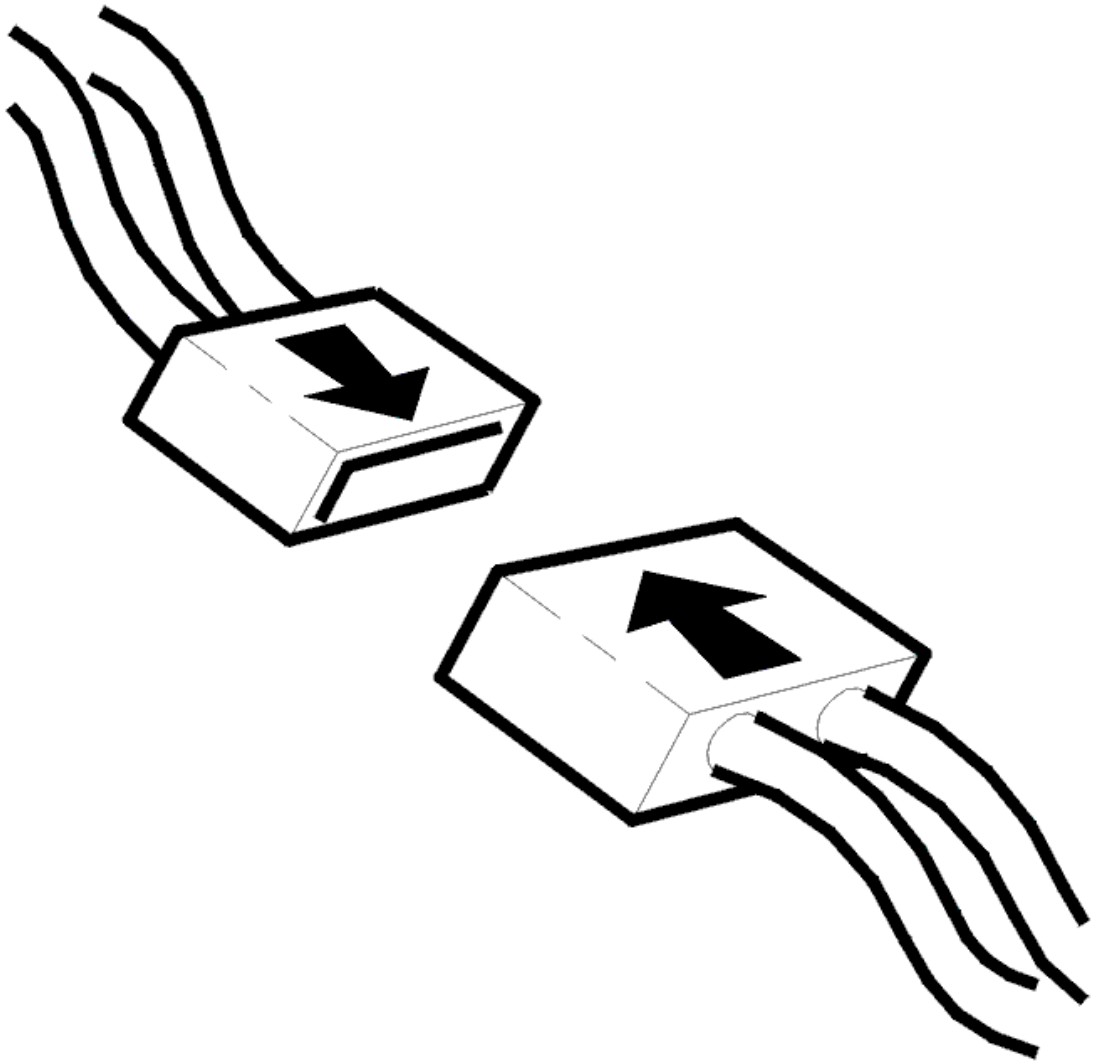

Fig. 180: Identifying Connector(s) Reinstallation
Courtesy of VOLVO CARS CORPORATION

- Ignition off
- Reinstall the connectors, components etc.

For checking MMS (up to and including MY 2011)

- Check that the function for reduced alarm is not activated (button on 7 in row).
- Open the driver's window and the rear window on the driver's side. Lock the vehicle using the remote control.
- Wait 25 seconds until the alarm is active. Then trigger the alarm by waving your arm through the driver's door window, inside the vehicle above the front seats. The siren or horn must sound and the hazard warning lamps flash.
- Reset the alarm by pressing the unlocking button on the remote control. Lock the vehicle again.

- Wait 25 seconds until the alarm is active. Then trigger the alarm by waving you arm, through the rear door window on the driver's side, inside the vehicle above the cargo compartment. The siren or horn must sound and the hazard warning lamps flash. Reset the alarm by pressing the unlocking button on the remote control.
- Check that the front and rear mass movement sensor (MMS) has triggered the alarm the last two times via the read out of the alarm cause in Vehicle communication.

For checking IMS (from and including MY 2012)

- Check that the function for reduced alarm is not activated (button on 7 in row).
- Open the driver's window, close all doors and hatches. Lock the vehicle using the remote control.
- Wait 25 seconds until the alarm is active. Then trigger the alarm by waving your arm inside the vehicle. The siren or horn must sound and the hazard warning lamps flash. Reset the alarm by pressing the unlocking button on the remote control.
- Check that the IMS has triggered the alarm via the read out of the alarm cause in Vehicle communication.

Is the function OK?

- **YES**

  VERIFIED: Troubleshooting has been completed.

- **NO**

  Refer to **INFORMATION**

INFORMATION

FAULT-TRACING INFORMATION

The fault should have been detected and remedied. As this is not the case fault-tracing has failed.

Exit fault-tracing for this diagnostic trouble code (DTC) or make another attempt.

UEM-0013: MOVEMENT SENSOR. INTERNAL FAULT (2003-2011)

DIAGNOSTIC TROUBLE CODE (DTC) INFORMATION UEM-0013

see **DIAGNOSTIC TROUBLE CODE (DTC) INFORMATION UEM-0013**

INTERNAL FAULT

CHECKING WIRING AND CONNECTORS

(For XC90 the fault-tracing refers to the rear movement sensor.)

Check the signal cable between the upper electronic module (UEM) connector terminal #22 (22) and movement sensor terminal connector terminal #3. Check for an open-circuit. Check for an intermittent open-circuit.

Also check the relevant connectors. Check for oxidation.

Other information:

- To connect the breakout box: **CONNECTING THE BREAKOUT BOX**
- For information about upper electronic module (UEM) signals:**SIGNAL DESCRIPTION, UPPER ELECTRONIC MODULE (UEM)**
- To replace the movement/rear level sensor, see **MASS MOVEMENT SENSOR MODULE (MMS) REAR, REPLACING**
- see **CHECKING WIRING AND TERMINALS** .

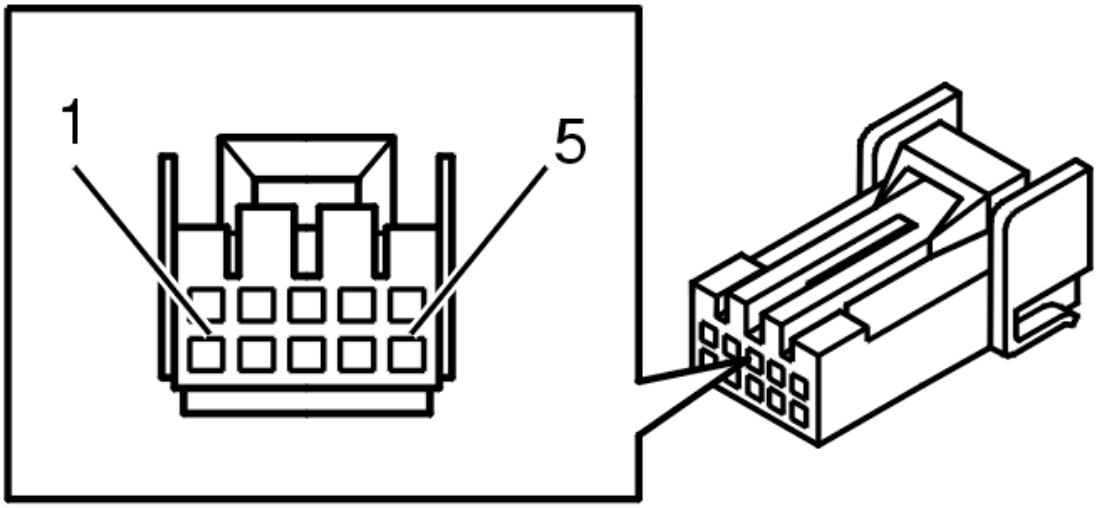

Fig. 181: Identifying 10 Pin Connector Terminals
Courtesy of VOLVO CARS CORPORATION

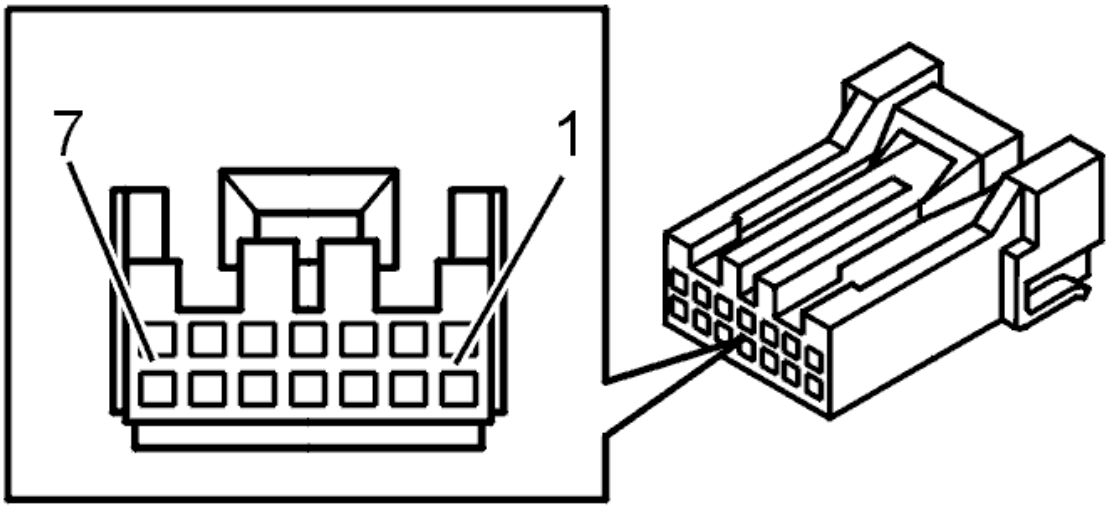

Fig. 182: Identifying Connector Terminals
Courtesy of VOLVO CARS CORPORATION

Was a fault detected?

- **YES**

  Refer to **VERIFICATION**

- **NO**

  Refer to **CHECKING WIRING AND CONNECTORS**

CHECKING WIRING AND CONNECTORS

(For XC90 the fault-tracing refers to the rear movement sensor.)

Check the signal cable. Check for a short-circuit to supply voltage. Check for an intermittent short-circuit to supply voltage.

Other information:

- To connect the breakout box: **CONNECTING THE BREAKOUT BOX**
- For information about upper electronic module (UEM) signals:**SIGNAL DESCRIPTION, UPPER ELECTRONIC MODULE (UEM)**
- To replace the movement/rear level sensor, see **MASS MOVEMENT SENSOR MODULE (MMS) REAR, REPLACING**
- see **CHECKING WIRING AND TERMINALS**

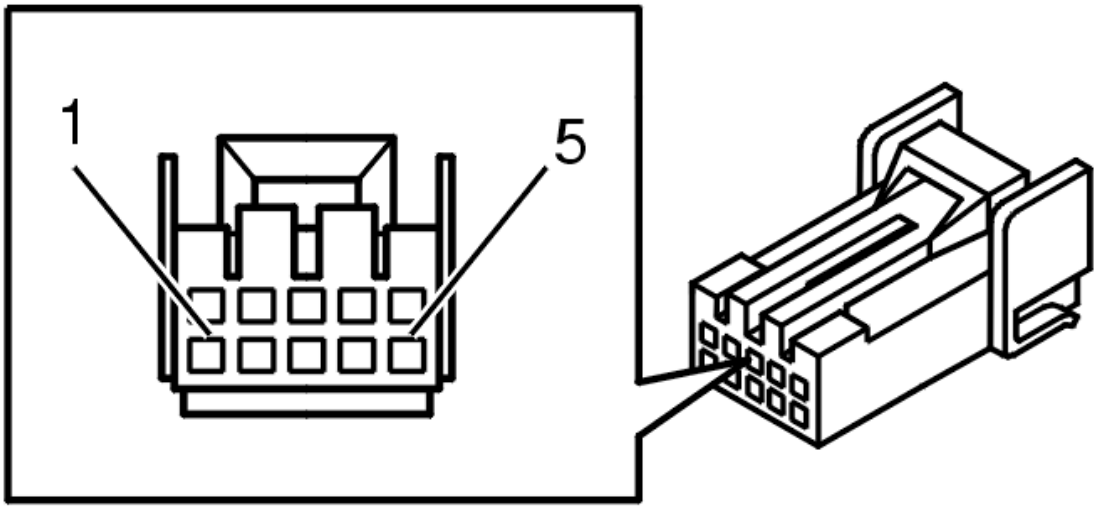

Fig. 183: Identifying 10 Pin Connector Terminals
Courtesy of VOLVO CARS CORPORATION

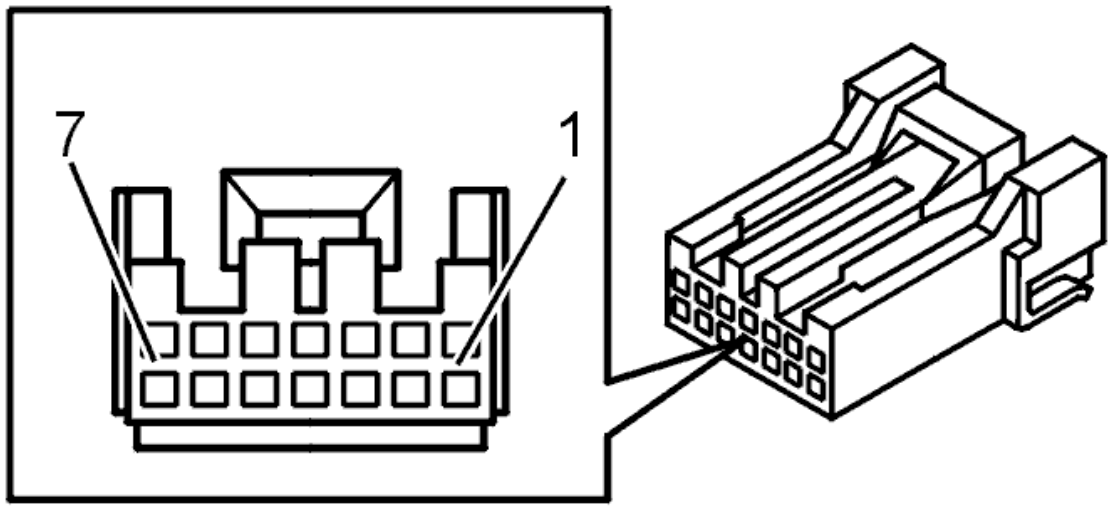

Fig. 184: Identifying Connector Terminals
Courtesy of VOLVO CARS CORPORATION

Was a fault detected?

- **YES**

  Refer to **VERIFICATION**

- **NO**

  Refer to **CHECKING WIRING AND CONNECTORS**

CHECKING WIRING AND CONNECTORS

(For XC90 the fault-tracing refers to the rear movement sensor.)

Check the power supply cable between upper electronic module (UEM) connector terminal #10 and movement sensor connector terminal #1. Check for an open-circuit. Check for a short-circuit to ground. Check for an intermittent open-circuit.

Other information:

- To connect the breakout box: **CONNECTING THE BREAKOUT BOX**
- For information about upper electronic module (UEM) signals:**SIGNAL DESCRIPTION, UPPER ELECTRONIC MODULE (UEM)**
- To replace the movement/rear level sensor, see **MASS MOVEMENT SENSOR MODULE (MMS) REAR, REPLACING**
- see **CHECKING WIRING AND TERMINALS**

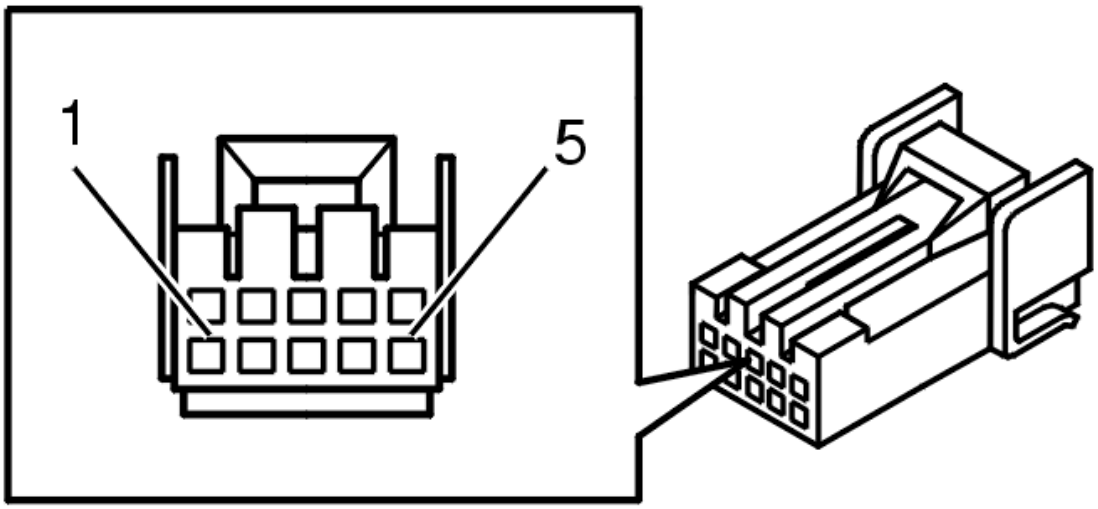

Fig. 185: Identifying 10 Pin Connector Terminals
Courtesy of VOLVO CARS CORPORATION

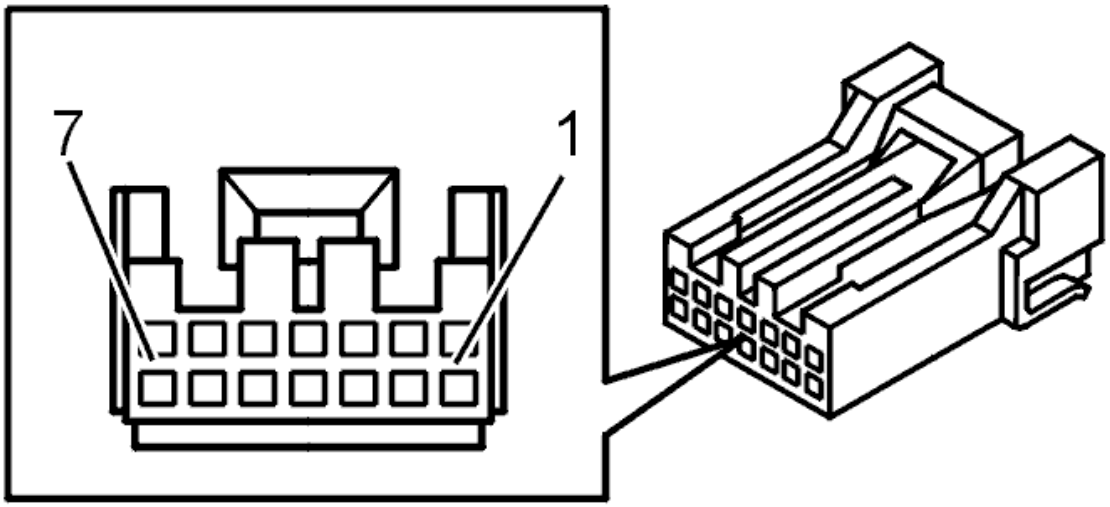

Fig. 186: Identifying Connector Terminals
Courtesy of VOLVO CARS CORPORATION

Was a fault detected?

- **YES**

  Refer to **VERIFICATION**

- **NO**

  Refer to **CHECKING WIRING AND CONNECTORS**

CHECKING WIRING AND CONNECTORS

(For XC90 the fault-tracing refers to the rear movement sensor.)

Check the ground lead between movement sensor connector terminal #5 and the ground terminal 31/83. Check for an open-circuit. Check for an intermittent open-circuit.

Check in particular intermediate connector (54/13:20) in the cable harness.

If no fault was found, try a new sensor.

Other information:

- To connect the breakout box: **CONNECTING THE BREAKOUT BOX**
- For information about upper electronic module (UEM) signals:**SIGNAL DESCRIPTION, UPPER ELECTRONIC MODULE (UEM)**
- To replace the movement/rear level sensor, see **MASS MOVEMENT SENSOR MODULE (MMS) REAR, REPLACING**
- see **CHECKING WIRING AND TERMINALS**

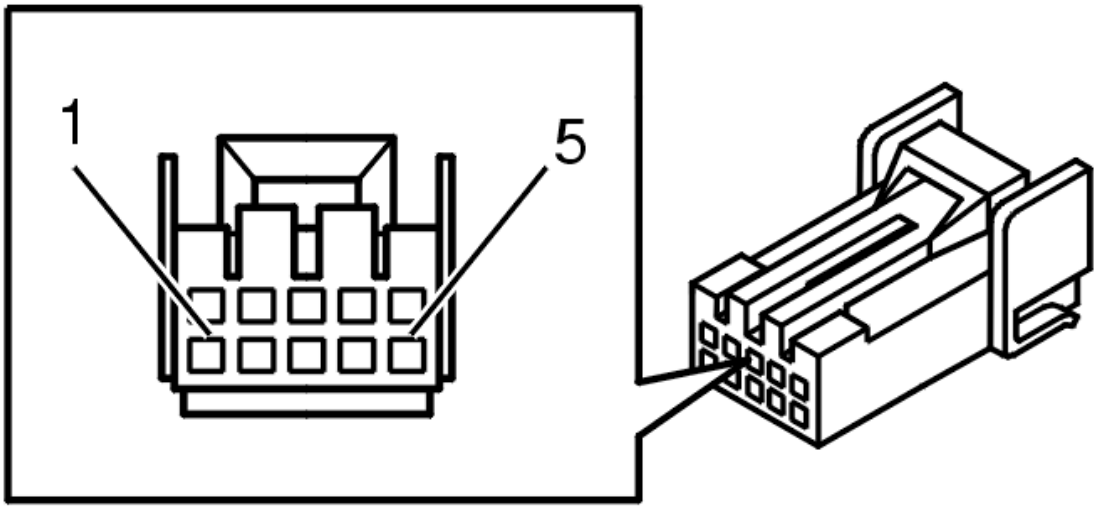

Fig. 187: Identifying 10 Pin Connector Terminals
Courtesy of VOLVO CARS CORPORATION

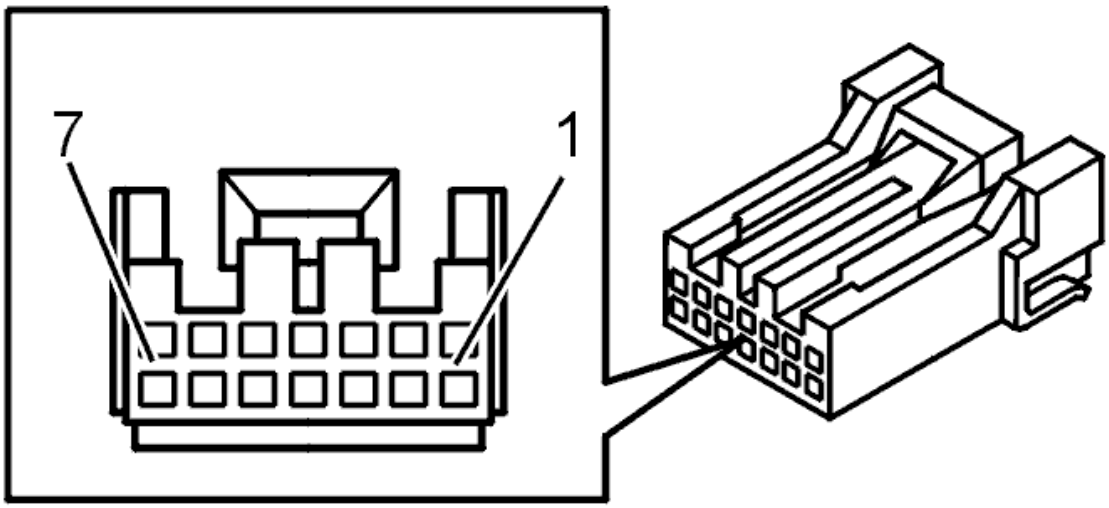

Fig. 188: Identifying Connector Terminals
Courtesy of VOLVO CARS CORPORATION

- **Continue**

  Refer to **VERIFICATION**

VERIFICATION

VERIFICATION

HINT: After carrying out the repair, check that the fault has been remedied.

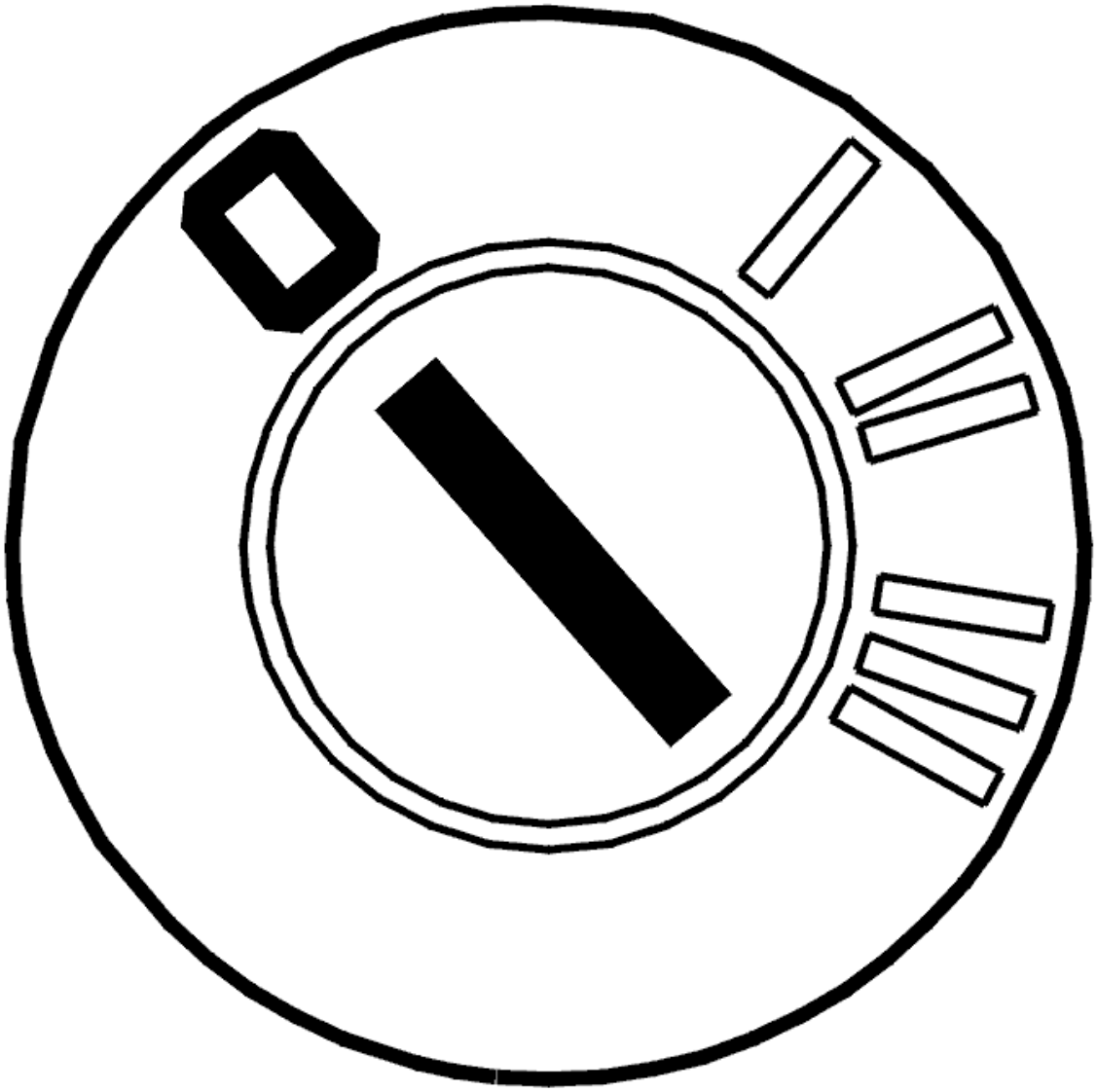

Fig. 189: Identifying Ignition OFF
Courtesy of VOLVO CARS CORPORATION

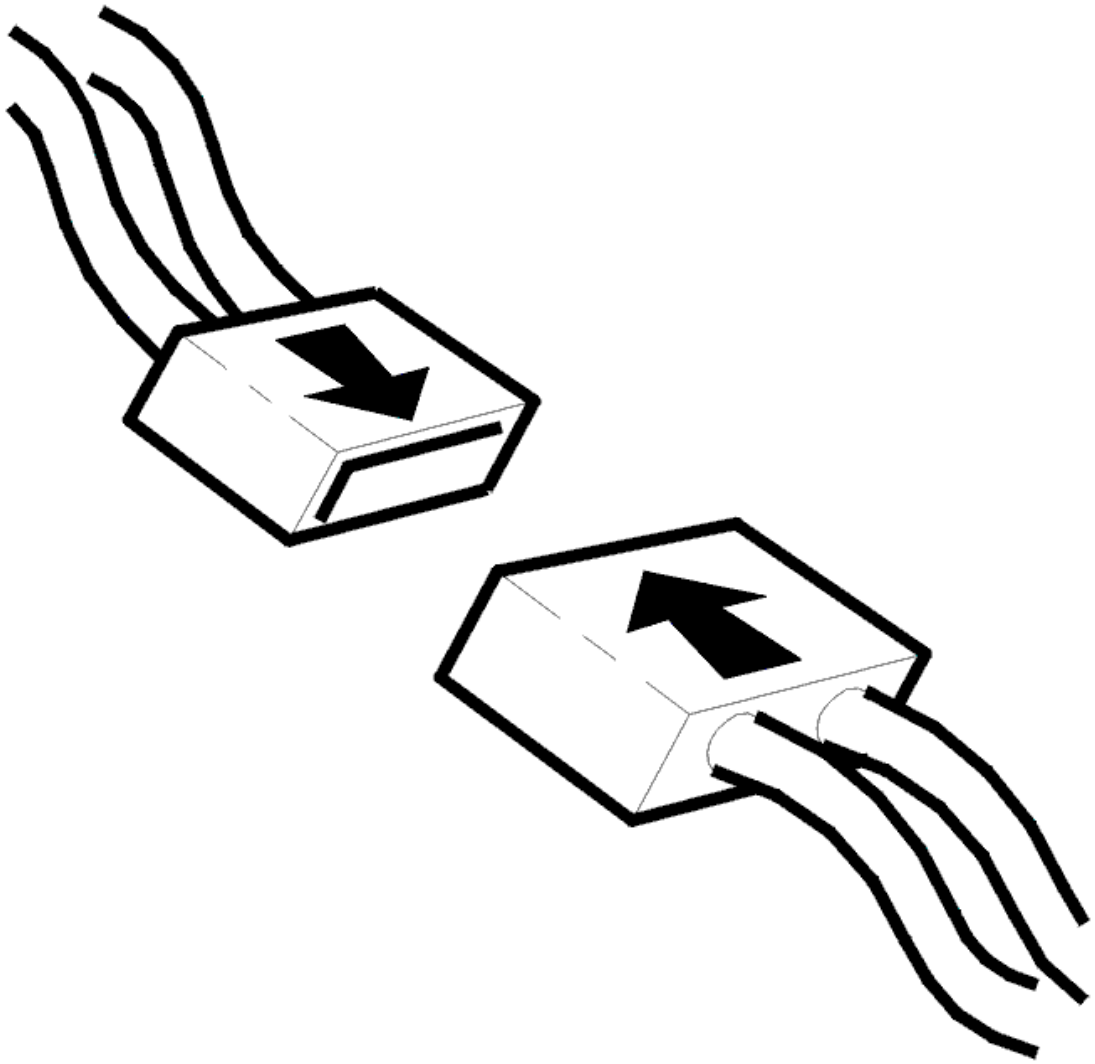

Fig. 190: Identifying Connector(s) Reinstallation
Courtesy of VOLVO CARS CORPORATION

- Ignition off
- Reinstall the connectors, components etc.

For checking MMS (up to and including MY 2011)

- Check that the function for reduced alarm is not activated (button on 7 in row).
- Open the driver's window and the rear window on the driver's side. Lock the vehicle using the remote control.
- Wait 25 seconds until the alarm is active. Then trigger the alarm by waving your arm through the driver's door window, inside the vehicle above the front seats. The siren or horn must sound and the hazard warning lamps flash.
- Reset the alarm by pressing the unlocking button on the remote control. Lock the vehicle again.

- Wait 25 seconds until the alarm is active. Then trigger the alarm by waving you arm, through the rear door window on the driver's side, inside the vehicle above the cargo compartment. The siren or horn must sound and the hazard warning lamps flash. Reset the alarm by pressing the unlocking button on the remote control.
- Check that the front and rear mass movement sensor (MMS) has triggered the alarm the last two times via the read out of the alarm cause in Vehicle communication.

For checking IMS (from and including MY 2012)

- Check that the function for reduced alarm is not activated (button on 7 in row).
- Open the driver's window, close all doors and hatches. Lock the vehicle using the remote control.
- Wait 25 seconds until the alarm is active. Then trigger the alarm by waving your arm inside the vehicle. The siren or horn must sound and the hazard warning lamps flash. Reset the alarm by pressing the unlocking button on the remote control.
- Check that the MMS or IMS has triggered the alarm via the read out of the alarm cause in Vehicle communication.

Is the function OK?

- **YES**

  VERIFIED: Troubleshooting has been completed.

- **NO**

  Refer to **INFORMATION**

INFORMATION

FAULT-TRACING INFORMATION

The fault should have been detected and remedied. As this is not the case fault-tracing has failed.

Exit fault-tracing for this diagnostic trouble code (DTC) or make another attempt.

UEM-0014: MOVEMENT SENSOR. INTERNAL FAULT (2003-2011)

DIAGNOSTIC TROUBLE CODE (DTC) INFORMATION UEM-0014

Condition

Diagnostic trouble code (DTC) UEM-0014 is stored if diagnostic trouble codes (DTCs) UEM-000A, UEM-000B, UEM-000C and UEM-0011 are not stored and the upper electronic module (UEM) registers an internal fault in the front movement sensor or registers that there is an open-circuit or too high a signal in the front movement sensor communication cable when the alarm is active.

Diagnostic trouble code (DTC) UEM-0014 can be diagnosed when the car is locked from the outside using the remote control.

Substitute Value

- None.

Possible Source

- Contact fault on the sensor and/or control module sides
- Open-circuit in the sensor communication cable
- Short-circuit to supply voltage in the sensor communication cable
- Defective sensor.

Fault symptom[s]

- Does not alarm the sensor.

INTERNAL FAULT

CHECKING WIRING AND CONNECTORS

(For XC90 the fault-tracing refers to the front movement sensor.)

Check the signal cable between the upper electronic module (UEM) connector terminal #22 and movement sensor terminal connector terminal #3. Check for an open-circuit. Check for an intermittent open-circuit.

Also check the relevant connectors. Check for oxidation.

Other information:

- see **CONNECTING THE BREAKOUT BOX** .
- For information about upper electronic module (UEM) signals:**SIGNAL DESCRIPTION, UPPER ELECTRONIC MODULE (UEM)**
- see **MASS MOVEMENT SENSOR MODULE (MMS) FRONT, REPLACING** .
- see **CHECKING WIRING AND TERMINALS** .

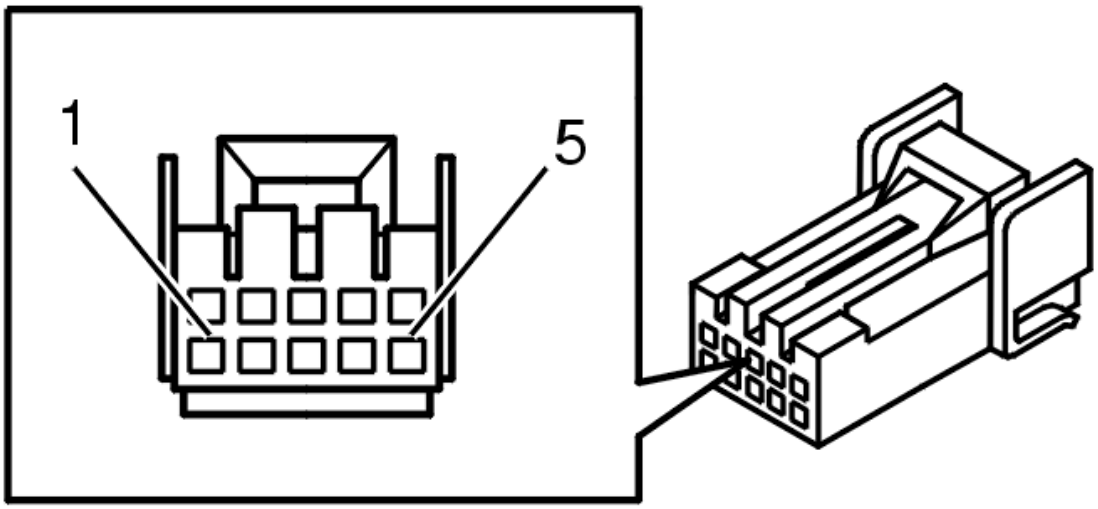

Fig. 191: Identifying 10 Pin Connector Terminals
Courtesy of VOLVO CARS CORPORATION

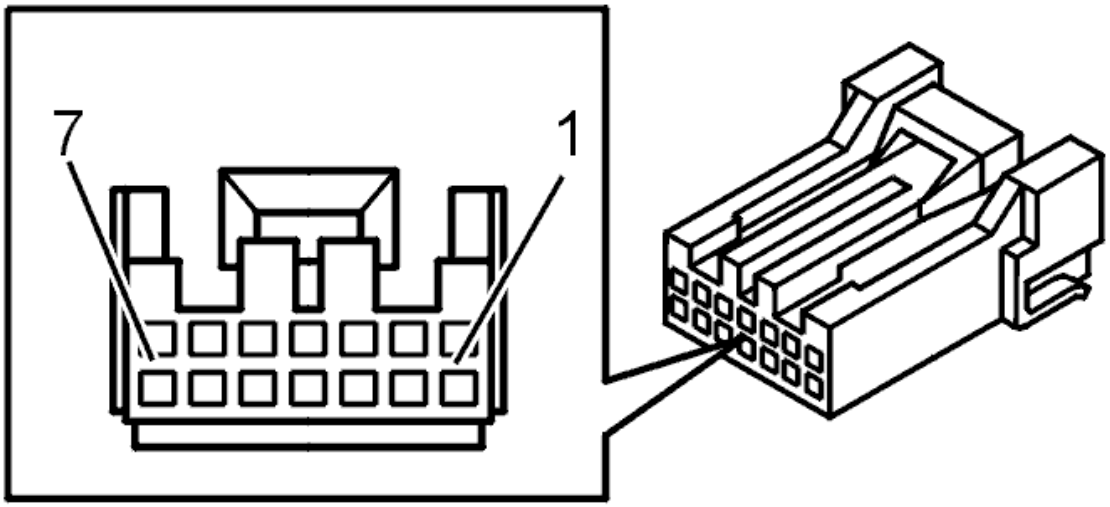

Fig. 192: Identifying Connector Terminals
Courtesy of VOLVO CARS CORPORATION

Was a fault detected?

- **YES**

  Refer to **VERIFICATION**

- **NO**

  Refer to **CHECKING WIRING AND CONNECTORS**

CHECKING WIRING AND CONNECTORS

Check the signal cable. Check for a short-circuit to supply voltage. Check for an intermittent short-circuit to supply voltage.

Other information:

- see **CONNECTING THE BREAKOUT BOX** .
- For information about upper electronic module (UEM) signals:**SIGNAL DESCRIPTION, UPPER ELECTRONIC MODULE (UEM)**
- see **MASS MOVEMENT SENSOR MODULE (MMS) FRONT, REPLACING** .
- see **CHECKING WIRING AND TERMINALS** .

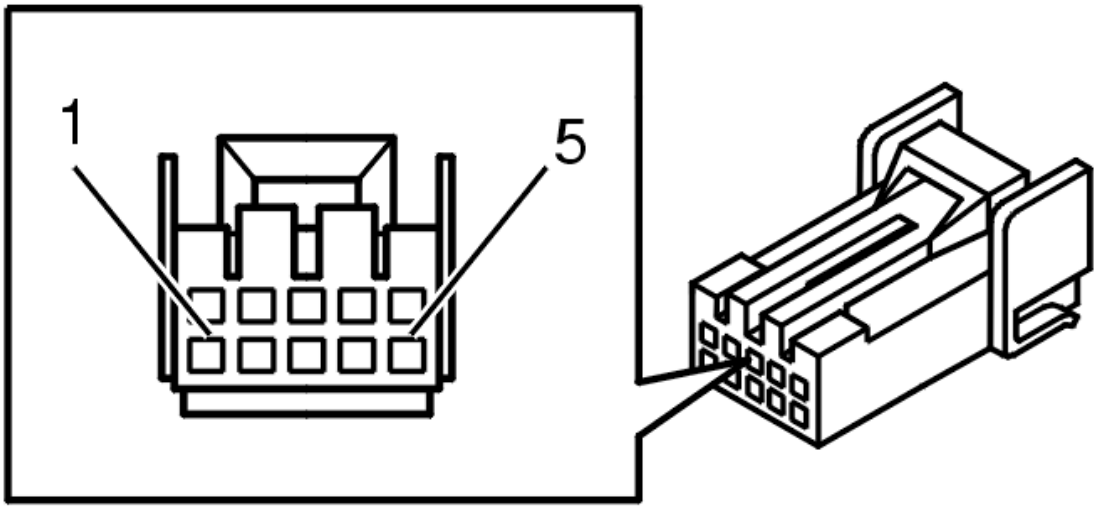

Fig. 193: Identifying 10 Pin Connector Terminals
Courtesy of VOLVO CARS CORPORATION

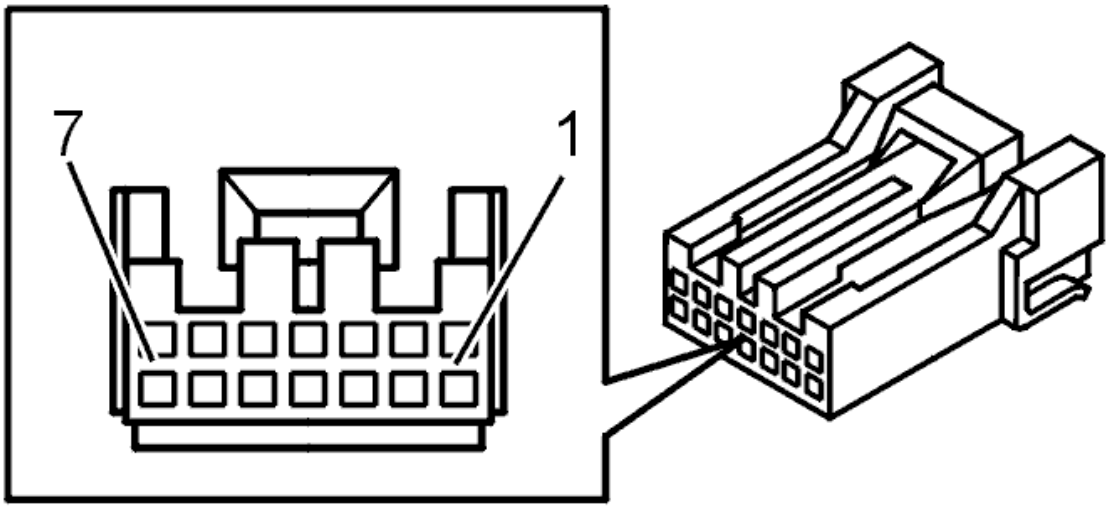

Fig. 194: Identifying Connector Terminals
Courtesy of VOLVO CARS CORPORATION

Was a fault detected?

- **YES**

  Refer to **VERIFICATION**

- **NO**

  Refer to **CHECKING WIRING AND CONNECTORS**

CHECKING WIRING AND CONNECTORS

Check the power supply cable between upper electronic module (UEM) connector terminal #10 and movement sensor connector terminal #1. Check for an open-circuit. Check for a short-circuit to ground. Check for an intermittent open-circuit.

Other information:

- see **CONNECTING THE BREAKOUT BOX** .
- For information about upper electronic module (UEM) signals:**SIGNAL DESCRIPTION, UPPER ELECTRONIC MODULE (UEM)**
- see **MASS MOVEMENT SENSOR MODULE (MMS) FRONT, REPLACING** .
- see **CHECKING WIRING AND TERMINALS** .

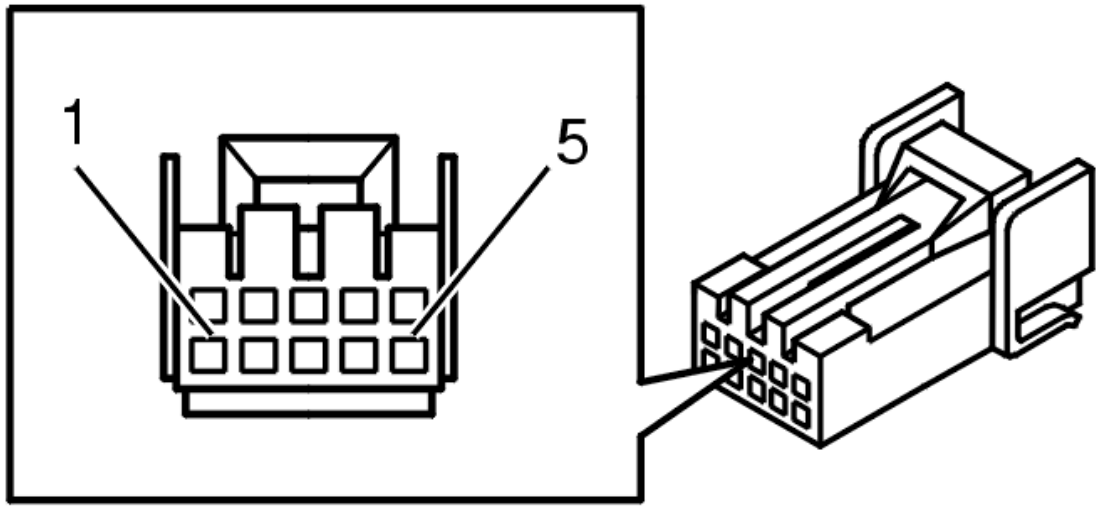

Fig. 195: Identifying 10 Pin Connector Terminals
Courtesy of VOLVO CARS CORPORATION

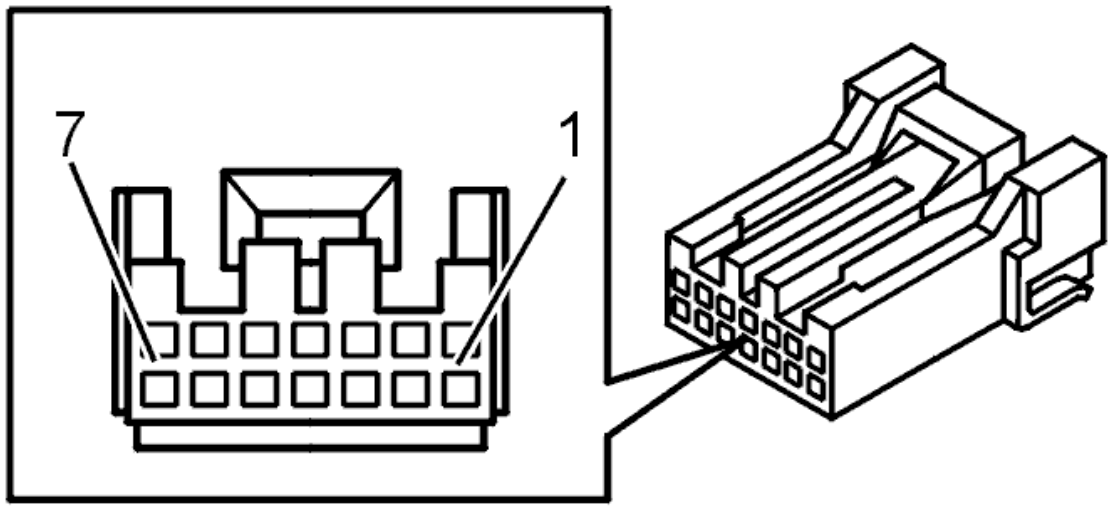

Fig. 196: Identifying Connector Terminals
Courtesy of VOLVO CARS CORPORATION

Was a fault detected?

- **YES**

  Refer to **VERIFICATION**

- **NO**

  Refer to **CHECKING WIRING AND CONNECTORS**

CHECKING WIRING AND CONNECTORS

Check the ground lead between movement sensor connector terminal #5 and the ground terminal 31/83. Check for an open-circuit. Check for an intermittent open-circuit.

Check in particular intermediate connector (54/13:20) in the cable harness.

If no fault was found, try a new sensor.

Other information:

- see **CONNECTING THE BREAKOUT BOX** .
- For information about upper electronic module (UEM) signals:**SIGNAL DESCRIPTION, UPPER ELECTRONIC MODULE (UEM)**
- see **MASS MOVEMENT SENSOR MODULE (MMS) FRONT, REPLACING** .
- see **CHECKING WIRING AND TERMINALS** .

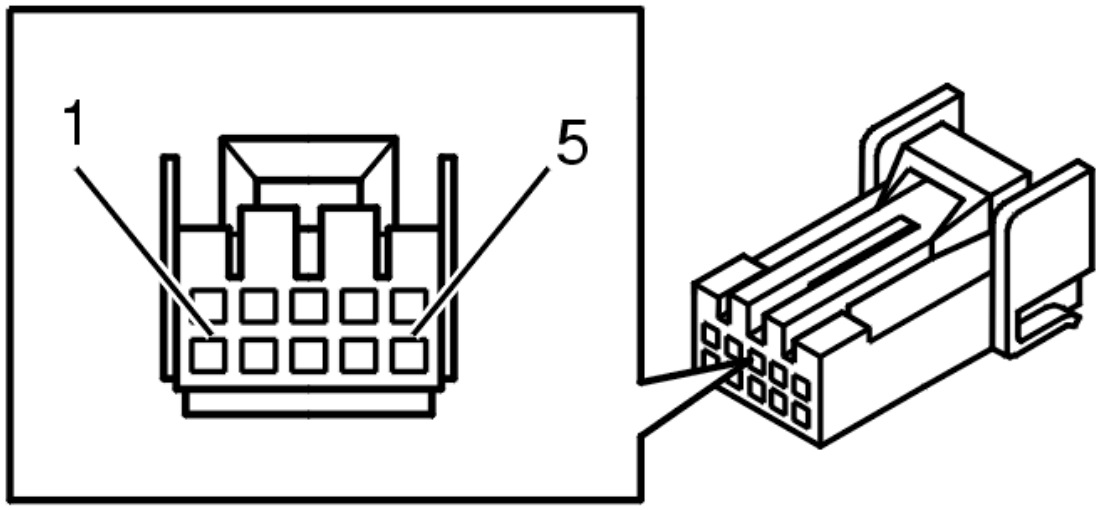

Fig. 197: Identifying 10 Pin Connector Terminals
Courtesy of VOLVO CARS CORPORATION

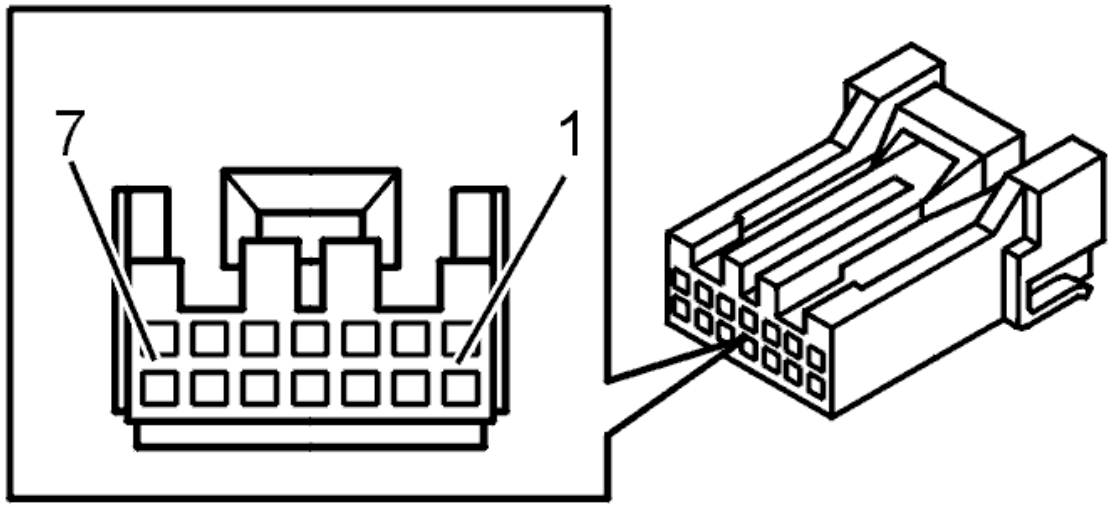

Fig. 198: Identifying Connector Terminals
Courtesy of VOLVO CARS CORPORATION

- **Continue**

  Refer to **VERIFICATION**

VERIFICATION

VERIFICATION

HINT: After carrying out the repair, check that the fault has been remedied.

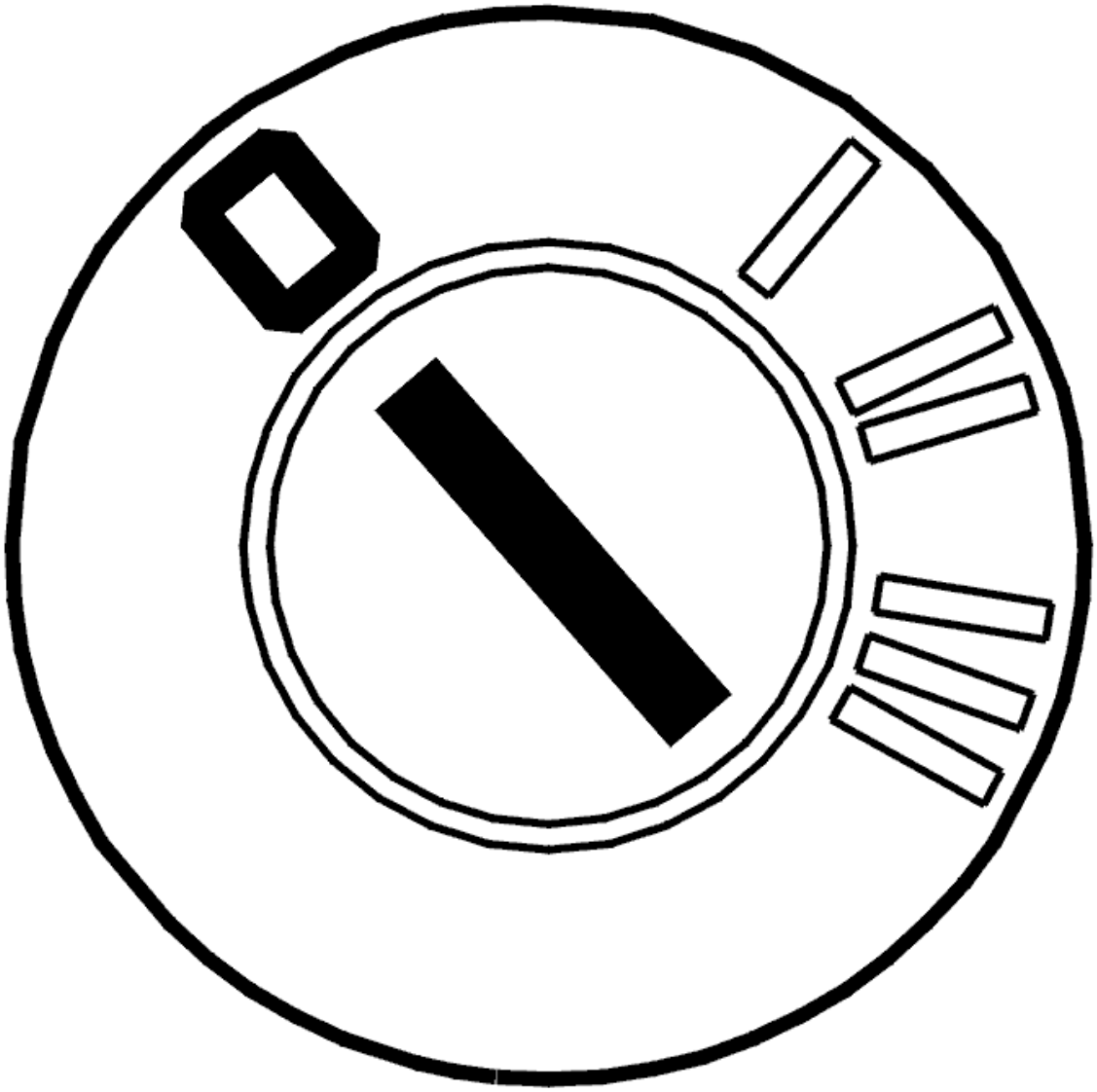

Fig. 199: Identifying Ignition OFF
Courtesy of VOLVO CARS CORPORATION

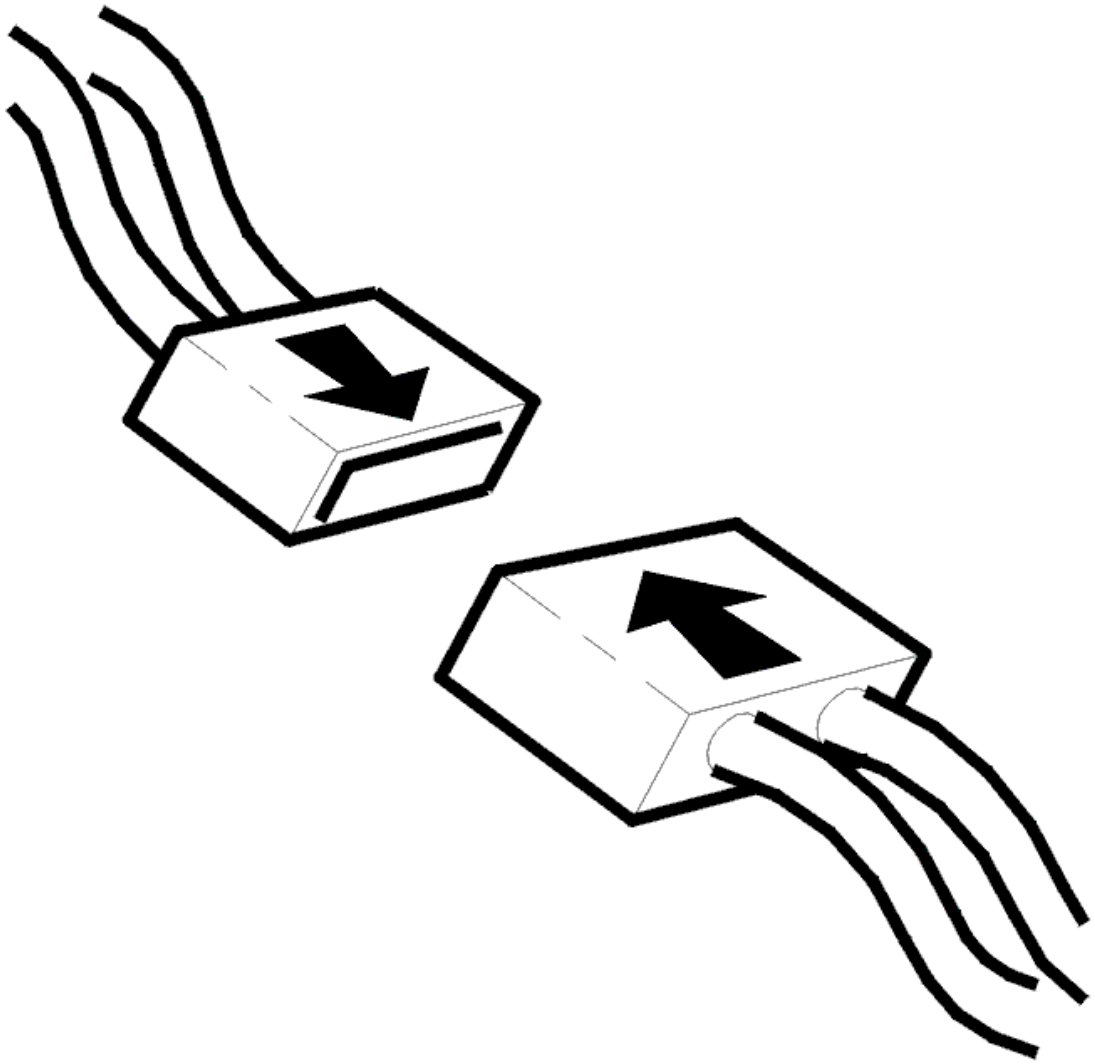

Fig. 200: Identifying Connector(s) Reinstallation
Courtesy of VOLVO CARS CORPORATION

- Ignition off
- Reinstall the connectors, components etc.

For checking MMS (up to and including MY 2011)

- Check that the function for reduced alarm is not activated (button on 7 in row).
- Open the driver's window and the rear window on the driver's side. Lock the vehicle using the remote control.
- Wait 25 seconds until the alarm is active. Then trigger the alarm by waving your arm through the driver's door window, inside the vehicle above the front seats. The siren or horn must sound and the hazard warning lamps flash.
- Reset the alarm by pressing the unlocking button on the remote control. Lock the vehicle again.

- Wait 25 seconds until the alarm is active. Then trigger the alarm by waving you arm, through the rear door window on the driver's side, inside the vehicle above the cargo compartment. The siren or horn must sound and the hazard warning lamps flash. Reset the alarm by pressing the unlocking button on the remote control.
- Check that the front and rear mass movement sensor (MMS) has triggered the alarm the last two times via the read out of the alarm cause in Vehicle communication.

For checking IMS (from and including MY 2012)

- Check that the function for reduced alarm is not activated (button on 7 in row).
- Open the driver's window, close all doors and hatches. Lock the vehicle using the remote control.
- Wait 25 seconds until the alarm is active. Then trigger the alarm by waving your arm inside the vehicle. The siren or horn must sound and the hazard warning lamps flash. Reset the alarm by pressing the unlocking button on the remote control.
- Check that the MMS or IMS has triggered the alarm via the read out of the alarm cause in Vehicle communication.

Is the function OK?

- **YES**

  VERIFIED: Troubleshooting has been completed.

- **NO**

  Refer to **INFORMATION**

INFORMATION

FAULT-TRACING INFORMATION

The fault should have been detected and remedied. As this is not the case fault-tracing has failed.

Exit fault-tracing for this diagnostic trouble code (DTC) or make another attempt.

UEM-001C: GENERAL COURTESY LIGHTING. SIGNAL FAULTY (2003-2012)

DIAGNOSTIC TROUBLE CODE INFORMATION

Condition

If the control unit detects that the general courtesy lighting switch has been pressed down for more than 3 minutes, a diagnostic trouble code is displayed. The test is done when the ignition is on or off.

Substitute Value

- Nothing.

Possible Source

- The general courtesy lighting switch has stuck
- CFL (front left reading lamp switch signal) and CFR (front right reading lamp switch signal) short circuited to voltage supply.

Fault symptom[s]

- Courtesy lighting does not work.

FAULTY SIGNAL

CHECKING FOR PERMANENT OR INTERMITTENT FAULTS

Unlock the car using the key or remote control from outside.

Does the general interior lighting come on?

- **YES**

  Refer to **INTERMITTENT FAULT**

- **NO**

  Refer to **CHECKING FOR A SHORT-CIRCUIT**

CHECKING FOR A SHORT-CIRCUIT

Check that the button has not jammed in its depressed position.

Check the cable between control module terminal #16 and roof lamp module terminal #7A. Check for a short-circuit to supply voltage.

Check the cable between control module terminal #4 and roof lamp module terminal #8A. Check for a short-circuit to supply voltage.

Replace the cable if a fault is found.

Other information:

- For further information about signals and other values, see **SIGNAL DESCRIPTION, UPPER ELECTRONIC MODULE (UEM)**
- To connect the breakout box, see **CONNECTING THE BREAKOUT BOX**
- To access the roof lamp module switches, see **INTERIOR LIGHTING, REPLACING**

- To access the connector for the upper electronic module (UEM), see **UPPER ELECTRONIC MODULE (UEM)/REARVIEW MIRROR, REPLACING**
- With the ignition on and when the function is not activated, the voltage between terminals #7A and #8A and ground should be 0 V
- see **CHECKING WIRING AND TERMINALS** .

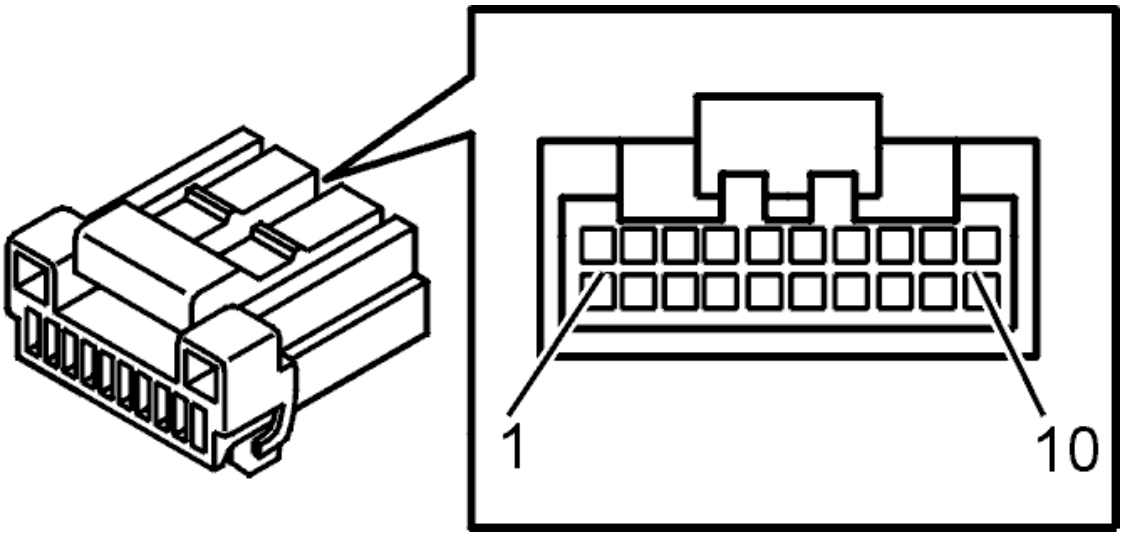

Fig. 201: Identifying Connector Terminals
Courtesy of VOLVO CARS CORPORATION

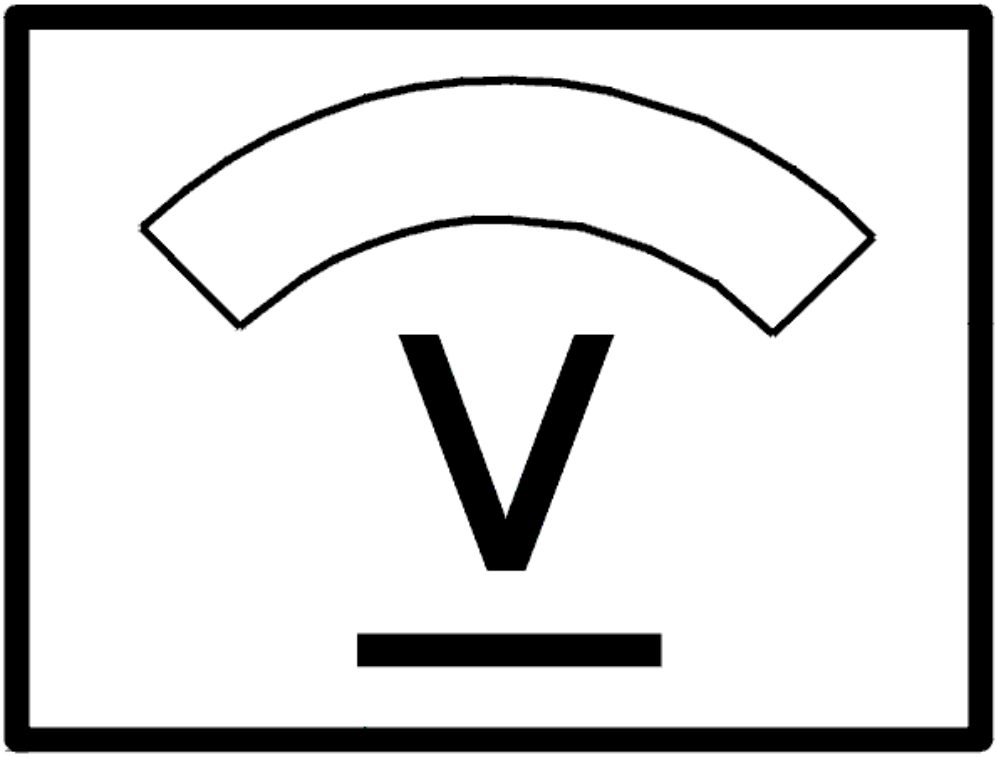

Fig. 202: Identifying Voltage Display
Courtesy of VOLVO CARS CORPORATION

Was a fault detected?

- **YES**

  Refer to **VERIFICATION**

- **NO**

  Refer to **REPLACING THE COMPONENT**

REPLACING THE COMPONENT

Remove the housing with the buttons.

Press directly on the switch for the light button.

If the switch works, replace the lamp housing.

If the switch still does not operate, replace the printed circuit board with switches.

Other information:

- To access the interior lighting, see **INTERIOR LIGHTING, REPLACING** .
- **Continue**

  Refer to **VERIFICATION**

INTERMITTENT FAULT

Check the control module and roof lamp module connectors. Check for contact resistance and oxidation. Check for loose connections.

Check the cable between control module terminal #16 and roof lamp module terminal #7A. Check for an intermittent short-circuit to supply voltage. Check for an intermittent open-circuit.

Check the cable between control module terminal #4 and roof lamp module terminal #8A. Check for an intermittent short-circuit to supply voltage. Check for an intermittent open-circuit.

Check the roof lamp module housing.

Check the roof lamp module switches.

Other information:

- For further information about signals and other values, see **SIGNAL DESCRIPTION, UPPER ELECTRONIC MODULE (UEM)**
- To connect the breakout box, see **CONNECTING THE BREAKOUT BOX**
- To access the roof lamp module switches, see **INTERIOR LIGHTING, REPLACING**
- To access the connector for the upper electronic module (UEM), see **UPPER ELECTRONIC MODULE (UEM)/REARVIEW MIRROR, REPLACING**
- With the ignition on and when the function is not activated, the voltage between terminals #7A and #8A and ground should be 0 V
- see **CHECKING WIRING AND TERMINALS** .

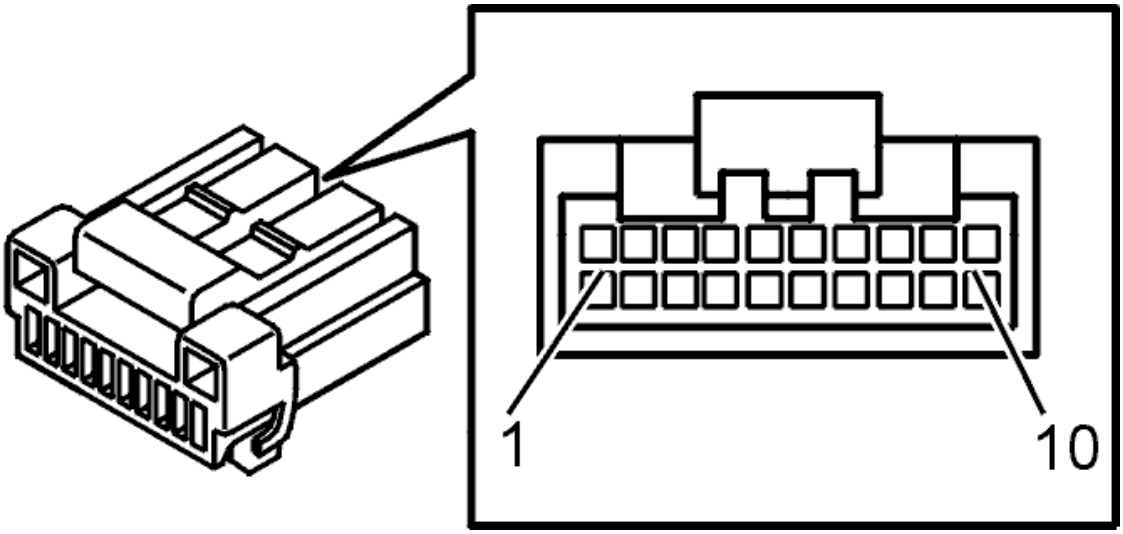

Fig. 203: Identifying Connector Terminals
Courtesy of VOLVO CARS CORPORATION

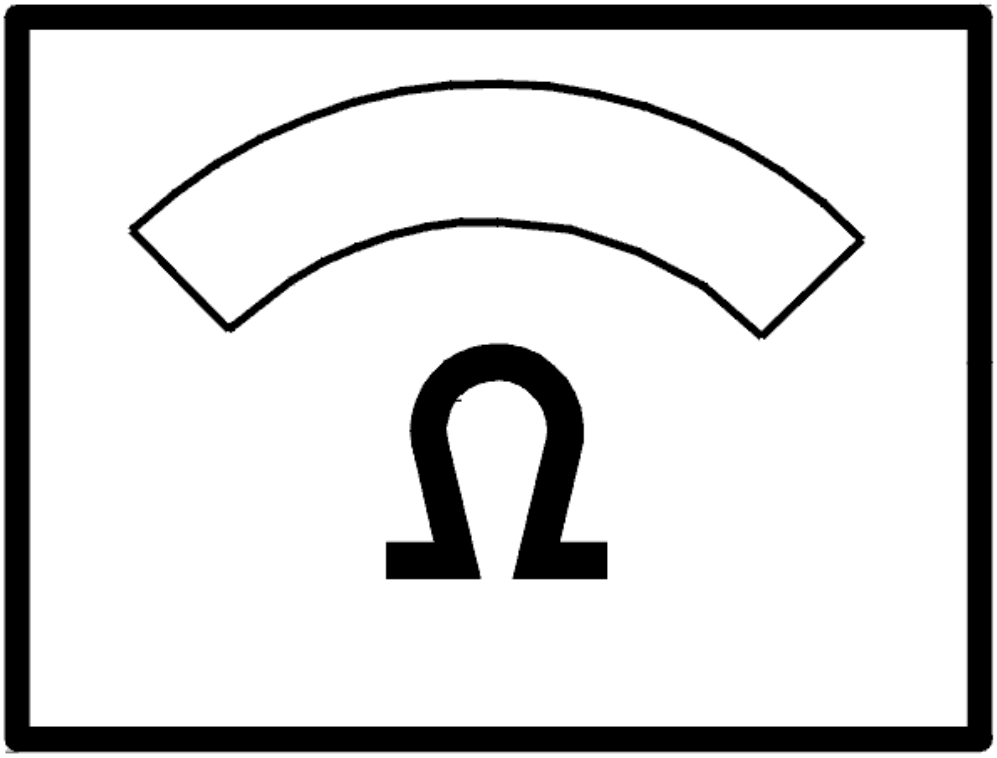

Fig. 204: Identifying Ohms Display
Courtesy of VOLVO CARS CORPORATION

- **Continue**

  Refer to **INFORMATION**

VERIFICATION

VERIFICATION

HINT: After the repair it is necessary to check that the fault has been rectified.

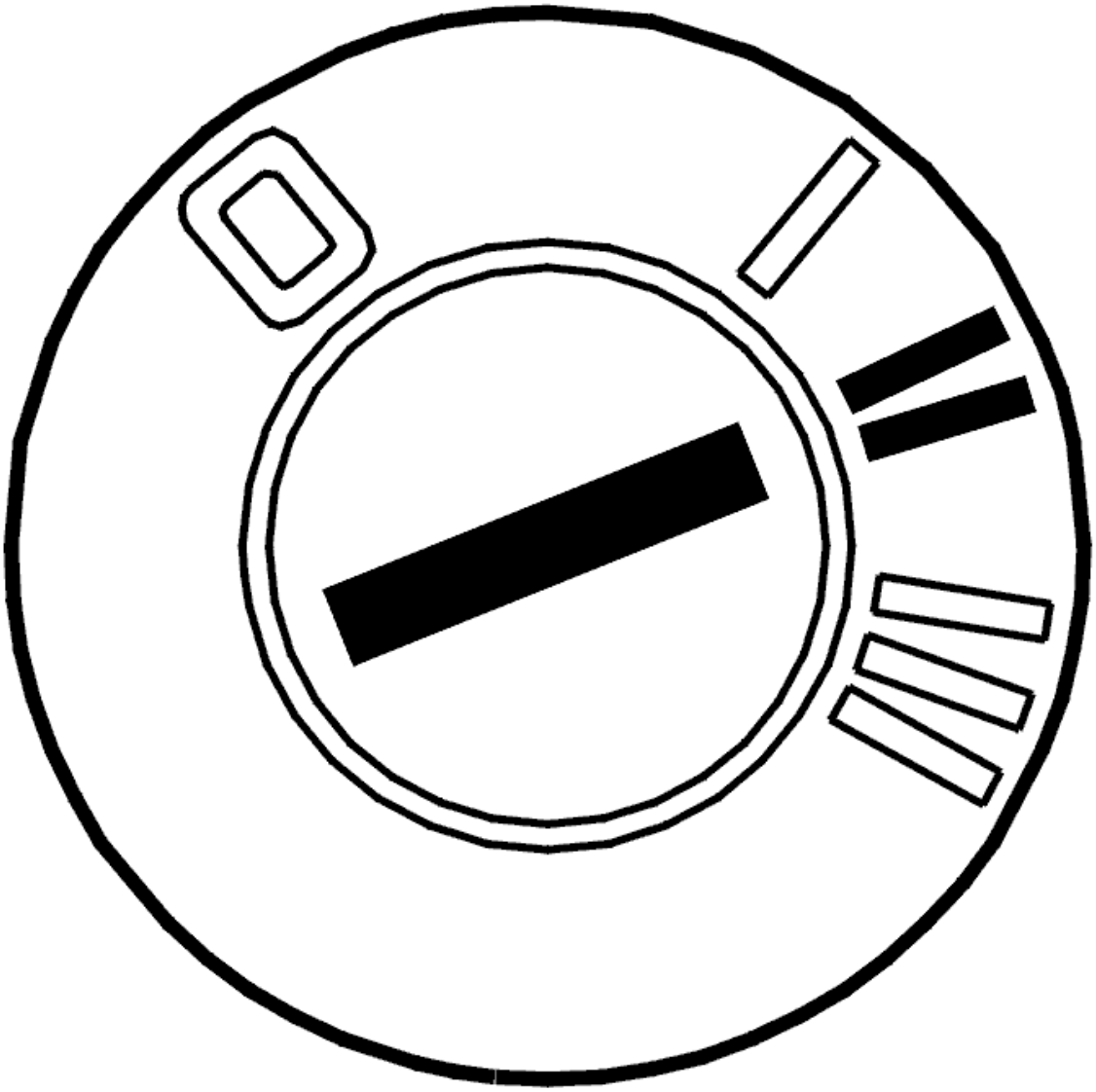

Fig. 205: Identifying Ignition ON
Courtesy of VOLVO CARS CORPORATION

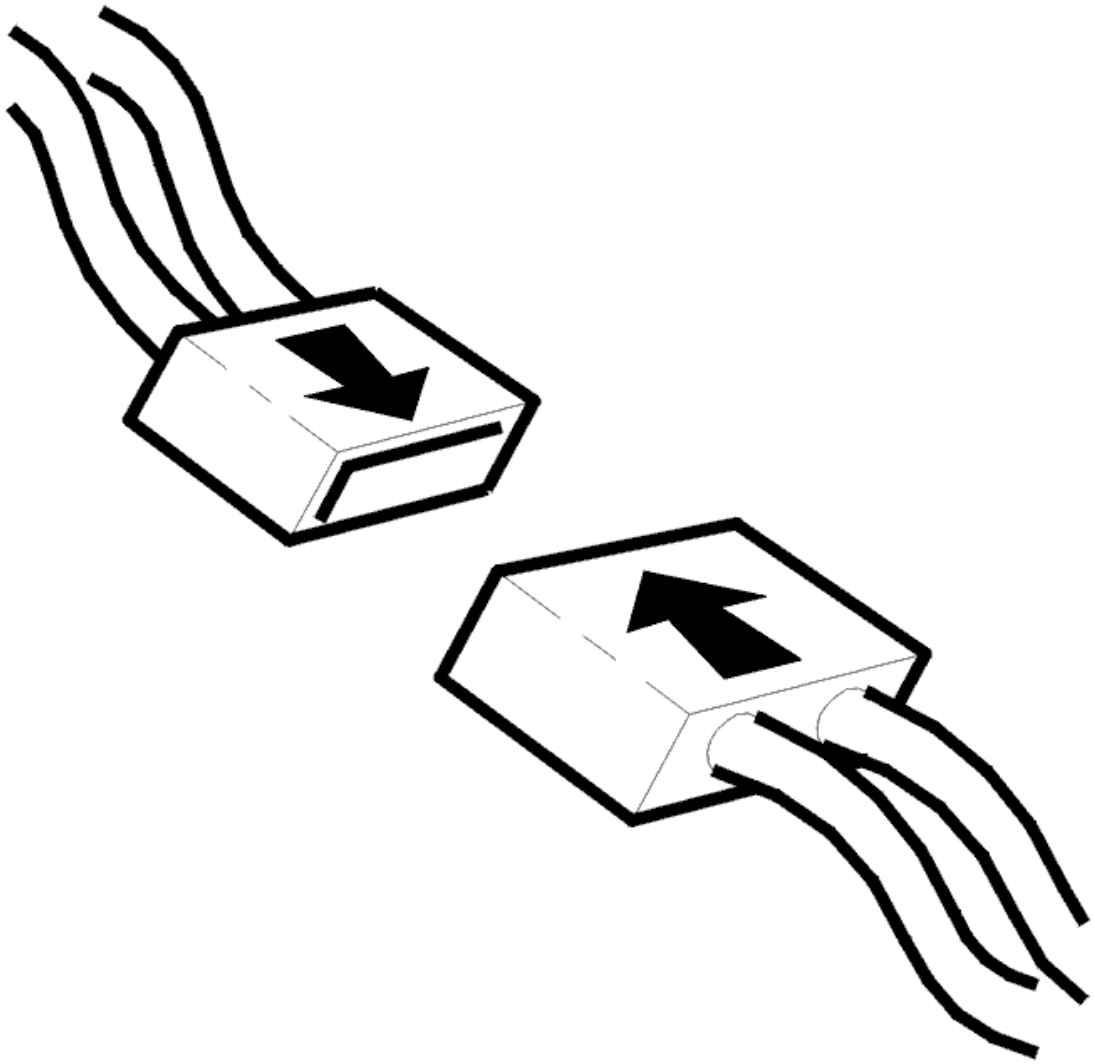

Fig. 206: Identifying Connector(s) Reinstallation
Courtesy of VOLVO CARS CORPORATION

- Ignition off.
- Connect the connectors, install the components, etc.
- Ignition on.

  Press the lamp switch and check that the lamps come on and that the switch does not stick.

Does it work?

- **YES**

  VERIFIED: Troubleshooting has been completed.

- **NO**

  Refer to **INFORMATION**

INFORMATION

FAULT-TRACING INFORMATION

The fault should have been detected and remedied. As this is not the case fault-tracing has failed.

Exit fault-tracing for this diagnostic trouble code (DTC) or make another attempt.

INFORMATION

FAULT-TRACING INFORMATION

If the fault is intermittent, do not verify fault-tracing if the fault does not recur.

It is possible to view the information again, or leave fault-tracing for this diagnostic trouble code (DTC).

UEM-001D: READING LAMP. SIGNAL TOO HIGH (2003-2012)

DIAGNOSTIC TROUBLE CODE INFORMATION

Condition

If the control unit registers a faulty signal from the front left reading lamp, the diagnostic trouble code is displayed.

Substitute Value

- Nothing.

Possible Source

- The switch for the front left reading lamp has stuck down
- The signal wire for the front left reading lamp is short circuited to voltage supply.

Fault symptom[s]

- Courtesy lighting does not work.

SIGNAL TOO HIGH

CHECKING FOR A SHORT-CIRCUIT

Check that the button has not jammed in its depressed position.

Check the cable between the upper electronic module (UEM) and the roof lamp module. Check for a short-circuit to supply voltage.

UEM-001D front left reading lamp

Control module terminal #4 and roof lamp module terminal #8A.

UEM-001E front right reading lamp

Control module terminal #16 and roof lamp module terminal #7A.

Replace the cable if a fault is found.

Other information:

- For further information about signals and other values, see **SIGNAL DESCRIPTION, UPPER ELECTRONIC MODULE (UEM)**
- To connect the breakout box, see **CONNECTING THE BREAKOUT BOX**
- To access the roof lamp module switches, see **INTERIOR LIGHTING, REPLACING**
- With the ignition on and when the function is not activated, the voltage between terminal #8A (UEM 001D) and terminal #7A (UEM 001E) on the roof lamp unit (control module side) and ground should be 0 V
- see **CHECKING WIRING AND TERMINALS** .

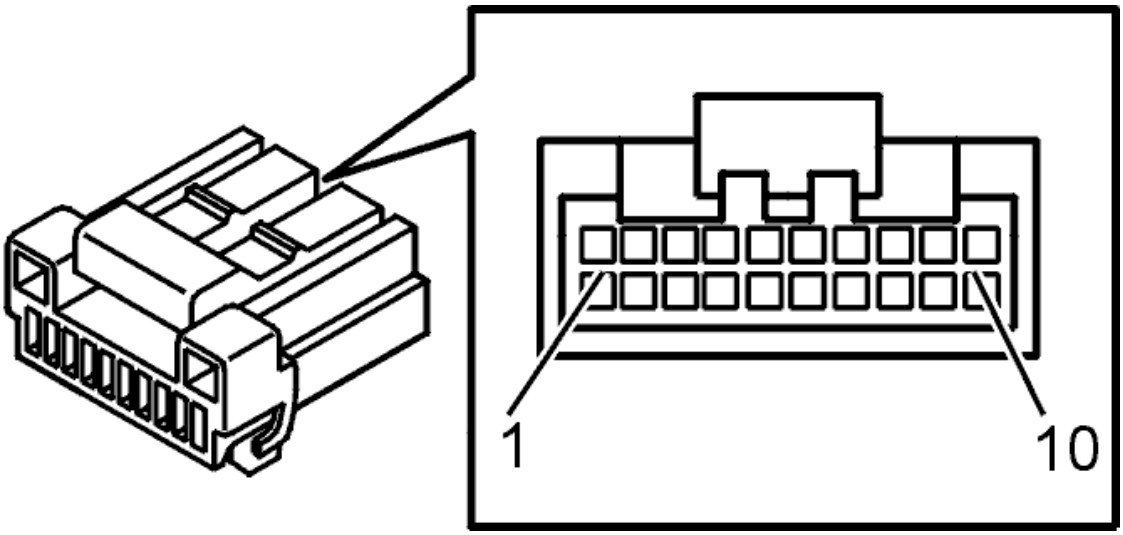

Fig. 207: Identifying Connector Terminals
Courtesy of VOLVO CARS CORPORATION

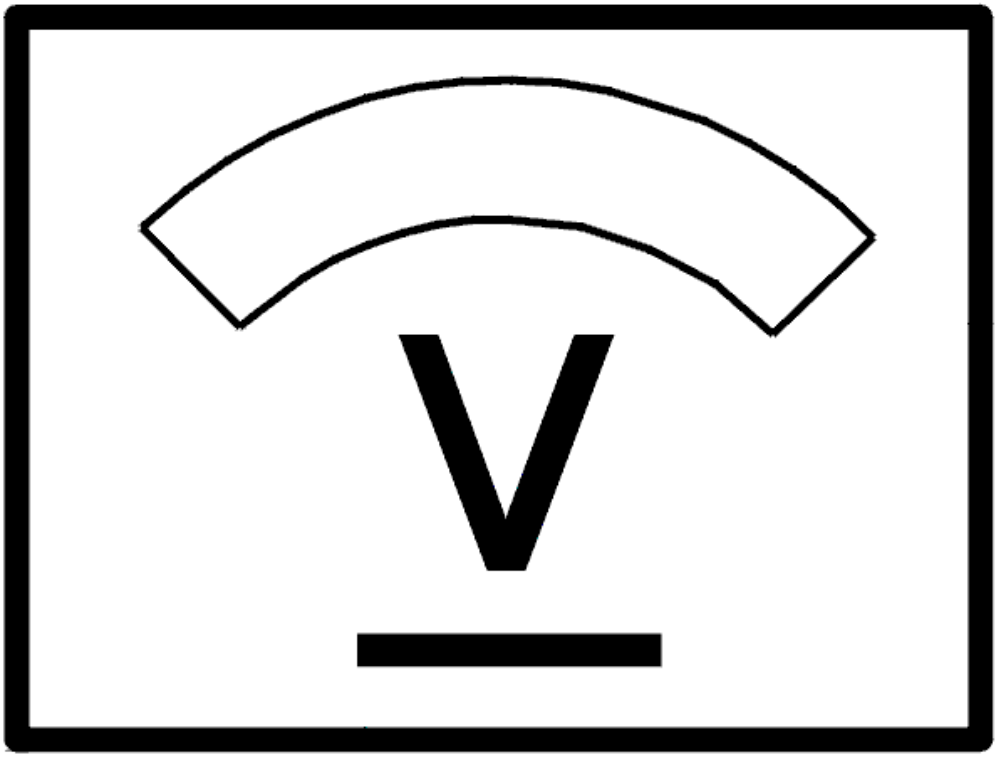

Fig. 208: Identifying Voltage Display
Courtesy of VOLVO CARS CORPORATION

Was a fault detected?

- **YES**

  Refer to **VERIFICATION**

- **NO**

  Refer to **REPLACING THE COMPONENT**

REPLACING THE COMPONENT

Remove the housing with the buttons.

Press the switch for the light button.

If the switch works, replace the lamp housing.

If the switch still does not operate, replace the printed circuit board and its switches.

Other information:

- To access the interior lighting, see **INTERIOR LIGHTING, REPLACING** .
- **Continue**

  Refer to **VERIFICATION**

VERIFICATION

VERIFICATION

HINT: After carrying out the repair, check that the fault has been remedied.

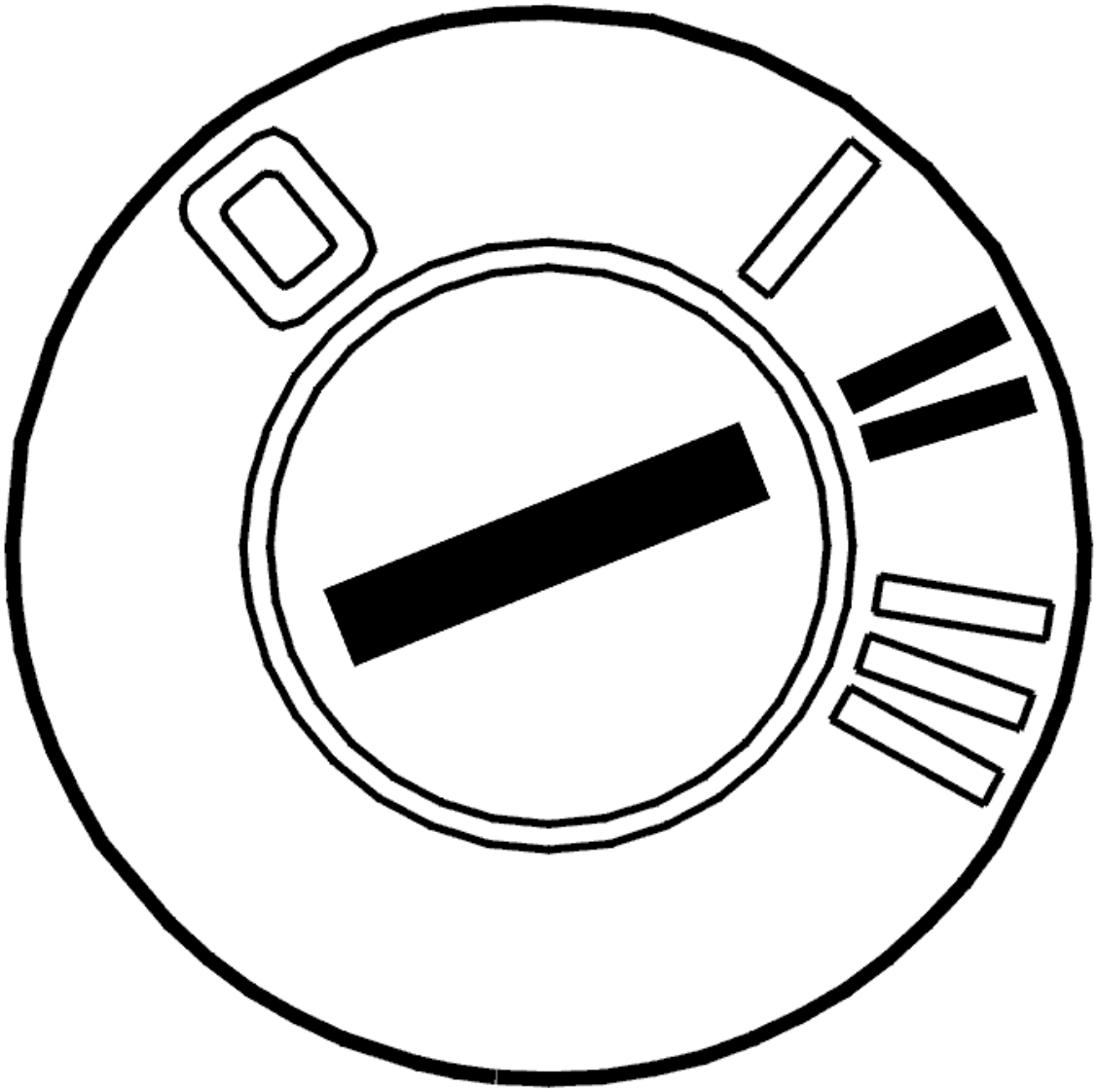

Fig. 209: Identifying Ignition ON
Courtesy of VOLVO CARS CORPORATION

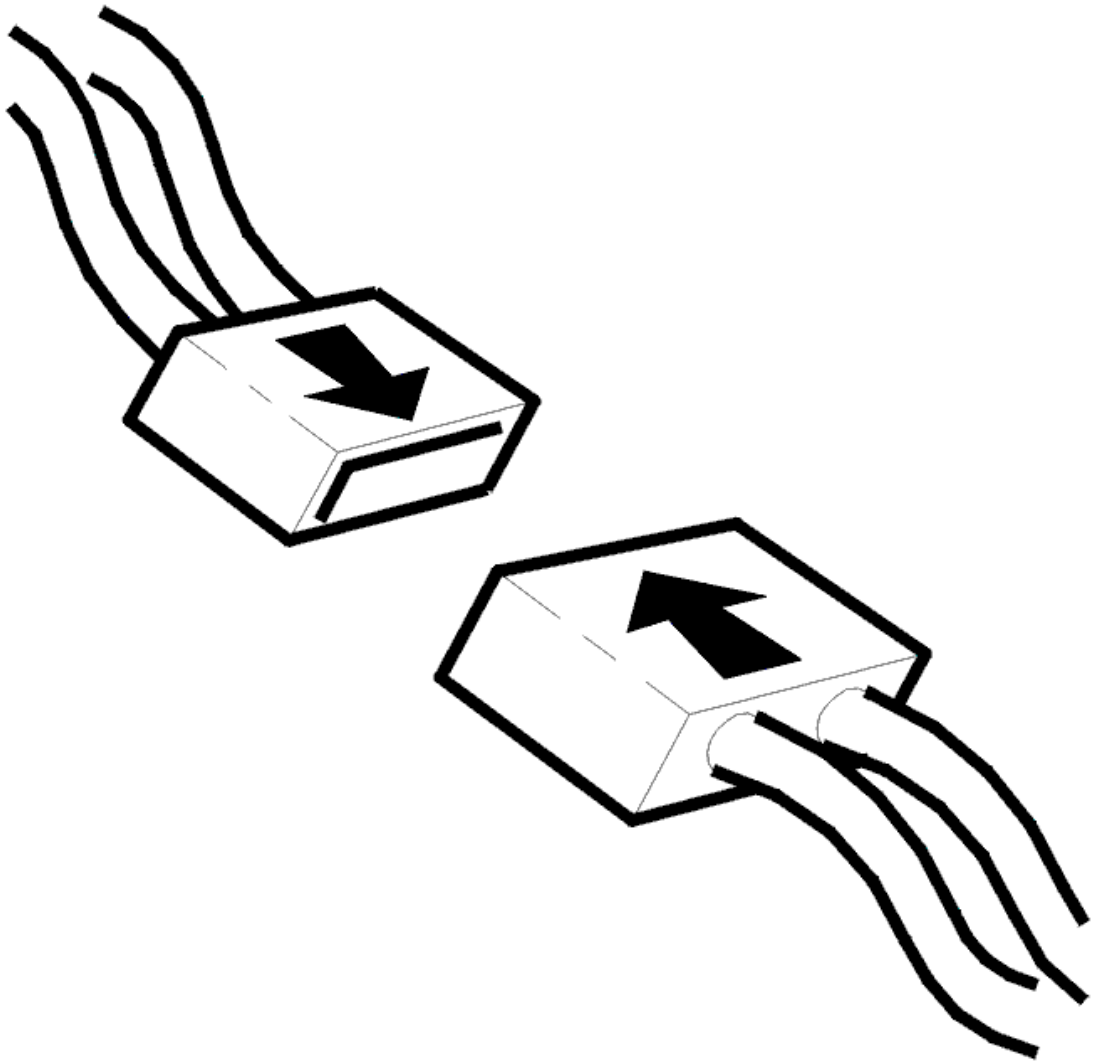

Fig. 210: Identifying Connector(s) Reinstallation
Courtesy of VOLVO CARS CORPORATION

- Ignition off.
- Reinstall the connectors, components etc.
- Ignition on.

  Check that the relevant lamp button and lamp are functioning.

Does the lamp function?

- **YES**

  VERIFIED: Troubleshooting has been completed.

- **NO**

  Refer to **INFORMATION**

INFORMATION

FAULT-TRACING INFORMATION

The fault should have been detected and remedied. As this is not the case fault-tracing has failed.

Exit fault-tracing for this diagnostic trouble code (DTC) or make another attempt.

UEM-001E: READING LAMP. SIGNAL TOO HIGH (2003-2012)

DIAGNOSTIC TROUBLE CODE INFORMATION

Condition

If the control unit registers a faulty signal from the right front reading lamp, the diagnostic trouble code is displayed.

Substitute Value

- Nothing.

Possible Source

- The switch for the front right reading lamp has stuck down
- The signal wire for the front right reading lamp is short circuited to voltage supply.

Fault symptom[s]

- Courtesy lighting does not work.

SIGNAL TOO HIGH

see **SIGNAL TOO HIGH**

UEM-0020: REAR VIEW MIRROR. SIGNAL MISSING (2003-2012)

DIAGNOSTIC TROUBLE CODE (DTC) INFORMATION

Condition

Diagnostic trouble code (DTC) UEM-0020 is stored if the control module registers that the actual value for rear view mirror anti-dazzle is different from the desired value.

Substitute Value

- None.

Possible Source

- Defective circuit in the rear view mirror.

Fault symptom[s]

- No anti-dazzle function
- Poor anti-dazzle function.

SIGNAL MISSING

REPLACING THE CONTROL MODULE AND PROGRAMMING

NOTE: **If possible, read off the programmed data from the control module before it is replaced.**

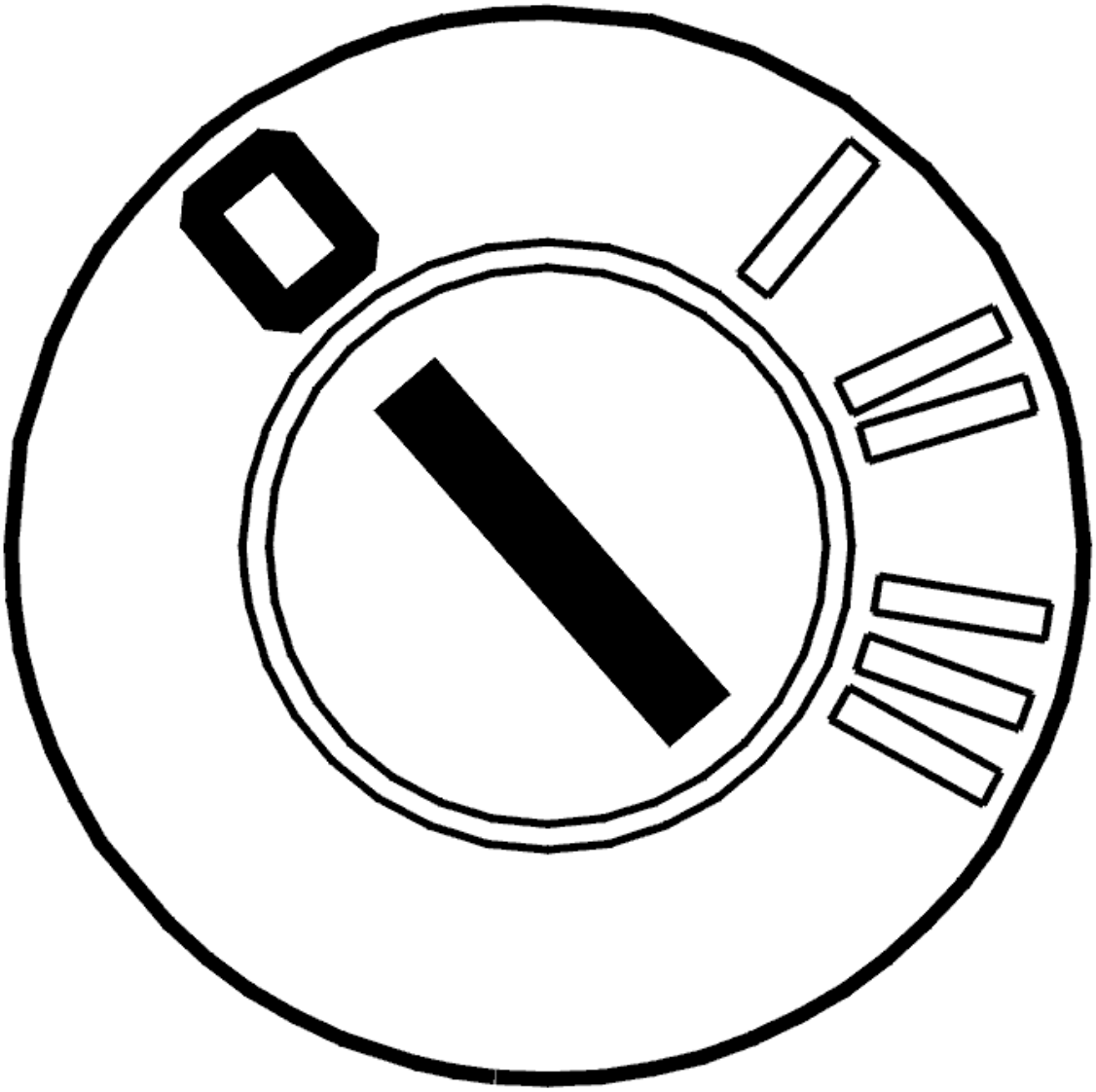

Fig. 211: Identifying Ignition OFF
Courtesy of VOLVO CARS CORPORATION

- Ignition off.

  The upper electronic module has registered an internal fault.

  As a result of the fault, the control module must be replaced.

- **Continue**

  Refer to **REPLACING THE CONTROL MODULE**

REPLACING THE CONTROL MODULE

READING OFF THE PROGRAMMED VALUES

NOTE: **Read off the programmed values from the upper electronic module (UEM) before replacing the control module.**

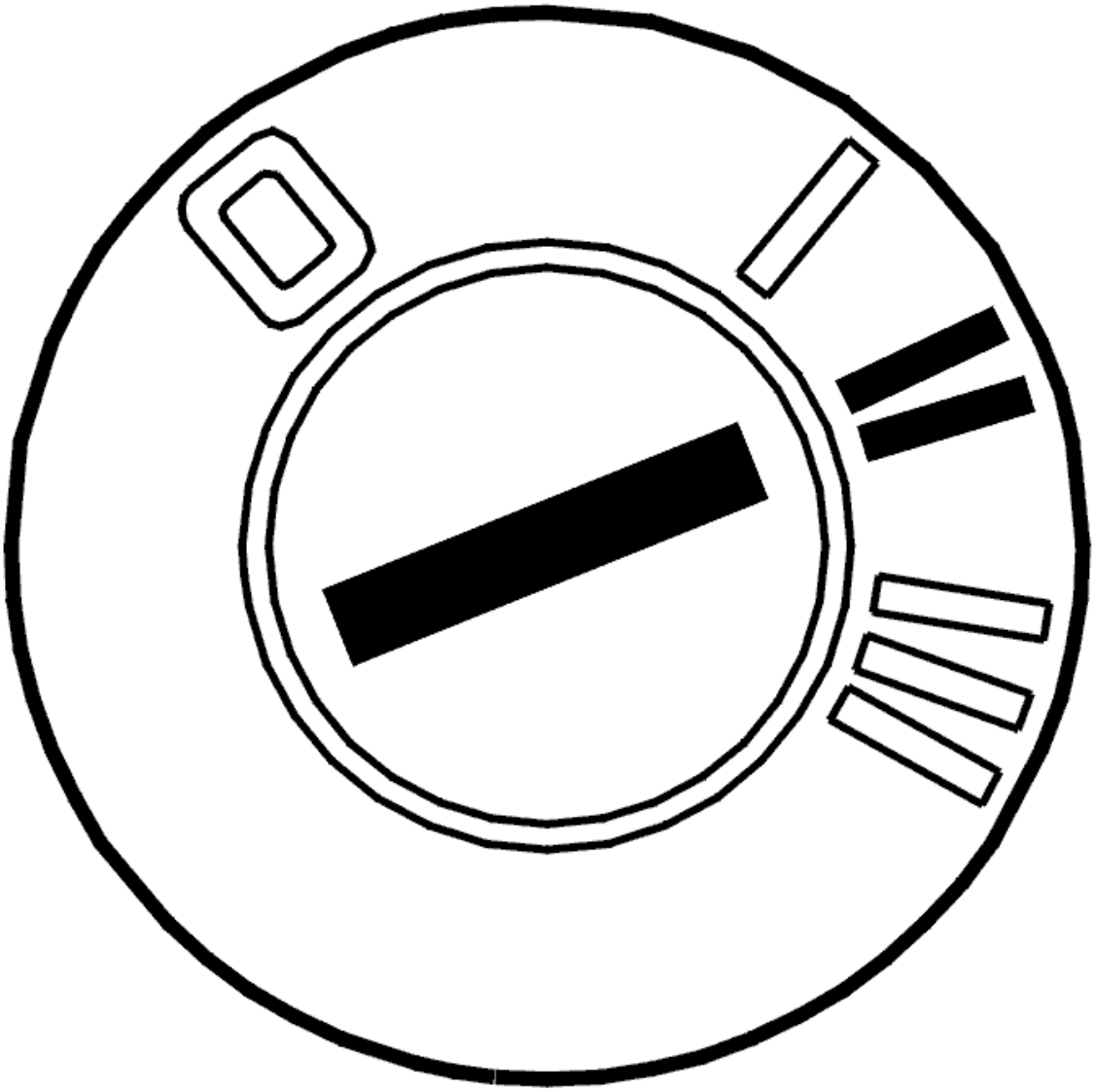

Fig. 212: Identifying Ignition ON
Courtesy of VOLVO CARS CORPORATION

- Ignition on
- Use the VCT2000 (or appropriate scan tool) to read off the programmed values.

  The retained values are programmed customer parameters in the upper electronic module (UEM). The retained values should be noted for later use.

  Other information

  - For information about programming the customer parameters, see **DIAGNOSTIC FUNCTIONS** .

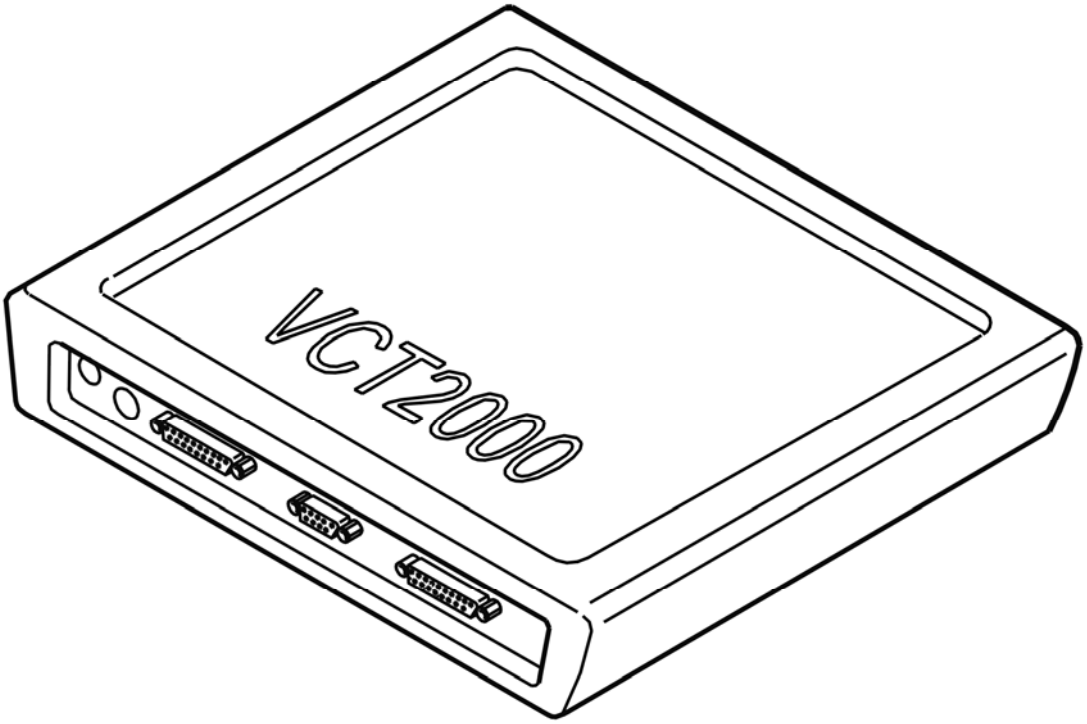

Fig. 213: Identifying VCT2000 Diagnostic Tool Symbol In VIDA
Courtesy of VOLVO CARS CORPORATION

- **Continue**

Refer to **REPLACING CONTROL MODULES AND DOWNLOADING SOFTWARE**

REPLACING CONTROL MODULES AND DOWNLOADING SOFTWARE

CAUTION: A new control module is delivered without software. In order for the control module to function new software must be programmed into the control module after it has been replaced.

Replace the control module and download the new software. See **UPPER ELECTRONIC MODULE (UEM)/REARVIEW MIRROR, REPLACING** .

HINT: When diagnostic trouble code (DTC) E001 is stored, communication with the control module cannot be established. This can be remedied in two ways.

1. Press the remote control button for local lighting
2. Remove fuse 11C/28 from the fusebox in the passenger compartment. Reinstall the fuse again.

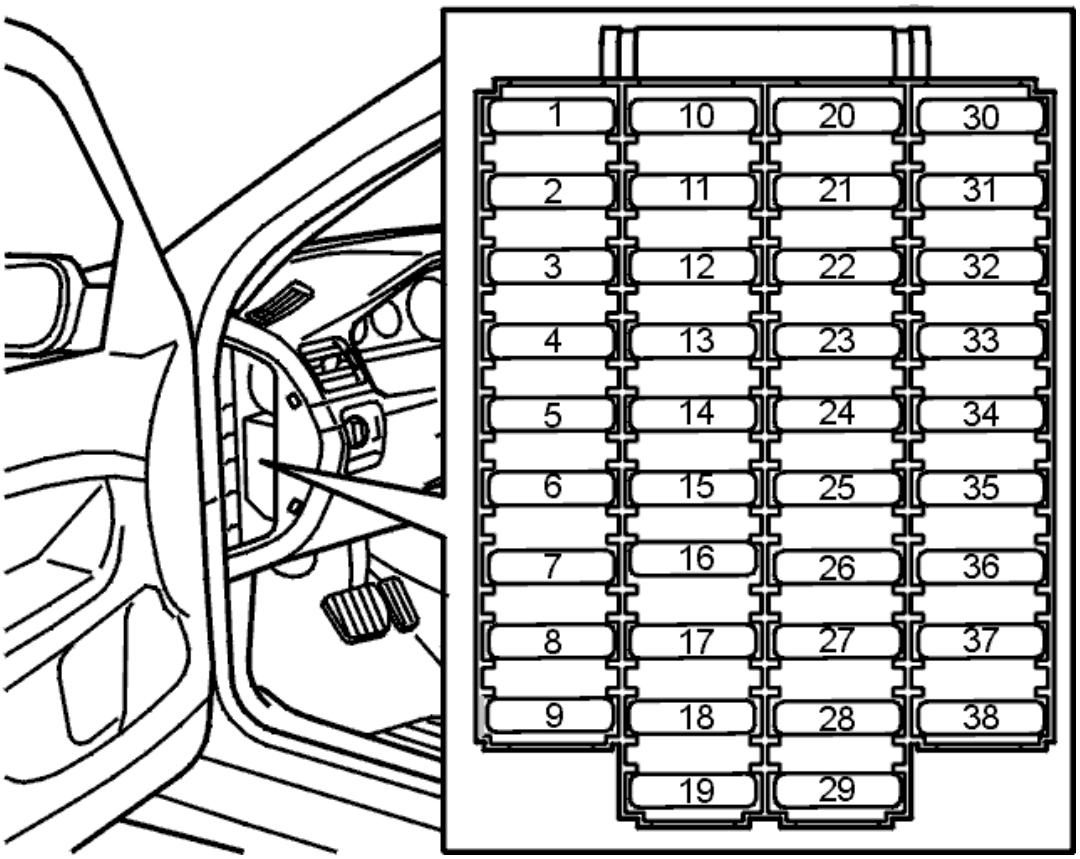

Fig. 214: Locating Fuse Holder (Passenger Compartment)
Courtesy of VOLVO CARS CORPORATION

- **Continue**

  Refer to **CHECKING THE INTERIOR LIGHTING (2)**

CHECKING THE INTERIOR LIGHTING (2)

CHECKING THE INTERIOR LIGHTING

Two times can be programmed for the interior lighting:

1. Short

The period from when the door is unlocked, or the engine stops, to when the interior lighting goes out can be changed if it is too long or too short.

2. Long

The period from when the door is opened, or a lamp is lit with a switch, to when the lamp goes out can be changed if it is too long or too short.

To program a long interior lighting, use VIDA (Volvo scan tool)

- **Continue**

  Refer to **PROGRAMMING A SHORT INTERIOR LIGHTING PERIOD**

PROGRAMMING A SHORT INTERIOR LIGHTING PERIOD

The general lighting and rear reading lamps light and remain lit for 30 seconds when:

- The door has been unlocked from outside with a key or the remote control.
- The engine has been stopped and the ignition key turned to 0.

The default period is 30 seconds. This can be changed to between 5 and 255 seconds.

Read off the programmed values.

To change the time, mark the desired value in the scrolling list and start programming.

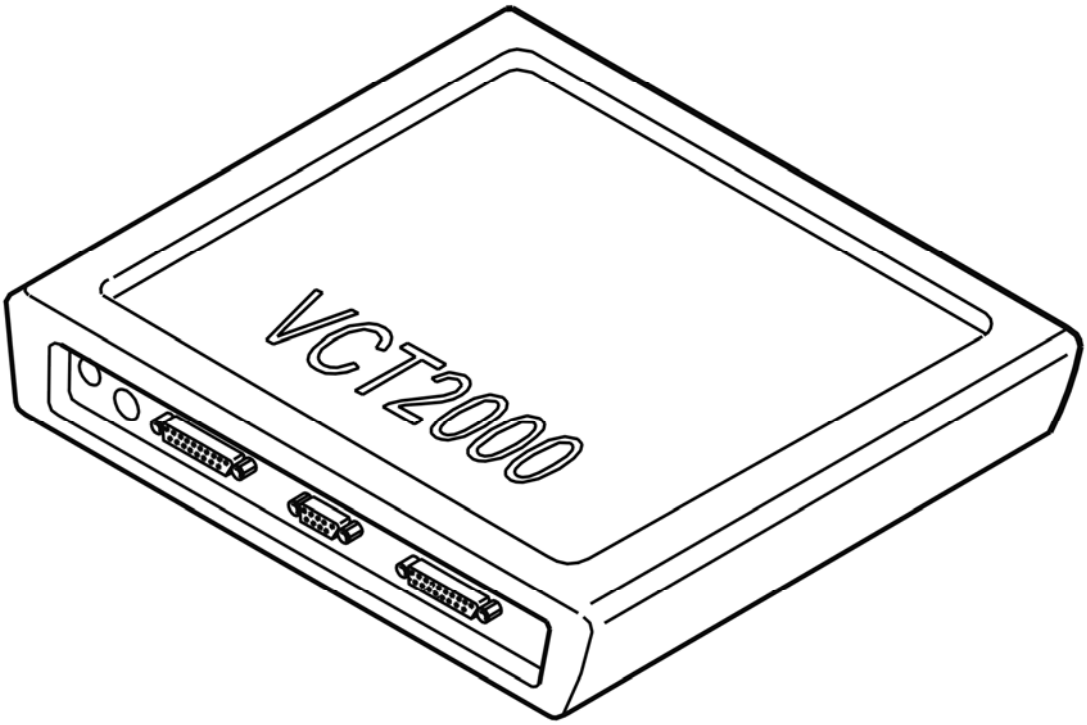

Fig. 215: Identifying VCT2000 Diagnostic Tool Symbol In VIDA
Courtesy of VOLVO CARS CORPORATION

Do you want to program any more parameters?

- **YES**

Refer to **PROGRAMMING A LONG INTERIOR LIGHTING PERIOD**

- **NO**

  Refer to **CHECKING THE ANTI-DAZZLE FUNCTION IN THE REAR VIEW MIRROR**

PROGRAMMING A LONG INTERIOR LIGHTING PERIOD

The general lighting and rear reading lamps light and remain lit for 10 minutes when:

- A door is opened after being unlocked.
- The lamp is lit with a switch.

The default period is 10 minutes. This can be changed to between 0 and 255 minutes at 10 minute intervals.

Read off the programmed values.

To change the time, mark the desired value in the scrolling list and start programming.

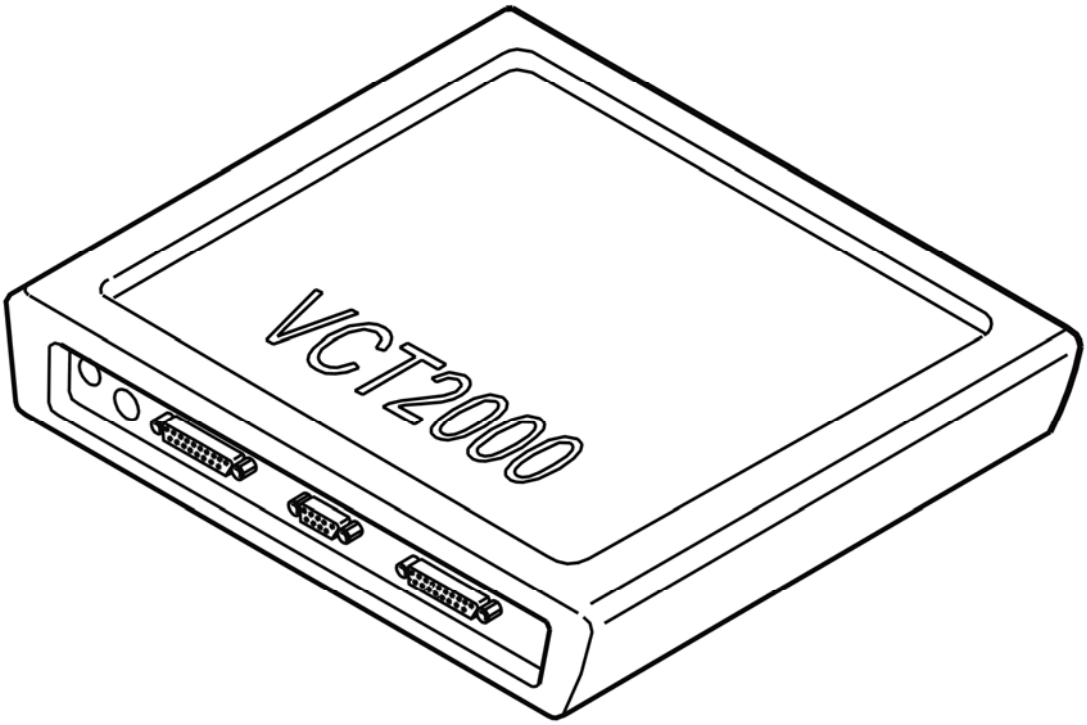

Fig. 216: Identifying VCT2000 Diagnostic Tool Symbol In VIDA
Courtesy of VOLVO CARS CORPORATION

- **Continue**

Refer to **CHECKING THE ANTI-DAZZLE FUNCTION IN THE REAR VIEW MIRROR**

CHECKING THE ANTI-DAZZLE FUNCTION IN THE REAR VIEW MIRROR

CHECKING THE ANTI-DAZZLE FUNCTION

NOTE: If the upper electronic module (UEM) has been replaced software, specially developed for downloading after replacing the control module, must be downloaded to the control module before the anti-dazzle function is changed. See UPPER ELECTRONIC MODULE (UEM)/REARVIEW MIRROR, REPLACING .

The rear view mirror anti-dazzle function can be adjusted:

- If the rear view mirror anti-dazzle function is too powerful or too weak, it can be adjusted.

Specific software for setting the anti-dazzle function must be installed in the car to do this.

CHECKING THE INNER REAR-VIEW MIRROR DIMMER

SYMPTOM VERIFICATION

HINT: After the repair it is necessary to check that the fault has been rectified.

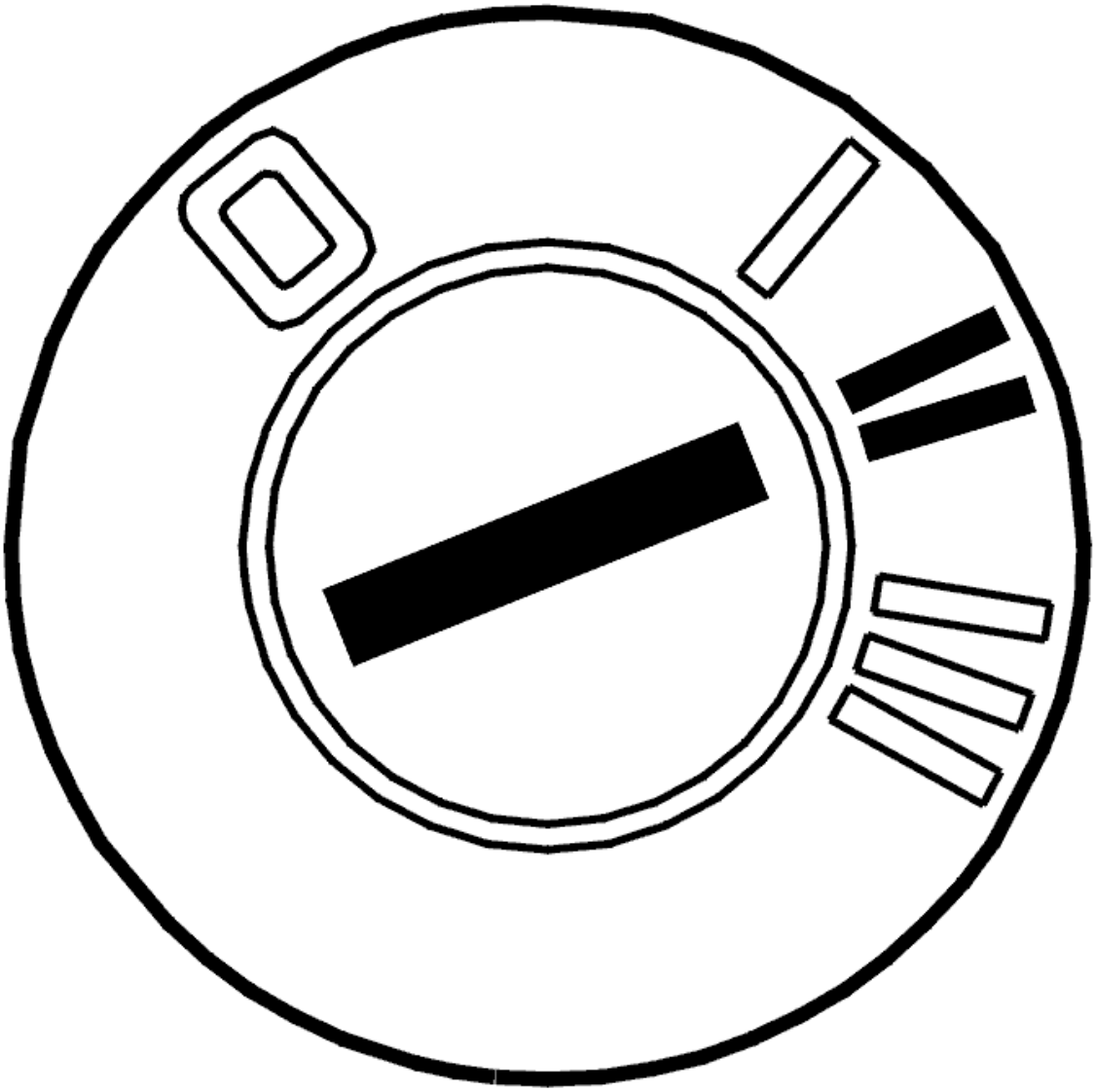

Fig. 217: Identifying Ignition ON
Courtesy of VOLVO CARS CORPORATION

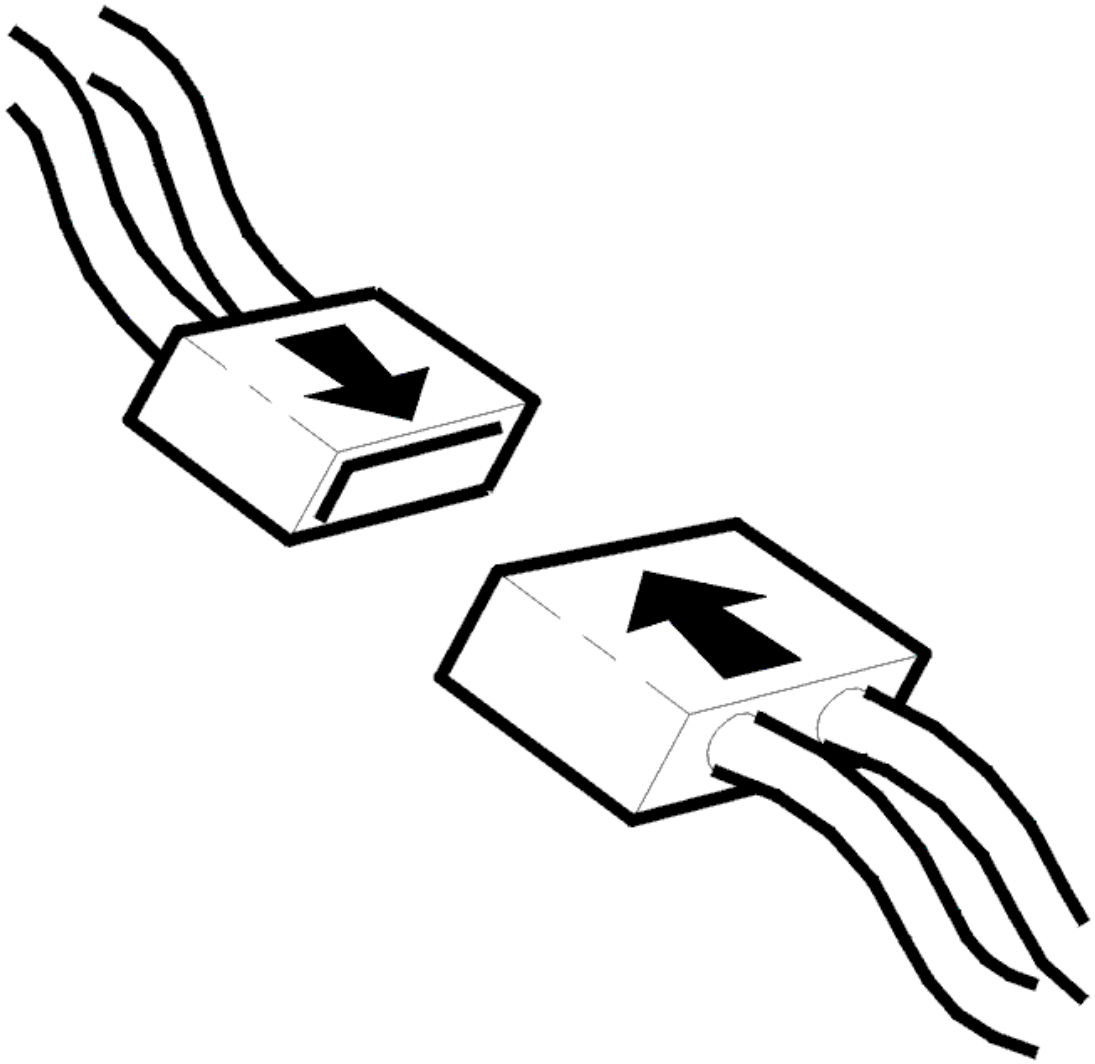

Fig. 218: Identifying Connector(s) Reinstallation
Courtesy of VOLVO CARS CORPORATION

- Ignition off.
- Connect the connectors, install the components, etc.
- Ignition on.

  Shine a strong light on the inner rear-view mirror and check that it dims (becomes darker). Remove the light and check that the mirror lightens. The mirror should also lighten when reverse is engaged.

Does the rear view mirror dimmer work?

- **YES**

  VERIFIED: Troubleshooting has been completed.

- **NO**

  Refer to **INFORMATION**

INFORMATION

FAULT-TRACING INFORMATION

The fault should have been detected and remedied. As this is not the case fault-tracing has failed.

Exit fault-tracing for this diagnostic trouble code (DTC) or make another attempt.

UEM-0030: REAR LEFT READING LAMP. SIGNAL TOO LOW (2003-2012)

DIAGNOSTIC TROUBLE CODE INFORMATION

Condition

The DTC is stored if the control module registers a faulty control signal from the lamp circuit when the rear left reading lamp is lit, at the same time the front left reading lamp is out.

Substitute Value

- The lamp goes off.

Possible Source

- The signal wire for the rear left reading lamp is short circuited to ground
- Intermittent open circuit on signal wire.

Fault symptom[s]

- Passenger compartment lighting/Does not work

SIGNAL TOO LOW

CHECKING THE CONNECTORS

Check the connectors on the upper electronic module and rear reading lamp unit for contact resistance and oxidation as described in, see **CONTACT RESISTANCE AND OXIDATION** , and for a loose contact as described in **LOOSE CONNECTIONS (TERMINALS)** .

Additional information:

- For information on signals and additional values, see **SIGNAL DESCRIPTION, UPPER ELECTRONIC MODULE (UEM)** .
- To connect the test box, see **CONNECTING THE BREAKOUT BOX** .

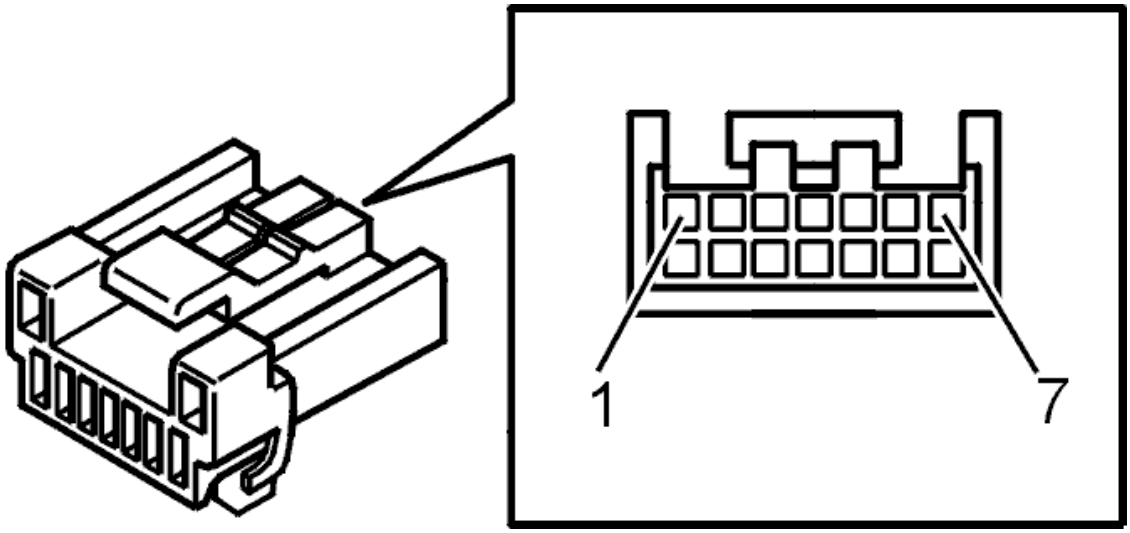

Fig. 219: Identifying Connector Terminals
Courtesy of VOLVO CARS CORPORATION

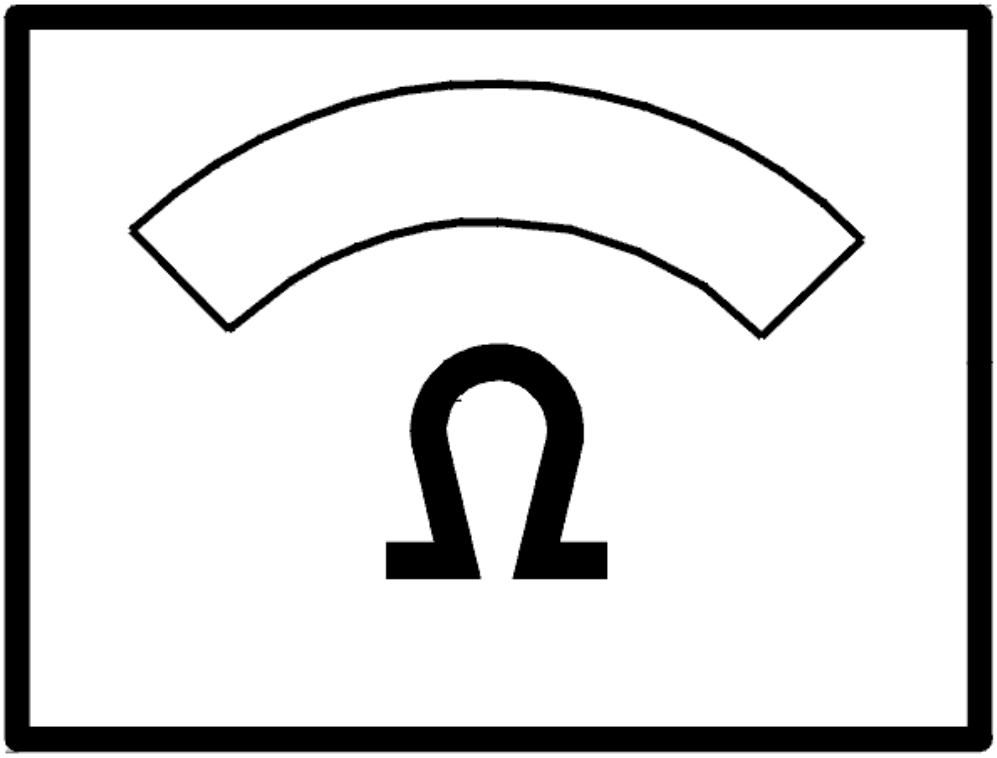

Fig. 220: Identifying Ohms Display
Courtesy of VOLVO CARS CORPORATION

Is there a fault?

- **YES**

  Refer to **VERIFICATION**

- **NO**

  Refer to **CHECKING FOR OPEN CIRCUITS AND SHORT CIRCUITS**

CHECKING FOR OPEN CIRCUITS AND SHORT CIRCUITS

Check the wire between the upper electronic module and the control unit of the rear reading lamp unit for a

short circuit to ground, as described in, see **SHORT-CIRCUIT TO GROUND, PERMANENT FAULTS** .

Remove the connector from the roof lamp unit and measure between the connector and the UEM as described below.

UEM-0030 Rear left reading lamp

Control unit #20 and reading lamp unit #1.

UEM-0032 Rear right reading lamp

Control unit #20 and reading lamp unit #7.

Check the wire between the upper electronic module and the control unit of the rear reading lamp unit for an open circuit, as described in, see **OPEN-CIRCUIT, PERMANENT FAULTS** .

UEM-0030 Rear left reading lamp

Control unit #7 and reading lamp unit #1.

UEM-0032 Rear right reading lamp

Control unit #17 and reading lamp unit #7.

If a fault is found, replace the wire.

If the wire is OK, test with a new bulb.

Additional information:

- For information on signals and additional values, see **SIGNAL DESCRIPTION, UPPER ELECTRONIC MODULE (UEM)** .
- To connect the test box, see **CONNECTING THE BREAKOUT BOX** .
- To replace the bulb, see **BULB, READING LAMP, REAR, REPLACING** .

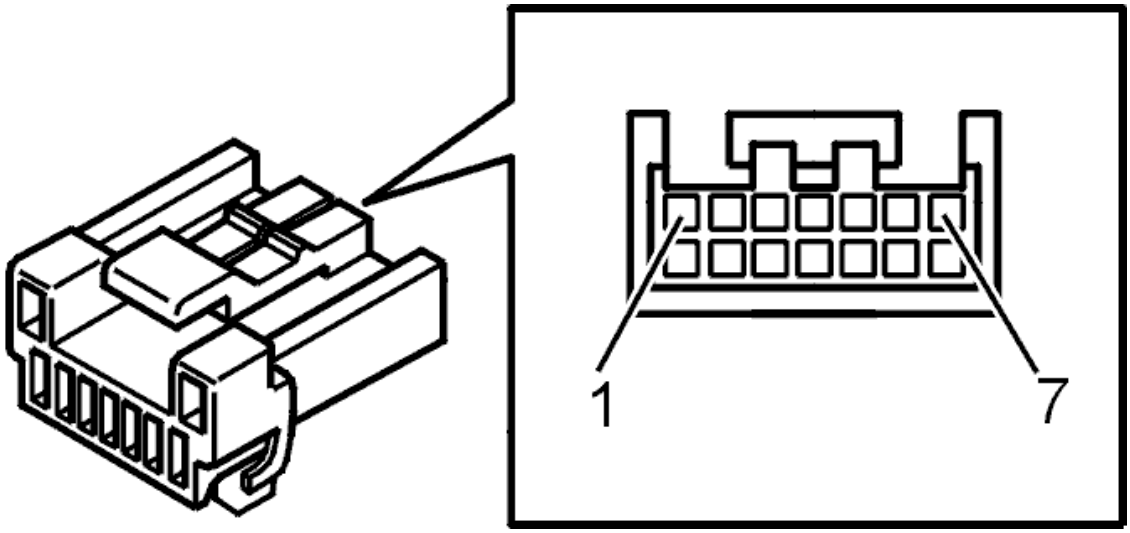

Fig. 221: Identifying Connector Terminals
Courtesy of VOLVO CARS CORPORATION

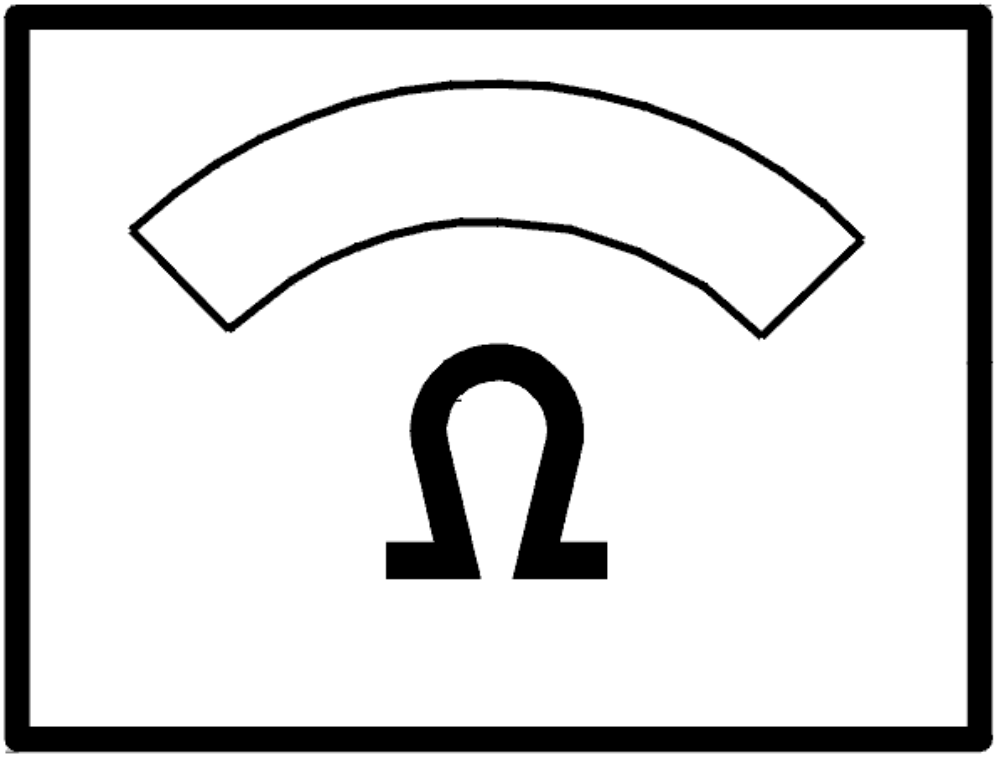

Fig. 222: Identifying Ohms Display
Courtesy of VOLVO CARS CORPORATION

- **Continue**

  Refer to **VERIFICATION**

VERIFICATION

VERIFICATION

HINT: After carrying out the repair, check that the fault has been remedied.

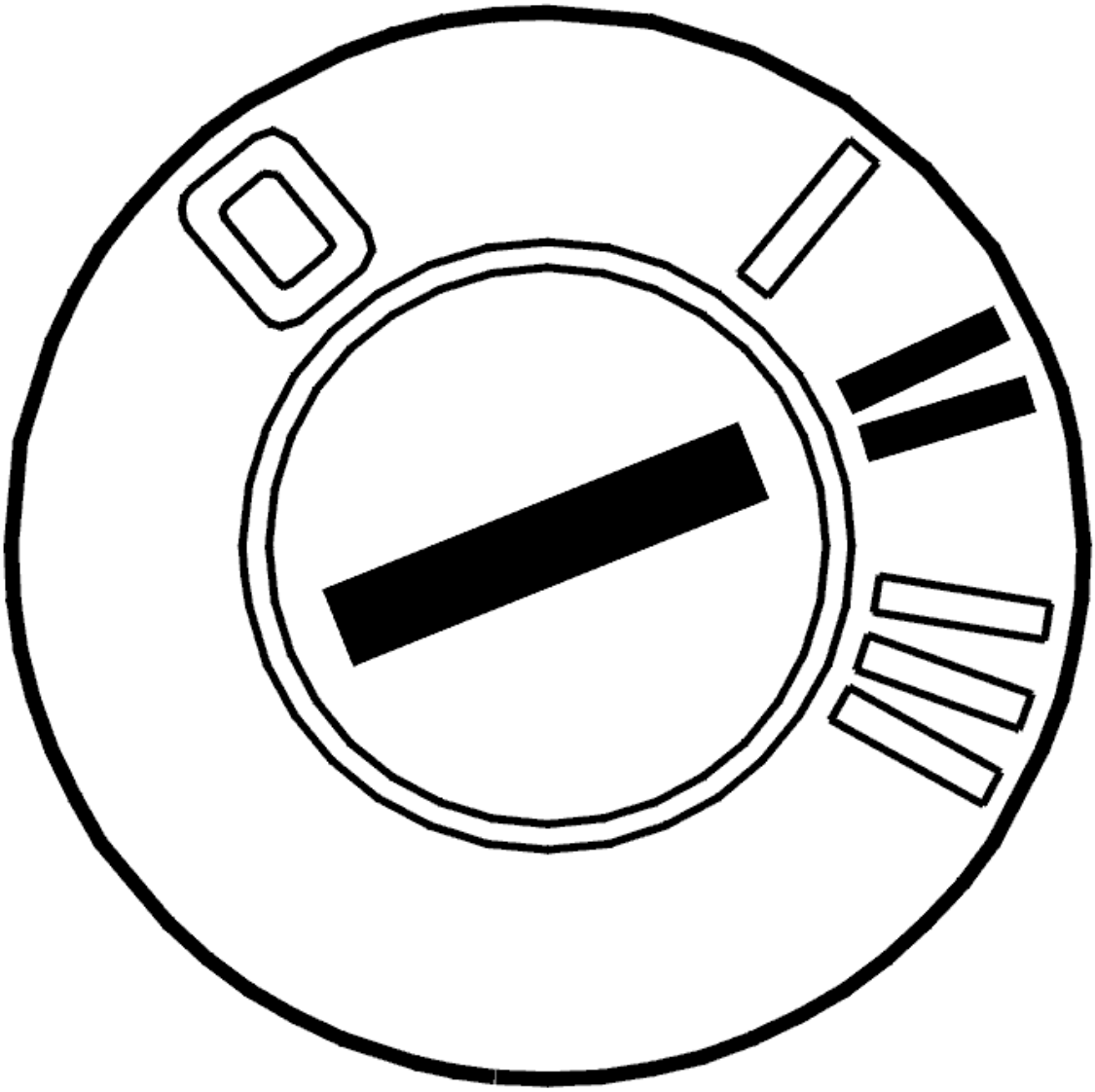

Fig. 223: Identifying Ignition ON
Courtesy of VOLVO CARS CORPORATION

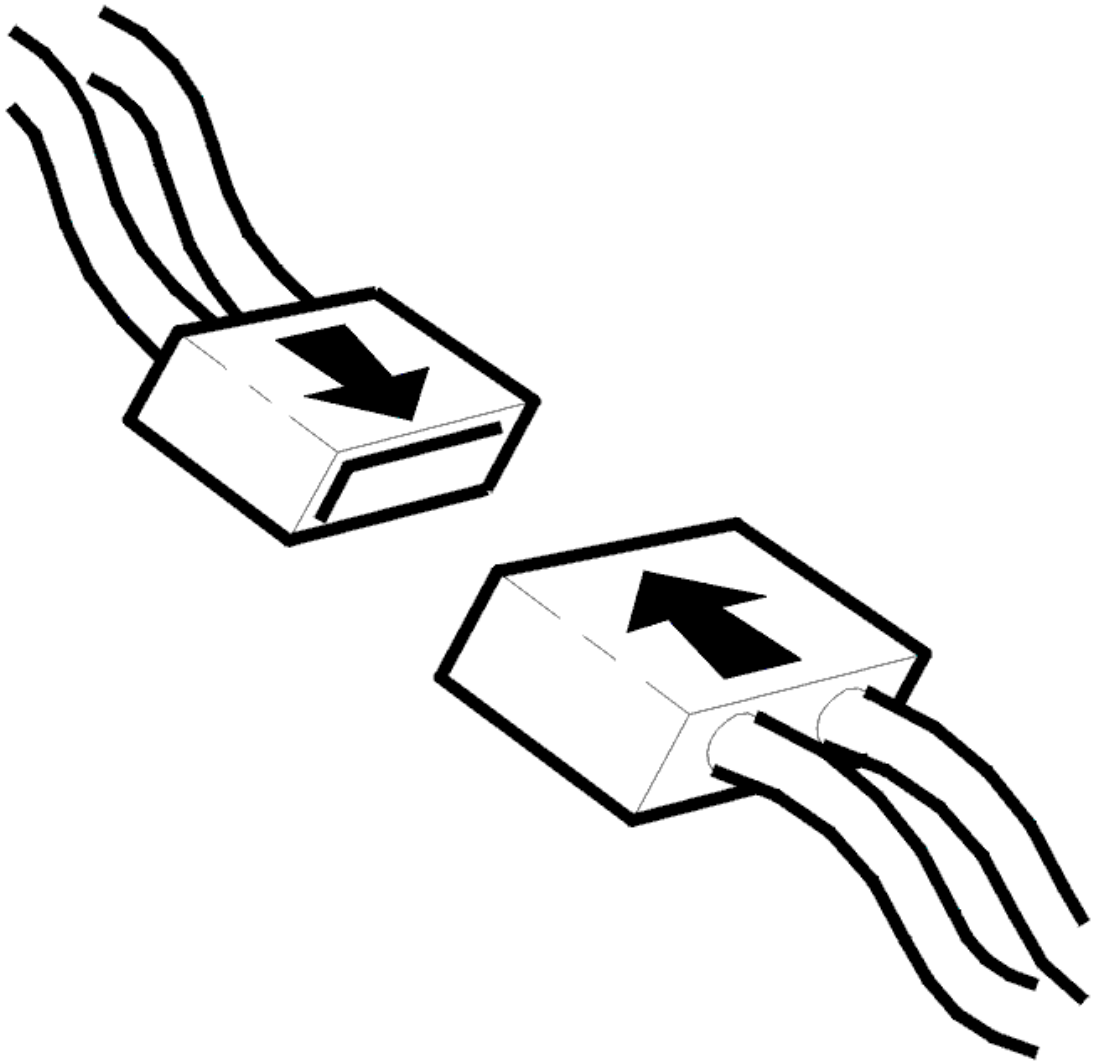

Fig. 224: Identifying Connector(s) Reinstallation
Courtesy of VOLVO CARS CORPORATION

- Ignition off.
- Reinstall the connectors, components etc.
- Ignition on.

  Check that the relevant lamp button and lamp are functioning.

Does the lamp function?

- **YES**

  VERIFIED: Troubleshooting has been completed.

- **NO**

  Refer to **INFORMATION**

INFORMATION

FAULT-TRACING INFORMATION

The fault should have been detected and remedied. As this is not the case fault-tracing has failed.

Exit fault-tracing for this diagnostic trouble code (DTC) or make another attempt.

UEM-0031: REAR LEFT READING LAMP. SIGNAL MISSING (2005-2012)

DIAGNOSTIC TROUBLE CODE (DTC) INFORMATION

Condition

The DTC is stored if the control module registers a faulty control signal from the lamp circuit when the rear left reading lamp is off, at the same time the front left reading lamp is lit.

Substitute Value

- The lamp goes out.

Possible Source

- Blown bulb.
- Open circuit on the signal line for reading lamp left rear.
- Short-circuit to supply voltage in the signal cable for the left rear reading lamp.

Fault symptom[s]

- Passenger compartment lighting/Does not work

SIGNAL MISSING

CHECKING THE CONNECTORS

Check that the bulb is intact.

Check the connectors on the upper electronic module and rear reading lamp unit for contact resistance and oxidation as described in, see **CONTACT RESISTANCE AND OXIDATION** , and a loose contact as described in **LOOSE CONNECTIONS (TERMINALS)** .

Do the necessary corrective action.

Additional information:

- To access/replace the lamp, see **BULB, READING LAMP, REAR, REPLACING** .

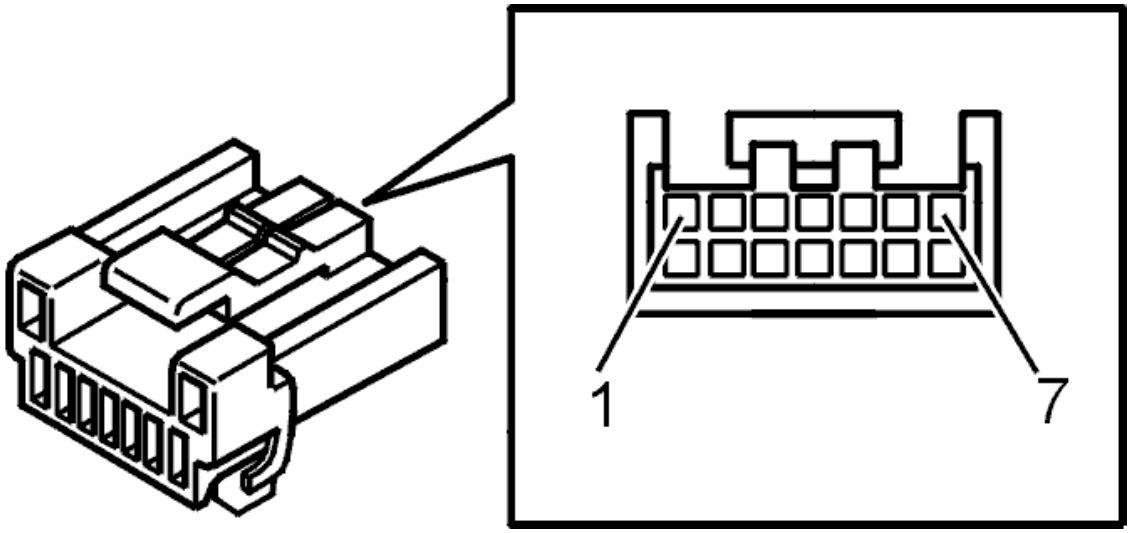

Fig. 225: Identifying Connector Terminals
Courtesy of VOLVO CARS CORPORATION

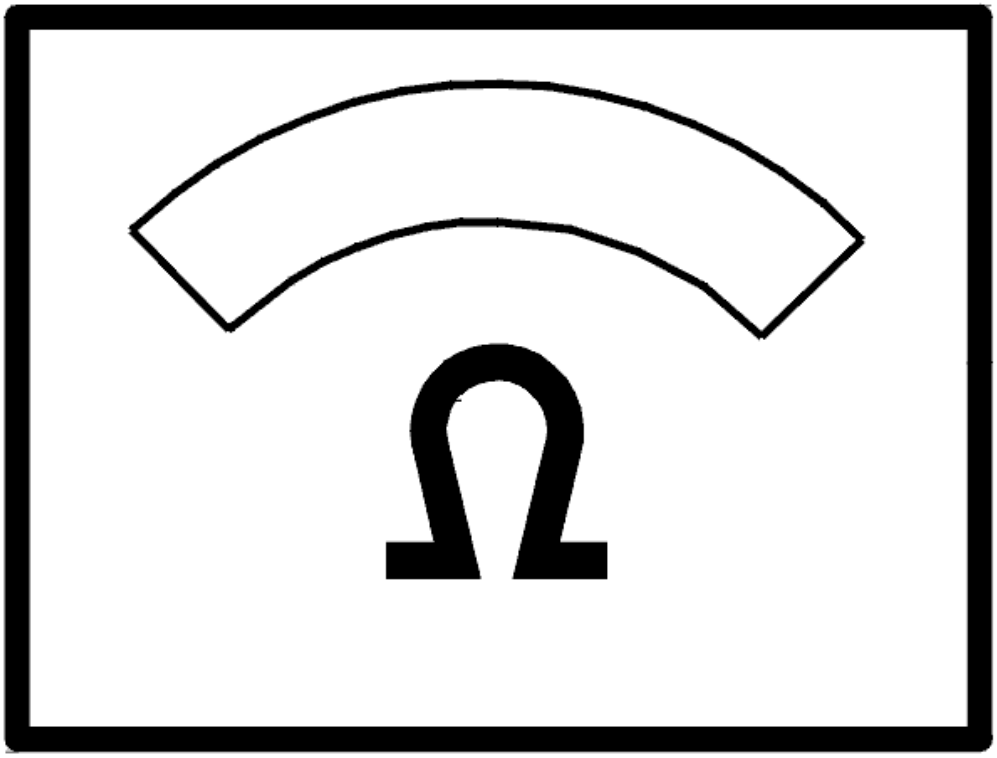

Fig. 226: Identifying Ohms Display
Courtesy of VOLVO CARS CORPORATION

Is there a fault?

- **YES**

  Refer to **VERIFICATION**

- **NO**

  Refer to **CHECKING FOR OPEN CIRCUITS AND SHORT CIRCUITS**

CHECKING FOR OPEN CIRCUITS AND SHORT CIRCUITS

Check the wire between the upper electronic module and rear reading lamp unit for an open circuit as described

in, see **OPEN-CIRCUIT, PERMANENT FAULTS** , and a short circuit to voltage supply as described in **SHORT-CIRCUIT TO SUPPLY VOLTAGE. PERMANENT FAULTS** .

UEM-0031 Rear left reading lamp

Control unit #7 and reading lamp unit #1.

UEM-0033 Rear right reading lamp

Control unit #17 and reading lamp unit #7.

Additional information:

- For information on signals and additional values, see **SIGNAL DESCRIPTION, UPPER ELECTRONIC MODULE (UEM)** .
- To connect the test box, see **CONNECTING THE BREAKOUT BOX** .

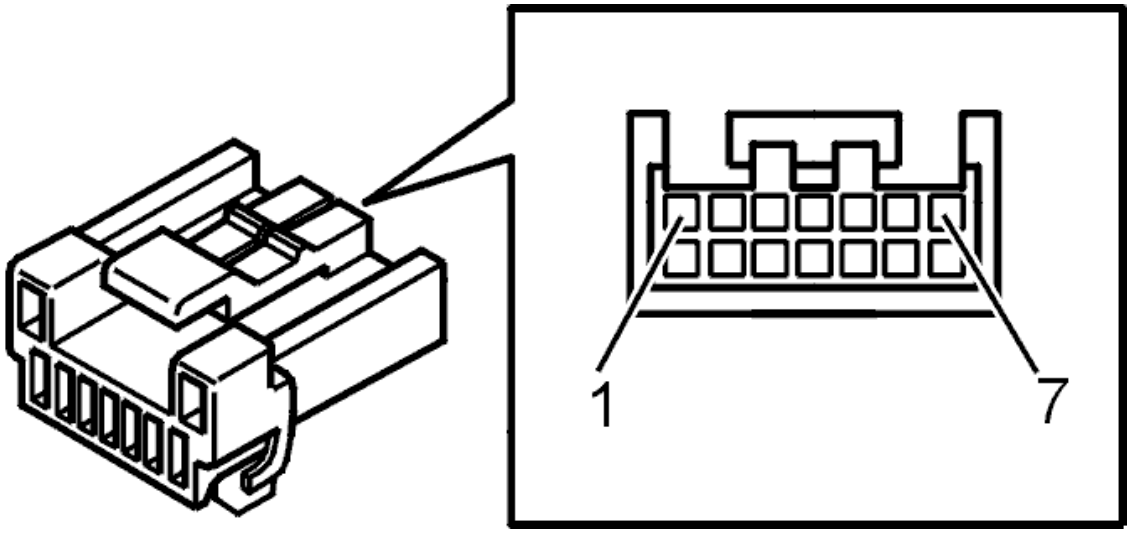

Fig. 227: Identifying Connector Terminals
Courtesy of VOLVO CARS CORPORATION

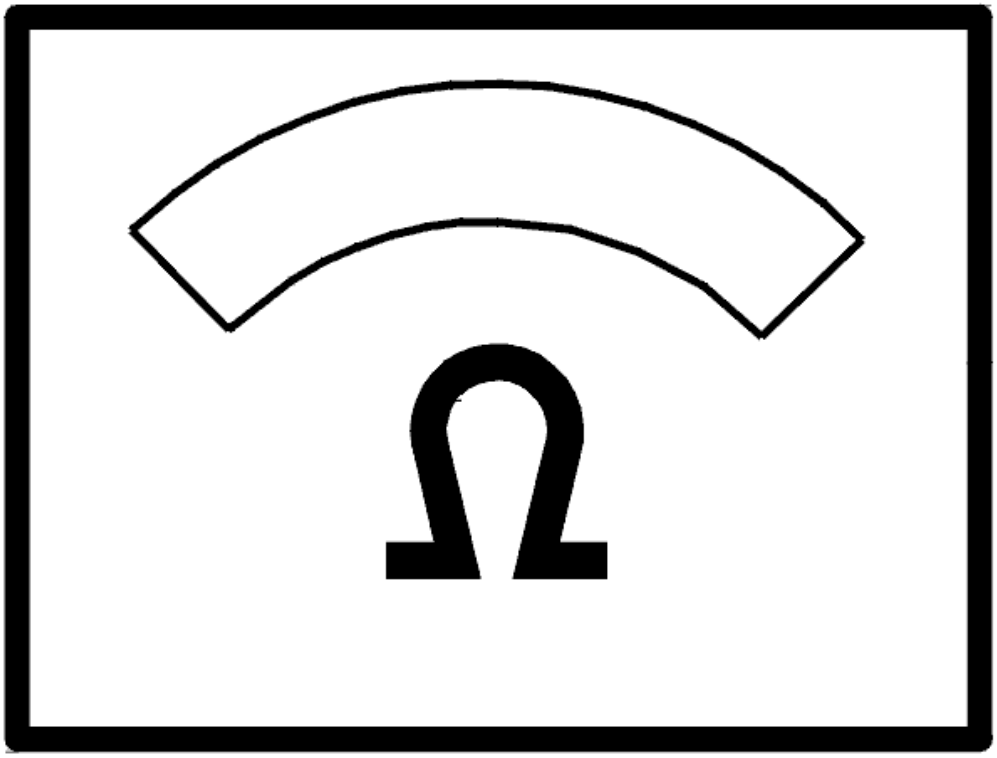

Fig. 228: Identifying Ohms Display
Courtesy of VOLVO CARS CORPORATION

- **Continue**

  Refer to **VERIFICATION**

VERIFICATION

VERIFICATION

HINT: After carrying out the repair, check that the fault has been remedied.

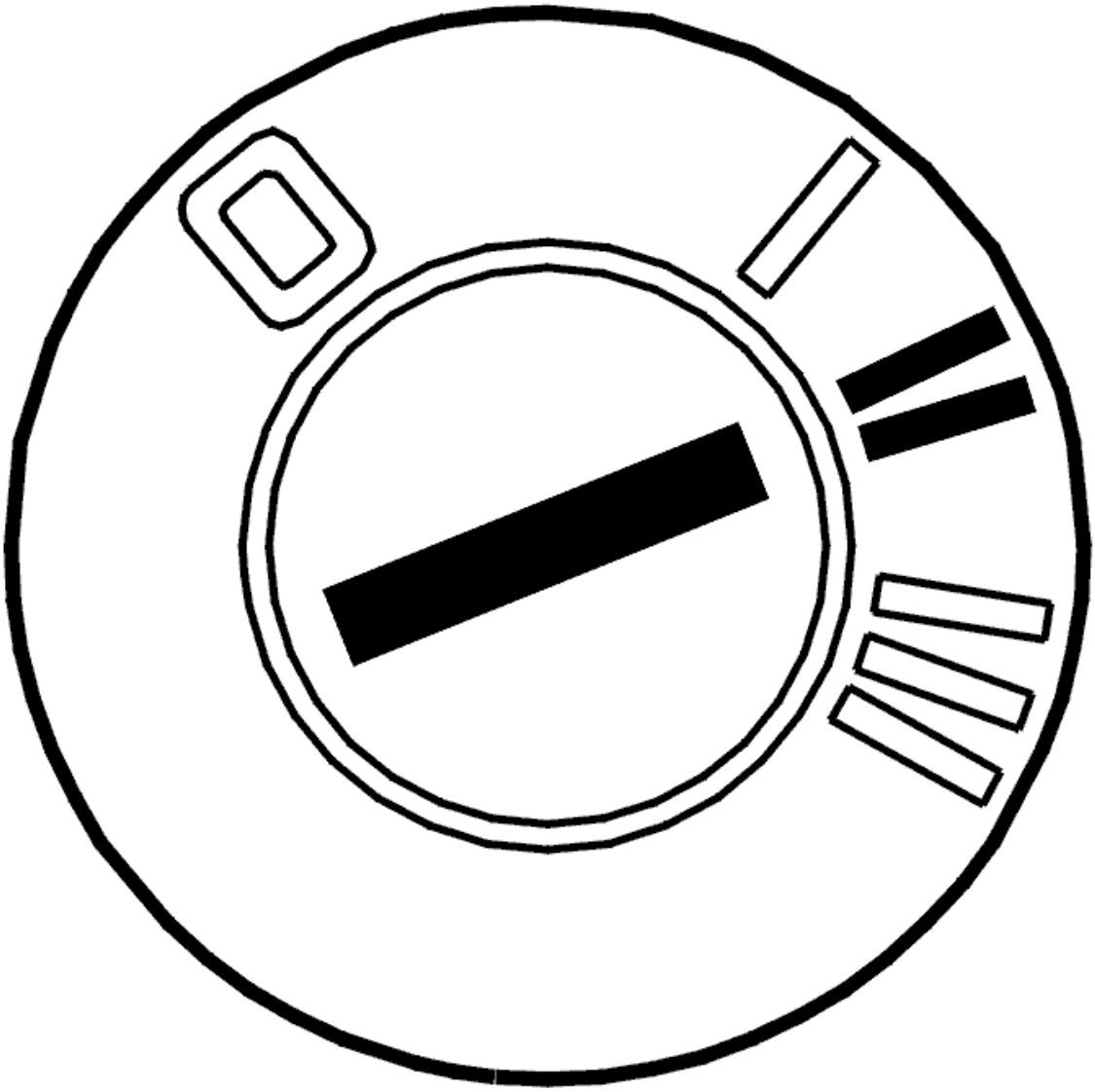

Fig. 229: Identifying Ignition ON
Courtesy of VOLVO CARS CORPORATION

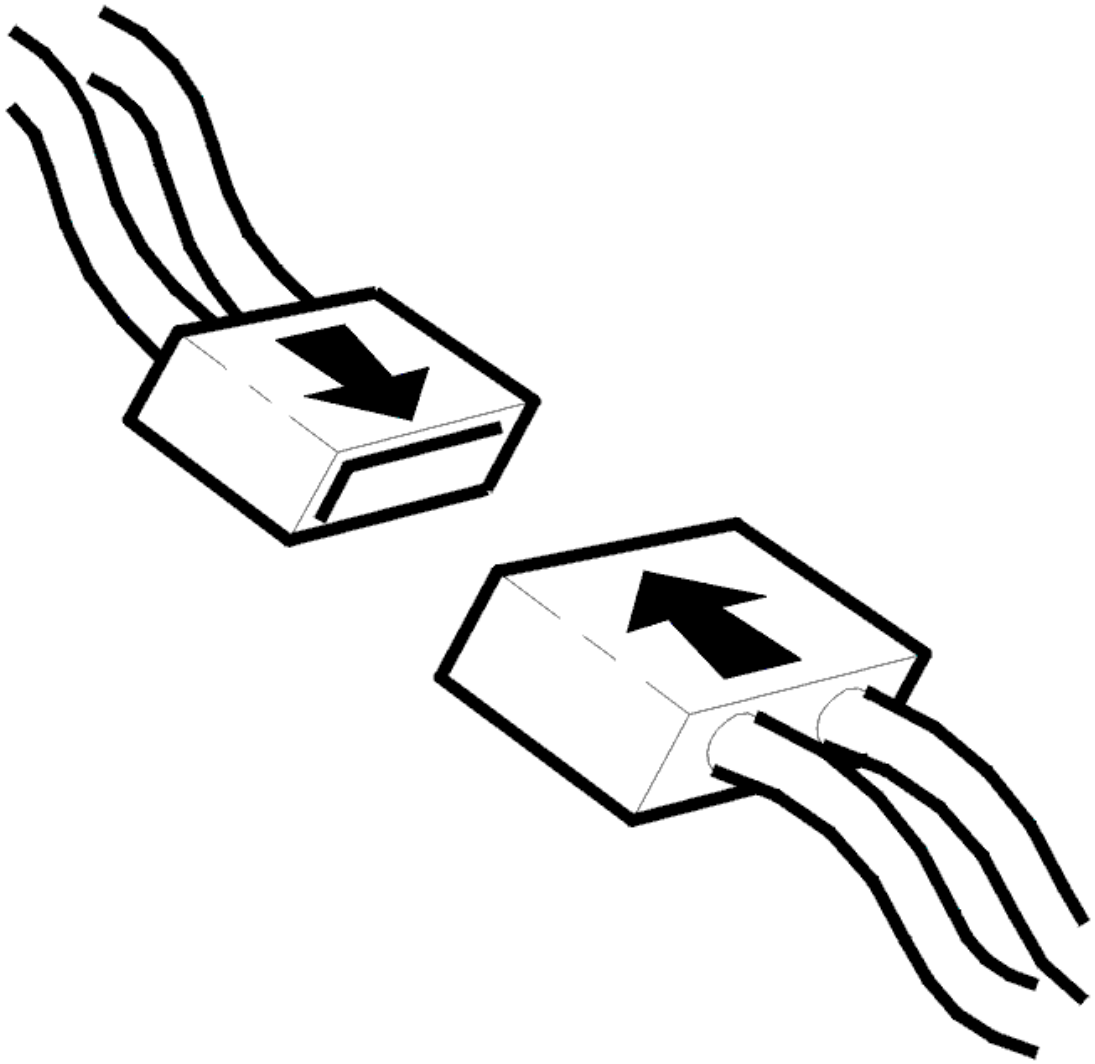

Fig. 230: Identifying Connector(s) Reinstallation
Courtesy of VOLVO CARS CORPORATION

- Ignition off.
- Reinstall the connectors, components etc.
- Ignition on.

  Check that the relevant lamp button and lamp are functioning.

Does the lamp function?

- **YES**

  VERIFIED: Troubleshooting has been completed.

- **NO**

  Refer to **INFORMATION**

INFORMATION

FAULT-TRACING INFORMATION

The fault should have been detected and remedied. As this is not the case fault-tracing has failed.

Exit fault-tracing for this diagnostic trouble code (DTC) or make another attempt.

UEM-0031: REAR LEFT READING LAMP. SIGNAL MISSING (2003-2004)

DIAGNOSTIC TROUBLE CODE (DTC) INFORMATION

Condition

The DTC is stored if the control module registers a faulty control signal from the lamp circuit when the rear left reading lamp is lit, at the same time the front left reading lamp is out.

Substitute Value

- The lamp goes out.

Possible Source

- Blown bulb.
- Open circuit on the signal line for reading lamp left rear.
- Short-circuit to supply voltage in the signal cable for the left rear reading lamp.

Fault symptom[s]

- Passenger compartment lighting/Does not work

SIGNAL MISSING

see **SIGNAL MISSING**

UEM-0032: REAR RIGHT READING LAMP. SIGNAL TOO LOW (2003-2012)

DIAGNOSTIC TROUBLE CODE INFORMATION

Condition

The DTC is stored if the control module registers a faulty control signal from the lamp circuit when the rear

right reading lamp is lit, at the same time the front right reading lamp is out.

Substitute Value

- The lamp goes off.

Possible Source

- The signal wire for the rear right reading lamp is short circuited to ground
- Intermittent open circuit on signal wire.

Fault symptom[s]

- Passenger compartment lighting/Does not work

SIGNAL TOO LOW

see **SIGNAL TOO LOW**

UEM-0033: REAR RIGHT READING LAMP. SIGNAL MISSING (2005-2012)

DIAGNOSTIC TROUBLE CODE INFORMATION

Condition

The DTC is stored if the control module registers a faulty control signal from the lamp circuit when the rear right reading lamp is off, at the same time the front right reading lamp is lit.

Substitute Value

- The lamp goes off.

Possible Source

- Open circuit in signal wire for rear right reading lamp.
- Short circuit to voltage supply on signal wire for rear right reading lamp.

Fault symptom[s]

- Passenger compartment lighting/Does not work

SIGNAL MISSING

see **SIGNAL MISSING**

UEM-0033: REAR RIGHT READING LAMP. SIGNAL MISSING (2003-2004)

DIAGNOSTIC TROUBLE CODE INFORMATION

Condition

The DTC is stored if the control module registers a faulty control signal from the lamp circuit when the rear right reading lamp is lit, at the same time the front right reading lamp is out.

Substitute Value

- The lamp goes off.

Possible Source

- Open circuit in signal wire for rear right reading lamp.
- Short circuit to voltage supply on signal wire for rear right reading lamp.

Fault symptom[s]

- Passenger compartment lighting/Does not work

SIGNAL MISSING

see **SIGNAL MISSING**

UEM-0034: FRONT LEFT READING LAMP. SIGNAL TOO LOW (2003-2012)

DIAGNOSTIC TROUBLE CODE INFORMATION

Condition

The DTC is stored if the control module registers a faulty control signal from the lamp circuit when the front left reading lamp is lit, at the same time the rear left reading lamp is out.

Substitute Value

- The lamp goes off.

Possible Source

- The signal wire for the front left reading lamp is short circuited to ground
- Intermittent open circuit on signal wire.

Fault symptom[s]

- Passenger compartment lighting/Does not work

SIGNAL TOO LOW

CHECKING THE CONNECTORS

Check the control module and roof lamp module connectors. Check for contact resistance and oxidation. Check for loose connections.

Other information:

- For further information about signals and other values, see **SIGNAL DESCRIPTION, UPPER ELECTRONIC MODULE (UEM)**
- To connect the breakout box, see **CONNECTING THE BREAKOUT BOX**
- To access or replace the roof lamp module, see **INTERIOR LIGHTING, REPLACING**
- To access the connector for the upper electronic module (UEM), see **UPPER ELECTRONIC MODULE (UEM)/REARVIEW MIRROR, REPLACING**
- see **CHECKING WIRING AND TERMINALS** .

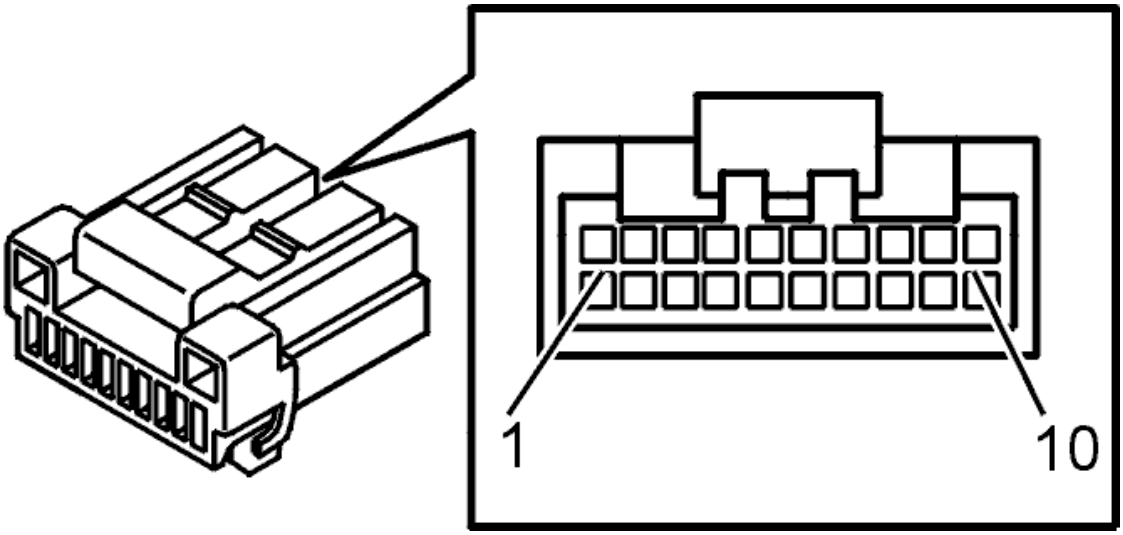

Fig. 231: Identifying Connector Terminals
Courtesy of VOLVO CARS CORPORATION

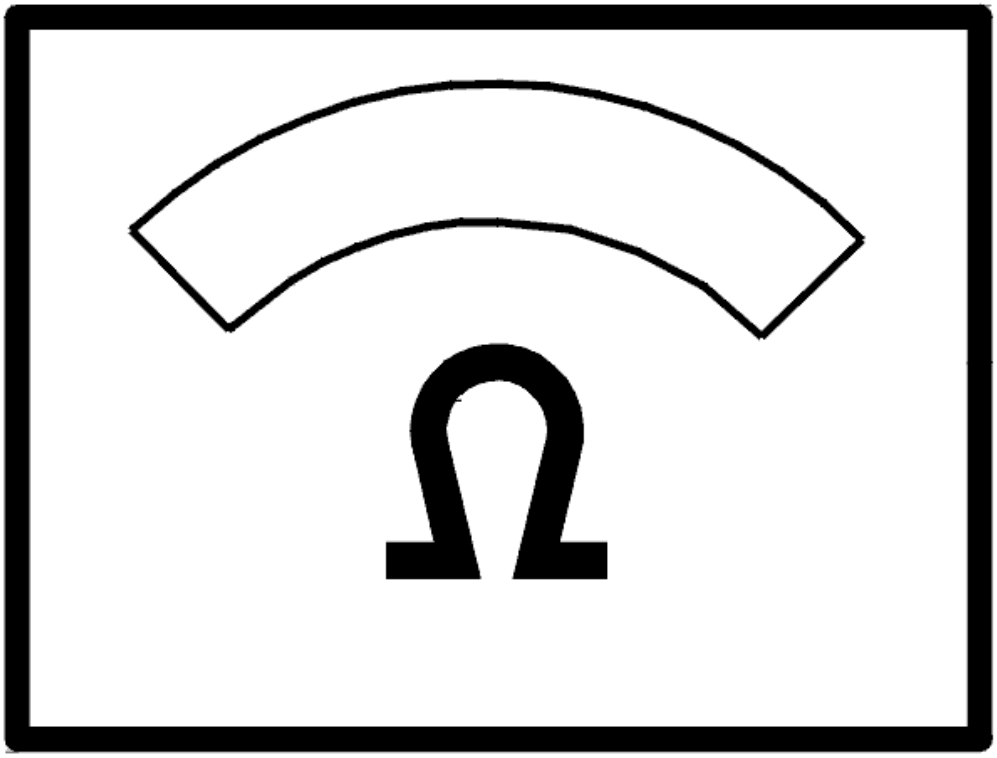

Fig. 232: Identifying Ohms Display
Courtesy of VOLVO CARS CORPORATION

Was a fault detected?

- **YES**

  Refer to **VERIFICATION**

- **NO**

  Refer to **CHECKING FOR OPEN-CIRCUITS AND SHORT-CIRCUITS**

CHECKING FOR OPEN-CIRCUITS AND SHORT-CIRCUITS

Check the cable between the control module and the roof lamp unit. Check for a short-circuit to ground.

Remove the connector from the roof lamp module and measure between the connector and the upper electronic module (UEM) as follows.

UEM-0034 Left front reading lamp

Control module terminal #20 and roof lamp module terminal #3A.

UEM-0036 Right front reading lamp

Control module terminal #20 and roof lamp module terminal #4A.

Check the cable between the control module and the roof lamp unit. Check for an open-circuit.

UEM-0034 Left front reading lamp

Control module terminal #18 and roof lamp module terminal #3A.

UEM-0036 Right front reading lamp

Control module terminal #6 and roof lamp module terminal #4A.

Replace the cable if a fault is found.

If the cable is OK, try a new bulb in the roof lamp module.

Other information:

- For further information about signals and other values, see **SIGNAL DESCRIPTION, UPPER ELECTRONIC MODULE (UEM)**
- To connect the breakout box, see **CONNECTING THE BREAKOUT BOX**
- To access or replace the lamp, see **INTERIOR LIGHTING, REPLACING**
- see **CHECKING WIRING AND TERMINALS** .

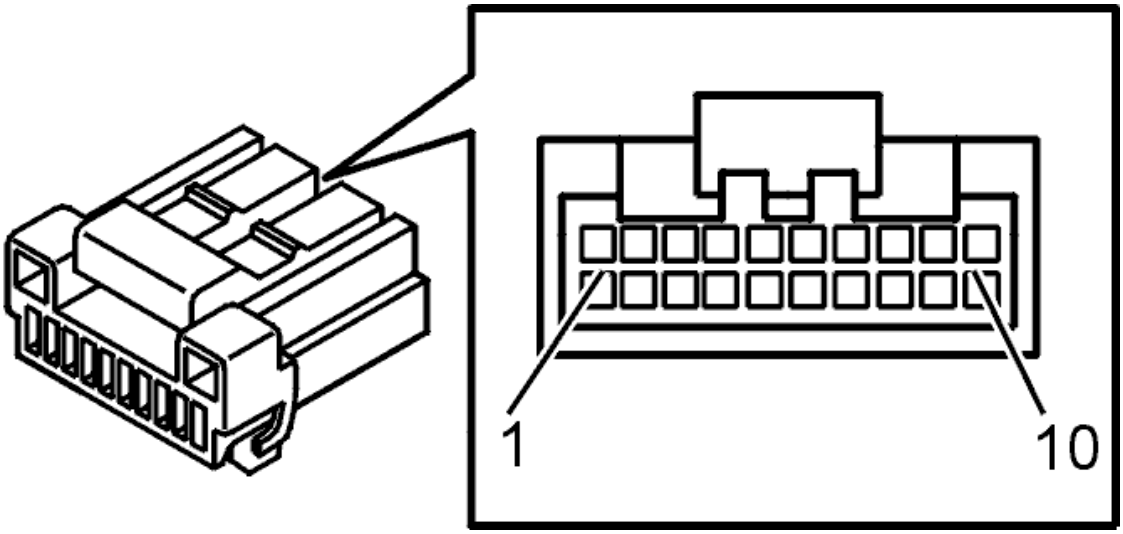

Fig. 233: Identifying Connector Terminals
Courtesy of VOLVO CARS CORPORATION

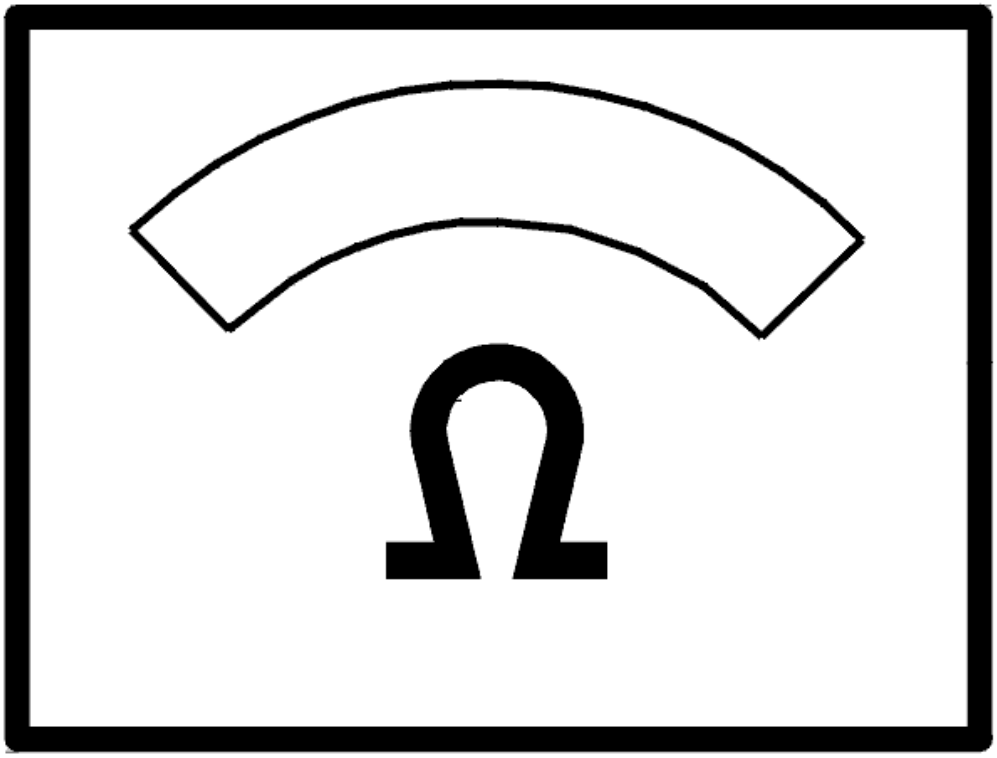

Fig. 234: Identifying Ohms Display
Courtesy of VOLVO CARS CORPORATION

- **Continue**

  Refer to **VERIFICATION**

VERIFICATION

VERIFICATION

HINT: After carrying out the repair, check that the fault has been remedied.

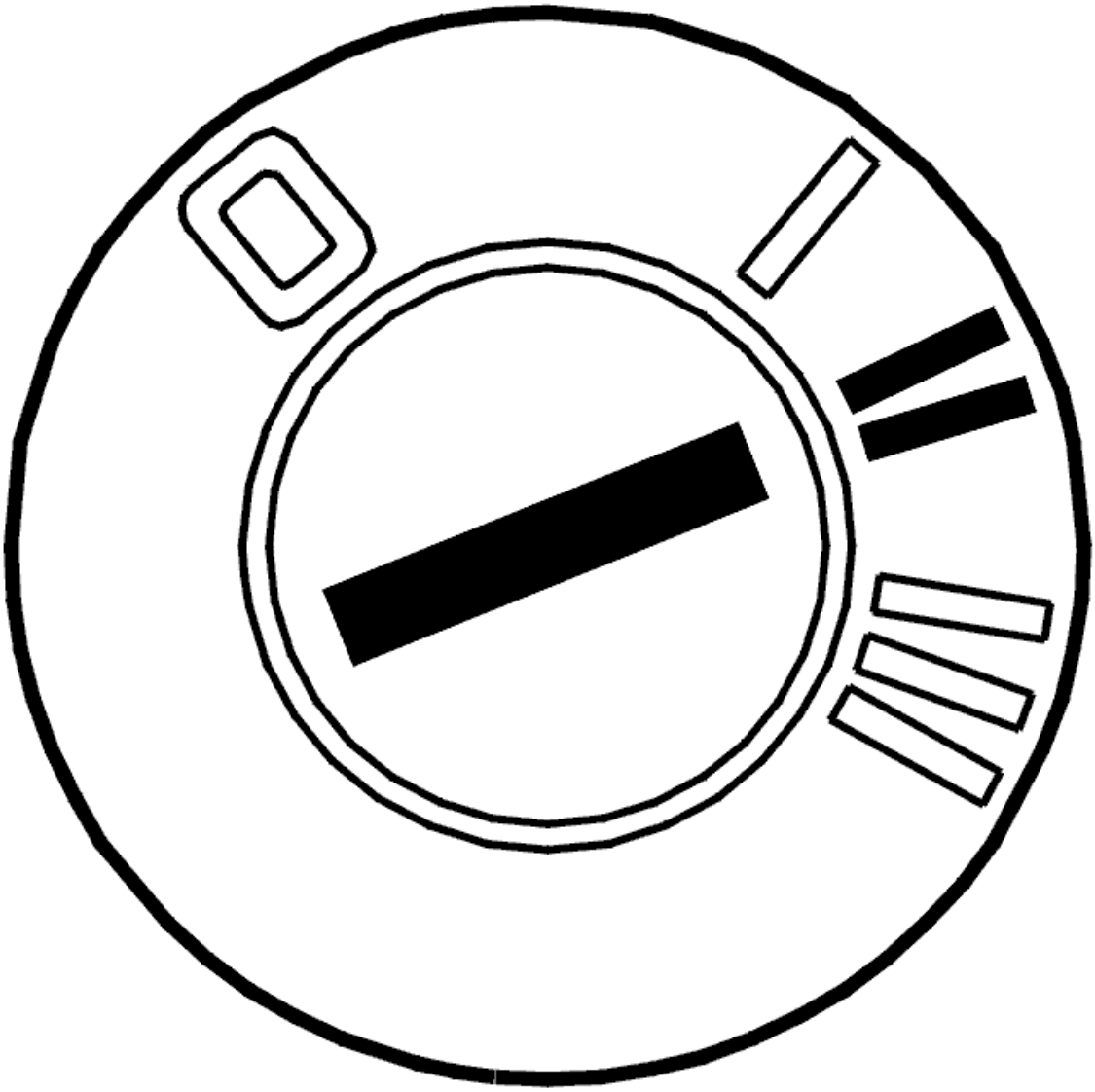

Fig. 235: Identifying Ignition ON
Courtesy of VOLVO CARS CORPORATION

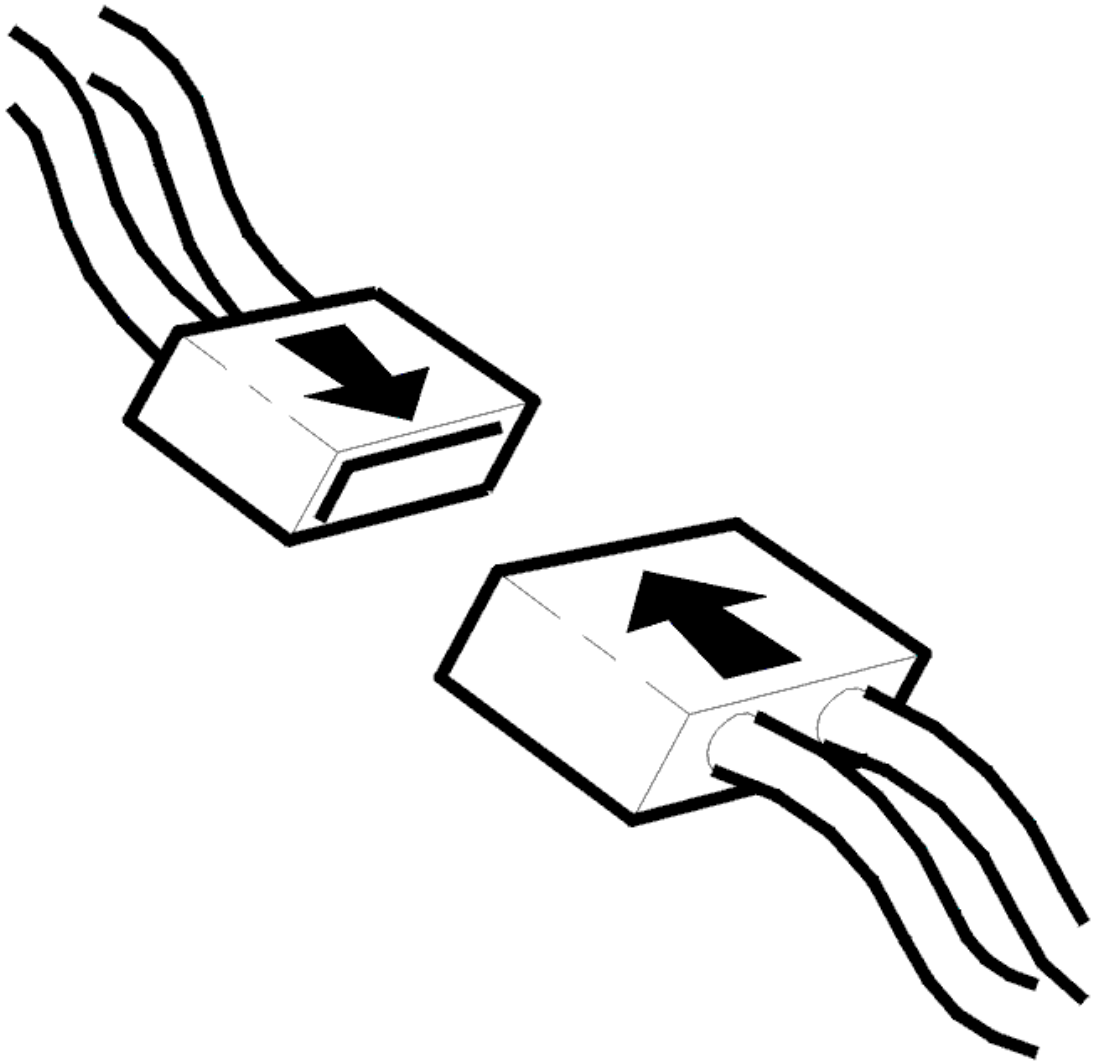

Fig. 236: Identifying Connector(s) Reinstallation
Courtesy of VOLVO CARS CORPORATION

- Ignition off.
- Reinstall the connectors, components etc.
- Ignition on.

  Check that the relevant lamp button and lamp are functioning.

Does the lamp function?

- **YES**

  VERIFIED: Troubleshooting has been completed.

- **NO**

  Refer to **INFORMATION**

INFORMATION

FAULT-TRACING INFORMATION

The fault should have been detected and remedied. As this is not the case fault-tracing has failed.

Exit fault-tracing for this diagnostic trouble code (DTC) or make another attempt.

UEM-0035: FRONT LEFT READING LAMP. SIGNAL MISSING (2005-2012)

DIAGNOSTIC TROUBLE CODE INFORMATION

Condition

The DTC is stored if the control module registers a faulty control signal from the lamp circuit when the front left reading lamp is off, at the same time the rear left reading lamp is lit.

NOTE: The DTC is stored if connector A to control unit roof lamp does not make contact correctly. DTC UEM-0037 and UEM-0039 are usually then also stored.

Substitute Value

- The lamp goes off.

Possible Source

- Faulty bulb.
- Open circuit in signal wire for front left reading lamp.
- Short circuit to voltage supply on signal wire for front left reading lamp.

Fault symptom[s]

- Passenger compartment lighting/Does not work

SIGNAL MISSING

CHECKING THE CONNECTORS

Check that the bulb is intact.

Check the connectors for the upper electronic module (UEM) and roof lamp module. Check for contact resistance and oxidation. Check for loose connections.

Remedy as necessary.

Other information:

- To access or replace the lamp, see **INTERIOR LIGHTING, REPLACING**
- To access the connector for the upper electronic module (UEM), see **UPPER ELECTRONIC MODULE (UEM)/REARVIEW MIRROR, REPLACING**
- see **CHECKING WIRING AND TERMINALS** .

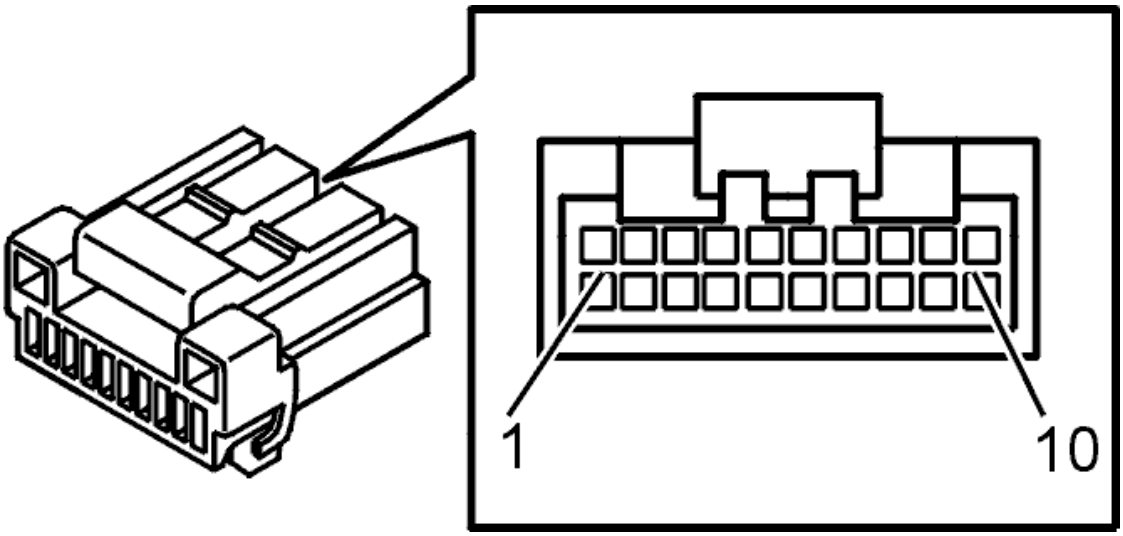

Fig. 237: Identifying Connector Terminals
Courtesy of VOLVO CARS CORPORATION

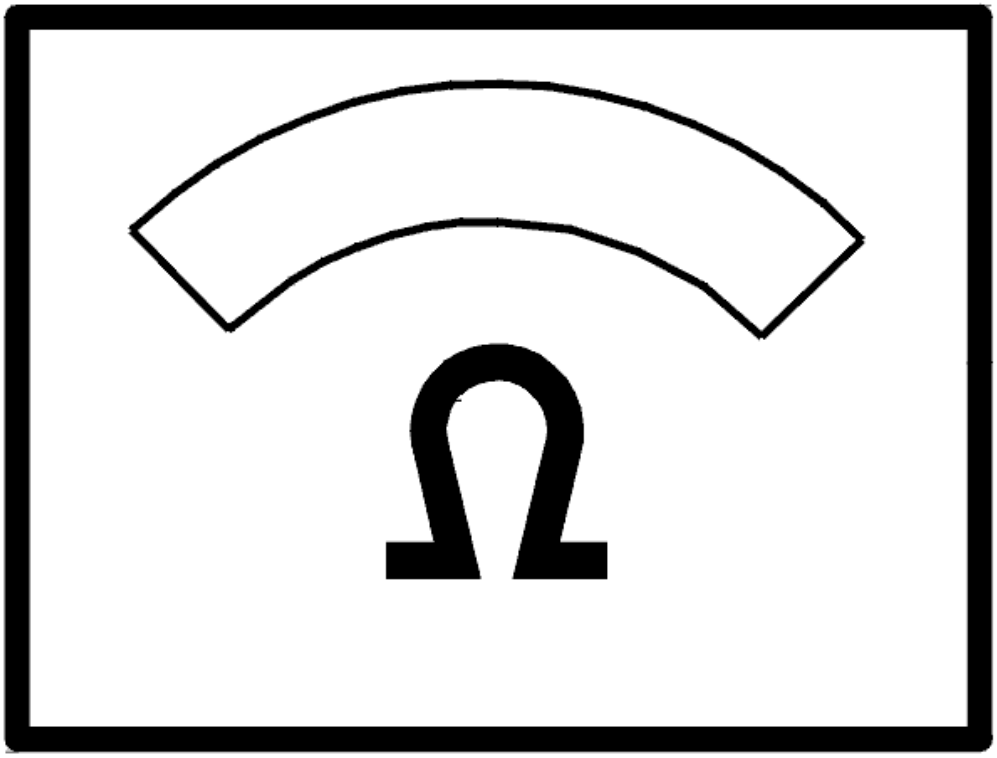

Fig. 238: Identifying Ohms Display
Courtesy of VOLVO CARS CORPORATION

Was a fault detected?

- **YES**

  Refer to **VERIFICATION**

- **NO**

  Refer to **CHECKING FOR OPEN-CIRCUITS AND SHORT-CIRCUITS**

CHECKING FOR OPEN-CIRCUITS AND SHORT-CIRCUITS

Check the cable between the upper electronic module (UEM) and the roof lamp module. Check for an open-

circuit. Check for a short-circuit to supply voltage.

UEM-0035 Left front reading lamp

Control module terminal #18 and roof lamp module terminal #3A.

UEM-0037 Right front reading lamp

Control module terminal #6 and roof lamp module terminal #4A.

Other information:

- For further information about signals and other values, see **SIGNAL DESCRIPTION, UPPER ELECTRONIC MODULE (UEM)**
- To connect the breakout box, see **CONNECTING THE BREAKOUT BOX**
- see **CHECKING WIRING AND TERMINALS** .

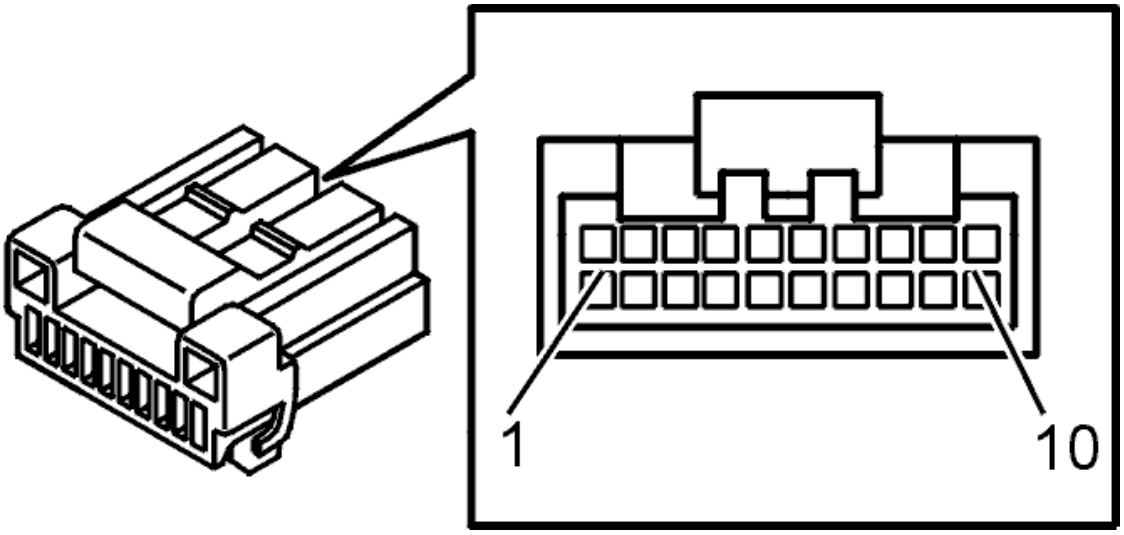

Fig. 239: Identifying Connector Terminals
Courtesy of VOLVO CARS CORPORATION

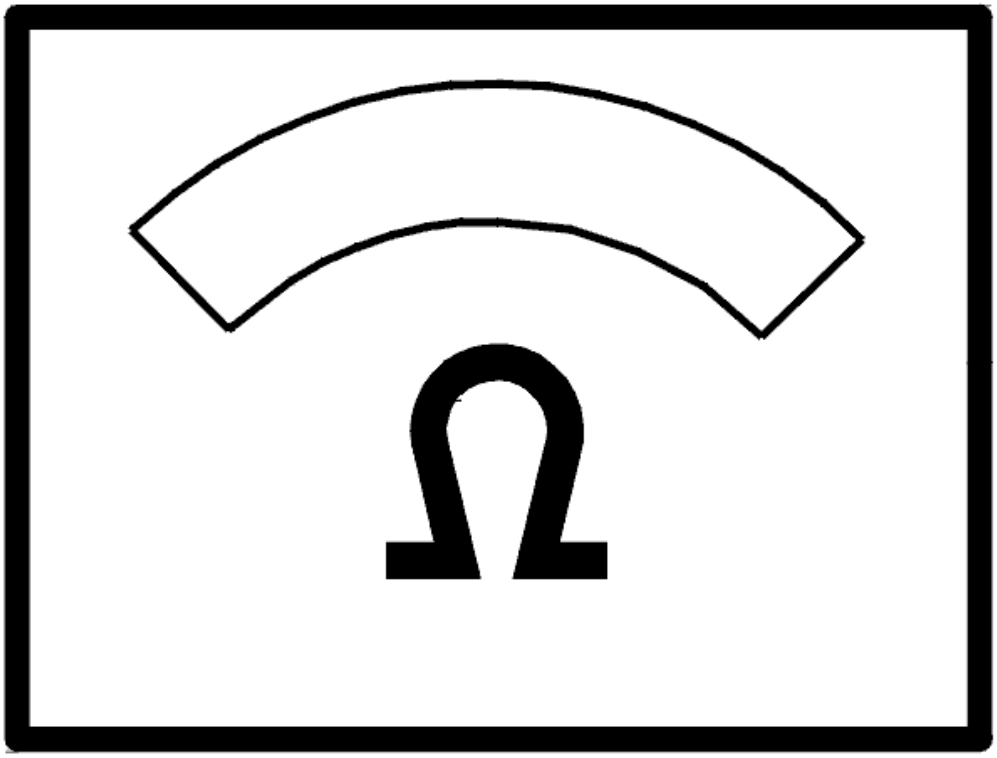

Fig. 240: Identifying Ohms Display
Courtesy of VOLVO CARS CORPORATION

- **Continue**

  Refer to **VERIFICATION**

VERIFICATION

VERIFICATION

HINT: After carrying out the repair, check that the fault has been remedied.

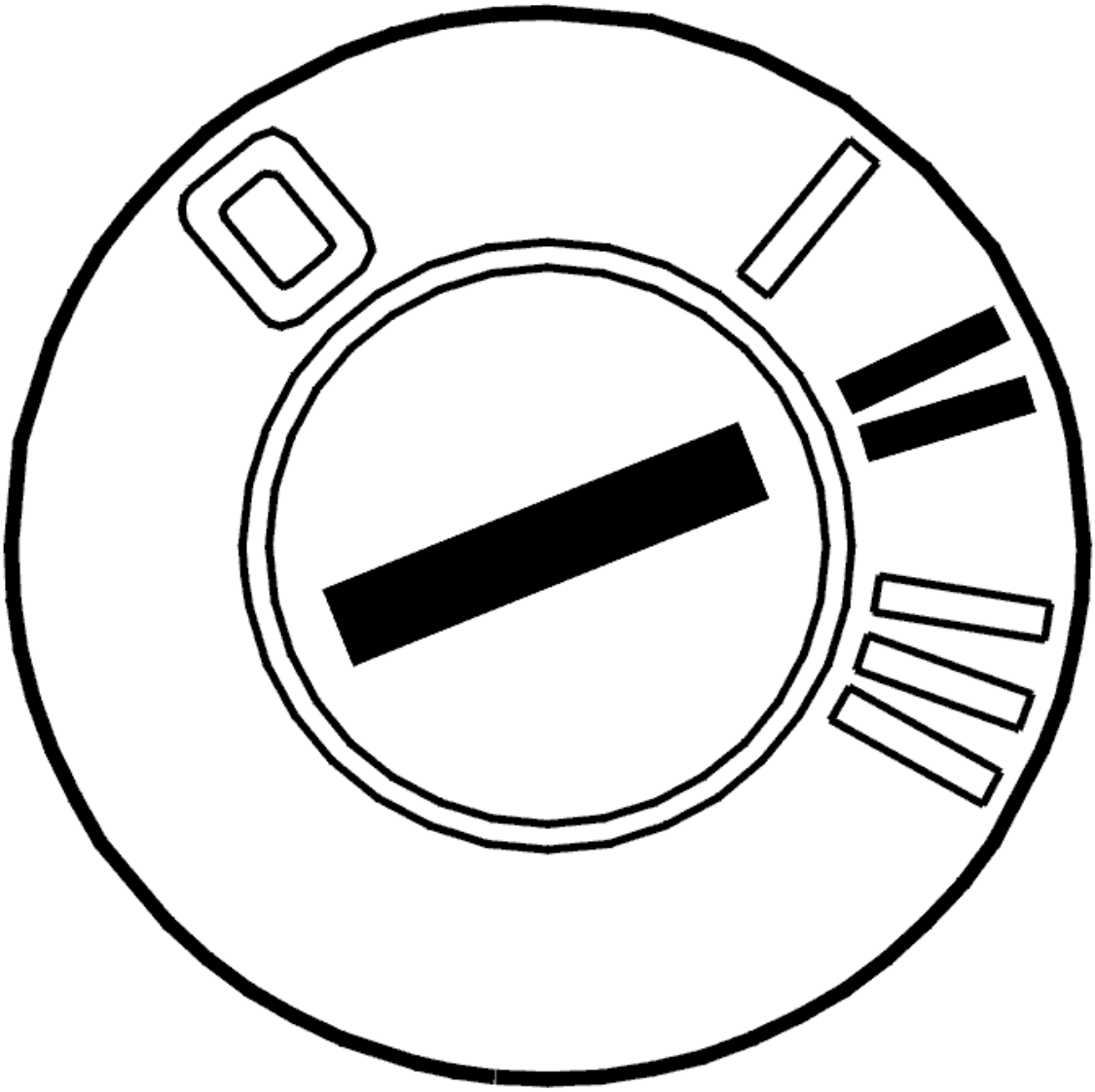

Fig. 241: Identifying Ignition ON
Courtesy of VOLVO CARS CORPORATION

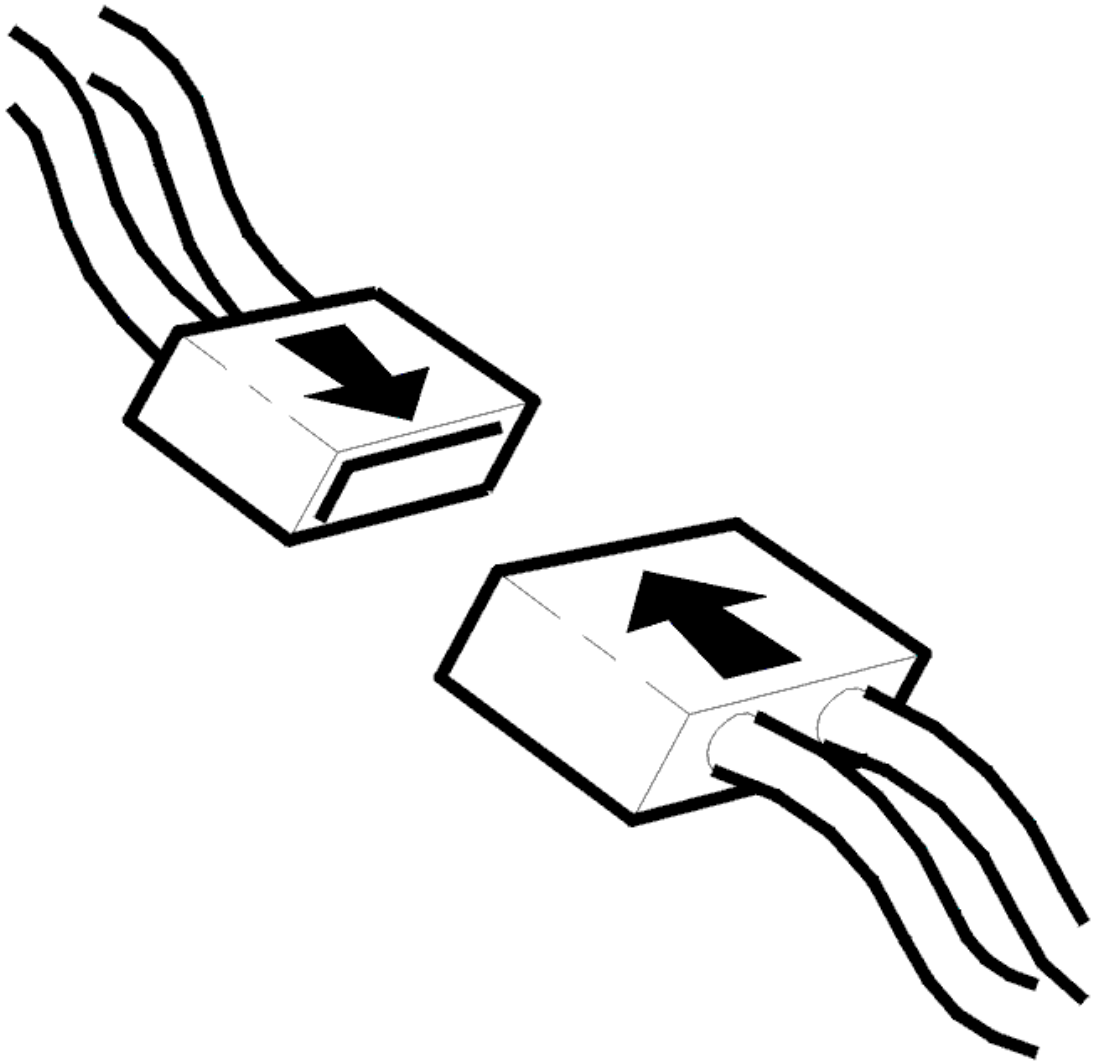

Fig. 242: Identifying Connector(s) Reinstallation
Courtesy of VOLVO CARS CORPORATION

- Ignition off.
- Reinstall the connectors, components etc.
- Ignition on.

  Check that the relevant lamp button and lamp are functioning.

Does the lamp function?

- **YES**

  VERIFIED: Troubleshooting has been completed.

- **NO**

  Refer to **INFORMATION**

INFORMATION

FAULT-TRACING INFORMATION

The fault should have been detected and remedied. As this is not the case fault-tracing has failed.

Exit fault-tracing for this diagnostic trouble code (DTC) or make another attempt.

UEM-0035: FRONT LEFT READING LAMP. SIGNAL MISSING (2003-2004)

DIAGNOSTIC TROUBLE CODE INFORMATION

Condition

The DTC is stored if the control module registers a faulty control signal from the lamp circuit when the front left reading lamp is lit, at the same time the rear left reading lamp is out.

Substitute Value

- The lamp goes off.

Possible Source

- Faulty bulb.
- Open circuit in signal wire for front left reading lamp.
- Short circuit to voltage supply on signal wire for front left reading lamp.

Fault symptom[s]

- Passenger compartment lighting/Does not work

SIGNAL MISSING

see **SIGNAL MISSING**

UEM-0036: FRONT RIGHT READING LAMP. SIGNAL TOO LOW (2003-2012)

DIAGNOSTIC TROUBLE CODE INFORMATION

Condition

The DTC is stored if the control module registers a faulty control signal from the lamp circuit when the front

right reading lamp is lit, at the same time the rear right reading lamp is out.

Substitute Value

- The lamp goes off.

Possible Source

- The signal wire for the front right reading lamp is short circuited to ground
- Intermittent open circuit on signal wire.

Fault symptom[s]

- Passenger compartment lighting/Does not work

SIGNAL TOO LOW

see **SIGNAL TOO LOW**

UEM-0037: FRONT RIGHT READING LAMP. SIGNAL MISSING (2005-2012)

DIAGNOSTIC TROUBLE CODE INFORMATION

Condition

The DTC is stored if the control module registers a faulty control signal from the lamp circuit when the front right reading lamp is off, at the same time the rear right reading lamp is lit.

NOTE: The DTC is stored if connector A to control unit roof lamp does not make contact correctly. DTC UEM-0035 and UEM-0039 are usually then also stored.

Substitute Value

- The lamp goes off.

Possible Source

- Open circuit in signal wire for front right reading lamp.
- Short circuit to voltage supply on signal wire for front right reading lamp.

Fault symptom[s]

- Passenger compartment lighting/Does not work

SIGNAL MISSING

see **SIGNAL MISSING**

UEM-0037: FRONT RIGHT READING LAMP. SIGNAL MISSING (2003-2004)

DIAGNOSTIC TROUBLE CODE INFORMATION

Condition

The DTC is stored if the control module registers a faulty control signal from the lamp circuit when the front right reading lamp is lit, at the same time the rear right reading lamp is out.

Substitute Value

- The lamp goes off.

Possible Source

- Open circuit in signal wire for front right reading lamp.
- Short circuit to voltage supply on signal wire for front right reading lamp.

Fault symptom[s]

- Passenger compartment lighting/Does not work

SIGNAL MISSING

see **SIGNAL MISSING**

UEM-0038: GENERAL LIGHTING. SIGNAL TOO LOW (2005-2012)

DIAGNOSTIC TROUBLE CODE (DTC) INFORMATION

Condition

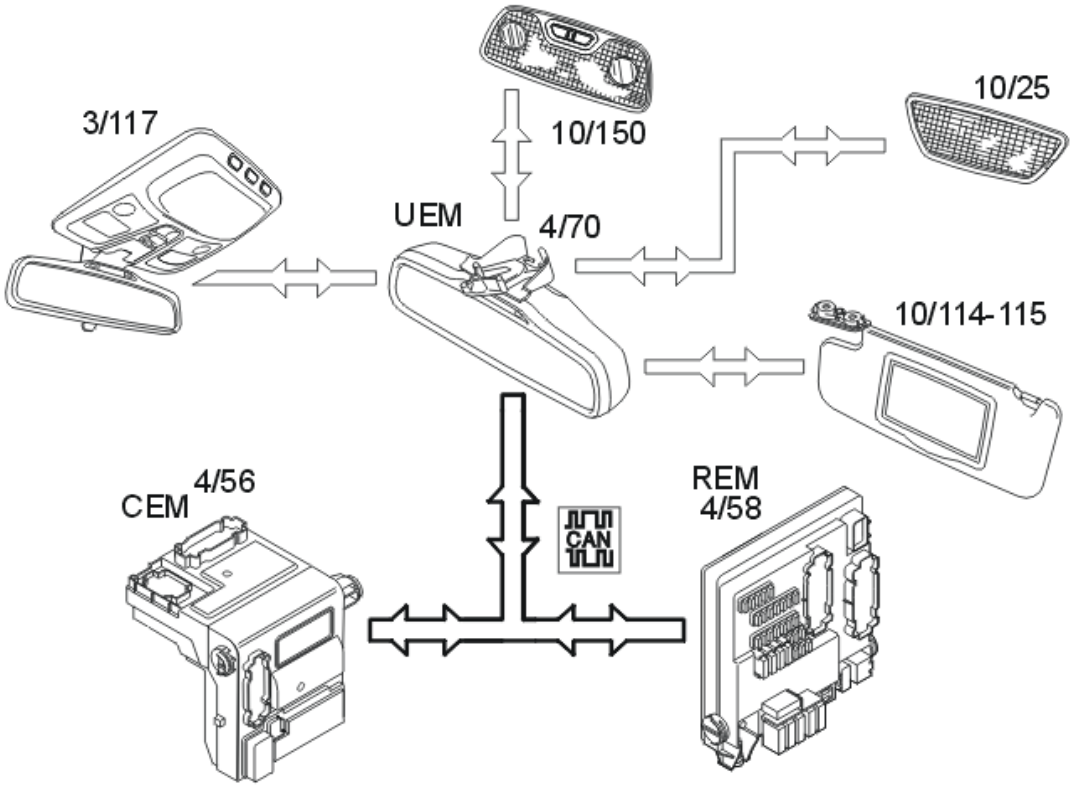

Fig. 243: Identifying Interior Roof Lighting Communication Links And Components
Courtesy of VOLVO CARS CORPORATION

The upper electronic module (UEM) checks the interior lighting. The diagnostic trouble code (DTC) is stored if the control module registers that there is an on signal for the interior lighting in the headlining when the control signal for the general lighting is low.

The diagnostic trouble code (DTC) can be diagnosed when the conditions are met for the interior lighting to be switched on at the same time as the lighting in the cargo compartment is off.

Substitute Value

- The lamp goes out.

Possible Source

- Short-circuit to ground in the signal cable for the general lighting.

Fault symptom[s]

- Passenger compartment lighting/Does not work

SIGNAL TOO LOW

CHECKING THE CONNECTORS

Check the control module and roof lamp module connectors. Check for contact resistance and oxidation.

Other information:

- To access the roof lamp module connector, see **INTERIOR LIGHTING, REPLACING**
- To access the connector for the upper electronic module (UEM), see **UPPER ELECTRONIC MODULE (UEM)/REARVIEW MIRROR, REPLACING**
- see **CHECKING WIRING AND TERMINALS** .

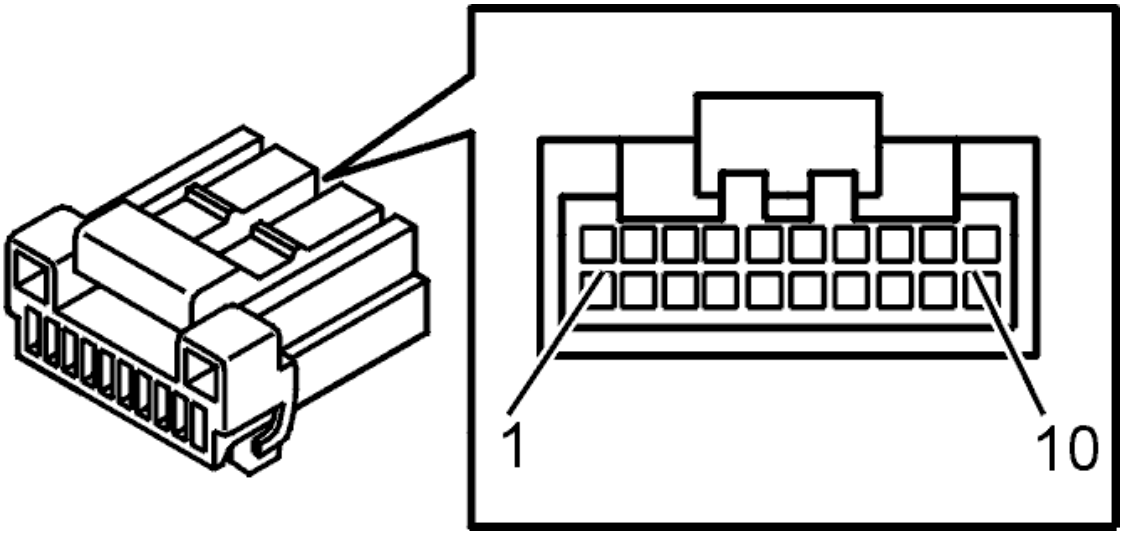

Fig. 244: Identifying Connector Terminals
Courtesy of VOLVO CARS CORPORATION

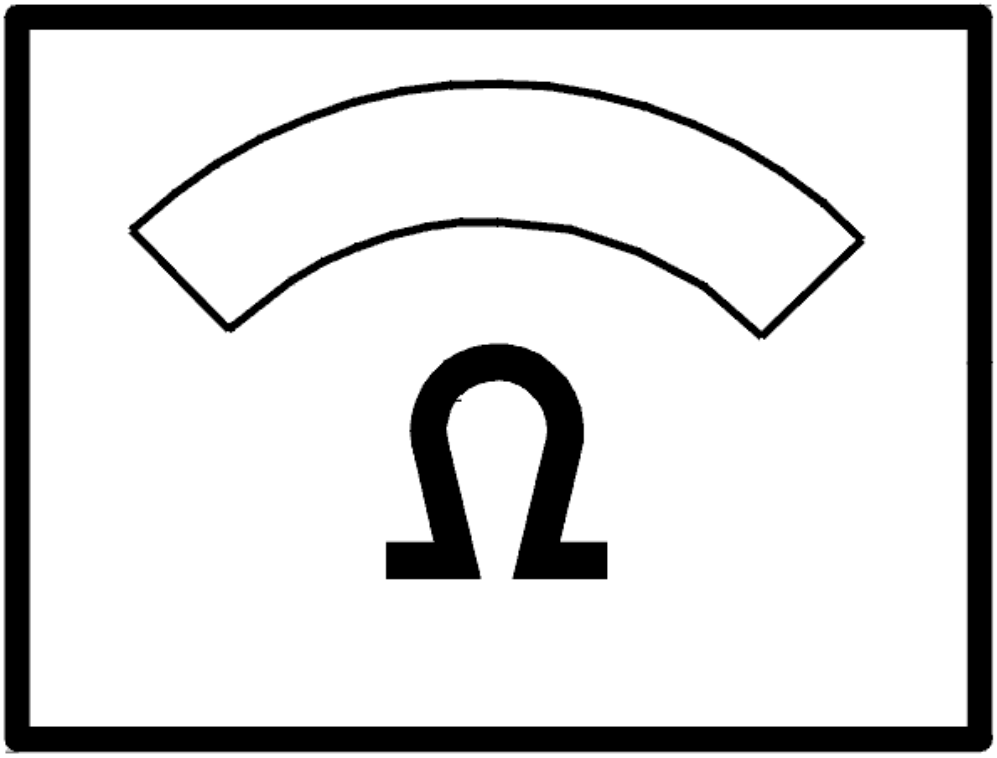

Fig. 245: Identifying Ohms Display
Courtesy of VOLVO CARS CORPORATION

Was a fault detected?

- **YES**

  Refer to **VERIFICATION**

- **NO**

  Refer to **CHECKING FOR OPEN-CIRCUITS AND SHORT-CIRCUITS**

CHECKING FOR OPEN-CIRCUITS AND SHORT-CIRCUITS

Check the cable between the control module terminal #19 and roof lamp module terminal #5A. Check for an

open-circuit. Check for a short-circuit to ground.

Replace the cable if a fault is found.

Try new bulbs in the roof lamp module if no fault is found.

Other information:

- For further information about signals and other values, see **SIGNAL DESCRIPTION, UPPER ELECTRONIC MODULE (UEM)**
- To connect the breakout box, see **CONNECTING THE BREAKOUT BOX**
- To replace bulbs in the roof lamp module, see **INTERIOR LIGHTING, REPLACING**
- see **CHECKING WIRING AND TERMINALS** .

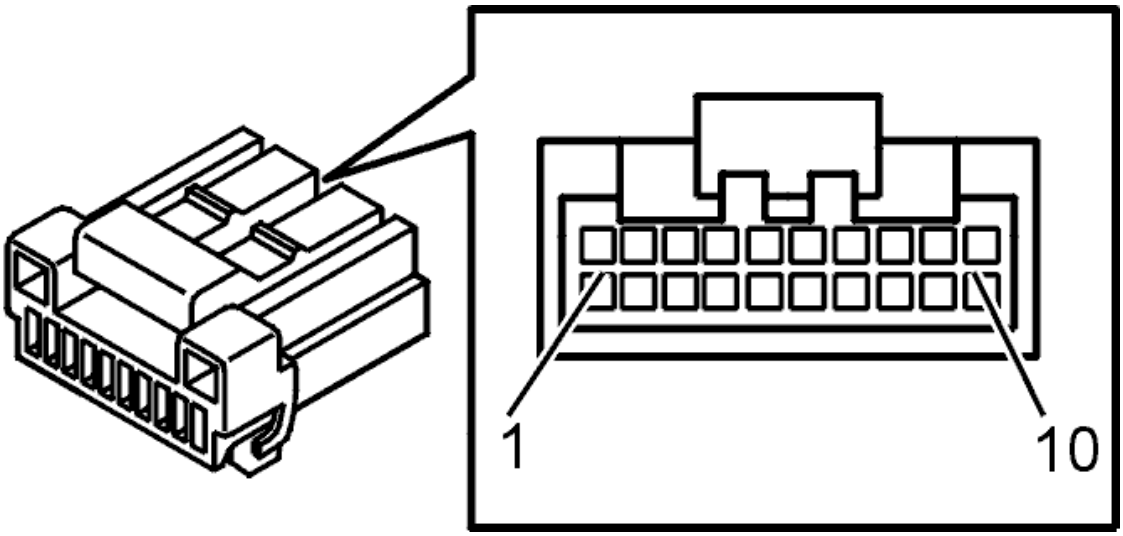

Fig. 246: Identifying Connector Terminals
Courtesy of VOLVO CARS CORPORATION

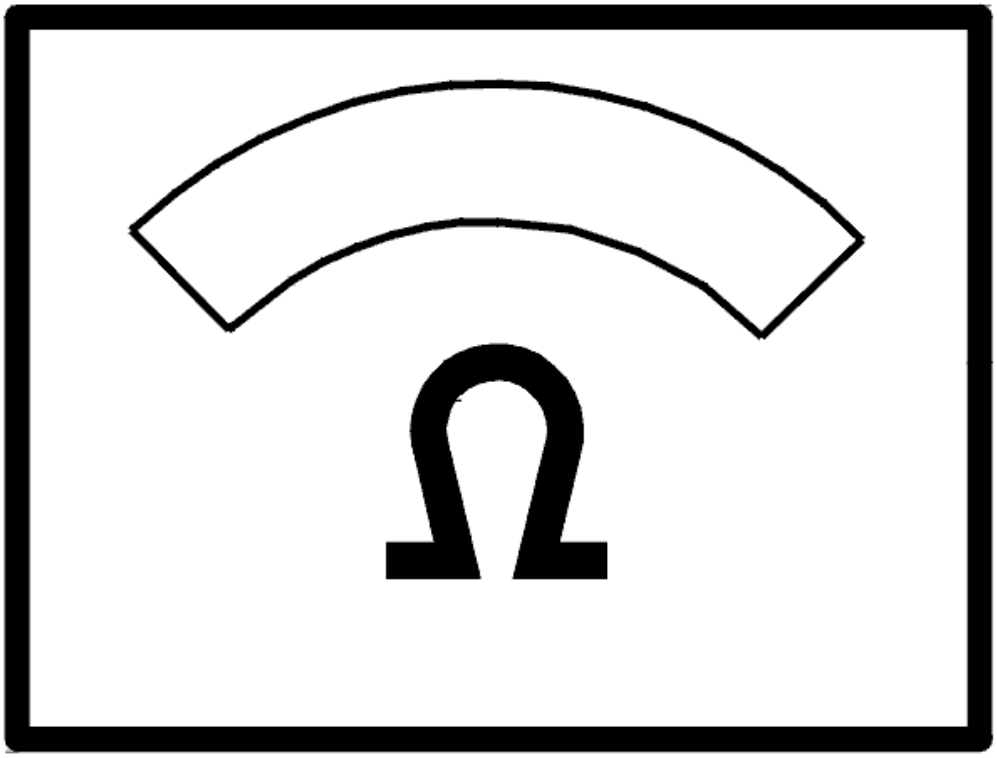

Fig. 247: Identifying Ohms Display
Courtesy of VOLVO CARS CORPORATION

- **Continue**

  Refer to **VERIFICATION**

VERIFICATION

VERIFICATION

HINT: After carrying out the repair, check that the fault has been remedied.

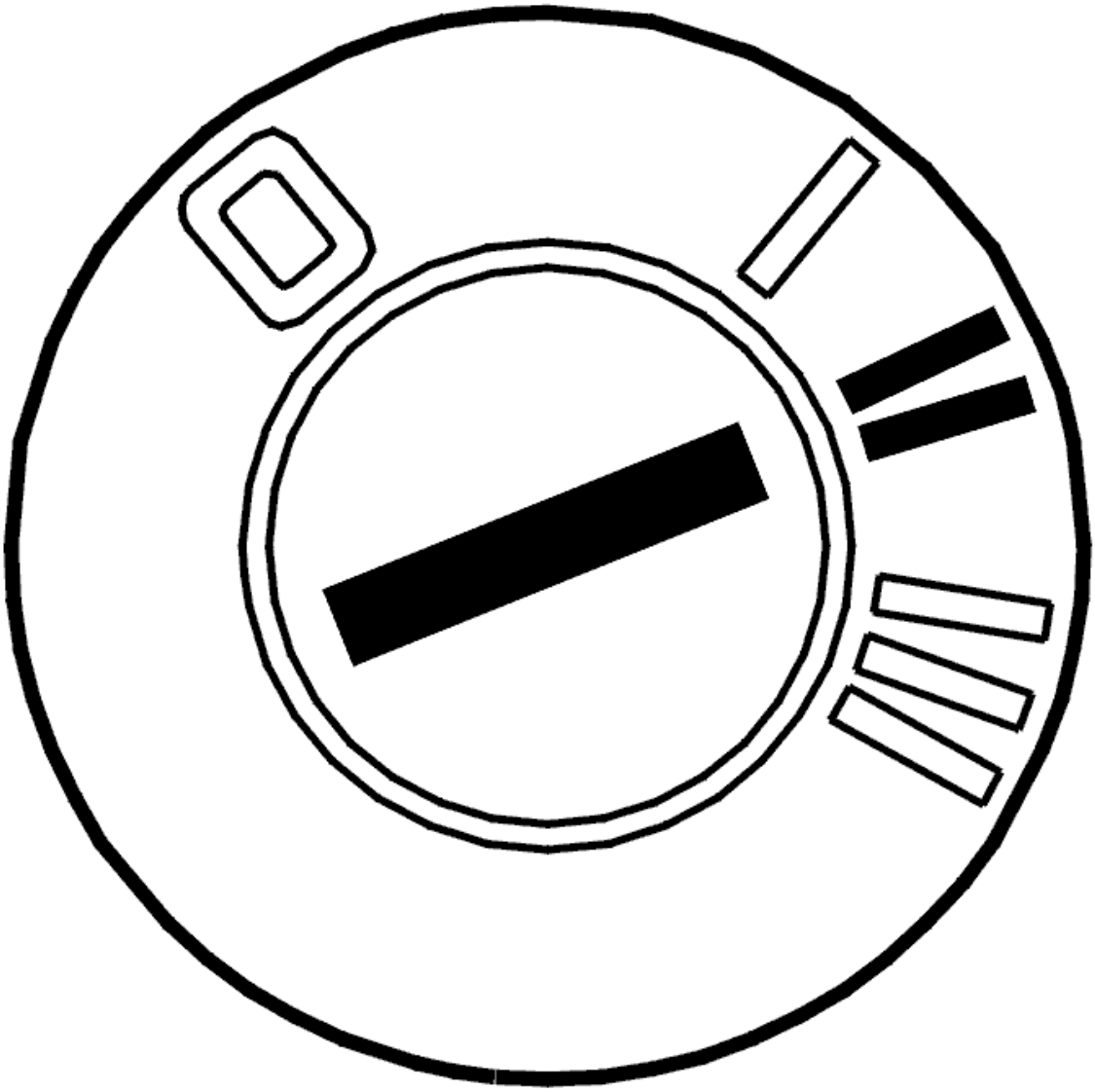

Fig. 248: Identifying Ignition ON
Courtesy of VOLVO CARS CORPORATION

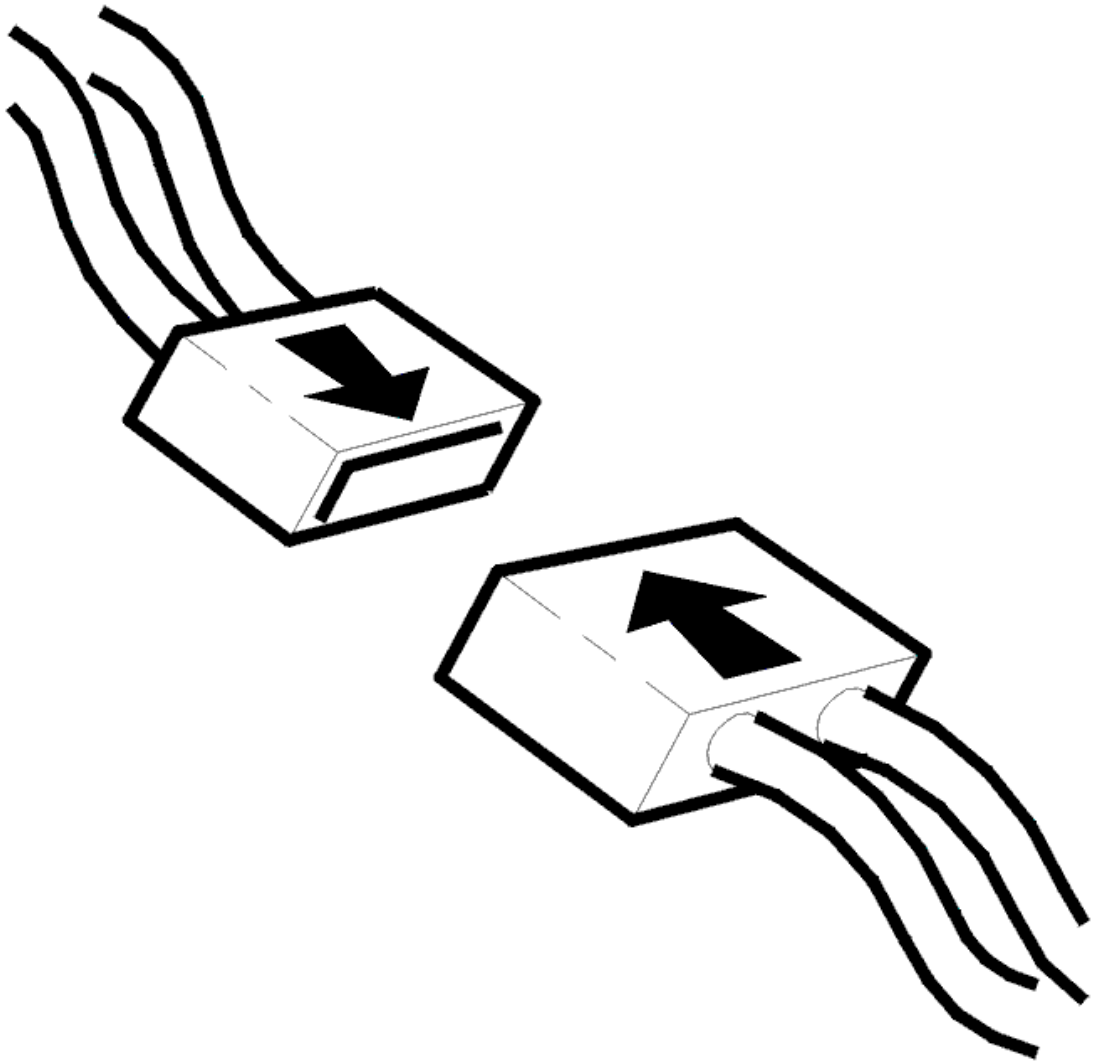

Fig. 249: Identifying Connector(s) Reinstallation
Courtesy of VOLVO CARS CORPORATION

- Ignition off.
- Reinstall the connectors, components etc.
- Ignition on.

  Check that the relevant lamp button and lamp are functioning.

Does the lamp function?

- **YES**

  VERIFIED: Troubleshooting has been completed.

- **NO**

  Refer to **INFORMATION**

INFORMATION

FAULT-TRACING INFORMATION

The fault should have been detected and remedied. As this is not the case fault-tracing has failed.

Exit fault-tracing for this diagnostic trouble code (DTC) or make another attempt.

UEM-0038: GENERAL LIGHTING. SIGNAL TOO LOW (2003-2004)

DIAGNOSTIC TROUBLE CODE INFORMATION

Condition

If the control unit detects that the signal supply is off at the same time as the control signal for the general courtesy lighting is high, the diagnostic trouble code is displayed.

Substitute Value

- The lamp goes off.

Possible Source

- Open circuit or short circuit to ground on signal wire for general lighting.

Fault symptom[s]

- Courtesy lighting does not work.

SIGNAL TOO LOW

see **SIGNAL TOO LOW**

UEM-0039: GENERAL LIGHTING. SIGNAL MISSING (2003-2004)

DIAGNOSTIC TROUBLE CODE INFORMATION

Condition

If the control unit registers a faulty control signal from the general courtesy lighting, the diagnostic trouble code is displayed.

Substitute Value

- The lamp goes off.

Possible Source

- Open circuit in signal wire for the general courtesy lighting.
- Short circuit to voltage supply on signal wire for general lighting.

Fault symptom[s]

- Passenger compartment lighting/Does not work

SIGNAL MISSING

CHECKING THE CABLE AND COMPONENT

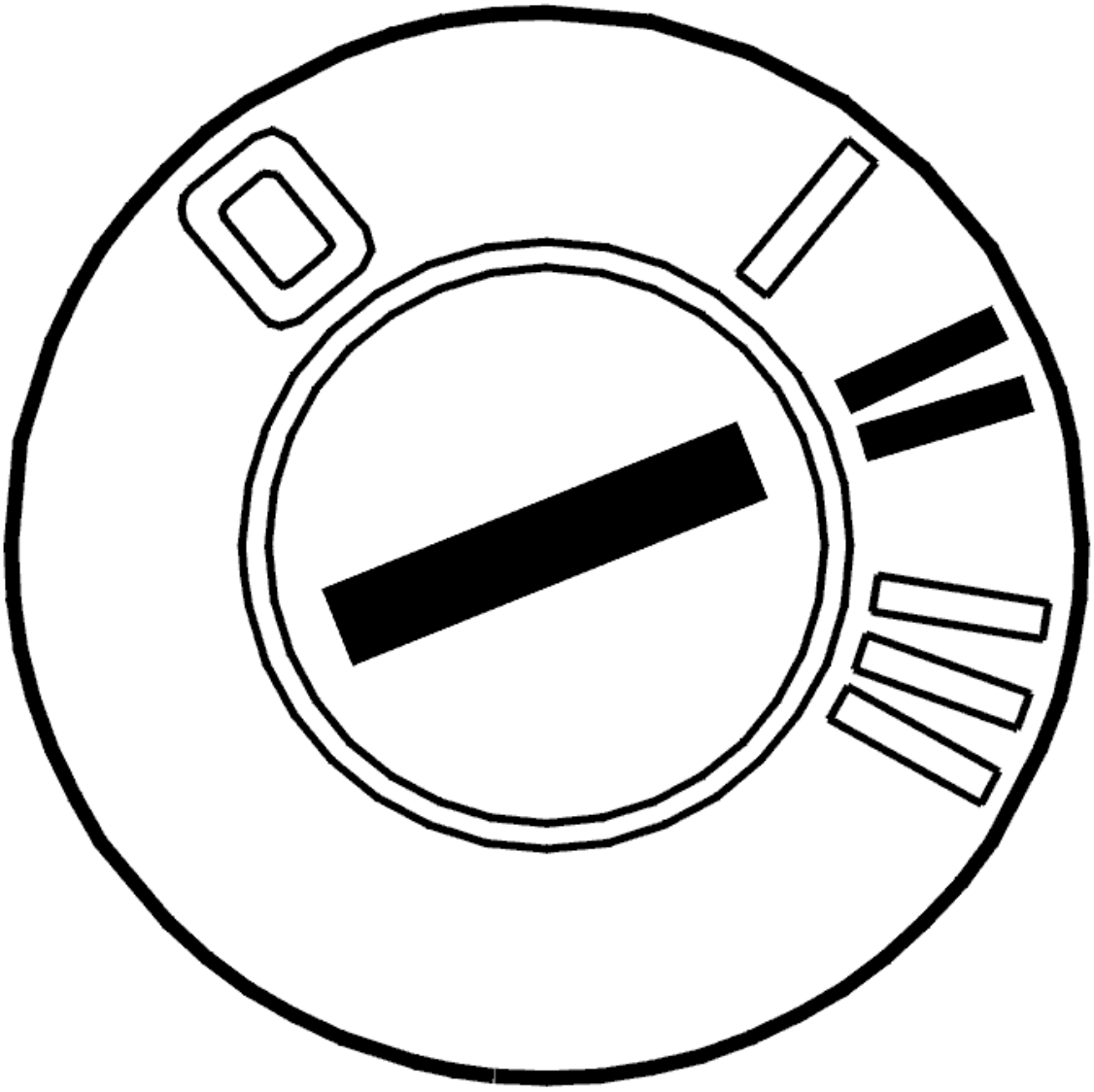

Fig. 250: Identifying Ignition ON
Courtesy of VOLVO CARS CORPORATION

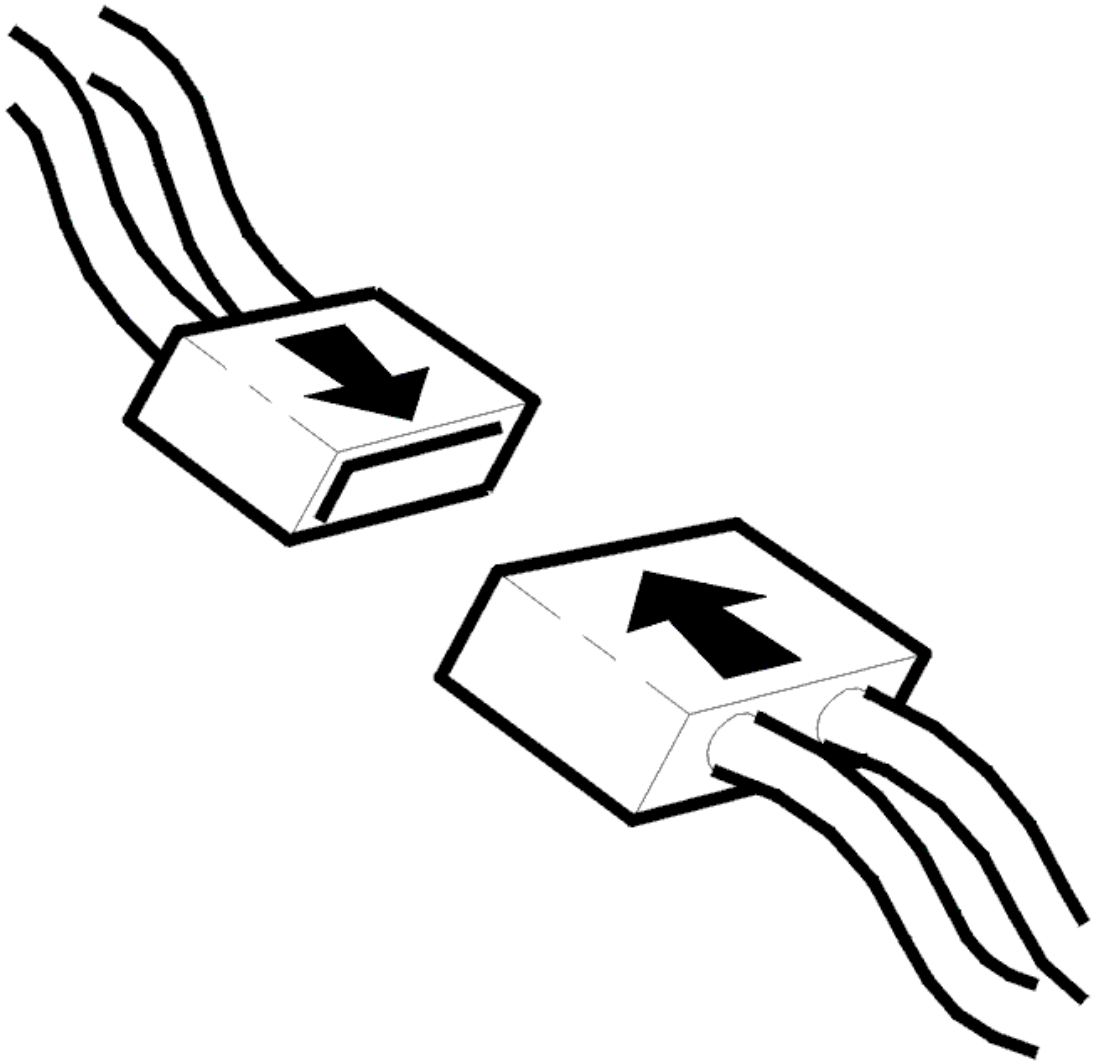

Fig. 251: Identifying Connector(s) Reinstallation
Courtesy of VOLVO CARS CORPORATION

- Ignition off
- Check the connectors for the upper electronic module (UEM) and roof lamp module. Check for contact resistance and oxidation.

  Remedy as necessary

- Reinstall the connectors, components etc.
- Ignition on.

Activate the general lighting: Use the VCT2000 (or appropriate scan tool).

Other information:

- To access the roof lamp switch, see **INTERIOR LIGHTING, REPLACING**
- To access the connector for the upper electronic module (UEM), see **UPPER ELECTRONIC MODULE (UEM)/REARVIEW MIRROR, REPLACING**
- see **CHECKING WIRING AND TERMINALS** .

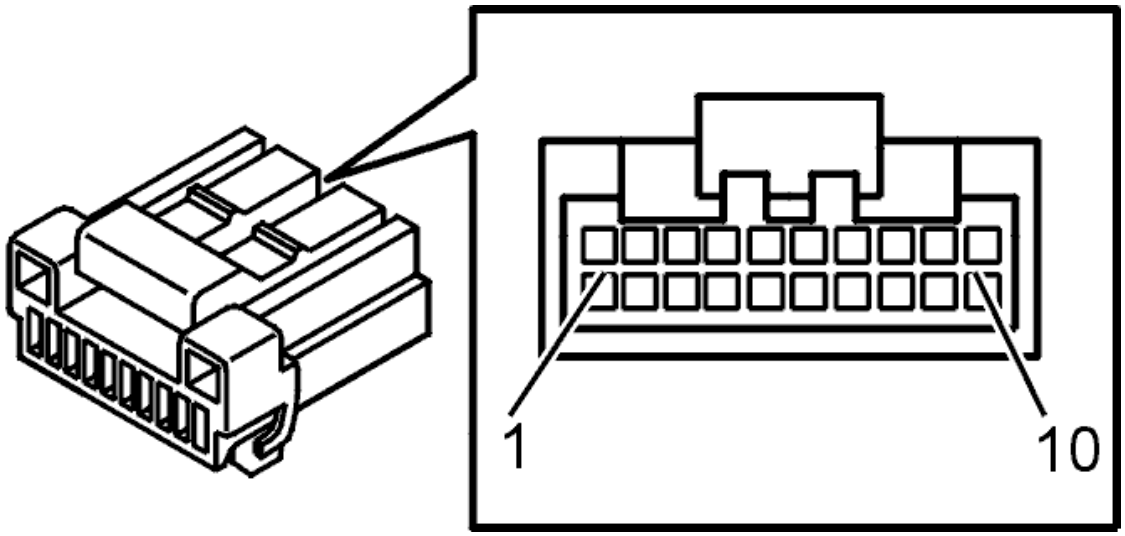

Fig. 252: Identifying Connector Terminals
Courtesy of VOLVO CARS CORPORATION

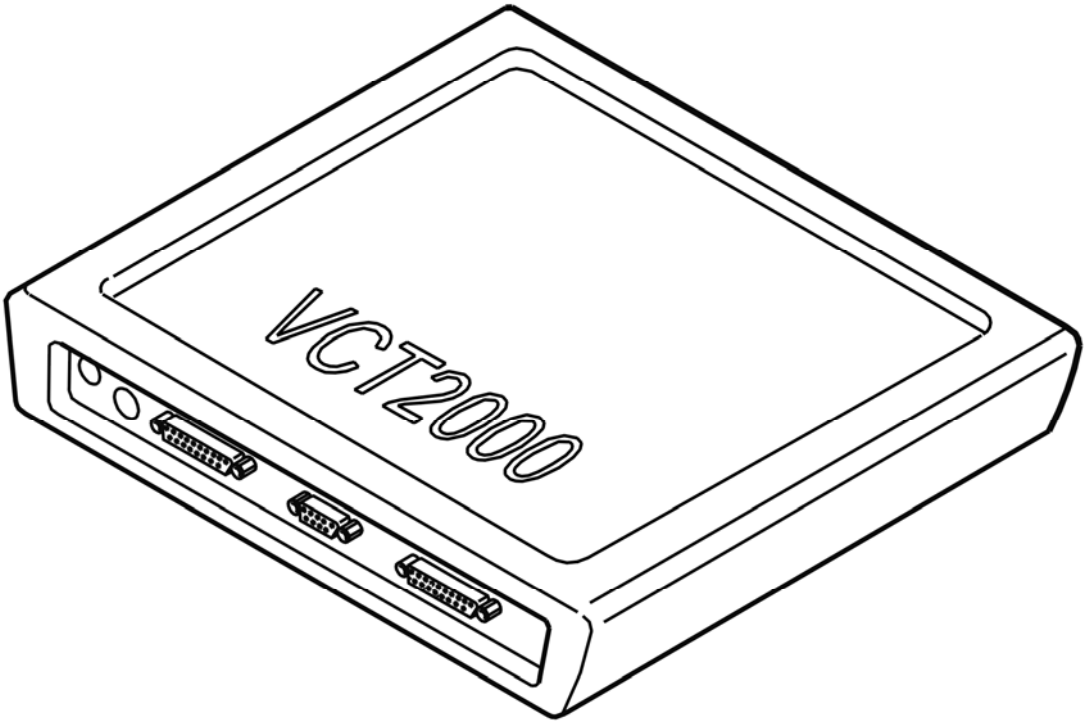

Fig. 253: Identifying VCT2000 Diagnostic Tool Symbol In VIDA
Courtesy of VOLVO CARS CORPORATION

Do the lamps light?

- **YES**

  Refer to **VERIFICATION**

- **NO**

  Refer to **CHECKING FOR AN OPEN-CIRCUIT**

CHECKING FOR AN OPEN-CIRCUIT

Check the cable between the control module terminal #19 and roof lamp module terminal #5A. Check for an open-circuit. Check for a short-circuit to supply voltage.

Replace the cable if a fault is found.

If no fault was found, try replacing the lamps.

Other information:

- For further information about signals and other values, see **SIGNAL DESCRIPTION, UPPER ELECTRONIC MODULE (UEM)**
- To connect the breakout box, see **CONNECTING THE BREAKOUT BOX**
- To replace the lamps, see **INTERIOR LIGHTING, REPLACING**
- see **CHECKING WIRING AND TERMINALS** .

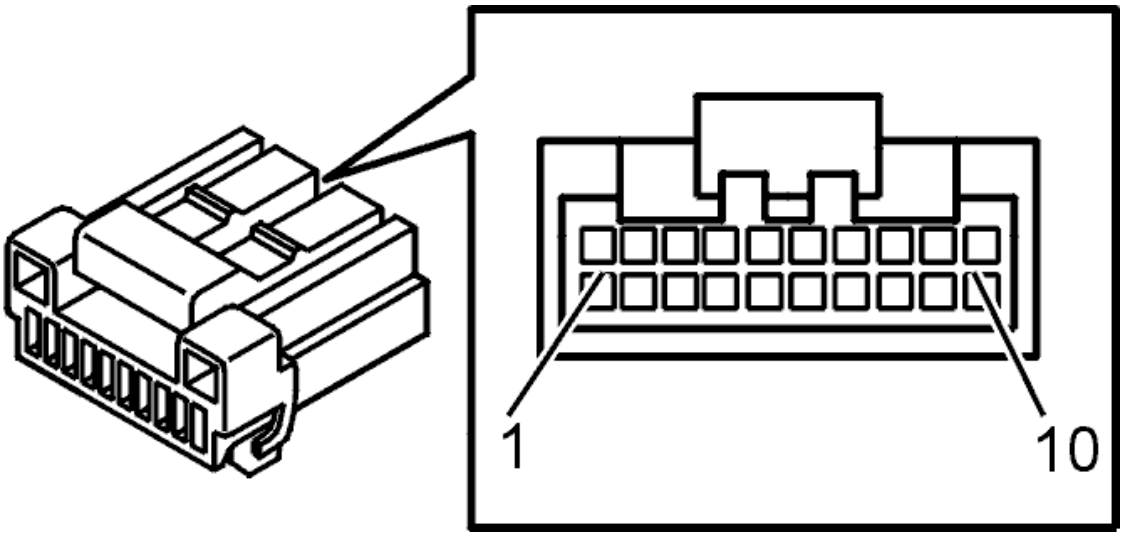

Fig. 254: Identifying Connector Terminals
Courtesy of VOLVO CARS CORPORATION

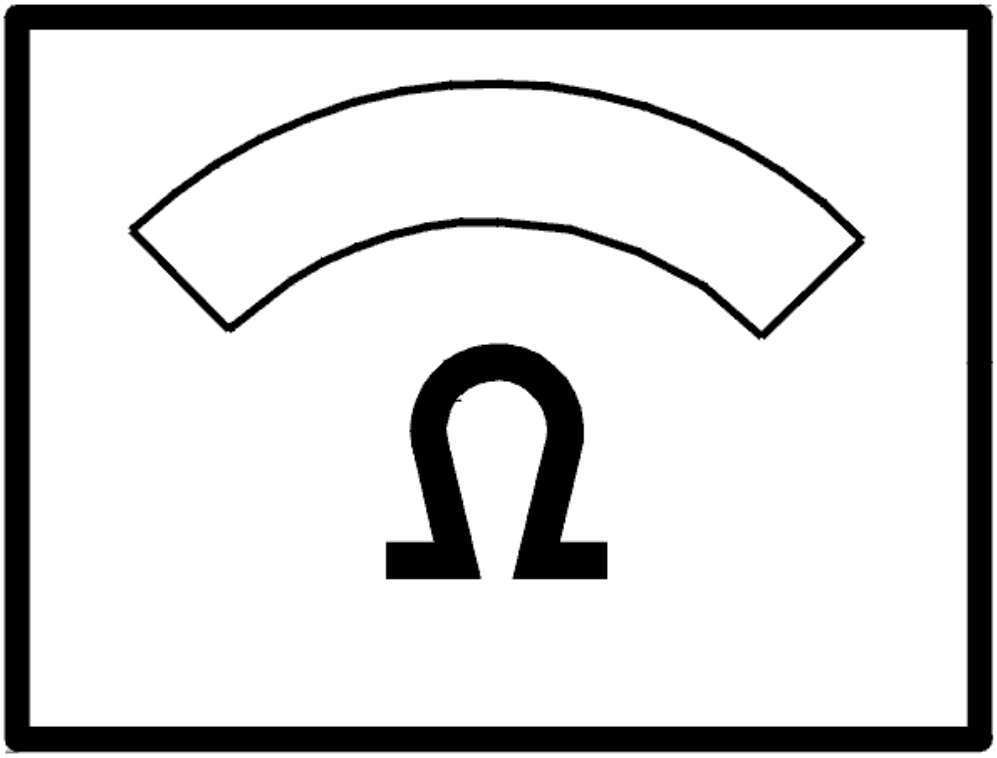

Fig. 255: Identifying Ohms Display
Courtesy of VOLVO CARS CORPORATION

- **Continue**

  Refer to **VERIFICATION**

VERIFICATION

VERIFICATION

HINT: After carrying out the repair, check that the fault has been remedied.

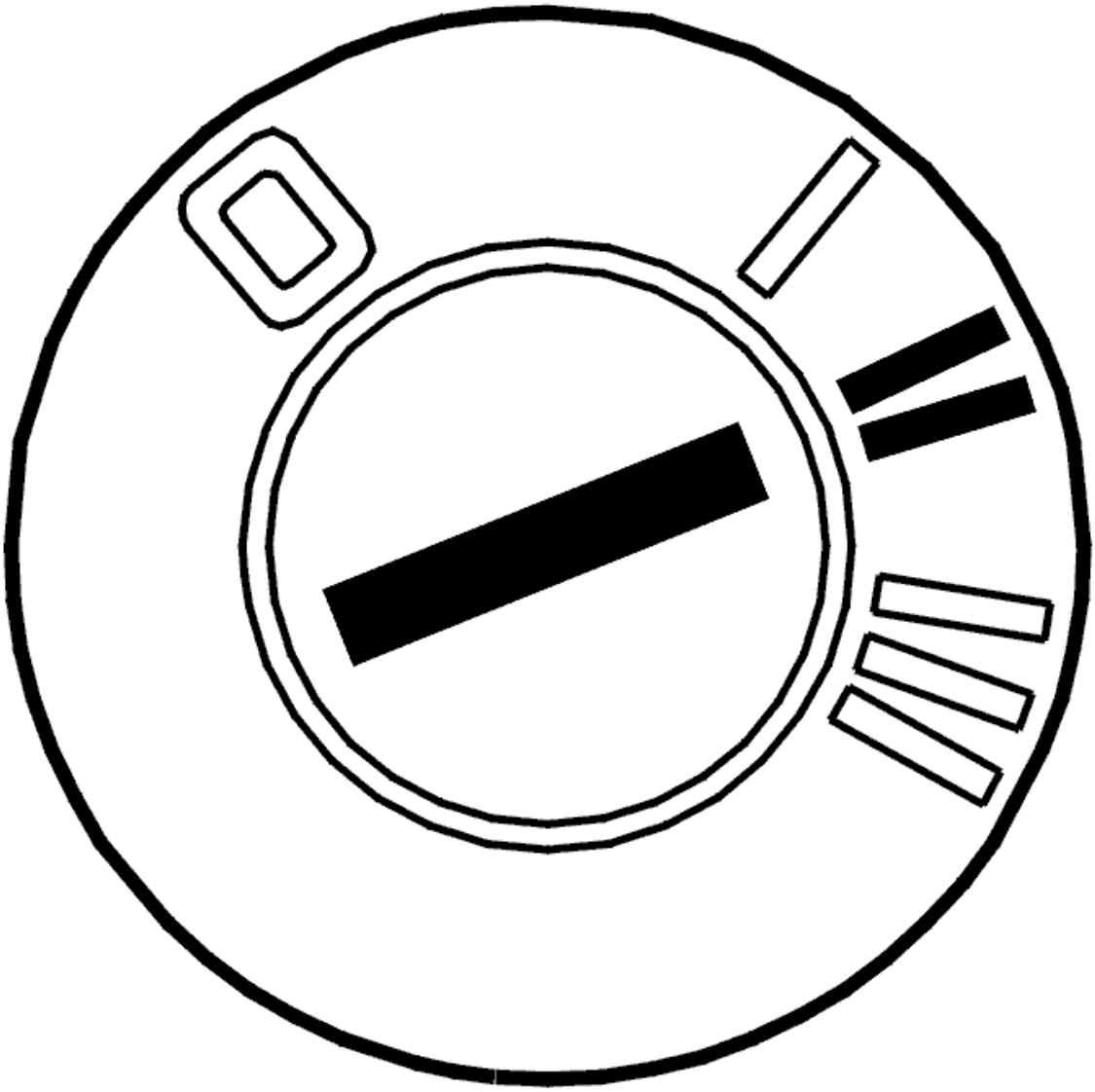

Fig. 256: Identifying Ignition ON
Courtesy of VOLVO CARS CORPORATION

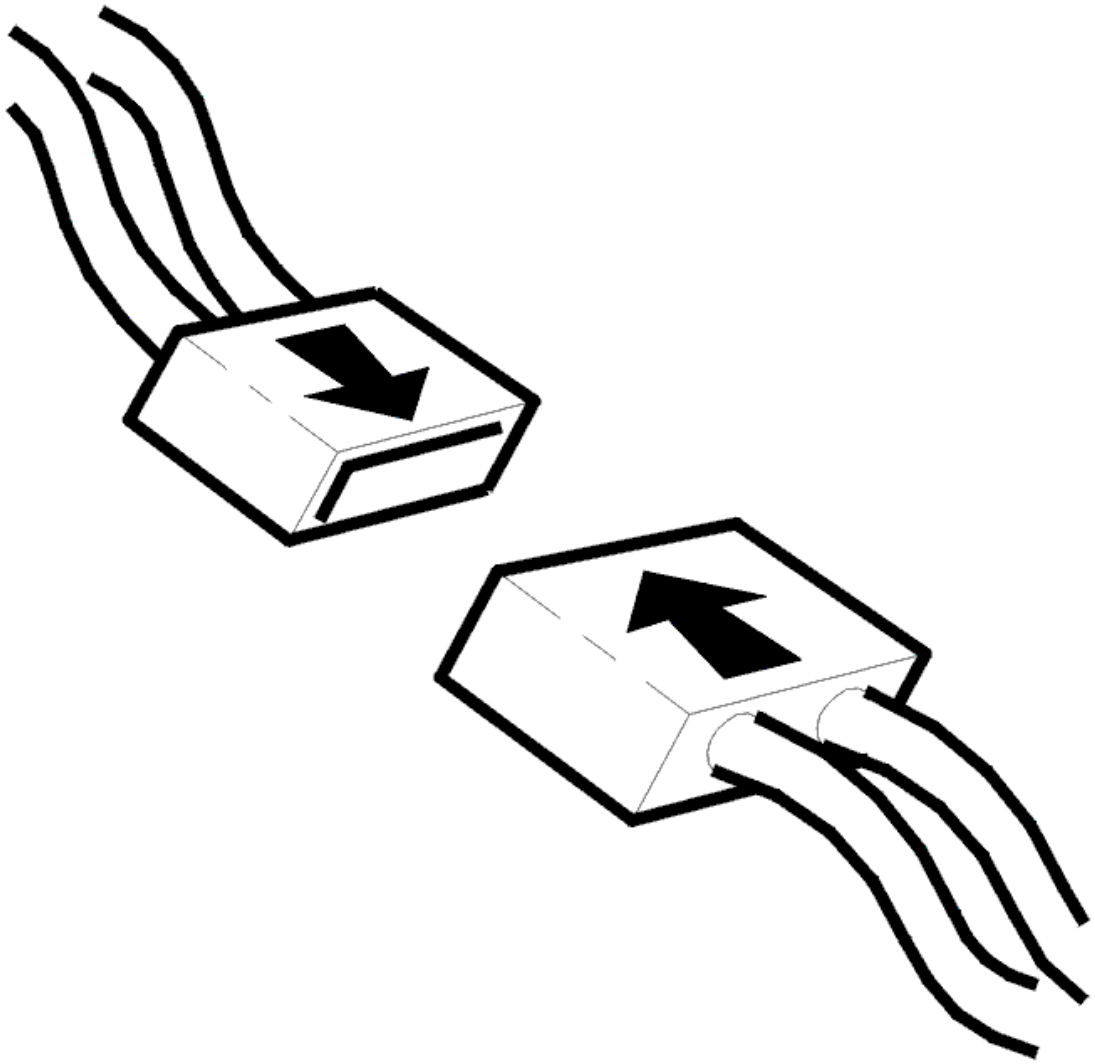

Fig. 257: Identifying Connector(s) Reinstallation
Courtesy of VOLVO CARS CORPORATION

- Ignition off.
- Reinstall the connectors, components etc.
- Ignition on.

  Check that the relevant lamp button and lamp are functioning.

Does the lamp function?

- **YES**

  VERIFIED: Troubleshooting has been completed.

- **NO**

  Refer to **INFORMATION**

INFORMATION

FAULT-TRACING INFORMATION

The fault should have been detected and remedied. As this is not the case fault-tracing has failed.

Exit fault-tracing for this diagnostic trouble code (DTC) or make another attempt.

UEM-0039: GENERAL LIGHTING. SIGNAL MISSING (2005-2012)

DIAGNOSTIC TROUBLE CODE INFORMATION

Condition

If the control unit registers a faulty control signal from the general courtesy lighting, the diagnostic trouble code is displayed.

NOTE: The DTC is stored if connector A to control unit roof lamp does not make contact correctly. DTC UEM-0035 and UEM-0037 are usually then also stored.

Substitute Value

- The lamp goes off.

Possible Source

- Open circuit in signal wire for the general courtesy lighting.
- Short circuit to voltage supply on signal wire for general lighting.

Fault symptom[s]

- Passenger compartment lighting/Does not work

SIGNAL MISSING

see **SIGNAL MISSING**

UEM-003A: EXTENDED X SUPPLY (EXT_X). SIGNAL TOO LOW (2003-2012)

DIAGNOSTIC TROUBLE CODE (DTC) INFORMATION UEM-003A

Condition

The upper electronic module (UEM) supplies power to a number of functions in the car via Extended X-supply (EXT_X). These functions include the sun roof logic, mirror lamps in the sun visor, rain sensor, buttons for the headlining lighting and certain button lighting.

Diagnostic trouble code (DTC) UEM-003A is stored if the upper electronic module (UEM) registers too low a level for power supply Extended X-supply (EXT_X).

Diagnostic trouble code (DTC) UEM-003A can be diagnosed in ignition positions I or II.

Substitute Value

- Sun roof, mirror lamps in the sun visor, buttons for the headlining lighting and certain button lighting are switched off.

Possible Source

- The power supply to the sun roof, mirror lamps in the sun visor, rain sensor, buttons for the headlining lighting and certain button lighting functions is short-circuited to ground.

Fault symptom[s]

- The power sun roof does not operate
- The interior lighting does not operate
- No rain sensor function.

SIGNAL TOO LOW

CHECKING FOR A SHORT-CIRCUIT

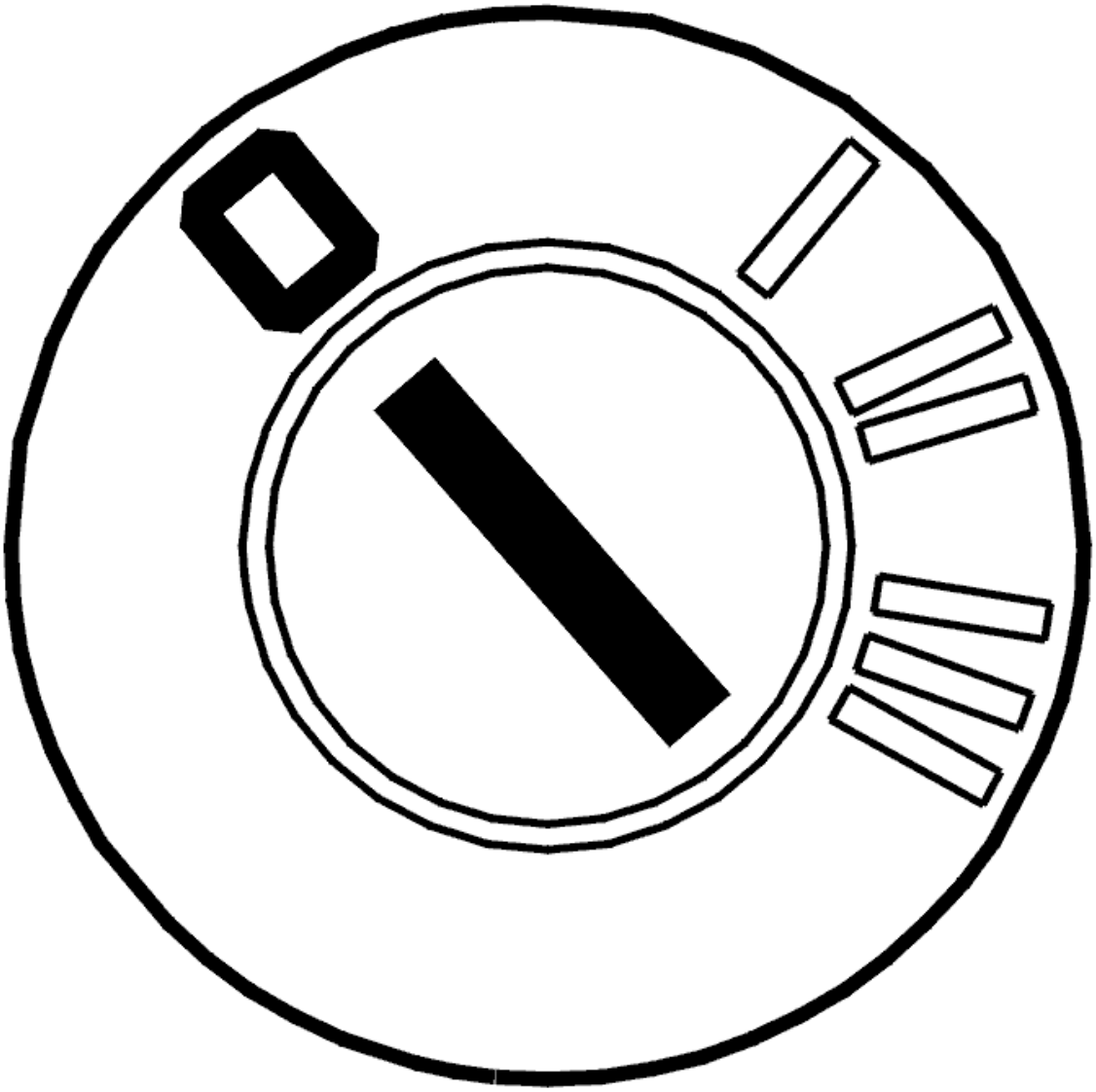

Fig. 258: Identifying Ignition OFF
Courtesy of VOLVO CARS CORPORATION

- Ignition off.

  If all the functions that are supplied with power from the upper electronic module (UEM) via Extended X-supply (EXT_X) are not working (i. e. sun roof logic, mirror lamps in the sun visor, rain sensor or interior lighting), it can be assumed that either the cable between the upper electronic module (UEM) and the junction point 53/505 is short-circuited to ground or the wiring from the junction point to each component is short-circuited to ground.

  First check the power supply cable between the upper electronic module (UEM) and each component. If the cable is short-circuited to ground, 0 ohms will be measured.

  For mirror lamps in the sun visor, check the cable between the mirror lamp connector terminal #1 and the connector for the upper electronic module (UEM) terminal #A8. Check for a short-circuit to ground.

For sun roof and interior lighting, take readings on the cable between the connector for roof lamps terminal #A2 (and the sun roof module) and the connector for the upper electronic module (UEM) #A8. Check for a short-circuit to ground.

For rain sensor, take readings on the cable between the rain sensor connector terminal #A3 and the connector for the upper electronic module (UEM) terminal #A8. Check for a short-circuit to ground.

If all the readings result in a short-circuit to ground, it can be assumed that the fault is between the upper electronic module (UEM) #A8 and junction point 53/505.

Remedy as necessary.

Other information:

- To connect the breakout box, see **CONNECTING THE BREAKOUT BOX**
- For information about signals, see **SIGNAL DESCRIPTION, UPPER ELECTRONIC MODULE (UEM)**
- To access or replace the interior lighting, see **INTERIOR LIGHTING, REPLACING**
- To fault-trace wiring and terminals, see **CHECKING WIRING AND TERMINALS** .

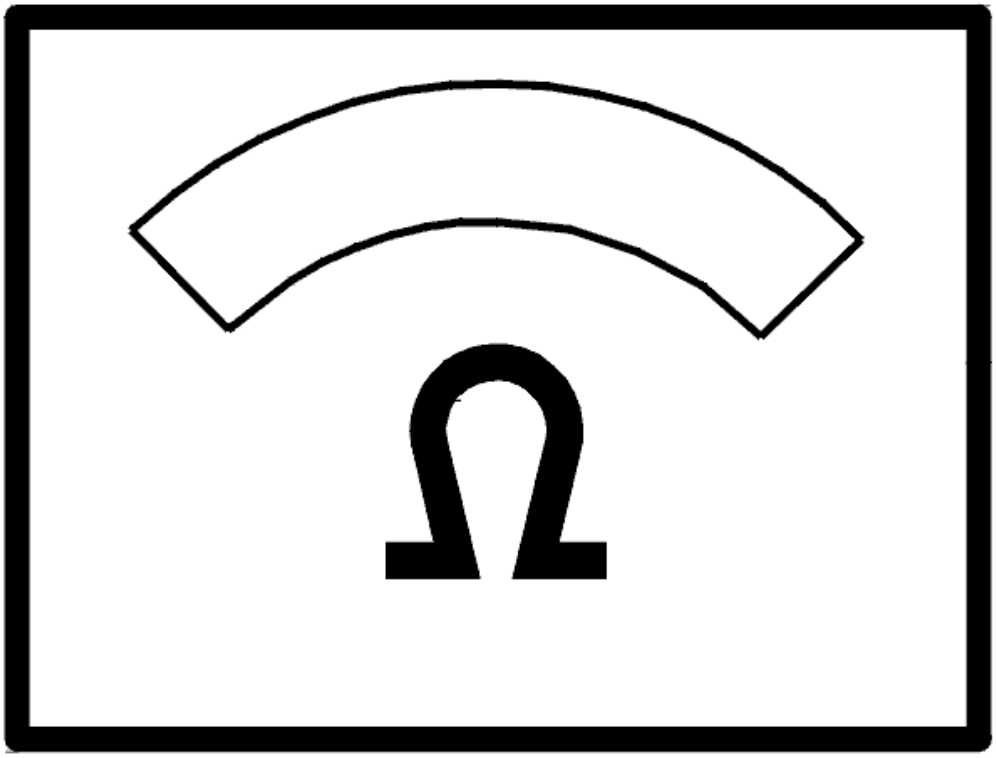

Fig. 259: Identifying Ohms Display
Courtesy of VOLVO CARS CORPORATION

Was a fault detected?

- **YES**

  Refer to **VERIFICATION**

- **NO**

  FAULT NOT FOUND: Troubleshooting has been completed.

VERIFICATION

VERIFICATION

HINT: After carrying out the repair, check that the fault has been remedied.

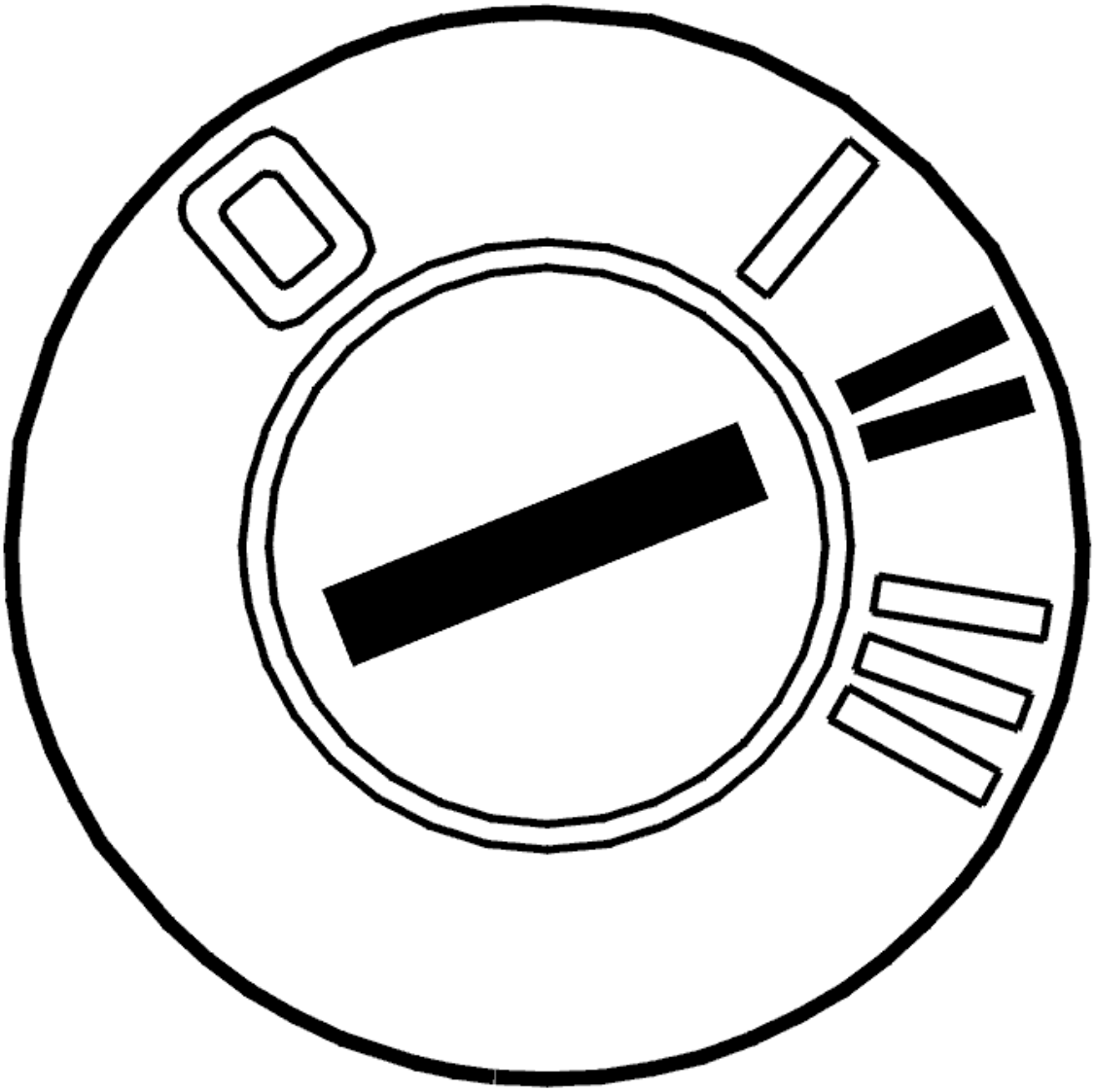

Fig. 260: Identifying Ignition ON
Courtesy of VOLVO CARS CORPORATION

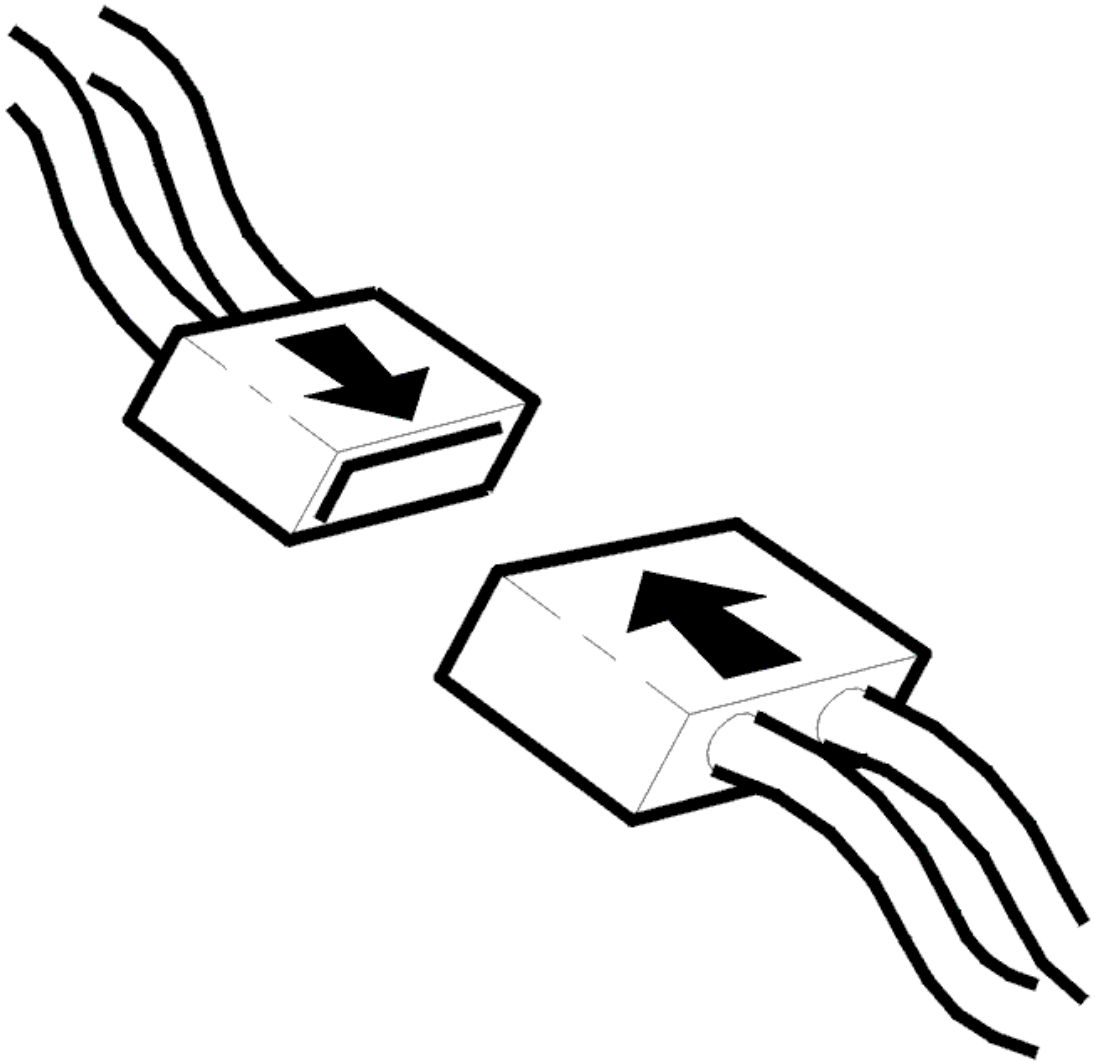

Fig. 261: Identifying Connector(s) Reinstallation
Courtesy of VOLVO CARS CORPORATION

- Ignition off
- Reinstall the connectors, components etc.
- Ignition on.

Check whether Extended X supply (EXT_X) is working.

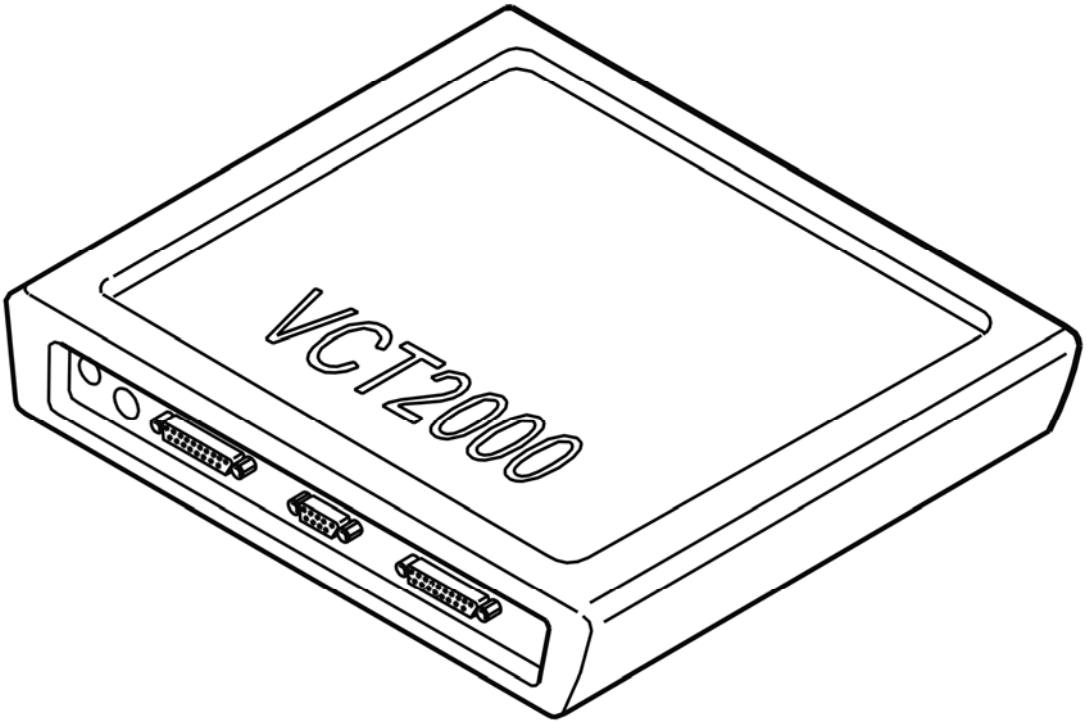

Fig. 262: Identifying VCT2000 Diagnostic Tool Symbol In VIDA
Courtesy of VOLVO CARS CORPORATION

Is each component working (sun roof, mirror lamps in sun visor, rain sensor and interior lighting)?

- **YES**

  VERIFIED: Troubleshooting has been completed.

- **NO**

  Refer to **INFORMATION**

INFORMATION

FAULT-TRACING INFORMATION

The fault should have been detected and remedied. As this is not the case fault-tracing has failed.

Exit fault-tracing for this diagnostic trouble code (DTC) or make another attempt.

UEM-003C: CARGO COMPARTMENT LIGHTING/3RD ROW READING LAMPS. SIGNAL TOO LOW (2003-2012)

DIAGNOSTIC TROUBLE CODE (DTC) INFORMATION UEM-003C

Condition

The upper electronic module (UEM) uses the same power stages and outputs for interior lighting in several different models. Diagnostic trouble code (DTC) UEM-003C indicates faults in various units, depending on whether the car is a V70, XC70 or an XC90. In the V70 and XC70, faults are indicated by the control signal from the cargo compartment lighting. In the XC90, faults are indicated by the control signal from the 3rd row reading lamps.

Diagnostic trouble code (DTC) UEM-003C is stored if the control module registers that the control signal from the cargo compartment lighting/third row reading lamps is too low.

Diagnostic trouble code (DTC) UEM-003C can be diagnosed when the general roof lighting is lit and the cargo compartment lighting/third row reading lighting is not lit.

Substitute Value

- Cargo compartment lighting/3rd row reading lamps switched off.

Possible Source

- The cable for power supply to the cargo compartment lighting/third row reading lamps is short-circuited to ground
- Loose connections in the cable for power supply to cargo compartment lighting/third row reading lamps.

Fault symptom[s]

- The cargo compartment lighting is not working
- The interior lighting does not work.

SIGNAL TOO LOW

CHECKING THE CONNECTORS AND COMPONENTS

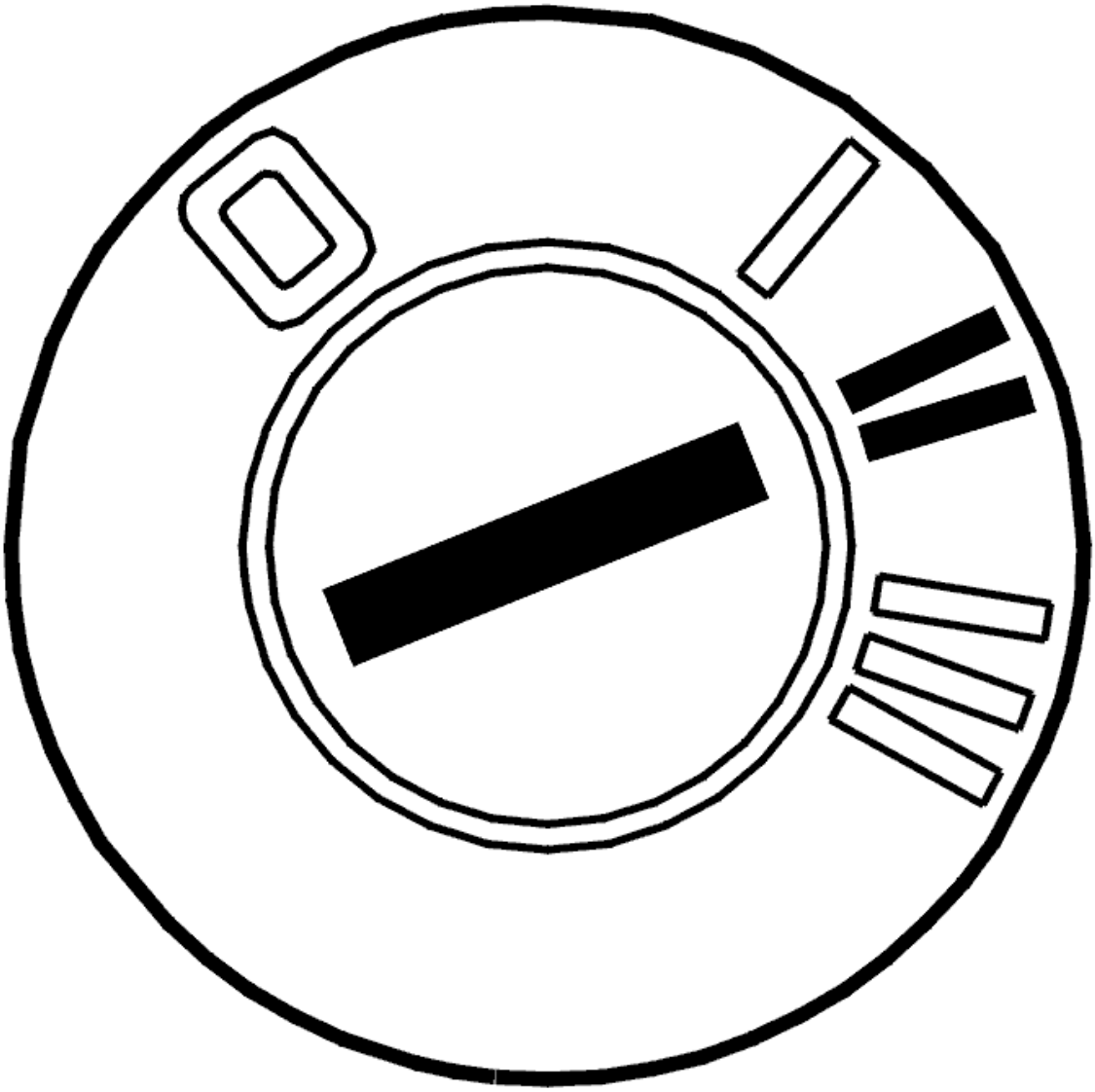

Fig. 263: Identifying Ignition ON
Courtesy of VOLVO CARS CORPORATION

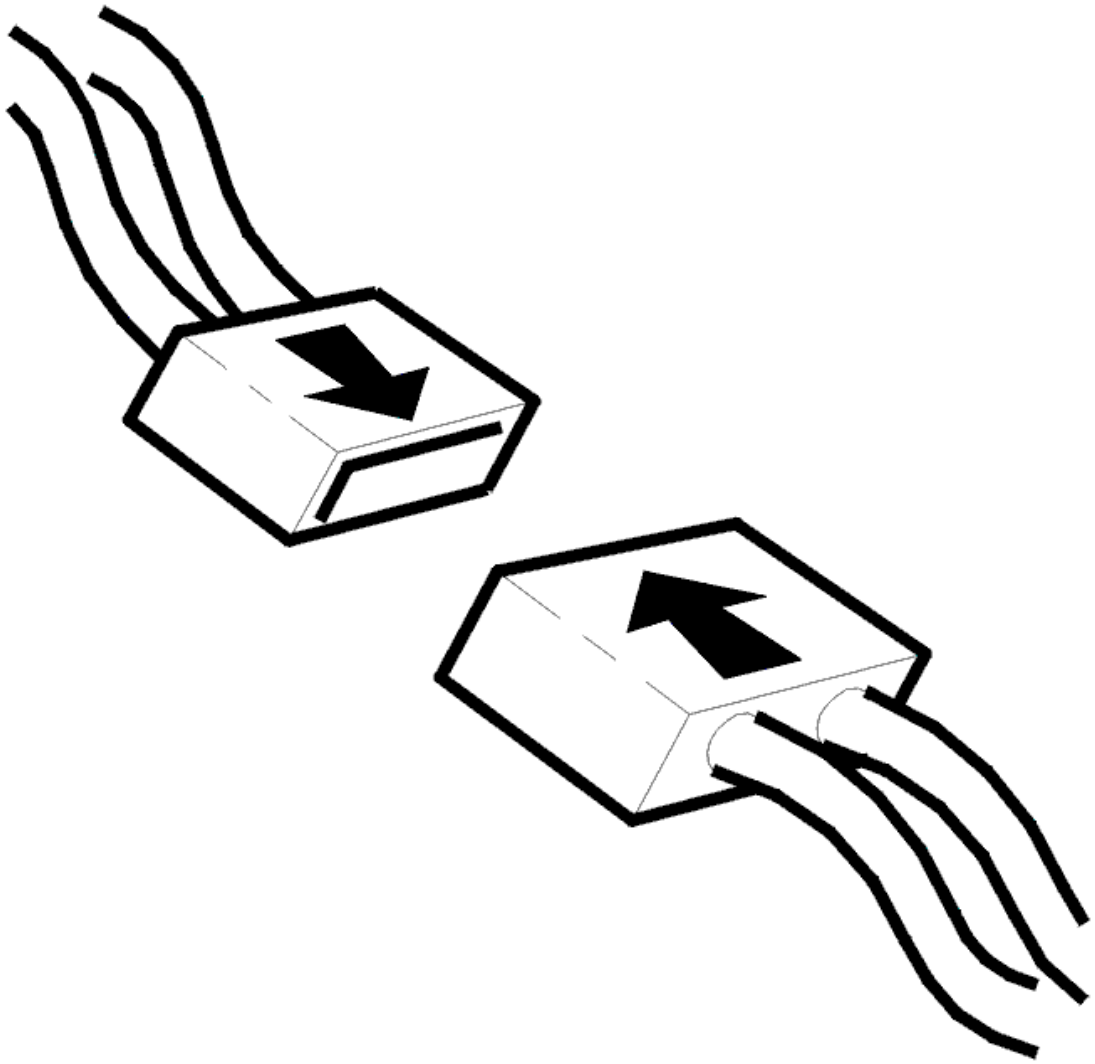

Fig. 264: Identifying Connector(s) Reinstallation
Courtesy of VOLVO CARS CORPORATION

- Check the lamp
- Check the connector for the upper electronic module (UEM) and cargo compartment lighting/third row reading lamps. Check for contact resistance and oxidation.

  Remedy as necessary

- Reinstall the connectors, components etc.

  Other information:

  - For further information about signals and other values, see **SIGNAL DESCRIPTION, UPPER ELECTRONIC MODULE (UEM)**

- see **CHECKING WIRING AND TERMINALS** .

Does the lamp function?

- **YES**

  Refer to **VERIFICATION**

- **NO**

  Refer to **CHECKING FOR SHORT-CIRCUITS TO GROUND**

CHECKING FOR SHORT-CIRCUITS TO GROUND

Check the cable between control module terminal #9 and the cargo compartment lighting/third row reading lamps. Check for a short-circuit to ground.

Replace the cable if a fault is found.

Other information:

- For further information about signals and other values, see **SIGNAL DESCRIPTION, UPPER ELECTRONIC MODULE (UEM)**
- To connect the breakout box, see **CONNECTING THE BREAKOUT BOX**
- see **CHECKING WIRING AND TERMINALS** .

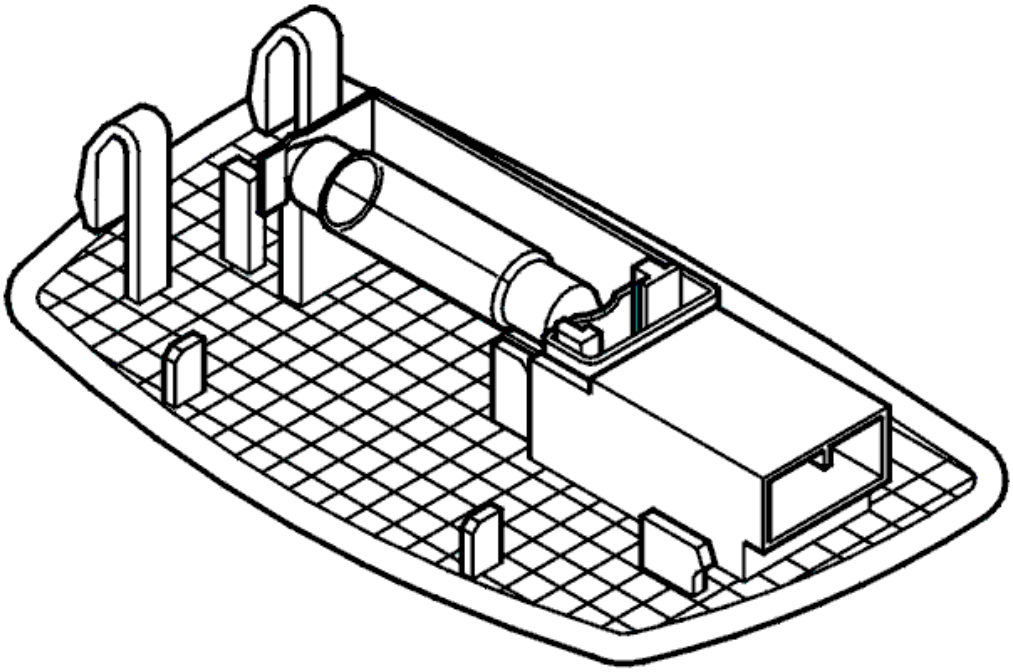

Fig. 265: Identifying Cargo Compartment Lighting/3rd Row Reading Lamp
Courtesy of VOLVO CARS CORPORATION

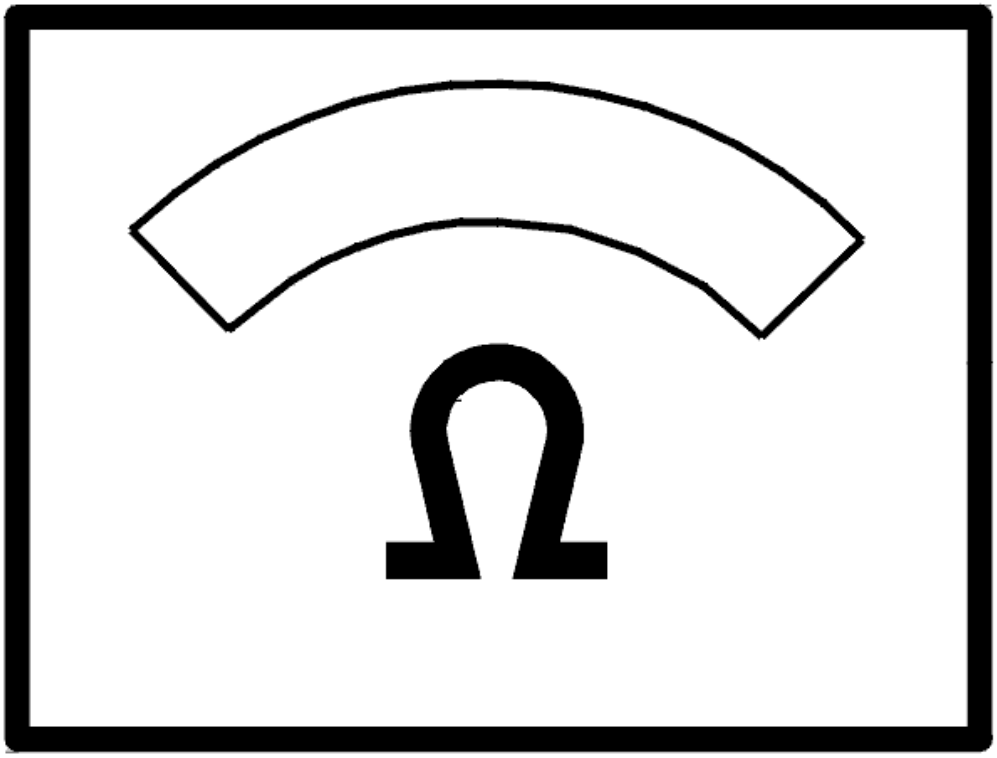

Fig. 266: Identifying Ohms Display
Courtesy of VOLVO CARS CORPORATION

- **Continue**

  Refer to **VERIFICATION**

VERIFICATION

VERIFICATION

HINT: After carrying out the repair, check that the fault has been remedied.

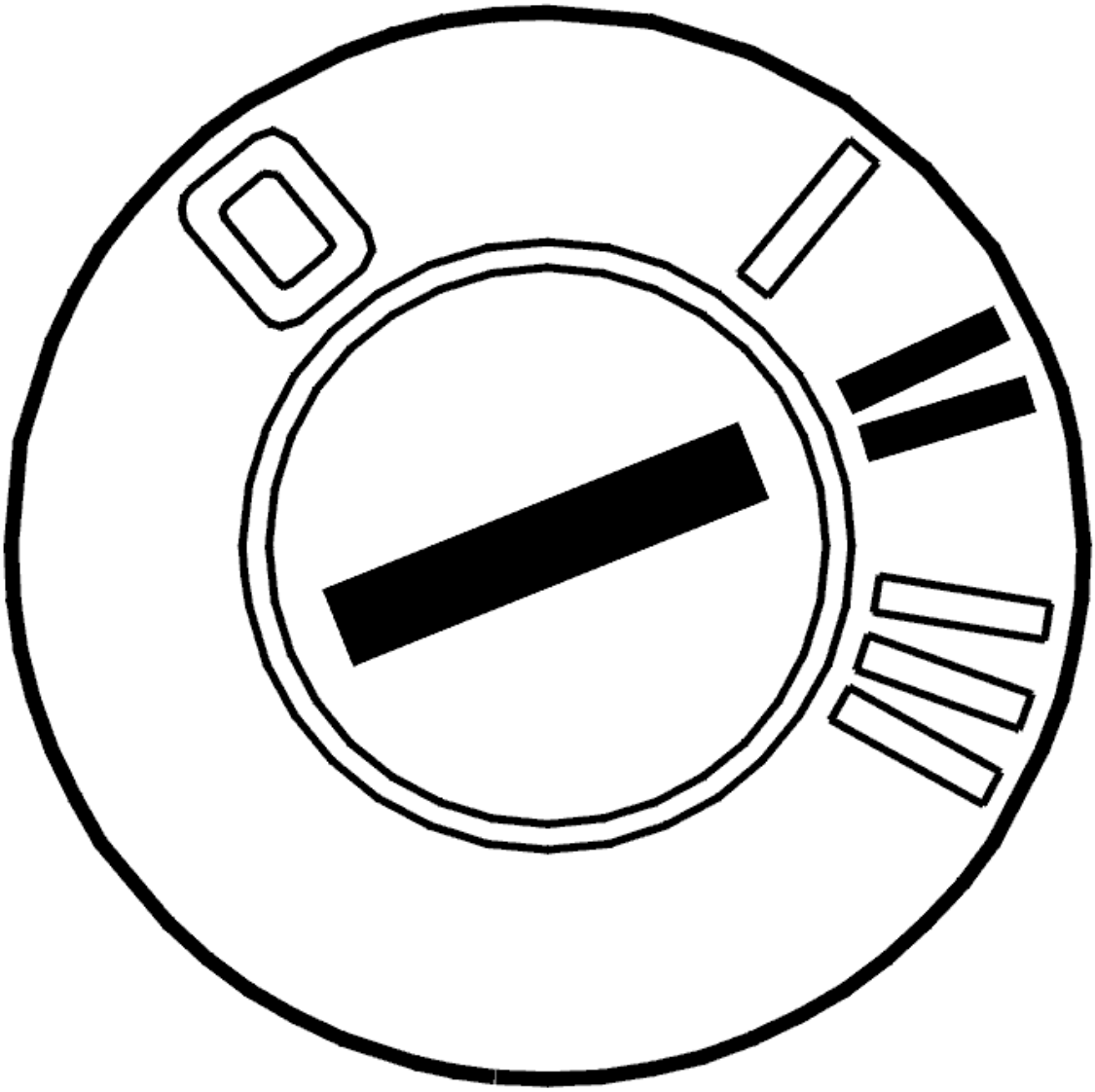

Fig. 267: Identifying Ignition ON
Courtesy of VOLVO CARS CORPORATION

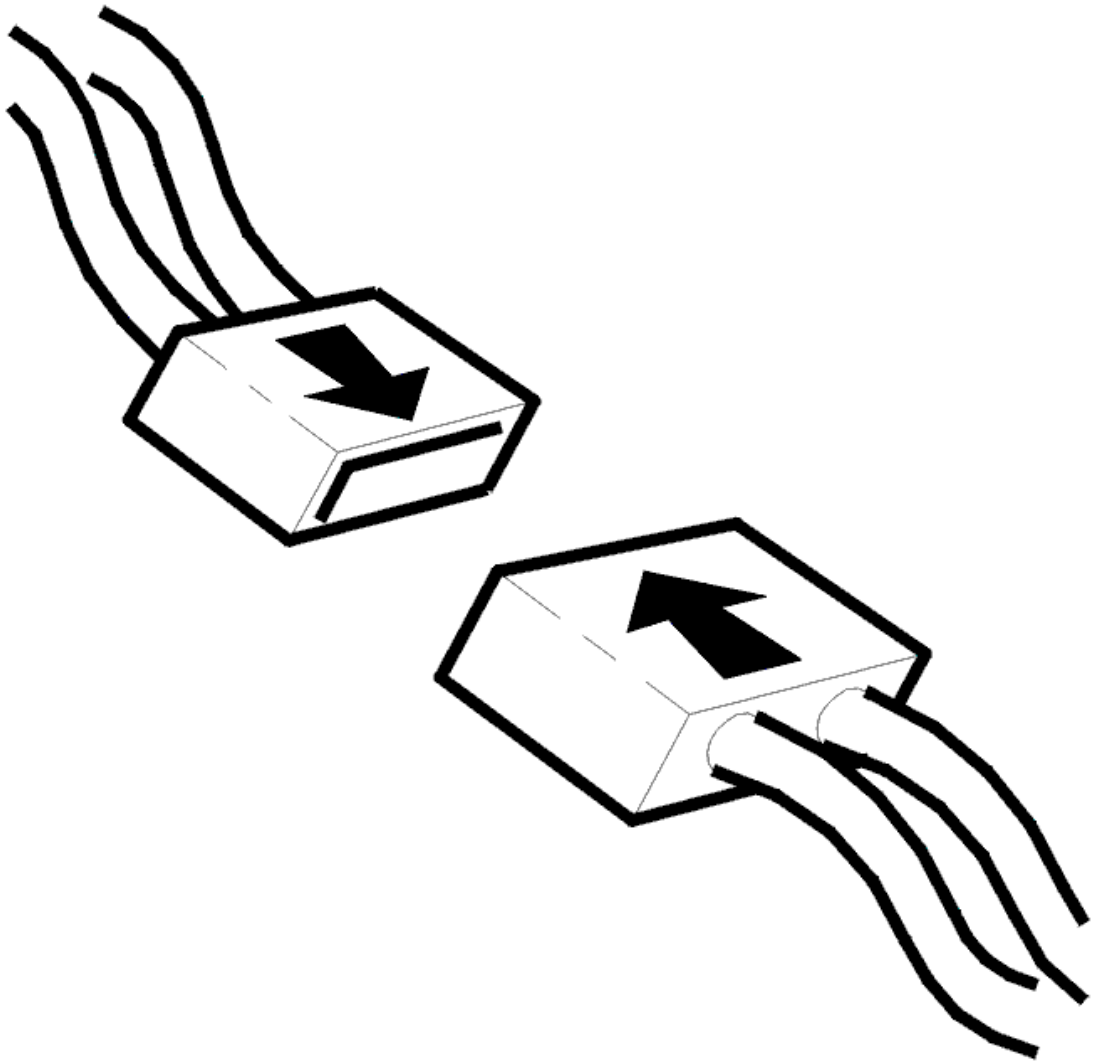

Fig. 268: Identifying Connector(s) Reinstallation
Courtesy of VOLVO CARS CORPORATION

- Ignition off.
- Reinstall the connectors, components etc.
- Ignition on.

  Check that the relevant lamp button and lamp are functioning.

Does the lamp function?

- **YES**

  VERIFIED: Troubleshooting has been completed.

- **NO**

  Refer to **INFORMATION**

INFORMATION

FAULT-TRACING INFORMATION

The fault should have been detected and remedied. As this is not the case fault-tracing has failed.

Exit fault-tracing for this diagnostic trouble code (DTC) or make another attempt.

UEM-003D: CARGO COMPARTMENT LIGHTING/3RD ROW READING LAMPS. FAULTY SIGNAL (2003-2012)

DIAGNOSTIC TROUBLE CODE (DTC) INFORMATION UEM-003D

Condition

The upper electronic module (UEM) uses the same power stages and outputs for interior lighting in several different models. Diagnostic trouble code (DTC) UEM-003D indicates faults in various units, depending on whether the car is a V70, XC70 or an XC90. In the V70 and XC70, faults are indicated by the control signal from the cargo compartment lighting. In the XC90, faults are indicated by the control signal from the 3rd row reading lamps.

Diagnostic trouble code (DTC) UEM-003D is stored if the control module registers that the control signal to the cargo compartment lighting/third row reading lamps is too high.

Diagnostic trouble code (DTC) UEM-003D can be diagnosed in ignition position II and when the general roof lighting is lit and the cargo compartment lighting/third row reading lighting is not lit.

Substitute Value

- Cargo compartment lighting/third row reading lamps switched off.

Possible Source

- The cable for power supply to the cargo compartment lighting/third row reading lamps is short-circuited to supply voltage
- Open-circuit in the cable for power supply to cargo compartment lighting/third row reading lamps.

Fault symptom[s]

- The cargo compartment lighting is not working
- The interior lighting does not work.

FAULTY SIGNAL

CHECKING THE CONNECTORS AND COMPONENTS

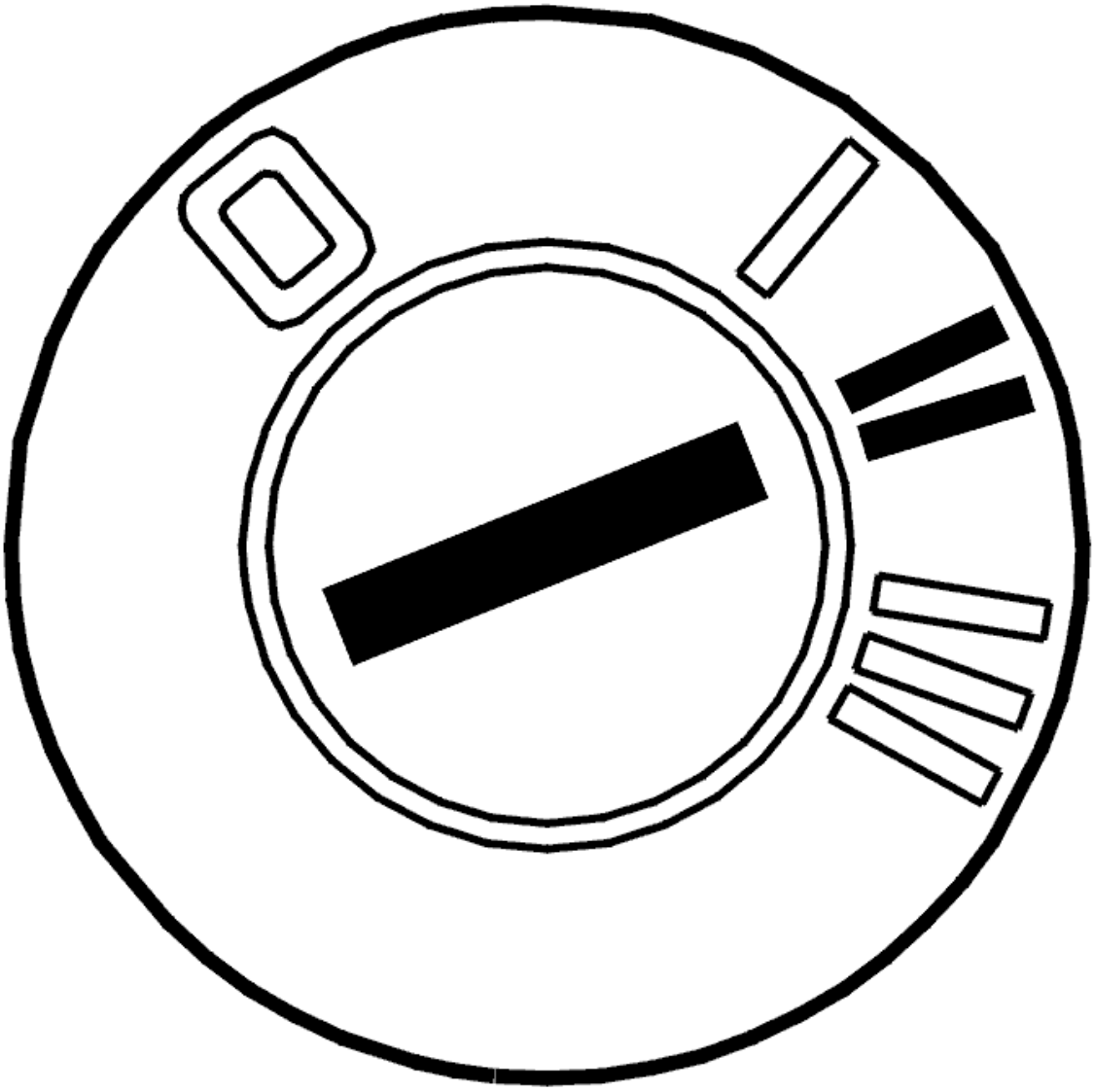

Fig. 269: Identifying Ignition ON
Courtesy of VOLVO CARS CORPORATION

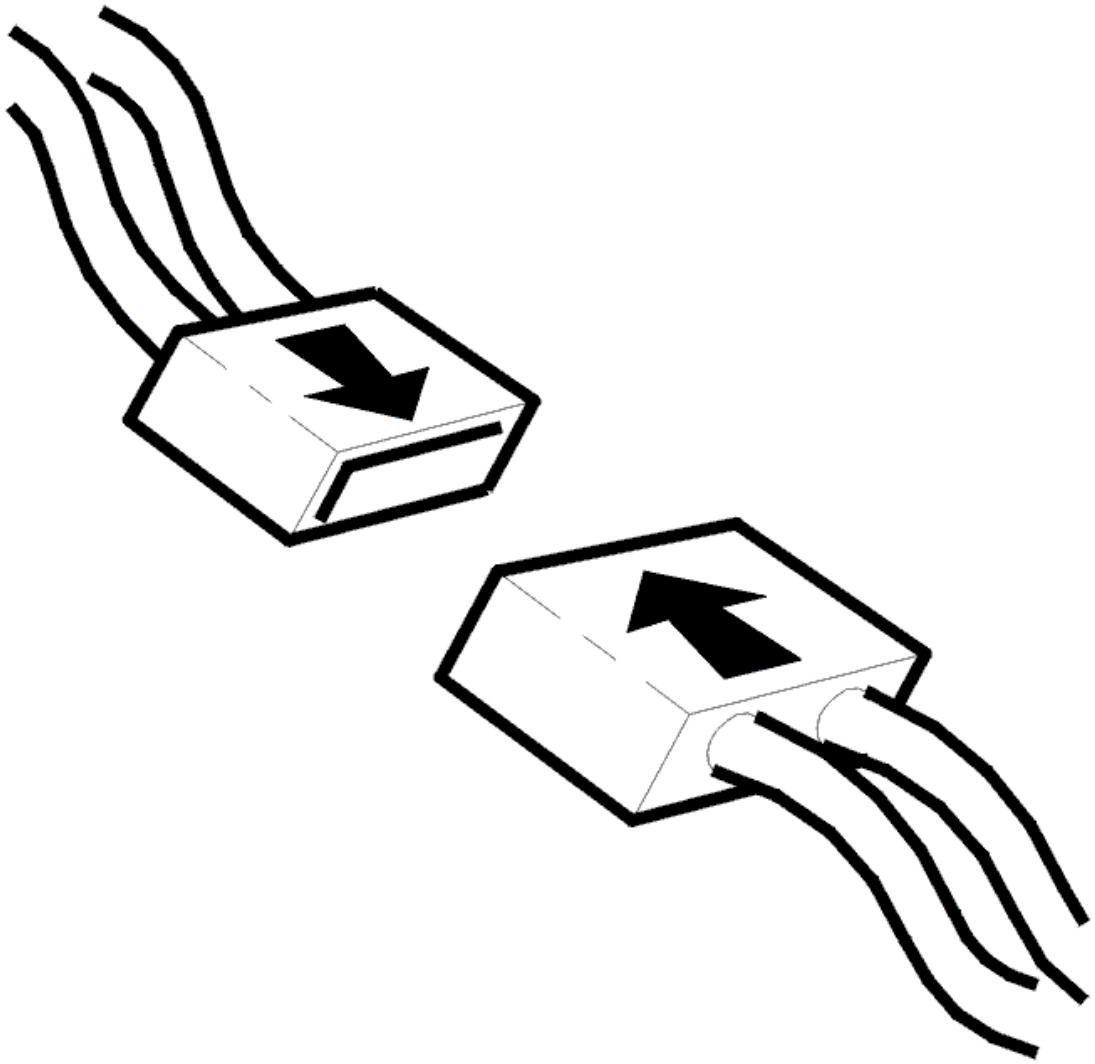

Fig. 270: Identifying Connector(s) Reinstallation
Courtesy of VOLVO CARS CORPORATION

- Check the lamp
- Check the connector for the upper electronic module (UEM) and cargo compartment lighting/third row reading lamps. Check for contact resistance and oxidation.

  Remedy as necessary

- Reinstall the connectors, components etc.

  Other information:

  - For further information about signals and other values, see **SIGNAL DESCRIPTION, UPPER ELECTRONIC MODULE (UEM)**

- see **CHECKING WIRING AND TERMINALS** .

Does the lamp function?

- **YES**

  Refer to **VERIFICATION**

- **NO**

  Refer to **CHECKING FOR OPEN-CIRCUITS AND SHORT-CIRCUITS TO VOLTAGE**

CHECKING FOR OPEN-CIRCUITS AND SHORT-CIRCUITS TO VOLTAGE

Check the cable between control module terminal #9 and the cargo compartment lighting/third row reading lamps. Check for an open-circuit. Check for a short-circuit to supply voltage.

Also check the ground connection of the cargo compartment lighting/third row reading lamps.

Remedy as necessary.

Other information:

- For further information about signals and other values, see **SIGNAL DESCRIPTION, UPPER ELECTRONIC MODULE (UEM)**
- To connect the breakout box, see **CONNECTING THE BREAKOUT BOX**
- see **CHECKING WIRING AND TERMINALS** .

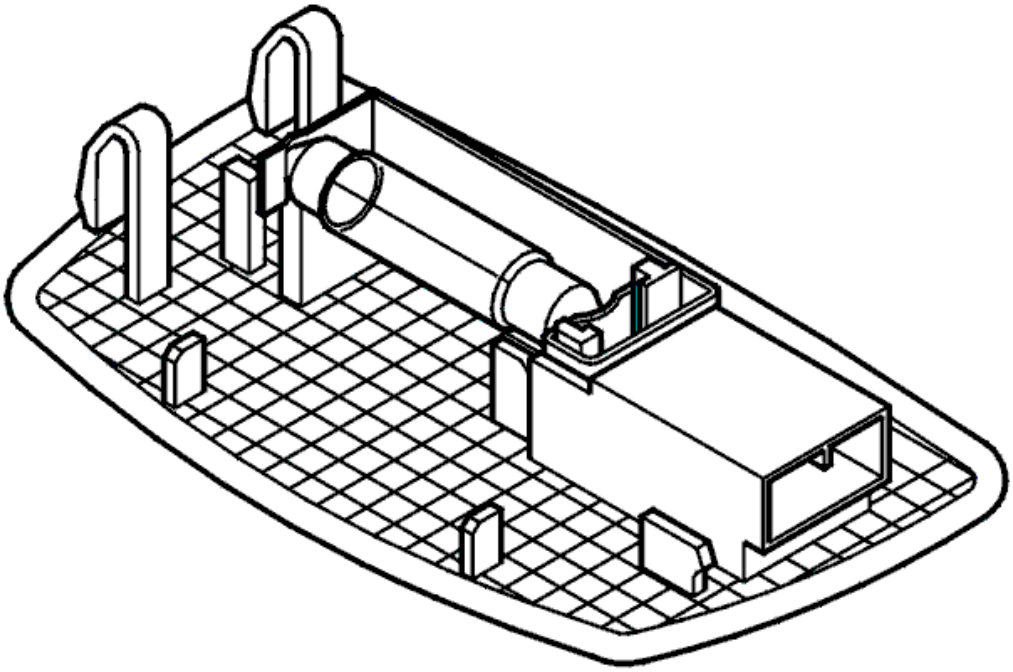

Fig. 271: Identifying Cargo Compartment Lighting/3rd Row Reading Lamp
Courtesy of VOLVO CARS CORPORATION

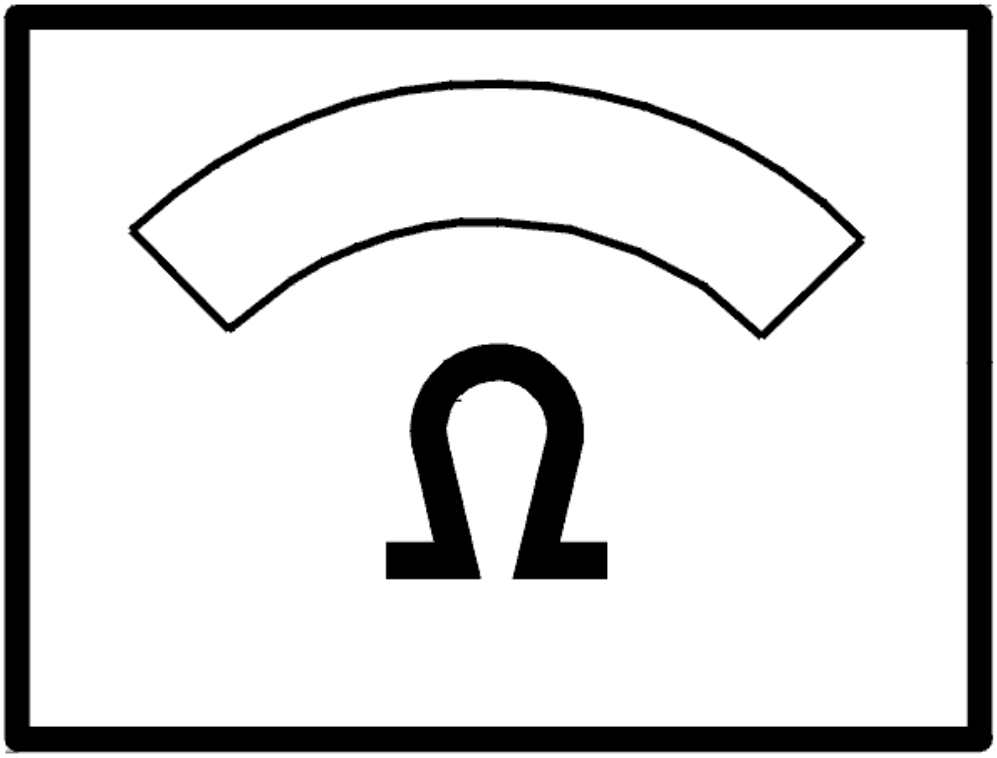

Fig. 272: Identifying Ohms Display
Courtesy of VOLVO CARS CORPORATION

- **Continue**

  Refer to **VERIFICATION**

VERIFICATION

VERIFICATION

HINT: After carrying out the repair, check that the fault has been remedied.

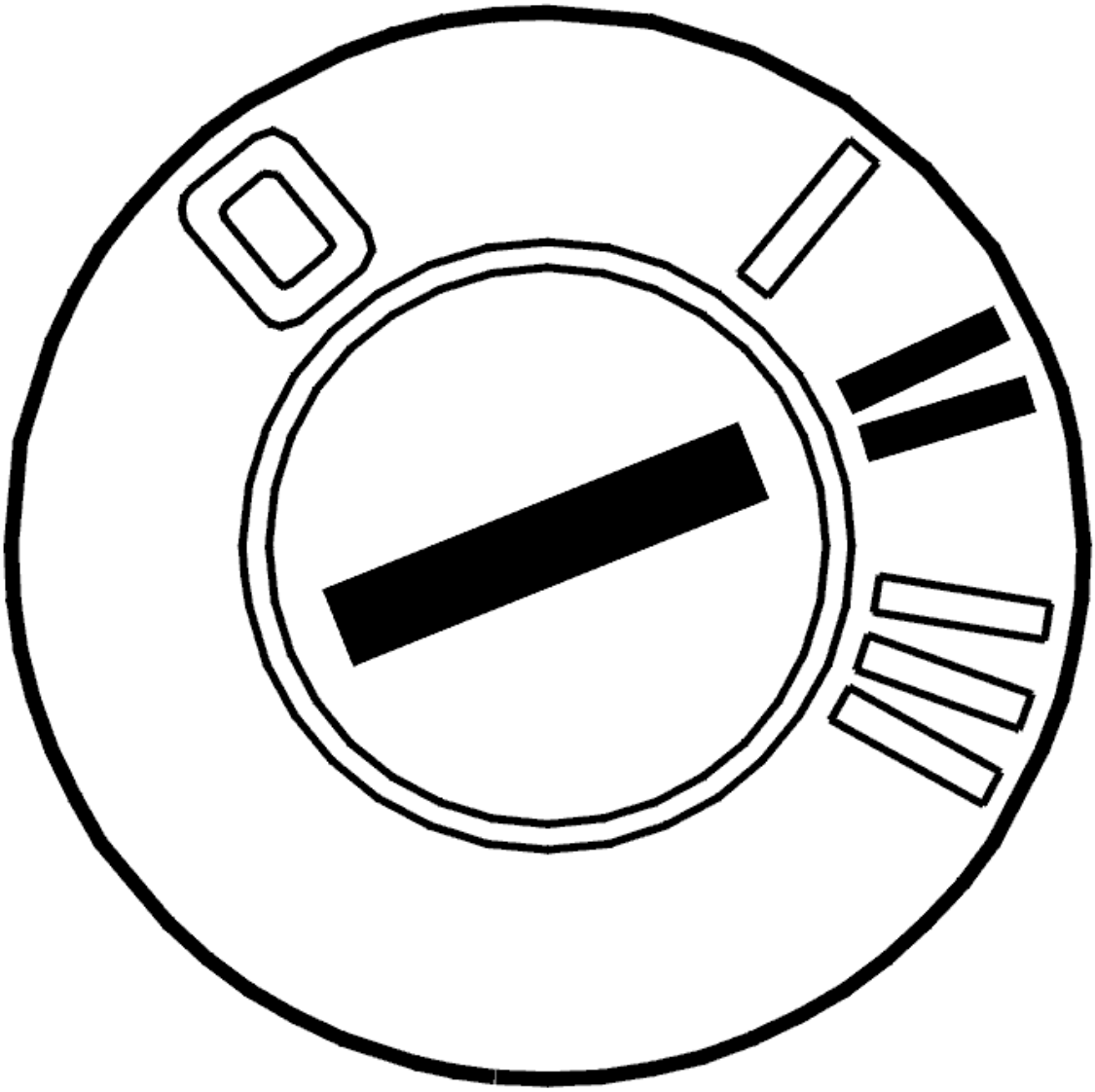

Fig. 273: Identifying Ignition ON
Courtesy of VOLVO CARS CORPORATION

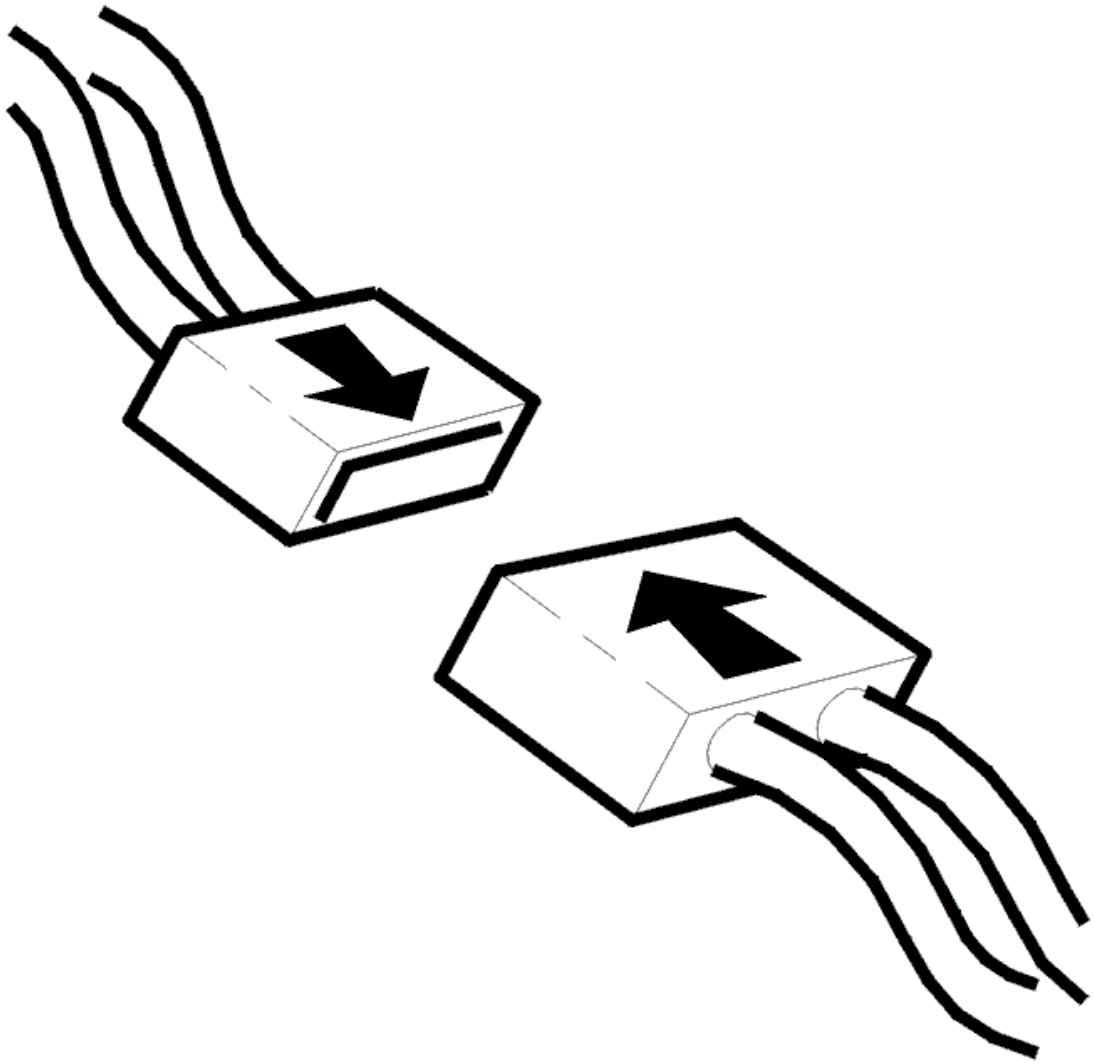

Fig. 274: Identifying Connector(s) Reinstallation
Courtesy of VOLVO CARS CORPORATION

- Ignition off.
- Reinstall the connectors, components etc.
- Ignition on.

  Check that the relevant lamp button and lamp are functioning.

Does the lamp function?

- **YES**

  VERIFIED: Troubleshooting has been completed.

- **NO**

  Refer to **INFORMATION**

INFORMATION

FAULT-TRACING INFORMATION

The fault should have been detected and remedied. As this is not the case fault-tracing has failed.

Exit fault-tracing for this diagnostic trouble code (DTC) or make another attempt.

UEM-0041: CONTROL UNIT. INTERNAL FAULT (2003-2012)

DIAGNOSTIC TROUBLE CODE INFORMATION

Condition

If the control unit tries to store data in its memory and the data becomes corrupted, the diagnostic trouble code is displayed.

Substitute Value

- Nothing.

Possible Source

- Fault in EEPROM.

Fault symptom[s]

- Courtesy lighting does not work
- Alarm does not work.

INTERNAL FAULT

CHECKING FOR PERMANENT OR INTERMITTENT FAULTS

Check whether any customer symptoms persist.

Do any symptoms persist?

- **YES**

  Refer to **REPLACEMENT OF CONTROL UNIT AND PROGRAMMING**

- **NO**

Refer to **FAULT-TRACING INFORMATION**

REPLACEMENT OF CONTROL UNIT AND PROGRAMMING

NOTE: Before replacing the control unit all the program data should be read from the control unit if possible.

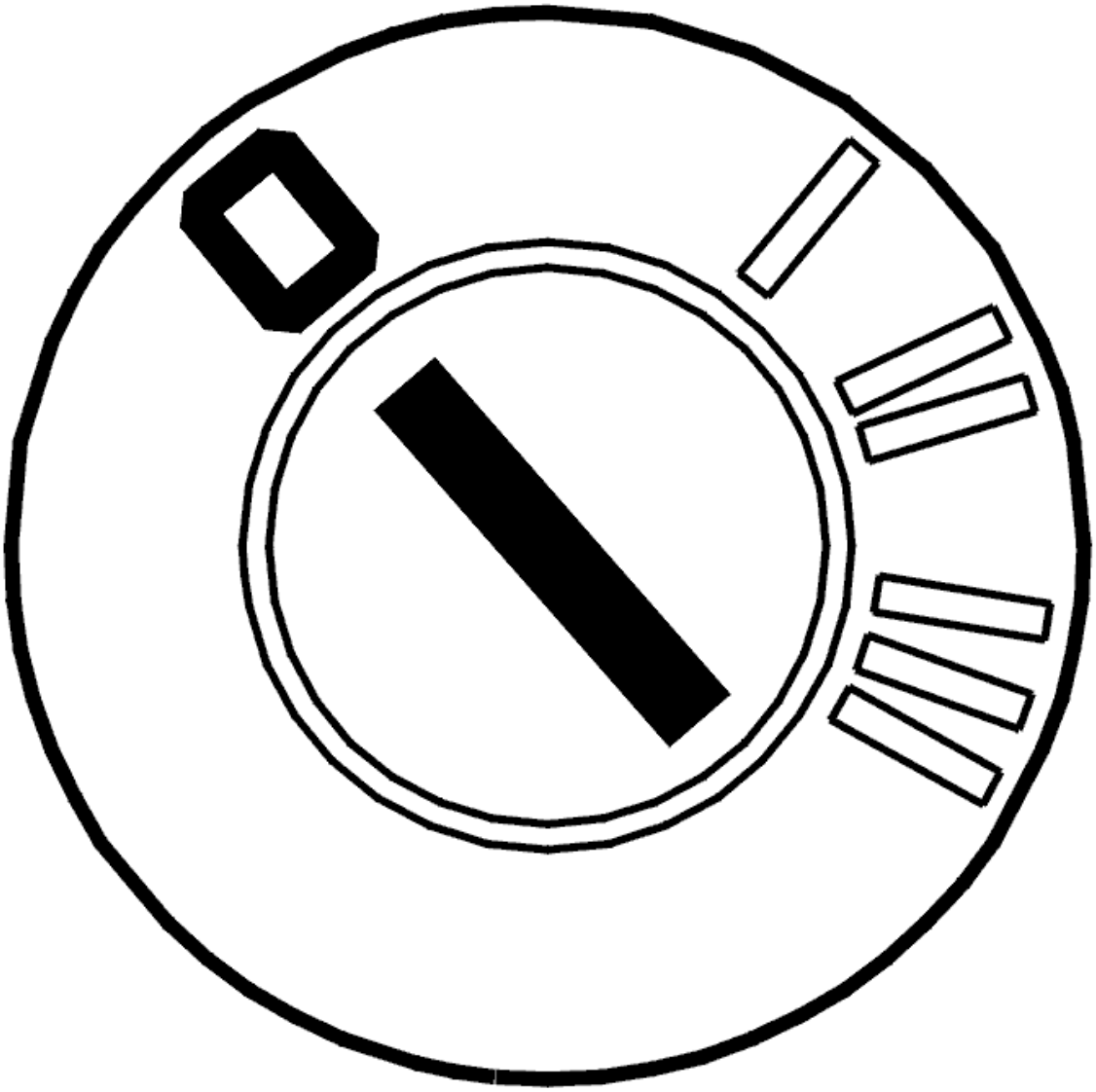

Fig. 275: Identifying Ignition OFF
Courtesy of VOLVO CARS CORPORATION

- Ignition off.

  The upper electronic module has registered an internal fault.

  There is a design fault and the control unit should be replaced.

- **Continue**

  Refer to **REPLACING THE CONTROL MODULE**

REPLACING THE CONTROL MODULE

READING OFF THE PROGRAMMED VALUES

NOTE: Read off the programmed values from the upper electronic module (UEM) before replacing the control module.

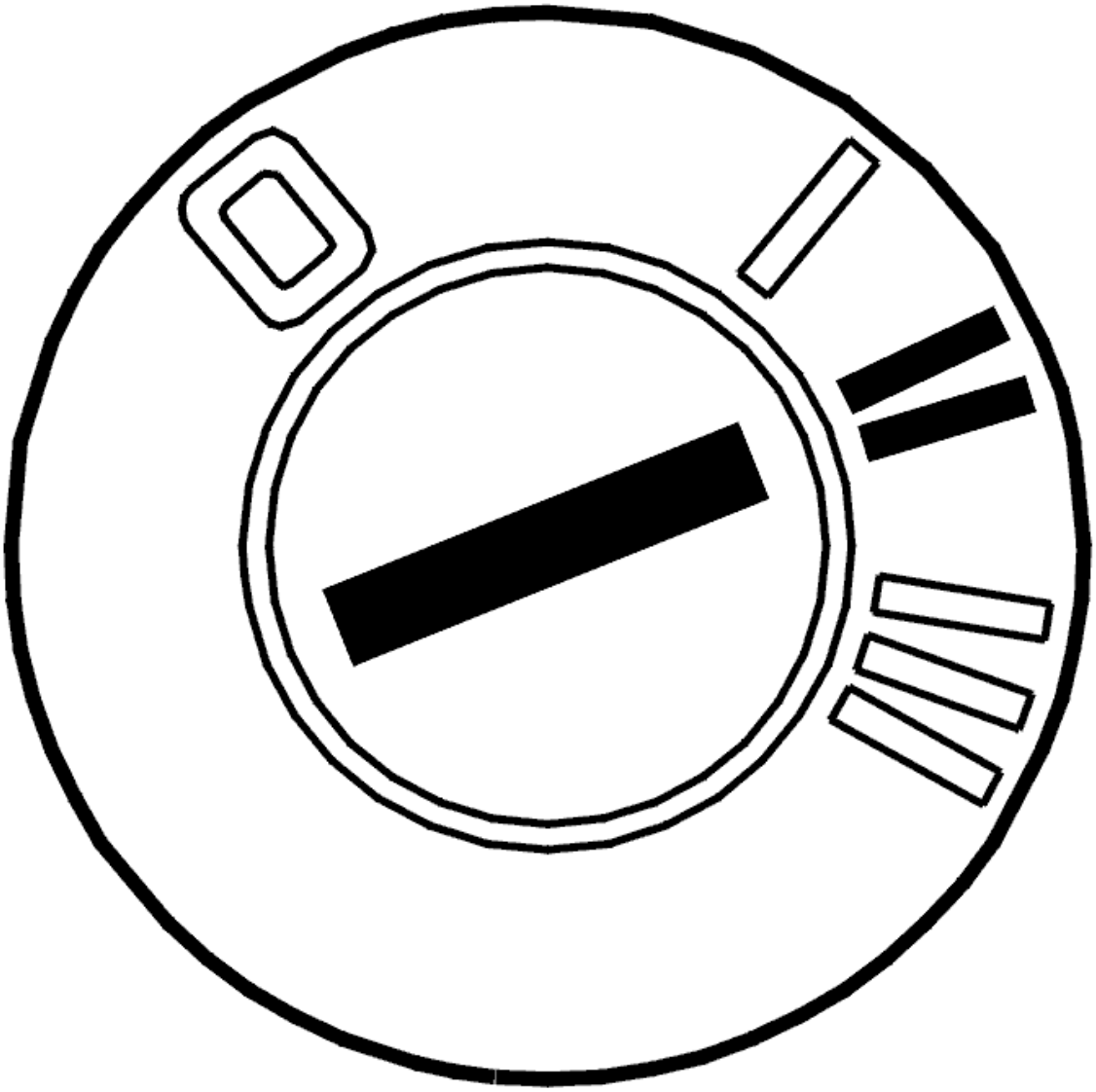

Fig. 276: Identifying Ignition ON
Courtesy of VOLVO CARS CORPORATION

- Ignition on

- Use the VCT2000 (or appropriate scan tool) to read off the programmed values.

  The retained values are programmed customer parameters in the upper electronic module (UEM). The retained values should be noted for later use.

  Other information

  - For information about programming the customer parameters, see **DIAGNOSTIC FUNCTIONS** .

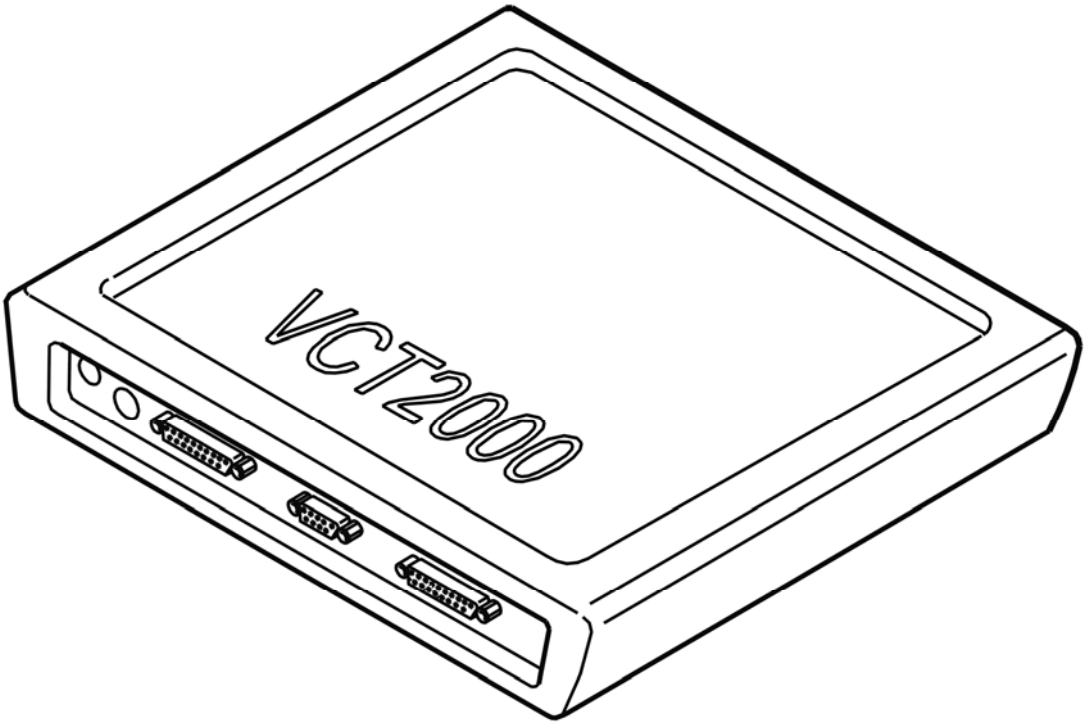

Fig. 277: Identifying VCT2000 Diagnostic Tool Symbol In VIDA
Courtesy of VOLVO CARS CORPORATION

- **Continue**

  Refer to **REPLACING CONTROL MODULES AND DOWNLOADING SOFTWARE**

REPLACING CONTROL MODULES AND DOWNLOADING SOFTWARE

CAUTION: A new control module is delivered without software. In order for the control module to function new software must be programmed into the control module after it has been replaced.

Replace the control module and download the new software. See **UPPER ELECTRONIC MODULE**

(UEM)/REARVIEW MIRROR, REPLACING .

HINT: When diagnostic trouble code (DTC) E001 is stored, communication with the control module cannot be established. This can be remedied in two ways.

1. Press the remote control button for local lighting
2. Remove fuse 11C/28 from the fusebox in the passenger compartment. Reinstall the fuse again.

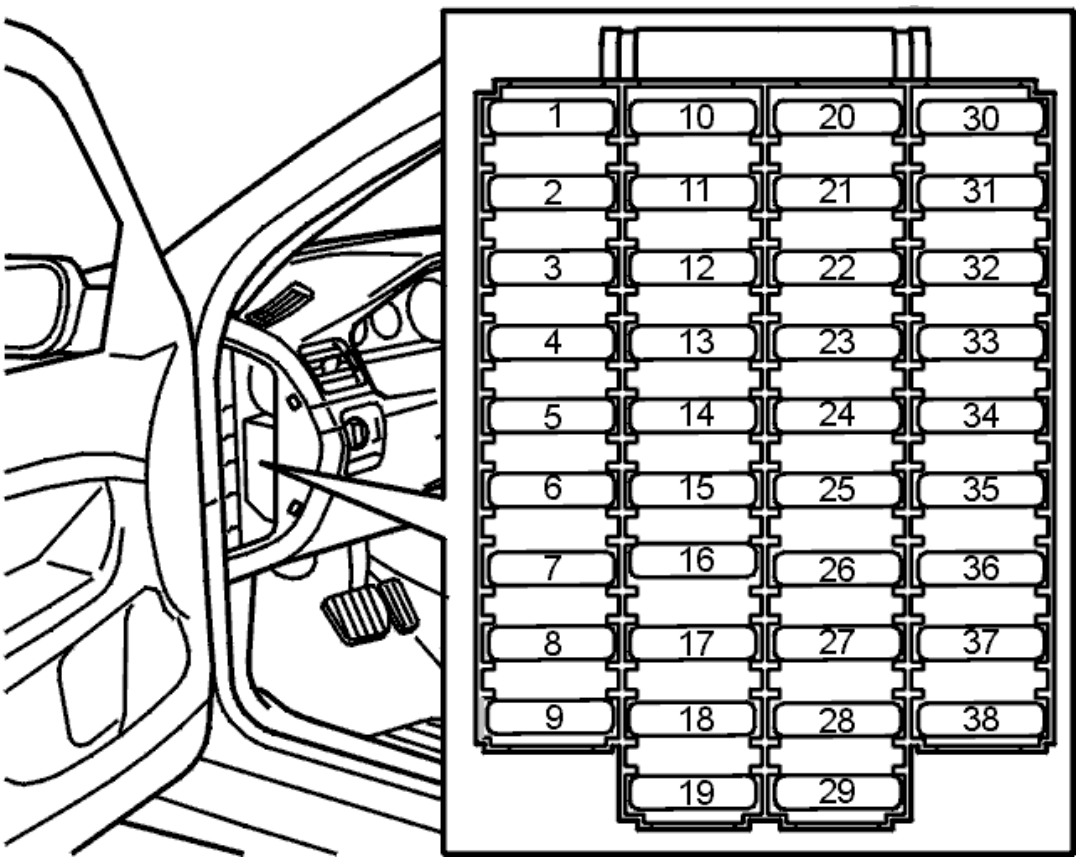

Fig. 278: Locating Fuse Holder (Passenger Compartment)
Courtesy of VOLVO CARS CORPORATION

- **Continue**

  Refer to **CHECKING THE INTERIOR LIGHTING (2)**

CHECKING THE INTERIOR LIGHTING (2)

CHECKING THE INTERIOR LIGHTING

Two times can be programmed for the interior lighting:

1. Short

The period from when the door is unlocked, or the engine stops, to when the interior lighting goes out can

be changed if it is too long or too short.

2. Long

The period from when the door is opened, or a lamp is lit with a switch, to when the lamp goes out can be changed if it is too long or too short.

To program a long interior lighting, use VIDA (Volvo scan tool)

- **Continue**

  Refer to **PROGRAMMING A SHORT INTERIOR LIGHTING PERIOD**

PROGRAMMING A SHORT INTERIOR LIGHTING PERIOD

The general lighting and rear reading lamps light and remain lit for 30 seconds when:

- The door has been unlocked from outside with a key or the remote control.
- The engine has been stopped and the ignition key turned to 0.

The default period is 30 seconds. This can be changed to between 5 and 255 seconds.

Read off the programmed values.

To change the time, mark the desired value in the scrolling list and start programming.

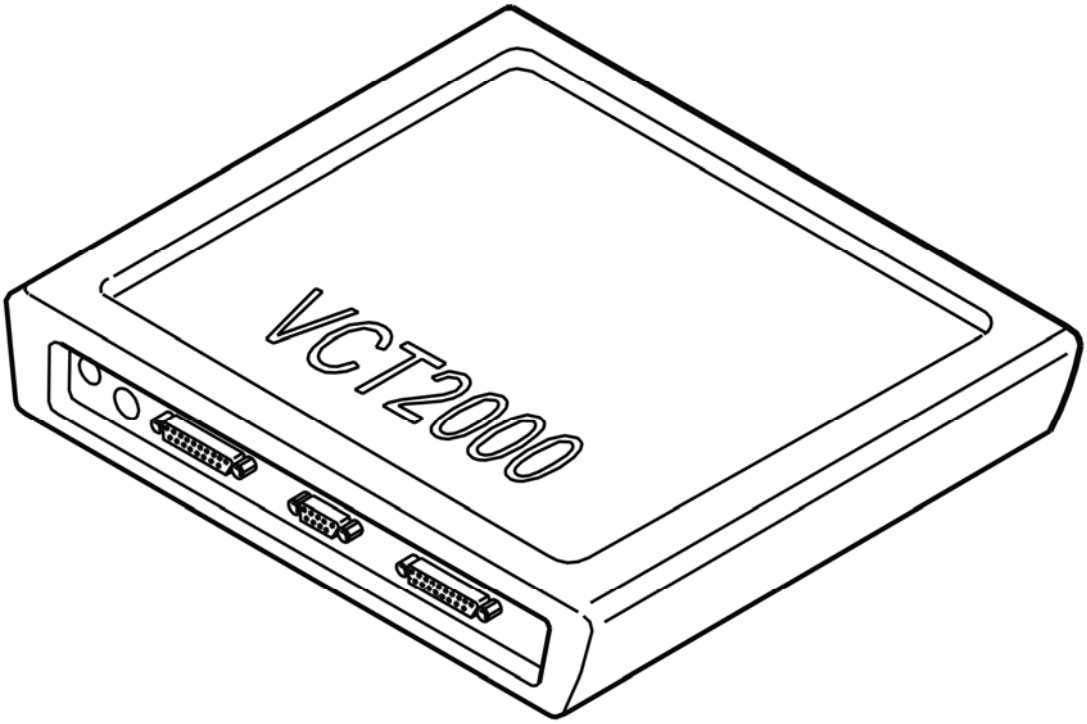

Fig. 279: Identifying VCT2000 Diagnostic Tool Symbol In VIDA
Courtesy of VOLVO CARS CORPORATION

Do you want to program any more parameters?

- **YES**

  Refer to **PROGRAMMING A LONG INTERIOR LIGHTING PERIOD**

- **NO**

  Refer to **CHECKING THE ANTI-DAZZLE FUNCTION IN THE REAR VIEW MIRROR**

PROGRAMMING A LONG INTERIOR LIGHTING PERIOD

The general lighting and rear reading lamps light and remain lit for 10 minutes when:

- A door is opened after being unlocked.
- The lamp is lit with a switch.

The default period is 10 minutes. This can be changed to between 0 and 255 minutes at 10 minute intervals.

Read off the programmed values.

To change the time, mark the desired value in the scrolling list and start programming.

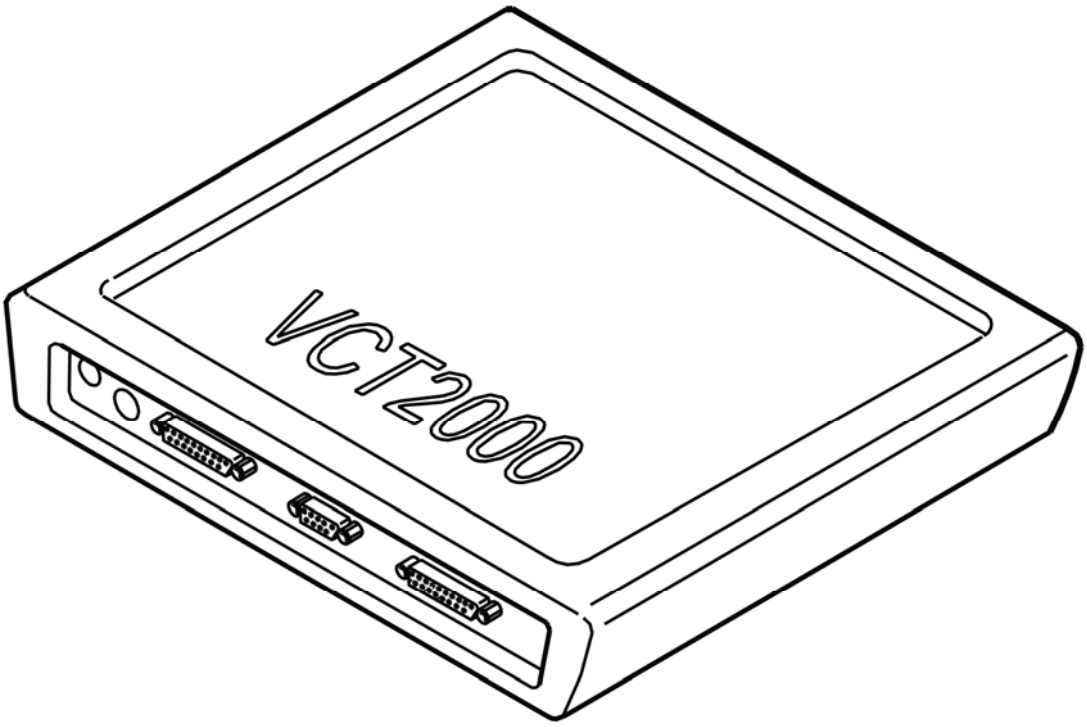

Fig. 280: Identifying VCT2000 Diagnostic Tool Symbol In VIDA
Courtesy of VOLVO CARS CORPORATION

- **Continue**

  Refer to **CHECKING THE ANTI-DAZZLE FUNCTION IN THE REAR VIEW MIRROR**

CHECKING THE ANTI-DAZZLE FUNCTION IN THE REAR VIEW MIRROR

CHECKING THE ANTI-DAZZLE FUNCTION

NOTE: **If the upper electronic module (UEM) has been replaced software, specially developed for downloading after replacing the control module, must be downloaded to the control module before the anti-dazzle function is changed. See UPPER ELECTRONIC MODULE (UEM)/REARVIEW MIRROR, REPLACING .**

The rear view mirror anti-dazzle function can be adjusted:

- If the rear view mirror anti-dazzle function is too powerful or too weak, it can be adjusted.

Specific software for setting the anti-dazzle function must be installed in the car to do this.

FAULT-TRACING INFORMATION

FAULT-TRACING INFORMATION

Fault-tracing indicates that the control module had previously identified an intermittent fault, but that the fault is no longer present.

UEM-0051: SUNROOF. SIGNAL FAULTY (2003-2012)

DIAGNOSTIC TROUBLE CODE INFORMATION

Condition

If the control unit registers an internal fault in the sunroof module (SRM), the diagnostic trouble code is displayed.

Substitute Value

- Nothing.

Possible Source

- Unknown position of sunroof.

Fault symptom[s]

- Automatic sunroof closing does not work.

SIGNAL FAULTY

SET-UP

- The sunroof has lost its position and must be calibrated before it will work again.

  Other information

  - see **SUN ROOF MODULE (SRM), CALIBRATING**

- **Continue**

  Refer to **VERIFICATION**

VERIFICATION

VERIFICATION

HINT: After the repair it is necessary to check that the fault has been rectified.

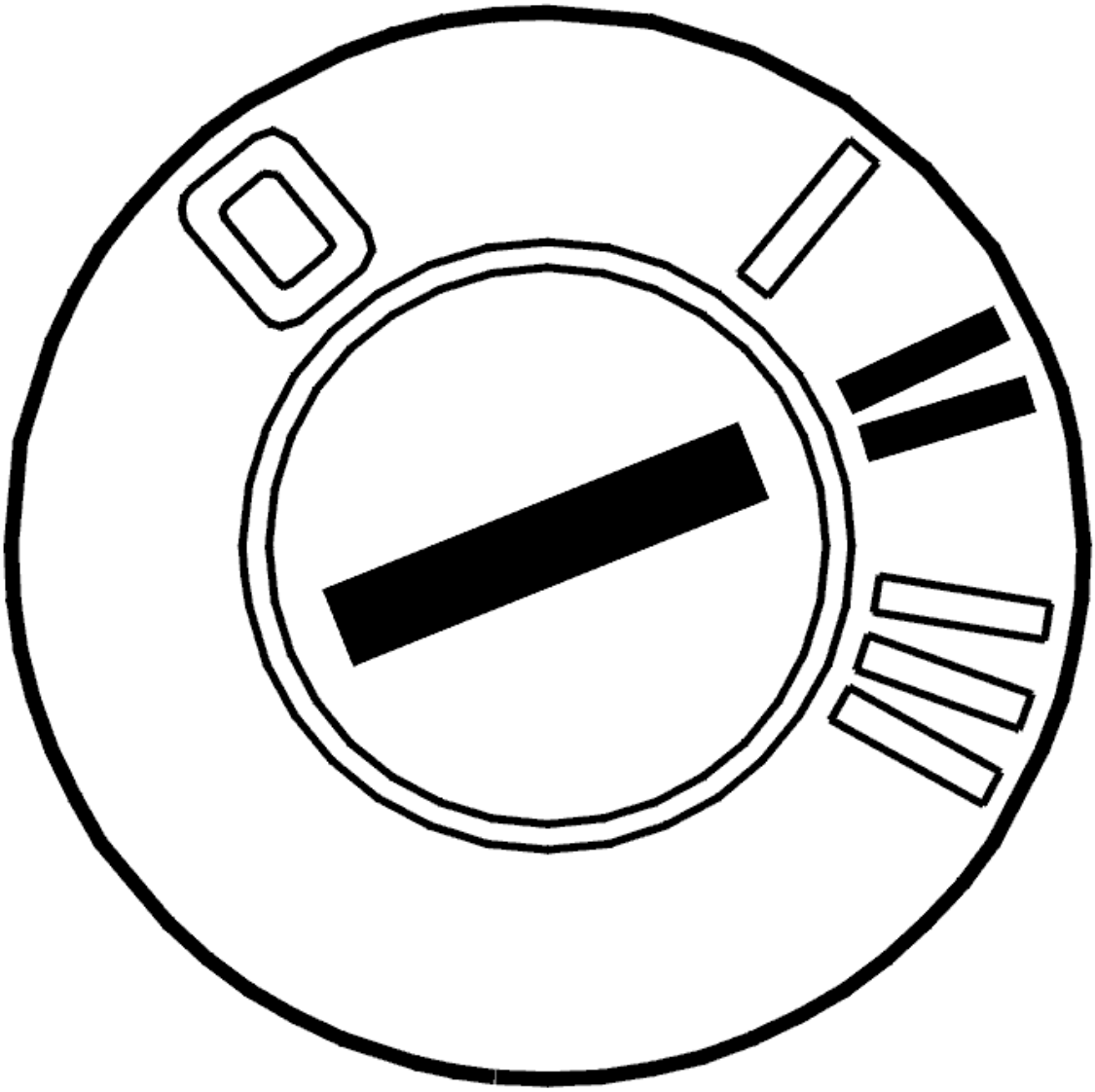

Fig. 281: Identifying Ignition ON
Courtesy of VOLVO CARS CORPORATION

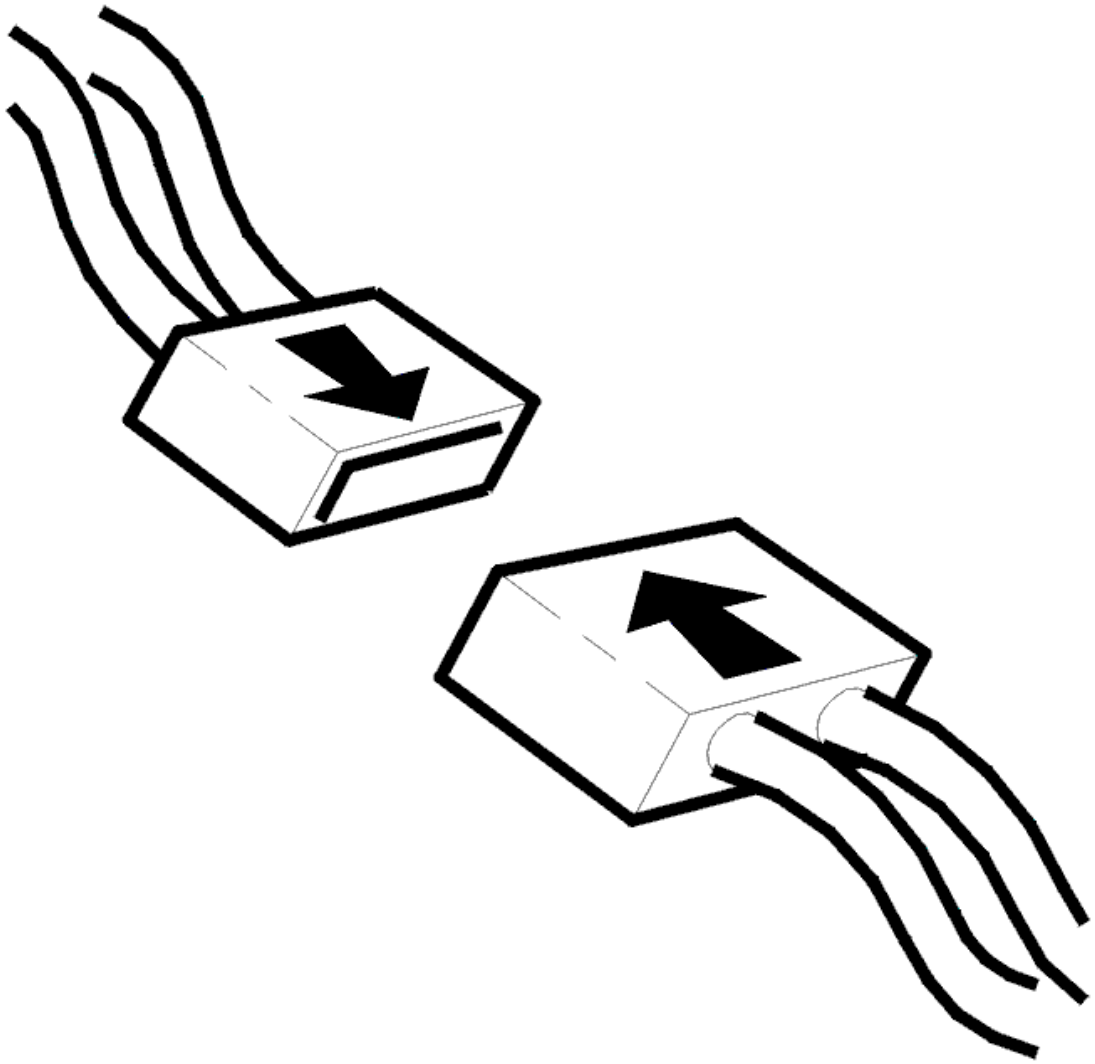

Fig. 282: Identifying Connector(s) Reinstallation
Courtesy of VOLVO CARS CORPORATION

- Ignition off.
- Connect the connectors, install the components, etc.
- Ignition on.

  Try to operate the sunroof automatically by pressing the switch down two stages.

Does the sunroof move automatically?

- **YES**

  VERIFIED: Troubleshooting has been completed.

- **NO**

  Refer to **INFORMATION**

INFORMATION

FAULT-TRACING INFORMATION

The fault should have been detected and remedied. As this is not the case fault-tracing has failed.

Exit fault-tracing for this diagnostic trouble code (DTC) or make another attempt.

UEM-0052: SUNROOF MOTOR. SIGNAL TOO HIGH (2003-2012)

DIAGNOSTIC TROUBLE CODE INFORMATION

Condition

If the control unit detects that SRM-0002 is given when contact is made with the sunroof control unit (SRM), the diagnostic trouble code is displayed.

Substitute Value

- Nothing.

Possible Source

- Even though the relay is switched off, the sunroof motor is fed by a current
- Faulty relay.

Fault symptom[s]

- Automatic sunroof closing does not work.

SIGNAL TOO HIGH

CHECKING FOR PERMANENT OR INTERMITTENT FAULTS

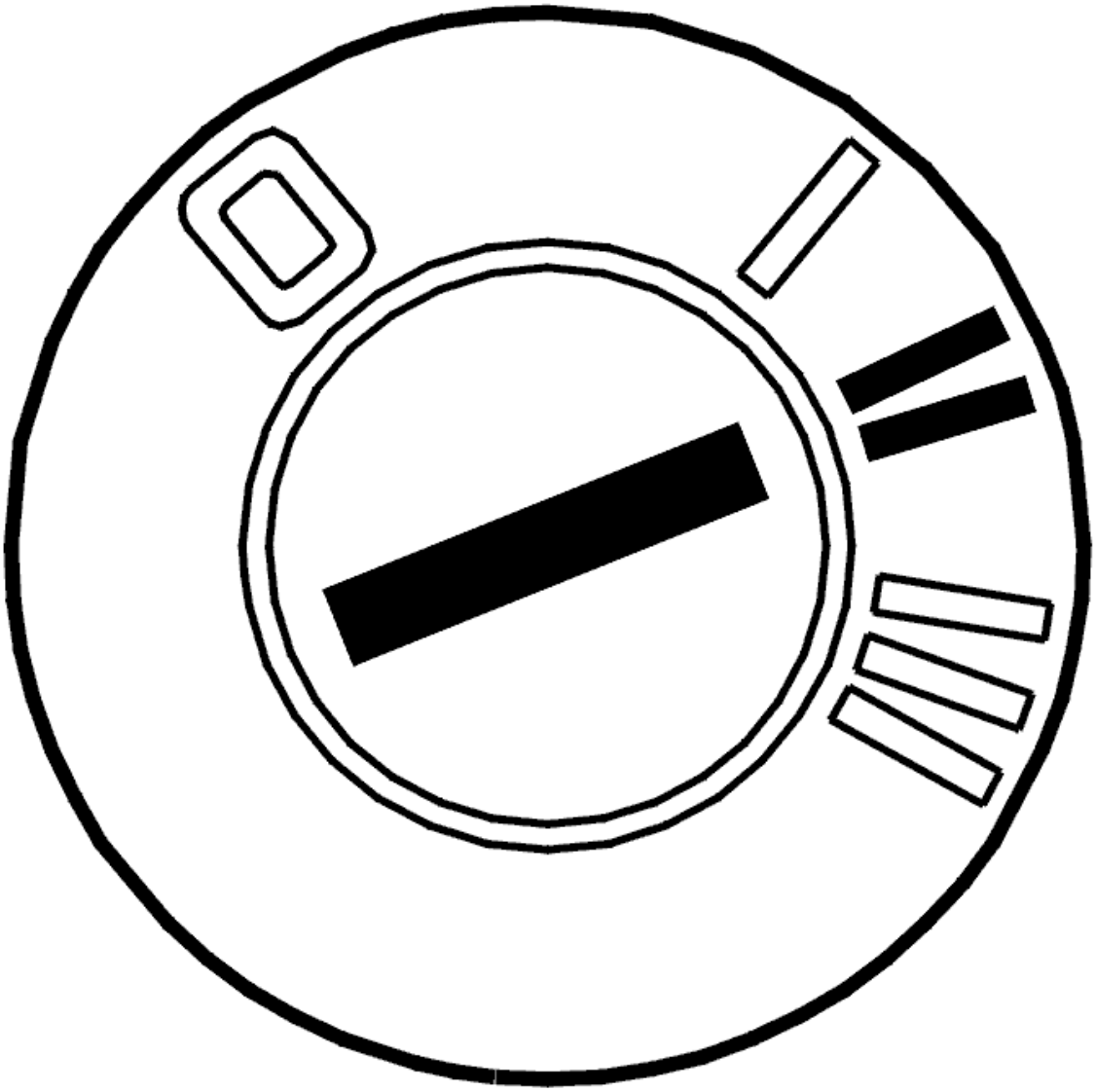

Fig. 283: Identifying Ignition ON
Courtesy of VOLVO CARS CORPORATION

- Ignition on
- Operate the sun roof to full tilt.

  Check that the automatic operation of the sun roof works.

Was the function OK?

- **YES**

  Refer to **VERIFICATION**

- **NO**

Refer to **REPLACING THE COMPONENT**

REPLACING THE COMPONENT

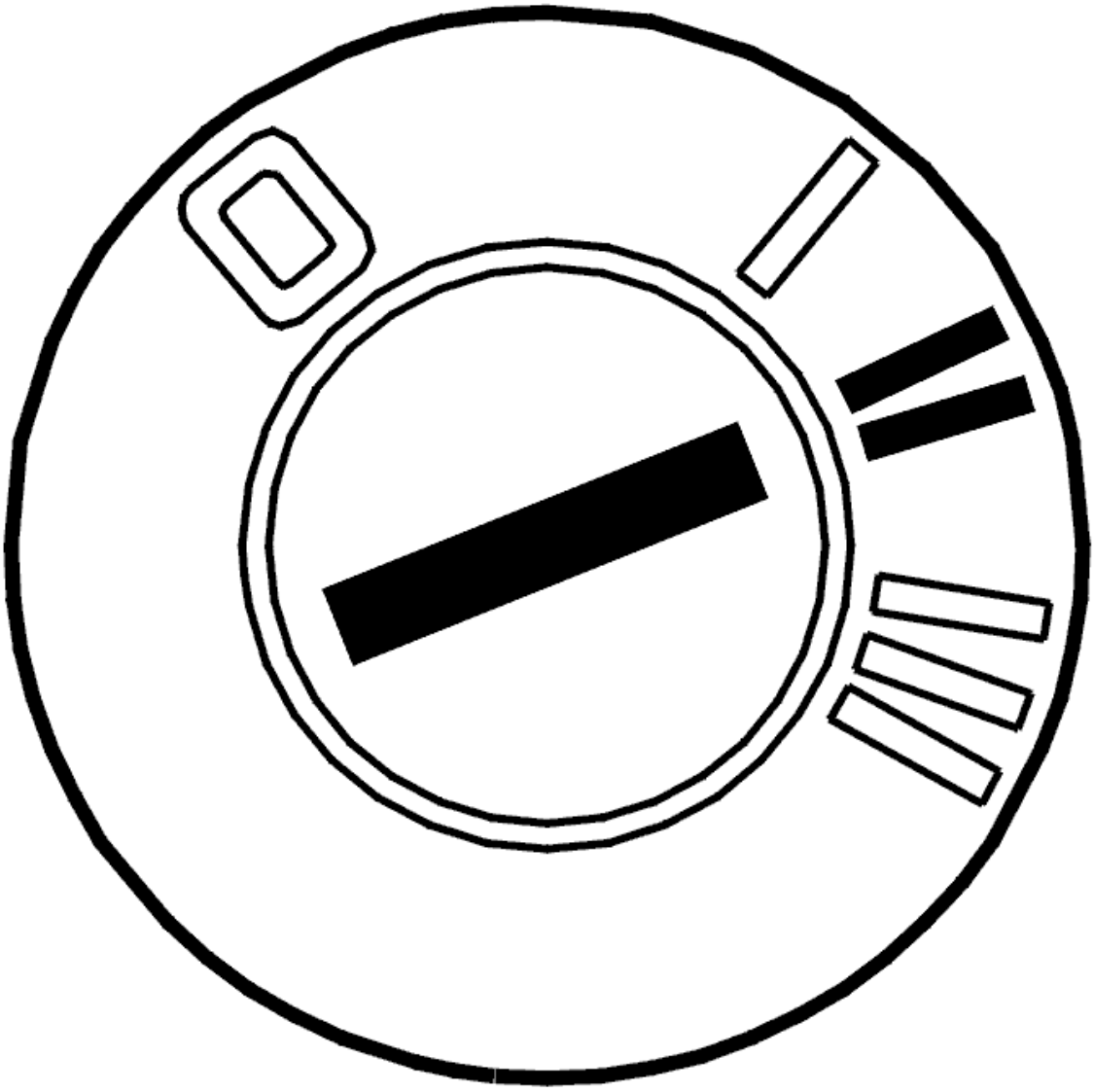

Fig. 284: Identifying Ignition ON
Courtesy of VOLVO CARS CORPORATION

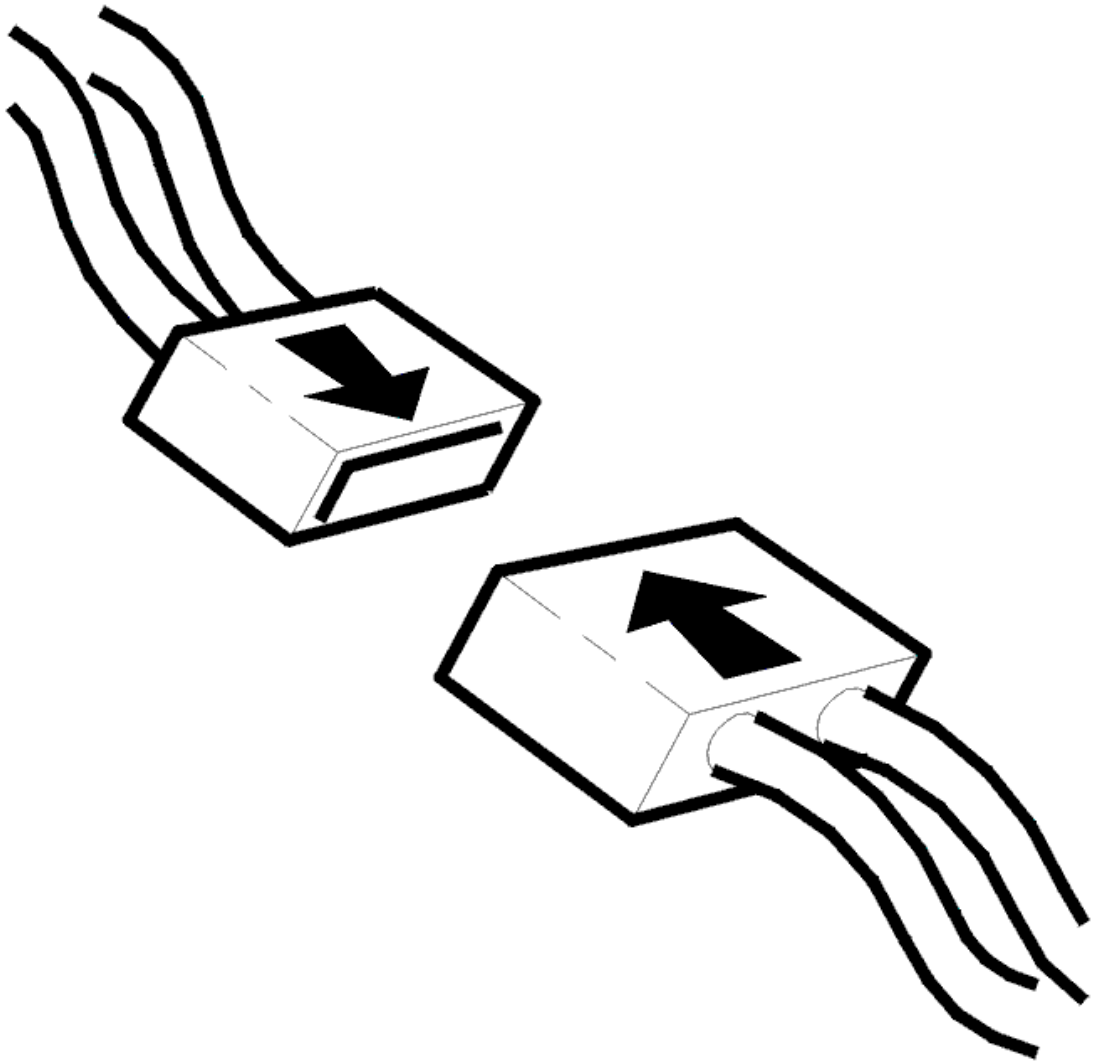

Fig. 285: Identifying Connector(s) Reinstallation
Courtesy of VOLVO CARS CORPORATION

- Replace the sun roof motor. See **ELECTRIC MOTOR, SUN ROOF, REPLACING**
- Ignition off
- Reinstall the components, reconnect the connectors etc.
- Ignition on.

  Check that the automatic closing of the sun roof works.

Does the automatic closing of the sun roof work?

- **YES**

  Refer to **VERIFICATION**

- **NO**

  Refer to **REPLACING THE COMPONENT**

REPLACING THE COMPONENT

Replace the sun roof control module according to **CONTROL MODULE, SUN ROOF, REPLACING** .

- **Continue**

  Refer to **VERIFICATION**

VERIFICATION

VERIFICATION

HINT: After the repair it is necessary to check that the fault has been rectified.

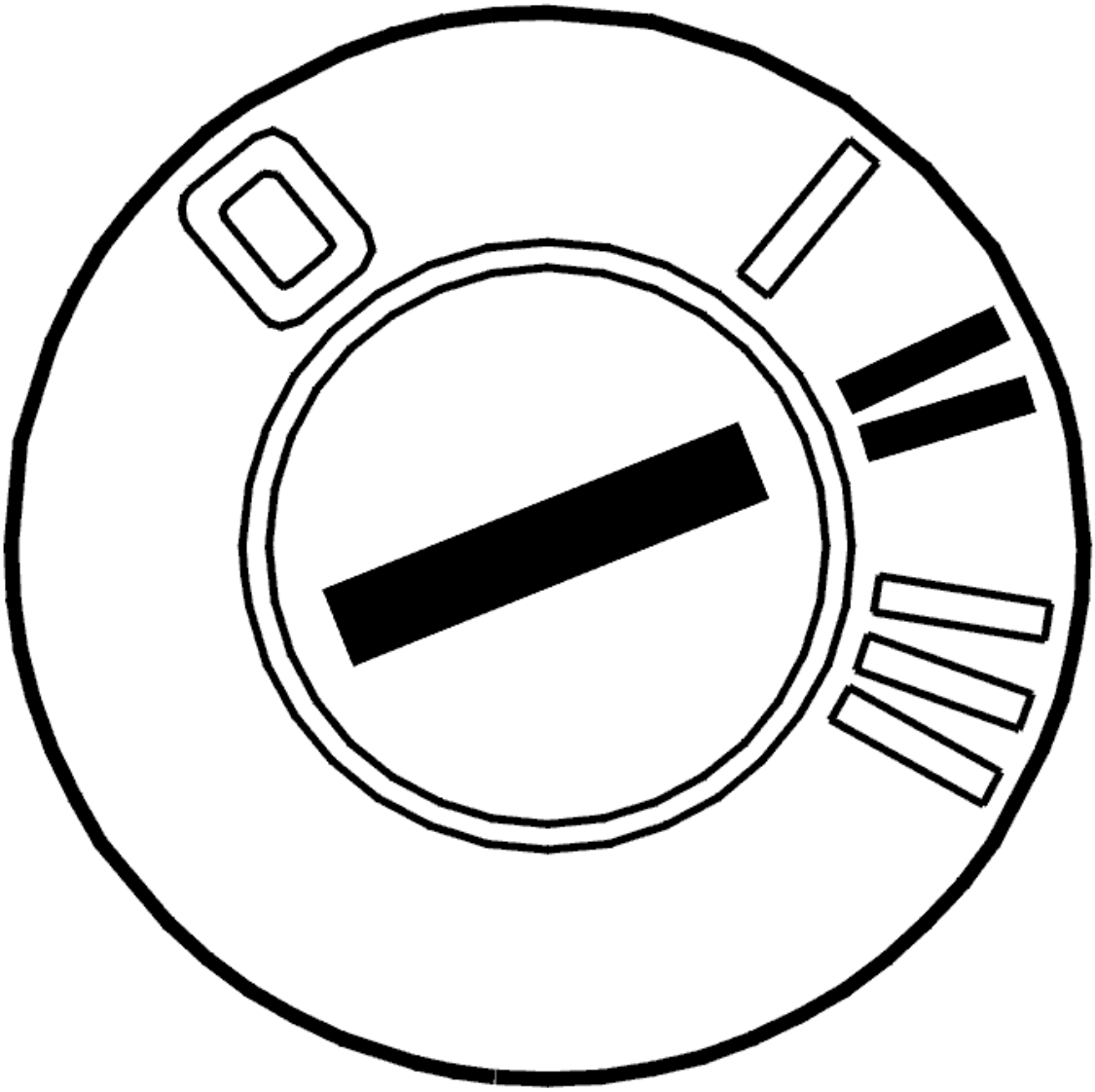

Fig. 286: Identifying Ignition ON
Courtesy of VOLVO CARS CORPORATION

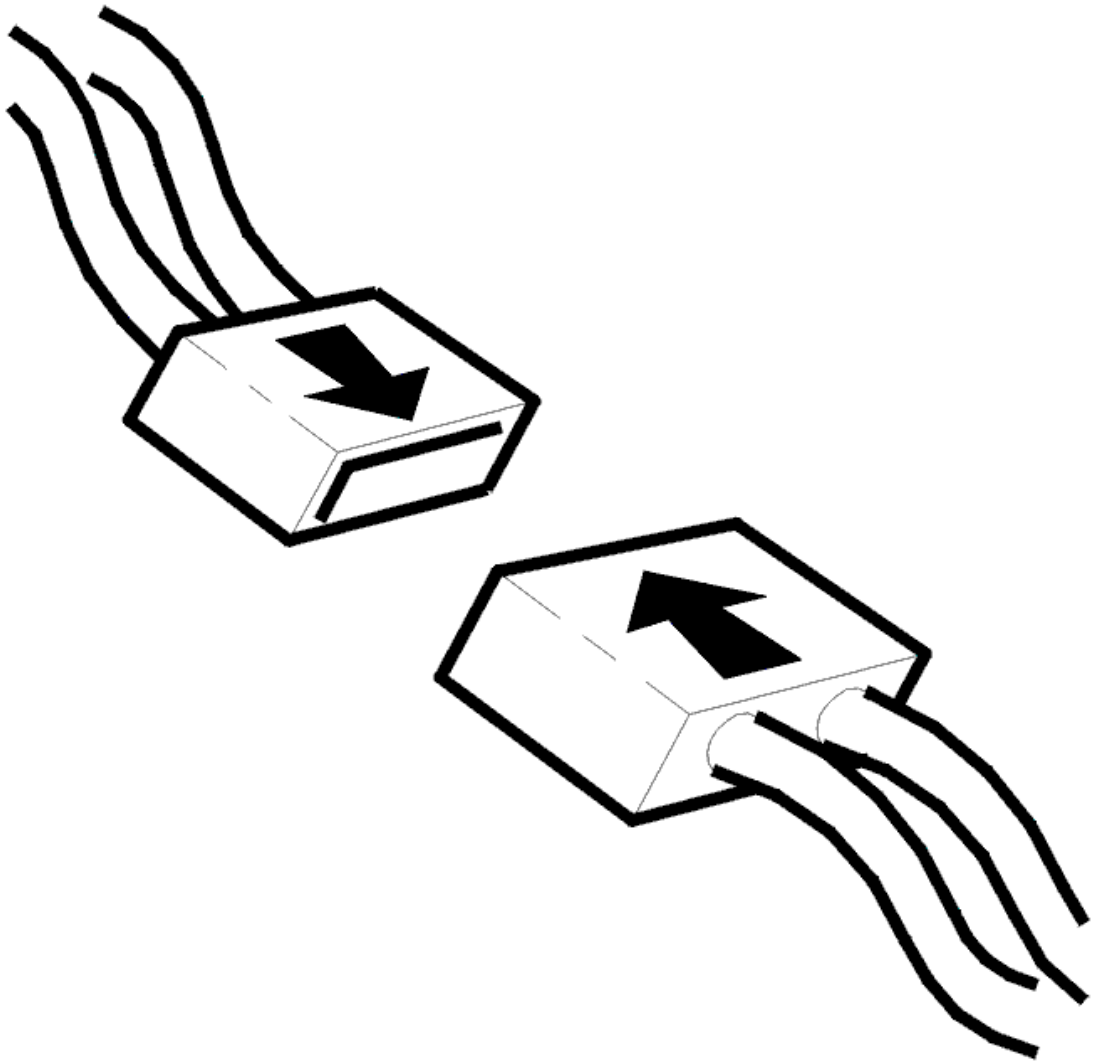

Fig. 287: Identifying Connector(s) Reinstallation
Courtesy of VOLVO CARS CORPORATION

- Ignition off.
- Connect the connectors, install the components, etc.
- Ignition on.

  Check that the automatic sunroof closing works.

Does it work?

- **YES**

  VERIFIED: Troubleshooting has been completed.

- **NO**

  Refer to **INFORMATION**

INFORMATION

FAULT-TRACING INFORMATION

The fault should have been detected and remedied. As this is not the case fault-tracing has failed.

Exit fault-tracing for this diagnostic trouble code (DTC) or make another attempt.

UEM-0053: SUNROOF MOTOR. SIGNAL TOO LOW (2003-2012)

DIAGNOSTIC TROUBLE CODE INFORMATION

Condition

If the control unit registers an internal fault in the sunroof module (SRM), diagnostic trouble code is displayed.

Substitute Value

- Nothing.

Possible Source

- Short circuit to voltage supply on control unit ground wire.
- Open circuit/short circuit to ground on wire from the control unit to the motor.
- Contact resistance or oxidation on the connectors.
- Fuse blown (11C/34).

Fault symptom[s]

- Electric sunroof does not work.

SIGNAL TOO LOW

CHECKING FOR PERMANENT OR INTERMITTENT FAULTS

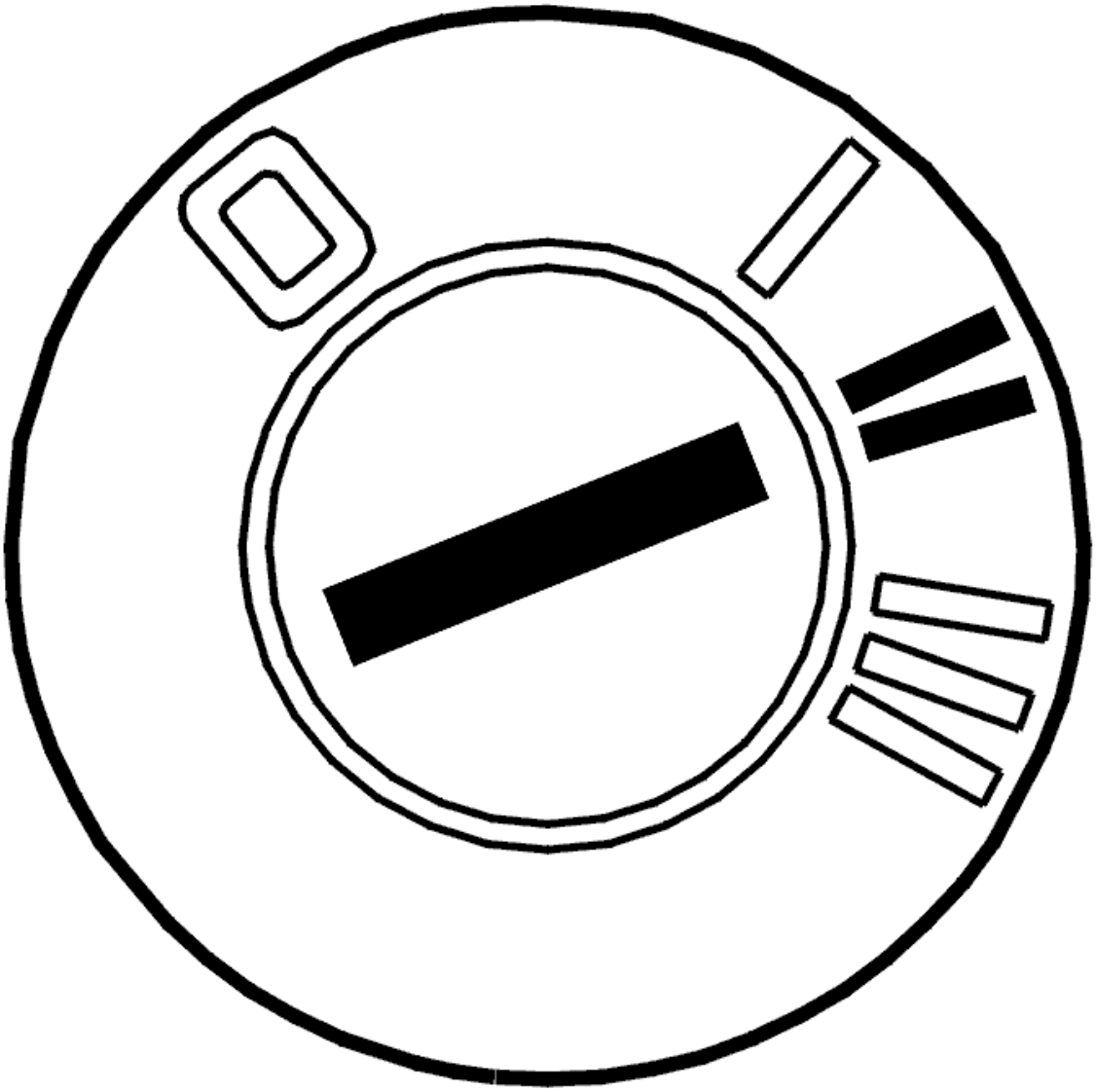

Fig. 288: Identifying Ignition ON
Courtesy of VOLVO CARS CORPORATION

- Ignition on.

  Check that the sun roof can be moved to its limit positions.

Can the sun roof be operated?

- **YES**

  Refer to **INTERMITTENT FAULT**

- **NO**

  Refer to **CHECKING THE CONNECTORS**

CHECKING THE CONNECTORS

Check the connector between the sun roof module (SRM) and sun roof motor. Check for contact resistance and oxidation.

Check that fuse 11C/7 (11C/13 XC90) in the passenger compartment fuse box is intact.

Check connector 54/13. Check for contact resistance and oxidation.

Other information:

- To access the connector between the sun roof module (SRM) and motor, see **ELECTRIC MOTOR, SUN ROOF, REPLACING** .
- see **CHECKING WIRING AND TERMINALS** .

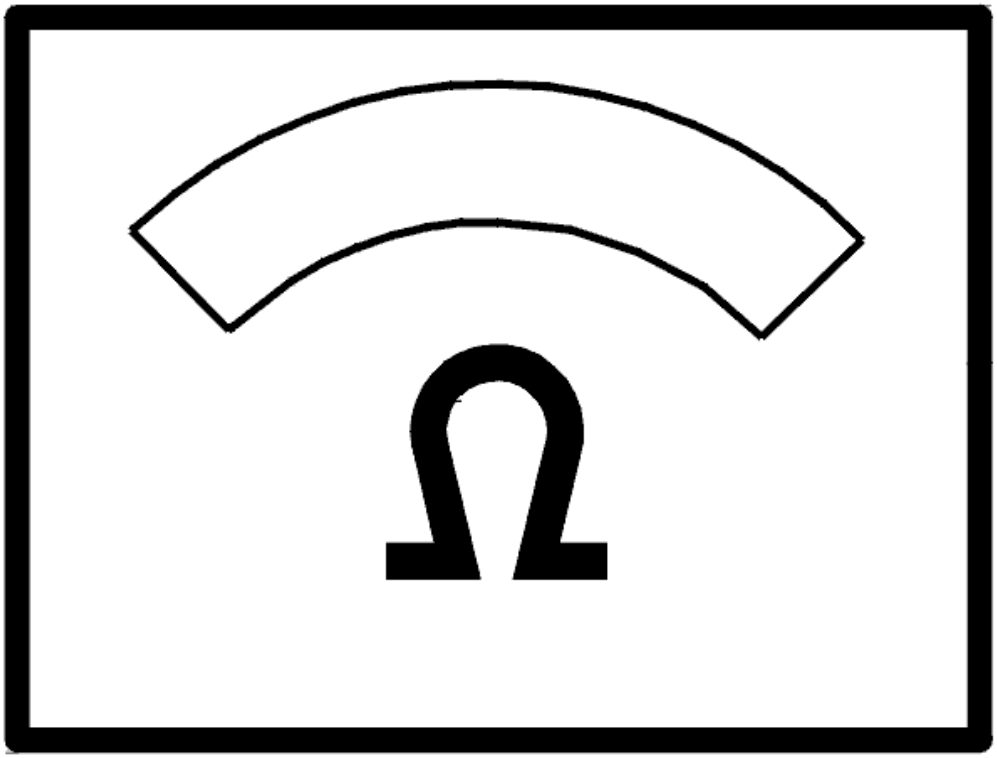

Fig. 289: Identifying Ohms Display

Courtesy of VOLVO CARS CORPORATION

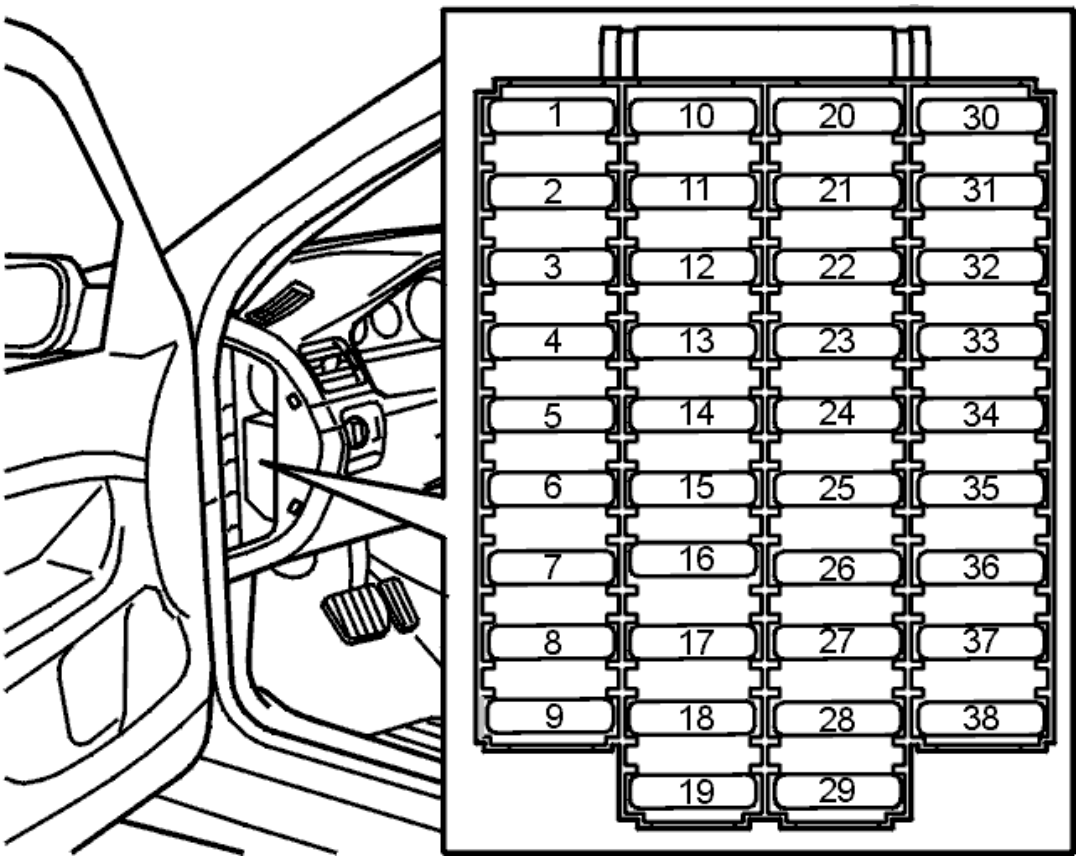

Fig. 290: Locating Fuse Holder (Passenger Compartment)
Courtesy of VOLVO CARS CORPORATION

Was a fault detected?

- **YES**

  Refer to **VERIFICATION**

- **NO**

  Refer to **CHECKING FOR OPEN-CIRCUITS AND SHORT-CIRCUITS**

CHECKING FOR OPEN-CIRCUITS AND SHORT-CIRCUITS

Check the cable between sun roof module (SRM) terminal #10A and ground, left A-post. Check for a short-circuit to supply voltage.

Check the cable between the sun roof module (SRM) terminal #1A and fuse 11C/7 (11C/13 XC90) in the passenger compartment fuse box for a short-circuit to ground or an open-circuit.

Replace the cable if a fault is found.

After carrying out repairs, the sun roof module (SRM) should be calibrated. See **SUN ROOF MODULE (SRM), CALIBRATING** .

Other information:

- For further information about signals and other values, see **SIGNAL DESCRIPTION, UPPER ELECTRONIC MODULE (UEM)** .
- To connect the breakout box, see **CONNECTING THE BREAKOUT BOX** .
- To access the sun roof module (SRM) connector, see **CONTROL MODULE, SUN ROOF, REPLACING** .
- see **CHECKING WIRING AND TERMINALS** .

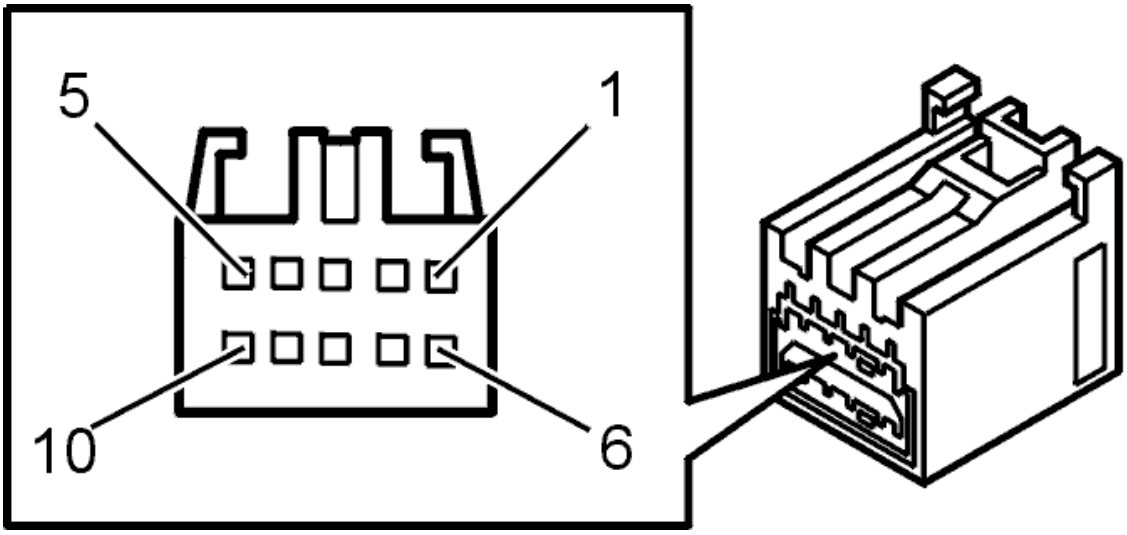

Fig. 291: Identifying Sunroof Module Connector Terminals
Courtesy of VOLVO CARS CORPORATION

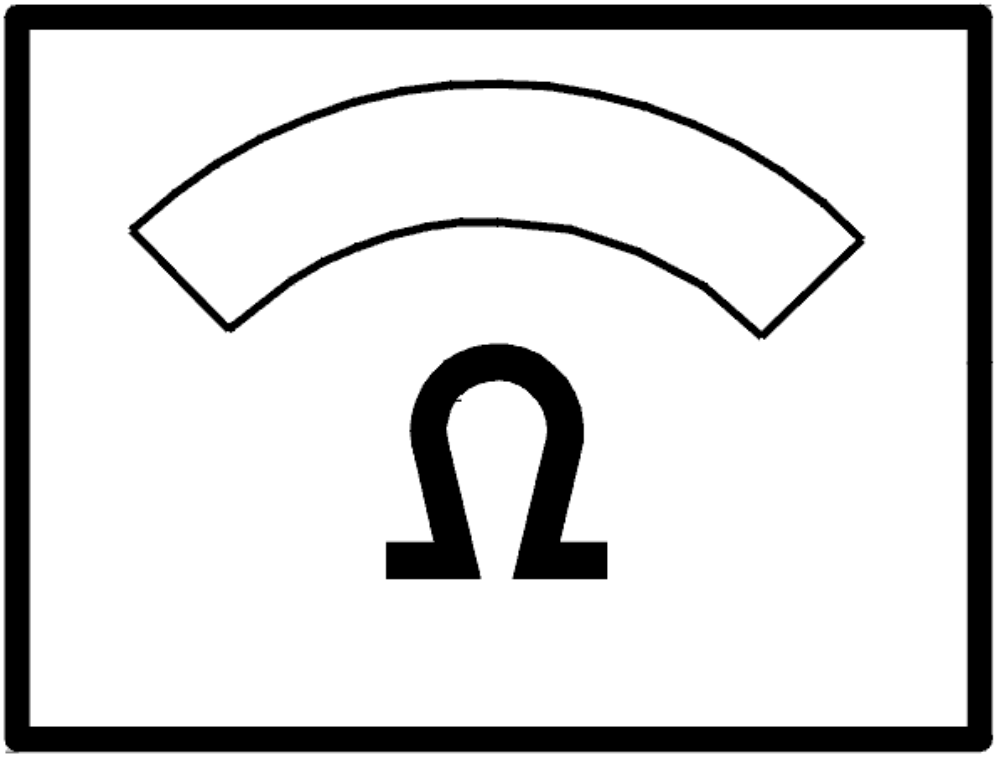

Fig. 292: Identifying Ohms Display
Courtesy of VOLVO CARS CORPORATION

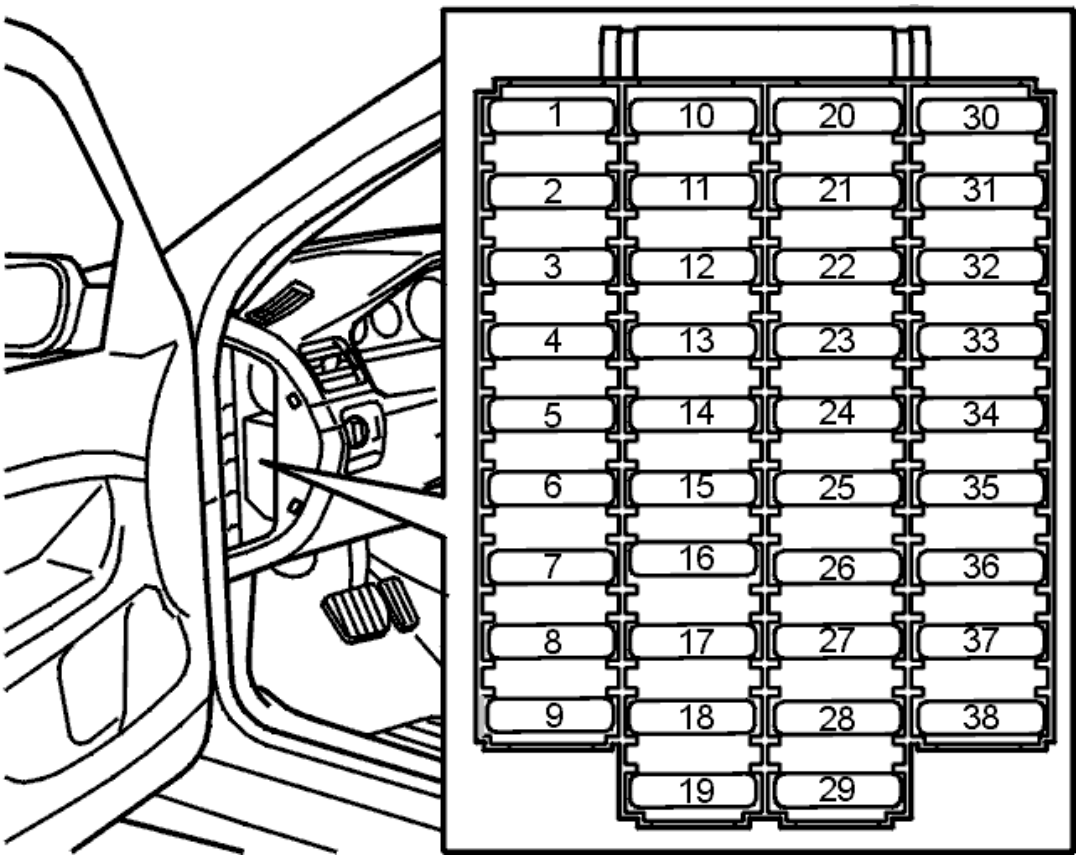

Fig. 293: Locating Fuse Holder (Passenger Compartment)
Courtesy of VOLVO CARS CORPORATION

Was a fault detected?

- **YES**

  Refer to **VERIFICATION**

- **NO**

  Refer to **REPLACING THE COMPONENT**

REPLACING THE COMPONENT

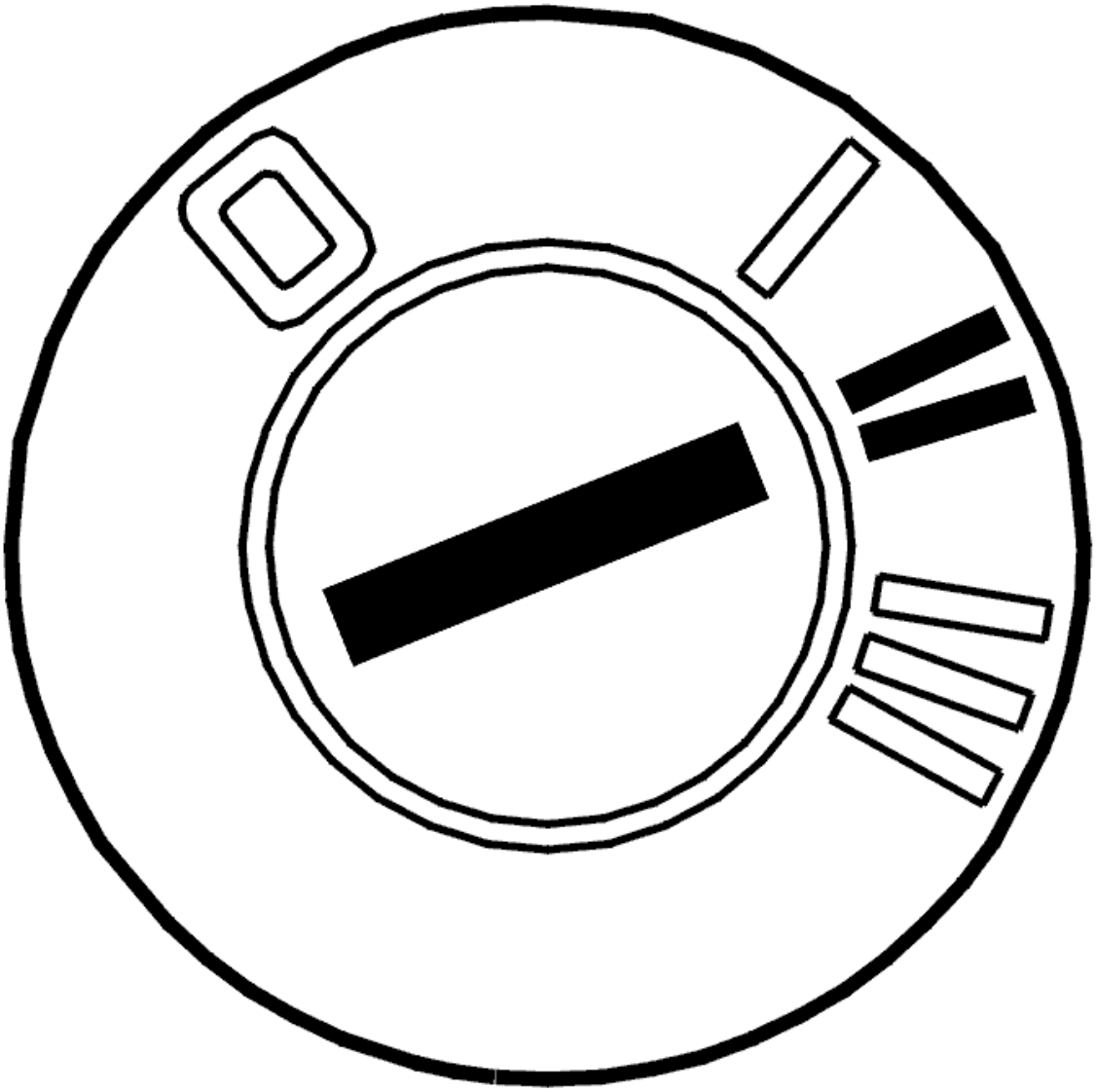

Fig. 294: Identifying Ignition ON
Courtesy of VOLVO CARS CORPORATION

- Replace the sun roof motor. See **ELECTRIC MOTOR, SUN ROOF, REPLACING** .
- Ignition off
- Reinstall the components and connectors etc.
- Ignition on.

After carrying out repairs, the sun roof module (SRM) should be calibrated. See **SUN ROOF MODULE (SRM), CALIBRATING** .

Check that automatic closing of the sun roof works by pressing forward the switch 2 steps.

Does the automatic closing of the sun roof work?

- **YES**

  Refer to **VERIFICATION**

- **NO**

  Refer to **REPLACING THE COMPONENT**

REPLACING THE COMPONENT

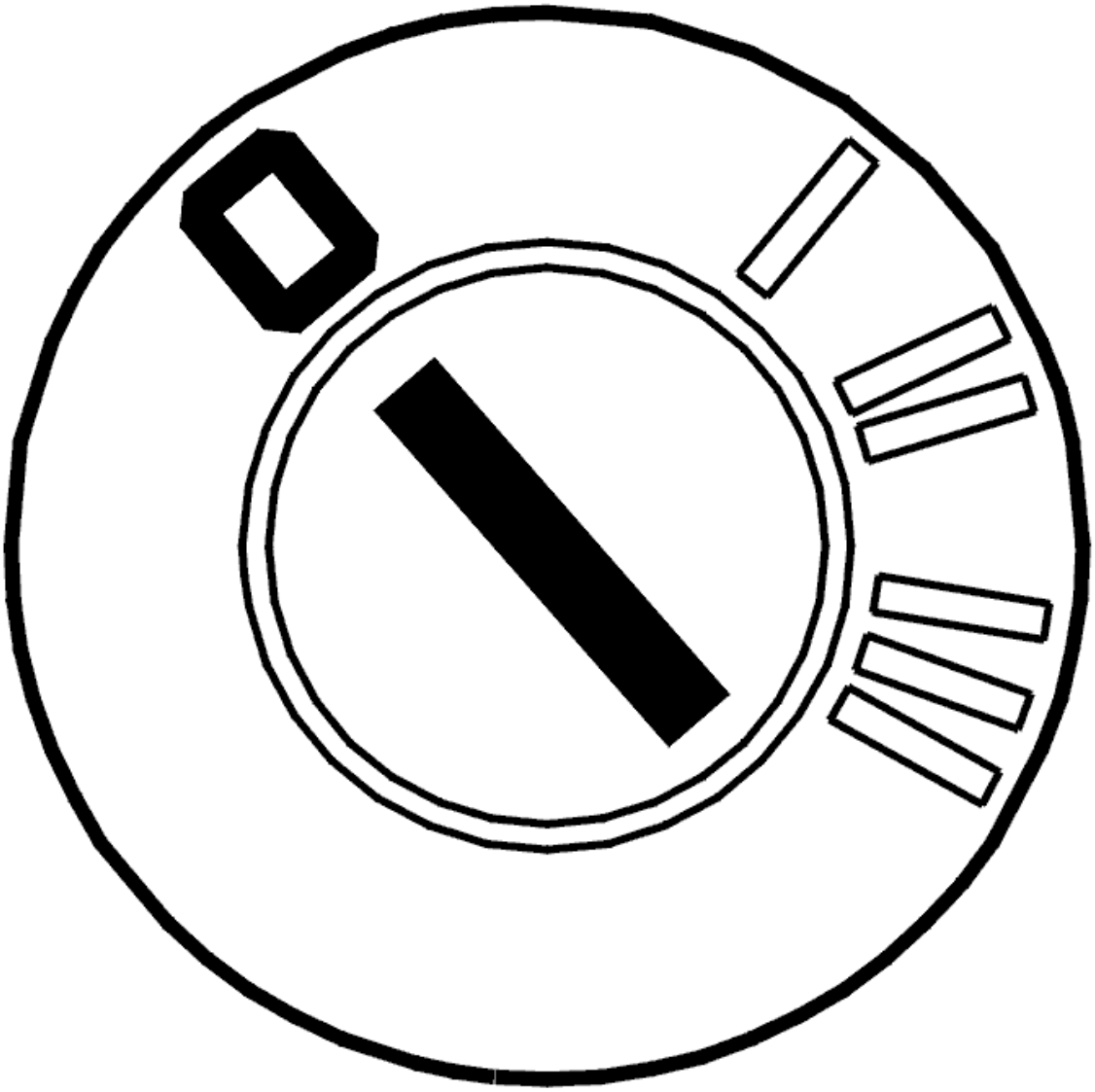

Fig. 295: Identifying Ignition OFF
Courtesy of VOLVO CARS CORPORATION

- Ignition off

  Replace the sun roof control module according to **CONTROL MODULE, SUN ROOF, REPLACING** .

- **Continue**

  Refer to **VERIFICATION**

INTERMITTENT FAULT

Check the connector between the sun roof module (SRM) and sun roof motor. Check for contact resistance and oxidation. Check for loose connections.

Check connector 54/13. Check for contact resistance and oxidation. Check for loose connections.

Check the cable between sun roof module (SRM) terminal #10A and ground, left A-post. Check for an intermittent short-circuit to supply voltage.

Check the cable between the sun roof module (SRM) terminal #1A and fuse 11C/7 (11C/13 XC90) in the passenger compartment fuse box for a short-circuit to ground or an intermittent open-circuit.

After carrying out repairs, the sun roof module (SRM) should be calibrated. See **SUN ROOF MODULE (SRM), CALIBRATING** .

Other information:

- For further information about signals and other values, see **SIGNAL DESCRIPTION, UPPER ELECTRONIC MODULE (UEM)** .
- To connect the breakout box, see **CONNECTING THE BREAKOUT BOX** .
- To access the connector between the sun roof module (SRM) and motor, see **ELECTRIC MOTOR, SUN ROOF, REPLACING** .
- see **CHECKING WIRING AND TERMINALS** .

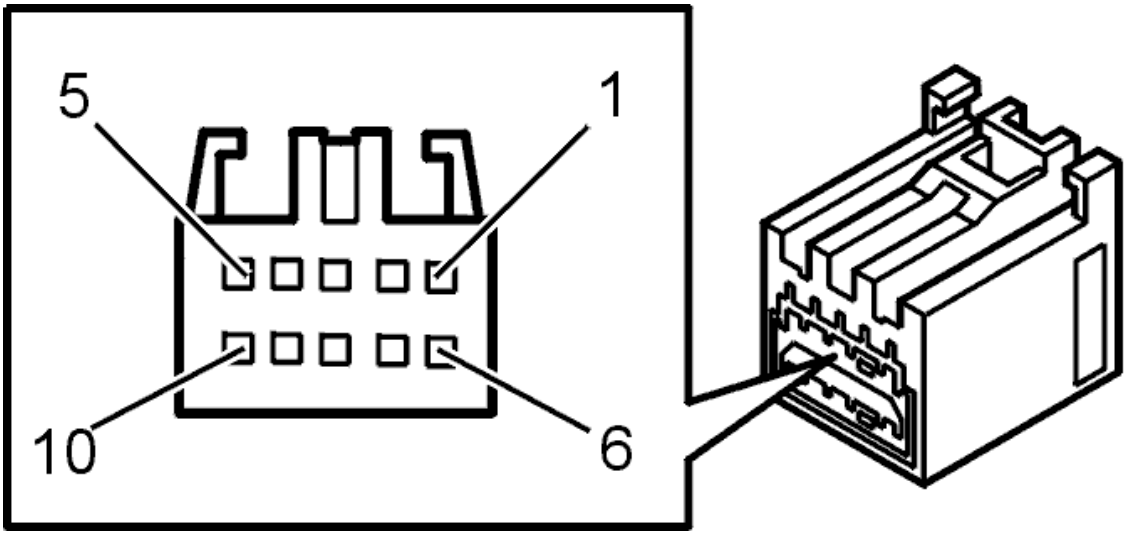

Fig. 296: Identifying Sunroof Module Connector Terminals
Courtesy of VOLVO CARS CORPORATION

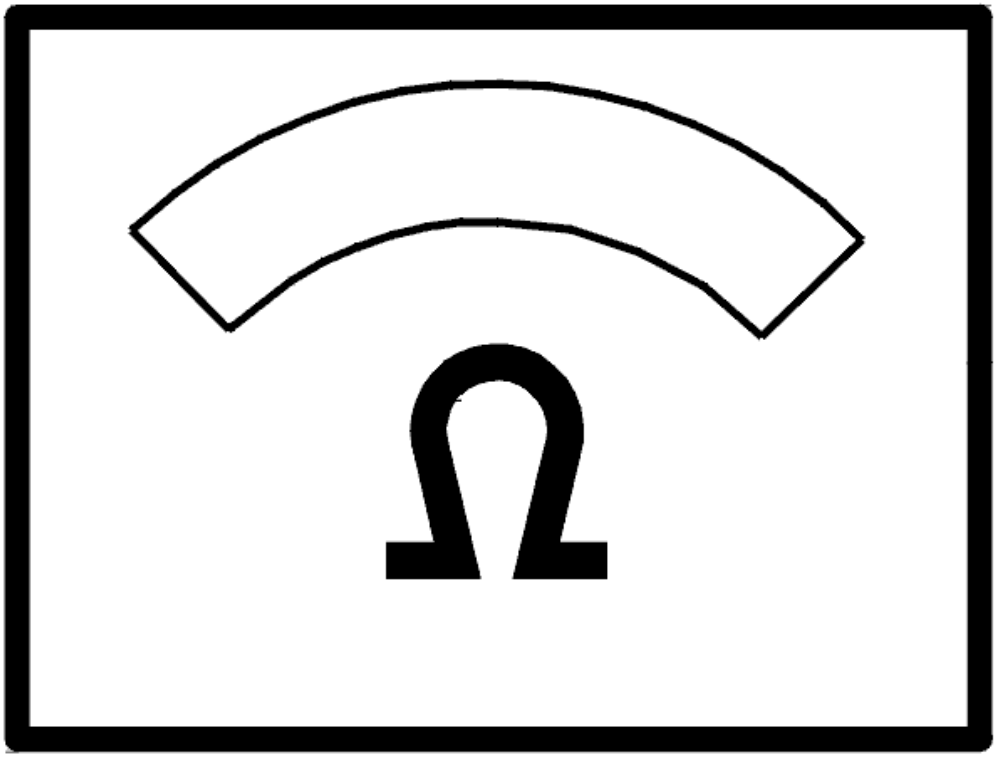

Fig. 297: Identifying Ohms Display
Courtesy of VOLVO CARS CORPORATION

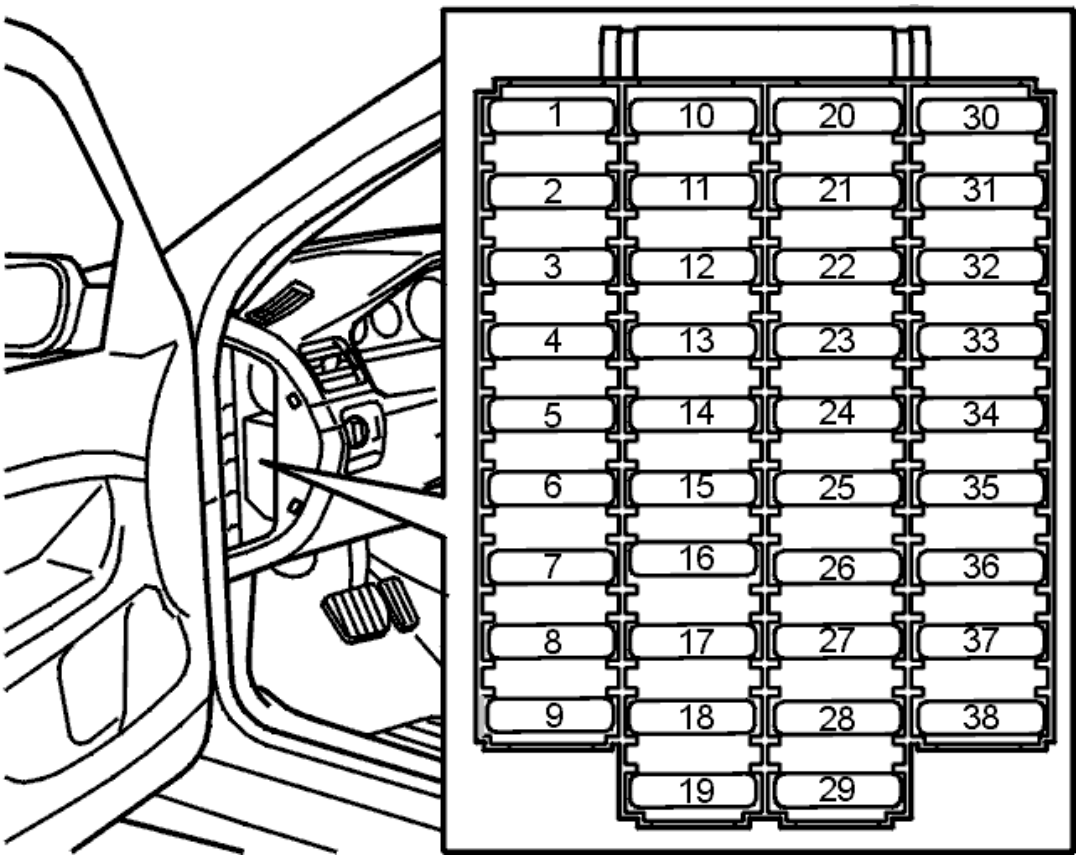

Fig. 298: Locating Fuse Holder (Passenger Compartment)
Courtesy of VOLVO CARS CORPORATION

- **Continue**

  Refer to **INFORMATION**

VERIFICATION

VERIFICATION

HINT: After the repair it is necessary to check that the fault has been rectified.

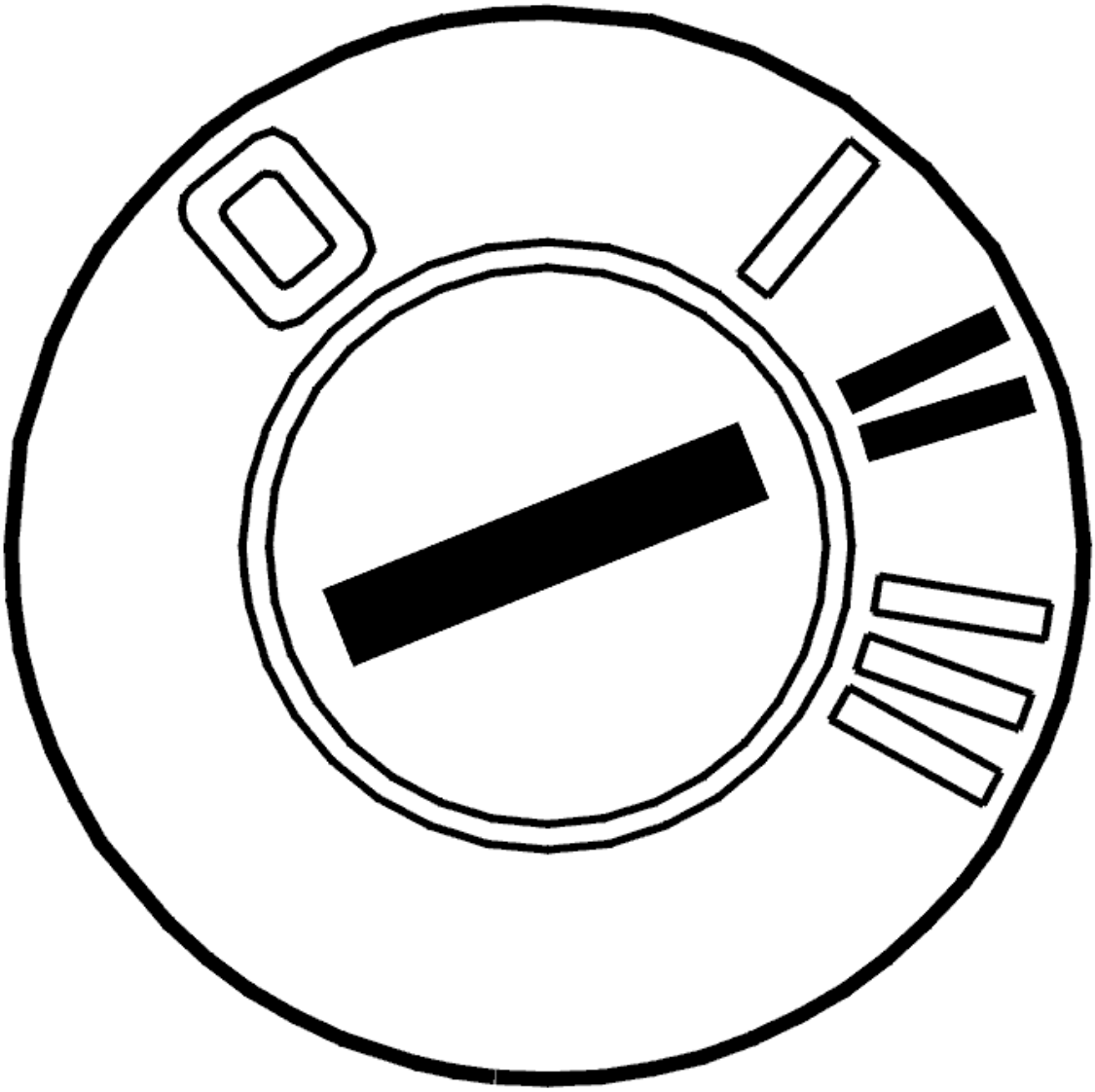

Fig. 299: Identifying Ignition ON
Courtesy of VOLVO CARS CORPORATION

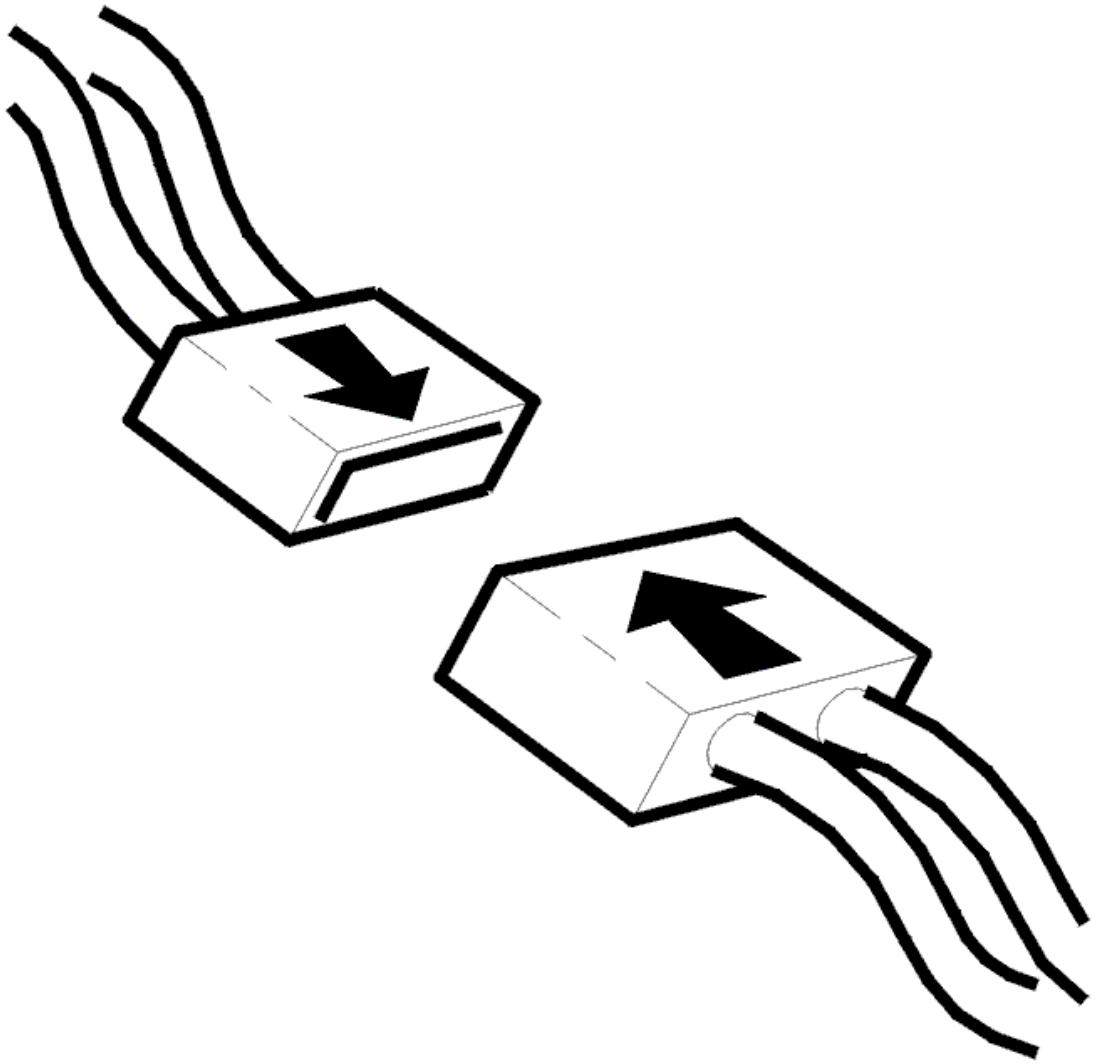

Fig. 300: Identifying Connector(s) Reinstallation
Courtesy of VOLVO CARS CORPORATION

- Ignition off.
- Connect the connectors, install the components, etc.
- Ignition on.

  Check that the sunroof can be moved to its end position.

Does the sunroof move?

- **YES**

  VERIFIED: Troubleshooting has been completed.

- **NO**

  Refer to **INFORMATION**

INFORMATION

FAULT-TRACING INFORMATION

The fault should have been detected and remedied. As this is not the case fault-tracing has failed.

Exit fault-tracing for this diagnostic trouble code (DTC) or make another attempt.

INFORMATION

FAULT-TRACING INFORMATION

If the fault is intermittent, do not verify fault-tracing if the fault does not recur.

It is possible to view the information again, or leave fault-tracing for this diagnostic trouble code (DTC).

UEM-0054: SUNROOF MOTOR. SIGNAL TOO LOW (2003-2012)

DIAGNOSTIC TROUBLE CODE INFORMATION

Condition

If the control unit registers an internal fault in the sunroof control unit (SRM), diagnostic trouble code is set.

Substitute Value

- Nothing.

Possible Source

- Despite the relay being activated and the sunroof changing position, you cannot measure any current in the motor.

Fault symptom[s]

- Automatic sunroof closing does not work.

SIGNAL TOO LOW

CHECKING FOR PERMANENT OR INTERMITTENT FAULTS

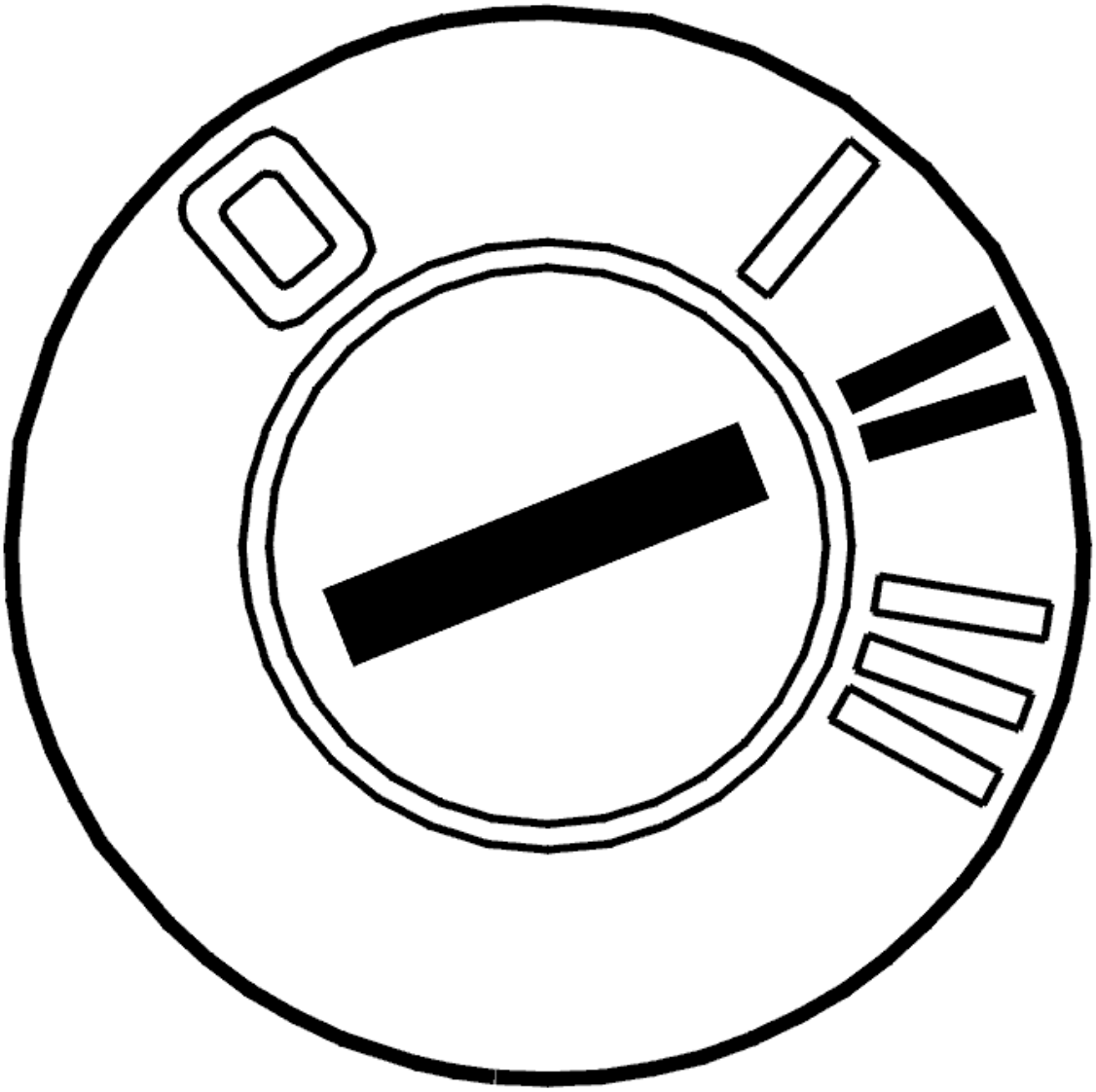

Fig. 301: Identifying Ignition ON
Courtesy of VOLVO CARS CORPORATION

- Ignition on
- Operate the sun roof to full tilt.

  Check that the automatic operation of the sun roof works.

Was the function OK?

- **YES**

  Refer to **VERIFICATION**

- **NO**

Refer to **CHECKING THE WIRING**

CHECKING THE WIRING

Check the connector to the sun roof motor. Check for contact resistance and oxidation. Check for loose connections.

Other information

- To access the sun roof motor connector, see **ELECTRIC MOTOR, SUN ROOF, REPLACING**
- see **CHECKING WIRING AND TERMINALS** .

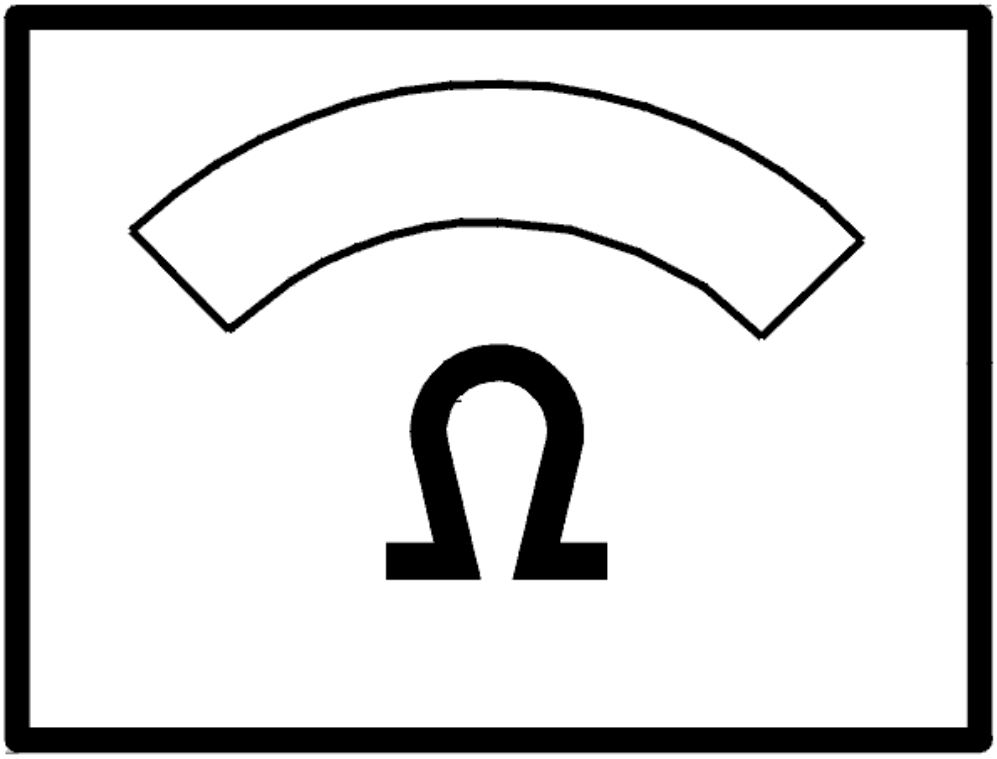

Fig. 302: Identifying Ohms Display
Courtesy of VOLVO CARS CORPORATION

- **Continue**

Refer to **REPLACING THE COMPONENT**

REPLACING THE COMPONENT

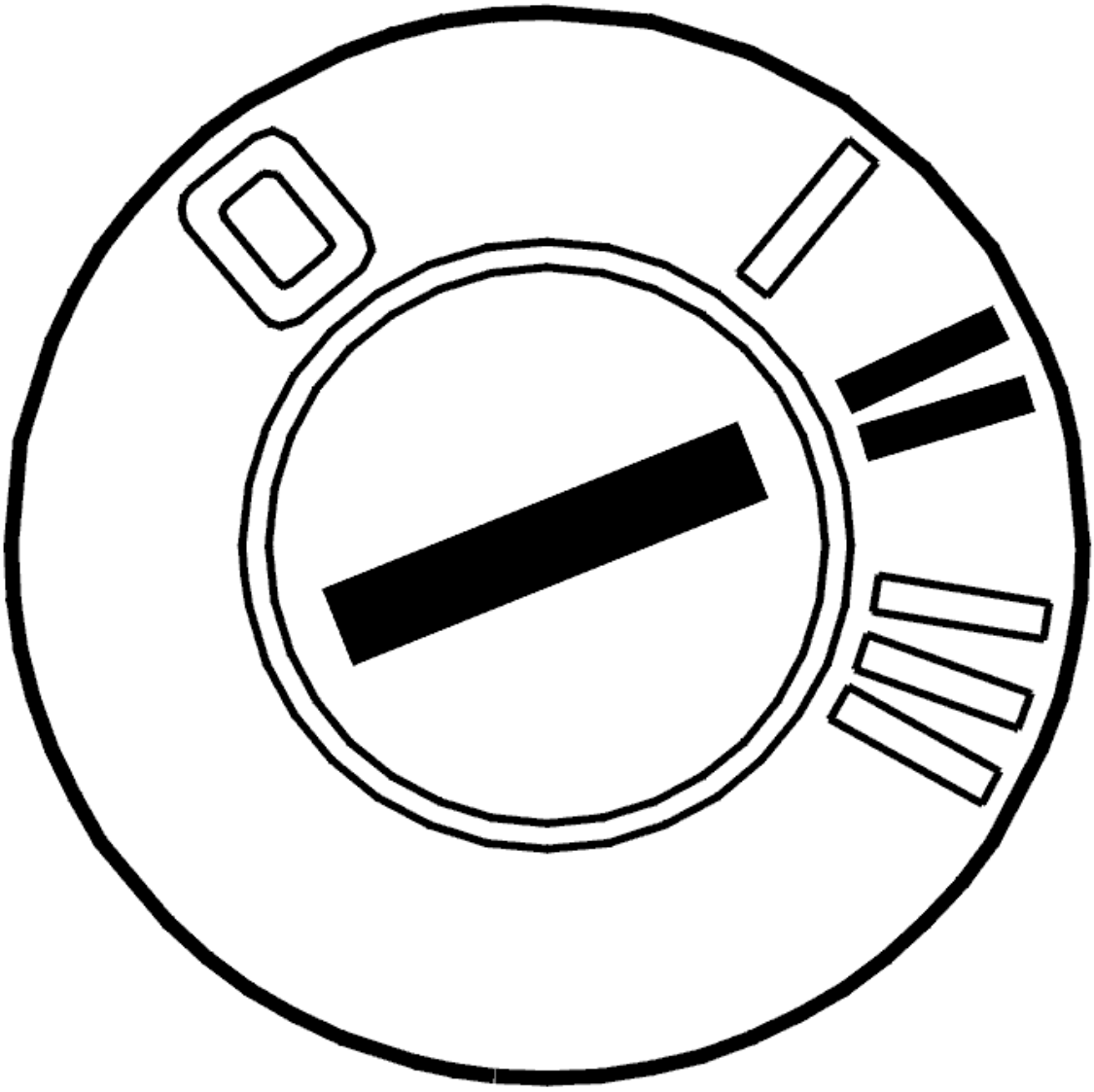

Fig. 303: Identifying Ignition ON
Courtesy of VOLVO CARS CORPORATION

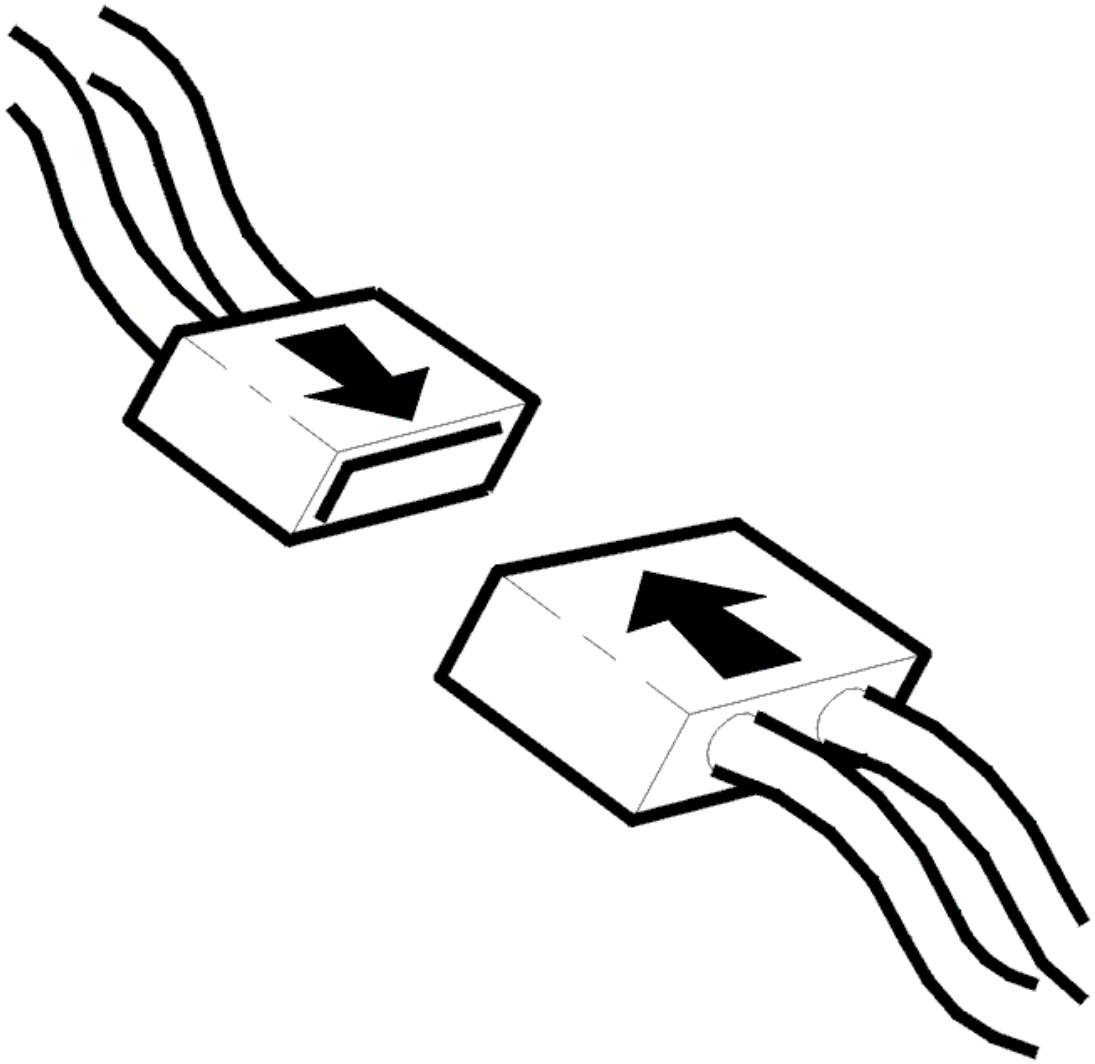

Fig. 304: Identifying Connector(s) Reinstallation
Courtesy of VOLVO CARS CORPORATION

- Replace the sun roof motor. See **ELECTRIC MOTOR, SUN ROOF, REPLACING**
- Ignition off
- Reinstall the components, reconnect the connectors etc.
- Ignition on.

  Check that automatic closing of the sun roof works by pressing forward the switch 2 steps.

Does the automatic closing of the sun roof work?

- **YES**

  Refer to **VERIFICATION**

- **NO**

  Refer to **REPLACING THE COMPONENT**

REPLACING THE COMPONENT

Replace the sun roof control module according to **CONTROL MODULE, SUN ROOF, REPLACING** .

- **Continue**

  Refer to **VERIFICATION**

VERIFICATION

VERIFICATION

HINT: After the repair it is necessary to check that the fault has been rectified.

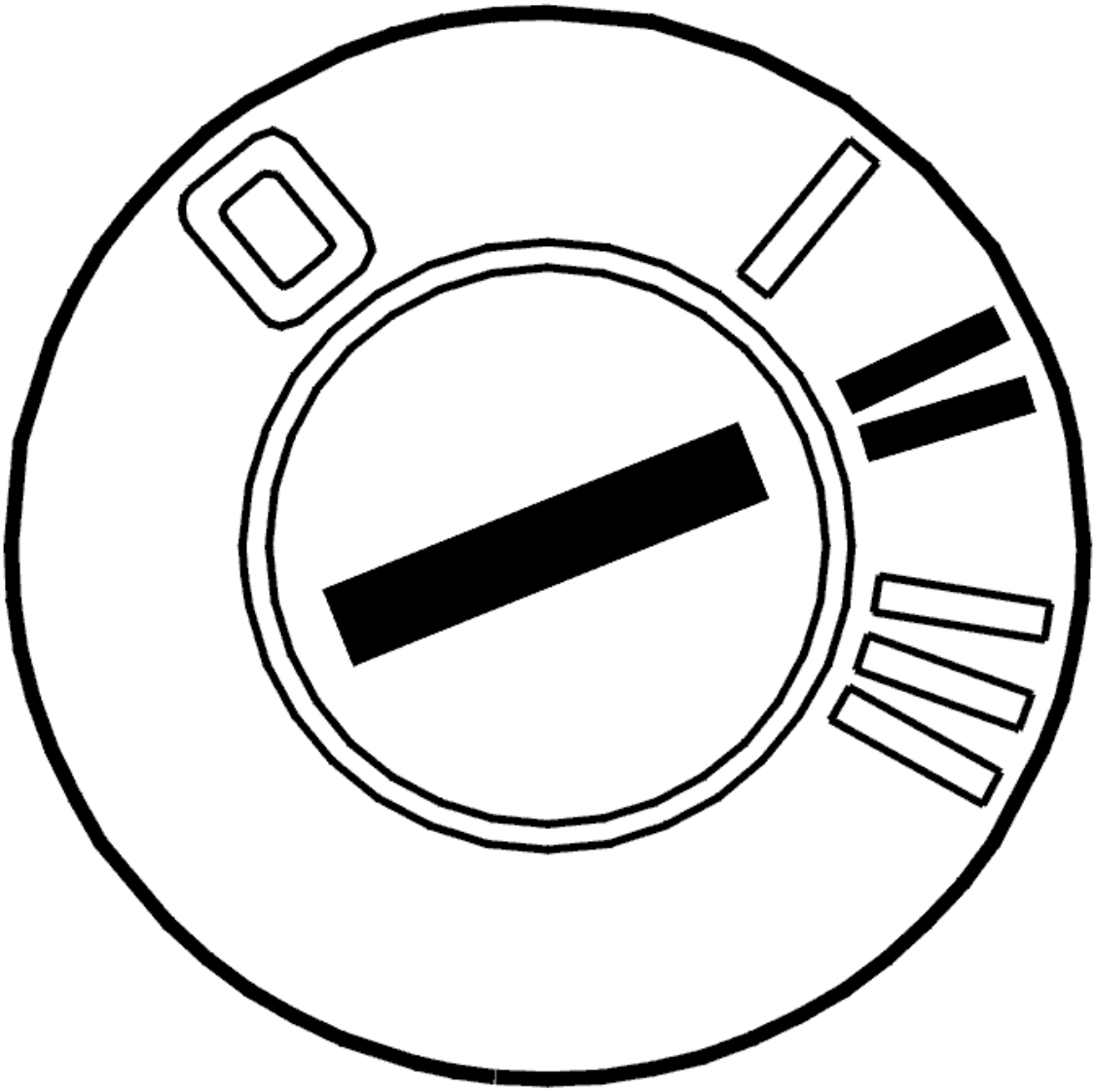

Fig. 305: Identifying Ignition ON
Courtesy of VOLVO CARS CORPORATION

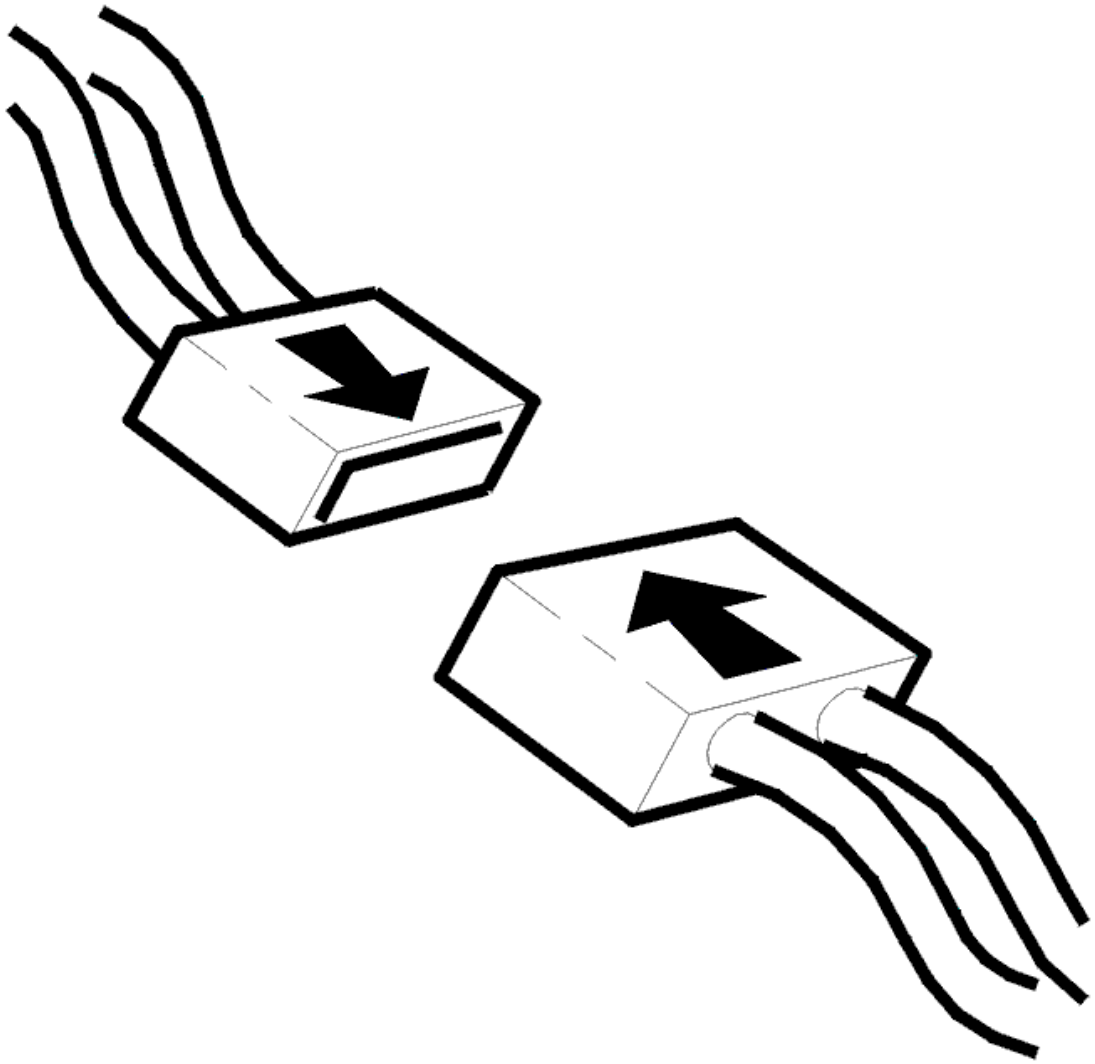

Fig. 306: Identifying Connector(s) Reinstallation
Courtesy of VOLVO CARS CORPORATION

- Ignition off.
- Connect the connectors, install the components, etc.
- Ignition on.

  Check that the automatic sunroof closing works.

Does it work?

- **YES**

  VERIFIED: Troubleshooting has been completed.

- **NO**

  Refer to **INFORMATION**

INFORMATION

FAULT-TRACING INFORMATION

The fault should have been detected and remedied. As this is not the case fault-tracing has failed.

Exit fault-tracing for this diagnostic trouble code (DTC) or make another attempt.

UEM-0056: SUNROOF MOTOR. SIGNAL TOO HIGH (2003-2012)

DIAGNOSTIC TROUBLE CODE INFORMATION

Condition

If the control unit registers an internal fault in the sunroof module (SRM), the diagnostic trouble code is displayed.

Substitute Value

- Nothing.

Possible Source

- No control signal from optical sensor 1 when the relay is activated and the motor is supplied with power.

Fault symptom[s]

- Automatic sunroof closing does not work.

SIGNAL TOO HIGH

CHECKING THE DRIVE WIRE

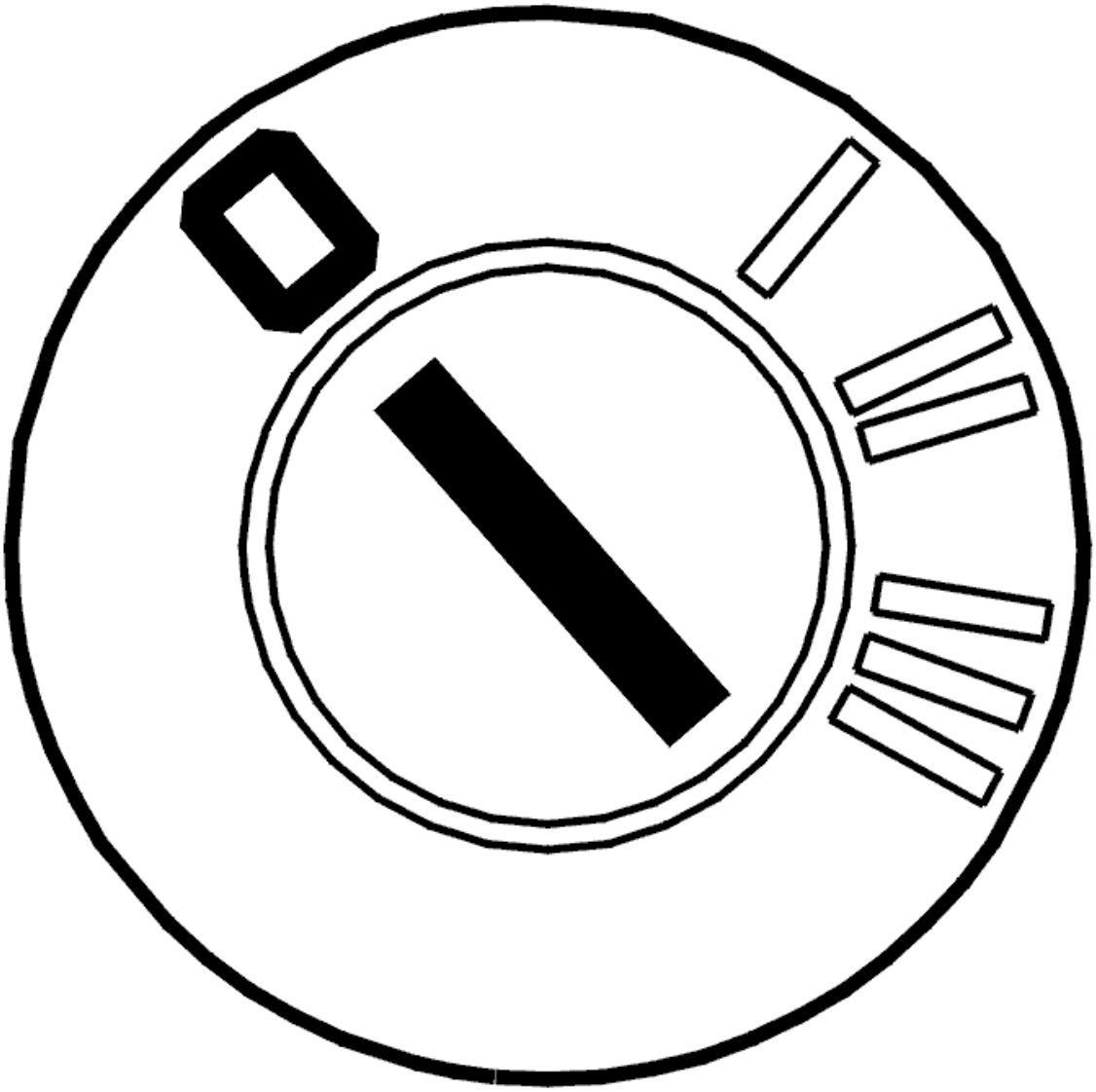

Fig. 307: Identifying Ignition OFF
Courtesy of VOLVO CARS CORPORATION

- Ignition off.

  Check that the position pulley on the sun roof control module is correctly aligned with the drive wire. A diagnostic trouble code (DTC) is stored if they are not correctly aligned.

  Remedy as necessary if a fault is found.

  Other information:

  - To access the position pulley, see **CONTROL MODULE, SUN ROOF, REPLACING** .

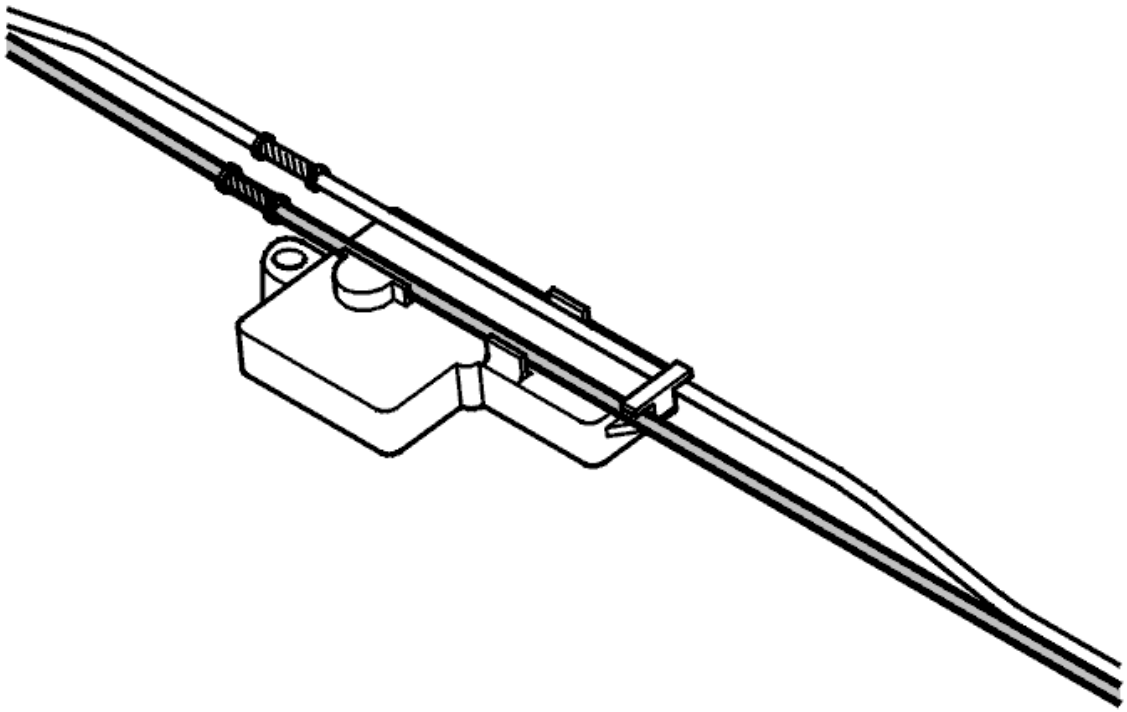

Fig. 308: Identifying Drive Wire And Position Pulley
Courtesy of VOLVO CARS CORPORATION

Were any faults detected?

- **YES**

  Refer to **VERIFICATION**

- **NO**

  Refer to **REPLACING THE COMPONENT**

REPLACING THE COMPONENT

Replace the sun roof control module according to **CONTROL MODULE, SUN ROOF, REPLACING** .

- **Continue**

  Refer to **VERIFICATION**

VERIFICATION

VERIFICATION

HINT: After the repair it is necessary to check that the fault has been rectified.

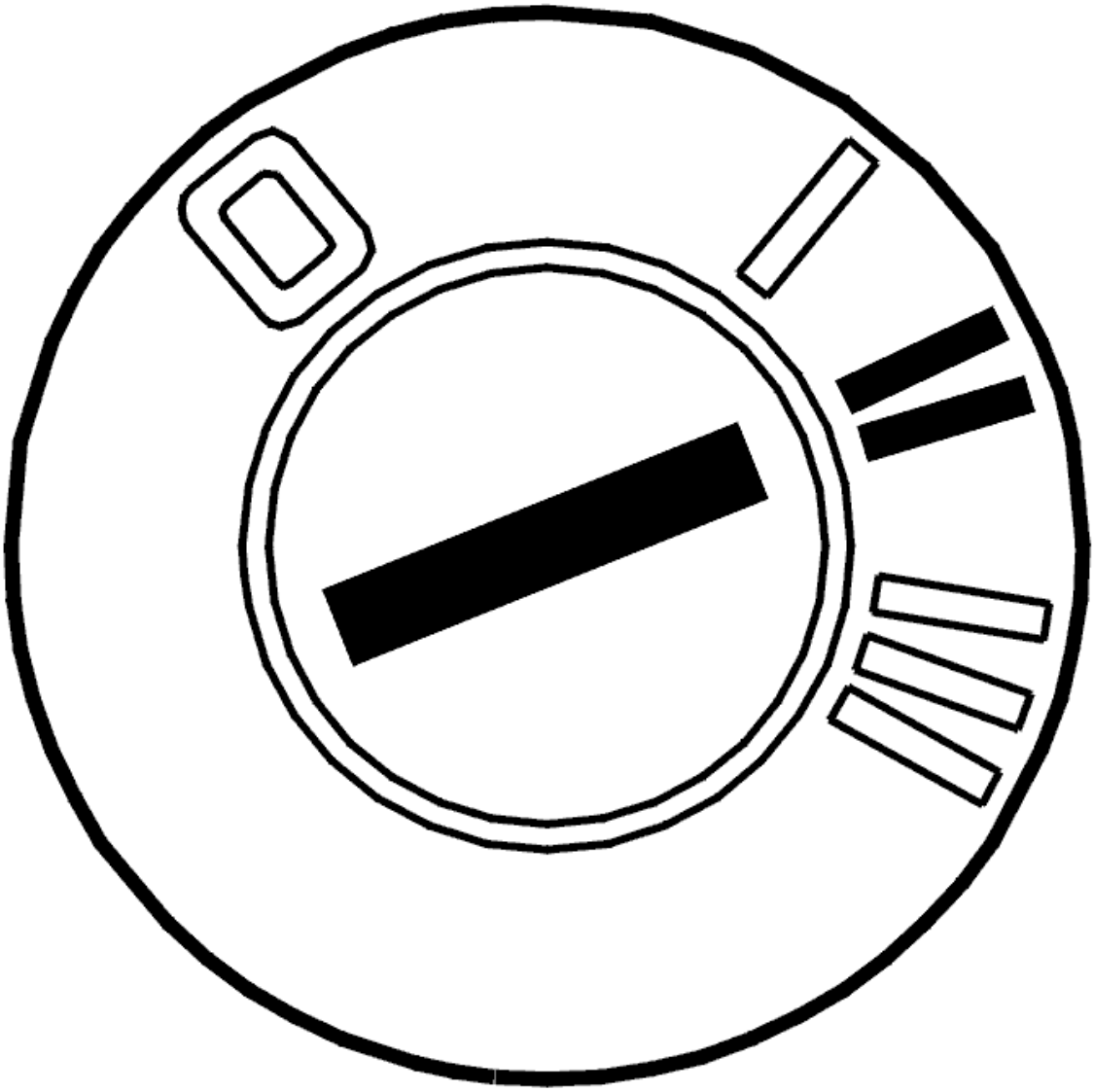

Fig. 309: Identifying Ignition ON
Courtesy of VOLVO CARS CORPORATION

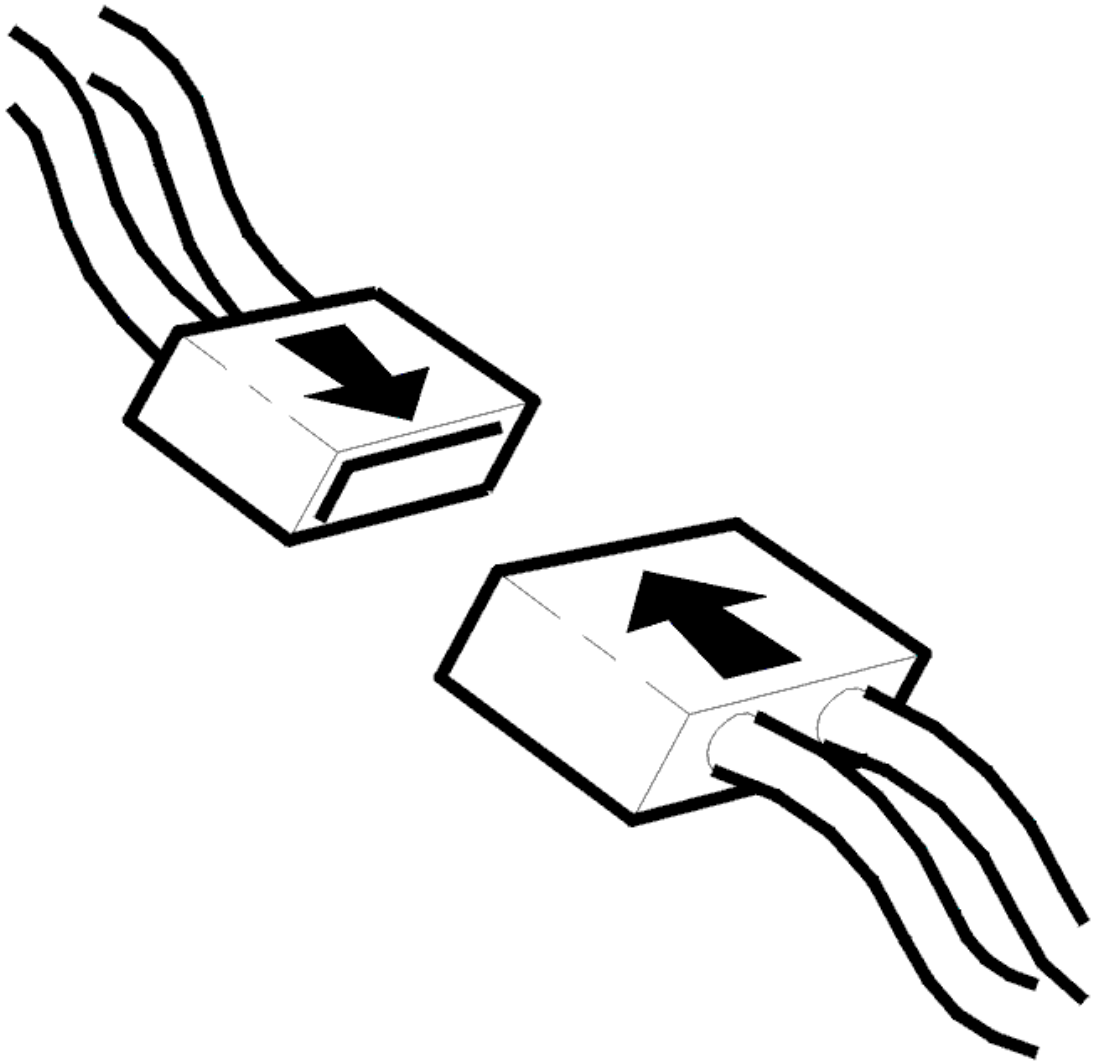

Fig. 310: Identifying Connector(s) Reinstallation
Courtesy of VOLVO CARS CORPORATION

- Ignition off.
- Connect the connectors, install the components, etc.
- Ignition on.

  Check that the automatic sunroof control works by pressing the switch down two stages.

Does it work?

- **YES**

  VERIFIED: Troubleshooting has been completed.

- **NO**

  Refer to **INFORMATION**

INFORMATION

FAULT-TRACING INFORMATION

The fault should have been detected and remedied. As this is not the case fault-tracing has failed.

Exit fault-tracing for this diagnostic trouble code (DTC) or make another attempt.

UEM-0057: SUNROOF MOTOR. SIGNAL TOO HIGH (2003-2012)

DIAGNOSTIC TROUBLE CODE INFORMATION

Condition

If the control unit registers an internal fault in the sunroof module (SRM), the diagnostic trouble code is displayed.

Substitute Value

- Nothing.

Possible Source

- No control signal from optical sensor 2 when the relay is activated and the motor is supplied with power.

Fault symptom[s]

- Automatic sunroof closing does not work.

SIGNAL TOO HIGH

see **SIGNAL TOO HIGH**

UEM-0058: SUNROOF MOTOR. SIGNAL TOO HIGH (2003-2012)

DIAGNOSTIC TROUBLE CODE INFORMATION

Condition

If the control unit registers an internal fault in the sunroof module (SRM), the diagnostic trouble code is displayed.

Substitute Value

- Nothing.

Possible Source

- Sunroof blocked after starting
- Incorrectly installed sunroof.

Fault symptom[s]

- Nothing.

SIGNAL TOO HIGH

INITIATING SUN ROOF POSITION

NOTE: Diagnostic trouble code (DTC) UEM-0058 is stored if the sun roof has been blocked at some point or incorrectly installed.

Try to adjust the sun roof so that it does not move at an angle or stick.

Check that nothing is located in the groove preventing the sun roof from being operated.

Other information

- see **SUN ROOF, ADJUSTING**
- **Continue**

  Refer to **ERASING DIAGNOSTIC TROUBLE CODE (DTC)**

ERASING DIAGNOSTIC TROUBLE CODE (DTC)

Erase diagnostic trouble codes (DTCs).

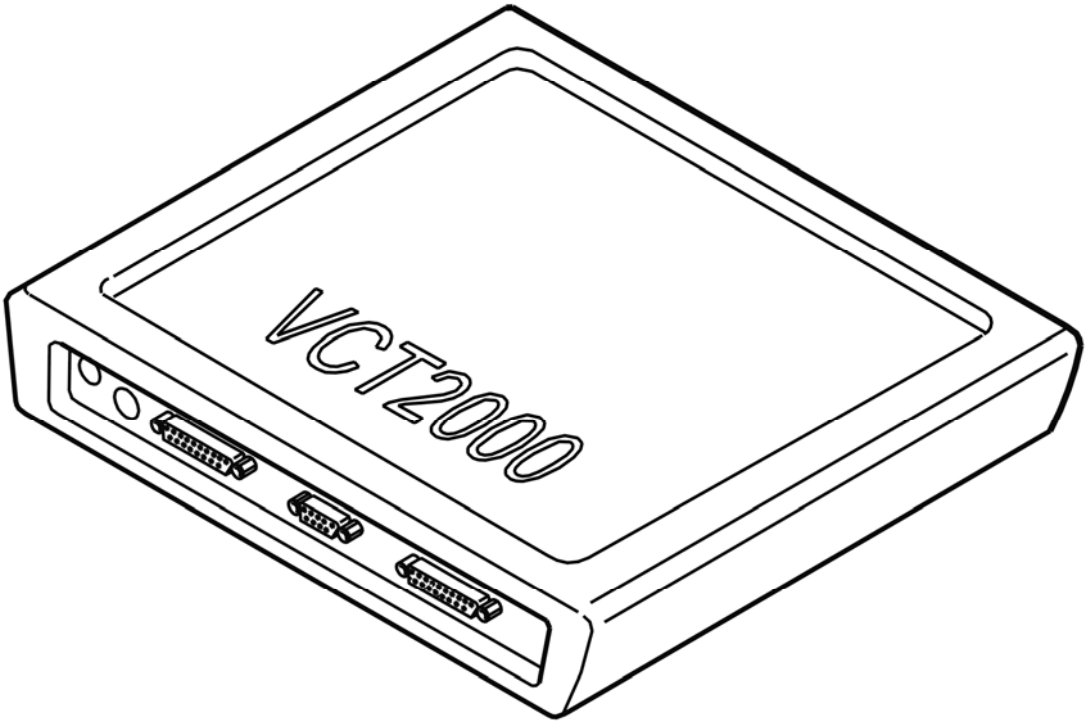

Fig. 311: Identifying VCT2000 Diagnostic Tool Symbol In VIDA
Courtesy of VOLVO CARS CORPORATION

- **Continue**

  Refer to **READING OFF DIAGNOSTIC TROUBLE CODES (DTC)**

READING OFF DIAGNOSTIC TROUBLE CODES (DTC)

Read off diagnostic trouble codes (DTCs). If the diagnostic trouble code (DTC) recurs, replace the sun roof.

Other information

- see **SUN ROOF, REPLACING** .

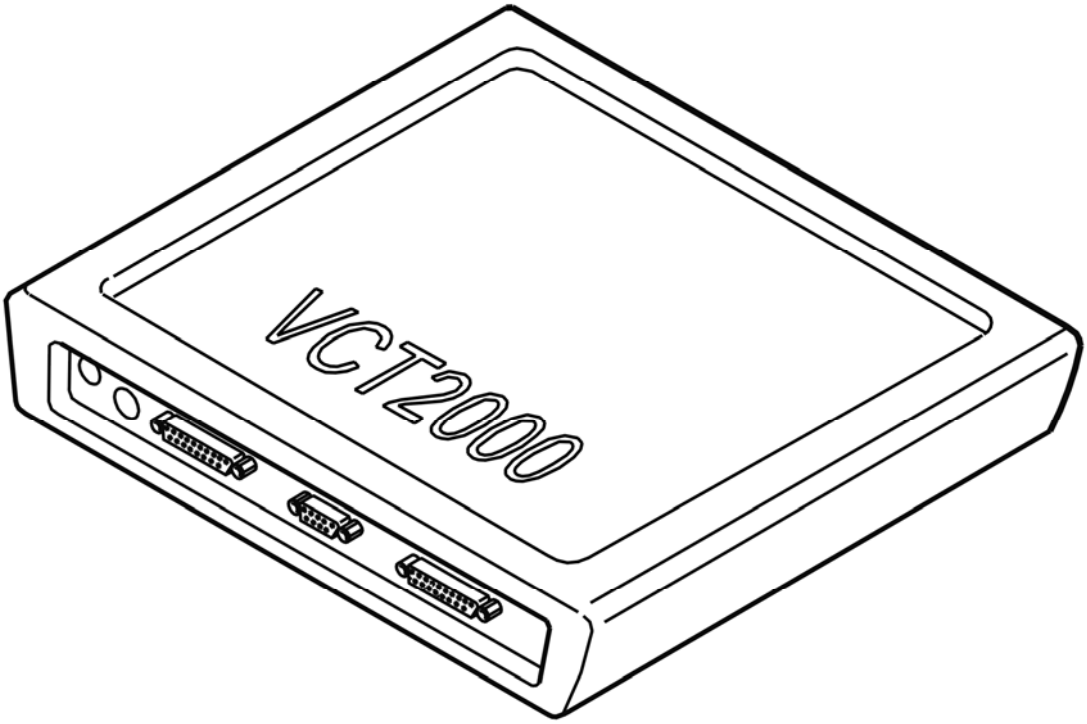

Fig. 312: Identifying VCT2000 Diagnostic Tool Symbol In VIDA
Courtesy of VOLVO CARS CORPORATION

UEM-0059: SUNROOF MOTOR. SIGNAL TOO HIGH (2003-2012)

DIAGNOSTIC TROUBLE CODE INFORMATION

Condition

If the control unit registers an internal fault in the sunroof module (SRM), diagnostic trouble code is displayed.

Substitute Value

- Nothing.

Possible Source

- Sunroof motor works and sunroof moves even when the relay is not activated.

Fault symptom[s]

- Electric sunroof does not work.

SIGNAL TOO HIGH

see **SIGNAL TOO HIGH**

UEM-0060: SUNROOF MOTOR. SIGNAL TOO HIGH (2003-2012)

DIAGNOSTIC TROUBLE CODE INFORMATION

Condition

If the control unit registers an internal fault in the sunroof module (SRM), diagnostic trouble code is displayed.

Substitute Value

- Nothing.

Possible Source

- Sunroof motor works and sunroof moves even when the relay is not activated.

Fault symptom[s]

- Electric sunroof does not work.

SIGNAL TOO HIGH

see **SIGNAL TOO HIGH**

UEM-0061: SUNROOF MOTOR. SIGNAL TOO HIGH (2003-2012)

DIAGNOSTIC TROUBLE CODE INFORMATION

Condition

If the control unit registers an internal fault in the sunroof control unit (SRM), diagnostic trouble code is set.

Substitute Value

- Nothing.

Possible Source

- The voltage supply wire for forward movement of the sunroof is short circuited to voltage supply.

Fault symptom[s]

- Electric sunroof does not work.

SIGNAL TOO HIGH

CHECKING FOR PERMANENT OR INTERMITTENT FAULTS

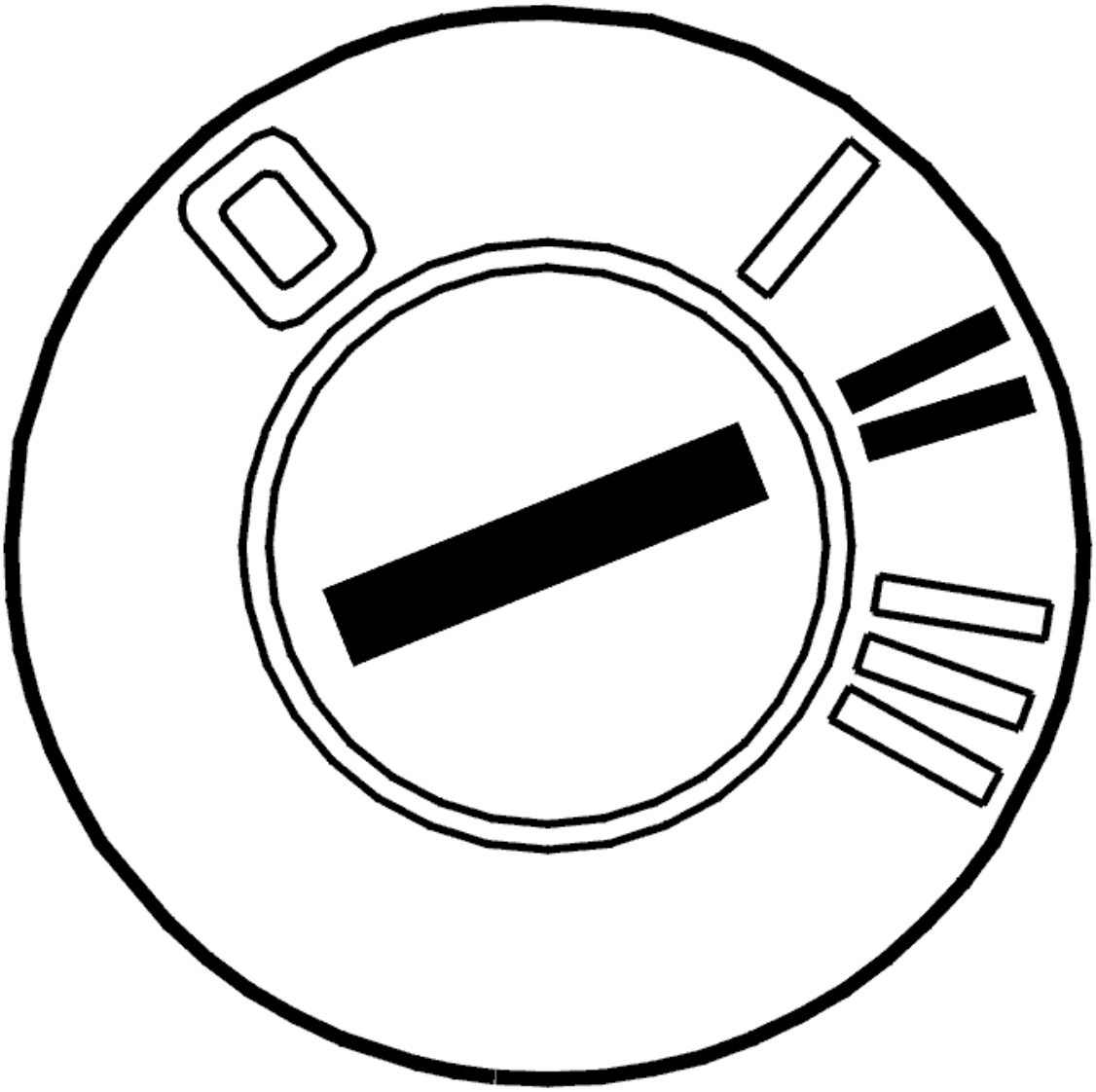

Fig. 313: Identifying Ignition ON
Courtesy of VOLVO CARS CORPORATION

- Ignition on.

  Try to operate the sun roof to its limit positions.

Can the sun roof be operated?

- **YES**

  Refer to **INTERMITTENT FAULT**

- **NO**

  Refer to **CHECKING FOR A SHORT-CIRCUIT**

CHECKING FOR A SHORT-CIRCUIT

Check the cable between the sun roof module (SRM) and the roof lamp module. Check for a short-circuit to supply voltage.

UEM-0061 Motor sun roof. Signal too high

The sun roof module (SRM) terminal #2A and roof lamp module terminal #4B.

UEM-0062 Motor sun roof. Signal too high

The sun roof module (SRM) terminal #8A and roof lamp module terminal #3B.

UEM-0063 Motor sun roof. Signal too high

The sun roof module (SRM) terminal #3A and roof lamp module terminal #2B.

UEM-0064 Motor sun roof. Signal too high

The sun roof module (SRM) terminal #7A and roof lamp module terminal #1B.

Remedy as necessary.

Other information:

- For further information about signals and other values, see **SIGNAL DESCRIPTION, UPPER ELECTRONIC MODULE (UEM)**
- To access the roof lamp module connector, see **INTERIOR LIGHTING, REPLACING**
- To access the sun roof module (SRM) connector, see **CONTROL MODULE, SUN ROOF, REPLACING**
- see **CHECKING WIRING AND TERMINALS** .

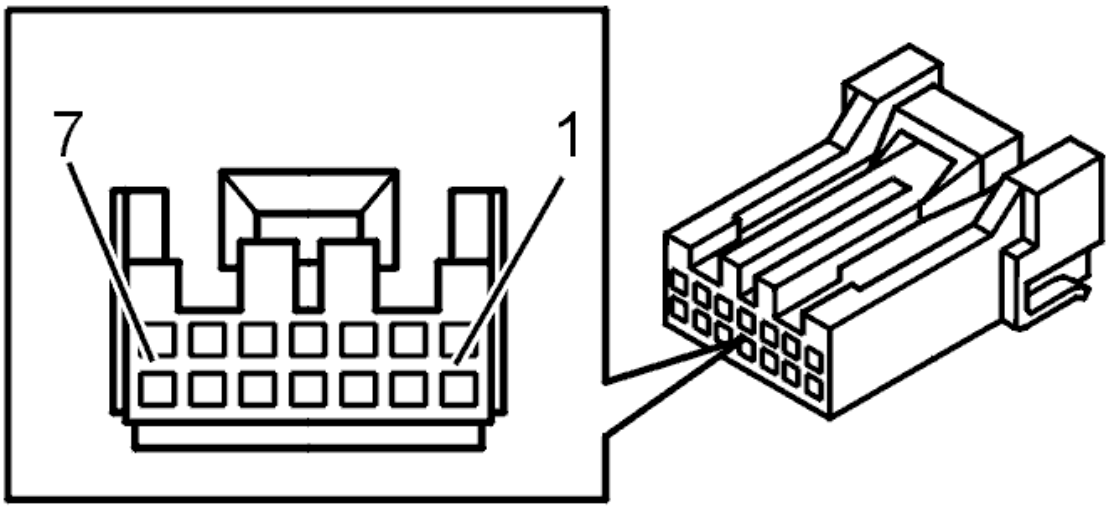

Fig. 314: Identifying Connector Terminals
Courtesy of VOLVO CARS CORPORATION

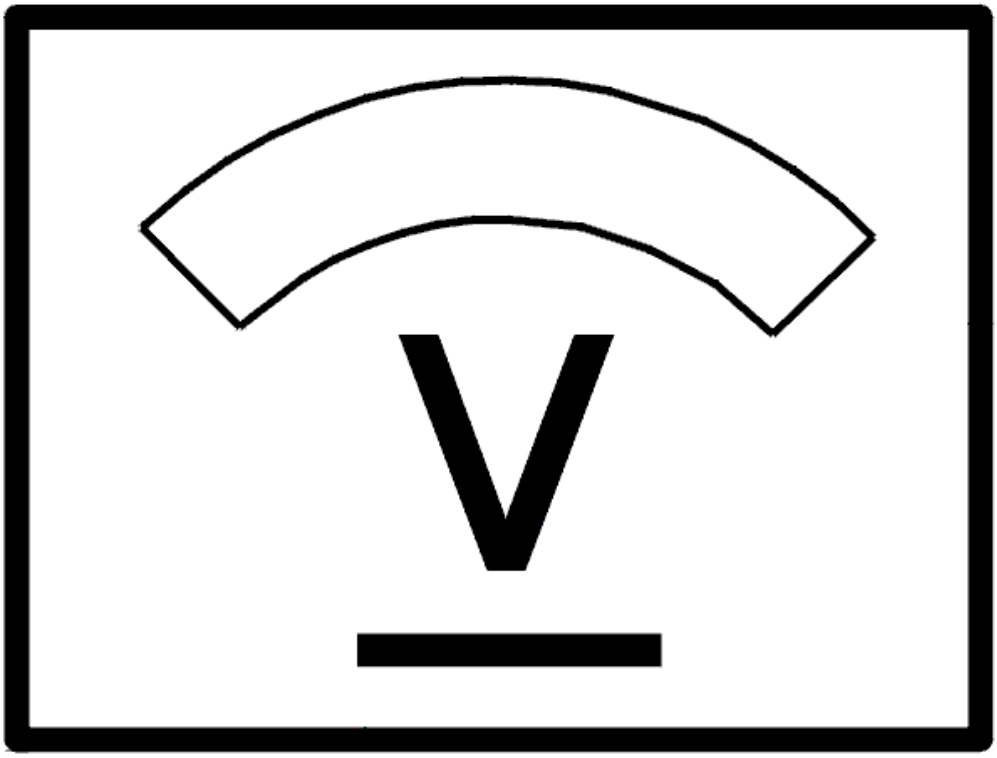

Fig. 315: Identifying Voltage Display
Courtesy of VOLVO CARS CORPORATION

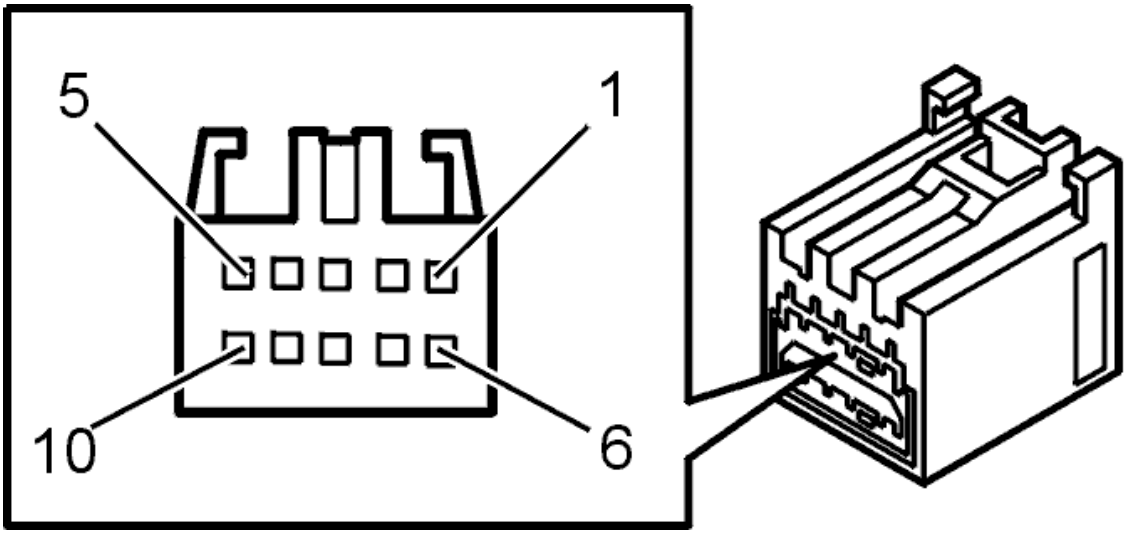

Fig. 316: Identifying Sunroof Module Connector Terminals
Courtesy of VOLVO CARS CORPORATION

Was a fault detected?

- **YES**

  Refer to **VERIFICATION**

- **NO**

  Refer to **CHECKING THE CABLE**

CHECKING THE CABLE

Check the wiring between the sun roof switch and the roof lamp module. Check for a short-circuit to supply voltage.

Other information:

- For further information about signals and other values, see **SIGNAL DESCRIPTION, UPPER ELECTRONIC MODULE (UEM)**
- see **CHECKING WIRING AND TERMINALS** .

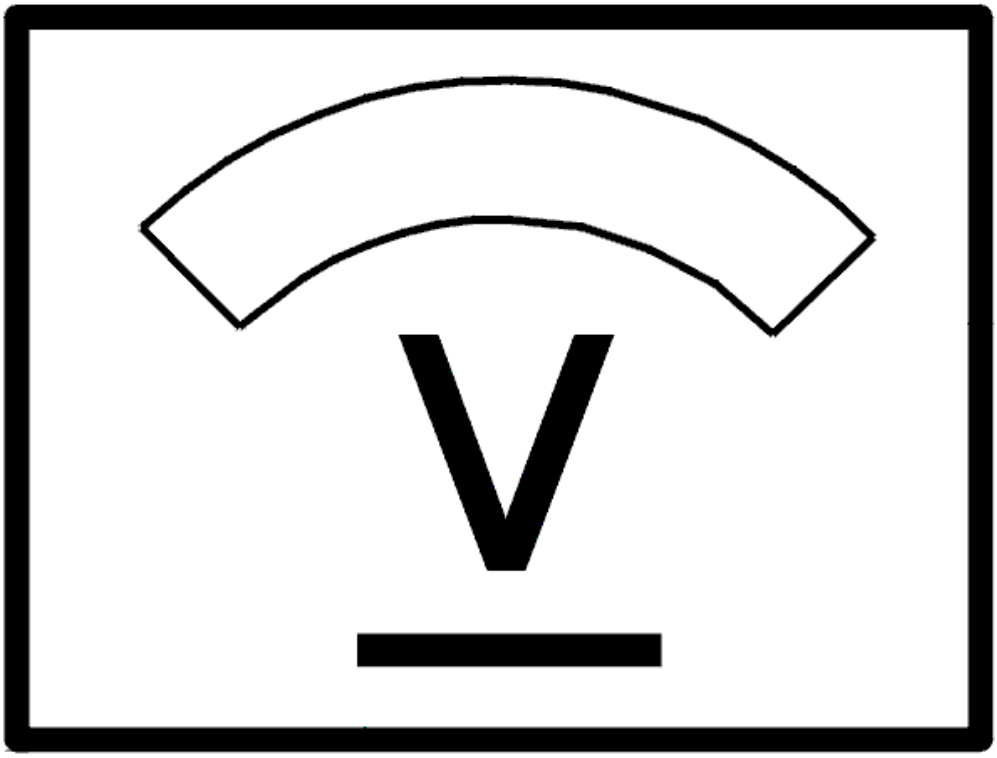

Fig. 317: Identifying Voltage Display
Courtesy of VOLVO CARS CORPORATION

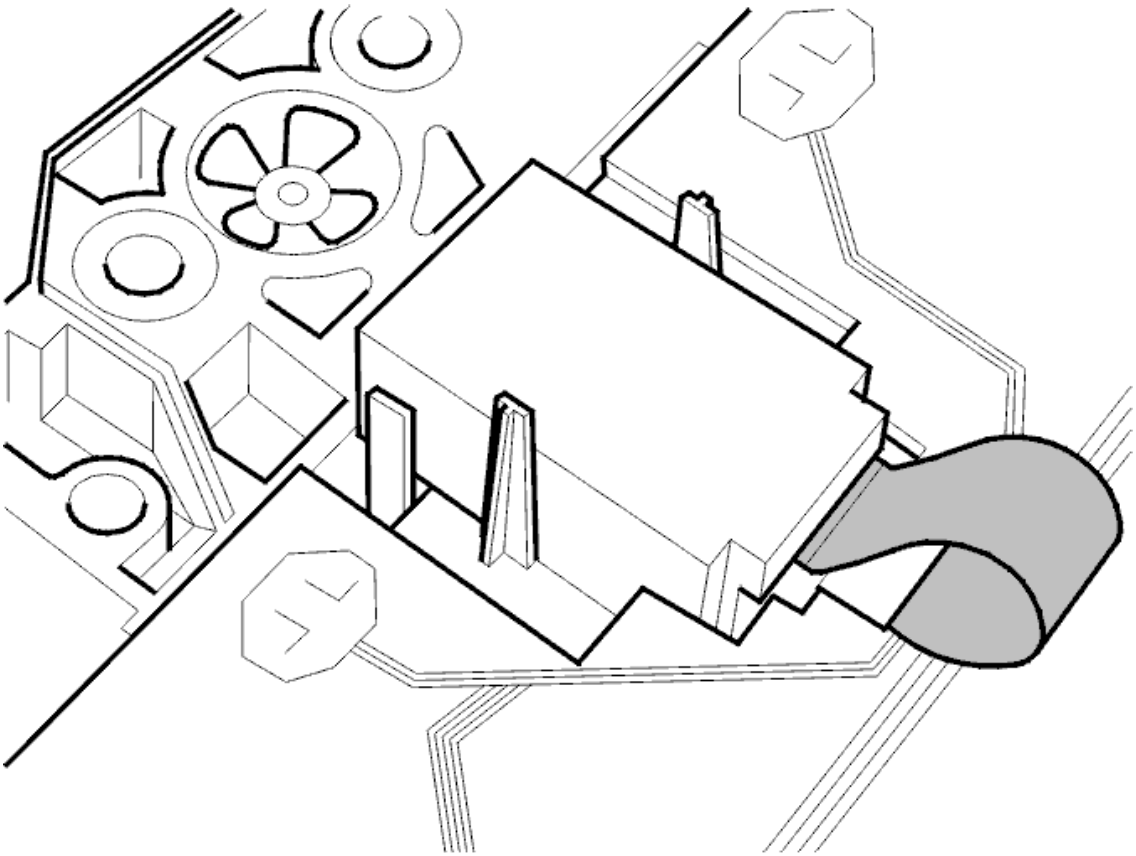

Fig. 318: Identifying Roof Lamp Module
Courtesy of VOLVO CARS CORPORATION

- **Continue**

  Refer to **REPLACING THE COMPONENT**

REPLACING THE COMPONENT

Visually check the roof lamp module and its switches.

If no fault is found replace the sun roof switch. See **SWITCH SUN ROOF, REPLACING** .

- **Continue**

  Refer to **VERIFICATION**

INTERMITTENT FAULT

Check the connector on the sun roof module (SRM) and the connector on the roof lamp module. Check for contact resistance and oxidation. Check for loose connections.

Visually check the cable between the sun roof module (SRM) and the roof lamp module. Check for an intermittent short-circuit to supply voltage. Check for an intermittent open-circuit.

UEM-0061 Motor sun roof. Signal too high

The sun roof module (SRM) terminal #2A and roof lamp module terminal #4B.

UEM-0062 Motor sun roof. Signal too high

The sun roof module (SRM) terminal #8A and roof lamp module terminal #3B.

UEM-0063 Motor sun roof. Signal too high

The sun roof module (SRM) terminal #3A and roof lamp module terminal #2B.

UEM-0064 Motor sun roof. Signal too high

The sun roof module (SRM) terminal #7A and roof lamp module terminal #1B.

Check the wiring between the sun roof switch and the roof lamp module (RCM). Check for an intermittent short-circuit to supply voltage.

Visually check the roof lamp module and its switches.

HINT: If no fault is found replace the sun roof switch.

Other information:

- For further information about signals and other values, see **SIGNAL DESCRIPTION, UPPER ELECTRONIC MODULE (UEM)**
- To access the roof lamp module connector, see **INTERIOR LIGHTING, REPLACING**
- To access the sun roof module (SRM) connector, see **CONTROL MODULE, SUN ROOF, REPLACING**
- To replace the printed circuit board and its switches, see **INTERIOR LIGHTING, REPLACING**
- To replace the switch for the sun roof, see **SWITCH SUN ROOF, REPLACING**
- see **CHECKING WIRING AND TERMINALS** .

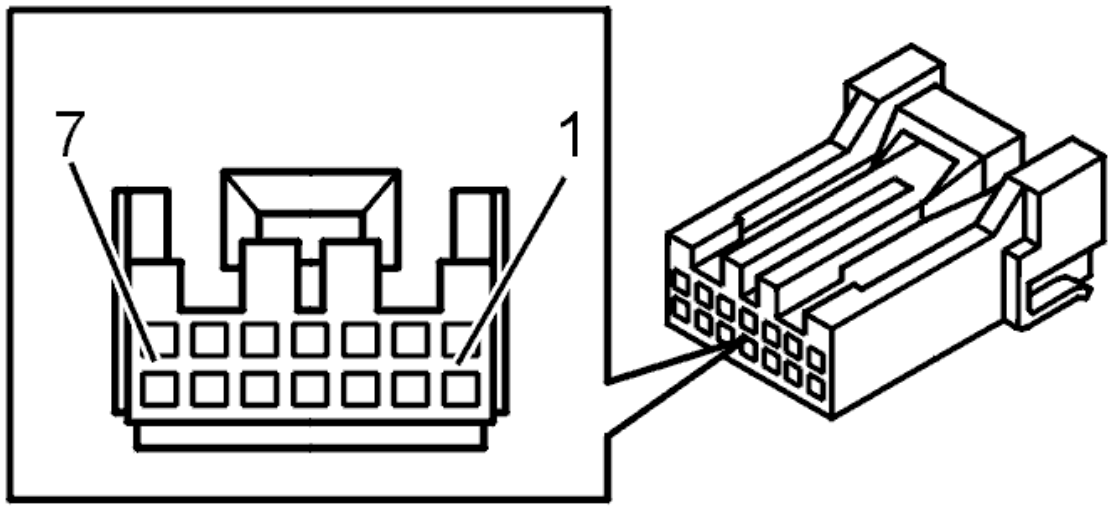

Fig. 319: Identifying Connector Terminals
Courtesy of VOLVO CARS CORPORATION

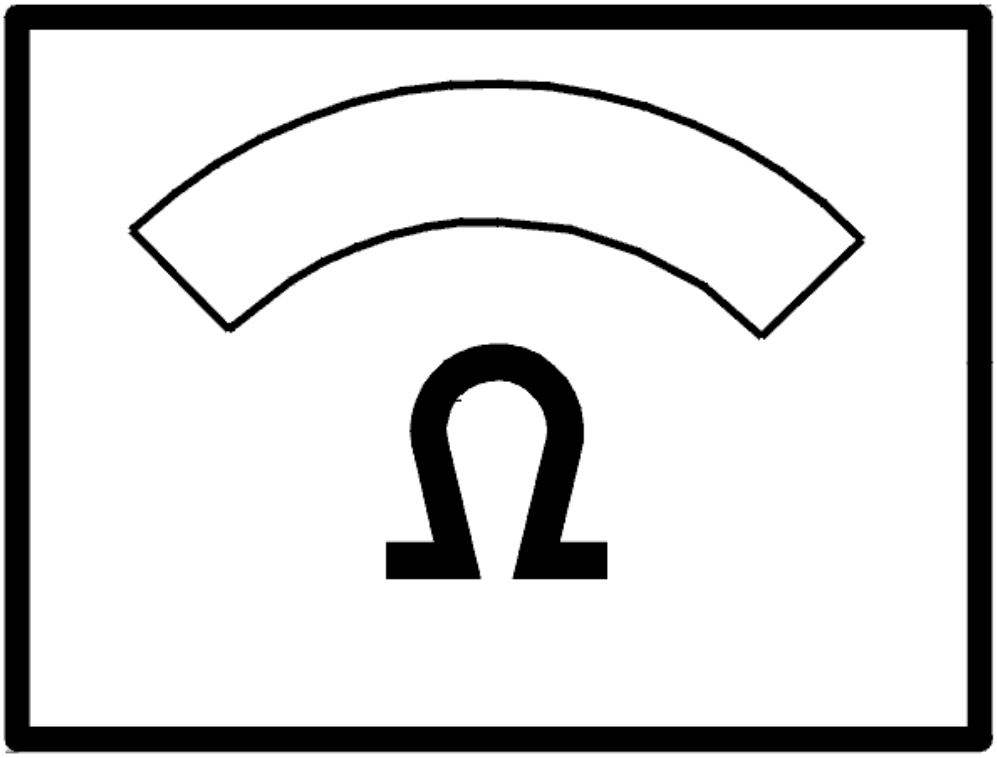

Fig. 320: Identifying Ohms Display
Courtesy of VOLVO CARS CORPORATION

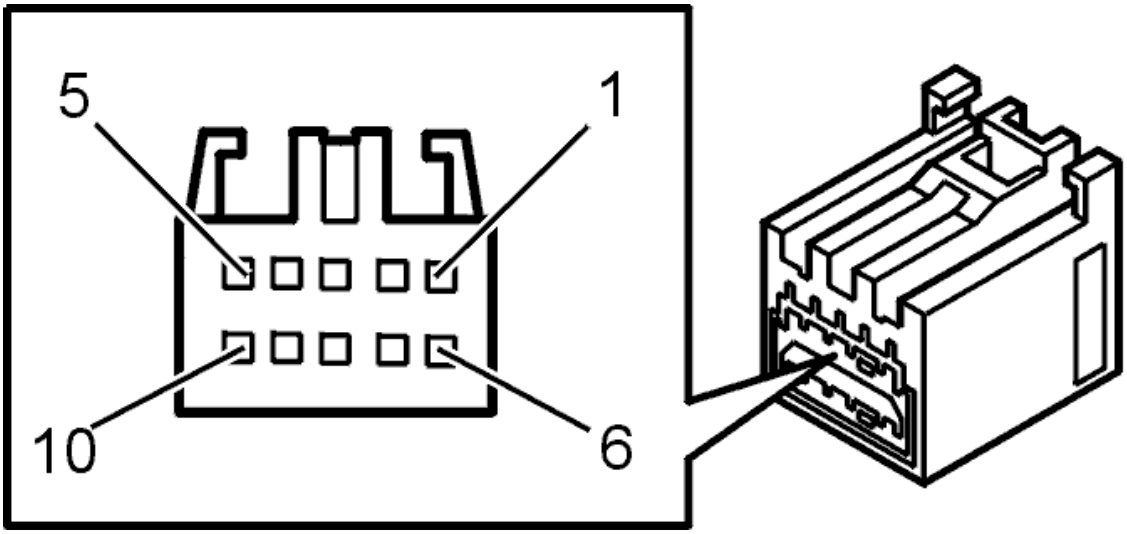

Fig. 321: Identifying Sunroof Module Connector Terminals
Courtesy of VOLVO CARS CORPORATION

- **Continue**

  Refer to **INFORMATION**

VERIFICATION

VERIFICATION

HINT: After the repair it is necessary to check that the fault has been rectified.

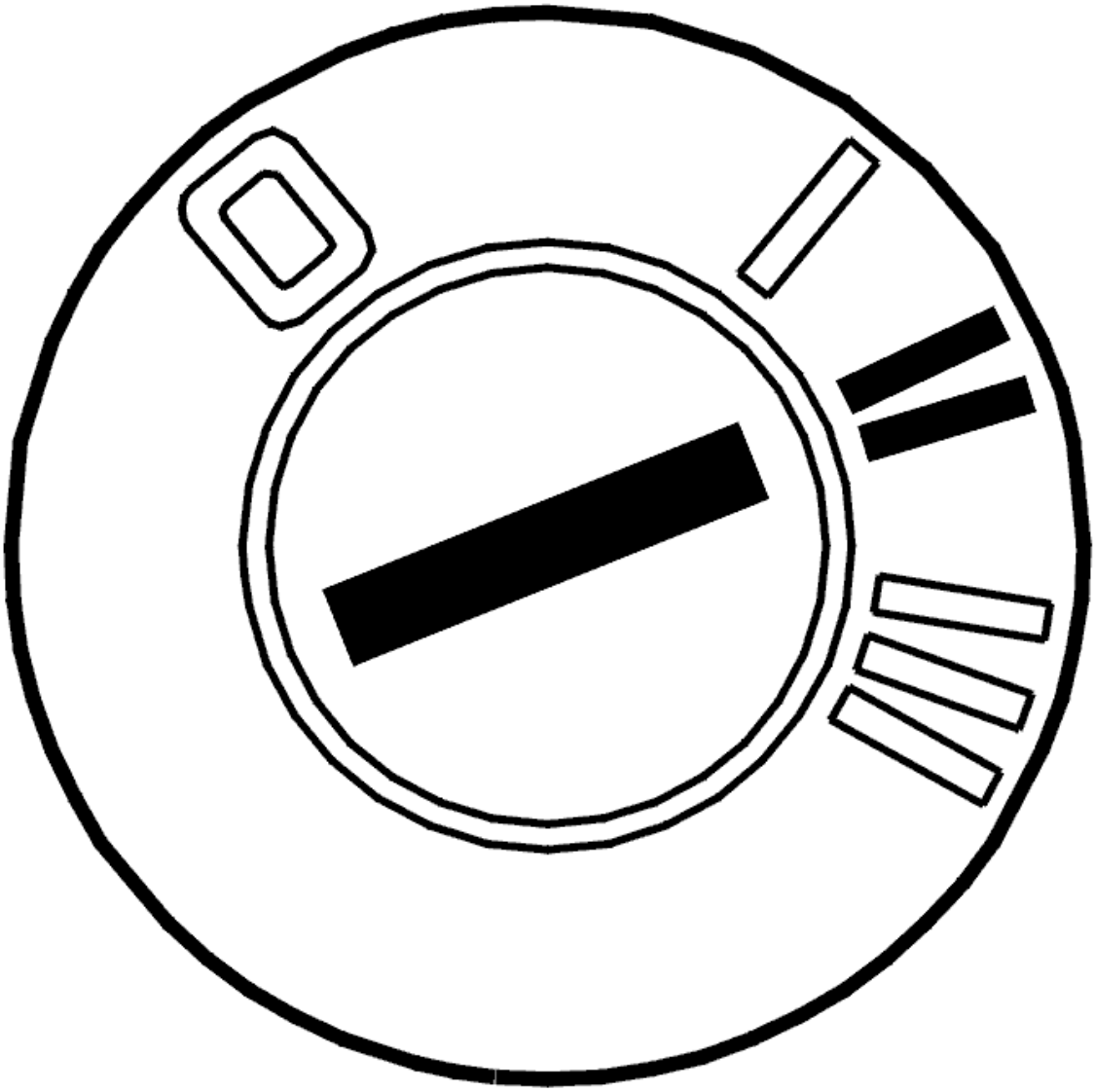

Fig. 322: Identifying Ignition ON
Courtesy of VOLVO CARS CORPORATION

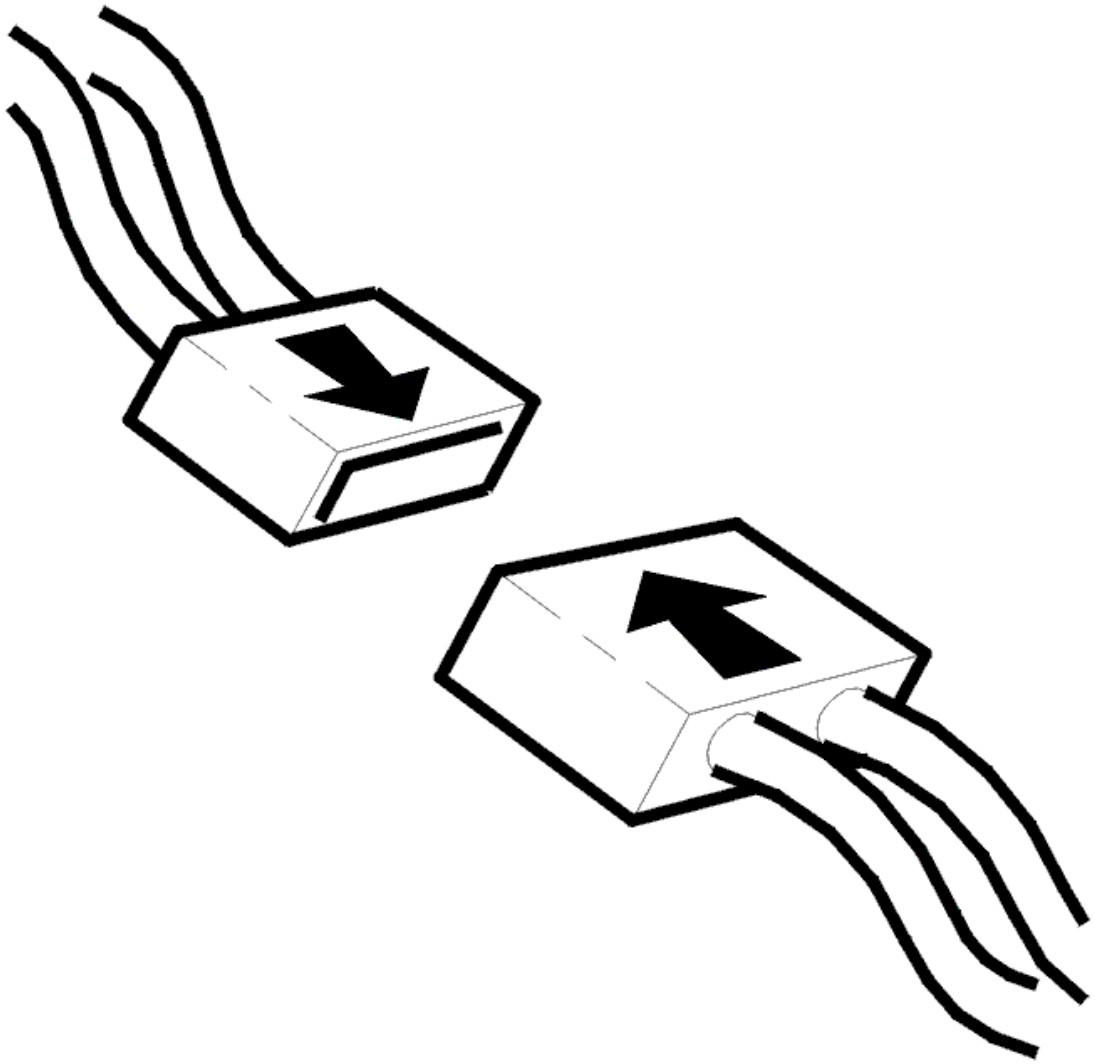

Fig. 323: Identifying Connector(s) Reinstallation
Courtesy of VOLVO CARS CORPORATION

- Ignition off.
- Connect the connectors, install the components, etc.
- Ignition on.

  Try to move the sunroof to its end position.

Does the sunroof move?

- **YES**

  VERIFIED: Troubleshooting has been completed.

- **NO**

  Refer to **INFORMATION**

INFORMATION

FAULT-TRACING INFORMATION

The fault should have been detected and remedied. As this is not the case fault-tracing has failed.

Exit fault-tracing for this diagnostic trouble code (DTC) or make another attempt.

INFORMATION

FAULT-TRACING INFORMATION

If the fault is intermittent, do not verify fault-tracing if the fault does not recur.

It is possible to view the information again, or leave fault-tracing for this diagnostic trouble code (DTC).

UEM-0062: SUNROOF MOTOR. SIGNAL TOO HIGH (2003-2012)

DIAGNOSTIC TROUBLE CODE INFORMATION

Condition

If the control unit registers an internal fault in the sunroof control unit (SRM), diagnostic trouble code is set.

Substitute Value

- Nothing.

Possible Source

- The voltage supply wire for rearward movement of the sunroof is short circuited to voltage supply.

Fault symptom[s]

- Electric sunroof does not work.

SIGNAL TOO HIGH

see **SIGNAL TOO HIGH**

UEM-0063: SUNROOF MOTOR. SIGNAL TOO HIGH (2003-2012)

DIAGNOSTIC TROUBLE CODE INFORMATION

Condition

If the control unit registers an internal fault in the sunroof control unit (SRM), diagnostic trouble code is set.

Substitute Value

- Nothing.

Possible Source

- The voltage supply wire for automatic movement of the sunroof is short circuited to voltage supply.

Fault symptom[s]

- Electric sunroof does not work.

SIGNAL TOO HIGH

see **SIGNAL TOO HIGH**

UEM-0064: SUNROOF. SIGNAL TOO HIGH (2003-2012)

DIAGNOSTIC TROUBLE CODE INFORMATION

Condition

If the control unit registers an internal fault in the sunroof control unit (SRM), diagnostic trouble code is set.

Substitute Value

- Nothing.

Possible Source

- The voltage supply wire for tilt movement of the sunroof is short circuited to voltage supply.

Fault symptom[s]

- Electric sunroof does not work.

SIGNAL TOO HIGH

see **SIGNAL TOO HIGH**

UEM-0065: SUNROOF. SIGNAL FAULTY (2003-2012)

DIAGNOSTIC TROUBLE CODE INFORMATION

Condition

If the control unit registers an internal fault in the sunroof module (SRM), the diagnostic trouble code is displayed.

Substitute Value

- Nothing.

Possible Source

- The signal for forwards movement of the sunroof is activated too long.

Fault symptom[s]

- Electric sunroof does not work.

FAULTY SIGNAL

REPLACING THE COMPONENT

Replace the sun roof switch. See **SWITCH SUN ROOF, REPLACING** .

Check that the function is now OK.

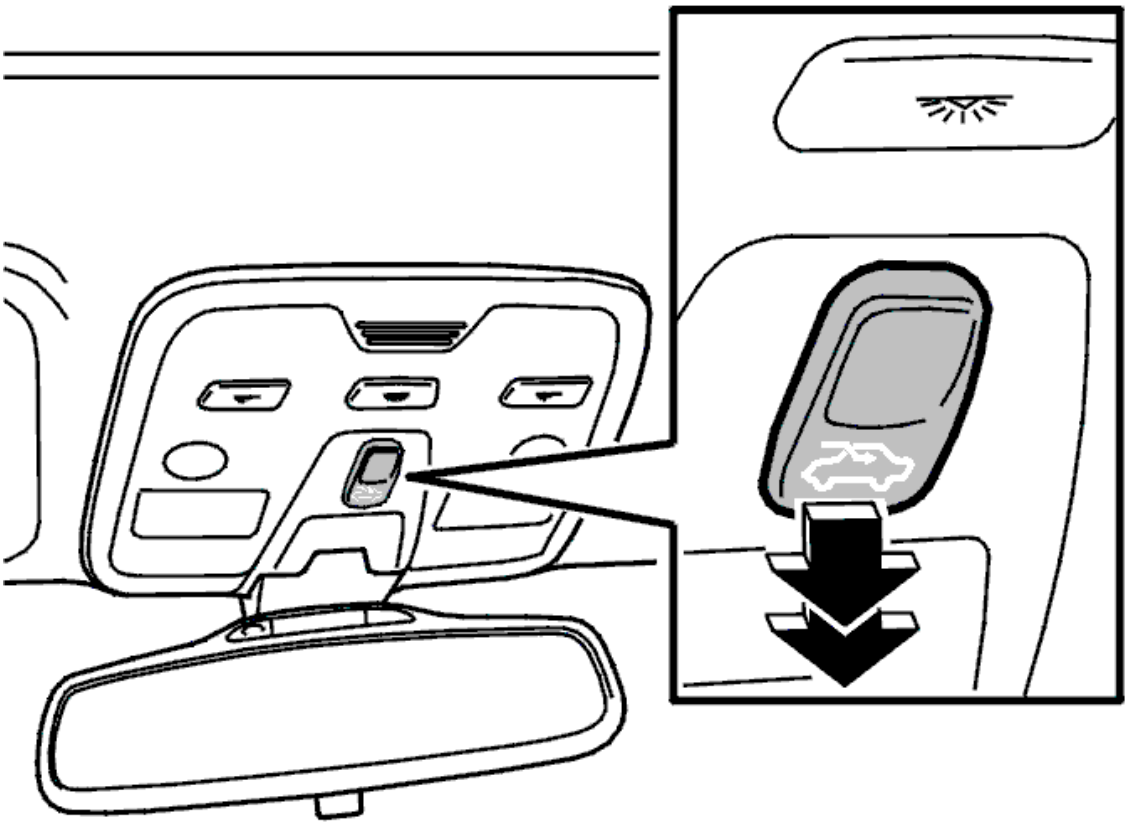

Fig. 324: Identifying Sun Roof Switch
Courtesy of VOLVO CARS CORPORATION

Is the function OK?

- **YES**

  Refer to **VERIFICATION**

- **NO**

  Refer to **CHECKING THE CABLE**

CHECKING THE CABLE

Check the wiring between the sun roof switch and the roof lamp module. Check for a short-circuit to supply voltage.

If a fault is found replace the wiring.

Other information:

- For further information about signals and other values, see **SIGNAL DESCRIPTION, UPPER ELECTRONIC MODULE (UEM)**

- see **CHECKING WIRING AND TERMINALS** .

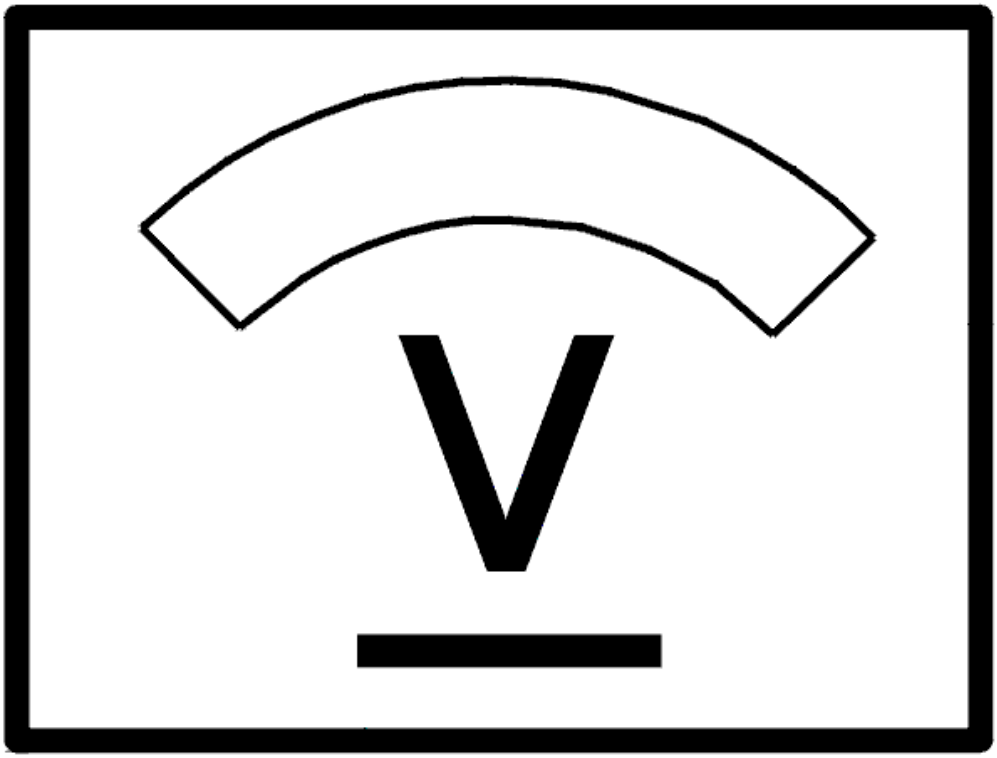

Fig. 325: Identifying Voltage Display
Courtesy of VOLVO CARS CORPORATION

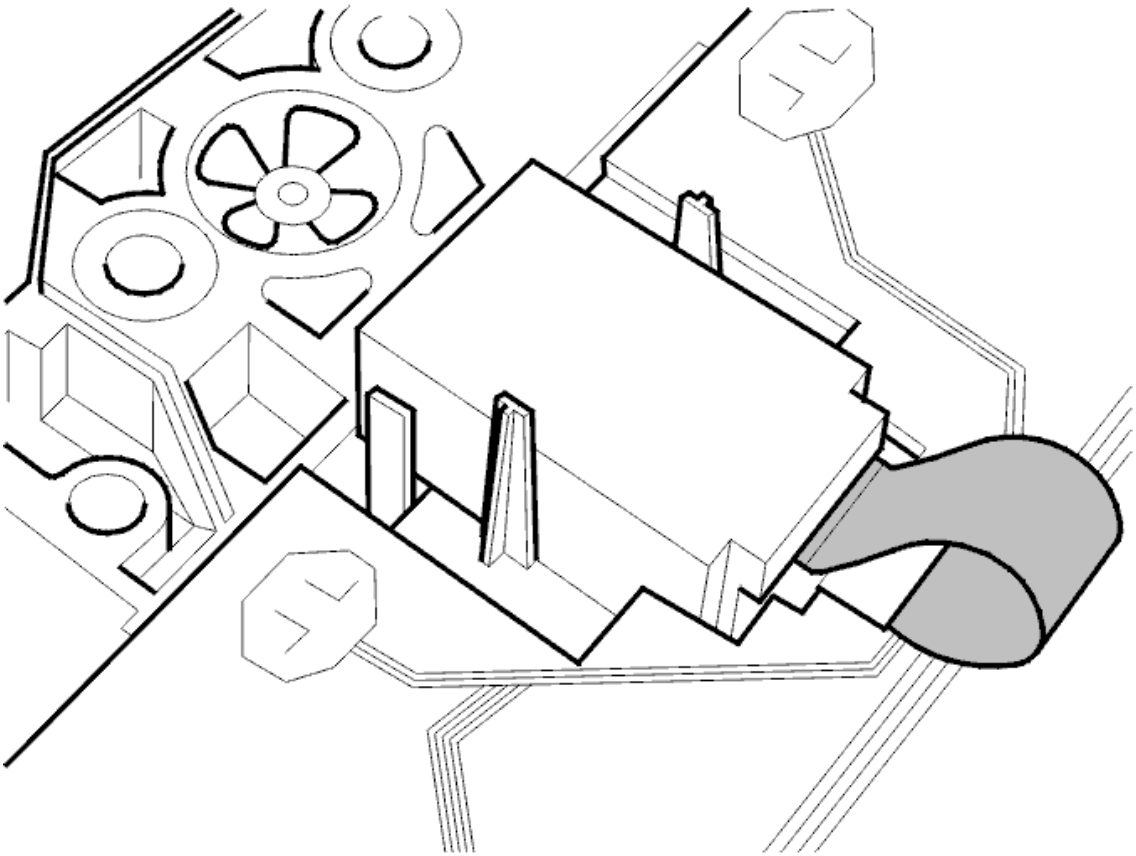

Fig. 326: Identifying Roof Lamp Module
Courtesy of VOLVO CARS CORPORATION

Has a fault been detected?

- **YES**

  Refer to **VERIFICATION**

- **NO**

  Refer to **REPLACING THE CONTROL MODULE**

REPLACING THE CONTROL MODULE

If no fault has been found, replace the sun roof module (SRM).

Other information

- To replace the sun roof module (SRM), see **CONTROL MODULE, SUN ROOF, REPLACING** .
- **Continue**

  Refer to **VERIFICATION**

VERIFICATION

VERIFICATION

HINT: After the repair it is necessary to check that the fault has been rectified.

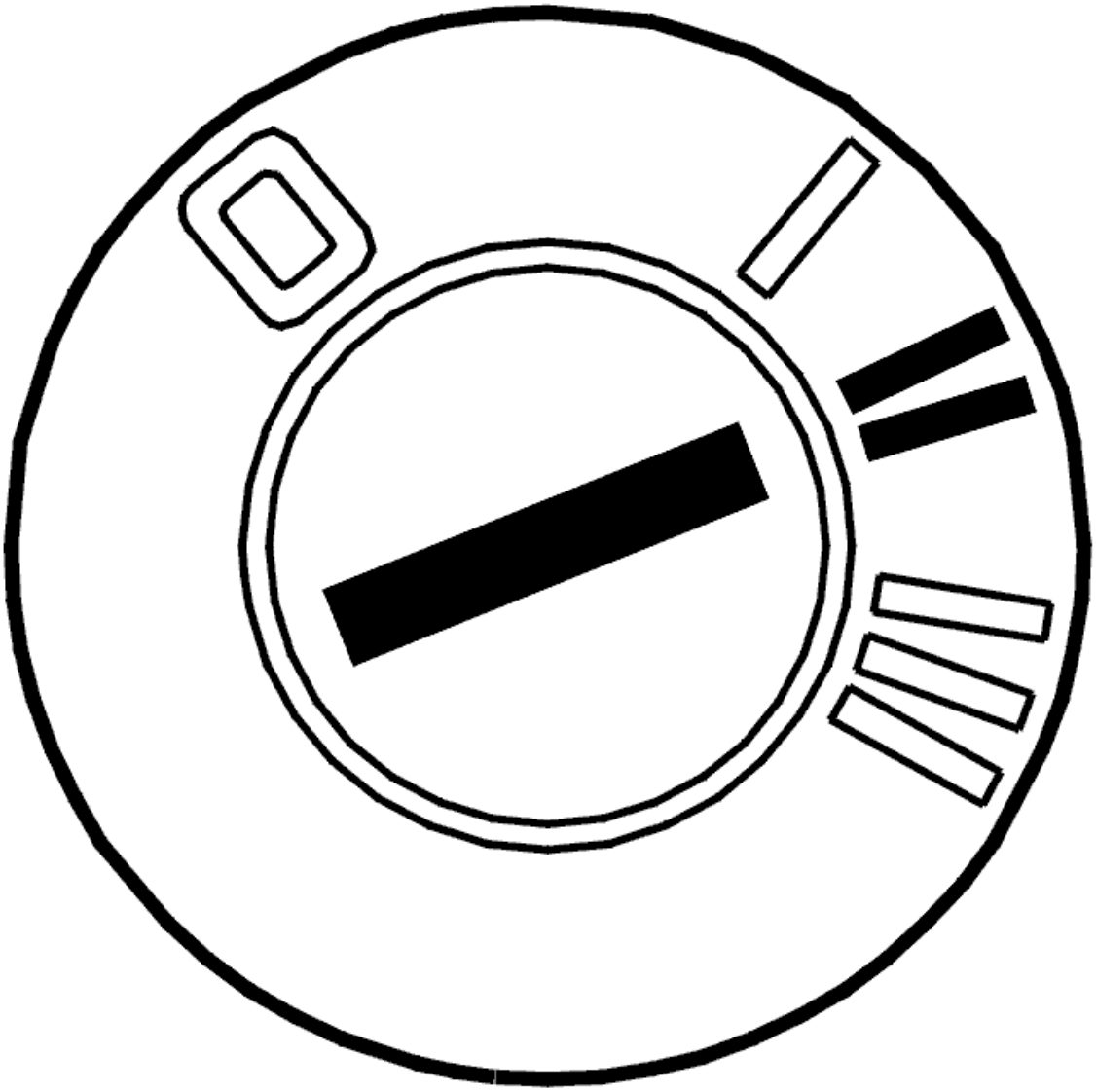

Fig. 327: Identifying Ignition ON
Courtesy of VOLVO CARS CORPORATION

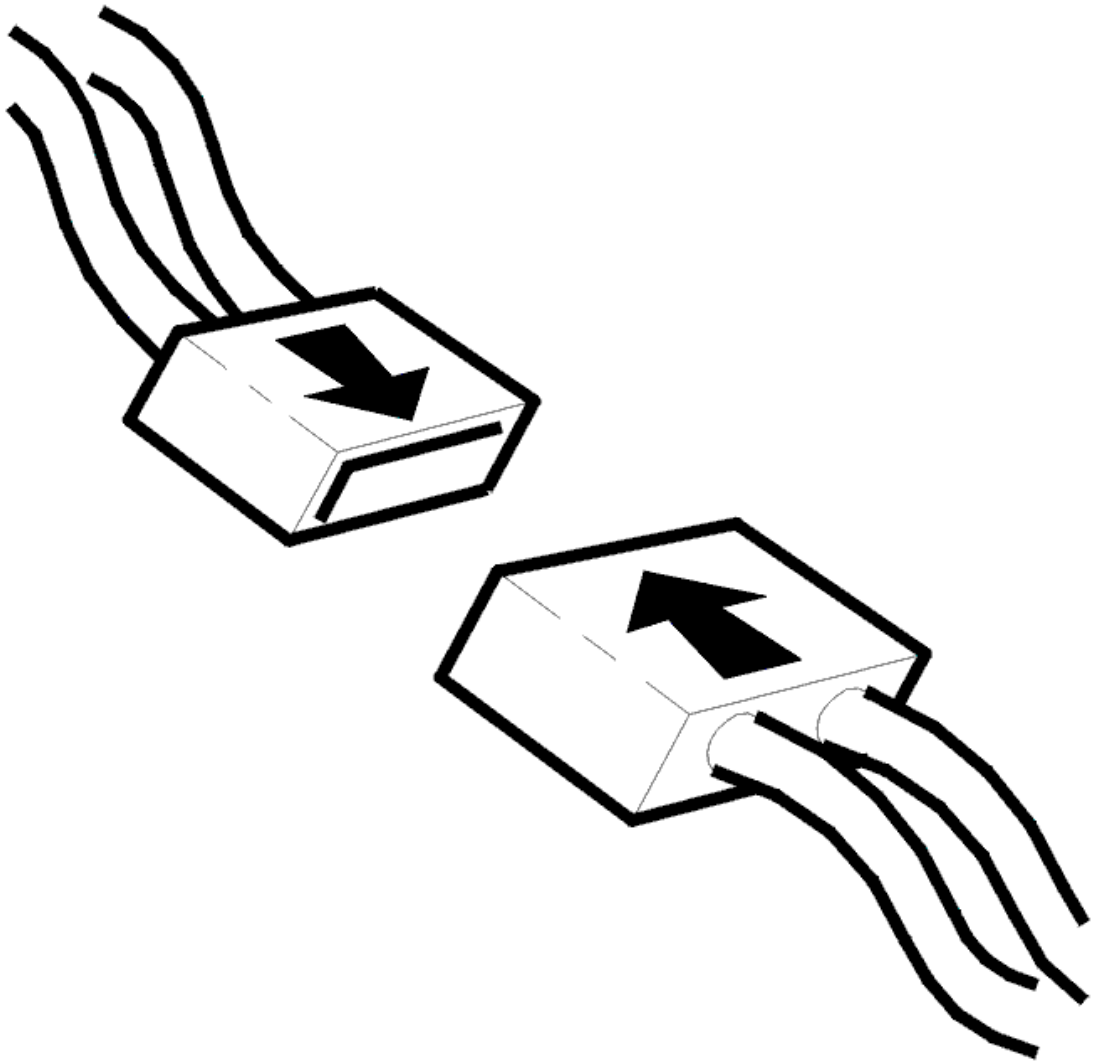

Fig. 328: Identifying Connector(s) Reinstallation
Courtesy of VOLVO CARS CORPORATION

- Ignition off.
- Connect the connectors, install the components, etc.
- Ignition on.

  Check that the sunroof control works.

Does the sunroof control work?

- **YES**

  VERIFIED: Troubleshooting has been completed.

- **NO**

  Refer to **INFORMATION**

INFORMATION

FAULT-TRACING INFORMATION

The fault should have been detected and remedied. As this is not the case fault-tracing has failed.

Exit fault-tracing for this diagnostic trouble code (DTC) or make another attempt.

UEM-0066: SUNROOF. SIGNAL FAULTY (2003-2012)

DIAGNOSTIC TROUBLE CODE INFORMATION

Condition

If the control unit registers an internal fault in the sunroof module (SRM), the diagnostic trouble code is displayed.

Substitute Value

- Nothing.

Possible Source

- The signal for backwards movement of the sunroof is activated too long.

Fault symptom[s]

- Electric sunroof does not work.

FAULTY SIGNAL

see **FAULTY SIGNAL**

UEM-0067: SUNROOF. SIGNAL FAULTY (2003-2012)

DIAGNOSTIC TROUBLE CODE INFORMATION

Condition

If the control unit registers an internal fault in the sunroof module (SRM), the diagnostic trouble code is displayed.

Substitute Value

- Nothing.

Possible Source

- The sunroof AUTO signal is activated too long.

Fault symptom[s]

- Electric sunroof does not work.

FAULTY SIGNAL

see **FAULTY SIGNAL**

UEM-0068: SUNROOF. SIGNAL FAULTY (2003-2012)

DIAGNOSTIC TROUBLE CODE INFORMATION

Condition

If the control unit registers an internal fault in the sunroof module (SRM), the diagnostic trouble code is displayed.

Substitute Value

- Nothing.

Possible Source

- The sunroof TILT signal is activated too long.

Fault symptom[s]

- Electric sunroof does not work.

FAULTY SIGNAL

see **FAULTY SIGNAL**

UEM-0070: SUNROOF. SIGNAL FAULTY (2003-2012)

DIAGNOSTIC TROUBLE CODE INFORMATION

Condition

If the control unit registers an internal fault in the sunroof module (SRM), the diagnostic trouble code is

displayed.

Substitute Value

- Nothing.

Possible Source

- The signals for AUTO and TILT occur at the same time.

Fault symptom[s]

- Electric sunroof does not work.

FAULTY SIGNAL

CHECKING FOR PERMANENT OR INTERMITTENT FAULTS

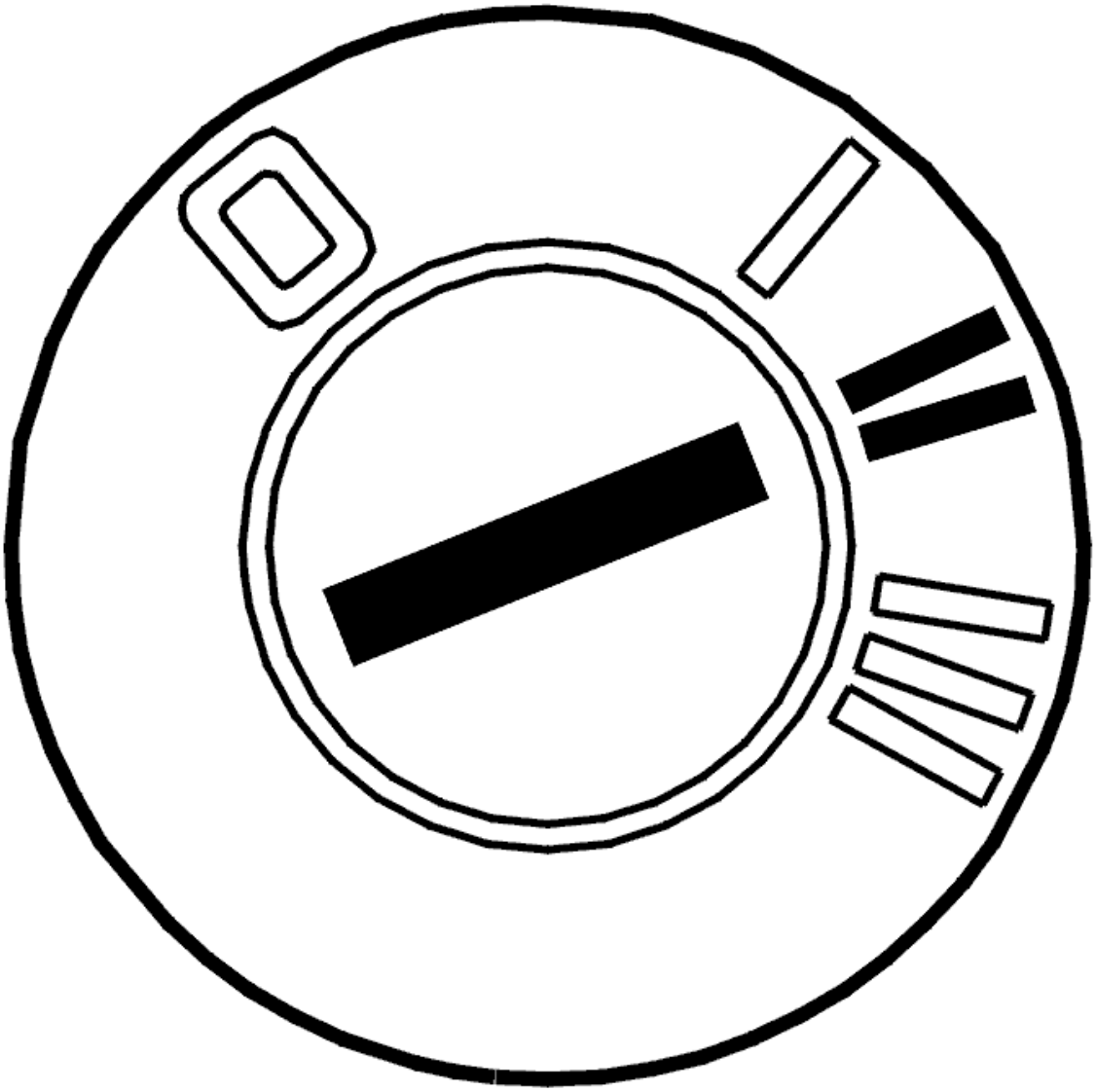

Fig. 329: Identifying Ignition ON
Courtesy of VOLVO CARS CORPORATION

- Ignition on.

  Check that the sun roof can be moved to its limit positions.

Can the sun roof be operated?

- **YES**

  Refer to **INTERMITTENT FAULT**

- **NO**

  Refer to **CHECKING FOR A SHORT-CIRCUIT**

CHECKING FOR A SHORT-CIRCUIT

Check the cable between the sun roof module (SRM) and the roof lamp module. Check for a short-circuit to supply voltage.

UEM-0070 Sun roof. Faulty signal

The sun roof module (SRM) terminal #3A and roof lamp module terminal #2B.

UEM-0070 Sun roof. Faulty signal

The sun roof module (SRM) terminal #7A and roof lamp module terminal #1B.

Replace the cable if a fault is found.

Other information:

- For further information about signals and other values, see **SIGNAL DESCRIPTION, UPPER ELECTRONIC MODULE (UEM)**
- To access the roof lamp module connector, see **INTERIOR LIGHTING, REPLACING**
- To access the sun roof module (SRM) connector, see **CONTROL MODULE, SUN ROOF, REPLACING**
- see **CHECKING WIRING AND TERMINALS** .

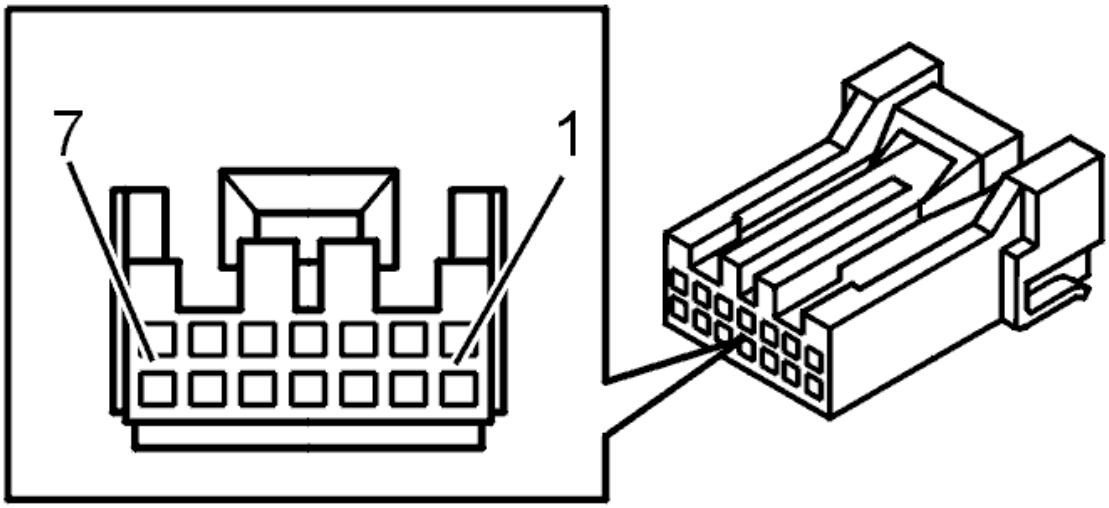

Fig. 330: Identifying Connector Terminals
Courtesy of VOLVO CARS CORPORATION

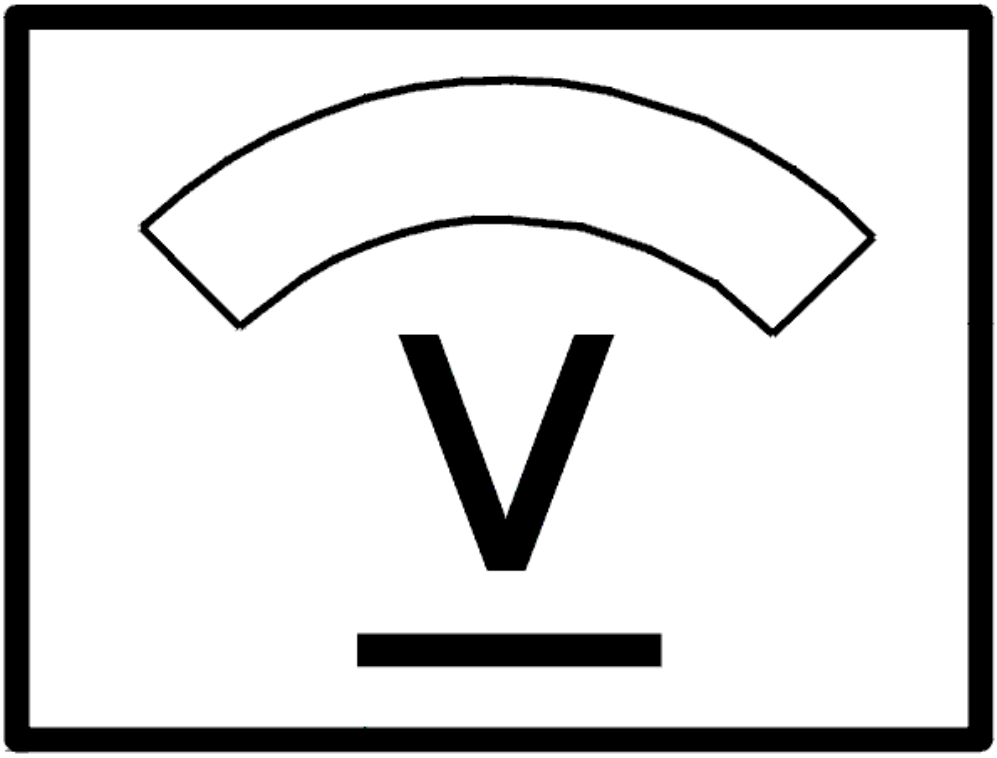

Fig. 331: Identifying Voltage Display
Courtesy of VOLVO CARS CORPORATION

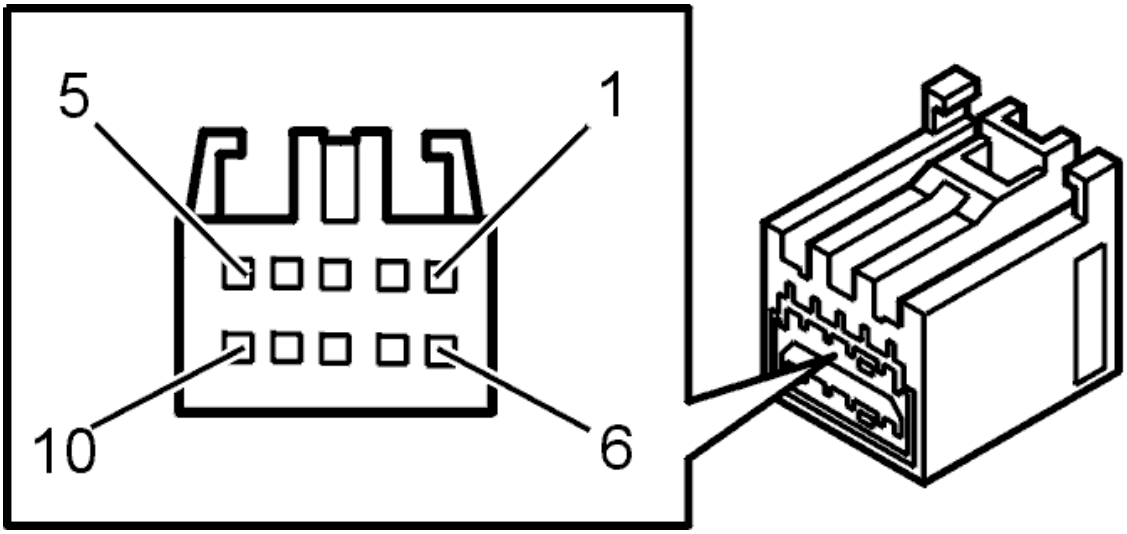

Fig. 332: Identifying Sunroof Module Connector Terminals
Courtesy of VOLVO CARS CORPORATION

- **Continue**

  Refer to **CHECKING THE CABLE**

CHECKING THE CABLE

Check the wiring between the sun roof switch and the roof lamp module. Check for a short-circuit to supply voltage.

Other information:

- For further information about signals and other values, see **SIGNAL DESCRIPTION, UPPER ELECTRONIC MODULE (UEM)**
- see **CHECKING WIRING AND TERMINALS** .

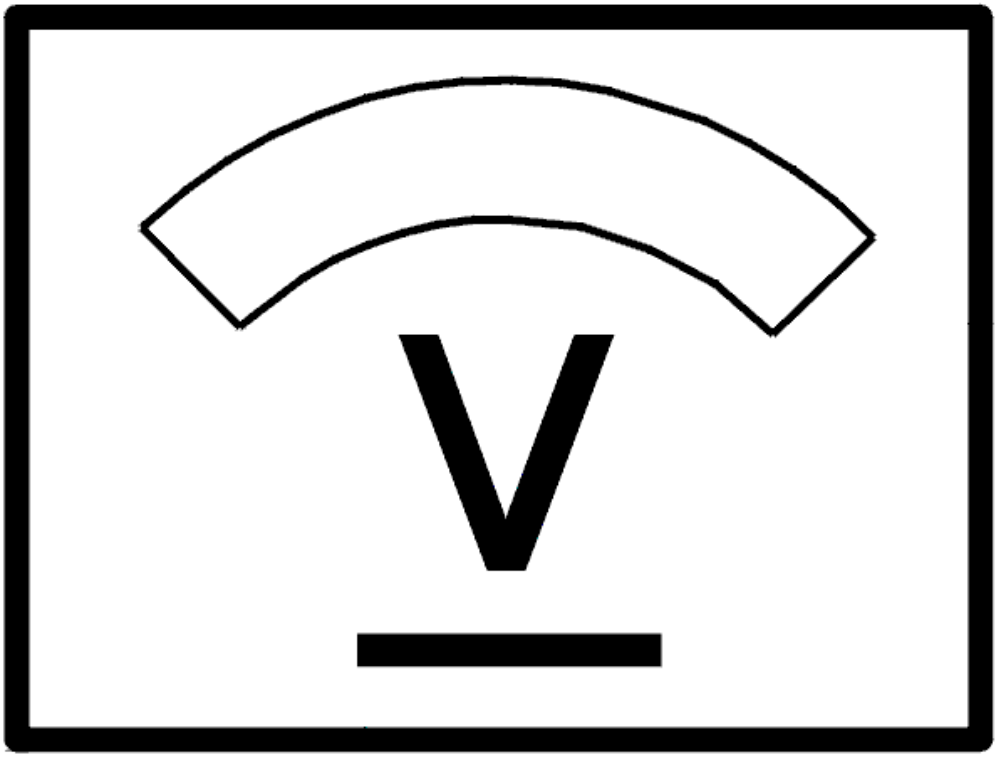

Fig. 333: Identifying Voltage Display
Courtesy of VOLVO CARS CORPORATION

- **Continue**

  Refer to **REPLACING THE COMPONENT**

REPLACING THE COMPONENT

Visually check for damage to the roof lamp module and its switches.

If no fault is found replace the sun roof switch. See **SWITCH SUN ROOF, REPLACING** .

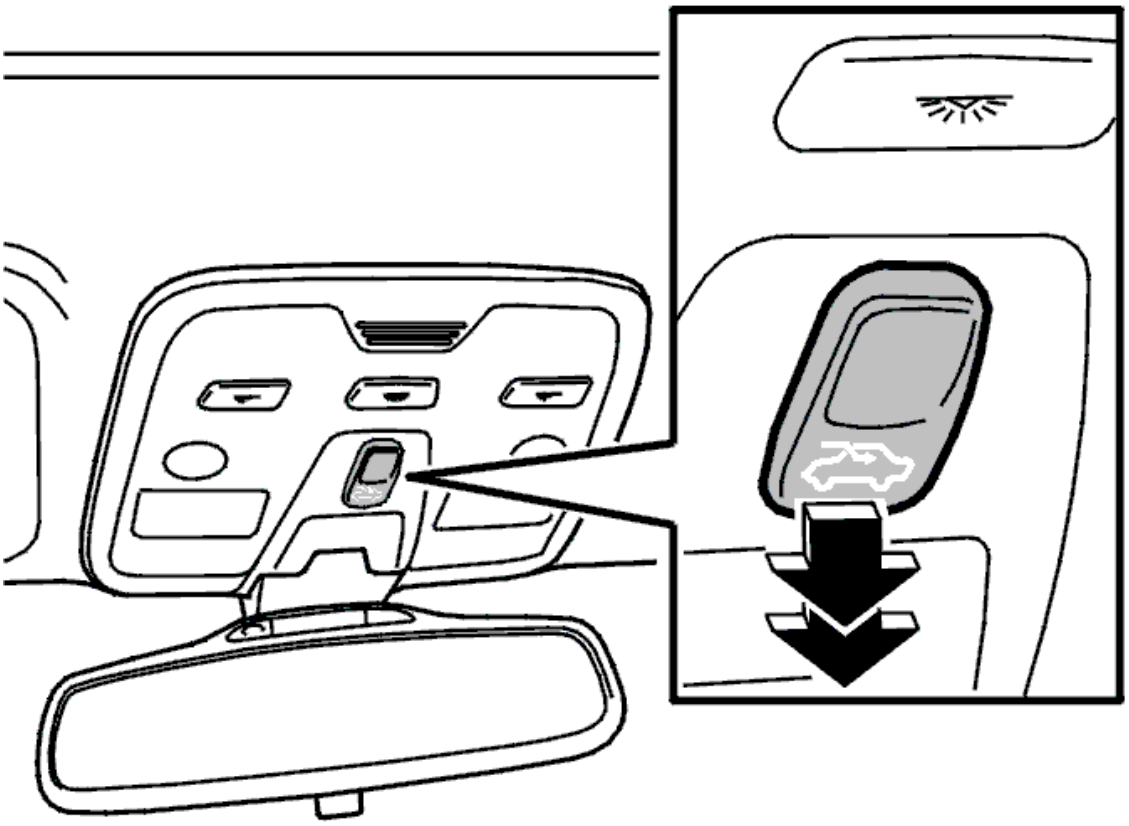

Fig. 334: Identifying Sun Roof Switch
Courtesy of VOLVO CARS CORPORATION

- **Continue**

  Refer to **VERIFICATION**

INTERMITTENT FAULT

Check the connector on the sun roof module (SRM) and the connector on the roof lamp module. Check for contact resistance and oxidation. Check for loose connections.

Check the cable between the sun roof module (SRM) and the roof lamp module. Check for an intermittent short-circuit to supply voltage. Check for an intermittent open-circuit.

UEM-0070 Sun roof. Faulty signal

The sun roof module (SRM) terminal #3A and roof lamp module terminal #2B.

UEM-0070 Sun roof. Faulty signal

The sun roof module (SRM) terminal #7A and roof lamp module terminal #1B.

Check the wiring between sun roof switch and RCM. Check for an intermittent short-circuit to supply voltage.

If no fault is found replace the sun roof switch. See **SWITCH SUN ROOF, REPLACING** .

Other information:

- For further information about signals and other values, see **SIGNAL DESCRIPTION, UPPER ELECTRONIC MODULE (UEM)**
- To access the roof lamp module connector, see **INTERIOR LIGHTING, REPLACING**
- To access the sun roof module (SRM) connector, see **CONTROL MODULE, SUN ROOF, REPLACING**
- To replace the switch for the sun roof, see **SWITCH SUN ROOF, REPLACING**
- see **CHECKING WIRING AND TERMINALS** .

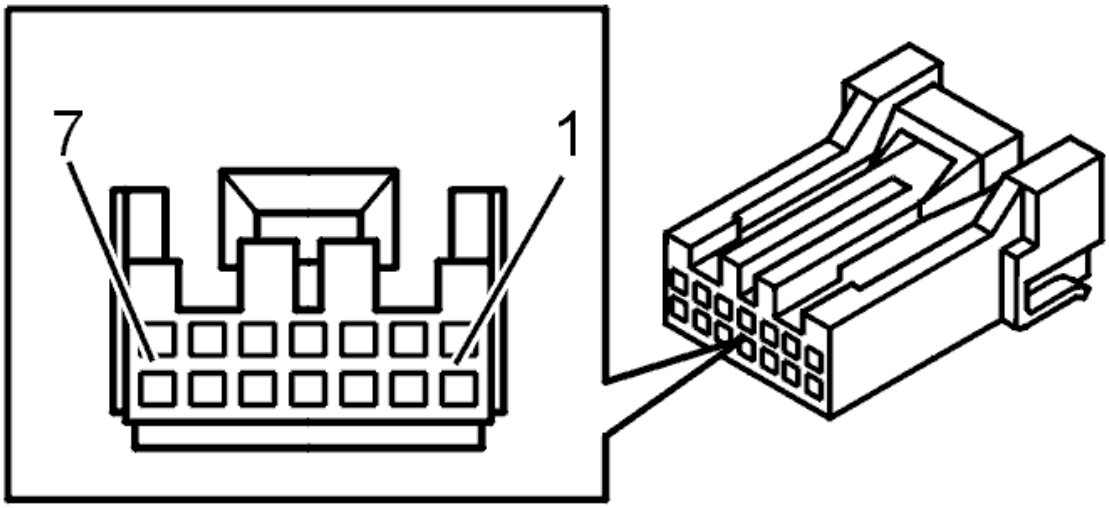

Fig. 335: Identifying Connector Terminals
Courtesy of VOLVO CARS CORPORATION

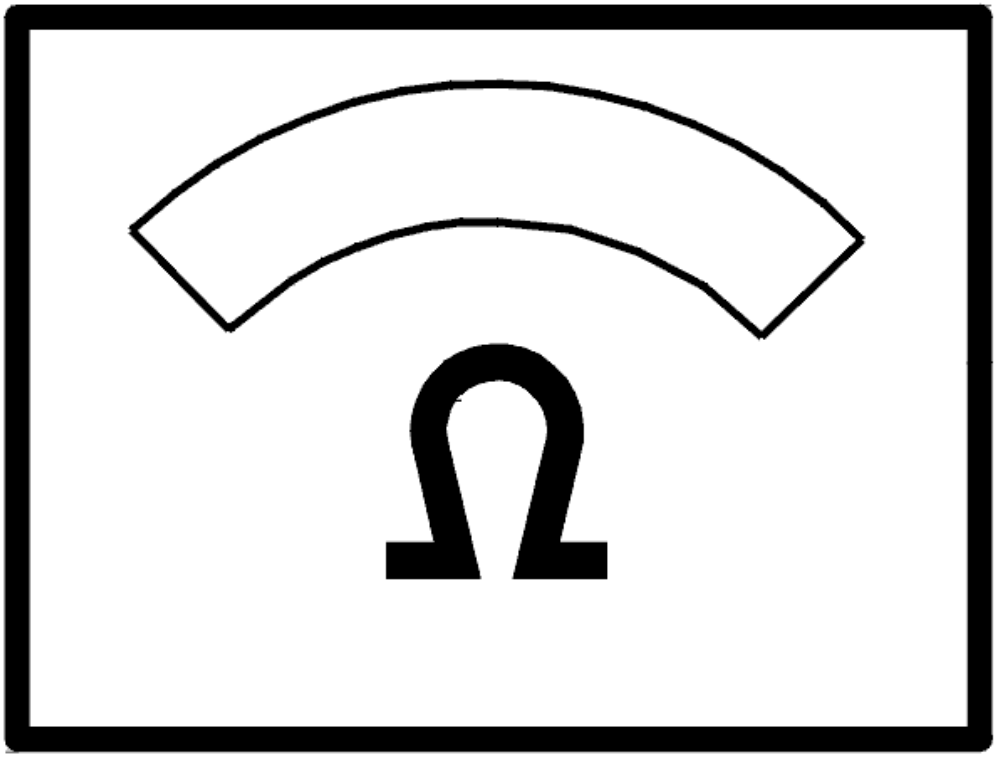

Fig. 336: Identifying Ohms Display
Courtesy of VOLVO CARS CORPORATION

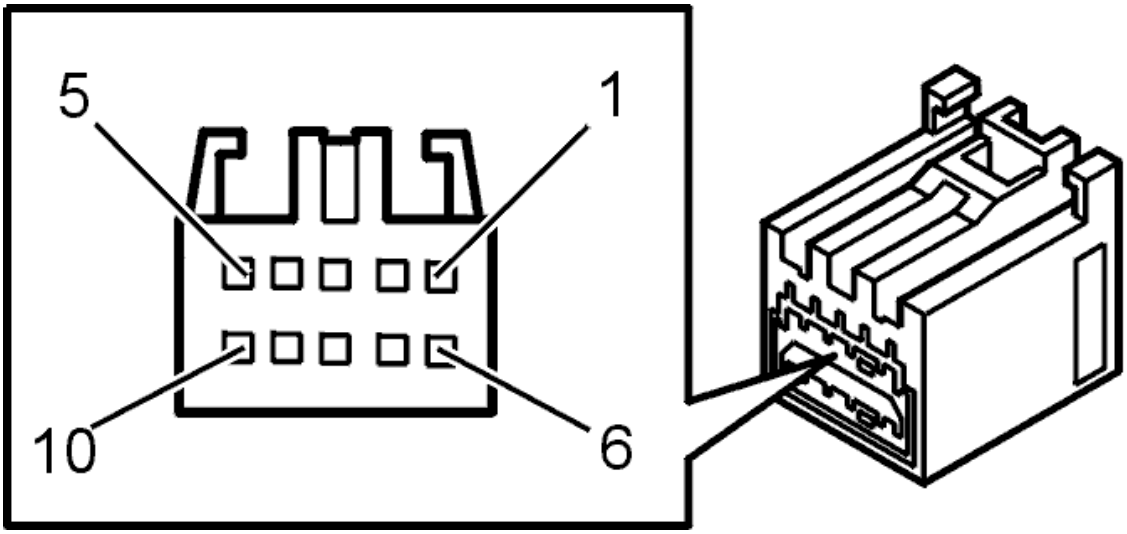

Fig. 337: Identifying Sunroof Module Connector Terminals
Courtesy of VOLVO CARS CORPORATION

- **Continue**

  Refer to **INFORMATION**

VERIFICATION

VERIFICATION

HINT: After the repair it is necessary to check that the fault has been rectified.

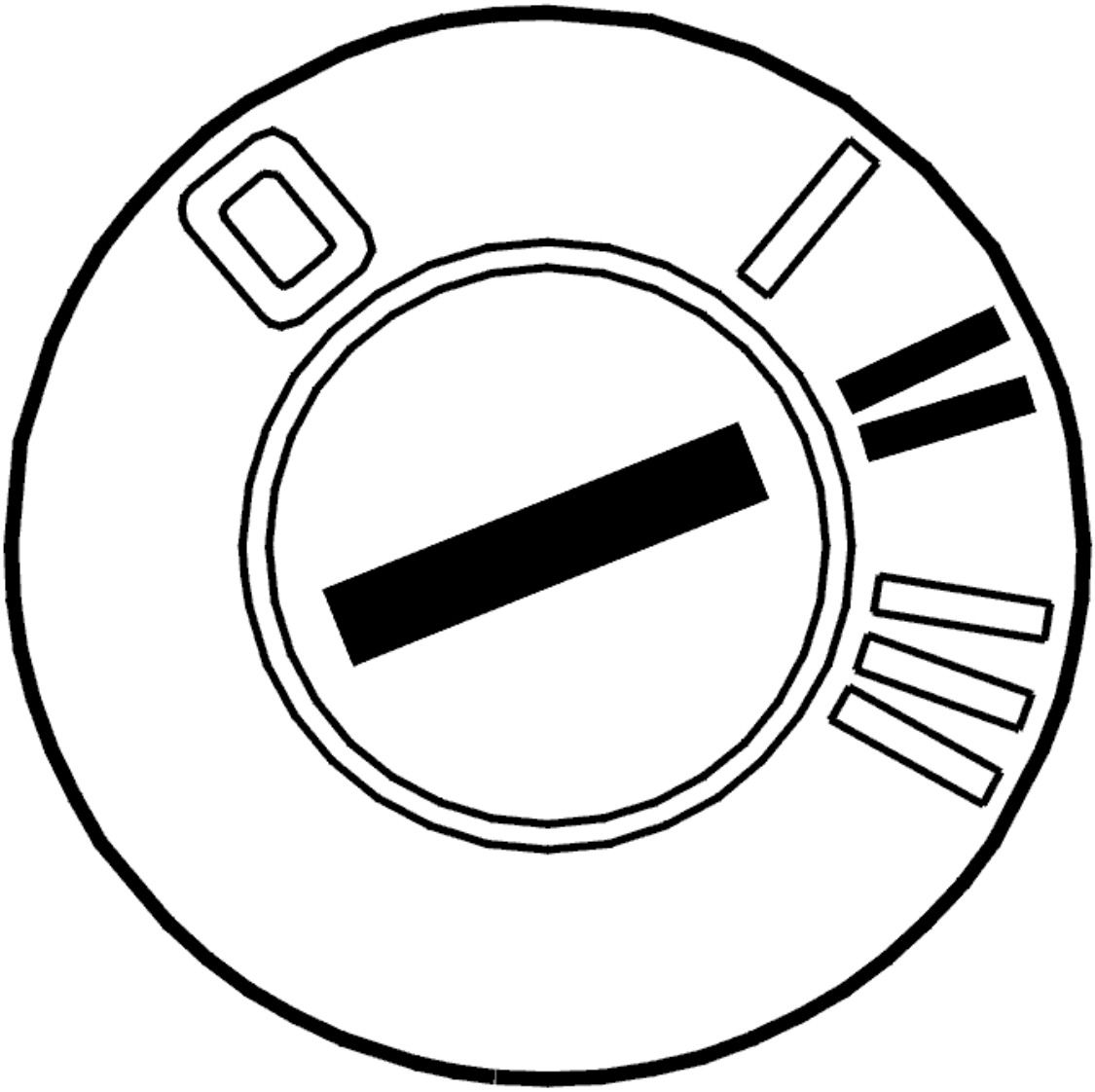

Fig. 338: Identifying Ignition ON
Courtesy of VOLVO CARS CORPORATION

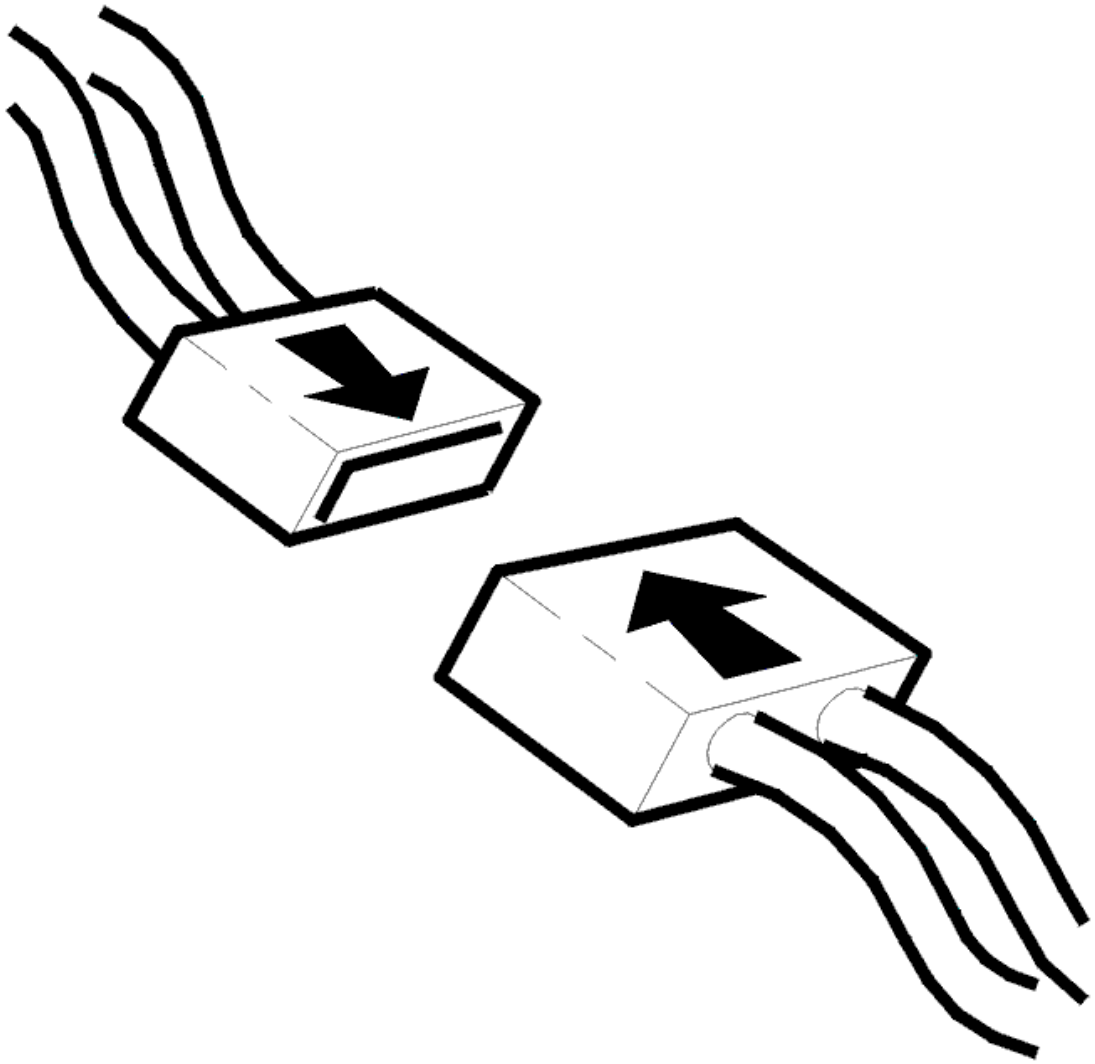

Fig. 339: Identifying Connector(s) Reinstallation
Courtesy of VOLVO CARS CORPORATION

- Ignition off.
- Connect the connectors, install the components, etc.
- Ignition on.

  Check that the sunroof can be moved to its end position.

Does the sunroof move?

- **YES**

  VERIFIED: Troubleshooting has been completed.

- **NO**

  Refer to **INFORMATION**

INFORMATION

FAULT-TRACING INFORMATION

The fault should have been detected and remedied. As this is not the case fault-tracing has failed.

Exit fault-tracing for this diagnostic trouble code (DTC) or make another attempt.

INFORMATION

FAULT-TRACING INFORMATION

If the fault is intermittent, do not verify fault-tracing if the fault does not recur.

It is possible to view the information again, or leave fault-tracing for this diagnostic trouble code (DTC).

UEM-0071: CONTROL UNIT. INTERNAL FAULT (2003-2012)

DIAGNOSTIC TROUBLE CODE INFORMATION

Condition

If the control unit detects that SRM-0021 is given when contact is made with the sunroof module (SRM), the diagnostic trouble code is displayed.

Substitute Value

- Nothing.

Possible Source

- Fault with voltage drop in sunroof module (SRM)
- Internal fault in sunroof module.

Fault symptom[s]

- Electric sunroof does not work
- Automatic sunroof closing does not work.

INTERNAL FAULT

CHECKING FOR PERMANENT OR INTERMITTENT FAULTS

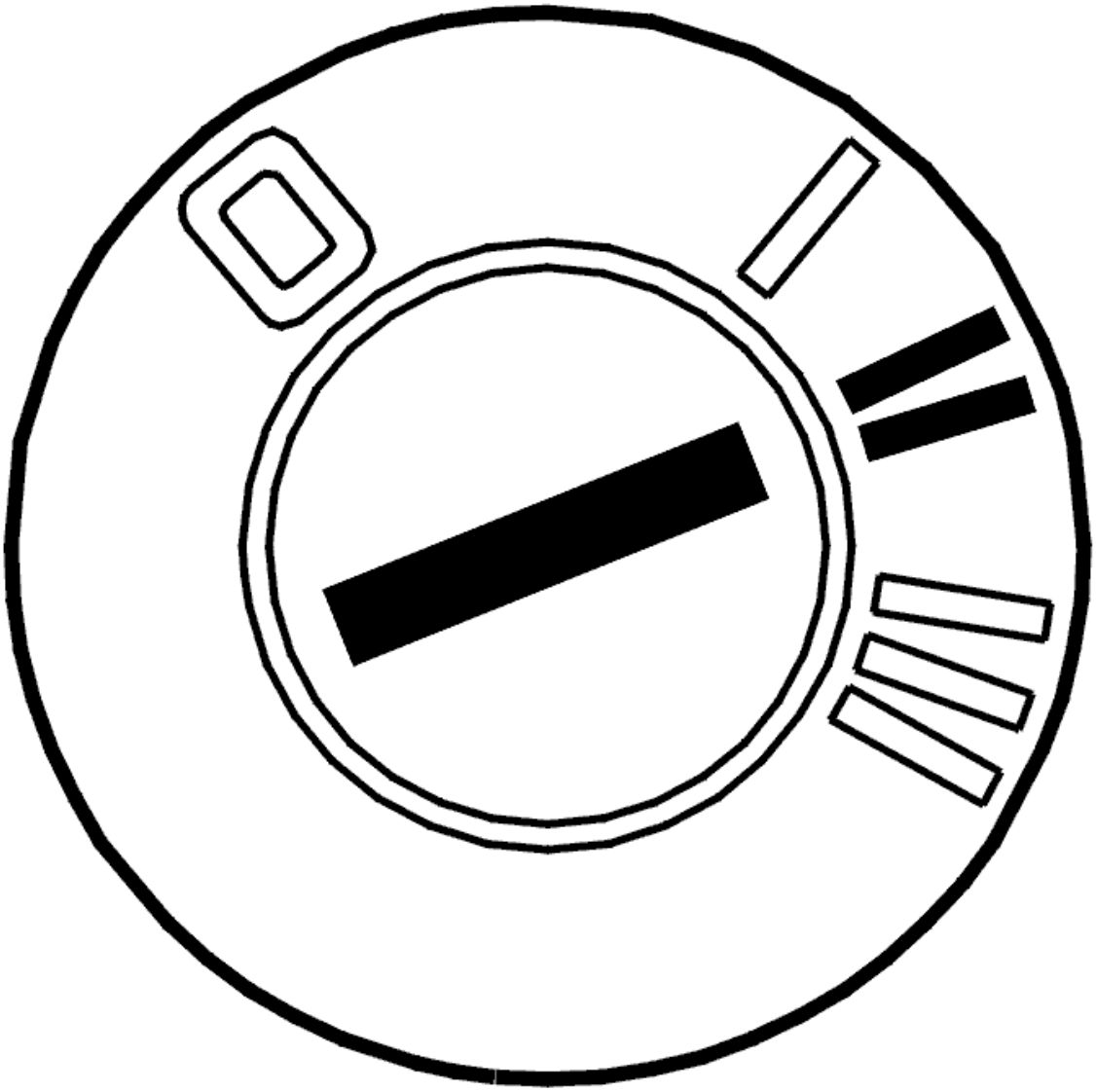

Fig. 340: Identifying Ignition ON
Courtesy of VOLVO CARS CORPORATION

- Ignition on.

  Check that the sun roof can be operated automatically by pressing the switch 2 steps.

Can the sun roof be operated automatically?

- **YES**

  Refer to **INTERMITTENT FAULT**

- **NO**

  Refer to **CHECKING FOR OPEN-CIRCUITS AND SHORT-CIRCUITS**

CHECKING FOR OPEN-CIRCUITS AND SHORT-CIRCUITS

Check the cable between the sun roof module (SRM) terminal #6A and the upper electronic module (UEM) terminal #8A. Check for an open-circuit.

Replace the cable if a fault is found.

Other information:

- For further information about signals and other values, see **SIGNAL DESCRIPTION, UPPER ELECTRONIC MODULE (UEM)**
- To connect the breakout box, see **CONNECTING THE BREAKOUT BOX**
- To access the sun roof module (SRM) connector, see **CONTROL MODULE, SUN ROOF, REPLACING**
- see **CHECKING WIRING AND TERMINALS** .

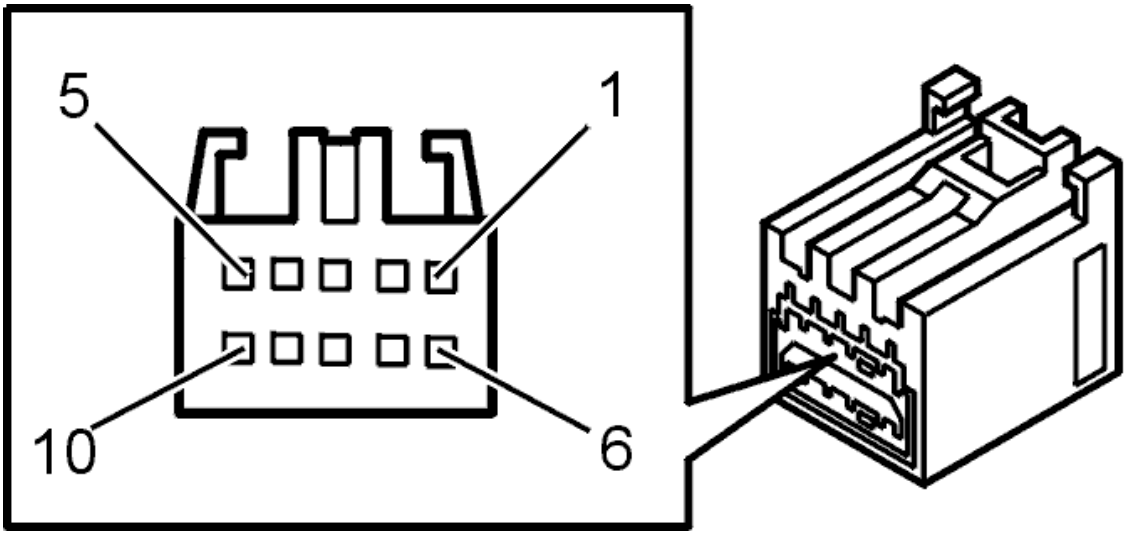

Fig. 341: Identifying Sunroof Module Connector Terminals
Courtesy of VOLVO CARS CORPORATION

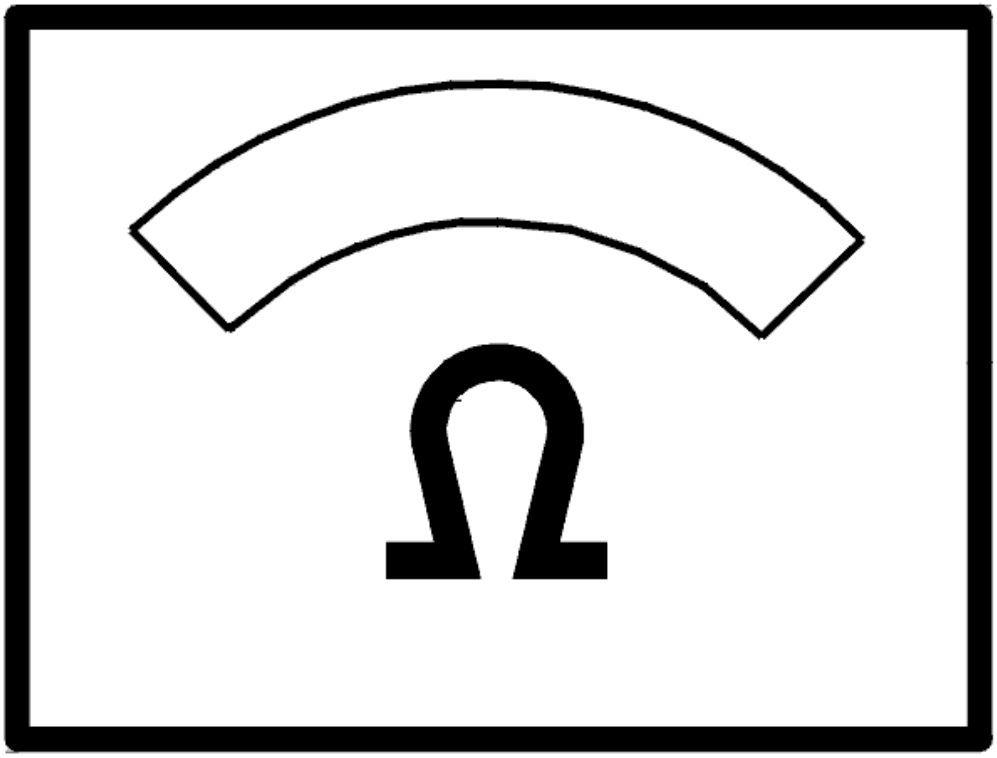

Fig. 342: Identifying Ohms Display
Courtesy of VOLVO CARS CORPORATION

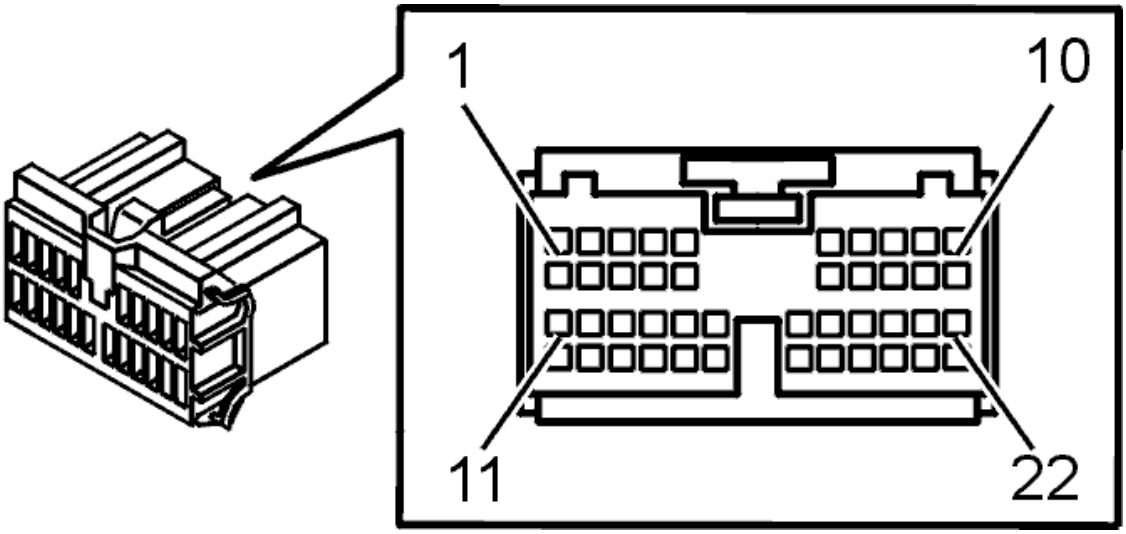

Fig. 343: Identifying Connector Terminals
Courtesy of VOLVO CARS CORPORATION

Was a fault detected?

- **YES**

  Refer to **VERIFICATION**

- **NO**

  Refer to **REPLACING THE COMPONENT**

INTERMITTENT FAULT

Check the cable between the sun roof module (SRM) terminal #6A and the upper electronic module (UEM) terminal #8A. Check for an intermittent open-circuit.

Replace the cable if a fault is found.

If no fault was found, try replacing the sun roof module (SRM).

Other information:

- For further information about signals and other values, see **SIGNAL DESCRIPTION, UPPER ELECTRONIC MODULE (UEM)**
- To connect the breakout box, see **CONNECTING THE BREAKOUT BOX**
- To access or replace the sun roof module (SRM) connector, see **CONTROL MODULE, SUN ROOF, REPLACING**
- see **CHECKING WIRING AND TERMINALS** .

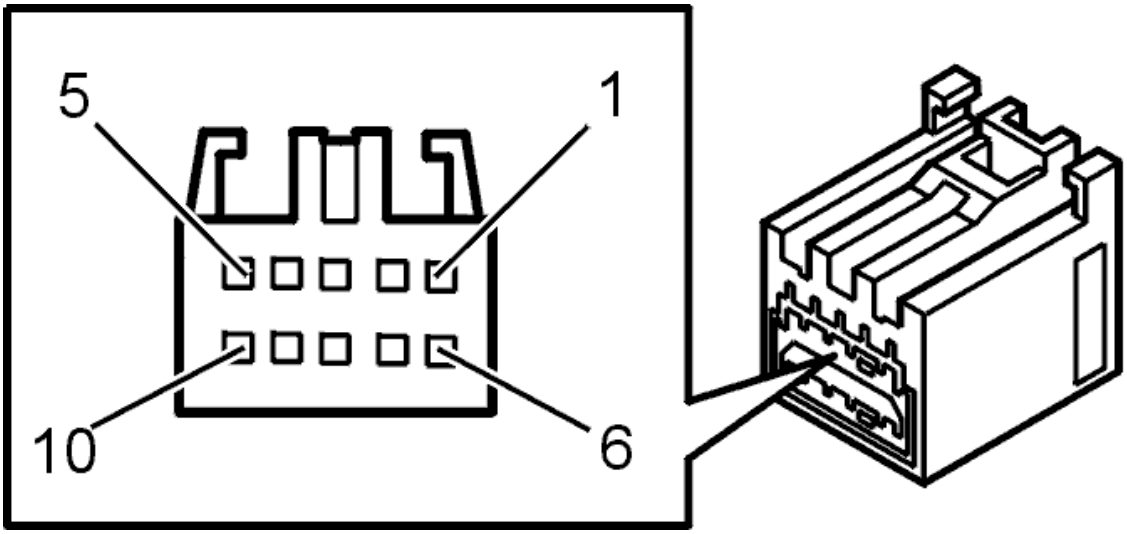

Fig. 344: Identifying Sunroof Module Connector Terminals
Courtesy of VOLVO CARS CORPORATION

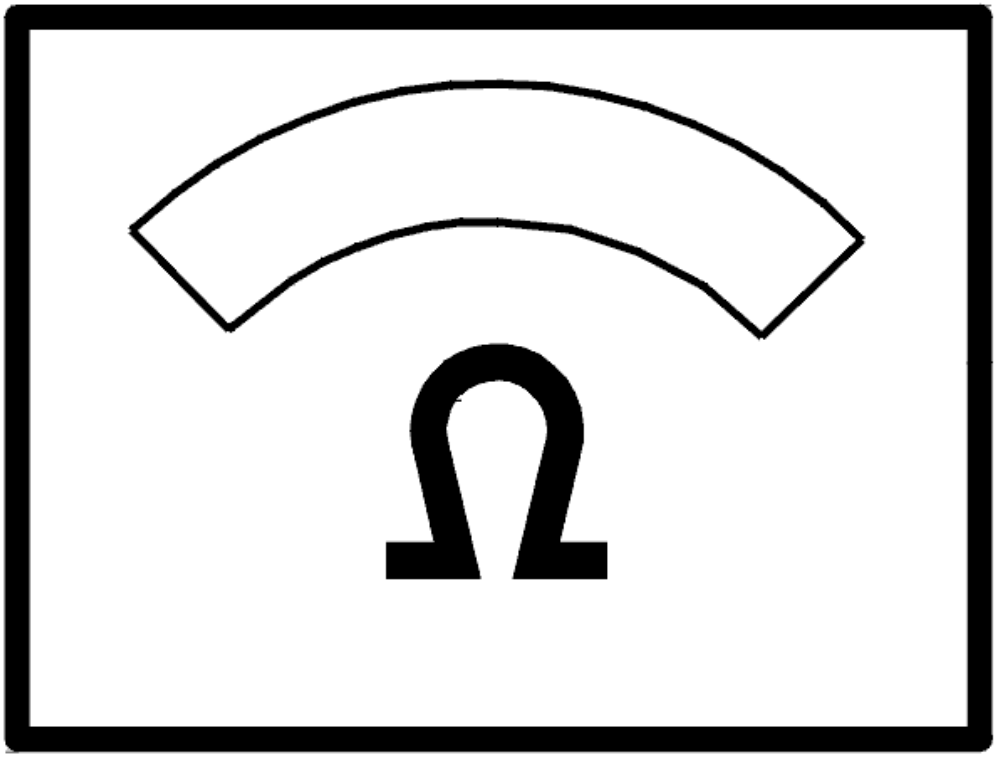

Fig. 345: Identifying Ohms Display
Courtesy of VOLVO CARS CORPORATION

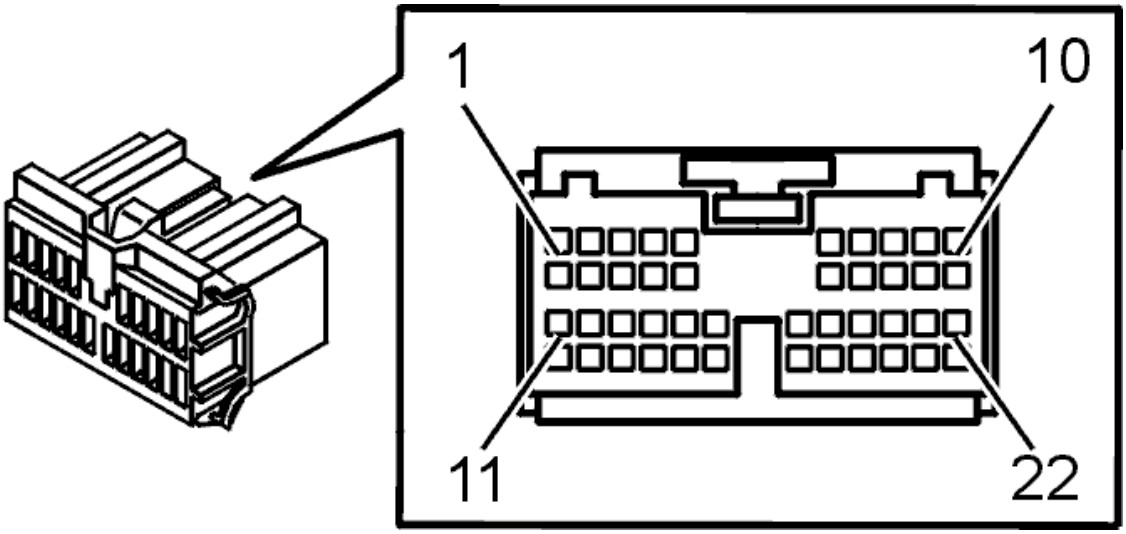

Fig. 346: Identifying Connector Terminals
Courtesy of VOLVO CARS CORPORATION

- **Continue**

  Refer to **INFORMATION**

REPLACING THE COMPONENT

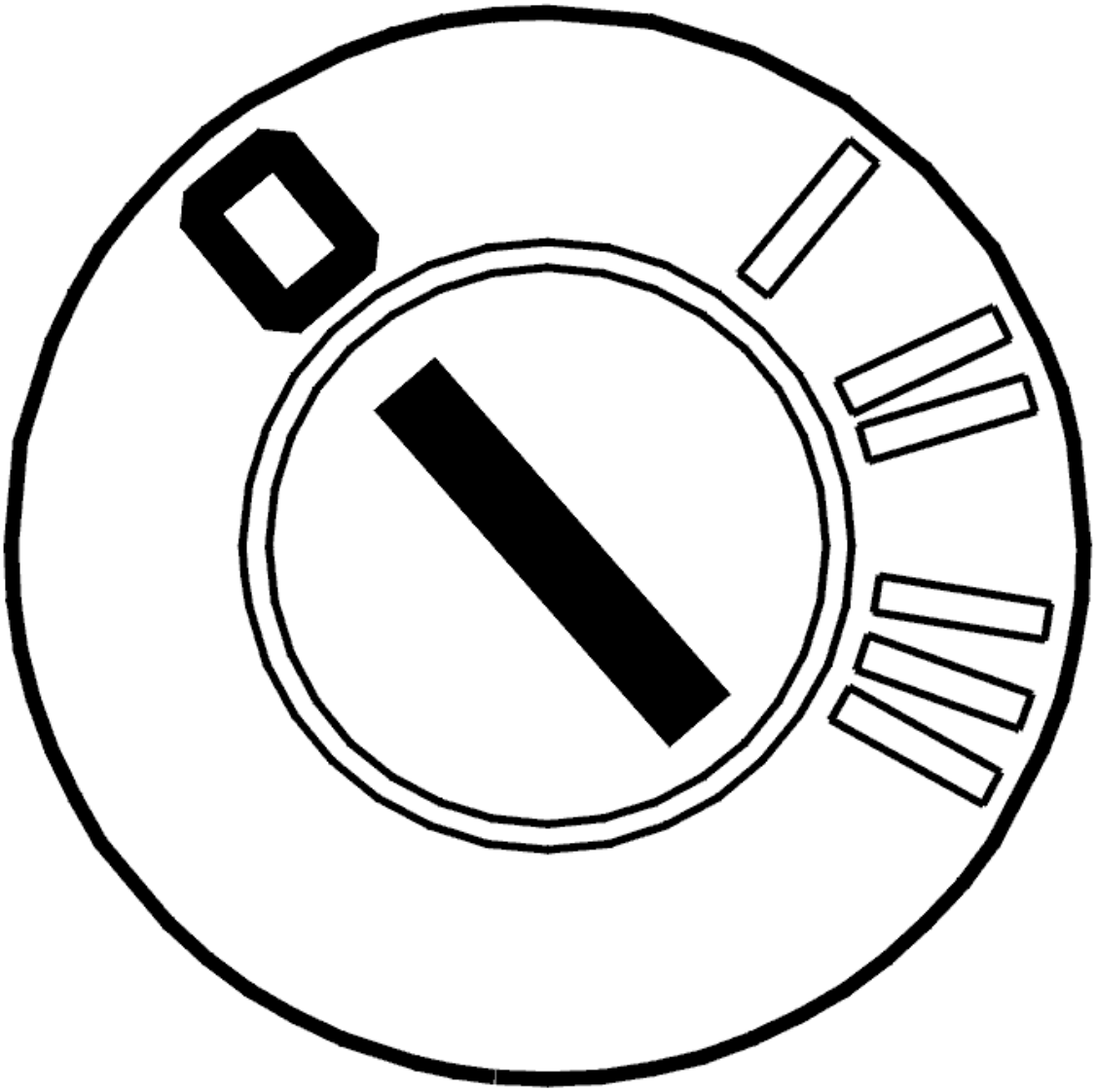

Fig. 347: Identifying Ignition OFF
Courtesy of VOLVO CARS CORPORATION

- Ignition off.

  Replace the sun roof control module according to **CONTROL MODULE, SUN ROOF, REPLACING** .

- **Continue**

  Refer to **VERIFICATION**

VERIFICATION

HINT: After carrying out the repair, check that the fault has been remedied.

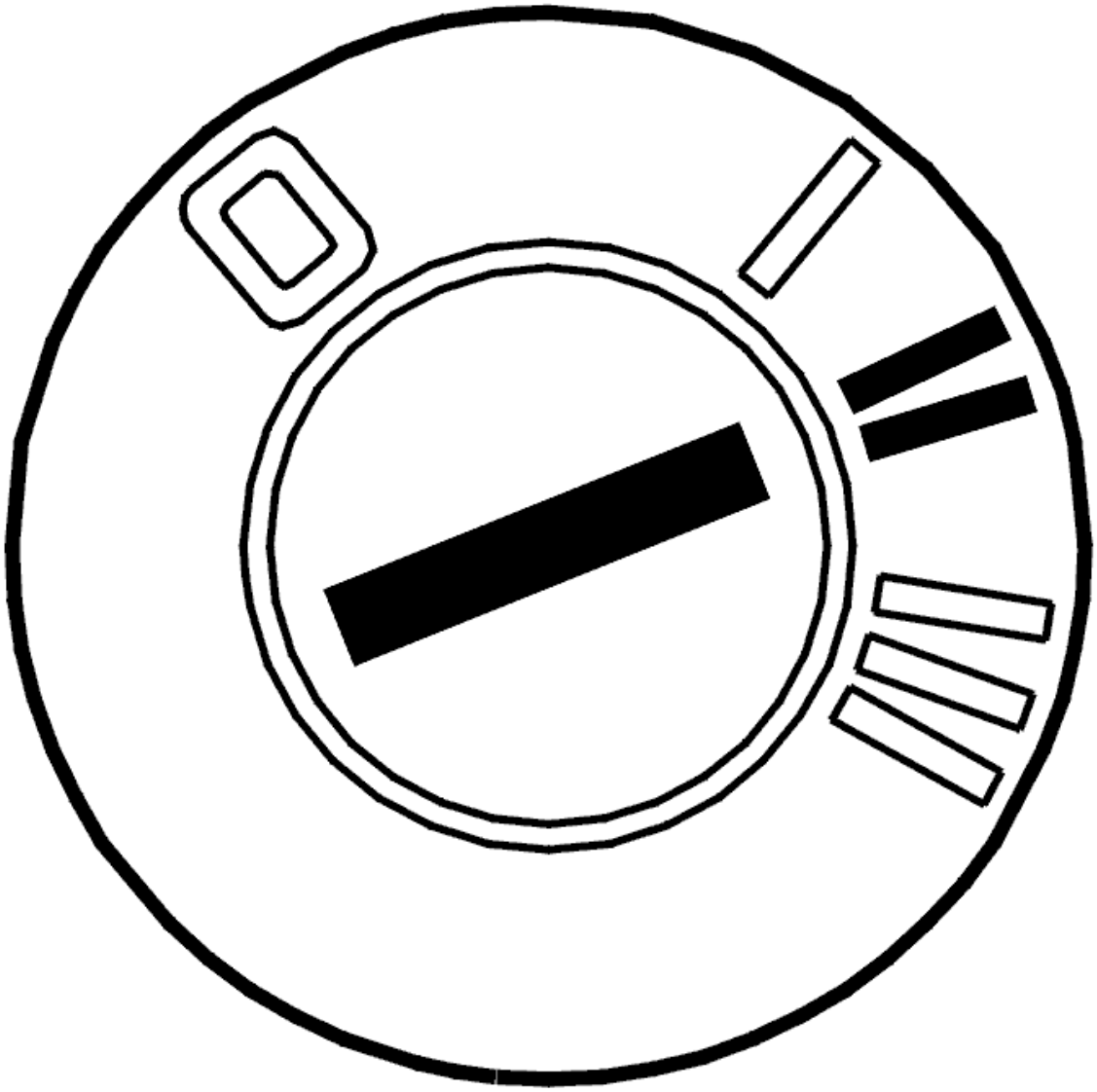

Fig. 348: Identifying Ignition ON
Courtesy of VOLVO CARS CORPORATION

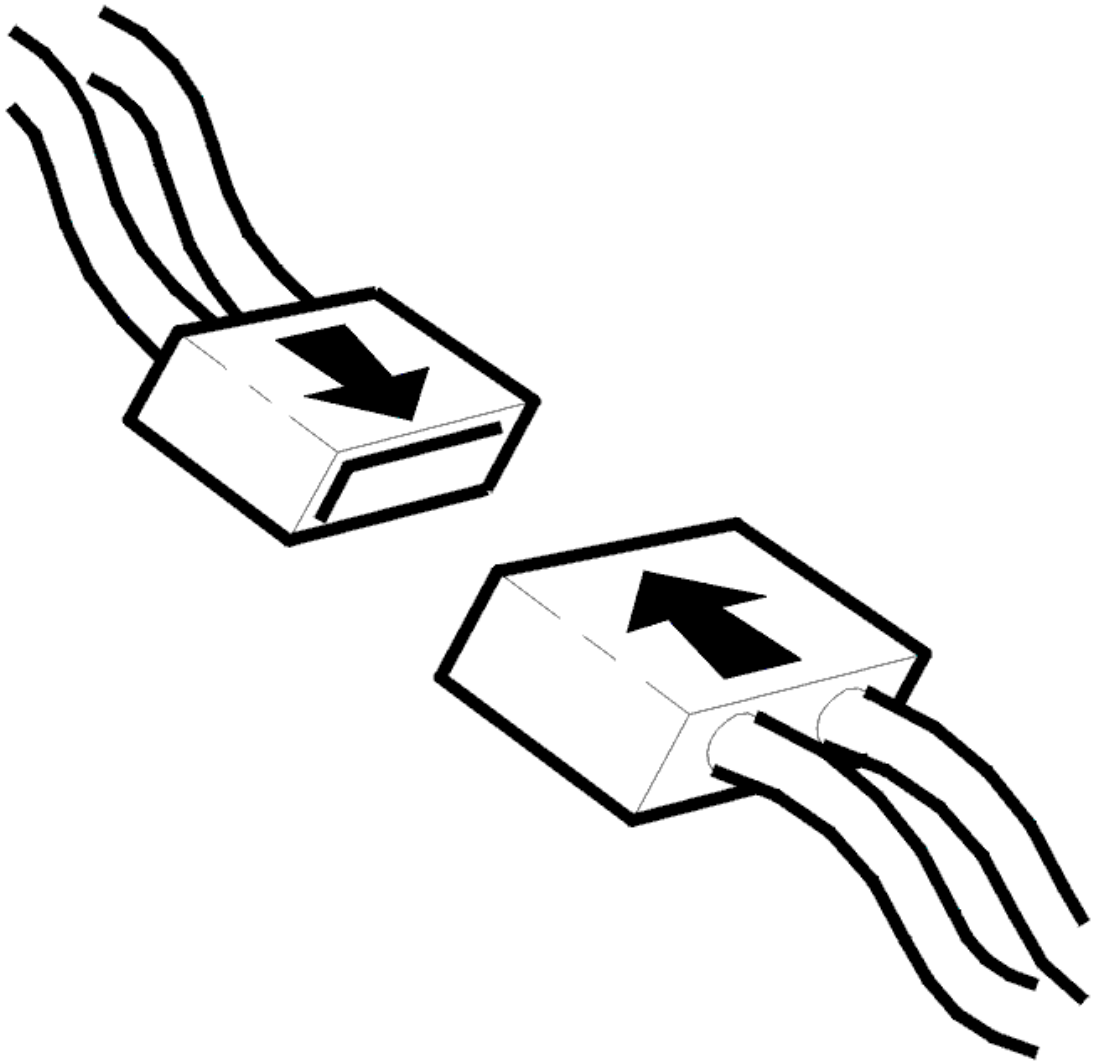

Fig. 349: Identifying Connector(s) Reinstallation
Courtesy of VOLVO CARS CORPORATION

- Ignition off
- Reinstall the connectors, components etc.
- Ignition on.

  Check that the sun roof can be operated automatically by pressing the switch 2 steps.

Can the sun roof be operated automatically?

- **YES**

  OKAY: Troubleshooting has been completed.

- **NO**

  Refer to **INFORMATION**

INFORMATION

FAULT-TRACING INFORMATION

The fault should have been detected and remedied. As this is not the case fault-tracing has failed.

Exit fault-tracing for this diagnostic trouble code (DTC) or make another attempt.

INFORMATION

FAULT-TRACING INFORMATION

If the fault is intermittent, do not verify fault-tracing if the fault does not recur.

It is possible to view the information again, or leave fault-tracing for this diagnostic trouble code (DTC).

UEM-0072: CONTROL UNIT. INTERNAL FAULT (2003-2012)

DIAGNOSTIC TROUBLE CODE INFORMATION

Condition

If the control unit detects that SRM-0022 is given when contact is made with the sunroof module (SRM), the diagnostic trouble code is displayed.

Substitute Value

- Nothing.

Possible Source

- Fault in programming of or reading from EEPROM.

Fault symptom[s]

- Automatic sunroof closing does not work.

INTERNAL FAULT

CHECKING FOR PERMANENT OR INTERMITTENT FAULTS

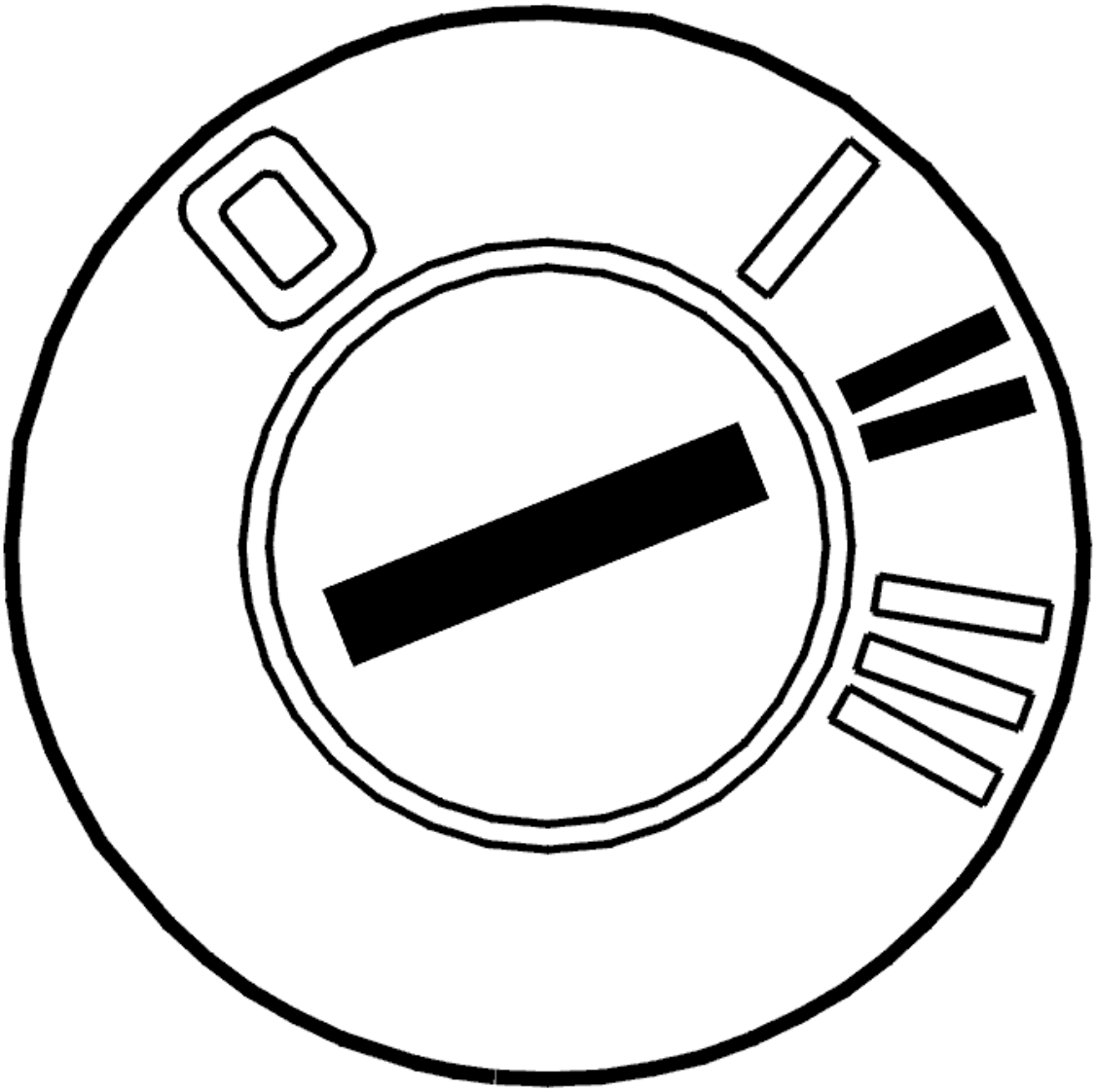

Fig. 350: Identifying Ignition ON
Courtesy of VOLVO CARS CORPORATION

- Ignition on.

  Check that the sun roof can be operated automatically by pressing the switch 2 steps.

Can the sun roof be operated automatically?

- **YES**

  Refer to **INTERMITTENT FAULT**

- **NO**

  Refer to **REPLACING THE COMPONENT**

REPLACING THE COMPONENT

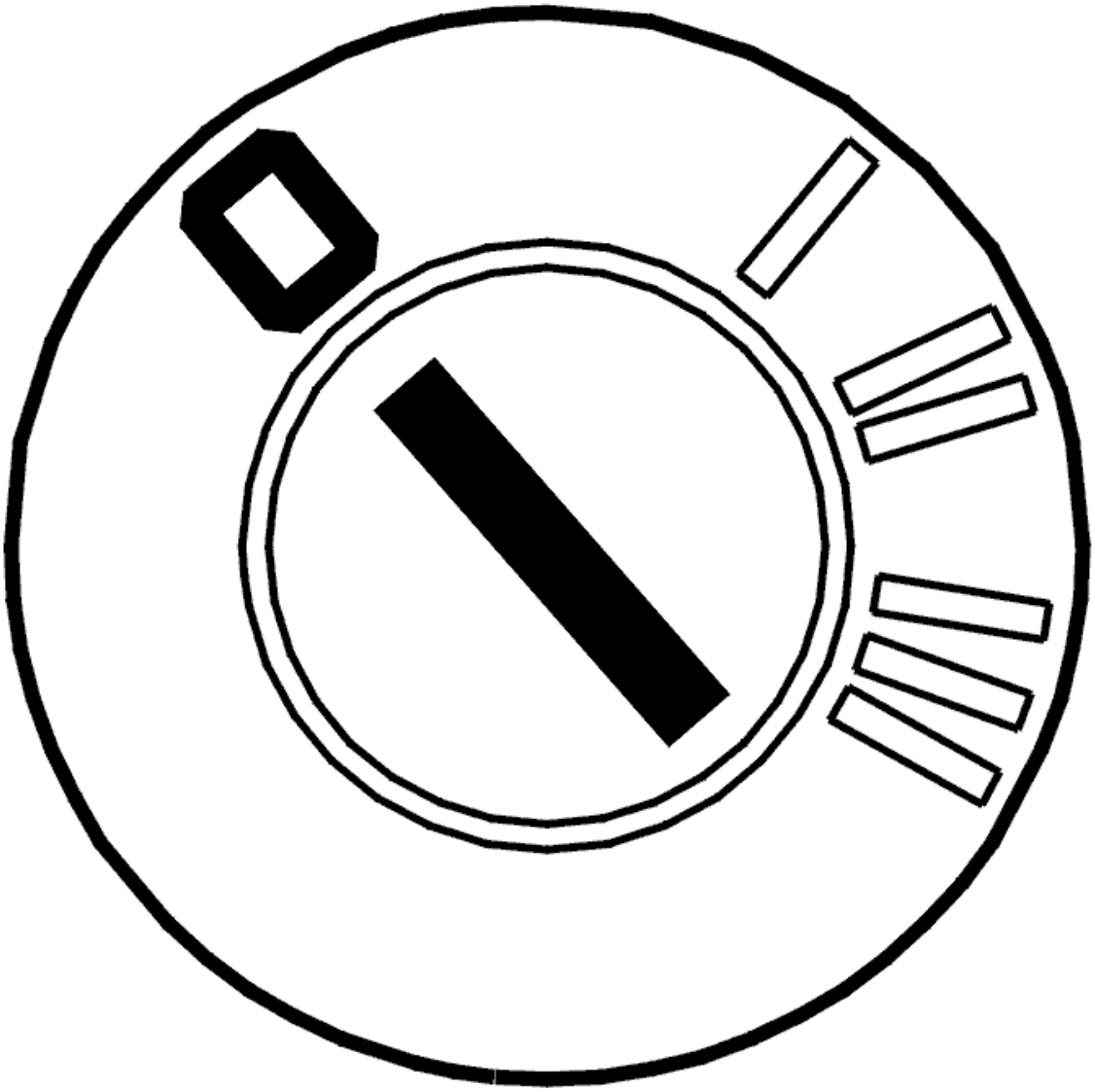

Fig. 351: Identifying Ignition OFF
Courtesy of VOLVO CARS CORPORATION

- Ignition off.

  Replace the sun roof control module according to **CONTROL MODULE, SUN ROOF, REPLACING** .

- **Continue**

  Refer to **VERIFICATION**

INTERMITTENT FAULT

The control module has previously registered a fault. The fault is now no longer present.

VERIFICATION

HINT: After carrying out the repair, check that the fault has been remedied.

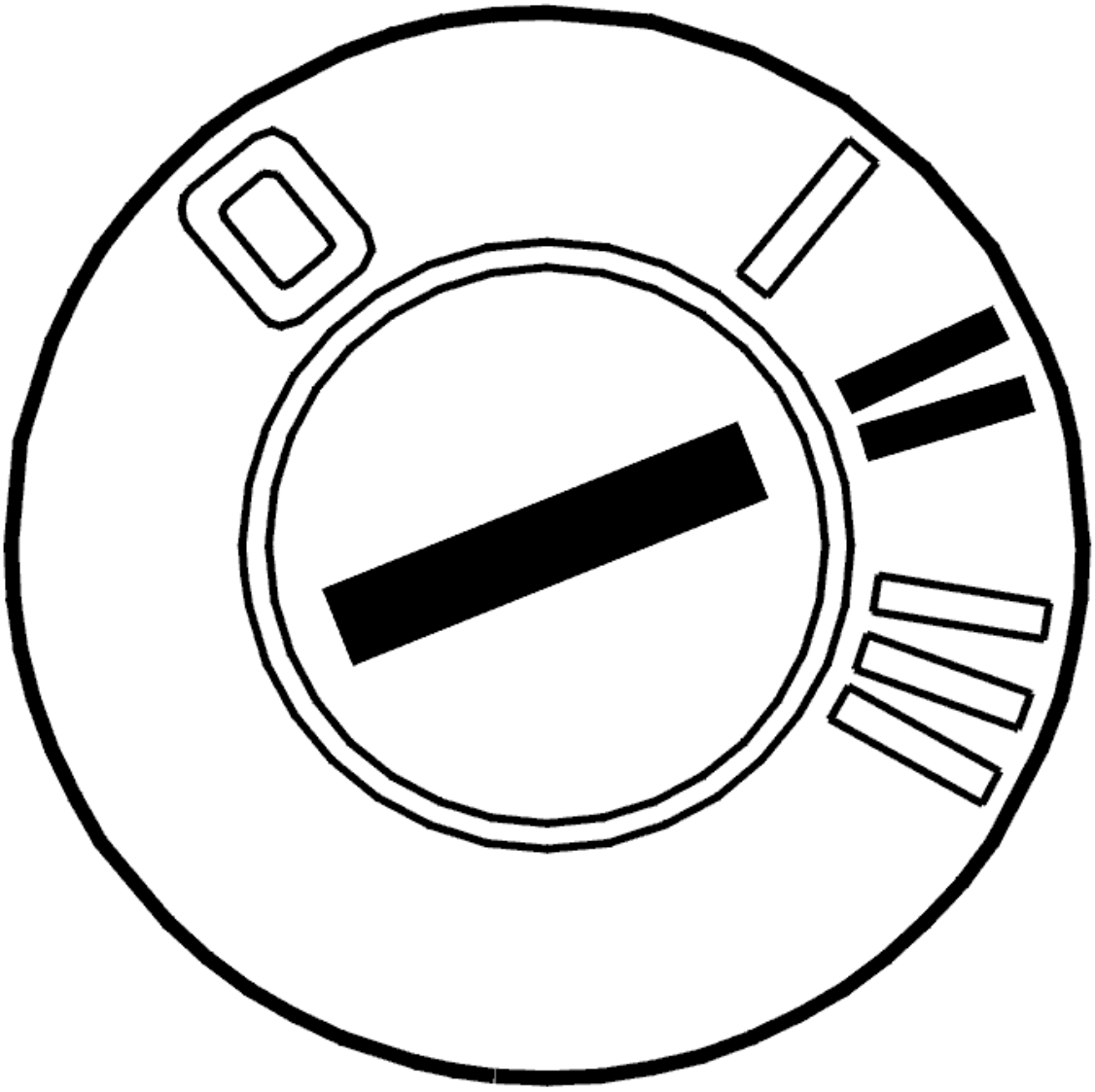

Fig. 352: Identifying Ignition ON
Courtesy of VOLVO CARS CORPORATION

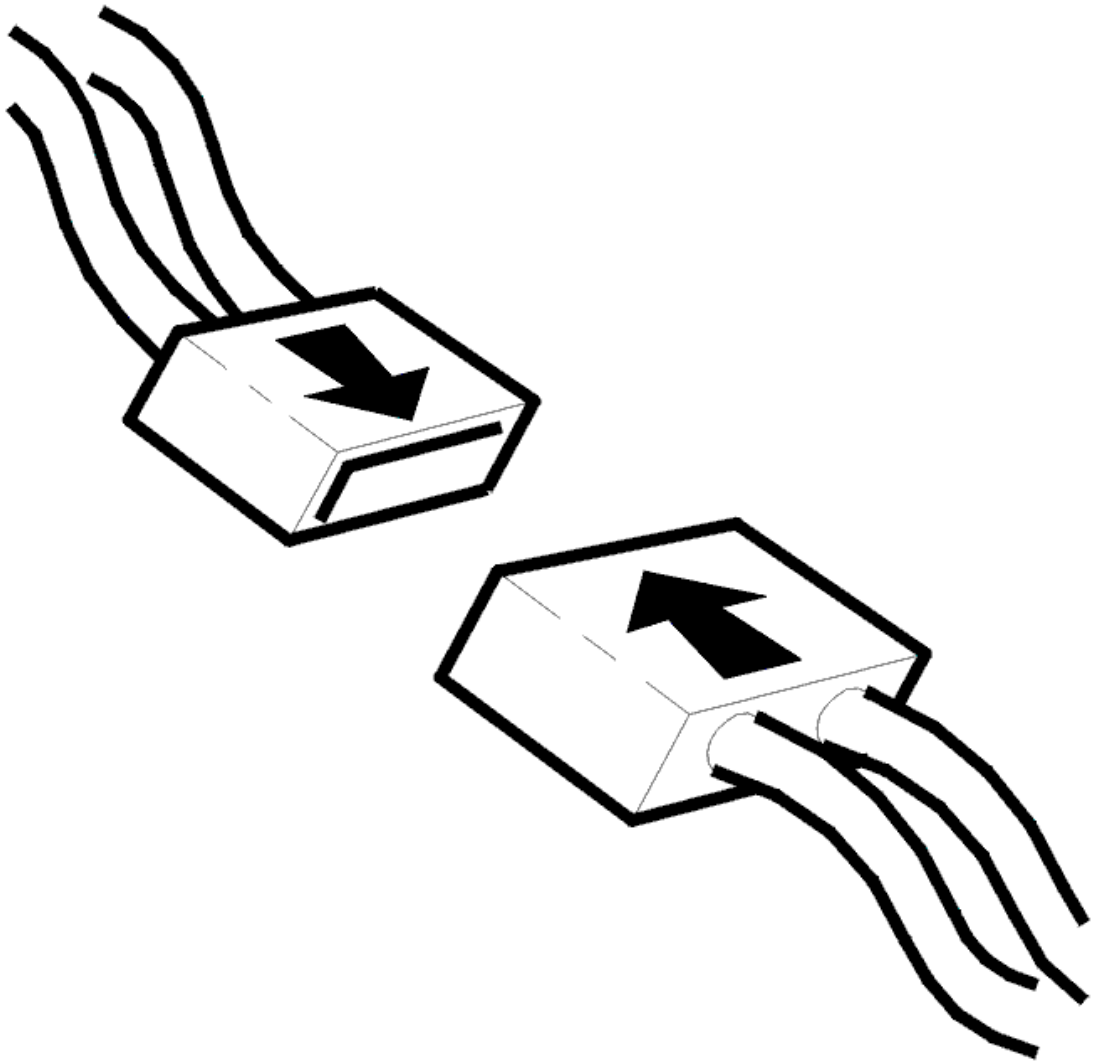

Fig. 353: Identifying Connector(s) Reinstallation
Courtesy of VOLVO CARS CORPORATION

- Ignition off
- Reinstall the connectors, components etc.
- Ignition on.

  Check that the sun roof can be operated automatically by pressing the switch 2 steps.

Can the sun roof be operated automatically?

- **YES**

  OKAY: Troubleshooting has been completed.

- **NO**

  Refer to **INFORMATION**

INFORMATION

FAULT-TRACING INFORMATION

The fault should have been detected and remedied. As this is not the case fault-tracing has failed.

Exit fault-tracing for this diagnostic trouble code (DTC) or make another attempt.

UEM-0078: SIREN. CONFIGURATION FAULT (2003-2012)

DIAGNOSTIC TROUBLE CODE (DTC) INFORMATION

Condition

Diagnostic trouble code (DTC) UEM-0078 is stored if the control module registers that the configuration of the siren does not correspond to the car.

Substitute Value

- None.

Possible Source

- The siren has not been configured after replacement
- Failed configuration after replacing the siren.

Fault symptom[s]

- None.

CONFIGURATION FAULT

RE-CONFIGURATION

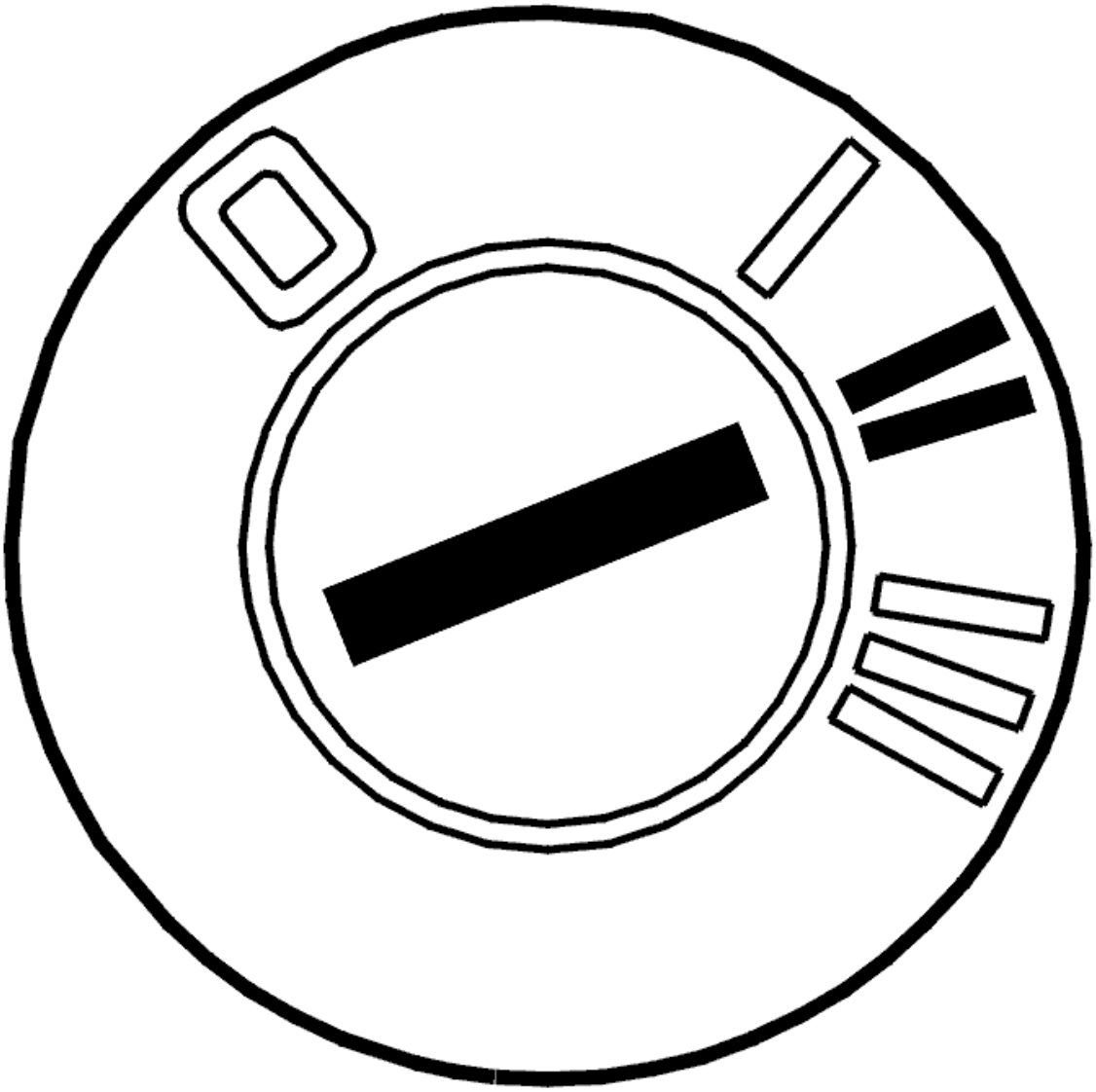

Fig. 354: Identifying Ignition ON
Courtesy of VOLVO CARS CORPORATION

- The configuration of the siren does not correspond to the configuration of the car
- Ignition on
- Use the VCT2000 (or appropriate scan tool) to re-configure the siren.

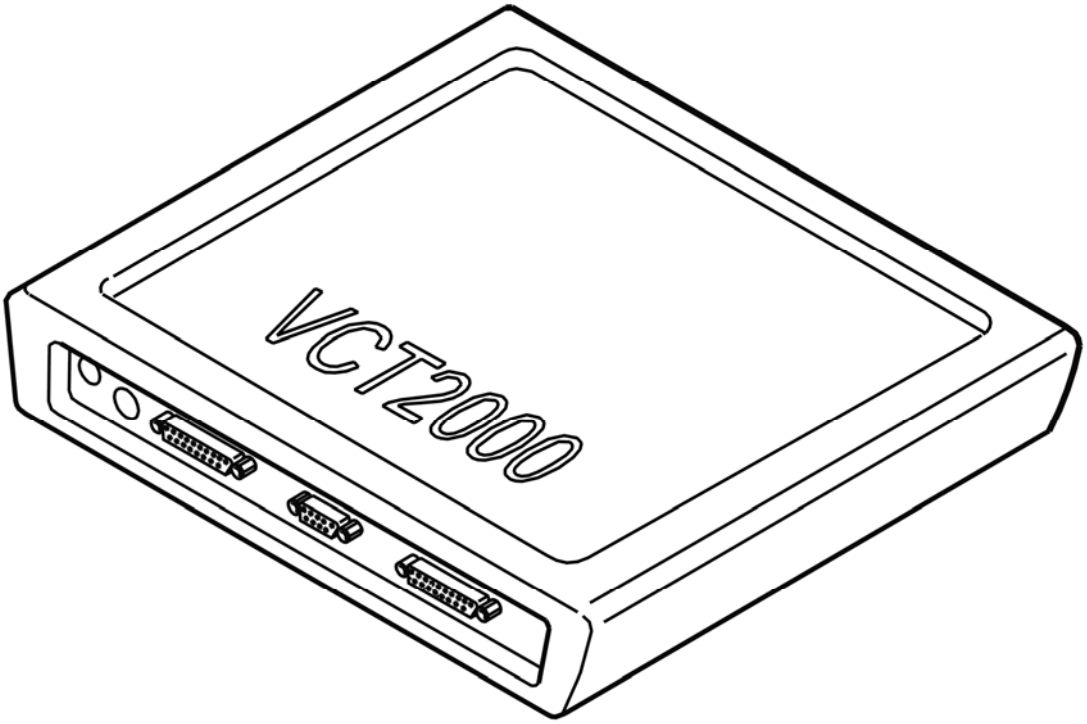

Fig. 355: Identifying VCT2000 Diagnostic Tool Symbol In VIDA
Courtesy of VOLVO CARS CORPORATION

- **Continue**

  Refer to **READING OFF DIAGNOSTIC TROUBLE CODES (DTC)**

READING OFF DIAGNOSTIC TROUBLE CODES (DTC)

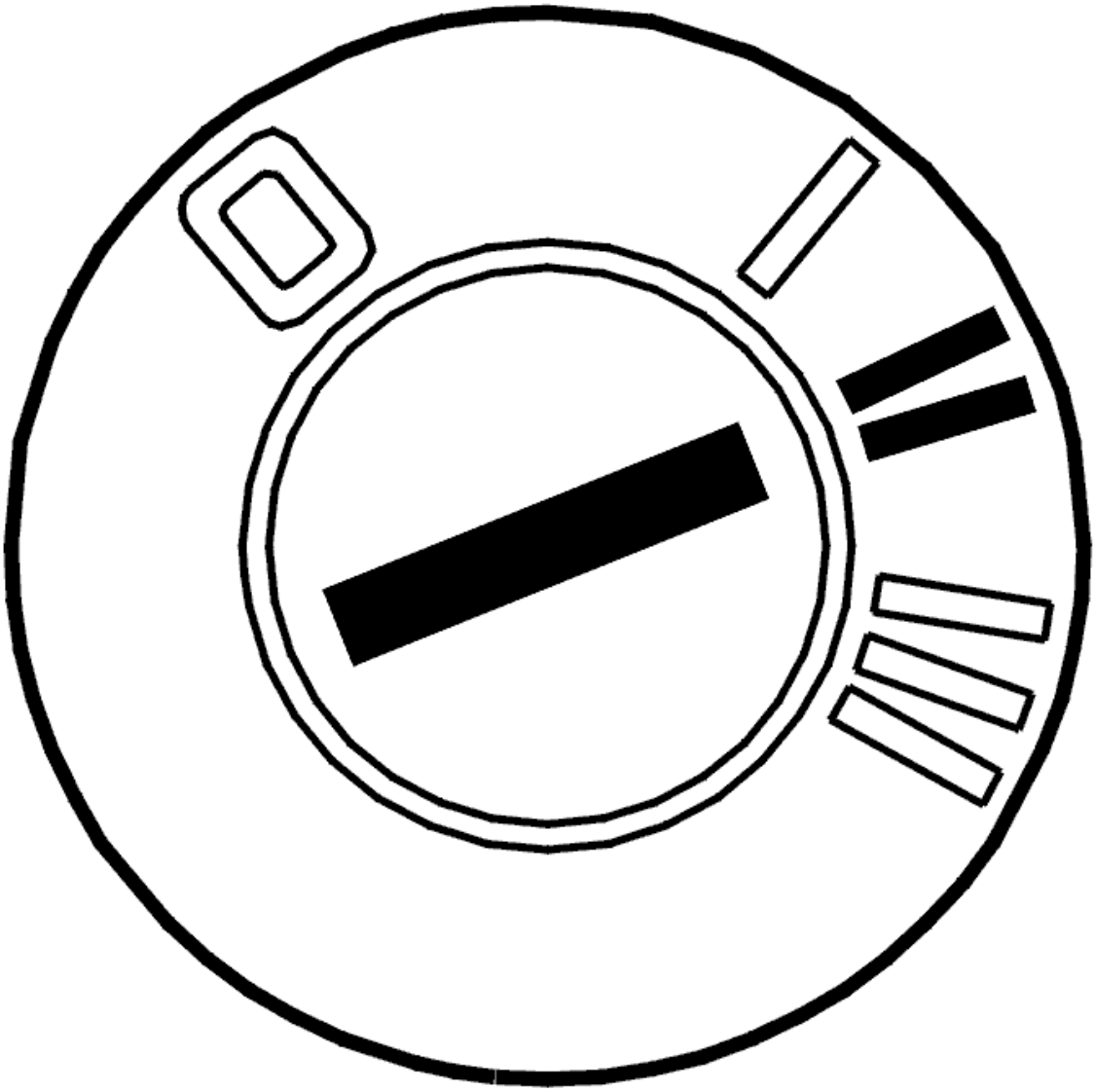

Fig. 356: Identifying Ignition ON
Courtesy of VOLVO CARS CORPORATION

- Ignition on.

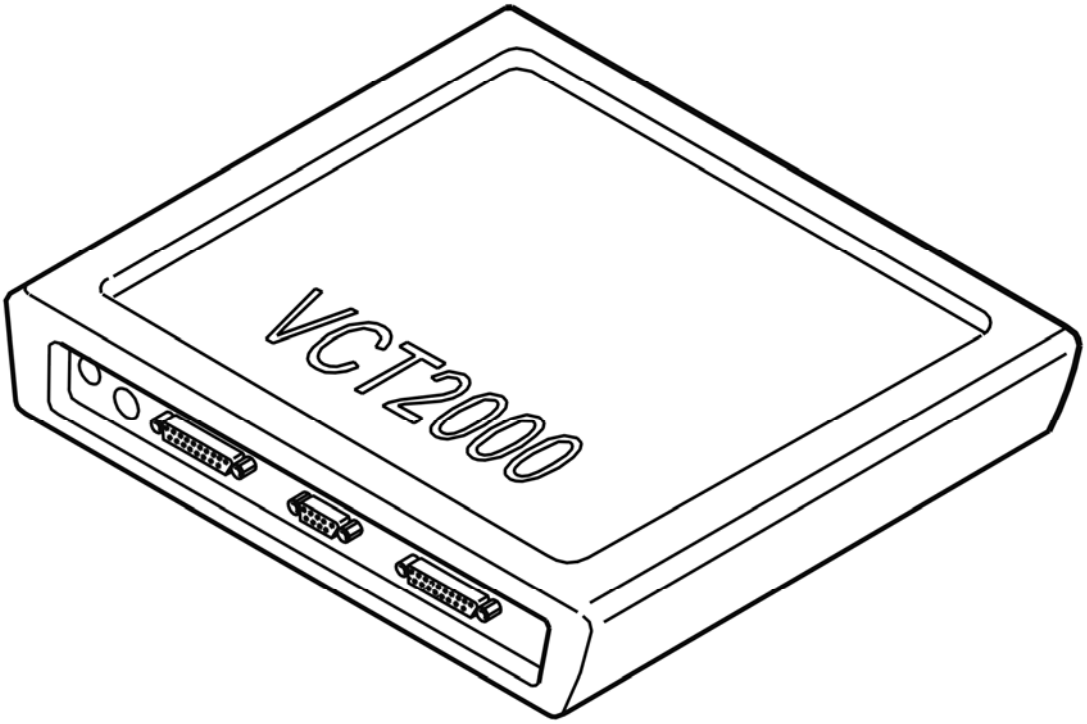

Fig. 357: Identifying VCT2000 Diagnostic Tool Symbol In VIDA
Courtesy of VOLVO CARS CORPORATION

- Read off diagnostic trouble codes (DTCs).

Has diagnostic trouble code (DTC) UEM-0078 been stored again?

- **YES**

  Refer to **REPLACING THE COMPONENT**

- **NO**

  OKAY: Troubleshooting has been completed.

REPLACING THE COMPONENT

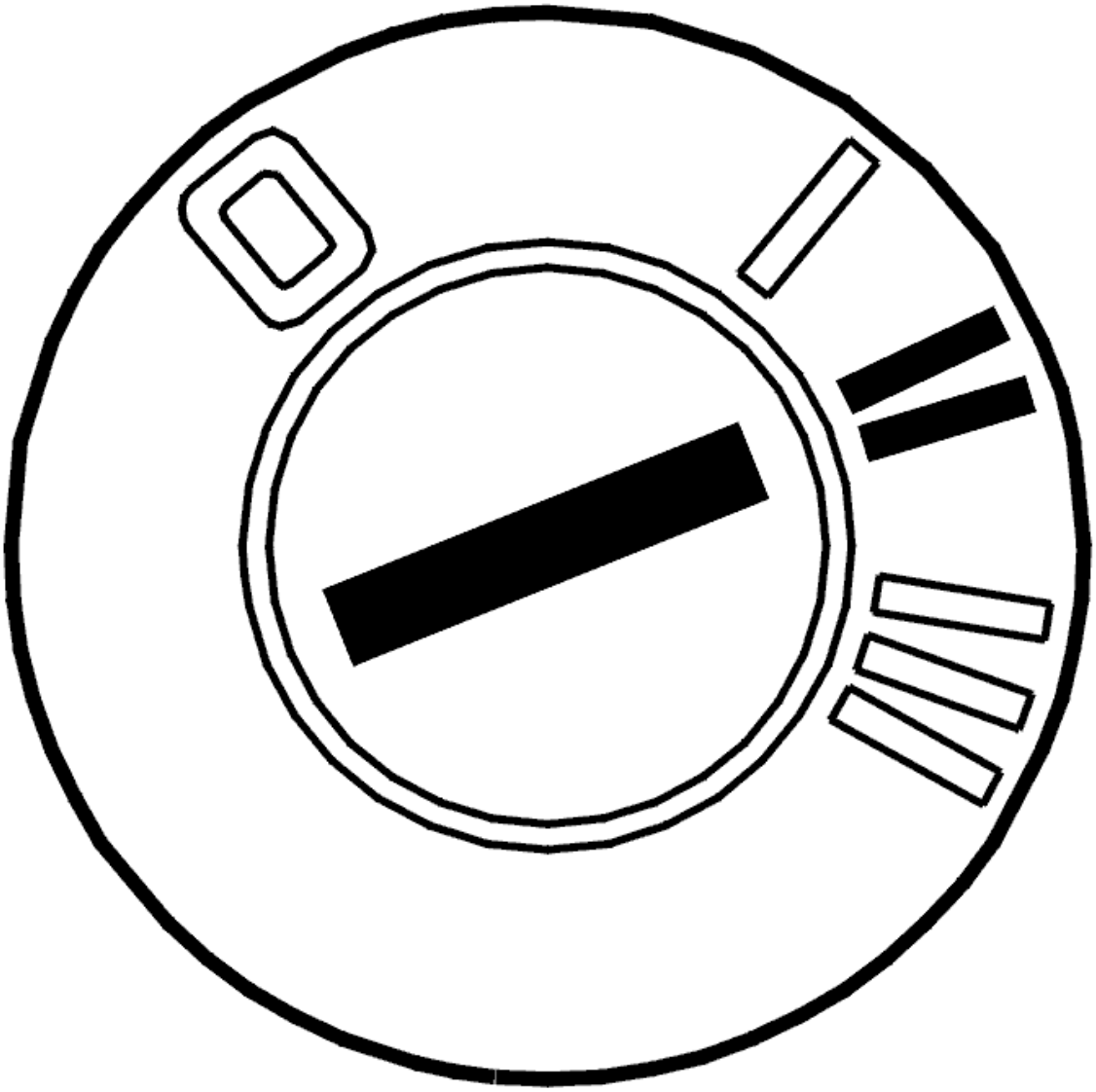

Fig. 358: Identifying Ignition ON
Courtesy of VOLVO CARS CORPORATION

- A faulty siren is installed
- Ignition on.

Activate the configuration.

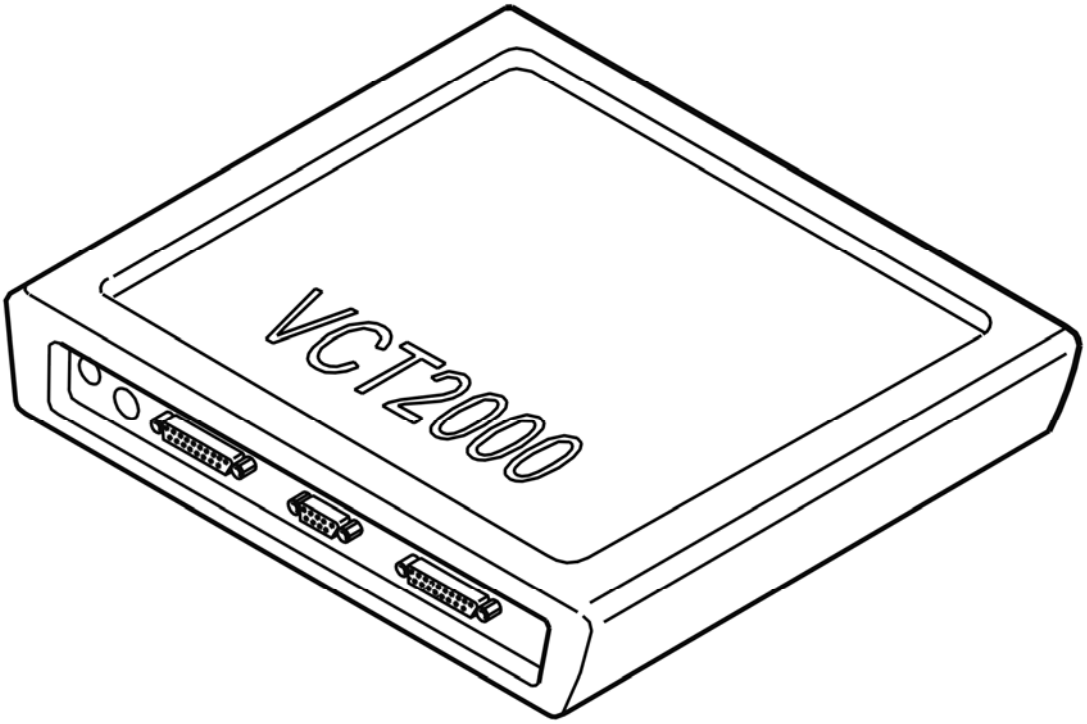

Fig. 359: Identifying VCT2000 Diagnostic Tool Symbol In VIDA
Courtesy of VOLVO CARS CORPORATION

SIREN, REPLACING

REMOVAL

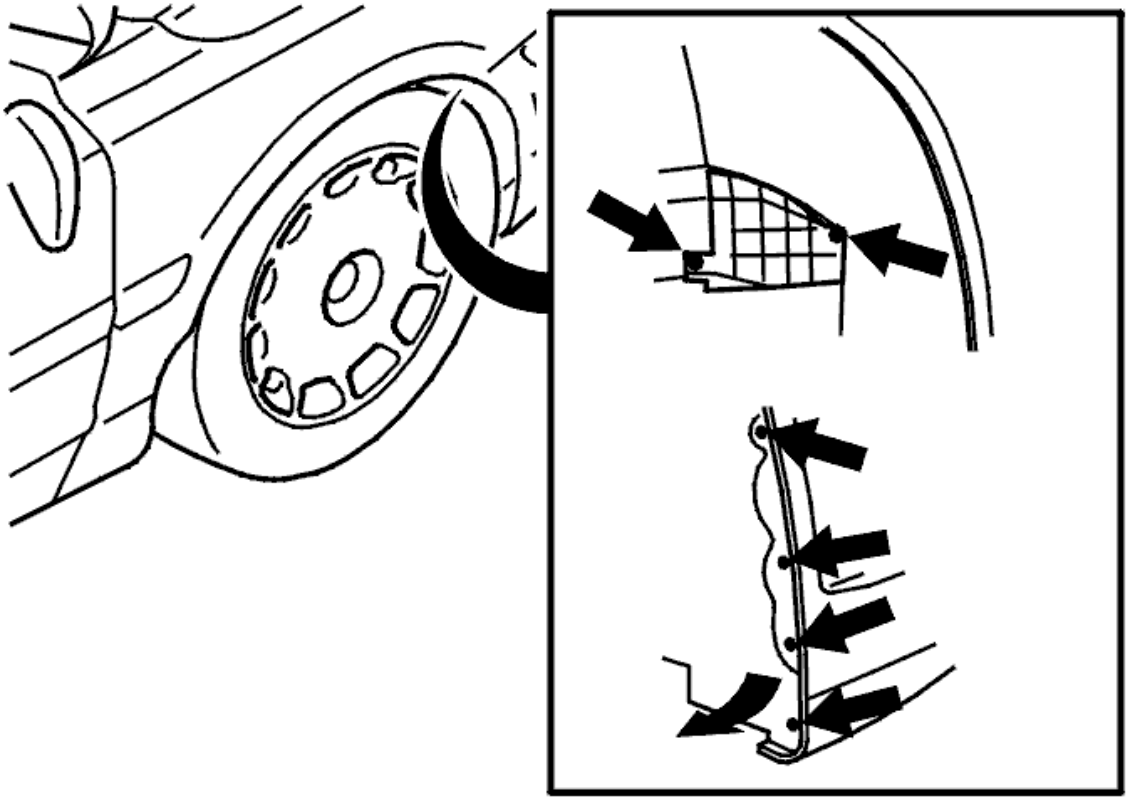

Fig. 360: Identifying Protective Panel In The Fender Liner, Plastic Nuts And Blind Rivets
Courtesy of VOLVO CARS CORPORATION

- Deactivate alarm
- Turn the front wheels to the right
- Knock out or drill out the blind rivets from the front edge of the fender liner
- Remove the plastic nuts from the protective panel in the fender liner. Remove the protective panel
- Disconnect the front edge of the fender liner. Move the fender lining out of the way.

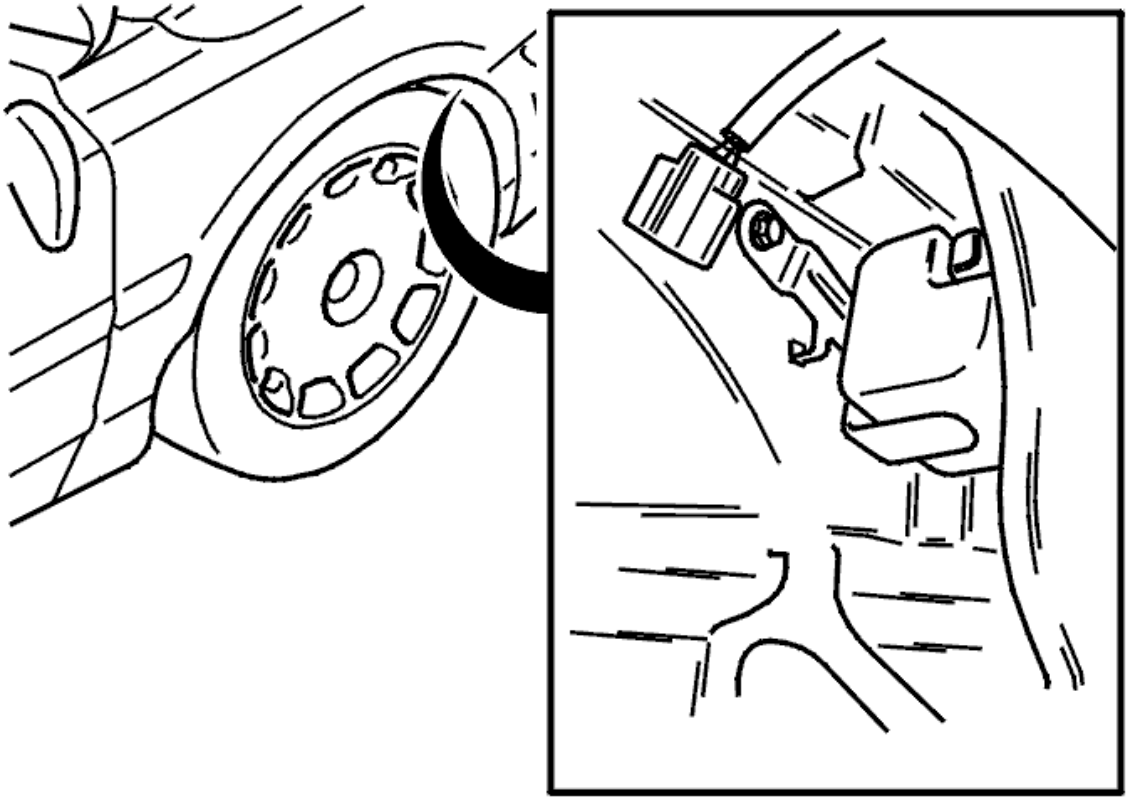

Fig. 361: Locating Siren And Screw
Courtesy of VOLVO CARS CORPORATION

- Remove the screw from the siren. Remove the siren
- Disconnect the connector.

INSTALLATION

- Connect the connector. Position the siren. Tighten the screws for the siren. Tighten to:**10 ± 2.5 Nm**
- Remove any rivet shavings. Rivet the fender liner into place
- Install the splash guard.

NOTE: The siren must be configured after replacement. This is carried out using VIDA (Volvo scan tool).

CONFIGURATION FAULT

RE-CONFIGURATION

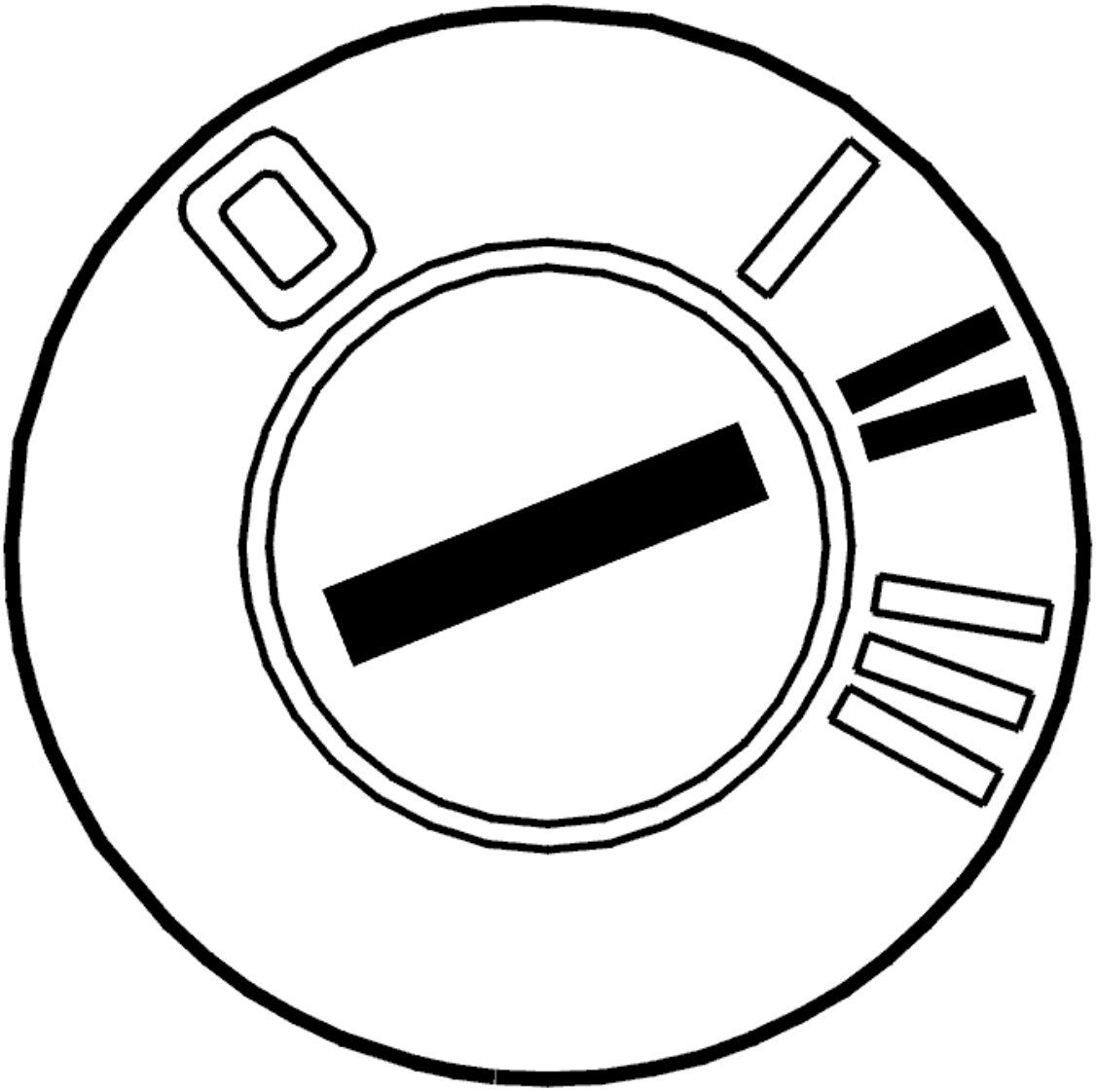

Fig. 362: Identifying Ignition ON
Courtesy of VOLVO CARS CORPORATION

- The configuration of the siren does not correspond to the configuration of the car
- Ignition on
- Use the VCT2000 (or appropriate scan tool) to re-configure the siren.

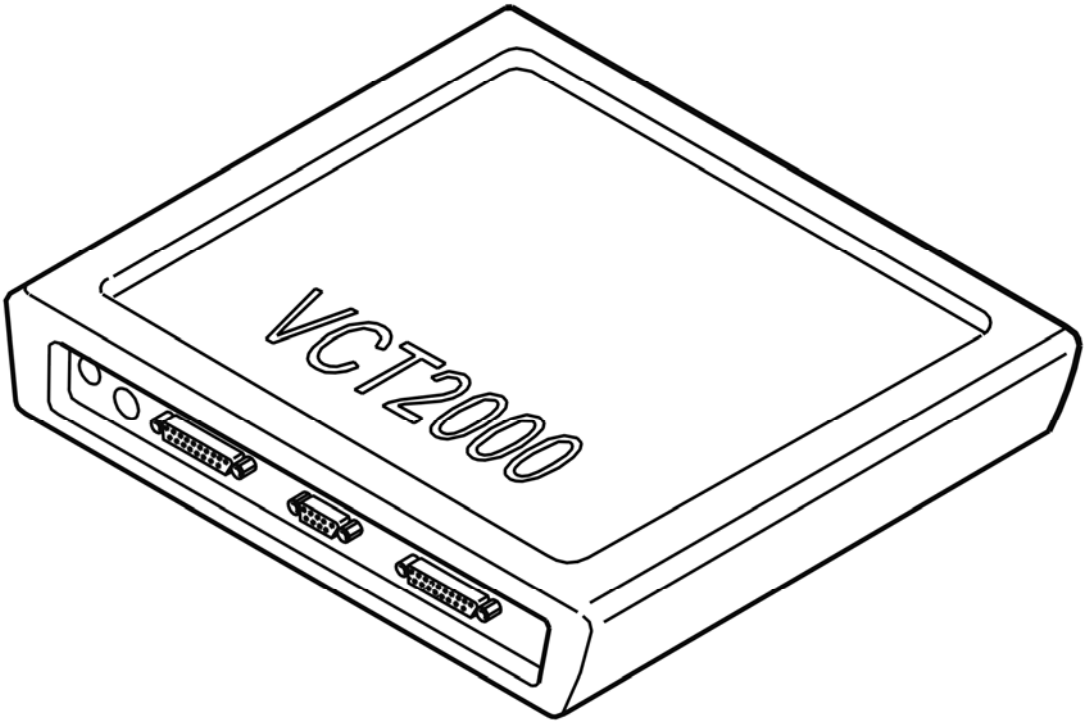

Fig. 363: Identifying VCT2000 Diagnostic Tool Symbol In VIDA
Courtesy of VOLVO CARS CORPORATION

- **Continue**

see **READING OFF DIAGNOSTIC TROUBLE CODES (DTC)**

READING OFF DIAGNOSTIC TROUBLE CODES (DTC)

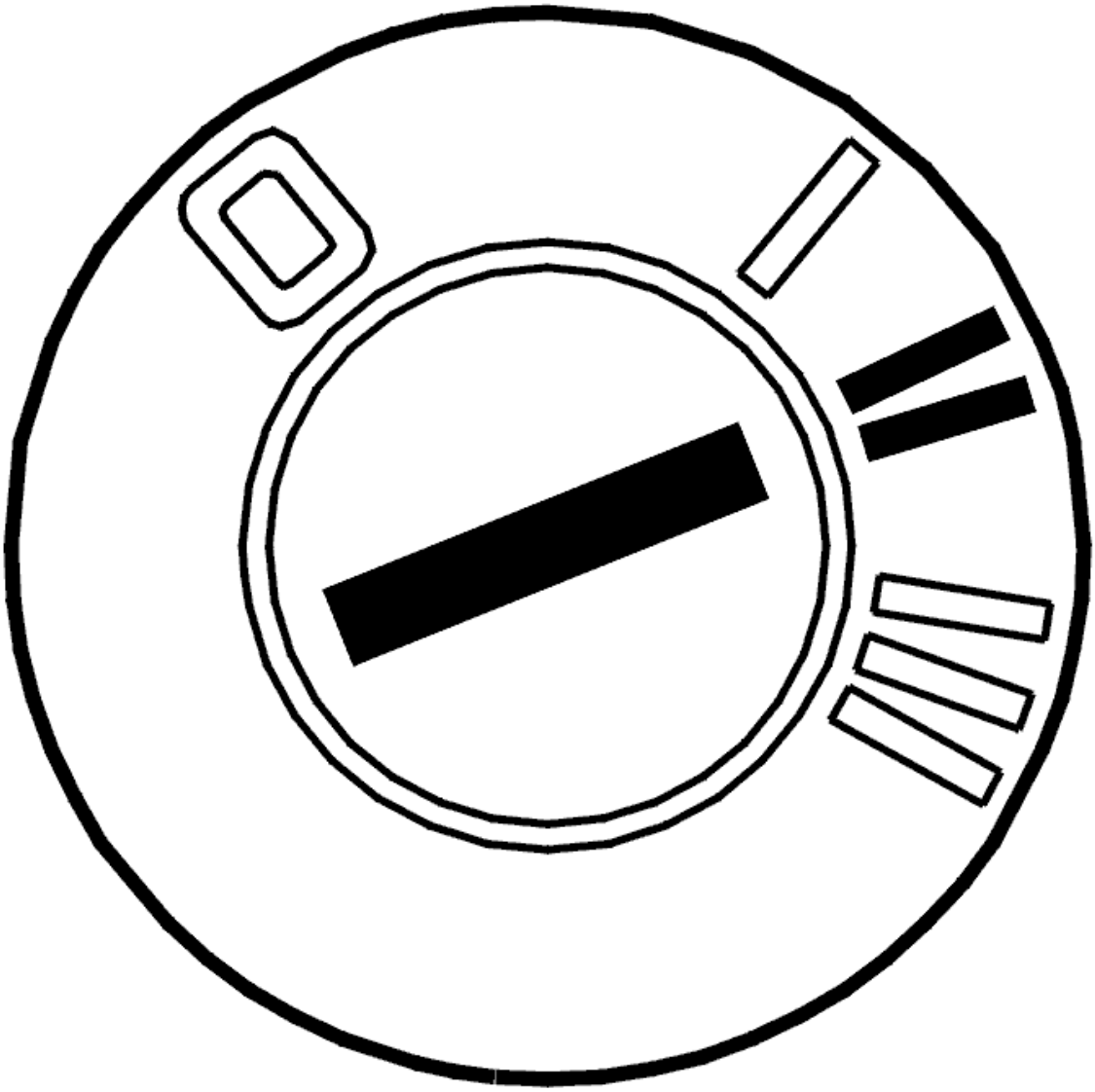

Fig. 364: Identifying Ignition ON
Courtesy of VOLVO CARS CORPORATION

- Ignition on.

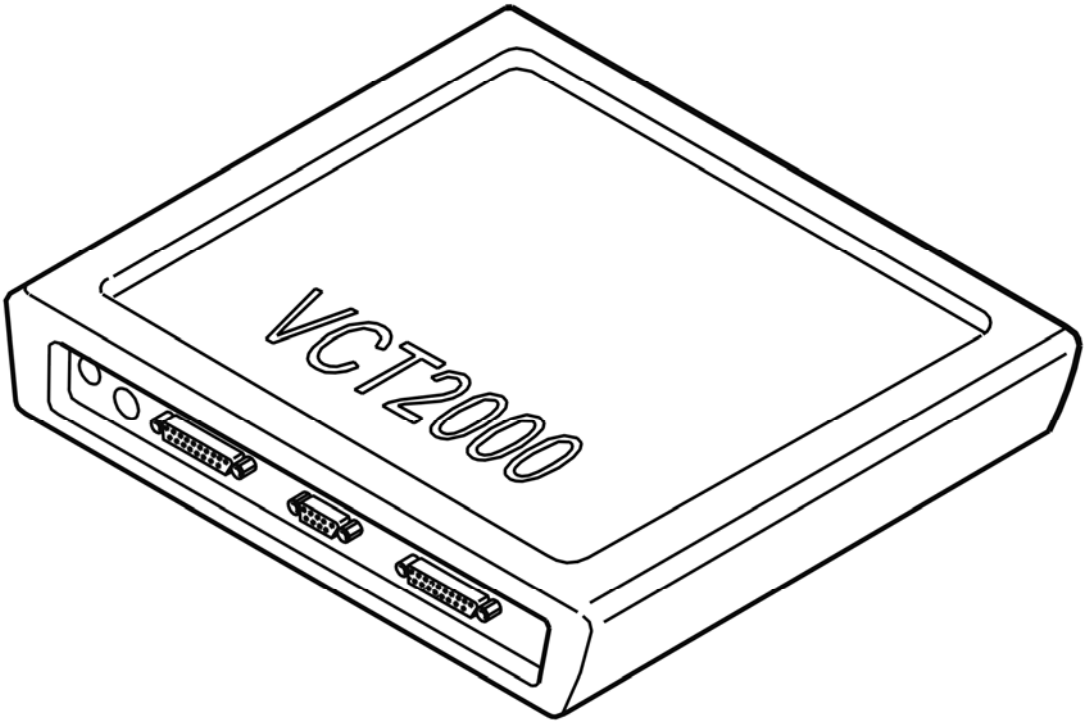

Fig. 365: Identifying VCT2000 Diagnostic Tool Symbol In VIDA
Courtesy of VOLVO CARS CORPORATION

- Read off diagnostic trouble codes (DTCs).

Has diagnostic trouble code (DTC) UEM-0078 been stored again?

- **YES**

  see **REPLACING THE COMPONENT**

- **NO**

  OKAY: Troubleshooting has been completed.

REPLACING THE COMPONENT

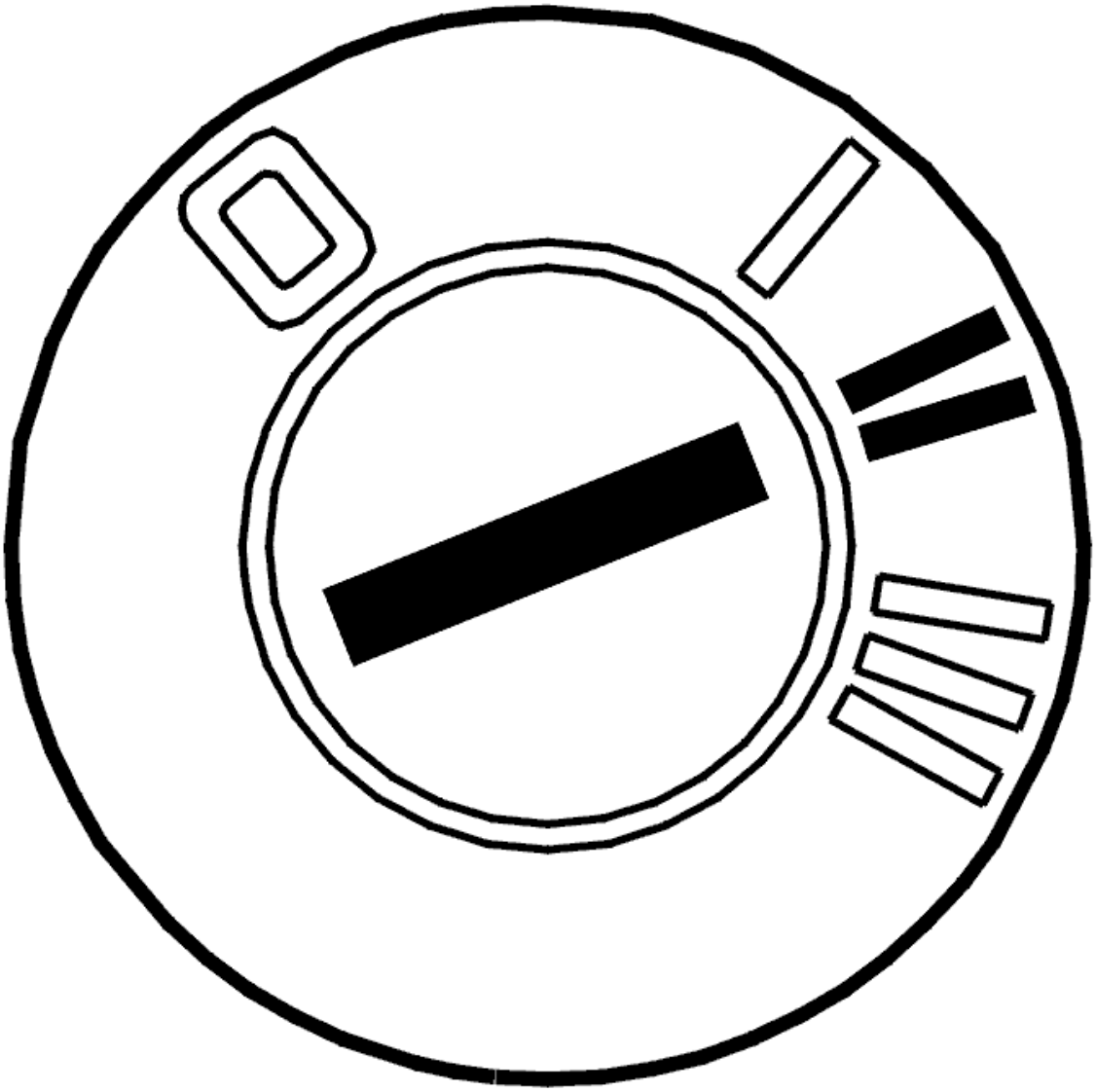

Fig. 366: Identifying Ignition ON
Courtesy of VOLVO CARS CORPORATION

- A faulty siren is installed
- Ignition on.

Activate the configuration.

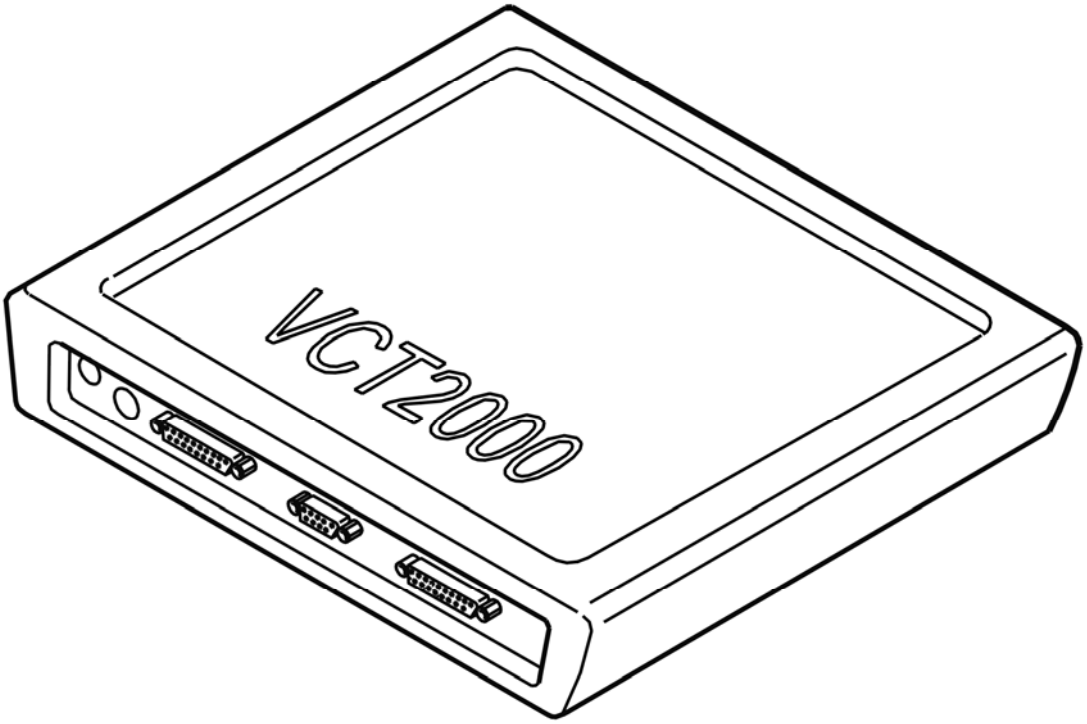

Fig. 367: Identifying VCT2000 Diagnostic Tool Symbol In VIDA
Courtesy of VOLVO CARS CORPORATION

UEM-0080: RAIN SENSOR. SIGNAL MISSING (2003-2012)

DIAGNOSTIC TROUBLE CODE (DTC) INFORMATION UEM-0080

Condition

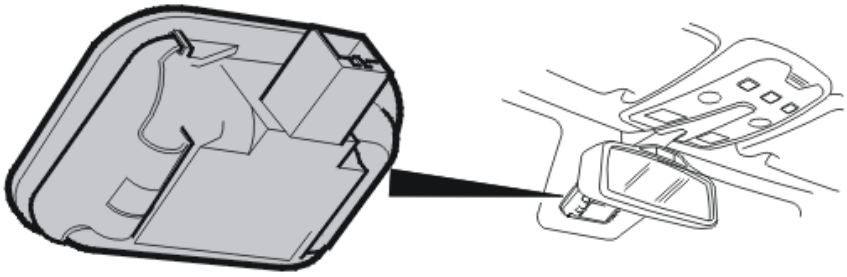

Fig. 368: Locating Rain Sensor Module
Courtesy of VOLVO CARS CORPORATION

The upper electronic module (UEM) regularly checks the communication with the rain sensor module (RSM).

A diagnostic trouble code (DTC) is stored If the rain sensor module (RSM) does not respond to a request from the upper electronic module (UEM).

The diagnostic trouble code (DTC) can be diagnosed 20 seconds after the ignition is switched on. Diagnostic trouble code (DTC) UEM-0080 is not stored if UEM-0081 or UEM-0082 is stored.

Substitute Value

- Intermittent windshield wipers
- The windshield wipers operate at high speed.

Possible Source

- Open-circuit in the power supply cable for the rain sensor
- Short-circuit to ground in the power supply cable for the rain sensor
- Open-circuit, short-circuit to ground or supply voltage in the data cable for the rain sensor
- Open-circuit or short-circuit to supply in the ground lead for the rain sensor
- Contact fault on the sensor side and/or control module side
- Defective rain sensor
- Defective control module.

Fault symptom[s]

- No rain sensor function.

SIGNAL MISSING

CHECKING THE RAIN SENSOR

CHECKING THE FUNCTION

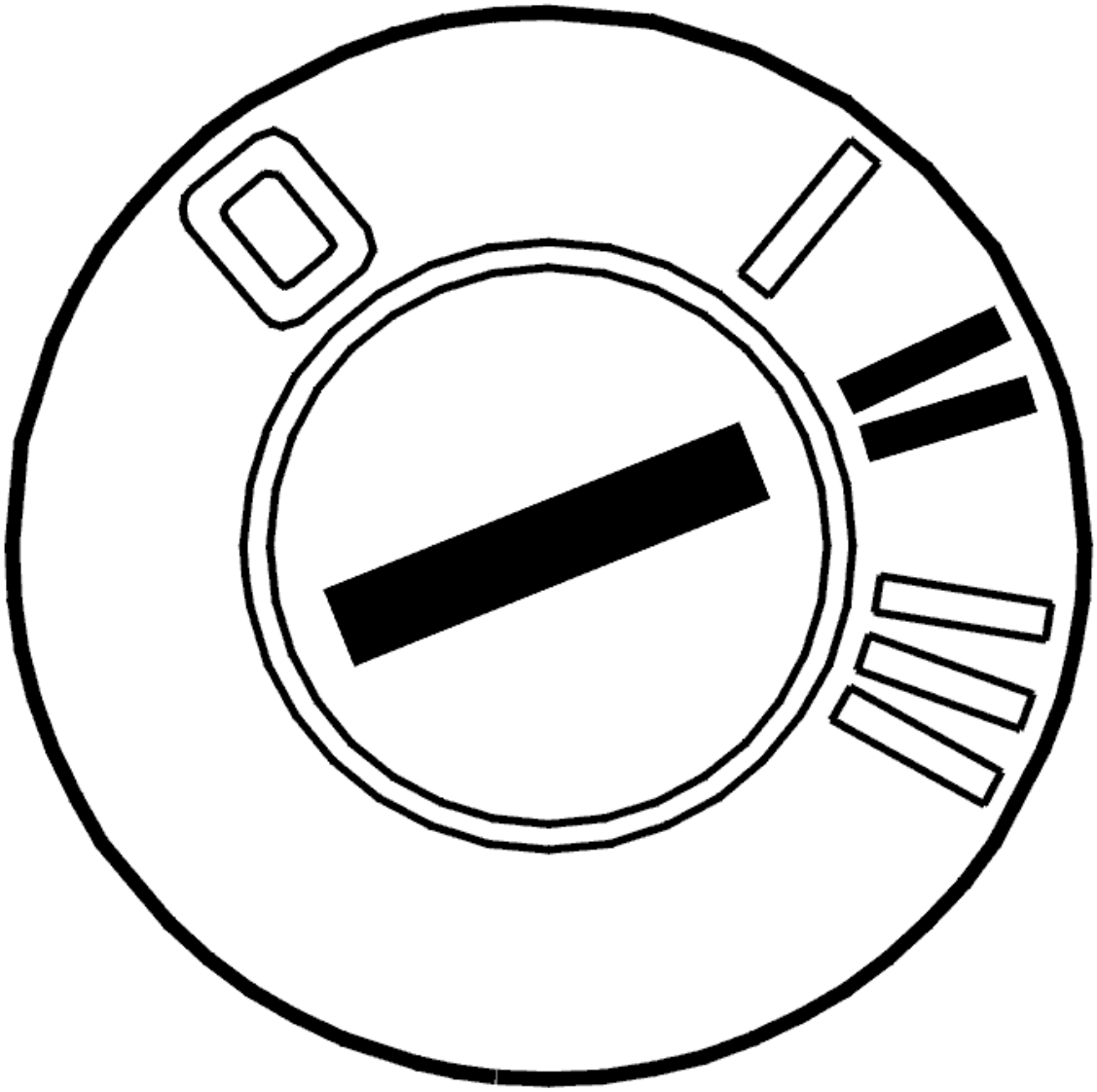

Fig. 369: Identifying Ignition ON
Courtesy of VOLVO CARS CORPORATION

- Ignition on
- Activate the rain sensor.

  HINT: The wiper blades make a reference stroke to determine the cleanliness and condition of the windshield when the rain sensor is activated. The rain sensor is deactivated when the ignition is switched off. To reactivate the rain sensor with the ignition on, move the stalk to position "0" and then to intermittent wiping.

  Spray water on the windshield where the rain sensor is positioned.

  The wiper blades must now wipe the windshield clean.

  HINT: In cars equipped with the rain sensor it replaces the intermittent function. One way of

checking the function of the rain sensor is to twist the collar on the lever. This changes the sensitivity of the rain sensor. The windshield wiper should make one stroke. If the intermittent or high speed functions are activated it indicates that the rain sensor function is missing.

- **Continue**

  Refer to **CHECKING THE SUPPLY TO THE RAIN SENSOR**

CHECKING THE SUPPLY TO THE RAIN SENSOR

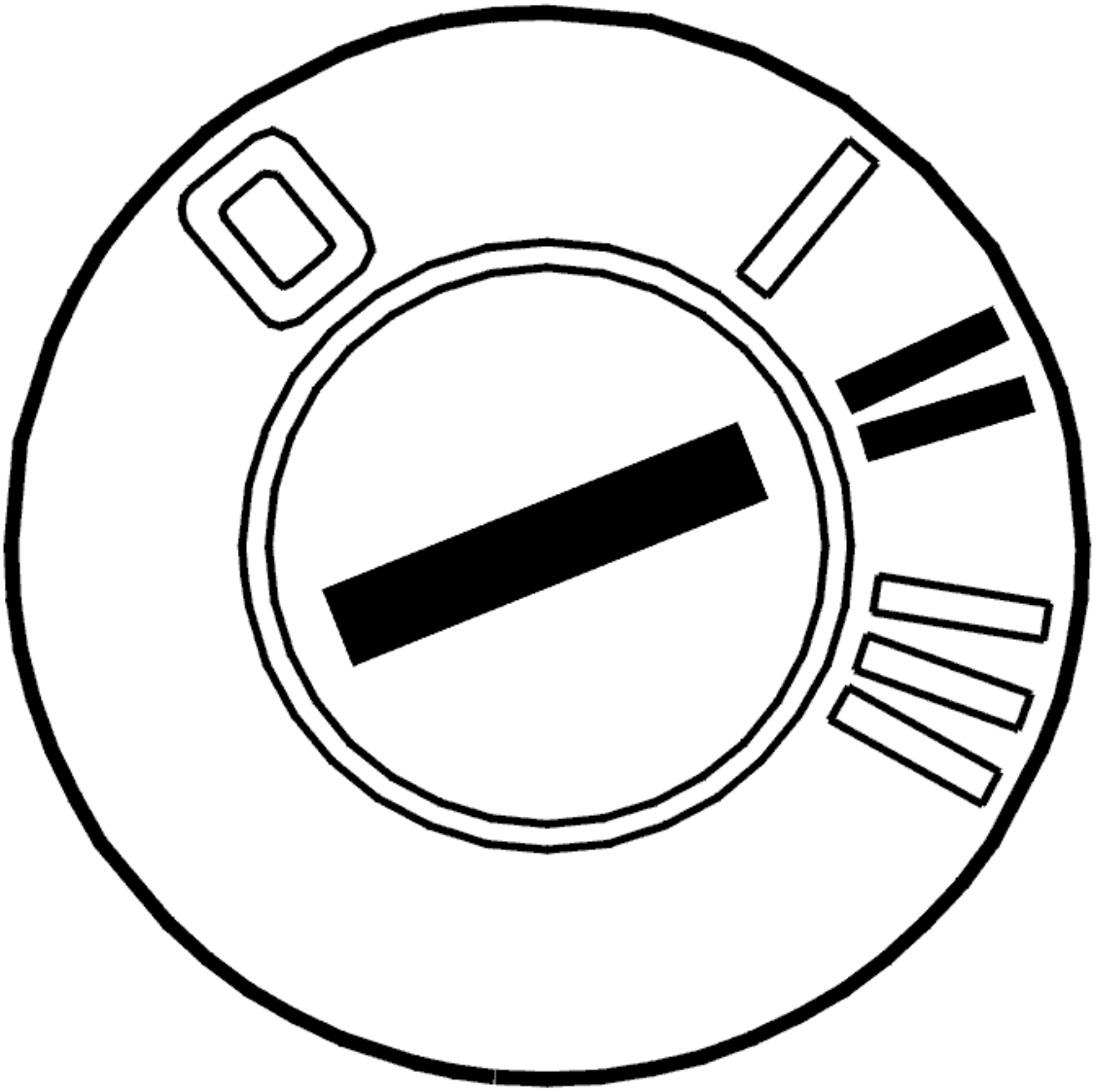

Fig. 370: Identifying Ignition ON
Courtesy of VOLVO CARS CORPORATION

- A number of measurements are required to check the wiring for the rain sensor. Measurements should be carried out on the wiring connector with the rain sensor disconnected. The terminals correspond to ground, voltage and data cables. The data cable is connected to terminal #1 on the rain sensor, terminal #2

is the ground cable and terminal #3 is the power supply for the rain sensor

- Move the windshield wiper stalk to position "0".
- Ignition off
- Disconnect the rain sensor
- Ignition on.

Check the voltage level between the voltage terminal #3 and ground terminal #2 of the wiring.

HINT: The voltage must be 12V.

Other information:

- For further information about signals and other values, see **SIGNAL DESCRIPTION, UPPER ELECTRONIC MODULE (UEM)**
- see **RAIN SENSOR**
- see **CHECKING WIRING AND TERMINALS** .

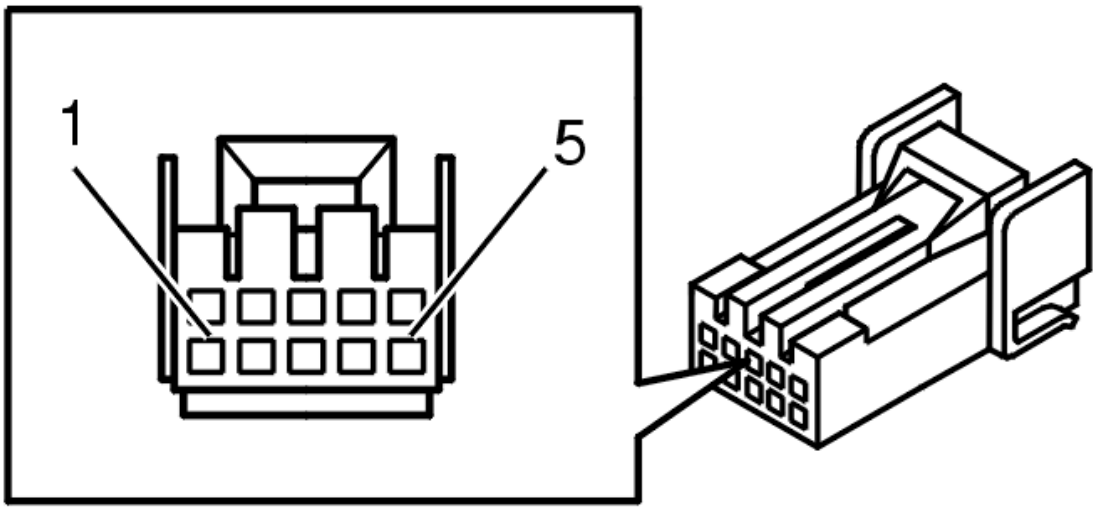

Fig. 371: Identifying 10 Pin Connector Terminals
Courtesy of VOLVO CARS CORPORATION

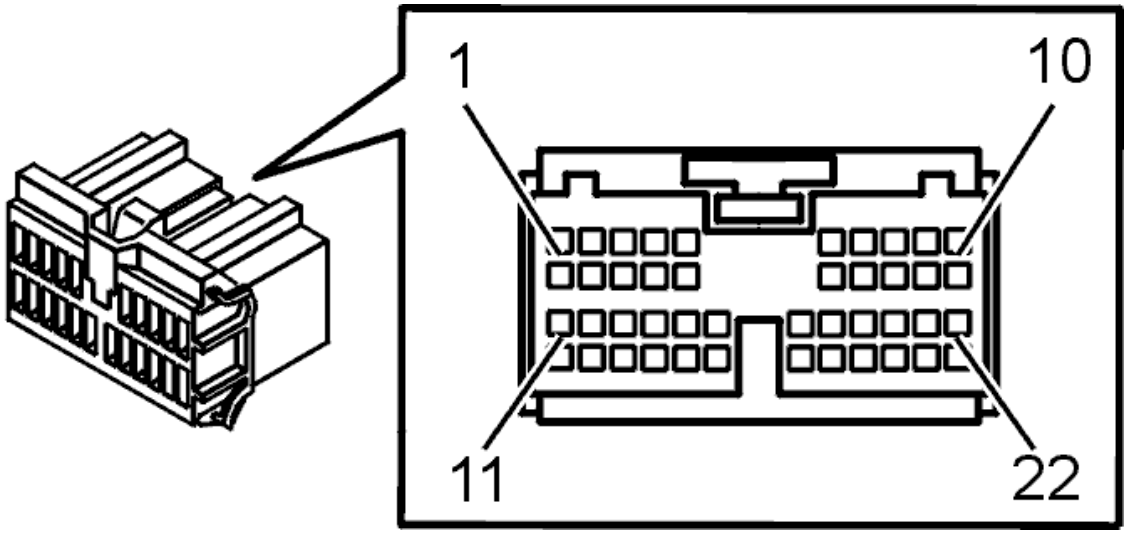

Fig. 372: Identifying Connector Terminals
Courtesy of VOLVO CARS CORPORATION

Is the voltage between the terminals 12 V?

- **YES**

  Refer to **CHECKING THE DATA CABLE**

- **NO**

  Refer to **CHECKING THE WIRING**

CHECKING THE DATA CABLE

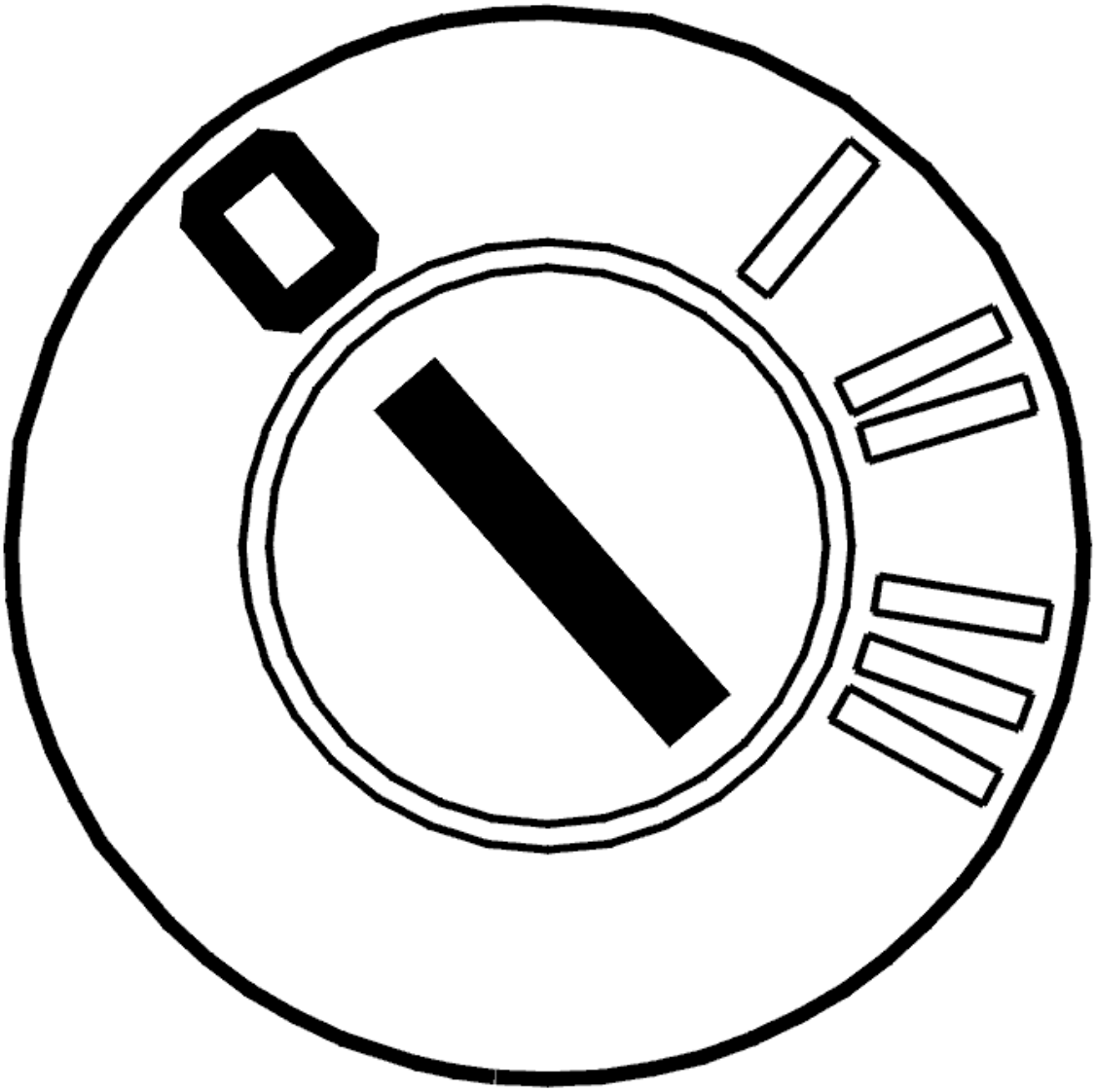

Fig. 373: Identifying Ignition OFF
Courtesy of VOLVO CARS CORPORATION

HINT: The wiring between upper electronic module (UEM) and the rain sensor consists of two cables.

The upper electronic module (UEM) transmits pulses to the rain sensor using the data cable.

Disconnect the rain sensor.

Check that the data is transmitted on the data cable terminal #1 by checking the voltage level between the data and ground cables for the wiring (that is terminals #1 and #2).

HINT: Use the oscilloscope function and check that a pulsed signal is transmitted. The difference between the high and low values of the pulses is approximately 12 V. In the event of an open-circuit in the data cable no pulses are transmitted and a continuous voltage is displayed.

If the difference between high and low values of the pulses is between 2 V and 10 V it indicates that the wiring is oxidized or trapped. Replace the wiring between the rain sensor and the roof wiring in the event of a fault.

If no other fault is found try replacing the rain sensor.

Remedy as necessary.

Other information:

- To access or replace the control module, see **UPPER ELECTRONIC MODULE (UEM)/REARVIEW MIRROR, REPLACING**
- see **RAIN SENSOR**
- For further information about signals and other values, see **SIGNAL DESCRIPTION, UPPER ELECTRONIC MODULE (UEM)**
- To connect the breakout box, see **CONNECTING THE BREAKOUT BOX**
- see **CHECKING WIRING AND TERMINALS** .

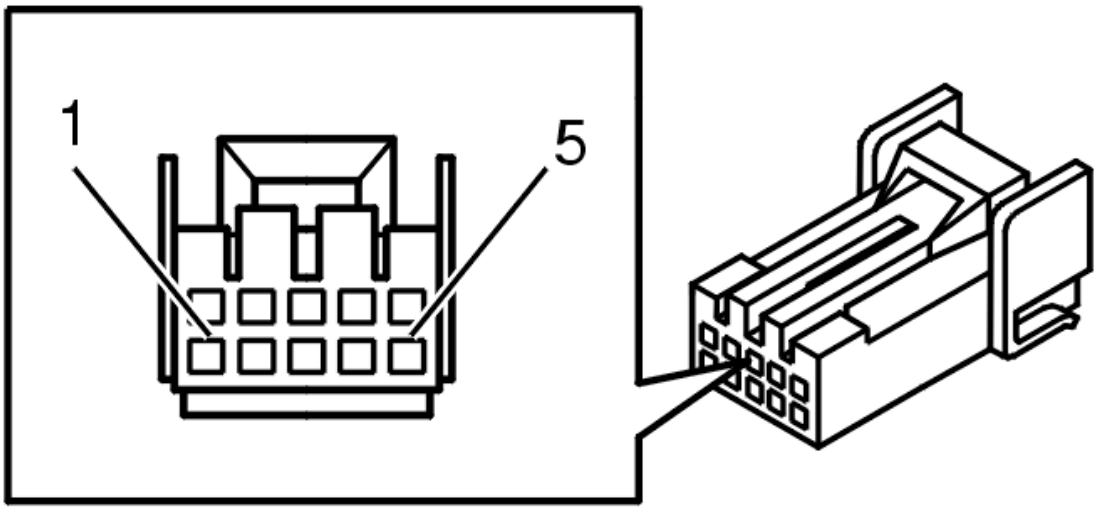

Fig. 374: Identifying 10 Pin Connector Terminals
Courtesy of VOLVO CARS CORPORATION

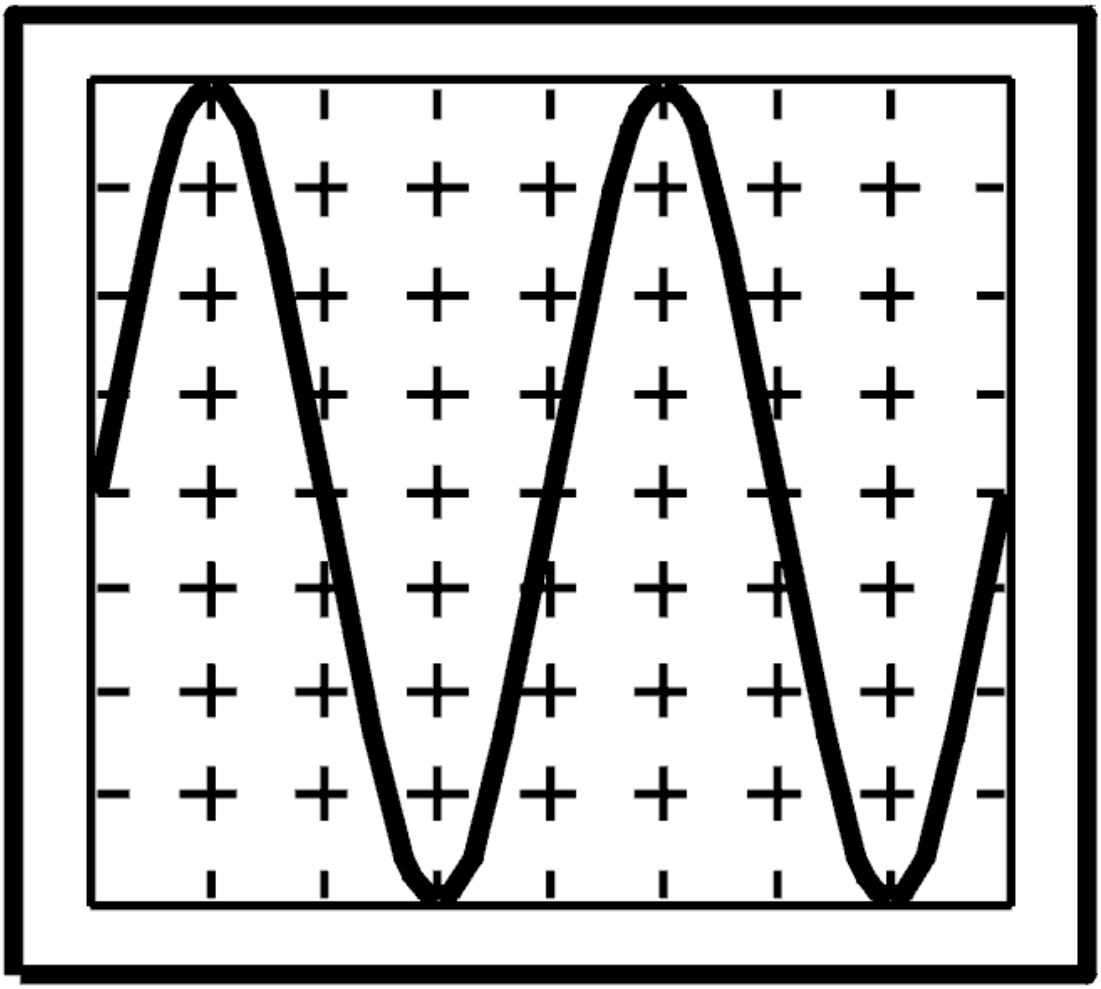

Fig. 375: Identifying Oscilloscope Display
Courtesy of VOLVO CARS CORPORATION

- **Continue**

  Refer to **VERIFICATION**

CHECKING THE WIRING

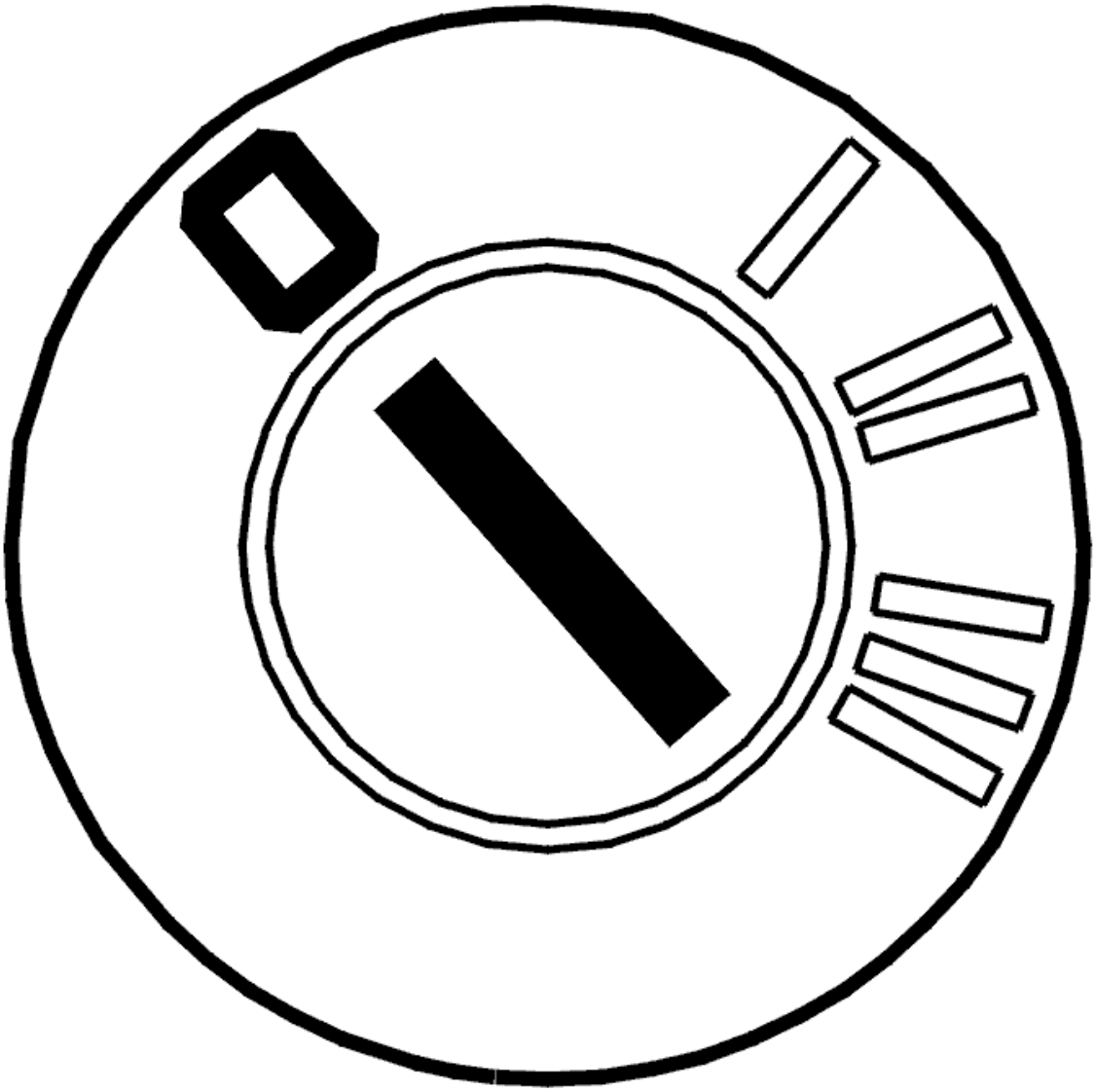

Fig. 376: Identifying Ignition OFF
Courtesy of VOLVO CARS CORPORATION

There is either a fault in the supply voltage or in the ground lead. Check the power supply cable against a ground terminal (the chassis).

HINT: If the voltage is 12 V the fault is in the ground lead. Other wise the fault is in the power supply cable.

Remedy as necessary.

Other information:

- To access or replace the control module, see **UPPER ELECTRONIC MODULE (UEM)/REARVIEW MIRROR, REPLACING**
- see **RAIN SENSOR**

- For further information about signals and other values, see **SIGNAL DESCRIPTION, UPPER ELECTRONIC MODULE (UEM)**
- To connect the breakout box, see **CONNECTING THE BREAKOUT BOX**
- To fault-trace the wiring and terminals, see **CHECKING WIRING AND TERMINALS** .

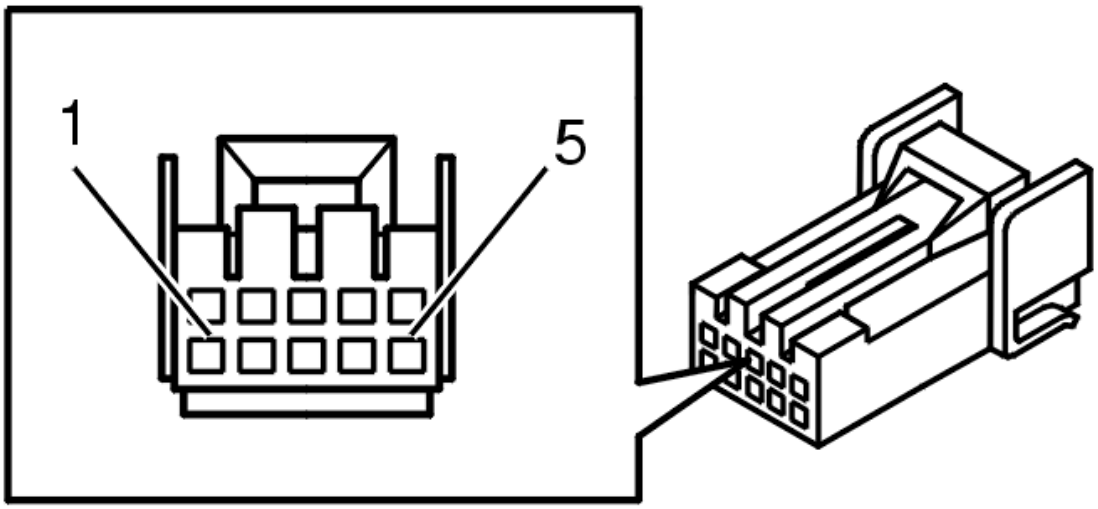

Fig. 377: Identifying 10 Pin Connector Terminals
Courtesy of VOLVO CARS CORPORATION

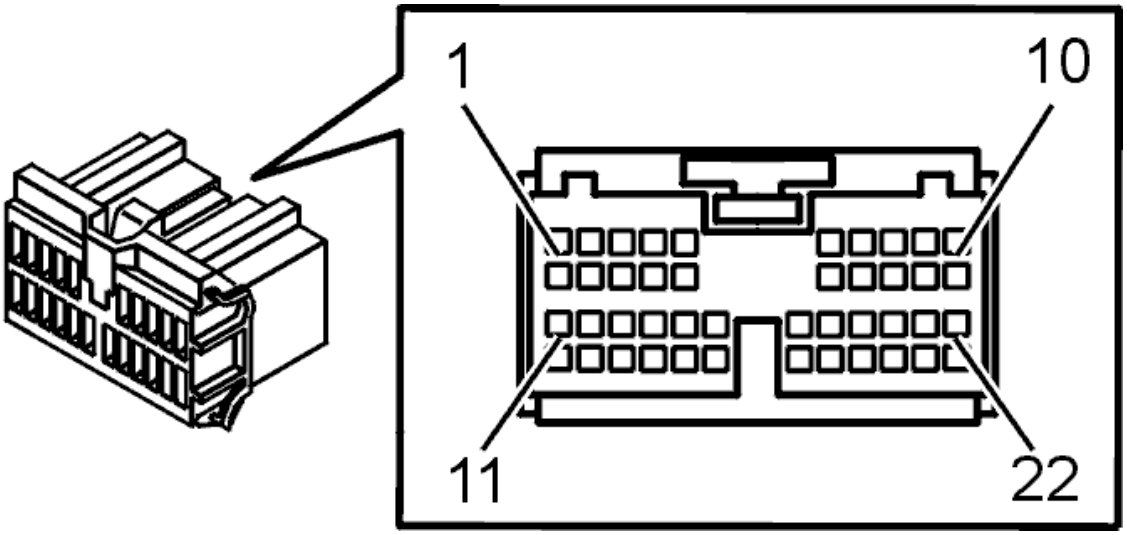

Fig. 378: Identifying Connector Terminals
Courtesy of VOLVO CARS CORPORATION

- **Continue**

  Refer to **VERIFICATION**

VERIFICATION

VERIFICATION

NOTE: After carrying out the repair, check that the fault has been remedied.

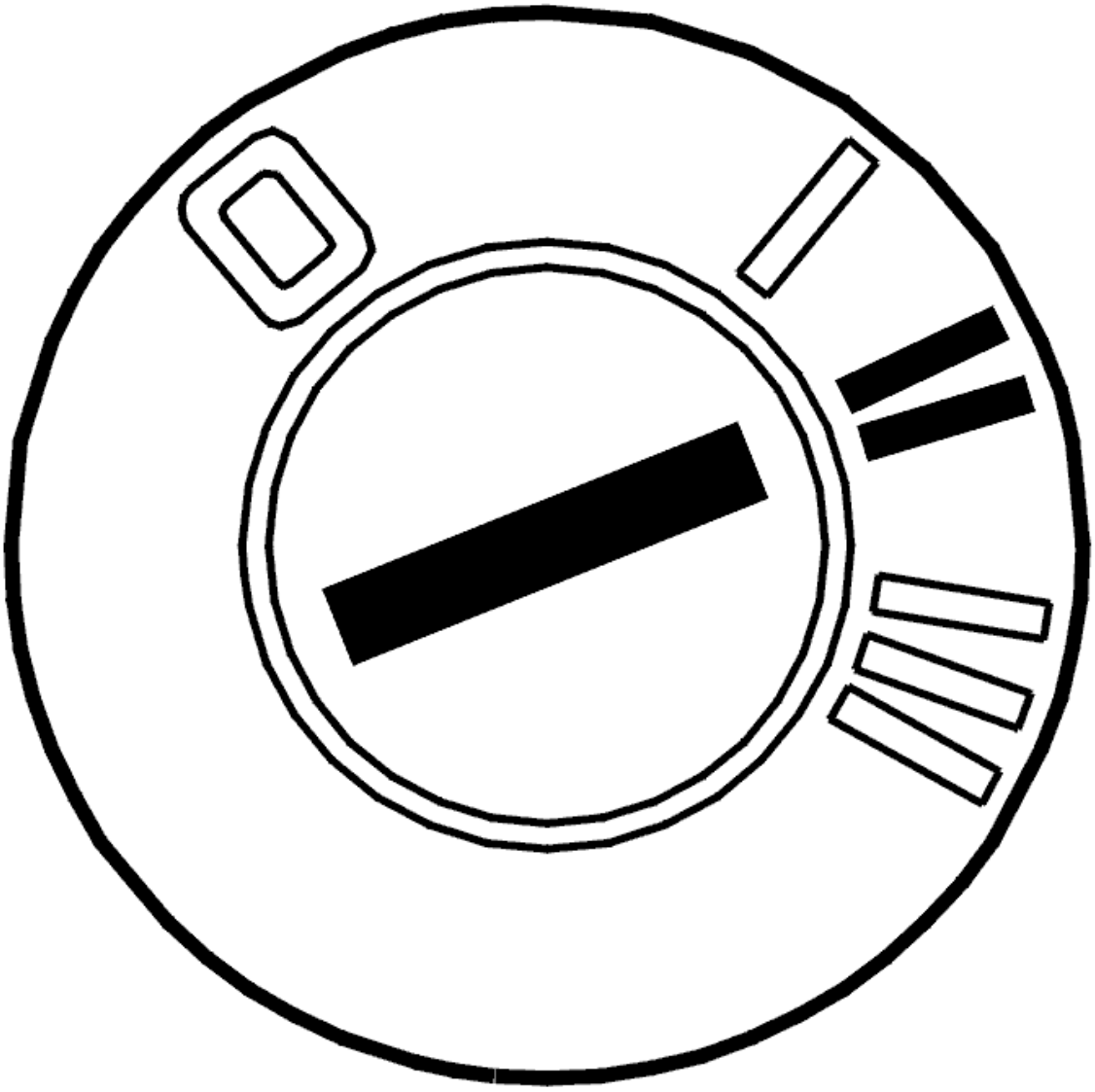

Fig. 379: Identifying Ignition ON
Courtesy of VOLVO CARS CORPORATION

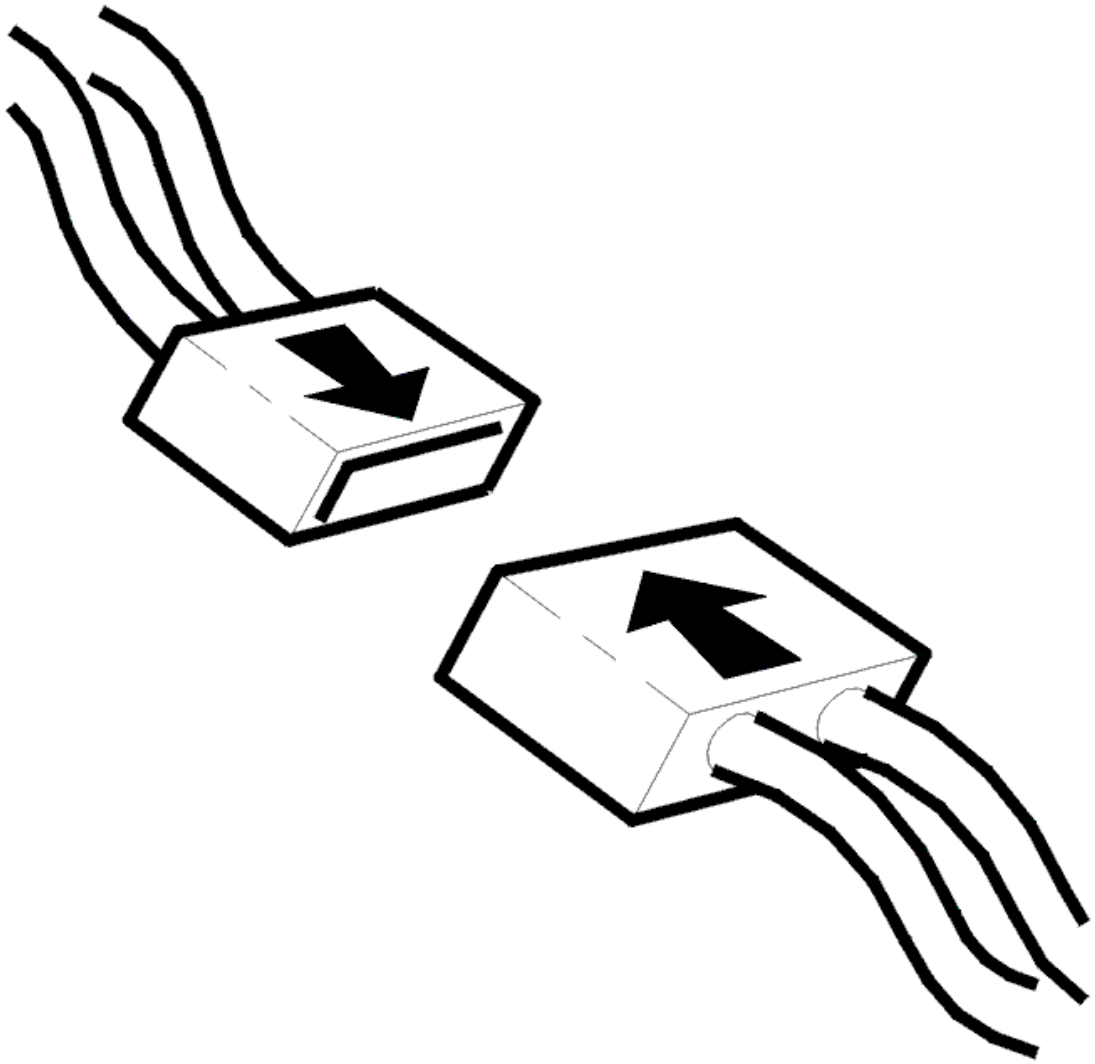

Fig. 380: Identifying Connector(s) Reinstallation
Courtesy of VOLVO CARS CORPORATION

- Ignition off
- Reinstall the connectors, components etc.
- Ignition on
- Activate the rain sensor.

  HINT: The wiper blades make a reference stroke to determine the cleanliness and condition of the windshield when the rain sensor is activated. The rain sensor is deactivated when the ignition is switched off. To reactivate the rain sensor with the ignition on, move the lever to position 0 and then to intermittent wiping.

  Spray water on the windshield where the rain sensor is positioned.

The wiper blades must now wipe the windshield clean.

Is the rain sensor functioning?

- **YES**

  VERIFIED: Troubleshooting has been completed.

- **NO**

  Refer to **INFORMATION**

INFORMATION

FAULT-TRACING INFORMATION

The fault should have been detected and remedied. As this is not the case fault-tracing has failed.

Exit fault-tracing for this diagnostic trouble code (DTC) or make another attempt.

REM-4F92: SENSOR, SEAT BELT REMINDER. SIGNAL MISSING (2003-2004)

DIAGNOSTIC TROUBLE CODE (DTC) INFORMATION REM-4F92

Condition

The rear electronic module (REM) checks the signal from the sensor, seat belt reminder in the passenger seat.

Diagnostic trouble code (DTC) REM-4F92 is stored if rear electronic module (REM) registers that there is no signal from the seat belt reminder sensor.

Diagnostic trouble code (DTC) REM-4F92 can be detected with ignition in positions I or II for at least 3 minutes and battery voltage > 9 volt.

Substitute Value

- None.

Possible Source

- Open-circuit in the signal cable
- Defective sensor, seat belt reminder.

Fault symptom[s]

- General warning lamp lit.

SIGNAL MISSING

CHECKING COMPONENTS AND WIRING

Check the rear electronic module (REM) and seat belt reminder sensor connectors. Check for contact resistance and oxidation. Check for damage and loose connections. Also check intermediate connector.

Check the signal cable between rear electronic module (REM) terminal #B19 (terminal #A39) and seat belt reminder sensor connector terminal #9. Check for an open-circuit.

Check the signal cable between rear electronic module (REM) terminal #B20 (terminal #A40) and seat belt reminder sensor connector terminal #10. Check for an open-circuit.

Check the seat belt reminder sensor. Measure the resistance between terminals #9 and #10 in the sensor connector.

HINT: The resistance should be above 100 kohms with no passengers and below 10 kohms with passengers.

Remedy as necessary.

Other information:

- To connect the breakout box, see **CONNECTING THE BREAKOUT BOX**
- See **HEATER PAD BACKREST AND CUSHION, REPLACING** (-2004) or **HEATER PAD BACKREST AND CUSHION, REPLACING** (2005-).
- For information about signals, see **SIGNAL SPECIFICATION**
- see **CHECKING WIRING AND TERMINALS** .

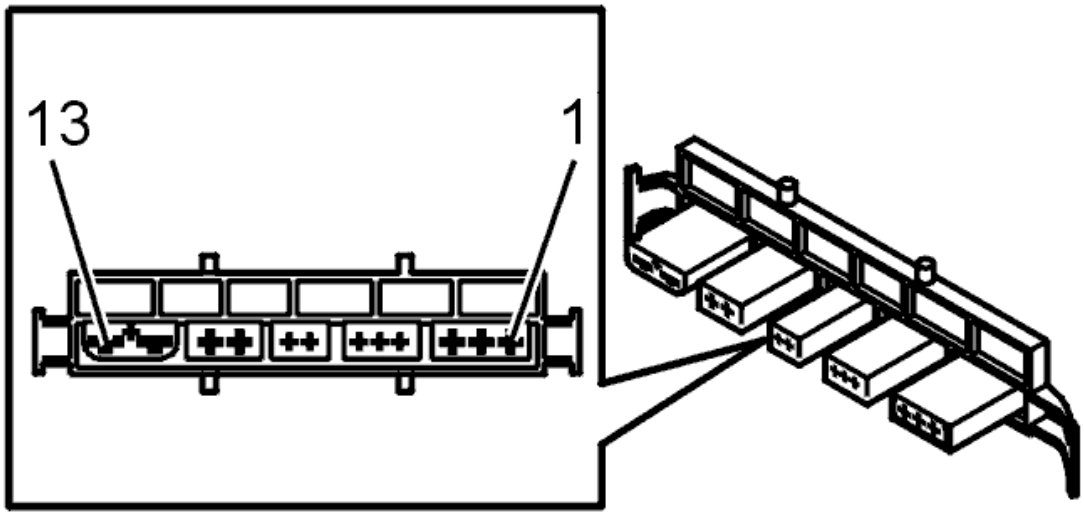

Fig. 1: Connector B, Hands-Free Speaker Connector On The Carphone Module (PHM)
Courtesy of VOLVO CARS CORPORATION

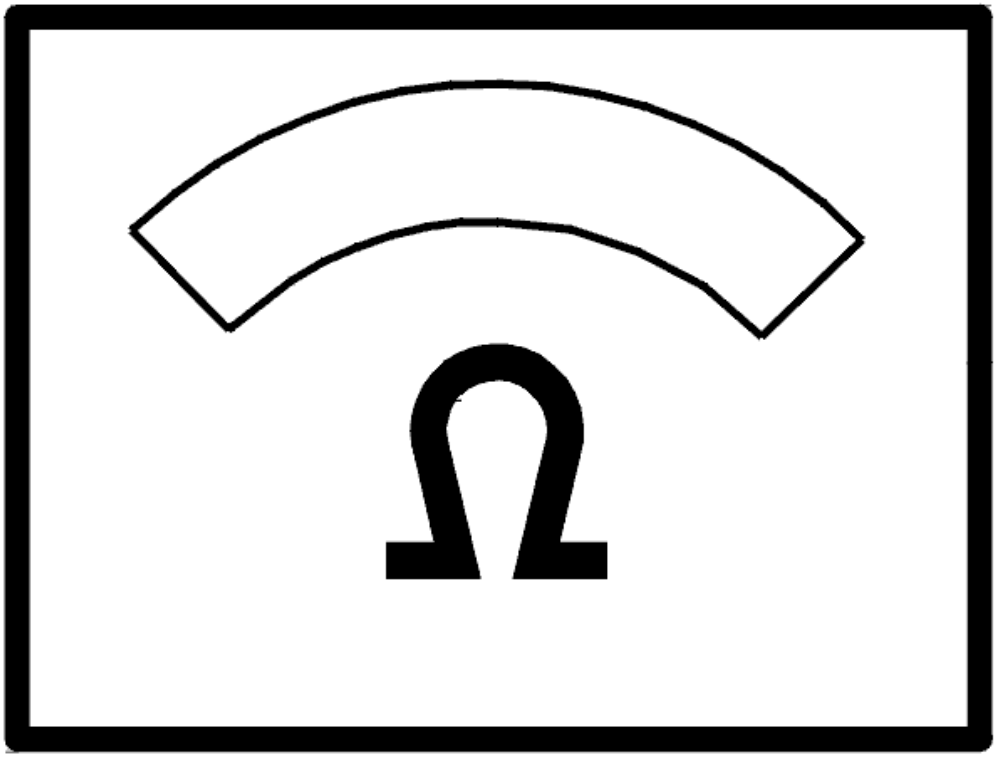

Fig. 2: Identifying Ohm Meter
Courtesy of VOLVO CARS CORPORATION

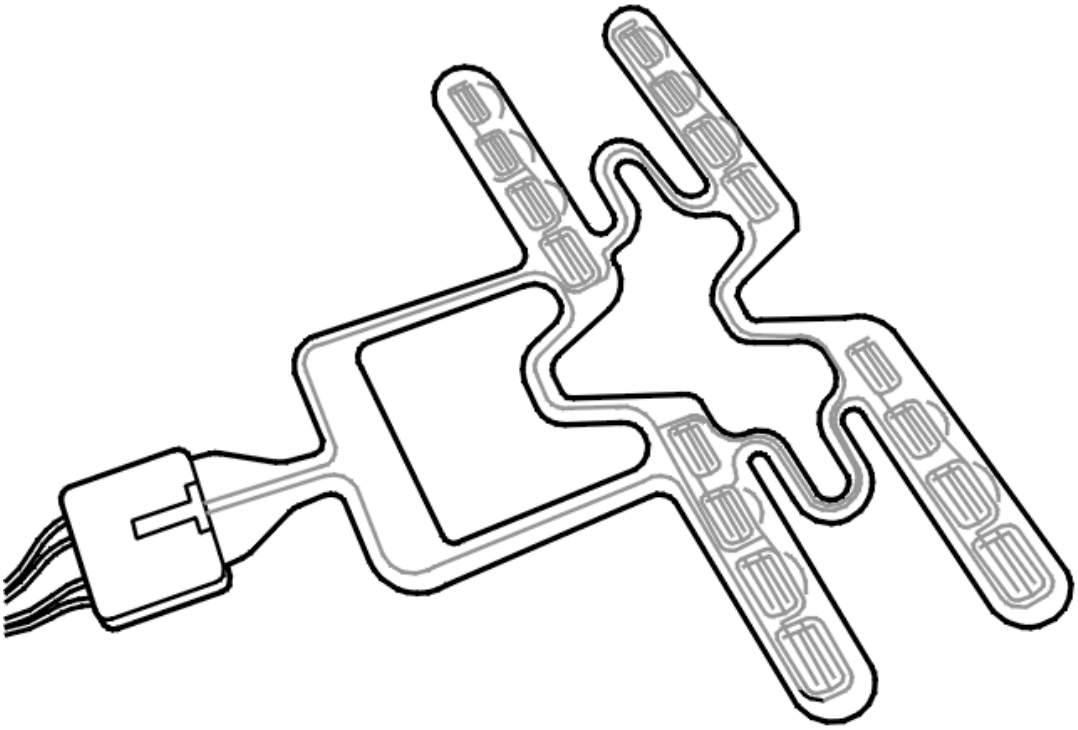

Fig. 3: Identifying Seat Belt Reminder Sensor
Courtesy of VOLVO CARS CORPORATION

- **Continue**

  Refer to **VERIFICATION**

VERIFICATION

VERIFICATION

HINT: After carrying out the repair, check that the fault has been remedied.

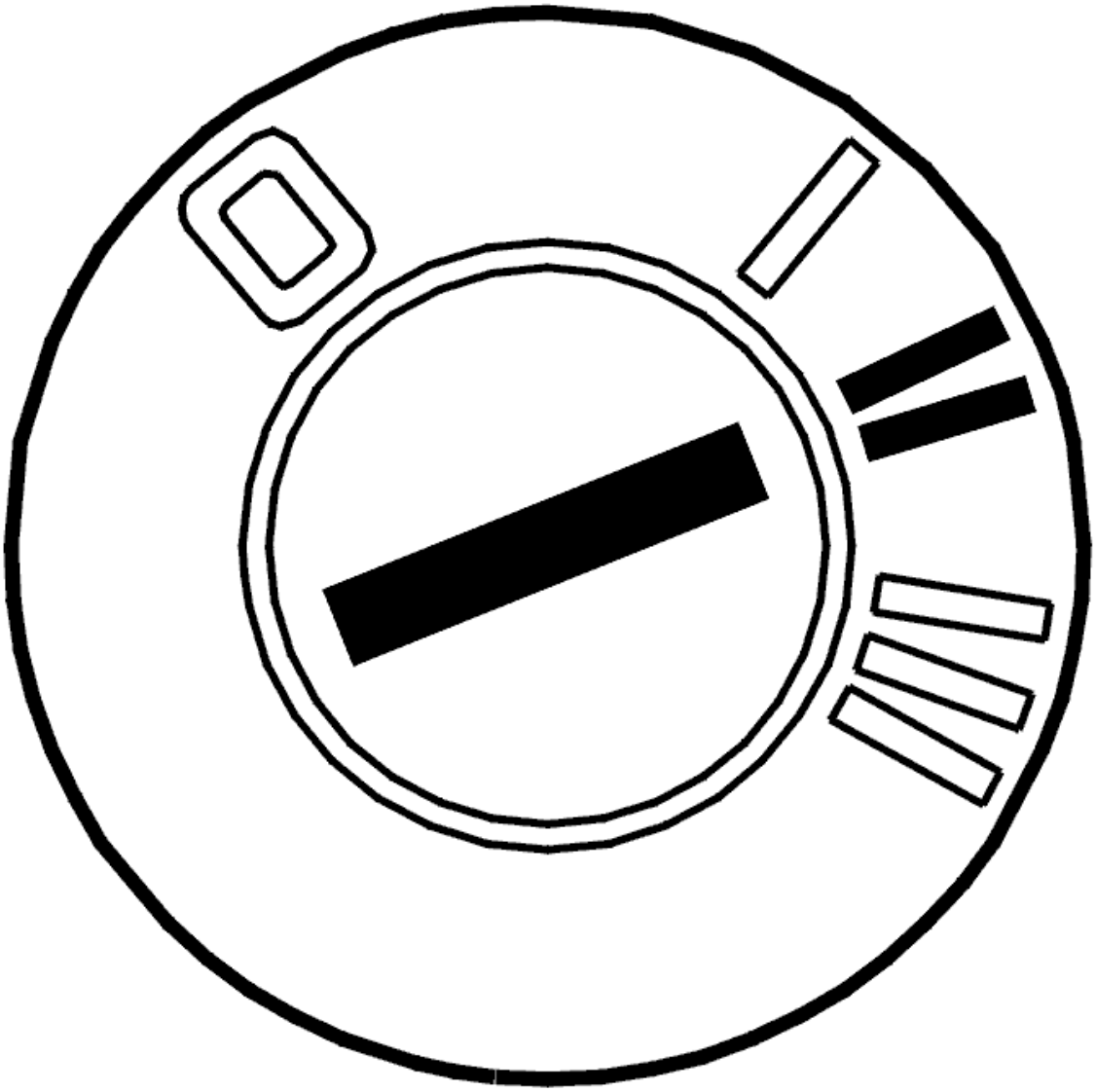

Fig. 4: Identifying Ignition ON
Courtesy of VOLVO CARS CORPORATION

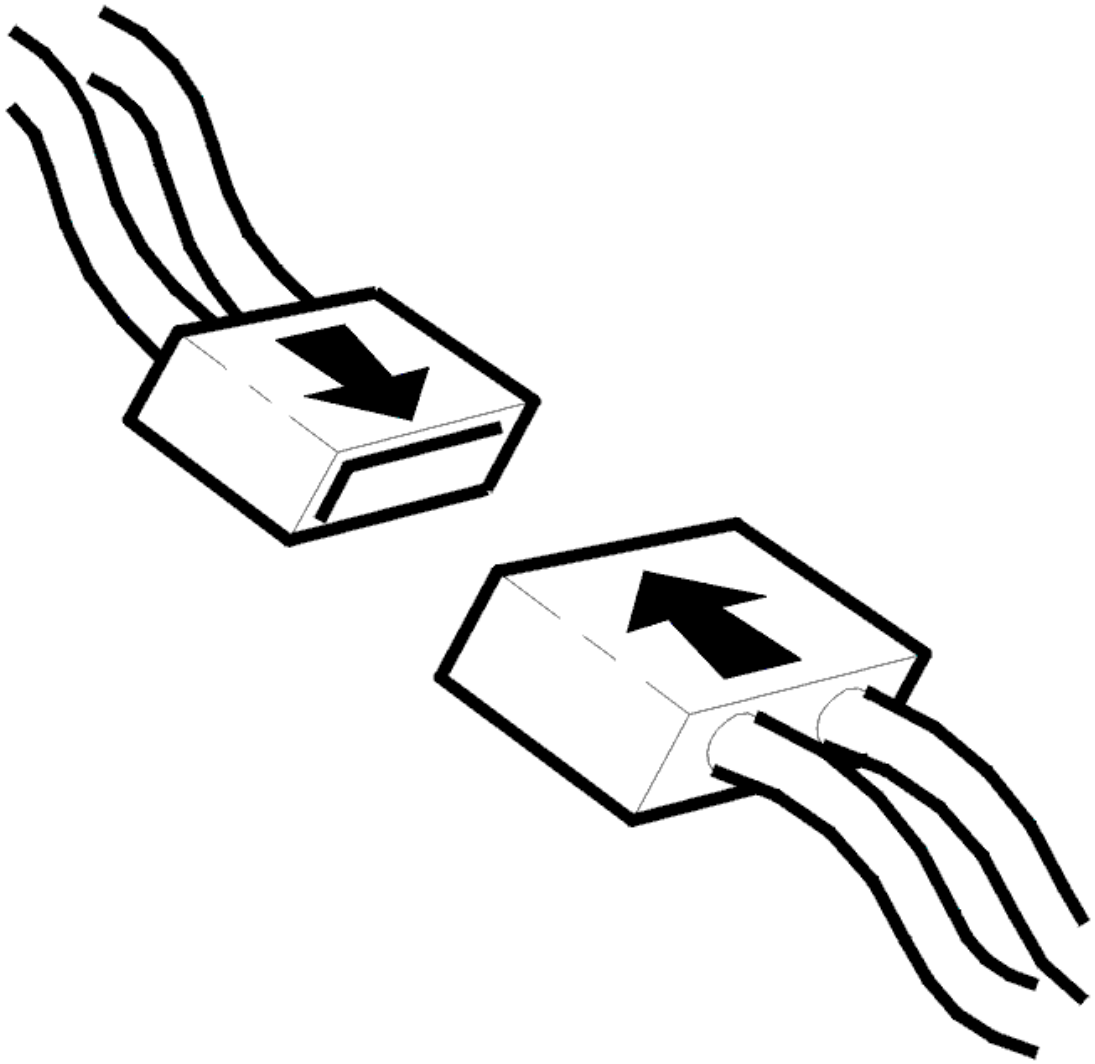

Fig. 5: Connecting Connector
Courtesy of VOLVO CARS CORPORATION

- Ignition off
- Reinstall the connectors, components etc.
- Ignition on.

Read off the status for seat belt reminder sensor using the VCT2000 (or appropriate scan tool).

Check that the sensor changes status with and without a passenger in the passenger seat.

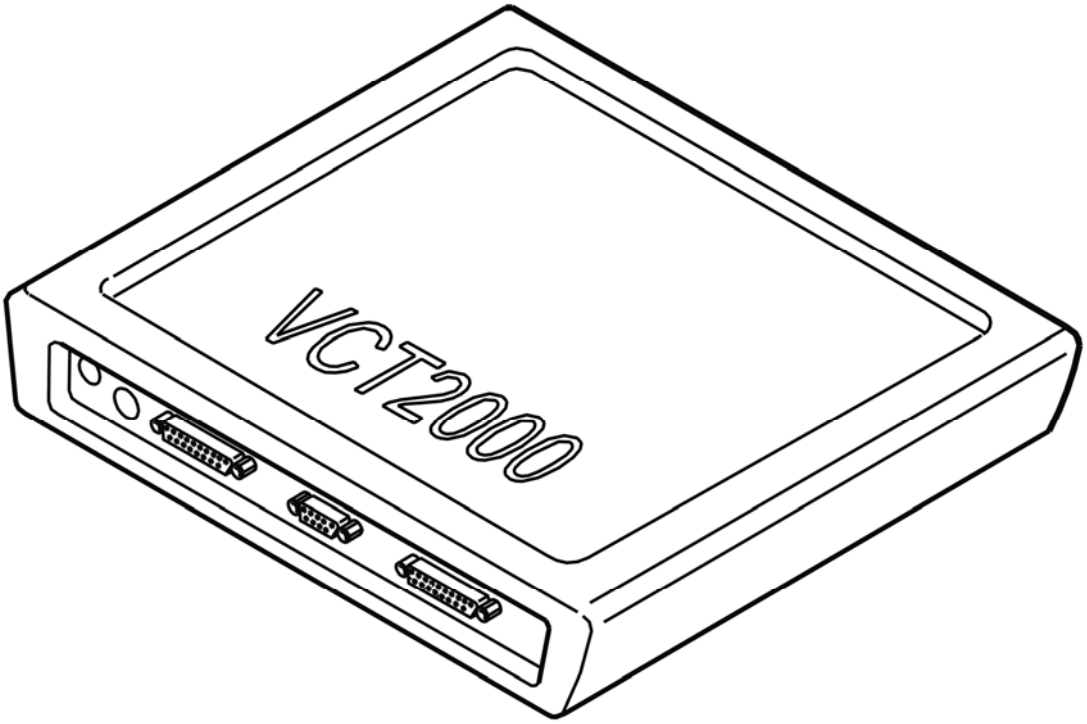

Fig. 6: Identifying VCT2000 Diagnostic Tool Symbol In VIDA
Courtesy of VOLVO CARS CORPORATION

Does the seat belt reminder sensor change status with and without a passenger?

- **YES**

  VERIFIED: Troubleshooting has been completed.

- **NO**

  Refer to **INFORMATION**

INFORMATION

FAULT-TRACING INFORMATION

The fault should have been detected and remedied. As this is not the case fault-tracing has failed.

Exit fault-tracing for this diagnostic trouble code (DTC) or make another attempt.

REM-4F93: SENSOR, SEAT BELT REMINDER. FAULTY SIGNAL (2003-2004)

DIAGNOSTIC TROUBLE CODE (DTC) INFORMATION REM-4F93

Condition

The rear electronic module (REM) checks the signal from the sensor, seat belt reminder in the passenger seat.

Diagnostic trouble code (DTC) REM-4F93 is stored if rear electronic module (REM) registers too an incorrect signal from the seat belt reminder sensor.

Diagnostic trouble code (DTC) REM-4F93 can be detected with ignition in positions I or II for at least 3 minutes and battery voltage > 9 volt.

Substitute Value

- None.

Possible Source

- Short-circuit between the signal cables
- Defective sensor, seat belt reminder.

Fault symptom[s]

- General warning lamp lit.

FAULTY SIGNAL

CHECKING THE COMPONENT

Check the rear electronic module (REM) and seat belt reminder sensor connectors. Check for contact resistance and oxidation. Check for damage and loose connections. Also check intermediate connector.

Check the signal cables. Check for a short-circuit between the cables by measuring the resistance between the rear electronic module (REM) terminals #B19 (#A39) and #B20 (#A40) with the seat belt reminder sensor disconnected. The resistance must be infinite.

Check the seat belt reminder sensor. Measure the resistance between terminals #9 and #10 in the sensor connector.

HINT: The resistance should be above 100 kohms with no passengers and below 10 kohms with passengers.

Remedy as necessary.

Other information:

- To connect the breakout box, see **CONNECTING THE BREAKOUT BOX**
- See **HEATER PAD BACKREST AND CUSHION, REPLACING** (-2004) or **HEATER PAD BACKREST AND CUSHION, REPLACING** (2005-).

- For information about signals, see **SIGNAL SPECIFICATION**
- see **CHECKING WIRING AND TERMINALS** .

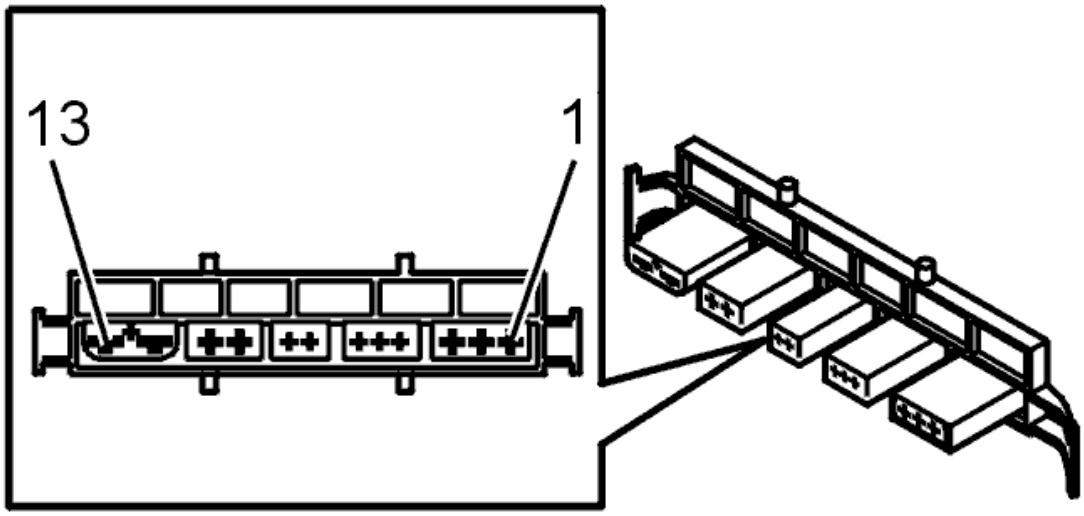

Fig. 7: Connector B, Hands-Free Speaker Connector On The Carphone Module (PHM)
Courtesy of VOLVO CARS CORPORATION

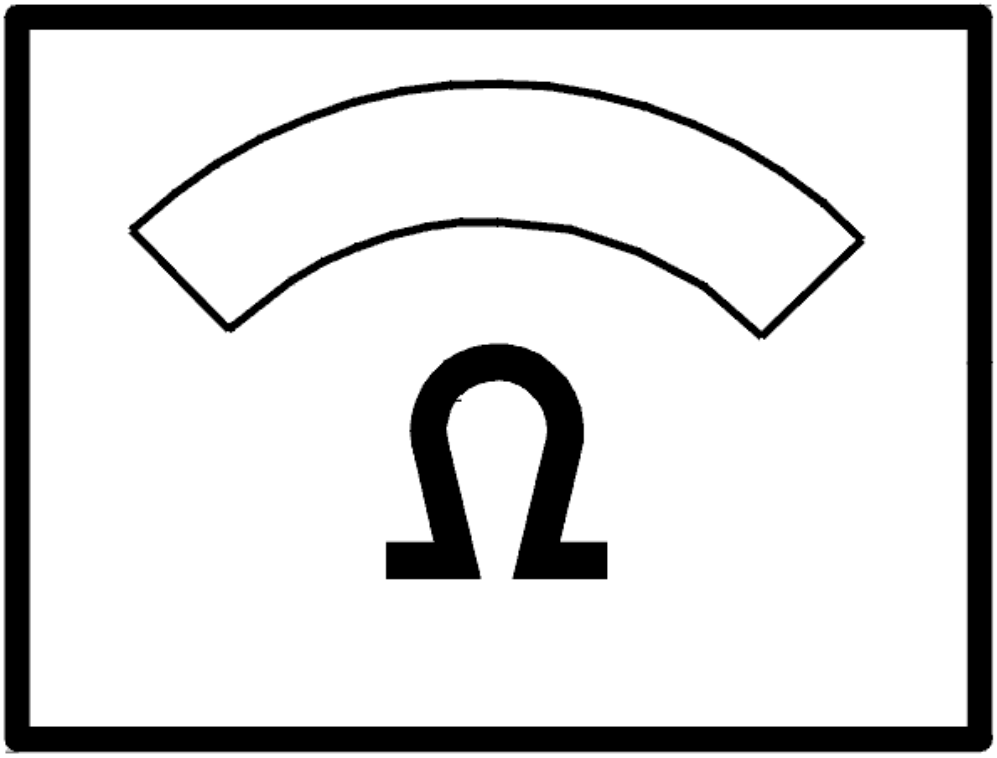

Fig. 8: Identifying Ohm Meter
Courtesy of VOLVO CARS CORPORATION

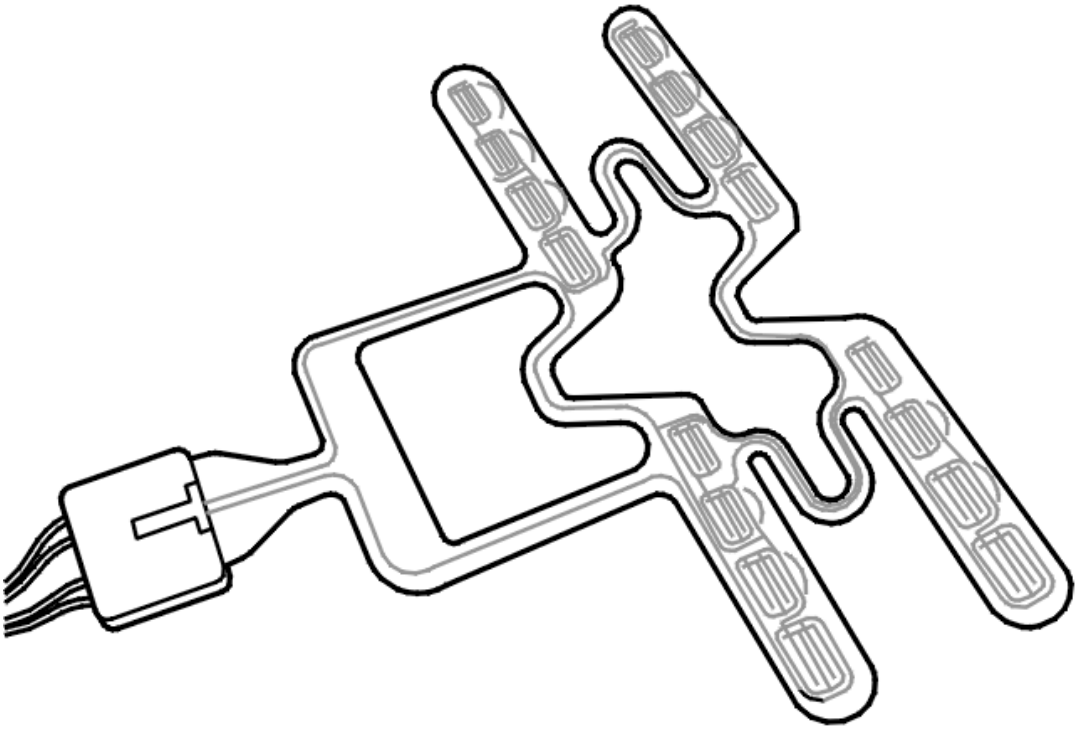

Fig. 9: Identifying Seat Belt Reminder Sensor
Courtesy of VOLVO CARS CORPORATION

- **Continue**

  Refer to **VERIFICATION**

VERIFICATION

VERIFICATION

HINT: After carrying out the repair, check that the fault has been remedied.

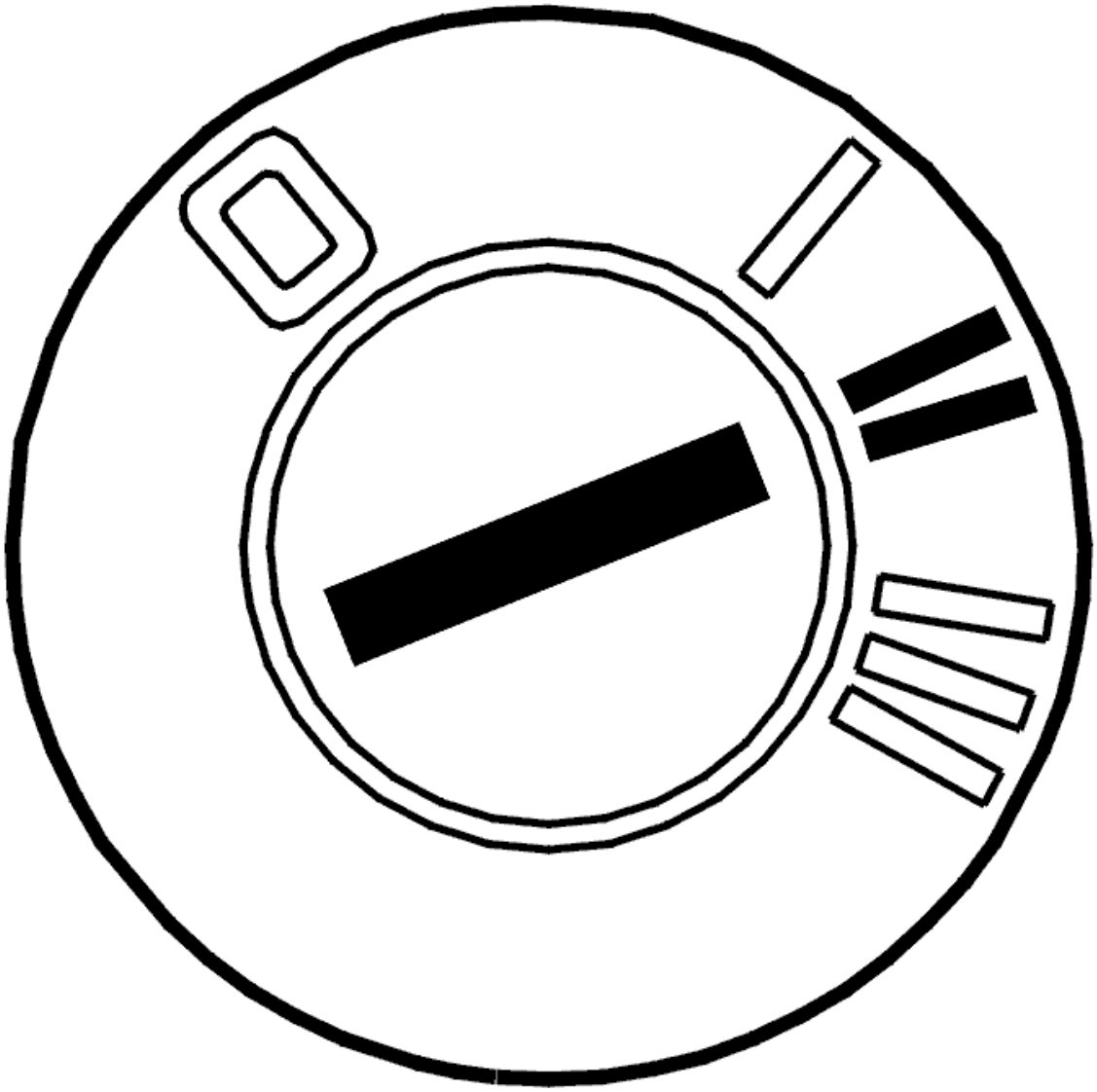

Fig. 10: Identifying Ignition ON
Courtesy of VOLVO CARS CORPORATION

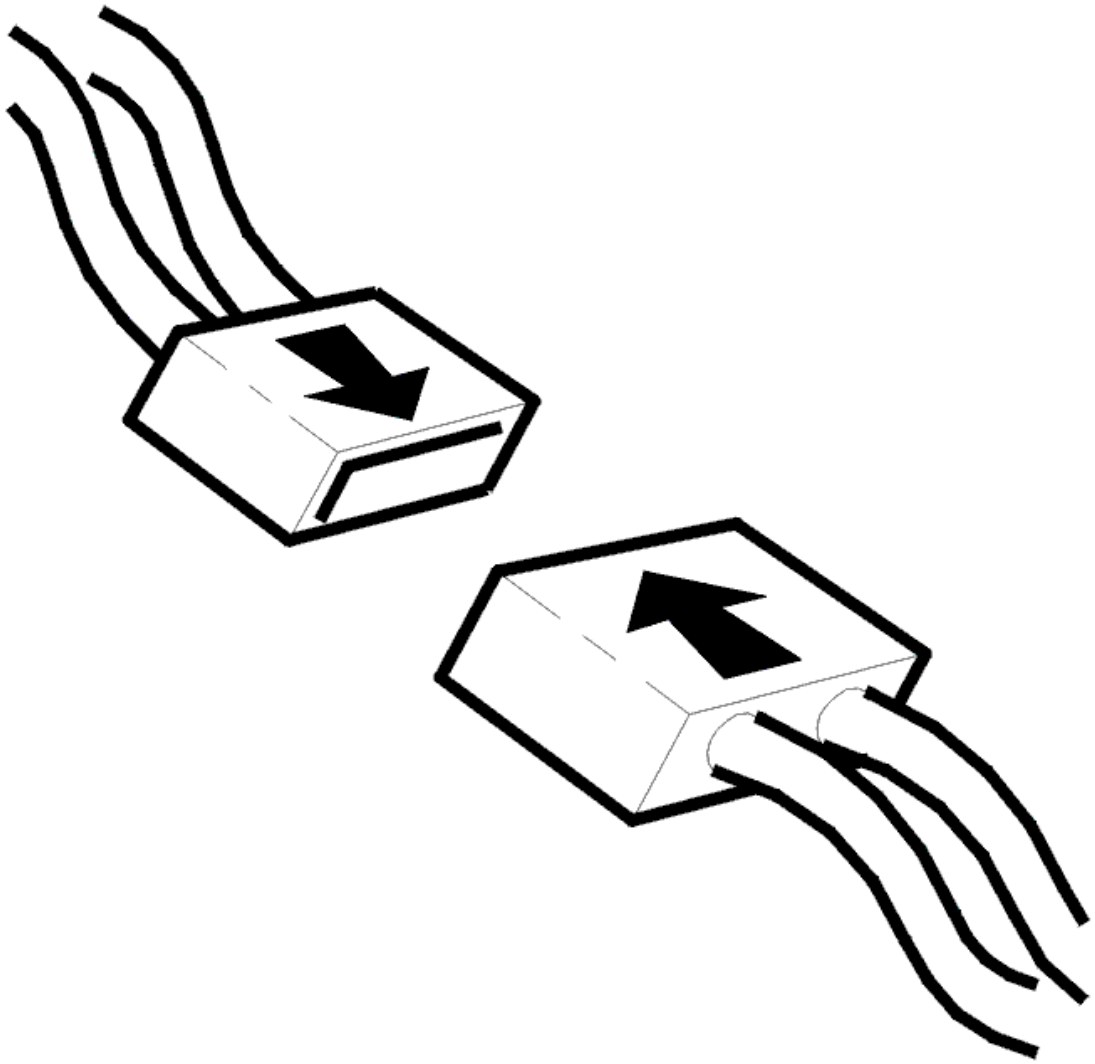

Fig. 11: Connecting Connector
Courtesy of VOLVO CARS CORPORATION

- Ignition off
- Reinstall the connectors, components etc.
- Ignition on.

Read off the status for seat belt reminder sensor using the VCT2000 (or appropriate scan tool).

Check that the sensor changes status with and without a passenger in the passenger seat.

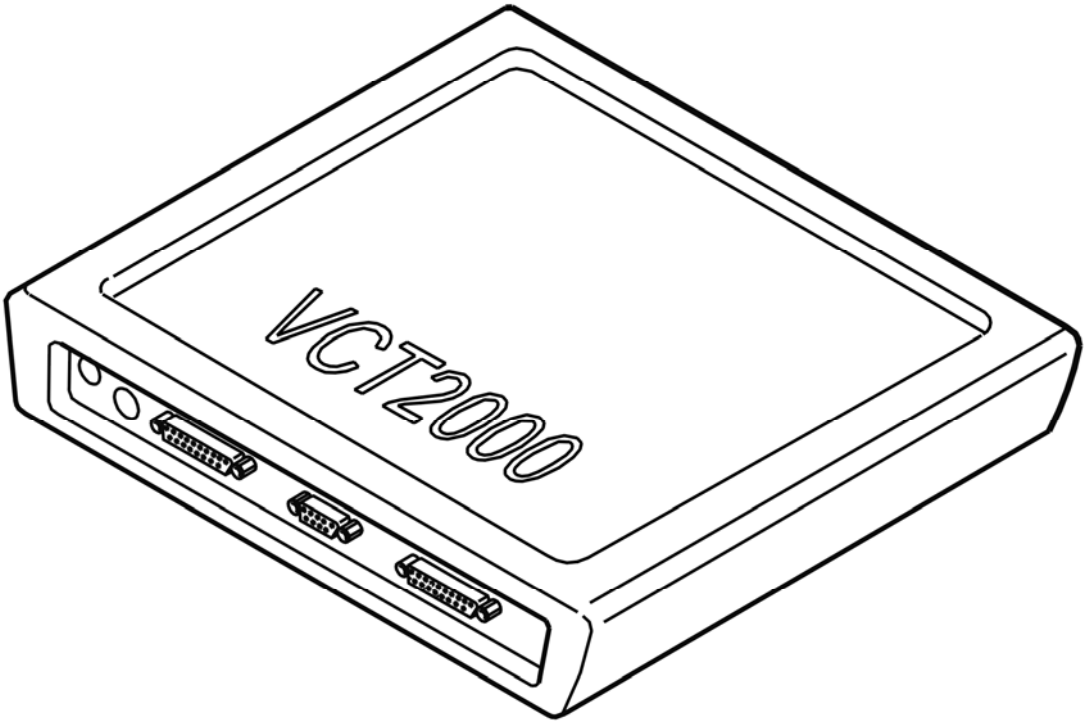

Fig. 12: Identifying VCT2000 Diagnostic Tool Symbol In VIDA
Courtesy of VOLVO CARS CORPORATION

Does the seat belt reminder sensor change status with and without a passenger?

- **YES**

  VERIFIED: Troubleshooting has been completed.

- **NO**

  Refer to **INFORMATION**

INFORMATION

FAULT-TRACING INFORMATION

The fault should have been detected and remedied. As this is not the case fault-tracing has failed.

Exit fault-tracing for this diagnostic trouble code (DTC) or make another attempt.

REM-5A31: RELAY, REAR A/C. SIGNAL TOO HIGH (2003-2004)

DIAGNOSTIC TROUBLE CODE (DTC) INFORMATION REM-5A31

Condition

The rear electronic module (REM) checks the output signal to the relay coil for relay, rear air conditioning (A/C).

Diagnostic trouble code (DTC) REM-5A31 is stored if the control module registers that the output signal to the relay coil is too high.

Diagnostic trouble code (DTC) REM-5A31 can be detected when the relay is activated.

Substitute Value

- None.

Possible Source

- Short-circuit to supply voltage in the relay circuit
- Defective relay.

Fault symptom[s]

- The rear air conditioning (A/C) system is not working.

SIGNAL TOO HIGH

CHECKING AND REPLACING THE COMPONENT

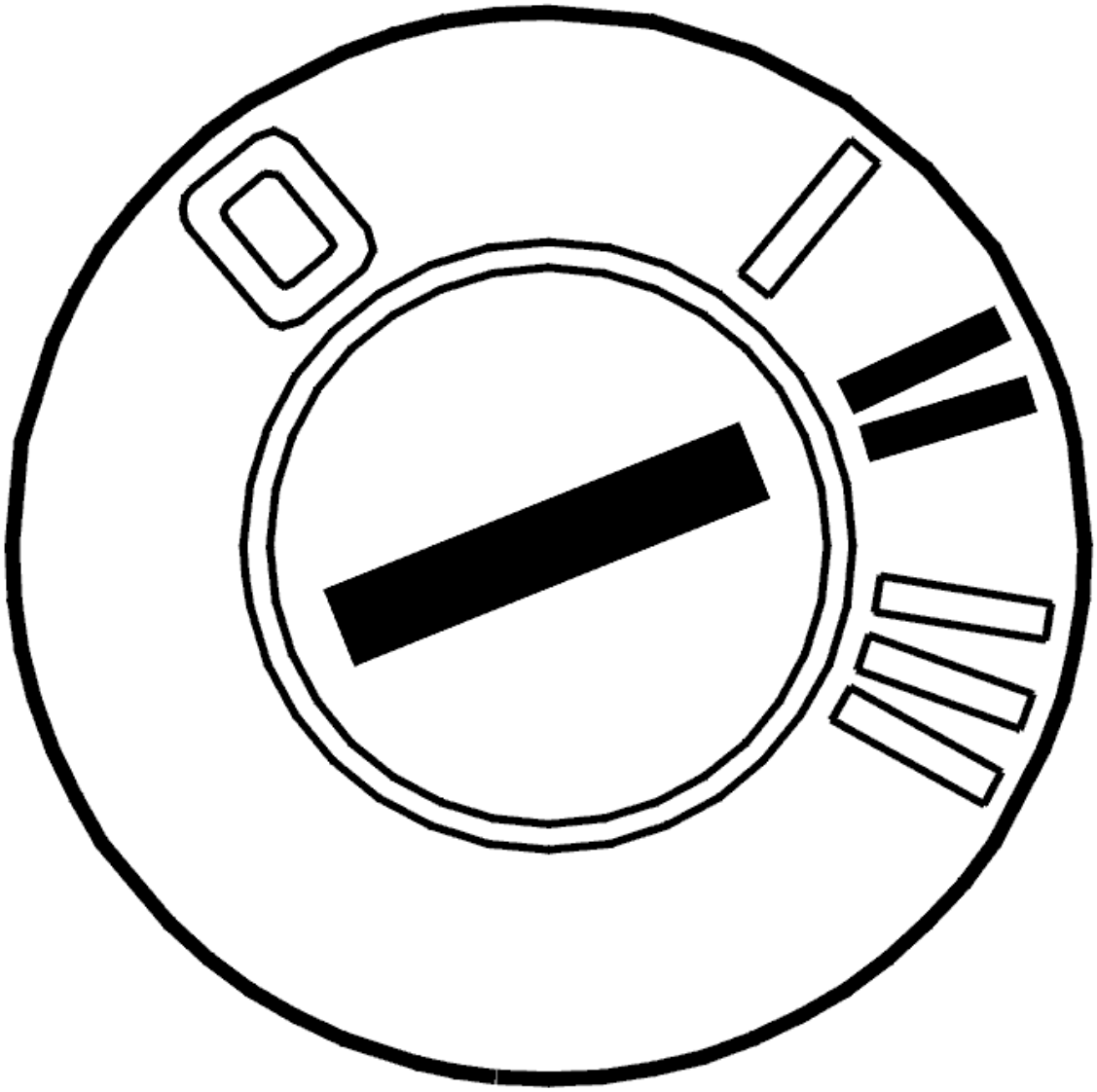

Fig. 13: Identifying Ignition ON
Courtesy of VOLVO CARS CORPORATION

- Ignition off
- Change the relay for rear air conditioning (A/C)
- Ignition on.

  Activate the relay. The relay should click.

  If the function is OK, the cause of the fault was a defective relay (short-circuit in the relay).

  Other information

  - To access and replace the relay, see **RELAY/FUSE BOX CARGO COMPARTMENT/REAR ELECTRONIC MODULE (REM), REPLACING**

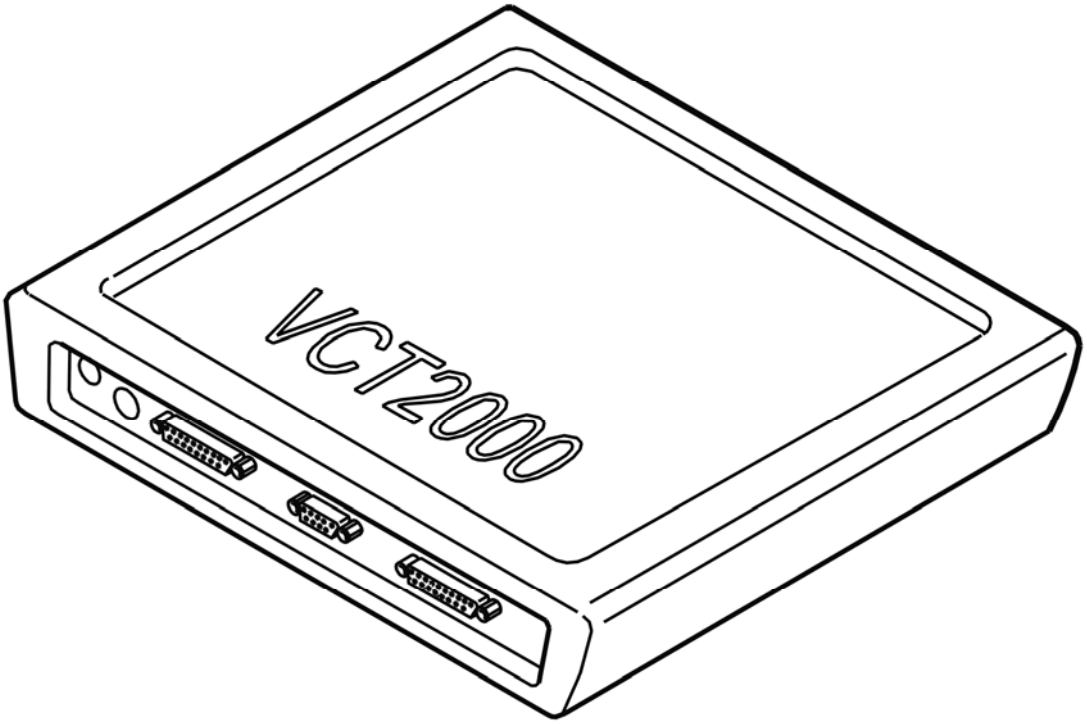

Fig. 14: Identifying VCT2000 Diagnostic Tool Symbol In VIDA
Courtesy of VOLVO CARS CORPORATION

Was the function OK?

- **YES**

  OKAY: Troubleshooting has been completed.

- **NO**

  Refer to **CHECKING THE CONTROL MODULE**

CHECKING THE CONTROL MODULE

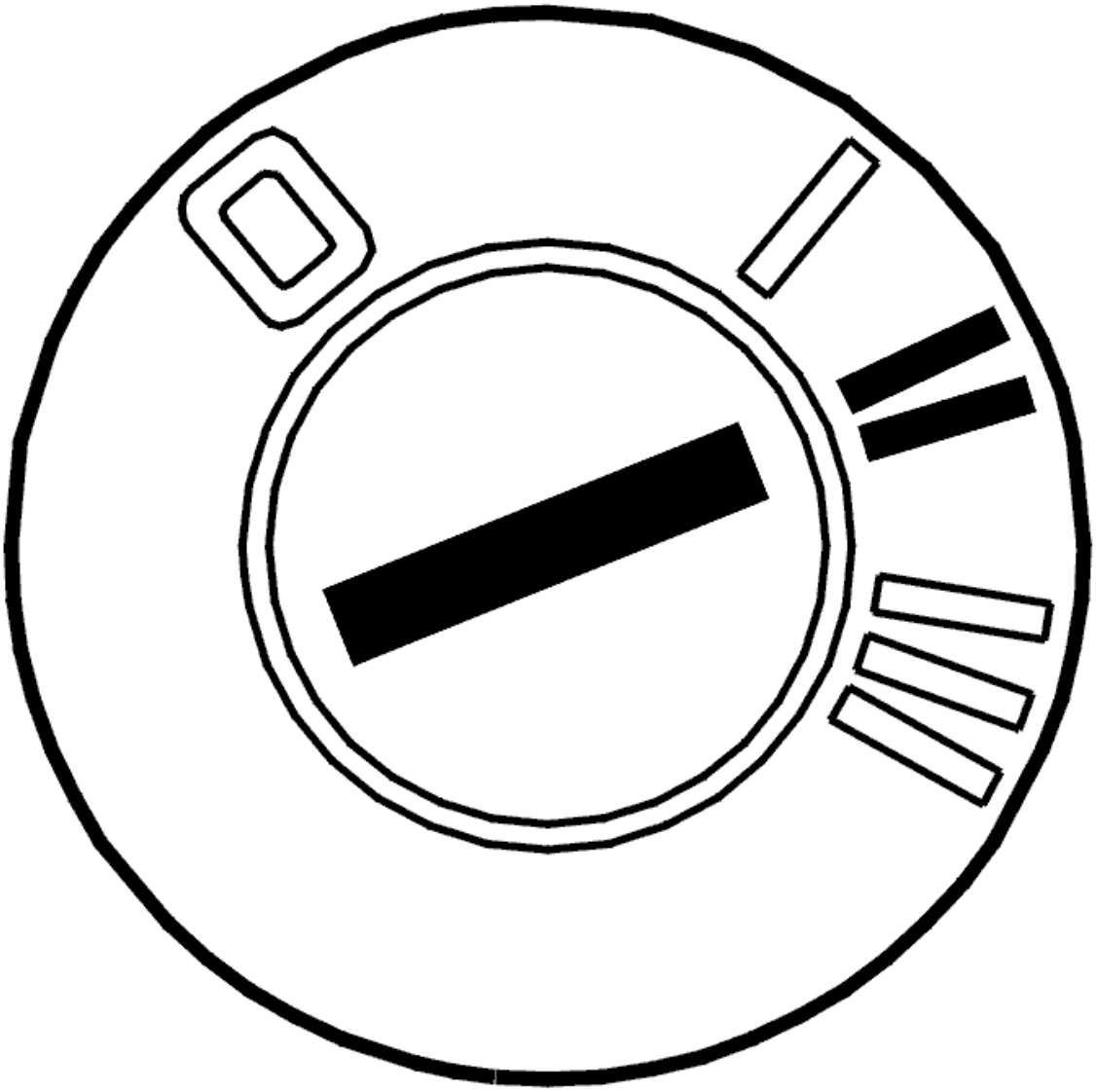

Fig. 15: Identifying Ignition ON
Courtesy of VOLVO CARS CORPORATION

- Ignition off
- Remove the relay
- Ignition on.

Check the relay coil driver circuit for a short-circuit to supply voltage by taking a voltmeter reading at terminal #2 in the relay base.

HINT: The voltage between terminal #2 and ground should be approximately 0 V.

Remedy as necessary.

Other information

- To access and replace the relay, see **RELAY/FUSE BOX CARGO COMPARTMENT/REAR ELECTRONIC MODULE (REM), REPLACING**
- see **CHECKING WIRING AND TERMINALS** .

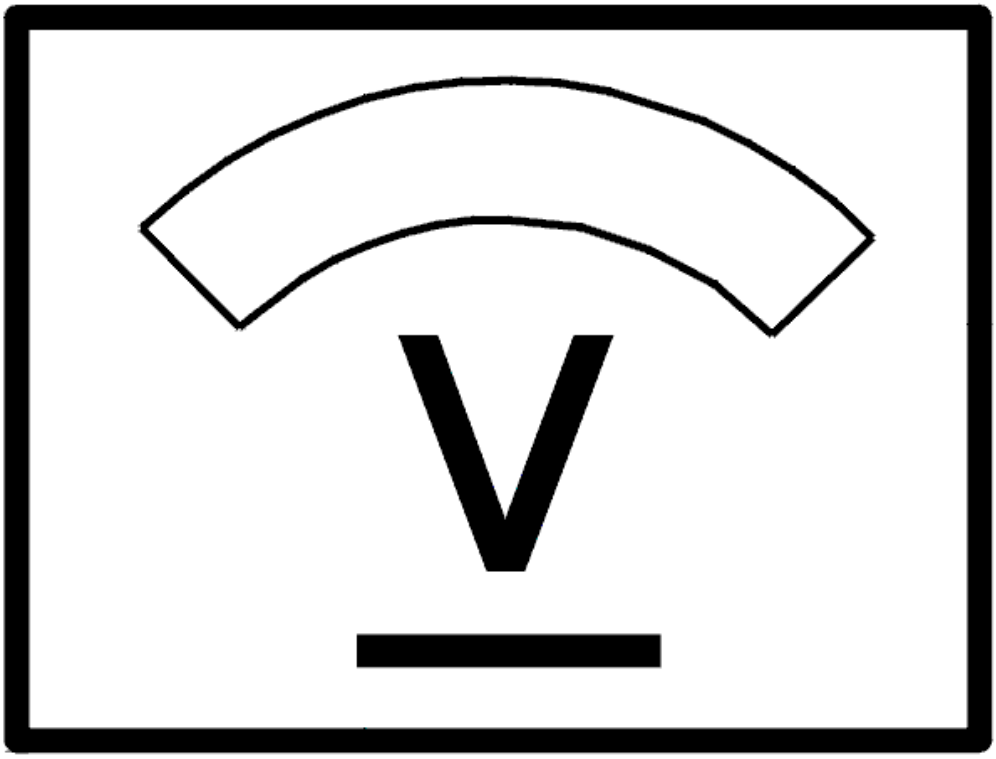

Fig. 16: Identifying Voltage Display
Courtesy of VOLVO CARS CORPORATION

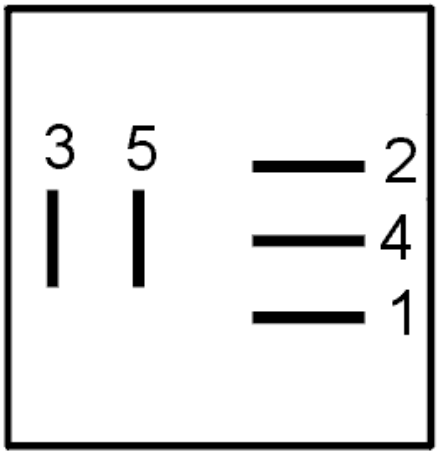

Fig. 17: Identifying Terminals
Courtesy of VOLVO CARS CORPORATION

- **Continue**

  Refer to **VERIFICATION**

VERIFICATION

VERIFICATION

HINT: After carrying out the repair, check that the fault has been remedied.

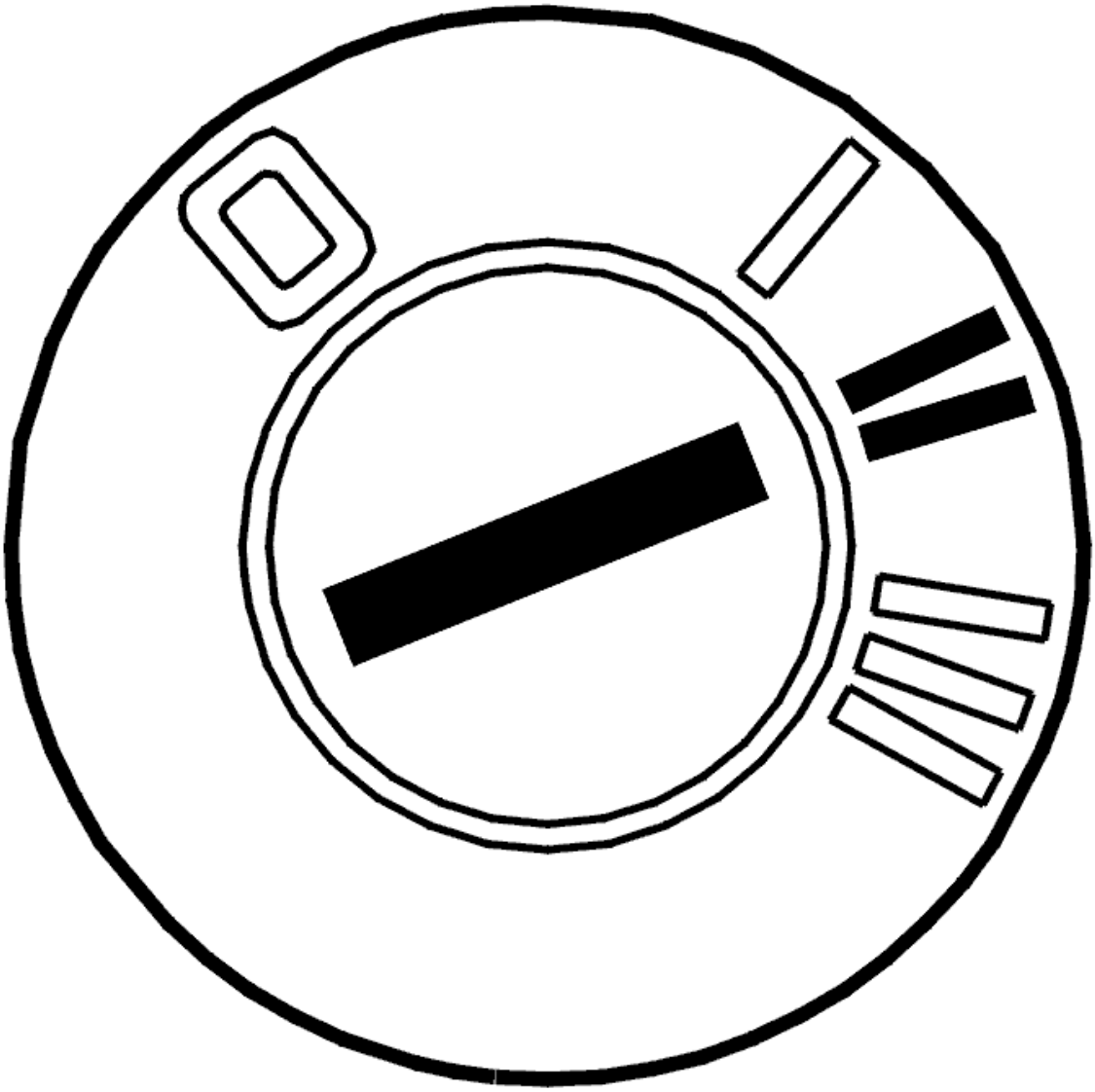

Fig. 18: Identifying Ignition ON
Courtesy of VOLVO CARS CORPORATION

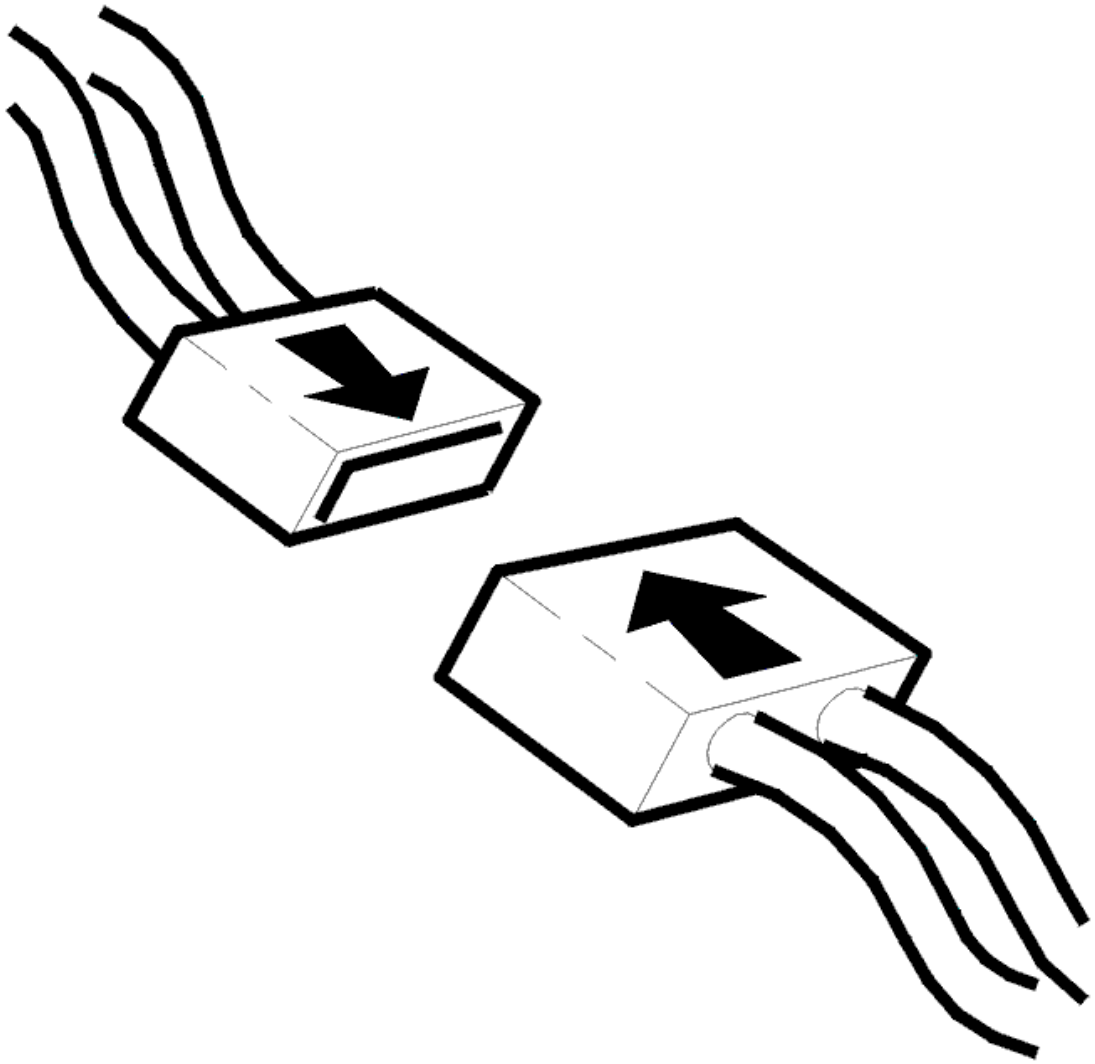

Fig. 19: Connecting Connector
Courtesy of VOLVO CARS CORPORATION

- Ignition off
- Reinstall the connectors, components etc.
- Ignition on.

Activate and deactivate the rear air conditioning (A/C) relay.

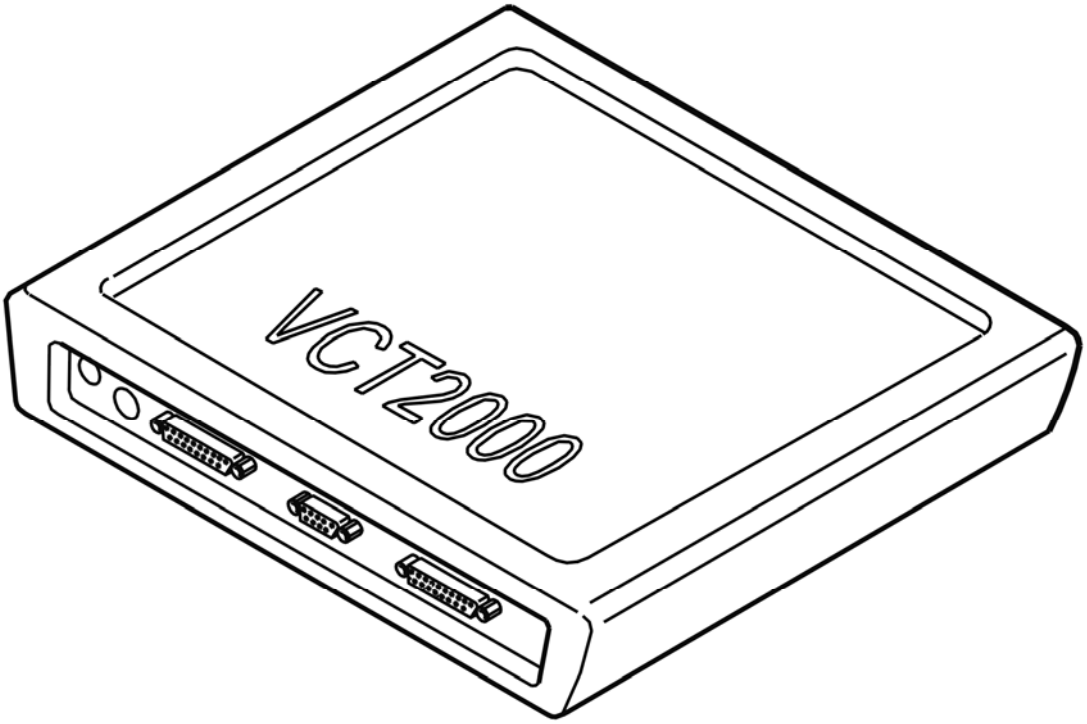

Fig. 20: Identifying VCT2000 Diagnostic Tool Symbol In VIDA
Courtesy of VOLVO CARS CORPORATION

Does the relay click at activation and deactivation?

- **YES**

  VERIFIED: Troubleshooting has been completed.

- **NO**

  Refer to **INFORMATION**

INFORMATION

FAULT-TRACING INFORMATION

The fault should have been detected and remedied. As this is not the case fault-tracing has failed.

Exit fault-tracing for this diagnostic trouble code (DTC) or make another attempt.

REM-5A32: RELAY, REAR A/C. SIGNAL TOO LOW OR SIGNAL MISSING (2003-2004)

DIAGNOSTIC TROUBLE CODE (DTC) INFORMATION REM-5A32

Condition

The rear electronic module (REM) checks the output signal to the relay coil for relay, rear air conditioning (A/C).

Diagnostic trouble code (DTC) REM-5A32 is stored if the control module registers that the output signal to the relay coil is missing or too low.

Diagnostic trouble code (DTC) REM-5A32 can be detected when the relay driver is not activated.

Substitute Value

- None.

Possible Source

- Relay missing
- Defective relay
- Contact resistance in the relay base.

Fault symptom[s]

- The rear air conditioning (A/C) system is not working
- Rear air conditioning (A/C) cannot be switched off.

SIGNAL TOO LOW OR SIGNAL MISSING

CHECKING AND REPLACING THE COMPONENT

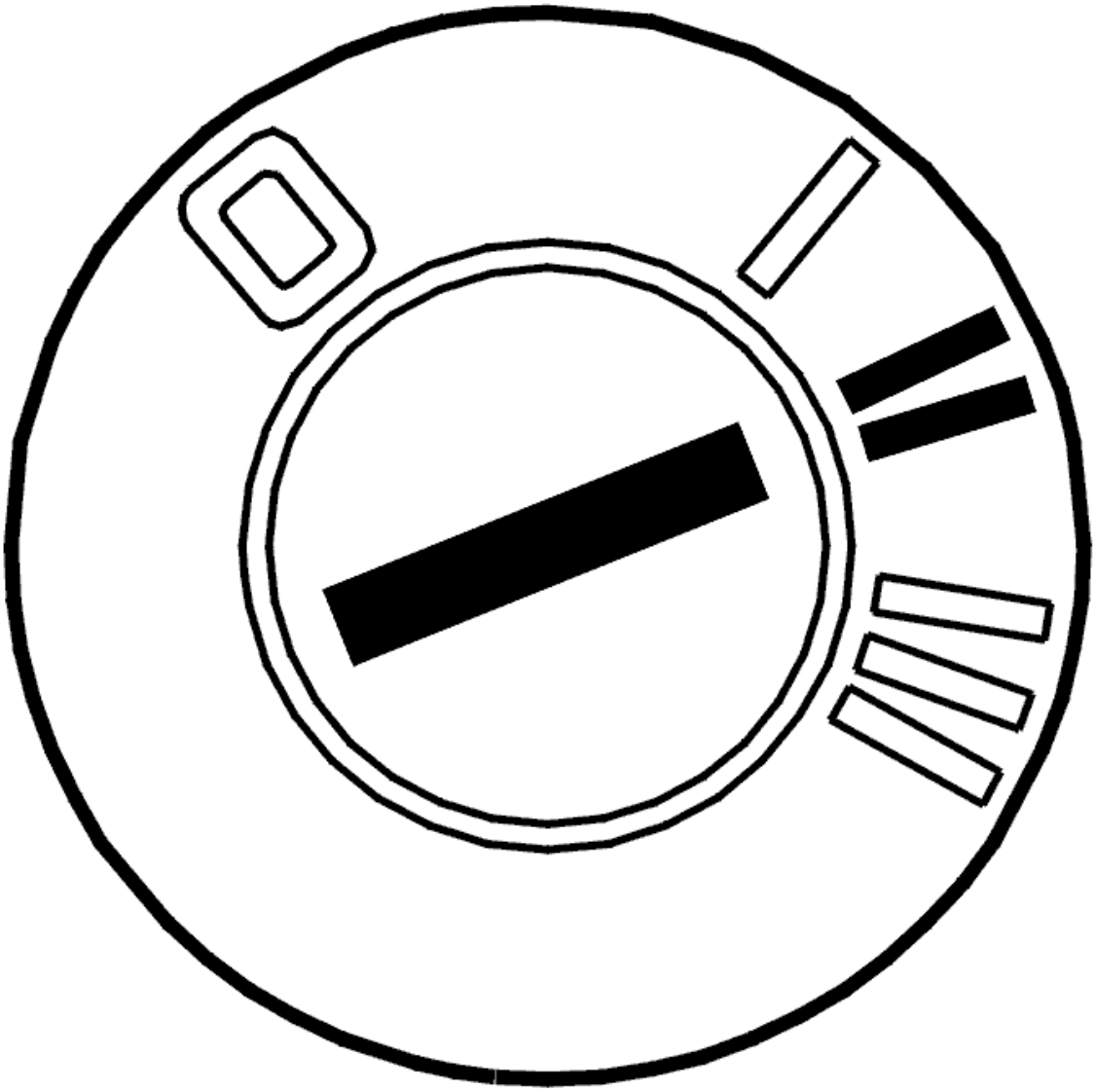

Fig. 21: Identifying Ignition ON
Courtesy of VOLVO CARS CORPORATION

- Ignition off
- Remove the rear air conditioning (A/C) relay and check the relay base switches. Check for contact resistance and oxidation
- Install the relay
- Ignition on.

  Activate and deactivate the relay. The relay must click.

  If the function is now OK the fault was caused by a contact fault in the relay base.

  Other information

- see **CHECKING WIRING AND TERMINALS** .

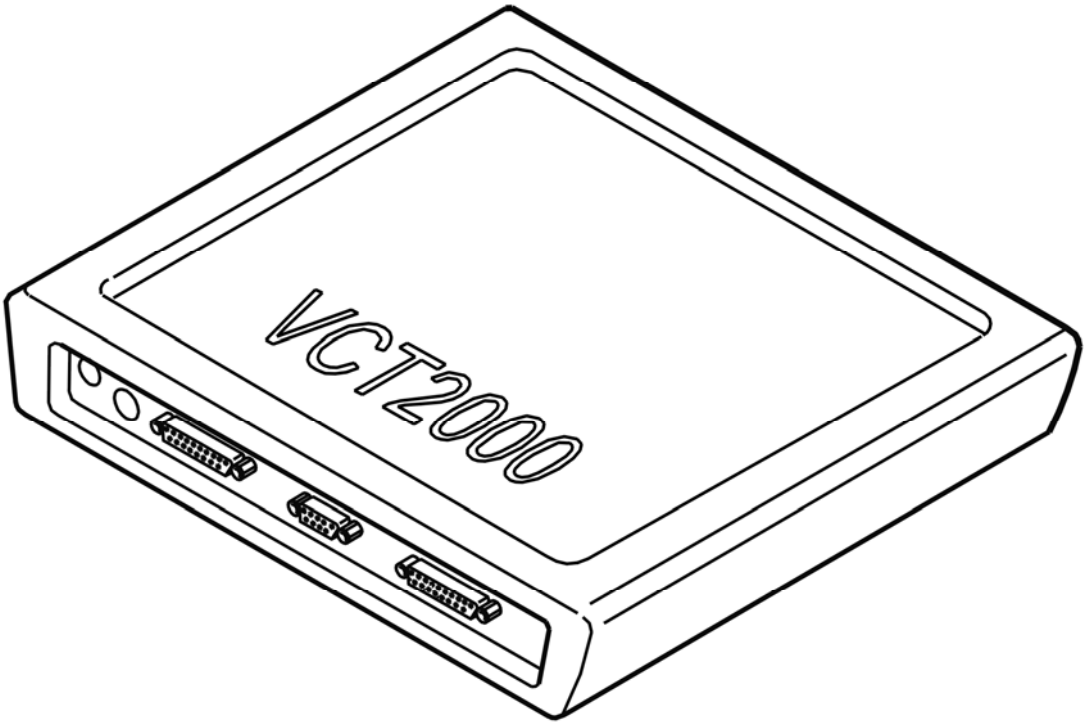

Fig. 22: Identifying VCT2000 Diagnostic Tool Symbol In VIDA
Courtesy of VOLVO CARS CORPORATION

Was the function OK?

- **YES**

  Refer to **VERIFICATION**

- **NO**

  Refer to **REPLACING THE COMPONENT**

REPLACING THE COMPONENT

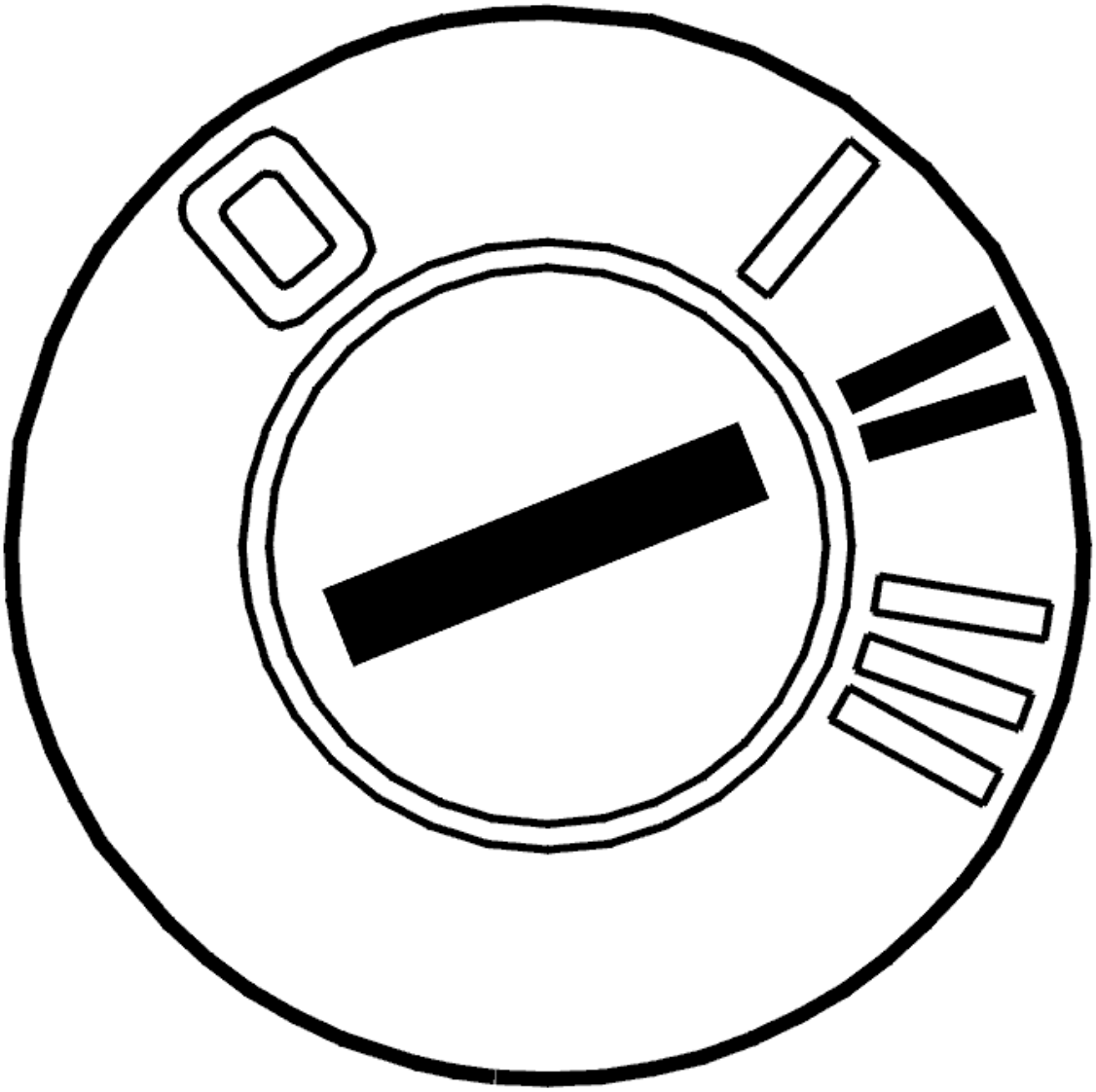

Fig. 23: Identifying Ignition ON
Courtesy of VOLVO CARS CORPORATION

- Ignition off
- Change the relay for rear air conditioning (A/C)
- Ignition on.

  Activate and deactivate the relay. The relay must click.

  If the function is now OK, the cause of the fault was a defective relay (short-circuit to ground or an open-circuit in the relay coil).

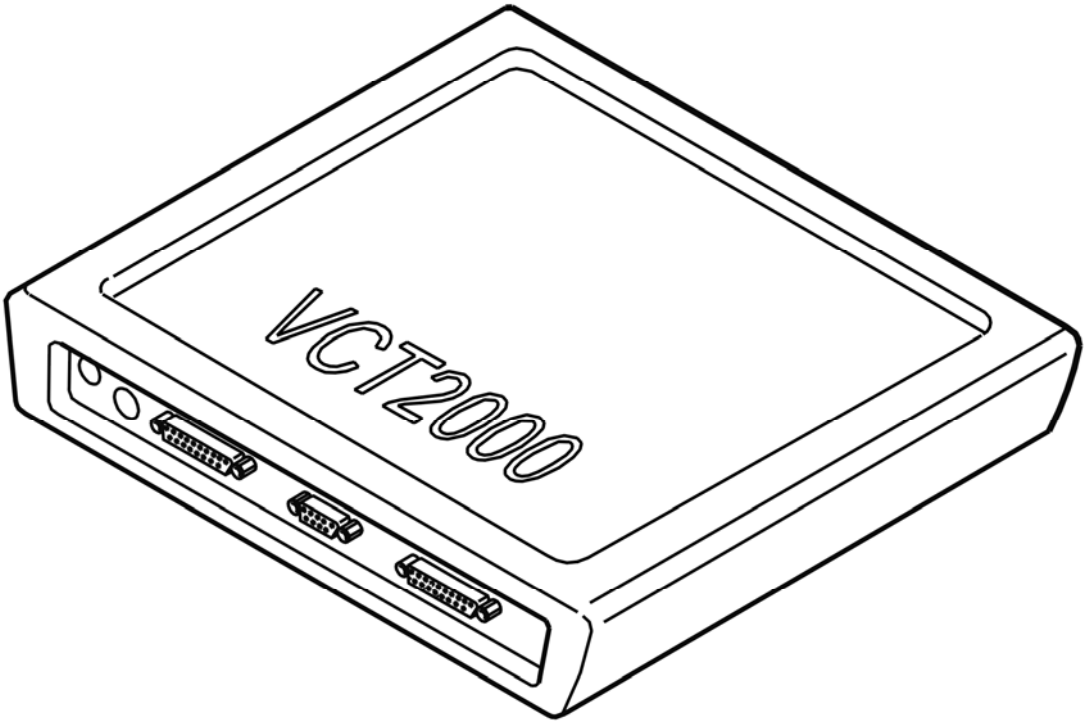

Fig. 24: Identifying VCT2000 Diagnostic Tool Symbol In VIDA
Courtesy of VOLVO CARS CORPORATION

Was the function OK?

- **YES**

  OKAY: Troubleshooting has been completed.

- **NO**

  Refer to **CHECKING THE CONTROL MODULE FOR OPEN-CIRCUITS**

CHECKING THE CONTROL MODULE FOR OPEN-CIRCUITS

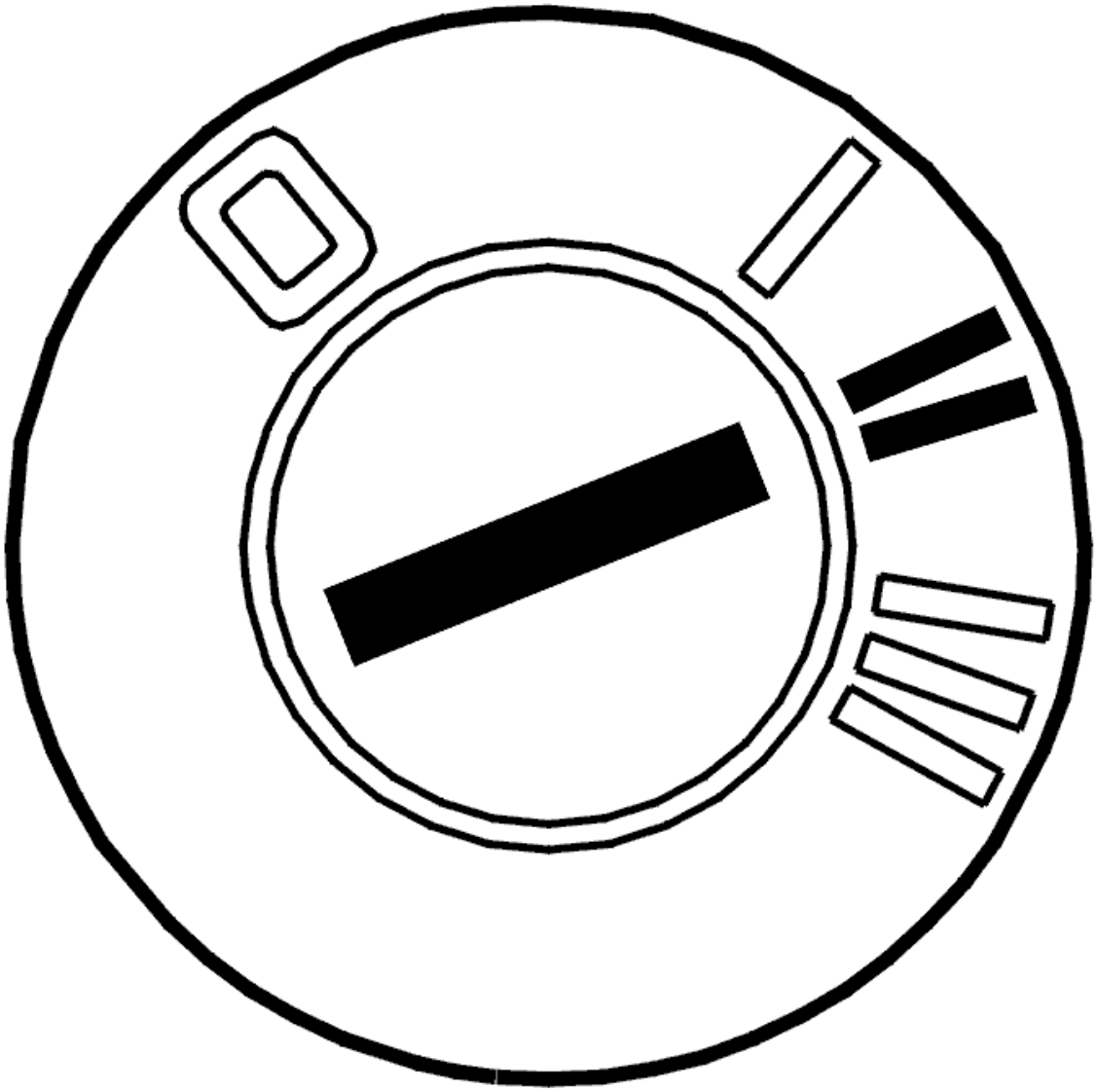

Fig. 25: Identifying Ignition ON
Courtesy of VOLVO CARS CORPORATION

- Ignition off
- Remove the relay for rear air conditioning (A/C)
- Ignition on.

Check the driver circuit for the relay coil for an open-circuit as follows: activate the relay driver. Measure the voltage between terminals #1 and #2 on the relay base.

The voltage between terminals #1 and #2 should be battery voltage.

If the value deviates excessively, check the voltage between terminal #2 and the battery and between terminal #1 and ground. Both should equal battery voltage.

NOTE: Do not forget to check that the power supply to the control module is OK.

Other information

- see **CHECKING WIRING AND TERMINALS** .

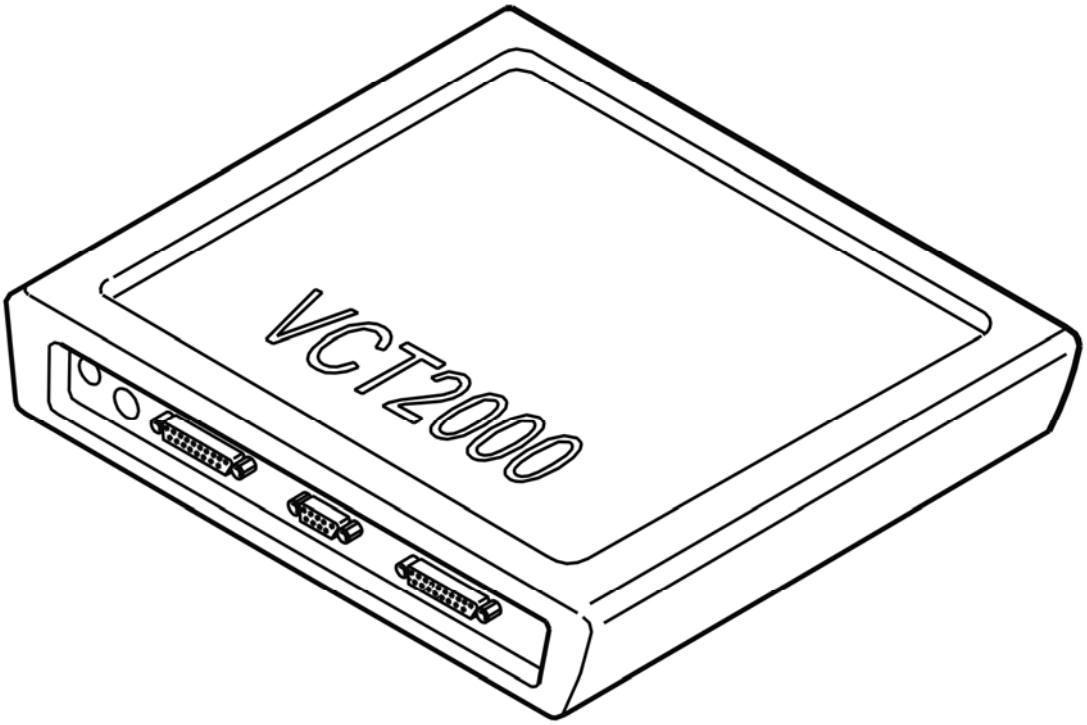

Fig. 26: Identifying VCT2000 Diagnostic Tool Symbol In VIDA
Courtesy of VOLVO CARS CORPORATION

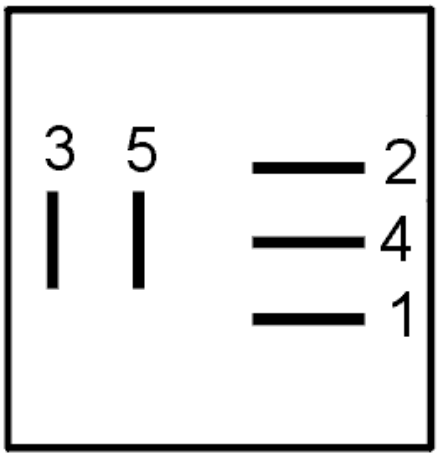

Fig. 27: Identifying Terminals
Courtesy of VOLVO CARS CORPORATION

Was a fault detected?

- **YES**

  Refer to **VERIFICATION**

- **NO**

  Refer to **CHECKING THE CONTROL MODULE FOR SHORT-CIRCUITS**

CHECKING THE CONTROL MODULE FOR SHORT-CIRCUITS

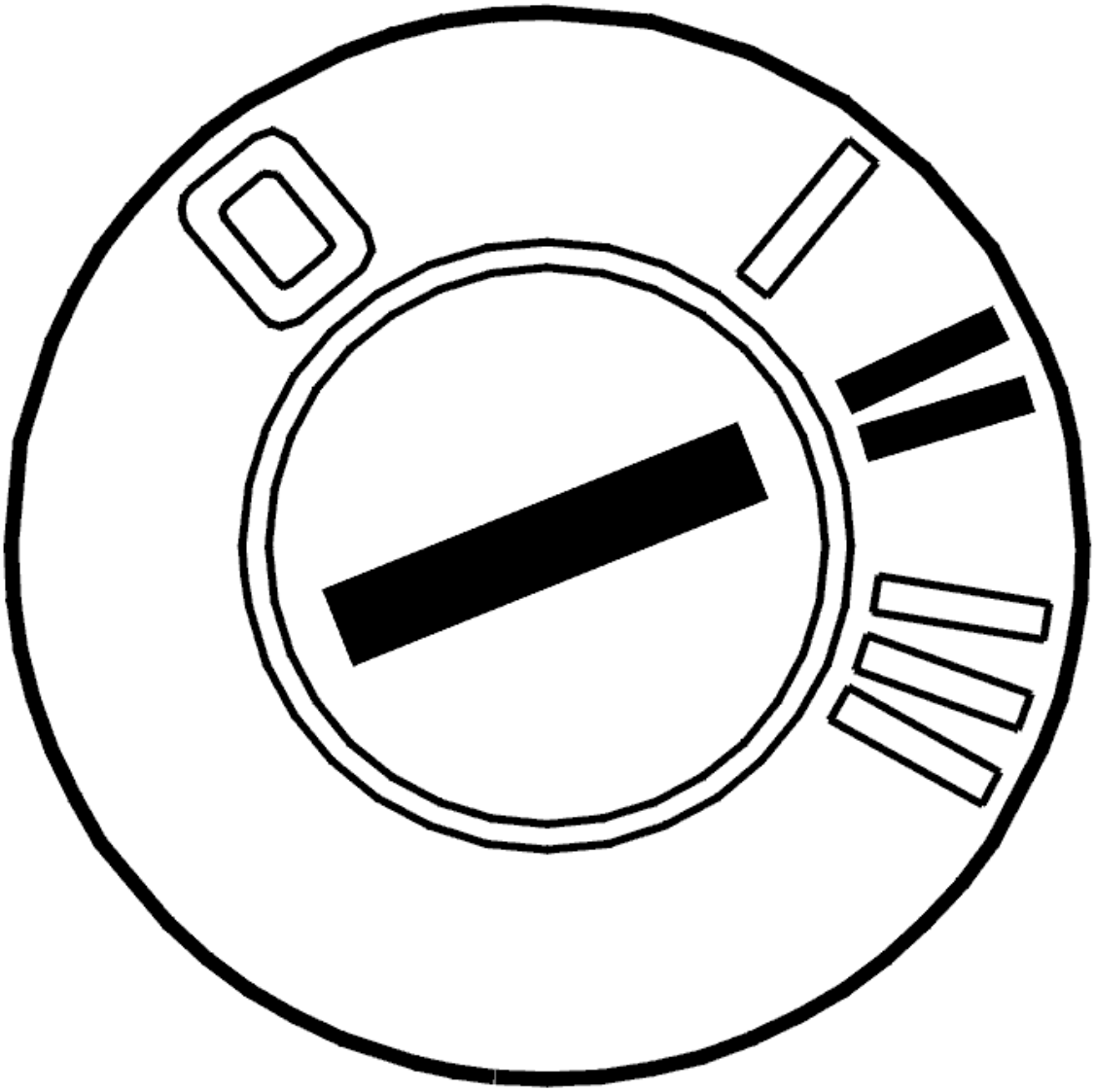

Fig. 28: Identifying Ignition ON

Courtesy of VOLVO CARS CORPORATION

- Ignition on.

  Activate the relay driver.

  Measure the resistance between terminal #2 and ground when the relay driver is active.

  The resistance must be low when the relay driver is active.

  Remedy as necessary.

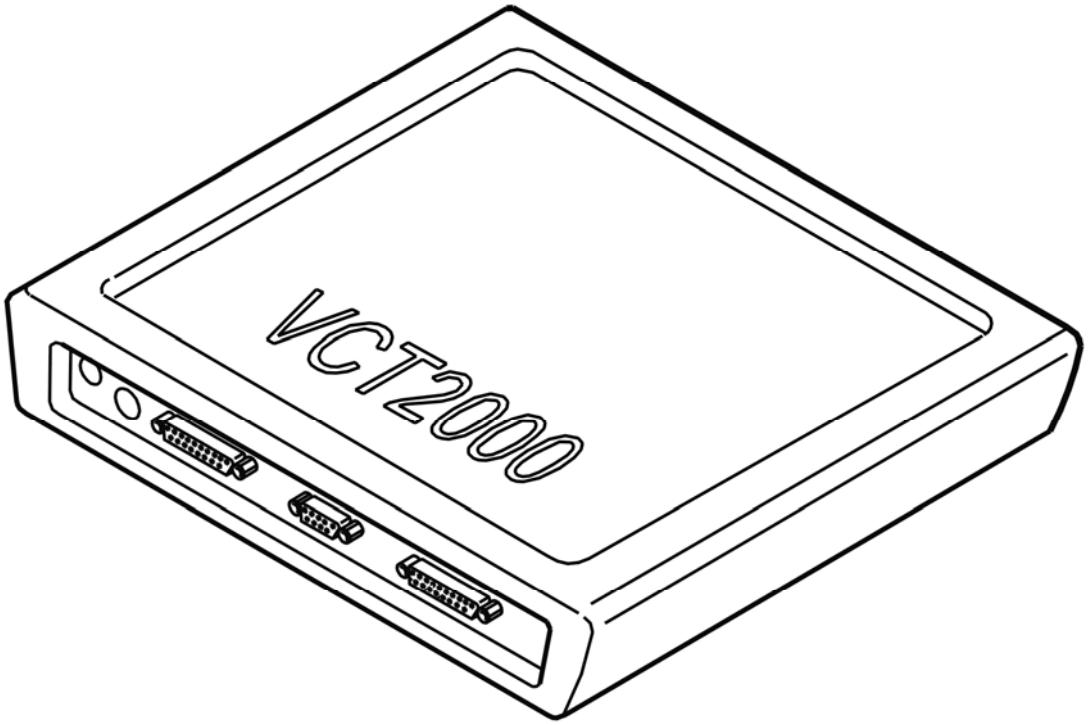

Fig. 29: Identifying VCT2000 Diagnostic Tool Symbol In VIDA
Courtesy of VOLVO CARS CORPORATION

- **Continue**

  Refer to **VERIFICATION**

VERIFICATION

VERIFICATION

HINT: After carrying out the repair, check that the fault has been remedied.

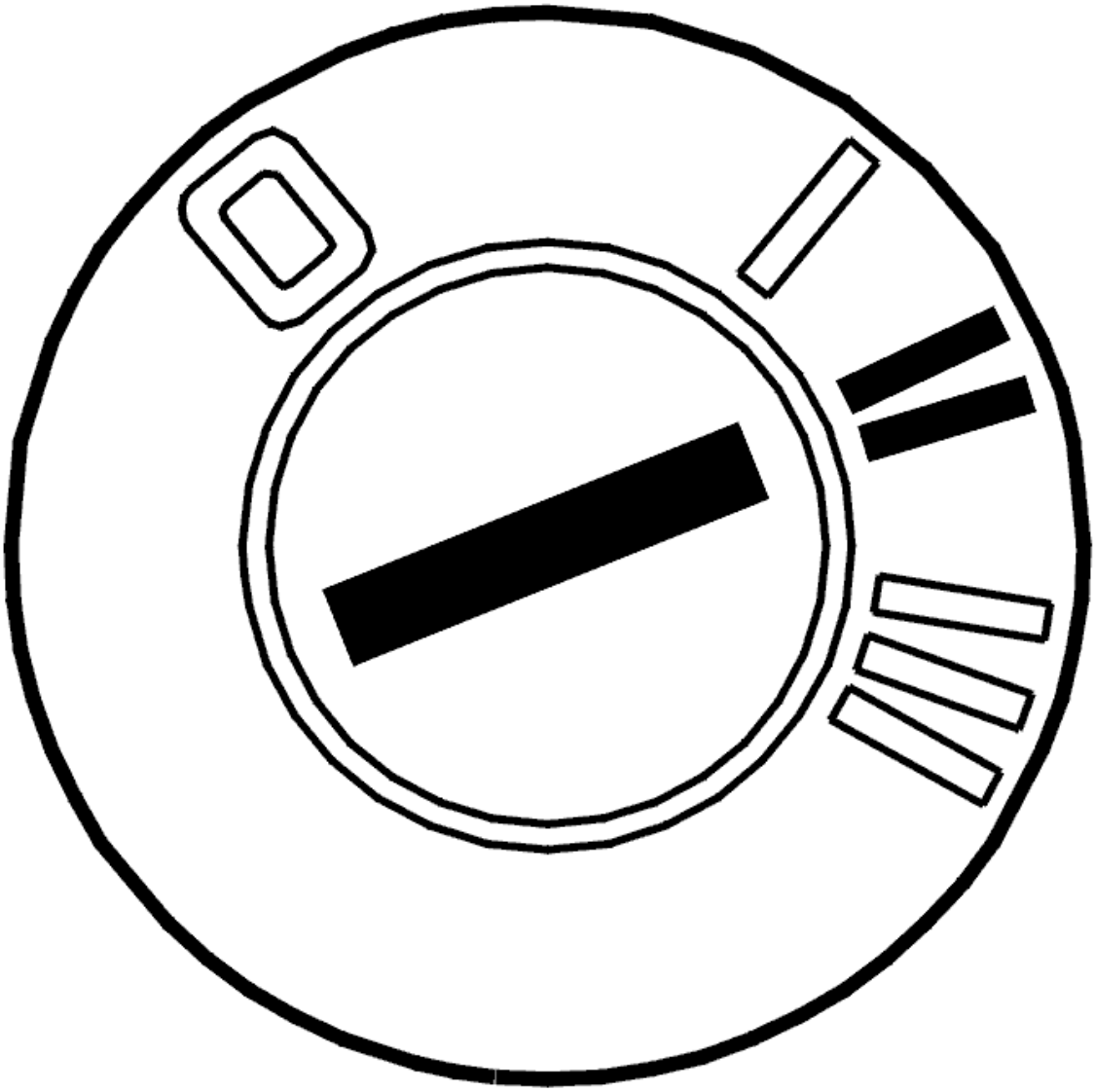

Fig. 30: Identifying Ignition ON
Courtesy of VOLVO CARS CORPORATION

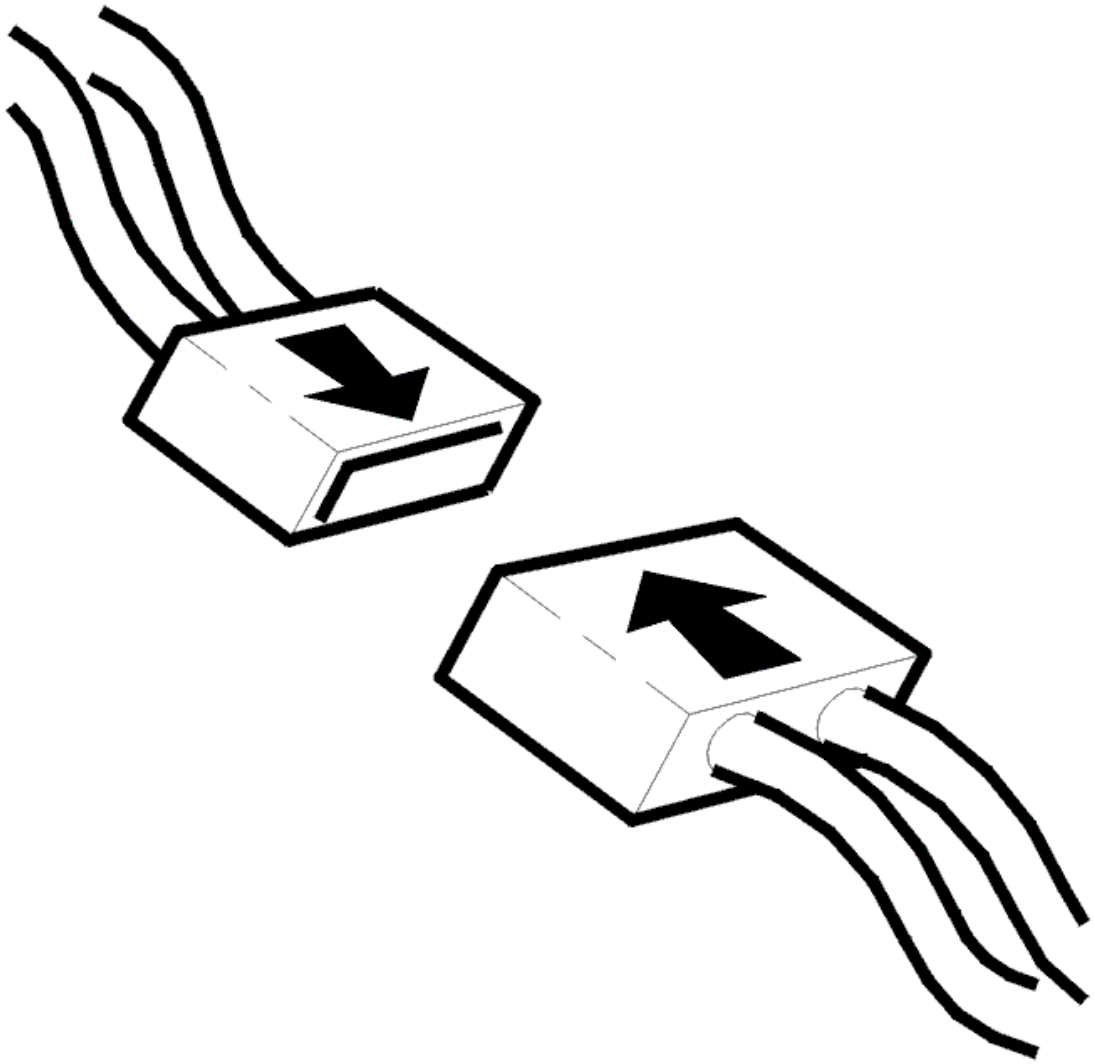

Fig. 31: Connecting Connector
Courtesy of VOLVO CARS CORPORATION

- Ignition off
- Reinstall the connectors, components etc.
- Ignition on.

Activate and deactivate the rear air conditioning (A/C) relay.

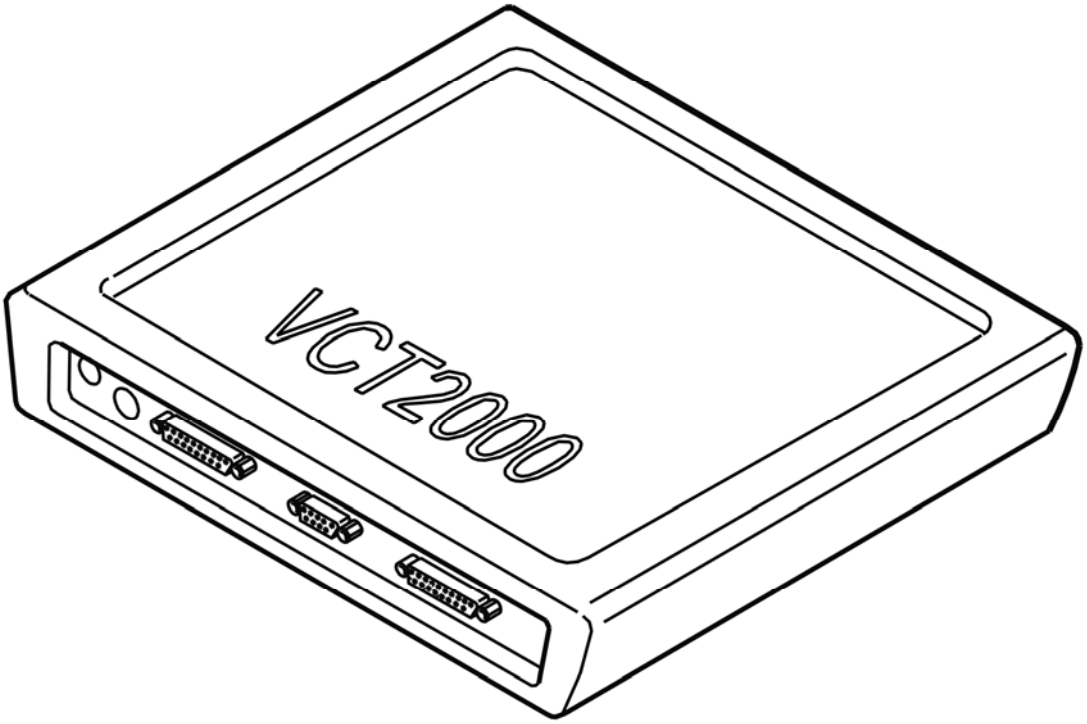

Fig. 32: Identifying VCT2000 Diagnostic Tool Symbol In VIDA
Courtesy of VOLVO CARS CORPORATION

Does the relay click at activation and deactivation?

- **YES**

  VERIFIED: Troubleshooting has been completed.

- **NO**

  Refer to **INFORMATION**

INFORMATION

FAULT-TRACING INFORMATION

The fault should have been detected and remedied. As this is not the case fault-tracing has failed.

Exit fault-tracing for this diagnostic trouble code (DTC) or make another attempt.

REM-6A01: RELAY, CENTRAL LOCKING. SIGNAL TOO HIGH (2003-2004)

DIAGNOSTIC TROUBLE CODE (DTC) INFORMATION

Condition

The rear electronic module checks the output signal to the relay coil for relay 2/158.

Diagnostic trouble code (DTC) REM-6A01 is stored if the rear electrical module detects that the output signal to the relay coil is too high.

Diagnostic trouble code (DTC) REM-6A01 can be diagnosed when relay 2/158 is activated.

Substitute Value

- None.

Possible Source

- Defective relay
- Damaged relay base.

Fault symptom[s]

- Does not lock / unlock a door
- Does not lock / unlock the fuel tank filler cap
- Does not lock or unlock the trunk lid.

SIGNAL TOO HIGH

CHECKING AND REPLACING THE COMPONENT

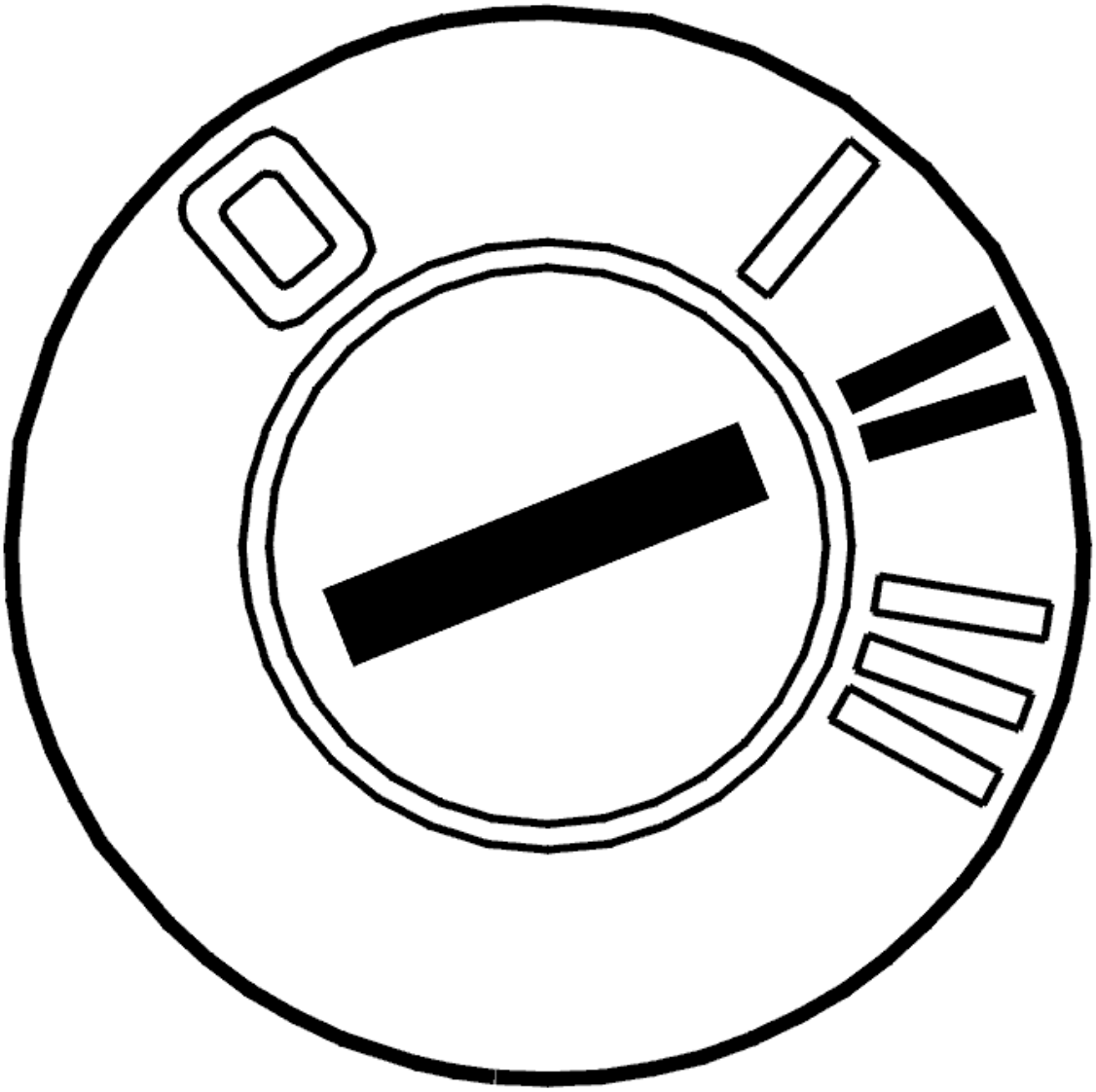

Fig. 33: Identifying Ignition ON
Courtesy of VOLVO CARS CORPORATION

- Ignition off
- Replace relay 2/158
- Ignition on.

  Activate the relay.

  If the function is OK, the cause of the fault was a defective relay (short-circuit in the relay).

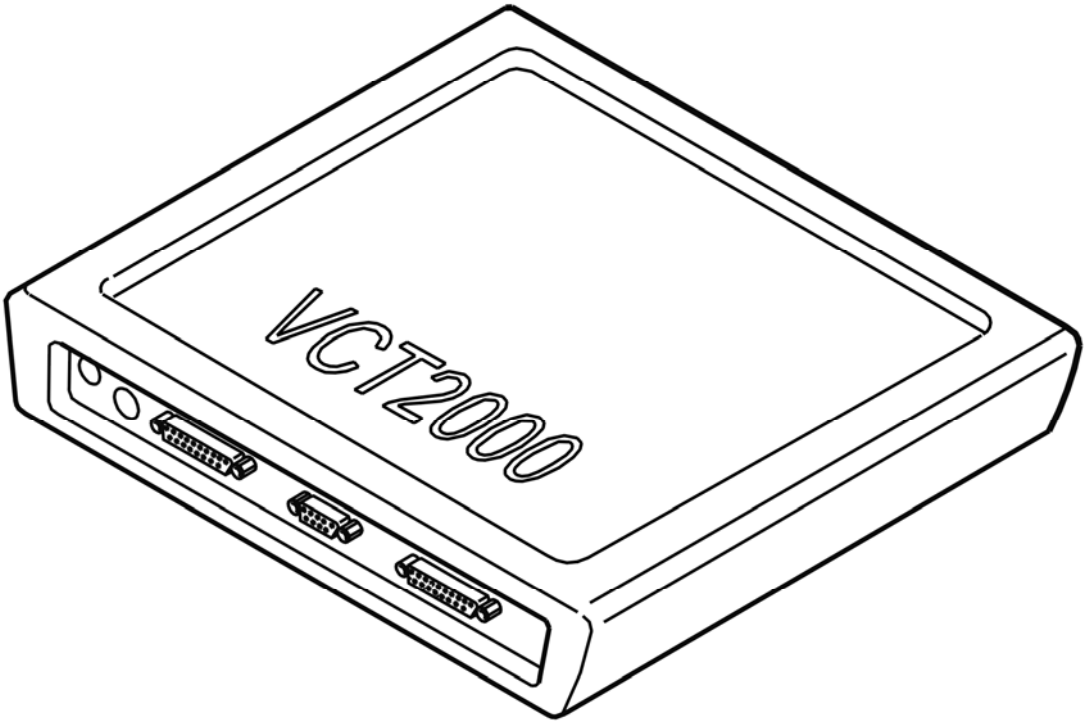

Fig. 34: Identifying VCT2000 Diagnostic Tool Symbol In VIDA
Courtesy of VOLVO CARS CORPORATION

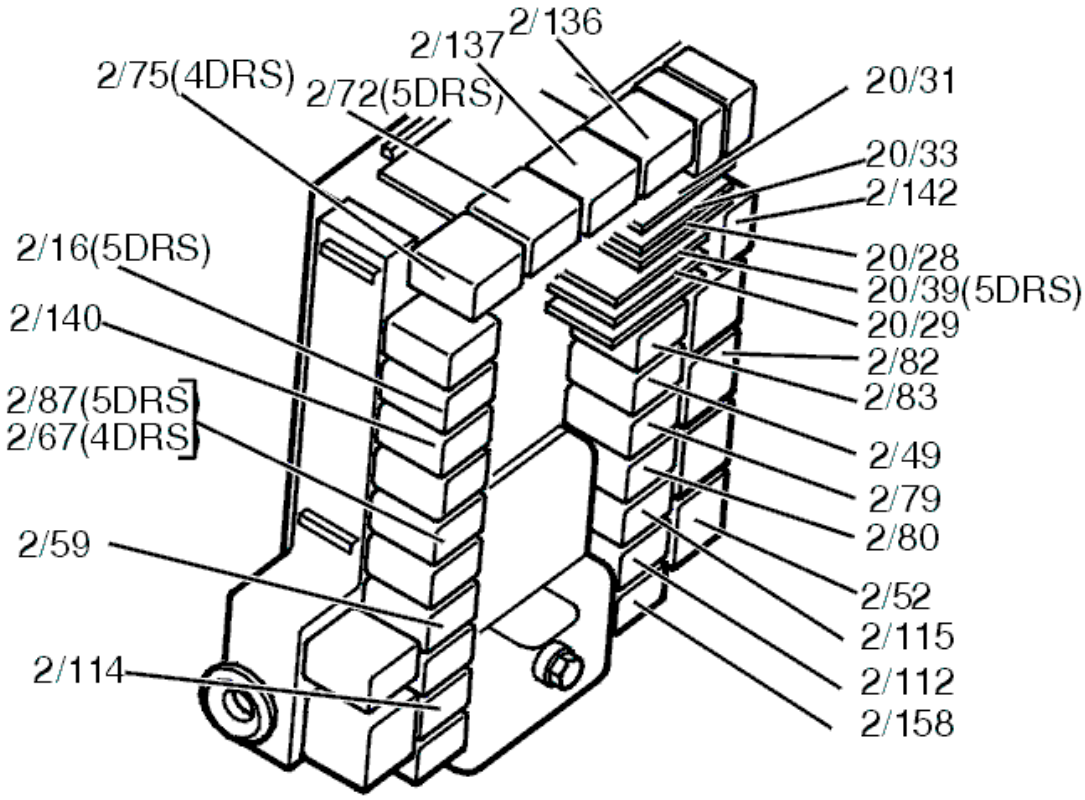

Fig. 35: Identifying Relays
Courtesy of VOLVO CARS CORPORATION

Was the function OK?

- **YES**

  OKAY: Troubleshooting has been completed.

- **NO**

  Refer to **CHECKING THE CONTROL MODULE**

CHECKING THE CONTROL MODULE

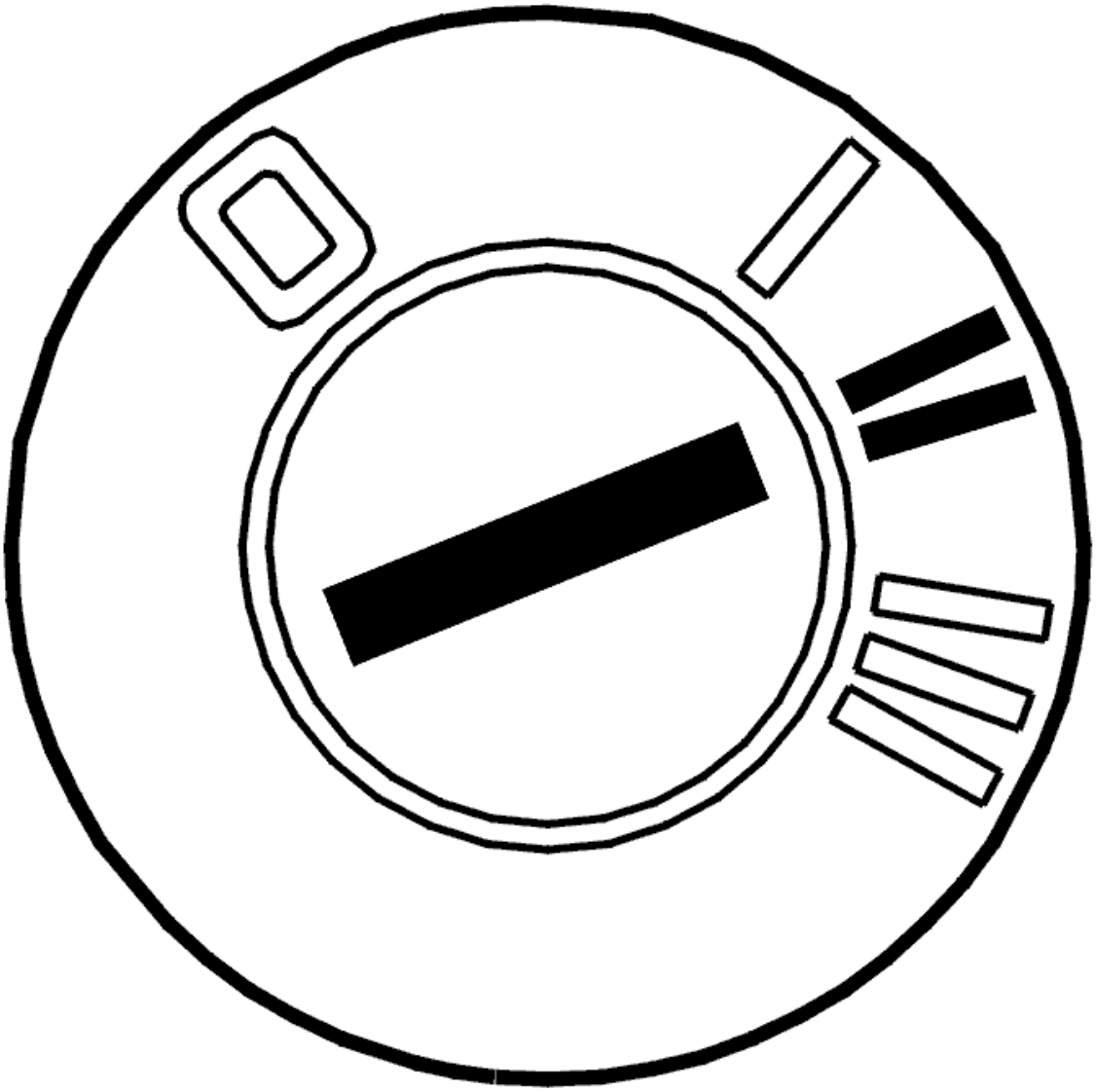

Fig. 36: Identifying Ignition ON
Courtesy of VOLVO CARS CORPORATION

- Ignition off
- Remove the relay
- Ignition on.

Check the relay coil driver circuit for a short-circuit to supply voltage by measuring the voltage at terminal #2 in the relay base.

HINT: The voltage between terminal #2 and ground should be approximately 0 V.

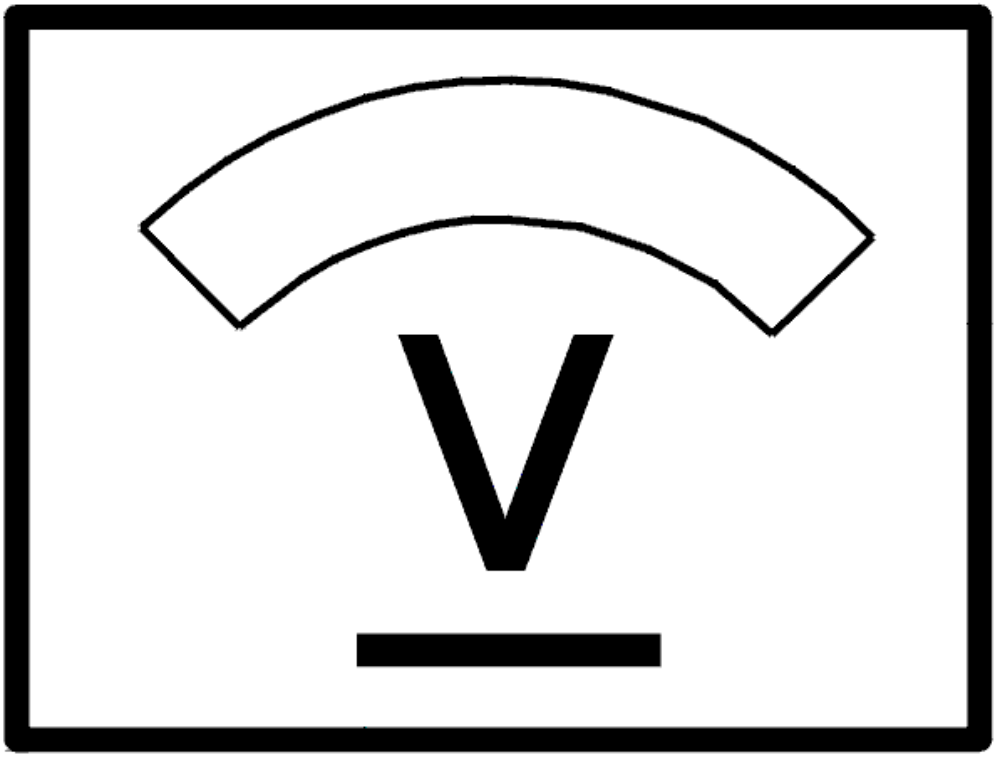

Fig. 37: Identifying Voltage Display
Courtesy of VOLVO CARS CORPORATION

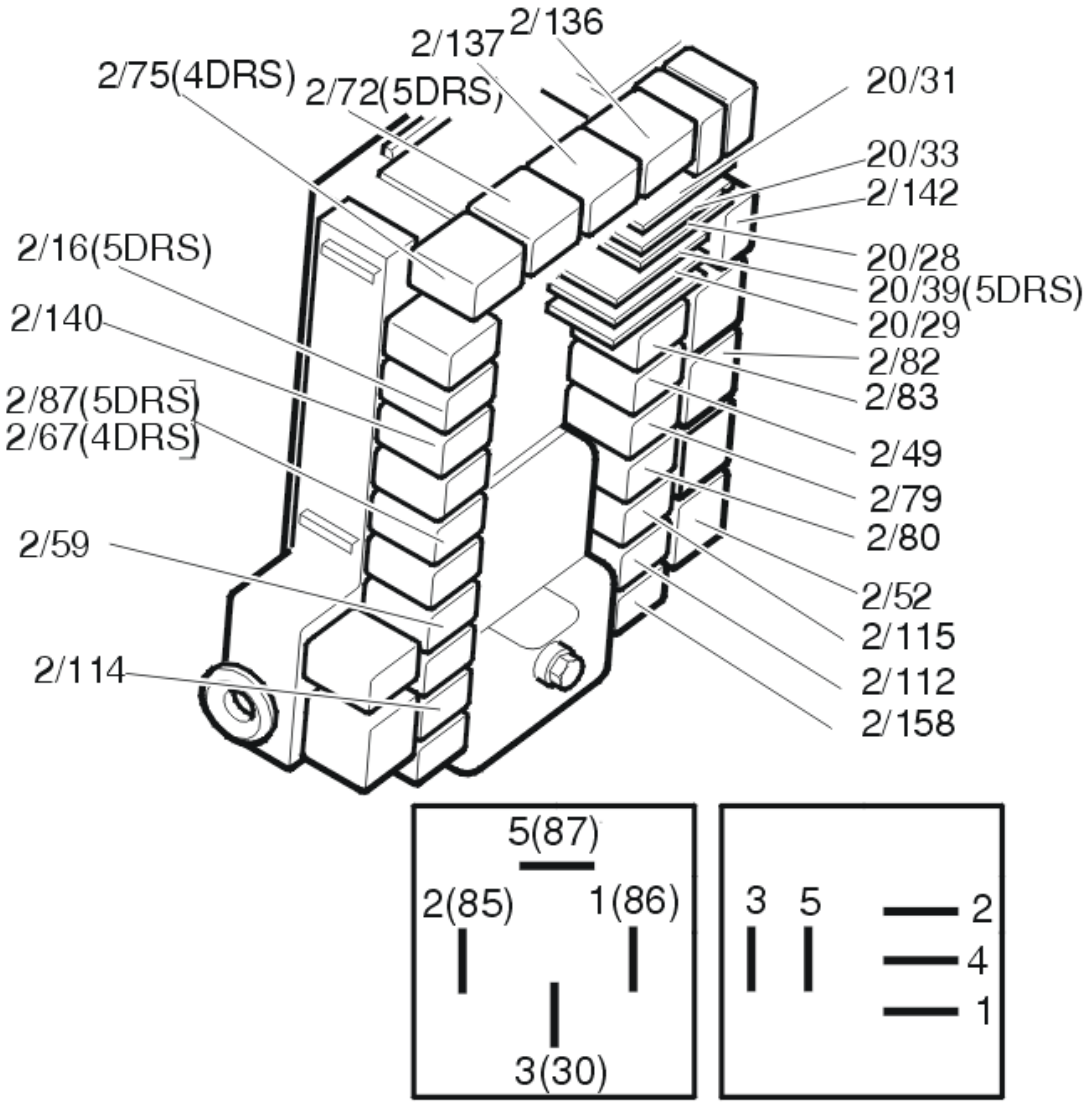

Fig. 38: Identifying Relays
Courtesy of VOLVO CARS CORPORATION

Replace the control module if the voltmeter displays an incorrect value.

Other information

- see **CHECKING WIRING AND TERMINALS** .

- **Continue**

Refer to **VERIFICATION**

VERIFICATION

VERIFICATION

HINT: After carrying out the repair, check that the fault has been remedied.

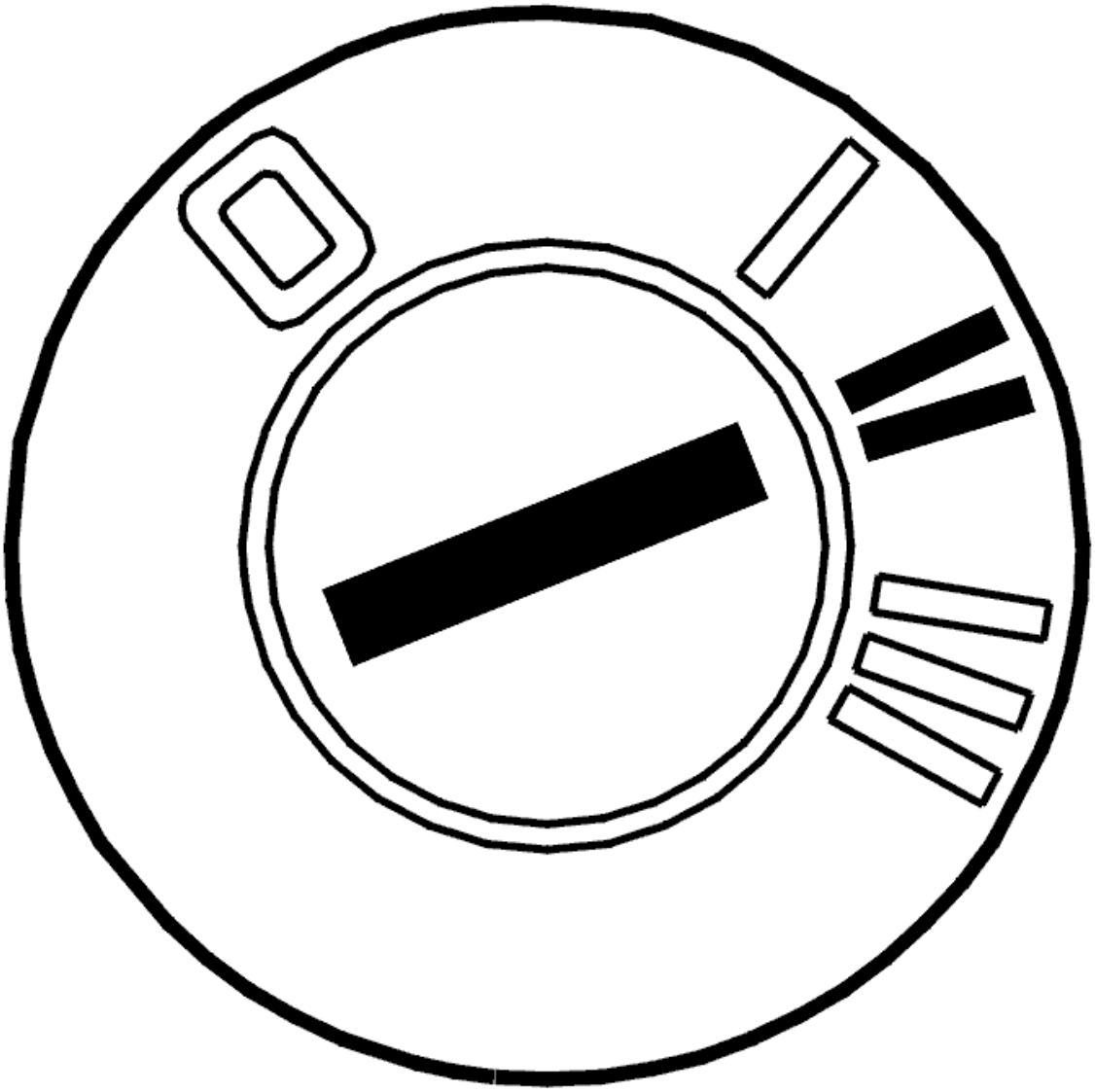

Fig. 39: Identifying Ignition ON
Courtesy of VOLVO CARS CORPORATION

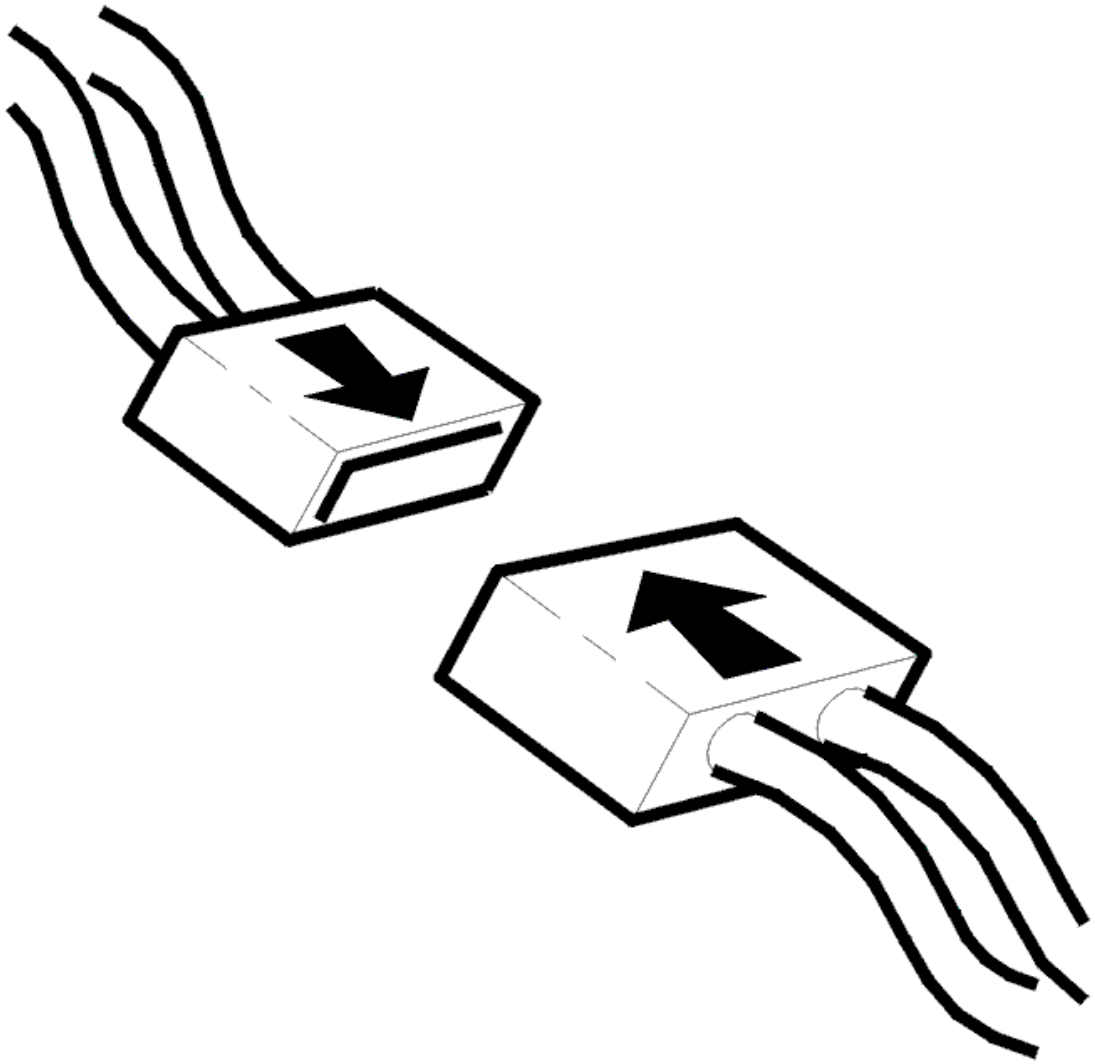

Fig. 40: Connecting Connector
Courtesy of VOLVO CARS CORPORATION

- Ignition off
- Reinstall the connectors, components etc.
- Ignition on.

Activate the relay.

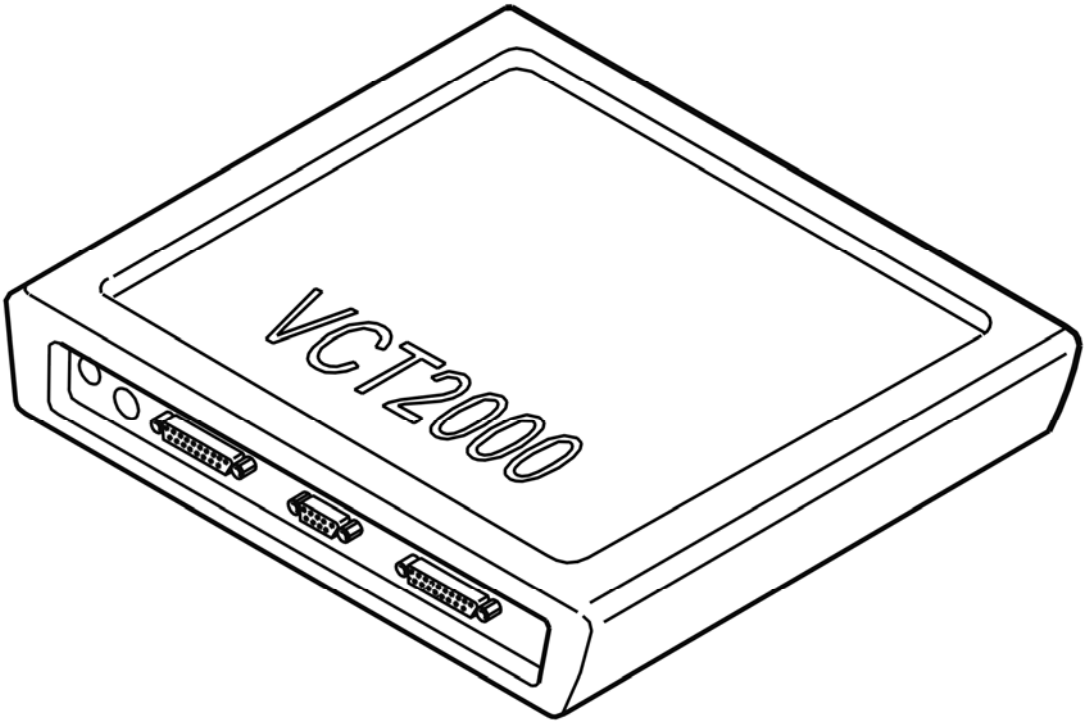

Fig. 41: Identifying VCT2000 Diagnostic Tool Symbol In VIDA
Courtesy of VOLVO CARS CORPORATION

Was the function OK?

- **YES**

  VERIFIED: Troubleshooting has been completed.

- **NO**

  Refer to **INFORMATION**

INFORMATION

FAULT-TRACING INFORMATION

The fault should have been detected and remedied. As this is not the case fault-tracing has failed.

Exit fault-tracing for this diagnostic trouble code (DTC) or make another attempt.

REM-6A01: SWITCH, CENTRAL LOCKING MOTOR. SIGNAL TOO HIGH (2005-2012)

DIAGNOSTIC TROUBLE CODE (DTC) INFORMATION REM-6A01

Condition

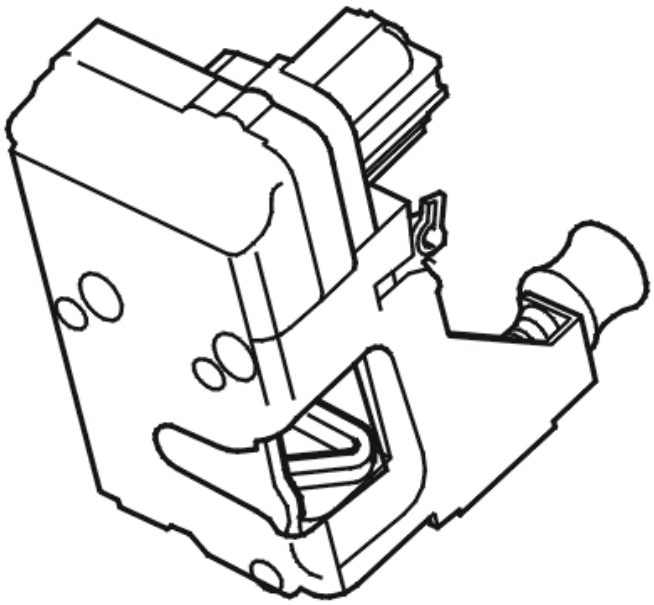

Fig. 42: Identifying Central Locking Motor
Courtesy of VOLVO CARS CORPORATION

The rear electronic module (REM) controls the lock units in the rear doors via a number of relays.

The rear electronic module (REM) receives an indication from the lock units about whether the central locking motor is in the locked or unlocked position. This information is provided by a switch in each lock unit. The switch must be closed when the lock motor is in the locked position.

The diagnostic trouble code (DTC) is stored if the rear electronic module (REM) detects that the input from the switch in the **left rear door** is still high 15 seconds after the unlock command was given.

The diagnostic trouble code (DTC) can be diagnosed when locking the central locking.

Substitute Value

- None.

Possible Source

- Contact resistance and oxidation in the terminals
- Fault or short-circuit to supply voltage in the switch for indication of the lock motor position
- Open-circuit in the cable from the switch for indication of the lock motor position
- The lock motor is stuck in one position
- Open-circuit in the ground lead/ground terminal for the lock mechanism
- Open-circuit, short-circuit to ground or supply voltage in the control cable to the lock motors
- Open-circuit, short-circuit to ground or supply voltage in the control cable to the lock motors from/to the relay for the child-proof lock
- Open-circuit, short-circuit to ground or supply voltage in the wiring to the relay for the child-proof lock from the power window switch
- Damaged relay for the child-proof lock.

Fault symptom[s]

- Does not lock / unlock a door.

SIGNAL TOO HIGH

CHECKING THE SIGNAL FROM THE SWITCHES IN THE REAR DOORS

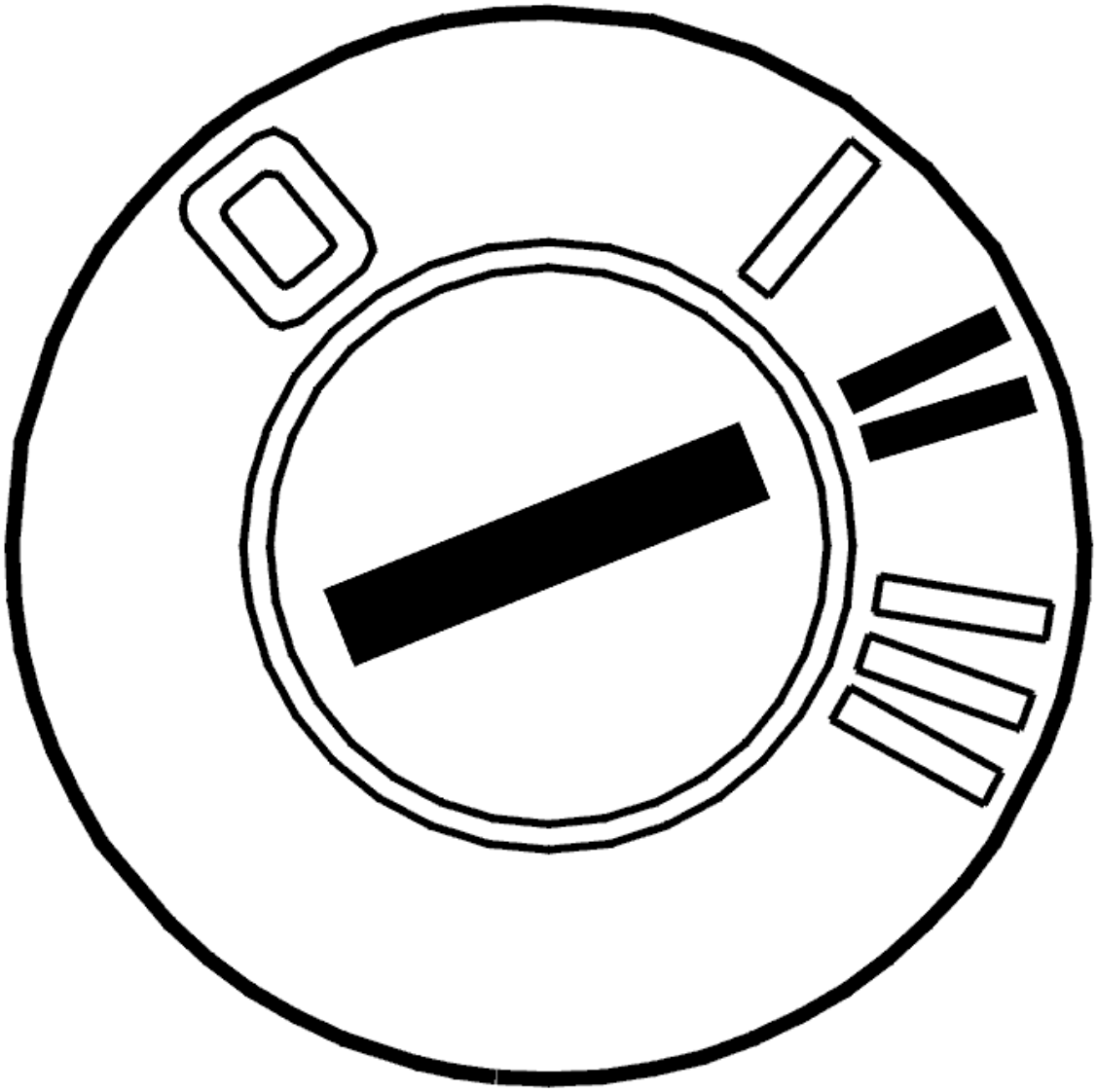

Fig. 43: Identifying Ignition ON
Courtesy of VOLVO CARS CORPORATION

- Ignition on
- Read off the status from the control switch in both rear doors (indicates whether the doors are locked or not).

  Lock and unlock the left and right-hand rear doors. The status of each door should change when the door is locked or unlocked.

  HINT: The doors can also be locked/unlocked using the remote control.

  The fault is permanent if the status does not change.

  If the status changes, this indicates an intermittent fault, i. e. the fault was present previously but is not active at the moment.

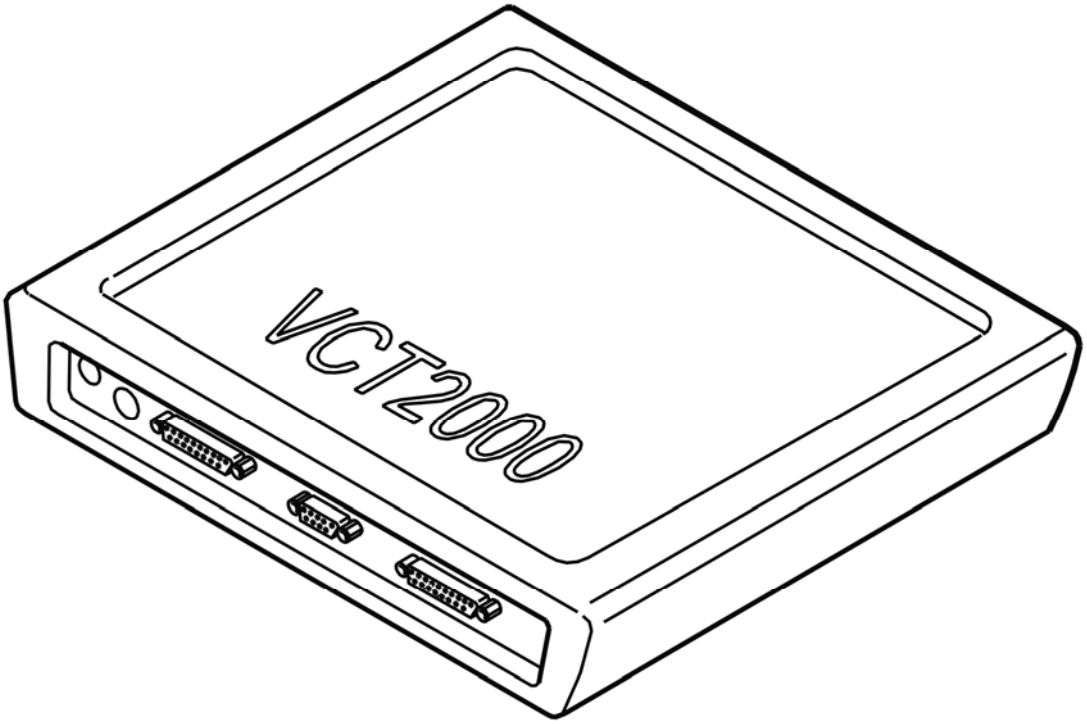

Fig. 44: Identifying VCT2000 Diagnostic Tool Symbol In VIDA
Courtesy of VOLVO CARS CORPORATION

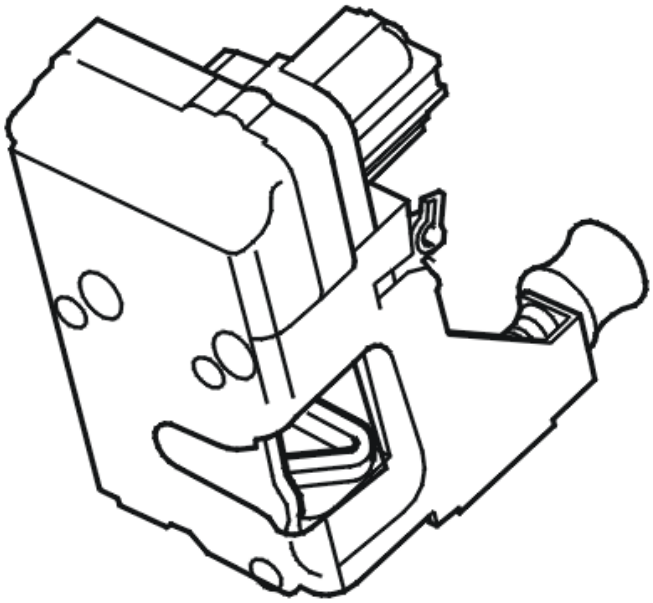

Fig. 45: Identifying Central Locking Motor
Courtesy of VOLVO CARS CORPORATION

- **Continue**

Refer to **CHECKING THE FUNCTION OF THE LOCK MECHANISM**

CHECKING THE FUNCTION OF THE LOCK MECHANISM

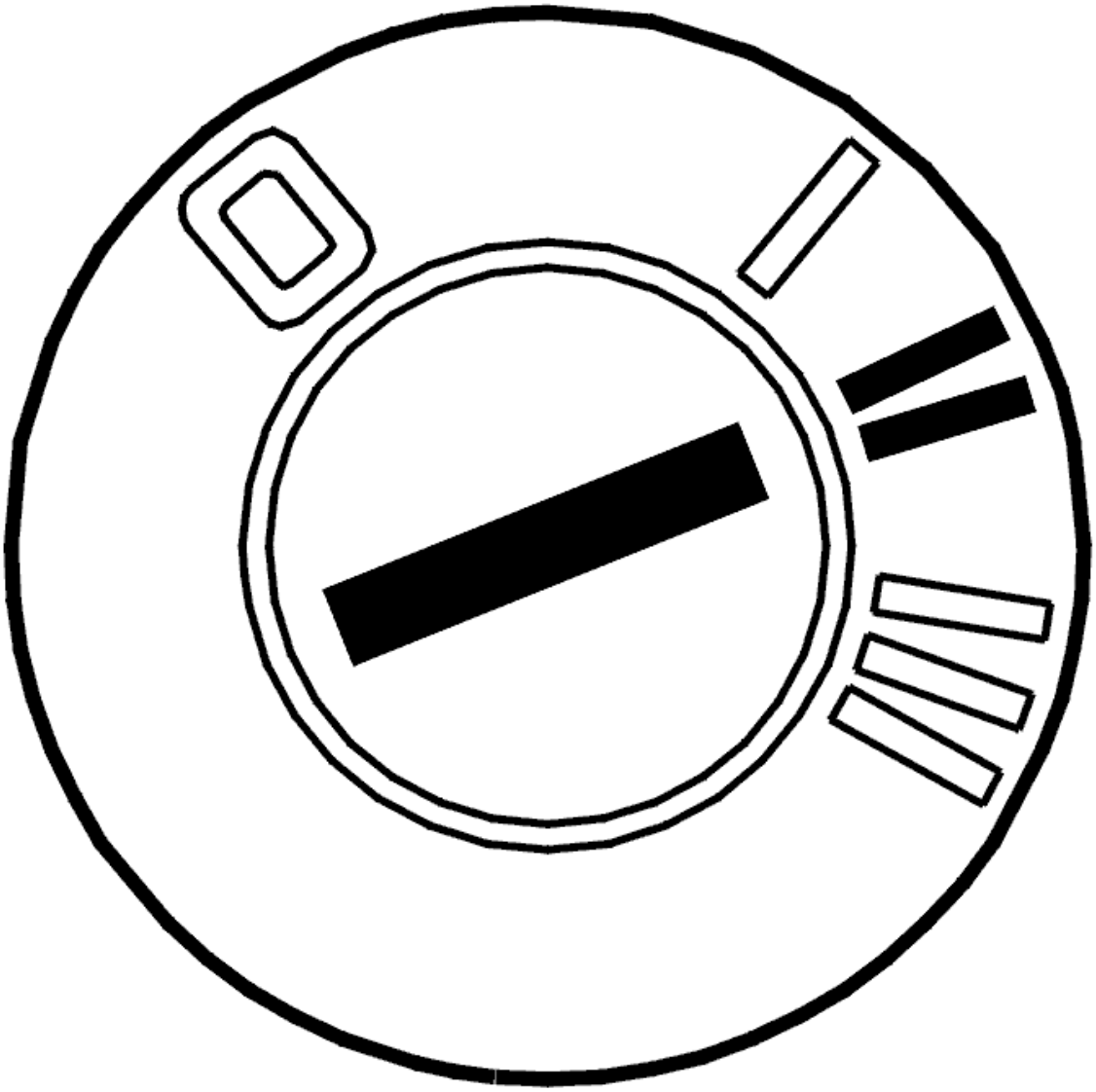

Fig. 46: Identifying Ignition ON
Courtesy of VOLVO CARS CORPORATION

- Ignition on

  Lock and unlock the left and right-hand rear doors. Check that the door can be opened when it is unlocked and cannot be opened when it is locked.

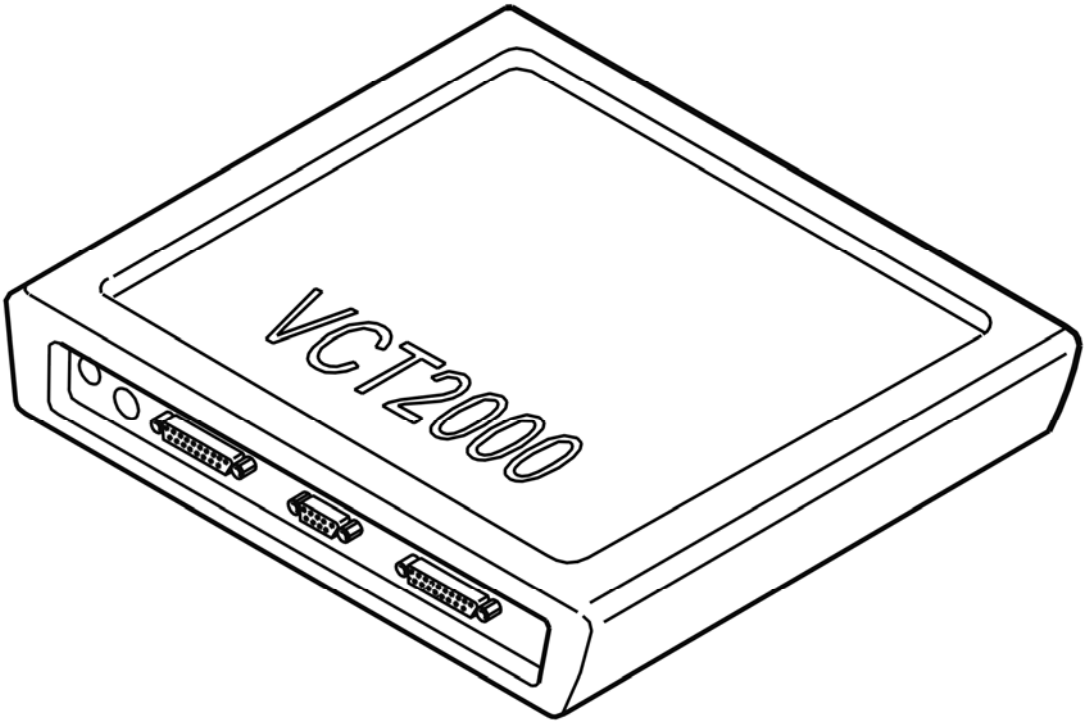

Fig. 47: Identifying VCT2000 Diagnostic Tool Symbol In VIDA
Courtesy of VOLVO CARS CORPORATION

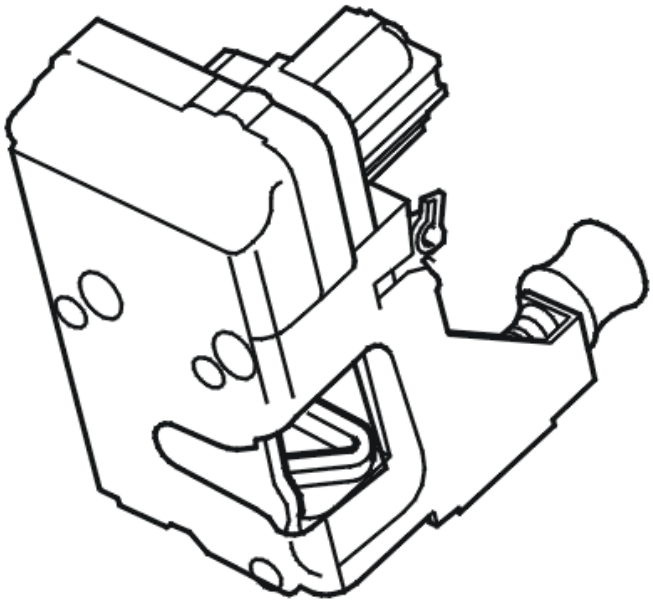

Fig. 48: Identifying Central Locking Motor
Courtesy of VOLVO CARS CORPORATION

Is the function OK?

- **YES**

  Refer to **CHECKING THE SIGNAL FROM THE SWITCHES IN THE REAR DOORS**

- **NO**

  Refer to **CHECKING CABLE AND COMPONENT**

CHECKING THE SIGNAL FROM THE SWITCHES IN THE REAR DOORS

NOTE: Only fault-trace the circuit of the door displaying the faulty value.

Check the connectors for the lock mechanism and the rear electronic module (REM). Check for contact resistance and oxidation.

Check the switch in the lock mechanism. Check for a short-circuit. Check for an open-circuit. Check by measuring the resistance between terminals #1 and #5 on the connector for the lock mechanism and ground.

Check the resistance between terminals #1 and #5 on the lock mechanism side. The resistance must be infinite or near 0 ohm depending on the position of the switch.

Left rear door

Check the signal cable between rear electronic module (REM) connector terminal #45 (#C5) and terminal #5 on the lock mechanism connector. Check for a short-circuit to supply voltage. Check for an open-circuit. The lock mechanism is jammed if no fault is found in the cable or the switch.

Right rear door

Check the signal cable between rear electronic module (REM) connector terminal #28 (#D28) and terminal #5 on the lock mechanism connector. Check for a short-circuit to supply voltage. Check for an open-circuit. The lock mechanism is jammed if no fault is found in the cable or the switch.

Remedy as necessary.

Other information

- see **CONNECTING THE BREAKOUT BOX**
- see **SIGNAL SPECIFICATION**
- see **LOCK MECHANISM FRONT SIDE DOOR, REPLACING**
- For -2004, see: **RELAY/FUSE BOX CARGO COMPARTMENT/REAR ELECTRONIC MODULE (REM), REPLACING**
- For 2005-, see: **REAR ELECTRONIC MODULE (REM), REPLACING** .
- see **CHECKING WIRING AND TERMINALS**

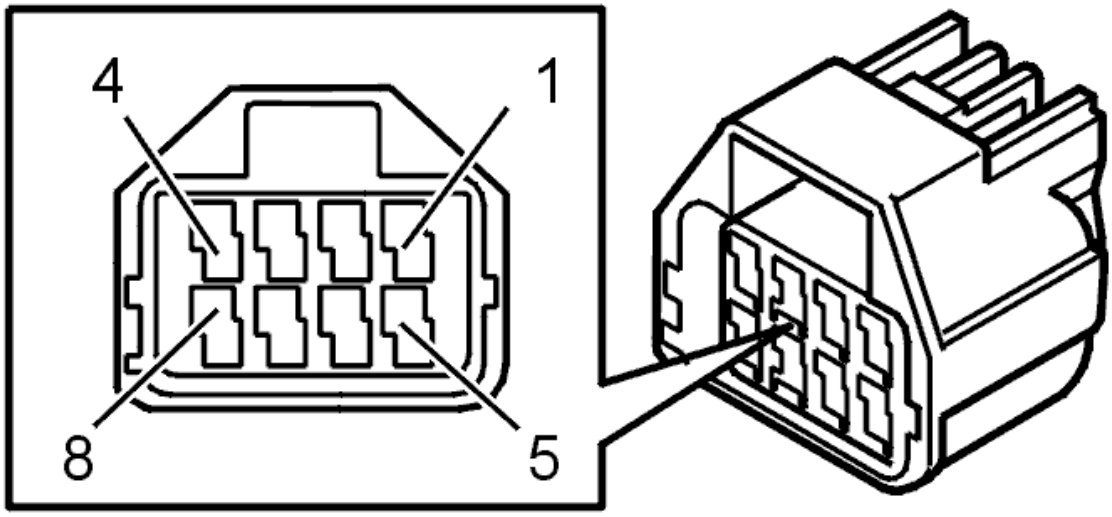

Fig. 49: Identifying Connector Terminals
Courtesy of VOLVO CARS CORPORATION

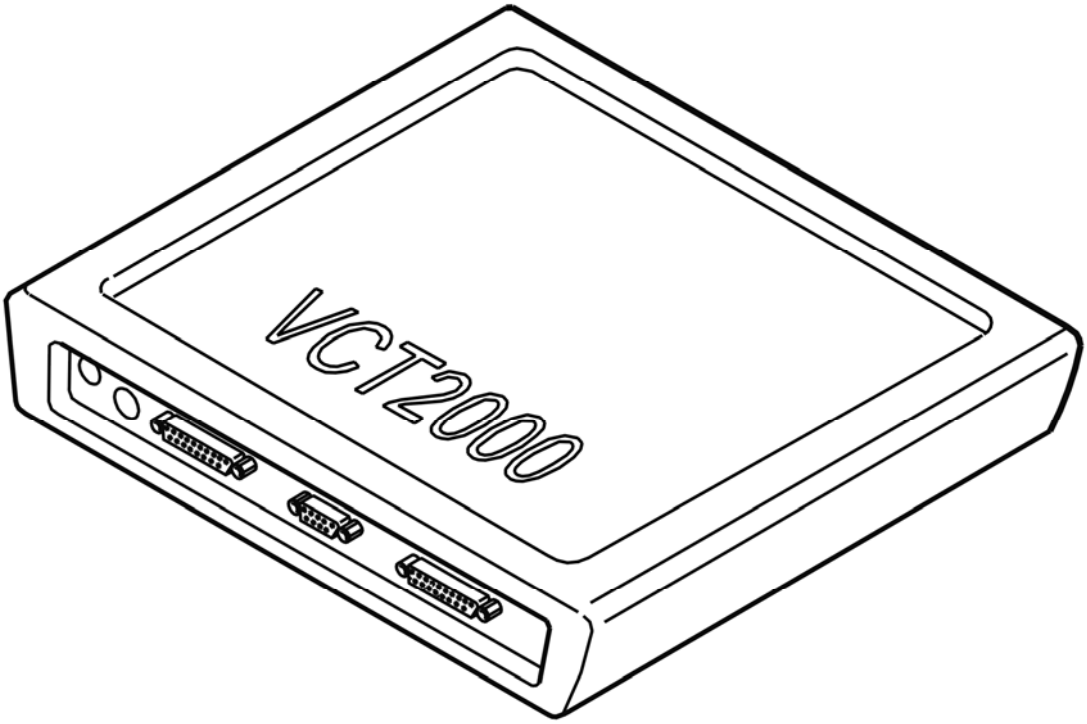

Fig. 50: Identifying VCT2000 Diagnostic Tool Symbol In VIDA
Courtesy of VOLVO CARS CORPORATION

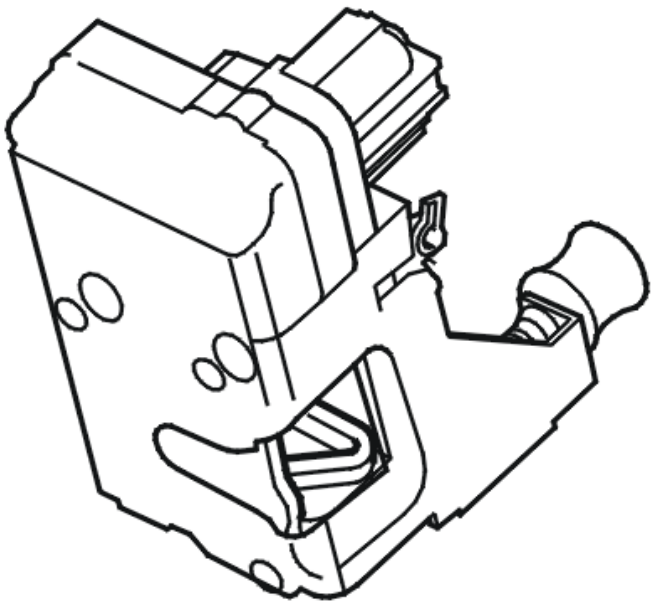

Fig. 51: Identifying Central Locking Motor
Courtesy of VOLVO CARS CORPORATION

- **Continue**

  Refer to **VERIFICATION**

CHECKING CABLE AND COMPONENT

NOTE: Only fault-trace the circuit of the door displaying the faulty value.

Check the connectors for the lock mechanism and the rear electronic module (REM). Check for contact resistance and oxidation.

Check the ground lead/ground terminal for the lock mechanism. Check for an open-circuit.

Left rear door

Check the control signal cable between rear electronic module (REM) connector terminal #23 (#A23) and terminal #4 on the lock mechanism connector. Check for an open-circuit. Check for a short-circuit to supply voltage. Check for a short-circuit to ground.

Check the control signal cable between rear electronic module (REM) connector terminal #27 (#A27) and

terminal #8 on the lock mechanism connector. Check for a short-circuit to supply voltage. Check for an open-circuit. Check for a short-circuit to ground.

Check the wiring between the lock mechanism connector terminals #3 and #8 and the relay terminals #2 and #4 for the child lock. Check for an open-circuit. Check for a short-circuit to ground. Check for a short-circuit to supply voltage.

Check the wiring between the lock mechanism connector terminals #3 and #5 and the power window switch. Check for an open-circuit. Check for a short-circuit to ground. Check for a short-circuit to supply voltage.

HINT: Remove the relay for the child locks while checking the lock motors. If the function is OK when the relay is removed it means that there is a fault in the relay or in the circuit for controlling the relay.

Right rear door

Check the control signal cable between rear electronic module (REM) connector terminal #26 (#B26) and terminal #4 on the lock mechanism connector. Check for an open-circuit. Check for a short-circuit to supply voltage. Check for a short-circuit to ground. The circuit runs via the lock motor for the fuel tank filler cap.

Check the control signal cable between rear electronic module (REM) connector terminal #24 (#B24) and terminal #8 on the lock mechanism connector. Check for an open-circuit. Check for a short-circuit to supply voltage. Check for a short-circuit to ground.

Check the wiring between the lock mechanism connector terminals #3 and #8 and the relay terminals #2 and #4 for the child lock. Check for an open-circuit. Check for a short-circuit to ground. Check for a short-circuit to supply voltage.

Check the wiring between the lock mechanism connector terminals #3 and #5 and the power window switch. Check for an open-circuit. Check for a short-circuit to ground. Check for a short-circuit to supply voltage.

HINT: Remove the relay for the child locks while checking the lock motors. If the function is OK when the relay is removed it means that there is a fault in the relay or in the circuit for controlling the relay.

Remedy as necessary.

Other information

- see **CONNECTING THE BREAKOUT BOX**
- see **SIGNAL SPECIFICATION**
- see **LOCK MECHANISM FRONT SIDE DOOR, REPLACING**
- For -2004, see: **RELAY/FUSE BOX CARGO COMPARTMENT/REAR ELECTRONIC MODULE (REM), REPLACING**
- For 2005-, see: **REAR ELECTRONIC MODULE (REM), REPLACING** .
- see **CHECKING WIRING AND TERMINALS**

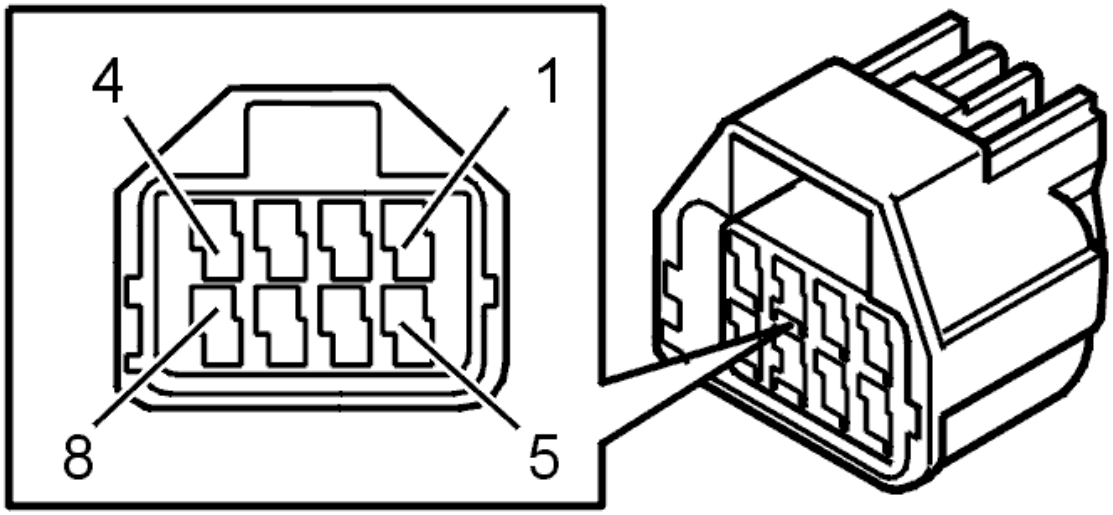

Fig. 52: Identifying Connector Terminals
Courtesy of VOLVO CARS CORPORATION

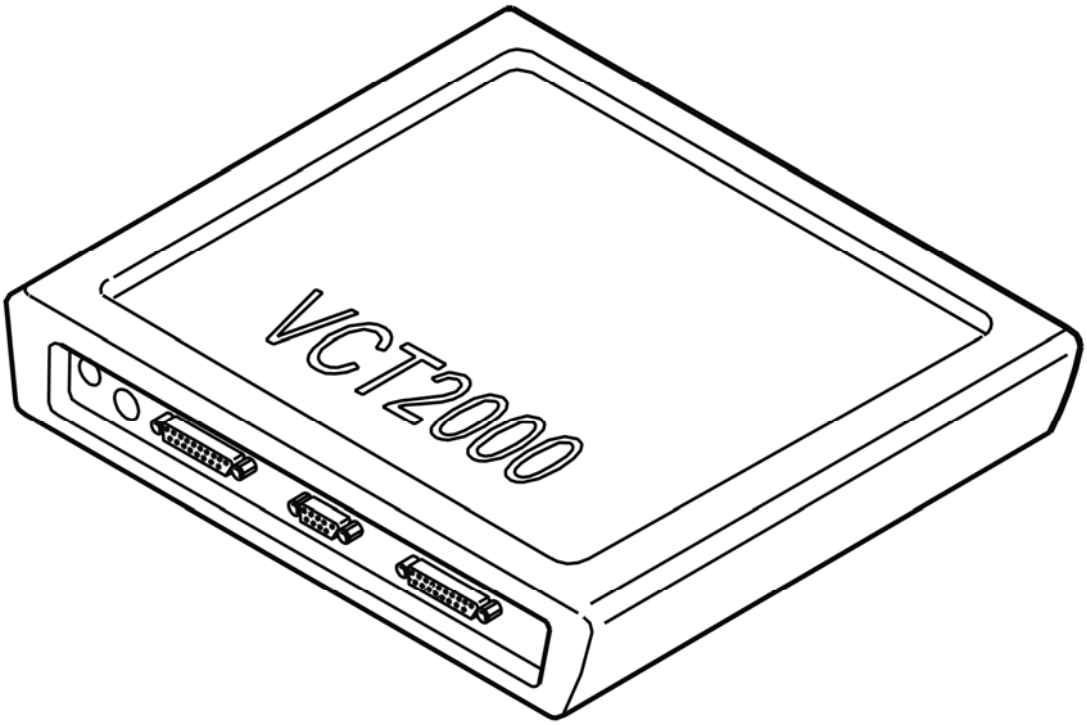

Fig. 53: Identifying VCT2000 Diagnostic Tool Symbol In VIDA
Courtesy of VOLVO CARS CORPORATION

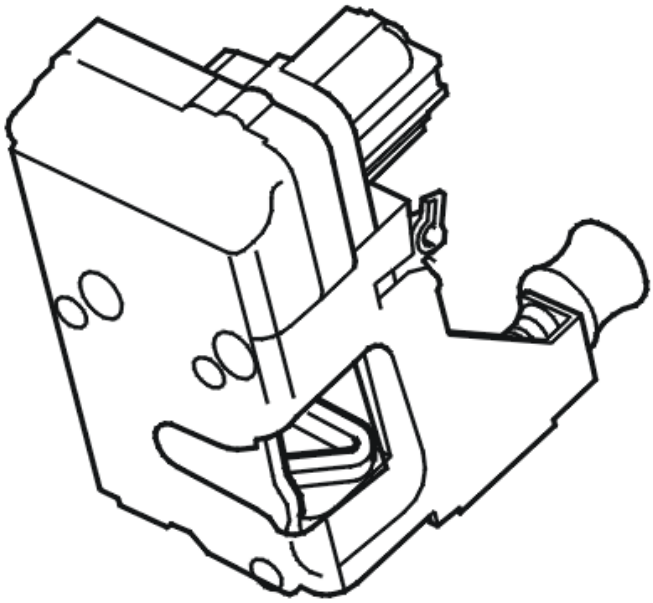

Fig. 54: Identifying Central Locking Motor
Courtesy of VOLVO CARS CORPORATION

- **Continue**

  Refer to **VERIFICATION**

VERIFICATION

VERIFICATION

HINT: After carrying out the repair, check that the fault has been remedied.

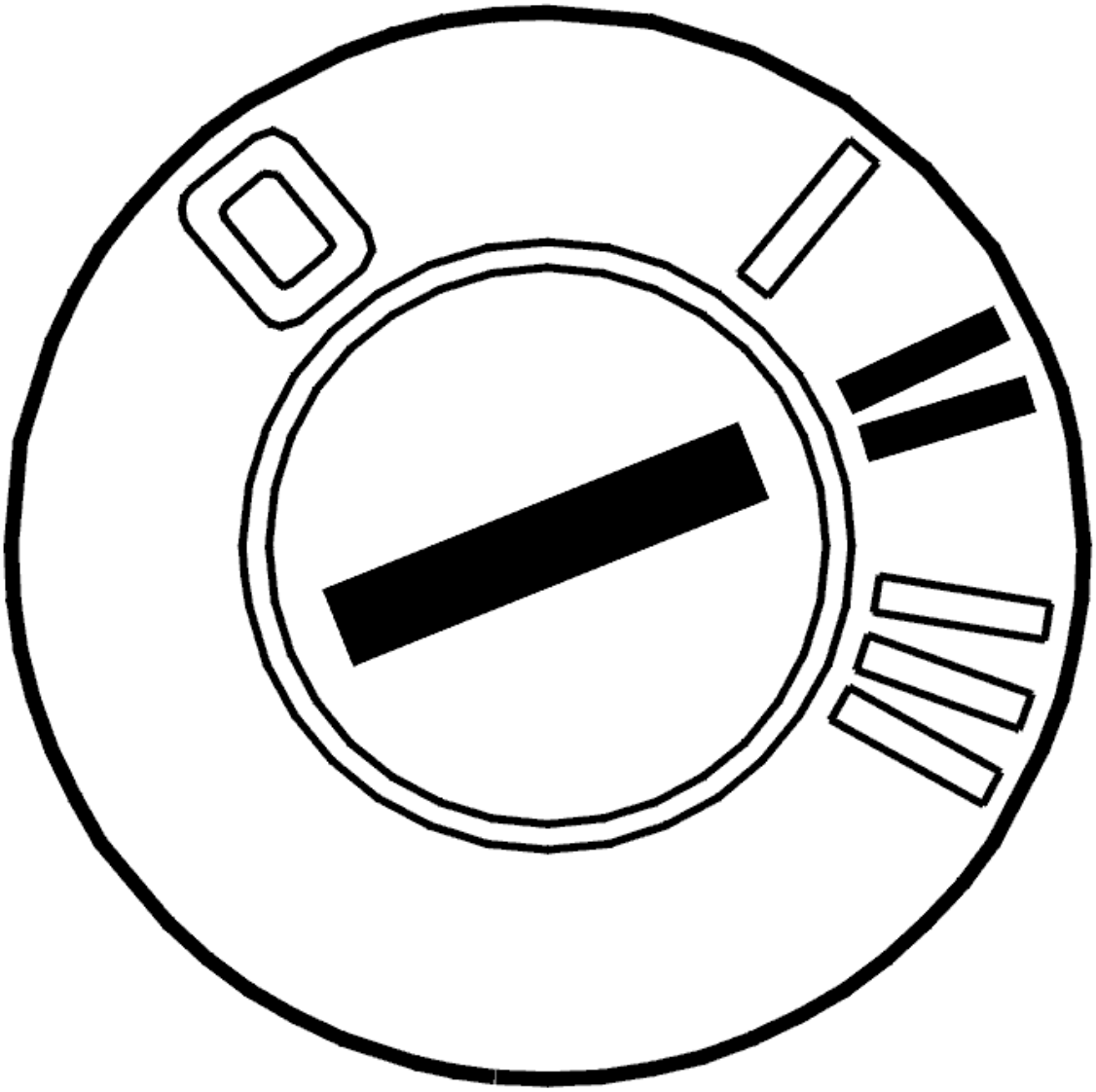

Fig. 55: Identifying Ignition ON
Courtesy of VOLVO CARS CORPORATION

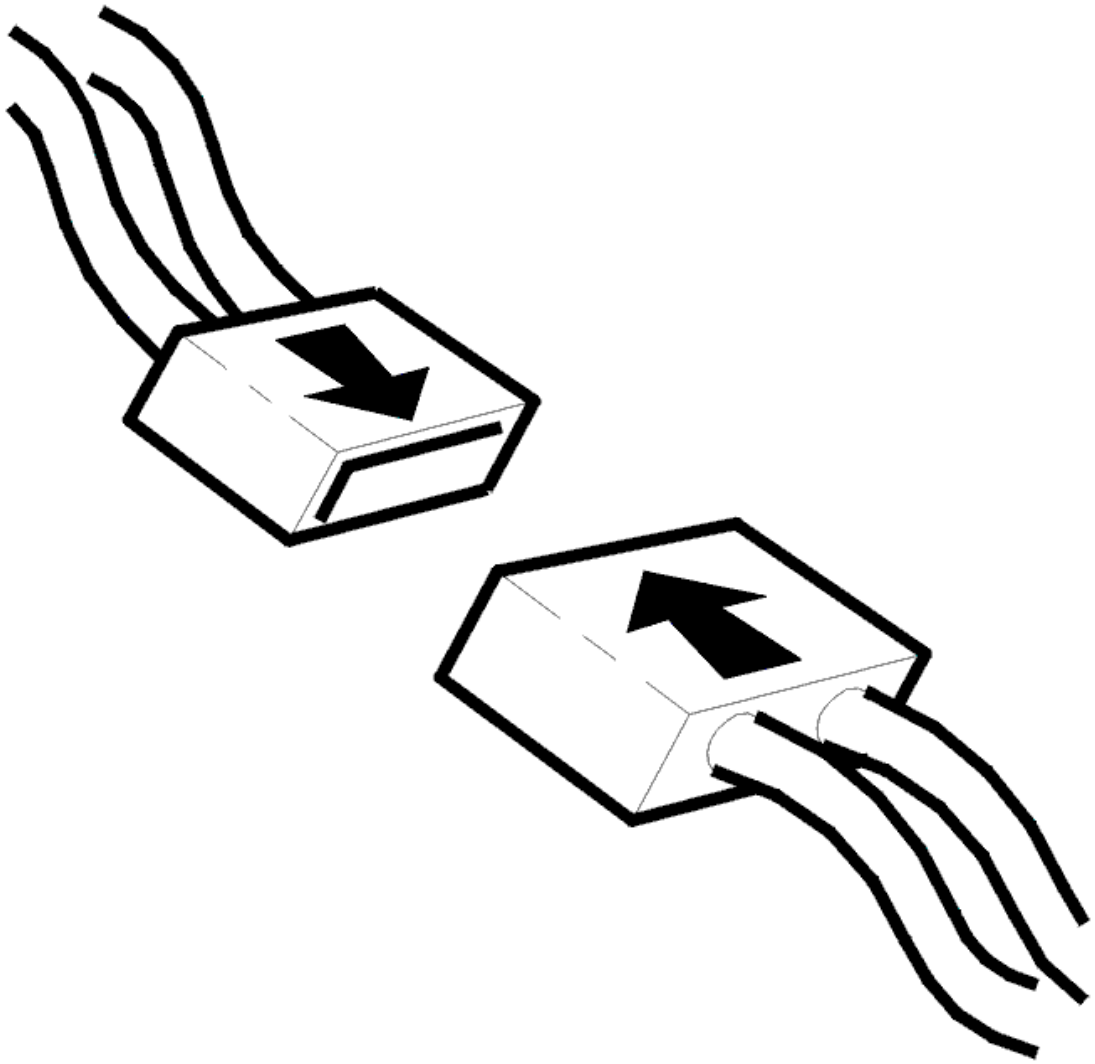

Fig. 56: Connecting Connector
Courtesy of VOLVO CARS CORPORATION

- Ignition off
- Reinstall the connectors, components etc.
- Ignition on
- Read off the status from the control switch in both rear doors (indicates whether the doors are locked or not).

  Lock and unlock the left and right-hand rear doors. The status of each door should change when the door is locked or unlocked.

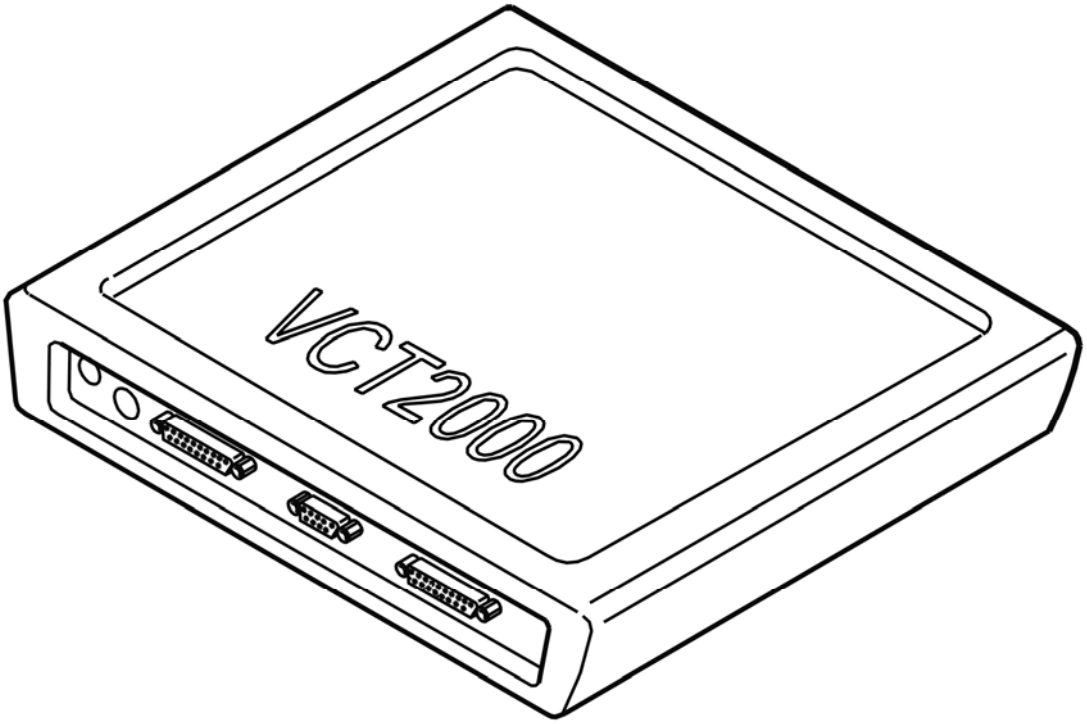

Fig. 57: Identifying VCT2000 Diagnostic Tool Symbol In VIDA
Courtesy of VOLVO CARS CORPORATION

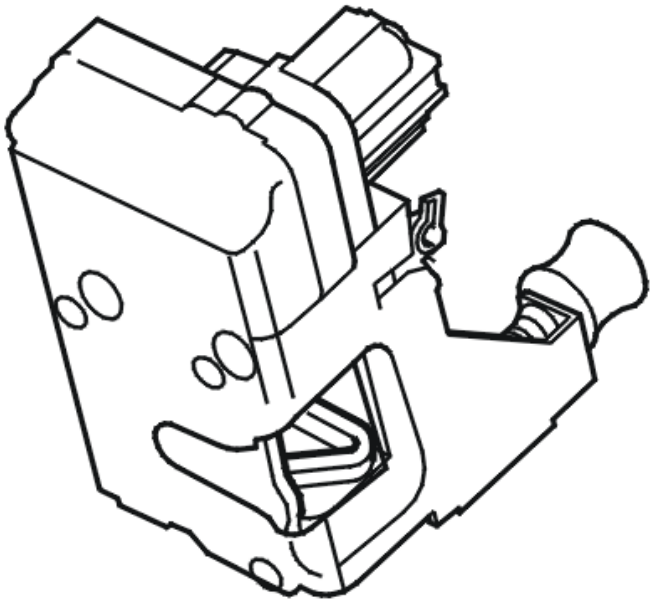

Fig. 58: Identifying Central Locking Motor
Courtesy of VOLVO CARS CORPORATION

Is the status OK?

- **YES**

  VERIFIED: Troubleshooting has been completed.

- **NO**

  Refer to **INFORMATION**

INFORMATION

FAULT-TRACING INFORMATION

The fault should have been detected and remedied. As this is not the case fault-tracing has failed.

Exit fault-tracing for this diagnostic trouble code (DTC) or make another attempt.

REM-6A02: SWITCH CENTRAL LOCKING MOTOR. SIGNAL TOO HIGH (2005-2012)

DIAGNOSTIC TROUBLE CODE (DTC) INFORMATION REM-6A02

Condition

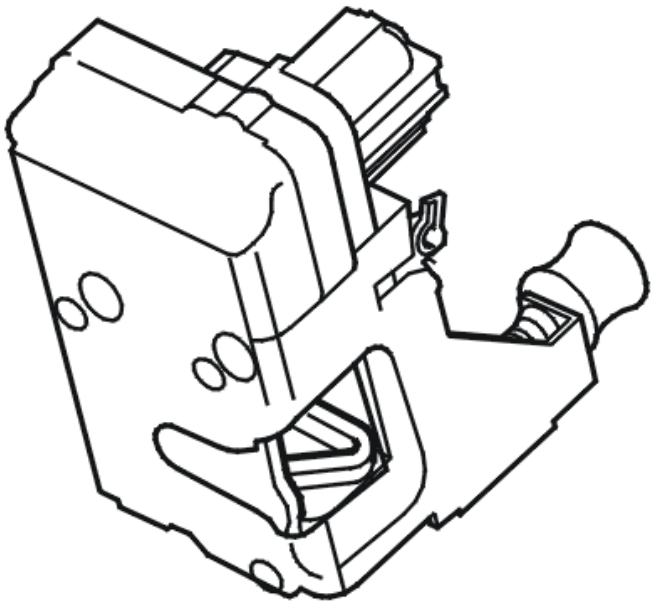

Fig. 59: Identifying Central Locking Motor
Courtesy of VOLVO CARS CORPORATION

The rear electronic module (REM) controls the lock units in the rear doors via a number of relays.

The rear electronic module (REM) receives an indication from the lock units about whether the central locking motor is in the locked or unlocked position. This information is provided by a switch in each lock unit. The switch must be closed when the lock motor is in the locked position.

The diagnostic trouble code (DTC) is stored if the rear electronic module (REM) detects that the input from the switch in the **right rear door** is still high 15 seconds after the unlock command was given.

The diagnostic trouble code (DTC) can be diagnosed during central locking and when no further lock command has been received within 15 seconds.

Substitute Value

- None.

Possible Source

- Contact resistance and oxidation in the terminals
- Fault or short-circuit to supply voltage in the switch for indication of the lock motor position
- Open-circuit in the cable from the switch for indication of the lock motor position
- The lock motor is stuck in one position
- Open-circuit in the ground lead/ground terminal for the lock mechanism
- Open-circuit, short-circuit to ground or supply voltage in the control cable to the lock motors
- Open-circuit, short-circuit to ground or supply voltage in the control cable to the lock motors from/to the relay for the child-proof lock
- Open-circuit, short-circuit to ground or supply voltage in the wiring to the relay for the child-proof lock from the power window switch
- Damaged relay for the child-proof lock.

Fault symptom[s]

- Does not lock / unlock a door.

SIGNAL TOO HIGH

see **SIGNAL TOO HIGH**

REM-6A03: RELAY, CENTRAL LOCKING. SIGNAL TOO LOW (2003-2004)

DIAGNOSTIC TROUBLE CODE (DTC) INFORMATION

Condition

The rear electronic module checks the output signal to the relay coil for relay 2/158.

Diagnostic trouble code (DTC) REM-6A03 is stored if the rear electrical module registers that the output signal to the relay coil is missing or too low.

Diagnostic trouble code (DTC) REM-6A03 can be diagnosed when relay 2/158 is not activated.

Substitute Value

- None.

Possible Source

- Oxidation on the relay base switches
- The relay is loose or missing
- Defective relay.

Fault symptom[s]

- Does not lock / unlock a door
- Does not lock / unlock the fuel tank filler cap
- Does not lock or unlock the trunk lid.

SIGNAL TOO LOW

CHECKING AND REPLACING THE COMPONENT

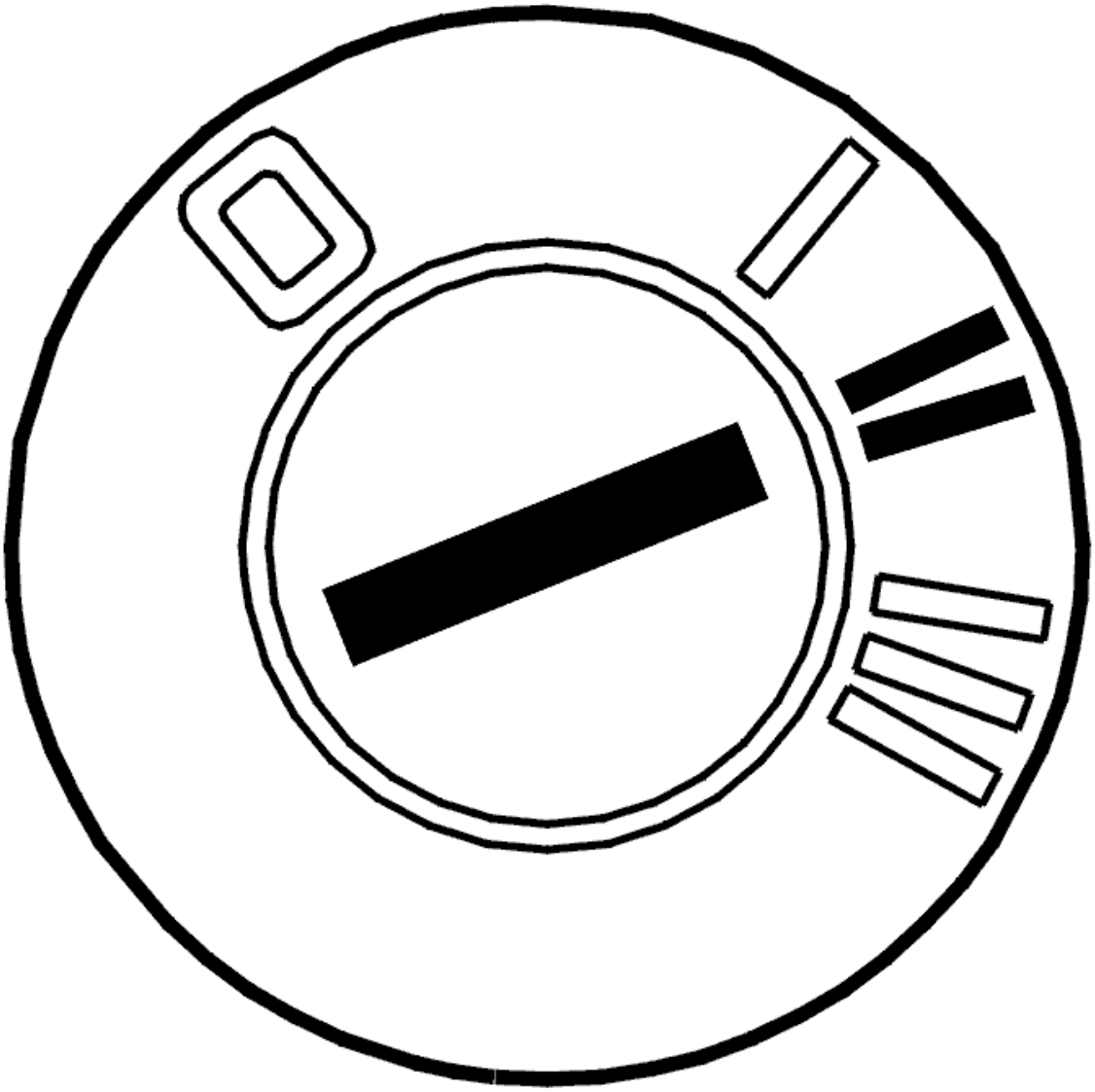

Fig. 60: Identifying Ignition ON
Courtesy of VOLVO CARS CORPORATION

- Ignition off
- Remove relay 2/158. Check the relay base switches. Check for contact resistance and oxidation
- Install the relay

- Ignition on.

  Activate the relay.

  If the function is now OK the fault was caused by a contact fault in the relay base.

  Other information

  - see **CHECKING WIRING AND TERMINALS** .

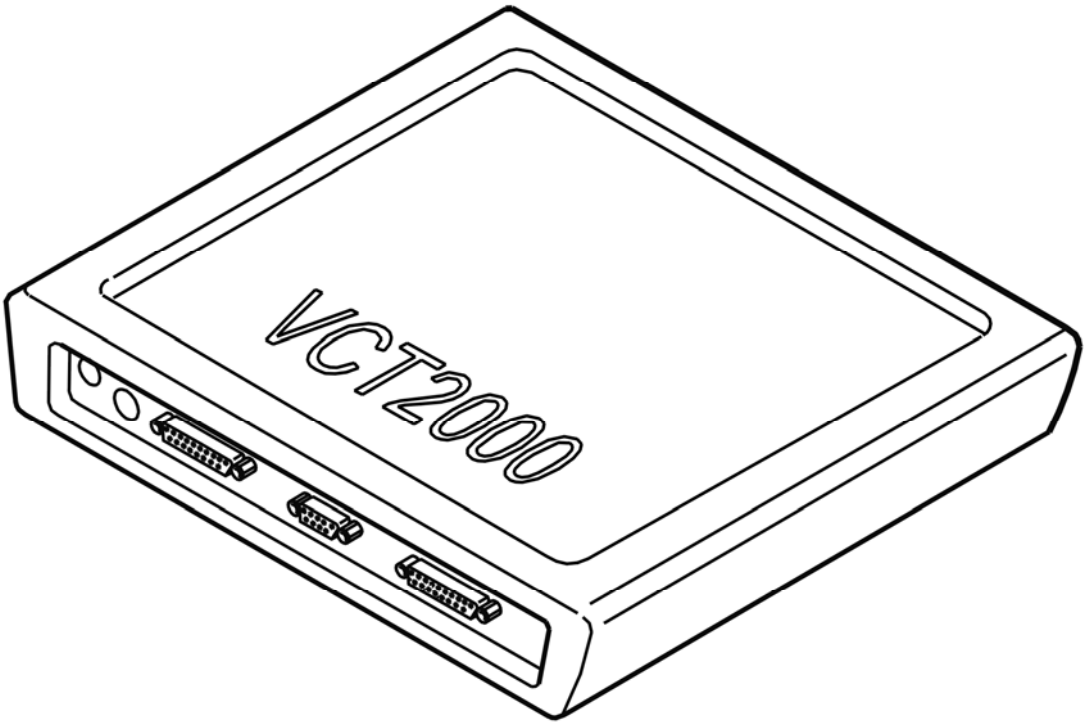

Fig. 61: Identifying VCT2000 Diagnostic Tool Symbol In VIDA
Courtesy of VOLVO CARS CORPORATION

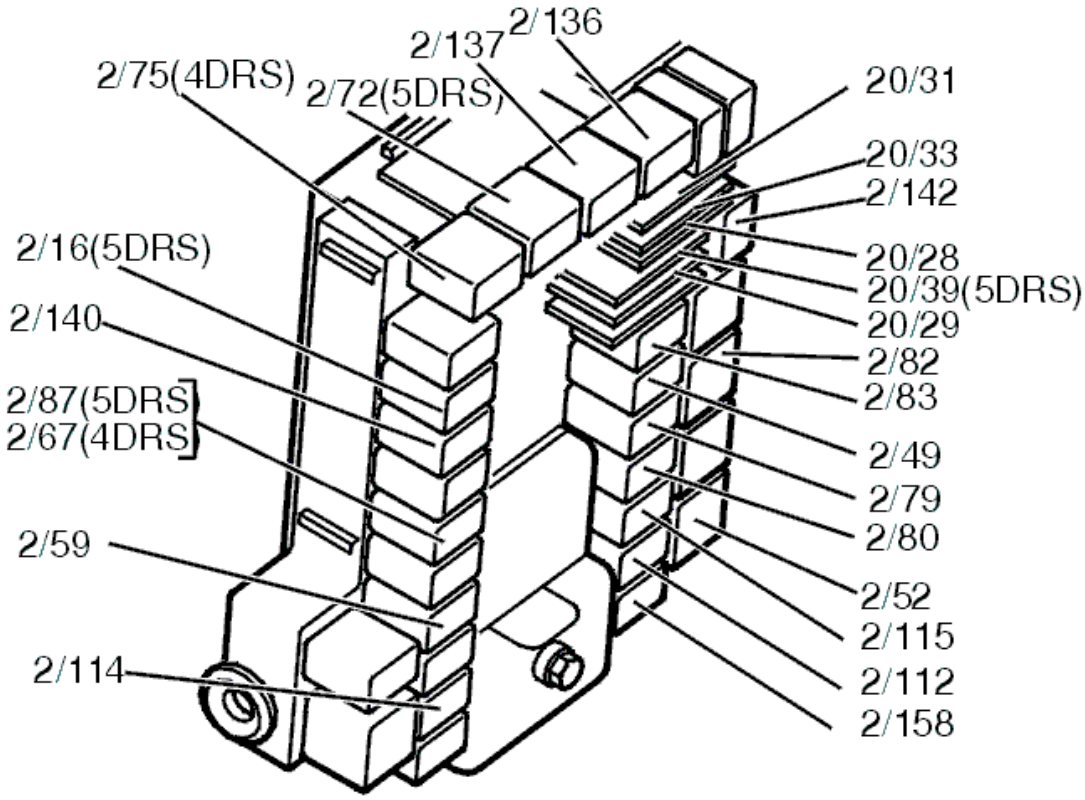

Fig. 62: Identifying Relays
Courtesy of VOLVO CARS CORPORATION

Was the function OK?

- **YES**

  Refer to **VERIFICATION**

- **NO**

  Refer to **REPLACING THE COMPONENT**

REPLACING THE COMPONENT

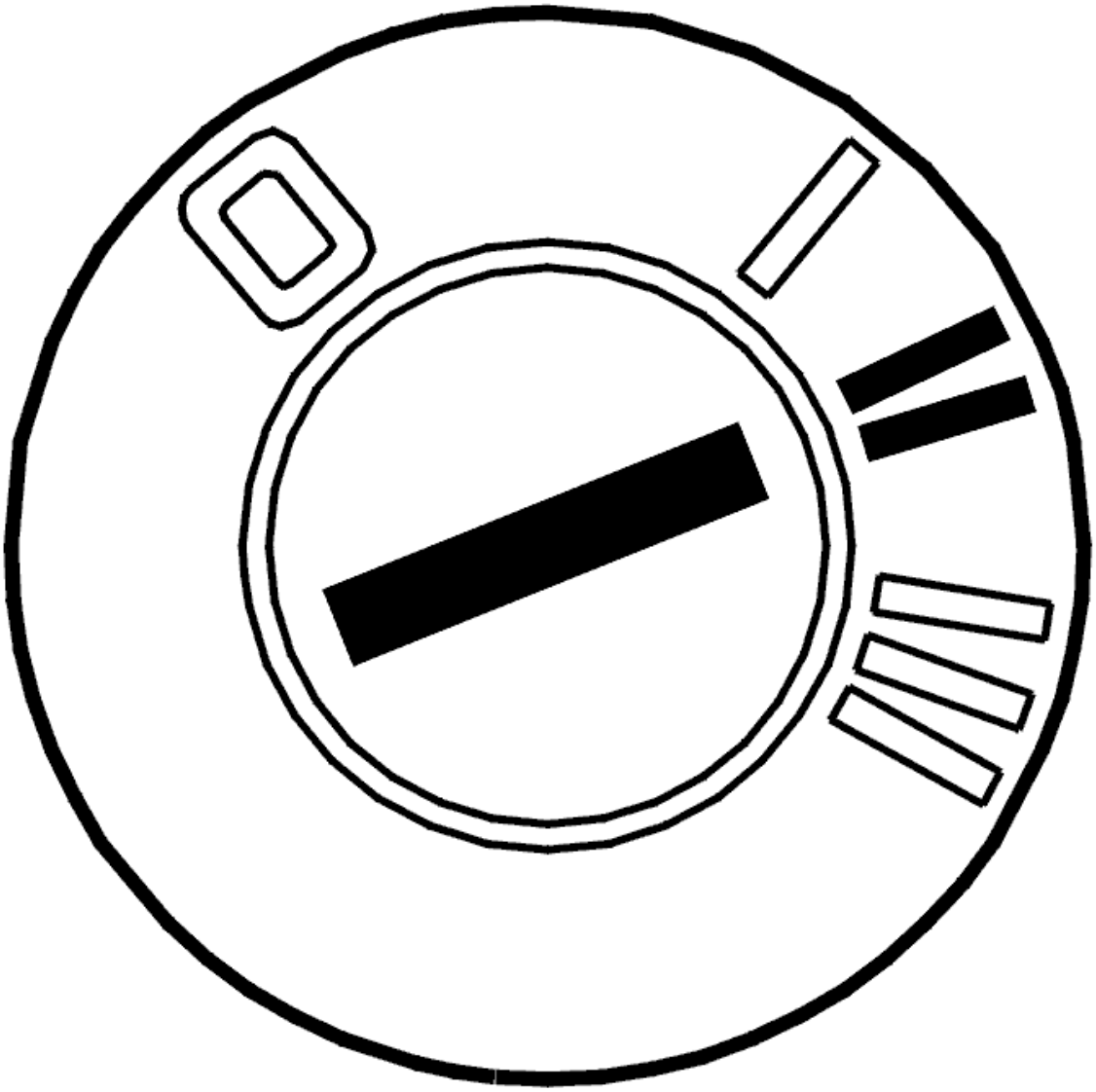

Fig. 63: Identifying Ignition ON
Courtesy of VOLVO CARS CORPORATION

- Ignition off
- Replace relay 2/158
- Ignition on.

  Activate the relay.

  If the function is now OK, the cause of the fault was a defective relay (short-circuit to ground or an open-circuit in the relay coil).

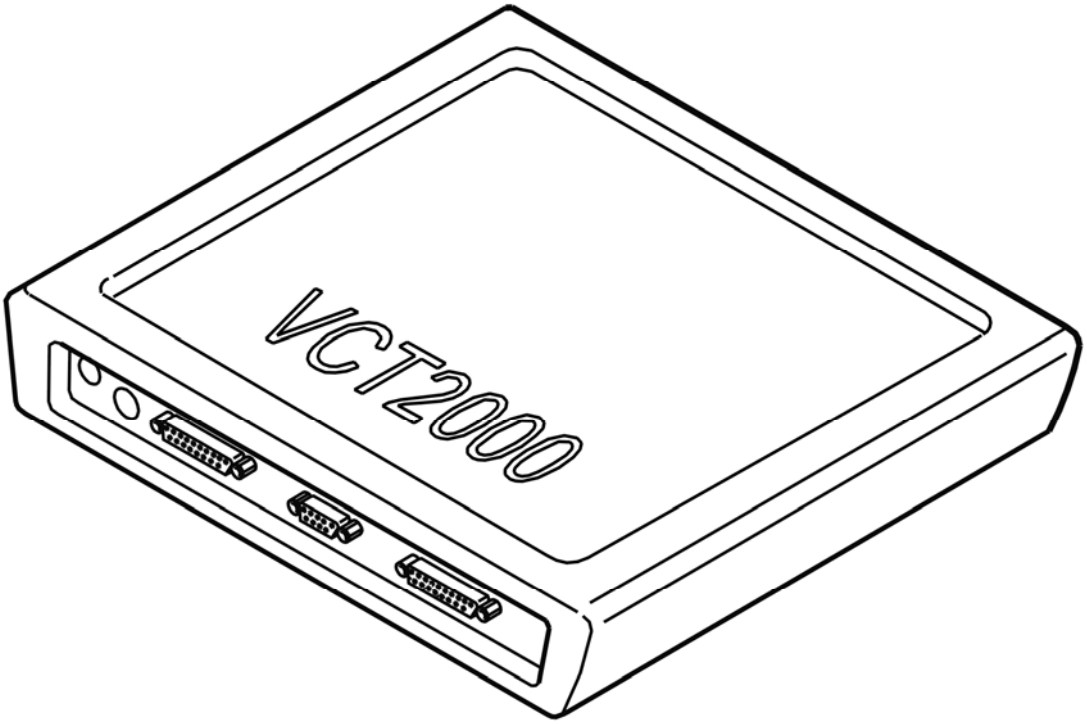

Fig. 64: Identifying VCT2000 Diagnostic Tool Symbol In VIDA
Courtesy of VOLVO CARS CORPORATION

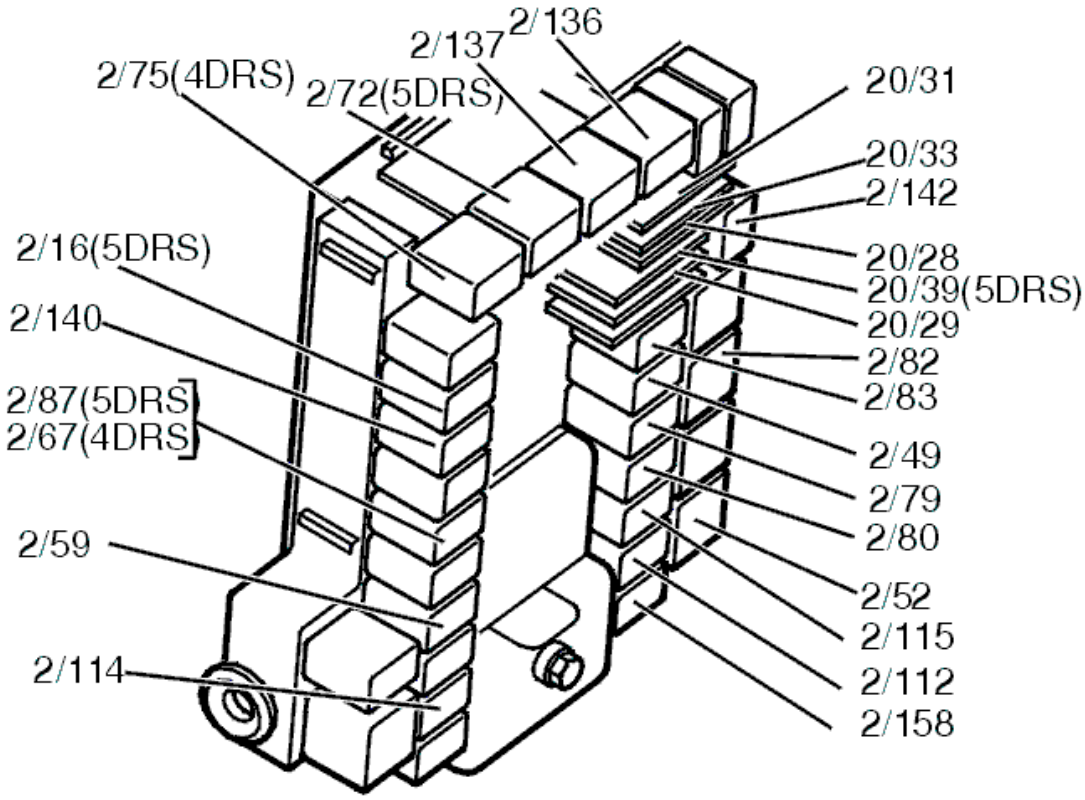

Fig. 65: Identifying Relays
Courtesy of VOLVO CARS CORPORATION

Was the function OK?

- **YES**

  OKAY: Troubleshooting has been completed.

- **NO**

  Refer to **CHECKING THE CONTROL MODULE FOR OPEN-CIRCUITS**

CHECKING THE CONTROL MODULE FOR OPEN-CIRCUITS

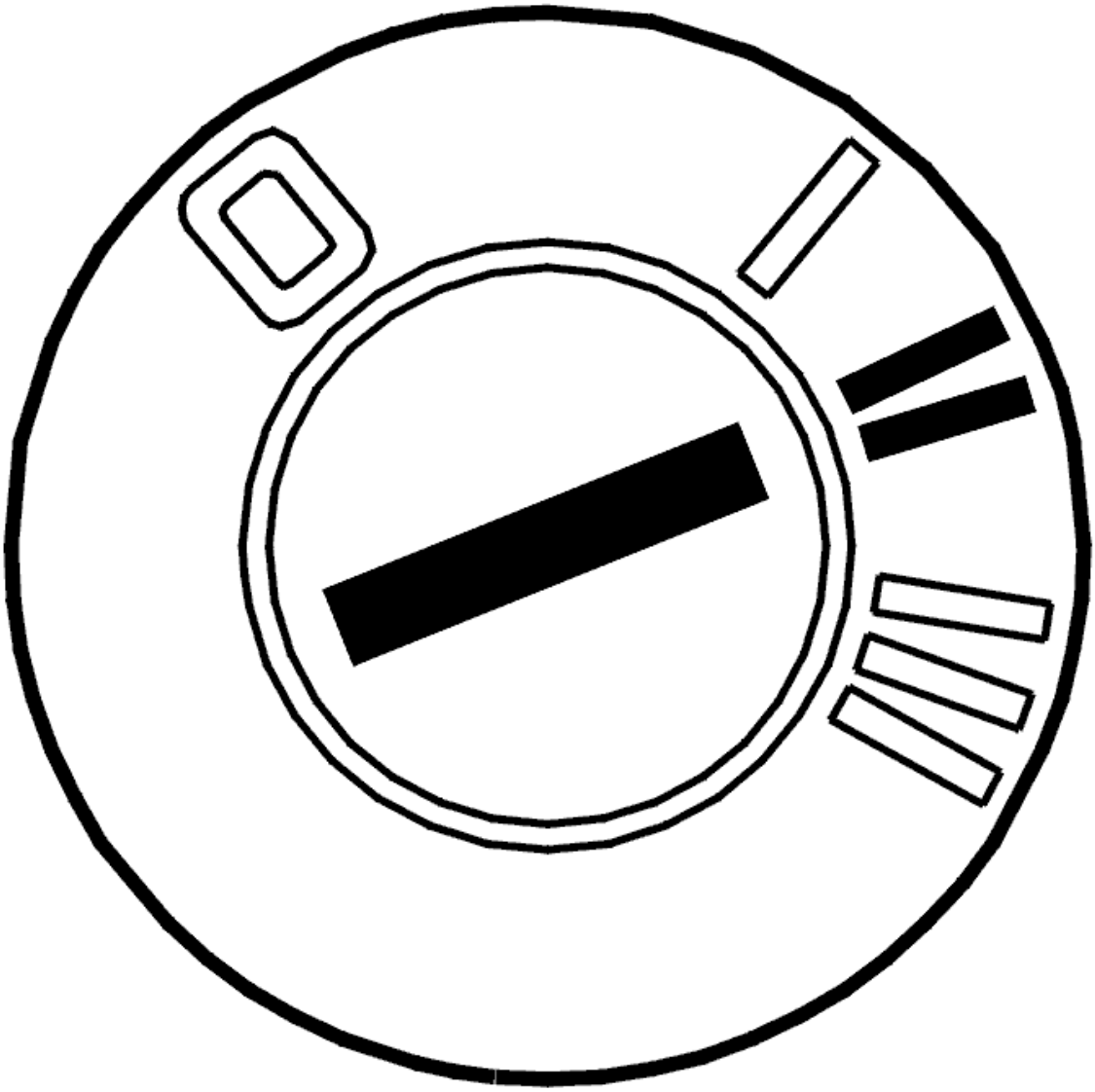

Fig. 66: Identifying Ignition ON
Courtesy of VOLVO CARS CORPORATION

- Ignition off
- Remove relay 2/158
- Ignition on.

Check the driver circuit for the relay coil for an open-circuit as follows: activate the relay driver. Measure the voltage between terminals #1 and #2 on the relay base.

The voltage between terminals #1 and #2 should be battery voltage.

If the value deviates excessively, check the voltage between terminal #2 and the battery voltage and between terminal #1 and ground. Both should equal battery voltage.

HINT: Do not forget to check that the power supply to the control module is OK.

Other information

- see **CHECKING WIRING AND TERMINALS** .

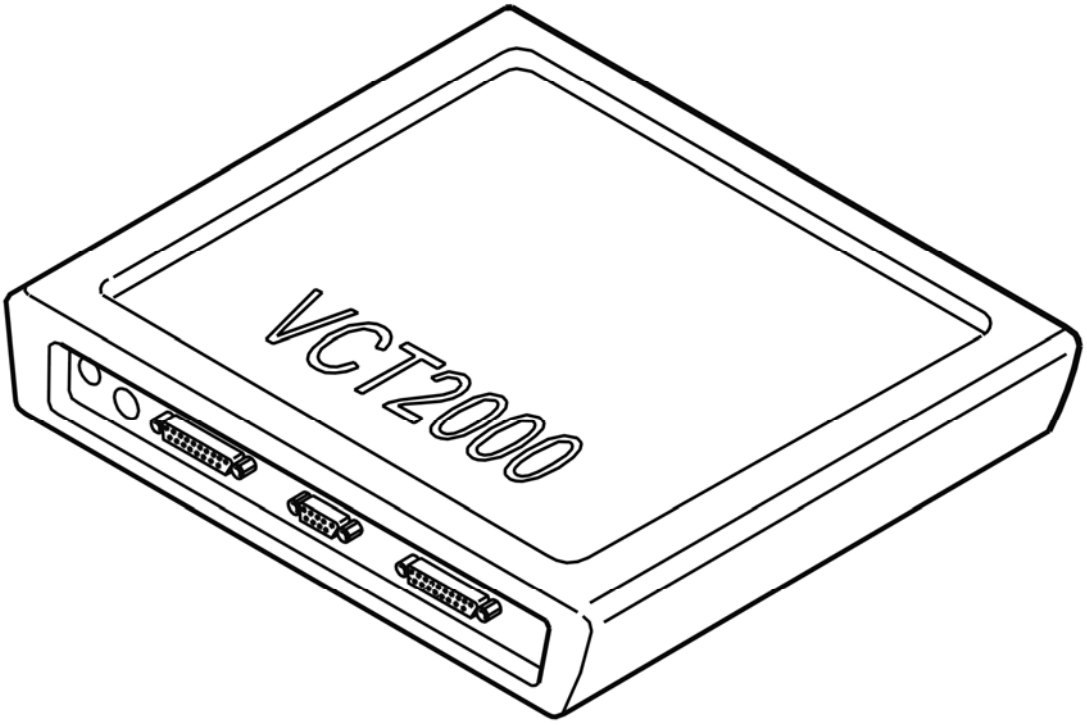

Fig. 67: Identifying VCT2000 Diagnostic Tool Symbol In VIDA
Courtesy of VOLVO CARS CORPORATION

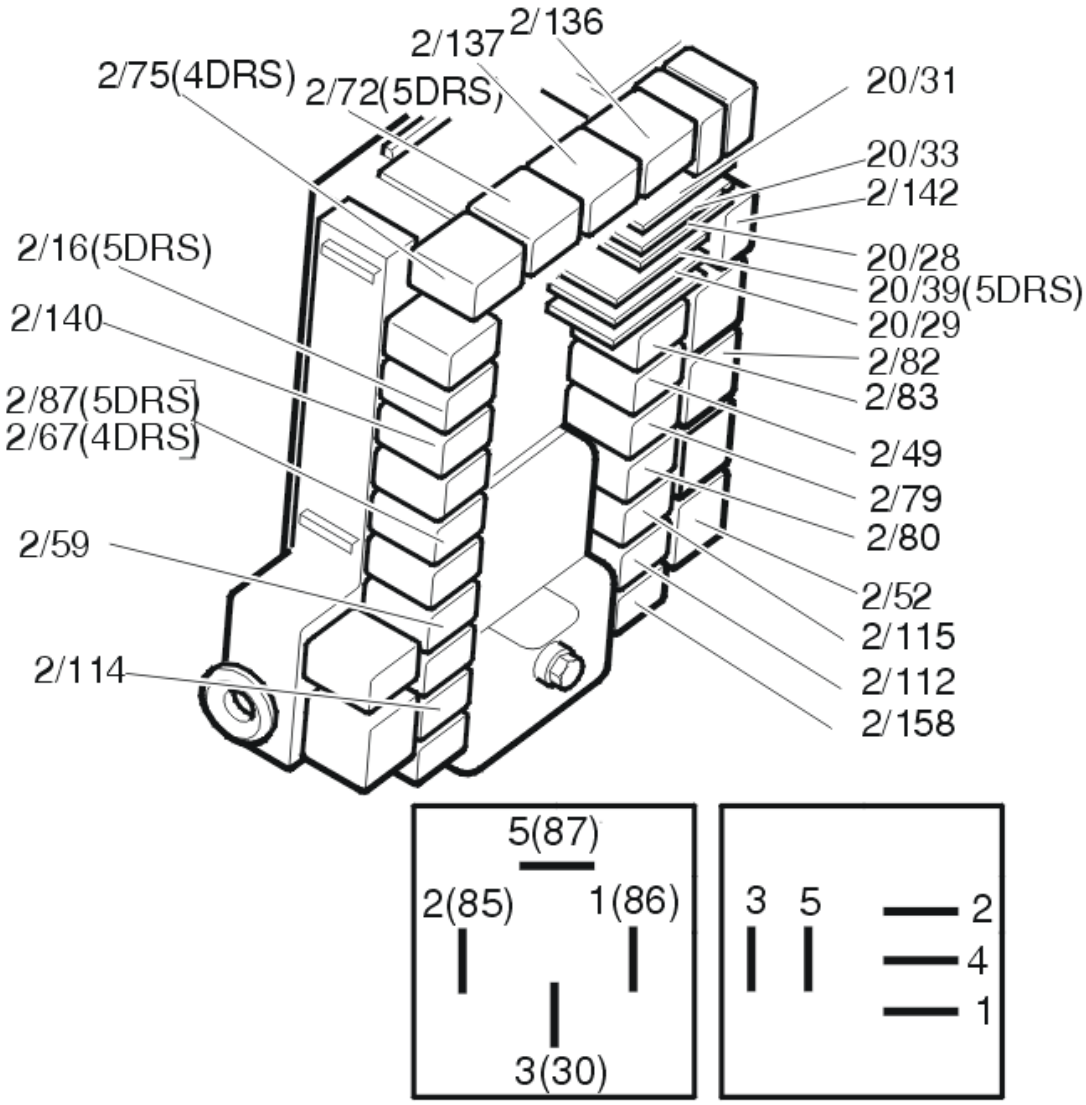

Fig. 68: Identifying Relays
Courtesy of VOLVO CARS CORPORATION

Was a fault detected?

- **YES**

  Refer to **VERIFICATION**

- **NO**

  Refer to **CHECKING THE CONTROL MODULE FOR SHORT-CIRCUITS**

CHECKING THE CONTROL MODULE FOR SHORT-CIRCUITS

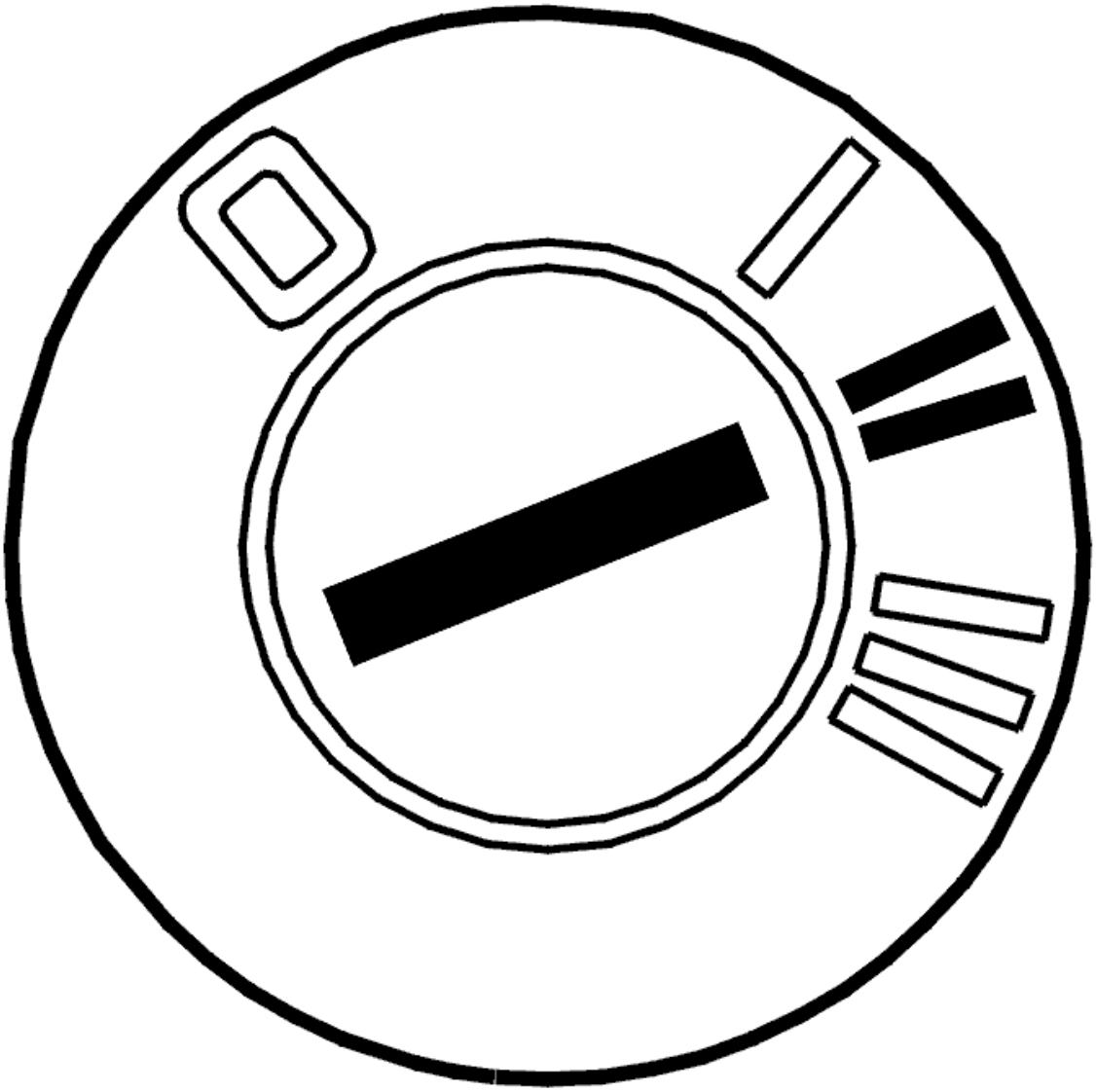

Fig. 69: Identifying Ignition ON
Courtesy of VOLVO CARS CORPORATION

- Ignition on.

  Activate the relay driver.

  Measure the resistance between terminal #2 and ground when the relay driver is active.

  The resistance must be low when the relay driver is active.

  Replace the control module if the resistance is high.

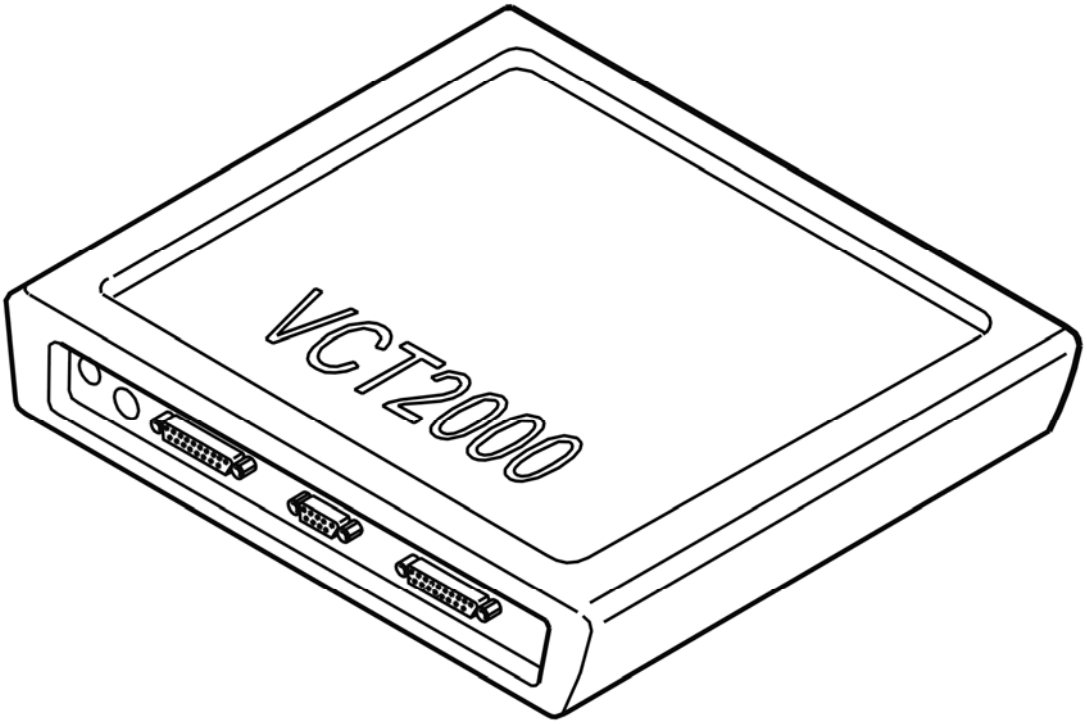

Fig. 70: Identifying VCT2000 Diagnostic Tool Symbol In VIDA
Courtesy of VOLVO CARS CORPORATION

- **Continue**

  Refer to **VERIFICATION**

VERIFICATION

VERIFICATION

HINT: After carrying out the repair, check that the fault has been remedied.

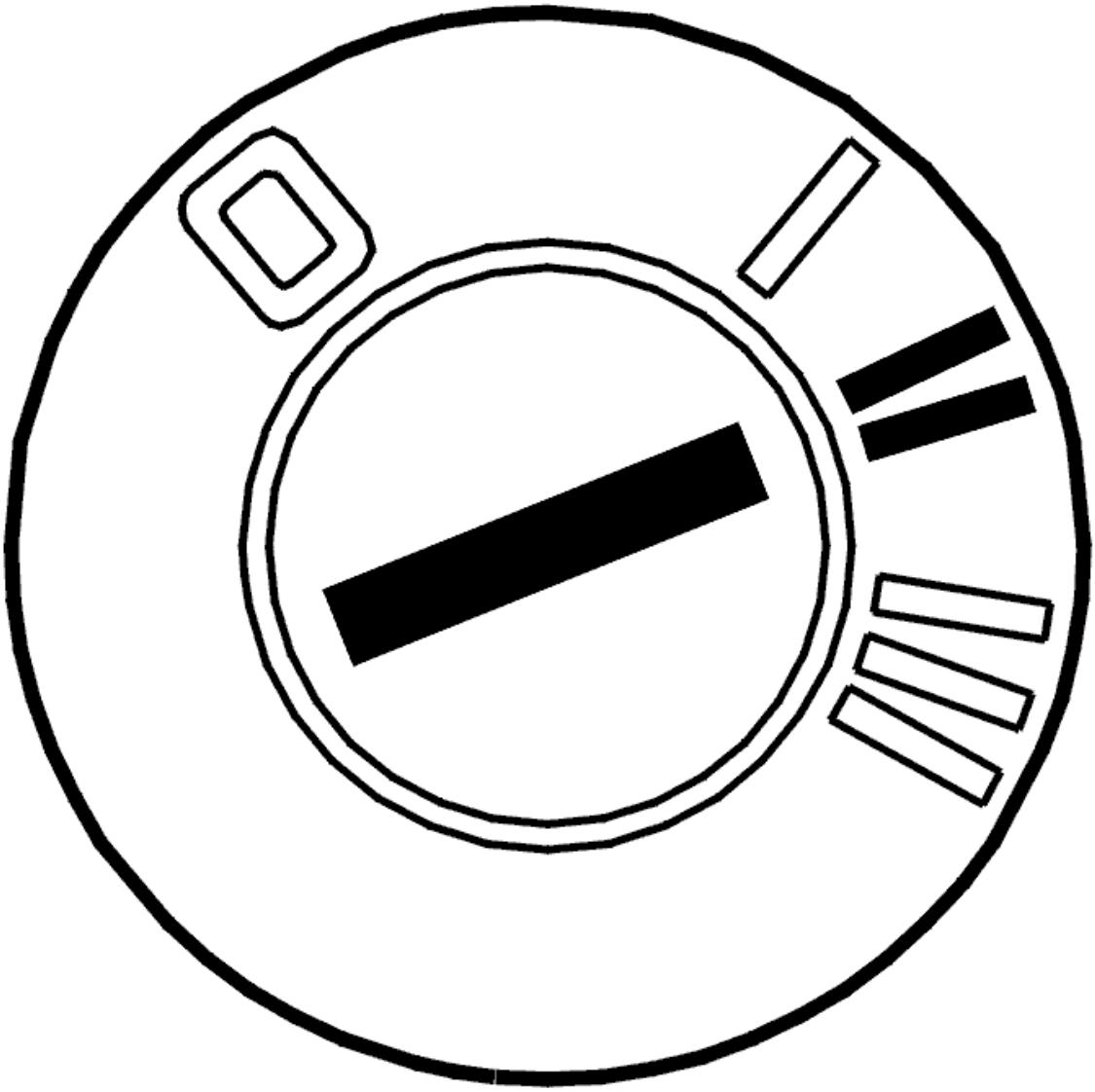

Fig. 71: Identifying Ignition ON
Courtesy of VOLVO CARS CORPORATION

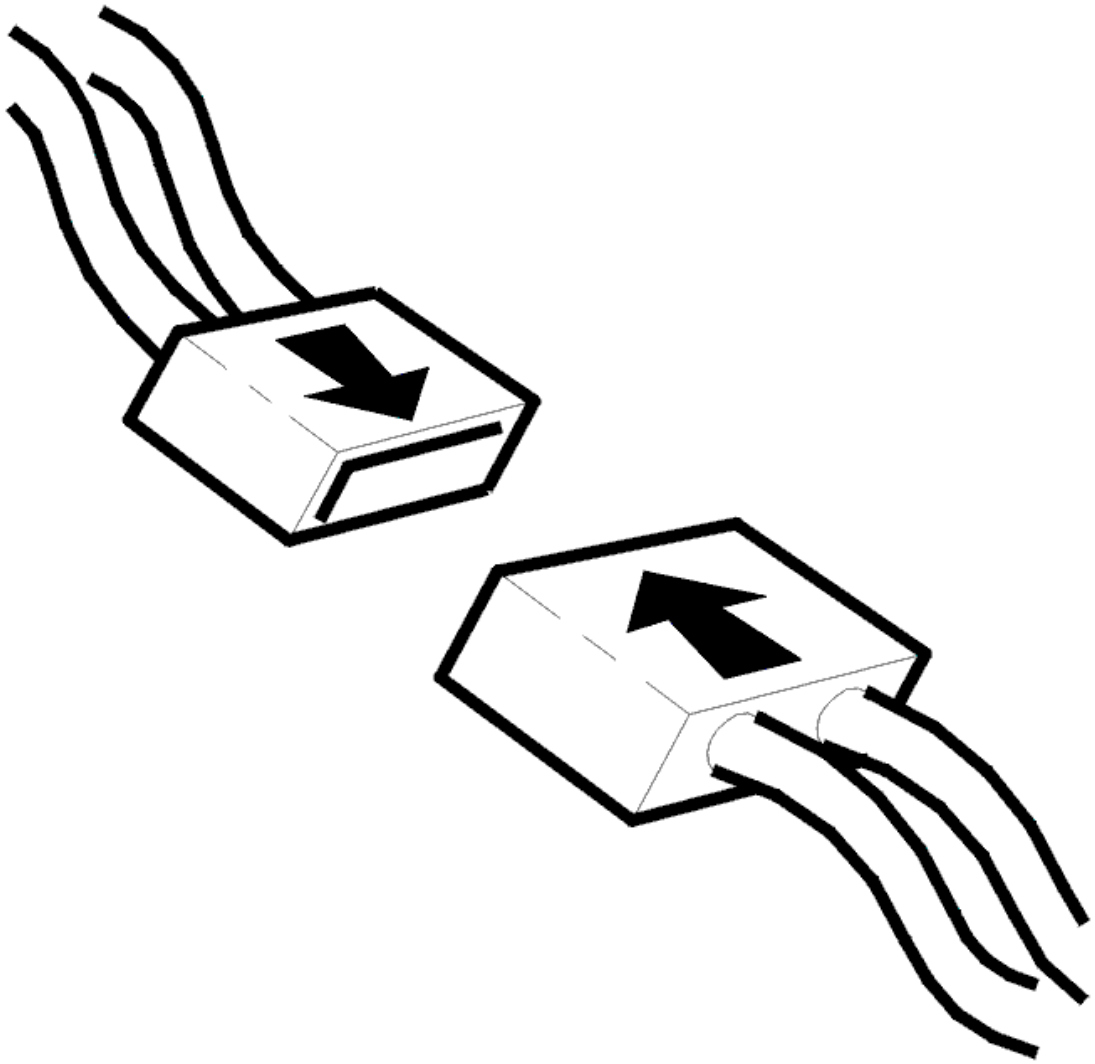

Fig. 72: Connecting Connector
Courtesy of VOLVO CARS CORPORATION

- Ignition off
- Reinstall the connectors, components etc.
- Ignition on.

  Activate the relay.

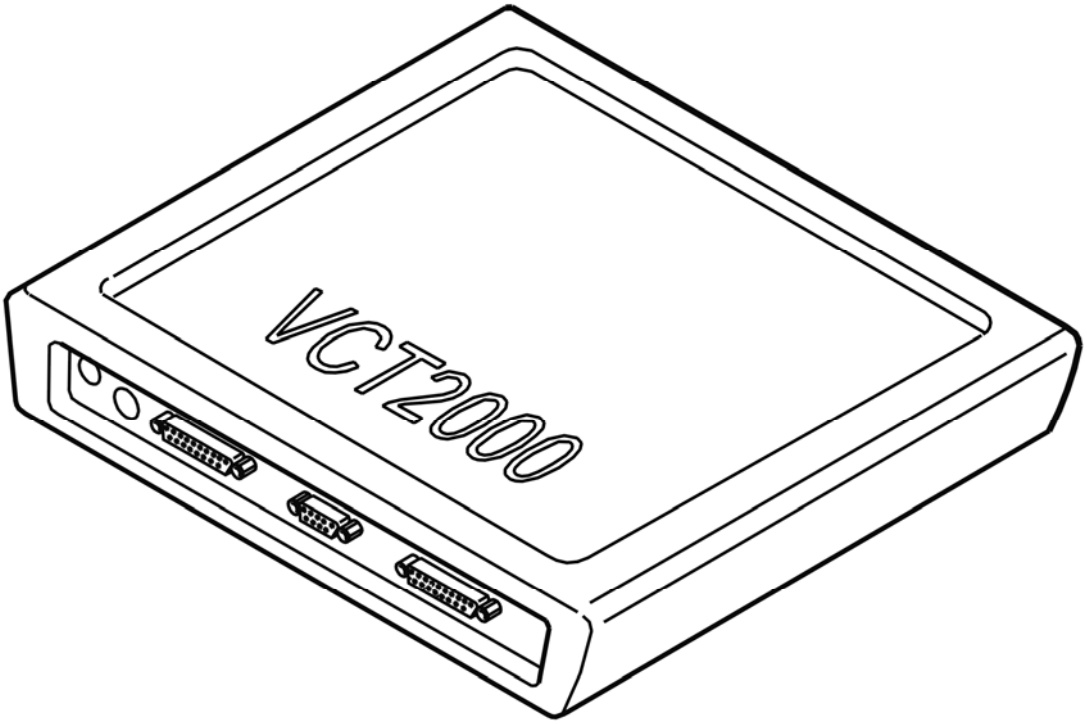

Fig. 73: Identifying VCT2000 Diagnostic Tool Symbol In VIDA
Courtesy of VOLVO CARS CORPORATION

Was the function OK?

- **YES**

  VERIFIED: Troubleshooting has been completed.

- **NO**

  Refer to **INFORMATION**

INFORMATION

FAULT-TRACING INFORMATION

The fault should have been detected and remedied. As this is not the case fault-tracing has failed.

Exit fault-tracing for this diagnostic trouble code (DTC) or make another attempt.

REM-6A03: SWITCH CENTRAL LOCKING MOTOR. SIGNAL TOO LOW (2005-2012)

DIAGNOSTIC TROUBLE CODE (DTC) INFORMATION REM-6A03

Condition

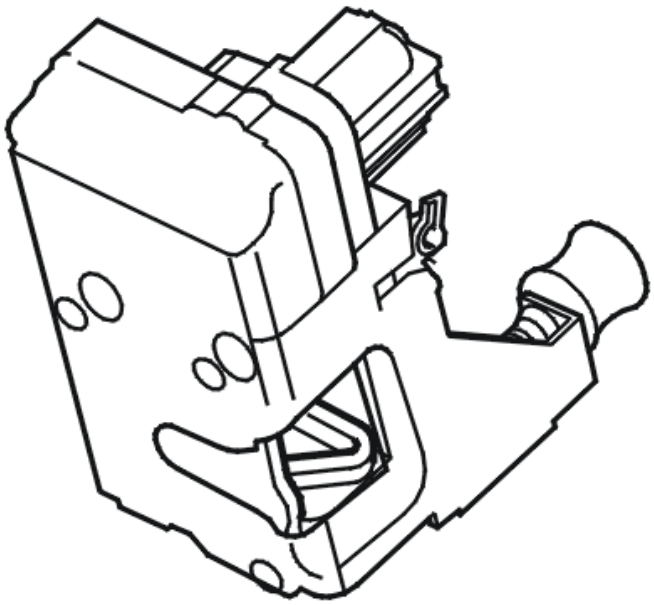

Fig. 74: Identifying Central Locking Motor
Courtesy of VOLVO CARS CORPORATION

The rear electronic module (REM) uses a number of relays to control the lock units in the rear doors for locking and unlocking.

The rear electronic module (REM) receives an indication from the lock units when the central locking motor is in the locked or unlocked position. This information is supplied by a switch in each lock unit. The switch provides a ground when the lock motor is in the locked position.

The diagnostic trouble code (DTC) is stored if the rear electronic module (REM) detects that the input from the switch in the **left rear door** is still low 15 seconds after the unlock command was given.

The diagnostic trouble code (DTC) can be diagnosed during unlocking by the central locking and when no further lock command has been received within 15 seconds.

Substitute Value

- None.

Possible Source

- Contact resistance and oxidation in the terminals
- Fault or short-circuit to ground in the switch for indication of the lock motor position
- Short-circuit to ground in the cable from the switch for indication of the lock motor position
- The lock motor is stuck in one position
- Open-circuit in the ground lead/ground terminal for the lock mechanism
- Open-circuit, short-circuit to ground or supply voltage in the control cable to the lock motors
- Open-circuit, short-circuit to ground or supply voltage in the control cable to the lock motors from/to the relay for the child-proof lock
- Open-circuit, short-circuit to ground or supply voltage in the wiring to the relay for the child-proof lock from the power window switch
- Damaged relay for the child-proof lock.

Fault symptom[s]

- Does not lock / unlock a door.

SIGNAL TOO LOW

CHECKING THE SIGNAL FROM THE SWITCHES IN THE REAR DOORS

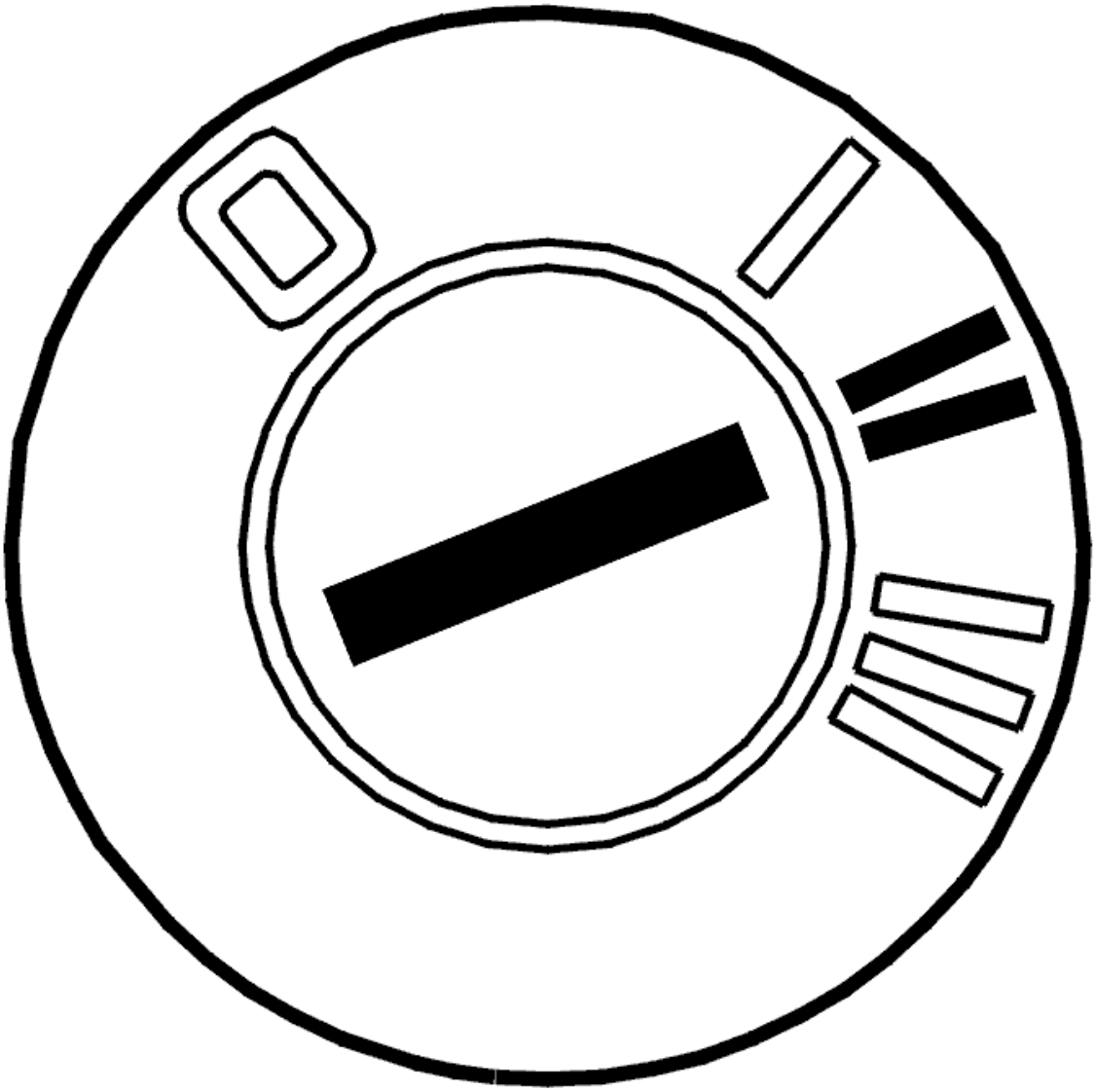

Fig. 75: Identifying Ignition ON
Courtesy of VOLVO CARS CORPORATION

- Ignition on
- Read off the status from the control switch in both rear doors (indicates whether the doors are locked or not).

  Lock and unlock the left and right-hand rear doors. The status of each door should change when the door is locked or unlocked.

  HINT: The doors can also be locked/unlocked using the remote control.

  The fault is permanent if the status does not change.

  If the status changes, this indicates an intermittent fault, i. e. the fault was present previously but is not active at the moment.

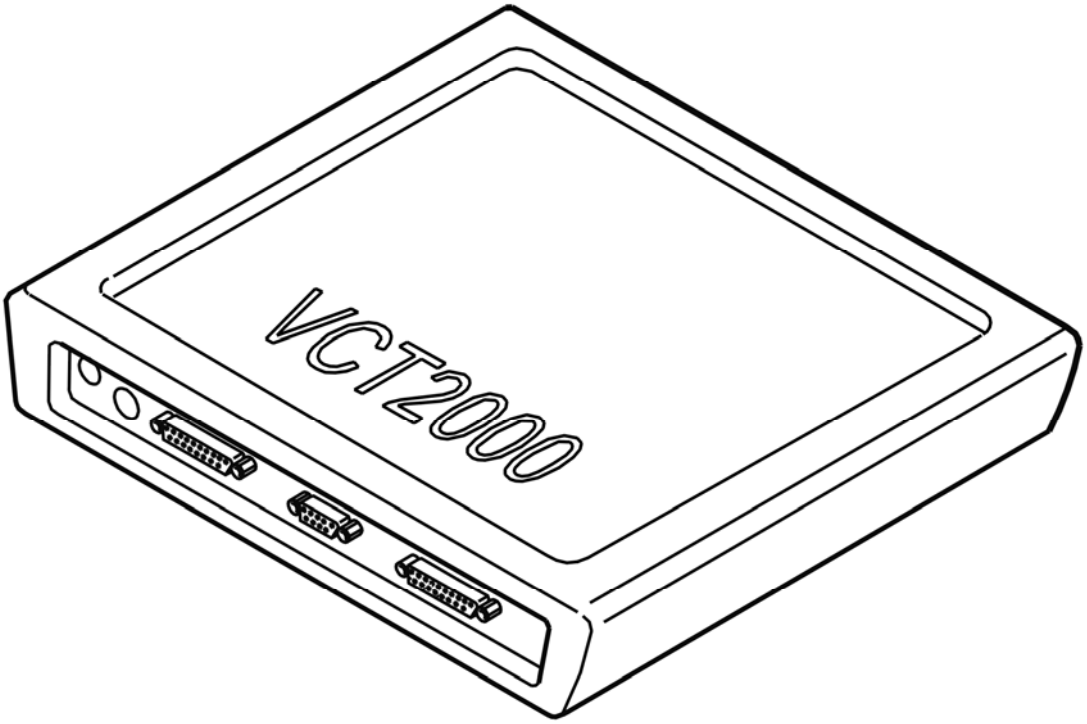

Fig. 76: Identifying VCT2000 Diagnostic Tool Symbol In VIDA
Courtesy of VOLVO CARS CORPORATION

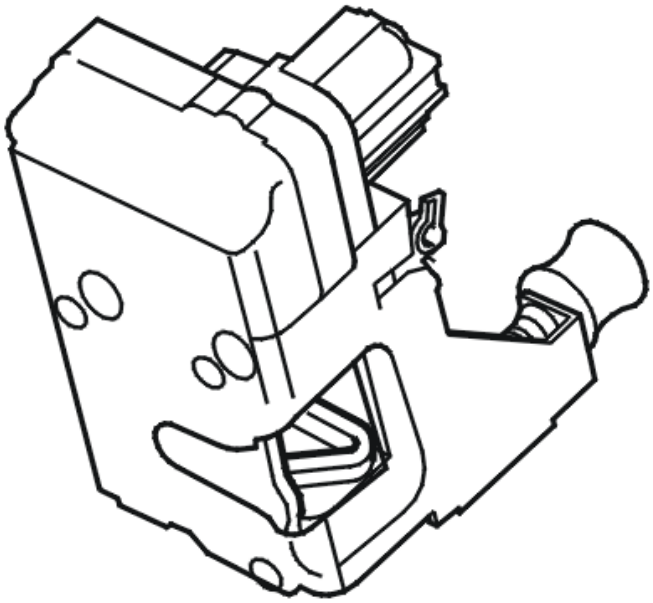

Fig. 77: Identifying Central Locking Motor
Courtesy of VOLVO CARS CORPORATION

- **Continue**

Refer to **CHECKING THE FUNCTION OF THE LOCK MECHANISM**

CHECKING THE FUNCTION OF THE LOCK MECHANISM

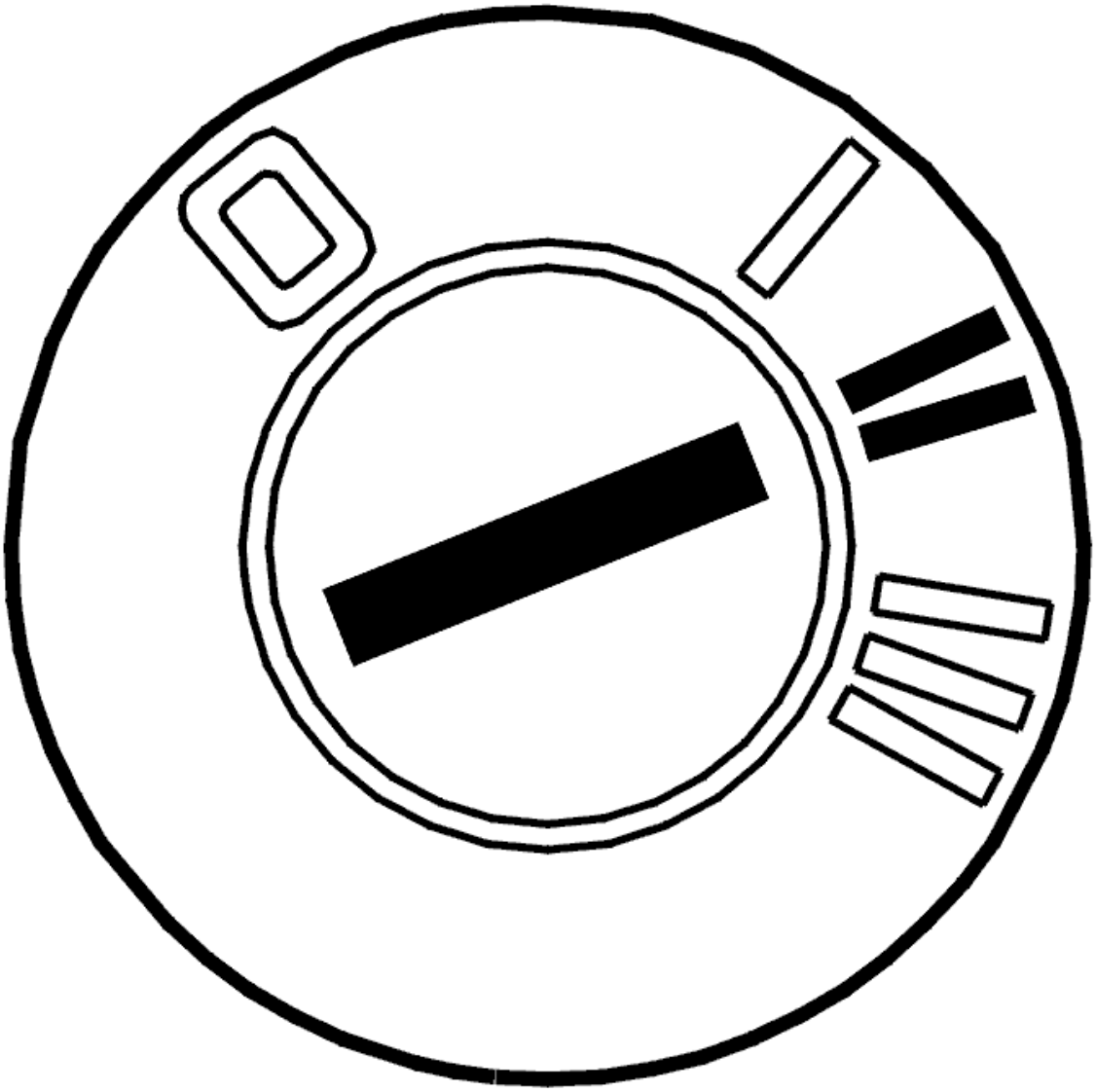

Fig. 78: Identifying Ignition ON
Courtesy of VOLVO CARS CORPORATION

- Ignition on

  Lock and unlock the left and right-hand rear doors. Check that the door can be opened when it is unlocked and cannot be opened when it is locked.

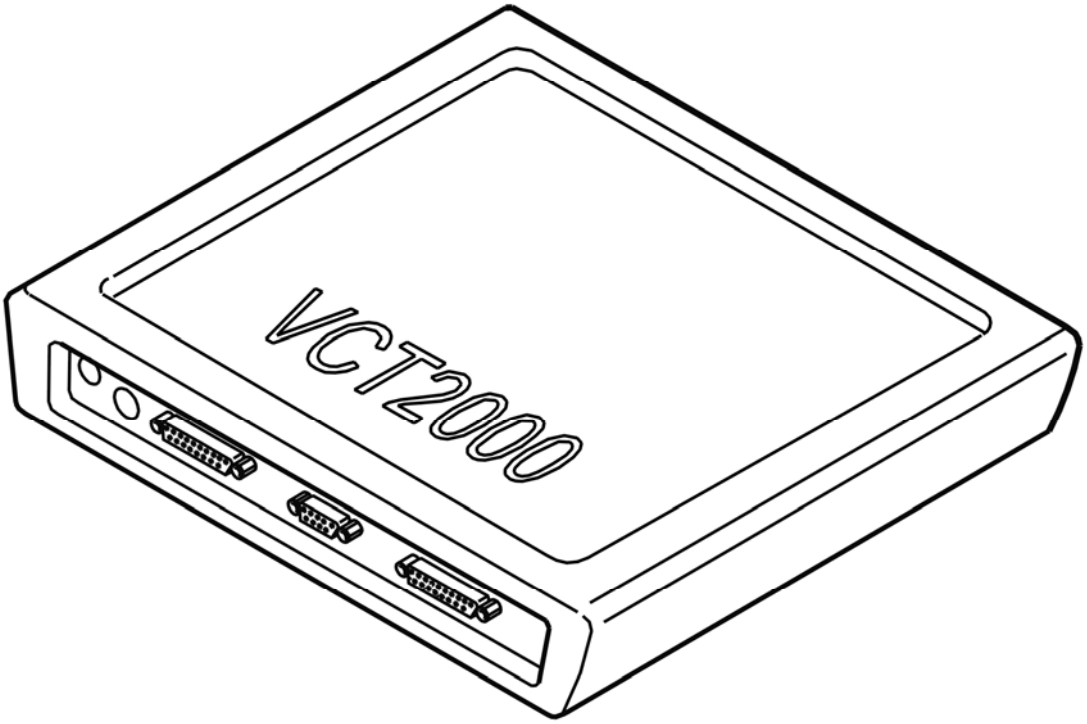

Fig. 79: Identifying VCT2000 Diagnostic Tool Symbol In VIDA
Courtesy of VOLVO CARS CORPORATION

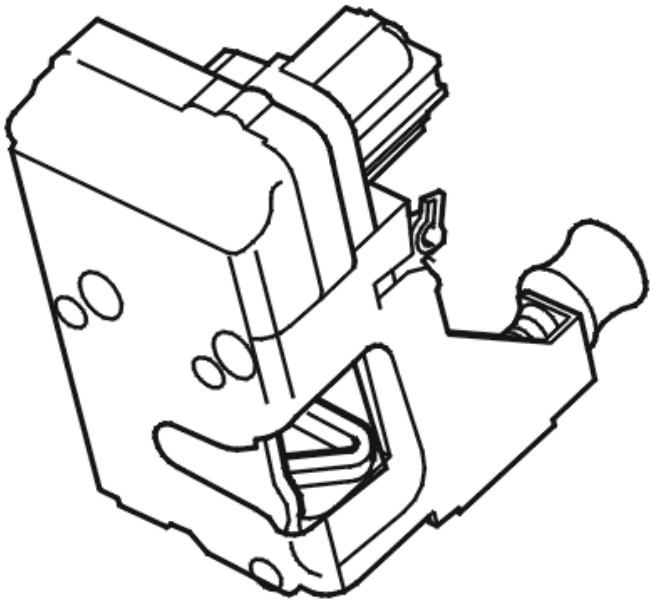

Fig. 80: Identifying Central Locking Motor
Courtesy of VOLVO CARS CORPORATION

Is the function OK?

- **YES**

  Refer to **CHECKING THE SIGNAL FROM THE SWITCHES IN THE REAR DOORS**

- **NO**

  Refer to **CHECKING CABLE AND COMPONENT**

CHECKING THE SIGNAL FROM THE SWITCHES IN THE REAR DOORS

NOTE: Only fault-trace the circuit of the door displaying the faulty value.

Check the switch in the lock mechanism. Check for a short-circuit. Check for an open-circuit. Check by measuring the resistance between terminals #1 and #5 on the connector for the lock mechanism and ground.

Check the resistance between terminals #1 and #5 on the lock mechanism side. The resistance must be infinite or near 0 ohm depending on the position of the switch.

Left rear door

Check the signal cable between rear electronic module (REM) connector terminal #45 (#C5) and terminal #5 on the lock mechanism. Check for a short-circuit to ground. The lock mechanism is jammed if no fault is found in the cable or the switch.

Right rear door

Check the signal cable between rear electronic module (REM) connector terminal #28 (#D28) and lock mechanism terminal #5. Check for a short-circuit to ground. The lock mechanism is jammed if no fault is found in the cable or the switch.

Remedy as necessary.

Other information

- see **CONNECTING THE BREAKOUT BOX**
- see **SIGNAL SPECIFICATION**
- see **LOCK MECHANISM FRONT SIDE DOOR, REPLACING**
- For -2004, see: **RELAY/FUSE BOX CARGO COMPARTMENT/REAR ELECTRONIC MODULE (REM), REPLACING**
- For 2005-, see: **REAR ELECTRONIC MODULE (REM), REPLACING** .
- see **CHECKING WIRING AND TERMINALS**

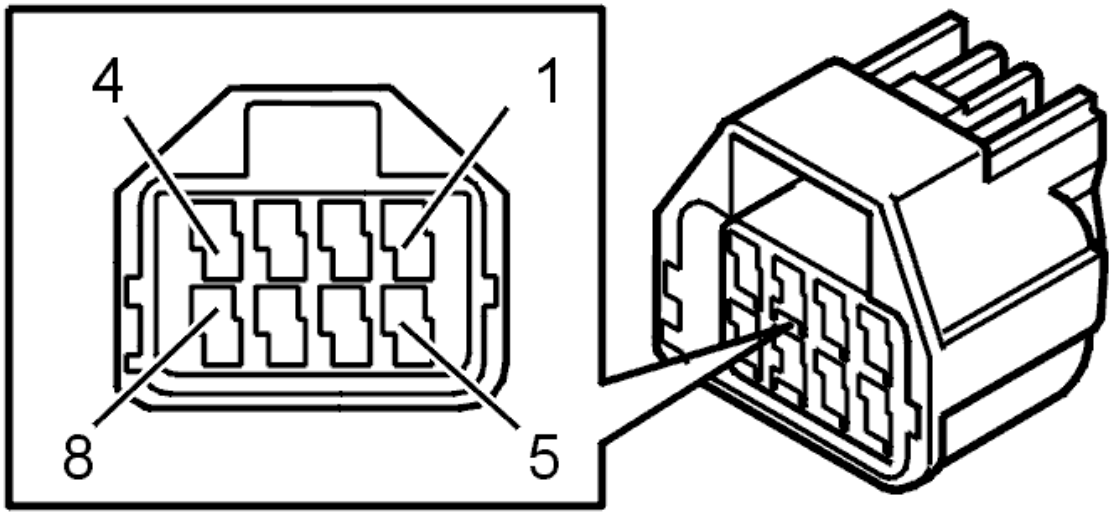

Fig. 81: Identifying Connector Terminals
Courtesy of VOLVO CARS CORPORATION

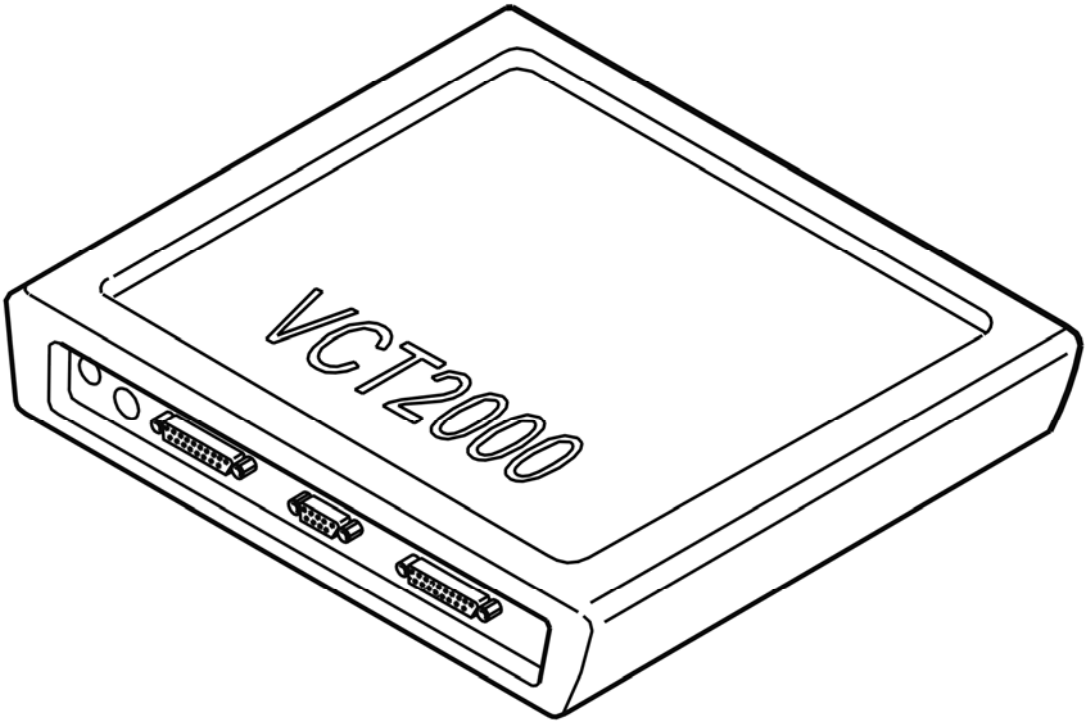

Fig. 82: Identifying VCT2000 Diagnostic Tool Symbol In VIDA
Courtesy of VOLVO CARS CORPORATION

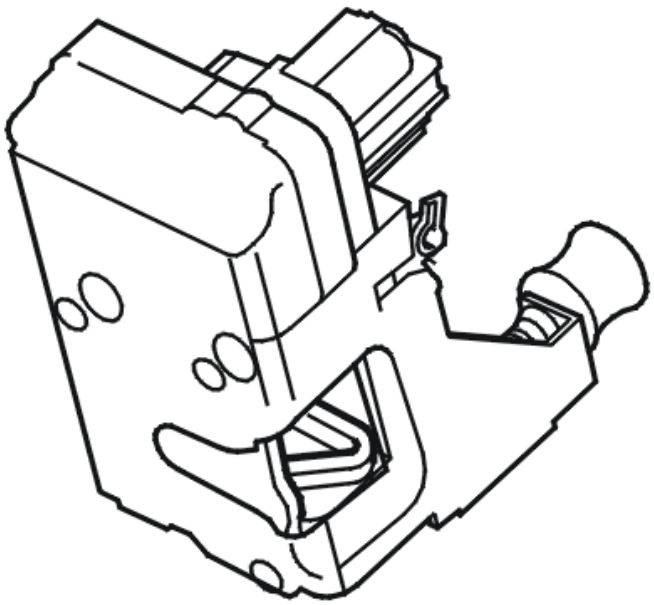

Fig. 83: Identifying Central Locking Motor
Courtesy of VOLVO CARS CORPORATION

- **Continue**

  Refer to **VERIFICATION**

CHECKING CABLE AND COMPONENT

NOTE: Only fault-trace the circuit of the door displaying the faulty value.

Check the connectors for the lock mechanism and the rear electronic module (REM). Check for contact resistance and oxidation.

Check the ground lead/ground terminal for the lock mechanism. Check for an open-circuit.

Left rear door

Check the control signal cable between rear electronic module (REM) connector terminal #23 (#A23) and terminal #4 on the lock mechanism connector. Check for an open-circuit. Check for a short-circuit to supply voltage. Check for a short-circuit to ground.

Check the control signal cable between rear electronic module (REM) connector terminal #27 (#A27) and

terminal #8 on the lock mechanism connector. Check for a short-circuit to supply voltage. Check for an open-circuit. Check for a short-circuit to ground.

Check the wiring between the lock mechanism connector terminals #3 and #8 and the relay terminals #2 and #4 for the child lock. Check for an open-circuit. Check for a short-circuit to ground. Check for a short-circuit to supply voltage.

Check the wiring between the lock mechanism connector terminals #3 and #5 and the power window switch. Check for an open-circuit. Check for a short-circuit to ground. Check for a short-circuit to supply voltage.

HINT: Remove the relay for the child locks while checking the lock motors. If the function is OK when the relay is removed it means that there is a fault in the relay or in the circuit for controlling the relay.

Right rear door

Check the control signal cable between rear electronic module (REM) connector terminal #26 (#B26) and terminal #4 on the lock mechanism connector. Check for an open-circuit. Check for a short-circuit to supply voltage. Check for a short-circuit to ground. The circuit runs via the lock motor for the fuel tank filler cap.

Check the control signal cable between rear electronic module (REM) connector terminal #24 (#B24) and terminal #8 on the lock mechanism connector. Check for an open-circuit. Check for a short-circuit to supply voltage. Check for a short-circuit to ground.

Check the wiring between the lock mechanism connector terminals #3 and #8 and the relay terminals #2 and #4 for the child lock. Check for an open-circuit. Check for a short-circuit to ground. Check for a short-circuit to supply voltage.

Check the wiring between the lock mechanism connector terminals #3 and #5 and the power window switch. Check for an open-circuit. Check for a short-circuit to ground. Check for a short-circuit to supply voltage.

HINT: Remove the relay for the child locks while checking the lock motors. If the function is OK when the relay is removed it means that there is a fault in the relay or in the circuit for controlling the relay.

Remedy as necessary.

Other information

- see **CONNECTING THE BREAKOUT BOX**
- see **SIGNAL SPECIFICATION**
- see **LOCK MECHANISM FRONT SIDE DOOR, REPLACING**
- For -2004, see: **RELAY/FUSE BOX CARGO COMPARTMENT/REAR ELECTRONIC MODULE (REM), REPLACING**
- For 2005-, see: **REAR ELECTRONIC MODULE (REM), REPLACING** .
- see **CHECKING WIRING AND TERMINALS**

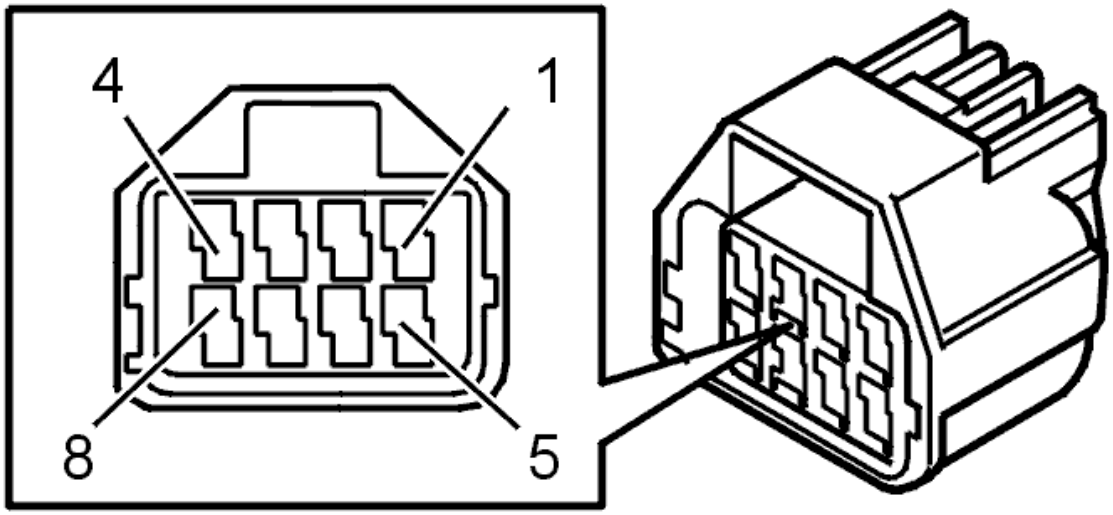

Fig. 84: Identifying Connector Terminals
Courtesy of VOLVO CARS CORPORATION

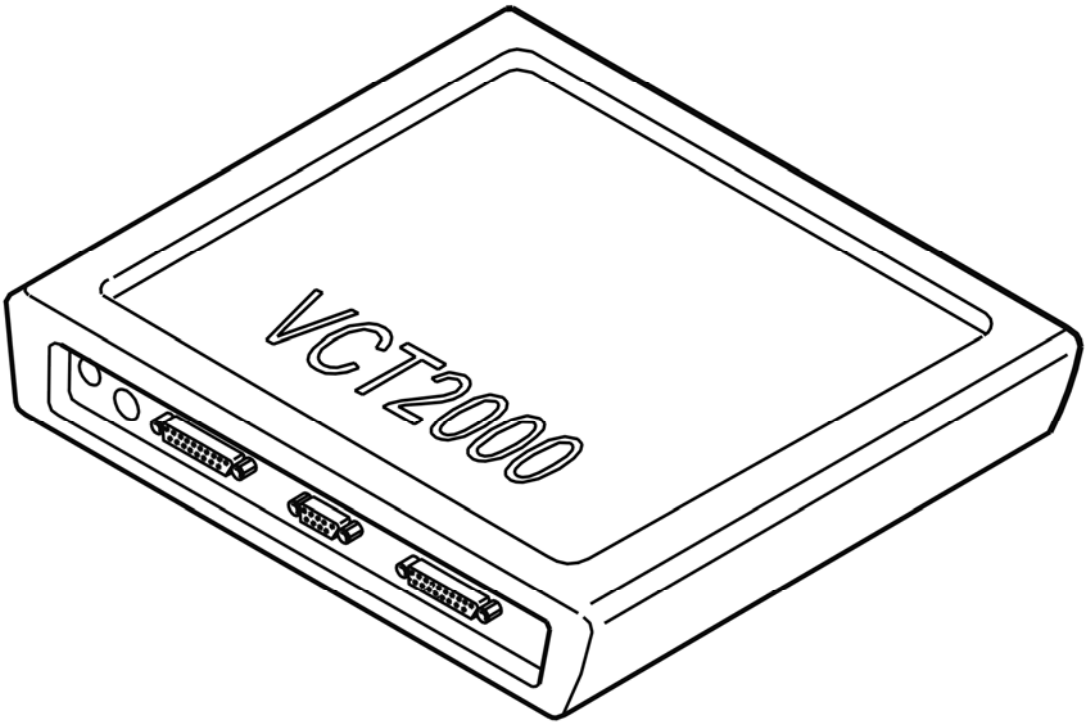

Fig. 85: Identifying VCT2000 Diagnostic Tool Symbol In VIDA
Courtesy of VOLVO CARS CORPORATION

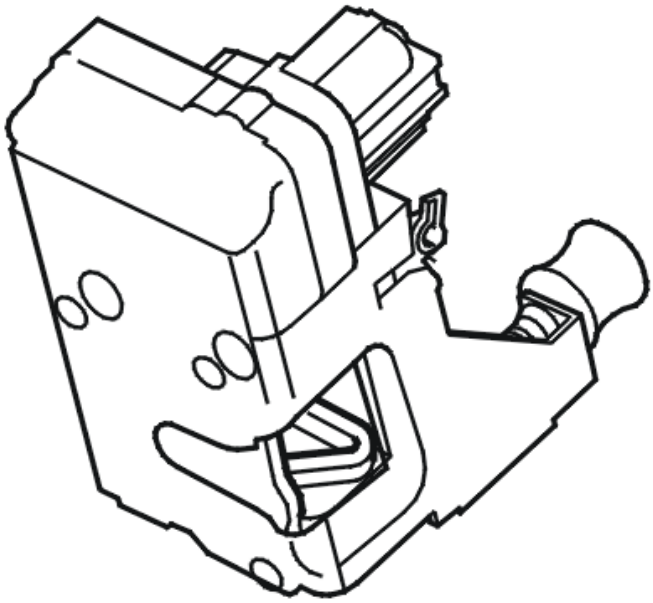

Fig. 86: Identifying Central Locking Motor
Courtesy of VOLVO CARS CORPORATION

- **Continue**

  Refer to **VERIFICATION**

VERIFICATION

VERIFICATION

HINT: After carrying out the repair, check that the fault has been remedied.

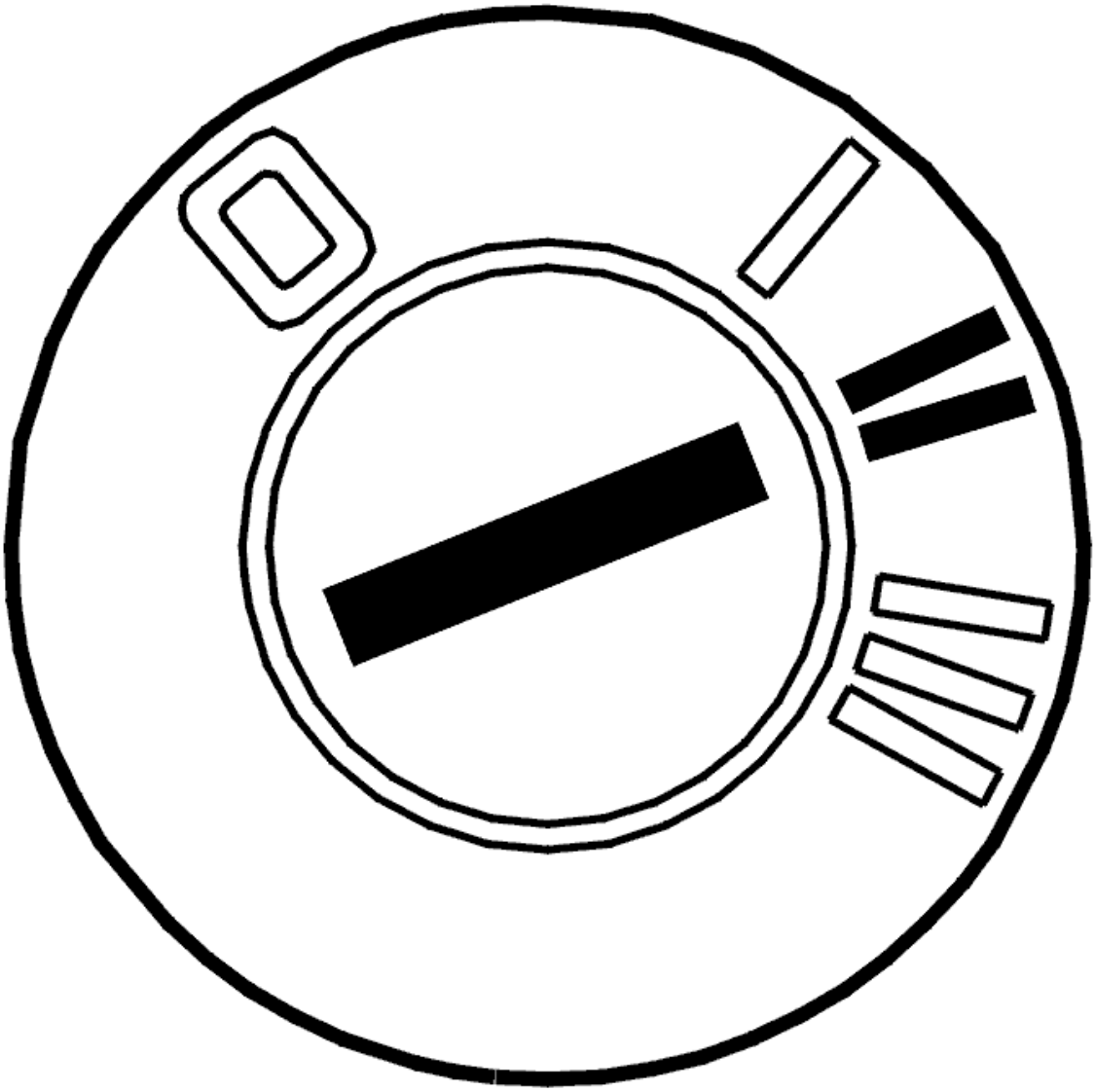

Fig. 87: Identifying Ignition ON
Courtesy of VOLVO CARS CORPORATION

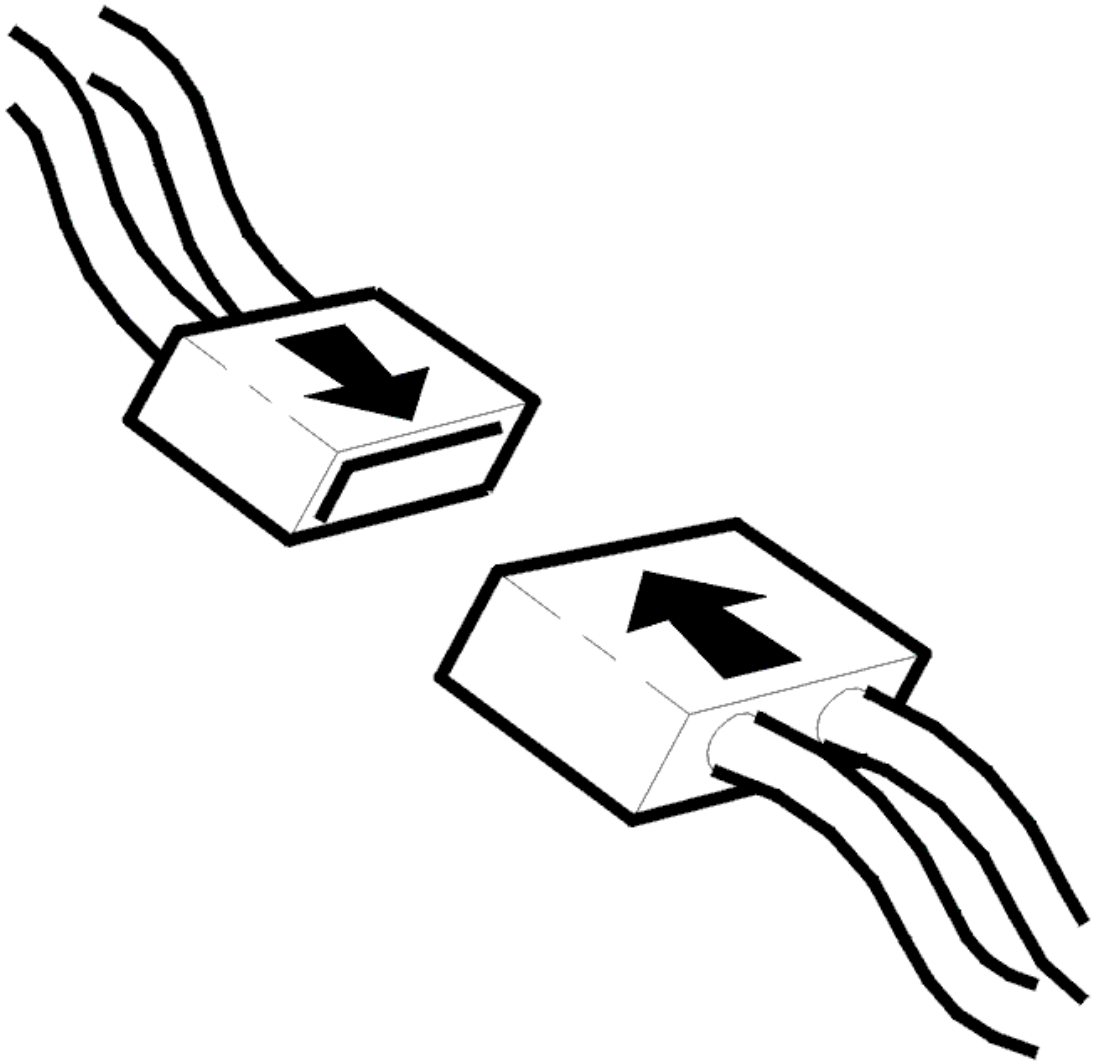

Fig. 88: Connecting Connector
Courtesy of VOLVO CARS CORPORATION

- Ignition off
- Reinstall the connectors, components etc.
- Ignition on
- Read off the status from the control switch in both rear doors (indicates whether the doors are locked or not).

  Lock and unlock the left and right-hand rear doors. The status of each door should change when the door is locked or unlocked.

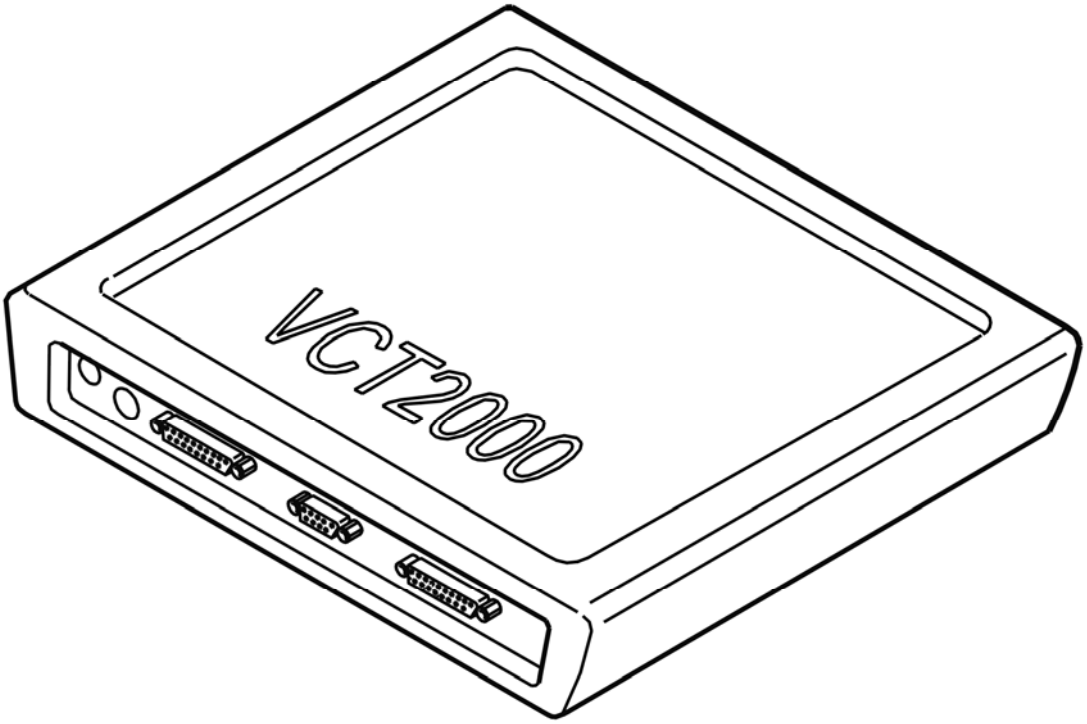

Fig. 89: Identifying VCT2000 Diagnostic Tool Symbol In VIDA
Courtesy of VOLVO CARS CORPORATION

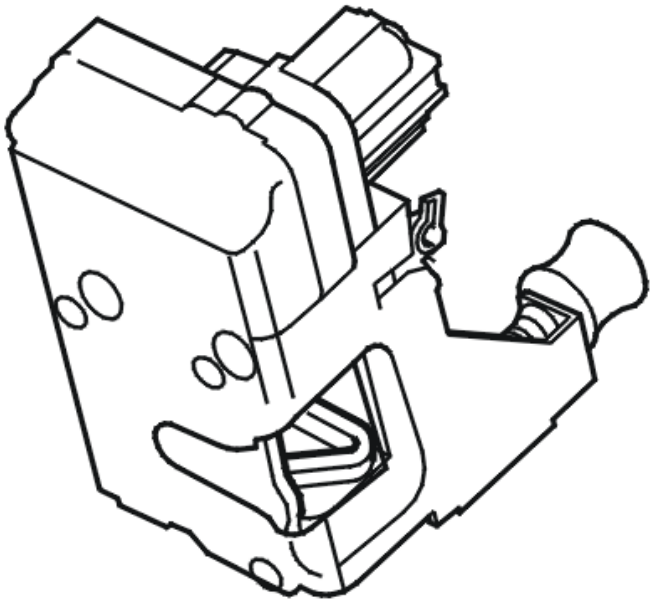

Fig. 90: Identifying Central Locking Motor
Courtesy of VOLVO CARS CORPORATION

Is the status OK?

- **YES**

  VERIFIED: Troubleshooting has been completed.

- **NO**

  Refer to **INFORMATION**

INFORMATION

FAULT-TRACING INFORMATION

The fault should have been detected and remedied. As this is not the case fault-tracing has failed.

Exit fault-tracing for this diagnostic trouble code (DTC) or make another attempt.

REM-6A04: SWITCH CENTRAL LOCKING MOTOR. SIGNAL TOO LOW (2005-2012)

DIAGNOSTIC TROUBLE CODE (DTC) INFORMATION REM-6A04

Condition

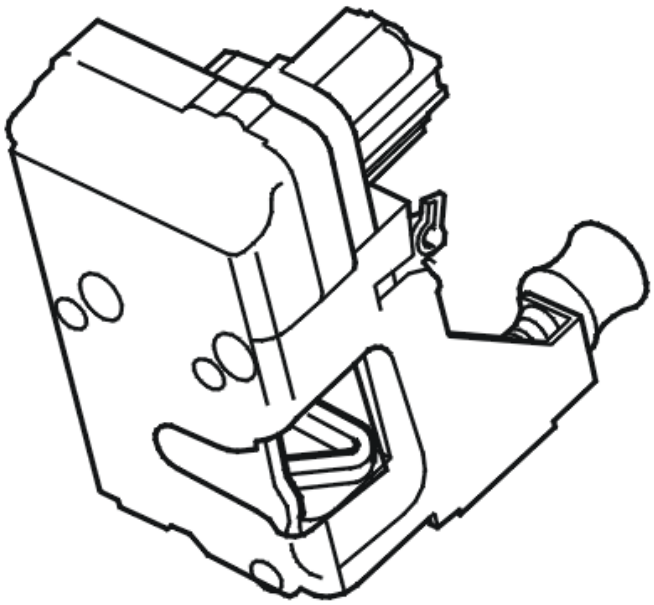

Fig. 91: Identifying Central Locking Motor
Courtesy of VOLVO CARS CORPORATION

The rear electronic module (REM) uses a number of relays to control the lock units in the rear doors for locking and unlocking.

The rear electronic module (REM) receives an indication from the lock units when the central locking motor is in the locked or unlocked position. This information is supplied by a switch in each lock unit. The switch provides a ground when the lock motor is in the locked position.

The diagnostic trouble code (DTC) is stored if the rear electronic module (REM) detects that the input from the switch in the **right rear door** is still low 15 seconds after the unlock command was given.

The diagnostic trouble code (DTC) can be diagnosed during unlocking by the central locking and when no further lock command has been received within 15 seconds.

Substitute Value

- None.

Possible Source

- Contact resistance and oxidation in the terminals
- Fault or short-circuit to ground in the switch for indication of the lock motor position
- Short-circuit to ground in the cable from the switch for indication of the lock motor position
- The lock motor is stuck in one position
- Open-circuit in the ground lead/ground terminal for the lock mechanism
- Open-circuit, short-circuit to ground or supply voltage in the control cable to the lock motors
- Open-circuit, short-circuit to ground or supply voltage in the control cable to the lock motors from/to the relay for the child-proof lock
- Open-circuit, short-circuit to ground or supply voltage in the wiring to the relay for the child-proof lock from the power window switch
- Damaged relay for the child-proof lock.

Fault symptom[s]

- Does not lock / unlock a door.

SIGNAL TOO LOW

see **SIGNAL TOO LOW**

REM-6A04: UNLOCKING RELAY, CENTRAL LOCKING REAR LEFT DOOR. SIGNAL TOO HIGH (2003-2004)

DIAGNOSTIC TROUBLE CODE INFORMATION

Condition

If rear electronic module registers signal too high on relay coil ground circuit when unlocking, diagnostic trouble code is displayed.

Substitute Value

Nothing.

Possible Source

- Faulty relay (short circuit in relay coil).
- Defective control unit.

Fault symptom[s]

- A door does not lock/open.

SIGNAL TOO HIGH

CHECKING AND REPLACING THE COMPONENT

Replace relay 2/112.

Activate the relay.

If the function is OK, the cause of the fault was a defective relay (short-circuit in the relay).

Other information:

- For -2004, see: **RELAY/FUSE BOX CARGO COMPARTMENT/REAR ELECTRONIC MODULE (REM), REPLACING**
- For 2005-, see: **REAR ELECTRONIC MODULE (REM), REPLACING** .

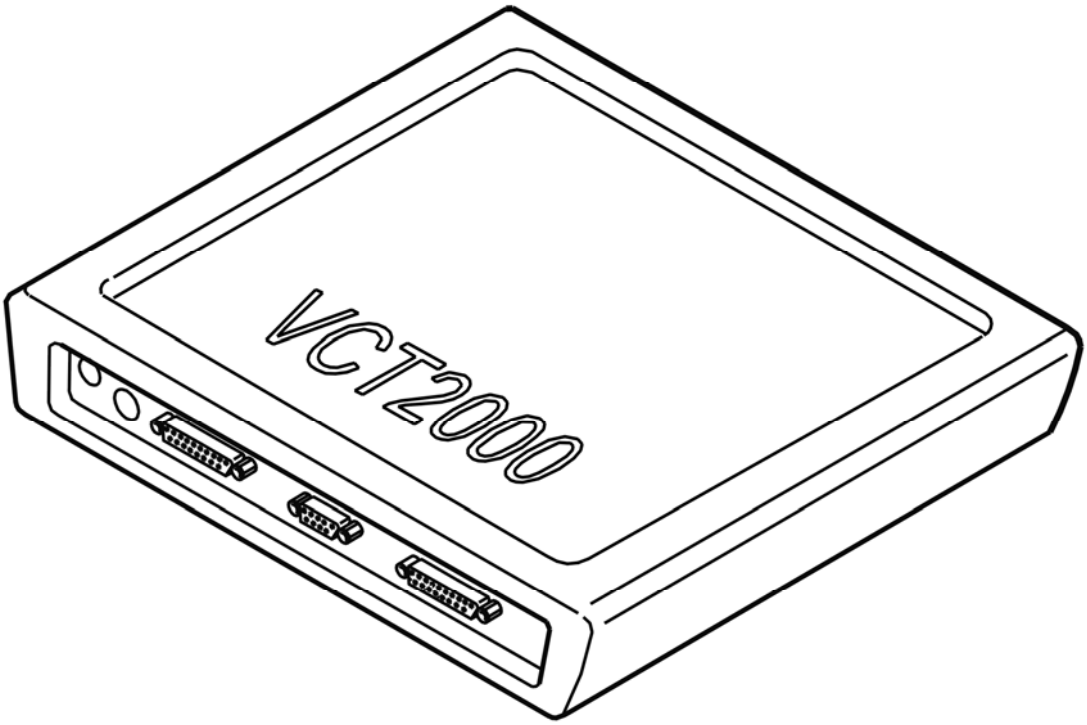

Fig. 92: Identifying VCT2000 Diagnostic Tool Symbol In VIDA
Courtesy of VOLVO CARS CORPORATION

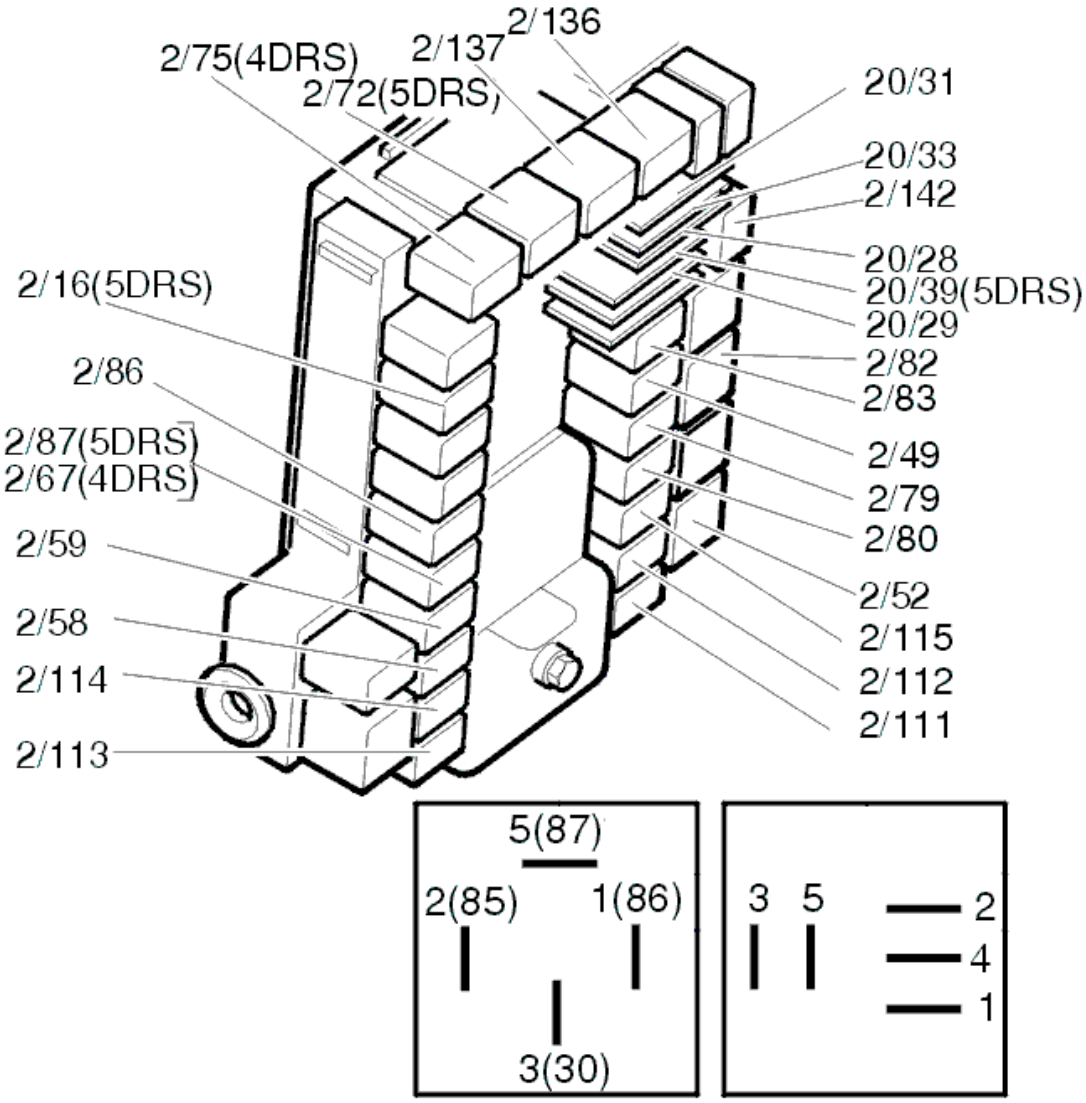

Fig. 93: Identifying Relays
Courtesy of VOLVO CARS CORPORATION

Was the function OK?

- **YES**

  OKAY: Troubleshooting has been completed.

- **NO**

  Refer to **CHECKING THE CONTROL MODULE**

CHECKING THE CONTROL MODULE

- Remove the relay.

Check the relay coil driver circuit for a short-circuit to supply voltage by measuring the voltage at terminal #2 in the relay base.

HINT: The voltage between terminal #2 and ground should be approximately 0 V.

Replace the control module if the voltmeter displays an incorrect value.

Other information:

- For -2004, see: **RELAY/FUSE BOX CARGO COMPARTMENT/REAR ELECTRONIC MODULE (REM), REPLACING**
- For 2005-, see: **REAR ELECTRONIC MODULE (REM), REPLACING** .
- see **CHECKING WIRING AND TERMINALS** .

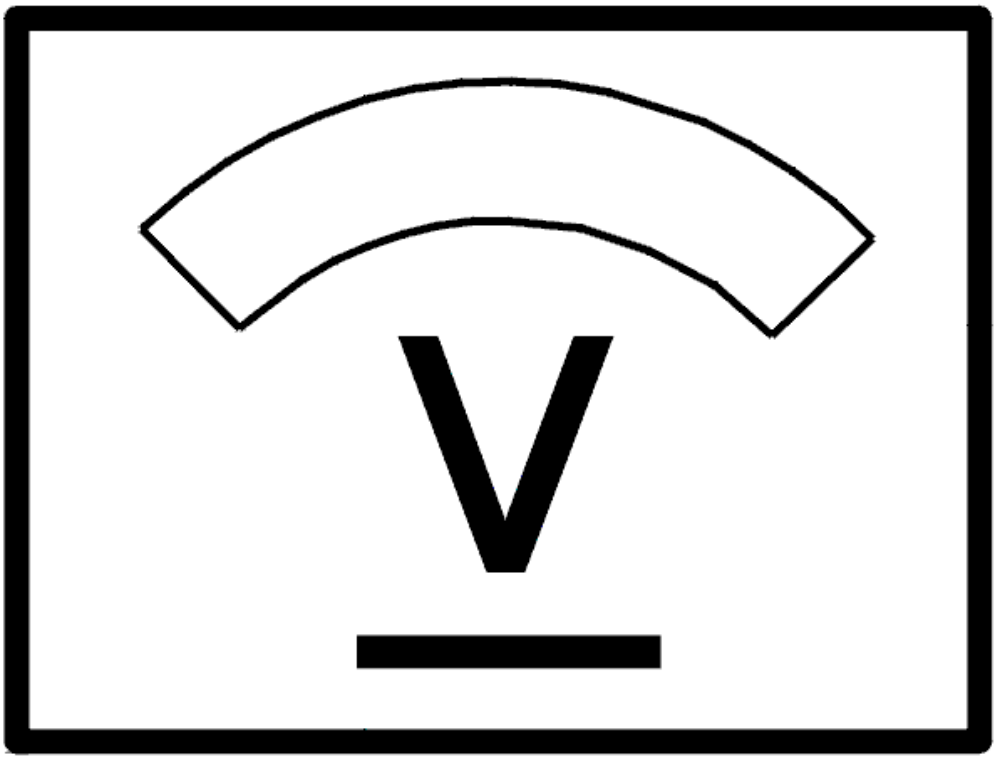

Fig. 94: Identifying Voltage Display

Courtesy of VOLVO CARS CORPORATION

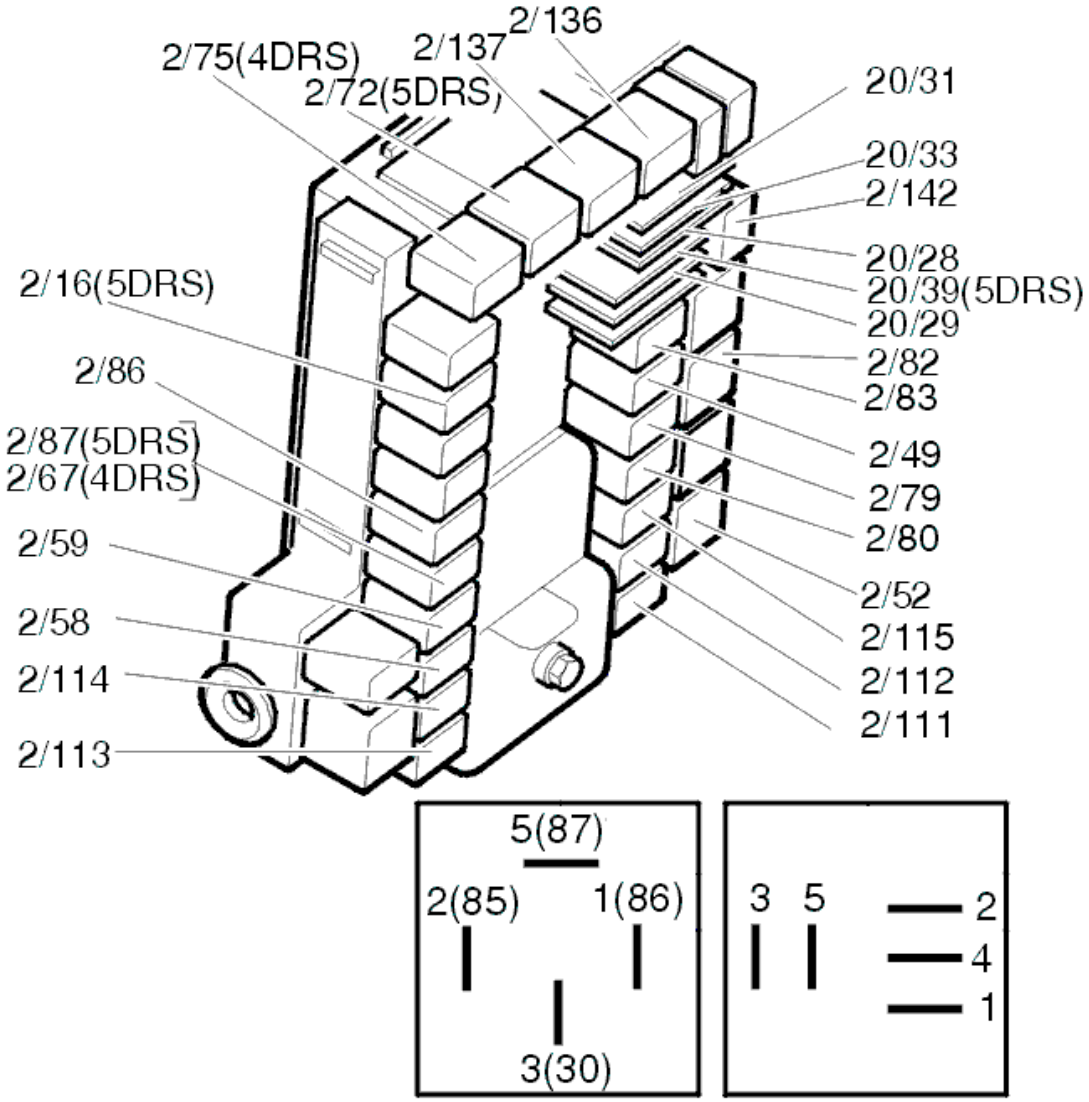

Fig. 95: Identifying Relays
Courtesy of VOLVO CARS CORPORATION

- **Continue**

Refer to **VERIFICATION**

VERIFICATION

VERIFICATION

HINT: After carrying out the repair, check that the fault has been remedied.

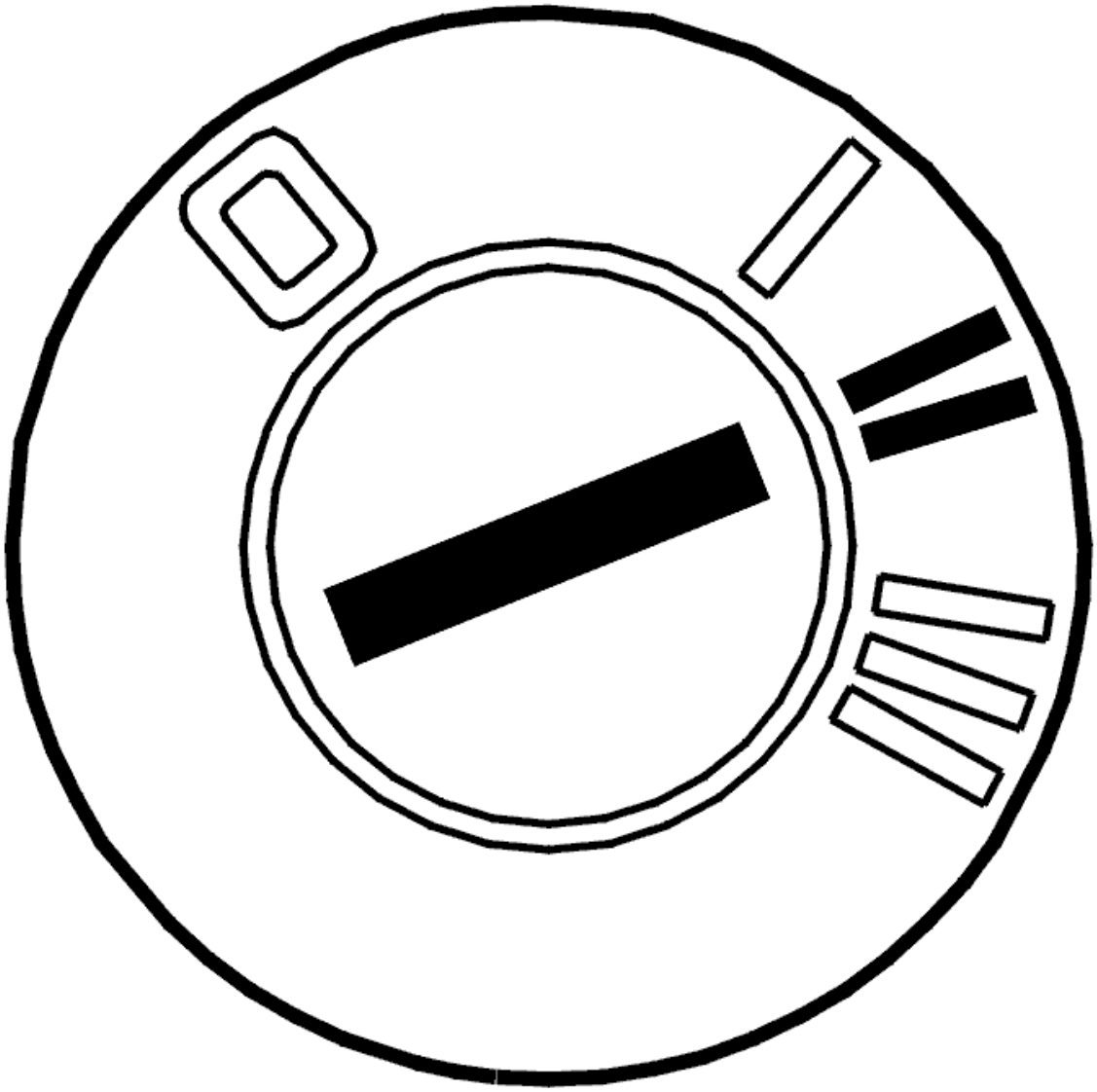

Fig. 96: Identifying Ignition ON
Courtesy of VOLVO CARS CORPORATION

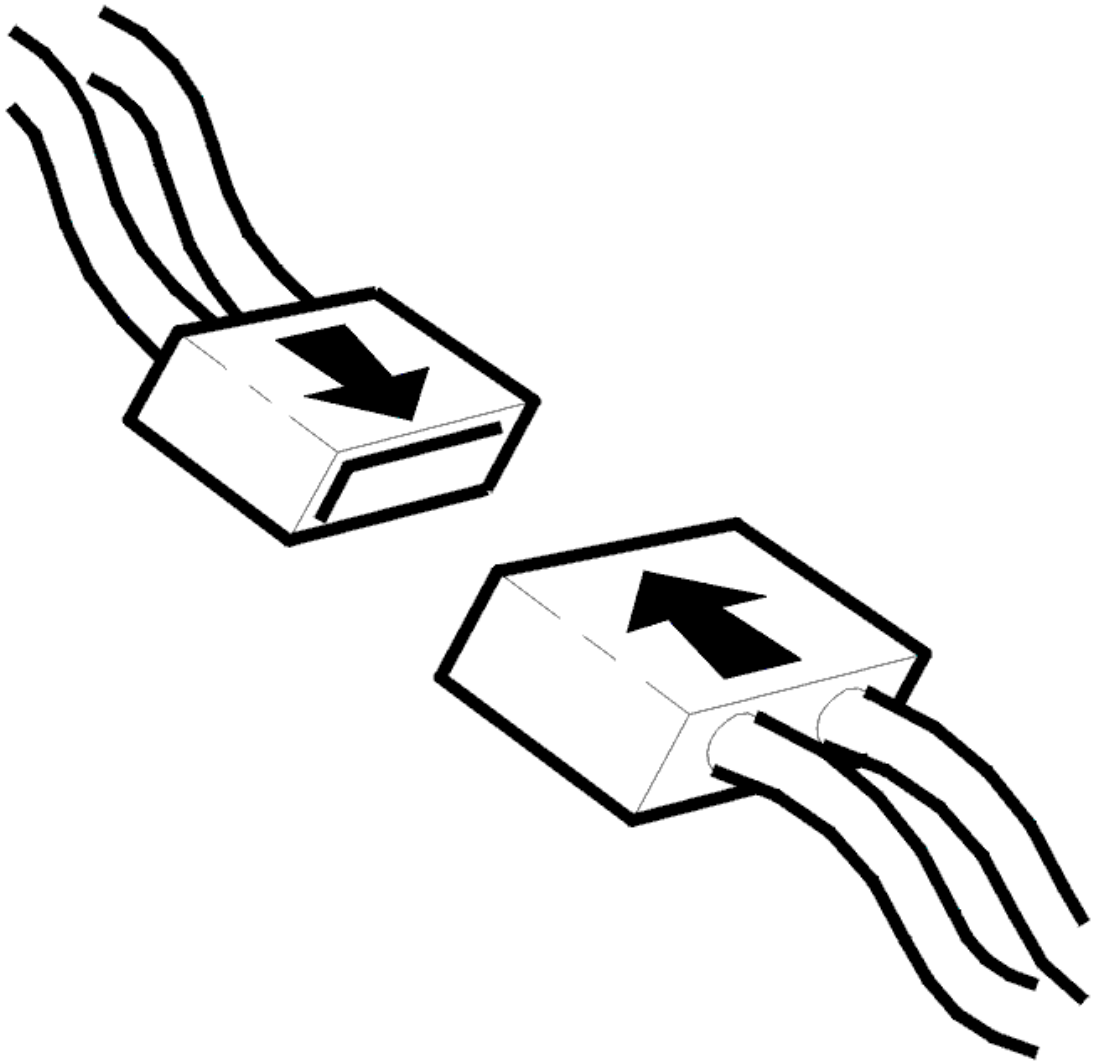

Fig. 97: Connecting Connector
Courtesy of VOLVO CARS CORPORATION

- Ignition off
- Reinstall the connectors, components etc.
- Ignition on.

Activate the relay.

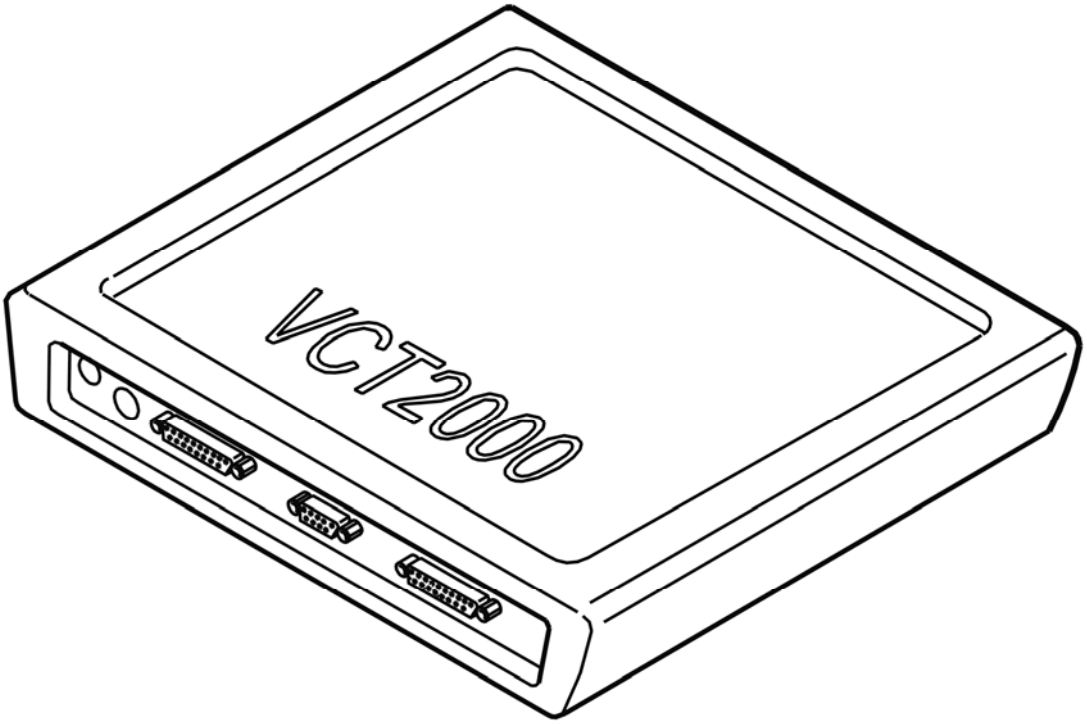

Fig. 98: Identifying VCT2000 Diagnostic Tool Symbol In VIDA
Courtesy of VOLVO CARS CORPORATION

Was the function OK?

- **YES**

  VERIFIED: Troubleshooting has been completed.

- **NO**

  Refer to **INFORMATION**

INFORMATION

FAULT-TRACING INFORMATION

The fault should have been detected and remedied. As this is not the case fault-tracing has failed.

Exit fault-tracing for this diagnostic trouble code (DTC) or make another attempt.

REM-6A05: SWITCH LOCKING MOTOR CHILD-PROOF LOCK. FAULTY SIGNAL (2005-2012)

DIAGNOSTIC TROUBLE CODE (DTC) INFORMATION REM-6A05

Condition

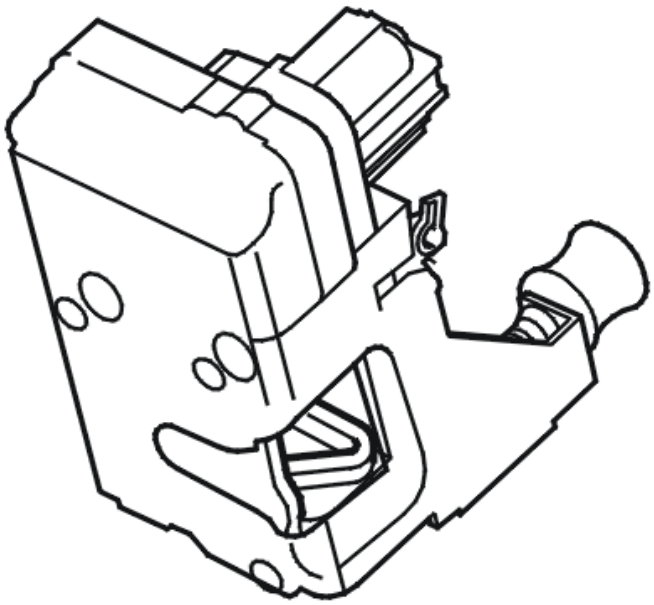

Fig. 99: Identifying Central Locking Motor
Courtesy of VOLVO CARS CORPORATION

The rear electronic module (REM) uses a number of relays to control the lock units in the rear doors for locking and unlocking.

The rear electronic module (REM) also activates the child-proof lock. A switch in the lock unit indicates that the child-proof lock is activated. The switch provides a ground when the lock motor is in the locked position.

The diagnostic trouble code (DTC) is stored if the rear electronic module (REM) detects that the input from the switch for the child-proof lock in **one of the rear doors** is still high 1 second after an activation command has been given.

The diagnostic trouble code (DTC) can be diagnosed when the child-proof lock is activated.

Substitute Value

- None.

Possible Source

- Contact resistance and oxidation in the terminals
- The lock motor in one of the rear doors is stuck in one position
- Fault or short-circuit to supply voltage in the switch for indication of the lock motor position in one of the rear doors
- Short-circuit to supply voltage in the cable from the switch for indication of the lock motor position in one of the rear doors
- Open-circuit in the cable from the switch for indication of the lock motor status in one of the rear doors
- Open-circuit, short-circuit to ground or supply voltage in the control cable to the lock motor
- Open-circuit, short-circuit to ground or supply voltage in the control cable to the lock motor from/to the relay for the child-proof lock
- Open-circuit, short-circuit to ground or supply voltage in the wiring to the relay for the child-proof lock from the power window switch
- Damaged relay for the child-proof lock.

Fault symptom[s]

- The child-proof lock does not function.

FAULTY SIGNAL

CHECKING THE SIGNAL FROM THE CONTROL SWITCH FOR THE CHILD LOCK SWITCH

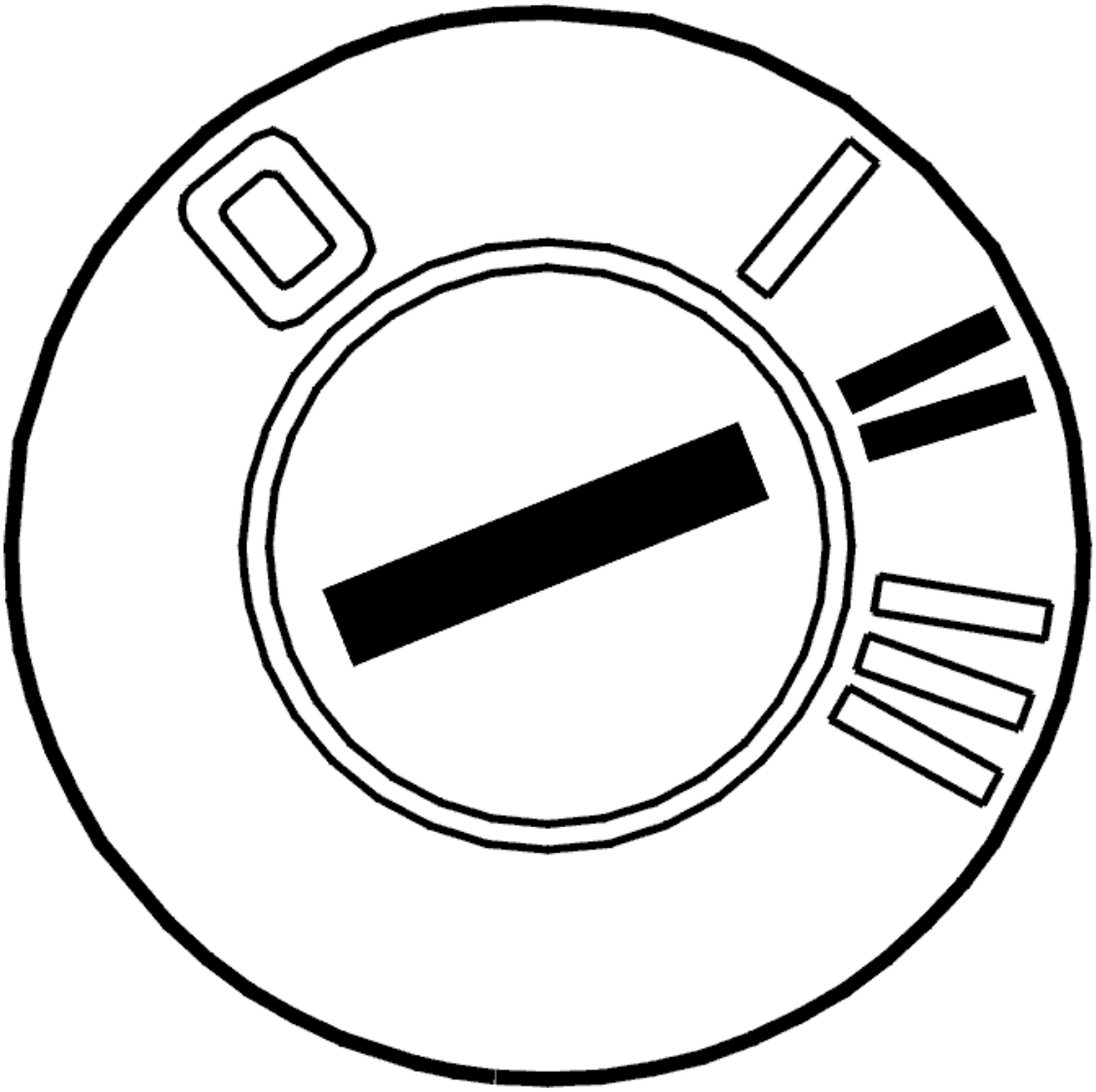

Fig. 100: Identifying Ignition ON
Courtesy of VOLVO CARS CORPORATION

- Ignition on
- Read the status of the control switch for the child lock from both rear doors.

  Activate and deactivate the power child locks.

  The status of both doors should change at the same time as the function is engaged / disengaged.

  The fault is permanent if the status does not change.

  If the status changes, this indicates an intermittent fault, i. e. the fault was present previously but is not active at the moment.

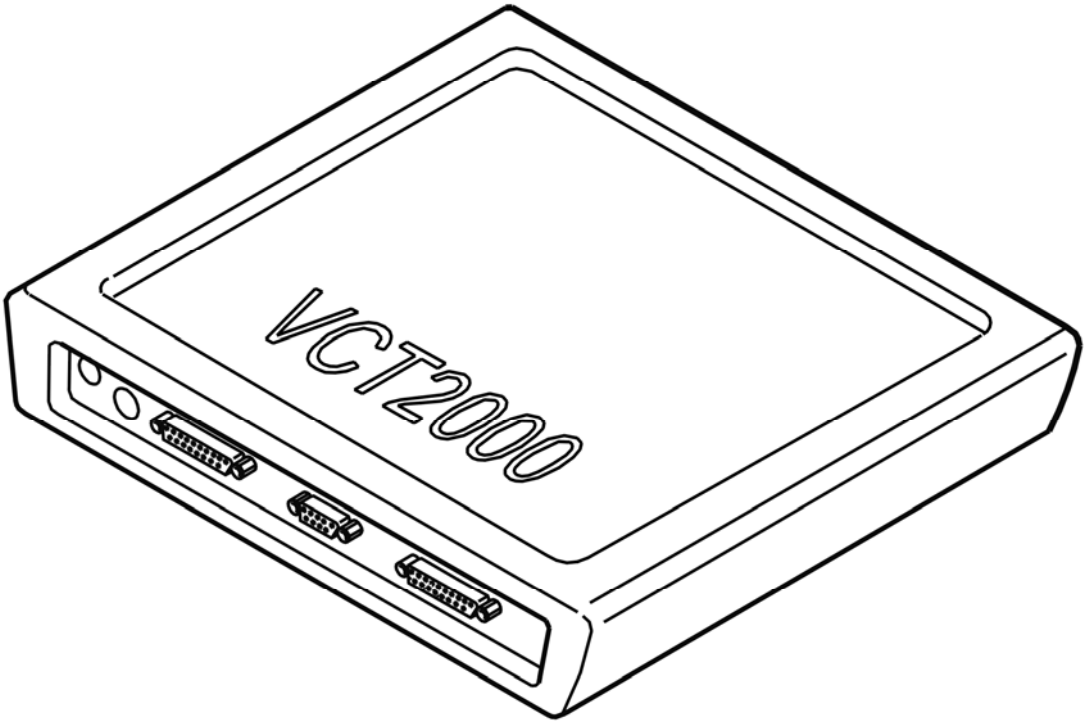

Fig. 101: Identifying VCT2000 Diagnostic Tool Symbol In VIDA
Courtesy of VOLVO CARS CORPORATION

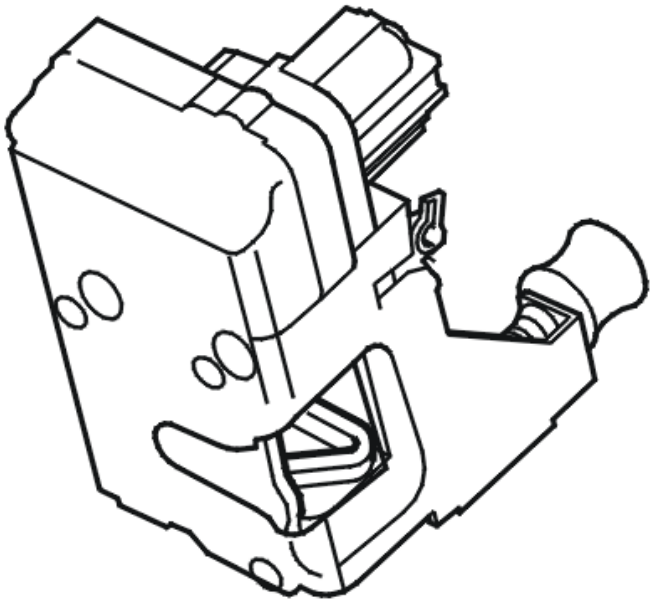

Fig. 102: Identifying Central Locking Motor
Courtesy of VOLVO CARS CORPORATION

- **Continue**

Refer to **CHECKING THE FUNCTION OF THE LOCK MECHANISM**

CHECKING THE FUNCTION OF THE LOCK MECHANISM

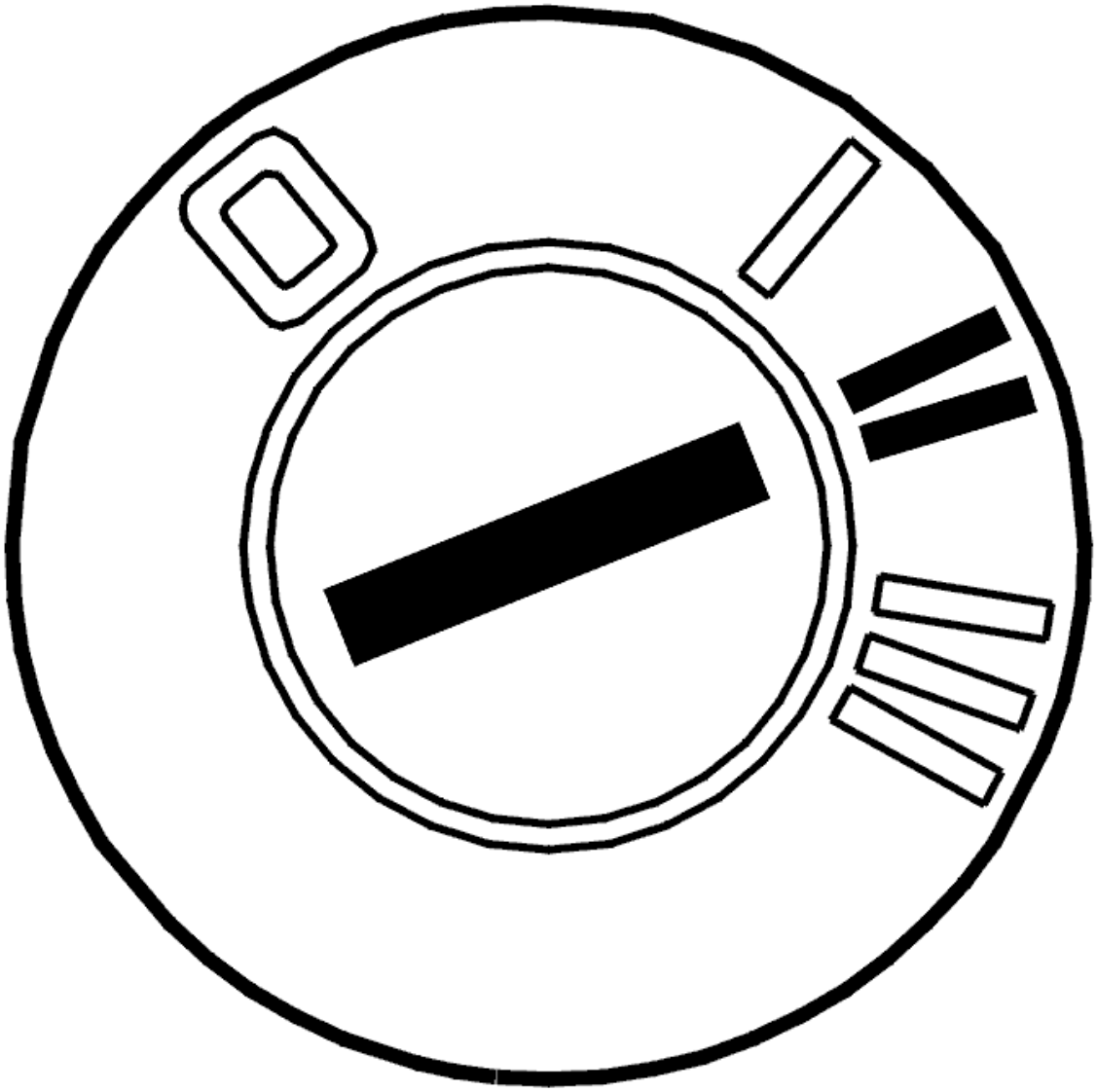

Fig. 103: Identifying Ignition ON
Courtesy of VOLVO CARS CORPORATION

- Ignition on

  Activate and deactivate the power child locks. Check that the door can be opened from the inside when unlocked and that it cannot be opened when locked.

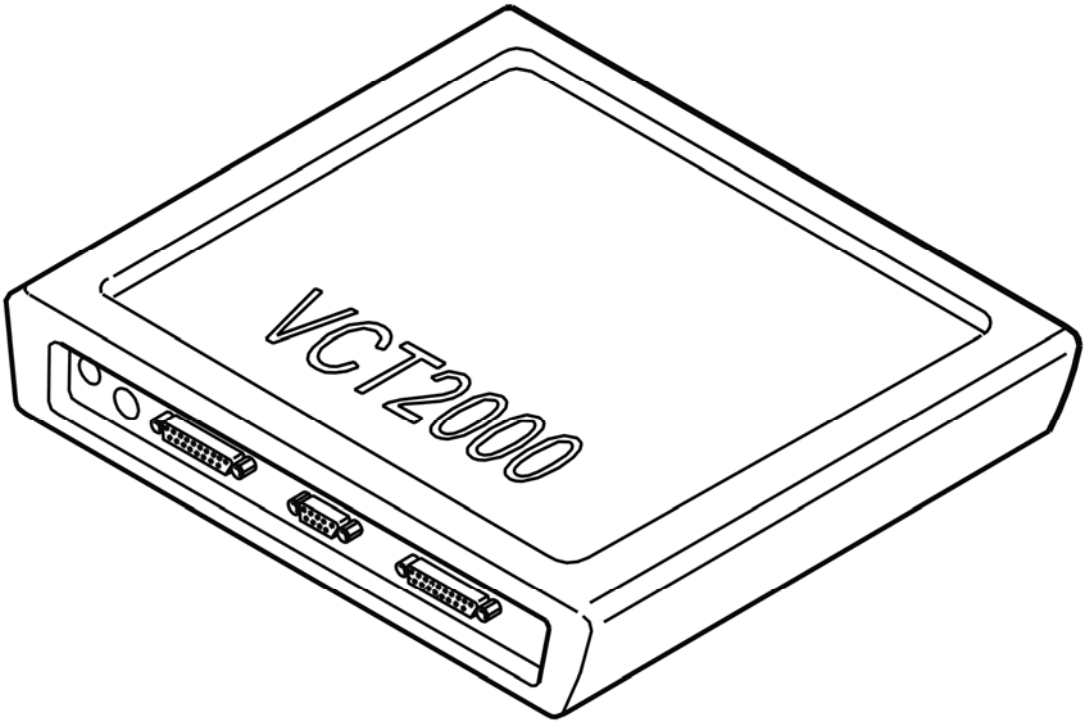

Fig. 104: Identifying VCT2000 Diagnostic Tool Symbol In VIDA
Courtesy of VOLVO CARS CORPORATION

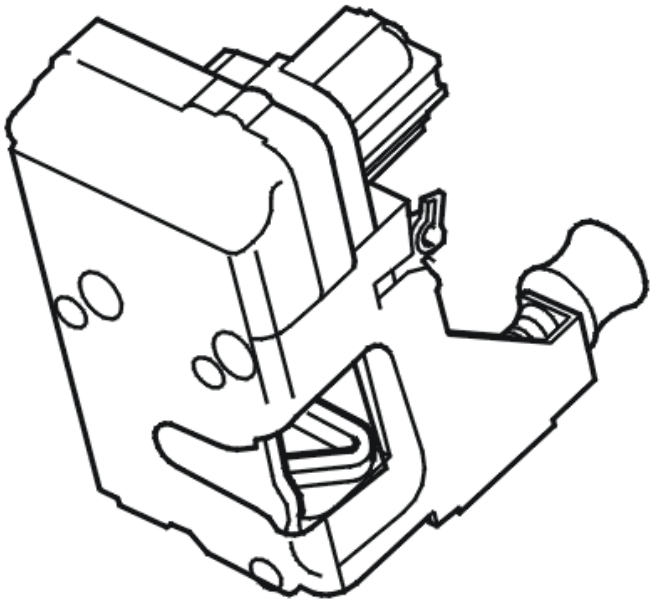

Fig. 105: Identifying Central Locking Motor
Courtesy of VOLVO CARS CORPORATION

Is the function OK?

- **YES**

  Refer to **CHECKING THE SIGNAL FROM THE SWITCHES IN THE REAR DOORS**

- **NO**

  Refer to **CHECKING CABLE AND COMPONENT**

CHECKING THE SIGNAL FROM THE SWITCHES IN THE REAR DOORS

NOTE: Only fault-trace the circuit of the door displaying the faulty value.

Check the connectors for the lock mechanism and the rear electronic module (REM). Check for contact resistance and oxidation.

Check the switch in the lock mechanism. Check for a short-circuit. Check by measuring the resistance between terminals #6 and #7 on the connector for the lock mechanism.

Check the resistance between terminals #6 and #7 on the lock mechanism. The resistance must be infinite or near 0 ohm depending on the position of the switch.

Left rear door

Check the signal cable between rear electronic module (REM) connector terminal #50 (#C10) and terminal #7 on the lock mechanism connector. Check for a short-circuit to supply voltage. Check for an open-circuit. The lock mechanism is jammed if no fault is found in the cable or the switch.

Right rear door

Check the signal cable between rear electronic module (REM) connector terminal #4 (#D4) and terminal #7 on the lock mechanism connector. Check for a short-circuit to supply voltage. Check for an open-circuit. The lock mechanism is jammed if no fault is found in the cable or the switch.

Remedy as necessary.

Other information

- see **CONNECTING THE BREAKOUT BOX**
- see **SIGNAL SPECIFICATION**
- see **LOCK MECHANISM FRONT SIDE DOOR, REPLACING**
- For -2004, see: **RELAY/FUSE BOX CARGO COMPARTMENT/REAR ELECTRONIC MODULE (REM), REPLACING**
- For 2005-, see: **REAR ELECTRONIC MODULE (REM), REPLACING** .
- see **CHECKING WIRING AND TERMINALS**

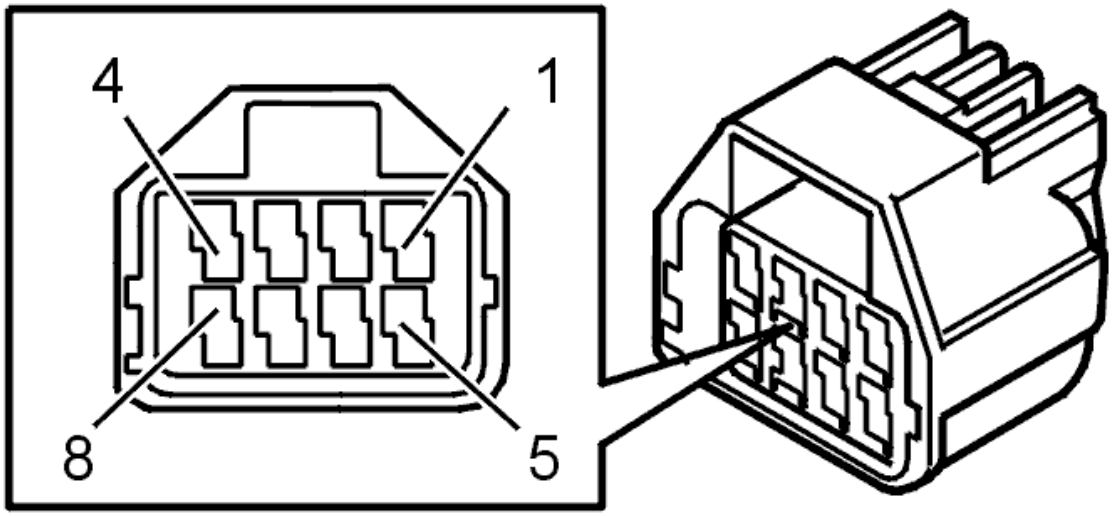

Fig. 106: Identifying Connector Terminals
Courtesy of VOLVO CARS CORPORATION

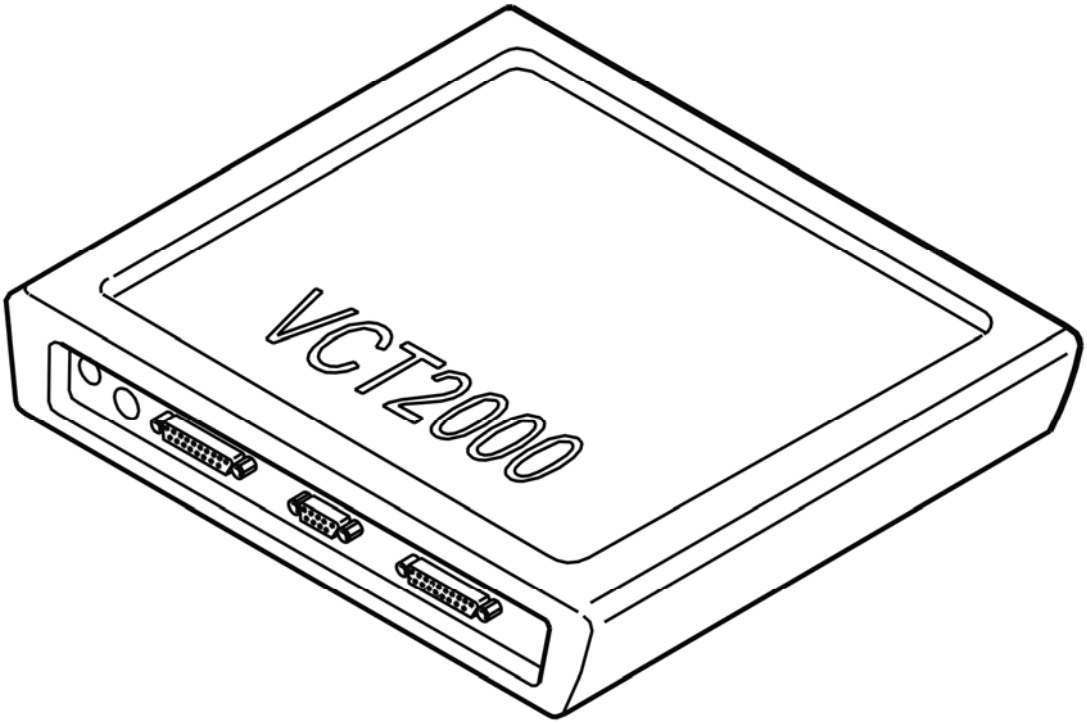

Fig. 107: Identifying VCT2000 Diagnostic Tool Symbol In VIDA
Courtesy of VOLVO CARS CORPORATION

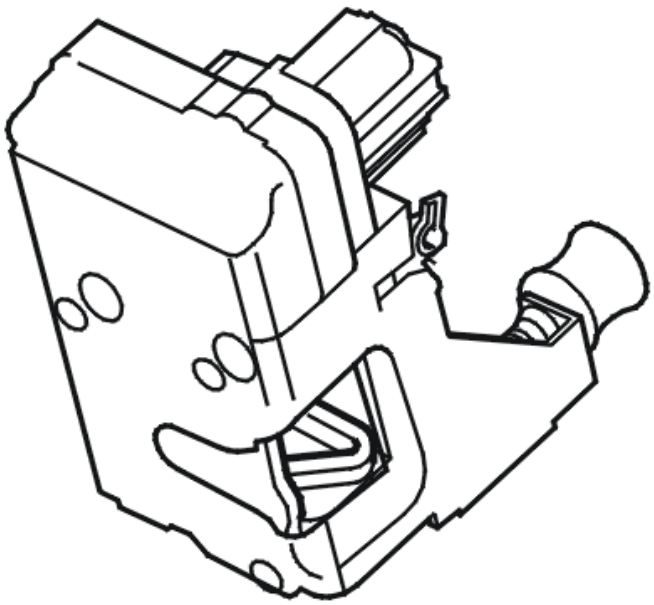

Fig. 108: Identifying Central Locking Motor
Courtesy of VOLVO CARS CORPORATION

- **Continue**

  Refer to **VERIFICATION**

CHECKING CABLE AND COMPONENT

NOTE: Only fault-trace the circuit of the door displaying the faulty value.

Check the connectors for the lock mechanism and the rear electronic module (REM). Check for contact resistance and oxidation.

Left rear door

Check the wiring between the lock mechanism connector terminals #3 and #8 and the relay terminals #2 and #4 for the child lock. Check for an open-circuit. Check for a short-circuit to ground. Check for a short-circuit to supply voltage.

Check the wiring between the lock mechanism connector terminals #3 and #5 and the power window switch. Check for an open-circuit. Check for a short-circuit to ground. Check for a short-circuit to supply voltage.

Check the cable between relay terminal #1 for the child lock and rear electronic module (REM) terminal #27 (#A27). Check for an open-circuit. Check for a short-circuit to ground. Check for a short-circuit to supply voltage.

HINT: Remove the relay for power child locks while checking the lock motors. If the function is OK when the relay is removed it means that there is a fault in the relay or in the circuit for controlling the relay.

Right rear door

Check the wiring between the lock mechanism connector terminals #3 and #8 and the relay terminals #2 and #4 for the child lock. Check for an open-circuit. Check for a short-circuit to ground. Check for a short-circuit to supply voltage.

Check the wiring between the lock mechanism connector terminals #3 and #5 and the power window switch. Check for an open-circuit. Check for a short-circuit to ground. Check for a short-circuit to supply voltage.

Check the cable between relay terminal #1 for the child lock and rear electronic module (REM) terminal #24 (#B24). Check for an open-circuit. Check for a short-circuit to ground. Check for a short-circuit to supply voltage.

HINT: Remove the relay for power child locks while checking the lock motors. If the function is OK when the relay is removed it means that there is a fault in the relay or in the circuit for controlling the relay.

The lock mechanism is jammed if no fault is found in the wiring.

Remedy as necessary.

Other information

- see **CONNECTING THE BREAKOUT BOX**
- see **SIGNAL SPECIFICATION**
- see **LOCK MECHANISM FRONT SIDE DOOR, REPLACING**
- For -2004, see: **RELAY/FUSE BOX CARGO COMPARTMENT/REAR ELECTRONIC MODULE (REM), REPLACING**
- For 2005-, see: **REAR ELECTRONIC MODULE (REM), REPLACING** .
- see **CHECKING WIRING AND TERMINALS**

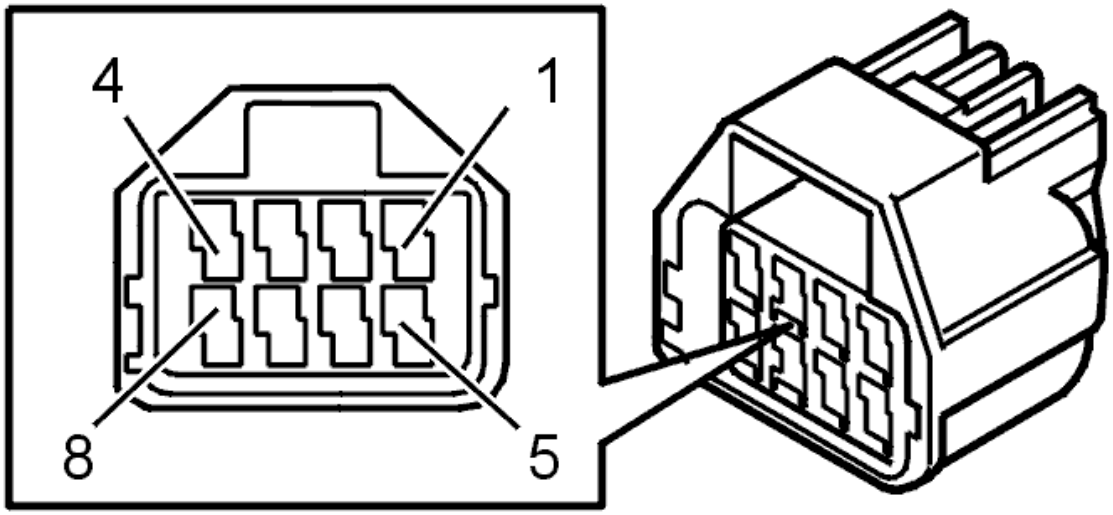

Fig. 109: Identifying Connector Terminals
Courtesy of VOLVO CARS CORPORATION

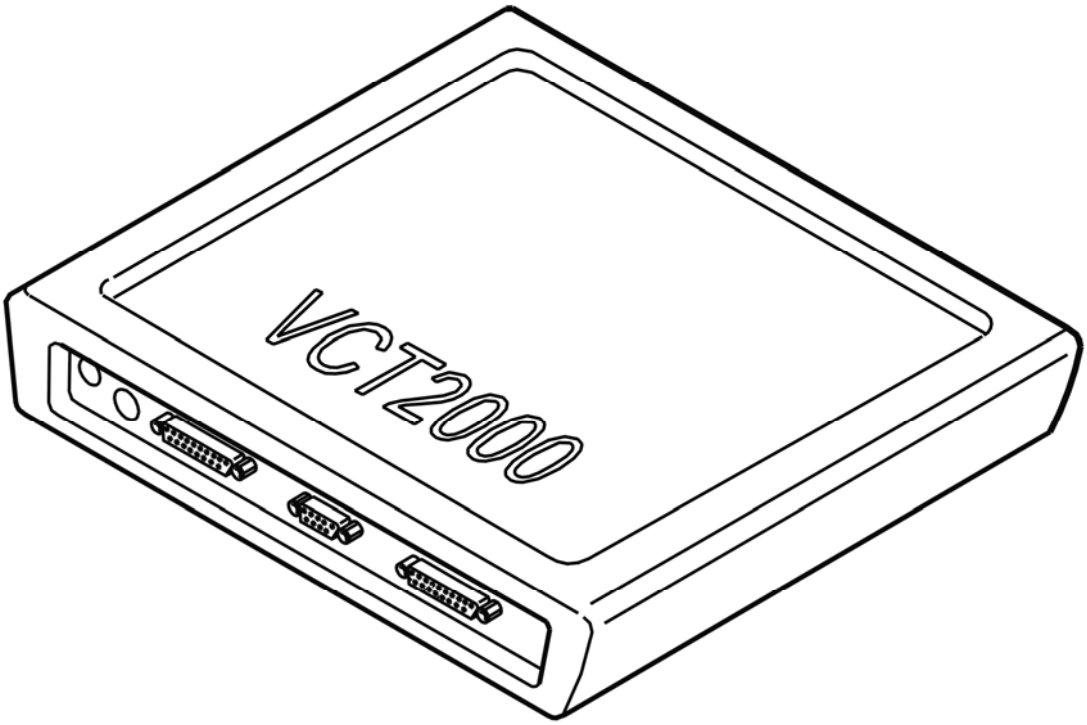

Fig. 110: Identifying VCT2000 Diagnostic Tool Symbol In VIDA
Courtesy of VOLVO CARS CORPORATION

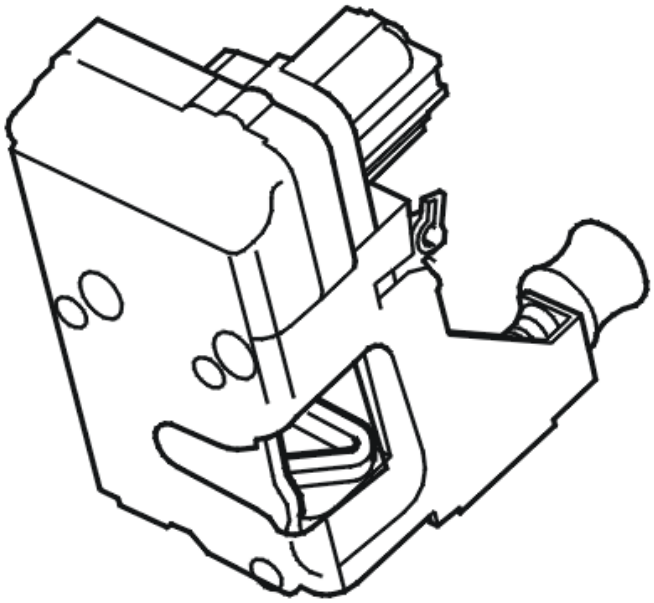

Fig. 111: Identifying Central Locking Motor
Courtesy of VOLVO CARS CORPORATION

- **Continue**

  Refer to **VERIFICATION**

VERIFICATION

VERIFICATION

HINT: After carrying out the repair, check that the fault has been remedied.

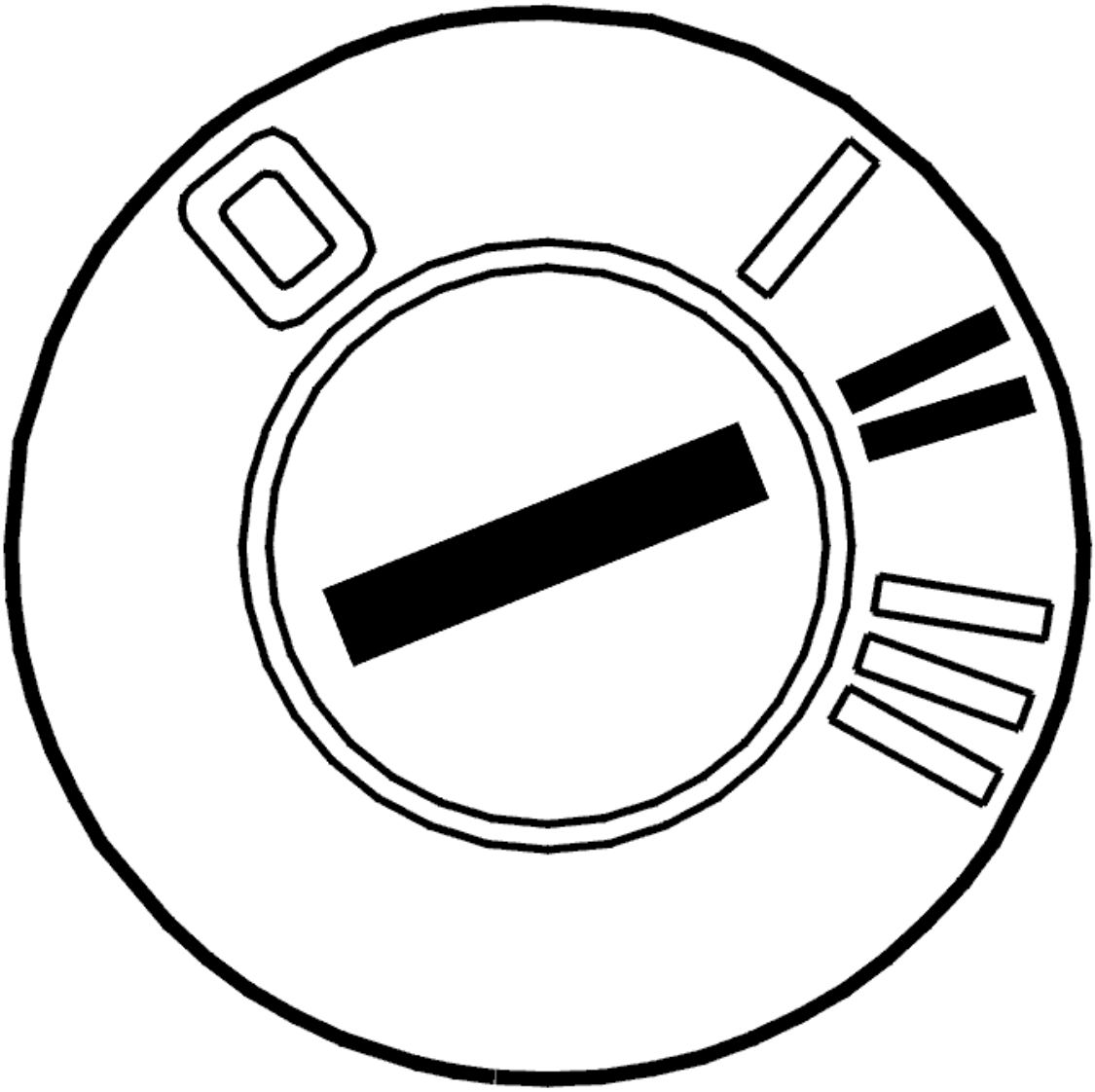

Fig. 112: Identifying Ignition ON
Courtesy of VOLVO CARS CORPORATION

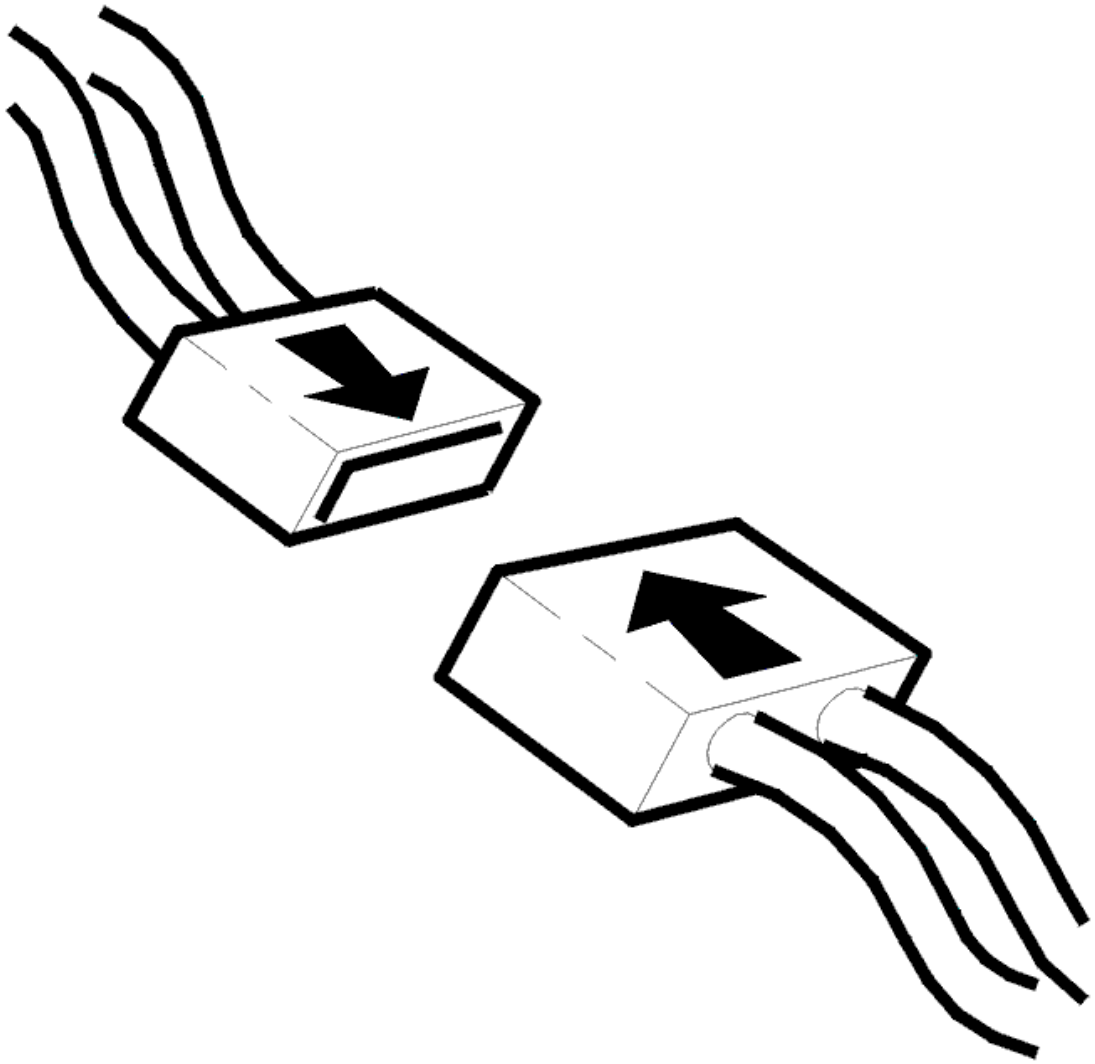

Fig. 113: Connecting Connector
Courtesy of VOLVO CARS CORPORATION

- Ignition off
- Reinstall the connectors, components etc.
- Ignition on
- Read the status of the control switch for the child lock from both rear doors.

  Activate and deactivate the power child locks.

  The status of both doors should change at the same time as the function is engaged / disengaged.

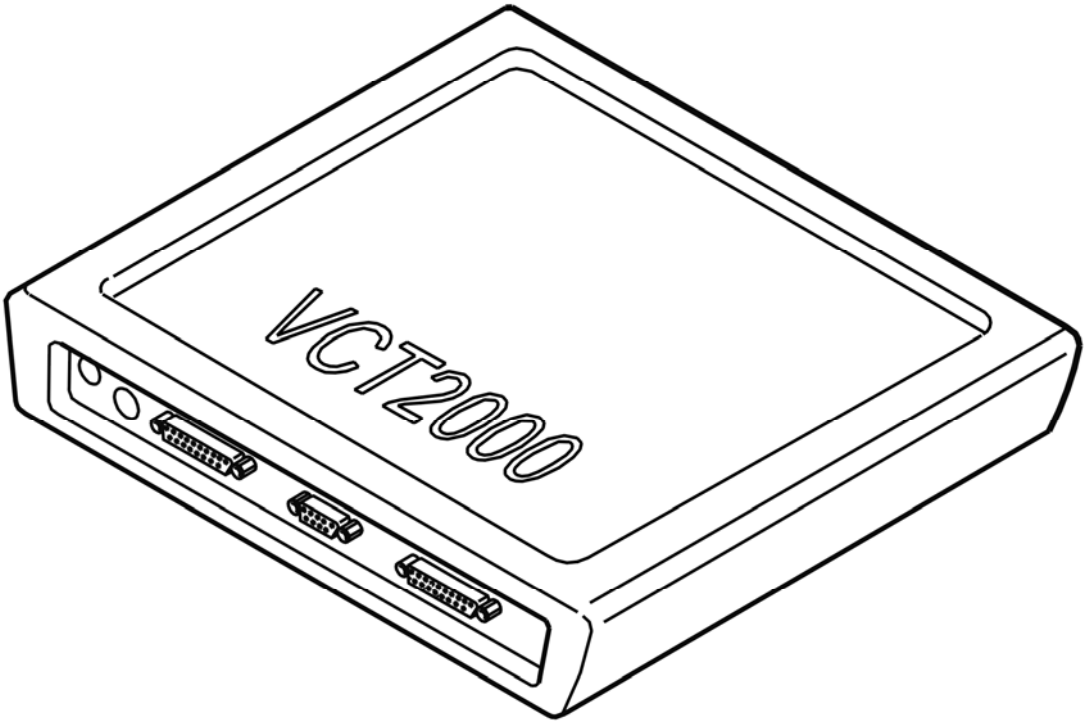

Fig. 114: Identifying VCT2000 Diagnostic Tool Symbol In VIDA
Courtesy of VOLVO CARS CORPORATION

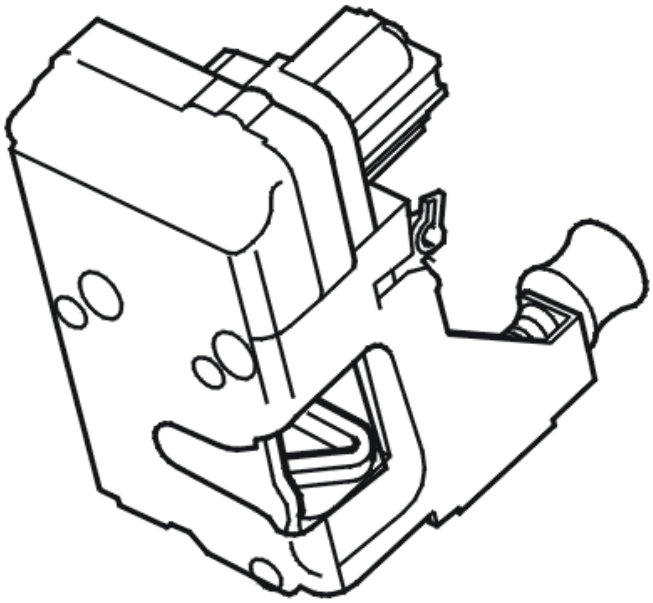

Fig. 115: Identifying Central Locking Motor
Courtesy of VOLVO CARS CORPORATION

Is the status OK?

- **YES**

  VERIFIED: Troubleshooting has been completed.

- **NO**

  Refer to **INFORMATION**

INFORMATION

FAULT-TRACING INFORMATION

The fault should have been detected and remedied. As this is not the case fault-tracing has failed.

Exit fault-tracing for this diagnostic trouble code (DTC) or make another attempt.

REM-6A05: UNLOCKING RELAY, CENTRAL LOCKING, REAR LEFT DOOR. SIGNAL MISSING (2003-2004)

DIAGNOSTIC TROUBLE CODE INFORMATION

see **DIAGNOSTIC TROUBLE CODE INFORMATION**

SIGNAL MISSING

CHECKING THE COMPONENT

Remove relay RMI 2 (2/112). Check the relay base switches. Check for contact resistance and oxidation.

Install the relay.

Activate the relay.

If the function is now OK the fault was caused by a contact fault in the relay base.

Other information:

- For -2004, see: **RELAY/FUSE BOX CARGO COMPARTMENT/REAR ELECTRONIC MODULE (REM), REPLACING**
- For 2005-, see: **REAR ELECTRONIC MODULE (REM), REPLACING** .
- see **CHECKING WIRING AND TERMINALS** .

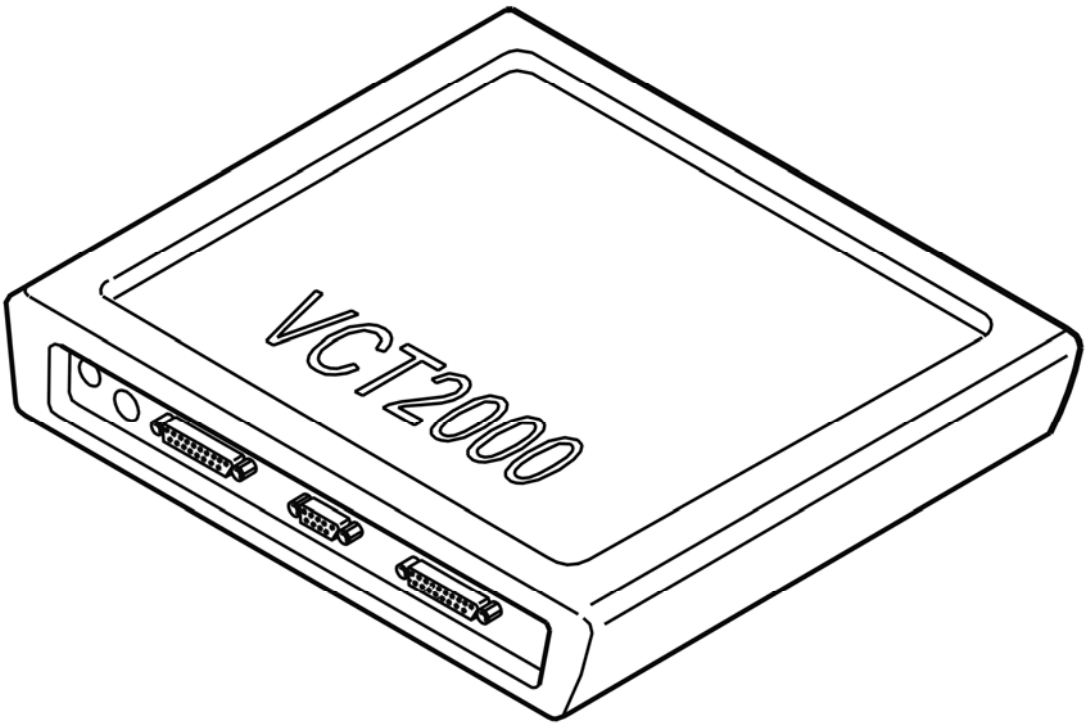

Fig. 116: Identifying VCT2000 Diagnostic Tool Symbol In VIDA
Courtesy of VOLVO CARS CORPORATION

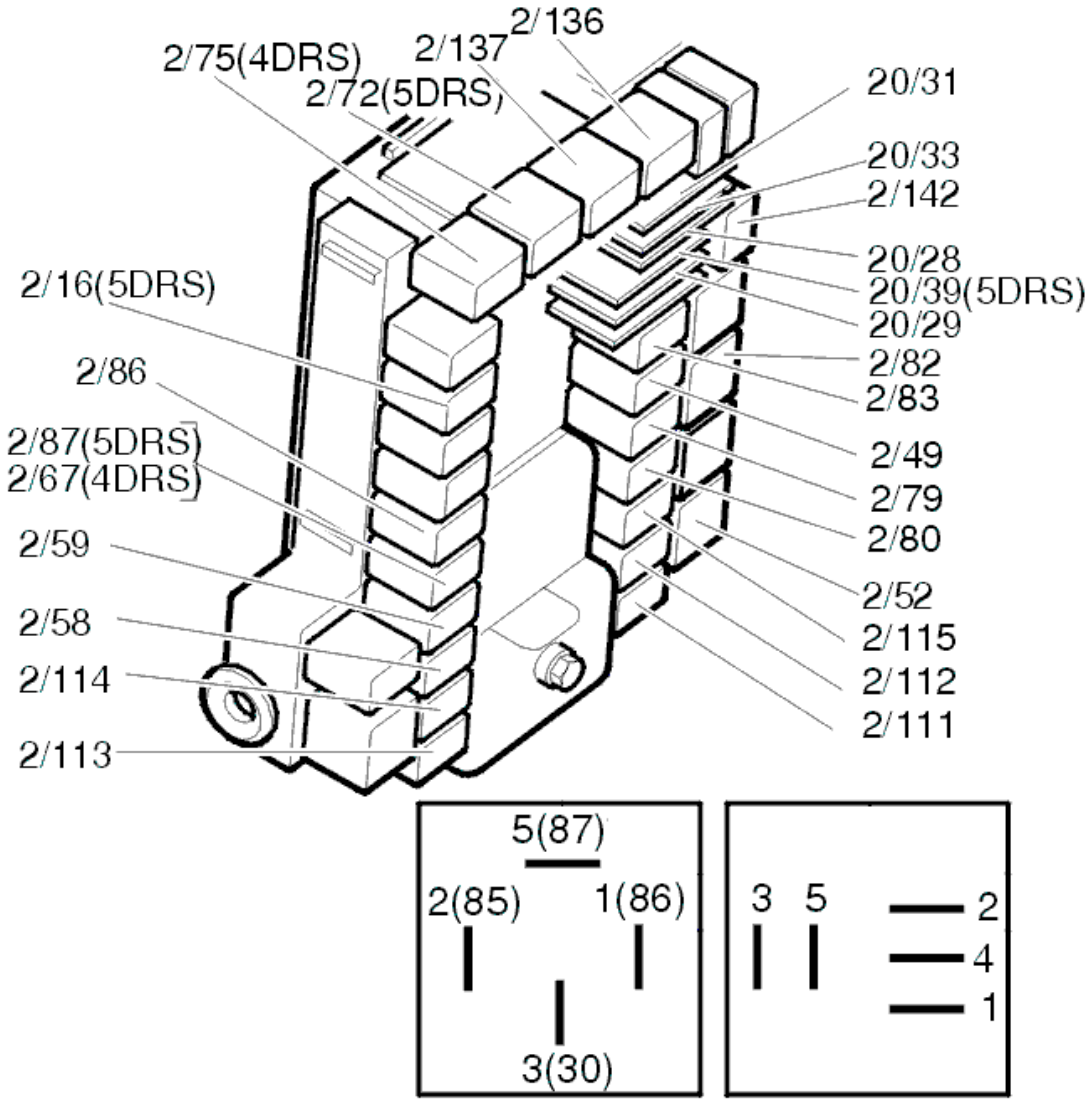

Fig. 117: Identifying Relays
Courtesy of VOLVO CARS CORPORATION

Was the function OK?

- **YES**

  Refer to **VERIFICATION**

- **NO**

  Refer to **REPLACING THE COMPONENT**

REPLACING THE COMPONENT

Replace the relay, 2/112.

Activate the relay.

If the function is now OK, the cause of the fault was a defective relay (short-circuit to ground or an open-circuit in the relay coil).

Other information:

- For -2004, see: **RELAY/FUSE BOX CARGO COMPARTMENT/REAR ELECTRONIC MODULE (REM), REPLACING**
- For 2005-, see: **REAR ELECTRONIC MODULE (REM), REPLACING** .

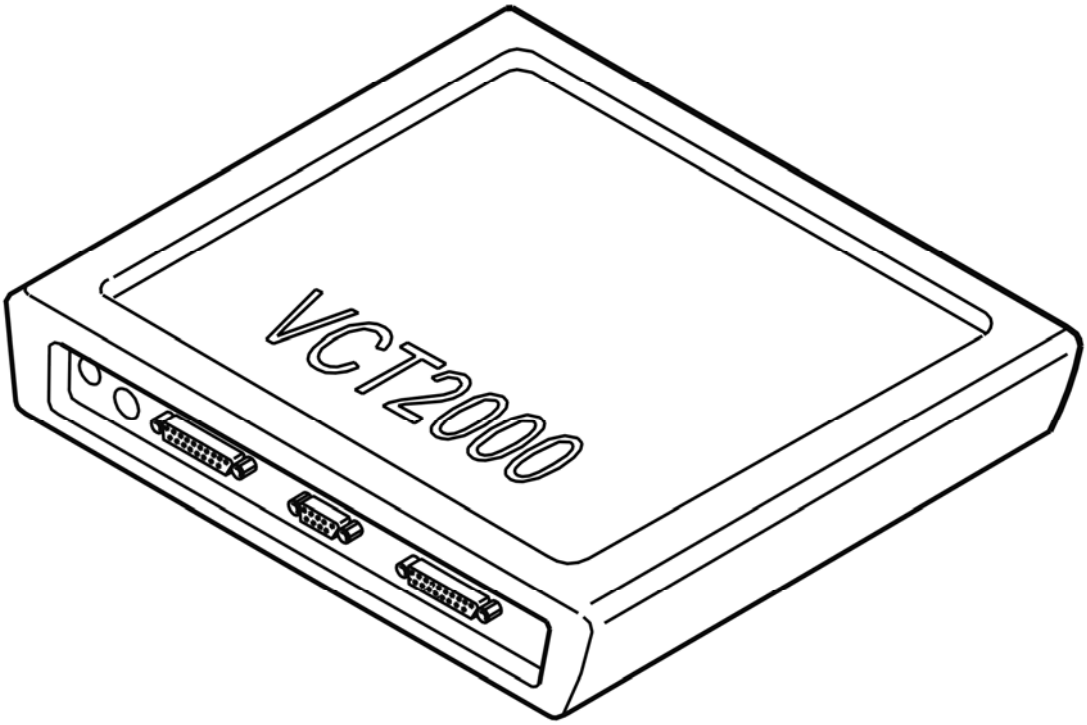

Fig. 118: Identifying VCT2000 Diagnostic Tool Symbol In VIDA
Courtesy of VOLVO CARS CORPORATION

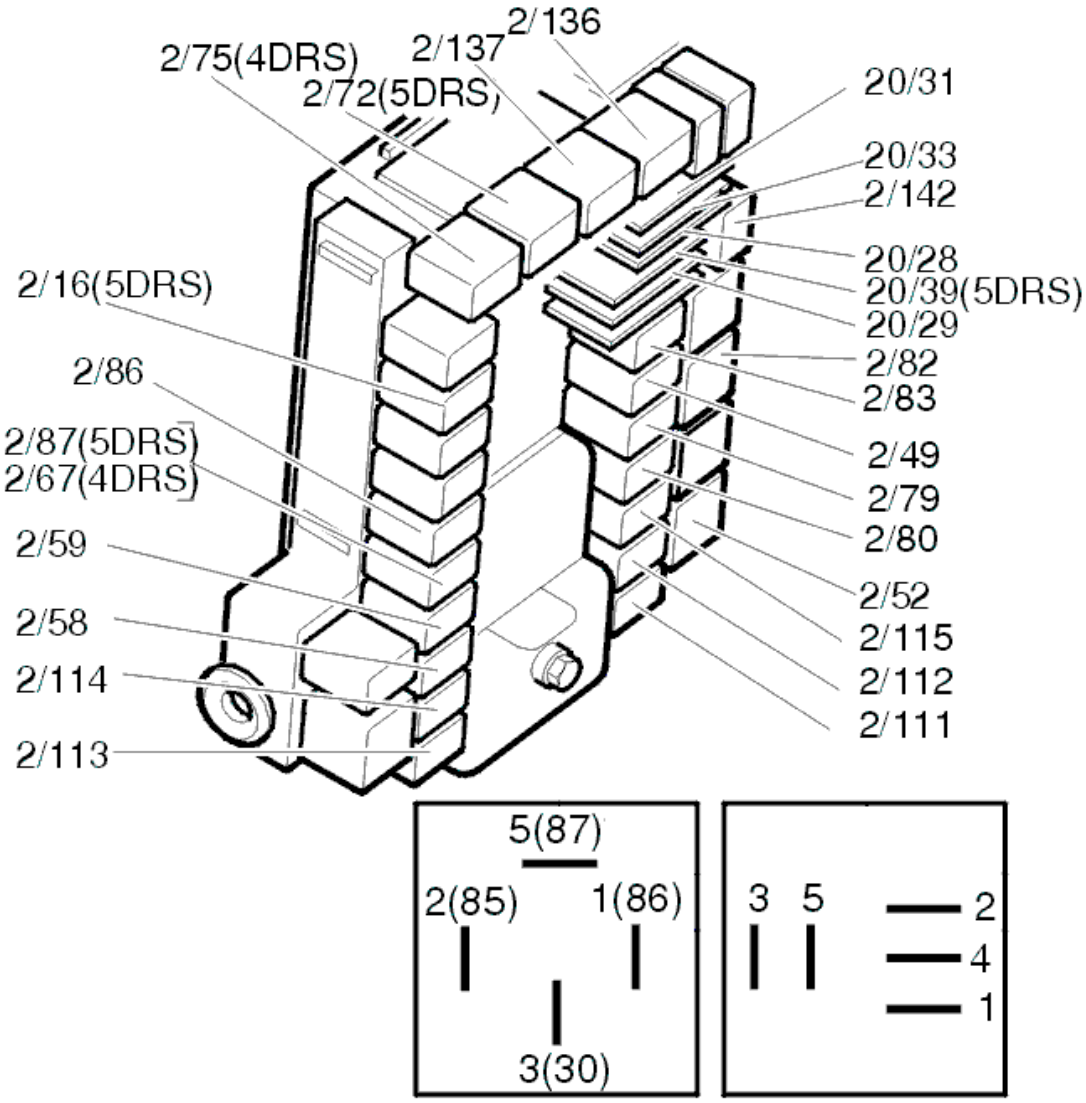

Fig. 119: Identifying Relays
Courtesy of VOLVO CARS CORPORATION

Was the function OK?

- **YES**

  OKAY: Troubleshooting has been completed.

- **NO**

  Refer to **CHECKING THE CONTROL MODULE FOR OPEN-CIRCUITS**

CHECKING THE CONTROL MODULE FOR OPEN-CIRCUITS

- Remove relay 2/112.

Check the driver circuit for the relay coil for an open-circuit as follows: activate the relay driver. Measure the voltage between terminals #1 and #2 on the relay base.

HINT: The voltage between terminals #1 and #2 should be battery voltage.

HINT: If the value deviates excessively, check the voltage between terminal #2 and the battery voltage and between terminal #1 and ground. Both should equal battery voltage.

HINT: Check for an open-circuit.

HINT: Do not forget to check that the power supply to the control module is OK.

Other information:

- For -2004, see: **RELAY/FUSE BOX CARGO COMPARTMENT/REAR ELECTRONIC MODULE (REM), REPLACING**
- For 2005-, see: **REAR ELECTRONIC MODULE (REM), REPLACING** .
- see **CHECKING WIRING AND TERMINALS** .

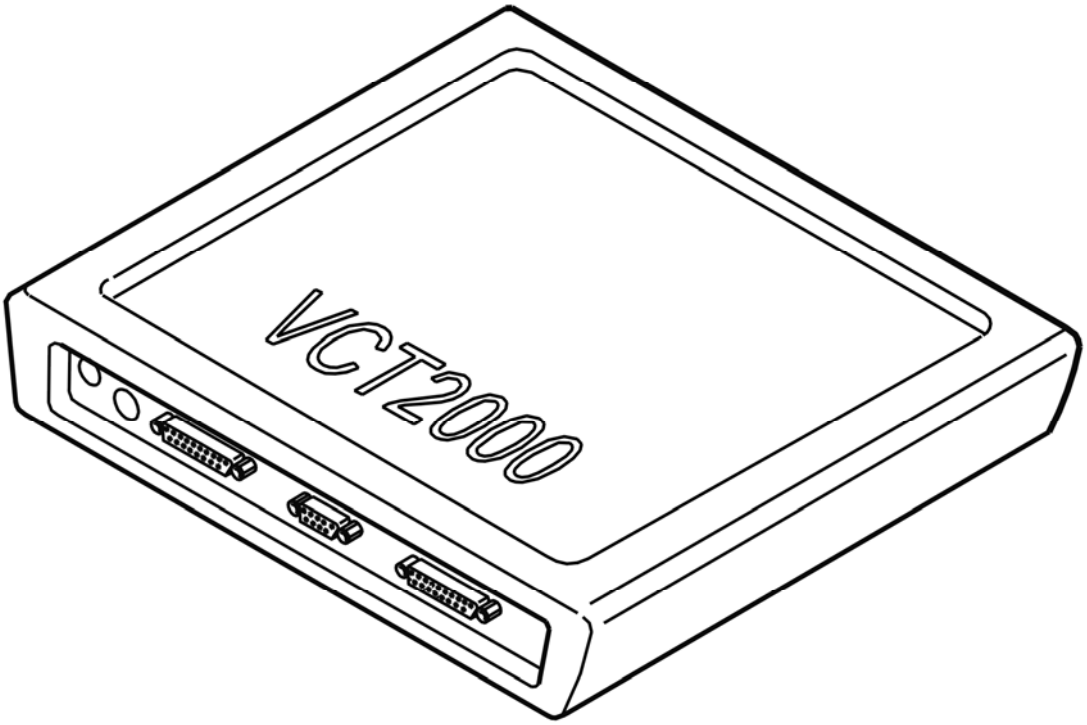

Fig. 120: Identifying VCT2000 Diagnostic Tool Symbol In VIDA
Courtesy of VOLVO CARS CORPORATION

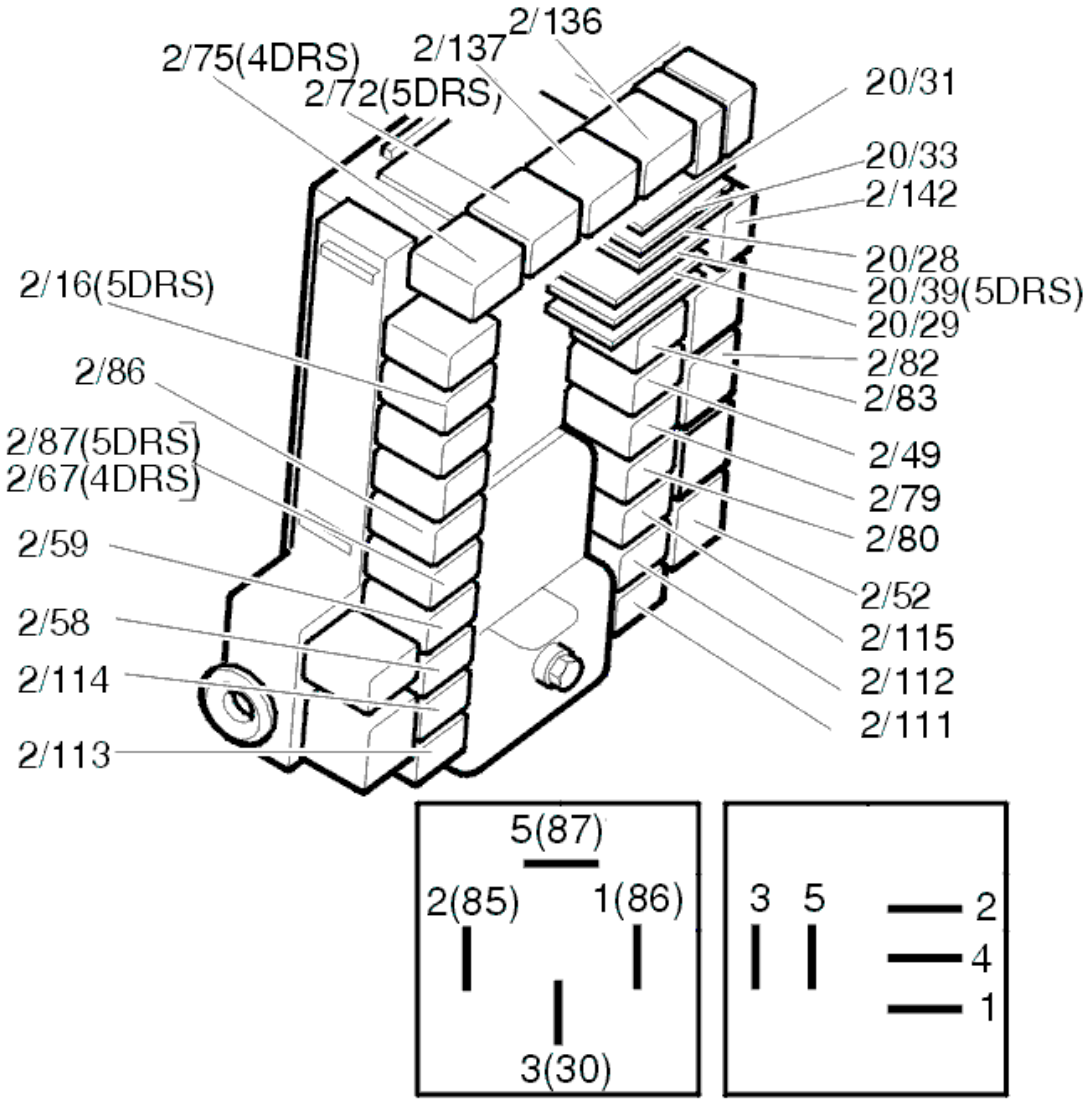

Fig. 121: Identifying Relays
Courtesy of VOLVO CARS CORPORATION

Was a fault detected?

- **YES**

  Refer to **VERIFICATION**

- **NO**

  Refer to **CHECKING THE CONTROL MODULE FOR SHORT-CIRCUITS**

CHECKING THE CONTROL MODULE FOR SHORT-CIRCUITS

Measure the resistance between terminal #2 and ground when the relay driver is active.

The resistance should be high when the relay driver is active.

Replace the control module if the resistance is low.

Other information:

- For -2004, see: **RELAY/FUSE BOX CARGO COMPARTMENT/REAR ELECTRONIC MODULE (REM), REPLACING**
- For 2005-, see: **REAR ELECTRONIC MODULE (REM), REPLACING** .

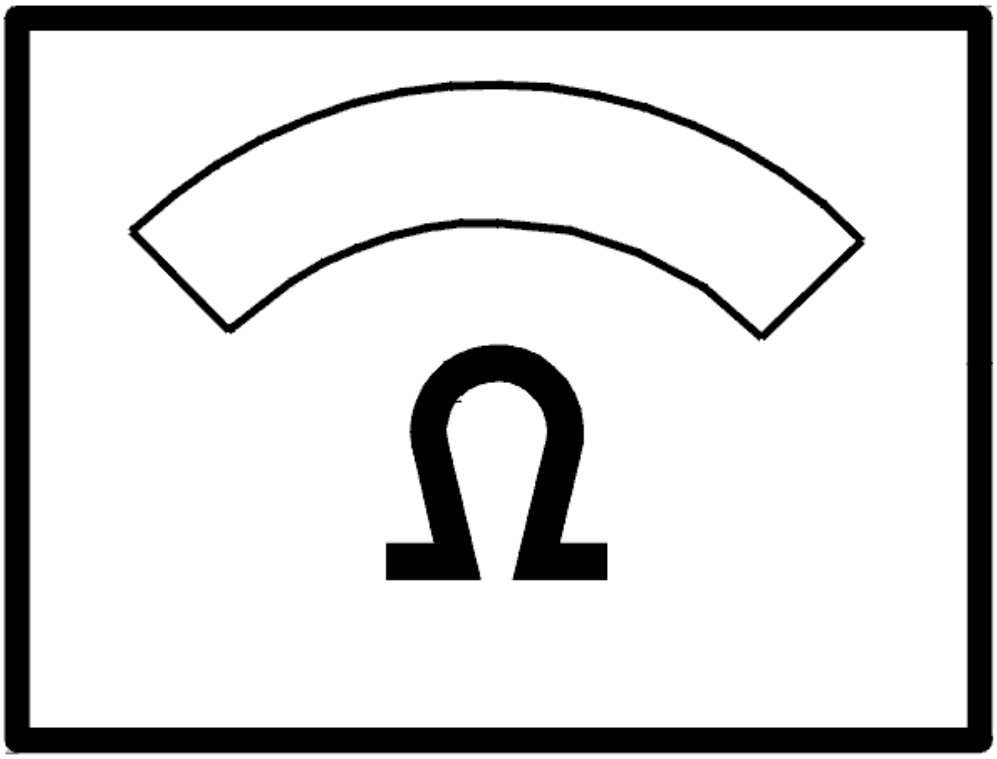

Fig. 122: Identifying Ohm Meter
Courtesy of VOLVO CARS CORPORATION

- **Continue**

  Refer to **VERIFICATION**

VERIFICATION

VERIFICATION

HINT: After carrying out the repair, check that the fault has been remedied.

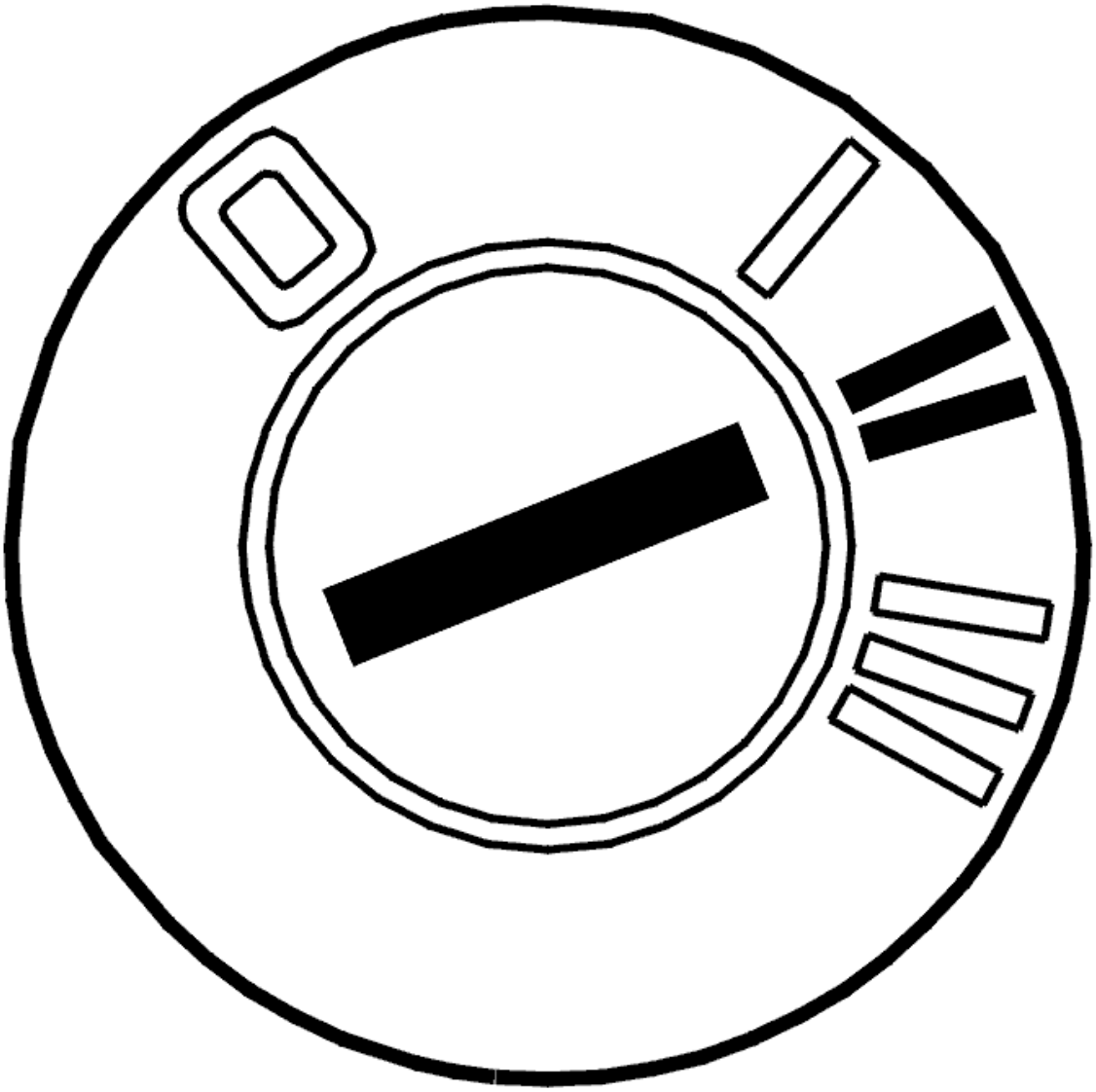

Fig. 123: Identifying Ignition ON
Courtesy of VOLVO CARS CORPORATION

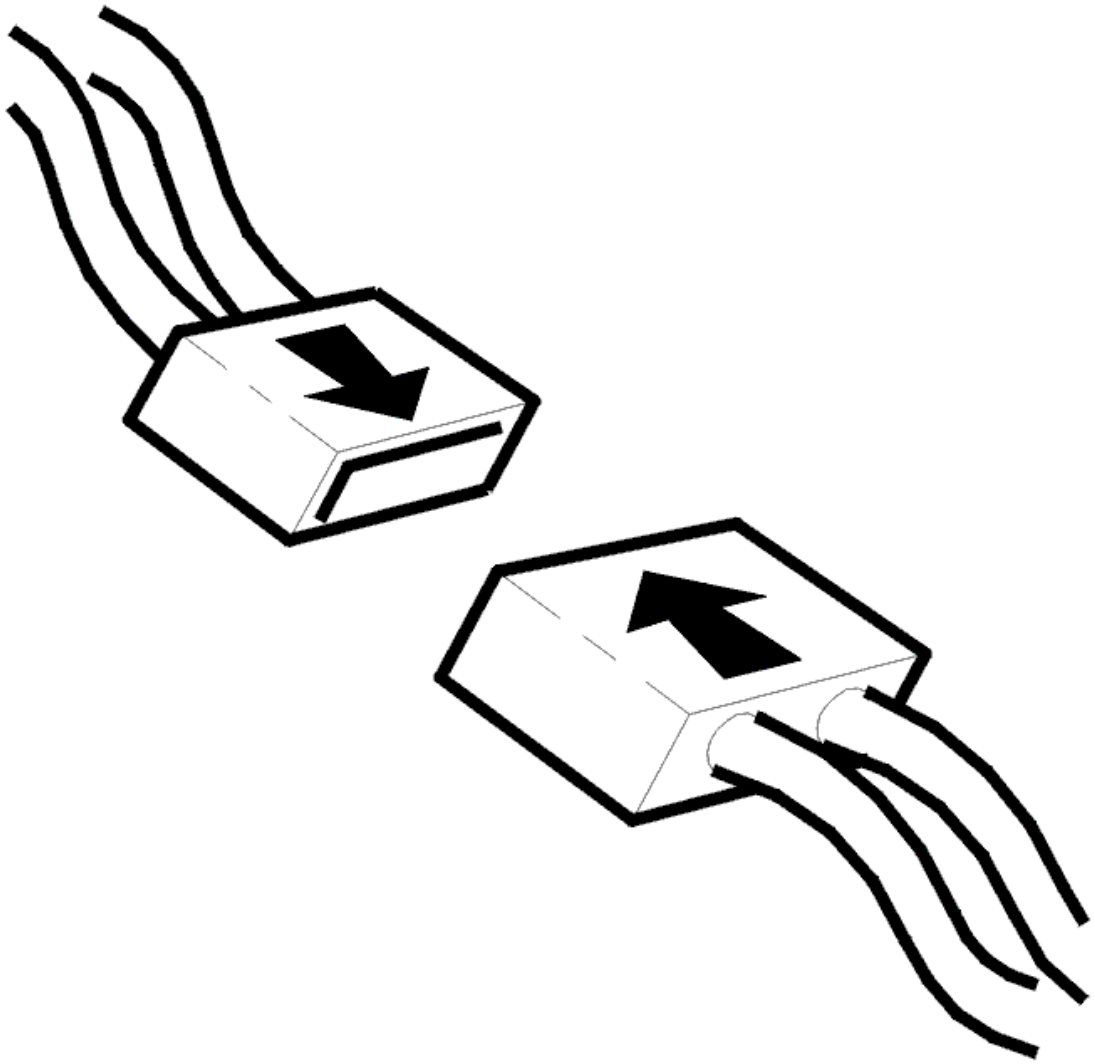

Fig. 124: Connecting Connector
Courtesy of VOLVO CARS CORPORATION

- Ignition off
- Reinstall the connectors, components etc.
- Ignition on.

  Activate the relay.

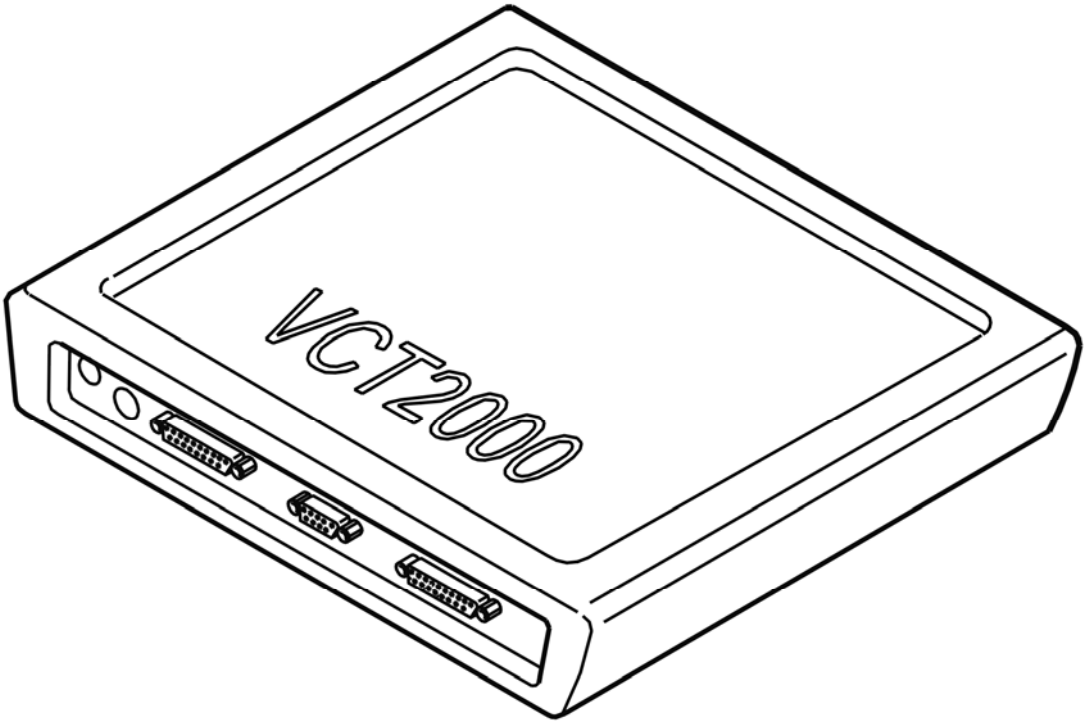

Fig. 125: Identifying VCT2000 Diagnostic Tool Symbol In VIDA
Courtesy of VOLVO CARS CORPORATION

Was the function OK?

- **YES**

  VERIFIED: Troubleshooting has been completed.

- **NO**

  Refer to **INFORMATION**

INFORMATION

FAULT-TRACING INFORMATION

The fault should have been detected and remedied. As this is not the case fault-tracing has failed.

Exit fault-tracing for this diagnostic trouble code (DTC) or make another attempt.

REM-6A06: RELAY, DEADLOCK. SIGNAL TOO HIGH (2003-2004)

DIAGNOSTIC TROUBLE CODE INFORMATION

Condition

If rear electronic module registers signal too high on relay coil ground circuit when locking to deadlock position, diagnostic trouble code is displayed.

Substitute Value

Nothing.

Possible Source

- Faulty relay (short circuit in relay coil).
- Defective control unit.

Fault symptom[s]

- Does not lock to the deadlock position BLL.
- Does not open from the deadlock position BLL.

SIGNAL TOO HIGH

CHECKING AND REPLACING THE COMPONENT

Replace the relay, 2/115.

Activate the relay.

If the function is OK, the cause of the fault was a defective relay (short-circuit in the relay).

Other information:

- For -2004, see: **RELAY/FUSE BOX CARGO COMPARTMENT/REAR ELECTRONIC MODULE (REM), REPLACING**
- For 2005-, see: **REAR ELECTRONIC MODULE (REM), REPLACING** .

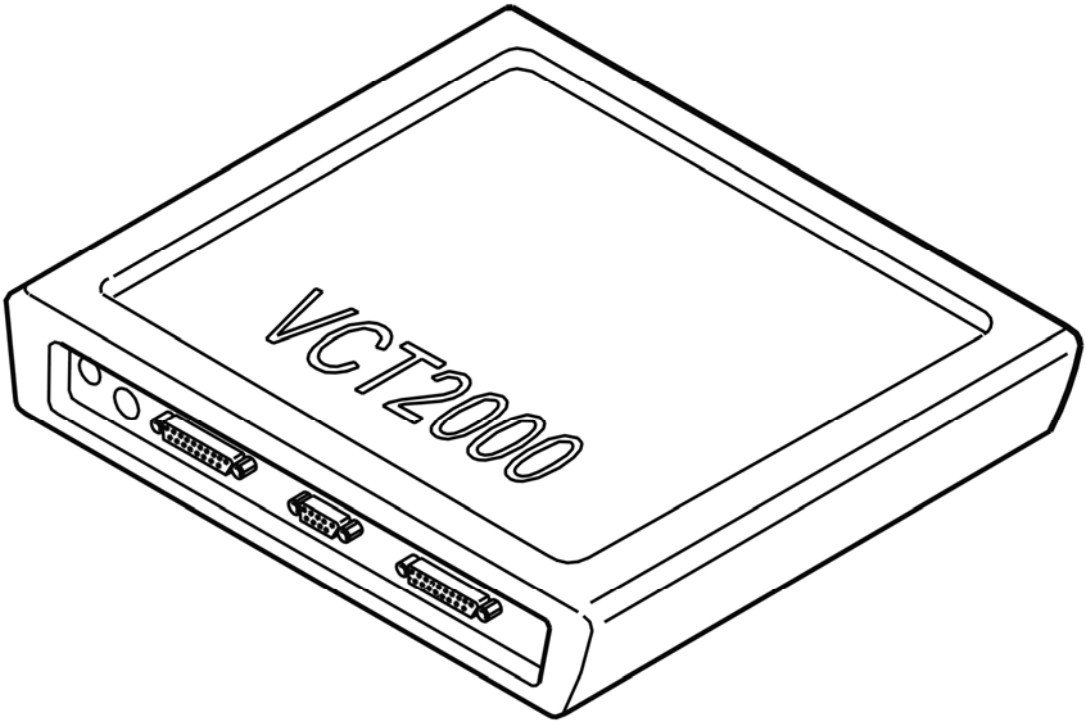

Fig. 126: Identifying VCT2000 Diagnostic Tool Symbol In VIDA
Courtesy of VOLVO CARS CORPORATION

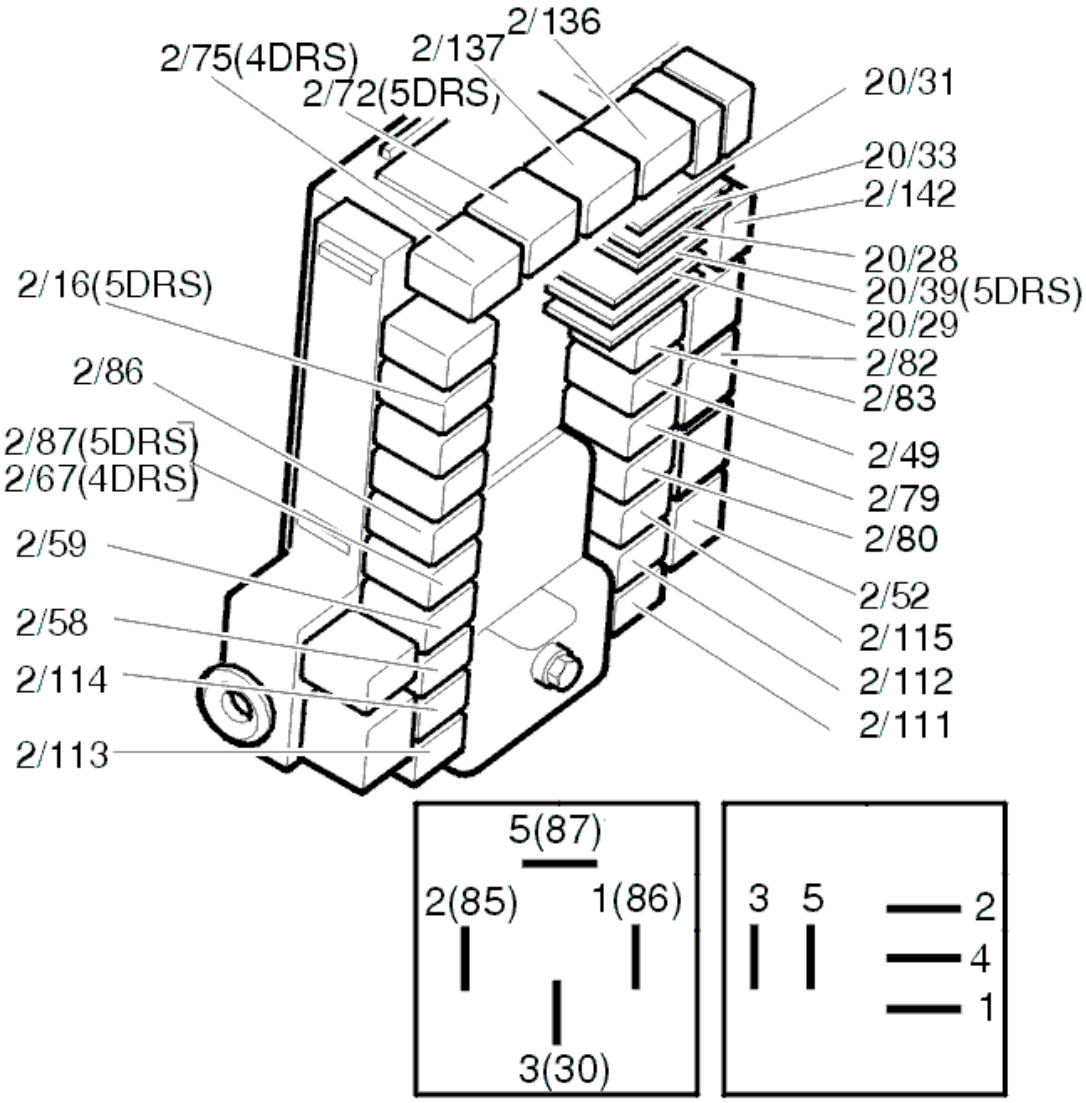

Fig. 127: Identifying Relays
Courtesy of VOLVO CARS CORPORATION

Was the function OK?

- **YES**

  OKAY: Troubleshooting has been completed.

- **NO**

  Refer to **CHECKING THE CONTROL MODULE**

CHECKING THE CONTROL MODULE

- Remove the relay.

Check the relay coil driver circuit for a short-circuit to supply voltage by measuring the voltage at terminal #2 in the relay base.

HINT: The voltage between terminal #2 and ground should be approximately 0 V.

Replace the control module if the voltmeter displays an incorrect value.

Other information:

- To access and replace the integrated relay / fusebox in the cargo compartment, see **RELAY/FUSE BOX CARGO COMPARTMENT/REAR ELECTRONIC MODULE (REM), REPLACING**
- see **CHECKING WIRING AND TERMINALS** .

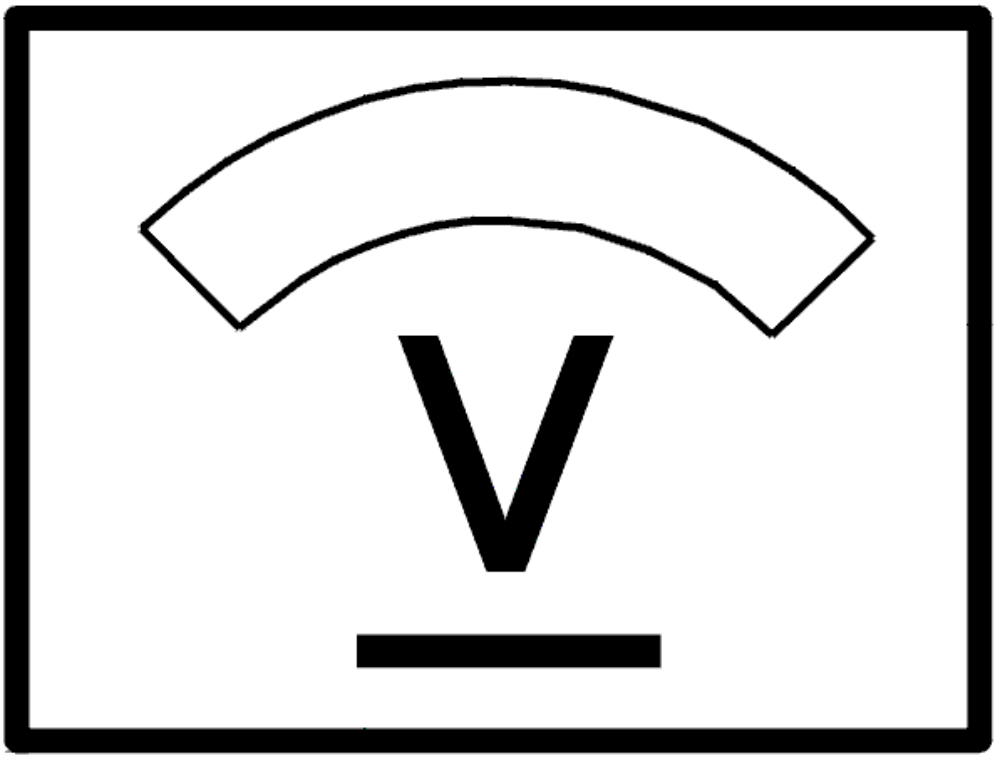

Fig. 128: Identifying Voltage Display
Courtesy of VOLVO CARS CORPORATION

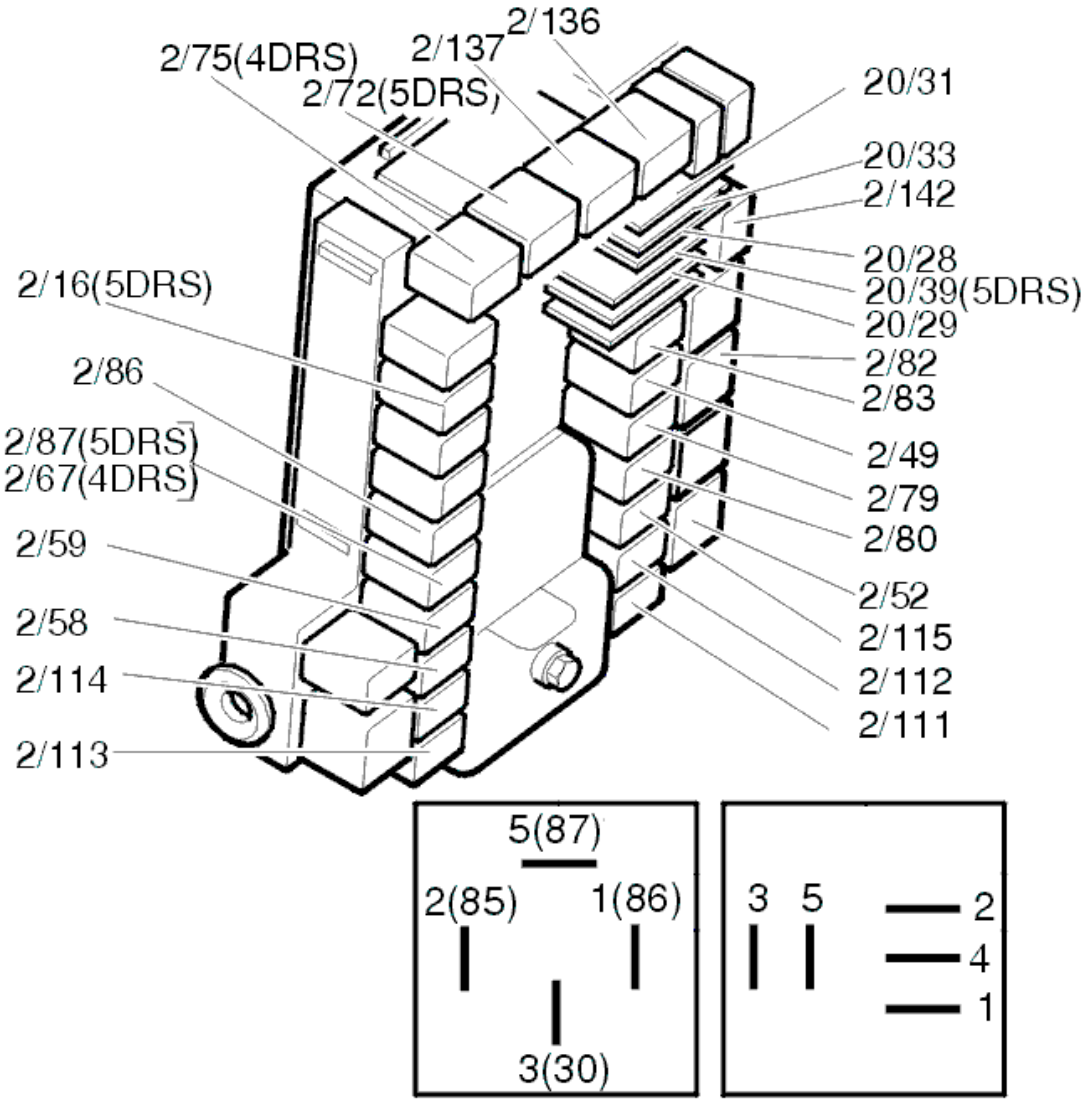

Fig. 129: Identifying Relays
Courtesy of VOLVO CARS CORPORATION

- **Continue**

  Refer to **VERIFICATION**

VERIFICATION

VERIFICATION

HINT: After carrying out the repair, check that the fault has been remedied.

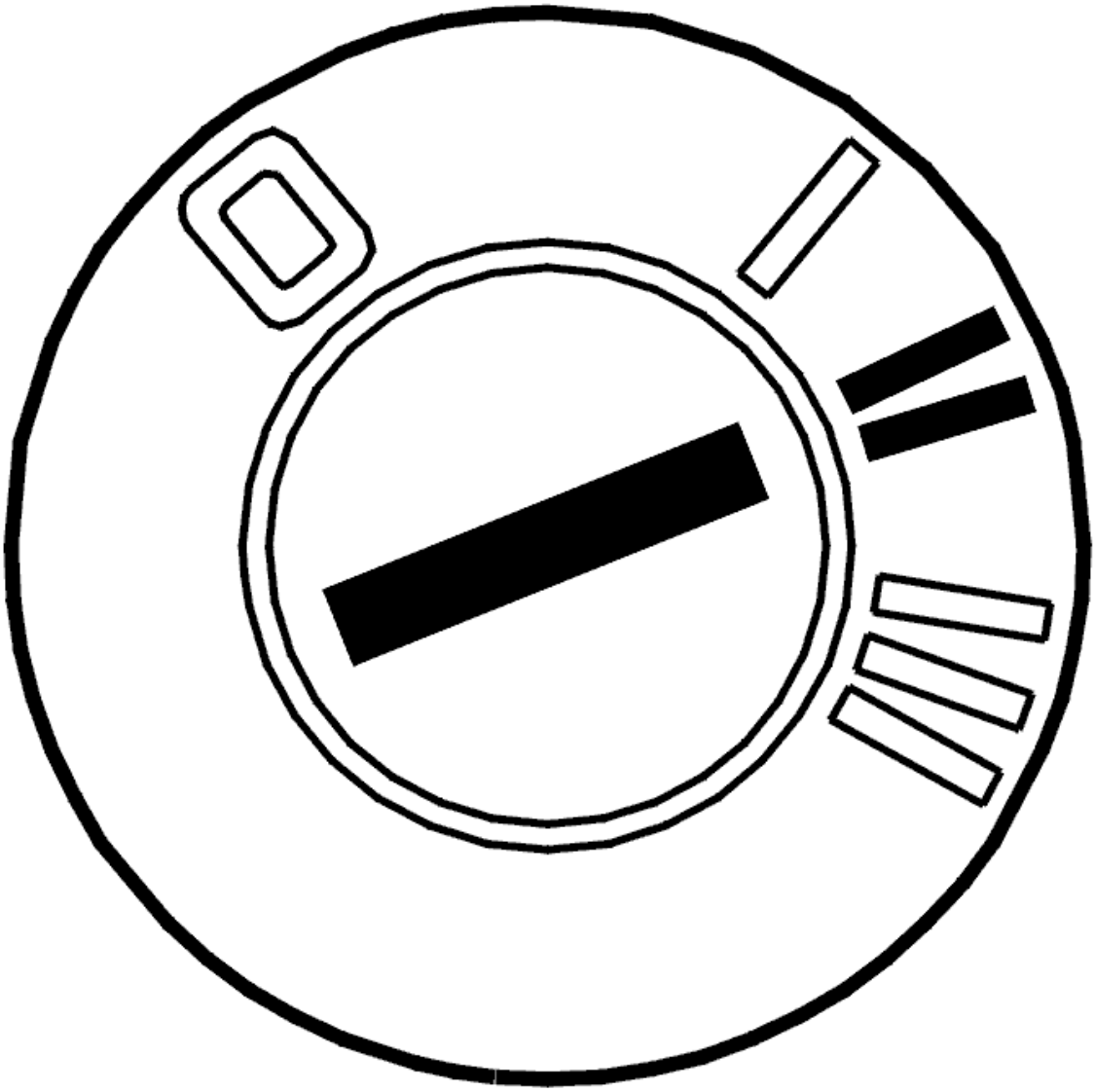

Fig. 130: Identifying Ignition ON
Courtesy of VOLVO CARS CORPORATION

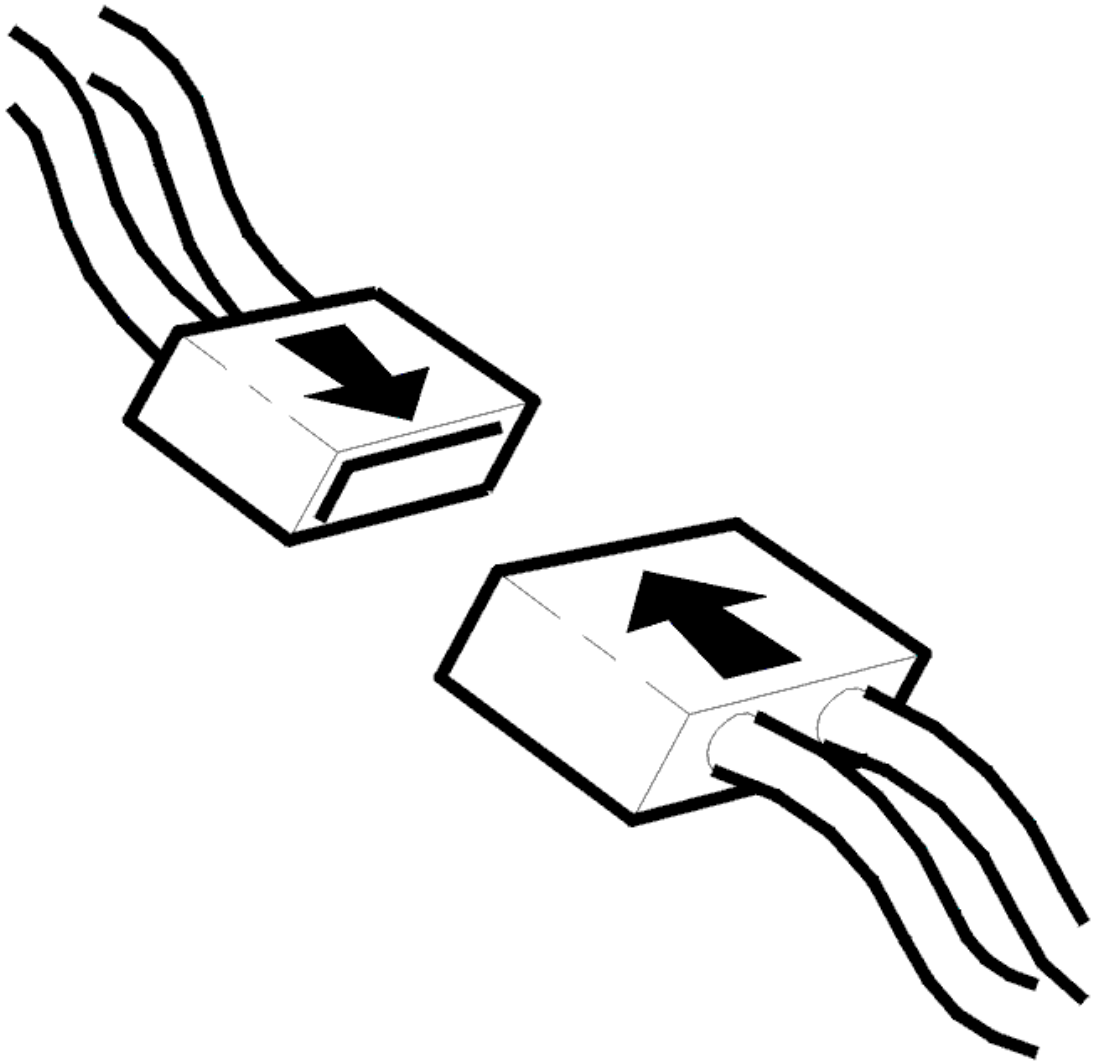

Fig. 131: Connecting Connector
Courtesy of VOLVO CARS CORPORATION

- Ignition off
- Reinstall the connectors, components etc.
- Ignition on.

Activate the relay.

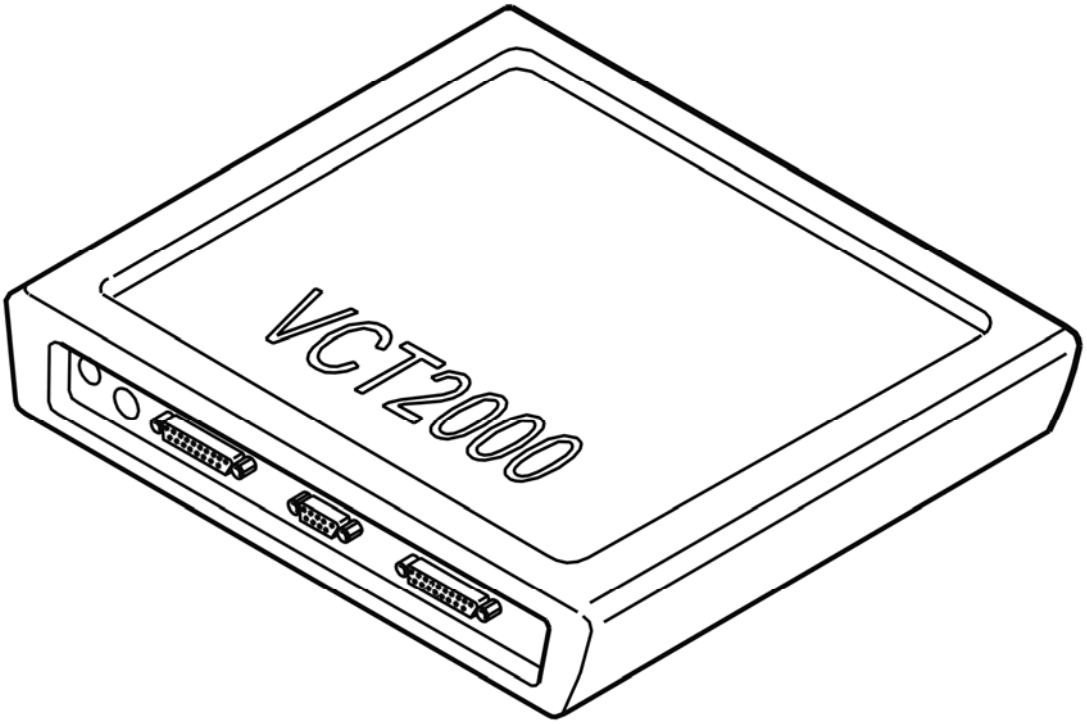

Fig. 132: Identifying VCT2000 Diagnostic Tool Symbol In VIDA
Courtesy of VOLVO CARS CORPORATION

Was the function OK?

- **YES**

  VERIFIED: Troubleshooting has been completed.

- **NO**

  Refer to **INFORMATION**

INFORMATION

FAULT-TRACING INFORMATION

The fault should have been detected and remedied. As this is not the case fault-tracing has failed.

Exit fault-tracing for this diagnostic trouble code (DTC) or make another attempt.

REM-6A06: SWITCH LOCKING MOTOR CHILD-PROOF LOCK. FAULTY SIGNAL (2005-2012)

DIAGNOSTIC TROUBLE CODE (DTC) INFORMATION REM-6A06

Condition

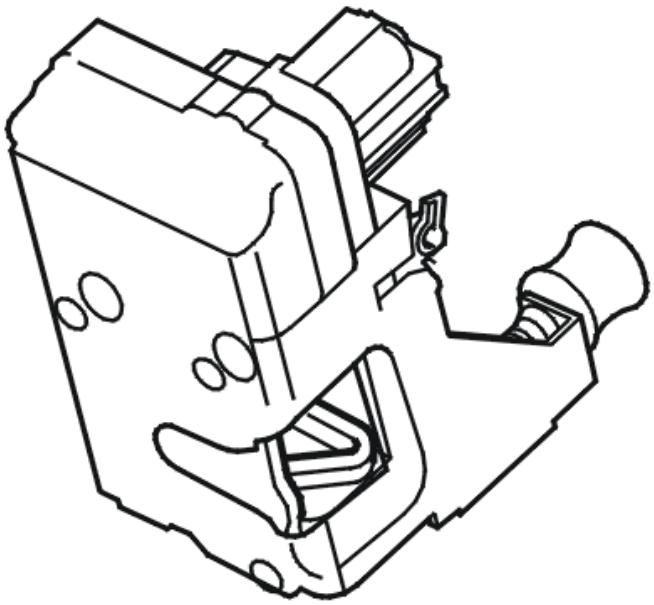

Fig. 133: Identifying Central Locking Motor
Courtesy of VOLVO CARS CORPORATION

The rear electronic module (REM) uses a number of relays to control the lock units in the rear doors for locking and unlocking.

The rear electronic module (REM) also activates the child-proof lock. A switch in the lock unit indicates that the child-proof lock is activated. The switch provides a ground when the lock motor is in the locked position.

The diagnostic trouble code (DTC) is stored if the rear electronic module (REM) detects that the input from the switch for the child-proof lock in **one of the rear doors** is still high 1 second after an activation command has been given.

The diagnostic trouble code (DTC) can be diagnosed when the child-proof lock is activated.

Substitute Value

- None.

Possible Source

- Contact resistance and oxidation in the terminals
- The lock motor in one of the rear doors is stuck in one position
- Short-circuit to ground in the switch for indication of the lock motor position in one of the rear doors
- Short-circuit to ground in the cable from the switch for indication of the lock motor position in one of the rear doors
- Open-circuit, short-circuit to ground or supply voltage in the control cable to the lock motor
- Open-circuit, short-circuit to ground or supply voltage in the control cable to the lock motor from/to the relay for the child-proof lock
- Open-circuit, short-circuit to ground or supply voltage in the wiring to the relay for the child-proof lock from the power window switch
- Damaged relay for the child-proof lock.

Fault symptom[s]

- The child-proof lock does not function.

FAULTY SIGNAL

CHECKING THE SIGNAL FROM THE CONTROL SWITCH FOR THE CHILD LOCK SWITCH

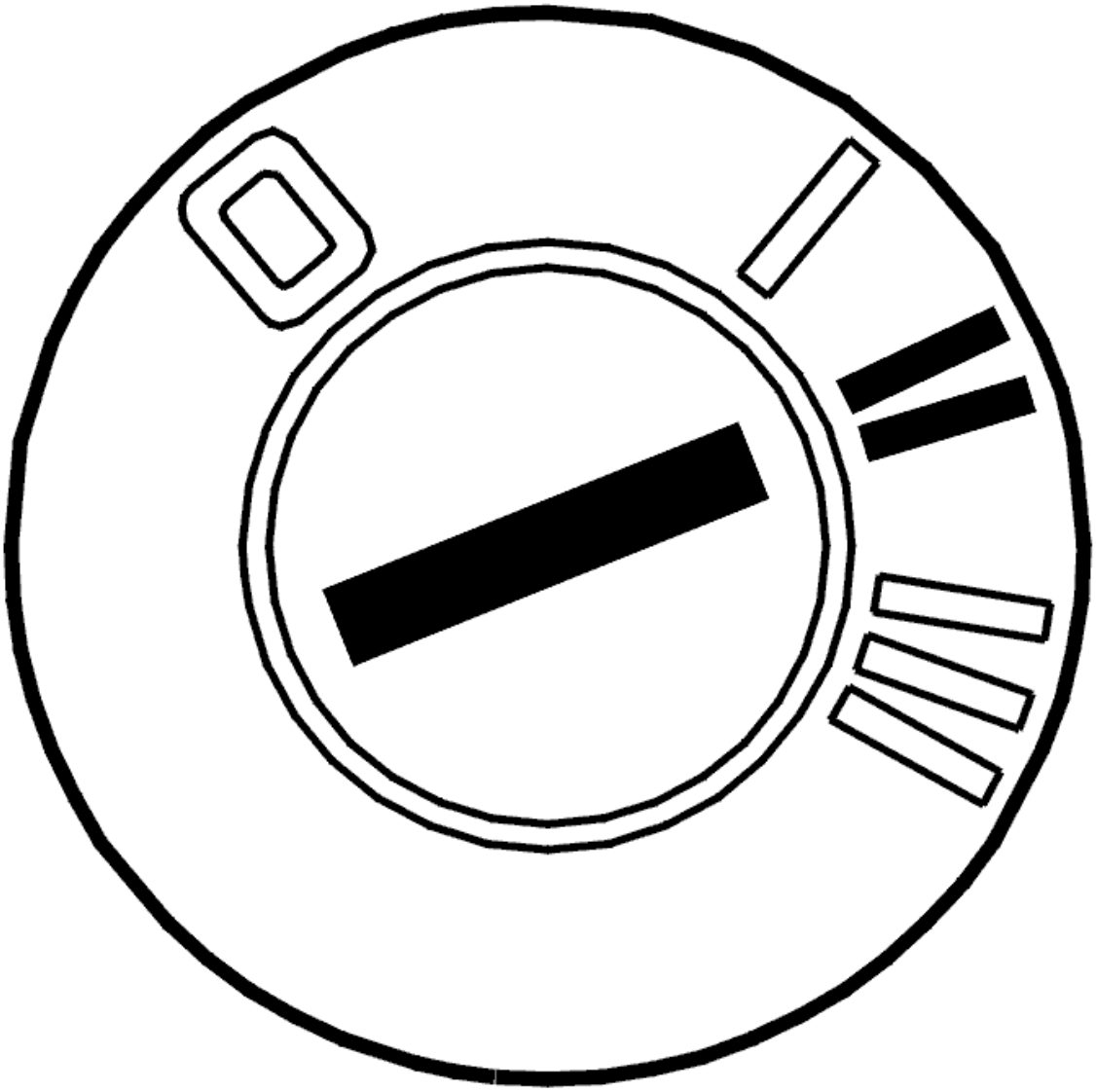

Fig. 134: Identifying Ignition ON
Courtesy of VOLVO CARS CORPORATION

- Ignition on
- Read the status of the control switch for the child lock from both rear doors.

  Activate and deactivate the power child locks.

  The status of both doors should change at the same time as the function is engaged / disengaged.

  The fault is permanent if the status does not change.

  If the status changes, this indicates an intermittent fault, i. e. the fault was present previously but is not active at the moment.

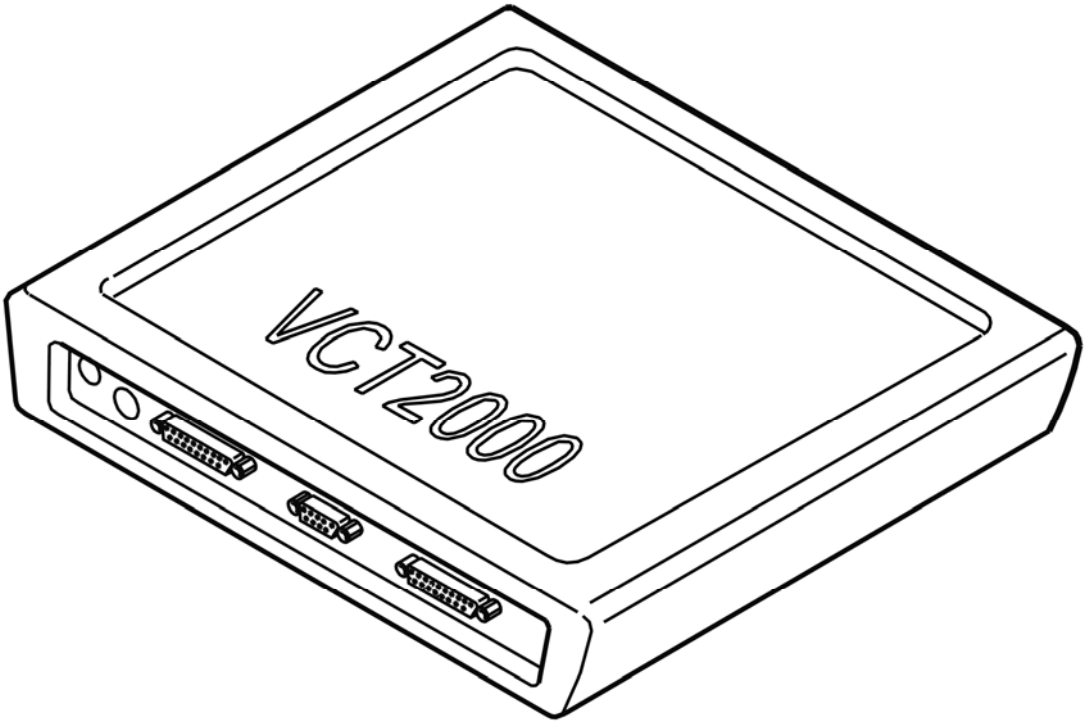

Fig. 135: Identifying VCT2000 Diagnostic Tool Symbol In VIDA
Courtesy of VOLVO CARS CORPORATION

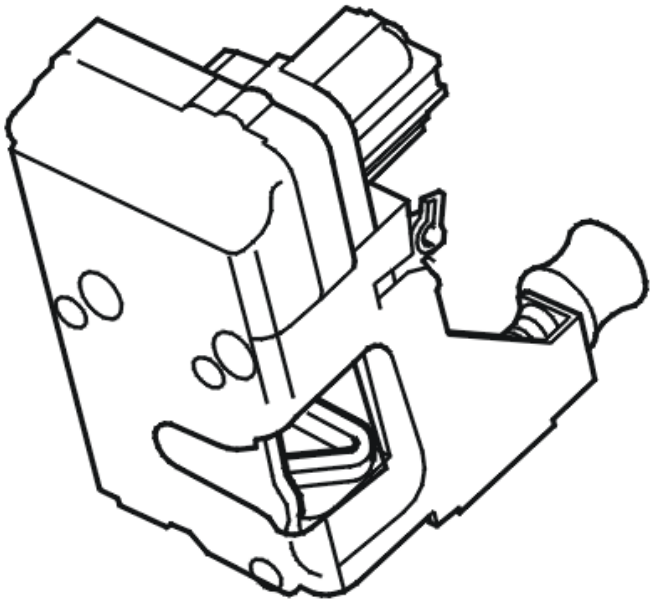

Fig. 136: Identifying Central Locking Motor
Courtesy of VOLVO CARS CORPORATION

- **Continue**

Refer to **CHECKING THE FUNCTION OF THE LOCK MECHANISM**

CHECKING THE FUNCTION OF THE LOCK MECHANISM

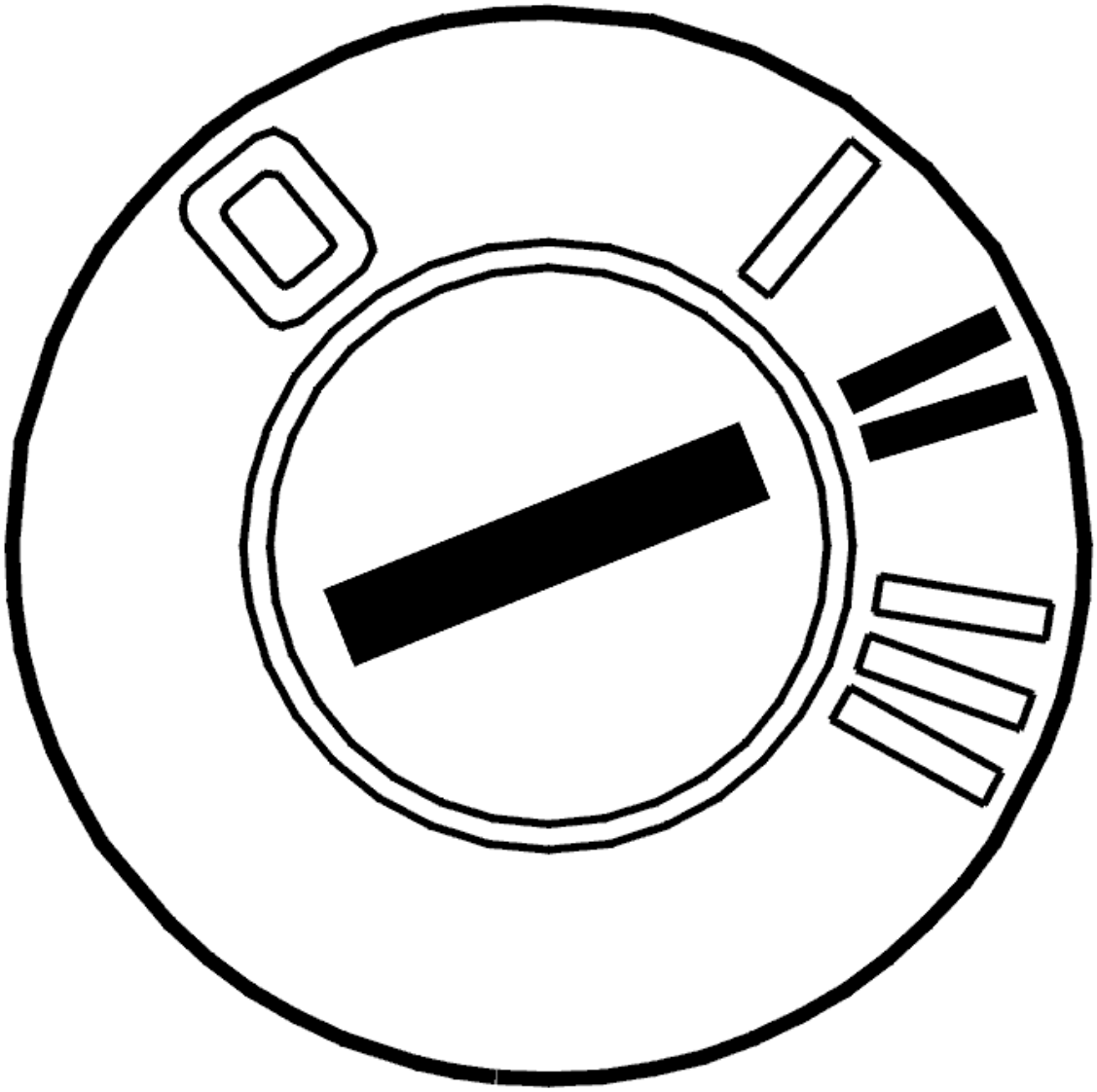

Fig. 137: Identifying Ignition ON
Courtesy of VOLVO CARS CORPORATION

- Ignition on

  Activate and deactivate the power child locks. Check that the door can be opened from the inside when unlocked and that it cannot be opened when locked.

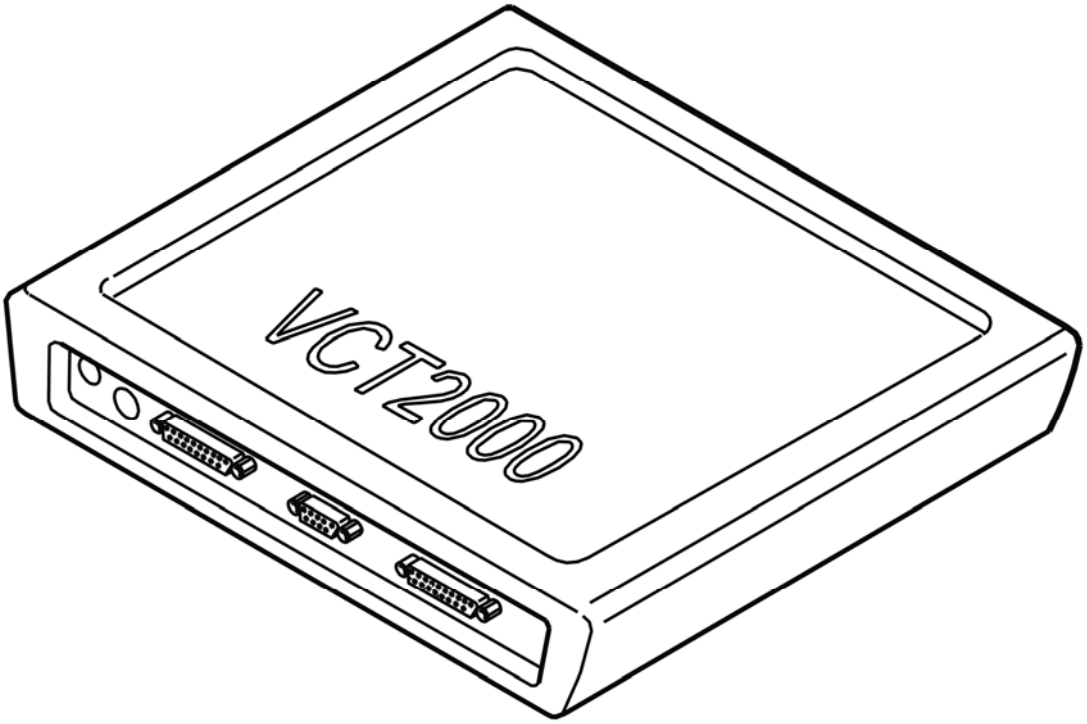

Fig. 138: Identifying VCT2000 Diagnostic Tool Symbol In VIDA
Courtesy of VOLVO CARS CORPORATION

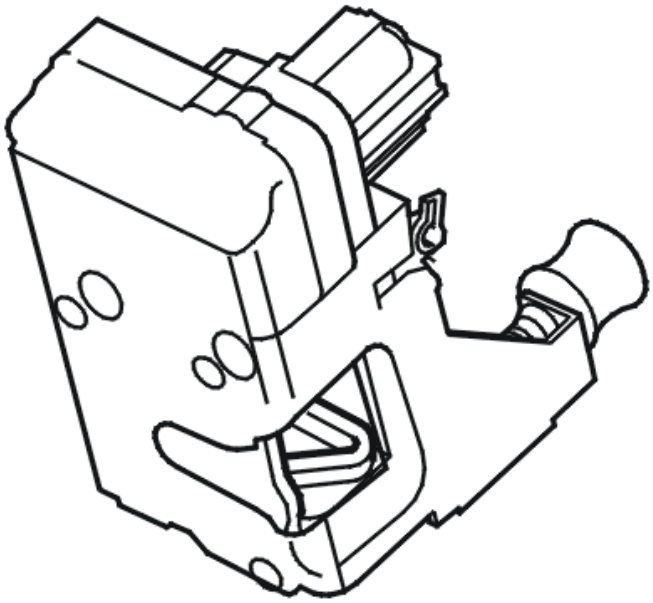

Fig. 139: Identifying Central Locking Motor
Courtesy of VOLVO CARS CORPORATION

Is the function OK?

- **YES**

  Refer to **CHECKING THE SIGNAL FROM THE SWITCHES IN THE REAR DOORS**

- **NO**

  Refer to **CHECKING CABLE AND COMPONENT**

CHECKING THE SIGNAL FROM THE SWITCHES IN THE REAR DOORS

NOTE: Only fault-trace the circuit of the door displaying the faulty value.

Check the switch in the lock mechanism. Check for a short-circuit. Check by measuring the resistance between terminals #6 and #7 on the connector for the lock mechanism.

Check the resistance between terminals #6 and #7 on the lock mechanism. The resistance must be infinite or near 0 ohm depending on the position of the switch.

Left rear door

Check the signal cable between rear electronic module (REM) connector terminal #50 (#C10) and terminal #7 on the lock mechanism. Check for a short-circuit to ground. The lock mechanism is jammed if no fault is found in the cable or the switch.

Right rear door

Check the signal cable between rear electronic module (REM) connector terminal #4 (#D4) and lock mechanism terminal #7. Check for a short-circuit to ground. The lock mechanism is jammed if no fault is found in the cable or the switch.

Remedy as necessary.

Other information

- see **CONNECTING THE BREAKOUT BOX**
- see **SIGNAL SPECIFICATION**
- see **LOCK MECHANISM FRONT SIDE DOOR, REPLACING**
- For -2004, see: **RELAY/FUSE BOX CARGO COMPARTMENT/REAR ELECTRONIC MODULE (REM), REPLACING**
- For 2005-, see: **REAR ELECTRONIC MODULE (REM), REPLACING** .
- see **CHECKING WIRING AND TERMINALS**

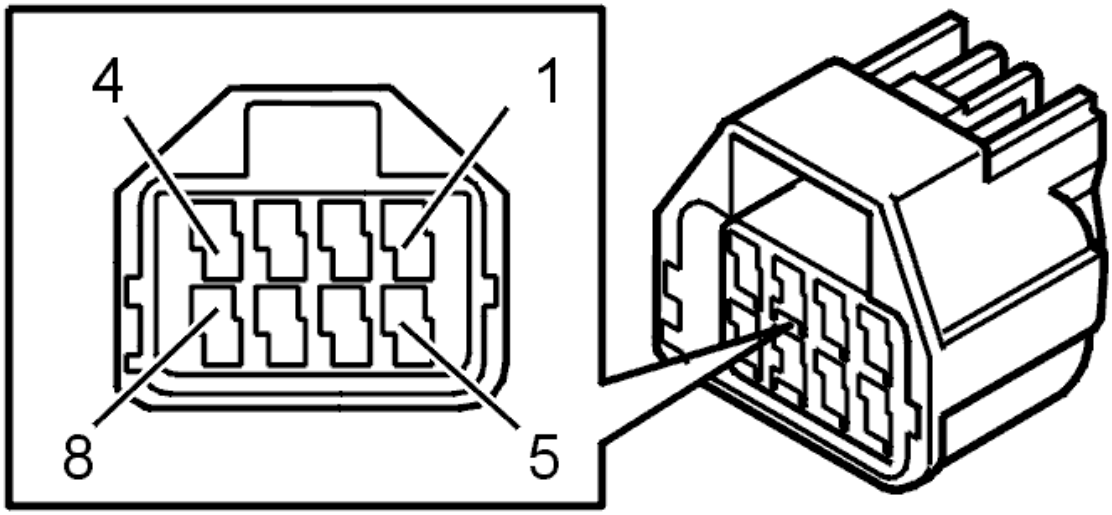

Fig. 140: Identifying Connector Terminals
Courtesy of VOLVO CARS CORPORATION

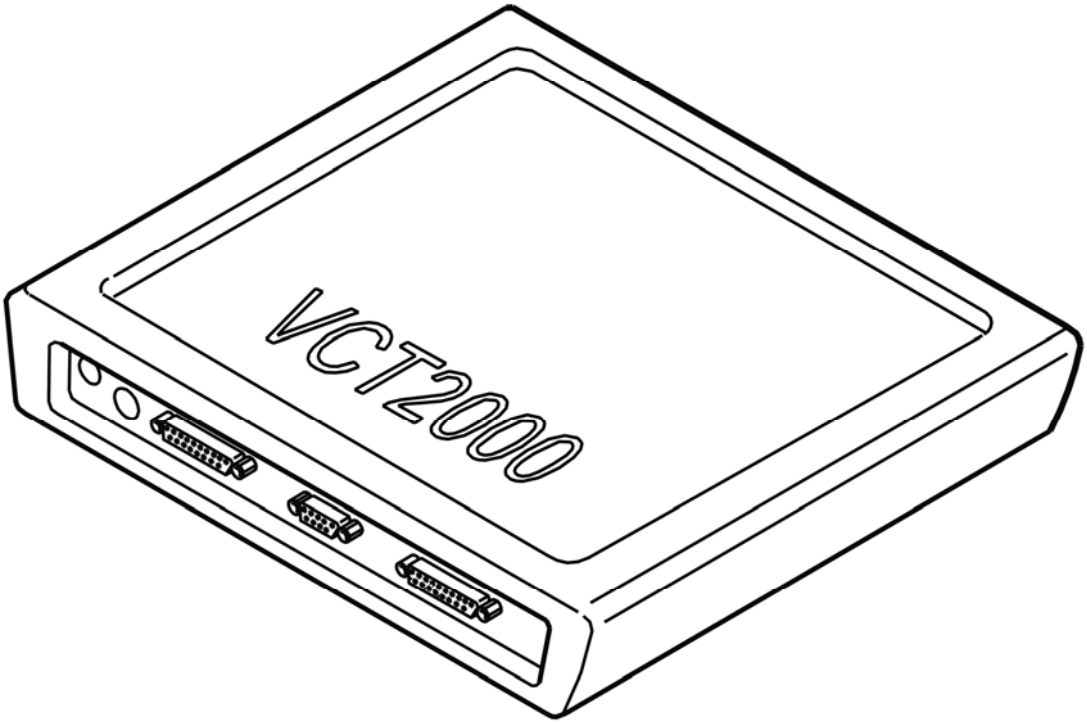

Fig. 141: Identifying VCT2000 Diagnostic Tool Symbol In VIDA
Courtesy of VOLVO CARS CORPORATION

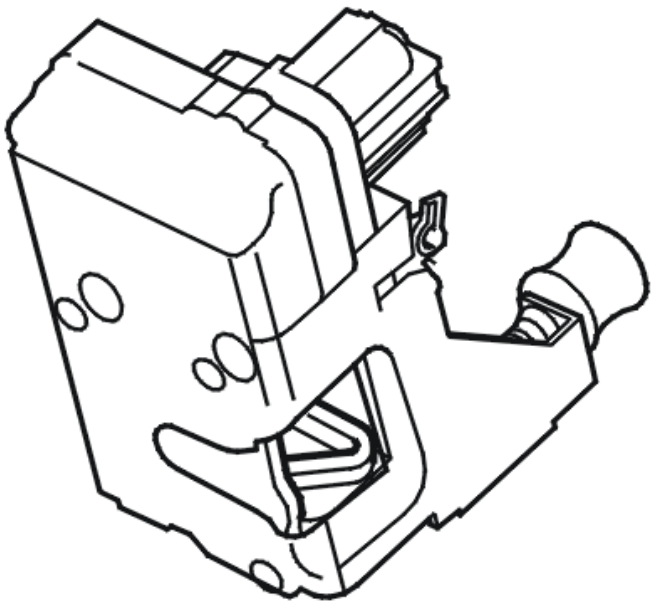

Fig. 142: Identifying Central Locking Motor
Courtesy of VOLVO CARS CORPORATION

- **Continue**

  Refer to **VERIFICATION**

CHECKING CABLE AND COMPONENT

NOTE: Only fault-trace the circuit of the door displaying the faulty value.

Check the connectors for the lock mechanism and the rear electronic module (REM). Check for contact resistance and oxidation.

Left rear door

Check the wiring between the lock mechanism connector terminals #3 and #8 and the relay terminals #2 and #4 for the child lock. Check for an open-circuit. Check for a short-circuit to ground. Check for a short-circuit to supply voltage.

Check the wiring between the lock mechanism connector terminals #3 and #5 and the power window switch. Check for an open-circuit. Check for a short-circuit to ground. Check for a short-circuit to supply voltage.

Check the cable between relay terminal #1 for the child lock and rear electronic module (REM) terminal #27 (#A27). Check for an open-circuit. Check for a short-circuit to ground. Check for a short-circuit to supply voltage.

HINT: Remove the relay for power child locks while checking the lock motors. If the function is OK when the relay is removed it means that there is a fault in the relay or in the circuit for controlling the relay.

Right rear door

Check the wiring between the lock mechanism connector terminals #3 and #8 and the relay terminals #2 and #4 for the child lock. Check for an open-circuit. Check for a short-circuit to ground. Check for a short-circuit to supply voltage.

Check the wiring between the lock mechanism connector terminals #3 and #5 and the power window switch. Check for an open-circuit. Check for a short-circuit to ground. Check for a short-circuit to supply voltage.

Check the cable between relay terminal #1 for the child lock and rear electronic module (REM) terminal #24 (#B24). Check for an open-circuit. Check for a short-circuit to ground. Check for a short-circuit to supply voltage.

HINT: Remove the relay for power child locks while checking the lock motors. If the function is OK when the relay is removed it means that there is a fault in the relay or in the circuit for controlling the relay.

The lock mechanism is jammed if no fault is found in the wiring.

Remedy as necessary.

Other information

- see **CONNECTING THE BREAKOUT BOX**
- see **SIGNAL SPECIFICATION**
- see **LOCK MECHANISM FRONT SIDE DOOR, REPLACING**
- For -2004, see: **RELAY/FUSE BOX CARGO COMPARTMENT/REAR ELECTRONIC MODULE (REM), REPLACING**
- For 2005-, see: **REAR ELECTRONIC MODULE (REM), REPLACING** .
- see **CHECKING WIRING AND TERMINALS**

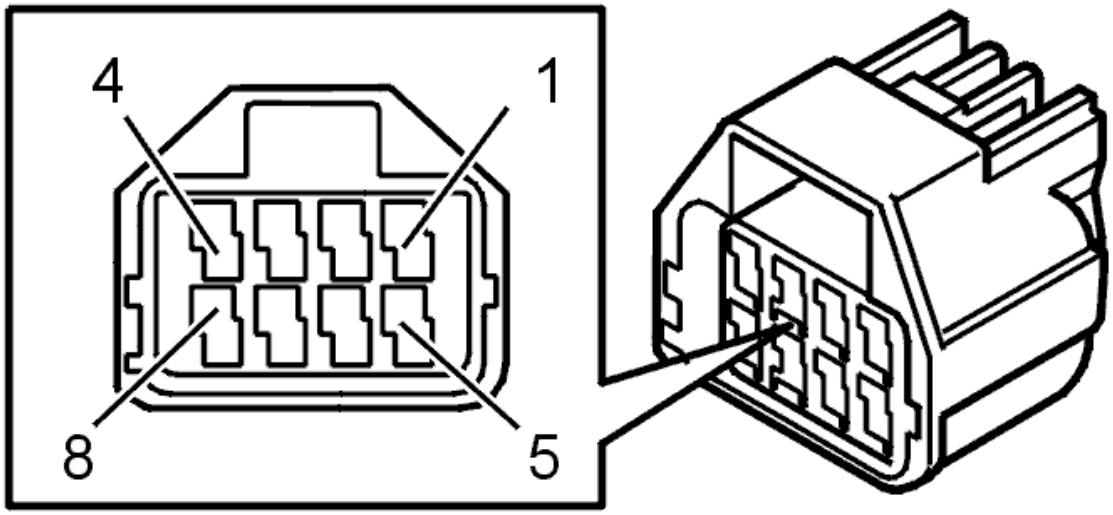

Fig. 143: Identifying Connector Terminals
Courtesy of VOLVO CARS CORPORATION

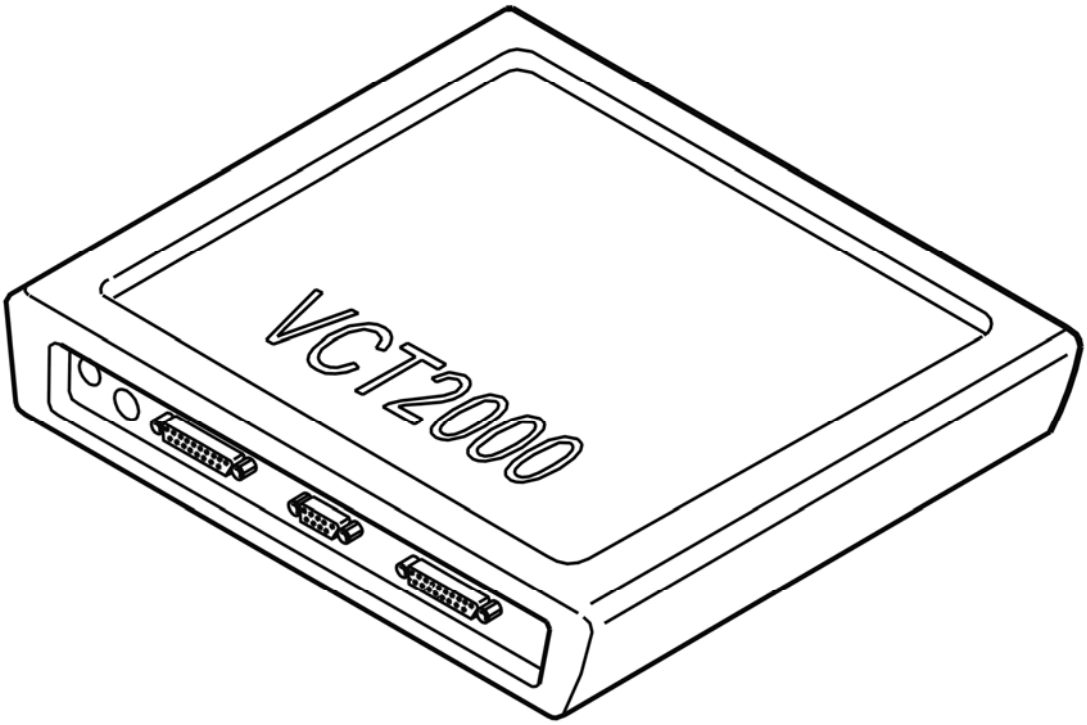

Fig. 144: Identifying VCT2000 Diagnostic Tool Symbol In VIDA
Courtesy of VOLVO CARS CORPORATION

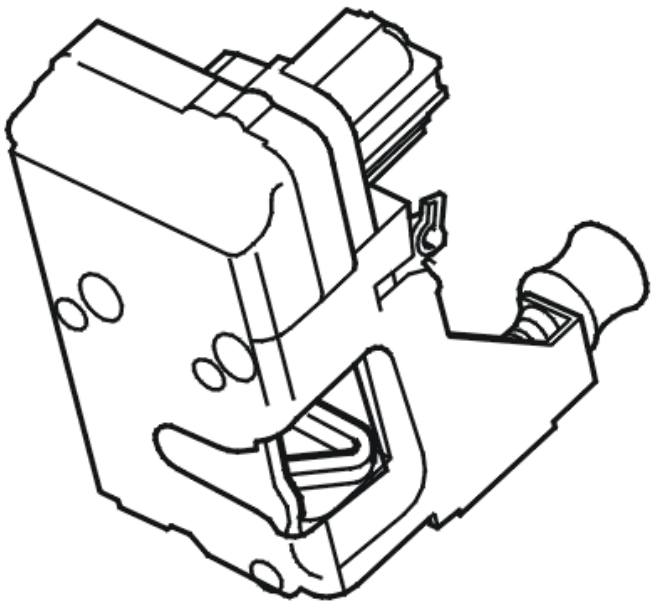

Fig. 145: Identifying Central Locking Motor
Courtesy of VOLVO CARS CORPORATION

- **Continue**

  Refer to **VERIFICATION**

VERIFICATION

VERIFICATION

HINT: After carrying out the repair, check that the fault has been remedied.

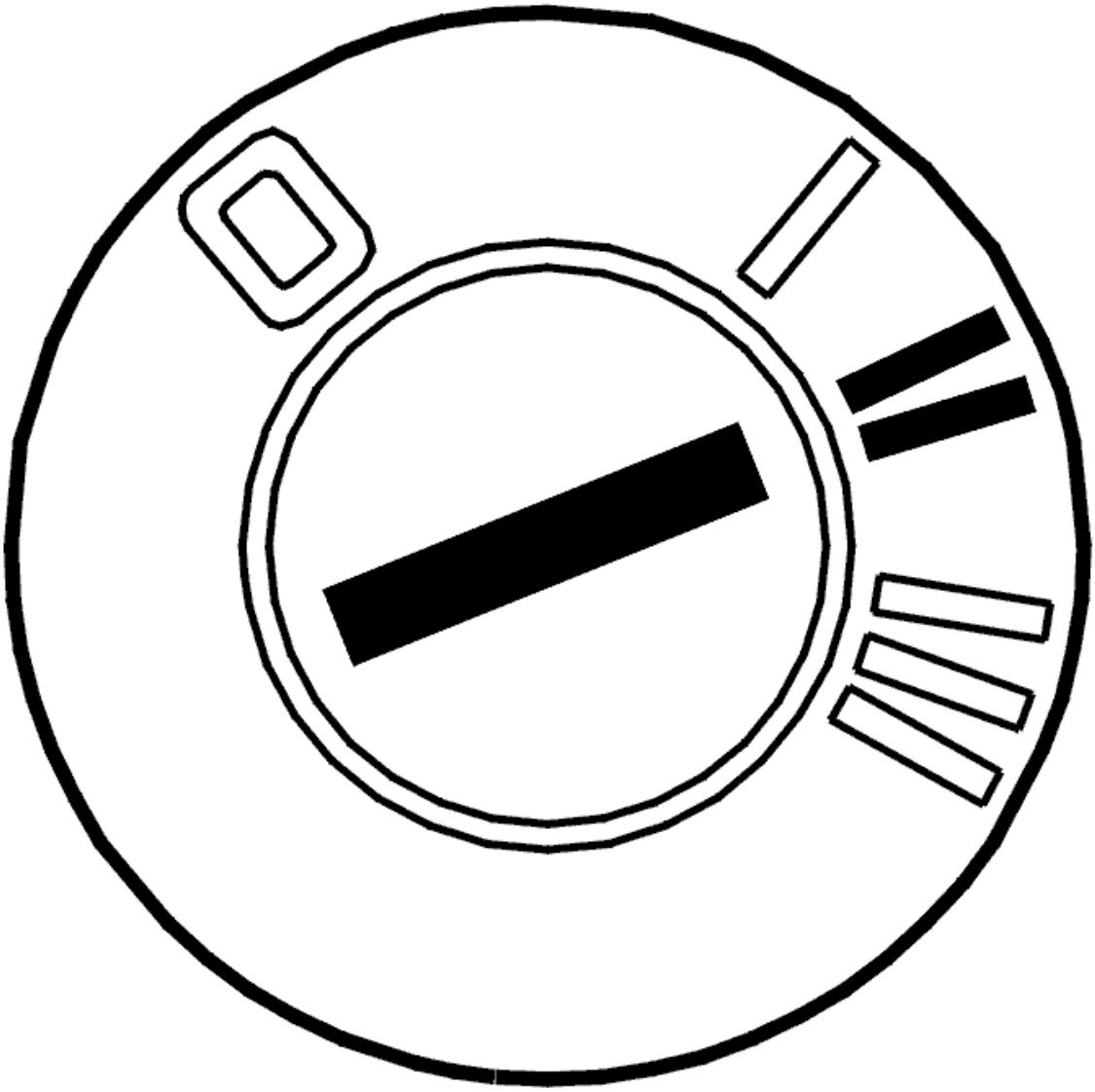

Fig. 146: Identifying Ignition ON
Courtesy of VOLVO CARS CORPORATION

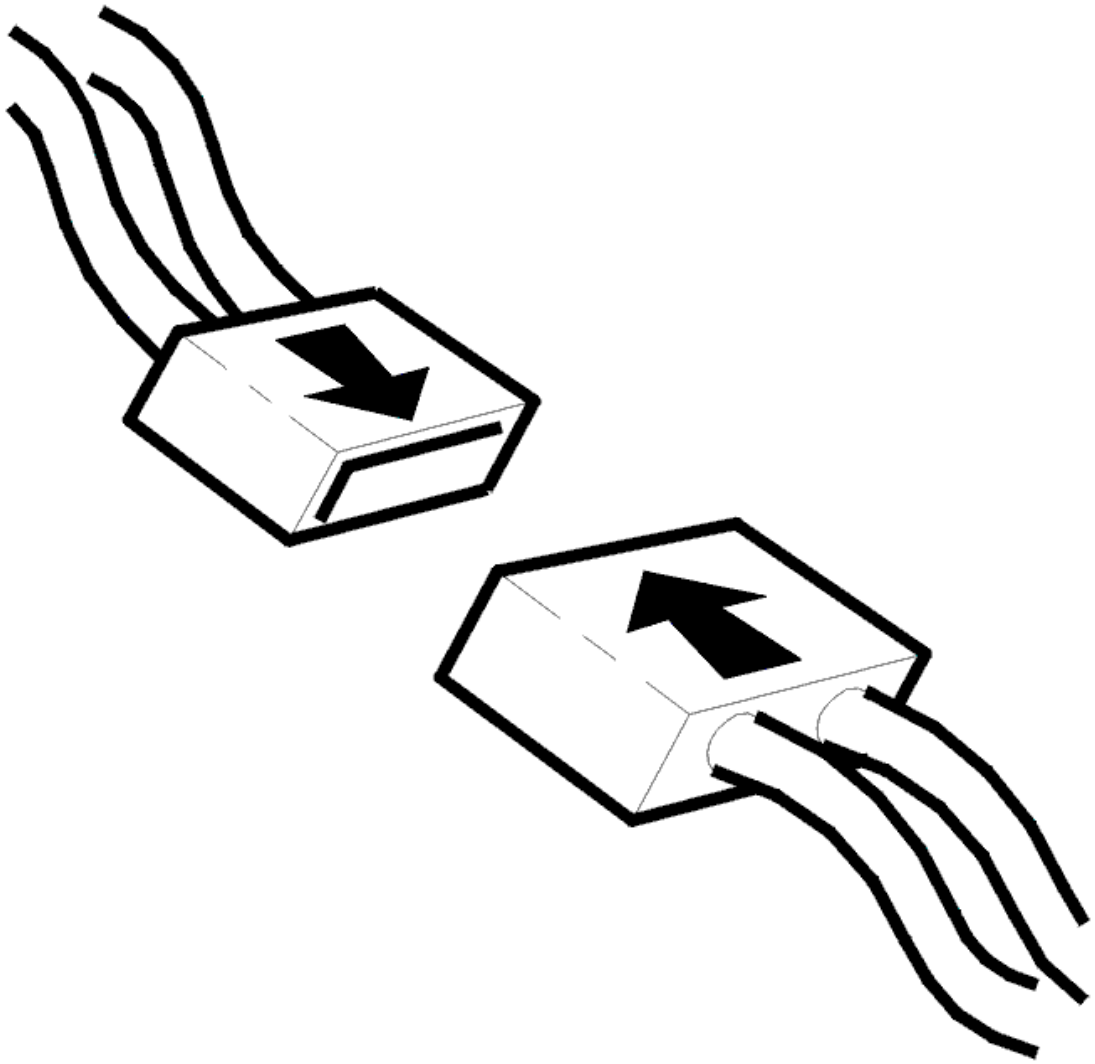

Fig. 147: Connecting Connector
Courtesy of VOLVO CARS CORPORATION

- Ignition off
- Reinstall the connectors, components etc.
- Ignition on
- Read the status of the control switch for the child lock from both rear doors.

  Activate and deactivate the power child locks.

  The status of both doors should change at the same time as the function is engaged / disengaged.

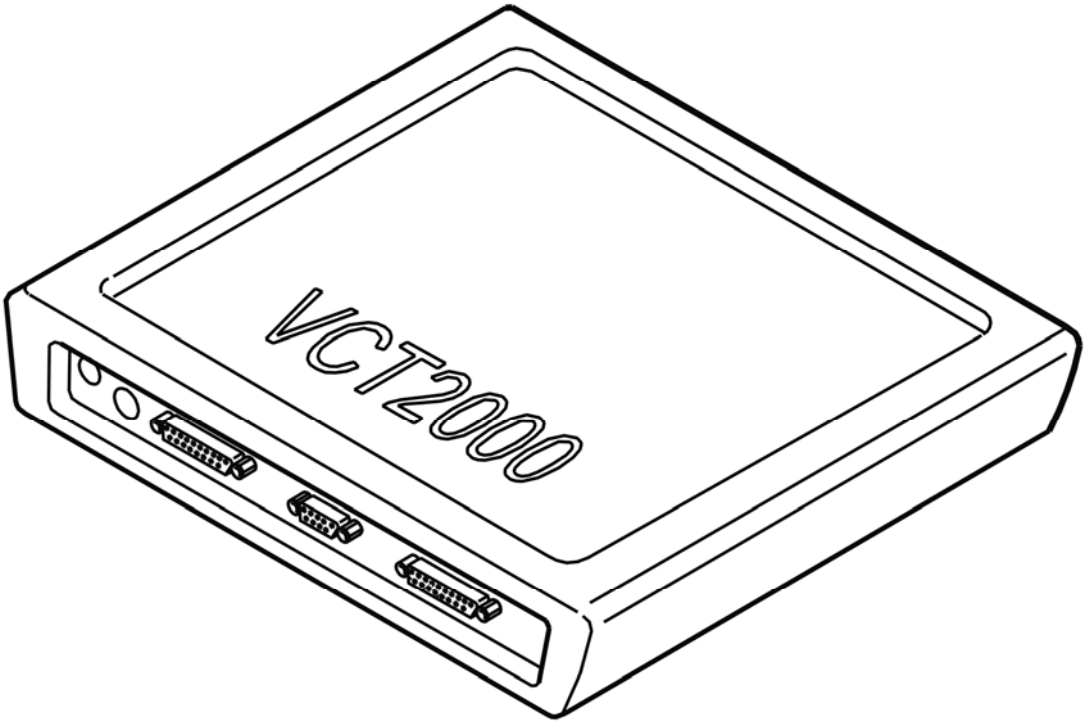

Fig. 148: Identifying VCT2000 Diagnostic Tool Symbol In VIDA
Courtesy of VOLVO CARS CORPORATION

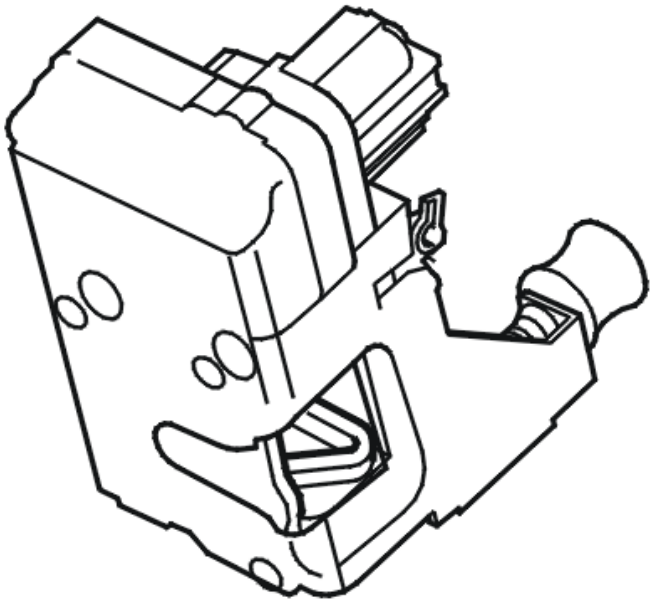

Fig. 149: Identifying Central Locking Motor
Courtesy of VOLVO CARS CORPORATION

Is the status OK?

- **YES**

  VERIFIED: Troubleshooting has been completed.

- **NO**

  Refer to **INFORMATION**

INFORMATION

FAULT-TRACING INFORMATION

The fault should have been detected and remedied. As this is not the case fault-tracing has failed.

Exit fault-tracing for this diagnostic trouble code (DTC) or make another attempt.

REM-6A07: POWER CHILD LOCK MOTOR SWITCH. FAULTY SIGNAL (2006-2012)

DIAGNOSTIC TROUBLE CODE (DTC) INFORMATION REM-6A07

Condition

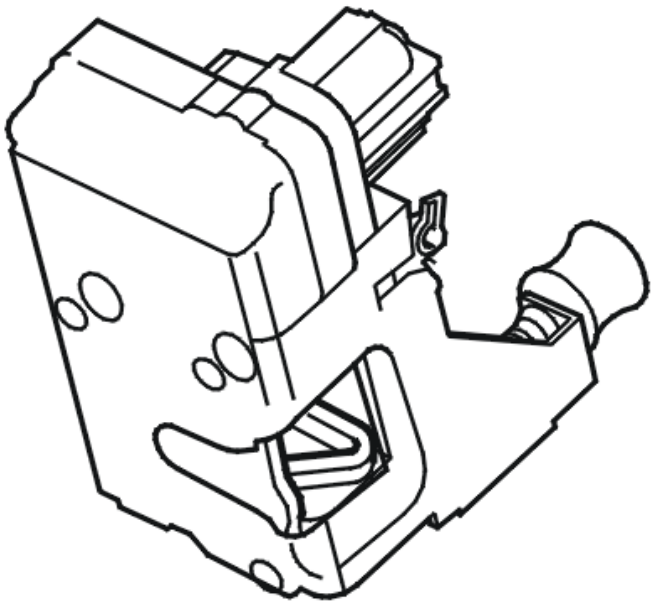

Fig. 150: Identifying Central Locking Motor
Courtesy of VOLVO CARS CORPORATION

The rear electronic module (REM) uses a number of relays to control the lock units in the rear doors for locking and unlocking.

The rear electronic module (REM) also activates the child-proof lock. A switch in the lock unit indicates that the child-proof lock is activated. The switch provides a ground when the lock motor is in the locked position.

The diagnostic trouble code (DTC) is stored if the rear electronic module (REM) detects that the child-proof lock in one of the rear doors indicates that the child-proof lock is unlocked when it should be locked.

The diagnostic trouble code (DTC) can be diagnosed when the child-proof lock is activated.

Substitute Value

- None.

Possible Source

- Contact resistance and oxidation in the terminals
- The lock motor in one of the rear doors is stuck in one position
- Short-circuit to ground in the switch for indication of the lock motor position in one of the rear doors
- Short-circuit to ground in the cable from the switch for indication of the lock motor position in one of the rear doors
- Open-circuit, short-circuit to ground or supply voltage in the wiring to the relay for the child-proof lock from the power window switch
- Damaged relay for the child-proof lock.

Fault symptom[s]

- The child-proof lock does not function.

FAULTY SIGNAL

see **FAULTY SIGNAL**

REM-6A08: POWER CHILD LOCK MOTOR SWITCH. FAULTY SIGNAL (2007-2012)

DIAGNOSTIC TROUBLE CODE (DTC) INFORMATION REM-6A08

Condition

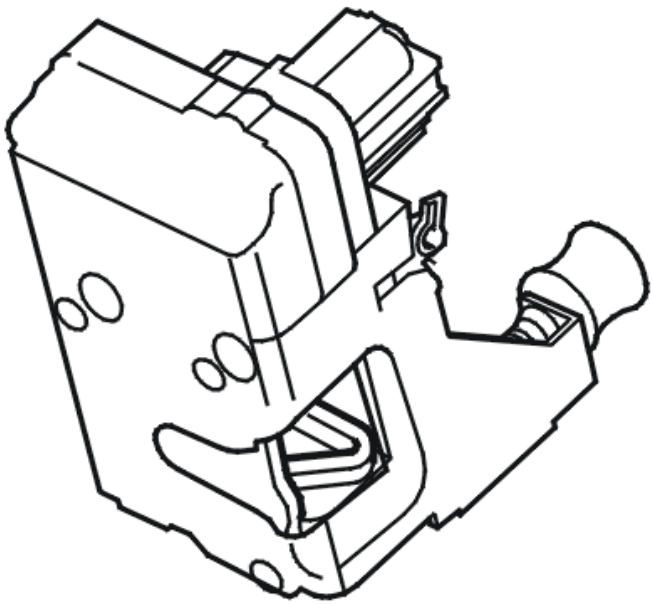

Fig. 151: Identifying Central Locking Motor
Courtesy of VOLVO CARS CORPORATION

The rear electronic module (REM) uses a number of relays to control the lock units in the rear doors for locking and unlocking.

The rear electronic module (REM) also activates the child-proof lock. A switch in the lock unit indicates that the child-proof lock is activated. The switch provides a ground when the lock motor is in the locked position.

The diagnostic trouble code (DTC) is stored if the rear electronic module (REM) detects that the child-proof lock in one of the rear doors indicates that the child-proof lock is locked when it should be unlocked.

The diagnostic trouble code (DTC) can be diagnosed when the child-proof lock is activated.

Substitute Value

- None.

Possible Source

- Contact resistance and oxidation in the terminals
- The lock motor in one of the rear doors is stuck in one position
- Short-circuit to ground in the switch for indication of the lock motor position in one of the rear doors

- Short-circuit to ground in the cable from the switch for indication of the lock motor position in one of the rear doors
- Open-circuit, short-circuit to ground or supply voltage in the wiring to the relay for the child-proof lock from the power window switch
- Damaged relay for the child-proof lock.

Fault symptom[s]

- The child-proof lock does not function.

FAULTY SIGNAL

see **FAULTY SIGNAL**

REM-6A08: RELAY, DEADLOCK. SIGNAL MISSING (2003-2004)

DIAGNOSTIC TROUBLE CODE INFORMATION

Condition

If the rear electronic module registers no signal/signal too low on relay coil ground circuit diagnostic trouble code is displayed.

Substitute Value

Nothing.

Possible Source

- Oxidation of relay socket contacts.
- Relay is loose or missing.
- Faulty relay (open circuit/short circuit to ground in relay coil).
- Defective control unit.

Fault symptom[s]

- Does not lock to the deadlock position BLL.
- Does not open from the deadlock position BLL.

SIGNAL MISSING

CHECKING AND REPLACING THE COMPONENT

Remove relay RMI 3 (2/115). Check the relay base switches. Check for contact resistance and oxidation.

Install the relay.

Activate the relay.

If the function is now OK the fault was caused by a contact fault in the relay base.

Other information:

- For -2004, see: **RELAY/FUSE BOX CARGO COMPARTMENT/REAR ELECTRONIC MODULE (REM), REPLACING**
- For 2005-, see: **REAR ELECTRONIC MODULE (REM), REPLACING** .
- see **CHECKING WIRING AND TERMINALS** .

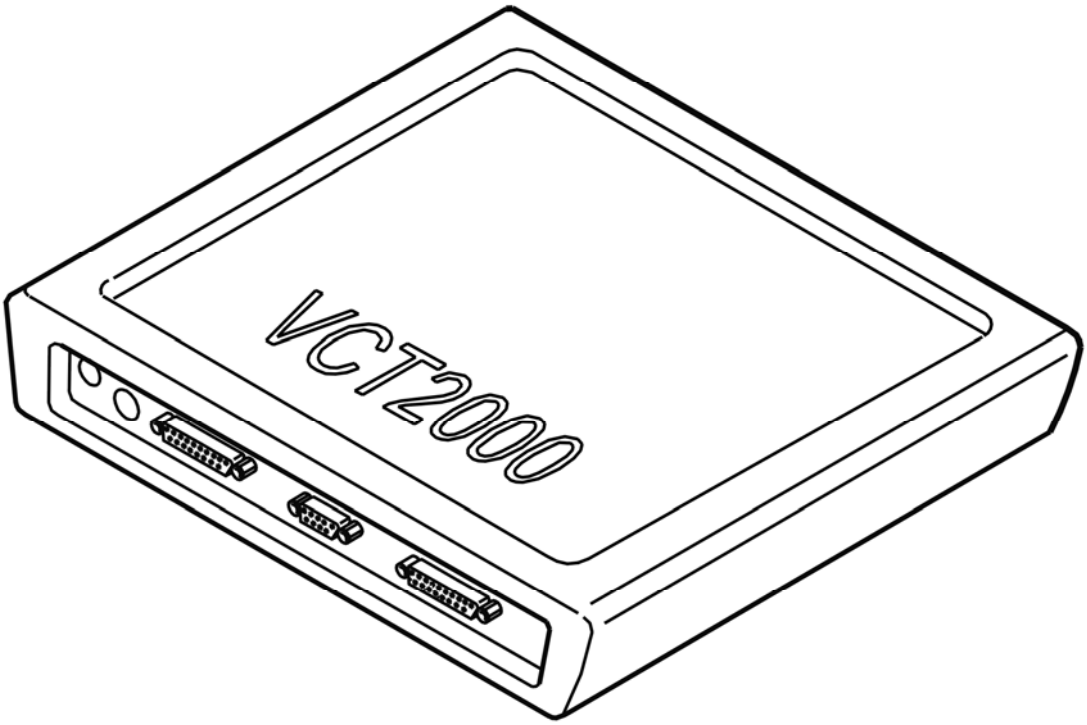

Fig. 152: Identifying VCT2000 Diagnostic Tool Symbol In VIDA
Courtesy of VOLVO CARS CORPORATION

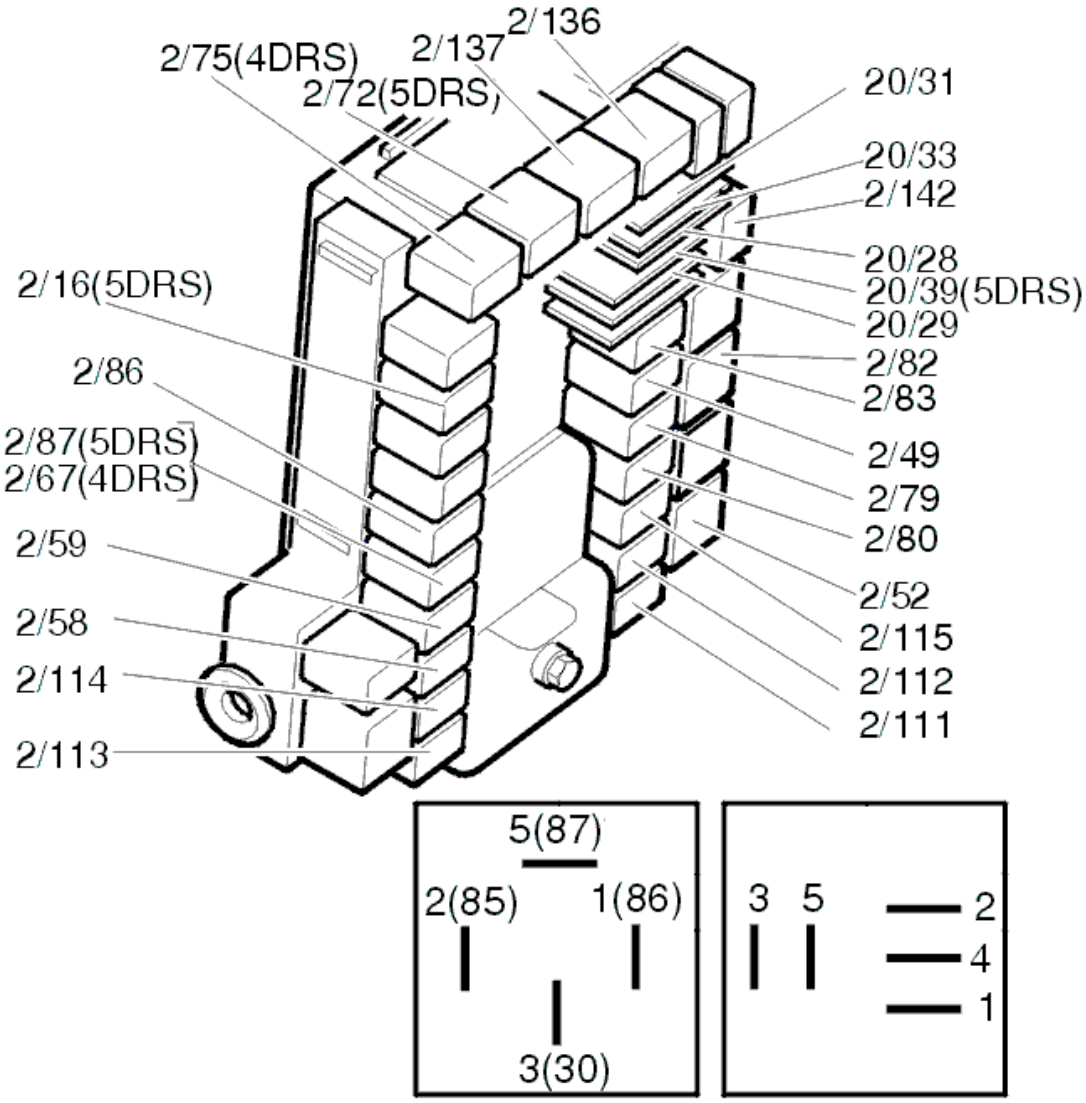

Fig. 153: Identifying Relays
Courtesy of VOLVO CARS CORPORATION

Was the function OK?

- **YES**

  Refer to **VERIFICATION**

- **NO**

  Refer to **REPLACING THE COMPONENT**

REPLACING THE COMPONENT

Replace the relay, 2/115.

Activate the relay.

If the function is now OK, the cause of the fault was a defective relay (short-circuit to ground or an open-circuit in the relay coil).

Other information:

- For -2004, see: **RELAY/FUSE BOX CARGO COMPARTMENT/REAR ELECTRONIC MODULE (REM), REPLACING**
- For 2005-, see: **REAR ELECTRONIC MODULE (REM), REPLACING** .

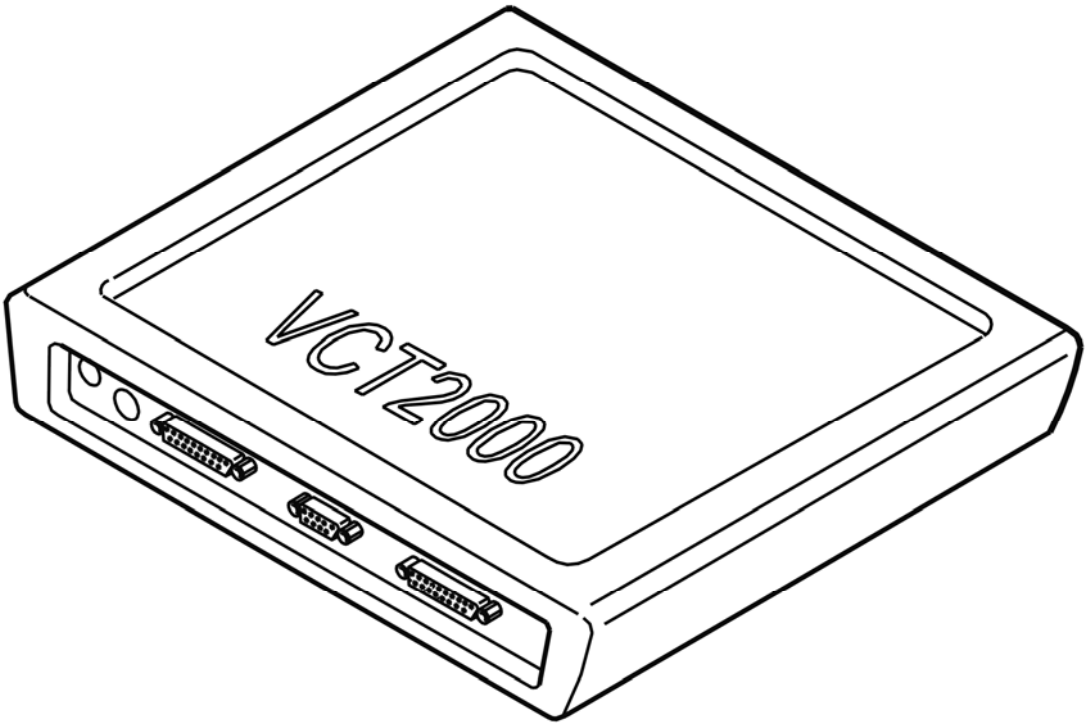

Fig. 154: Identifying VCT2000 Diagnostic Tool Symbol In VIDA
Courtesy of VOLVO CARS CORPORATION

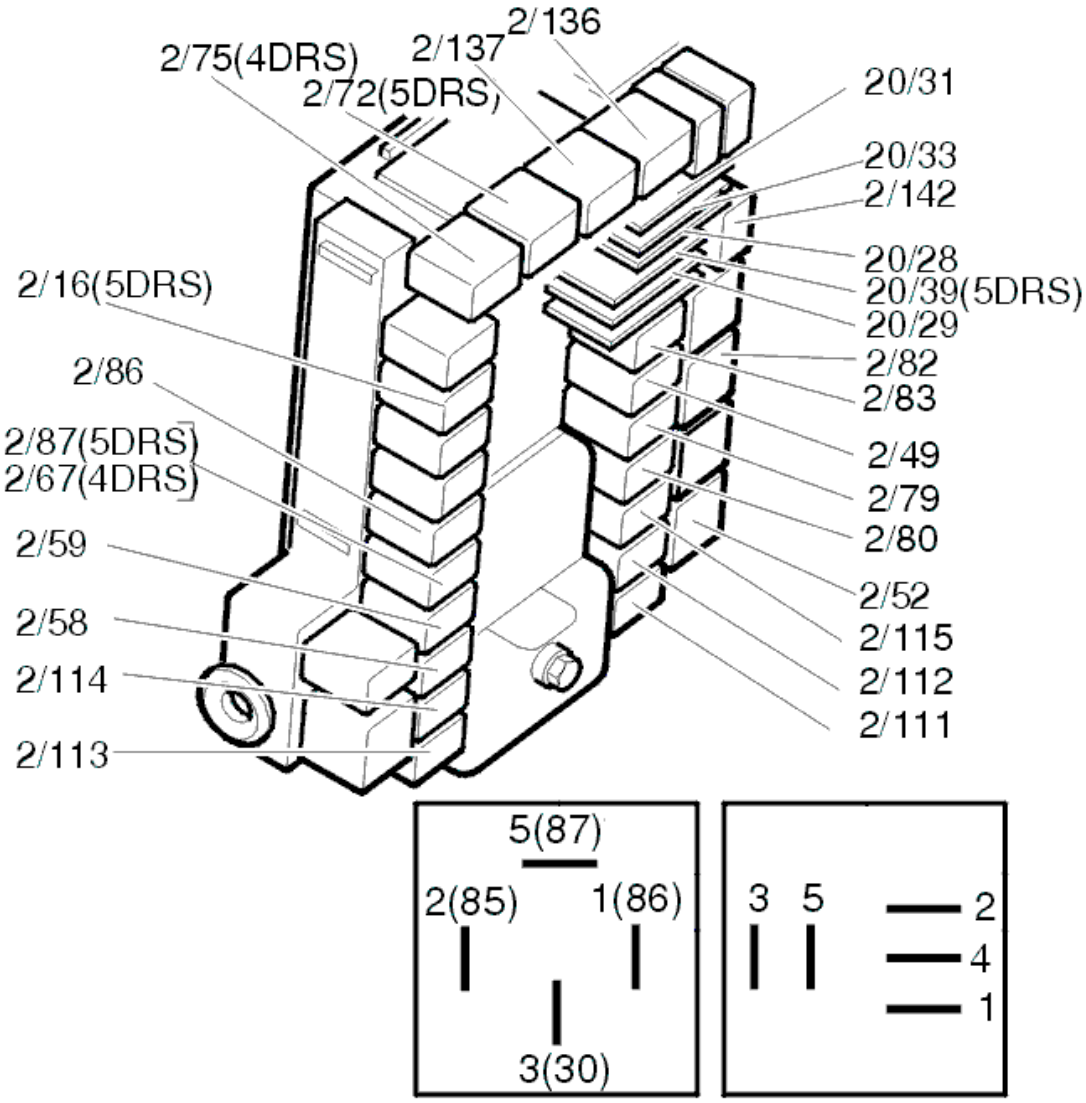

Fig. 155: Identifying Relays
Courtesy of VOLVO CARS CORPORATION

Was the function OK?

- **YES**

  OKAY: Troubleshooting has been completed.

- **NO**

  Refer to **CHECKING THE CONTROL MODULE FOR OPEN-CIRCUITS**

CHECKING THE CONTROL MODULE FOR OPEN-CIRCUITS

- Remove relay 2/115.

Check the driver circuit for the relay coil for an open-circuit as follows: activate the relay driver. Measure the voltage between terminals #1 and #2 on the relay base.

HINT: The voltage between terminals #1 and #2 should be battery voltage.

HINT: If the value deviates excessively, check the voltage between terminal #2 and the battery voltage and between terminal #1 and ground. Both should equal battery voltage.

HINT: Check for an open-circuit.

HINT: Do not forget to check that the power supply to the control module is OK.

Other information:

- For -2004, see: **RELAY/FUSE BOX CARGO COMPARTMENT/REAR ELECTRONIC MODULE (REM), REPLACING**
- For 2005-, see: **REAR ELECTRONIC MODULE (REM), REPLACING** .
- see **CHECKING WIRING AND TERMINALS** .

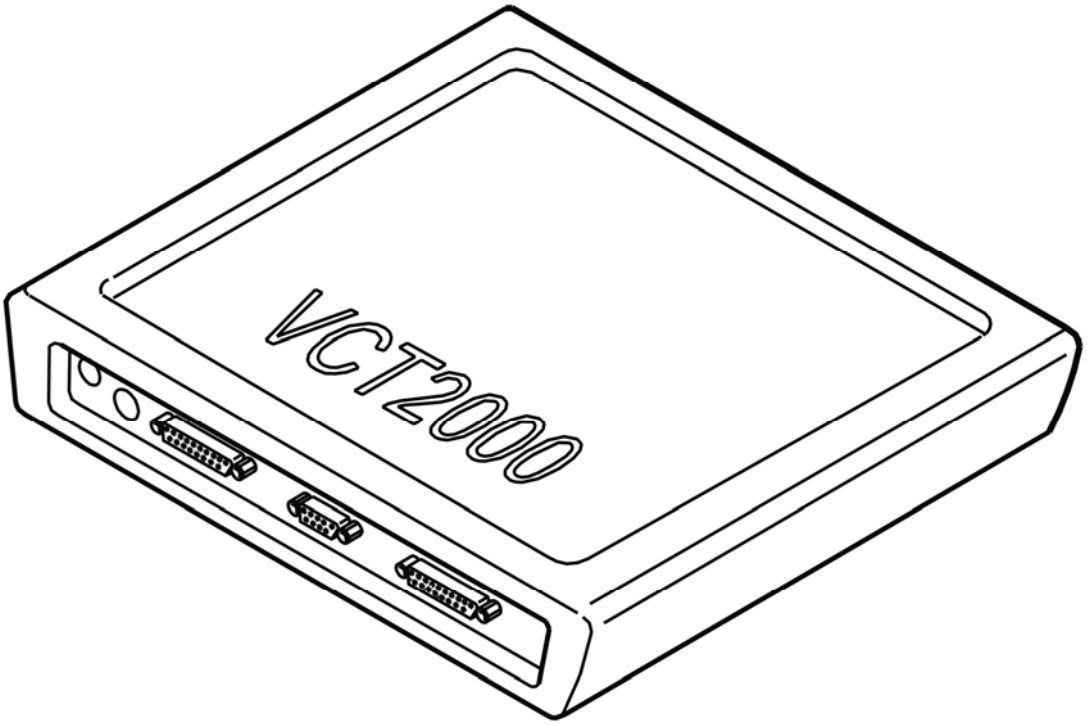

Fig. 156: Identifying VCT2000 Diagnostic Tool Symbol In VIDA
Courtesy of VOLVO CARS CORPORATION

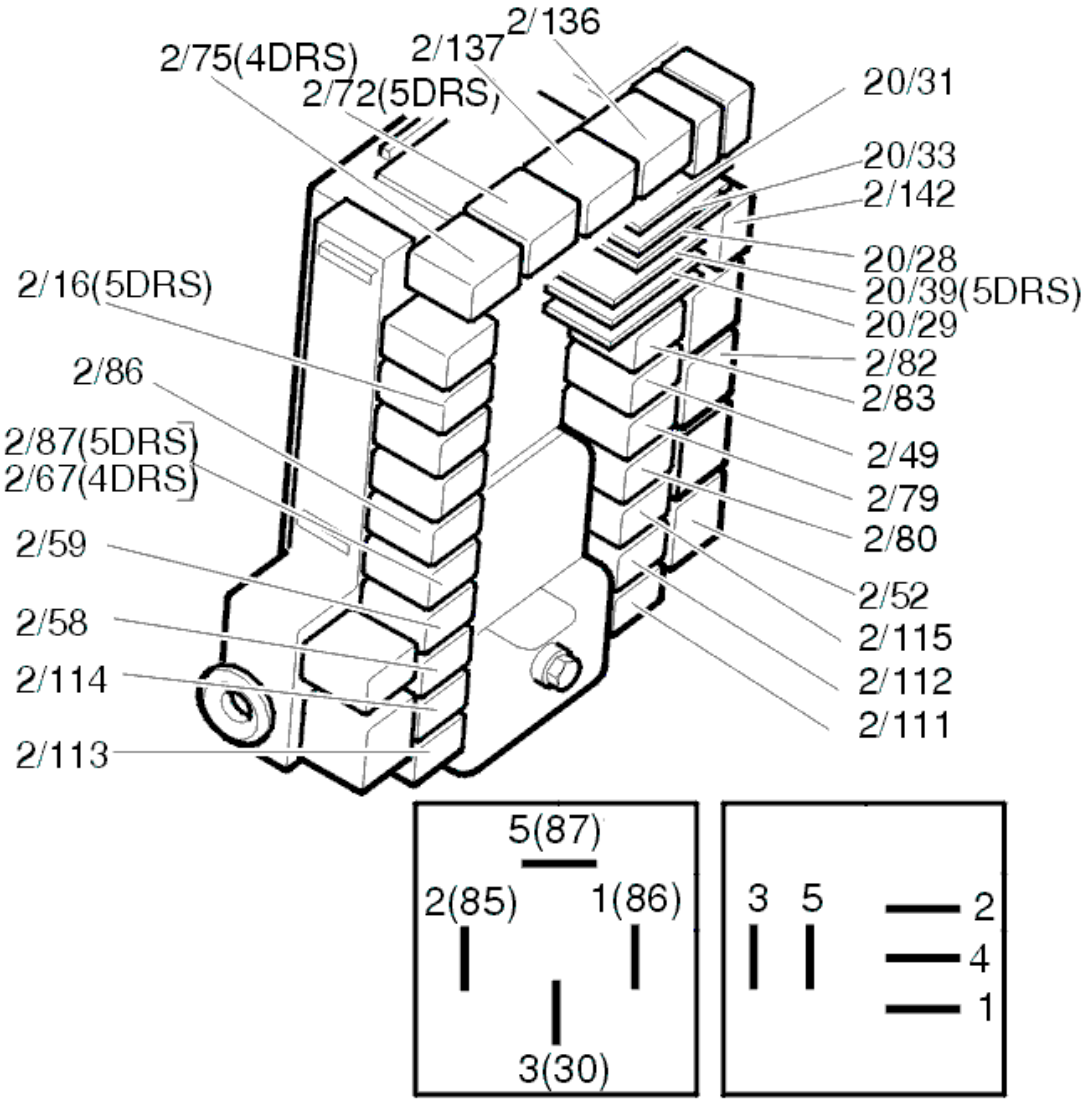

Fig. 157: Identifying Relays
Courtesy of VOLVO CARS CORPORATION

Was a fault detected?

- **YES**

  Refer to **VERIFICATION**

- **NO**

  Refer to **CHECKING THE CONTROL MODULE FOR SHORT-CIRCUITS**

CHECKING THE CONTROL MODULE FOR SHORT-CIRCUITS

Measure the resistance between terminal #2 and ground when the relay driver is active.

The resistance should be high when the relay driver is active.

Replace the control module if the resistance is low.

Other information:

- For -2004, see: **RELAY/FUSE BOX CARGO COMPARTMENT/REAR ELECTRONIC MODULE (REM), REPLACING**
- For 2005-, see: **REAR ELECTRONIC MODULE (REM), REPLACING** .

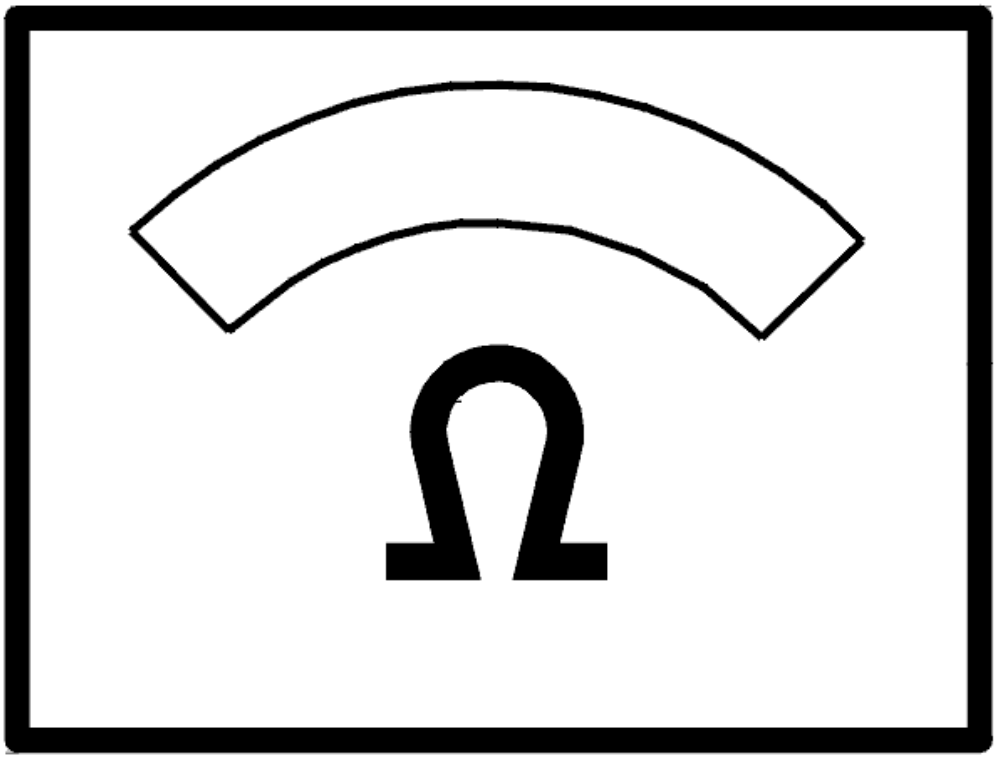

Fig. 158: Identifying Ohm Meter
Courtesy of VOLVO CARS CORPORATION

- **Continue**

  Refer to **VERIFICATION**

VERIFICATION

VERIFICATION

HINT: After carrying out the repair, check that the fault has been remedied.

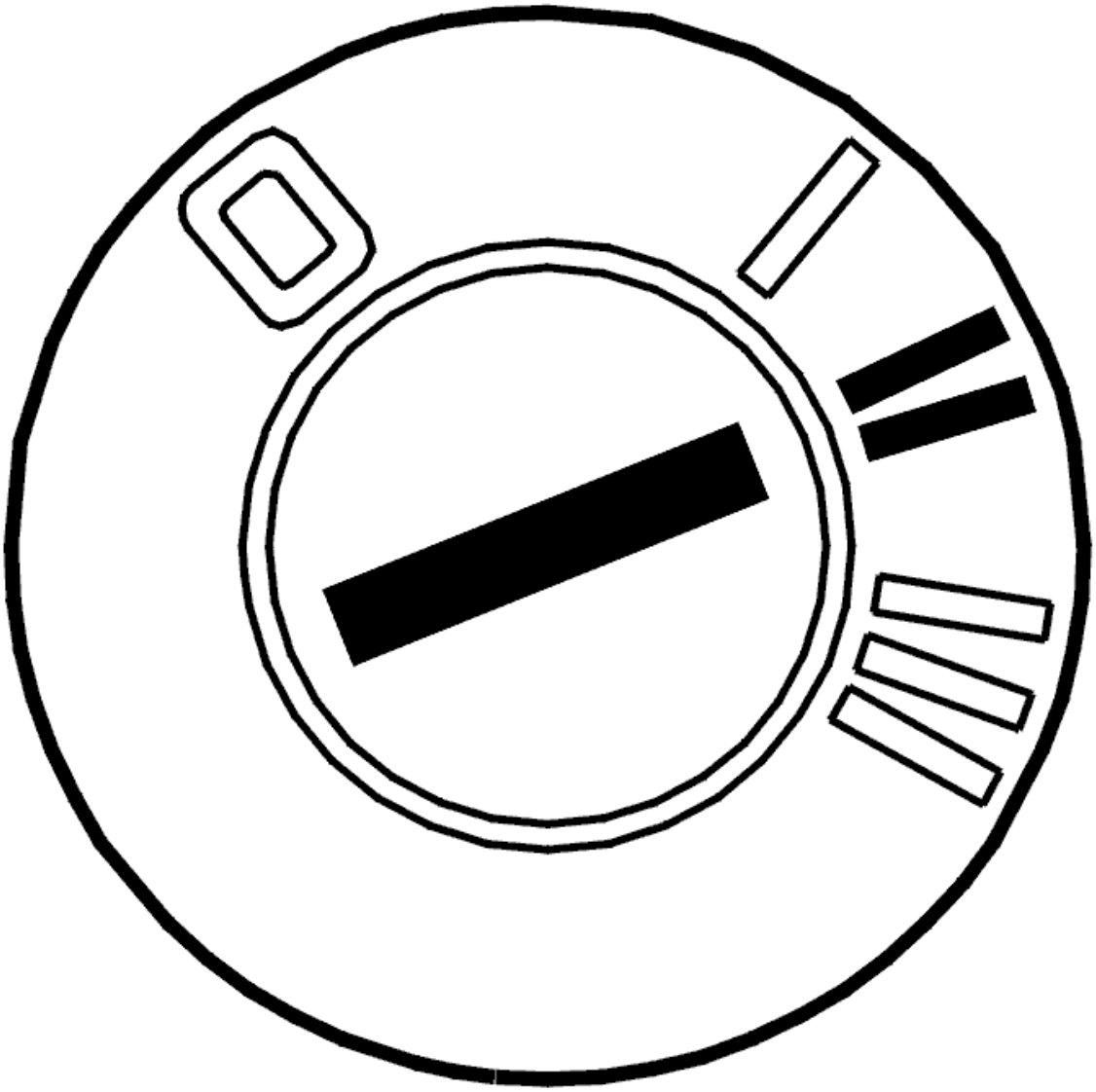

Fig. 159: Identifying Ignition ON
Courtesy of VOLVO CARS CORPORATION

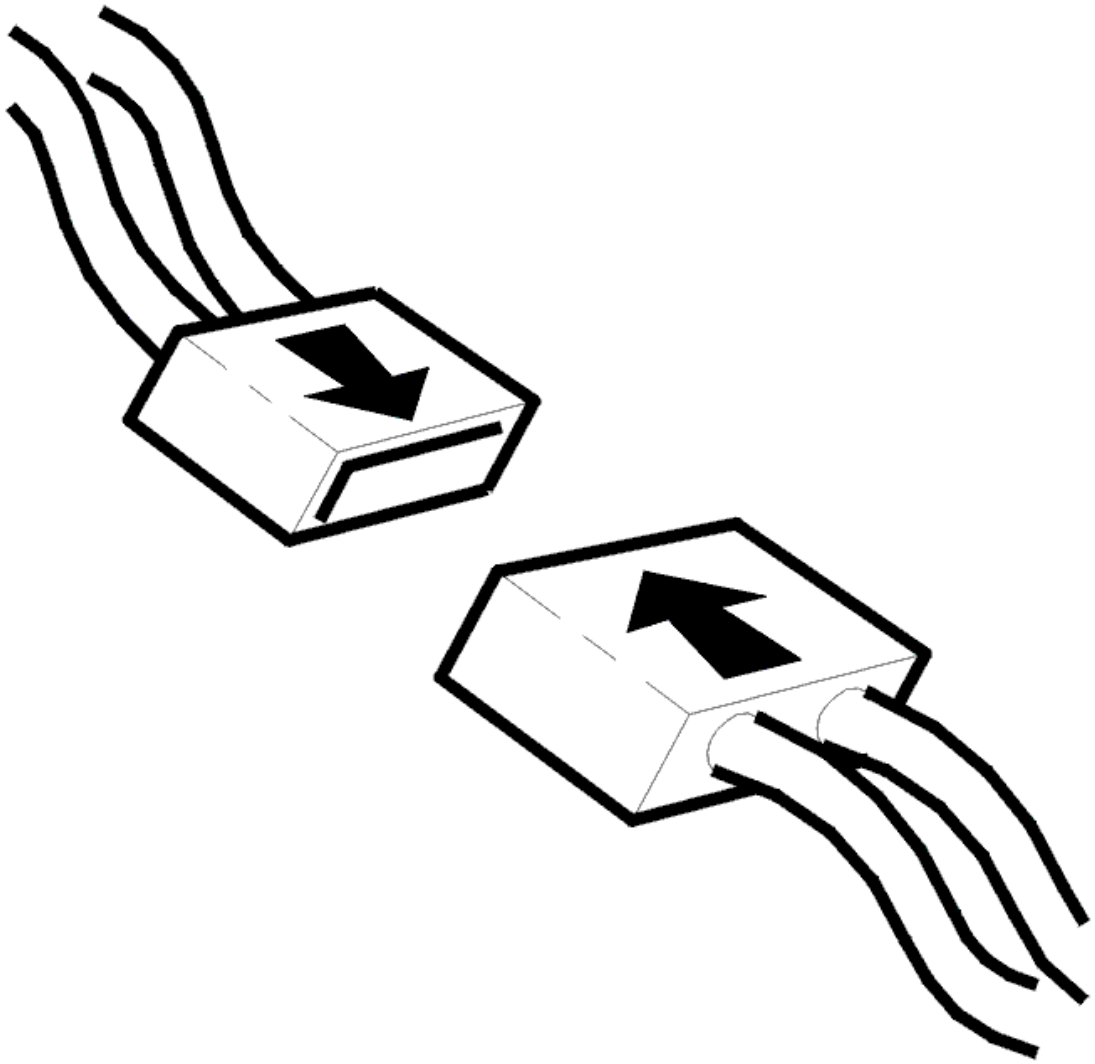

Fig. 160: Connecting Connector
Courtesy of VOLVO CARS CORPORATION

- Ignition off
- Reinstall the connectors, components etc.
- Ignition on.

Activate the relay.

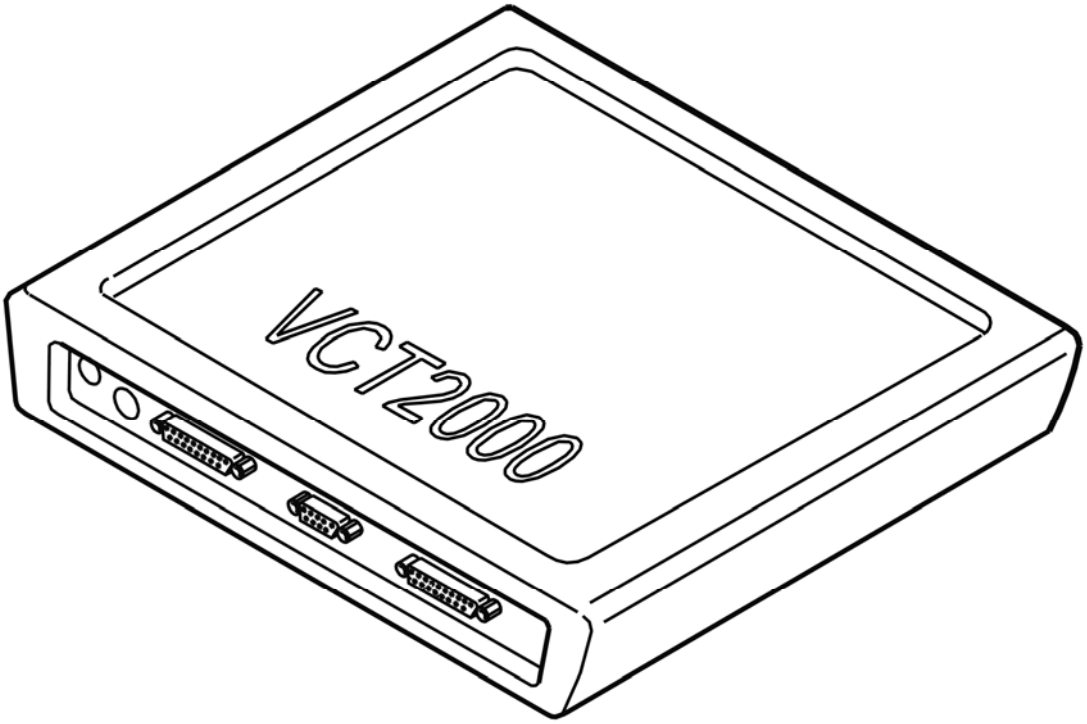

Fig. 161: Identifying VCT2000 Diagnostic Tool Symbol In VIDA
Courtesy of VOLVO CARS CORPORATION

Was the function OK?

- **YES**

  VERIFIED: Troubleshooting has been completed.

- **NO**

  Refer to **INFORMATION**

INFORMATION

FAULT-TRACING INFORMATION

The fault should have been detected and remedied. As this is not the case fault-tracing has failed.

Exit fault-tracing for this diagnostic trouble code (DTC) or make another attempt.

REM-6A09: POWER CHILD LOCK MOTOR SWITCH. FAULTY SIGNAL (2007-2012)

DIAGNOSTIC TROUBLE CODE (DTC) INFORMATION REM-6A09

Condition

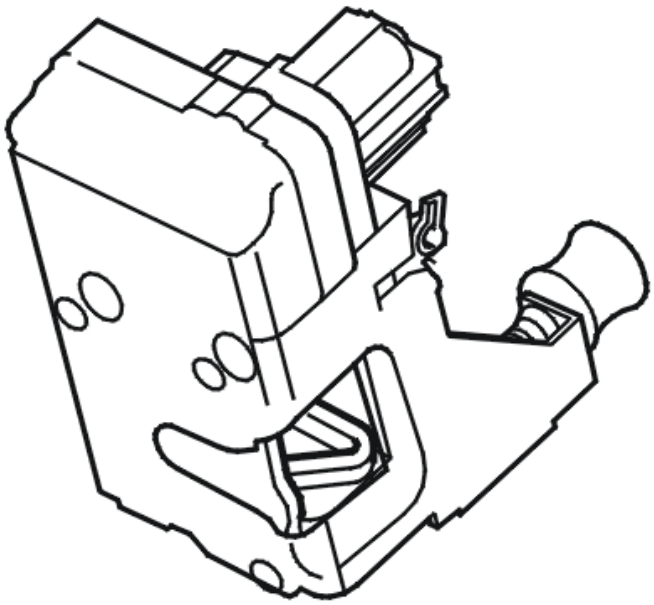

Fig. 162: Identifying Central Locking Motor
Courtesy of VOLVO CARS CORPORATION

The rear electronic module (REM) uses a number of relays to control the lock units in the rear doors for locking and unlocking.

The rear electronic module (REM) also activates the child-proof lock. A switch in the lock unit indicates that the child-proof lock is activated. The switch provides a ground when the lock motor is in the locked position.

A diagnostic trouble code (DTC) is stored if the Rear electronic module (REM) detects that the status of the child-proof lock in any of the rear doors changes from locked to unlocked without the control being activated.

The diagnostic trouble code (DTC) can be diagnosed in ignition position I and II and when the child-proof locks are activated.

Substitute Value

- None.

Possible Source

- Short-circuit to ground in the switch for indication of the lock motor position in one of the rear doors
- Short-circuit to ground in the cable from the switch for indication of the lock motor position in one of the rear doors
- Open-circuit, short-circuit to ground or supply voltage in the wiring to the relay for the child-proof lock from the power window switch
- Damaged relay for the child-proof lock.

Fault symptom[s]

- The child-proof lock does not function.

FAULTY SIGNAL

see **FAULTY SIGNAL**

REM-6A0A: POWER CHILD LOCK MOTOR SWITCH. FAULTY SIGNAL (2006-2012)

DIAGNOSTIC TROUBLE CODE (DTC) INFORMATION REM-6A0A

Condition

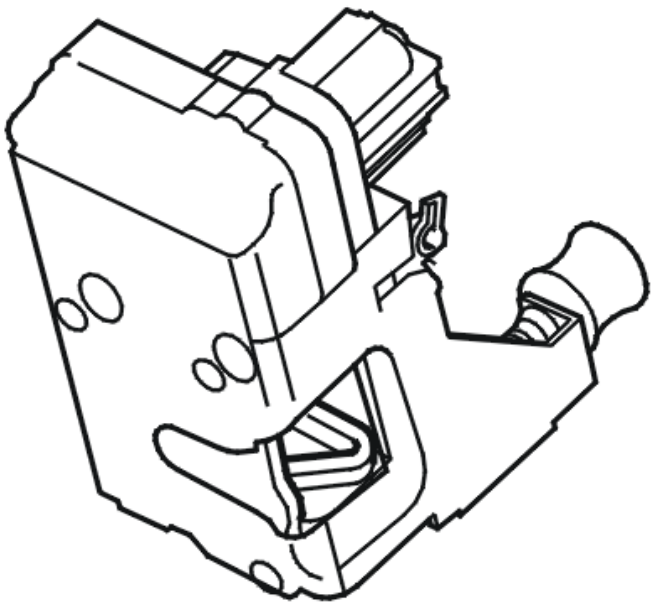

Fig. 163: Identifying Central Locking Motor
Courtesy of VOLVO CARS CORPORATION

The rear electronic module (REM) uses a number of relays to control the lock units in the rear doors for locking and unlocking.

The rear electronic module (REM) also activates the child-proof lock. A switch in the lock unit indicates that the child-proof lock is activated. The switch provides a ground when the lock motor is in the locked position.

A diagnostic trouble code (DTC) is stored if the Rear electronic module (REM) detects that the status of the child-proof lock in any of the rear doors changes from unlocked to locked without the control being activated.

The diagnostic trouble code (DTC) can be diagnosed in ignition position I and II and when the child-proof locks are deactivated.

Substitute Value

- None.

Possible Source

- Short-circuit to ground in the switch for indication of the lock motor position in one of the rear doors
- Short-circuit to ground in the cable from the switch for indication of the lock motor position in one of the rear doors
- Open-circuit, short-circuit to ground or supply voltage in the wiring to the relay for the child-proof lock from the power window switch
- Damaged relay for the child-proof lock.

Fault symptom[s]

- The child-proof lock does not function.

FAULTY SIGNAL

see **FAULTY SIGNAL**

REM-6A0C: UNLOCKING RELAY, CENTRAL LOCKING REAR RIGHT DOOR. SIGNAL TOO HIGH (2003-2004)

DIAGNOSTIC TROUBLE CODE INFORMATION

Condition

If rear electronic module (REM) registers signal too high on relay coil ground circuit when unlocking, diagnostic trouble code is displayed.

Substitute Value

Nothing.

Possible Source

- Faulty relay.
- Defective control unit.

Fault symptom[s]

- A door does not lock/open.

SIGNAL TOO HIGH

CHECKING AND REPLACING THE COMPONENT

Replace the relay, 2/114.

Activate the relay.

If the function is OK, the cause of the fault was a defective relay (short-circuit in the relay).

Other information:

- For -2004, see: **RELAY/FUSE BOX CARGO COMPARTMENT/REAR ELECTRONIC MODULE (REM), REPLACING**
- For 2005-, see: **REAR ELECTRONIC MODULE (REM), REPLACING** .

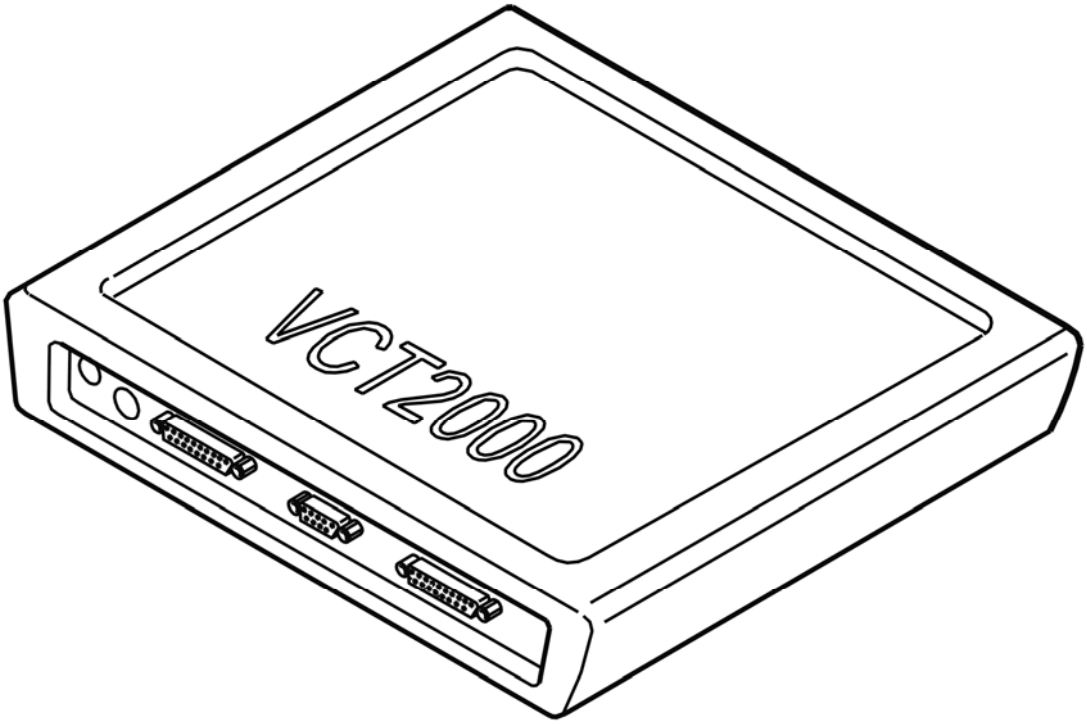

Fig. 164: Identifying VCT2000 Diagnostic Tool Symbol In VIDA
Courtesy of VOLVO CARS CORPORATION

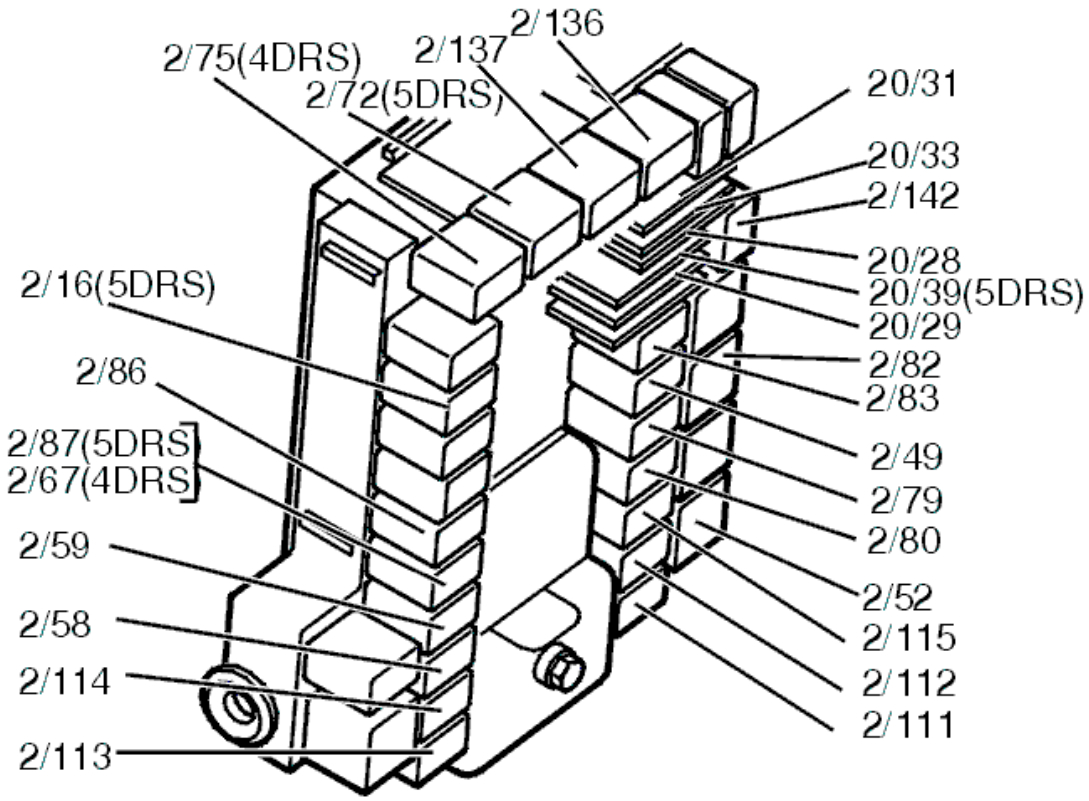

Fig. 165: Identifying Relays
Courtesy of VOLVO CARS CORPORATION

Was the function OK?

- **YES**

  OKAY: Troubleshooting has been completed.

- **NO**

  Refer to **CHECKING THE CONTROL MODULE**

CHECKING THE CONTROL MODULE

- Remove the relay.

  Check the relay coil driver circuit for a short-circuit to supply voltage by measuring the voltage at terminal #2 in the relay base.

  HINT: The voltage between terminal #2 and ground should be approximately 0 V.

  Replace the control module if the voltmeter displays an incorrect value.

Other information:

- For -2004, see: **RELAY/FUSE BOX CARGO COMPARTMENT/REAR ELECTRONIC MODULE (REM), REPLACING**
- For 2005-, see: **REAR ELECTRONIC MODULE (REM), REPLACING** .
- see **CHECKING WIRING AND TERMINALS** .

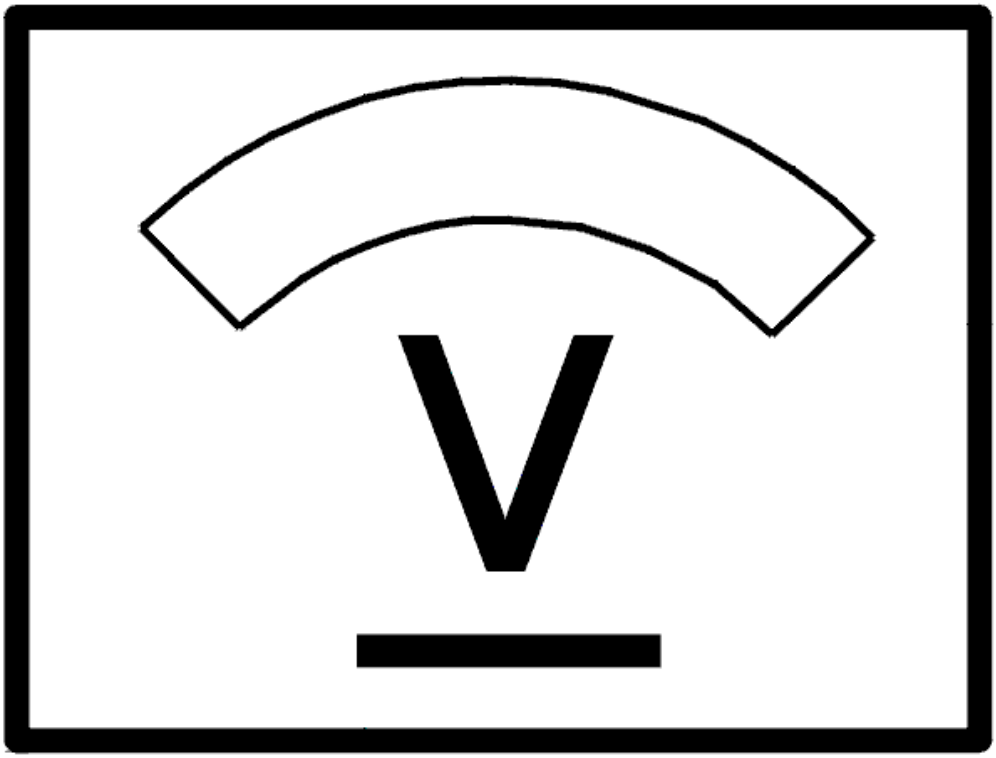

Fig. 166: Identifying Voltage Display
Courtesy of VOLVO CARS CORPORATION

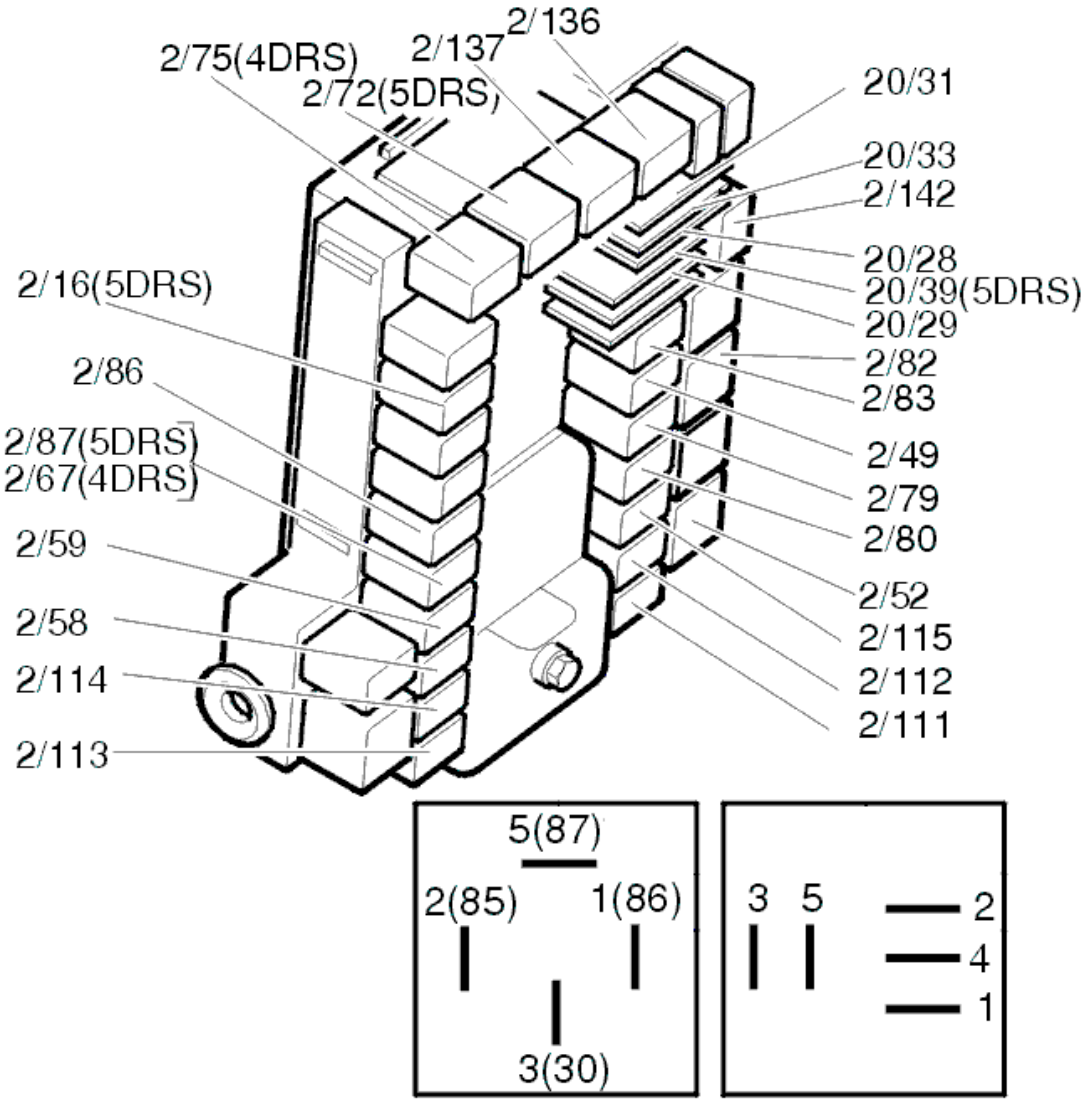

Fig. 167: Identifying Relays
Courtesy of VOLVO CARS CORPORATION

- **Continue**

  Refer to **VERIFICATION**

VERIFICATION

VERIFICATION

HINT: After carrying out the repair, check that the fault has been remedied.

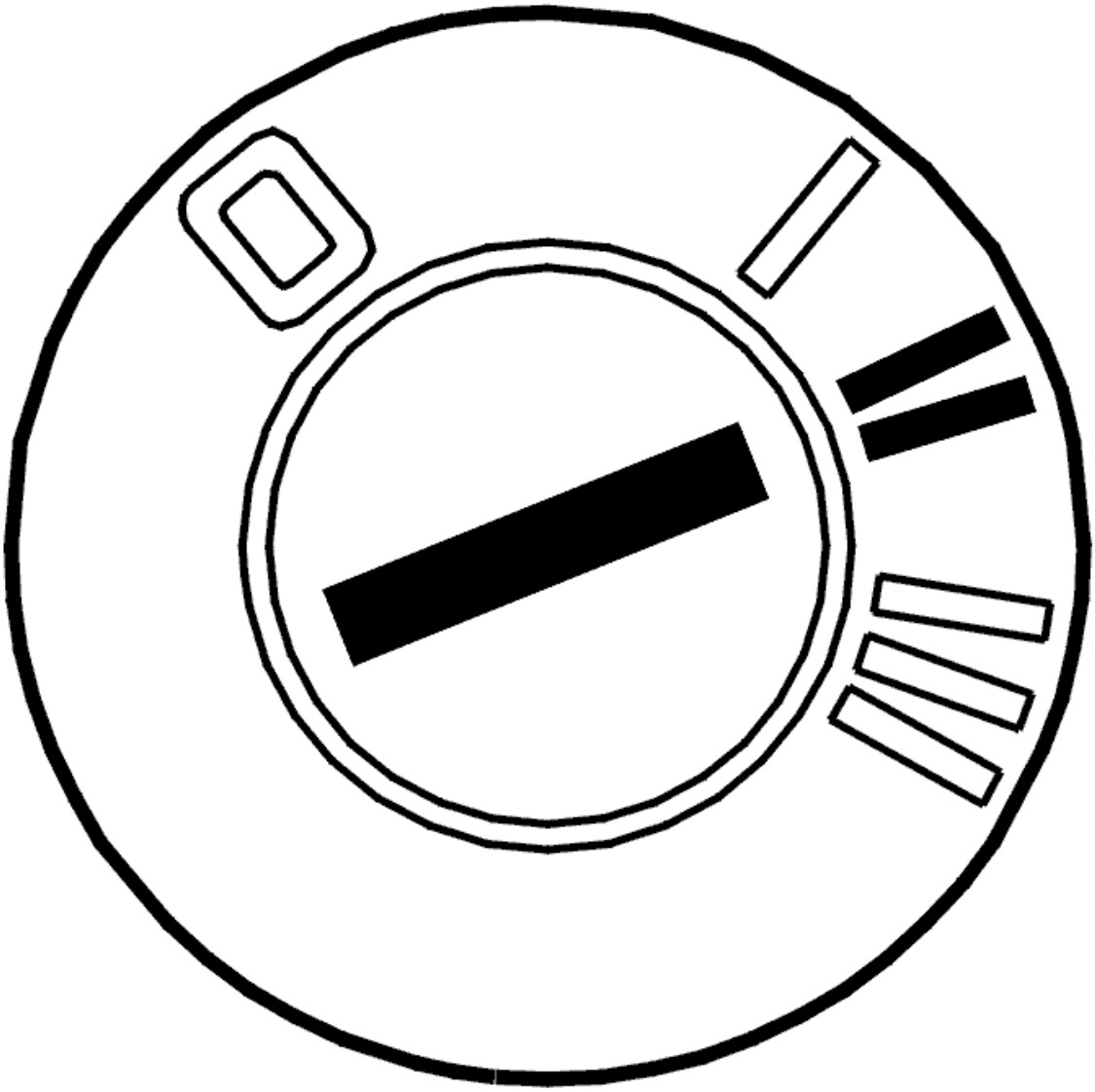

Fig. 168: Identifying Ignition ON
Courtesy of VOLVO CARS CORPORATION

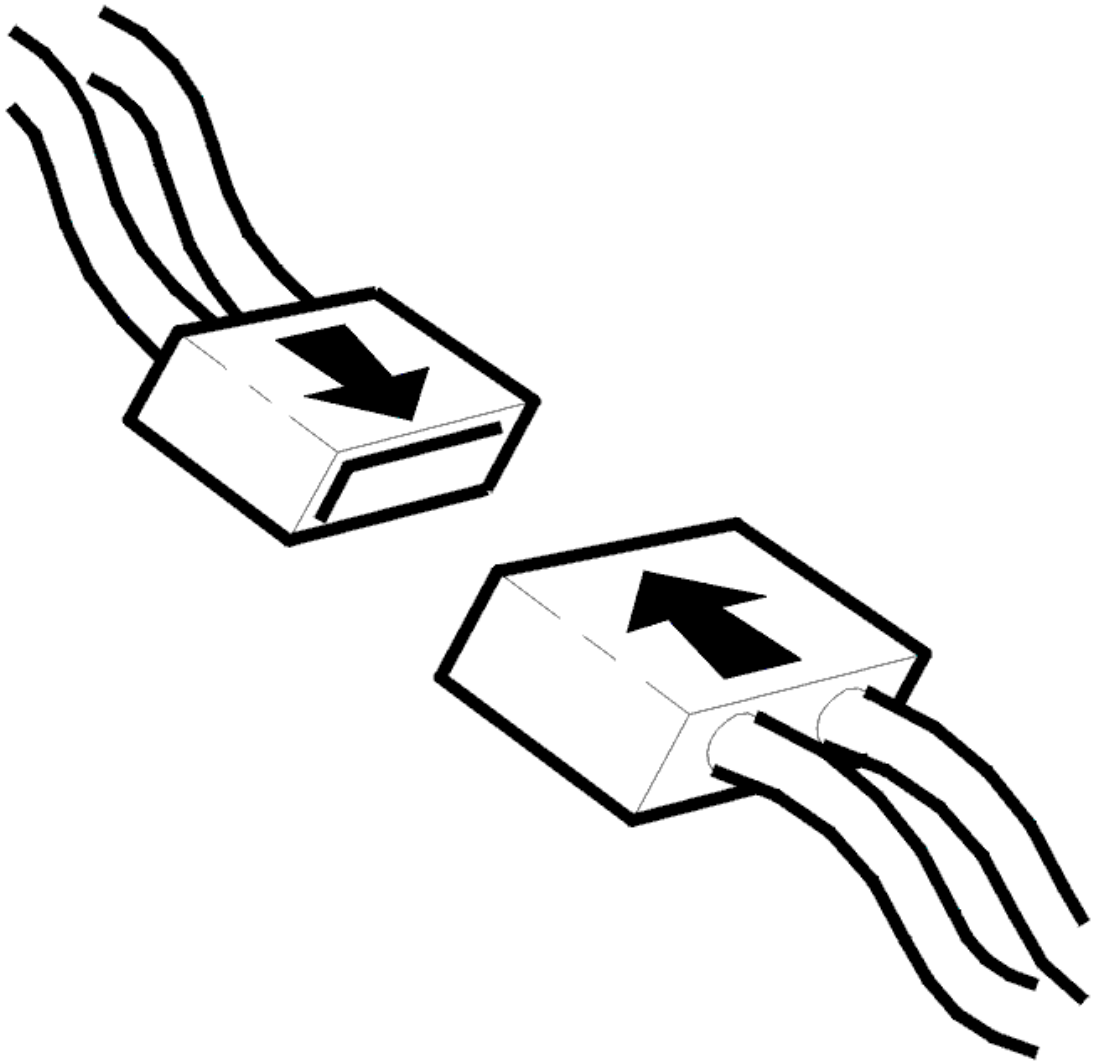

Fig. 169: Connecting Connector
Courtesy of VOLVO CARS CORPORATION

- Ignition off
- Reinstall the connectors, components etc.
- Ignition on.

Activate the relay.

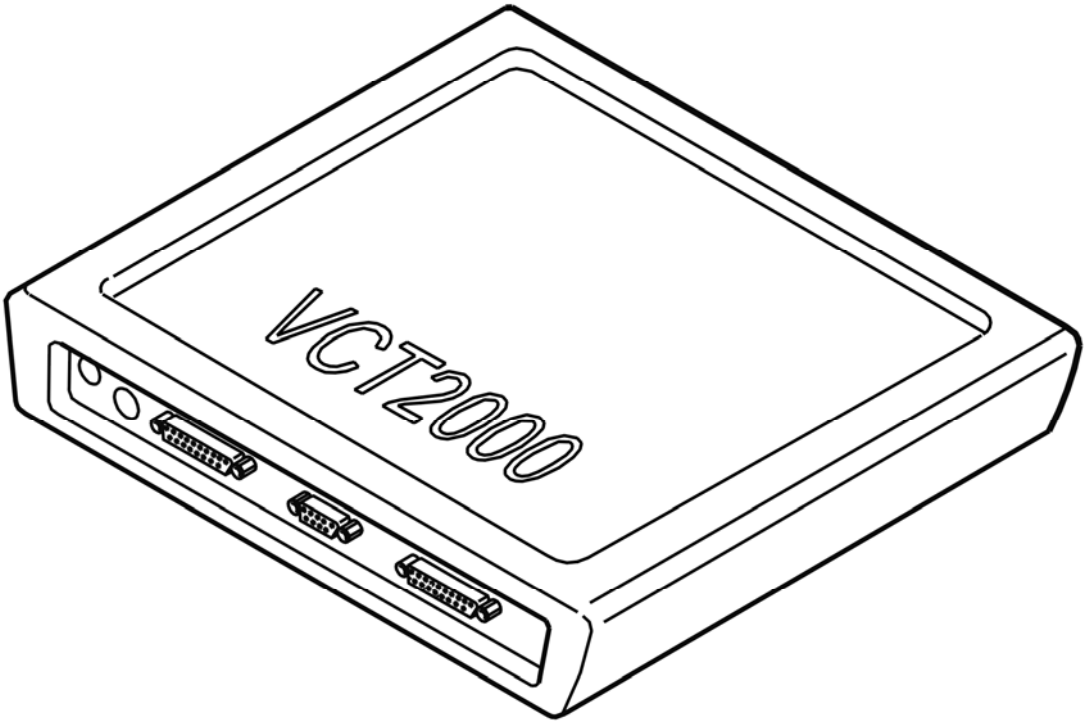

Fig. 170: Identifying VCT2000 Diagnostic Tool Symbol In VIDA
Courtesy of VOLVO CARS CORPORATION

Was the function OK?

- **YES**

  VERIFIED: Troubleshooting has been completed.

- **NO**

  Refer to **INFORMATION**

INFORMATION

FAULT-TRACING INFORMATION

The fault should have been detected and remedied. As this is not the case fault-tracing has failed.

Exit fault-tracing for this diagnostic trouble code (DTC) or make another attempt.

REM-6A0E: UNLOCKING RELAY, CENTRAL LOCKING REAR RIGHT DOOR. SIGNAL MISSING (2003-2004)

DIAGNOSTIC TROUBLE CODE INFORMATION

Condition

If the rear electronic module registers no signal/signal too low on relay coil ground circuit diagnostic trouble code is displayed.

Substitute Value

Nothing.

Possible Source

- Oxidation of relay socket contacts.
- Relay is loose or missing.
- Faulty relay (open circuit/short circuit to ground in relay coil).
- Defective control unit.

Fault symptom[s]

- A door does not lock/open.

SIGNAL MISSING

CHECKING AND REPLACING THE COMPONENT

Remove the relay (2/114). Check the relay base switches. Check for contact resistance and oxidation.

Install the relay.

Activate the relay.

If the function is now OK the fault was caused by a contact fault in the relay base.

Other information:

- For -2004, see: **RELAY/FUSE BOX CARGO COMPARTMENT/REAR ELECTRONIC MODULE (REM), REPLACING**
- For 2005-, see: **REAR ELECTRONIC MODULE (REM), REPLACING** .
- see **CHECKING WIRING AND TERMINALS** .

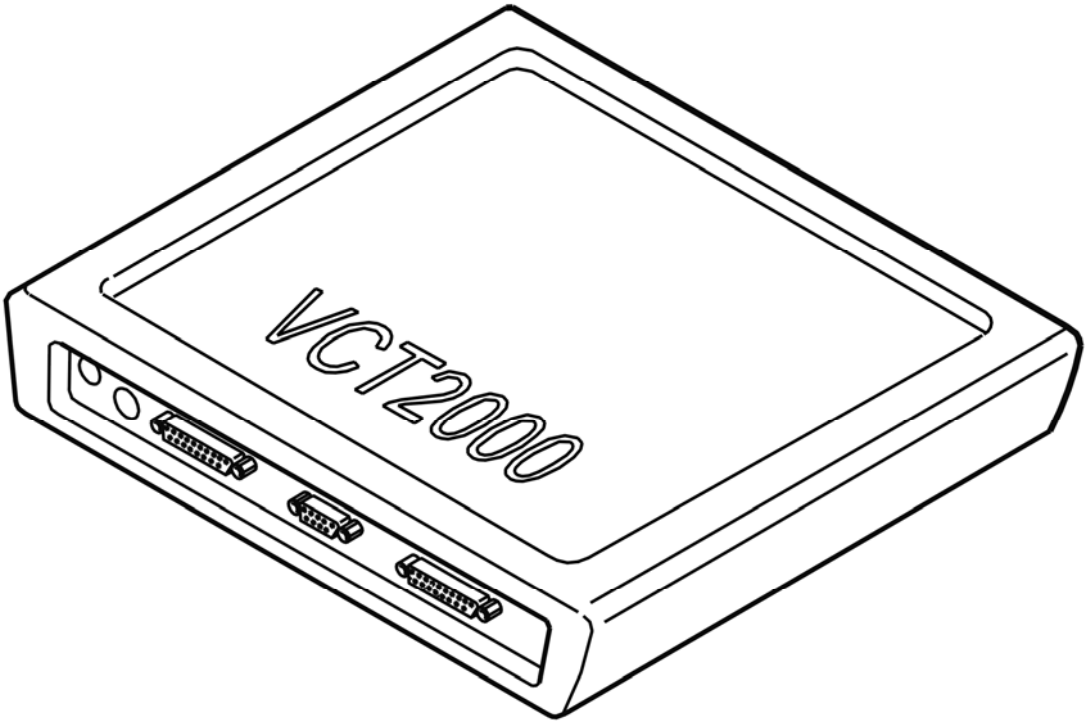

Fig. 171: Identifying VCT2000 Diagnostic Tool Symbol In VIDA
Courtesy of VOLVO CARS CORPORATION

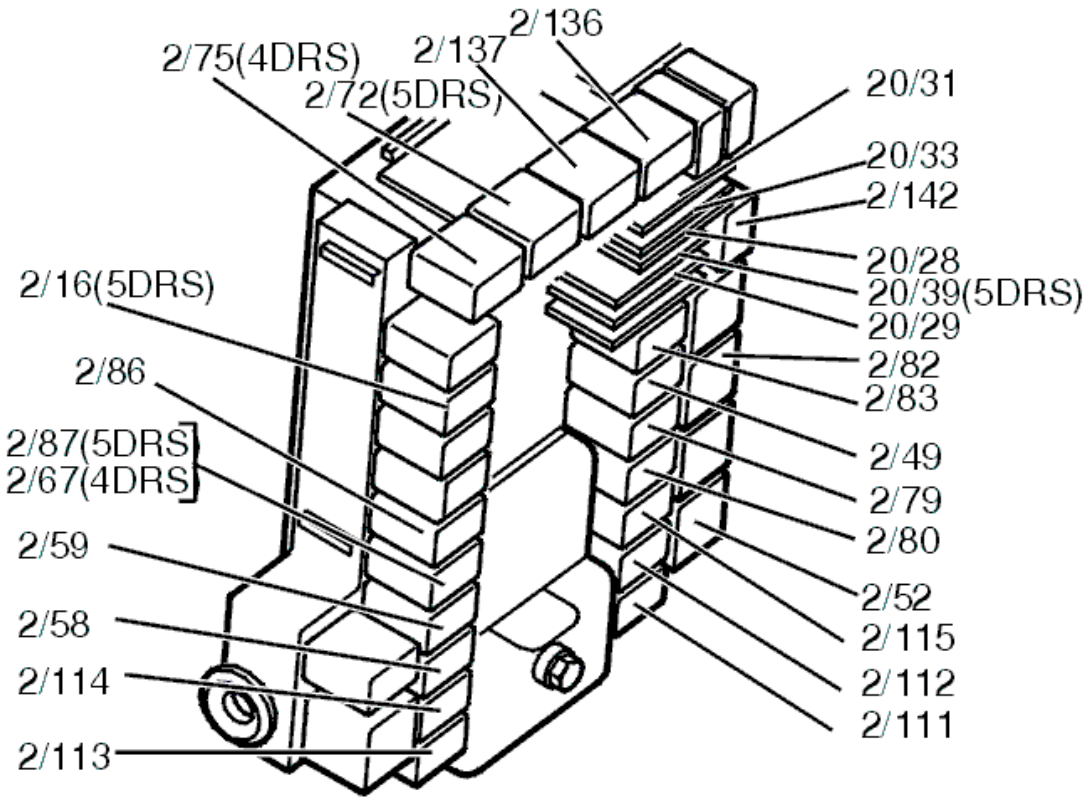

Fig. 172: Identifying Relays
Courtesy of VOLVO CARS CORPORATION

Was the function OK?

- **YES**

  Refer to **VERIFICATION**

- **NO**

  Refer to **REPLACING THE COMPONENT**

REPLACING THE COMPONENT

Replace the relay, 2/114.

Activate the relay.

If the function is now OK, the cause of the fault was a defective relay (short-circuit to ground or an open-circuit in the relay coil).

Other information:

- For -2004, see: **RELAY/FUSE BOX CARGO COMPARTMENT/REAR ELECTRONIC MODULE (REM), REPLACING**
- For 2005-, see: **REAR ELECTRONIC MODULE (REM), REPLACING** .

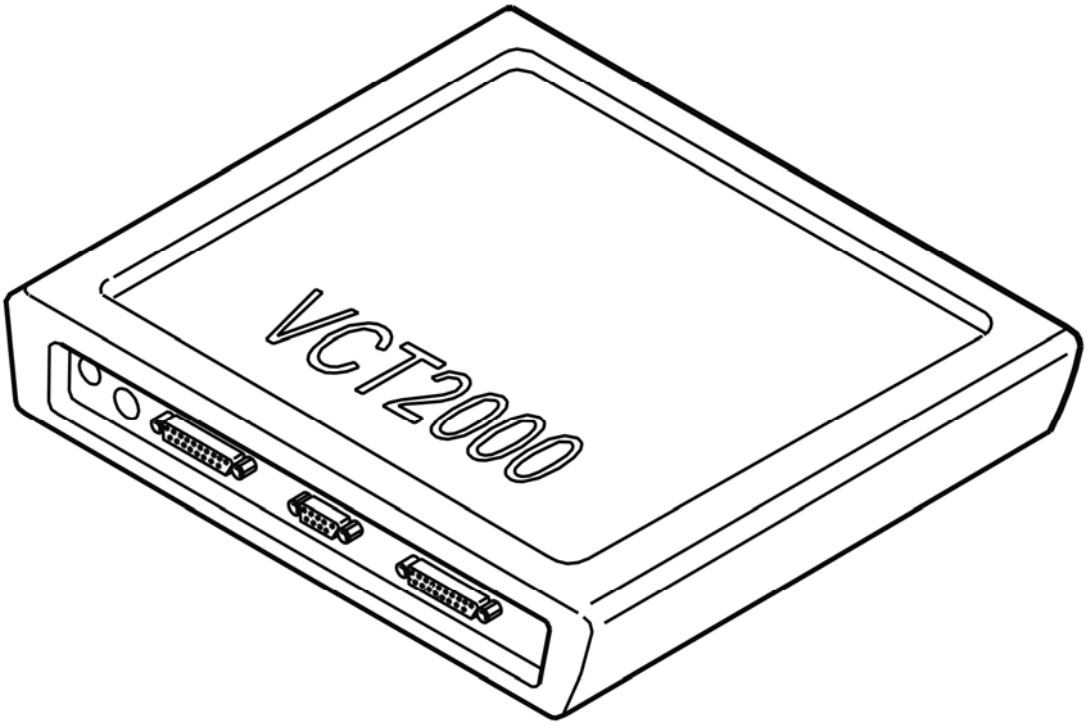

Fig. 173: Identifying VCT2000 Diagnostic Tool Symbol In VIDA
Courtesy of VOLVO CARS CORPORATION

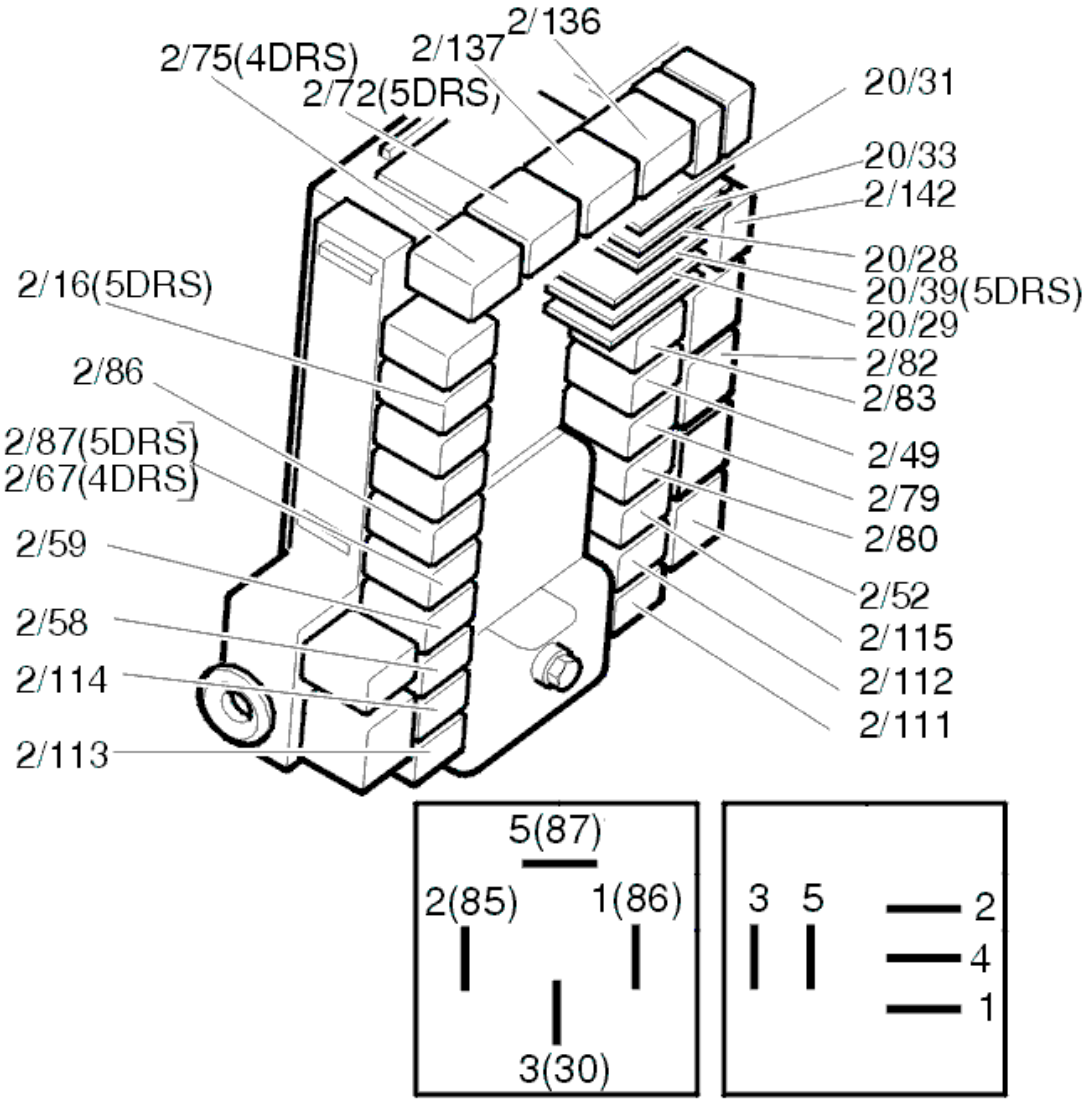

Fig. 174: Identifying Relays
Courtesy of VOLVO CARS CORPORATION

Was the function OK?

- **YES**

  OKAY: Troubleshooting has been completed.

- **NO**

  Refer to **CHECKING THE CONTROL MODULE FOR OPEN-CIRCUITS**

CHECKING THE CONTROL MODULE FOR OPEN-CIRCUITS

- Remove relay 2/114.

Check the driver circuit for the relay coil for an open-circuit as follows: activate the relay driver. Measure the voltage between terminals #1 and #2 on the relay base.

HINT: The voltage between terminals #1 and #2 should be battery voltage.

HINT: If the value deviates excessively, check the voltage between terminal #2 and the battery voltage and between terminal #1 and ground. Both should equal battery voltage.

HINT: Check for an open-circuit.

HINT: Do not forget to check that the power supply to the control module is OK.

Other information:

- For -2004, see: **RELAY/FUSE BOX CARGO COMPARTMENT/REAR ELECTRONIC MODULE (REM), REPLACING**
- For 2005-, see: **REAR ELECTRONIC MODULE (REM), REPLACING** .
- see **CHECKING WIRING AND TERMINALS** .

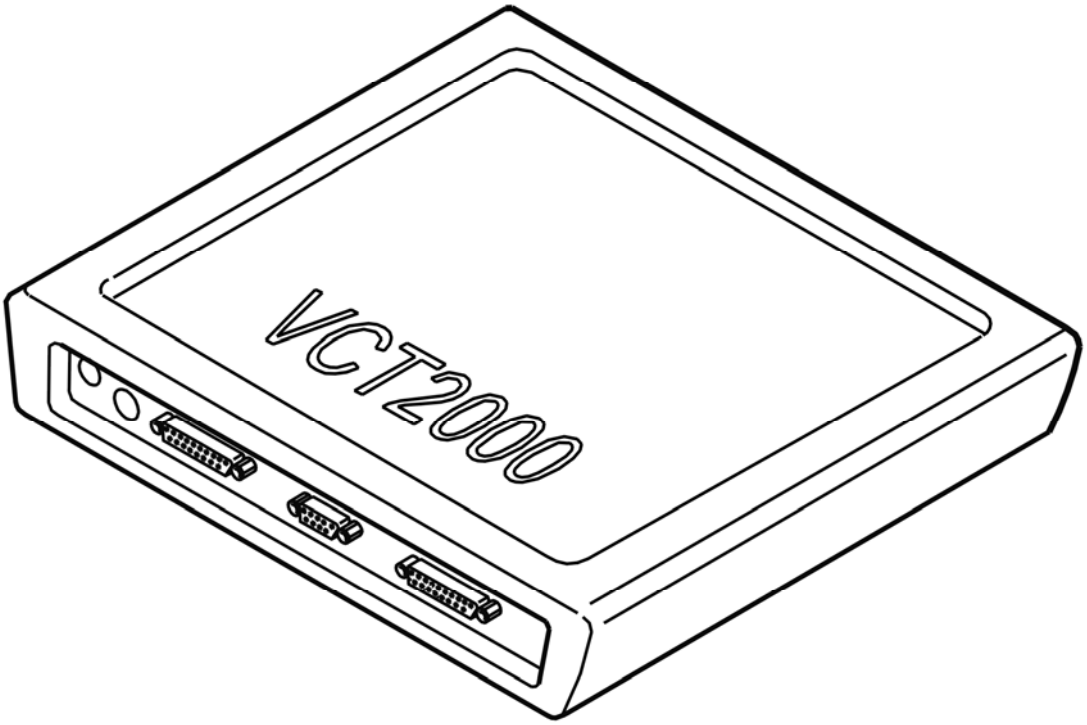

Fig. 175: Identifying VCT2000 Diagnostic Tool Symbol In VIDA
Courtesy of VOLVO CARS CORPORATION

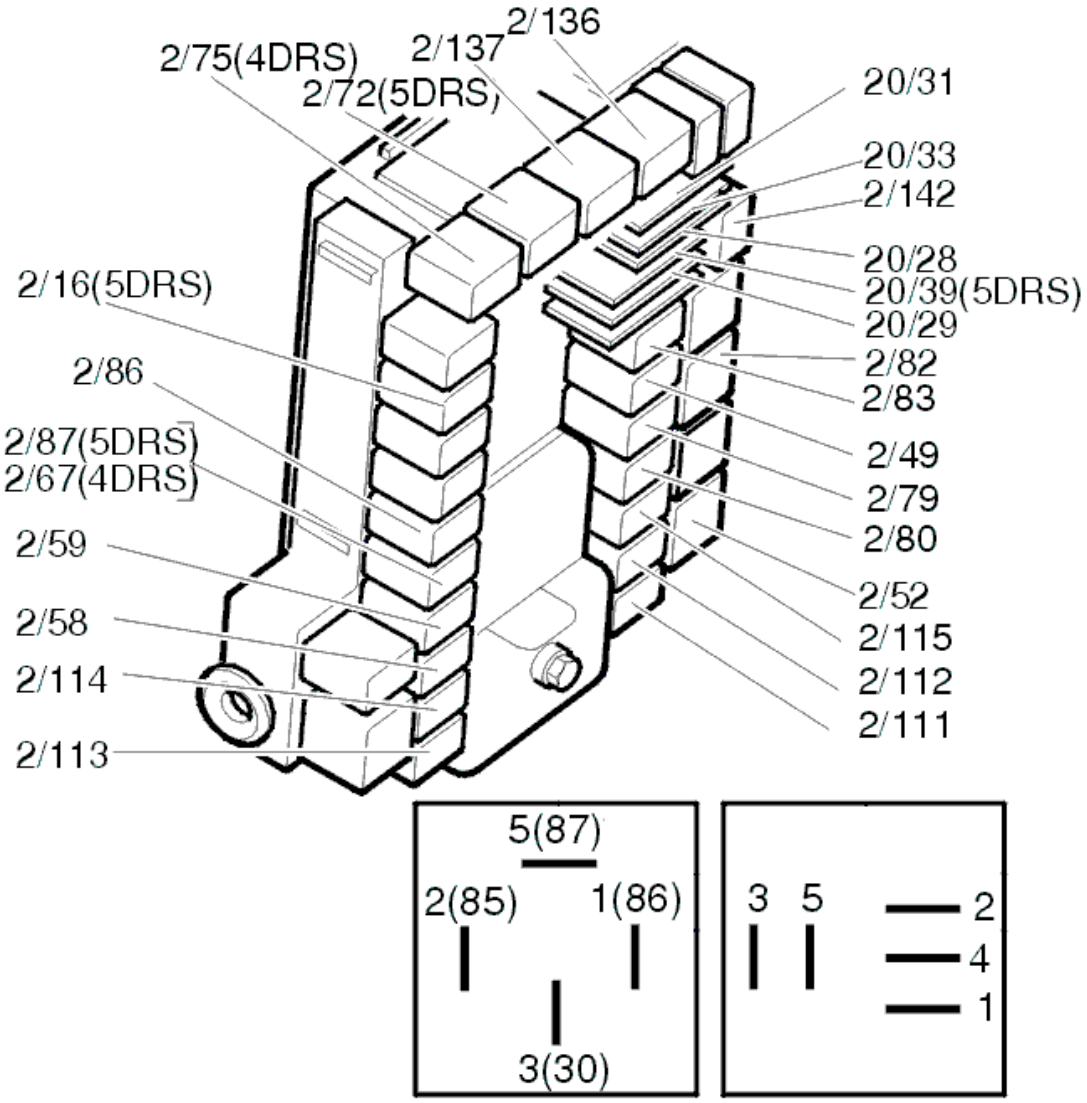

Fig. 176: Identifying Relays
Courtesy of VOLVO CARS CORPORATION

Was a fault detected?

- **YES**

  Refer to **VERIFICATION**

- **NO**

  Refer to **CHECKING THE CONTROL MODULE FOR SHORT-CIRCUITS**

CHECKING THE CONTROL MODULE FOR SHORT-CIRCUITS

Measure the resistance between terminal #2 and ground when the relay driver is active.

The resistance should be high when the relay driver is active.

Replace the control module if the resistance is low.

Other information:

- For -2004, see: **RELAY/FUSE BOX CARGO COMPARTMENT/REAR ELECTRONIC MODULE (REM), REPLACING**
- For 2005-, see: **REAR ELECTRONIC MODULE (REM), REPLACING** .

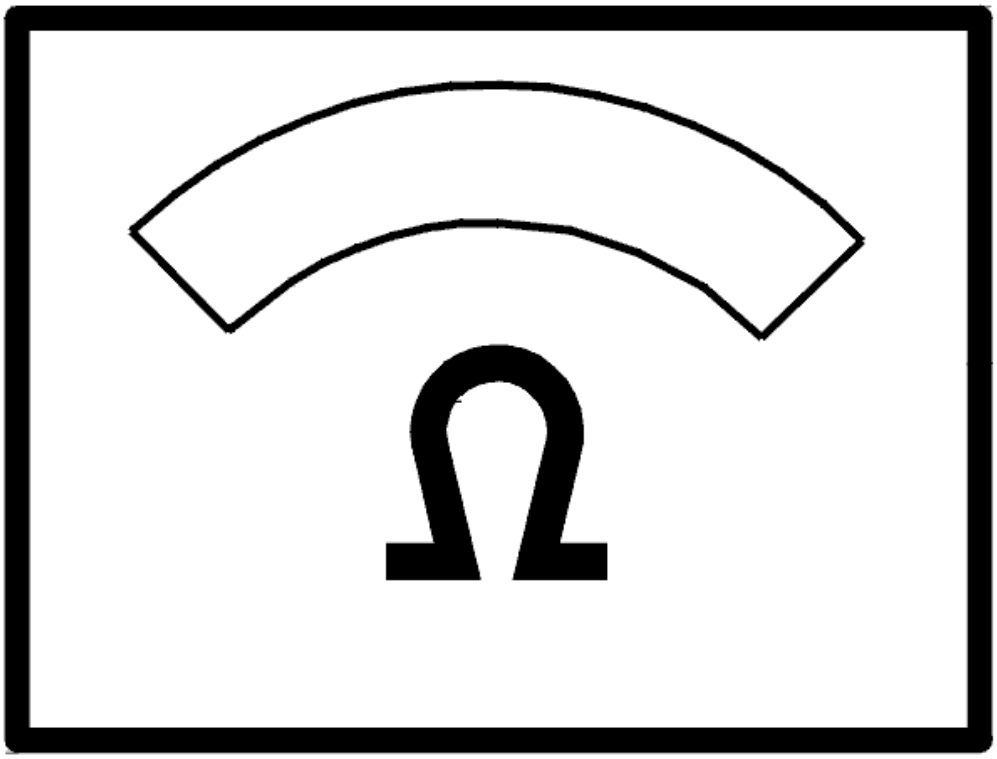

Fig. 177: Identifying Ohm Meter
Courtesy of VOLVO CARS CORPORATION

- **Continue**

  Refer to **VERIFICATION**

VERIFICATION

VERIFICATION

HINT: After carrying out the repair, check that the fault has been remedied.

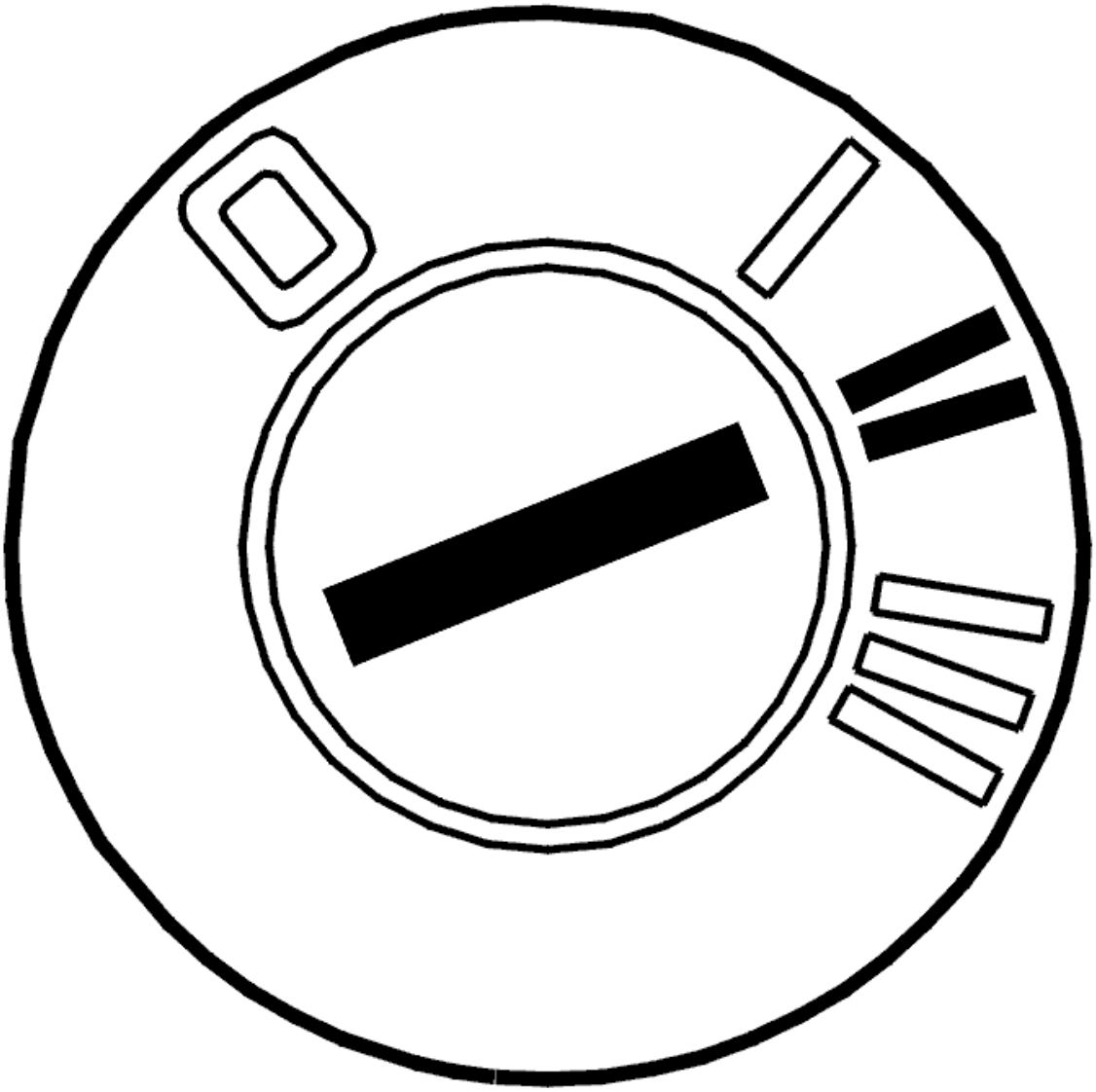

Fig. 178: Identifying Ignition ON
Courtesy of VOLVO CARS CORPORATION

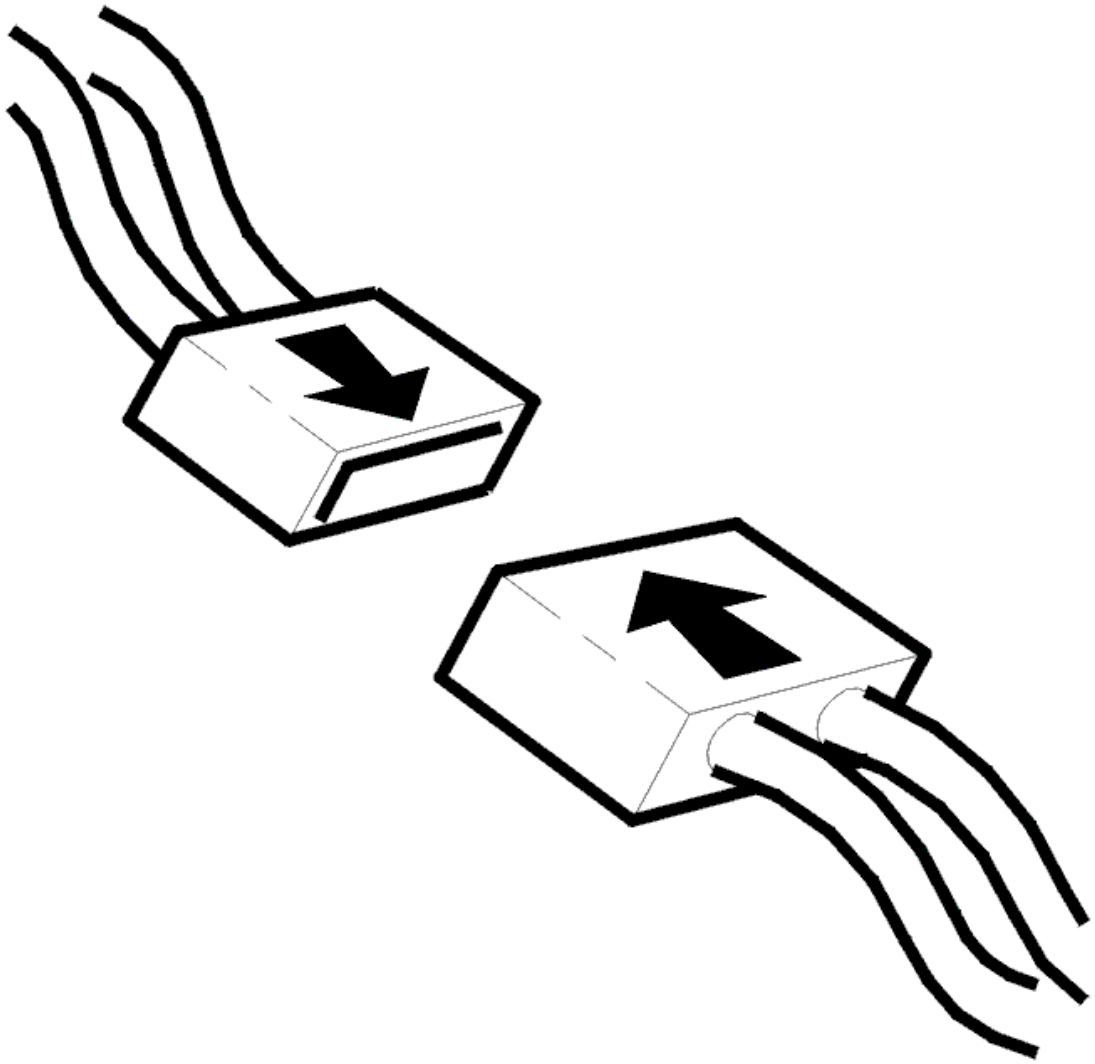

Fig. 179: Connecting Connector
Courtesy of VOLVO CARS CORPORATION

- Ignition off
- Reinstall the connectors, components etc.
- Ignition on.

Activate the relay.

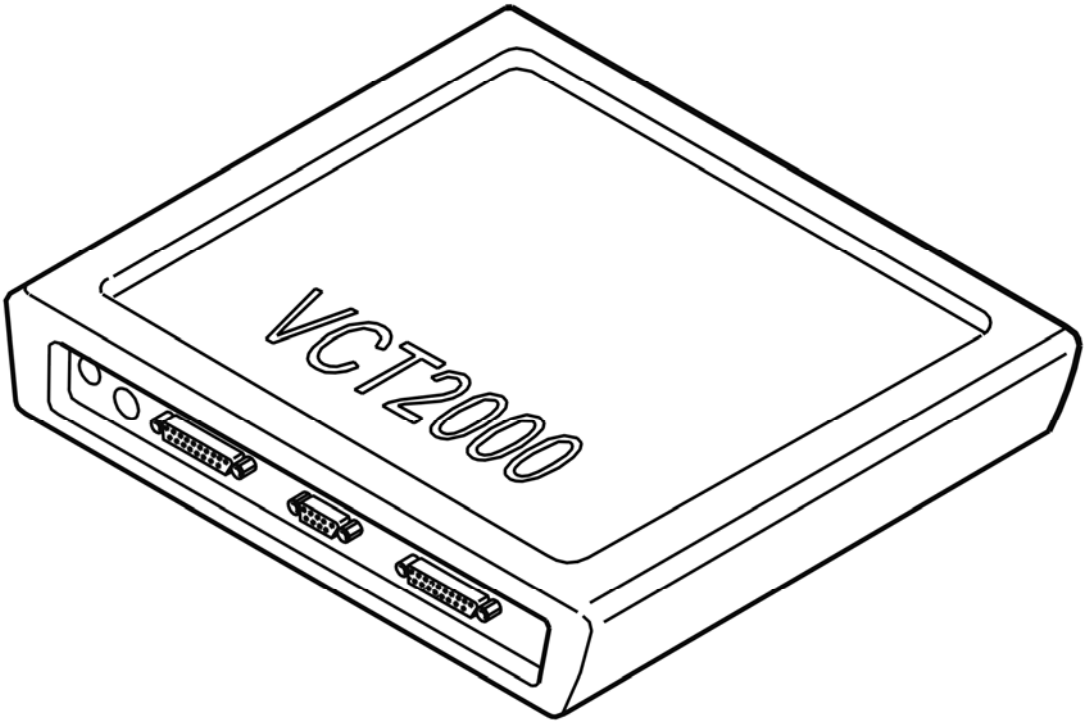

Fig. 180: Identifying VCT2000 Diagnostic Tool Symbol In VIDA
Courtesy of VOLVO CARS CORPORATION

Was the function OK?

- **YES**

  VERIFIED: Troubleshooting has been completed.

- **NO**

  Refer to **INFORMATION**

INFORMATION

FAULT-TRACING INFORMATION

The fault should have been detected and remedied. As this is not the case fault-tracing has failed.

Exit fault-tracing for this diagnostic trouble code (DTC) or make another attempt.

REM-6A10: DOOR SWITCH. SIGNAL TOO HIGH (2005-2012)

DIAGNOSTIC TROUBLE CODE (DTC) INFORMATION REM-6A10

Condition

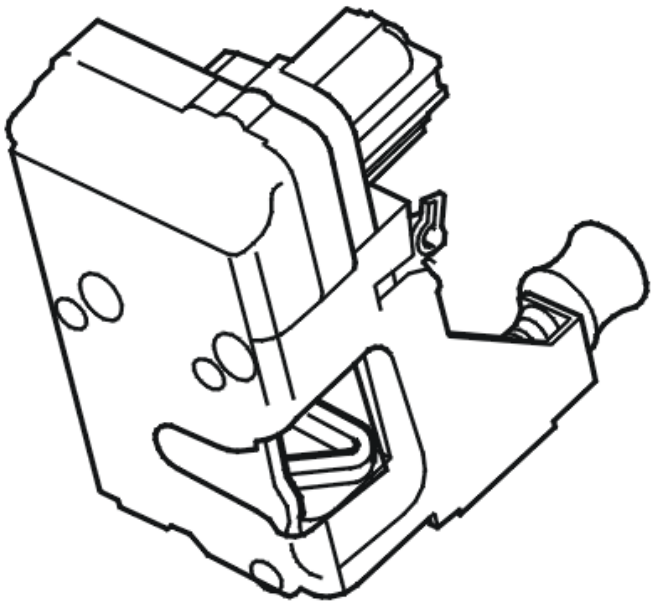

Fig. 181: Identifying Central Locking Motor
Courtesy of VOLVO CARS CORPORATION

The rear electrical module (REM) checks if the doors are open or closed using the switches in the lock units. The switches provide a ground to the rear electronic module (REM) when the doors are shut.

The rear electronic module (REM) checks the status of the switches by powering them for a short period ("polling").

The diagnostic trouble code (DTC) is stored if the rear electronic module (REM) receives a high signal from the **driver's door** switch when the control module has not polled that switch. This is seen as a short-circuit to supply voltage in the switch or the cable to the switch.

Substitute Value

- None.

Possible Source

- Short-circuit to supply voltage in the switch for indicating a closed door.

Fault symptom[s]

- General warning lamp lit.
- Message in the display.
- Does not alarm the door.

SIGNAL TOO HIGH

CHECKING THE SIGNAL FROM THE SWITCH IN THE FRONT DOOR

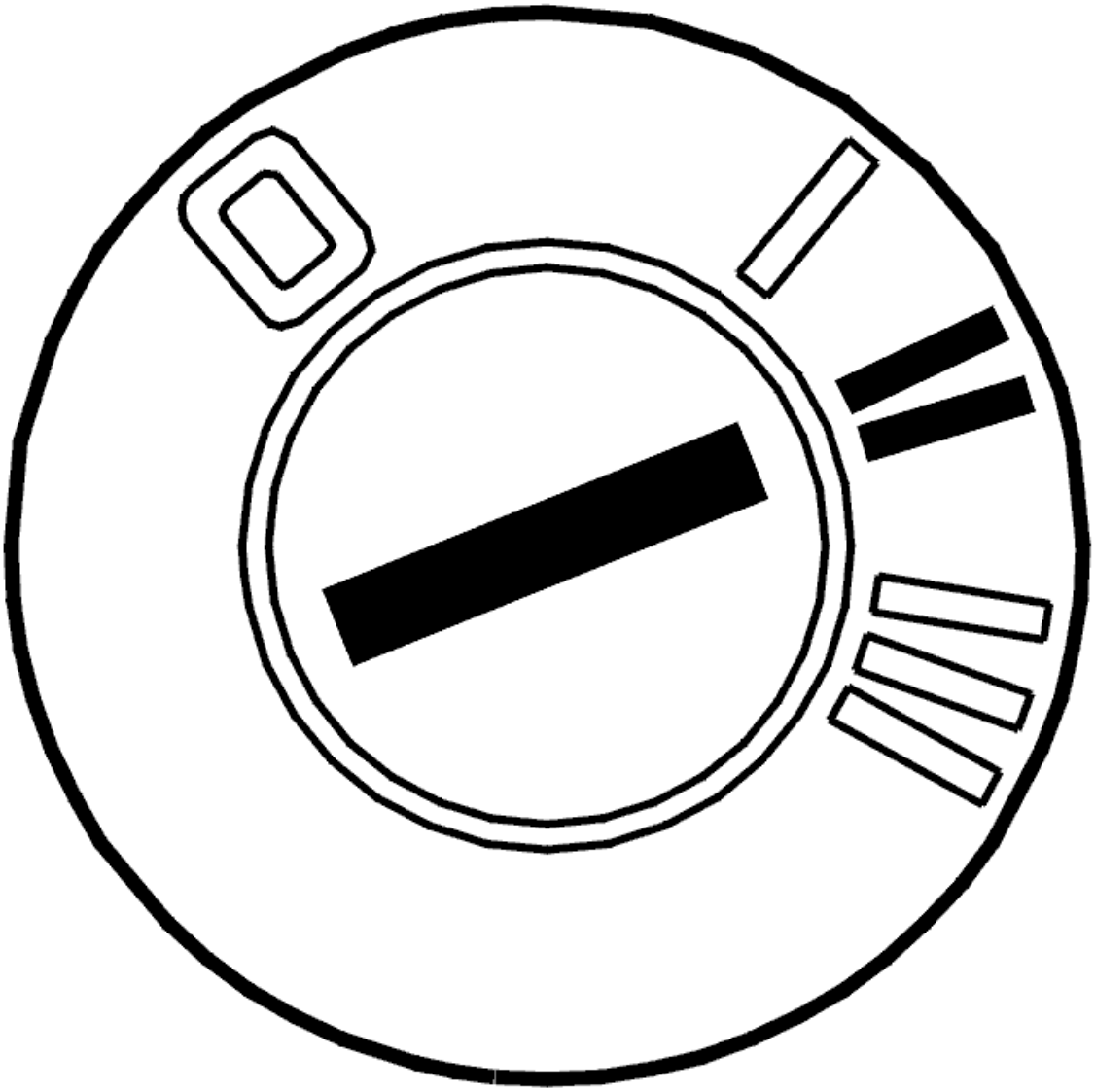

Fig. 182: Identifying Ignition ON
Courtesy of VOLVO CARS CORPORATION

- Ignition on
- Read off the status from the control switch in both front doors (indicates whether the doors are open or closed).

Open and close the left and right-hand front door. The status for each door must change when the door is opened/closed.

The fault is permanent if the status does not change.

If the status changes, this indicates an intermittent fault, i. e. the fault was present previously but is not active at the moment.

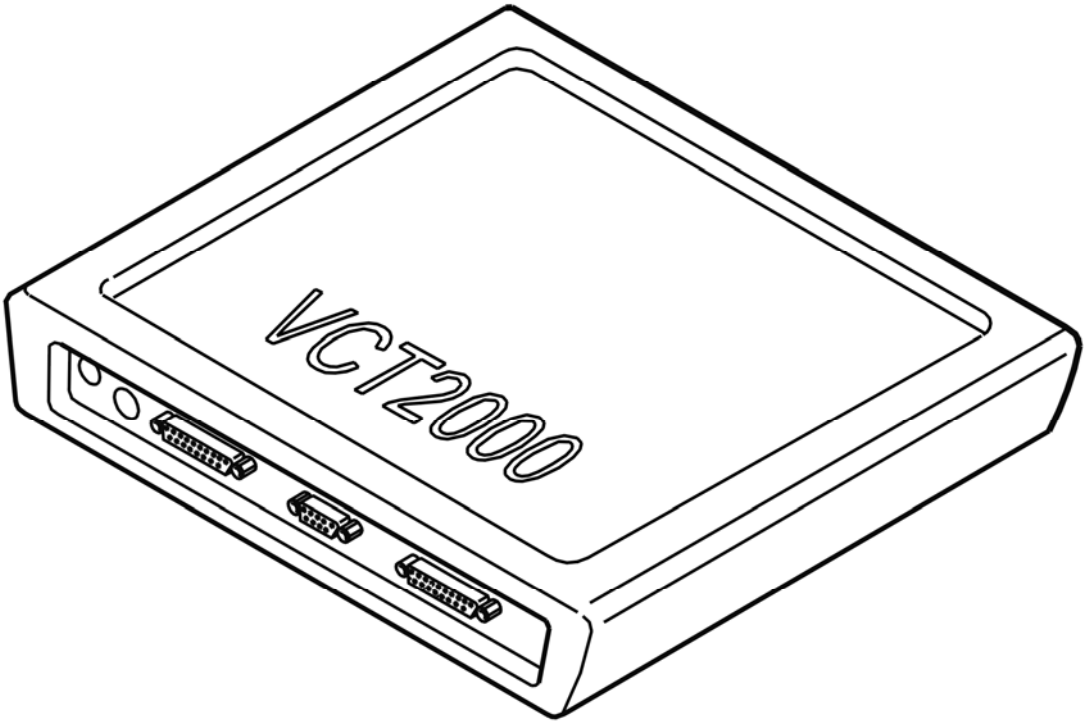

Fig. 183: Identifying VCT2000 Diagnostic Tool Symbol In VIDA
Courtesy of VOLVO CARS CORPORATION

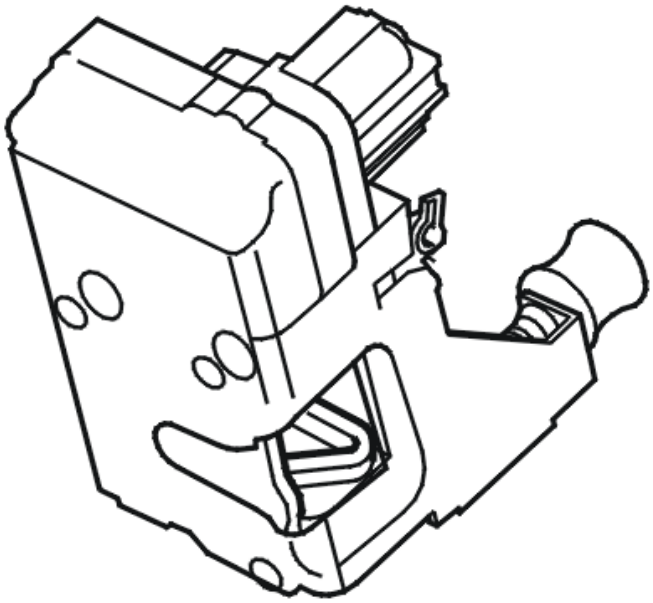

Fig. 184: Identifying Central Locking Motor
Courtesy of VOLVO CARS CORPORATION

- **Continue**

  Refer to **CHECKING CABLE AND COMPONENT**

CHECKING CABLE AND COMPONENT

NOTE: Only fault-trace the circuit of the door displaying the faulty value.

Left front door

Check the signal cable between rear electronic module (REM) connector terminal #52 (#C12) and terminal #3 on the lock mechanism connector. Check for a short-circuit to supply voltage. Check for an open-circuit.

Right front door

Check the signal cable between rear electronic module (REM) connector terminal #29 (#D29) and terminal #3 on the lock mechanism connector. Check for a short-circuit to supply voltage. Check for an open-circuit.

Remedy as necessary.

Other information

- see **CONNECTING THE BREAKOUT BOX**
- see **SIGNAL SPECIFICATION**
- see **LOCK MECHANISM FRONT SIDE DOOR, REPLACING**
- For -2004, see: **RELAY/FUSE BOX CARGO COMPARTMENT/REAR ELECTRONIC MODULE (REM), REPLACING**
- For 2005-, see: **REAR ELECTRONIC MODULE (REM), REPLACING** .
- see **CHECKING WIRING AND TERMINALS**

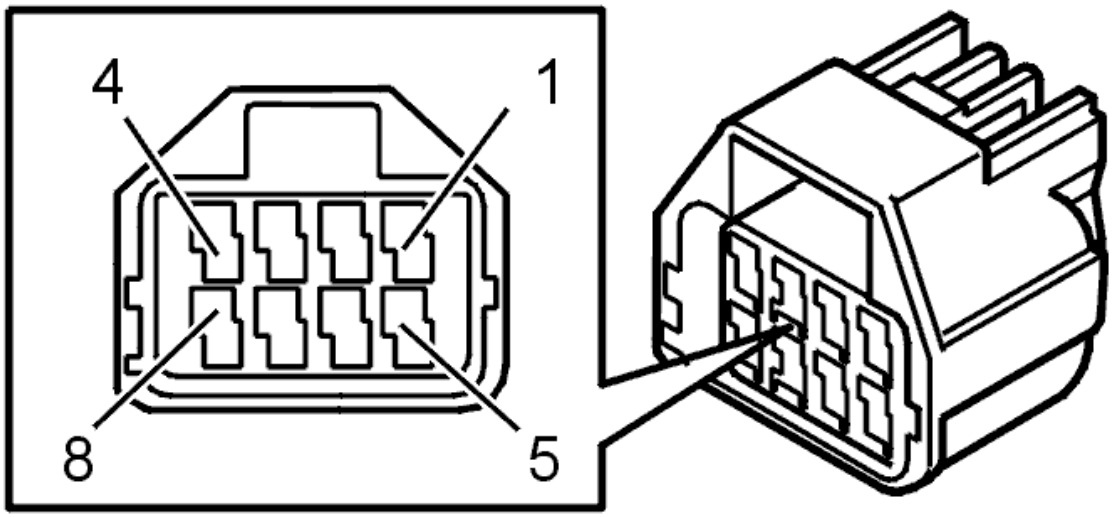

Fig. 185: Identifying Connector Terminals
Courtesy of VOLVO CARS CORPORATION

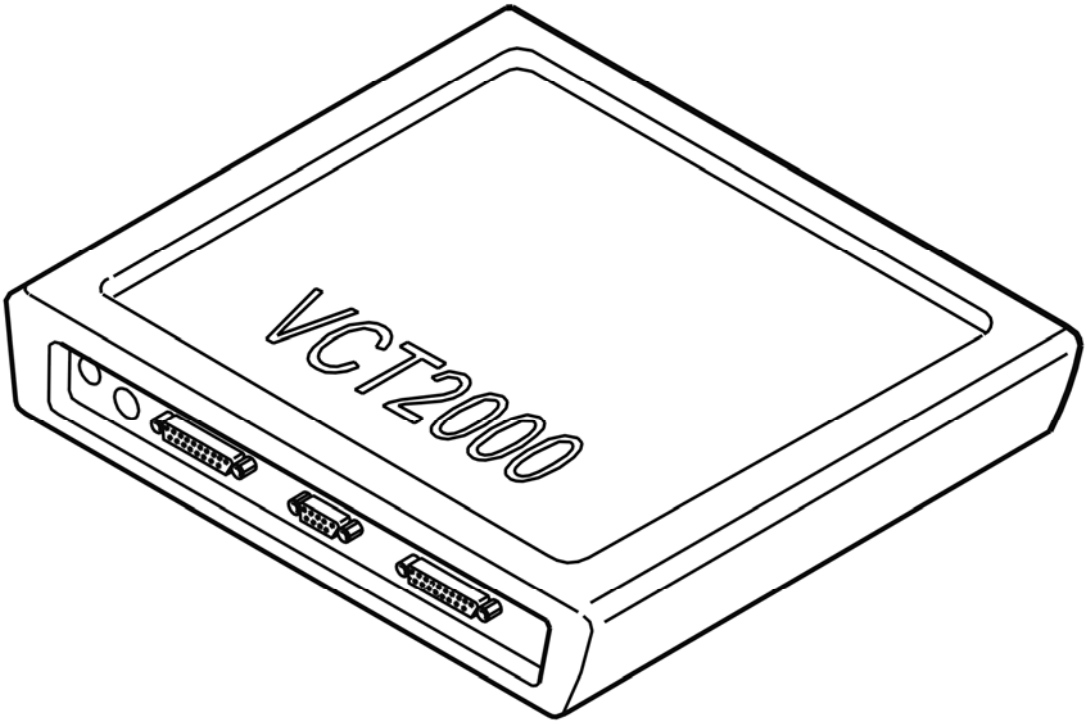

Fig. 186: Identifying VCT2000 Diagnostic Tool Symbol In VIDA
Courtesy of VOLVO CARS CORPORATION

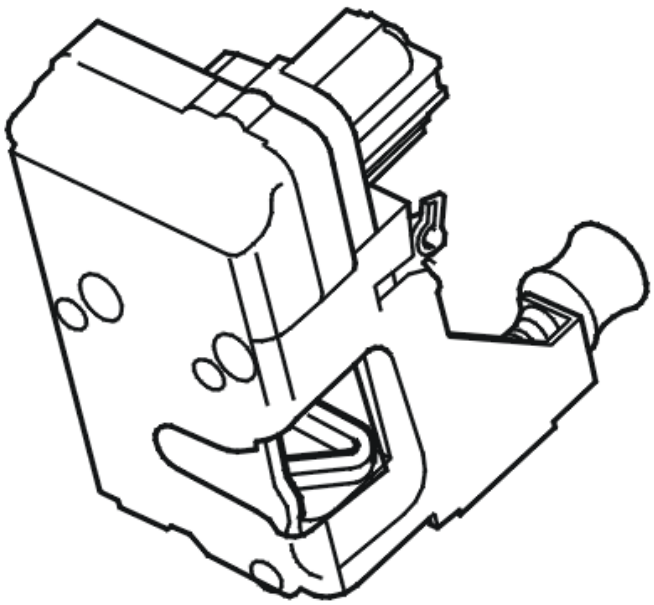

Fig. 187: Identifying Central Locking Motor
Courtesy of VOLVO CARS CORPORATION

- **Continue**

  Refer to **VERIFICATION**

VERIFICATION

VERIFICATION

HINT: After carrying out the repair, check that the fault has been remedied.

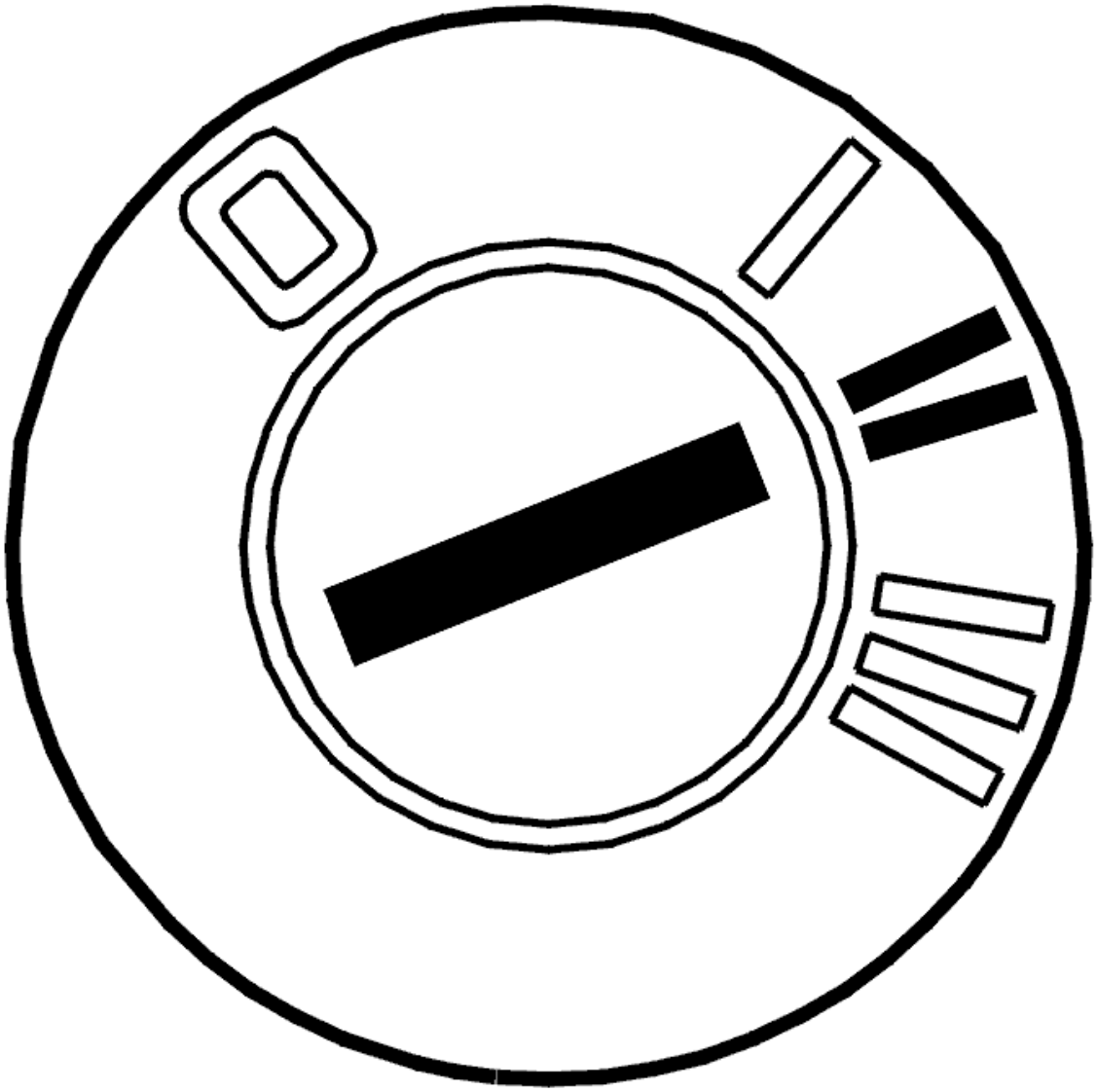

Fig. 188: Identifying Ignition ON
Courtesy of VOLVO CARS CORPORATION

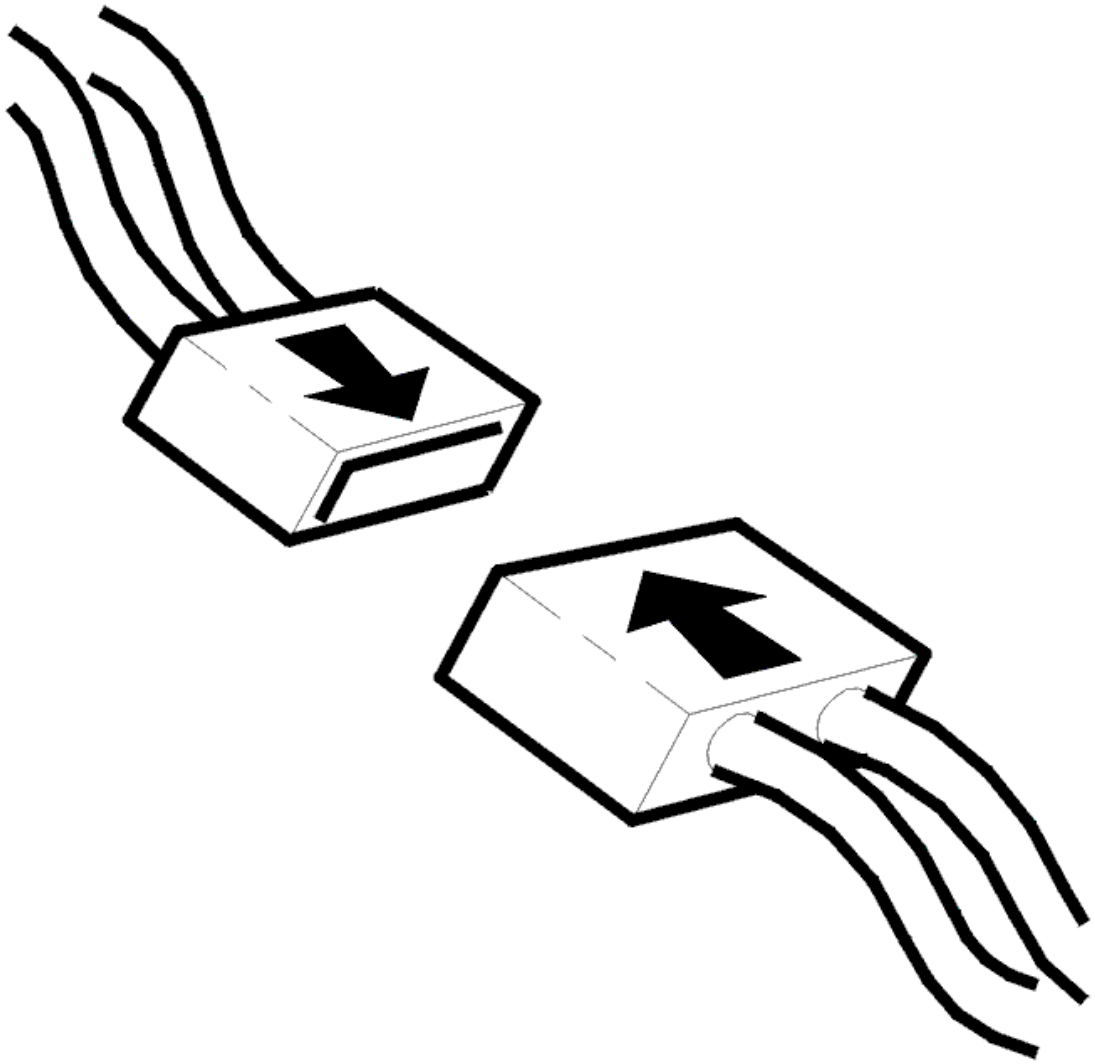

Fig. 189: Connecting Connector
Courtesy of VOLVO CARS CORPORATION

- Ignition off
- Reinstall the connectors, components etc.
- Ignition on
- Read off the status from the control switch in both front doors (indicates whether the doors are open or closed).

  Open and close the left and right-hand front door. The status for each door must change when the door is opened/closed.

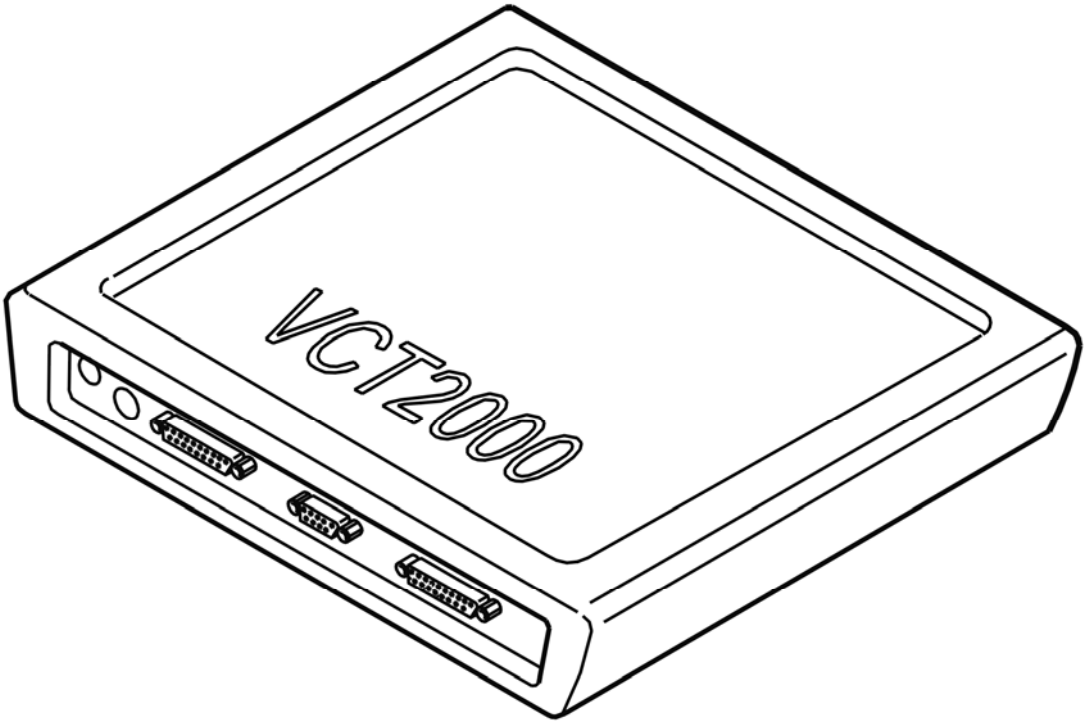

Fig. 190: Identifying VCT2000 Diagnostic Tool Symbol In VIDA
Courtesy of VOLVO CARS CORPORATION

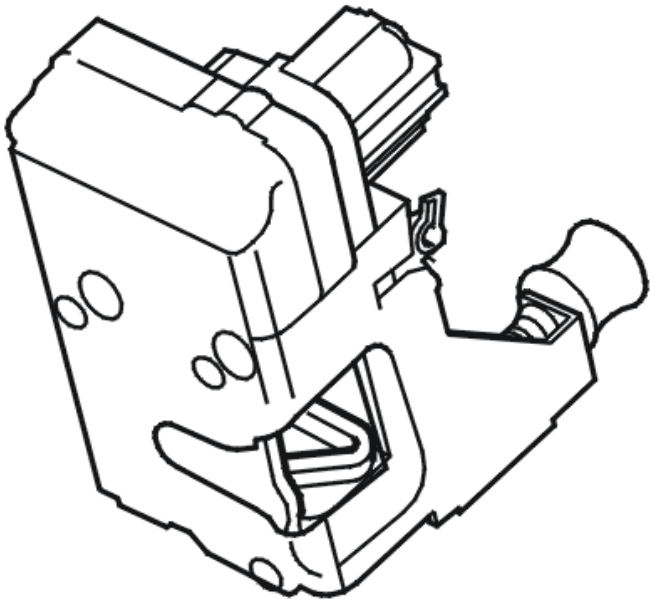

Fig. 191: Identifying Central Locking Motor
Courtesy of VOLVO CARS CORPORATION

Is the status OK?

- **YES**

  VERIFIED: Troubleshooting has been completed.

- **NO**

  Refer to **INFORMATION**

INFORMATION

FAULT-TRACING INFORMATION

The fault should have been detected and remedied. As this is not the case fault-tracing has failed.

Exit fault-tracing for this diagnostic trouble code (DTC) or make another attempt.

REM-6A11: DOOR SWITCH. SIGNAL TOO HIGH (2005-2012)

DIAGNOSTIC TROUBLE CODE (DTC) INFORMATION REM-6A11

Condition

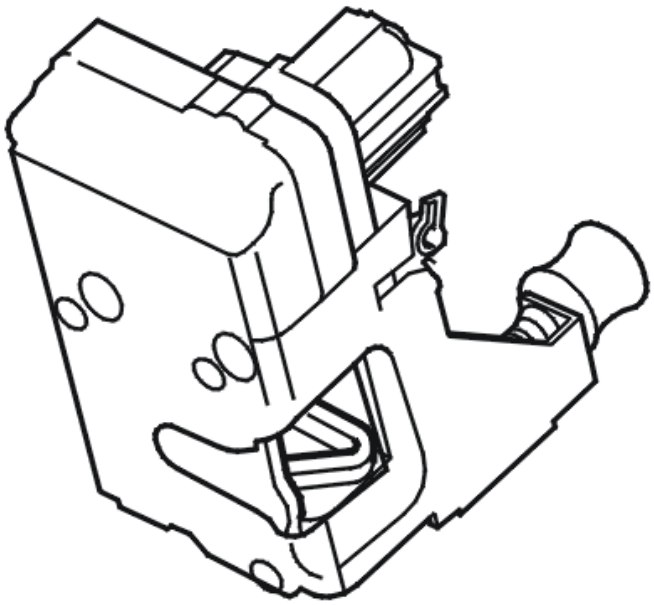

Fig. 192: Identifying Central Locking Motor
Courtesy of VOLVO CARS CORPORATION

The rear electrical module (REM) checks if the doors are open or closed using the switches in the lock units. The switches provide a ground to the rear electronic module (REM) when the doors are shut.

The rear electronic module (REM) checks the status of the switches by powering them for a short period ("polling").

The diagnostic trouble code (DTC) is stored if the rear electronic module (REM) receives a high signal from the **passenger door** switch when the control module has not polled that switch. This is seen as a short-circuit to supply voltage in the switch or the cable to the switch.

Substitute Value

- None.

Possible Source

- Short-circuit to supply voltage in the switch for indicating a closed door.

Fault symptom[s]

- General warning lamp lit.
- Message in the display.
- Does not alarm the door.

SIGNAL TOO HIGH

see **SIGNAL TOO HIGH**

REM-6A12: DOOR SWITCH. SIGNAL TOO HIGH (2005-2012)

DIAGNOSTIC TROUBLE CODE (DTC) INFORMATION REM-6A12

Condition

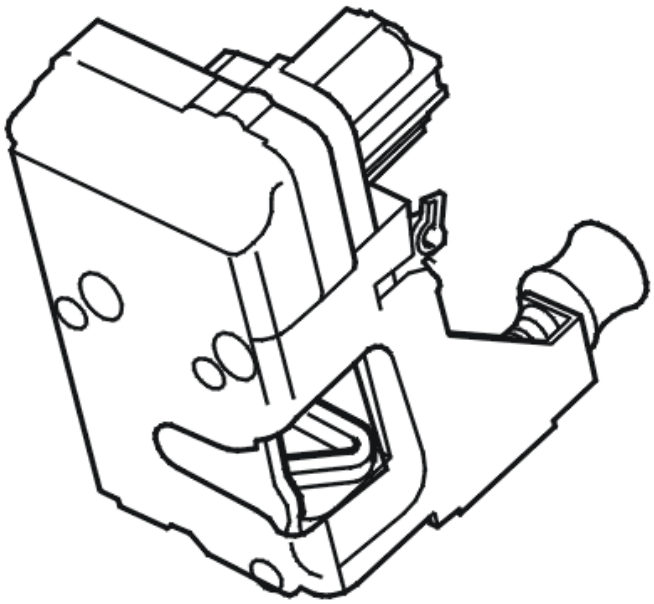

Fig. 193: Identifying Central Locking Motor
Courtesy of VOLVO CARS CORPORATION

The rear electrical module (REM) checks if the doors are open or closed using the switches in the lock units. The switches provide a ground to the rear electronic module (REM) when the doors are shut.

The rear electronic module (REM) checks the status of the switches by powering them for a short period ("polling").

The diagnostic trouble code (DTC) is stored if the rear electronic module (REM) receives a high signal from the **rear left door** switch when the control module has not polled that switch. This is seen as a short-circuit to supply voltage in the switch or the cable to the switch.

Substitute Value

- None.

Possible Source

- Short-circuit to supply voltage in the switch for indicating a closed door.

Fault symptom[s]

- General warning lamp lit.
- Message in the display.
- Does not alarm the door.

SIGNAL TOO HIGH

CHECKING THE SIGNAL FROM THE SWITCH IN THE REAR DOOR

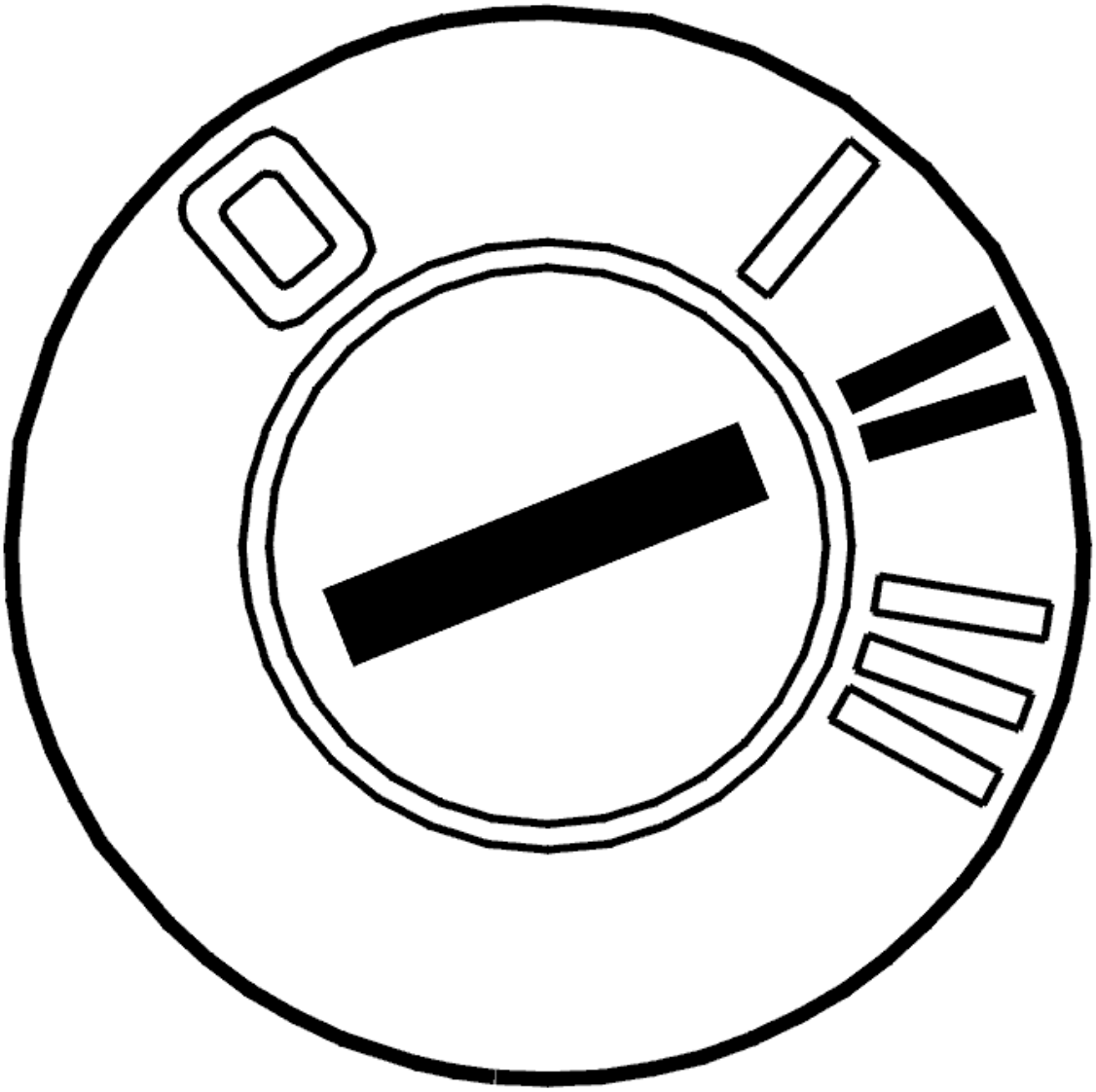

Fig. 194: Identifying Ignition ON
Courtesy of VOLVO CARS CORPORATION

- Ignition on
- Read off the status of the switch in both rear doors (indicates whether the doors are open or closed).

  Open and close the left and right-hand rear doors. The status for each door must change when the door is opened/closed.

  The fault is permanent if the status does not change.

  If the status changes, this indicates an intermittent fault, i. e. the fault was present previously but is not active at the moment.

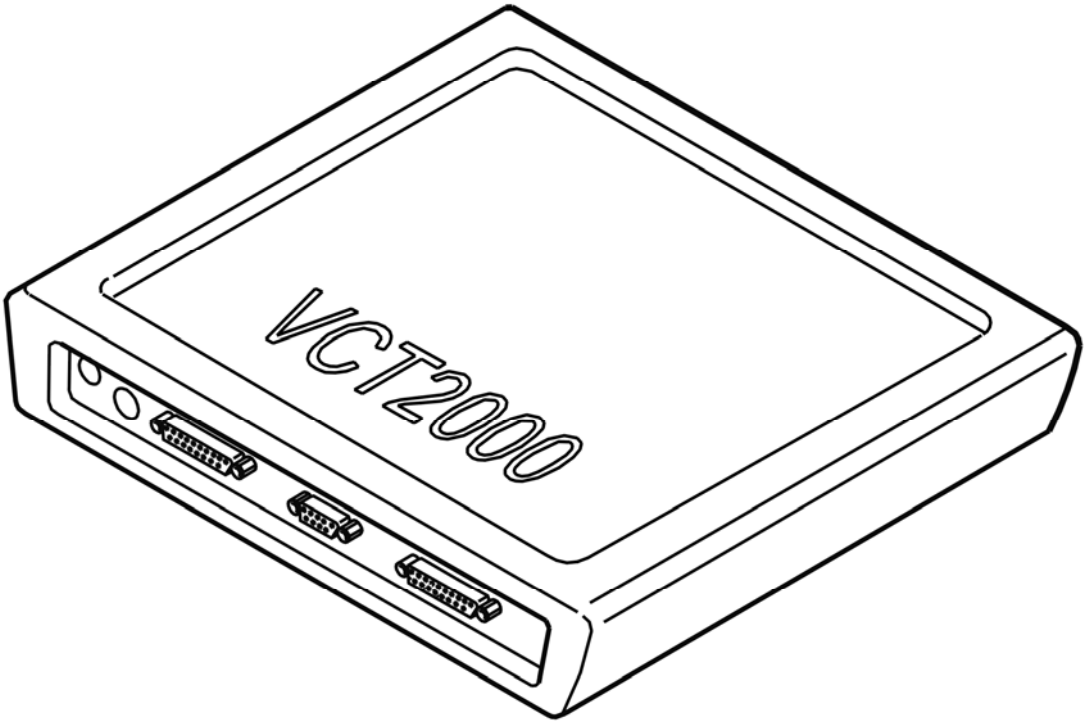

Fig. 195: Identifying VCT2000 Diagnostic Tool Symbol In VIDA
Courtesy of VOLVO CARS CORPORATION

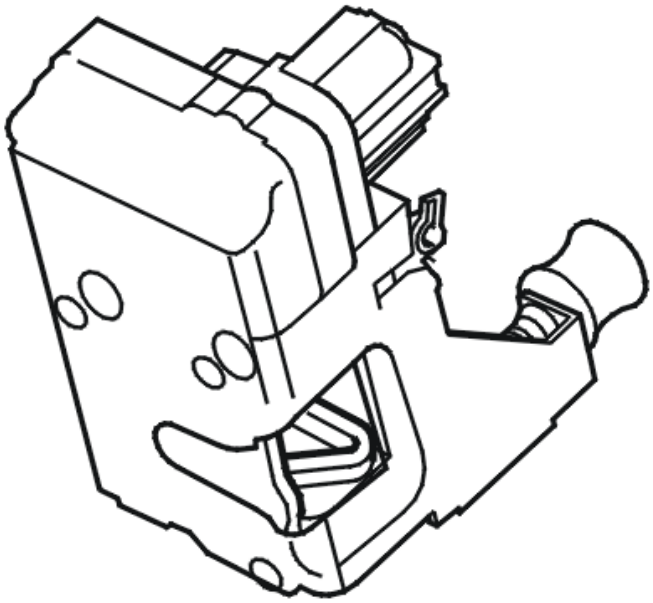

Fig. 196: Identifying Central Locking Motor
Courtesy of VOLVO CARS CORPORATION

- **Continue**

  Refer to **CHECKING CABLE AND COMPONENT**

CHECKING CABLE AND COMPONENT

NOTE: Only fault-trace the circuit of the door displaying the faulty value.

Left rear door

Check the signal cable between rear electronic module (REM) connector terminal #43 (#C3) and terminal #2 on the lock mechanism connector. Check for a short-circuit to supply voltage. Check for an open-circuit.

Right rear door

Check the signal cable between rear electronic module (REM) connector terminal #33 (#D33) and terminal #2 on the lock mechanism connector. Check for a short-circuit to supply voltage. Check for an open-circuit.

Remedy as necessary.

Other information

- see **CONNECTING THE BREAKOUT BOX**
- see **SIGNAL SPECIFICATION**
- see **LOCK MECHANISM REAR SIDE DOOR, REPLACING**
- For -2004, see: **RELAY/FUSE BOX CARGO COMPARTMENT/REAR ELECTRONIC MODULE (REM), REPLACING**
- For 2005-, see: **REAR ELECTRONIC MODULE (REM), REPLACING** .
- see **CHECKING WIRING AND TERMINALS**

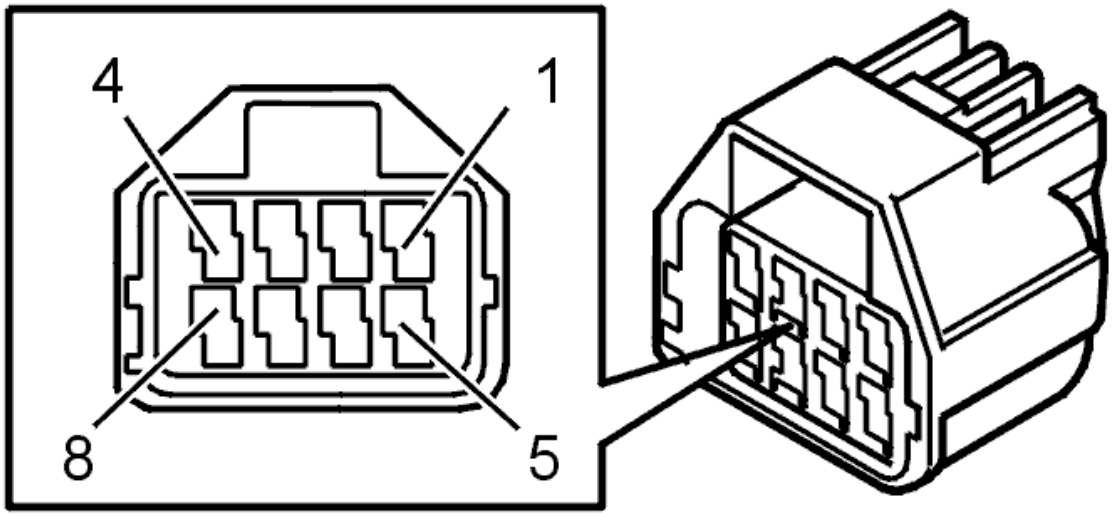

Fig. 197: Identifying Connector Terminals
Courtesy of VOLVO CARS CORPORATION

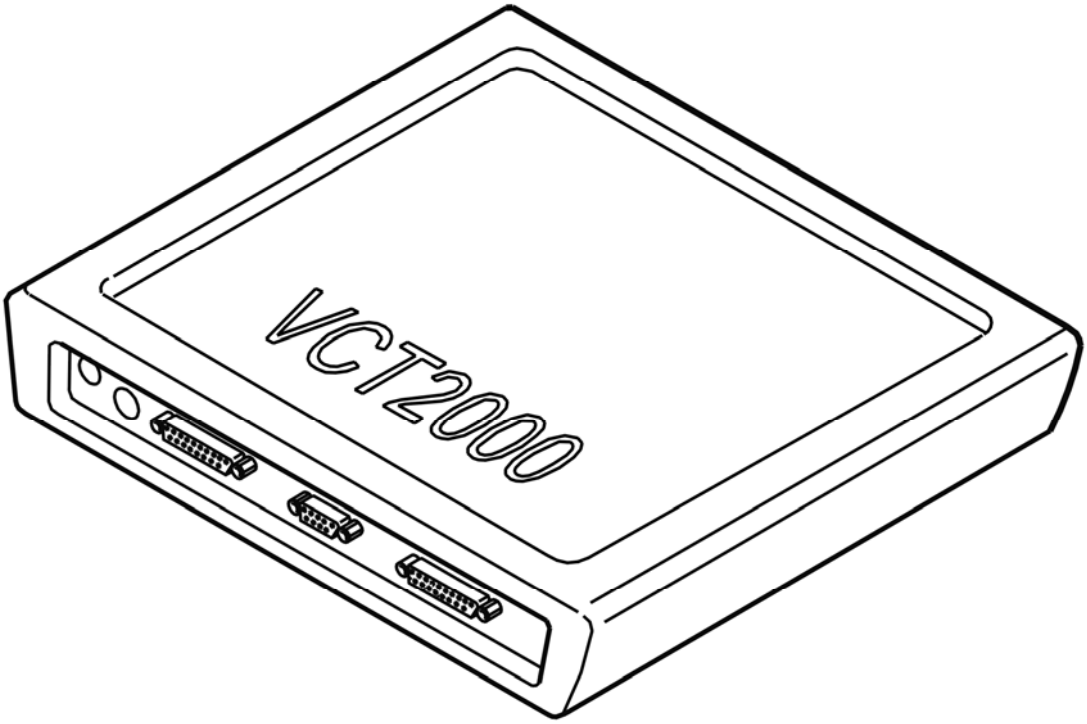

Fig. 198: Identifying VCT2000 Diagnostic Tool Symbol In VIDA
Courtesy of VOLVO CARS CORPORATION

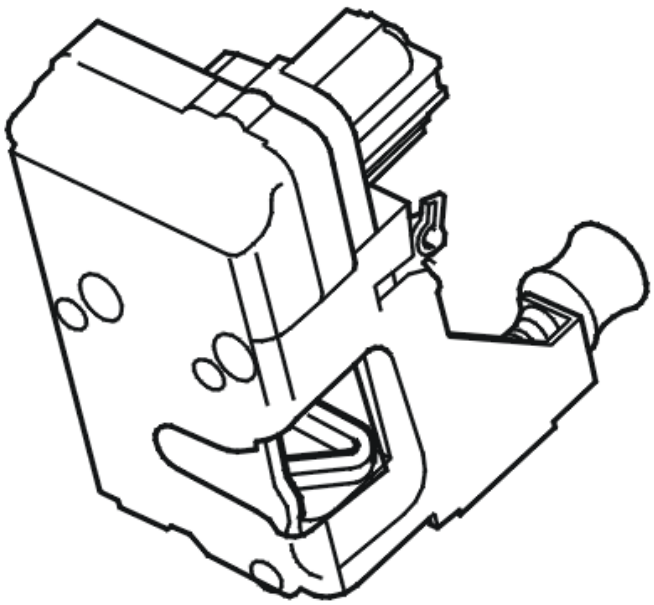

Fig. 199: Identifying Central Locking Motor
Courtesy of VOLVO CARS CORPORATION

- **Continue**

  Refer to **VERIFICATION**

VERIFICATION

VERIFICATION

HINT: After carrying out the repair, check that the fault has been remedied.

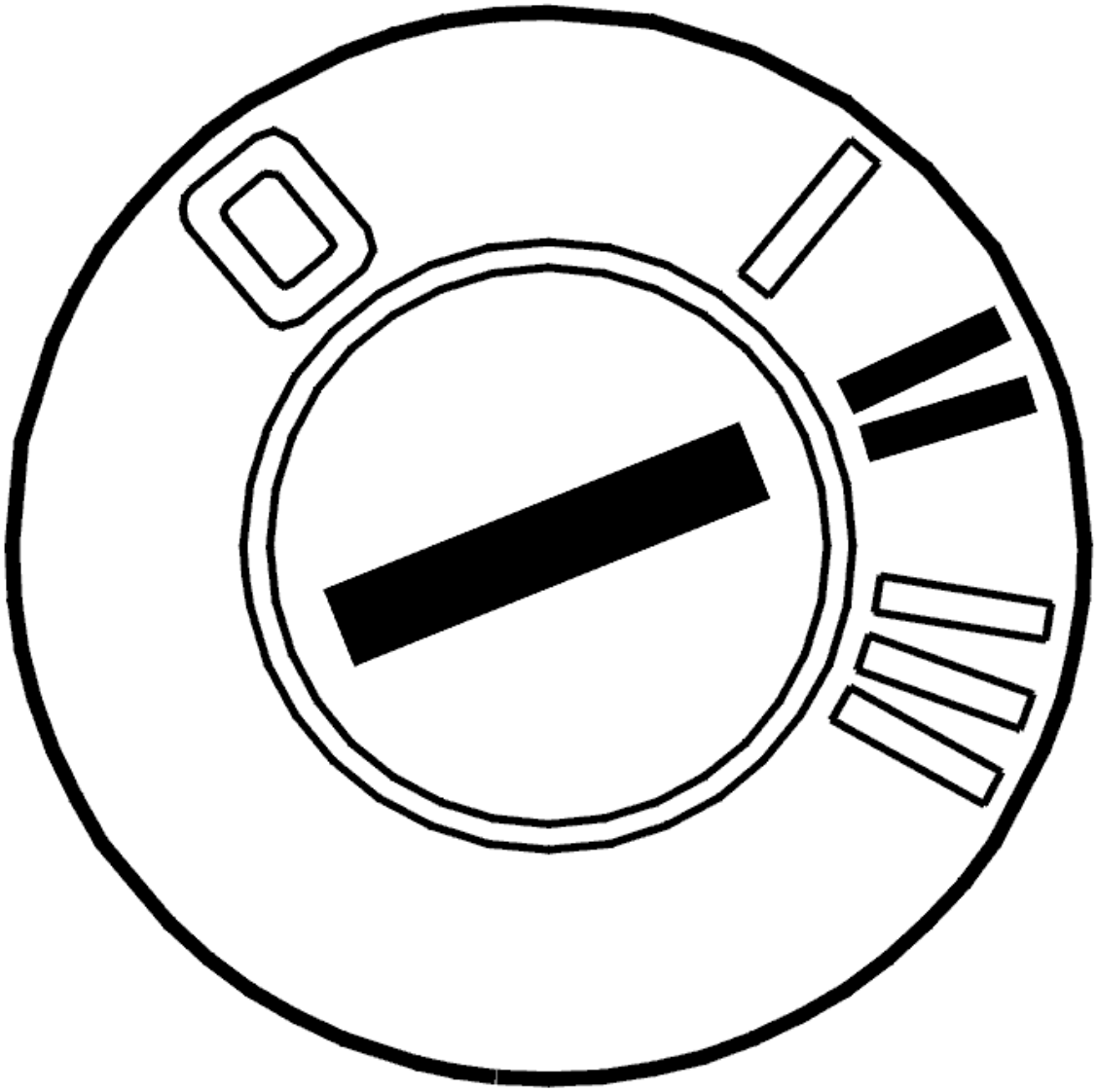

Fig. 200: Identifying Ignition ON
Courtesy of VOLVO CARS CORPORATION

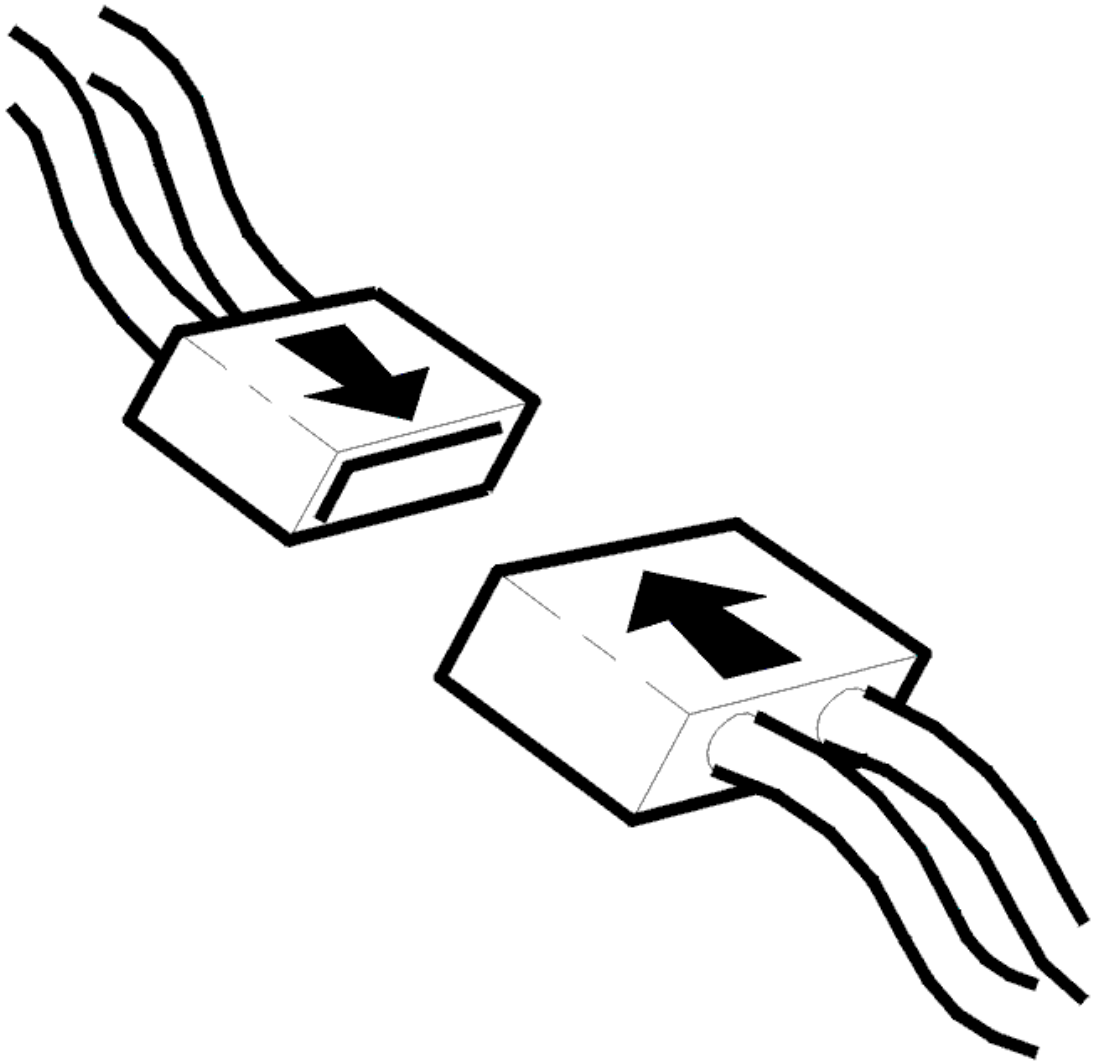

Fig. 201: Connecting Connector
Courtesy of VOLVO CARS CORPORATION

- Ignition off
- Reinstall the connectors, components etc.
- Ignition on
- Read off the status of the switch in both rear doors (indicates whether the doors are open or closed).

  Open and close the left and right-hand rear doors. The status for each door must change when the door is opened/closed.

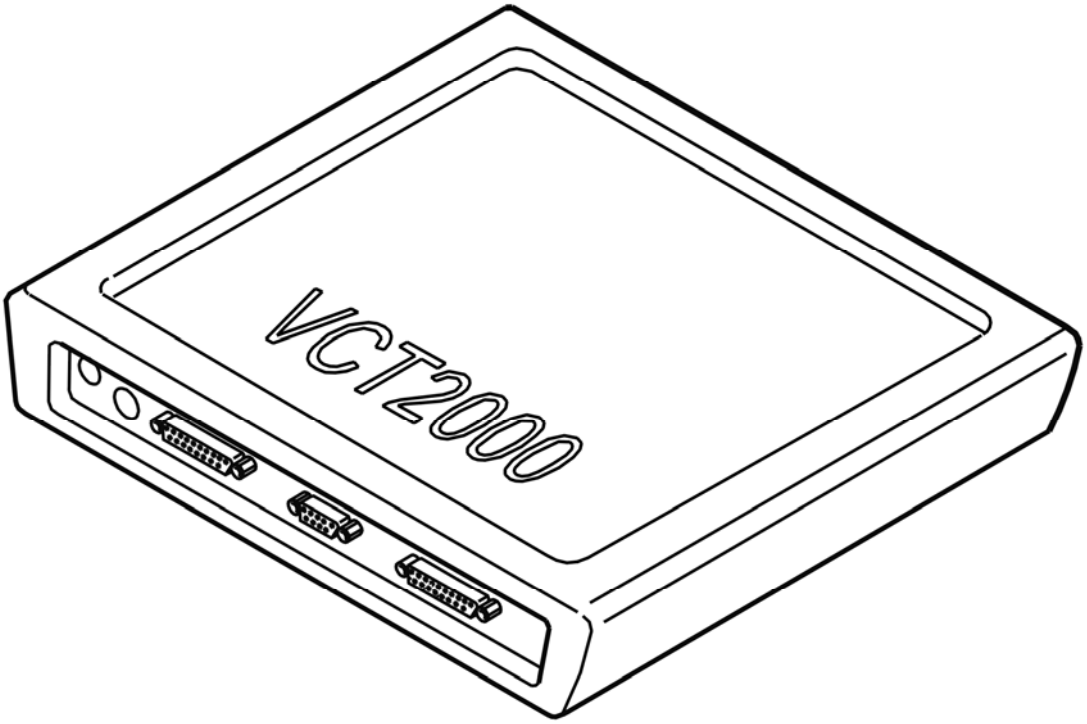

Fig. 202: Identifying VCT2000 Diagnostic Tool Symbol In VIDA
Courtesy of VOLVO CARS CORPORATION

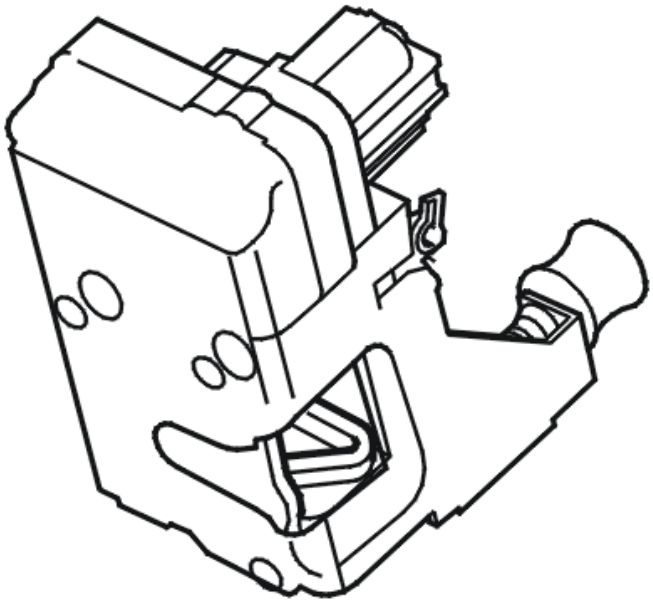

Fig. 203: Identifying Central Locking Motor
Courtesy of VOLVO CARS CORPORATION

Is the status OK?

- **YES**

  VERIFIED: Troubleshooting has been completed.

- **NO**

  Refer to **INFORMATION**

INFORMATION

FAULT-TRACING INFORMATION

The fault should have been detected and remedied. As this is not the case fault-tracing has failed.

Exit fault-tracing for this diagnostic trouble code (DTC) or make another attempt.

REM-6A13: DOOR SWITCH. SIGNAL TOO HIGH (2005-2012)

DIAGNOSTIC TROUBLE CODE (DTC) INFORMATION REM-6A13

Condition

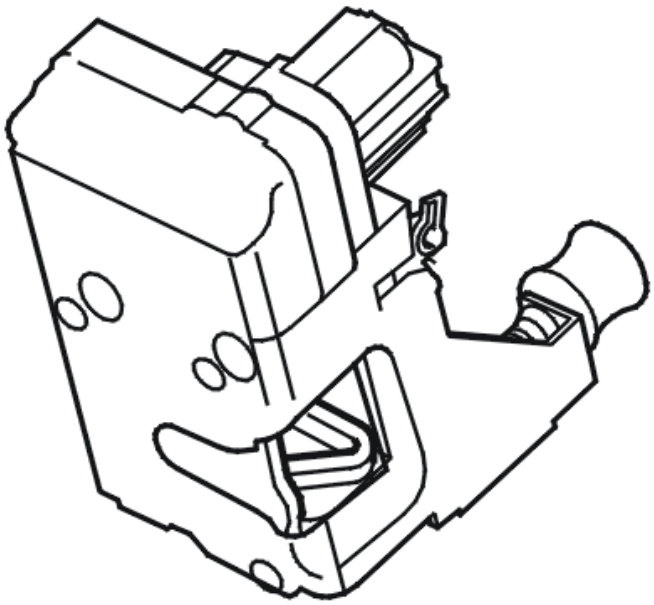

Fig. 204: Identifying Central Locking Motor
Courtesy of VOLVO CARS CORPORATION

The rear electrical module (REM) checks if the doors are open or closed using the switches in the lock units. The switches provide a ground to the rear electronic module (REM) when the doors are shut.

The rear electronic module (REM) checks the status of the switches by powering them for a short period ("polling").

The diagnostic trouble code (DTC) is stored if the rear electronic module (REM) receives a high signal from the **rear right door** switch when the control module has not polled that switch. This is seen as a short-circuit to supply voltage in the switch or the cable to the switch.

Substitute Value

- None.

Possible Source

- Short-circuit to supply voltage in the switch for indicating a closed door.

Fault symptom[s]

- General warning lamp lit.
- Message in the display.
- Does not alarm the door.

SIGNAL TOO HIGH

see **SIGNAL TOO HIGH**

REM-6A14: HOOD SWITCH. SIGNAL TOO HIGH (2005-2012)

DIAGNOSTIC TROUBLE CODE (DTC) INFORMATION REM-6A14

Condition

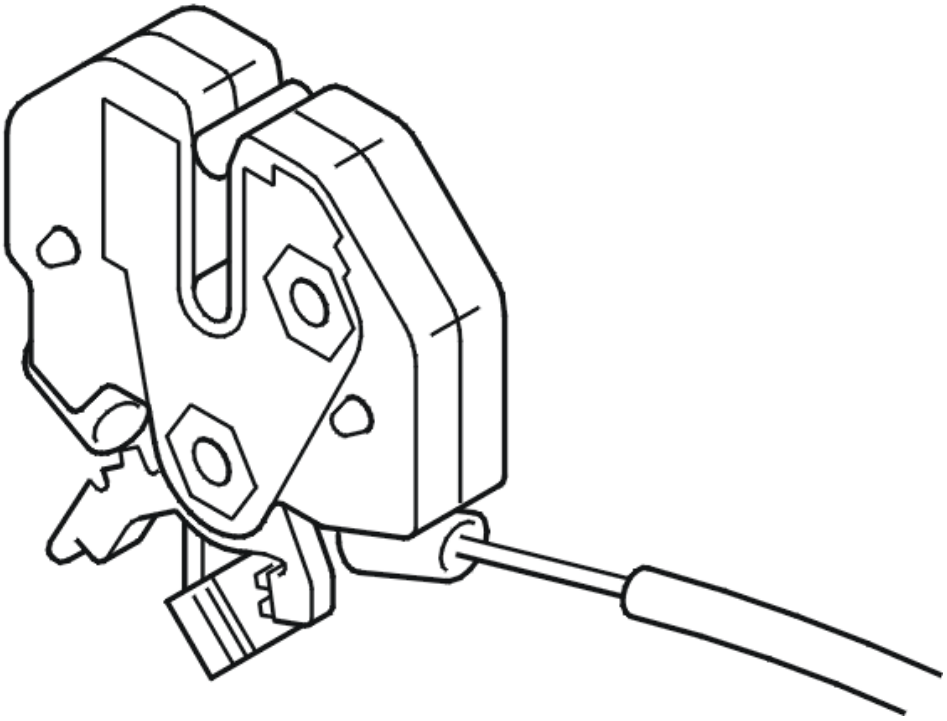

Fig. 205: Identifying Hood Switch
Courtesy of VOLVO CARS CORPORATION

The rear electrical module (REM) uses a switch to check whether the hood is open or closed. The switch provides a ground to the rear electronic module (REM) when the hood is shut.

The rear electronic module (REM) checks the status of the switch by powering it for a short period ("polling").

The diagnostic trouble code (DTC) is stored if the rear electronic module (REM) receives a high signal from the

hood switch when the control module has not polled that switch. This is seen as a short-circuit to supply voltage in the switch or the cable to the switch.

NOTE: This switch is only installed on cars equipped with an alarm.

Substitute Value

- None.

Possible Source

- Short-circuit to supply voltage in the switch for indicating a closed hood.

Fault symptom[s]

- General warning lamp lit.
- Message in the display.
- Does not alarm the hood.

SIGNAL TOO HIGH

CHECKING THE SIGNAL FROM THE HOOD SWITCH

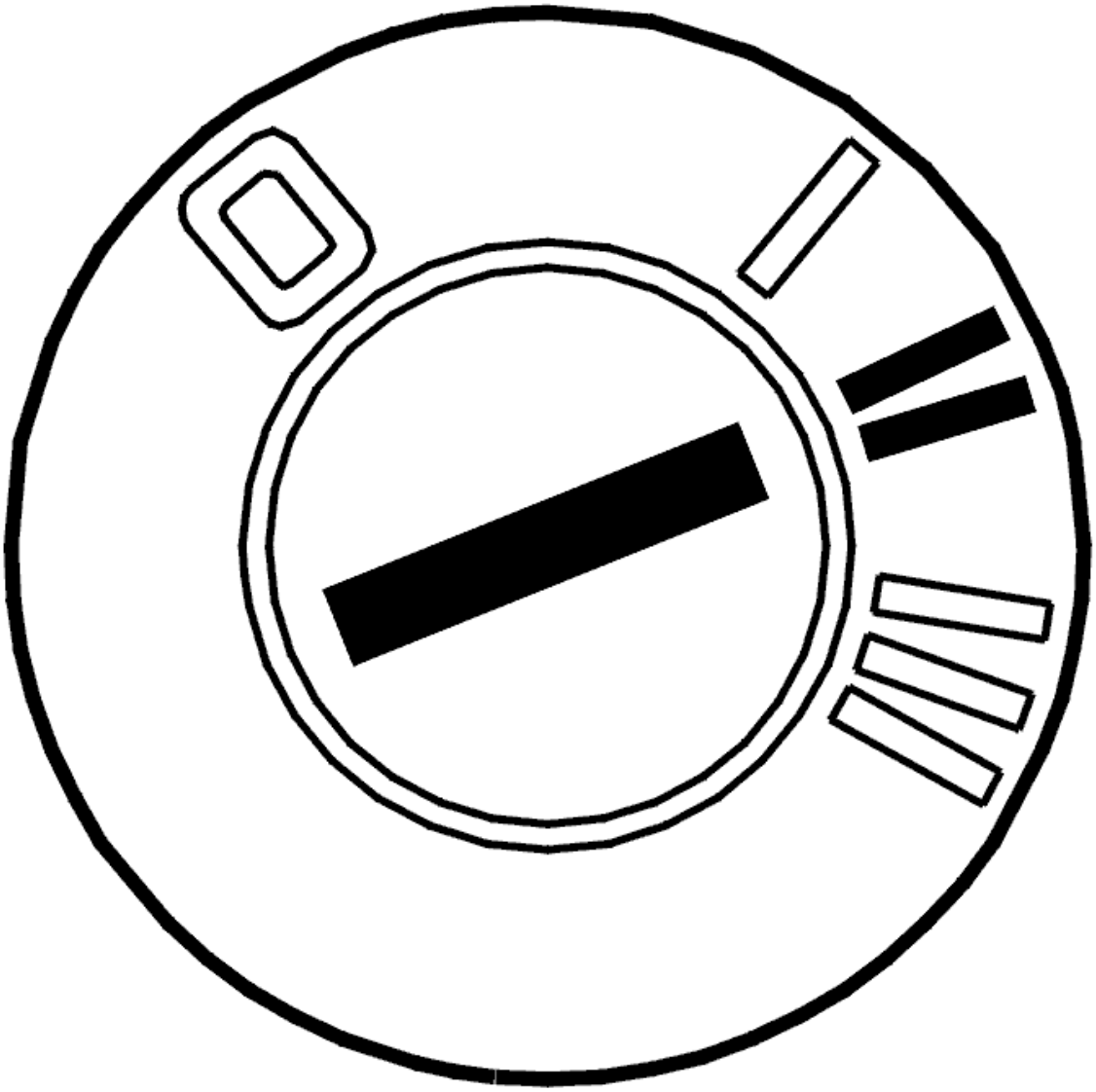

Fig. 206: Identifying Ignition ON
Courtesy of VOLVO CARS CORPORATION

- Ignition on
- Read off the signal from the hood switch.

  Open and close the hood so that the hood switch is affected. The signal should change status.

  The fault is permanent if the signal does not change status.

  If the status changes, this indicates an intermittent fault, i. e. the fault was present previously but is not active at the moment.

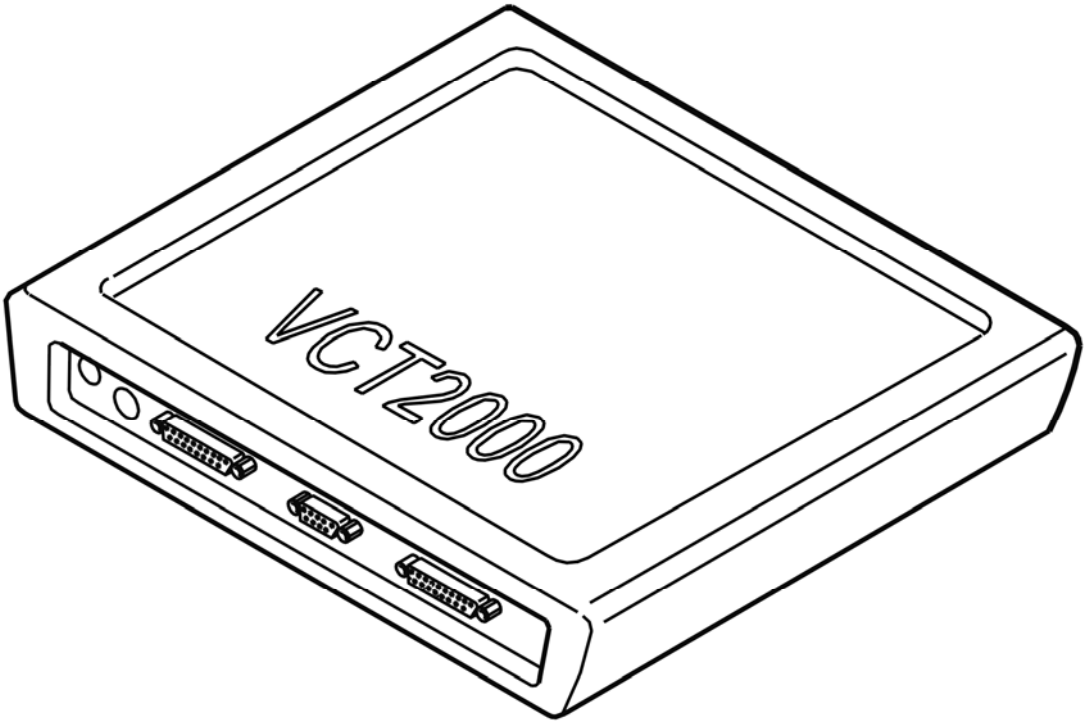

Fig. 207: Identifying VCT2000 Diagnostic Tool Symbol In VIDA
Courtesy of VOLVO CARS CORPORATION

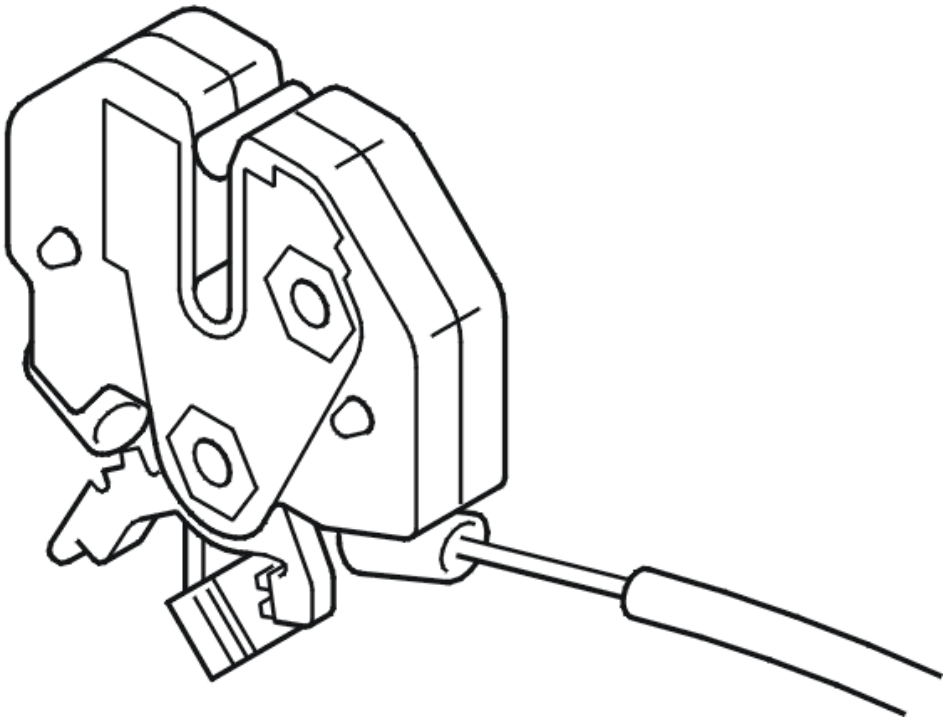

Fig. 208: Identifying Hood Switch
Courtesy of VOLVO CARS CORPORATION

- **Continue**

  Refer to **CHECKING CABLE AND COMPONENT**

CHECKING CABLE AND COMPONENT

Check the signal cable between rear electronic module (REM) connector terminal #44 (#C4) and hood switch terminal #1. Check for a short-circuit to supply voltage.

Remedy as necessary.

Other information

- see **CONNECTING THE BREAKOUT BOX**
- see **SIGNAL SPECIFICATION**
- For -2004, see: **RELAY/FUSE BOX CARGO COMPARTMENT/REAR ELECTRONIC MODULE (REM), REPLACING**
- For 2005-, see: **REAR ELECTRONIC MODULE (REM), REPLACING** .
- see **CHECKING WIRING AND TERMINALS**

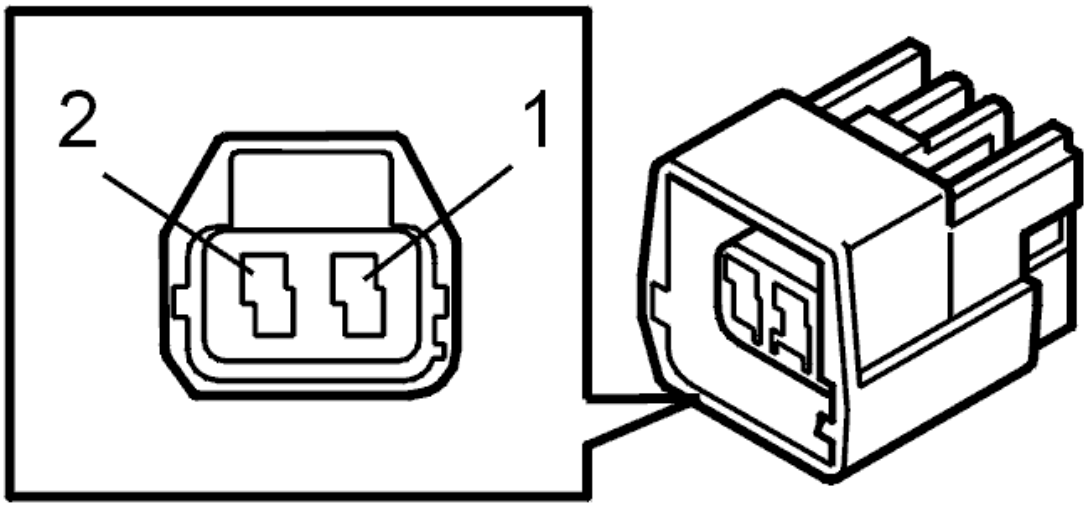

Fig. 209: Identifying Camshaft Reset Valve Connector Terminals
Courtesy of VOLVO CARS CORPORATION

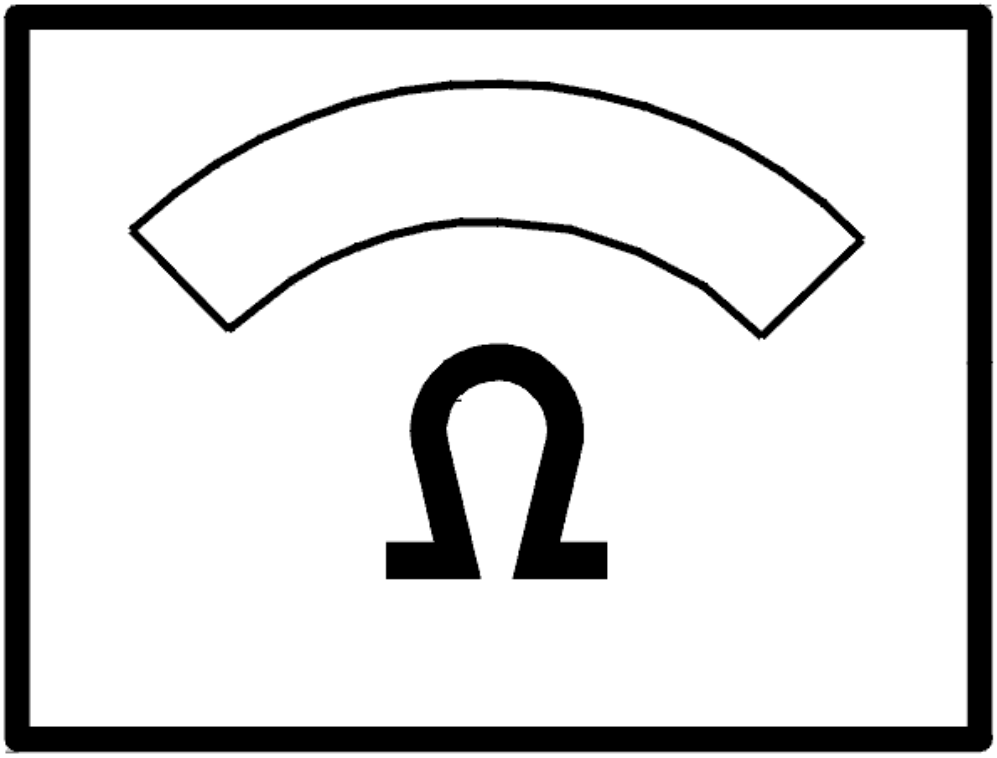

Fig. 210: Identifying Ohm Meter
Courtesy of VOLVO CARS CORPORATION

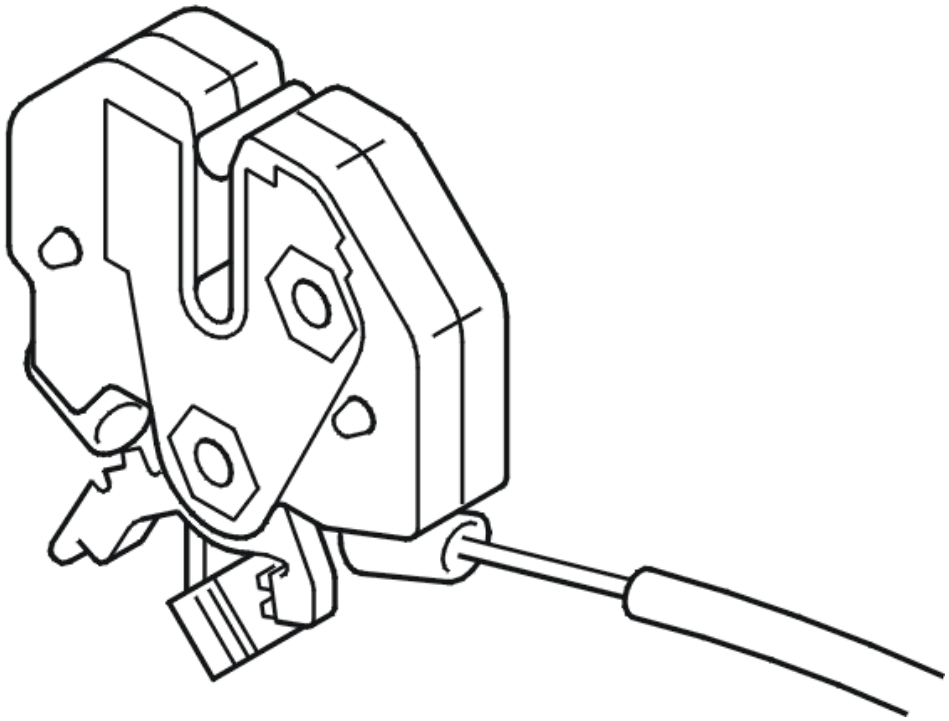

Fig. 211: Identifying Hood Switch
Courtesy of VOLVO CARS CORPORATION

- **Continue**

  Refer to **VERIFICATION**

VERIFICATION

VERIFICATION

HINT: After carrying out the repair, check that the fault has been remedied.

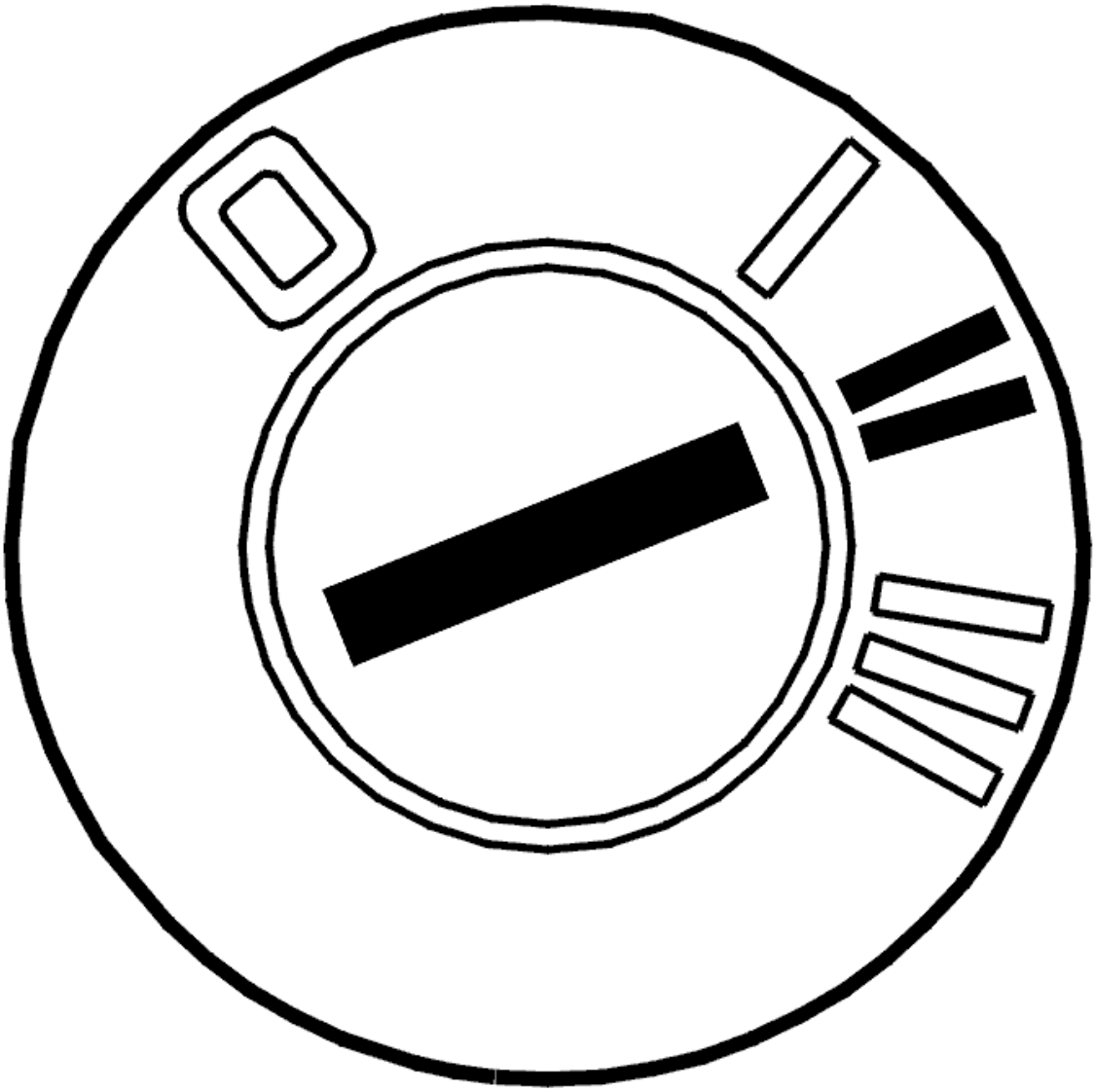

Fig. 212: Identifying Ignition ON
Courtesy of VOLVO CARS CORPORATION

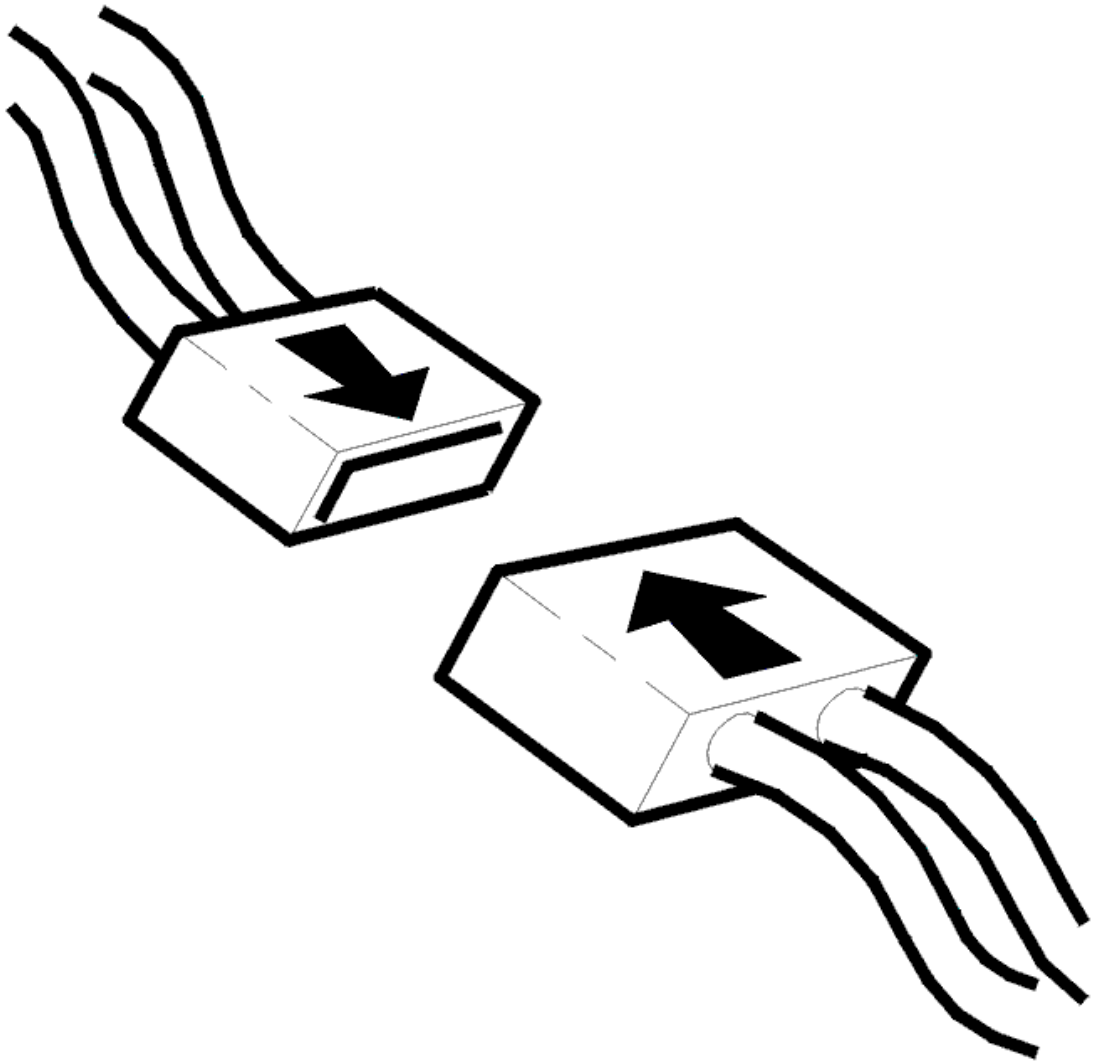

Fig. 213: Connecting Connector
Courtesy of VOLVO CARS CORPORATION

- Ignition off
- Reinstall the connectors, components etc.
- Ignition on
- Read off the signal from the hood switch.

  Open and close the hood so that the hood switch is affected. The signal should change status.

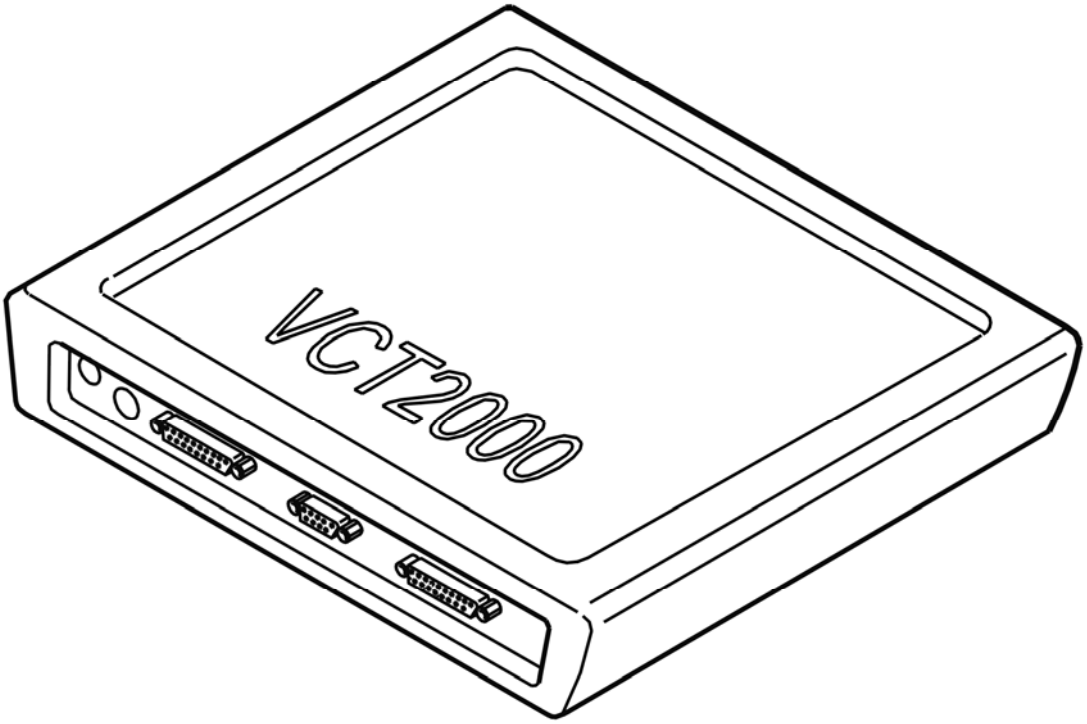

Fig. 214: Identifying VCT2000 Diagnostic Tool Symbol In VIDA
Courtesy of VOLVO CARS CORPORATION

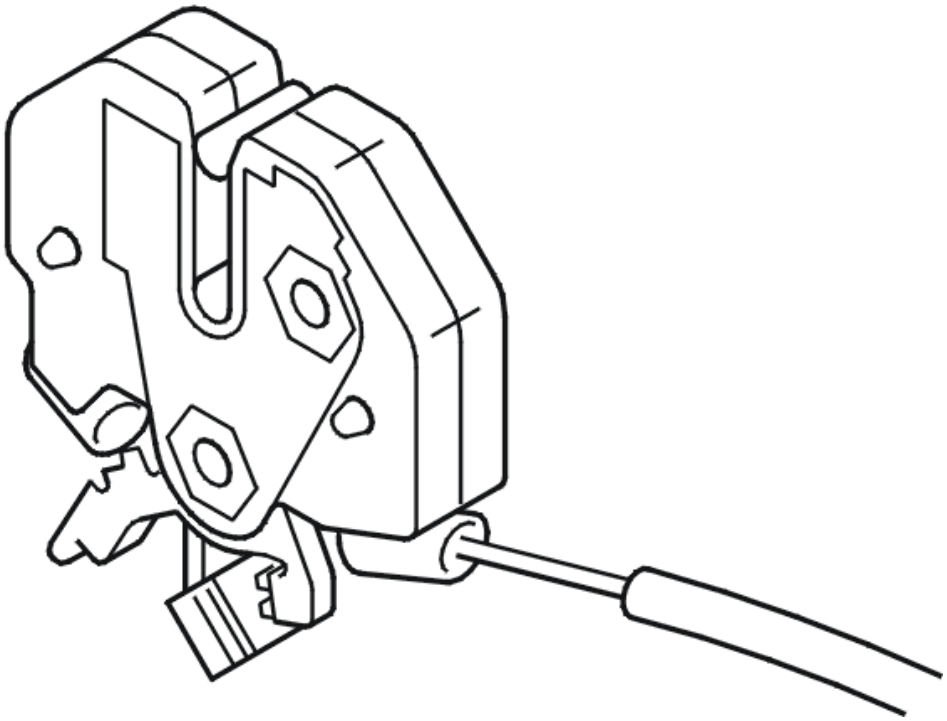

Fig. 215: Identifying Hood Switch
Courtesy of VOLVO CARS CORPORATION

Is the status OK?

- **YES**

  VERIFIED: Troubleshooting has been completed.

- **NO**

  Refer to **INFORMATION**

INFORMATION

FAULT-TRACING INFORMATION

The fault should have been detected and remedied. As this is not the case fault-tracing has failed.

Exit fault-tracing for this diagnostic trouble code (DTC) or make another attempt.

REM-6A15: SWITCH, TAILGATE. SIGNAL TOO HIGH (2005-2012)

DIAGNOSTIC TROUBLE CODE (DTC) INFORMATION REM-6A15

Condition

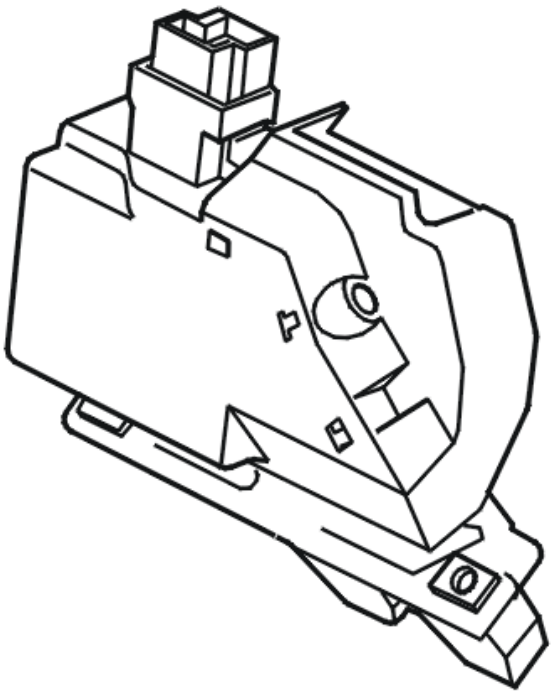

Fig. 216: Identifying Tailgate Switch
Courtesy of VOLVO CARS CORPORATION

The rear electrical module (REM) checks if the tailgate is open or closed using a switch in the lock unit of the tailgate. The switch provides a ground to the rear electronic module (REM) when the tailgate is shut.

The rear electronic module (REM) checks the status of the switch by powering it for a short period ("polling").

The diagnostic trouble code (DTC) is stored if the rear electronic module (REM) receives a high signal from the **tailgate** switch when the control module has not polled that switch. This is seen as a short-circuit to supply voltage in the switch or the cable to the switch.

Substitute Value

- None.

Possible Source

- Short-circuit to supply voltage in the switch for indicating a closed tailgate.

Fault symptom[s]

- General warning lamp lit.
- Message in the display.
- Does not alarm the tailgate.

SIGNAL TOO HIGH

CHECKING THE SIGNAL FROM THE SWITCH IN THE TAILGATE/TRUNK LID

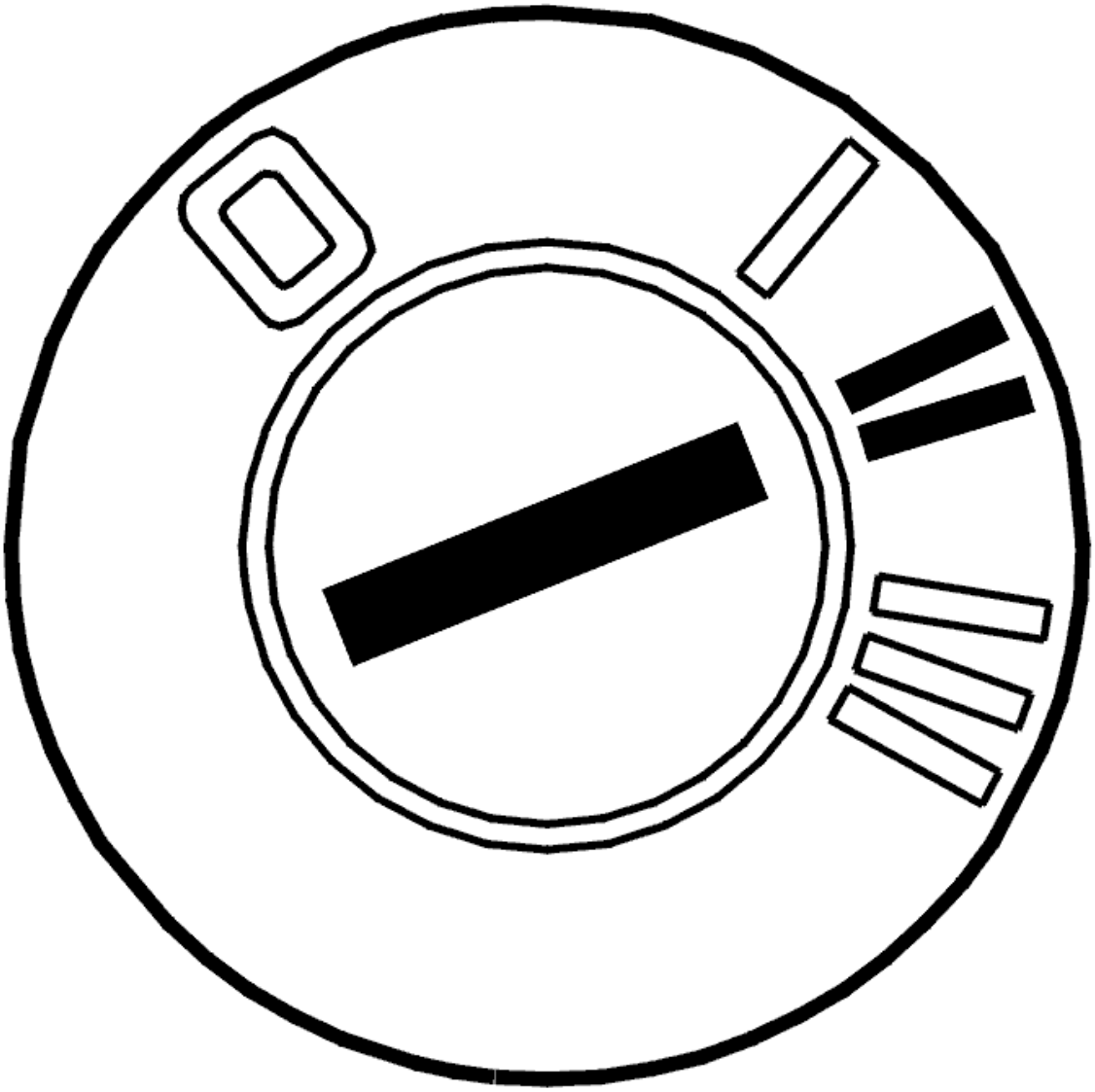

Fig. 217: Identifying Ignition ON
Courtesy of VOLVO CARS CORPORATION

- Ignition on
- Read off the status from the switch in tailgate/trunk lid (indicates whether the tailgate/trunk lid is open or closed).

Open and close the trunk lid / tailgate. The status should change when the tailgate/trunk lid is opened/closed.

The fault is permanent if the status does not change.

If the status changes, this indicates an intermittent fault, i. e. the fault was present previously but is not active at the moment.

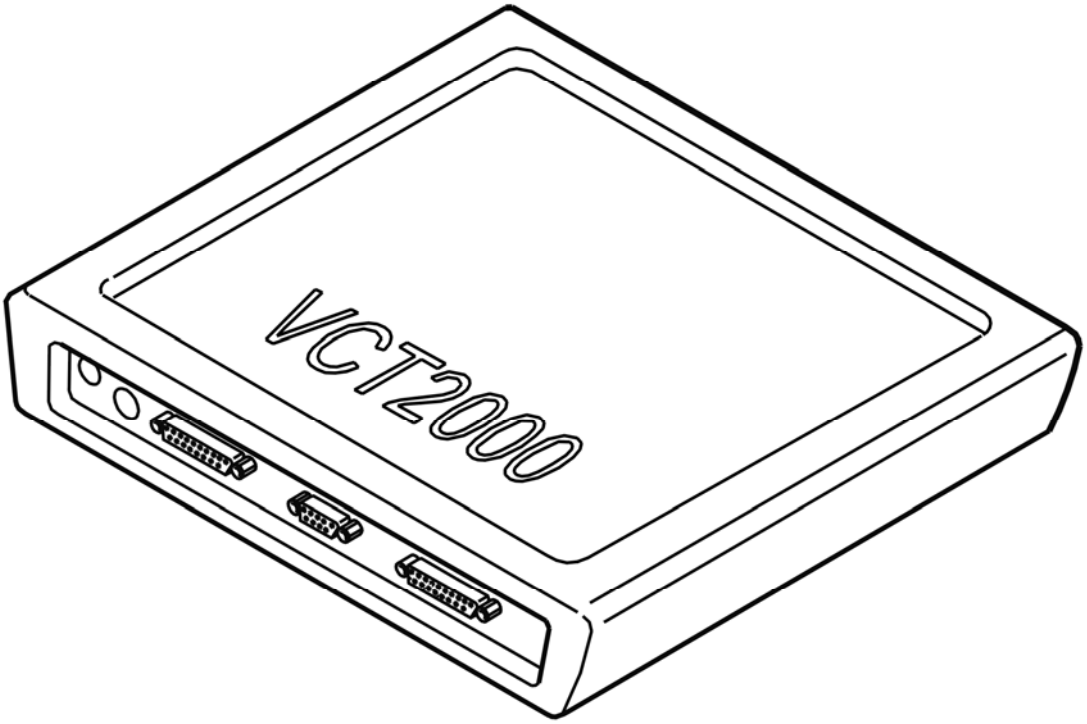

Fig. 218: Identifying VCT2000 Diagnostic Tool Symbol In VIDA
Courtesy of VOLVO CARS CORPORATION

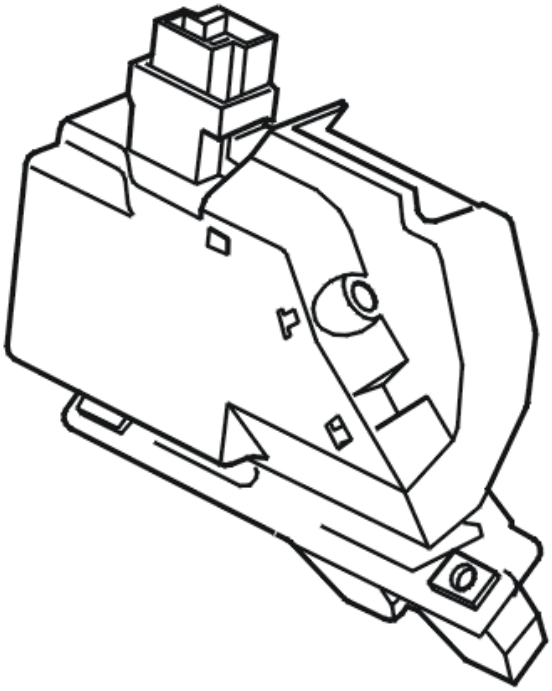

Fig. 219: Identifying Tailgate Switch
Courtesy of VOLVO CARS CORPORATION

- **Continue**

  Refer to **CHECKING CABLE AND COMPONENT**

CHECKING CABLE AND COMPONENT

Check the signal cable between rear electronic module (REM) connector terminal #42 (#F2) and terminal #1 on the lock mechanism connector. Check for a short-circuit to supply voltage. Check for an open-circuit.

Remedy as necessary.

Other information

- see **CONNECTING THE BREAKOUT BOX**
- see **SIGNAL SPECIFICATION**
- For -2004, see: **RELAY/FUSE BOX CARGO COMPARTMENT/REAR ELECTRONIC MODULE (REM), REPLACING**
- For 2005-, see: **REAR ELECTRONIC MODULE (REM), REPLACING** .
- see **CHECKING WIRING AND TERMINALS**

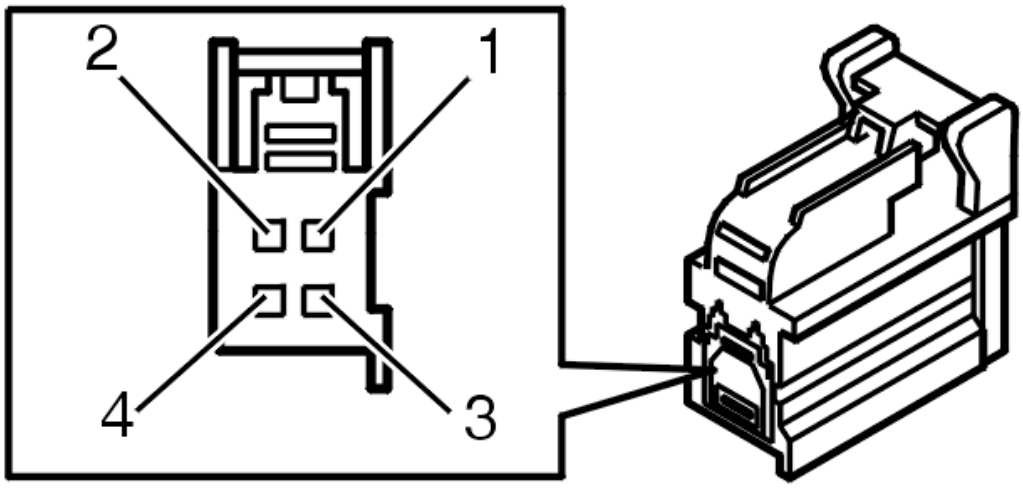

Fig. 220: Checking Wiring & Terminals
Courtesy of VOLVO CARS CORPORATION

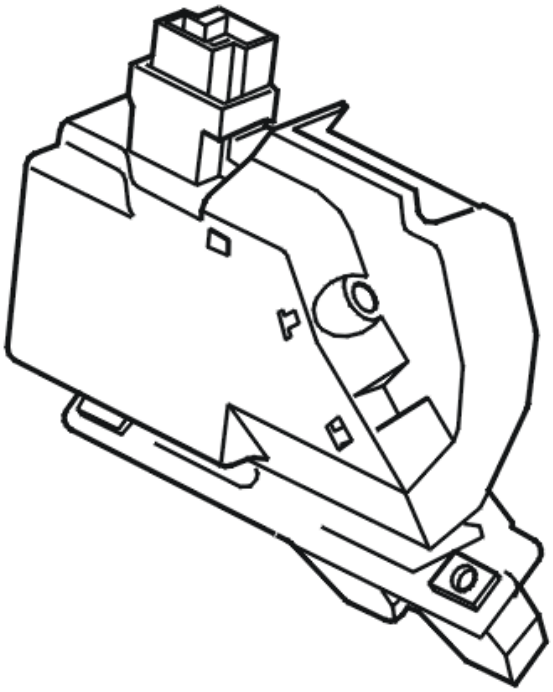

Fig. 221: Identifying Tailgate Switch
Courtesy of VOLVO CARS CORPORATION

- **Continue**

  Refer to **VERIFICATION**

VERIFICATION

VERIFICATION

HINT: After carrying out the repair, check that the fault has been remedied.

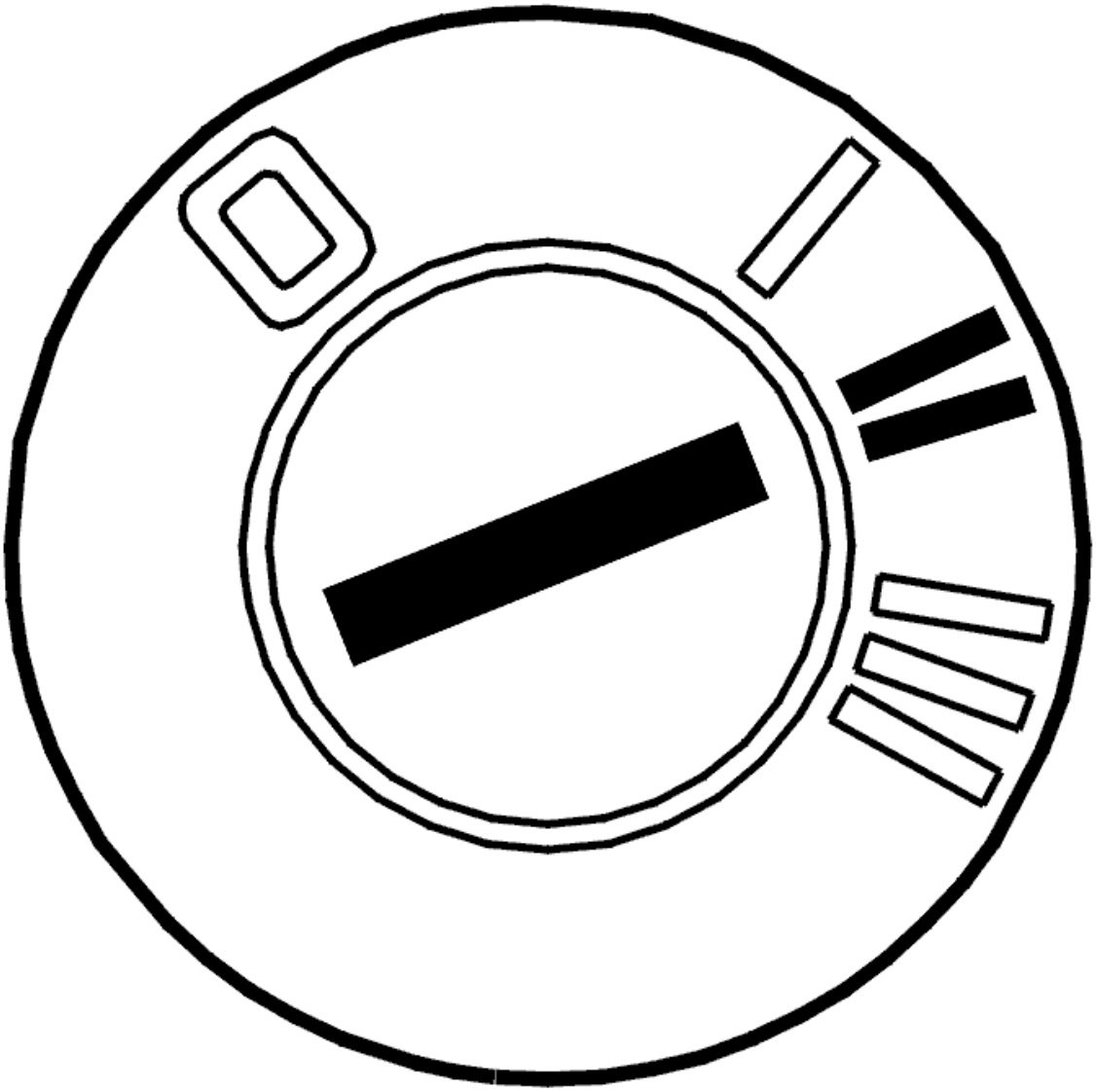

Fig. 222: Identifying Ignition ON
Courtesy of VOLVO CARS CORPORATION

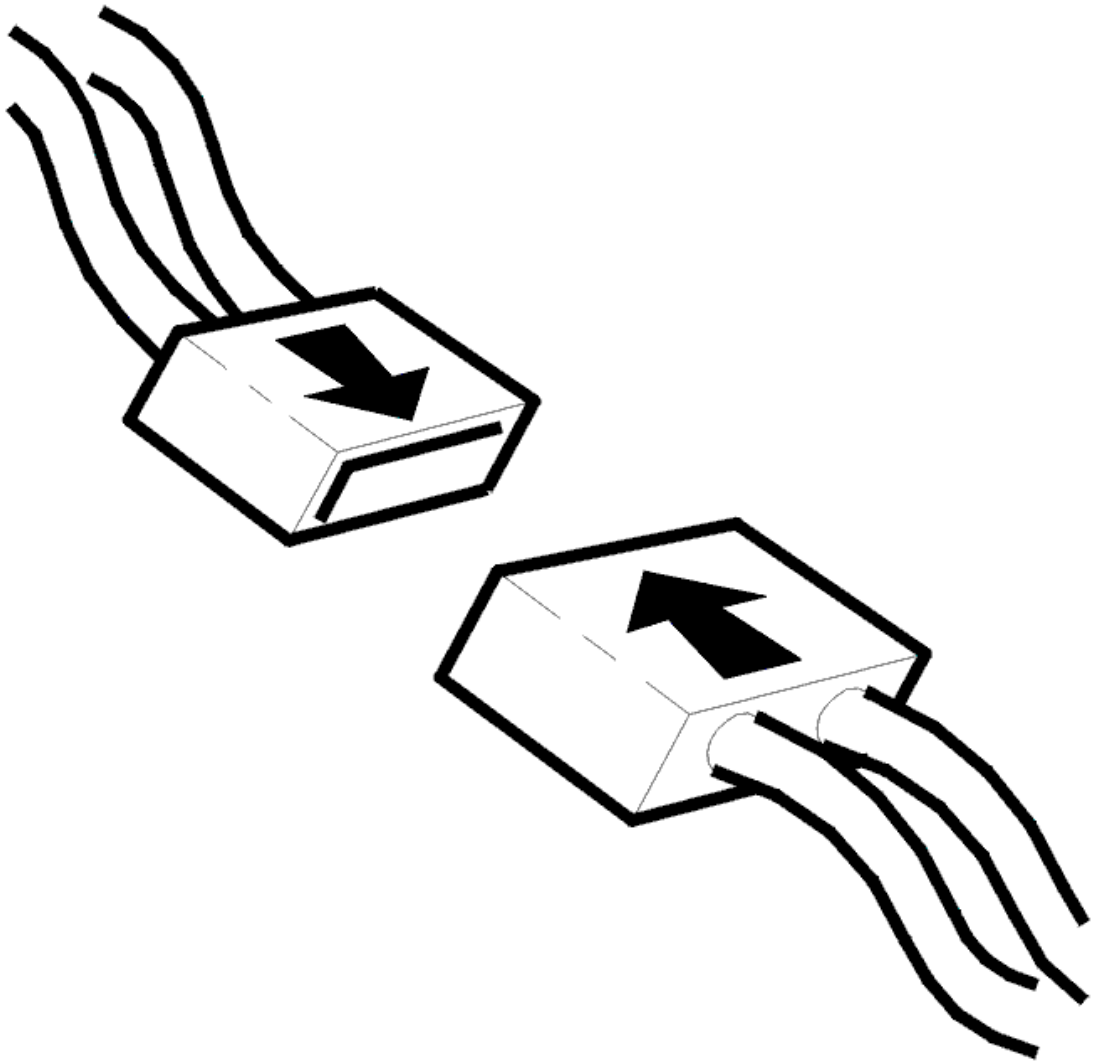

Fig. 223: Connecting Connector
Courtesy of VOLVO CARS CORPORATION

- Ignition off
- Reinstall the connectors, components etc.
- Ignition on
- Read off the status from the switch in tailgate/trunk lid (indicates whether the tailgate/trunk lid is open or closed).

  Open and close the trunk lid / tailgate. The status should change when the tailgate/trunk lid is opened/closed.

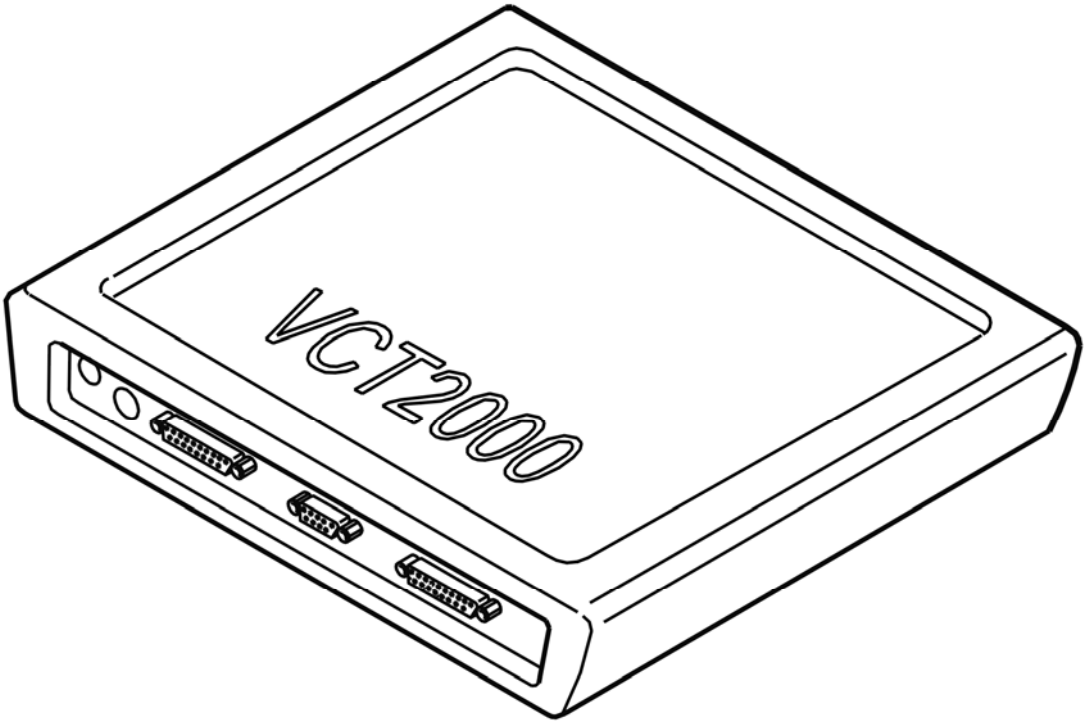

Fig. 224: Identifying VCT2000 Diagnostic Tool Symbol In VIDA
Courtesy of VOLVO CARS CORPORATION

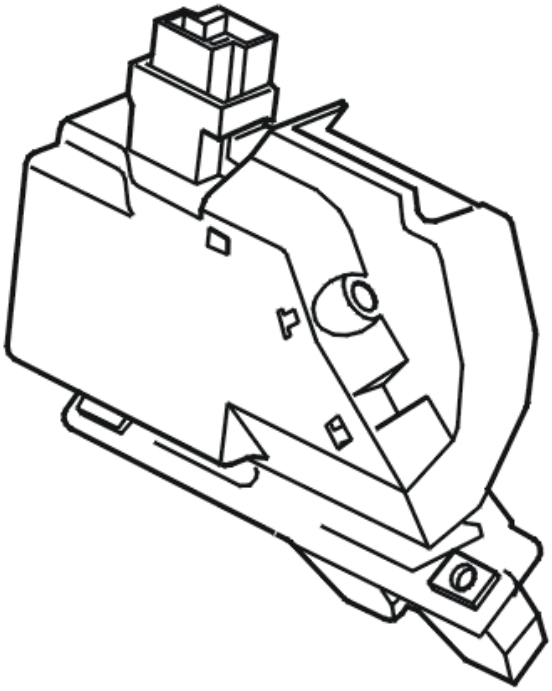

Fig. 225: Identifying Tailgate Switch
Courtesy of VOLVO CARS CORPORATION

Is the status OK?

- **YES**

  VERIFIED: Troubleshooting has been completed.

- **NO**

  Refer to **INFORMATION**

INFORMATION

FAULT-TRACING INFORMATION

The fault should have been detected and remedied. As this is not the case fault-tracing has failed.

Exit fault-tracing for this diagnostic trouble code (DTC) or make another attempt.

REM-6C11: TILT SENSOR, POWER SUPPLY. SIGNAL TOO HIGH. INTERMITTENT FAULT (2003-2004)

DIAGNOSTIC TROUBLE CODE (DTC) INFORMATION

Condition

Diagnostic trouble code (DTC) REM-6C11 is stored if the rear electronic module registers that the signal in the tilt sensor communication cable is too high when the alarm is deactivated.

Substitute Value

None.

Possible Source

- Short-circuit to supply voltage in the power supply cable to the tilt sensor.

Fault symptom[s]

- Does not alarm the sensor.

SIGNAL TOO HIGH. INTERMITTENT FAULT

CHECKING THE WIRING

Check the power supply cable between rear electronic module connector #B20 (#D20) and tilt sensor connector terminal #1 for an intermittent short-circuit to supply voltage according to **SHORT-CIRCUIT TO SUPPLY VOLTAGE, INTERMITTENT FAULTS** .

Other information

- For further information about signals and other values, see **SIGNAL SPECIFICATION** .
- To connect the breakout box, see **CONNECTING THE BREAKOUT BOX** .
- To access the rear electronic module, see **RELAY/FUSE BOX CARGO COMPARTMENT/REAR ELECTRONIC MODULE (REM), REPLACING** .

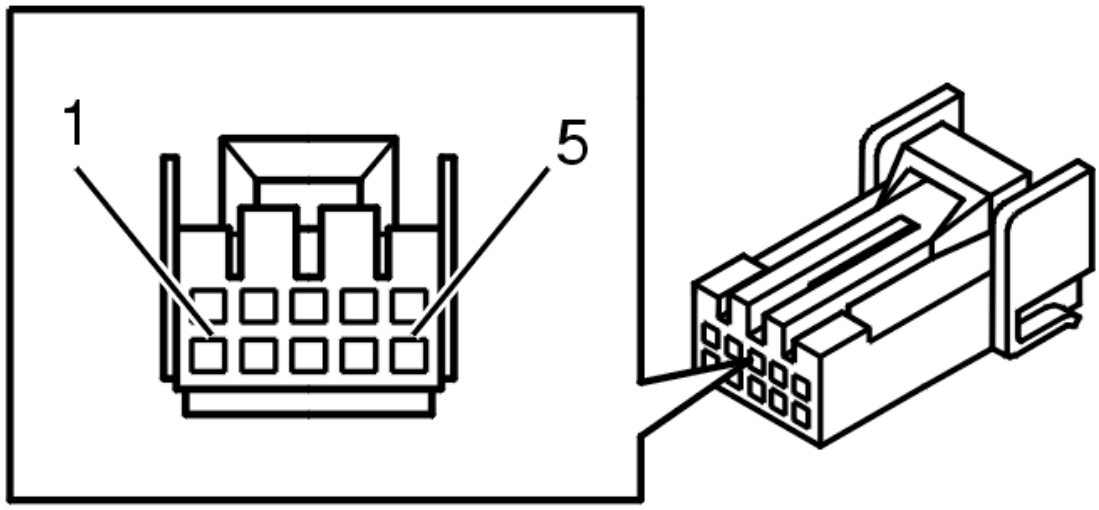

Fig. 226: 10 CD Changer Connector Terminals
Courtesy of VOLVO CARS CORPORATION

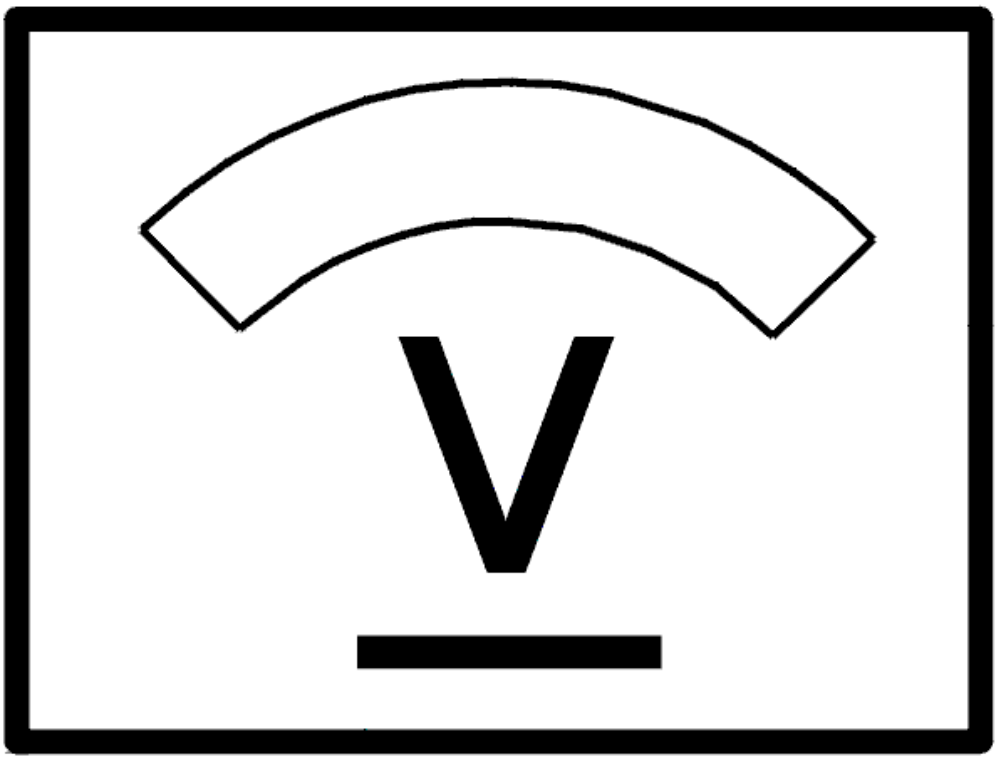

Fig. 227: Identifying Voltage Display
Courtesy of VOLVO CARS CORPORATION

- **Continue**

  Refer to **INFORMATION**

INFORMATION

FAULT-TRACING INFORMATION

If the fault is intermittent, do not verify fault-tracing if the fault does not recur.

It is possible to view the information again, or leave fault-tracing for this diagnostic trouble code (DTC).

REM-6C11: TILT SENSOR, POWER SUPPLY. SIGNAL TOO HIGH.

PERMANENT FAULT (2003-2004)

DIAGNOSTIC TROUBLE CODE (DTC) INFORMATION

see **DIAGNOSTIC TROUBLE CODE (DTC) INFORMATION**

SIGNAL TOO HIGH. PERMANENT FAULT

CHECKING THE WIRING

Check the power supply cable between rear electronic module connector #B20 (#D20) and tilt sensor connector terminal #1 for a short-circuit to supply voltage according to **SHORT-CIRCUIT TO SUPPLY VOLTAGE. PERMANENT FAULTS** .

Other information

- For further information about signals and other values, see **SIGNAL SPECIFICATION** .
- To connect the breakout box, see **CONNECTING THE BREAKOUT BOX** .
- To access the rear electronic module, see **RELAY/FUSE BOX CARGO COMPARTMENT/REAR ELECTRONIC MODULE (REM), REPLACING** .

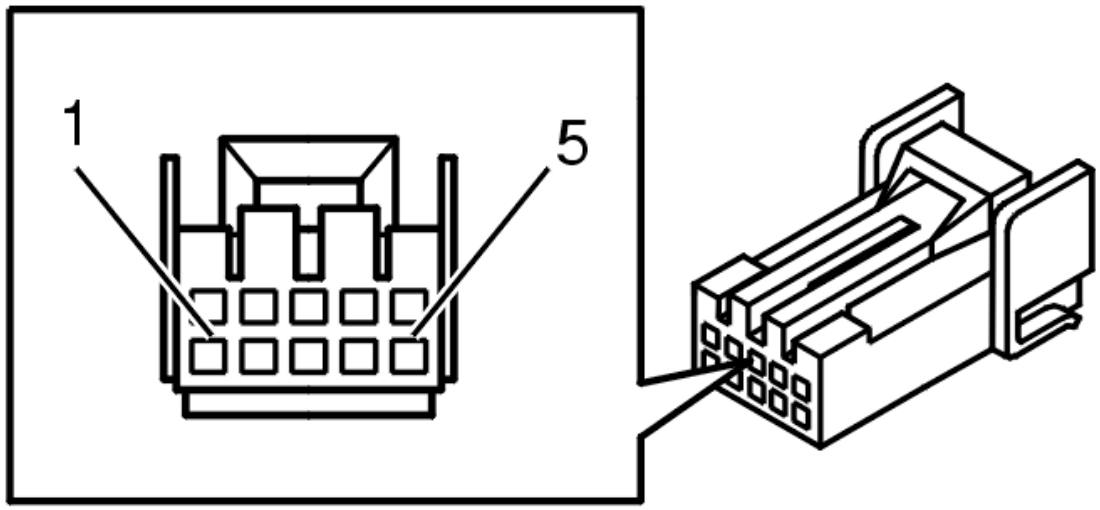

Fig. 228: 10 CD Changer Connector Terminals
Courtesy of VOLVO CARS CORPORATION

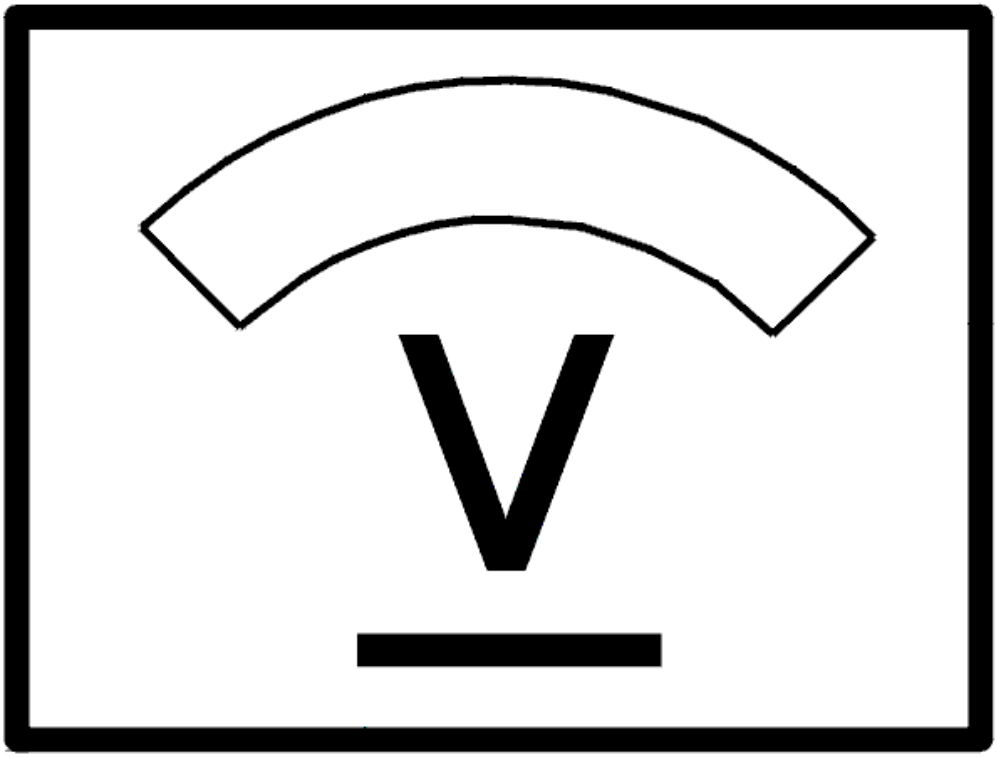

Fig. 229: Identifying Voltage Display
Courtesy of VOLVO CARS CORPORATION

- **Continue**

  Refer to **VERIFICATION**

VERIFICATION

VERIFICATION

HINT: After the repair it is necessary to check that the fault has been rectified.

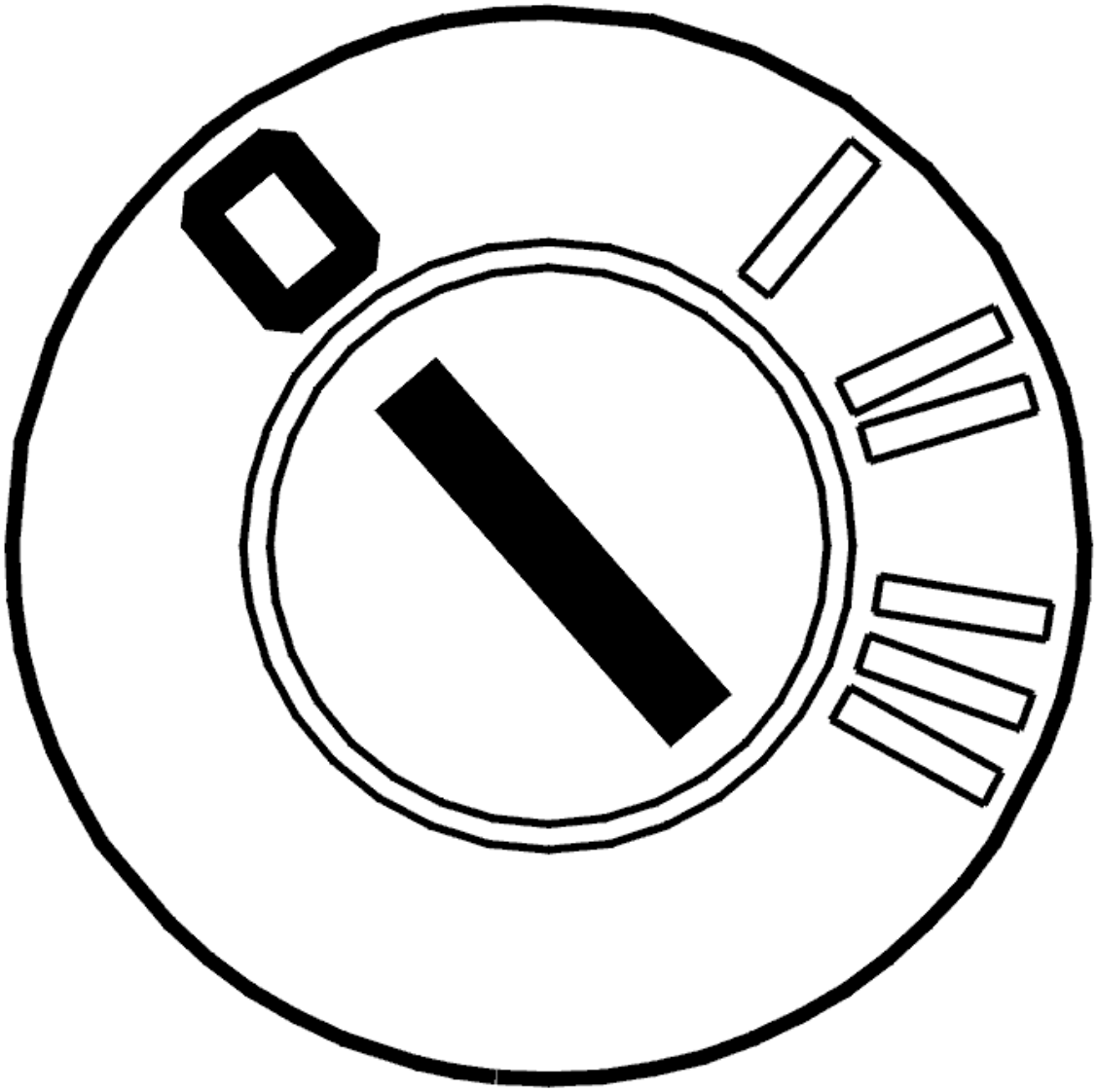

Fig. 230: Identifying Ignition OFF
Courtesy of VOLVO CARS CORPORATION

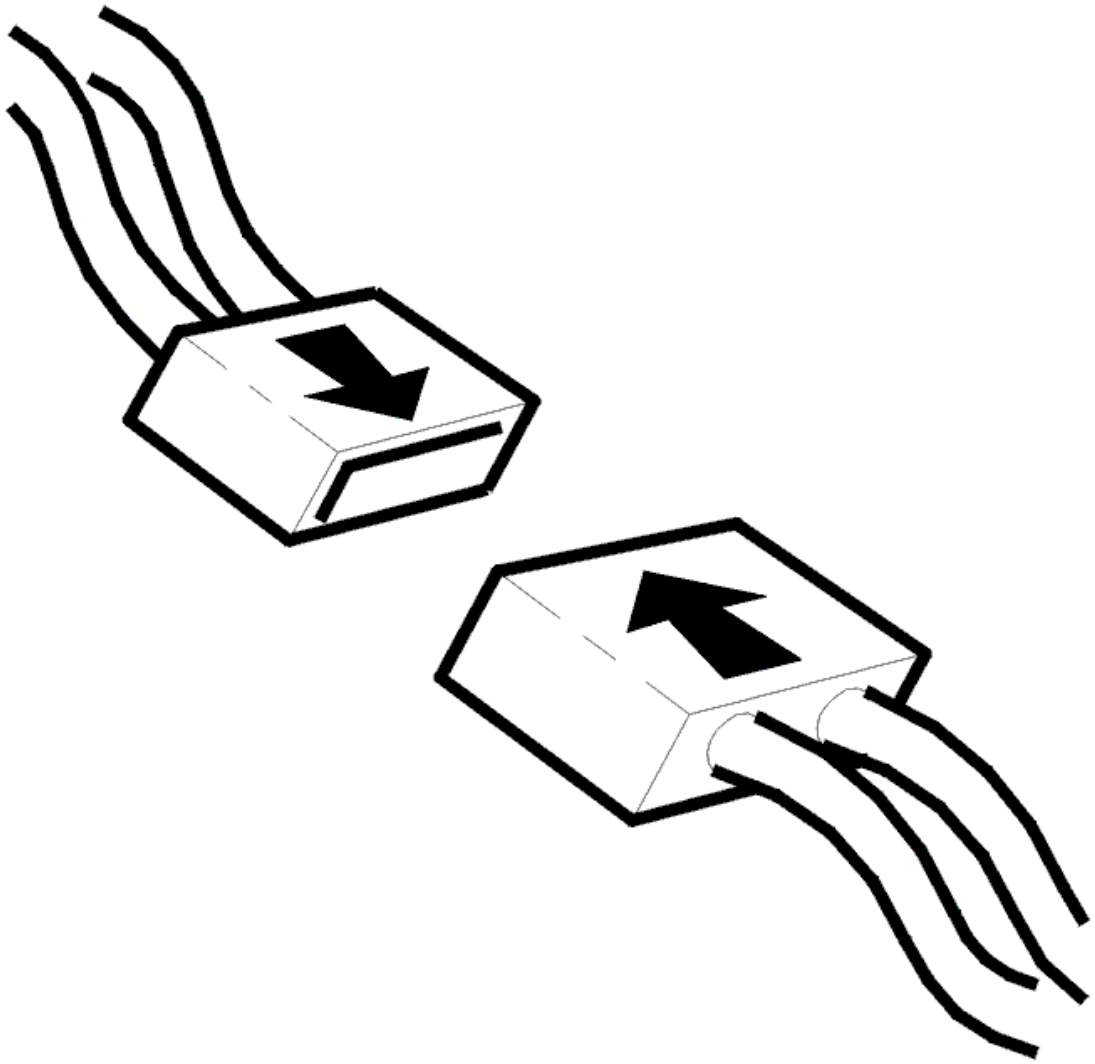

Fig. 231: Connecting Connector
Courtesy of VOLVO CARS CORPORATION

- Ignition off.
- Connect the connectors, install the components, etc.

  Open the boot lid and lock in the open position by pressing in the lock hinge.

  Lock the car by remote control.

  Wait for 25 seconds until the alarm is activated and sound the alarm by releasing the level sensor and turning it.

Is function OK?

- **YES**

VERIFIED: Troubleshooting has been completed.

- **NO**

  Refer to **INFORMATION**

INFORMATION

FAULT-TRACING INFORMATION

The fault should have been detected and remedied. As this is not the case fault-tracing has failed.

Exit fault-tracing for this diagnostic trouble code (DTC) or make another attempt.

REM-6C11: TILT SENSOR. SIGNAL TOO HIGH (2005-2012)

DIAGNOSTIC TROUBLE CODE (DTC) INFORMATION REM-6C11

Condition

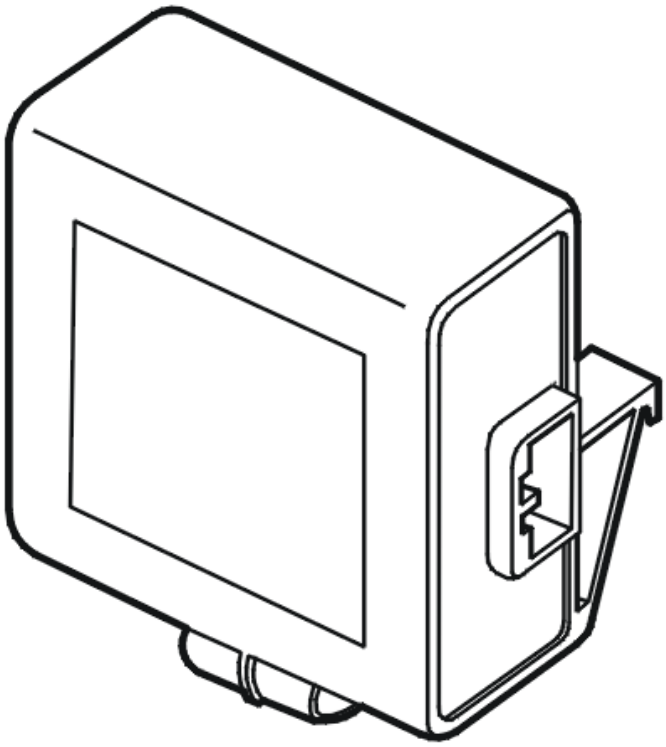

Fig. 232: Identifying Inclination Sensor Module
Courtesy of VOLVO CARS CORPORATION

The rear electronic module (REM) controls the power supply to the inclination sensor module (ISM). The

power supply is active when the alarm is activated if the function for reduced alarm is not activated.

The diagnostic trouble code (DTC) is stored if the rear electronic module (REM) registers a high level in the power supply to the inclination sensor module (ISM) even though the power supply is not activated.

The diagnostic trouble code (DTC) can be diagnosed when the rear electronic module (REM) is in alert mode and the alarm is not activated.

Substitute Value

- None.

Possible Source

- Short-circuit to supply voltage in the power supply for the inclination sensor module (ISM).

Fault symptom[s]

- Does not alarm the sensor.

SIGNAL TOO HIGH

CHECKING CABLE AND COMPONENT

Check the power supply cable between rear electronic module (REM) connector terminal #31 (#D31) and tilt sensor connector terminal #1. Check for a short-circuit to supply voltage.

Remedy as necessary.

Other information

- see **CONNECTING THE BREAKOUT BOX**
- see **SIGNAL SPECIFICATION**
- For -2004, see: **RELAY/FUSE BOX CARGO COMPARTMENT/REAR ELECTRONIC MODULE (REM), REPLACING**
- For 2005-, see: **REAR ELECTRONIC MODULE (REM), REPLACING** .
- see **CHECKING WIRING AND TERMINALS**

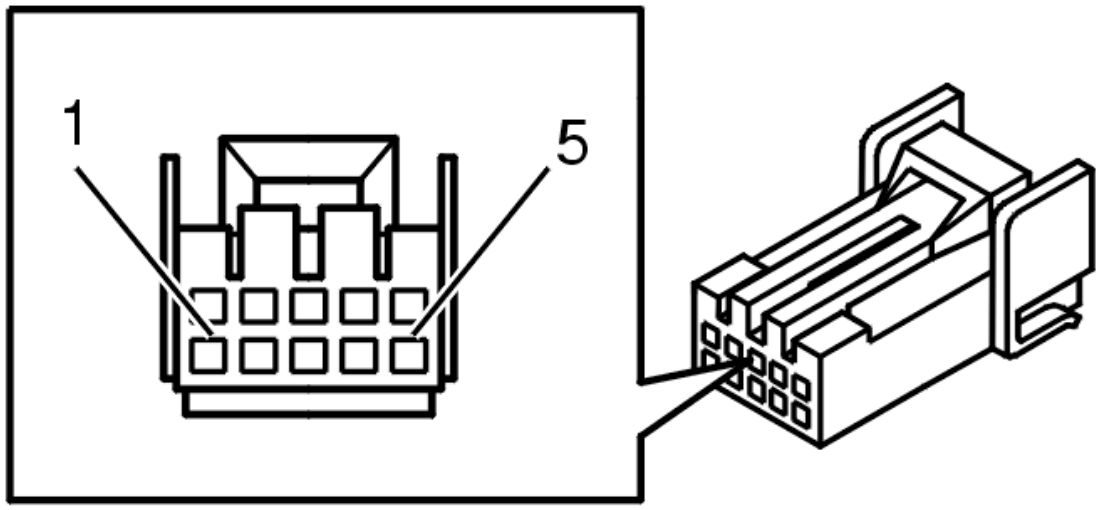

Fig. 233: 10 CD Changer Connector Terminals
Courtesy of VOLVO CARS CORPORATION

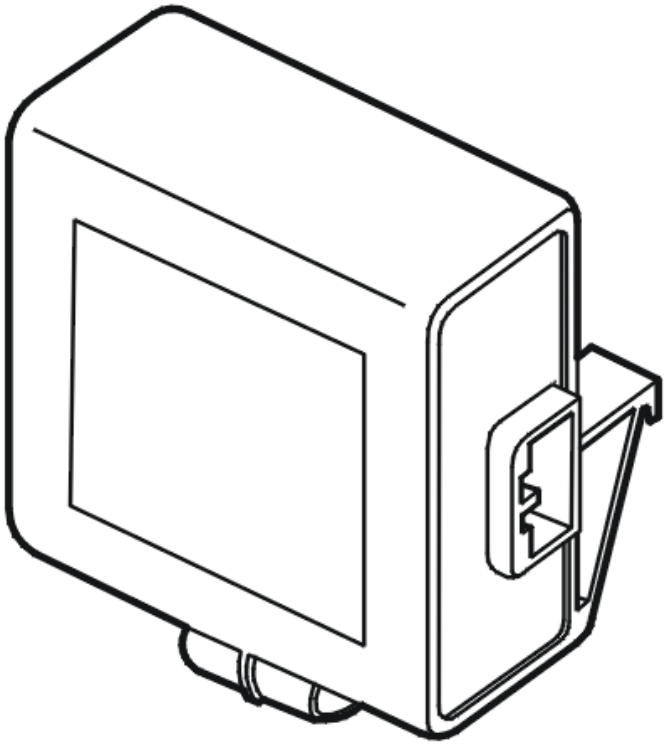

Fig. 234: Identifying Inclination Sensor Module
Courtesy of VOLVO CARS CORPORATION

- **Continue**

  Refer to **VERIFICATION**

VERIFICATION

VERIFICATION

HINT: After carrying out the repair, check that the fault has been remedied.

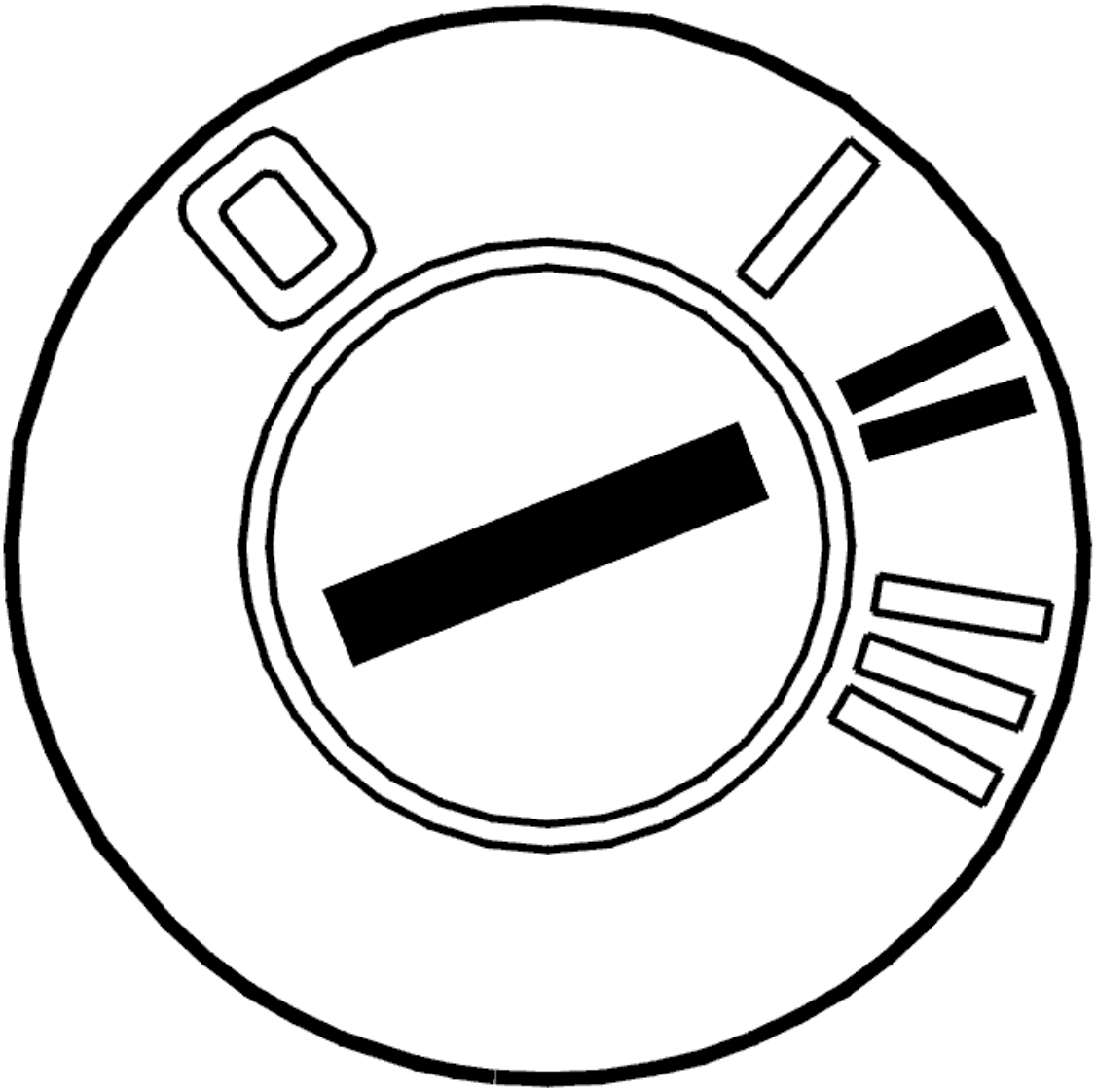

Fig. 235: Identifying Ignition ON
Courtesy of VOLVO CARS CORPORATION

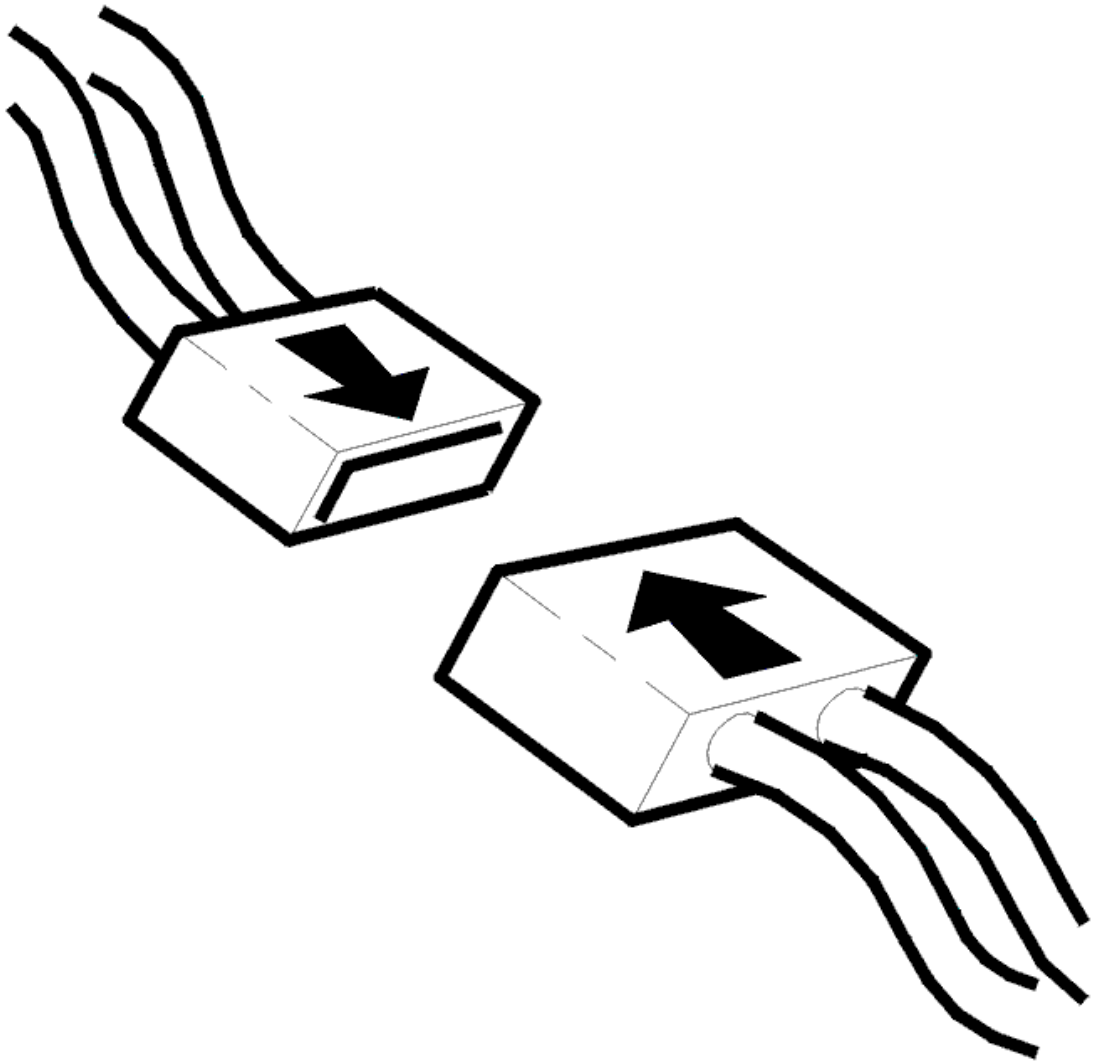

Fig. 236: Connecting Connector
Courtesy of VOLVO CARS CORPORATION

- Ignition off
- Reinstall the connectors, components etc.
- Ignition on
- Shut all the doors. Activate the alarm. Wait 25 seconds until the car is alarmed
- Then deactivate the alarm
- Read off diagnostic trouble codes (DTCs).

Check if the status of the diagnostic trouble code (DTC) is intermittent.

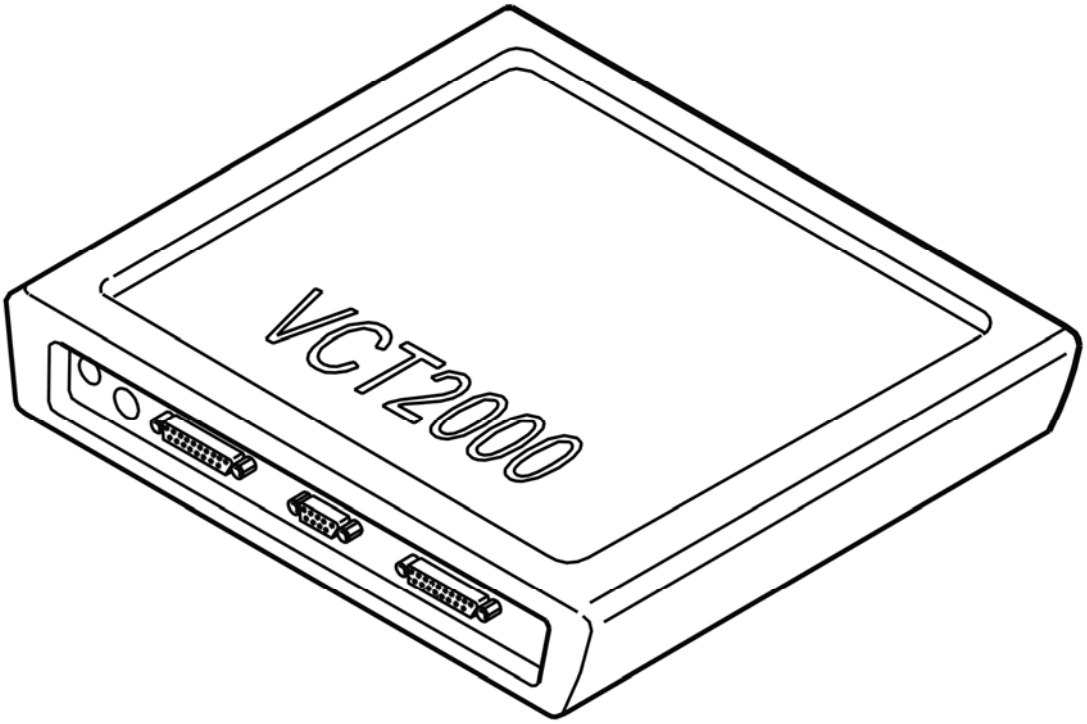

Fig. 237: Identifying VCT2000 Diagnostic Tool Symbol In VIDA
Courtesy of VOLVO CARS CORPORATION

Is the status intermittent?

- **YES**

  VERIFIED: Troubleshooting has been completed.

- **NO**

  Refer to **INFORMATION**

INFORMATION

FAULT-TRACING INFORMATION

The fault should have been detected and remedied. As this is not the case fault-tracing has failed.

Exit fault-tracing for this diagnostic trouble code (DTC) or make another attempt.

REM-6C12: TILT SENSOR, POWER SUPPLY. SIGNAL TOO LOW. INTERMITTENT FAULT (2003-2004)

DIAGNOSTIC TROUBLE CODE INFORMATION

Condition

If the rear electronic module registers too low a signal for the level sensor supply wire when the alarm is set, diagnostic trouble code REM-6C12 is displayed.

Substitute Value

Nothing.

Possible Source

- Level sensor voltage supply short circuited to ground
- Faulty sensor.

Fault symptom[s]

- No alarm from sensor.

SIGNAL TOO LOW. INTERMITTENT FAULT

CHECKING THE WIRING

Check the power supply cable between rear electronic module (REM) connector terminal #B20 (#D20) and tilt sensor connector terminal #1. Check for an intermittent short-circuit to ground.

If no fault was found, try a new sensor.

Other information

- For further information about signals and other values, see **SIGNAL SPECIFICATION**
- To connect the breakout box, see **CONNECTING THE BREAKOUT BOX**
- To access the rear electronic module (REM), see **RELAY/FUSE BOX CARGO COMPARTMENT/REAR ELECTRONIC MODULE (REM), REPLACING**
- To access and replace the tilt sensor, see **TILT SENSOR ALARM, REPLACING**
- see **CHECKING WIRING AND TERMINALS** .

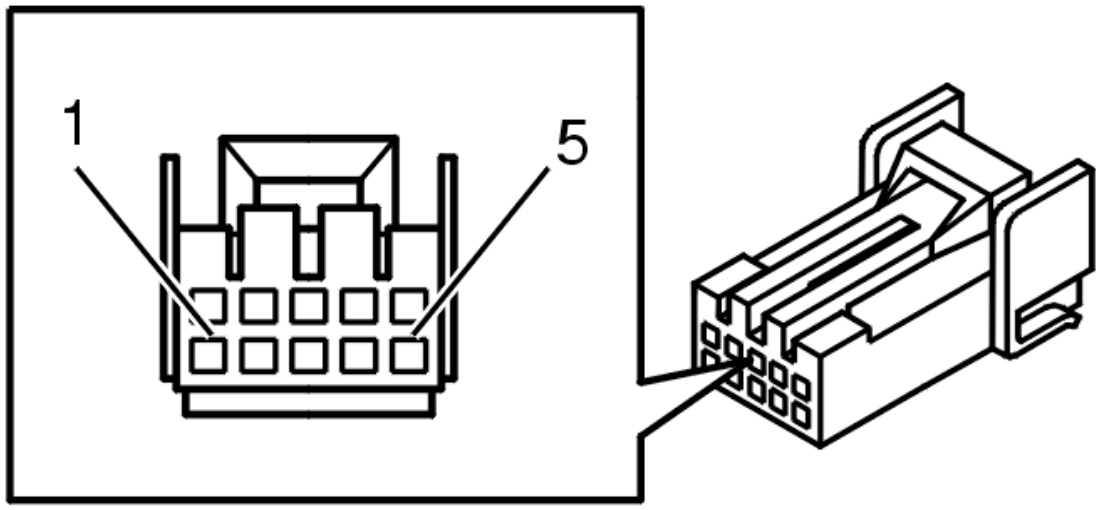

Fig. 238: 10 CD Changer Connector Terminals
Courtesy of VOLVO CARS CORPORATION

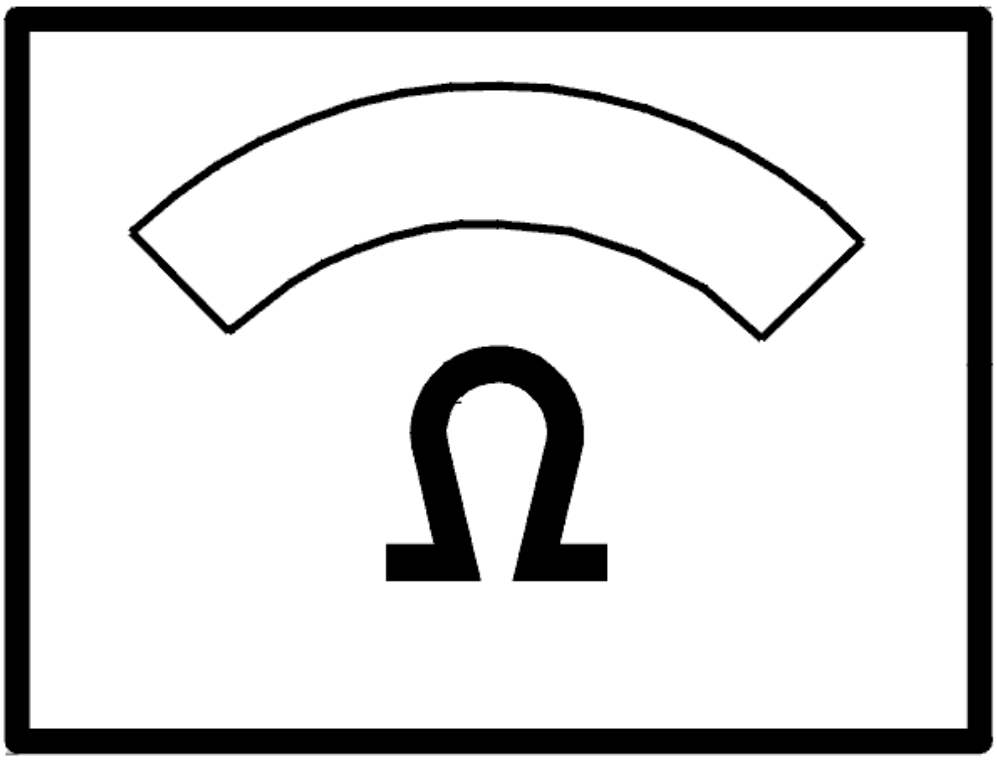

Fig. 239: Identifying Ohm Meter
Courtesy of VOLVO CARS CORPORATION

- **Continue**

  Refer to **INFORMATION**

INFORMATION

FAULT-TRACING INFORMATION

If the fault is intermittent, do not verify fault-tracing if the fault does not recur.

It is possible to view the information again, or leave fault-tracing for this diagnostic trouble code (DTC).

REM-6C12: TILT SENSOR, POWER SUPPLY. SIGNAL TOO LOW.

PERMANENT FAULT (2003-2004)

DIAGNOSTIC TROUBLE CODE INFORMATION

see **DIAGNOSTIC TROUBLE CODE INFORMATION**

SIGNAL TOO LOW. PERMANENT FAULT

CHECKING THE WIRING

Check the power supply cable between rear electronic module (REM) connector terminal #B20 (#D20) and tilt sensor connector terminal #1. Check for a short-circuit to ground.

If no fault was found, try a new sensor.

Other information

- For further information about signals and other values, see **SIGNAL SPECIFICATION**
- To connect the breakout box, see **CONNECTING THE BREAKOUT BOX**
- To access the rear electronic module (REM), see **RELAY/FUSE BOX CARGO COMPARTMENT/REAR ELECTRONIC MODULE (REM), REPLACING**
- To access and replace the tilt sensor, see **TILT SENSOR ALARM, REPLACING**
- see **CHECKING WIRING AND TERMINALS** .

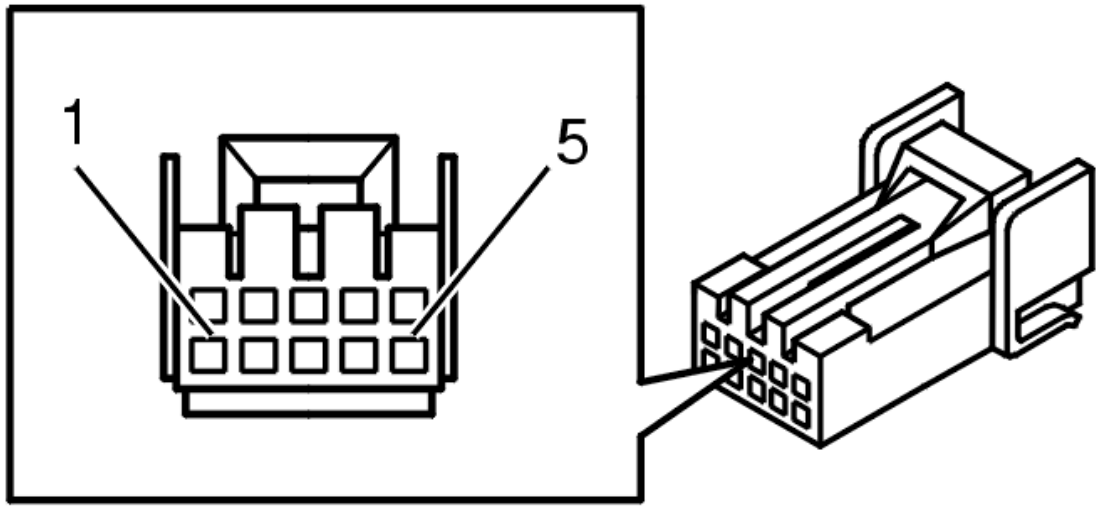

Fig. 240: 10 CD Changer Connector Terminals
Courtesy of VOLVO CARS CORPORATION

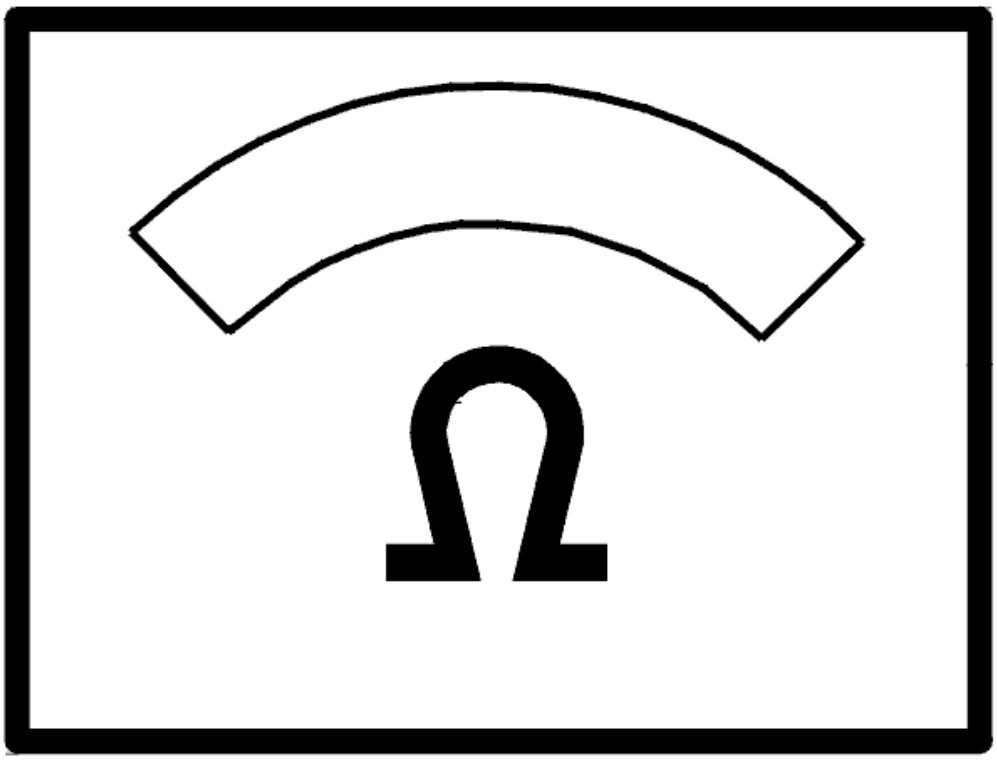

Fig. 241: Identifying Ohm Meter
Courtesy of VOLVO CARS CORPORATION

- **Continue**

  Refer to **VERIFICATION**

VERIFICATION

VERIFICATION

HINT: After the repair it is necessary to check that the fault has been rectified.

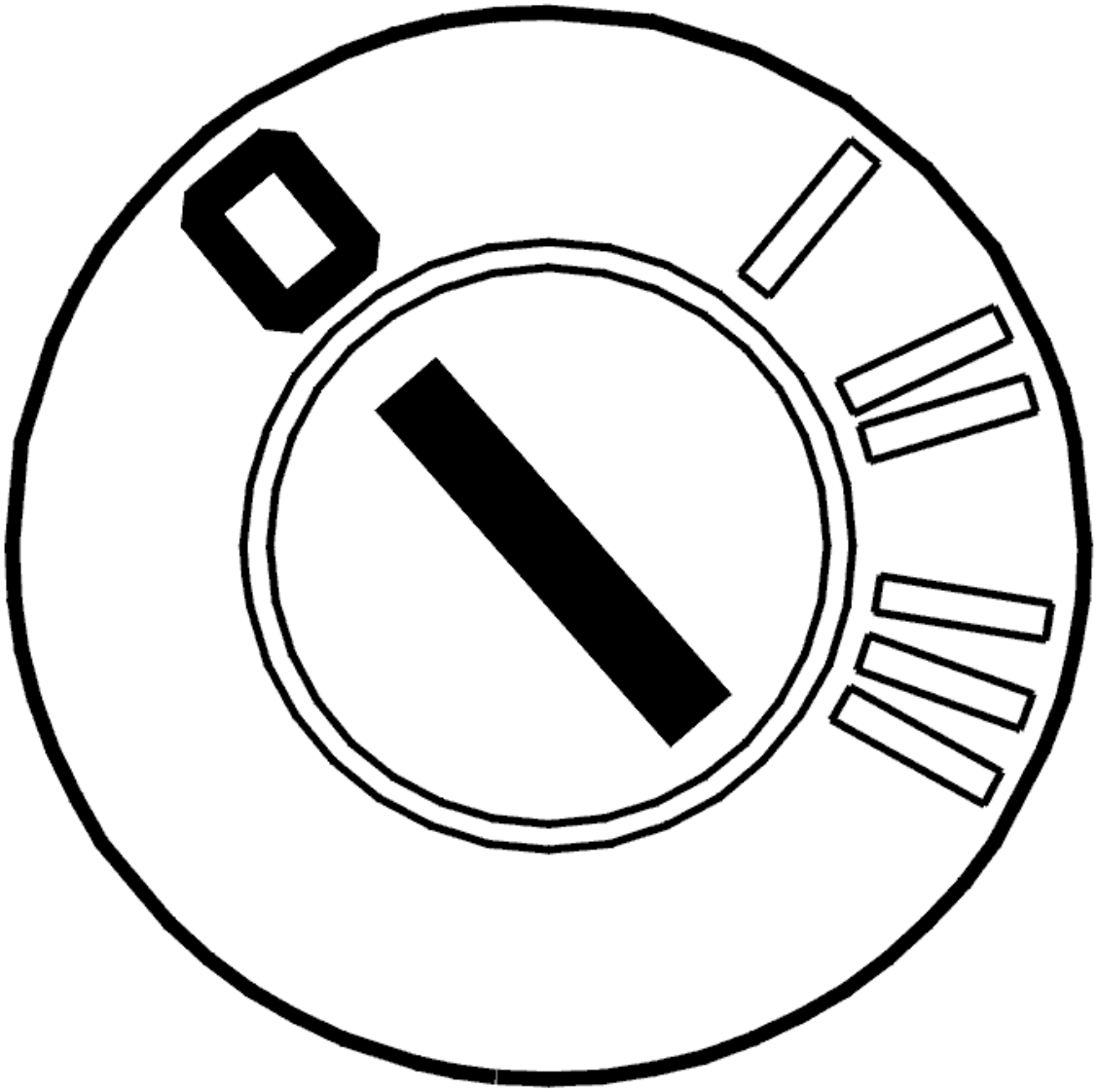

Fig. 242: Identifying Ignition OFF
Courtesy of VOLVO CARS CORPORATION

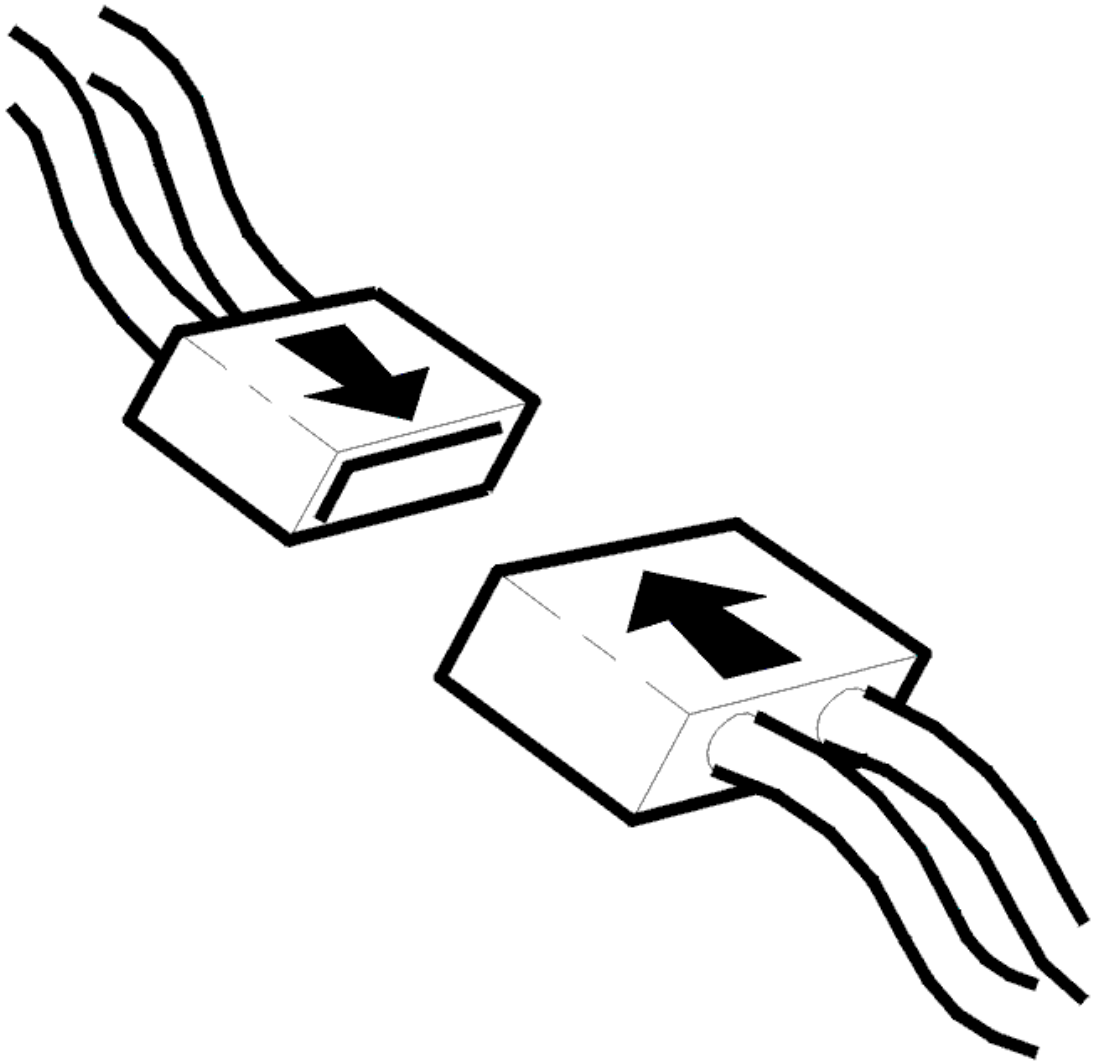

Fig. 243: Connecting Connector
Courtesy of VOLVO CARS CORPORATION

- Ignition off.
- Connect the connectors, install the components, etc.

  Open the boot lid and lock in the open position by pressing in the lock hinge.

  Lock the car by remote control.

  Wait for 25 seconds until the alarm is activated and sound the alarm by releasing the level sensor and turning it.

Is function OK?

- **YES**

VERIFIED: Troubleshooting has been completed.

- **NO**

  Refer to **INFORMATION**

INFORMATION

FAULT-TRACING INFORMATION

The fault should have been detected and remedied. As this is not the case fault-tracing has failed.

Exit fault-tracing for this diagnostic trouble code (DTC) or make another attempt.

REM-6C12: TILT SENSOR. SIGNAL TOO LOW (2005-2012)

DIAGNOSTIC TROUBLE CODE (DTC) INFORMATION REM-6C12

Condition

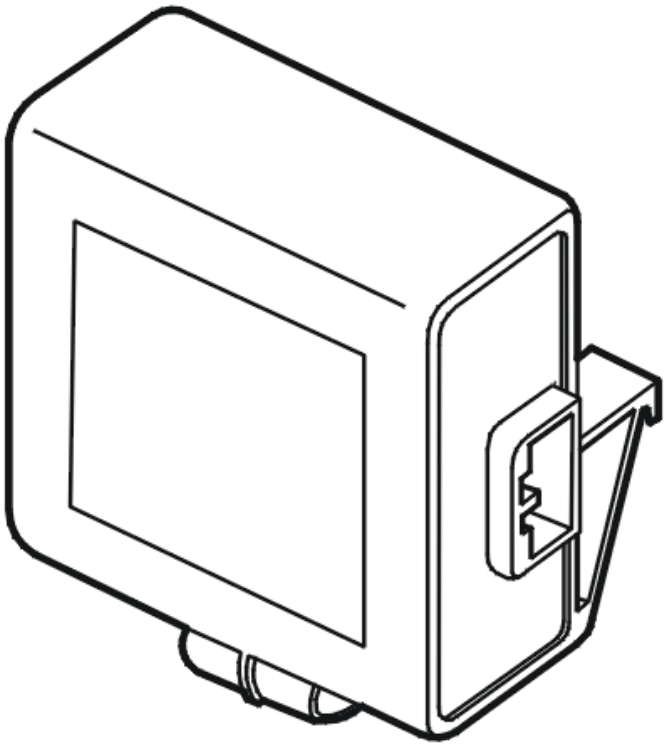

Fig. 244: Identifying Inclination Sensor Module
Courtesy of VOLVO CARS CORPORATION

The rear electronic module (REM) controls the power supply to the inclination sensor module (ISM). The

power supply is active when the alarm is activated if the function for reduced alarm is not activated.

The diagnostic trouble code (DTC) is stored if the rear electronic module (REM) registers a short-circuit to ground in the power supply cable for the inclination sensor module (ISM).

The diagnostic trouble code (DTC) can be diagnosed when the rear electronic module (REM) is in alert mode and the alarm is not activated.

Substitute Value

- None.

Possible Source

- Short-circuit to ground in the power supply for the inclination sensor module (ISM).

Fault symptom[s]

- Does not alarm the sensor.

SIGNAL TOO LOW

CHECKING CABLE AND COMPONENT

Check the power supply cable between rear electronic module (REM) connector terminal #31 (#D31) and inclination sensor module (ISM) connector terminal #1. Check for a short-circuit to ground.

Remedy as necessary.

Other information

- see **CONNECTING THE BREAKOUT BOX**
- see **SIGNAL SPECIFICATION**
- For -2004, see: **RELAY/FUSE BOX CARGO COMPARTMENT/REAR ELECTRONIC MODULE (REM), REPLACING**
- For 2005-, see: **REAR ELECTRONIC MODULE (REM), REPLACING** .
- see **CHECKING WIRING AND TERMINALS**

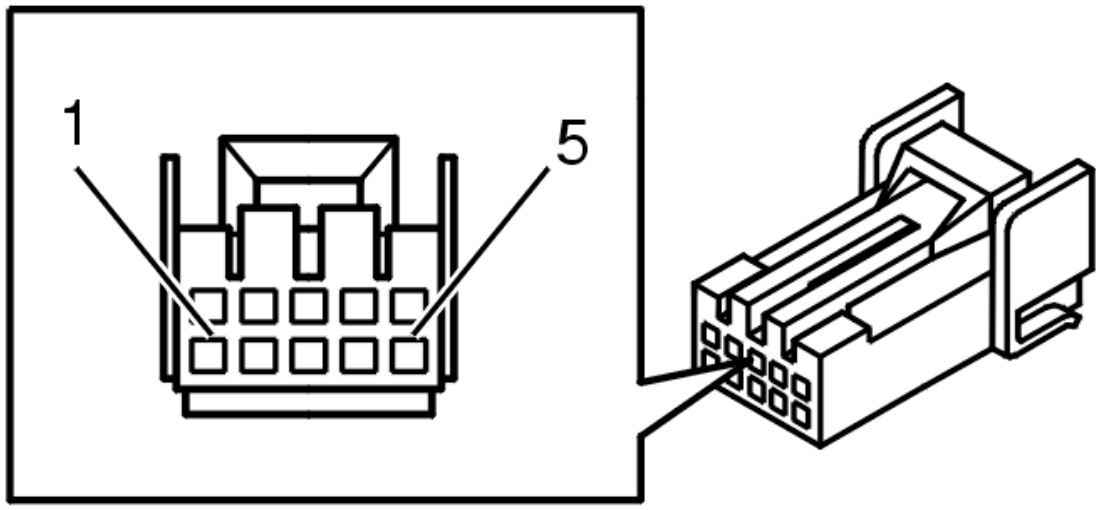

Fig. 245: 10 CD Changer Connector Terminals
Courtesy of VOLVO CARS CORPORATION

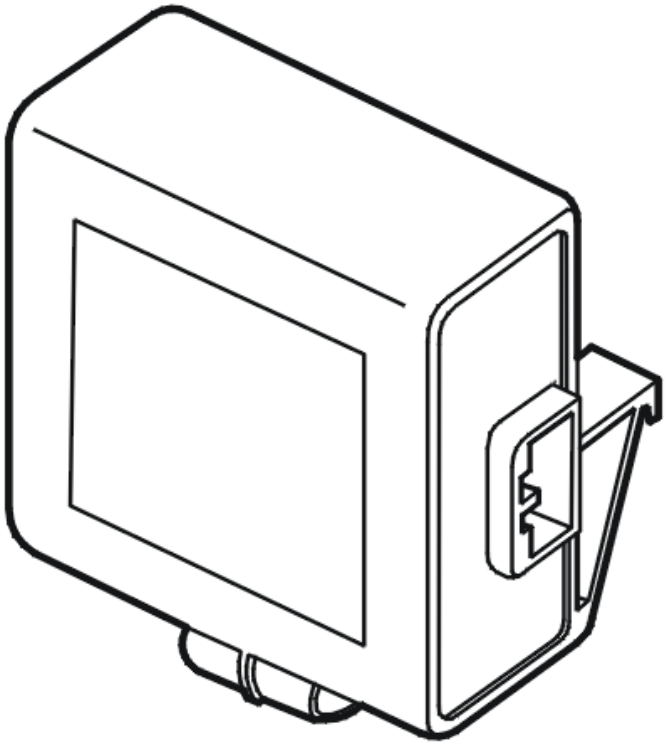

Fig. 246: Identifying Inclination Sensor Module
Courtesy of VOLVO CARS CORPORATION

- **Continue**

  Refer to **VERIFICATION**

VERIFICATION

VERIFICATION

HINT: After carrying out the repair, check that the fault has been remedied.

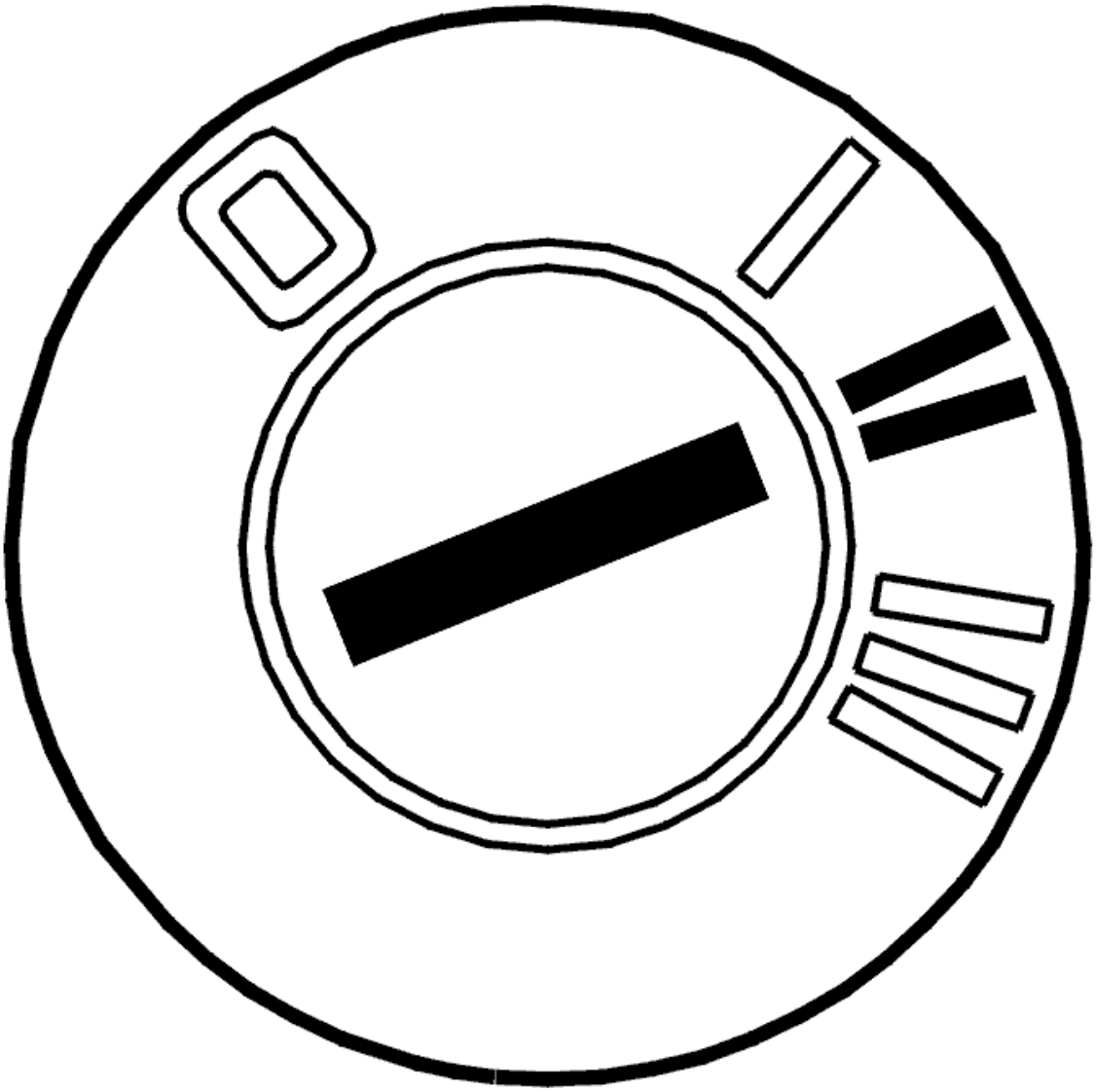

Fig. 247: Identifying Ignition ON
Courtesy of VOLVO CARS CORPORATION

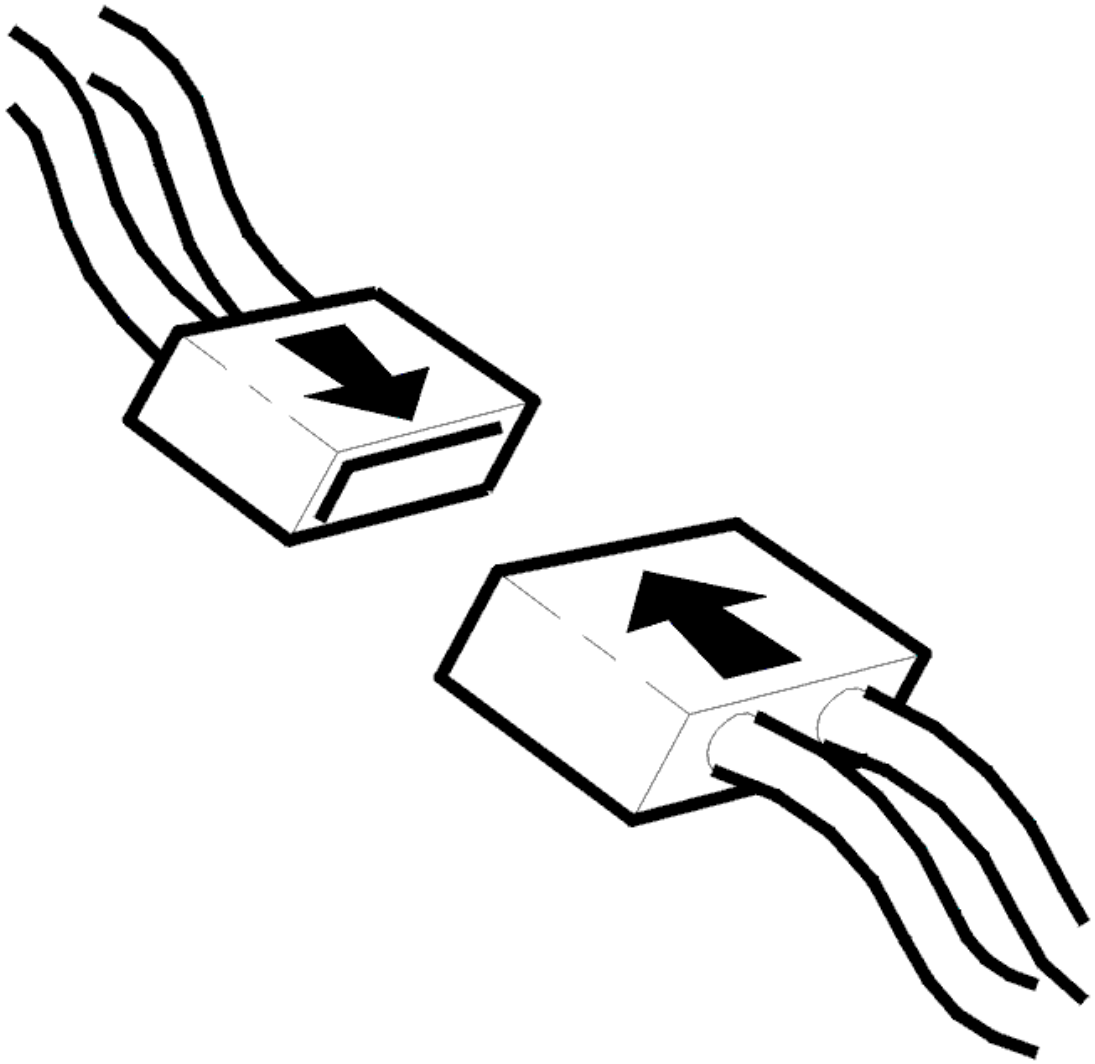

Fig. 248: Connecting Connector
Courtesy of VOLVO CARS CORPORATION

- Ignition off
- Reinstall the connectors, components etc.
- Ignition on
- Shut all the doors. Activate the alarm. Wait 25 seconds until the car is alarmed
- Then deactivate the alarm
- Read off diagnostic trouble codes (DTCs).

Check if the status of the diagnostic trouble code (DTC) is intermittent.

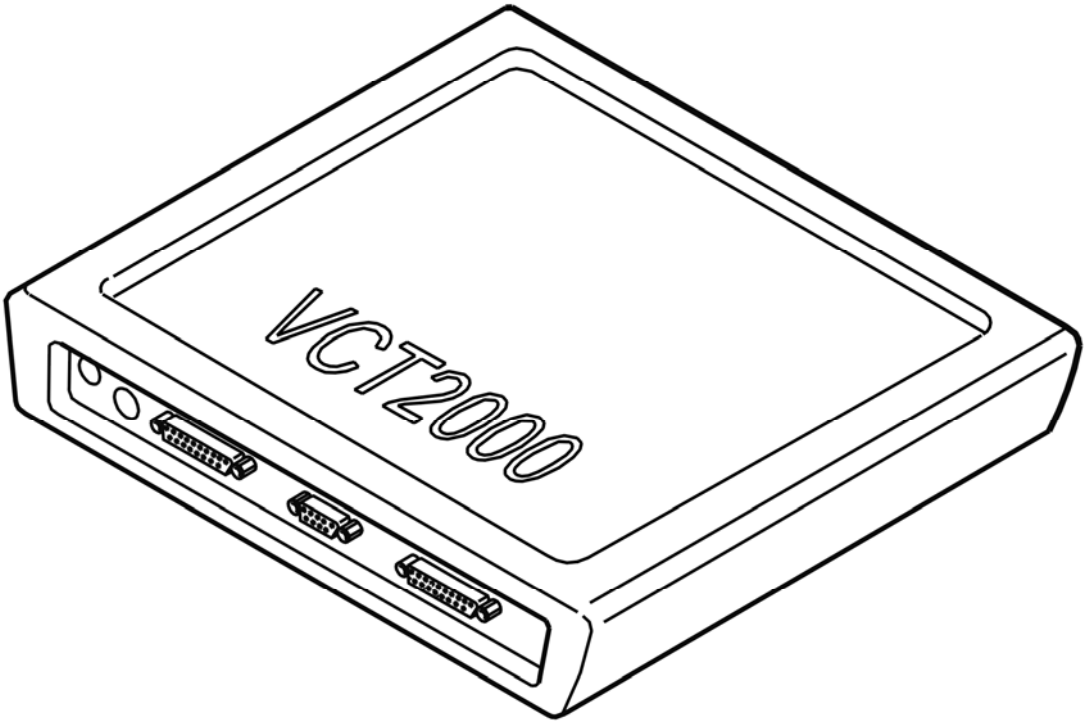

Fig. 249: Identifying VCT2000 Diagnostic Tool Symbol In VIDA
Courtesy of VOLVO CARS CORPORATION

Is the status intermittent?

- **YES**

  VERIFIED: Troubleshooting has been completed.

- **NO**

  Refer to **INFORMATION**

INFORMATION

FAULT-TRACING INFORMATION

The fault should have been detected and remedied. As this is not the case fault-tracing has failed.

Exit fault-tracing for this diagnostic trouble code (DTC) or make another attempt.

REM-6C15: COMMUNICATION WITH THE TILT SENSOR. SIGNAL MISSING. INTERMITTENT FAULT (2003-2004)

DIAGNOSTIC TROUBLE CODE (DTC) INFORMATION

Condition

Diagnostic trouble code (DTC) REM-6C15 is stored if the rear electronic module registers that the signal in the tilt sensor communication cable is missing.

Substitute Value

None.

Possible Source

- Contact fault on the sensor and/or control module sides.
- Open-circuit, short-circuit to supply voltage or short-circuit to ground in tilt sensor communication cable.
- Open-circuit in sensor supply cable or ground lead.
- Defective sensor.

Fault symptom[s]

- Does not alarm sensor

SIGNAL MISSING. INTERMITTENT FAULT

CHECKING THE WIRING

Check the signal cable between rear electronic module (REM) connector #B06 (#D6) and tilt sensor connector terminal #2. Check for an intermittent short-circuit to ground.

Also check both connectors for intermittent contact resistance and oxidation.

If no fault was found, try a new sensor.

Other information

- For further information about signals and other values, see **SIGNAL SPECIFICATION**
- To connect the breakout box, see **CONNECTING THE BREAKOUT BOX**
- To access the rear electronic module (REM), see **RELAY/FUSE BOX CARGO COMPARTMENT/REAR ELECTRONIC MODULE (REM), REPLACING**
- To access and replace the tilt sensor, see **TILT SENSOR ALARM, REPLACING**
- see **CHECKING WIRING AND TERMINALS** .

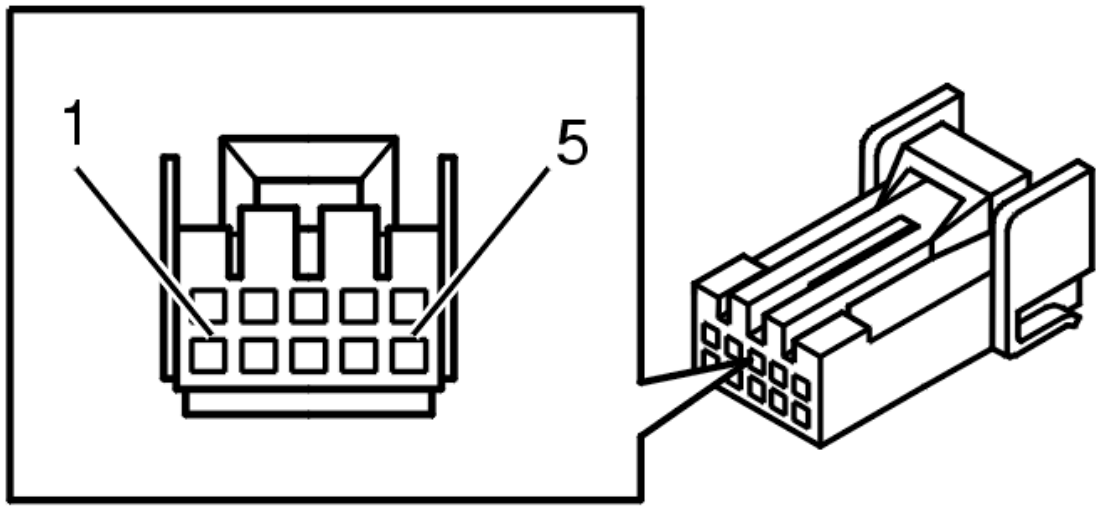

Fig. 250: 10 CD Changer Connector Terminals
Courtesy of VOLVO CARS CORPORATION

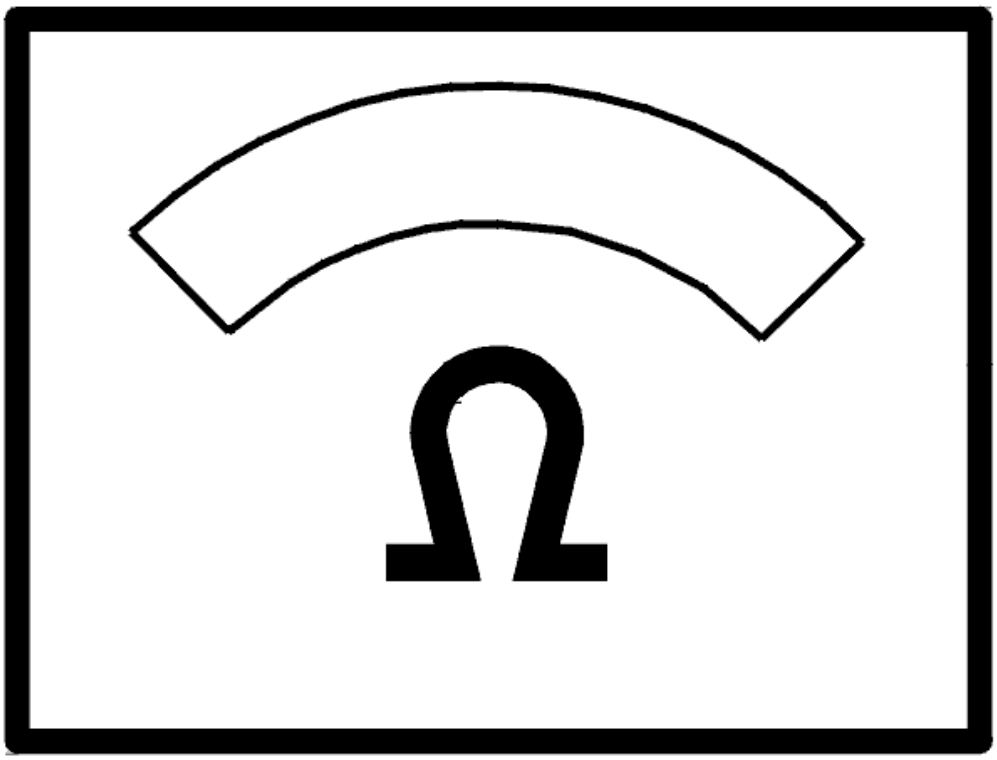

Fig. 251: Identifying Ohm Meter
Courtesy of VOLVO CARS CORPORATION

- **Continue**

  Refer to **INFORMATION**

INFORMATION

FAULT-TRACING INFORMATION

If the fault is intermittent, do not verify fault-tracing if the fault does not recur.

It is possible to view the information again, or leave fault-tracing for this diagnostic trouble code (DTC).

REM-6C15: COMMUNICATION WITH THE TILT SENSOR. SIGNAL MISSING.

PERMANENT FAULT (2003-2004)

DIAGNOSTIC TROUBLE CODE (DTC) INFORMATION

see **DIAGNOSTIC TROUBLE CODE (DTC) INFORMATION**

SIGNAL MISSING. PERMANENT FAULT

CHECKING THE WIRING

Check the signal cable between rear electronic module (REM) connector #B06 (#D6) and tilt sensor connector terminal #2. Check for an open-circuit.

Also check both connectors for contact resistance and oxidation.

If no fault was found, try a new sensor.

Other information

- For further information about signals and other values, see **SIGNAL SPECIFICATION**
- To connect the breakout box, see **CONNECTING THE BREAKOUT BOX**
- To access the rear electronic module (REM), see **RELAY/FUSE BOX CARGO COMPARTMENT/REAR ELECTRONIC MODULE (REM), REPLACING**
- To access and replace the tilt sensor, see **TILT SENSOR ALARM, REPLACING**
- see **CHECKING WIRING AND TERMINALS** .

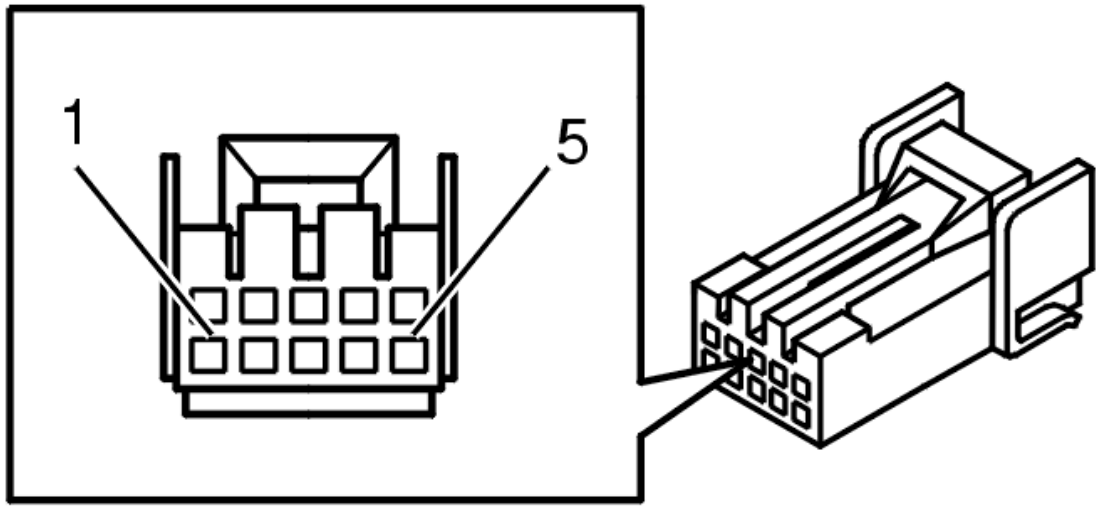

Fig. 252: 10 CD Changer Connector Terminals
Courtesy of VOLVO CARS CORPORATION

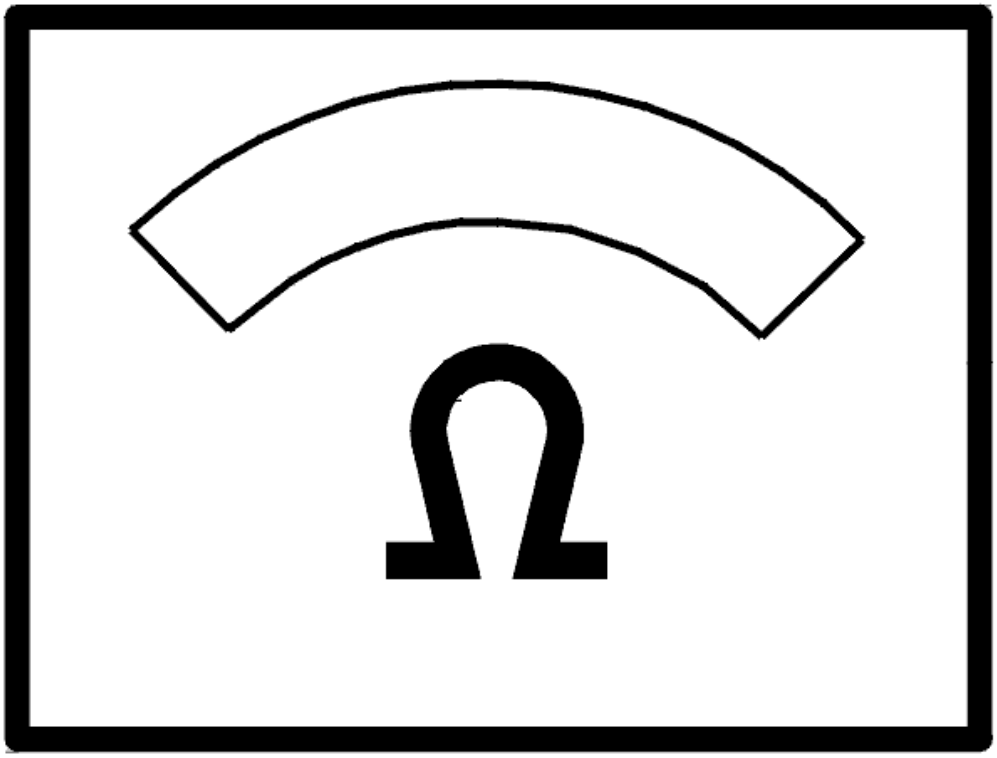

Fig. 253: Identifying Ohm Meter
Courtesy of VOLVO CARS CORPORATION

- **Continue**

  Refer to **VERIFICATION**

VERIFICATION

VERIFICATION

HINT: After the repair it is necessary to check that the fault has been rectified.

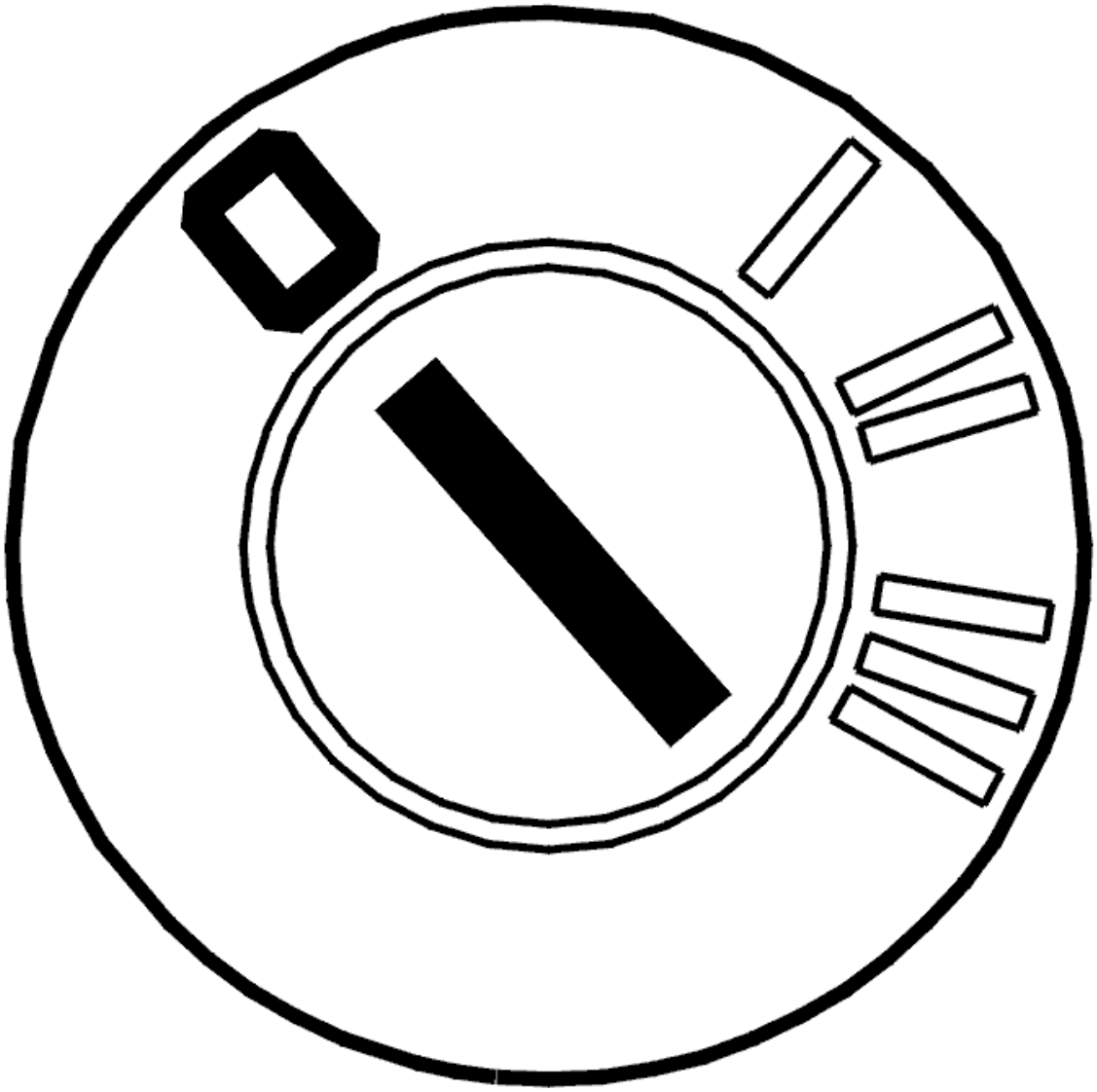

Fig. 254: Identifying Ignition OFF
Courtesy of VOLVO CARS CORPORATION

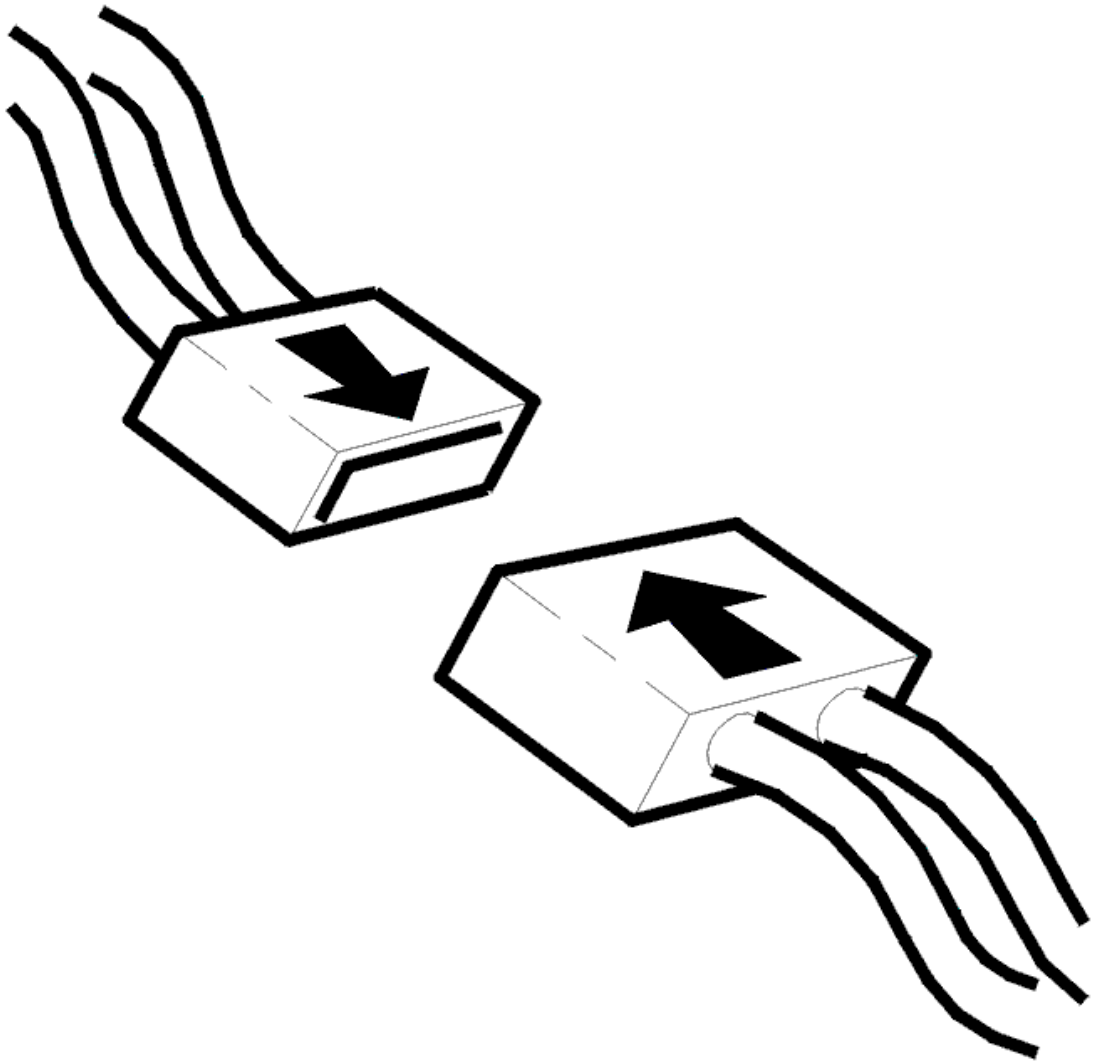

Fig. 255: Connecting Connector
Courtesy of VOLVO CARS CORPORATION

- Ignition off.
- Connect the connectors, install the components, etc.

  Open the boot lid and lock in the open position by pressing in the lock hinge.

  Lock the car by remote control.

  Wait for 25 seconds until the alarm is activated and sound the alarm by releasing the level sensor and turning it.

Is function OK?

- **YES**

VERIFIED: Troubleshooting has been completed.

- **NO**

  Refer to **INFORMATION**

INFORMATION

FAULT-TRACING INFORMATION

The fault should have been detected and remedied. As this is not the case fault-tracing has failed.

Exit fault-tracing for this diagnostic trouble code (DTC) or make another attempt.

REM-6C15: TILT SENSOR. COMMUNICATION FAULT (2005-2012)

DIAGNOSTIC TROUBLE CODE (DTC) INFORMATION REM-6C15

Condition

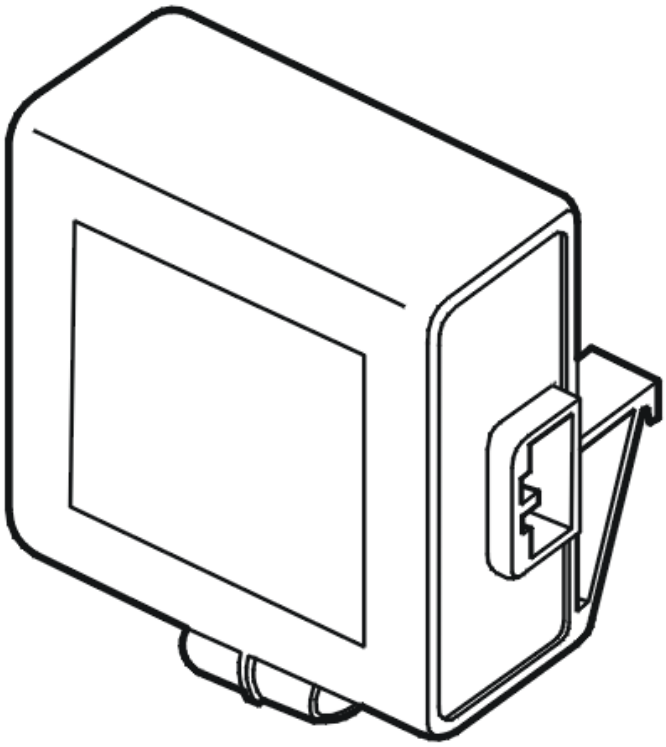

Fig. 256: Identifying Inclination Sensor Module
Courtesy of VOLVO CARS CORPORATION

The rear electronic module (REM) receives signals from the inclination sensor module (ISM) when the alarm is

activated. Before the rear electronic module (REM) accepts signals from the inclination sensor module (ISM) a communication test is carried out after the alarm is activated.

The diagnostic trouble code (DTC) is stored if the rear electronic module (REM) registers that communication with the inclination sensor module (ISM) is not working.

The diagnostic trouble code (DTC) can be diagnosed when the rear electronic module (REM) is in alert mode.

Substitute Value

- None.

Possible Source

- Contact resistance or oxidation in the connectors
- Open-circuit in the communication cable to the inclination sensor module (ISM)
- Open-circuit in the power supply to the inclination sensor module (ISM)
- Open-circuit in the ground cable to the inclination sensor module (ISM).

Fault symptom[s]

- Does not alarm the sensor.

COMMUNICATION FAULT

CHECKING CABLE AND COMPONENT

Check connector D for the rear electronic module (REM) and the connector for the inclination sensor module (ISM). Check for contact resistance and oxidation.

Check the communication cable between rear electronic module (REM) connector terminal #26 (#D26) and inclination sensor module (ISM) connector terminal #2. Check for an open-circuit.

Check the cable between inclination sensor module (ISM) connector terminal #5 and the ground terminal. Check for open-circuit.

Remedy as necessary.

Other information

- see **CONNECTING THE BREAKOUT BOX**
- see **SIGNAL SPECIFICATION**
- For -2004, see: **RELAY/FUSE BOX CARGO COMPARTMENT/REAR ELECTRONIC MODULE (REM), REPLACING**
- For 2005-, see: **REAR ELECTRONIC MODULE (REM), REPLACING** .
- see **CHECKING WIRING AND TERMINALS**

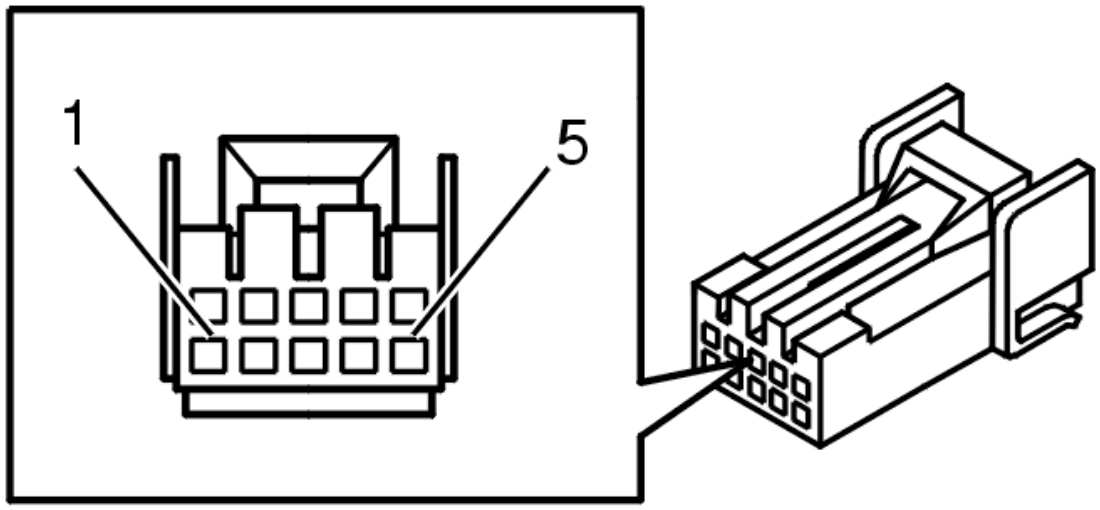

Fig. 257: 10 CD Changer Connector Terminals
Courtesy of VOLVO CARS CORPORATION

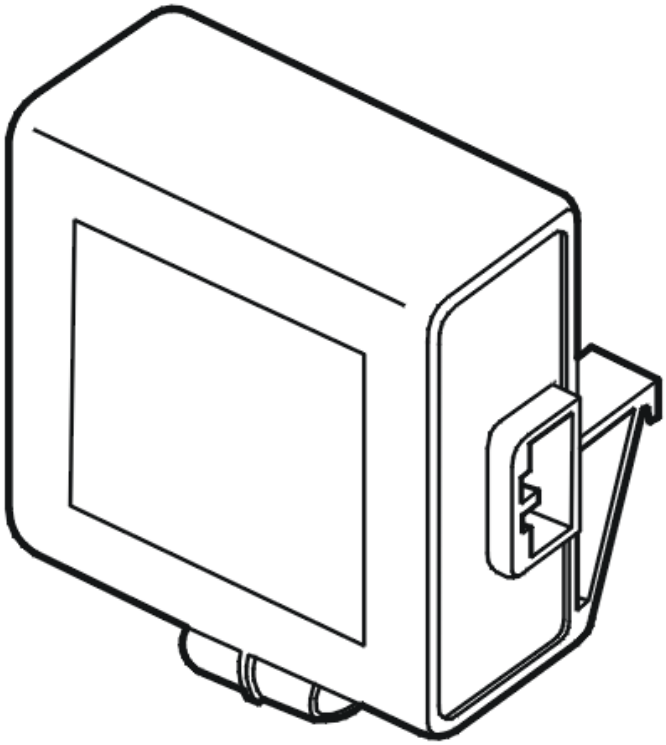

Fig. 258: Identifying Inclination Sensor Module
Courtesy of VOLVO CARS CORPORATION

- **Continue**

  Refer to **VERIFICATION**

VERIFICATION

VERIFICATION

HINT: After carrying out the repair, check that the fault has been remedied.

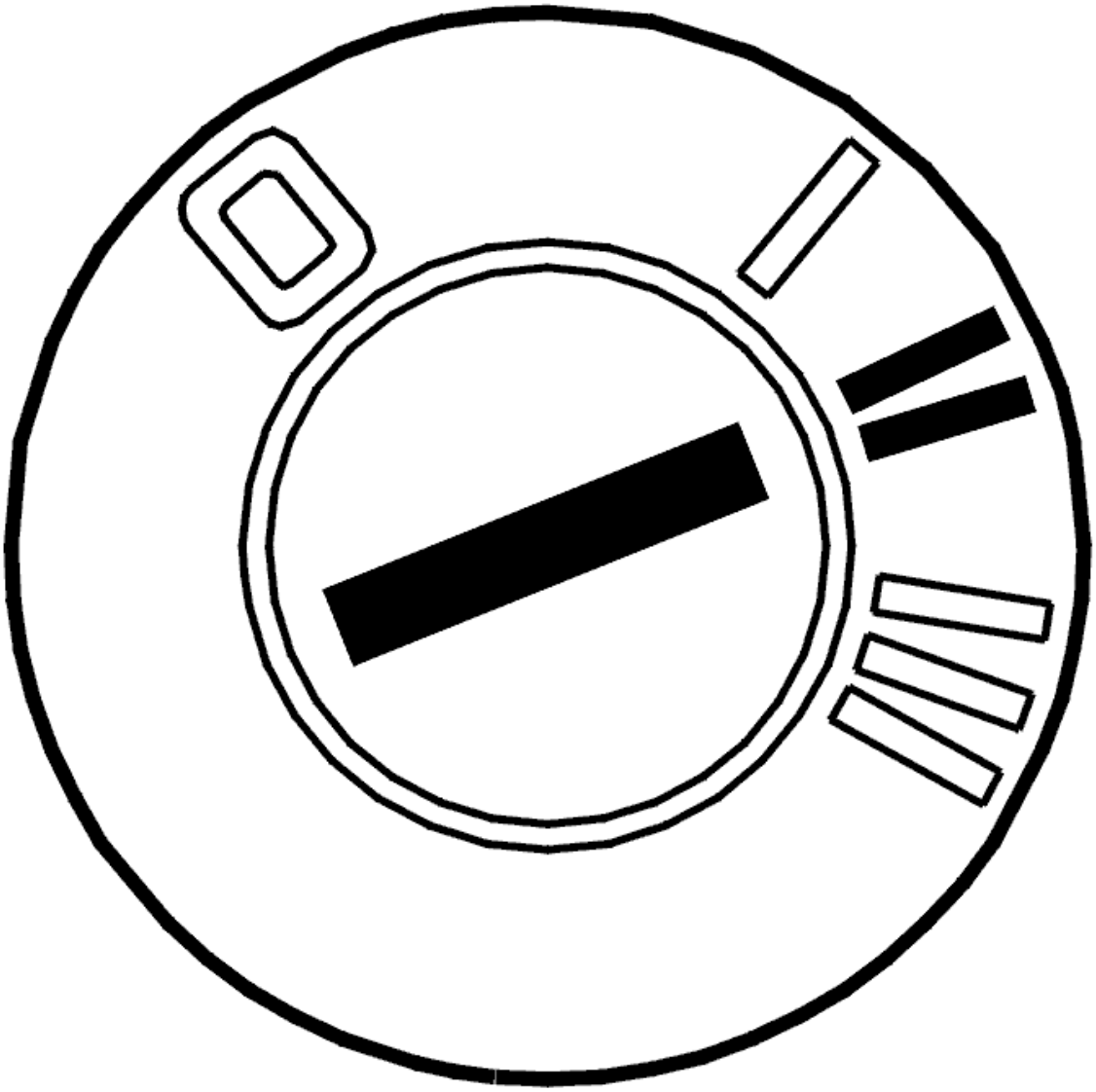

Fig. 259: Identifying Ignition ON
Courtesy of VOLVO CARS CORPORATION

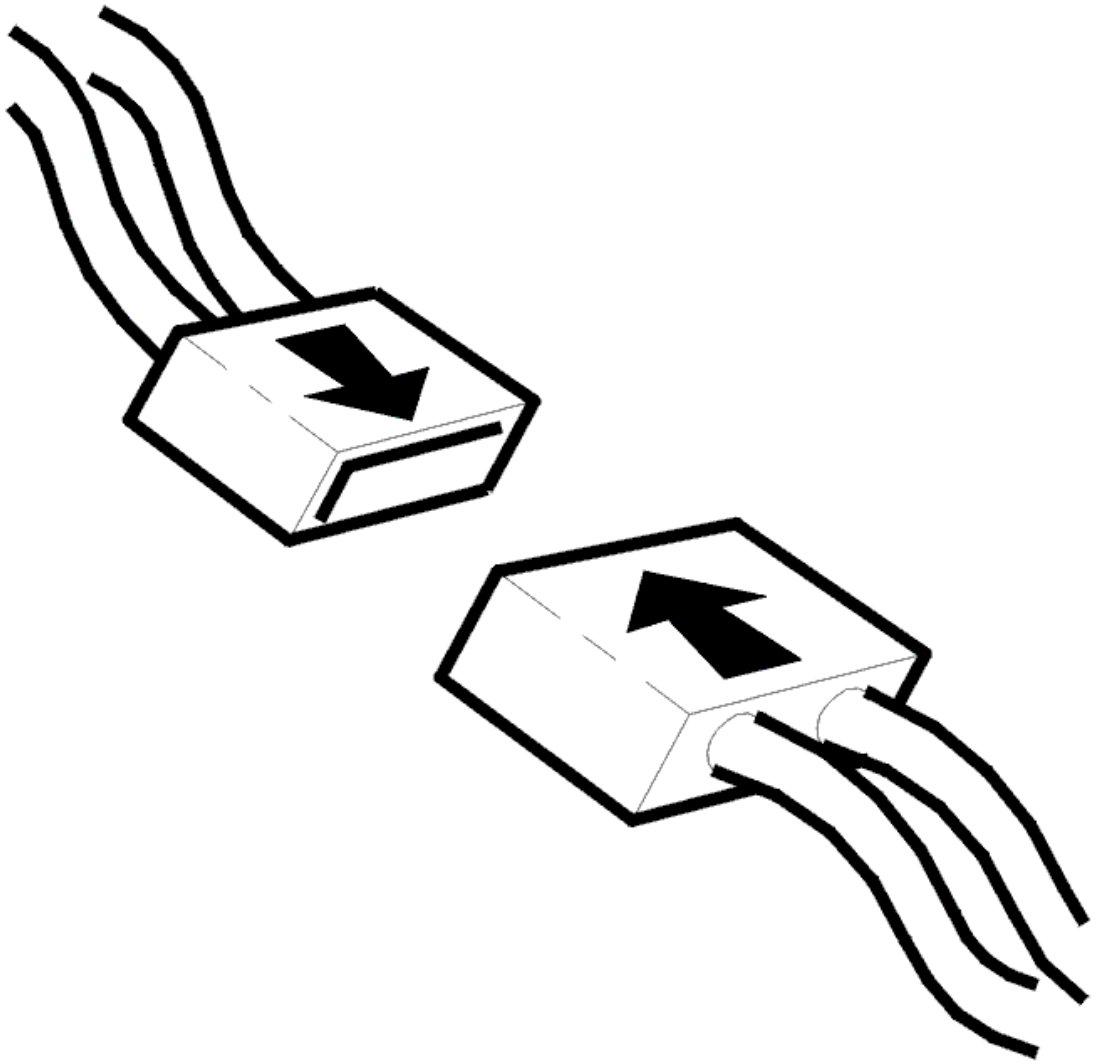

Fig. 260: Connecting Connector
Courtesy of VOLVO CARS CORPORATION

- Ignition off
- Reinstall the connectors, components etc.
- Ignition on
- Shut all the doors. Activate the alarm. Wait 25 seconds until the car is alarmed
- Then deactivate the alarm
- Read off diagnostic trouble codes (DTCs).

Check if the status of the diagnostic trouble code (DTC) is intermittent.

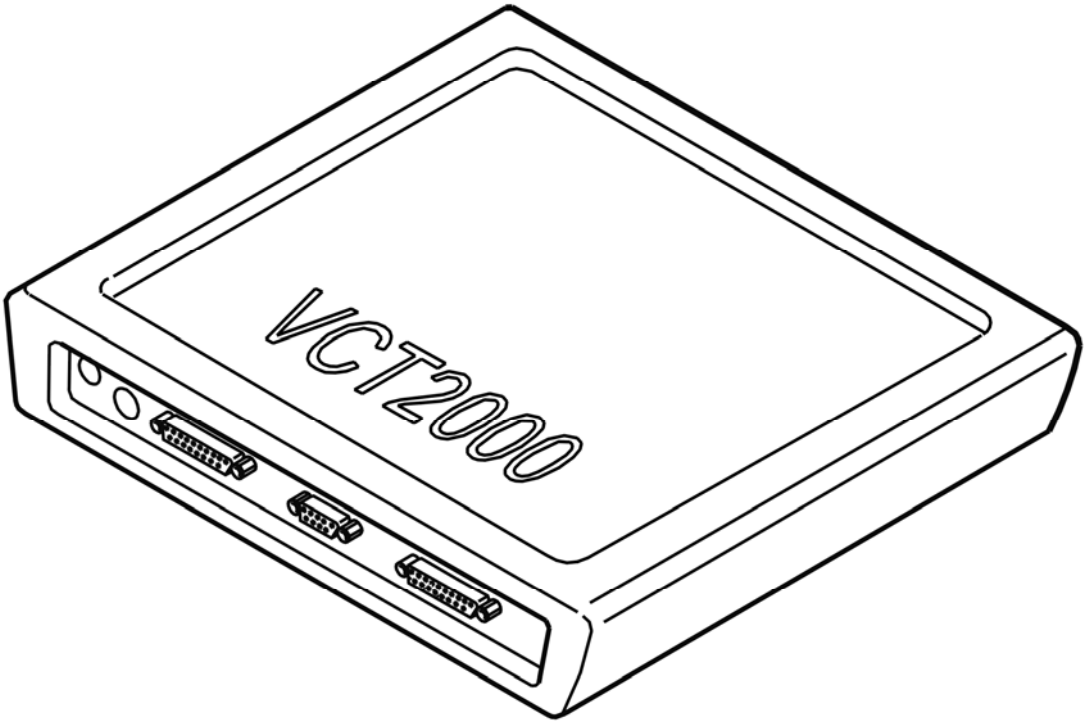

Fig. 261: Identifying VCT2000 Diagnostic Tool Symbol In VIDA
Courtesy of VOLVO CARS CORPORATION

Is the status intermittent?

- **YES**

  VERIFIED: Troubleshooting has been completed.

- **NO**

  Refer to **INFORMATION**

INFORMATION

FAULT-TRACING INFORMATION

The fault should have been detected and remedied. As this is not the case fault-tracing has failed.

Exit fault-tracing for this diagnostic trouble code (DTC) or make another attempt.

REM-6C16: TILT SENSOR. INTERNAL FAULT (2005-2012)

DIAGNOSTIC TROUBLE CODE (DTC) INFORMATION REM-6C16

Condition

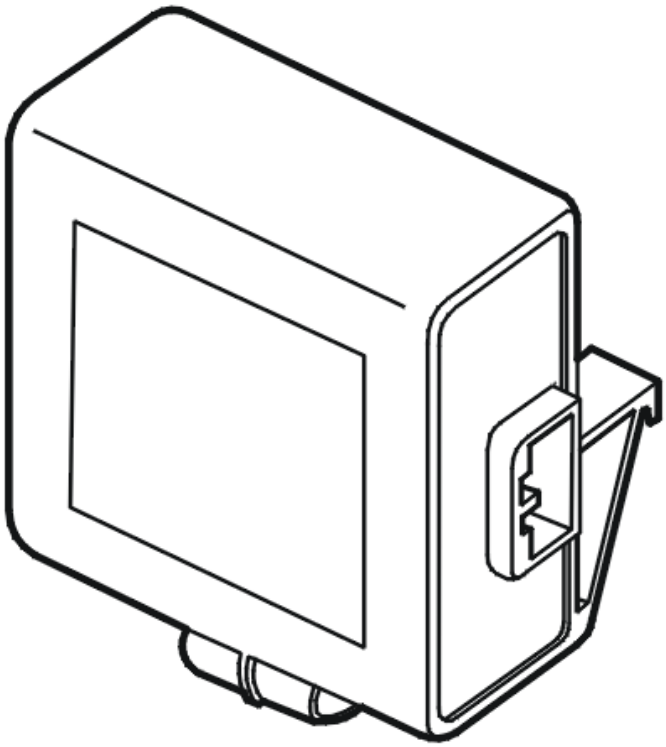

Fig. 262: Identifying Inclination Sensor Module
Courtesy of VOLVO CARS CORPORATION

The rear electronic module (REM) receives signals from the inclination sensor module (ISM) when the alarm is activated. Before the rear electronic module (REM) accepts signals from the inclination sensor module (ISM) a communication test is carried out after the alarm is activated.

The diagnostic trouble code (DTC) is stored if the rear electronic module (REM) receives information from the inclination sensor module (ISM) indicating an internal fault.

The diagnostic trouble code (DTC) can be diagnosed when the rear electronic module (REM) is in alert mode.

Substitute Value

- None.

Possible Source

- Contact resistance or oxidation in the connectors
- Open-circuit in the communication cable to the inclination sensor module (ISM)
- Open-circuit in the power supply to the inclination sensor module (ISM)

- Open-circuit in the ground cable to the inclination sensor module (ISM)
- Internal fault in the inclination sensor module (ISM).

Fault symptom[s]

- Does not alarm the sensor.

INTERNAL FAULT

CHECKING CABLE AND COMPONENT

Check connector D for the rear electronic module (REM) and the connector for the inclination sensor module (ISM). Check for contact resistance and oxidation.

Check the power cable between rear electronic module (REM) connector terminal #31 (#D31) and inclination sensor module (ISM) connector terminal #1. Check for an open-circuit.

Check the communication cable between rear electronic module (REM) connector terminal #26 (#D26) and inclination sensor module (ISM) connector terminal #2. Check for an open-circuit.

Check the cable between inclination sensor module (ISM) connector terminal #5 and the ground terminal. Check for open-circuit.

Try a new inclination sensor module (ISM) if no fault is found.

Remedy as necessary.

Other information

- see **CONNECTING THE BREAKOUT BOX**
- see **SIGNAL SPECIFICATION**
- see **TILT SENSOR ALARM, REPLACING**
- For -2004, see: **RELAY/FUSE BOX CARGO COMPARTMENT/REAR ELECTRONIC MODULE (REM), REPLACING**
- For 2005-, see: **REAR ELECTRONIC MODULE (REM), REPLACING** .
- see **CHECKING WIRING AND TERMINALS**

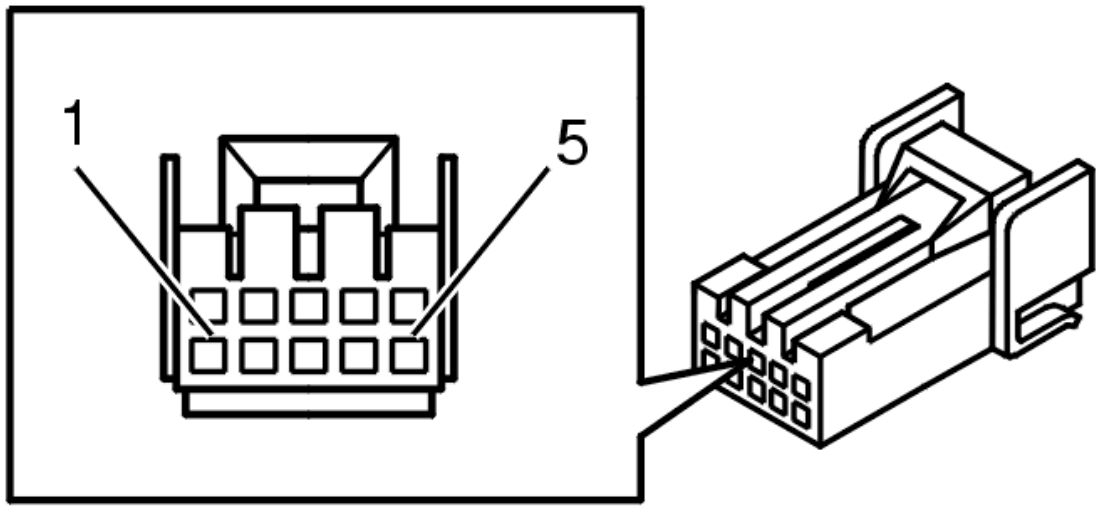

Fig. 263: 10 CD Changer Connector Terminals
Courtesy of VOLVO CARS CORPORATION

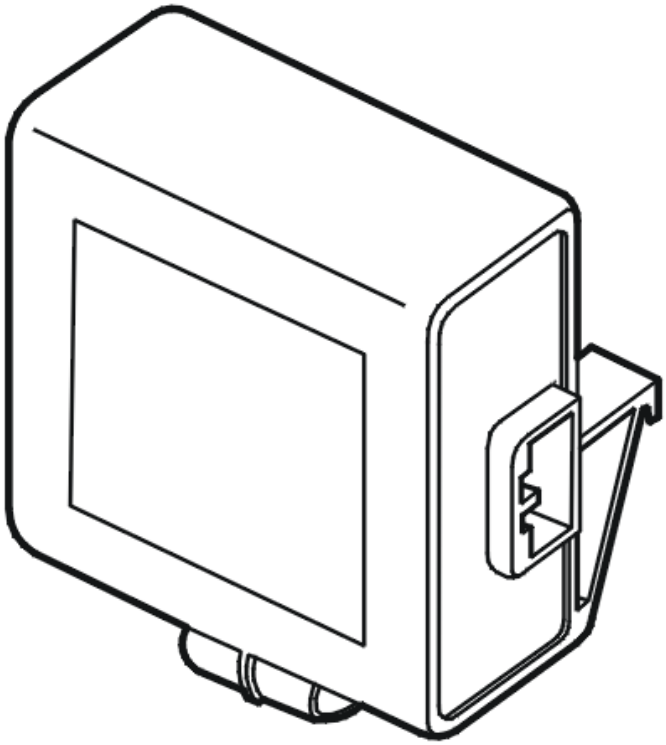

Fig. 264: Identifying Inclination Sensor Module
Courtesy of VOLVO CARS CORPORATION

- **Continue**

  Refer to **VERIFICATION**

VERIFICATION

VERIFICATION

HINT: After carrying out the repair, check that the fault has been remedied.

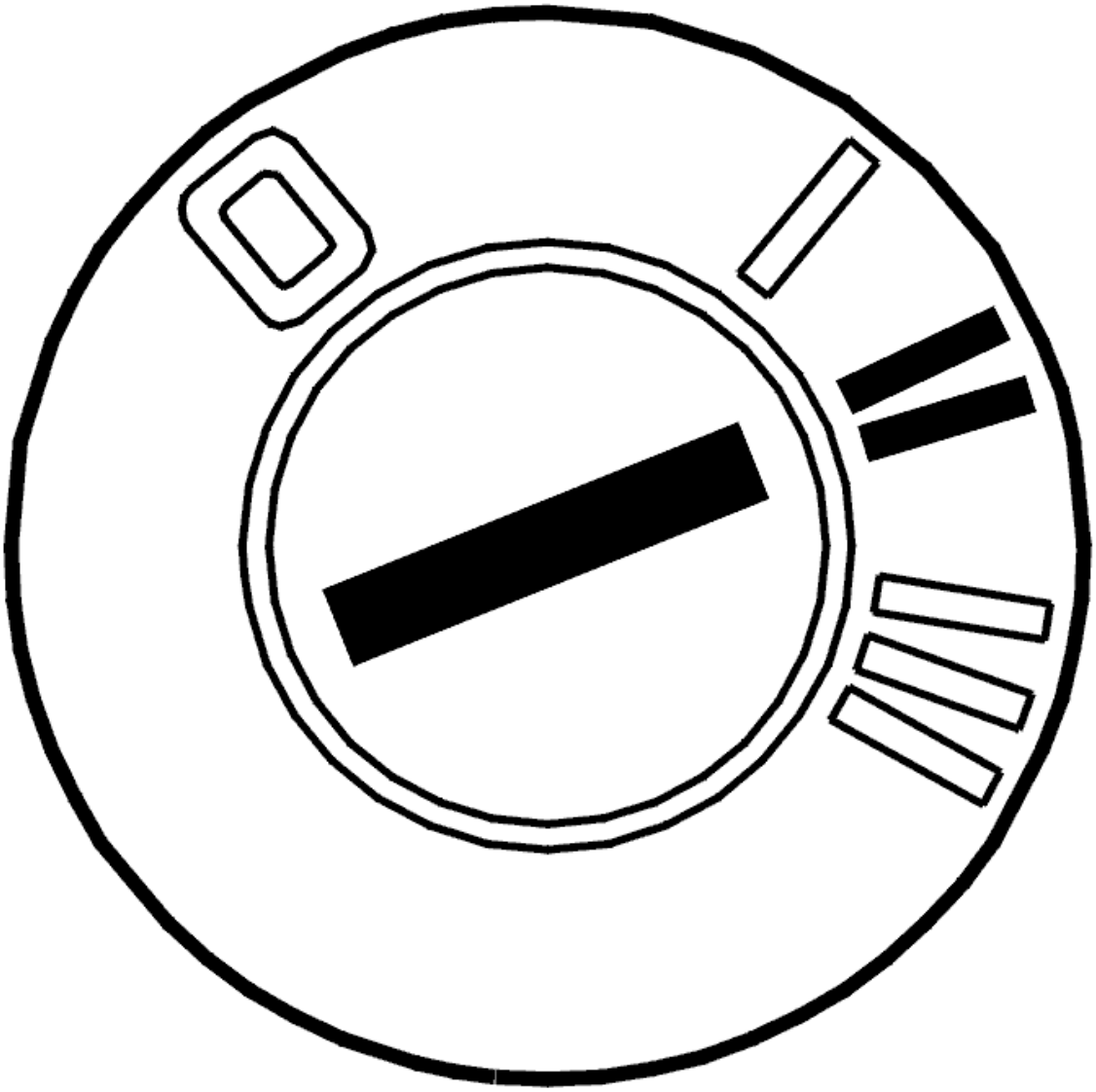

Fig. 265: Identifying Ignition ON
Courtesy of VOLVO CARS CORPORATION

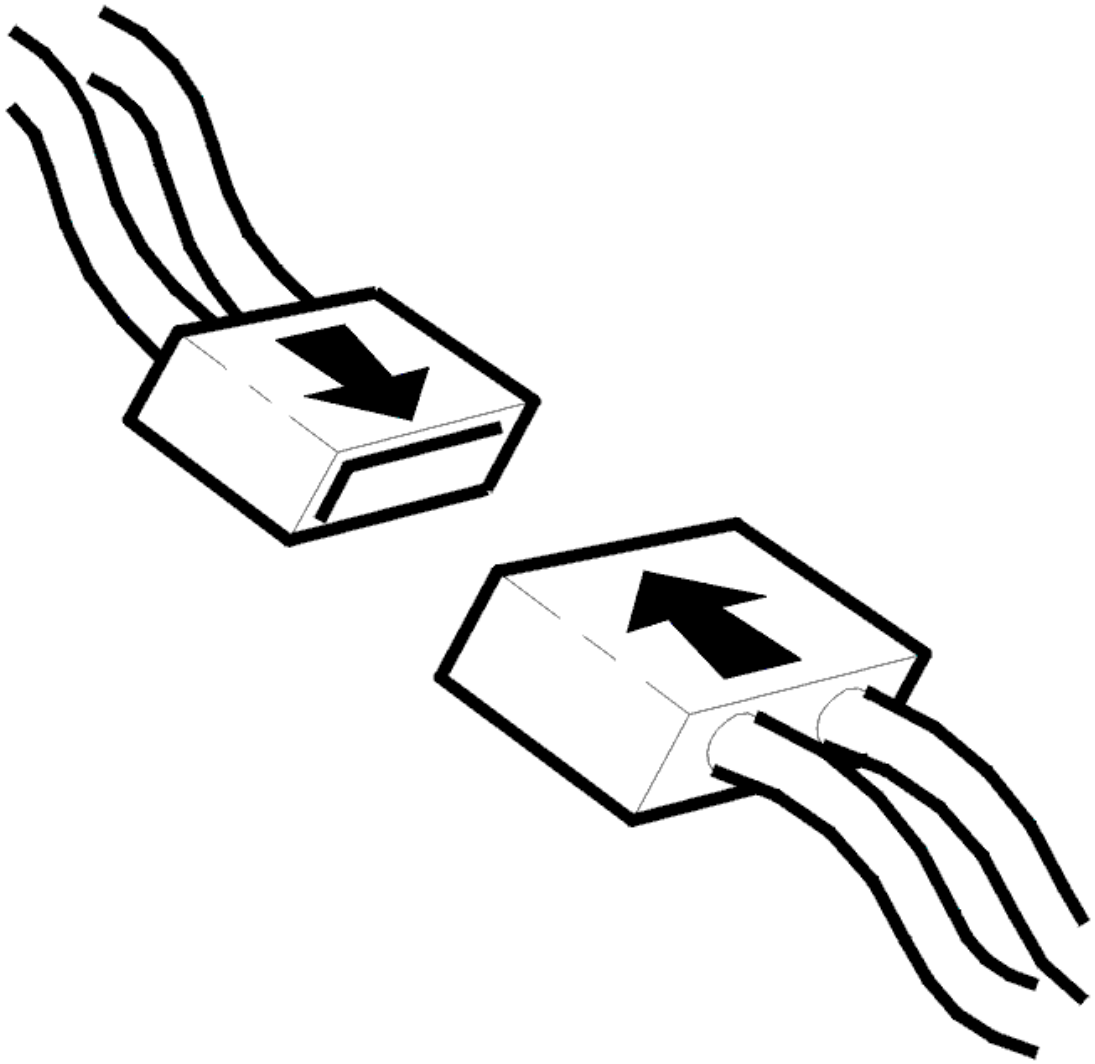

Fig. 266: Connecting Connector
Courtesy of VOLVO CARS CORPORATION

- Ignition off
- Reinstall the connectors, components etc.
- Ignition on
- Shut all the doors. Activate the alarm. Wait 25 seconds until the car is alarmed
- Then deactivate the alarm
- Read off diagnostic trouble codes (DTCs).

Check if the status of the diagnostic trouble code (DTC) is intermittent.

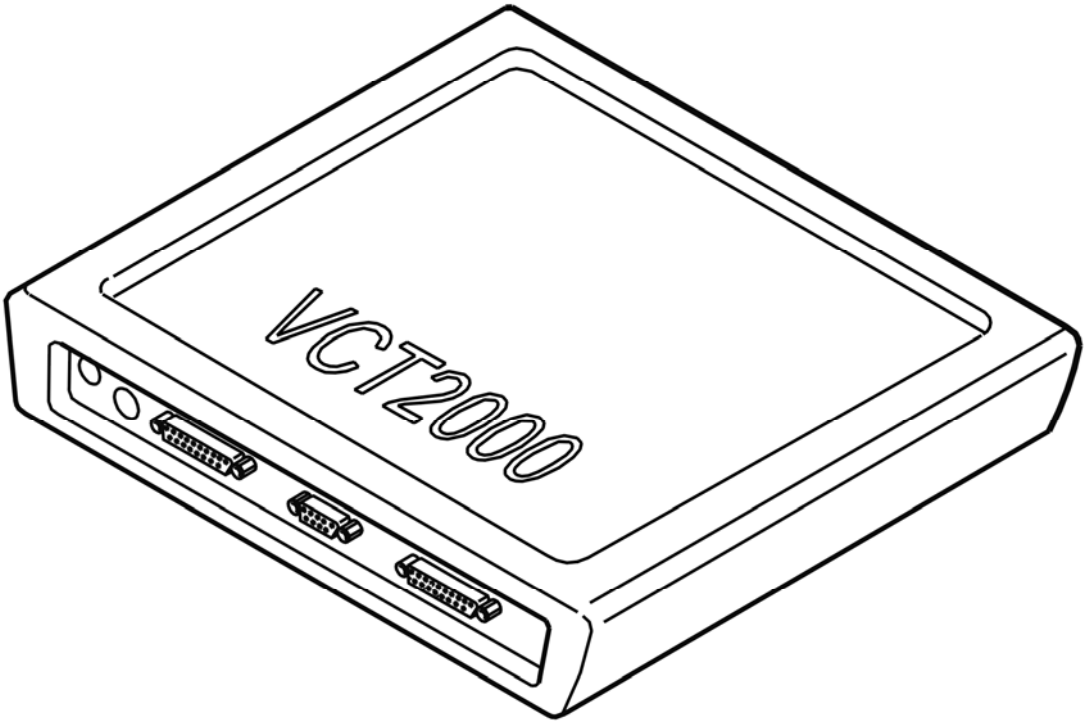

Fig. 267: Identifying VCT2000 Diagnostic Tool Symbol In VIDA
Courtesy of VOLVO CARS CORPORATION

Is the status intermittent?

- **YES**

  VERIFIED: Troubleshooting has been completed.

- **NO**

  Refer to **INFORMATION**

INFORMATION

FAULT-TRACING INFORMATION

The fault should have been detected and remedied. As this is not the case fault-tracing has failed.

Exit fault-tracing for this diagnostic trouble code (DTC) or make another attempt.

REM-6C16: TILT SENSOR. INTERNAL FAULT. INTERMITTENT FAULT (2003-2004)

DIAGNOSTIC TROUBLE CODE INFORMATION

Condition

If the rear electronic module registers that an internal fault has occurred in the level sensor, diagnostic trouble code REM-6C16 is displayed.

Substitute Value

Nothing.

Possible Source

- Faulty sensor.

Fault symptom[s]

- No alarm from sensor.

INTERNAL FAULT. INTERMITTENT FAULT

CHECKING THE WIRING

Check the power supply cable between rear electronic module (REM) connector #B20 (#D20) and tilt sensor connector terminal #1. Check for an intermittent open-circuit.

Check the ground lead between the rear electronic module (REM), the ground terminal and tilt sensor connector terminal #5. Check for an intermittent open-circuit.

If no fault was found, try a new sensor.

Other information

- For further information about signals and other values, see **SIGNAL SPECIFICATION**
- To connect the breakout box, see **CONNECTING THE BREAKOUT BOX**
- To access the rear electronic module (REM), see **RELAY/FUSE BOX CARGO COMPARTMENT/REAR ELECTRONIC MODULE (REM), REPLACING**
- To access and replace the tilt sensor, see **TILT SENSOR ALARM, REPLACING**
- see **CHECKING WIRING AND TERMINALS** .

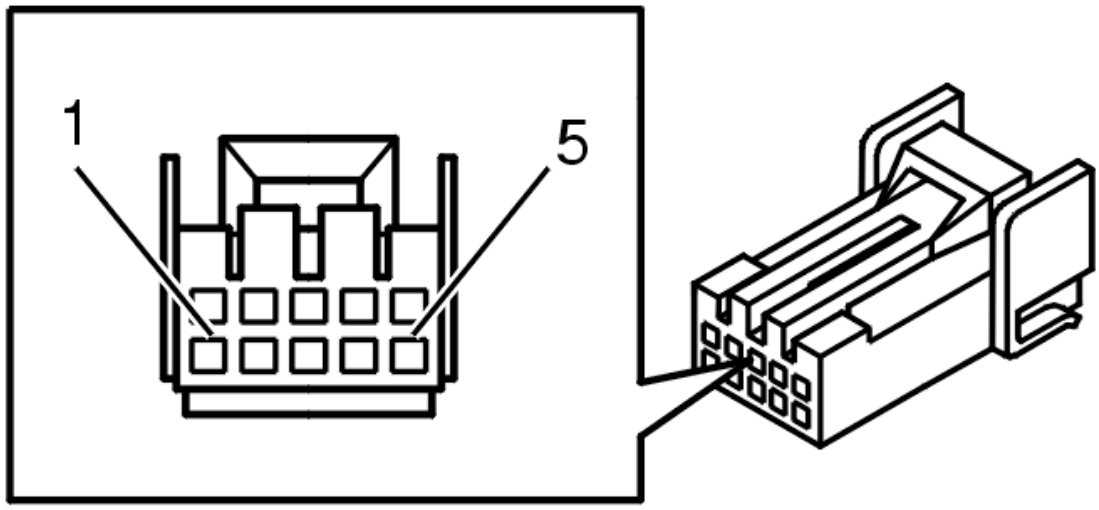

Fig. 268: 10 CD Changer Connector Terminals
Courtesy of VOLVO CARS CORPORATION

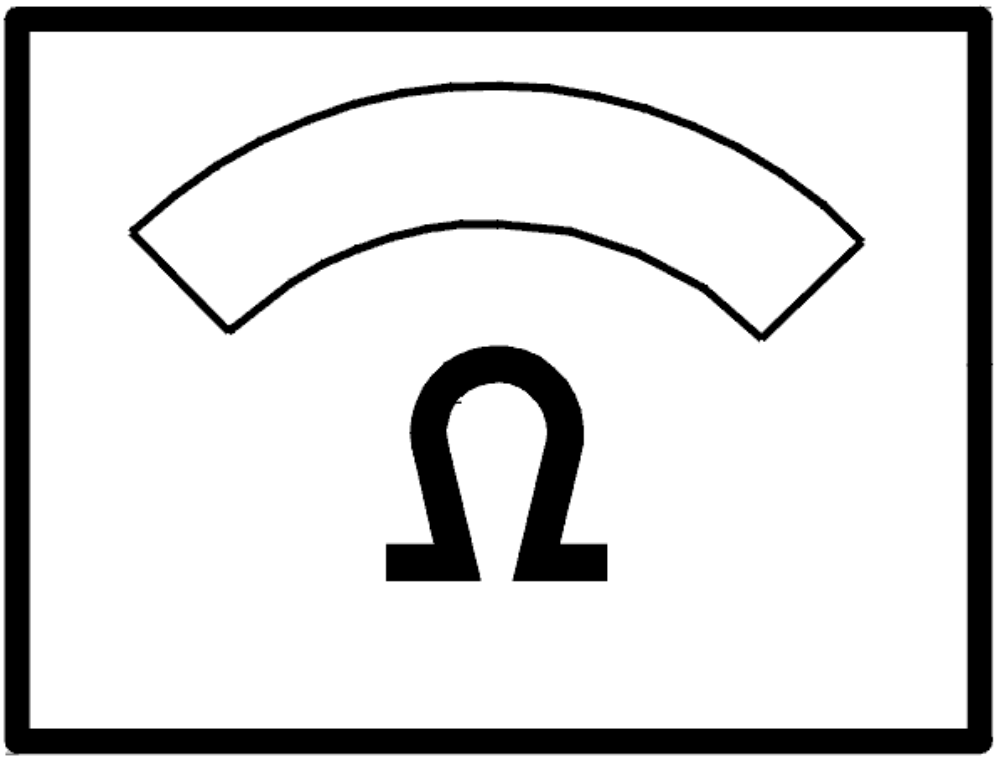

Fig. 269: Identifying Ohm Meter
Courtesy of VOLVO CARS CORPORATION

- **Continue**

  Refer to **INFORMATION**

INFORMATION

FAULT-TRACING INFORMATION

If the fault is intermittent, do not verify fault-tracing if the fault does not recur.

It is possible to view the information again, or leave fault-tracing for this diagnostic trouble code (DTC).

REM-6C16: TILT SENSOR. INTERNAL FAULT. PERMANENT FAULT (2003-

2004)

DIAGNOSTIC TROUBLE CODE INFORMATION

see **DIAGNOSTIC TROUBLE CODE INFORMATION**

INTERNAL FAULT. PERMANENT FAULT

CHECKING THE WIRING

Check the power supply cable between rear electronic module (REM) connector #B20 (#D20) and tilt sensor connector terminal #1. Check for an open-circuit.

Check the ground lead between rear electronic module (REM), ground terminal 31/72 and tilt sensor connector terminal #5. Check for an open-circuit.

In particular check the connector in the tilt sensor for contact resistance and oxidation.

If no fault was found, try a new sensor.

Other information

- For further information about signals and other values, see **SIGNAL SPECIFICATION**
- To connect the breakout box, see **CONNECTING THE BREAKOUT BOX**
- To access the rear electronic module (REM), see **RELAY/FUSE BOX CARGO COMPARTMENT/REAR ELECTRONIC MODULE (REM), REPLACING**
- To access and replace the tilt sensor, see **TILT SENSOR ALARM, REPLACING**
- see **CHECKING WIRING AND TERMINALS** .

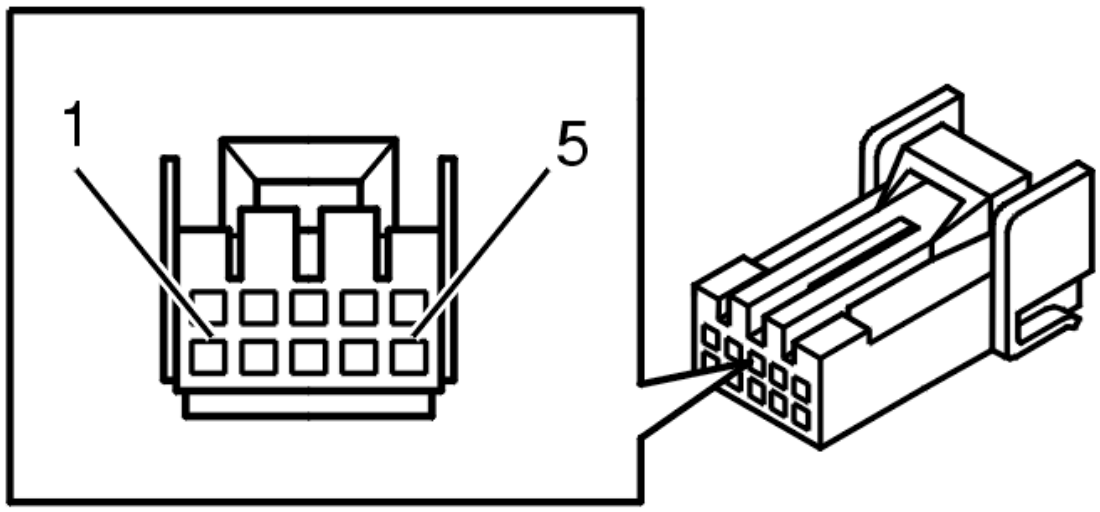

Fig. 270: 10 CD Changer Connector Terminals
Courtesy of VOLVO CARS CORPORATION

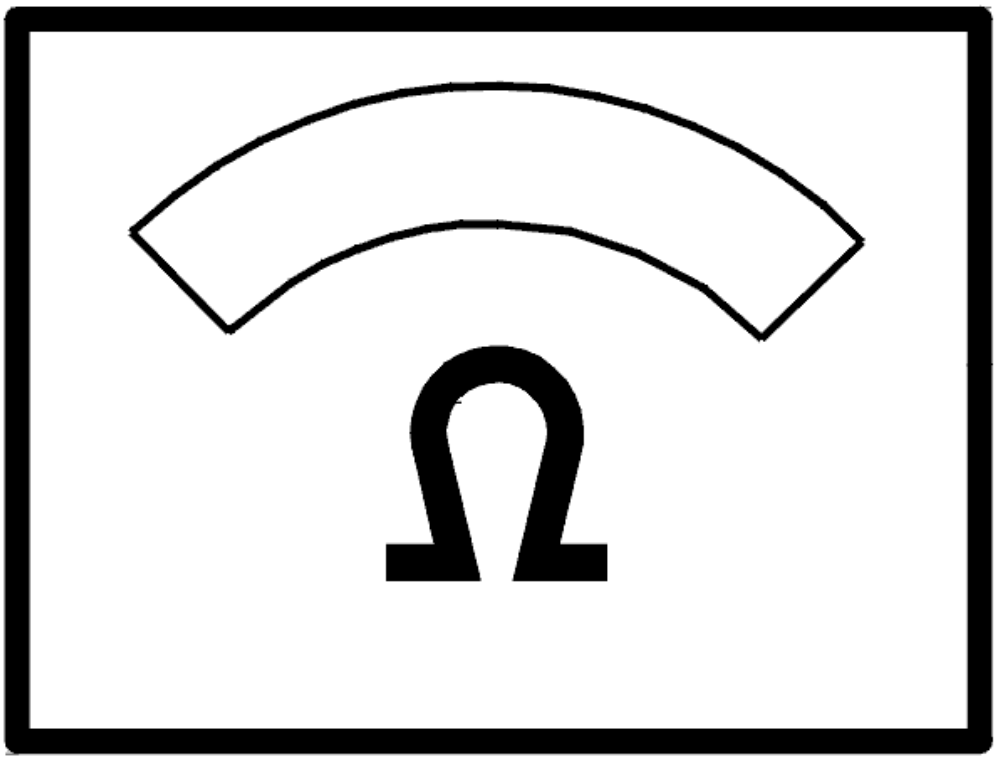

Fig. 271: Identifying Ohm Meter
Courtesy of VOLVO CARS CORPORATION

- **Continue**

  Refer to **VERIFICATION**

VERIFICATION

VERIFICATION

HINT: After the repair it is necessary to check that the fault has been rectified.

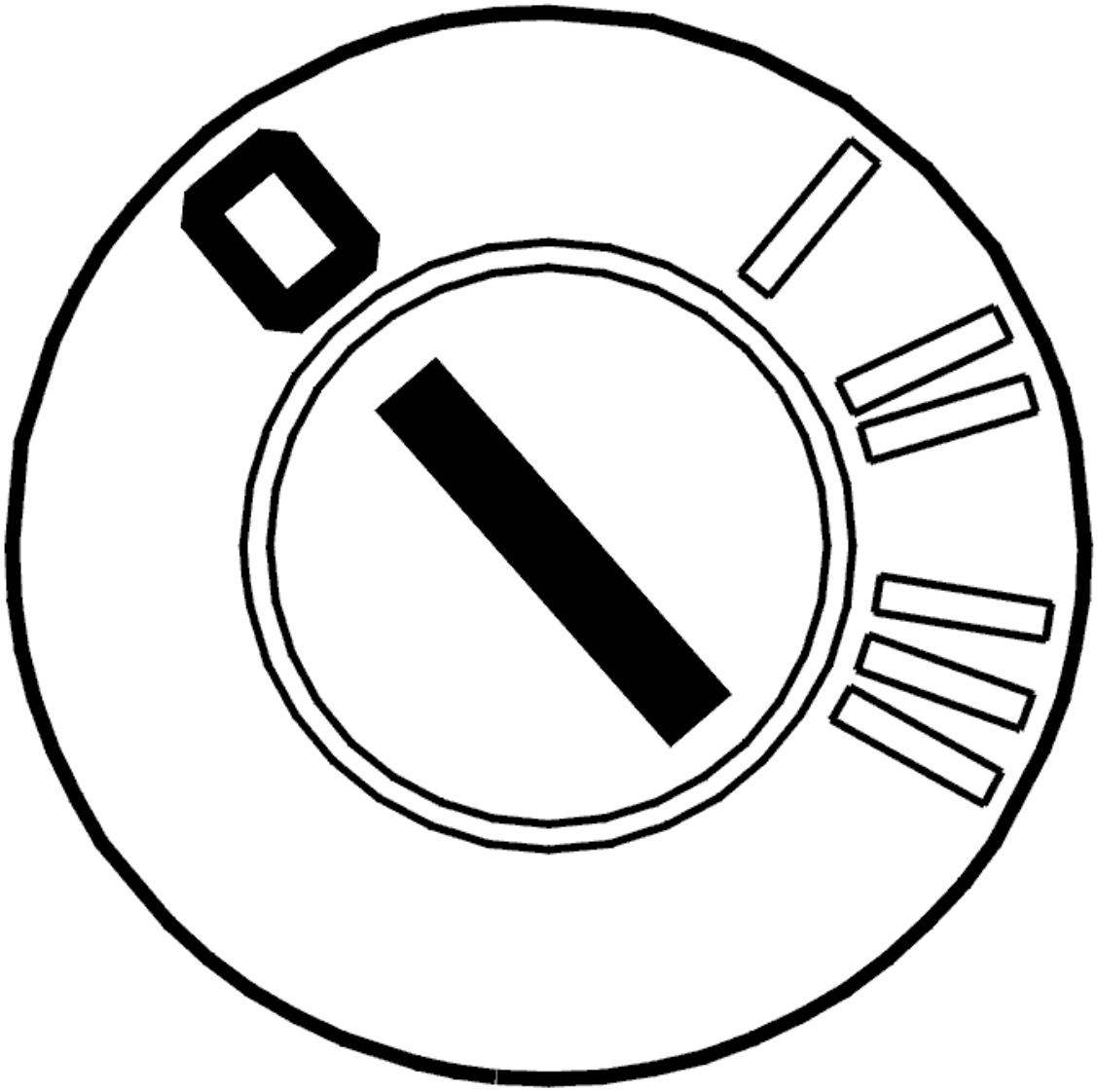

Fig. 272: Identifying Ignition OFF
Courtesy of VOLVO CARS CORPORATION

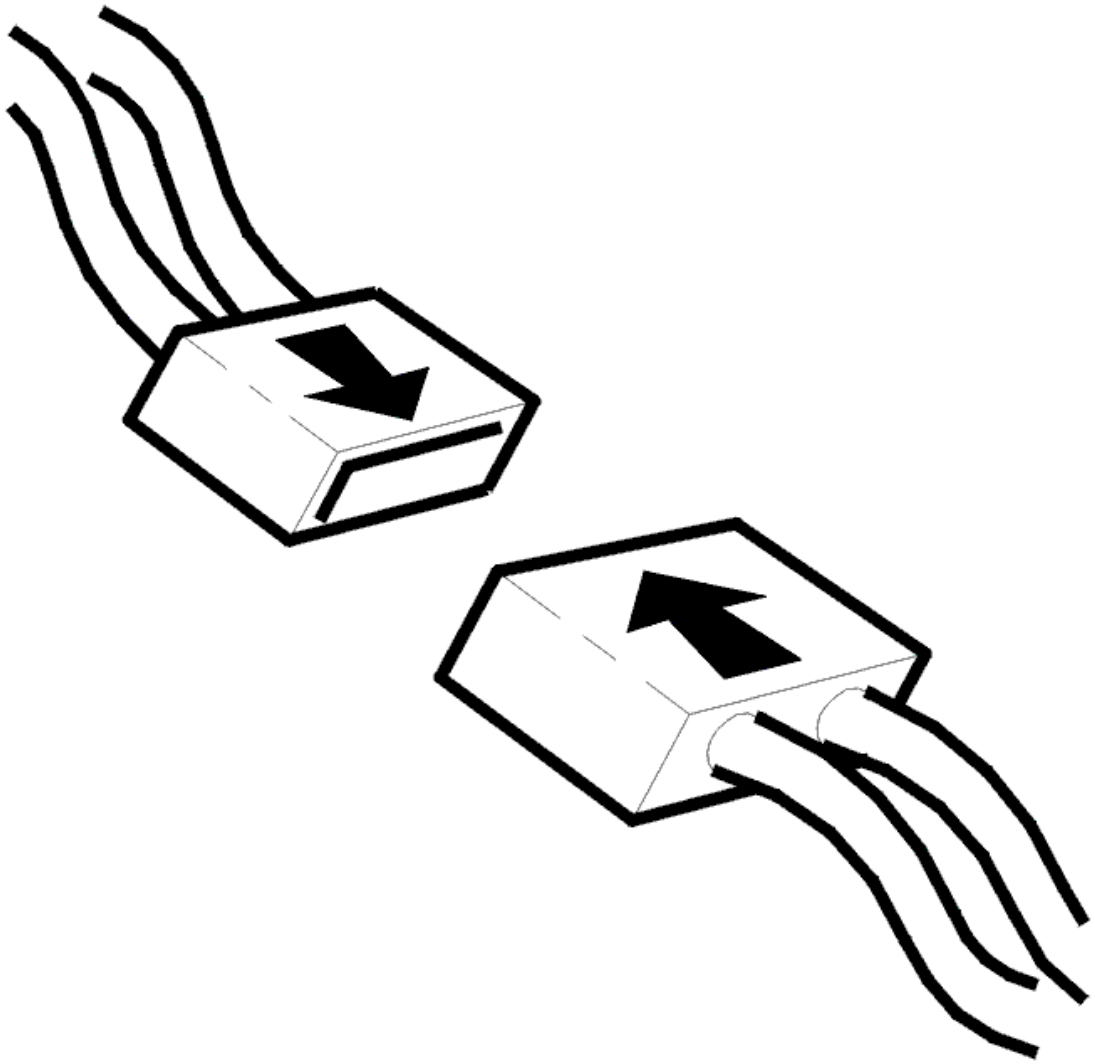

Fig. 273: Connecting Connector
Courtesy of VOLVO CARS CORPORATION

- Ignition off.
- Connect the connectors, install the components, etc.

  Open the boot lid and lock in the open position by pressing in the lock hinge.

  Lock the car by remote control.

  Wait for 25 seconds until the alarm is activated and sound the alarm by releasing the level sensor and turning it.

Is function OK?

- **YES**

VERIFIED: Troubleshooting has been completed.

- **NO**

  Refer to **INFORMATION**

INFORMATION

FAULT-TRACING INFORMATION

The fault should have been detected and remedied. As this is not the case fault-tracing has failed.

Exit fault-tracing for this diagnostic trouble code (DTC) or make another attempt.

REM-6C17: GLASS BREAK WIRE. SIGNAL MISSING (2005-2012)

DIAGNOSTIC TROUBLE CODE (DTC) INFORMATION REM-6C17

Condition

When the alarm is activated, the central electronic module (CEM) checks the glass breakage loops in the rear side windows at regular intervals. A diagnostic trouble code (DTC) is stored if the control module detects an open-circuit in any of the glass breakage loops.

The diagnostic trouble code (DTC) can be diagnosed when the alarm is activated.

Substitute Value

- The alarm sounds.

Possible Source

- Open-circuit in one of the glass breakage loops in the rear side windows
- Contact resistance in the terminals.

Fault symptom[s]

- Text window and warning symbol/Text message
- Alarm/False alarm
- Alarm/Other alarm problems

SIGNAL MISSING

CHECKING CABLE AND COMPONENT

- Disconnect connector C from the rear electronic module (REM).

HINT: The signal loop runs from rear electronic module (REM) terminal #48 (#C8) to the glass breakage loop in the right-hand rear window, to the glass breakage loop in the left-hand rear window and then to the ground terminal.

Check connector C for the rear electronic module (REM) and the terminals for the glass breakage loop. Check for contact resistance and oxidation.

Check the glass breakage loop and the intermediate cable between rear electronic module (REM) terminal #48 (#C8) and the ground terminal. Check for an open-circuit.

Remedy as necessary.

Other information

- see **CONNECTING THE BREAKOUT BOX**
- see **SIGNAL SPECIFICATION**
- For -2004, see: **RELAY/FUSE BOX CARGO COMPARTMENT/REAR ELECTRONIC MODULE (REM), REPLACING**
- For 2005-, see: **REAR ELECTRONIC MODULE (REM), REPLACING** .
- see **CHECKING WIRING AND TERMINALS**

- **Continue**

  Refer to **VERIFICATION**

VERIFICATION

VERIFICATION

HINT: After carrying out the repair, check that the fault has been remedied.

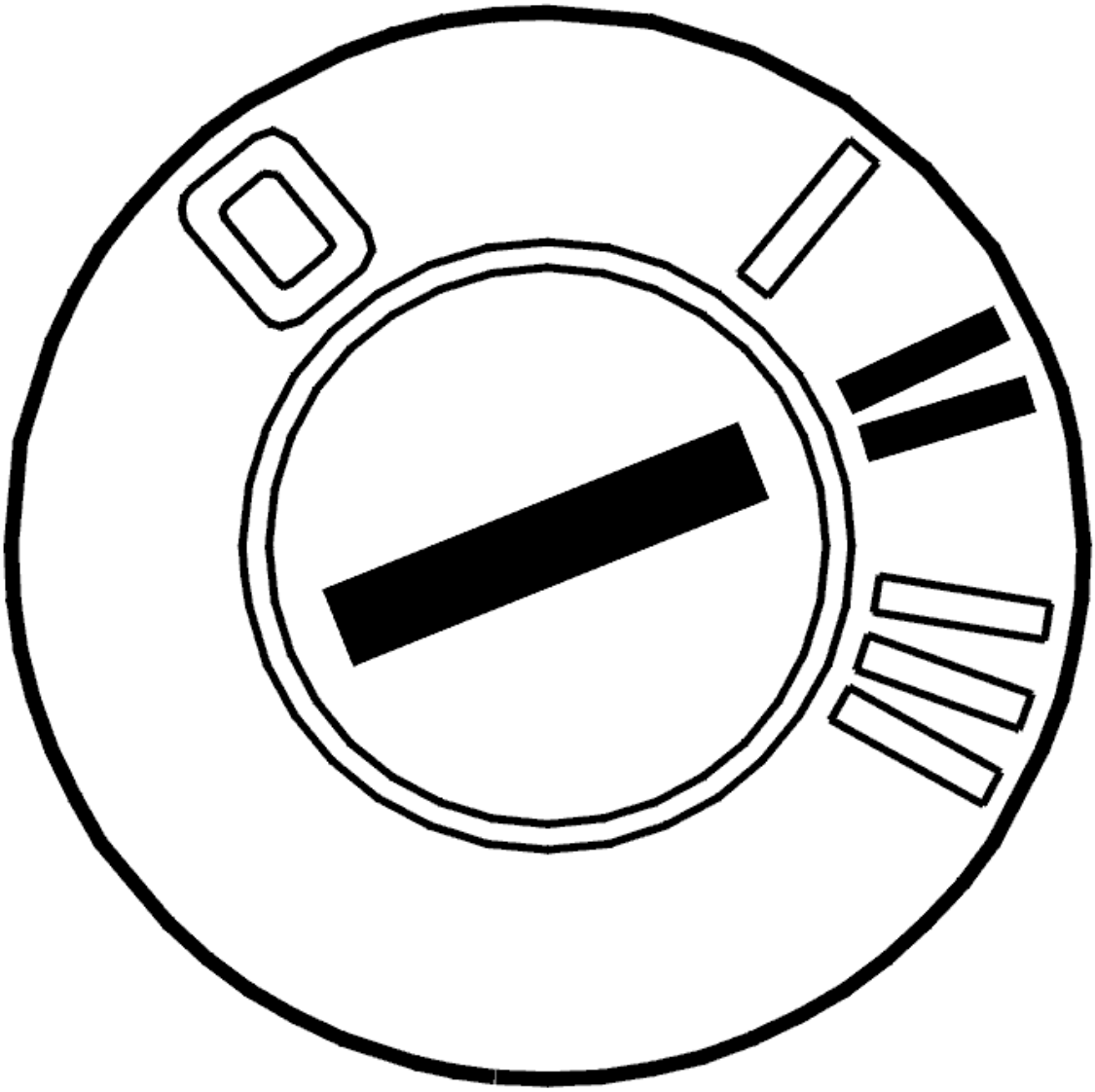

Fig. 274: Identifying Ignition ON
Courtesy of VOLVO CARS CORPORATION

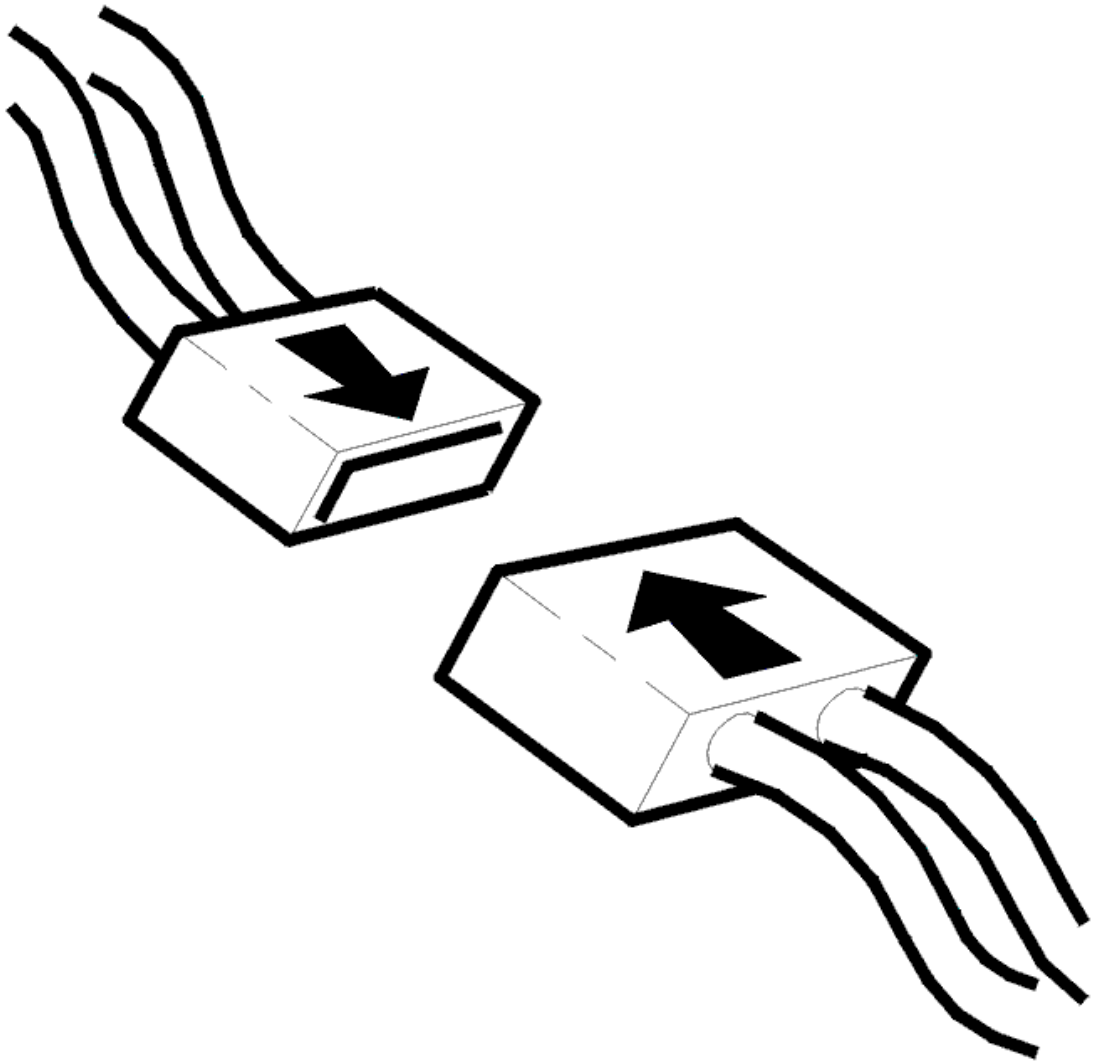

Fig. 275: Connecting Connector
Courtesy of VOLVO CARS CORPORATION

- Ignition off
- Reinstall the connectors, components etc.
- Ignition on
- Shut all the doors. Activate the alarm. Wait 25 seconds until the car is alarmed
- Then deactivate the alarm
- Read off diagnostic trouble codes (DTCs).

Check if the status of the diagnostic trouble code (DTC) is intermittent.

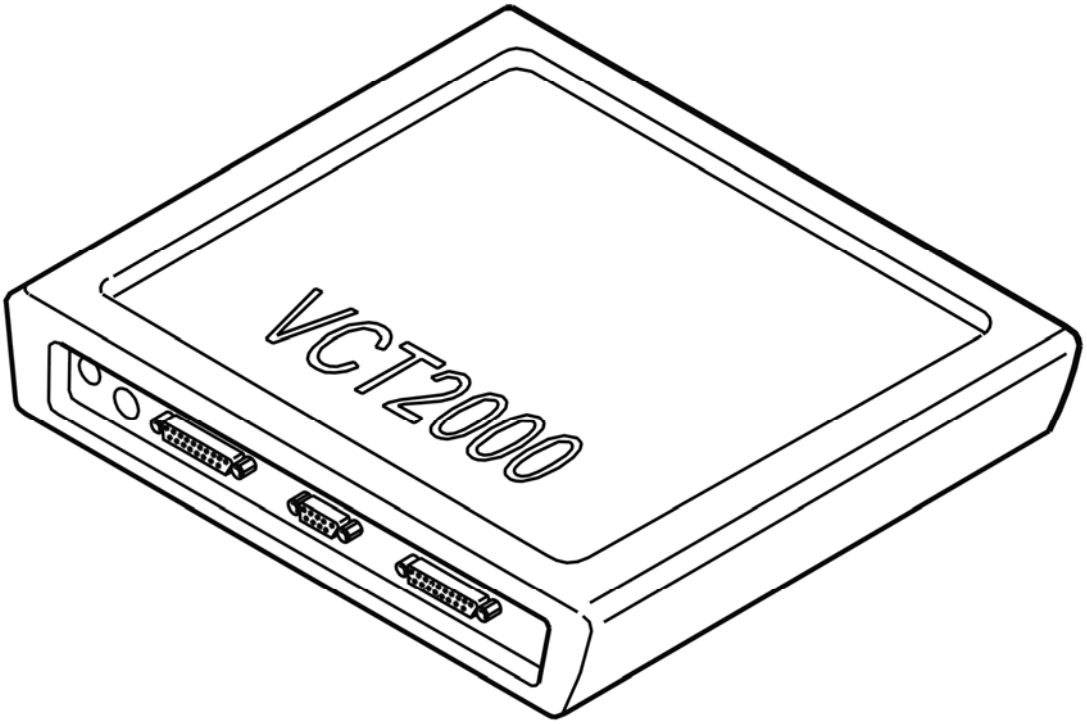

Fig. 276: Identifying VCT2000 Diagnostic Tool Symbol In VIDA
Courtesy of VOLVO CARS CORPORATION

Is the status intermittent?

- **YES**

  VERIFIED: Troubleshooting has been completed.

- **NO**

  Refer to **INFORMATION**

INFORMATION

FAULT-TRACING INFORMATION

The fault should have been detected and remedied. As this is not the case fault-tracing has failed.

Exit fault-tracing for this diagnostic trouble code (DTC) or make another attempt.

REM-6C18: GLASS BREAK WIRE. SIGNAL TOO HIGH (2005-2012)

DIAGNOSTIC TROUBLE CODE (DTC) INFORMATION REM-6C18

Condition

When the alarm is activated, the central electronic module (CEM) checks the glass breakage loops in the rear side windows at regular intervals. The diagnostic trouble code (DTC) is stored if the control module registers a short-circuit to supply voltage in any of the glass breakage loops.

The diagnostic trouble code (DTC) can be diagnosed when the alarm is activated.

Substitute Value

- The alarm sounds.

Possible Source

- Short-circuit to supply voltage in one of the glass breakage loops in the rear side windows.

Fault symptom[s]

- False alarm.

SIGNAL TOO HIGH

CHECKING CABLE AND COMPONENT

- Disconnect connector C from the rear electronic module (REM).

  HINT: The signal loop runs from rear electronic module (REM) terminal #48 (#C8) to the glass breakage loop in the right-hand rear window, to the glass breakage loop in the left-hand rear window and then to the ground terminal.

  Check the glass breakage loop and the intermediate cable between rear electronic module (REM) terminal #48 (#C8) and the ground terminal. Check for a short-circuit to supply voltage.

  Remedy as necessary.

  Other information

  - see **CONNECTING THE BREAKOUT BOX**
  - see **SIGNAL SPECIFICATION**
  - For -2004, see: **RELAY/FUSE BOX CARGO COMPARTMENT/REAR ELECTRONIC MODULE (REM), REPLACING**
  - For 2005-, see: **REAR ELECTRONIC MODULE (REM), REPLACING** .
  - see **CHECKING WIRING AND TERMINALS**

- **Continue**

Refer to **VERIFICATION**

VERIFICATION

VERIFICATION

HINT: After carrying out the repair, check that the fault has been remedied.

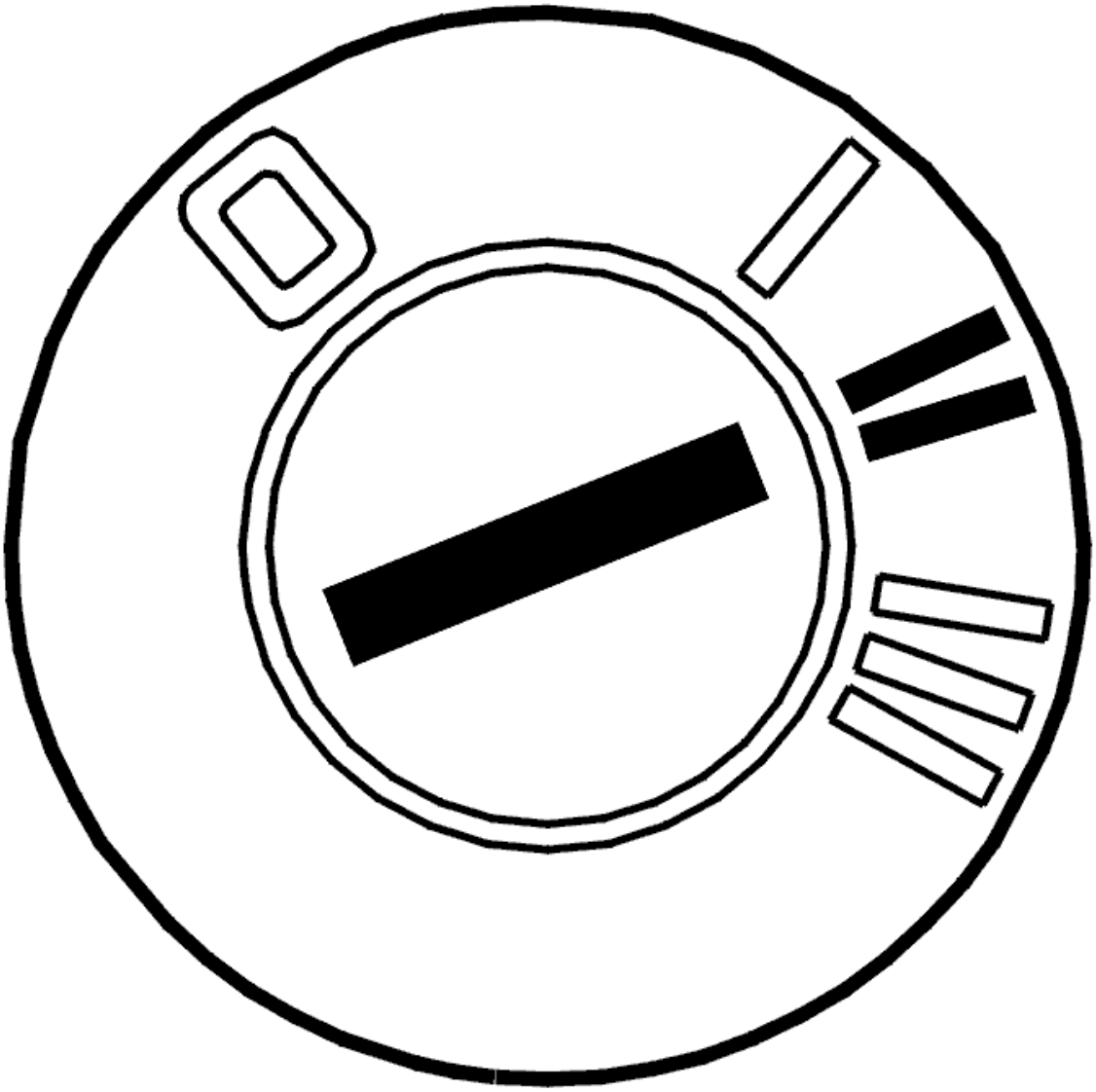

Fig. 277: Identifying Ignition ON
Courtesy of VOLVO CARS CORPORATION

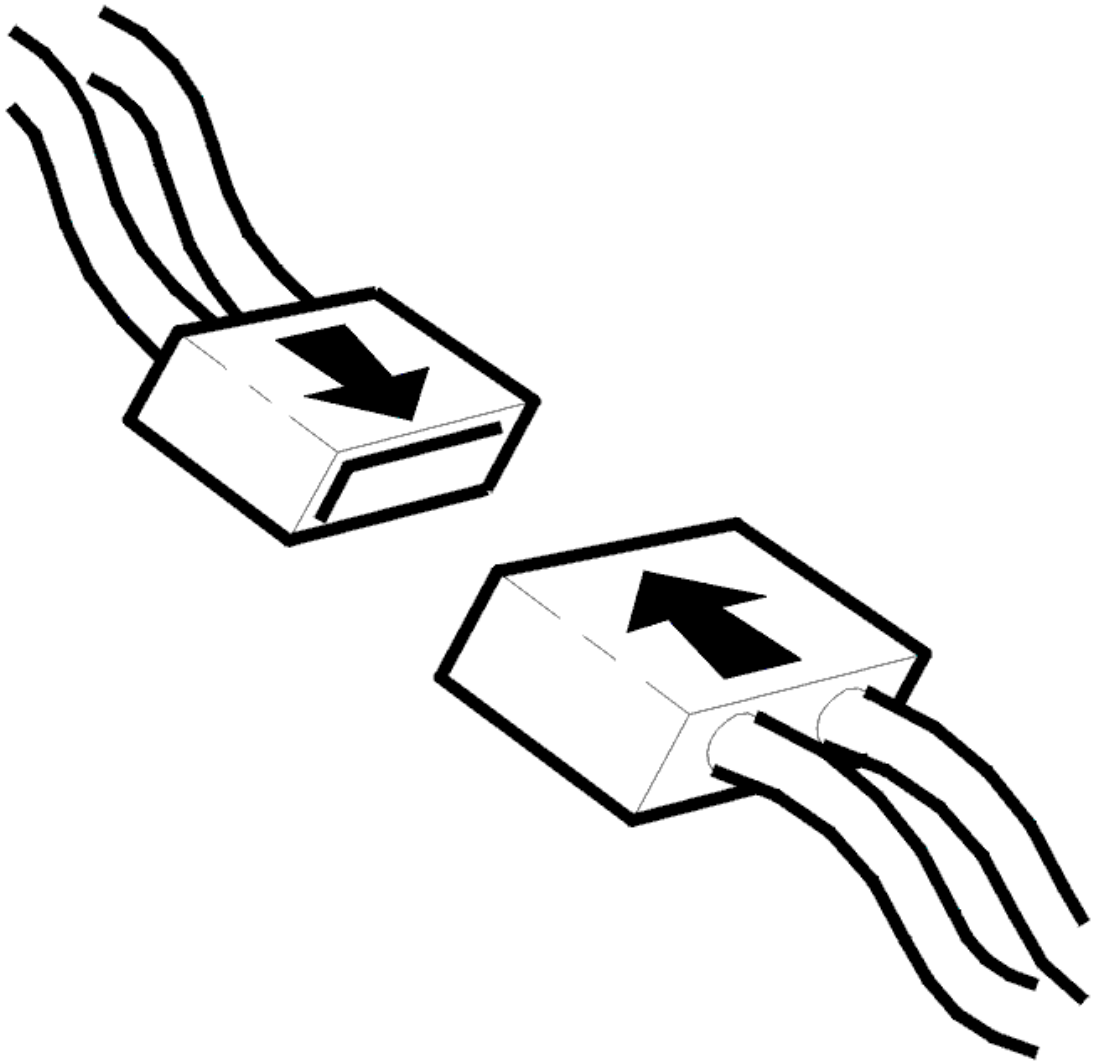

Fig. 278: Connecting Connector
Courtesy of VOLVO CARS CORPORATION

- Ignition off
- Reinstall the connectors, components etc.
- Ignition on
- Shut all the doors. Activate the alarm. Wait 25 seconds until the car is alarmed
- Then deactivate the alarm
- Read off diagnostic trouble codes (DTCs).

Check if the status of the diagnostic trouble code (DTC) is intermittent.

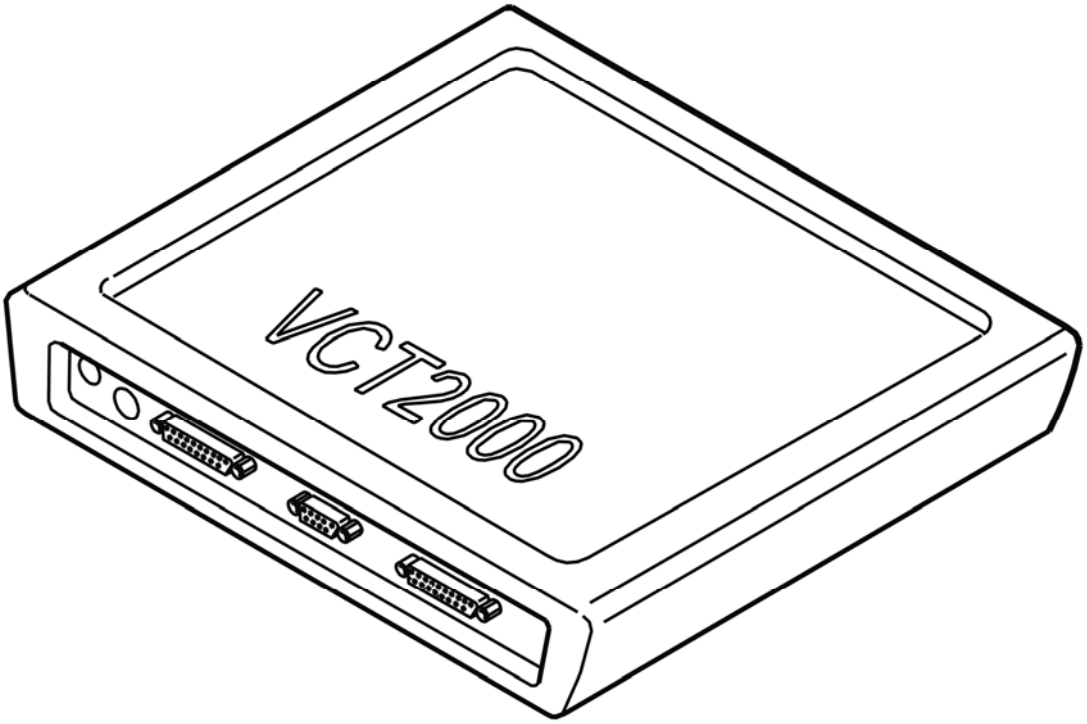

Fig. 279: Identifying VCT2000 Diagnostic Tool Symbol In VIDA
Courtesy of VOLVO CARS CORPORATION

Is the status intermittent?

- **YES**

  VERIFIED: Troubleshooting has been completed.

- **NO**

  Refer to **INFORMATION**

INFORMATION

FAULT-TRACING INFORMATION

The fault should have been detected and remedied. As this is not the case fault-tracing has failed.

Exit fault-tracing for this diagnostic trouble code (DTC) or make another attempt.

REM-6C19: SIREN COMMUNICATION FAULT (2012)

DTC-INFORMATION: REM-6C19

Condition

The Rear electronic module (REM) checks the function of the siren (BBS) via check messages.

The diagnostic trouble code (DTC) is stored if the control module detects that:

- Communication with siren (BBS) is lost.
- The siren responds with incorrect information.

The control module's test for the diagnostic trouble code (DTC) starts in the event of:

- Communication between the Rear electronic module (REM) and siren (BBS), for example during siren activation.

NOTE: The control module can only detect the fault once the test has been started and the diagnostic trouble code (DTC) is stored when the conditions are met.

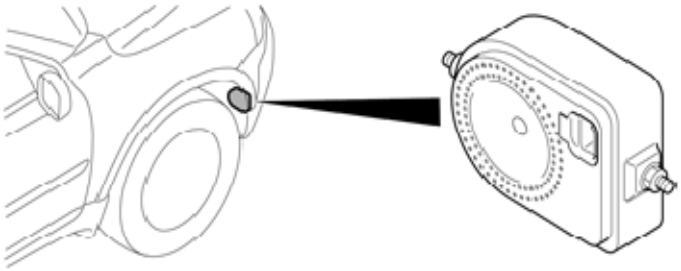

Fig. 280: Locating Siren (BBS)
Courtesy of VOLVO CARS CORPORATION

Substitute Value

- None.

Possible Source

- Open-circuit in the signal cable to the siren (BBS).
- Fault on the connector in the Rear electronic module (REM), Central electronic module (CEM) or siren (BBS).
- Leaking battery acid in siren (BBS) causes interference in the LIN-net.
- Internal fault in the siren (BBS).

Fault symptom[s]

- False alarm
- The vehicle angle sensor does not activate, on the condition that the siren is equipped with vehicle angle sensor.

FAULT-TRACING

CHECKING THE WIRING

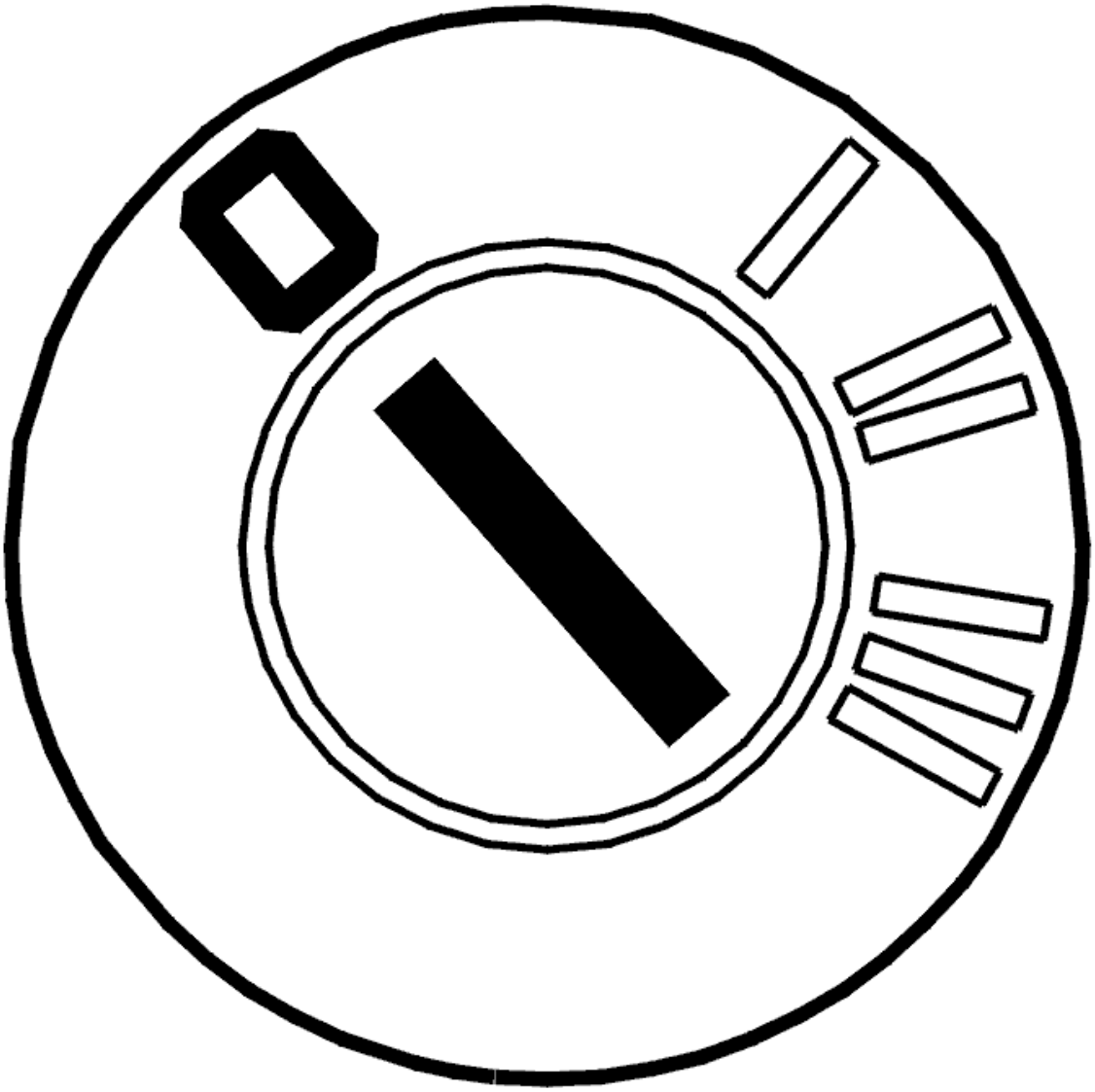

Fig. 281: Identifying Ignition OFF
Courtesy of VOLVO CARS CORPORATION

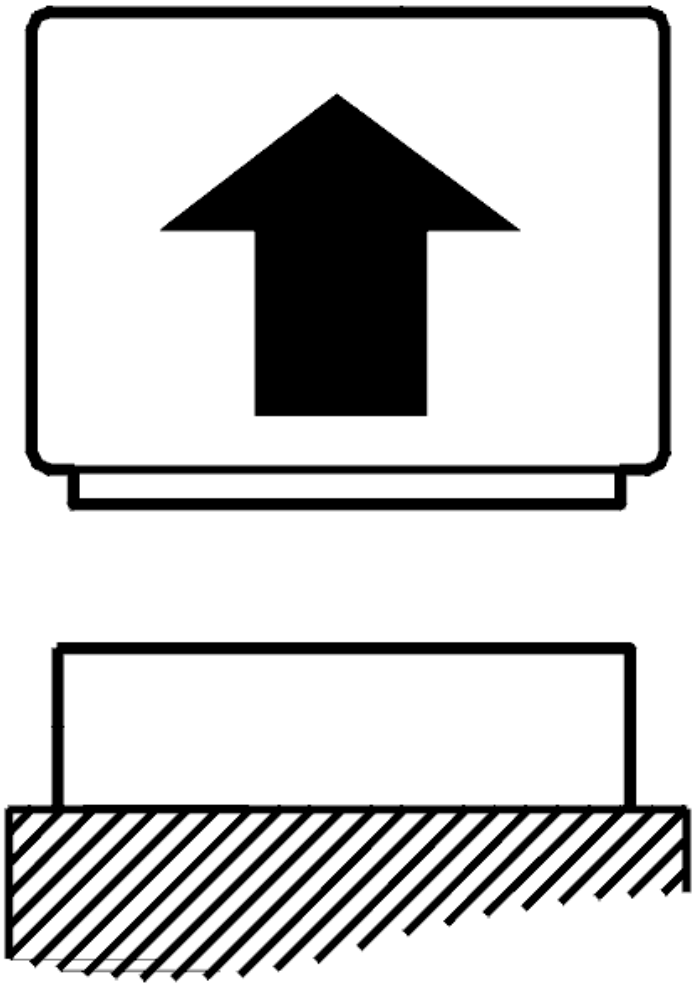

Fig. 282: Disconnecting Connector
Courtesy of VOLVO CARS CORPORATION

- Ignition off
- Disconnect connector D on the rear electronic module (REM).
- Check the connectors for loose connections, damaged or bent terminal pins and oxidation.
- Check the signal line for open circuit, short-circuit to ground and short-circuit to voltage.

  Take readings between:

  - Rear electronic module (REM) #D26 (#26) and siren (BBS).

  Remedy as necessary.

  Other information

- see **CONNECTING THE BREAKOUT BOX**
- see **SIGNAL SPECIFICATION**
- see **CHECKING WIRING AND TERMINALS**
- see **ANTI-THEFT PROTECTION SIREN**

- **Continue**

  Refer to **COMMUNICATION TEST**

REPLACING THE CONTROL MODULE

Replace siren (BBS).

Other information

- see **ANTI-THEFT PROTECTION SIREN**
- see **CONNECTING THE BREAKOUT BOX**
- see **CHECKING WIRING AND TERMINALS**
- see **SIGNAL SPECIFICATION**

- **Continue**

  Refer to **VERIFICATION**

COMMUNICATION TEST

Fig. 283: Identifying Ignition On Position
Courtesy of VOLVO CARS CORPORATION

Check whether the siren responds with incorrect information by:

- Erase diagnostic trouble codes
- Close all vehicle doors.
- Wait 5 seconds.
- Read off diagnostic trouble codes (DTCs).
- Check for any DTCs.

Are any DTCs stored?

- **YES**

  Refer to **REPLACING THE CONTROL MODULE**

- **NO**

  Refer to **VERIFICATION**

VERIFICATION

VERIFICATION

HINT: After carrying out the repair, check that the fault has been remedied.

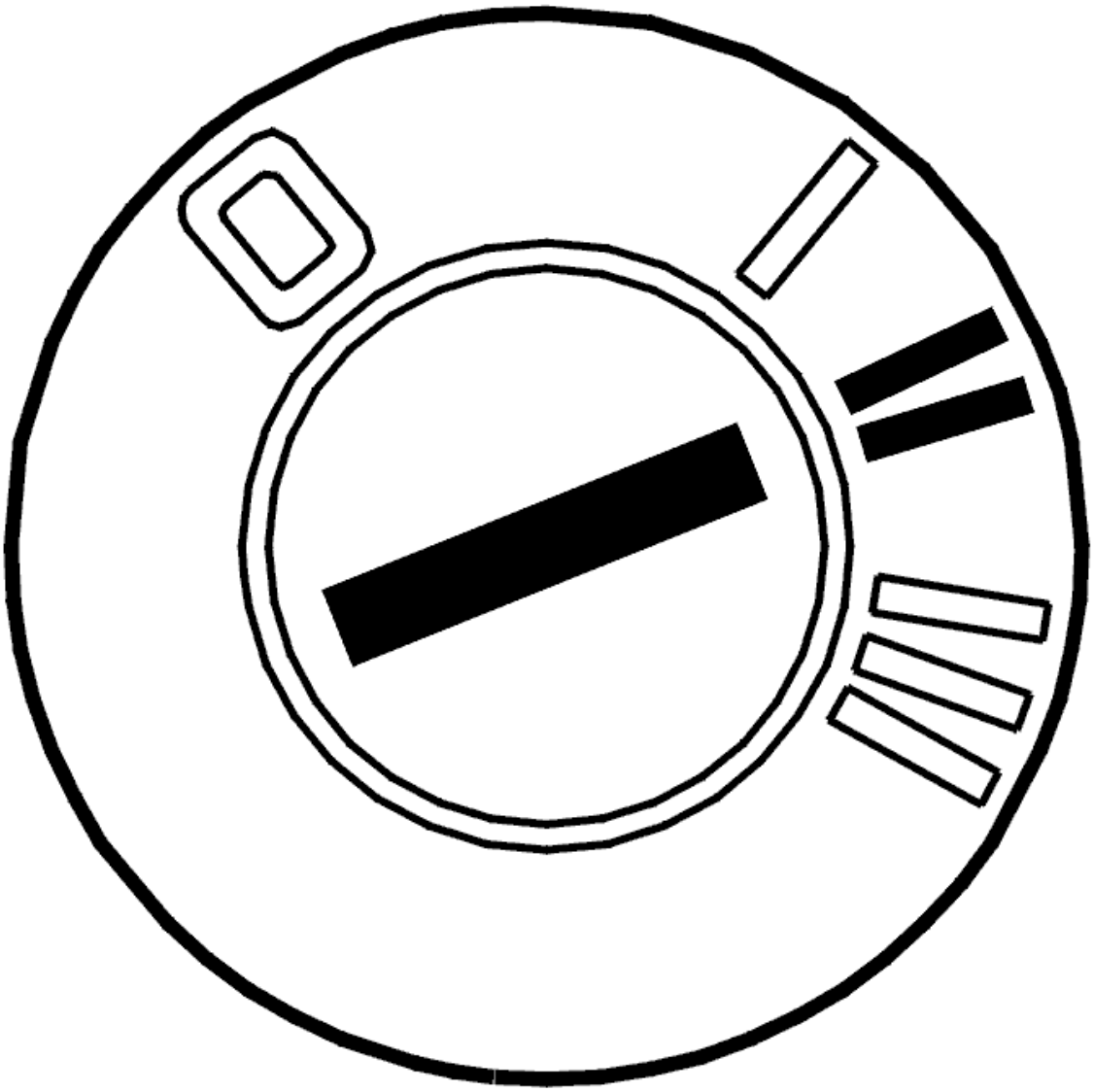

Fig. 284: Identifying Ignition ON
Courtesy of VOLVO CARS CORPORATION

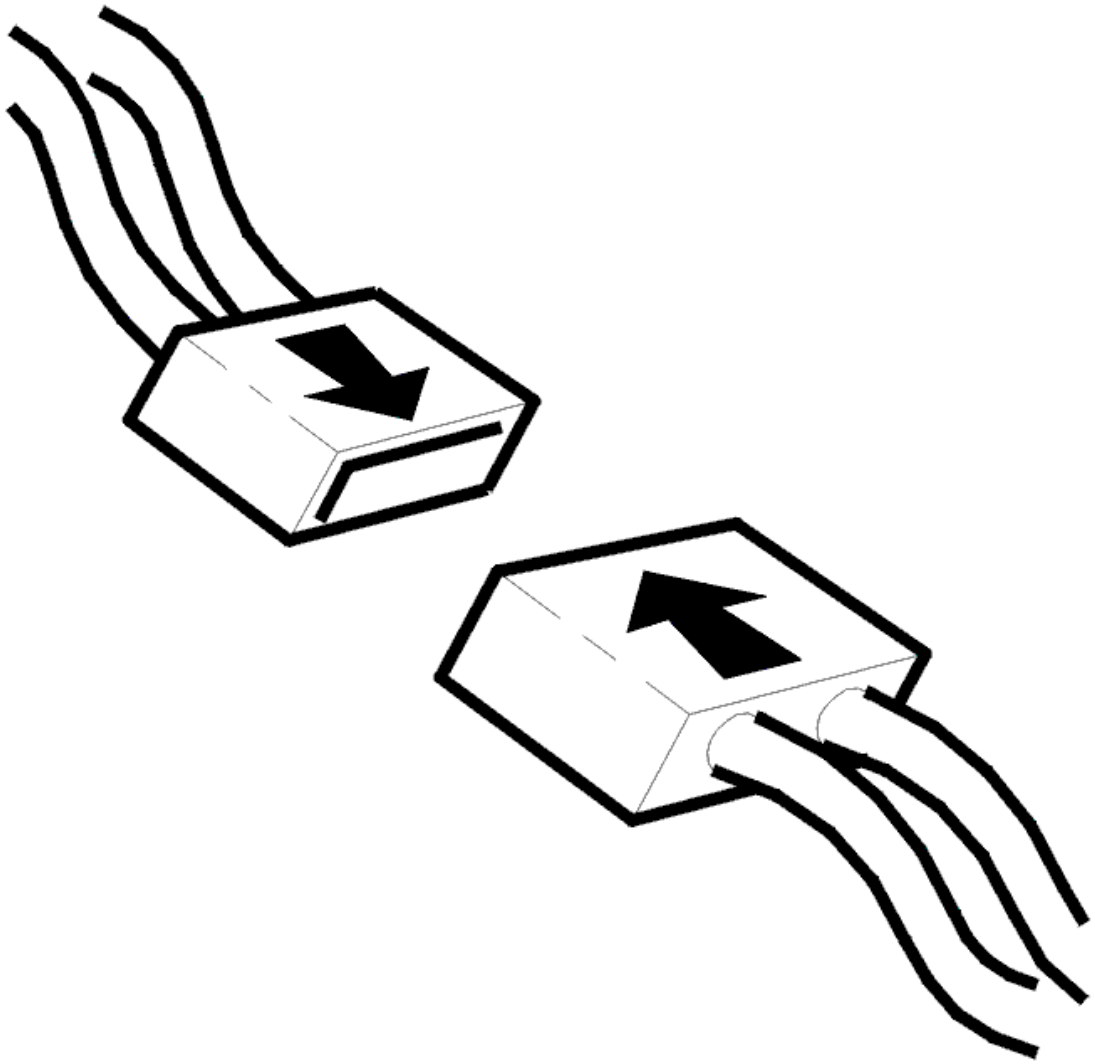

Fig. 285: Connecting Connector
Courtesy of VOLVO CARS CORPORATION

- Ignition off
- Reinstall the connectors, components etc.
- Ignition on.

  Activate the alarm.

  Check that the functions are OK.

Are the functions OK?

- **YES**

VERIFIED: Troubleshooting has been completed.

- **NO**

  Refer to **INFORMATION**

INFORMATION

FAULT-TRACING INFORMATION

The fault should have been detected and remedied. As this is not the case fault-tracing has failed.

Exit fault-tracing for this diagnostic trouble code (DTC) or make another attempt.

REM-6C20: SIREN INTERNAL FAULT (2012)

DTC-INFORMATION: REM-6C20

Condition

The Rear electronic module (REM) checks the function of the siren (BBS) via check messages.

The diagnostic trouble code (DTC) is stored if the control module detects that:

- Siren (BBS) has registered an internal error.

The control module's test for the diagnostic trouble code (DTC) starts in the event of:

- Activation of the alarm function.

NOTE: **The control module can only detect the fault once the test has been started and the diagnostic trouble code (DTC) is stored when the conditions are met.**

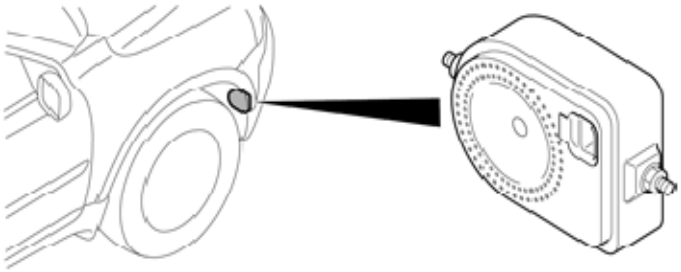

Fig. 286: Locating Siren (BBS)
Courtesy of VOLVO CARS CORPORATION

Substitute Value

- None.

Possible Source

- Internal fault in the siren (BBS).

Fault symptom[s]

- No audible signal when alarm is triggered

INTERNAL FAULT

REPLACING A COMPONENT

Siren (BBS) has registered an internal error.

If the fault is intermittent, it has been registered previously but is no longer present. Intermittent problem may be due to interference at start of the component or may be another type of problem that can return at different times. The fault is evaluated depending on how it occurs. If the fault recurs, replace the siren (BBS).

In the event of a permanent fault, replace the siren (BBS).

- **Continue**

  Refer to **INFORMATION**

INFORMATION

FAULT-TRACING INFORMATION

In case of this defect, troubleshooting is not followed by verification.

The information can be displayed again or the fault-tracing for this fault can be interrupted.

REM-6F51: TAILGATE HANDLE. SIGNAL TOO LOW (2005-2012)

DIAGNOSTIC TROUBLE CODE (DTC) INFORMATION REM-6F51

Condition

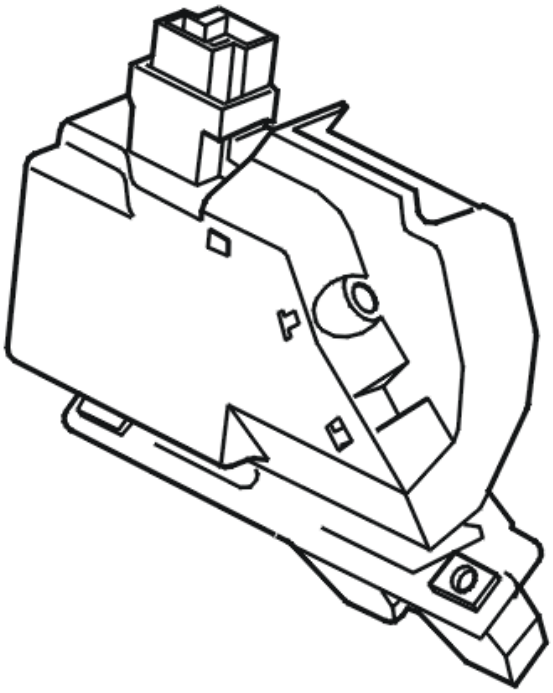

Fig. 287: Identifying Tailgate Switch
Courtesy of VOLVO CARS CORPORATION

The rear electronic module (REM) is grounded when a switch on the tailgate is pushed in.

The diagnostic trouble code (DTC) is stored if the rear electronic module (REM) registers that the switch on the tailgate has been activated for more than 20 seconds.

Substitute Value

- None.

Possible Source

- The switch for the tailgate has stuck in the activated position
- Short-circuit to ground in the cable for the tailgate switch.

Fault symptom[s]

- No locking/unlocking of the tailgate.

SIGNAL TOO LOW

CHECKING THE SIGNAL FROM THE TRUNK LID HANDLE

NOTE: Only applies to 4-door cars.

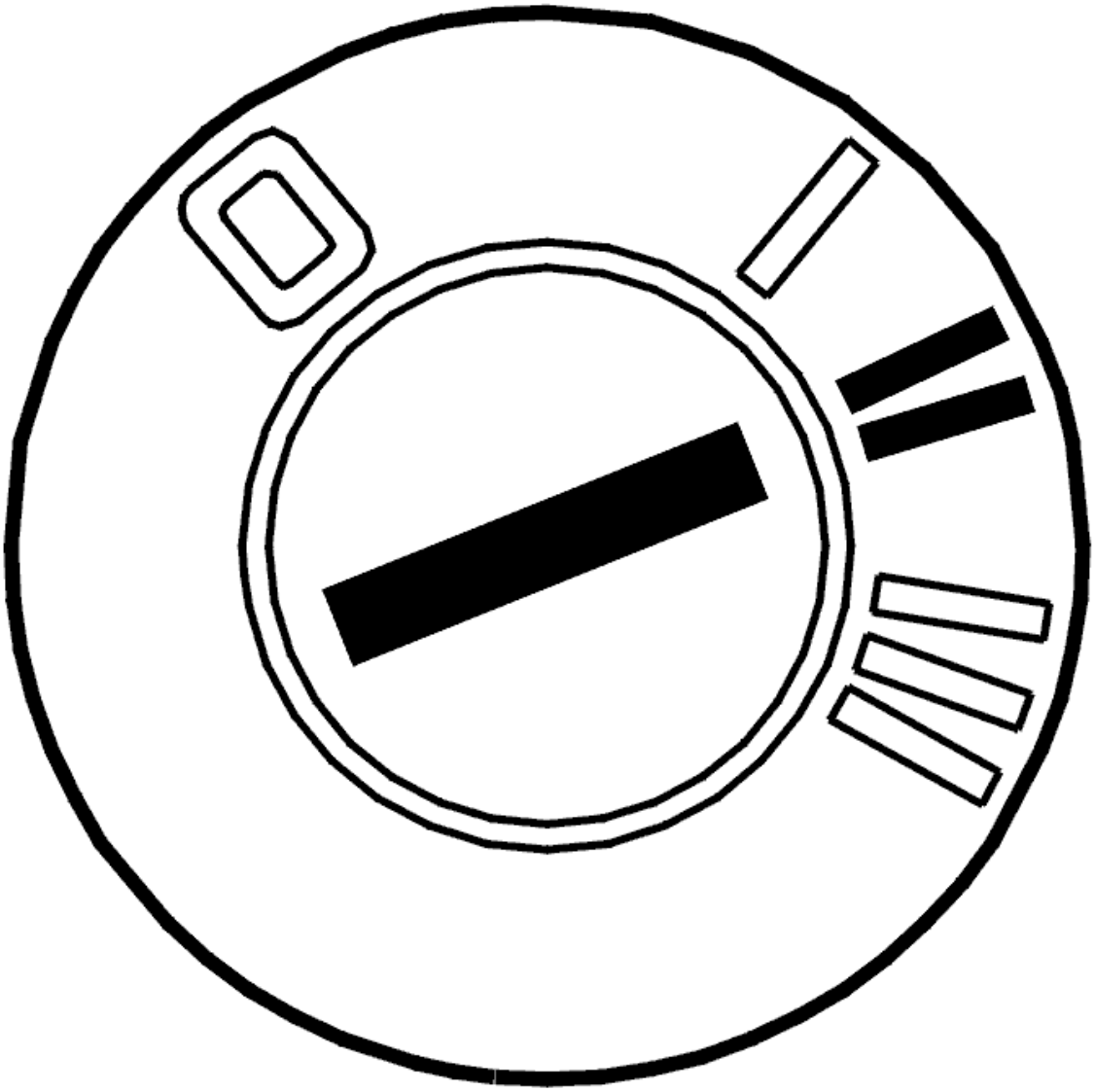

Fig. 288: Identifying Ignition ON
Courtesy of VOLVO CARS CORPORATION

- Ignition on
- Read off the status from the trunk lid handle. Open and close the trunk lid using the handle.

The status should alternate as the handle is affected.

The fault is permanent if the status does not change.

If the status changes, this indicates an intermittent fault, i. e. the fault was present previously but is not active at the moment.

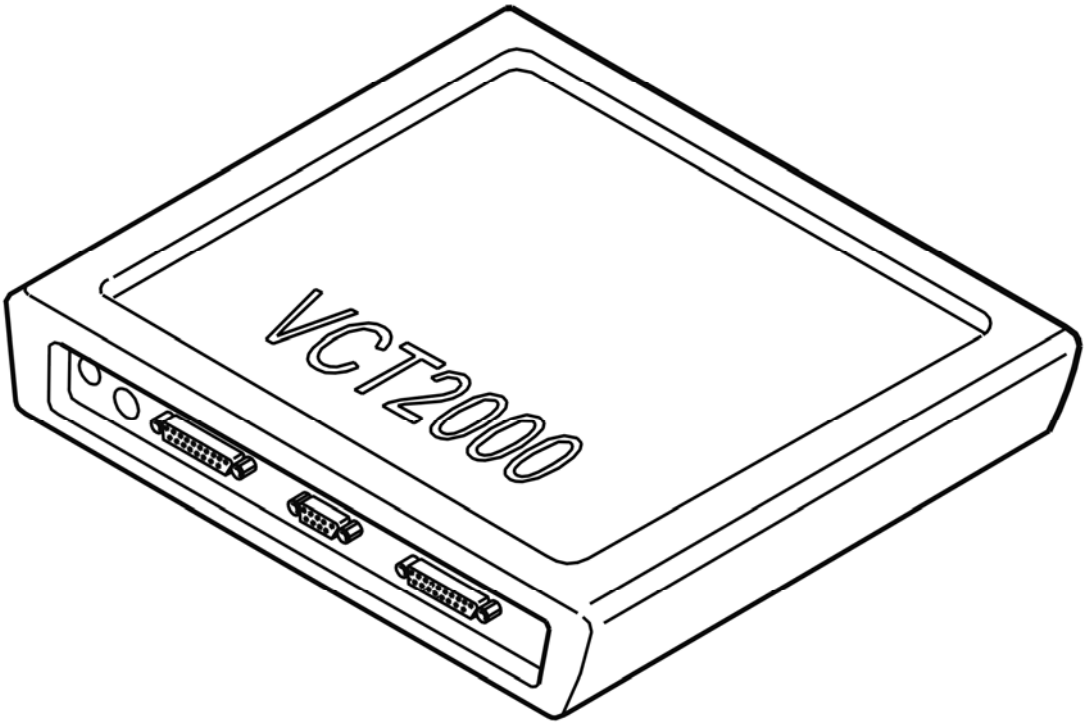

Fig. 289: Identifying VCT2000 Diagnostic Tool Symbol In VIDA
Courtesy of VOLVO CARS CORPORATION

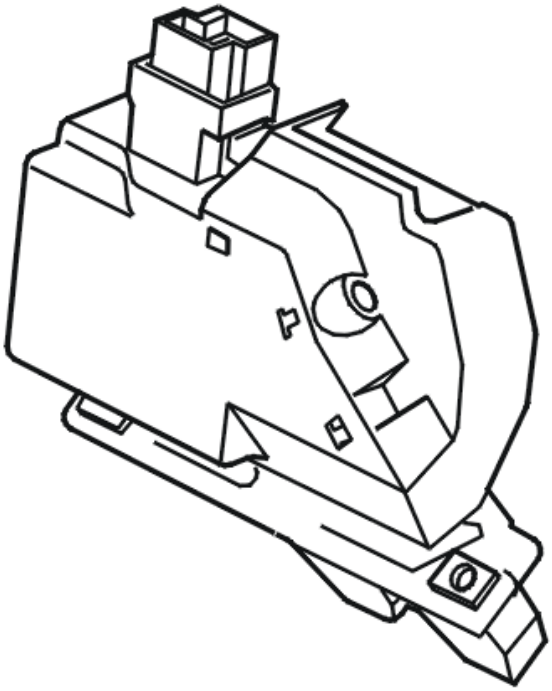

Fig. 290: Identifying Tailgate Switch
Courtesy of VOLVO CARS CORPORATION

- **Continue**

  Refer to **CHECKING CABLE AND COMPONENT**

CHECKING CABLE AND COMPONENT

Disconnect the connector from the lamp housing for the license plate lighting. Check that the button has not stuck in the pressed in position. Check that there is not a short-circuit in the contact breaker for the switch by taking a reading between terminal #1 and ground.

Check the resistance between terminals #1 and #3 on the switch. The resistance must be infinite or near 0 ohm depending on the position of the switch.

Check the signal cable between terminal #43 (#F3) on the connector for the rear electronic module (REM) and terminal #1 on the connector for the lamp housing for the license plate lighting. Check for a short-circuit to ground.

Remedy as necessary.

Other information

- see **CONNECTING THE BREAKOUT BOX**
- see **SIGNAL SPECIFICATION**
- For -2004, see: **RELAY/FUSE BOX CARGO COMPARTMENT/REAR ELECTRONIC MODULE (REM), REPLACING**
- For 2005-, see: **REAR ELECTRONIC MODULE (REM), REPLACING** .
- see **CHECKING WIRING AND TERMINALS**

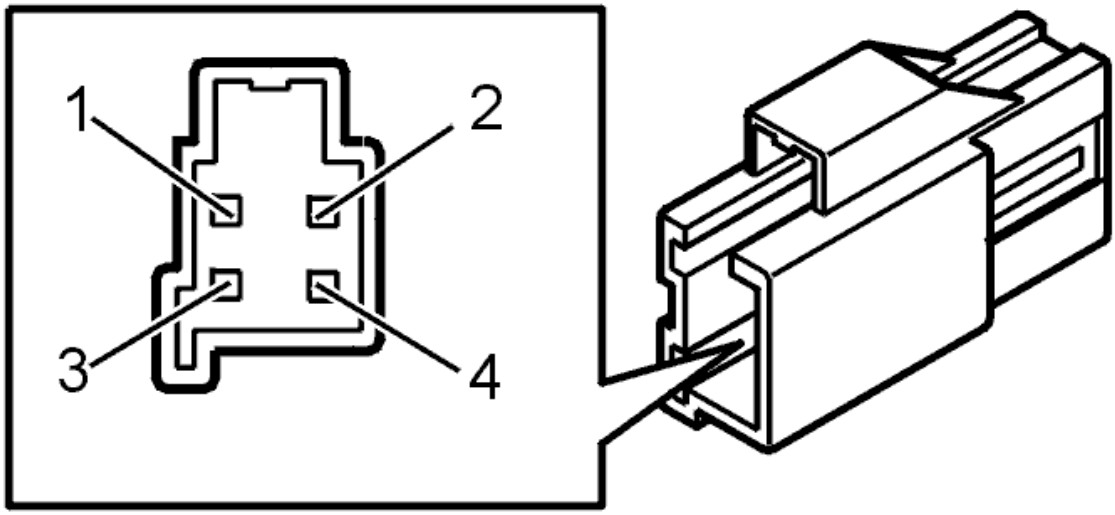

Fig. 291: Identifying Connector Terminals
Courtesy of VOLVO CARS CORPORATION

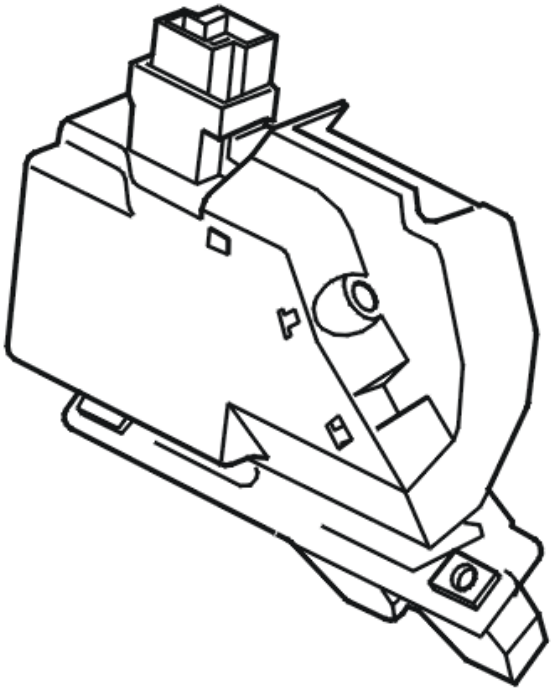

Fig. 292: Identifying Tailgate Switch
Courtesy of VOLVO CARS CORPORATION

- **Continue**

  Refer to **VERIFICATION**

VERIFICATION

VERIFICATION

HINT: After carrying out the repair, check that the fault has been remedied.

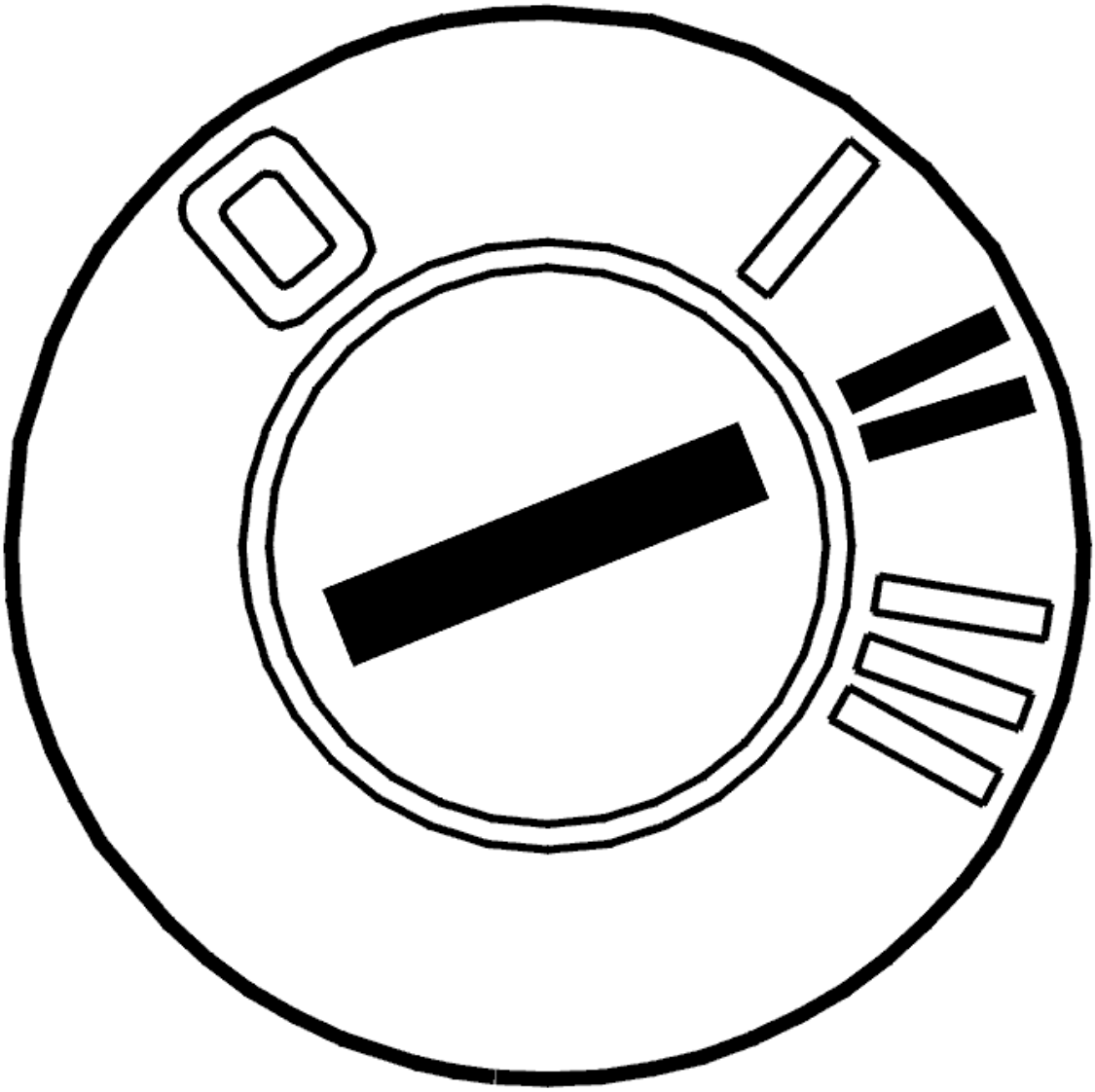

Fig. 293: Identifying Ignition ON
Courtesy of VOLVO CARS CORPORATION

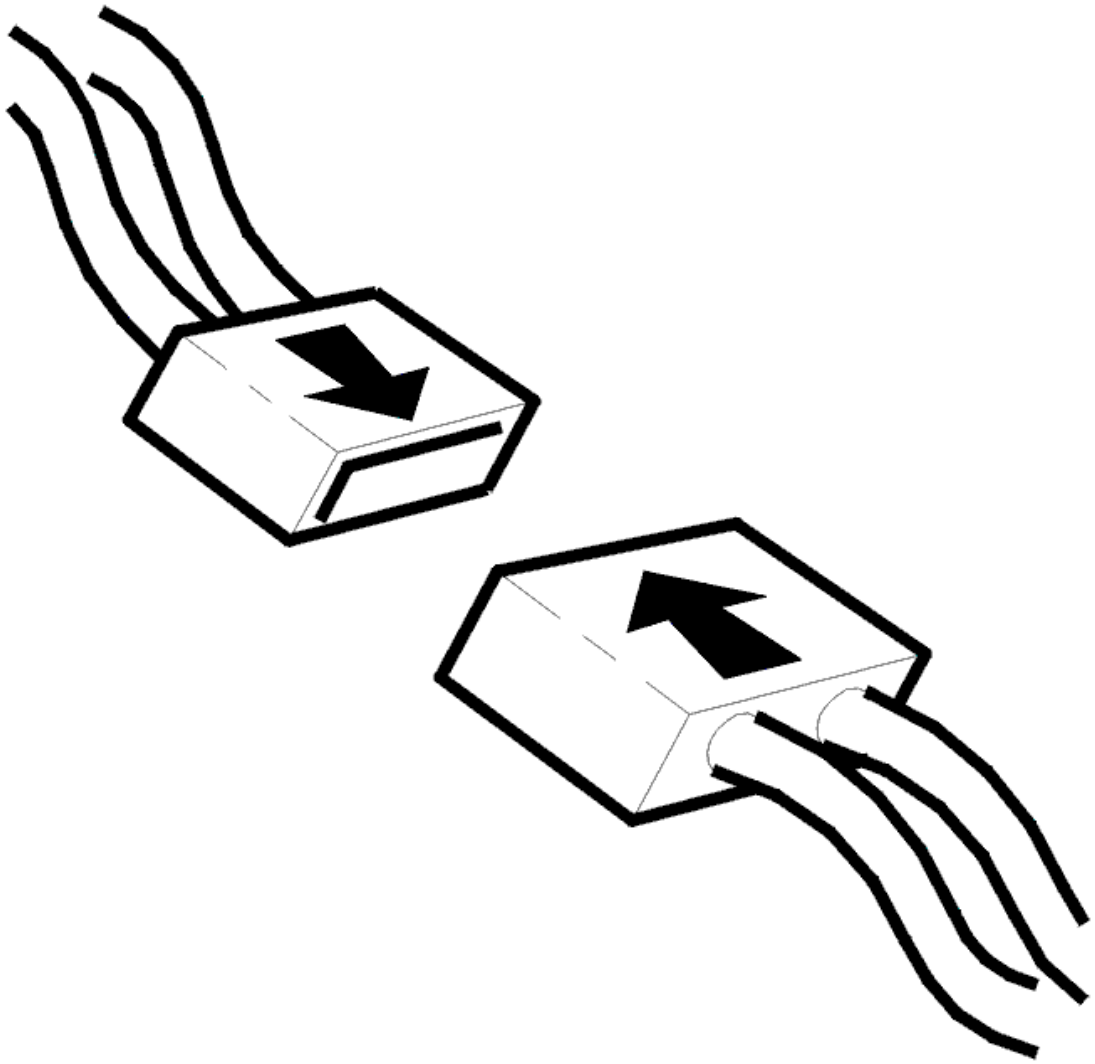

Fig. 294: Connecting Connector
Courtesy of VOLVO CARS CORPORATION

- Ignition off
- Reinstall the connectors, components etc.
- Ignition on
- Read off the status from the trunk lid handle. Open and close the trunk lid using the handle.

  The status should alternate as the handle is affected.

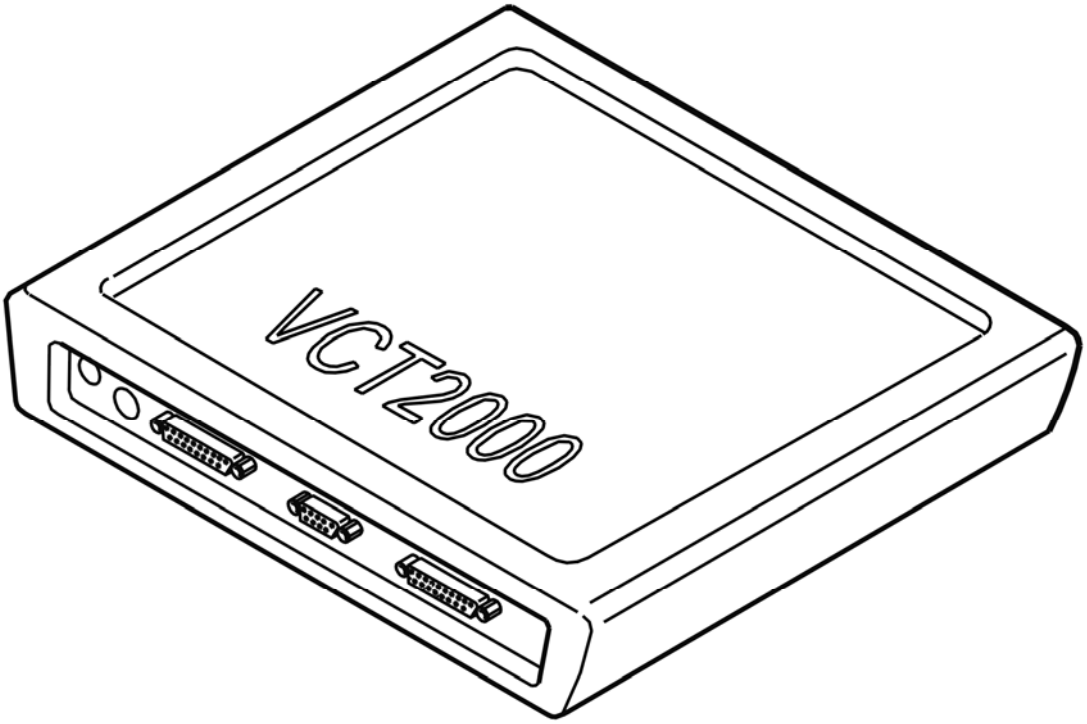

Fig. 295: Identifying VCT2000 Diagnostic Tool Symbol In VIDA
Courtesy of VOLVO CARS CORPORATION

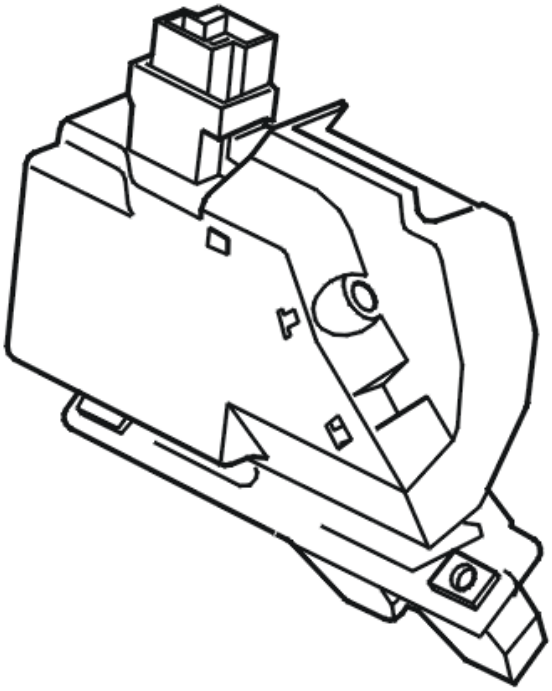

Fig. 296: Identifying Tailgate Switch
Courtesy of VOLVO CARS CORPORATION

Is the status OK?

- **YES**

  VERIFIED: Troubleshooting has been completed.

- **NO**

  Refer to **INFORMATION**

INFORMATION

FAULT-TRACING INFORMATION

The fault should have been detected and remedied. As this is not the case fault-tracing has failed.

Exit fault-tracing for this diagnostic trouble code (DTC) or make another attempt.

REM-6F51: TAILGATE HANDLE. SIGNAL TOO LOW. INTERMITTENT FAULT (2003-2004)

DIAGNOSTIC TROUBLE CODE INFORMATION

Condition

If rear electronic module registers signal too low from boot lid handle for more than 20 seconds, diagnostic trouble code is displayed.

Substitute Value

Nothing.

Possible Source

- Handle push button has stuck in an activated position.
- Signal wire short circuited to ground.

Fault symptom[s]

- Boot lid will not open/lock.

SIGNAL TOO LOW. INTERMITTENT FAULT

CHECKING THE WIRING

Disconnect the connector from the lamp housing for the license plate lighting.

Check that the button has not stuck in the pressed in position. Check that there is not a short-circuit in the contact breaker for the switch: Take a reading between terminal #1 and ground.

Check the signal cable between rear electronic module connector terminal #B07 (#D7) and lamp housing connector terminal #1 for the license plate lighting for an intermittent short-circuit to ground according to **SHORT-CIRCUIT TO GROUND, INTERMITTENT FAULTS** .

Other information

- For further information about signals and other values, see **SIGNAL SPECIFICATION** .
- To connect the breakout box, see **CONNECTING THE BREAKOUT BOX** .
- To access the rear electronic module, see **RELAY/FUSE BOX CARGO COMPARTMENT/REAR ELECTRONIC MODULE (REM), REPLACING** .
- To access and replace the license plate lighting, see **BULB, NUMBER PLATE LIGHTING, REPLACING** .

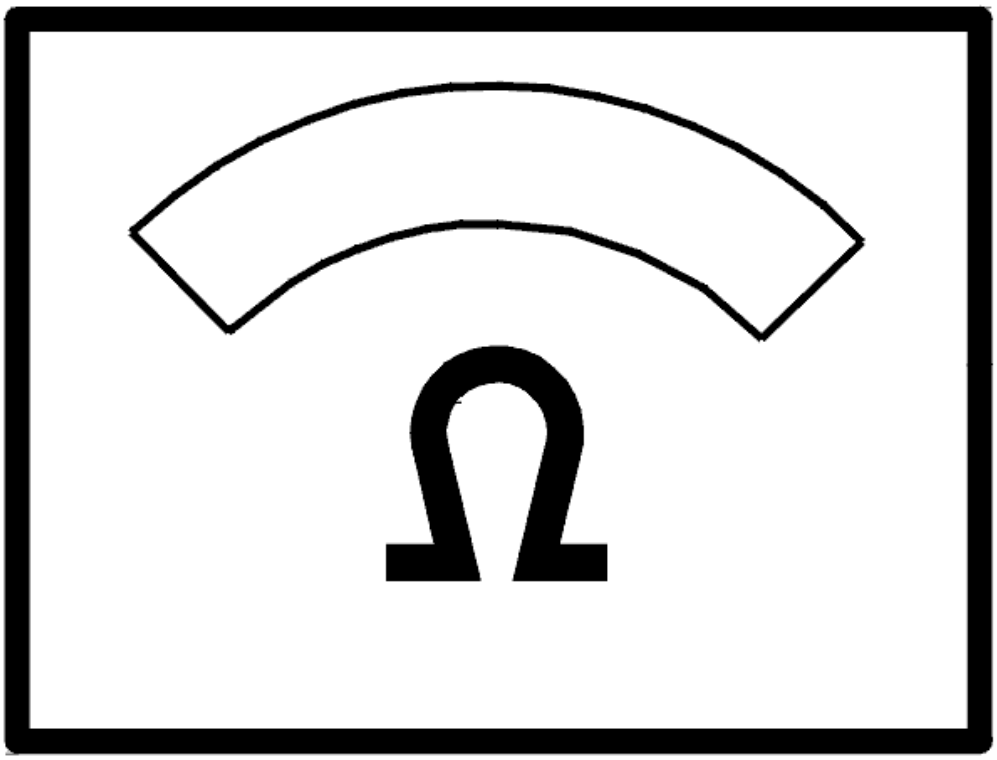

Fig. 297: Identifying Ohm Meter
Courtesy of VOLVO CARS CORPORATION

- **Continue**

  Refer to **INFORMATION**

INFORMATION

FAULT-TRACING INFORMATION

If the fault is intermittent, do not verify fault-tracing if the fault does not recur.

It is possible to view the information again, or leave fault-tracing for this diagnostic trouble code (DTC).

REM-6F51: TAILGATE HANDLE. SIGNAL TOO LOW. PERMANENT FAULT

(2003-2004)

DIAGNOSTIC TROUBLE CODE INFORMATION

see **DIAGNOSTIC TROUBLE CODE INFORMATION**

SIGNAL TOO LOW. PERMANENT FAULT

CHECKING THE WIRING

Disconnect the connector from the lamp housing for the license plate lighting.

Check that the button has not stuck in the pressed in position. Check that there is not a short-circuit in the contact breaker for the switch: Take a reading between terminal #1 and ground.

Check the signal cable between rear electronic module connector terminal #B07 (terminal #D7) and lamp housing connector terminal #1 for the license plate lighting for a short-circuit to ground according to **SHORT-CIRCUIT TO GROUND, PERMANENT FAULTS** .

Other information

- For further information about signals and other values, see **SIGNAL SPECIFICATION** .
- To connect the breakout box, see **CONNECTING THE BREAKOUT BOX** .
- To access the rear electronic module, see **RELAY/FUSE BOX CARGO COMPARTMENT/REAR ELECTRONIC MODULE (REM), REPLACING** .
- To access and replace the license plate lighting, see **BULB, NUMBER PLATE LIGHTING, REPLACING** .

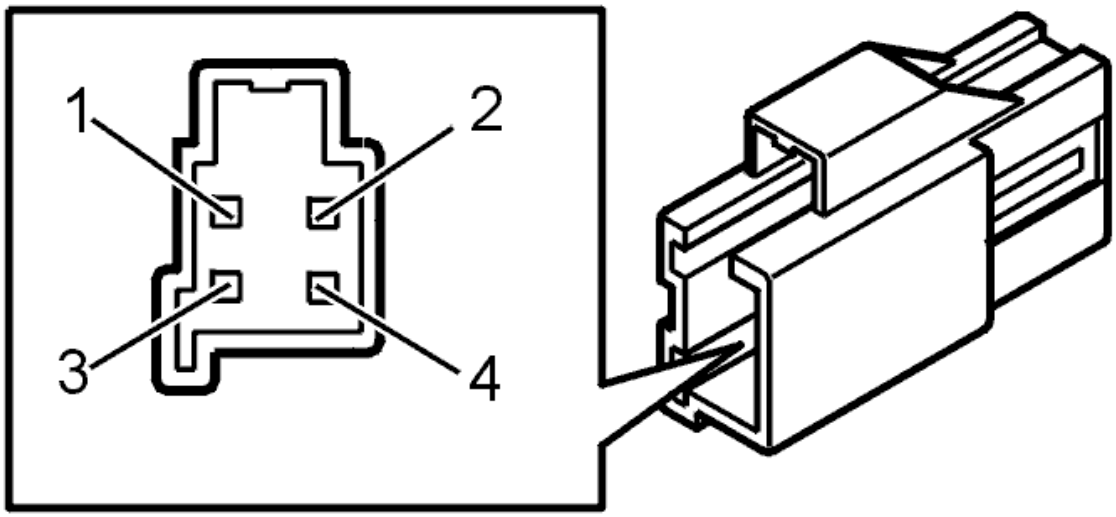

Fig. 298: Identifying Connector Terminals
Courtesy of VOLVO CARS CORPORATION

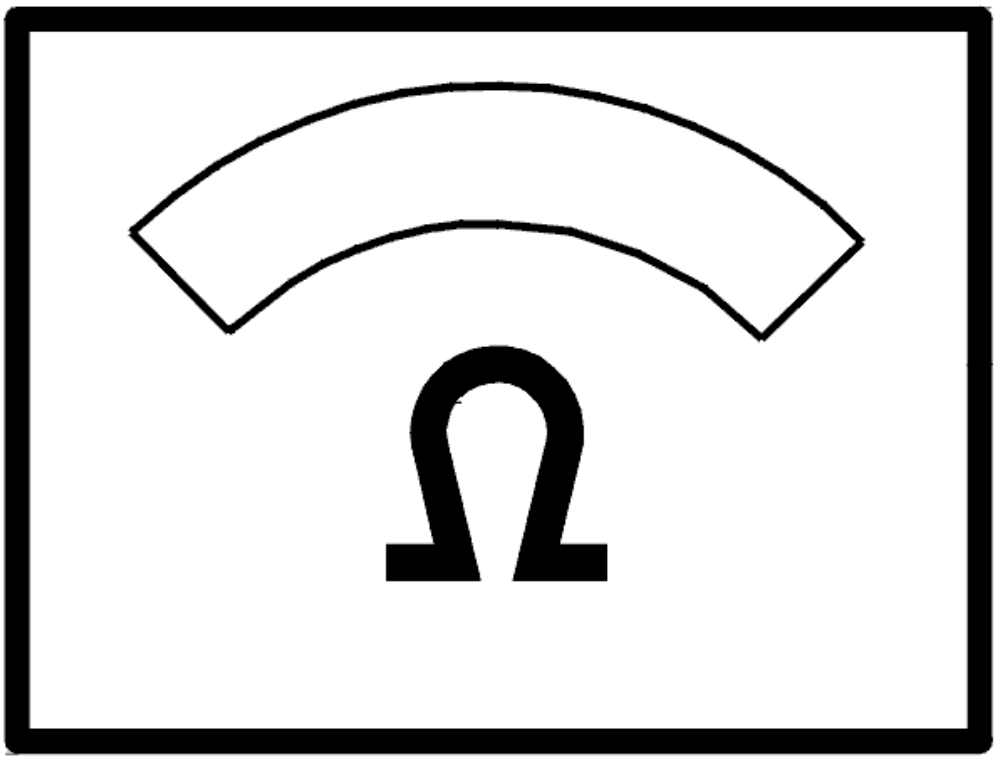

Fig. 299: Identifying Ohm Meter
Courtesy of VOLVO CARS CORPORATION

- **Continue**

  Refer to **VERIFICATION**

VERIFICATION

VERIFICATION

HINT: After the repair it is necessary to check that the fault has been rectified.

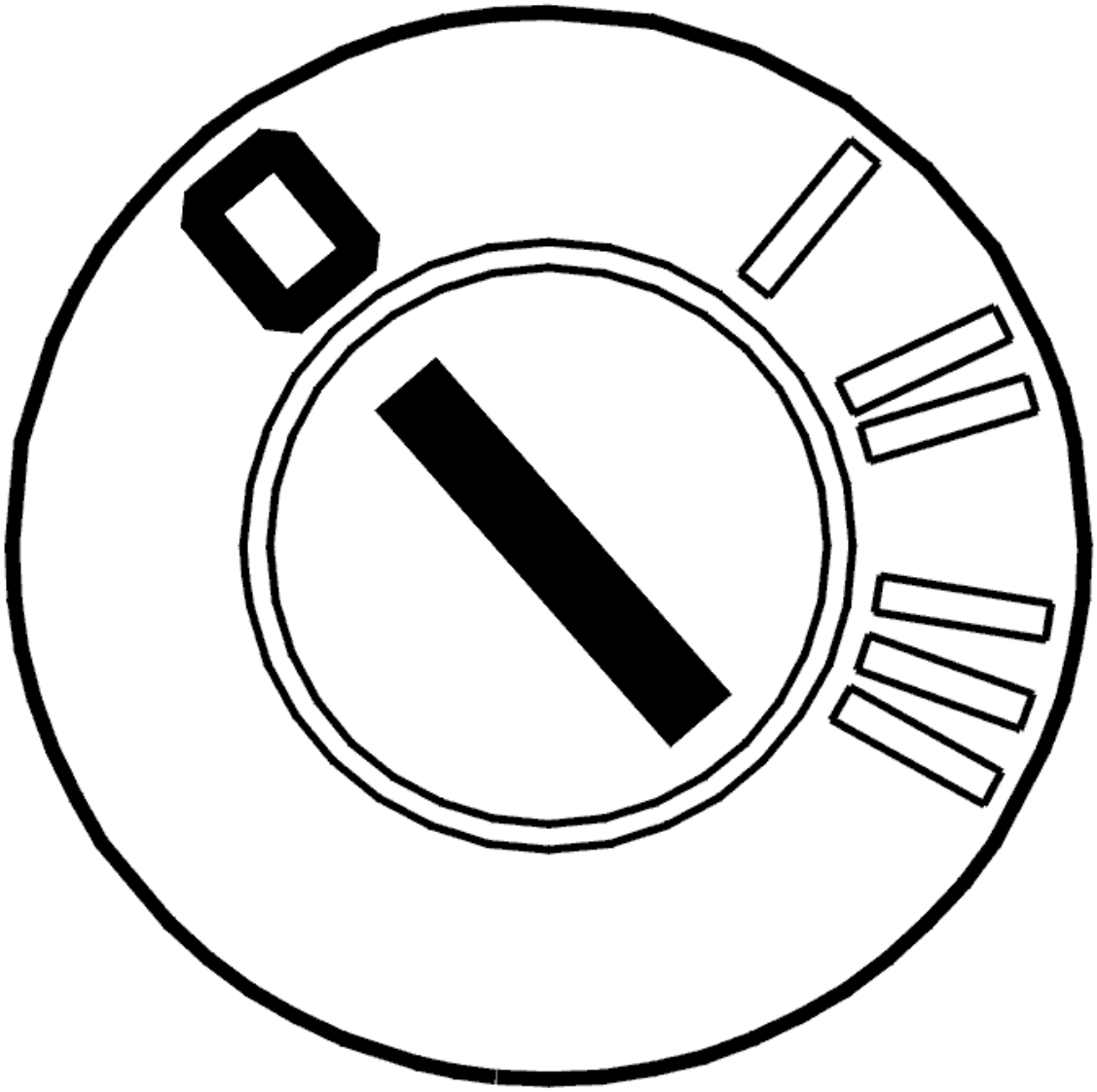

Fig. 300: Identifying Ignition OFF
Courtesy of VOLVO CARS CORPORATION

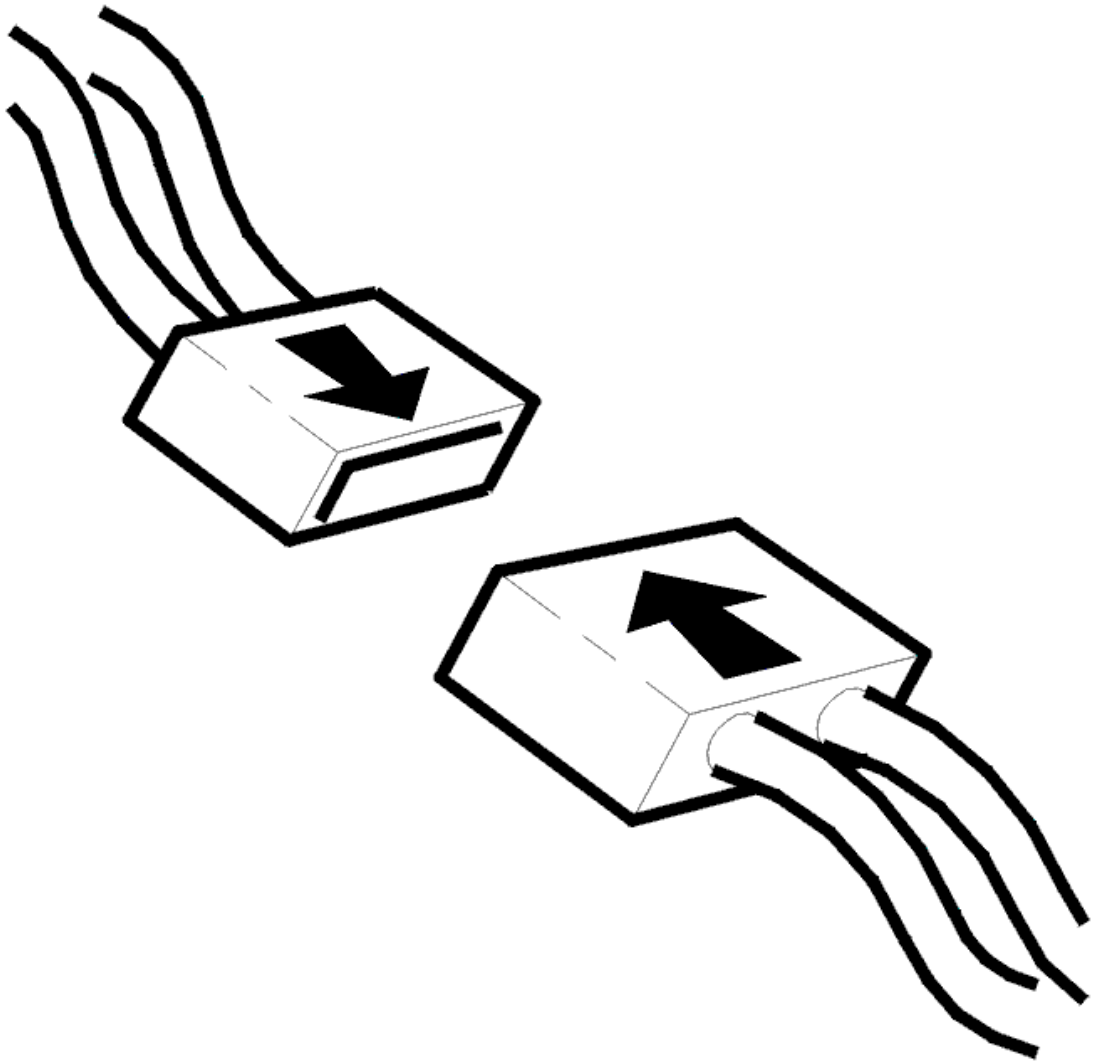

Fig. 301: Connecting Connector
Courtesy of VOLVO CARS CORPORATION

- Ignition off.
- Install the components, connect the connectors, etc.

  Close the boot lid.

  Lock the car by remote control.

  Make sure that the boot lid is correctly locked and that opening works.

Is function OK?

- **YES**

VERIFIED: Troubleshooting has been completed.

- **NO**

  Refer to **INFORMATION**

INFORMATION

FAULT-TRACING INFORMATION

The fault should have been detected and remedied. As this is not the case fault-tracing has failed.

Exit fault-tracing for this diagnostic trouble code (DTC) or make another attempt.

REM-6F52: UNLOCKING RELAY, CENTRAL LOCKING TAILGATE. SIGNAL TOO HIGH (2003-2004)

DIAGNOSTIC TROUBLE CODE INFORMATION

Condition

If rear electronic module registers signal too high on relay coil ground circuit when unlocking, diagnostic trouble code is displayed.

Substitute Value

Nothing.

Possible Source

- Faulty relay (short circuit in relay coil).
- Defective control unit.

Fault symptom[s]

- The boot lid will not lock/open.

SIGNAL TOO HIGH

REPLACING THE COMPONENT

Replace the relay, 2/67 (2/87 5DRS).

Activate the relay.

If the function is OK, the cause of the fault was a defective relay (short-circuit in the relay).

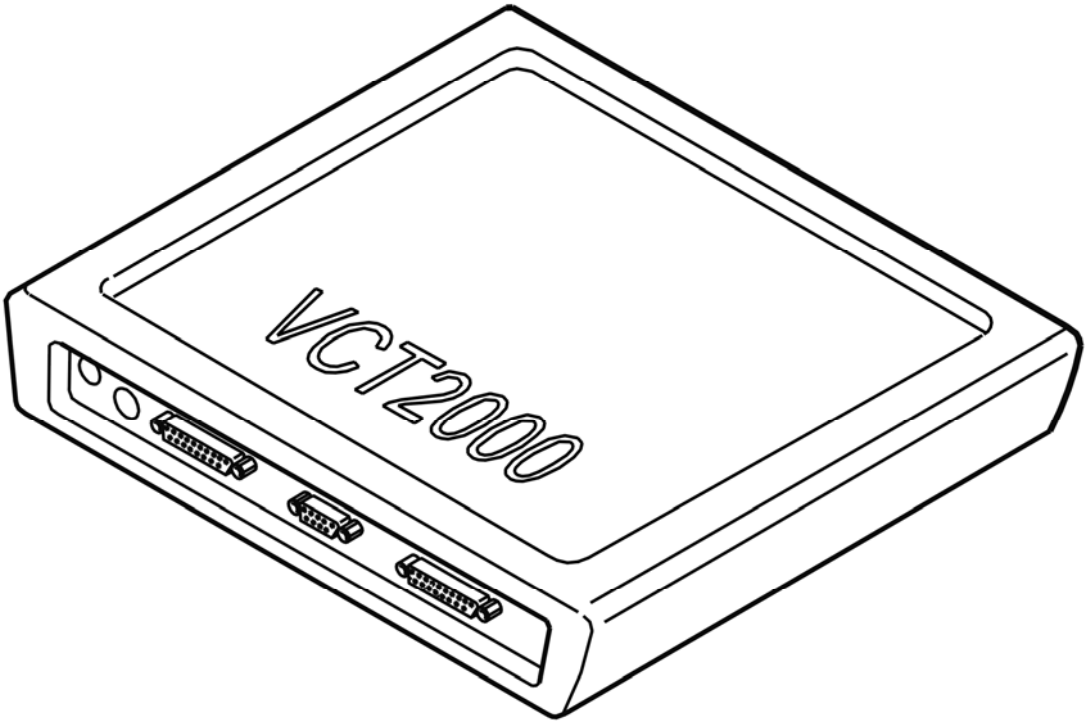

Fig. 302: Identifying VCT2000 Diagnostic Tool Symbol In VIDA
Courtesy of VOLVO CARS CORPORATION

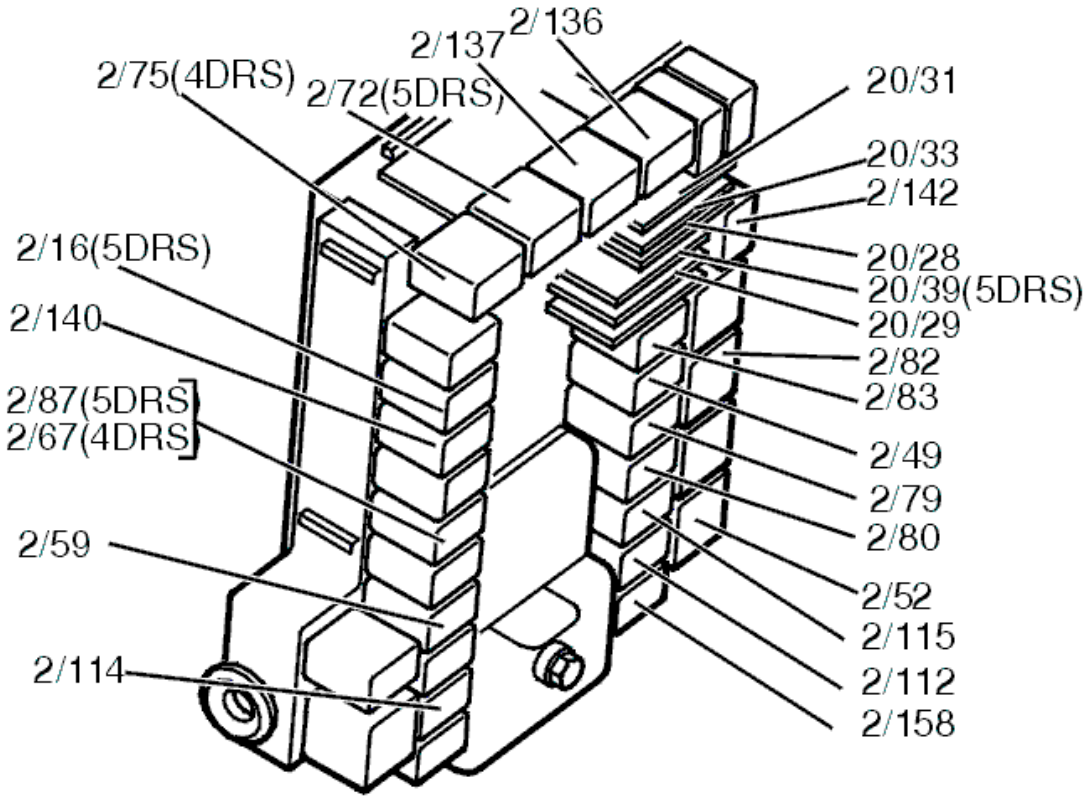

Fig. 303: Identifying Relays
Courtesy of VOLVO CARS CORPORATION

Was the function OK?

- **YES**

  OKAY: Troubleshooting has been completed.

- **NO**

  Refer to **CHECKING THE WIRING**

CHECKING THE WIRING

- Remove the relay.

  Check the relay coil driver circuit for a short-circuit to supply voltage by measuring the voltage at terminal #2 in the relay base.

  HINT: The voltage between terminal #2 and ground should be approximately 0 V.

  Replace the control module if the voltmeter displays an incorrect value.

Other information

- see **CHECKING WIRING AND TERMINALS** .

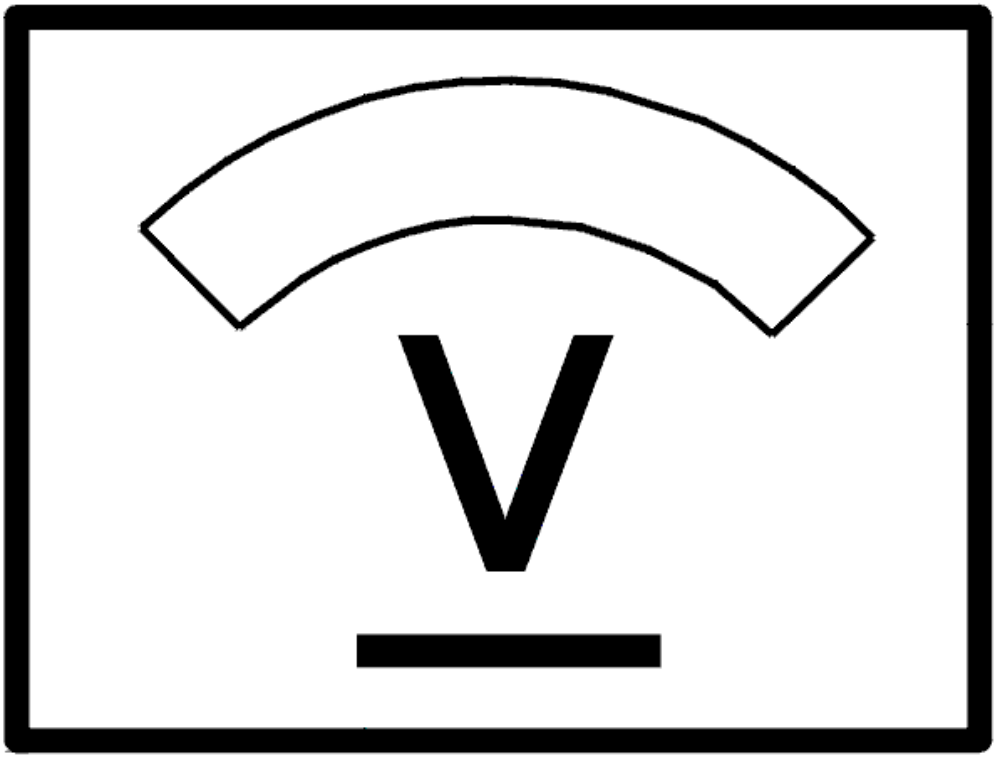

Fig. 304: Identifying Voltage Display
Courtesy of VOLVO CARS CORPORATION

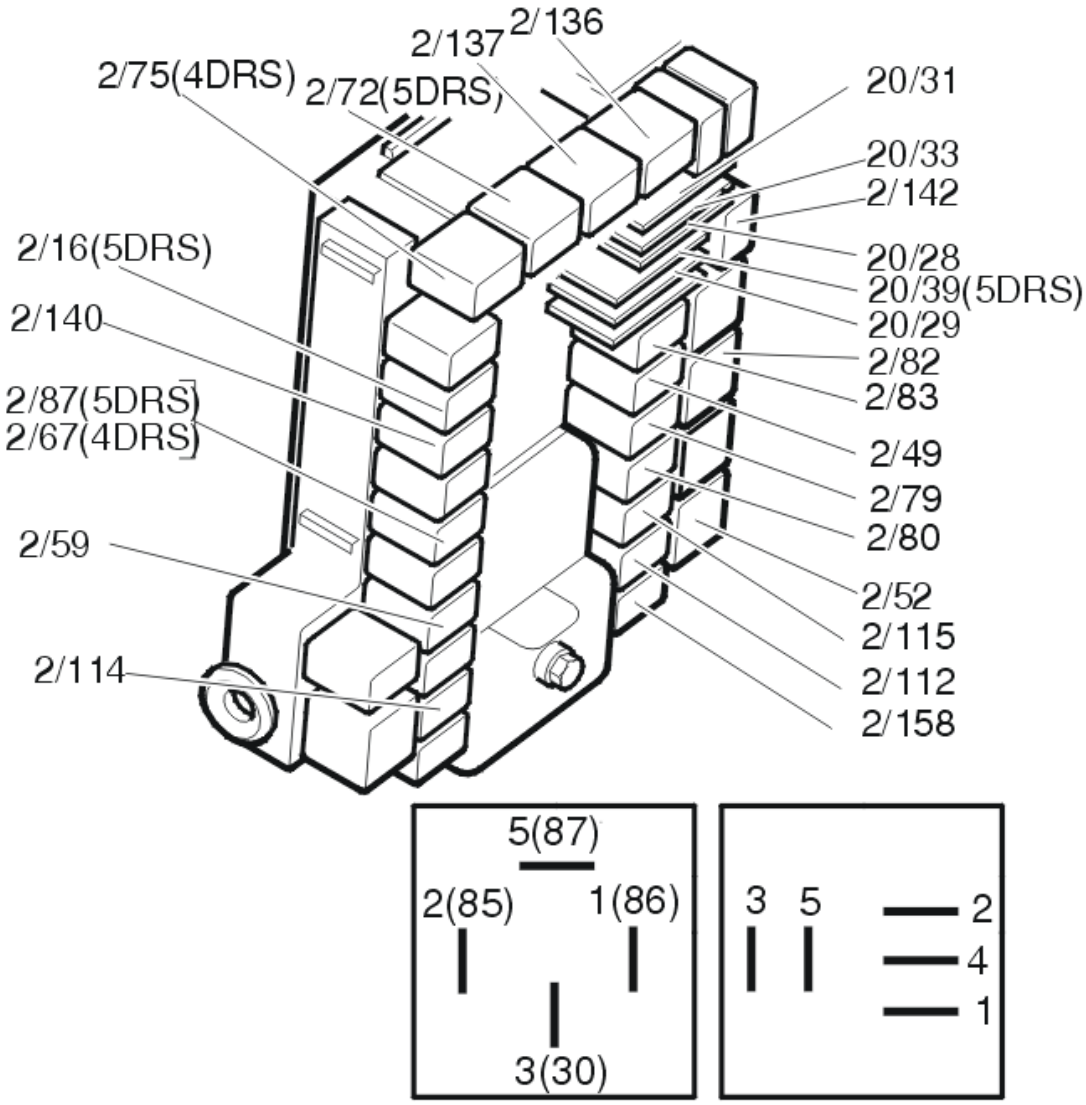

Fig. 305: Identifying Relays
Courtesy of VOLVO CARS CORPORATION

- **Continue**

  Refer to **VERIFICATION**

VERIFICATION

VERIFICATION

HINT: After carrying out the repair, check that the fault has been remedied.

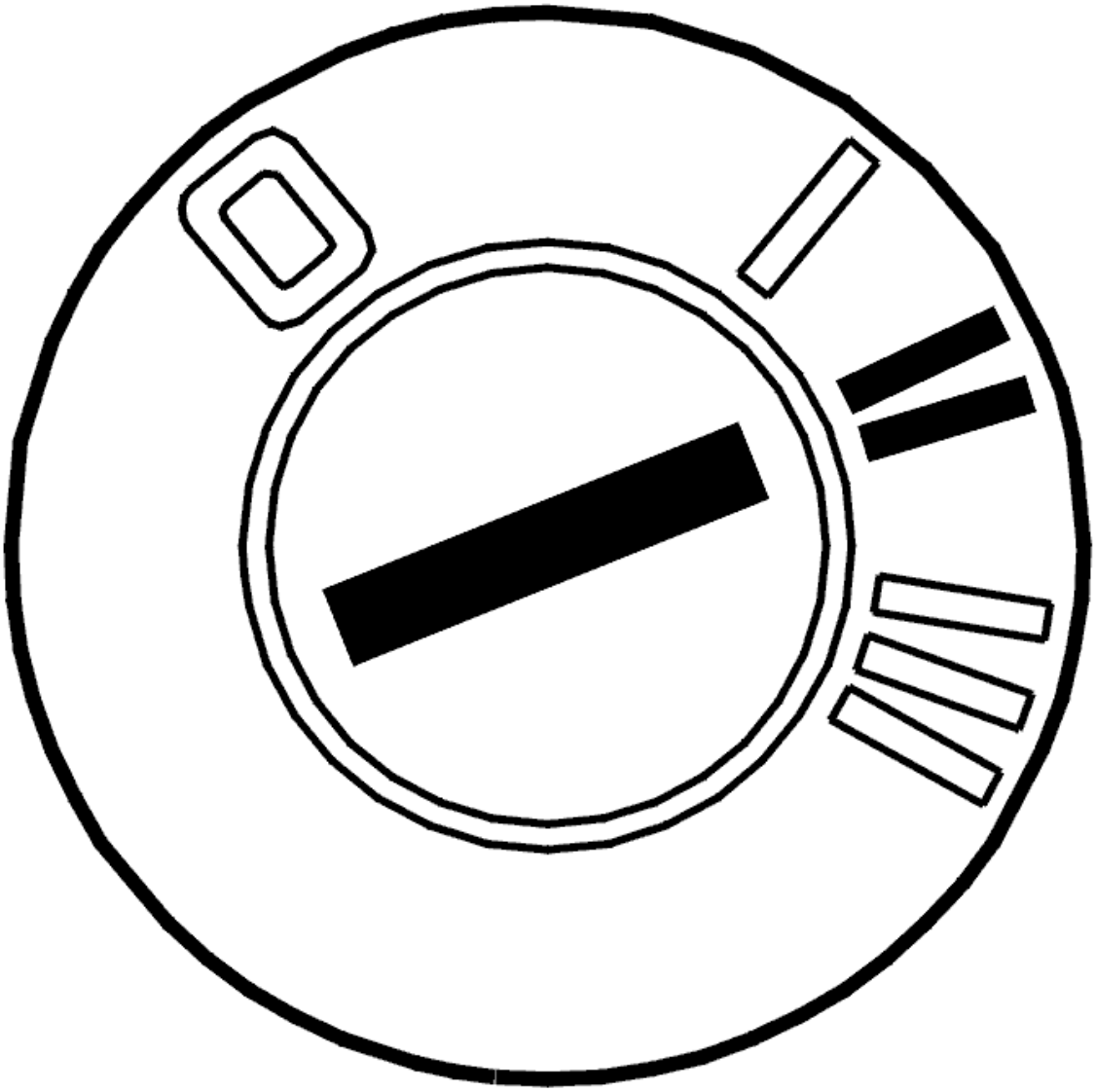

Fig. 306: Identifying Ignition ON
Courtesy of VOLVO CARS CORPORATION

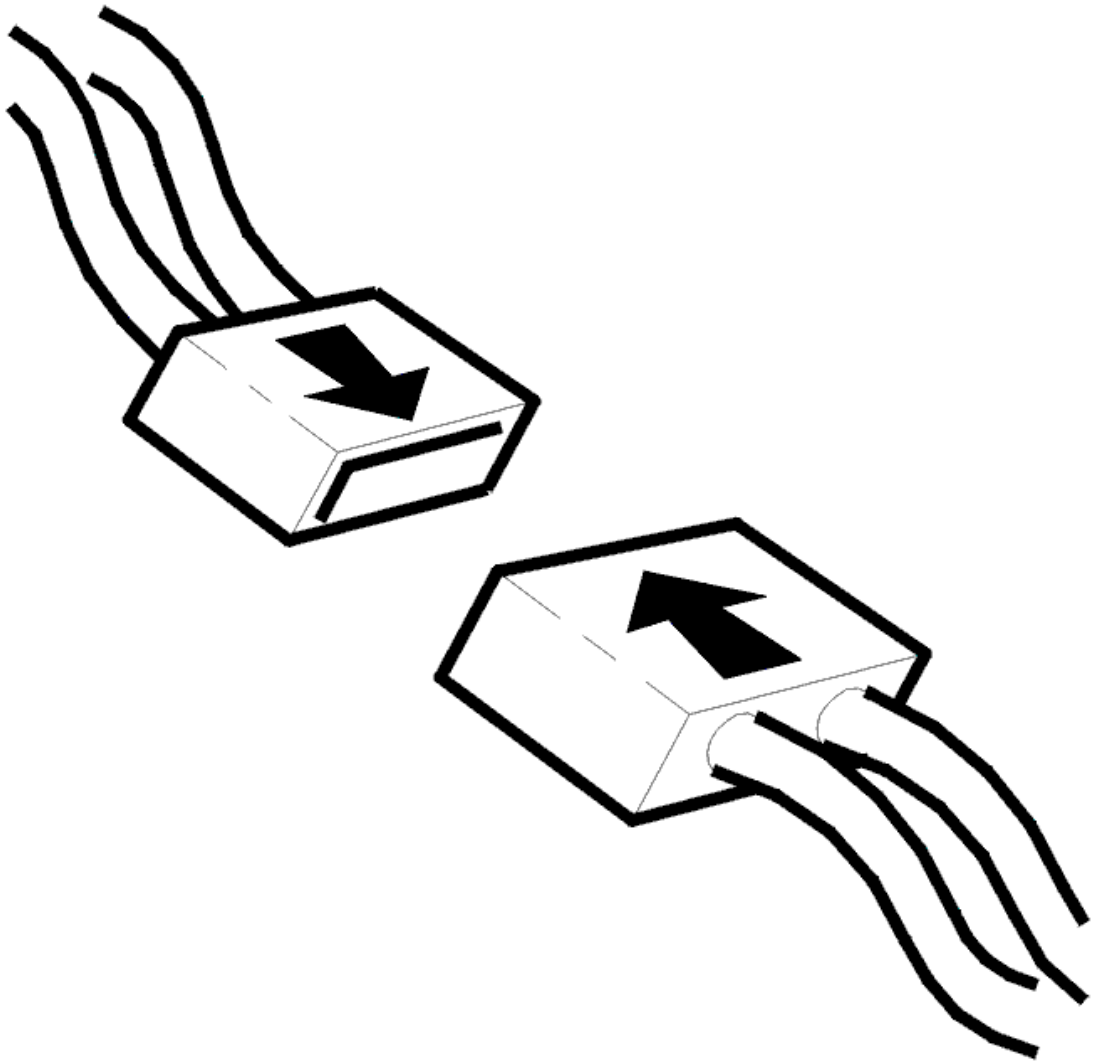

Fig. 307: Connecting Connector
Courtesy of VOLVO CARS CORPORATION

- Ignition off
- Reinstall the connectors, components etc.
- Ignition on.

  Activate the relay.

  If the function is now OK, the fault was caused by a short-circuit in the relay driver circuit.

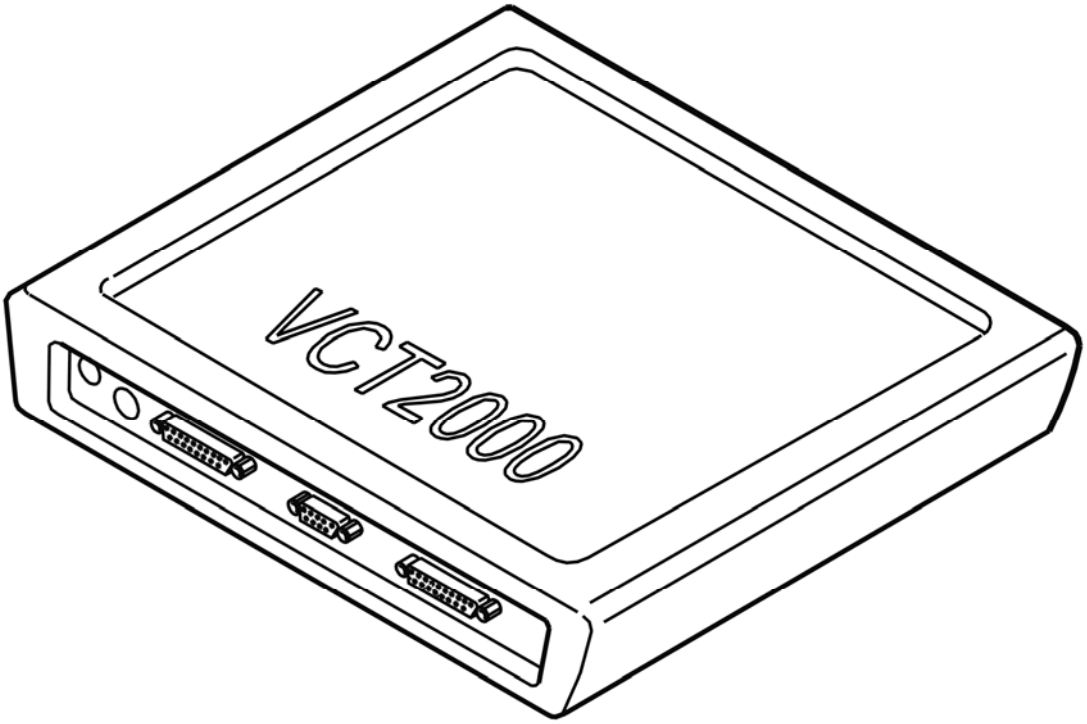

Fig. 308: Identifying VCT2000 Diagnostic Tool Symbol In VIDA
Courtesy of VOLVO CARS CORPORATION

Was the function OK?

- **YES**

  VERIFIED: Troubleshooting has been completed.

- **NO**

  Refer to **INFORMATION**

INFORMATION

FAULT-TRACING INFORMATION

The fault should have been detected and remedied. As this is not the case fault-tracing has failed.

Exit fault-tracing for this diagnostic trouble code (DTC) or make another attempt.

REM-6F54: UNLOCKING RELAY, CENTRAL LOCKING TAILGATE. SIGNAL MISSING (2003-2004)

DIAGNOSTIC TROUBLE CODE INFORMATION

Condition

If the rear electronic module registers no signal/signal too low on relay coil ground circuit diagnostic trouble code is displayed.

Substitute Value

Nothing.

Possible Source

- Oxidation of relay socket contacts.
- Relay is loose or missing.
- Faulty relay (open circuit/short circuit to ground in relay coil).
- Defective control unit.

Fault symptom[s]

- The boot lid will not lock/open.

SIGNAL MISSING

CHECKING THE COMPONENT

Remove the relay 2/67 (2/87 5DRS). Check the relay base switches. Check for contact resistance and oxidation.

Install the relay.

Activate the relay.

If the function is now OK the fault was caused by a contact fault in the relay base.

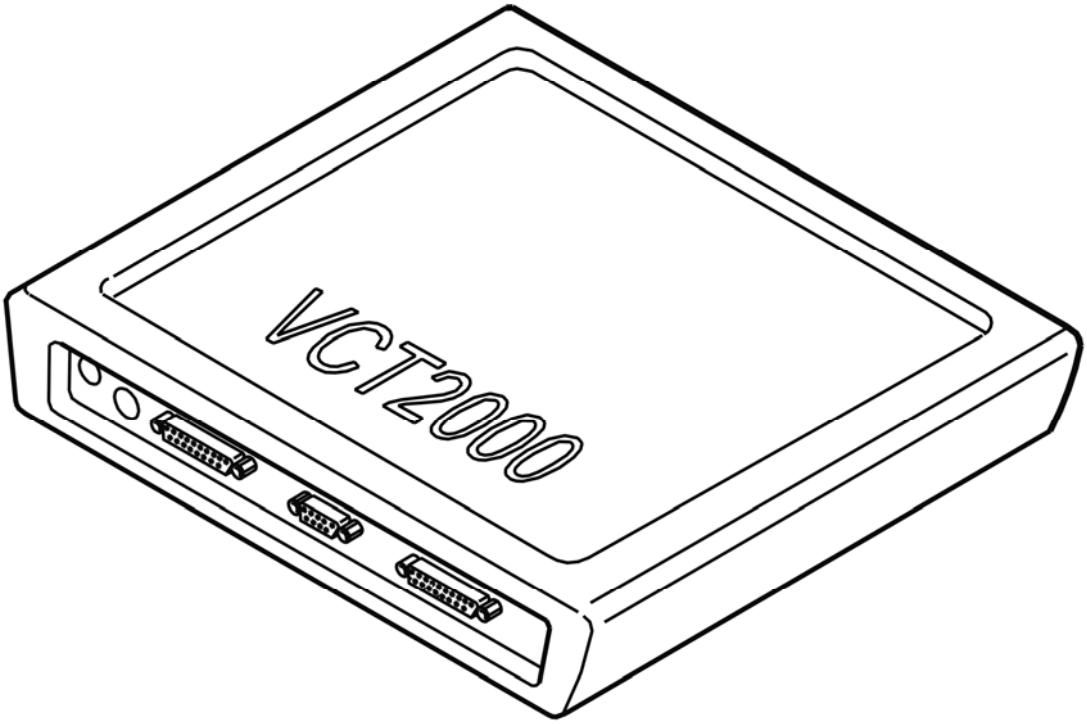

Fig. 309: Identifying VCT2000 Diagnostic Tool Symbol In VIDA
Courtesy of VOLVO CARS CORPORATION

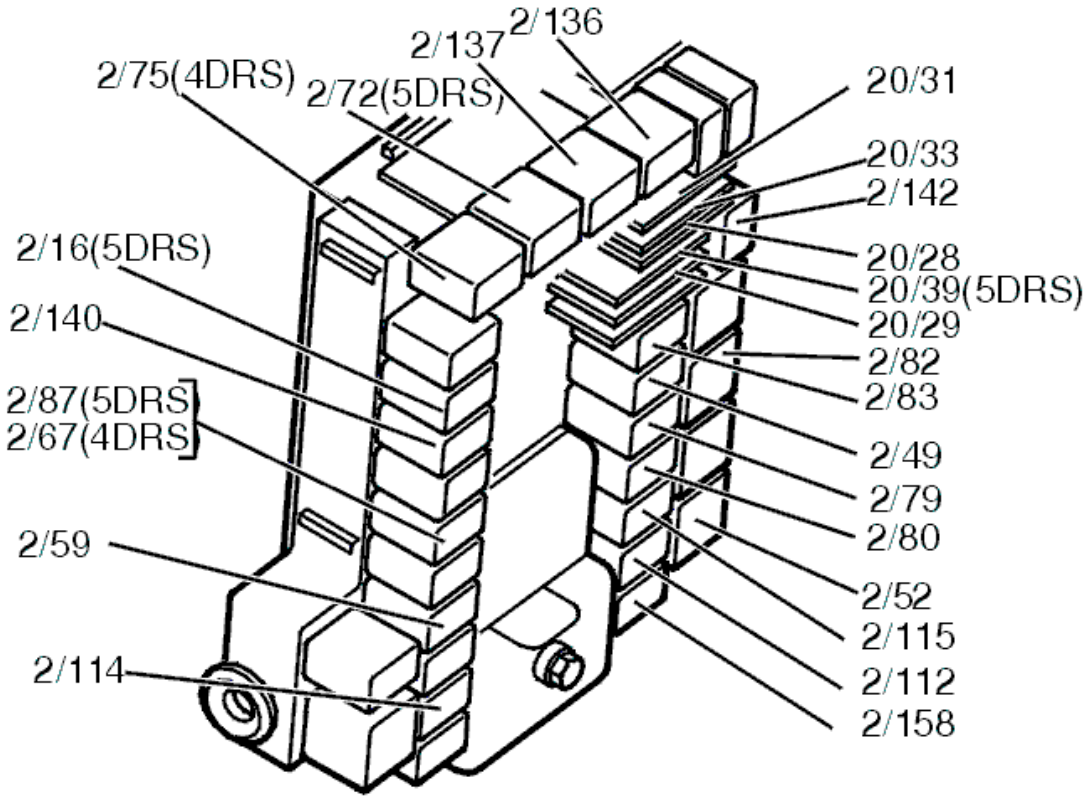

Fig. 310: Identifying Relays
Courtesy of VOLVO CARS CORPORATION

Was the function OK?

- **YES**

  Refer to **VERIFICATION**

- **NO**

  Refer to **REPLACING THE COMPONENT**

REPLACING THE COMPONENT

Replace the relay, 2/67 (2/87 5DRS).

Activate the relay.

If the function is now OK, the cause of the fault was a defective relay (short-circuit to ground or an open-circuit in the relay coil).

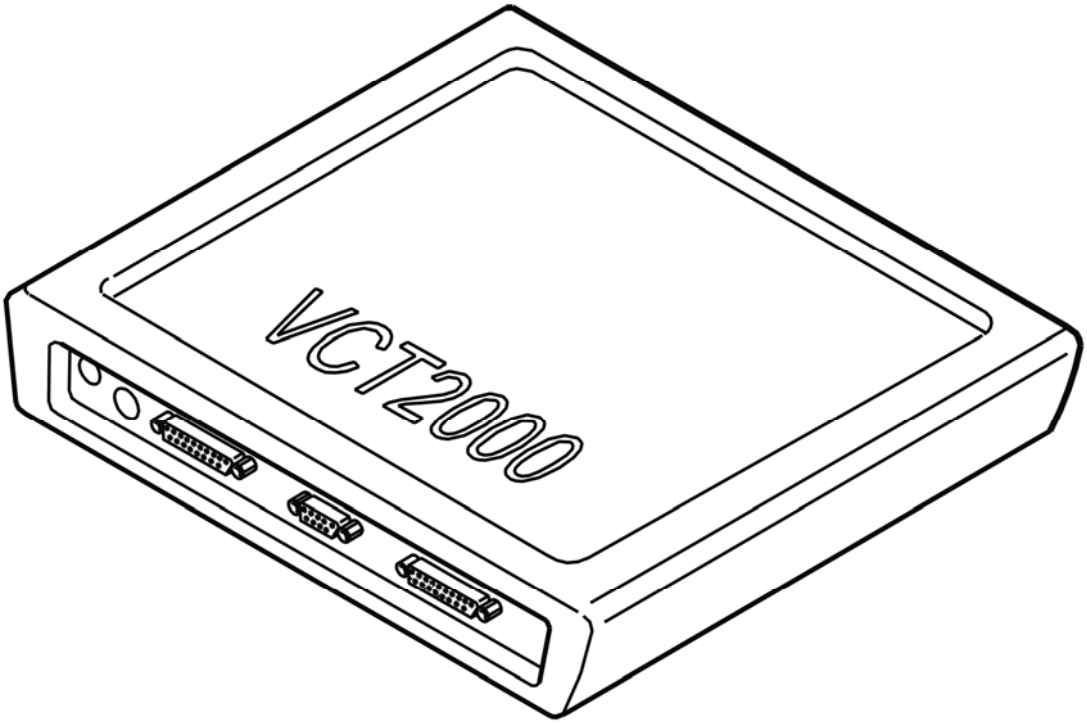

Fig. 311: Identifying VCT2000 Diagnostic Tool Symbol In VIDA
Courtesy of VOLVO CARS CORPORATION

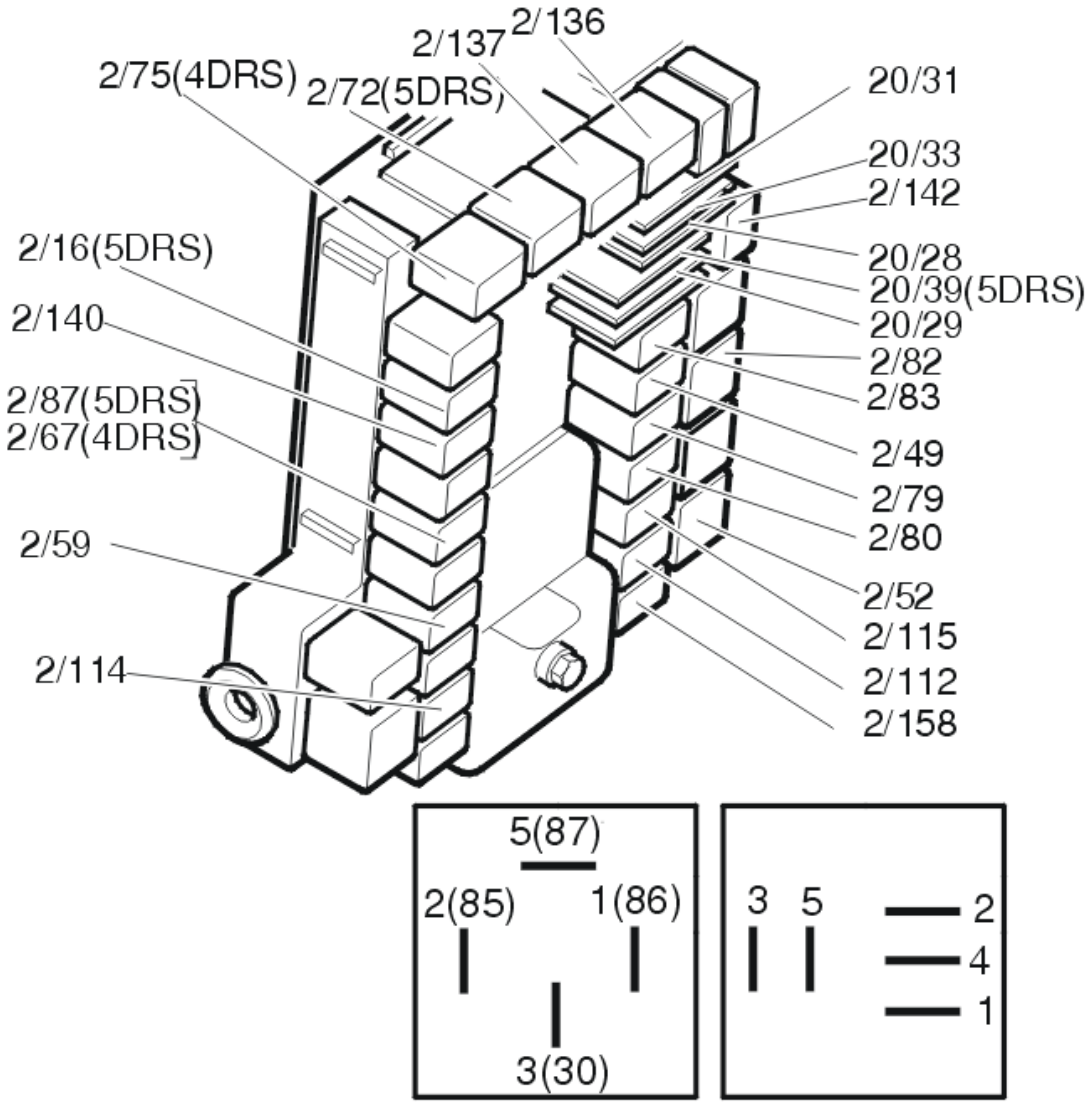

Fig. 312: Identifying Relays
Courtesy of VOLVO CARS CORPORATION

Was the function OK?

- **YES**

  OKAY: Troubleshooting has been completed.

- **NO**

  Refer to **CHECKING THE CONTROL MODULE FOR OPEN-CIRCUITS**

CHECKING THE CONTROL MODULE FOR OPEN-CIRCUITS

- Remove the relay, 2/67 (2/87 5DRS).

Check the driver circuit for the relay coil for an open-circuit as follows: activate the relay driver. Measure the voltage between terminals #1 and #2 on the relay base.

HINT: The voltage between terminals #1 and #2 should be battery voltage.

HINT: If the value deviates excessively, check the voltage between terminal #2 and battery voltage and between terminal #1 and ground. Both should equal battery voltage.

HINT: Check for an open-circuit.

HINT: Do not forget to check that the power supply to the control module is OK.

Other information

- see **CHECKING WIRING AND TERMINALS** .

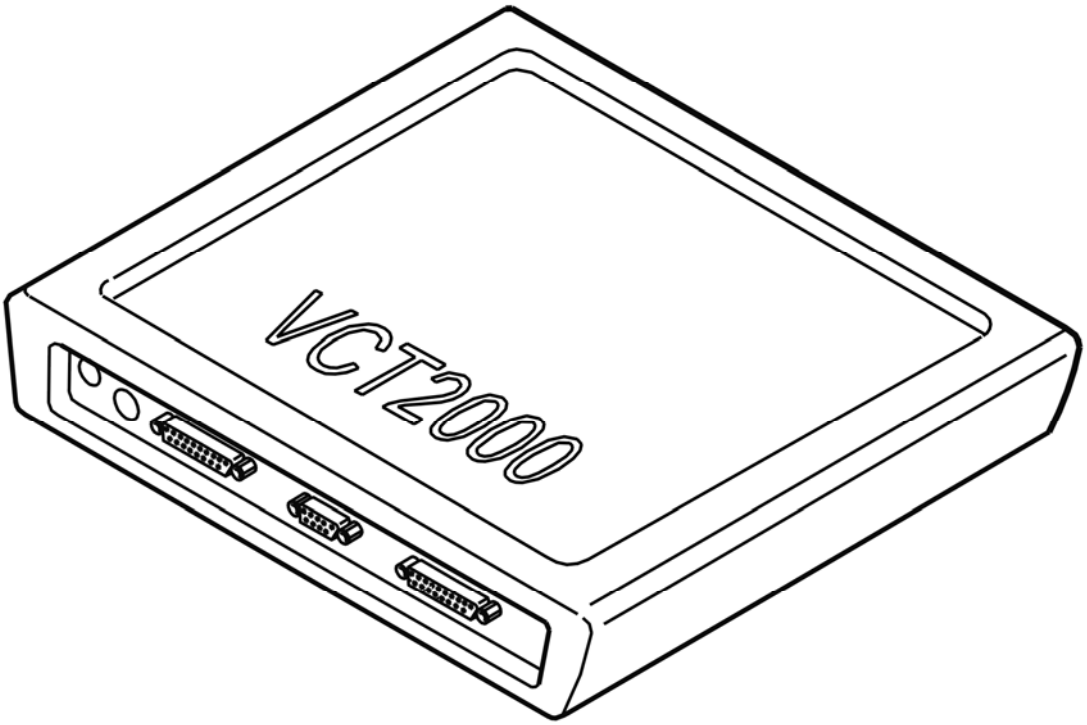

Fig. 313: Identifying VCT2000 Diagnostic Tool Symbol In VIDA
Courtesy of VOLVO CARS CORPORATION

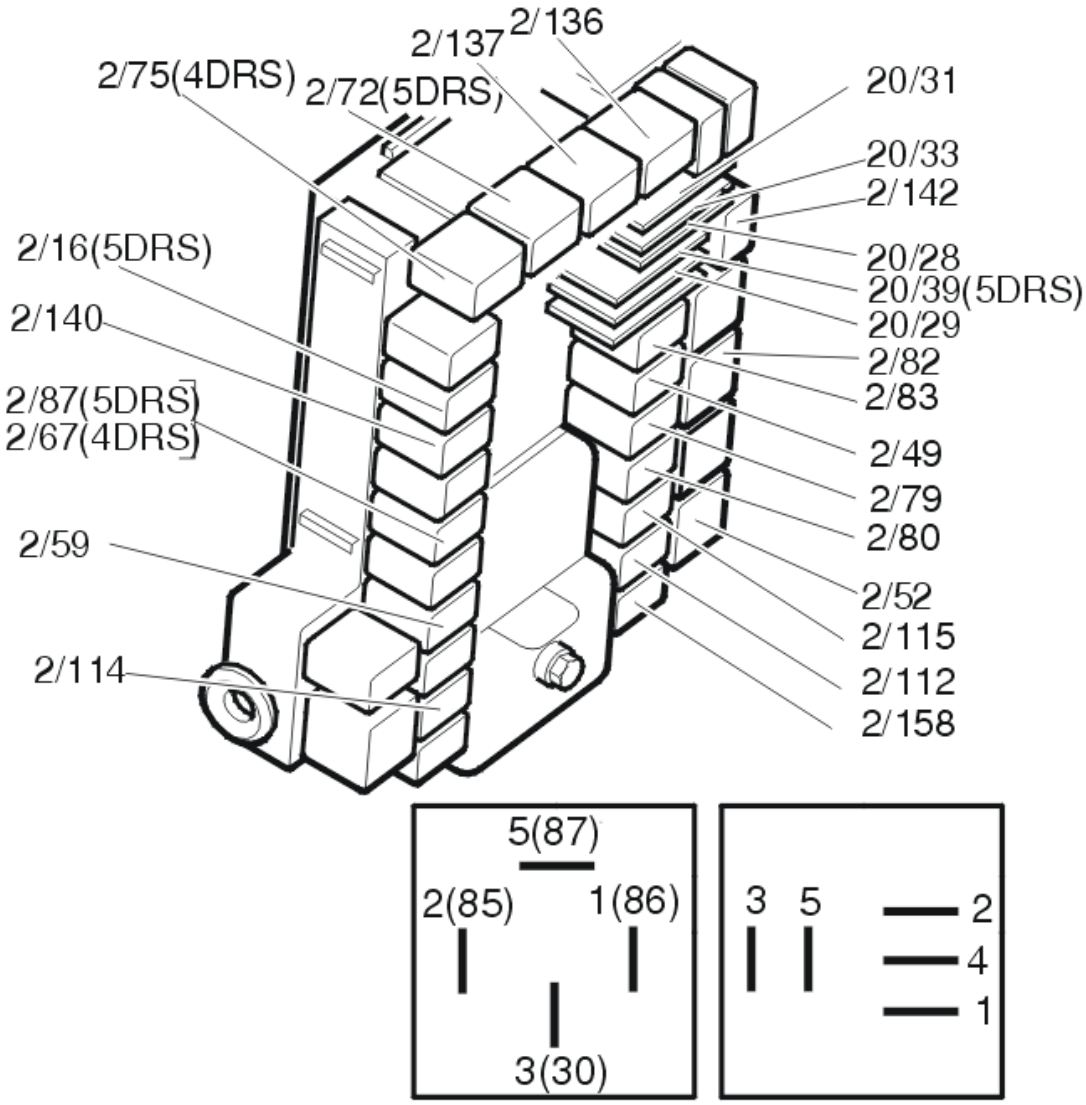

Fig. 314: Identifying Relays
Courtesy of VOLVO CARS CORPORATION

Was a fault detected?

- **YES**

  Refer to **VERIFICATION**

- **NO**

  Refer to **CHECKING THE CONTROL MODULE FOR SHORT-CIRCUITS**

CHECKING THE CONTROL MODULE FOR SHORT-CIRCUITS

Measure the resistance between terminal #2 and ground when the relay driver is active.

The resistance should be high when the relay driver is active.

Replace the control module if the resistance is low.

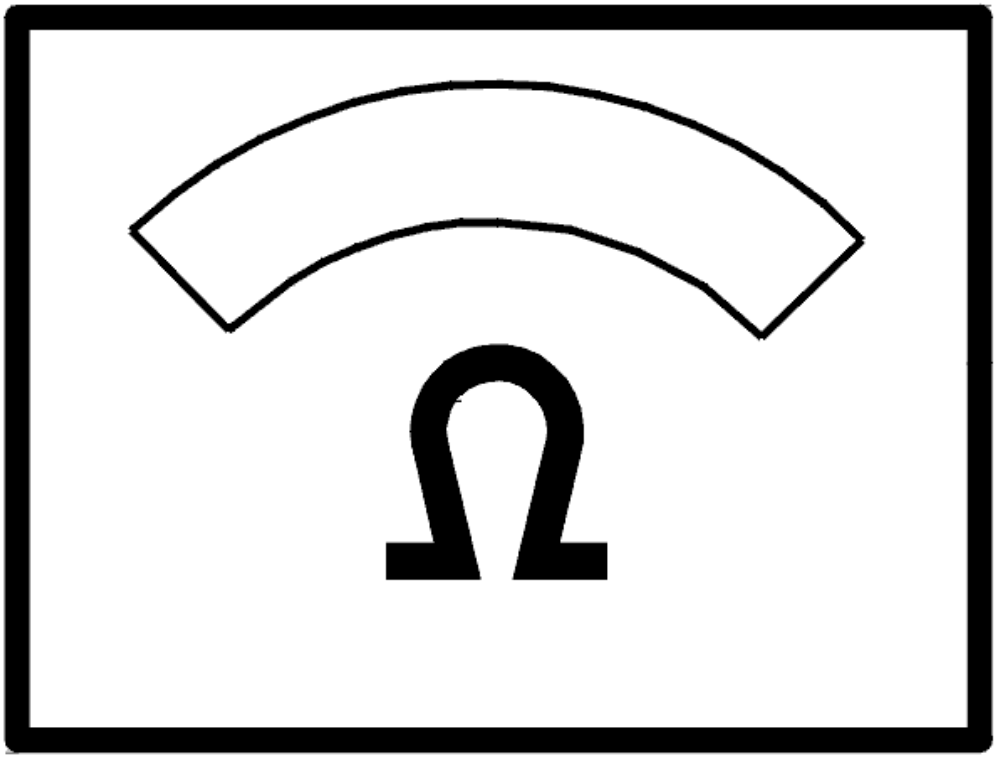

Fig. 315: Identifying Ohm Meter
Courtesy of VOLVO CARS CORPORATION

- **Continue**

  Refer to **VERIFICATION**

VERIFICATION

VERIFICATION

HINT: After carrying out the repair, check that the fault has been remedied.

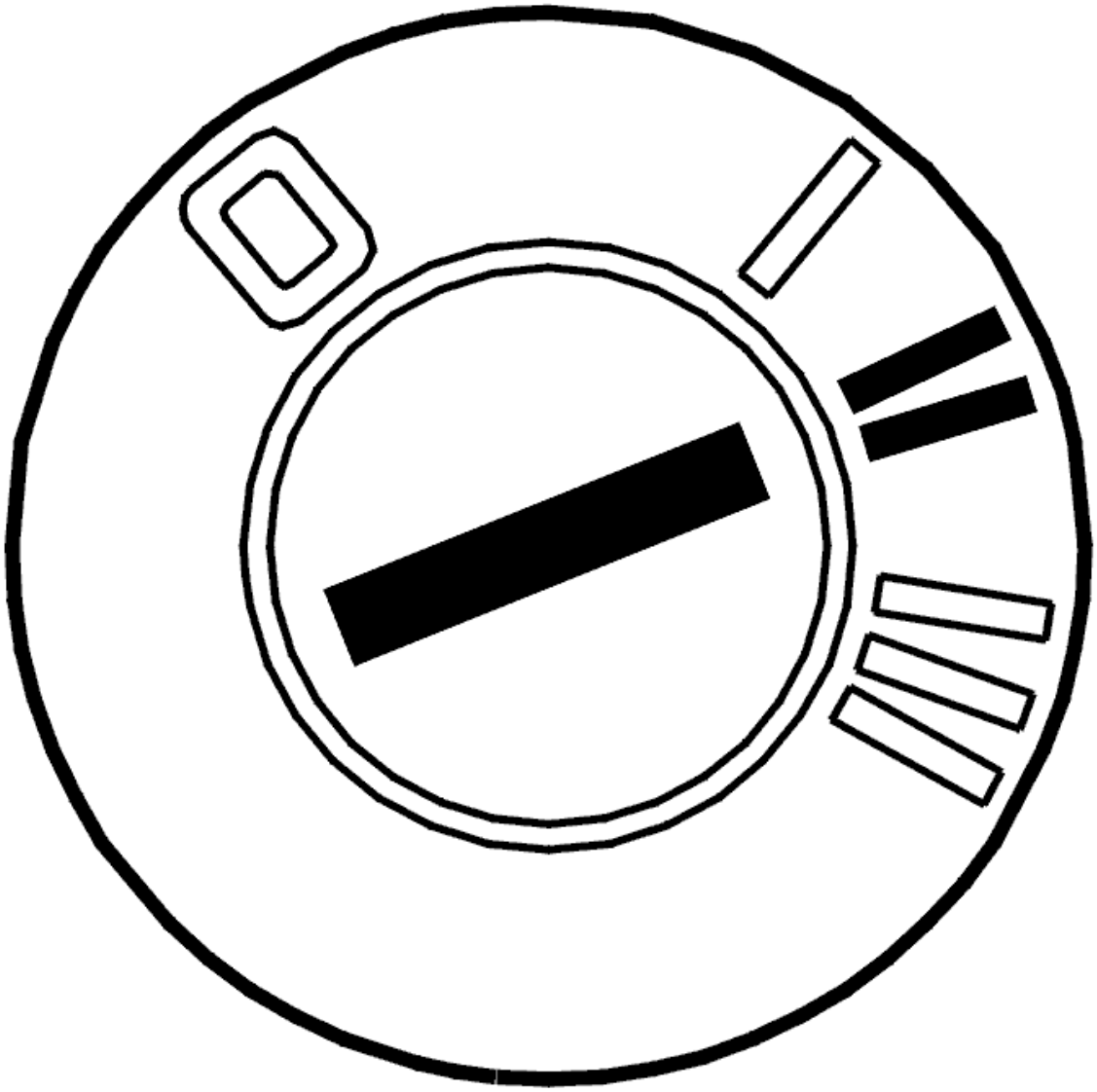

Fig. 316: Identifying Ignition ON
Courtesy of VOLVO CARS CORPORATION

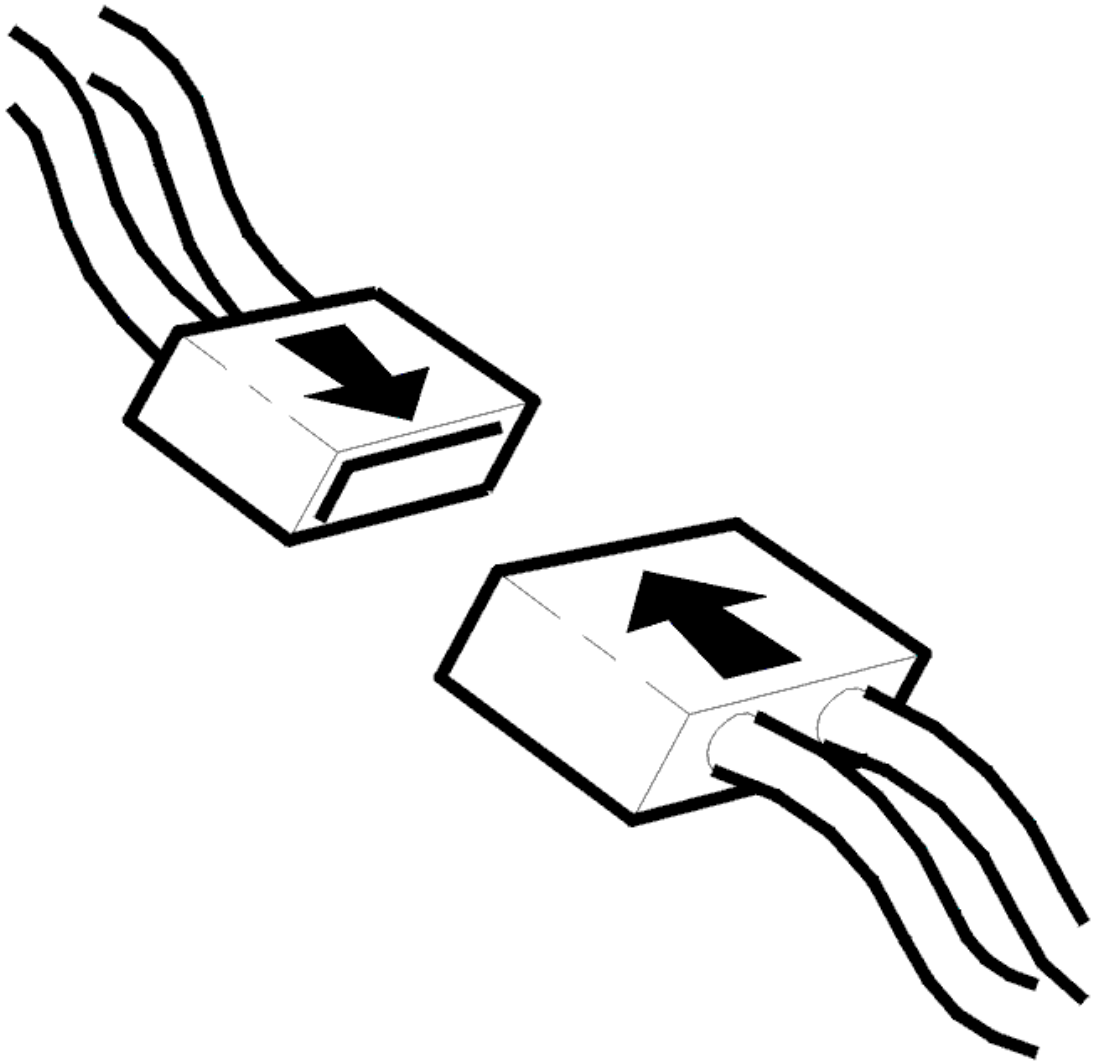

Fig. 317: Connecting Connector
Courtesy of VOLVO CARS CORPORATION

- Ignition off
- Reinstall the connectors, components etc.
- Ignition on.

  Activate the relay.

  If the function is now OK, the fault was caused by a short-circuit in the relay driver circuit.

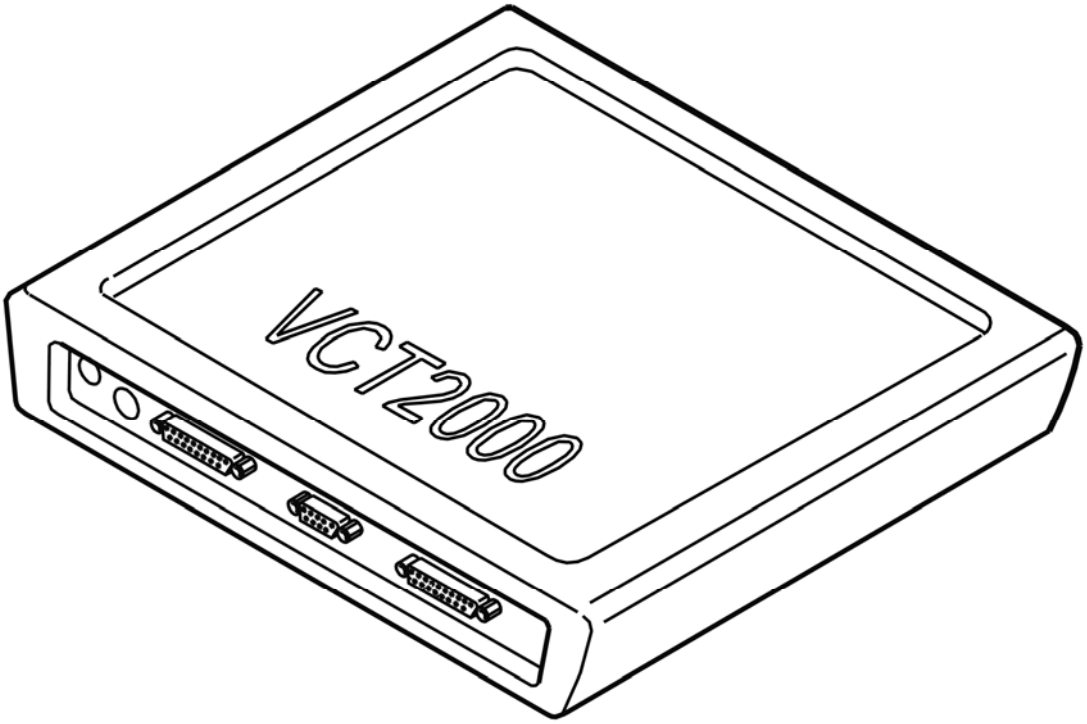

Fig. 318: Identifying VCT2000 Diagnostic Tool Symbol In VIDA
Courtesy of VOLVO CARS CORPORATION

Was the function OK?

- **YES**

  VERIFIED: Troubleshooting has been completed.

- **NO**

  Refer to **INFORMATION**

INFORMATION

FAULT-TRACING INFORMATION

The fault should have been detected and remedied. As this is not the case fault-tracing has failed.

Exit fault-tracing for this diagnostic trouble code (DTC) or make another attempt.

REM-6F55: LOCKING RELAY, CENTRAL LOCKING, TAILGATE. SIGNAL TOO HIGH. PERMANENT FAULT (2003)

DIAGNOSTIC TROUBLE CODE (DTC) INFORMATION

Condition

Diagnostic trouble code (DTC) REM-6F55 is stored if the signal across the relay coil (2/86) is too high during activation.

Substitute Value

None.

Possible Source

- Short-circuit to supply voltage in the relay coil.

Fault symptom[s]

- Does not lock / unlock the trunk lid.

SIGNAL TOO HIGH. PERMANENT FAULT

REPLACING THE COMPONENT

Replace relay 2/86.

Other information:

- To access the integrated relay / fusebox in the cargo compartment, see **RELAY/FUSE BOX CARGO COMPARTMENT/REAR ELECTRONIC MODULE (REM), REPLACING** .

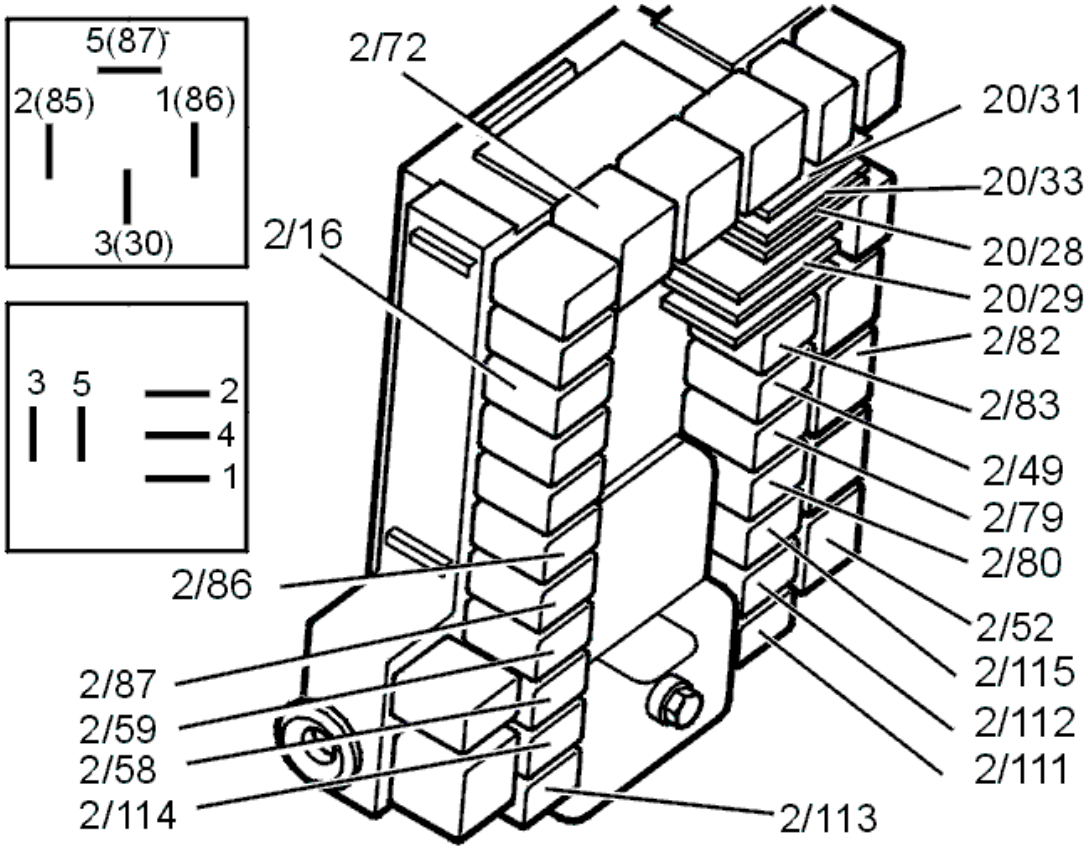

Fig. 319: Identifying Relay / Fuse Box
Courtesy of VOLVO CARS CORPORATION

- **Continue**

  Refer to **VERIFICATION**

VERIFICATION

VERIFICATION

HINT: After carrying out the repair, check that the fault has been remedied.

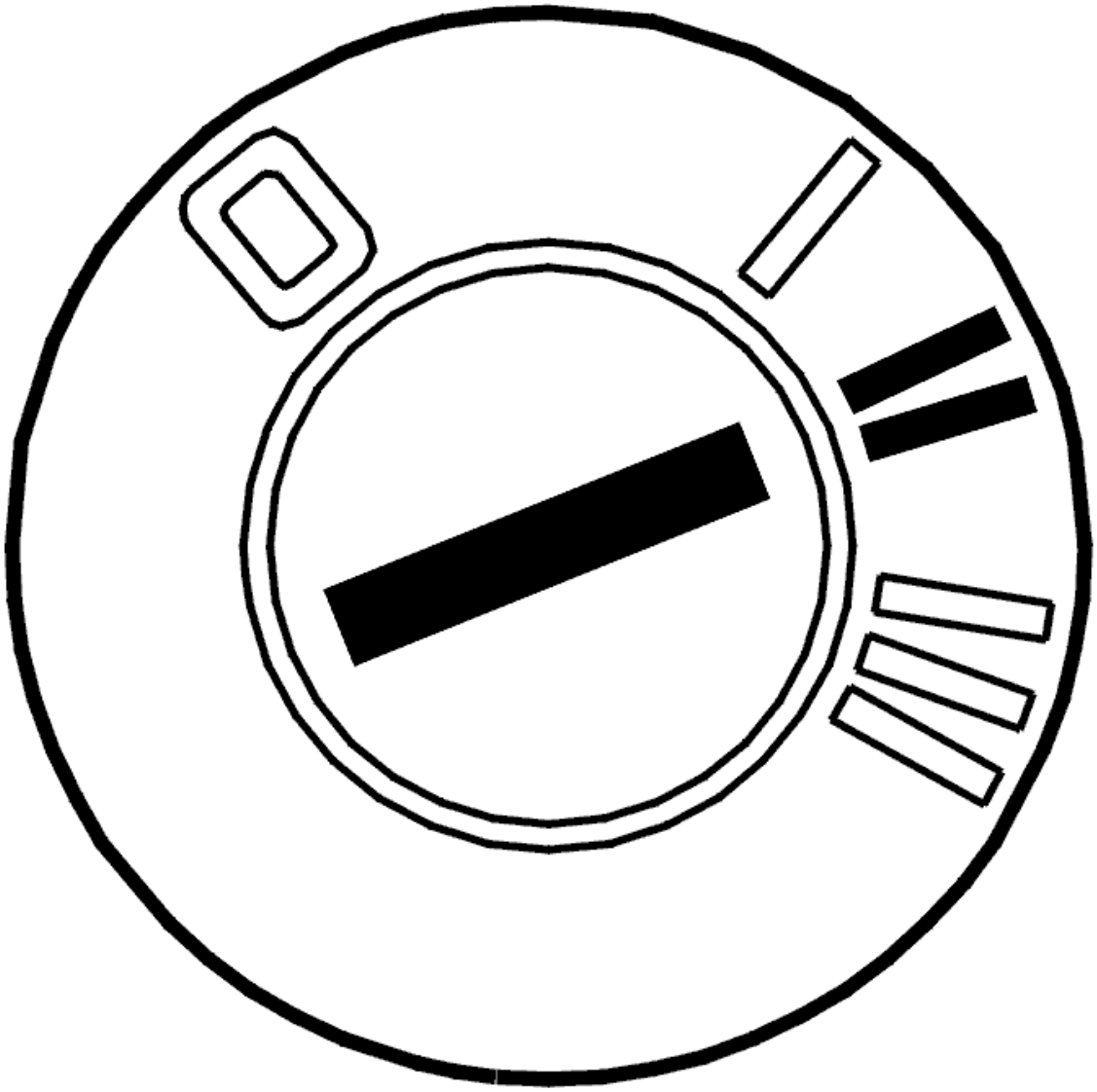

Fig. 320: Identifying Ignition ON
Courtesy of VOLVO CARS CORPORATION

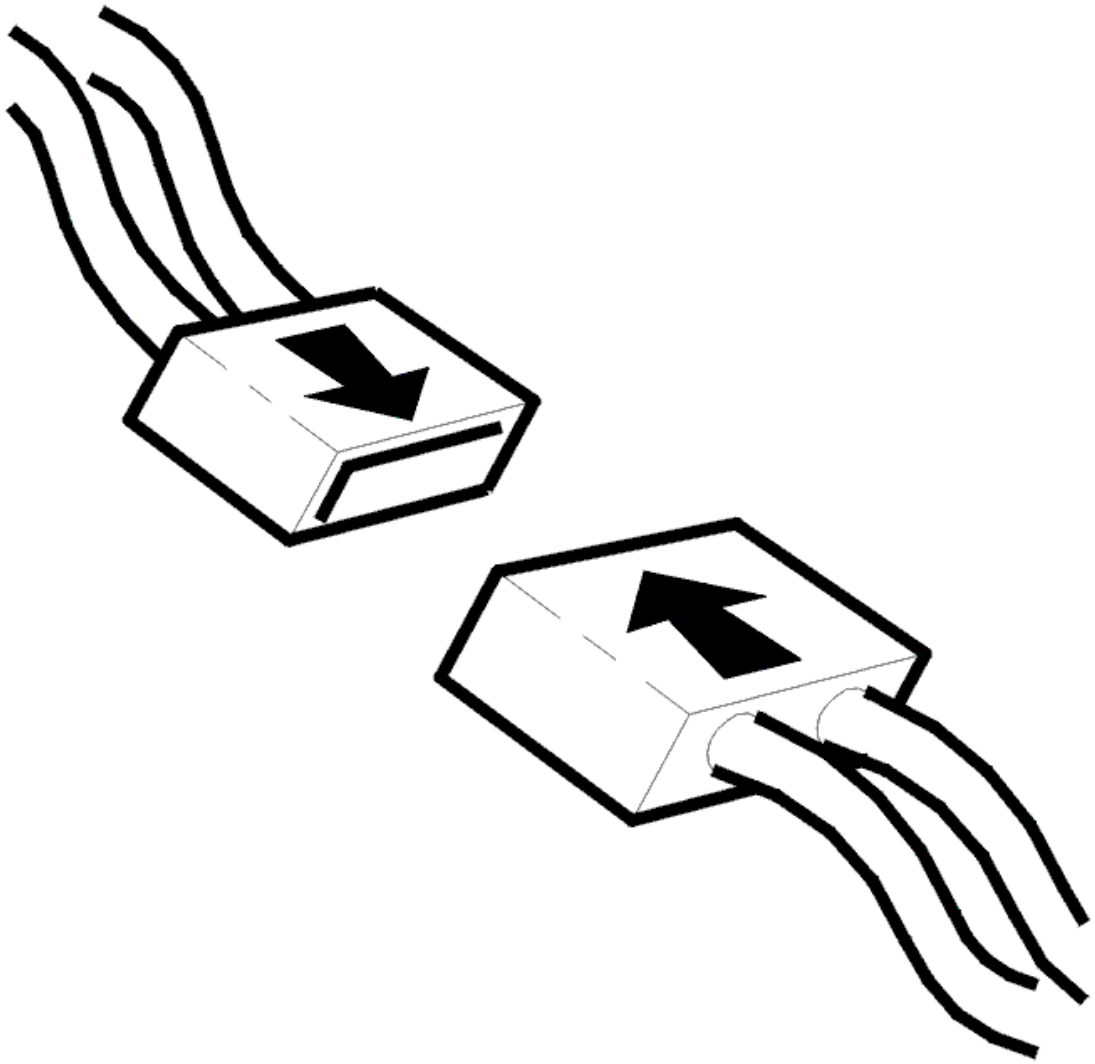

Fig. 321: Connecting Connector
Courtesy of VOLVO CARS CORPORATION

- Ignition off.
- Reinstall the connectors, components etc.
- Ignition on.

  Activate the relay.

  If the function is now OK, the fault was caused by a short-circuit in the relay driver circuit.

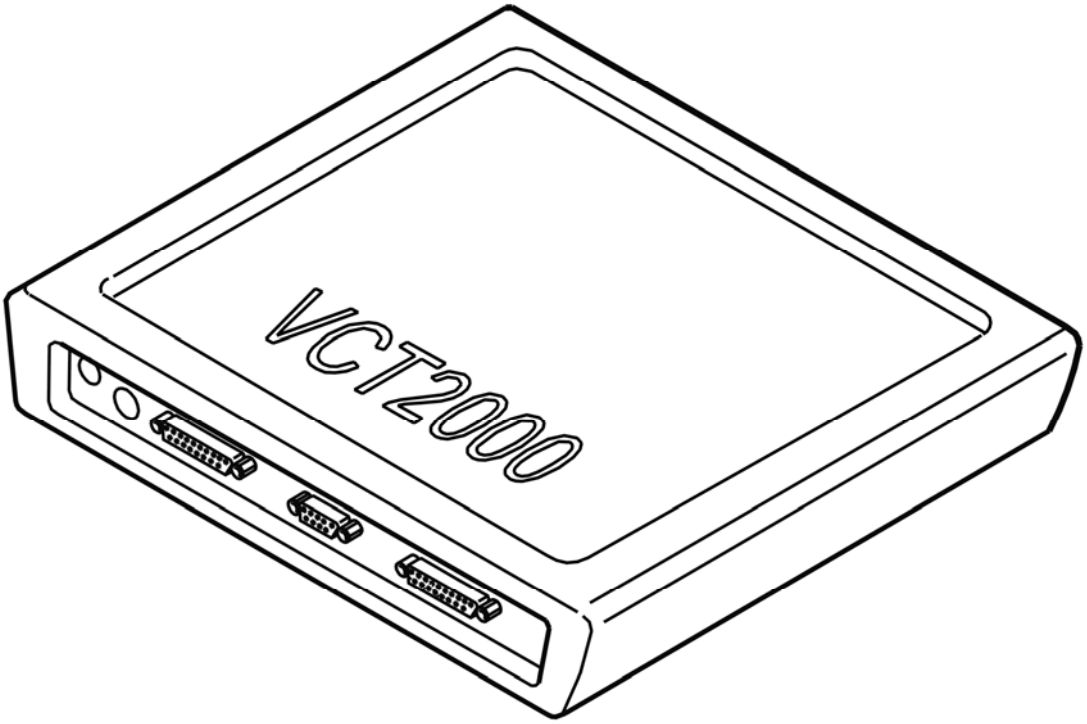

Fig. 322: Identifying VCT2000 Diagnostic Tool Symbol In VIDA
Courtesy of VOLVO CARS CORPORATION

Was the function OK?

- **YES**

  VERIFIED: Troubleshooting has been completed.

- **NO**

  Refer to **INFORMATION**

INFORMATION

FAULT-TRACING INFORMATION

The fault should have been detected and remedied. As this is not the case fault-tracing has failed.

Exit fault-tracing for this diagnostic trouble code (DTC) or make another attempt.

REM-6F55: UNLOCKING RELAY, CENTRAL LOCKING, TAILGATE. SIGNAL TOO HIGH. INTERMITTENT FAULT (2003)

DIAGNOSTIC TROUBLE CODE (DTC) INFORMATION

see **DIAGNOSTIC TROUBLE CODE (DTC) INFORMATION**

SIGNAL TOO HIGH. INTERMITTENT FAULT

REPLACING THE COMPONENT

Replace relay 2/86.

Other information:

- To access the integrated relay / fusebox in the cargo compartment, see **RELAY/FUSE BOX CARGO COMPARTMENT/REAR ELECTRONIC MODULE (REM), REPLACING** .

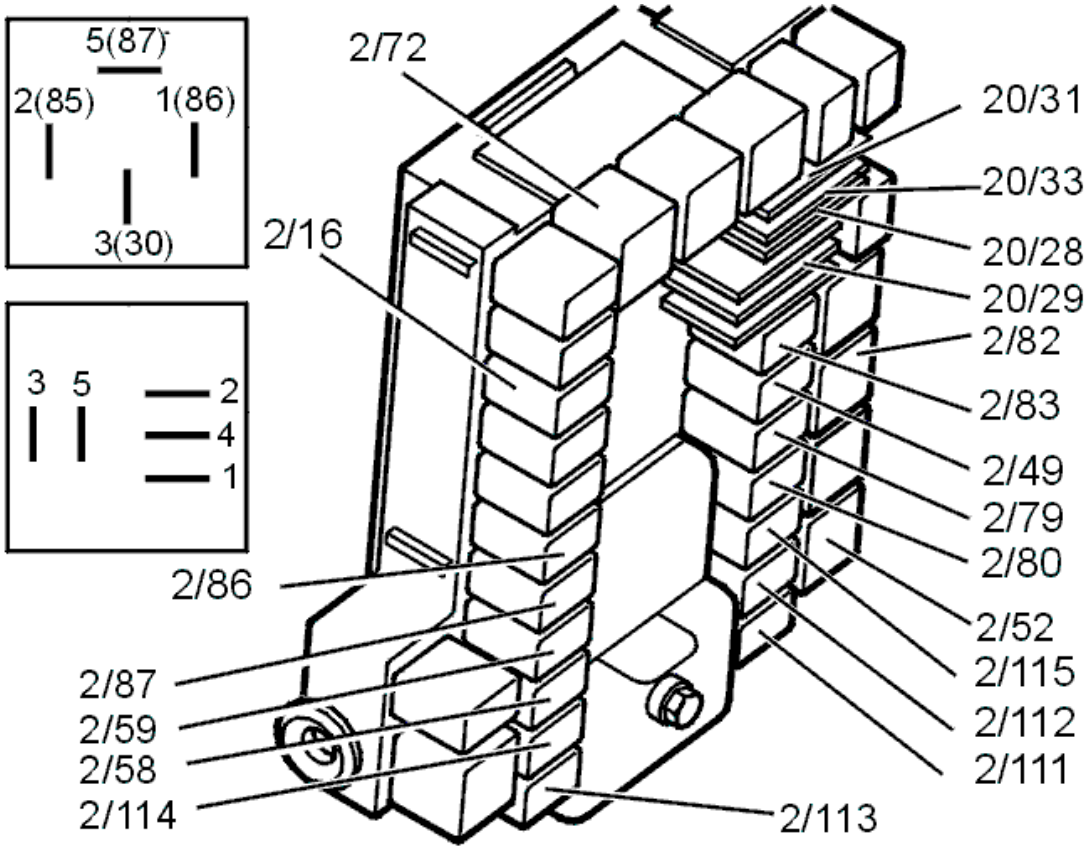

Fig. 323: Identifying Relay / Fuse Box
Courtesy of VOLVO CARS CORPORATION

- **Continue**

  Refer to **INFORMATION**

INFORMATION

FAULT-TRACING INFORMATION

If the fault is intermittent, do not verify fault-tracing if the fault does not recur.

It is possible to view the information again, or leave fault-tracing for this diagnostic trouble code (DTC).

REM-6F56: LOCKING RELAY, CENTRAL LOCKING, TAILGATE. SIGNAL TOO LOW. INTERMITTENT FAULT (2003)

DIAGNOSTIC TROUBLE CODE (DTC) INFORMATION

Condition

Diagnostic trouble code (DTC) REM-6F56 is stored if the signal across the relay coil (2/86) is too low during activation.

Substitute Value

None.

Possible Source

- The relay is not installed.
- Open-circuit in the relay coil.
- Short-circuit to ground in the relay coil.

Fault symptom[s]

- Does not lock / unlock the trunk lid.

SIGNAL TOO LOW. INTERMITTENT FAULT

REPLACING THE COMPONENT

Remove relay 2/86 and check the relay base switches for contact resistance and oxidation according to **CHECKING WIRING AND TERMINALS. INTERMITTENT FAULTS** .

Install the relay.

Other information:

- To access the integrated relay / fusebox in the cargo compartment, see **RELAY/FUSE BOX CARGO COMPARTMENT/REAR ELECTRONIC MODULE (REM), REPLACING** .

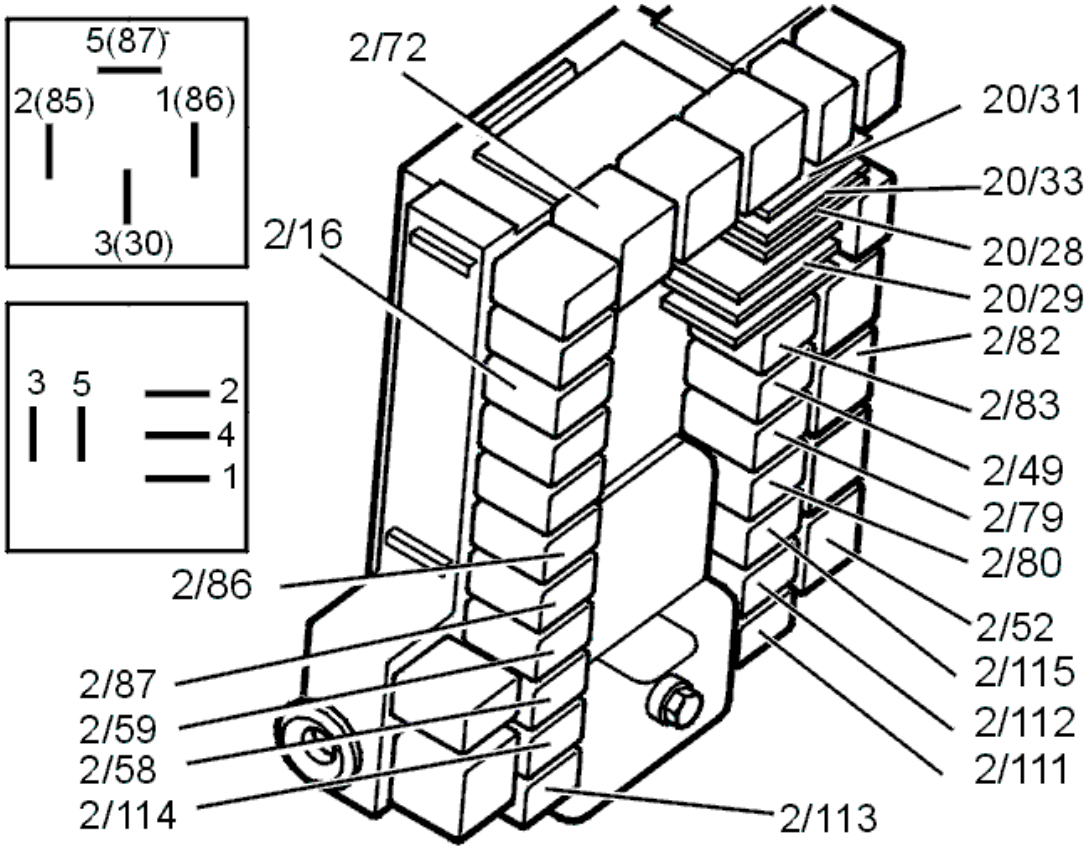

Fig. 324: Identifying Relay / Fuse Box
Courtesy of VOLVO CARS CORPORATION

- **Continue**

  Refer to **INFORMATION**

INFORMATION

FAULT-TRACING INFORMATION

If the fault is intermittent, do not verify fault-tracing if the fault does not recur.

It is possible to view the information again, or leave fault-tracing for this diagnostic trouble code (DTC).

REM-6F56: LOCKING RELAY, CENTRAL LOCKING, TAILGATE. SIGNAL TOO LOW. PERMANENT FAULT (2003)

DIAGNOSTIC TROUBLE CODE (DTC) INFORMATION

see **DIAGNOSTIC TROUBLE CODE (DTC) INFORMATION**

SIGNAL TOO LOW. PERMANENT FAULT

REPLACING THE COMPONENT

Remove relay 2/86 and check the relay base switches for contact resistance and oxidation according to **CHECKING WIRING AND TERMINALS. PERMANENT FAULT** .

Install a new relay.

Other information:

- To access the integrated relay / fusebox in the cargo compartment, see **RELAY/FUSE BOX CARGO COMPARTMENT/REAR ELECTRONIC MODULE (REM), REPLACING** .

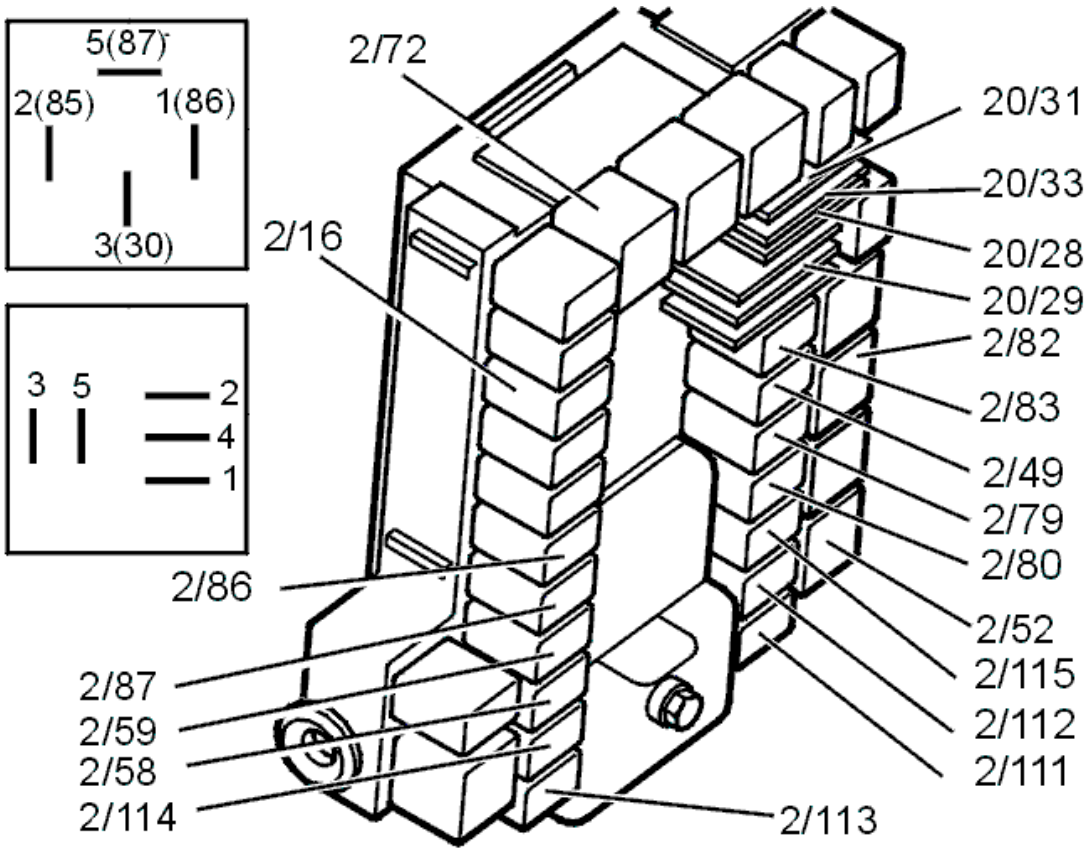

Fig. 325: Identifying Relay / Fuse Box
Courtesy of VOLVO CARS CORPORATION

- **Continue**

  Refer to **VERIFICATION**

VERIFICATION

VERIFICATION

HINT: After carrying out the repair, check that the fault has been remedied.

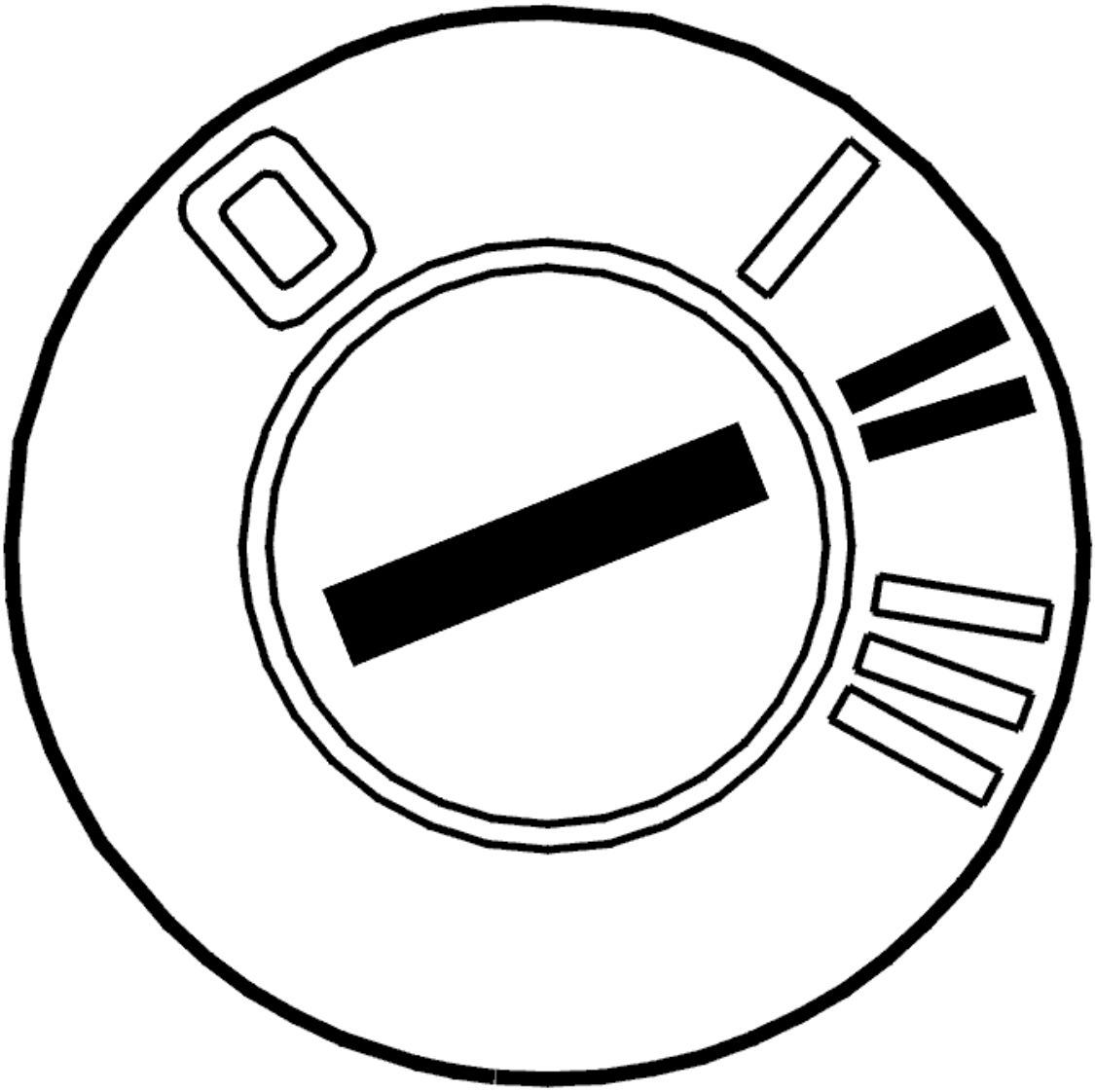

Fig. 326: Identifying Ignition ON
Courtesy of VOLVO CARS CORPORATION

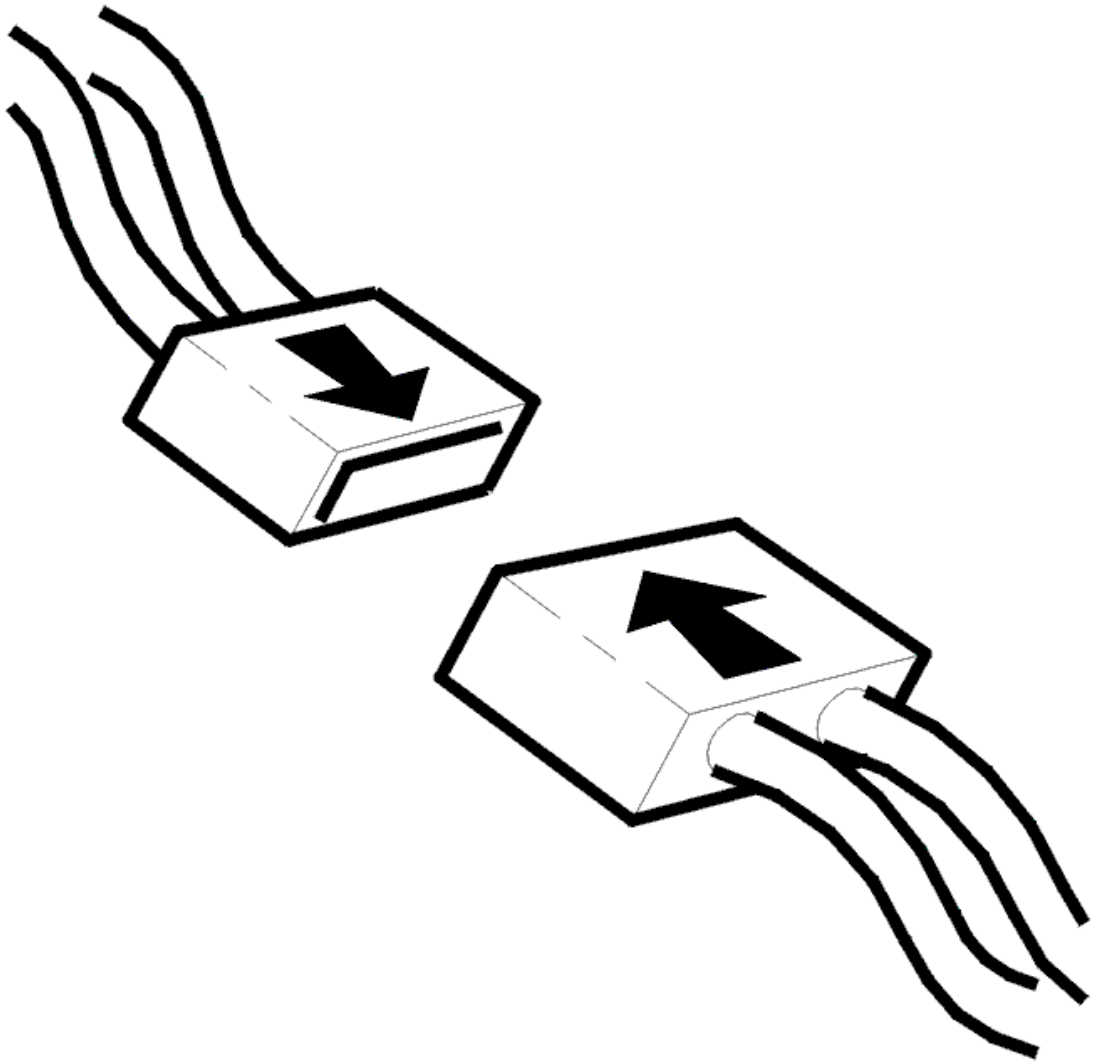

Fig. 327: Connecting Connector
Courtesy of VOLVO CARS CORPORATION

- Ignition off.
- Reinstall the connectors, components etc.
- Ignition on.

  Activate the relay.

  If the function is now OK, the fault was caused by a short-circuit in the relay driver circuit.

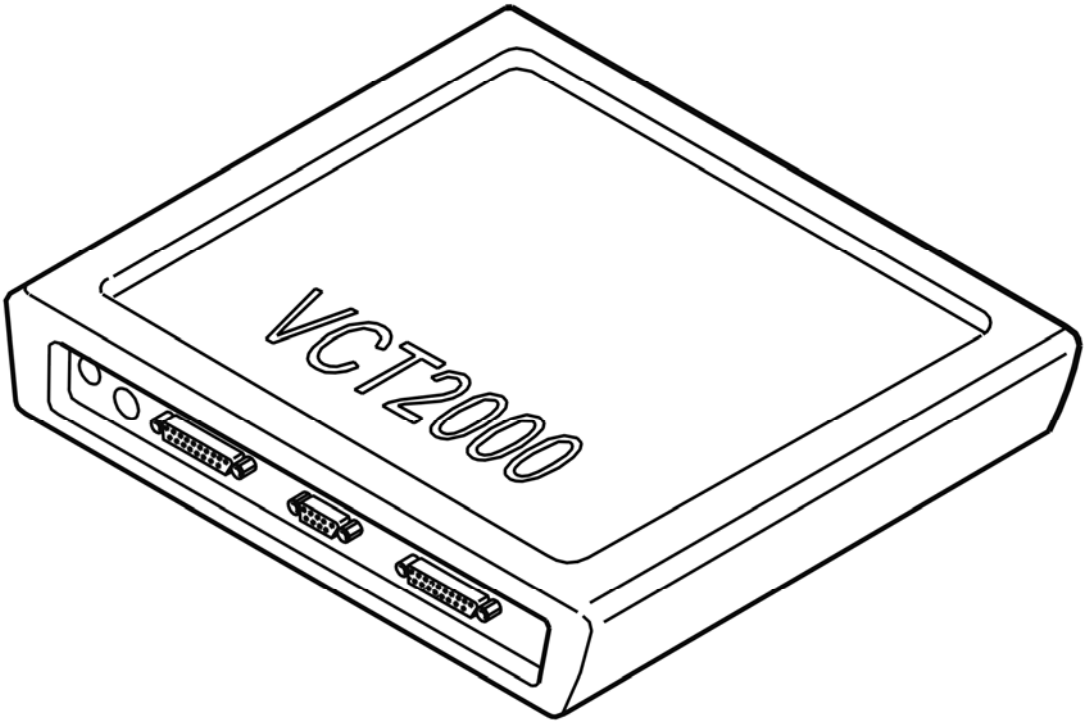

Fig. 328: Identifying VCT2000 Diagnostic Tool Symbol In VIDA
Courtesy of VOLVO CARS CORPORATION

Was the function OK?

- **YES**

  VERIFIED: Troubleshooting has been completed.

- **NO**

  Refer to **INFORMATION**

INFORMATION

FAULT-TRACING INFORMATION

The fault should have been detected and remedied. As this is not the case fault-tracing has failed.

Exit fault-tracing for this diagnostic trouble code (DTC) or make another attempt.

REM-6F71: UNLOCKING RELAY, CENTRAL LOCKING, FUEL TANK FILLER COVER. SIGNAL TOO HIGH (2003-2004)

DIAGNOSTIC TROUBLE CODE INFORMATION

Condition

If rear electronic module registers signal too high on relay coil ground circuit when locking, diagnostic trouble code is displayed.

Substitute Value

Nothing.

Possible Source

- Faulty relay (short circuit in relay coil).
- Defective control unit.

Fault symptom[s]

- Tank hatch will not open/lock.

SIGNAL TOO HIGH

CHECKING AND REPLACING THE COMPONENT

Replace the relay, 2/59.

Activate the relay.

If the function is OK, the cause of the fault was a defective relay (short-circuit in the relay).

Other information:

- For -2004, see: **RELAY/FUSE BOX CARGO COMPARTMENT/REAR ELECTRONIC MODULE (REM), REPLACING**
- For 2005-, see: **REAR ELECTRONIC MODULE (REM), REPLACING** .

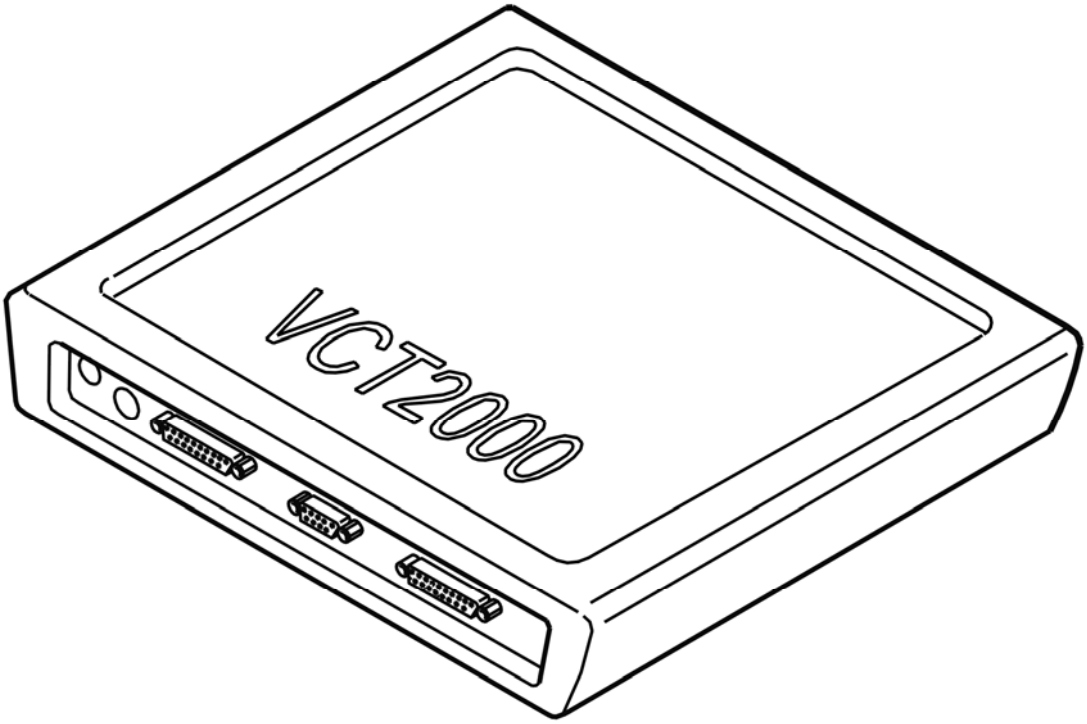

Fig. 329: Identifying VCT2000 Diagnostic Tool Symbol In VIDA
Courtesy of VOLVO CARS CORPORATION

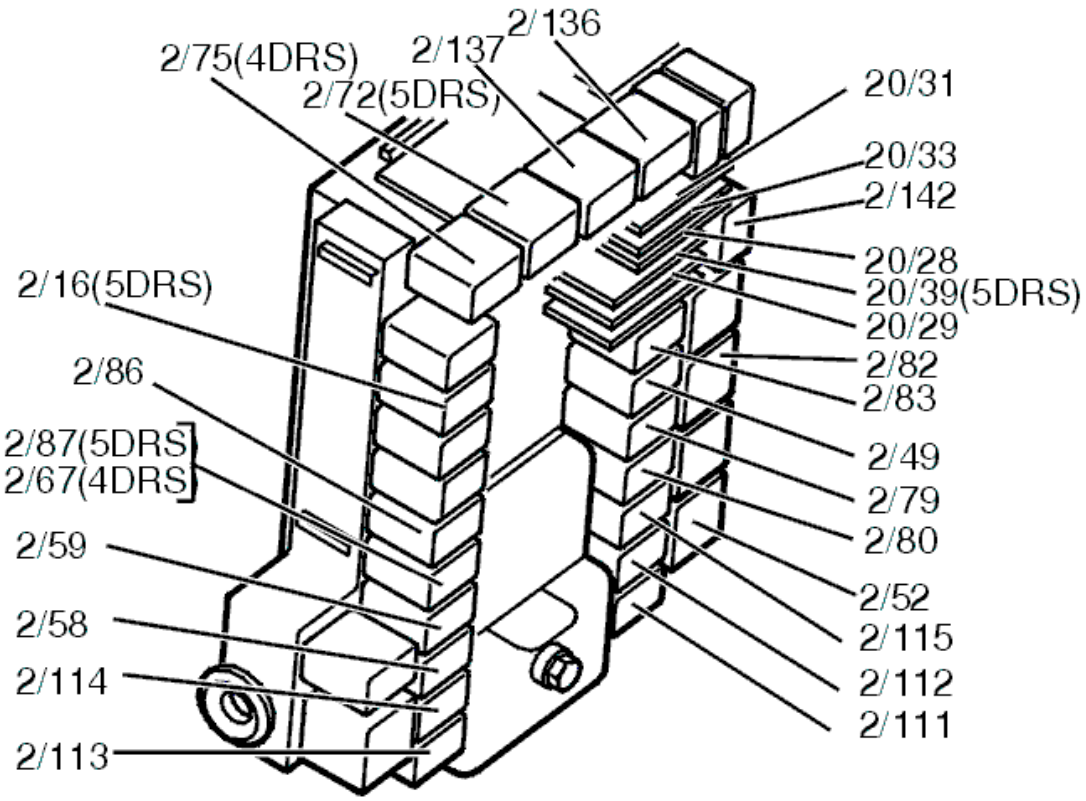

Fig. 330: Identifying Relays
Courtesy of VOLVO CARS CORPORATION

Was the function OK?

- **YES**

  OKAY: Troubleshooting has been completed.

- **NO**

  Refer to **CHECKING THE WIRING**

CHECKING THE WIRING

- Remove the relay.

  Check the relay coil driver circuit for a short-circuit to supply voltage by measuring the voltage at terminal #2 in the relay base.

  HINT: The voltage between terminal #2 and ground should be approximately 0 V.

  Replace the control module if the voltmeter displays an incorrect value.

Other information:

- For -2004, see: **RELAY/FUSE BOX CARGO COMPARTMENT/REAR ELECTRONIC MODULE (REM), REPLACING**
- For 2005-, see: **REAR ELECTRONIC MODULE (REM), REPLACING** .
- see **CHECKING WIRING AND TERMINALS**

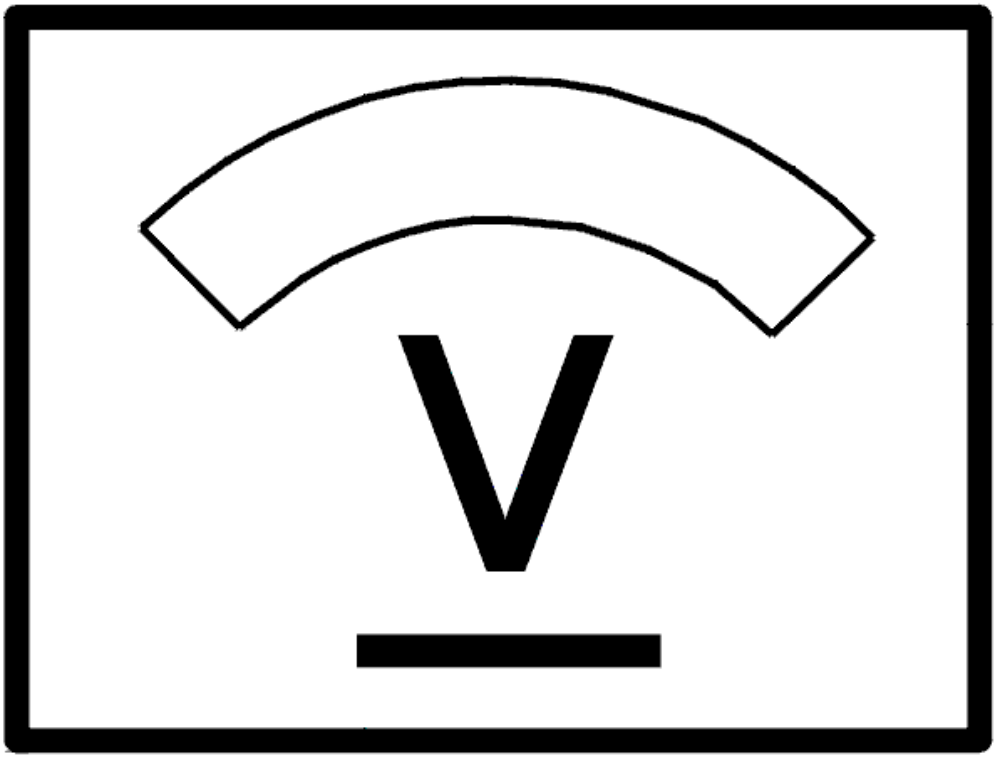

Fig. 331: Identifying Voltage Display
Courtesy of VOLVO CARS CORPORATION

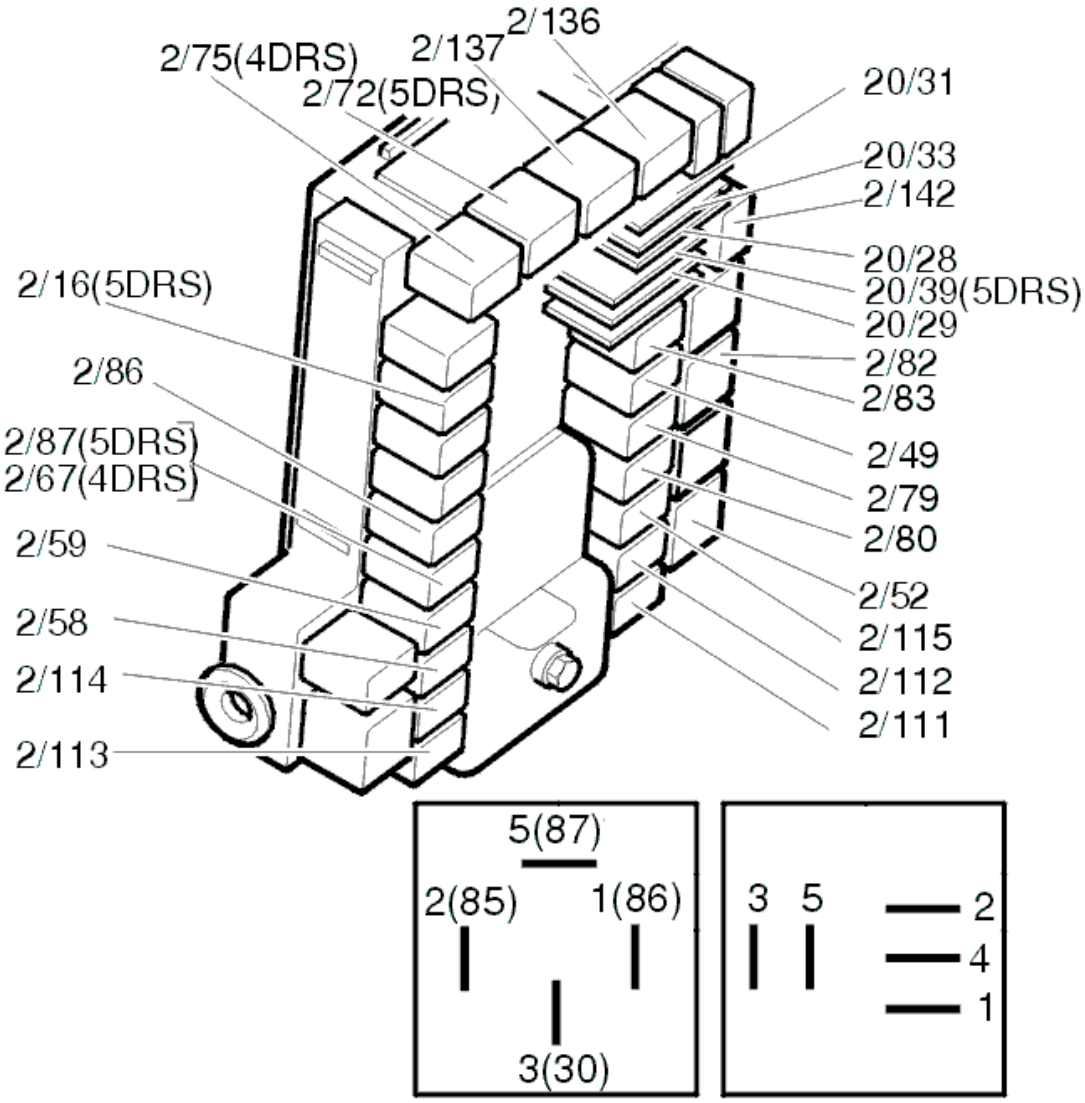

Fig. 332: Identifying Relays
Courtesy of VOLVO CARS CORPORATION

- **Continue**

  Refer to **VERIFICATION**

VERIFICATION

VERIFICATION

HINT: After carrying out the repair, check that the fault has been remedied.

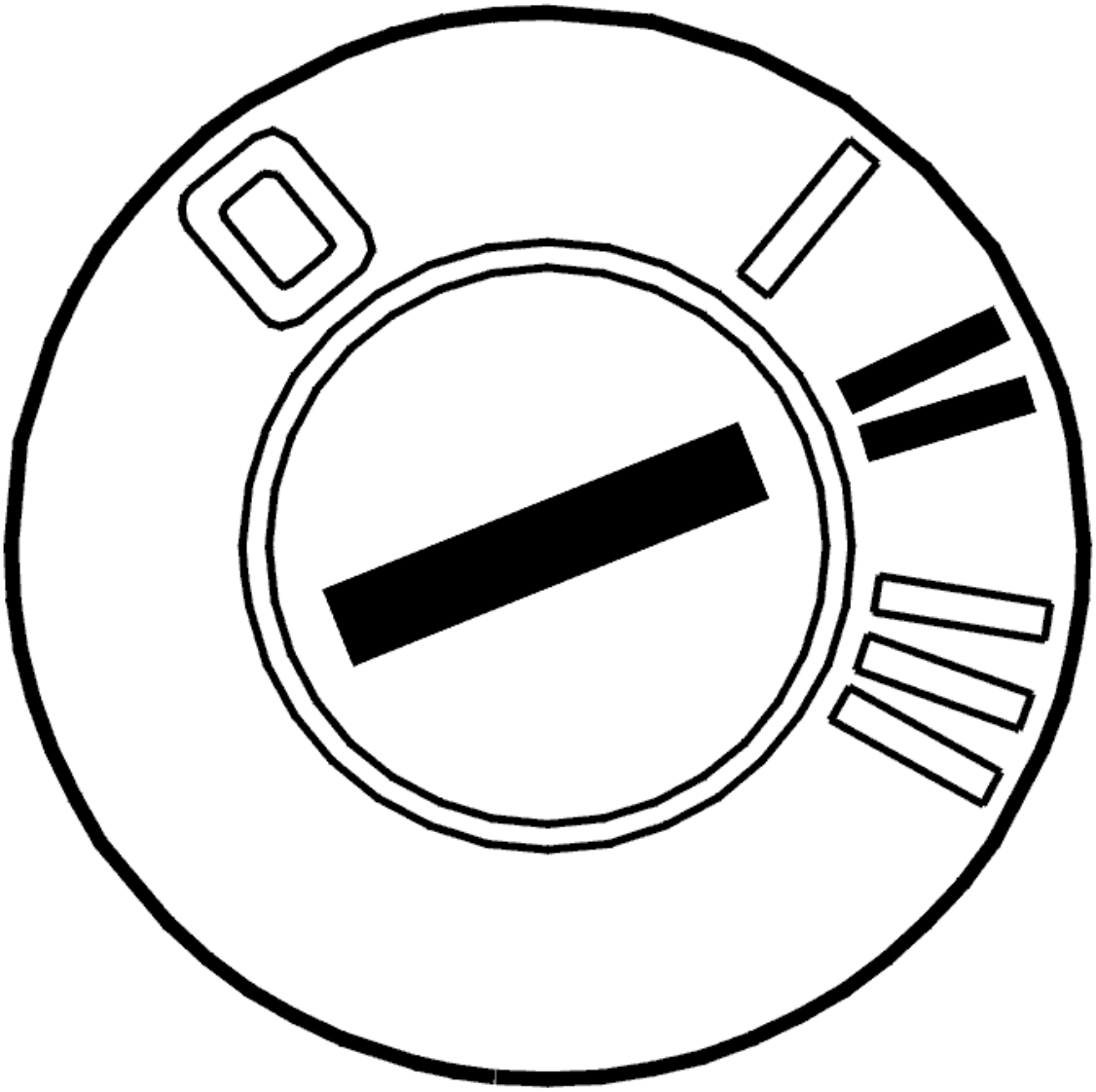

Fig. 333: Identifying Ignition ON
Courtesy of VOLVO CARS CORPORATION

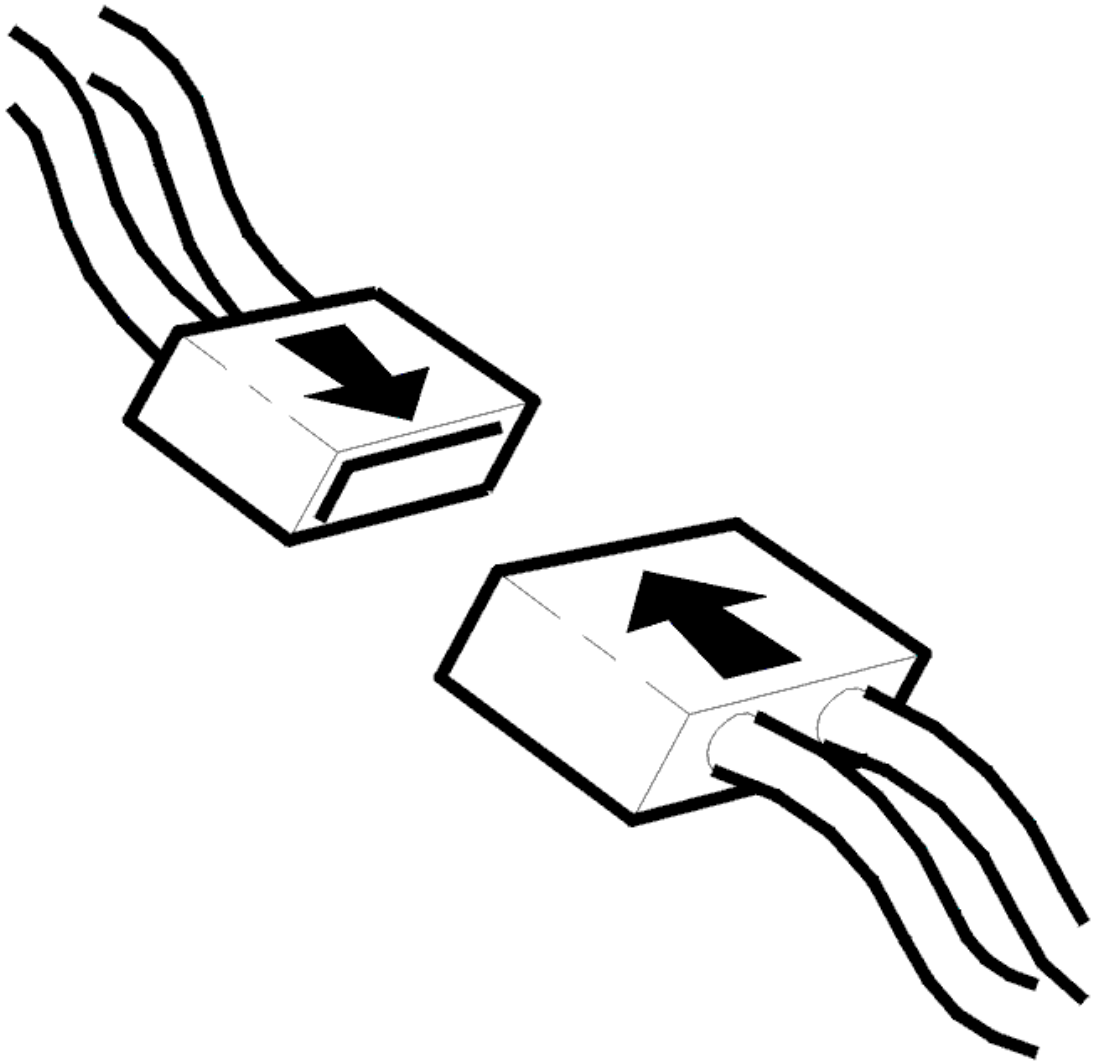

Fig. 334: Connecting Connector
Courtesy of VOLVO CARS CORPORATION

- Ignition off
- Reinstall the connectors, components etc.
- Ignition on.

  Activate the relay.

  If the function is now OK, the cause of the fault was a short-circuit to supply voltage in the relay driver circuit.

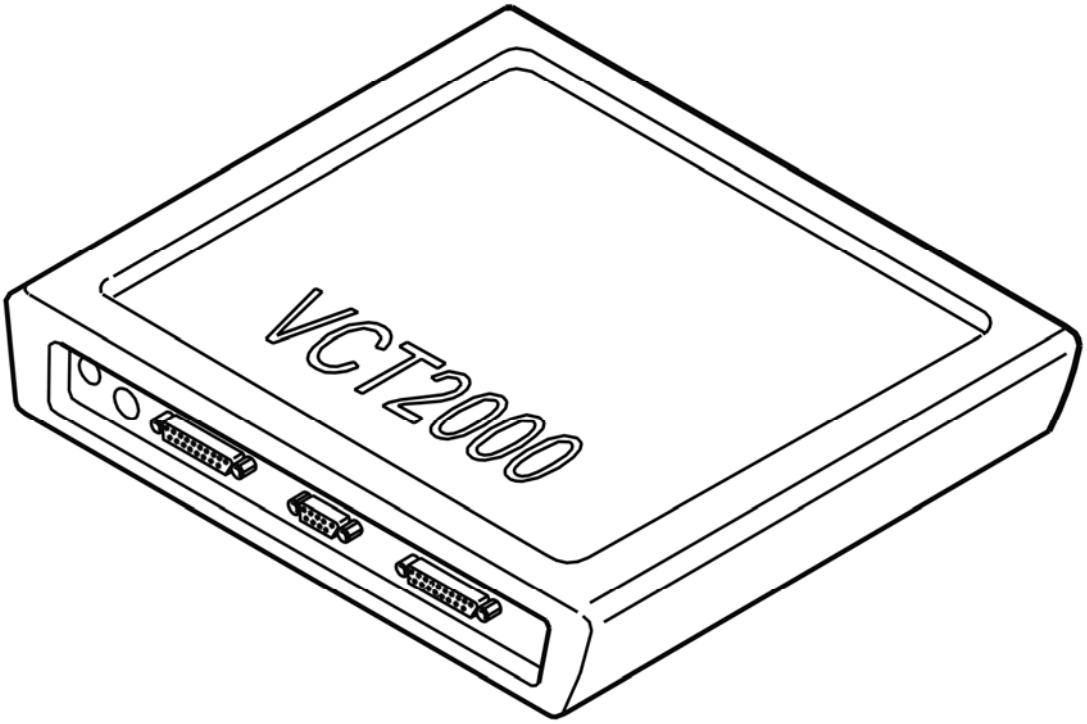

Fig. 335: Identifying VCT2000 Diagnostic Tool Symbol In VIDA
Courtesy of VOLVO CARS CORPORATION

Was the function OK?

- **YES**

  VERIFIED: Troubleshooting has been completed.

- **NO**

  Refer to **INFORMATION**

INFORMATION

FAULT-TRACING INFORMATION

The fault should have been detected and remedied. As this is not the case fault-tracing has failed.

Exit fault-tracing for this diagnostic trouble code (DTC) or make another attempt.

REM-6F73: UNLOCKING RELAY, CENTRAL LOCKING, FUEL TANK FILLER COVER. SIGNAL MISSING (2003-2004)

DIAGNOSTIC TROUBLE CODE INFORMATION

Condition

If the rear electronic module registers no signal/signal too low on relay coil ground circuit diagnostic trouble code is displayed.

Substitute Value

Nothing.

Possible Source

- Oxidation of relay socket contacts.
- Relay is loose or missing.
- Faulty relay (open circuit/short circuit to ground in relay coil).
- Defective control unit.

Fault symptom[s]

- Tank hatch will not open/lock.

SIGNAL MISSING

CHECKING THE COMPONENT

Remove the relay (2/59). Check the relay base switches. Check for contact resistance and oxidation.

Install the relay.

Activate the relay.

If the function is now OK the fault was caused by a contact fault in the relay base.

Other information:

- For -2004, see: **RELAY/FUSE BOX CARGO COMPARTMENT/REAR ELECTRONIC MODULE (REM), REPLACING**
- For 2005-, see: **REAR ELECTRONIC MODULE (REM), REPLACING** .
- see **CHECKING WIRING AND TERMINALS** .

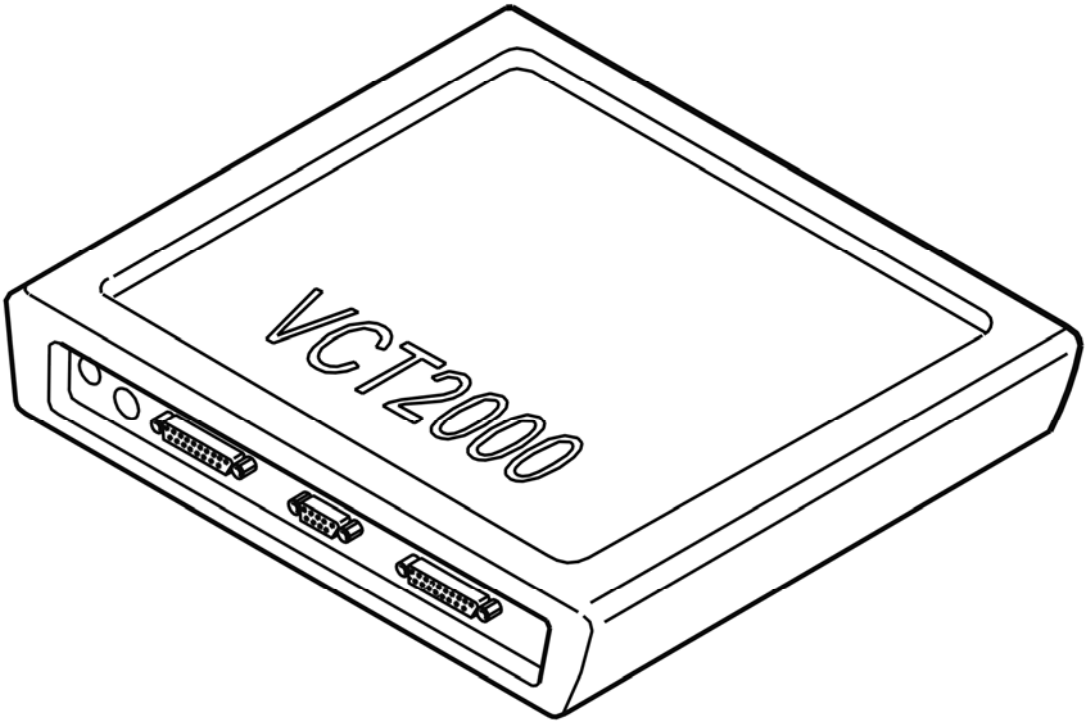

Fig. 336: Identifying VCT2000 Diagnostic Tool Symbol In VIDA
Courtesy of VOLVO CARS CORPORATION

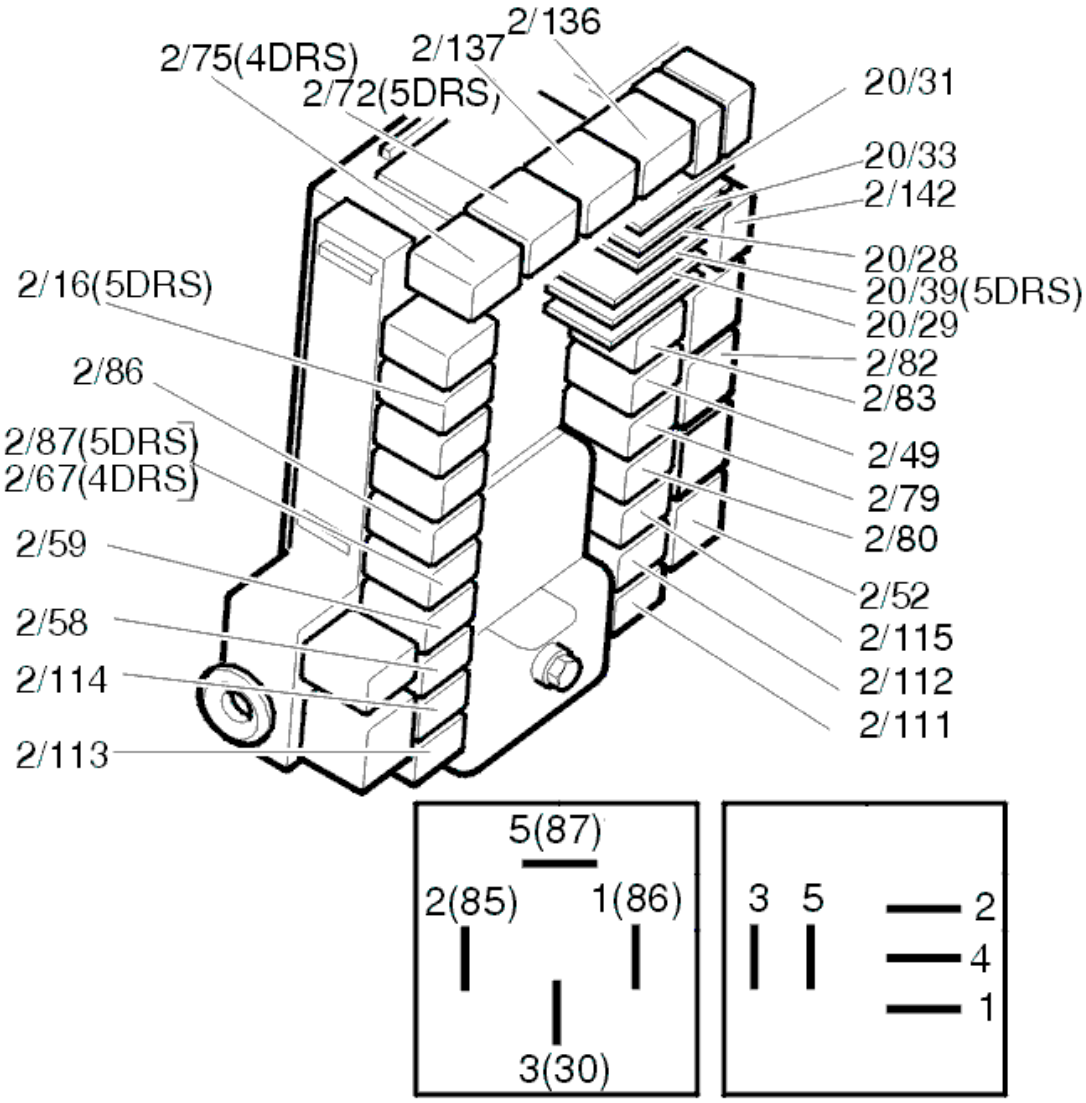

Fig. 337: Identifying Relays
Courtesy of VOLVO CARS CORPORATION

Was the function OK?

- **YES**

  Refer to **VERIFICATION**

- **NO**

  Refer to **REPLACING THE COMPONENT**

REPLACING THE COMPONENT

Replace the relay, 2/59.

Activate the relay.

If the function is now OK, the cause of the fault was a defective relay (short-circuit to ground or an open-circuit in the relay coil).

Other information:

- For -2004, see: **RELAY/FUSE BOX CARGO COMPARTMENT/REAR ELECTRONIC MODULE (REM), REPLACING**
- For 2005-, see: **REAR ELECTRONIC MODULE (REM), REPLACING** .

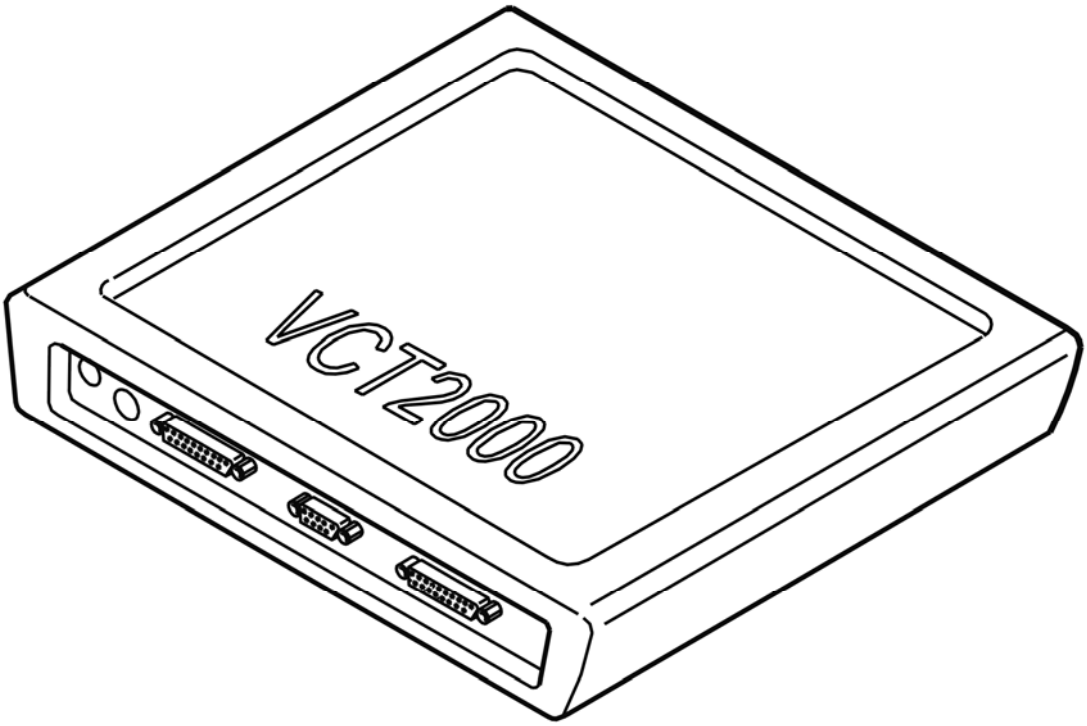

Fig. 338: Identifying VCT2000 Diagnostic Tool Symbol In VIDA
Courtesy of VOLVO CARS CORPORATION

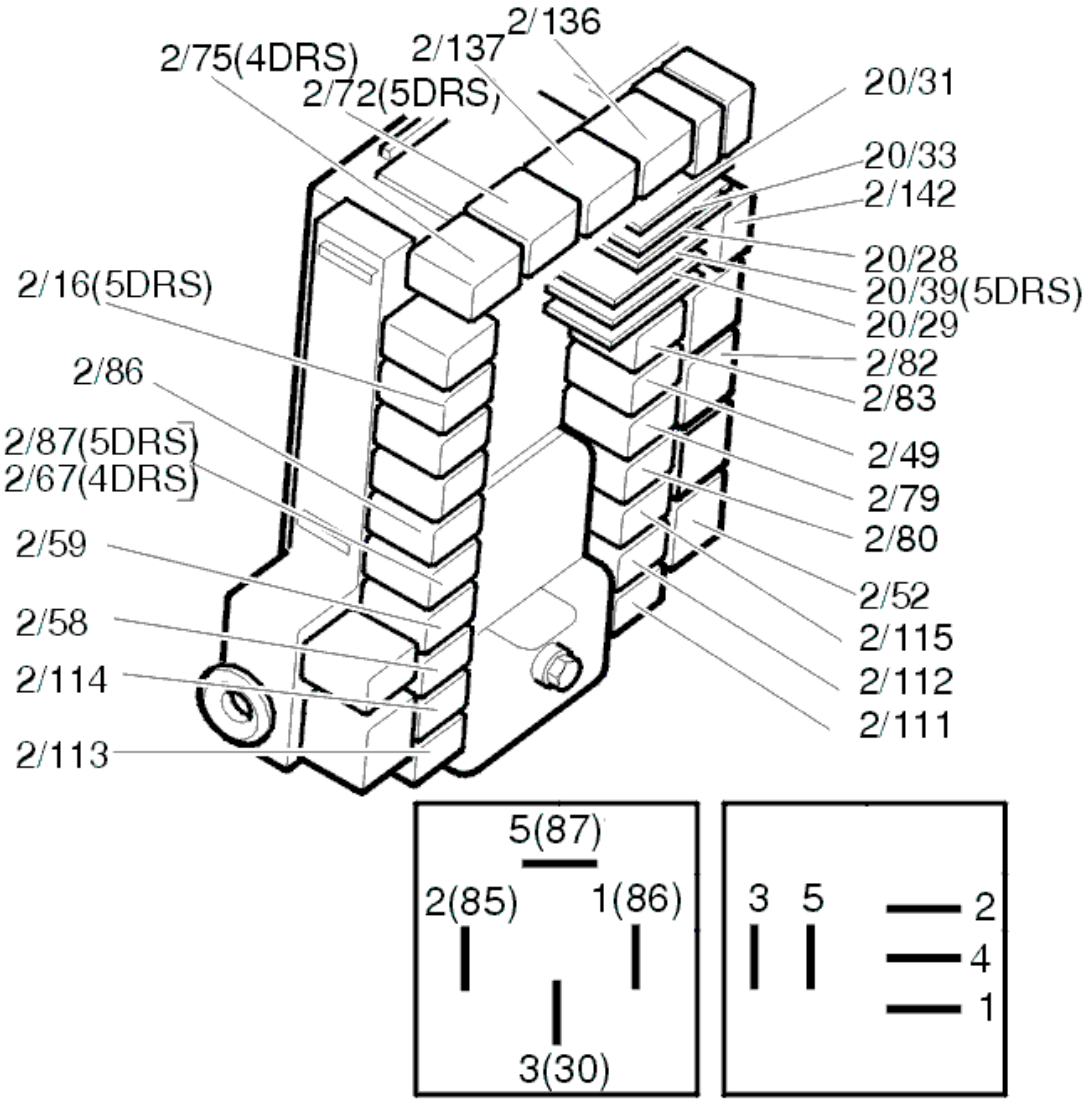

Fig. 339: Identifying Relays
Courtesy of VOLVO CARS CORPORATION

Was the function OK?

- **YES**

  OKAY: Troubleshooting has been completed.

- **NO**

  Refer to **CHECKING THE WIRING**

CHECKING THE WIRING

- Remove relay RMI 21, 2/59.

Check the driver circuit for the relay coil for an open-circuit as follows: activate the relay driver. Measure the voltage between terminals #1 and #2 on the relay base.

HINT: The voltage between terminals #1 and #2 should be battery voltage.

HINT: If the value deviates excessively, check the voltage between terminal #2 and the battery voltage and between terminal #1 and ground. Both should equal battery voltage.

HINT: Check for an open-circuit.

HINT: Do not forget to check that the power supply to the control module is OK.

Other information:

- For -2004, see: **RELAY/FUSE BOX CARGO COMPARTMENT/REAR ELECTRONIC MODULE (REM), REPLACING**
- For 2005-, see: **REAR ELECTRONIC MODULE (REM), REPLACING** .
- see **CHECKING WIRING AND TERMINALS** .

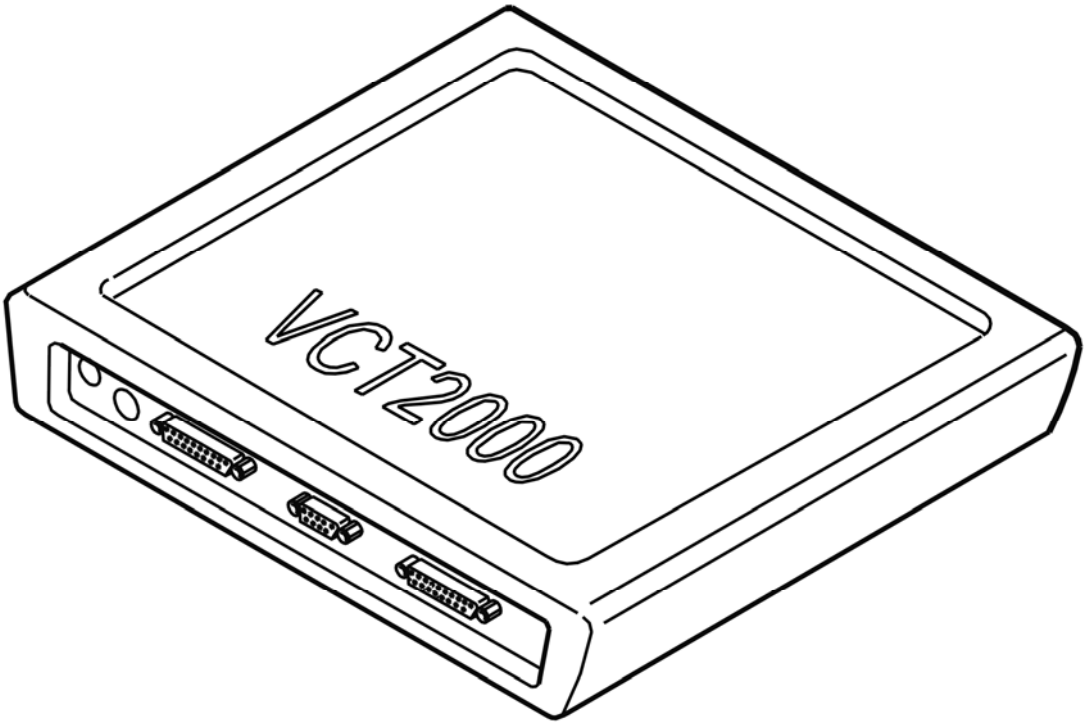

Fig. 340: Identifying VCT2000 Diagnostic Tool Symbol In VIDA
Courtesy of VOLVO CARS CORPORATION

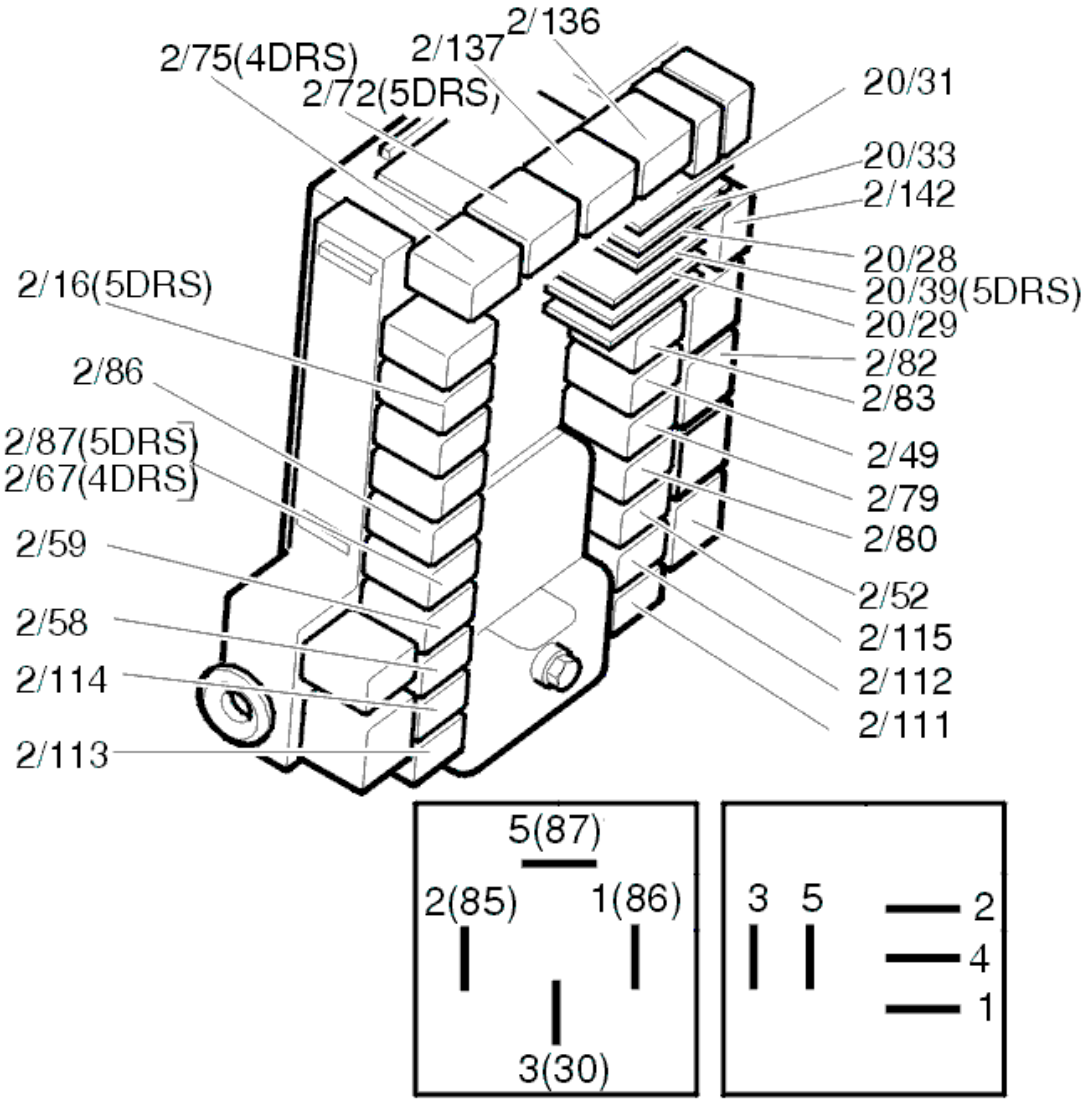

Fig. 341: Identifying Relays
Courtesy of VOLVO CARS CORPORATION

Was a fault detected?

- **YES**

  Refer to **VERIFICATION**

- **NO**

  Refer to **CHECKING THE CONTROL MODULE FOR SHORT-CIRCUITS**

CHECKING THE CONTROL MODULE FOR SHORT-CIRCUITS

Measure the resistance between terminal #2 and ground when the relay driver is active.

The resistance should be high when the relay driver is active.

Replace the control module if the resistance is low.

Other information:

- For -2004, see: **RELAY/FUSE BOX CARGO COMPARTMENT/REAR ELECTRONIC MODULE (REM), REPLACING**
- For 2005-, see: **REAR ELECTRONIC MODULE (REM), REPLACING** .

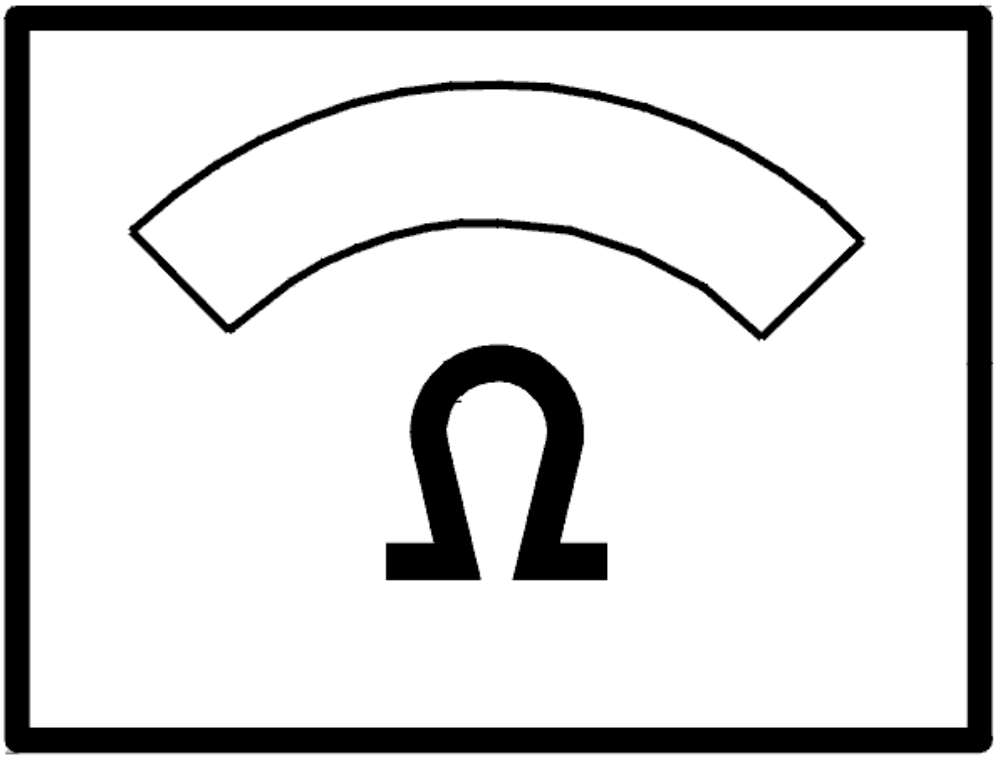

Fig. 342: Identifying Ohm Meter
Courtesy of VOLVO CARS CORPORATION

- **Continue**

  Refer to **VERIFICATION**

VERIFICATION

VERIFICATION

HINT: After carrying out the repair, check that the fault has been remedied.

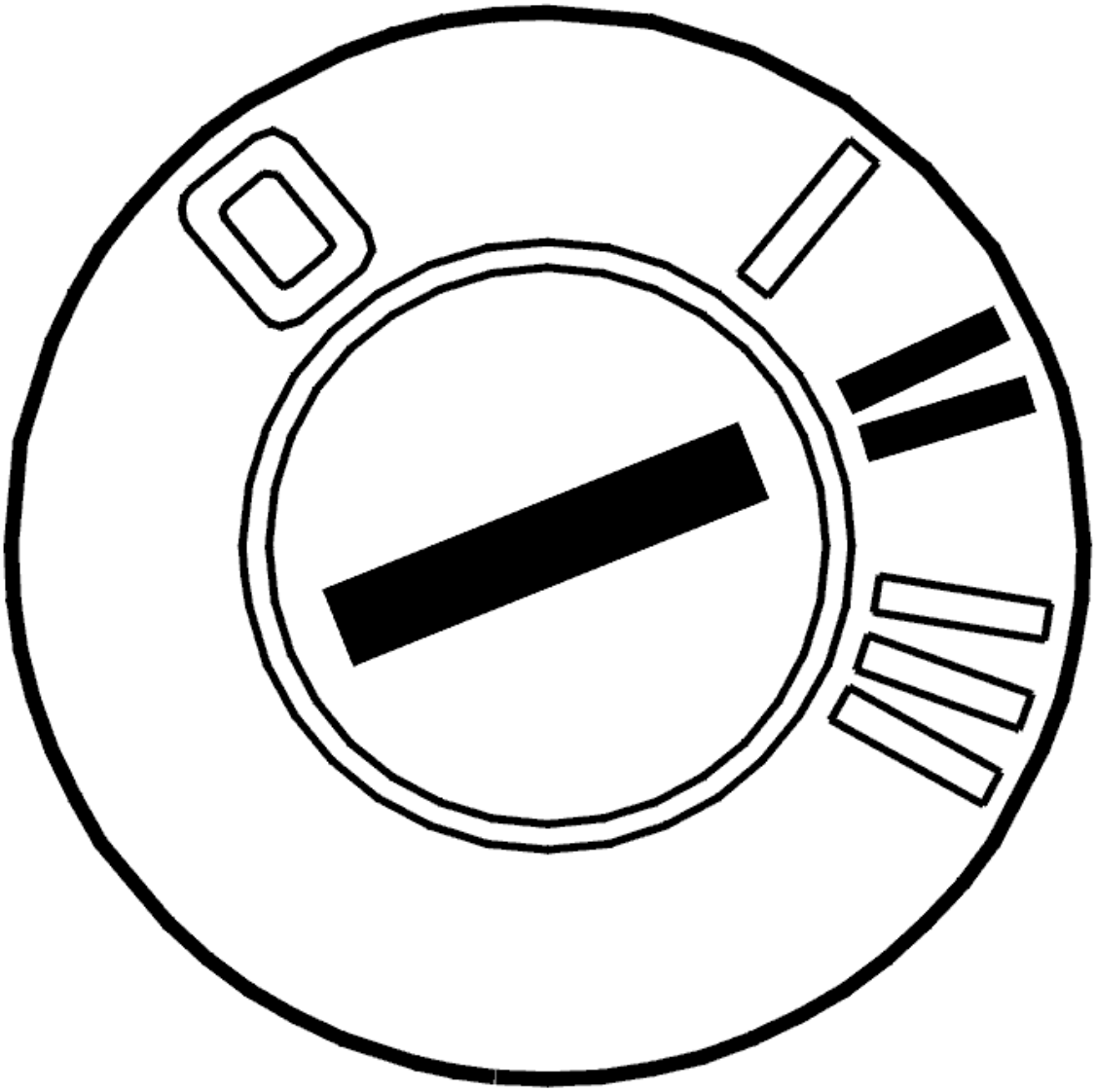

Fig. 343: Identifying Ignition ON
Courtesy of VOLVO CARS CORPORATION

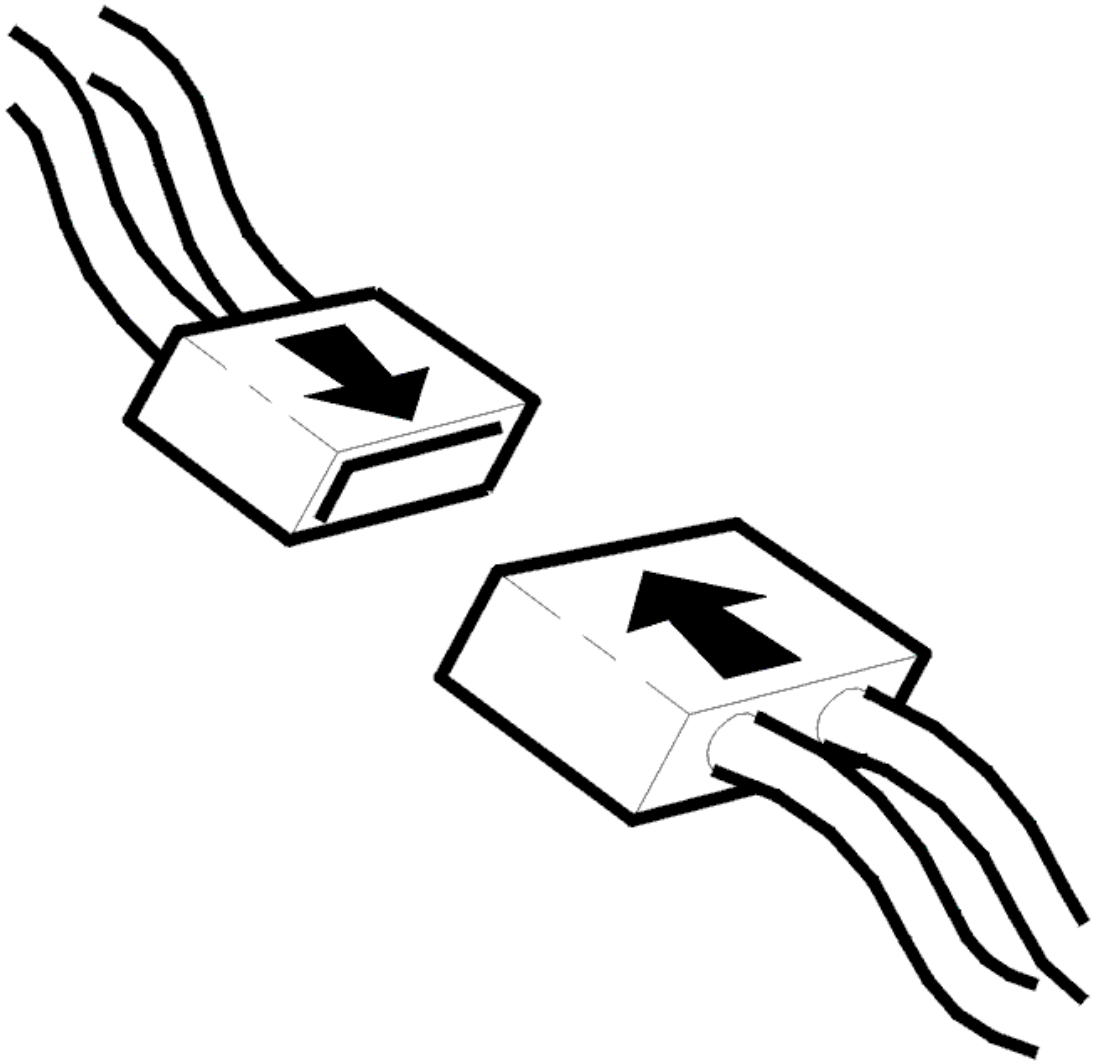

Fig. 344: Connecting Connector
Courtesy of VOLVO CARS CORPORATION

- Ignition off
- Reinstall the connectors, components etc.
- Ignition on.

  Activate the relay.

  If the function is now OK, the cause of the fault was a short-circuit to supply voltage in the relay driver circuit.

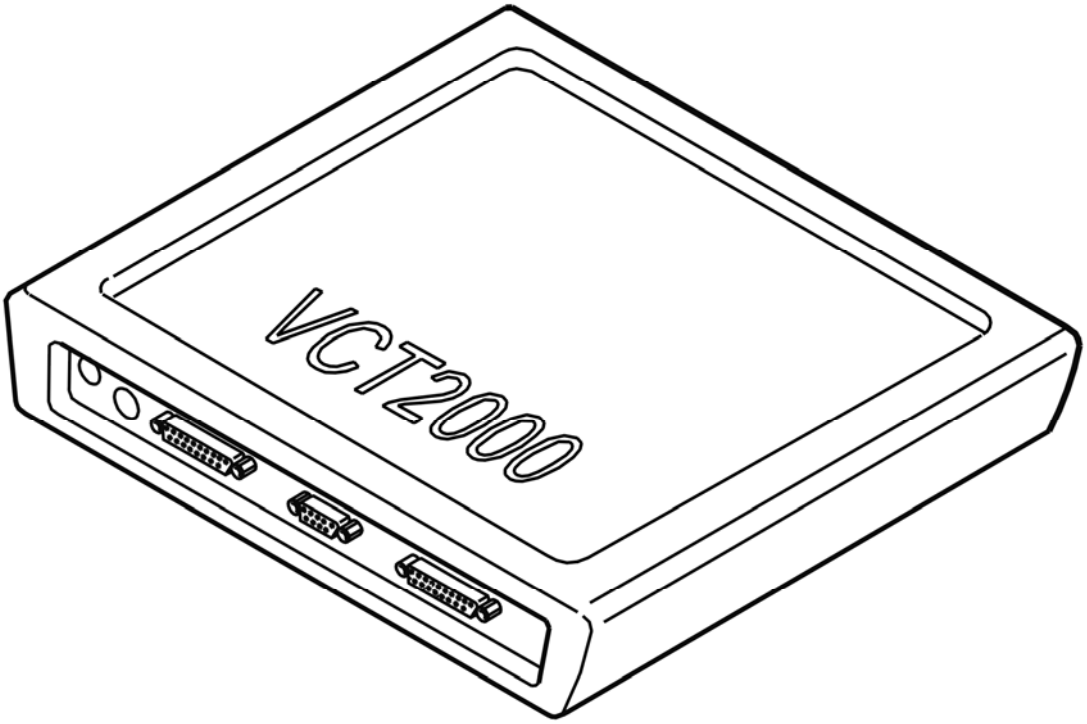

Fig. 345: Identifying VCT2000 Diagnostic Tool Symbol In VIDA
Courtesy of VOLVO CARS CORPORATION

Was the function OK?

- **YES**

  VERIFIED: Troubleshooting has been completed.

- **NO**

  Refer to **INFORMATION**

INFORMATION

FAULT-TRACING INFORMATION

The fault should have been detected and remedied. As this is not the case fault-tracing has failed.

Exit fault-tracing for this diagnostic trouble code (DTC) or make another attempt.

REM-6F74: UNLOCKING RELAY, CENTRAL LOCKING, FUEL TANK FILLER COVER. SIGNAL TOO HIGH. INTERMITTENT FAULT (2003)

DIAGNOSTIC TROUBLE CODE INFORMATION

Condition

If rear electronic module registers signal too high on relay coil ground circuit when unlocking, diagnostic trouble code is displayed.

Substitute Value

Nothing.

Possible Source

- Faulty relay (short circuit in relay coil).
- Defective control unit.

Fault symptom[s]

- Tank hatch will not open/lock.

SIGNAL TOO HIGH. INTERMITTENT FAULT

CHECKING THE WIRING

Check the relay coil driver circuit for an intermittent short-circuit to supply voltage: Measure the voltage between terminal #2 in the relay base and relay 2/58.

For further information about a short-circuit to supply voltage, see **SHORT-CIRCUIT TO SUPPLY VOLTAGE, INTERMITTENT FAULTS** .

HINT: The voltage between terminal #2 and ground should be approximately 0 V.

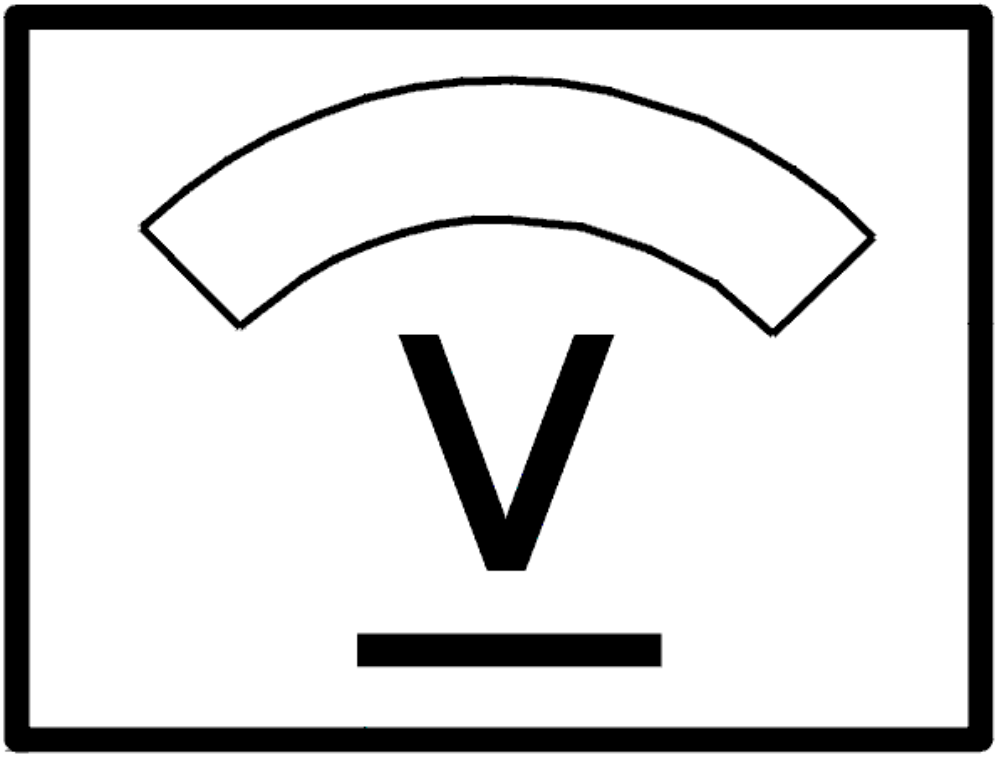

Fig. 346: Identifying Voltage Display
Courtesy of VOLVO CARS CORPORATION

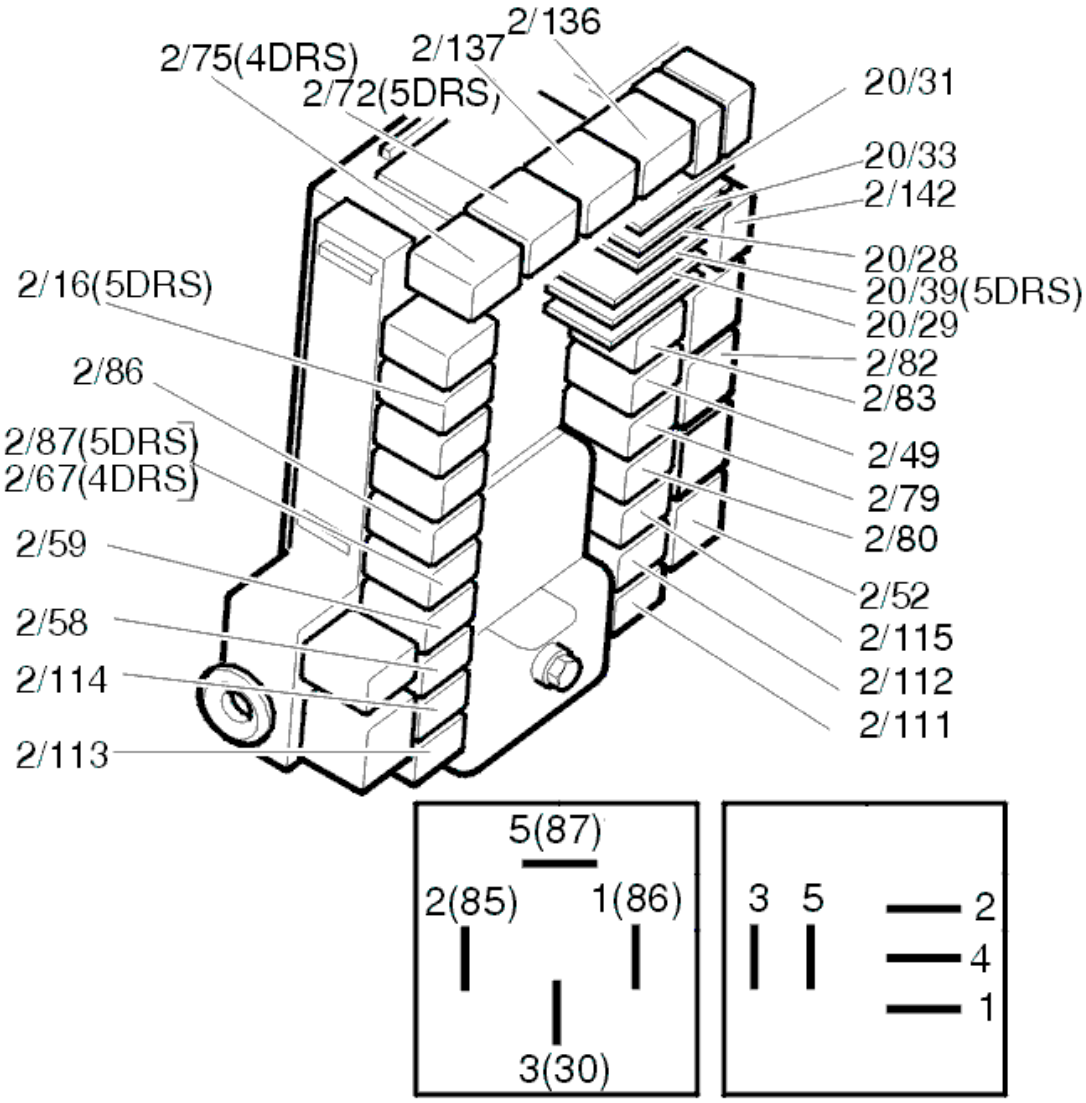

Fig. 347: Identifying Relays
Courtesy of VOLVO CARS CORPORATION

If the voltmeter displays an incorrect value replace the control module.

Other information:

- To access and replace the integrated relay / fusebox in the cargo compartment, see **RELAY/FUSE BOX CARGO COMPARTMENT/REAR ELECTRONIC MODULE (REM), REPLACING** .

- **Continue**

  Refer to **INFORMATION**

INFORMATION

FAULT-TRACING INFORMATION

If the fault is intermittent, do not verify fault-tracing if the fault does not recur.

It is possible to view the information again, or leave fault-tracing for this diagnostic trouble code (DTC).

REM-6F74: UNLOCKING RELAY, CENTRAL LOCKING, FUEL TANK FILLER COVER. SIGNAL TOO HIGH. PERMANENT FAULT (2003)

DIAGNOSTIC TROUBLE CODE INFORMATION

see **DIAGNOSTIC TROUBLE CODE INFORMATION**

SIGNAL TOO HIGH. PERMANENT FAULT

REPLACING THE COMPONENT

Replace relay, 2/58.

Activate the relay.

If the function is OK the cause of the fault was a defective relay (short-circuit in the relay).

Other information:

- To access the integrated relay / fusebox in the cargo compartment, see **RELAY/FUSE BOX CARGO COMPARTMENT/REAR ELECTRONIC MODULE (REM), REPLACING** .

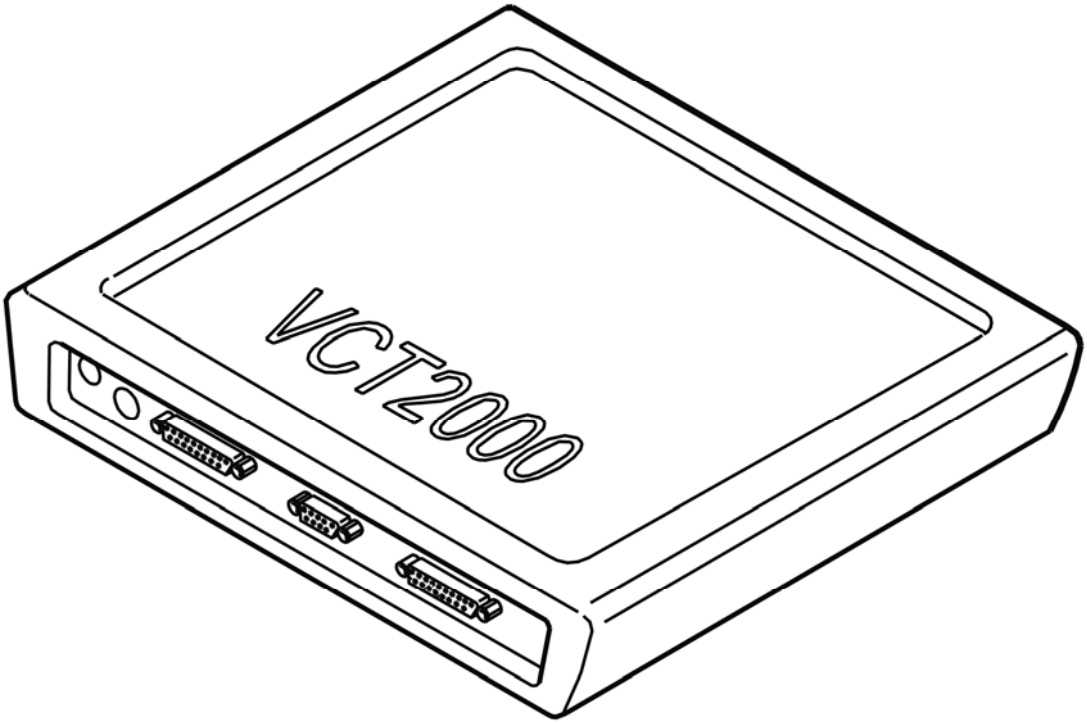

Fig. 348: Identifying VCT2000 Diagnostic Tool Symbol In VIDA
Courtesy of VOLVO CARS CORPORATION

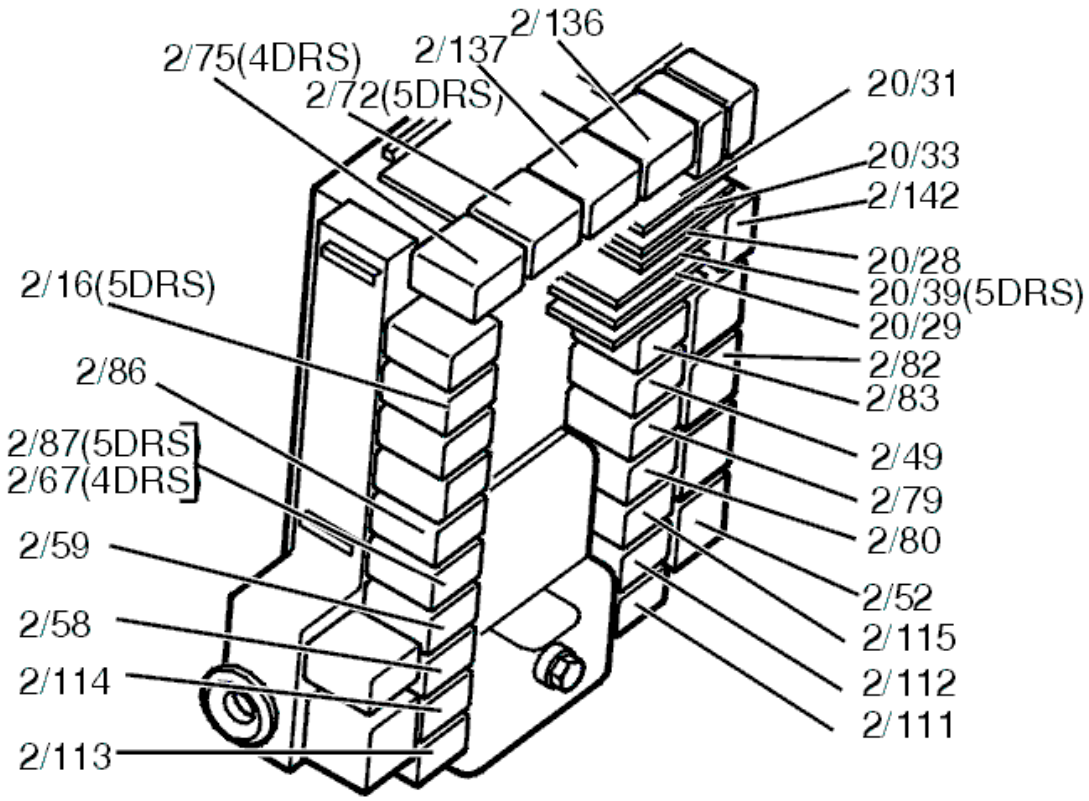

Fig. 349: Identifying Relays
Courtesy of VOLVO CARS CORPORATION

Was the function OK?

- **YES**

  OKAY: Troubleshooting has been completed.

- **NO**

  Refer to **CHECKING THE CONTROL MODULE**

CHECKING THE CONTROL MODULE

- Remove the relay.

  Check the relay coil driver circuit for a short-circuit to supply voltage by taking a voltmeter reading at terminal #2 in the relay base.

  For further information about a short-circuit to supply voltage, see **SHORT-CIRCUIT TO SUPPLY VOLTAGE. PERMANENT FAULTS** .

  HINT: The voltage between terminal #2 and ground should be approximately 0 V.

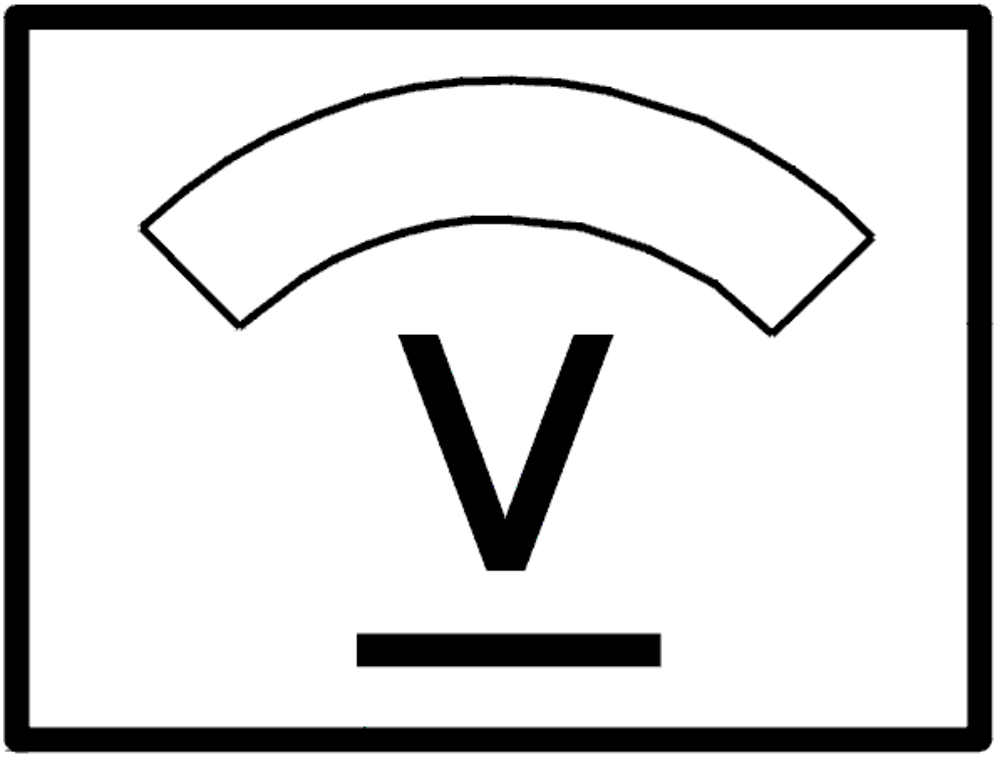

Fig. 350: Identifying Voltage Display
Courtesy of VOLVO CARS CORPORATION

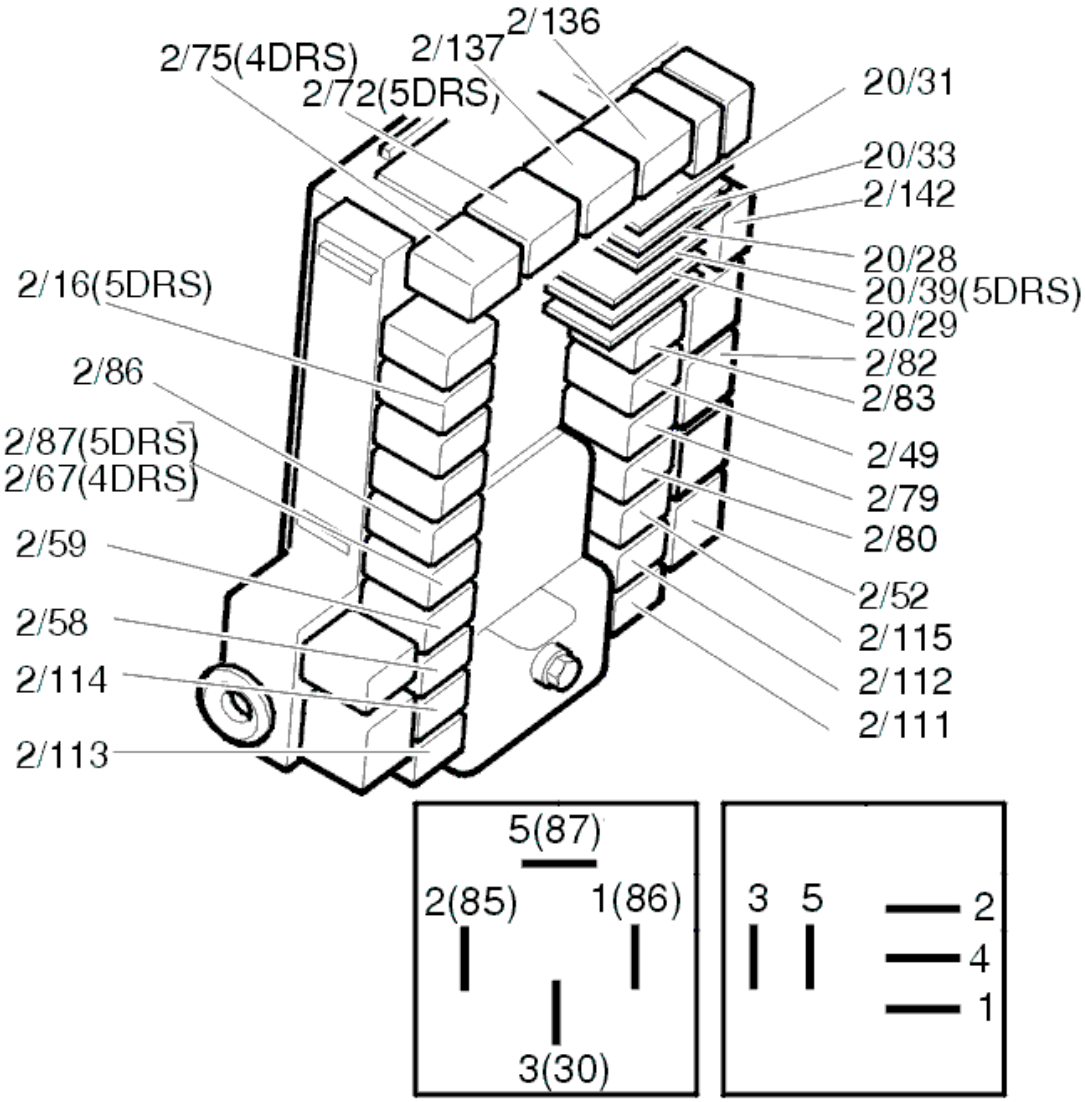

Fig. 351: Identifying Relays
Courtesy of VOLVO CARS CORPORATION

If the voltmeter displays an incorrect value replace the control module.

Other information:

- To access and replace the integrated relay / fusebox in the cargo compartment, see **RELAY/FUSE BOX CARGO COMPARTMENT/REAR ELECTRONIC MODULE (REM), REPLACING** .

- **Continue**

Refer to **VERIFICATION**

VERIFICATION

VERIFICATION

HINT: After the repair it is necessary to check that the fault has been rectified.

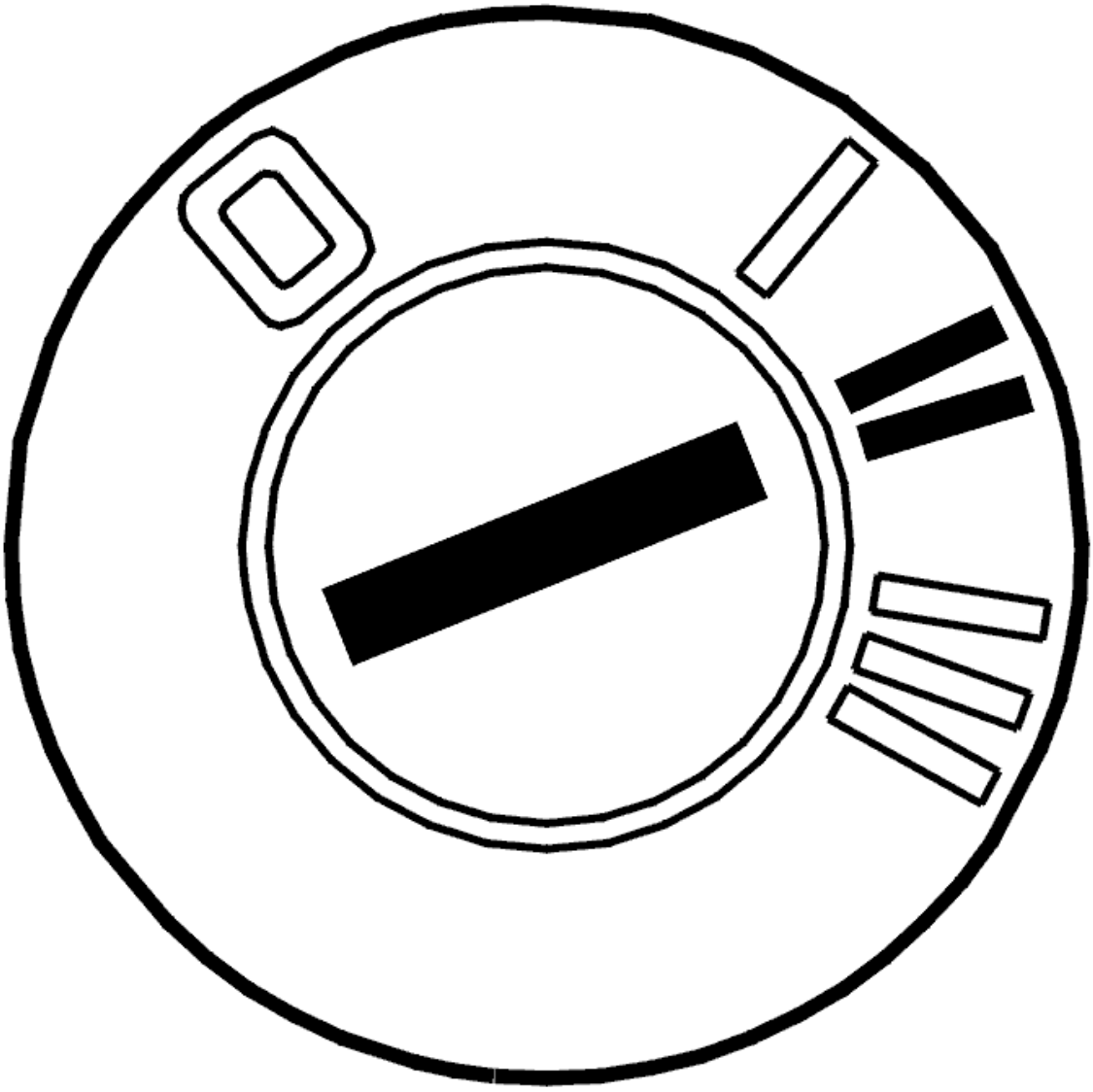

Fig. 352: Identifying Ignition ON
Courtesy of VOLVO CARS CORPORATION

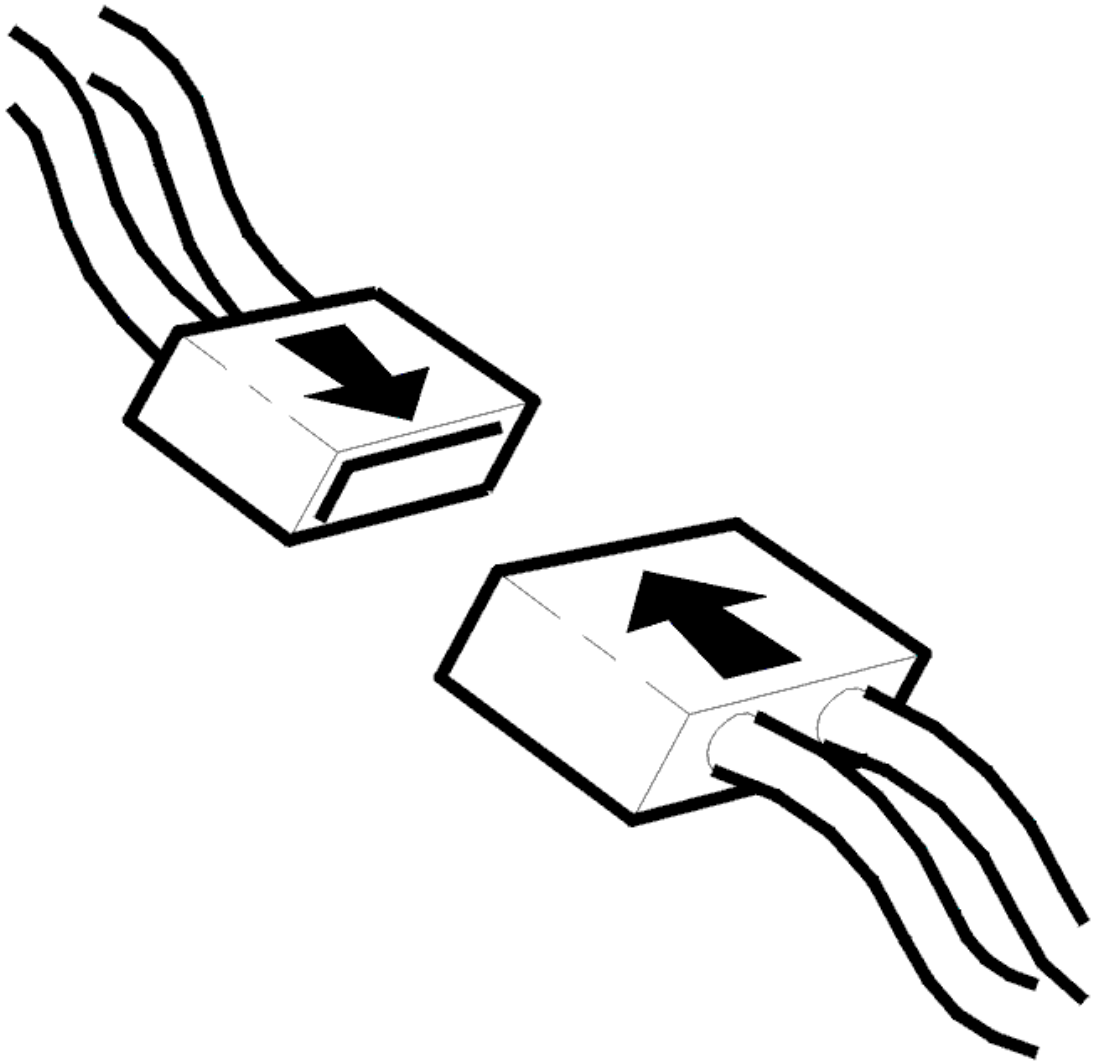

Fig. 353: Connecting Connector
Courtesy of VOLVO CARS CORPORATION

- Ignition off.
- Connect connectors, install components, etc.
- Ignition on.

  Activate relay.

  If the function is now OK, this means that the fault was caused by a short circuit in the relay driver.

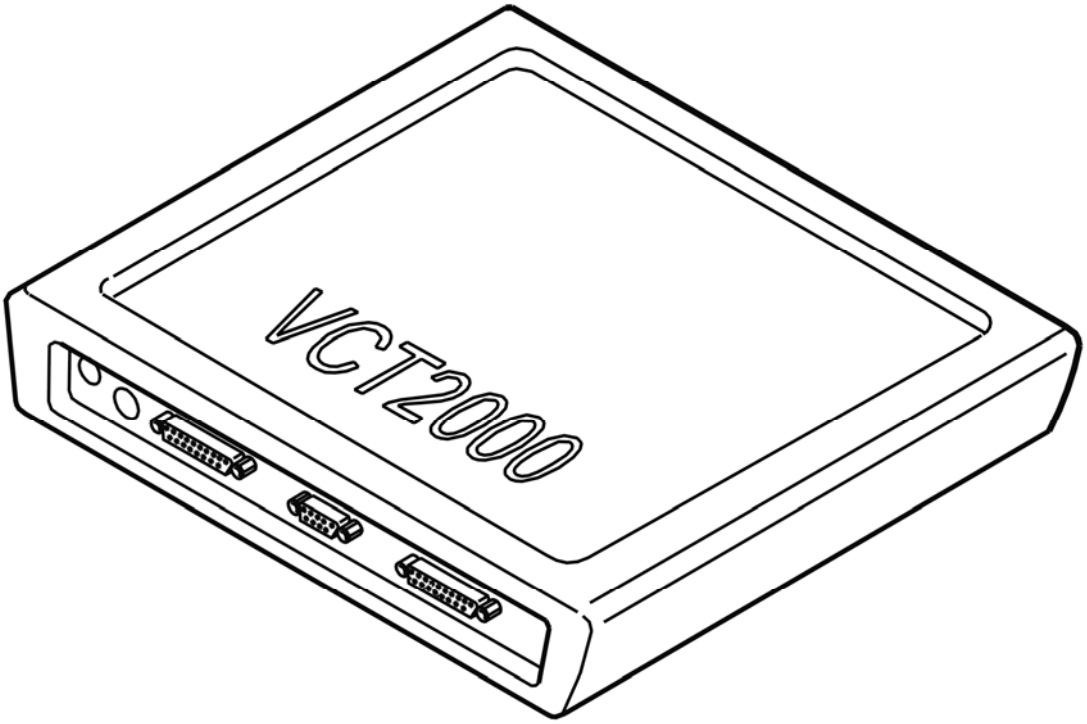

Fig. 354: Identifying VCT2000 Diagnostic Tool Symbol In VIDA
Courtesy of VOLVO CARS CORPORATION

Does it work?

- **YES**

  VERIFIED: Troubleshooting has been completed.

- **NO**

  Refer to **INFORMATION**

INFORMATION

FAULT-TRACING INFORMATION

The fault should have been detected and remedied. As this is not the case fault-tracing has failed.

Exit fault-tracing for this diagnostic trouble code (DTC) or make another attempt.

REM-6F76: UNLOCKING RELAY, CENTRAL LOCKING, FUEL TANK FILLER COVER. SIGNAL MISSING OR TOO LOW. INTERMITTENT FAULT (2003)

DIAGNOSTIC TROUBLE CODE INFORMATION

Condition

If the rear electronic module registers no signal/signal too low on relay coil ground circuit diagnostic trouble code is displayed.

Substitute Value

Nothing.

Possible Source

- Oxidation of relay socket contacts.
- Relay is loose or missing.
- Faulty relay (open circuit/short circuit to ground in relay coil).
- Defective control unit.

Fault symptom[s]

- Tank hatch will not open/lock.

SIGNAL MISSING OR TOO LOW. INTERMITTENT FAULT

CHECKING THE WIRING

- Remove relay 2/58.

  Check the driver circuit for the relay coil for an intermittent open-circuit as follows: activate the relay driver. Measure the voltage between terminals #1 and #2 on the relay base.

  For further information about intermittent open-circuits, see **OPEN-CIRCUIT, INTERMITTENT FAULTS** .

  HINT: The voltage between terminals #1 and #2 should be battery voltage.

  HINT: If the value deviates excessively, check the voltage between terminal #2 and the battery and between terminal #1 and ground. Both should equal battery voltage.

  HINT: Check for an intermittent open-circuit according to OPEN-CIRCUIT, INTERMITTENT FAULTS .

  HINT: Do not forget to check that the power supply to the control module is OK.

  Other information:

  - To access the integrated relay / fusebox in the cargo compartment, see **RELAY/FUSE BOX**

CARGO COMPARTMENT/REAR ELECTRONIC MODULE (REM), REPLACING .

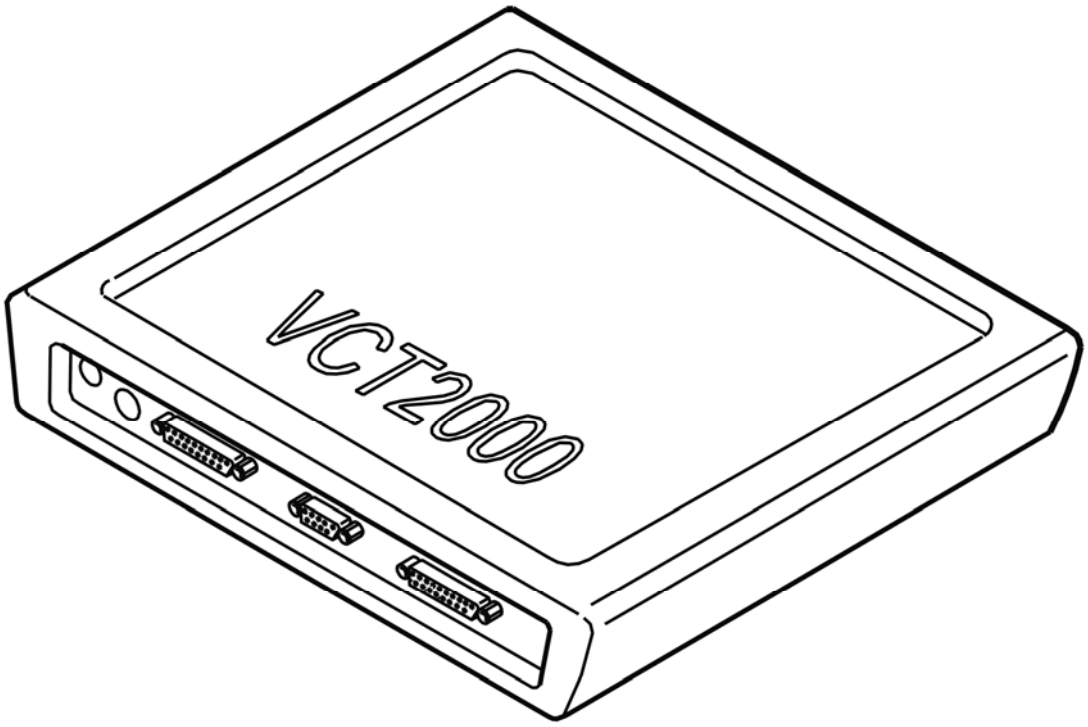

Fig. 355: Identifying VCT2000 Diagnostic Tool Symbol In VIDA
Courtesy of VOLVO CARS CORPORATION

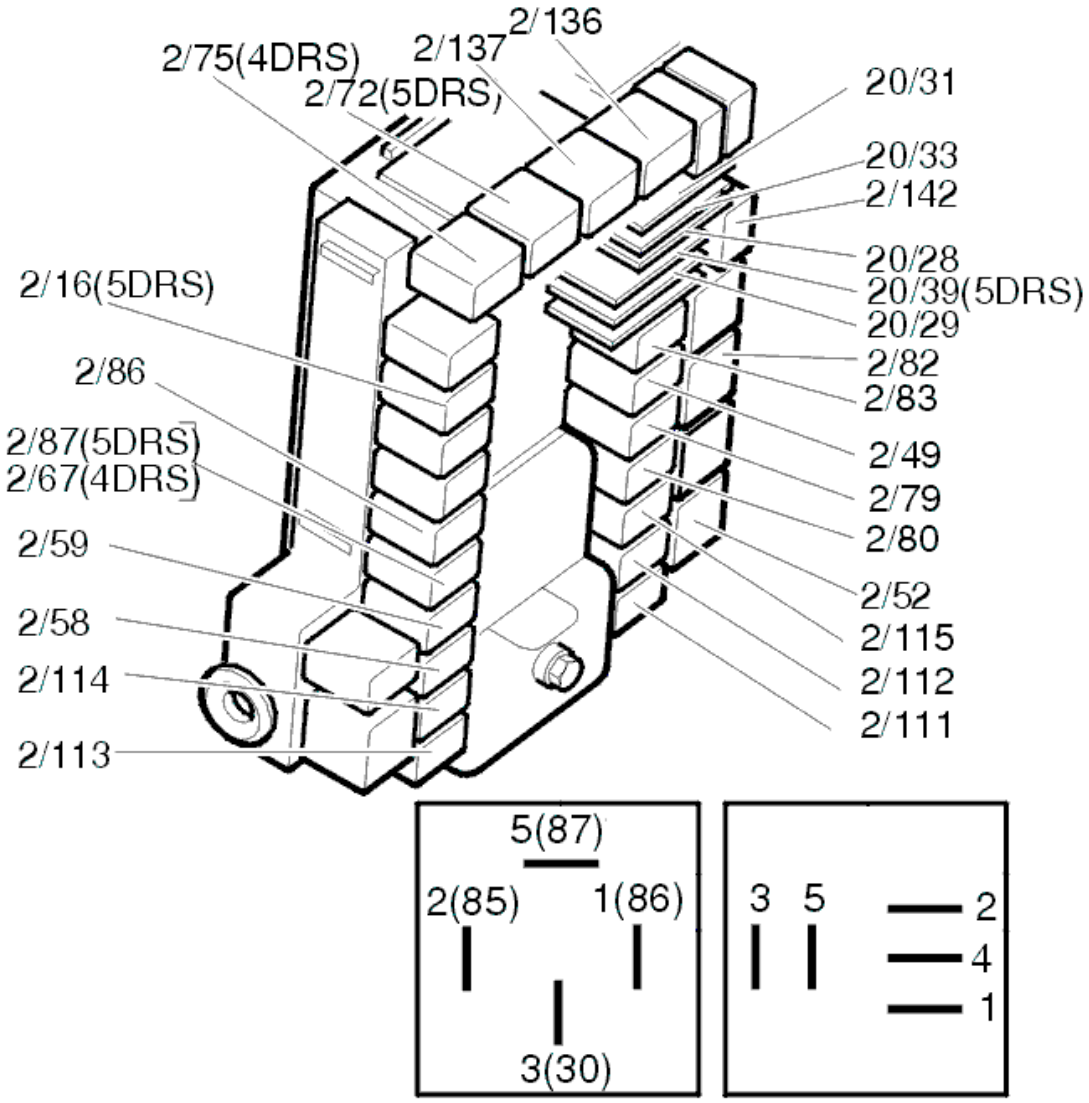

Fig. 356: Identifying Relays
Courtesy of VOLVO CARS CORPORATION

Was a fault detected?

- **YES**

  Refer to **INFORMATION**

- **NO**

  Refer to **CHECKING THE CONTROL MODULE FOR SHORT-CIRCUITS**

CHECKING THE CONTROL MODULE FOR SHORT-CIRCUITS

Measure the resistance between terminal #2 and ground when the relay driver is active.

The resistance should be high when the relay driver is active.

Replace the control module if the resistance is low.

Other information:

- To access the integrated relay / fusebox in the cargo compartment, see **RELAY/FUSE BOX CARGO COMPARTMENT/REAR ELECTRONIC MODULE (REM), REPLACING** .

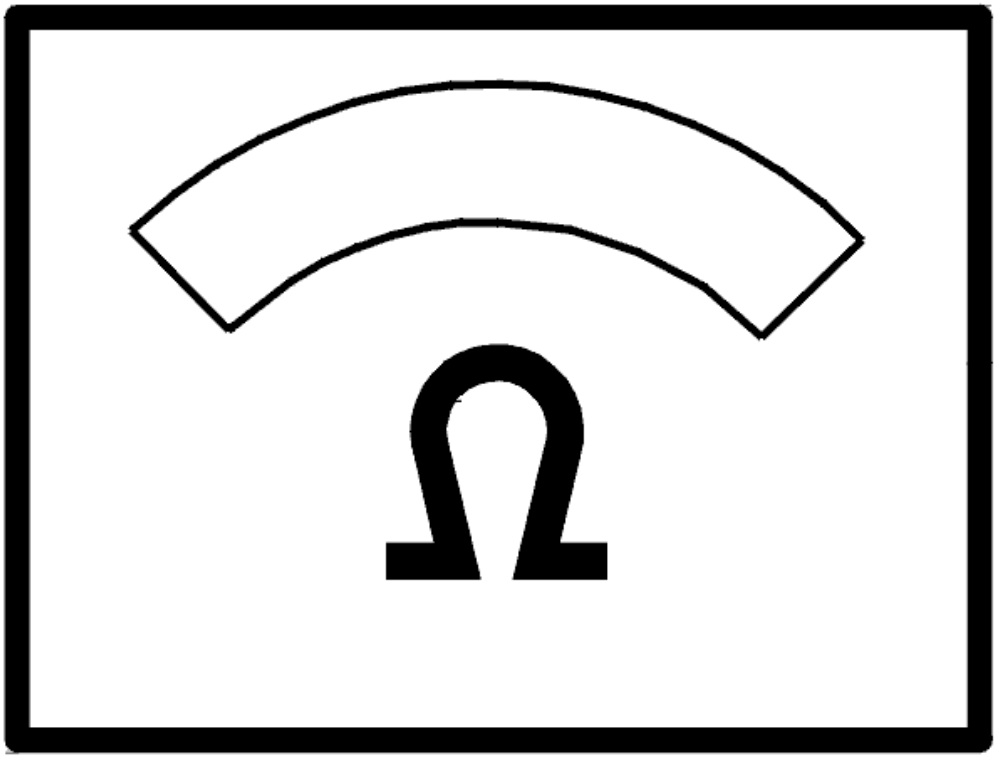

Fig. 357: Identifying Ohm Meter
Courtesy of VOLVO CARS CORPORATION

- **Continue**

  Refer to **INFORMATION**

INFORMATION

FAULT-TRACING INFORMATION

If the fault is intermittent, do not verify fault-tracing if the fault does not recur.

It is possible to view the information again, or leave fault-tracing for this diagnostic trouble code (DTC).

REM-6F76: UNLOCKING RELAY, CENTRAL LOCKING, FUEL TANK FILLER COVER. SIGNAL MISSING OR TOO LOW. PERMANENT FAULT (2003)

DIAGNOSTIC TROUBLE CODE INFORMATION

see **DIAGNOSTIC TROUBLE CODE INFORMATION**

SIGNAL MISSING OR TOO LOW. PERMANENT FAULT

CHECKING THE COMPONENT

Remove relay (2/58) and check the relay base switches for contact resistance and oxidation according to **CONTACT RESISTANCE AND OXIDATION** .

Install the relay.

Activate the relay.

If the function is now OK the fault was caused by a contact fault in the relay base.

Other information:

- To access the integrated relay / fusebox in the cargo compartment, see **RELAY/FUSE BOX CARGO COMPARTMENT/REAR ELECTRONIC MODULE (REM), REPLACING** .

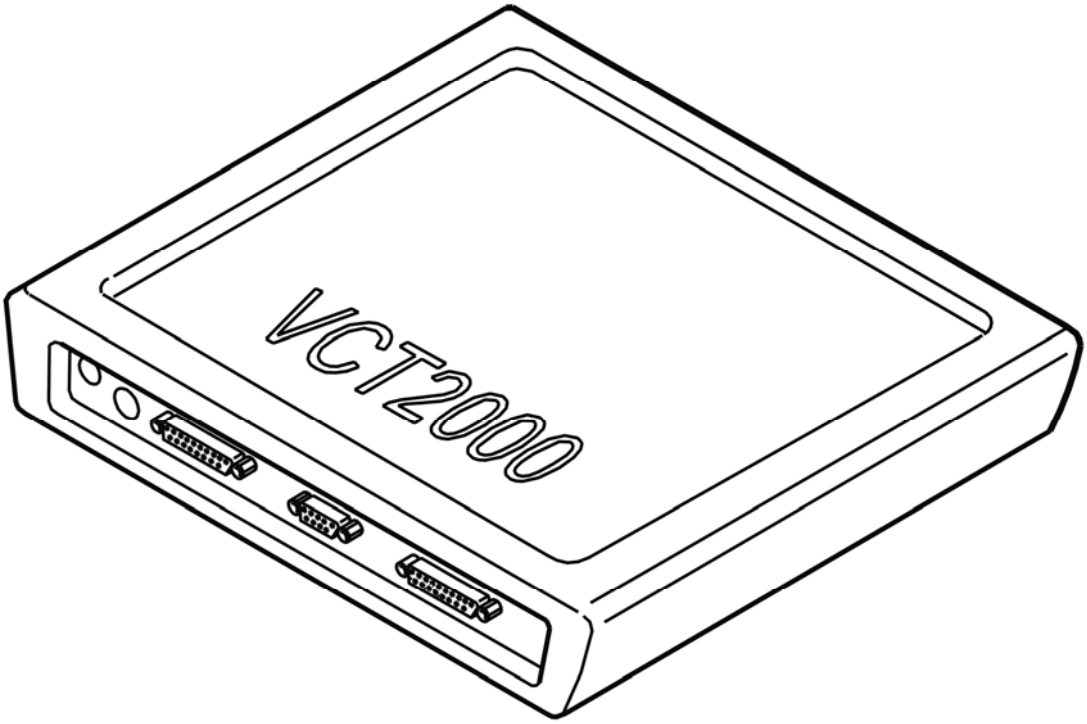

Fig. 358: Identifying VCT2000 Diagnostic Tool Symbol In VIDA
Courtesy of VOLVO CARS CORPORATION

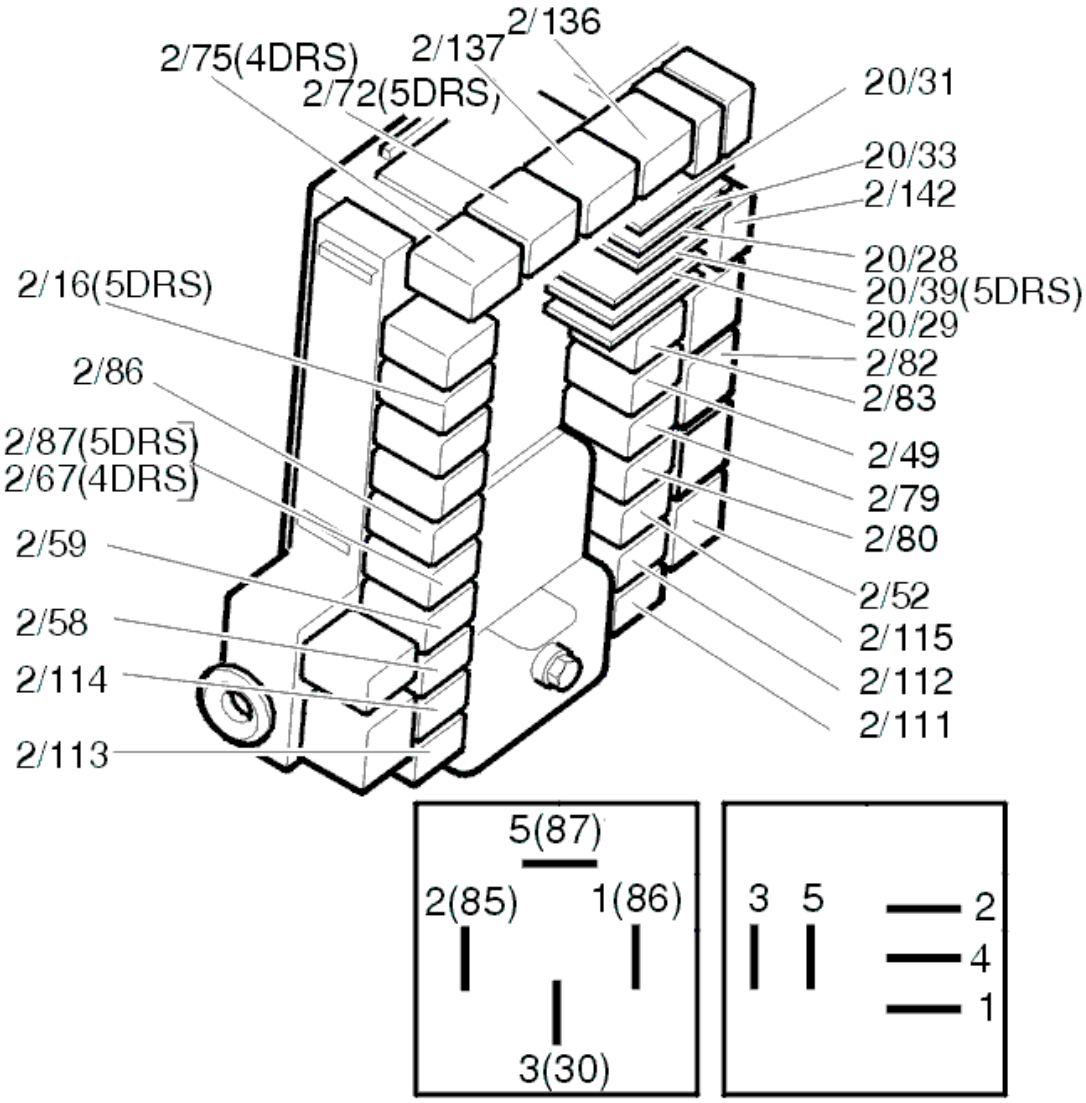

Fig. 359: Identifying Relays
Courtesy of VOLVO CARS CORPORATION

Was the function OK?

- **YES**

  Refer to **VERIFICATION**

- **NO**

  Refer to **REPLACING THE COMPONENT**

REPLACING THE COMPONENT

Replace relay, 2/58.

Activate the relay.

If the function is now OK, the cause of the fault was a defective relay (short-circuit to ground or an open-circuit in the relay).

Other information:

- To access the integrated relay / fusebox in the cargo compartment, see **RELAY/FUSE BOX CARGO COMPARTMENT/REAR ELECTRONIC MODULE (REM), REPLACING** .

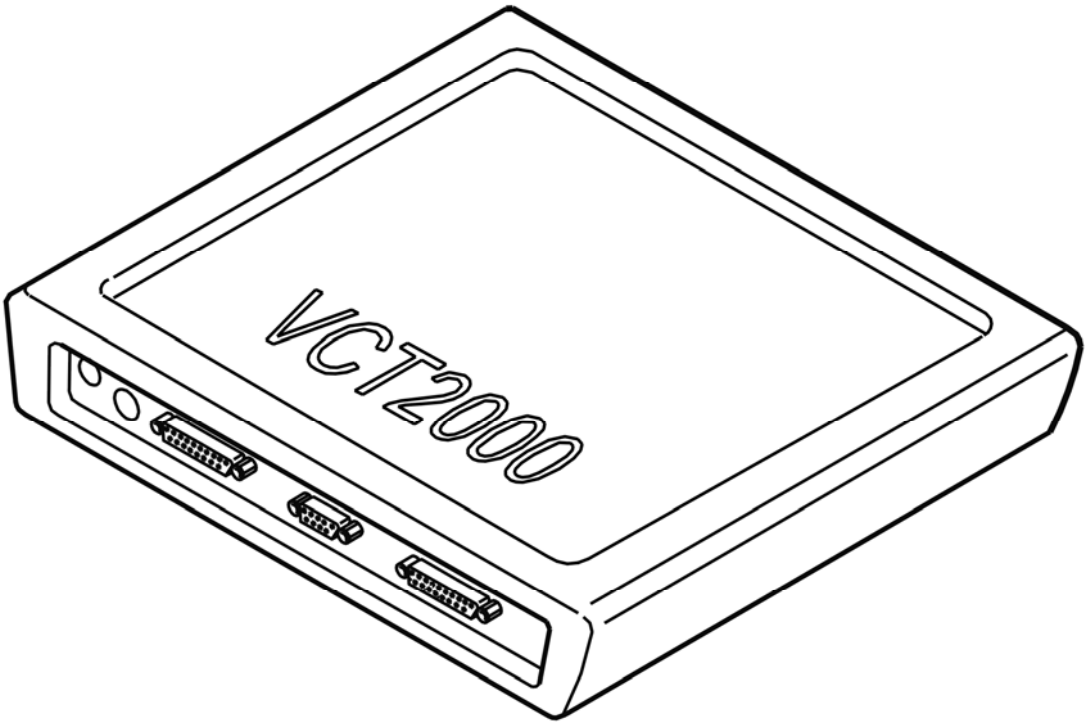

Fig. 360: Identifying VCT2000 Diagnostic Tool Symbol In VIDA
Courtesy of VOLVO CARS CORPORATION

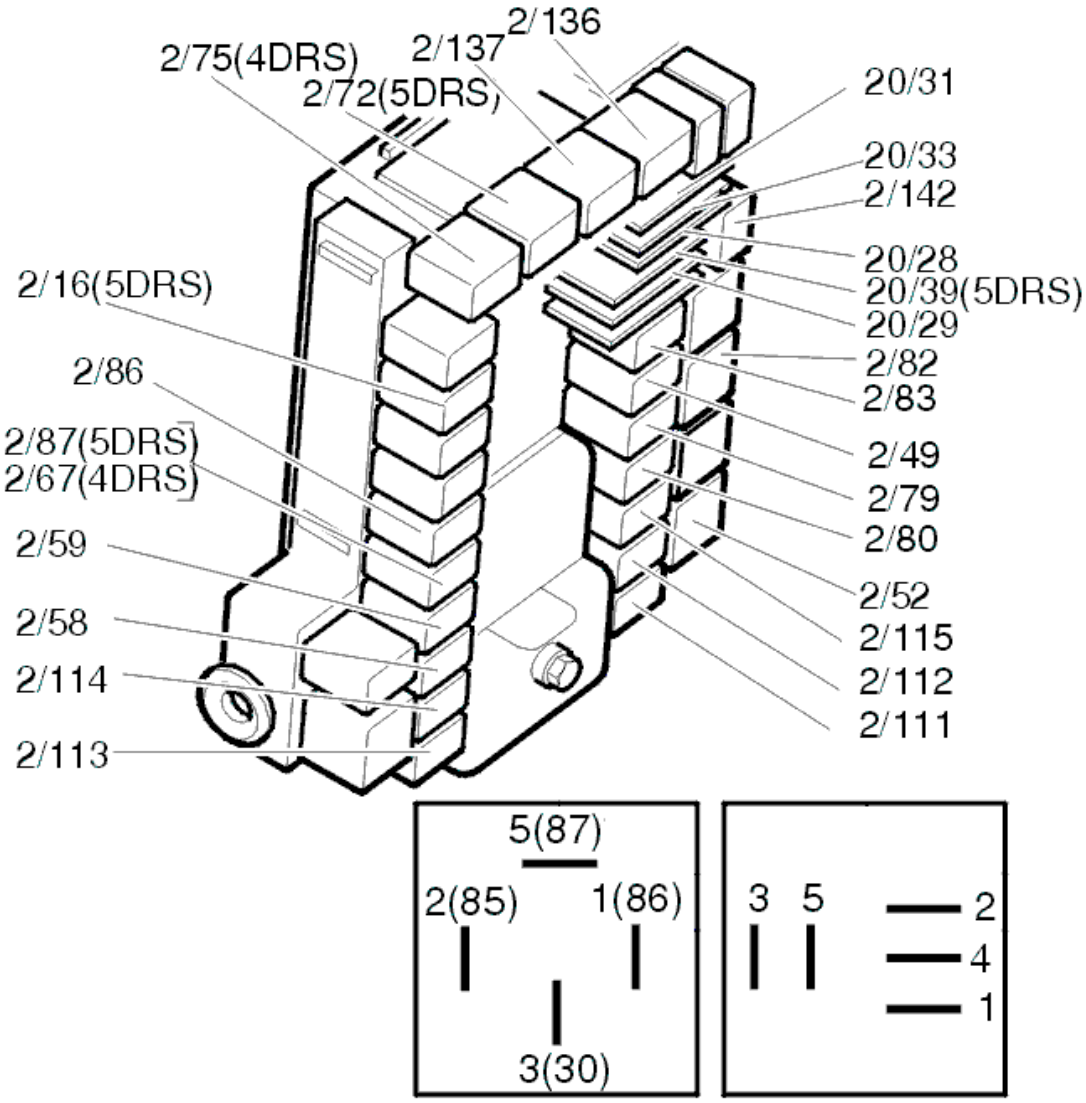

Fig. 361: Identifying Relays
Courtesy of VOLVO CARS CORPORATION

Was the function OK?

- **YES**

  OKAY: Troubleshooting has been completed.

- **NO**

  Refer to **CHECKING THE WIRING**

CHECKING THE WIRING

- Remove relay 2/58.

Check the driver circuit for the relay coil for an open-circuit as follows: Activate the relay driver. Measure the voltage between terminals #1 and #2 on the relay base.

For further information about open-circuits, see **OPEN-CIRCUIT, PERMANENT FAULTS** .

HINT: The voltage between terminals #1 and #2 should be battery voltage.

HINT: If the value deviates excessively, check the voltage between terminal #2 and the battery and between terminal #1 and ground. Both should equal battery voltage.

HINT: Check for an open-circuit according to OPEN-CIRCUIT, PERMANENT FAULTS .

HINT: Do not forget to check that the power supply to the control module is OK.

Other information:

- To access the integrated relay / fusebox in the cargo compartment, see **RELAY/FUSE BOX CARGO COMPARTMENT/REAR ELECTRONIC MODULE (REM), REPLACING** .

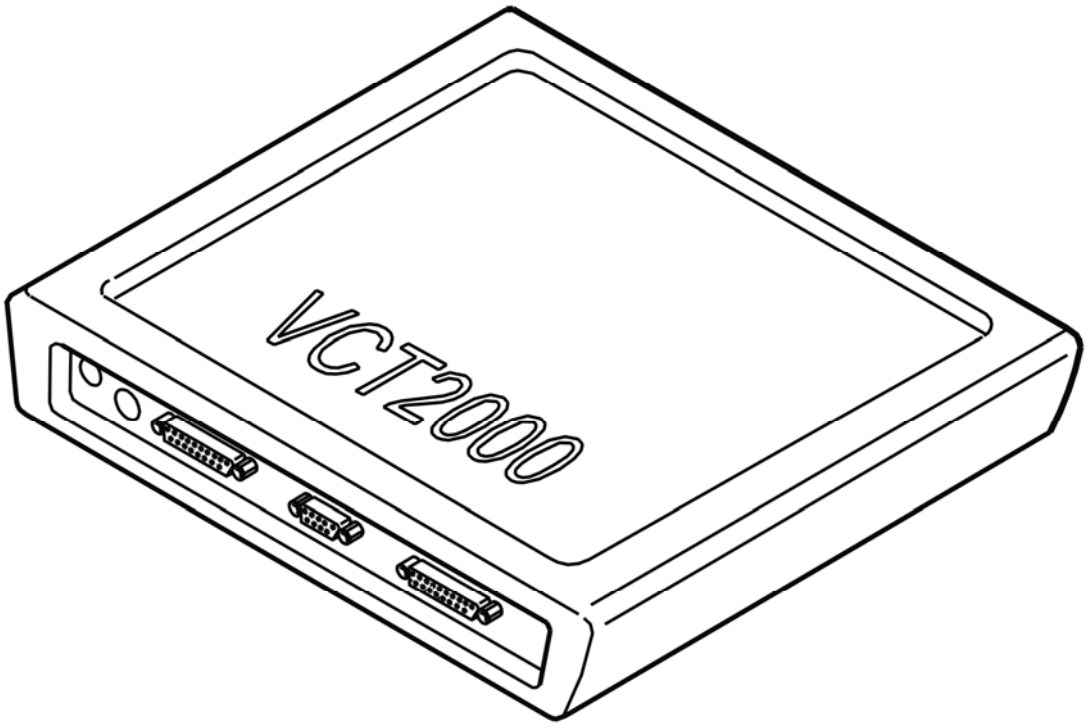

Fig. 362: Identifying VCT2000 Diagnostic Tool Symbol In VIDA
Courtesy of VOLVO CARS CORPORATION

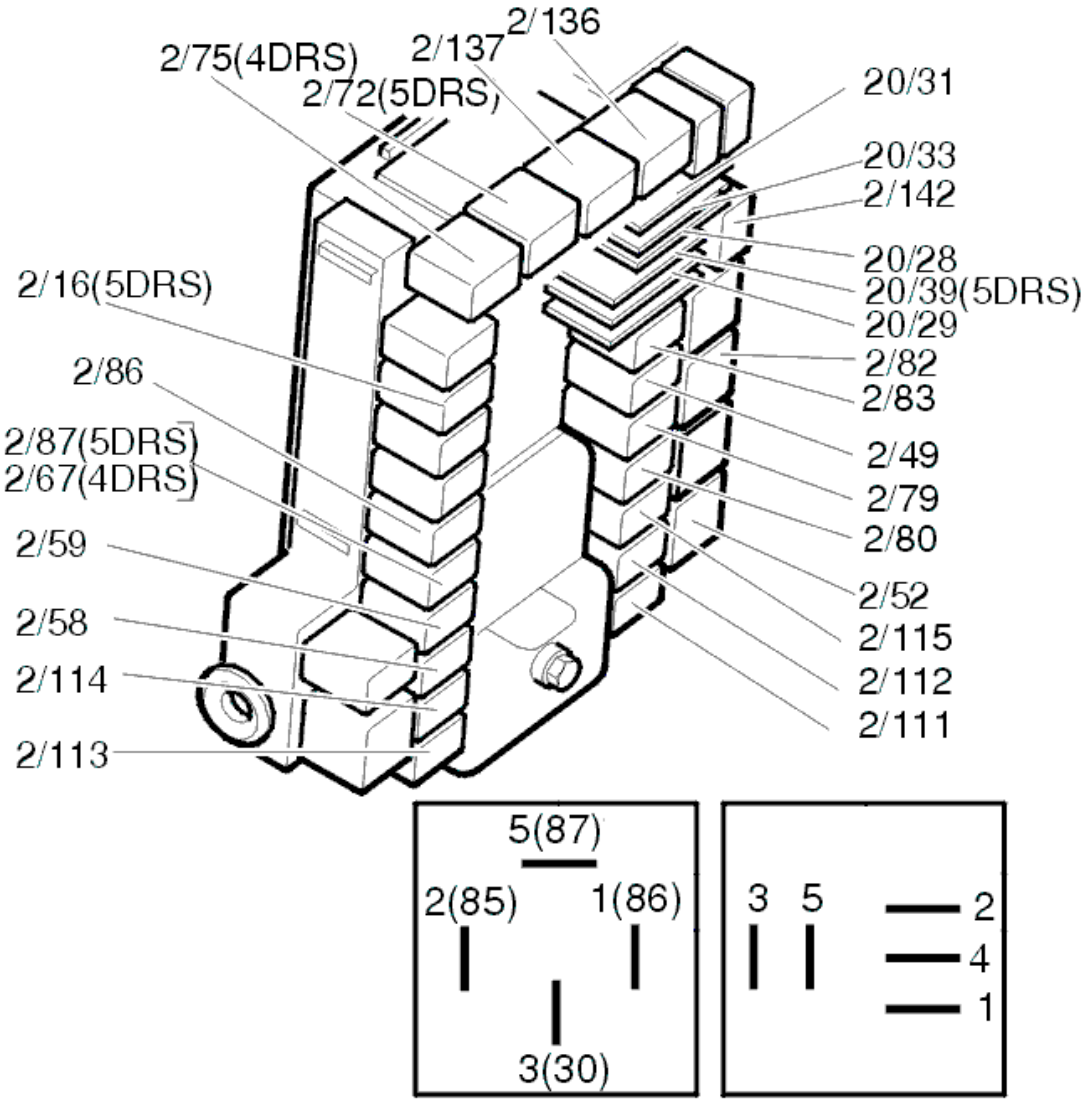

Fig. 363: Identifying Relays
Courtesy of VOLVO CARS CORPORATION

Was a fault detected?

- **YES**

  Refer to **VERIFICATION**

- **NO**

  Refer to **CHECKING THE CONTROL MODULE FOR SHORT-CIRCUITS**

CHECKING THE CONTROL MODULE FOR SHORT-CIRCUITS

Measure the resistance between terminal #2 and ground when the relay driver is active.

The resistance should be high when the relay driver is active.

Replace the control module if the resistance is low.

Other information:

- To access the integrated relay / fusebox in the cargo compartment, see **RELAY/FUSE BOX CARGO COMPARTMENT/REAR ELECTRONIC MODULE (REM), REPLACING** .

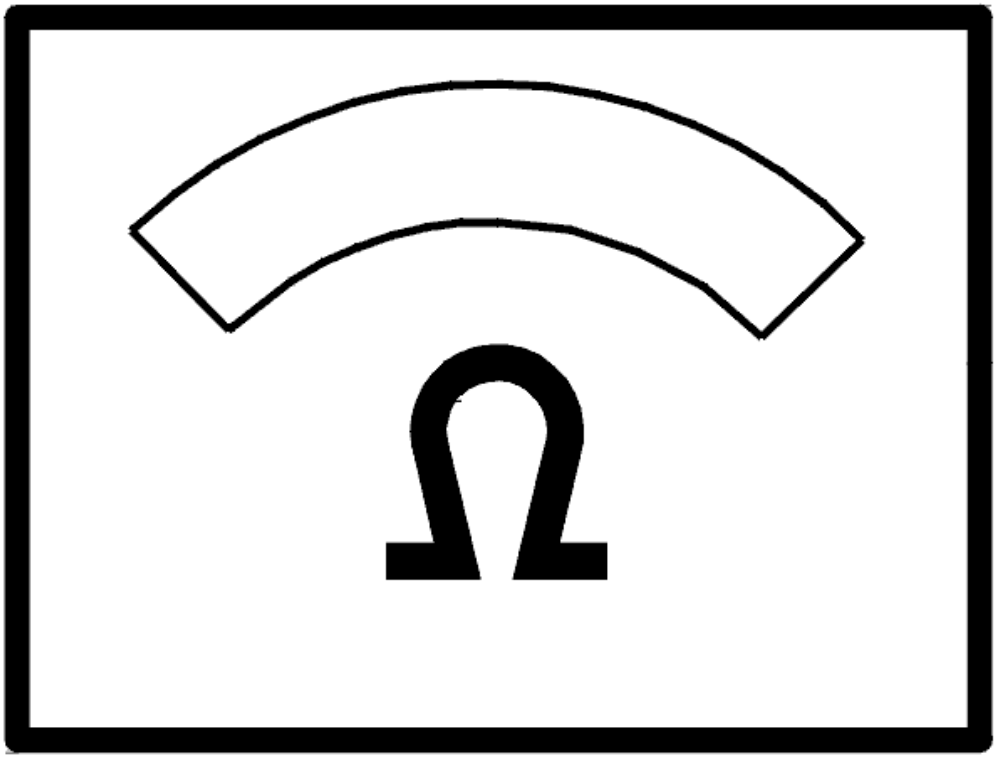

Fig. 364: Identifying Ohm Meter
Courtesy of VOLVO CARS CORPORATION

- **Continue**

  Refer to **VERIFICATION**

VERIFICATION

VERIFICATION

HINT: After the repair it is necessary to check that the fault has been rectified.

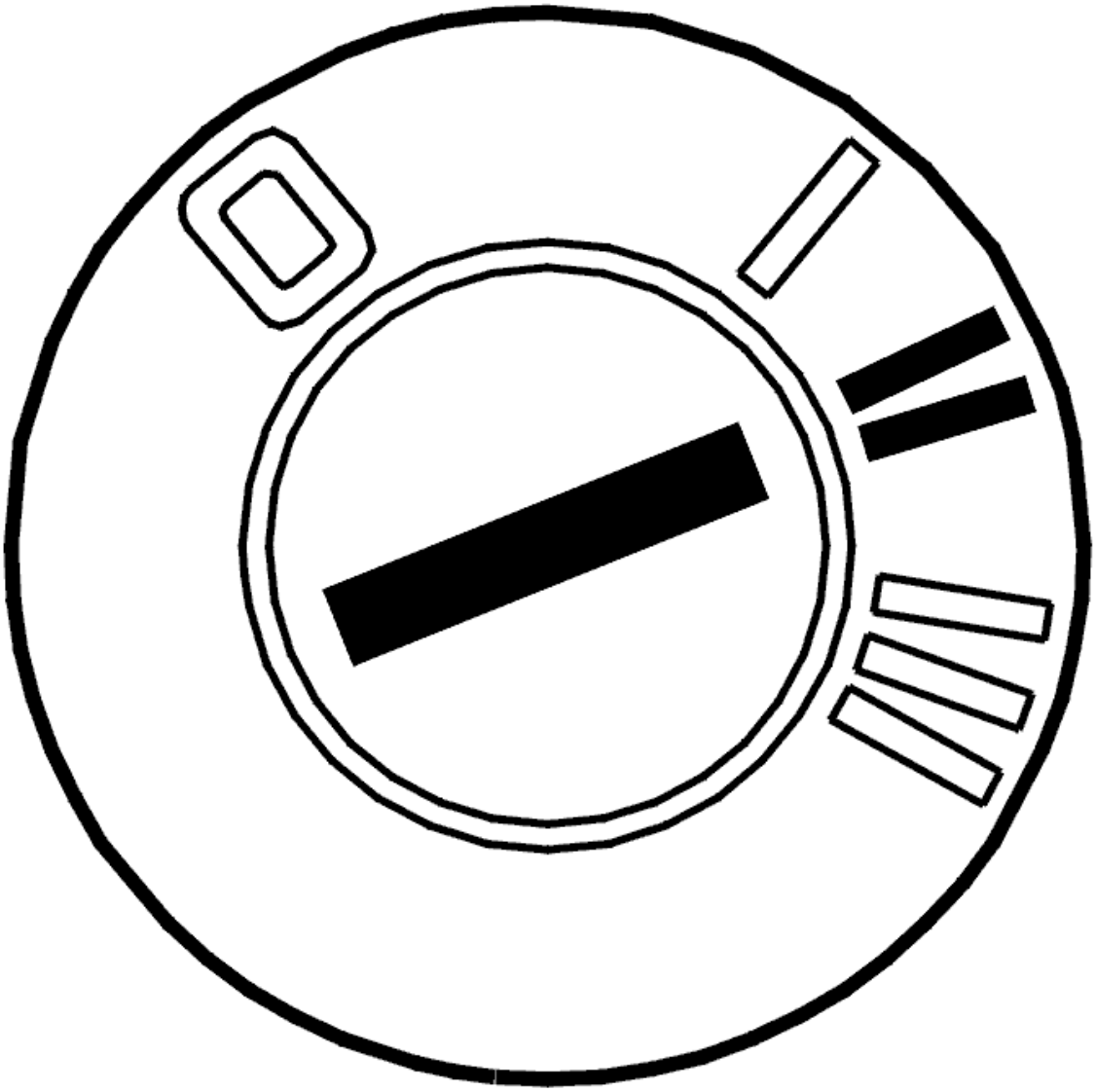

Fig. 365: Identifying Ignition ON
Courtesy of VOLVO CARS CORPORATION

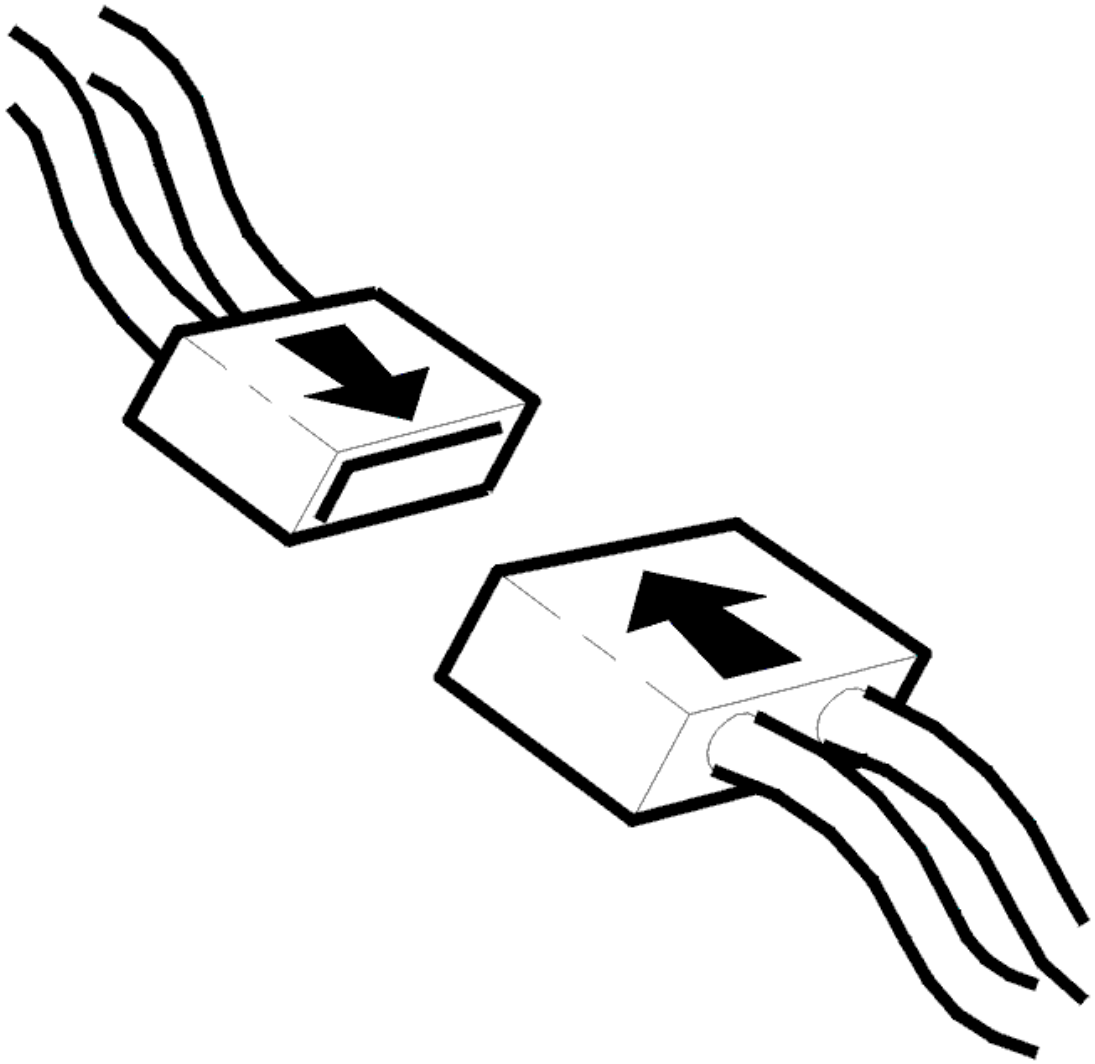

Fig. 366: Connecting Connector
Courtesy of VOLVO CARS CORPORATION

- Ignition off.
- Connect connectors, install components, etc.
- Ignition on.

  Activate relay.

  If the function is now OK, this means that the fault was caused by a short circuit in the relay driver.

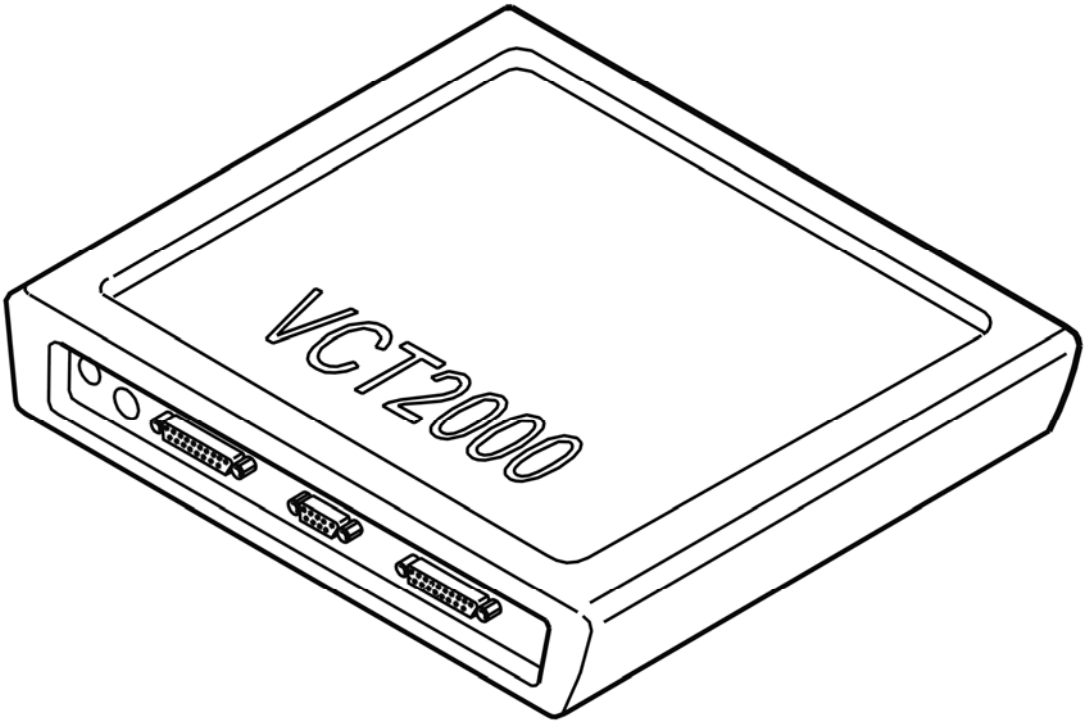

Fig. 367: Identifying VCT2000 Diagnostic Tool Symbol In VIDA
Courtesy of VOLVO CARS CORPORATION

Does it work?

- **YES**

  VERIFIED: Troubleshooting has been completed.

- **NO**

  Refer to **INFORMATION**

INFORMATION

FAULT-TRACING INFORMATION

The fault should have been detected and remedied. As this is not the case fault-tracing has failed.

Exit fault-tracing for this diagnostic trouble code (DTC) or make another attempt.

REM-7A20: SUBWOOFER X-FEED, SIGNAL OR TEMPERATURE TOO HIGH (2006-2012)

DIAGNOSTIC TROUBLE CODE (DTC) INFORMATION REM-7A20

Condition

The Rear electronic module (REM) checks the voltage supply to the Subwoofer module (SUB) via a driver stage.

The diagnostic trouble code (DTC) is stored if the control module detects that the output has a short-circuit to supply voltage or if the driver stage has a too high a temperature.

The diagnostic trouble code (DTC) can be diagnosed in ignition positions I or II.

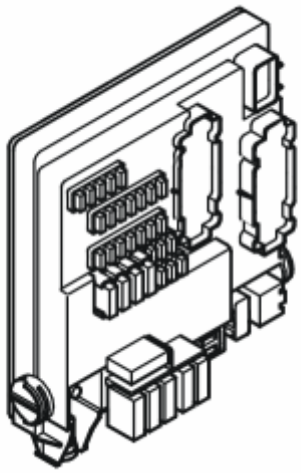

Fig. 368: Identifying Rear Electronic Module (REM)
Courtesy of VOLVO CARS CORPORATION

Substitute Value

- The control module deactivates the output.
- If the fault has been detected in 100 ignition cycles, the output is closed permanently until the diagnostic trouble code is erased (applies from structure week 200539).

Possible Source

- Short-circuit to supply voltage in the signal cable.
- Internal fault in Rear electronic module (REM).

Fault symptom[s]

- Subwoofer sound reproduction. Doesn't correspond to set position.
- No sound from subwoofer

SIGNAL TOO HIGH OR TEMPERATURE TOO HIGH

CHECKING THE WIRING

Fig. 369: Identifying Ignition In Off Position
Courtesy of VOLVO CARS CORPORATION

- Ignition on.

  Erase diagnostic trouble codes using the VCT2000 (or appropriate scan tool).

  NOTE: Note any other diagnostic trouble codes (DTCs) that are in the control module, before the diagnostic trouble codes (DTCs) are erased, in order to carry out other fault-traces.

  - Ignition off.

  Check the wiring for power supply between the Rear electronic module (REM) and the Subwoofer module (SUB). Check for a short-circuit to supply voltage. Any damage to the cable insulation can also cause intermittent or permanent short-circuits.

  Remedy as necessary.

  Other information

  - see **CHECKING WIRING AND TERMINALS**

Fig. 370: Identifying VCT2000 Diagnostic Tool Symbol In VIDA
Courtesy of VOLVO CARS CORPORATION

Was a fault detected?

- **YES**

  Refer to **VERIFICATION**

- **NO**

Refer to **INFORMATION**

VERIFICATION

VERIFICATION

HINT: After carrying out the repair, check that the fault has been remedied.

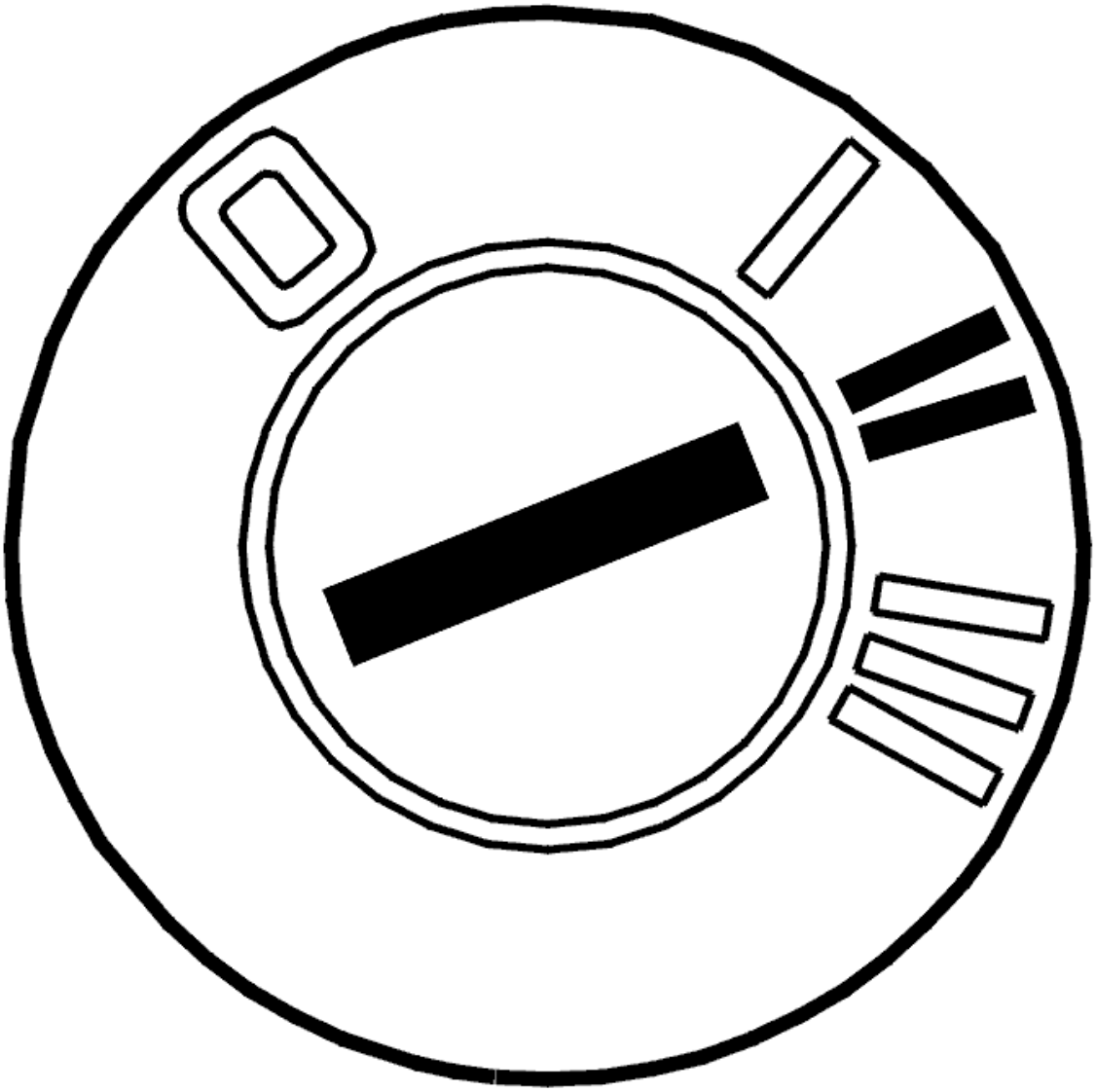

Fig. 371: Identifying Ignition ON
Courtesy of VOLVO CARS CORPORATION

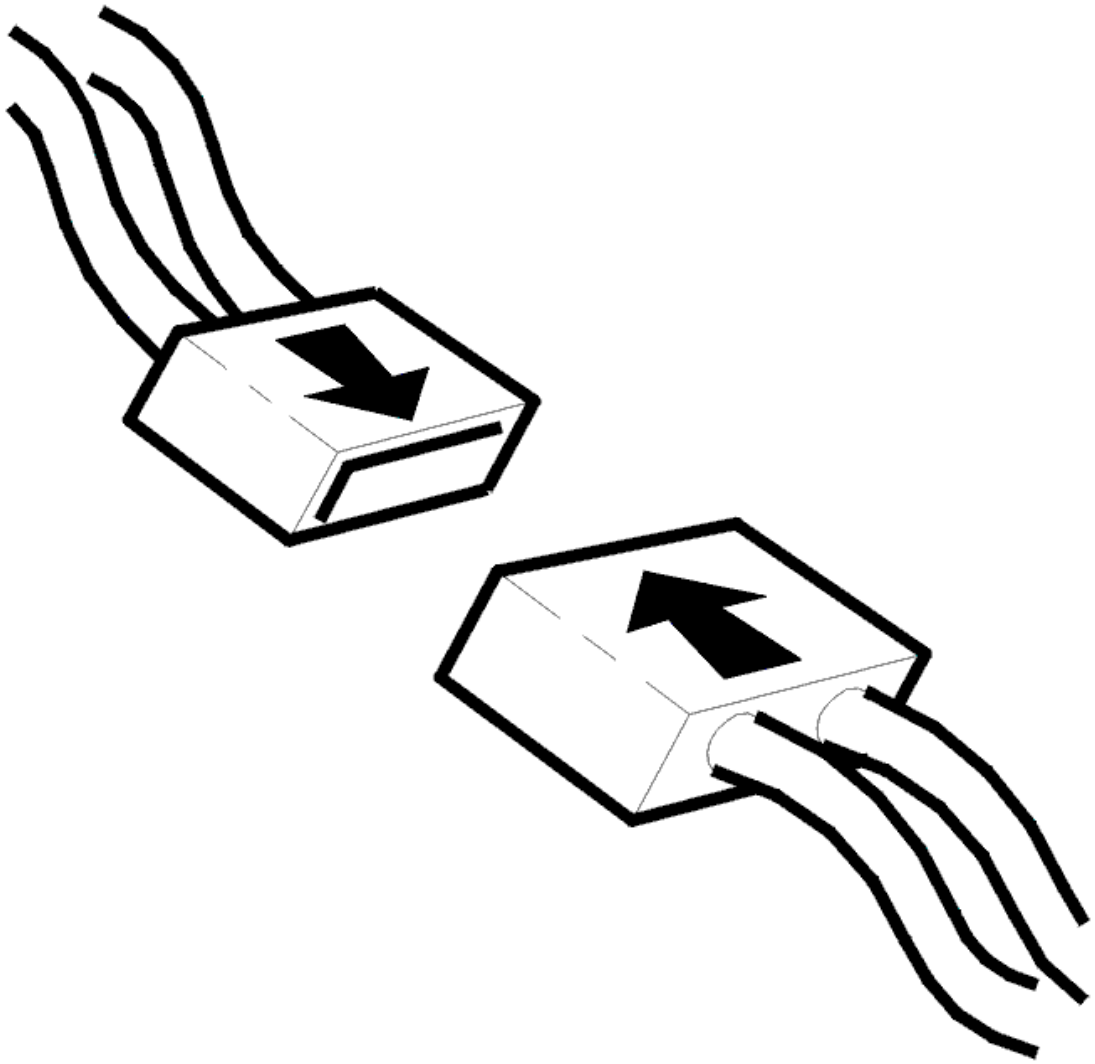

Fig. 372: Connecting Connector
Courtesy of VOLVO CARS CORPORATION

- Switch off the ignition. Wait at least 15 seconds
- Reinstall the connectors, components etc.
- Read off the diagnostic trouble codes (DTCs) using the VCT2000 (or appropriate scan tool).

  Check that the diagnostic trouble code (DTC) for too high voltage is not stored again.

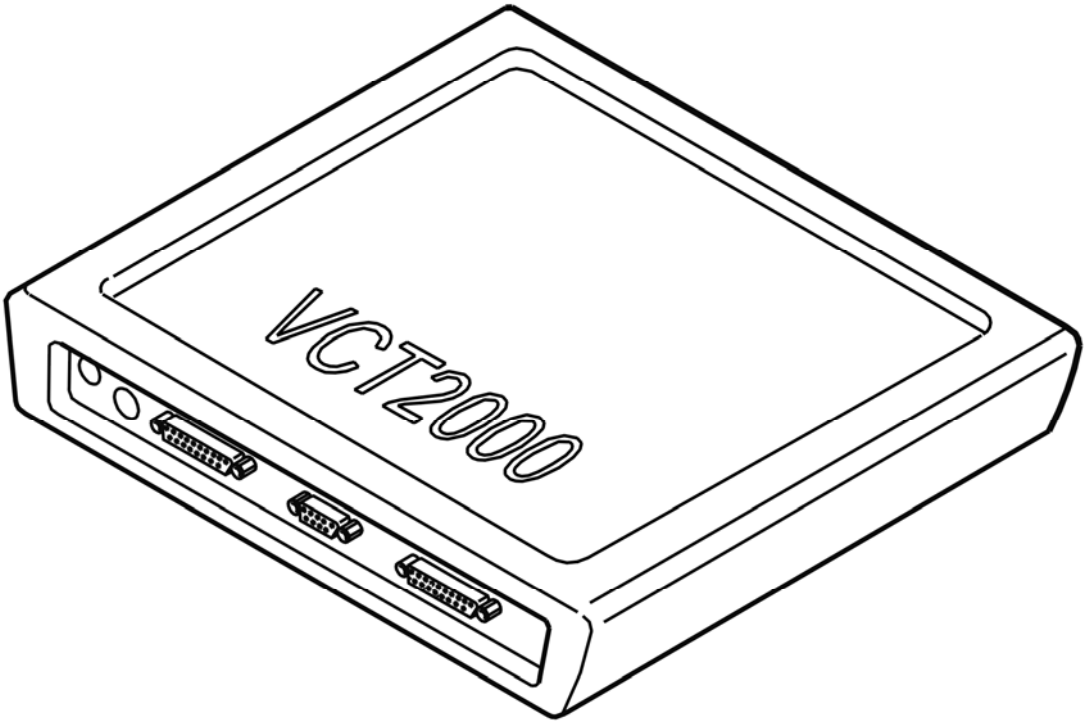

Fig. 373: Identifying VCT2000 Diagnostic Tool Symbol In VIDA
Courtesy of VOLVO CARS CORPORATION

Does the diagnostic trouble code (DTC) recur?

- **YES**

  Refer to **INFORMATION**

- **NO**

  VERIFIED: Troubleshooting has been completed.

INFORMATION

FAULT-TRACING INFORMATION

The fault should have been detected and remedied. As this is not the case fault-tracing has failed.

Exit fault-tracing for this diagnostic trouble code (DTC) or make another attempt.

REM-8B01: PARKING LAMPS RIGHT. SIGNAL TOO LOW (2005-2012)

DIAGNOSTIC TROUBLE CODE (DTC) INFORMATION REM-8B01

Condition

The rear electronic module (REM) powers the right-hand parking lamp directly via an output.

The diagnostic trouble code (DTC) is stored if the rear electronic module (REM) registers that the signal at the output is too low.

The diagnostic trouble code (DTC) can be diagnosed at key position II.

Substitute Value

- If the fault has been detected in 100 ignition cycles, the output is closed permanently until the diagnostic trouble code is erased (applies from structure week 200539).

Possible Source

- Short-circuit to ground in the signal cable.

Fault symptom[s]

- The parking lamps do not operate.

SIGNAL TOO LOW

CHECKING THE WIRING

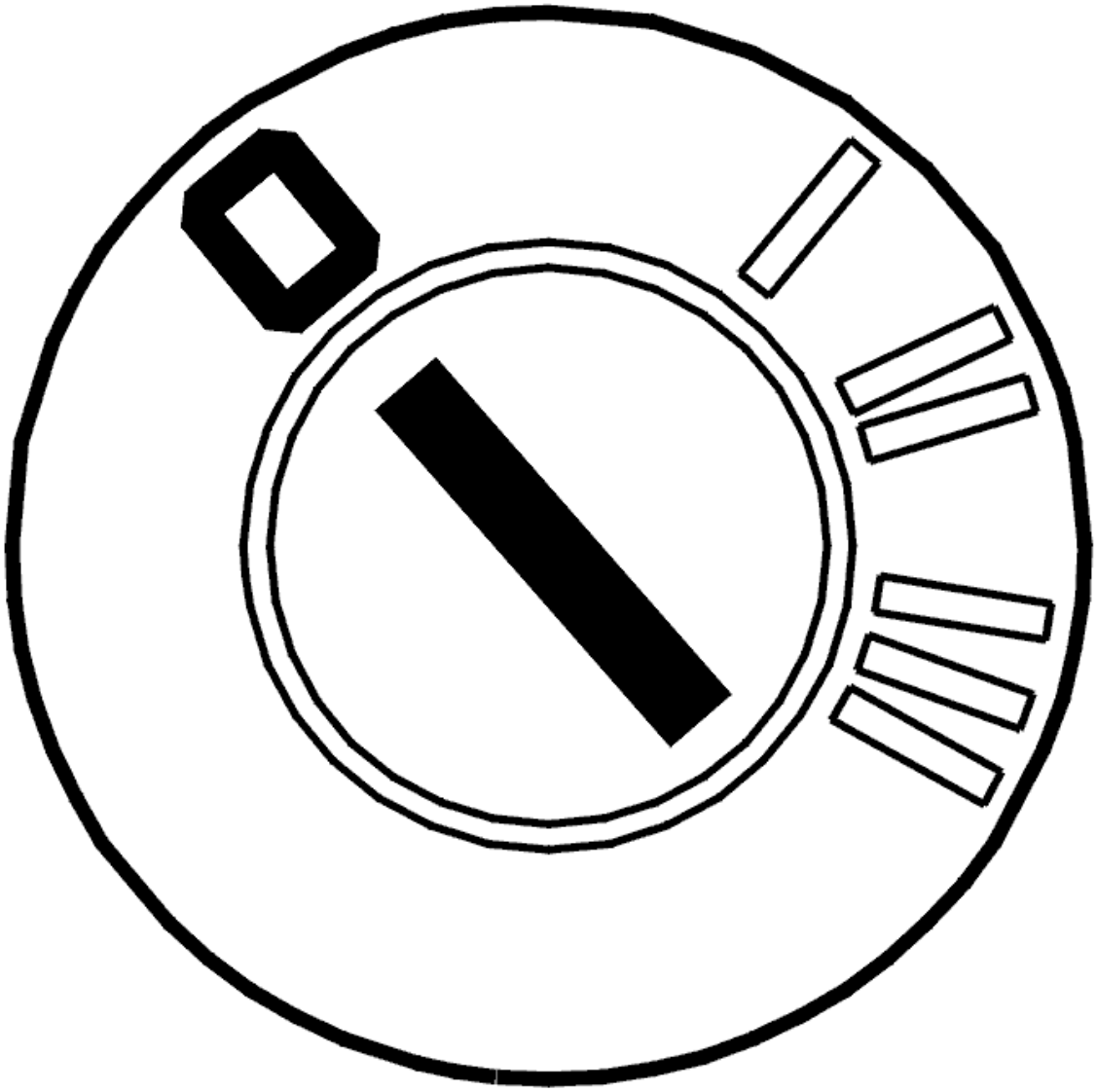

Fig. 374: Identifying Ignition OFF
Courtesy of VOLVO CARS CORPORATION

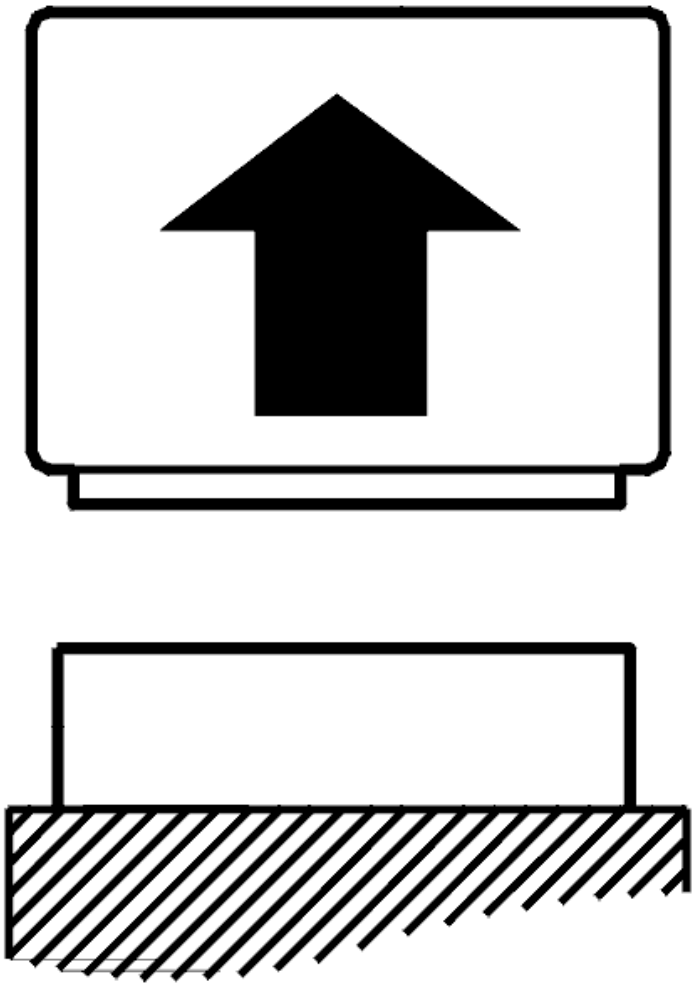

Fig. 375: Disconnecting Connector
Courtesy of VOLVO CARS CORPORATION

- Ignition off
- Disconnect connector D on the rear electronic module (REM).

  Check the signal cable. Check for a short-circuit to ground.

  Take readings between:

  - Rear electronic module (REM) terminal #D5 (#5) and terminal #A1 on the connector for the rear right-hand lamp housing.

  Remedy as necessary.

  Other information

- see **CONNECTING THE BREAKOUT BOX**
- see **SIGNAL SPECIFICATION**
- see **CHECKING WIRING AND TERMINALS**

- **Continue**

  Refer to **VERIFICATION**

VERIFICATION

VERIFICATION

HINT: After carrying out the repair, check that the fault has been remedied.

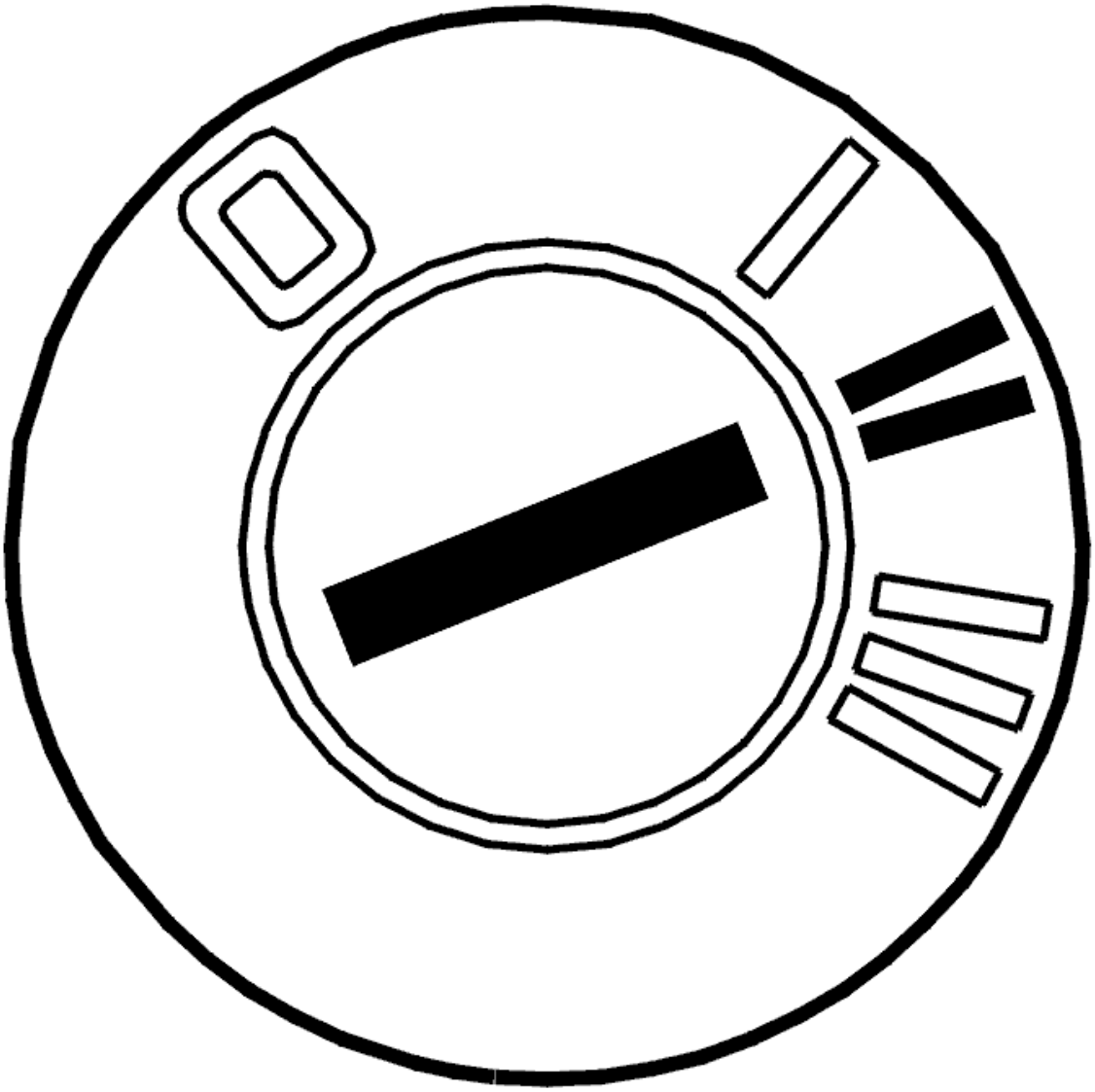

Fig. 376: Identifying Ignition ON

Courtesy of VOLVO CARS CORPORATION

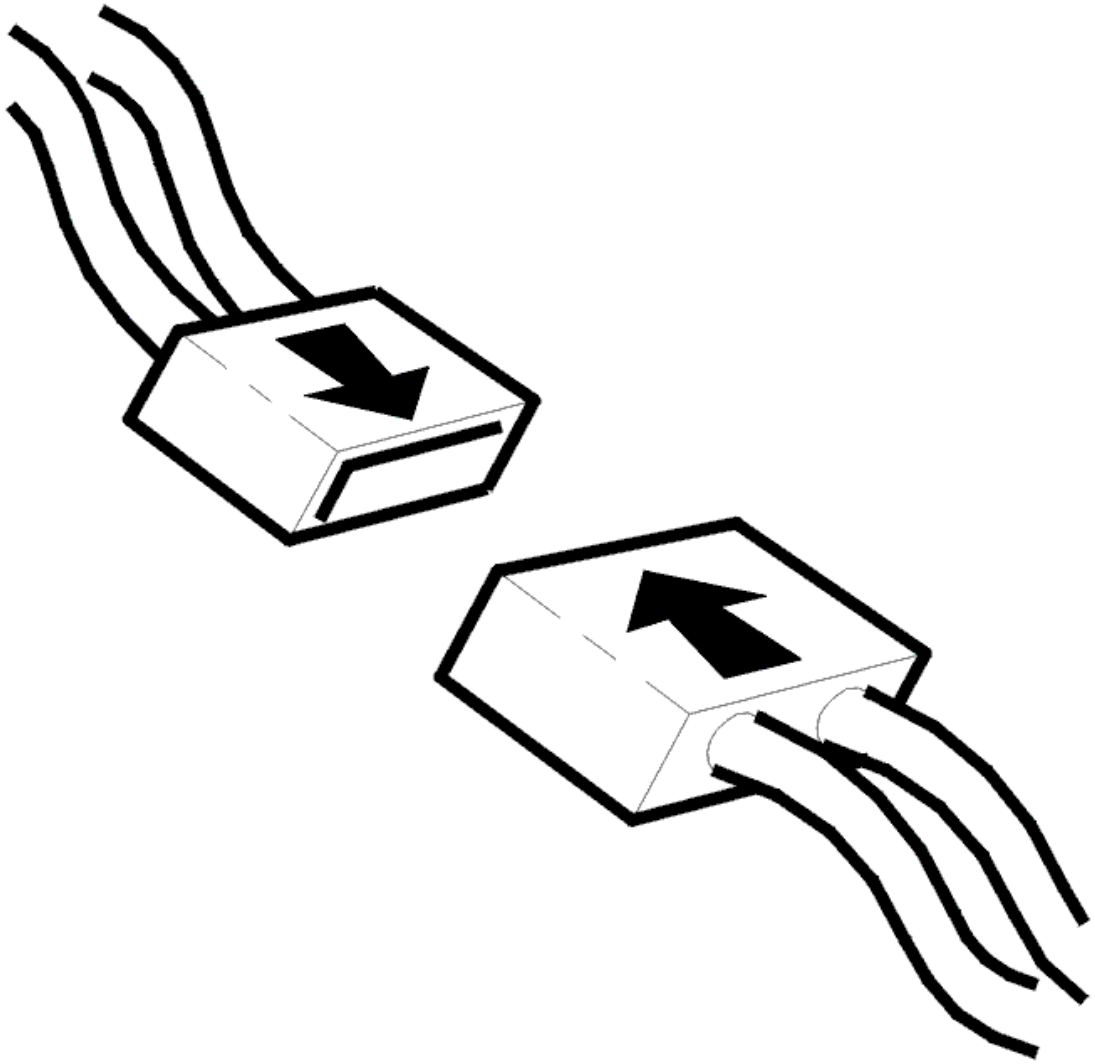

Fig. 377: Connecting Connector
Courtesy of VOLVO CARS CORPORATION

- Ignition off
- Reinstall the connectors, components etc.
- Ignition on.

  Activate the parking lamp.

  Check that the parking lamp is activated.

Is the parking lamp activated?

- **YES**

  VERIFIED: Troubleshooting has been completed.

- **NO**

  Refer to **INFORMATION**

INFORMATION

FAULT-TRACING INFORMATION

The fault should have been detected and remedied. As this is not the case fault-tracing has failed.

Exit fault-tracing for this diagnostic trouble code (DTC) or make another attempt.

REM-8B11: PARKING LAMPS LEFT. SIGNAL TOO LOW (2005-2012)

DIAGNOSTIC TROUBLE CODE (DTC) INFORMATION REM-8B11

Condition

The rear electronic module (REM) powers the left-hand parking lamp directly via an output.

The diagnostic trouble code (DTC) is stored if the rear electronic module (REM) registers that the signal at the output is too low.

The diagnostic trouble code (DTC) can be diagnosed at key position II.

Substitute Value

- If the fault has been detected in 100 ignition cycles, the output is closed permanently until the diagnostic trouble code is erased (applies from structure week 200539).

Possible Source

- Short-circuit to ground in the signal cable.

Fault symptom[s]

- The parking lamps do not operate.

SIGNAL TOO LOW

CHECKING THE WIRING

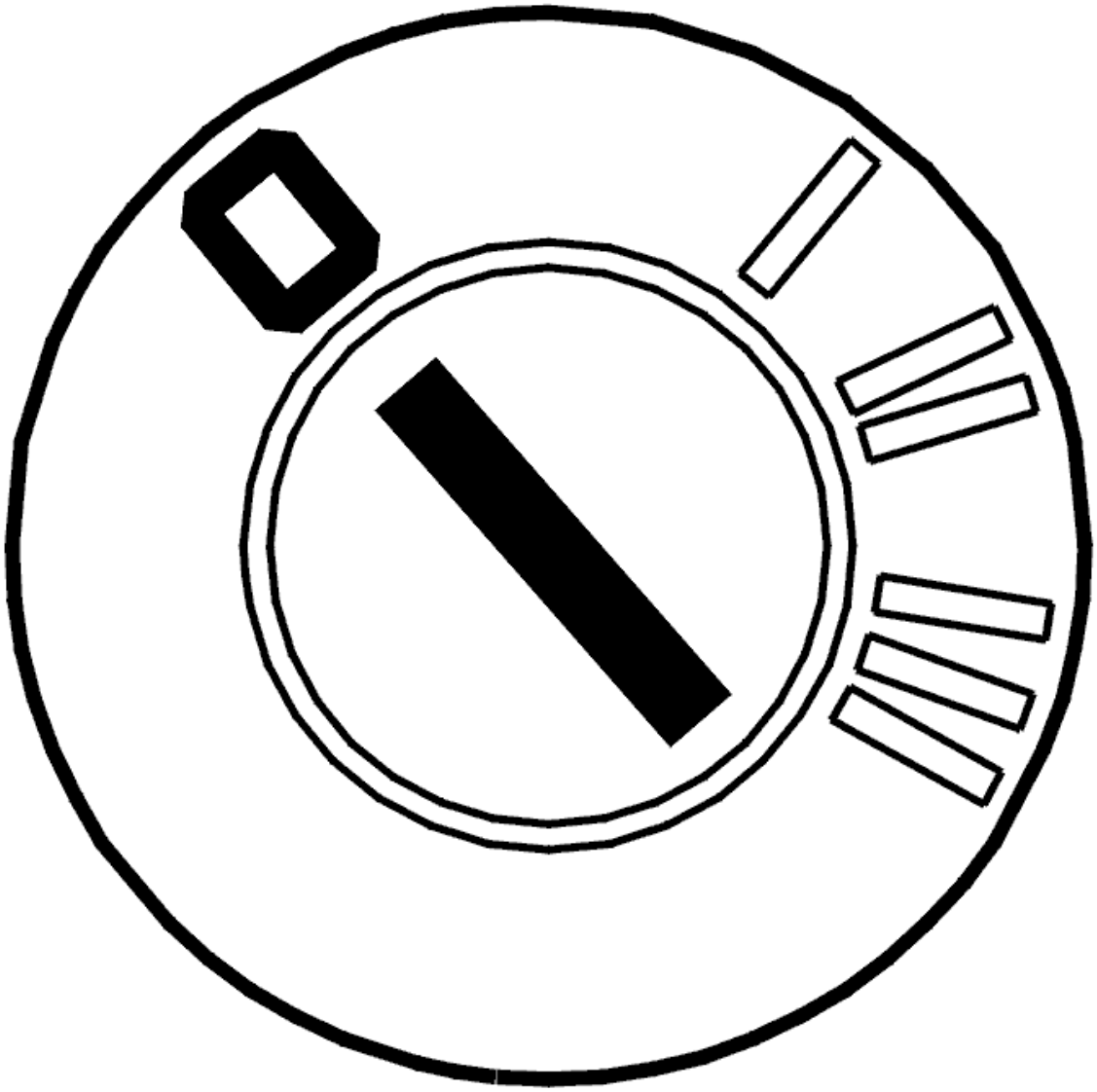

Fig. 378: Identifying Ignition OFF
Courtesy of VOLVO CARS CORPORATION

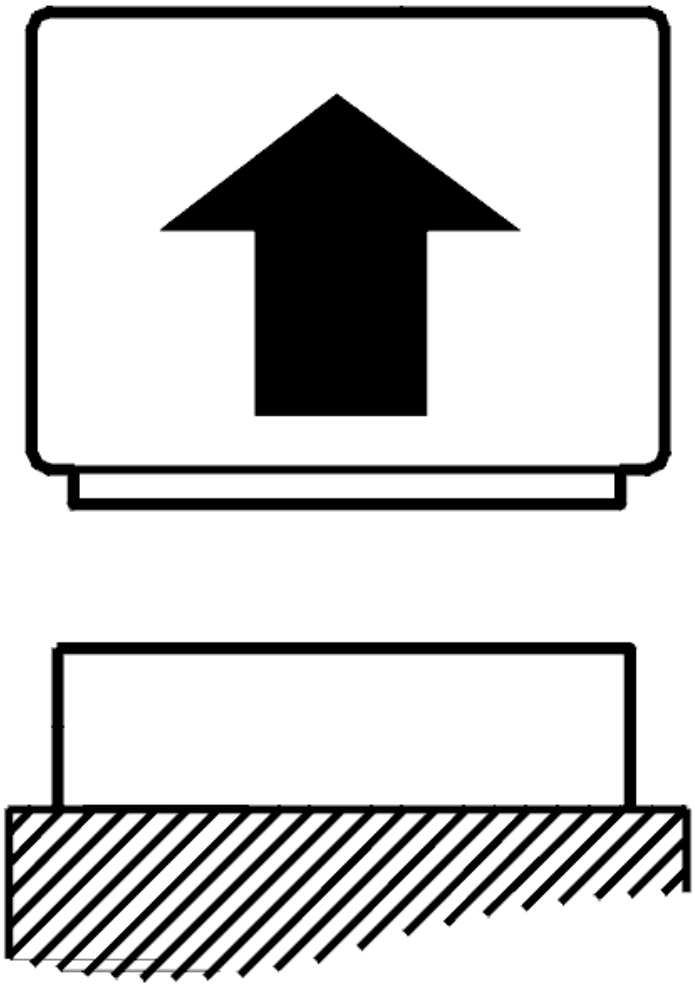

Fig. 379: Disconnecting Connector
Courtesy of VOLVO CARS CORPORATION

- Ignition off
- Disconnect connector D on the rear electronic module (REM).

  Check the signal cable. Check for a short-circuit to ground.

  Take readings between:

  - Rear electronic module (REM) terminal #D6 (#6) and terminal #A1 on the connector for the rear left-hand lamp housing.

  Remedy as necessary.

  Other information

- see **CONNECTING THE BREAKOUT BOX**
- see **SIGNAL SPECIFICATION**
- see **CHECKING WIRING AND TERMINALS**

- **Continue**

  Refer to **VERIFICATION**

VERIFICATION

VERIFICATION

HINT: After carrying out the repair, check that the fault has been remedied.

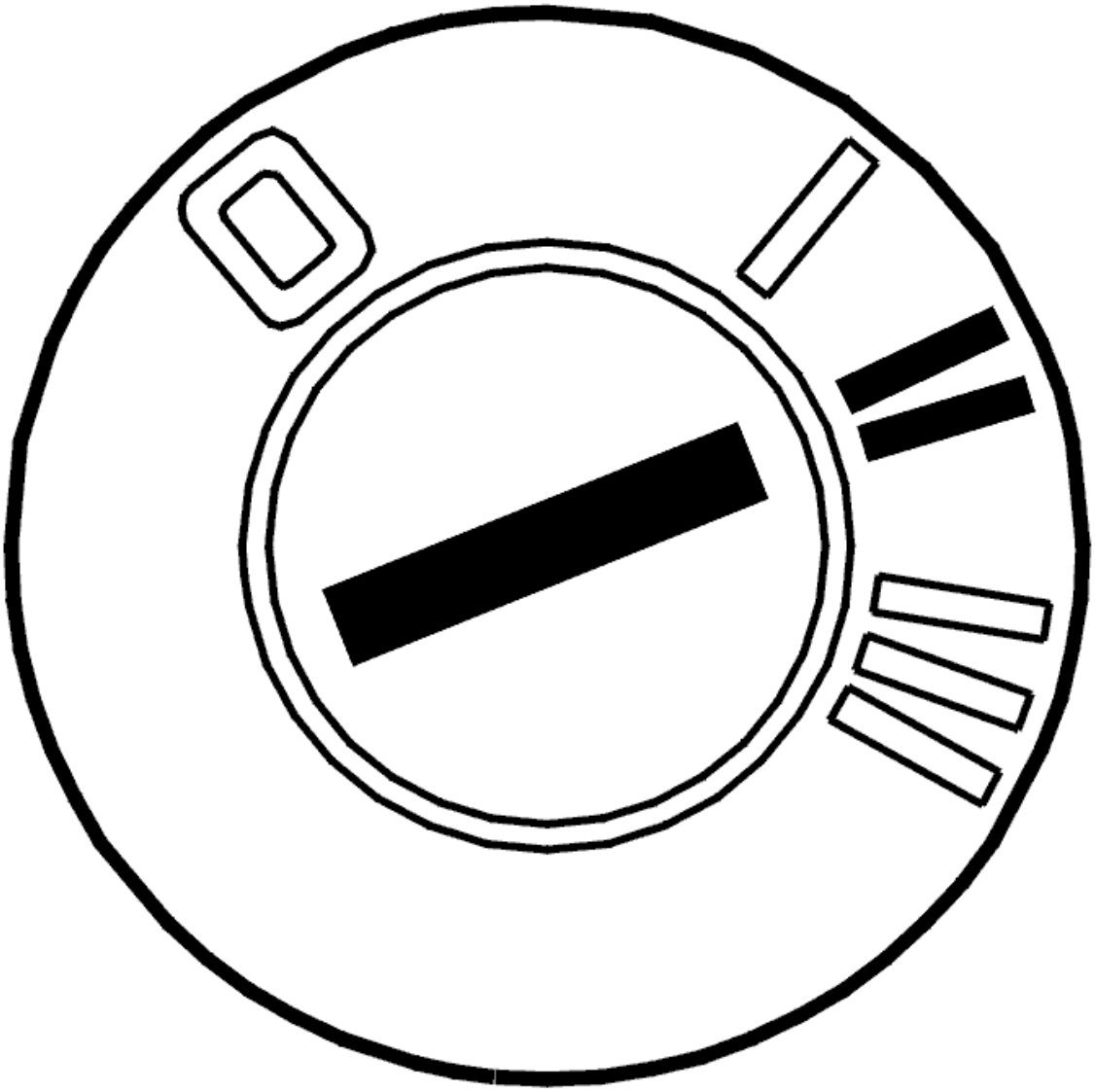

Fig. 380: Identifying Ignition ON

Courtesy of VOLVO CARS CORPORATION

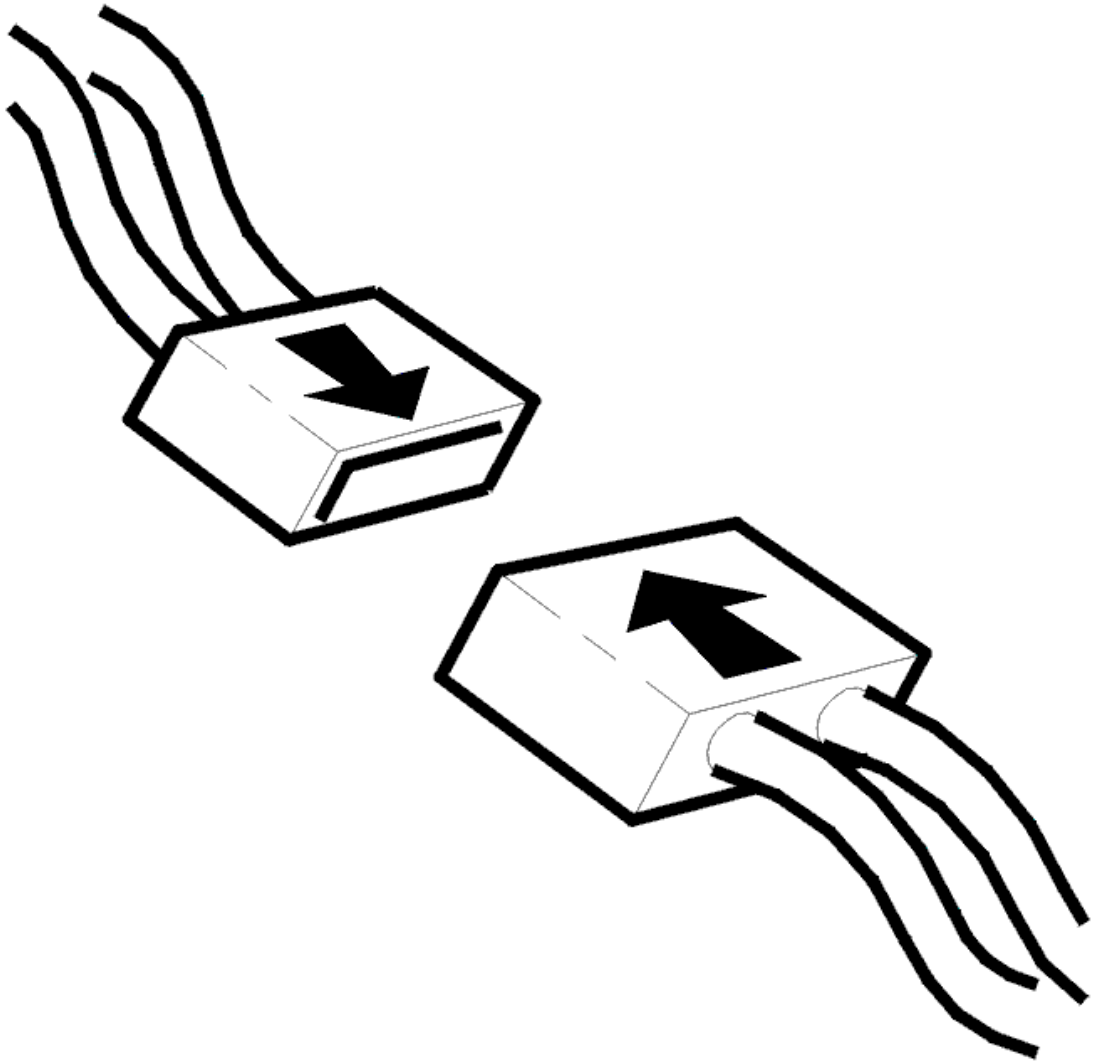

Fig. 381: Connecting Connector
Courtesy of VOLVO CARS CORPORATION

- Ignition off
- Reinstall the connectors, components etc.
- Ignition on.

  Activate the parking lamp.

  Check that the parking lamp is activated.

Is the parking lamp activated?

- **YES**

  VERIFIED: Troubleshooting has been completed.

- **NO**

  Refer to **INFORMATION**

INFORMATION

FAULT-TRACING INFORMATION

The fault should have been detected and remedied. As this is not the case fault-tracing has failed.

Exit fault-tracing for this diagnostic trouble code (DTC) or make another attempt.

REM-8B21: LICENSE PLATE LIGHTING. SIGNAL TOO LOW (2005-2012)

DIAGNOSTIC TROUBLE CODE (DTC) INFORMATION REM-8B21

Condition

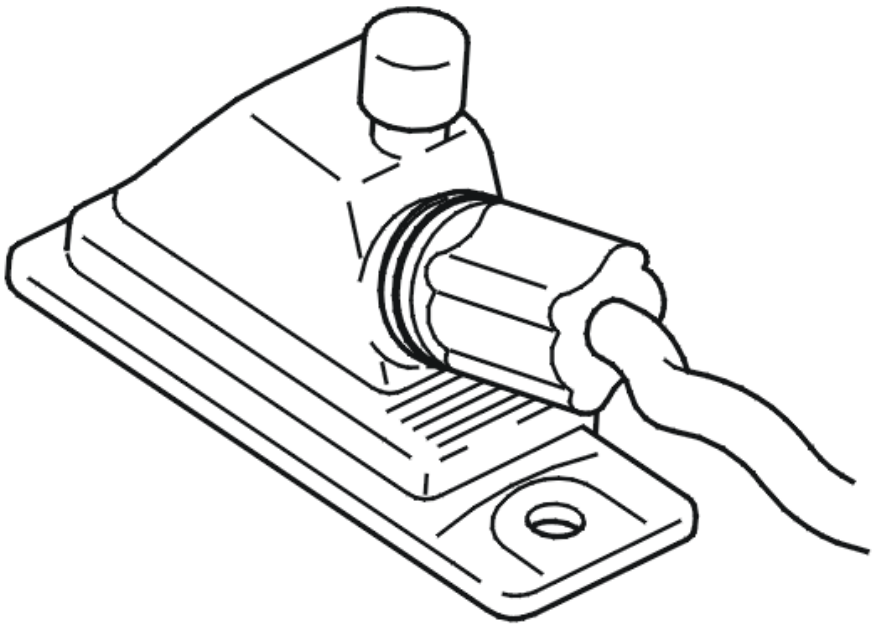

Fig. 382: Identifying License Plate Lighting Unit

Courtesy of VOLVO CARS CORPORATION

The rear electronic module (REM) powers the license plate lighting directly via an output.

The diagnostic trouble code (DTC) is stored if the rear electronic module (REM) detects a faulty signal.

The diagnostic trouble code (DTC) can be diagnosed at key position II.

Substitute Value

- If the fault has been detected in 100 ignition cycles, the output is closed permanently until the diagnostic trouble code is erased (applies from structure week 200539).

Possible Source

- Short-circuit to ground in the signal cable.

Fault symptom[s]

- The license plate lighting does not operate.

SIGNAL TOO LOW

CHECKING THE WIRING

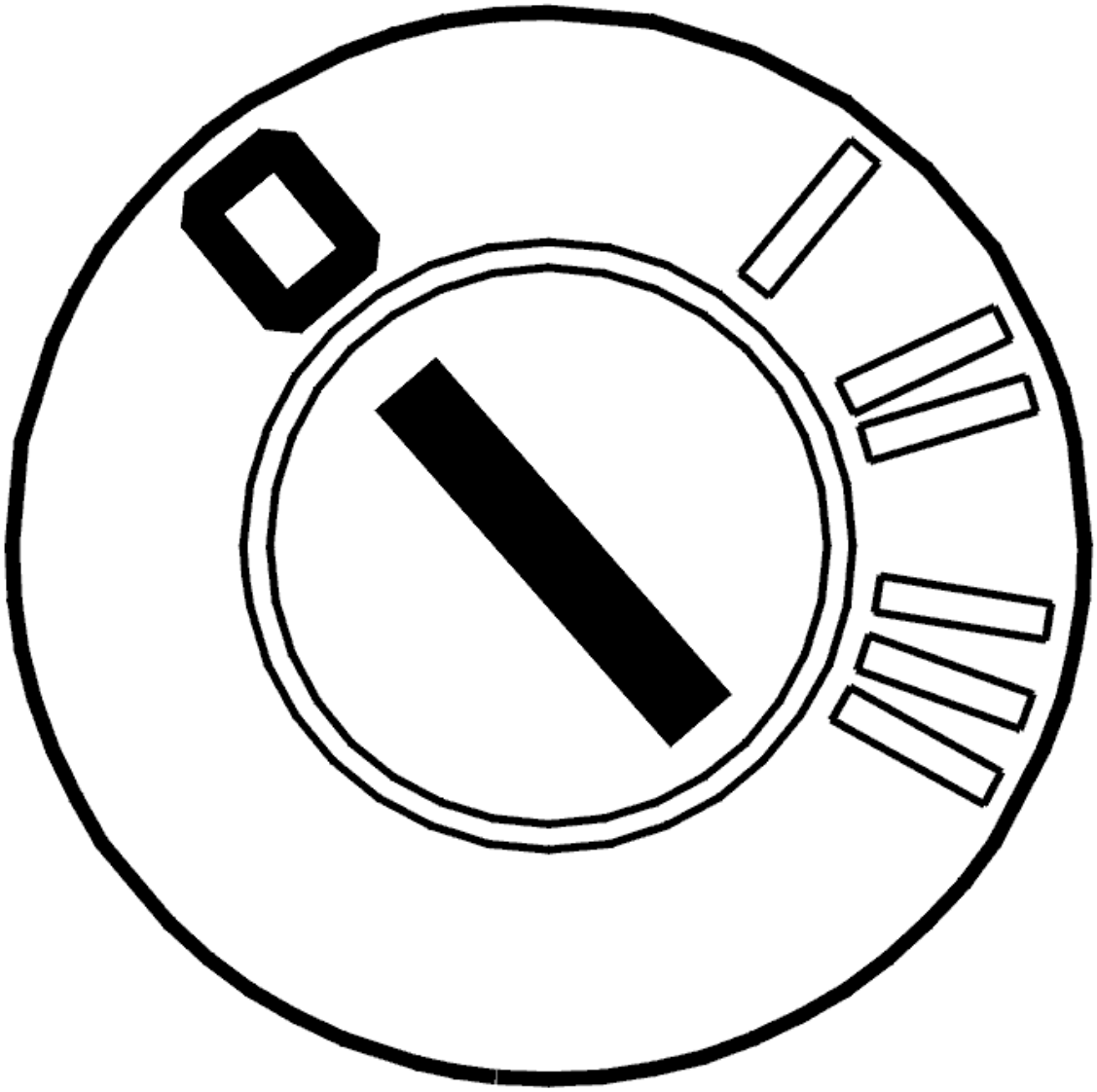

Fig. 383: Identifying Ignition OFF
Courtesy of VOLVO CARS CORPORATION

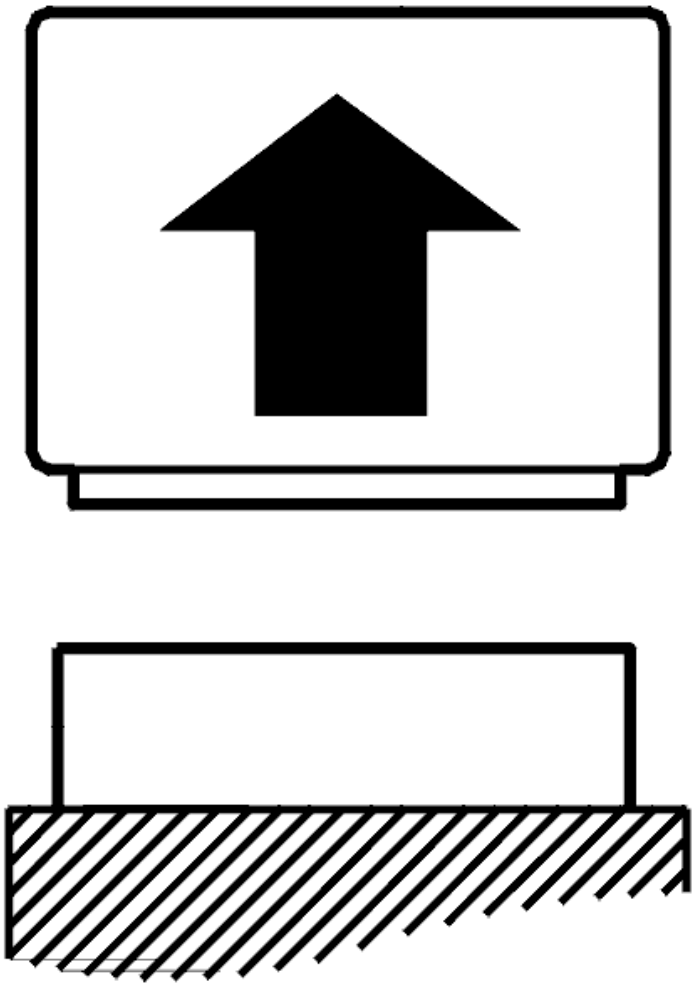

Fig. 384: Disconnecting Connector
Courtesy of VOLVO CARS CORPORATION

- Ignition off
- Disconnect connector F on the rear electronic module (REM).

  Check the signal cable. Check for a short-circuit to ground.

  Take readings between:

  - Rear electronic module (REM) terminal #F10 (#50) and terminal #1 on the connector for the license plate lighting.

  Remedy as necessary.

  Other information

- see **CONNECTING THE BREAKOUT BOX**
- see **SIGNAL SPECIFICATION**
- see **CHECKING WIRING AND TERMINALS**

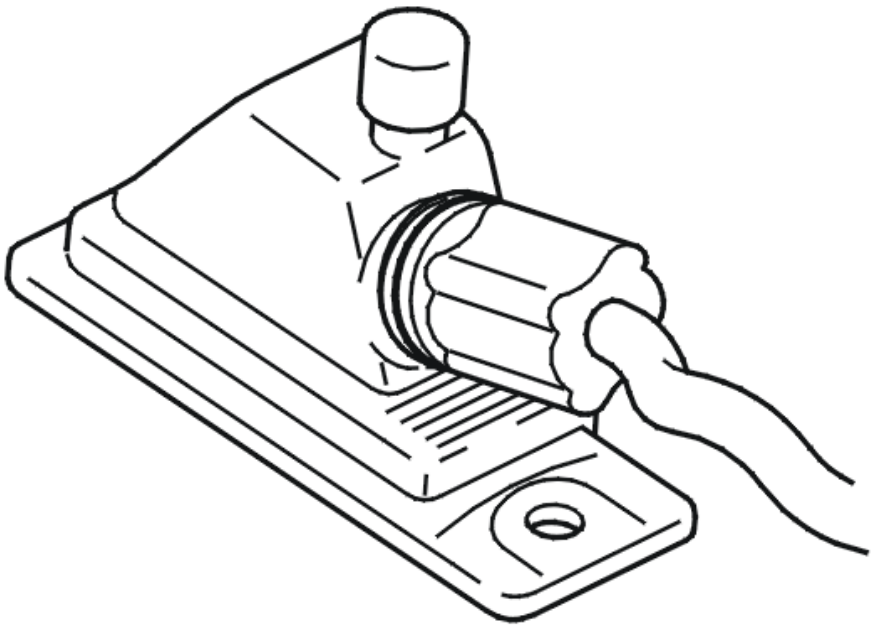

Fig. 385: Identifying License Plate Lighting Unit
Courtesy of VOLVO CARS CORPORATION

- **Continue**

  Refer to **VERIFICATION**

VERIFICATION

VERIFICATION

HINT: After carrying out the repair, check that the fault has been remedied.

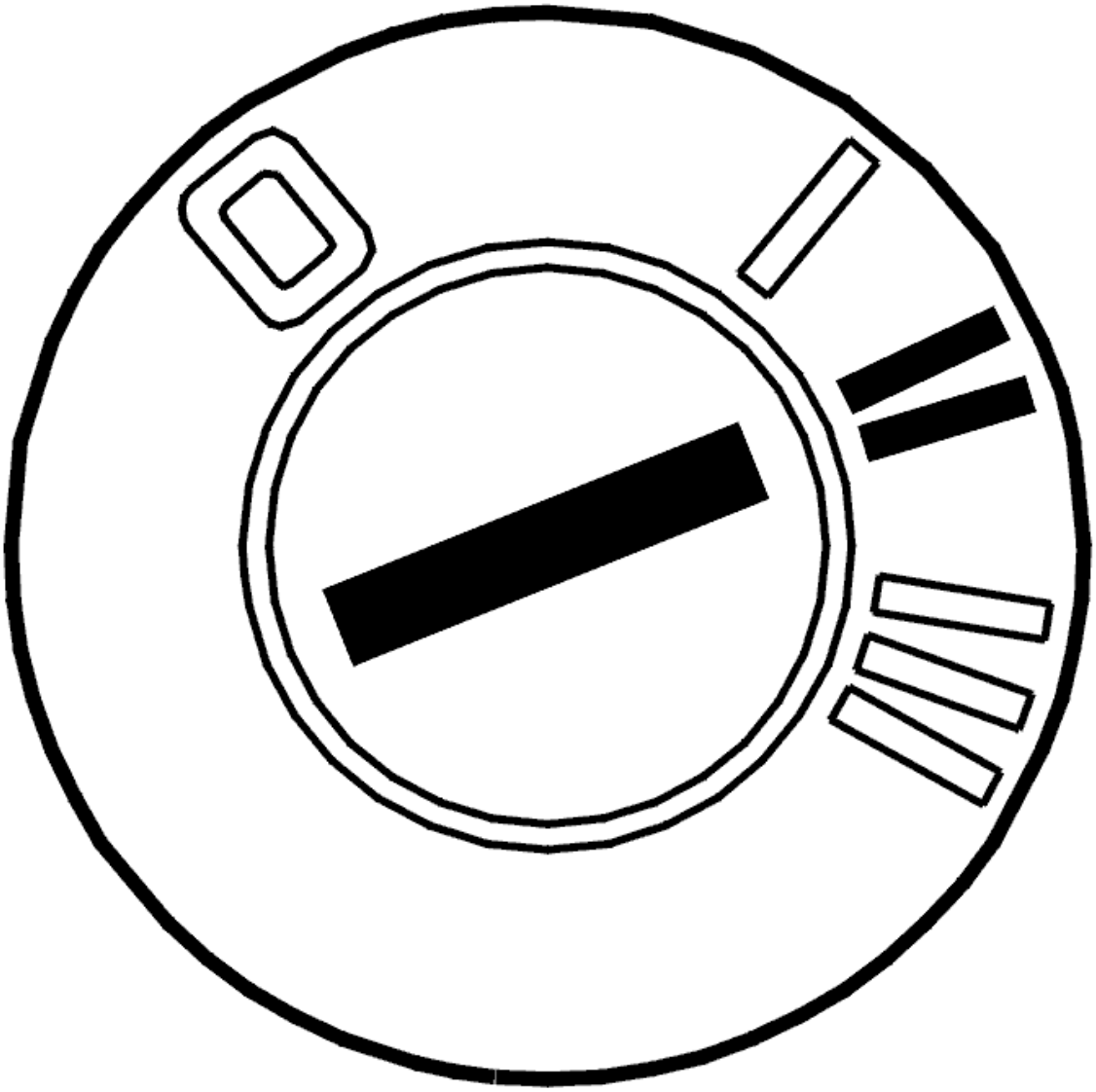

Fig. 386: Identifying Ignition ON
Courtesy of VOLVO CARS CORPORATION

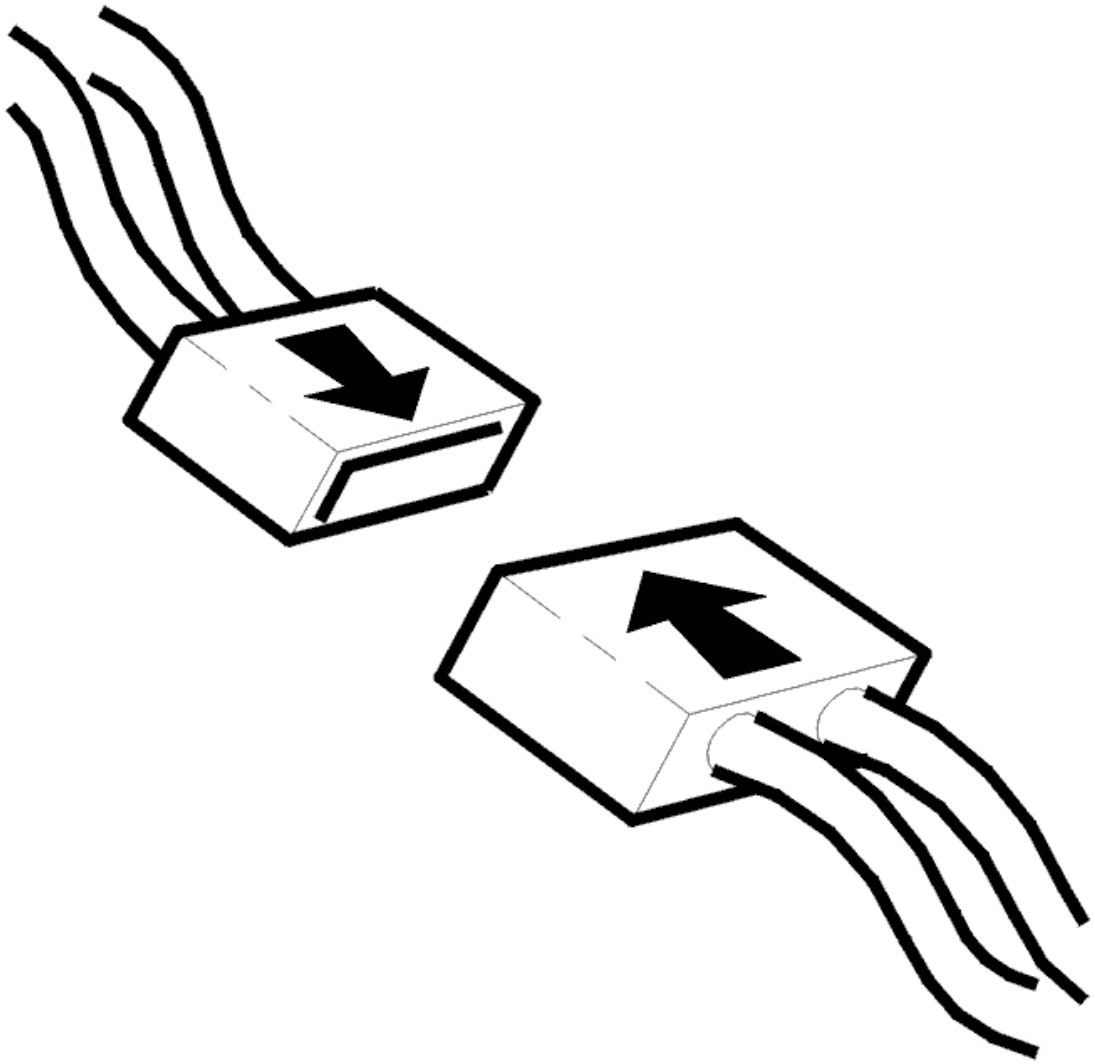

Fig. 387: Connecting Connector
Courtesy of VOLVO CARS CORPORATION

- Ignition off
- Reinstall the connectors, components etc.
- Ignition on.

  Activate the parking lamp.

  Check that the license plate lighting is activated.

Is the license plate lighting activated?

- **YES**

VERIFIED: Troubleshooting has been completed.

- **NO**

  Refer to **INFORMATION**

INFORMATION

FAULT-TRACING INFORMATION

The fault should have been detected and remedied. As this is not the case fault-tracing has failed.

Exit fault-tracing for this diagnostic trouble code (DTC) or make another attempt.

REM-8C21: REAR FOG LAMP. SIGNAL TOO LOW (2005-2012)

DIAGNOSTIC TROUBLE CODE (DTC) INFORMATION REM-8C21

Condition

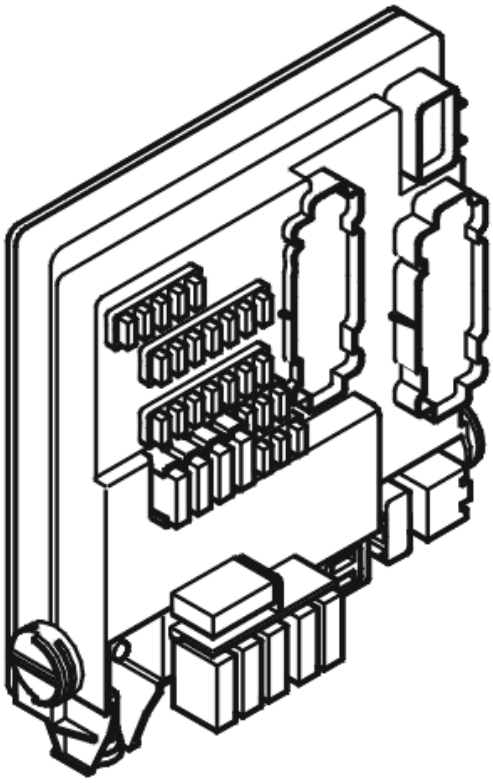

Fig. 388: Identifying Central Electronic Module (CEM)
Courtesy of VOLVO CARS CORPORATION

The rear electronic module (REM) powers the rear fog lamps directly via an output.

The diagnostic trouble code (DTC) is stored if the rear electronic module (REM) detects a faulty signal.

The diagnostic trouble code (DTC) can be diagnosed at key position II.

Substitute Value

- If the fault has been detected in 100 ignition cycles, the output is closed permanently until the diagnostic trouble code is erased (applies from structure week 200539).

Possible Source

- Short-circuit to ground in the signal cable.

Fault symptom[s]

- The rear fog lamp does not work.

SIGNAL TOO LOW

CHECKING THE WIRING

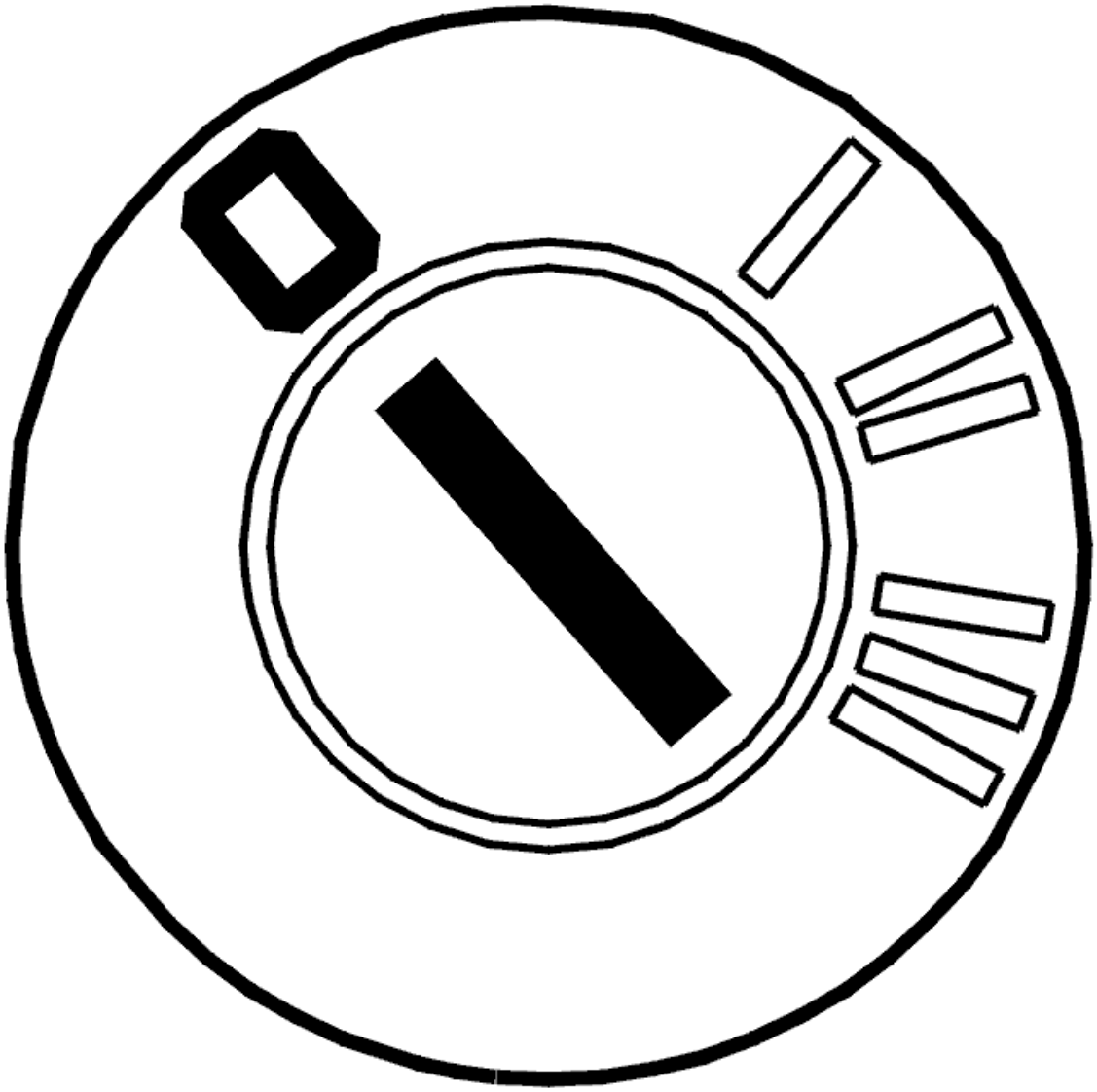

Fig. 389: Identifying Ignition OFF
Courtesy of VOLVO CARS CORPORATION

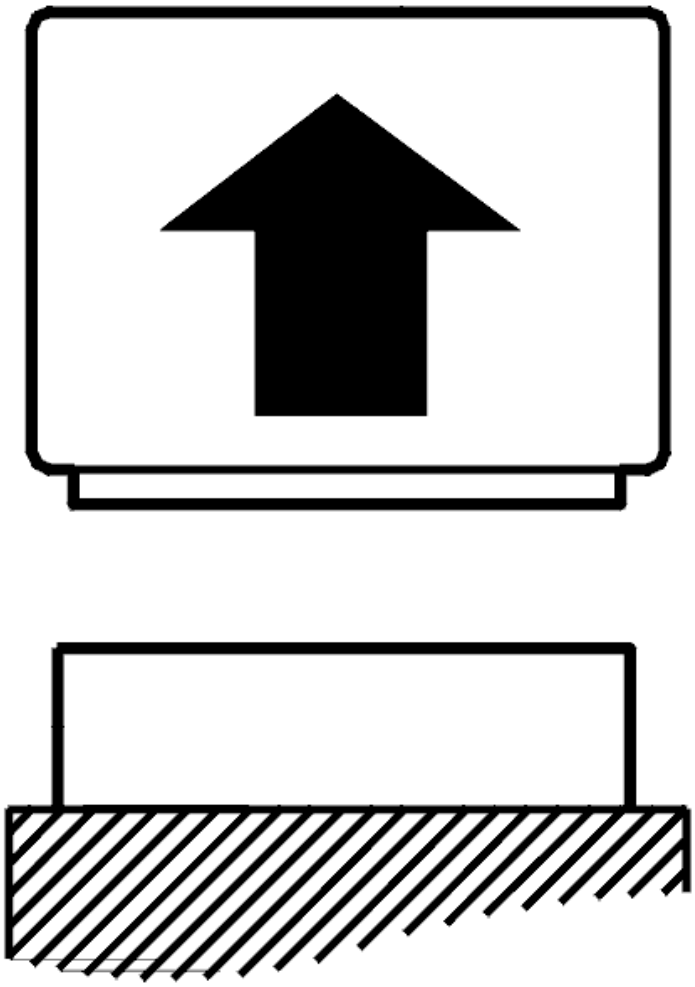

Fig. 390: Disconnecting Connector
Courtesy of VOLVO CARS CORPORATION

- Ignition off
- Disconnect connector B on the rear electronic module (REM).

  Check the signal cable. Check for a short-circuit to ground.

  Take readings between:

  - Rear electronic module (REM) terminal #B4 (#4) and terminal #A3 on the connector for the rear left-hand lamp housing
  - Terminal #A3 on the connector for the rear left-hand lamp housing and terminal #A3 on the connector for the rear right-hand lamp housing.

Remedy as necessary.

Other information

- see **CONNECTING THE BREAKOUT BOX**
- see **SIGNAL SPECIFICATION**
- see **CHECKING WIRING AND TERMINALS**

- **Continue**

Refer to **VERIFICATION**

VERIFICATION

VERIFICATION

HINT: After carrying out the repair, check that the fault has been remedied.

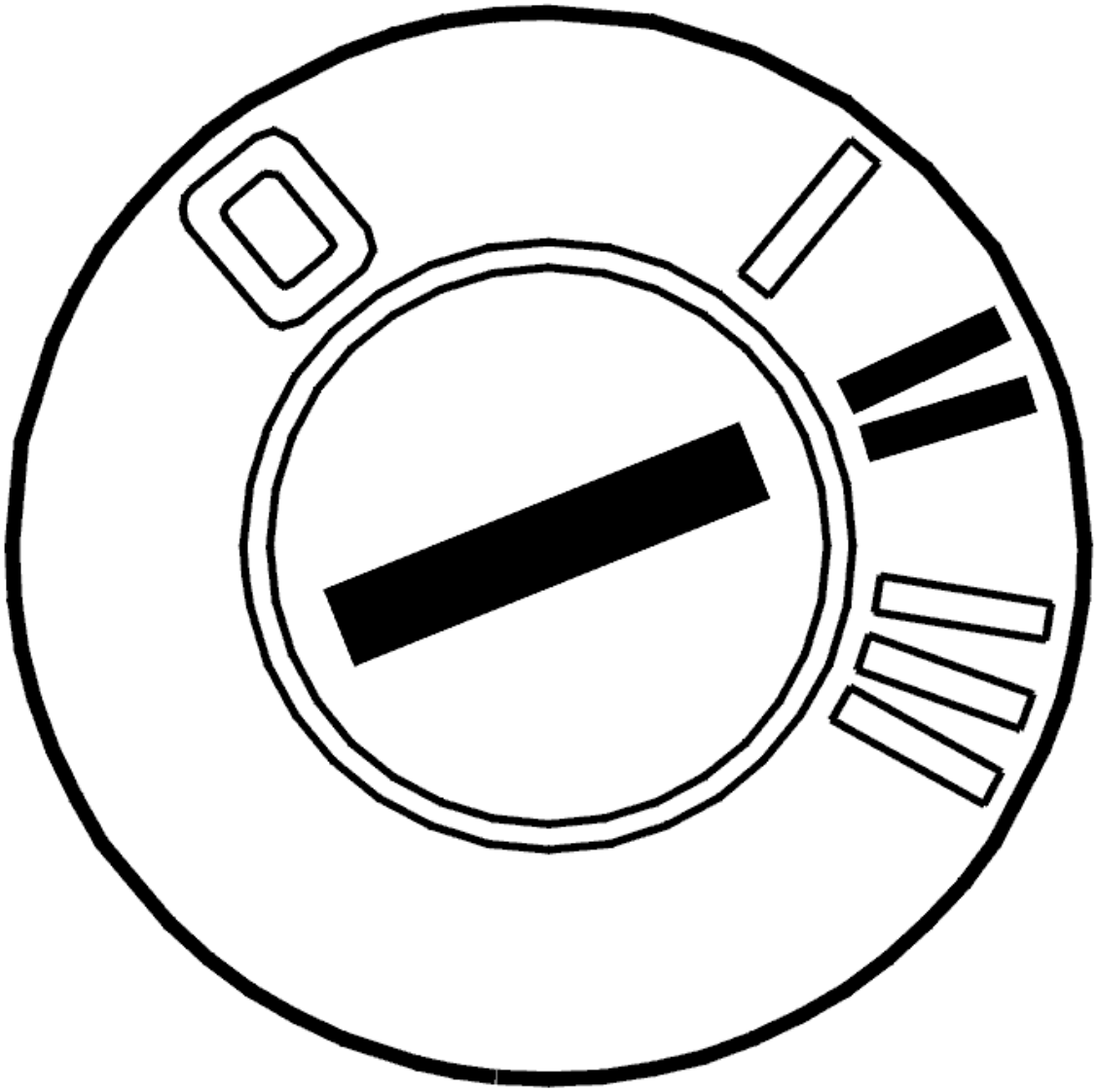

Fig. 391: Identifying Ignition ON
Courtesy of VOLVO CARS CORPORATION

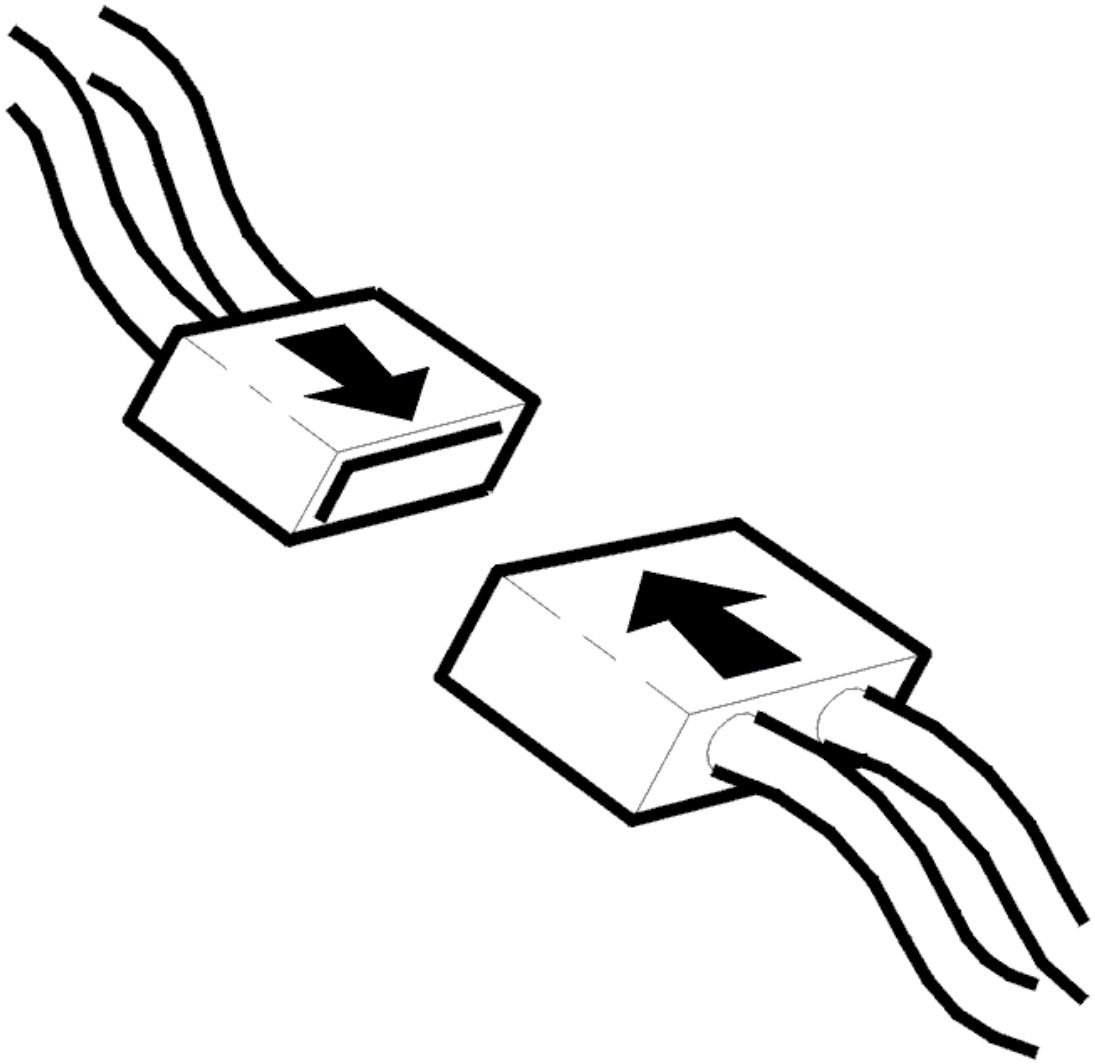

Fig. 392: Connecting Connector
Courtesy of VOLVO CARS CORPORATION

- Ignition off
- Reinstall the connectors, components etc.
- Ignition on.

  Activate the rear fog lamp.

  Check that the rear fog lamp is activated.

Is the rear fog lamp activated?

- **YES**

VERIFIED: Troubleshooting has been completed.

- **NO**

  Refer to **INFORMATION**

INFORMATION

FAULT-TRACING INFORMATION

The fault should have been detected and remedied. As this is not the case fault-tracing has failed.

Exit fault-tracing for this diagnostic trouble code (DTC) or make another attempt.

REM-8C21: RELAY, REAR FOG LAMP. SIGNAL TOO HIGH. INTERMITTENT FAULT (2003-2004)

DIAGNOSTIC TROUBLE CODE INFORMATION

Condition

If control unit registers signal too high from status flag when activating relay control, the diagnostic trouble code is displayed.

Substitute Value

Nothing.

Possible Source

- Relay control to relay 2/49 short circuited to battery voltage.

Fault symptom[s]

- Rear fog lamp does not work.

SIGNAL TOO HIGH. INTERMITTENT FAULT

CHECKING THE WIRING AND COMPONENT

Check that the rear fog lamp relay (position 2/49) is correctly installed.

Check the relay terminal (2/49). Check for an intermittent short-circuit to supply voltage according to **SHORT-CIRCUIT TO SUPPLY VOLTAGE. PERMANENT FAULTS** . Check for contact resistance and oxidation according to **CONTACT RESISTANCE AND OXIDATION** . Check for loose connections according to **LOOSE CONNECTIONS (TERMINALS)** .

Other information:

- For further information about signals and other values, see **SIGNAL SPECIFICATION** .
- To connect the breakout box, see **CONNECTING THE BREAKOUT BOX** .
- To access the control module, see **RELAY/FUSE BOX CARGO COMPARTMENT/REAR ELECTRONIC MODULE (REM), REPLACING** .
- When the relay is installed and activated, the voltage at the relay guide (terminal #2) should be 0 V.

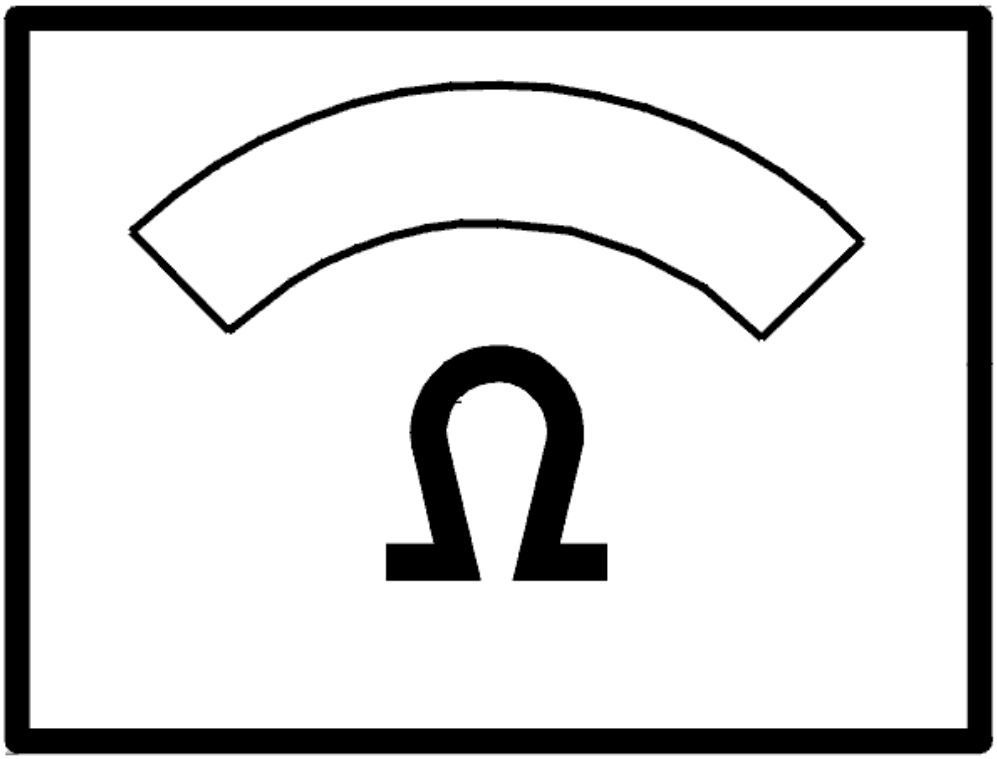

Fig. 393: Identifying Ohm Meter
Courtesy of VOLVO CARS CORPORATION

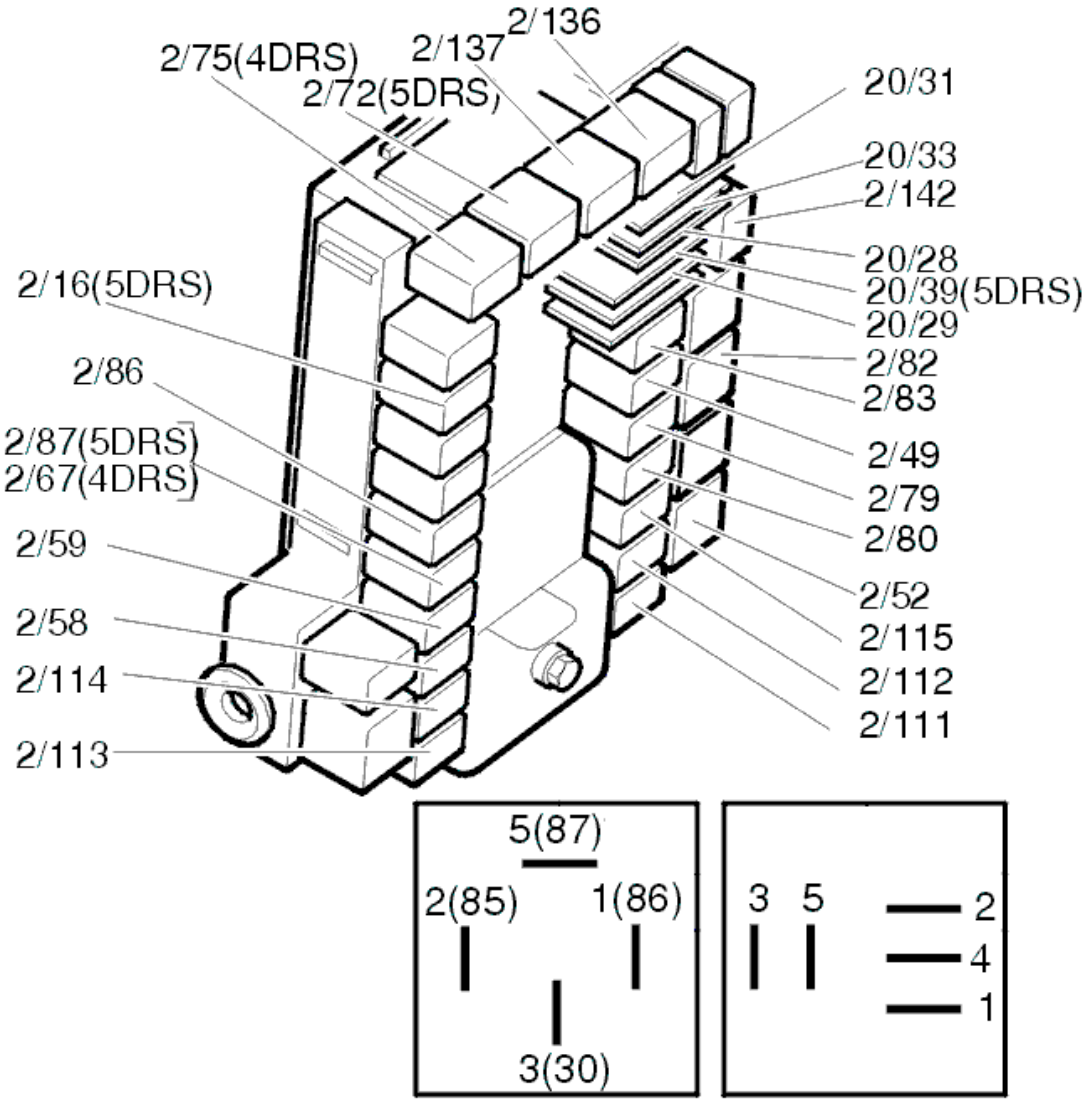

Fig. 394: Identifying Relays
Courtesy of VOLVO CARS CORPORATION

- **Continue**

  Refer to **INFORMATION**

INFORMATION

FAULT-TRACING INFORMATION

If the fault is intermittent, do not verify fault-tracing if the fault does not recur.

It is possible to view the information again, or leave fault-tracing for this diagnostic trouble code (DTC).

REM-8C21: RELAY, REAR FOG LAMP. SIGNAL TOO HIGH. PERMANENT

FAULT (2003-2004)

DIAGNOSTIC TROUBLE CODE INFORMATION

see **DIAGNOSTIC TROUBLE CODE INFORMATION**

SIGNAL TOO HIGH. PERMANENT FAULT

REPLACING THE COMPONENT

Replace the Rear fog lamp relay (position 2/49). Check the relay terminal, in particular the relay guide (2/49 terminal #2), for a short-circuit to supply voltage according to **SHORT-CIRCUIT TO SUPPLY VOLTAGE. PERMANENT FAULTS** .

Remedy as necessary

Other information:

- For further information about signals and other values, see **SIGNAL SPECIFICATION** .
- To access and replace the relay, see **RELAY/FUSE BOX CARGO COMPARTMENT/REAR ELECTRONIC MODULE (REM), REPLACING** .
- When the relay is installed and activated, the voltage at the relay guide (terminal #2) should be 0 V.

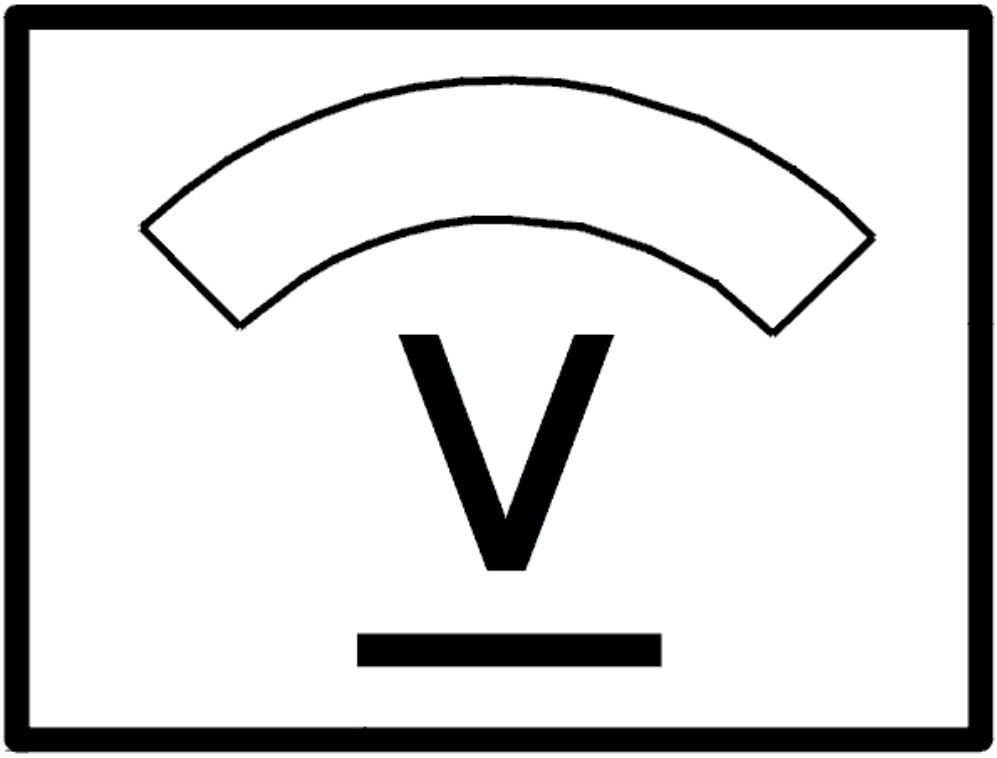

Fig. 395: Identifying Voltage Display
Courtesy of VOLVO CARS CORPORATION

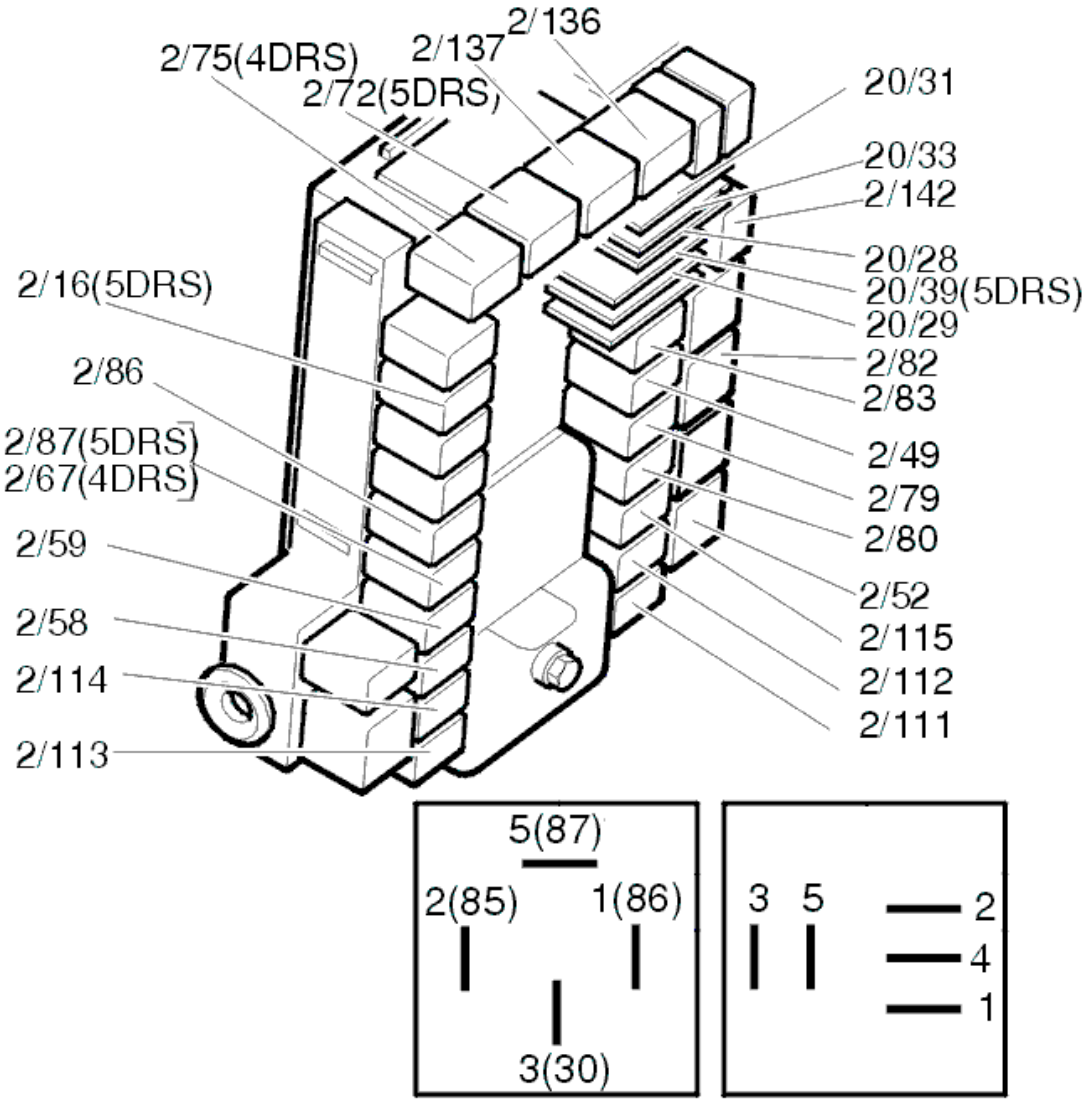

Fig. 396: Identifying Relays
Courtesy of VOLVO CARS CORPORATION

- **Continue**

  Refer to **VERIFICATION**

VERIFICATION

VERIFICATION

HINT: After the repair it is necessary to check that the fault has been rectified.

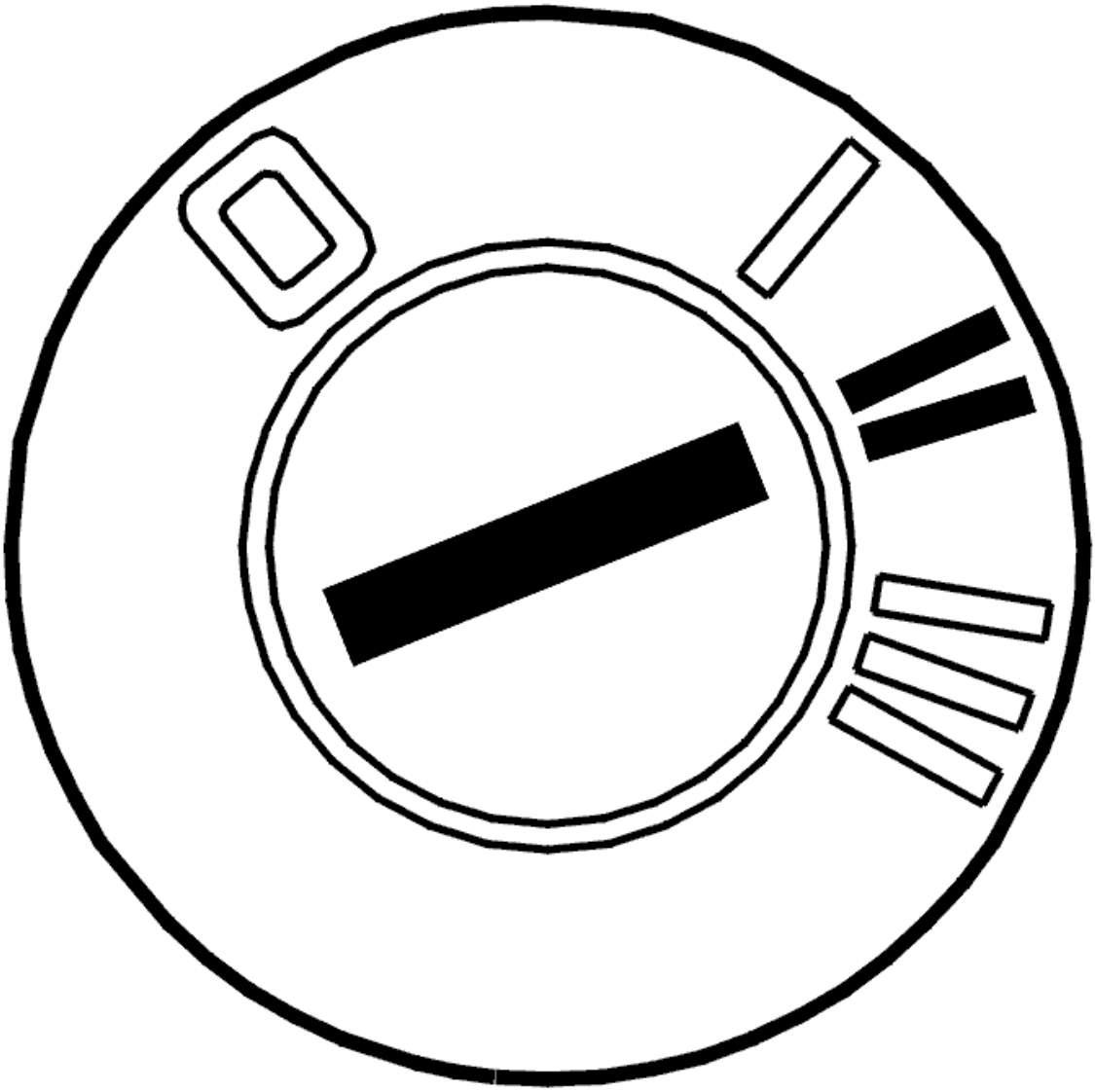

Fig. 397: Identifying Ignition ON
Courtesy of VOLVO CARS CORPORATION

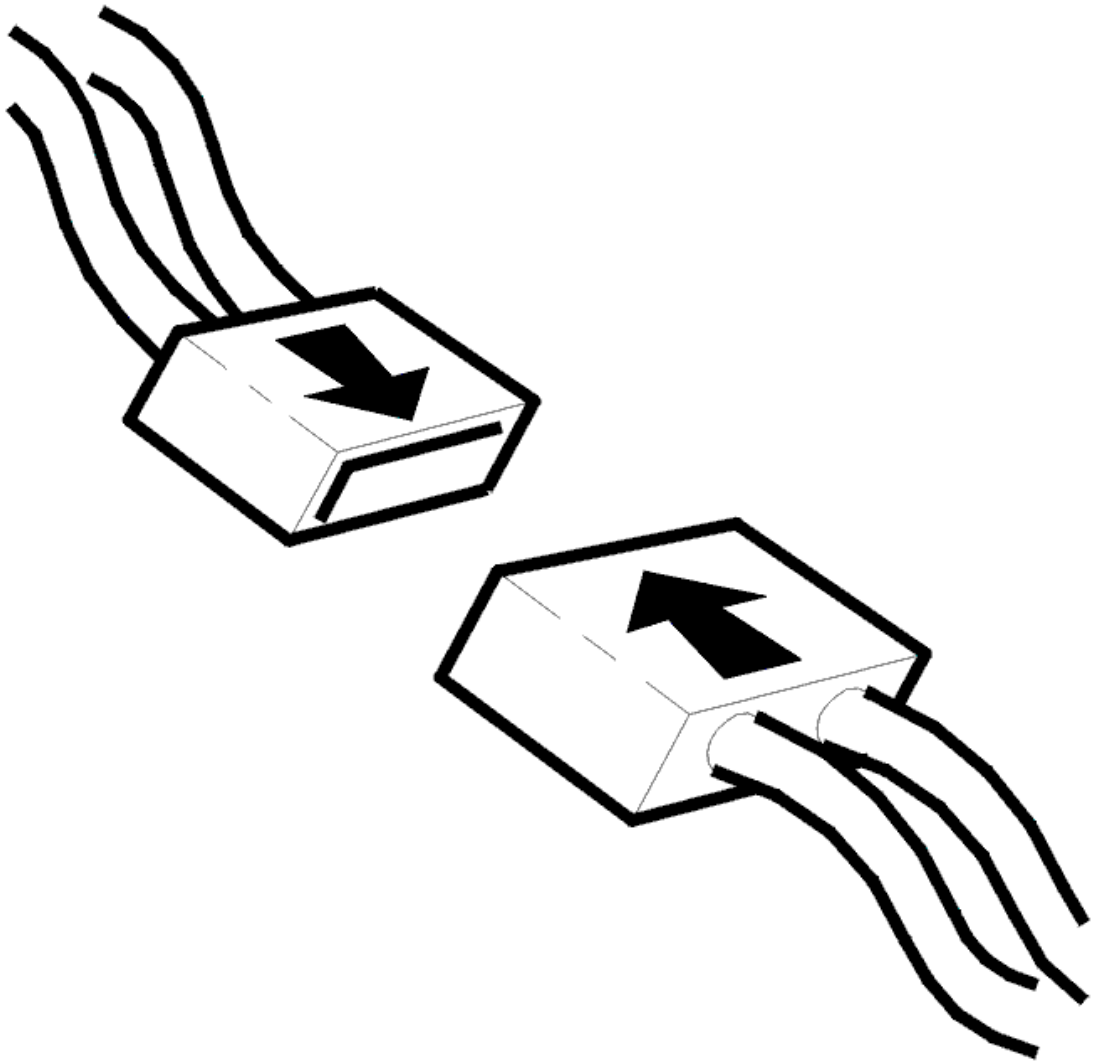

Fig. 398: Connecting Connector
Courtesy of VOLVO CARS CORPORATION

- Ignition off.
- Install the components, connect the connectors, etc.
- Ignition on.

  Activate rear fog lamps.

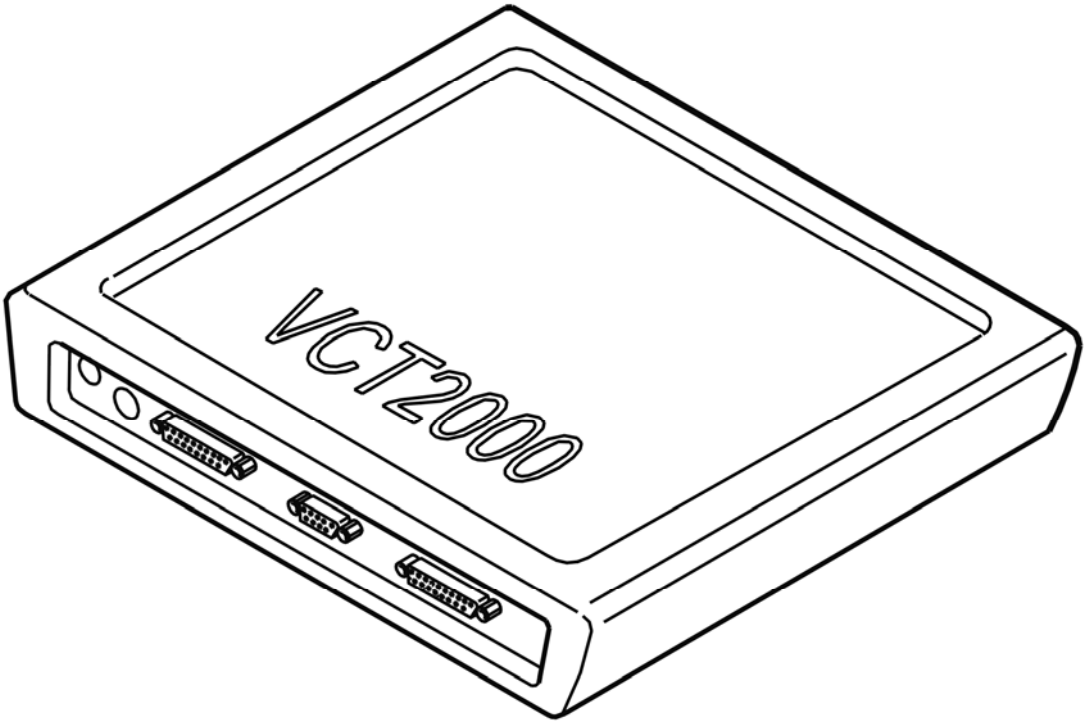

Fig. 399: Identifying VCT2000 Diagnostic Tool Symbol In VIDA
Courtesy of VOLVO CARS CORPORATION

Do the rear fog lamps work?

- **YES**

  VERIFIED: Troubleshooting has been completed.

- **NO**

  Refer to **INFORMATION**

INFORMATION

FAULT-TRACING INFORMATION

The fault should have been detected and remedied. As this is not the case fault-tracing has failed.

Exit fault-tracing for this diagnostic trouble code (DTC) or make another attempt.

REM-8C23: RELAY, REAR FOG LAMP. SIGNAL MISSING. INTERMITTENT FAULT (2003-2004)

DIAGNOSTIC TROUBLE CODE INFORMATION

Condition

If control unit registers an open circuit from the status flag when relay control is not activated, the diagnostic trouble code is displayed.

Substitute Value

Nothing.

Possible Source

- Open circuit in relay control to relay 2/49. Relay 2/49 not installed.

Fault symptom[s]

- Rear fog lamp does not work.

SIGNAL MISSING. INTERMITTENT FAULT

CHECKING THE WIRING AND COMPONENT

Check that the rear fog lamp relay (position 2/49) is correctly installed.

Check the relay terminal (2/49). Check for contact resistance and oxidation according to **CONTACT RESISTANCE AND OXIDATION** . Check for loose connections according to **LOOSE CONNECTIONS (TERMINALS)** .

Other information:

- For further information about signals and other values, see **SIGNAL SPECIFICATION** .
- To connect the breakout box, see **CONNECTING THE BREAKOUT BOX** .
- To access the rear electronic module, see **RELAY/FUSE BOX CARGO COMPARTMENT/REAR ELECTRONIC MODULE (REM), REPLACING** .
- When the relay is installed and activated, the voltage at the relay guide (terminal #2) should be 0 V.

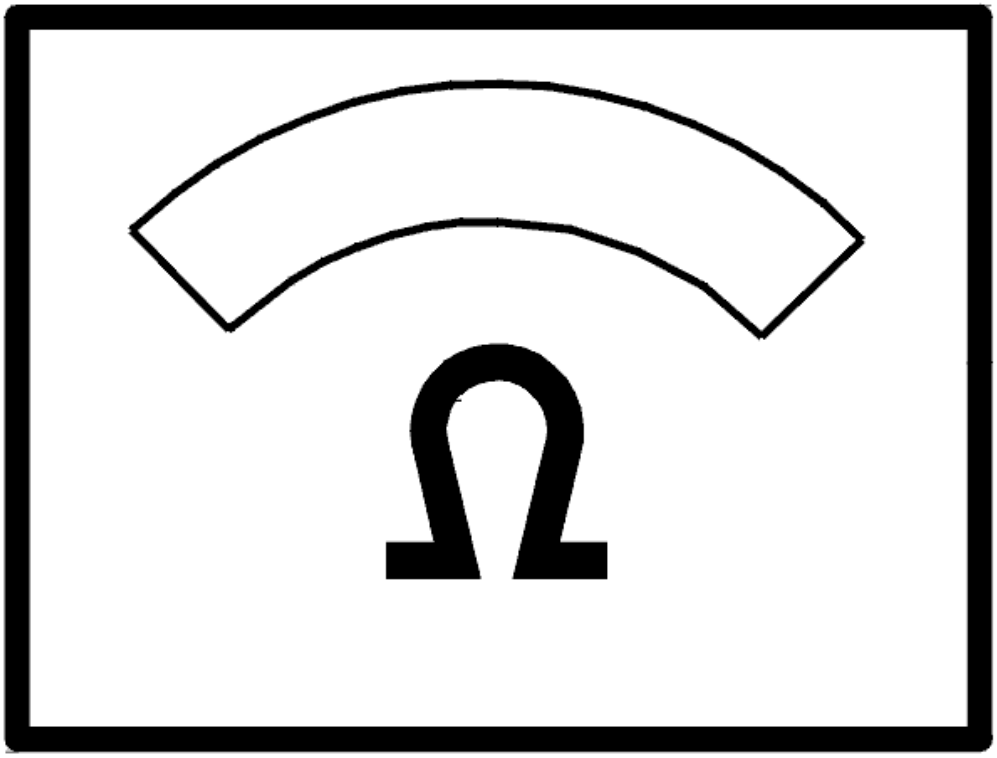

Fig. 400: Identifying Ohm Meter
Courtesy of VOLVO CARS CORPORATION

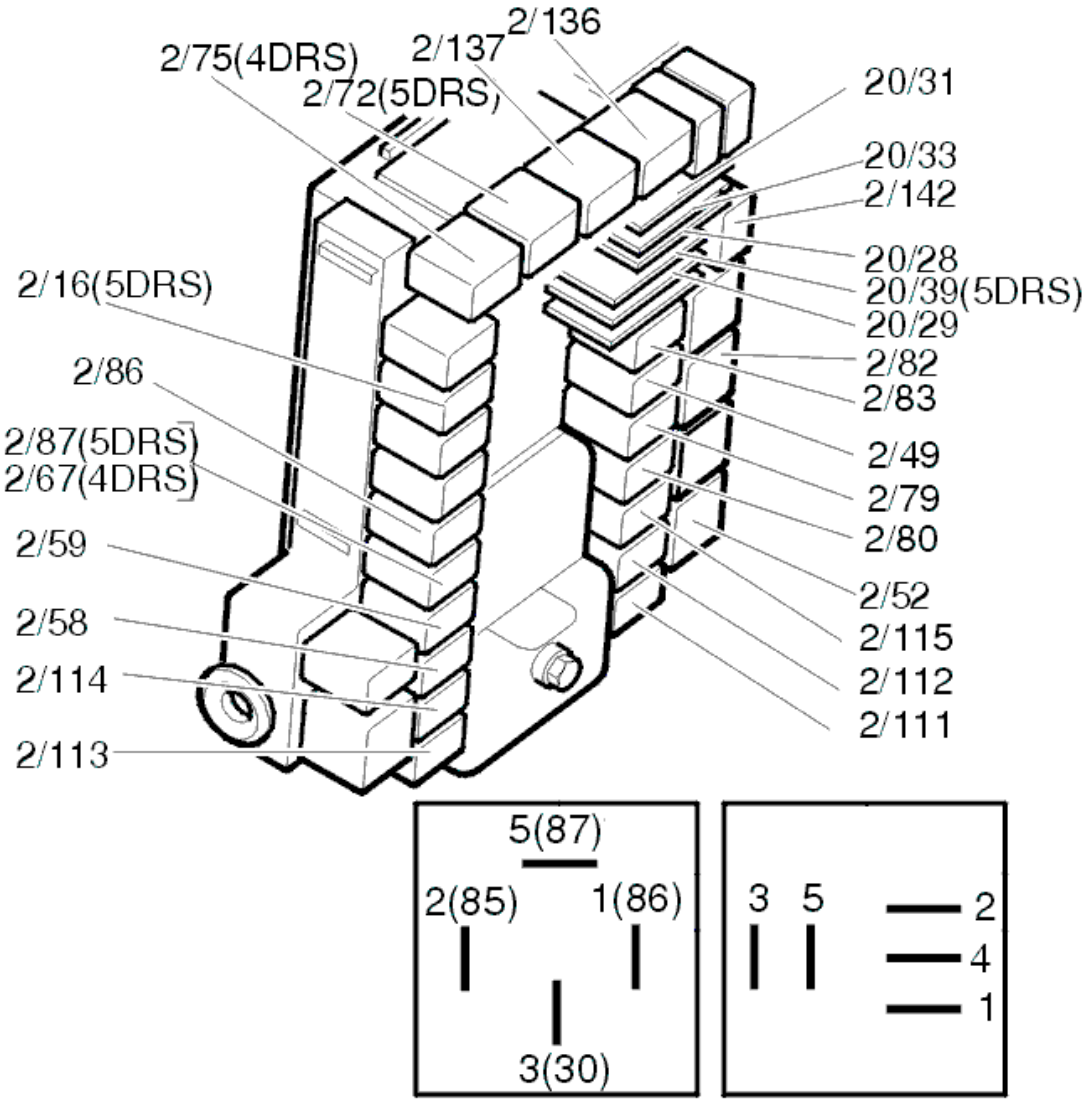

Fig. 401: Identifying Relays
Courtesy of VOLVO CARS CORPORATION

- **Continue**

  Refer to **INFORMATION**

INFORMATION

FAULT-TRACING INFORMATION

If the fault is intermittent, do not verify fault-tracing if the fault does not recur.

It is possible to view the information again, or leave fault-tracing for this diagnostic trouble code (DTC).

REM-8C23: RELAY, REAR FOG LAMP. SIGNAL MISSING. PERMANENT

FAULT (2003-2004)

DIAGNOSTIC TROUBLE CODE INFORMATION

see **DIAGNOSTIC TROUBLE CODE INFORMATION**

SIGNAL MISSING. PERMANENT FAULT

CHECKING THE COMPONENT

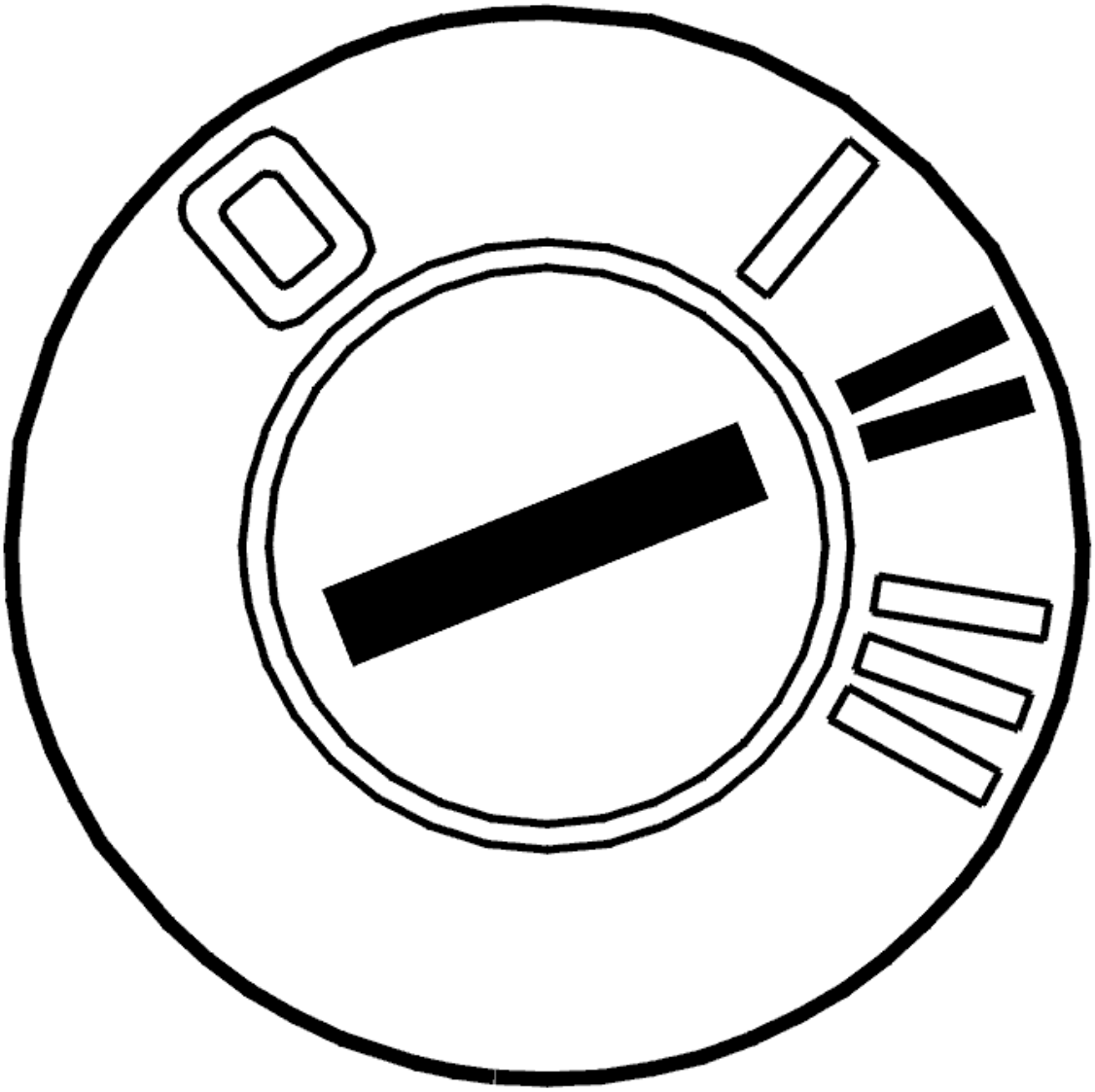

Fig. 402: Identifying Ignition ON
Courtesy of VOLVO CARS CORPORATION

- Check that the rear fog lamp relay (position 2/49) is correctly installed.
- Remedy as necessary.

- Ignition on.

  Activate the rear fog lamps by pressing ON and OFF a few times.

  Other information:

  - For further information about signals and other values, see **SIGNAL SPECIFICATION** .
  - To access and replace the relay, see **RELAY/FUSE BOX CARGO COMPARTMENT/REAR ELECTRONIC MODULE (REM), REPLACING** .
  - When the relay is installed but not activated, the voltage at the relay guide (terminal #2) should be 12 V.

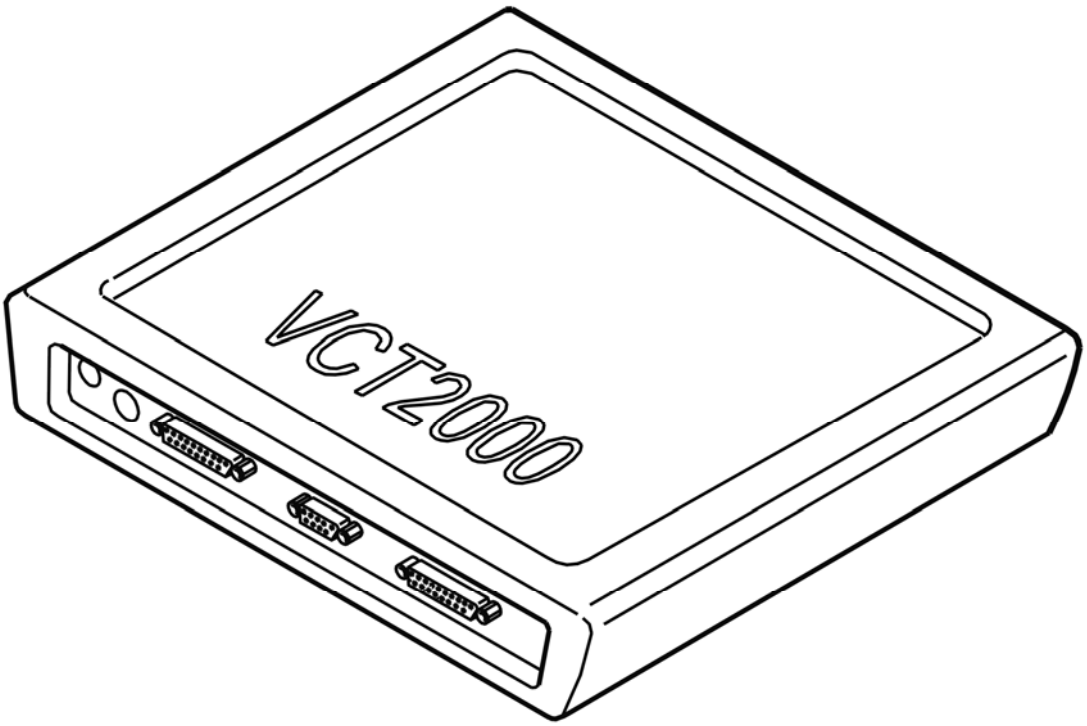

Fig. 403: Identifying VCT2000 Diagnostic Tool Symbol In VIDA
Courtesy of VOLVO CARS CORPORATION

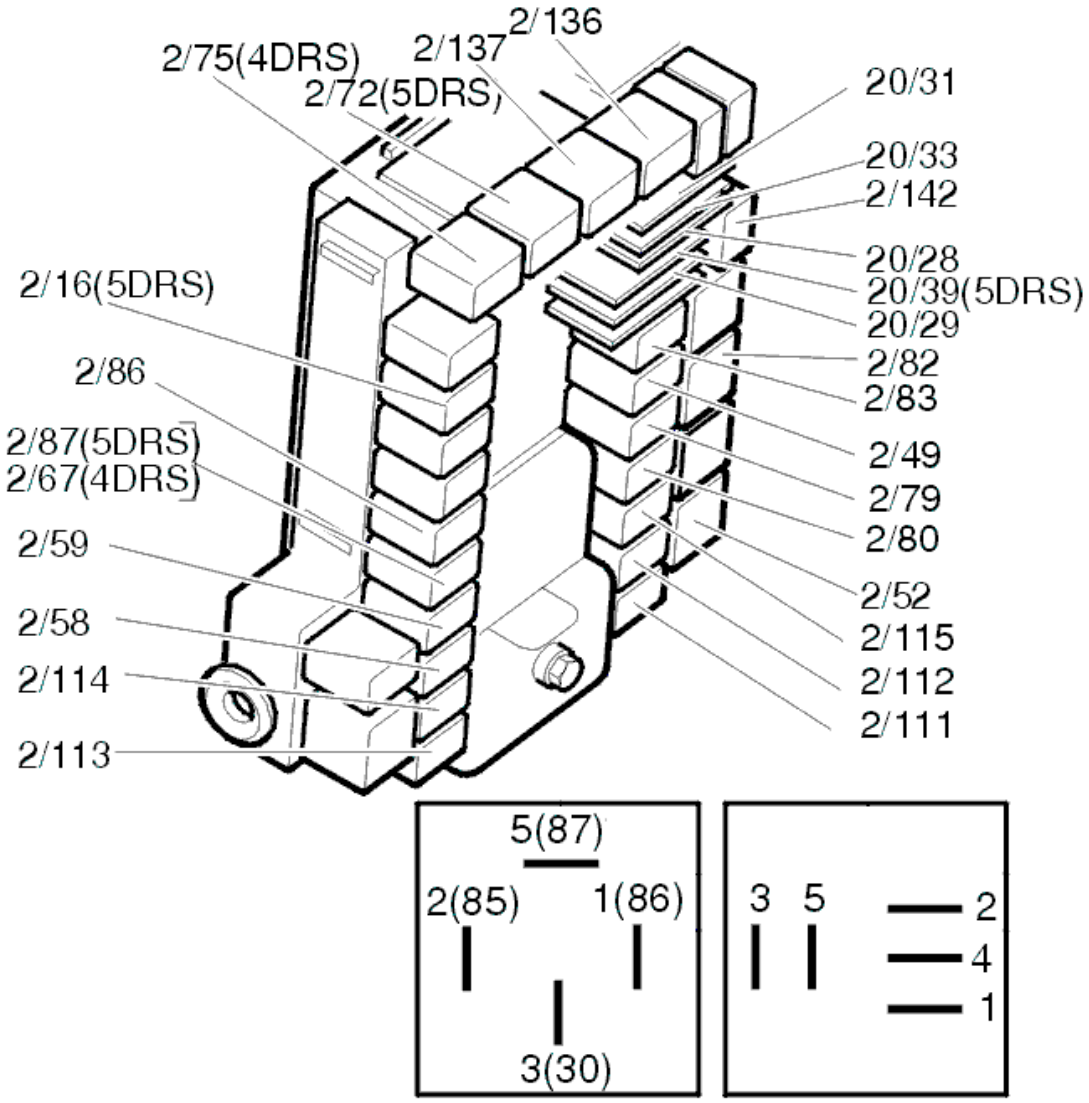

Fig. 404: Identifying Relays
Courtesy of VOLVO CARS CORPORATION

Are the rear fog lamps working?

- **YES**

  OKAY: Troubleshooting has been completed.

- **NO**

  Refer to **REPLACING THE COMPONENT**

REPLACING THE COMPONENT

Replace the rear fog lamp relay (position 2/49). Check the relay terminal, in particular the relay guide (2/49

terminal #2), for an open-circuit according to **OPEN-CIRCUIT, PERMANENT FAULTS** .

Other information:

- For further information about signals and other values, see **SIGNAL SPECIFICATION** .
- To access and replace the relay, see **RELAY/FUSE BOX CARGO COMPARTMENT/REAR ELECTRONIC MODULE (REM), REPLACING** .
- When the relay is installed but not activated, the voltage at the relay guide (terminal #2) should be 12 V.

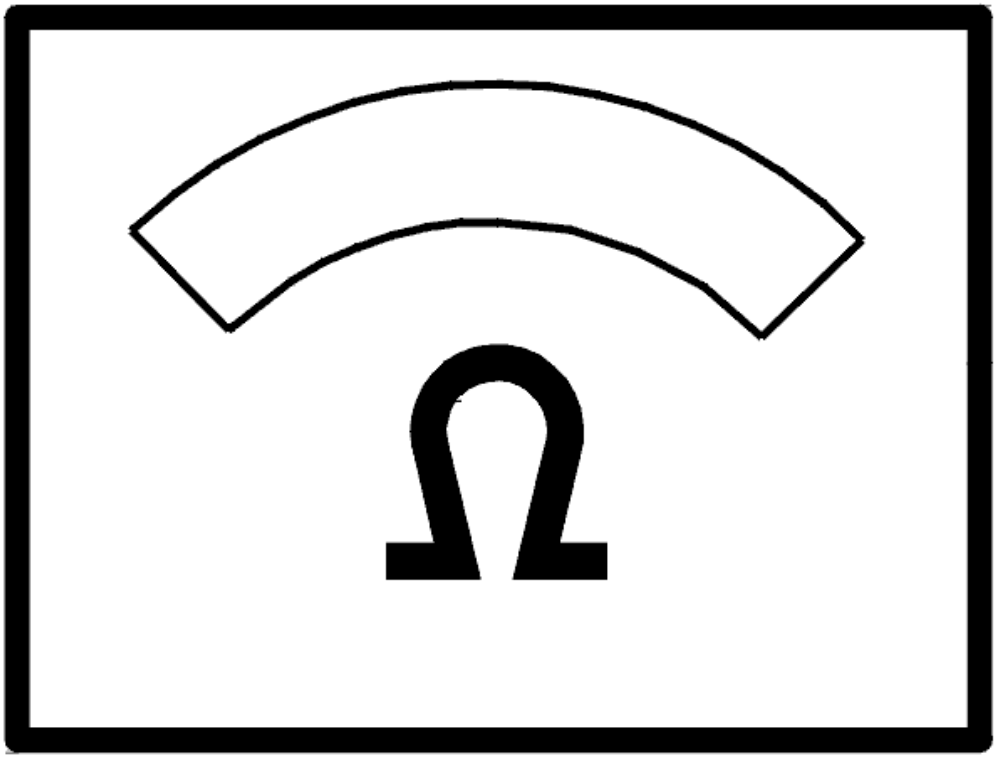

Fig. 405: Identifying Ohm Meter
Courtesy of VOLVO CARS CORPORATION

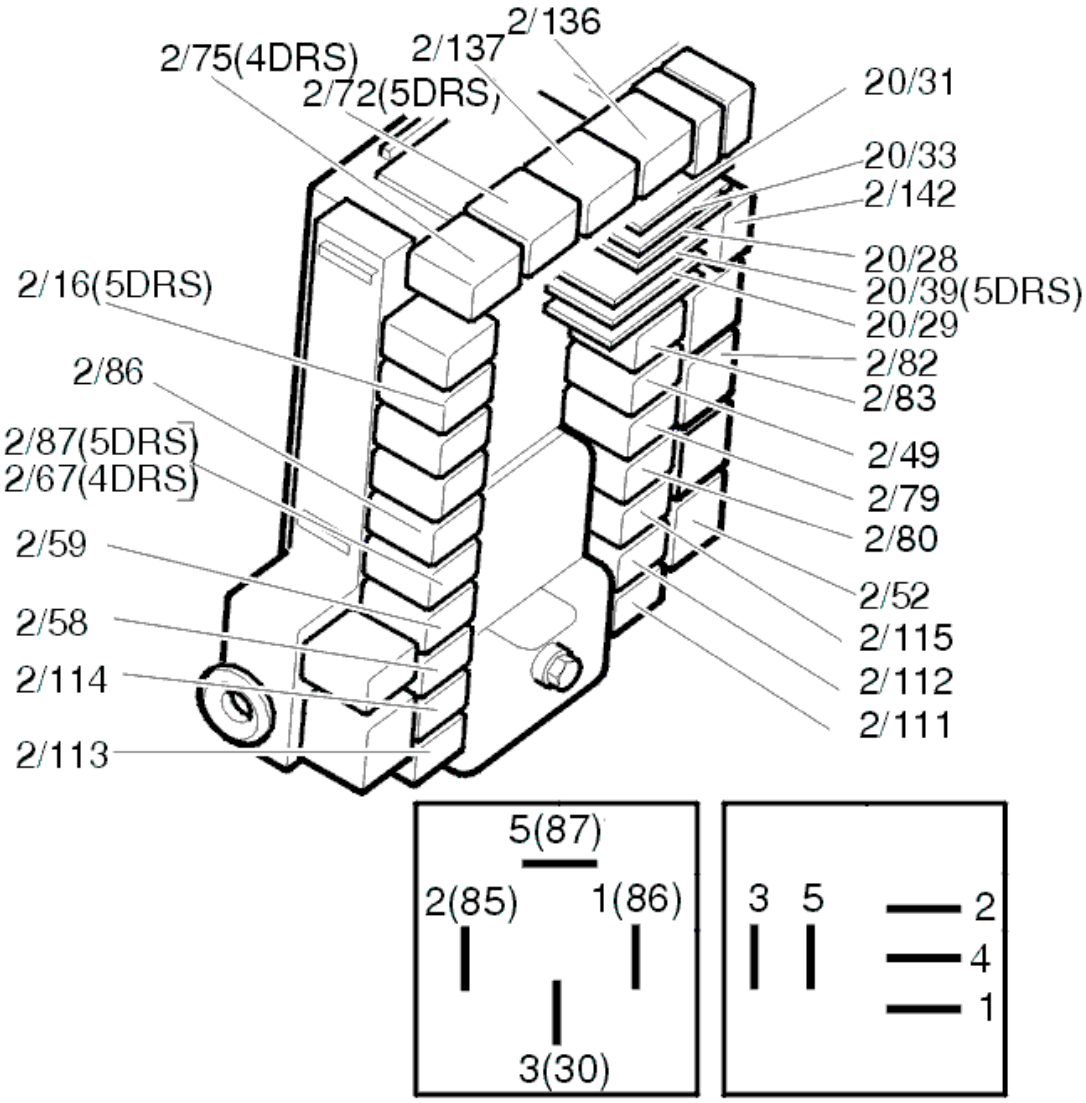

Fig. 406: Identifying Relays
Courtesy of VOLVO CARS CORPORATION

- **Continue**

  Refer to **VERIFICATION**

VERIFICATION

VERIFICATION

HINT: After the repair it is necessary to check that the fault has been rectified.

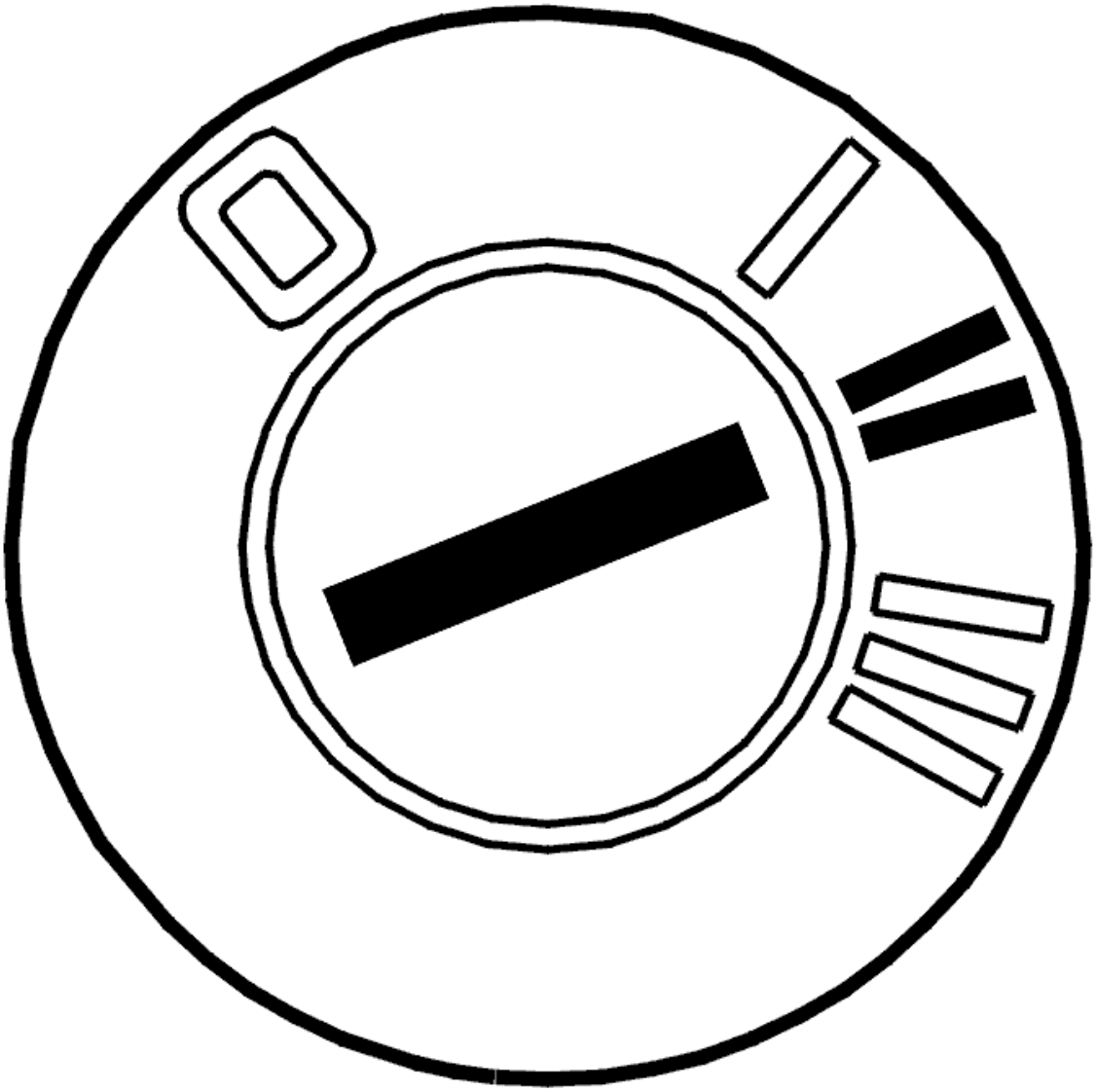

Fig. 407: Identifying Ignition ON
Courtesy of VOLVO CARS CORPORATION

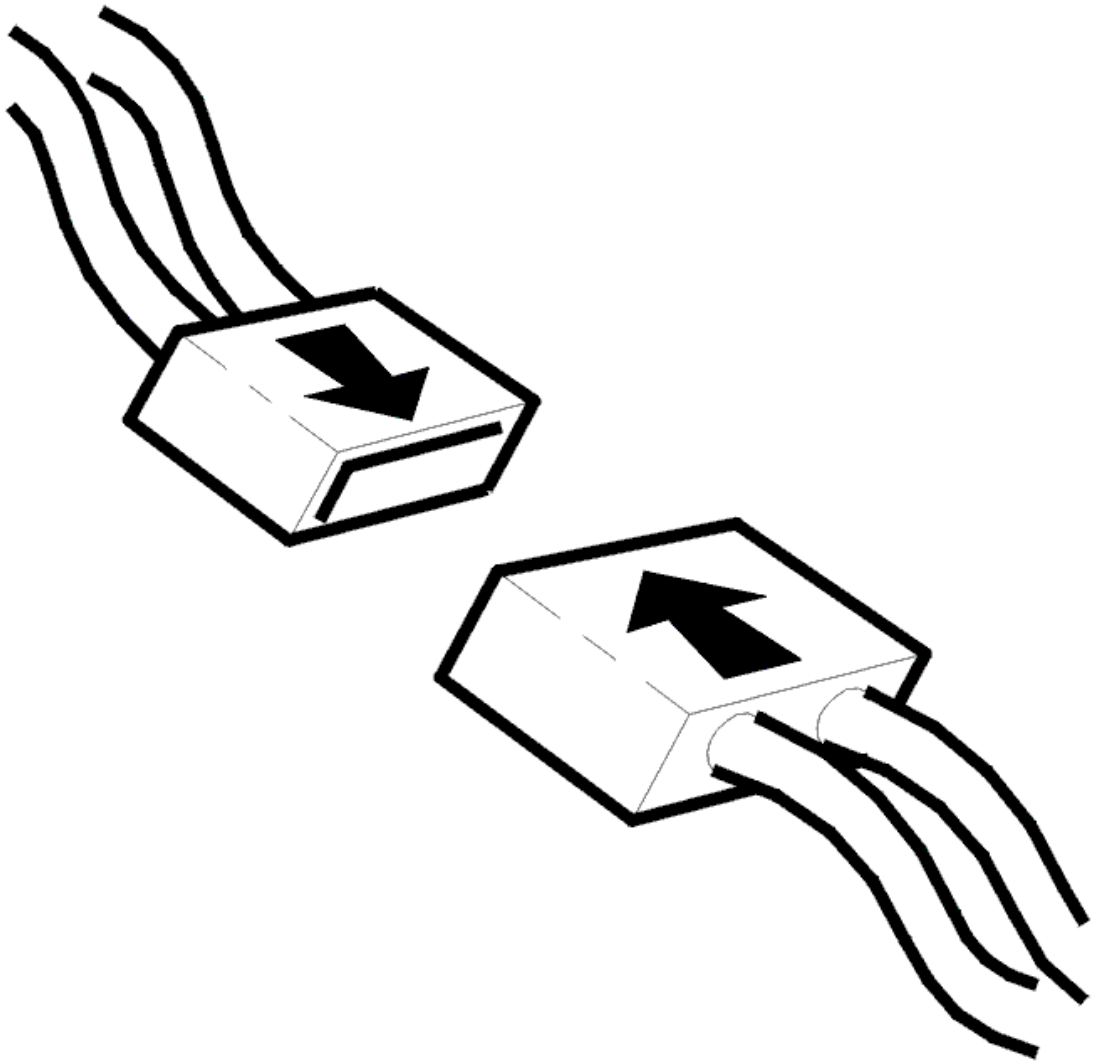

Fig. 408: Connecting Connector
Courtesy of VOLVO CARS CORPORATION

- Ignition off.
- Install the components, connect the connectors, etc.
- Ignition on.

  Activate rear fog lamps.

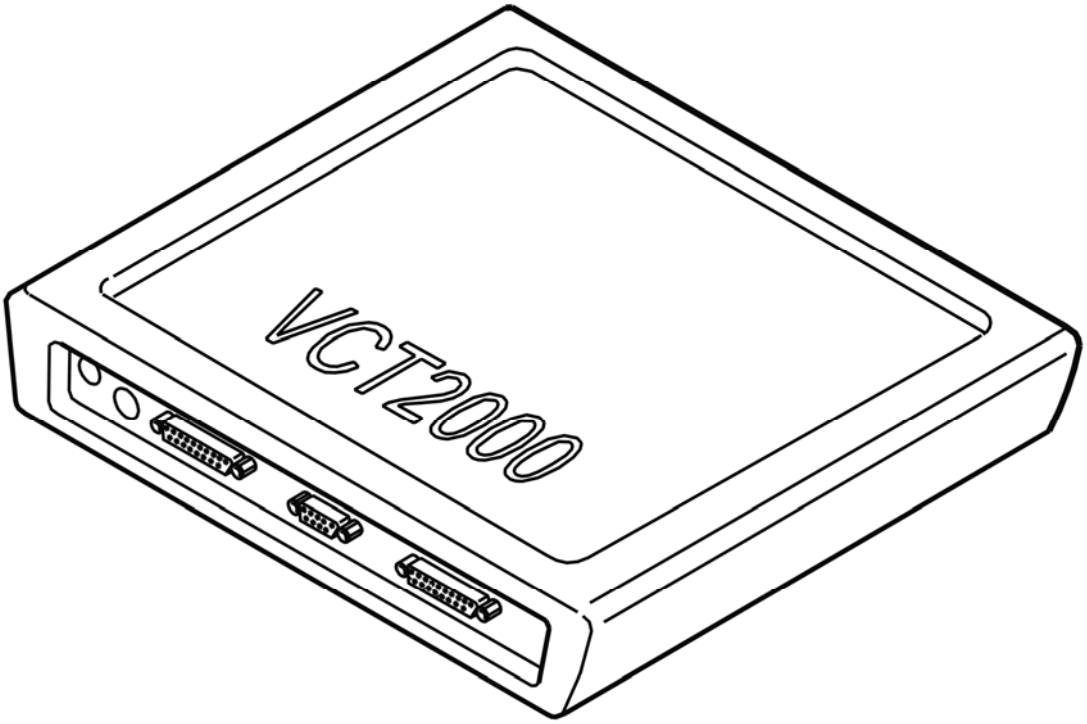

Fig. 409: Identifying VCT2000 Diagnostic Tool Symbol In VIDA
Courtesy of VOLVO CARS CORPORATION

Do the rear fog lamps work?

- **YES**

  VERIFIED: Troubleshooting has been completed.

- **NO**

  Refer to **INFORMATION**

INFORMATION

FAULT-TRACING INFORMATION

The fault should have been detected and remedied. As this is not the case fault-tracing has failed.

Exit fault-tracing for this diagnostic trouble code (DTC) or make another attempt.

REM-8D11: HIGH LEVEL STOP LAMP. SIGNAL TOO LOW (2005-2012)

DIAGNOSTIC TROUBLE CODE (DTC) INFORMATION REM-8D11

Condition

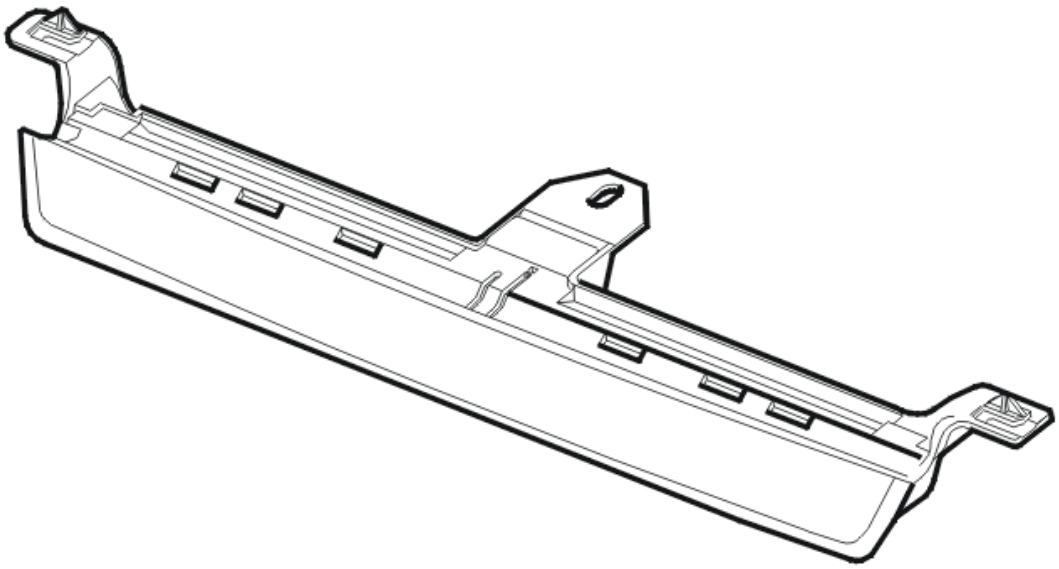

Fig. 410: Identifying High Level Stop Lamp
Courtesy of VOLVO CARS CORPORATION

The rear electronic module (REM) powers the high level stop lamps directly via an output.

The diagnostic trouble code (DTC) is stored if the rear electronic module (REM) registers that the signal at the output is too low.

The diagnostic trouble code (DTC) can be diagnosed at key position II.

Substitute Value

- None.

Possible Source

- Short-circuit to ground in the signal cable.

Fault symptom[s]

- The stop lamp does not light when the brake pedal is depressed.

SIGNAL TOO LOW

CHECKING THE WIRING

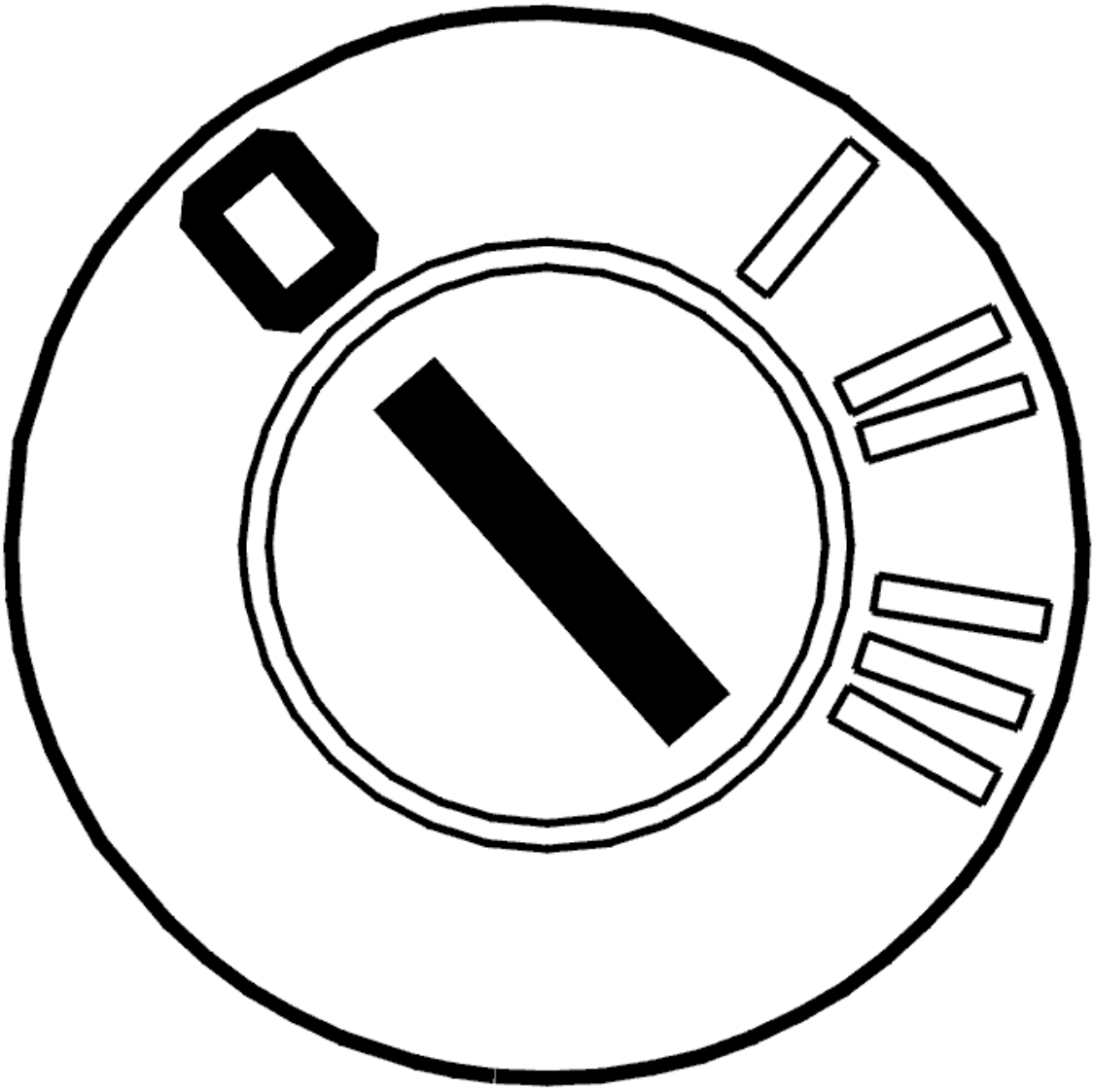

Fig. 411: Identifying Ignition OFF
Courtesy of VOLVO CARS CORPORATION

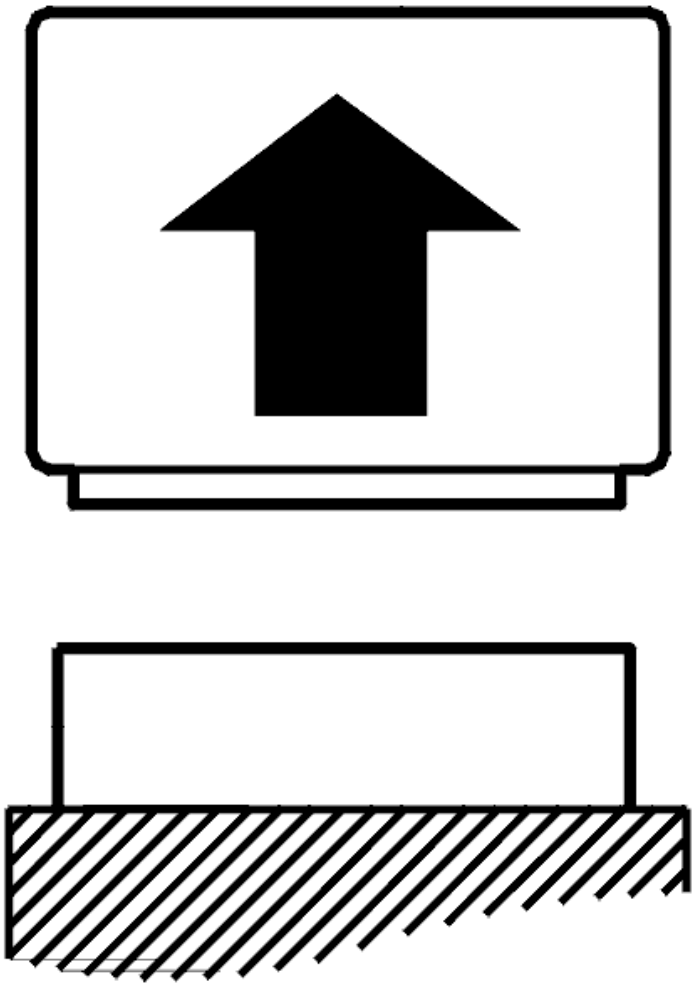

Fig. 412: Disconnecting Connector
Courtesy of VOLVO CARS CORPORATION

- Ignition off
- Disconnect connectors A and F on the rear electronic module (REM).

  Check the signal cable. Check for a short-circuit to ground.

  Take readings between:

  - Rear electronic module (REM) terminal #F4 (#44) and terminal #1 on the connector for the high level stop lamp.

  Remedy as necessary.

  Other information

- see **CONNECTING THE BREAKOUT BOX**
- see **SIGNAL SPECIFICATION**
- see **CHECKING WIRING AND TERMINALS**

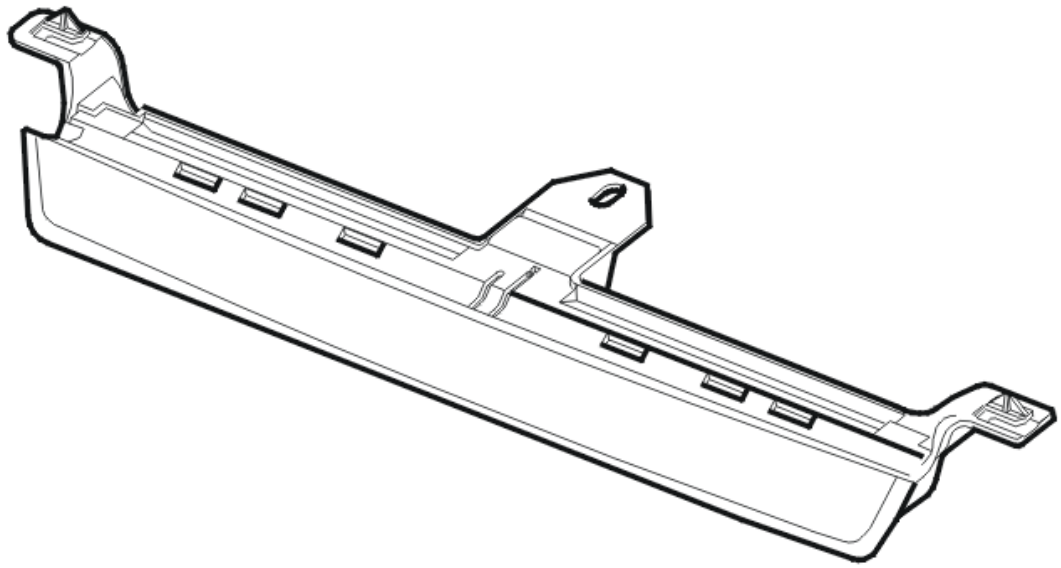

Fig. 413: Identifying High Level Stop Lamp
Courtesy of VOLVO CARS CORPORATION

- **Continue**

  Refer to **VERIFICATION**

VERIFICATION

VERIFICATION

HINT: After carrying out the repair, check that the fault has been remedied.

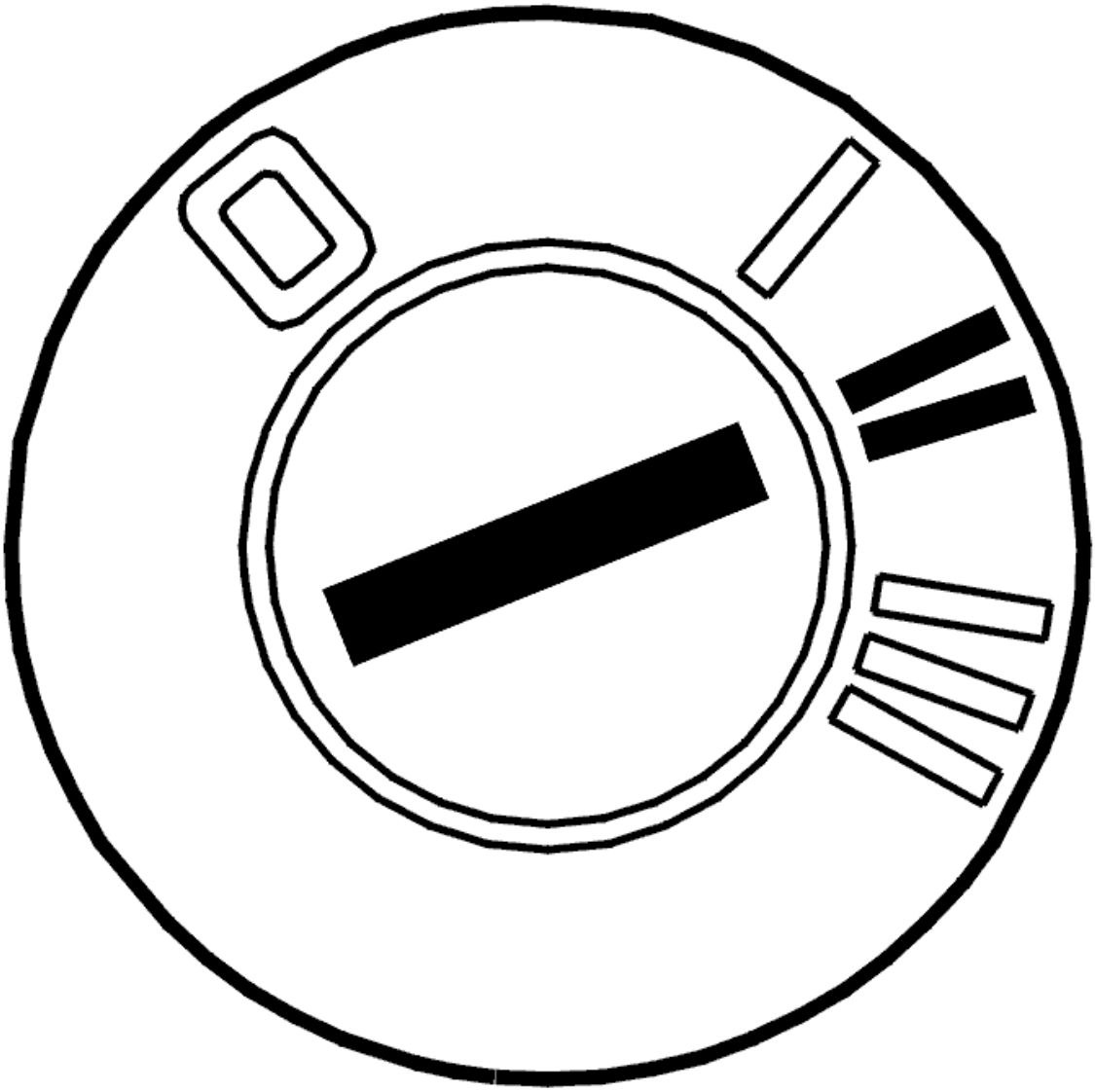

Fig. 414: Identifying Ignition ON
Courtesy of VOLVO CARS CORPORATION

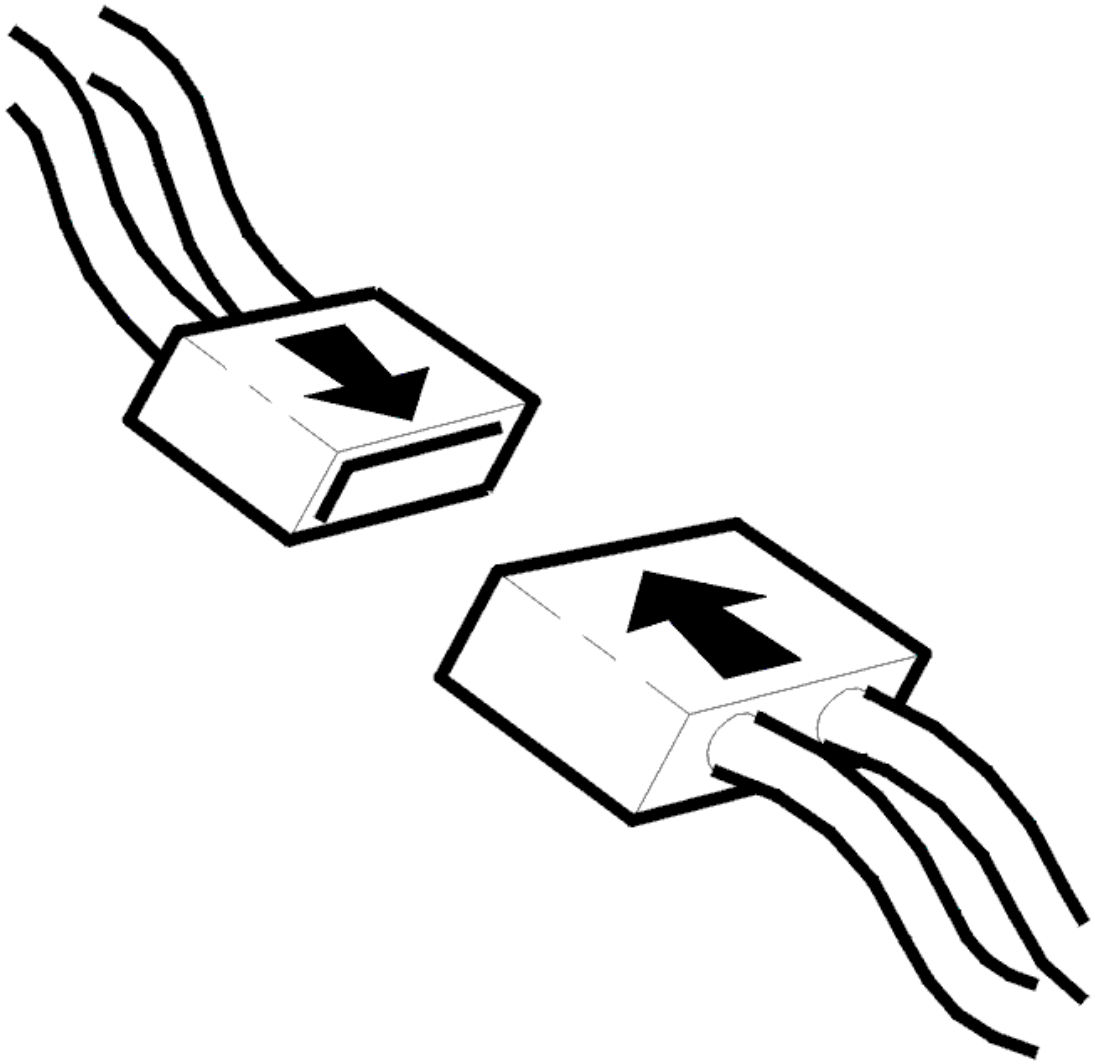

Fig. 415: Connecting Connector
Courtesy of VOLVO CARS CORPORATION

- Ignition off
- Reinstall the connectors, components etc.
- Ignition on
- Activate the stop lamps.

  Check that the stop lamps are working.

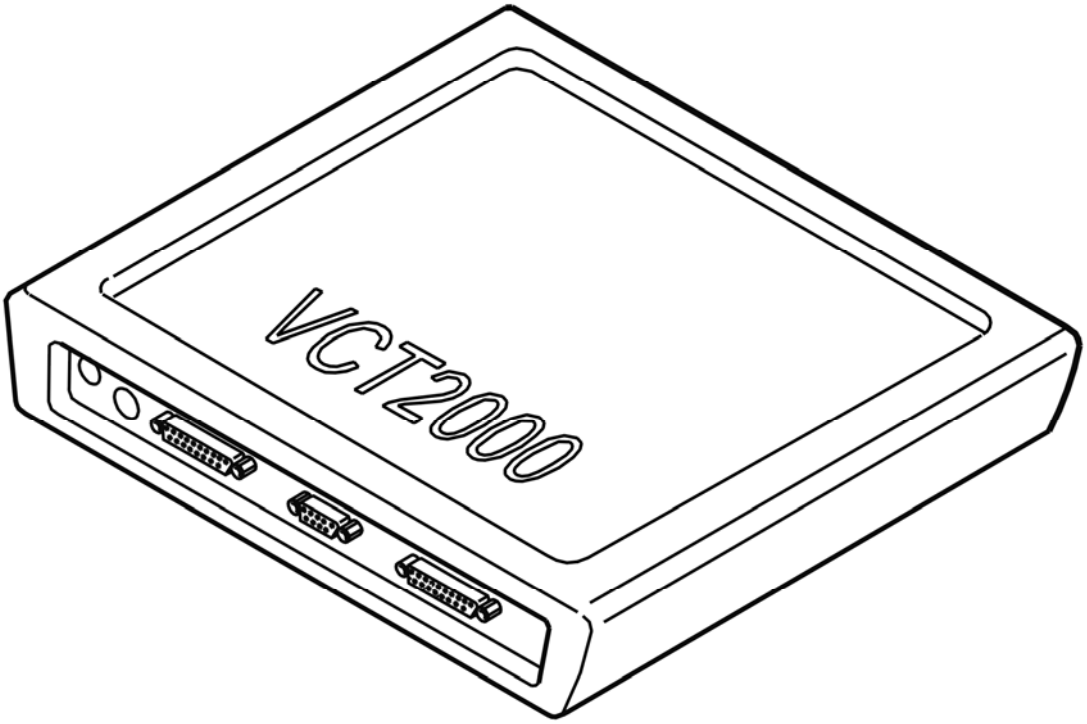

Fig. 416: Identifying VCT2000 Diagnostic Tool Symbol In VIDA
Courtesy of VOLVO CARS CORPORATION

Are the stop lamps working?

- **YES**

  VERIFIED: Troubleshooting has been completed.

- **NO**

  Refer to **INFORMATION**

INFORMATION

FAULT-TRACING INFORMATION

The fault should have been detected and remedied. As this is not the case fault-tracing has failed.

Exit fault-tracing for this diagnostic trouble code (DTC) or make another attempt.

REM-8D11: STOP LAMP. FAULTY SIGNAL (2003-2004)

DIAGNOSTIC TROUBLE CODE (DTC) INFORMATION REM-8D11

Condition

Diagnostic trouble code (DTC) REM-8D11 is stored if the rear electrical module (REM) registers that the signal for the high mounted stop lamp is too high, too low or missing.

NOTE: The diagnostic trouble code (DTC) may be stored if the incorrect roof spoiler is installed. Do not replace the spoiler if the stop lamp is working.

Substitute Value

None.

Possible Source

- Short-circuit or open-circuit in the wiring for the high mounted stop lamp
- Defective stop lamp
- Incorrect roof spoiler installed.

Fault symptom[s]

- The stop lamp does not light when the brake pedal is depressed.

FAULTY SIGNAL

CHECKING COMPONENTS AND WIRING

NOTE: The diagnostic trouble code (DTC) may be stored if the incorrect roof spoiler is installed. Do not replace the roof spoiler if the stop lamp is working.

Check the rear electronic module (REM) and the high-mounted stop lamp connectors. Check for contact resistance and oxidation. Check for loose connections. Check for damage carefully.

HINT: When the stop lamp is activated, the voltage between #1 and #5 in the connector for the stop lamp must be battery voltage.

Check the power supply cable between rear electronic module (REM) terminal #4D (#B04) and brake light connector terminal #1. Check for an open-circuit. Check for a short-circuit to ground.

Check the ground lead between brake light connector terminal #5 and the ground terminal. Check for an open-circuit. Check for a short-circuit to supply voltage.

Try a new brake light if no faults were found.

Remedy as necessary.

Other information:

- To access / replace the high mounted stop lamp, see **HIGH LEVEL STOP LAMP, REPLACING**
- To access the rear electronic module (REM), see **RELAY/FUSE BOX CARGO COMPARTMENT/REAR ELECTRONIC MODULE (REM), REPLACING**
- For information about signals, see **SIGNAL SPECIFICATION**
- see **CHECKING WIRING AND TERMINALS** .

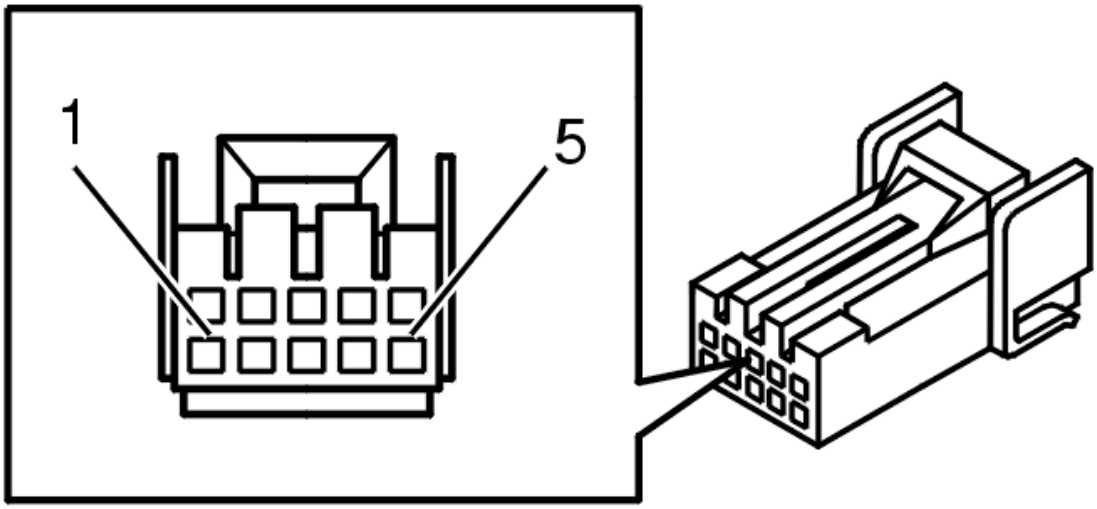

Fig. 417: 10 CD Changer Connector Terminals
Courtesy of VOLVO CARS CORPORATION

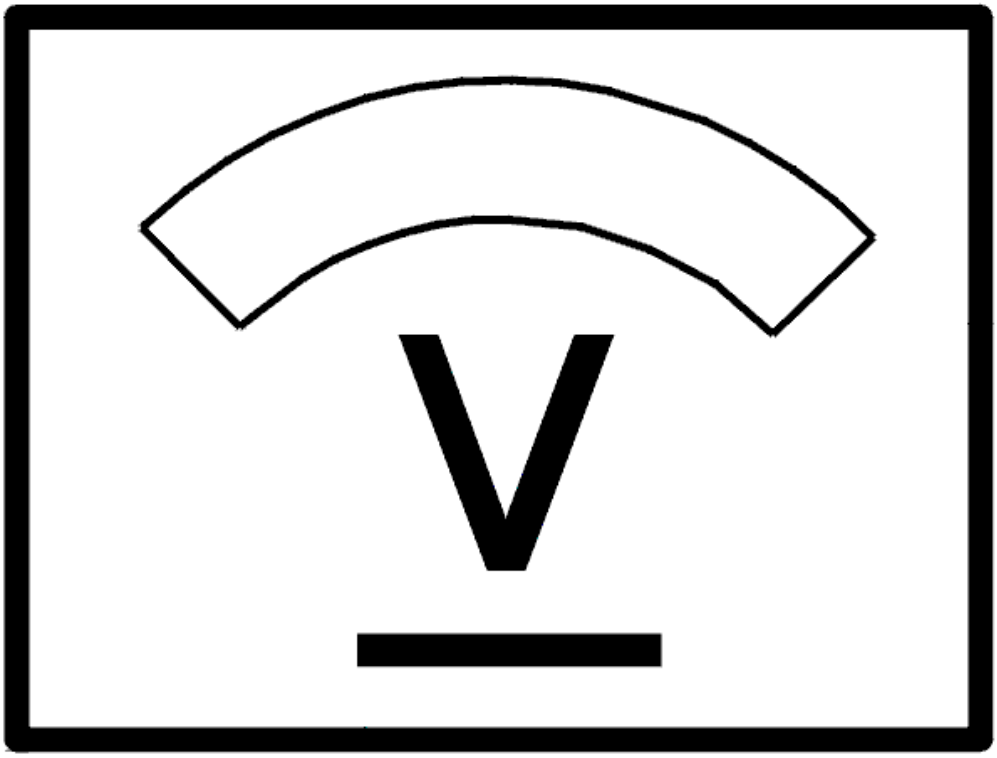

Fig. 418: Identifying Voltage Display
Courtesy of VOLVO CARS CORPORATION

- **Continue**

  Refer to **VERIFICATION**

VERIFICATION

VERIFICATION

HINT: After carrying out the repair, check that the fault has been remedied.

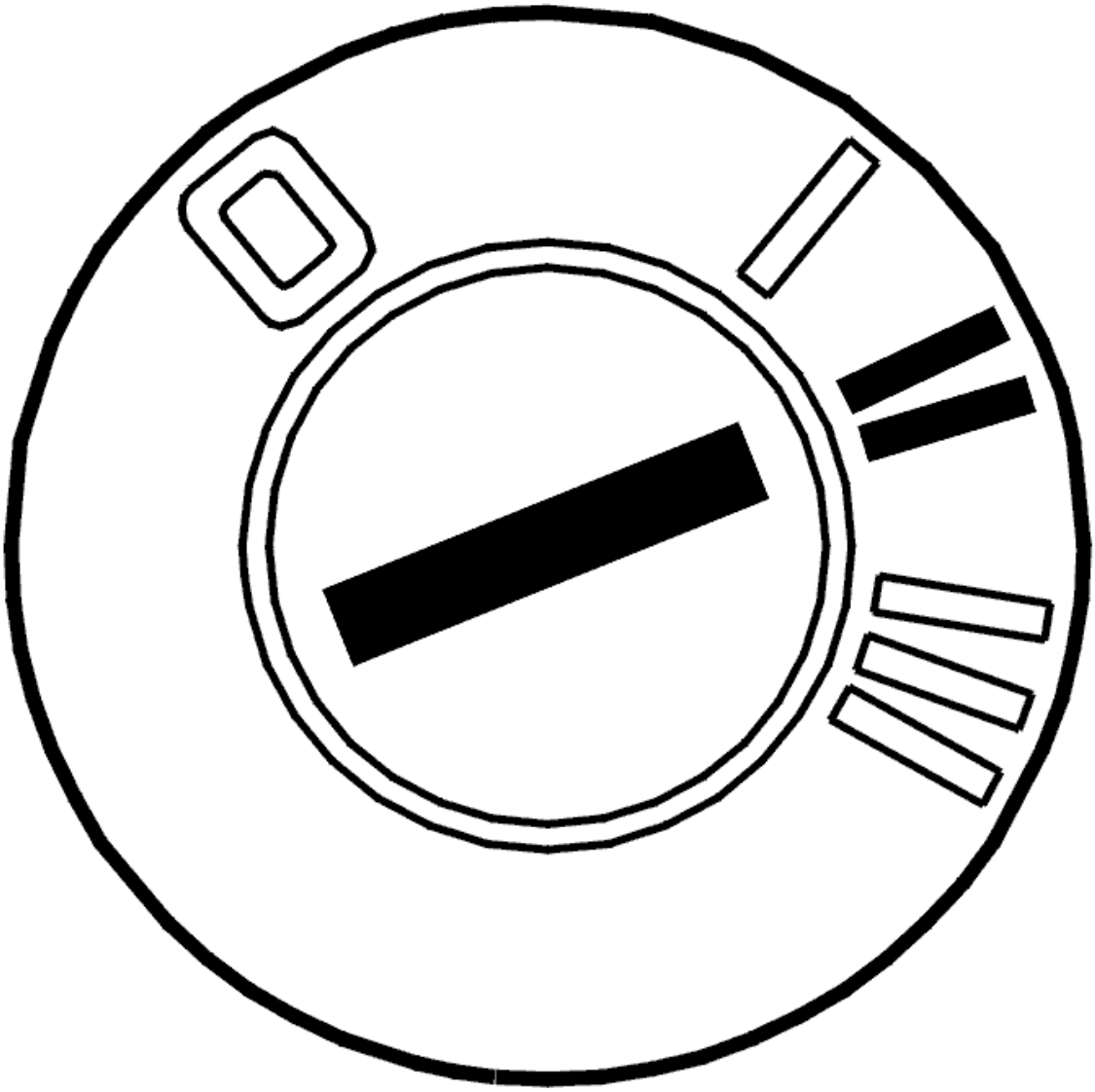

Fig. 419: Identifying Ignition ON
Courtesy of VOLVO CARS CORPORATION

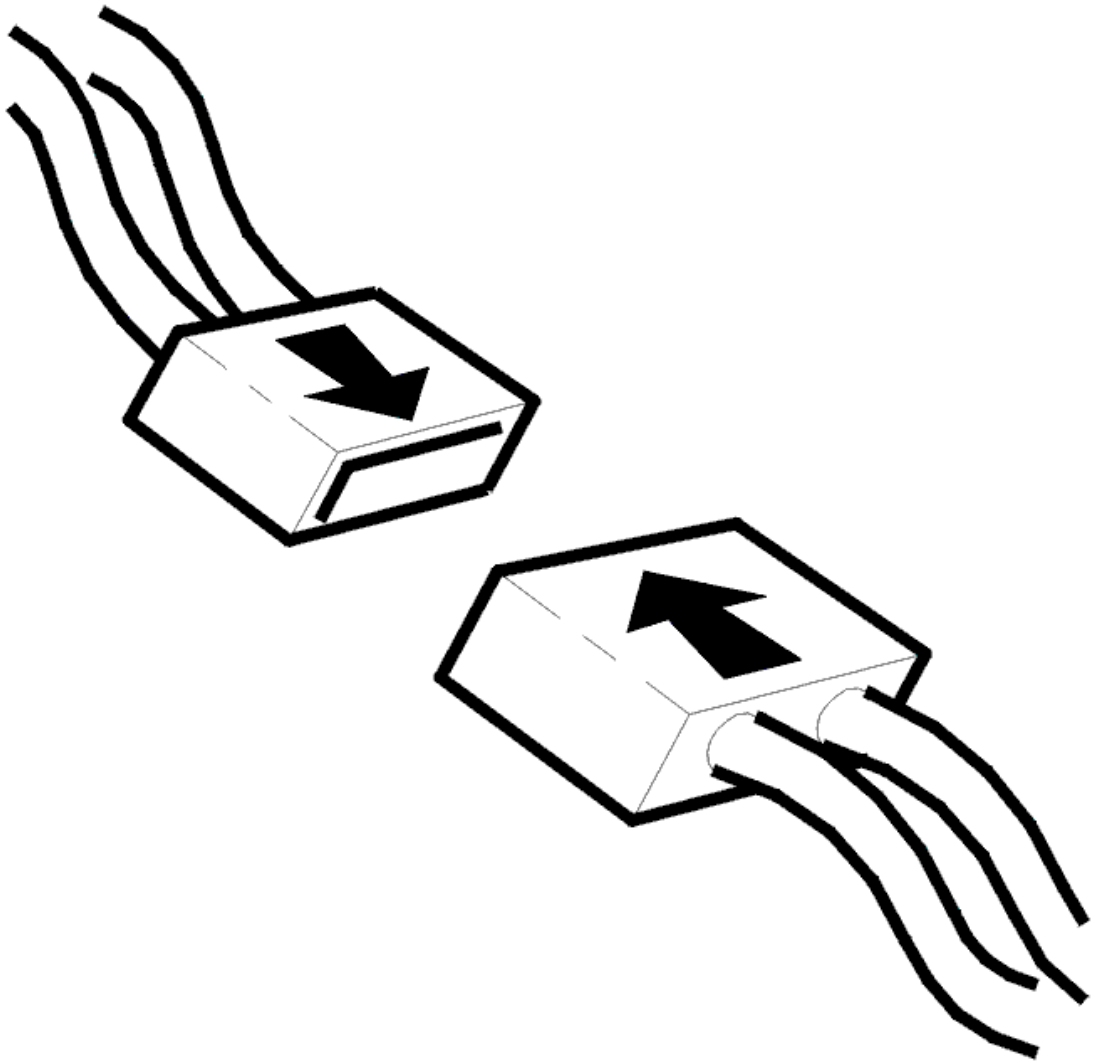

Fig. 420: Connecting Connector
Courtesy of VOLVO CARS CORPORATION

- Ignition off
- Reinstall the connectors, components etc.
- Ignition on.

  Check that the high mounted stop light comes on when the brake pedal is pressed.

Is the high-level stop lamp working?

- **YES**

  VERIFIED: Troubleshooting has been completed.

- **NO**

  Refer to **INFORMATION**

INFORMATION

FAULT-TRACING INFORMATION

The fault should have been detected and remedied. As this is not the case fault-tracing has failed.

Exit fault-tracing for this diagnostic trouble code (DTC) or make another attempt.

REM-8D12: HIGH LEVEL STOP LAMP. SIGNAL TOO HIGH (2005-2012)

DIAGNOSTIC TROUBLE CODE (DTC) INFORMATION REM-8D12

Condition

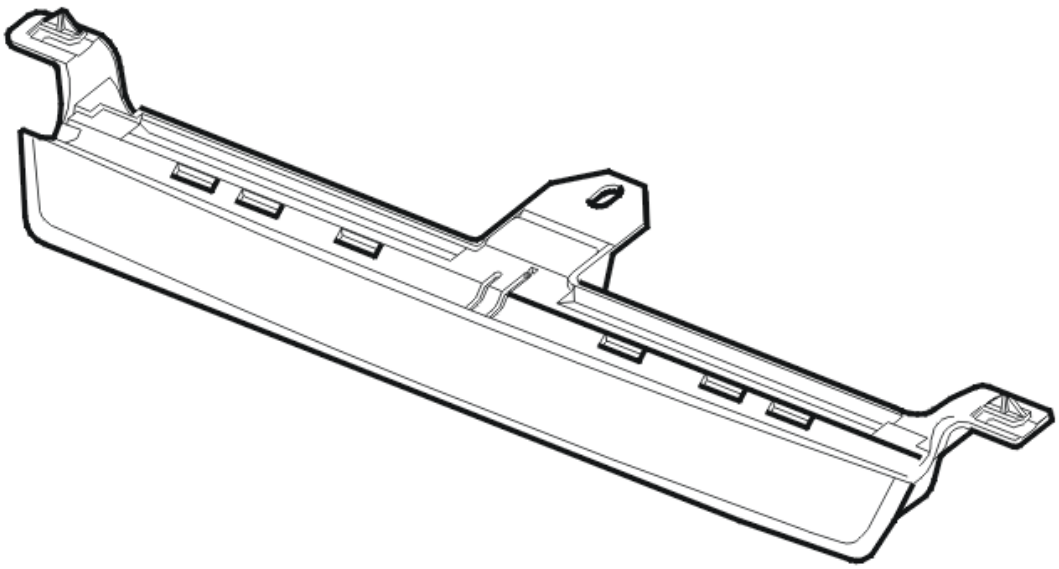

Fig. 421: Identifying High Level Stop Lamp
Courtesy of VOLVO CARS CORPORATION

The rear electronic module (REM) powers the high level stop lamps directly via an output.

The diagnostic trouble code (DTC) is stored if the rear electronic module (REM) registers that the signal at the output is too high.

The diagnostic trouble code (DTC) can be diagnosed at key position II.

Substitute Value

- None.

Possible Source

- Short-circuit to supply voltage in the signal cable
- High brake light not installed/damaged.

Fault symptom[s]

- The stop lamp lights constantly.
- Message in display

SIGNAL TOO HIGH

CHECKING THE WIRING

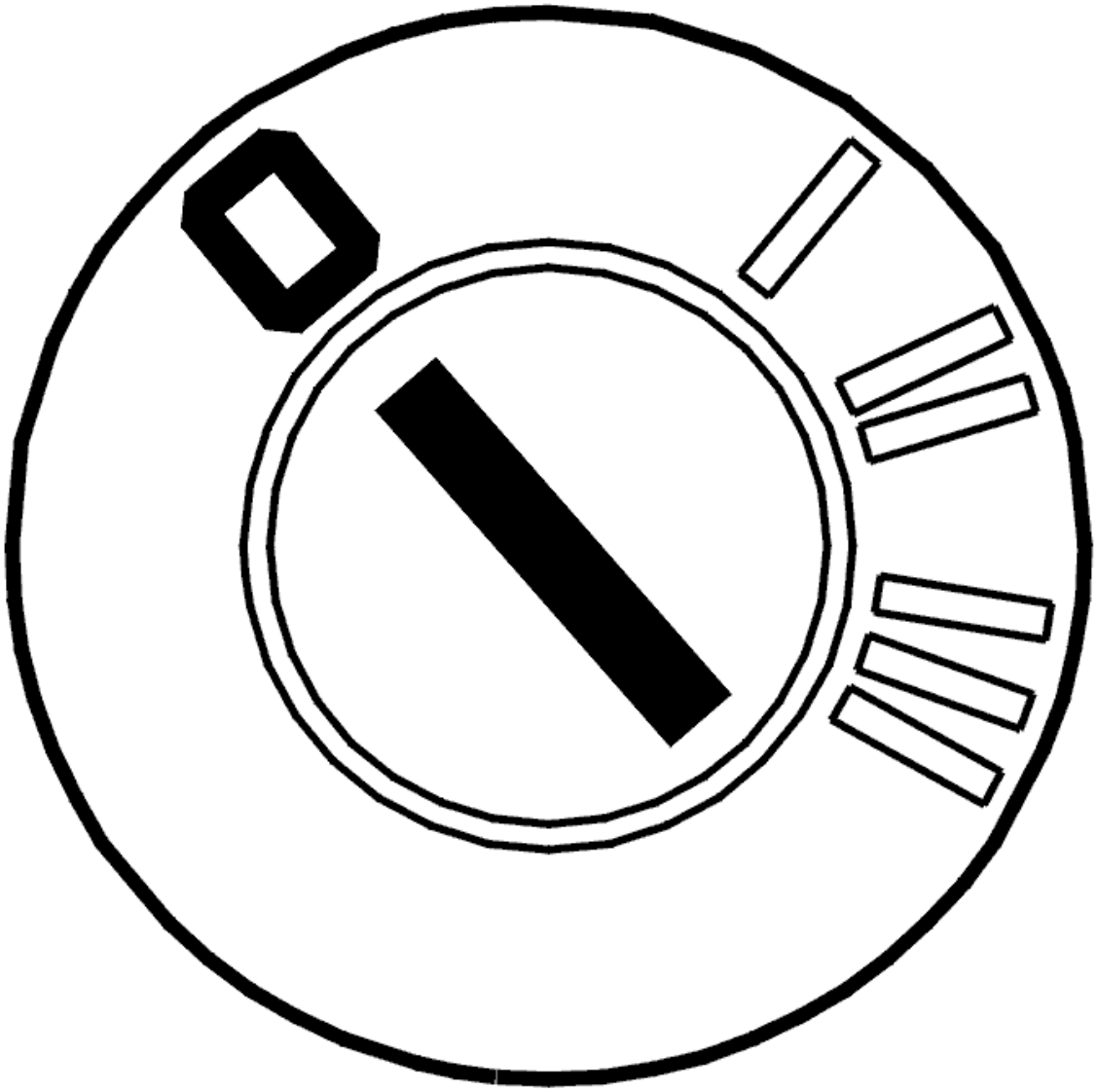

Fig. 422: Identifying Ignition OFF
Courtesy of VOLVO CARS CORPORATION

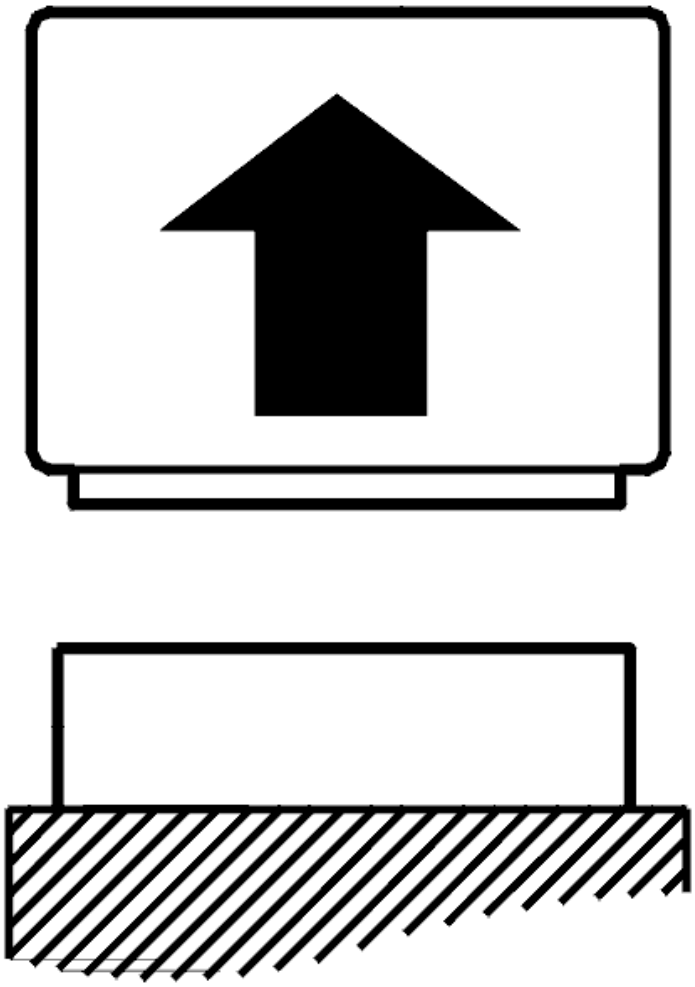

Fig. 423: Disconnecting Connector
Courtesy of VOLVO CARS CORPORATION

- Ignition off
- Disconnect connectors A and F on the rear electronic module (REM).

  Check the signal cable. Check for an open-circuit. Check for a short-circuit to supply voltage.

  Take readings between:

  - Rear electronic module (REM) terminal #F4 (#44) and terminal #1 on the connector for the high level stop lamp.

  Remedy as necessary.

  Other information

- see **CONNECTING THE BREAKOUT BOX**
- see **SIGNAL SPECIFICATION**
- see **CHECKING WIRING AND TERMINALS**

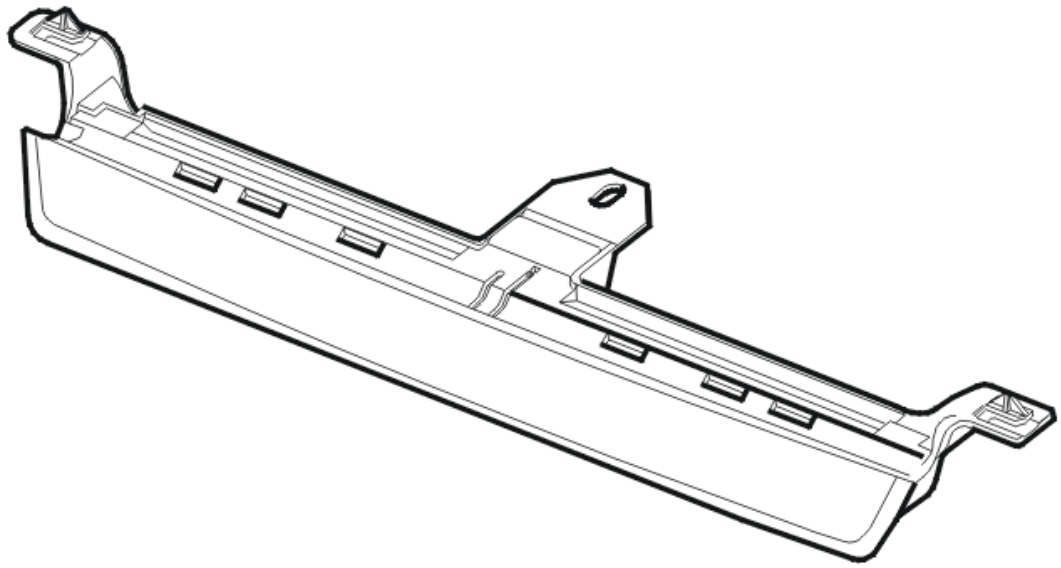

Fig. 424: Identifying High Level Stop Lamp
Courtesy of VOLVO CARS CORPORATION

- **Continue**

  Refer to **VERIFICATION**

VERIFICATION

VERIFICATION

HINT: After carrying out the repair, check that the fault has been remedied.

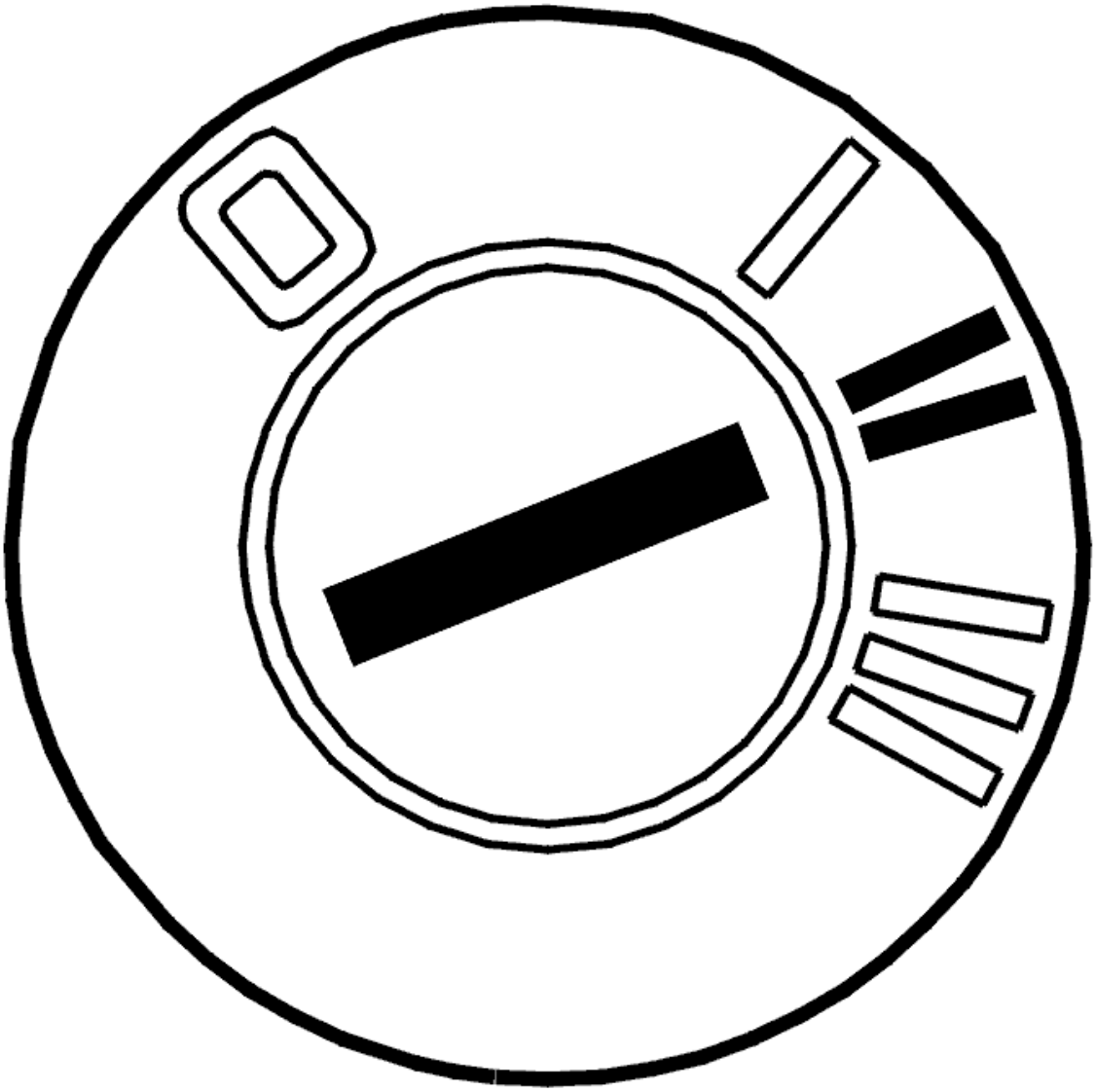

Fig. 425: Identifying Ignition ON
Courtesy of VOLVO CARS CORPORATION

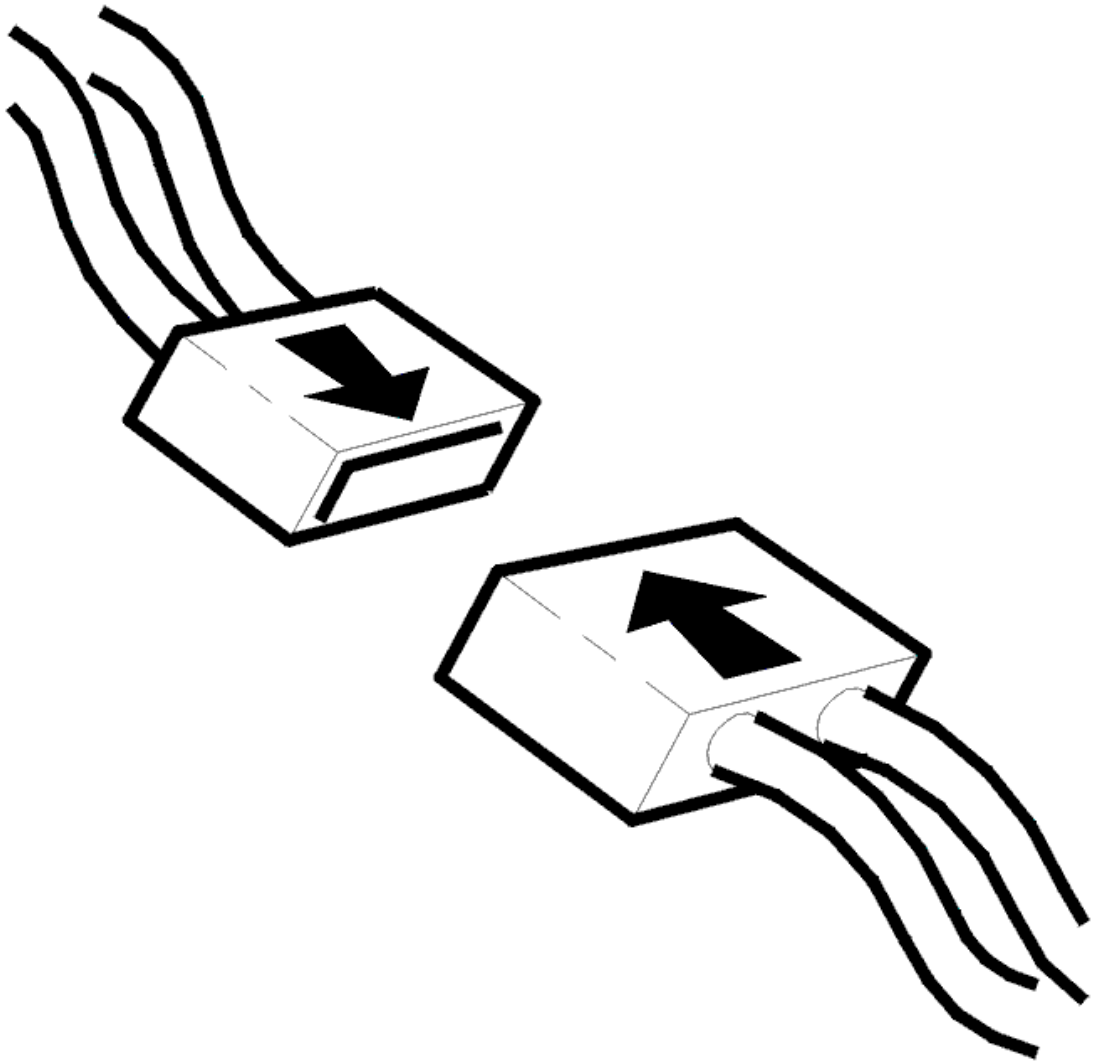

Fig. 426: Connecting Connector
Courtesy of VOLVO CARS CORPORATION

- Ignition off
- Reinstall the connectors, components etc.
- Ignition on.

  Activate the stop lamp.

  Check that the stop lamp is activated.

Is the stop lamp activated?

- **YES**

VERIFIED: Troubleshooting has been completed.

- **NO**

  Refer to **INFORMATION**

INFORMATION

FAULT-TRACING INFORMATION

The fault should have been detected and remedied. As this is not the case fault-tracing has failed.

Exit fault-tracing for this diagnostic trouble code (DTC) or make another attempt.

REM-8E11: RELAY, BACK-UP (REVERSING) LAMP. SIGNAL TOO HIGH. INTERMITTENT FAULT (2003-2004)

DIAGNOSTIC TROUBLE CODE INFORMATION

Condition

If control unit registers signal too high from status flag when activating relay control, the diagnostic trouble code is displayed.

Substitute Value

Nothing.

Possible Source

- Relay control to relay 2/80 short circuited to battery voltage.

Fault symptom[s]

- Reversing light not working.

SIGNAL TOO HIGH. INTERMITTENT FAULT

CHECKING THE WIRING AND COMPONENT

Check that the back-up (reversing) lamp relay (position 2/80) is correctly installed.

Check the relay terminal (2/80). Check for a short-circuit to supply voltage according to **SHORT-CIRCUIT TO SUPPLY VOLTAGE, INTERMITTENT FAULTS** . Check for loose connections according to **LOOSE CONNECTIONS (TERMINALS)** .

Other information:

- For further information about signals and other values, see **SIGNAL SPECIFICATION** .
- To connect the breakout box, see **CONNECTING THE BREAKOUT BOX** .
- To access the rear electronic module, see **RELAY/FUSE BOX CARGO COMPARTMENT/REAR ELECTRONIC MODULE (REM), REPLACING** .
- When the relay is installed and activated, the voltage at the relay guide should be 0 V.

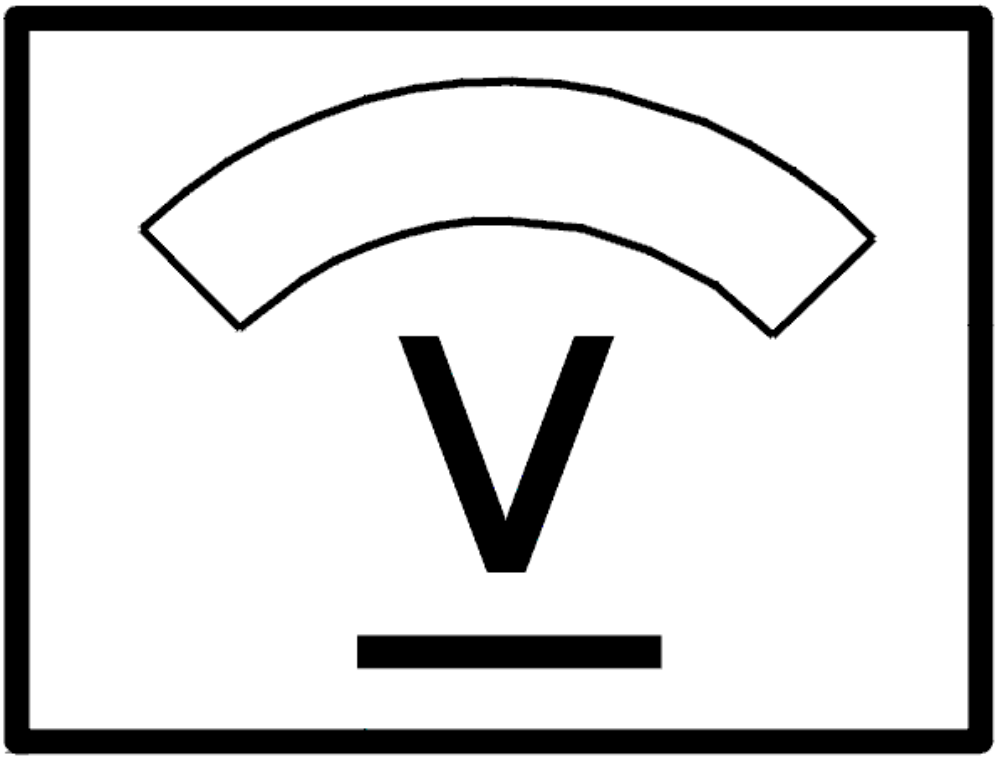

Fig. 427: Identifying Voltage Display
Courtesy of VOLVO CARS CORPORATION

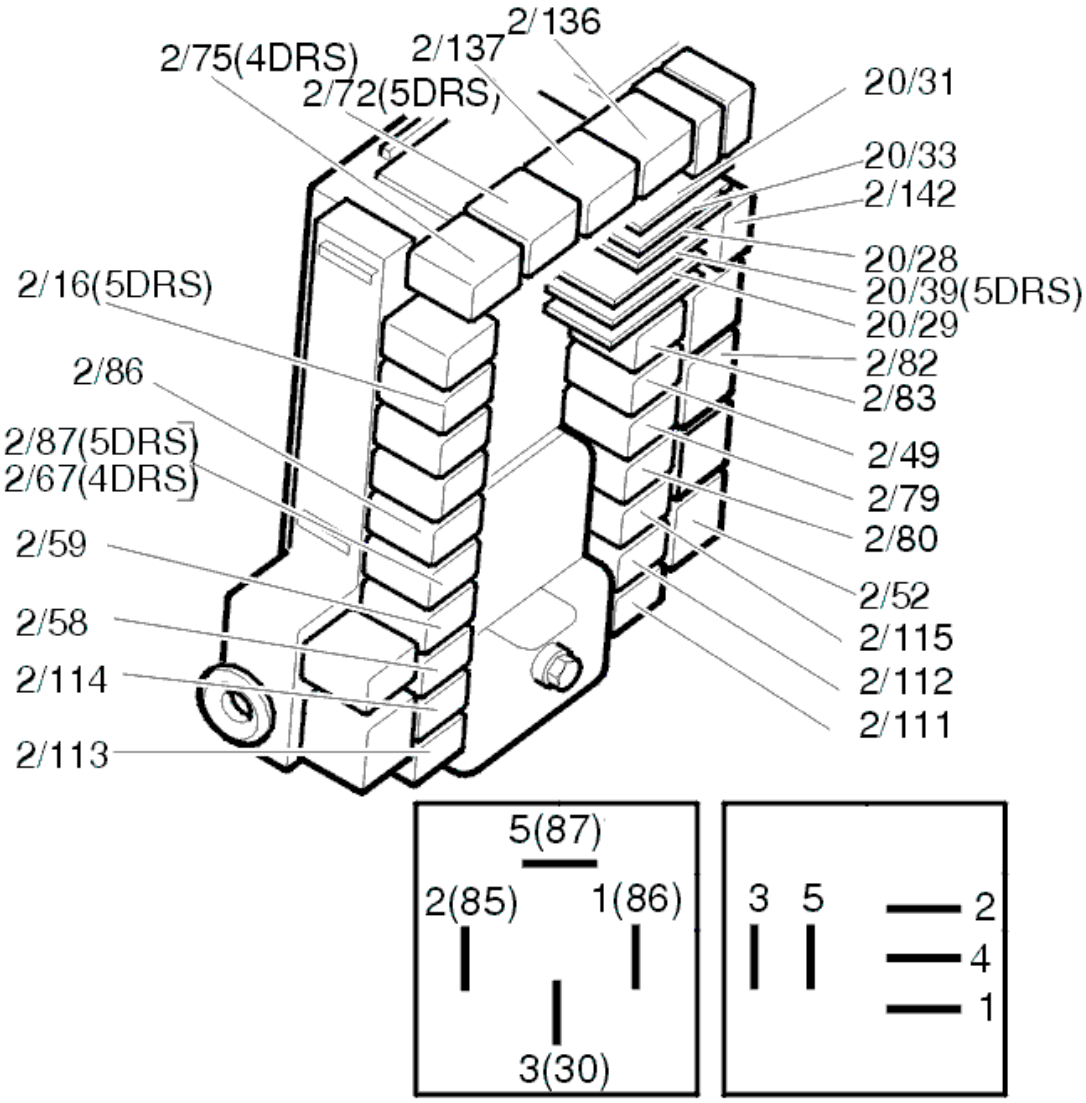

Fig. 428: Identifying Relays
Courtesy of VOLVO CARS CORPORATION

- **Continue**

  Refer to **INFORMATION**

INFORMATION

FAULT-TRACING INFORMATION

If the fault is intermittent, do not verify fault-tracing if the fault does not recur.

It is possible to view the information again, or leave fault-tracing for this diagnostic trouble code (DTC).

REM-8E11: RELAY, BACK-UP (REVERSING) LAMP. SIGNAL TOO HIGH.

PERMANENT FAULT (2003-2004)

DIAGNOSTIC TROUBLE CODE INFORMATION

see **DIAGNOSTIC TROUBLE CODE INFORMATION**

SIGNAL TOO HIGH. PERMANENT FAULT

REPLACING THE COMPONENT

Replace the back-up (reversing) lamp relay (position 2/80). Check the relay terminal, in particular the relay guide (2/80 terminal #2), for a short-circuit to supply voltage according to **SHORT-CIRCUIT TO SUPPLY VOLTAGE. PERMANENT FAULTS** .

Other information:

- For further information about signals and other values, see **SIGNAL SPECIFICATION** .
- To access and replace the relay, see **RELAY/FUSE BOX CARGO COMPARTMENT/REAR ELECTRONIC MODULE (REM), REPLACING** .
- When the relay is installed and activated, the voltage at the relay guide (terminal #2) should be 0 V.

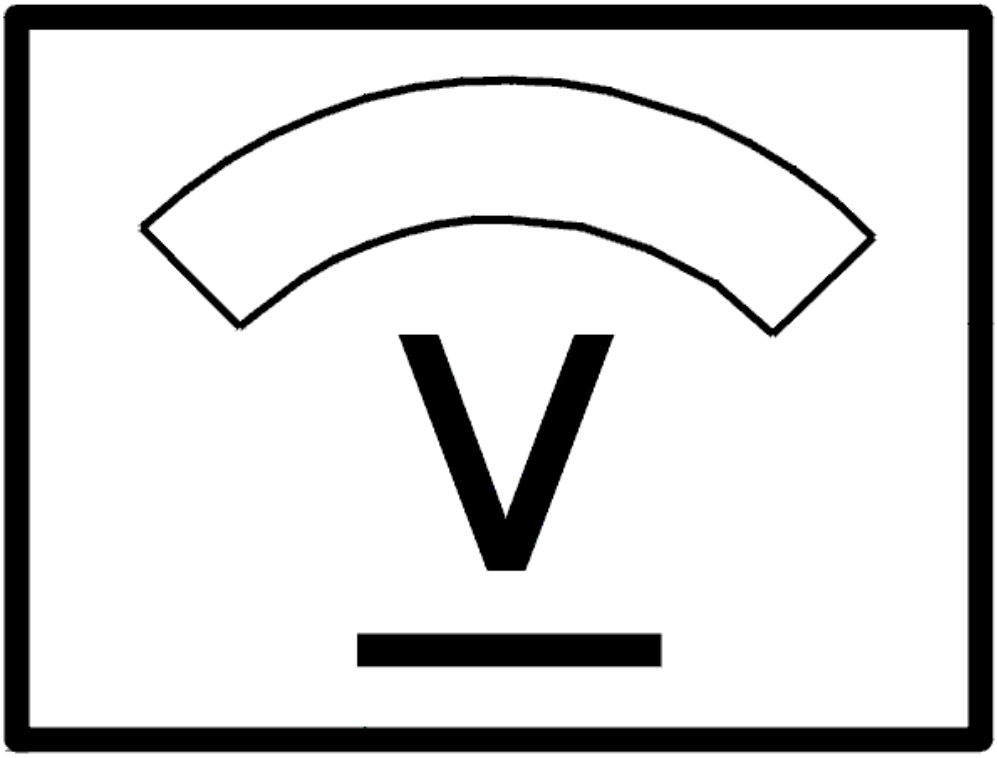

Fig. 429: Identifying Voltage Display
Courtesy of VOLVO CARS CORPORATION

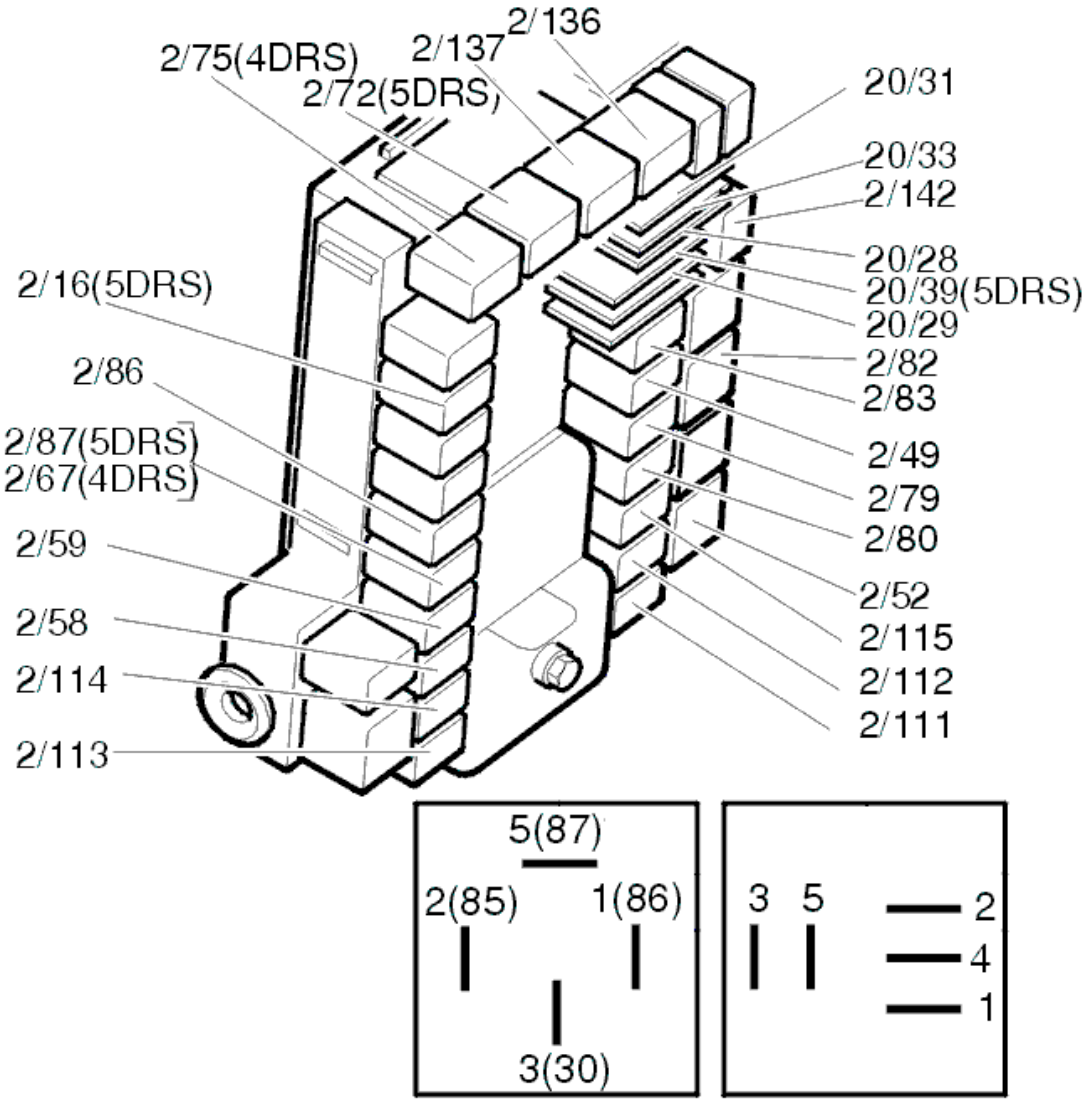

Fig. 430: Identifying Relays
Courtesy of VOLVO CARS CORPORATION

- **Continue**

  Refer to **VERIFICATION**

VERIFICATION

VERIFICATION

HINT: After the repair it is necessary to check that the fault has been rectified.

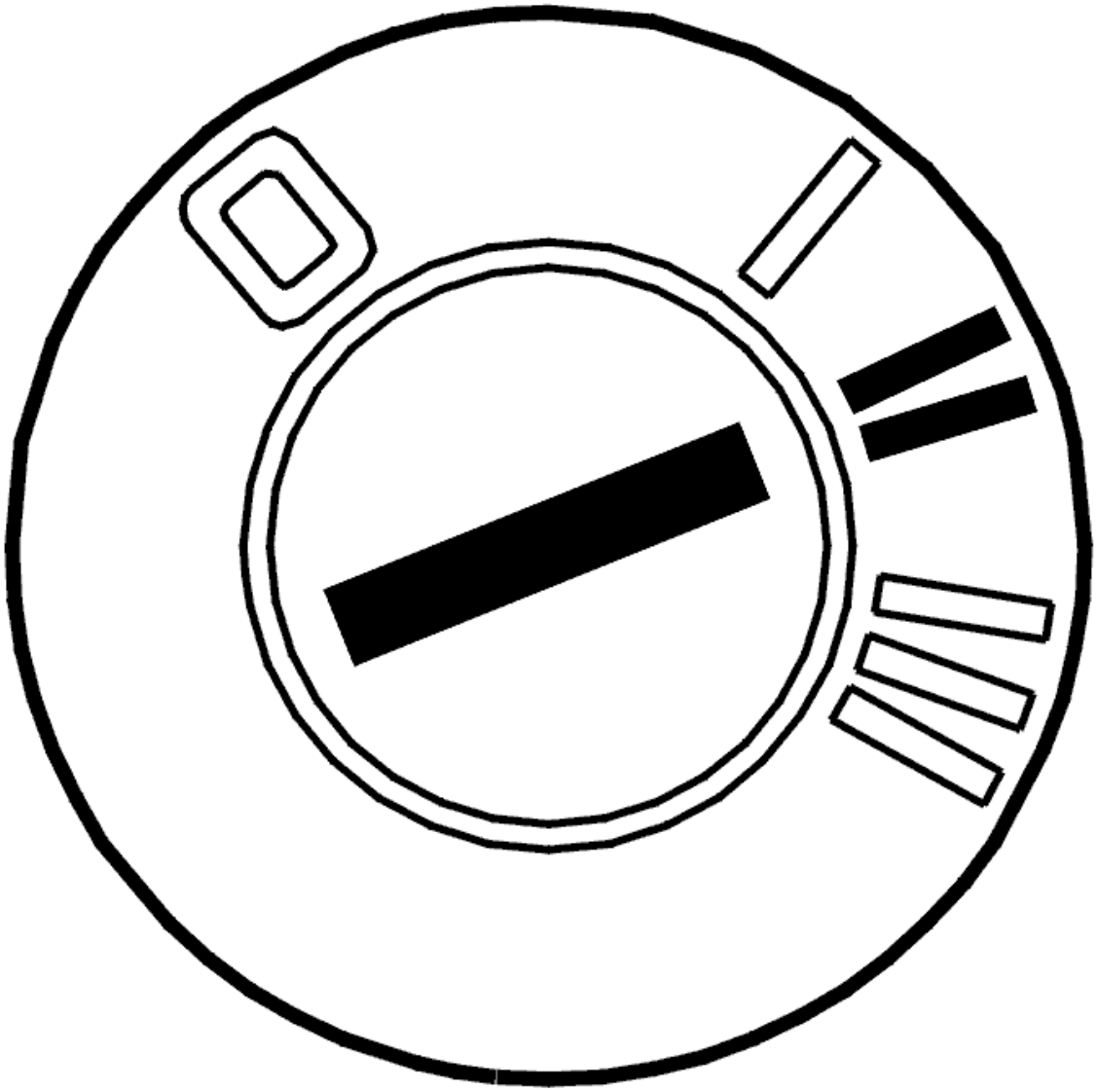

Fig. 431: Identifying Ignition ON
Courtesy of VOLVO CARS CORPORATION

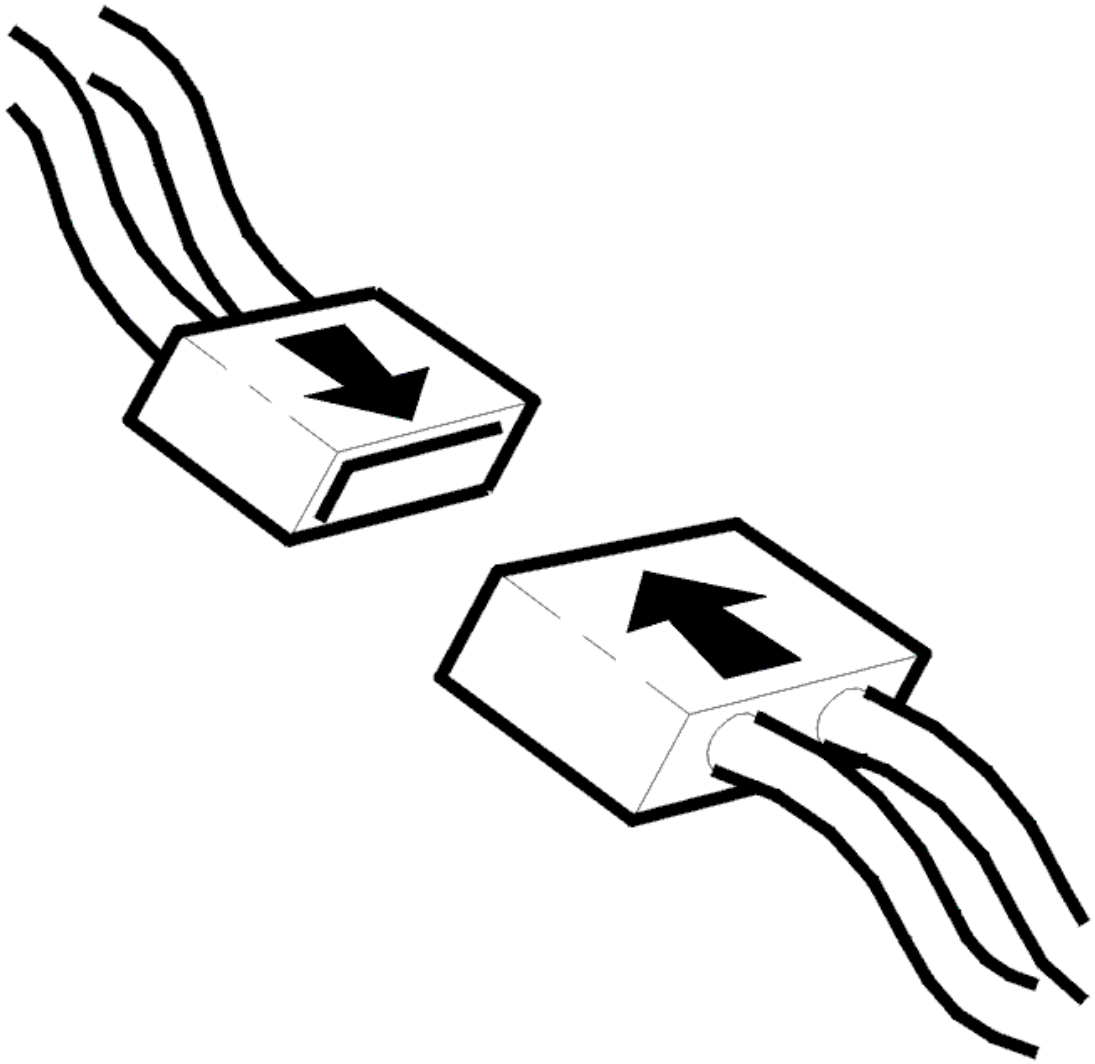

Fig. 432: Connecting Connector
Courtesy of VOLVO CARS CORPORATION

- Ignition off.
- Install the components, connect the connectors, etc.
- Ignition on.

  Activate reversing lamps.

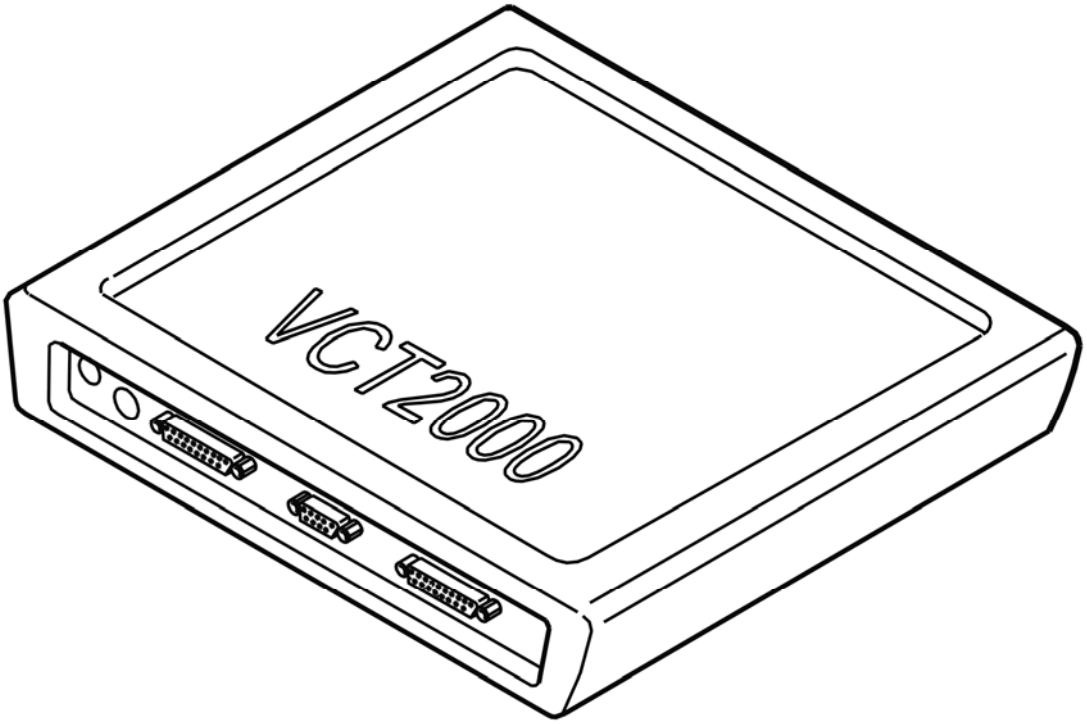

Fig. 433: Identifying VCT2000 Diagnostic Tool Symbol In VIDA
Courtesy of VOLVO CARS CORPORATION

Do the reversing lights work?

- **YES**

  VERIFIED: Troubleshooting has been completed.

- **NO**

  Refer to **INFORMATION**

INFORMATION

FAULT-TRACING INFORMATION

The fault should have been detected and remedied. As this is not the case fault-tracing has failed.

Exit fault-tracing for this diagnostic trouble code (DTC) or make another attempt.

REM-8E13: RELAY, BACK-UP (REVERSING) LAMP. SIGNAL MISSING. INTERMITTENT FAULT (2003-2004)

DIAGNOSTIC TROUBLE CODE INFORMATION

Condition

If control unit registers an open circuit from the status flag when relay control is not activated, the diagnostic trouble code is displayed.

Substitute Value

Nothing.

Possible Source

- Open circuit in relay control to relay 2/80.

Fault symptom[s]

- Reversing light not working.

SIGNAL MISSING. INTERMITTENT FAULT

CHECKING THE WIRING AND COMPONENT

Check that the back-up (reversing) lamp relay (position 2/80) is correctly installed.

Check the relay terminal (2/80). Check for contact resistance and oxidation according to **CONTACT RESISTANCE AND OXIDATION** . Check for loose connections according to **LOOSE CONNECTIONS (TERMINALS)** .

Other information:

- For further information about signals and other values, see **SIGNAL SPECIFICATION** .
- To connect the breakout box, see **CONNECTING THE BREAKOUT BOX** .
- To access the rear electronic module, see **RELAY/FUSE BOX CARGO COMPARTMENT/REAR ELECTRONIC MODULE (REM), REPLACING** .
- When the relay is installed and activated, the voltage at the relay guide should be 0 V.

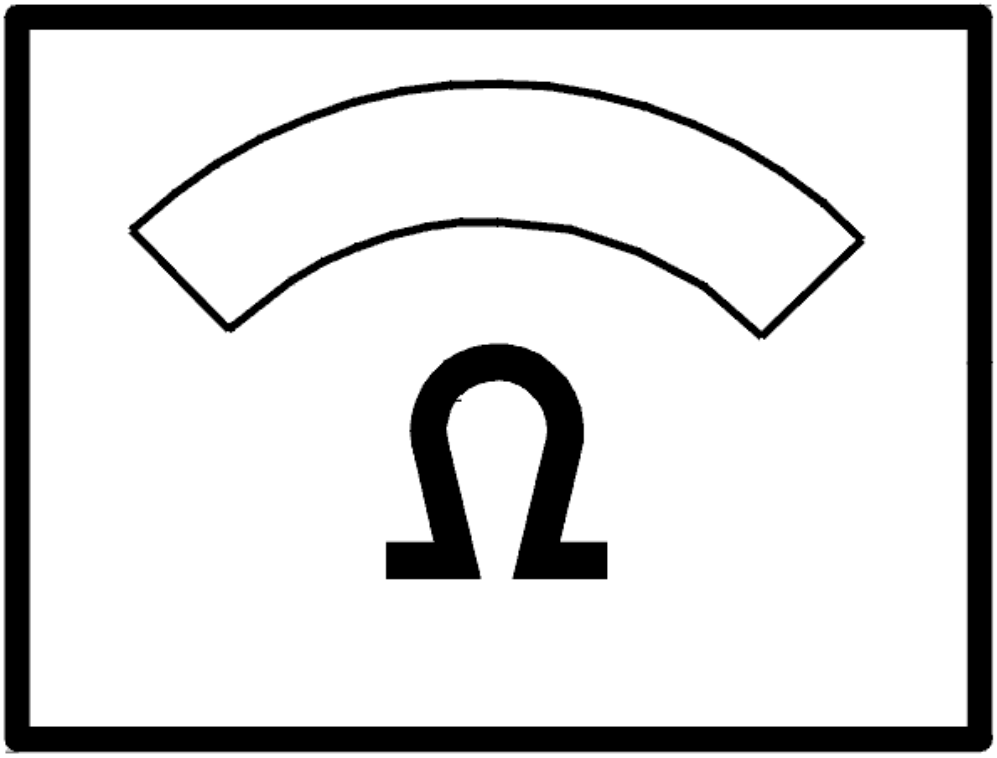

Fig. 434: Identifying Ohm Meter
Courtesy of VOLVO CARS CORPORATION

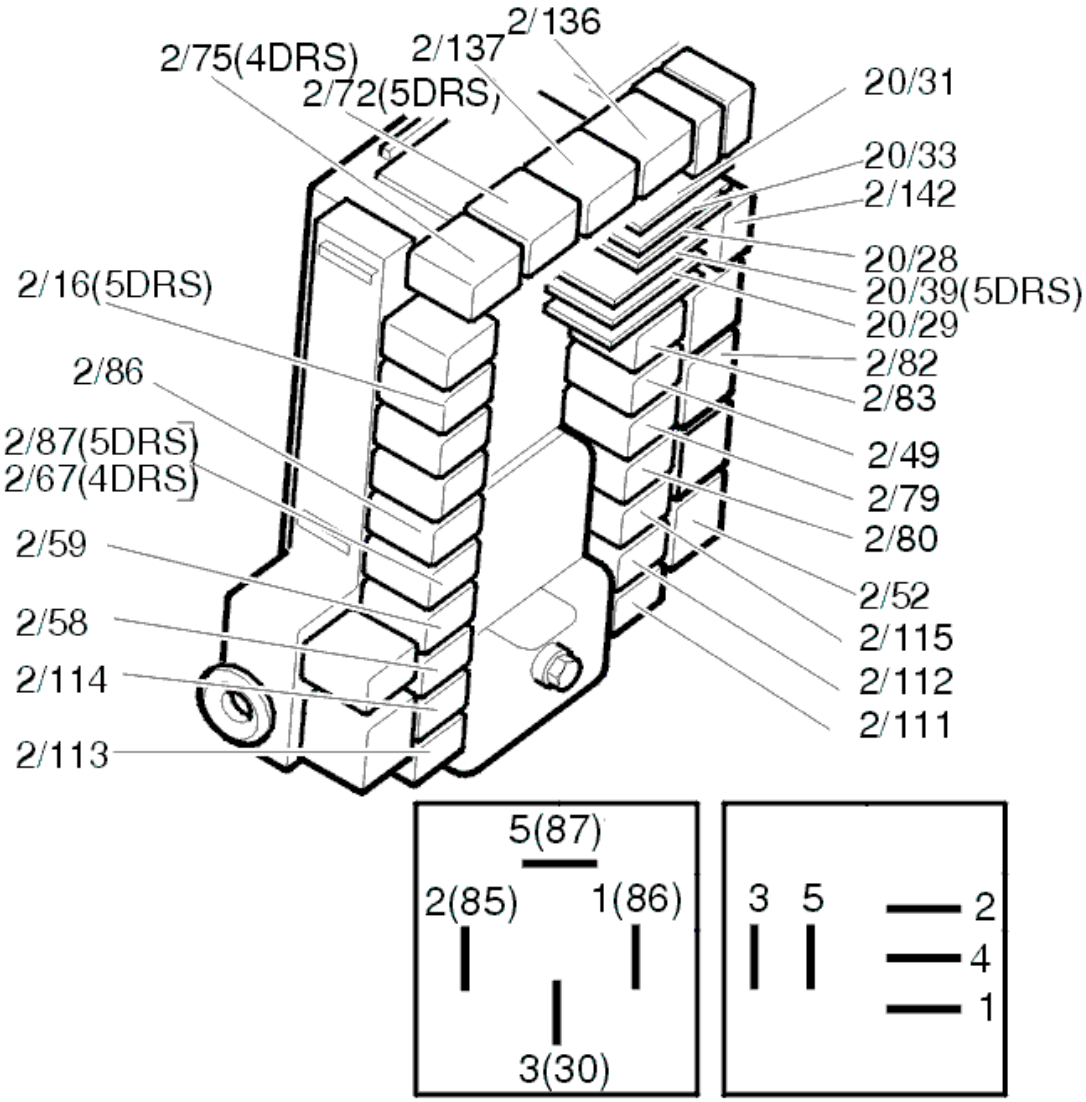

Fig. 435: Identifying Relays
Courtesy of VOLVO CARS CORPORATION

- **Continue**

  Refer to **INFORMATION**

INFORMATION

FAULT-TRACING INFORMATION

If the fault is intermittent, do not verify fault-tracing if the fault does not recur.

It is possible to view the information again, or leave fault-tracing for this diagnostic trouble code (DTC).

REM-8E13: RELAY, BACK-UP (REVERSING) LAMP. SIGNAL MISSING.

PERMANENT FAULT (2003-2004)

DIAGNOSTIC TROUBLE CODE INFORMATION

see **DIAGNOSTIC TROUBLE CODE INFORMATION**

SIGNAL MISSING. PERMANENT FAULT

CHECKING THE COMPONENT

- Check that the back-up (reversing) lamp relay (position 2/80) is correctly installed.
- Remedy as necessary.

Activate the back-up (reversing) lamps by pressing ON and OFF a few times.

Other information:

- For further information about signals and other values, see **SIGNAL SPECIFICATION** .
- To access and replace the relay, see **RELAY/FUSE BOX CARGO COMPARTMENT/REAR ELECTRONIC MODULE (REM), REPLACING** .
- When the relay is installed and not activated, the voltage at the relay guide should be 12 V.

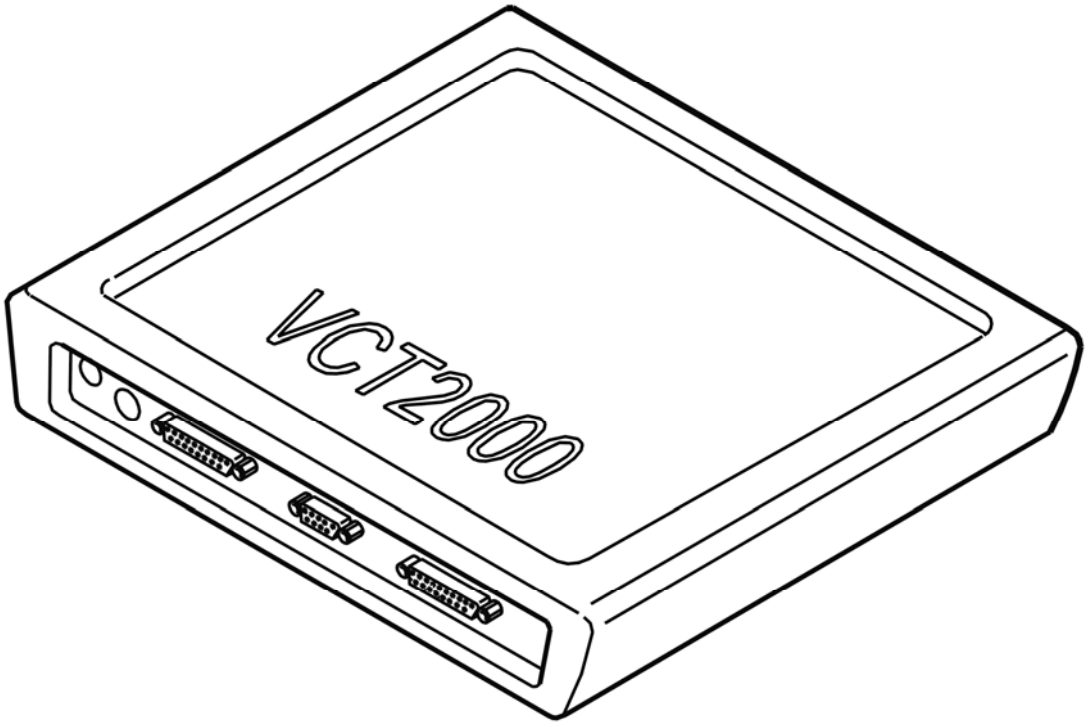

Fig. 436: Identifying VCT2000 Diagnostic Tool Symbol In VIDA

Courtesy of VOLVO CARS CORPORATION

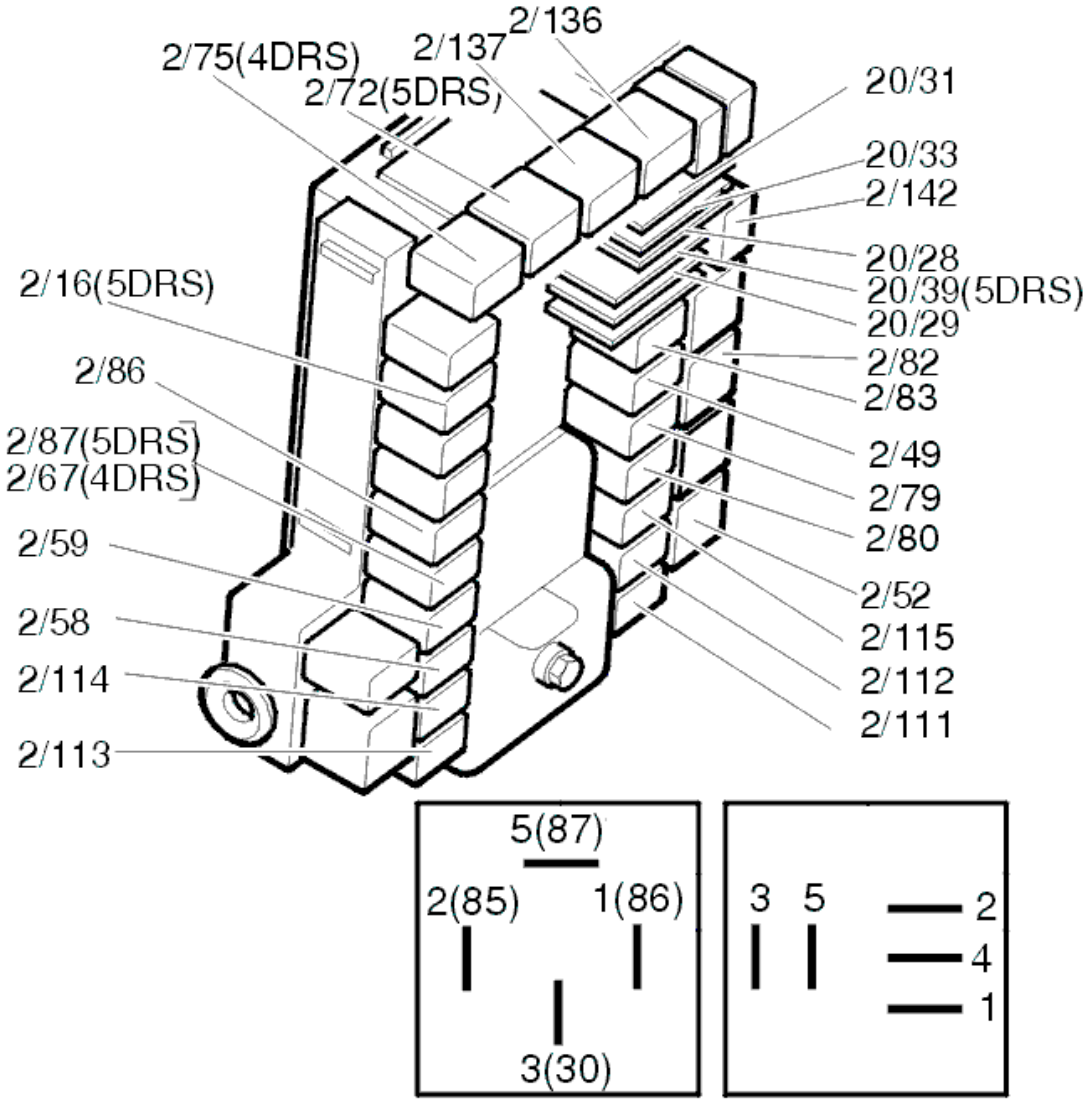

Fig. 437: Identifying Relays
Courtesy of VOLVO CARS CORPORATION

Do the back-up (reversing) lamps function?

- **YES**

  OKAY: Troubleshooting has been completed.

- **NO**

  Refer to **REPLACING THE COMPONENT**

REPLACING THE COMPONENT

Replace the back-up (reversing) lamp relay (position 2/80). Check the relay terminal, in particular the relay guide (2/80 terminal #2), for an open-circuit according to **OPEN-CIRCUIT, PERMANENT FAULTS** .

Other information:

- For further information about signals and other values, see **SIGNAL SPECIFICATION** .
- To access and replace the relay, see **RELAY/FUSE BOX CARGO COMPARTMENT/REAR ELECTRONIC MODULE (REM), REPLACING** .
- When the relay is installed and not activated, the voltage at the relay guide should be 12 V.

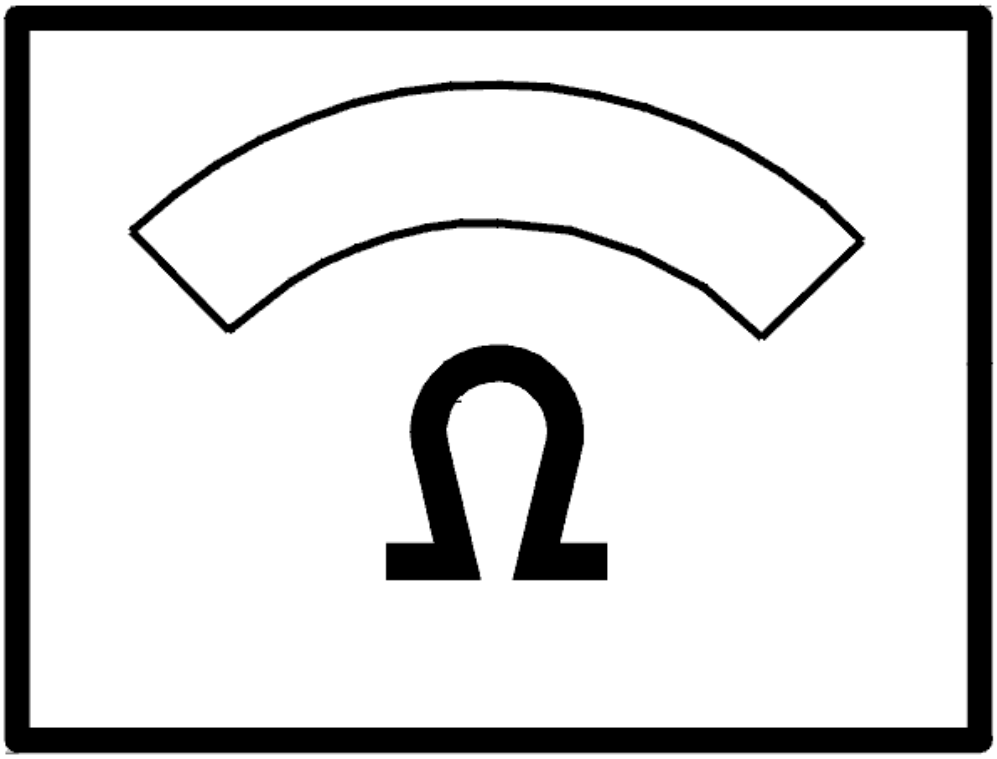

Fig. 438: Identifying Ohm Meter
Courtesy of VOLVO CARS CORPORATION

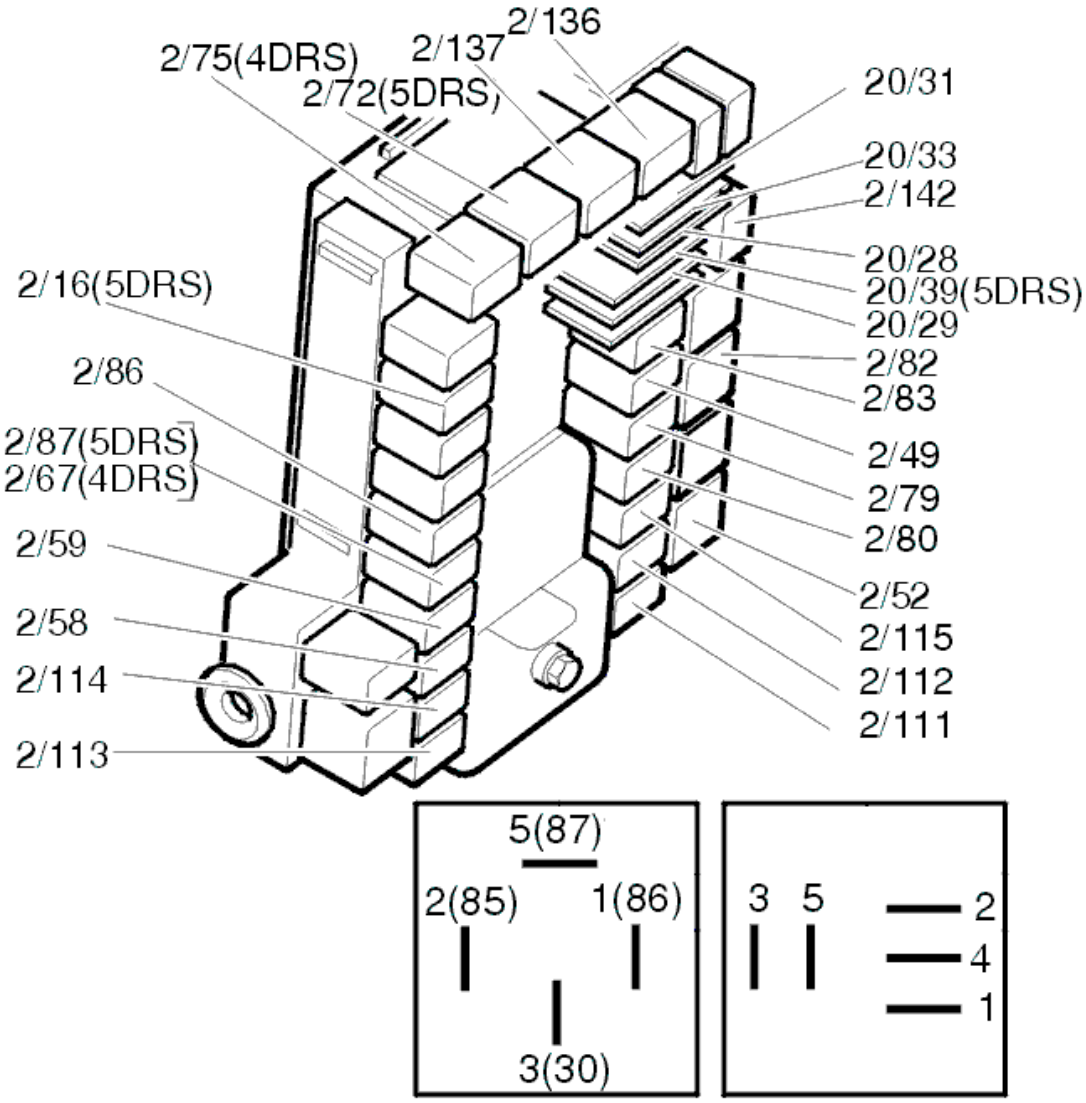

Fig. 439: Identifying Relays
Courtesy of VOLVO CARS CORPORATION

- **Continue**

  Refer to **VERIFICATION**

VERIFICATION

VERIFICATION

HINT: After the repair it is necessary to check that the fault has been rectified.

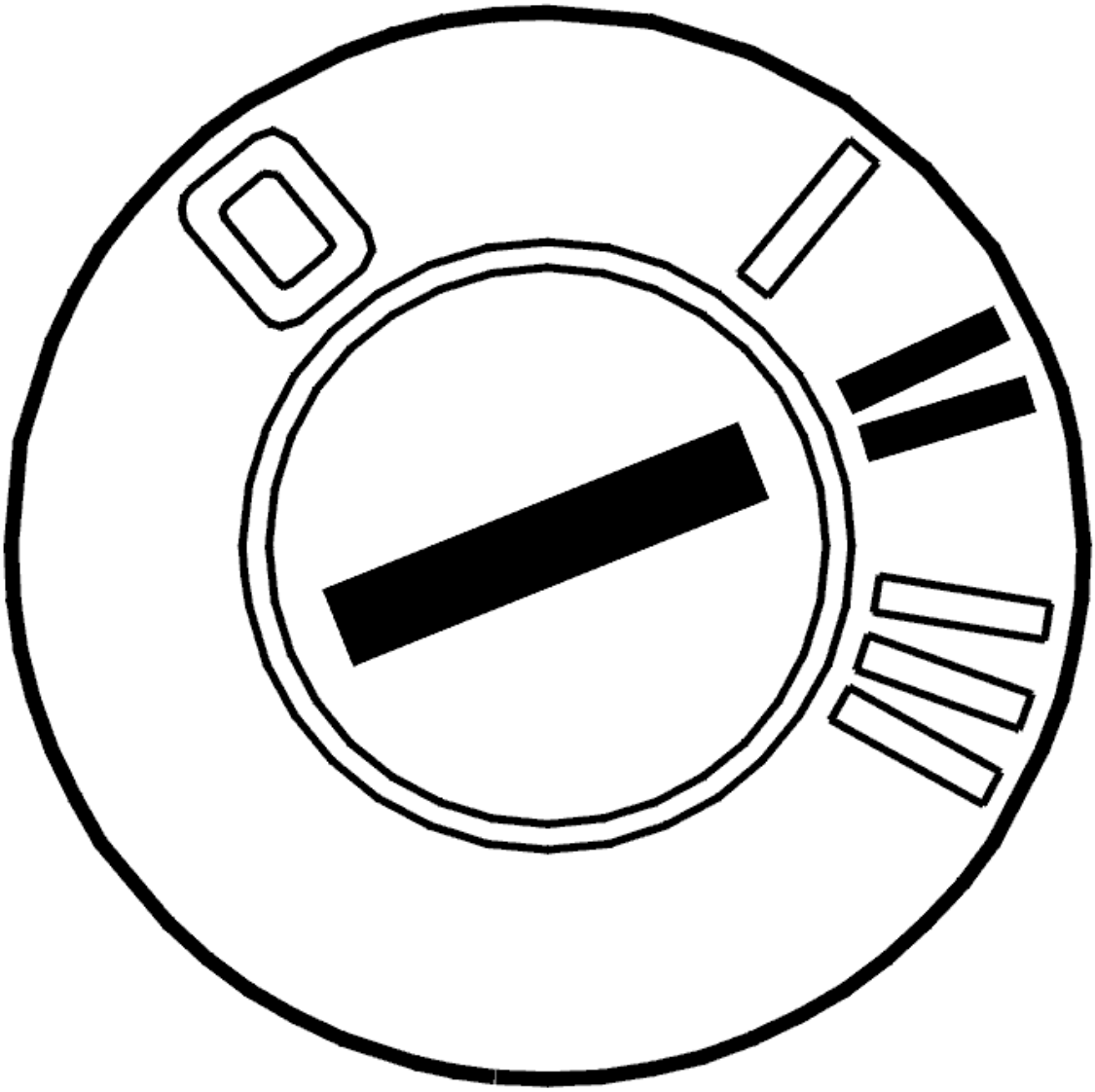

Fig. 440: Identifying Ignition ON
Courtesy of VOLVO CARS CORPORATION

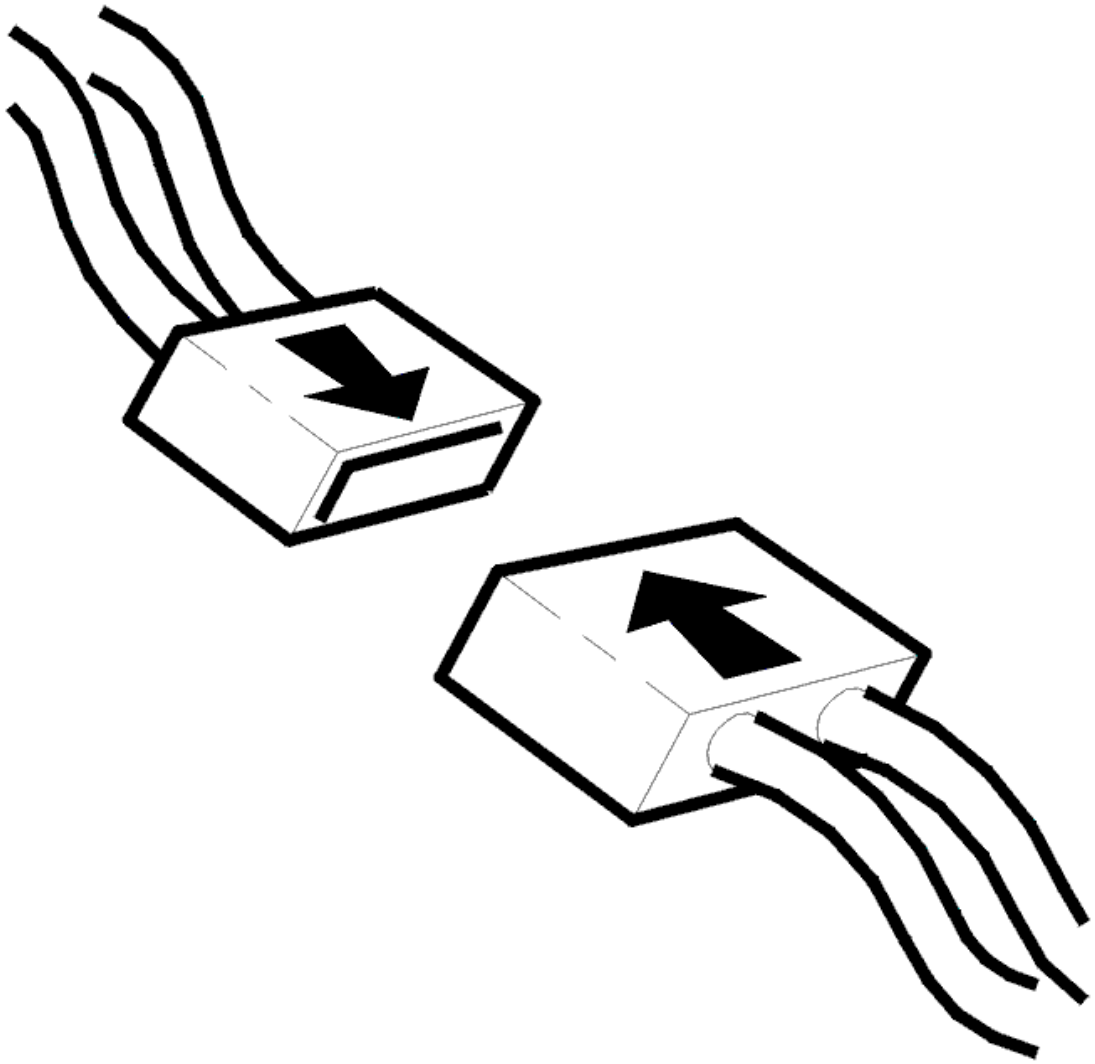

Fig. 441: Connecting Connector
Courtesy of VOLVO CARS CORPORATION

- Ignition off.
- Install the components, connect the connectors, etc.
- Ignition on.

  Activate reversing lamps.

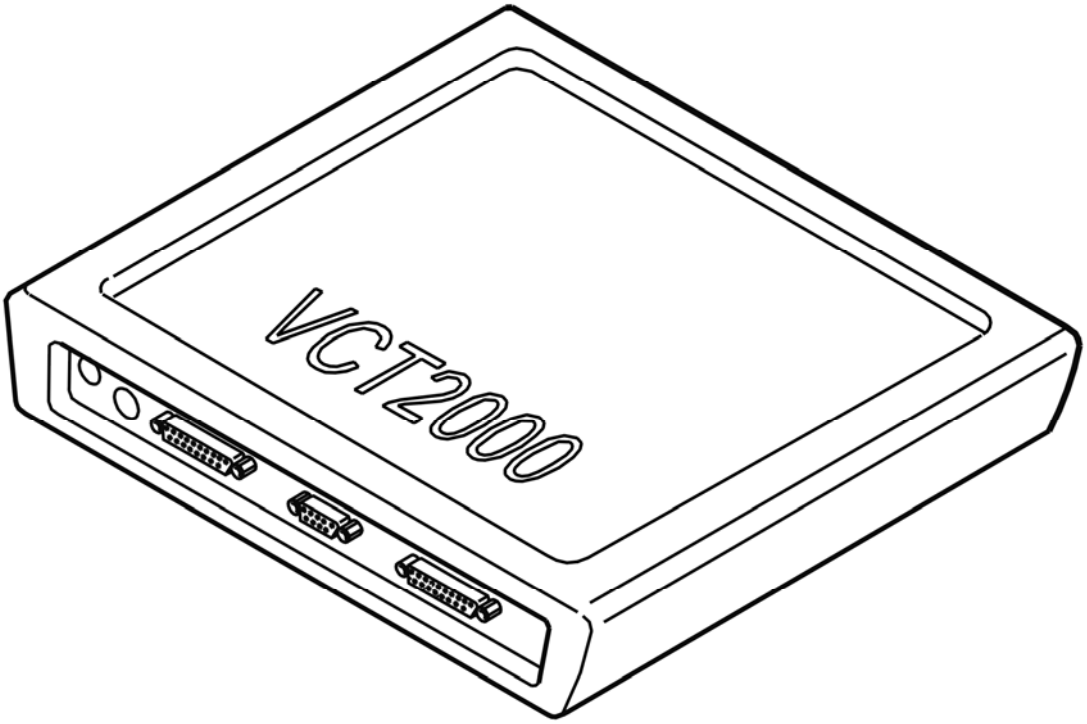

Fig. 442: Identifying VCT2000 Diagnostic Tool Symbol In VIDA
Courtesy of VOLVO CARS CORPORATION

Do the reversing lights work?

- **YES**

  VERIFIED: Troubleshooting has been completed.

- **NO**

  Refer to **INFORMATION**

INFORMATION

FAULT-TRACING INFORMATION

The fault should have been detected and remedied. As this is not the case fault-tracing has failed.

Exit fault-tracing for this diagnostic trouble code (DTC) or make another attempt.

REM-8F10: POSITION SENSOR XENON LAMP. SIGNAL TOO HIGH (2003-2004)

DIAGNOSTIC TROUBLE CODE (DTC) INFORMATION

Condition

The rear electronic module checks the signal from the Xenon lamp position sensor.

Diagnostic trouble code (DTC) REM-8F10 is stored in the rear electrical module if the rear electrical module registers too high a signal from the Xenon lamp position sensor.

Diagnostic trouble code (DTC) REM-8F10 can be detected at ignition on.

Substitute Value

- None.

Possible Source

- Short-circuit to supply voltage in the signal cable
- The position sensor for the Xenon lamp is incorrectly installed.

Fault symptom[s]

- The road surface is not illuminated.

SIGNAL TOO HIGH

CHECKING COMPONENTS AND WIRING

Check that the position sensor for the xenon lamp is correctly installed.

Check the cable between rear electronic module (REM) terminal #B8 (terminal #A28) and position sensor terminal #4. Check for a short-circuit to supply voltage.

Remedy as necessary.

Other information:

- To connect the breakout box, see **CONNECTING THE BREAKOUT BOX**
- For information about signals, see **SIGNAL SPECIFICATION**
- To access or replace the position sensor for the Xenon lamp, see **POSITION SENSOR BI-XENON LAMPS, REPLACING**
- see **CHECKING WIRING AND TERMINALS** .

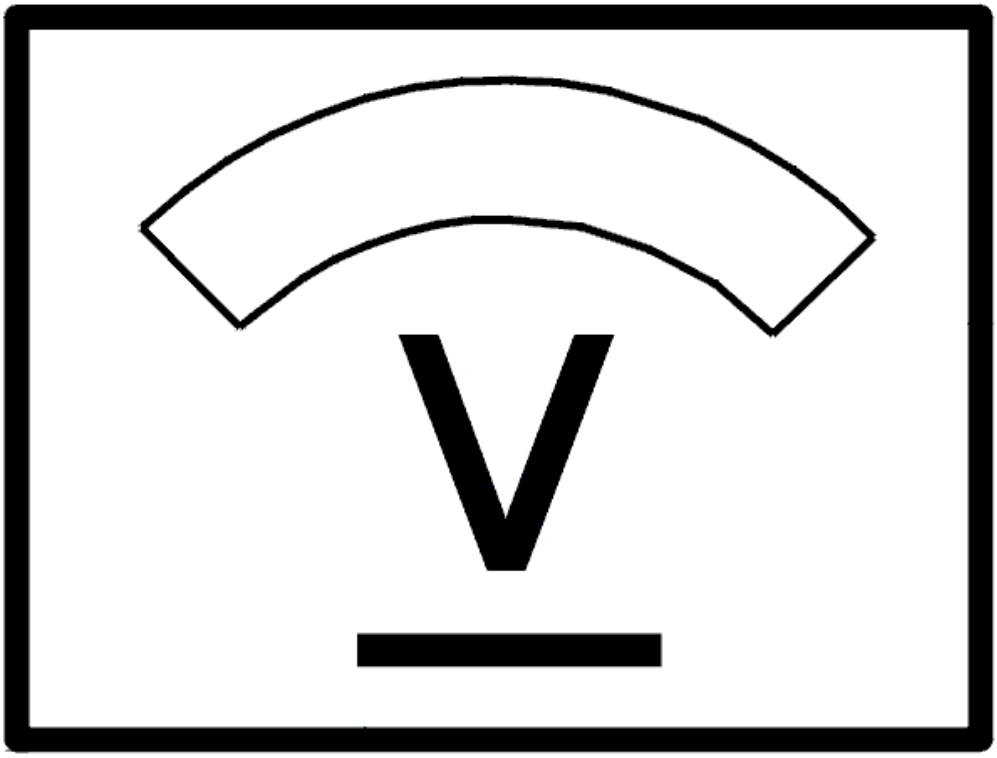

Fig. 443: Identifying Voltage Display
Courtesy of VOLVO CARS CORPORATION

- **Continue**

  Refer to **VERIFICATION**

VERIFICATION

VERIFICATION

HINT: After carrying out the repair, check that the fault has been remedied.

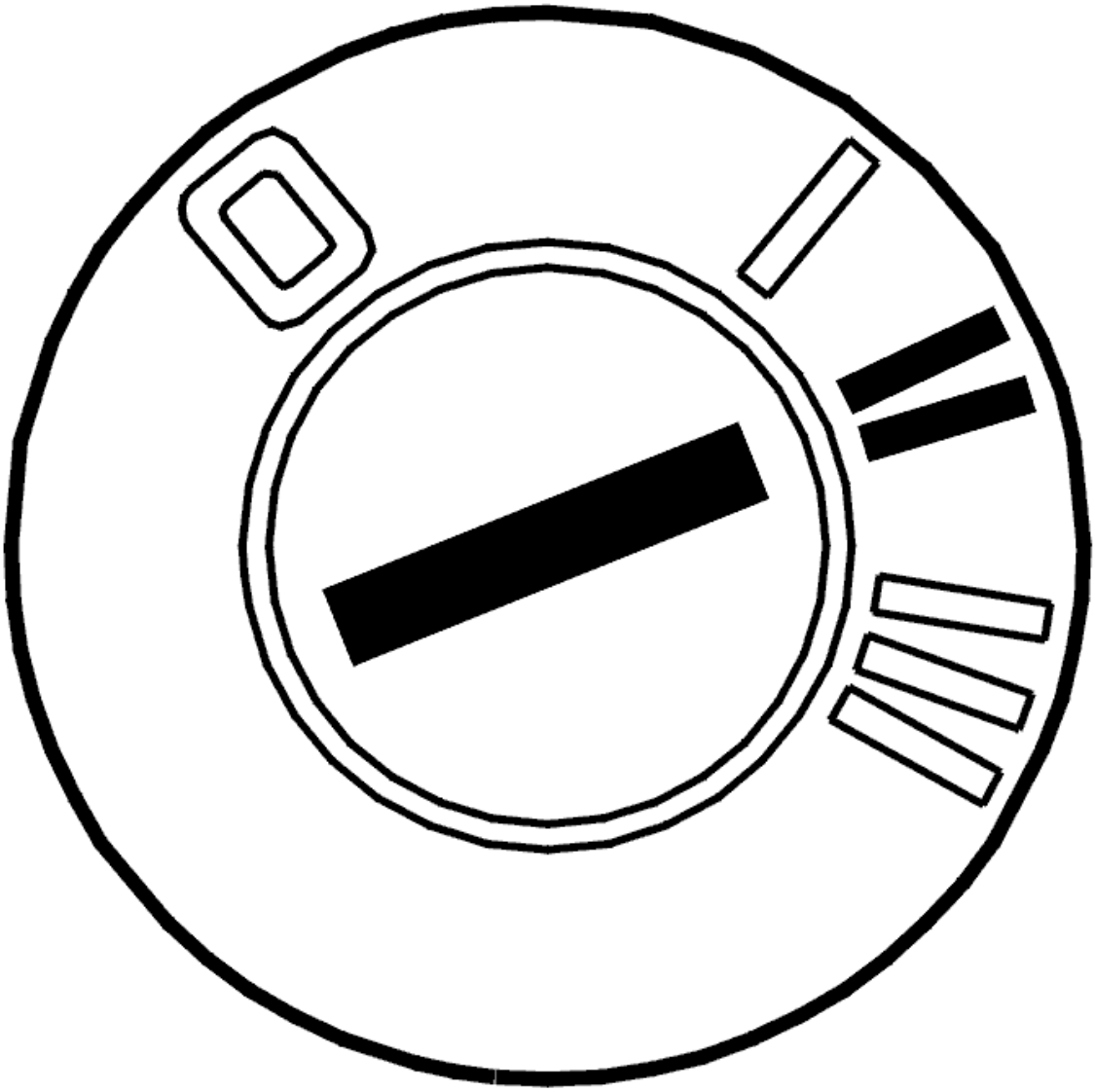

Fig. 444: Identifying Ignition ON
Courtesy of VOLVO CARS CORPORATION

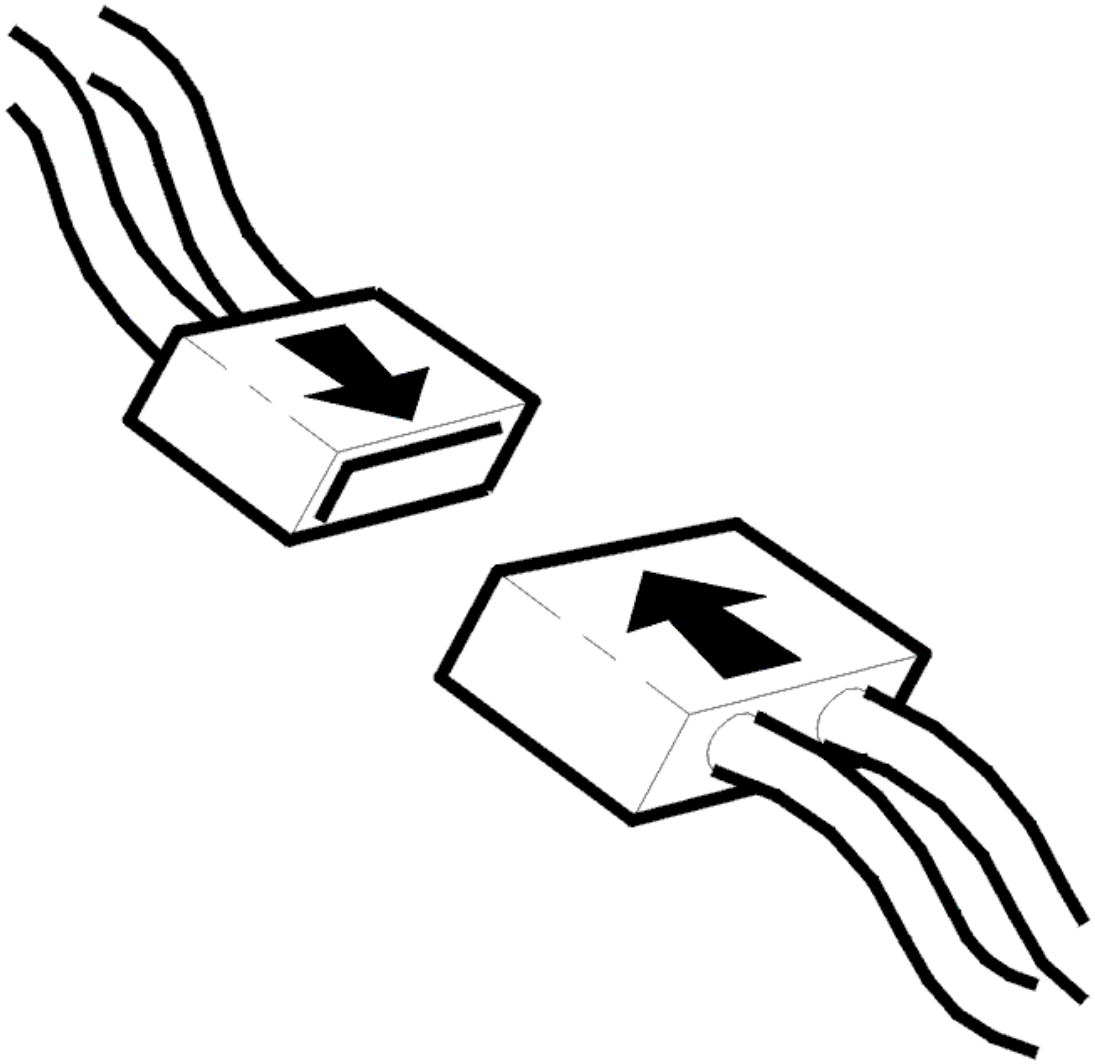

Fig. 445: Connecting Connector
Courtesy of VOLVO CARS CORPORATION

- Ignition off
- Reinstall the connectors, components etc.
- Ignition on.

  Check the signal from position sensor using the VCT2000 (or appropriate scan tool). The voltage should be between 1.7-3.2V depending on loading and inclination. Check that road surface illumination is normal.

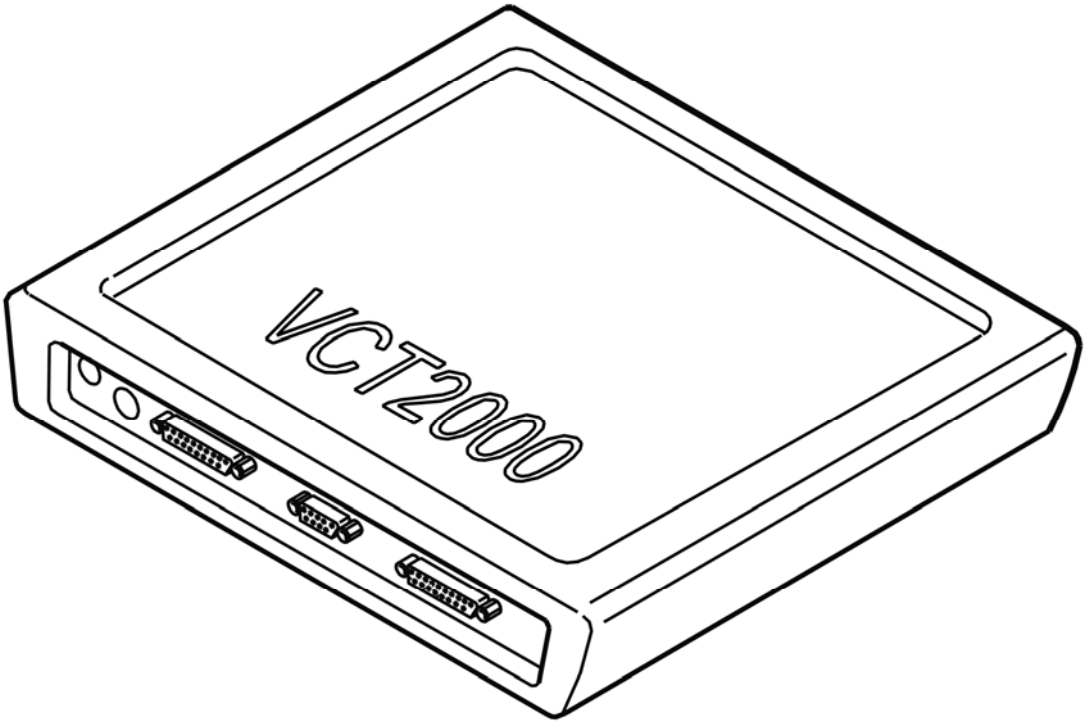

Fig. 446: Identifying VCT2000 Diagnostic Tool Symbol In VIDA
Courtesy of VOLVO CARS CORPORATION

Is the voltage and road surface illumination OK?

- **YES**

  VERIFIED: Troubleshooting has been completed.

- **NO**

  Refer to **INFORMATION**

INFORMATION

FAULT-TRACING INFORMATION

The fault should have been detected and remedied. As this is not the case fault-tracing has failed.

Exit fault-tracing for this diagnostic trouble code (DTC) or make another attempt.

REM-8F10: POSITION SENSOR XENON LAMP. SIGNAL TOO HIGH (2005-2012)

DIAGNOSTIC TROUBLE CODE (DTC) INFORMATION REM-8F10

Condition

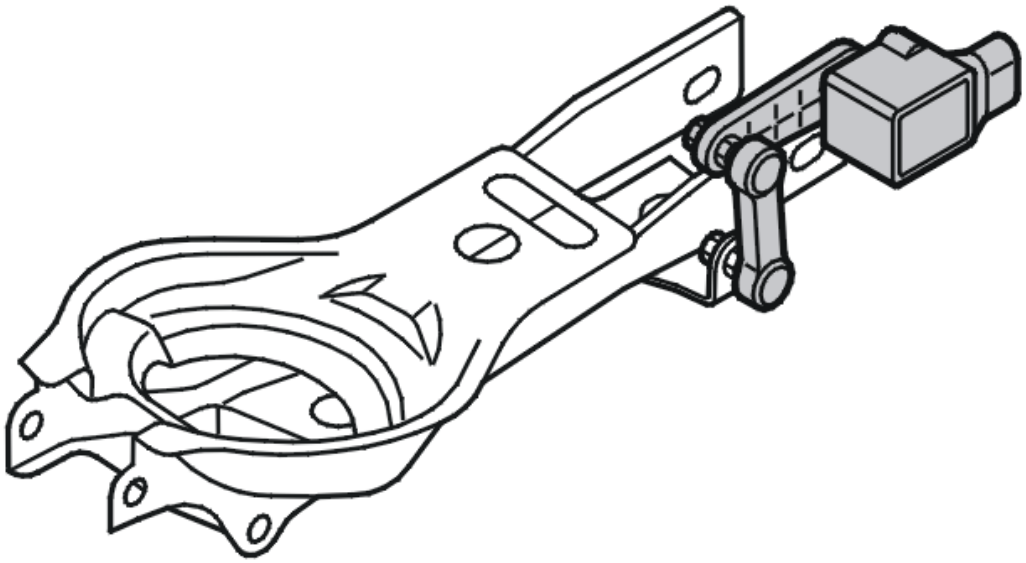

Fig. 447: Identifying Position Sensor For Headlamp
Courtesy of VOLVO CARS CORPORATION

The rear electronic module (REM) checks the signal from the rear position sensor.

The diagnostic trouble code (DTC) is stored if the rear electronic module (REM) registers a faulty signal from the position sensor.

The diagnostic trouble code (DTC) can be diagnosed at key position II.

Substitute Value

- The shortest headlamp range will be used.

Possible Source

- Short-circuit to supply voltage in the signal cable
- Defective position sensor.

Fault symptom[s]

- Automatic headlamp range control is not functioning.

SIGNAL TOO HIGH

CHECKING THE WIRING

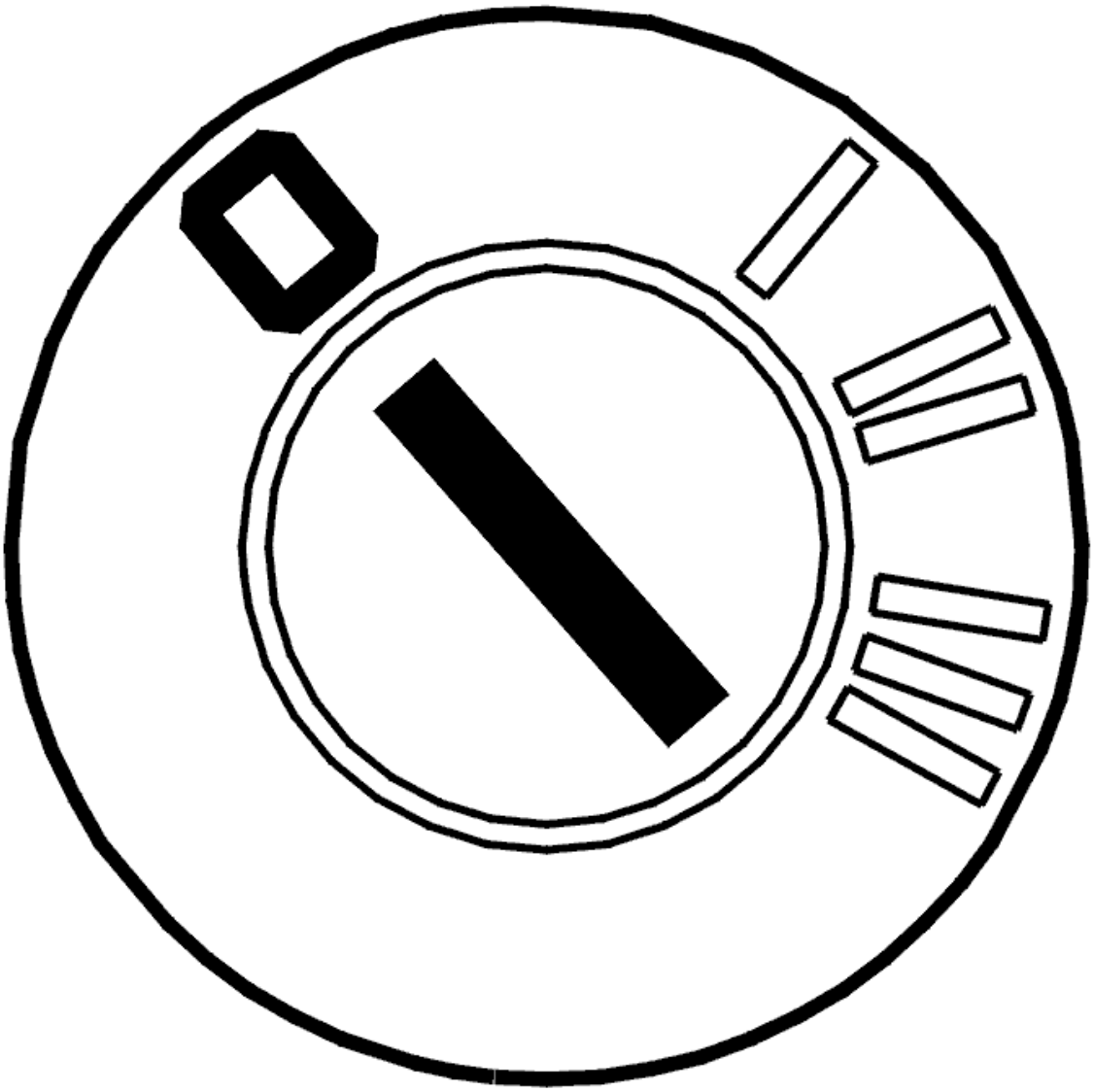

Fig. 448: Identifying Ignition OFF
Courtesy of VOLVO CARS CORPORATION

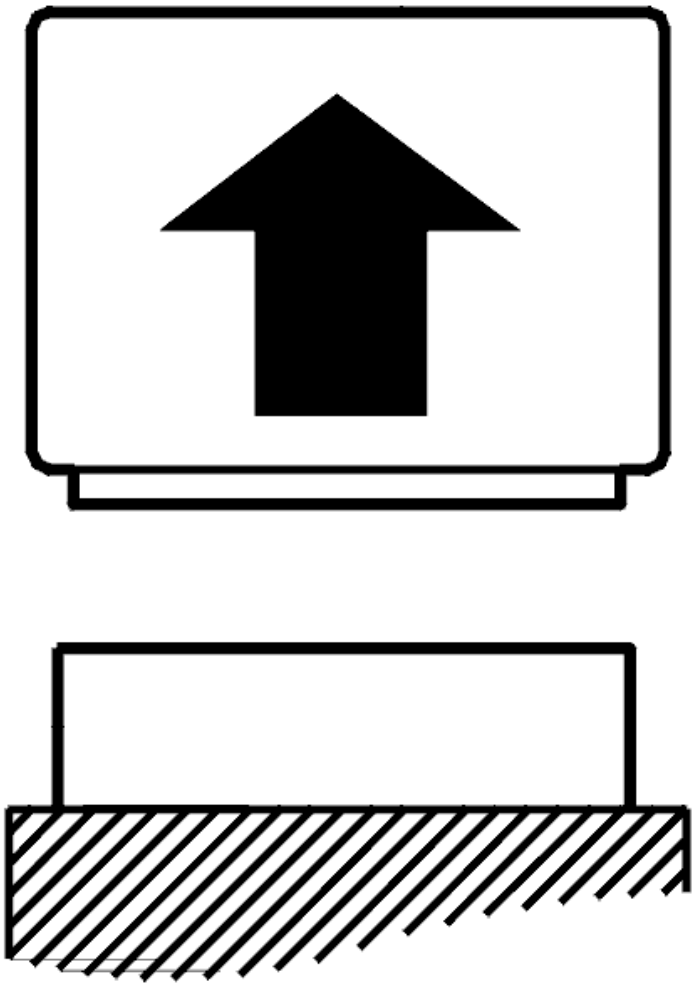

Fig. 449: Disconnecting Connector
Courtesy of VOLVO CARS CORPORATION

- Ignition off
- Disconnect the connector on the rear electronic module (REM).

  Check that the position sensor for the Xenon lamp is correctly installed.

  Check the signal cable. Check for a short-circuit to supply voltage.

  Take readings between:

  - Rear electronic module (REM) terminal #C6 (#46) and terminal #4 on the position sensor for the Xenon lamp.

  Check the power supply and the ground connection for the position sensor.

Remedy as necessary.

Other information

- see **CONNECTING THE BREAKOUT BOX**
- see **SIGNAL SPECIFICATION**
- see **POSITION SENSOR BI-XENON LAMPS, REPLACING**
- see **CHECKING WIRING AND TERMINALS**

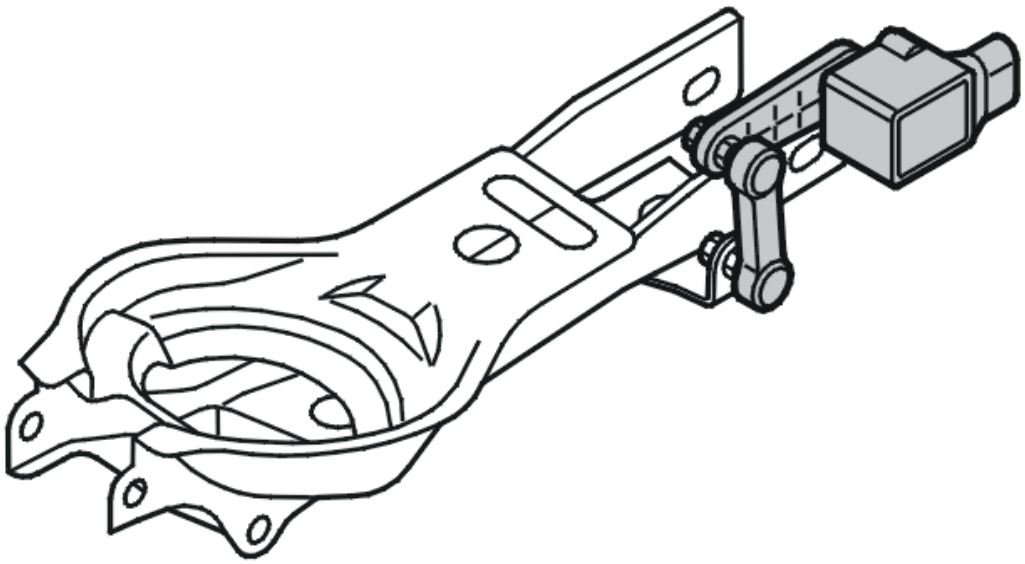

Fig. 450: Identifying Position Sensor For Headlamp
Courtesy of VOLVO CARS CORPORATION

- **Continue**

  Refer to **VERIFICATION**

VERIFICATION

VERIFICATION

HINT: After carrying out the repair, check that the fault has been remedied.

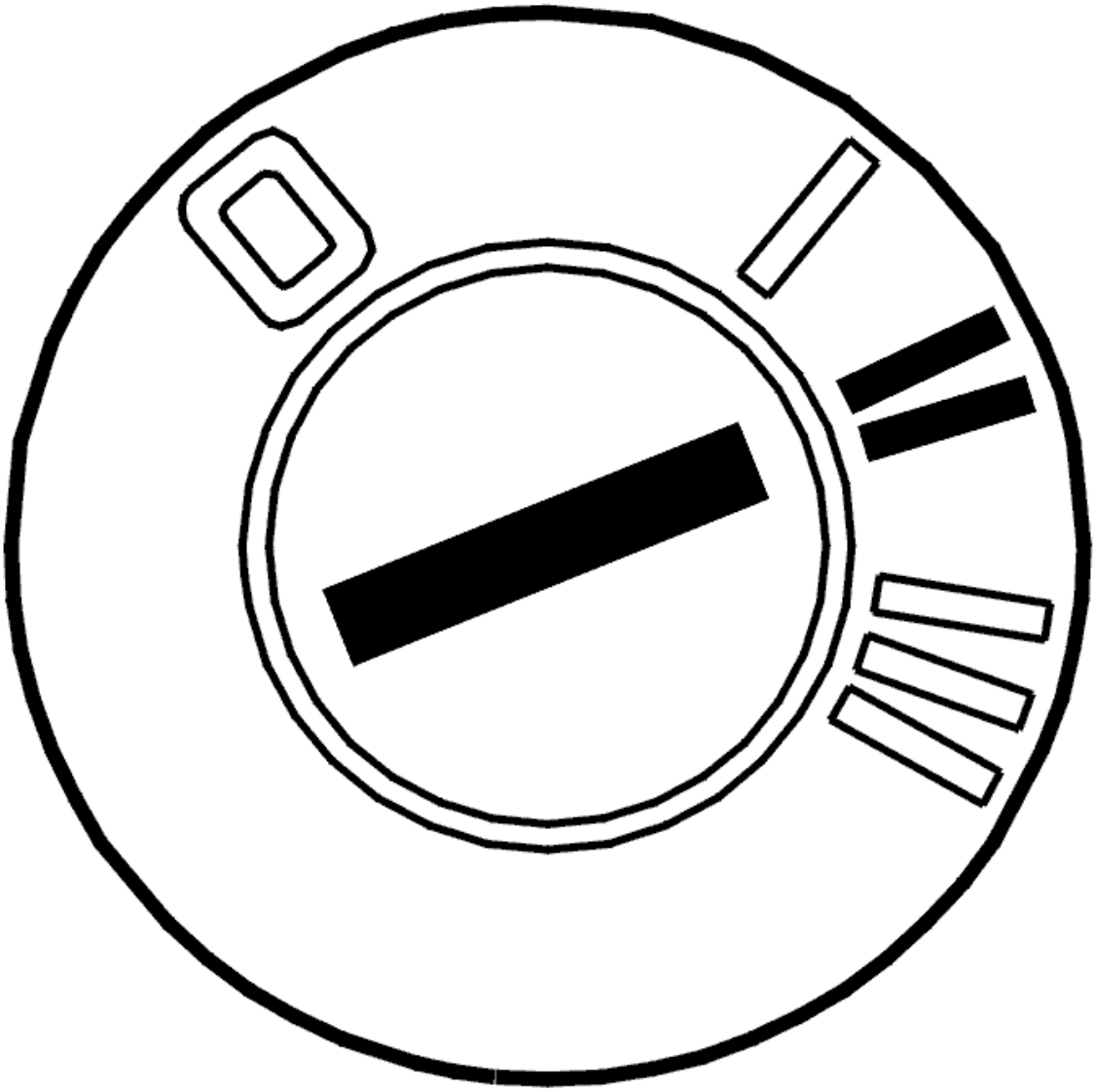

Fig. 451: Identifying Ignition ON
Courtesy of VOLVO CARS CORPORATION

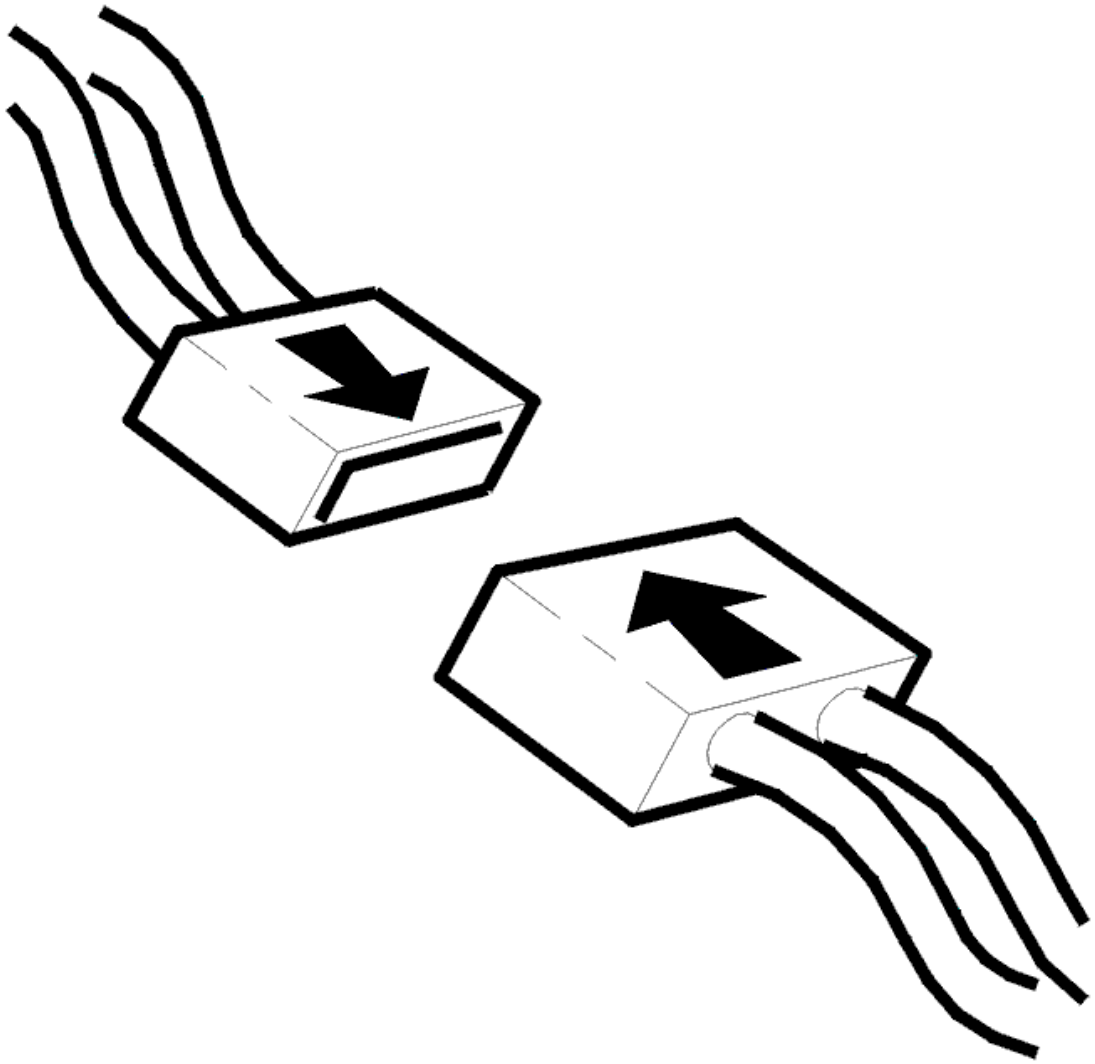

Fig. 452: Connecting Connector
Courtesy of VOLVO CARS CORPORATION

- Ignition off
- Reinstall the connectors, components etc.
- Ignition on.

  Check the signal from the position sensor for Xenon lamps using the VCT2000 (or appropriate scan tool). The voltage must be between 1.7-3.2 V depending on the load and inclination.

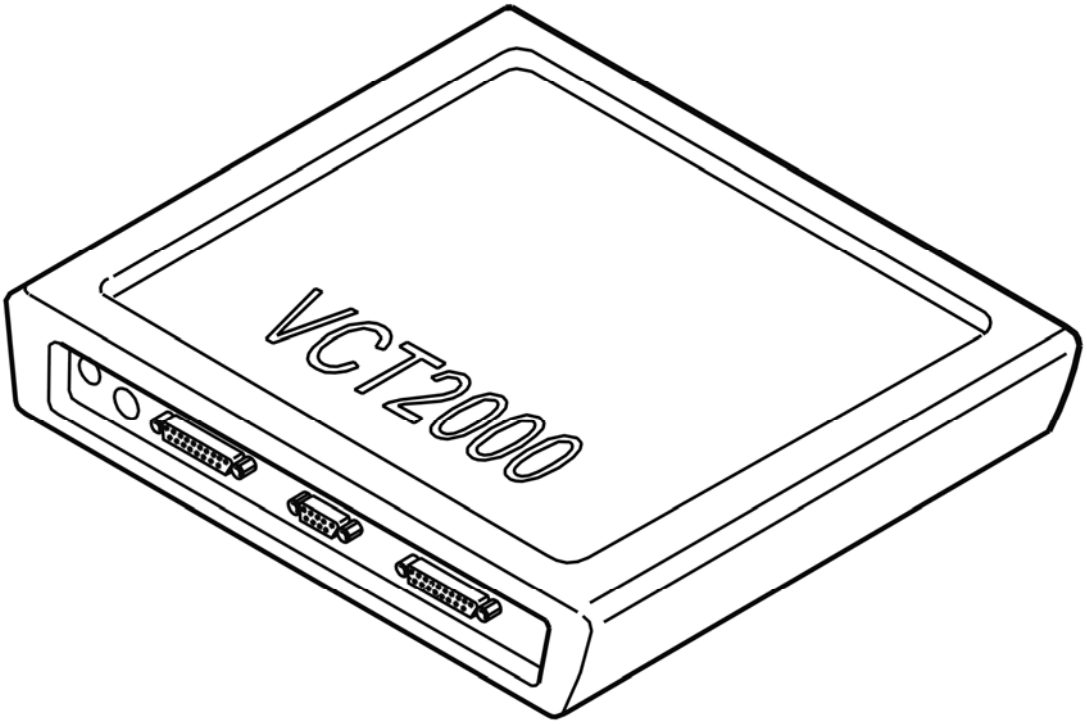

Fig. 453: Identifying VCT2000 Diagnostic Tool Symbol In VIDA
Courtesy of VOLVO CARS CORPORATION

Is the value OK?

- **YES**

  VERIFIED: Troubleshooting has been completed.

- **NO**

  Refer to **INFORMATION**

INFORMATION

FAULT-TRACING INFORMATION

The fault should have been detected and remedied. As this is not the case fault-tracing has failed.

Exit fault-tracing for this diagnostic trouble code (DTC) or make another attempt.

REM-8F11: XENON LAMP POSITION SENSOR. SIGNAL TOO LOW (2003-2004)

DIAGNOSTIC TROUBLE CODE (DTC) INFORMATION

Condition

The rear electronic module checks the signal from the Xenon lamp position sensor.

Diagnostic trouble code (DTC) REM-8F11 is stored in the rear electrical module if the rear electrical module registers too high a signal from the Xenon lamp position sensor.

Diagnostic trouble code (DTC) REM-8F11 can be detected at ignition on.

Substitute Value

- None.

Possible Source

- Short-circuit to ground in the signal cable
- Open-circuit in the signal cable
- The position sensor for the Xenon lamp is incorrectly installed.

Fault symptom[s]

- The road surface is not illuminated.

SIGNAL TOO LOW

CHECKING COMPONENTS AND WIRING

Check that the position sensor for the xenon lamp is correctly installed.

Check the cable between the rear electrical module terminal #B8 (#A28) and position sensor terminal #4. Check the cable between rear electrical module terminal #B10 (#A30) and position sensor terminal #5. Check the cable between rear electrical module terminal #B6 (#A26) and position sensor terminal #1. Check for an open-circuit. Check for a short-circuit to ground.

Remedy as necessary.

Other information:

- To connect the breakout box, see **CONNECTING THE BREAKOUT BOX**
- For information about signals, see **SIGNAL SPECIFICATION**
- To access or replace the position sensor for the Xenon lamp, see **POSITION SENSOR BI-XENON LAMPS, REPLACING**
- see **CHECKING WIRING AND TERMINALS** .

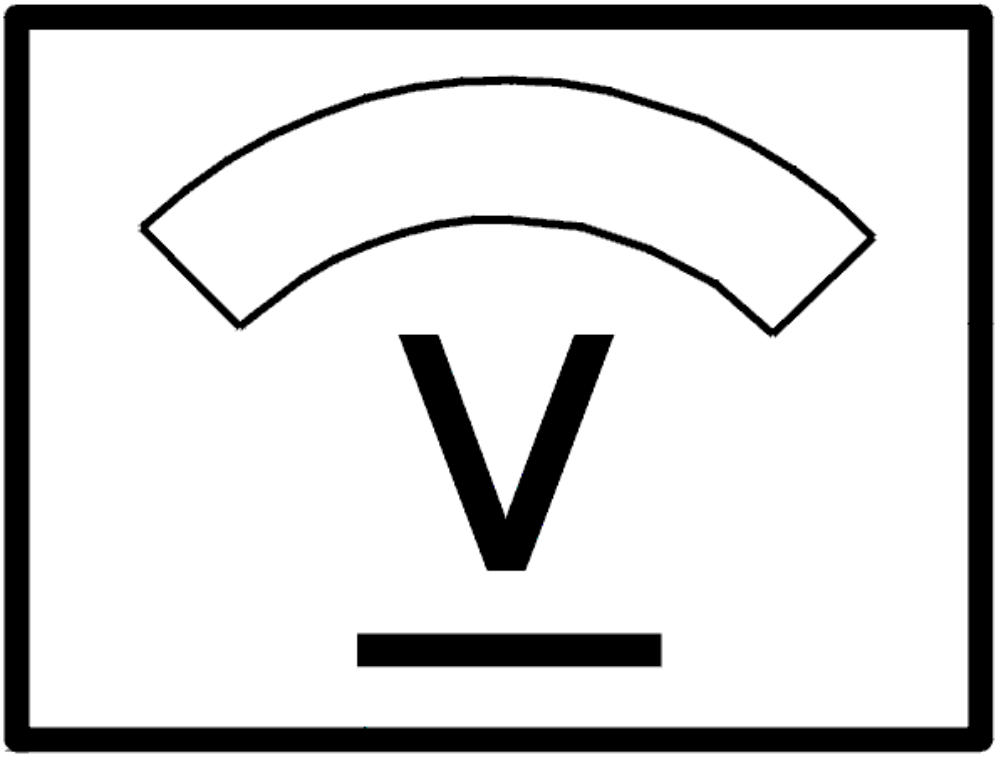

Fig. 454: Identifying Voltage Display
Courtesy of VOLVO CARS CORPORATION

- **Continue**

  Refer to **VERIFICATION**

VERIFICATION

VERIFICATION

HINT: After carrying out the repair, check that the fault has been remedied.

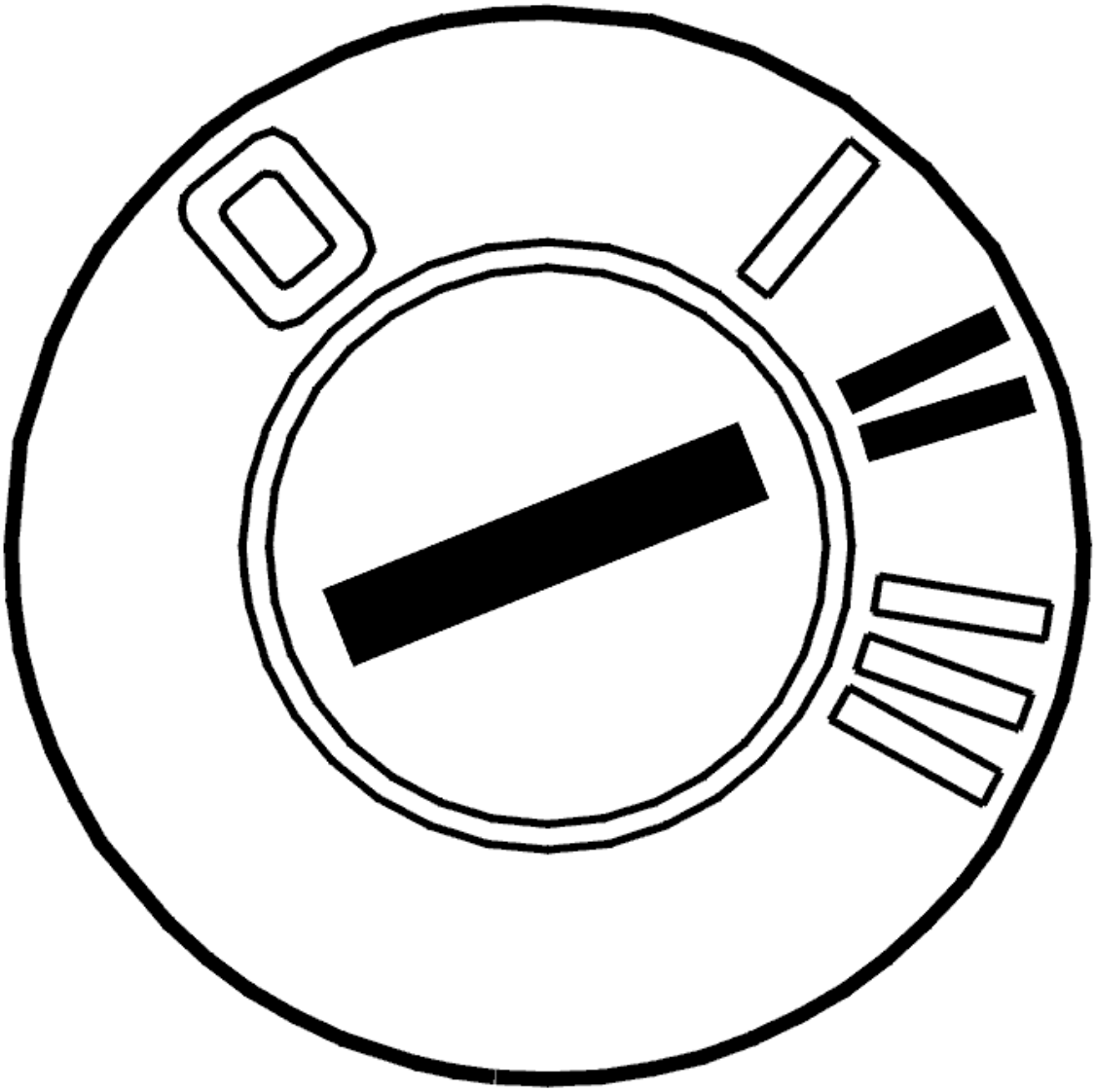

Fig. 455: Identifying Ignition ON
Courtesy of VOLVO CARS CORPORATION

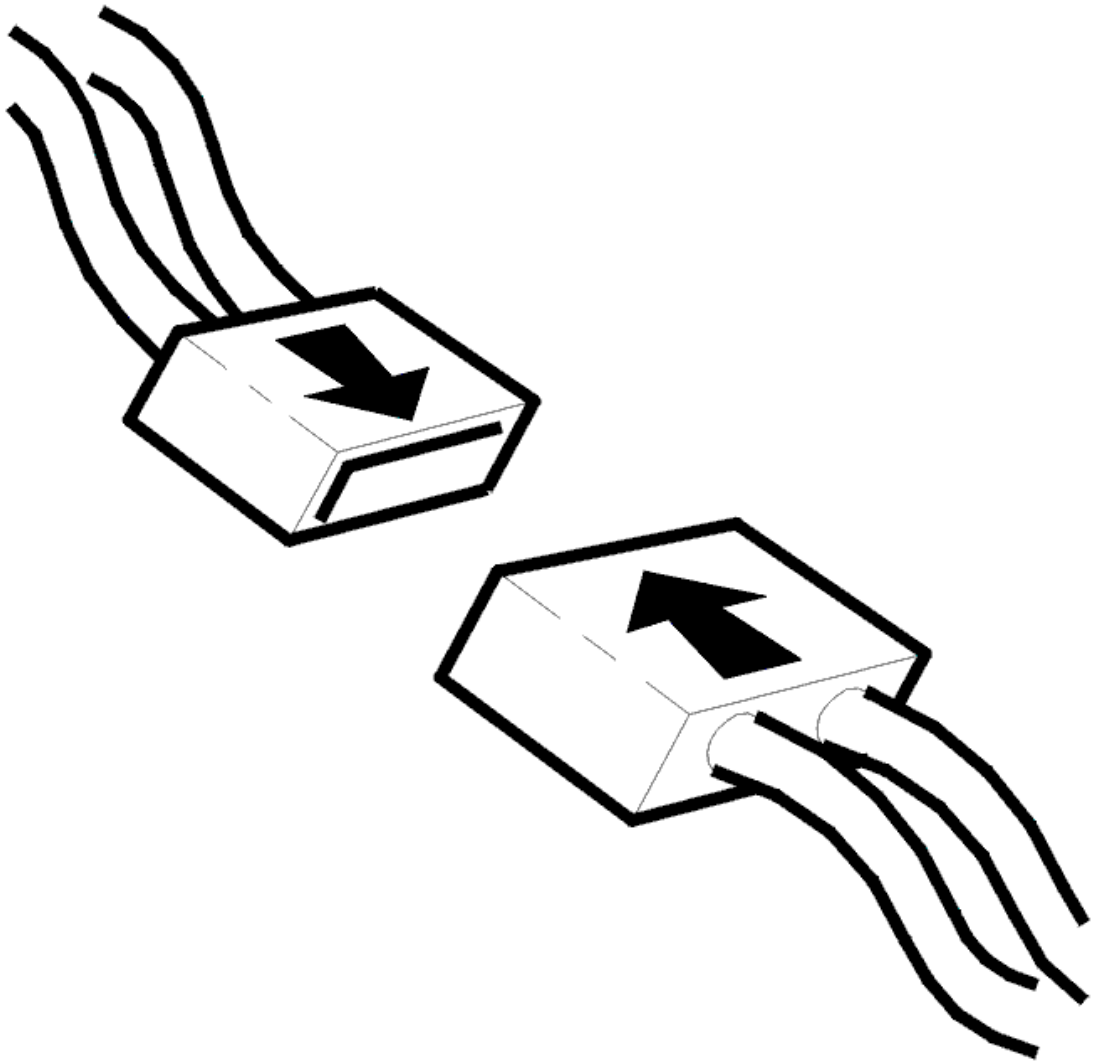

Fig. 456: Connecting Connector
Courtesy of VOLVO CARS CORPORATION

- Ignition off
- Reinstall the connectors, components etc.
- Ignition on.

  Check the signal from position sensor using the VCT2000 (or appropriate scan tool). The voltage should be between 1.7-3.2V depending on loading and inclination. Check that road surface illumination is normal.

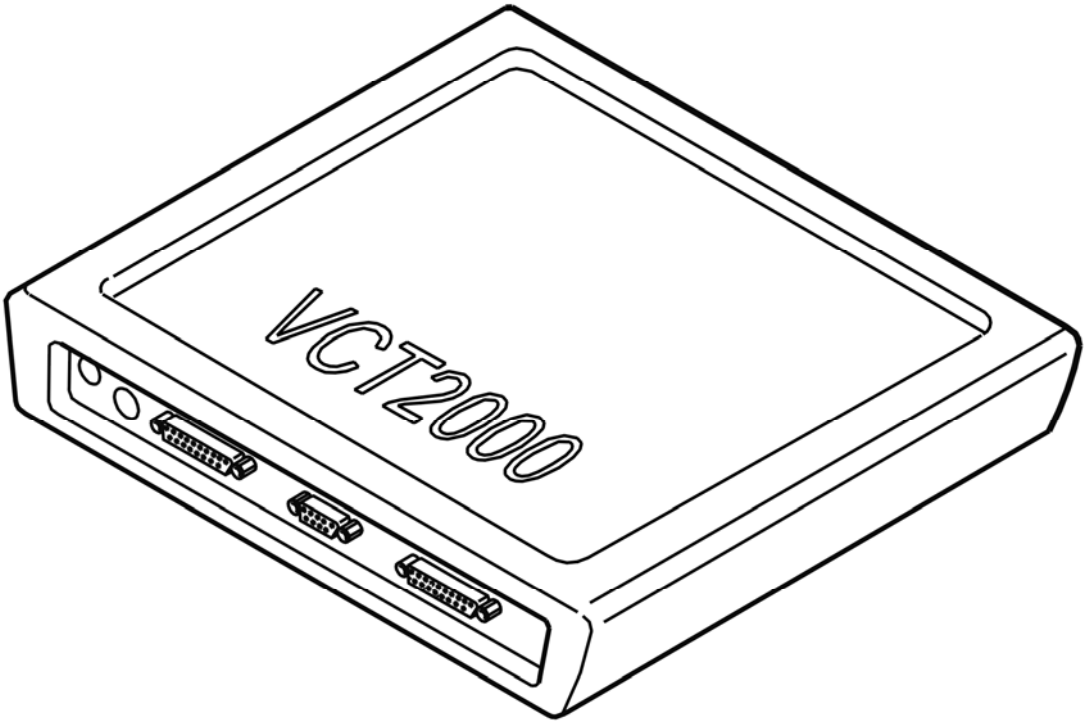

Fig. 457: Identifying VCT2000 Diagnostic Tool Symbol In VIDA
Courtesy of VOLVO CARS CORPORATION

Is the voltage and road surface illumination OK?

- **YES**

  VERIFIED: Troubleshooting has been completed.

- **NO**

  Refer to **INFORMATION**

INFORMATION

FAULT-TRACING INFORMATION

The fault should have been detected and remedied. As this is not the case fault-tracing has failed.

Exit fault-tracing for this diagnostic trouble code (DTC) or make another attempt.

REM-8F11: XENON LAMP POSITION SENSOR. SIGNAL TOO LOW (2005-2012)

DIAGNOSTIC TROUBLE CODE (DTC) INFORMATION REM-8F11

Condition

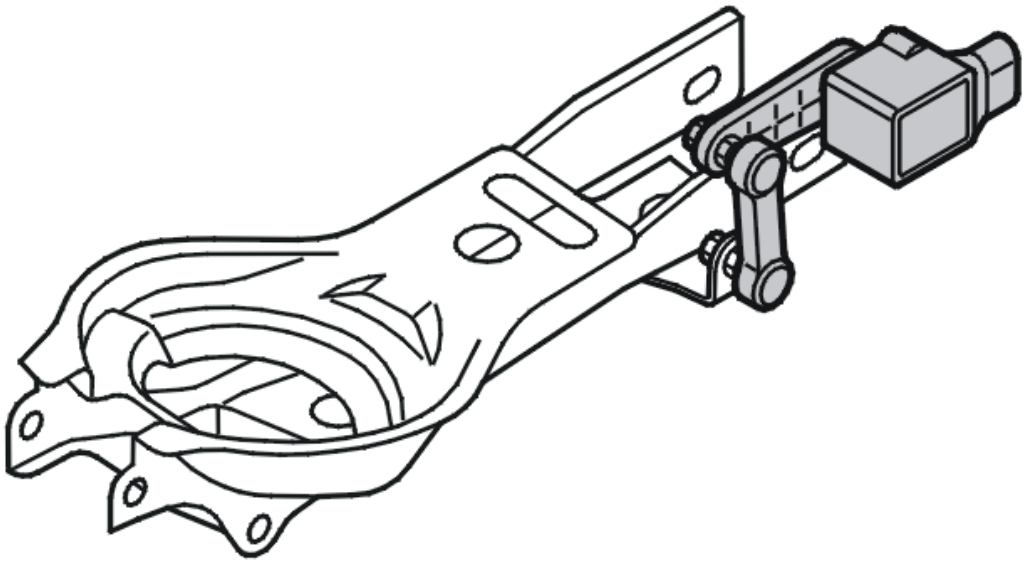

Fig. 458: Identifying Position Sensor For Headlamp
Courtesy of VOLVO CARS CORPORATION

The rear electronic module (REM) checks the signal from the rear position sensor.

The diagnostic trouble code (DTC) is stored if the rear electronic module (REM) registers that the signal from the position sensor is too low.

The diagnostic trouble code (DTC) can be diagnosed at key position II.

Substitute Value

- The shortest headlamp range will be used.

Possible Source

- Short-circuit to ground in the signal cable
- The position sensor is not installed.

Fault symptom[s]

- Automatic headlamp range control is not functioning.

SIGNAL TOO LOW

CHECKING THE WIRING

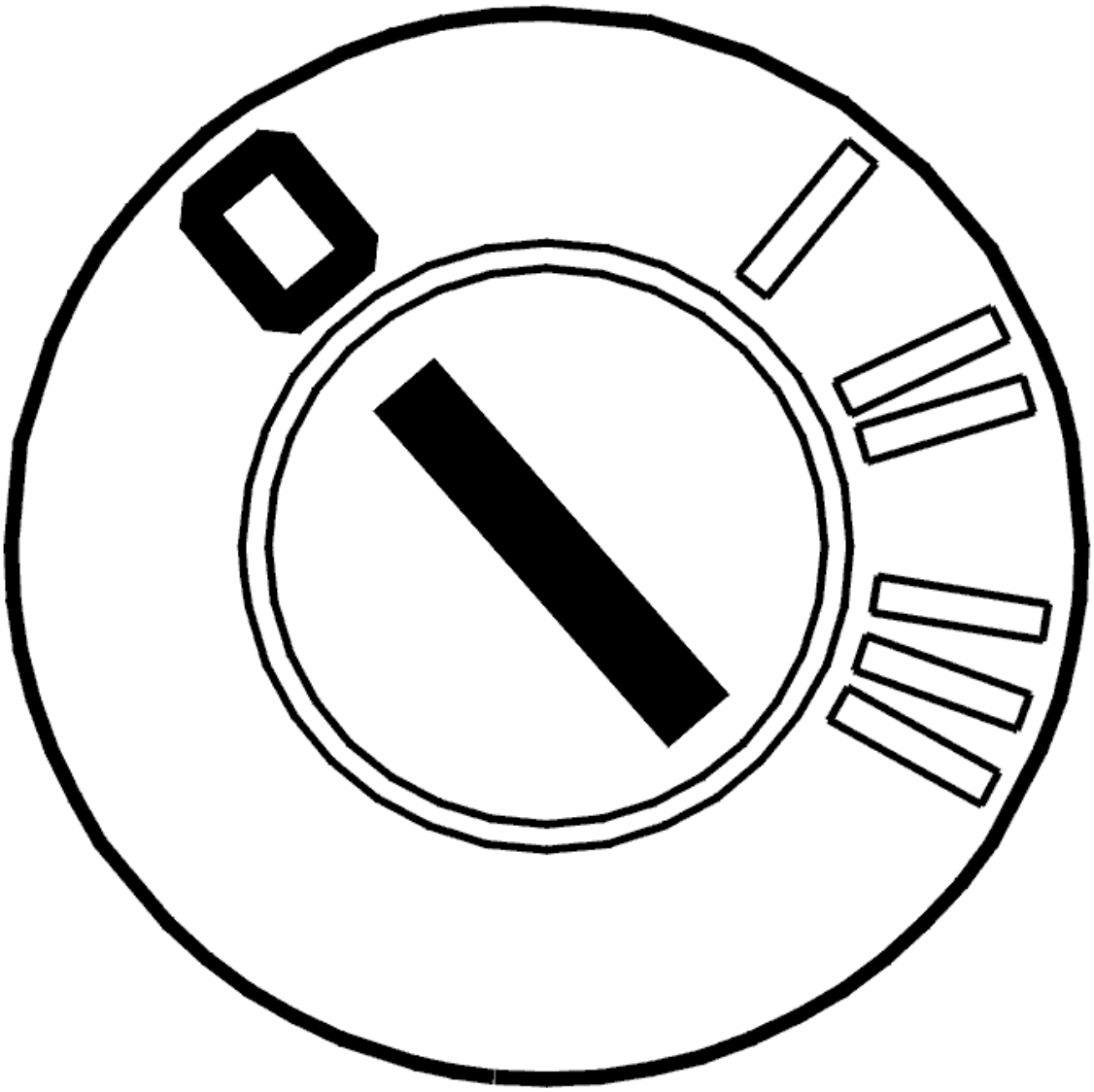

Fig. 459: Identifying Ignition OFF
Courtesy of VOLVO CARS CORPORATION

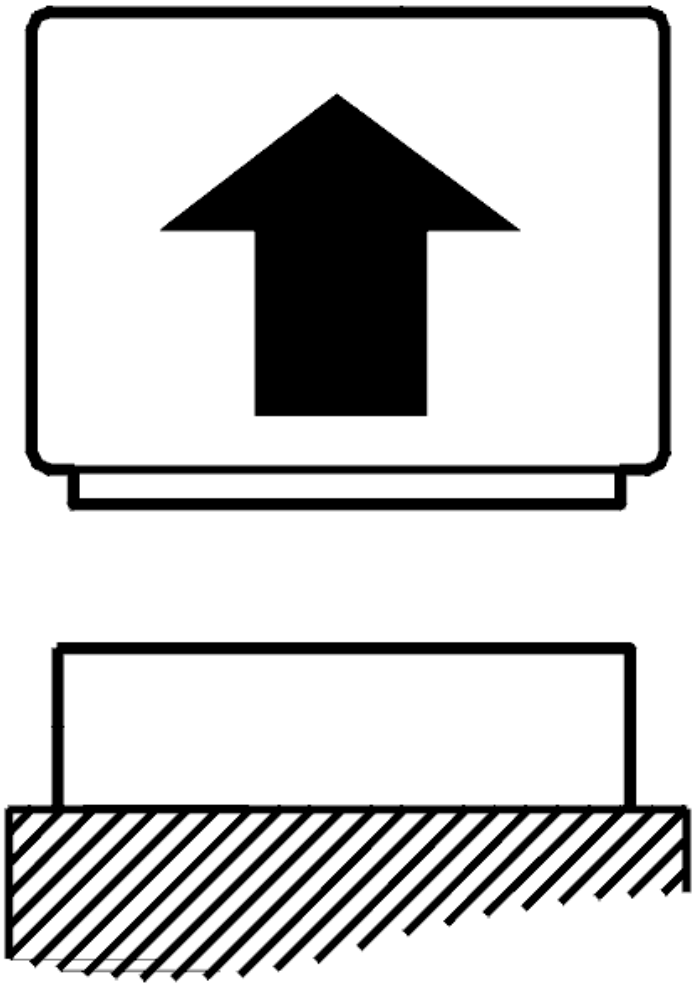

Fig. 460: Disconnecting Connector
Courtesy of VOLVO CARS CORPORATION

- Ignition off
- Disconnect the connector on the rear electronic module (REM).

  Check that the position sensor for the Xenon lamp is correctly installed.

  Check the signal cable. Check for an open-circuit. Check for a short-circuit to ground.

  Take readings between:

  - Rear electronic module (REM) terminal #C6 (#46) and terminal #4 on the position sensor for the Xenon lamp.

  Check the power supply and the ground connection for the position sensor.

Remedy as necessary.

Other information

- see **CONNECTING THE BREAKOUT BOX**
- see **SIGNAL SPECIFICATION**
- see **POSITION SENSOR BI-XENON LAMPS, REPLACING**
- see **CHECKING WIRING AND TERMINALS**

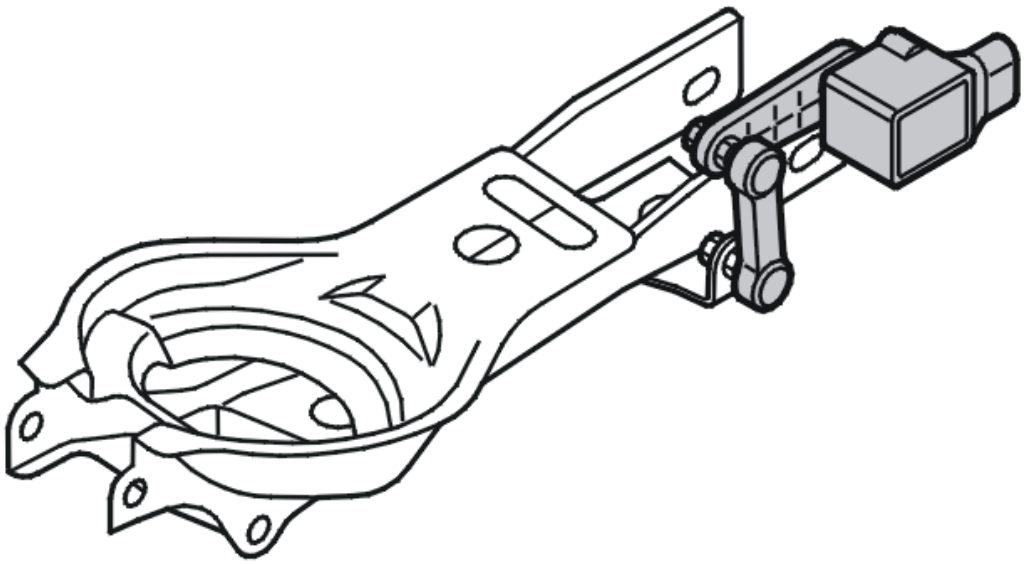

Fig. 461: Identifying Position Sensor For Headlamp
Courtesy of VOLVO CARS CORPORATION

- **Continue**

Refer to **VERIFICATION**

VERIFICATION

VERIFICATION

HINT: After carrying out the repair, check that the fault has been remedied.

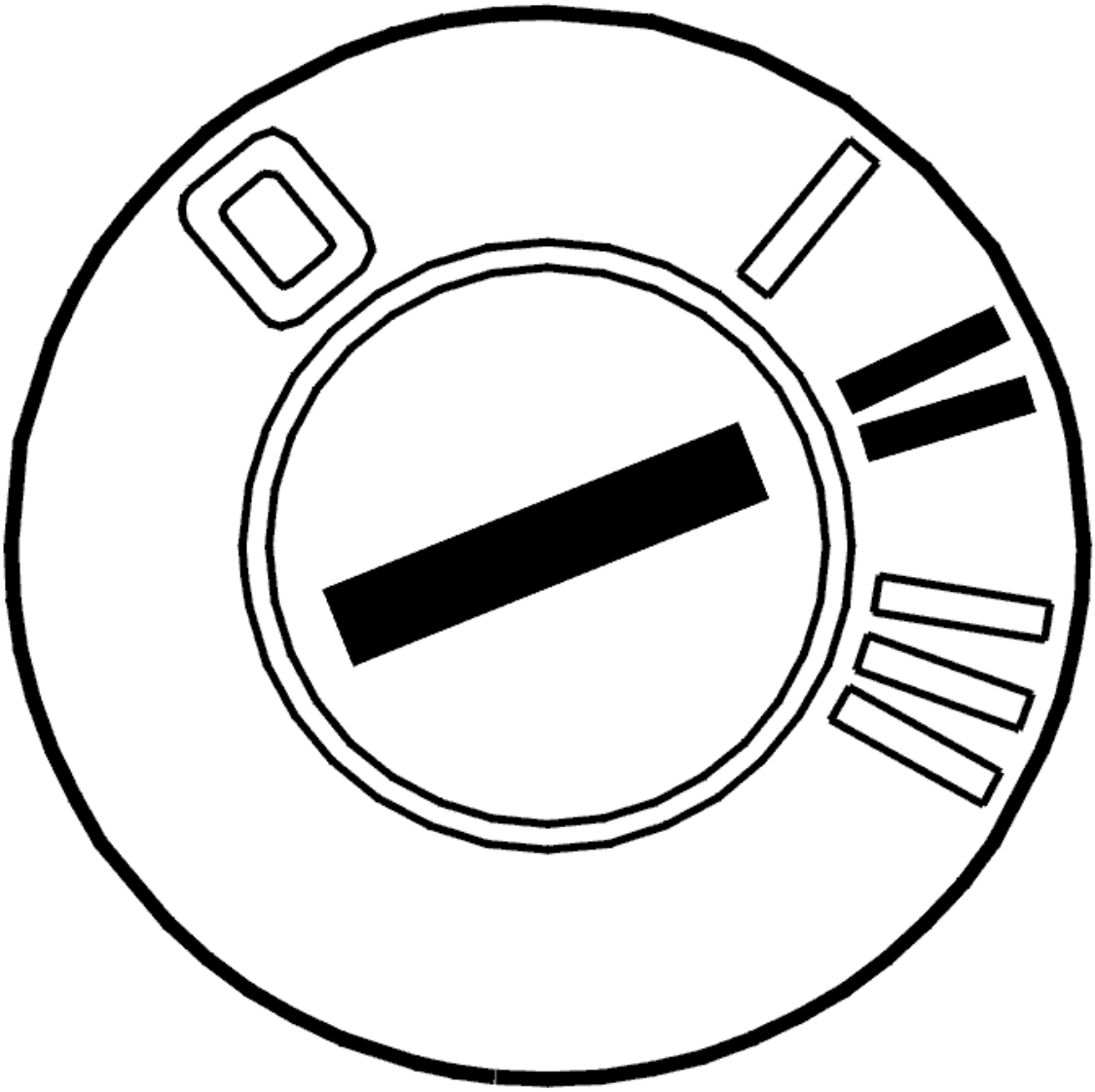

Fig. 462: Identifying Ignition ON
Courtesy of VOLVO CARS CORPORATION

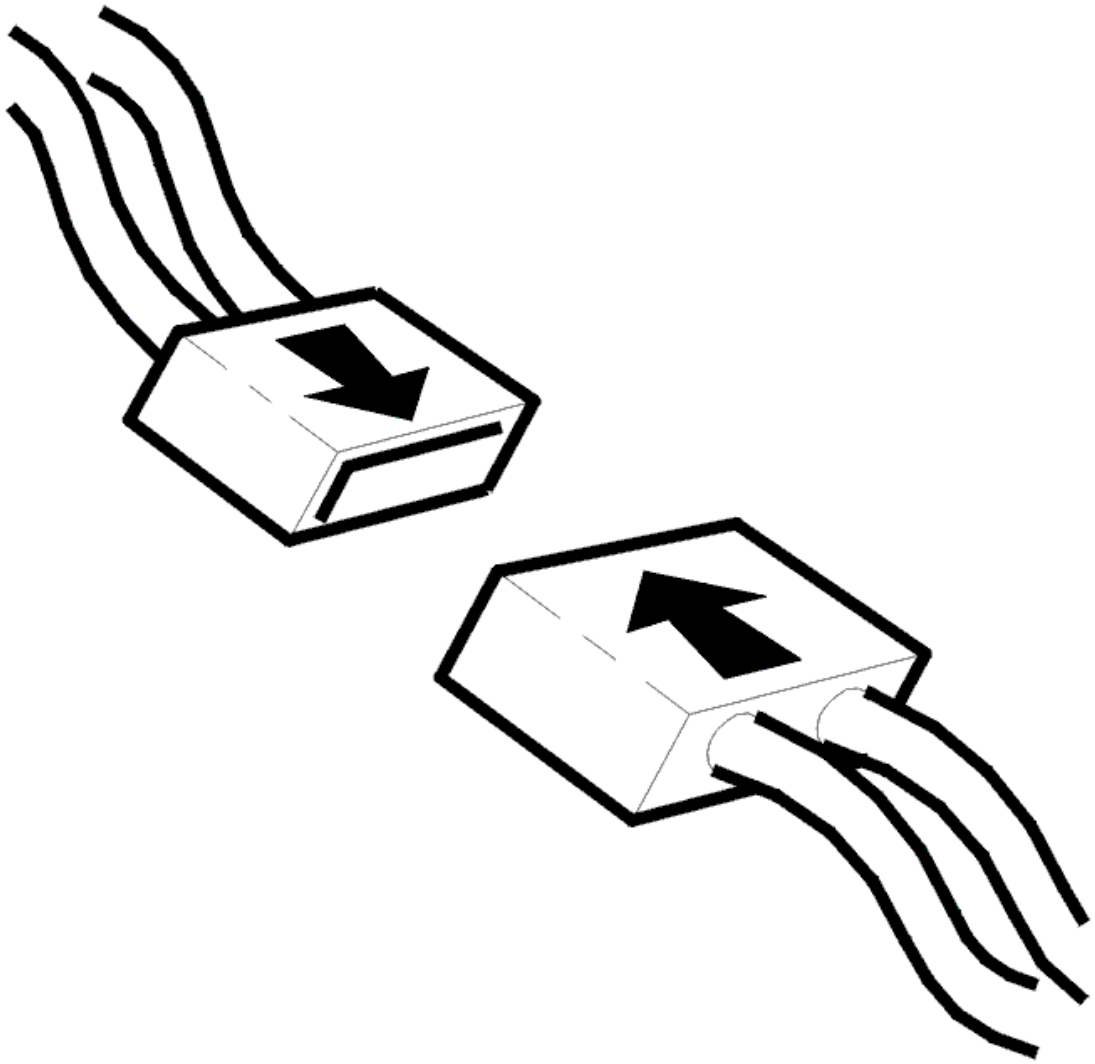

Fig. 463: Connecting Connector
Courtesy of VOLVO CARS CORPORATION

- Ignition off
- Reinstall the connectors, components etc.
- Ignition on.

Check the signal from the position sensor for Xenon lamps using the VCT2000 (or appropriate scan tool). The voltage must be between 1.7-3.2 V depending on the load and inclination.

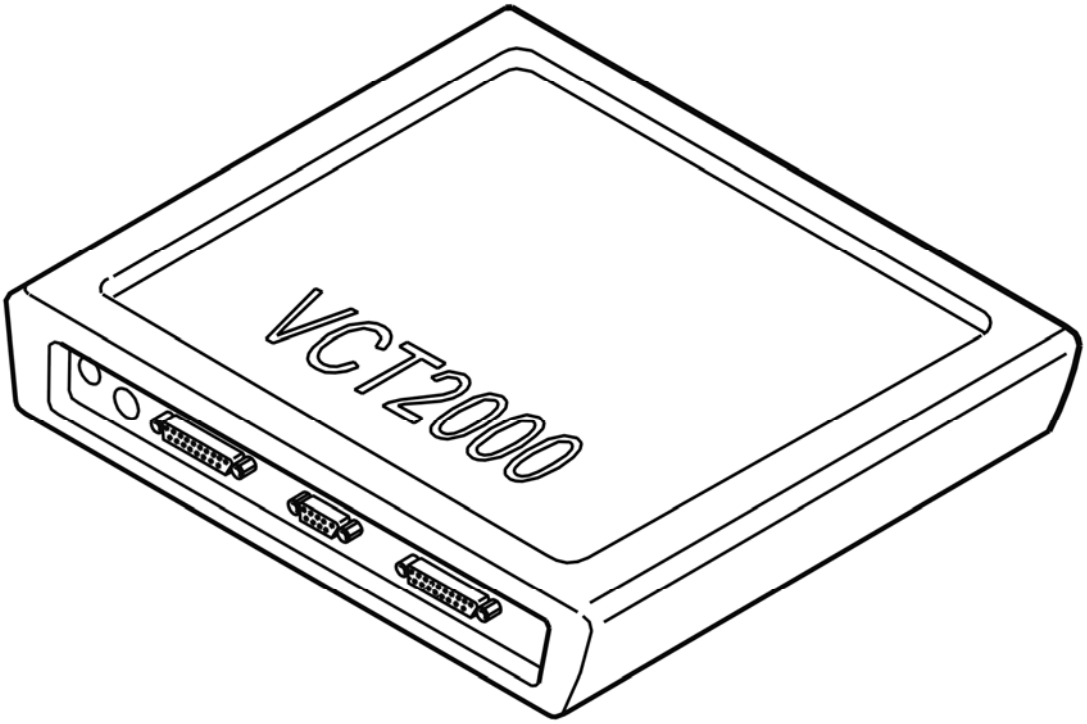

Fig. 464: Identifying VCT2000 Diagnostic Tool Symbol In VIDA
Courtesy of VOLVO CARS CORPORATION

Is the value OK?

- **YES**

  VERIFIED: Troubleshooting has been completed.

- **NO**

  Refer to **INFORMATION**

INFORMATION

FAULT-TRACING INFORMATION

The fault should have been detected and remedied. As this is not the case fault-tracing has failed.

Exit fault-tracing for this diagnostic trouble code (DTC) or make another attempt.

REM-8F12: XENON LAMP POSITION SENSOR. FAULTY SIGNAL (2003-2004)

DIAGNOSTIC TROUBLE CODE (DTC) INFORMATION

Condition

The rear electrical module checks if the position sensor for the xenon lamp is calibrated.

Diagnostic trouble code (DTC)REM-8F12 is stored in the rear electrical module if the rear electrical module registers that the Xenon lamp position sensor is not calibrated.

Diagnostic trouble code (DTC) REM-8F12 can be detected at ignition on.

Substitute Value

- None.

Possible Source

- Calibration sequence not carried out.

Fault symptom[s]

- The road surface is not illuminated.

FAULTY SIGNAL

CALIBRATING THE COMPONENT

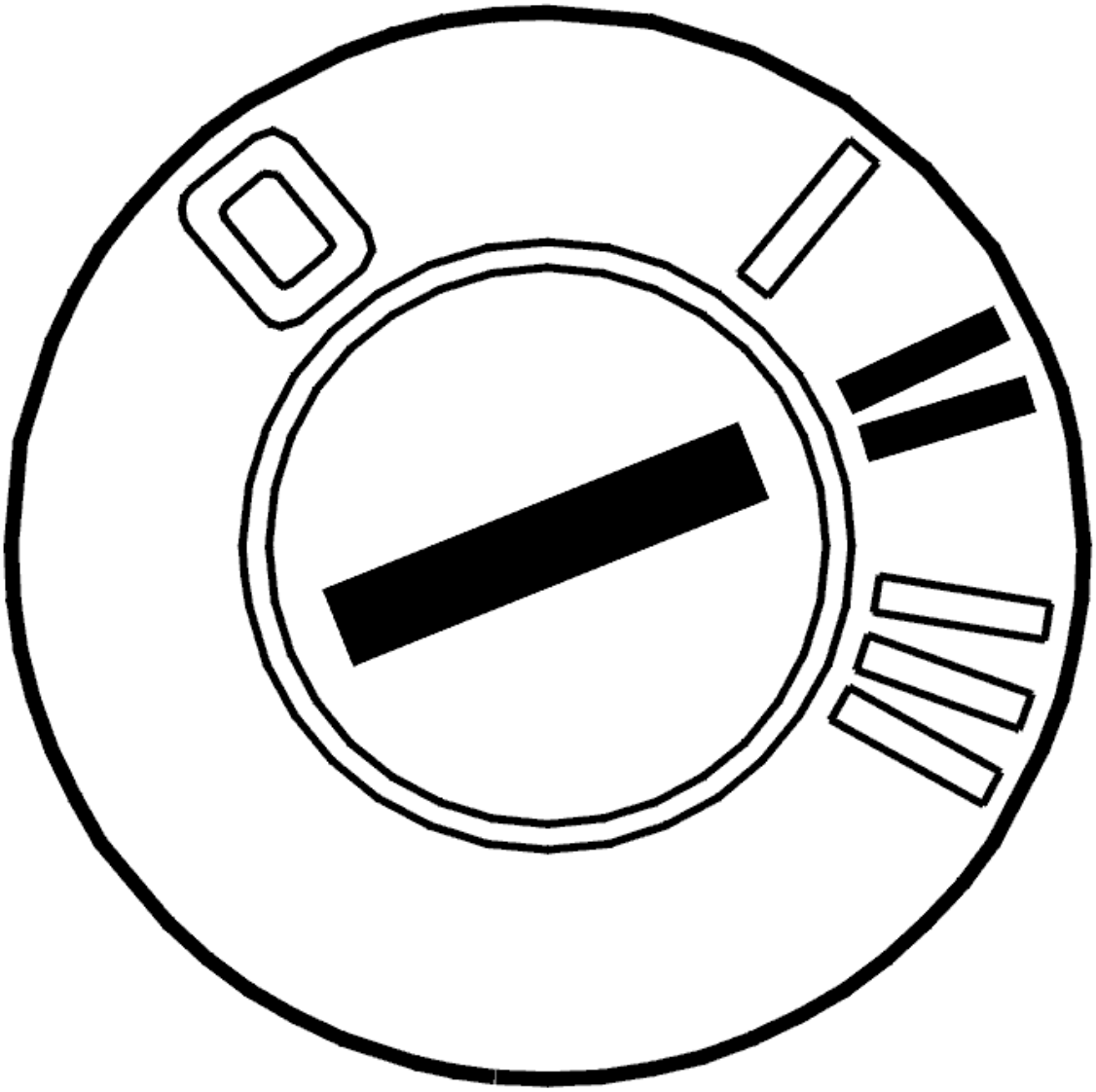

Fig. 465: Identifying Ignition ON
Courtesy of VOLVO CARS CORPORATION

NOTE: **If the vehicle is equipped with Four-C, calibration must be carried out via suspension module (SUM). See Vehicle communication, function group 7, suspension module (SUM), system calibration.**

Calibrate the position sensor for the Bi-Xenon lamps.

- Someone must sit in the driver's seat during calibration. The person must weigh at least 75 kg. Ensure that the vehicle is unladen and is on a flat surface.
- Ignition on
- Calibrate the position sensor using the VCT2000 (or appropriate scan tool).

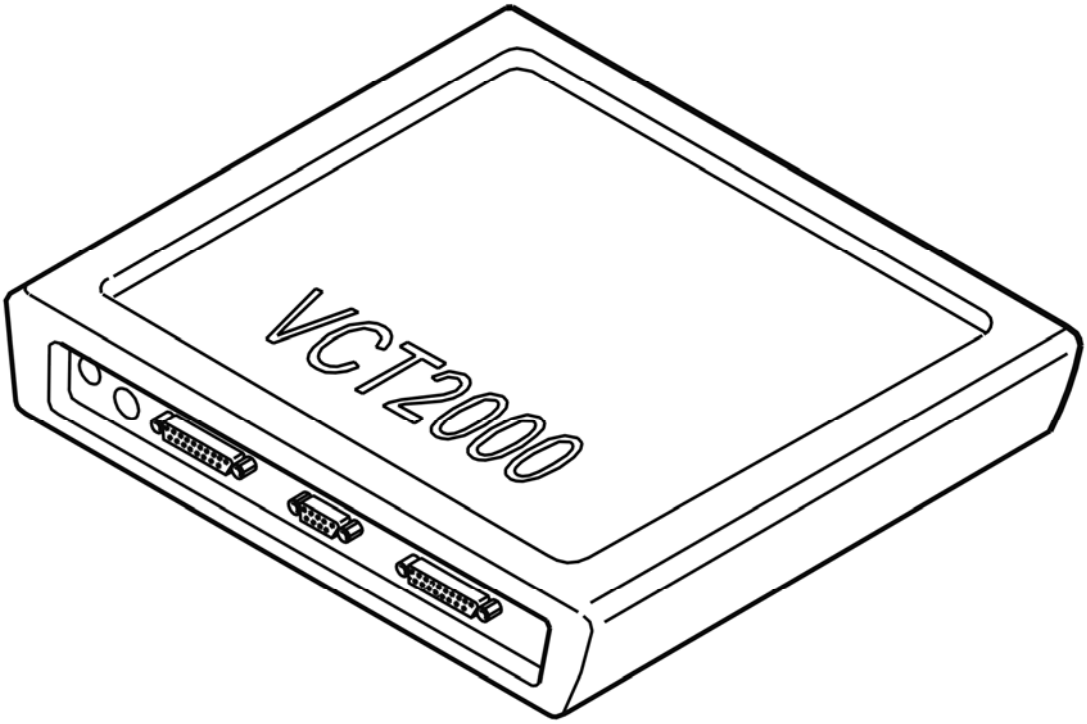

Fig. 466: Identifying VCT2000 Diagnostic Tool Symbol In VIDA
Courtesy of VOLVO CARS CORPORATION

- **Continue**

  Refer to **VERIFICATION**

VERIFICATION

VERIFICATION

HINT: After carrying out the repair, check that the fault has been remedied.

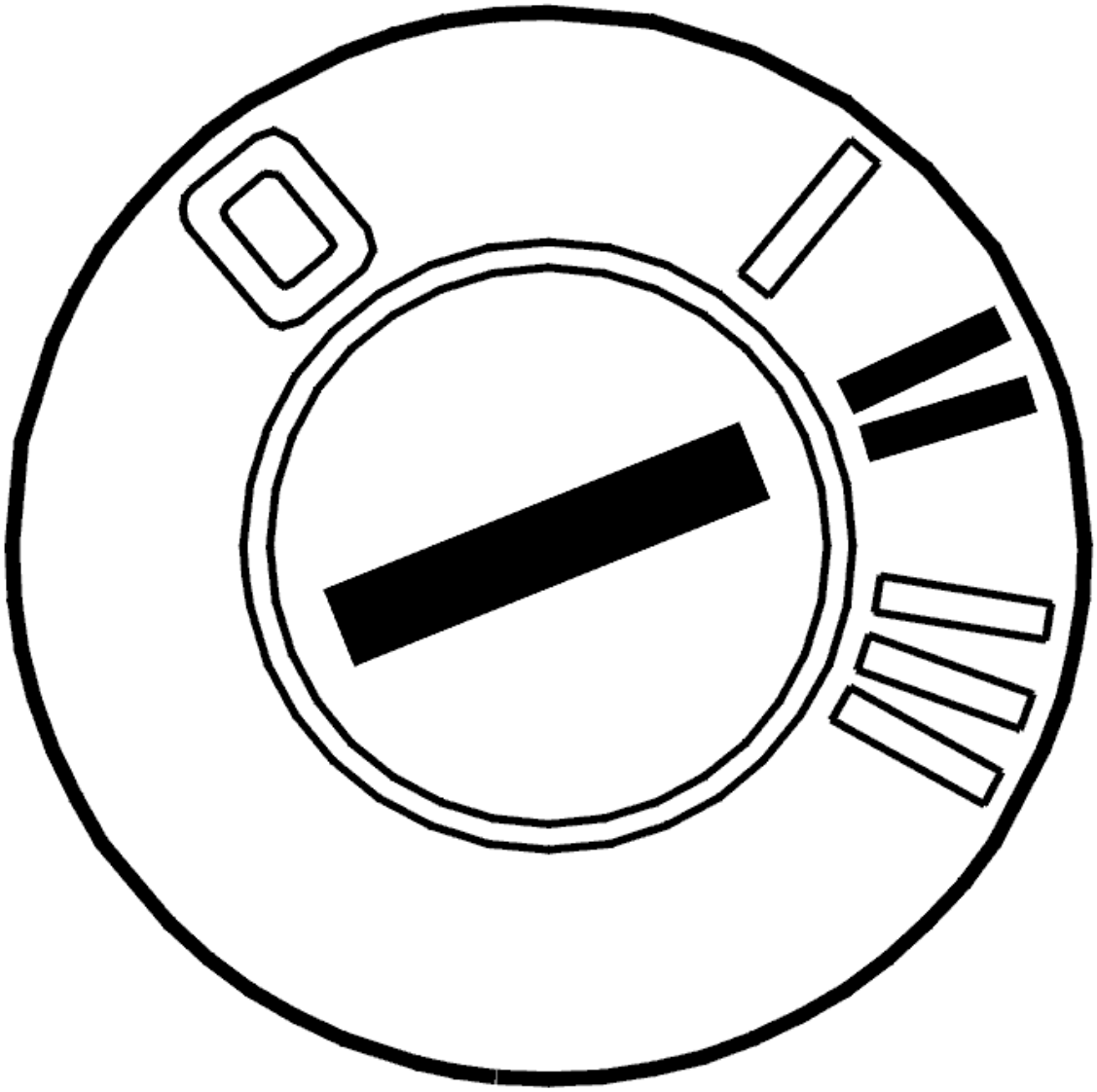

Fig. 467: Identifying Ignition ON
Courtesy of VOLVO CARS CORPORATION

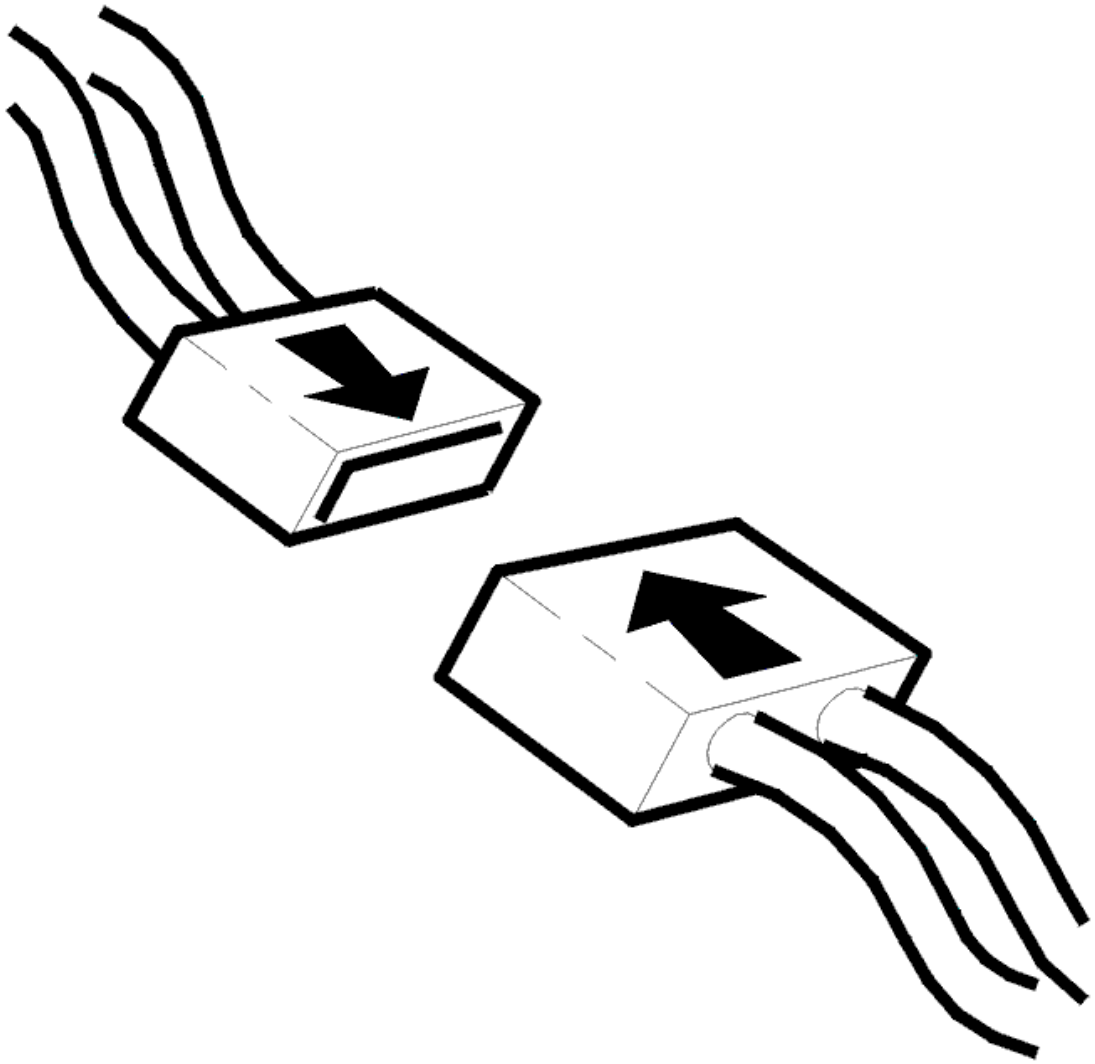

Fig. 468: Connecting Connector
Courtesy of VOLVO CARS CORPORATION

- Ignition off
- Reinstall the connectors, components etc.
- Ignition on.

  Check that the rear axle sensor for the Xenon lamp is calibrated using the VCT2000 (or appropriate scan tool).

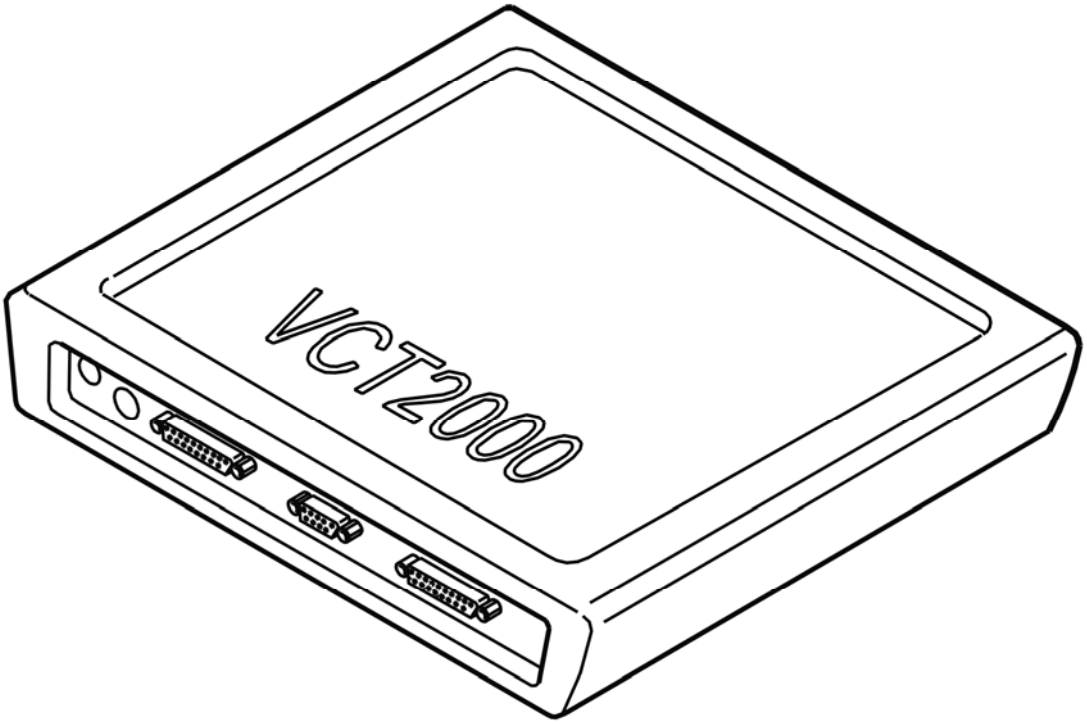

Fig. 469: Identifying VCT2000 Diagnostic Tool Symbol In VIDA
Courtesy of VOLVO CARS CORPORATION

Is the rear axle sensor calibrated?

- **YES**

  VERIFIED: Troubleshooting has been completed.

- **NO**

  Refer to **INFORMATION**

INFORMATION

FAULT-TRACING INFORMATION

The fault should have been detected and remedied. As this is not the case fault-tracing has failed.

Exit fault-tracing for this diagnostic trouble code (DTC) or make another attempt.

REM-8F12: XENON LAMP POSITION SENSOR. NOT CALIBRATED (2005-2012)

DIAGNOSTIC TROUBLE CODE (DTC) INFORMATION REM-8F12

Condition

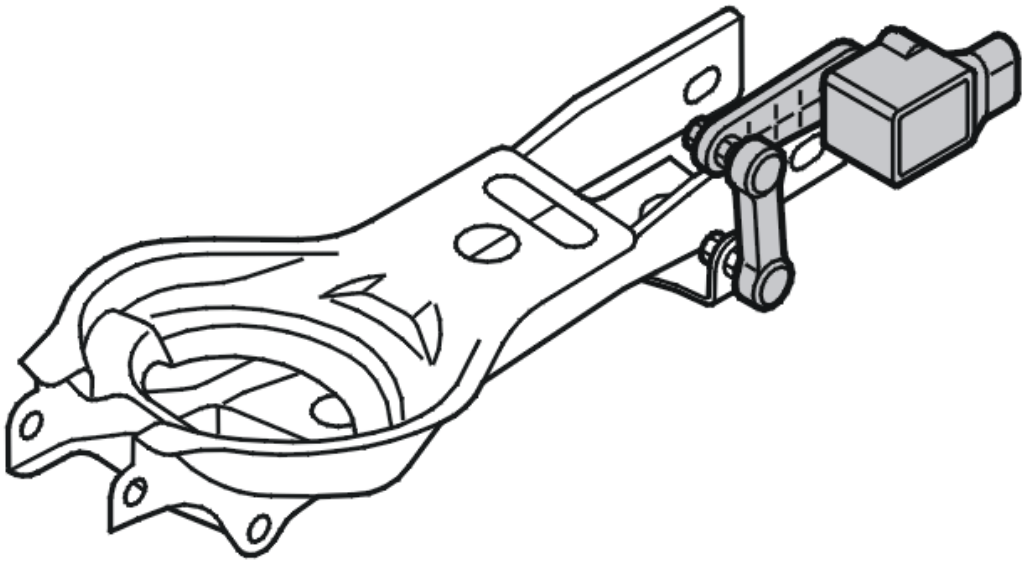

Fig. 470: Identifying Position Sensor For Headlamp
Courtesy of VOLVO CARS CORPORATION

The rear electronic module (REM) checks the signal from the rear position sensor.

The diagnostic trouble code (DTC) is stored if the rear electronic module (REM) registers that the position sensor is not calibrated.

The diagnostic trouble code (DTC) can be diagnosed at key position II.

Substitute Value

- The shortest headlamp range will be used.

Possible Source

- The position sensor is not calibrated.

Fault symptom[s]

- Automatic headlamp range control is not functioning.

NOT CALIBRATED

CALIBRATING THE COMPONENT

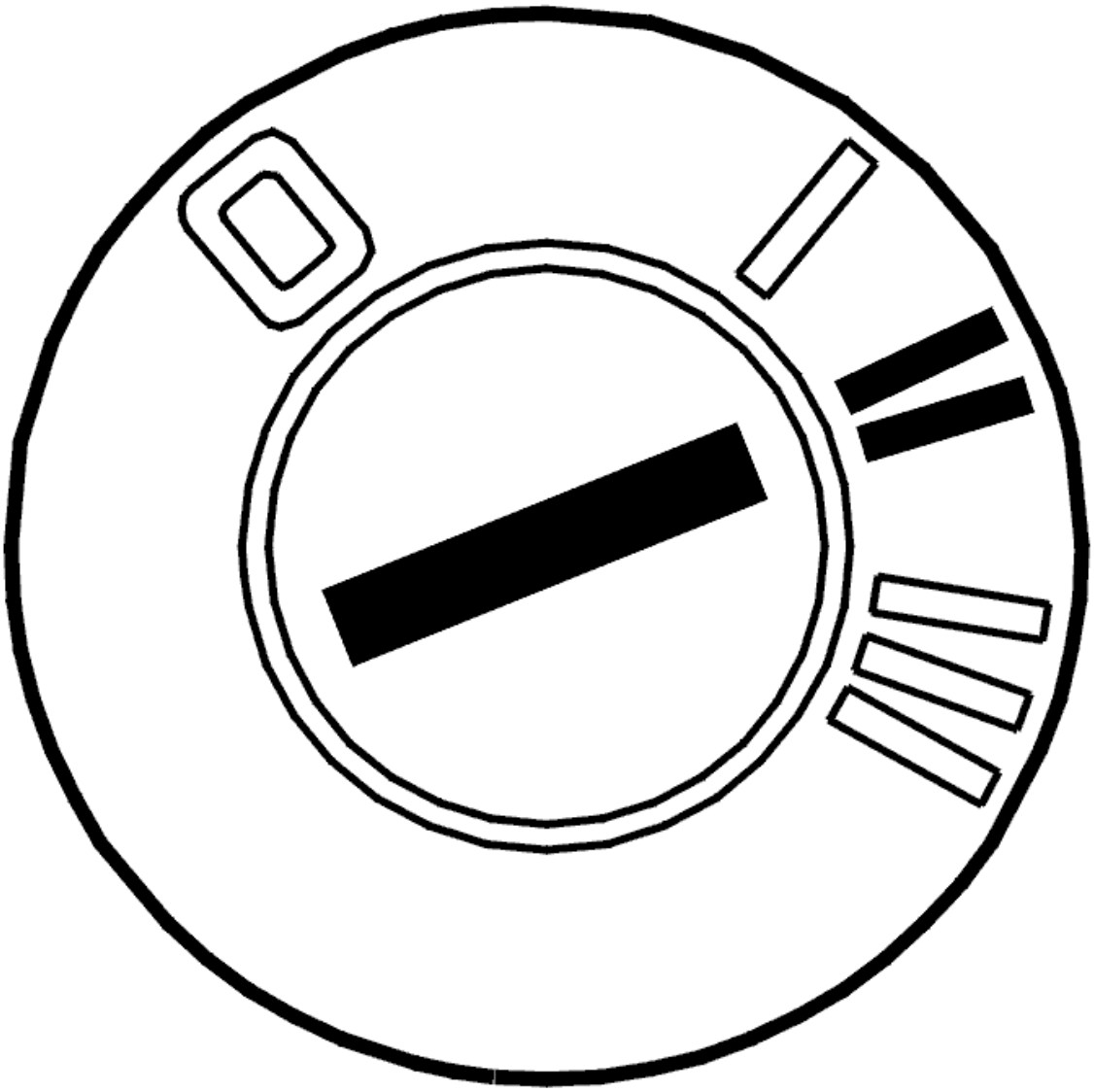

Fig. 471: Identifying Ignition ON
Courtesy of VOLVO CARS CORPORATION

NOTE: **If the vehicle is equipped with Four-C, calibration must be carried out via suspension module (SUM). See Vehicle communication, function group 7, suspension module (SUM), system calibration.**

Calibrate the position sensor for the Bi-Xenon lamps.

- Someone must sit in the driver's seat during calibration. The person must weigh at least 75 kg. Ensure that the car is unladen and is on a flat surface
- Ignition on
- Calibrate the position sensor using the VCT2000 (or appropriate scan tool).

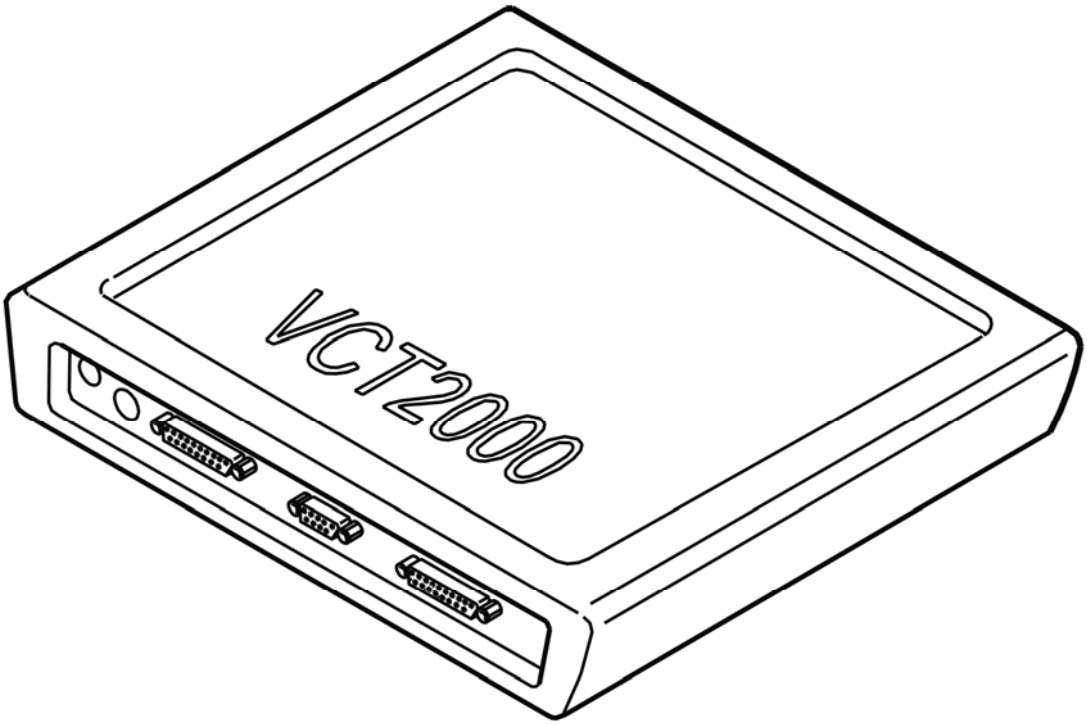

Fig. 472: Identifying VCT2000 Diagnostic Tool Symbol In VIDA
Courtesy of VOLVO CARS CORPORATION

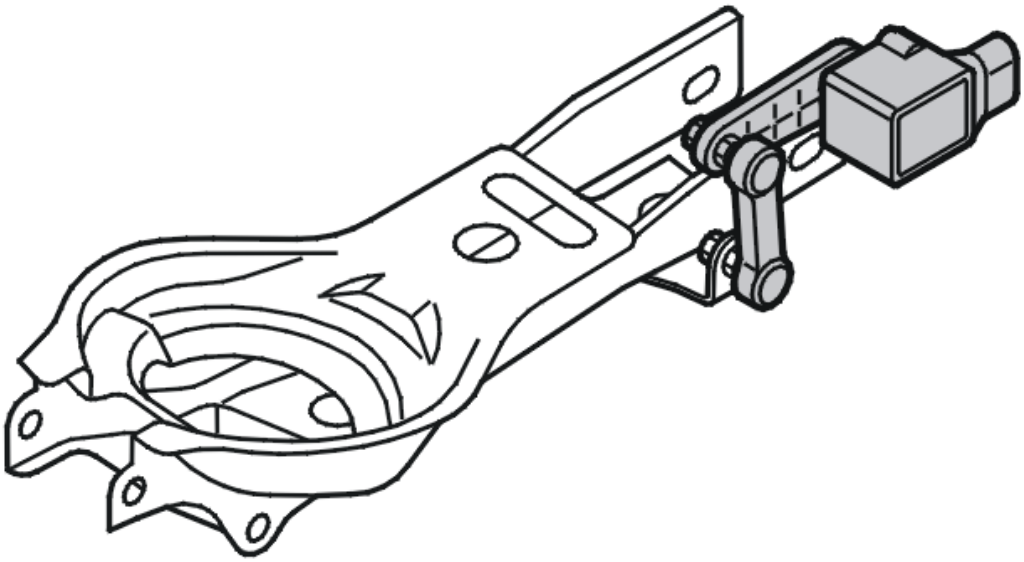

Fig. 473: Identifying Position Sensor For Headlamp
Courtesy of VOLVO CARS CORPORATION

- **Continue**

  Refer to **VERIFICATION**

VERIFICATION

VERIFICATION

HINT: After carrying out the repair, check that the fault has been remedied.

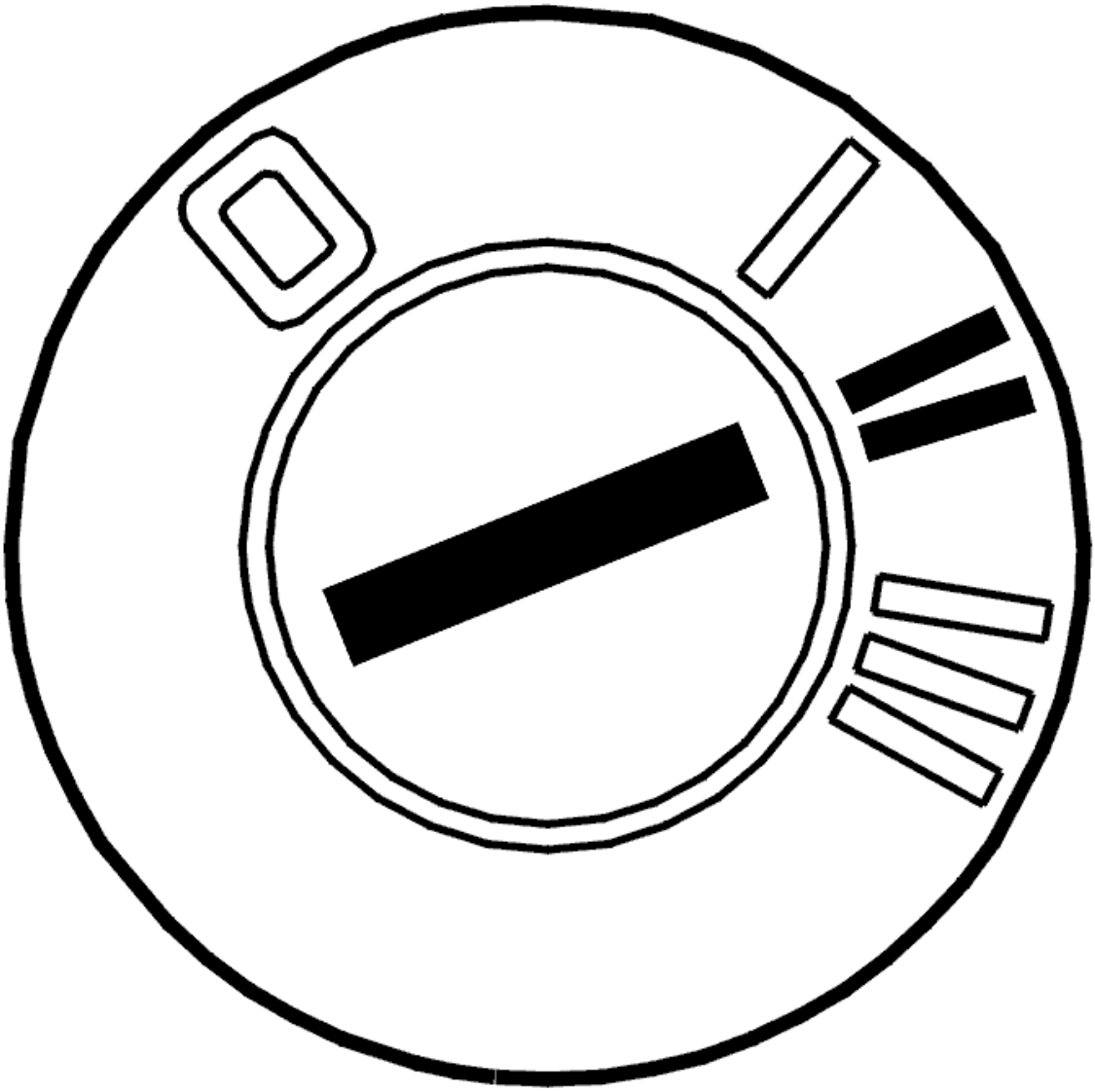

Fig. 474: Identifying Ignition ON
Courtesy of VOLVO CARS CORPORATION

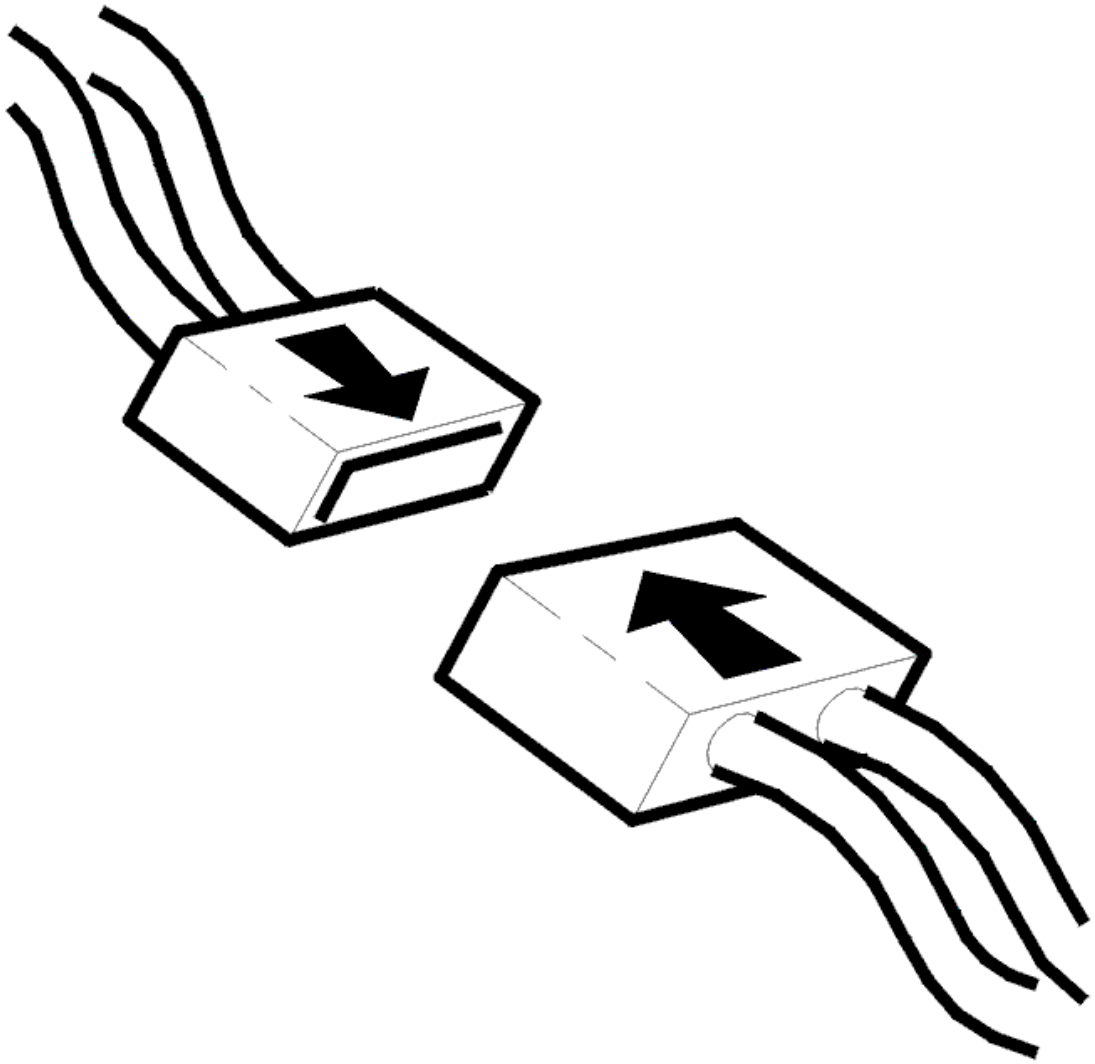

Fig. 475: Connecting Connector
Courtesy of VOLVO CARS CORPORATION

- Ignition off
- Reinstall the connectors, components etc.
- Ignition on.

  Check that the position sensor for the Xenon lamp is calibrated using the VCT2000 (or appropriate scan tool).

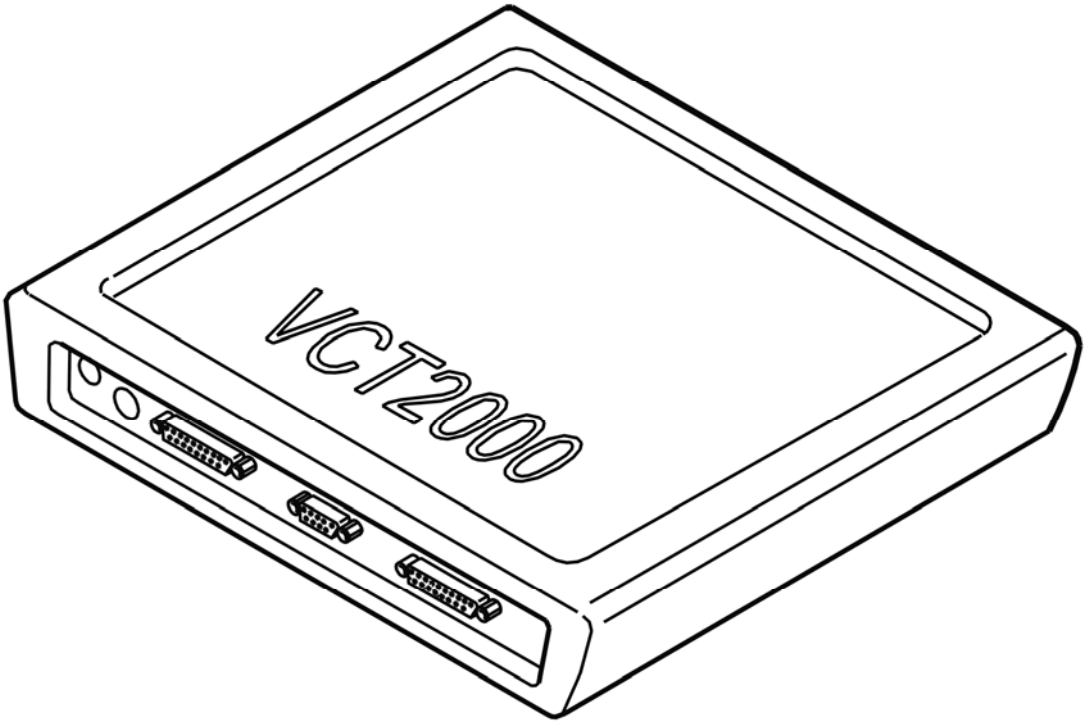

Fig. 476: Identifying VCT2000 Diagnostic Tool Symbol In VIDA
Courtesy of VOLVO CARS CORPORATION

Is the position sensor calibrated?

- **YES**

  VERIFIED: Troubleshooting has been completed.

- **NO**

  Refer to **INFORMATION**

INFORMATION

FAULT-TRACING INFORMATION

The fault should have been detected and remedied. As this is not the case fault-tracing has failed.

Exit fault-tracing for this diagnostic trouble code (DTC) or make another attempt.

ELECTRICAL

Cables And Fuses - Diagnostic Trouble Codes And Associated Procedures

UEM-0081: RAIN SENSOR. SIGNAL TOO LOW (2003-2012)

DIAGNOSTIC TROUBLE CODE INFORMATION UEM-0081

Condition

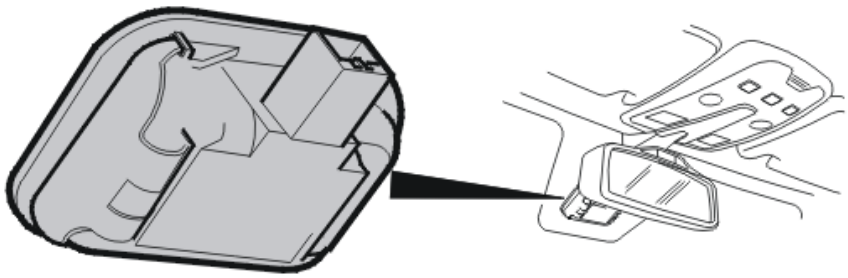

Fig. 1: Locating Rain Sensor Module
Courtesy of VOLVO CARS CORPORATION

The upper electronic module (UEM) regularly compares a communication test with the rain sensor.

The diagnostic trouble code (DTC) is generated if the upper electronic module (UEM) registers that the signal cable of the rain sensor is short-circuited to ground.

The diagnostic trouble code can be diagnosed when the ignition is on.

Substitute Value

- Intermittent windshield wiping.
- High speed windshield wiping.

Possible Source

- The rain sensor's signal cable is short-circuited to ground.
- Faulty rain sensor.

Fault symptom[s]

- No rain sensor function.

SIGNAL TOO LOW

CHECKING THE RAIN SENSOR

CHECKING THE FUNCTION

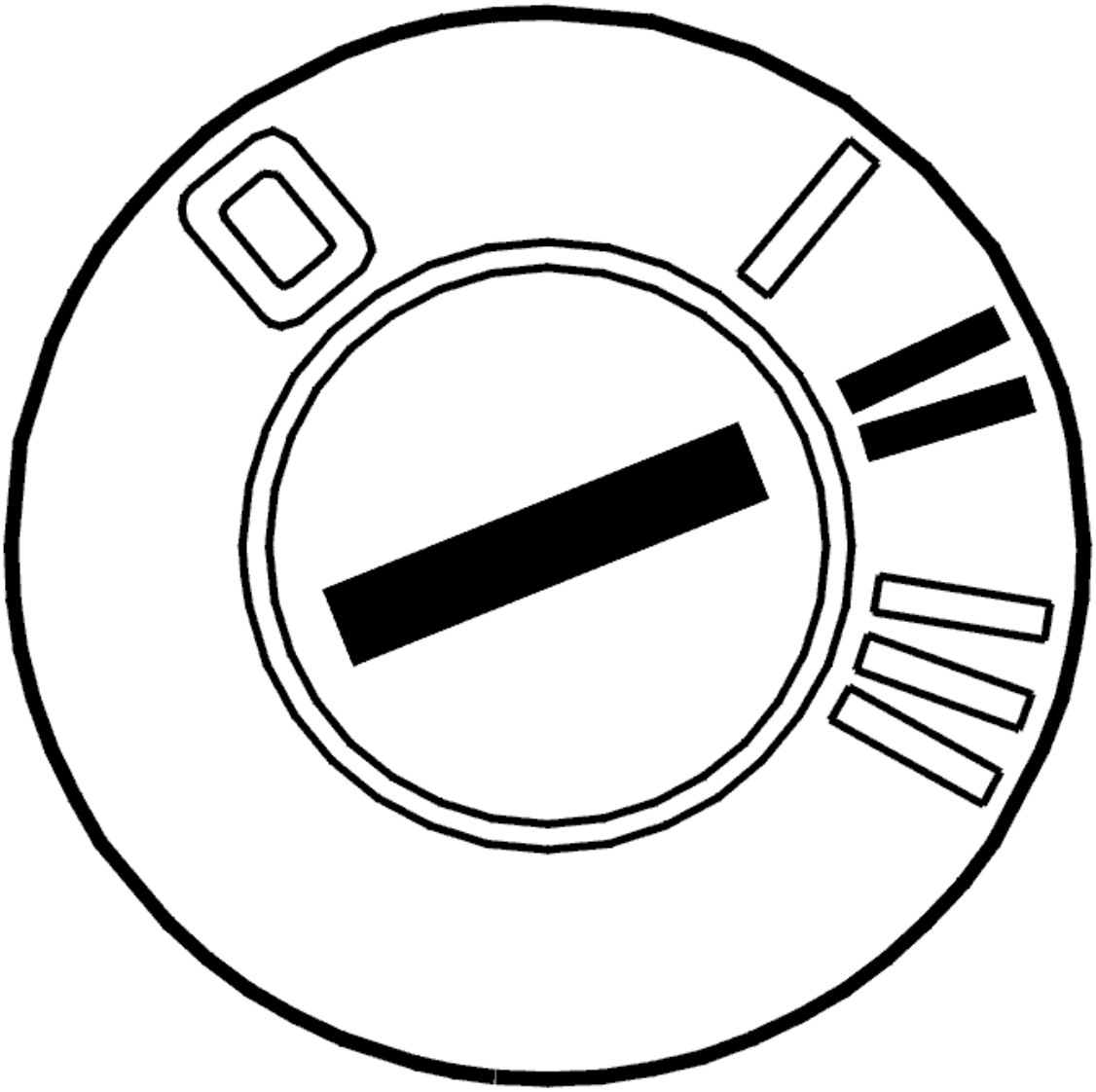

Fig. 2: Identifying Ignition ON
Courtesy of VOLVO CARS CORPORATION

- Ignition on
- Activate the rain sensor.

  HINT: The wiper blades make a reference stroke to determine the cleanliness and condition of the windshield when the rain sensor is activated. The rain sensor is deactivated when the ignition is switched off. To reactivate the rain sensor with the ignition on, move the stalk to position "0" and then to intermittent wiping.

Spray water on the windshield where the rain sensor is positioned.

The wiper blades must now wipe the windshield clean.

HINT: In cars equipped with the rain sensor it replaces the intermittent function. One way of checking the function of the rain sensor is to twist the collar on the lever. This changes the sensitivity of the rain sensor. The windshield wiper should make one stroke. If the intermittent or high speed functions are activated it indicates that the rain sensor function is missing.

- **Continue**

  Refer to **CHECKING THE WIRING**

CHECKING THE WIRING

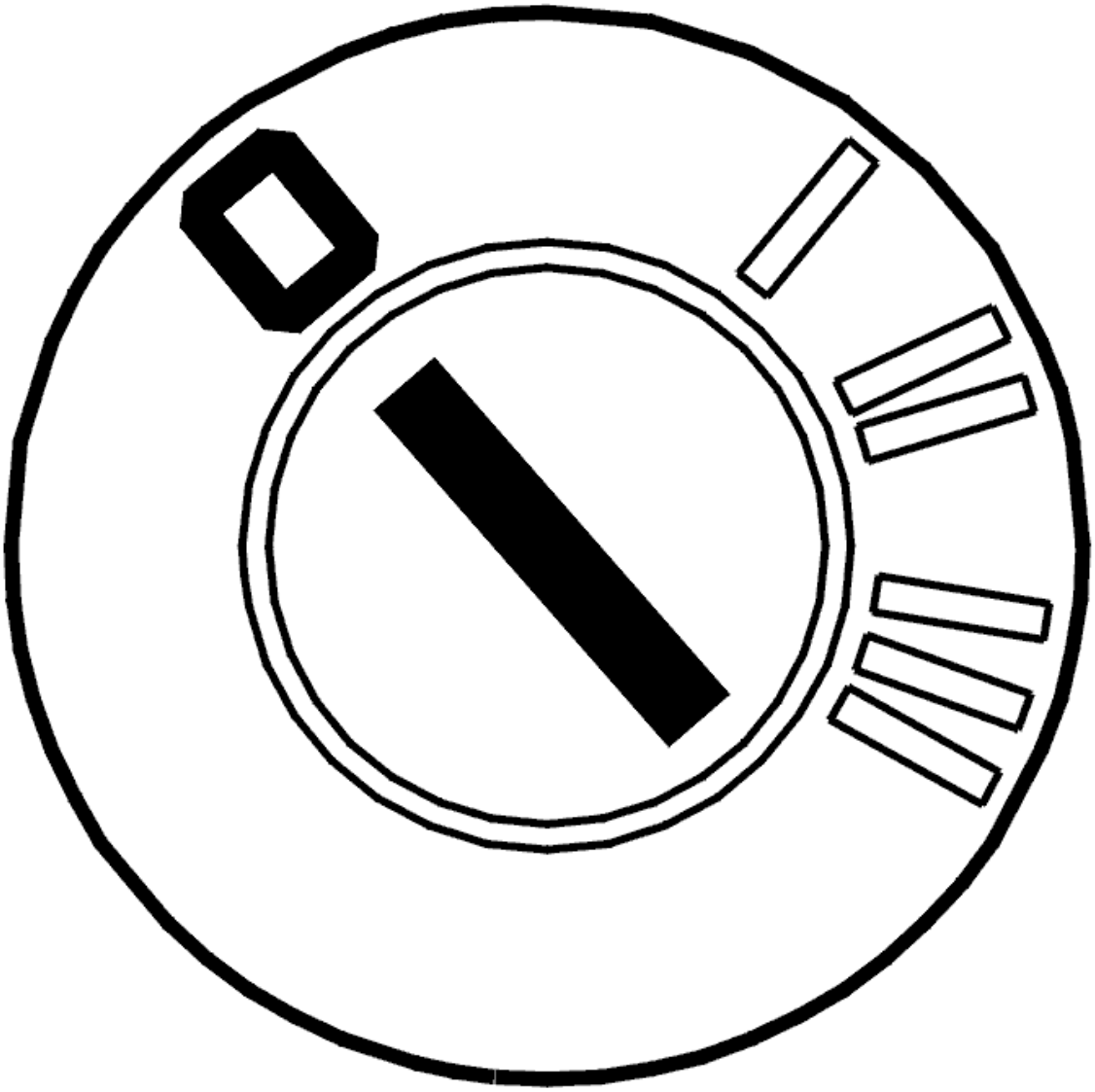

Fig. 3: Identifying Ignition OFF

Courtesy of VOLVO CARS CORPORATION

- **HINT: The wiring between the upper electronic module (UEM) and the rain sensor consists of two cables.**
- Windshield wiper stalk in position "0".

  Check the cable between upper electronic module (UEM) terminal #13 (#A13) and rain sensor terminal #1. Check for a short-circuit to ground.

  HINT: The upper electronic module (UEM) terminal #20 (#A20) is signal ground.

  Remedy as necessary.

  Other information:

  - see **UPPER ELECTRONIC MODULE (UEM)/REARVIEW MIRROR, REPLACING**
  - see **RAIN SENSOR**
  - see **SIGNAL DESCRIPTION, UPPER ELECTRONIC MODULE (UEM)**
  - see **CONNECTING THE BREAKOUT BOX**
  - see **CONTENTS** .

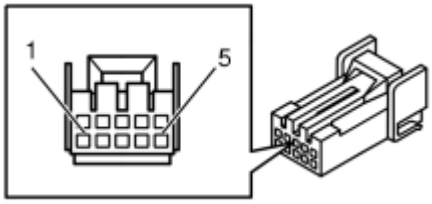

Fig. 4: Identifying 10-CD Changer Connector Terminals
Courtesy of VOLVO CARS CORPORATION

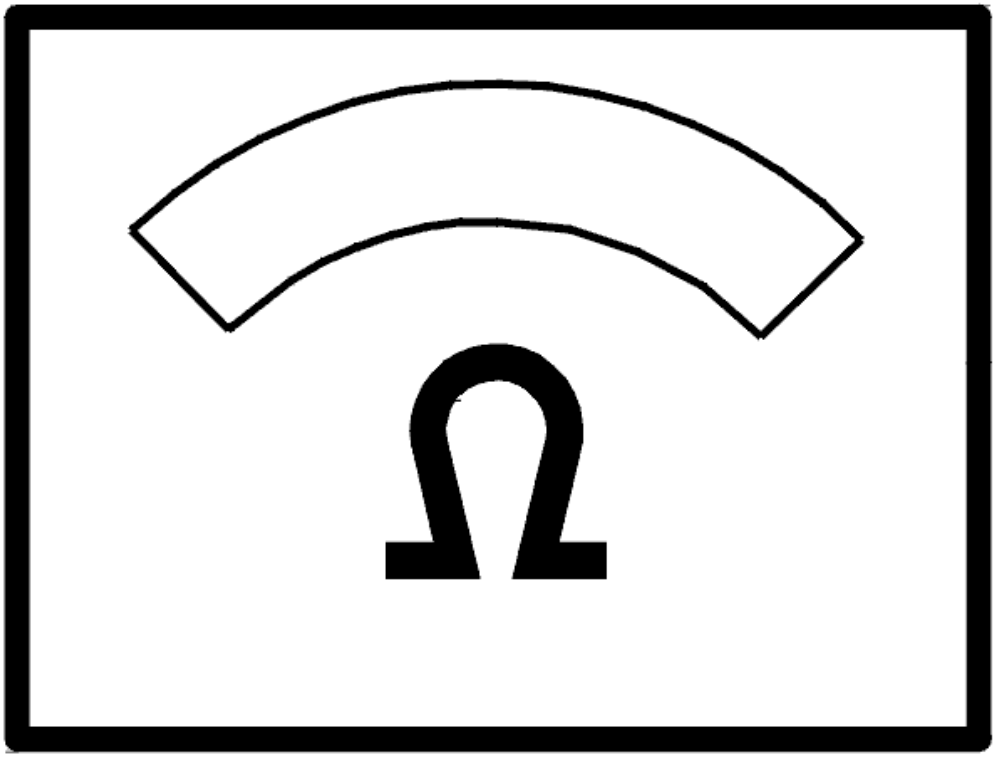

Fig. 5: Identifying Ohmmeter
Courtesy of VOLVO CARS CORPORATION

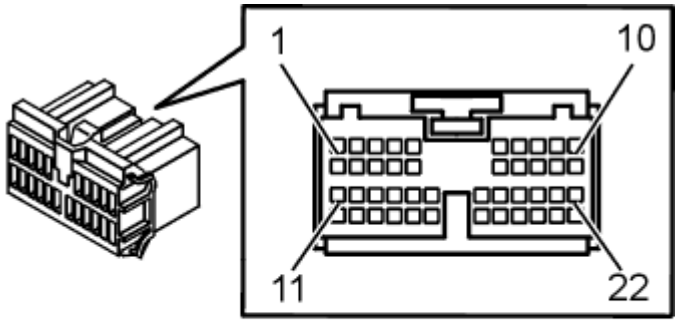

Fig. 6: Identifying Connector Terminals
Courtesy of VOLVO CARS CORPORATION

- **Continue**

  Refer to **VERIFICATION**

VERIFICATION

NOTE: After carrying out the repair, check that the fault has been remedied.

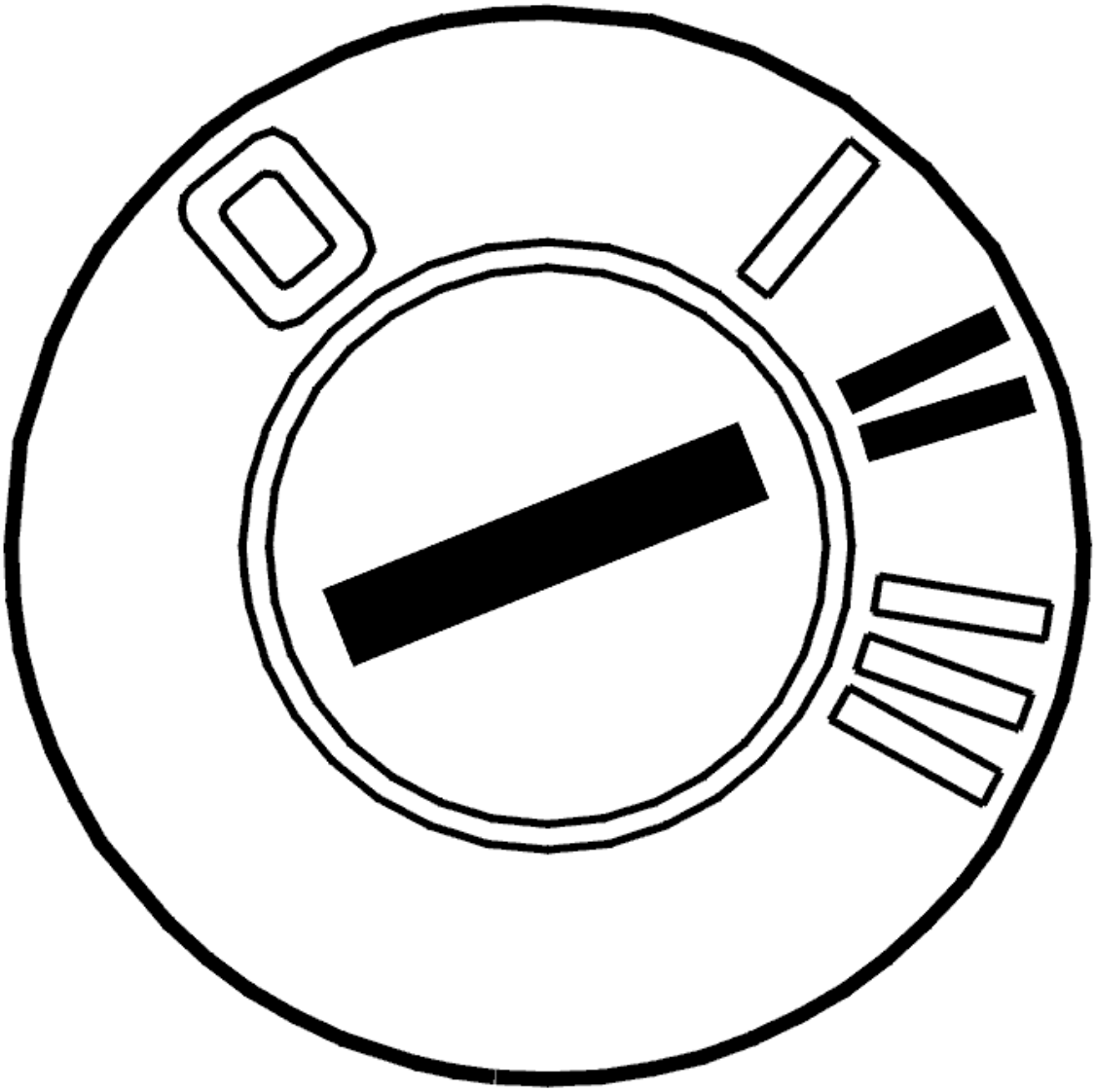

Fig. 7: Identifying Ignition ON
Courtesy of VOLVO CARS CORPORATION

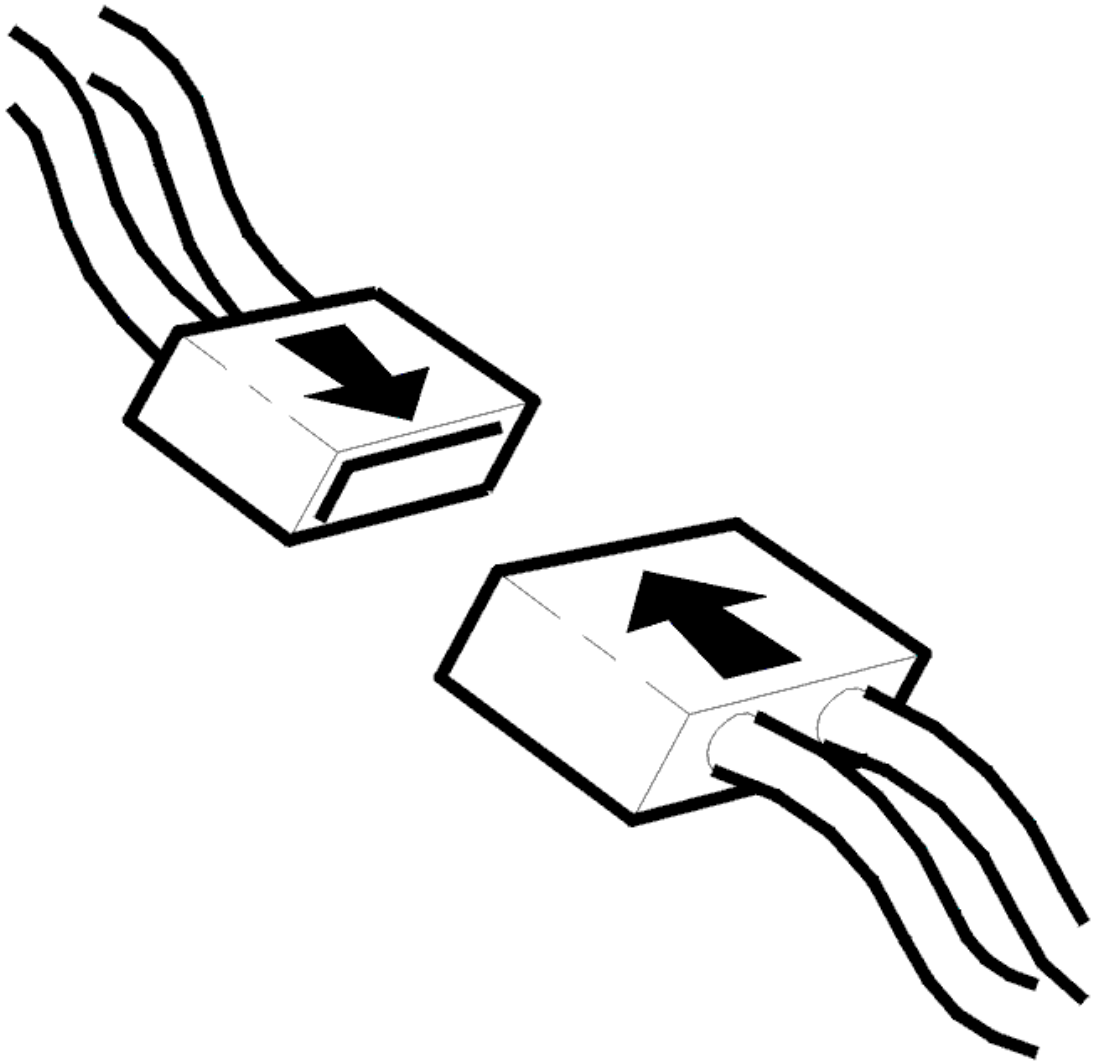

Fig. 8: Connecting Connector
Courtesy of VOLVO CARS CORPORATION

- Ignition off
- Reinstall the connectors, components etc.
- Ignition on
- Activate the rain sensor.

  HINT: The wiper blades make a reference stroke to determine the cleanliness and condition of the windshield when the rain sensor is activated. The rain sensor is deactivated when the ignition is switched off. To reactivate the rain sensor with the ignition on, move the lever to position 0 and then to intermittent wiping.

  Spray water on the windshield where the rain sensor is positioned.

The wiper blades must now wipe the windshield clean.

Is the rain sensor functioning?

- **YES**

  VERIFIED: Troubleshooting has been completed.

- **NO**

  Refer to **INFORMATION**

INFORMATION

FAULT-TRACING INFORMATION

The fault should have been detected and remedied. As this is not the case fault-tracing has failed.

Exit fault-tracing for this diagnostic trouble code (DTC) or make another attempt.

UEM-0082: RAIN SENSOR. SIGNAL TOO HIGH (2003-12)

DIAGNOSTIC TROUBLE CODE INFORMATION UEM-0082

Condition

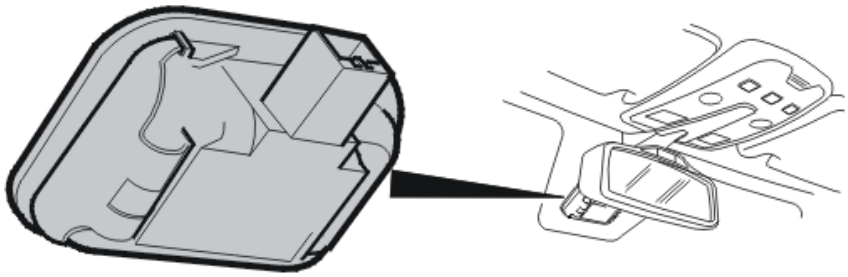

Fig. 9: Locating Rain Sensor Module
Courtesy of VOLVO CARS CORPORATION

The upper electronic module (UEM) regularly compares a communication test with the rain sensor.

The diagnostic trouble code (DTC) is generated if the upper electronic module (UEM) registers that the signal cable of the rain sensor is short-circuited to supply voltage. The diagnostic trouble code (DTC) is not generated if UEM-0081 is stored.

The diagnostic trouble code can be diagnosed when the ignition is on.

Substitute Value

- Intermittent windshield wiping.
- High speed windshield wiping.

Possible Source

- Short-circuit to supply voltage in the signal cable for the rain sensor
- Faulty rain sensor.

Fault symptom[s]

- No rain sensor function.

SIGNAL TOO HIGH

CHECKING THE RAIN SENSOR

CHECKING THE FUNCTION

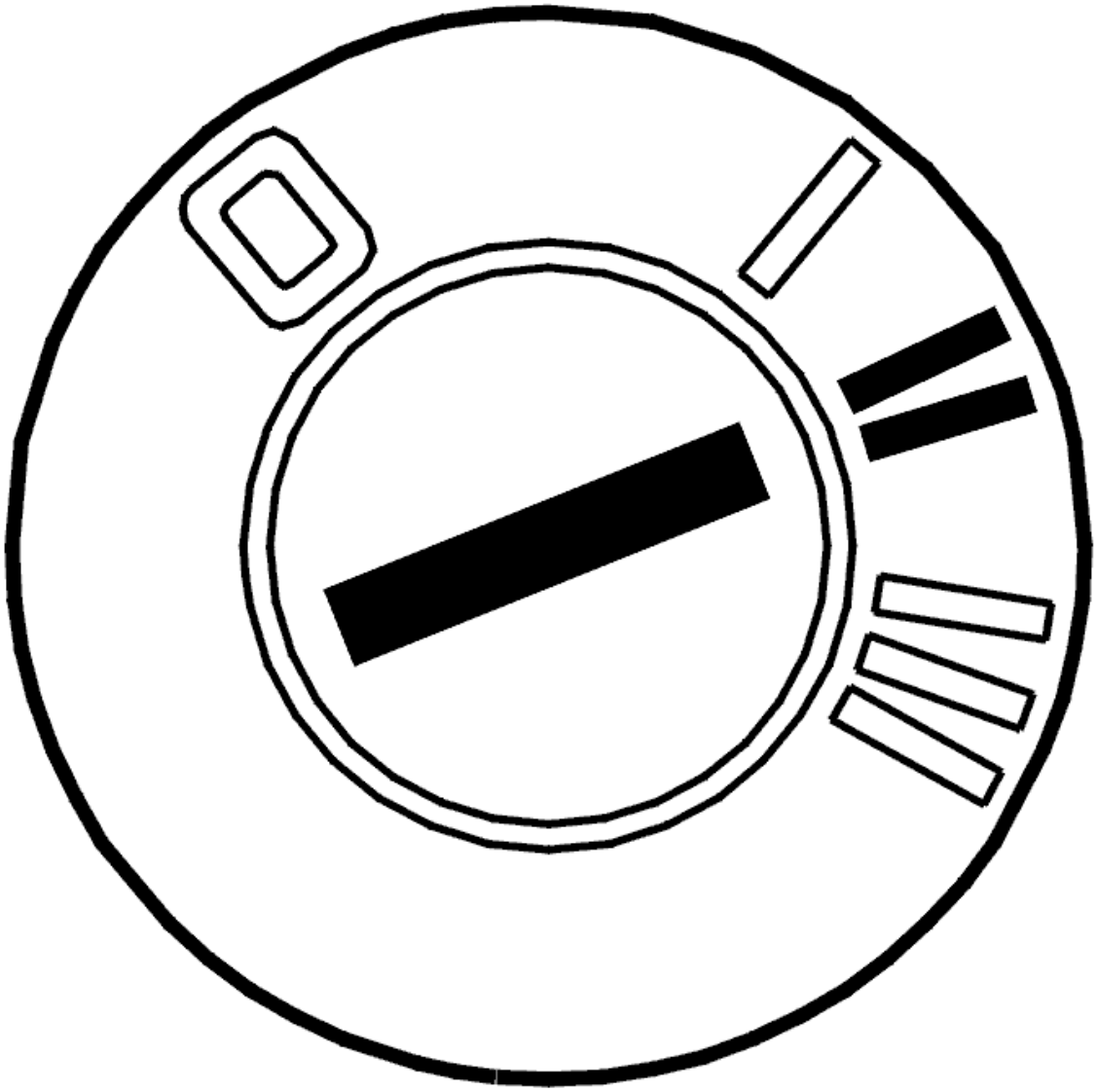

Fig. 10: Identifying Ignition ON
Courtesy of VOLVO CARS CORPORATION

- Ignition on
- Activate the rain sensor.

  HINT: The wiper blades make a reference stroke to determine the cleanliness and condition of the windshield when the rain sensor is activated. The rain sensor is deactivated when the ignition is switched off. To reactivate the rain sensor with the ignition on, move the stalk to position "0" and then to intermittent wiping.

  Spray water on the windshield where the rain sensor is positioned.

  The wiper blades must now wipe the windshield clean.

  HINT: In cars equipped with the rain sensor it replaces the intermittent function. One way of

checking the function of the rain sensor is to twist the collar on the lever. This changes the sensitivity of the rain sensor. The windshield wiper should make one stroke. If the intermittent or high speed functions are activated it indicates that the rain sensor function is missing.

- **Continue**

  Refer to **CHECKING THE WIRING**

CHECKING THE WIRING

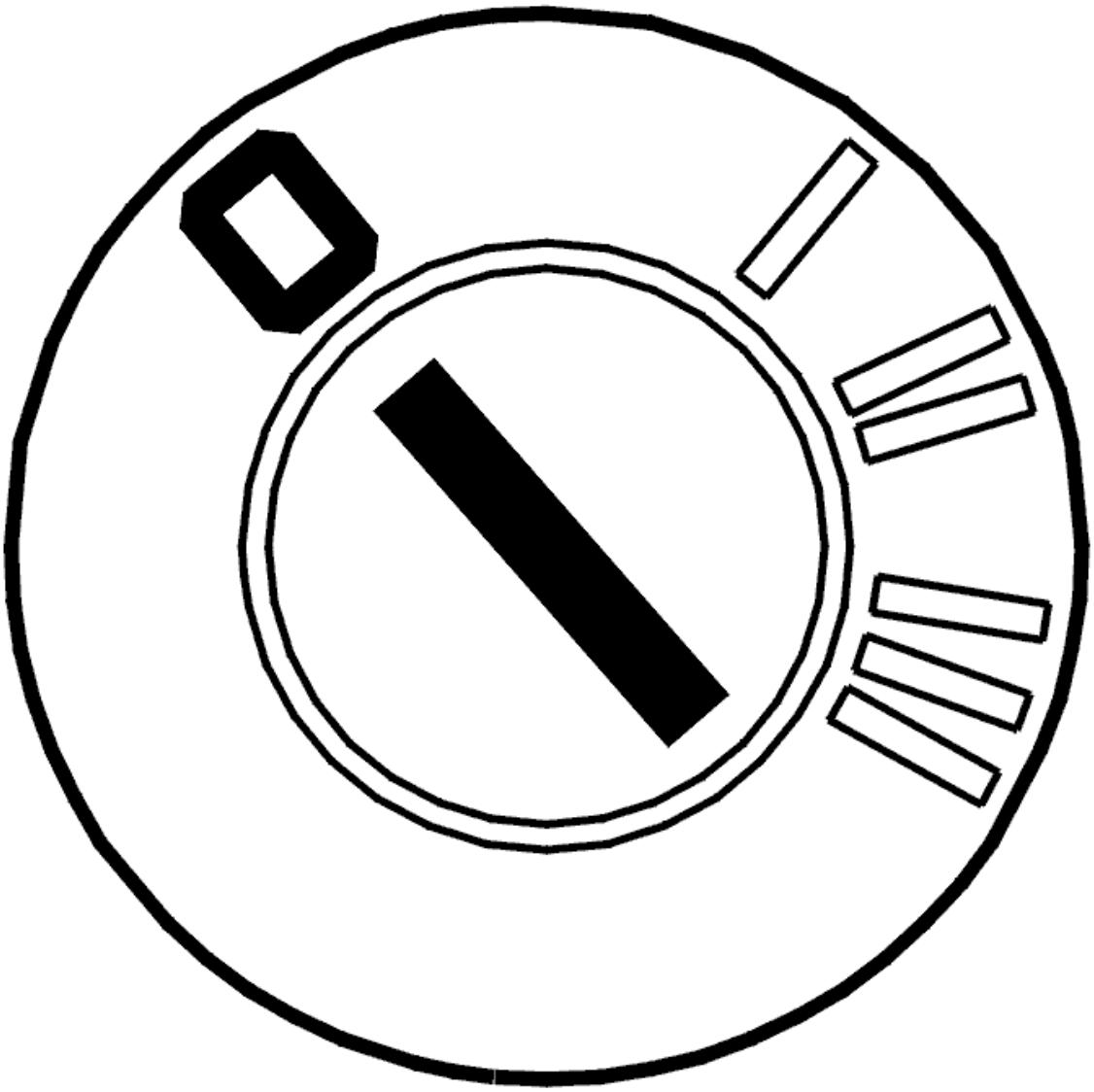

Fig. 11: Identifying Ignition OFF
Courtesy of VOLVO CARS CORPORATION

- **HINT: The wiring between the upper electronic module (UEM) and the rain sensor consists of two cables.**
- Windshield wiper stalk in position "0".

Check the cable between upper electronic module (UEM) terminal #13 (#A13) and rain sensor terminal #1. Check for a short-circuit to supply voltage.

HINT: Resistance between the power supply cable to the rain sensor terminal #8 (#A8) and the data cable to the rain sensor terminal #13 (#A13) should be infinite. The resistance between the data cable to the rain sensor terminal #13 (#A13) and the 30-supply to the upper electronic module (UEM) terminal #11 (#A11) should be infinite.

Remedy as necessary.

Other information

- see **UPPER ELECTRONIC MODULE (UEM)/REARVIEW MIRROR, REPLACING**
- see **RAIN SENSOR**
- see **SIGNAL DESCRIPTION, UPPER ELECTRONIC MODULE (UEM)**
- see **CONNECTING THE BREAKOUT BOX**
- see **CHECKING WIRING AND TERMINALS**

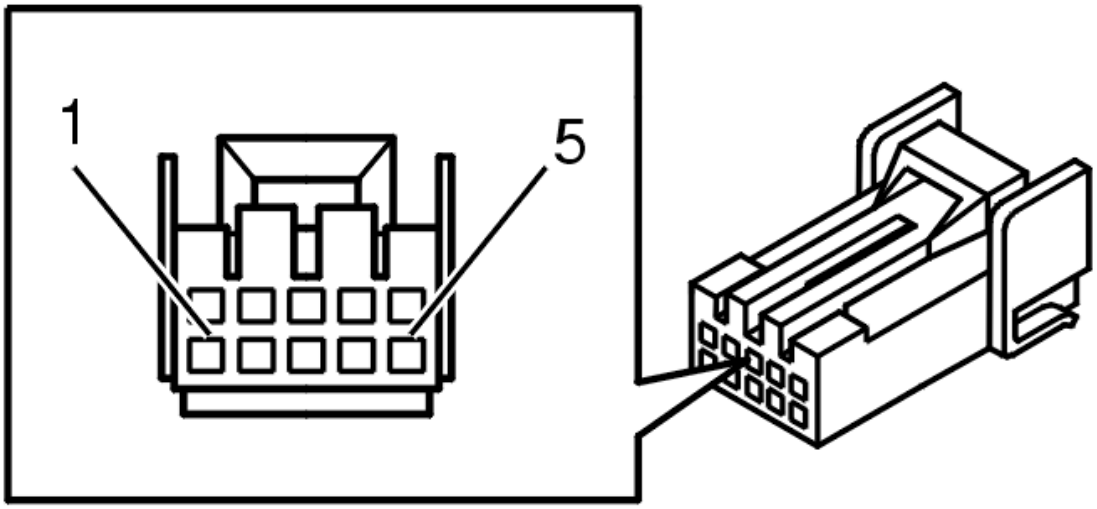

Fig. 12: 10-CD Changer Connector Terminals
Courtesy of VOLVO CARS CORPORATION

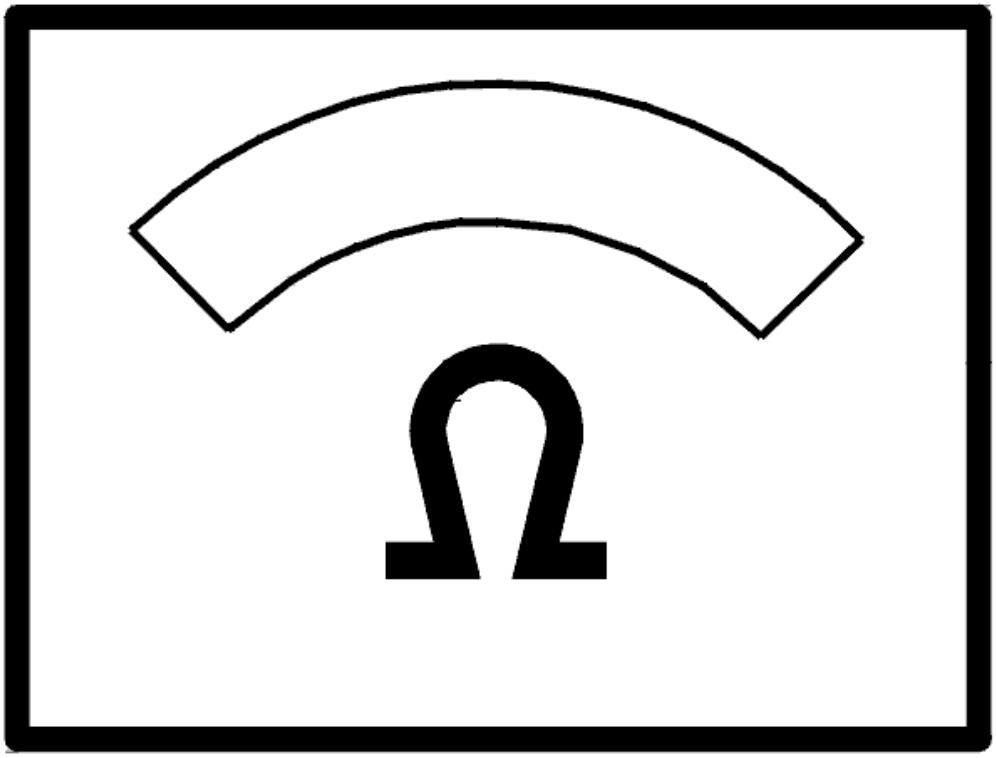

Fig. 13: Identifying Ohmmeter
Courtesy of VOLVO CARS CORPORATION

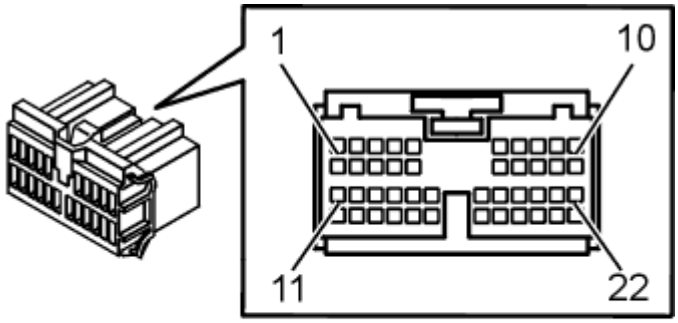

Fig. 14: Identifying Connector Terminals
Courtesy of VOLVO CARS CORPORATION

- **Continue**

  Refer to **VERIFICATION**

VERIFICATION

NOTE: After carrying out the repair, check that the fault has been remedied.

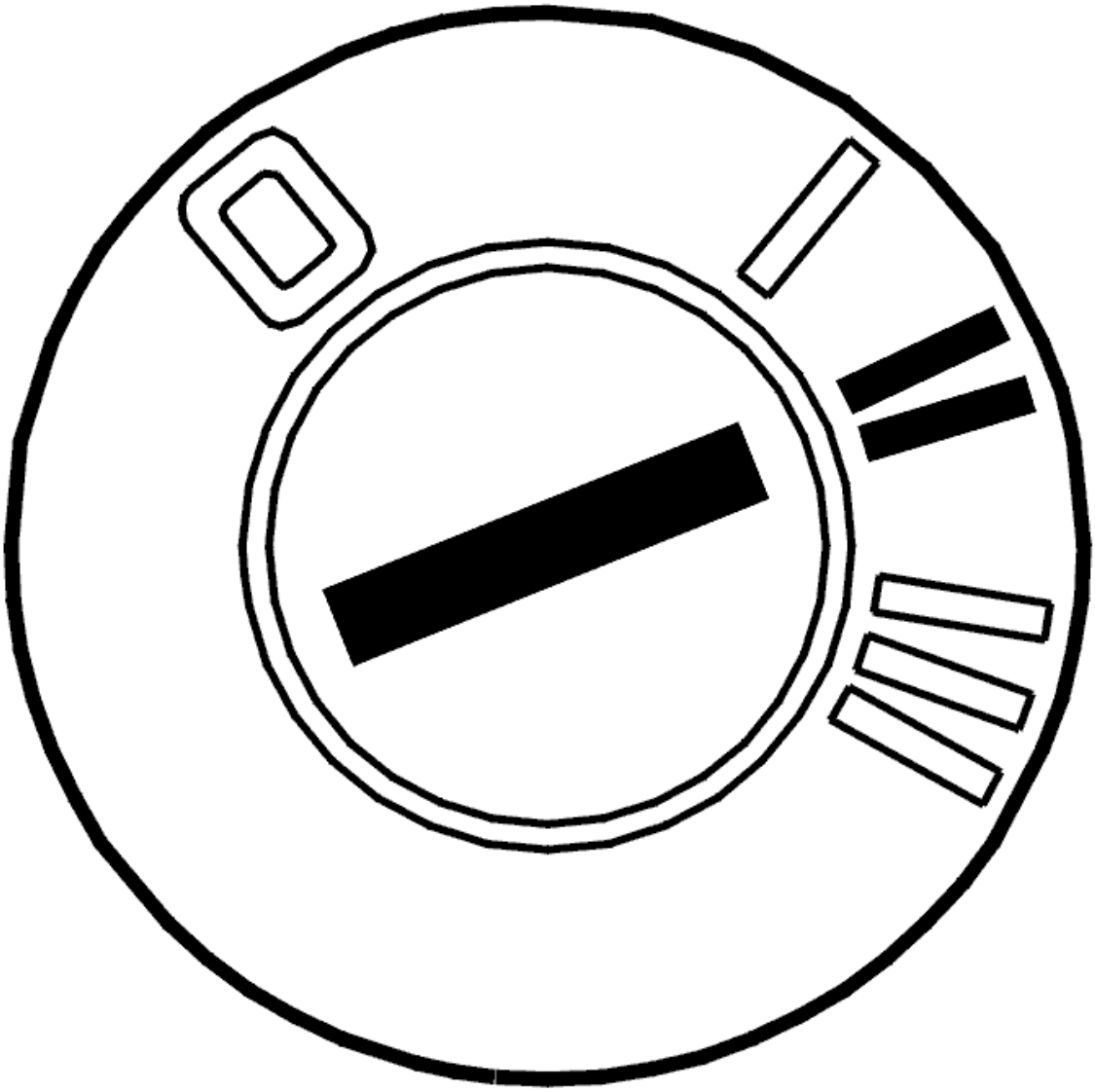

Fig. 15: Identifying Ignition ON
Courtesy of VOLVO CARS CORPORATION

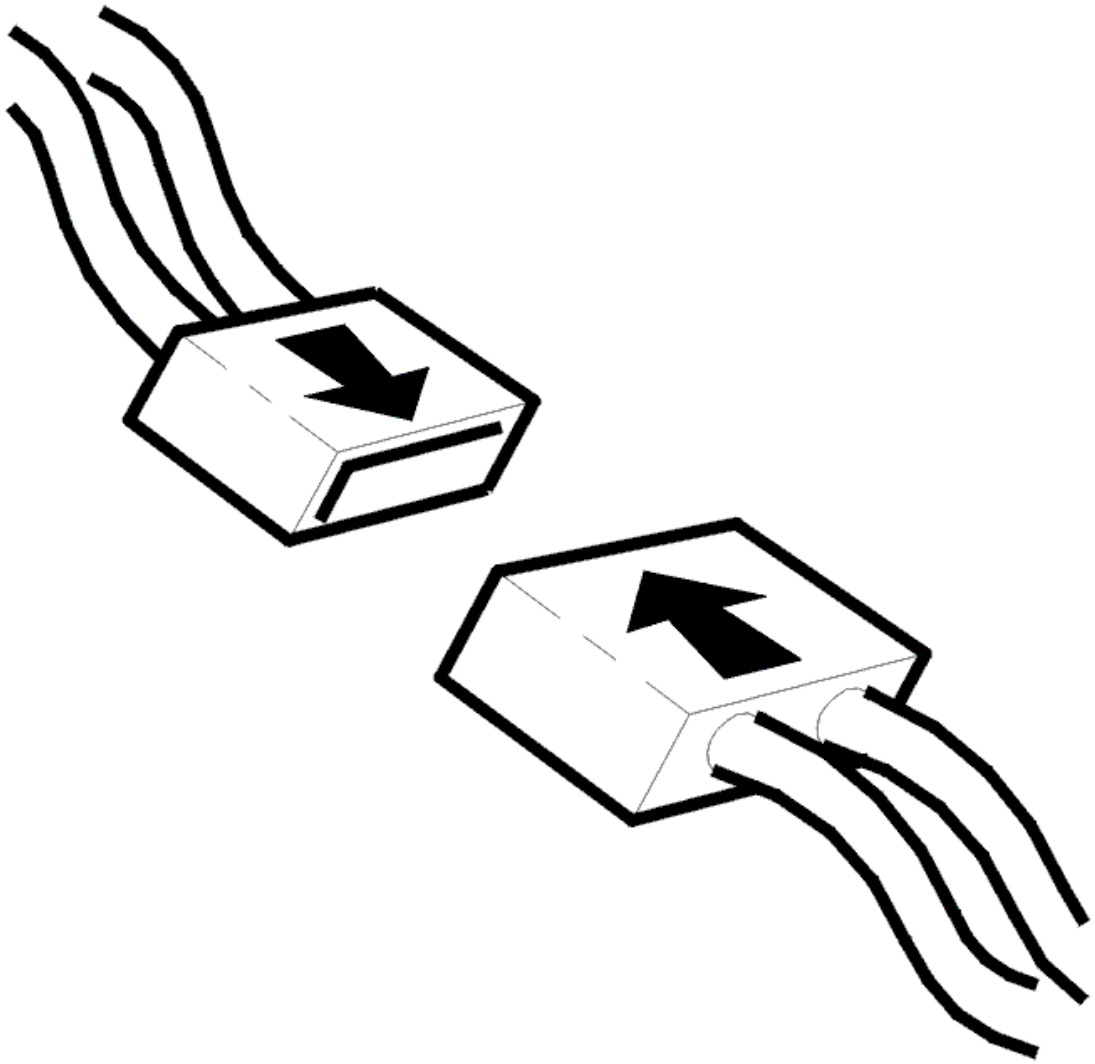

Fig. 16: Connecting Connector
Courtesy of VOLVO CARS CORPORATION

- Ignition off
- Reinstall the connectors, components etc.
- Ignition on
- Activate the rain sensor.

  HINT: The wiper blades make a reference stroke to determine the cleanliness and condition of the windshield when the rain sensor is activated. The rain sensor is deactivated when the ignition is switched off. To reactivate the rain sensor with the ignition on, move the lever to position 0 and then to intermittent wiping.

  Spray water on the windshield where the rain sensor is positioned.

The wiper blades must now wipe the windshield clean.

Is the rain sensor functioning?

- **YES**

  VERIFIED: Troubleshooting has been completed.

- **NO**

  Refer to **INFORMATION**

INFORMATION

FAULT-TRACING INFORMATION

The fault should have been detected and remedied. As this is not the case fault-tracing has failed.

Exit fault-tracing for this diagnostic trouble code (DTC) or make another attempt.

UEM-0083: RAIN SENSOR. INTERNAL FAULT (2003-12)

DIAGNOSTIC TROUBLE CODE (DTC) INFORMATION UEM-0083

Condition

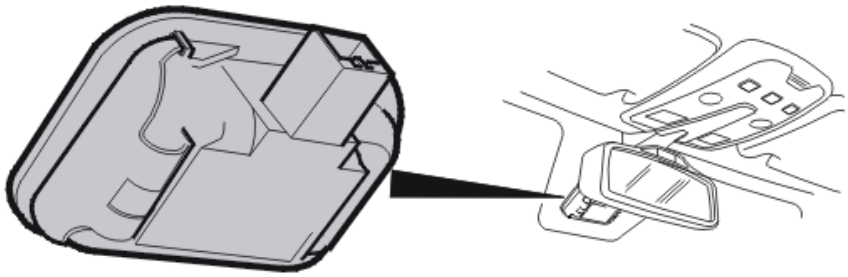

Fig. 17: Locating Rain Sensor Module
Courtesy of VOLVO CARS CORPORATION

The rain sensor checks itself at start.

The rain sensor checks factors such as reflections on the windshield.

The diagnostic trouble code (DTC) is stored if the rain sensor registers incorrect function.

The diagnostic trouble code (DTC) can be diagnosed with the ignition on and with an outside temperature above + 5°C (41°F).

NOTE: **On early model years, this diagnostic trouble code (DTC) may be stored if for example there was frost on the window when the check was run. In this case, it does not help to replace any components. Fault-trace the function of the rain sensor before replacing any components.**

Substitute Value

- Intermittent windshield wipers
- The windshield wipers operate at high speed.

Possible Source

- Frost on the windshield during the check
- Crack in the windshield by the rain sensor
- Stone chip on the windshield close to the rain sensor
- The rain sensor is not properly secured to the windshield
- Defective rain sensor.

Fault symptom[s]

- No rain sensor function.

INTERNAL FAULT

CHECKING THE RAIN SENSOR

CHECKING THE FUNCTION

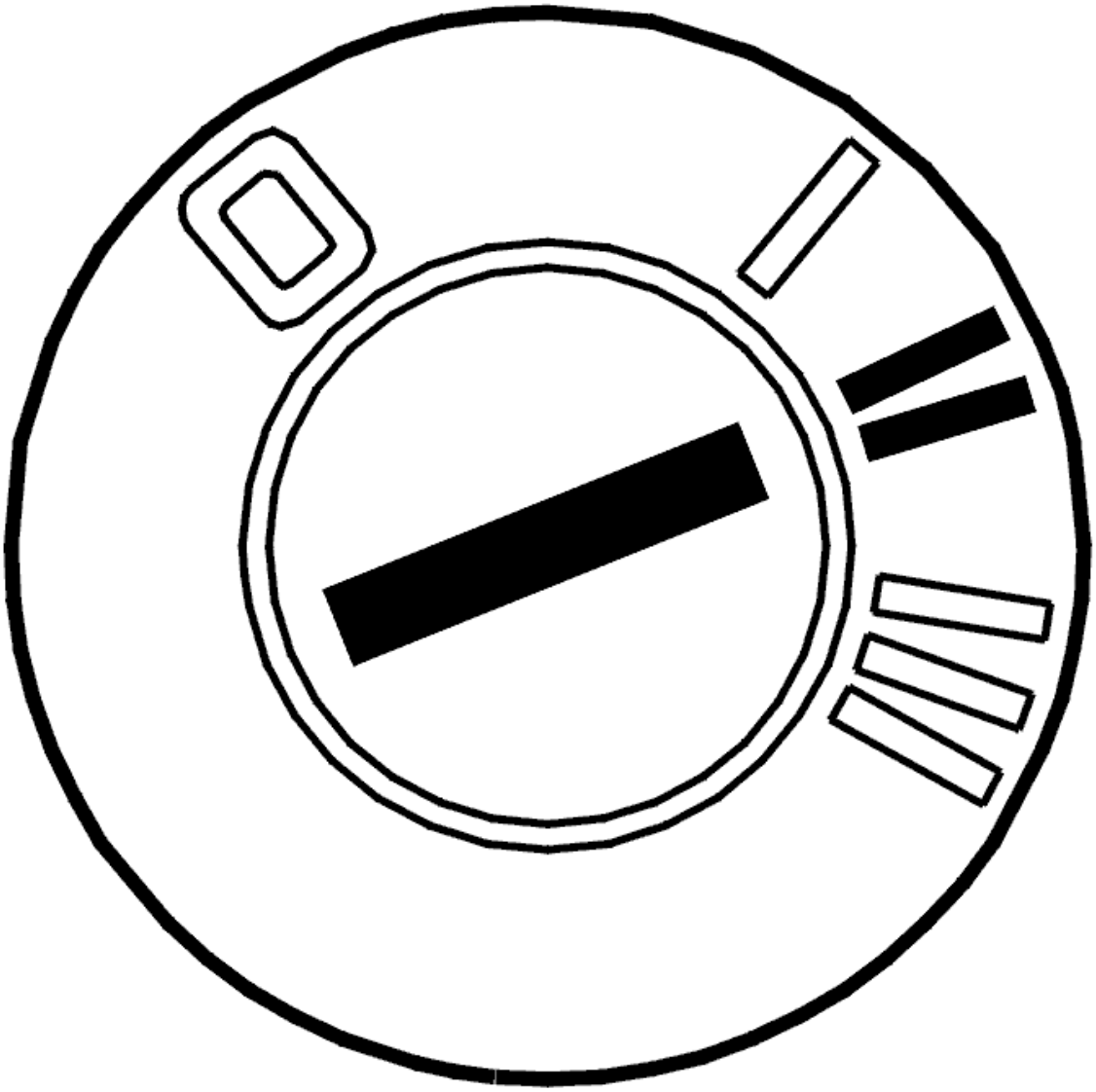

Fig. 18: Identifying Ignition ON
Courtesy of VOLVO CARS CORPORATION

- Ignition on
- Activate the rain sensor.

  HINT: The wiper blades make a reference stroke to determine the cleanliness and condition of the windshield when the rain sensor is activated. The rain sensor is deactivated when the ignition is switched off. To reactivate the rain sensor with the ignition on, move the stalk to position "0" and then to intermittent wiping.

  Spray water on the windshield where the rain sensor is positioned.

  The wiper blades must now wipe the windshield clean.

  HINT: In cars equipped with the rain sensor it replaces the intermittent function. One way of

checking the function of the rain sensor is to twist the collar on the lever. This changes the sensitivity of the rain sensor. The windshield wiper should make one stroke. If the intermittent or high speed functions are activated it indicates that the rain sensor function is missing.

- **Continue**

  Refer to **CHECKING THE RAIN SENSOR**

CHECKING THE RAIN SENSOR

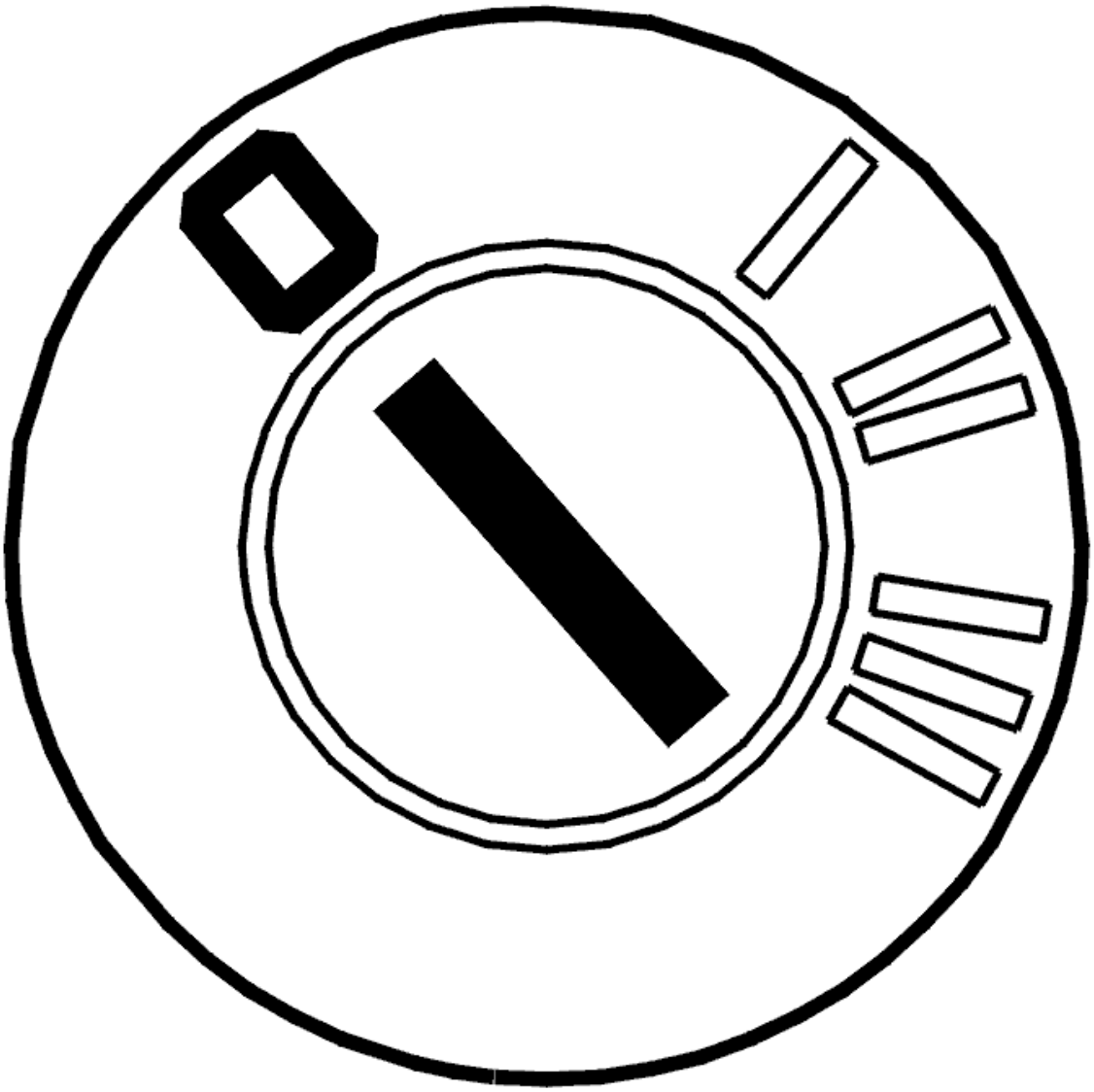

Fig. 19: Identifying Ignition OFF
Courtesy of VOLVO CARS CORPORATION

- Ignition off.

  Check that the rain sensor is properly secured. Check that there is no dirt on the inside of the windshield.

Check that there are no stone chips or damage to the windshield where the rain sensor is positioned.

Remedy as necessary.

Other information:

- see **RAIN SENSOR**

Was a fault detected?

- **YES**

  Refer to **VERIFICATION**

- **NO**

  Refer to **REPLACING THE RAIN SENSOR**

REPLACING THE RAIN SENSOR

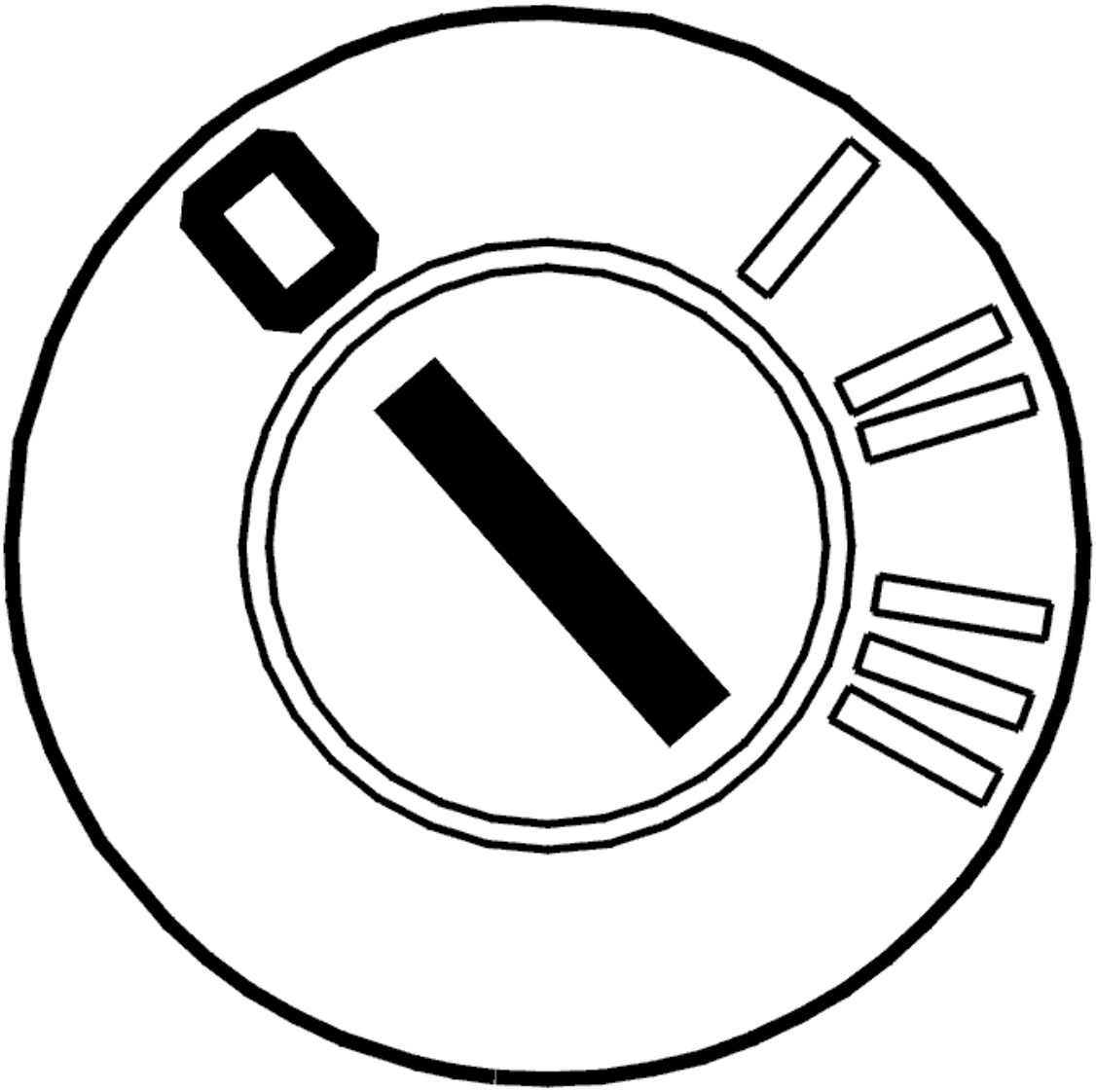

Fig. 20: Identifying Ignition OFF
Courtesy of VOLVO CARS CORPORATION

- Ignition off.

  If no other fault is found, try replacing the rain sensor.

  Other information

  - see **RAIN SENSOR**

- **Continue**

  Refer to **VERIFICATION**

VERIFICATION

NOTE: **After carrying out the repair, check that the fault has been remedied.**

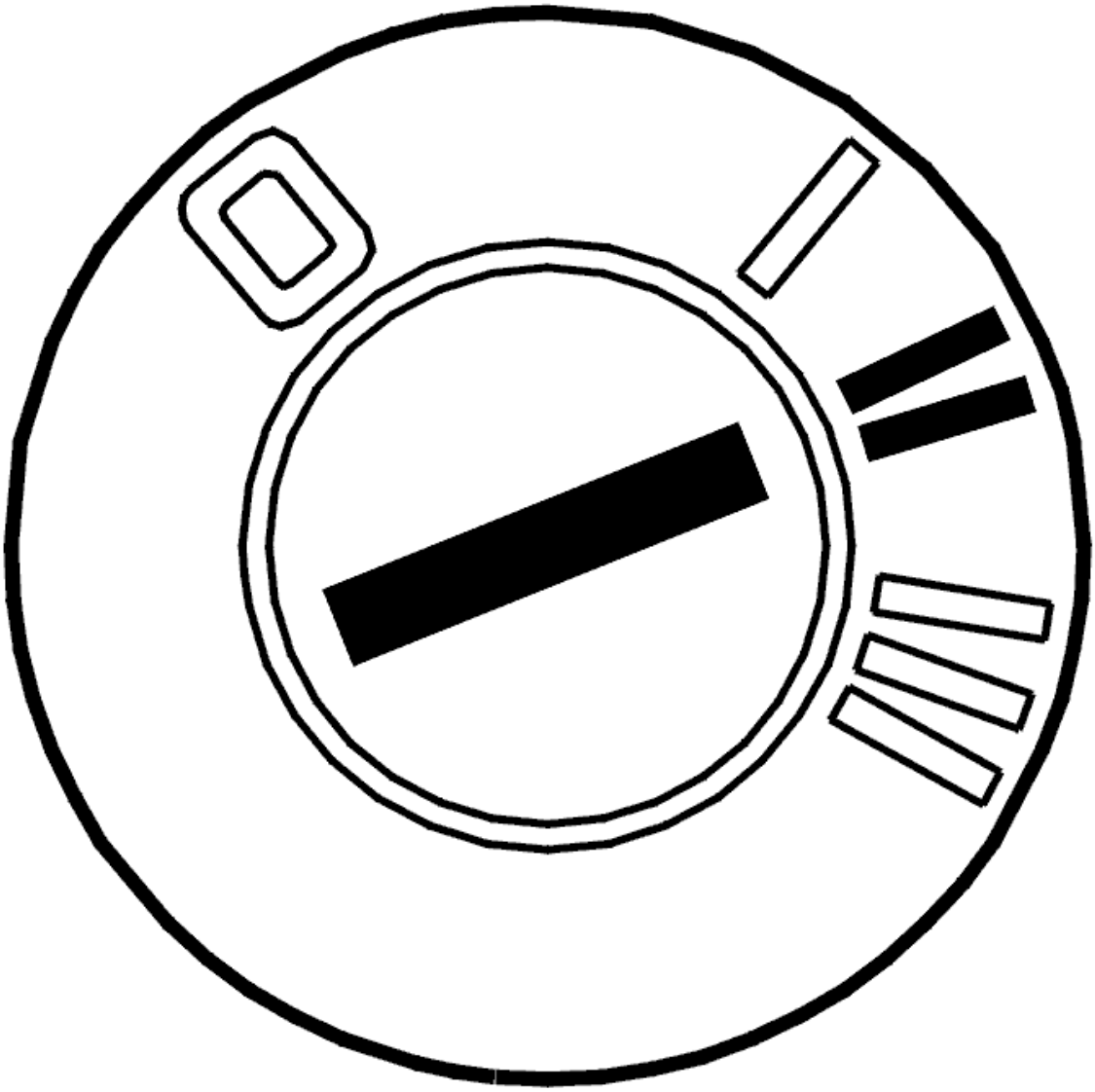

Fig. 21: Identifying Ignition ON
Courtesy of VOLVO CARS CORPORATION

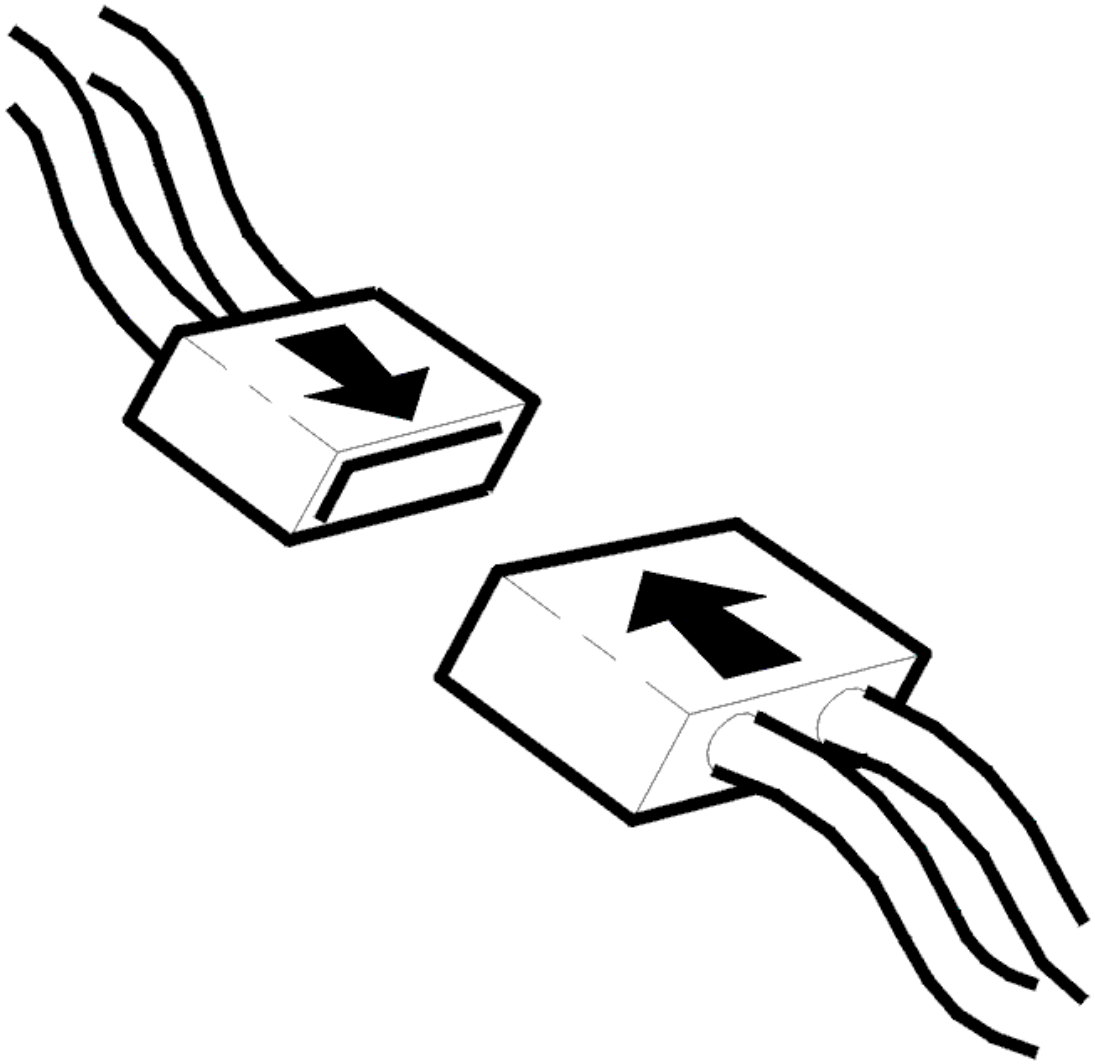

Fig. 22: Connecting Connector
Courtesy of VOLVO CARS CORPORATION

- Ignition off
- Reinstall the connectors, components etc.
- Ignition on
- Activate the rain sensor.

  HINT: The wiper blades make a reference stroke to determine the cleanliness and condition of the windshield when the rain sensor is activated. The rain sensor is deactivated when the ignition is switched off. To reactivate the rain sensor with the ignition on, move the lever to position 0 and then to intermittent wiping.

  Spray water on the windshield where the rain sensor is positioned.

The wiper blades must now wipe the windshield clean.

Is the rain sensor functioning?

- **YES**

  VERIFIED: Troubleshooting has been completed.

- **NO**

  Refer to **INFORMATION**

INFORMATION

FAULT-TRACING INFORMATION

The fault should have been detected and remedied. As this is not the case fault-tracing has failed.

Exit fault-tracing for this diagnostic trouble code (DTC) or make another attempt.

UEM-0084: RAIN SENSOR. FAULTY SIGNAL (2003-12)

DIAGNOSTIC TROUBLE CODE INFORMATION UEM-0084

Condition

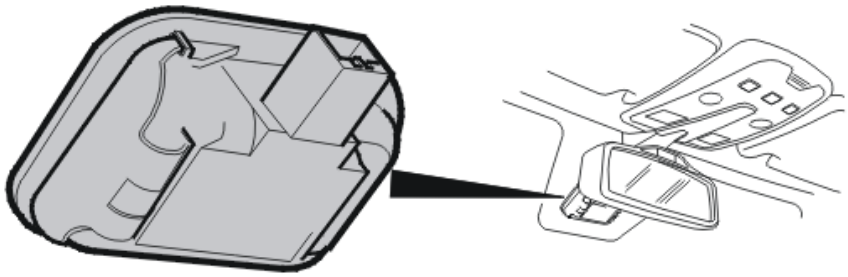

Fig. 23: Locating Rain Sensor Module
Courtesy of VOLVO CARS CORPORATION

The upper electronic module (UEM) regularly checks communication with the rain sensor.

The diagnostic trouble code (DTC) is generated if the upper electronic module or the rain sensor registers a fault in communication.

The diagnostic trouble code can be diagnosed when the ignition is on.

Substitute Value

- Intermittent windshield wiping.
- High speed windshield wiping.

Possible Source

- Contact resistance or oxidation on the signal cable.
- Communication disrupted.
- Faulty rain sensor.

Fault symptom[s]

- No rain sensor function.

FAULTY SIGNAL

CHECKING THE RAIN SENSOR

CHECKING THE FUNCTION

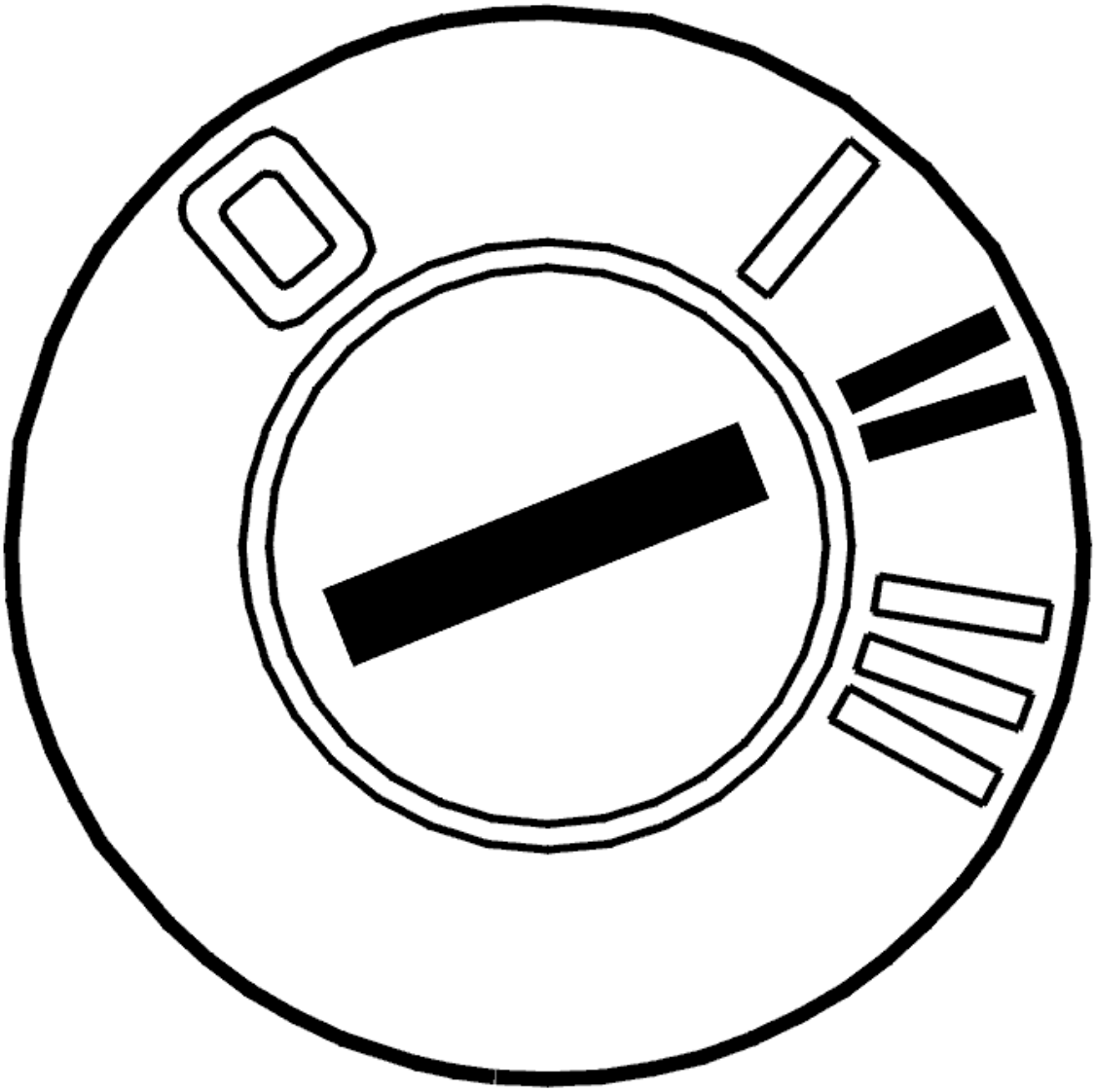

Fig. 24: Identifying Ignition ON
Courtesy of VOLVO CARS CORPORATION

- Ignition on
- Activate the rain sensor.

  HINT: The wiper blades make a reference stroke to determine the cleanliness and condition of the windshield when the rain sensor is activated. The rain sensor is deactivated when the ignition is switched off. To reactivate the rain sensor with the ignition on, move the stalk to position "0" and then to intermittent wiping.

  Spray water on the windshield where the rain sensor is positioned.

  The wiper blades must now wipe the windshield clean.

  HINT: In cars equipped with the rain sensor it replaces the intermittent function. One way of

checking the function of the rain sensor is to twist the collar on the lever. This changes the sensitivity of the rain sensor. The windshield wiper should make one stroke. If the intermittent or high speed functions are activated it indicates that the rain sensor function is missing.

- **Continue**

  Refer to **CHECKING THE WIRING**

CHECKING THE WIRING

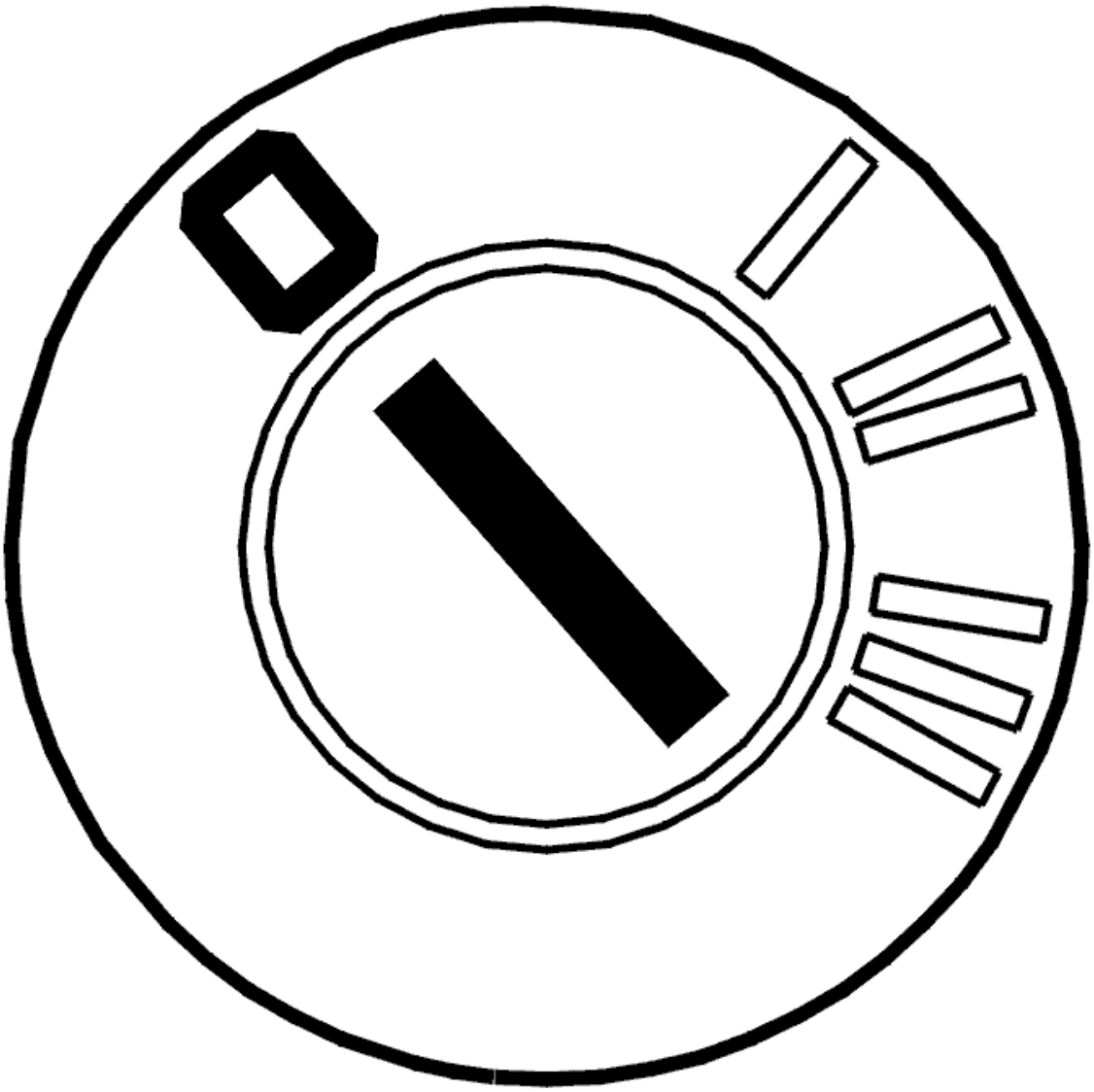

Fig. 25: Identifying Ignition OFF
Courtesy of VOLVO CARS CORPORATION

- Ignition off.

  Check the connectors for the upper electronic module (UEM) and rain sensor. Check for contact

resistance and oxidation.

Also check the rain sensor and GSM antenna wiring (if applicable). Ensure that there are no sources of interference nearby.

Remedy as necessary.

Other information:

- see **UPPER ELECTRONIC MODULE (UEM)/REARVIEW MIRROR, REPLACING**
- see **RAIN SENSOR**
- see **SIGNAL DESCRIPTION, UPPER ELECTRONIC MODULE (UEM)**
- see **CHECKING WIRING AND TERMINALS**

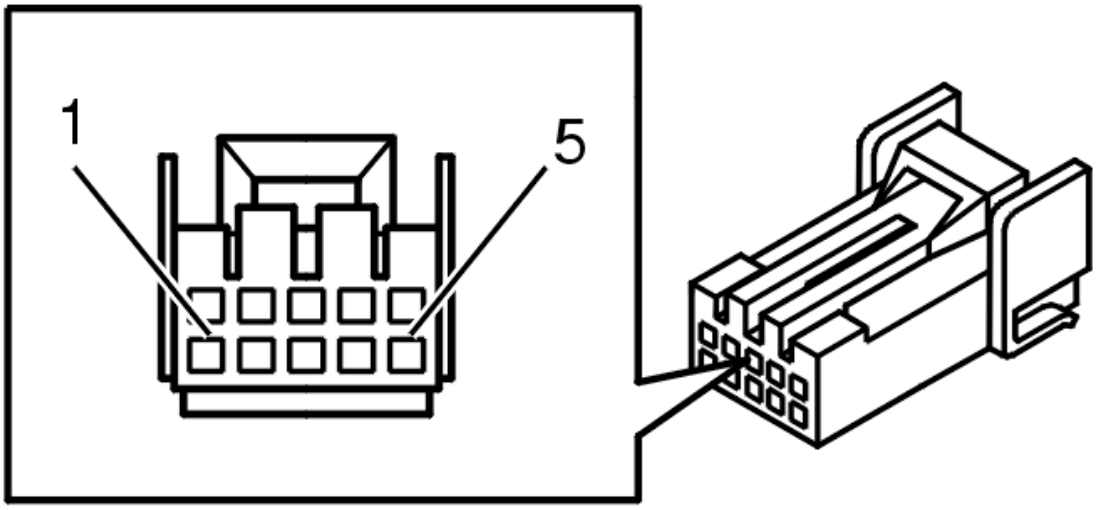

Fig. 26: 10 CD Changer Connector Terminals
Courtesy of VOLVO CARS CORPORATION

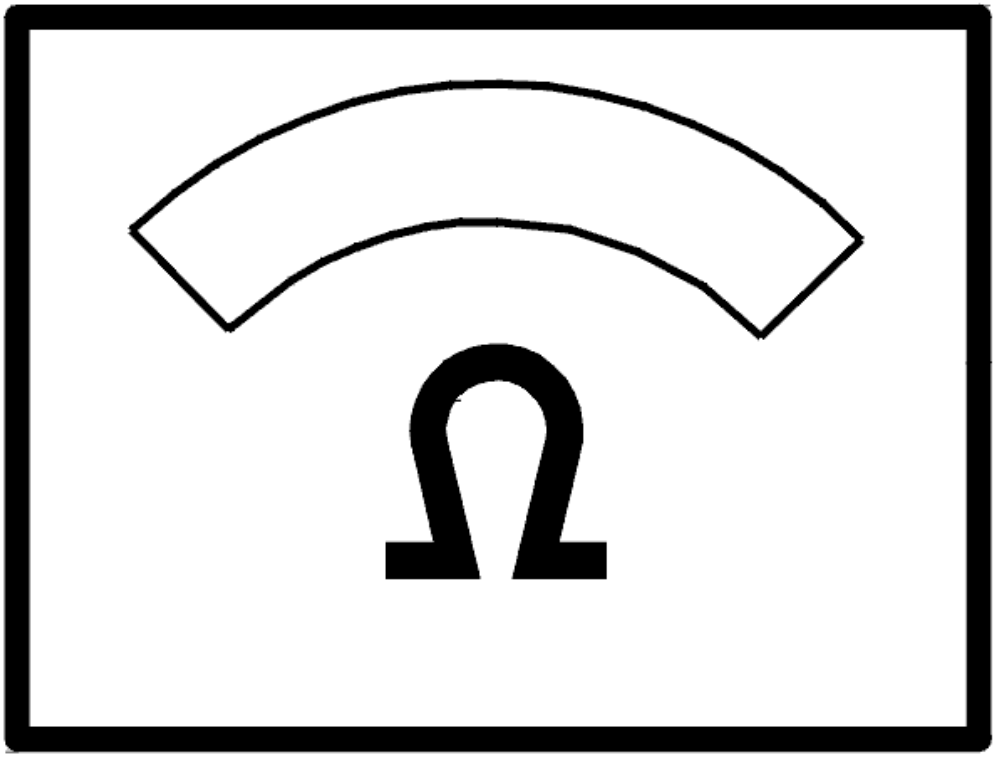

Fig. 27: Identifying Ohmmeter
Courtesy of VOLVO CARS CORPORATION

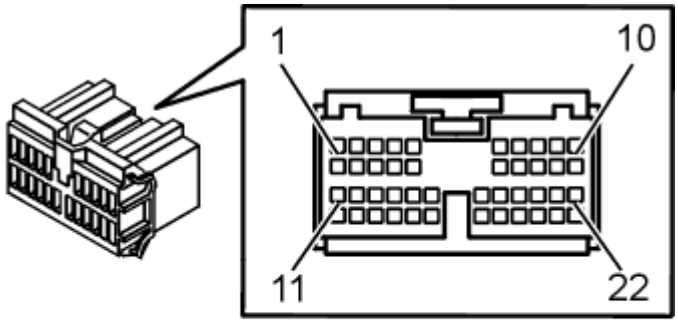

Fig. 28: Identifying Connector Terminals
Courtesy of VOLVO CARS CORPORATION

- **Continue**

  Refer to **VERIFICATION**

VERIFICATION

NOTE: After carrying out the repair, check that the fault has been remedied.

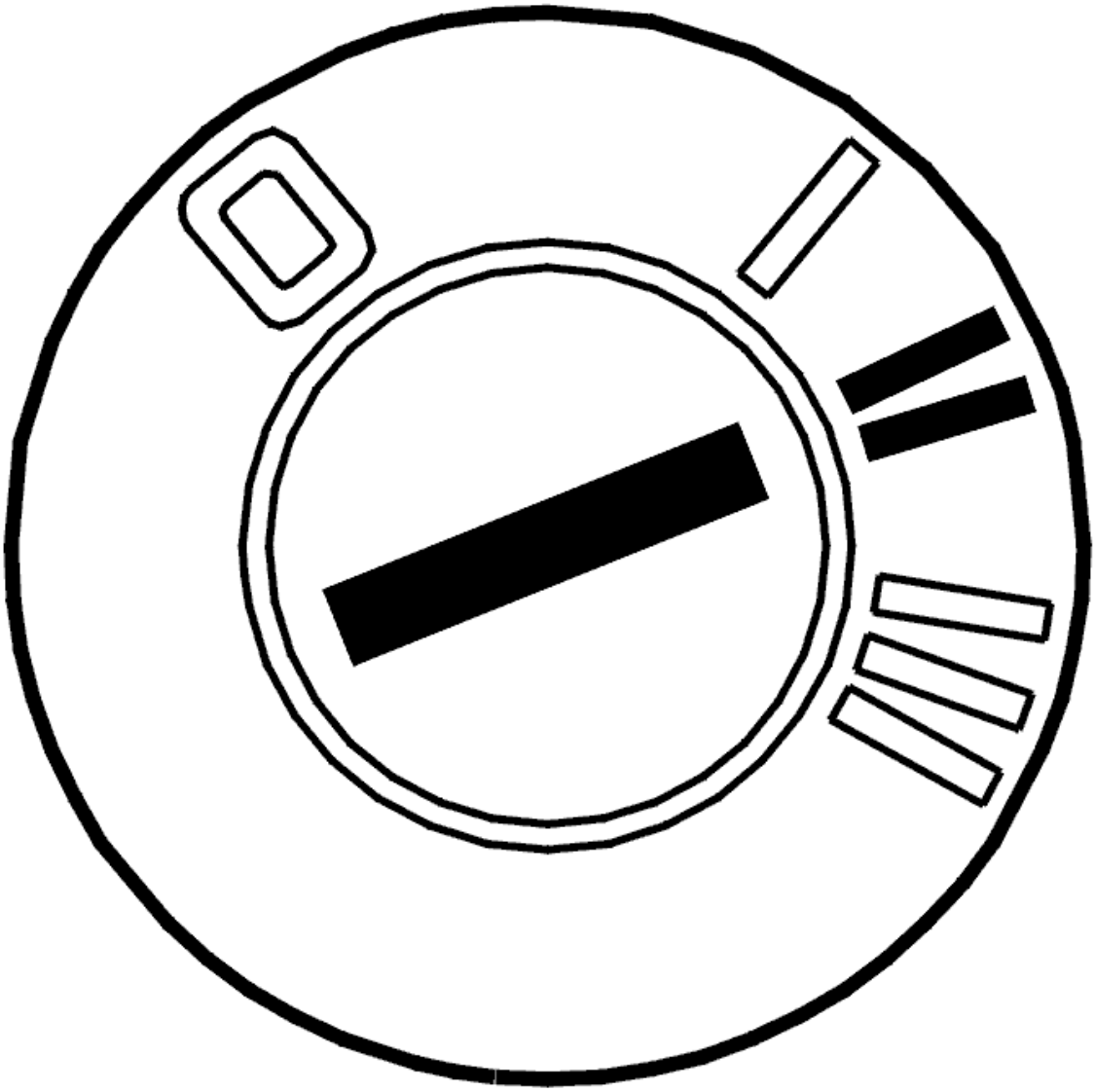

Fig. 29: Identifying Ignition ON
Courtesy of VOLVO CARS CORPORATION

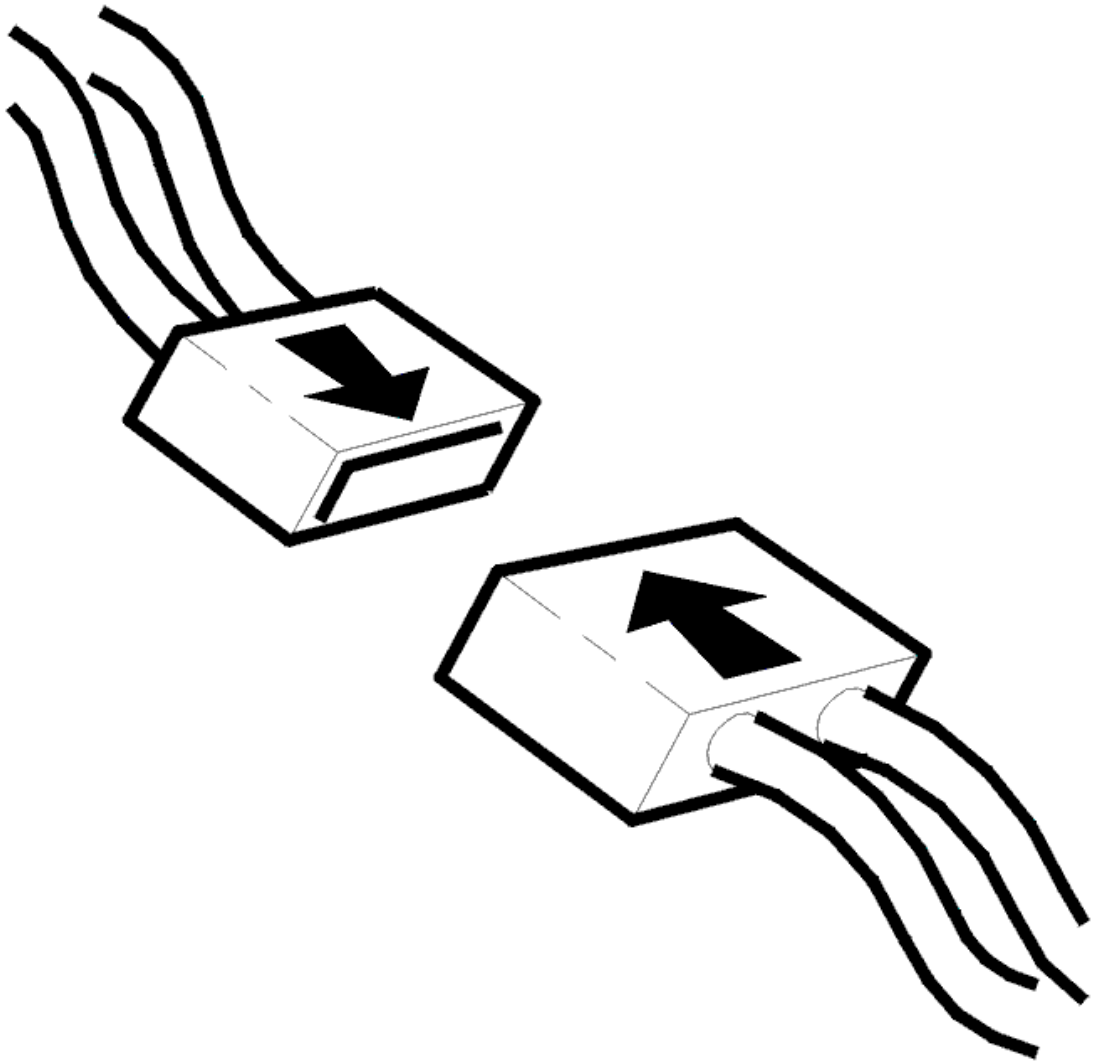

Fig. 30: Connecting Connector
Courtesy of VOLVO CARS CORPORATION

- Ignition off
- Reinstall the connectors, components etc.
- Ignition on
- Activate the rain sensor.

  HINT: The wiper blades make a reference stroke to determine the cleanliness and condition of the windshield when the rain sensor is activated. The rain sensor is deactivated when the ignition is switched off. To reactivate the rain sensor with the ignition on, move the lever to position 0 and then to intermittent wiping.

  Spray water on the windshield where the rain sensor is positioned.

The wiper blades must now wipe the windshield clean.

Is the rain sensor functioning?

- **YES**

  VERIFIED: Troubleshooting has been completed.

- **NO**

  Refer to **INFORMATION**

INFORMATION

FAULT-TRACING INFORMATION

The fault should have been detected and remedied. As this is not the case fault-tracing has failed.

Exit fault-tracing for this diagnostic trouble code (DTC) or make another attempt.

UEM-0090: PAD LAMP. SIGNAL TOO LOW (2005-12)

DIAGNOSTIC TROUBLE CODE (DTC) INFORMATION UEM-0090

Condition

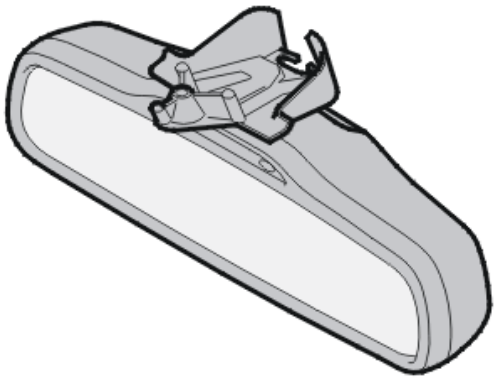

Fig. 31: Identifying Rear View Mirror
Courtesy of VOLVO CARS CORPORATION

The upper electronic module (UEM) checks the power supply to the LED for the PAD lamp (Passenger Airbag Deactivated). The LED is integrated in the rear view mirror.

The diagnostic trouble code (DTC) is stored if the upper electronic module (UEM) registers that the power supply signal to the PAD lamp is too low.

The diagnostic trouble code (DTC) can be diagnosed when the LEDs in the rear view mirror are supplied with power, i. e. when the LEDs in the display satisfy conditions for lighting.

Substitute Value

- None.

Possible Source

- Defective upper electronic module (UEM) (internal fault).

Fault symptom[s]

- The SRS indicator lamp is lit.
- Message in the display.

SIGNAL TOO LOW

CHECKING THE PAD-LIGHT

Fig. 32: Identifying Ignition On Position
Courtesy of VOLVO CARS CORPORATION

- Ignition off.
  - Read off using the VCT2000 (or appropriate scan tool).
  - Turn the ignition key to position I.
  - Check that the requested status from the Supplemental restraint system module (SRS) is ON and that the status of the PAD lamp in the Upper electronic module (UEM) is ON when the lamp is lit. Also check if the Passenger airbag warning lamp (PAD) comes on after the ignition is switched on.

  If the requested status from the Supplemental restraint system module (SRS) is ON, the Upper electronic module (UEM) has activated the lamp (status is ON) but the lamp does not come on, the lamp is probably broken. Replace the upper electronic module (UEM). Check that new hardware has the correct P/N.

  If the requested status from the Supplemental restraint system module (SRS) is ON, but the Upper electronic module (UEM) has not activated the lamp (status is OFF), check DTCs for errors in CAN communication in the Central electronic module (CEM). Also check the CAN cables between the Upper electronic module (UEM) and the Supplemental restraint system module (SRS). Remedy as necessary.

  Other information

- see **CHECKING WIRING AND TERMINALS**

Fig. 33: Identifying VCT2000 Diagnostic Tool Symbol In VIDA
Courtesy of VOLVO CARS CORPORATION

Fig. 34: Identifying Rear View Mirror
Courtesy of VOLVO CARS CORPORATION

Is the function OK?

- **YES**

  FAULT NOT FOUND: Troubleshooting has been completed.

- **NO**

  Refer to **REPLACING CONTROL MODULE AND PROGRAMMING**

REPLACING CONTROL MODULE AND PROGRAMMING

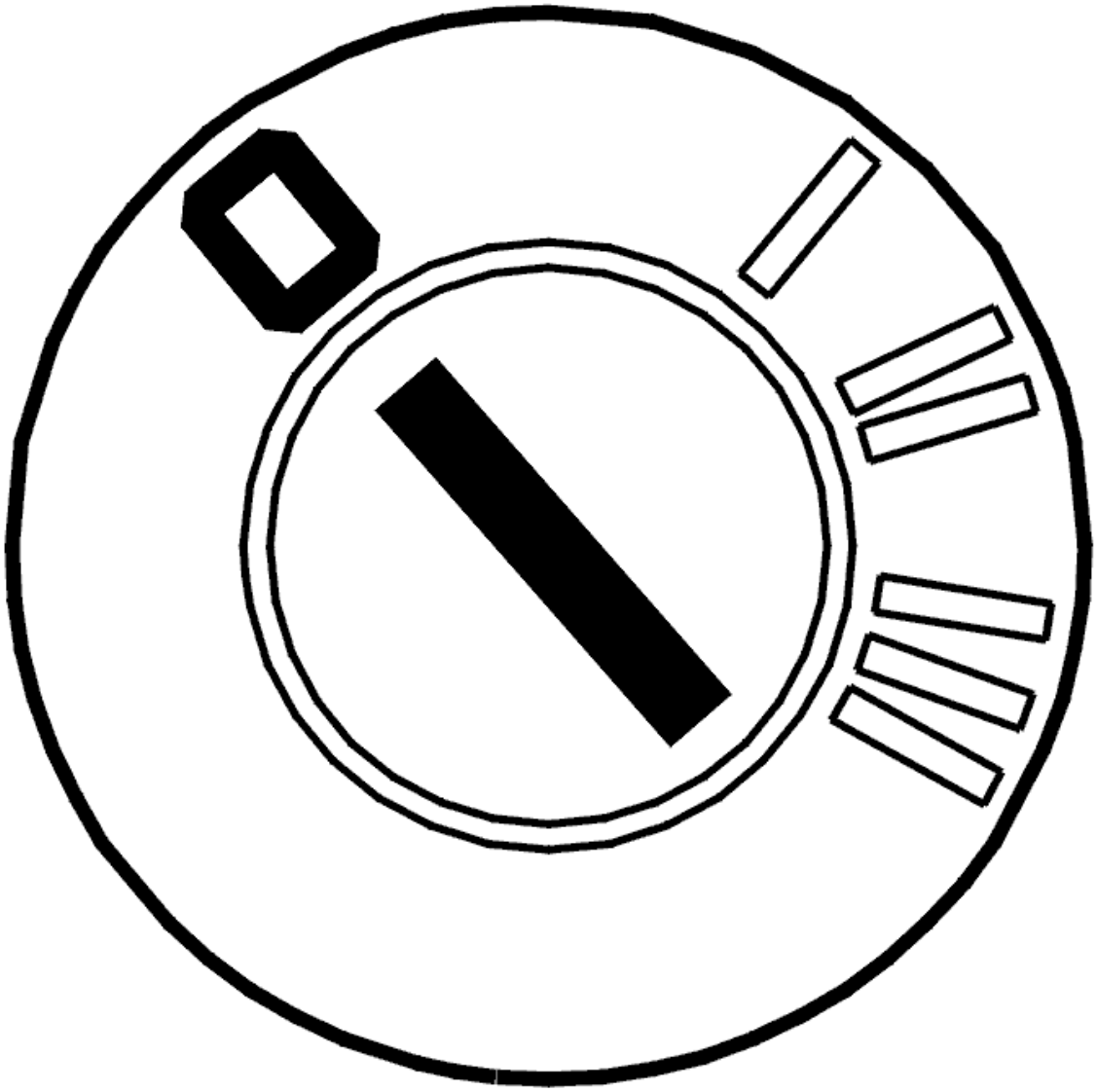

Fig. 35: Identifying Ignition OFF
Courtesy of VOLVO CARS CORPORATION

- Ignition off.

  The LED for the PAD lamp is mounted internally in the rear view mirror and cannot be replaced. Check there are no indications that the power supply to the upper electronic module (UEM) is faulty. Check that the fault in the LED remains after the power is switched off and on again. If the fault remains, the upper electronic module (UEM) must be replaced.

  NOTE: **If possible, read off the programmed data from the control module before it is replaced. This should be done as this information is not stored in Volvo's central database. Switch off the ignition before replacing the control module.**

- **Continue**

Refer to **REPLACING THE CONTROL MODULE**

REPLACING THE CONTROL MODULE

READING OFF THE PROGRAMMED VALUES

NOTE: Read off the programmed values from the upper electronic module (UEM) before replacing the control module.

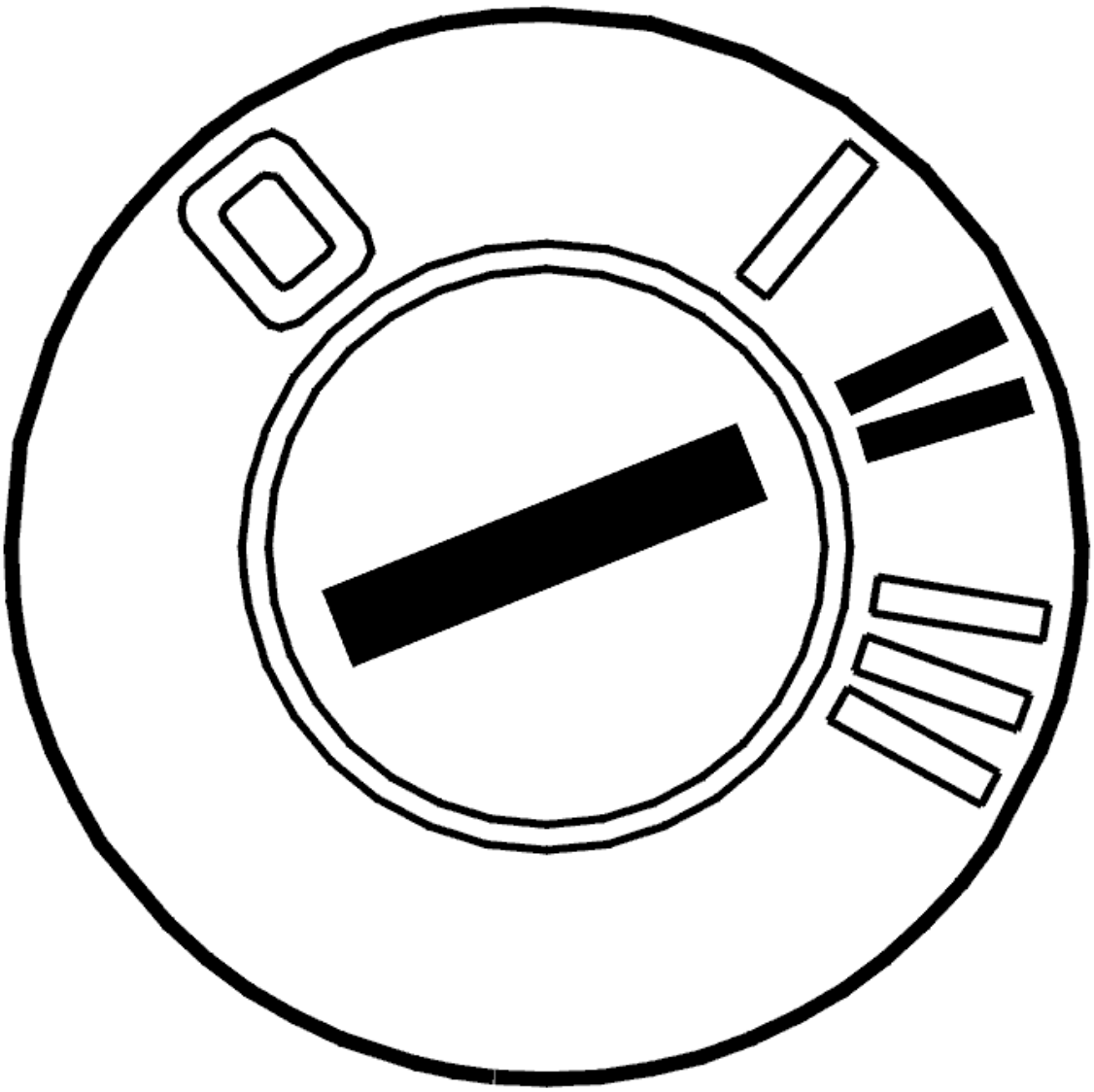

Fig. 36: Identifying Ignition ON
Courtesy of VOLVO CARS CORPORATION

- Ignition on
- Use the VCT2000 (or appropriate scan tool) to read off the programmed values.

The retained values are programmed customer parameters in the upper electronic module (UEM). The

retained values should be noted for later use.

Other information

- For information about programming the customer parameters, see **DIAGNOSTIC FUNCTIONS** .

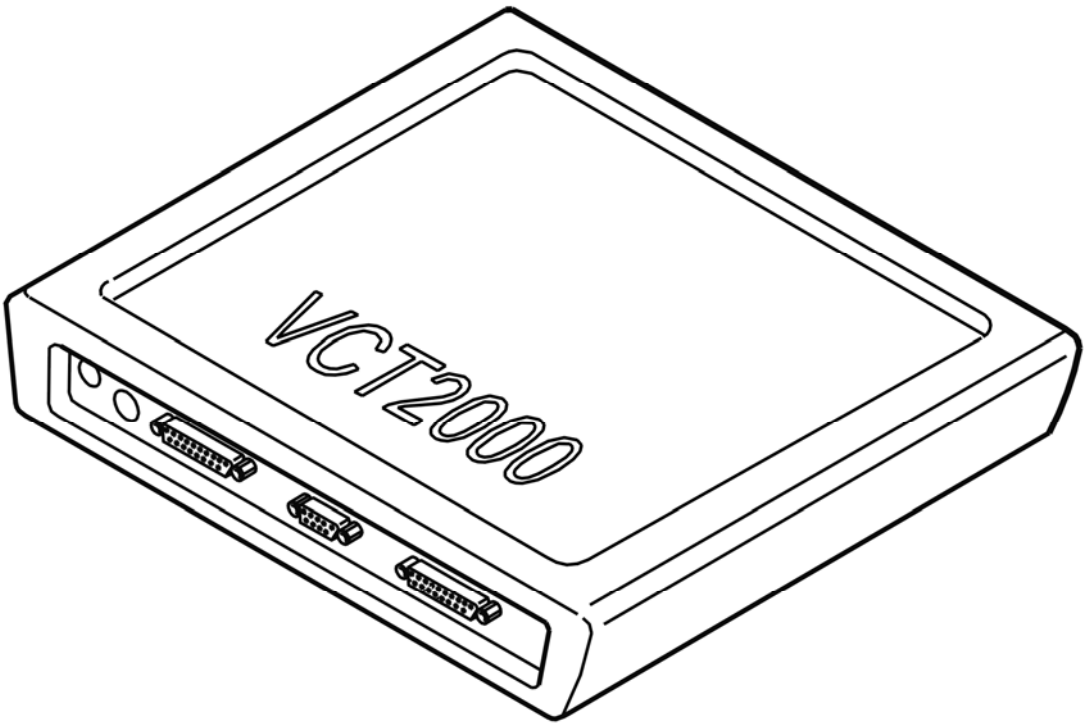

Fig. 37: Identifying VCT2000 Diagnostic Tool Symbol In VIDA
Courtesy of VOLVO CARS CORPORATION

- **Continue**

Refer to **REPLACING CONTROL MODULES AND DOWNLOADING SOFTWARE**

REPLACING CONTROL MODULES AND DOWNLOADING SOFTWARE

CAUTION: A new control module is delivered without software. In order for the control module to function new software must be programmed into the control module after it has been replaced.

Replace the control module and download the new software. See **UPPER ELECTRONIC MODULE (UEM)/REARVIEW MIRROR, REPLACING** .

HINT: When diagnostic trouble code (DTC) E001 is stored, communication with the control module cannot be established. This can be remedied in two ways.

1. Press the remote control button for local lighting
2. Remove fuse 11C/28 from the fusebox in the passenger compartment. Reinstall the fuse again.

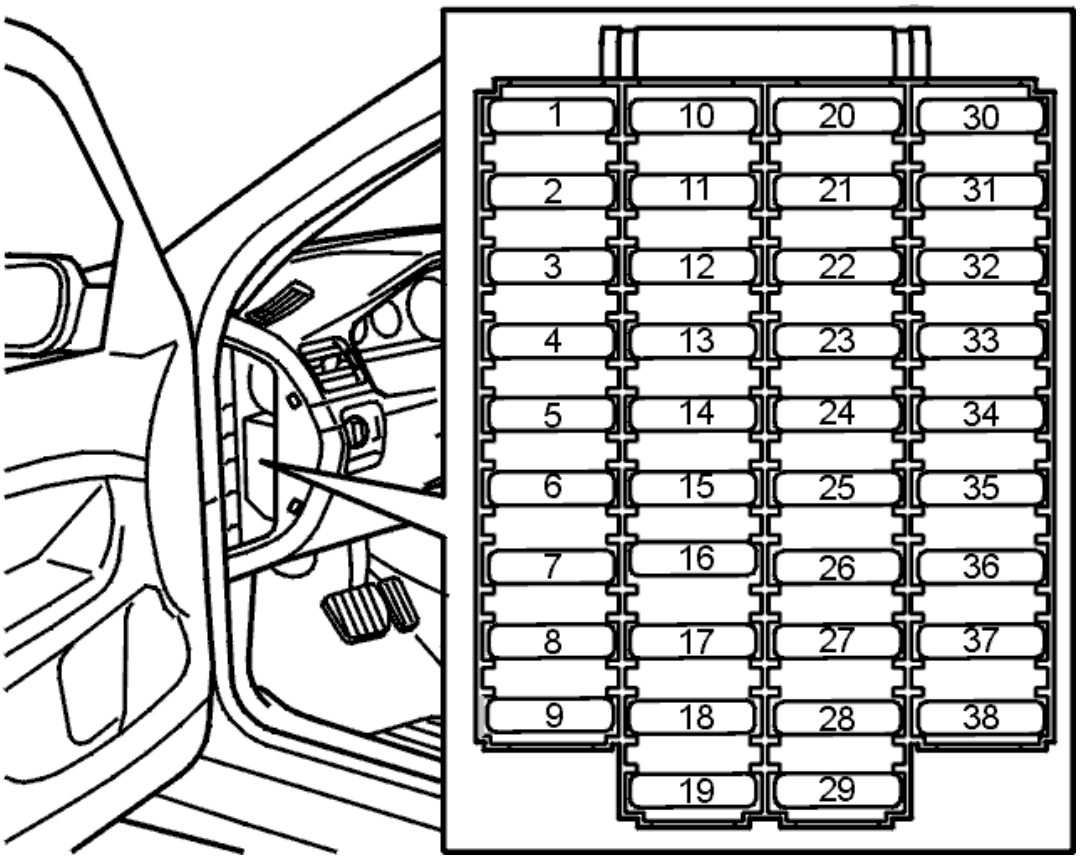

Fig. 38: Fuse Holder (Passenger Compartment)
Courtesy of VOLVO CARS CORPORATION

- **Continue**

  Refer to **CHECKING THE INTERIOR LIGHTING (2)**

CHECKING THE INTERIOR LIGHTING

Two times can be programmed for the interior lighting:

1. **Short**

   The period from when the door is unlocked, or the engine stops, to when the interior lighting goes out can be changed if it is too long or too short.

2. **Long**

   The period from when the door is opened, or a lamp is lit with a switch, to when the lamp goes out can be changed if it is too long or too short.

To program a long interior lighting period, use VIDA (Volvo scan tool).

- **Continue**

  Refer to **PROGRAMMING A SHORT INTERIOR LIGHTING PERIOD**

PROGRAMMING A SHORT INTERIOR LIGHTING PERIOD

The general lighting and rear reading lamps light and remain lit for 30 seconds when:

- The door has been unlocked from outside with a key or the remote control.
- The engine has been stopped and the ignition key turned to 0.

The default period is 30 seconds. This can be changed to between 5 and 255 seconds.

Read off the programmed values.

To change the time, mark the desired value in the scrolling list and start programming.

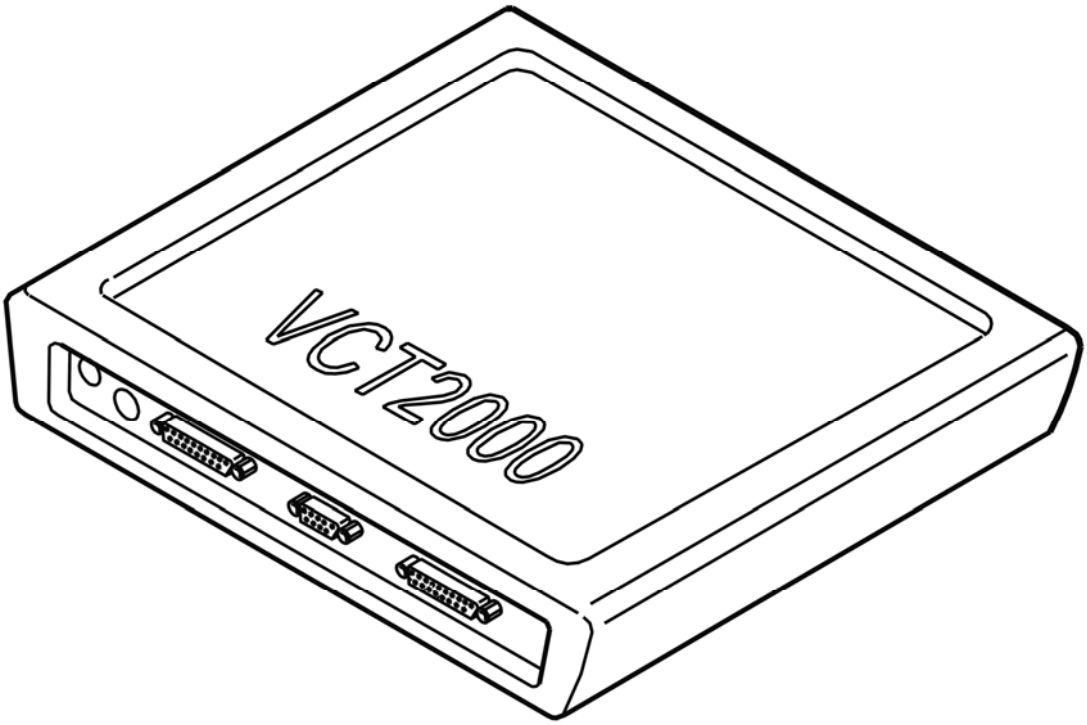

Fig. 39: Identifying VCT2000 Diagnostic Tool Symbol In VIDA
Courtesy of VOLVO CARS CORPORATION

Do you want to program any more parameters?

- **YES**

  Refer to **PROGRAMMING A LONG INTERIOR LIGHTING PERIOD**

- **NO**

  Refer to **CHECKING THE ANTI-DAZZLE FUNCTION IN THE REAR VIEW MIRROR**

PROGRAMMING A LONG INTERIOR LIGHTING PERIOD

The general lighting and rear reading lamps light and remain lit for 10 minutes when:

- A door is opened after being unlocked.
- The lamp is lit with a switch.

The default period is 10 minutes. This can be changed to between 0 and 255 minutes at 10 minute intervals.

Read off the programmed values.

To change the time, mark the desired value in the scrolling list and start programming.

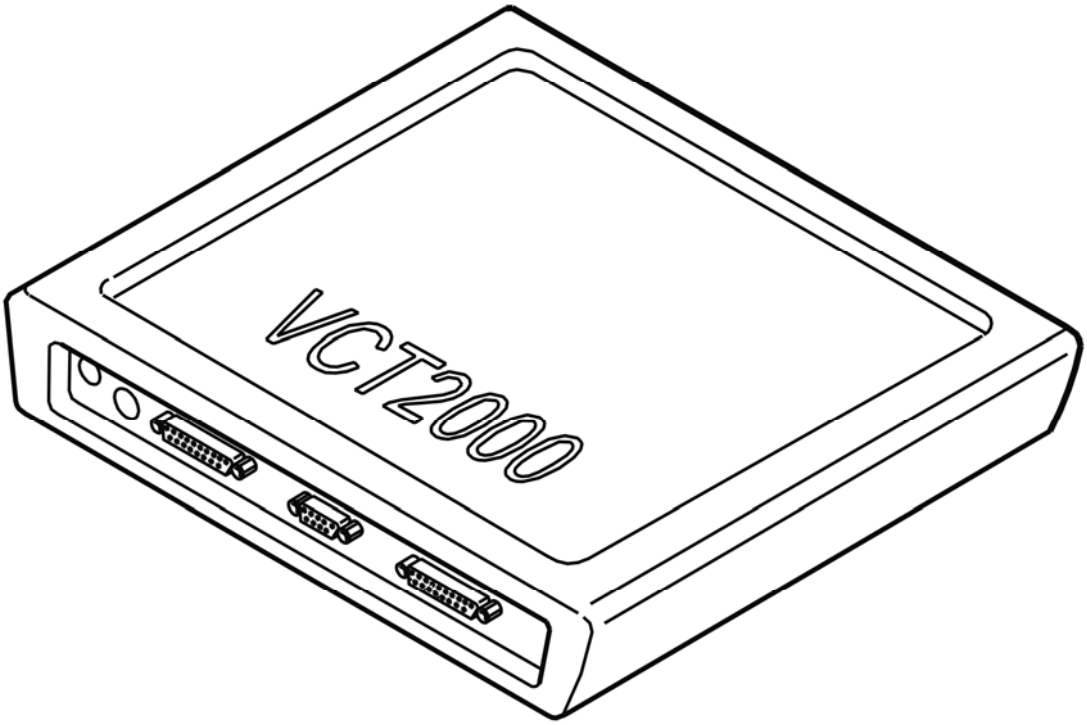

Fig. 40: Identifying VCT2000 Diagnostic Tool Symbol In VIDA
Courtesy of VOLVO CARS CORPORATION

- **Continue**

  Refer to **CHECKING THE ANTI-DAZZLE FUNCTION IN THE REAR VIEW MIRROR**

CHECKING THE ANTI-DAZZLE FUNCTION IN THE REAR VIEW MIRROR

CHECKING THE ANTI-DAZZLE FUNCTION

NOTE: If the upper electronic module (UEM) has been replaced software, specially developed for downloading after replacing the control module, must be downloaded to the control module before the anti-dazzle function is changed. See UPPER ELECTRONIC MODULE (UEM)/REARVIEW MIRROR, REPLACING .

The rear view mirror anti-dazzle function can be adjusted:

- If the rear view mirror anti-dazzle function is too powerful or too weak, it can be adjusted.

Specific software for setting the anti-dazzle function must be installed in the car to do this.

VERIFICATION

HINT: After carrying out the repair, check that the fault has been remedied.

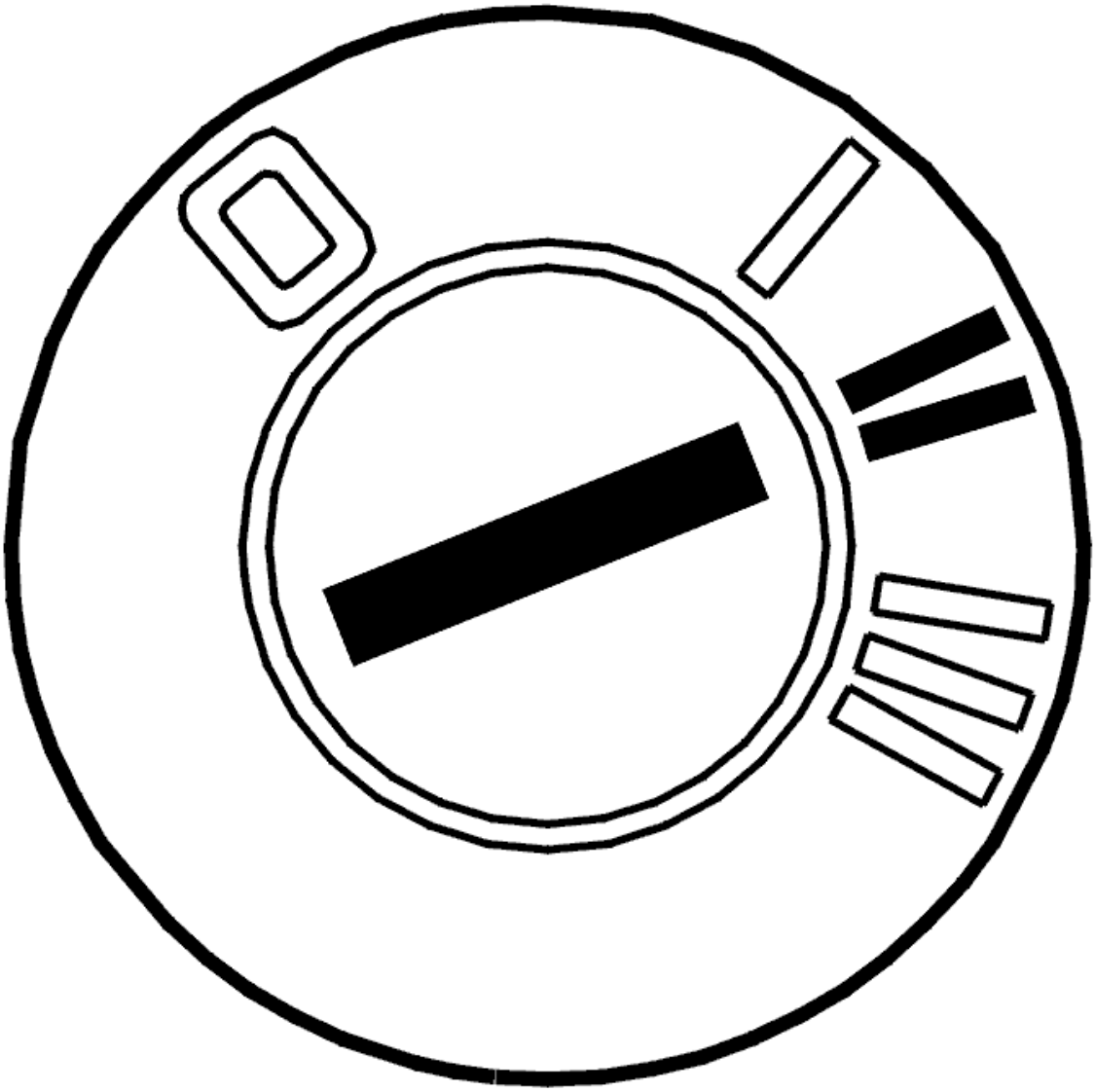

Fig. 41: Identifying Ignition ON
Courtesy of VOLVO CARS CORPORATION

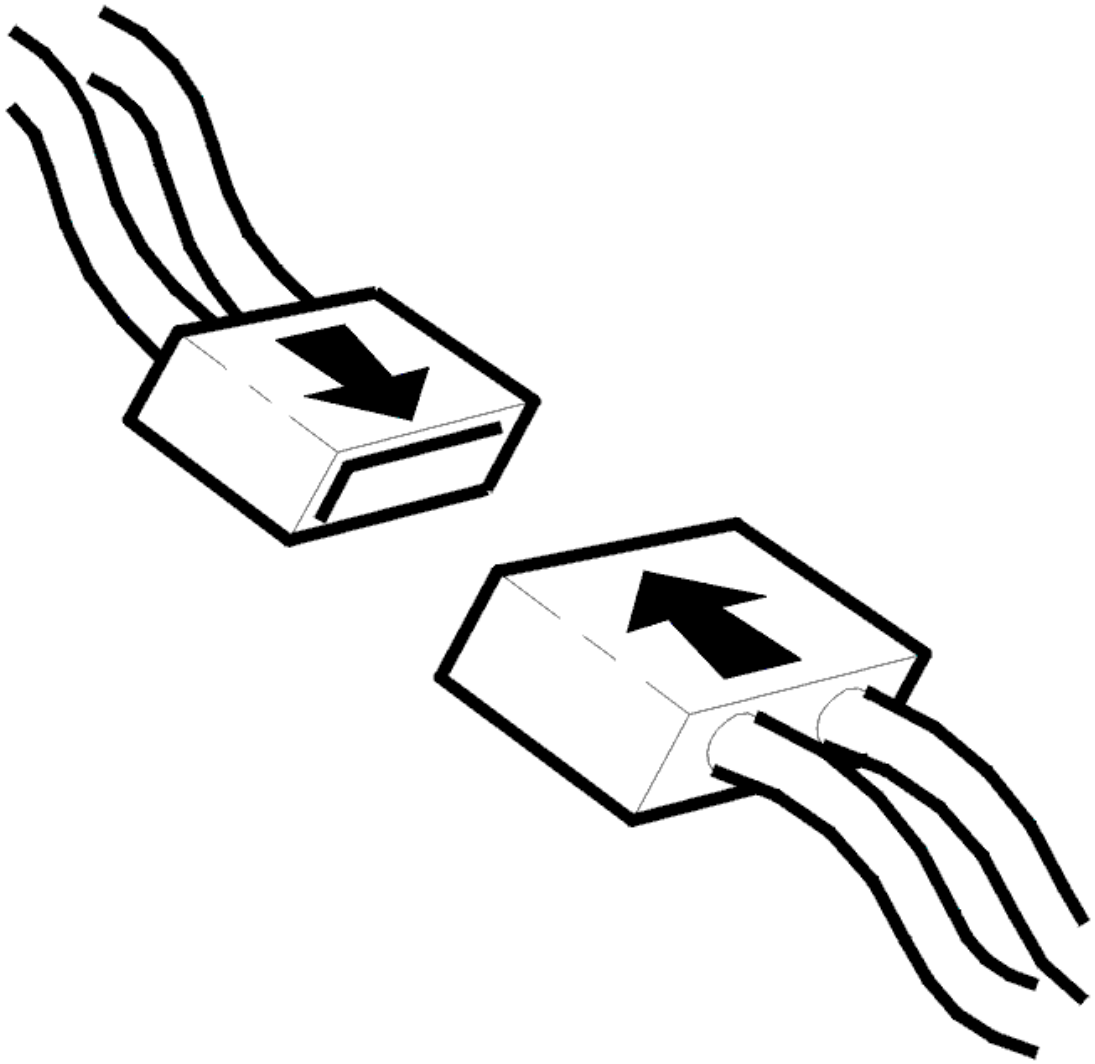

Fig. 42: Connecting Connector
Courtesy of VOLVO CARS CORPORATION

- Ignition off
- Reinstall the connectors, components etc.
- Ignition on.

  Check that the LEDs in the display in the rear view mirror light.

Are the LEDs in the display working?

- **YES**

  VERIFIED: Troubleshooting has been completed.

- **NO**

  Refer to **INFORMATION**

INFORMATION

FAULT-TRACING INFORMATION

The fault should have been detected and remedied. As this is not the case fault-tracing has failed.

Exit fault-tracing for this diagnostic trouble code (DTC) or make another attempt.

UEM-0090: REAR VIEW MIRROR, DISPLAY. SIGNAL TOO LOW (2003-04)

DIAGNOSTIC TROUBLE CODE (DTC) INFORMATION UEM-0090

Condition

The upper electronic module (UEM) checks the power supply to the LEDs in the display in the rear view mirror. The five LEDs are supplied with power via the same cable and are internally mounted in the rear view mirror.

Diagnostic trouble code (DTC) UEM-0090 is stored in the control module if the upper electronic module (UEM) registers too low a signal for the power supply to the LEDs in the display in the rear view mirror.

Diagnostic trouble code (DTC) UEM-0090 can be diagnosed when the LEDs in the rear view mirror are supplied with power, i. e. when the LEDs in the display satisfy conditions for lighting.

Substitute Value

- None.

Possible Source

- The power supply cable to LEDs in the display in the rear view mirror is short-circuited to ground.

Fault symptom[s]

- The SRS indicator lamp is lit.

SIGNAL TOO LOW

REPLACING THE CONTROL MODULE AND PROGRAMMING

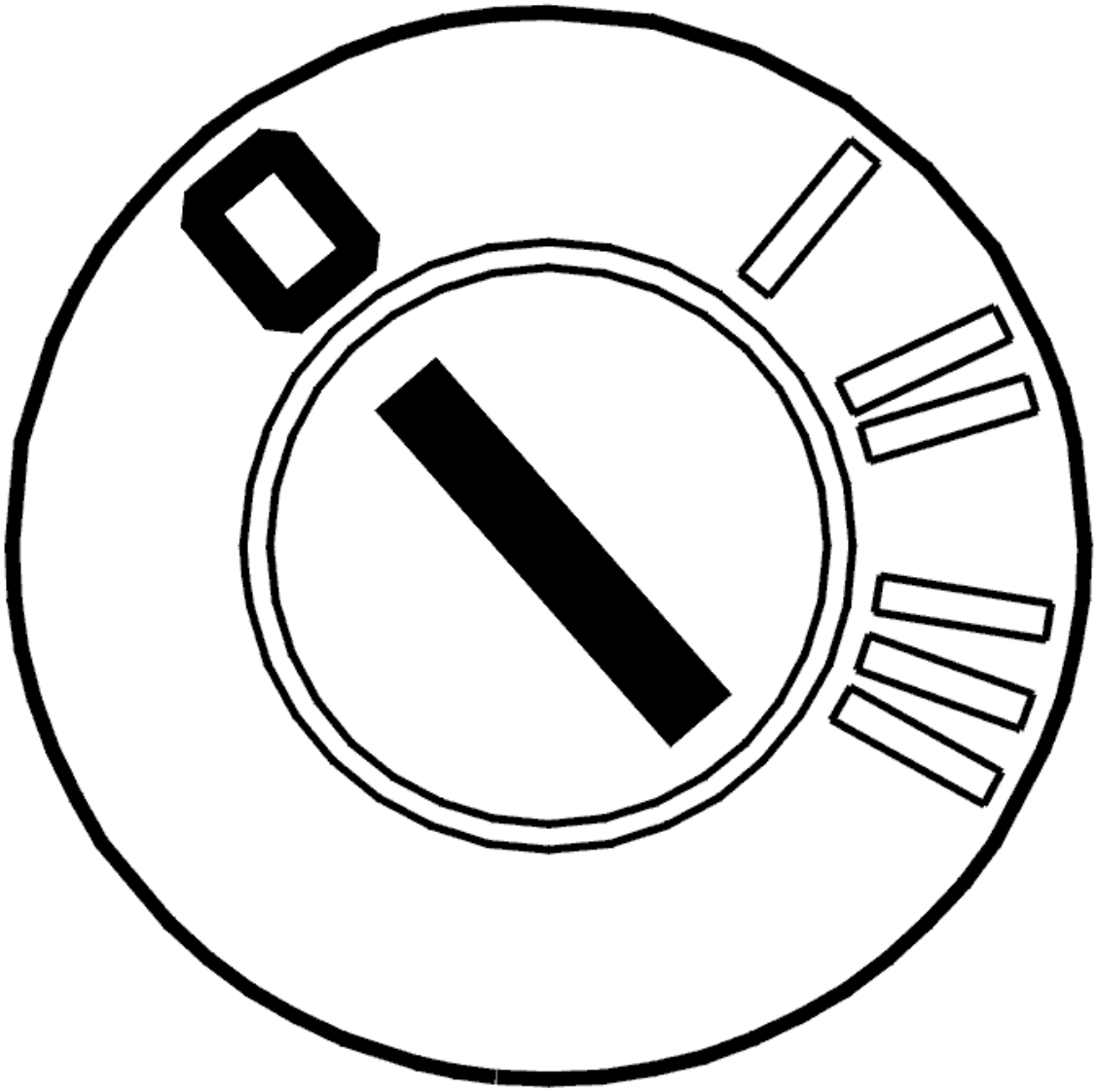

Fig. 43: Identifying Ignition OFF
Courtesy of VOLVO CARS CORPORATION

- Ignition off.

  The LEDs are mounted internally in the rear view mirror and cannot be replaced. Check there are no indications that the power supply to the upper electronic module (UEM) is faulty. Check that the fault in the LED remains after the power is switched off and on again. If the fault remains, the upper electronic module (UEM) should be replaced.

  NOTE: **If possible, read off the programmed data from the control module before it is replaced. This should be done as this information is not stored in Volvo's central database. Switch off the ignition before replacing the control module.**

- **Continue**

Refer to **REPLACING THE CONTROL MODULE**

REPLACING THE CONTROL MODULE

READING OFF THE PROGRAMMED VALUES

NOTE: Read off the programmed values from the upper electronic module (UEM) before replacing the control module.

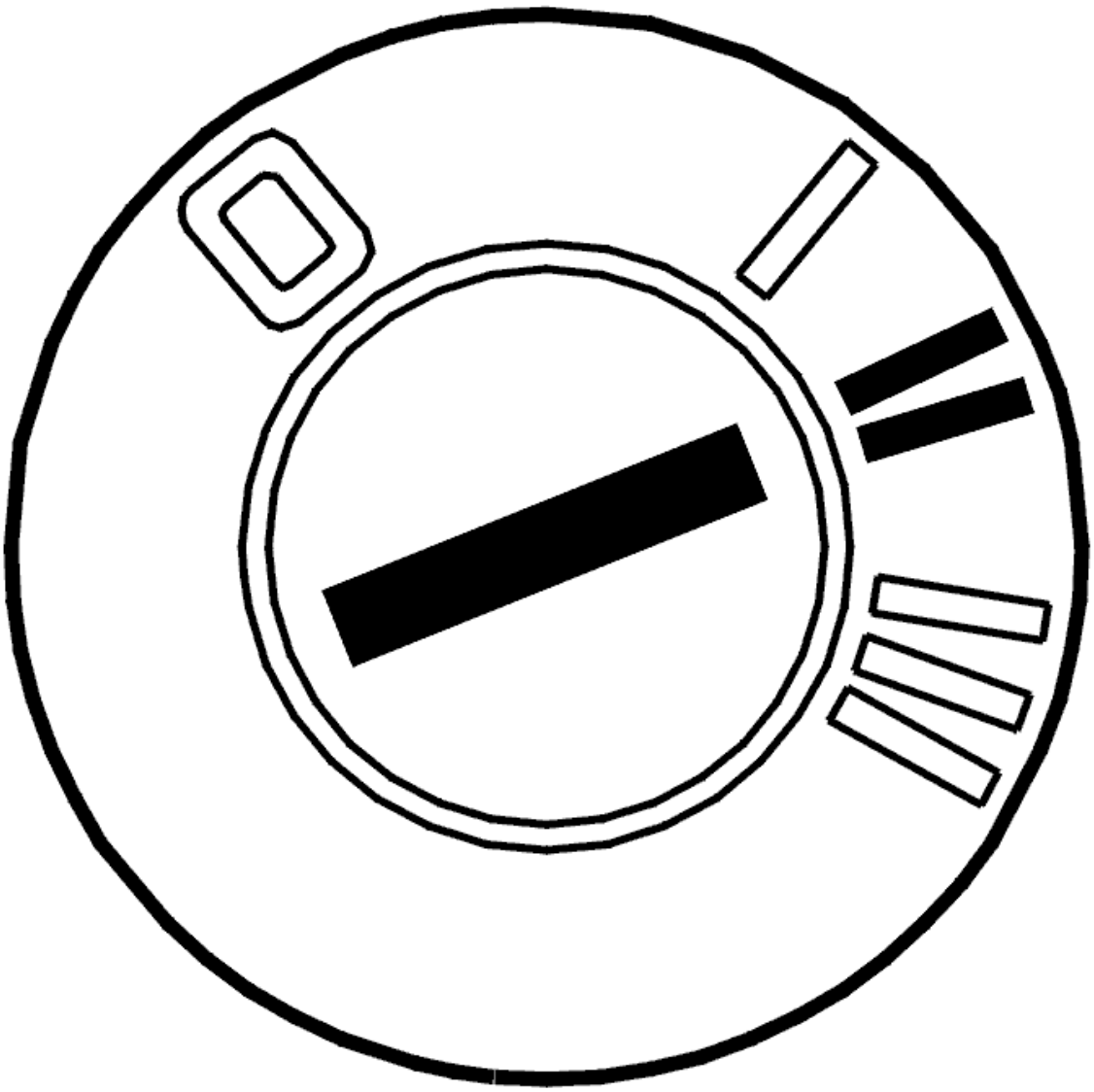

Fig. 44: Identifying Ignition ON
Courtesy of VOLVO CARS CORPORATION

- Ignition on
- Use the VCT2000 (or appropriate scan tool) to read off the programmed values.

The retained values are programmed customer parameters in the upper electronic module (UEM). The

retained values should be noted for later use.

Other information

- For information about programming the customer parameters, see **DIAGNOSTIC FUNCTIONS** .

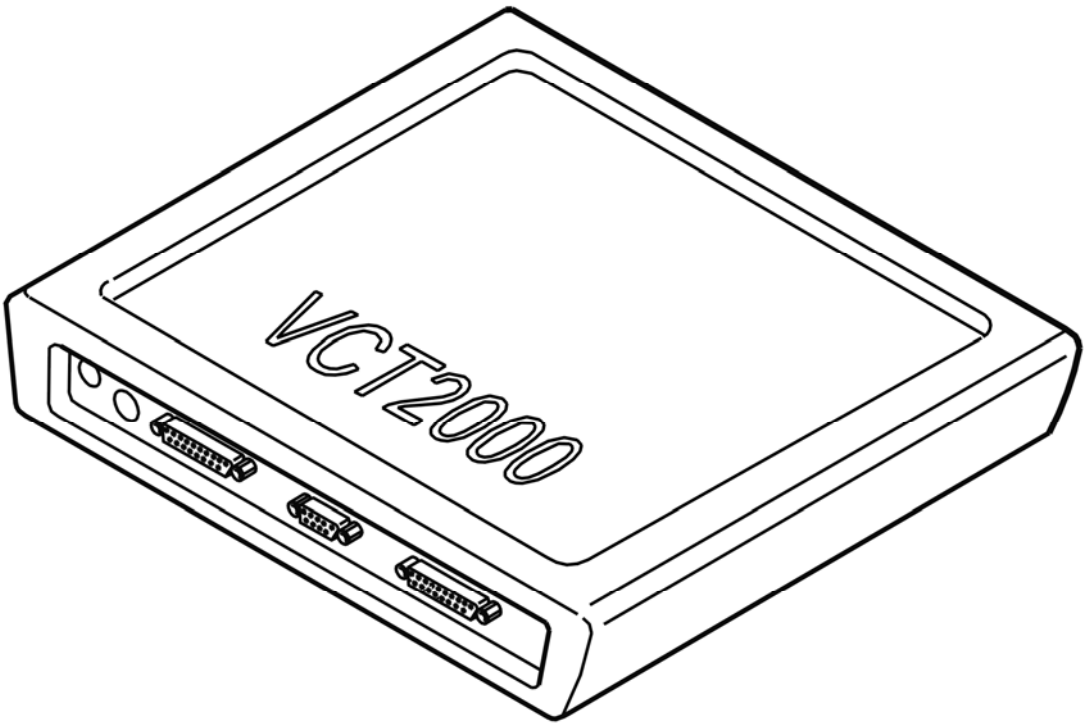

Fig. 45: Identifying VCT2000 Diagnostic Tool Symbol In VIDA
Courtesy of VOLVO CARS CORPORATION

- **Continue**

Refer to **REPLACING CONTROL MODULES AND DOWNLOADING SOFTWARE**

REPLACING CONTROL MODULES AND DOWNLOADING SOFTWARE

CAUTION: A new control module is delivered without software. In order for the control module to function new software must be programmed into the control module after it has been replaced.

Replace the control module and download the new software. See **UPPER ELECTRONIC MODULE (UEM)/REARVIEW MIRROR, REPLACING** .

HINT: When diagnostic trouble code (DTC) E001 is stored, communication with the control module cannot be established. This can be remedied in two ways.

1. Press the remote control button for local lighting
2. Remove fuse 11C/28 from the fusebox in the passenger compartment. Reinstall the fuse again.

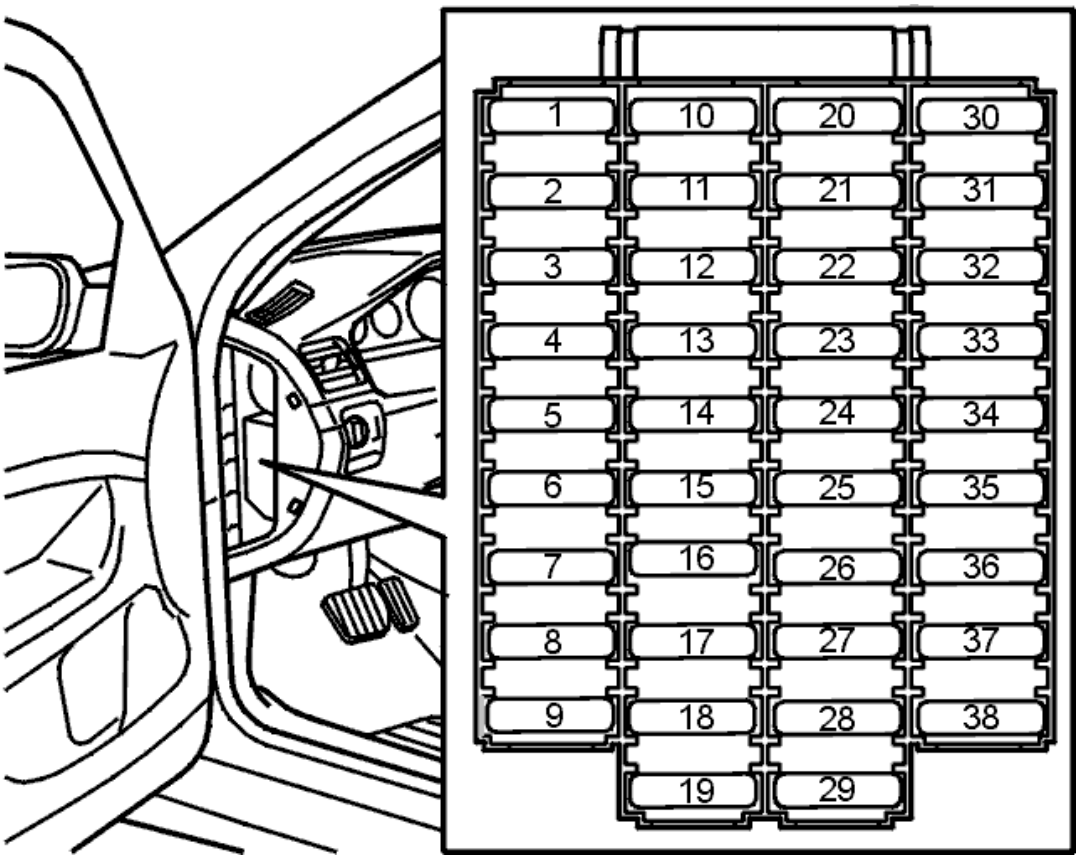

Fig. 46: Fuse Holder (Passenger Compartment)
Courtesy of VOLVO CARS CORPORATION

- **Continue**

  Refer to **CHECKING THE INTERIOR LIGHTING**

CHECKING THE INTERIOR LIGHTING

Two times can be programmed for the interior lighting:

1. **Short**

   The period from when the door is unlocked, or the engine stops, to when the interior lighting goes out can be changed if it is too long or too short.

2. **Long**

   The period from when the door is opened, or a lamp is lit with a switch, to when the lamp goes out can be changed if it is too long or too short.

To program a long interior lighting period, use VIDA (Volvo scan tool).

- **Continue**

  Refer to **PROGRAMMING A SHORT INTERIOR LIGHTING PERIOD**

PROGRAMMING A SHORT INTERIOR LIGHTING PERIOD

The general lighting and rear reading lamps light and remain lit for 30 seconds when:

- The door has been unlocked from outside with a key or the remote control.
- The engine has been stopped and the ignition key turned to 0.

The default period is 30 seconds. This can be changed to between 5 and 255 seconds.

Read off the programmed values.

To change the time, mark the desired value in the scrolling list and start programming.

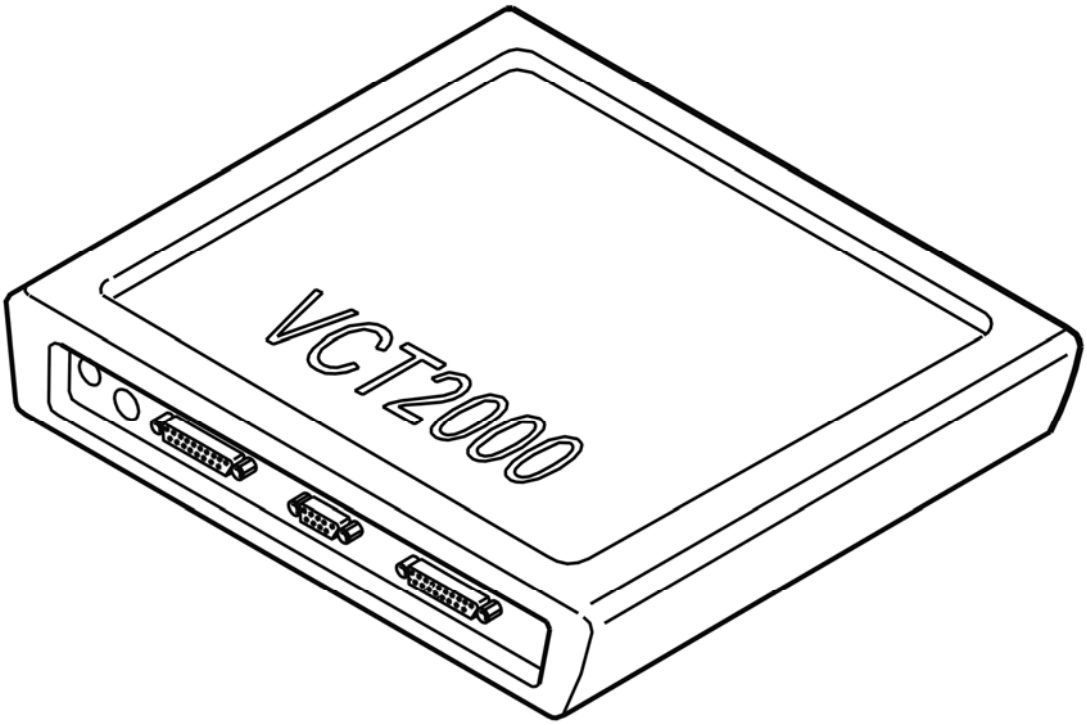

Fig. 47: Identifying VCT2000 Diagnostic Tool Symbol In VIDA
Courtesy of VOLVO CARS CORPORATION

Do you want to program any more parameters?

- **YES**

  Refer to **PROGRAMMING A LONG INTERIOR LIGHTING PERIOD**

- **NO**

  Refer to **CHECKING THE ANTI-DAZZLE FUNCTION IN THE REAR VIEW MIRROR**

PROGRAMMING A LONG INTERIOR LIGHTING PERIOD

The general lighting and rear reading lamps light and remain lit for 10 minutes when:

- A door is opened after being unlocked.
- The lamp is lit with a switch.

The default period is 10 minutes. This can be changed to between 0 and 255 minutes at 10 minute intervals.

Read off the programmed values.

To change the time, mark the desired value in the scrolling list and start programming.

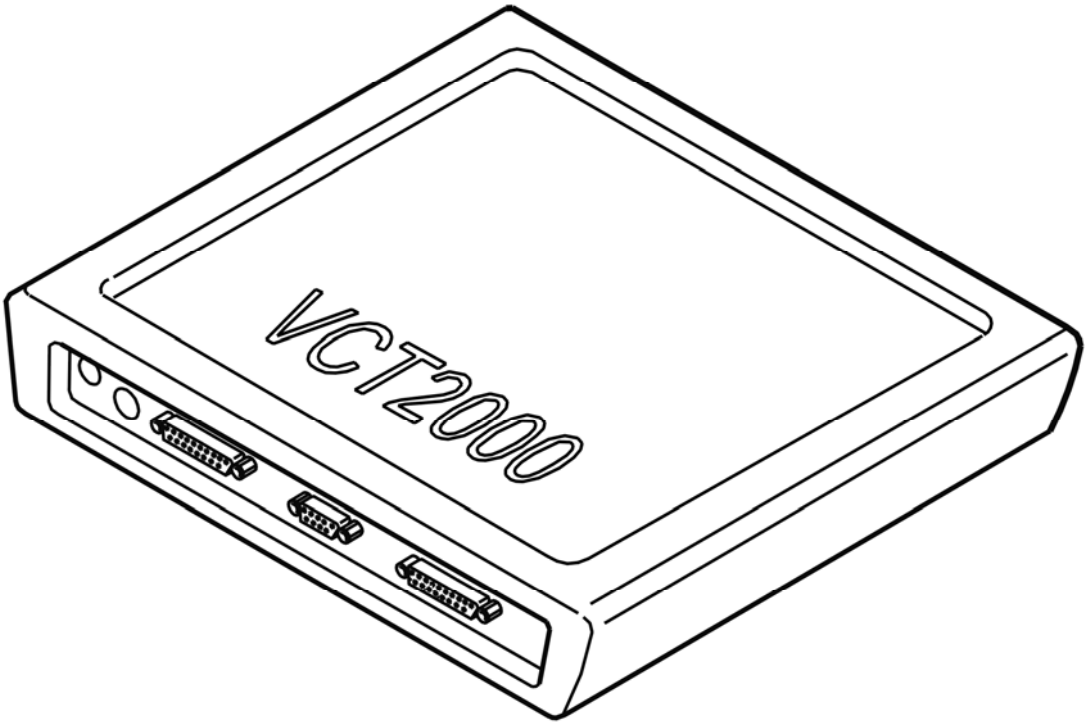

Fig. 48: Identifying VCT2000 Diagnostic Tool Symbol In VIDA
Courtesy of VOLVO CARS CORPORATION

- **Continue**

  Refer to **CHECKING THE ANTI-DAZZLE FUNCTION IN THE REAR VIEW MIRROR**

CHECKING THE ANTI-DAZZLE FUNCTION IN THE REAR VIEW MIRROR

CHECKING THE ANTI-DAZZLE FUNCTION

NOTE: If the upper electronic module (UEM) has been replaced software, specially developed for downloading after replacing the control module, must be downloaded to the control module before the anti-dazzle function is changed. See UPPER ELECTRONIC MODULE (UEM)/REARVIEW MIRROR, REPLACING .

The rear view mirror anti-dazzle function can be adjusted:

- If the rear view mirror anti-dazzle function is too powerful or too weak, it can be adjusted.

Specific software for setting the anti-dazzle function must be installed in the car to do this.

VERIFICATION

HINT: After carrying out the repair, check that the fault has been remedied.

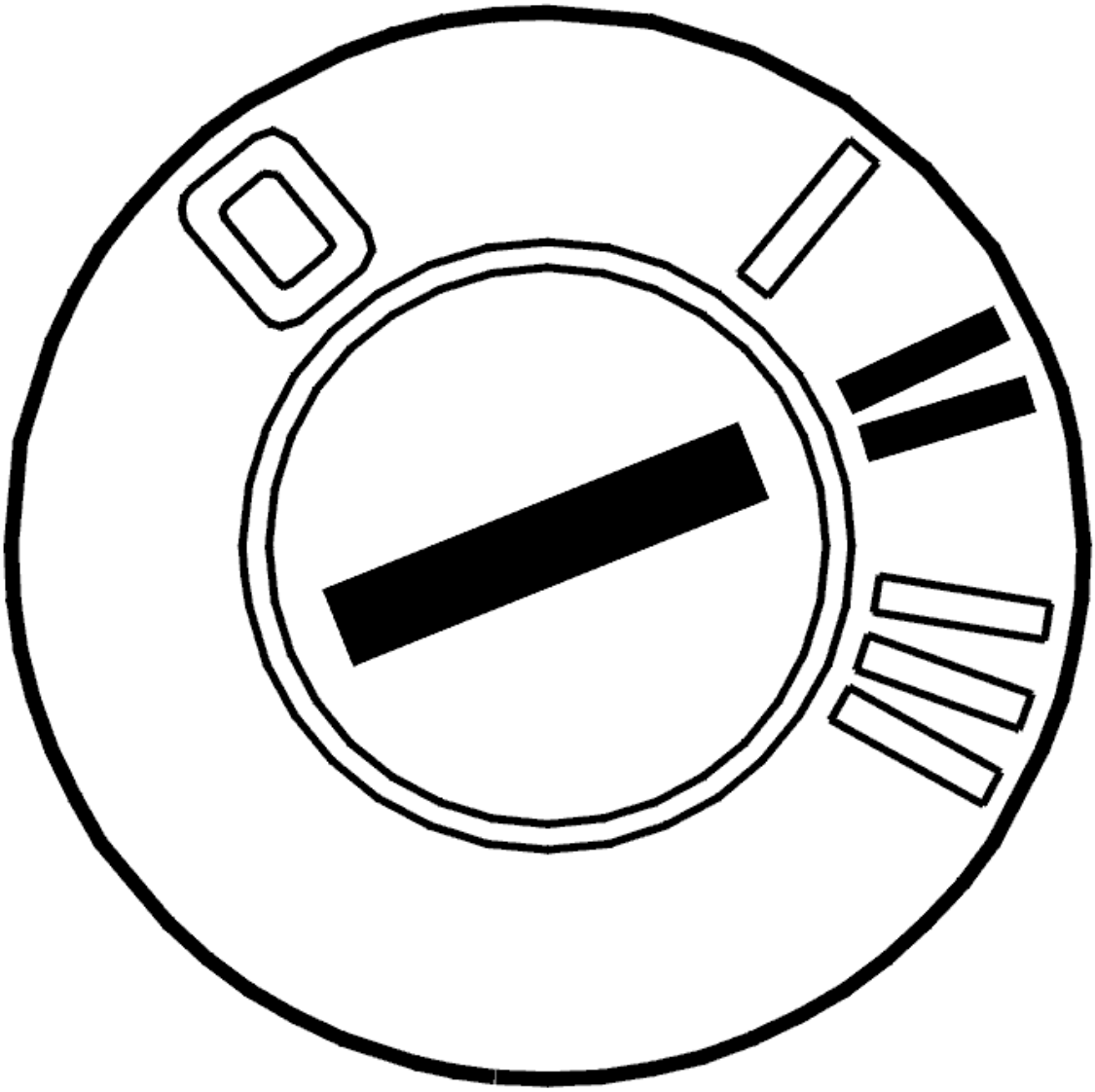

Fig. 49: Identifying Ignition ON
Courtesy of VOLVO CARS CORPORATION

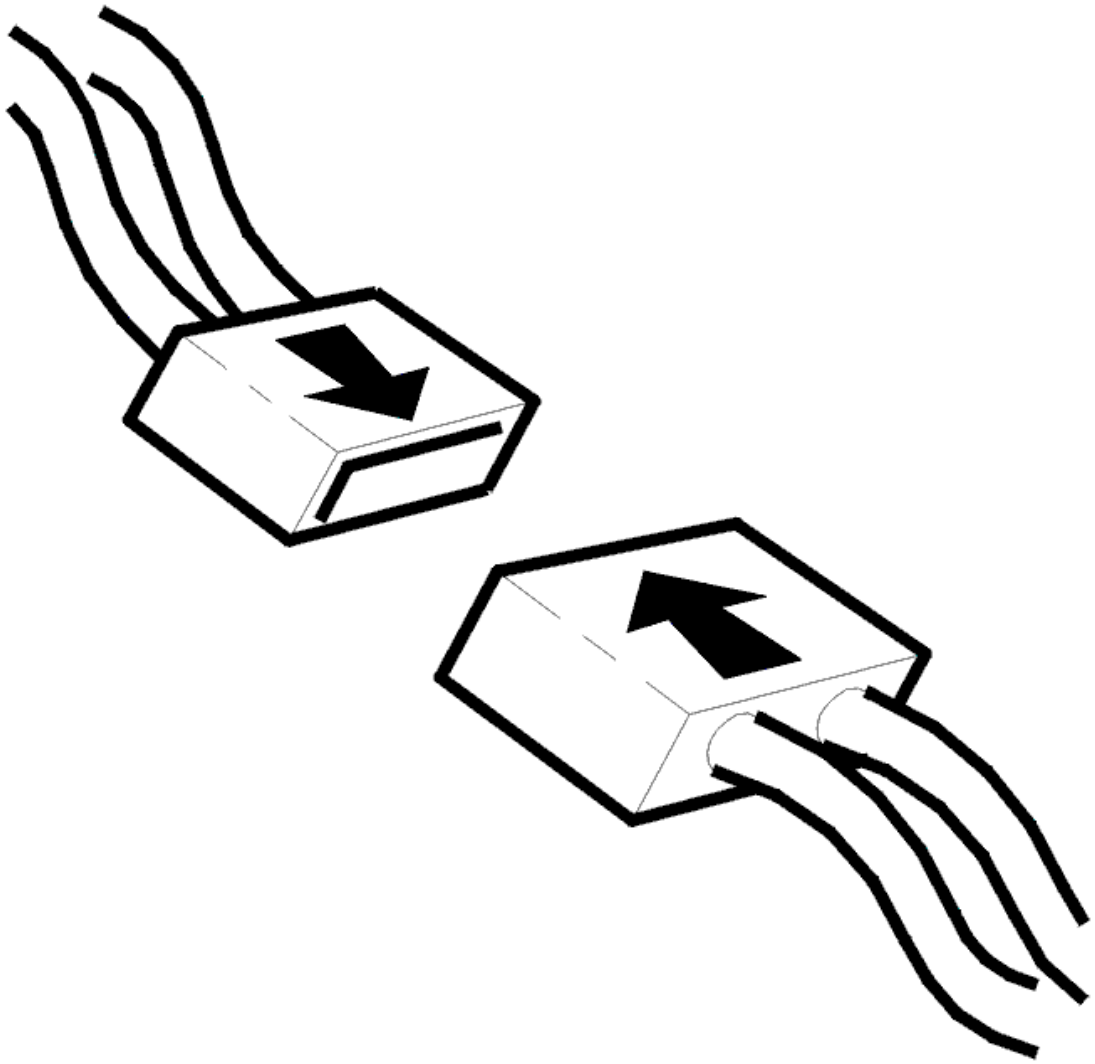

Fig. 50: Connecting Connector
Courtesy of VOLVO CARS CORPORATION

- Ignition off
- Reinstall the connectors, components etc.
- Ignition on.

  Check that the LEDs in the display in the rear view mirror light.

Are the LEDs in the display working?

- **YES**

  VERIFIED: Troubleshooting has been completed.

- **NO**

  Refer to **INFORMATION**

INFORMATION

FAULT-TRACING INFORMATION

The fault should have been detected and remedied. As this is not the case fault-tracing has failed.

Exit fault-tracing for this diagnostic trouble code (DTC) or make another attempt.

UEM-0091: PAD LAMP. SIGNAL TOO HIGH (2005-12)

DIAGNOSTIC TROUBLE CODE (DTC) INFORMATION UEM-0091

Condition

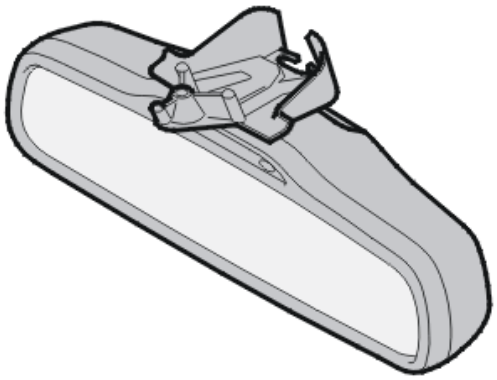

Fig. 51: Identifying Rear View Mirror
Courtesy of VOLVO CARS CORPORATION

The upper electronic module (UEM) checks the power supply to the LED for the PAD lamp (Passenger Airbag Deactivated) in the rear view mirror. The LED is integrated in the rear view mirror.

The diagnostic trouble code (DTC) is stored if the upper electronic module (UEM) registers that the power supply signal to the PAD lamp is too high.

The diagnostic trouble code (DTC) can be diagnosed when the LEDs in the rear view mirror are not supplied with power, i. e. when the LEDs in the display do not satisfy conditions for lighting.

Substitute Value

- None.

Possible Source

- Defective upper electronic module (UEM) (internal fault).

Fault symptom[s]

- The SRS indicator lamp is lit.
- Message in the display.

SIGNAL TOO HIGH

CHECKING THE FUNCTION

Fig. 52: Identifying Ignition On Position
Courtesy of VOLVO CARS CORPORATION

- Ignition off.

  The light-emitting diode for indicating disconnected passenger airbag is located internally in the interior rearview mirror and cannot be replaced. Check that the fault in the LED remains after the power is switched off and on again.

  - Read off using the VCT2000 (or appropriate scan tool).
  - Turn the ignition key to position I.
  - Check that the requested status from the Supplemental restraint system module (SRS) is ON and that the status of the PAD lamp in the Upper electronic module (UEM) is ON when the lamp is lit. Check visually in the vehicle that the status of the PAD-light matches the read-out value.

Fig. 53: Identifying VCT2000 Diagnostic Tool Symbol In VIDA
Courtesy of VOLVO CARS CORPORATION

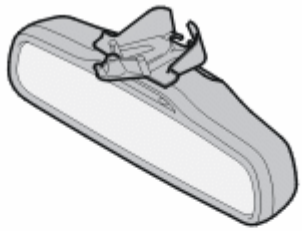

Fig. 54: Identifying Rear View Mirror
Courtesy of VOLVO CARS CORPORATION

Does the LED work as it should?

- **YES**

  FAULT NOT FOUND: Troubleshooting has been completed.

- **NO**

  Refer to **REPLACING CONTROL MODULE AND PROGRAMMING**

REPLACING CONTROL MODULE AND PROGRAMMING

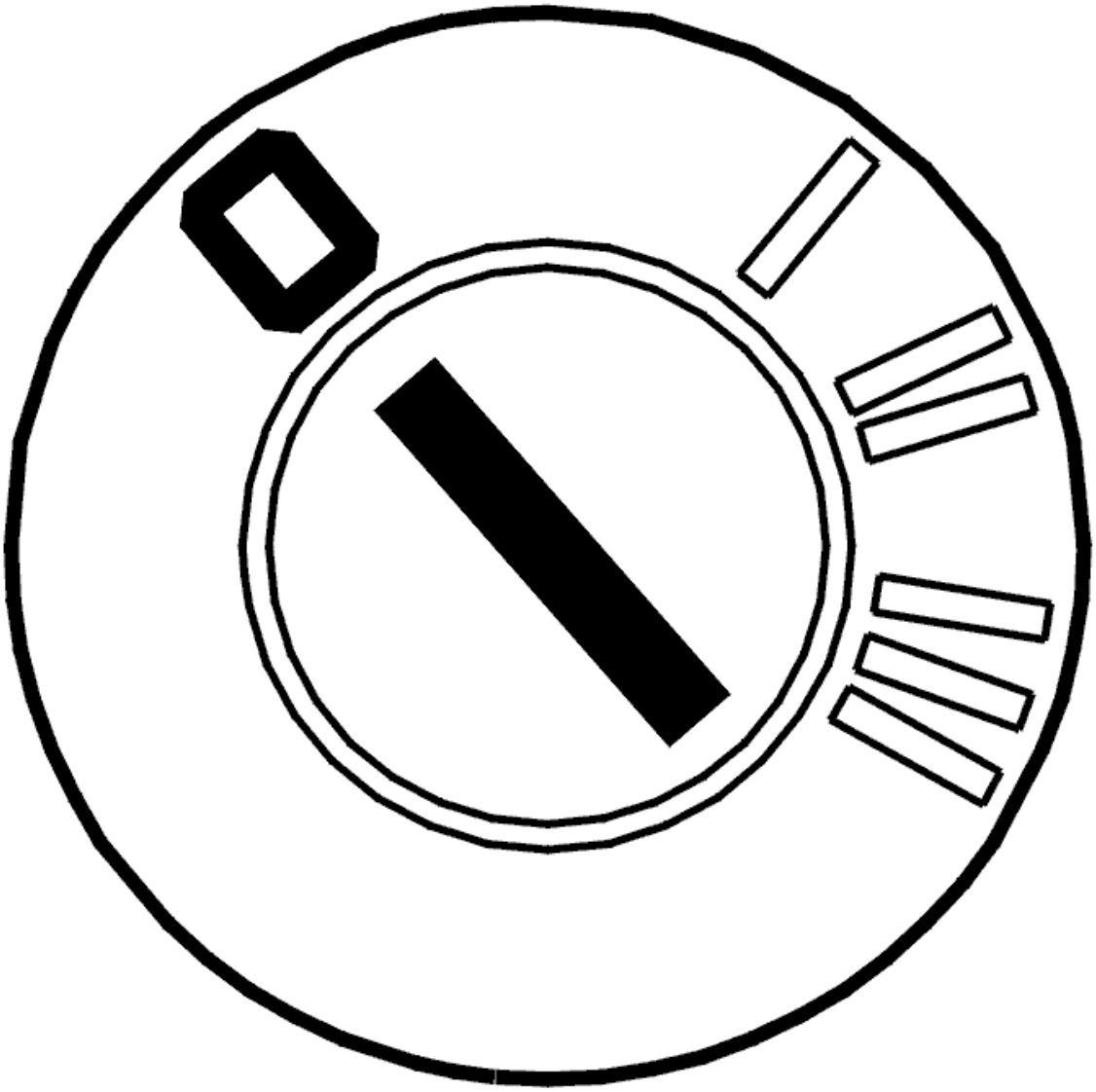

Fig. 55: Identifying Ignition OFF
Courtesy of VOLVO CARS CORPORATION

- Ignition off.

  If the fault remains, the upper electronic module (UEM) must be replaced.

NOTE: **If possible, read off the programmed data from the control module before it is replaced. This should be done as this information is not stored in Volvo's central database. Switch off the ignition before replacing the control module.**

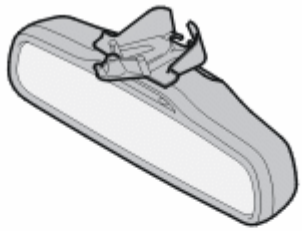

Fig. 56: Identifying Rear View Mirror
Courtesy of VOLVO CARS CORPORATION

- **Continue**

Refer to **REPLACING THE CONTROL MODULE**

REPLACING THE CONTROL MODULE

READING OFF THE PROGRAMMED VALUES

NOTE: Read off the programmed values from the upper electronic module (UEM) before replacing the control module.

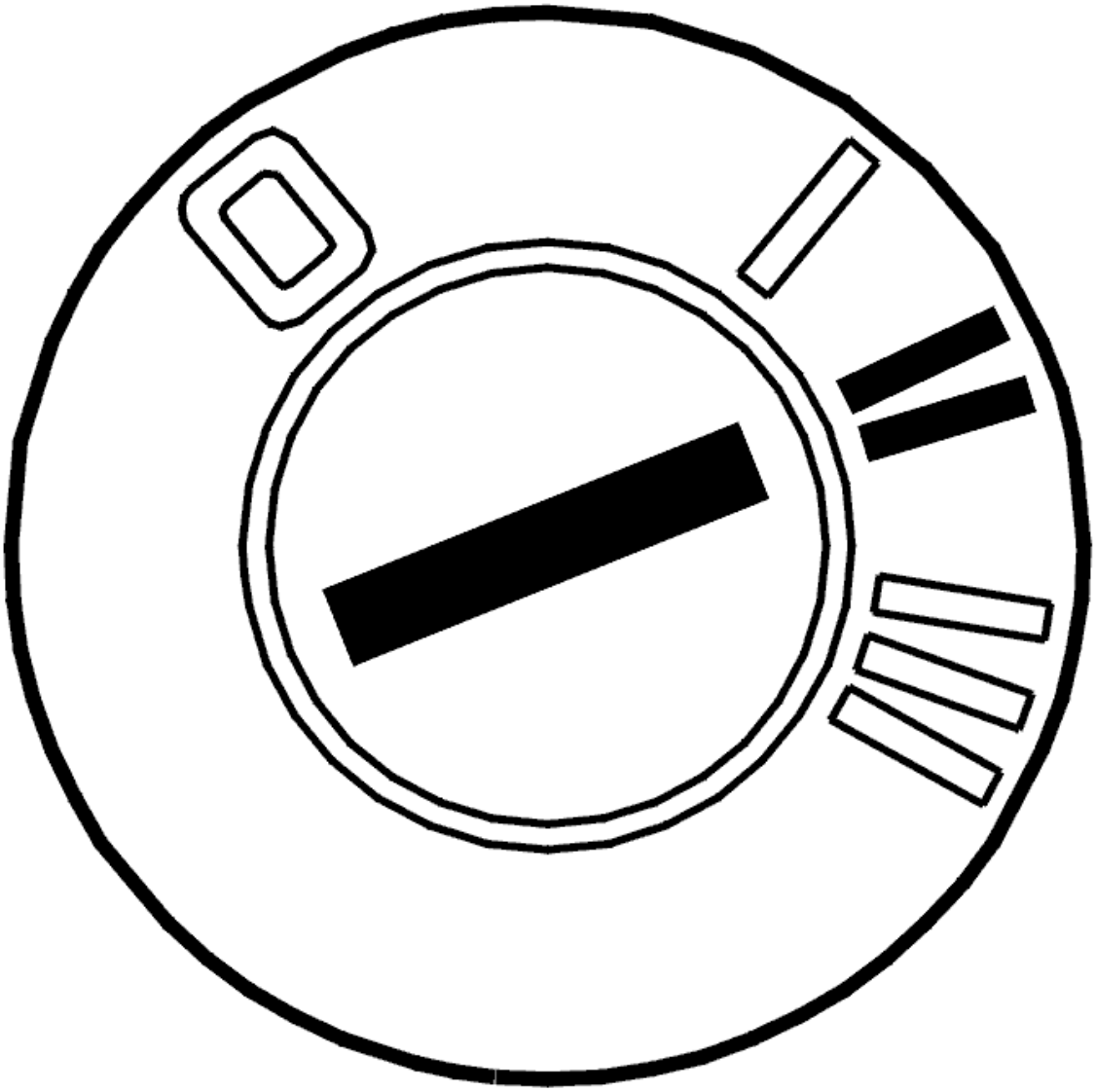

Fig. 57: Identifying Ignition ON
Courtesy of VOLVO CARS CORPORATION

- Ignition on
- Use the VCT2000 (or appropriate scan tool) to read off the programmed values.

  The retained values are programmed customer parameters in the upper electronic module (UEM). The retained values should be noted for later use.

  Other information

  - For information about programming the customer parameters, see **DIAGNOSTIC FUNCTIONS** .

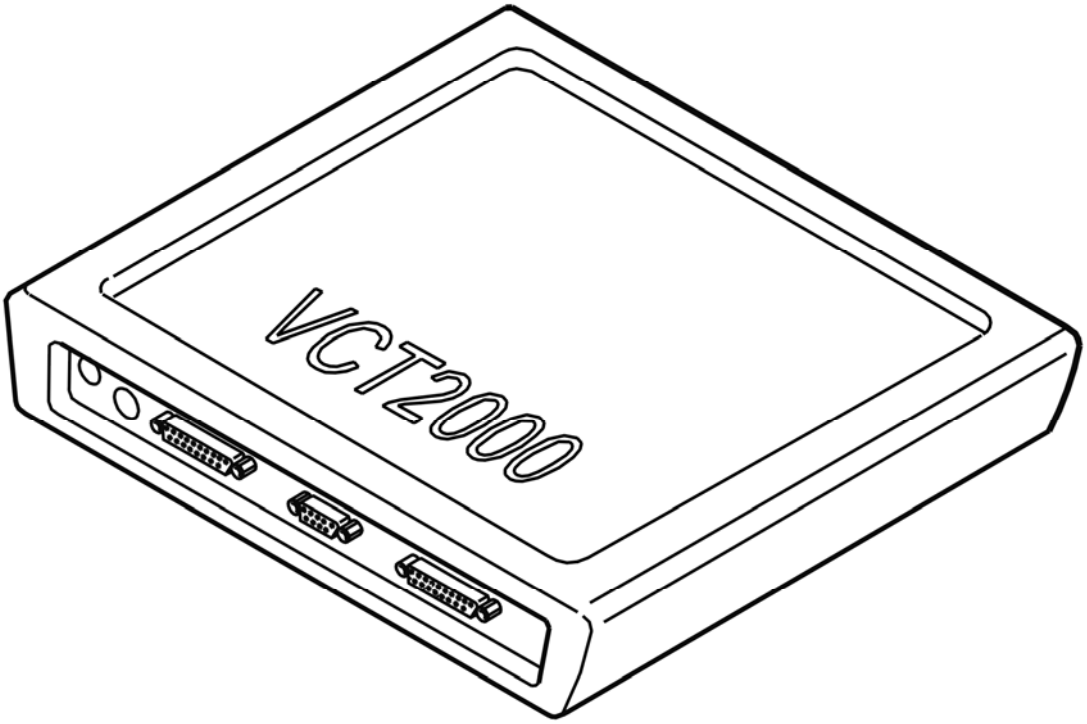

Fig. 58: Identifying VCT2000 Diagnostic Tool Symbol In VIDA
Courtesy of VOLVO CARS CORPORATION

- **Continue**

Refer to **REPLACING CONTROL MODULES AND DOWNLOADING SOFTWARE**

REPLACING CONTROL MODULES AND DOWNLOADING SOFTWARE

CAUTION: A new control module is delivered without software. In order for the control module to function new software must be programmed into the control module after it has been replaced.

Replace the control module and download the new software. See **UPPER ELECTRONIC MODULE (UEM)/REARVIEW MIRROR, REPLACING** .

HINT: When diagnostic trouble code (DTC) E001 is stored, communication with the control module cannot be established. This can be remedied in two ways.

1. Press the remote control button for local lighting
2. Remove fuse 11C/28 from the fusebox in the passenger compartment. Reinstall the fuse again.

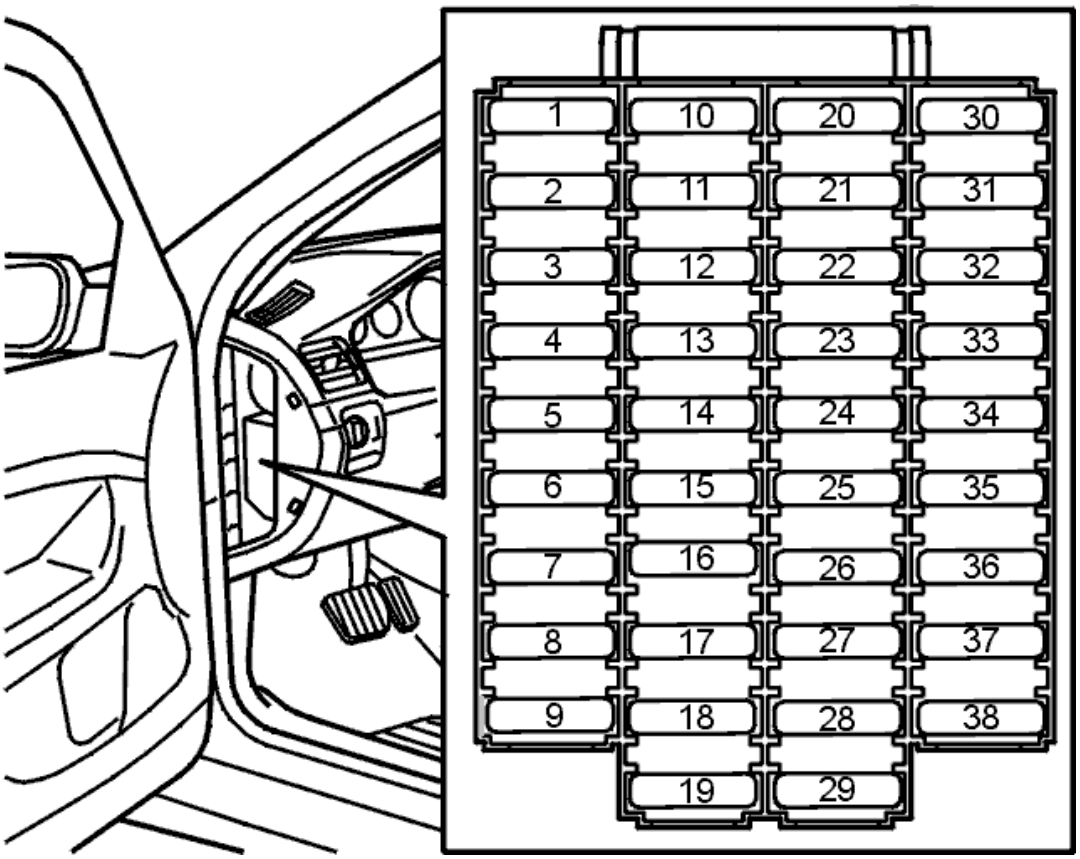

Fig. 59: Fuse Holder (Passenger Compartment)
Courtesy of VOLVO CARS CORPORATION

- **Continue**

  Refer to **CHECKING THE INTERIOR LIGHTING**

CHECKING THE INTERIOR LIGHTING

Two times can be programmed for the interior lighting:

1. **Short**

   The period from when the door is unlocked, or the engine stops, to when the interior lighting goes out can be changed if it is too long or too short.

2. **Long**

   The period from when the door is opened, or a lamp is lit with a switch, to when the lamp goes out can be changed if it is too long or too short.

To program a long interior lighting period, use VIDA (Volvo scan tool).

- **Continue**

Refer to **PROGRAMMING A SHORT INTERIOR LIGHTING PERIOD**

PROGRAMMING A SHORT INTERIOR LIGHTING PERIOD

The general lighting and rear reading lamps light and remain lit for 30 seconds when:

- The door has been unlocked from outside with a key or the remote control.
- The engine has been stopped and the ignition key turned to 0.

The default period is 30 seconds. This can be changed to between 5 and 255 seconds.

Read off the programmed values.

To change the time, mark the desired value in the scrolling list and start programming.

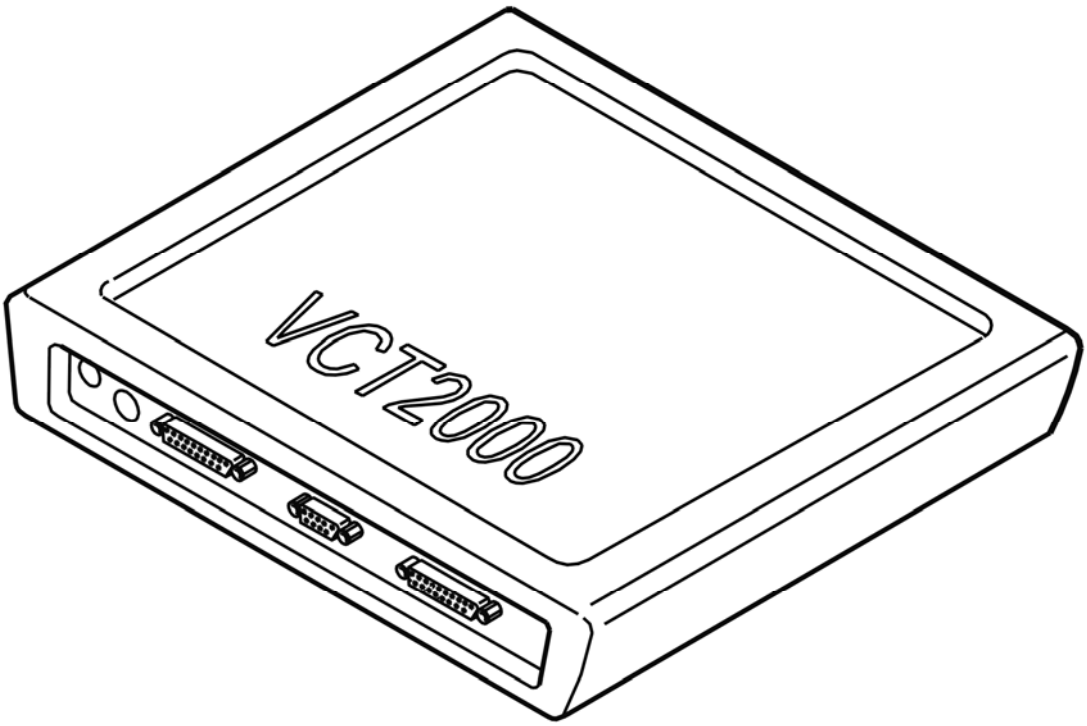

Fig. 60: Identifying VCT2000 Diagnostic Tool Symbol In VIDA
Courtesy of VOLVO CARS CORPORATION

Do you want to program any more parameters?

- **YES**

  Refer to **PROGRAMMING A LONG INTERIOR LIGHTING PERIOD**

- **NO**

  Refer to **CHECKING THE ANTI-DAZZLE FUNCTION IN THE REAR VIEW MIRROR**

PROGRAMMING A LONG INTERIOR LIGHTING PERIOD

The general lighting and rear reading lamps light and remain lit for 10 minutes when:

- A door is opened after being unlocked.
- The lamp is lit with a switch.

The default period is 10 minutes. This can be changed to between 0 and 255 minutes at 10 minute intervals.

Read off the programmed values.

To change the time, mark the desired value in the scrolling list and start programming.

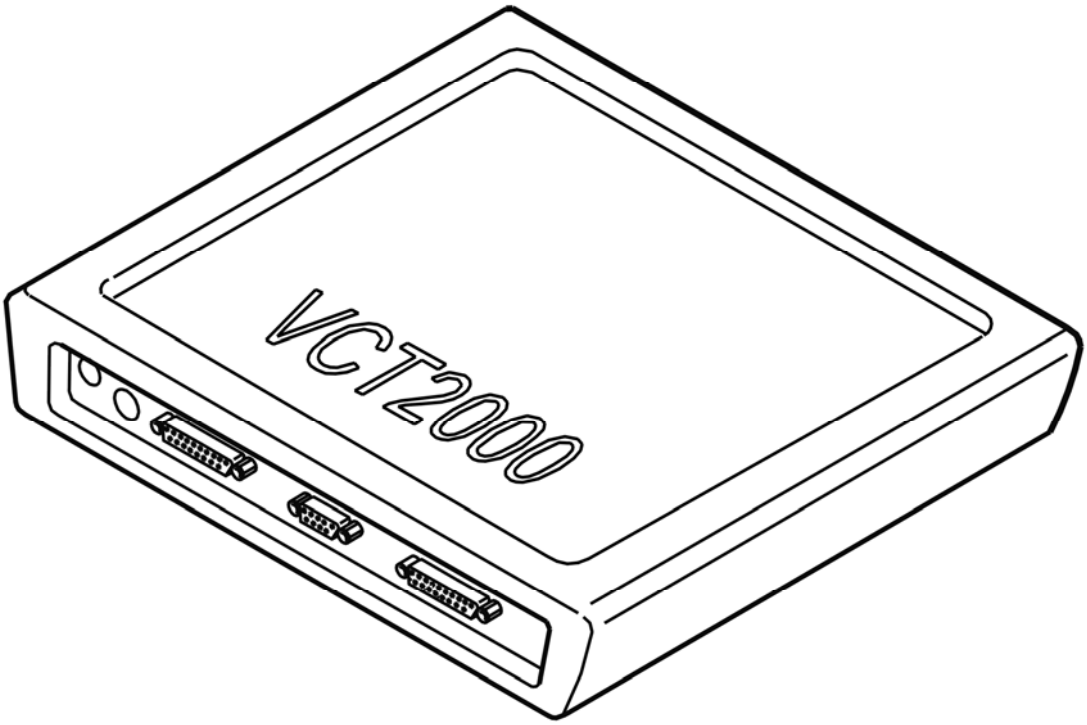

Fig. 61: Identifying VCT2000 Diagnostic Tool Symbol In VIDA
Courtesy of VOLVO CARS CORPORATION

- **Continue**

  Refer to **CHECKING THE ANTI-DAZZLE FUNCTION IN THE REAR VIEW MIRROR**

CHECKING THE ANTI-DAZZLE FUNCTION IN THE REAR VIEW MIRROR

CHECKING THE ANTI-DAZZLE FUNCTION

NOTE: **If the upper electronic module (UEM) has been replaced software, specially developed for downloading after replacing the control module, must be downloaded to the control module before the anti-dazzle function is changed. See UPPER ELECTRONIC MODULE (UEM)/REARVIEW MIRROR, REPLACING .**

The rear view mirror anti-dazzle function can be adjusted:

- If the rear view mirror anti-dazzle function is too powerful or too weak, it can be adjusted.

Specific software for setting the anti-dazzle function must be installed in the car to do this.

VERIFICATION

HINT: After carrying out the repair, check that the fault has been remedied.

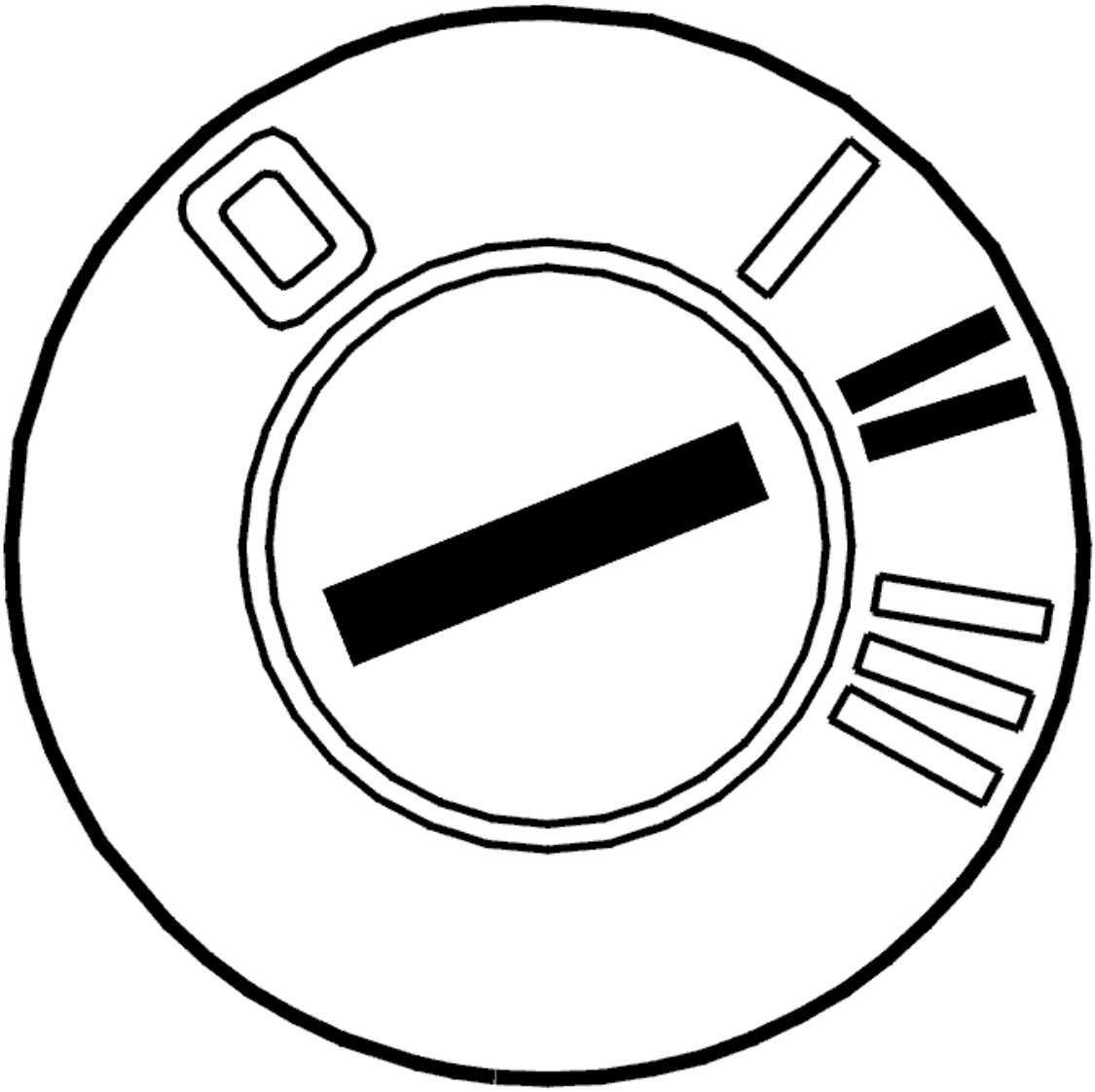

Fig. 62: Identifying Ignition ON
Courtesy of VOLVO CARS CORPORATION

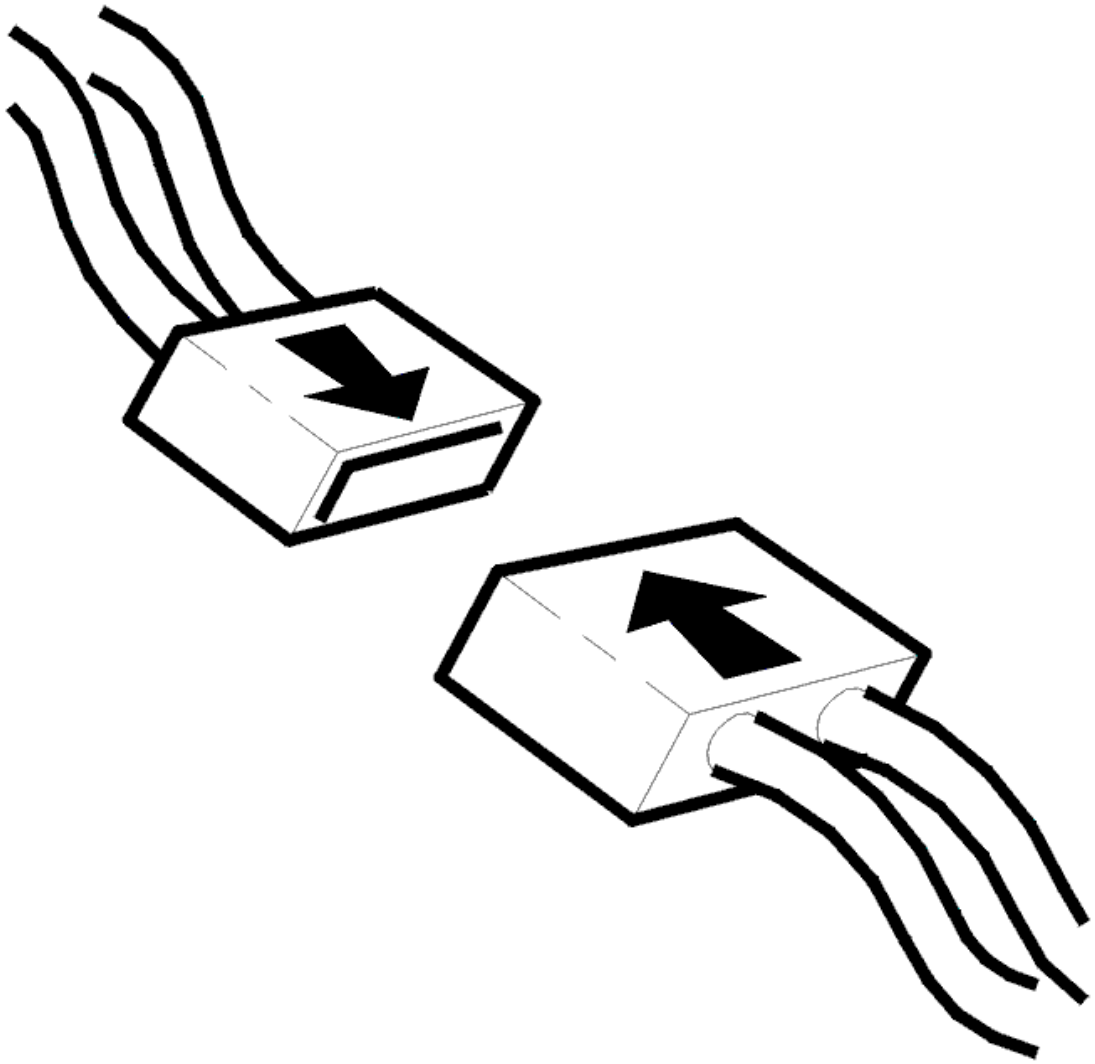

Fig. 63: Connecting Connector
Courtesy of VOLVO CARS CORPORATION

- Ignition off
- Reinstall the connectors, components etc.
- Ignition on.

  Check that the LEDs in the display in the rear view mirror light.

Are the LEDs in the display working?

- **YES**

  VERIFIED: Troubleshooting has been completed.

- **NO**

  Refer to **INFORMATION**

INFORMATION

FAULT-TRACING INFORMATION

The fault should have been detected and remedied. As this is not the case fault-tracing has failed.

Exit fault-tracing for this diagnostic trouble code (DTC) or make another attempt.

UEM-0091: REAR VIEW MIRROR, DISPLAY. SIGNAL TOO HIGH (2003-04)

DIAGNOSTIC TROUBLE CODE (DTC) INFORMATION UEM-0091

Condition

The upper electronic module (UEM) checks the power supply to the LEDs in the display in the rear view mirror. The five LEDs are supplied with power via the same cable and are internally mounted in the rear view mirror.

Diagnostic trouble code (DTC) UEM-0091 is stored in the control module if the upper electronic module (UEM) registers too high a signal for the power supply to the LEDs in the display in the rear view mirror.

Diagnostic trouble code (DTC) UEM-0091 can be diagnosed when the LEDs in the rear view mirror are not supplied with power, i. e. when the LEDs in the display do not satisfy conditions for lighting.

Substitute Value

- None.

Possible Source

- The power supply cable to LEDs in the display in the rear view mirror is short-circuited to supply voltage.

Fault symptom[s]

- The SRS indicator lamp is lit.

SIGNAL TOO HIGH

REPLACING THE CONTROL MODULE AND PROGRAMMING

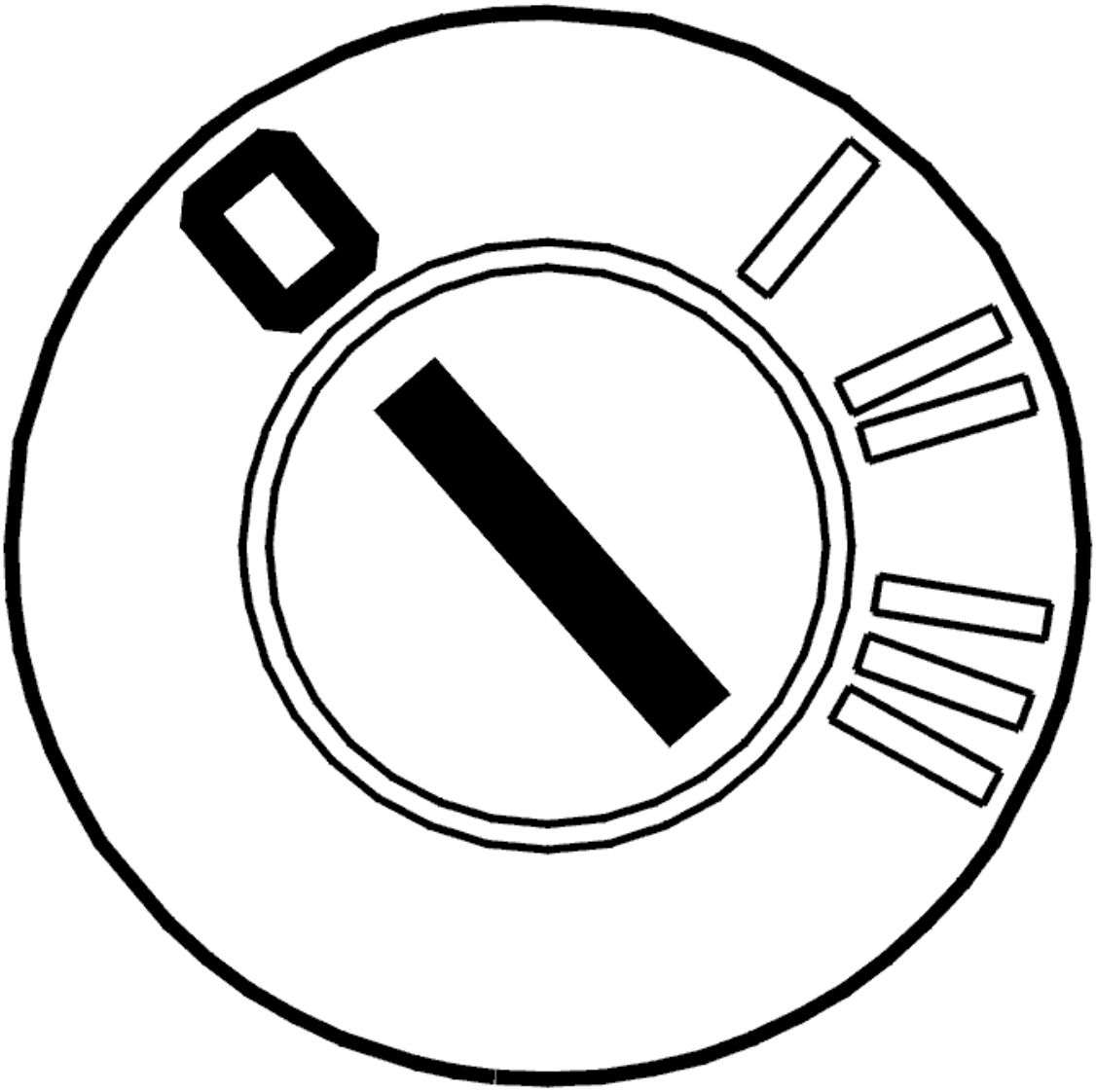

Fig. 64: Identifying Ignition OFF
Courtesy of VOLVO CARS CORPORATION

- Ignition off.

  The LEDs are mounted internally in the rear view mirror and cannot be replaced. Check there are no indications that the power supply to the upper electronic module (UEM) is faulty. Check that the fault in the LED remains after the power is switched off and on again. If the fault remains, the upper electronic module (UEM) should be replaced.

  NOTE: **If possible, read off the programmed data from the control module before it is replaced. This should be done as this information is not stored in Volvo's central database. Switch off the ignition before replacing the control module.**

- **Continue**

Refer to **REPLACING THE CONTROL MODULE**

REPLACING THE CONTROL MODULE

READING OFF THE PROGRAMMED VALUES

NOTE: Read off the programmed values from the upper electronic module (UEM) before replacing the control module.

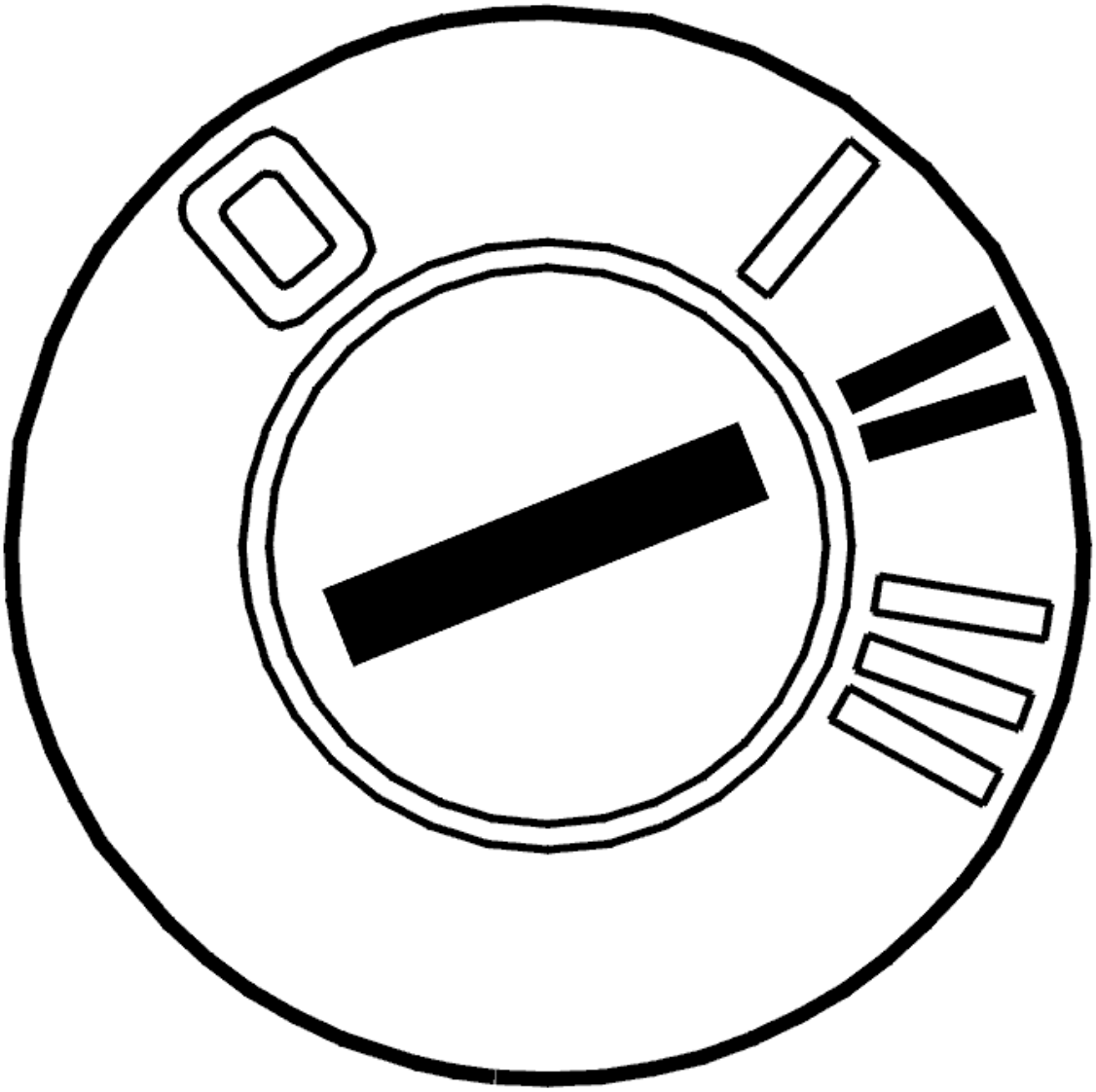

Fig. 65: Identifying Ignition ON
Courtesy of VOLVO CARS CORPORATION

- Ignition on
- Use the VCT2000 (or appropriate scan tool) to read off the programmed values.

The retained values are programmed customer parameters in the upper electronic module (UEM). The

retained values should be noted for later use.

Other information

- For information about programming the customer parameters, see **DIAGNOSTIC FUNCTIONS** .

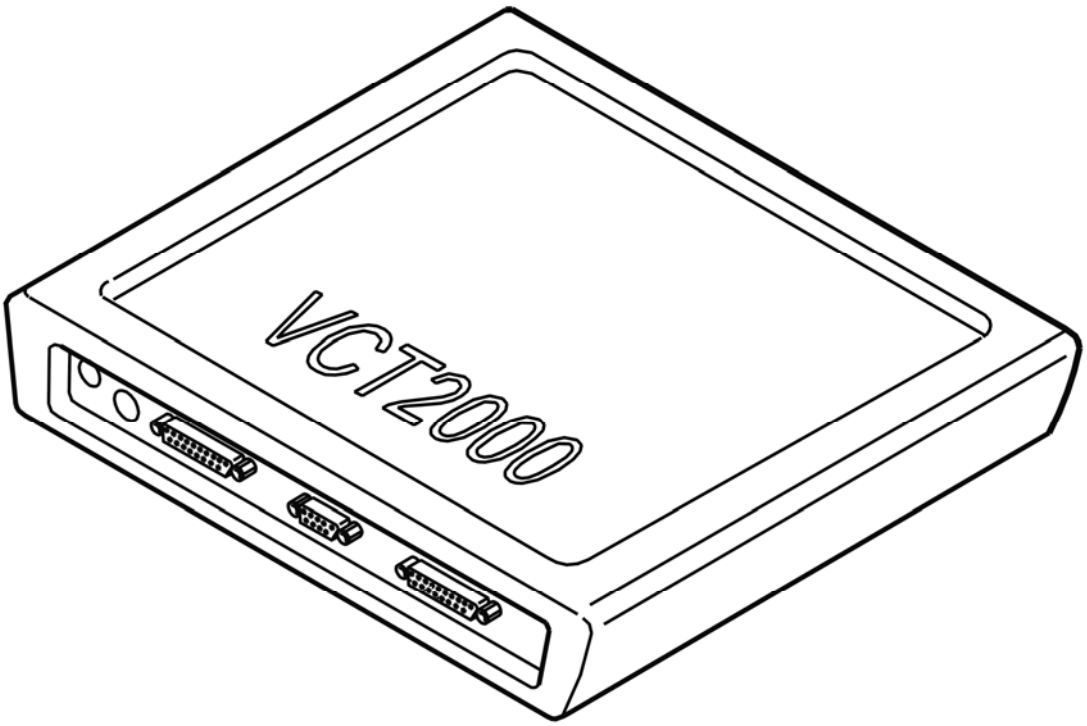

Fig. 66: Identifying VCT2000 Diagnostic Tool Symbol In VIDA
Courtesy of VOLVO CARS CORPORATION

- **Continue**

Refer to **REPLACING CONTROL MODULES AND DOWNLOADING SOFTWARE**

REPLACING CONTROL MODULES AND DOWNLOADING SOFTWARE

CAUTION: A new control module is delivered without software. In order for the control module to function new software must be programmed into the control module after it has been replaced.

Replace the control module and download the new software. See **UPPER ELECTRONIC MODULE (UEM)/REARVIEW MIRROR, REPLACING** .

HINT: When diagnostic trouble code (DTC) E001 is stored, communication with the control module cannot be established. This can be remedied in two ways.

1. Press the remote control button for local lighting
2. Remove fuse 11C/28 from the fusebox in the passenger compartment. Reinstall the fuse again.

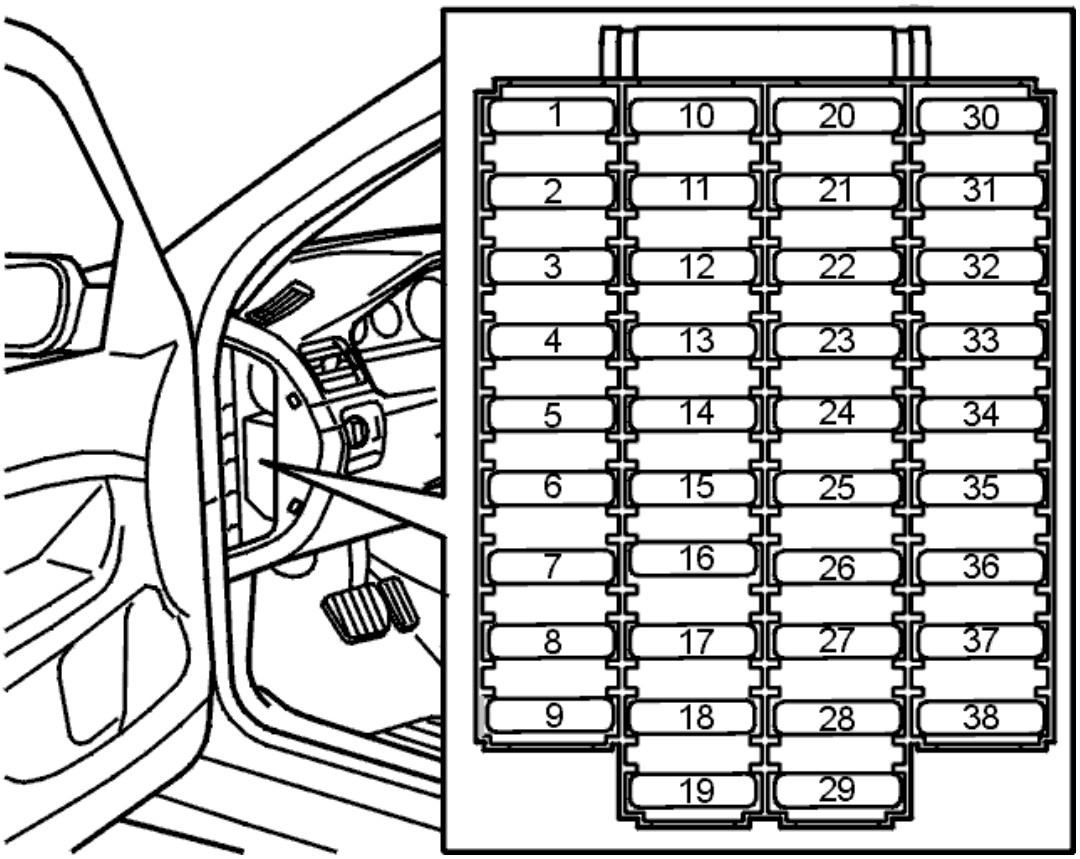

Fig. 67: Fuse Holder (Passenger Compartment)
Courtesy of VOLVO CARS CORPORATION

- **Continue**

  Refer to **CHECKING THE INTERIOR LIGHTING**

CHECKING THE INTERIOR LIGHTING

Two times can be programmed for the interior lighting:

1. **Short**

   The period from when the door is unlocked, or the engine stops, to when the interior lighting goes out can be changed if it is too long or too short.

2. **Long**

   The period from when the door is opened, or a lamp is lit with a switch, to when the lamp goes out can be changed if it is too long or too short.

To program a long interior lighting period, use VIDA (Volvo scan tool).

- **Continue**

  Refer to **PROGRAMMING A SHORT INTERIOR LIGHTING PERIOD**

PROGRAMMING A SHORT INTERIOR LIGHTING PERIOD

The general lighting and rear reading lamps light and remain lit for 30 seconds when:

- The door has been unlocked from outside with a key or the remote control.
- The engine has been stopped and the ignition key turned to 0.

The default period is 30 seconds. This can be changed to between 5 and 255 seconds.

Read off the programmed values.

To change the time, mark the desired value in the scrolling list and start programming.

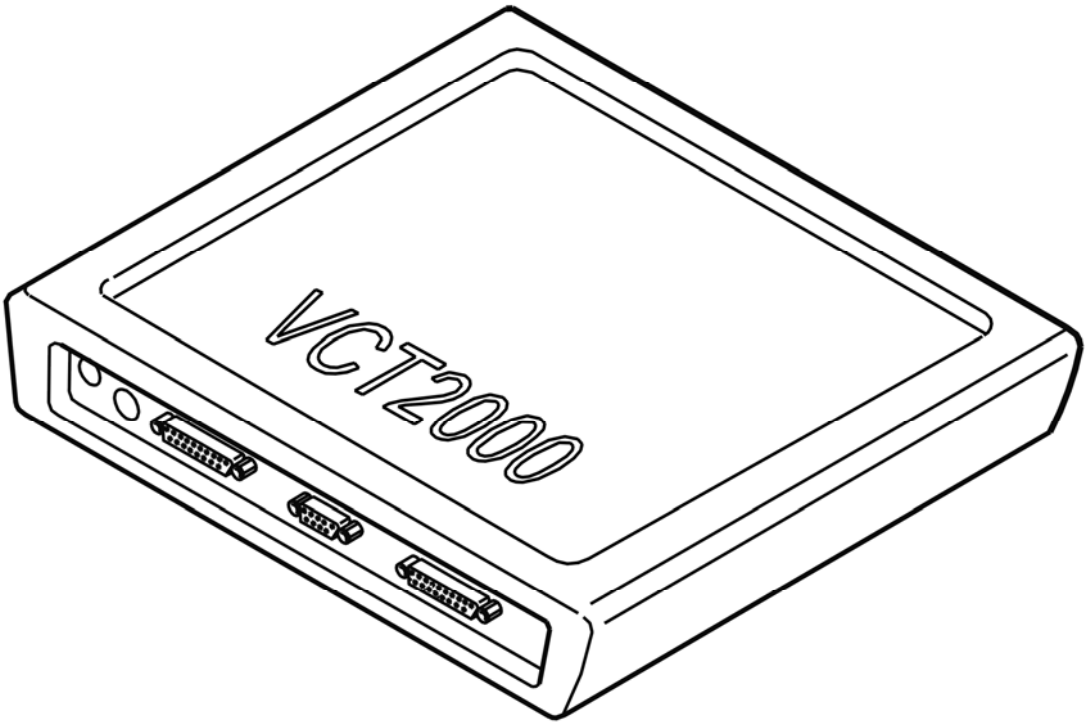

Fig. 68: Identifying VCT2000 Diagnostic Tool Symbol In VIDA
Courtesy of VOLVO CARS CORPORATION

Do you want to program any more parameters?

- **YES**

  Refer to **PROGRAMMING A LONG INTERIOR LIGHTING PERIOD**

- **NO**

  Refer to **CHECKING THE ANTI-DAZZLE FUNCTION IN THE REAR VIEW MIRROR**

PROGRAMMING A LONG INTERIOR LIGHTING PERIOD

The general lighting and rear reading lamps light and remain lit for 10 minutes when:

- A door is opened after being unlocked.
- The lamp is lit with a switch.

The default period is 10 minutes. This can be changed to between 0 and 255 minutes at 10 minute intervals.

Read off the programmed values.

To change the time, mark the desired value in the scrolling list and start programming.

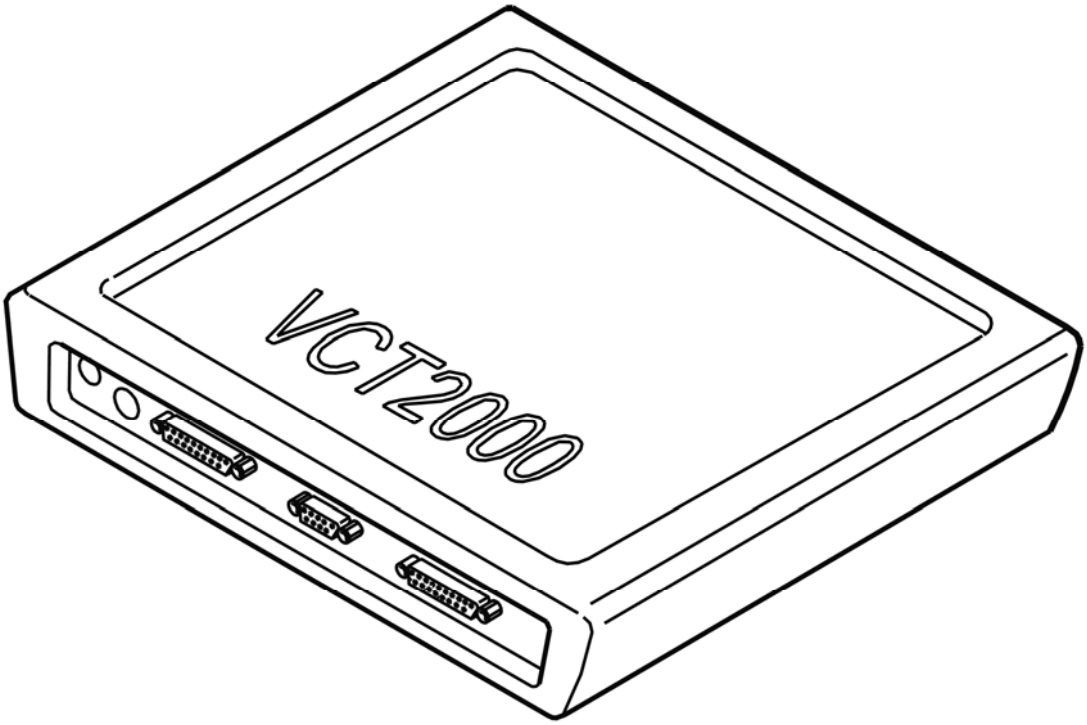

Fig. 69: Identifying VCT2000 Diagnostic Tool Symbol In VIDA
Courtesy of VOLVO CARS CORPORATION

- **Continue**

  Refer to **CHECKING THE ANTI-DAZZLE FUNCTION IN THE REAR VIEW MIRROR**

CHECKING THE ANTI-DAZZLE FUNCTION IN THE REAR VIEW MIRROR

CHECKING THE ANTI-DAZZLE FUNCTION

NOTE: If the upper electronic module (UEM) has been replaced software, specially developed for downloading after replacing the control module, must be downloaded to the control module before the anti-dazzle function is changed. See UPPER ELECTRONIC MODULE (UEM)/REARVIEW MIRROR, REPLACING .

The rear view mirror anti-dazzle function can be adjusted:

- If the rear view mirror anti-dazzle function is too powerful or too weak, it can be adjusted.

Specific software for setting the anti-dazzle function must be installed in the car to do this.

VERIFICATION

HINT: After carrying out the repair, check that the fault has been remedied.

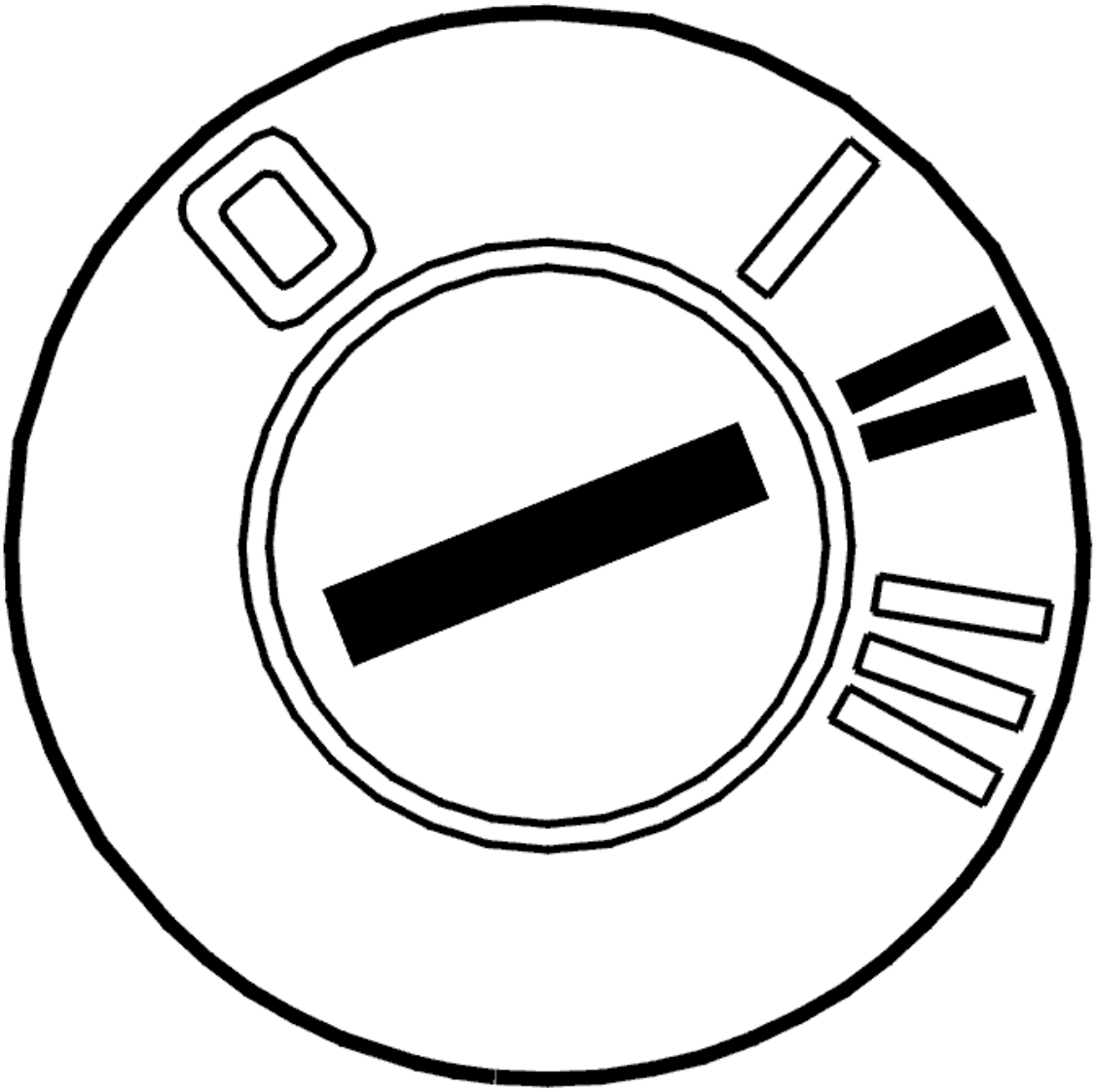

Fig. 70: Identifying Ignition ON
Courtesy of VOLVO CARS CORPORATION

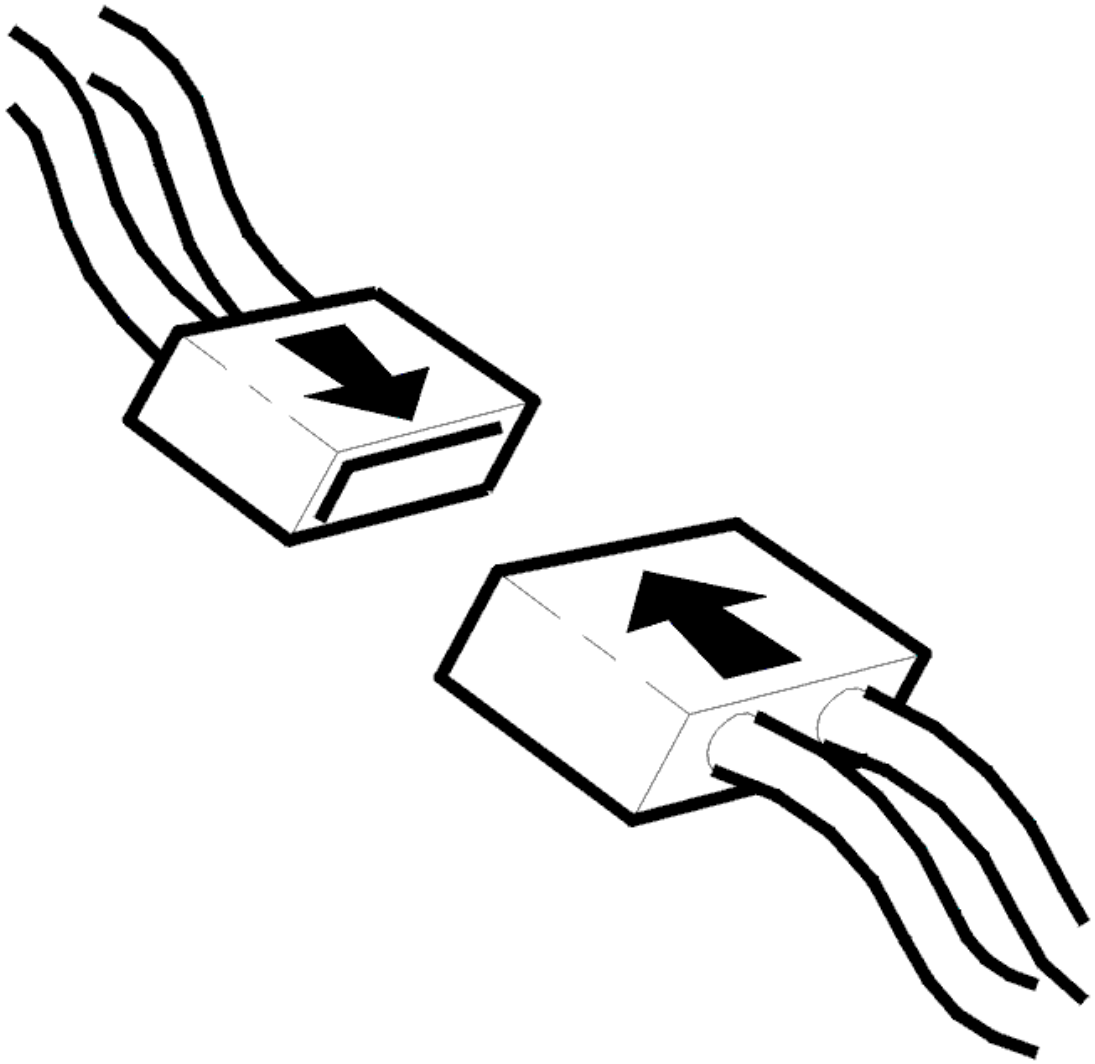

Fig. 71: Connecting Connector
Courtesy of VOLVO CARS CORPORATION

- Ignition off
- Reinstall the connectors, components etc.
- Ignition on.

  Check that the LEDs in the display in the rear view mirror light.

Are the LEDs in the display working?

- **YES**

  VERIFIED: Troubleshooting has been completed.

- **NO**

  Refer to **INFORMATION**

INFORMATION

FAULT-TRACING INFORMATION

The fault should have been detected and remedied. As this is not the case fault-tracing has failed.

Exit fault-tracing for this diagnostic trouble code (DTC) or make another attempt.

UEM-0092: REAR VIEW MIRROR, DISPLAY. FAULTY HARDWARE (2003-04)

DIAGNOSTIC TROUBLE CODE (DTC) INFORMATION UEM-0092

Condition

The display in the rear view mirror can indicate signals for two different functions, seat belt reminder or AOS. The different functions require different hardware. The upper electronic module (UEM) checks the hardware identity number on the installed rear view mirror and compares this with the software installed in the control module.

Diagnostic trouble code (DTC) UEM-0092 is stored in the control module if the upper electronic module (UEM) registers an identity number which is not compatible with the installed function.

Diagnostic trouble code (DTC) UEM-0092 can be diagnosed in ignition position II.

Substitute Value

- None.

Possible Source

- Read off identity number not compatible with installed function.

Fault symptom[s]

- The SRS indicator lamp is lit.

FAULTY HARDWARE

REPLACING THE CONTROL MODULE AND PROGRAMMING

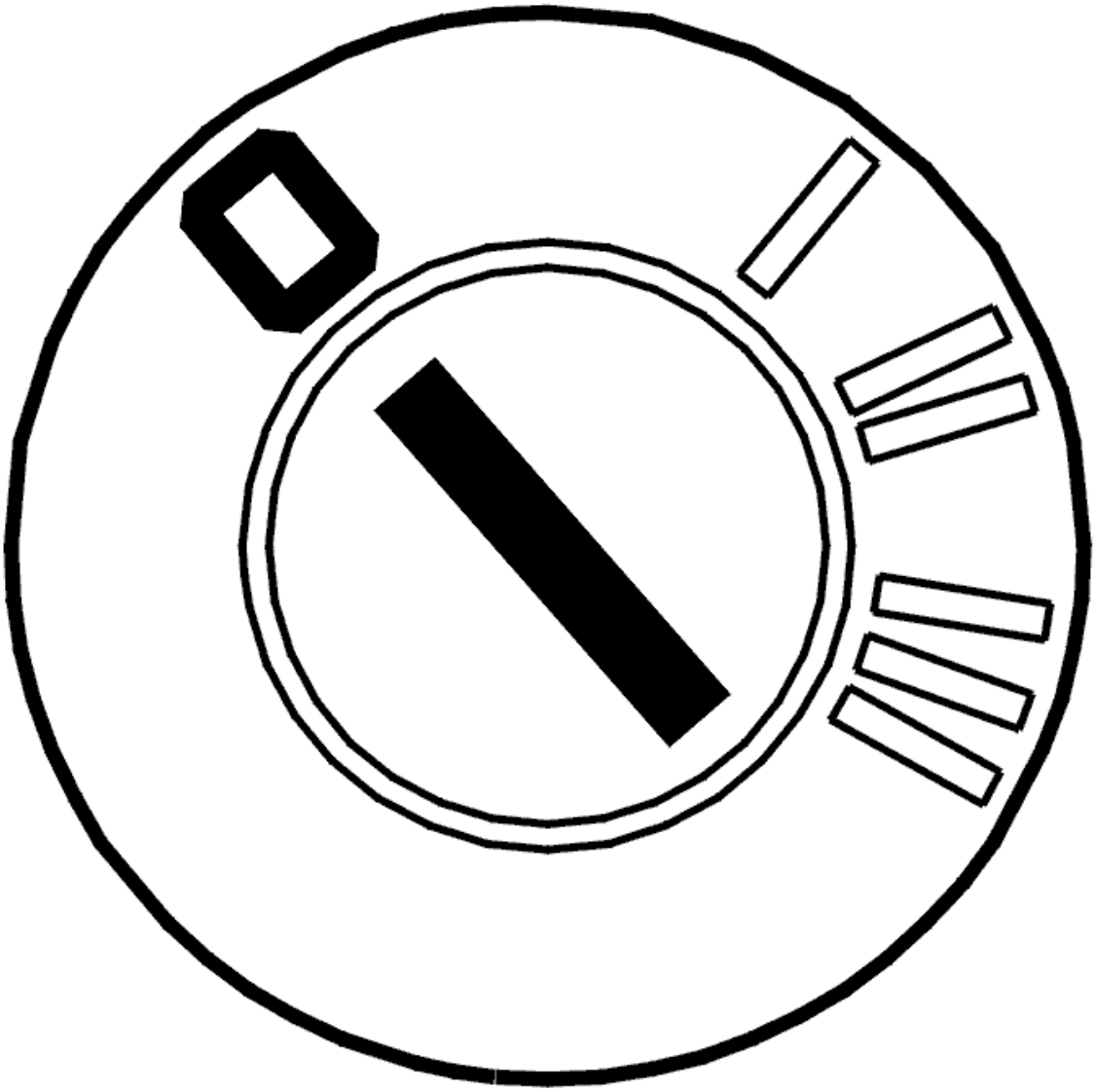

Fig. 72: Identifying Ignition OFF
Courtesy of VOLVO CARS CORPORATION

- Ignition off.

  Identity number for hardware does not correspond to the installed software. Replace the upper electronic module (UEM), check that new hardware has the correct P/N.

  NOTE: **If possible, read off the programmed data from the control module before it is replaced. This should be done as this information is not stored in Volvo's central database. Switch off the ignition before replacing the control module.**

- **Continue**

  Refer to **REPLACING THE CONTROL MODULE**

REPLACING THE CONTROL MODULE

READING OFF THE PROGRAMMED VALUES

NOTE: Read off the programmed values from the upper electronic module (UEM) before replacing the control module.

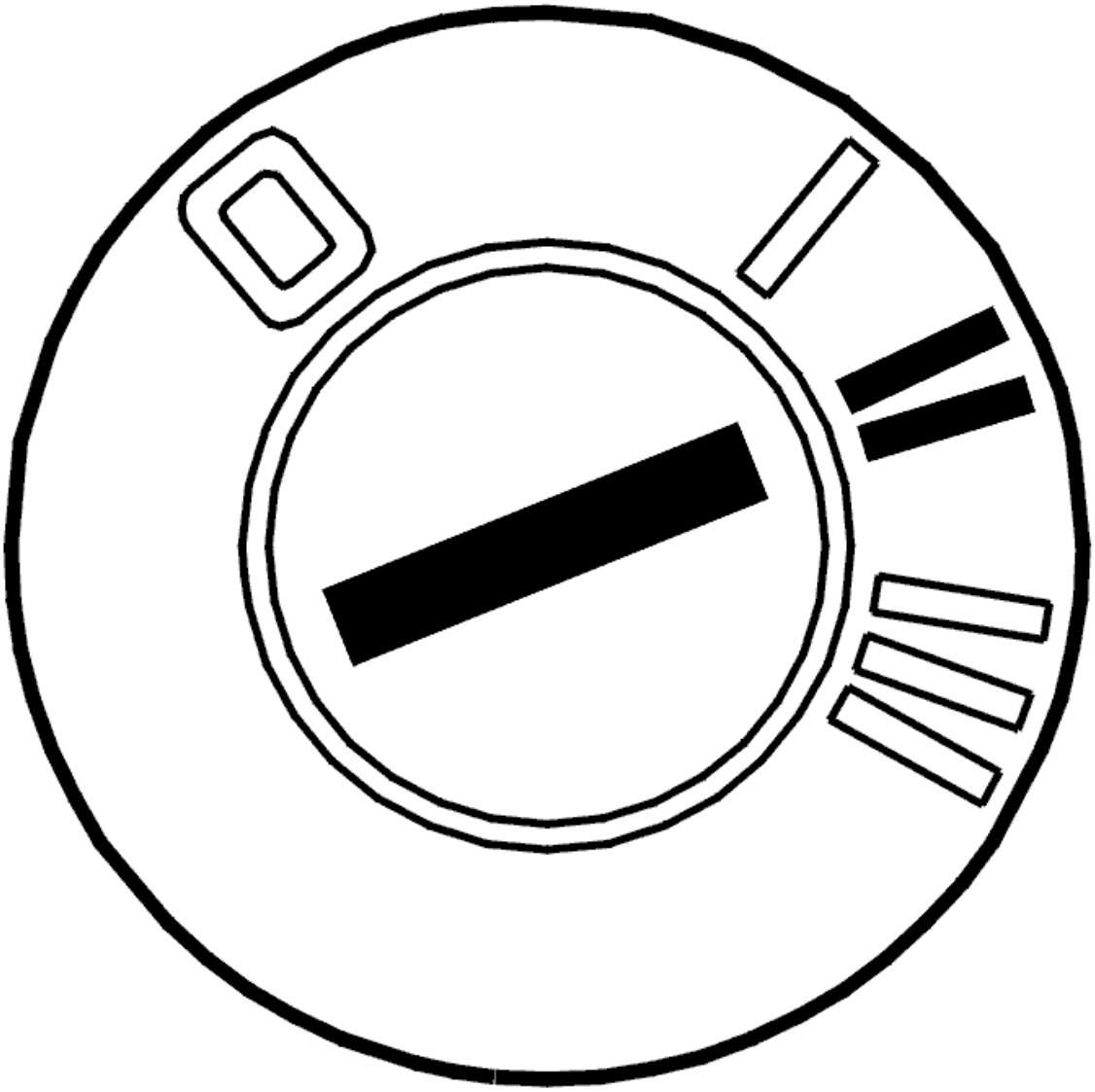

Fig. 73: Identifying Ignition ON
Courtesy of VOLVO CARS CORPORATION

- Ignition on
- Use the VCT2000 (or appropriate scan tool) to read off the programmed values.

  The retained values are programmed customer parameters in the upper electronic module (UEM). The retained values should be noted for later use.

Other information

- For information about programming the customer parameters, see **DIAGNOSTIC FUNCTIONS** .

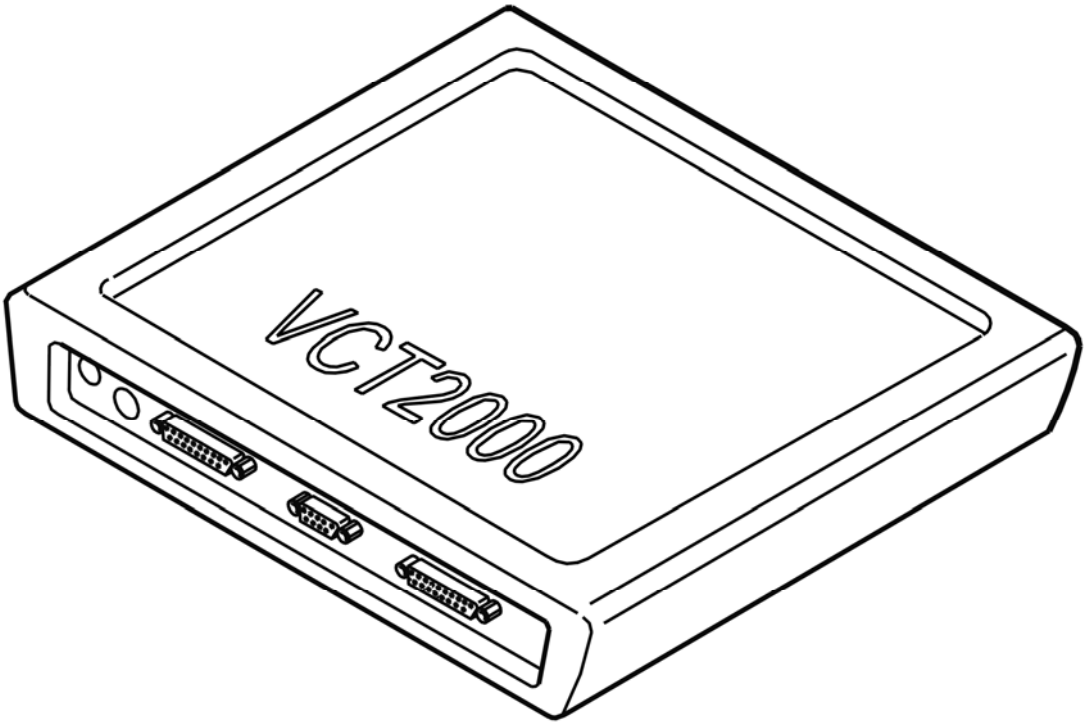

Fig. 74: Identifying VCT2000 Diagnostic Tool Symbol In VIDA
Courtesy of VOLVO CARS CORPORATION

- **Continue**

Refer to **REPLACING CONTROL MODULES AND DOWNLOADING SOFTWARE**

REPLACING CONTROL MODULES AND DOWNLOADING SOFTWARE

CAUTION: A new control module is delivered without software. In order for the control module to function new software must be programmed into the control module after it has been replaced.

Replace the control module and download the new software. See **UPPER ELECTRONIC MODULE (UEM)/REARVIEW MIRROR, REPLACING** .

HINT: When diagnostic trouble code (DTC) E001 is stored, communication with the control module cannot be established. This can be remedied in two ways.

1. Press the remote control button for local lighting

2. Remove fuse 11C/28 from the fusebox in the passenger compartment. Reinstall the fuse again.

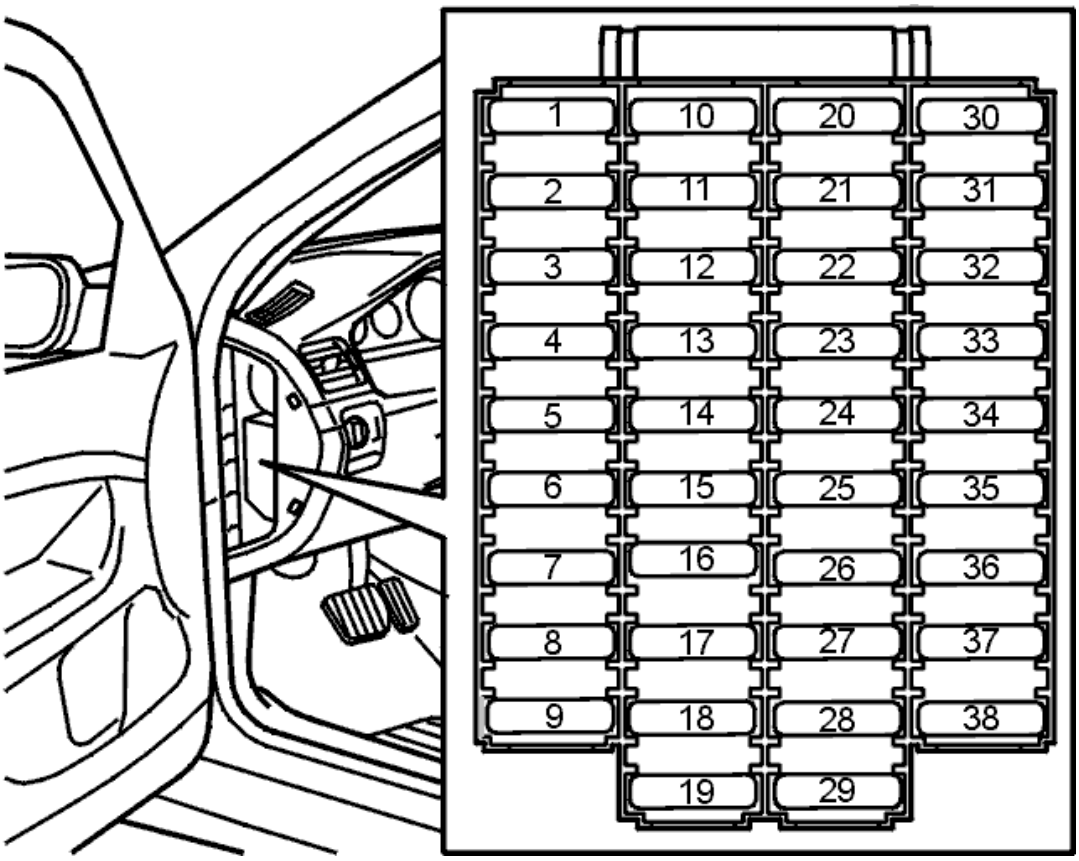

Fig. 75: Fuse Holder (Passenger Compartment)
Courtesy of VOLVO CARS CORPORATION

- **Continue**

  Refer to **CHECKING THE INTERIOR LIGHTING**

CHECKING THE INTERIOR LIGHTING

Two times can be programmed for the interior lighting:

1. **Short**

   The period from when the door is unlocked, or the engine stops, to when the interior lighting goes out can be changed if it is too long or too short.

2. **Long**

   The period from when the door is opened, or a lamp is lit with a switch, to when the lamp goes out can be changed if it is too long or too short.

To program a long interior lighting period, use VIDA (Volvo scan tool).

- **Continue**

  Refer to **PROGRAMMING A SHORT INTERIOR LIGHTING PERIOD**

PROGRAMMING A SHORT INTERIOR LIGHTING PERIOD

The general lighting and rear reading lamps light and remain lit for 30 seconds when:

- The door has been unlocked from outside with a key or the remote control.
- The engine has been stopped and the ignition key turned to 0.

The default period is 30 seconds. This can be changed to between 5 and 255 seconds.

Read off the programmed values.

To change the time, mark the desired value in the scrolling list and start programming.

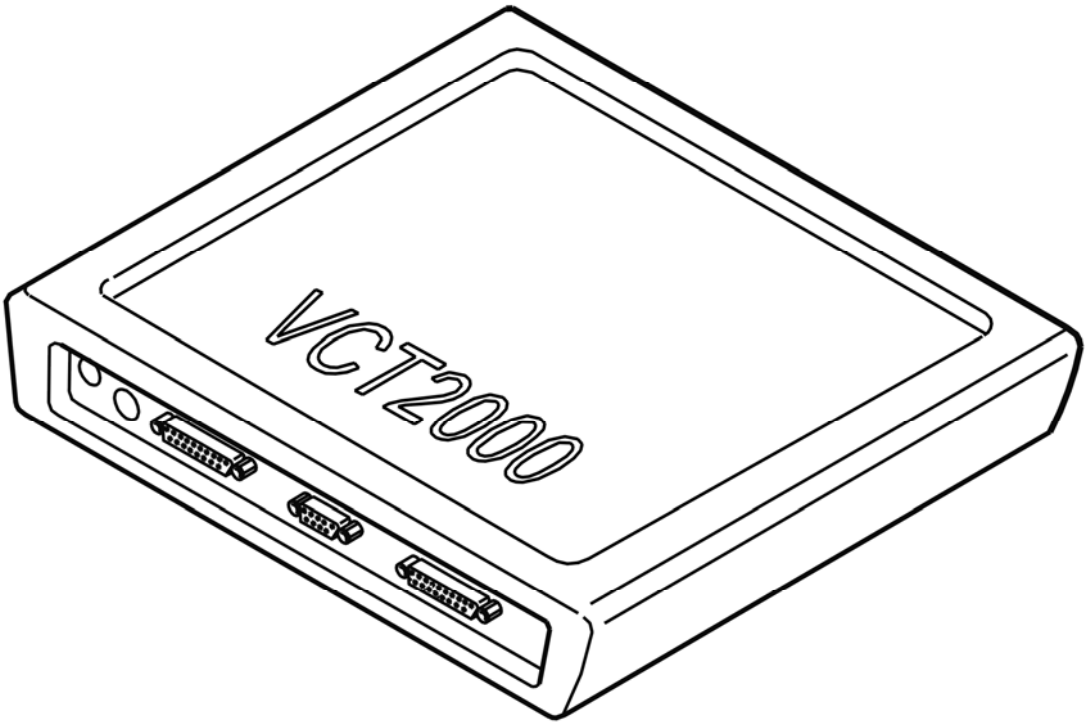

Fig. 76: Identifying VCT2000 Diagnostic Tool Symbol In VIDA
Courtesy of VOLVO CARS CORPORATION

Do you want to program any more parameters?

- **YES**

  Refer to **PROGRAMMING A LONG INTERIOR LIGHTING PERIOD**

- **NO**

  Refer to **CHECKING THE ANTI-DAZZLE FUNCTION IN THE REAR VIEW MIRROR**

PROGRAMMING A LONG INTERIOR LIGHTING PERIOD

The general lighting and rear reading lamps light and remain lit for 10 minutes when:

- A door is opened after being unlocked.
- The lamp is lit with a switch.

The default period is 10 minutes. This can be changed to between 0 and 255 minutes at 10 minute intervals.

Read off the programmed values.

To change the time, mark the desired value in the scrolling list and start programming.

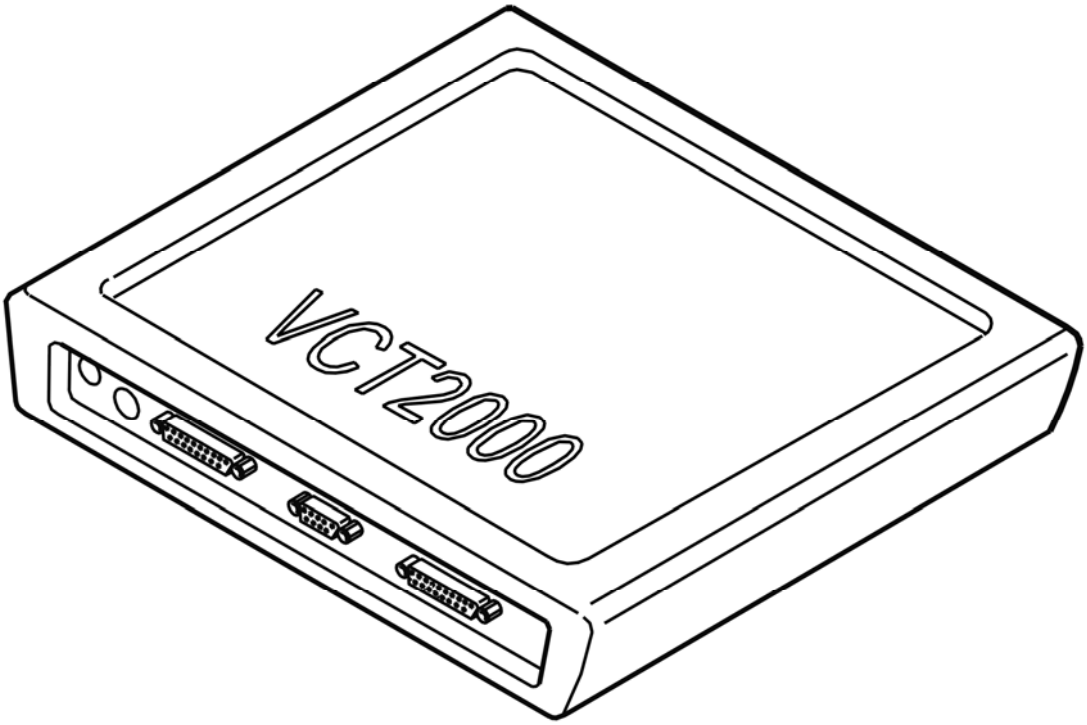

Fig. 77: Identifying VCT2000 Diagnostic Tool Symbol In VIDA
Courtesy of VOLVO CARS CORPORATION

- **Continue**

  Refer to **CHECKING THE ANTI-DAZZLE FUNCTION IN THE REAR VIEW MIRROR**

CHECKING THE ANTI-DAZZLE FUNCTION IN THE REAR VIEW MIRROR

CHECKING THE ANTI-DAZZLE FUNCTION

NOTE: If the upper electronic module (UEM) has been replaced software, specially developed for downloading after replacing the control module, must be downloaded to the control module before the anti-dazzle function is changed. See UPPER ELECTRONIC MODULE (UEM)/REARVIEW MIRROR, REPLACING .

The rear view mirror anti-dazzle function can be adjusted:

- If the rear view mirror anti-dazzle function is too powerful or too weak, it can be adjusted.

Specific software for setting the anti-dazzle function must be installed in the car to do this.

VERIFICATION

HINT: After carrying out the repair, check that the fault has been remedied.

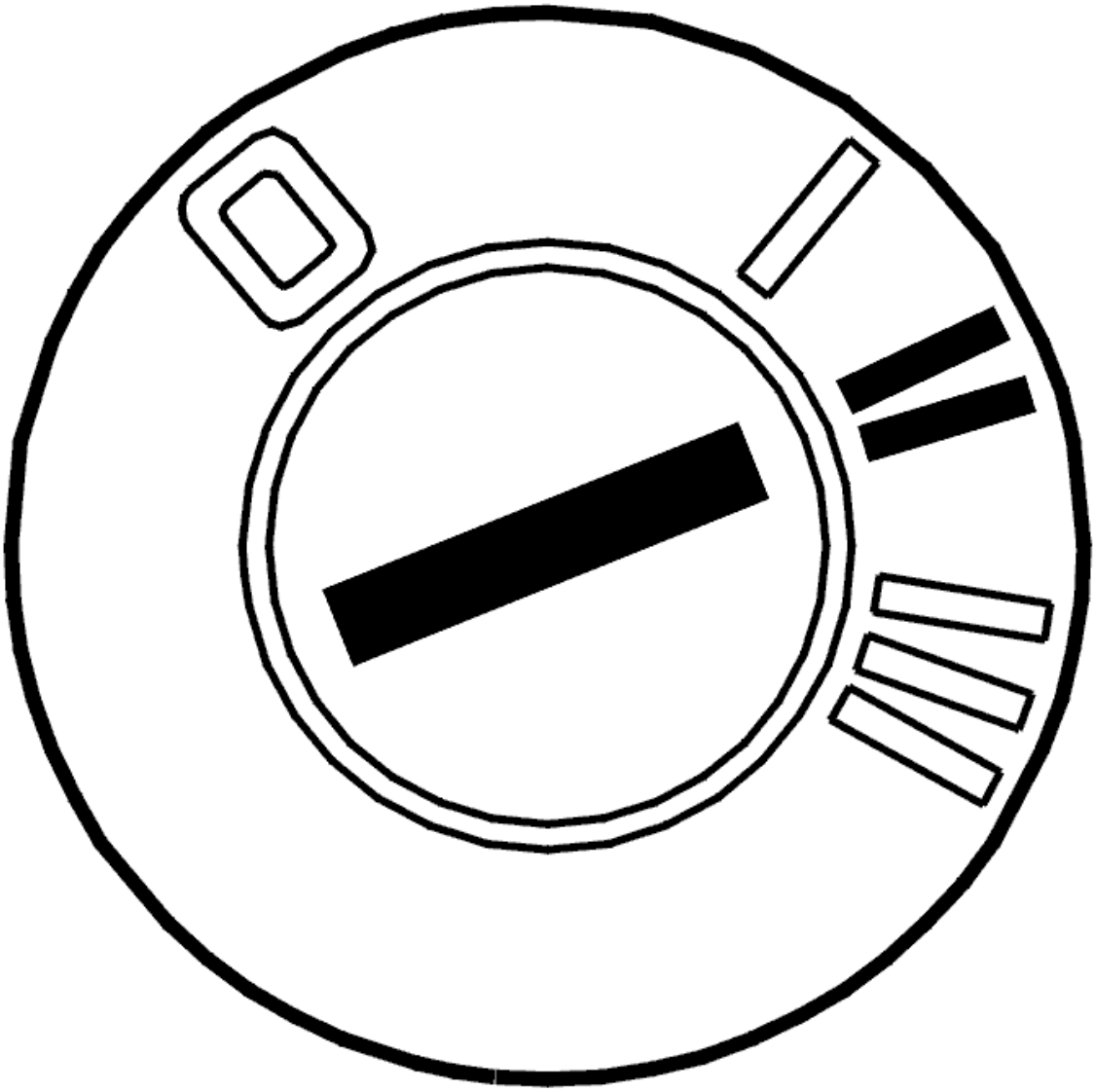

Fig. 78: Identifying Ignition ON
Courtesy of VOLVO CARS CORPORATION

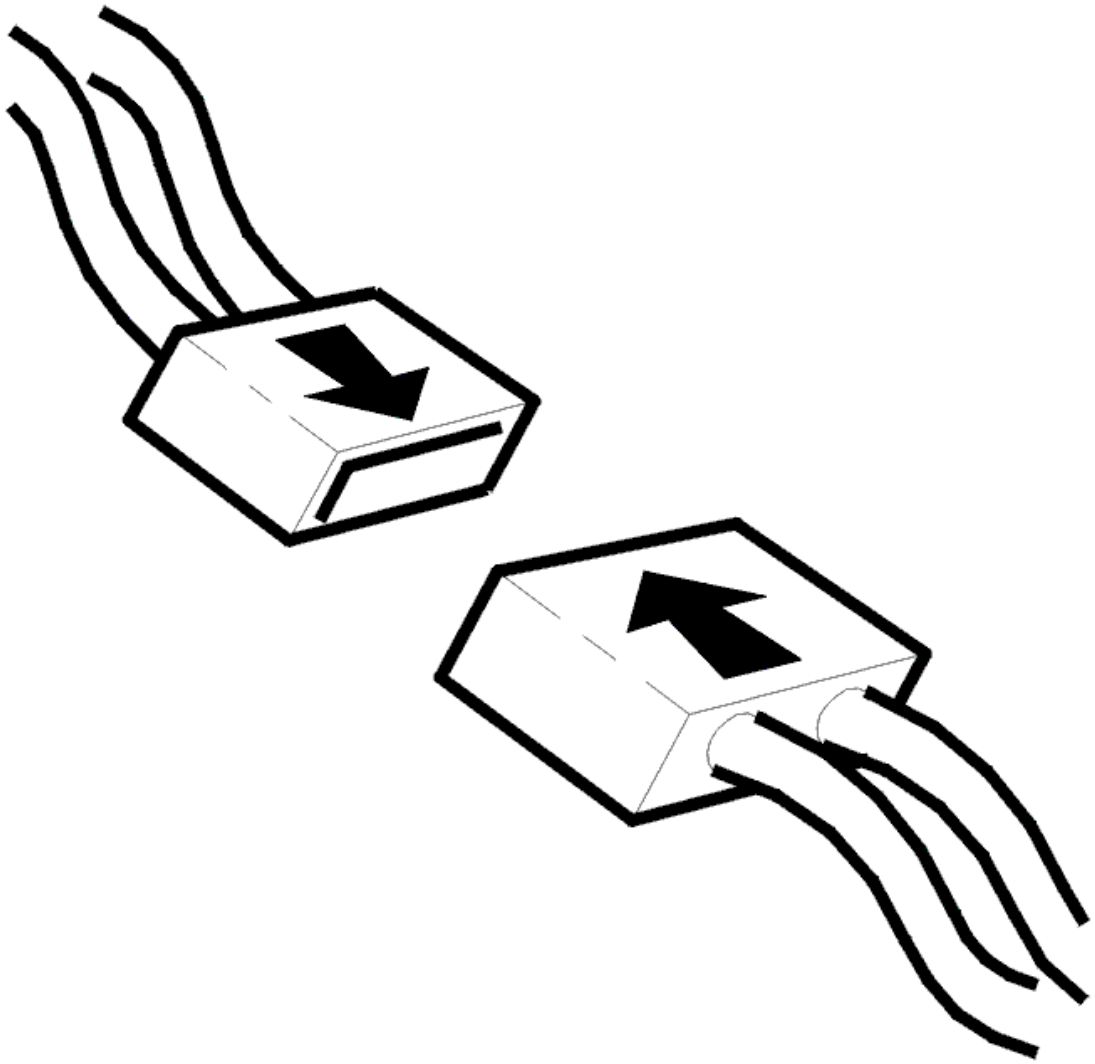

Fig. 79: Connecting Connector
Courtesy of VOLVO CARS CORPORATION

- Ignition off
- Reinstall the connectors, components etc.
- Ignition on.

  Check that the LEDs in the display in the rear view mirror light.

Are the LEDs in the display working?

- **YES**

  VERIFIED: Troubleshooting has been completed.

- **NO**

  Refer to **INFORMATION**

INFORMATION

FAULT-TRACING INFORMATION

The fault should have been detected and remedied. As this is not the case fault-tracing has failed.

Exit fault-tracing for this diagnostic trouble code (DTC) or make another attempt.

UEM-0093: SEAT BELT REMINDER. FAULTY SIGNAL (2005-12)

DIAGNOSTIC TROUBLE CODE (DTC) INFORMATION UEM-0093

Condition

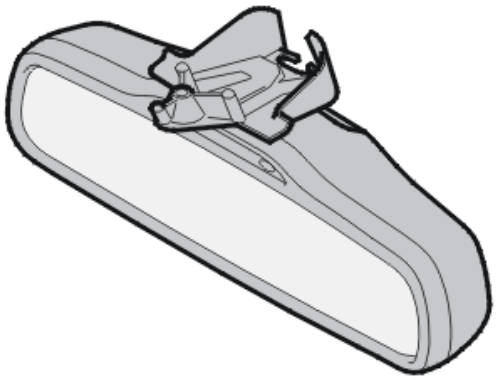

Fig. 80: Identifying Rear View Mirror
Courtesy of VOLVO CARS CORPORATION

The upper electronic module (UEM) receives information via the controller area network (CAN) indicating whether the seat belt reminder lamp should be on or off. The diagnostic trouble code (DTC) is stored if the upper electronic module (UEM) is notified that there is a short-circuit to ground or open-circuit in the power supply for the seat belt reminder lamp when it should be lit.

The diagnostic trouble code (DTC) can be diagnosed when the ignition is switched on.

Substitute Value

- None.

Possible Source

- Defective upper electronic module (UEM) (internal fault).

Fault symptom[s]

- The seat belt lamp does not light.

FAULTY SIGNAL

REPLACING CONTROL MODULE AND PROGRAMMING

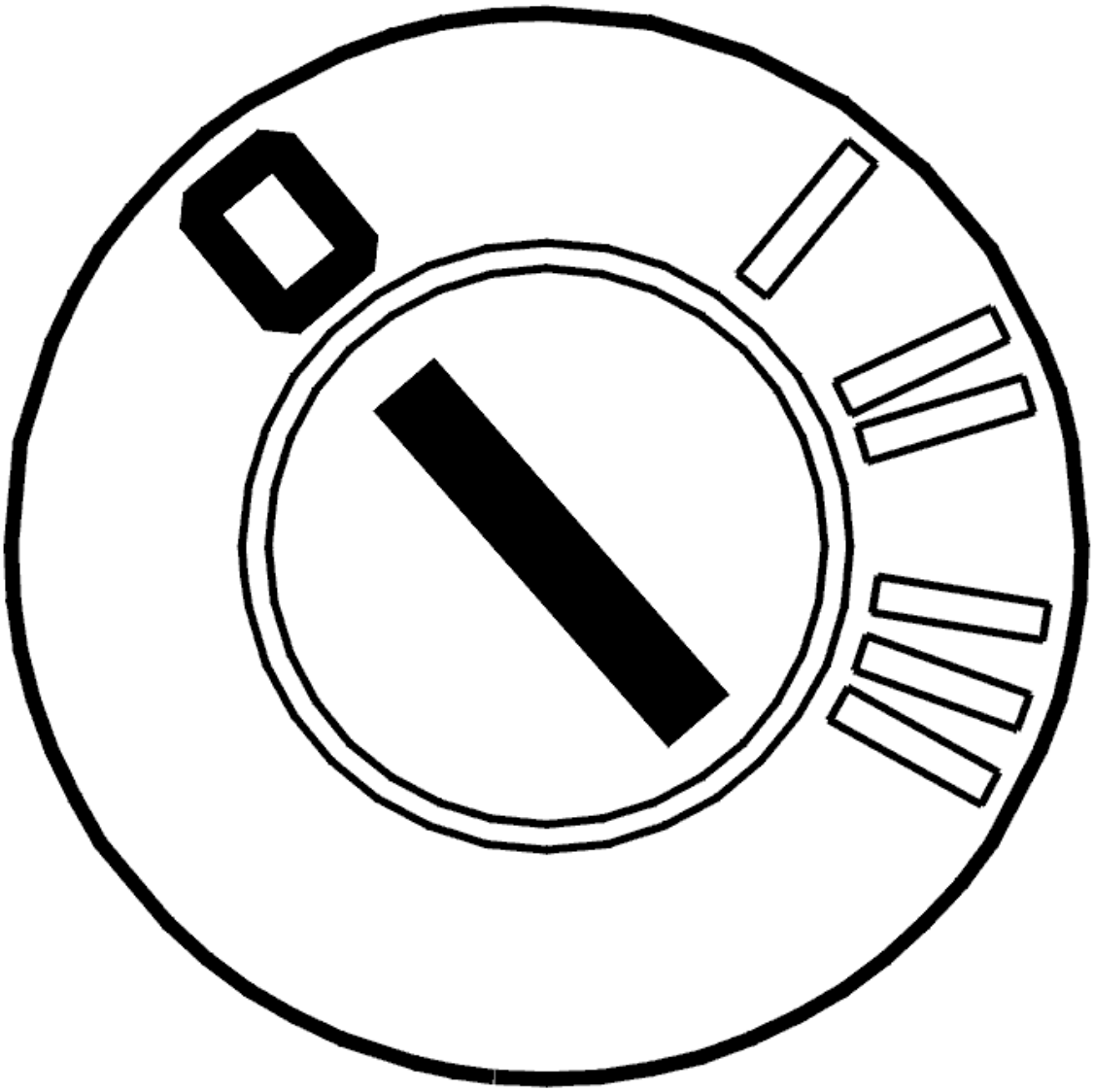

Fig. 81: Identifying Ignition OFF
Courtesy of VOLVO CARS CORPORATION

- Ignition off.

  The LED for the seat belt reminder is mounted internally in the rear view mirror and cannot be replaced. Check there are no indications that the power supply to the upper electronic module (UEM) is faulty. Check that the fault in the LED remains after the power is switched off and on again. If the fault remains,

the upper electronic module (UEM) must be replaced.

NOTE: **If possible, read off the programmed data from the control module before it is replaced. This should be done as this information is not stored in Volvo's central database. Switch off the ignition before replacing the control module.**

- **Continue**

Refer to **REPLACING THE CONTROL MODULE**

REPLACING THE CONTROL MODULE

READING OFF THE PROGRAMMED VALUES

NOTE: **Read off the programmed values from the upper electronic module (UEM) before replacing the control module.**

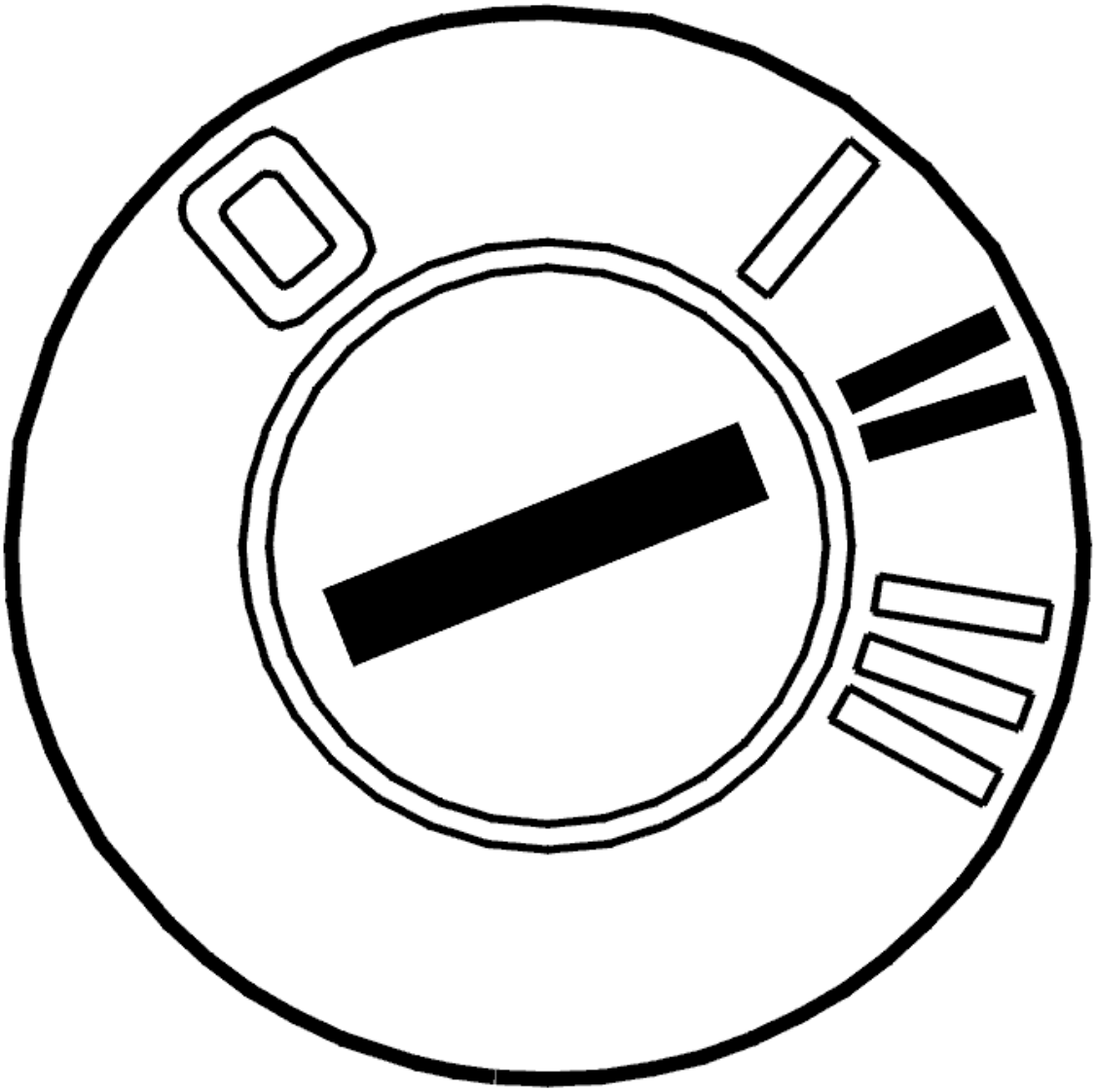

Fig. 82: Identifying Ignition ON
Courtesy of VOLVO CARS CORPORATION

- Ignition on
- Use the VCT2000 (or appropriate scan tool) to read off the programmed values.

  The retained values are programmed customer parameters in the upper electronic module (UEM). The retained values should be noted for later use.

  Other information

  - For information about programming the customer parameters, see **DIAGNOSTIC FUNCTIONS** .

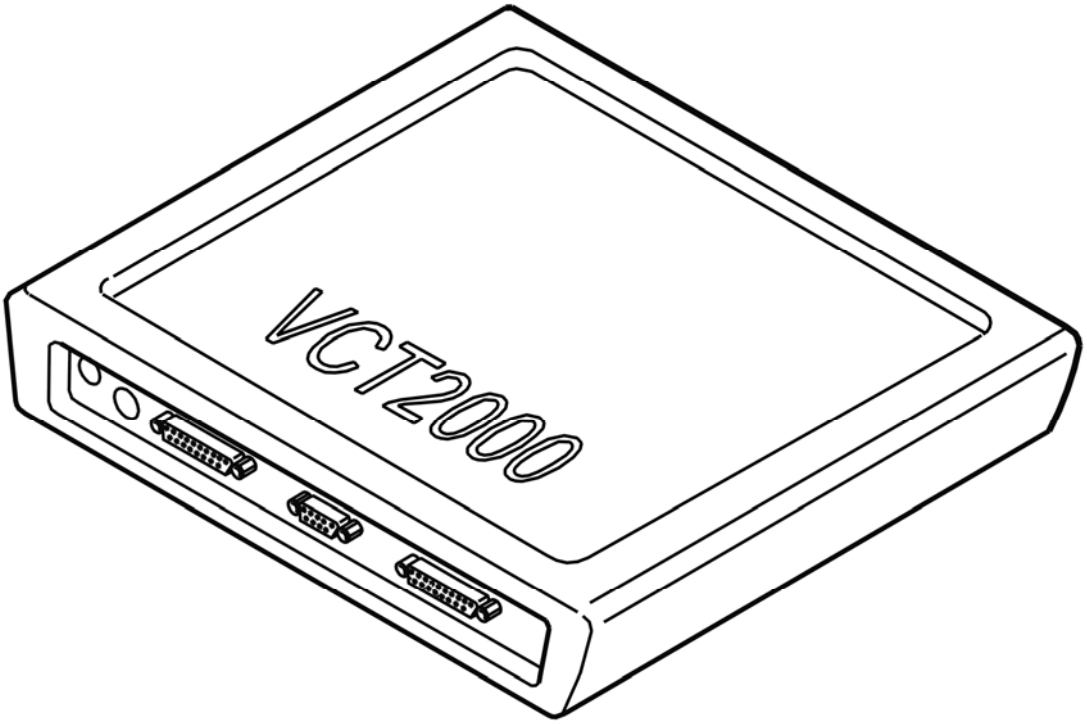

Fig. 83: Identifying VCT2000 Diagnostic Tool Symbol In VIDA
Courtesy of VOLVO CARS CORPORATION

- **Continue**

Refer to **REPLACING CONTROL MODULES AND DOWNLOADING SOFTWARE**

REPLACING CONTROL MODULES AND DOWNLOADING SOFTWARE

CAUTION: A new control module is delivered without software. In order for the control module to function new software must be programmed into the control module after it has been replaced.

Replace the control module and download the new software. See **UPPER ELECTRONIC MODULE (UEM)/REARVIEW MIRROR, REPLACING** .

HINT: When diagnostic trouble code (DTC) E001 is stored, communication with the control module cannot be established. This can be remedied in two ways.

1. Press the remote control button for local lighting
2. Remove fuse 11C/28 from the fusebox in the passenger compartment. Reinstall the fuse again.

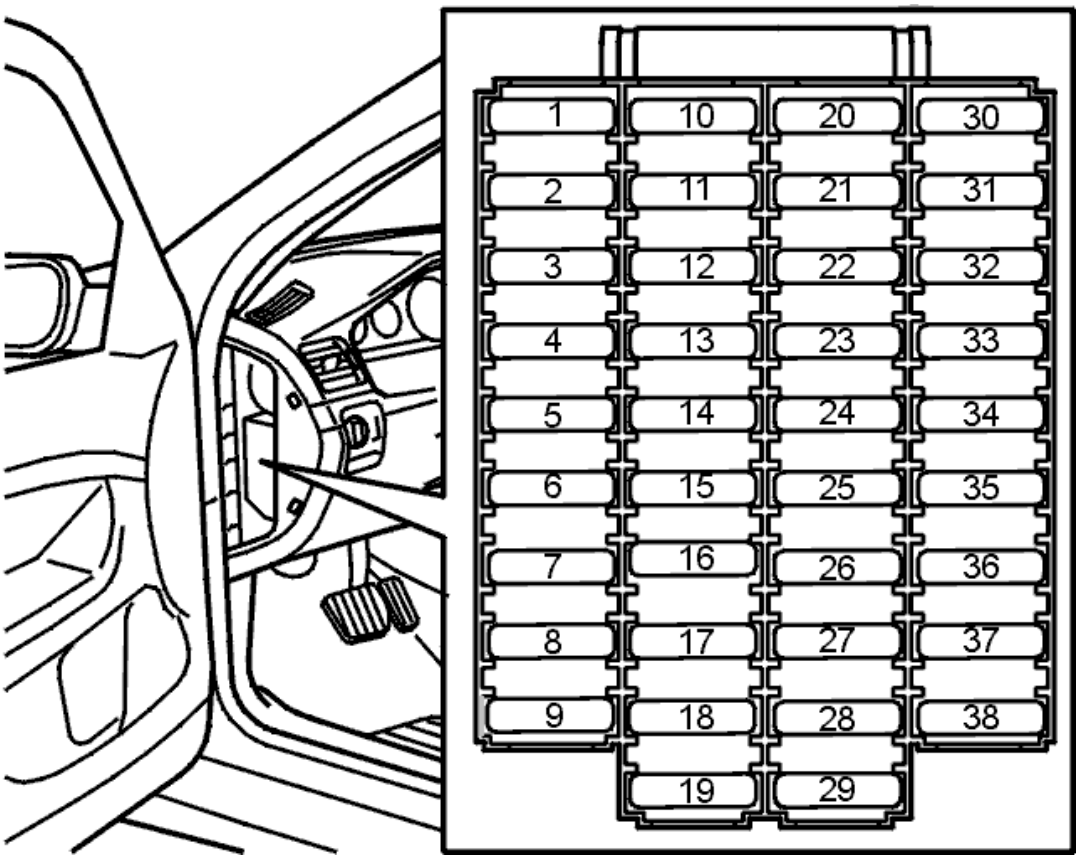

Fig. 84: Fuse Holder (Passenger Compartment)
Courtesy of VOLVO CARS CORPORATION

- **Continue**

  Refer to **CHECKING THE INTERIOR LIGHTING**

CHECKING THE INTERIOR LIGHTING

Two times can be programmed for the interior lighting:

1. **Short**

   The period from when the door is unlocked, or the engine stops, to when the interior lighting goes out can be changed if it is too long or too short.

2. **Long**

   The period from when the door is opened, or a lamp is lit with a switch, to when the lamp goes out can be changed if it is too long or too short.

To program a long interior lighting period, use VIDA (Volvo scan tool).

- **Continue**

Refer to **PROGRAMMING A SHORT INTERIOR LIGHTING PERIOD**

PROGRAMMING A SHORT INTERIOR LIGHTING PERIOD

The general lighting and rear reading lamps light and remain lit for 30 seconds when:

- The door has been unlocked from outside with a key or the remote control.
- The engine has been stopped and the ignition key turned to 0.

The default period is 30 seconds. This can be changed to between 5 and 255 seconds.

Read off the programmed values.

To change the time, mark the desired value in the scrolling list and start programming.

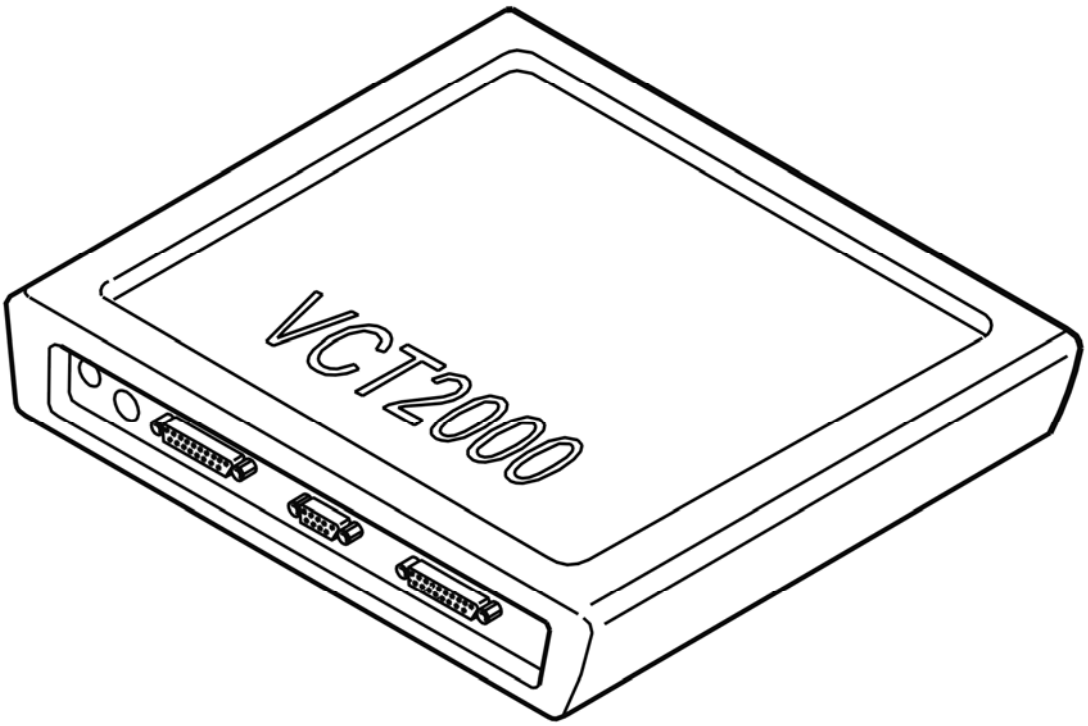

Fig. 85: Identifying VCT2000 Diagnostic Tool Symbol In VIDA
Courtesy of VOLVO CARS CORPORATION

Do you want to program any more parameters?

- **YES**

  Refer to **PROGRAMMING A LONG INTERIOR LIGHTING PERIOD**

- **NO**

  Refer to **CHECKING THE ANTI-DAZZLE FUNCTION IN THE REAR VIEW MIRROR**

PROGRAMMING A LONG INTERIOR LIGHTING PERIOD

The general lighting and rear reading lamps light and remain lit for 10 minutes when:

- A door is opened after being unlocked.
- The lamp is lit with a switch.

The default period is 10 minutes. This can be changed to between 0 and 255 minutes at 10 minute intervals.

Read off the programmed values.

To change the time, mark the desired value in the scrolling list and start programming.

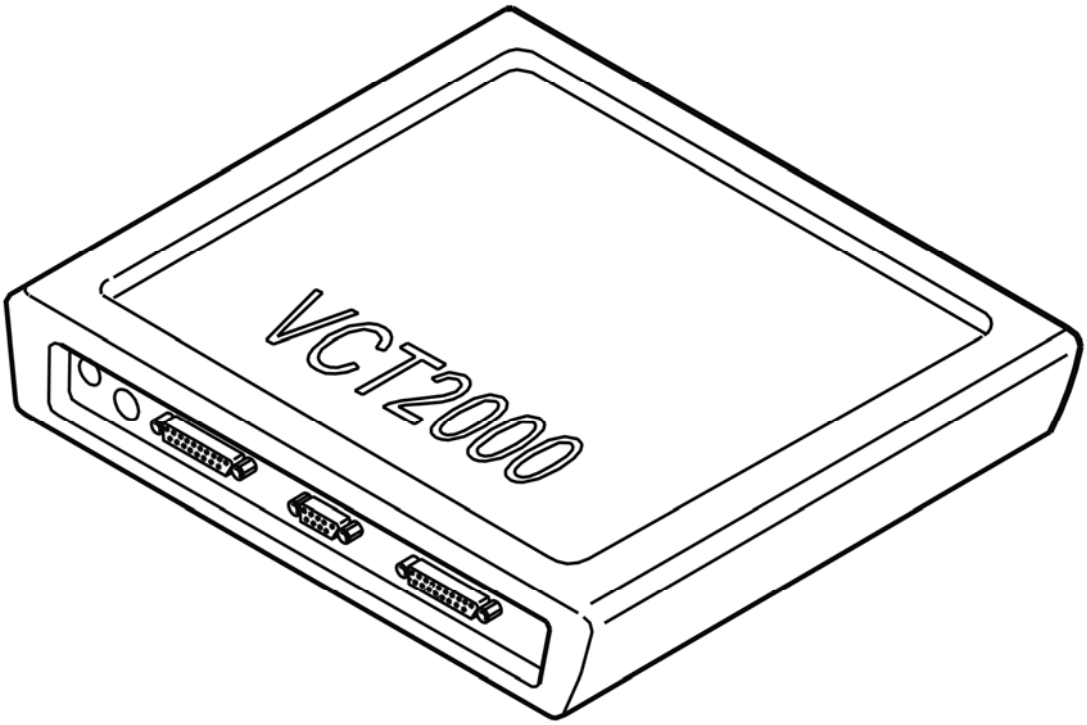

Fig. 86: Identifying VCT2000 Diagnostic Tool Symbol In VIDA
Courtesy of VOLVO CARS CORPORATION

- **Continue**

  Refer to **CHECKING THE ANTI-DAZZLE FUNCTION IN THE REAR VIEW MIRROR**

CHECKING THE ANTI-DAZZLE FUNCTION IN THE REAR VIEW MIRROR

CHECKING THE ANTI-DAZZLE FUNCTION

NOTE: **If the upper electronic module (UEM) has been replaced software, specially developed for downloading after replacing the control module, must be downloaded to the control module before the anti-dazzle function is changed. See UPPER ELECTRONIC MODULE (UEM)/REARVIEW MIRROR, REPLACING .**

The rear view mirror anti-dazzle function can be adjusted:

- If the rear view mirror anti-dazzle function is too powerful or too weak, it can be adjusted.

Specific software for setting the anti-dazzle function must be installed in the car to do this.

VERIFICATION

HINT: After carrying out the repair, check that the fault has been remedied.

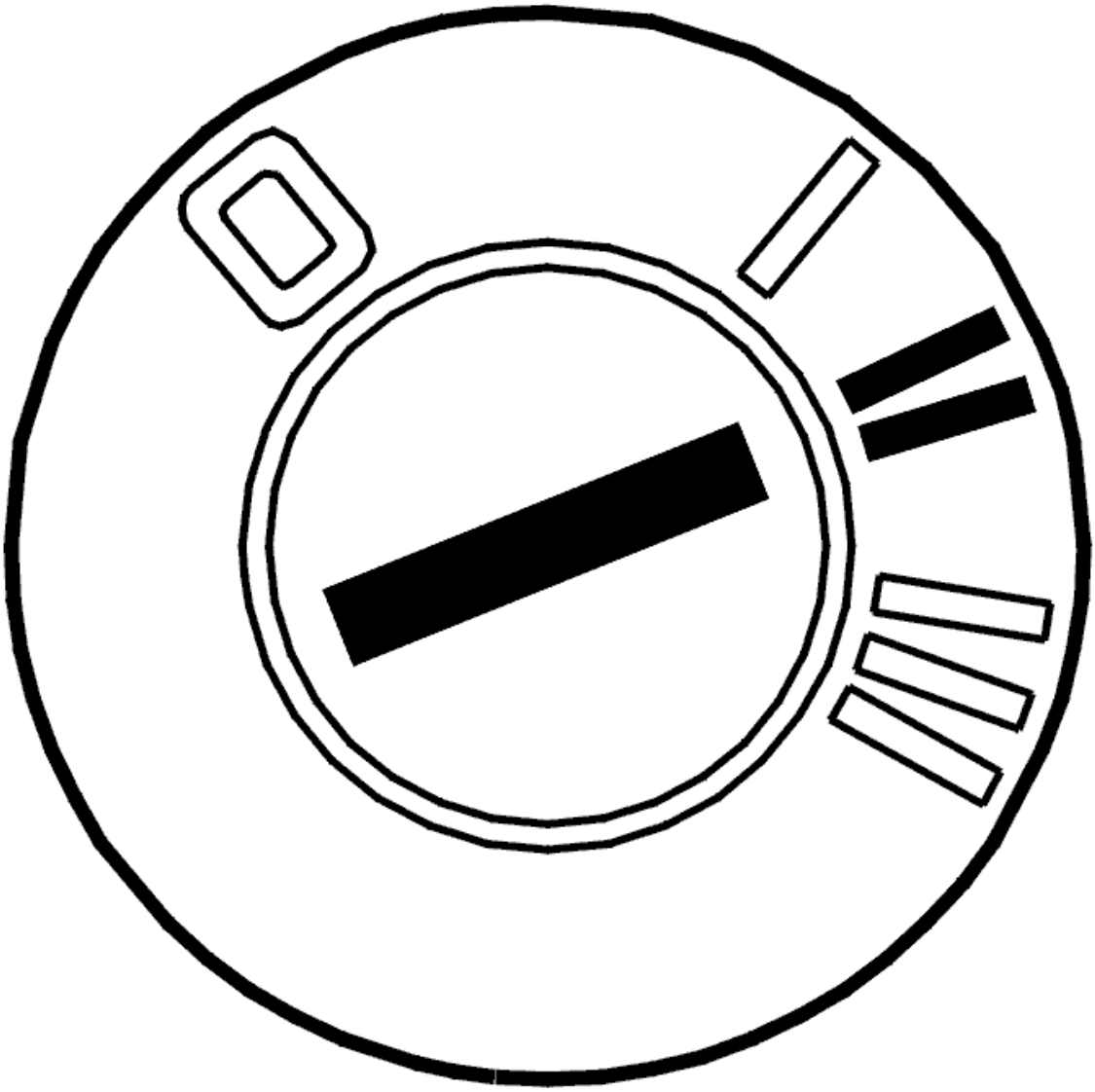

Fig. 87: Identifying Ignition ON
Courtesy of VOLVO CARS CORPORATION

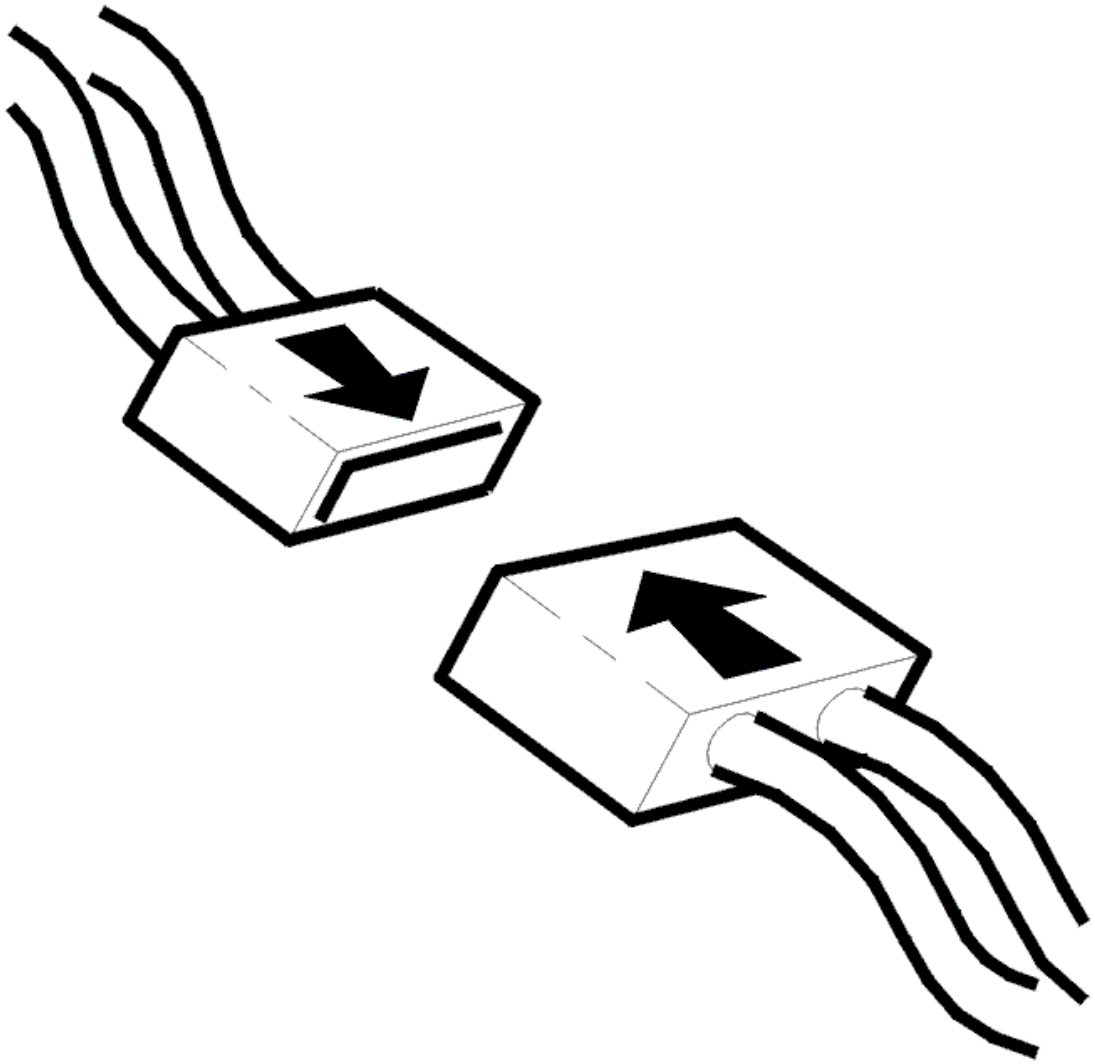

Fig. 88: Connecting Connector
Courtesy of VOLVO CARS CORPORATION

- Ignition off
- Reinstall the connectors, components etc.
- Ignition on.

  Check that the LEDs in the display in the rear view mirror light.

Are the LEDs in the display working?

- **YES**

  VERIFIED: Troubleshooting has been completed.

- **NO**

  Refer to **INFORMATION**

INFORMATION

FAULT-TRACING INFORMATION

The fault should have been detected and remedied. As this is not the case fault-tracing has failed.

Exit fault-tracing for this diagnostic trouble code (DTC) or make another attempt.

UEM-0094: SEAT BELT REMINDER. SIGNAL TOO HIGH (2005-12)

DIAGNOSTIC TROUBLE CODE (DTC) INFORMATION UEM-0094

Condition

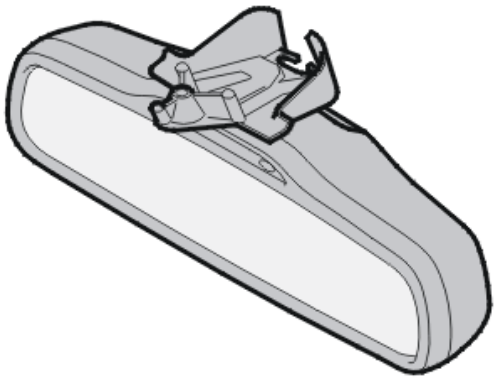

Fig. 89: Identifying Rear View Mirror
Courtesy of VOLVO CARS CORPORATION

The upper electronic module (UEM) receives information via the controller area network (CAN) indicating whether the seat belt reminder lamp should be on or off. The diagnostic trouble code (DTC) is stored if the upper electronic module (UEM) receives an indication that the seat belt reminder lamp should not be lit but the lamp is lit anyway.

The diagnostic trouble code (DTC) can be diagnosed when the ignition is switched on.

Substitute Value

- None.

Possible Source

- Defective upper electronic module (UEM) (internal fault).

Fault symptom[s]

- The seat belt reminder lamp is constantly on.
- The seat belt reminder lamp shines weakly

SIGNAL TOO HIGH

REPLACING CONTROL MODULE AND PROGRAMMING

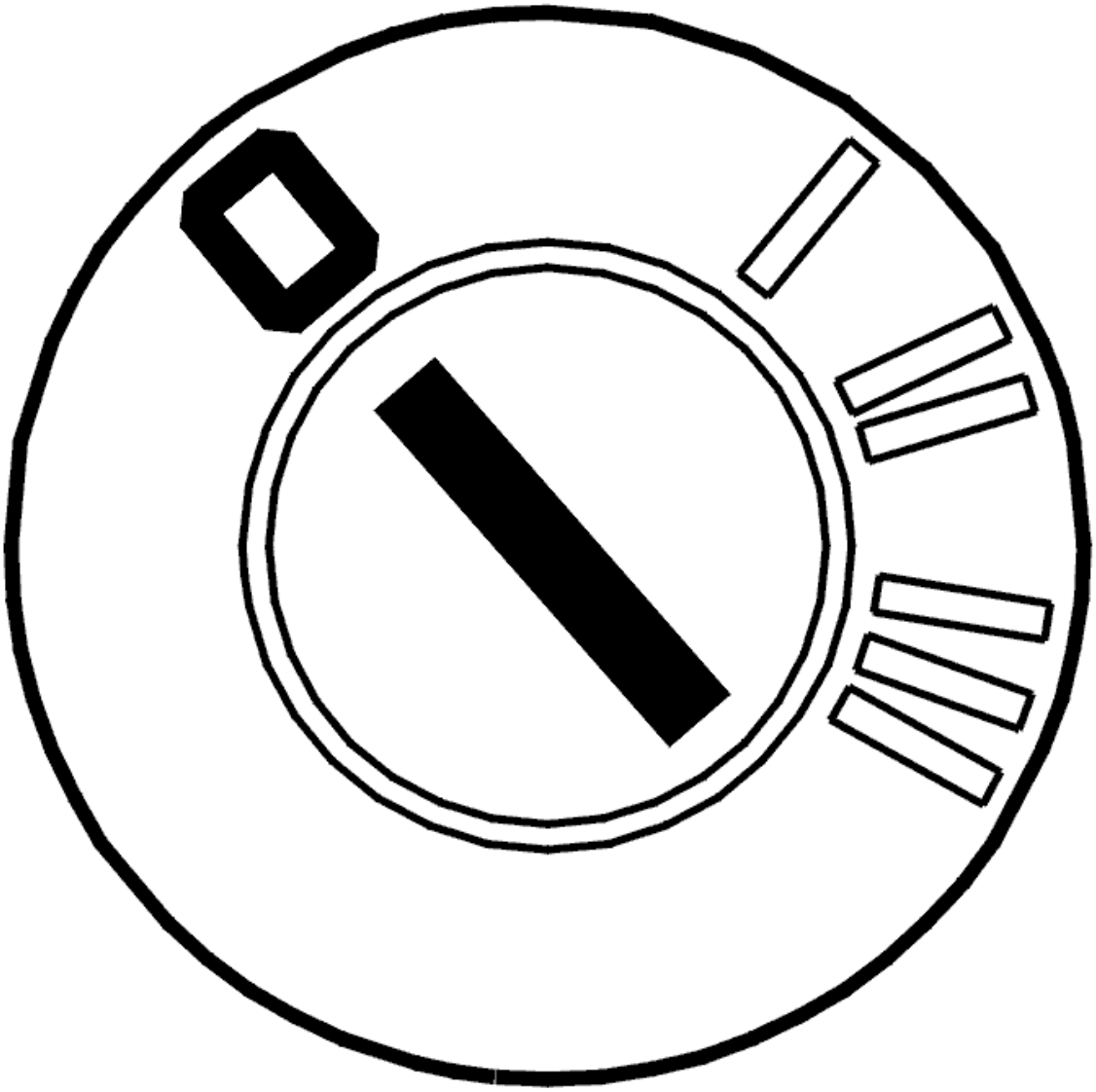

Fig. 90: Identifying Ignition OFF
Courtesy of VOLVO CARS CORPORATION

- Ignition off.

  The LED for the seat belt reminder is mounted internally in the rear view mirror and cannot be replaced. Check there are no indications that the power supply to the upper electronic module (UEM) is faulty.

Check that the fault in the LED remains after the power is switched off and on again. If the fault remains, the upper electronic module (UEM) must be replaced.

NOTE: **If possible, read off the programmed data from the control module before it is replaced. This should be done as this information is not stored in Volvo's central database. Switch off the ignition before replacing the control module.**

- **Continue**

Refer to **REPLACING THE CONTROL MODULE**

REPLACING THE CONTROL MODULE

READING OFF THE PROGRAMMED VALUES

NOTE: **Read off the programmed values from the upper electronic module (UEM) before replacing the control module.**

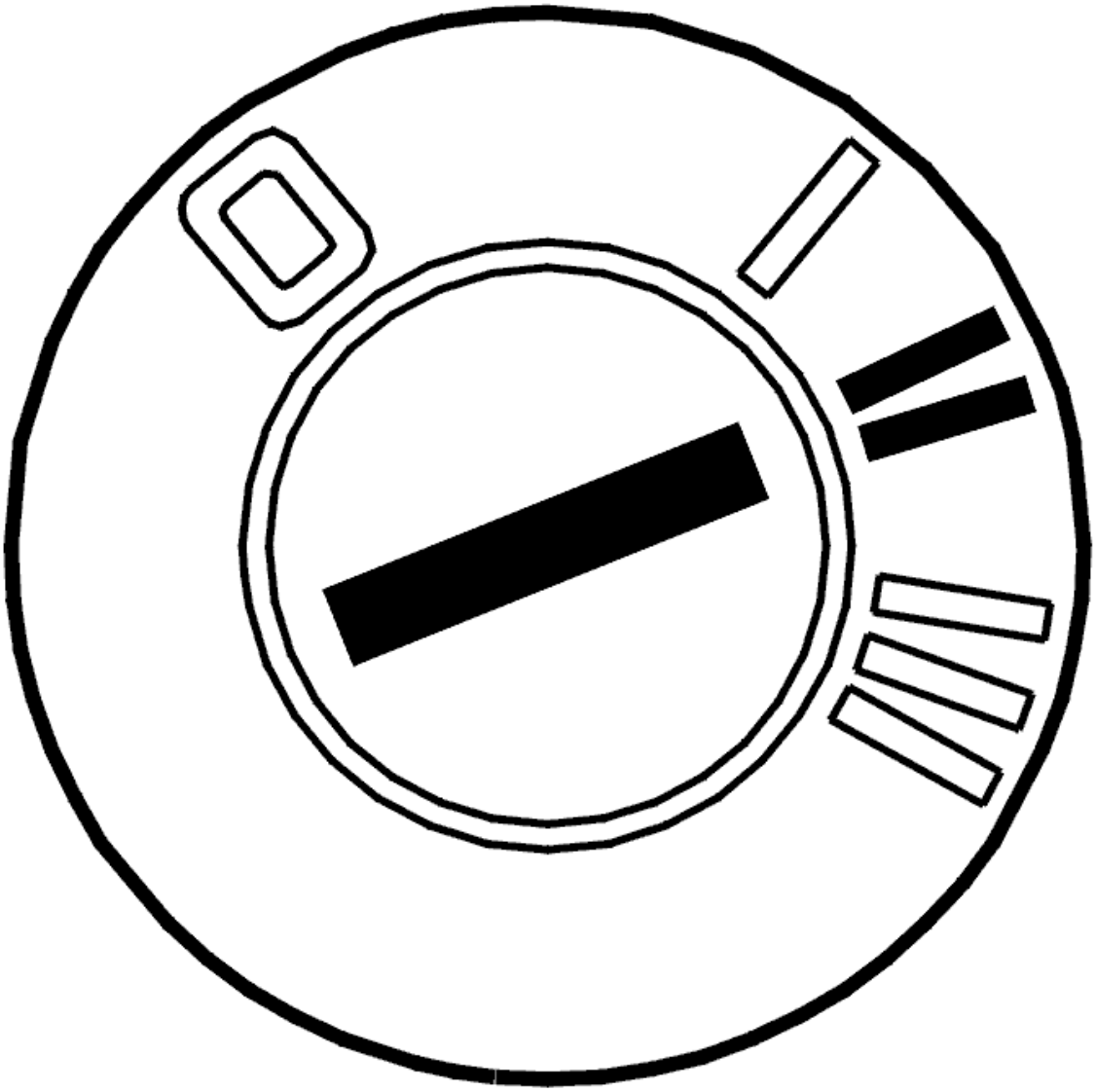

Fig. 91: Identifying Ignition ON
Courtesy of VOLVO CARS CORPORATION

- Ignition on
- Use the VCT2000 (or appropriate scan tool) to read off the programmed values.

  The retained values are programmed customer parameters in the upper electronic module (UEM). The retained values should be noted for later use.

  Other information

  - For information about programming the customer parameters, see **DIAGNOSTIC FUNCTIONS** .

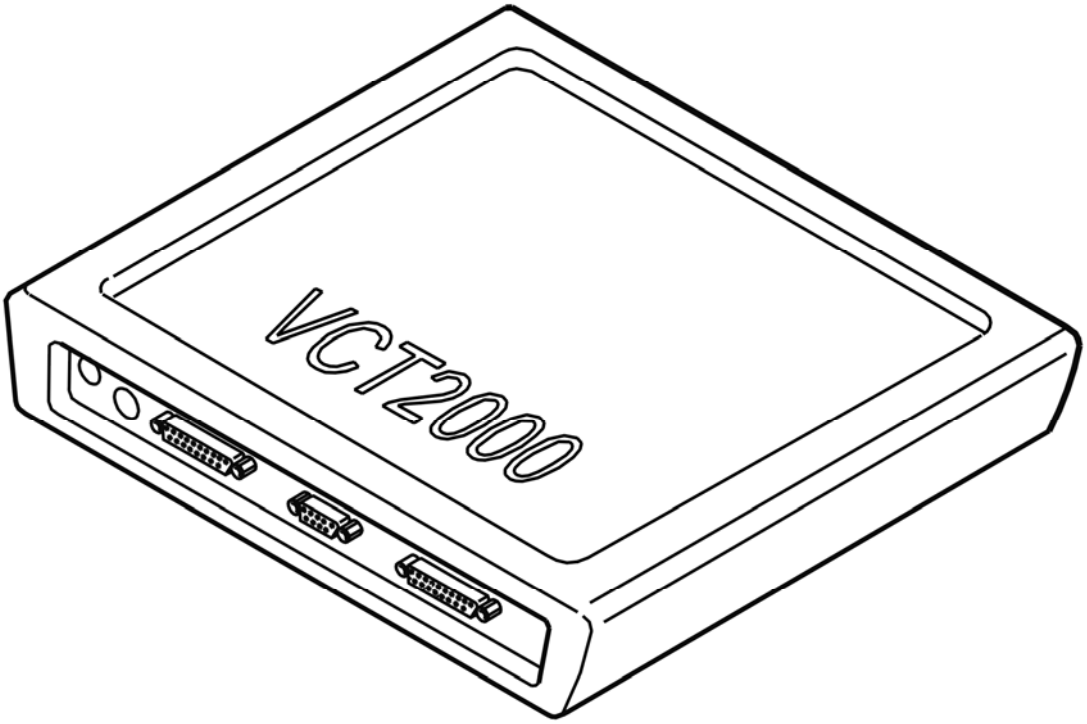

Fig. 92: Identifying VCT2000 Diagnostic Tool Symbol In VIDA
Courtesy of VOLVO CARS CORPORATION

- **Continue**

Refer to **REPLACING CONTROL MODULES AND DOWNLOADING SOFTWARE**

REPLACING CONTROL MODULES AND DOWNLOADING SOFTWARE

CAUTION: A new control module is delivered without software. In order for the control module to function new software must be programmed into the control module after it has been replaced.

Replace the control module and download the new software. See **UPPER ELECTRONIC MODULE (UEM)/REARVIEW MIRROR, REPLACING** .

HINT: When diagnostic trouble code (DTC) E001 is stored, communication with the control module cannot be established. This can be remedied in two ways.

1. Press the remote control button for local lighting
2. Remove fuse 11C/28 from the fusebox in the passenger compartment. Reinstall the fuse again.

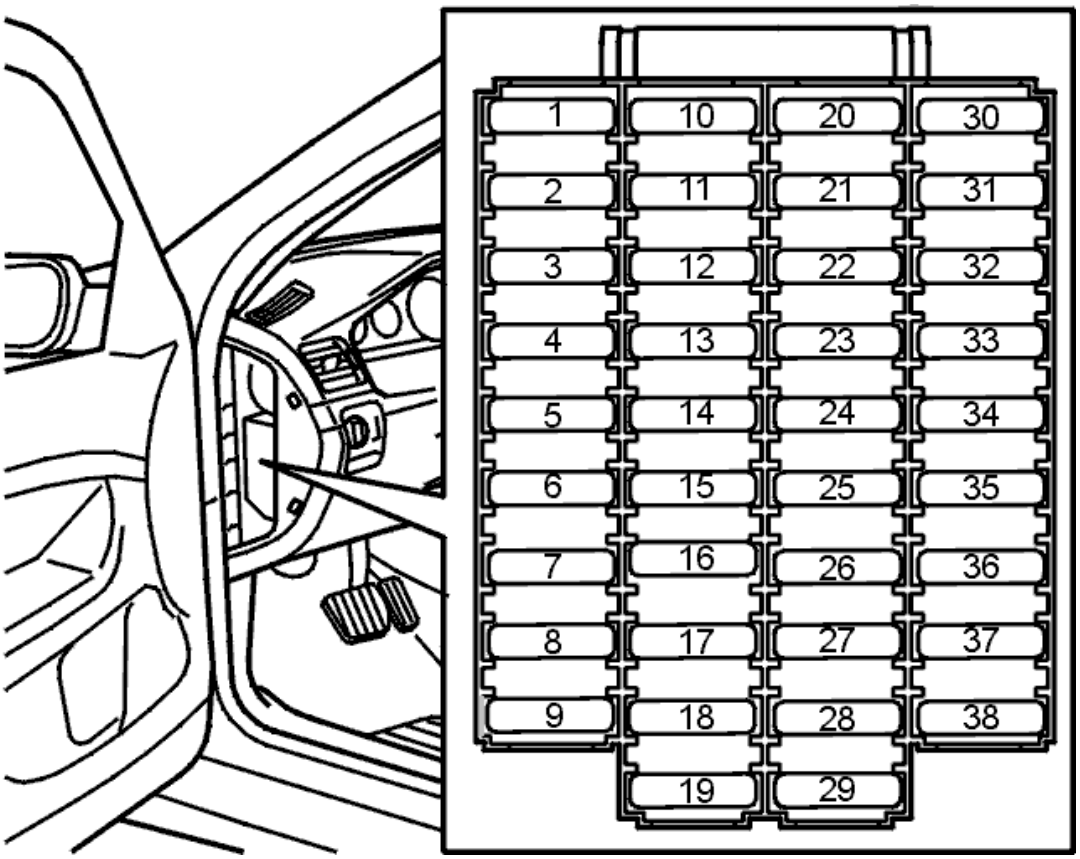

Fig. 93: Fuse Holder (Passenger Compartment)
Courtesy of VOLVO CARS CORPORATION

- **Continue**

  Refer to **CHECKING THE INTERIOR LIGHTING**

CHECKING THE INTERIOR LIGHTING

Two times can be programmed for the interior lighting:

1. **Short**

   The period from when the door is unlocked, or the engine stops, to when the interior lighting goes out can be changed if it is too long or too short.

2. **Long**

   The period from when the door is opened, or a lamp is lit with a switch, to when the lamp goes out can be changed if it is too long or too short.

To program a long interior lighting period, use VIDA (Volvo scan tool).

- **Continue**

Refer to **PROGRAMMING A SHORT INTERIOR LIGHTING PERIOD**

PROGRAMMING A SHORT INTERIOR LIGHTING PERIOD

The general lighting and rear reading lamps light and remain lit for 30 seconds when:

- The door has been unlocked from outside with a key or the remote control.
- The engine has been stopped and the ignition key turned to 0.

The default period is 30 seconds. This can be changed to between 5 and 255 seconds.

Read off the programmed values.

To change the time, mark the desired value in the scrolling list and start programming.

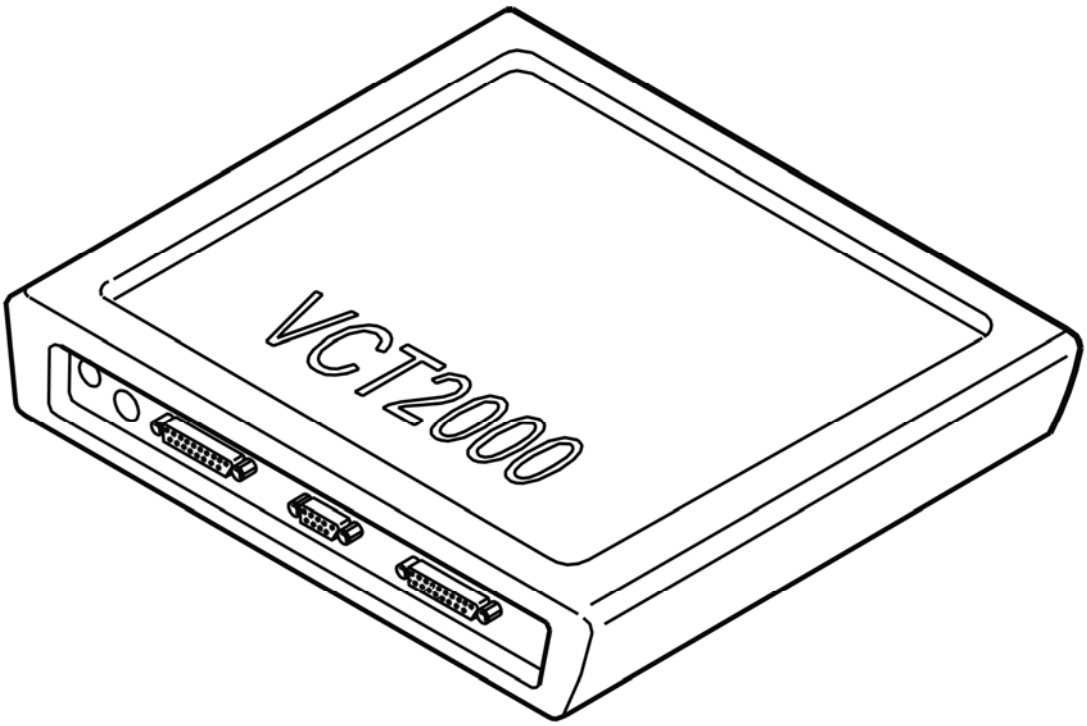

Fig. 94: Identifying VCT2000 Diagnostic Tool Symbol In VIDA
Courtesy of VOLVO CARS CORPORATION

Do you want to program any more parameters?

- **YES**

  Refer to **PROGRAMMING A LONG INTERIOR LIGHTING PERIOD**

- **NO**

  Refer to **CHECKING THE ANTI-DAZZLE FUNCTION IN THE REAR VIEW MIRROR**

PROGRAMMING A LONG INTERIOR LIGHTING PERIOD

The general lighting and rear reading lamps light and remain lit for 10 minutes when:

- A door is opened after being unlocked.
- The lamp is lit with a switch.

The default period is 10 minutes. This can be changed to between 0 and 255 minutes at 10 minute intervals.

Read off the programmed values.

To change the time, mark the desired value in the scrolling list and start programming.

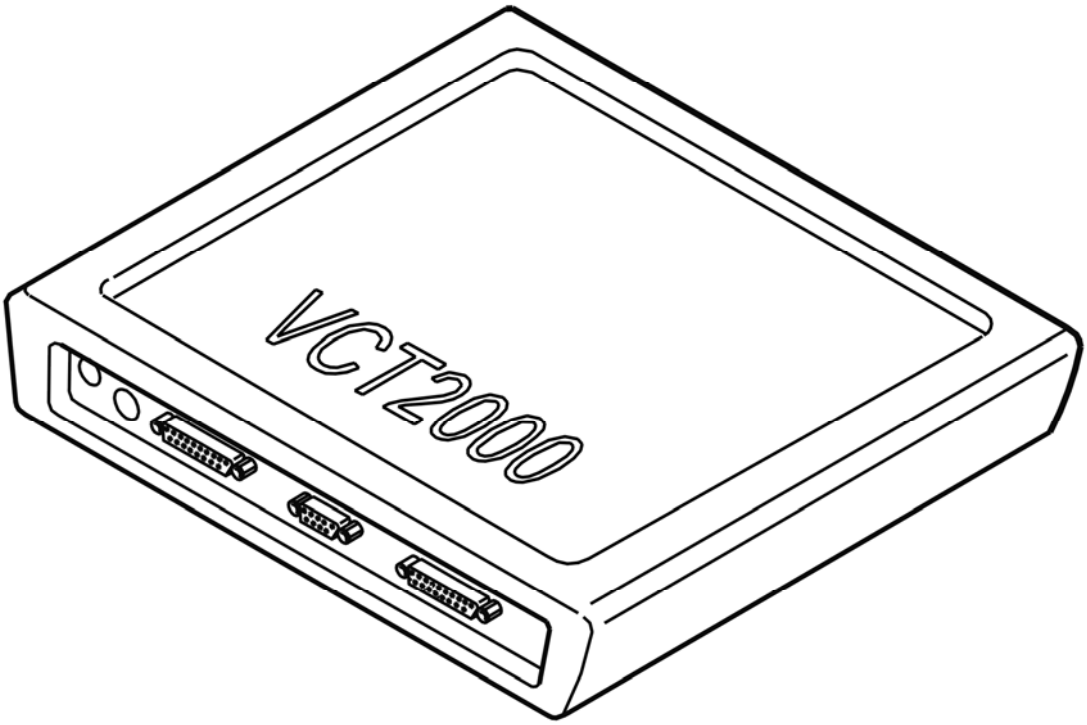

Fig. 95: Identifying VCT2000 Diagnostic Tool Symbol In VIDA
Courtesy of VOLVO CARS CORPORATION

- **Continue**

  Refer to **CHECKING THE ANTI-DAZZLE FUNCTION IN THE REAR VIEW MIRROR**

CHECKING THE ANTI-DAZZLE FUNCTION IN THE REAR VIEW MIRROR

CHECKING THE ANTI-DAZZLE FUNCTION

NOTE: **If the upper electronic module (UEM) has been replaced software, specially developed for downloading after replacing the control module, must be downloaded to the control module before the anti-dazzle function is changed. See UPPER ELECTRONIC MODULE (UEM)/REARVIEW MIRROR, REPLACING .**

The rear view mirror anti-dazzle function can be adjusted:

- If the rear view mirror anti-dazzle function is too powerful or too weak, it can be adjusted.

Specific software for setting the anti-dazzle function must be installed in the car to do this.

VERIFICATION

HINT: After carrying out the repair, check that the fault has been remedied.

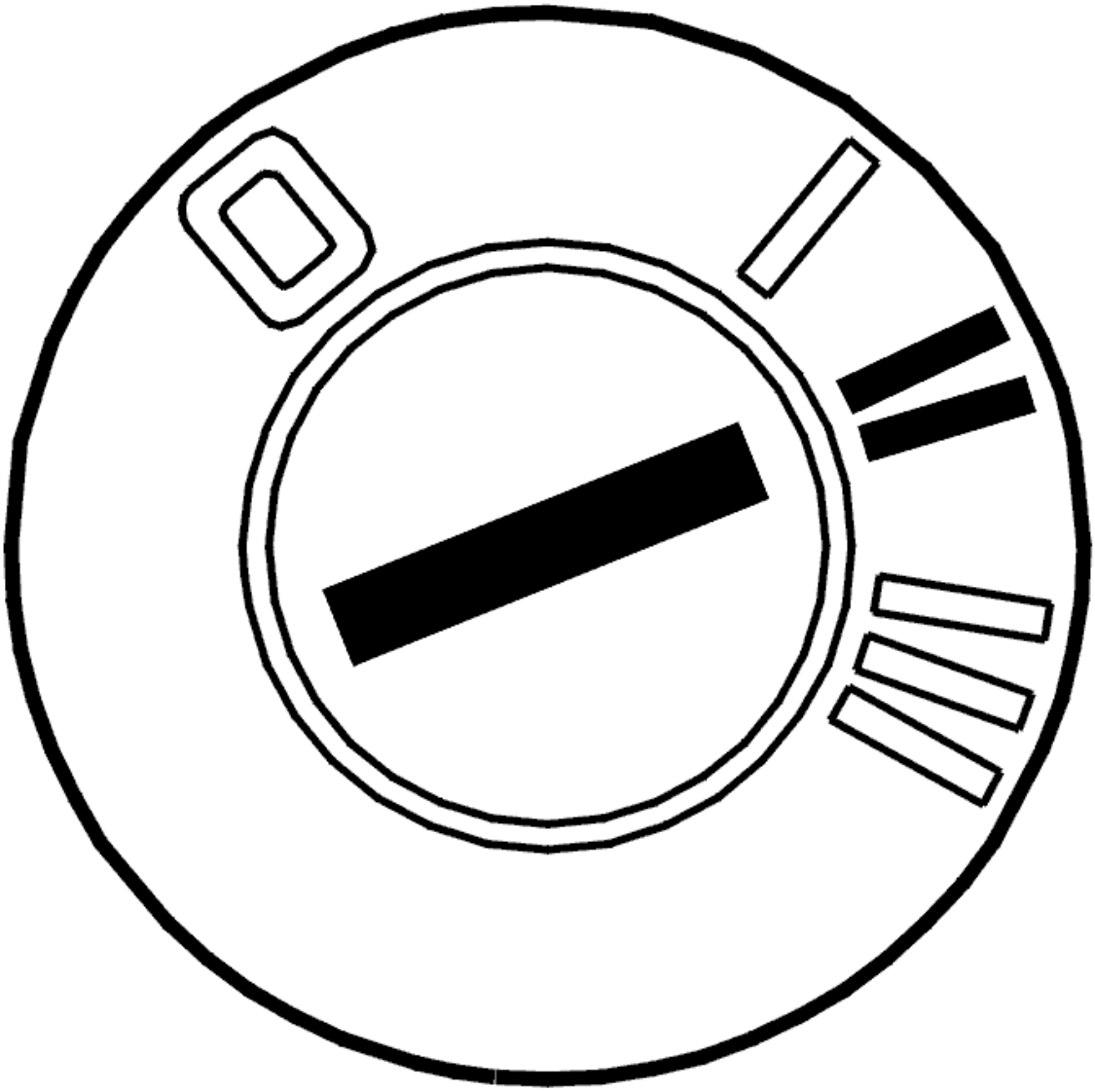

Fig. 96: Identifying Ignition ON
Courtesy of VOLVO CARS CORPORATION

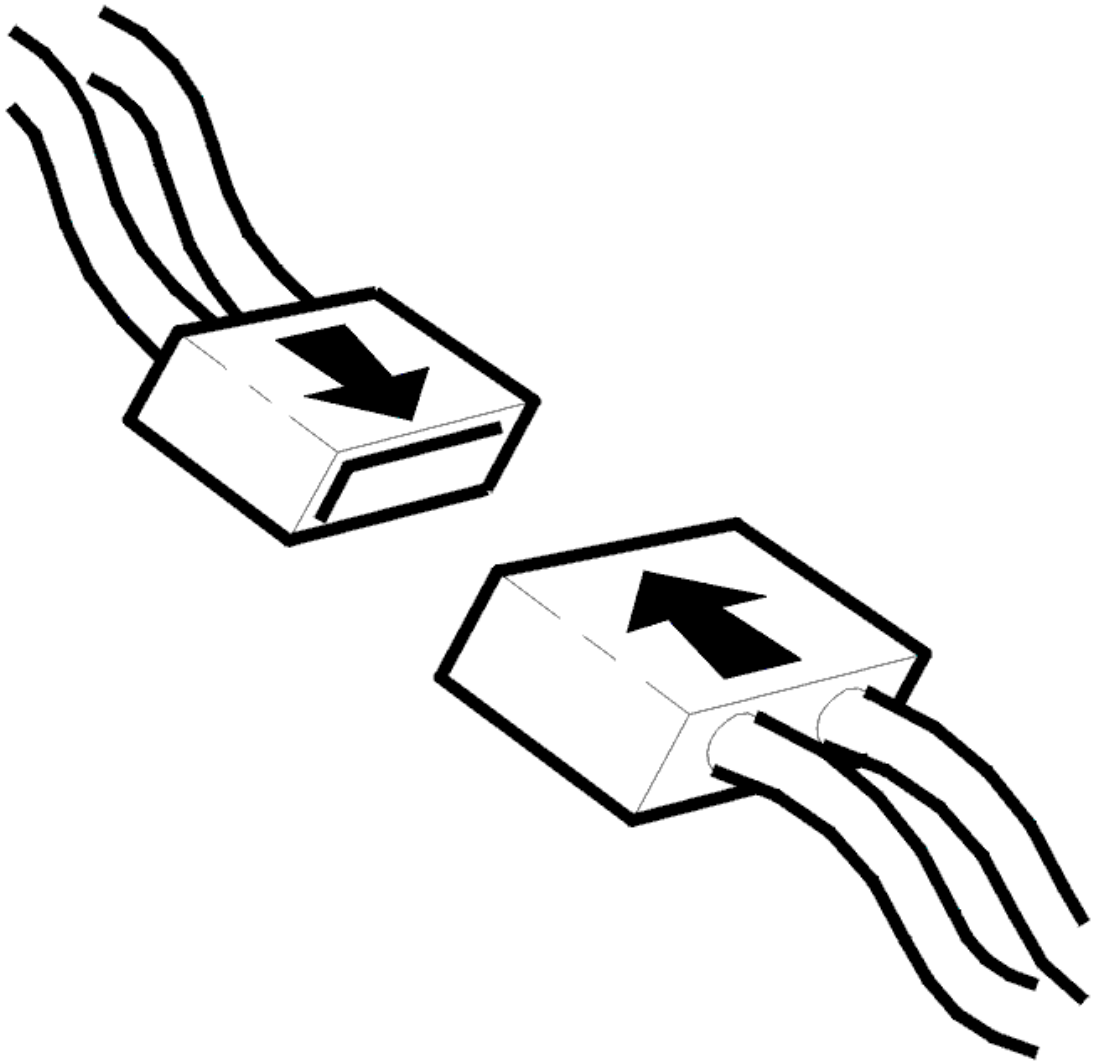

Fig. 97: Connecting Connector
Courtesy of VOLVO CARS CORPORATION

- Ignition off
- Reinstall the connectors, components etc.
- Ignition on.

  Check that the LEDs in the display in the rear view mirror light.

Are the LEDs in the display working?

- **YES**

  VERIFIED: Troubleshooting has been completed.

- **NO**

  Refer to **INFORMATION**

INFORMATION

FAULT-TRACING INFORMATION

The fault should have been detected and remedied. As this is not the case fault-tracing has failed.

Exit fault-tracing for this diagnostic trouble code (DTC) or make another attempt.

UEM-00A0: TIRE PRESSURE SENSOR. SIGNAL MISSING (2003-12)

DIAGNOSTIC TROUBLE CODE (DTC) INFORMATION UEM-00A0

Condition

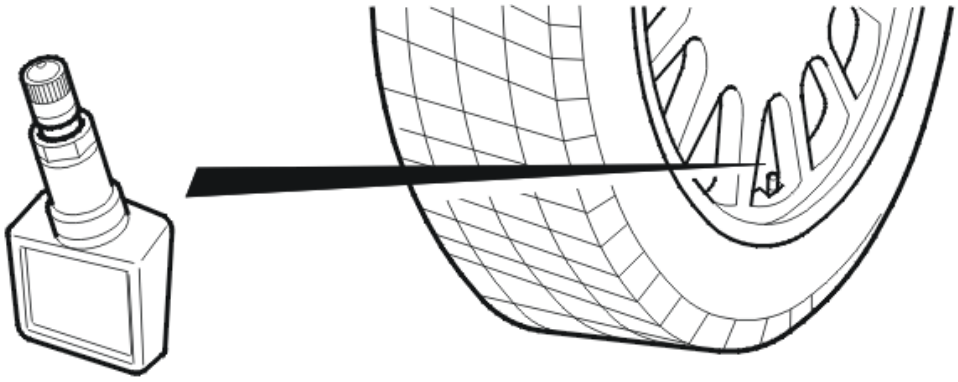

Fig. 98: Identifying Special Tool
Courtesy of VOLVO CARS CORPORATION

The upper electronic module (UEM) receives information transmitted by the tire pressure sensors in the wheels, irrespective of the car. The sensors which are registered in the vehicle can be checked by running a statistical selection. A list can then be stored internally in the upper electronic module (UEM).

The diagnostic trouble code (DTC) is stored if the upper electronic module (UEM) registers that the signal from the first of the four accepted sensors disappears whilst the vehicle is being driven.

The diagnostic trouble code (DTC) can be diagnosed after 10 minutes when the tire pressure warning system is active (vehicle speed is above 40 km/h (25 mph)).

Substitute Value

- None.

Possible Source

- Defective tire pressure sensor
- The receiver is not functioning.

Fault symptom[s]

- Message in the display.
- Warning lights and chimes/Tire pressure monitoring indication/no indication

SIGNAL MISSING

CHECKING THE REMOTE RECEIVER

The remote receiver is located in the inner rear view mirror, and receives signals from both the remote control and the tire pressure sensors. The function of the remote receiver can be checked using the remote control.

Check that the remote receiver works by pressing the lock and unlock button on the remote control. The vehicle should be locked and unlocked.

NOTE: Fault-trace the symptoms first, if the remote control and receiver are not working.

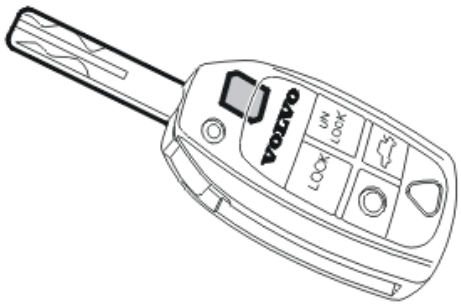

Fig. 99: Identifying Ignition Key
Courtesy of VOLVO CARS CORPORATION

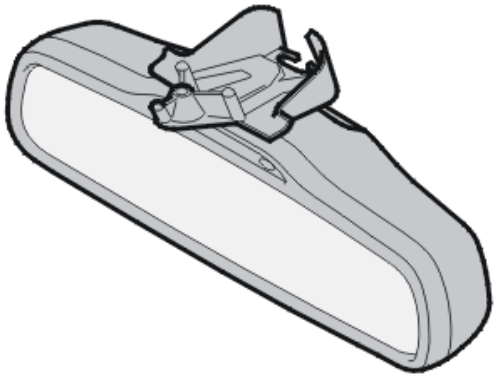

Fig. 100: Identifying Rear View Mirror
Courtesy of VOLVO CARS CORPORATION

Does the remote control and remote receiver work?

- **YES**

  Refer to **CHECKING TIRE PRESSURE SENSORS**

- **NO**

  OKAY: Troubleshooting has been completed.

CHECKING TIRE PRESSURE SENSORS

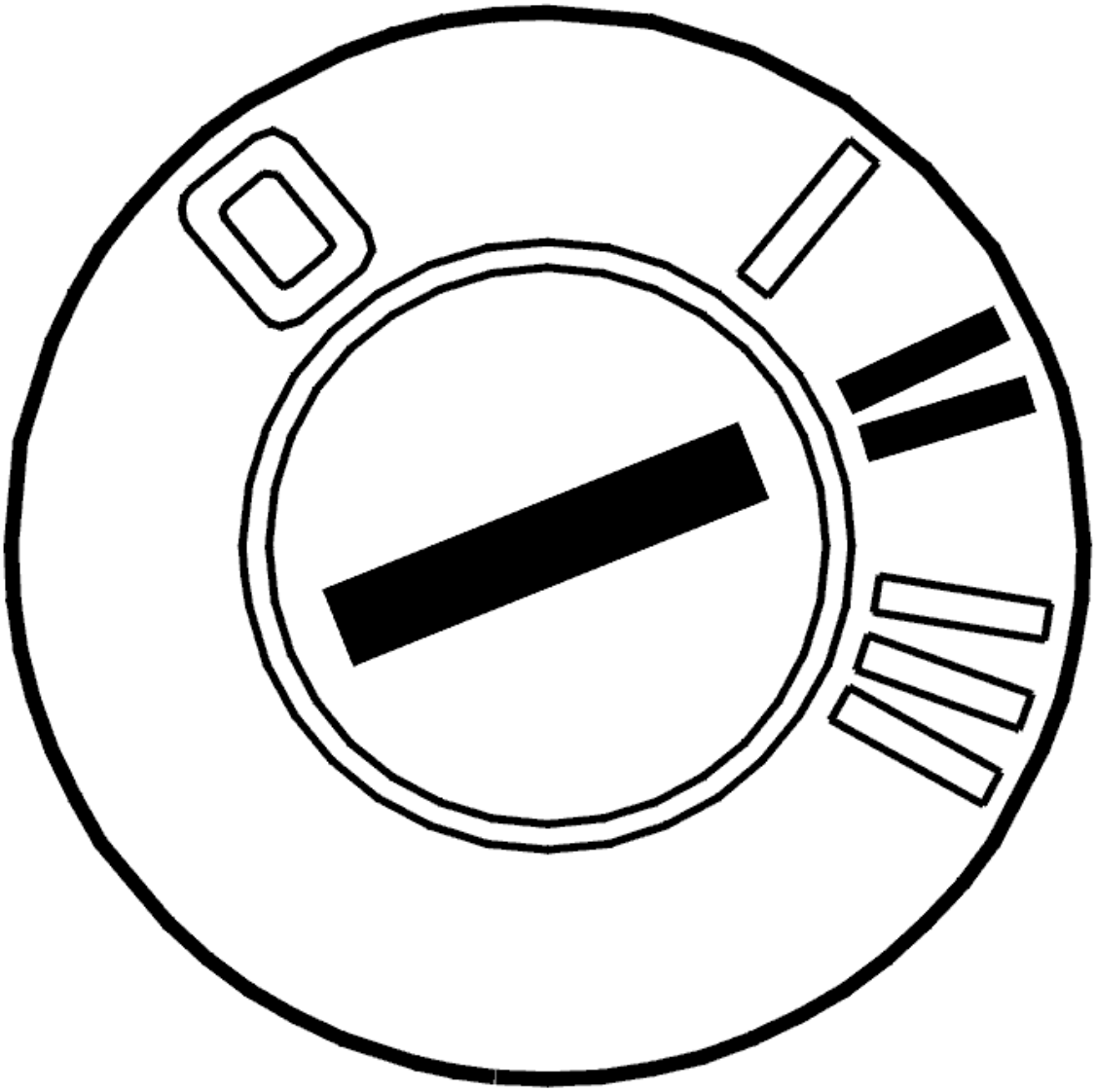

Fig. 101: Identifying Ignition ON
Courtesy of VOLVO CARS CORPORATION

- Ignition on.

  Each tire pressure sensor has its own ID number and battery voltage status, which are sent to and stored in the Upper electronic module (UEM). Read out the ID numbers for the tire pressure sensors using the VCT2000 (or appropriate scan tool).

  Use the following special tools to activate the sensor.

  - see **9512987**

  The TPMS special tool activates the sensor, which then starts to send information to the Upper Electronic Module (UEM). After activating a sensor, press the "Show data" button for the relevant wheel. Repeat activation for all wheels. Different ID numbers should appear. If the same ID number is displayed as for

the previous wheel, activation has failed. Then activate the relevant wheel again and press the "Show data" button again.

NOTE: Do not forget to press the correct button after each wheel has been activated.

NOTE: Make sure no special tools lie under the edge of the rim against the tire where the sensor is installed. Activation will not happen if the tool is placed next to the rim. The tool must then be kept in position for 5 seconds for the signals to be received correctly. Use only one special tool at a time in the vicinity of the vehicle.

NOTE: Avoid positioning the vehicle close to other moving vehicles, the receiver may then receive signals from the sensors of these vehicles. The incorrect ID number may then appear.

Then read off the ID number that is stored for the relevant diagnostic trouble code, by clicking on the diagnostic trouble code in the list. The ID number is then displayed in the window above the list.

Compare the read-out ID number for the relevant wheel with the ID number that is stored with the DTC.

If a sensor does not respond during the test:

- Replace the tire pressure sensor for the relevant wheel. It is probably the sensor that caused the DTC to be stored.

If all sensors respond:

- The sensor that caused the diagnostic trouble code to be stored has probably had an intermittent malfunction. Replace the tire pressure sensor for the relevant wheel.

Other information

- see **TIRE PRESSURE SENSOR, REPLACEMENT**

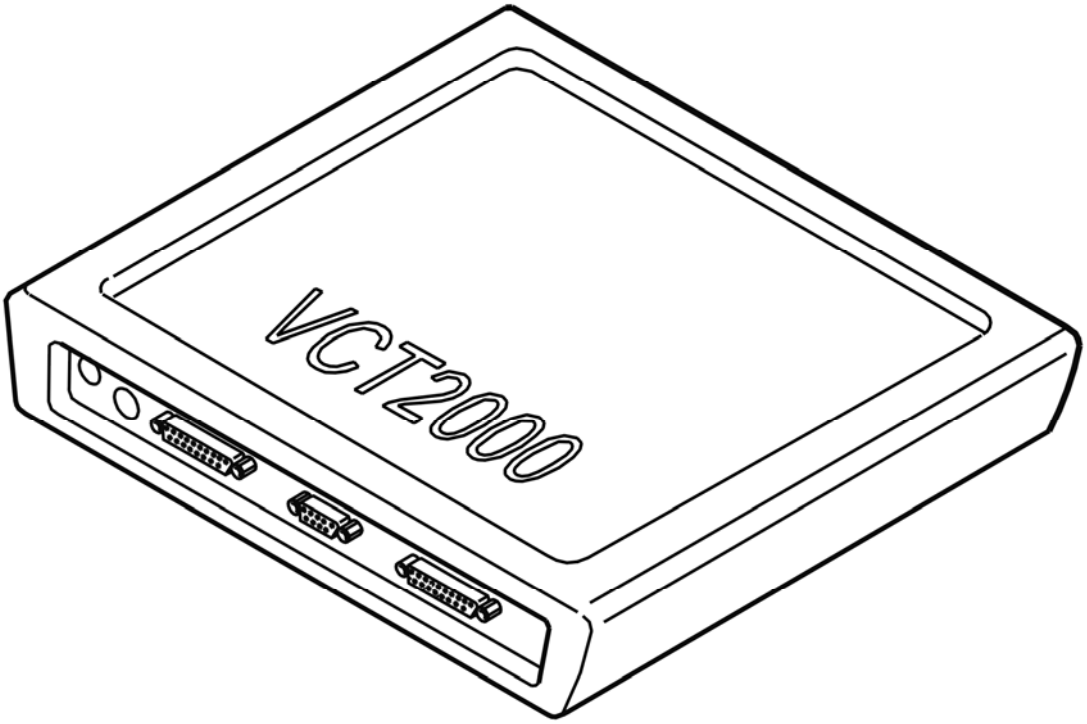

Fig. 102: Identifying VCT2000 Diagnostic Tool Symbol In VIDA
Courtesy of VOLVO CARS CORPORATION

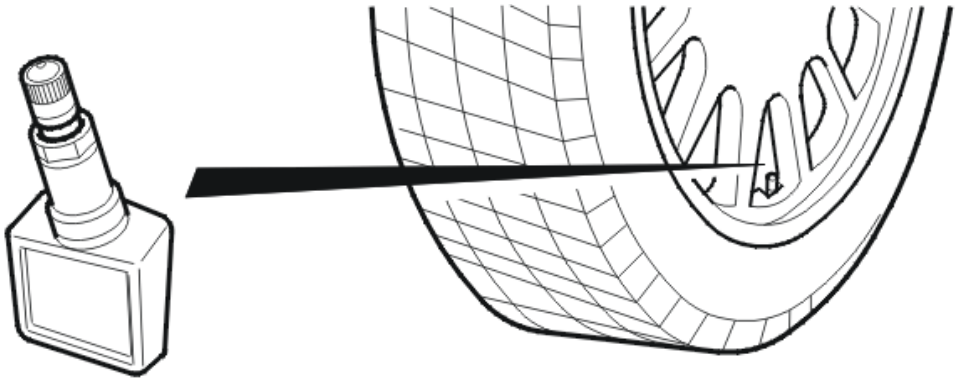

Fig. 103: Identifying Special Tool
Courtesy of VOLVO CARS CORPORATION

- **Continue**

  Refer to **VERIFICATION**

INFORMATION

FAULT-TRACING INFORMATION

The fault should have been detected and remedied. As this is not the case fault-tracing has failed.

Exit fault-tracing for this diagnostic trouble code (DTC) or make another attempt.

VERIFICATION

HINT: After carrying out the repair, check that the fault has been remedied.

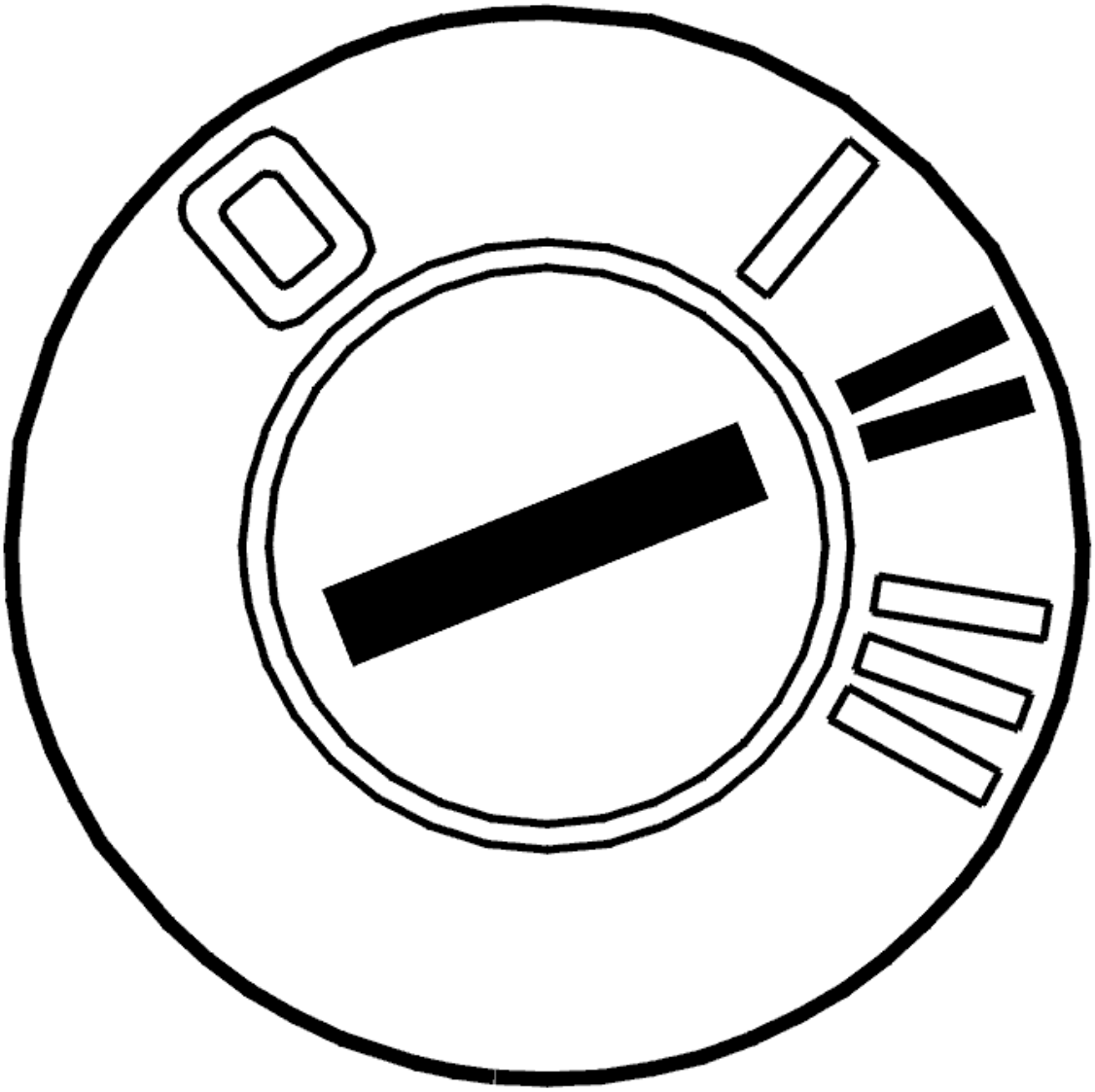

Fig. 104: Identifying Ignition ON
Courtesy of VOLVO CARS CORPORATION

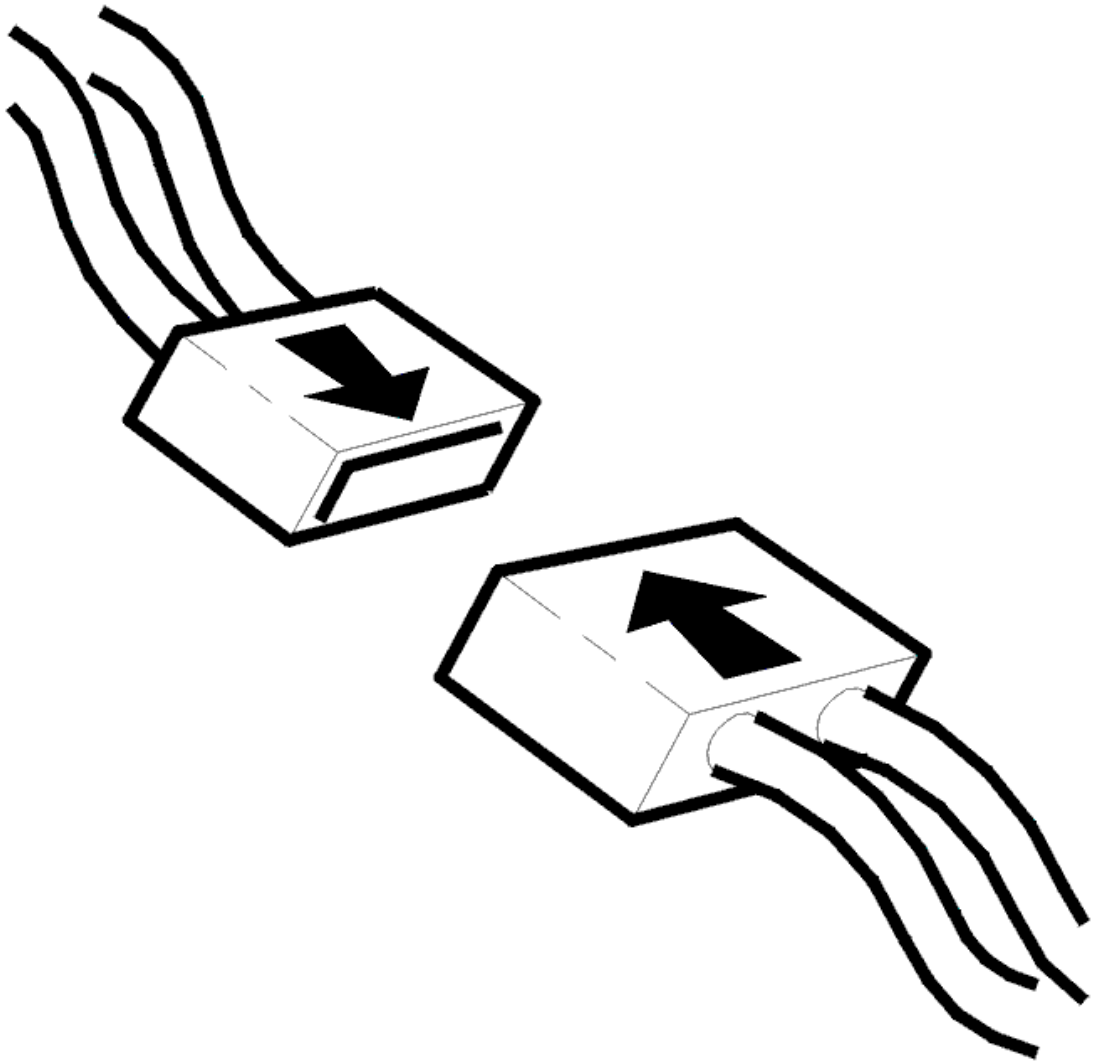

Fig. 105: Connecting Connector
Courtesy of VOLVO CARS CORPORATION

- Ignition off
- Reinstall the connectors, components etc.
- Ignition on.

Read out the ID numbers for the tire pressure sensors using the VCT2000 (or appropriate scan tool).

Use the following special tools to activate the sensor.

- see **9512987**

The TPMS special tool activates the sensor, which then starts to send information to the Upper Electronic Module (UEM). After activating a sensor, press the "Show data" button for the relevant wheel. Repeat

activation for all wheels. Different ID numbers should appear.

NOTE: **Ensure that the special tool is positioned under the edge of the rim against the tire where the sensor is installed. The sensor will not be activated if the tool is against the rim. The sensor must then be held in place for approximately 5 seconds for the signals to be correctly received. Use only one special tool at a time in the vicinity of the car.**

NOTE: **Carry out the above in an area away from where other cars are being driven. The receiver can pick up signals from sensors on other cars. An incorrect ID number would then be displayed.**

Check that the relevant sensor(s) respond. Test different wheels to ensure that different ID numbers are displayed.

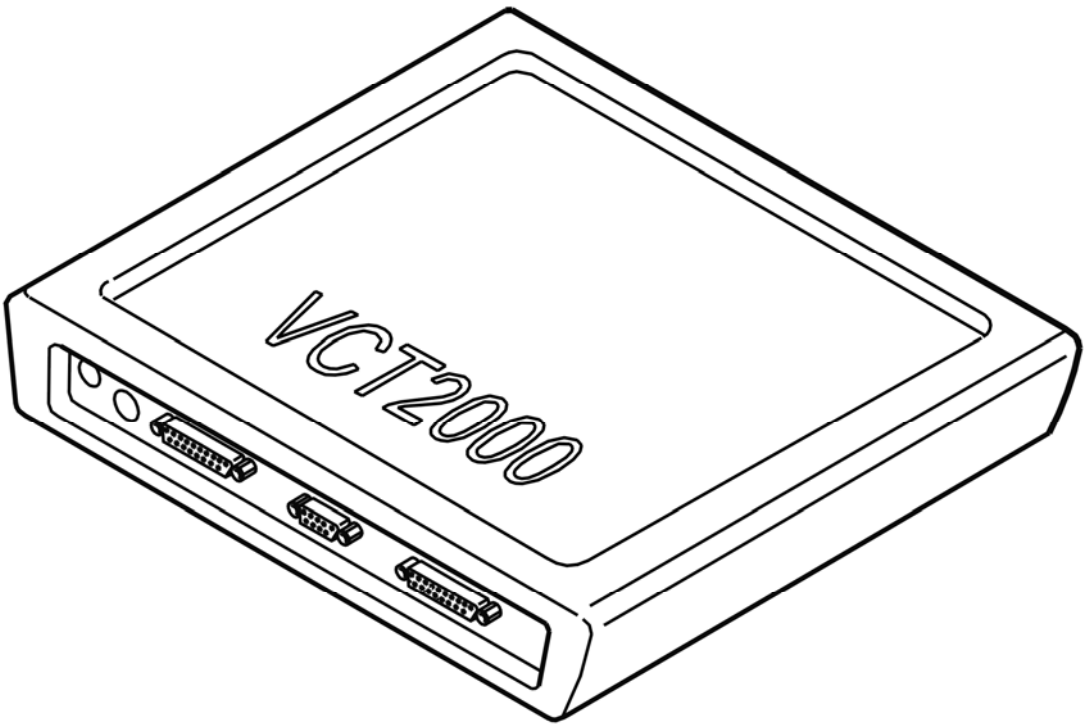

Fig. 106: Identifying VCT2000 Diagnostic Tool Symbol In VIDA
Courtesy of VOLVO CARS CORPORATION

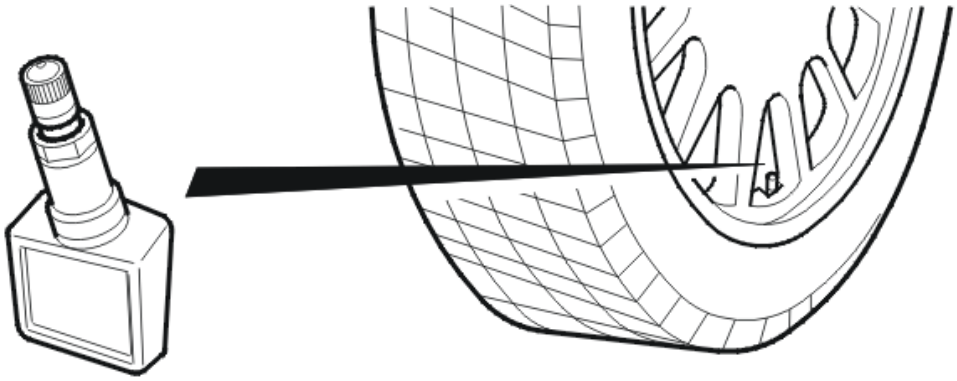

Fig. 107: Identifying Special Tool
Courtesy of VOLVO CARS CORPORATION

Is the sensor OK?

- **YES**

  VERIFIED: Troubleshooting has been completed.

- **NO**

  Refer to **INFORMATION**

UEM-00A1: TIRE PRESSURE SENSOR. SIGNAL MISSING (2003-12)

DIAGNOSTIC TROUBLE CODE (DTC) INFORMATION UEM-00A1

Condition

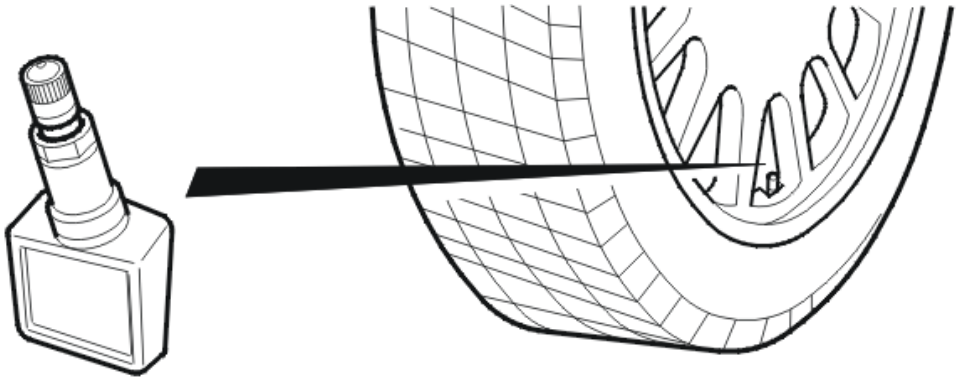

Fig. 108: Identifying Special Tool
Courtesy of VOLVO CARS CORPORATION

The upper electronic module (UEM) receives information transmitted by the tire pressure sensors in the wheels,

irrespective of the car. The sensors which are registered in the vehicle can be checked by running a statistical selection. A list can then be stored internally in the upper electronic module (UEM).

The diagnostic trouble code (DTC) is stored if the upper electronic module (UEM) registers that the signal from the second of the four accepted sensors disappears whilst the vehicle is being driven.

The diagnostic trouble code (DTC) can be diagnosed after 10 minutes when the tire pressure warning system is active (vehicle speed is above 40 km/h (25 mph)).

Substitute Value

- None.

Possible Source

- Defective tire pressure sensor
- The receiver is not functioning.

Fault symptom[s]

- Message in the display.
- Warning lights and chimes/Tire pressure monitoring indication/no indication

SIGNAL MISSING

see **SIGNAL MISSING**

UEM-00A2: TIRE PRESSURE SENSOR. SIGNAL MISSING (2003-12)

DIAGNOSTIC TROUBLE CODE (DTC) INFORMATION UEM-00A2

Condition

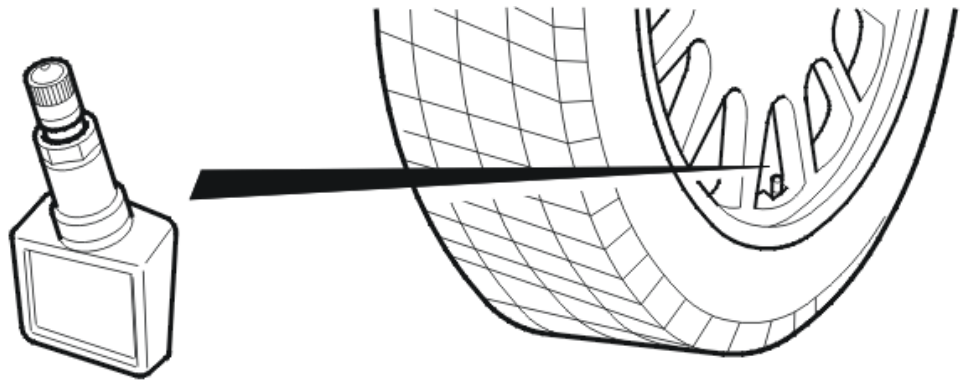

Fig. 109: Identifying Special Tool

Courtesy of VOLVO CARS CORPORATION

The upper electronic module (UEM) receives information transmitted by the tire pressure sensors in the wheels, irrespective of the car. The sensors which are registered in the vehicle can be checked by running a statistical selection. A list can then be stored internally in the upper electronic module (UEM).

The diagnostic trouble code (DTC) is stored if the upper electronic module (UEM) registers that the signal from the third of the four accepted sensors disappears whilst the vehicle is being driven.

The diagnostic trouble code (DTC) can be diagnosed after 10 minutes when the tire pressure warning system is active (vehicle speed is above 40 km/h (25 mph)).

Substitute Value

- None.

Possible Source

- Defective tire pressure sensor
- The receiver is not functioning.

Fault symptom[s]

- Message in the display.
- Warning lights and chimes/Tire pressure monitoring indication/no indication

SIGNAL MISSING

see **SIGNAL MISSING**

UEM-00A3: TIRE PRESSURE SENSOR. SIGNAL MISSING (2003-12)

DIAGNOSTIC TROUBLE CODE (DTC) INFORMATION UEM-00A3

Condition

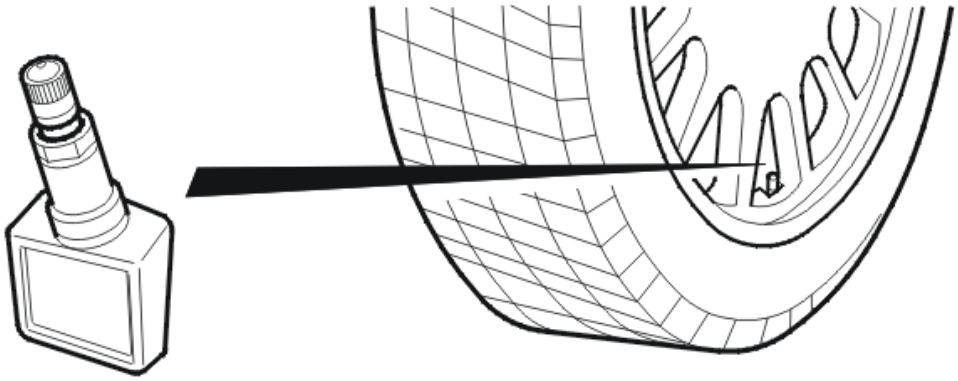

Fig. 110: Identifying Special Tool
Courtesy of VOLVO CARS CORPORATION

The upper electronic module (UEM) receives information transmitted by the tire pressure sensors in the wheels, irrespective of the car. The sensors which are registered in the vehicle can be checked by running a statistical selection. A list can then be stored internally in the upper electronic module (UEM).

The diagnostic trouble code (DTC) is stored if the upper electronic module (UEM) registers that the signal from the fourth of the four accepted sensors disappears whilst the vehicle is being driven.

The diagnostic trouble code (DTC) can be diagnosed after 10 minutes when the tire pressure warning system is active (vehicle speed is above 40 km/h (25 mph)).

Substitute Value

- None.

Possible Source

- Defective tire pressure sensor
- The receiver is not functioning.

Fault symptom[s]

- Message in the display.
- Warning lights and chimes/Tire pressure monitoring indication/no indication

SIGNAL MISSING

see **SIGNAL MISSING**

UEM-00A4: TIRE PRESSURE SENSOR. LOW BATTERY VOLTAGE (2003-12)

DIAGNOSTIC TROUBLE CODE (DTC) INFORMATION UEM-00A4

Condition

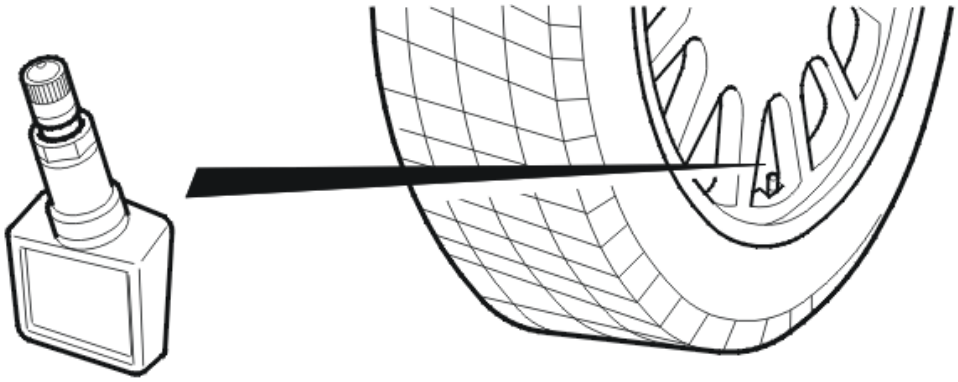

Fig. 111: Identifying Special Tool
Courtesy of VOLVO CARS CORPORATION

The upper electronic module (UEM) receives information transmitted by the tire pressure sensors in the wheels, irrespective of the car. The sensors which are registered in the vehicle can be checked by running a statistical selection. A list can then be stored internally in the upper electronic module (UEM). The messages transmitted by the sensors contain information such as the voltage of the internal battery in the sensor.

The diagnostic trouble code (DTC) is stored if the upper electronic module (UEM) receives a message from the first of the four accepted sensors indicating low battery voltage.

The diagnostic trouble code (DTC) can be diagnosed after 10 minutes when the tire pressure warning system is active (vehicle speed is above 40 km/h (25 mph)).

Substitute Value

- None.

Possible Source

- Low battery voltage in the tire pressure sensor.

Fault symptom[s]

- Message in the display.
- Warning lights and chimes/Tire pressure monitoring indication/no indication

LOW BATTERY

CHECKING THE REMOTE RECEIVER

The remote receiver is located in the inner rear view mirror, and receives signals from both the remote control and the tire pressure sensors. The function of the remote receiver can be checked using the remote control.

Check that the remote receiver works by pressing the lock and unlock button on the remote control. The vehicle should be locked and unlocked.

NOTE: **Fault-trace the symptoms first, if the remote control and receiver are not working.**

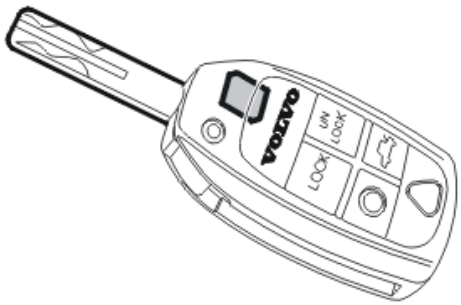

Fig. 112: Identifying Ignition Key
Courtesy of VOLVO CARS CORPORATION

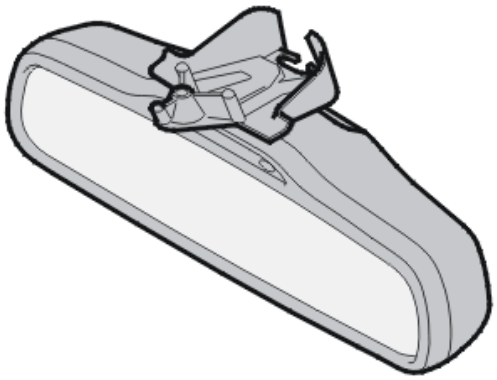

Fig. 113: Identifying Rear View Mirror
Courtesy of VOLVO CARS CORPORATION

Does the remote control and remote receiver work?

- **YES**

  Refer to **CHECKING TIRE PRESSURE SENSORS**

- **NO**

  OKAY: Troubleshooting has been completed.

CHECKING TIRE PRESSURE SENSORS

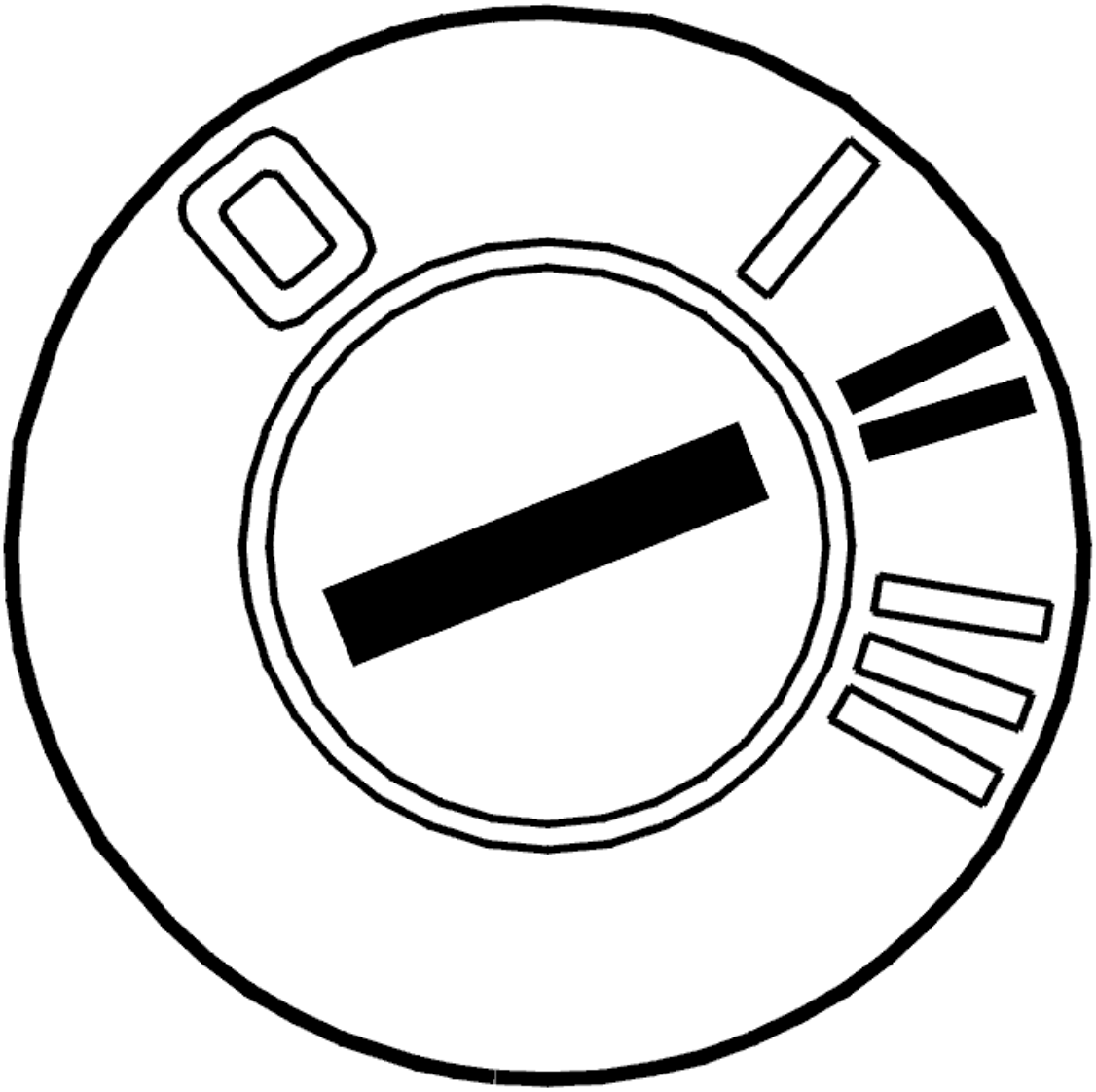

Fig. 114: Identifying Ignition ON
Courtesy of VOLVO CARS CORPORATION

- Ignition on.

  Each tire pressure sensor has its own ID number and battery voltage status, which are sent to and stored in the Upper electronic module (UEM)Read out the ID numbers for the tire pressure sensors using the VCT2000 (or appropriate scan tool).

  Use the following special tools to activate the sensor.

  - see **9512987**

  The TPMS special tool activates the sensor, which then starts to send information to the Upper Electronic Module (UEM). After activating a sensor, press the "Show data" button for the relevant wheel. Repeat activation for all wheels. Different ID numbers should appear. If the same ID number is displayed as for

the previous wheel, activation has failed. Then activate the relevant wheel again and press the "Show data" button again. If the sensor does not respond, the battery has probably been discharged or the sensor does not work. Replace the sensor for the relevant wheel.

NOTE: **Do not forget to press the correct button after each wheel has been activated.**

NOTE: **Make sure no special tools lie under the edge of the rim against the tire where the sensor is installed. Activation will not happen if the tool is placed next to the rim. The tool must then be kept in position for 5 seconds for the signals to be received correctly. Use only one special tool at a time in the vicinity of the vehicle.**

NOTE: **Avoid positioning the vehicle close to other moving vehicles, the receiver may then receive signals from the sensors of these vehicles. The incorrect ID number may then appear.**

Then read off the ID number that is stored for the relevant diagnostic trouble code, by clicking on the diagnostic trouble code in the list. The ID number is then displayed in the window above the list.

Compare the read-out ID number for the relevant wheel with the ID number that is stored with the DTC.

Replace the tire pressure sensor for the relevant wheel.

Other information

- see **TIRE PRESSURE SENSOR, REPLACEMENT**

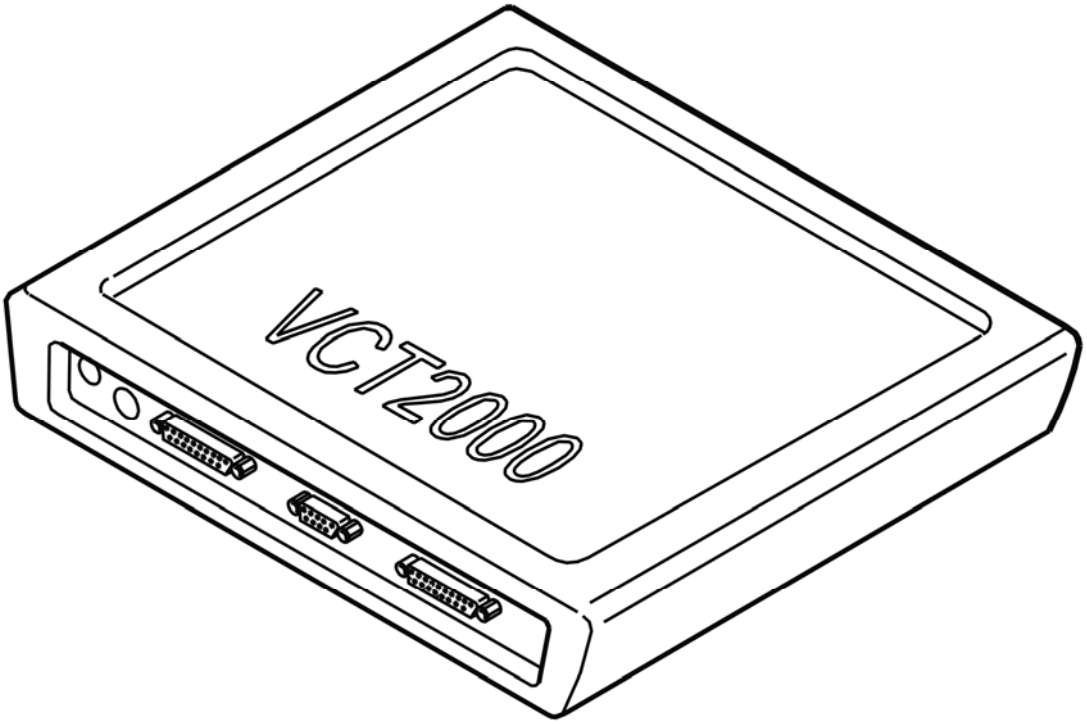

Fig. 115: Identifying VCT2000 Diagnostic Tool Symbol In VIDA
Courtesy of VOLVO CARS CORPORATION

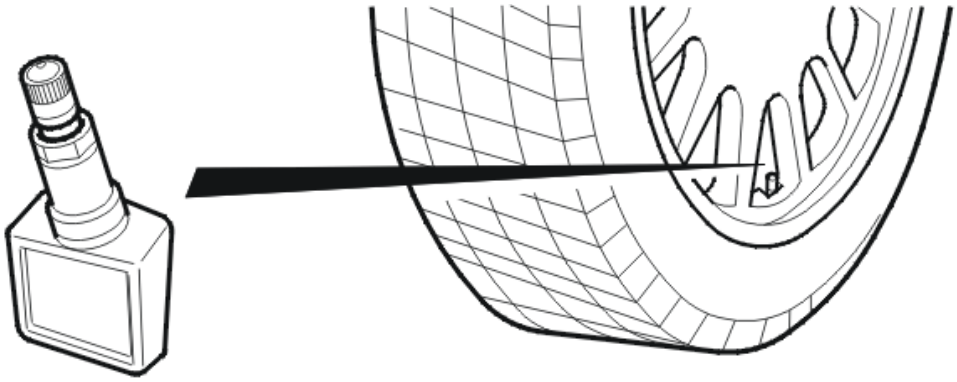

Fig. 116: Identifying Special Tool
Courtesy of VOLVO CARS CORPORATION

- **Continue**

  Refer to **VERIFICATION**

INFORMATION

FAULT-TRACING INFORMATION

The fault should have been detected and remedied. As this is not the case fault-tracing has failed.

Exit fault-tracing for this diagnostic trouble code (DTC) or make another attempt.

VERIFICATION

HINT: After carrying out the repair, check that the fault has been remedied.

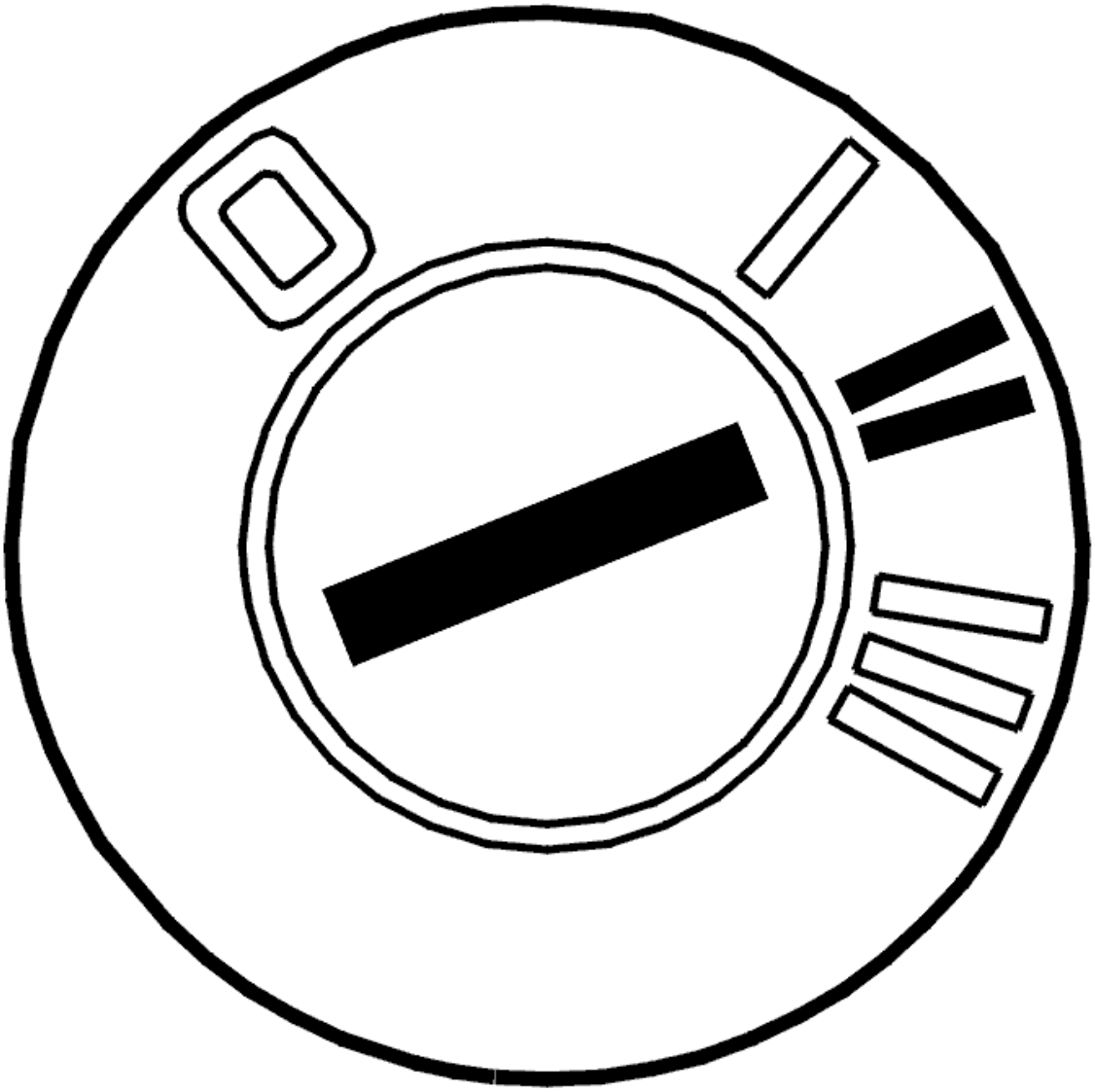

Fig. 117: Identifying Ignition ON
Courtesy of VOLVO CARS CORPORATION

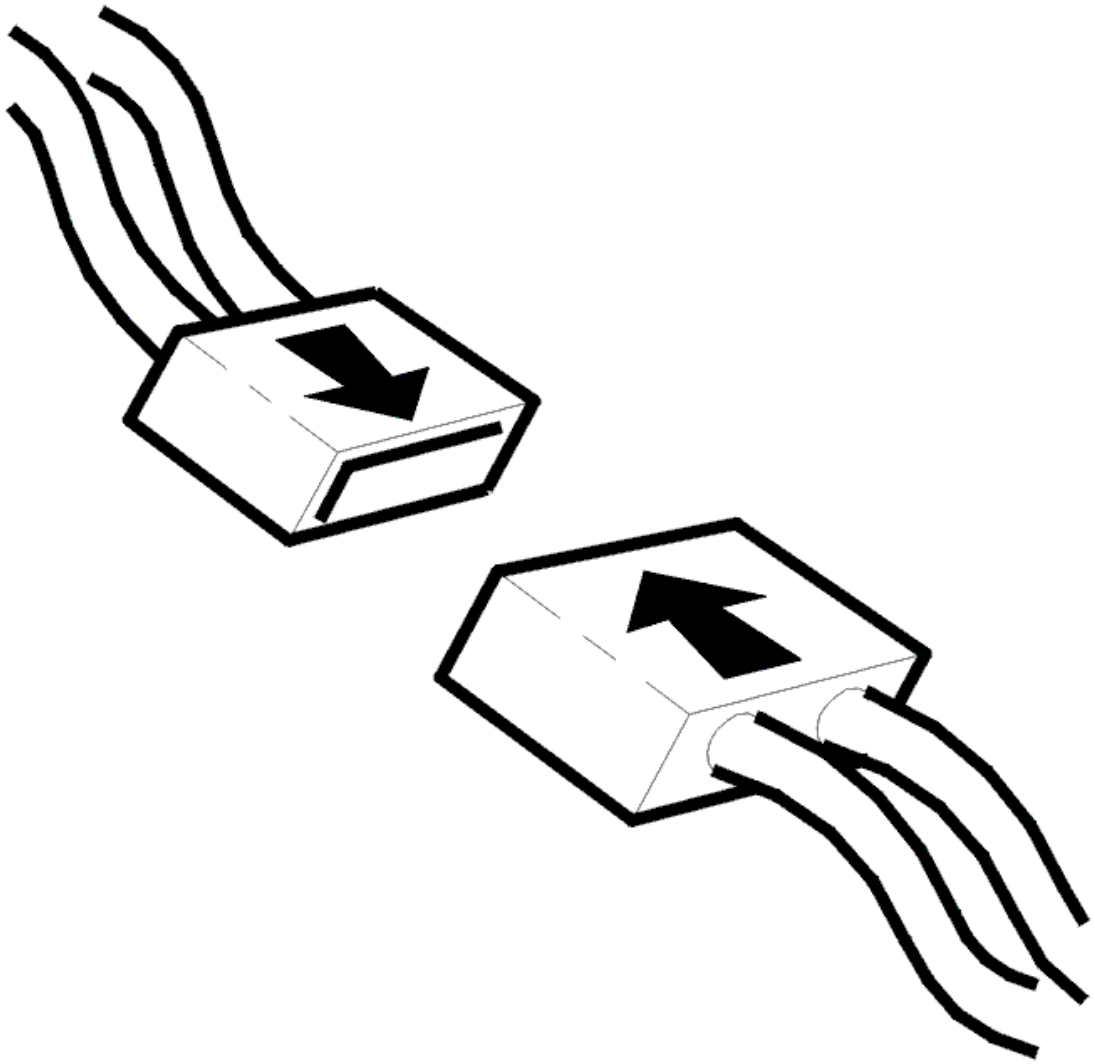

Fig. 118: Connecting Connector
Courtesy of VOLVO CARS CORPORATION

- Ignition off
- Reinstall the connectors, components etc.
- Ignition on.

Read out the ID numbers for the tire pressure sensors using the VCT2000 (or appropriate scan tool).

Use the following special tools to activate the sensor.

- see **9512987**

The TPMS special tool activates the sensor, which then starts to send information to the Upper Electronic Module (UEM). After activating a sensor, press the "Show data" button for the relevant wheel. Repeat

activation for all wheels. Different ID numbers should appear.

NOTE: **Ensure that the special tool is positioned under the edge of the rim against the tire where the sensor is installed. The sensor will not be activated if the tool is against the rim. The sensor must then be held in place for approximately 5 seconds for the signals to be correctly received. Use only one special tool at a time in the vicinity of the car.**

NOTE: **Carry out the above in an area away from where other cars are being driven. The receiver can pick up signals from sensors on other cars. An incorrect ID number would then be displayed.**

Check that the relevant sensor(s) respond. Test different wheels to ensure that different ID numbers are displayed.

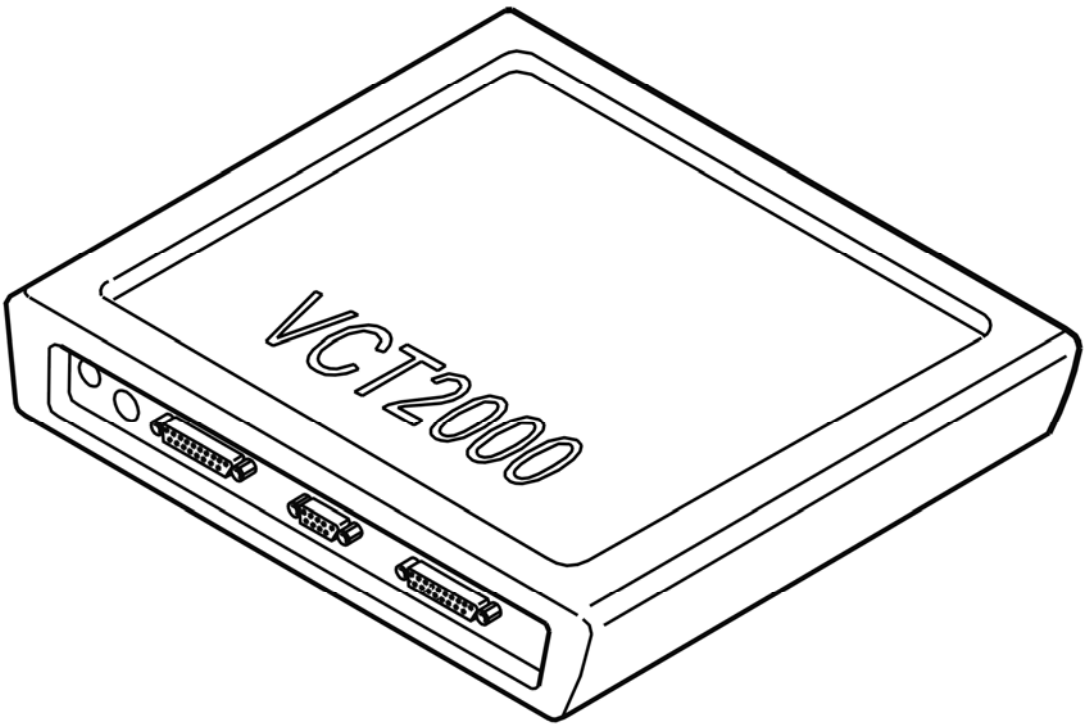

Fig. 119: Identifying VCT2000 Diagnostic Tool Symbol In VIDA
Courtesy of VOLVO CARS CORPORATION

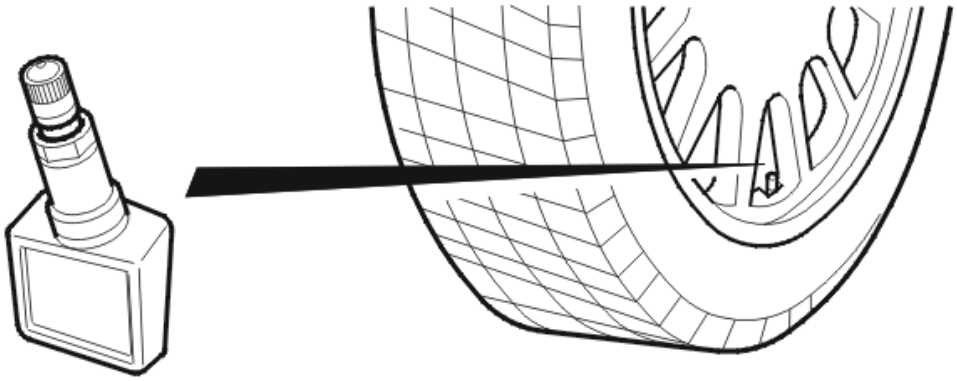

Fig. 120: Identifying Special Tool
Courtesy of VOLVO CARS CORPORATION

Is the sensor OK?

- **YES**

  VERIFIED: Troubleshooting has been completed.

- **NO**

  Refer to **INFORMATION**

UEM-00A5: TIRE PRESSURE SENSOR. LOW BATTERY VOLTAGE (2003-12)

DIAGNOSTIC TROUBLE CODE (DTC) INFORMATION UEM-00A5

Condition

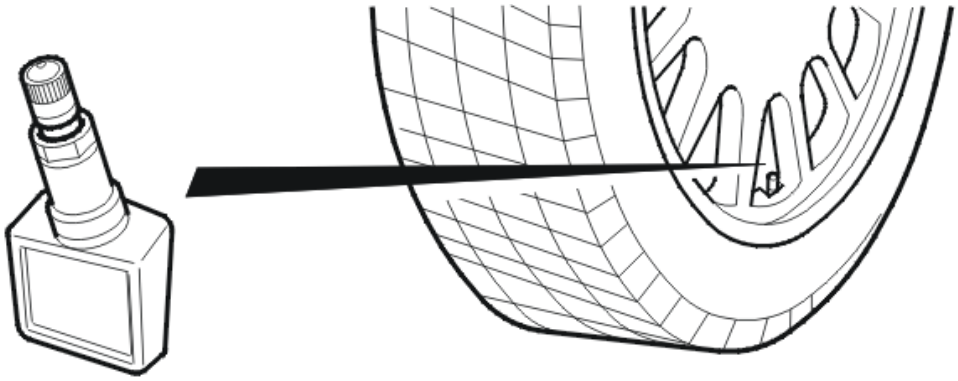

Fig. 121: Identifying Special Tool
Courtesy of VOLVO CARS CORPORATION

The upper electronic module (UEM) receives information transmitted by the tire pressure sensors in the wheels,

irrespective of the car. The sensors which are registered in the vehicle can be checked by running a statistical selection. A list can then be stored internally in the upper electronic module (UEM). The messages transmitted by the sensors contain information such as the voltage of the internal battery in the sensor.

The diagnostic trouble code (DTC) is stored if the upper electronic module (UEM) receives a message from the second of the four accepted sensors indicating low battery voltage.

The diagnostic trouble code (DTC) can be diagnosed after 10 minutes when the tire pressure warning system is active (vehicle speed is above 40 km/h (25 mph)).

Substitute Value

- None.

Possible Source

- Low battery voltage in the tire pressure sensor.

Fault symptom[s]

- Message in the display.
- Warning lights and chimes/Tire pressure monitoring indication/no indication

LOW BATTERY

see **LOW BATTERY**

UEM-00A6: TIRE PRESSURE SENSOR. LOW BATTERY VOLTAGE (2003-12)

DIAGNOSTIC TROUBLE CODE (DTC) INFORMATION UEM-00A6

Condition

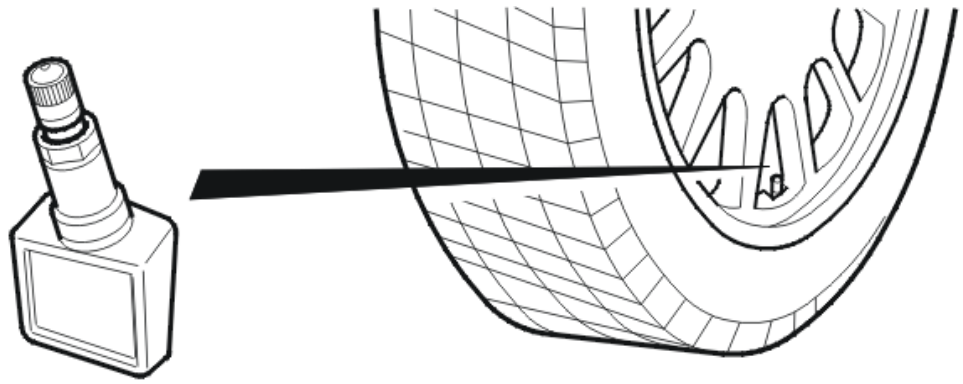

Fig. 122: Identifying Special Tool
Courtesy of VOLVO CARS CORPORATION

The upper electronic module (UEM) receives information transmitted by the tire pressure sensors in the wheels, irrespective of the car. The sensors which are registered in the vehicle can be checked by running a statistical selection. A list can then be stored internally in the upper electronic module (UEM). The messages transmitted by the sensors contain information such as the voltage of the internal battery in the sensor.

The diagnostic trouble code (DTC) is stored if the upper electronic module (UEM) receives a message from the third of the four accepted sensors indicating low battery voltage.

The diagnostic trouble code (DTC) can be diagnosed after 10 minutes when the tire pressure warning system is active (vehicle speed is above 40 km/h (25 mph)).

Substitute Value

- None.

Possible Source

- Low battery voltage in the tire pressure sensor.

Fault symptom[s]

- Message in the display.
- Warning lights and chimes/Tire pressure monitoring indication/no indication

LOW BATTERY

see **LOW BATTERY**

UEM-00A7: TIRE PRESSURE SENSOR. LOW BATTERY VOLTAGE (2003-12)

DIAGNOSTIC TROUBLE CODE (DTC) INFORMATION UEM-00A7

Condition

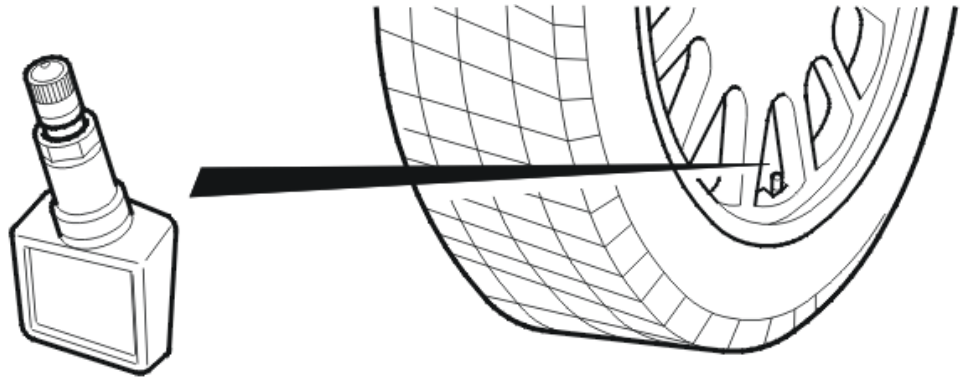

Fig. 123: Identifying Special Tool

Courtesy of VOLVO CARS CORPORATION

The upper electronic module (UEM) receives information transmitted by the tire pressure sensors in the wheels, irrespective of the car. The sensors which are registered in the vehicle can be checked by running a statistical selection. A list can then be stored internally in the upper electronic module (UEM). The messages transmitted by the sensors contain information such as the voltage of the internal battery in the sensor.

The diagnostic trouble code (DTC) is stored if the upper electronic module (UEM) receives a message from the fourth of the four accepted sensors indicating low battery voltage.

The diagnostic trouble code (DTC) can be diagnosed after 10 minutes when the tire pressure warning system is active (vehicle speed is above 40 km/h (25 mph)).

Substitute Value

- None.

Possible Source

- Low battery voltage in the tire pressure sensor.

Fault symptom[s]

- Message in the display.
- Warning lights and chimes/Tire pressure monitoring indication/no indication

LOW BATTERY

see **LOW BATTERY**

UEM-00A8: TIRE PRESSURE WARNING. SENSOR MISSING (2003-12)

DIAGNOSTIC TROUBLE CODE (DTC) INFORMATION UEM-00A8

Condition

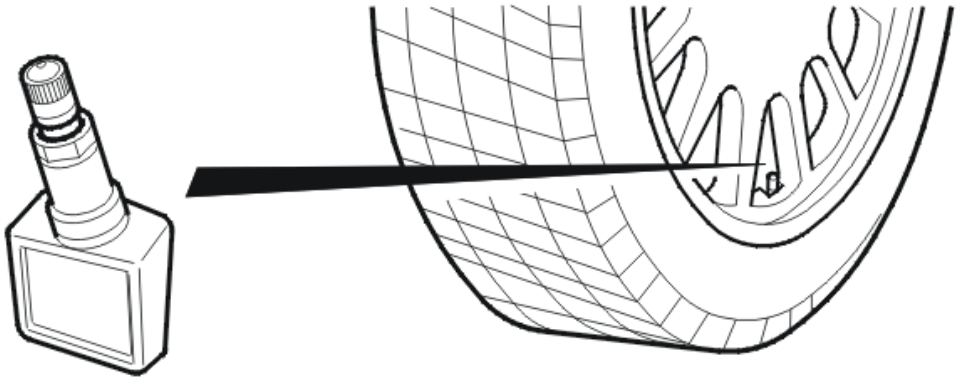

Fig. 124: Identifying Special Tool
Courtesy of VOLVO CARS CORPORATION

The upper electronic module (UEM) receives information transmitted by the tire pressure sensors in the wheels, irrespective of the car. The sensors which are registered in the vehicle can be checked by running a statistical selection. A list can then be stored internally in the upper electronic module (UEM).

The diagnostic trouble code (DTC) is stored if the upper electronic module (UEM) registers that the signal from fewer than four of the accepted sensors has been received during an operating cycle.

The diagnostic trouble code (DTC) can be diagnosed after 10 minutes when the tire pressure warning system is active (vehicle speed is above 40 km/h (25 mph)).

Substitute Value

- None.

Possible Source

- A rim without a tire pressure sensor has been installed
- A rim with a tire pressure sensor not intended for this model has been installed (the sensor is unable to communicate with the receiver)
- Defective tire pressure sensor
- The receiver is not functioning.

Fault symptom[s]

- Message in the display.
- Warning lights and chimes/Tire pressure monitoring indication/no indication

SENSOR MISSING

CHECKING THE RECEIVER

The receiver is in the rear view mirror. It receives signals from both the remote control and tire pressure sensors. The remote control can be used to check that the receiver is working.

Check the function of the receiver by pressing the locking and unlocking button on the remote control. The vehicle must lock and unlock.

NOTE: Fault-trace the symptoms if the remote control and receiver are not working.

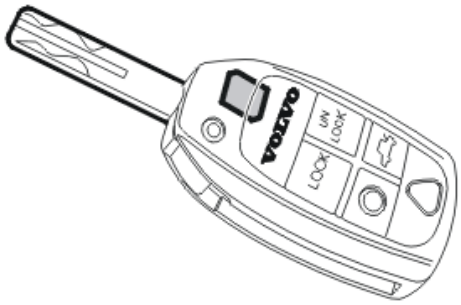

Fig. 125: Identifying Ignition Key
Courtesy of VOLVO CARS CORPORATION

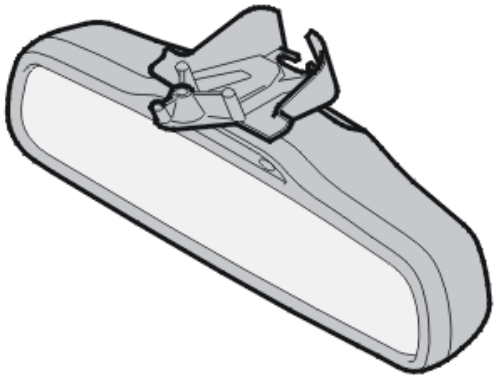

Fig. 126: Identifying Rear View Mirror
Courtesy of VOLVO CARS CORPORATION

Are the remote control and receiver working?

- **YES**

  Refer to **CHECKING THE TIRE PRESSURE SENSORS**

- **NO**

  OKAY: Troubleshooting has been completed.

CHECKING THE TIRE PRESSURE SENSORS

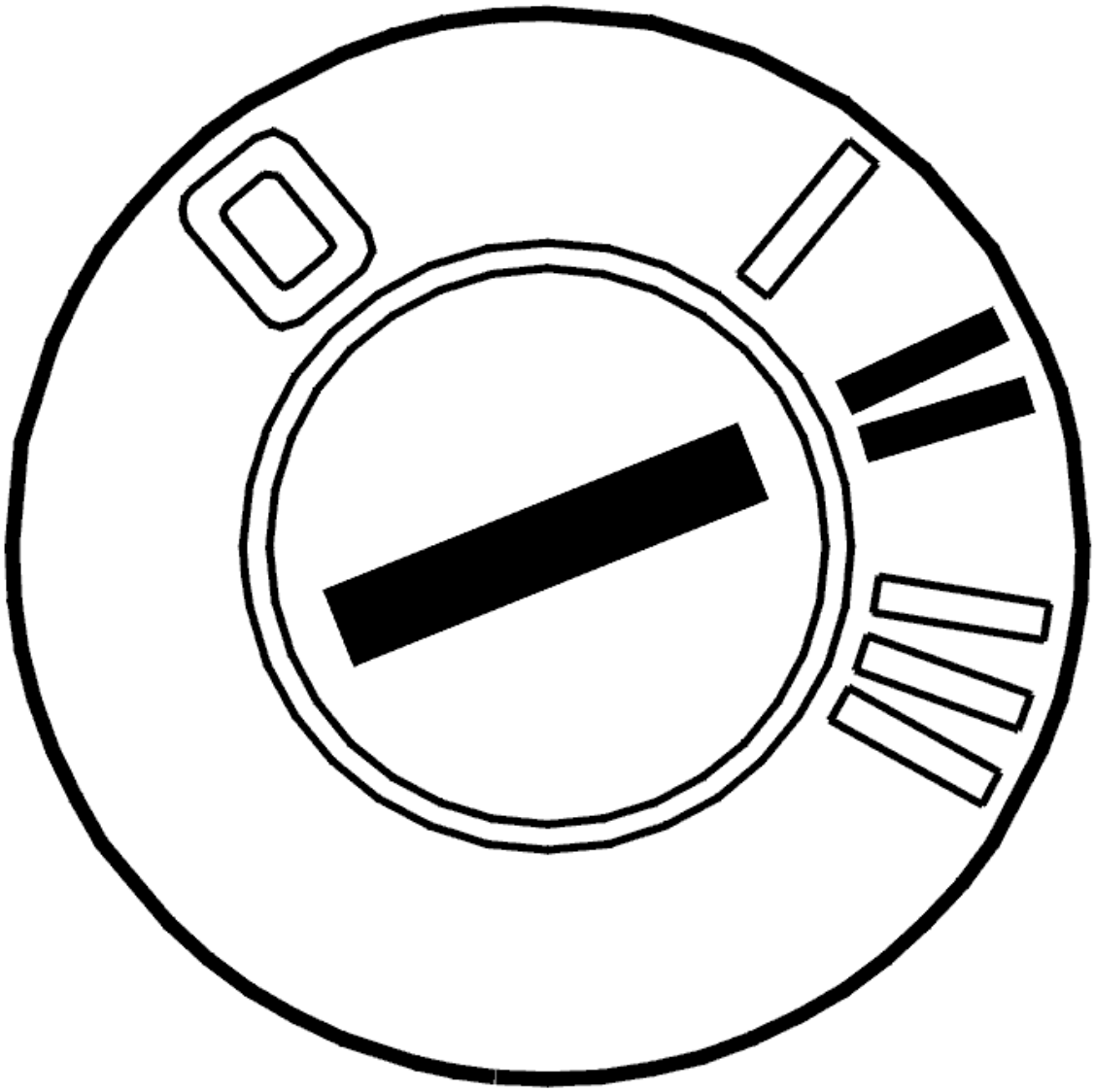

Fig. 127: Identifying Ignition ON
Courtesy of VOLVO CARS CORPORATION

- Ignition on.

  Each tire pressure sensor has its own ID number which is transmitted to and stored in the upper electronic module (UEM). Read off the last stored ID number using the VCT2000 (or appropriate scan tool). The last stored ID number is displayed until a new ID number is received and stored.

  NOTE: The last stored value is erased when the ignition is switched off and on again.

  Activate one of the sensors by using the special tool: see **9512987** The special tool activates the sensor which then starts to send information to the Upper electronic module (UEM) and the sensor's id-number

can then be read in the character window.

NOTE: **Ensure that the special tool is positioned under the edge of the rim against the tire where the sensor is installed. The sensor will not be activated if the tool is against the rim. The sensor must then be held in place for approximately 5 seconds for the signals to be correctly received. Use only one special tool at a time in the vicinity of the car.**

NOTE: **Carry out the above in an area away from where other cars are being driven. The receiver can pick up signals from sensors on other cars. An incorrect ID number would then be displayed.**

Repeat this procedure for each wheel. Different ID numbers must be displayed.

If a sensor does not respond during the test:

Check that a tire pressure sensor is installed on the rim. Install a new sensor if there is no sensor installed. If the sensor is installed but is still not working, it may be defective or be a sensor intended for another make or model. Replace the tire pressure sensor.

If all sensors respond:

Intermittent fault. The control module has previously detected that one or more sensors are not communicating. This may be because the vehicle previously had a wheel mounted without a functioning sensor.

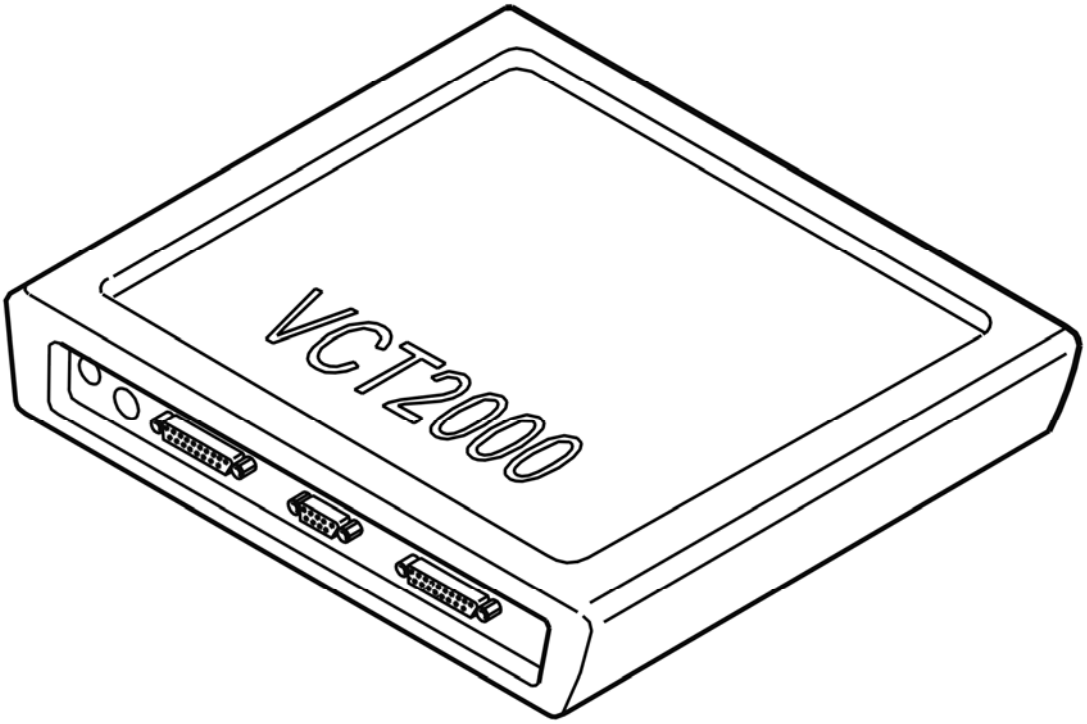

Fig. 128: Identifying VCT2000 Diagnostic Tool Symbol In VIDA
Courtesy of VOLVO CARS CORPORATION

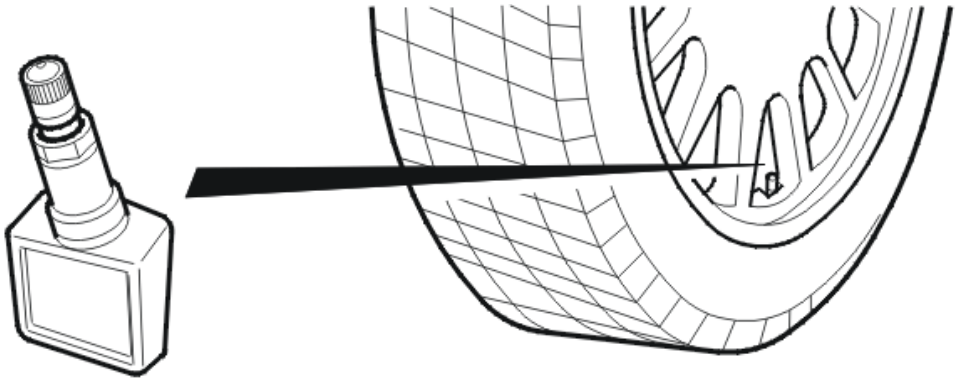

Fig. 129: Identifying Special Tool
Courtesy of VOLVO CARS CORPORATION

- **Continue**

  Refer to **VERIFICATION**

INFORMATION

FAULT-TRACING INFORMATION

The fault should have been detected and remedied. As this is not the case fault-tracing has failed.

Exit fault-tracing for this diagnostic trouble code (DTC) or make another attempt.

VERIFICATION

HINT: After carrying out the repair, check that the fault has been remedied.

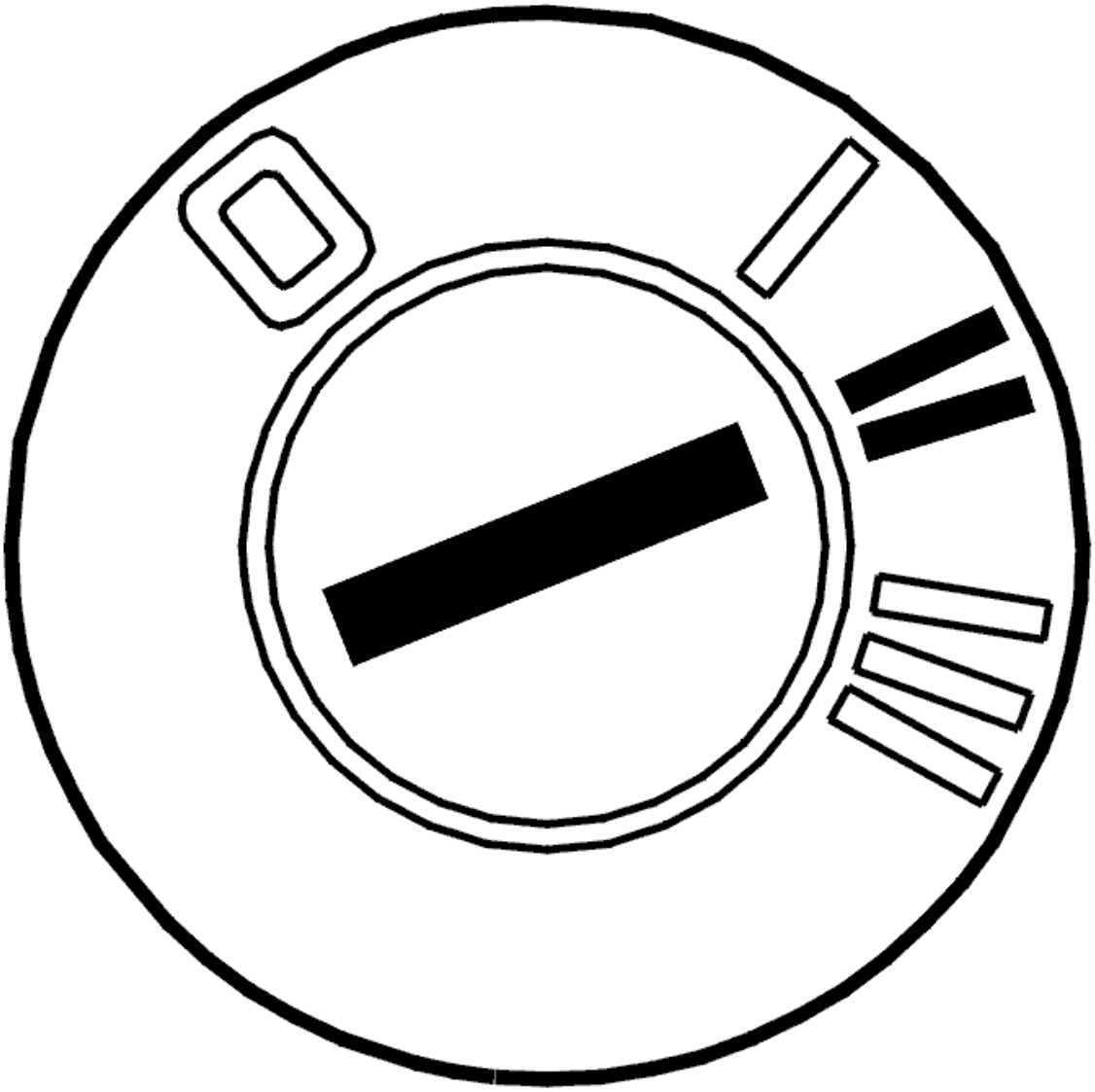

Fig. 130: Identifying Ignition ON
Courtesy of VOLVO CARS CORPORATION

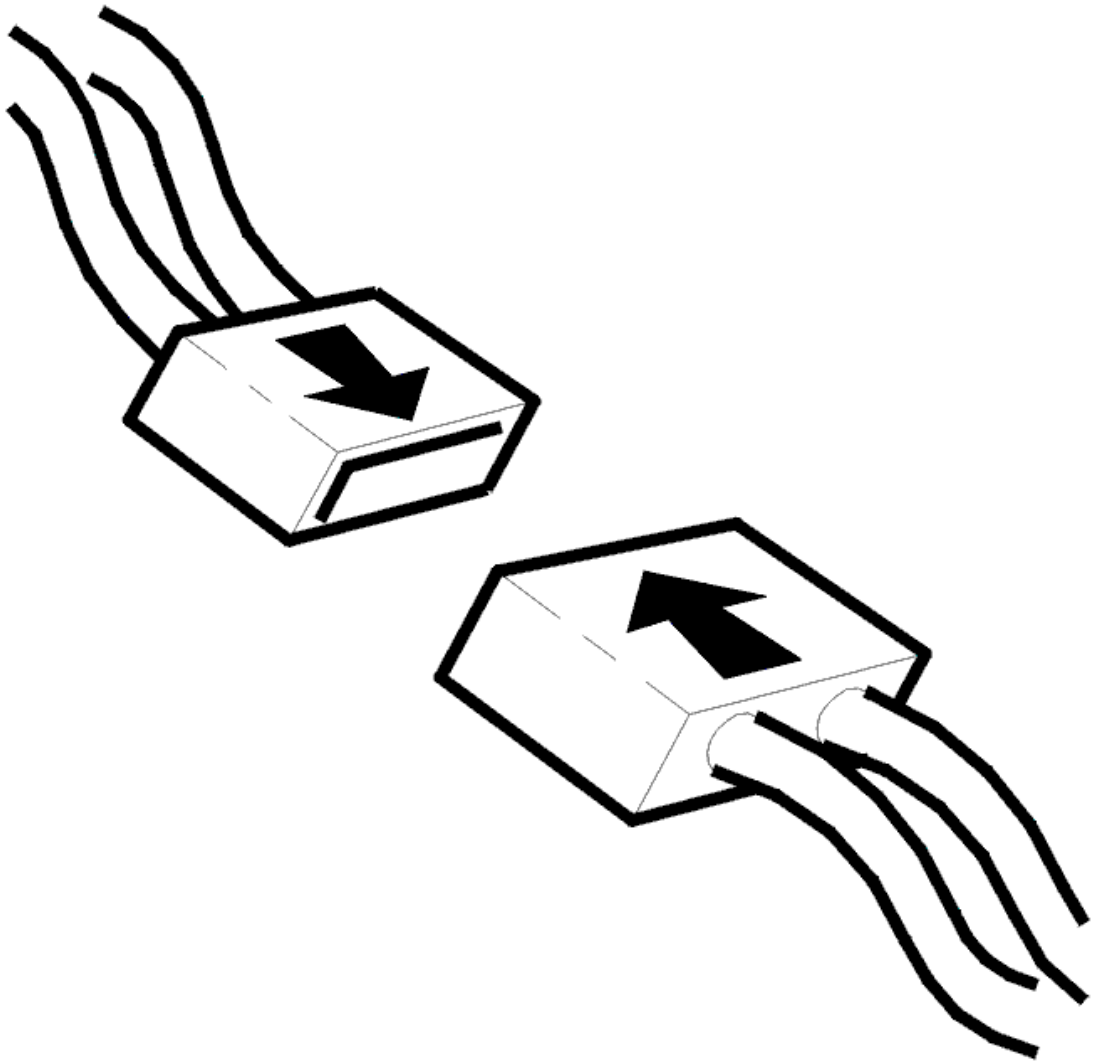

Fig. 131: Connecting Connector
Courtesy of VOLVO CARS CORPORATION

- Ignition off
- Reinstall the connectors, components etc.
- Ignition on.

Read out the ID numbers for the tire pressure sensors using the VCT2000 (or appropriate scan tool).

Use the following special tools to activate the sensor.

- see **9512987**

The TPMS special tool activates the sensor, which then starts to send information to the Upper Electronic Module (UEM). After activating a sensor, press the "Show data" button for the relevant wheel. Repeat

activation for all wheels. Different ID numbers should appear.

NOTE: **Ensure that the special tool is positioned under the edge of the rim against the tire where the sensor is installed. The sensor will not be activated if the tool is against the rim. The sensor must then be held in place for approximately 5 seconds for the signals to be correctly received. Use only one special tool at a time in the vicinity of the car.**

NOTE: **Carry out the above in an area away from where other cars are being driven. The receiver can pick up signals from sensors on other cars. An incorrect ID number would then be displayed.**

Check that the relevant sensor(s) respond. Test different wheels to ensure that different ID numbers are displayed.

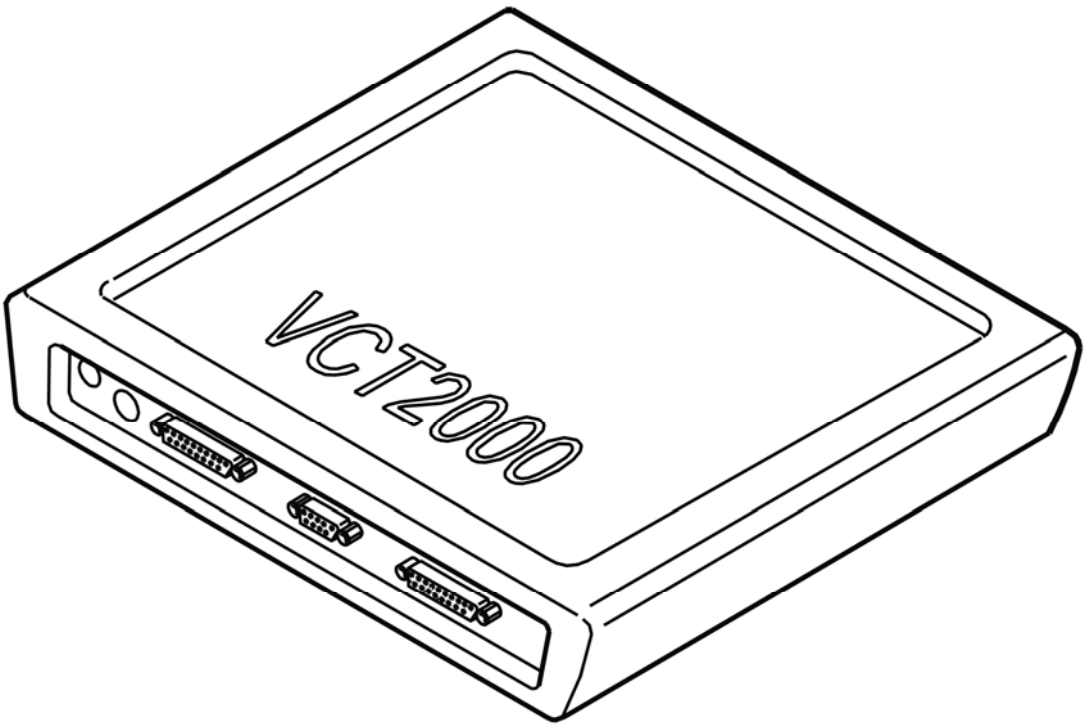

Fig. 132: Identifying VCT2000 Diagnostic Tool Symbol In VIDA
Courtesy of VOLVO CARS CORPORATION

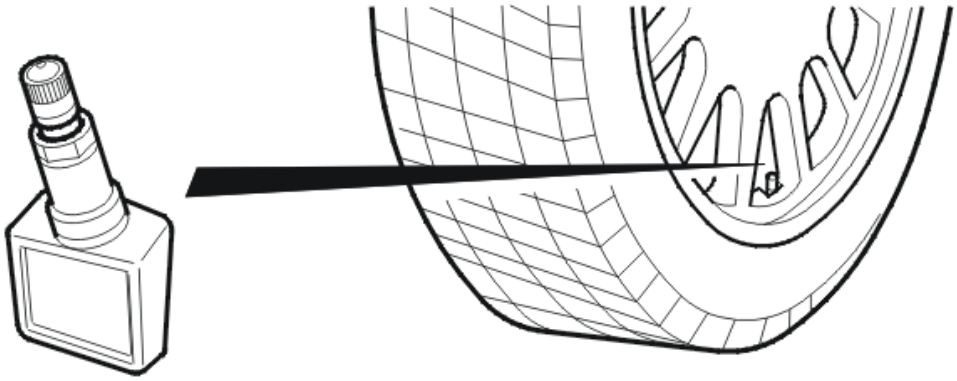

Fig. 133: Identifying Special Tool
Courtesy of VOLVO CARS CORPORATION

Is the sensor OK?

- **YES**

  VERIFIED: Troubleshooting has been completed.

- **NO**

  Refer to **INFORMATION**

UEM-00A9: CONTROL MODULE. CONFIGURATION FAULT (2003-12)

DIAGNOSTIC TROUBLE CODE (DTC) INFORMATION UEM-00A9

Condition

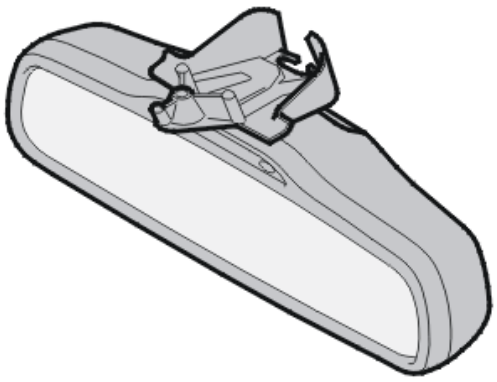

Fig. 134: Identifying Rear View Mirror
Courtesy of VOLVO CARS CORPORATION

The upper electronic module (UEM) has a configuration file which controls certain internal settings. The upper

electronic module (UEM) checks that the configuration file is correct.

The diagnostic trouble code (DTC) is stored if the upper electronic module (UEM) registers that the configuration file is incorrect or missing.

The diagnostic trouble code (DTC) can be detected when the control module is initialized after being reset or when diagnostic trouble codes (DTCs) are erased.

Substitute Value

- Factory settings are used.

Possible Source

- Incorrect or missing configuration file.

Fault symptom[s]

- None.

CONFIGURATION FAULT

REPLACING SOFTWARE

NOTE: If possible, read off the programmed data before replacing software.

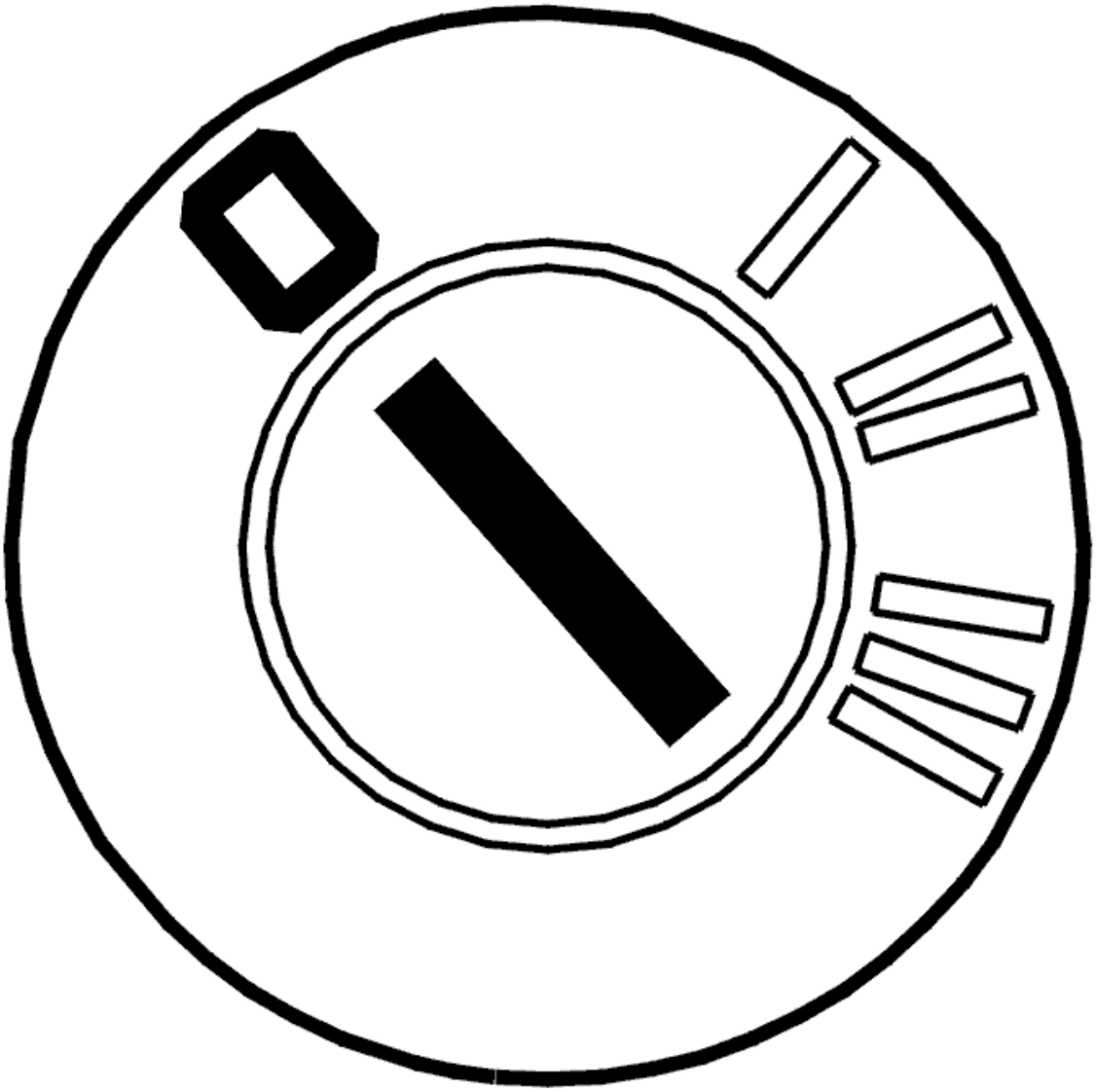

Fig. 135: Identifying Ignition OFF
Courtesy of VOLVO CARS CORPORATION

- Ignition off.

  The upper electronic module (UEM) has registered a fault in the configuration file.

  The fault may be due to a program fault. The software must be replaced.

- **Continue**

  Refer to **READING OFF PROGRAMMED VALUES**

READING OFF PROGRAMMED VALUES

NOTE: Read off the programmed values from the upper electronic module (UEM)

before re-programming.

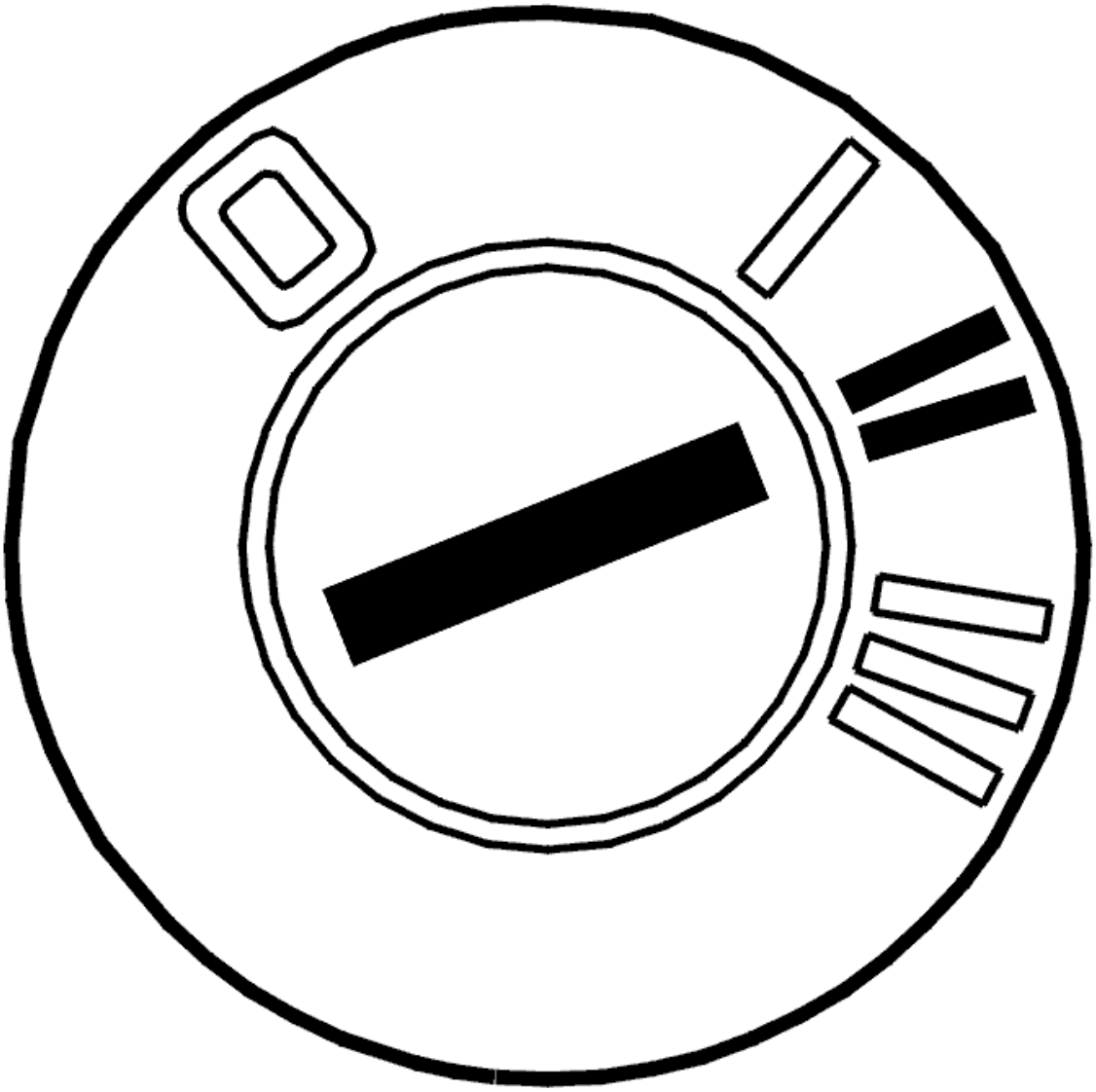

Fig. 136: Identifying Ignition ON
Courtesy of VOLVO CARS CORPORATION

- Ignition on
- Use the VCT2000 (or appropriate scan tool) to read off the programmed values.

  The obtained values are programmed customer parameters in the upper electronic module (UEM). These values should be noted for later use.

  Other information

  - For information about programming the customer parameters, see **DIAGNOSTIC FUNCTIONS** .

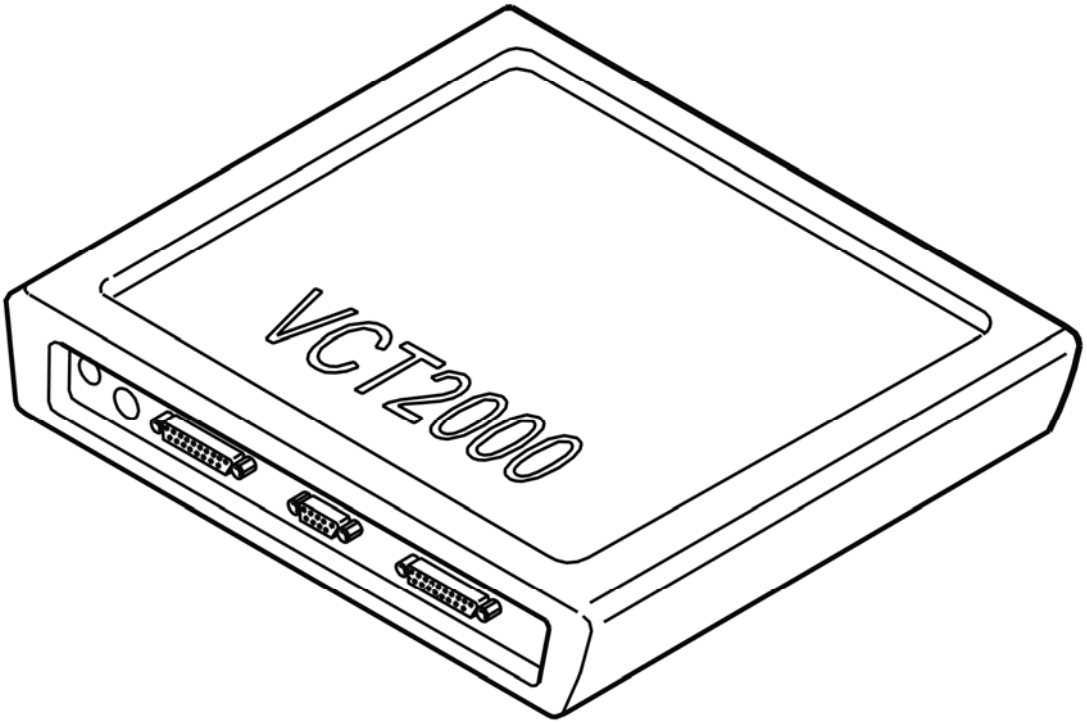

Fig. 137: Identifying VCT2000 Diagnostic Tool Symbol In VIDA
Courtesy of VOLVO CARS CORPORATION

- **Continue**

  Refer to **DOWNLOADING SOFTWARE**

DOWNLOADING SOFTWARE

Download new software. See **UPPER ELECTRONIC MODULE (UEM)/REARVIEW MIRROR, REPLACING** .

Do not replace the control module.

HINT: If diagnostic trouble code (DTC) UEM-E001 is stored, communication with the control module cannot be established. This can be remedied in two ways.

1. Press the remote control button for local lighting
2. Remove fuse 11C/28 from the fusebox in the passenger compartment. Reinstall the fuse again.

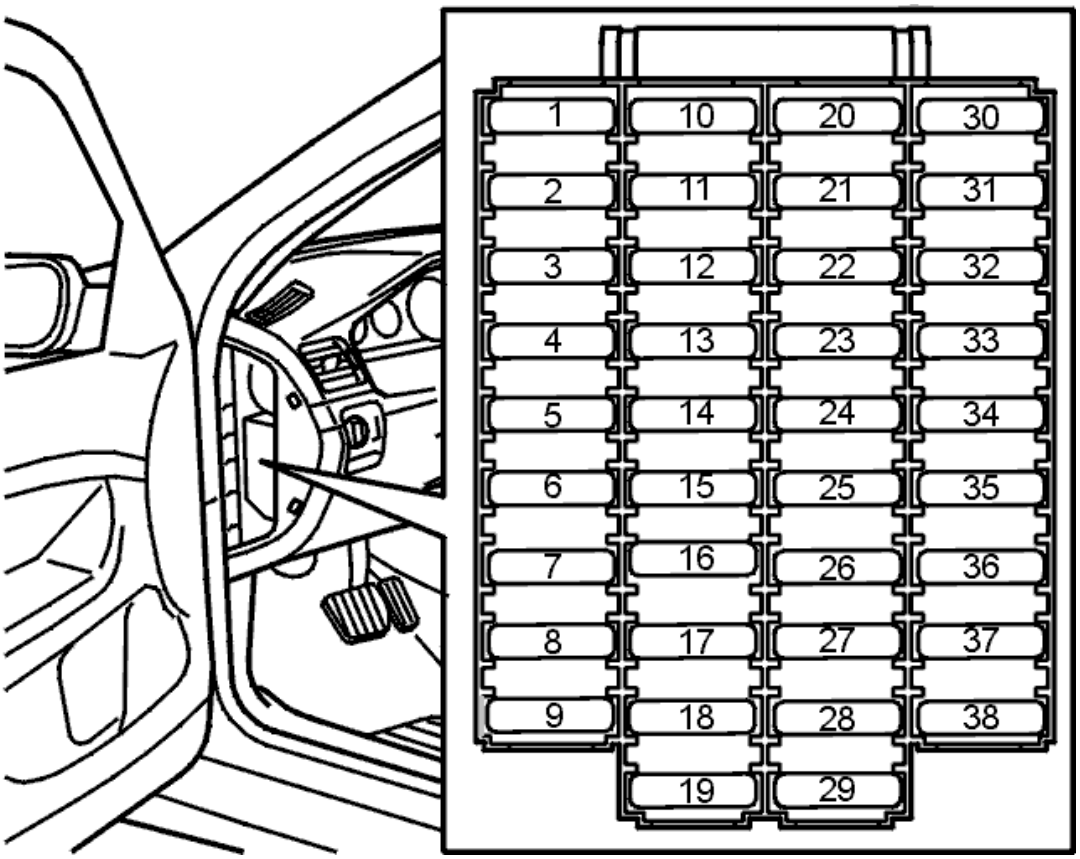

Fig. 138: Fuse Holder (Passenger Compartment)
Courtesy of VOLVO CARS CORPORATION

- **Continue**

  Refer to **CHECKING THE INTERIOR LIGHTING**

CHECKING THE INTERIOR LIGHTING

Two times can be programmed for the interior lighting:

1. **Short**

   The period from when the door is unlocked, or the engine stops, to when the interior lighting goes out can be changed if it is too long or too short.

2. **Long**

   The period from when the door is opened, or a lamp is lit with a switch, to when the lamp goes out can be changed if it is too long or too short.

To program a long interior lighting period, use VIDA (Volvo scan tool).

- **Continue**

Refer to **PROGRAMMING A SHORT INTERIOR LIGHTING PERIOD**

PROGRAMMING A SHORT INTERIOR LIGHTING PERIOD

The general lighting and rear reading lamps light and remain lit for 30 seconds when:

- The door has been unlocked from outside with a key or the remote control.
- The engine has been stopped and the ignition key turned to 0.

The default period is 30 seconds. This can be changed to between 5 and 255 seconds.

Read off the programmed values.

To change the time, mark the desired value in the scrolling list and start programming.

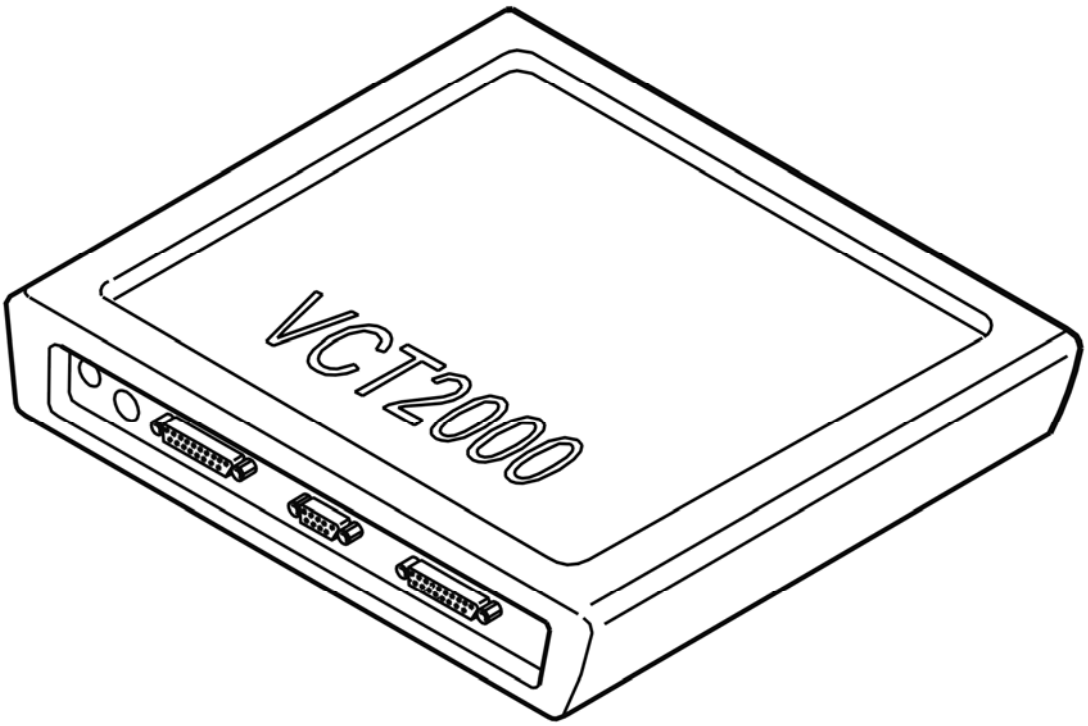

Fig. 139: Identifying VCT2000 Diagnostic Tool Symbol In VIDA
Courtesy of VOLVO CARS CORPORATION

Do you want to program any more parameters?

- **YES**

Refer to **PROGRAMMING A LONG INTERIOR LIGHTING PERIOD**

- **NO**

  Refer to **CHECKING THE ANTI-DAZZLE FUNCTION IN THE REAR VIEW MIRROR**

PROGRAMMING A LONG INTERIOR LIGHTING PERIOD

The general lighting and rear reading lamps light and remain lit for 10 minutes when:

- A door is opened after being unlocked.
- The lamp is lit with a switch.

The default period is 10 minutes. This can be changed to between 0 and 255 minutes at 10 minute intervals.

Read off the programmed values.

To change the time, mark the desired value in the scrolling list and start programming.

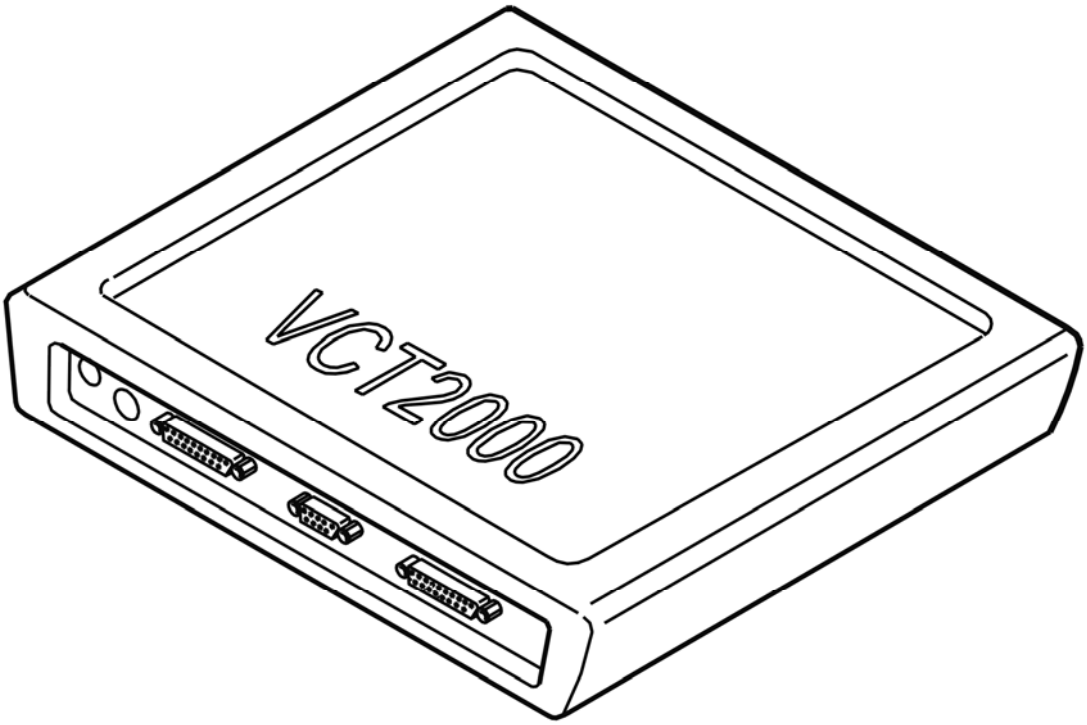

Fig. 140: Identifying VCT2000 Diagnostic Tool Symbol In VIDA
Courtesy of VOLVO CARS CORPORATION

- **Continue**

  Refer to **CHECKING THE ANTI-DAZZLE FUNCTION IN THE REAR VIEW MIRROR**

CHECKING THE ANTI-DAZZLE FUNCTION IN THE REAR VIEW MIRROR

CHECKING THE ANTI-DAZZLE FUNCTION

NOTE: If the upper electronic module (UEM) has been replaced software, specially developed for downloading after replacing the control module, must be downloaded to the control module before the anti-dazzle function is changed. See UPPER ELECTRONIC MODULE (UEM)/REARVIEW MIRROR, REPLACING .

The rear view mirror anti-dazzle function can be adjusted:

- If the rear view mirror anti-dazzle function is too powerful or too weak, it can be adjusted.

Specific software for setting the anti-dazzle function must be installed in the car to do this.

UEM-E001: CONTROL MODULE COMMUNICATION. FAULTY COMMUNICATION (2003-04)

DIAGNOSTIC TROUBLE CODE (DTC) INFORMATION UEM-E001

Condition

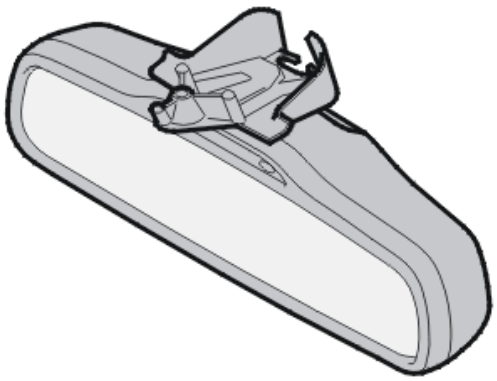

Fig. 141: Identifying Rear View Mirror
Courtesy of VOLVO CARS CORPORATION

The control modules transmit and receive information via a standardized serial communication method - CAN (Controller Area Network). The diagnostic trouble code (DTC) is stored if the control module registers serious interference (CAN communication blocked).

NOTE: In the event of system communication problems, it is not possible to communicate with the control module. Therefore it will only be possible to read off the fault if it is intermittent.

Substitute Value

- The control module shuts itself off ("bus-off").

  HINT: The control module will remain shut off until the power supply is broken (15, 30, X). When the power supply is connected the control module will make a new attempt to communicate.

Possible Source

- Short-circuit between the control area network (CAN) wiring
- Open-circuit in the control area network (CAN) wiring
- Internal fault in the control module
- Internal fault in another control module in the same part of the control area network (CAN).

Fault symptom[s]

- Cannot be controlled with the remote control
- The interior lighting does not operate
- The power sun roof does not operate
- The alarm does not function at all
- No rain sensor function.

FAULTY COMMUNICATION

see **FAULTY COMMUNICATION**

UEM-E001: CONTROL MODULE COMMUNICATION. FAULTY COMMUNICATION (2005-12)

DIAGNOSTIC TROUBLE CODE (DTC) INFORMATION UEM-E001

see **DIAGNOSTIC TROUBLE CODE (DTC) INFORMATION UEM-E001**

SIGNAL MISSING

see **SIGNAL MISSING**

UEM-E003: CONFIGURATION FAULT. FAULTY CONFIGURATION (2005-12)

DIAGNOSTIC TROUBLE CODE (DTC) INFORMATION UEM-E003

Condition

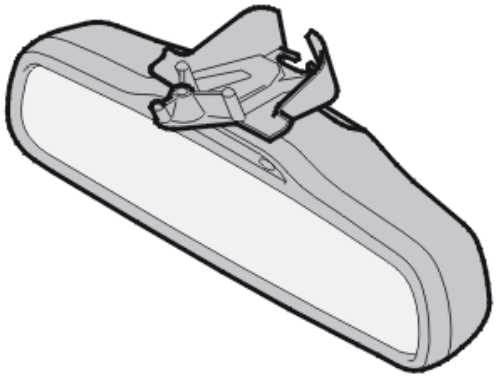

Fig. 142: Identifying Rear View Mirror
Courtesy of VOLVO CARS CORPORATION

The control module compares its configuration ID with the signal configuration transmitted on the control area network (CAN) by the central electronic module (CEM). If the configuration IDs do not correspond the fault code is stored. The diagnostic trouble code (DTC) is also stored if the communication between the control module and the central electronic module (CEM) is interrupted.

NOTE: **In the event of open-circuit in both the control area network (CAN) cables, it is not possible to communicate with the control module. Therefore it will only be possible to read off the diagnostic trouble code (DTC) if this type of fault is intermittent. When the diagnostic trouble code (DTC) is stored, the control module responds to the diagnostic command, however normal control area network (CAN) communication does not work. ("Expulsion mode")**

Substitute Value

- None.

Possible Source

- Faulty control area network (CAN) configuration ID. (The node is not intended for this car, for example a used control module with different software/hardware.)
- Open-circuit in the control area network (CAN) wiring between the control module and the central electrical module (CEM).

Fault symptom[s]

- Cannot be controlled with the remote control
- The interior lighting does not operate
- The power sun roof does not operate
- The alarm does not function at all
- No rain sensor function.

SIGNAL MISSING

see **SIGNAL MISSING**

UEM-E003: CONFIGURATION FAULT. FAULTY CONFIGURATION (2003-04)

DIAGNOSTIC TROUBLE CODE (DTC) INFORMATION UEM-E003

see **DIAGNOSTIC TROUBLE CODE (DTC) INFORMATION UEM-E003**

FAULTY CONFIGURATION (2003)

see **FAULTY CONFIGURATION (2003)**

FAULTY CONFIGURATION (2004)

see **FAULTY CONFIGURATION (2004)**

UEM-XXXX: UNKNOWN DIAGNOSTIC TROUBLE CODE (DTC) FOR THE CURRENT CONTROL MODULE VERSION (2003-12)

UNKNOWN DIAGNOSTIC TROUBLE CODE (DTC) FOR THE CURRENT CONTROL MODULE VERSION

READING OFF DIAGNOSTIC TROUBLE CODES (DTCS)

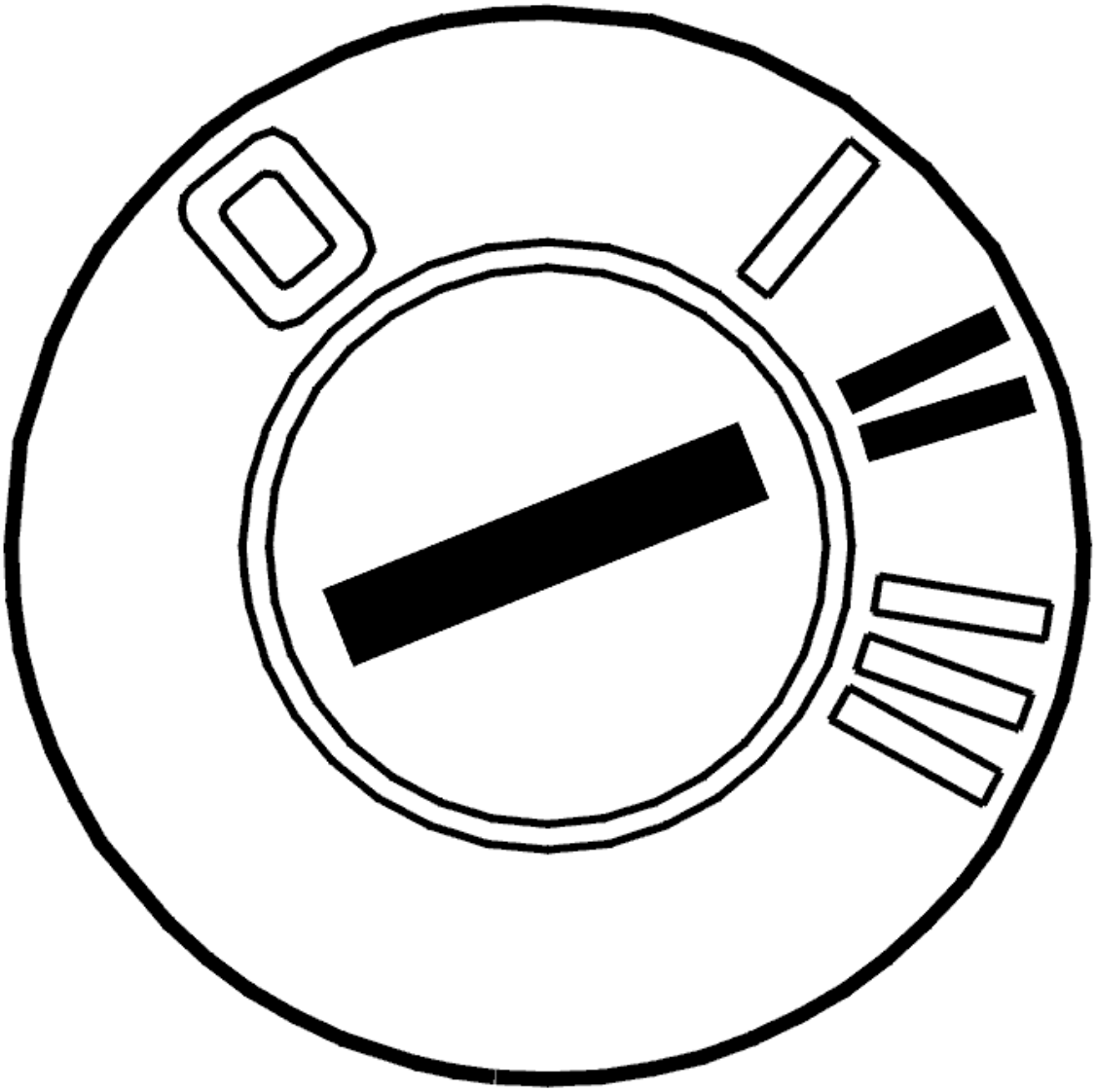

Fig. 143: Identifying Ignition ON
Courtesy of VOLVO CARS CORPORATION

- Ignition on.

  Read off the diagnostic trouble code (DTC) that is stored in the car.

  Make a note of the code for reporting purposes.

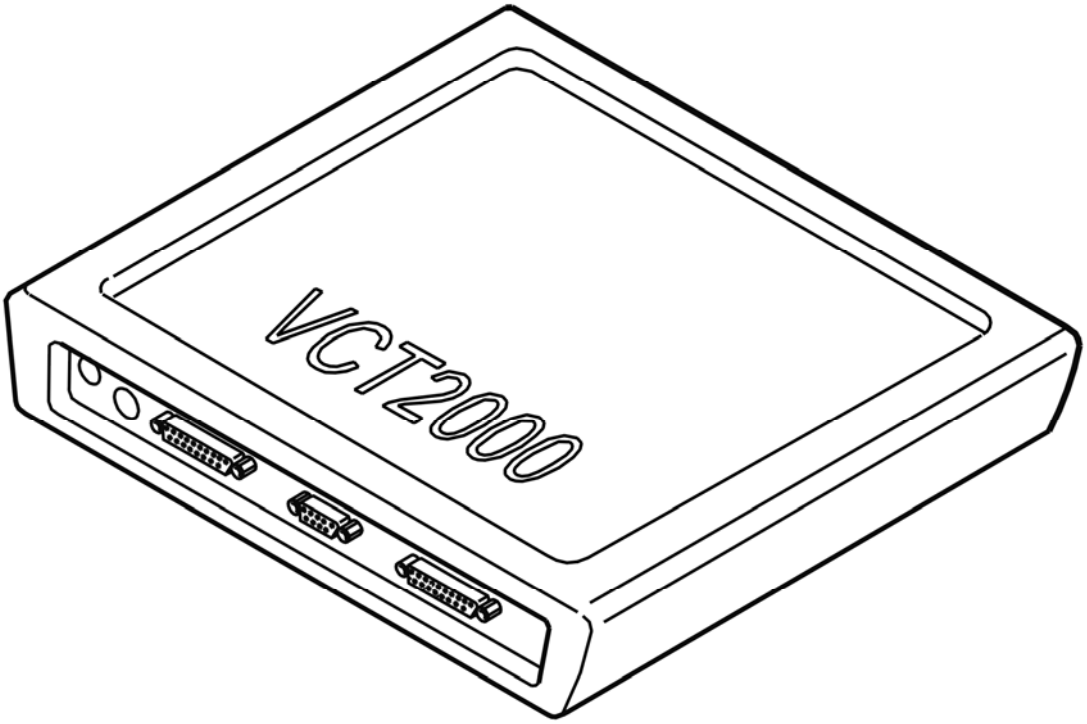

Fig. 144: Identifying VCT2000 Diagnostic Tool Symbol In VIDA
Courtesy of VOLVO CARS CORPORATION

ELECTRICAL

Cables And Fuses - General Diagnostics And Tests

CHECKING THE GROUND TERMINAL FOR THE REAR ELECTRONIC MODULE (REM) (2003-04)

CHECKING THE GROUND TERMINAL

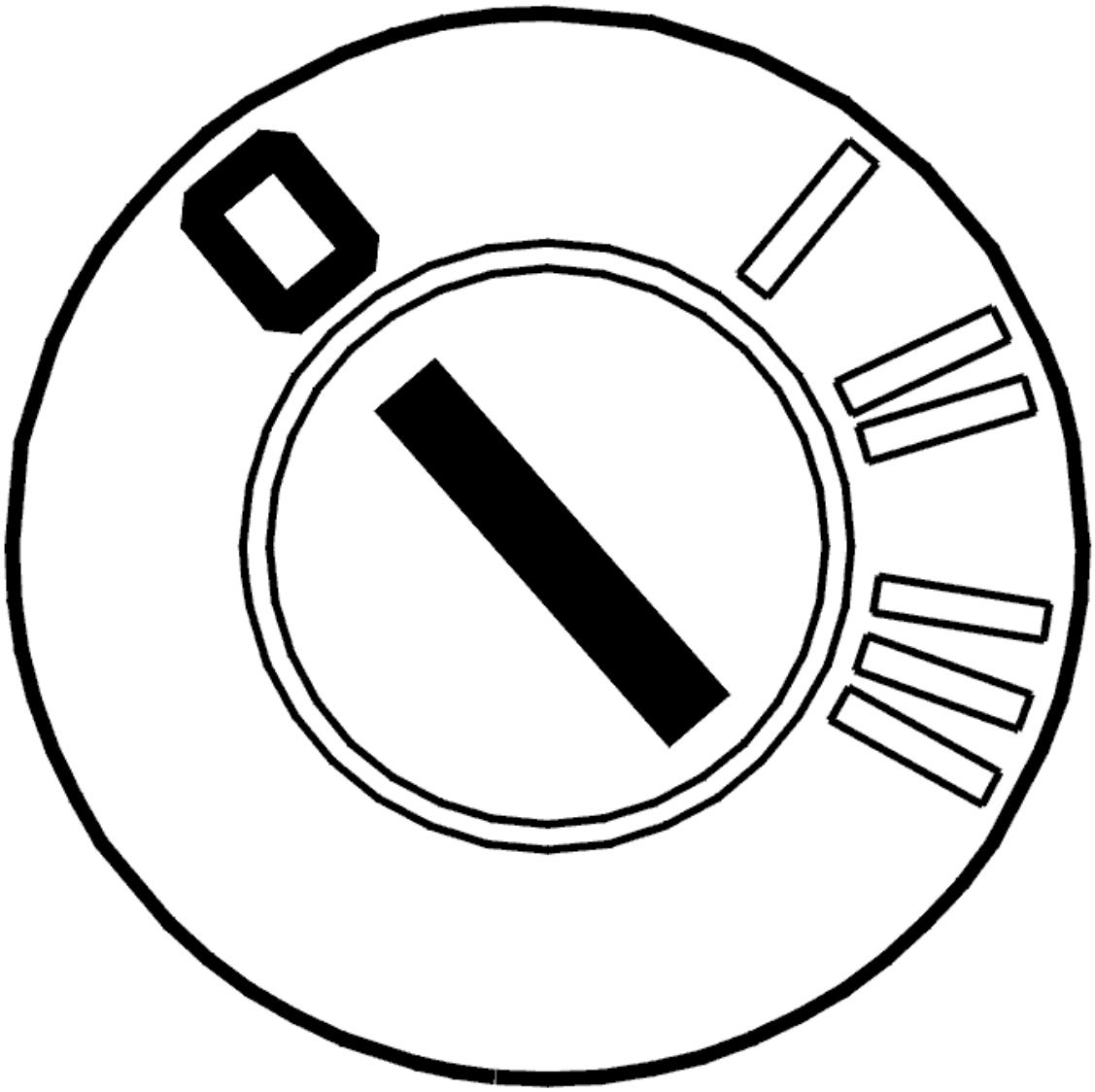

Fig. 1: Identifying Ignition OFF
Courtesy of VOLVO CARS CORPORATION

- Ignition off
- Control module disconnected
- Switch off all equipment that takes power from the battery (courtesy lighting, radio etc).

Connect the breakout box.

Connect an ohmmeter between terminal #B21 on the breakout box and the battery negative terminal.

The ohmmeter should read approximately 0 ohm.

Other information

- To connect the breakout box, see **CONNECTING THE BREAKOUT BOX**.

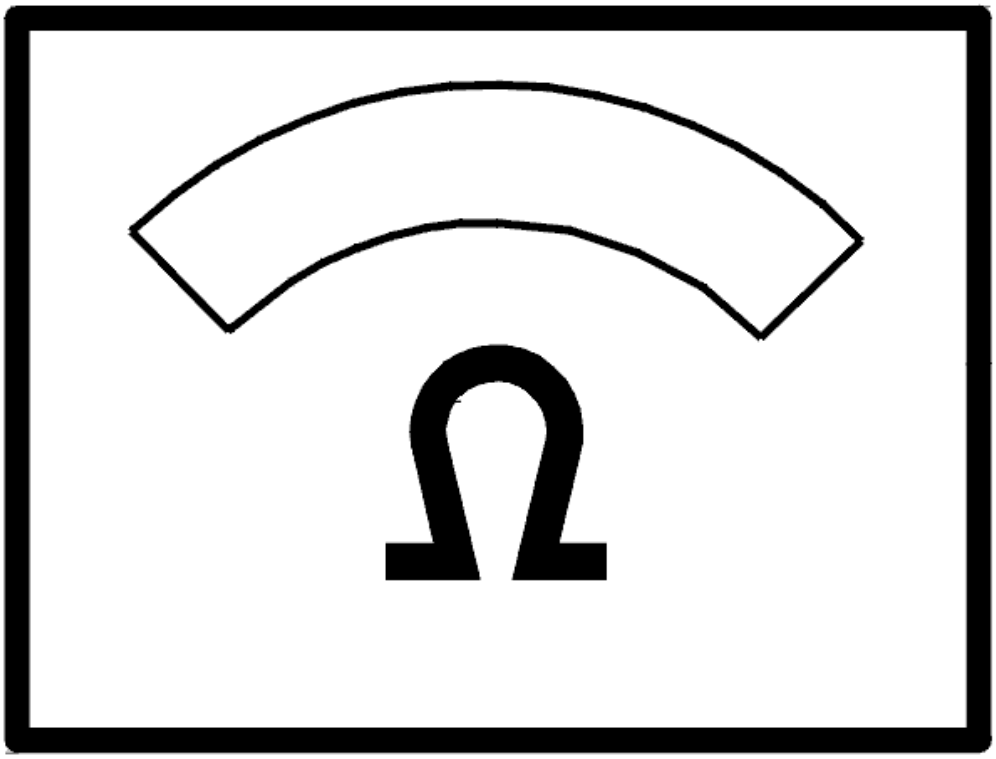

Fig. 2: Identifying Ohmmeter
Courtesy of VOLVO CARS CORPORATION

Is the value OK?

- **YES**

OKAY: Troubleshooting has been completed.

- **NO**

  Refer to **CHECKING FOR OPEN-CIRCUITS, CONTACT RESISTANCE AND OXIDATION**

CHECKING FOR OPEN-CIRCUITS, CONTACT RESISTANCE AND OXIDATION

Check ground terminal 31/72 and the wiring connected to it. Check for an open-circuit. Check for contact resistance and oxidation.

Other information

- see **CHECKING WIRING AND TERMINALS** .

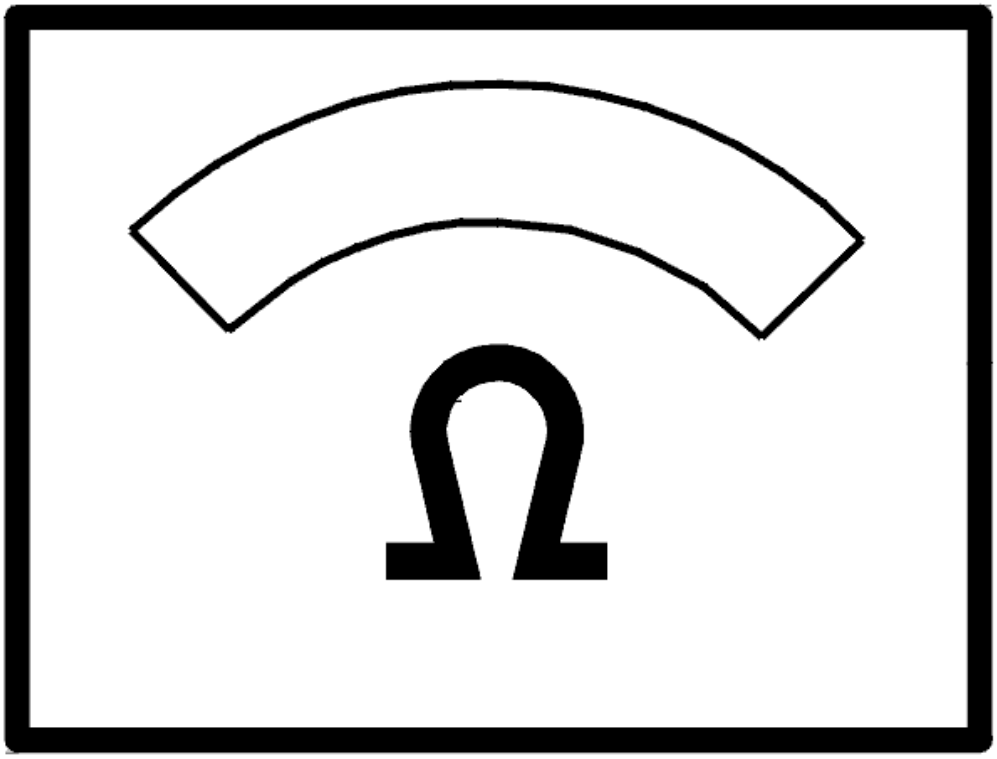

Fig. 3: Identifying Ohmmeter

Courtesy of VOLVO CARS CORPORATION

- **Continue**

  Refer to **VERIFICATION**

VERIFICATION

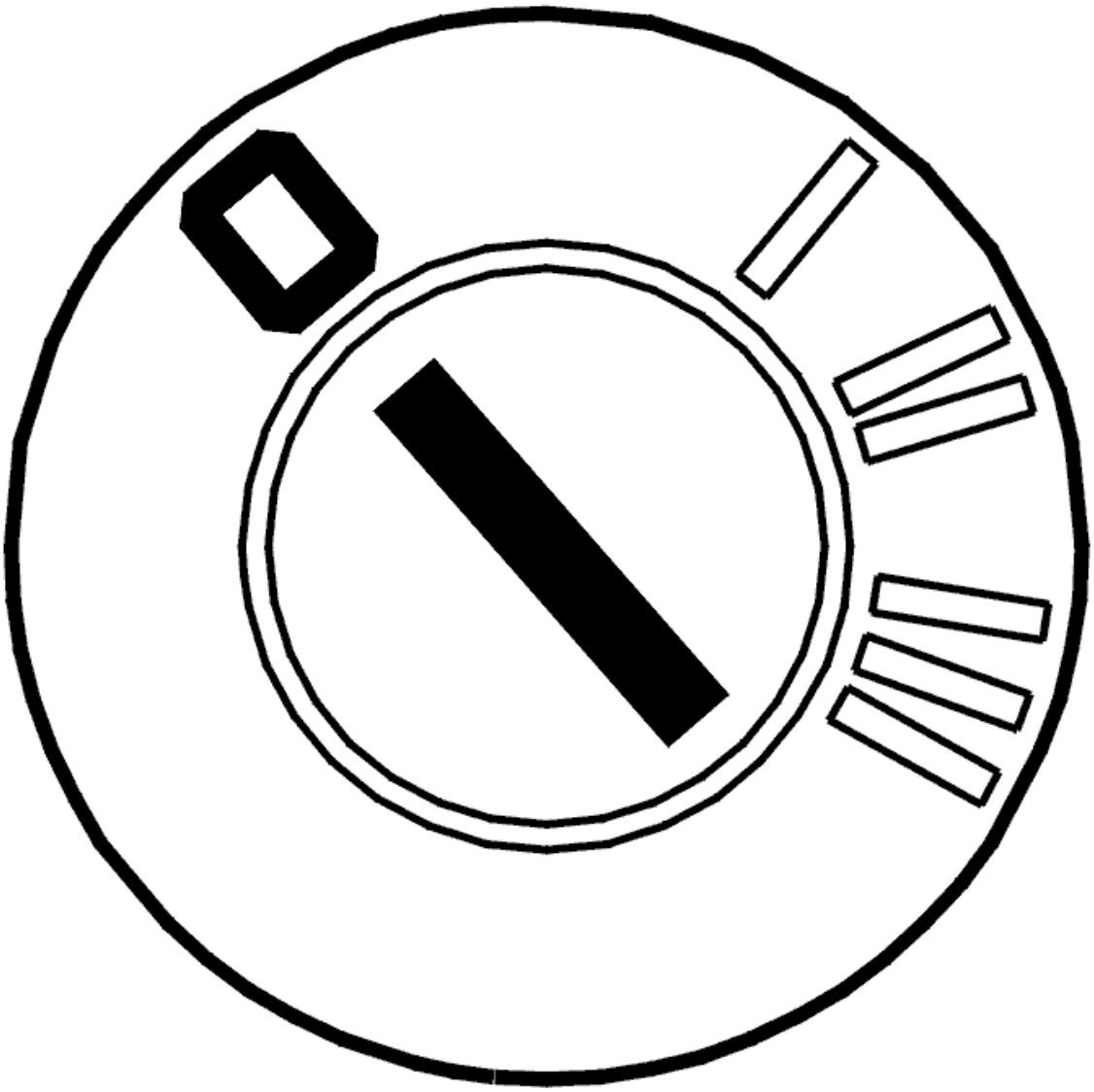

Fig. 4: Identifying Ignition OFF
Courtesy of VOLVO CARS CORPORATION

- Ignition off
- Control module disconnected
- Switch off all equipment that takes power from the battery (courtesy lighting, radio etc).

Connect an ohmmeter between terminal #B21 on the breakout box and the battery negative terminal.

The ohmmeter should read approximately 0 ohms.

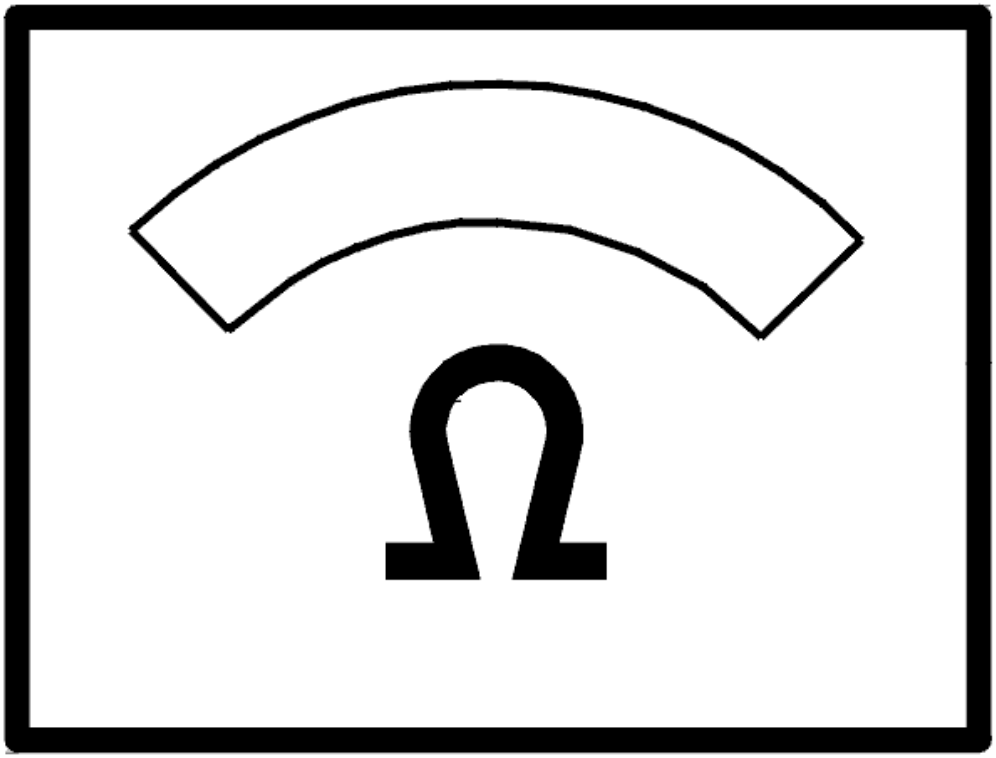

Fig. 5: Identifying Ohmmeter
Courtesy of VOLVO CARS CORPORATION

Is the value OK?

- **YES**

  VERIFIED: Troubleshooting has been completed.

- **NO**

  Refer to **INFORMATION**

INFORMATION

FAULT-TRACING INFORMATION

The fault should have been detected and remedied. As this is not the case fault-tracing has failed.

Exit fault-tracing for this diagnostic trouble code (DTC) or make another attempt.

CHECKING THE GROUND TERMINAL FOR THE UPPER ELECTRONIC MODULE (UEM) (2003-12)

CHECKING THE GROUND TERMINAL

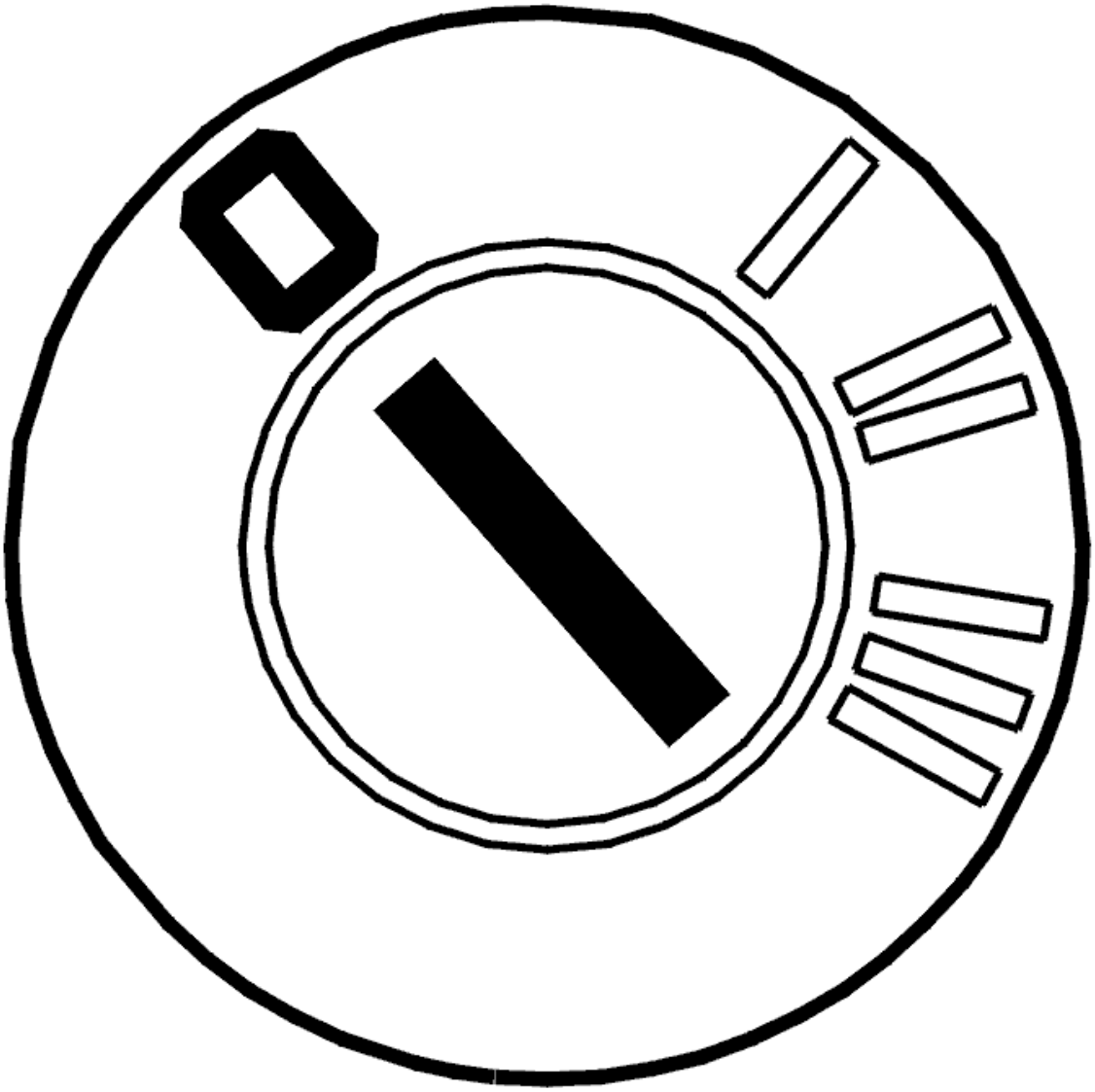

Fig. 6: Identifying Ignition OFF
Courtesy of VOLVO CARS CORPORATION

- Ignition off
- Control module disconnected
- Switch off all equipment that takes power from the battery (courtesy lighting, radio etc).

Connect the breakout box.

Connect an ohmmeter between terminal #A20 on the breakout box and the battery negative terminal.

The ohmmeter should read 0 ohms.

Other information

- To connect the breakout box, see **CONNECTING THE BREAKOUT BOX**.

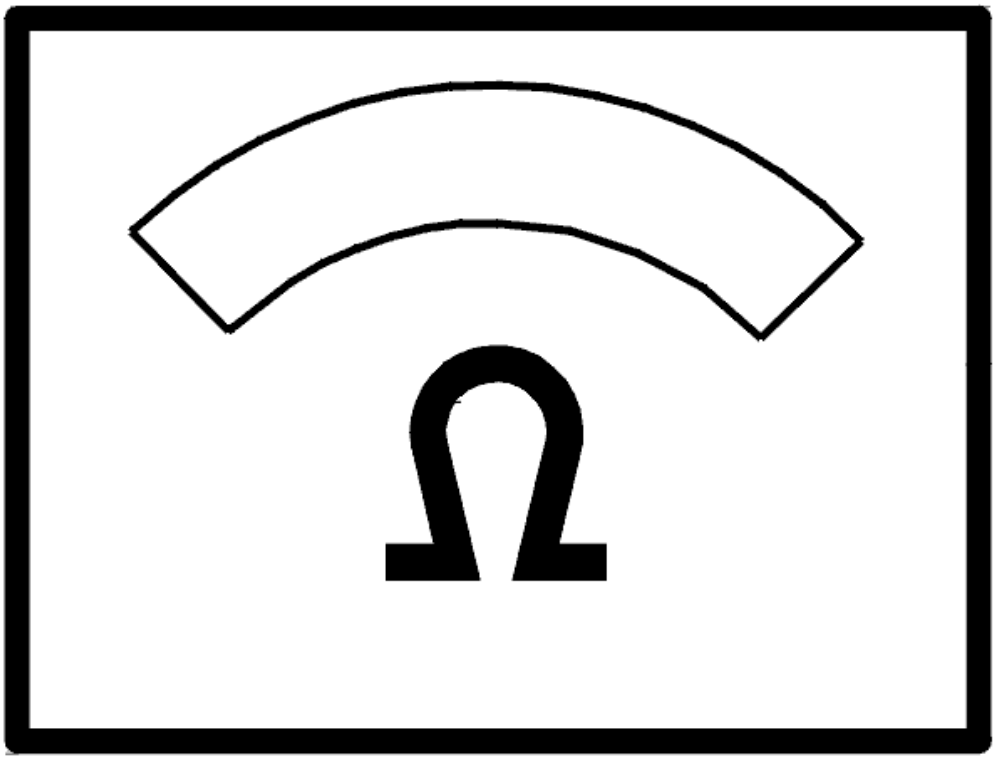

Fig. 7: Identifying Ohmmeter

Courtesy of VOLVO CARS CORPORATION

Is the value OK?

- **YES**

  OKAY: Troubleshooting has been completed.

- **NO**

  Refer to **CHECKING FOR OPEN-CIRCUITS, CONTACT RESISTANCE AND OXIDATION**

CHECKING FOR OPEN-CIRCUITS, CONTACT RESISTANCE AND OXIDATION

Check the ground terminal 31/83. Check for an open-circuit. See **OPEN-CIRCUIT, PERMANENT FAULTS** . Check contact resistance and oxidation. See **CONTACT RESISTANCE AND OXIDATION** .

Check connector 54/13 for, see **CONTACT RESISTANCE AND OXIDATION** .

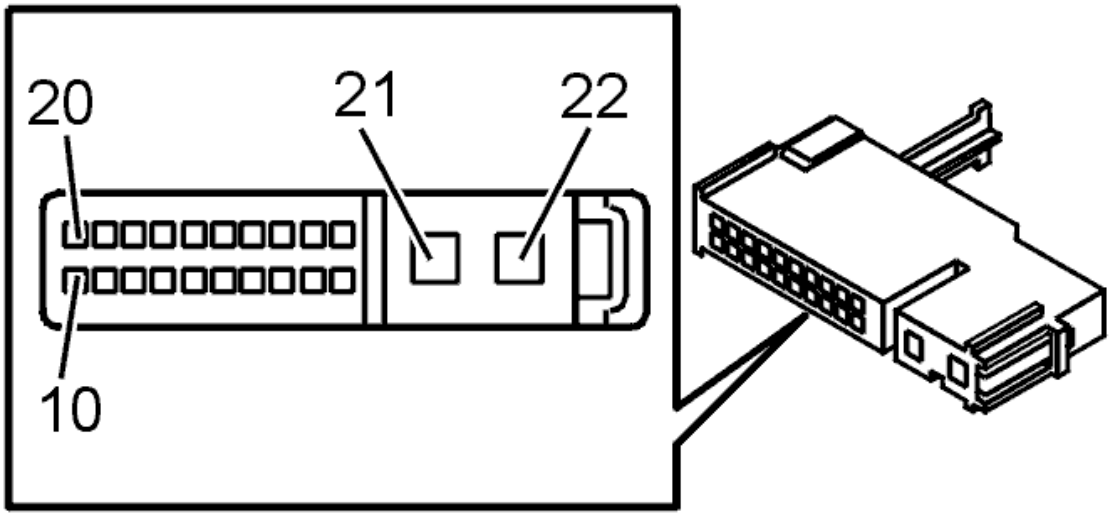

Fig. 8: Identifying Connector Terminals
Courtesy of VOLVO CARS CORPORATION

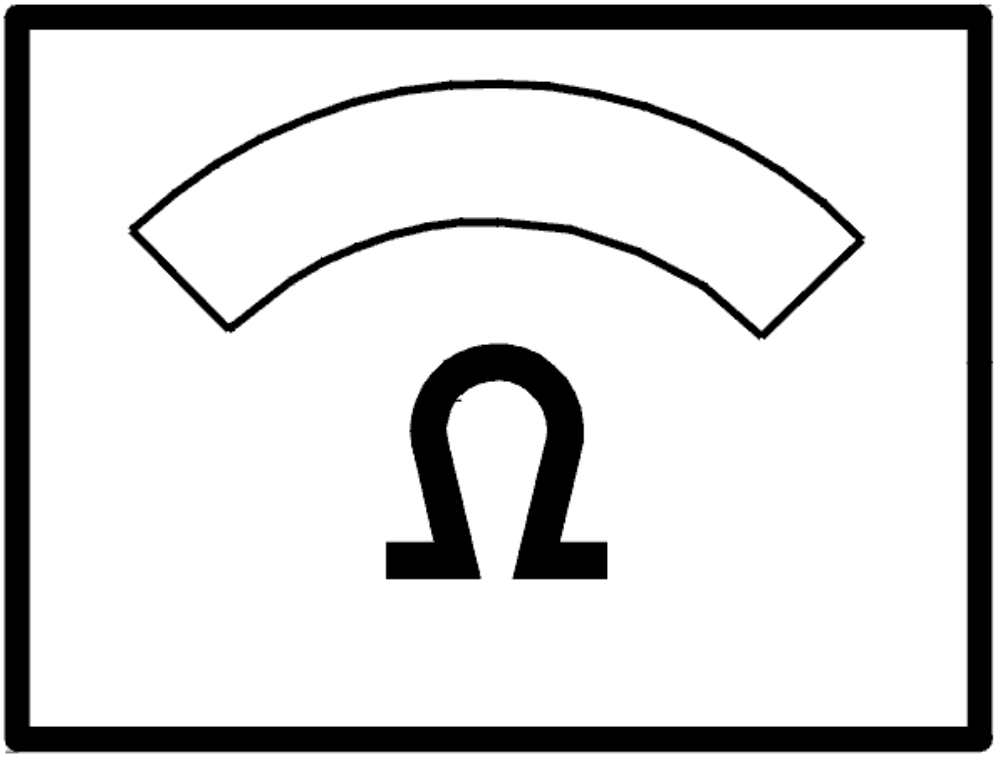

Fig. 9: Identifying Ohmmeter
Courtesy of VOLVO CARS CORPORATION

- **Continue**

  Refer to **VERIFICATION**

VERIFICATION

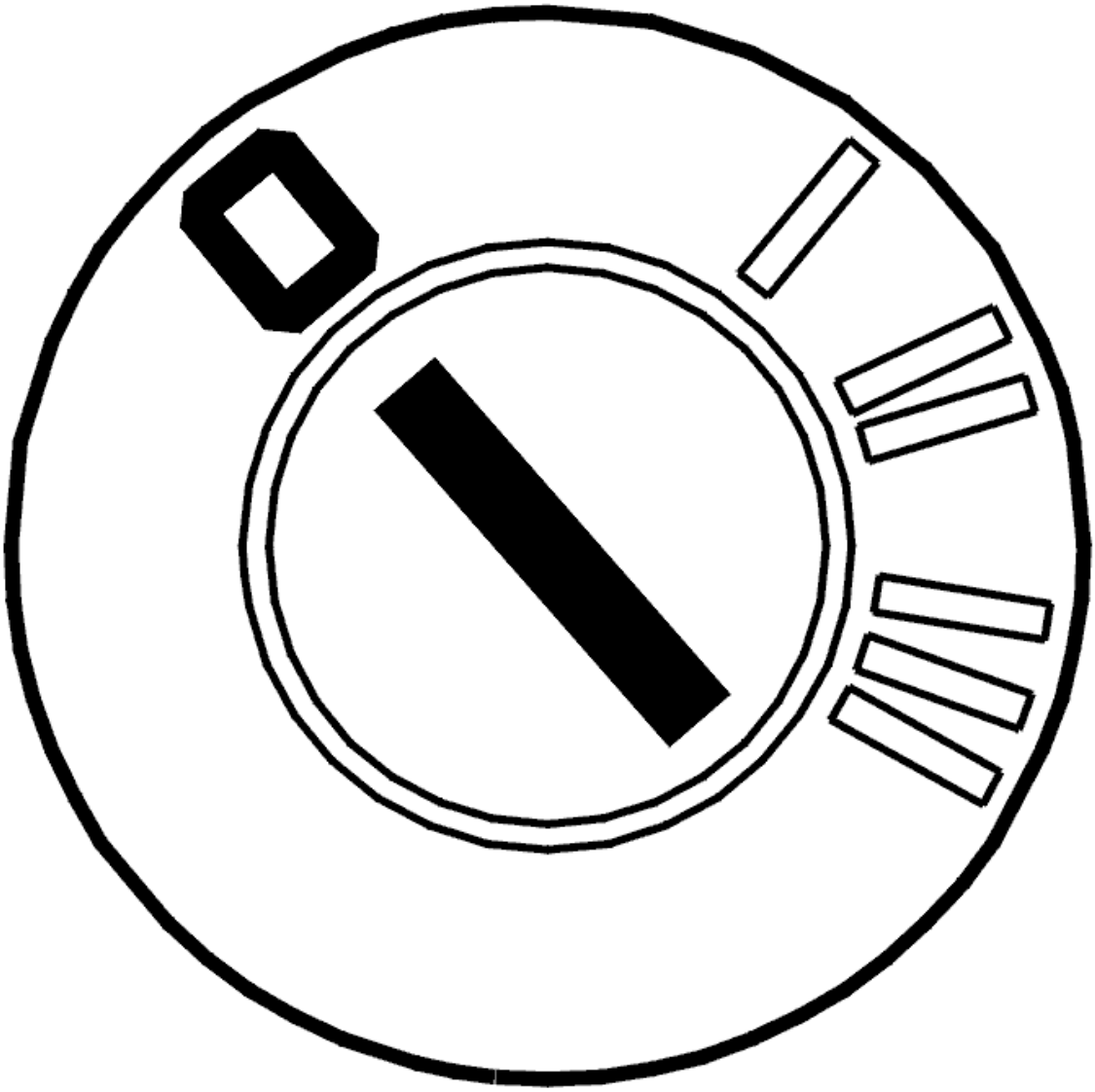

Fig. 10: Identifying Ignition OFF
Courtesy of VOLVO CARS CORPORATION

- Ignition off.
- Control unit disconnected
- Switch off all battery loadings such as entrance lights and radio.

Connect an ohmmeter between the battery negative terminal and test box A20.

The ohmmeter should display 0.

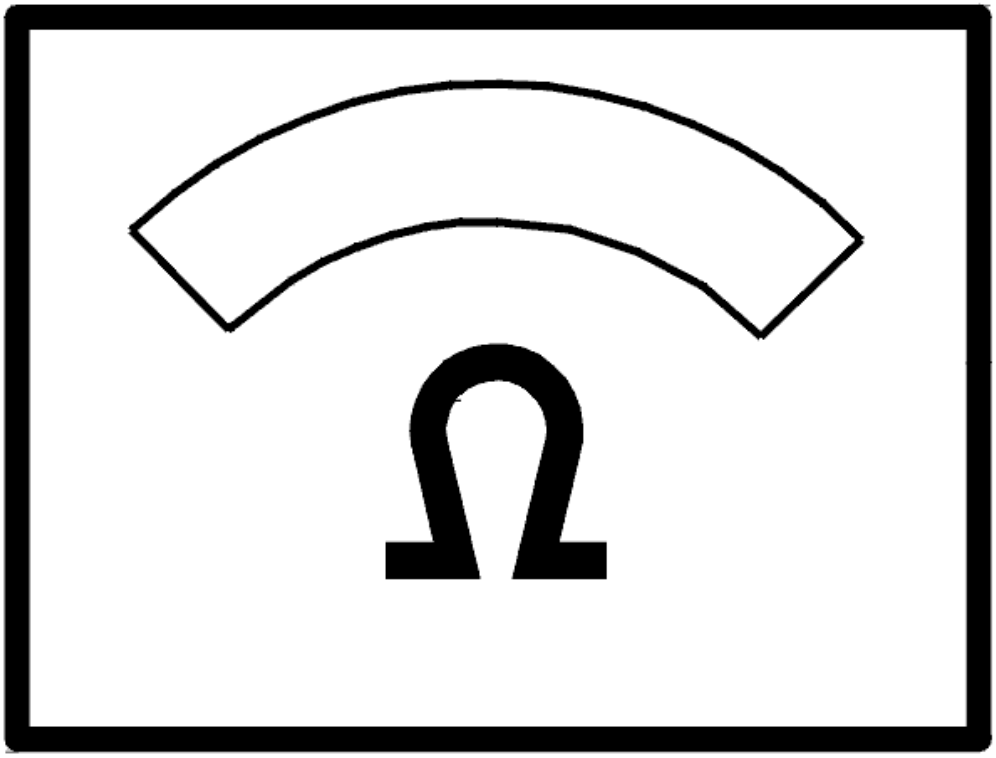

Fig. 11: Identifying Ohmmeter
Courtesy of VOLVO CARS CORPORATION

Is the value OK?

- **YES**

  VERIFIED: Troubleshooting has been completed.

- **NO**

  Refer to **INFORMATION**

INFORMATION

FAULT-TRACING INFORMATION

The fault should have been detected and remedied. As this is not the case fault-tracing has failed.

Exit fault-tracing for this diagnostic trouble code (DTC) or make another attempt.

CHECKING THE GROUND TERMINAL, CENTRAL ELECTRONIC MODULE (CEM) (2003-04)

CHECKING THE GROUND TERMINAL

CONNECTING THE BREAKOUT BOX

Connect the breakout box. See **CONNECTING THE BREAKOUT BOX**.

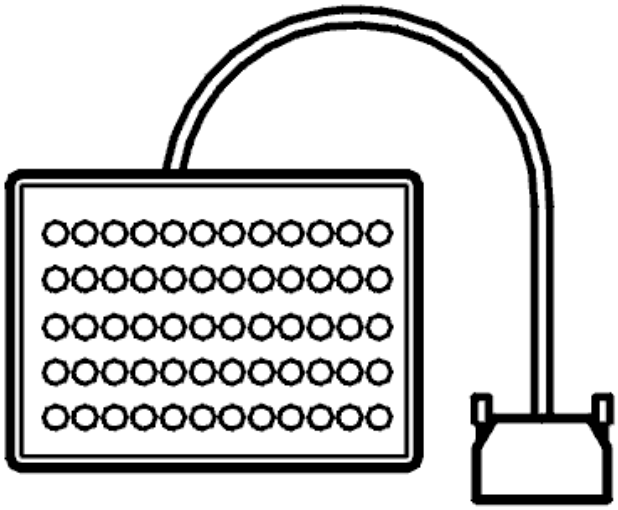

Fig. 12: Breakout Box
Courtesy of VOLVO CARS CORPORATION

- **Continue**

  Refer to **CHECKING THE GROUND TERMINAL**

CHECKING THE GROUND TERMINAL

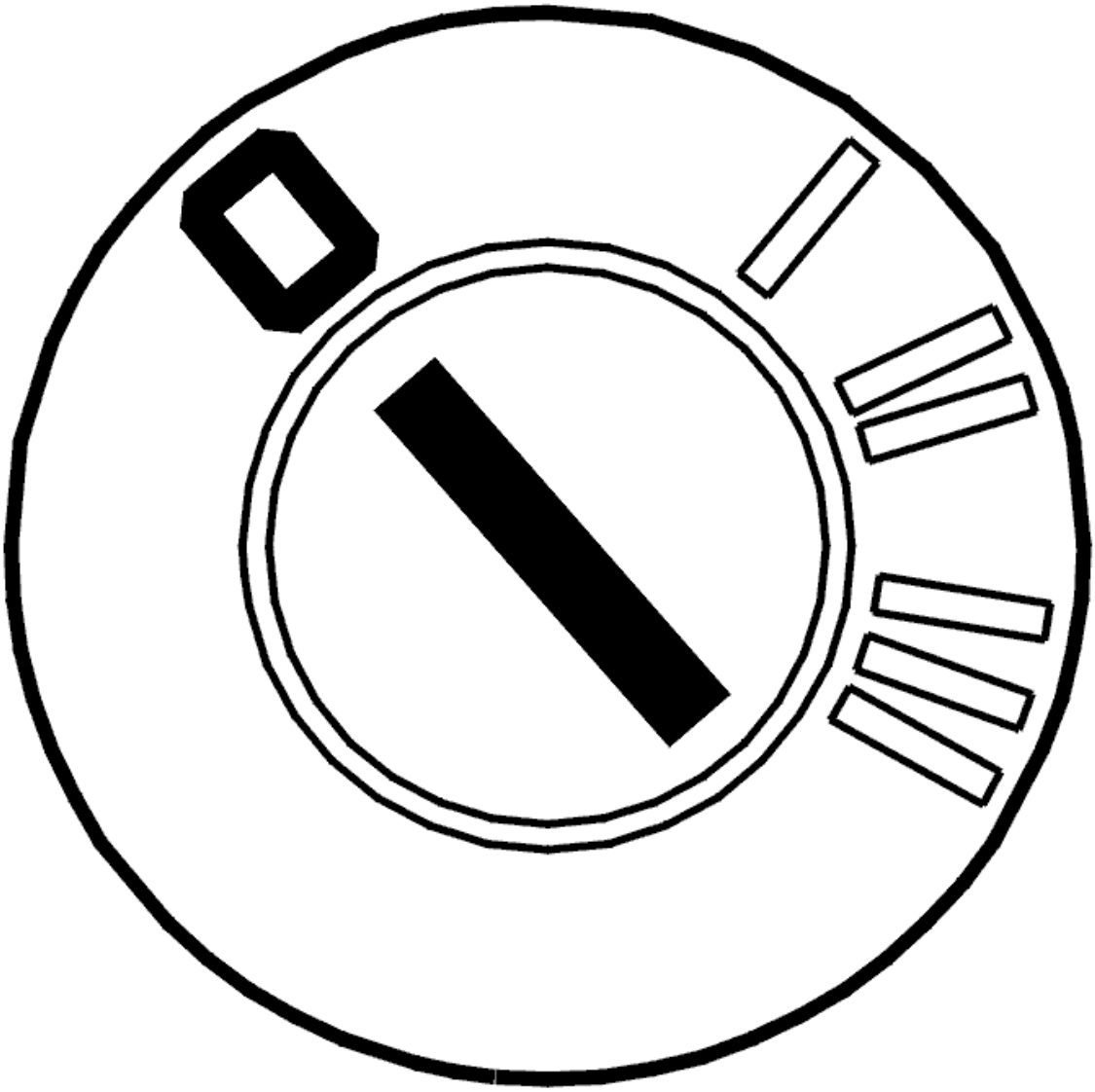

Fig. 13: Identifying Ignition OFF
Courtesy of VOLVO CARS CORPORATION

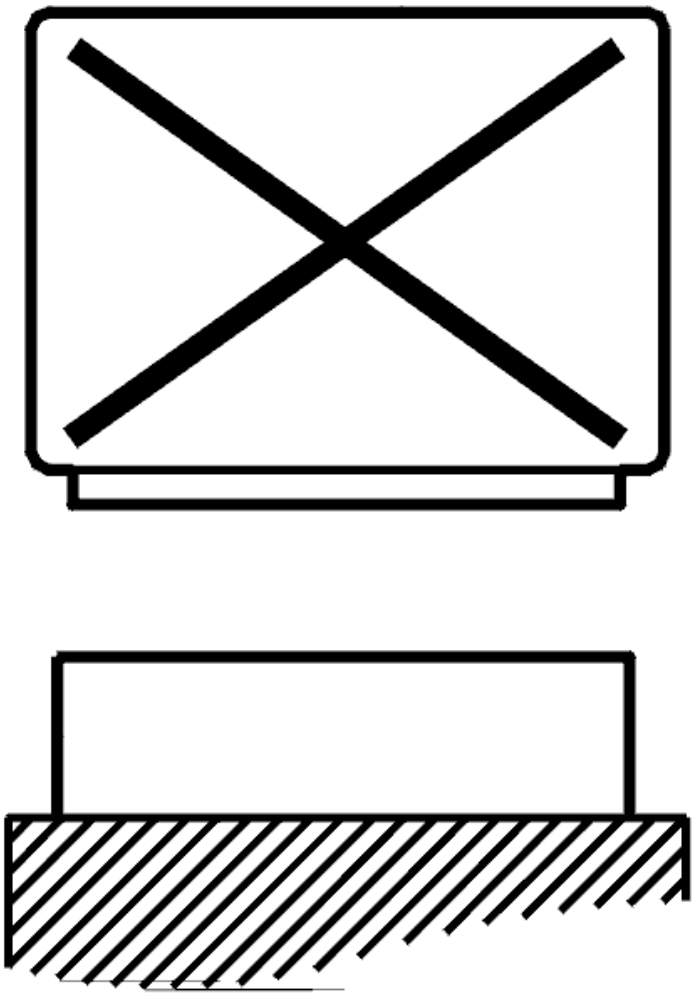

Fig. 14: Disconnecting Control Unit
Courtesy of VOLVO CARS CORPORATION

- Ignition off
- Control module disconnected.
- Switch off all equipment that takes power from the battery (courtesy lighting, radio etc).

  Connect an ohmmeter between terminal #B21 on the breakout box and the battery negative terminal.

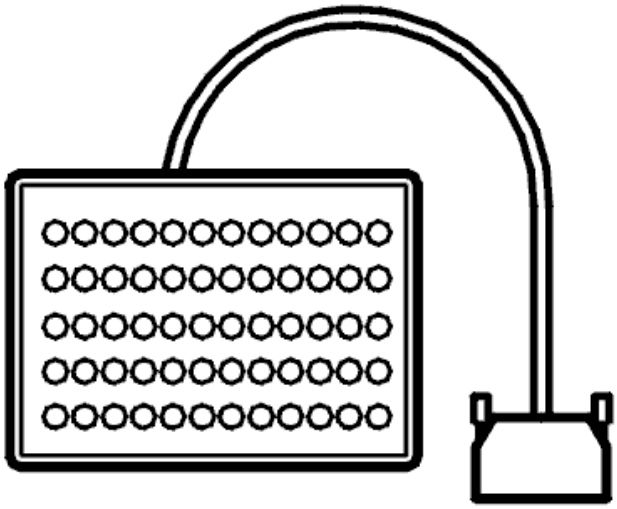

Fig. 15: Breakout Box
Courtesy of VOLVO CARS CORPORATION

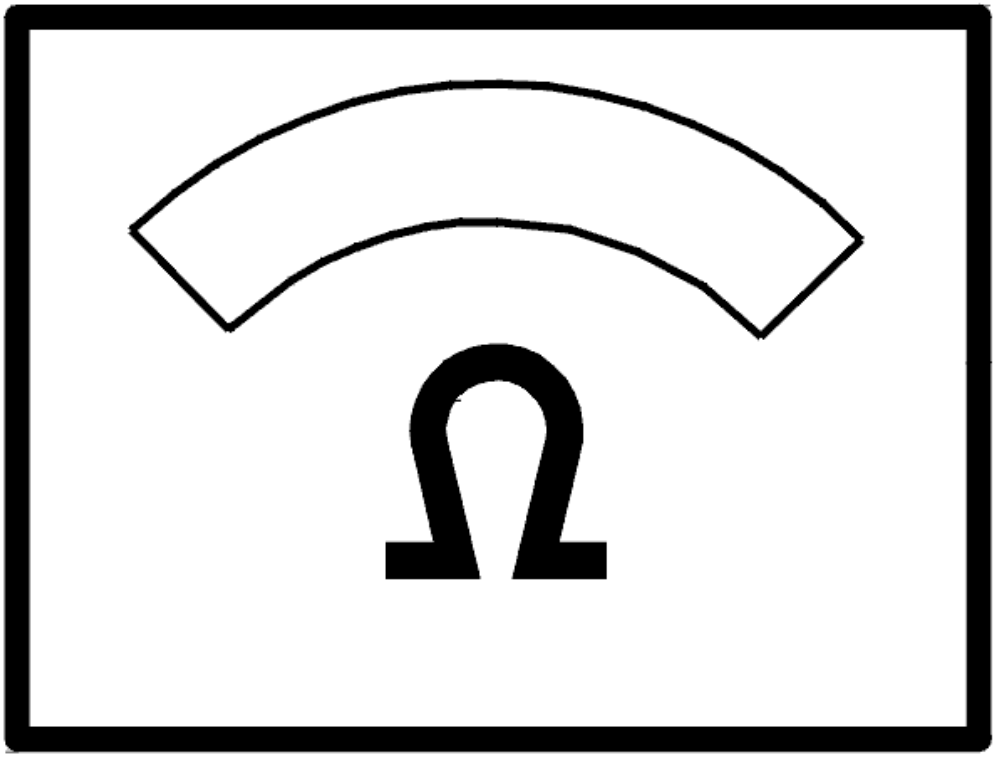

Fig. 16: Identifying Ohmmeter
Courtesy of VOLVO CARS CORPORATION

The ohmmeter should read approximately 0 ohms.

- **OK**

  FAULT NOT FOUND: Troubleshooting has been completed.

- **NOT OK**

  Refer to **CHECKING FOR OPEN-CIRCUITS, CONTACT RESISTANCE AND OXIDATION**

CHECKING FOR OPEN-CIRCUITS, CONTACT RESISTANCE AND OXIDATION

Check ground terminal 31/6 (LHD)/ and the wiring connected to it. Check for an open-circuit. Check for

contact resistance and oxidation.

Other information

- see **CHECKING WIRING AND TERMINALS**

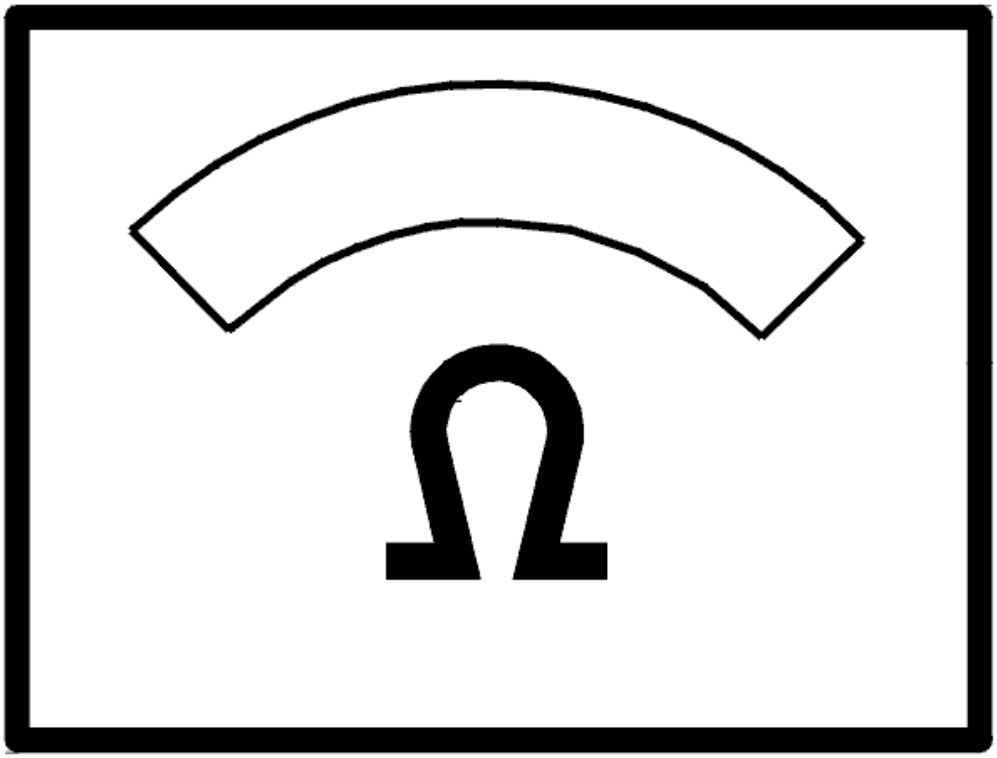

Fig. 17: Identifying Ohmmeter
Courtesy of VOLVO CARS CORPORATION

- **Continue**

  Refer to **VERIFICATION**

VERIFICATION

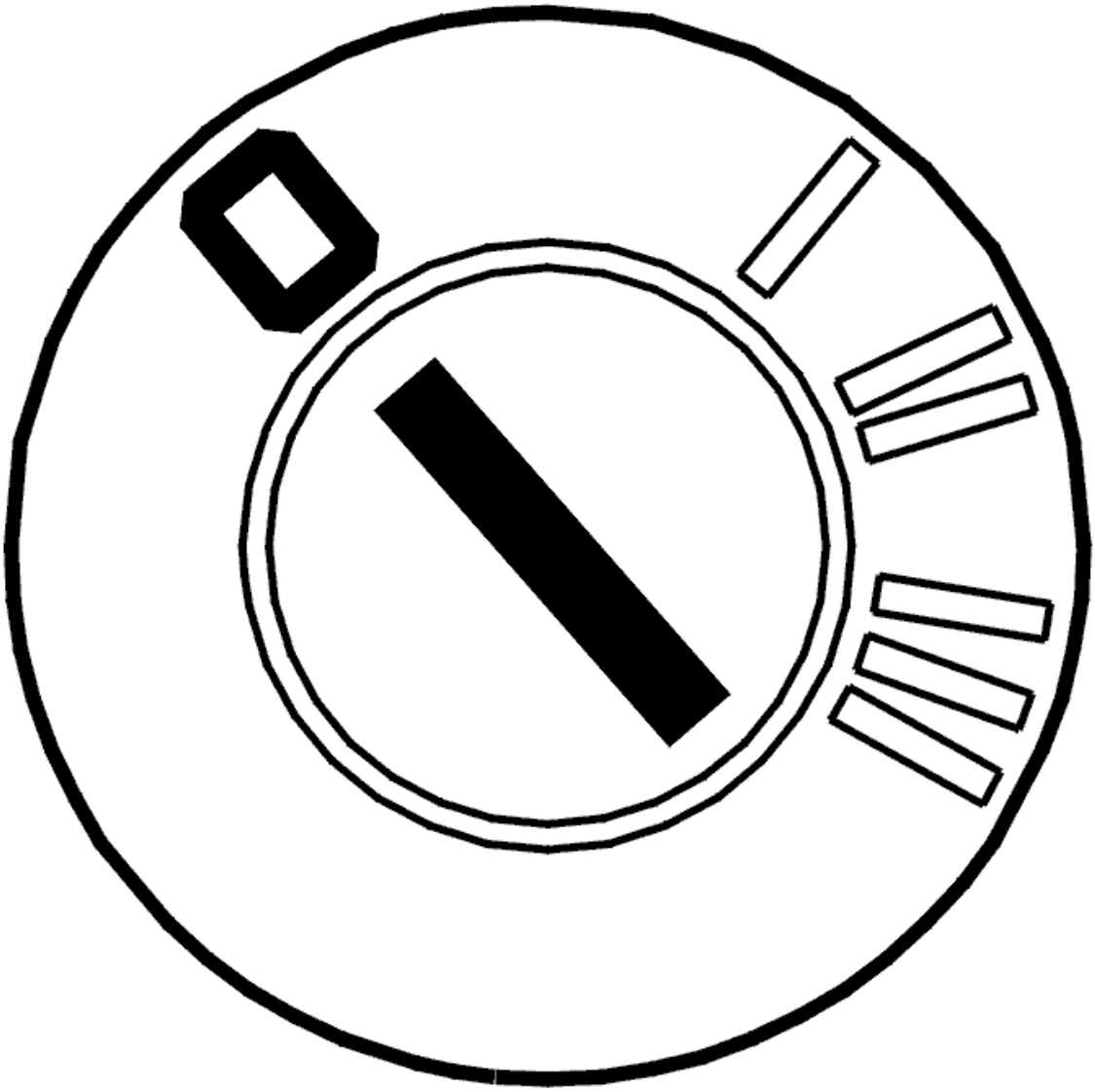

Fig. 18: Identifying Ignition OFF
Courtesy of VOLVO CARS CORPORATION

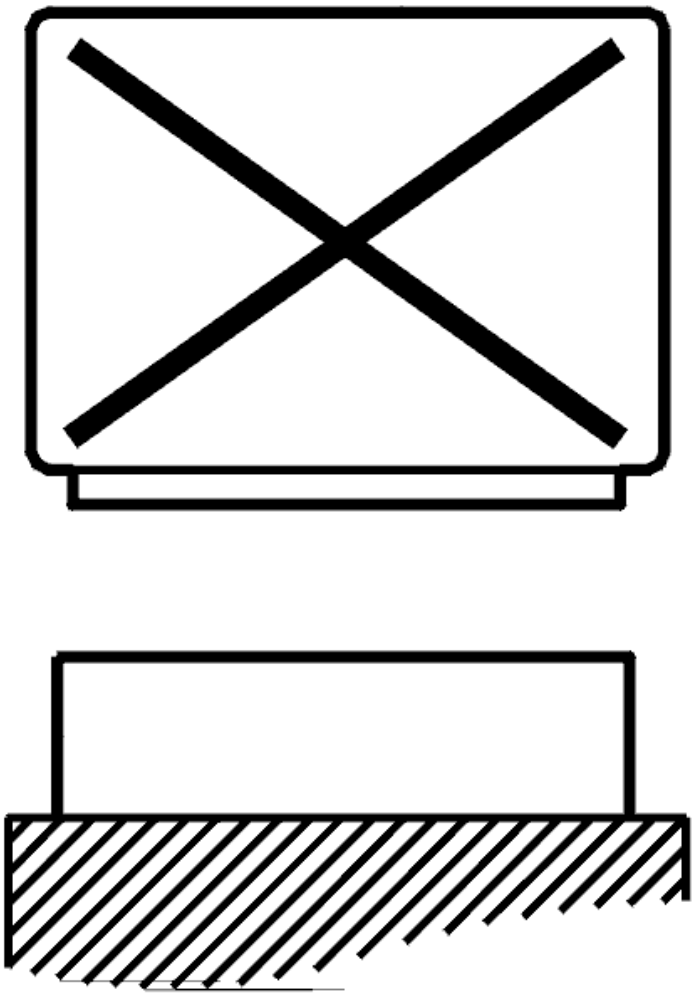

Fig. 19: Disconnecting Control Unit
Courtesy of VOLVO CARS CORPORATION

- Ignition off
- Control module disconnected.
- Switch off all equipment that takes power from the battery (courtesy lighting, radio etc).

Connect an ohmmeter between terminal #E1 on the breakout box and the battery negative terminal.

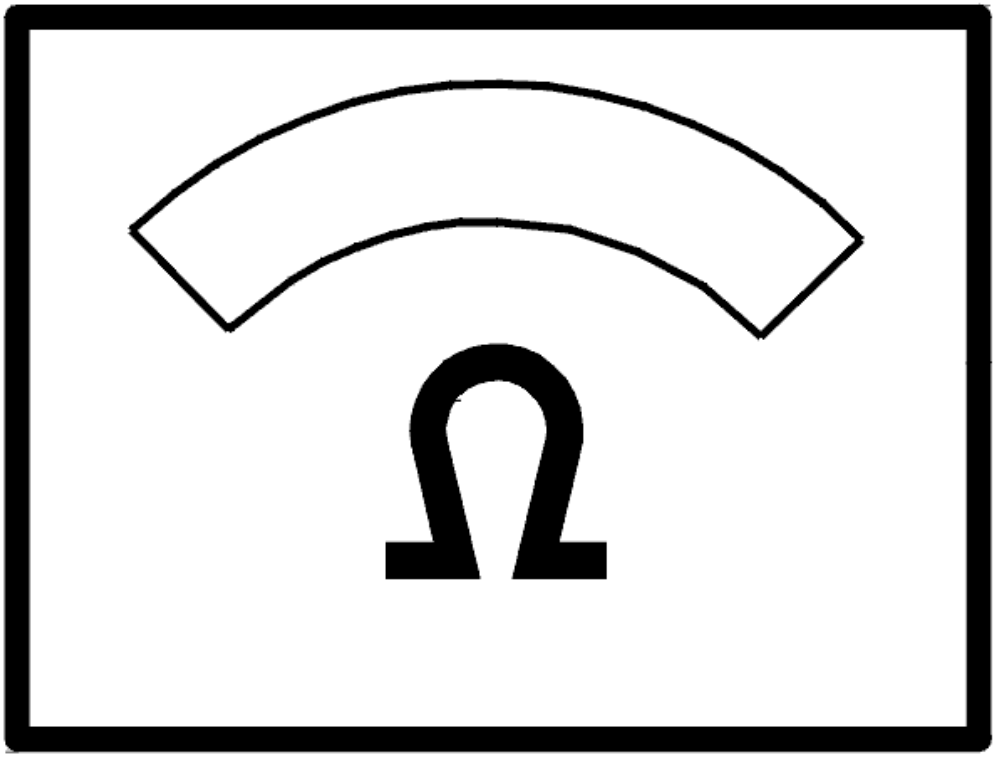

Fig. 20: Identifying Ohmmeter
Courtesy of VOLVO CARS CORPORATION

The ohmmeter should read 0 ohms.

- **YES**

  OKAY: Troubleshooting has been completed.

- **NO**

  Refer to **INFORMATION**

INFORMATION

FAULT-TRACING INFORMATION

The fault should be diagnosed and remedied. Since this is not the case the fault-tracing process has failed.

Complete the fault-tracing for those fault or try again.

CHECKING THE GROUND TERMINAL. ACCESSORY ELECTRONIC MODULE (2003-12)

CHECKING THE GROUND TERMINAL

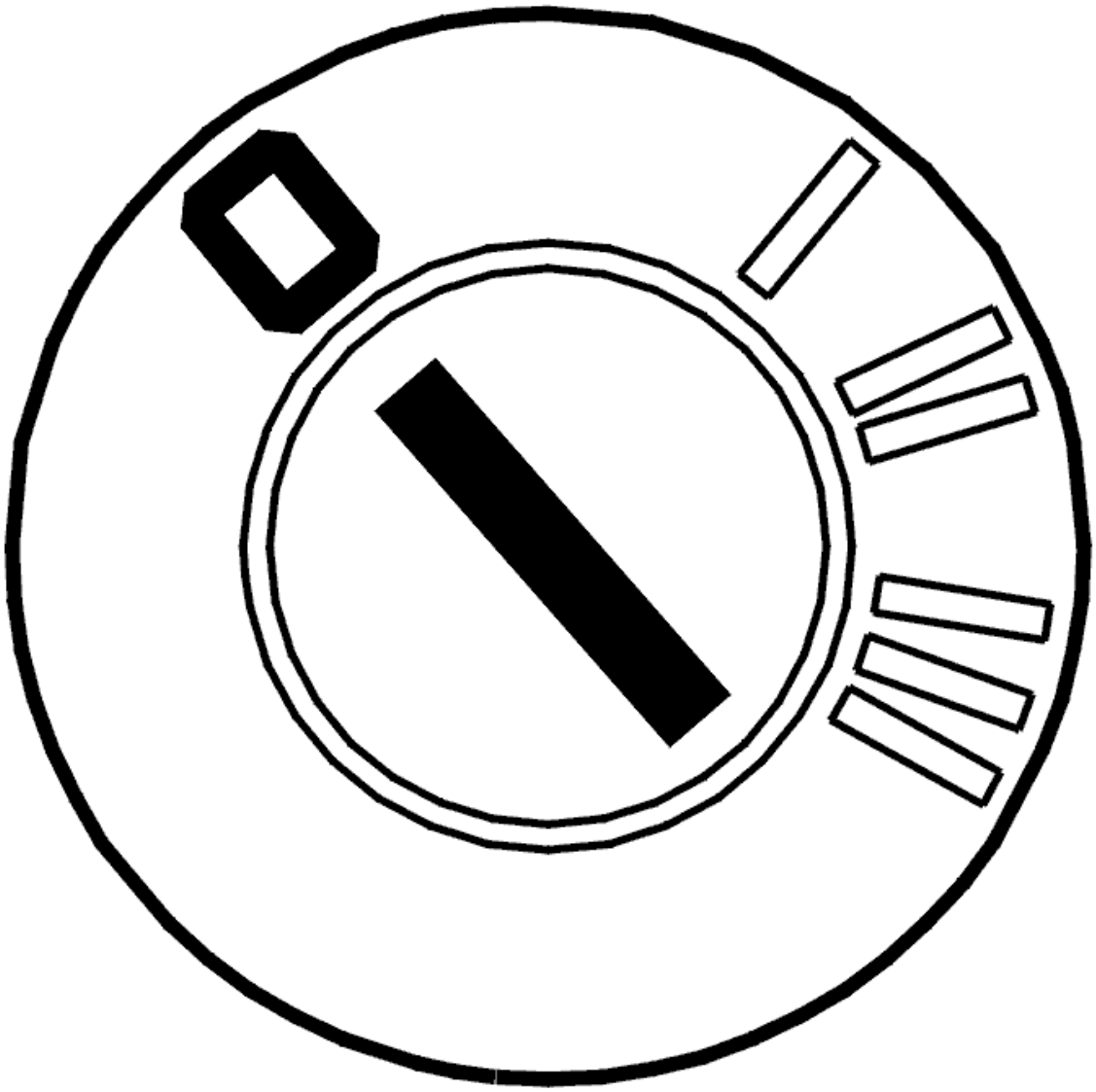

Fig. 21: Identifying Ignition OFF
Courtesy of VOLVO CARS CORPORATION

- Ignition off
- Control module disconnected
- Switch off all equipment that takes power from the battery (courtesy lighting, radio etc).

Connect the breakout box.

Connect an ohmmeter between terminal #A2 on the breakout box and the battery negative terminal.

The ohmmeter should read 0 ohms.

Other information

- To connect the breakout box, see **CONNECTING THE BREAKOUT BOX. ACCESSORY ELECTRONIC MODULE**.

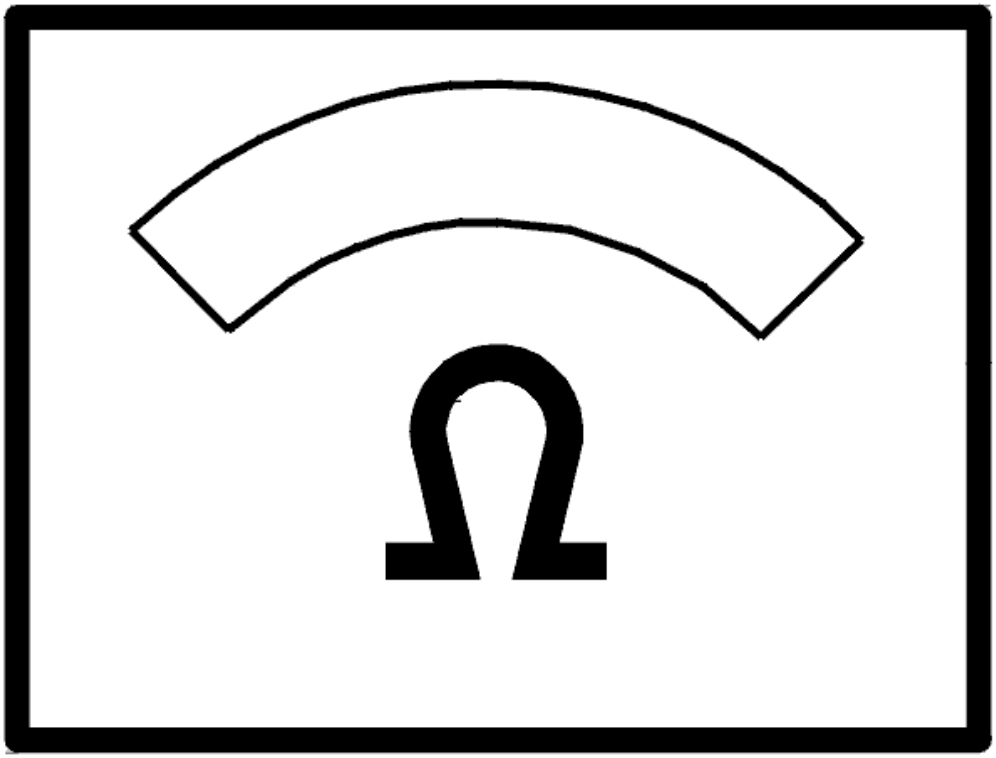

Fig. 22: Identifying Ohmmeter
Courtesy of VOLVO CARS CORPORATION

Is the value OK?

- **YES**

  OKAY: Troubleshooting has been completed.

- **NO**

  Refer to **CHECKING FOR OPEN-CIRCUITS, CONTACT RESISTANCE AND OXIDATION**

CHECKING FOR OPEN-CIRCUITS, CONTACT RESISTANCE AND OXIDATION

Check the ground terminal and the wiring connected to it. Check for an open-circuit.

Check the ground terminal and the wiring connected to it. Check for contact resistance and oxidation.

Other information

- To fault-trace wiring and terminals, see **CONTENTS**

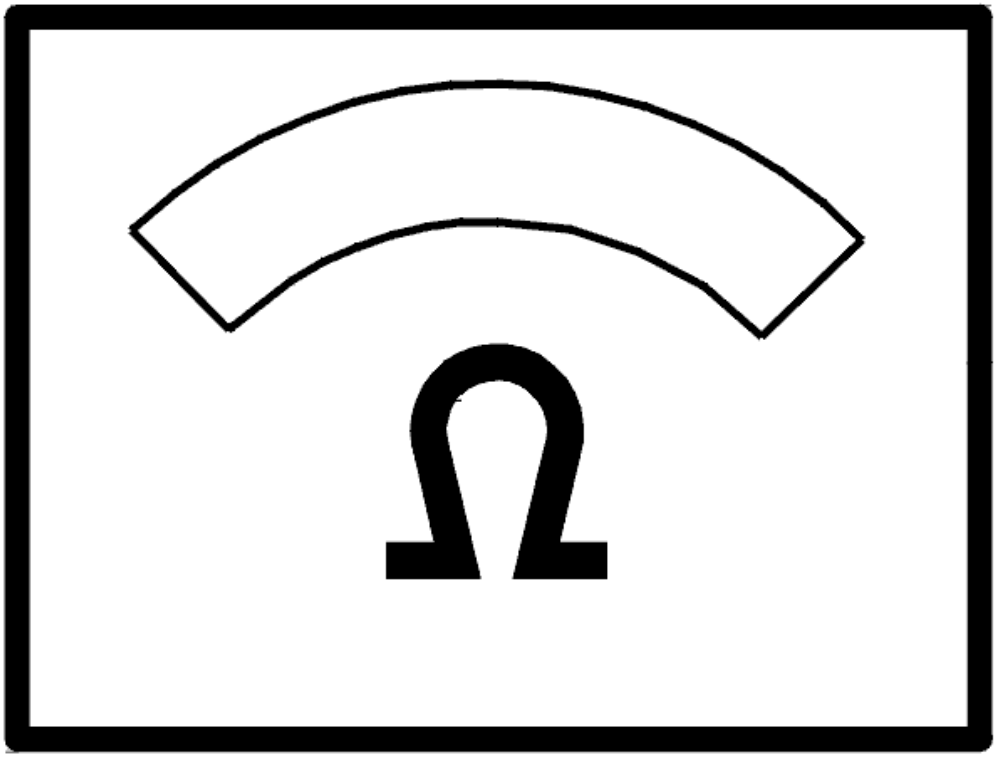

Fig. 23: Identifying Ohmmeter
Courtesy of VOLVO CARS CORPORATION

- **Continue**

  Refer to **VERIFICATION**

VERIFICATION

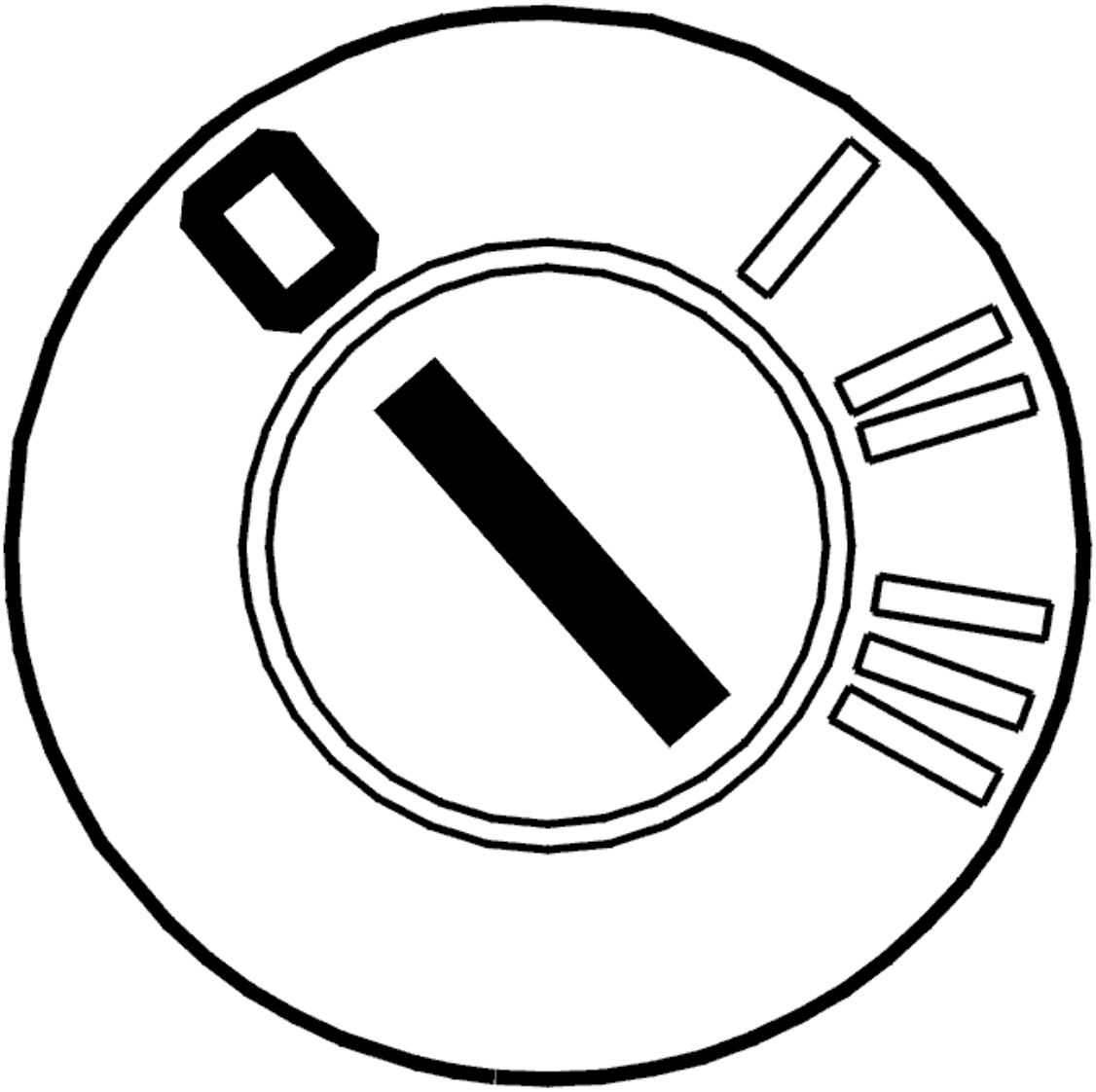

Fig. 24: Identifying Ignition OFF
Courtesy of VOLVO CARS CORPORATION

- Ignition off
- Control module disconnected
- Switch off all equipment that takes power from the battery (courtesy lighting, radio etc).

  Connect an ohmmeter between terminal #A2 on the breakout box and the battery negative terminal.

  The ohmmeter should read 0 ohms.

Is the value OK?

- **YES**

VERIFIED: Troubleshooting has been completed.

- **NO**

  Refer to **INFORMATION**

INFORMATION

FAULT-TRACING INFORMATION

The fault should have been detected and remedied. As this is not the case fault-tracing has failed.

Exit fault-tracing for this diagnostic trouble code (DTC) or make another attempt.

CHECKING THE SUPPLY VOLTAGE/GROUND TERMINAL, REAR ELECTRONIC MODULE (REM) (2005-12)

CHECKING THE SUPPLY VOLTAGE/GROUND TERMINAL

Power supply, rear electronic module (REM)

The rear electronic module (REM) is supplied with power directly from the battery via a voltage input on the control module.

The rear electronic module (REM) is also supplied with power via an input from the ignition switch.

Power supply directly from battery

1. Power input #K1 is supplied with power via a fuse from the battery. This power input is used to power the memory in the rear electronic module (REM). In the event of an open-circuit, the rear electronic module (REM) will be reset and adaptation values and diagnostic trouble codes (DTCs) will disappear.

Power supply from the ignition switch

1. Power input terminal #A29 (#29). 15i-supply. The power supply is activated when the ignition key is in position II.

Checking the power supply

Check the power supply cable from the battery to rear electronic module (REM) terminal #K1. Check for an open-circuit. Check for loose connections. Check for contact resistance and oxidation. Check the fuse. The voltage must be approximately battery voltage when the ignition is on.

Check the power supply cable from the ignition switch to rear electronic module (REM) terminal #A29. Check for an open-circuit. Check for loose connections. Check for contact resistance and oxidation. The voltage must be approximately battery voltage when the ignition is on.

Ground terminal, rear electronic module (REM)

The rear electronic module (REM) has two ground terminals. The ground inputs from the control module are connected via two separate ground leads to the same ground terminal in the car body.

1. Ground input 1 (terminal #A32 (#32) is power ground and is connected to the ground terminal in the car body
2. Ground input terminal 2 #D12 (#12) is signal ground and is connected to the ground terminal in the car body.

Checking the ground terminal

Check the ground lead between rear electronic module (REM) terminal #A32 (32) and ground terminal 31/47. Check for an open-circuit. Check for loose connections. Check for contact resistance. Check for oxidation. With the ignition on, the drop in voltage between the ground connections for the rear electronic module (REM) must not be greater than 0.5 V.

Check the ground lead between rear electronic module (REM) terminal #D12 (12) and ground terminal 31/72. Check for an open-circuit. Check for loose connections. Check for contact resistance. Check for oxidation. With the ignition on, the drop in voltage between the ground connections for the rear electronic module (REM) must not be greater than 0.5 V.

Remedy as necessary.

Other information

- see **CONNECTING THE BREAKOUT BOX**
- see **SIGNAL SPECIFICATION**
- see **CONTENTS**

CHECKING THE VOLTAGE/GROUND TERMINAL, CENTRAL ELECTRONIC MODULE (CEM) (2005-12)

CHECKING THE SUPPLY VOLTAGE/GROUND TERMINAL LHD

Power supply, central electronic module (CEM)

The central electronic module (CEM) is powered directly from the rear electronic module (REM) via two power inputs on the control module.

The central electronic module (CEM) is also powered via four inputs from the ignition switch. These inputs are active on different occasions, depending on the position of the ignition key.

Power supply from the rear electronic module (REM)

1. Voltage input 1 terminal #EA is powered via a fuse from rear electronic module (REM) terminal #IA.

This power input is used, for example, to power the motherboard in the central electronic module (CEM)

2. Voltage input 2 terminal #EB is powered via a fuse from rear electronic module (REM) terminal #IB. This power input is used for example to power the internal electronics in the central electronic module (CEM).

Power supply from ignition switch

1. Power input terminal #D15 (#15). S-supply. The power supply is activated when the ignition key is in position 0
2. Power input terminal #D8 (#8). X-supply. The power supply is activated when the ignition key is in position I
3. Power input terminal #D16 (#16). 15 supply. The power supply is activated when the ignition key is in position II
4. Power input terminal #D60 (#60). 50 supply. The power supply is activated when the ignition key is in position III.

Checking the power supply

Check the power supply cable from rear electronic module (REM) terminal #IA to central electronic module (CEM) terminal #EA. Check for an open-circuit. Check for loose connections. Check for contact resistance and oxidation. Check the fuse. Voltage should be approximately battery voltage.

Check the power supply cable from rear electronic module (REM) terminal #IB to central electronic module (CEM) terminal #EB. Check for an open-circuit. Check for loose connections. Check for contact resistance and oxidation. Check the fuse. Voltage should be approximately battery voltage.

NOTE: Also check the power supply cable from the battery to rear electronic module (REM) terminal #K1. Check for an open-circuit. Check for loose connections. Check for contact resistance and oxidation. Check the fuse.

Ground terminal, central electronic module (CEM)

The central electronic module (CEM) has a ground input.

1. Ground input terminal #D6 (#6) is power ground and is connected to the ground terminal in the car body.

Checking the ground terminal

Check the ground lead between central electronic module (CEM) terminal #D6 (#6) and the ground terminal 31/6. Check for an open-circuit. Check for loose connections. Check for contact resistance and oxidation. With the ignition on, the drop in voltage between the ground connection for the central electronic module (CEM) and the ground terminal must not be greater than 0.5 V.

Remedy as necessary.

Other information

- see **CONNECTING THE BREAKOUT BOX**
- see **SIGNAL SPECIFICATION**
- see **CONTENTS**

CHECKING THE SUPPLY VOLTAGE/GROUND TERMINAL

Power supply, central electronic module (CEM)

The central electronic module (CEM) is powered directly from the rear electronic module (REM) via two power inputs on the control module.

The central electronic module (CEM) is also powered via four inputs from the ignition switch. These inputs are active on different occasions, depending on the position of the ignition key.

Power supply from the rear electronic module (REM)

1. Voltage input 1 terminal #EA is powered via a fuse from rear electronic module (REM) terminal #IA. This power input is used, for example, to power the motherboard in the central electronic module (CEM)
2. Voltage input 2 terminal #EB is powered via a fuse from rear electronic module (REM) terminal #IB. This power input is used for example to power the internal electronics in the central electronic module (CEM).

Power supply from ignition switch

1. Power input terminal #D15 (#15). S-supply. The power supply is activated when the ignition key is in position 0
2. Power input terminal #D8 (#8). X-supply. The power supply is activated when the ignition key is in position I
3. Power input terminal #D16 (#16). 15 supply. The power supply is activated when the ignition key is in position II
4. Power input terminal #D60 (#60). 50 supply. The power supply is activated when the ignition key is in position III.

Checking the power supply

Check the power supply cable from rear electronic module (REM) terminal #IA to central electronic module (CEM) terminal #EA. Check for an open-circuit. Check for loose connections. Check for contact resistance and oxidation. Check the fuse. Voltage should be approximately battery voltage.

Check the power supply cable from rear electronic module (REM) terminal #IB to central electronic module (CEM) terminal #EB. Check for an open-circuit. Check for loose connections. Check for contact resistance and oxidation. Check the fuse. Voltage should be approximately battery voltage.

NOTE: Also check the power supply cable from the battery to rear electronic module (REM) terminal #K1. Check for an open-circuit. Check for loose connections.

Check for contact resistance and oxidation. Check the fuse.

Ground terminal, central electronic module (CEM)

The central electronic module (CEM) has a ground input.

1. Ground input terminal #D6 (#6) is power ground and is connected to the ground terminal in the car body.

Checking the ground terminal

Check the ground lead between central electronic module (CEM) terminal #D6 (#6) and the ground terminal 31/10. Check for an open-circuit. Check for loose connections. Check for contact resistance and oxidation. With the ignition on, the drop in voltage between the ground connection for the central electronic module (CEM) and the ground terminal must not be greater than 0.5 V.

Remedy as necessary.

Other information

- see **CONNECTING THE BREAKOUT BOX**
- see **SIGNAL SPECIFICATION**
- see **CONTENTS**

CHECKING VOLTAGE/GROUND CONNECTION, ACCESSORY USB UNIT (AUU) (2007-12)

CHECKING THE SUPPLY VOLTAGE/GROUND TERMINAL

VOLTAGE FEED ACCESSORY USB UNIT (AUU)

Accessory USB Unit (AUU) is supplied with voltage via a voltage input on the control module. When the ignition is on, the power input is powered and the control module is in active mode.

1. Power input #A C1:1 is supplied with voltage via a fuse from the battery. This power input is used to power the memory in the control module. In the event of an open-circuit, the control module will be reset and adaptation values and diagnostic trouble codes (DTCs) will disappear.

Checking the power supply

Check the voltage feed cable from the battery to the Accessory USB Unit (AUU) #C1-1 for open circuit, loose connections, contact resistance, and oxidation. Check the fuse. The voltage must be approximately battery voltage.

Ground connection Accessory USB Unit (AUU)

Accessory USB Unit (AUU) has a ground input.

Checking the ground terminal

Check the ground cable. Check for loose connections, contact resistance and oxidation. Check for an open-circuit. With the ignition on, the drop in voltage between the ground connection for the control module and the ground terminal must not be greater than 0.5 V.

Remedy as necessary.

Other information

- see **SIGNAL SPECIFICATION**
- see **CHECKING WIRING AND TERMINALS**

CONNECTING BREAKOUT BOX, REAR ELECTRONIC MODULE (REM) (2005-12)

CONNECTING THE BREAKOUT BOX

Special tools:

see **9511428**

see **9512971**

GENERAL INFORMATION

Check that the male and female terminals on the connectors are undamaged and secure (cannot be pressed in). Check that the cables to the female terminals are secured to the terminal pins.

The breakout box is designed to facilitate reading off the control module input and output signals when the control module is connected; and the cable and component resistance when the control module is disconnected. The use of a breakout box reduces the risk of accidental short-circuited cables and damage to the connector pins.

CONNECTING THE BREAKOUT BOX

- Ignition off
- Remove the fuses
- To expose the rear electronic module (REM) connectors:
  - For -2004, see: **RELAY/FUSE BOX CARGO COMPARTMENT/REAR ELECTRONIC MODULE (REM), REPLACING**
  - For 2005-, see: **REAR ELECTRONIC MODULE (REM), REPLACING** .

Connect breakout box see **9511428** to the adapter.

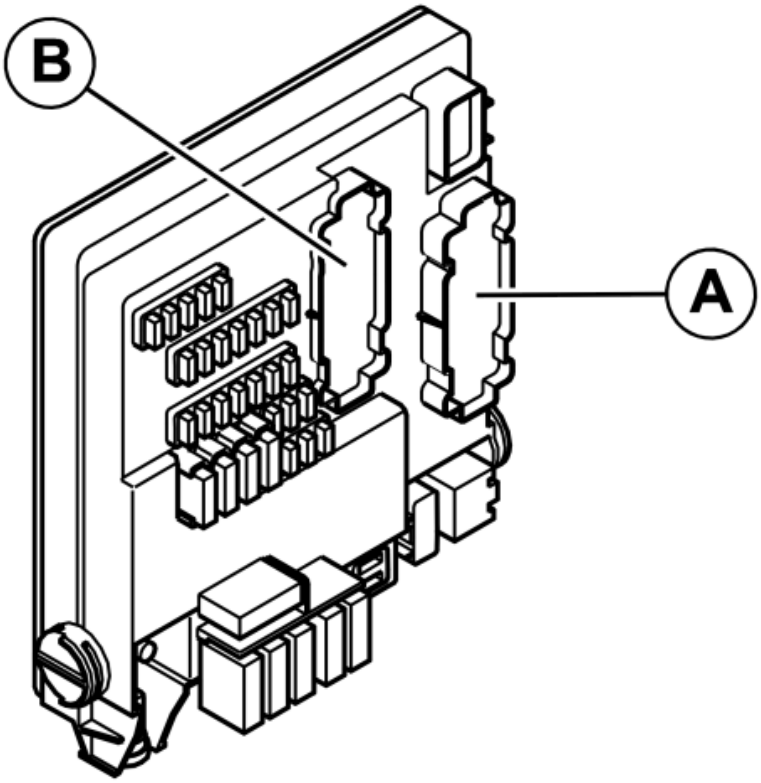

Fig. 25: Identifying Rear Electronic Module (REM) Connectors A And B
Courtesy of VOLVO CARS CORPORATION

Rear electronic module (REM)

- Connect adapter see **9512971** to the control module connectors A, B, C, D and F.

  HINT: Connectors A, B and D cannot be plugged in simultaneously. Neither can connectors C and F be plugged in simultaneously.

- For connector A, terminals #A1-#A32 correspond to terminals #1-#32 on the breakout box
- For connector B, terminals #B1-#B32 correspond to terminals #1-#32 on the breakout box
- For connector C, terminals #C1-#C14 correspond to terminals #41-#54 on the breakout box
- For connector D terminals #D1-#D36 correspond to terminals #1-#36 on the breakout box
- For connector F, terminals #F1-#F10 correspond to terminals #41-#50 on the breakout box.

NOTE: The removed fuses must be reinstalled before the control module can be checked and measurements taken.

Other information

- see **SIGNAL SPECIFICATION**

CONNECTING BREAKOUT BOX, REAR ELECTRONIC MODULE (REM) (2003-04)

CONNECTING THE BREAKOUT BOX

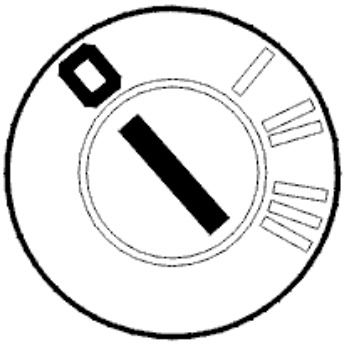

Fig. 26: Identifying Ignition In Off Position
Courtesy of VOLVO CARS CORPORATION

- Ignition off
- Expose the integrated relay/fusebox in the cargo compartment
- Remove fuses 11D/1 and 11D/2 from the integrated relay/fusebox in the cargo compartment
- Release the locking hooks on the top of the integrated relay/fusebox in the cargo compartment
- Fold the integrated relay/fusebox in the cargo compartment downwards/inwards. The integrated relay/fusebox in the cargo compartment can now be removed
- Slacken off the screw holding the rear electronic module (REM) connector so that it can hang free
- Disconnect the rear electronic module (REM) connector. The connector may be stiff.

Connect the adapter between the rear electronic module (REM) and its connector. Connect the breakout box to the adapter. Breakout box wiring see **9511503** .

Disconnect the breakout box in reverse order.

NOTE: Before the rear electronic control module can be checked and measurements taken, the removed fuses must first be installed.

Other information

- For the location of the components, see **RELAY/FUSE BOX CARGO COMPARTMENT/REAR ELECTRONIC MODULE (REM), REPLACING**
- For further information about signals and other values, see **SIGNAL SPECIFICATION** .

CONNECTING BREAKOUT BOX. AUXILIARY HEATER (COMBUSTION PREHEATER MODULE (CPM)) (2005-12)

CONNECTING THE BREAKOUT BOX

Special tools:

see **9511373**

see **9511428**

CONNECTING THE BREAKOUT BOX

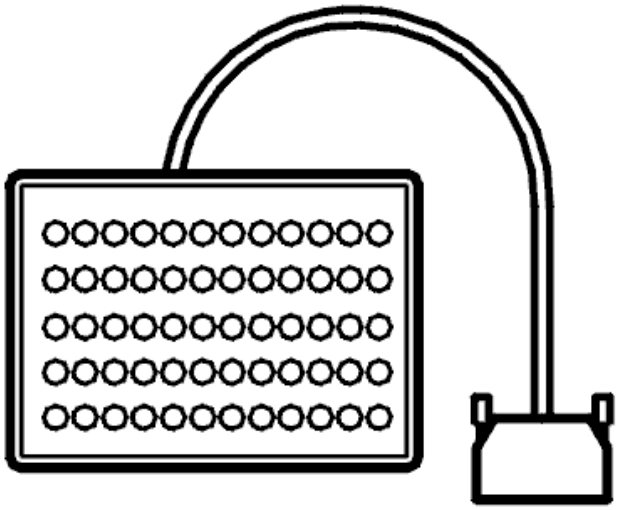

Fig. 27: Breakout Box
Courtesy of VOLVO CARS CORPORATION

- Ignition off
- Expose the heater.

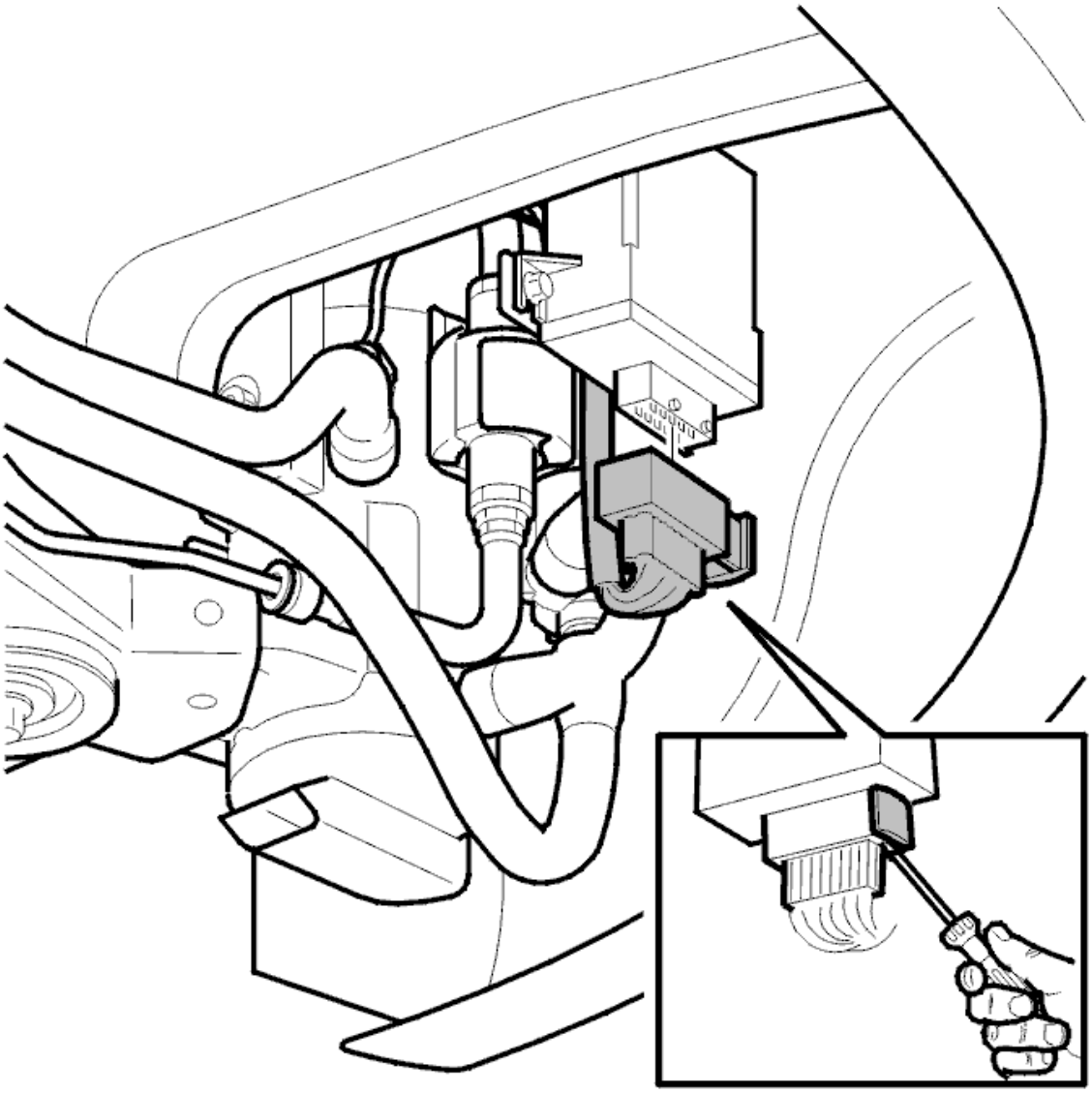

Fig. 28: Releasing Catch Using Screwdriver
Courtesy of VOLVO CARS CORPORATION

Position a screwdriver between the control module connector and its locking handle.

Turn the screwdriver to release the catch.

Continue pulling the locking handle outwards until the connector comes away from the control module.

Connect adapter see **9511373** to the control module connector. Connect breakout box see **9511428** to the adapter.

Disconnect the breakout box in reverse order.

For the location of the components, see **ENGINE COOLANT HEATER, COMPONENT LOCATION**.

ENGINE COOLANT HEATER, COMPONENT LOCATION

- See **ENGINE COOLANT HEATER, COMPONENT LOCATION** .

CONNECTING THE BREAKOUT BOX, ACCESSORY ELECTRONIC MODULE (AEM) (2003-12)

CONNECTING THE BREAKOUT BOX. ACCESSORY ELECTRONIC MODULE

CONNECTING THE BREAKOUT BOX

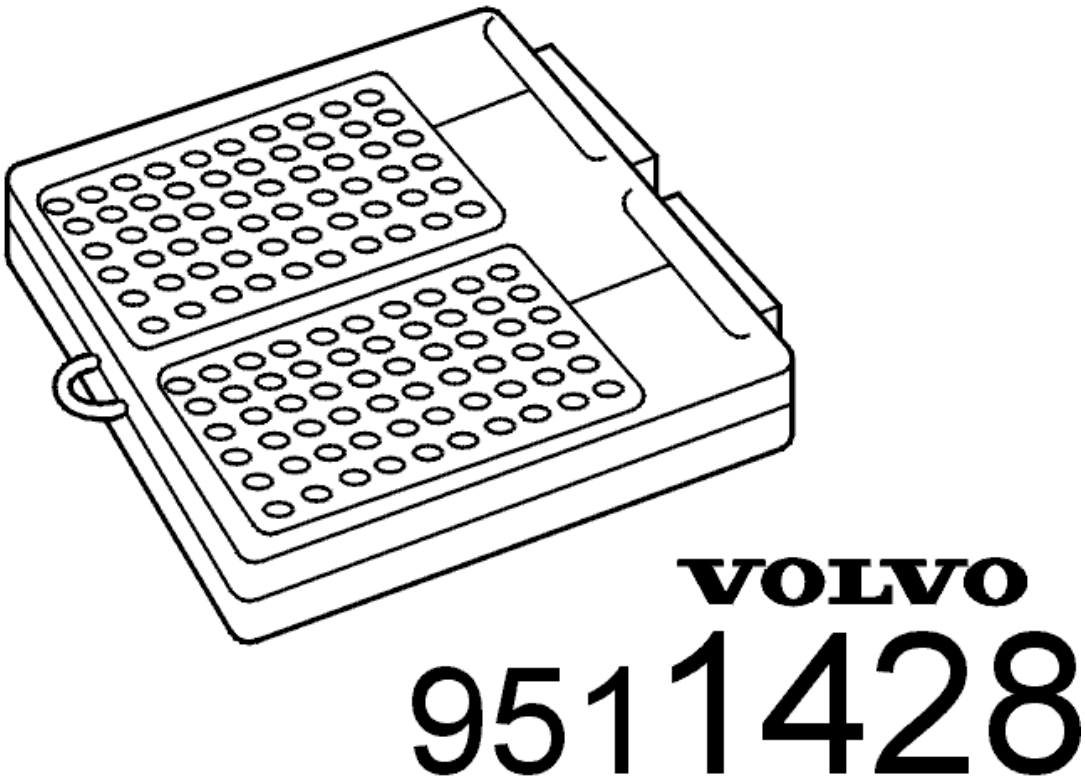

Fig. 29: Breakout Box. Accessory Electronic Module
Courtesy of VOLVO CARS CORPORATION

- Ignition off
- Expose the accessory electronic module.

Connect adapter see **9512843** to the control module connector. Connect breakout box see **9511428** to the adapter.

Disconnect the breakout box in reverse order.

NOTE: **Before the central electronic control module can be checked and measurements taken, the removed fuses must first be installed.**

Other information

- For further information about signals and other values, see **SIGNAL DESCRIPTION. ACCESSORY ELECTRONIC MODULE (AEM)**

CONNECTING THE BREAKOUT BOX, CENTRAL ELECTRONIC MODULE (CEM) (2003-04)

CONNECTING THE BREAKOUT BOX

Special tools:

see **9511503**

see **9511428**

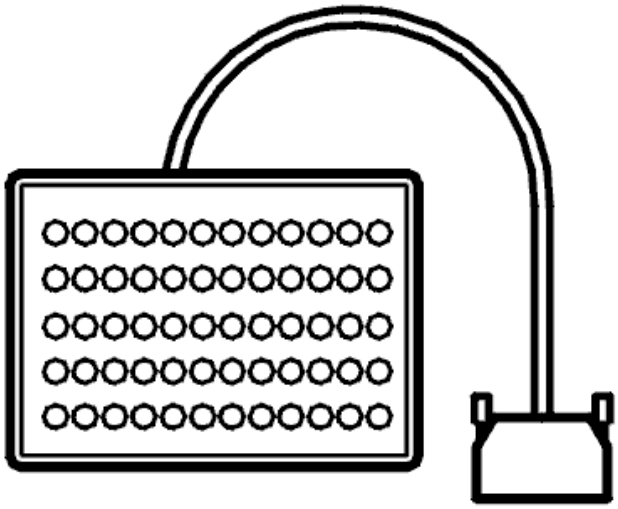

Fig. 30: Breakout Box
Courtesy of VOLVO CARS CORPORATION

- Ignition off
- Remove fuses 11C/21, 11C/25 and 11C/32 from the fusebox in the passenger compartment
- Expose the central electronic module (CEM):
  - For -2004, see: **CENTRAL ELECTRONIC MODULE (CEM), REPLACING**
  - For 2005-, see: **CENTRAL ELECTRONIC MODULE (CEM), REPLACING** .

Connect adapter see **9511503** to the control module connector. Connect breakout box see **9511428** to the adapter.

Disconnect the breakout box in reverse order.

NOTE: Before the control module can be checked and measurements taken, the

removed fuses must first be installed.

For further information about signals and other values, see **SIGNAL SPECIFICATION** .

CONNECTING THE BREAKOUT BOX, CENTRAL ELECTRONIC MODULE (CEM) (2005-12)

CONNECTING THE BREAKOUT BOX

Special tools:

see **9511428**

see **9512971**

GENERAL INFORMATION

Check that the male and female terminals on the connectors are undamaged and secure (cannot be pressed in). Check that the cables to the female terminals are secured to the terminal pins.

The breakout box is designed to facilitate reading off the control module input and output signals when the control module is connected. The breakout box is designed to facilitate reading off the cable and component resistance when the control module is disconnected. The use of a breakout box reduces the risk of accidental short-circuited cables and damage to the connector pins.

CONNECTING THE BREAKOUT BOX

- Ignition off
- Remove the fuses
- see **CENTRAL ELECTRONIC MODULE (CEM), REPLACING**

Connect breakout box see **9511428** to the adapter.

Central electronic module (CEM)

- Connect adapter see **9512971** to the control module connectors A, B, C and D
- For connector A, terminals #A1-#A32 correspond to terminals #1-#32 on the breakout box
- For connector B, terminals #B1-#B32 correspond to terminals #1-#32 on the breakout box
- For connector C, terminals #C1-#C36 correspond to terminals #1-#36 on the breakout box
- For connector D terminals #D1-#D60 correspond to terminals #1-#60 on the breakout box.

NOTE: Before the control module can be checked and measurements taken, the removed fuses must first be installed.

Other information

- see **SIGNAL SPECIFICATION**

CONNECTING THE BREAKOUT BOX, UPPER ELECTRONIC MODULE (UEM) (2003-12)

CONNECTING THE BREAKOUT BOX

Special tools:

see **9511463**

see **9813190**

see **9511428**

see **9511499**

- Ignition off
- Remove fuse 11A/4 in the fusebox in the engine compartment
- Remove the rear view mirror. See **UPPER ELECTRONIC MODULE (UEM)/REARVIEW MIRROR, REPLACING**
- Remove the cover from the back of the rear view mirror
- Disconnect the control module connector.

Connect adapter see **9511463** to the upper electronic module (UEM) connector. Connect breakout box see **9813190** or breakout box see **9511428** and wiring see **9511499** to the adapter.

Disconnect the breakout box in reverse order.

For further information about signals and other values, see **SIGNAL DESCRIPTION, UPPER ELECTRONIC MODULE (UEM)** .

CONNECTING THE TEST BOX. AUXILIARY HEATER (2003-04)

CHECKING GROUND POINTS

INFORMATION

CONNECTING THE TEST BOX

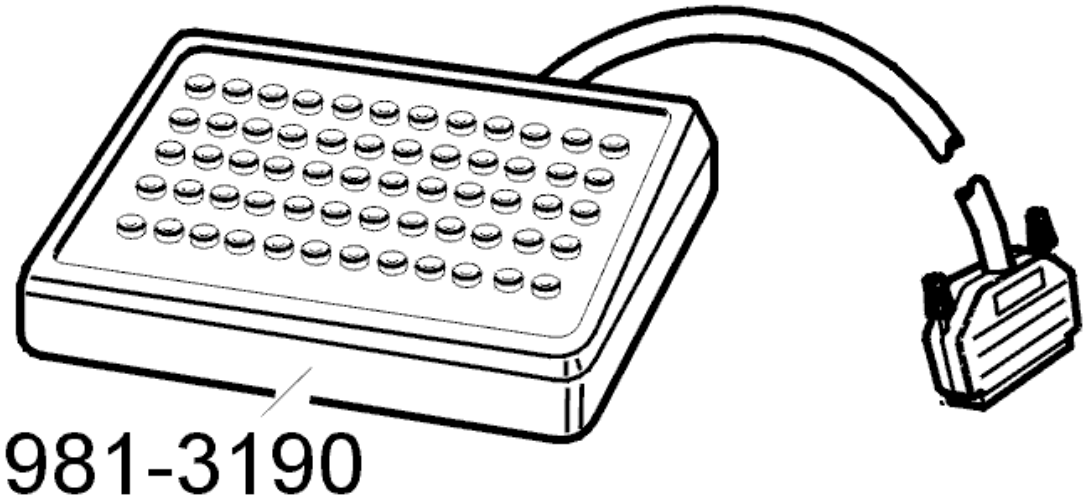

Fig. 31: Identifying Breakout Box
Courtesy of VOLVO CARS CORPORATION

Is the test box connected to the control unit?

- **YES**

  Refer to **CHECKING GROUND POINT**

- **NO**

  Refer to **CONNECTING THE TEST BOX**

CONNECTING THE TEST BOX

Special tools:

see **9511373**

see **9511428**

Connect test box as described in, see **CONNECTING THE BREAKOUT BOX**.

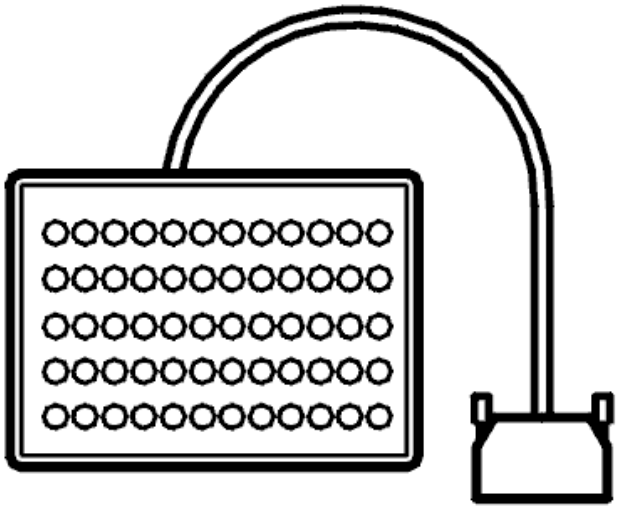

Fig. 32: Breakout Box
Courtesy of VOLVO CARS CORPORATION

- **Continue**

  Refer to **CHECKING GROUND POINT**

CHECKING GROUND POINT

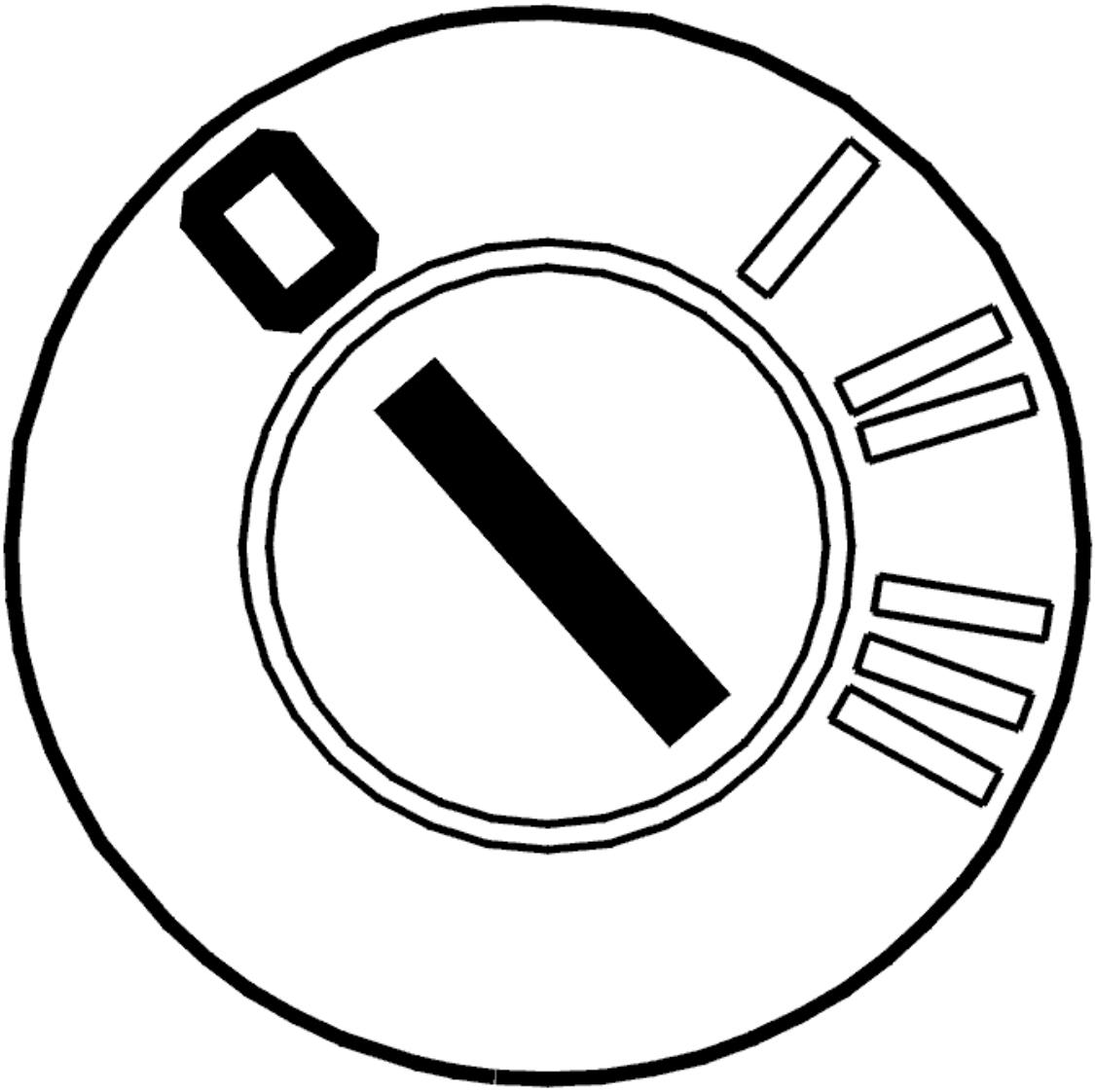

Fig. 33: Identifying Ignition OFF
Courtesy of VOLVO CARS CORPORATION

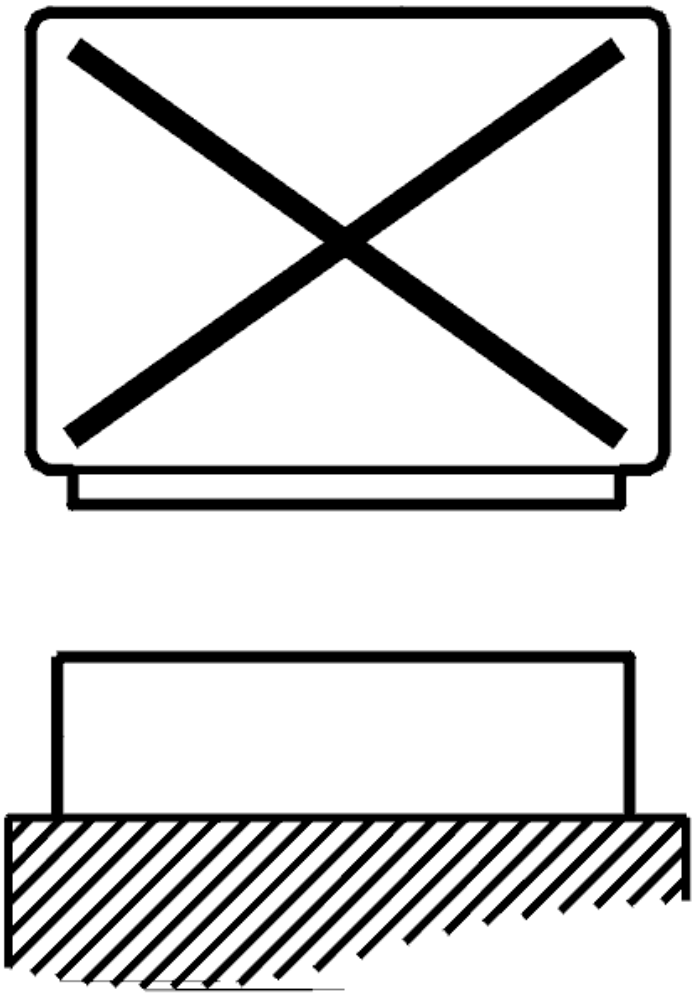

Fig. 34: Disconnecting Control Unit
Courtesy of VOLVO CARS CORPORATION

- Ignition off.
- Control unit disconnected.
- Switch off all battery loads such as entrance lights and radio.

Connect an ohmmeter between the battery negative terminal and #3 on the test box.

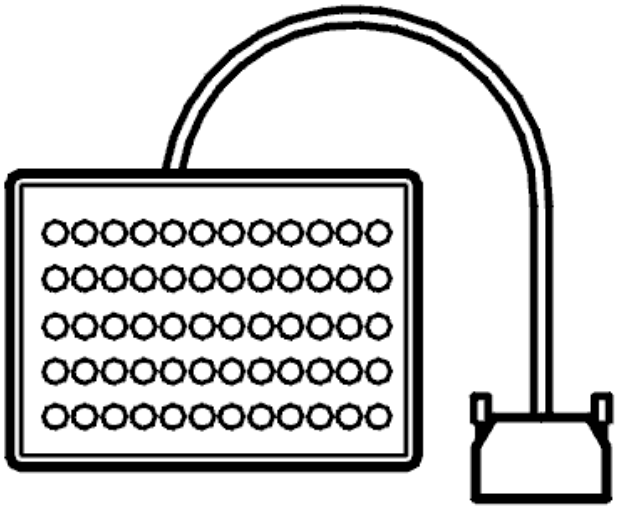

Fig. 35: Breakout Box
Courtesy of VOLVO CARS CORPORATION

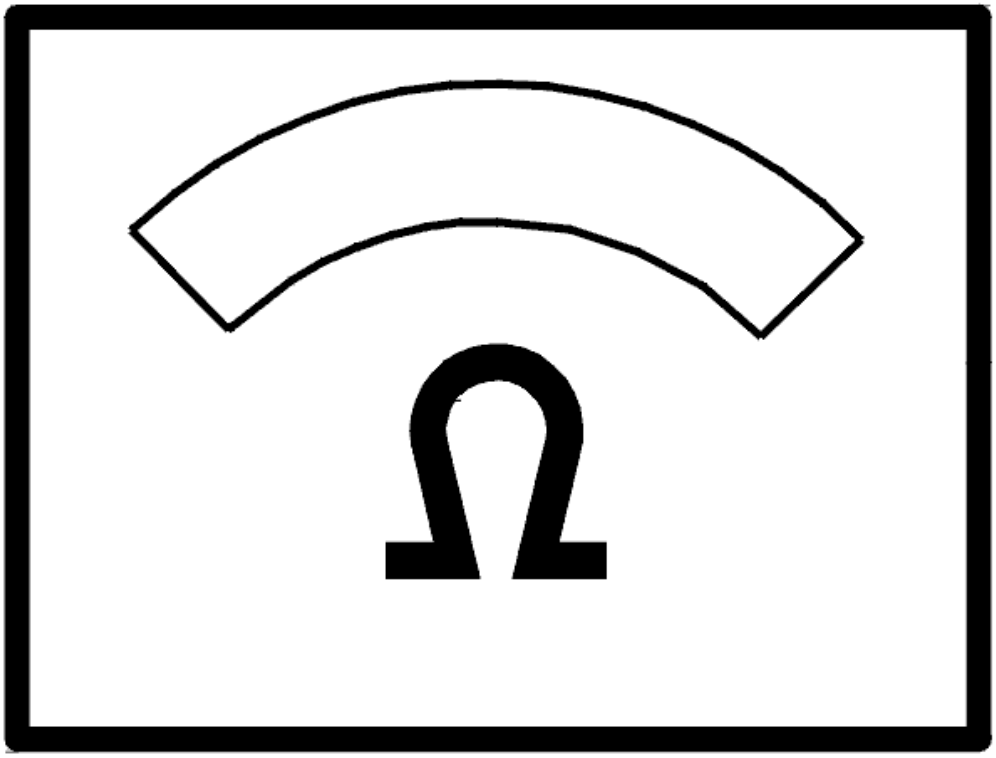

Fig. 36: Identifying Ohmmeter
Courtesy of VOLVO CARS CORPORATION

The ohmmeter should display approximately 0.

- **OK**

  FAULT NOT FOUND: Troubleshooting has been completed.

- **NOT OK**

  Refer to **CHECKING FOR OPEN CIRCUITS, CONTACT RESISTANCE AND OXIDATION**

CHECKING FOR OPEN CIRCUITS, CONTACT RESISTANCE AND OXIDATION

Check the heater's ground point and wires connected to it for an open circuit as described in, see **OPEN-**

CIRCUIT, PERMANENT FAULTS , and for **CONTACT RESISTANCE AND OXIDATION** .

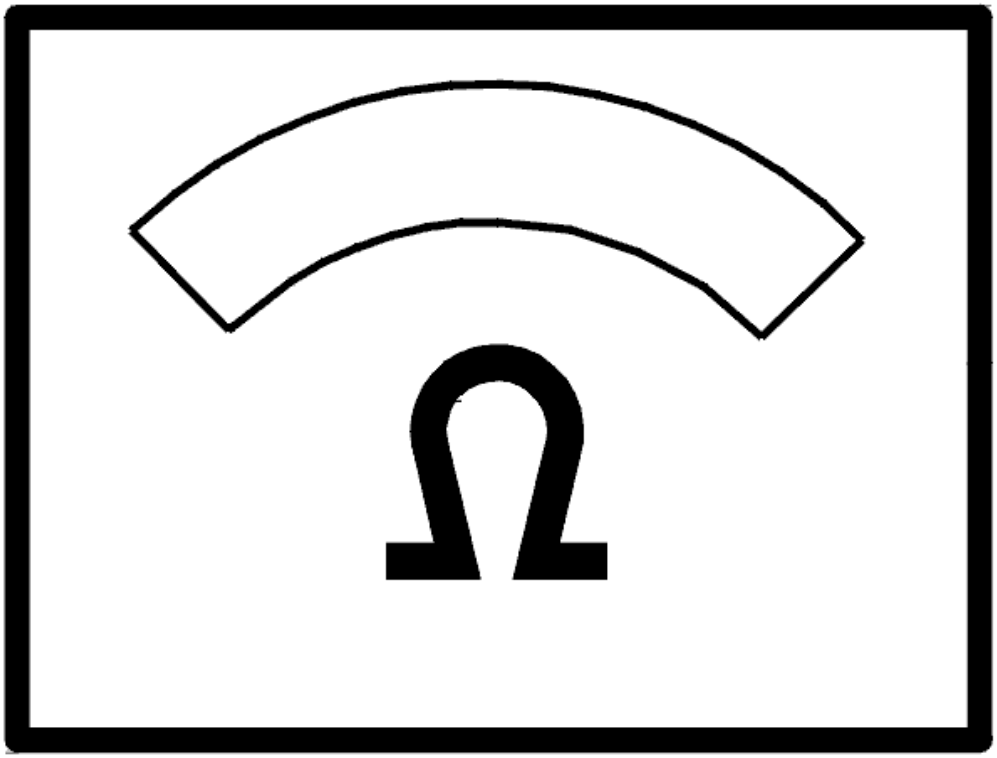

Fig. 37: Identifying Ohmmeter
Courtesy of VOLVO CARS CORPORATION

- **Continue**

  Refer to **VERIFICATION**

VERIFICATION

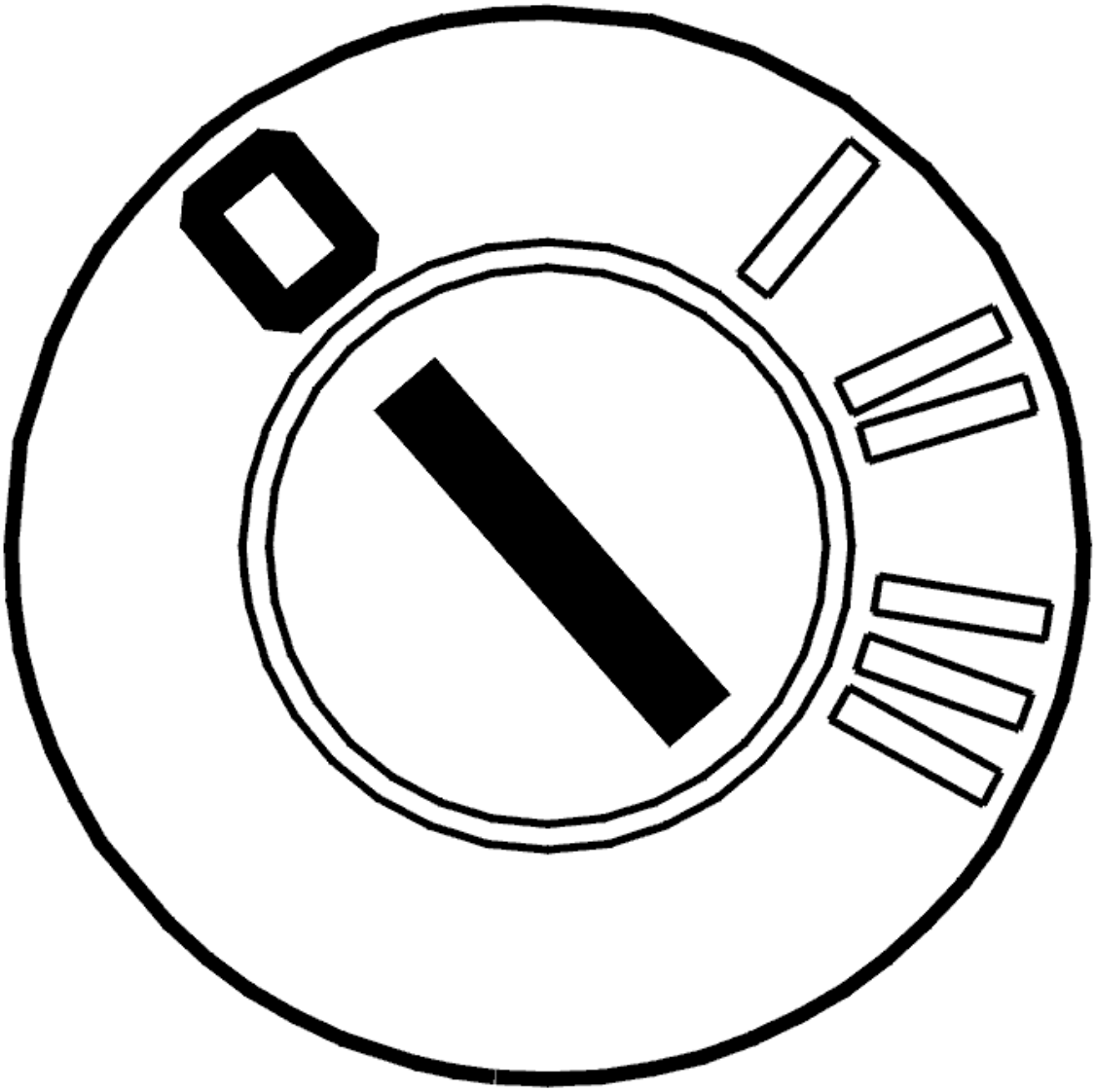

Fig. 38: Identifying Ignition OFF
Courtesy of VOLVO CARS CORPORATION

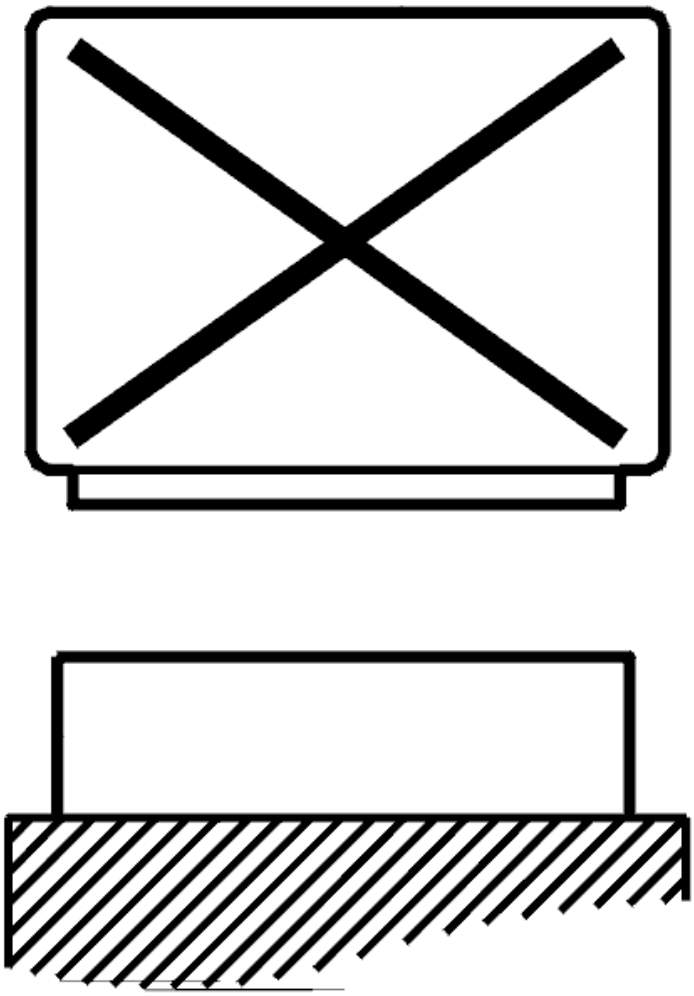

Fig. 39: Disconnecting Control Unit
Courtesy of VOLVO CARS CORPORATION

- Ignition off.
- Control unit disconnected.
- Switch off all parts fed by the battery such as courtesy lights and radio.

Connect an ohmmeter between the battery negative terminal and #3 on the test box.

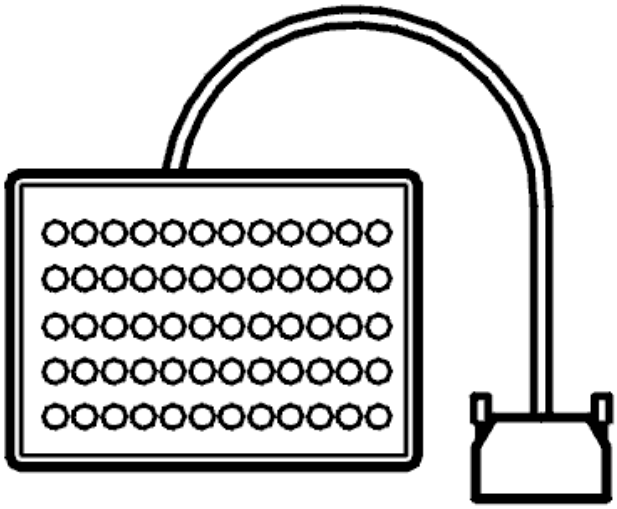

Fig. 40: Breakout Box
Courtesy of VOLVO CARS CORPORATION

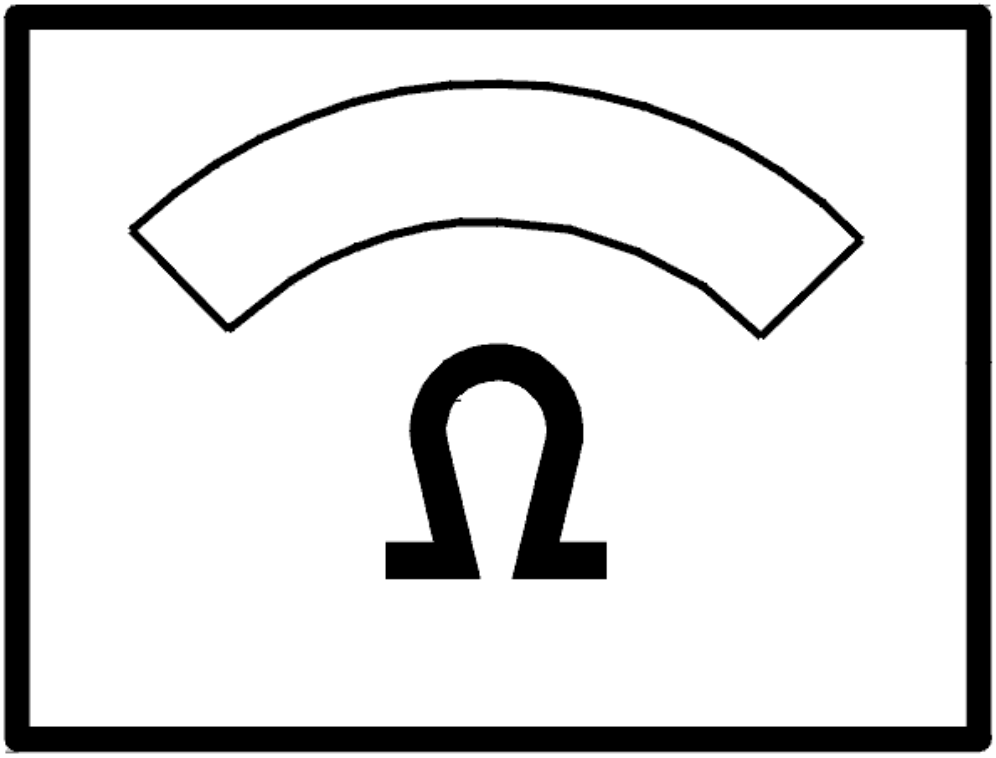

Fig. 41: Identifying Ohmmeter
Courtesy of VOLVO CARS CORPORATION

The ohmmeter should display approximately 0.

- **OK**

  VERIFIED: Troubleshooting has been completed.

- **NOT OK**

  Refer to **INFORMATION**

INFORMATION

FAULT-TRACING INFORMATION

The fault should be diagnosed and remedied. Since this is not the case the fault-tracing process has failed.

Complete the fault-tracing for those fault or try again.

DELIVERY TESTS. AUXILIARY HEATER (2003-04)

CHECKING PARKING HEATER FUNCTION

CHECKING PARKING HEATER

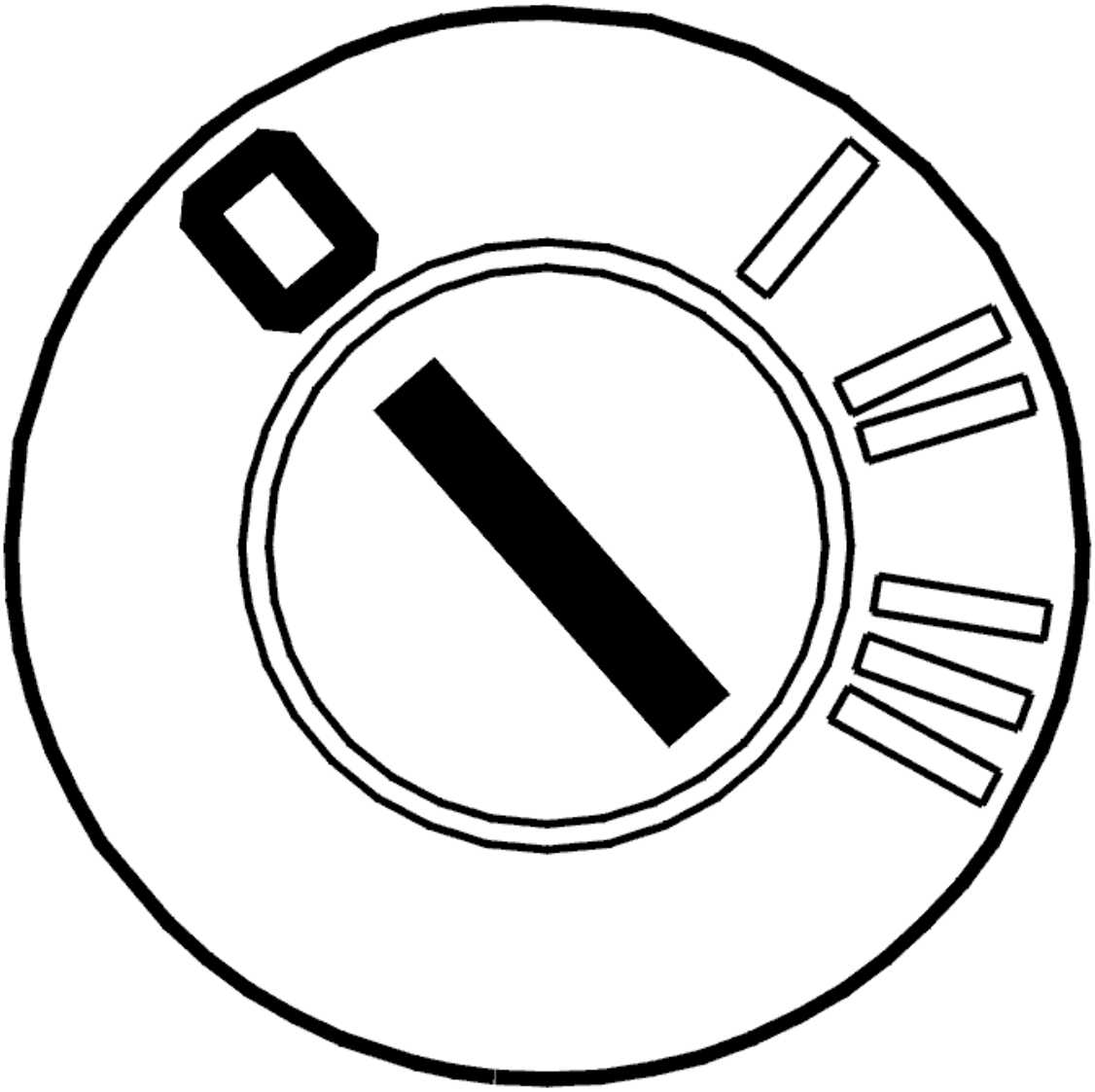

Fig. 42: Identifying Ignition OFF
Courtesy of VOLVO CARS CORPORATION

- Ignition off.
- Activate heater by selecting immediate start in combined instrument (DIM).

The heater should now start and run.

Press the RESET button to activate/deactivate the heater. A p is displayed when the heater starts.

Is function OK?

- **YES**

  VERIFIED: Troubleshooting has been completed.

- **NO**

  VERIFICATION FAILED: The fault should have been detected and remedied. As this is not the case fault-tracing has failed. Exit fault-tracing for this diagnostic trouble code (DTC) or make another attempt.

DELIVERY TESTS. AUXILIARY HEATER (B5254T2; B6294T; 2003-04)

CHECKING DIAGNOSTIC TROUBLE CODES (DTCS). ADDITIONAL HEATER

PREPARATIONS

Before erasing diagnostic trouble codes (DTCs) all indicated faults must be corrected.

NOTE: To obtain the correct communication with the control module during the procedure the instructions concerning the ignition switch position must be followed.

Select 1 to continue erasing. Refer to **ERASING DIAGNOSTIC TROUBLE CODES (DTCS)**.

Select 2 to interrupt erasing. Abort

ERASING DIAGNOSTIC TROUBLE CODES (DTCS)

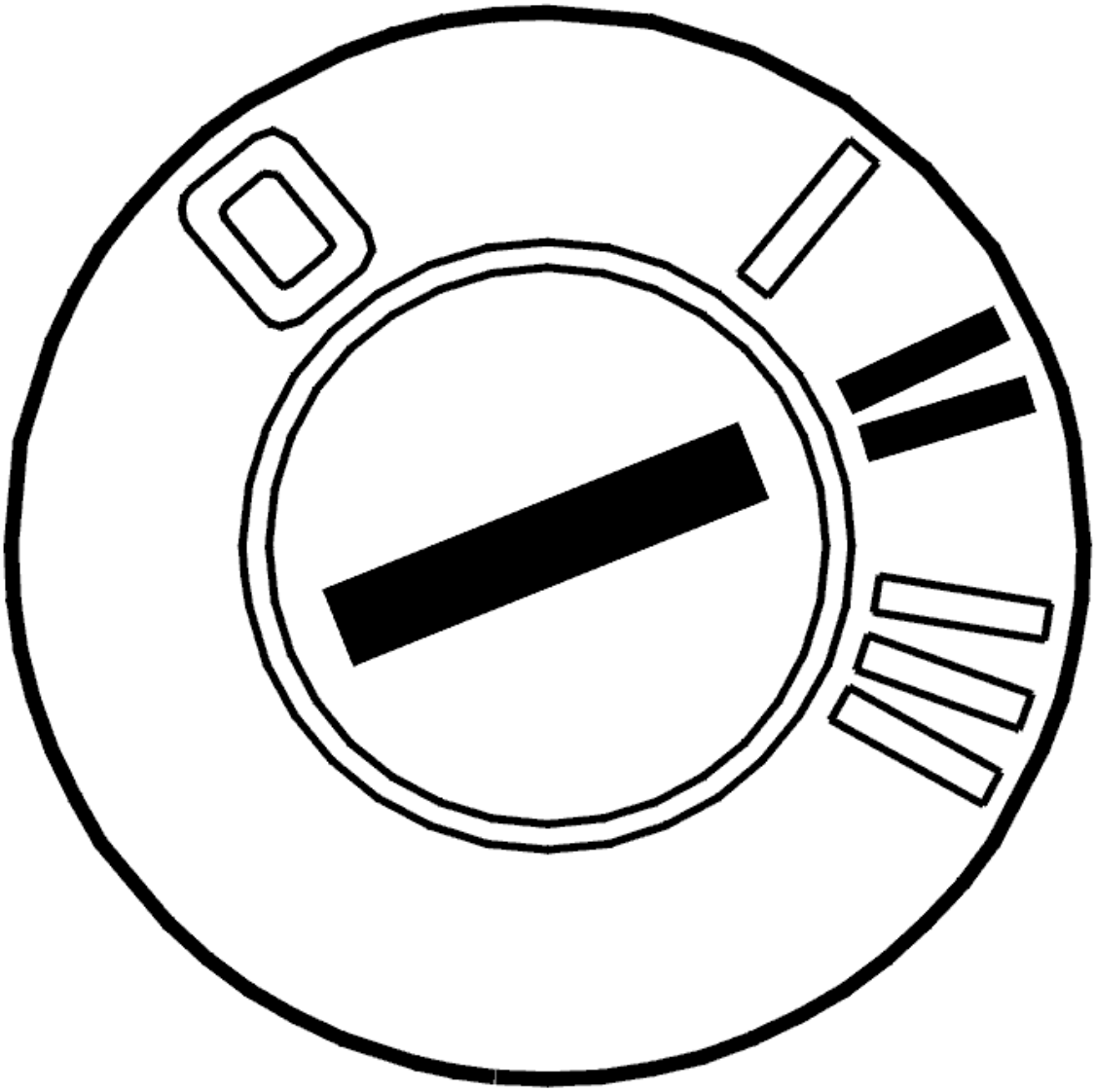

Fig. 43: Identifying Ignition ON
Courtesy of VOLVO CARS CORPORATION

- Ignition on.

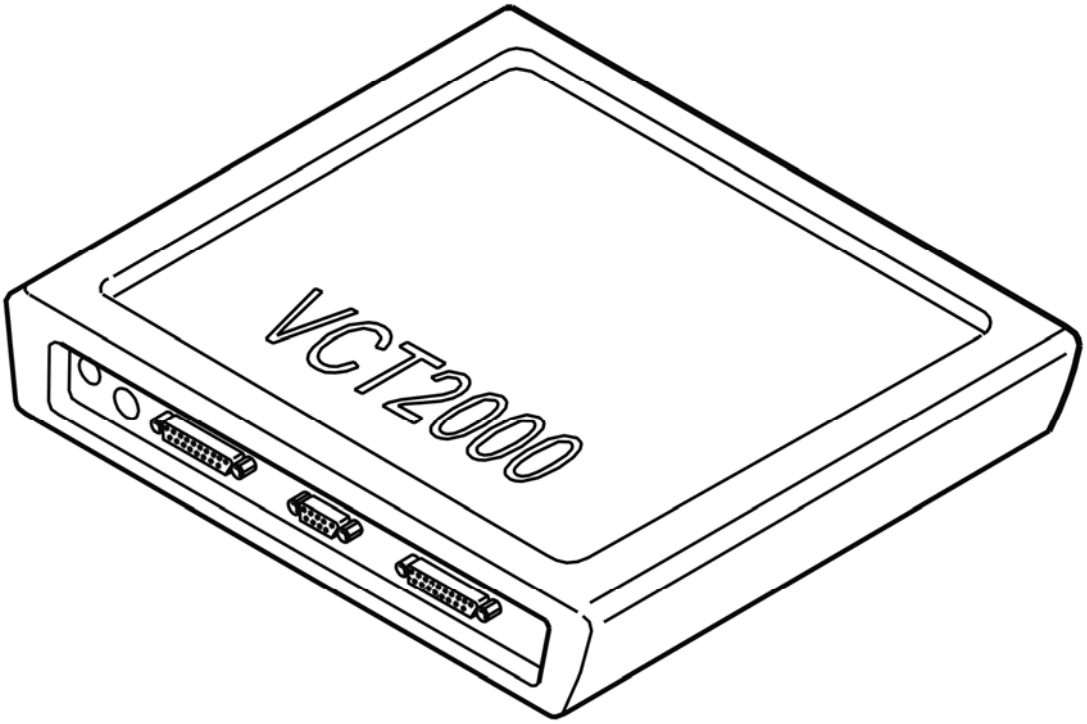

Fig. 44: Identifying VCT2000 Diagnostic Tool Symbol In VIDA
Courtesy of VOLVO CARS CORPORATION

- Erase diagnostic trouble codes (DTCs).

- **Continue**

  Refer to **ACTIVATING THE HEATER**

ACTIVATING THE HEATER

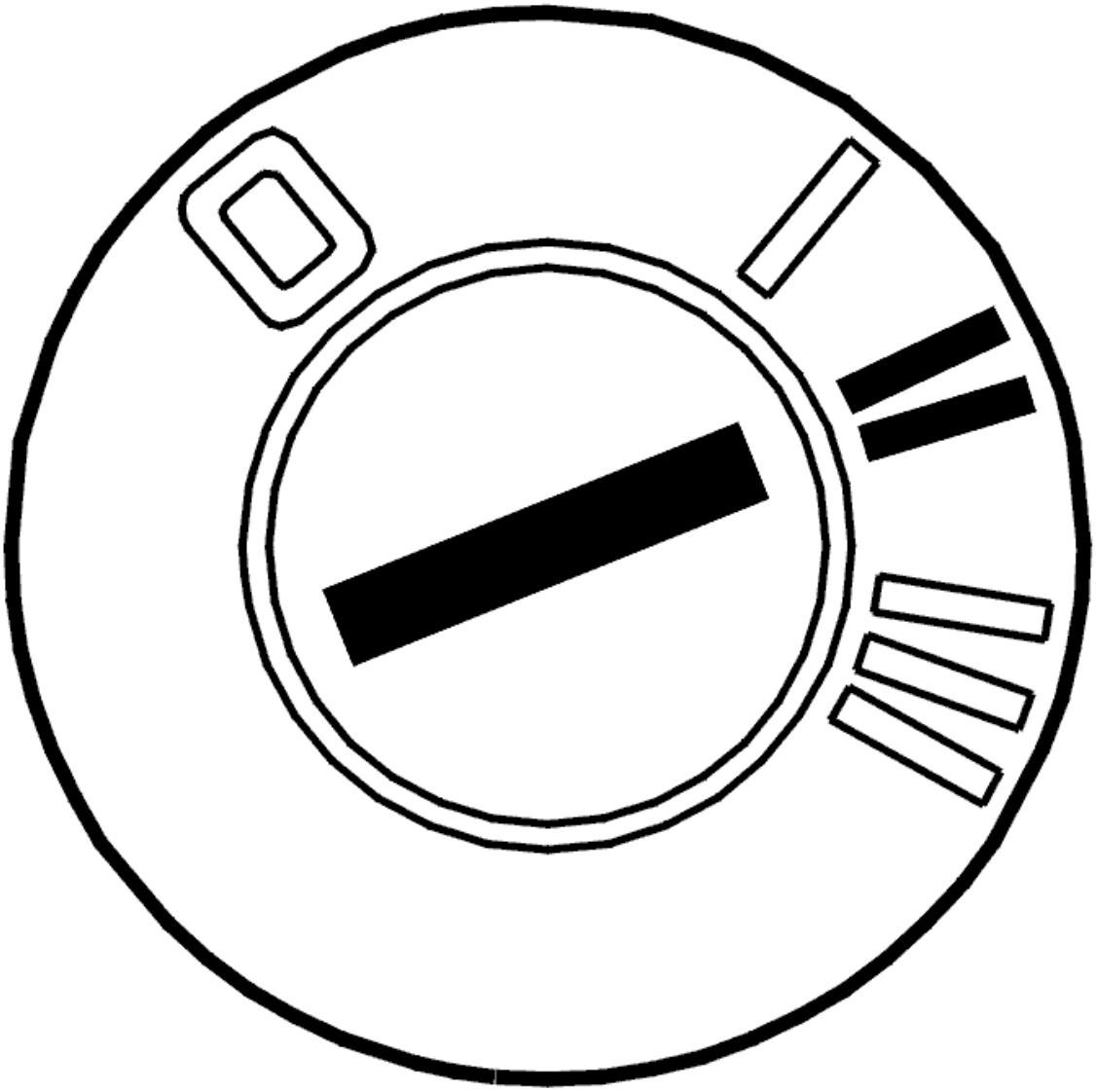

Fig. 45: Identifying Ignition ON
Courtesy of VOLVO CARS CORPORATION

- Ignition on.

  NOTE: It is important that only the ignition is on in order for the heater to start.

- Activate the heater.

  A buzzing sound must be heard from the heater

- Allow the heater to run for at least 2 minutes.

  Check the function of the heater according to **ENGINE COOLANT HEATER, TEST RUNNING** .

Other information:

- For a description of parameters, see **DESCRIPTION OF PARAMETERS**
- For a description of activations, see **ACTIVATING COMPONENTS/FUNCTIONS** .

Stop the heater.

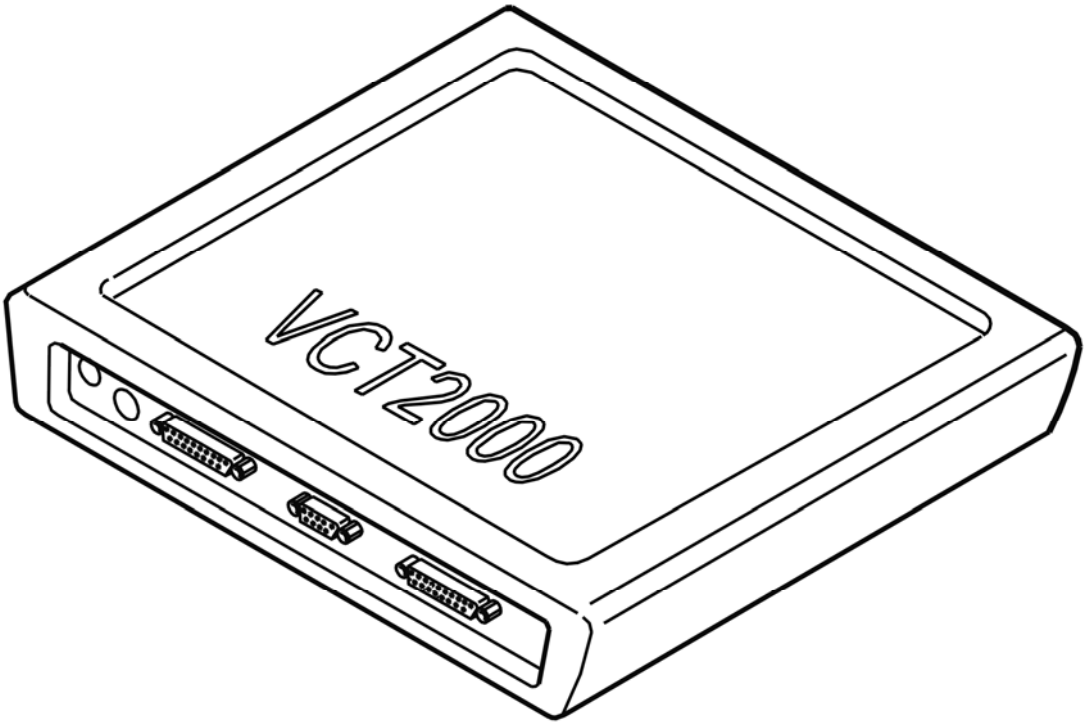

Fig. 46: Identifying VCT2000 Diagnostic Tool Symbol In VIDA
Courtesy of VOLVO CARS CORPORATION

- **Continue**

Refer to **READING OFF DIAGNOSTIC TROUBLE CODES (DTCS)**

READING OFF DIAGNOSTIC TROUBLE CODES (DTCS)

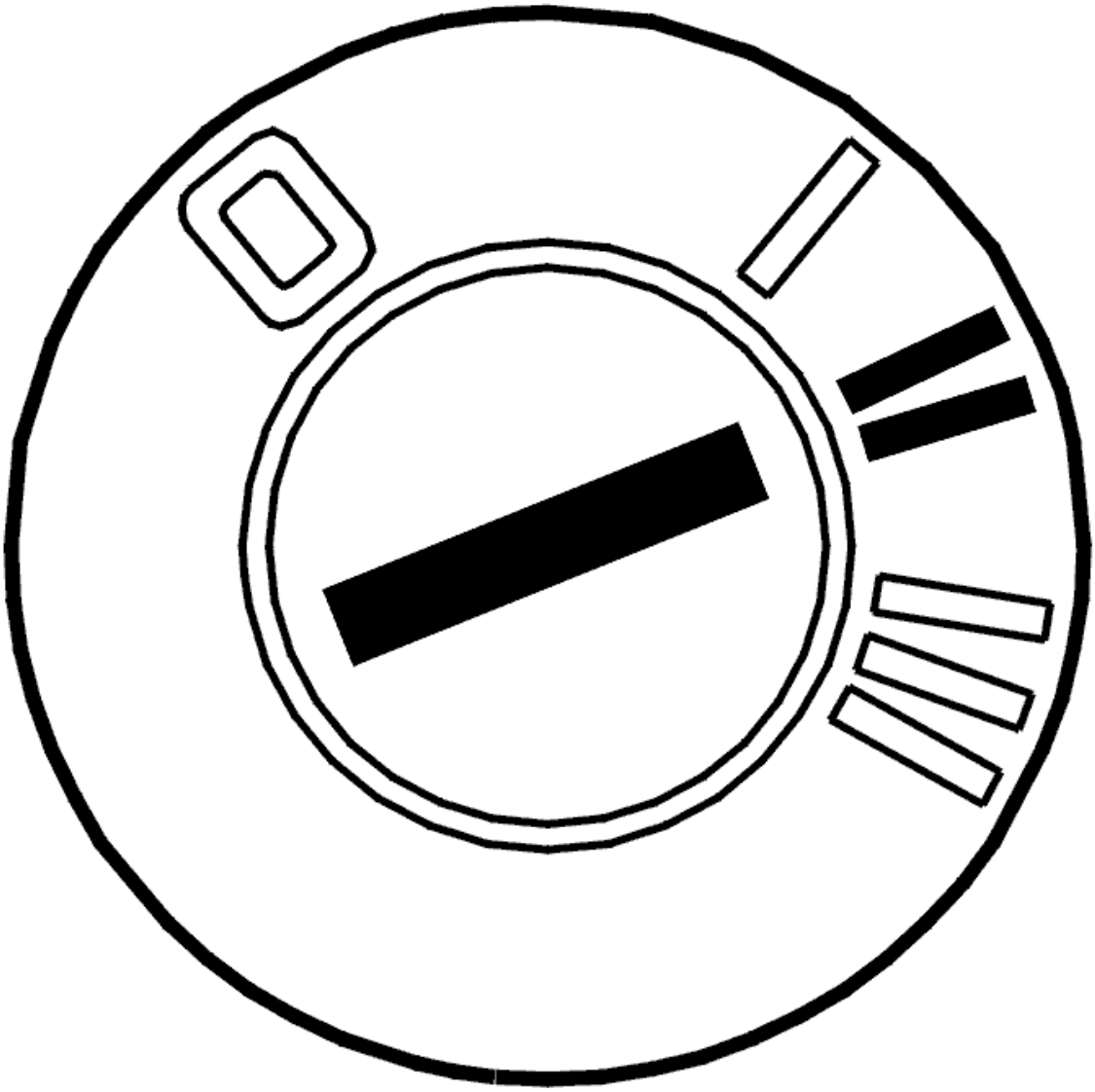

Fig. 47: Identifying Ignition ON
Courtesy of VOLVO CARS CORPORATION

- Ignition on.

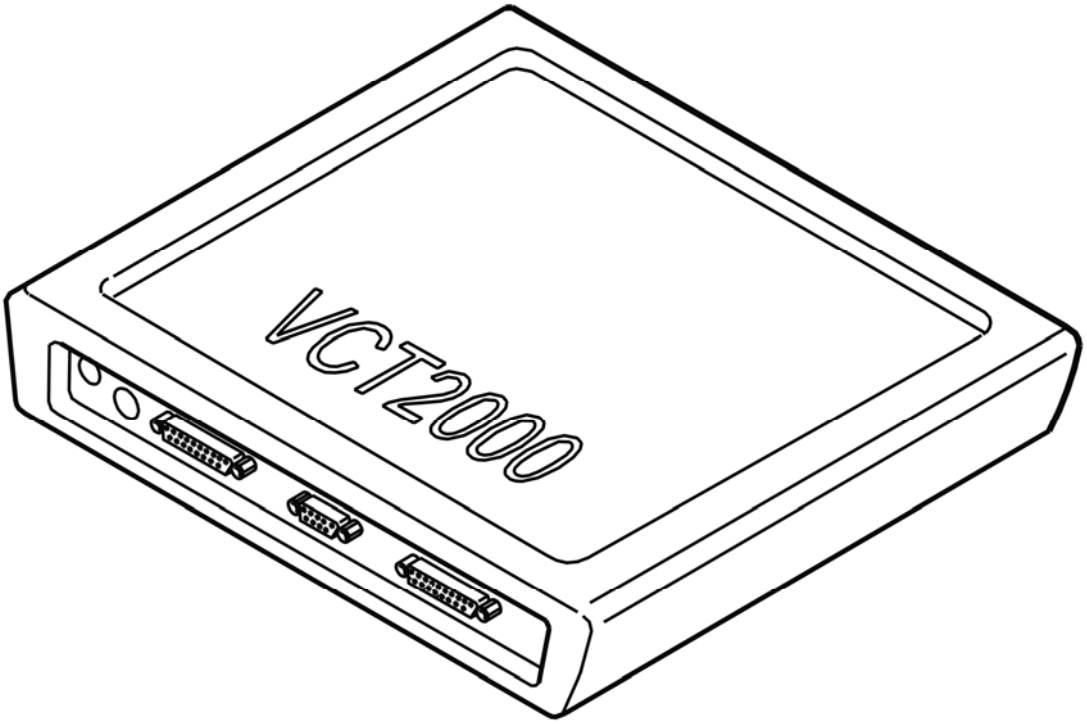

Fig. 48: Identifying VCT2000 Diagnostic Tool Symbol In VIDA
Courtesy of VOLVO CARS CORPORATION

- Read off diagnostic trouble codes (DTCs).
- Make a note if any diagnostic trouble codes (DTCs) are stored.

There should be no diagnostic trouble codes (DTCs) stored.

- **OK**

  Refer to **INFORMATION**

- **NOT OK**

  Refer to **FAULT-TRACING INFORMATION**

FAULT-TRACING INFORMATION

Diagnostic trouble codes (DTCs) not stored earlier

Diagnostic trouble codes (DTCs) have probably been stored during repair work.

Check that all connectors and components have been correctly connected.

Diagnostic trouble codes (DTCs) stored earlier

Diagnostic trouble codes (DTCs) have probably been stored during incorrectly performed repair work

Check that fault-tracing has been carried out correctly according to the relevant fault-tracing instructions.

It is possible to interrupt or make a new attempt to erase diagnostic trouble codes (DTCs).

Do you want to repeat attempt?

- **YES**

  Refer to **ERASING DIAGNOSTIC TROUBLE CODES (DTCS)**

- **NO**

  Troubleshooting has been completed.

INFORMATION

- Diagnostic trouble codes (DTCs) have been correctly erased and not restored.

CHECKING THE AUXILIARY HEATER FUNCTION

CHECKING AUXILIARY HEATER

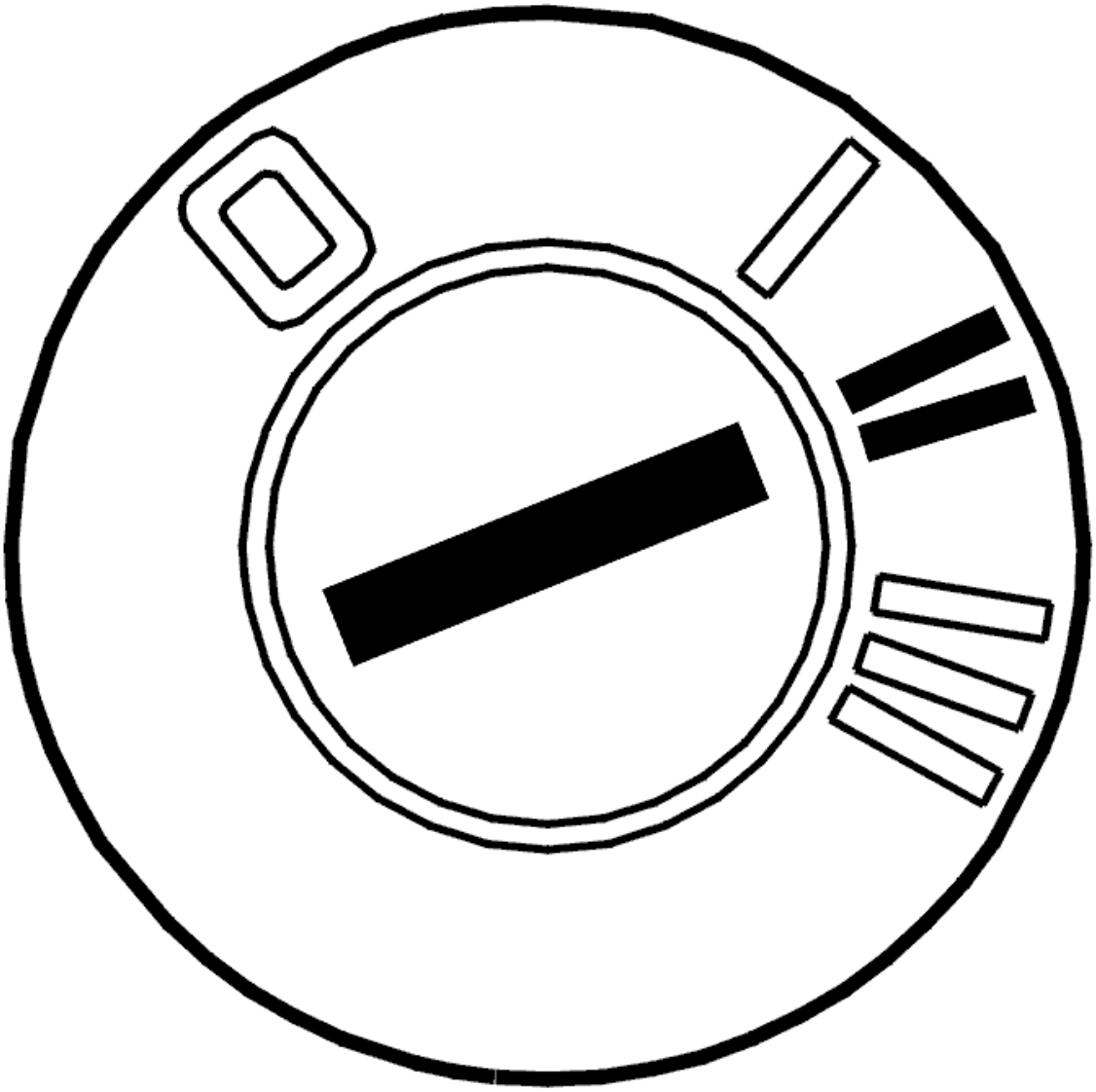

Fig. 49: Identifying Ignition ON
Courtesy of VOLVO CARS CORPORATION

- Ignition on.

  NOTE: It is important that only the ignition is on for the heater to start up.

- Activate the heater.

  A buzzing sound should be heard from the heater.

  Check the function of the heater as described in, see **ENGINE COOLANT HEATER, TEST RUNNING** .

  Additional information:

- For a description of the parameters, see **DESCRIPTION OF PARAMETERS** .
- For a description of activations, see **ACTIVATING COMPONENTS/FUNCTIONS** .

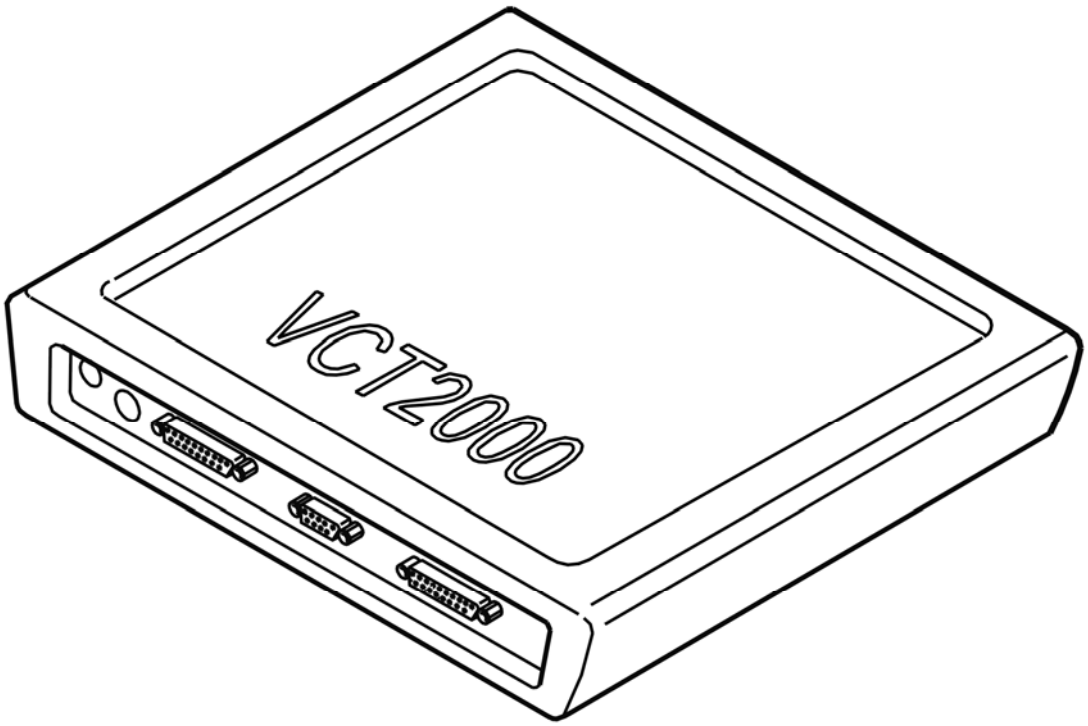

Fig. 50: Identifying VCT2000 Diagnostic Tool Symbol In VIDA
Courtesy of VOLVO CARS CORPORATION

Does the heater work OK?

- **YES**

  VERIFIED: Troubleshooting has been completed.

- **NO**

  VERIFICATION FAILED: The fault should have been detected and remedied. As this is not the case fault-tracing has failed. Exit fault-tracing for this diagnostic trouble code (DTC) or make another attempt.

GENERAL INFORMATION ABOUT FAULT-TRACING IN THE CAN NETWORK (2004-12)

GENERAL INFORMATION ABOUT FAULT-TRACING IN THE CAN NETWORK (2005-2012)

The CAN network is a pure communications network and contains no fuses or sensors. The network is divided

into two parts: the low speed network (LS-CAN, Low Speed CAN) and the high speed network (HS-CAN, High Speed CAN). The differences between the networks are their physical position in the car and the transfer rates. In general terms, HS-CAN is restricted to the engine compartment and LS-CAN to the passenger compartment and the cargo compartment.

Both the low speed and the high speed networks house two network resistors in two of the control modules. Each resistor has resistance of 120 ohms. If resistance between the two CAN cables is measured, a normal value is approximately 60 ohms. The value may vary between vehicles. Permissible values are approximately 55-65 ohms.

NOTE: Resistance 60 ohms can only be measured if the main artery is intact and connected in the part of the CAN network in which the reading is taken. If there is an open circuit anywhere along the main artery or if any control module through which the main artery passes (a control module with four CAN connections) is not connected, resistance will be 120 ohms when the reading is taken.

NOTE: Troubleshoot each CAN-net, see troubleshooting for CAN-related fault codes for Central electronic module (CEM). For example, choose one of CEM-DF01-DF17 depending on CAN-net.

Diagnostic trouble code (DTC) types

Diagnostic trouble codes (DTCs) which can be stored by control modules connected to the controller area network (CAN) can be split into two categories:

Electrical fault

These diagnostic trouble codes (DTC) can only be stored in the central electronic module (CEM). This type of diagnostic trouble code (DTC) is stored when the central electronic module (CEM) has detected an electrical fault in the controller area network (CAN) wiring. For example a short-circuit between the controller area network (CAN) wiring or a short-circuit between the controller area network (CAN) wiring and voltage or ground. The fault may be due to an open-circuit in the CAN-H on the network. These diagnostic trouble codes (DTCs) do not normally indicate that a fault has occurred in any control module.

Communication error, CEM

These diagnostic trouble codes (DTC) can only be stored in the central electronic module (CEM). The diagnostic trouble code (DTC) indicates that a control module, with which the central electronic module (CEM) expects to communicate, is not responding for one reason or another. This can be due to an open-circuit on one or both the controller area network (CAN) cables to one control module or the control module not being supplied with power, for example.

Communication error, control module

These diagnostic trouble codes (DTC) can be stored by all control modules. A control module that has stored this diagnostic trouble code (DTC) has discovered that some sort of interference has occurred with

communication. The diagnostic trouble code (DTC) does not point out a specific fault source. Examples of fault causes can be intermittent short-circuits between the controller area network (CAN) wiring, intermittent short-circuits in the controller area network (CAN) wiring to supply/ground or a control module which transmits incorrect messages via the controller area network (CAN).

NOTE: The diagnostic trouble codes (DTC) for communication errors can thus be stored in one or more control modules and stem from the same causes as the diagnostic trouble codes for electrical faults in the Central Electronic Module (CEM), that is to say "short-circuit" of one or both CAN cables to supply voltage or ground. It is only the Central Electronic Module (CEM), however, that can store a diagnostic trouble code (DTC) that is generated due to the short-circuit itself.

Configuration fault

The diagnostic trouble codes (DTC) can be stored by all control modules in both the HS-CAN and LS-CAN except for the central electronic module (CEM). The diagnostic trouble code (DTC) indicates that a control module could not receive anticipated communication from the central electronic module (CEM). Examples of fault causes could be incorrect software configuration in the control module which stored the diagnostic trouble code (DTC) or an open-circuit in the controller area network (CAN) wiring to the control module which stored the diagnostic trouble code (DTC). This diagnostic trouble code (DTC) can also be stored if there is play in the connectors or bent terminal pins in a connector on one of the CAN cables.

NOTE: Software in one control module cannot "malfunction". If the control module which stored the diagnostic trouble code (DTC) once has functioned in the vehicle, the fault cannot be remedied by downloading new software. The only instance when downloading new software to a control module is of use is if the customer or workshop replace a control module with a control module from another vehicle without downloading software after replacement.

Design and Function, Controller area network (CAN) XC90

- see **CONTROL MODULES IN THE CONTROL AREA NETWORK (CAN)**
- see **THE NETWORK**
- see **CONSTRUCTION OF THE NETWORK**
- see **CAN-NETWORK (CONTROLLER AREA NETWORK)**
- see **ERROR MANAGEMENT IN THE CONTROLLER AREA NETWORK (CAN)**

Diagnostic functions in the central electronic module (CEM)

The central electronic module (CEM) acts as a hub between the two networks. This operates as an exchange and can distribute traffic between the high speed network (HS-CAN) and the low speed network (LS-CAN) and vice versa. The central electronic module (CEM) also contains diagnostic functions for monitoring the traffic on the CAN network and the voltage levels in the CAN cables.

NOTE: The central electronic module (CEM) contains more functions for monitoring the

CAN network than other control modules. For example, the central electronic module (CEM) is the only control module that can store diagnostic trouble codes (DTC) for short-circuits between the CAN cables, between a CAN cable and ground and between a CAN cable and supply voltage. The fact that the central electronic module (CEM) can do this does not mean that the central electronic module (CEM) is the cause of all faults in the CAN network. On the other hand, other control modules can store diagnostic trouble codes (DTC) as a result of the short-circuit. This is a small, but very important difference.

Example:

The information applies initially to the S60/S80/V70/XC70 because of the designations of units and the use of points in the vehicle where fault tracing may be appropriate. Despite most of the information being model specific, certain methods can also be used on other models.

Diagnostic trouble codes (DTC) in pairs between the central electronic module (CEM) and a particular control module (CEM-1AXX and XXX-E003)

Fault-tracing of the relevant control module begins if the central electronic module (CEM) has stored diagnostic trouble code (DTC) CEM-1A5X or CEM-1A6X for an open-circuit in communication with a control module and if the control module stored XXX-E003. There is an open-circuit at some point in the path between the central electronic module (CEM) and the control module.

NOTE: **If diagnostic trouble codes can be read out from the relevant control module, the fault is probably intermittent. In case of a fault in the low-speed network, it is especially important to investigate the junctions behind the central electronic module (CEM) and the audio module (AUM) as well as the cable harness behind the audio module (AUM).**

Single diagnostic trouble codes (DTC) in the central electronic module (CEM), CEM-1AXX

If the central electronic module (CEM) has stored diagnostic trouble code (DTC) 1AXX for an open-circuit in communication with a control module and there is no diagnostic trouble code (DTC) stored in the corresponding control module it indicates an intermittent fault in the power supply to the indicated control module. The diagnostic trouble code (DTC) cannot be stored if the control module which could not communicate with the engine module (CEM) is not powered.

General procedure

- Check the supply voltage to the relevant control module
- Check the ground terminal for the control module
- Check the CAN cables for the control module.

Checking the power supply

A simple way to check the supply voltage and ground is to check if there is any functionality remaining in the

control module. Examples of corrective action:

- Audio module (AUM): Check whether the radio plays
- Upper electronic module (UEM): Check whether the seat belt reminder lights or whether the sun roof works
- Power seat module (PSM): Check whether the seat can be moved manually
- Road traffic information module (RTI): Check whether the display for the road traffic information module (RTI) can be folded up or whether a disc can be inserted and fed out
- Climate control module (CCM): Check the function. The blower fan must blow. However, the air conditioning (A/C) will not work in the event of interrupted CAN communication.

In the event of difficulty, check as follows: Measure the supply voltage and ground terminal in the connector directly adjacent to the control module that has stored the diagnostic trouble code (DTC).

NOTE: The terminals could be damaged when if readings are taken using measurement cables directly in the connector. If possible, take readings on the rear of the connector. If this is not possible, use a loose terminal strip to insert in the connector.

Diagnostic testing of main arteries in the low speed network (LS-CAN)

Take readings at the connector to the power seat module (PSM) (if applicable). Otherwise connect the breakout box at the central electronic module (CEM). The advantage of using the breakout box is that it is possible to check the functionality of the entire network with all control modules connected.

The resistance reading only checks the main path in the LS-CAN. The resistance reading does not check the divergence paths such as the road traffic information module (RTI), accessory electronic module (AEM), power seat module (PSM), phone module (PHM), audio module (AUM), driver door module (DDM) and passenger door module (PDM). However, resistance readings between the two CAN cables can show if there is a short-circuit between the two cables (or their junctions). A normal value, measured somewhere in the middle of the network, is between 55 and 65 ohms if both terminating resistors are connected (120 ohms parallel connected). Twist and bend the cable harness at suitable points to detect any intermittent fault causes.

NOTE: Resistance 60 ohms can only be measured if the main artery is intact and connected in the part of the CAN network in which the reading is taken. If there is an open circuit anywhere along the main artery or if any control module through which the main artery passes (a control module with four CAN connections) is not connected, resistance will be 120 ohms when the reading is taken.

Also measure the resistance between each CAN-lead and voltage feed and ground. Twist and bend the cable harness in suitable places to detect any intermittent fault sources. The resistance should be over 1 kohms. If resistance is less than 1 kohms, this indicates short-circuiting between the CAN-lead and ground/voltage.

HINT: Both readings can be taken in the same connector if the CAN cables, power supply and ground are exposed. If possible, take readings on the rear of the connector to prevent damage to the terminals in

the connector. If this is not possible, use the adapter wiring or loose terminal pins to obtain a good contact. The resistance must be over 1 kohms. If the resistance is less than 1 kohms, this indicates short-circuiting between the CAN-lead and ground/voltage.

If the main artery is OK (i. e. approximately 60 ohms measured in the power seat module (PSM), for example), measure the resistance in the CAN cables from the relevant control module.

Diagnostic testing of main arteries in the high speed network (HS-CAN)

In principle it is only possible to measure the resistance in the high speed network (HS-CAN) using adapter wiring. It is easiest to connect the adapter wiring at the engine control module (ECM). Connect the engine control module (ECM) again to the adapter wiring to obtain the correct values when taking readings. The resistance must be approximately 60 ohms.

NOTE: **Resistance 60 ohms can only be measured if the main artery is intact and connected in the part of the CAN network in which the reading is taken. If there is an open circuit anywhere along the main artery or if any control module through which the main artery passes (a control module with four CAN connections) is not connected, resistance will be 120 ohms when the reading is taken.**

Abbreviations and terms

- CAN. Controller Area Network
- LS-CAN (Low Speed CAN). Low speed network in the car. In practice this is restricted to the passenger compartment and the cargo compartment
- HS-CAN (High Speed CAN). High speed network in the car. In practice this is restricted to the engine compartment
- CAN-H. CAN cable with the higher voltage. The voltage oscillates between 2.5 V and approximately 3.5 V when there is traffic on the CAN network
- CAN-L. CAN cable with the lower voltage. The voltage oscillates between 2.5 V and approximately 1.5 V when there is traffic on the CAN network.

GENERAL INFORMATION ABOUT FAULT-TRACING IN THE CAN NETWORK (2004)

The CAN network is a pure communications network and contains no fuses or sensors. The network is divided into two parts: the low speed network (LS-CAN, Low Speed CAN) and the high speed network (HS-CAN, High Speed CAN). The differences between the networks are their physical position in the car and the transfer rates. In general terms, HS-CAN is restricted to the engine compartment and LS-CAN to the passenger compartment and the cargo compartment.

Both the low speed and the high speed networks house two network resistors in two of the control modules. Each resistor has resistance of 120 ohms. If resistance between the two CAN cables is measured, a normal value is approximately 60 ohms. The value may vary between vehicles. Permissible values are approximately 55-65 ohms.

NOTE: **Resistance 60 ohms can only be measured if the main artery is intact and connected in the part of the CAN network in which the reading is taken. If there is an open circuit anywhere along the main artery or if any control module through which the main artery passes (a control module with four CAN connections) is not connected, resistance will be 120 ohms when the reading is taken.**

NOTE: **Troubleshoot each CAN-net, see troubleshooting for CAN-related fault codes for Central electronic module (CEM). For example, choose one of CEM-DF01-DF17 depending on CAN-net.**

Diagnostic trouble code (DTC) types

Diagnostic trouble codes (DTCs) which can be stored by control modules connected to the controller area network (CAN) can be split into two categories:

Electrical fault

These diagnostic trouble codes (DTC) can only be stored in the central electronic module (CEM). This type of diagnostic trouble code (DTC) is stored when the central electronic module (CEM) has detected an electrical fault in the controller area network (CAN) wiring. For example a short-circuit between the controller area network (CAN) wiring or a short-circuit between the controller area network (CAN) wiring and voltage or ground. The fault may be due to an open-circuit in the CAN-H on the network. These diagnostic trouble codes (DTCs) do not normally indicate that a fault has occurred in any control module.

Communication error, CEM

These diagnostic trouble codes (DTC) can only be stored in the central electronic module (CEM). The diagnostic trouble code (DTC) indicates that a control module, with which the central electronic module (CEM) expects to communicate, is not responding for one reason or another. This can be due to an open-circuit on one or both the controller area network (CAN) cables to one control module or the control module not being supplied with power, for example.

Communication error, control module

These diagnostic trouble codes (DTC) can be stored by all control modules. A control module that has stored this diagnostic trouble code (DTC) has discovered that some sort of interference has occurred with communication. The diagnostic trouble code (DTC) does not point out a specific fault source. Examples of fault causes can be intermittent short-circuits between the controller area network (CAN) wiring, intermittent short-circuits in the controller area network (CAN) wiring to supply/ground or a control module which transmits incorrect messages via the controller area network (CAN).

NOTE: **The diagnostic trouble codes (DTC) for communication errors can thus be stored in one or more control modules and stem from the same causes as the diagnostic trouble codes for electrical faults in the Central Electronic Module (CEM), that is to say "short-circuit" of one or both CAN cables to supply voltage or ground. It is only the Central Electronic Module (CEM), however, that can**

store a diagnostic trouble code (DTC) that is generated due to the short-circuit itself.

Configuration fault

The diagnostic trouble codes (DTC) can be stored by all control modules in both the HS-CAN and LS-CAN except for the central electronic module (CEM). The diagnostic trouble code (DTC) indicates that a control module could not receive anticipated communication from the central electronic module (CEM). Examples of fault causes could be incorrect software configuration in the control module which stored the diagnostic trouble code (DTC) or an open-circuit in the controller area network (CAN) wiring to the control module which stored the diagnostic trouble code (DTC). This diagnostic trouble code (DTC) can also be stored if there is play in the connectors or bent terminal pins in a connector on one of the CAN cables.

NOTE: **Software in one control module cannot "malfunction". If the control module which stored the diagnostic trouble code (DTC) once has functioned in the vehicle, the fault cannot be remedied by downloading new software. The only instance when downloading new software to a control module is of use is if the customer or workshop replace a control module with a control module from another vehicle without downloading software after replacement.**

Design and Function, Controller area network (CAN) XC90

- see **CONTROL MODULES IN THE CONTROL AREA NETWORK (CAN)**
- see **THE NETWORK**
- see **THE NETWORK CONSTRUCTION**
- see **CAN-NETWORK (CONTROLLER AREA NETWORK)**
- see **ERROR MANAGEMENT IN THE CONTROLLER AREA NETWORK (CAN)**

Diagnostic functions in the central electronic module (CEM)

The central electronic module (CEM) acts as a hub between the two networks. This operates as an exchange and can distribute traffic between the high speed network (HS-CAN) and the low speed network (LS-CAN) and vice versa. The central electronic module (CEM) also contains diagnostic functions for monitoring the traffic on the CAN network and the voltage levels in the CAN cables.

NOTE: **The central electronic module (CEM) contains more functions for monitoring the CAN network than other control modules. For example, the central electronic module (CEM) is the only control module that can store diagnostic trouble codes (DTC) for short-circuits between the CAN cables, between a CAN cable and ground and between a CAN cable and supply voltage. The fact that the central electronic module (CEM) can do this does not mean that the central electronic module (CEM) is the cause of all faults in the CAN network. On the other hand, other control modules can store diagnostic trouble codes (DTC) as a result of the short-circuit. This is a small, but very important difference.**

Example:

The information applies initially to the S60/S80/V70/XC70 because of the designations of units and the use of points in the vehicle where fault tracing may be appropriate. Despite most of the information being model specific, certain methods can also be used on other models.

Diagnostic trouble codes (DTC) in pairs between the central electronic module (CEM) and a particular control module (CEM-1AXX and XXX-E003)

Fault-tracing of the relevant control module begins if the central electronic module (CEM) has stored diagnostic trouble code (DTC) CEM-1A5X or CEM-1A6X for an open-circuit in communication with a control module and if the control module stored XXX-E003. There is an open-circuit at some point in the path between the central electronic module (CEM) and the control module.

NOTE: **If diagnostic trouble codes can be read out from the relevant control module, the fault is probably intermittent. In case of a fault in the low-speed network, it is especially important to investigate the junctions behind the central electronic module (CEM) and the audio module (AUM) as well as the cable harness behind the audio module (AUM).**

Single diagnostic trouble codes (DTC) in the central electronic module (CEM), CEM-1AXX

If the central electronic module (CEM) has stored diagnostic trouble code (DTC) 1AXX for an open-circuit in communication with a control module and there is no diagnostic trouble code (DTC) stored in the corresponding control module it indicates an intermittent fault in the power supply to the indicated control module. The diagnostic trouble code (DTC) cannot be stored if the control module which could not communicate with the engine module (CEM) is not powered.

General procedure

- Check the supply voltage to the relevant control module
- Check the ground terminal for the control module
- Check the CAN cables for the control module.

Checking the power supply

A simple way to check the supply voltage and ground is to check if there is any functionality remaining in the control module. Examples of corrective action:

- Audio module (AUM): Check whether the radio plays
- Upper electronic module (UEM): Check whether the seat belt reminder lights or whether the sun roof works
- Power seat module (PSM): Check whether the seat can be moved manually
- Road traffic information module (RTI): Check whether the display for the road traffic information module (RTI) can be folded up or whether a disc can be inserted and fed out
- Climate control module (CCM): Check the function. The blower fan must blow. However, the air

conditioning (A/C) will not work in the event of interrupted CAN communication.

In the event of difficulty, check as follows: Measure the supply voltage and ground terminal in the connector directly adjacent to the control module that has stored the diagnostic trouble code (DTC).

NOTE: The terminals could be damaged when if readings are taken using measurement cables directly in the connector. If possible, take readings on the rear of the connector. If this is not possible, use a loose terminal strip to insert in the connector.

Diagnostic testing of main arteries in the low speed network (LS-CAN)

Take readings at the connector to the power seat module (PSM) (if applicable). Otherwise connect the breakout box at the central electronic module (CEM). The advantage of using the breakout box is that it is possible to check the functionality of the entire network with all control modules connected.

The resistance reading only checks the main path in the LS-CAN. The resistance reading does not check the divergence paths such as the road traffic information module (RTI), accessory electronic module (AEM), power seat module (PSM), phone module (PHM), audio module (AUM), driver door module (DDM) and passenger door module (PDM). However, resistance readings between the two CAN cables can show if there is a short-circuit between the two cables (or their junctions). A normal value, measured somewhere in the middle of the network, is between 55 and 65 ohms if both terminating resistors are connected (120 ohms parallel connected). Twist and bend the cable harness at suitable points to detect any intermittent fault causes.

NOTE: Resistance 60 ohms can only be measured if the main artery is intact and connected in the part of the CAN network in which the reading is taken. If there is an open circuit anywhere along the main artery or if any control module through which the main artery passes (a control module with four CAN connections) is not connected, resistance will be 120 ohms when the reading is taken.

Also measure the resistance between each CAN-lead and voltage feed and ground. Twist and bend the cable harness in suitable places to detect any intermittent fault sources. The resistance should be over 1 kohms. If resistance is less than 1 kohms, this indicates short-circuiting between the CAN-lead and ground/voltage.

HINT: Both readings can be taken in the same connector if the CAN cables, power supply and ground are exposed. If possible, take readings on the rear of the connector to prevent damage to the terminals in the connector. If this is not possible, use the adapter wiring or loose terminal pins to obtain a good contact. The resistance must be over 1 kohms. If the resistance is less than 1 kohms, this indicates short-circuiting between the CAN-lead and ground/voltage.

If the main artery is OK (i. e. approximately 60 ohms measured in the power seat module (PSM), for example), measure the resistance in the CAN cables from the relevant control module.

Diagnostic testing of main arteries in the high speed network (HS-CAN)

In principle it is only possible to measure the resistance in the high speed network (HS-CAN) using adapter

wiring. It is easiest to connect the adapter wiring at the engine control module (ECM). Connect the engine control module (ECM) again to the adapter wiring to obtain the correct values when taking readings. The resistance must be approximately 60 ohms.

NOTE: **Resistance 60 ohms can only be measured if the main artery is intact and connected in the part of the CAN network in which the reading is taken. If there is an open circuit anywhere along the main artery or if any control module through which the main artery passes (a control module with four CAN connections) is not connected, resistance will be 120 ohms when the reading is taken.**

Abbreviations and terms

- CAN. Controller Area Network
- LS-CAN (Low Speed CAN). Low speed network in the car. In practice this is restricted to the passenger compartment and the cargo compartment
- HS-CAN (High Speed CAN). High speed network in the car. In practice this is restricted to the engine compartment
- CAN-H. CAN cable with the higher voltage. The voltage oscillates between 2.5 V and approximately 3.5 V when there is traffic on the CAN network
- CAN-L. CAN cable with the lower voltage. The voltage oscillates between 2.5 V and approximately 1.5 V when there is traffic on the CAN network.

ELECTRICAL

Cables And Fuses - General Information

CABLES

CABLE TERMINALS SURFACE TREATMENT

GENERAL INFORMATION

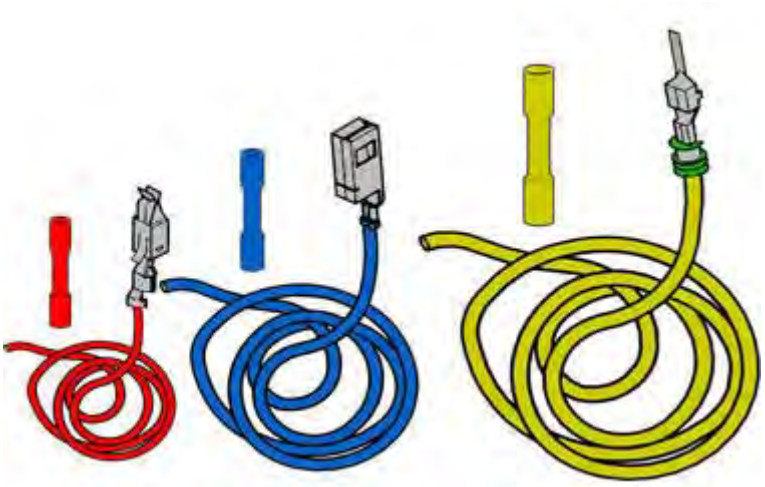

Fig. 1: Identifying Terminal With Integrated Cable
Courtesy of VOLVO CARS CORPORATION

Terminal with integrated cable designated "cable terminal", certain cases "service terminal".

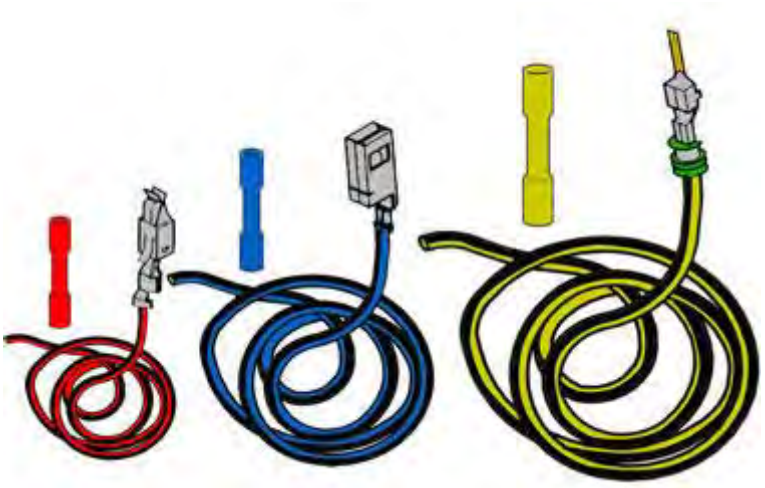

Fig. 2: Identifying Terminal With Integrated Cable
Courtesy of VOLVO CARS CORPORATION

Black marking = terminal's surface treatment is gold. Marking introduced running from second quarter 2008.

CAUTION: If new components are supplied with a section of new wiring, the equivalent wiring section in the vehicle must be substituted with the new section.

Due to oxidation and galvanic currents, female and male connections with the same surface treatment should be used.

Example of different surface treatments: Gold (Au), Silver (Ag), Tin (Sn)

- Silver + Tin = Permitted
- Tin + Gold = Not permitted
- Silver + Gold = Permitted

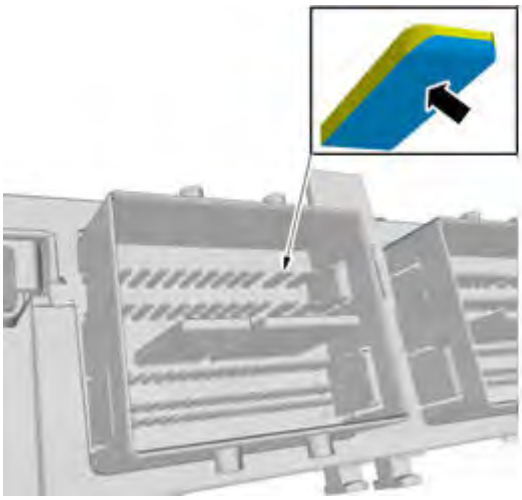

Fig. 3: Identifying Terminal With Integrated Cable Designated "Cable Terminal" (Black Mark)
Courtesy of VOLVO CARS CORPORATION

The type of surface treatment on the connector can only be determined by inspection the male connector's pins with a magnifying glass.

ELECTRICAL

Cables And Fuses - Removal, Replacement And Installation

CENTRAL ELECTRICAL UNIT, FUSEBOX (2003-04)

CENTRAL ELECTRONIC MODULE (CEM), REPLACING

EXPOSING AND REMOVING RELAY BOX IN PASSENGER COMPARTMENT

CAUTION: The customer-programmed data must be read off before the control module is replaced. The information must then be entered into the new control module after it has been installed. This is performed via VIDA vehicle communication.

NOTE: Applies to vehicles -2003, All ignition keys are needed when programming a new control module.

NOTE: For vehicles equipped with Volvo On Call (see phone's keypad) the battery's minus lead shall be removed first. Otherwise the automatic alarm for emergency services may be triggered. See BATTERY, DISCONNECTING

NOTE: The driver information module (DIM) must not be replaced at the same time. This would erase the mileage.

For further information, see **DOWNLOADING SOFTWARE AND REPLACING THE CONTROL MODULE**

REMOVING SOUNDPROOFING PANEL ON DRIVER'S SIDE

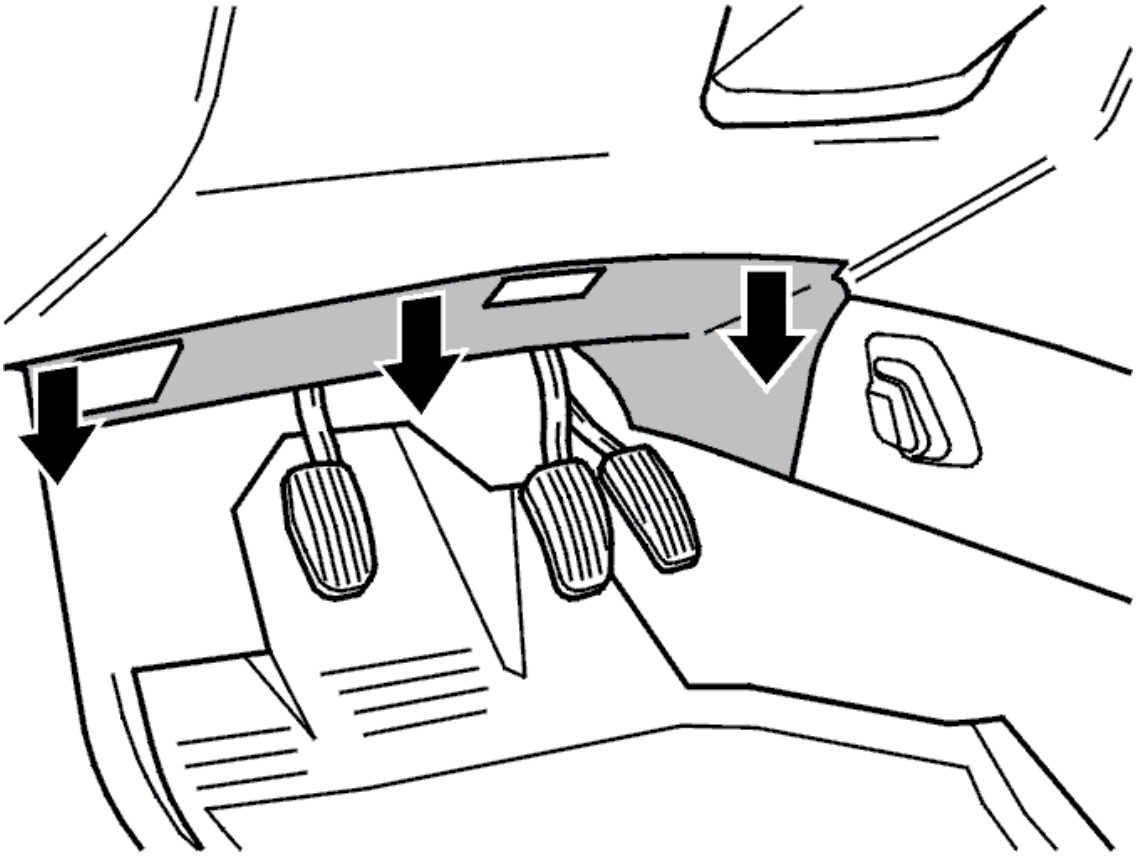

Fig. 1: Identifying Driver Side Soundproofing Panel
Courtesy of VOLVO CARS CORPORATION

The central electronic module (CEM) is located as a separate unit in the relay box.

- Loosen the screws, 2 pcs.

  HINT: The soundproofing panel is located in grooves by the pedal box.

- Pull the soundproofing panel straight down by the instrument panel.
- Pull back the soundproofing panel.
- Lift out the soundproofing panel.
- Remove the side panel for the fuses on the dashboard's left side (a part of the console is visible).

REMOVING RELAY BOX

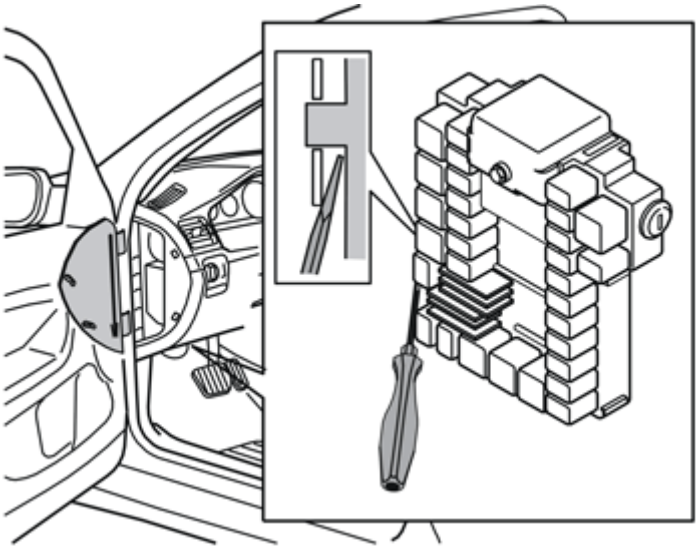

Fig. 2: Removing Relay Box
Courtesy of VOLVO CARS CORPORATION

- Insert a screwdriver up between the bracket and the relay box. Turn the screwdriver so that the bracket expands and, at the same time, pull the relay box from the bracket towards the underside of the dashboard.
- Lift away the relay box from the bracket and pull it downward under the dashboard.

REPLACING RELAY/SHUNT

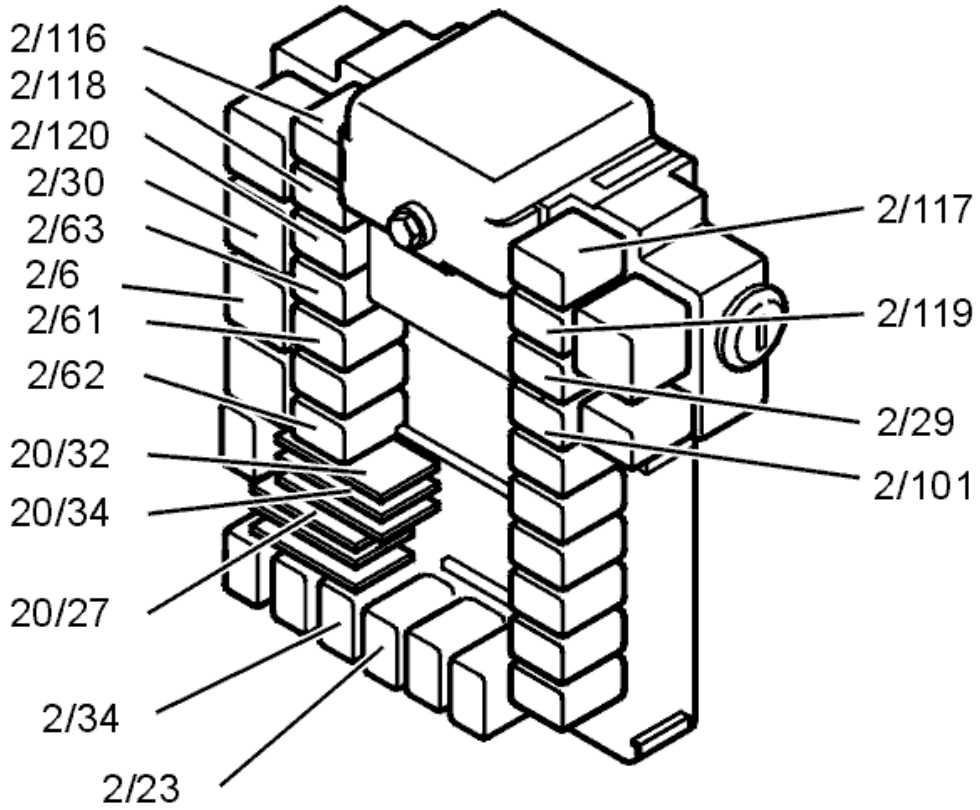

Fig. 3: Identifying Relay Locations
Courtesy of VOLVO CARS CORPORATION

- Expose the relay box for better access.
- Replace relay/shunt.

RELAY POSITION

For position of relays, see

1. Decals by respective relay and fuse box in the vehicle
2. Pocket Data booklet
3. Driver's manual

INSTALLING THE RELAY BOX IN THE PASSENGER COMPARTMENT

- Install the relay box on the bracket
- Press the relay box forward so that the catches engage in the bracket and "click".
- Install the soundproofing panel on the driver's side.

REMOVING THE CONTROL MODULE

PREPARATIONS

CAUTION: The customer-programmed data must be read off before the control module is replaced. The information must then be entered into the new control module after it has been installed. This is performed via VIDA vehicle communication.

NOTE: The driver information module (DIM) must not be replaced at the same time. This would erase the mileage.

NOTE: Before disconnecting the control module's connector, remove fuses 11C/32, 11C/25 and 11C/21.

REMOVING THE CONNECTOR AND THE COVER

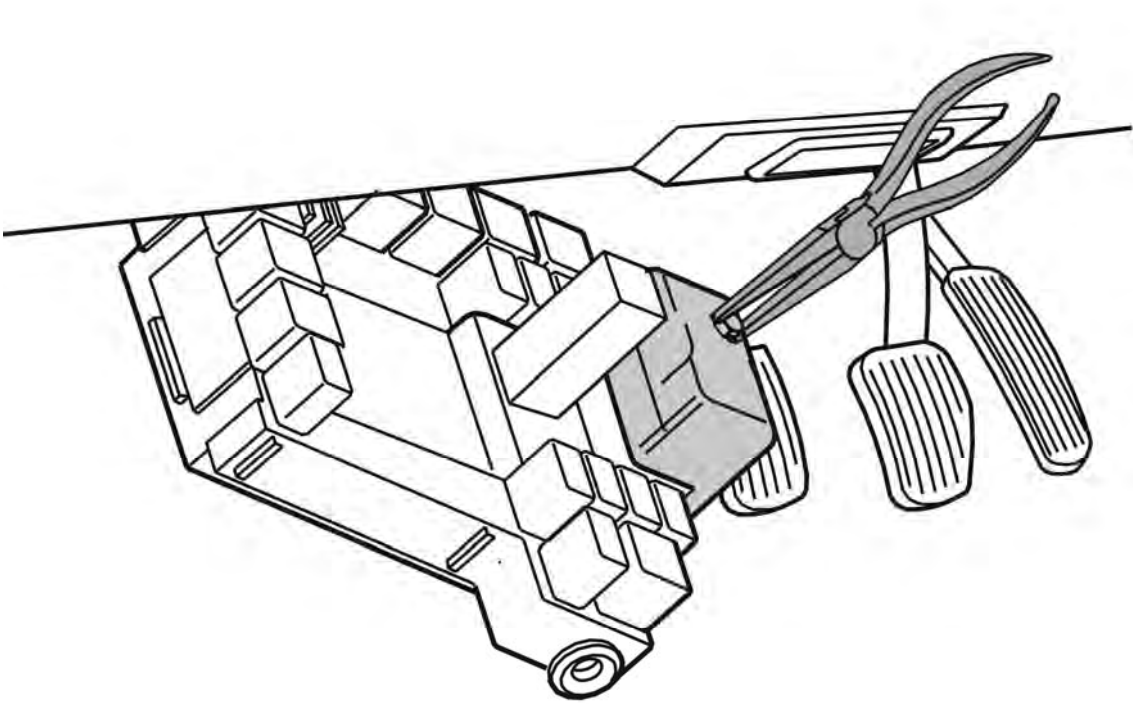

Fig. 4: Disconnecting Connector Using Pliers
Courtesy of VOLVO CARS CORPORATION

- Slacken off the screw holding the connector so that it releases from the threads. Check that the screw is free with your fingers.

NOTE: Do not damage the terminal pins.

- Use pliers to disconnect the connector. Grip the screw and pull it straight outwards so that the connector and cover follow.

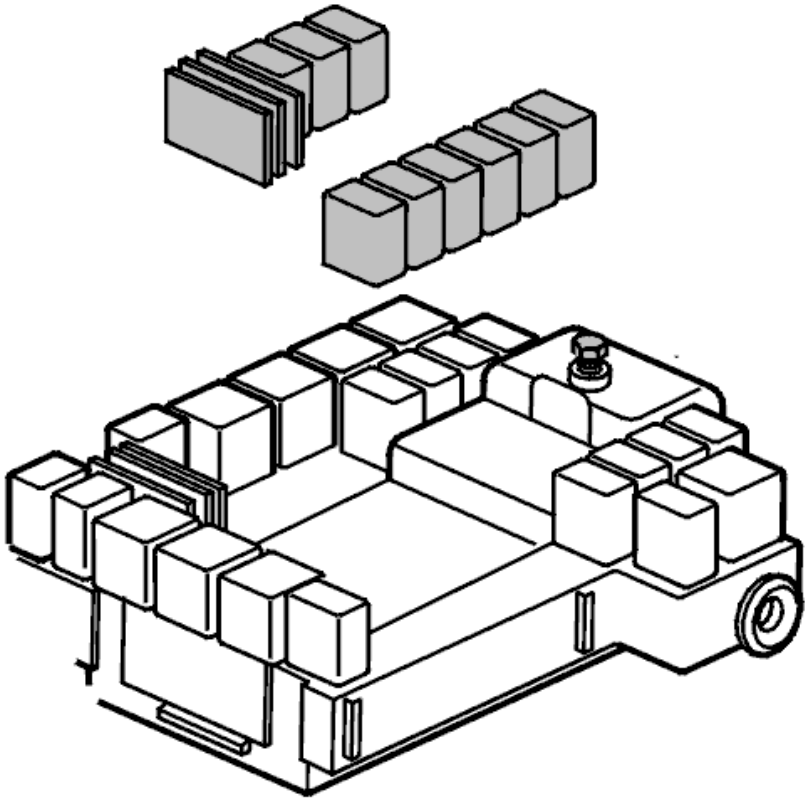

Fig. 5: Identifying Relay Box In Passenger Compartment/Cargo Compartment
Courtesy of VOLVO CARS CORPORATION

- Remove all relays and shunts bridged to the control module. Note the locations.

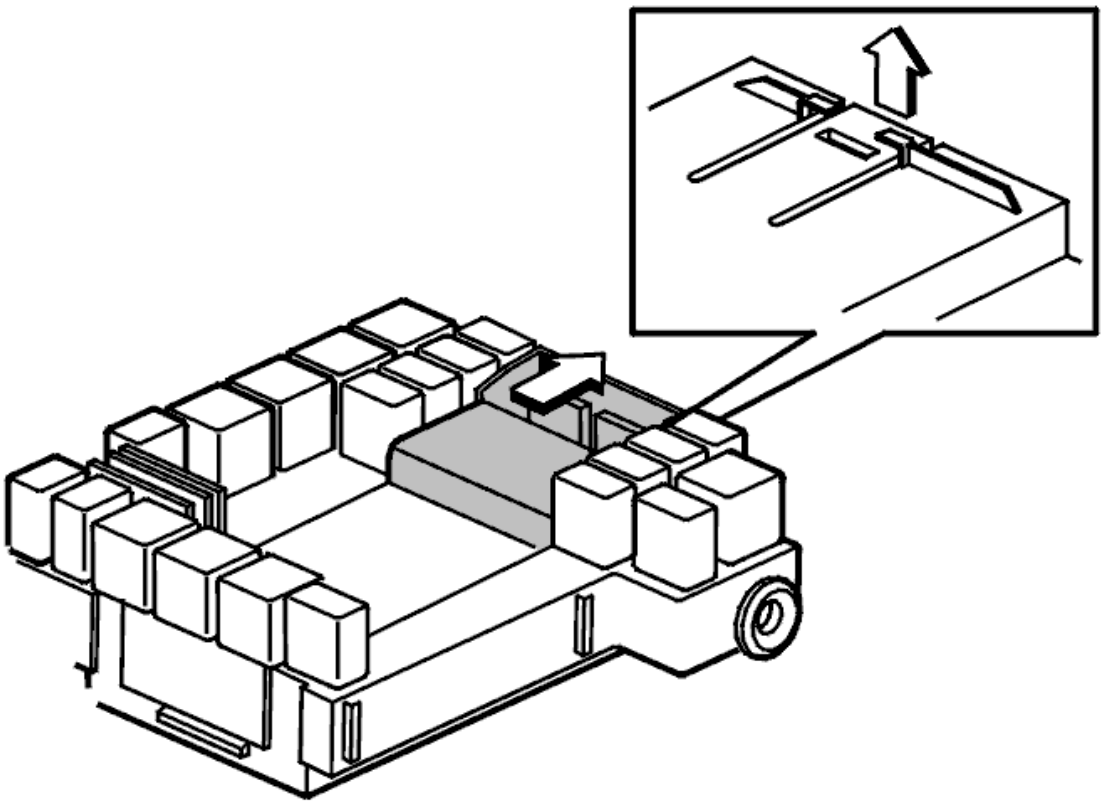

Fig. 6: Identifying Control Module Removal
Courtesy of VOLVO CARS CORPORATION

- Release the catch on the rear. Use a screwdriver
- Lift and pull out the control module.

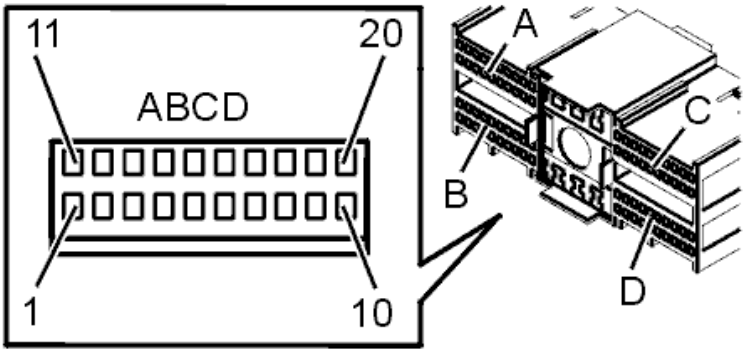

Fig. 7: Control Module Terminals (1 Of 2)
Courtesy of VOLVO CARS CORPORATION

Check that the control module connector is intact.

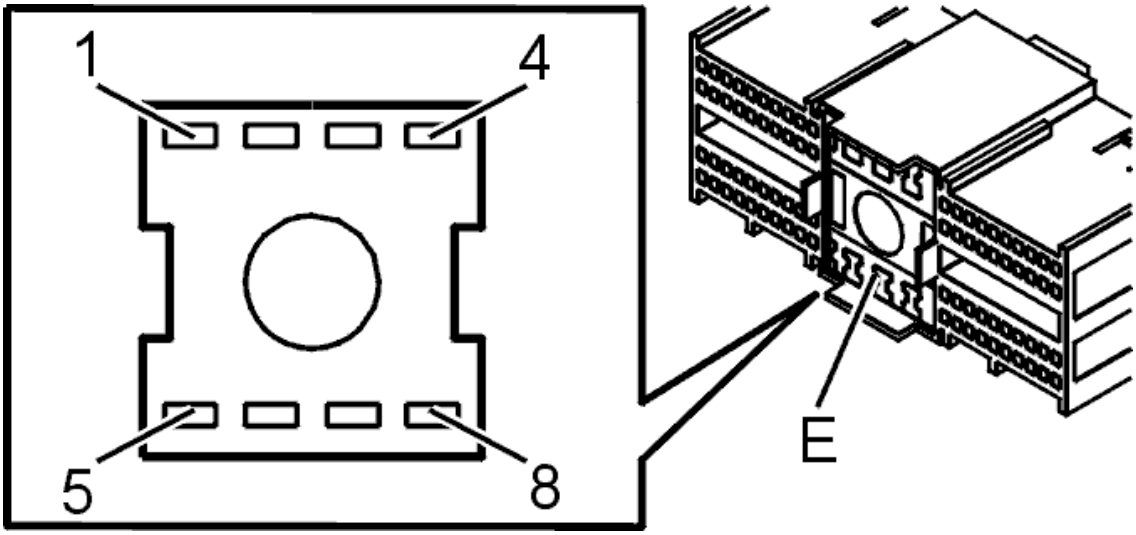

Fig. 8: Control Module Terminals (2 Of 2)
Courtesy of VOLVO CARS CORPORATION

INSTALLING THE CONTROL MODULE

- Press the control module into place so that the catch on the rear engages
- Position the connector. **Carefully** press the connector down.

NOTE: The pins are fragile. Check that the connector goes straight down into the control module.

- Tighten the screw for the connector
- Check that the connector cover is correctly positioned. Remedy if necessary.
- Install relays and shunts.
- Install the relay box.
- Install the soundproofing panel on the driver's side.

ORDERING AND PROGRAMMING SOFTWARE

Order and program software following the table below.

XC90	94382739438273

FINISHING

- Program in the data read off from the old control module (customer-programmed data for example). This is performed via VIDA vehicle communication.
- Reset the service reminder indicator (SRI). Otherwise the lamp will receive incorrect reference data. (Global time is reset when the central electronic module (CEM) is replaced.) Reset the service reminder indicator (SRI) according to **RESETTING THE SERVICE REMINDER INDICATOR (SRI)**
- Check that the control area network (CAN) is functioning. This is done by reading off the control module ID for the central electronic module (CEM), rear electronic module (REM) and engine control module (ECM) via VIDA vehicle communication.

OTHER INFORMATION

For the location of other relay and fuse boxes, see **RELAYS, FUSE BOXES AND WIRING**

CENTRAL ELECTRICAL UNIT, FUSEBOX (B5254T2; B6294T; 2003-04)

ACCESSORY ELECTRONIC MODULE (AEM), REPLACING

REMOVAL

NOTE: The graphics in this service information are used for different model years and/or models. Some variation may occur. However, the essential information in the graphics is always correct.

PREPARATORY WORK

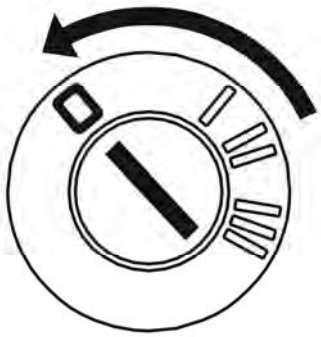

Fig. 9: Identifying Ignition In OFF Position
Courtesy of VOLVO CARS CORPORATION

Ignition off.

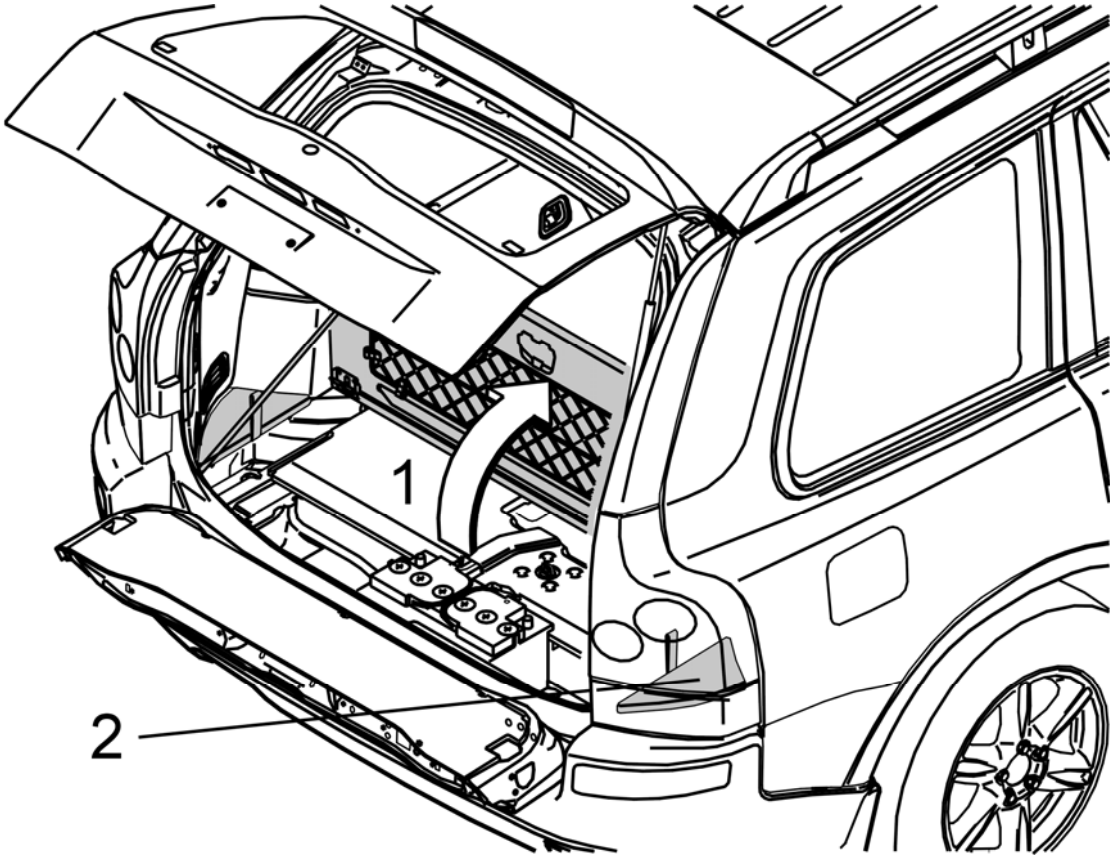

Fig. 10: Identifying Floor Hatch And Floor Piece
Courtesy of VOLVO CARS CORPORATION

Fold up the floor hatch (1) in the cargo compartment.

Remove the floor piece (2).

REMOVING THE ACCESSORY ELECTRONIC MODULE (AEM)

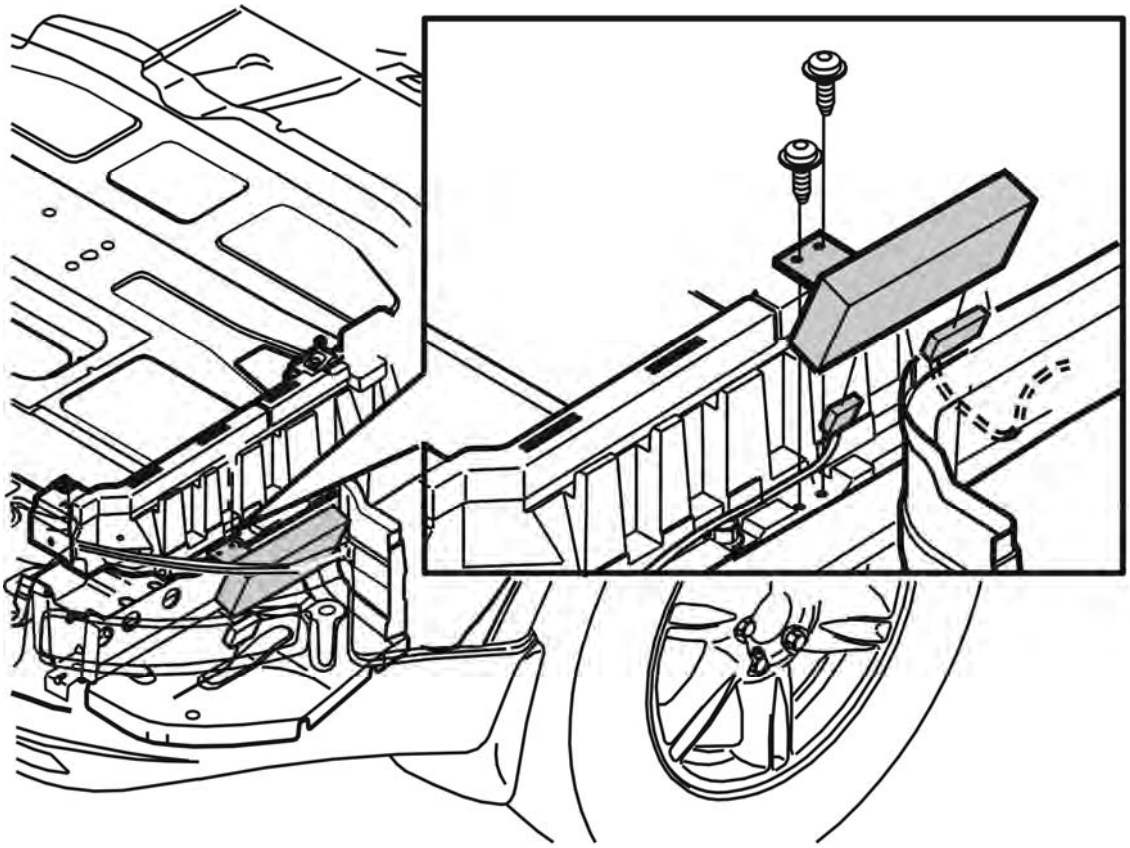

Fig. 11: Identifying Control Module, Bracket And Screws
Courtesy of VOLVO CARS CORPORATION

Remove the screws. Disconnect the connectors.

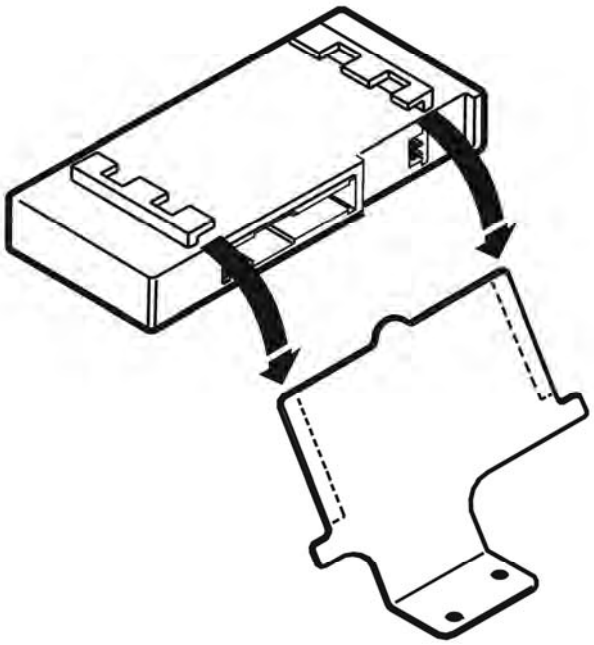

Fig. 12: Identifying Accessory Electronic Module (AEM) And Bracket
Courtesy of VOLVO CARS CORPORATION

Remove:

- the accessory electronic module (AEM) and the bracket
- the bracket.

INSTALLATION

INSTALLING THE ACCESSORY ELECTRONIC MODULE (AEM)

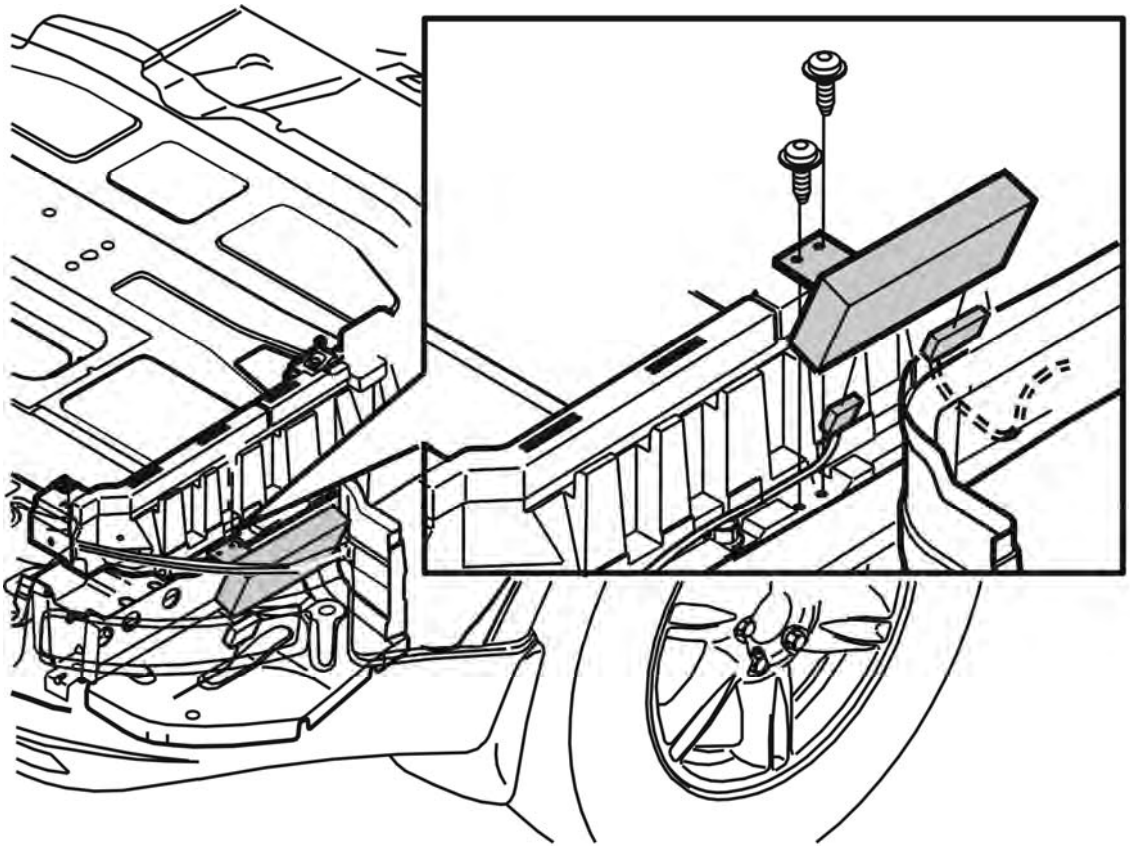

Fig. 13: Identifying Control Module, Bracket And Screws
Courtesy of VOLVO CARS CORPORATION

Install:

- the control module in the bracket. Connect the connectors
- the control module and the bracket
- the screws.

ORDERING SOFTWARE

NOTE: After replacing the accessory electronic module (AEM), new software must be ordered and the module programmed.

Order the software. See 8637230 .

CENTRAL ELECTRICAL UNIT ENGINE COMPARTMENT, REPLACING

REMOVAL

PREPARATORY WORK

NOTE: As the graphics in this service information are used for different model years

and/or models, some variation may occur. However, the essential information in the graphics is always correct.

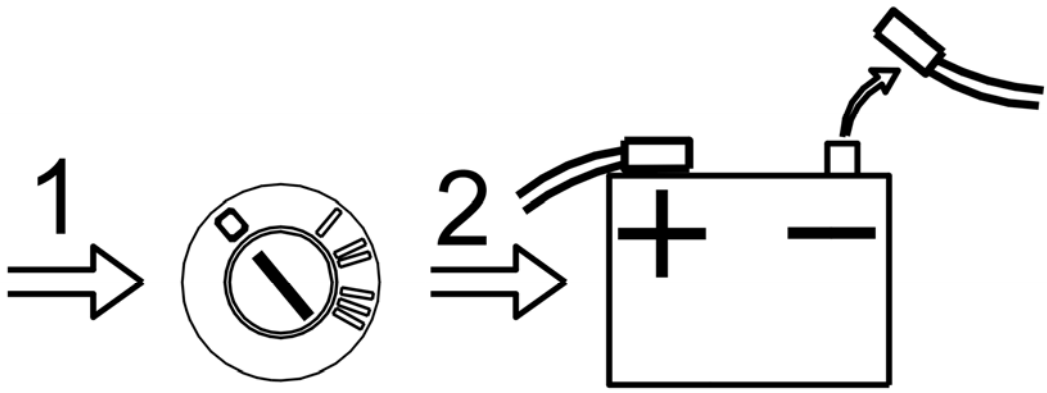

Fig. 14: Disconnecting Battery Negative Cable
Courtesy of VOLVO CARS CORPORATION

- Disconnect the battery negative lead. See **BATTERY, REPLACING** and **BATTERY, DISCONNECTING**
- Remove the power steering fluid and coolant reservoirs. Lift up and move to one side
- Remove the cover from the central electrical unit
- Remove, see **ENGINE CONTROL MODULE (ECM), REPLACING** and **TRANSMISSION CONTROL MODULE (TCM), REPLACING** .

REMOVING THE CENTRAL ELECTRICAL UNIT

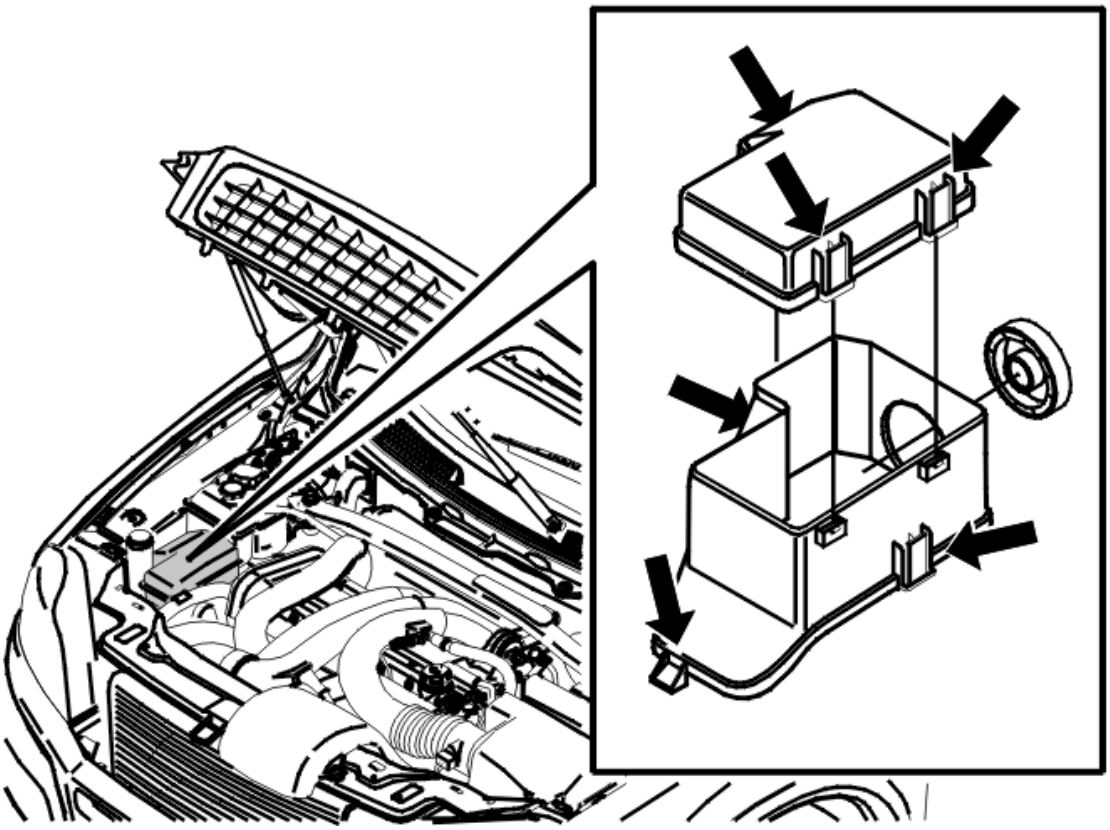

Fig. 15: Identifying Central Electrical Unit And Clips
Courtesy of VOLVO CARS CORPORATION

Release the 3 clips.

Remove:

- intermediate section
- the engine cooling fan (FC) if applicable
- the 2 screws for the connector holder at the front edge. Disconnect the retaining clips for the connector holder using a screwdriver. Pull up the contact holder and the rubber grommet
- the screw at the rear edge of the bottom piece
- the tie straps for the cables
- the bottom section by pulling it backwards until the hook releases.

REMOVING THE CONNECTOR

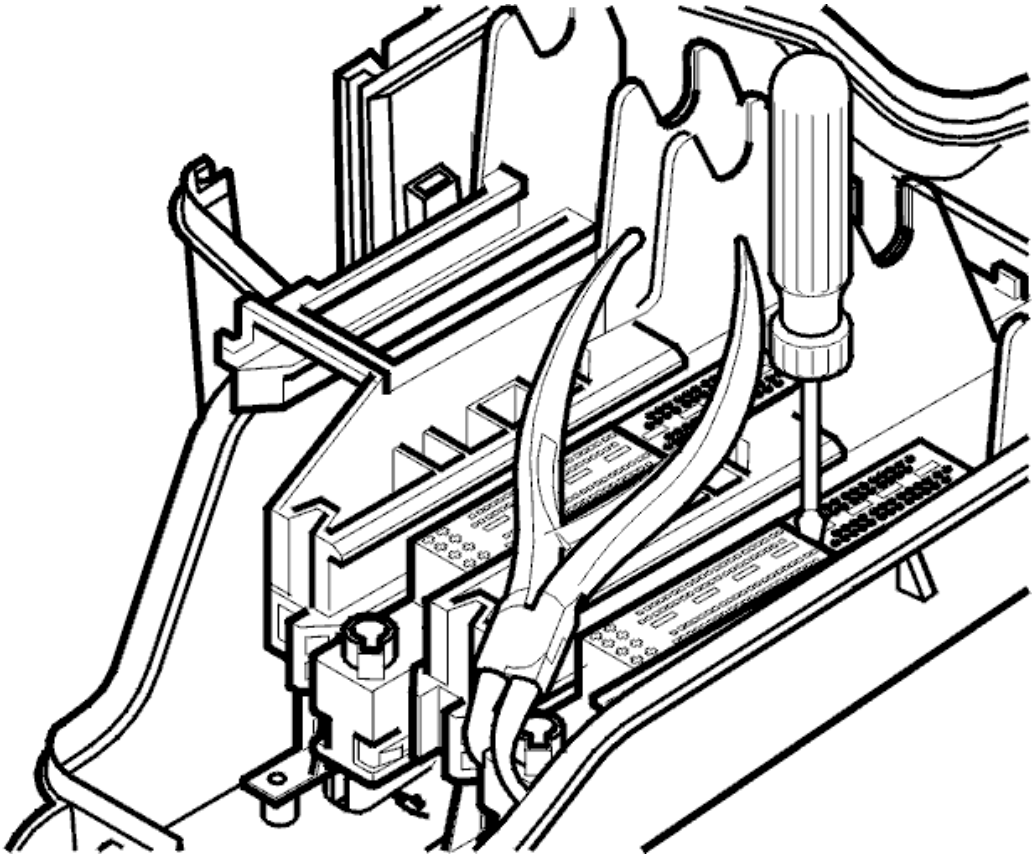

Fig. 16: Disconnecting Connector By Releasing Catches At Front Edge
Courtesy of VOLVO CARS CORPORATION

- Remove the tie straps from the cables
- Disconnect the connector by releasing the locks on the front edge
- Pull out and remove the connector.

INSTALLATION

NOTE: For tightening torques, see TIGHTENING TORQUE .

INSTALLING THE CONNECTOR

Press the connector into the holder.

CENTRAL ELECTRICAL UNIT, INSTALLING

Install:

- the tie straps for the cables
- the bottom section. Hook into place at the front edge
- the screw in the rear edge. Tighten

- the connector holder. Press into the catch.

NOTE: The rubber grommet

- the screws
- the engine cooling fan (FC) if applicable
- the intermediate section. Check that all 3 clips have engaged.

FINISHING WORK

Install:

- see **ENGINE CONTROL MODULE (ECM), REPLACING** and **TRANSMISSION CONTROL MODULE (TCM), REPLACING**
- the cover for the central electrical unit
- the battery negative pole. Also, see **BATTERY, DISCONNECTING** .

INTEGRATED RELAY/FUSEBOX IN ENGINE COMPARTMENT

REMOVAL

PREPARATORY WORK

NOTE: As the graphics in this service information are used for different model years and/or models, some variation may occur. However, the essential information in the graphics is always correct.

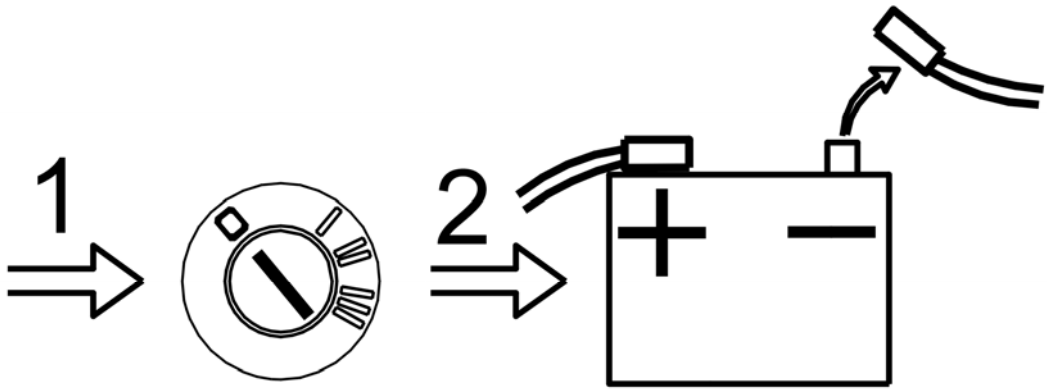

Fig. 17: Disconnecting Battery Negative Cable
Courtesy of VOLVO CARS CORPORATION

Disconnect the battery negative lead. Also, see **BATTERY, DISCONNECTING** .

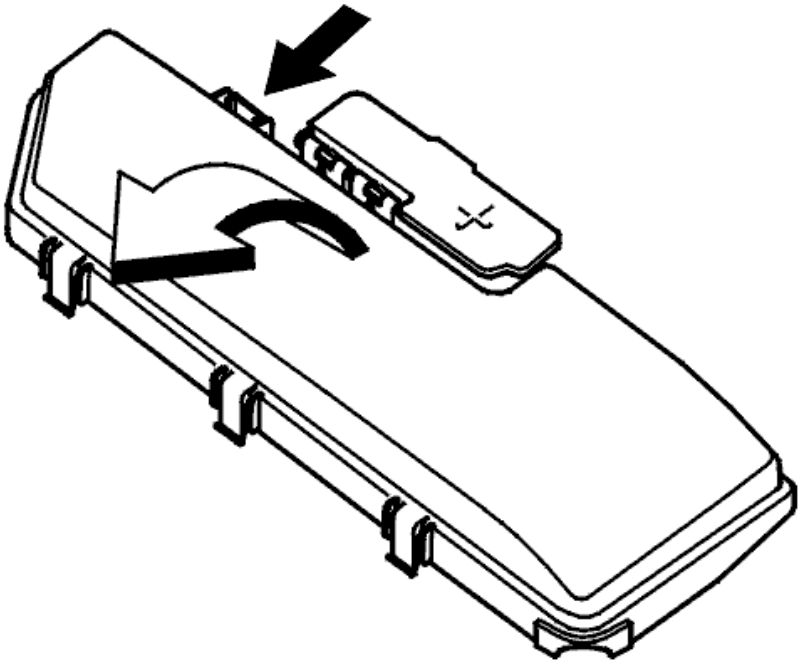

Fig. 18: Identifying Fusebox Cover
Courtesy of VOLVO CARS CORPORATION

Remove the cover for the integrated relay/fusebox.

REMOVING THE INTEGRATED RELAY/FUSEBOX

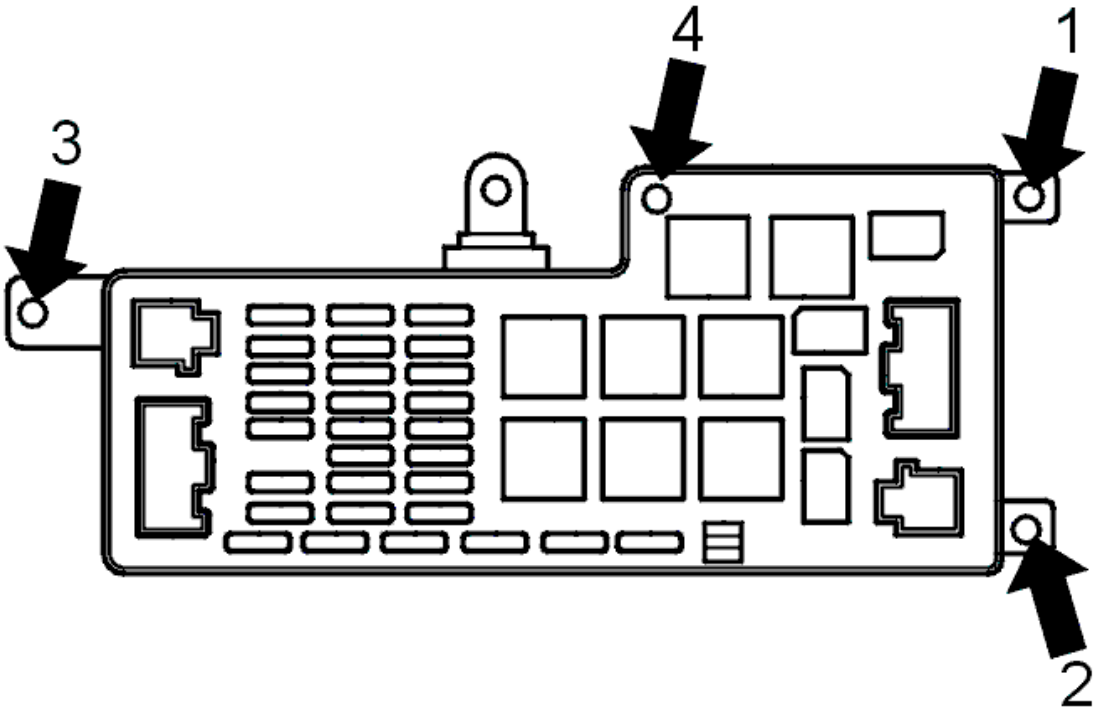

Fig. 19: Identifying Fuse Nuts
Courtesy of VOLVO CARS CORPORATION

- Remove the nut for the battery leads. Push the cables to one side
- Remove the screws for the rely/fuse holder. Push the lock at the front of the fusebox to one side. Lift the relay/fuse holder straight up
- Disconnect the connectors
- Remove the cable terminals for the main fuse.

REMOVING THE MAIN FUSE

- The main fuse is on the underneath of the relay/fuse holder
- Release the relay/fuse holder. See **REMOVING THE INTEGRATED RELAY/FUSEBOX**. The connectors do not need to be disconnected
- Remove the nuts for the main fuse
- Replace the fuse
- Install the nuts.

REMOVING THE CAPACITOR

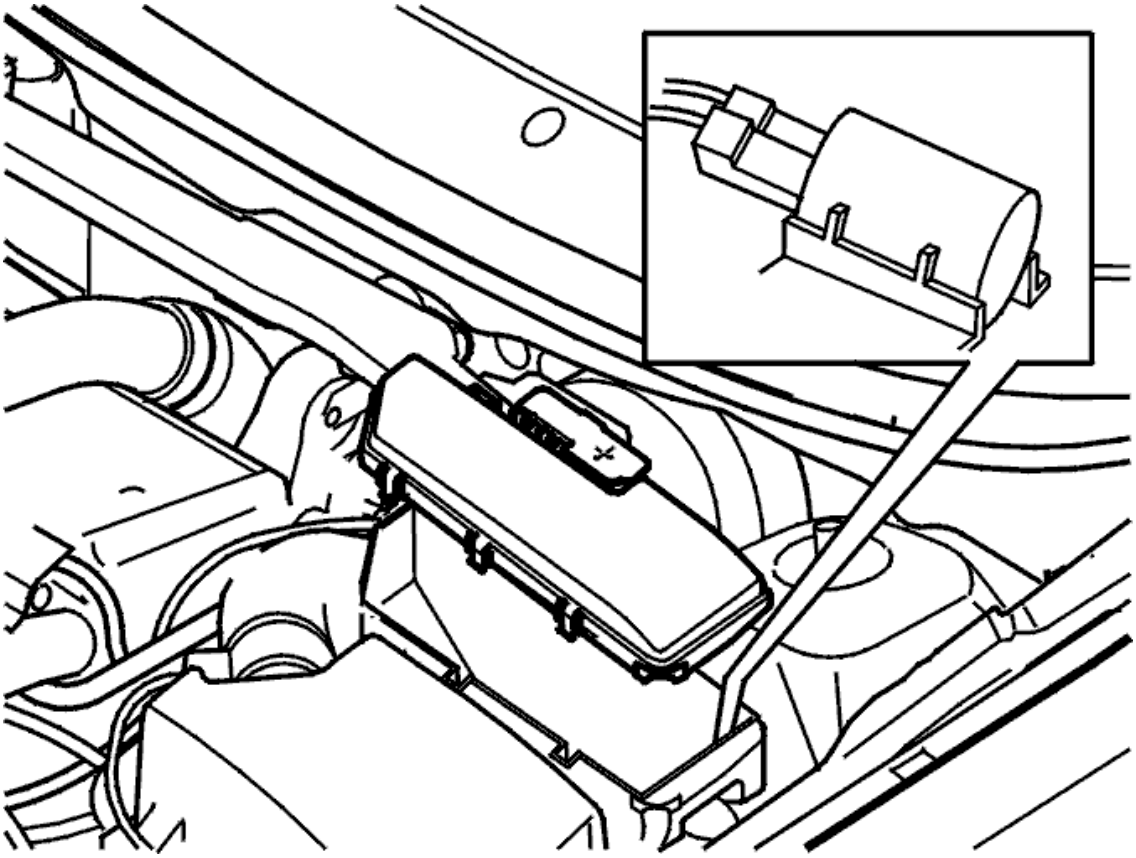

Fig. 20: Disconnecting Capacitor From Lower Section/Mounting Hooks
Courtesy of VOLVO CARS CORPORATION

- The capacitor is at the bottom of the integrated relay/fusebox
- Disconnect the cable terminals, making a note of their locations
- Replace the capacitor
- Connect the cable terminals, making a note of their locations.

REMOVING THE BOTTOM SECTION

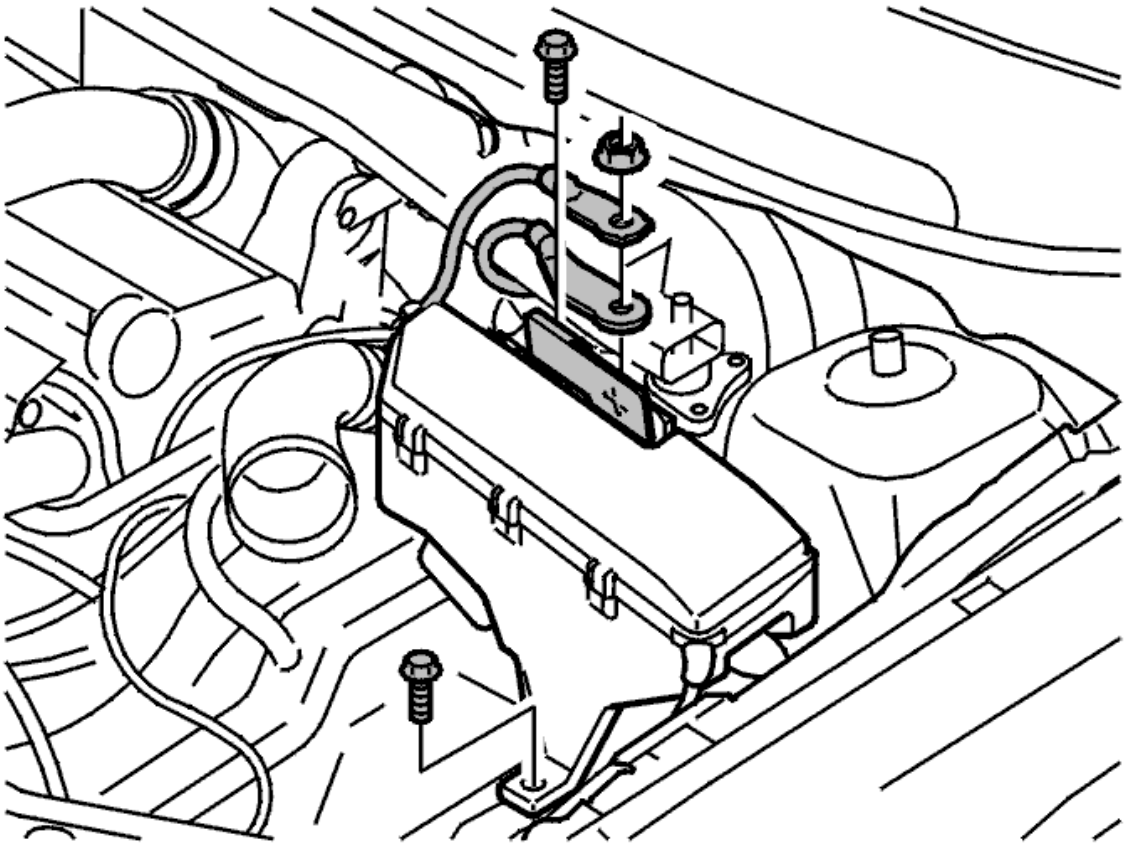

Fig. 21: Identifying Battery Leads, Screws And Nut
Courtesy of VOLVO CARS CORPORATION

Remove:

- the relay/fuse holder as above
- the air cleaner (ACL) housing
- the screws.

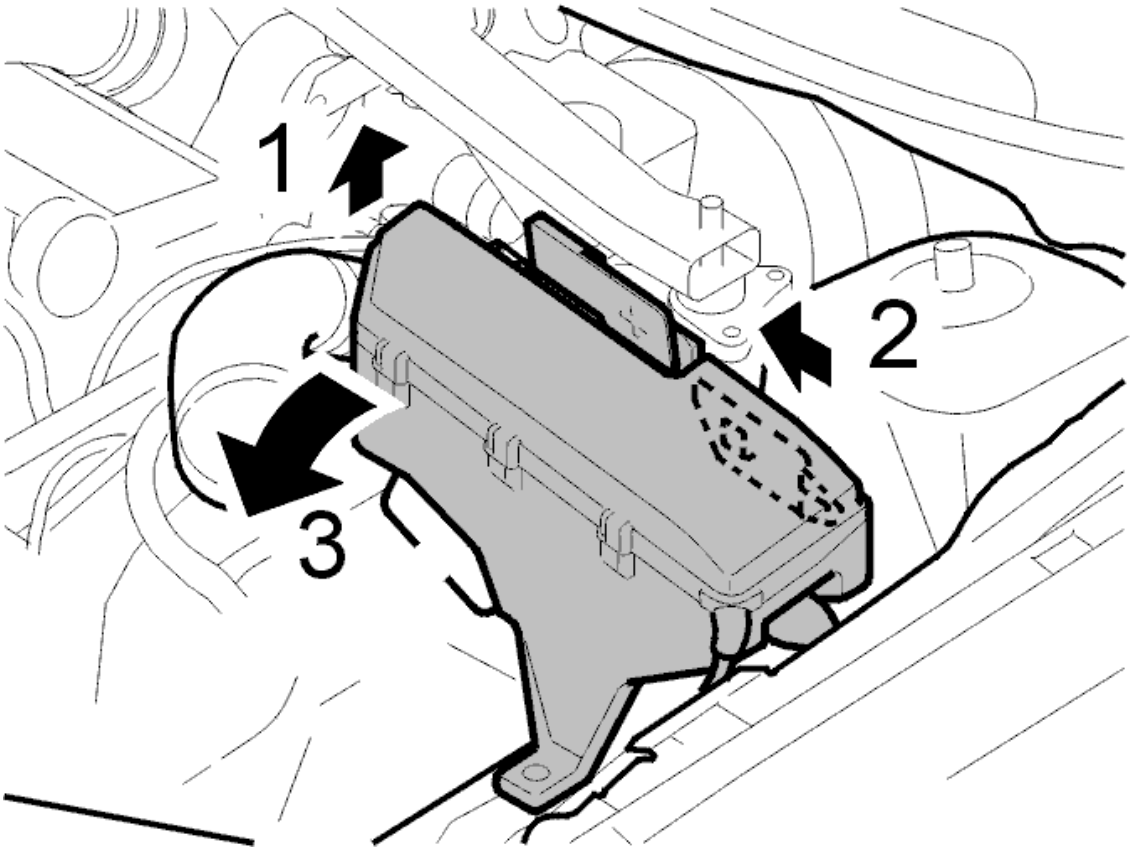

Fig. 22: Disconnecting Electrical Box From Spring Strut Housing
Courtesy of VOLVO CARS CORPORATION

Detach the bottom section from its mounting by the spring strut housing by pressing it in towards the engine compartment.

INSTALLATION

NOTE: For tightening torques, see TIGHTENING TORQUE .

INSTALLING THE BOTTOM SECTION

Install:

- bottom section
- the screws
- the air cleaner (ACL) housing.

INSTALLING THE RELAY/FUSE HOLDER

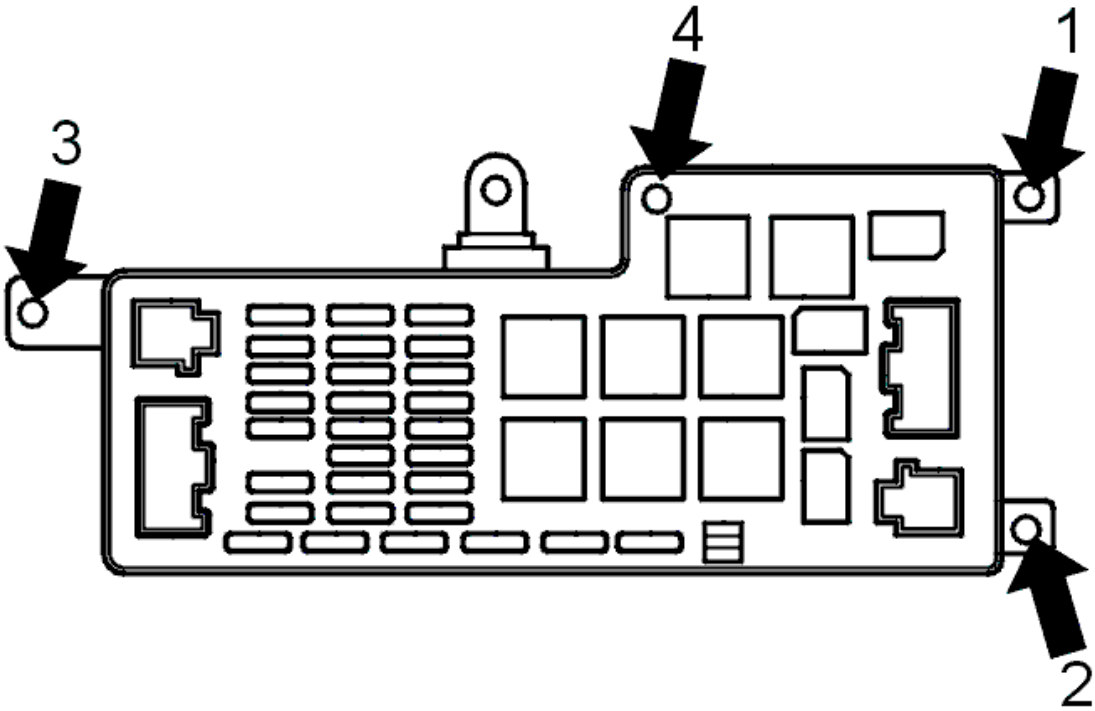

Fig. 23: Identifying Fuse Nuts
Courtesy of VOLVO CARS CORPORATION

Install:

- the cable terminals for the main terminals
- the relay/fuse holder. Check that the rubber seals are correctly positioned
- the screws as shown. Tighten screw **4** . Tighten to **2 Nm**
- the battery leads
- the nut for the battery leads.

FINISHING WORK

Install:

- the cover for the fusebox
- the battery negative pole. Tighten according to **TIGHTENING TORQUE** . Also, see **BATTERY, DISCONNECTING** .

MAIN FUSE CARGO COMPARTMENT, REPLACING

REMOVAL

MAIN FUSE

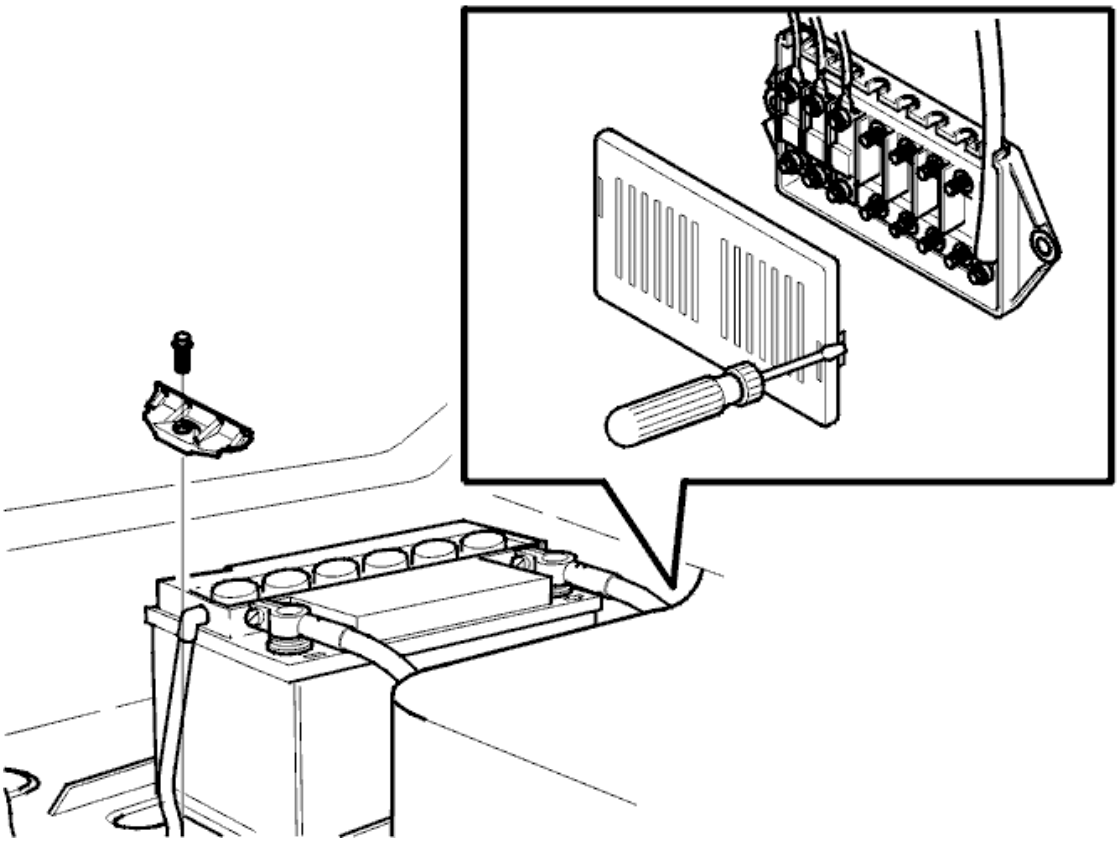

Fig. 24: Battery And Cargo Compartment Main Fuse
Courtesy of VOLVO CARS CORPORATION

- Remove the battery. See **BATTERY, REPLACING** .

CAUTION: When removing and installing the battery leads. See BATTERY, DISCONNECTING .

- Remove the panel. Use a screwdriver
- Remove the nut
- Remove the main fuse.

LOCATION OF MAIN FUSE, 11E

1. Decals at respective integrated relay/fusebox in the car,
2. Pocket data book,
3. Owner's Manual.

INSTALLATION

MAIN FUSE

In reverse order.

CAUTION: When removing and installing the battery leads. See BATTERY, DISCONNECTING .

RELAY ELECTRICAL ENGINE BLOCK HEATER, REPLACING

NOTE: As the graphics in this service information are used for different model years and / or models, some variation may occur. However, the essential information in the graphics is always correct.

REMOVAL

PREPARATORY WORK

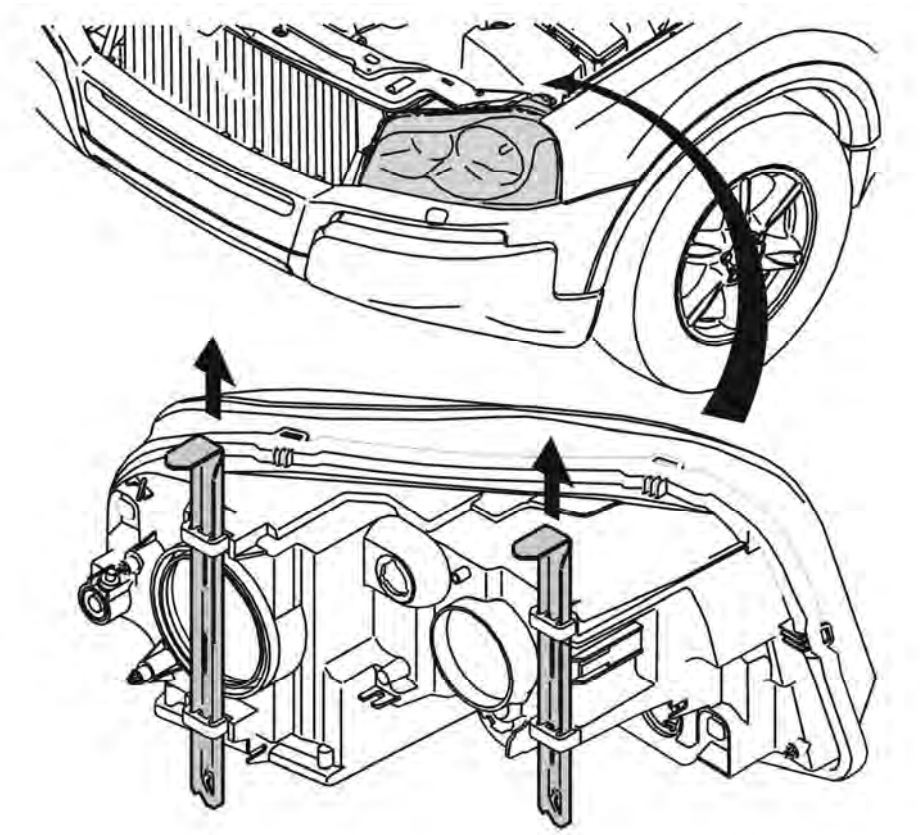

Fig. 25: Pulling Locking Plate Straight Up
Courtesy of VOLVO CARS CORPORATION

Remove the locking plate for the headlamp as shown.

Disconnect the connector.

Remove the headlamp.

REMOVING THE RELAY FOR THE ELECTRIC ENGINE BLOCK HEATER

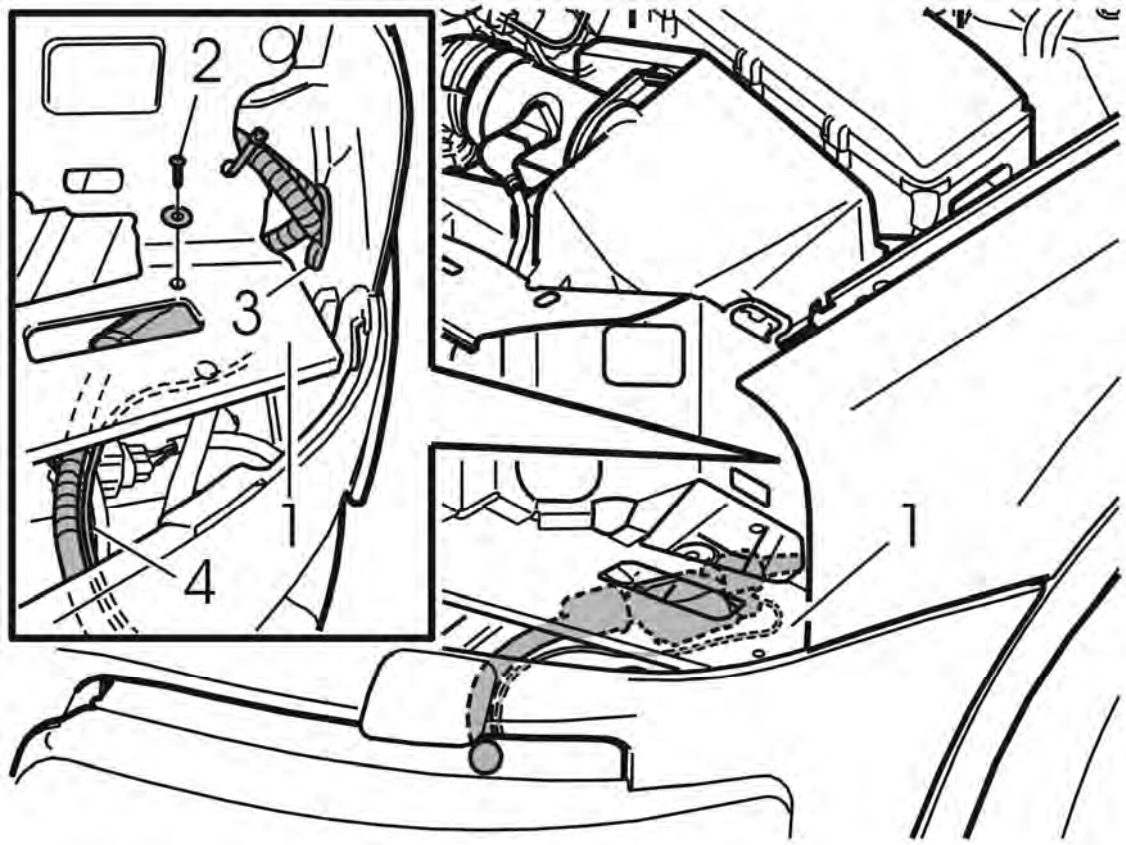

Fig. 26: Removing Relay For Electric Engine Block Heater
Courtesy of VOLVO CARS CORPORATION

Remove:

- the tie straps
- 2 screws. Pull out the engine block heater relay
- the locking sleeves for the cable splices. Disconnect the wiring
- the engine block heater relay.

INSTALLATION

INSTALLING THE RELAY FOR THE ELECTRIC ENGINE BLOCK HEATER

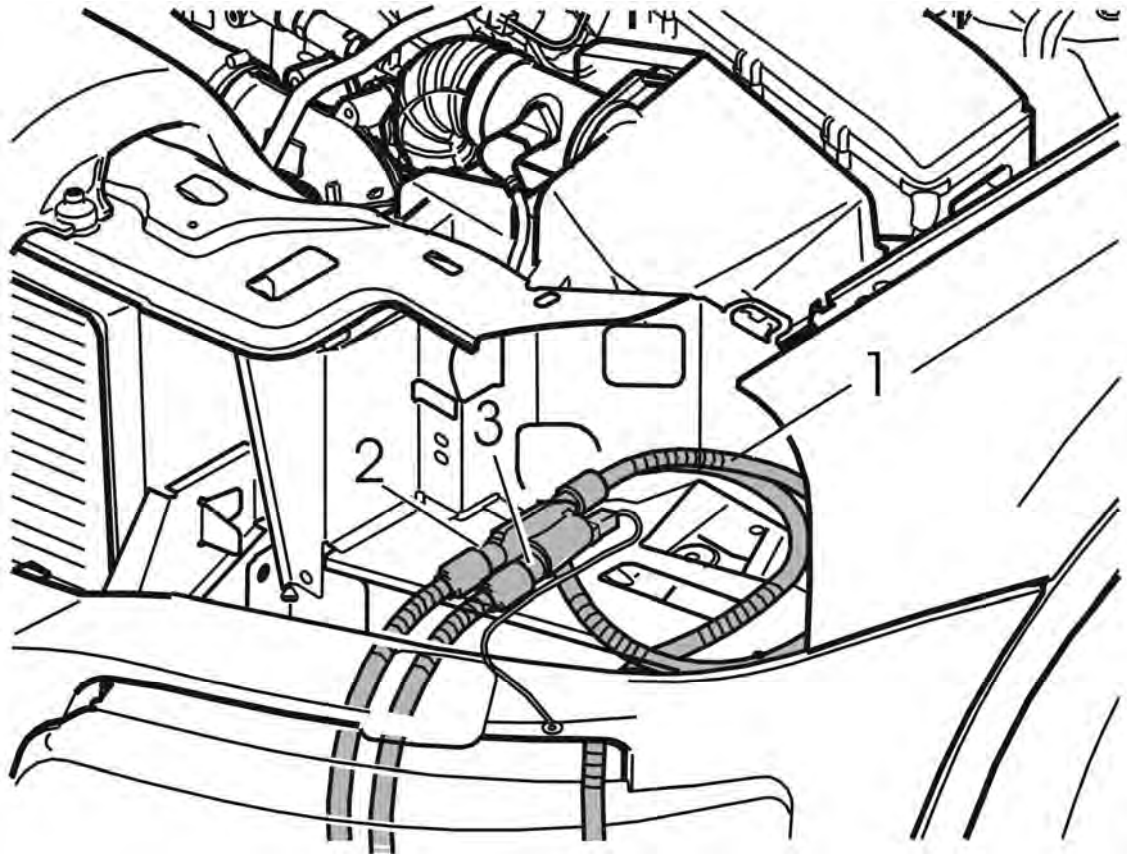

Fig. 27: Installing Relay For Electric Engine Block Heater (1 Of 2)
Courtesy of VOLVO CARS CORPORATION

Connect the wiring:

- front engine block heater socket (1)
- engine block heater (2)
- passenger compartment socket (3) if applicable.

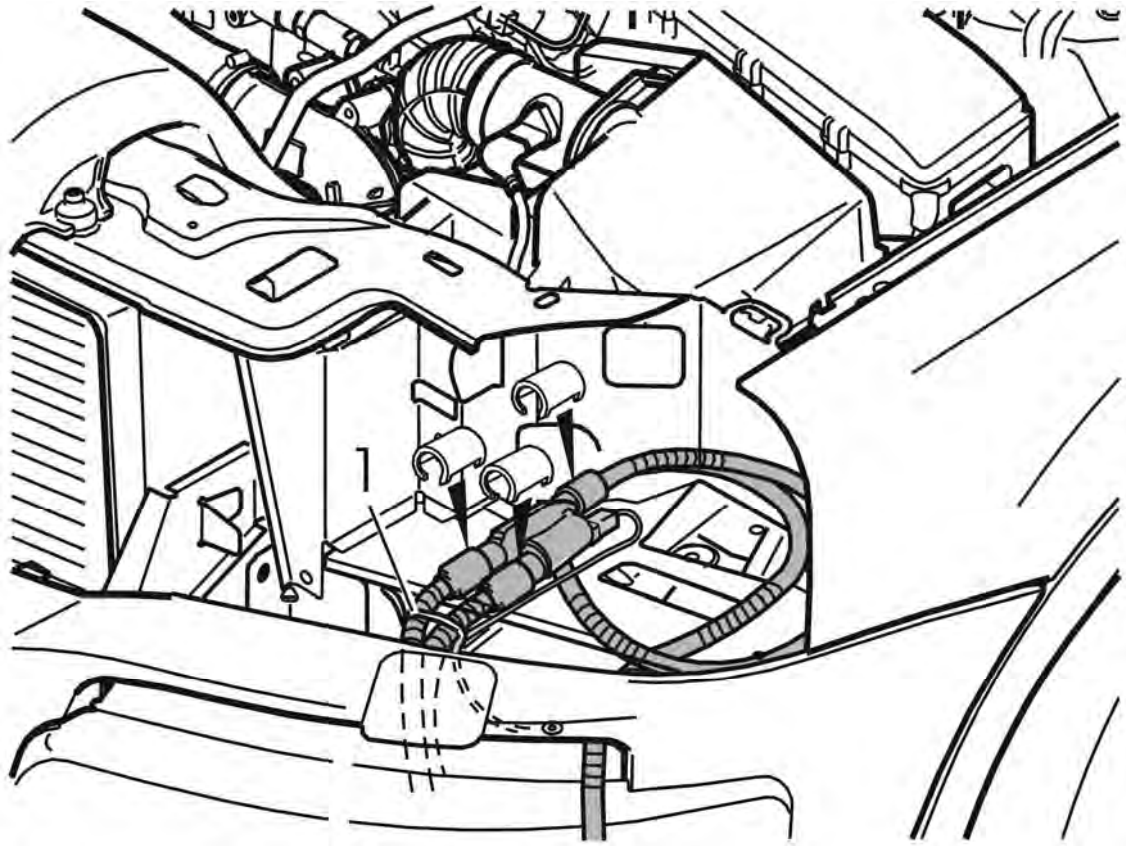

Fig. 28: Installing Relay For Electric Engine Block Heater (2 Of 2)
Courtesy of VOLVO CARS CORPORATION

Connect the ground lead (4).

Install locking sleeves for the cable splices.

Position the engine block heater relay under the plate (1).

Install the screws (2). Clamp the cables (3, 4).

FINISHING WORK

Connect the connector for the headlamp.

Install the headlamp.

Install the locking plate for the headlamp.

Test the function.

RELAY/FUSE BOX CARGO COMPARTMENT/REAR ELECTRONIC MODULE (REM), REPLACING

NOTE: **The graphics in this service information are used for different model years and/or models. Some variation may occur. However, the essential information in the graphics is always correct.**

EXPOSING THE INTEGRATED RELAY/FUSEBOX IN THE CARGO COMPARTMENT

Switch off the ignition.

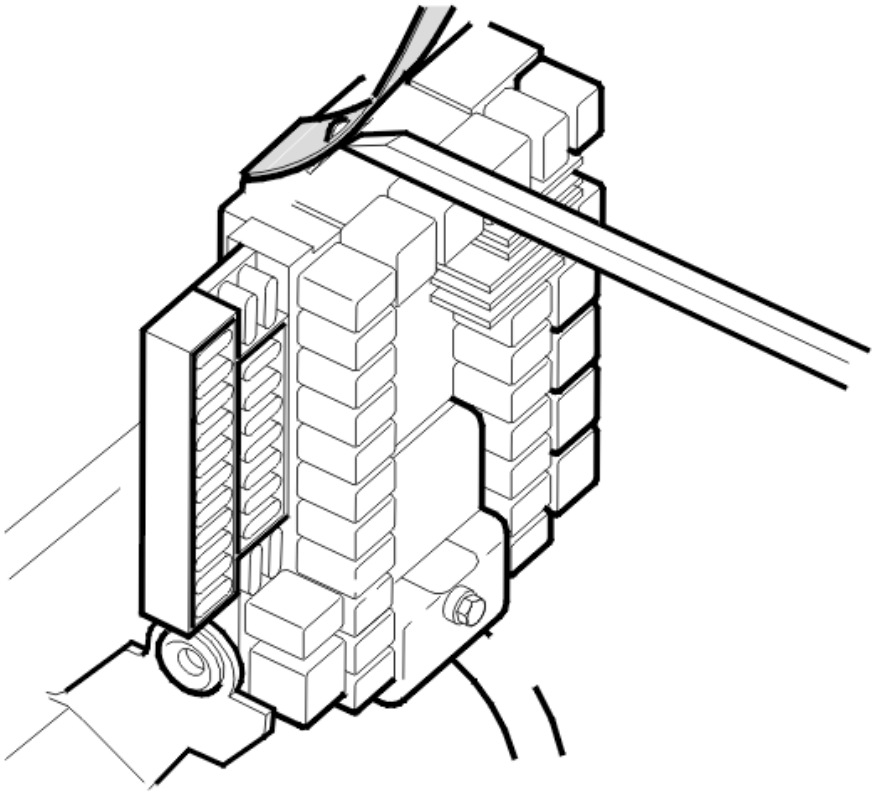

Fig. 29: Lifting Cargo Compartment/Rear Relay/Fusebox Catch
Courtesy of VOLVO CARS CORPORATION

Remove the left side panel in the cargo compartment.

Release the integrated relay/fusebox. Lift the catch by the upper edge and angle out the integrated relay/fusebox.

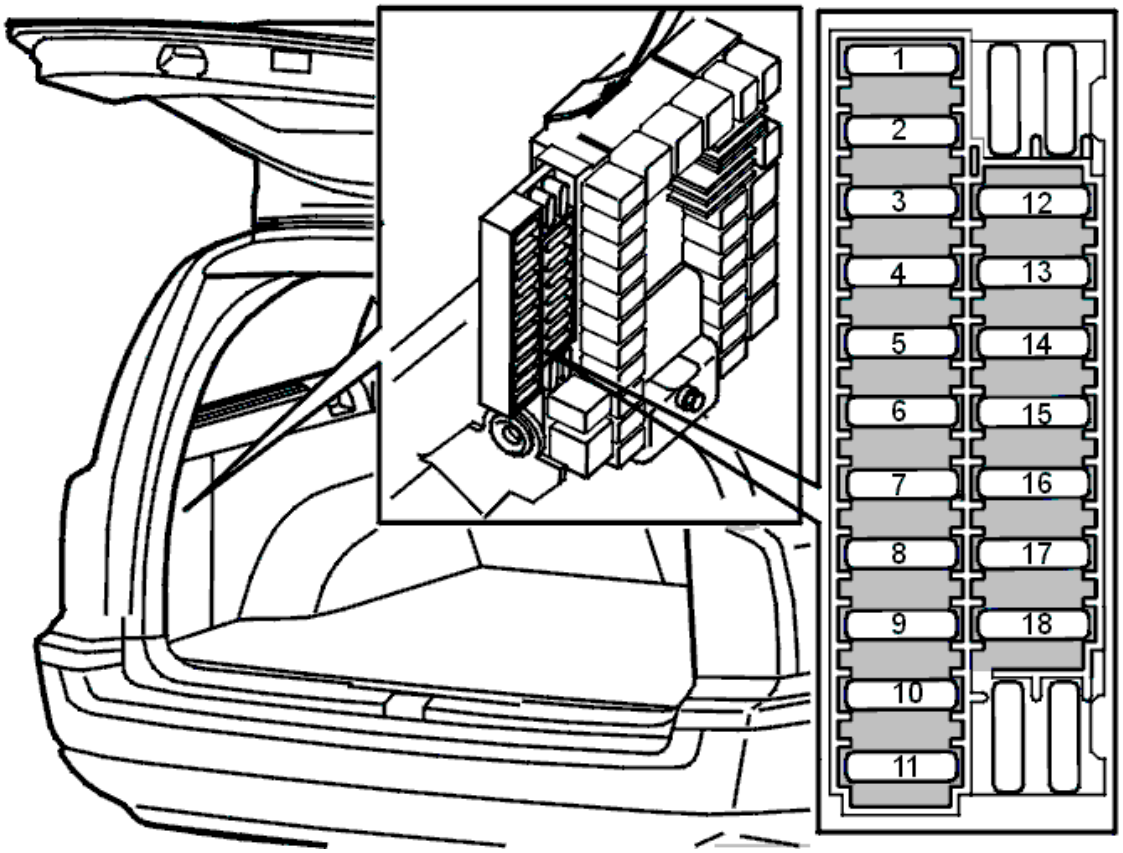

Fig. 30: Cargo Compartment/Rear Relay/Fusebox Fuse Locations
Courtesy of VOLVO CARS CORPORATION

HINT: The rear panel in the side panel of the cargo compartment can be removed to change fuses.

RELAY AND FUSE LOCATION, 11D

For the location of the relays and fuses, see

1. Decals at both the integrated relay box and fusebox in the car
2. Pocket data book
3. Owner's Manual.

INSTALLING THE INTEGRATED RELAY/FUSEBOX IN THE CARGO COMPARTMENT

Align the integrated relay/fusebox in the grooves in the bracket and press into place.

Install the left side panel in the cargo compartment.

REPLACING THE REAR ELECTRONIC MODULE (REM)

The rear electronic module (REM) is a separate unit in the relay box in the cargo compartment.

CAUTION: New software can only be ordered when the control module is installed in the car. VIDA reads off the new control module identity which is required to order the correct software.

Release the relay and fuse box. See **EXPOSING THE INTEGRATED RELAY/FUSEBOX IN THE CARGO COMPARTMENT**.

REMOVING THE CONTROL MODULE

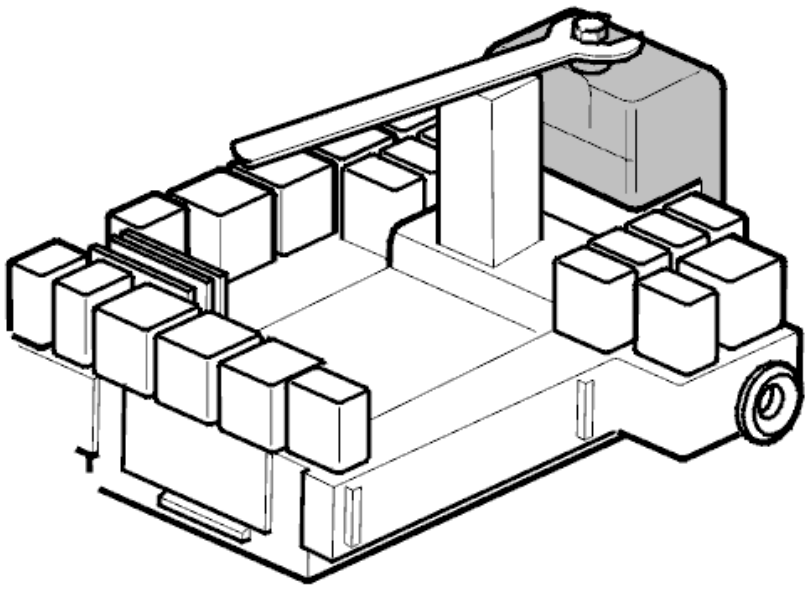

Fig. 31: Disconnecting Control Module Connector
Courtesy of VOLVO CARS CORPORATION

Unscrew the screw holding the connector so that it is free of its threads. Check that the screw is free with your fingers.

Disconnect the connector. Use an open spanner and a support.

NOTE: Do not damage the terminal pins. Always check that the control module and control module box connectors do not have bent or damaged terminals or socket/sleeves. This may have been the cause of the fault.

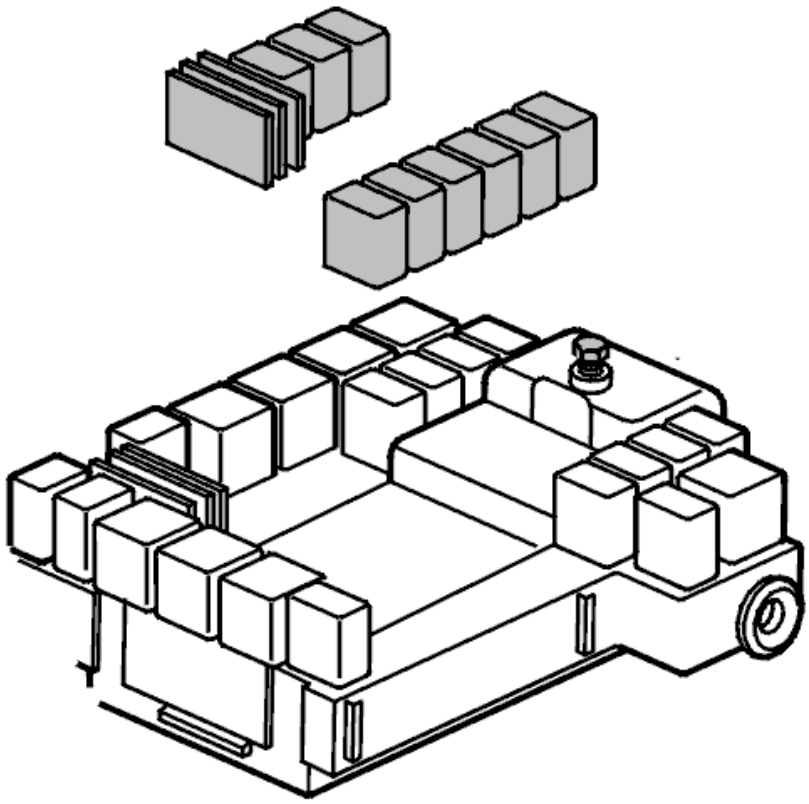

Fig. 32: Identifying Relay Box In Passenger Compartment/Cargo Compartment
Courtesy of VOLVO CARS CORPORATION

Remove all relays and shunts bridged to the control module. Note the locations.

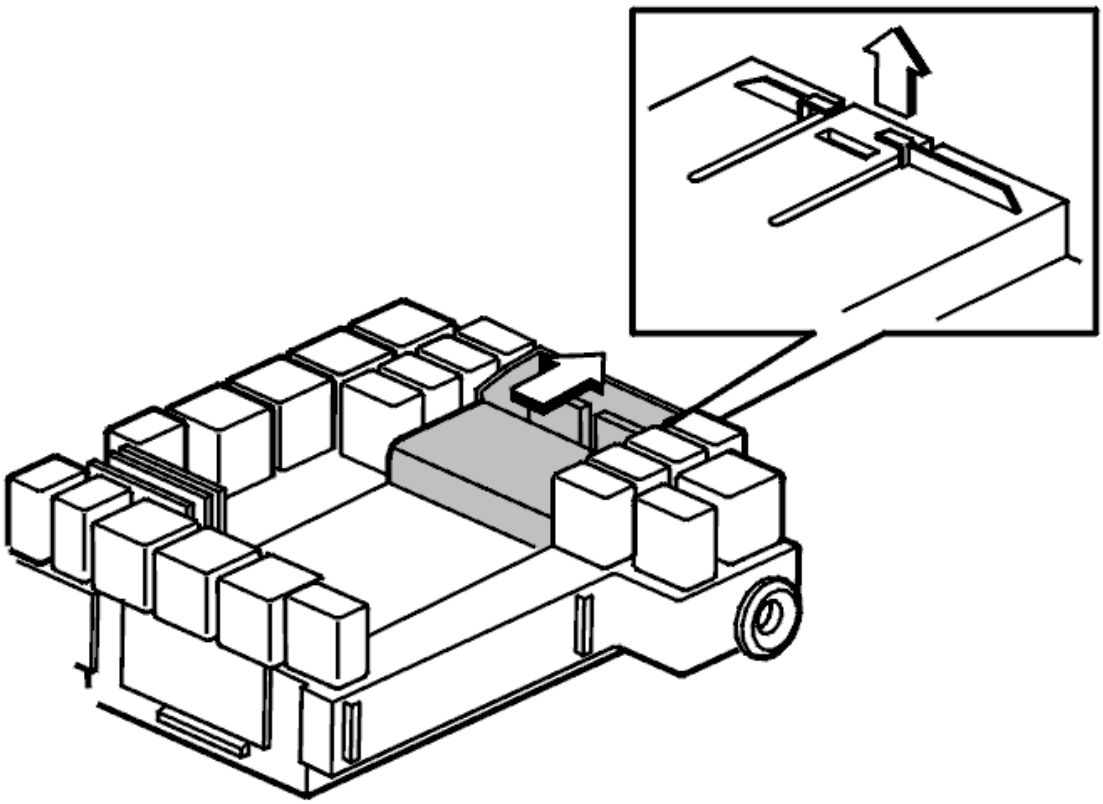

Fig. 33: Identifying Control Module Removal
Courtesy of VOLVO CARS CORPORATION

Release the catch on the rear. Use a screwdriver.

Lift and pull out the control module.

CHECK

Check that the control module connectors are intact.

INSTALLING THE CONTROL MODULE

- Press the control module into place so that the catch on the rear engages
- Position the connector. **Carefully** press the connector down.

NOTE: The pins are fragile. Check that the connector goes straight down into the control module.

- Tighten the screw for the connector
- Check that the connector cover is correctly positioned. Remedy if necessary
- Install the relays and shunts. Note their locations
- Install the integrated relay/fusebox. See **INSTALLING THE INTEGRATED RELAY/FUSEBOX IN**

THE CARGO COMPARTMENT.

ORDERING SOFTWARE

Order software according to the table below.

XC90	9438285

CENTRAL ELECTRICAL UNIT, FUSEBOX (B5254T2; 2005-07)

ACCESSORY ELECTRONIC MODULE (AEM), REPLACING

see **ACCESSORY ELECTRONIC MODULE (AEM), REPLACING**

CENTRAL ELECTRICAL UNIT ENGINE COMPARTMENT, REPLACING

see **CENTRAL ELECTRICAL UNIT ENGINE COMPARTMENT, REPLACING**

CENTRAL ELECTRONIC MODULE (CEM), REPLACING

NOTE: The graphics in this service information are used for different model years and/or models. Some variation may occur. However, the essential information in the graphics is always correct.

For further information, see **DOWNLOADING SOFTWARE AND REPLACING THE CONTROL MODULE**

PREPARATORY WORK

DISCONNECTING THE BATTERY LEAD

CAUTION: The customer-programmed data must be read off before the control module is replaced. The relevant data must then be programmed into the new control module, via VIDA vehicle communication, after it has been installed.

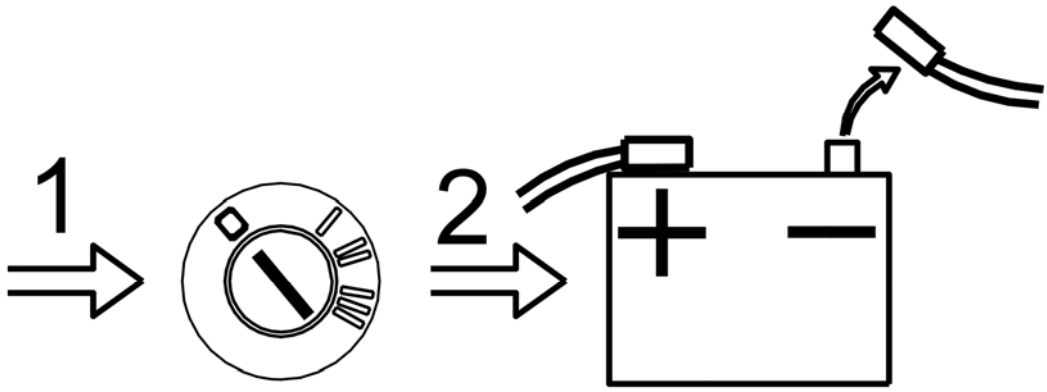

Fig. 34: Disconnecting Battery Negative Cable
Courtesy of VOLVO CARS CORPORATION

Ignition off

Disconnect the battery negative cable. See **BATTERY, DISCONNECTING** .

NOTE: **For vehicles equipped with Volvo On Call Plus, the automatic alarm for the emergency services may deploy.**

NOTE: **The driver information module (DIM) must not be replaced at the same time. This would erase the mileage.**

REMOVAL

REMOVING THE WIPER MECHANISM AND COVER

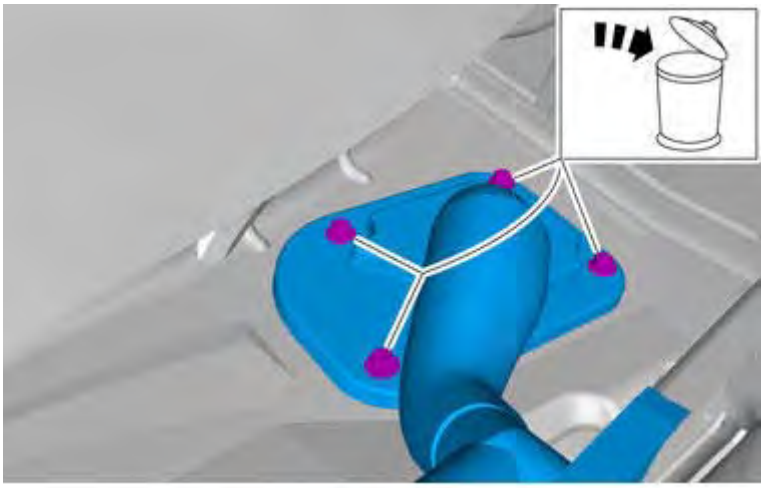

Fig. 35: Identifying Wiper Mechanism Mounting Bolts
Courtesy of VOLVO CARS CORPORATION

Remove the wiper mechanism according to **WIPER MECHANISM WINDSHIELD, REPLACING**

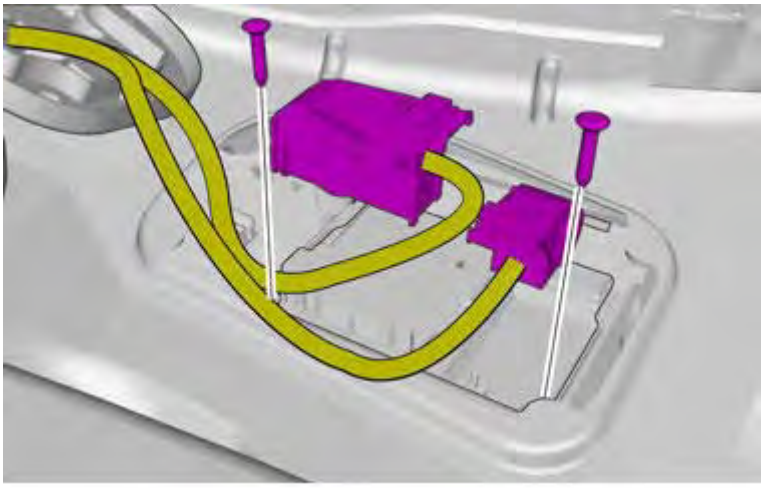

Fig. 36: Identifying Wiper Mechanism Connectors
Courtesy of VOLVO CARS CORPORATION

REMOVING THE SOUNDPROOFING PANEL ON THE DRIVER'S SIDE

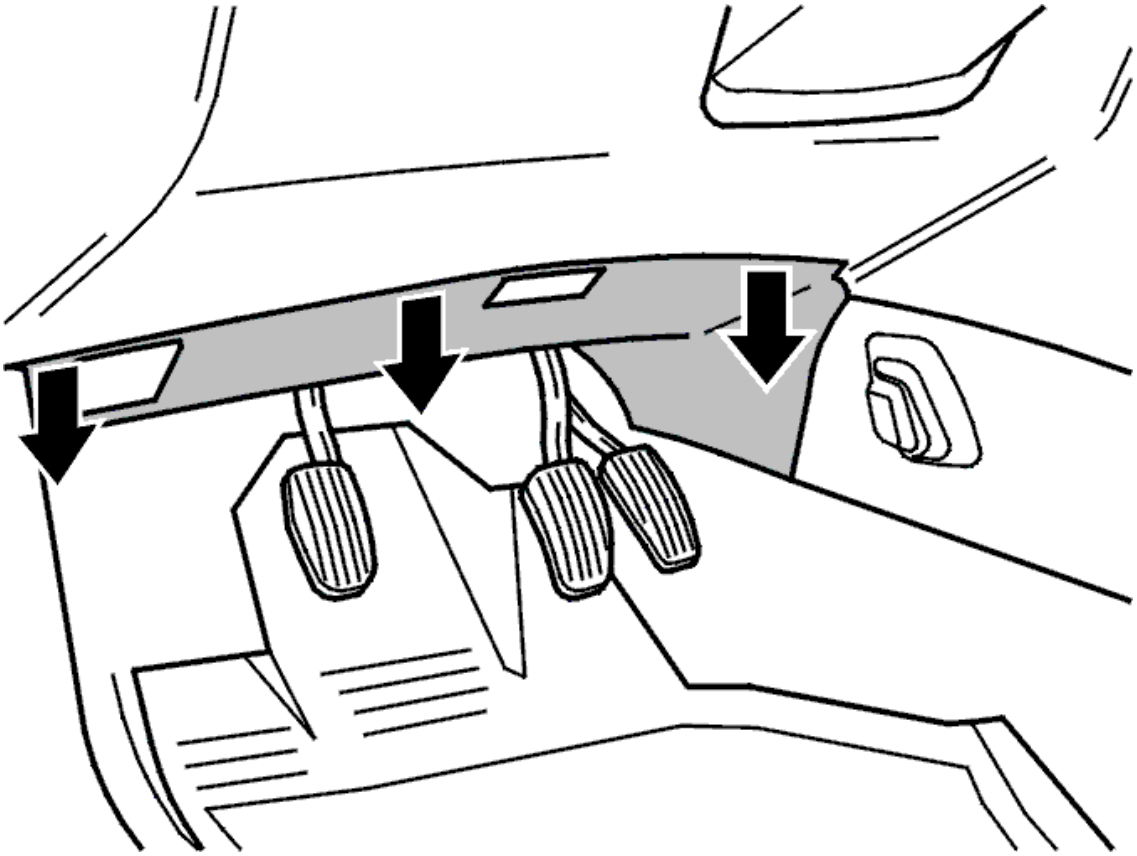

Fig. 37: Identifying Driver Side Soundproofing Panel
Courtesy of VOLVO CARS CORPORATION

Remove the 2 screws.

HINT: The soundproofing panel sits in a groove at the pedal box.

Remove the soundproofing panel by pulling it straight down and back.

REMOVING THE CENTRAL ELECTRONIC MODULE (CEM)

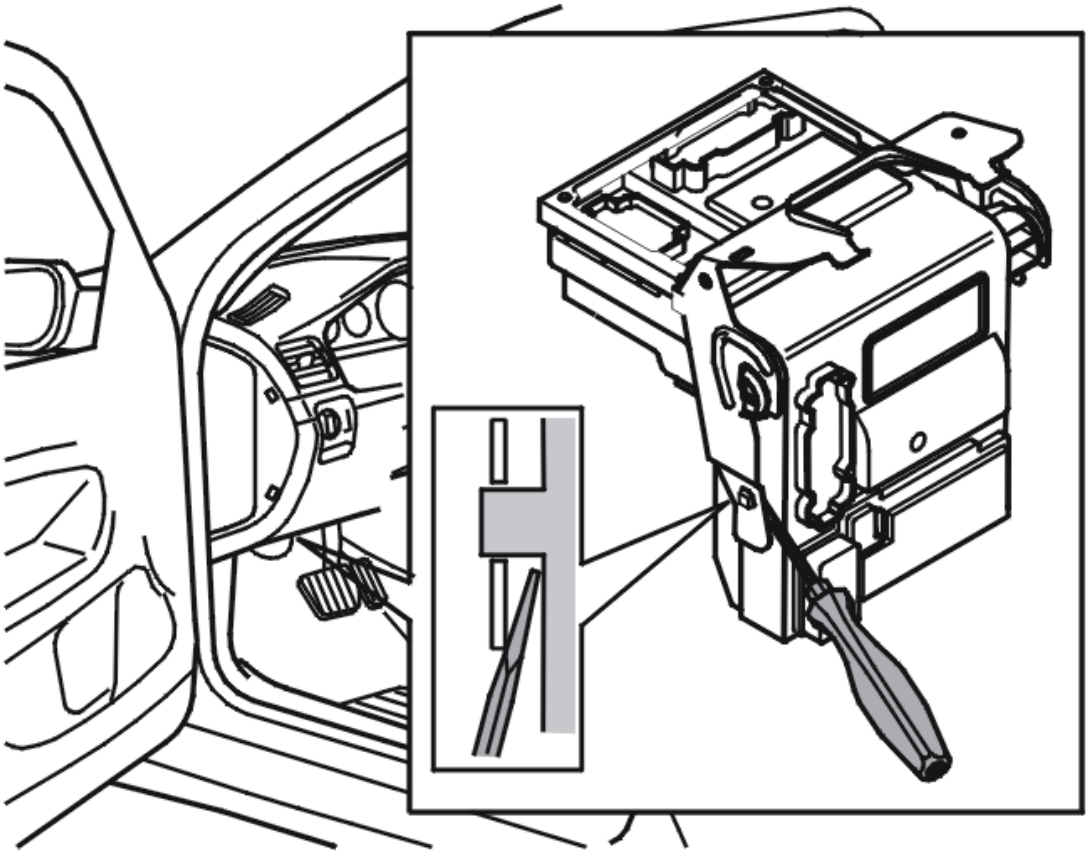

Fig. 38: Removing Central Electronic Module (CEM)
Courtesy of VOLVO CARS CORPORATION

Remove:

- the connectors
- the control module by inserting a screwdriver up between the bracket and the relay box. Twist the screwdriver so that the bracket opens out. At the same time, pull the control module out of the bracket towards the underside of the dashboard
- the control module from the bracket and pull downwards under the dashboard.

Remove the fuses from the central electronic module (CEM).

HINT: For the location of the fuses, see

- The decals by the relevant fuse box in the vehicle
- The Pocket Data booklet
- The Owner's manual.

INSTALLATION

INSTALLING THE CENTRAL ELECTRONIC MODULE (CEM)

CAUTION: The pins are fragile. Check that the connectors go straight down into the control module.

Install:

- the control module on the bracket. Press the control module forward so that the catches enter the bracket
- the connectors
- the soundproofing panel on the driver's side
- the 2 screws on top of the control module
- the 2 connectors on top of the control module.

NOTE: Ensure that the rubber seal is correctly positioned in the groove.

Install:

- the cover
- the wiper arm mechanism. See **WIPER MECHANISM WINDSHIELD, REPLACING**
- the battery negative lead. See **BATTERY, DISCONNECTING** .

FINISHING

ORDERING SOFTWARE

Order software. See 9438273 .

PROGRAMMING DATA

Program in the data read off from the old control module (customer-programmed data for example). This is performed via VIDA vehicle communication.

Reset the service reminder indicator (SRI). Otherwise the lamp will receive incorrect reference data. (Global time is reset when the central electronic module (CEM) is replaced.) Reset the service reminder indicator (SRI). See **RESETTING THE SERVICE REMINDER INDICATOR (SRI)** .

Check that the CAN-communication is functioning. This is done by reading off the control module ID for the central electronic module (CEM), rear electronic module (REM) and engine control module (ECM) via VIDA vehicle communication.

OTHER INFORMATION

For the location of other relay and fuse boxes, see **RELAYS, FUSE BOXES AND WIRING** .

INTEGRATED RELAY/FUSEBOX IN ENGINE COMPARTMENT

see **INTEGRATED RELAY/FUSEBOX IN ENGINE COMPARTMENT**

MAIN FUSE CARGO COMPARTMENT, REPLACING

see **MAIN FUSE CARGO COMPARTMENT, REPLACING**

REAR ELECTRONIC MODULE (REM), REPLACING

NOTE: **The graphics in this service information are used for different model years and/or models. Some variation may occur. However, the essential information in the graphics is always correct.**

PREPARATORY WORK

IGNITION OFF

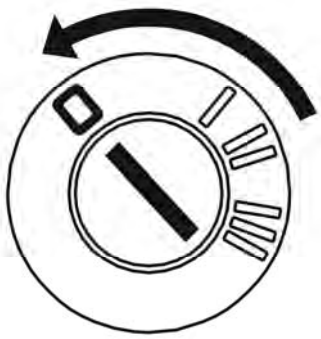

Fig. 39: Identifying Ignition In OFF Position
Courtesy of VOLVO CARS CORPORATION

Ignition off.

REMOVAL

REMOVING THE LEFT CARGO COMPARTMENT SIDE PANEL

HINT: The rear panel in the side panel of the cargo compartment can be removed to change fuses.

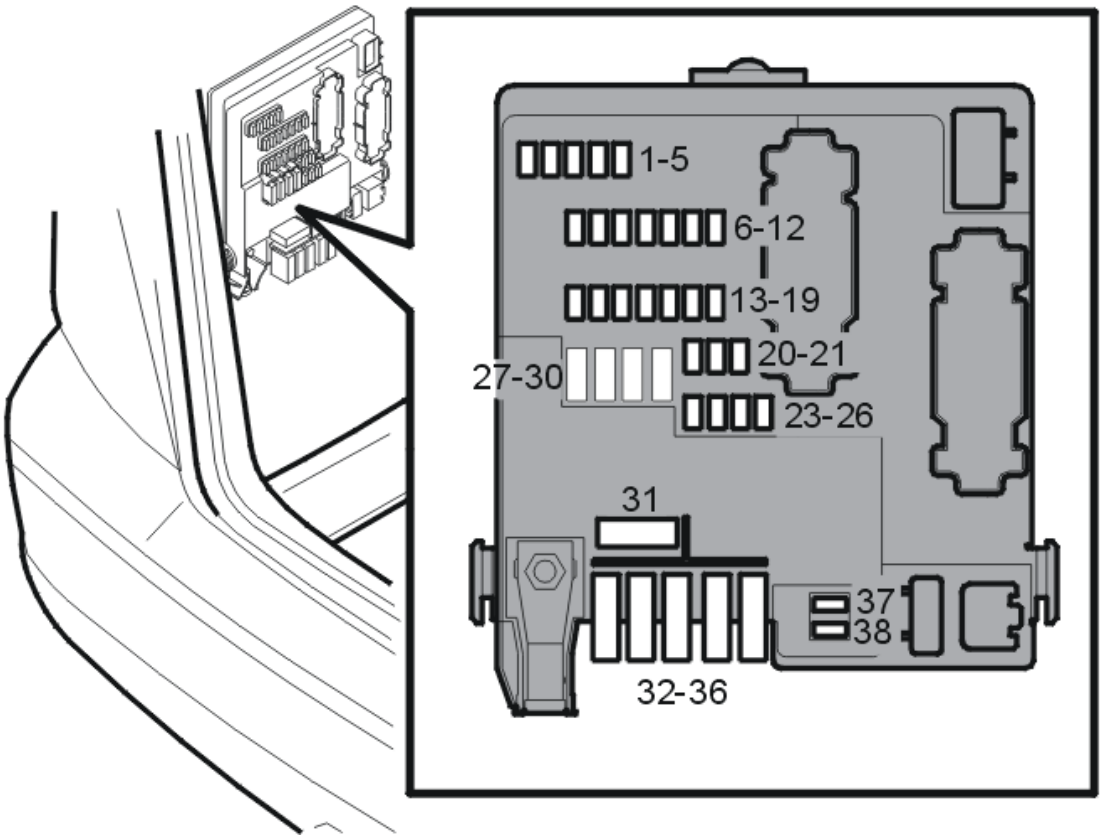

Fig. 40: Locating Rear Electronic Module (REM) Behind Left-Hand Side Panel In Cargo Compartment
Courtesy of VOLVO CARS CORPORATION

Remove the left-hand side panel in the cargo compartment. See **SIDE PANEL CARGO COMPARTMENT, REPLACEMENT** .

REMOVING THE REAR ELECTRONIC MODULE (REM)

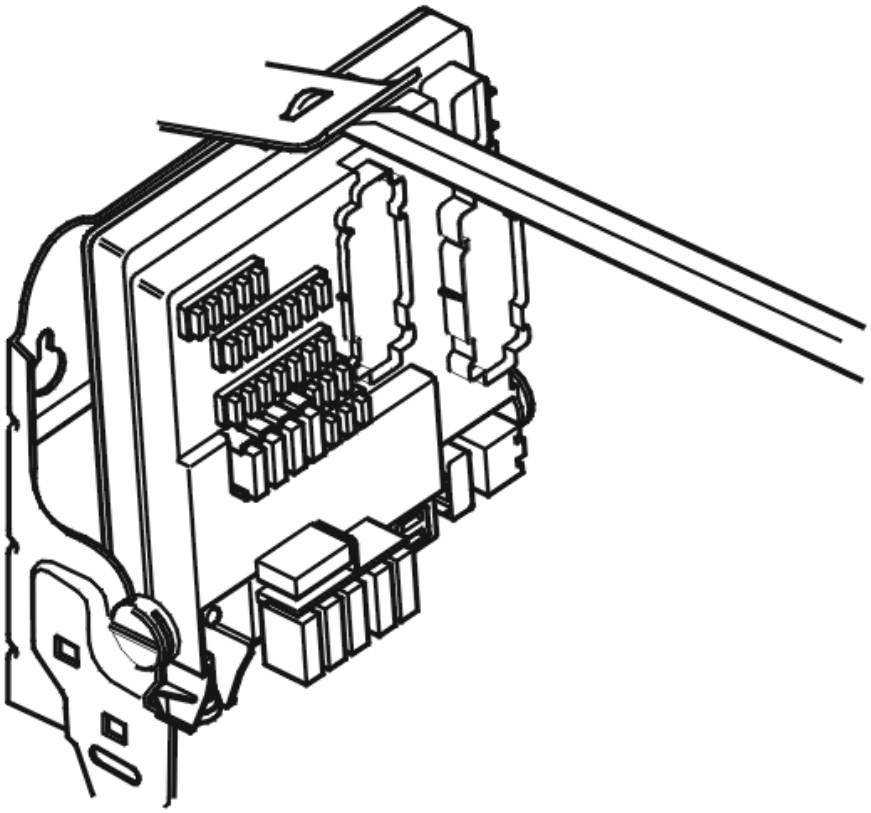

Fig. 41: Removing Rear Electronic Module (REM)
Courtesy of VOLVO CARS CORPORATION

Remove:

- the control module by lifting the catches at the upper edge and angle out
- the connectors.

NOTE: **Always check that the terminals or pins/sockets of the control module and control module box connectors are not bent or damaged. This may have been the cause of the fault.**

HINT: For the location of relays, see

- Decals at both the integrated relay box and fusebox in the car
- The Pocket Data book
- The Owner's manual.

INSTALLATION

INSTALLING THE REAR ELECTRONIC MODULE (REM)

CAUTION: The pins are fragile. Check that the connector goes straight down into the

control module.

Install:

- the connectors
- the control module in the bracket groove. Press the control module into place.

INSTALLING THE LEFT CARGO COMPARTMENT SIDE PANEL

Install the left-hand side panel in the cargo compartment. See **SIDE PANEL CARGO COMPARTMENT, REPLACEMENT** .

FINISHING

ORDERING SOFTWARE

CAUTION: New software can only be ordered when the new control module is installed in the vehicle. The new control module identity is read off by VIDA with ordering, which is required for ordering the correct software.

Order software. See 9438285 .

RELAY ELECTRICAL ENGINE BLOCK HEATER, REPLACING

see **RELAY ELECTRICAL ENGINE BLOCK HEATER, REPLACING**

CENTRAL ELECTRICAL UNIT, FUSEBOX (B6294T; 2005-06)

ACCESSORY ELECTRONIC MODULE (AEM), REPLACING

see **ACCESSORY ELECTRONIC MODULE (AEM), REPLACING**

CENTRAL ELECTRICAL UNIT ENGINE COMPARTMENT, REPLACING

see **CENTRAL ELECTRICAL UNIT ENGINE COMPARTMENT, REPLACING**

CENTRAL ELECTRONIC MODULE (CEM), REPLACING

see **CENTRAL ELECTRONIC MODULE (CEM), REPLACING**

INTEGRATED RELAY/FUSEBOX IN ENGINE COMPARTMENT

see **INTEGRATED RELAY / FUSEBOX IN ENGINE COMPARTMENT**

MAIN FUSE CARGO COMPARTMENT, REPLACING

see **MAIN FUSE CARGO COMPARTMENT, REPLACING**

REAR ELECTRONIC MODULE (REM), REPLACING

see **REAR ELECTRONIC MODULE (REM), REPLACING**

RELAY ELECTRICAL ENGINE BLOCK HEATER, REPLACING

see **RELAY ELECTRICAL ENGINE BLOCK HEATER, REPLACING**

CENTRAL ELECTRICAL UNIT, FUSEBOX (B6324S; 2007-10)

ACCESSORY ELECTRONIC MODULE (AEM), REPLACING

see **ACCESSORY ELECTRONIC MODULE (AEM), REPLACING**

CENTRAL ELECTRICAL UNIT ENGINE COMPARTMENT, REPLACING

see **CENTRAL ELECTRICAL UNIT ENGINE COMPARTMENT, REPLACING**

CENTRAL ELECTRONIC MODULE (CEM), REPLACING

see **CENTRAL ELECTRONIC MODULE (CEM), REPLACING**

INTEGRATED RELAY/FUSEBOX IN ENGINE COMPARTMENT

see **INTEGRATED RELAY/FUSEBOX IN ENGINE COMPARTMENT**

MAIN FUSE CARGO COMPARTMENT, REPLACING

see **MAIN FUSE CARGO COMPARTMENT, REPLACING**

REAR ELECTRONIC MODULE (REM), REPLACING

see **REAR ELECTRONIC MODULE (REM), REPLACING**

RELAY ELECTRICAL ENGINE BLOCK HEATER, REPLACING

see **RELAY ELECTRICAL ENGINE BLOCK HEATER, REPLACING**

CENTRAL ELECTRICAL UNIT, FUSEBOX (B6324S5; 2011-12)

ACCESSORY ELECTRONIC MODULE (AEM), REPLACING

see **ACCESSORY ELECTRONIC MODULE (AEM), REPLACING**

CENTRAL ELECTRICAL UNIT ENGINE COMPARTMENT, REPLACING

see **CENTRAL ELECTRICAL UNIT ENGINE COMPARTMENT, REPLACING**

CENTRAL ELECTRONIC MODULE (CEM), REPLACING

see **CENTRAL ELECTRONIC MODULE (CEM), REPLACING**

INTEGRATED RELAY/FUSEBOX IN ENGINE COMPARTMENT

see **INTEGRATED RELAY / FUSEBOX IN ENGINE COMPARTMENT**

MAIN FUSE CARGO COMPARTMENT, REPLACING

see **MAIN FUSE CARGO COMPARTMENT, REPLACING**

REAR ELECTRONIC MODULE (REM), REPLACING

see **REAR ELECTRONIC MODULE (REM), REPLACING**

RELAY ELECTRICAL ENGINE BLOCK HEATER, REPLACING

see **RELAY ELECTRICAL ENGINE BLOCK HEATER, REPLACING**

CENTRAL ELECTRICAL UNIT, FUSEBOX (B8444S; 2005-11)

ACCESSORY ELECTRONIC MODULE (AEM), REPLACING

see **ACCESSORY ELECTRONIC MODULE (AEM), REPLACING**

CENTRAL ELECTRICAL UNIT ENGINE COMPARTMENT, REPLACING

see **CENTRAL ELECTRICAL UNIT ENGINE COMPARTMENT, REPLACING**

CENTRAL ELECTRONIC MODULE (CEM), REPLACING

see **CENTRAL ELECTRONIC MODULE (CEM), REPLACING**

INTEGRATED RELAY/FUSEBOX IN ENGINE COMPARTMENT

see **INTEGRATED RELAY/FUSEBOX IN ENGINE COMPARTMENT**

MAIN FUSE CARGO COMPARTMENT, REPLACING

see **MAIN FUSE CARGO COMPARTMENT, REPLACING**

REAR ELECTRONIC MODULE (REM), REPLACING

see **REAR ELECTRONIC MODULE (REM), REPLACING**

RELAY ELECTRICAL ENGINE BLOCK HEATER, REPLACING

see **RELAY ELECTRICAL ENGINE BLOCK HEATER, REPLACING**

WIRING (2003-12)

CABLE HARNESS SRS SYSTEM, REPAIR

Special tools: see **9512785** , see **9512620** , see **9512777**

Materials: SRS system repair kit for the selected car.

NOTE: The graphics in this service information are used for different model years and/or models. Some variation may occur. However, the essential information in the graphics is always correct.

CAUTION: As the SRS system is a safety system, it is extremely important that these instructions are carefully followed when carrying out repairs in the cable harness.

CAUTION: Ensure that the new pin has the same type of surface treatment as the old.

Only special tools and materials from the SRS system repair kit for the selected car must be used. Choose a repair location where there is plenty of room to guarantee that work is of the highest quality.

The cables should always be connected color to color. In the cases where the repair terminals have a completely orange cable then this is always fitted to terminal No. 1. In the cases where the repair terminals have a blue and a brown cable, then blue is No. 1 and brown is No. 2.

WARNING: Do not carry out any work on the SRS cable until the connector has been disconnected from the relevant airbag or seat belt tensioner. There is otherwise a risk of static electricity deploying the component.

BEFORE WORK IN THE CABLE HARNESS

Always disconnect the battery. See **BATTERY, DISCONNECTING**

Disconnect the relevant ignition cable. See **IGNITER WIRE CONNECTOR**

CUT AND STRIP THE CABLES

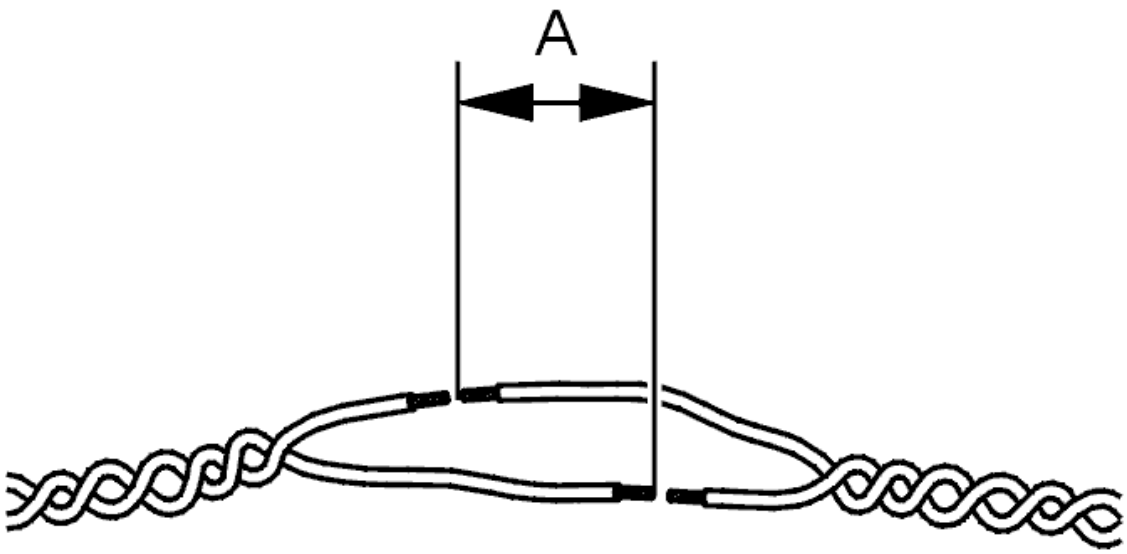

Fig. 42: Cables Cut With Approximately 40 mm Between Splices
Courtesy of VOLVO CARS CORPORATION

Release the cable from the cable harness so that you have plenty of room in which to work.

NOTE: **The maximum permitted twinned length after splicing is 100 mm. This is to prevent interference problems.**

Cut the cables so that there is approximately 40 mm between the splices (center to center) (A).

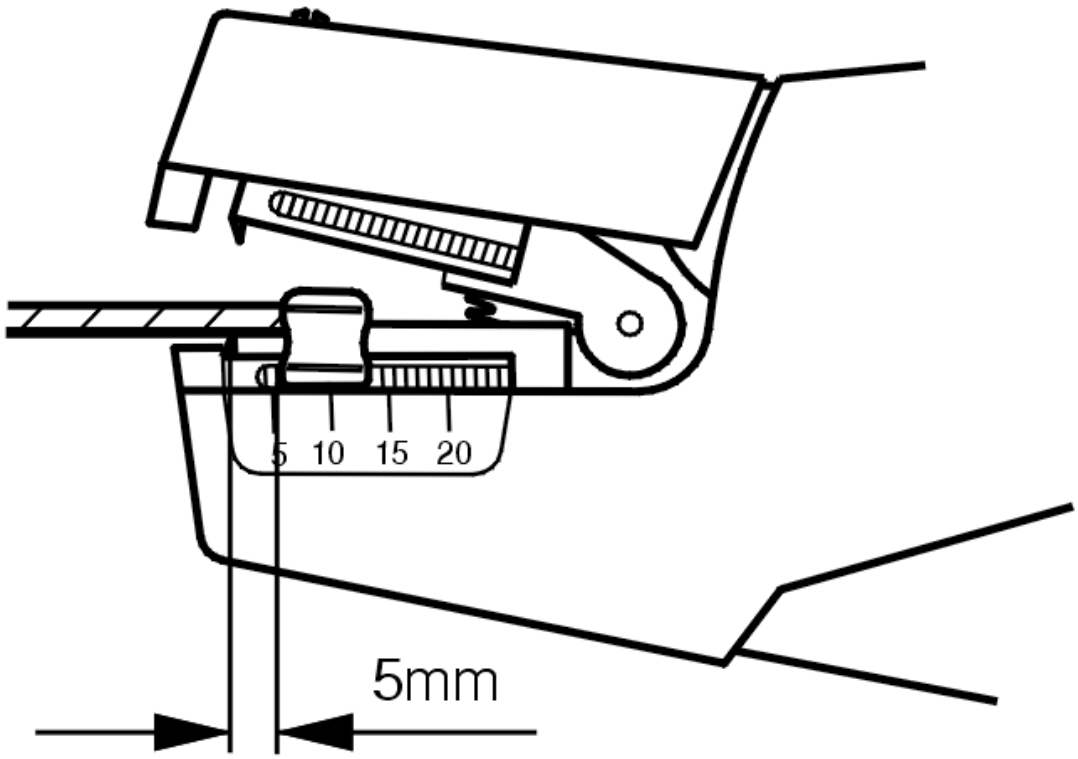

Fig. 43: Identifying Cable Strip Length
Courtesy of VOLVO CARS CORPORATION

Strip the insulation on the 4 cable ends by 5.0 mm. Use pliers see **9512620** .

Twin the cable cores on the stripped ends of the cables.

CAUTION: Ensure that all the cores are twinned.

CRIMPING THE SLEEVE

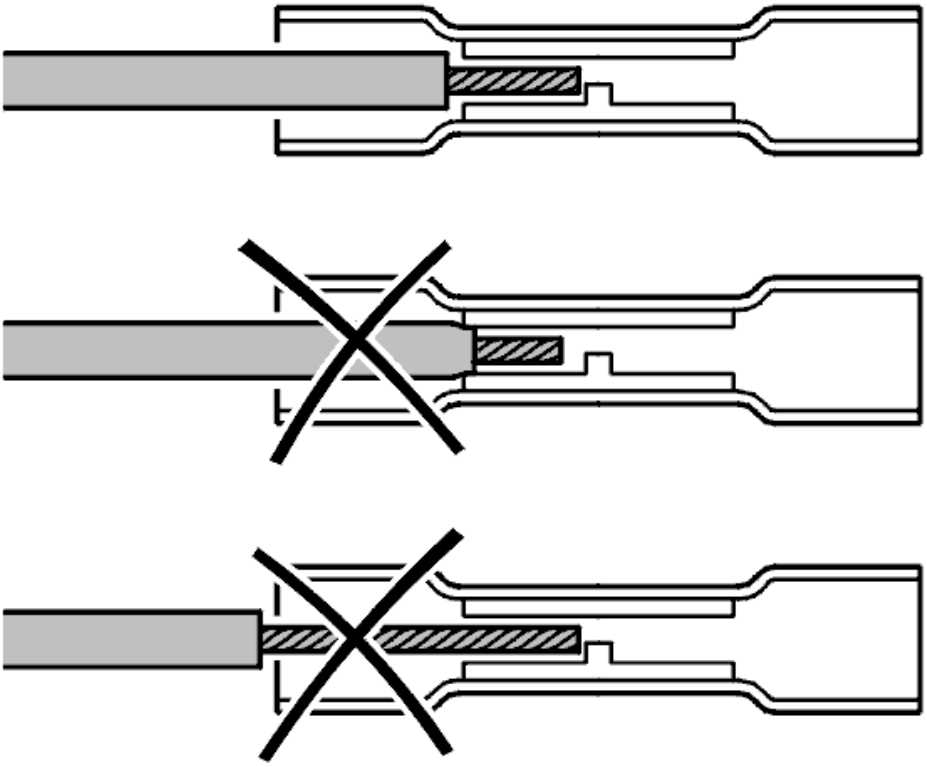

Fig. 44: Crimping Examples
Courtesy of VOLVO CARS CORPORATION

Install a crimp sleeve from the repair kit in the press tool: see **9512785**

Squeeze the crimping tool a little to secure the crimping sleeve in the tool.

Insert the cable as far into the crimp sleeve as it will go.

Ensure that the cable insulation does not get into the crimping area or that stripped cable does not extend outside the sleeve.

Press the pliers' handles as far as they will go to ensure a proper joint. The pliers release automatically.

Check by hand that the crimping sleeve is secure.

Prepare the remaining cable ends in the same way.

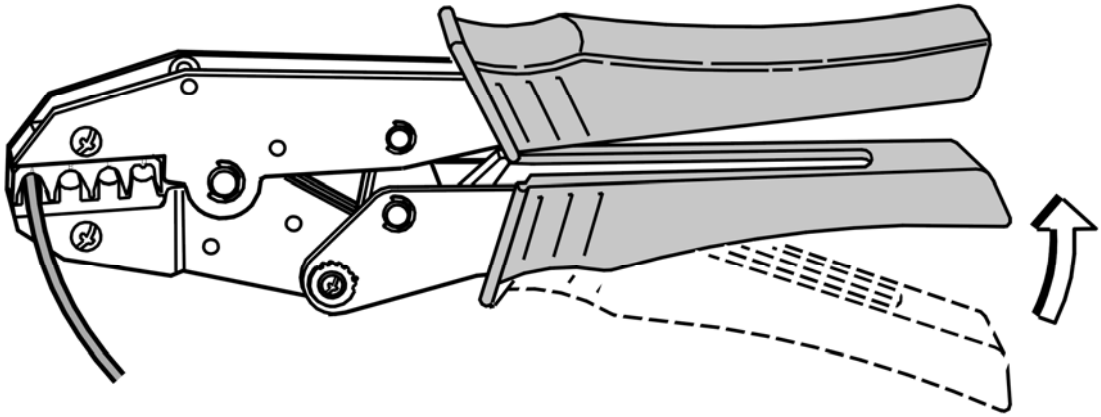

Fig. 45: Crimping Cable Terminal
Courtesy of VOLVO CARS CORPORATION

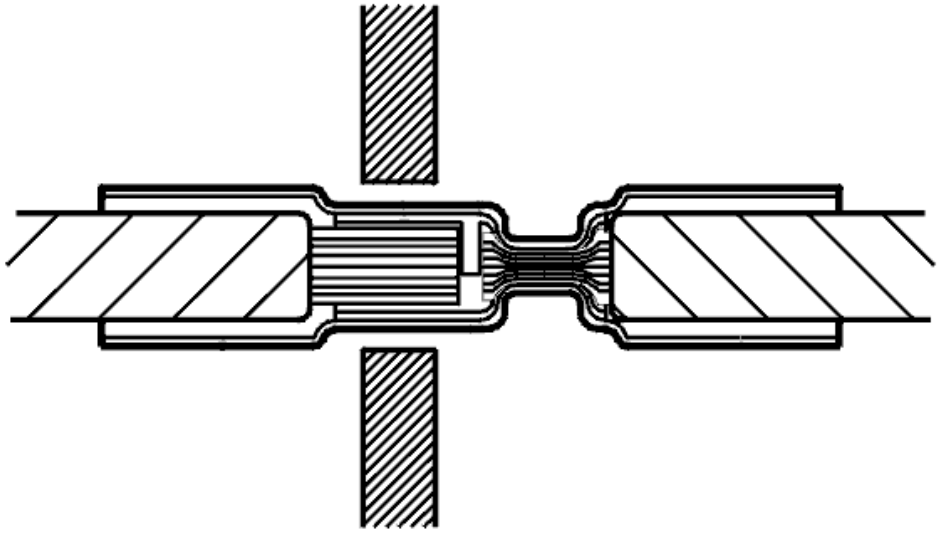

Fig. 46: Crimped Wire
Courtesy of VOLVO CARS CORPORATION

HEAT THE HEAT-SHRINK TUBING

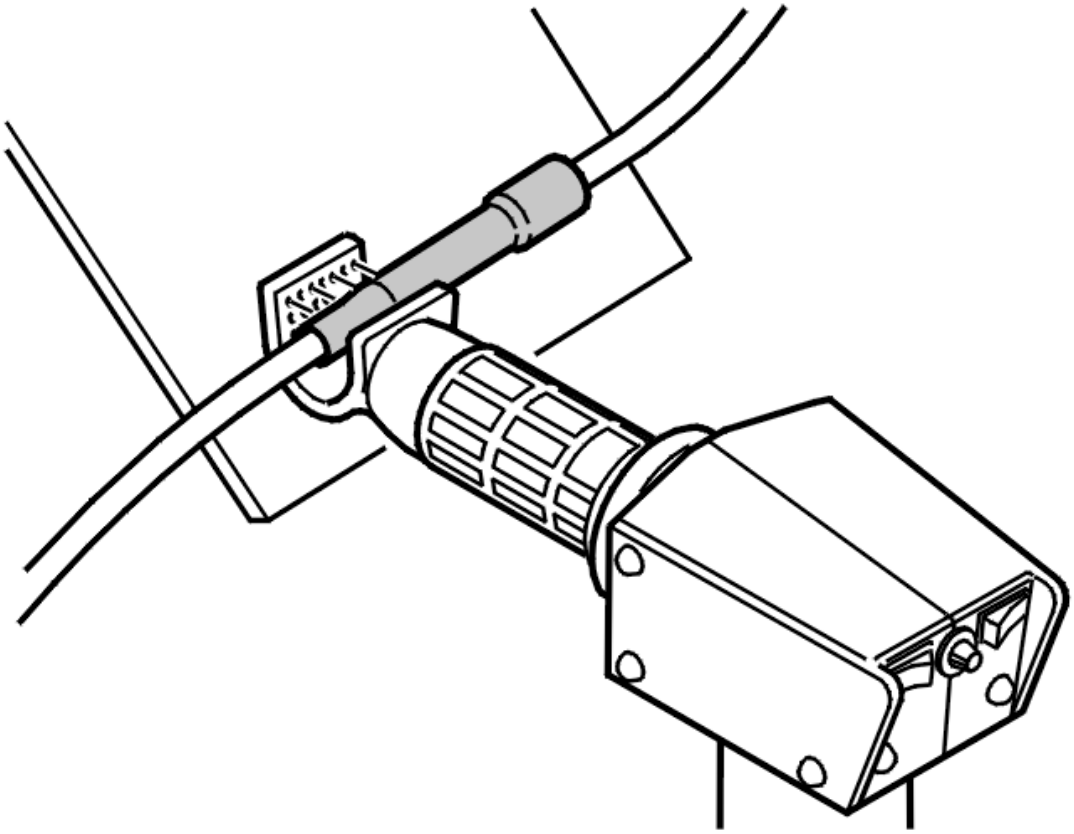

Fig. 47: Heating Heat-Shrink Tubing
Courtesy of VOLVO CARS CORPORATION

Hold a putty knife or other suitable protection behind the heat-shrink tubing to shield the surrounding components from heat.

Heat the sleeve using the hot air gun see **9512777** and a suitable nozzle. It is very important that the heat-shrink tubing is thoroughly shrunk around the cable. It should be possible to, see some adhesive that has squeezed out around the cable.

Fig. 48: Checking Shrinking Results
Courtesy of VOLVO CARS CORPORATION

REINSTALLING AND CHECKING

Secure the new SRS cable next to the old cable using a tie strap or similar. Reinstall the connectors.

Reconnect the battery. See **BATTERY, DISCONNECTING**

Turn the ignition to position 2.

Check the SRS system to ensure that the warning lamp comes on and stays on while the SRS system performs a self-test. The lamp must go out after a few seconds. If not, perform fault-tracing according to VIDA vehicle communication.

If everything is working, reinstall other components.

Test drive the vehicle.

CABLE SHOE

NOTE: The graphics in this service information are used for different model years and/or models. Some variation may occur. However, the essential information in

the graphics is always correct.

INFORMATION

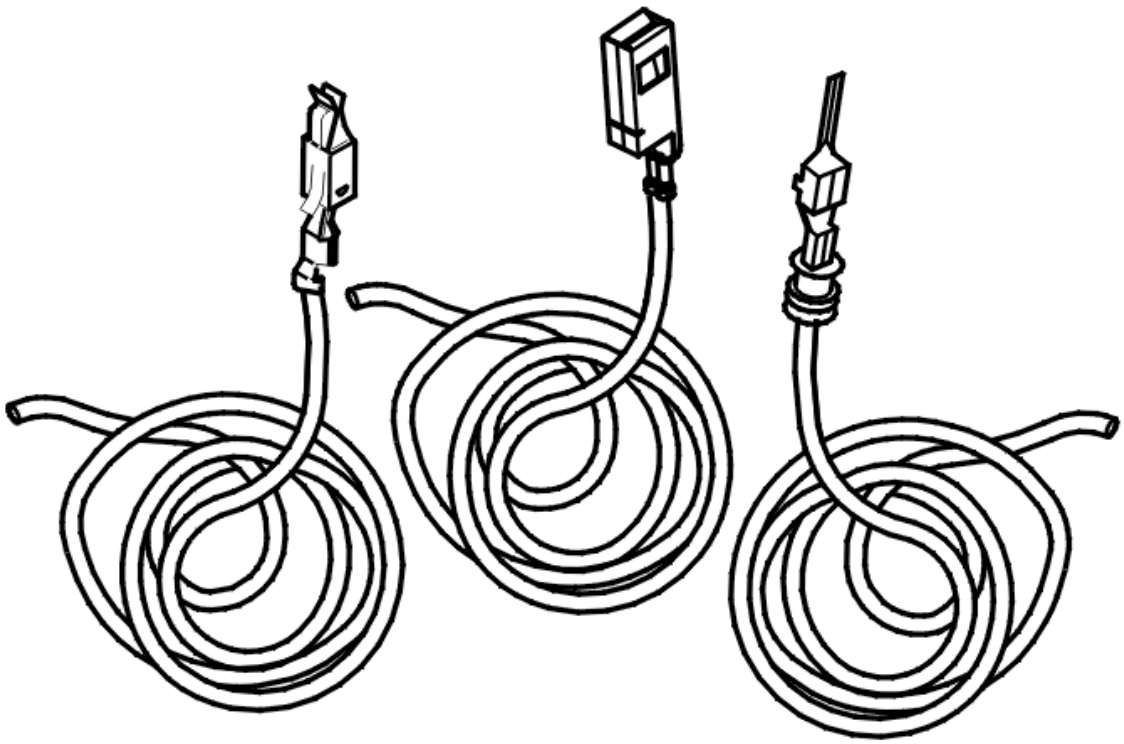

Fig. 49: Identifying Pre-Crimped Cables
Courtesy of VOLVO CARS CORPORATION

NOTE: **In 2003 the cable terminal with a pre-crimped cable section was introduced to the Volvo range as shown. This method applies for repairs with this type of cable terminal.**

CAUTION: Ensure that the new pin has the same type of surface treatment as the old.

CAUTION: For repairing SRS wiring, see CABLE HARNESS SRS SYSTEM, REPAIR.

PREPARATORY WORK

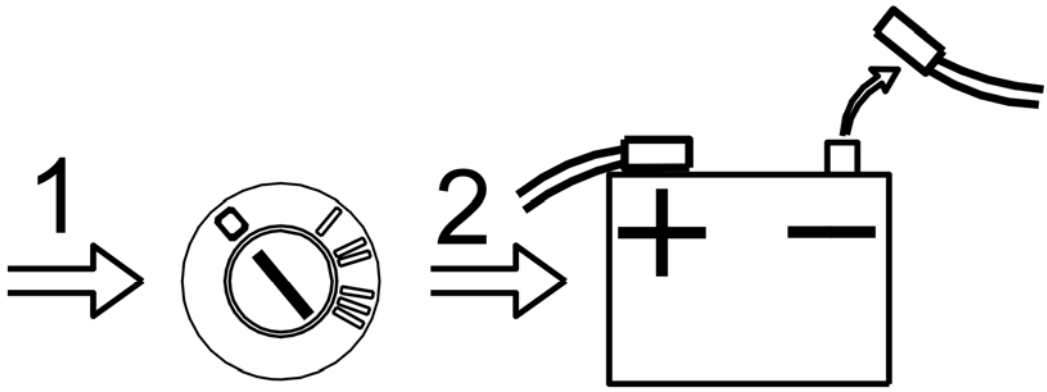

Fig. 50: Disconnecting Battery Negative Cable
Courtesy of VOLVO CARS CORPORATION

Disconnect the battery negative cable. See **BATTERY, DISCONNECTING** .

REMOVAL

CAUTION: Disconnect and work with only one cable at a time to minimize the risk of mixing them up.

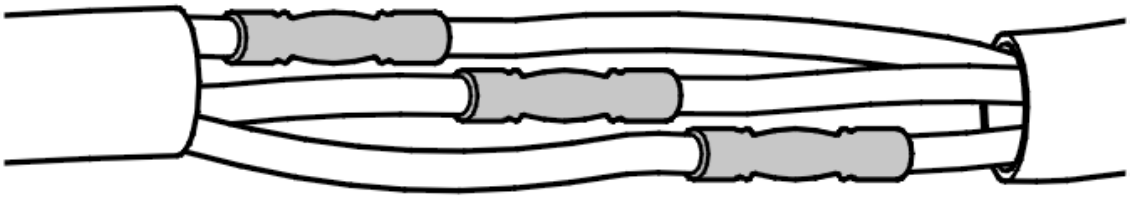

Fig. 51: Spreading Out Splice Points
Courtesy of VOLVO CARS CORPORATION

Disconnect the cable terminal that is to be replaced. See **CONNECTORS, REPAIR**.

HINT: If several cable terminals are to be replaced at the same time, spread out the splice points, as shown.

Cut the cable at a suitable point. Note the length of the new cable terminal cable.

INSTALLATION

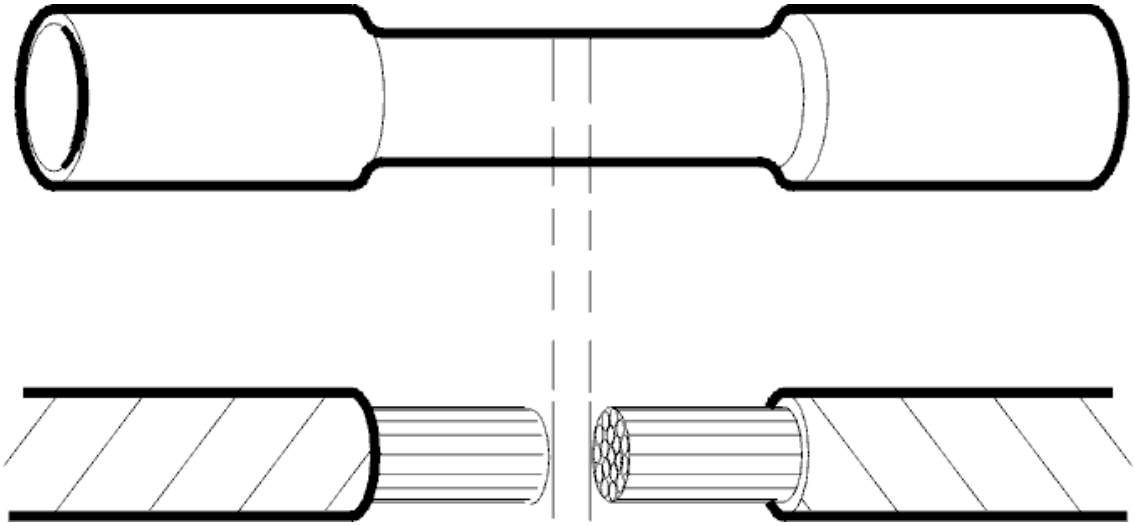

Fig. 52: Cable Cut
Courtesy of VOLVO CARS CORPORATION

Select a cable terminal with the same area as the old one.

Select a butt connector that corresponds to the cable area. The butt connector is the same color as the cable terminal cable.

Cut the new cable terminal cable to a suitable length.

Splice the cables. See **JOINING THE CABLES**.

FINISHING WORK

Reinstall the cable harness. If necessary use a crimping sleeve and tie straps.

Connect the battery negative lead. See **BATTERY, DISCONNECTING** .

Test the function.

CONNECTORS, REPAIR

NOTE: **As the graphics in this service information are used for different model years and / or models, some variation may occur. However, the essential information in the graphics is always correct.**

CONNECTOR

The commonest types of connector and central electrical unit in the vehicle are listed here.

For more information about secondary locking, primary locking, terminal removal tools, etc., see the link by each type of connector.

NOTE: **Before working in the connector, disconnect the battery negative terminal, see BATTERY, DISCONNECTING .**

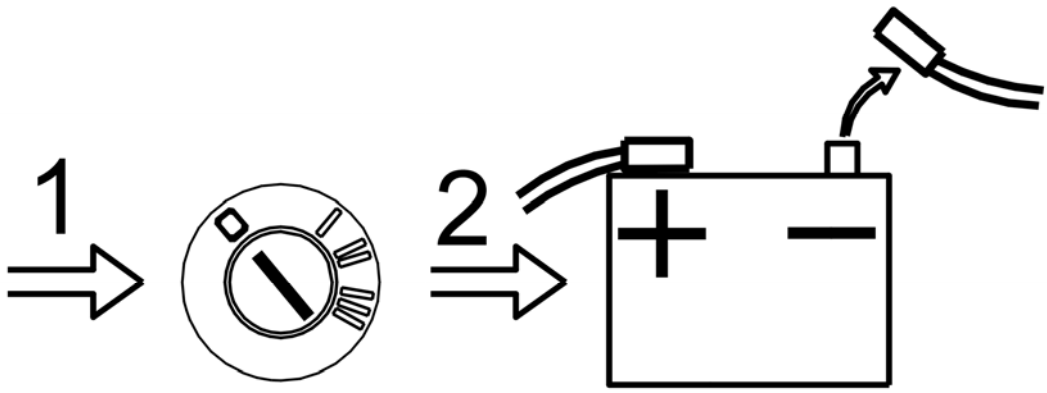

Fig. 53: Disconnecting Battery Negative Cable
Courtesy of VOLVO CARS CORPORATION

NOTE: **When several tools are recommended for the same type of connector, choose the correct tool according to the size of the lock.**

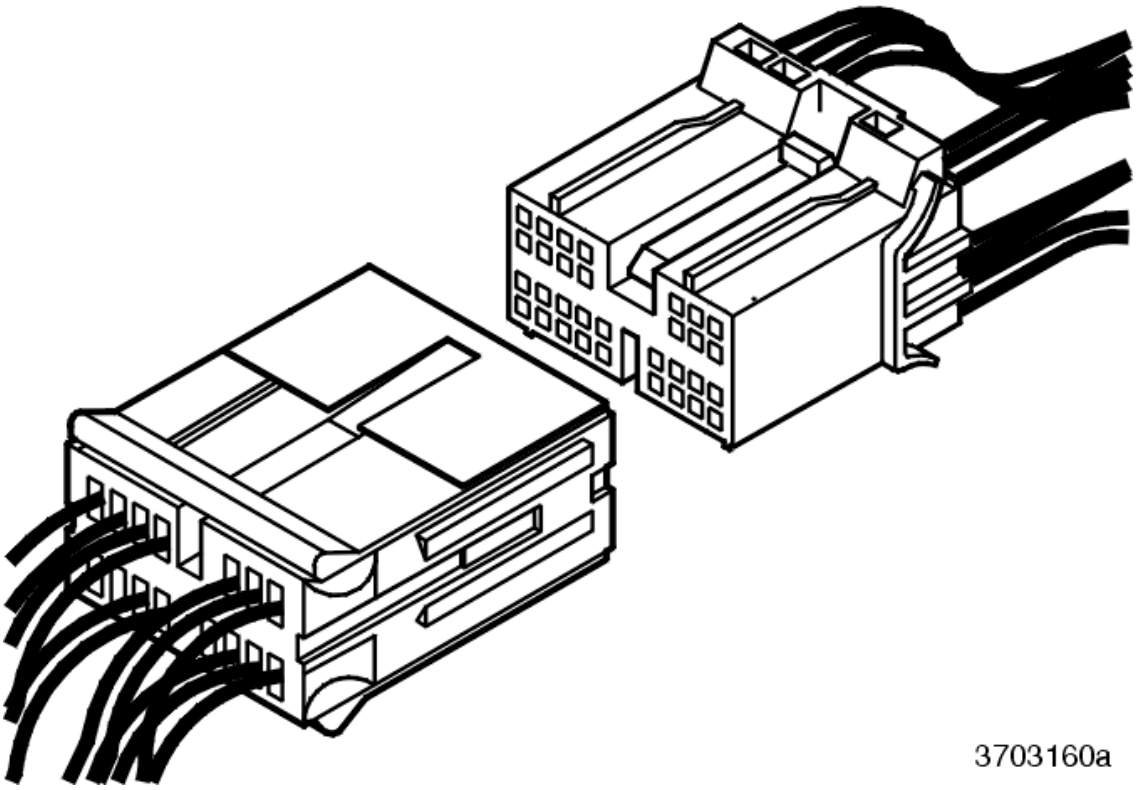

Fig. 54: Connector (1 Of 10)
Courtesy of VOLVO CARS CORPORATION

Connectors occur in a number of variants with different numbers of conductors. See **CONNECTORS, REPAIR**.

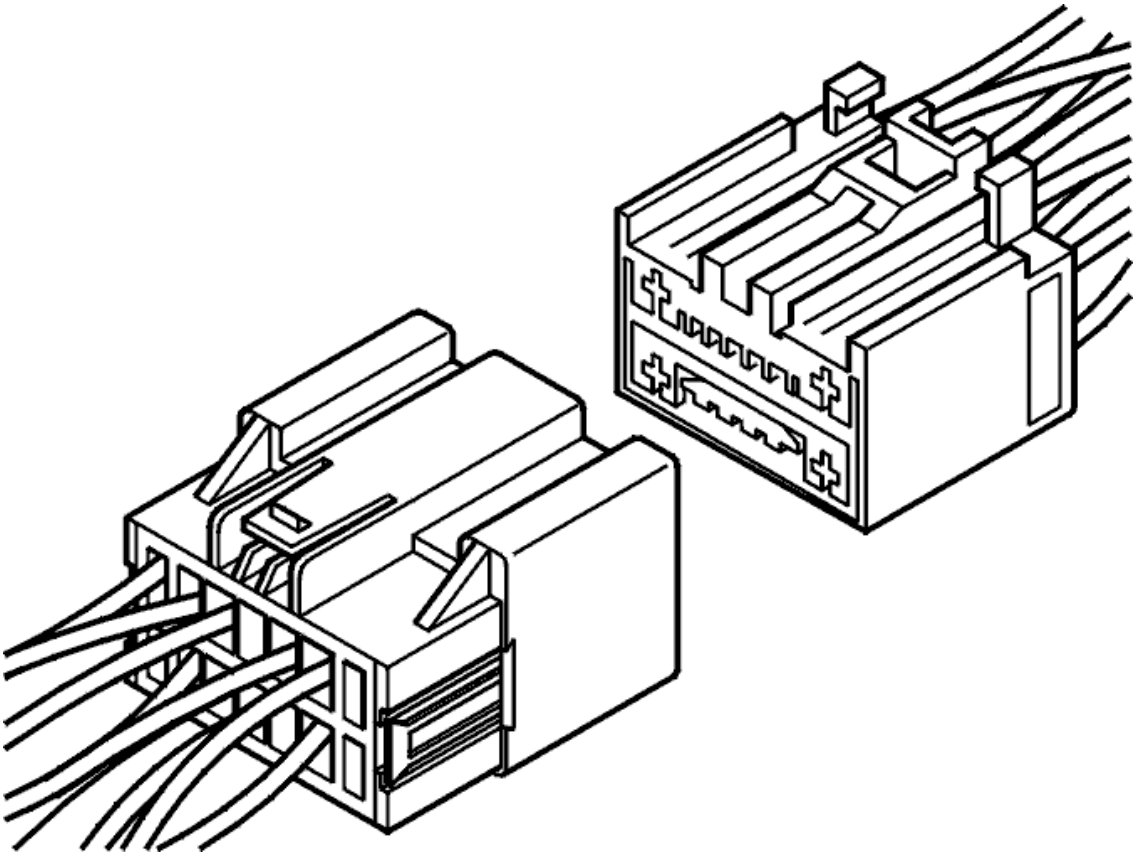

Fig. 55: Connector (2 Of 10)
Courtesy of VOLVO CARS CORPORATION

Connectors occur in a number of variants with different numbers of conductors. See **CONNECTORS, REPAIR**.

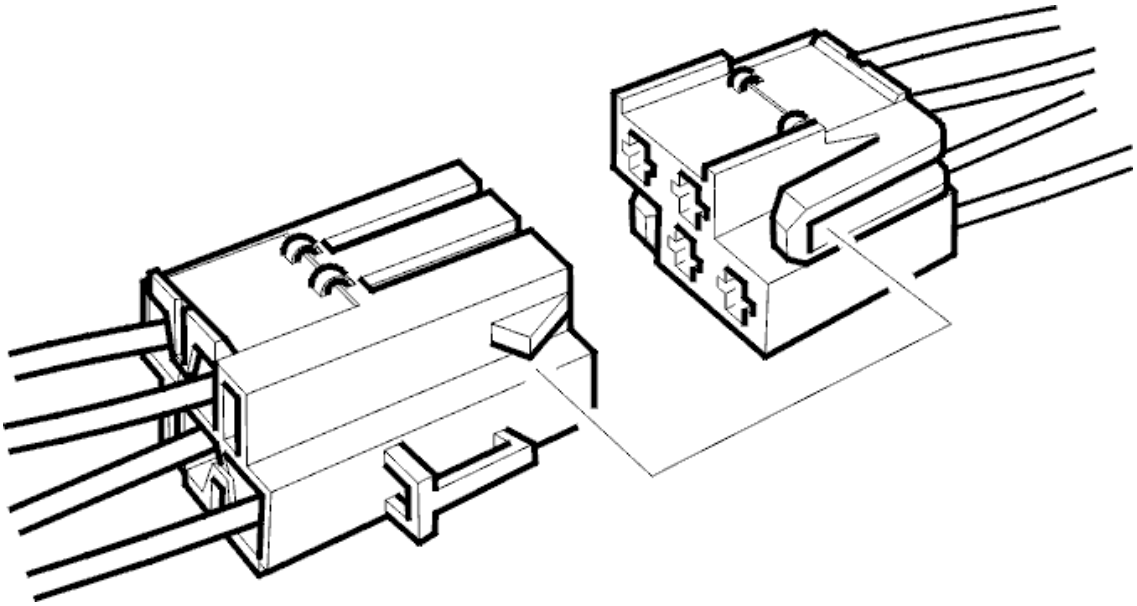

Fig. 56: Connector (3 Of 10)

Courtesy of VOLVO CARS CORPORATION

Connectors occur in a number of variants with different numbers of conductors. See **CONNECTORS, REPAIR**.

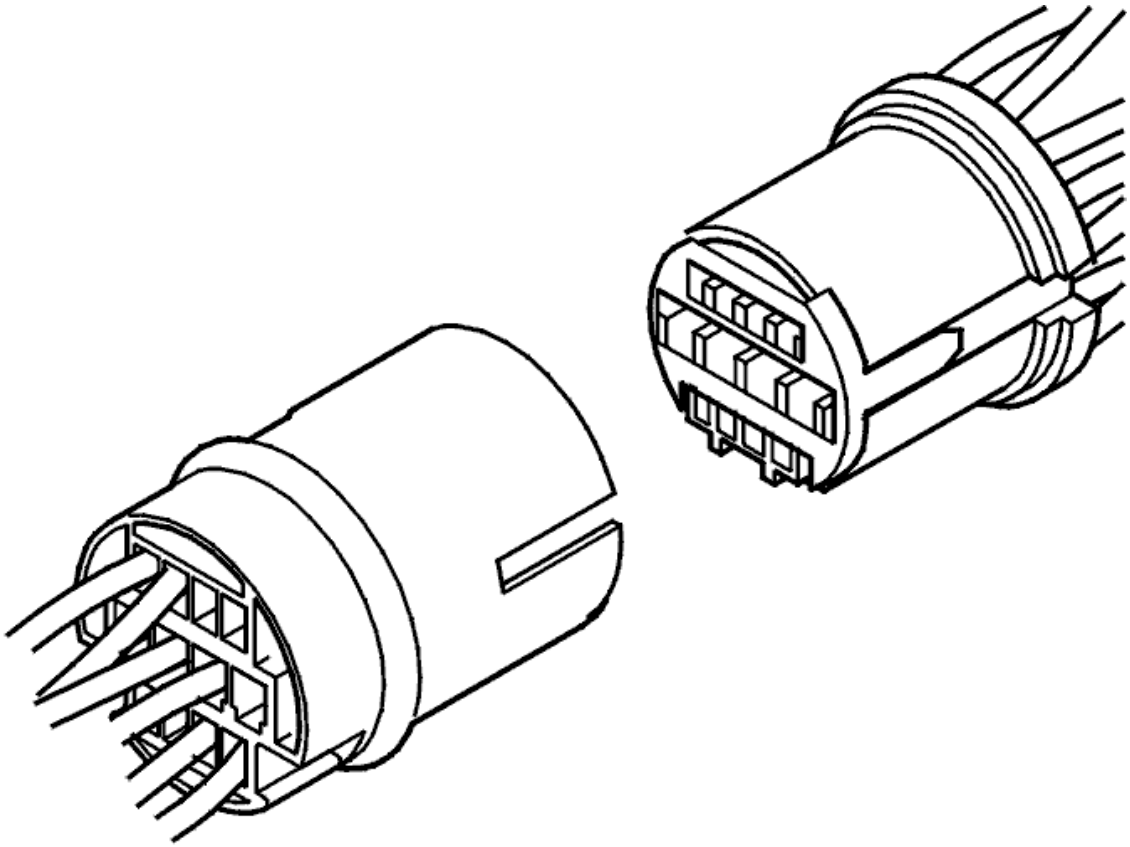

Fig. 57: Connector (4 Of 10)
Courtesy of VOLVO CARS CORPORATION

Connector, see **CONNECTORS, REPAIR**.

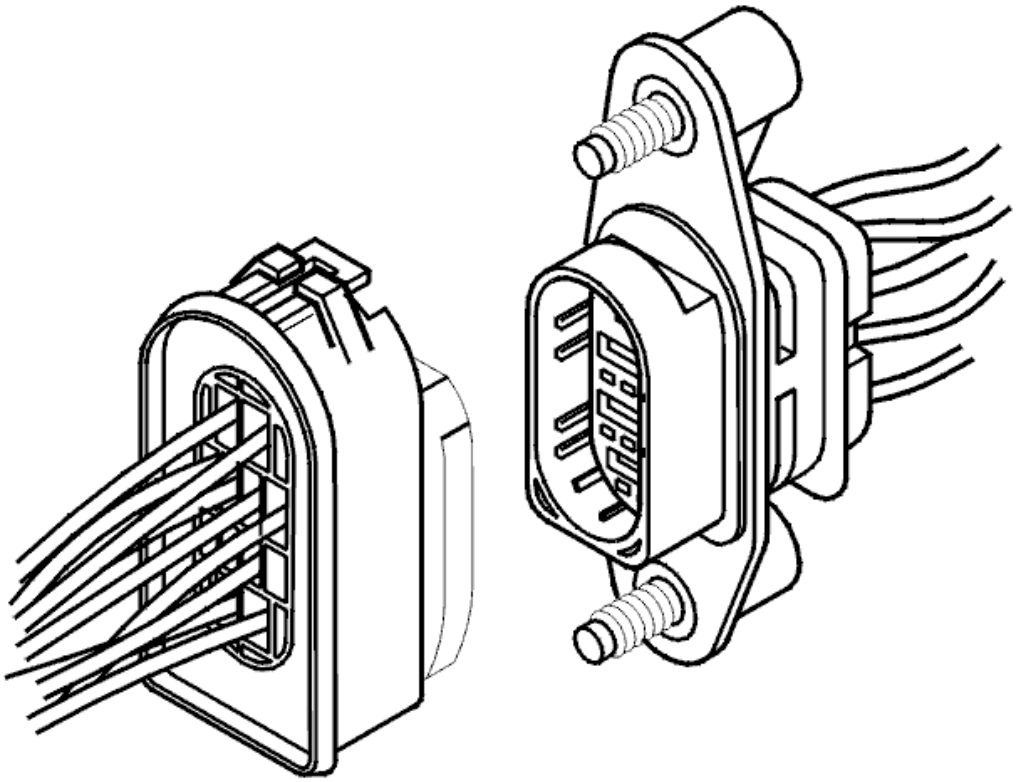

Fig. 58: Connector (5 Of 10)
Courtesy of VOLVO CARS CORPORATION

Connector door, see **CONNECTOR DOOR, REPAIR**.

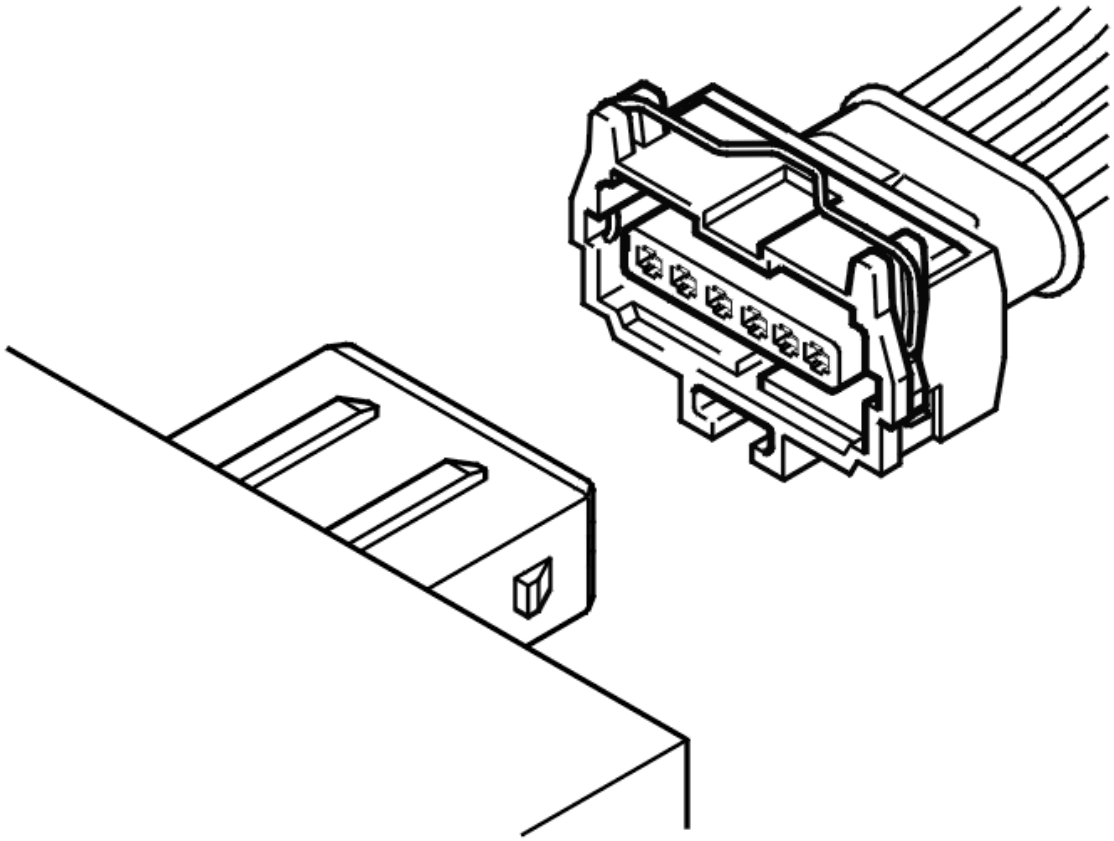

Fig. 59: Connector (6 Of 10)
Courtesy of VOLVO CARS CORPORATION

Sealed connectors occur in a number of variants with different numbers of conductors. See **CONNECTOR SEALED, REPAIR**.

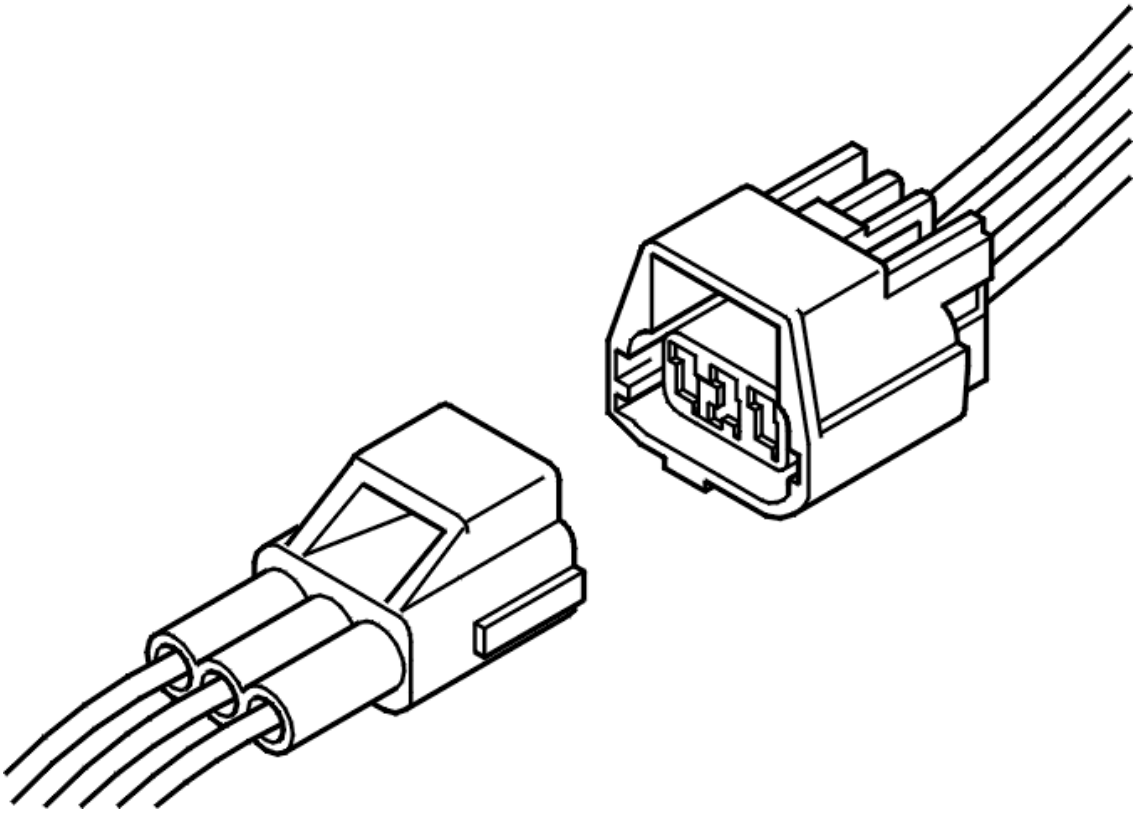

Fig. 60: Connector (7 Of 10)
Courtesy of VOLVO CARS CORPORATION

Sealed connectors occur in a number of variants with different numbers of conductors. See **CONNECTOR SEALED, REPAIR**.

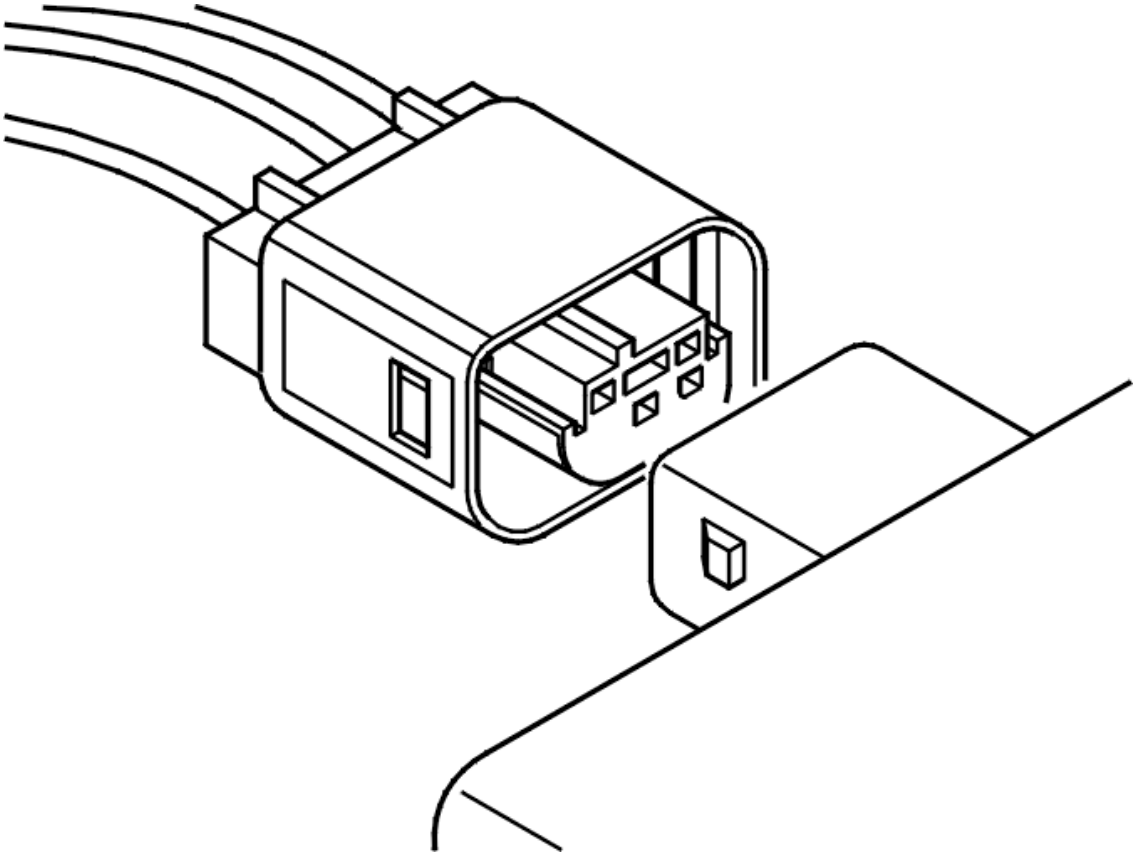

Fig. 61: Connector (8 Of 10)
Courtesy of VOLVO CARS CORPORATION

Sealed connectors occur in a number of variants with different numbers of conductors. See **CONNECTORS, REPAIR**.

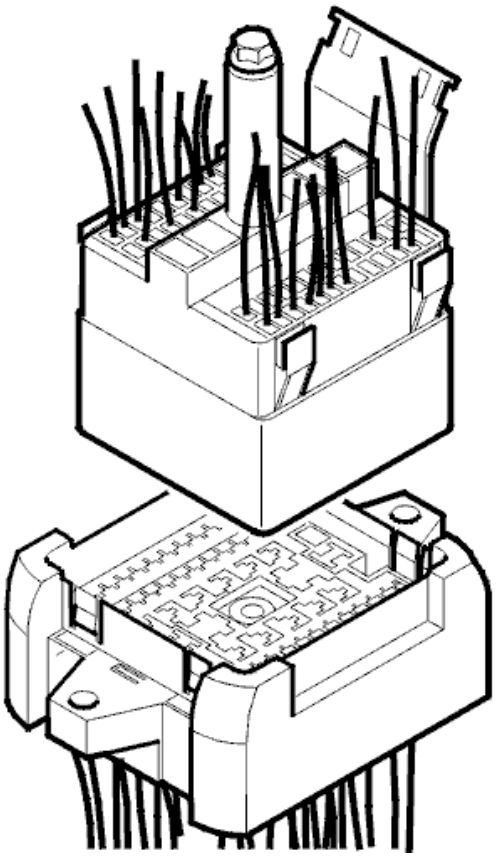

Fig. 62: Connector (9 Of 10)
Courtesy of VOLVO CARS CORPORATION

Connector, see **CONNECTORS, REPAIR**.

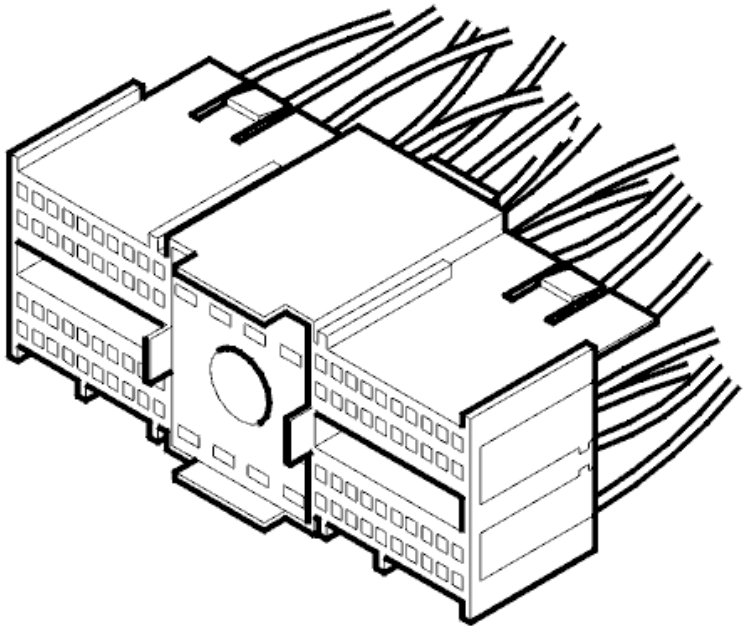

Fig. 63: Connector (10 Of 10)
Courtesy of VOLVO CARS CORPORATION

Connector, see **CONNECTORS, REPAIR**.

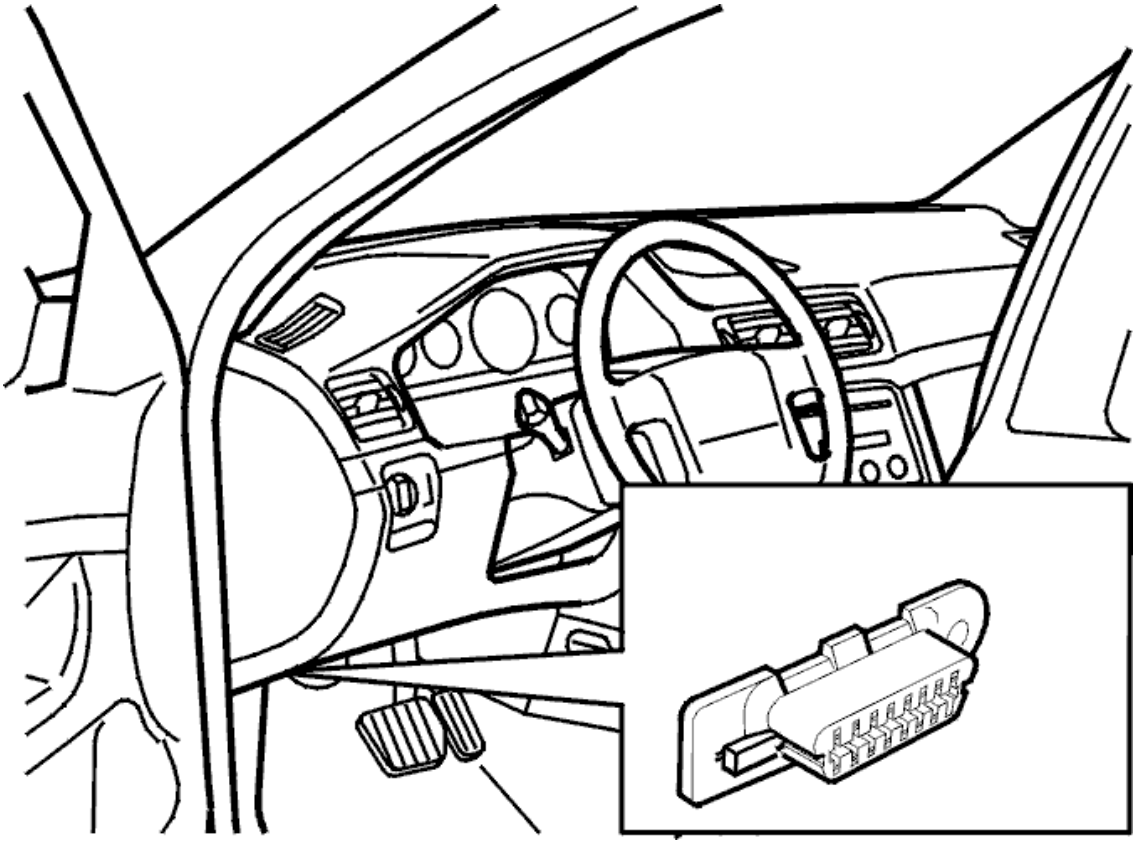

Fig. 64: Data Link Connector
Courtesy of VOLVO CARS CORPORATION

Data Link Connector (DLC). See **CONNECTOR DATA LINK CONNECTOR (DLC), REPAIR**.

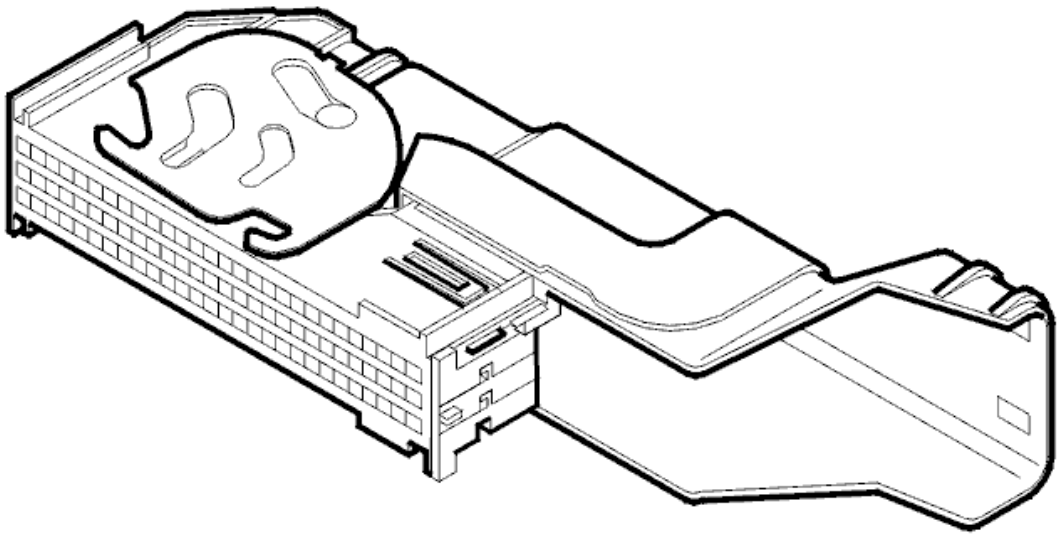

Fig. 65: Identifying SRS Module Connector
Courtesy of VOLVO CARS CORPORATION

Connector for the SRS module, see **CONNECTOR SUPPLEMENTAL RESTRAINT SYSTEM MODULE (SRS), REPAIR**.

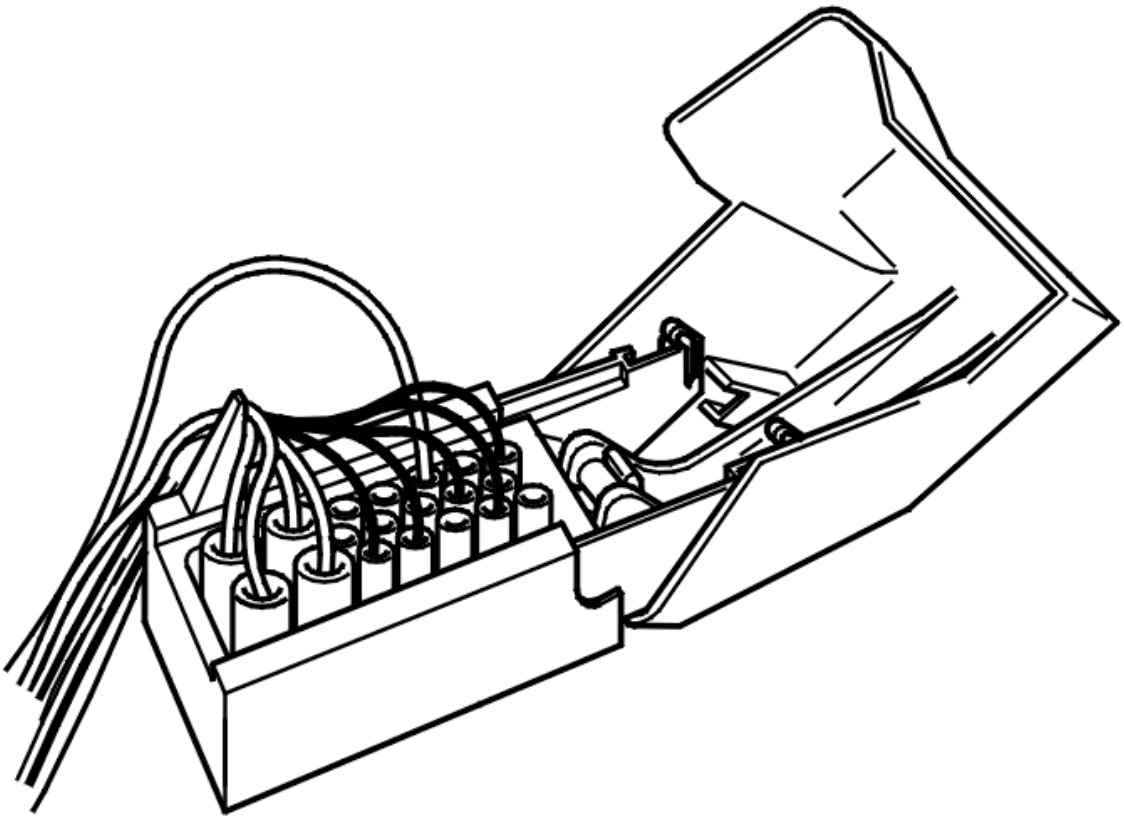

Fig. 66: Connector -- Control Module For Anti-Lock Brake
Courtesy of VOLVO CARS CORPORATION

Connector Control module for anti-lock brakes (ABS). See **CONNECTOR CONTROL MODULE FOR ANTI-LOCK BRAKE SYSTEM MODULE (ABS), REPAIR**.

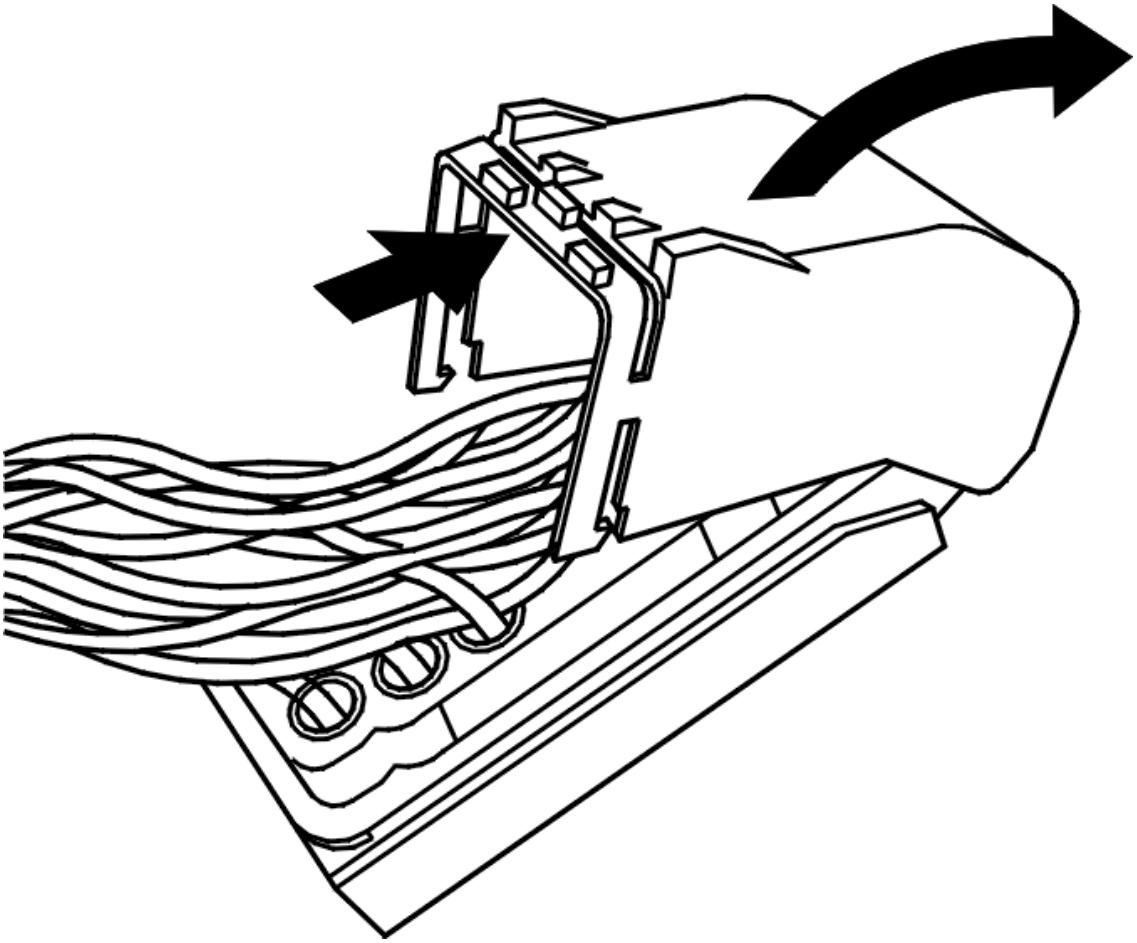

Fig. 67: Connector -- Brake Control Module
Courtesy of VOLVO CARS CORPORATION

Connector Brake Control Module (BCM). See **CONNECTOR BRAKE CONTROL MODULE (BCM), REPAIR**.

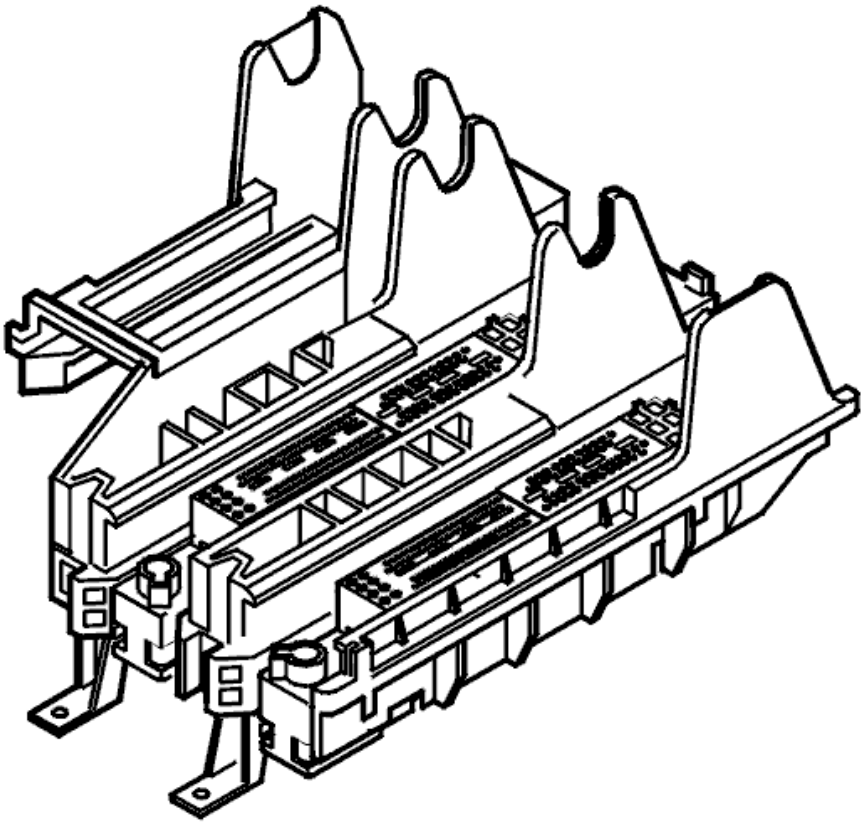

Fig. 68: Central Electrical Unit Engine/Transmission Control Module
Courtesy of VOLVO CARS CORPORATION

Central electrical unit engine/transmission control module (ECM/TCM). See **CONNECTOR CENTRAL ELECTRICAL UNIT ENGINE/TRANSMISSION CONTROL MODULE (ECM/TCM), REPAIR**.

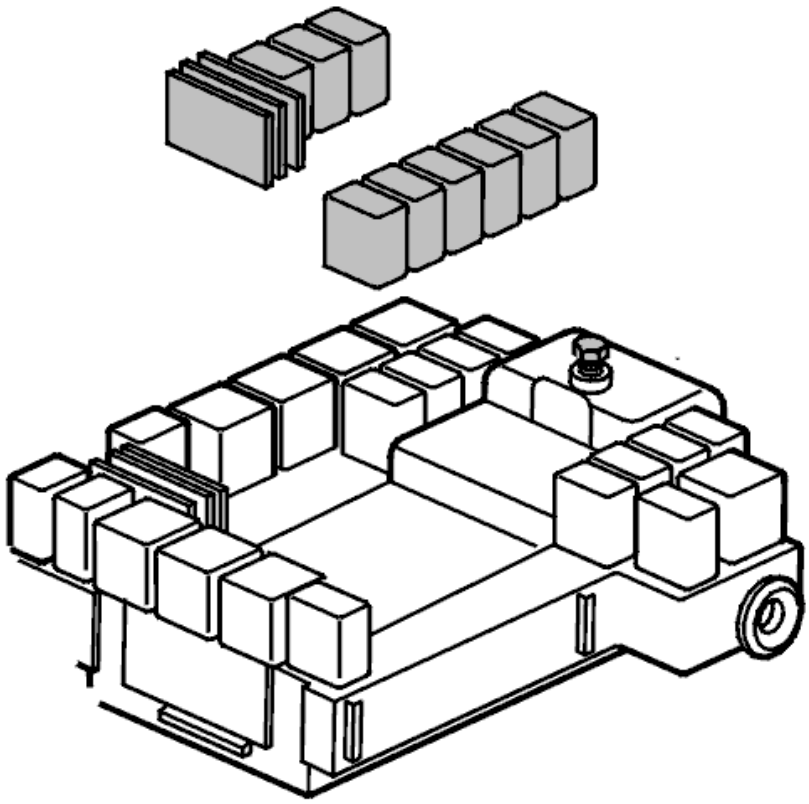

Fig. 69: Identifying Relay Box In Passenger Compartment/Cargo Compartment
Courtesy of VOLVO CARS CORPORATION

Relay box in passenger compartment/cargo compartment. See **CONNECTOR RELAY BOX, REPAIR**.

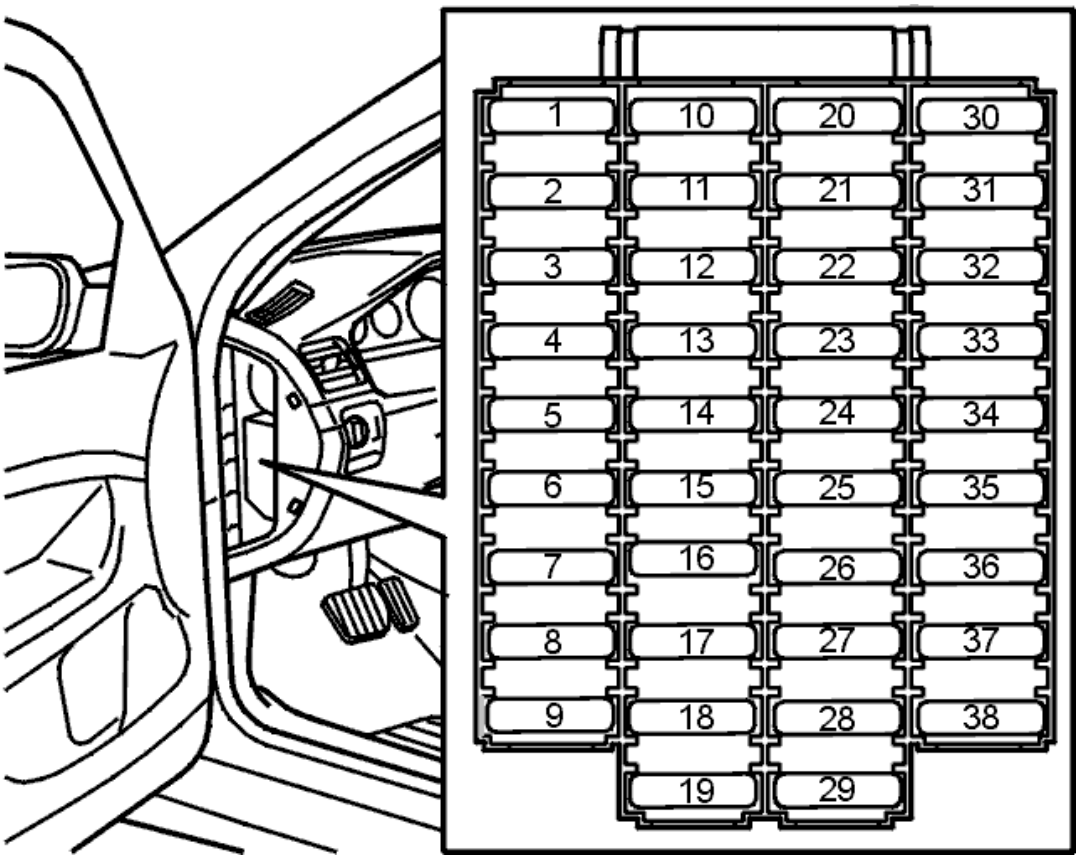

Fig. 70: Fuse Holder (Passenger Compartment)
Courtesy of VOLVO CARS CORPORATION

Fuse holder in passenger compartment/cargo compartment. See **CONNECTOR FUSE HOLDER, REPAIR**.

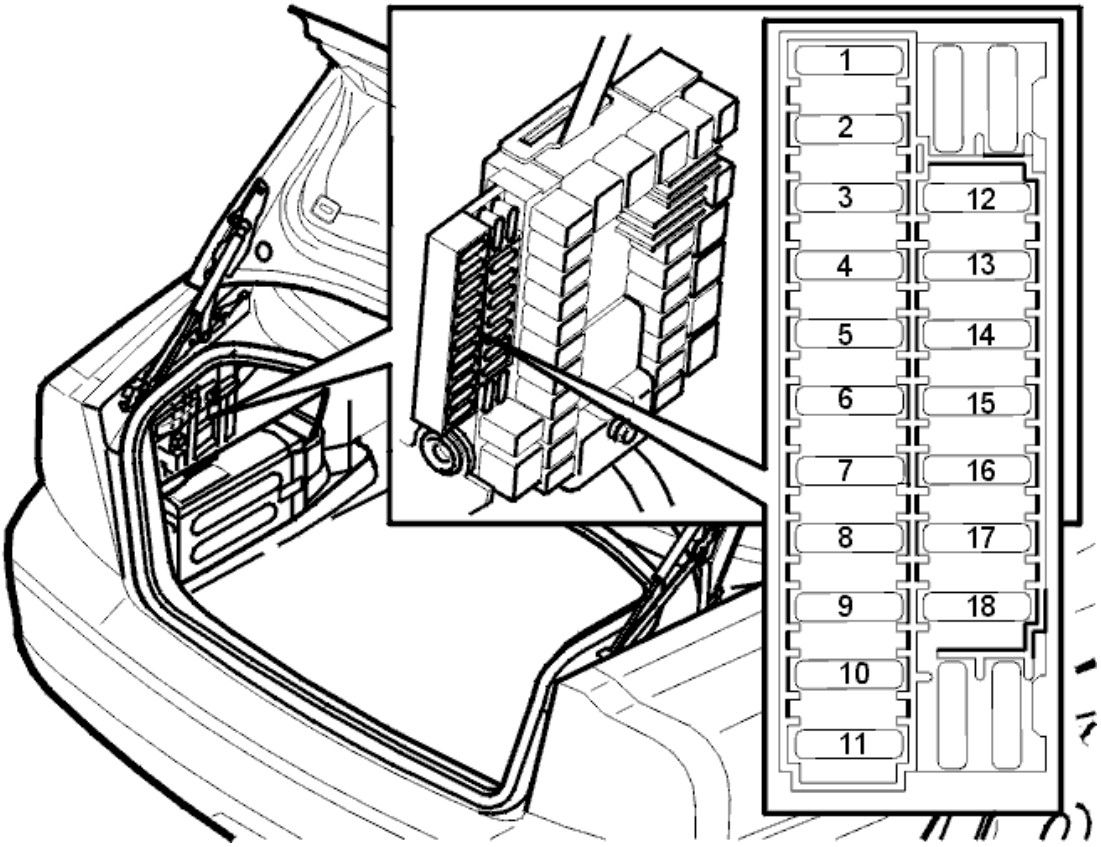

Fig. 71: Fuse Holder (Cargo Compartment)
Courtesy of VOLVO CARS CORPORATION

CONNECTORS, REPAIR

Special tools: see **9512811** see **9512632** , see **9512633** , see **9512639** , see **9512852** .

NOTE: **As the graphics in this service information are used for different model years and/or models, some variation may occur. However, the essential information in the graphics is always correct.**

CONNECTOR, DISMANTLING

SECONDARY LOCK

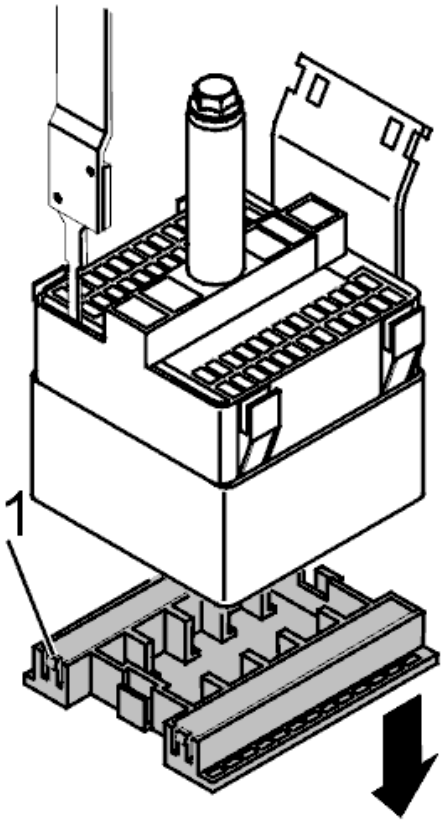

Fig. 72: Identifying Secondary Lock Pressed Out From Cable Side Using Tool 951 2811 (1 Of 2)
Courtesy of VOLVO CARS CORPORATION

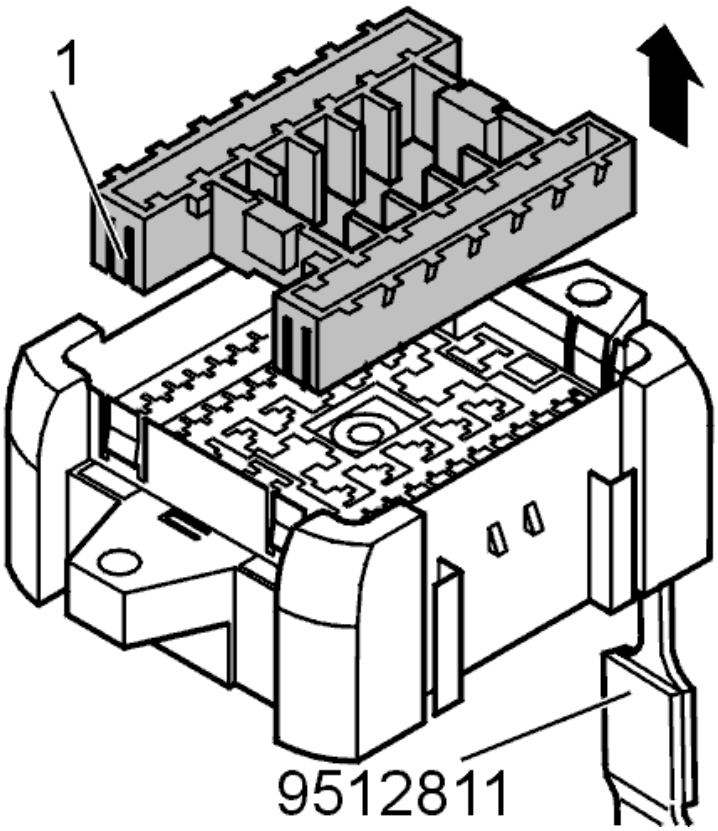

Fig. 73: Identifying Secondary Lock Pressed Out From Cable Side Using Tool 951 2811 (2 Of 2)
Courtesy of VOLVO CARS CORPORATION

Press out the secondary lock from the cable side using tool see **9512811** or an electrician's screwdriver, as shown.

PRIMARY LOCK

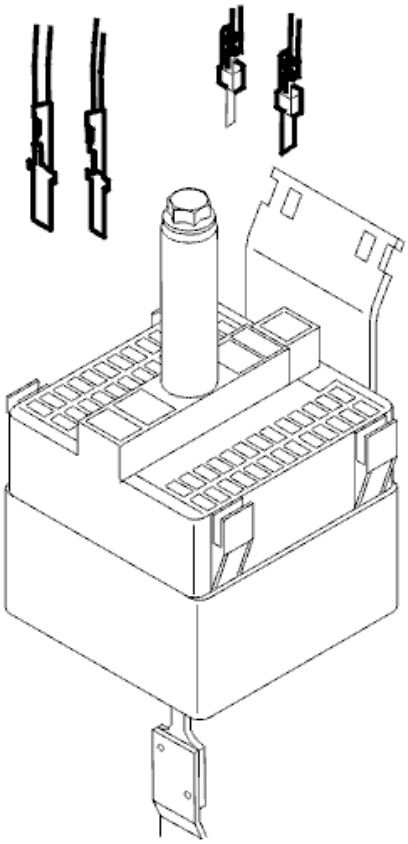

Fig. 74: Identifying Tools 951 2632, 951 2633, 951 2639 To Remove Primary Lock (1 Of 2)
Courtesy of VOLVO CARS CORPORATION

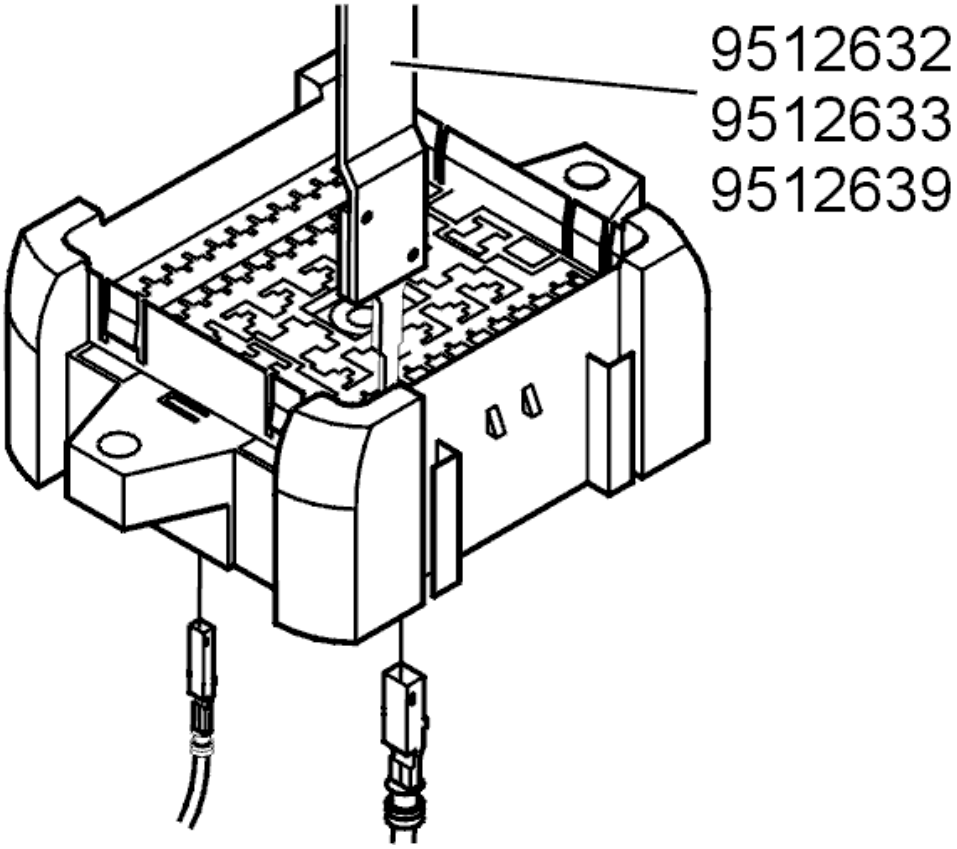

Fig. 75: Identifying Tools 951 2632, 951 2633, 951 2639 To Remove Primary Lock (2 Of 2)
Courtesy of VOLVO CARS CORPORATION

Use tools see **9512632** , see **9512633** , see **9512639** to remove the primary lock, as shown.

At the same time pull the cable carefully backwards.

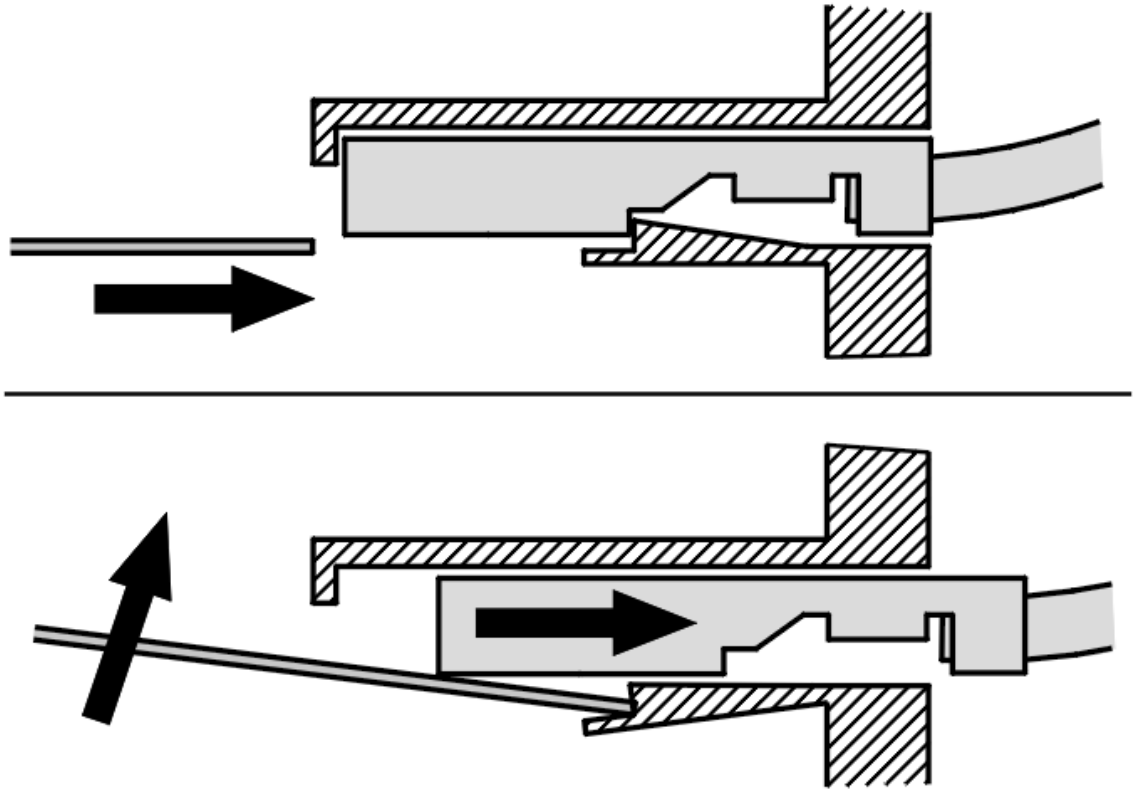

Fig. 76: Identifying Cable Pulled Backwards
Courtesy of VOLVO CARS CORPORATION

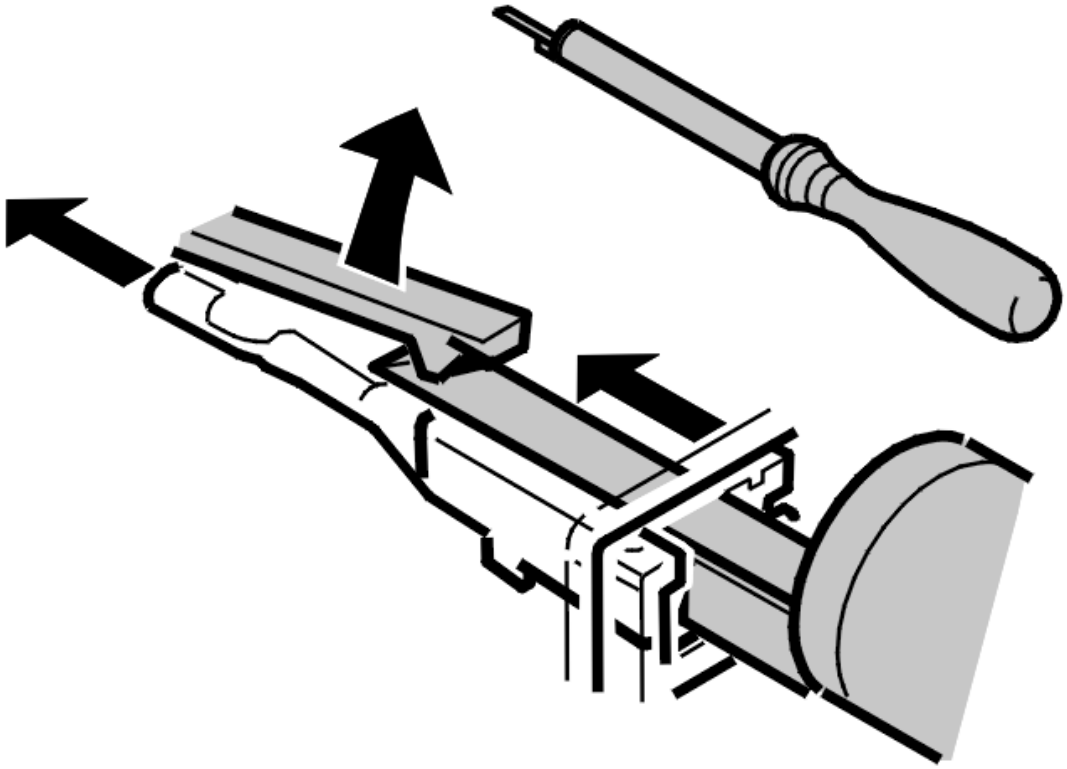

Fig. 77: Alternatively Using Tool 951 2852
Courtesy of VOLVO CARS CORPORATION

Alternatively use tool see **9512852** as shown.

NOTE: Tool see 9512852 can only be used for socket housings.

CONNECTOR, ASSEMBLING

PRIMARY LOCK

Check that the cable terminal is undamaged.

Press the cable terminal into the housing.

Check that the cable terminal is properly locked by pulling carefully on the cable.

THE SECONDARY LOCK

Press the secondary lock into place.

CONNECTORS, REPAIR

Special tool see **9512637** .

NOTE: **As the graphics in this service information are used for different model years and / or models, some variation may occur. However, the essential information in the graphics is always correct.**

CONNECTOR, DISMANTLING

SECONDARY LOCK

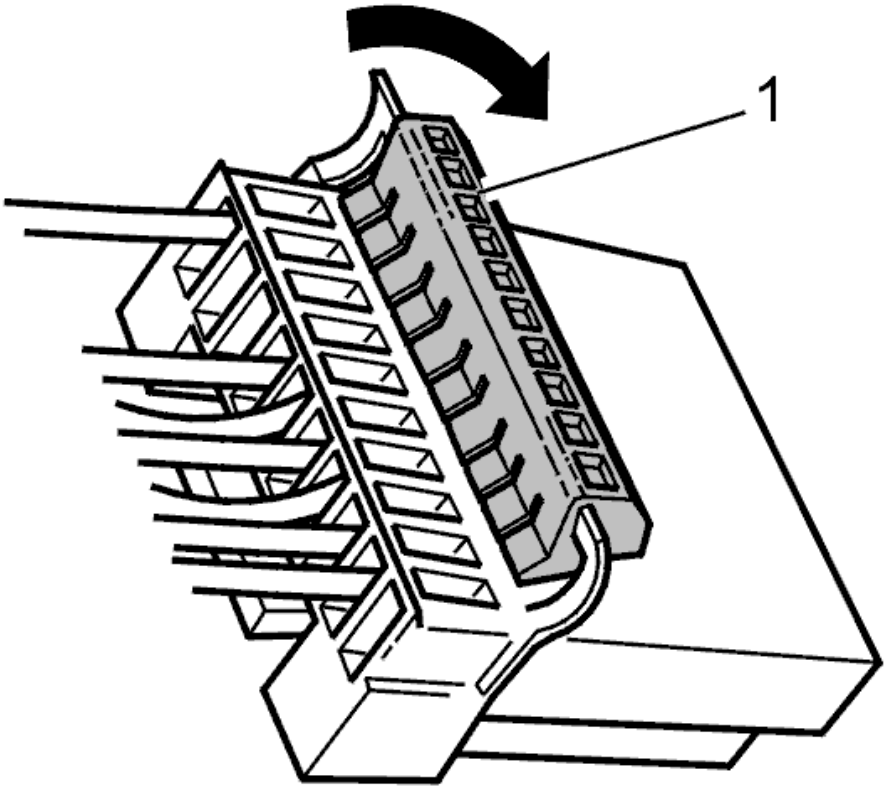

Fig. 78: Folding Up Secondary Lock
Courtesy of VOLVO CARS CORPORATION

Fold up the secondary lock (1), as shown. Use an electrician's screwdriver.

PRIMARY LOCK

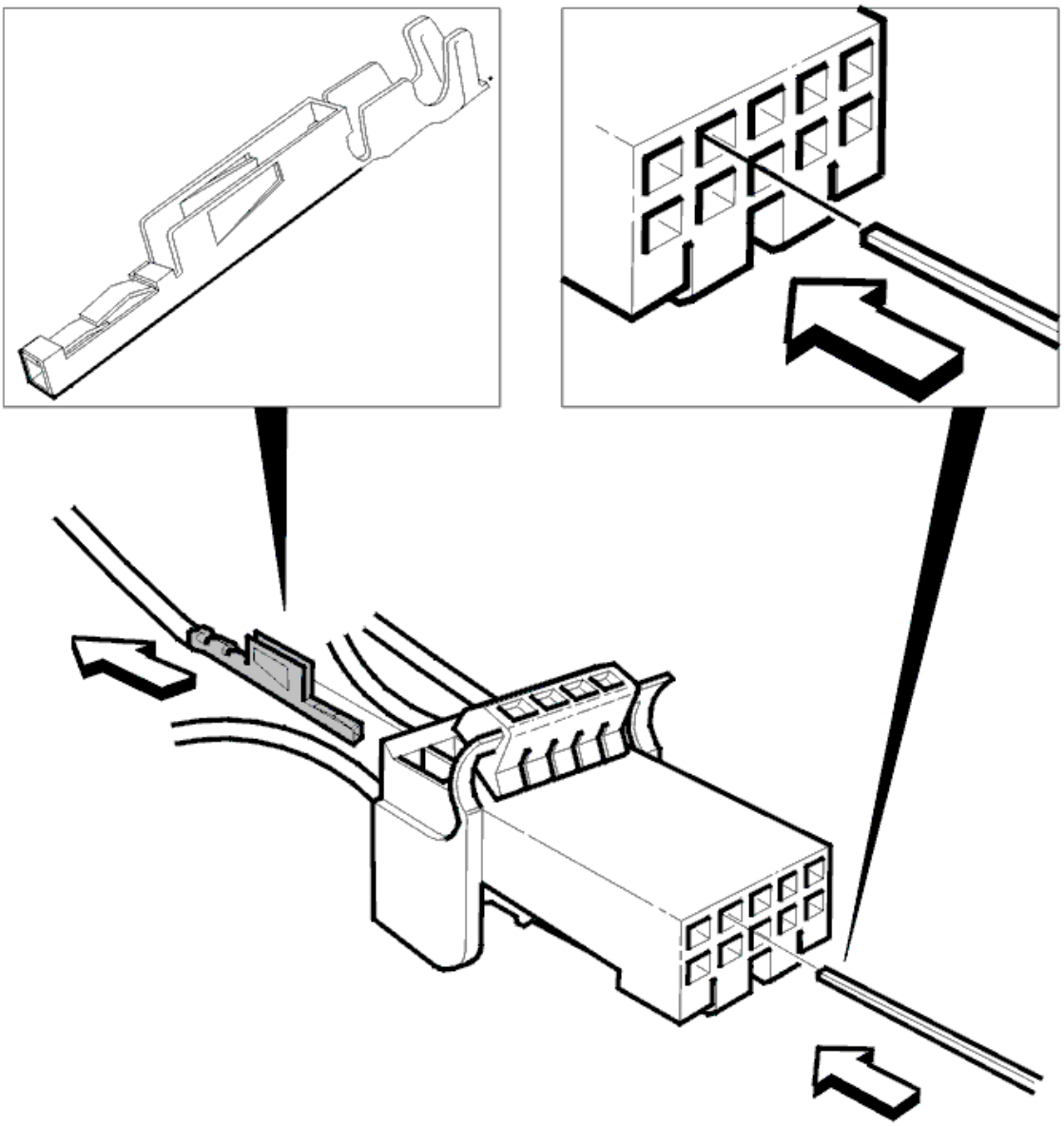

Fig. 79: Identifying Tool 951 2637 To Remove Primary Lock
Courtesy of VOLVO CARS CORPORATION

Use tool see **9512637** to remove the primary lock, as shown.

At the same time pull the cable carefully backwards.

CONNECTOR, ASSEMBLING

PRIMARY LOCKING

Check that the catches for the cable terminal are undamaged.

Press the cable terminal into the housing.

Check that the cable terminal is properly locked by pulling carefully on the cable.

SECONDARY LOCKING

Press the secondary lock into place.

CONNECTORS, REPAIR

Special tools: see **9512637** .

NOTE: **As the graphics in this service information are used for different model years and/or models, some variation may occur. However, the essential information in the graphics is always correct.**

CONNECTOR, DISMANTLING

SECONDARY LOCK

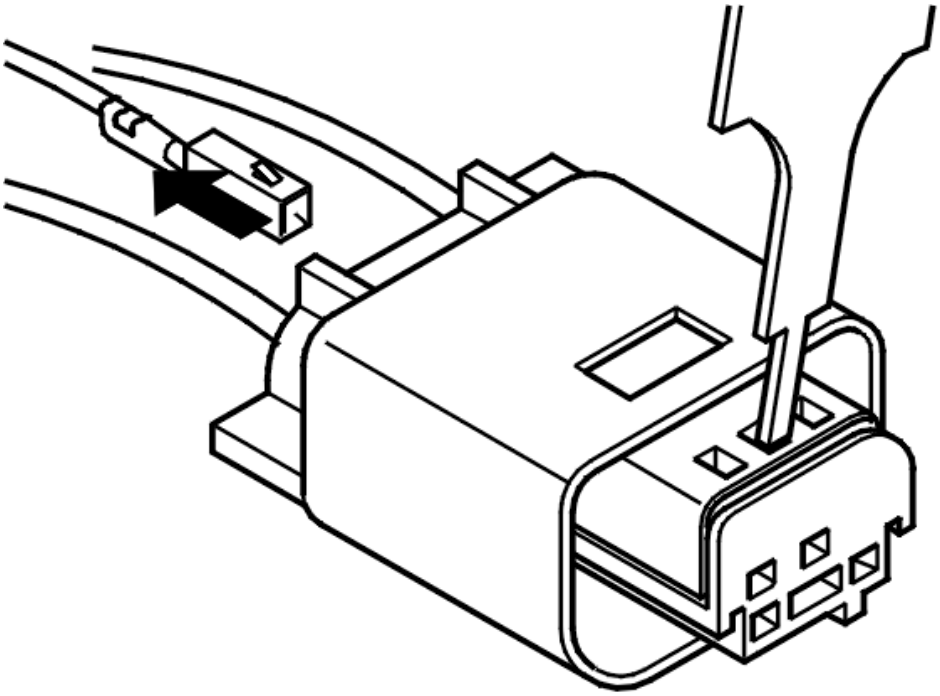

Fig. 80: Adjusting Lock Pins Using An Electrician's Screwdriver
Courtesy of VOLVO CARS CORPORATION

Adjust the lock pins using an electrician's screwdriver and press up the secondary lock, as shown.

THE PRIMARY LOCK

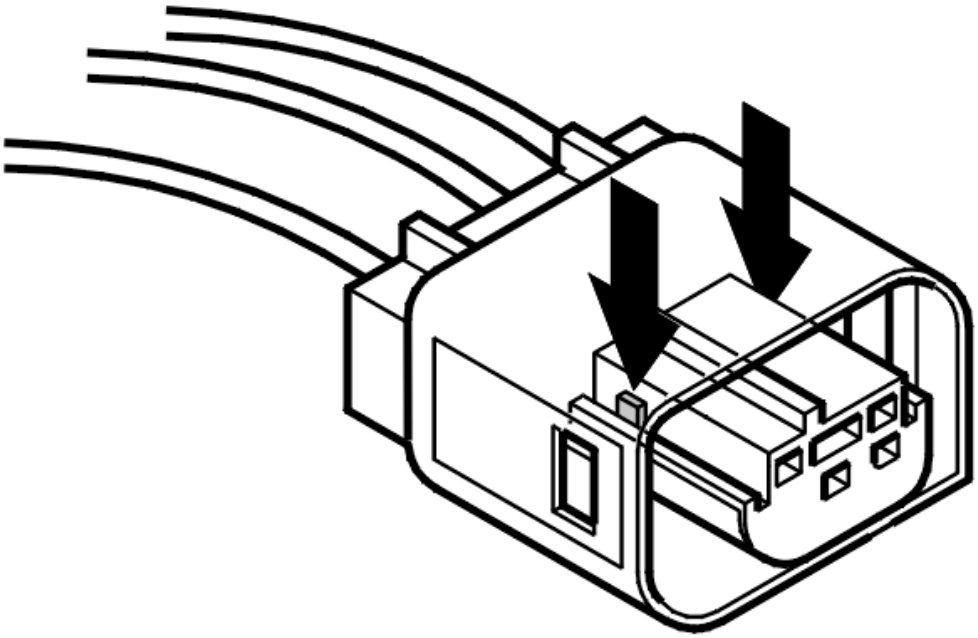

Fig. 81: Identifying Cable Terminal Locking Tab
Courtesy of VOLVO CARS CORPORATION

Use tool see **9512637** to press down the cable terminal locking tab, as shown.

At the same time pull the cable carefully backwards.

CONNECTOR, ASSEMBLING

PRIMARY LOCK

Check that the cable terminal is undamaged.

Press the cable terminal into the housing.

Check that the seal is correctly positioned and that the cable terminal is properly locked by pulling carefully on the cable.

SECONDARY LOCK

Press the secondary lock into place.

CONNECTOR DOOR, REPAIR

Special tools: see **9512632** , see **9512639** , see **9512852** .

NOTE: **As the graphics in this service information are used for different model years and/or models, some variation may occur. However, the essential information in the graphics is always correct.**

CONNECTOR, DISMANTLING

SECONDARY LOCK

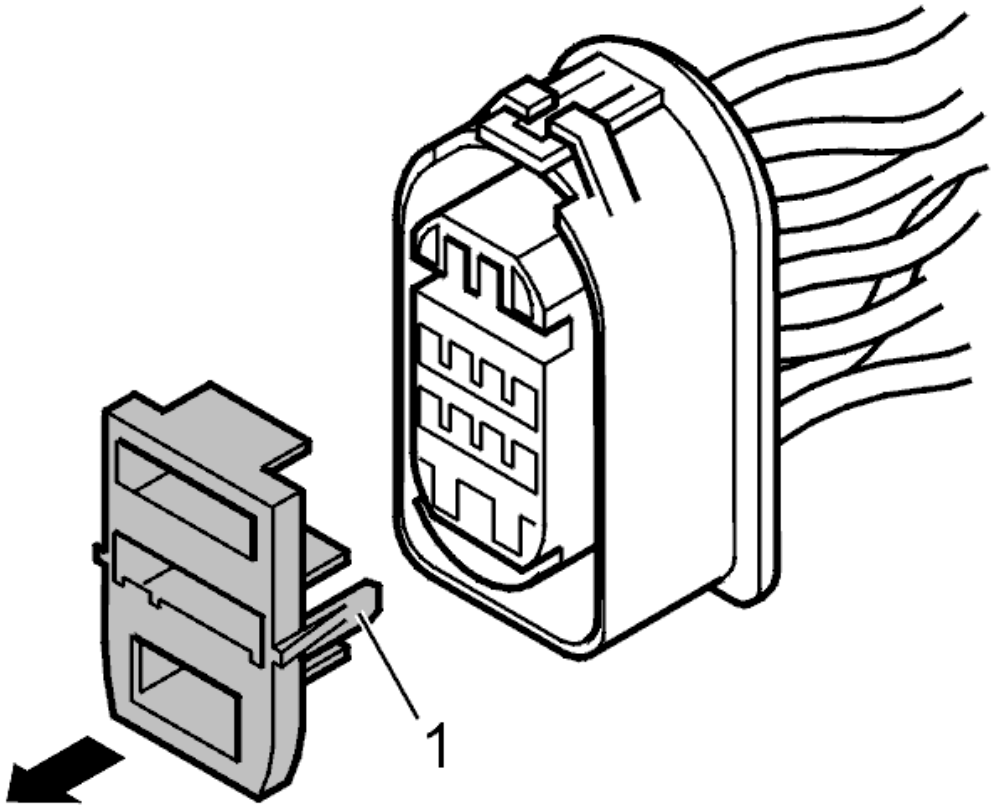

Fig. 82: Connector Secondary Lock (1 Of 2)
Courtesy of VOLVO CARS CORPORATION

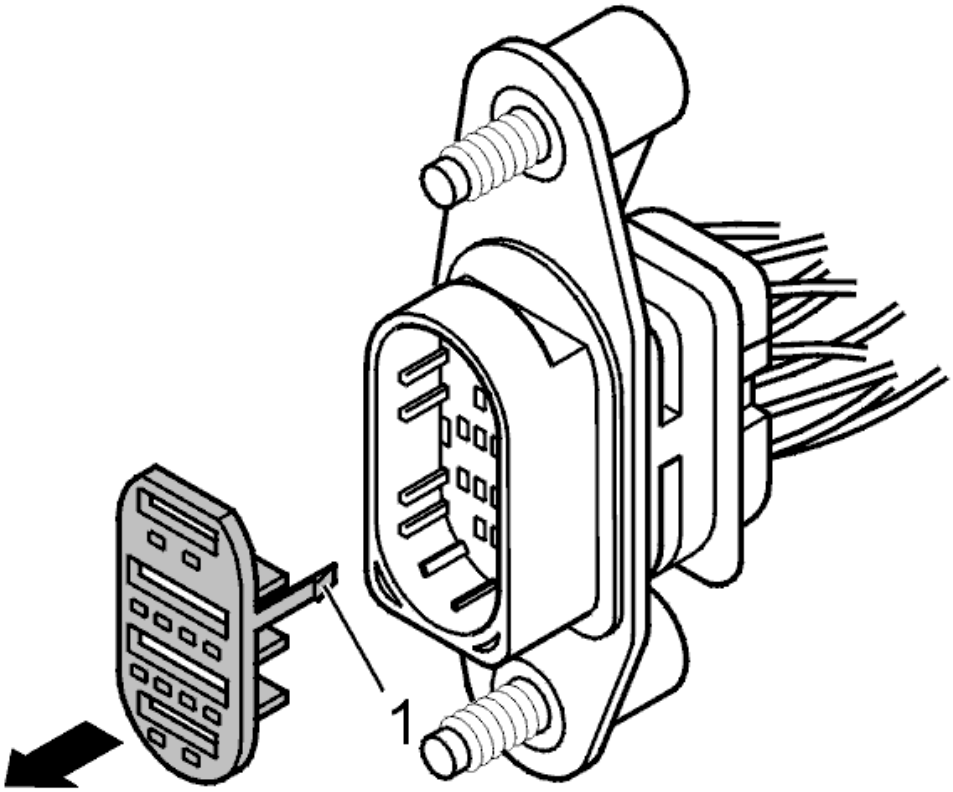

Fig. 83: Connector Secondary Lock (2 Of 2)
Courtesy of VOLVO CARS CORPORATION

Angle out the catches on both sides.

Pull out the secondary lock.

PRIMARY LOCK

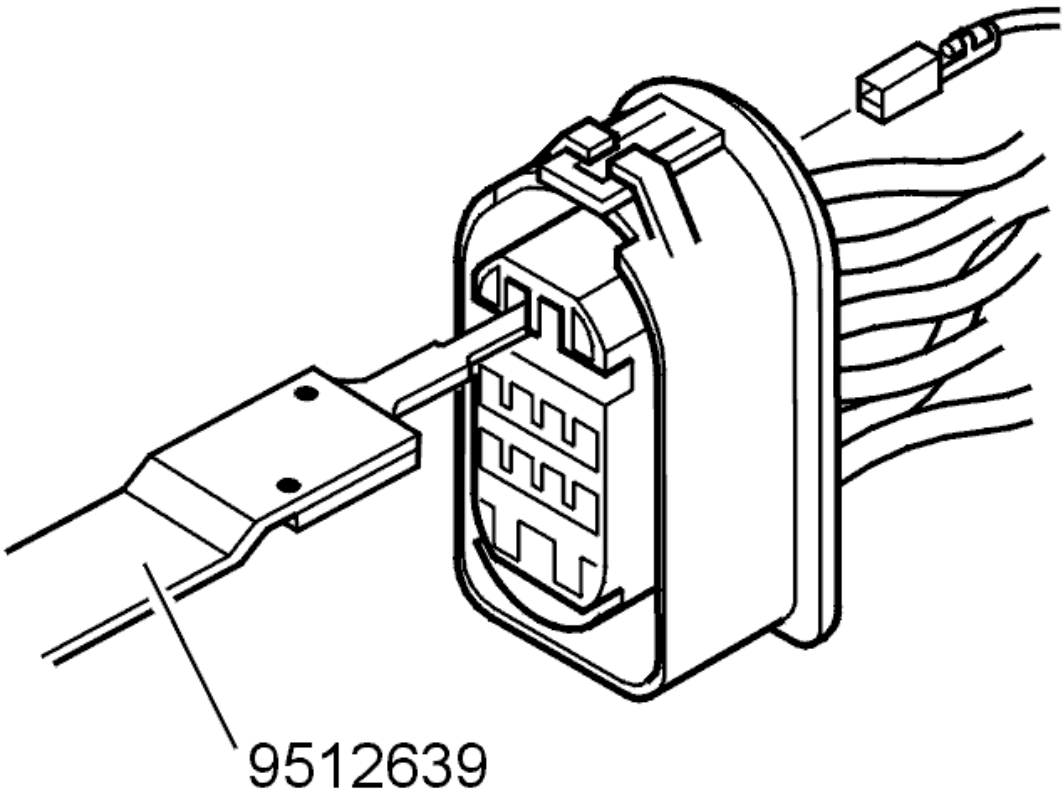

Fig. 84: Identifying Tool 951 2639 At Primary Lock
Courtesy of VOLVO CARS CORPORATION

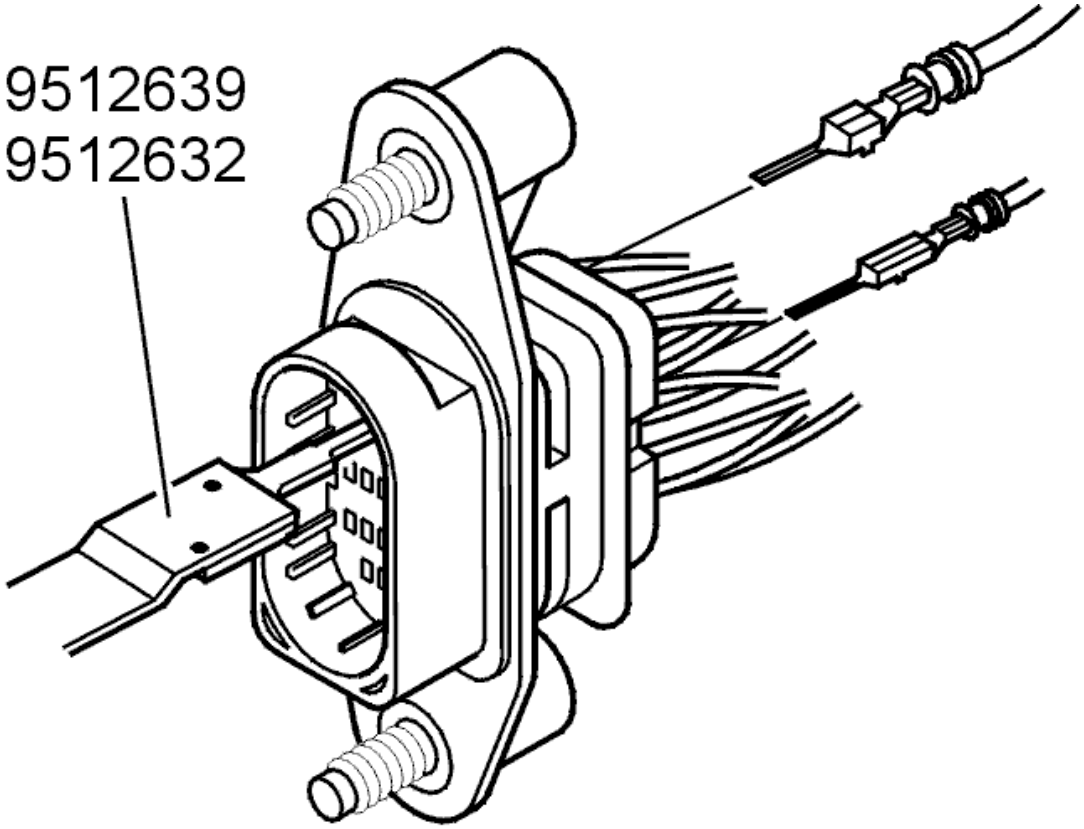

Fig. 85: Identifying Tools 951 2632, 951 2639 To Remove Primary Lock (2 Of 2)
Courtesy of VOLVO CARS CORPORATION

Use tools see **9512632** , see **9512639** to remove the primary lock, as shown.

At the same time pull the cable carefully backwards.

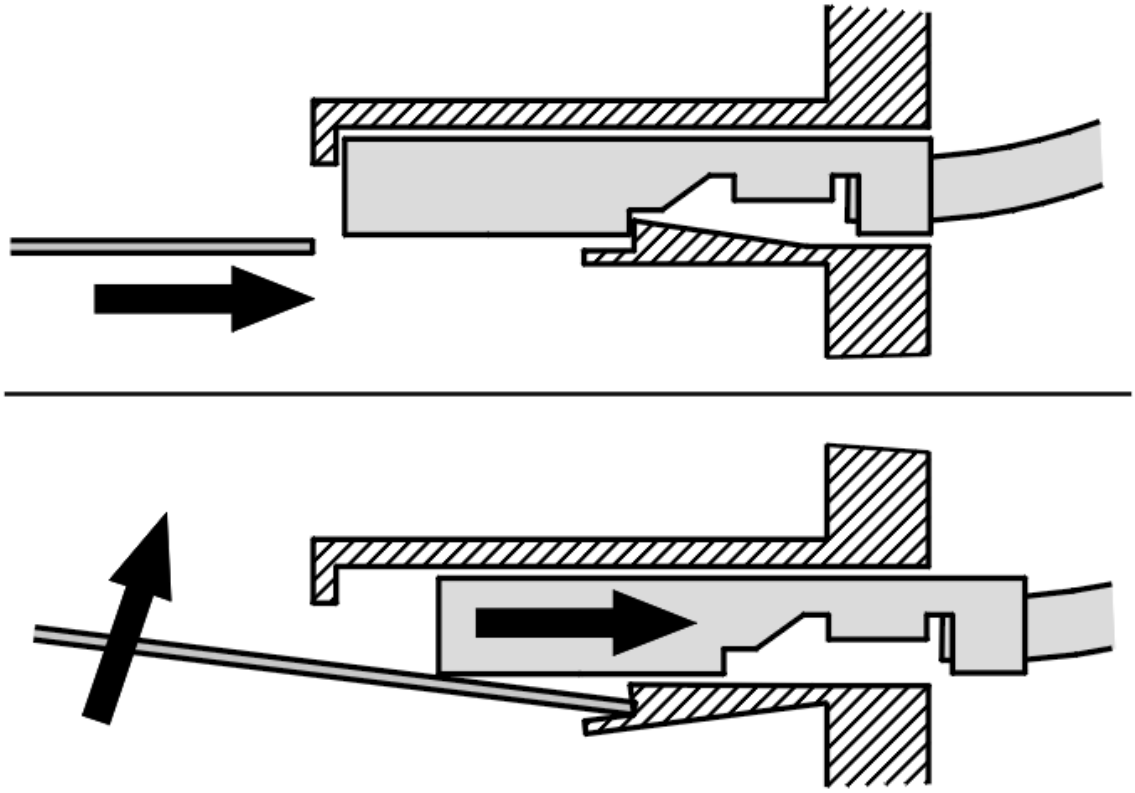

Fig. 86: Identifying Cable Pulled Backwards
Courtesy of VOLVO CARS CORPORATION

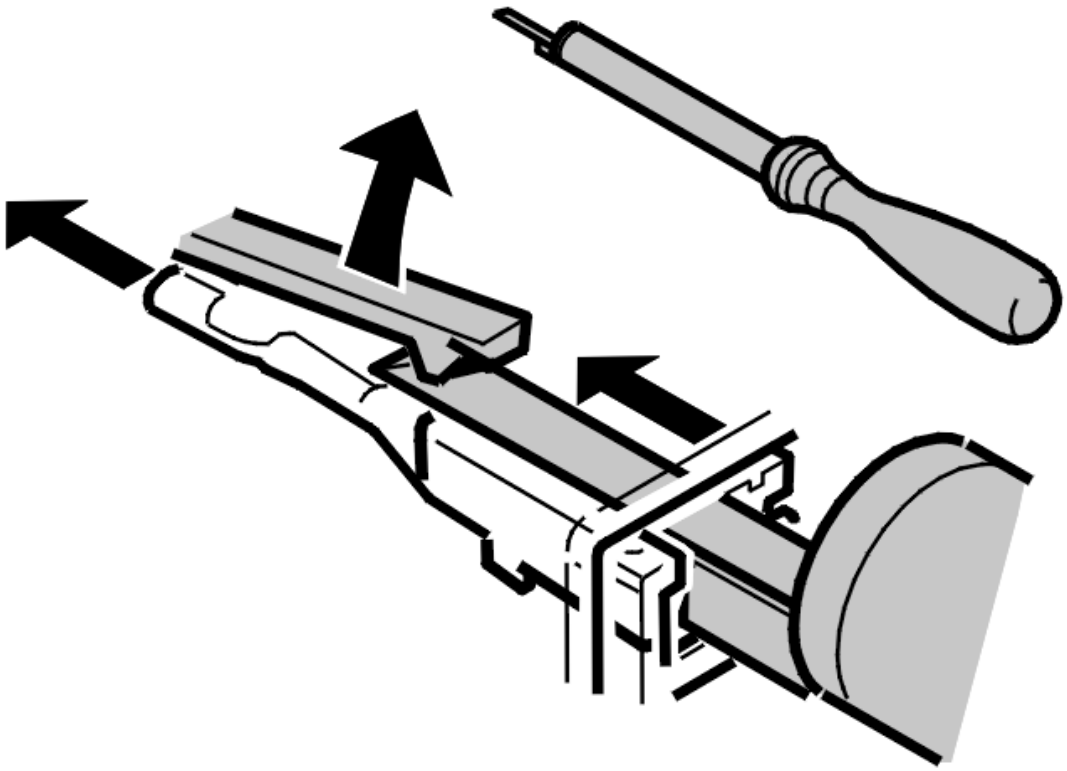

Fig. 87: Alternatively Using Tool 951 2852
Courtesy of VOLVO CARS CORPORATION

Alternatively use tool see **9512852** as shown.

NOTE: Tool see 9512852 can only be used for socket housings.

CONNECTOR, ASSEMBLING

PRIMARY LOCK

Check that the cable terminal is undamaged.

Press the cable terminal into the housing.

Check that the cable terminal is properly locked by pulling carefully on the cable.

SECONDARY LOCK

Press the secondary lock into place.

CONNECTOR CONTROL MODULE FOR ANTI-LOCK BRAKE SYSTEM MODULE (ABS), REPAIR

Special tools: see **9512630** , see **9512631** .

NOTE: **As the graphics in this service information are used for different model years and / or models, some variation may occur. However, the essential information in the graphics is always correct.**

CONNECTOR, DISMANTLING

SECONDARY LOCK

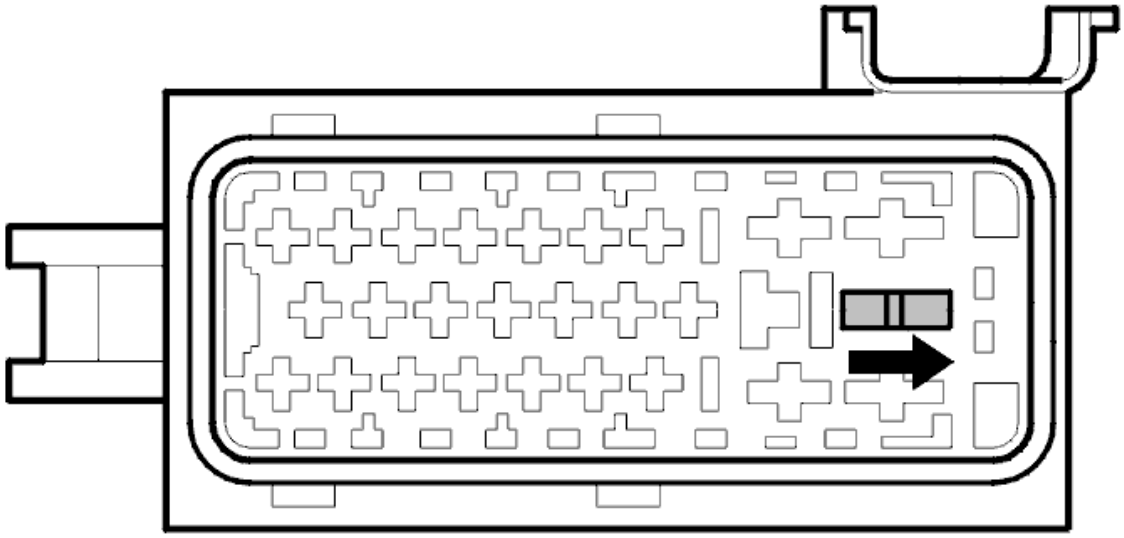

Fig. 88: Identifying Catch Placed In Direction Of Arrow
Courtesy of VOLVO CARS CORPORATION

Slide the catch in the direction of the arrow, as shown.

CAUTION: **Disconnect and work with only one cable at a time to minimize the risk of mixing them up.**

PRIMARY LOCK

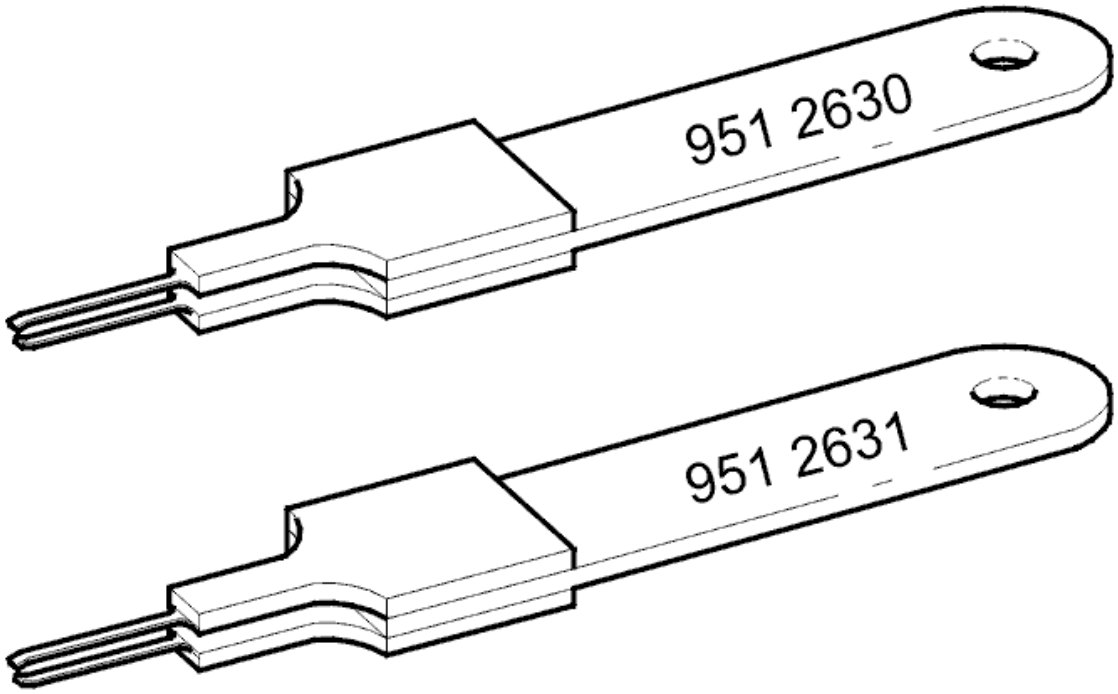

Fig. 89: Identifying Special Tools 951 2630 And 951 2631
Courtesy of VOLVO CARS CORPORATION

Use tools see **9512630** and see **9512631** to remove the primary lock, as shown.

At the same time pull the cable carefully backwards.

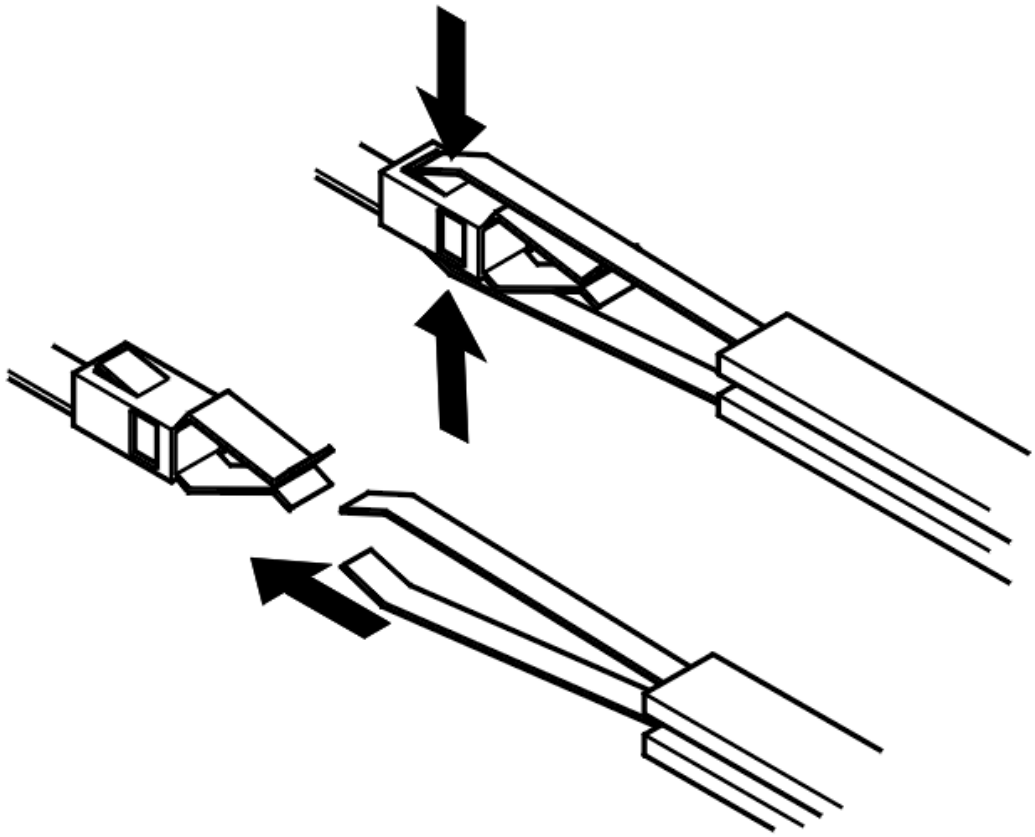

Fig. 90: Identifying Cable Terminal Insertion
Courtesy of VOLVO CARS CORPORATION

CONNECTOR, ASSEMBLING

NOTE: **Wheel sensor cables are twisted pair (positive and negative signal) cables for each wheel. It is important that paired cables are twinned in the same way when they are reinstalled in the connector. The cables must be twisted approximately 3 times per 100 mm.**

PRIMARY LOCK

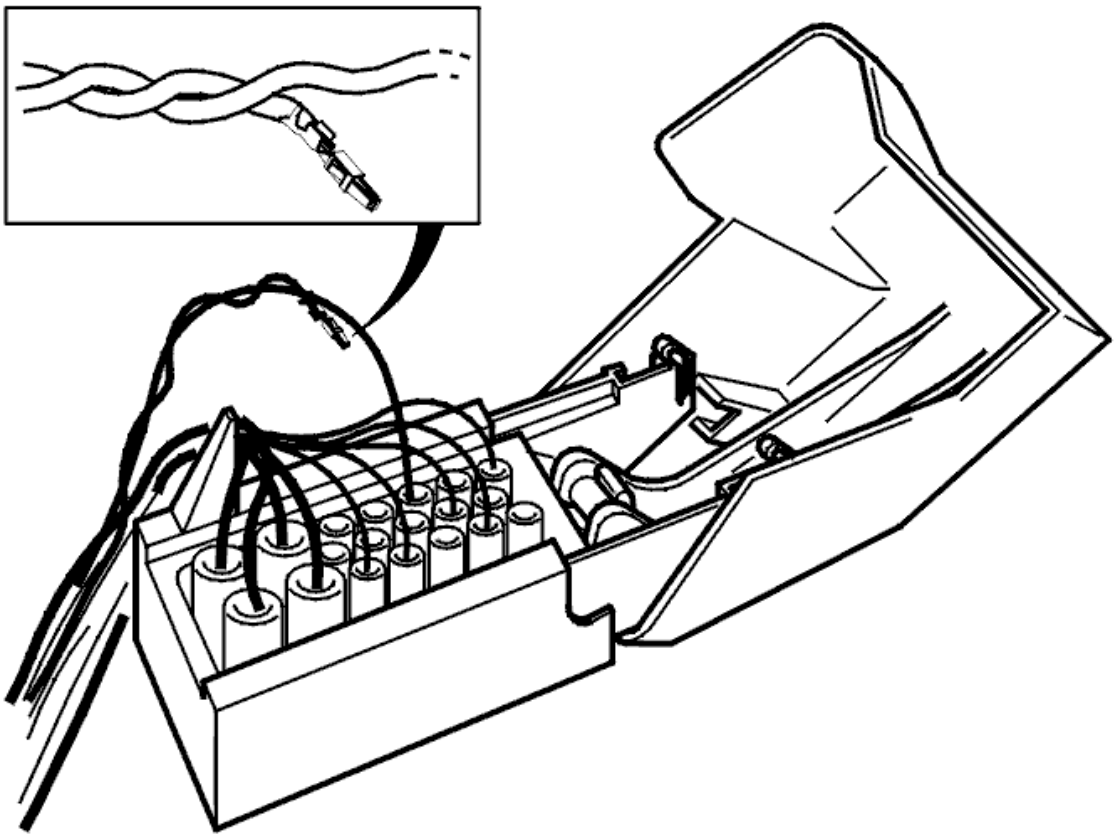

Fig. 91: Checking Cable Terminal Is Properly Locked By Pulling Carefully On Cable
Courtesy of VOLVO CARS CORPORATION

Check that the cable terminal is undamaged.

Press the cable terminal into the housing.

Check that the cable terminal is properly locked by pulling carefully on the cable.

SECONDARY LOCK

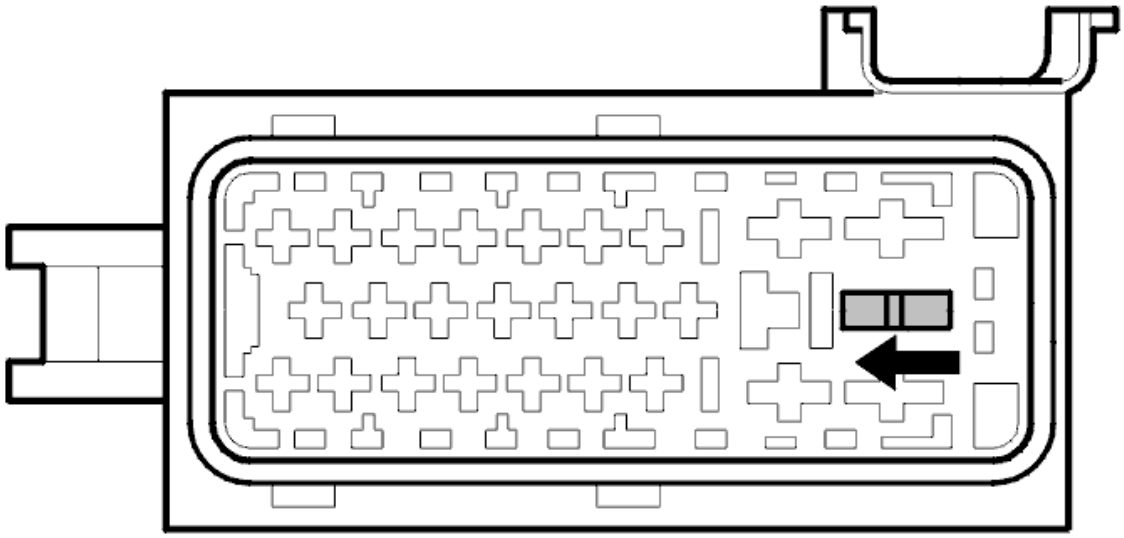

Fig. 92: Identifying Catch Placed In Direction Of Arrow
Courtesy of VOLVO CARS CORPORATION

Slide the catch in the direction of the arrow, as shown.

CONNECTOR CENTRAL ELECTRICAL UNIT ENGINE/TRANSMISSION CONTROL MODULE (ECM/TCM), REPAIR

Special tools: see **9512812** , see **9512637** .

NOTE: **As the graphics in this service information are used for different model years and / or models, some variation may occur. However, the essential information in the graphics is always correct.**

CENTRAL ELECTRICAL UNIT (ECM/TCM)

REPLACING CABLE TERMINALS

Expose the central electrical unit.

EXTRACT THE CABLE TERMINAL, 70 PIN SWITCH

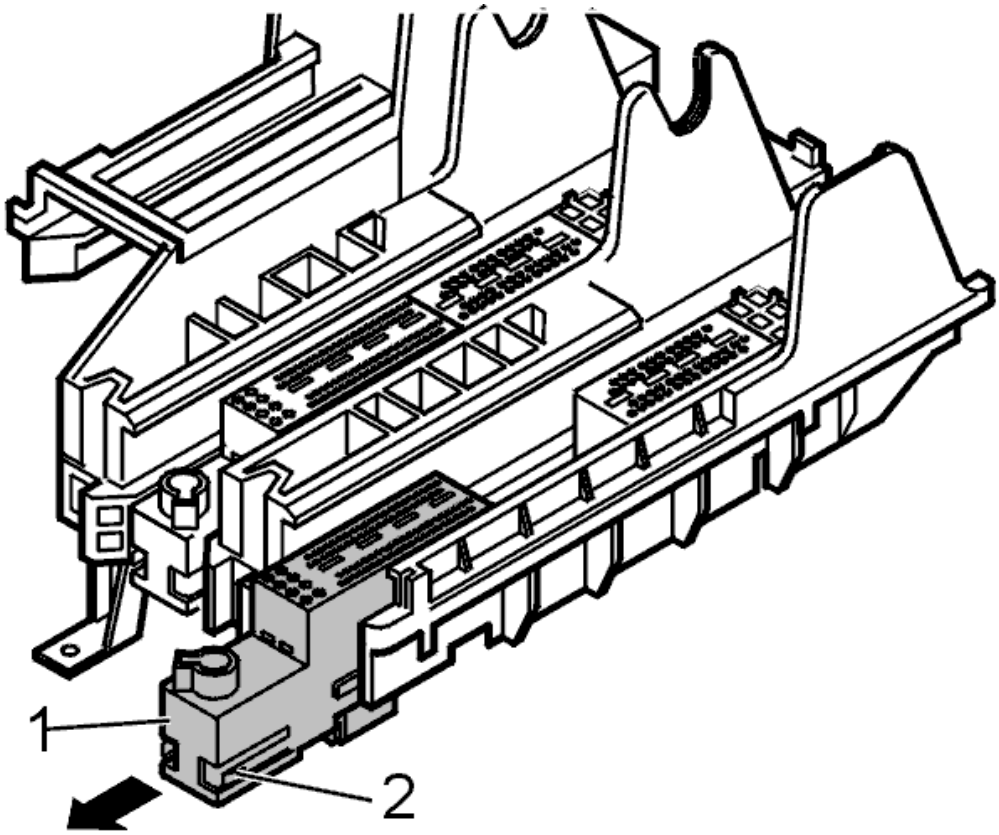

Fig. 93: Identifying Insulating Plate From Central Electrical Unit
Courtesy of VOLVO CARS CORPORATION

Remove the insulating plate from the central electrical unit by releasing the catch at the same time as the insulating plate is slid out.

HINT: Use a radio screwdriver.

CONNECTOR WITH LOCK MECHANISM

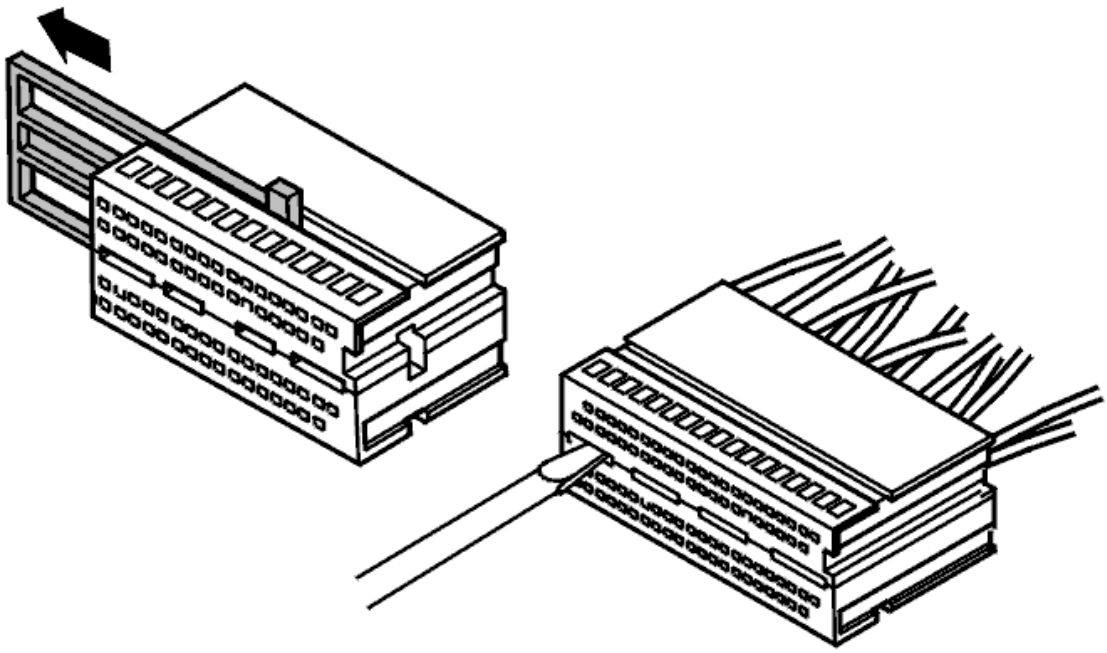

Fig. 94: Identifying Lock Mechanism Removal
Courtesy of VOLVO CARS CORPORATION

Release the catch and slide out the lock mechanism.

HINT: Use a radio screwdriver.

CONNECTOR WITH PASSIVE LOCKING

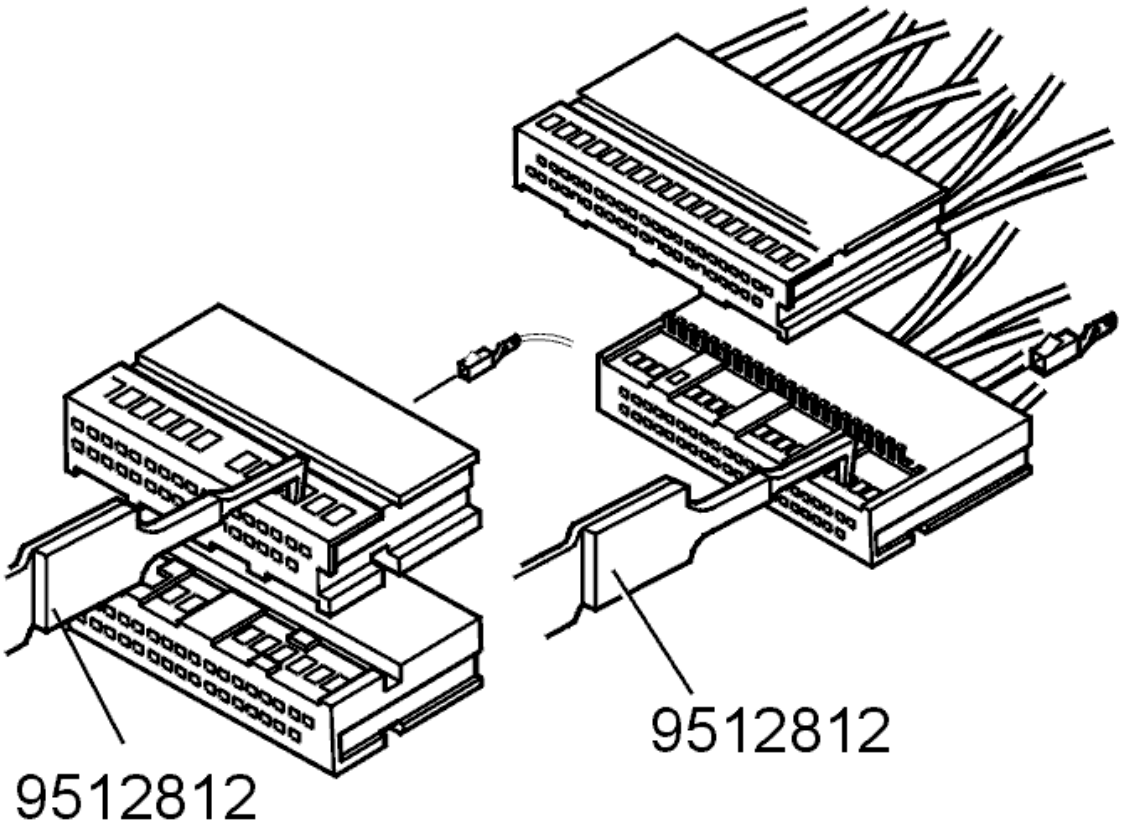

Fig. 95: Identifying Cable And Cable Terminal Removal
Courtesy of VOLVO CARS CORPORATION

Separate the connector.

HINT: Use a radio screwdriver.

Press in the locking tab on the cable terminal and carefully pull out the cable and the cable terminal.

HINT: Use tool see 9512812 or see 9512637 .

EXTRACT THE CABLE TERMINAL, 6 PIN SWITCH

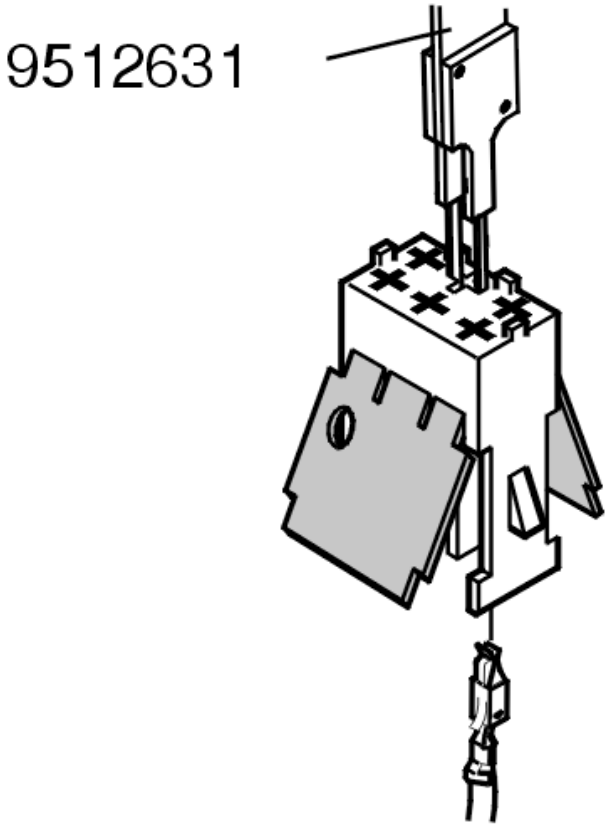

Fig. 96: Identifying Connector Removed From Central Electrical Unit
Courtesy of VOLVO CARS CORPORATION

Remove the connector from the central electrical unit by releasing the catches at the same time the connector is slid out on the cable side.

HINT: Use a radio screwdriver.

Open the secondary lock.

Remove the cable terminal.

HINT: Use tool see 9512631 .

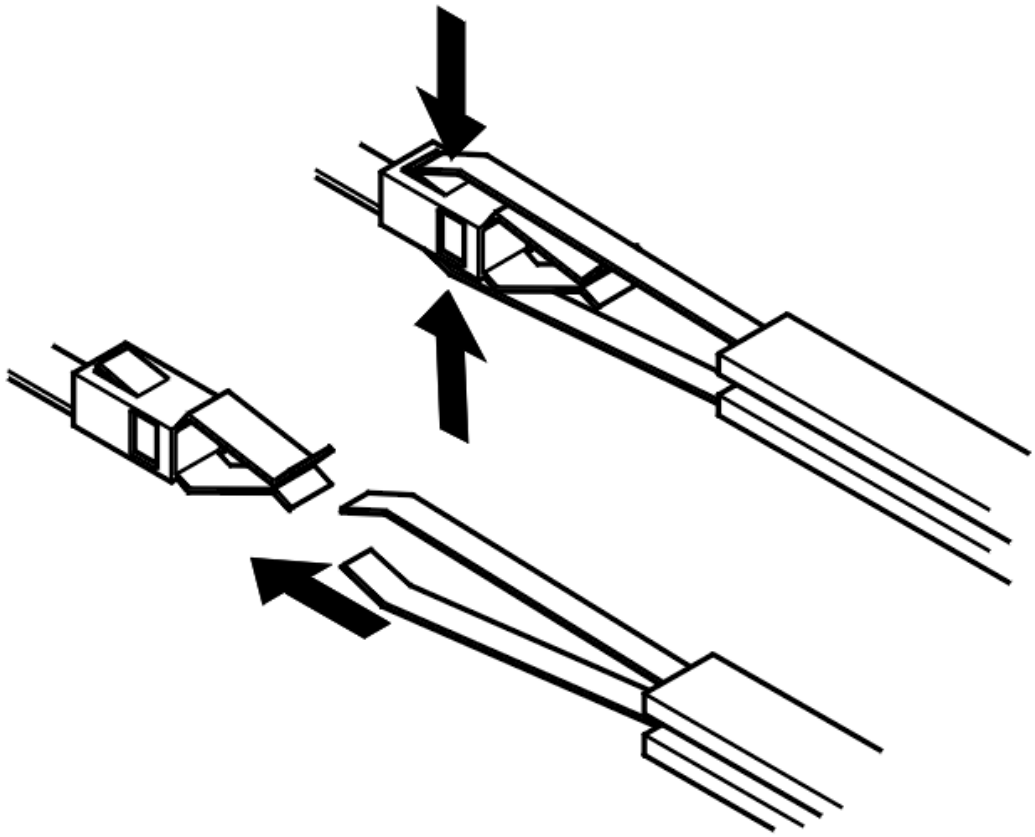

Fig. 97: Identifying Cable Terminal Insertion
Courtesy of VOLVO CARS CORPORATION

INSTALLATION

INSERT THE NEW CABLE TERMINAL

Insert the new cable terminal in the receptacle housing from the cable side (in the correct position). A click is heard when it hooks into place.

Carefully pull on the cable to check that it is firmly attached.

REASSEMBLE THE CONNECTOR

Assemble the secondary locks and slide the connector into the central electrical unit.

CONNECTOR RELAY BOX, REPAIR

Special tools: see **9512633** , see **9512639** , see **9512852** .

NOTE: **As the graphics in this service information are used for different model years and/or models, some variation may occur. However, the essential information in the graphics is always correct.**

PREPARATORY WORK

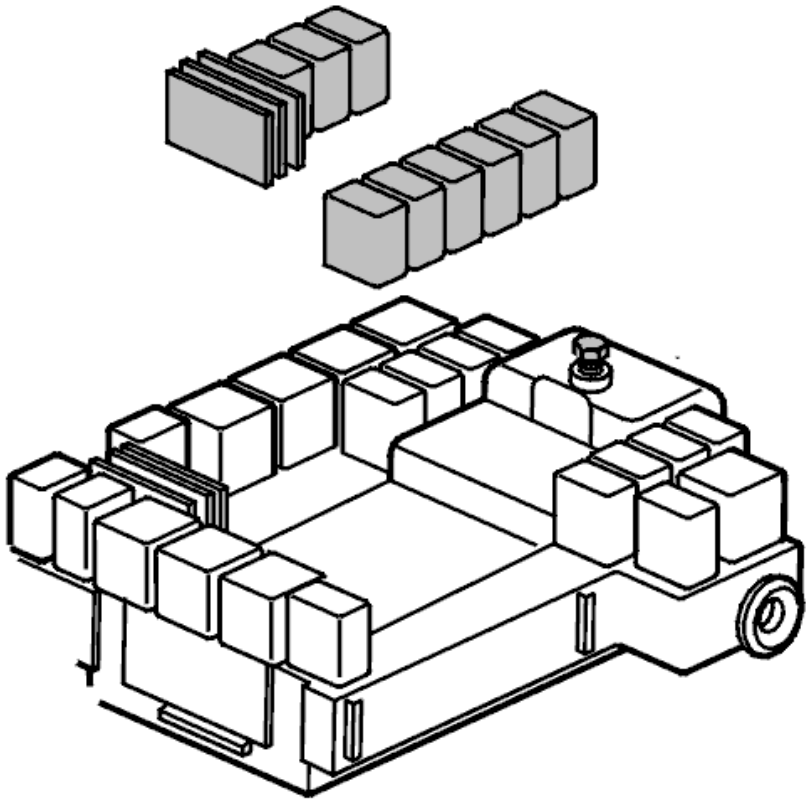

Fig. 98: Identifying Relay Box In Passenger Compartment/Cargo Compartment
Courtesy of VOLVO CARS CORPORATION

Expose the relevant relay box.

Remove the relevant relays, noting their position.

DISMANTLING

SECONDARY LOCK

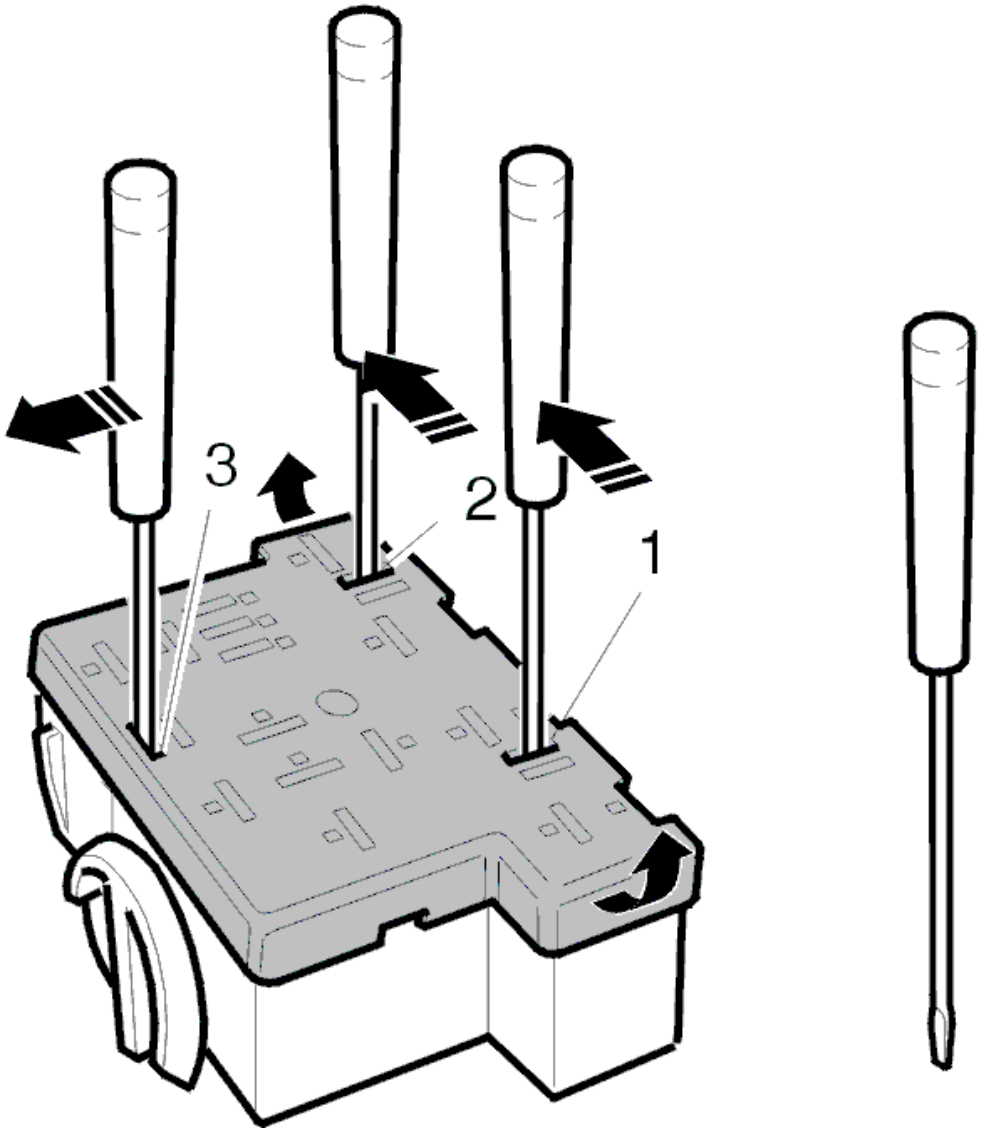

Fig. 99: Identifying Relevant Secondary Lock Released By Adjusting Locks With An Electrician's Screwdriver
Courtesy of VOLVO CARS CORPORATION

Release the relevant secondary lock by adjusting the locks with an electrician's screwdriver, as shown.

PRIMARY LOCK

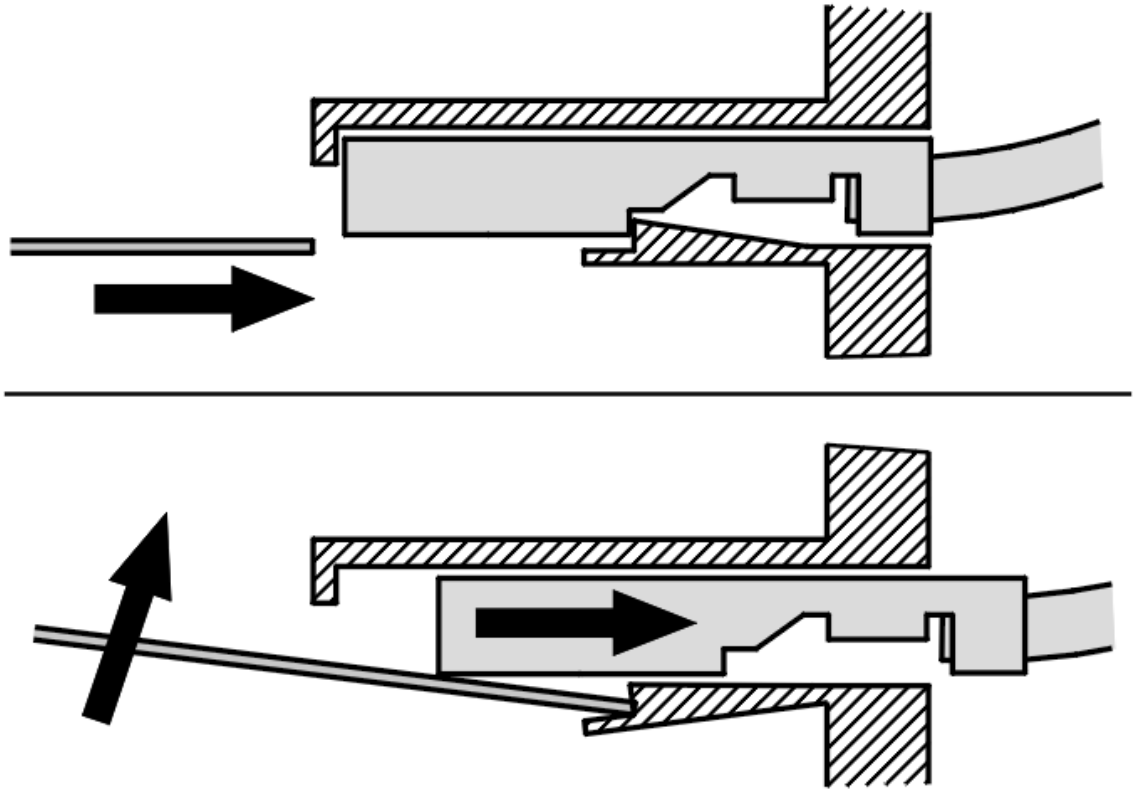

Fig. 100: Identifying Cable Pulled Backwards
Courtesy of VOLVO CARS CORPORATION

Use tools see **9512633** , see **9512639** to remove the primary lock, as shown.

At the same time pull the cable carefully backwards.

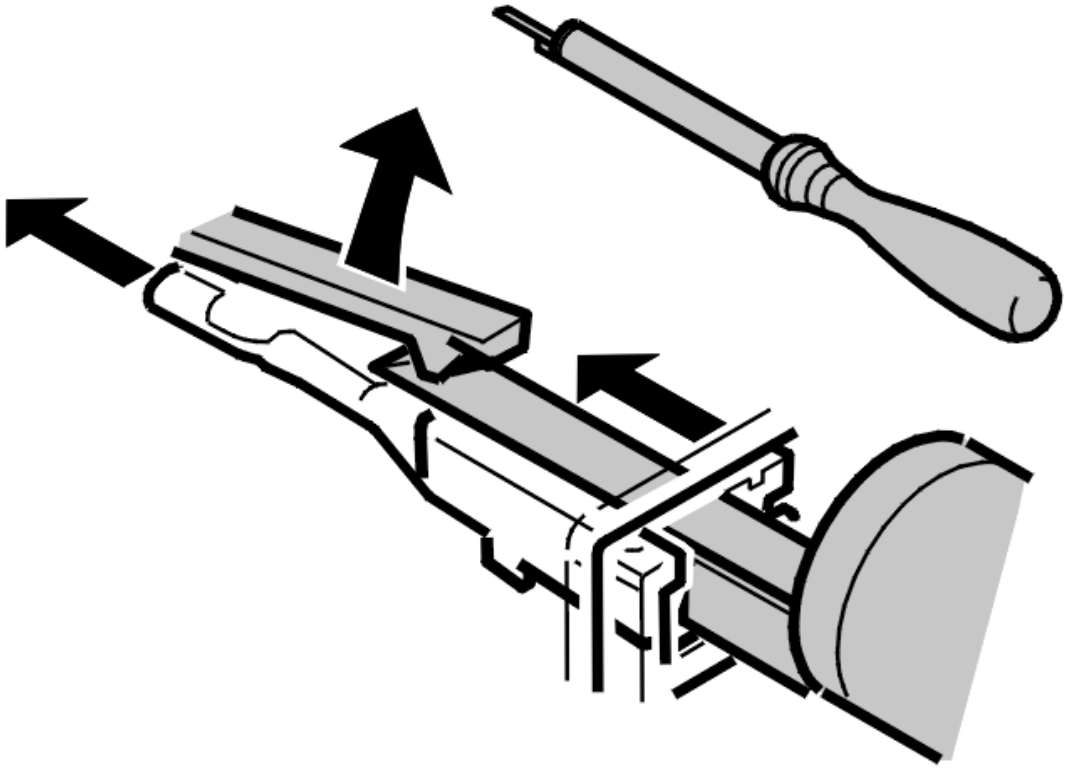

Fig. 101: Alternatively Using Tool 951 2852
Courtesy of VOLVO CARS CORPORATION

Alternatively use tool see **9512852** as shown.

INSTALLATION

PRIMARY LOCK

Check that the cable terminal is undamaged.

Press the cable terminal into the housing.

Check that the cable terminal is properly locked by pulling carefully on the cable.

THE SECONDARY LOCK

Press the secondary lock into place.

FINISHING WORK

Install the relays.

NOTE: Take care with the positioning.

Install the relevant relay box.

CONNECTOR SEALED, REPAIR

Special tools: see **9512631** .

NOTE: **As the graphics in this service information are used for different model years and / or models, some variation may occur. However, the essential information in the graphics is always correct.**

CONNECTOR, DISMANTLING

The connector has no secondary lock.

PRIMARY LOCK

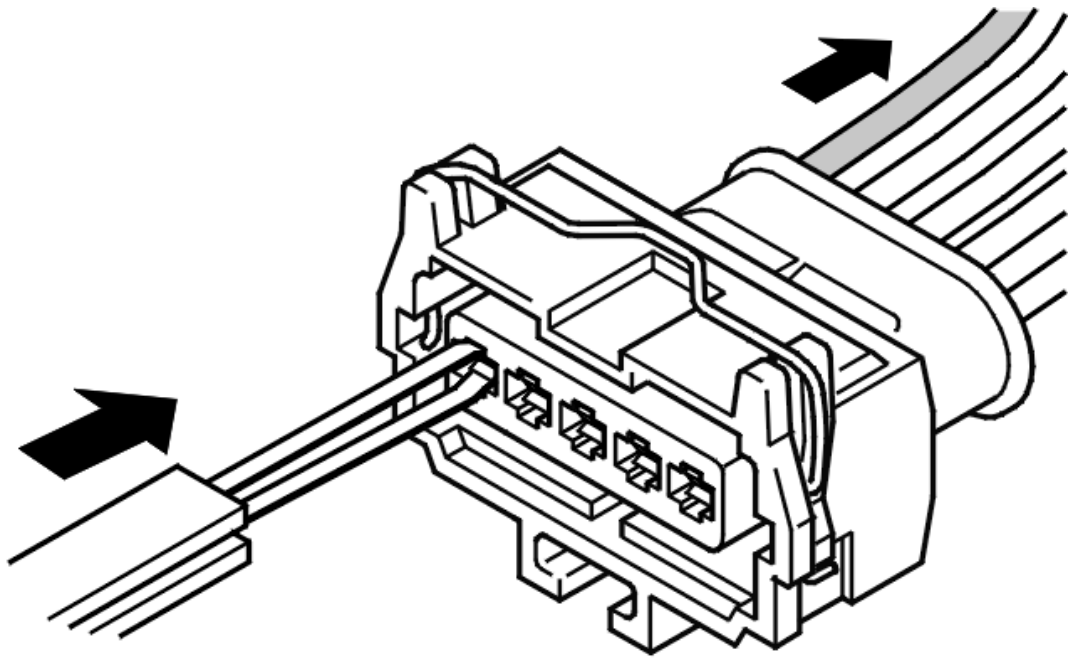

Fig. 102: Identifying Tool 951 2631 To Remove Primary Lock
Courtesy of VOLVO CARS CORPORATION

Use tool see **9512631** to remove the primary lock, as shown.

At the same time pull the cable carefully backwards.

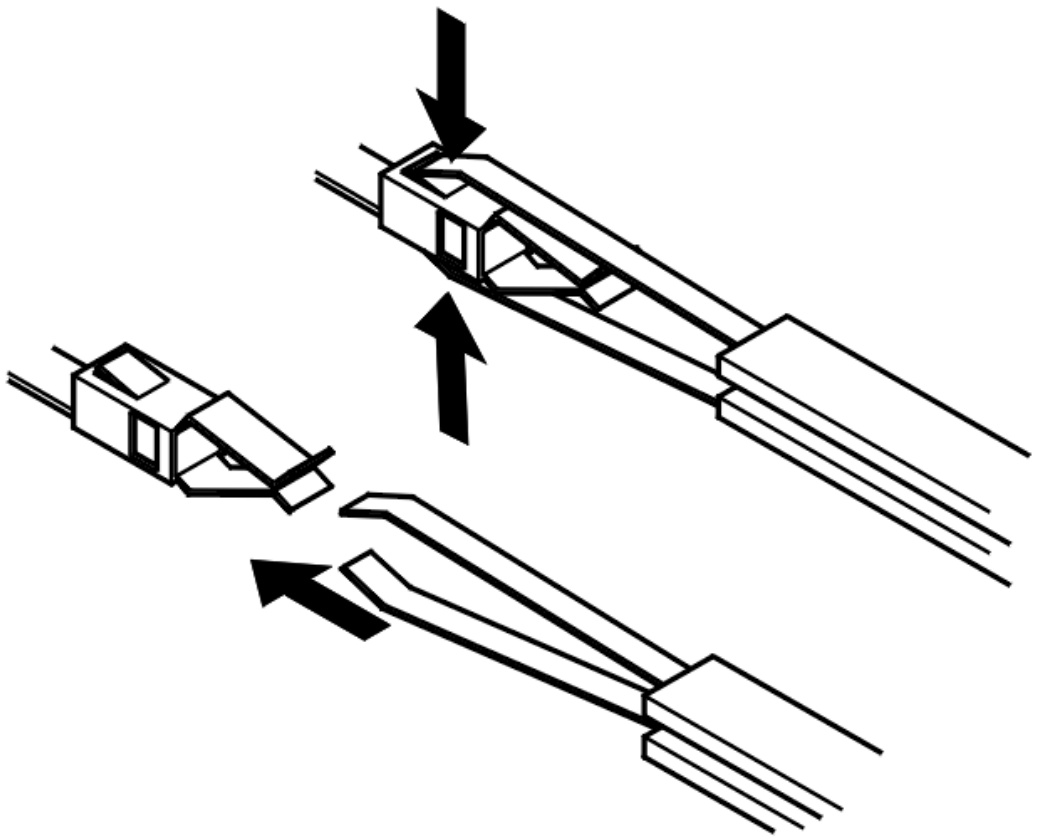

Fig. 103: Identifying Cable Terminal Insertion
Courtesy of VOLVO CARS CORPORATION

CONNECTOR, ASSEMBLING

PRIMARY LOCKING

Check that the cable terminal is undamaged.

Press the cable terminal into the housing.

Check that the seal is correctly positioned and that the cable terminal is properly locked by pulling carefully on the cable.

CONNECTOR FUSE HOLDER, REPAIR

Special tools: see **9512633** , see **9512639** , see **9512852** .

NOTE: **As the graphics in this service information are used for different model years and / or models, some variation may occur. However, the essential information in the graphics is always correct.**

PREPARATORY WORK

Expose the relevant fusebox.

Remove the fuses. Note the positions of the fuses.

DISMANTLING

SECONDARY LOCK

Releases the catches for the secondary lock.

Slide the secondary lock to one side to access the primary lock, as shown.

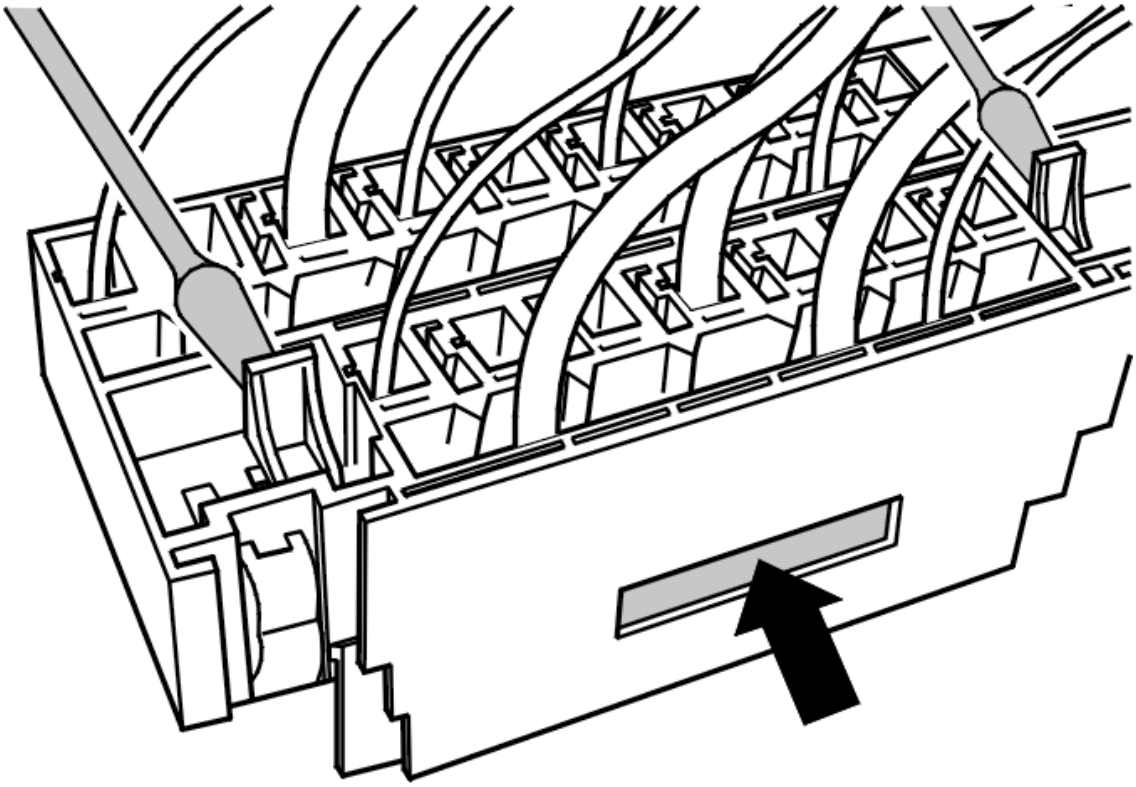

Fig. 104: Identifying Removal Of Fuse Holder From Cargo Compartment
Courtesy of VOLVO CARS CORPORATION

Fuse holder cargo compartment.

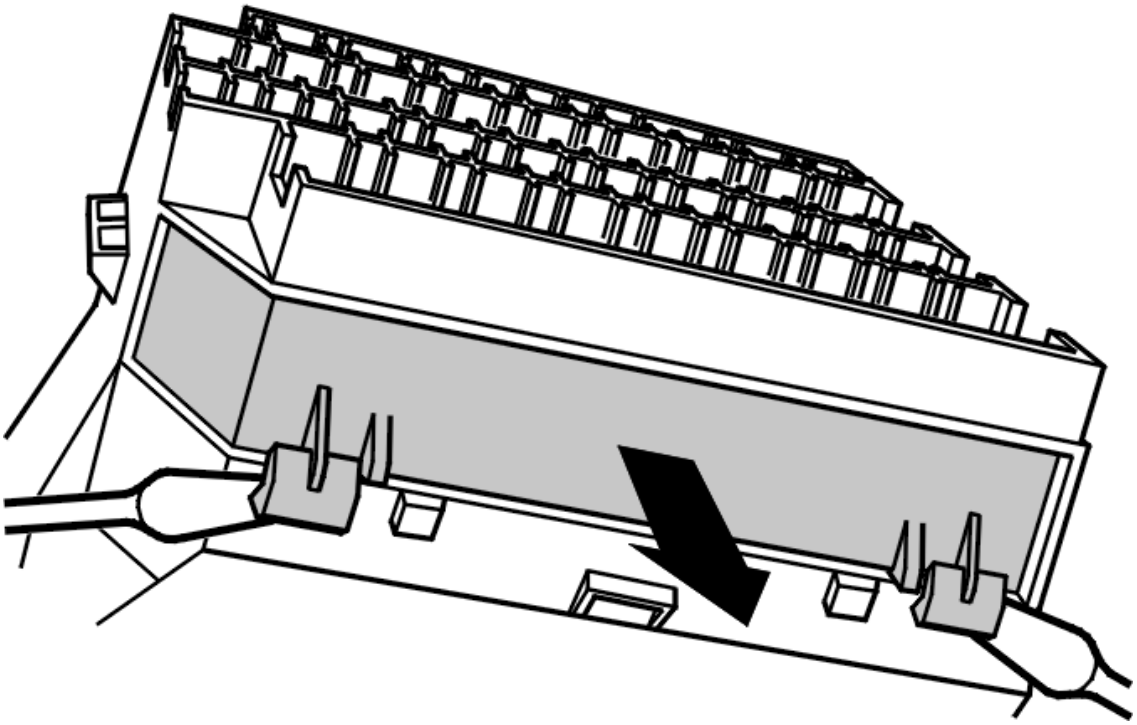

Fig. 105: Identifying Removal Of Fuse Holder From Passenger Compartment
Courtesy of VOLVO CARS CORPORATION

Fuse holder passenger compartment.

PRIMARY LOCK

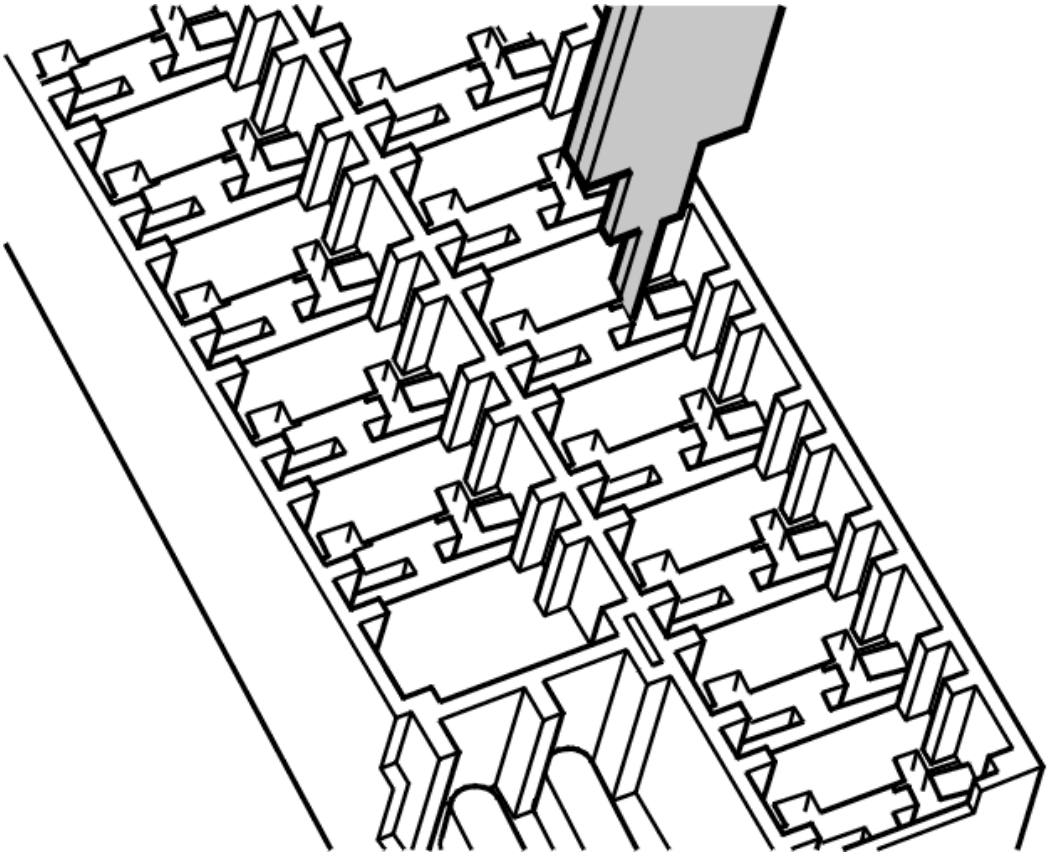

Fig. 106: Identifying Tools 951 2633, 951 2639 To Remove Primary Lock
Courtesy of VOLVO CARS CORPORATION

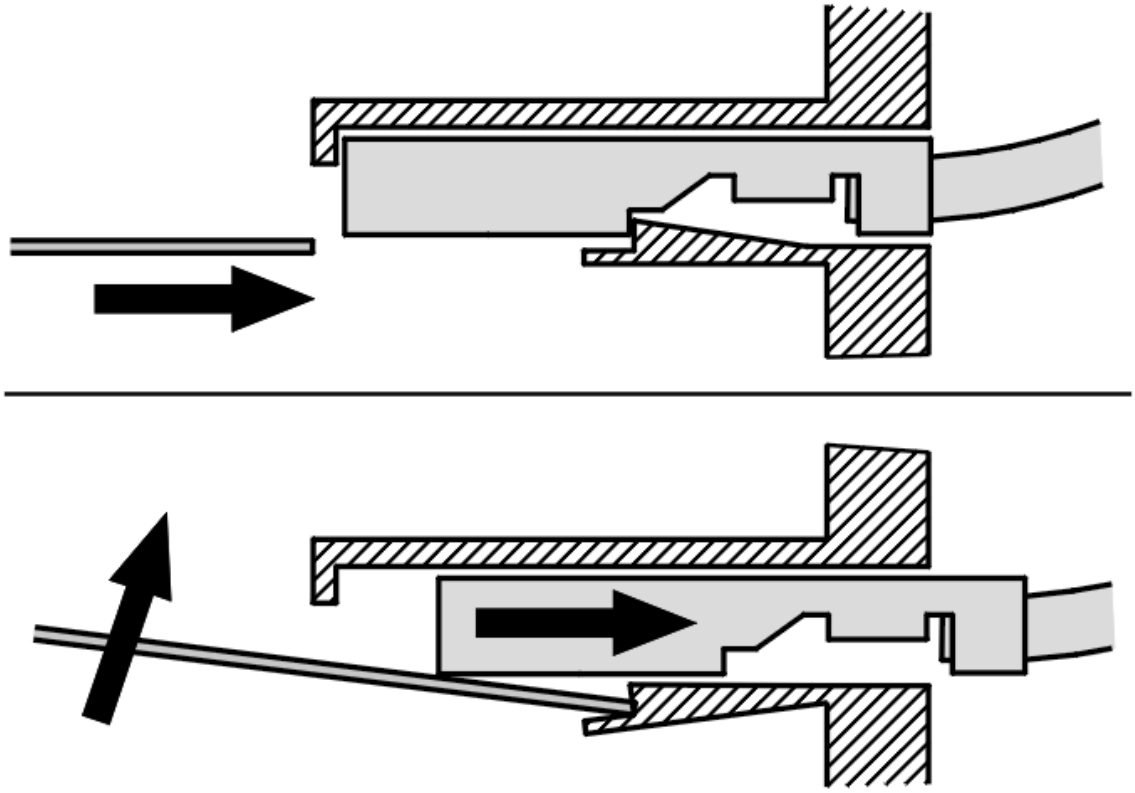

Fig. 107: Identifying Cable Pulled Backwards
Courtesy of VOLVO CARS CORPORATION

Use tools see **9512633** , see **9512639** to remove the primary lock, as shown.

NOTE: **The relay holders can be connected and several locks may need to be adjusted at the same time.**

At the same time pull the cable carefully backwards.

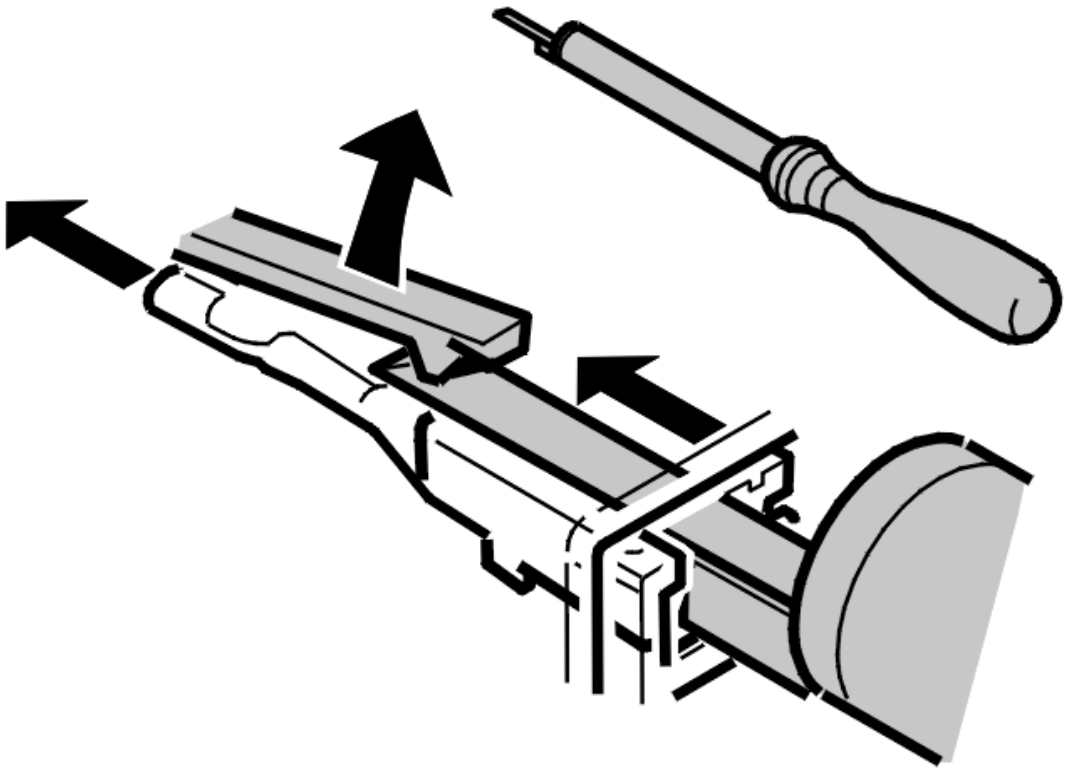

Fig. 108: Alternatively Using Tool 951 2852
Courtesy of VOLVO CARS CORPORATION

Alternatively use tool see **9512852** as shown.

INSTALLATION

PRIMARY LOCK

Check that the cable terminal is undamaged.

Press the cable terminal into the housing.

Check that the cable terminal is properly locked by pulling carefully on the cable.

SECONDARY LOCK

Slide back the secondary lock.

FINISHING WORK

Install the relays.

NOTE: Take care with the positioning.

Reinstall the central relay box.

CONNECTOR SUPPLEMENTAL RESTRAINT SYSTEM MODULE (SRS), REPAIR

Special tools: see **9512812** , see **9512637** .

NOTE: As the graphics in this service information are used for different model years and / or models, some variation may occur. However, the essential information in the graphics is always correct.

CONNECTOR, DISMANTLING

SECONDARY LOCK

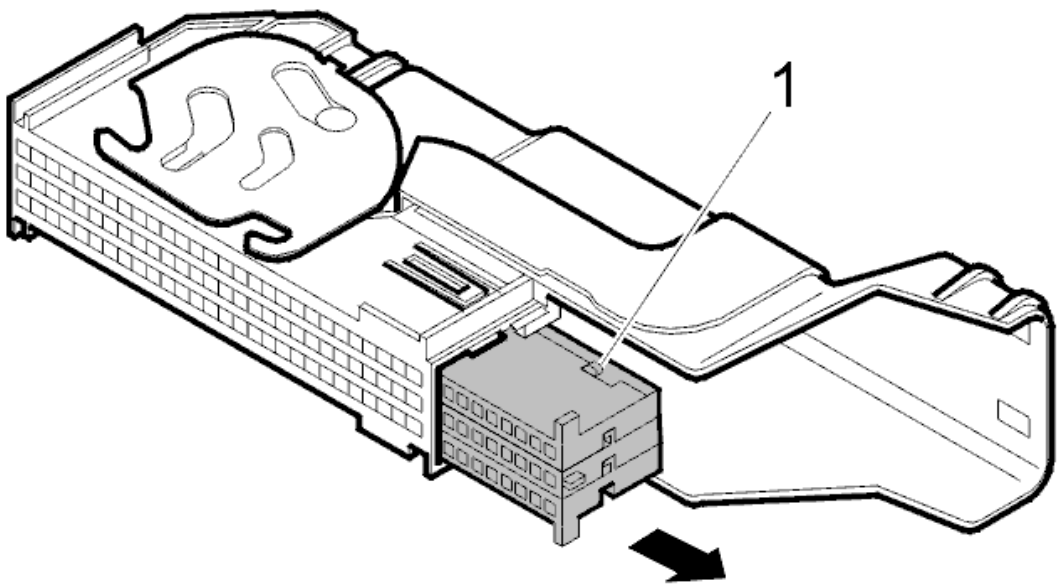

Fig. 109: Identifying Receptacle Housings Removal
Courtesy of VOLVO CARS CORPORATION

Press in the active catches on both sides of the socket housing and slide out the receptacle housings.

CAUTION: Disconnect and work with only one cable at a time to minimize the risk of mixing them up.

PRIMARY LOCK

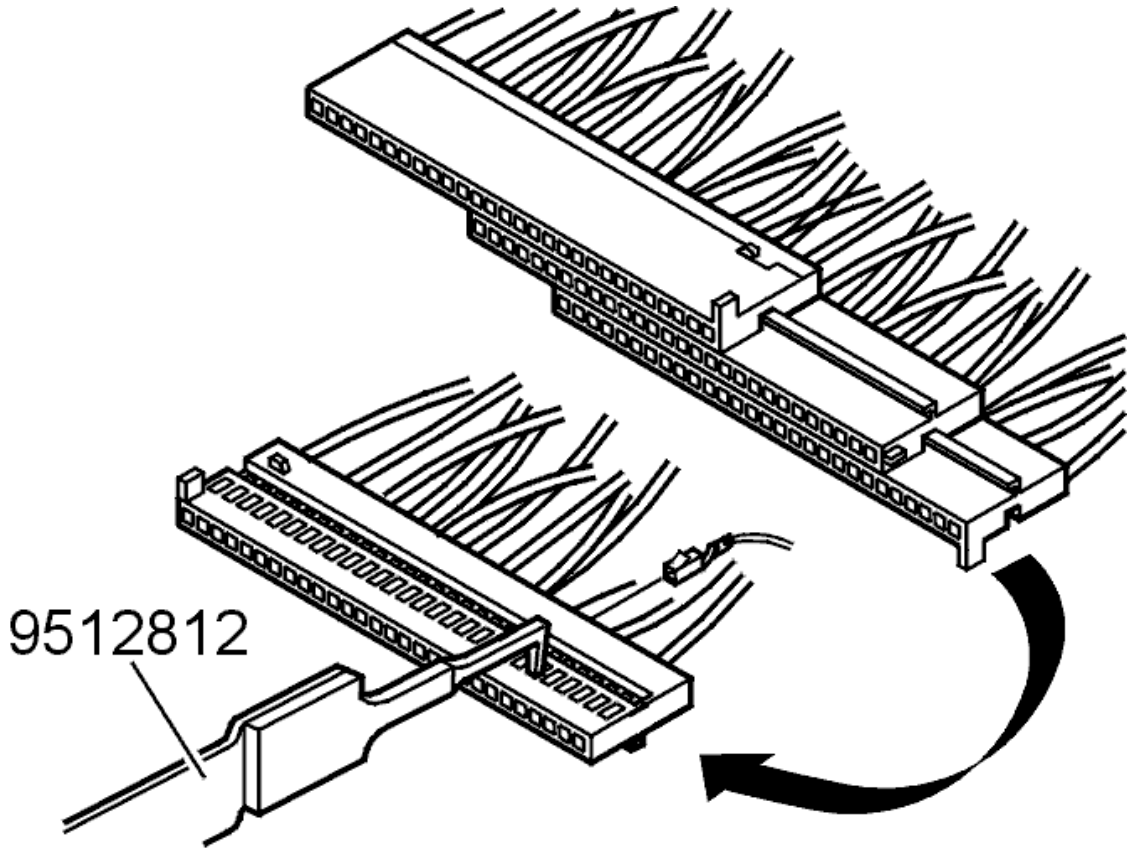

Fig. 110: Identifying Locking Tab Pressed In On Cable Terminal Using Special Tool 9512812
Courtesy of VOLVO CARS CORPORATION

Press in the locking tab on the cable terminal and carefully pull out the cable and the cable terminal. Use tool see **9512812** or tool see **9512637** , as shown.

CONNECTOR, ASSEMBLING

PRIMARY LOCKING

Check that the cable terminal is undamaged.

Press the cable terminal into the housing.

Check that the cable terminal is properly locked by pulling carefully on the cable.

SECONDARY LOCKING

Press the secondary lock into place.

CONNECTOR BRAKE CONTROL MODULE (BCM), REPAIR

Special tools: see **9512636** , see **9512639**

NOTE: **As the graphics in this service information are used for different model years and / or models, some variation may occur. However, the essential information in the graphics is always correct.**

CONNECTOR, DISMANTLING

SECONDARY LOCK

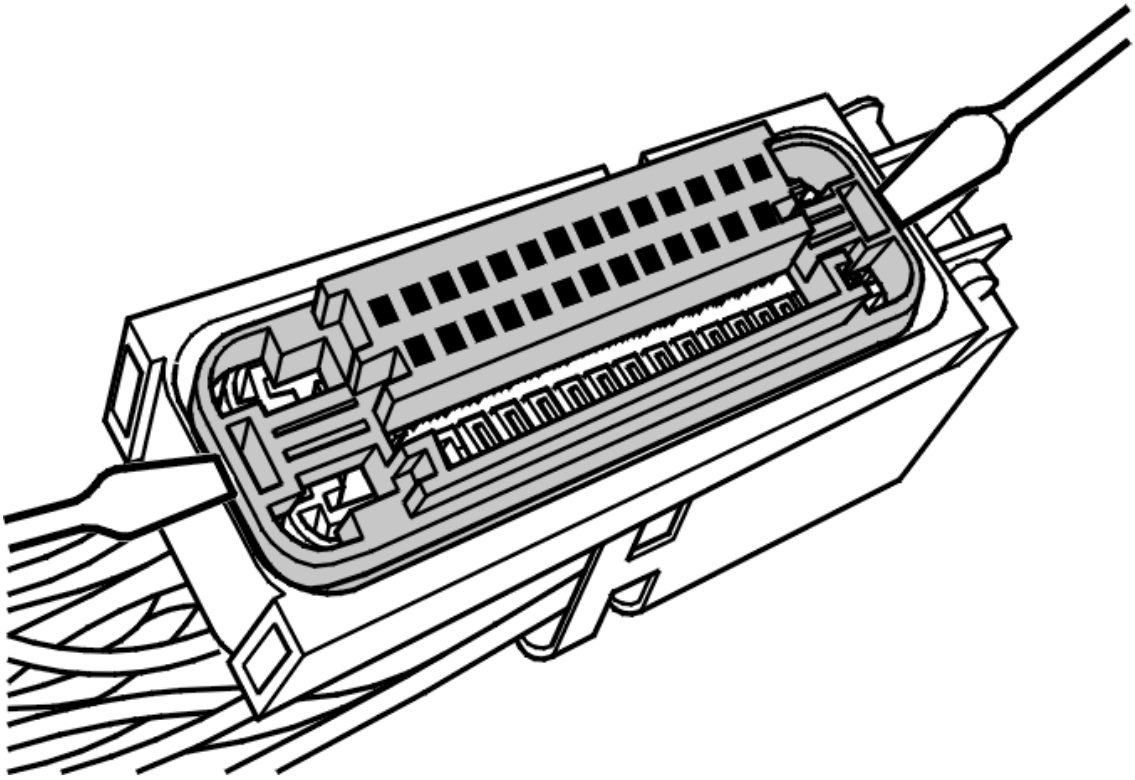

Fig. 111: Identifying Secondary Lock Released Using Electrician's Screwdriver
Courtesy of VOLVO CARS CORPORATION

Release the secondary lock. Use electrician's screwdriver as shown.

CAUTION: **Disconnect and work with only one cable at a time to minimize the risk of mixing them up.**

PRIMARY LOCK

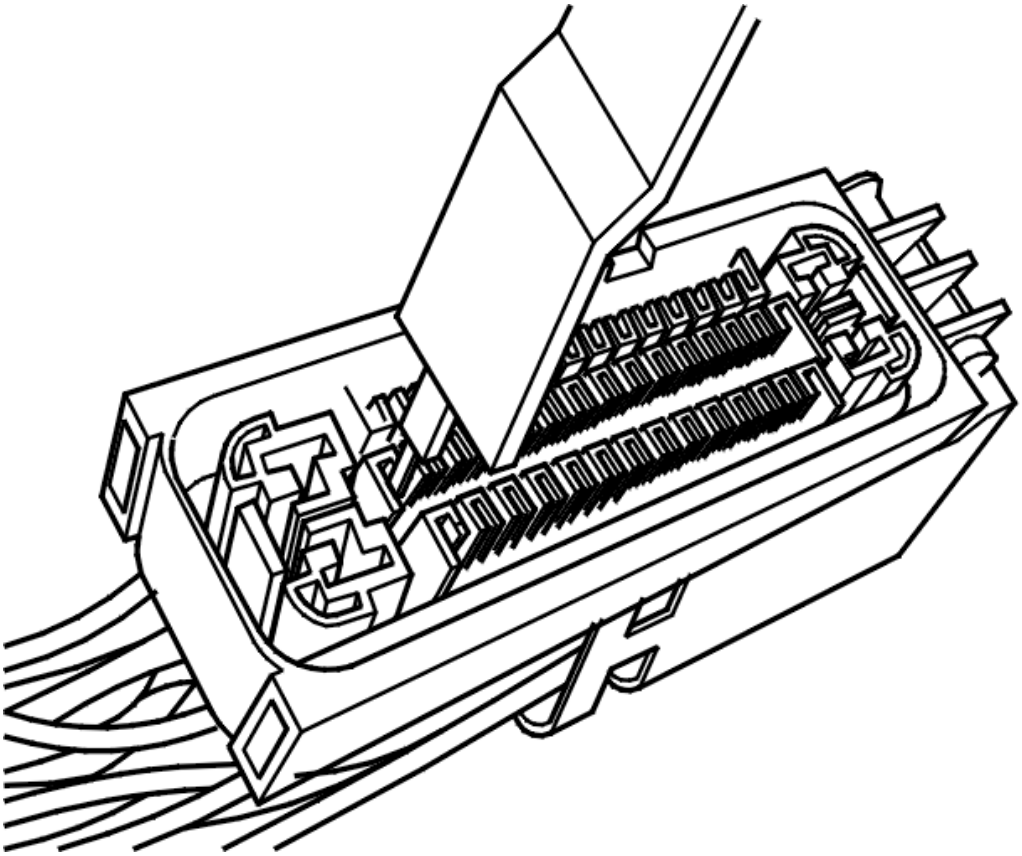

Fig. 112: Identifying Tools 951 2636 Or 951 2639 To Remove Primary Lock
Courtesy of VOLVO CARS CORPORATION

Use tools see **9512636** or see **9512639** to remove the primary lock, as shown.

At the same time pull the cable carefully backwards.

CONNECTOR, ASSEMBLING

NOTE: **Wheel sensor cables are twisted pair (positive and negative signal) cables for each wheel. It is important that paired cables are twinned in the same way when they are reinstalled in the connector. The cables must be twisted approximately 3 times per 100 mm.**

PRIMARY LOCK

Check that the cable terminal is undamaged.

Press the cable terminal into the housing.

Check that the cable terminal is properly locked by pulling carefully on the cable.

SECONDARY LOCK

Press the secondary lock into place.

CONNECTOR SEALED, REPAIR

Special tools: see **9512632** , see **9512639** , see **9512852** , see **9512853** .

NOTE: **As the graphics in this service information are used for different model years and / or models, some variation may occur. However, the essential information in the graphics is always correct.**

CONNECTOR, DISMANTLING

SECONDARY LOCK

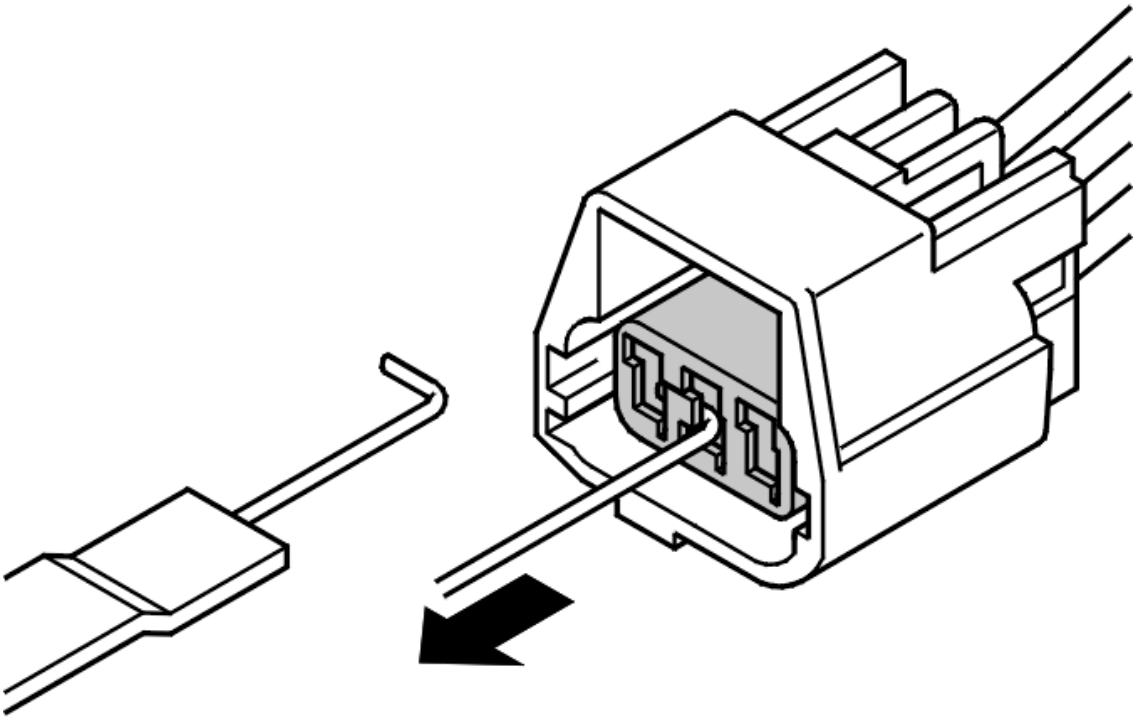

Fig. 113: Identifying Secondary Lock Pulled Out Using Tool 951 2853
Courtesy of VOLVO CARS CORPORATION

Open the catches and pull out the secondary lock, use tool see **9512853** or an electrician's screwdriver, as shown.

PRIMARY LOCK

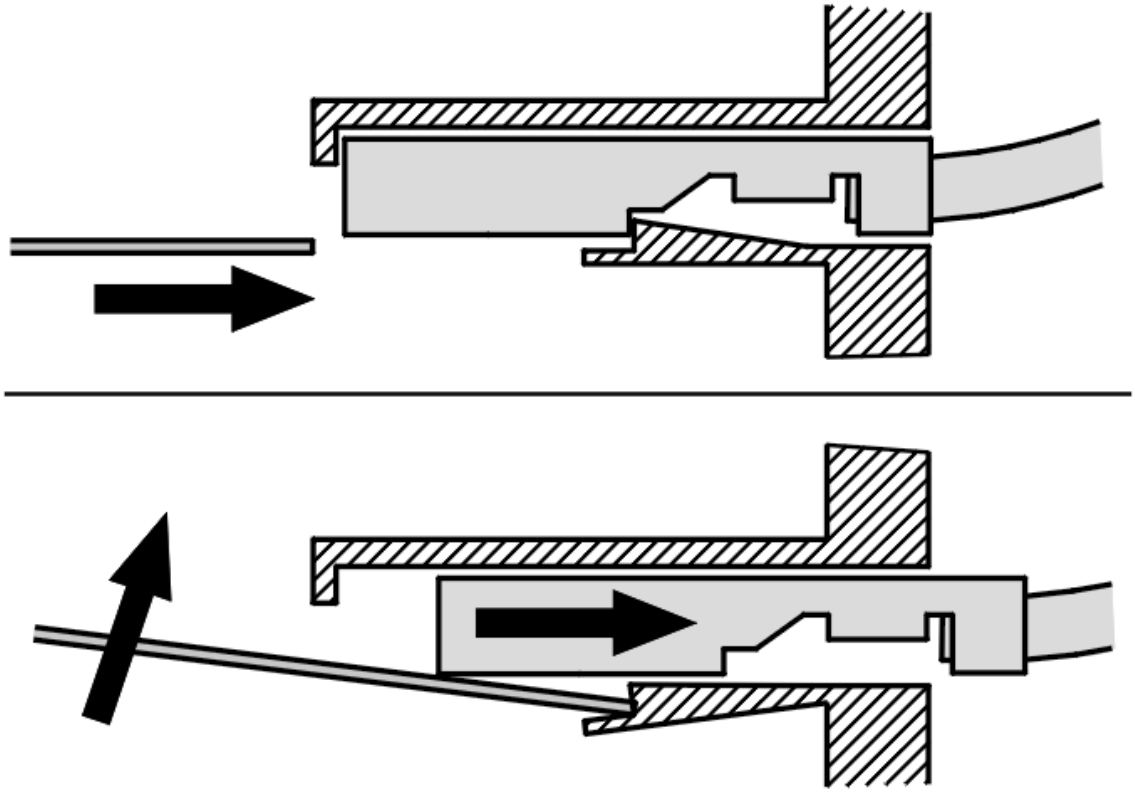

Fig. 114: Identifying Cable Pulled Backwards
Courtesy of VOLVO CARS CORPORATION

Use tools see **9512632** , see **9512639** to remove the primary lock, as shown.

At the same time pull the cable carefully backwards.

Alternatively use tool see **9512852** as shown.

NOTE: Tool see 9512852 can only be used for socket housings.

CONNECTOR, ASSEMBLING

PRIMARY LOCKING

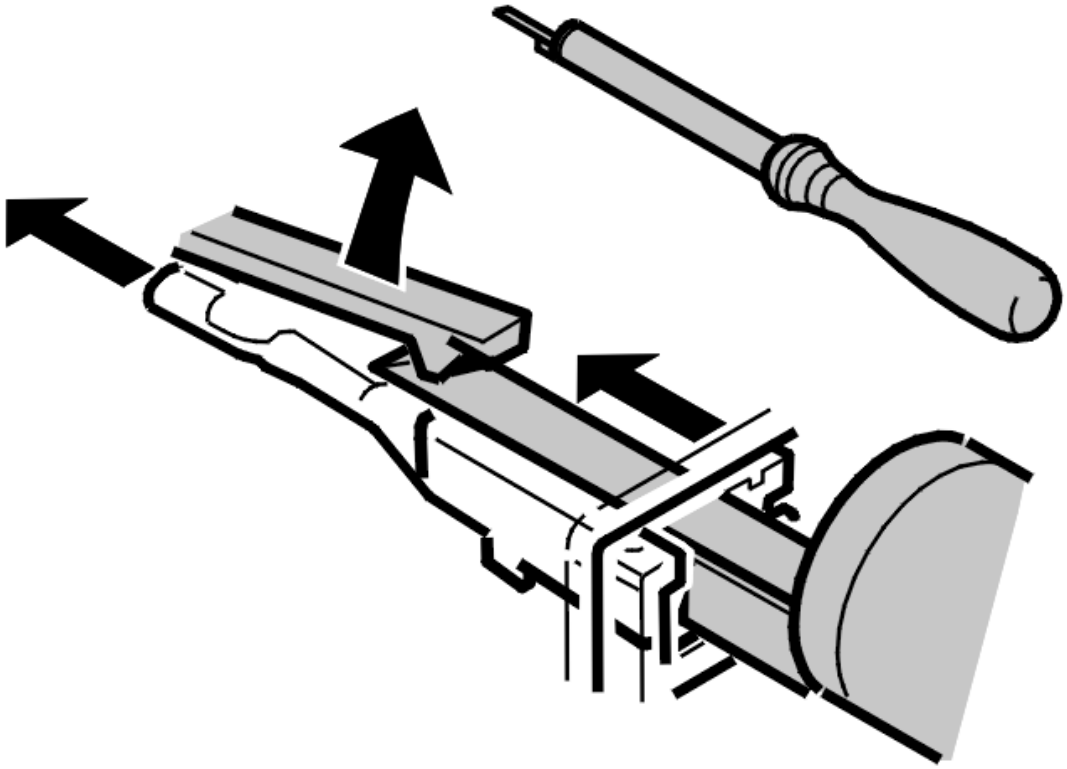

Fig. 115: Alternatively Using Tool 951 2852
Courtesy of VOLVO CARS CORPORATION

Check that the cable terminal is undamaged.

Press the cable terminal into the housing.

Check that the seal is correctly positioned and that the cable terminal is properly locked by pulling carefully on the cable.

CONNECTOR DATA LINK CONNECTOR (DLC), REPAIR

Special tools: see **9512636**

NOTE: **As the graphics in this service information are used for different model years and/or models, some variation may occur. However, the essential information in the graphics is always correct.**

DATA LINK CONNECTOR (DLC), DISMANTLING

Expose the data link connector (DLC).

SECONDARY LOCK

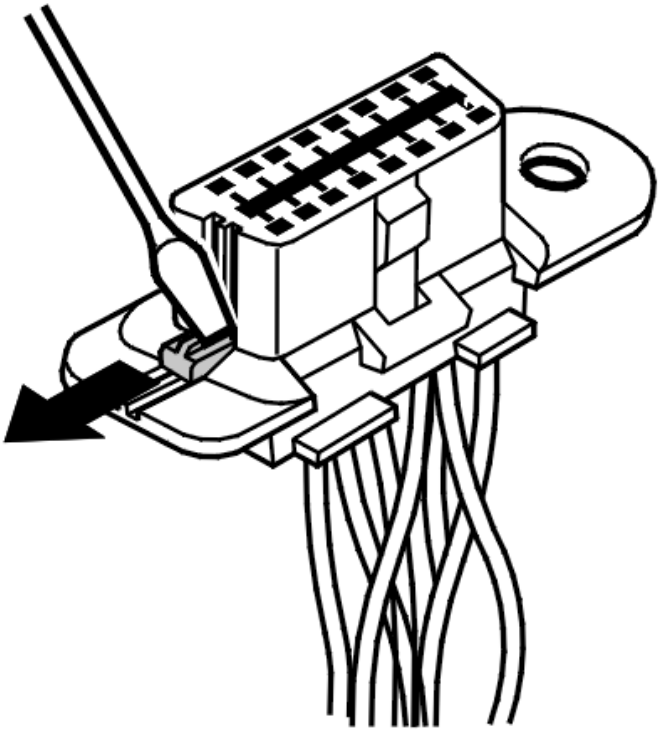

Fig. 116: Identifying Secondary Lock Pulled Out To Side
Courtesy of VOLVO CARS CORPORATION

Pull the secondary lock out to the side. Use an electrician's screwdriver, as shown.

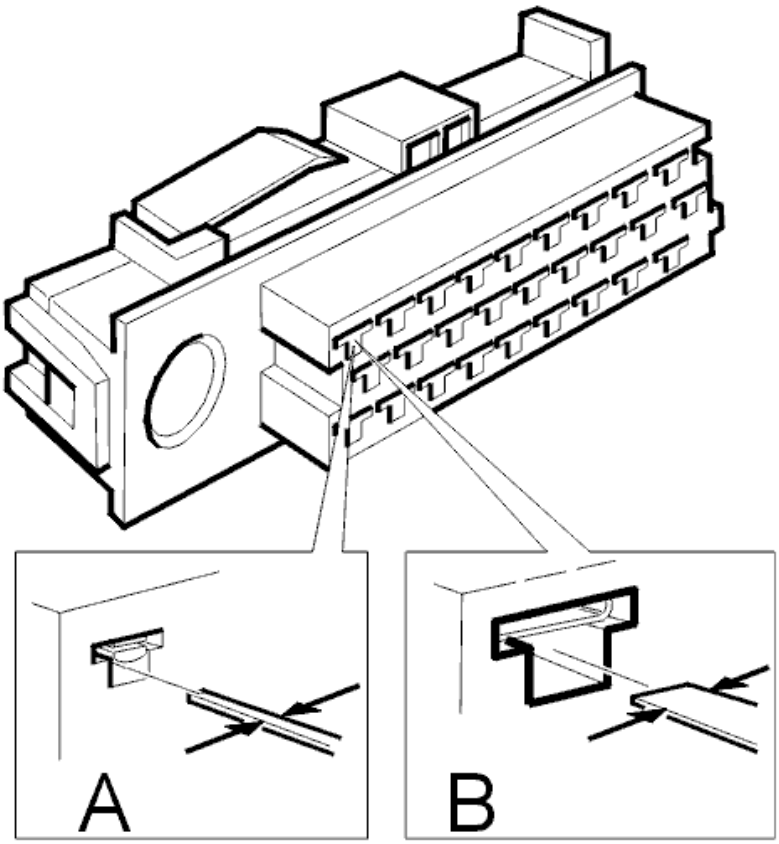

Fig. 117: Identifying Two Sizes Of Cavity Opening
Courtesy of VOLVO CARS CORPORATION

Use tool see **9512636** to remove the cable terminal lock, as shown.

At the same time pull the cable carefully backwards.

DATA LINK CONNECTOR, ASSEMBLING

PRIMARY LOCK

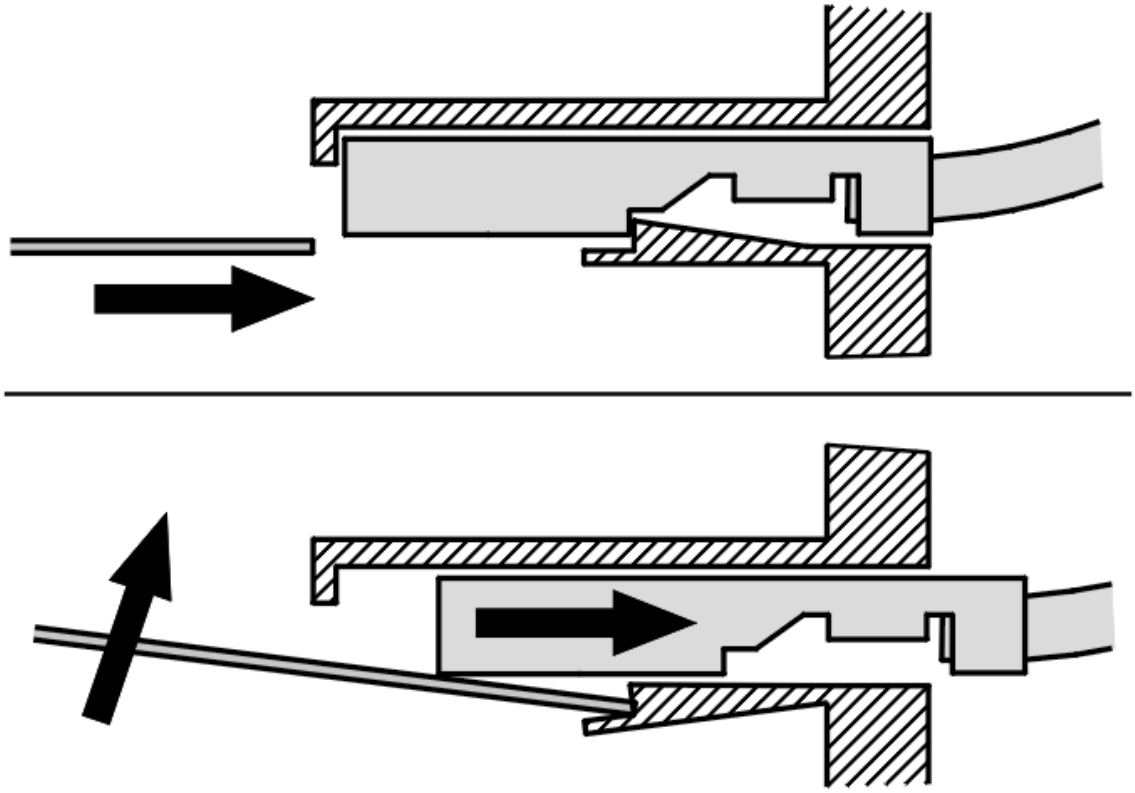

Fig. 118: Identifying Cable Pulled Backwards
Courtesy of VOLVO CARS CORPORATION

Check that the cable terminal is undamaged.

Press the cable terminal into the housing.

Check that the cable terminal is properly locked by pulling carefully on the cable.

SECONDARY LOCK

Press the secondary lock into place.

FIBER OPTIC CABLE HARNESS, REPAIRING

REMOVAL AND INSTALLATION

NOTE: **As the graphics in this service information are used for different model years and/or models, some variation may occur. However, the essential information in the graphics is always correct.**

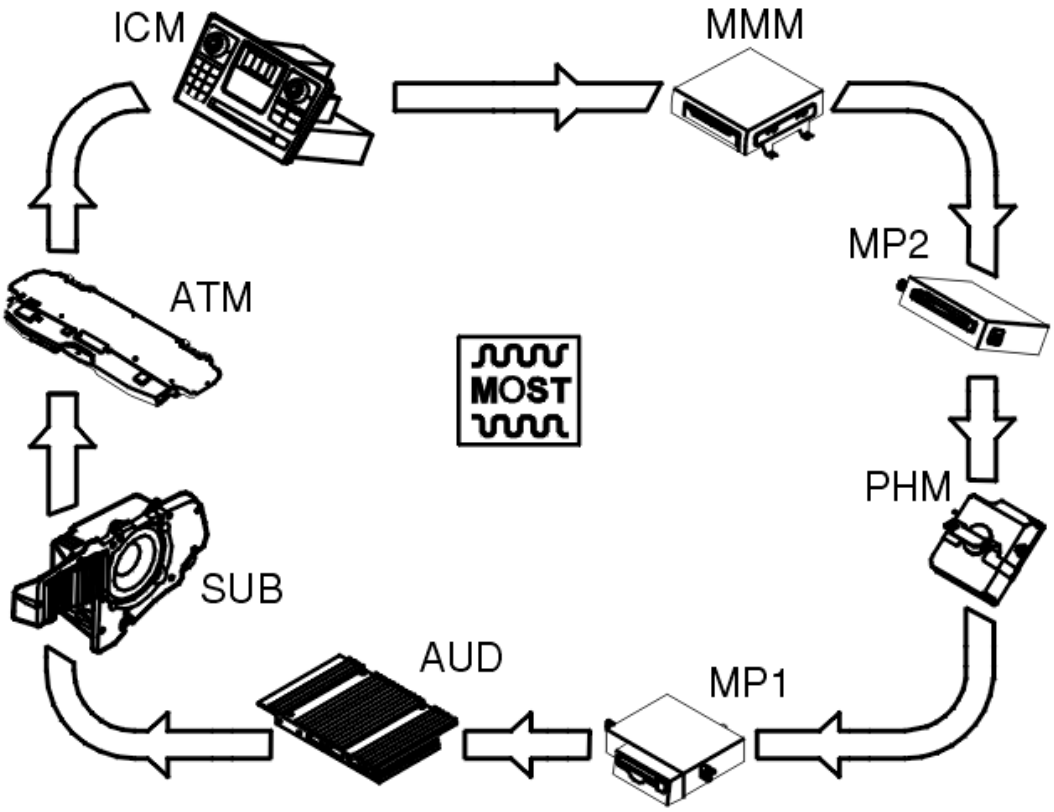

Fig. 119: MOST Bus (Media Oriented System Transportation) Communication Diagram
Courtesy of VOLVO CARS CORPORATION

The components in the infotainment system are part of an optical network, known as the MOST bus. (Media Oriented System Transportation). The network consists of fiber optics (POF = Polymer Optical Fibers), special connectors for fiber optics and MOST nodes, i. e. control modules which are connected to the MOST bus.

Data is transmitted via the fiber optics, for example music, in the form of light signals. The MOST bus is a ring which must be unbroken for it to work. None of the infotainment system will work if an optical fiber breaks or if a connector is disconnected. The ends of the fibers must also be clean to allow the light to pass.

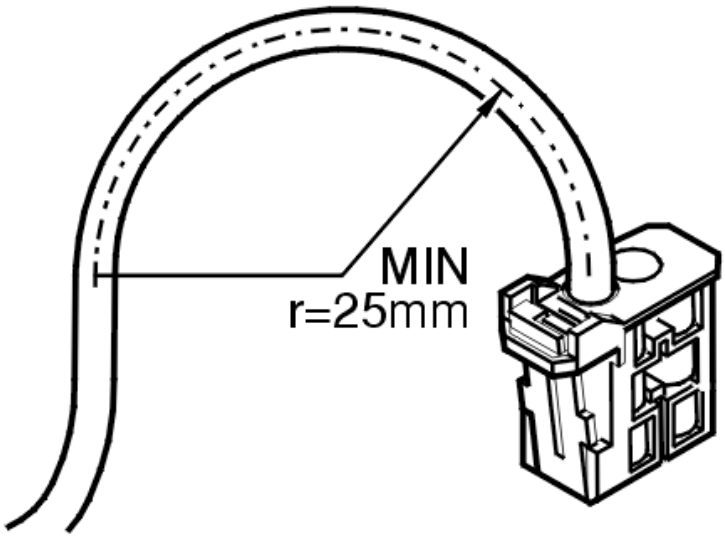

Fig. 120: Identifying Maximum Bend Radius Of Optic Cable
Courtesy of VOLVO CARS CORPORATION

A fiber requires a larger bend radius than a copper cable. The bend radius must not be less than **25 mm** . If the fiber bends too much, not enough light will be let through.

NOTE: **Fiber optics must not be spliced. Damaged fiber optics can be repaired if there is sufficient length remaining to install a new ferrule (4). If the remaining fiber is not long enough, a new fiber optic must be routed parallel to the damaged fiber.**

NOTE: **Fiber optics are sensitive to bending and pinching. Be careful when routing and securing.**

DISASSEMBLING THE CONNECTOR (2)

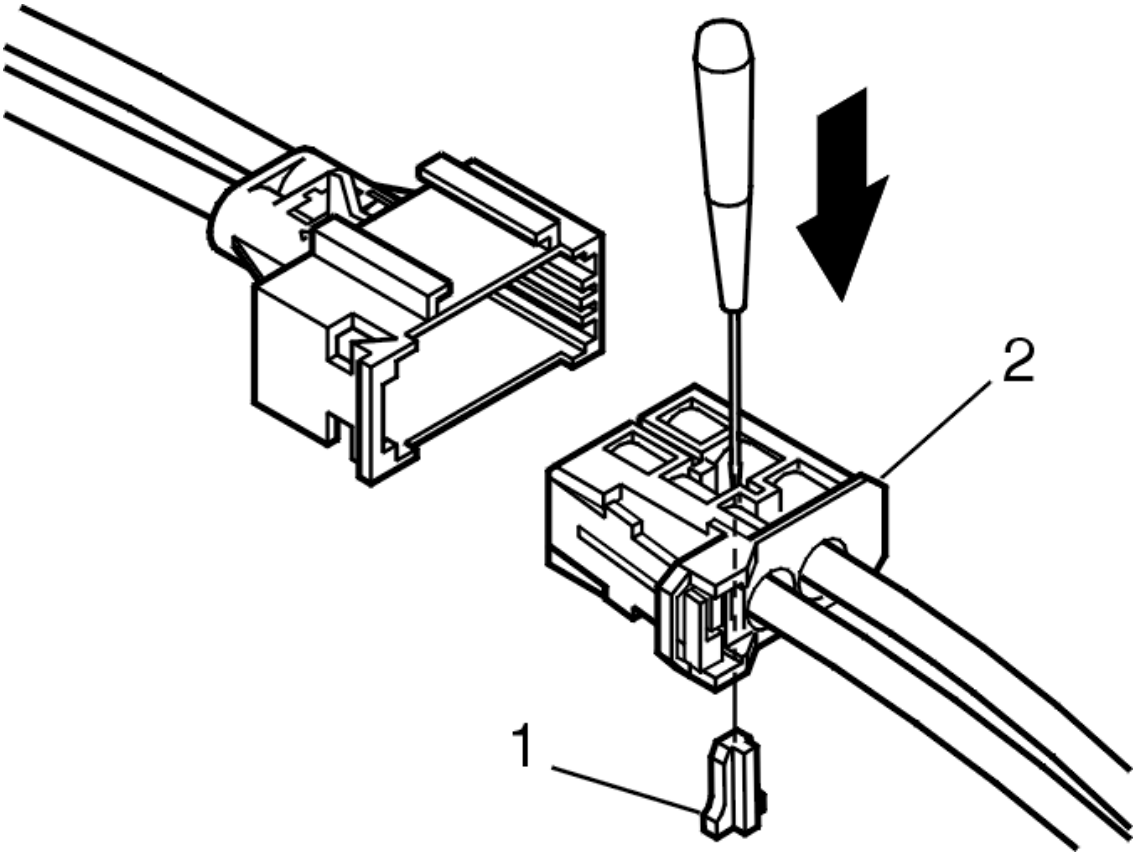

Fig. 121: Identifying Catch Pressed Out With Screwdriver
Courtesy of VOLVO CARS CORPORATION

NOTE: **There is one fiber for the input and one for the output signal. The system will not work if the are interchanged.**

Press out the catch (1) using a screwdriver.

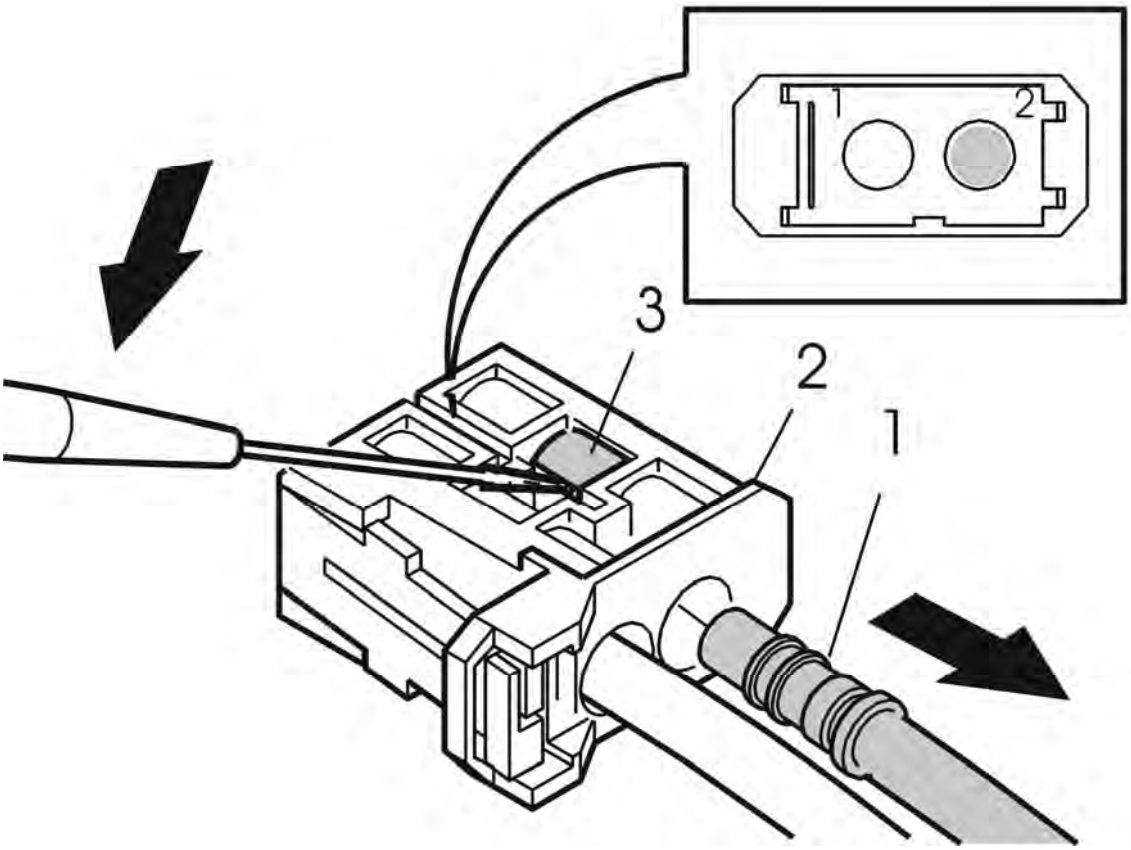

Fig. 122: Identifying Catches Opened With Screwdriver To Pull Out Ferrule
Courtesy of VOLVO CARS CORPORATION

Open the catches (3) using a screwdriver.

Pull out the ferrule (1). Make a note of its location.

DISASSEMBLING THE COMBINED CONNECTOR (OPTIC AND ELECTRICAL CONDUCTOR) (1)

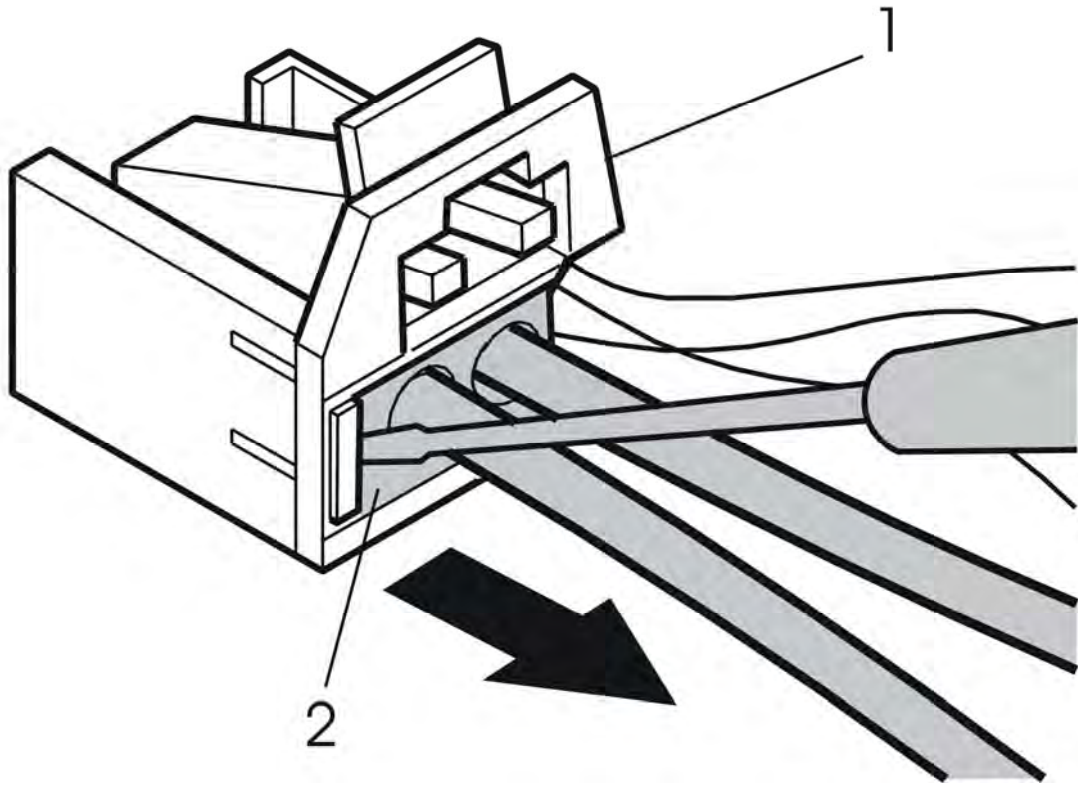

Fig. 123: Disassembling Combined Connector
Courtesy of VOLVO CARS CORPORATION

Release the lock using a screwdriver. Remove the inner section (2).

Remove the ferrule. See **DISASSEMBLING THE CONNECTOR (2)**

INSTALLING THE FERRULE

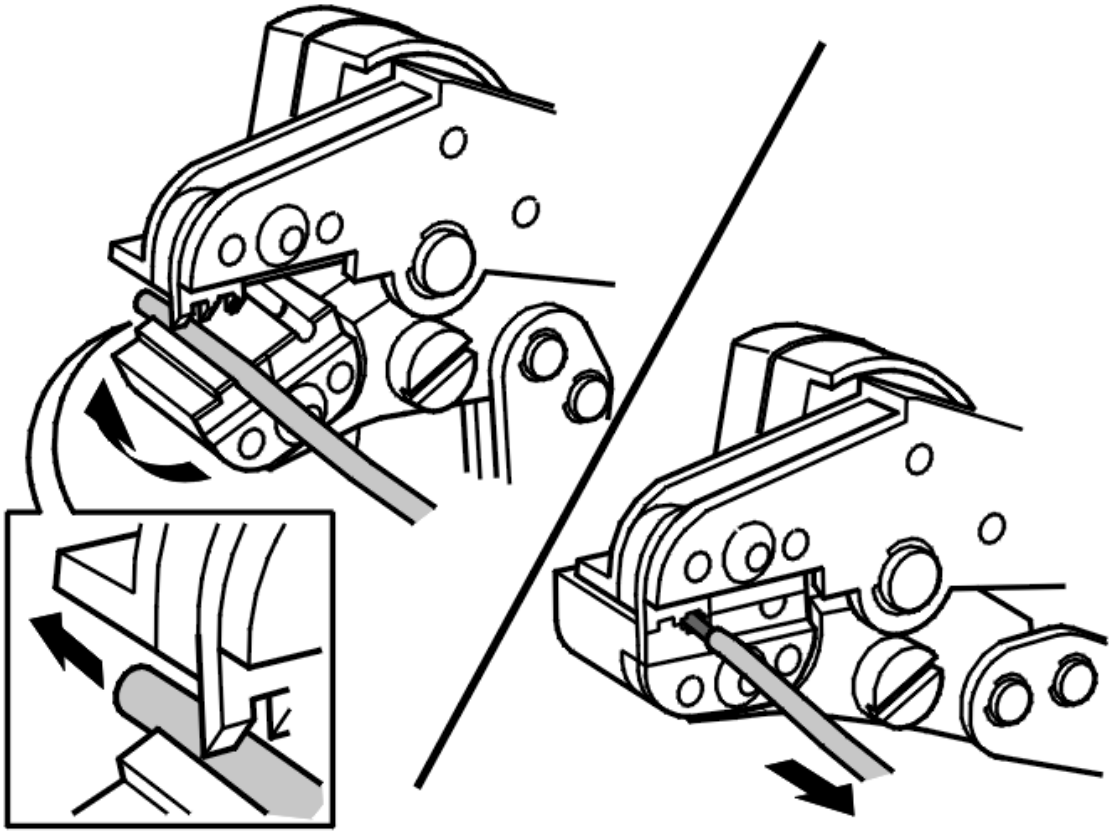

Fig. 124: Identifying Fiber Optic Cable Stripped With Tool 9512868 (1 Of 2)
Courtesy of VOLVO CARS CORPORATION

Cut the required length (+10 mm) of fiber optic.

Strip the fiber optic. Use tool see **9512868** as shown.

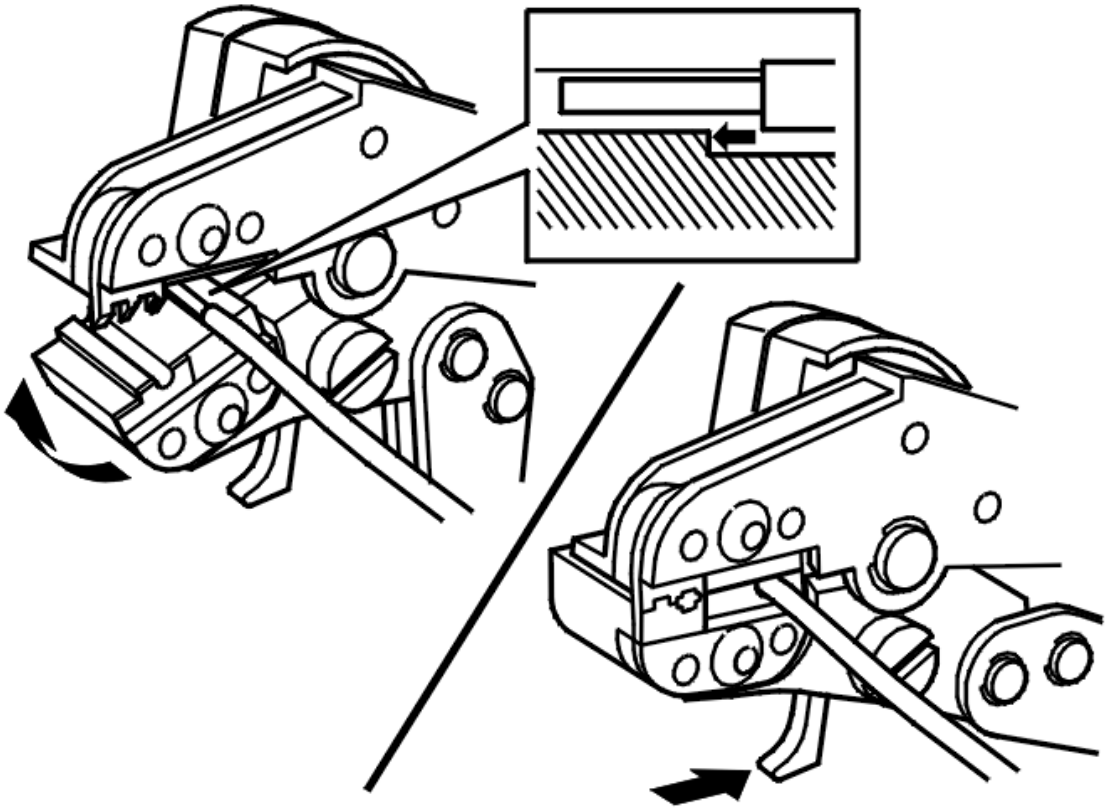

Fig. 125: Identifying Fiber Optic Cable Stripped With Tool 9512868 (2 Of 2)
Courtesy of VOLVO CARS CORPORATION

Strip the fiber optic. Use tool see **9512868** as shown.

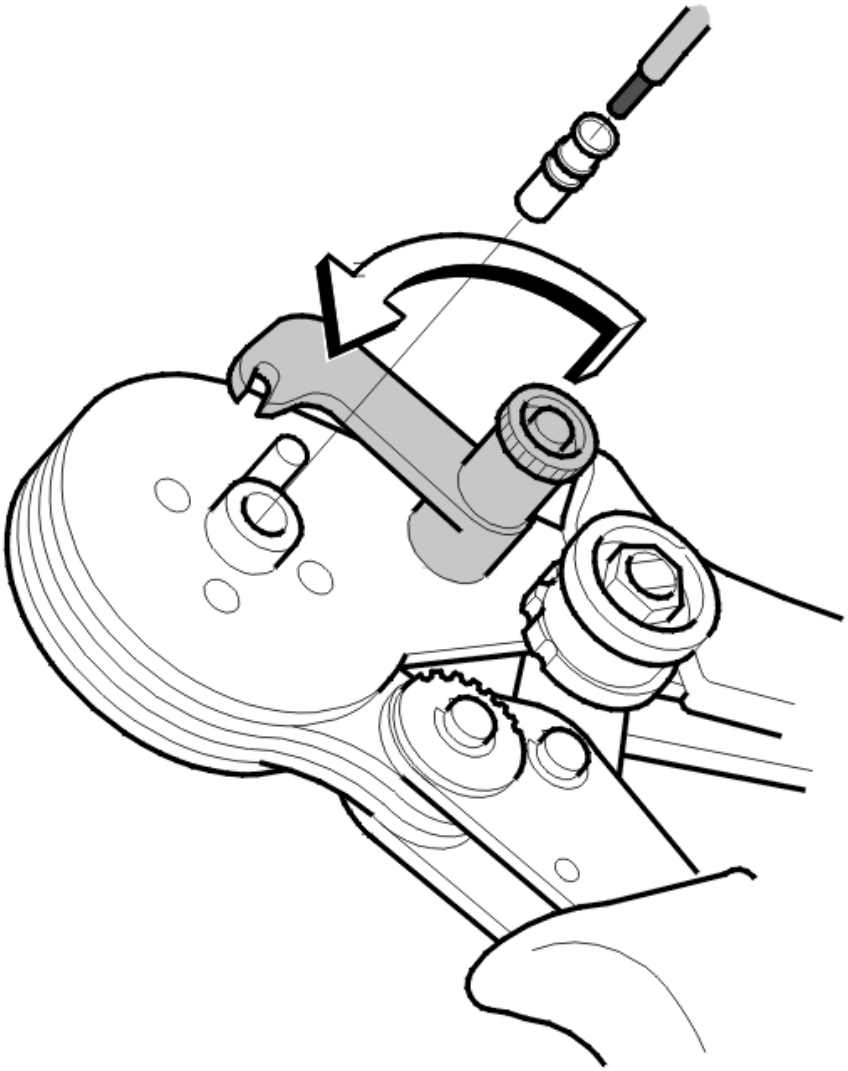

Fig. 126: Aligning Ferrule Using Tool 9512869
Courtesy of VOLVO CARS CORPORATION

Align the ferrule. Use tool see **9512869** as shown.

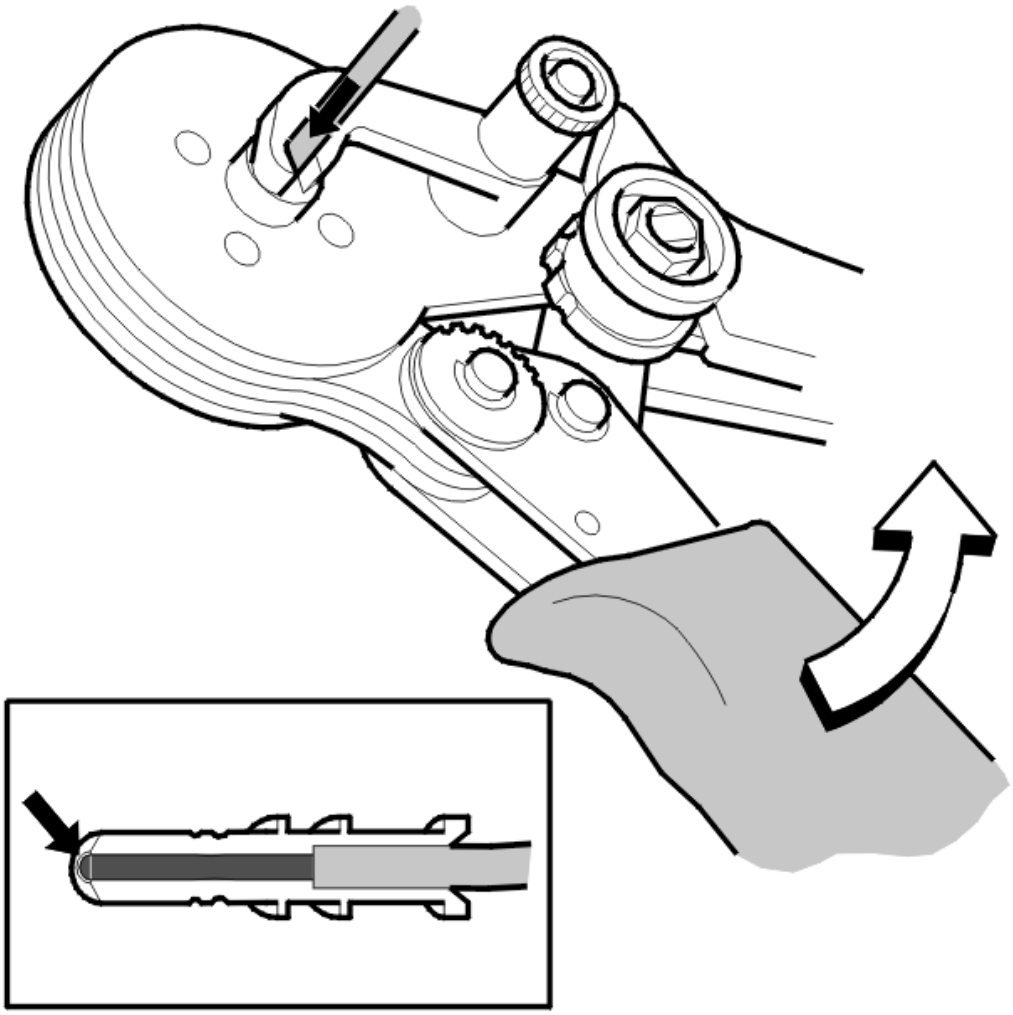

Fig. 127: Ensuring Ferrule Is Edge To Edge With Fiber
Courtesy of VOLVO CARS CORPORATION

Check that the ferrule is secure and is edge to edge with the fiber.

ASSEMBLING THE CONNECTOR

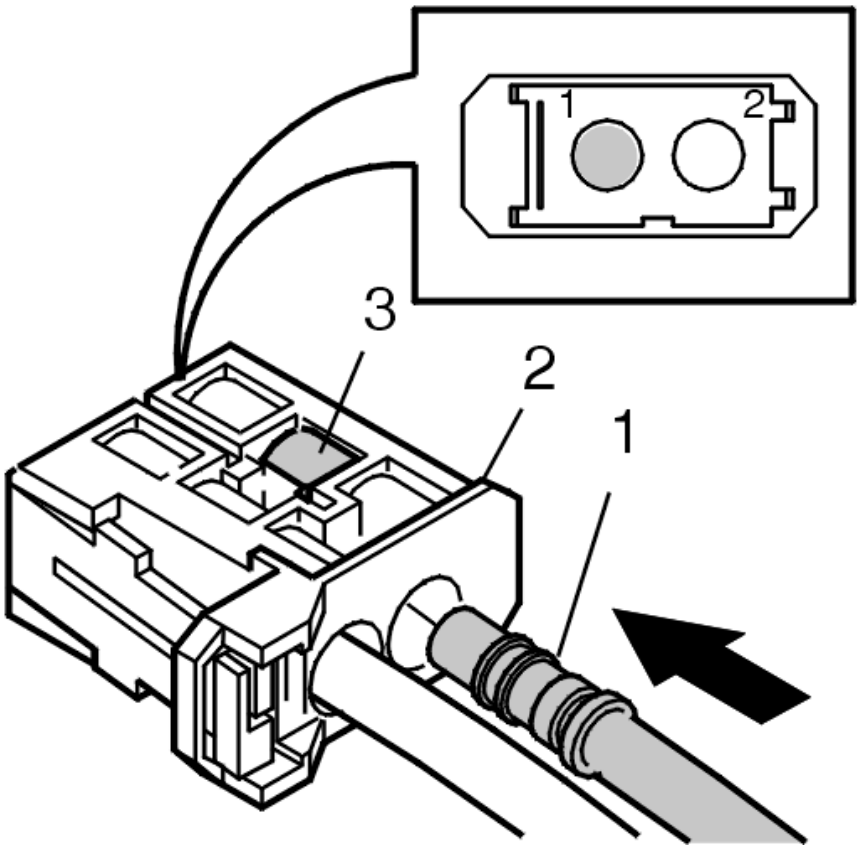

Fig. 128: Identifying Ferrule Pressed Into Place In Connector
Courtesy of VOLVO CARS CORPORATION

NOTE: **There is one fiber for the input and one for the output signal. If they are mixed up the system will not work.**

Press the ferrule (1) into place in the connector (2).

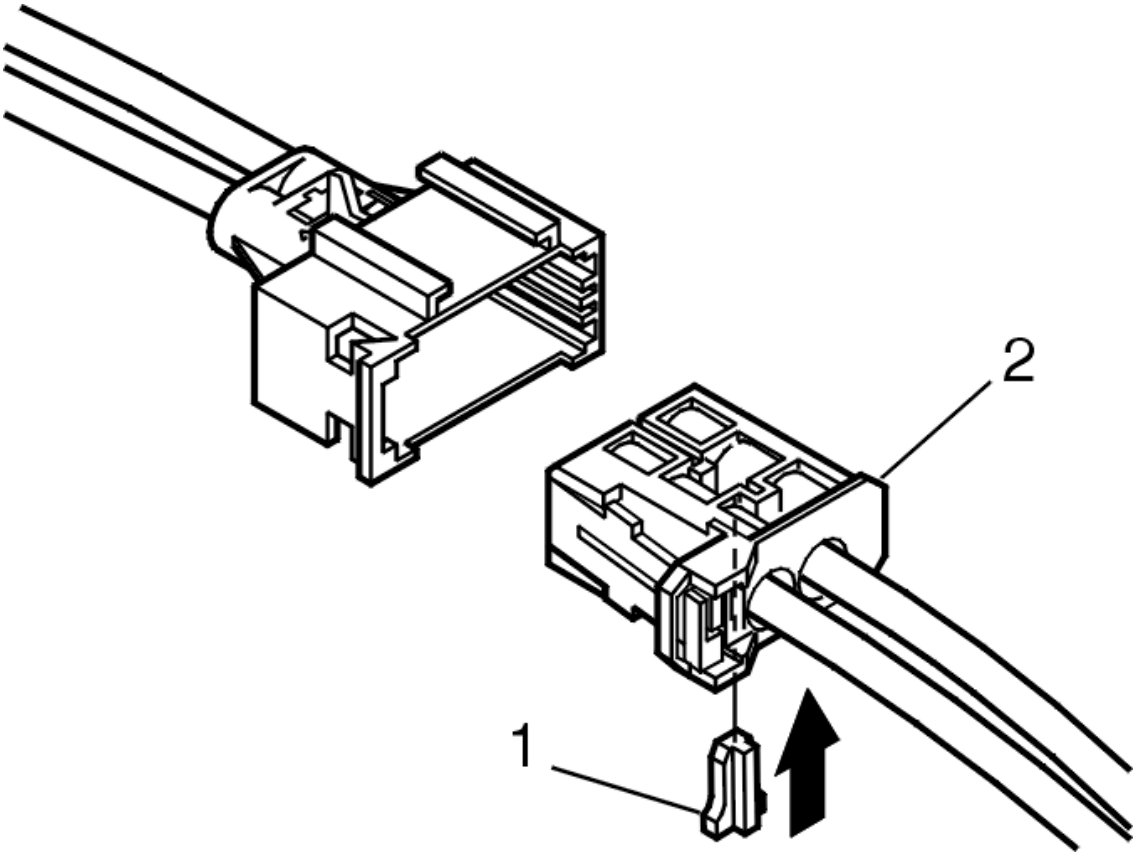

Fig. 129: Identifying Installation Of Catch
Courtesy of VOLVO CARS CORPORATION

Install the catch (1).

ASSEMBLING THE COMBINED CONNECTOR (2 OPTIC AND 4 ELECTRICAL CONDUCTORS)

Install the ferrule. See **ASSEMBLING THE CONNECTOR**.

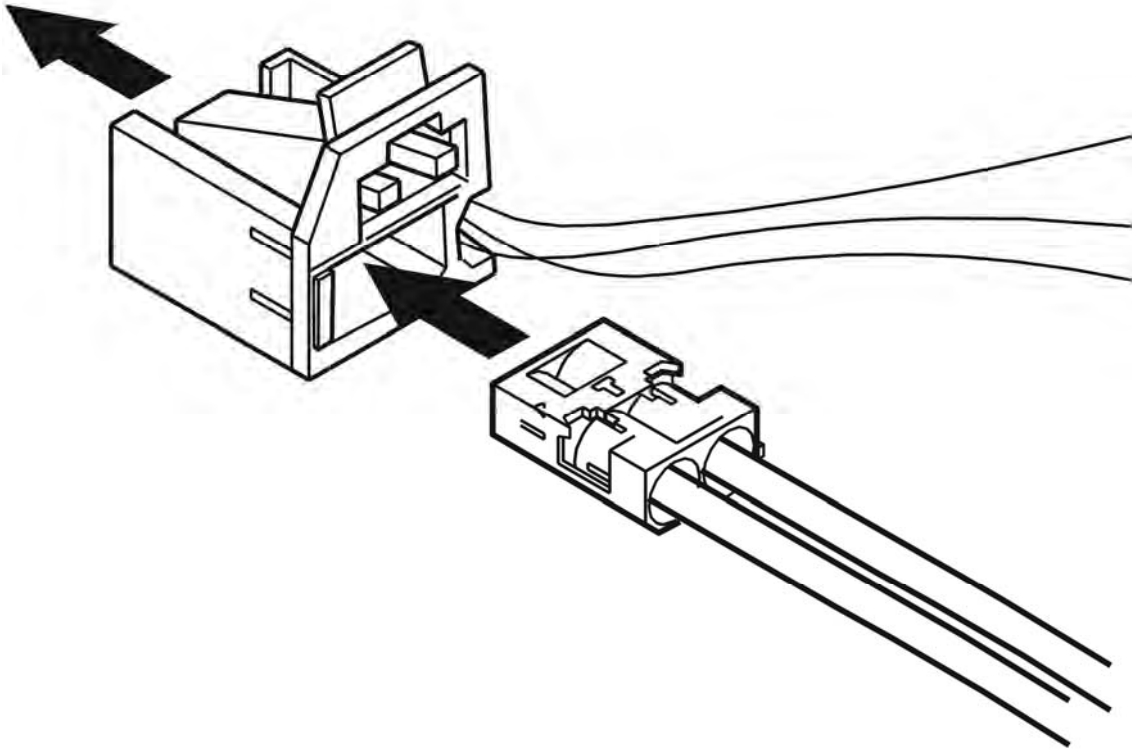

Fig. 130: Identifying Inner Section Pressed Into Place In Combined Connector
Courtesy of VOLVO CARS CORPORATION

Press the inner section into place in the combined connector.

FINISHING WORK

Check the repair. See **DIAGNOSTIC INSTRUCTIONS - FIBER OPTIC CABLE**.

DIAGNOSTIC INSTRUCTIONS - FIBER OPTIC CABLE

CHECK

NOTE: Check that special tool see 9512867 is working before using it. This is carried out as follows.

- Select the desired socket for connection by setting the SELECTOR SWITCH to position 2+0 or 2+4
- Connect a suitable optical test cable, with the instrument supplied, to the selected socket
- Select visual indication (green lamp - LED) or sound indication (buzzer - BEEP) by setting the right-hand BEEP/LED switch to the desired position
- Set the OFF/ON switch on the special tool to **ON** . The red POWER ON lamp must light.
- Press the red button (2+0 TEST or 2+4 TEST) on the lower section of the special tool which corresponds to a connected test cable. The unit now transmits a light signal through the test cable

- The transmitted signal will be received as long as there is now a complete optical loop. If visual indication is selected, the green lamp (Rx) will light to indicate that the signal has been received. If sound indication is selected the buzzer will sound to indicate that the signal has been received
- When the check is complete, set the OFF/ON switch on the special tool to **OFF** .

The following must be carried out after repairs, checks or replacement of fibre optic wiring.

- Connect the desired connector on the MOST cable to the relevant socket on the special tool
- Select the socket which is connected by setting the SELECTOR SWITCH to position 2+0 or 2+4
- Set the OFF/ON switch on the special tool to **ON** . The red POWER ON lamp must light
- Activate the Infotainment system.

HINT: If the infotainment system has been activated and there is not an open-circuit in the fibre optic network, the display on the infotainment control module (ICM) must be lit.

HINT: It is also possible to check visually if there is a light signal in the MOST cable from a control module in the network to the connector for the next control module without switching on the ignition. This is done by connecting the special tool to the connector on the MOST cable at the relevant control module.

- Select the socket which is connected on the special tool by setting the SELECTOR SWITCH to position 2+0 or 2+4
- Disconnect the MOST cable from the next control module
- Set the OFF/ON switch on the special tool to **ON** . The red POWER ON lamp must light.
- Press the red button (2+0 TEST or 2+4 TEST) on the lower section of the special tool which corresponds to a connected MOST cable. The special tool now transmits a light signal through the cable. Check that there is a red light at the next connector on the MOST cable
- When the check is complete, set the OFF/ON switch on the special tool to **OFF** .

NOTE: The visual check is not a verification of the function of the system. However the strength of the light signal must exceed a certain level for there to be full functionality in the system.

JOINING THE CABLES

CONNECTING

See information about SRS cables: **CABLE HARNESS SRS SYSTEM, REPAIR**

Perform battery disconnection. See **BATTERY, DISCONNECTING**

see information about cable terminals surface treatment. See **CABLE TERMINALS SURFACE TREATMENT**

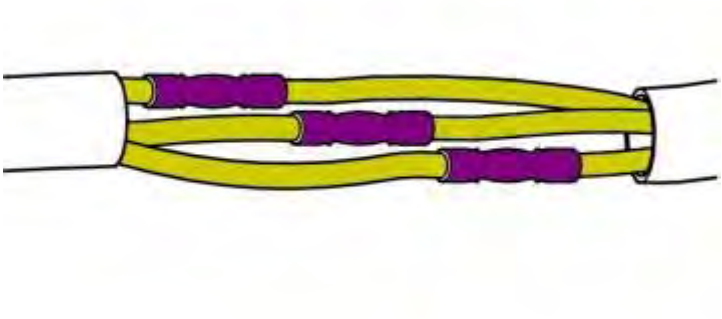

Fig. 131: Identifying Crimped Wires
Courtesy of VOLVO CARS CORPORATION

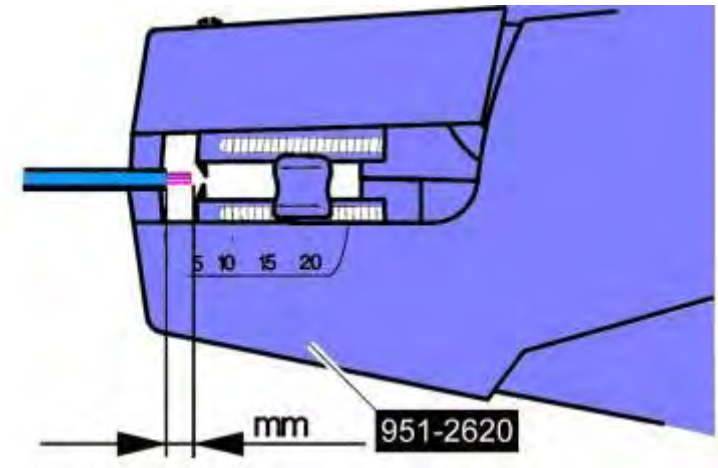

Fig. 132: Identifying Cable Stripping Length
Courtesy of VOLVO CARS CORPORATION

see **9512620**

See information about stripping length. See **JUNCTION SLEEVE**

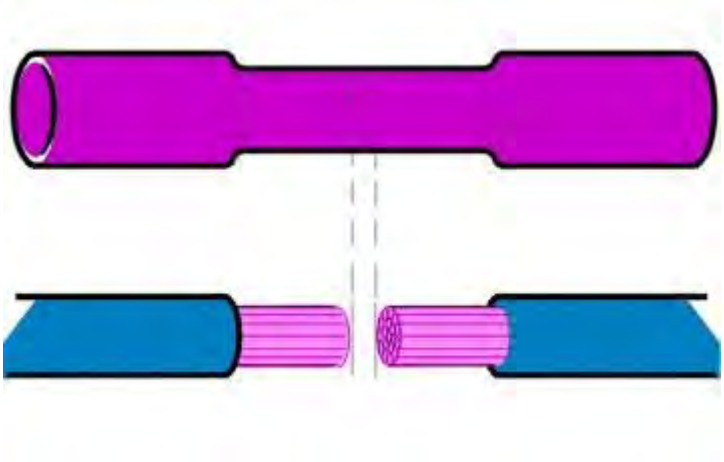

Fig. 133: Crimping Wires (1 Of 4)
Courtesy of VOLVO CARS CORPORATION

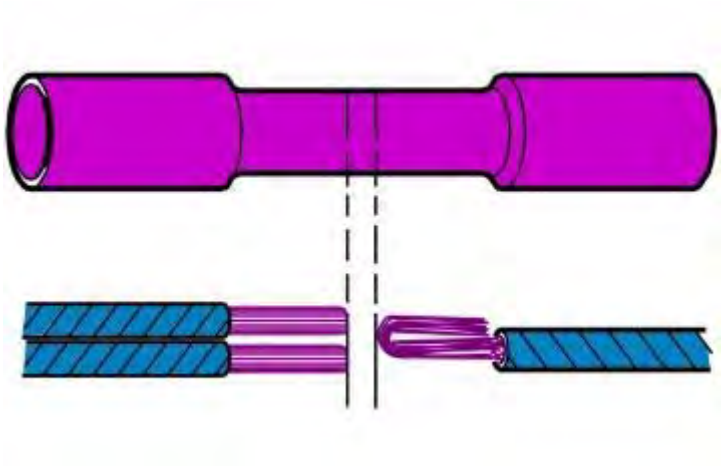

Fig. 134: Crimping Wires (2 Of 4)
Courtesy of VOLVO CARS CORPORATION

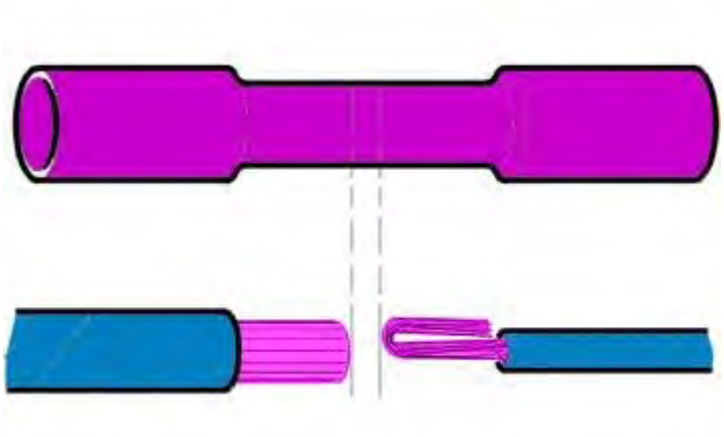

Fig. 135: Crimping Wires (3 Of 4)
Courtesy of VOLVO CARS CORPORATION

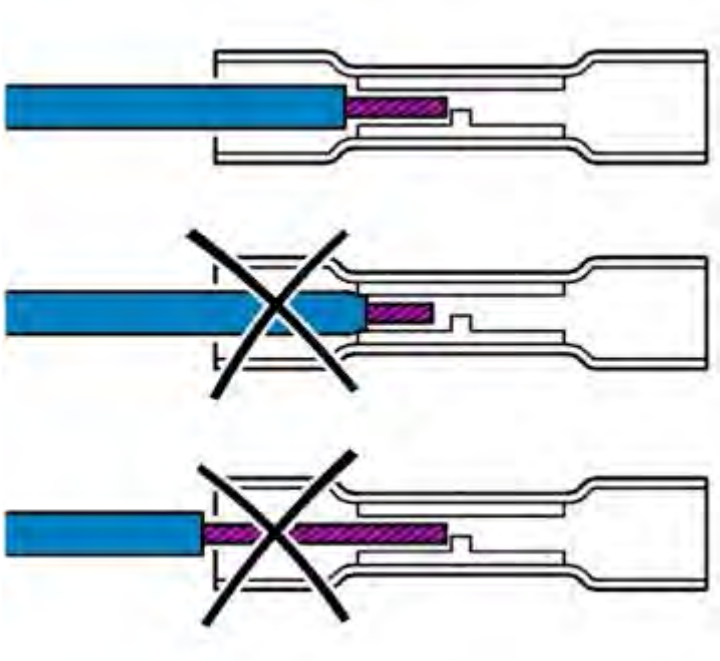

Fig. 136: Crimping Wires (4 Of 4)
Courtesy of VOLVO CARS CORPORATION

Junction sleeve

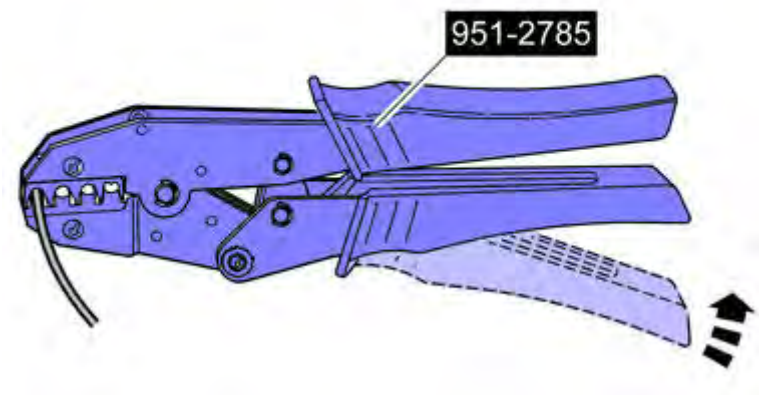

Fig. 137: Identifying Crimping Tool 951 2785
Courtesy of VOLVO CARS CORPORATION

see **9512785**

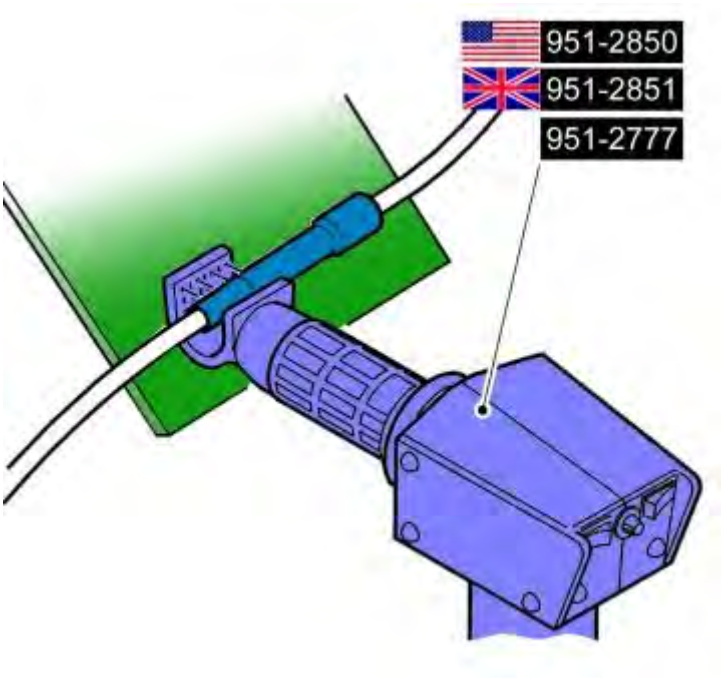

Fig. 138: Identifying Hot Air Gun
Courtesy of VOLVO CARS CORPORATION

CAUTION: Protect the surroundings from the heat.

see **9512850** see **9512851** see **9512777**

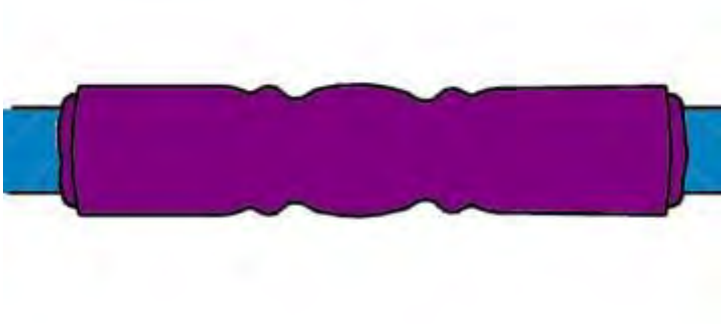

Fig. 139: Identifying Crimping Sleeve
Courtesy of VOLVO CARS CORPORATION

WIRING (B5254T2, AW50/51 AWD; 2003-07)

CONNECTORS, TRANSMISSION, DISCONNECTING/CONNECTING

NOTE: **As the graphics in this service information are used for different model years and/or models, some variation may occur. However, the essential information is always correct.**

DISASSEMBLY

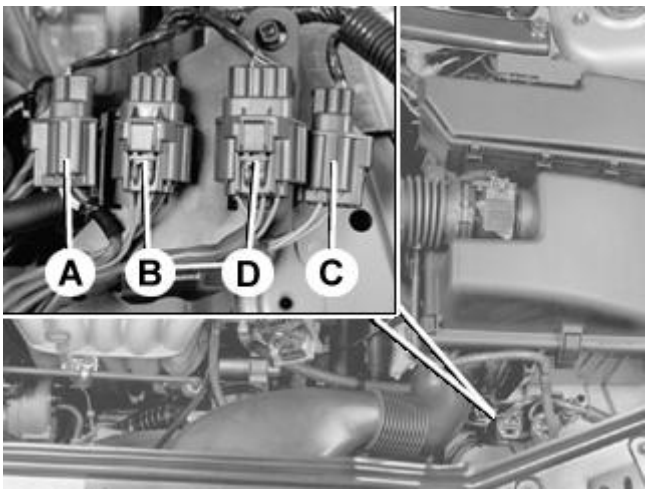

Fig. 140: Identifying Connectors For Transmission Sensors And Solenoids
Courtesy of VOLVO CARS CORPORATION

Transmission input and output speed sensors.

Gear-shift position sensor.

Oil temperature sensor solenoids: SLU, SLT and SLS.

Solenoids S1 - S5.

Unhook the mounting with the connectors for the transmission from the bracket for the air cleaner (ACL) housing.

Separate the connectors.

REASSEMBLY

Connect the connectors. Ensure that the catches for the connectors are in their positions

Install the mounting on the bracket for the air cleaner (ACL) housing.

TEMPERATURE SENSOR FLUID, TRANSAXLE, (TFT)

Special tools:

see **9985972**

see **9995185**

see **9995460**

see **9995477**

see **9995562**

see **9995716**

see **9995972**

see **9997070**

see **9997077**

NOTE: **As the graphics in this service information are used for different model years and/or models, some variation may occur. However, the essential information is always correct.**

REMOVAL

PREPARATIONS

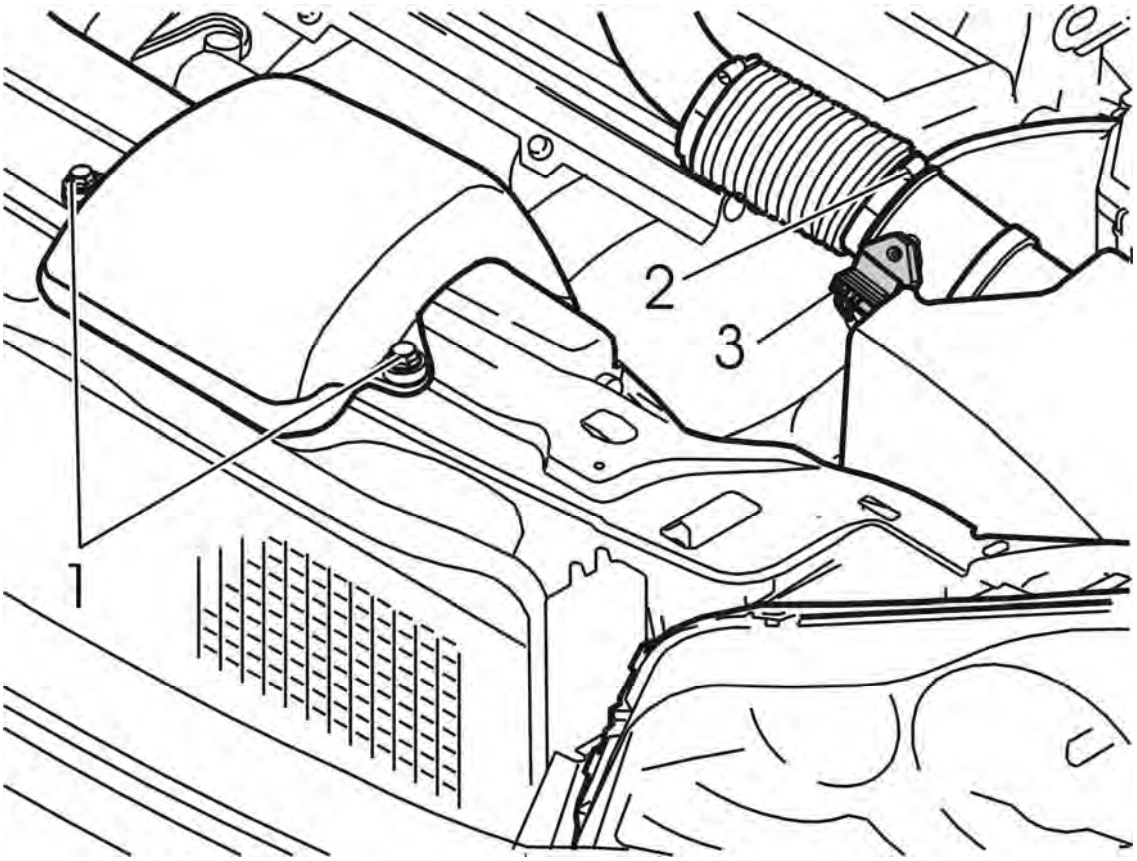

Fig. 141: Air Cleaner (ACL) Housing
Courtesy of VOLVO CARS CORPORATION

Switch off the ignition.

Removing the air cleaner (ACL) housing

Remove the air cleaner housing ACL assembly with the intake pipe.

REMOVING THE GEAR SELECTOR CABLE FROM THE LEVER ON THE GEARBOX

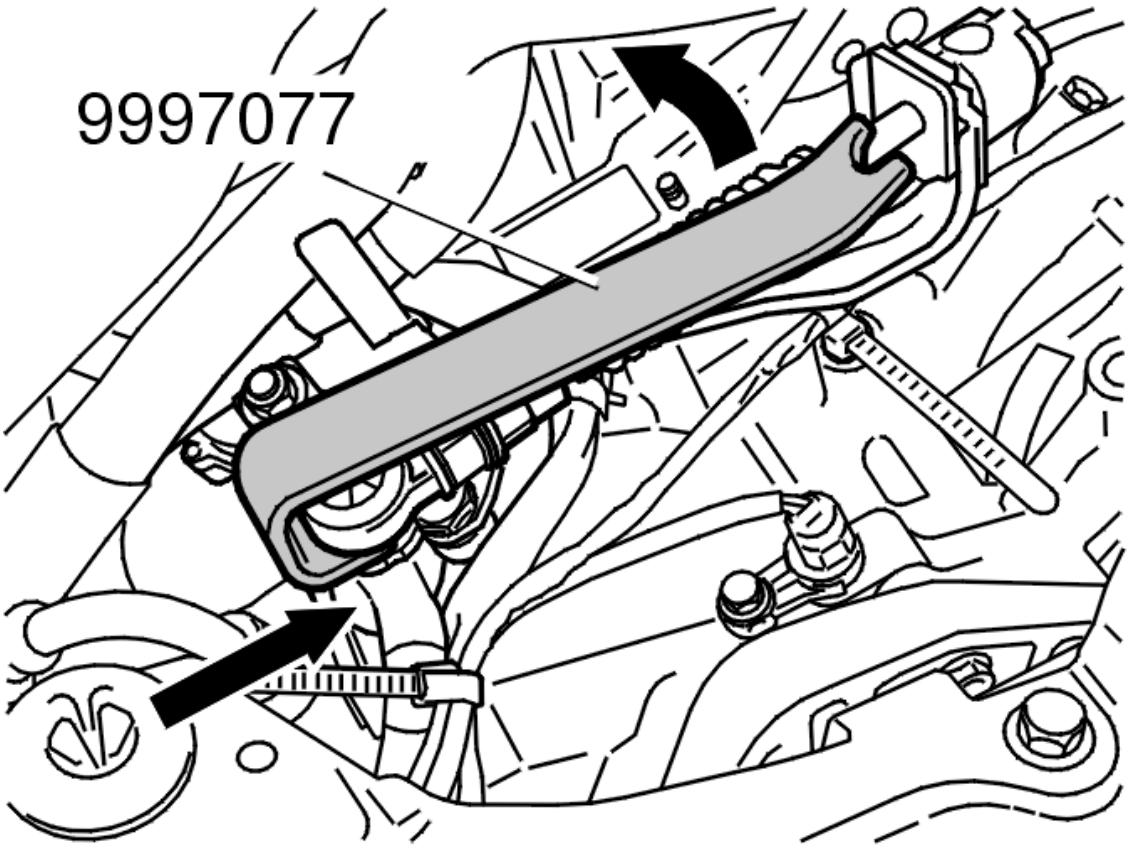

Fig. 142: Detaching Cable From Lever Using Special Tool
Courtesy of VOLVO CARS CORPORATION

Remove the mechanical transmission cable from the lever on the transmission. Use jimmy bar see **9997077** .

Unhook the mounting with the connectors for the gearbox from the bracket for the air cleaner (ACL) housing.

REMOVING THE LEVER ON THE GEAR SHIFT LINKAGE ROD

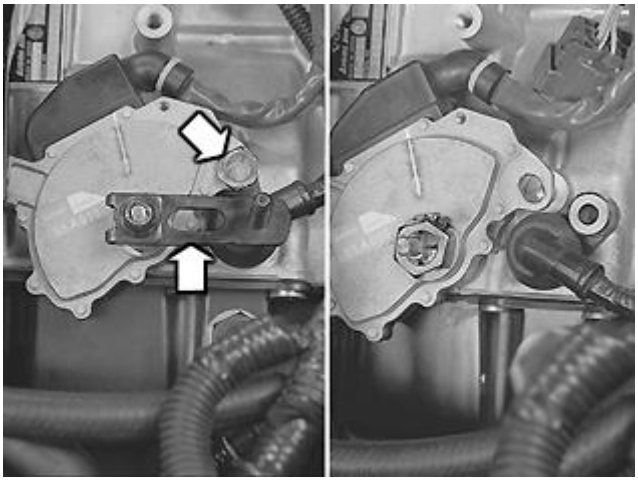

Fig. 143: Identifying Lever On Gear Shift Linkage Rod
Courtesy of VOLVO CARS CORPORATION

Remove:

- the lever on the gear shift linkage rod
- the screw for the gear selector sensor and cable harness.

Twist out the tab on the cable harness holder.

INSTALLING THE LIFTING BEAMS AND LIFTING HOOKS ON THE ENGINE LIFTING LUGS

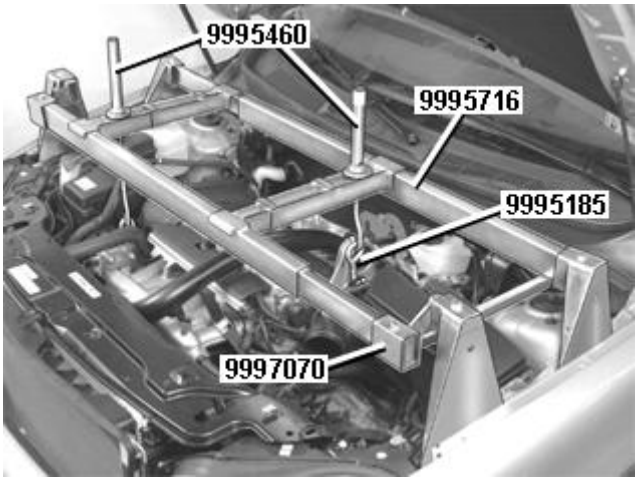

Fig. 144: Identifying Fixture Kit, Lifting Beam And Lifting Hooks
Courtesy of VOLVO CARS CORPORATION

NOTE: The front lifting beam must be equipped with fixture kit see 9997070 as shown.

Position lifting beam see **9995716** on the wheel arch and directly above the engine lifting eyelets on the left and right-hand sides.

Fasten lifting hooks see **9995460** and see **9995185** to the engine lifting lugs. Tighten to light contact.

Raise the car

REMOVING THE SUB-FRAME

Remove the sub-frame. See **SUB-FRAME FRONT, REPLACING (2003-06)** .

DRAINING GEARBOX FLUID

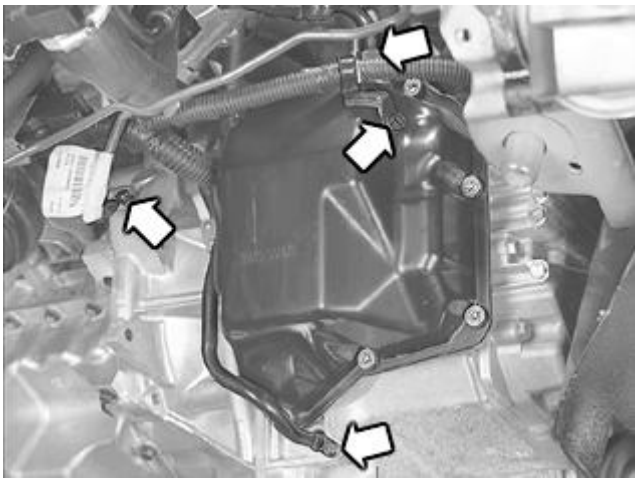

Fig. 145: Control System Cover, Harness Clamp, Cooler Return Line And Screws
Courtesy of VOLVO CARS CORPORATION

Place a container underneath the gearbox. Drain the oil. Measure and note the volume of oil.

Then tighten the plug. Tighten to 40 Nm. Remove the cable harness clamp on the control system cover.

Disconnect the ground lead from the gearbox. Tie up the cable harness and ground lead.

Disconnect the oil cooler return line from the control system cover. Disconnect the oil cooler pipe and hose from the gearbox. Move the pipe to one side. Seal the hole in the gearbox with a plastic plug.

REMOVING THE CONTROL SYSTEM COVER

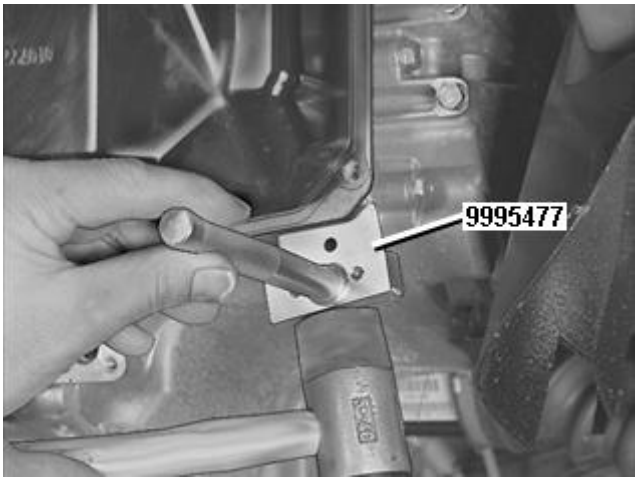

Fig. 146: Cleaning Sealing Compound From Threads Using A Tap
Courtesy of VOLVO CARS CORPORATION

Remove the Torx TX40 screws for the control system cover.

Clean the sealing compound from the threads.

Use tap M8 x 1.25.

Remove the cover. Use joint wedge see **9995477** .

Carefully tap it in between the cover and gearbox so as not to bend the seal flange on the cover.

Clean the gasket residue from the cover and the gearbox.

REMOVING THE CABLE HARNESS

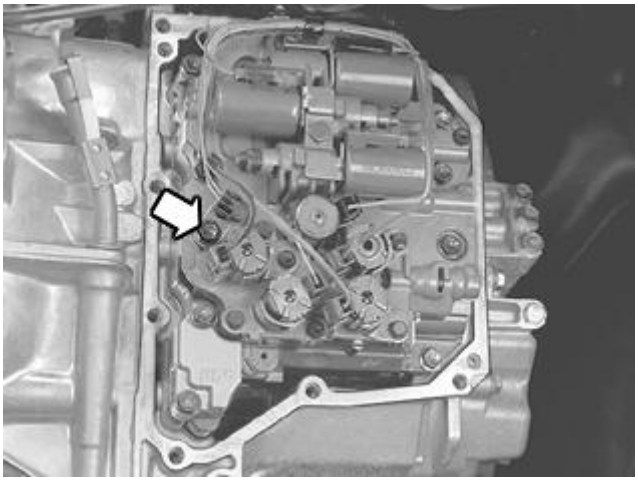

Fig. 147: Identifying Oil Temperature Sensor And Holder Screw
Courtesy of VOLVO CARS CORPORATION

Remove:

- the connectors for the solenoid valves
- the screw for the oil temperature sensor holder.

Remove the sensor from the control system.

Remove:

- the cable harness from the holders on the control system
- the cable harness.

INSTALLATION

NOTE: For tightening torques, see TIGHTENING TORQUE .

CONNECTING THE CABLE HARNESS

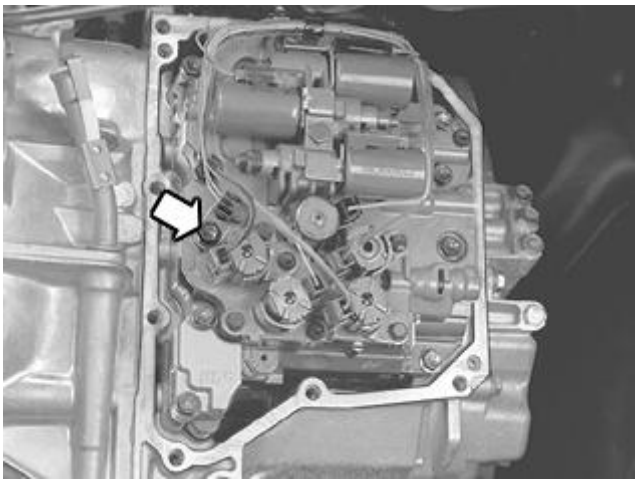

Fig. 148: Identifying Oil Temperature Sensor And Holder Screw
Courtesy of VOLVO CARS CORPORATION

Lubricate the O-rings for the cable harness grommet and the oil temperature sensor with automatic gearbox fluid.

Install:

- the cable harness. Connect the connectors to the solenoids
- the oil temperature sensor with the holder and screw. Tighten to **10 Nm**
- the cable harness on the holder. Check that the cable harness is correctly positioned.

SEALING THE COVER

Fig. 149: Applying Sealant To Cover
Courtesy of VOLVO CARS CORPORATION

Check that the mating surface for the cover is level.

Wipe the cleaned mating surfaces on the cover and gearbox. Use methylated spirit.

NOTE: Ensure that no dirt gets into the gearbox.

Apply a bead of sealing compound, approximately 3 mm thick, to the cover. P/N 1161409-6. Apply the compound around the screw holes.

INSTALLING THE CONTROL SYSTEM COVER

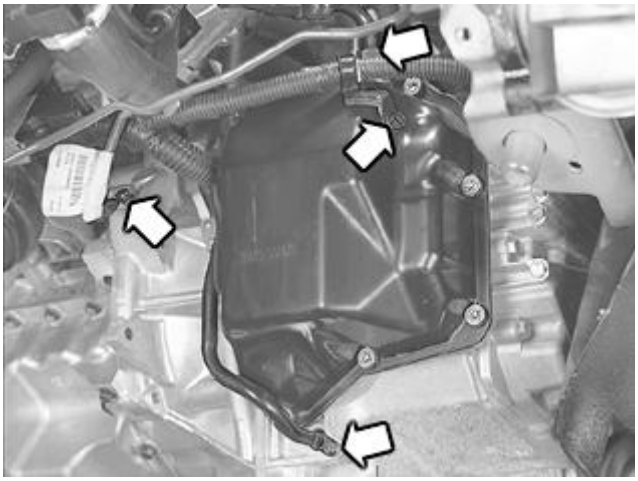

Fig. 150: Control System Cover, Harness Clamp, Cooler Return Line And Screws
Courtesy of VOLVO CARS CORPORATION

Reinstall the control system cover on the gearbox. Tighten the screws alternately. Tighten to **12 Nm** . Torx TX 40.

Install:

- the oil pipe on the gearbox with a new O-ring
- the return line to the control system cover
- the cable harness to the holder on the cover
- the ground lead for the gearbox.

INSTALLING THE SUB-FRAME

Fig. 151: Gear-Shift Position Sensor Screw And Gear Shift Linkage Rod
Courtesy of VOLVO CARS CORPORATION

Install the sub-frame. See **SUB-FRAME FRONT, REPLACING (2003-06)** .

Remove the lifting beams and lifting hooks

Twist in the tab on the cable harness holder.

Install:

- the screw for the gear-shift position sensor and holder. Tighten to **25 Nm**
- the lever for the gear shift linkage rod. Tighten the nut. Tighten to **16 Nm**
- the mechanical gearbox cable on the lever.

INSTALLING THE AIR CLEANER (ACL) HOUSING

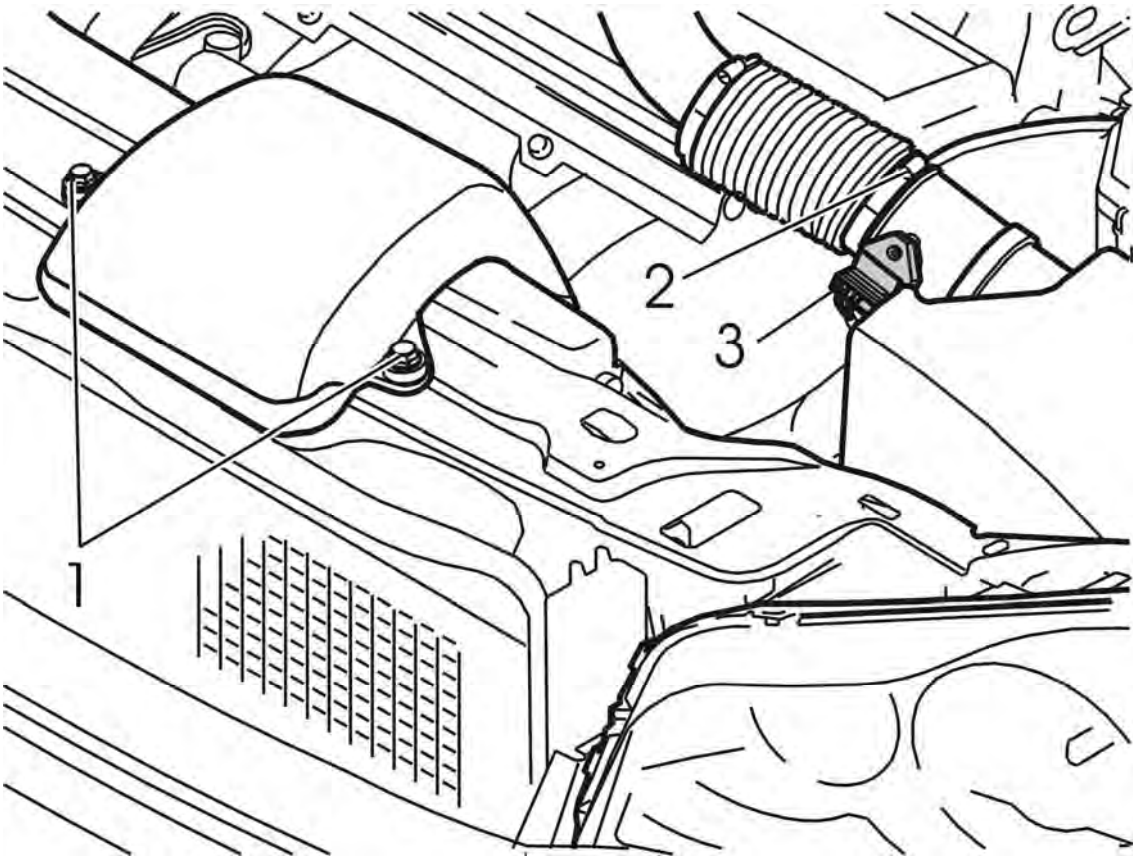

Fig. 152: Air Cleaner (ACL) Housing
Courtesy of VOLVO CARS CORPORATION

Install the air cleaner (ACL) housing, including all hoses and electrical terminals. See **GEAR SELECTOR CABLES, REPLACING** .

Top up with new oil, part no. 116 1540-8, using the same quantity that was drained earlier. See **TRANSMISSION FLUID, REPLACING** . Top up and check the oil level. See **OIL LEVEL, CHECKING** .

NOTE: After replacing the transmission oil, the "Transmission oil change" counter must be reset. See TRANSMISSION FLUID, REPLACING .

DIAGNOSTIC TROUBLE CODES (DTCS)

Check any diagnostic trouble codes (DTCs).

WIRING (B5254T2, AW55-50/51SN; 2004-07)

CONNECTORS, TRANSMISSION, DISCONNECTING/CONNECTING

see **CONNECTORS, TRANSMISSION, DISCONNECTING/CONNECTING**

TEMPERATURE SENSOR FLUID, TRANSAXLE, (TFT)

see **TEMPERATURE SENSOR FLUID, TRANSAXLE, (TFT)**

WIRING (B6294T, 4T65 AWD; 2003-06)

TEMPERATURE SENSOR FLUID, TRANSAXLE, (TFT)

SIDE COVER, GEARBOX, REMOVING

See **SIDE COVER TRANSMISSION, REMOVING** .

REMOVING THE CABLE HARNESS

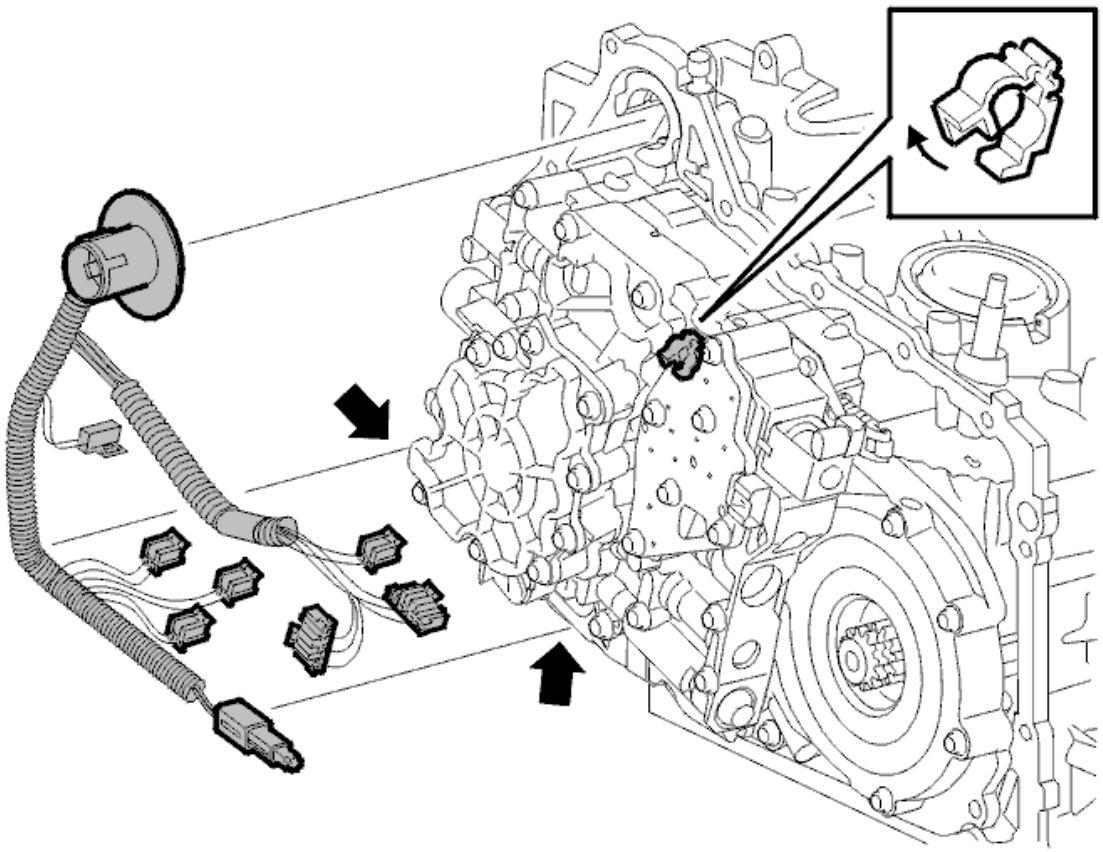

Fig. 153: Identifying Removing/Installing Cable Harness
Courtesy of VOLVO CARS CORPORATION

Remove:

- the connectors. No marking is necessary. Each connector is designed for only one component
- the cable harness from its clips and holder
- the large connector. Bend it down slightly and pull it straight out.

INSTALLING THE CABLE HARNESS

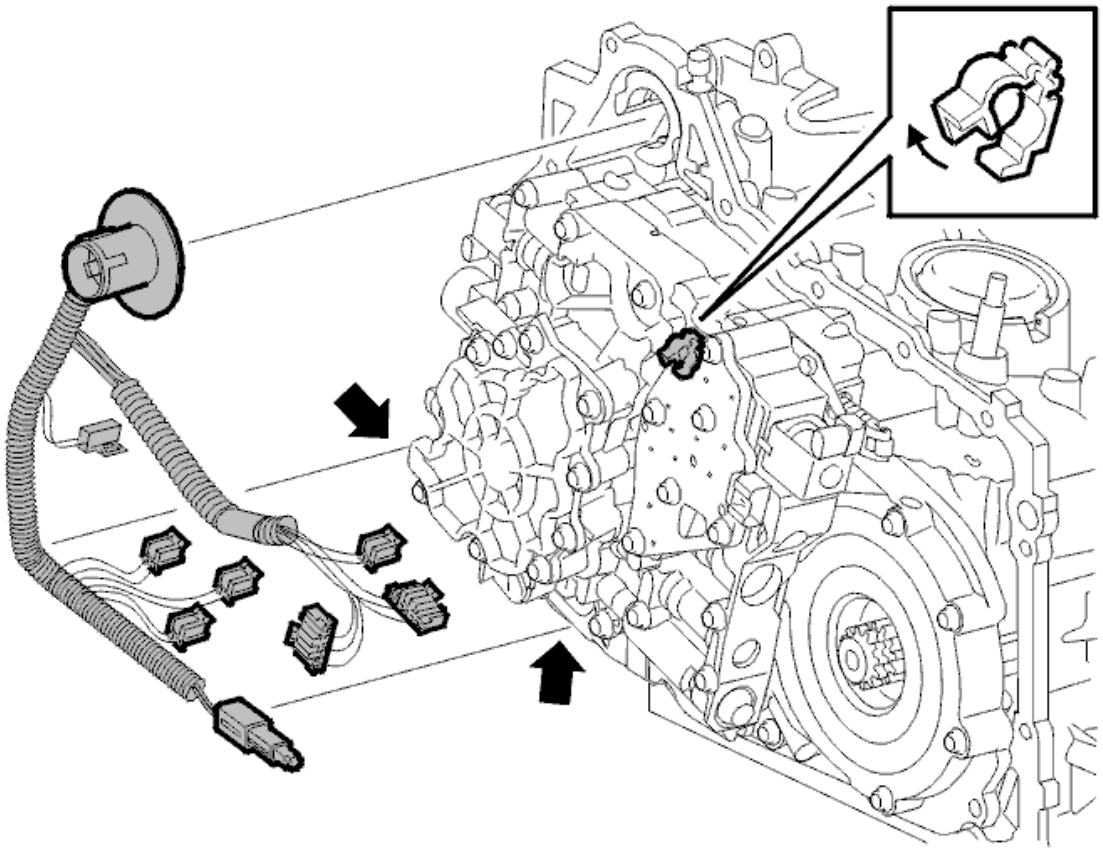

Fig. 154: Identifying Removing/Installing Cable Harness
Courtesy of VOLVO CARS CORPORATION

Install:

- the large connector
- the connectors on the relevant switches
- the cable harness in the clips and holder
- the temperature sensor in the clip.

INSTALLING THE SIDE COVER ON THE GEARBOX

See **SIDE COVER TRANSMISSION, INSTALLING** .

WIRING (B8444S, TF-80SC AWD; 2005-11)

CABLE HARNESS, CONTROL SYSTEM, GEARBOX, REPLACING

NOTE: **The graphics in this service information are used for different model years and/or models. Some variation may occur. However, the essential information in the graphics is always correct.**

REMOVAL

REMOVING COVER CONTROL SYSTEM

Remove the cover over the control system. See **COVER CONTROL SYSTEM, REPLACING (2007-11)** .

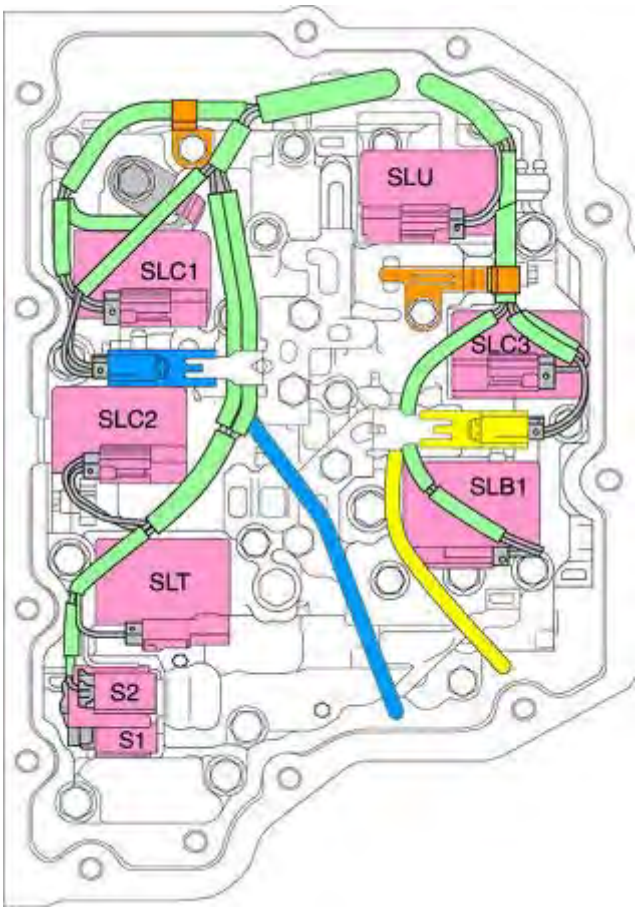

Fig. 155: Identifying Cable Harness
Courtesy of VOLVO CARS CORPORATION

TEMPERATURE SENSOR, FLUID TRANSMISSION

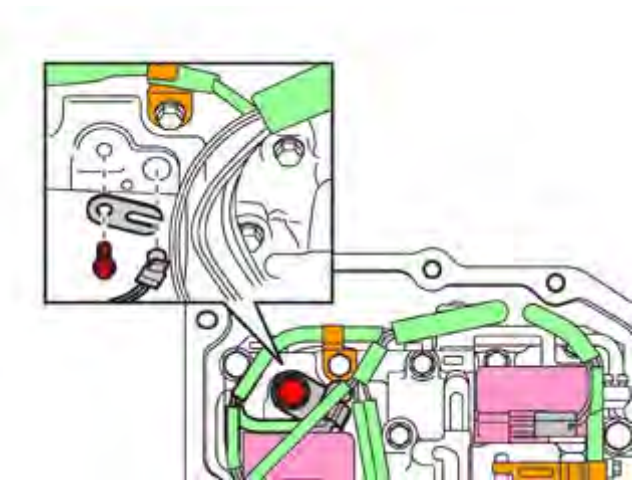

Fig. 156: Identifying Temperature Sensor & Connector
Courtesy of VOLVO CARS CORPORATION

CONNECTING TO TRANSMISSION INPUT SPEED SENSOR

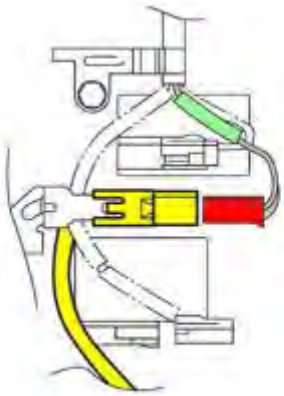

Fig. 157: Identifying Transmission Input Speed Sensor And Connector
Courtesy of VOLVO CARS CORPORATION

CONNECTING TO VEHICLE SPEED SENSOR

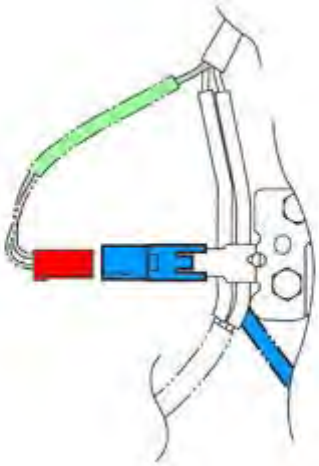

Fig. 158: Identifying Vehicle Speed Sensor And Connector
Courtesy of VOLVO CARS CORPORATION

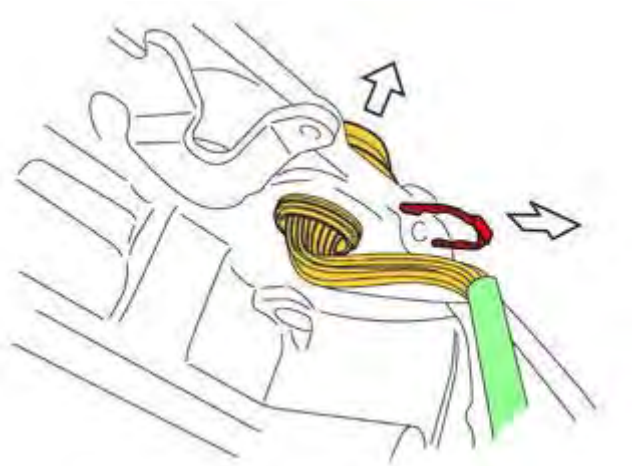

Fig. 159: Identifying Wire Harness Clip & Connector
Courtesy of VOLVO CARS CORPORATION

INSTALLATION

Fig. 160: Identifying Cable And Connector
Courtesy of VOLVO CARS CORPORATION

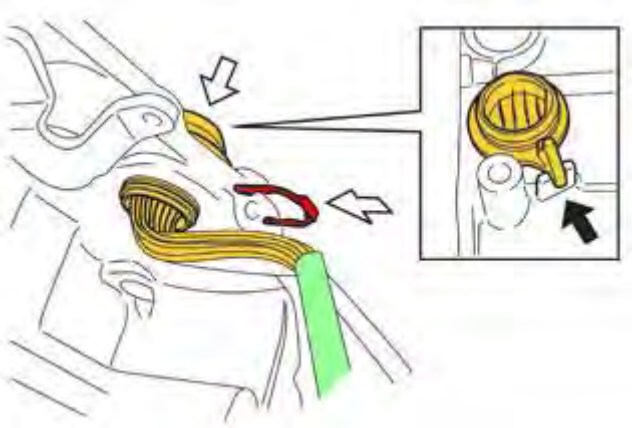

Fig. 161: Identifying Cable, Connector, And Clip

Courtesy of VOLVO CARS CORPORATION

TEMPERATURE SENSOR, FLUID TRANSMISSION

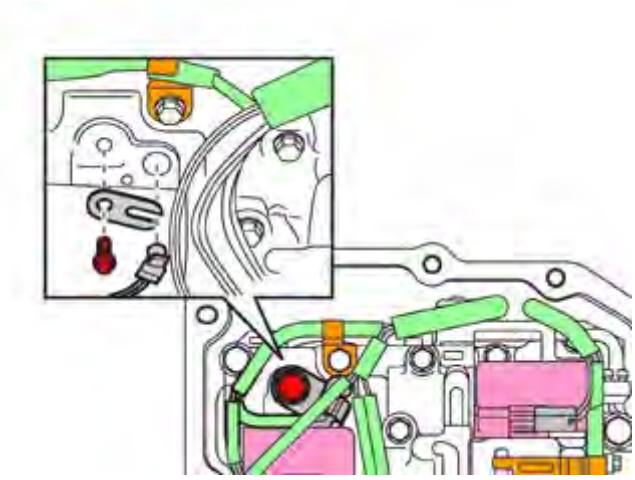

Fig. 162: Identifying Temperature Sensor & Connector
Courtesy of VOLVO CARS CORPORATION

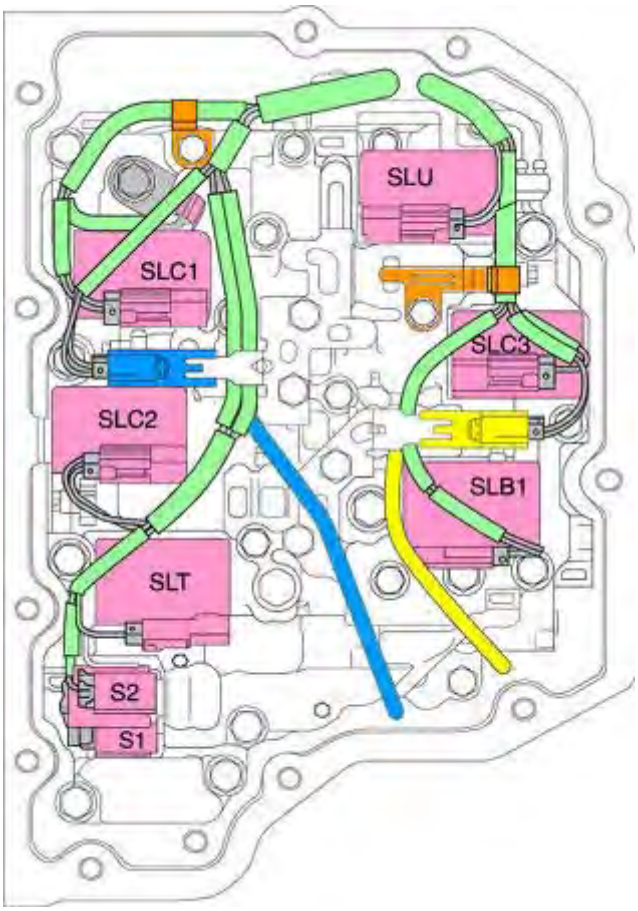

Fig. 163: Identifying Cable Harness
Courtesy of VOLVO CARS CORPORATION

INSTALLING COVER CONTROL SYSTEM

Install the cover over the control system. See **COVER CONTROL SYSTEM, REPLACING (2007-11)** .

REMOTE CONTROL, ADD/REPLACE/ERASE (2003)

IGNITION KEY/REMOTE CONTROL, ADDING/REPLACING/ERASING

see **IGNITION KEY/REMOTE CONTROL, ADDING/REPLACING/ERASING**

ELECTRICAL

Cables And Fuses - Specifications, Electrical/Electronic

COMPONENT SPECIFICATION, CENTRAL ELECTRONIC MODULE (CEM) (2003-04)

COMPONENT SPECIFICATION

The resistance value assumes a temperature of +20°C unless otherwise stated.

Designation	Type	Value
Sensor temperature seat, left/right	Negative temperature coefficient (NTC) sensor	Resistance: approximately 5 kohms

SIGNAL DESCRIPTION, ACCESSORY ELECTRONIC MODULE (AEM) (2003-12)

SIGNAL DESCRIPTION. ACCESSORY ELECTRONIC MODULE (AEM)

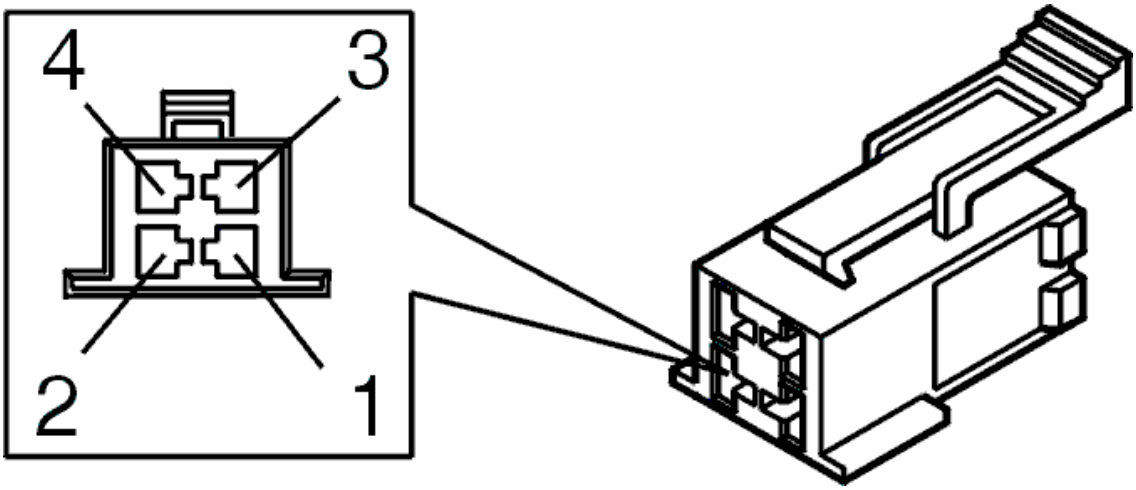

Fig. 1: Identifying Connector Terminals
Courtesy of VOLVO CARS CORPORATION

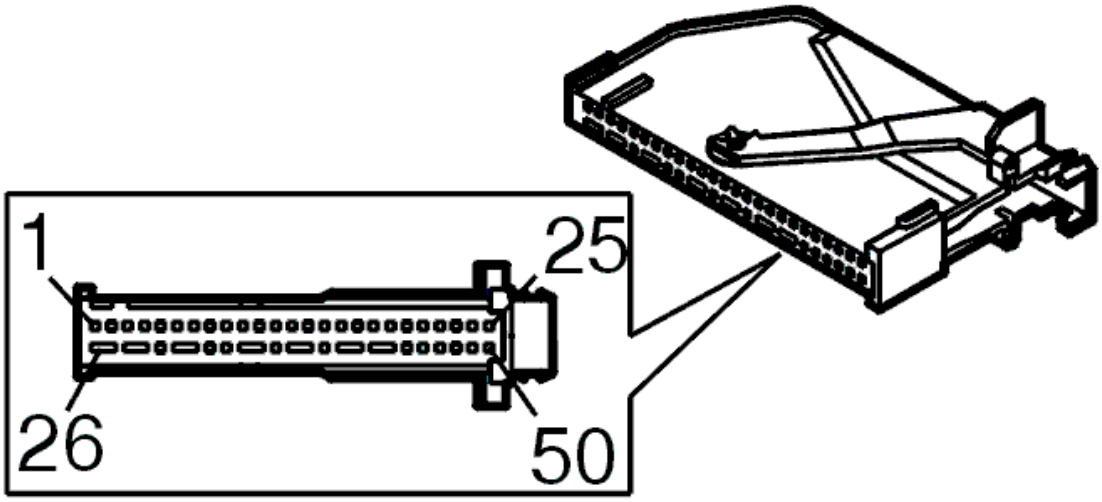

Fig. 2: Accessory Electronic Module Ground Terminals
Courtesy of VOLVO CARS CORPORATION

NOTE: **It is important to connect the breakout box and check the ground terminals before taking readings.**

Other information

- see **CONNECTING THE BREAKOUT BOX. ACCESSORY ELECTRONIC MODULE**
- see **CHECKING THE GROUND TERMINAL**

U=	DC voltage in volts (V)	U_{AC} =	AC voltage in volts (V)
U_{bat} =	Battery voltage (V)	f =	Frequency in Hertz (Hz)
U_{low} =	Voltage approximately 0 V	% duty =	Duty cycle (pulse ratio) as a percentage (%)
t =	Time in milliseconds (ms)	-	-

Connector A, terminals #A1-#A4
The following values are measured between the relevant terminal in column 1 and terminal #A1 (power ground) unless otherwise stated.

NOTE:
Check the ground terminals before starting to take readings with the breakout box.

Terminal in the breakout box	Terminal in connector	Signal type	Ignition off		Ignition on		Other
-	-	-	Activated	Not activated	Activated	Not activated	-

#51	#A1	Power ground	U_{low}	U_{low}	U_{low}	U_{low}	-
#52	#A2	30-supply to the accessory electronic module	U_{bat}	U_{bat}	U_{bat}	U_{bat}	-
#53	#A3	Communication CAN L low speed network	1.5-2.5 V		1.5-2.5 V		1.5 V, at communication
#54	#A4	Communication CAN_H low speed network	2.5-3.5 V		2.5-3.5 V		3.5 V, at communication

Connector B, terminals #B1 - #B50
The following values are measured between the relevant terminal in column 1 and terminal #A1 (power ground) unless otherwise stated.

NOTE:
Check the ground terminals before starting to take readings with the breakout box.

Terminal in the breakout box	Terminal in connector	Signal type	Ignition off		Ignition on		Other
-	-	-	**Activated**	**Not activated**	**Activated**	**Not activated**	-
#1	#B1	Remote start, power supply	U_{bat}	U_{bat}	U_{bat}	U_{bat}	Remote start module always activated
#2	#B2	Remote start, ground	U_{low}	U_{low}	U_{low}	U_{low}	-
#3	#B3	Remote start, digital input signal	U_{low}	U=3V or U=5V	U_{low}	U=3V or U=5V	Pulses with variable time periods
#4	#B4	Electric engine block heater, ground	U_{low}	U_{low}	U_{low}	U_{low}	-
#5	#B5	Electric engine block heater, control signal	U_{bat}	U_{low}	U_{bat}	U_{low}	-
#6	#B6	Reverse (reversing) warning system, power supply	U_{low}	U_{low}	U_{bat}	U_{low}	**NOTE:** **Does not apply to XC90 2003-**

#7	#B7	Reverse (reversing) warning system buzzer, digital input signal	U_{bat}	U_{bat}	U_{low}	U_{bat}	**NOTE: Does not apply to XC90 2003-.**
#8	#B8	Reverse (reversing) warning system, ground	U_{low}	U_{low}	U_{low}	U_{low}	**NOTE: Does not apply to XC90 2003-.**
#9	#B9	-	-	-	-	-	-
#10	#B10	-	-	-	-	-	-
#11	#B11	Carphone mute, digital input signal	U_{bat}	U_{bat}	U_{low}	U_{bat}	-
#12	#B12	Mute signal (radio), digital output signal	U_{bat}	U_{bat}	U_{low}	U_{bat}	-
#13	#B13	Rheostat signal (radio), digital output signal	U_{low}	U_{low}	PWM = 6.3%-100%	PWM = 6.3%-100%	Pulse width modulation (PWM) signal
#14	#B14	Speed signal (radio), digital output signal	U_{bat}	U_{bat}	PWM = 30%-70%	PWM = 30%-70%	Pulse width modulation (PWM) signal
#15	#B15	Alarm signal P0, digital output signal	U_{low}	U_{bat}	U_{bat}	U_{bat}	Status "Ignition off " on condition the ignition key is out
#16	#B16	Alarm signal P1, digital output signal	U_{low}	U_{bat}	U_{bat}	U_{bat}	Status "Ignition off " on condition the ignition key is out
#17	#B17	-	-	-	-	-	-
#18	#B18	-	-	-	-	-	-
#19	#B19	-	-	-	-	-	-
#20	#B20	-	-	-	-	-	-
#21	#B21	-	-	-	-	-	-
#22	#B22	-	-	-	-	-	-
#23	#B23	-	-	-	-	-	-
#24	#B24	-	-	-	-	-	-

#25	#B25	-	-	-	-	-	-
#26	#B26	-	-	-	-	-	-
#27	#B27	-	-	-	-	-	-
#28	#B28	-	-	-	-	-	-
#29	#B29	-	-	-	-	-	-
#30	#B30	Aerial amplifier, power supply	U_{low}	U_{low}	U_{bat}	U_{bat}	$U=U_{bat}$ at ignition key position I
#31	#B31	-	-	-	-	-	-
#32	#B32	-	-	-	-	-	-
#33	#B33	Alarm signal S0, digital output signal	U_{bat}	U_{bat}	U_{low}	U_{bat}	-
#34	#B34	Alarm signal P1, digital output signal	U_{low}	U_{low}	U_{bat}	U_{low}	-
#35	#B35	-	-	-	-	-	-
#36	#B36	-	-	-	-	-	-
#37	#B37	-	-	-	-	-	-
#38	#B38	-	-	-	-	-	-
#39	#B39	-	-	-	-	-	-
#40	#B40	-	-	-	-	-	-
#41	#B41	-	-	-	-	-	-
#42	#B42	-	-	-	-	-	-
#43	#B43	-	-	-	-	-	-
#44	#B44	-	-	-	-	-	-
#45	#B45	-	-	-	-	-	-
#46	#B46	-	-	-	-	-	-
#47	#B47	-	-	-	-	-	-
#48	#B48	-	-	-	-	-	-
#49	#B49	-	-	-	-	-	-
#50	#B50	-	-	-	-	-	-

SIGNAL DESCRIPTION, CENTRAL ELECTRONIC MODULE (CEM) (2005-12)

SIGNAL SPECIFICATION

All the values given below are between the terminals stated in column 1 and terminal #D6 in column 2 (power ground). This applies unless otherwise indicated in the last column.

NOTE: **It is important that the breakout box is connected and that the ground connections have been checked before starting to measure.**

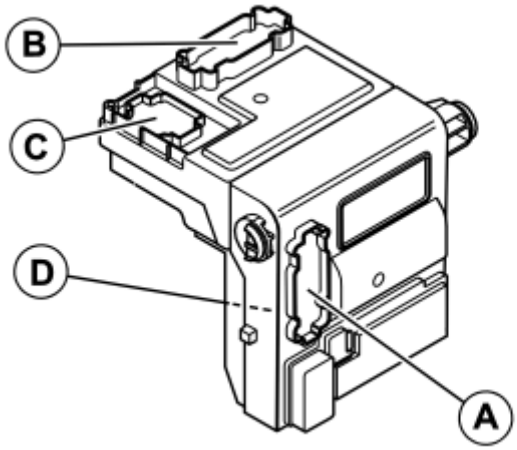

Fig. 3: Identifying Breakout Box
Courtesy of VOLVO CARS CORPORATION

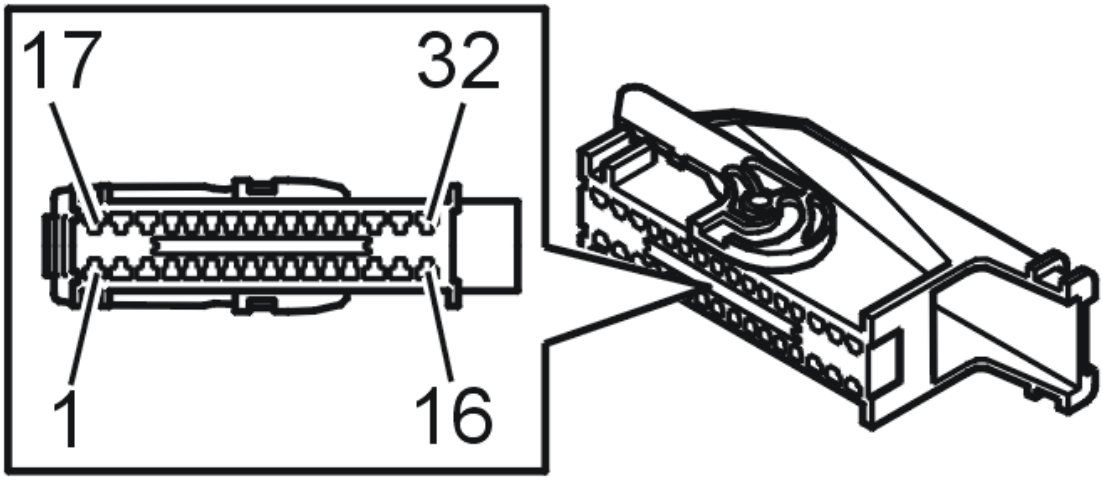

Fig. 4: Identifying Connector A
Courtesy of VOLVO CARS CORPORATION

U=	DC voltage in volts (V)	t =	Time in milliseconds (ms)
U_{bat} =	Battery voltage (V)	f =	Frequency in Hertz (Hz)
U_{low} =	Voltage approximately 0 V	% duty	Duty cycle (pulse ratio) as a percentage (%)

Connector A					
Breakout box terminal	**Control module terminal**	**Signal type**	**Ignition off Active/Not active**	**Ignition on Active/Not active**	**Miscellaneous**
#1	#A1	Reserve	-	-	-
#2	#A2	Reserve	-	-	-
#3	#A3	Extended X-supply			XC90, Infotainment.

		(3)	U_{low}	U_{bat} (Ignition switch position I & II)	
#4	#A4	Bifuel, power supply to the rear electronic module (REM)	U_{low}	U_{bat} (Ignition switch position II & III)	-
#5	#A5	Reserve	-	-	-
#6	#A6	X supply (Voltage supply from ignition switch)	U_{low}	U_{bat} (Ignition switch position I & II)	RTI/Radio
#7	#A7	Reserve	-	-	-
#8	#A8	15-supply (Power supply from ignition switch)	U_{low}	U_{bat} (Ignition switch position II & III)	-
#9	#A9	Reserve	-	-	-
#10	#A10	Extended X-supply (1)	U_{bat}	U_{bat}	Certain climate functions
#11	#A11	Reserve	-	-	-
#12	#A12	Left turn signal lamp	U_{low}	U_{low} -U_{bat} (Ignition position II) / U_{low}	Pulsed signal, f = approximately 1.5 Hz
#13	#A13	Reserve	-	-	-
#14	#A14	Reserve	-	-	-
#15	#A15	Stop lamps, power supply	U_{bat} /U_{low}	U_{bat} /U_{low}	Does not go to the centrally located brake light (CAN-signal)
#16	#A16	Fuel pump (FP), power supply	U_{low}	U_{bat} /U_{low}	-
#17	#A17	Cigarette lighter, power supply	U_{low}	U_{bat}	-
#18	#A18	Passenger seat heater, power supply	U_{bat}	U_{bat}	-
#19	#A19	Driver seat heater, power supply	U_{bat}	U_{bat}	-
#20	#A20	Collision signal	U_{low}	U_{bat} /U_{bat}	Active in the event of a collision
#21	#A21	Reserve	-	-	-
#22	#A22	Power passenger seat, power supply	U_{low}	U_{bat}	-

#23	#A23	Circulation pump saddle tank, voltage feed	U_{low}	U_{bat} /U_{low}	Only applies to vehicles from model year 2007
#24	#A24	Reserve	-	-	-
#25	#A25	Extended X-supply (2)	U_{bat}	U_{bat}	U_{bat} for 10 seconds after the key is removed, then Ulow Gear selector module (GSM).
#26	#A26	Reserve	-	-	-
#27	#A27	Steering wheel angle sensor module (SAS), power supply	U_{low}	U_{bat} (Ignition switch position II & III)	-
#28	#A28	Reserve	-	-	-
#29	#A29	Rear right-hand turn signal lamp, power supply	U_{low}	U_{low} -U_{bat} (Ignition position II) / U_{low}	Pulsed signal, f = approximately 1.5 Hz
#30	#A30	Reserve	-	-	-
#31	#A31	Reserve	-	-	-
#32	#A32	Reserve	-	-	-

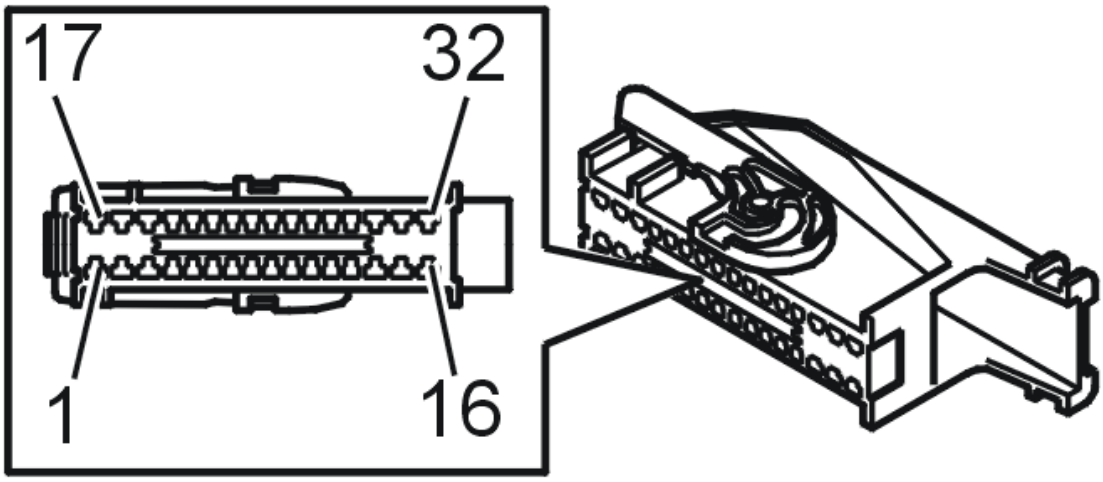

Fig. 5: Identifying Connector B
Courtesy of VOLVO CARS CORPORATION

Connector B					
Breakout box terminal	**Control module terminal**	**Signal type**	**Ignition off Active/Not active**	**Ignition on Active/Not active**	**Miscellaneous**

#1	#B1	Contact breaker, vacuum pump	U_{low}	U_{bat} (Ignition switch position II & III)	-
#2	#B2	30-supply to the central electronic module (CEM)	U_{bat}	U_{bat}	Right low beam
#3	#B3	30-supply to the central electronic module (CEM)	U_{bat}	U_{bat}	Left low beam
#4	#B4	Right low beam	U_{low}	U_{bat} /U_{low}	Ulow when turning the engine
#5	#B5	Reserve	-	-	-
#6	#B6	Reserve	-	-	-
#7	#B7	Left low beam	U_{low}	U_{bat} /U_{low}	Ulow when turning the engine
#8	#B8	Daytime running lamps left	U_{bat} /U_{low}	U_{bat} /U_{low}	-
#9	#B9	Daytime running lamps right	U_{bat} /U_{low}	U_{bat} /U_{low}	-
#10	#B10	Extended X-supply (1)	U_{bat}	U_{bat}	Parking heater. Certain climate control functions.
#11	#B11	30-supply to the stop lamp switch	U_{bat}	U_{bat}	-
#12	#B12	Reserve	-	-	-
#13	#B13	Reserve	-	-	-
#14	#B14	Reserve	-	-	-
#15	#B15	Power supply to the horn	U_{bat} /U_{low}	U_{bat} /U_{low}	-
#16	#B16	30-supply, fuel pump (FP)	U_{bat}	U_{bat}	-
#17	#B17	Front fog lamp, left	U_{low}	U_{bat} /U_{low}	-
#18	#B18	Front fog lamp, right	U_{low}	U_{bat} /U_{low}	-
#19	#B19	Headlamp washer	U_{low}	U_{bat} (Ignition switch position I & II)	-
#20	#B20	Extended X-supply (2)	U_{bat}	U_{bat}	Ubat for 10 seconds after the key is removed, then Ulow Transmission control module (TCM)
#21	#B21	Front washer motor	U_{low}	U_{bat} /U_{low}	-

#22	#B22	Power supply ABS/DSTC	U_{low}	U_{bat} (Ignition switch position II & III)	-
#23	#B23	Voltage supply headlamp alignment	U_{low}	U_{bat} at ignition switch positions II and III/U_{low}	-
#24	#B24	Power supply to the parking lamps	U_{bat}	U_{bat}	-
#25	#B25	Siren control module (SCM)	U_{bat} /U_{low}	U_{bat} /U_{low}	-
#26	#B26	30-supply to the engine control module (ECM)	U_{bat}	U_{bat}	-
#27	#B27	Full beam, left	U_{bat} /U_{low}	U_{bat} /U_{low}	-
#28	#B28	High beam, right	U_{bat} /U_{low}	U_{bat} /U_{low}	-
#29	#B29	Rear washer motor	U_{low}	U_{bat} /U_{low}	-
#30	#B30	Headlamp washer	U_{low}	U_{bat} /U_{low}	-
#31	#B31	Left turn signal lamp	U_{low}	U_{low} -U_{bat} / U_{low}	-
#32	#B32	Right turn signal lamp	U_{low}	U_{low} -U_{bat} / U_{low}	-

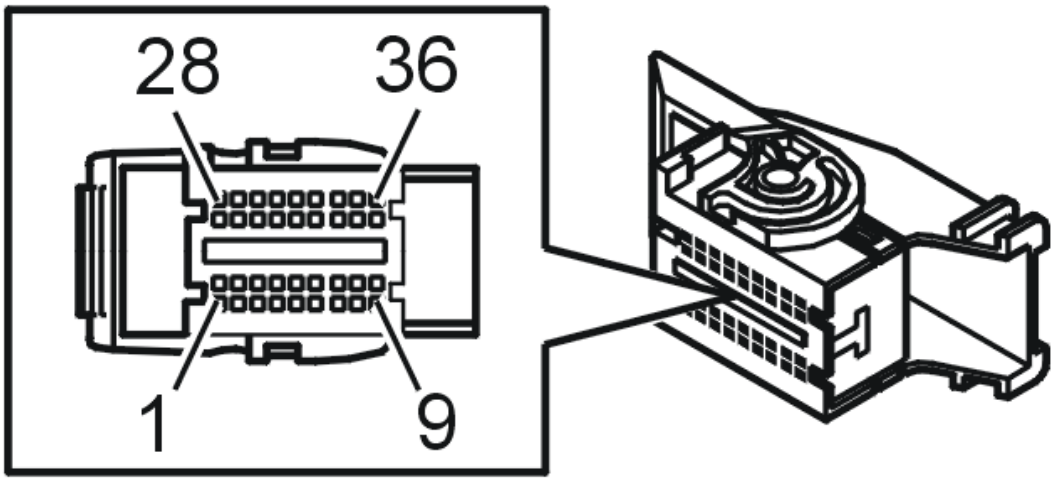

Fig. 6: Identifying Connector C
Courtesy of VOLVO CARS CORPORATION

Connector C					
Breakout	**Control**	**Signal type**	**Ignition off**	**Ignition on**	**Miscellaneous**

box terminal	module terminal		Active/Not active	Active/Not active	
#1	#C1	Status signal from the left-hand gas discharge lamp module (GDL)	U_{low}	U_{bat} minus approx. 1.5 V in ignition position II, U_{bat} in ignition position I; regardless of being active/not active	-
#2	#C2	Status signal from the right-hand gas discharge lamp module (GDL)	U_{low}	U_{bat} minus approx. 1.5 V in ignition position II, U_{bat} in ignition position I; regardless of being active/not active	-
#3	#C3	Windshield wiper, high speed	U_{low}	U_{low} if wipers not on; U_{bat} only when wipers move intermittently; U_{bat} when wipers move continuously at low speed; U_{low} when the wipers move at high speed	-
#4	#C4	Windshield wipers Off/On	Ubat	U_{bat} if the wipers are not on; U_{low} only during intermittent wiping; U_{low} when low speed wiping; U_{low} during high speed wiping	-
#5	#C5	50-supply to the engine control module (ECM)	U_{low}	U_{bat} only in ignition switch position III	-
#6	#C6	Starter motor relay	U_{low}	U= 2.7 V	-
#7	#C7	Control signal, starter motor relay	U_{low}	U_{bat} /U_{low}	U_{bat} in ignition switch position 3, otherwise U_{low}
#8	#C8	Reserve	-	-	-
#9	#C9	Auxiliary lamps	U_{low}	U_{bat} /U_{low}	-

#10	#C10	Washer fluid level sensor	U_{bat} if the tank is not empty; U_{low} if less than 1 litre.		-
#11	#C11	Control signal for the right-hand headlamp alignment motor	U_{low}	U_{bat} /U_{low}	-
#12	#C12	Control signal for the left-hand headlamp alignment motor	U_{low}	U_{bat} /U_{low}	-
#13	#C13	Reserve	-	-	-
#14	#C14	15-supply to the engine control module (ECM)	U_{low}	U_{bat} (Ignition switch position II & III) / U_{low} otherwise	-
#15	#C15	Wake up signal to ECM	U = 0V/U_{bat} .	Ignition position I: U = 0V/Ubat. Ignition position II & III: U = Ubat	U_{bat} a time after ignition position 0 or I has been selected. Then 0 V.
#16	#C16	LIN bus communication	During communication the voltage is 0V - Ubat		-
#17	#C17	Speed signal	U_{low}	U_{low} -U_{bat}	Frequency signal, increases with speed
#18	#C18	Reserve	-	-	-
#19	#C19	Parking lamps, left-hand front	U_{bat} /U_{low}	U_{bat} /U_{low}	-
#20	#C20	Parking lamps, right front	U_{bat} /U_{low}	U_{bat} /U_{low}	-
#21	#C21	Communication CAN_H high speed network	The voltage is 2.0-3.5 V during communication		-
#22	#C22	Communication CAN_L high speed network	The voltage is 1.5-2.5 V during communication		-
#23	#C23	Communication CAN_H high speed network	The voltage is 2.0-3.5 V during communication		Brake control module
#24	#C24	Communication CAN_L high speed network	The voltage is 1.5-2.5 V during communication		Brake control module
#25	#C25	High-pressure cleaning pump	U_{bat}	U_{low} / U_{bat}	-
#26	#C26	Reserve	-	-	-
#27	#C27	Reserve	-	-	-
#28	#C28	Control signal, gear	-		-

		selector module (GSM) P/N position		U_{bat} /U_{low}	
#29	#C29	Reserve	-	-	-
#30	#C30	Reserve	-	-	-
#31	#C31	Input signal, windshield wipers	U= 10.9 V	U_{low} as long as the wiper arm is not in the start position. When the wiper arm is in the start position, the voltage increases to U = 10.9 V/Not active: U= 10.9 V	-
#32	#C32	Volcano Lite CAN H	The voltage is 8.5-9.5 V during communication		-
#33	#C33	Reserve	-	-	-
#34	#C34	Stop lamp switch signal	U_{bat} /U_{low}	U_{bat} /U_{low}	-
#35	#C35	Stop lamp switch signal	U_{bat} /U_{low}	U_{bat} /U_{low}	-
#36	#C36	Reserve	-	-	-

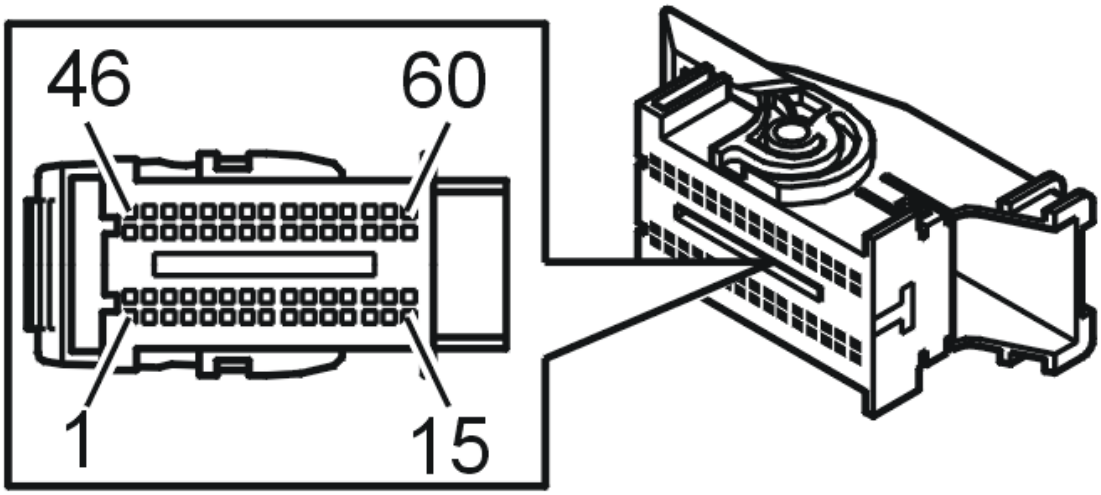

Fig. 7: Identifying Connector D
Courtesy of VOLVO CARS CORPORATION

Connector D					
Breakout box terminal	**Control module terminal**	**Signal type**	**Ignition off Active/Not active**	**Ignition on Active/Not active**	**Miscellaneous**
#1	#D1	Courtesy lighting left front	U_{low} -U_{bat} / U	U_{low} -U_{bat} / U $_{low}$	Pulsed signal, f = approximately 100

			low		Hz.
#2	#D2	Courtesy lighting right front	U_{low} -U_{bat} / U low	U_{low} -U_{bat} / U low	Pulsed signal, f = approximately 100 Hz.
#3	#D3	Courtesy lighting, left rear	U_{low} -U_{bat} / U low	U_{low} -U_{bat} / U low	Pulsed signal, f = approximately 100 Hz.
#4	#D4	Courtesy lighting, right rear	U_{low} -U_{bat} / U low	U_{low} -U_{bat} / U low	Pulsed signal, f = approximately 100 Hz.
#5	#D5	Reserve	-	-	-
#6	#D6	Power ground	U low /U_{low}		-
#7	#D7	Windshield wipers (Limp Home)	U_{bat} /U_{low}	U_{bat} /U_{low}	-
#8	#D8	X supply (Voltage supply from ignition switch)	U bat (Ignition switch positions I and II); U_{low} otherwise		-
#9	#D9	Signal (+) glove compartment lighting	U_{bat}	U_{bat}	30 minutes after the ignition is switched off, U_{low}
#10	#D10	Seat position sensor, driver	U_{bat} /	U_{bat} /	-
#11	#D11	Rain sensor	U_{low} / U_{bat}	U_{low} / U_{bat}	-
#12	#D12	Pulse width modulated signal (+) to rheostat	U_{low} -U_{bat} if active, U_{low} otherwise		-
#13	#D13	Signal (+) ignition switch illumination	U_{bat} /U_{low}	U_{bat} /U_{low}	-
#14	#D14	Lamp, switch, hazard warning signal flashers, power supply.	U_{bat} -U low if activated; U_{low} otherwise		-
#15	#D15	S-supply (Power supply from ignition switch)	U bat (Ignition switch positions 0, I, II and III); U_{low} otherwise		U_{low} with key removed.
#16	#D16	15-supply (Power supply from ignition switch)	U bat (Key in positions II and III); U_{low} otherwise		-
#17	#D17	Signal (-) from horn switch	U_{low} /U_{bat}	U_{low} /U_{bat}	-
#18	#D18	Seat position sensor, passenger	U_{low}	U_{bat}	Reference.
#19	#D19	Collision output signal to the phone	-	-	-

		(from the Supplemental Restraint System Module (SRS))			
#20	#D20	Signal (-) from the SRS-control module (airbag OK)	U_{bat} below 200 ms if the airbag is triggered, U_{low} if the airbag has not deployed.		-
#21	#D21	Reserve	-	-	-
#22	#D22	Signal (-) switch for the hazard warning signal flasher.	U_{low} if button is held in, U_{bat} otherwise		-
#23	#D23	Gear-shift position sensor	U_{low}	U_{low} / U_{bat}	U_{low} in positions P and N
#24	#D24	LIN bus communication	During communication the voltage is 0V - Ubat		-
#25	#D25	Seat position sensor, driver	-	-	(Only XC90 USA/CDN)
#26	#D26	Seat position sensor, passenger	-	-	(Only XC90 USA/CDN)
#27	#D27	Sensor, set belt reminder (+)	U_{low} / U_{bat}	U_{bat} /U_{bat}	-
#28	#D28	Sensor, seat belt reminder (-)	U_{low} /U_{low}	U_{low} /U_{low}	-
#29	#D29	Twilight sensor	U_{low} /U_{low}	U=0.25-4.75V	-
#30	#D30	Sun sensor	U_{low} /U_{low}	U=0.25-4.75V	-
#31	#D31	Communication CAN_H high speed network	The voltage is 2.0-3.5 V during communication		-
#32	#D32	Communication CAN_H high speed network	The voltage is 2.0-3.5 V during communication		-
#33	#D33	Communication CAN_H high speed network	The voltage is 2.0-3.5 V during communication		OBD out
#34	#D34	Communication CAN_H low speed network	The voltage is 2.0-3.5 V during communication		-
#35	#D35	Communication CAN_H low speed network	The voltage is 2.0-3.5 V during communication		-
#36	#D36	Communication CAN_H low speed network	The voltage is 2.0-3.5 V during communication		-

#37	#D37	Communication CAN_H low speed network	The voltage is 2.0-3.5 V during communication		Via SRS
#38	#D38	Communication CAN_H low speed network	The voltage is 2.0-3.5 V during communication		Via UEM
#39	#D39	Communication CAN_H low speed network	The voltage is 2.0-3.5 V during communication		Via DDM
#40	#D40	Communication CAN_H low speed network	The voltage is 2.0-3.5 V during communication		OBD out
#41	#D41	Volcano Lite CAN H	The voltage is 8.5-9.5 V during communication		-
#42	#D42	The sun sensor, twilight sensor and alarm LED share a common ground	U_{low} /U_{low}	U_{low} /U_{low}	-
#43	#D43	Fuel level sensor, left-hand side (+). Switched signal, 5/35 ms.	U~U_{low}	U=0.54-3.96 V	Full: 0.54 V Empty: 3.96 V
#44	#D44	Fuel level sensor, right-hand side (+). Switched signal, 5/35 ms.	U~U_{low}	U=0.54-3.96 V	Full: 0.54 V Empty: 3.96 V
#45	#D45	Fuel level sensor common ground	U_{low} /U_{low}	U_{low} /U_{low}	-
#46	#D46	Communication CAN_L high speed network	The voltage is 1.5-2.5 V during communication		-
#47	#D47	Communication CAN_L high speed network	The voltage is 1.5-2.5 V during communication		-
#48	#D48	Communication CAN_L high speed network	The voltage is 1.5-2.5 V during communication		OBD
#49	#D49	Communication CAN L low speed network	The voltage is 1.5-2.5 V during communication		-
#50	#D50	Communication CAN L low speed network	The voltage is 1.5-2.5 V during communication		-
#51	#D51	Communication CAN L low speed network	The voltage is 1.5-2.5 V during communication		-

#52	#D52	Communication CAN L low speed network	The voltage is 1.5-2.5 V during communication		Via SRS
#53	#D53	Communication CAN L low speed network	The voltage is 1.5-2.5 V during communication		Via UEM
#54	#D54	Communication CAN L low speed network	The voltage is 1.5-2.5 V during communication		Via DDM
#55	#D55	Communication CAN L low speed network	The voltage is 1.5-2.5 V during communication		OBD out
#56	#D56	IMMO Data	U_{low} /U_{low}	The voltage is 0.5-2.5 V during communication	Antenna ring/lighting ignition switch
#57	#D57	IMMO Clock	U_{low} /U_{low}	The voltage is 0.5-2.5 V during communication	Antenna ring/lighting ignition switch
#58	#D58	LIN bus 2	During communication the voltage is 0 V - U_{bat}		SWM/SAS
#59	#D59	Speed signal	U_{low}	U_{low} -U_{bat}	Output signal Frequency signal, increases with speed
#60	#D60	50-supply (Power supply from ignition switch)	U_{bat} (Key in position III); U_{low} otherwise		-

SIGNAL DESCRIPTION, COMBUSTION PREHEATER MODULE (CPM) (2005-12)

SIGNAL SPECIFICATION

All values given below are between the respective terminal in column 1 and terminal #3 (power ground) unless otherwise stated in brackets after the entry. Control module terminals #1-#16 correspond to terminals #1-#16 on the breakout box.

NOTE: **It is important to connect the breakout box and check the ground terminals before taking readings.**

U=	DC voltage in volts (V)	U_{AC} =	AC voltage in volts (V)
U_{bat} =	Battery voltage (V)	f =	Frequency in Hertz (Hz)
U_{low} =	Voltage approximately 0 V	% duty =	Duty cycle (pulse ratio) as a percentage (%)
t =	Time in milliseconds (ms)	-	-

Terminal	Signal type	Ignition on	Engine idling	Other
#1	Glow plug signal	Glow plug off: $U=U_{low}$ Glow plug on: Pulse ratio (% duty) > 0%		Pulse ratio (% duty) increases with glow plug intensity.
#2	-	-		-
#3	Power ground (Measured to the battery negative terminal)	U_{low}		-
#4	Signal ground, engine coolant temperature sensor and flame sensor	U_{low}		-
#5	-	-		-
#6	Communication cable for the central electrical module (CEM)	-	Digital signal	-
#7	-	-	-	-
#8	Flame sensor signal	Flame not lit: Uapprox.5 V Flame lit: U<1.5 V		-
#9	30-supply (Power supply from battery)	U_{bat}		-
#10	Combustion fan control signal	Combustion fan off and power supply off: U_{low} Combustion fan off and power supply on: U_{bat} Fan on: Pulse ratio (% duty) > 0%		The pulse ratio (% duty) increases with fan speed.
#11 Model year - 2001	Power supply, combustion fan, fuel pump (FP) and water pump	Power supply off: U_{low} Power supply on: U_{bat}		-
#11 Model year 2002-	Power supply, combustion fan and water pump	Power supply off: U_{low} Power supply on: U_{bat}		-
#12	Water pump control signal	Water pump off and power supply off: U_{low} Water pump off and power supply on: U_{bat} Water pump on and power supply on: U_{low}		-
#13	Fuel pump control signal	Fuel pump off: f=0 Hz Fuel pump on: f>0 Hz		The frequency increases with pump speed
#14	-	-		-
#15	Extended X-supply	U_{bat}	U_{bat}	-
#16	Coolant temperature sensor	+20°C: U approx. 3.5 V		The voltage

	signal	+75°C= 2.02 V +90°C= 0.78 V	decreases with increasing temperature

SIGNAL SPECIFICATION, ACCESSORY USB UNIT (AUU) (2007-12)

SIGNAL SPECIFICATION

U=	DC voltage in volts (V)	U_{AC} =	AC voltage in volts (V)
U_{bat} =	Battery voltage (V)	f =	Frequency in Hertz (Hz)
U_{low} =	Voltage approximately 0 V	t =	Time in seconds
PWM =	Pulse width modulated signal as a %	-	-

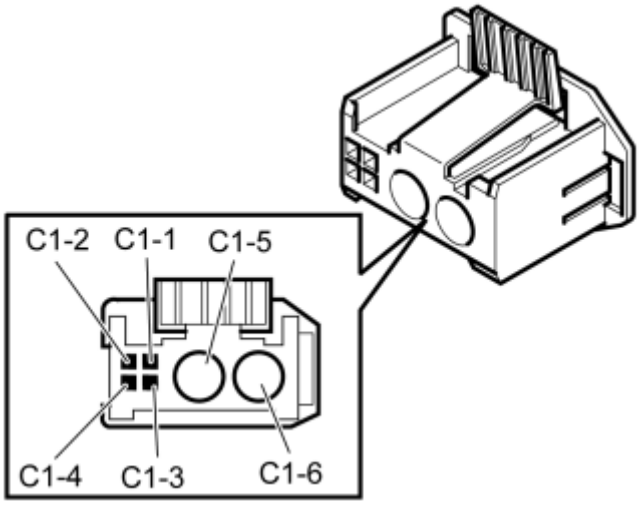

Fig. 8: Identifying 6-Bit Connector C1
Courtesy of VOLVO CARS CORPORATION

CONNECTOR C1

Breakout box terminal	Control module terminal	Signal type	Ignition on	Other
-	#C1-1	Power supply	U = U_{bat}	-
-	#C1-2	Ground, power supply	U = U_{low}	-
-	#C1-3	Reserve	-	-
-	#C1-4	Reserve	-	-
-	#C1-5	MOST input signal	Optical input signal when the MOST network is activated	-
-	#C1-6	MOST output signal	Optical output signal when the	-

			MOST network is activated	

SIGNAL SPECIFICATION, CENTRAL ELECTRONIC MODULE (CEM) (2003-04)

SIGNAL SPECIFICATION

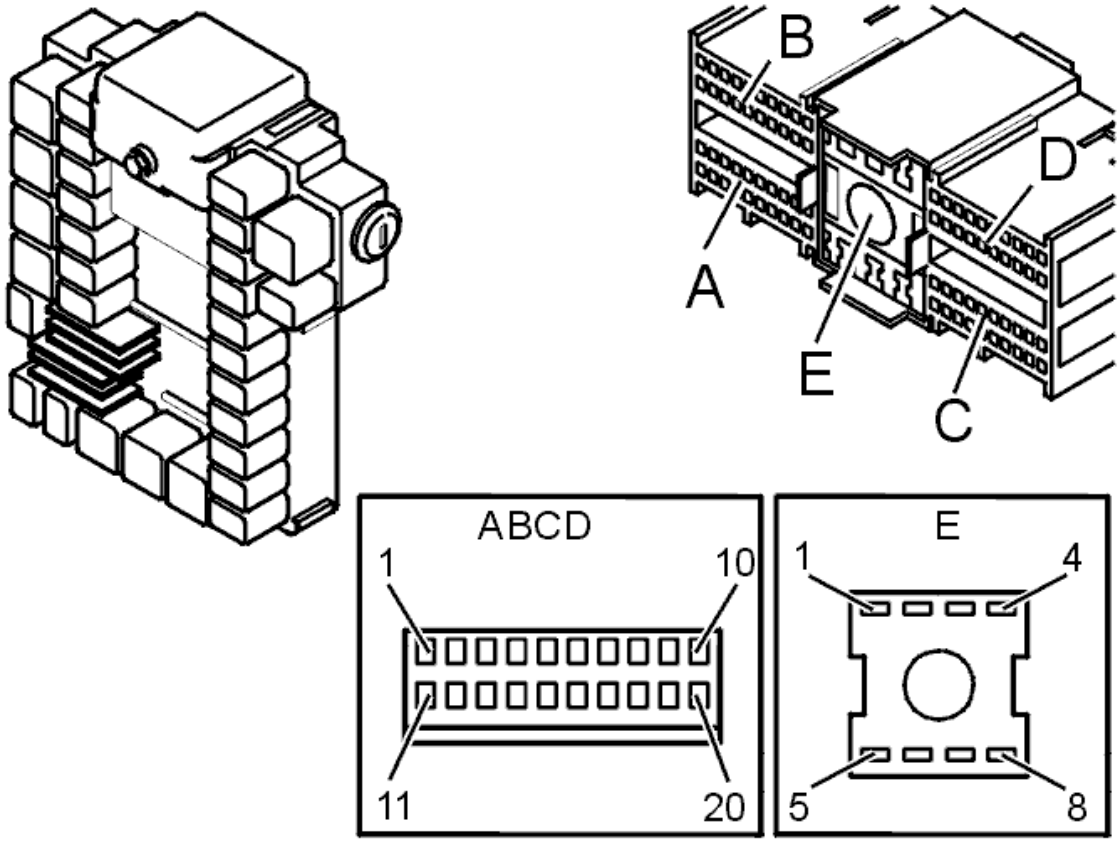

Fig. 9: Ground Terminals
Courtesy of VOLVO CARS CORPORATION

NOTE: **It is important to connect the breakout box and check the ground terminals before taking readings.**

Other information

- To connect the breakout box, see **CONNECTING THE BREAKOUT BOX**
- To check ground terminals, see **CHECKING THE GROUND TERMINAL** .

U=	DC voltage in volts (V)	U_{AC} =	AC voltage in volts (V)
U_{bat} =	Battery voltage (V)	f =	Frequency in Hertz (Hz)

U_{low} =	Voltage approximately 0 V	% duty =	Duty cycle (pulse ratio) as a percentage (%)
t =	Time in milliseconds (ms)	-	-

Connector A, terminals #A1-#A20
The following values are measured between the relevant terminal in column 1 and terminal #E1 (power ground) unless otherwise stated.

NOTE:
Check the ground terminals before starting to take readings with the breakout box.

U = DC in volts (V)
Ubat = battery voltage in volts (V)
Ulow = Voltage close to 0 V

Breakout box terminal	Terminal in connector	Signal type	Ignition off		Ignition on		Other
-	-	-	Activated	Not activated	Activated	Not activated	-
#A1	#A1	Signal (-) back-up (reversing) lamp	Ulow	Ubat	Ulow	Ubat	-
#A2	#A2	Signal, for fault-tracing the actuator motor for the left-hand xenon lamp	Ulow	Ulow	Ulow-Ubat if active, Ulow otherwise in pulse ratio (%duty) = 0-100%		A fault is detected at 65% > pulse ratio (% duty) > 90%
#A3	#A3	Control signal, starter motor relay	-		0 V	0 V	Activated with key in position III
#A4	#A4	Signal, Hood switch	Ulow with the hood closed Ulow-Ubat with the hood open				Pulsed signal, f=100 Hz
#A5	#A5	Signal (-) L-signal	Ulow	Ulow	Ubat	U~0.3-0.7*Ubat	-
#A6	#A6	Stepper motor speed related power steering (channel B)	Ulow		Ulow-Ubat	Ulow	signal for 12 ms
#A7	#A7	Stepper motor speed related power steering (channel A)	Ulow		Ulow-Ubat	Ulow	signal for 12 ms
#A8	#A8	Control signal relay for	Ulow	Ubat	Ulow	Ubat	-

		headlamp washing					
#A9	#A9	Pulse width modulated signal (+) to beam adjustment unit	Ulow		Ulow-Ubat if active, Ulow otherwise Pulse ratio (% duty) > 0%		Pulse ratio increases with increased beam width
#A10	#A10	-	-		-		-
#A11	#A11	Stepper motor speed related power steering (channel B)	Ulow		Ulow-Ubat	Ulow	signal for 12 ms
#A12	#A12	Stepper motor speed related power steering (channel A)	Ulow		Ulow-Ubat	Ulow	signal for 12 ms
#A13	#A13	Control signal, windshield wiper relay off/on	Ubat		Ulow	Ubat	-
#A14	#A14	Control signal, windshield wiper high speed relay	Ubat		Ulow	Ubat	-
#A15	#A15	Glass breakage loop, pulsed signal	0-12 V		Ulow	Ulow	0-12 V periodically when the car is alarmed
#A16	#A16	Control signal, front washer motor relay	Ubat		Ulow	Ubat	-
#A17	#A17	Control signal, rear washer motor relay	Ubat		Ulow	Ubat	(5 DRS)
#A18	#A18	Volcano Lite	The voltage is 0 V - Ubat during communication				Serial communication
#A19	#A19	Control signal, horn relay	Ulow	Ubat	Ulow	Ubat	-
#A20	#A20	Signal (-), starter motor relay	Ulow		Ubat	Ulow	-

Connector B, terminals #B1 - #B20
The following values are measured between the relevant terminal in column 1 and terminal #E1 (power ground) unless otherwise stated.

NOTE:
Check the ground terminals before starting to take readings with the breakout box.

U = DC in volts (V)
Ubat = battery voltage in volts (V)
Ulow = Voltage close to 0 V

Breakout box terminal	Terminal in connector	Signal type	Ignition off		Ignition on		Other
-	-	-	Activated	Not activated	Activated	Not activated	-
#A21	#B1	S-supply (Power supply from ignition switch)	Ulow (Key out), Ubat (key in)				-
#A22	#B2	X-supply (Power supply from the ignition switch)	Ubat (Key in positions I and II); Ulow otherwise				-
#A23	#B3	15-supply (Power supply from ignition switch)	Ubat (Key in positions II and III); Ulow otherwise				-
#A24	#B4	Stop lamp switch signal	Ubat	Ulow	Ubat	Ulow	-
#A25	#B5	Supply upper stop lamp (4 door)	Ubat	6 V	Ubat	6 V	-
#A26	#B6	Supply to stop lamp relay in the rear electronic module	Ulow	Ubat	Ulow	Ubat	-
#A27	#B7	Diagnostic communication (CAN H) for the high speed network	The voltage is 2.0-3.5 V during communication				-
#A28	#B8	Diagnostic communication (CAN_L) for the high speed network	The voltage is 1.5-2.5 V during communication				-
#A29	#B9	Signal (-) sensor for the front left seat belt buckle	Ulow		0-5 V	0-5 V	-
#A30	#B10	Reference voltage (+) for X-supply to	Ulow		Ubat		-

		the left seat belt buckle					
#A31	#B11	Serial communication the left heated seat	Ulow		During communication voltage is ~Ubat		-
#A32	#B12	Signal (-) contact breaker (left rear door open)	Ulow-Ubat if the door is open, Ulow otherwise				Pulsed signal, f=100 Hz.
#A33	#B13	Signal (-) contact breaker (left rear door locked)	Ulow if the door is locked, Ubat otherwise				-
#A34	#B14	Frequency signal (-) from the Engine Control Module (ECM) for the fuel pump (FP) relay	Ulow		Frequency signal U=Ulow-Ubat		f=50 HZ
#A35	#B15	Signal (-) from the windshield washer reservoir level sensor	Ubat if the tank is not empty, Ulow if under 1 liter.				-
#A36	#B16	Signal (-) from the windshield wiper motor	Ulow	Ubat	Ulow	Ubat	Ulow if the engine is running
#A37	#B17	Communication CAN_H high speed network	The voltage is 2.0-3.5 V during communication				-
#A38	#B18	Communication CAN_L high speed network	The voltage is 1.5-2.5 V during communication				-
#A39	#B19	Diagnostic communication (CAN_H) for the low speed network	The voltage is 2.0-3.5 V during communication				-
#A40	#B20	Diagnostic communication (CAN_L) for the low speed network	The voltage is 1.5-2.5 V during communication				-

Connector C, terminals #C1-#C20
The following values are measured between the relevant terminal in column 1 and terminal #E1 (power ground) unless otherwise stated.

NOTE:

Check the ground terminals before starting to take readings with the breakout box.

U = DC in volts (V)
Ubat = battery voltage in volts (V)
Ulow = Voltage close to 0 V

Breakout box terminal	Terminal in connector	Signal type	Ignition off		Ignition on		Other
-	-	-	Activated	Not activated	Activated	Not activated	-
#A41	#C1	Reference voltage (+) for X-supply to the right seat belt buckle	Ulow		Ubat		-
#A42	#C2	Signal (-) sensor for the front right seat belt buckle	Ulow		0-5 V	0-5 V	---
#A43	#C3	Signal (-) contact breaker (right rear door locked)	Ulow if the door is locked, Ubat otherwise			-	-
#A44	#C4	Serial communication right heated seat	Ulow		During communication voltage is ~Ubat	-	-
#A45	#C5	Signal (-) Lock unit trunk lid	Ulow-Ubat if the tailgate is open, Ulow otherwise			-	Pulsed signal, f=100 Hz.
#A46	#C6	Control signal, auxiliary lamp relay	-	Ubat	Ulow	Ubat	-
#A47	#C7	-	-	-	-	-	-
#A48	#C8	-	-	-	-	-	-
#A49	#C9	-	-	-	-	-	-
#A50	#C10	-	-	-	-	-	-
#A51	#C11	-	-	-	-	-	-
#A52	#C12	-	-	-	-	-	-
#A53	#C13	-	-	-	-	-	-
#A54	#C14	Signal (-) fuel pump (FP) relay switch	-	Ulow	Ubat	Ulow	-
#A55	#C15	-	-	-	-	-	-
#A56	#C16	-	-	-	-	-	-

#A57	#C17	-	-	-	-	-	-
#A58	#C18	Signal (-) contact breaker (right rear door open)	Ulow-Ubat if the door is open, Ulow otherwise				Pulsed signal, f= 100 Hz.
#A59	#C19	-	-	-	-	-	-
#A60	#C20	Reserve (-)	-	-	-	-	-

Connector D, terminals #D1-#D20
The following values are measured between the relevant terminal in column 1 and terminal #E1 (power ground) unless otherwise stated.

NOTE:
Check the ground terminals before starting to take readings with the breakout box.

U = DC in volts (V)
Ubat = battery voltage in volts (V)
Ulow = Voltage close to 0 V

Breakout box terminal	Terminal in connector	Signal type	Ignition off		Ignition on		Other
-	-	-	Activated	Not activated	Activated	Not activated	-
#B1	#D1	Control signal automatic gear selector module, switch to ground	-		Ubat	Ulow	-
#B2	#D2	Communication CAN L low speed network	The voltage is 1.5-2.5 V during communication				-
#B3	#D3	Communication CAN_H low speed network	The voltage is 2-3.5 V during communication				-
#B4	#D4	Signal (-) from control stalks (Limp Home)	Ubat	Ulow	Ubat	Ulow	-
#B5	#D5	Signal (-) from the SRS-control module (airbag OK)	Ubat for 200 ms if the airbag is triggered, Ulow if the airbag is not triggered.				-
#B6	#D6	Serial communication (K-line),	The voltage is 0 V - Ubat during communication				-

		diagnostic					
#B7	#D7	Signal (-) contact breaker (left front door open)	Ulow-Ubat if the door is open, Ulow otherwise.				Pulsed signal, f= 100 Hz.
#B8	#D8	Signal (-) contact breaker (right front door open)	Ulow-Ubat if the door is open, Ulow otherwise.				Pulsed signal, f= 100 Hz.
#B9	#D9	Signal (-) from the gear-shift position sensor (locked in P/N)	Ulow	Ulow	Ulow	Ubat	Ulow in P and N position
#B10	#D10	Signal (+), speed (frequency signal)	Ulow		Ulow-Ubat		Frequency signal increases with speed
#B11	#D11	Signal, for fault-tracing the actuator motor for the right-hand xenon lamp	Ulow	Ulow	Ulow-Ubat if active, Ulow otherwise in pulse ratio (% duty) = 0-100%		A fault is detected at 65%>pulse ratio (% duty)>90%
#B12	#D12	Signal (-) from horn switch	Ulow	Ubat	Ulow	Ubat	-
#B13	#D13	Signal (+) data Immobilizer	Ulow		Ubat		-
#B14	#D14	Signal (+) Immobilizer	Ulow		Ubat		-
#B15	#D15	-	-	-	-	-	-
#B16	#D16	Signal (-) switch for the hazard warning signal flasher	Ulow if the button is held in, Ubat otherwise				-
#B17	#D17	Pulse width modulated signal (+) lamp in button for hazard warning signal flasher	Ulow-Ubat if active, Ulow otherwise Pulse ratio (% duty) > 0%				-
#B18	#D18	Signal (+) glove compartment lighting	Ubat				30 minutes after ignition off, Ulow
#B19	#D19	Signal (+) ignition switch illumination	Ubat	Ulow	Ubat	Ulow	-
#B20	#D20	Signal (+) Alarm indicator LED	Ulow or 0.7 V		Ulow		0.7 V if the LED is

					active

Connector E, terminals #E1-#E8
The following values are measured between the relevant terminal in column 1 and terminal #E1 (power ground) unless otherwise stated.

NOTE:
Check the ground terminals before starting to take readings with the breakout box.

U = DC in volts (V)
Ubat = battery voltage in volts (V)
Ulow = Voltage close to 0 V

Breakout box terminal	Terminal in connector	Signal type	Ignition off		Ignition on		Other
-	-	-	Activated	Not activated	Activated	Not activated	-
#B21	#E1	Power ground	Ulow				-
#B22	#E2	Pulse width modulated signal (+) courtesy lighting	Ulow-Ubat if active, Ulow otherwise			-	-
#B23	#E3	30-supply to turn signal lamps and hazard warning signal flasher	Ubat			-	-
#B24	#E4	-	-	-	-	-	-
#B25	#E5	-	-	-	-	-	-
#B26	#E6	30-supply to the central electronic module (CEM)	Ubat				-
#B27	#E7	-	-	-	-	-	-
#B28	#E8	Pulse width modulated signal (+) to rheostat	Ulow-Ubat if active, Ulow otherwise			-	-

SIGNAL SPECIFICATION, REAR ELECTRONIC MODULE (REM) (2003-04)

SIGNAL SPECIFICATION

REAR ELECTRONIC MODULE (REM) CONNECTORS A-E

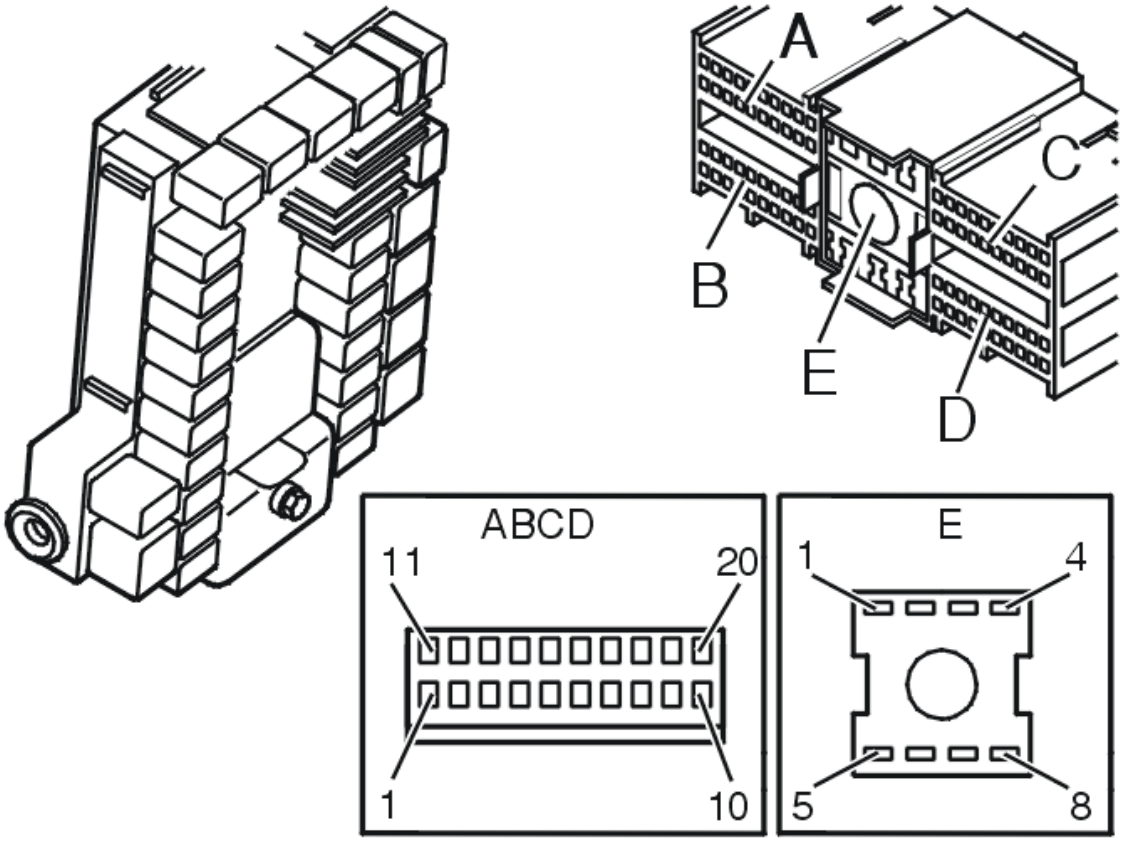

Fig. 10: Identifying Rear Electronic Module (REM) And Connector Terminals
Courtesy of VOLVO CARS CORPORATION

Connector A, terminals #A1-#A20

The following values are measured between the relevant terminal and terminal #E1 (power ground) unless otherwise stated.

The values are measured with the control module in "Active mode".

NOTE: **It is important to connect the breakout box and check the ground terminals before taking readings.**

U = DC in volts (V).

Ubat = battery voltage in volts (V).

Ulow = Voltage close to 0 V.

NC = Not connected

NC* = grounded via capacitor (C=22nF)

Terminal, breakout box	Terminal, control module	Signal type	Ignition off Active/not active	Ignition on Active/not active	Other
#A01	#A1	Spare input (30)	U~Ubat	U~Ubat	At no input
#A02	#A2	Fuel level sensor, left-hand side (+). Switched signal, 5/35 ms.	U~Ulow	U=0.54-3.96 V	Full: 0.54 V Empty: 3.96 V
#A03	#A3	Reserve output (switch to ground)	U~Ulow	U~Ulow	-
#A04	#A4	Stop lamp, relay driver from the central electronic module (CEM)	U~Ulow/Ubat	U~Ulow/Ubat	-
#A05	#A5	-	-	-	-
#A06	#A6	Reserve, analog input signal	NC*	NC*	-
#A07	#A7	Signal ground (-)	U~Ulow	U~Ulow	-
#A08	#A8	Fuel level sensor, right-hand side (+). Switched signal, 5/35 ms.	U~Ulow	U=0.54-3.96 V	Full: 0.54 V Empty: 3.96 V
#A09	#A9	Spare input (30)	U~Ubat	U~Ubat	At no input
#A10	#A10	Fuel level sensor common ground	U~Ulow	U~Ulow	-
#A11	#A11	Reserve, analog input signal	NC*	NC*	-
#A12	#A12	Signal ground (-)	U~Ulow	U~Ulow	-
#A13	#A13	Reserve output (switch to ground)	U~Ulow	U~Ulow	-
#A14	#A14	CAN H	-	-	During communication U= 2.0-3.5 V
#A15	#A15	Volcano Lite CAN H	-	-	During communication U= 2.0-3.5 V
#A16	#A16	CAN L	-	-	During communication U= 2.0-3.5 V
#A17	#A17	Volcano Lite CAN L	-	-	During communication U= 2.0-3.5 V
#A18	#A18	Reserve	U~Ulow	U~Ulow	NC
#A19	#A19	Reserve output (switch to ground)	U~Ulow	U~Ulow	-

#A20	#A20	-	-	-	-
#A21	#B1	Spare input (GND)	U~Ulow	U~Ulow	At no input
#A22	#B2	Spare input (GND)	U~Ulow	U~Ulow	At no input
#A23	#B3	Reserve output (switch to ground)	U~Ulow	U~Ulow	-
#A24	#B4	Reserve	U~Ulow	U~Ulow	NC
#A25	#B5	Reserve	U~Ulow	U~Ulow	NC
#A26	#B6	Signal ground, position sensor for headlamp beam height control	U~Ulow	U~Ulow	-
#A27	#B7	Reserve output (switch to ground)	U~Ulow	U~Ulow	-
#A28	#B8	Analog input signal from the position sensor for headlamp beam height control.	U~Ulow	U= 1.7-3.2 V	NC
#A29	#B9	Reserve	U~Ulow	U~Ulow	NC
#A30	#B10	Power supply, position sensor for headlamp beam height control	U~Ulow	U=5 V	-
#A31	#B11	Reserve	U~Ulow	U~Ulow	NC
#A32	#B12	Reserve	U~Ulow	U~Ulow	NC
#A33	#B13	Reserve	U~Ulow	U~Ulow	NC
#A34	#B14	Reserve	U~Ulow	U~Ulow	NC
#A35	#B15	Reserve	U~Ulow	U~Ulow	NC
#A36	#B16	Reserve	U~Ulow	U~Ulow	NC
#A37	#B17	Reserve	U~Ulow	U~Ulow	NC
#A38	#B18	Reserve	U~Ulow	U~Ulow	NC
#A39	#B19	Input signal seat belt reminder passenger	U~Ulow	U=0-5 V	Oscillating signal in three phases.
#A40	#B20	Input/output signal seat belt reminder passenger	U~Ulow	U=0-5 V	Oscillating signal in three phases.
#A41	#C1	Reference signal fuel level sensor, CNG	U~Ulow	U~0.41-4.94 V	Bi-fuel
#A42	#C2	Signal ground (-)	U~Ulow	U~Ulow	-
#A43	#C3	Reserve	U~Ulow	U~Ulow	NC
#A44	#C4	-	-	-	-
#A45	#C5	-	-	-	-
#A46	#C6	Reserve output (switch to ground)	U~Ulow	U~Ulow	-

#A47	#C7	Reserve	U~Ulow	U~Ulow	NC
#A48	#C8	Reserve output (switch to ground)	U~Ulow	U~Ulow	-
#A49	#C9	Reserve	U~Ulow	U~Ulow	NC
#A50	#C10	Reserve	U~Ulow	U~Ulow	NC
#A51	#C11	Reserve output (switch to ground)	U~Ulow	U~Ulow	-
#A52	#C12	Reserve output (switch to ground)	U~Ulow	U~Ulow	-
#A53	#C13	Reserve	U~Ulow	U~Ulow	NC
#A54	#C14	Reserve	U~Ulow	U~Ulow	NC
#A55	#C15	Reserve	U~Ulow	U~Ulow	NC
#A56	#C16	Reserve	U~Ulow	U~Ulow	NC
#A57	#C17	Spare input (30)	U~Ubat	U~Ubat	At no input
#A58	#C18	Spare input (30)	U~Ubat	U~Ubat	At no input
#A59	#C19	Reserve	U~Ulow	U~Ulow	NC
#A60	#C20	Reserve output (switch to ground)	U~Ulow	U~Ulow	-
#B01	#D1	Relay driver, rear windshield heating	U~Ubat	U~Ulow / Ubat	Grounded when the relay is activated
#B02	#D2	Relay driver, rear 15l-supply	-	-	-
#B03	#D3	Reserve	U~Ulow	U~Ulow	NC
#B04	#D4	Signal voltage, high mounted stop lamp	U~Ubat / Ulow	U~Ubat / Ulow	-
#B05	#D5	Reserve	5 V / Ulow	5 V / Ulow	NC
#B06	#D6	Serial communication, input signal from the level sensor control module	During communication U= 8-11 V	During communication U= 8-11 V	Communicates when the car is alarmed. Conditional on the car being equipped with an inclination sensor module (ISM).
#B07	#D7	Input signal from the tailgate handle	U~Ulow / Ubat	U~Ulow / Ubat	Grounded when the tailgate handle is pressed in.
#B08	#D8	LIN communication	During communication the voltage is 0 V - Ubat		Serial communication
#B09	#D9	Spare input (30)	Ubat	Ubat	At no input
#B10	#D10	Spare input (30)	Ubat	Ubat	At no input
#B11	#D11	-	U~Ulow	U~Ulow	NC
#B12	#D12	Reserve, relay RMA	U~Ulow	U~Ulow	-

		04			
#B13	#D13	Reserve, relay RMI 09	U~Ulow	U~Ulow	-
#B14	#D14	Reserve, relay RMI 10	U~Ulow	U~Ulow	-
#B15	#D15	Reserve, relay RMI 25	U~Ulow	U~Ulow	-
#B17	#D17	Reserve, relay RST 01	U~Ulow	U~Ulow	-
#B18	#D18	Relay driver, rear X-supply	-	-	-
#B19	#D19	Reserve output (switch to ground)	U~Ulow	U~Ulow	-
#B20	#D20	Power supply to the tilt sensor. Output signal.	U~Ulow /Ubat	U~Ulow	Supplied with voltage when the car is alarmed. Conditional on the car being equipped with an inclination sensor module (ISM).

The power signals below are measured between the relevant terminal and terminal #E1 (power ground)

Terminal, breakout box	Terminal, control module	Signal type	Ignition off Active/not active	Ignition on Active/not active	Other
#B21	#E1	Power ground	U~Ulow	U~Ulow	-
#B22	#E2	Power supply to the cargo compartment lighting. Output signal.	U~Ulow/Ubat	U~Ulow/Ubat	Activated when the trunk lid is open. Goes out after 30 minutes Goes out when driving forward with the trunk lid open. The ignition must be switched off before it lights again. Can be switched off

					via the upper electronic module (UEM).
#B23	#E3	Reserve	U~Ulow	U~Ulow	NC
#B24	#E4	Power supply to the rear fog lamp. Input signal.	U~Ubat	U~Ubat	-
#B25	#E5	Reserve	U~Ulow	U~Ulow	NC
#B26	#E6	Power supply to the rear electronic module (REM)	U~Ubat	U~Ubat	-
#B27	#E7	Reserve	U~Ulow	U~Ulow	NC
#B28	#E8	Reserve	U~Ulow	U~Ulow	NC

RESISTANCE VALUES, FUEL LEVEL SENSOR

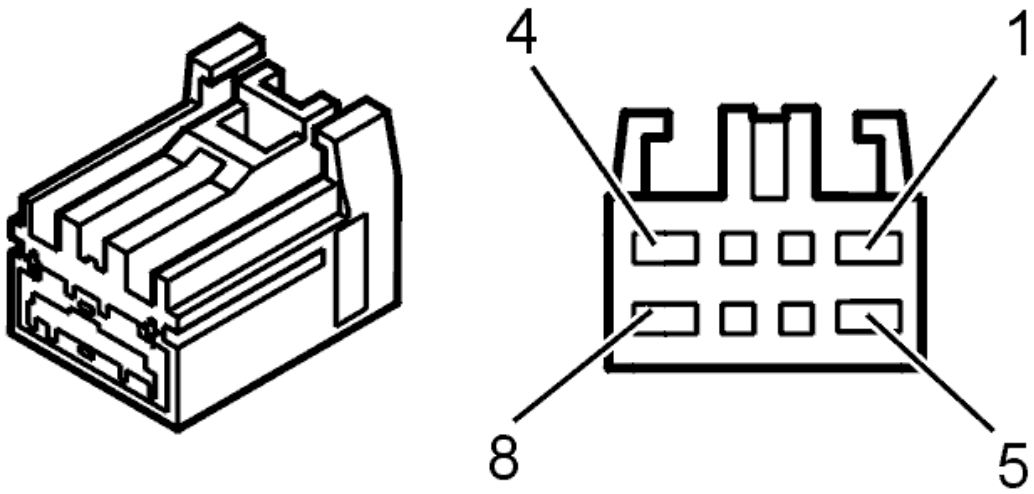

Fig. 11: Fuel Level Sensor Terminals
Courtesy of VOLVO CARS CORPORATION

Readings for the left fuel level sensor are taken between terminals #5 and #6.

Readings for the right fuel level sensor are taken between terminals #7 and #6.

The following table lists the fuel level sensor resistance and the corresponding fuel volume.

Resistance (ohm)	Fuel volume (liters)
12	40
38	35
66	30
96	25

130	20
171	15
223	10
297	5
383	1

SIGNAL SPECIFICATION, REAR ELECTRONIC MODULE (REM) (2005-12)

SIGNAL SPECIFICATION

All the values given below are between the terminals stated in column 1 and terminal #D12 in column 2 (power ground). This applies unless otherwise indicated in the last column.

NOTE: It is important to connect the breakout box and check the ground connections before starting to measure.

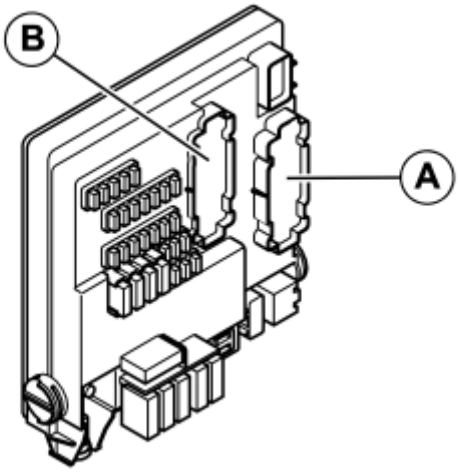

Fig. 12: Identifying Rear Electronic Module (REM) Connectors
Courtesy of VOLVO CARS CORPORATION

U=	DC voltage in volts (V)	t =	Time in milliseconds (ms)
U_{bat} =	Battery voltage (V)	f =	Frequency in Hertz (Hz)
U_{low} =	Voltage approximately 0 V	% duty	Duty cycle (pulse ratio) as a percentage (%)

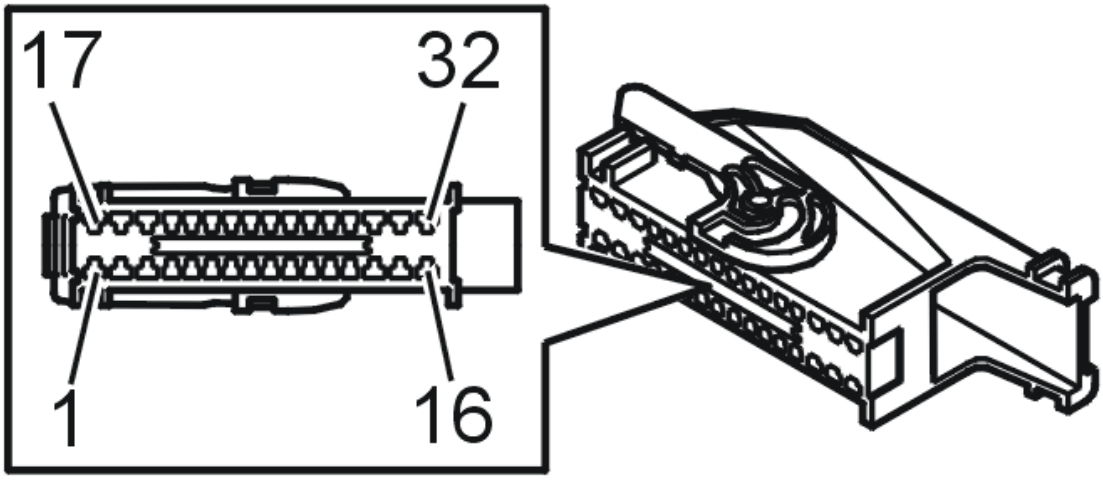

Fig. 13: Identifying Connector A
Courtesy of VOLVO CARS CORPORATION

Connector A					
Breakout box terminal	**Control module terminal**	**Signal type**	**Ignition off Active/Not active**	**Ignition on Active/Not active**	**Miscellaneous**
#1	#A1	Power window left rear door, up	U_{bat} /U_{low}	U_{bat} /U_{low}	Supplied with voltage via fuse and relay and grounded via relay integrates in Rear electronic module (REM).
#2	#A2	Power window left rear door, down	U_{bat} /U_{low}	U_{bat} /U_{low}	Supplied with voltage via fuse and relay and grounded via relay integrates in Rear electronic module (REM).
#3	#A3	Reserve	-	-	-
#4	#A4	Reserve	-	-	-
#5	#A5	Reserve	-	-	-
#6	#A6	Reserve	-	-	-
#7	#A7	High level stop lamp	U_{bat} /U_{low}	U_{bat} /U_{low}	S60, S80
#8	#A8	Reserve	-	-	-
#9	#A9	Reserve	-	-	-
#10	#A10	Reserve	-	-	-
#11	#A11	Reserve	-	-	-
#12	#A12	Reserve	-	-	-
#13	#A13	Power supply Bi			-

		Fuel from the central electronic module (CEM)	U_{low}	U_{bat} (Ignition positions II and III), otherwise U_{low}	
#14	#A14	15-power supply differential electronic module (DEM)	U_{low}	U_{bat} (Ignition position II); U_{bat} (Ignition position I and III) if the key has been in ignition position II earlier, otherwise U_{low} in ignition positions I and III	-
#15	#A15	Defroster rear windshield	U_{low}	U_{bat} /U_{low}	S60, S80
#16	#A16	Defroster rear windshield	U_{low}	U_{low}	S60, S80
#17	#A17	Reserve	-	-	-
#18	#A18	Stop lamp, input signal from the central electronic module (CEM)	U_{bat} /U_{low}	U_{bat} /U_{low}	-
#19	#A19	Child-proof lock left rear door	U_{low} /U_{bat}	U_{low} /U_{bat}	Supplied with voltage via fuse and relay and grounded via relay integrates in Rear electronic module (REM).
#20	#A20	Right-hand turn signal lamp, input signal from the central electronic module (CEM)	U_{low}	U_{bat} /U_{low}	Pulsed signal, f = ca. 1.5 Hz
#21	#A21	Left-hand turn signal lamp, input signal from the central electronic module (CEM)	U_{low}	U_{bat} /U_{low}	Pulsed signal, f = ca. 1.5 Hz
#22	#A22	Reserve	-	-	-
#23	#A23	Lock motor left rear door, lock signal	U_{bat} /U_{low}	U_{bat} /U_{low}	-

#24	#A24	Lock motor left rear door, unlock signal	U_{bat} /U_{low}	U_{bat} /U_{low}	-
#25	#A25	Folding head restraints, left	U_{low}	U_{bat} /U_{low}	S60, S80
#26	#A26	Reserve	-	-	-
#27	#A27	Lock motor double lock left rear door, signal	U_{bat} /U_{low}	U_{bat} /U_{low}	-
#28	#A28	Reserve	-	-	-
#29	#A29	15-power supply	U_{low}	U_{bat} (Ignition position II), otherwise U_{low}	-
#30	#A30	15-power supply to the suspension module (SUM)	U_{low}	U_{bat} (Ignition switch position II)	-
#31	#A31	Reserve	-	-	-
#32	#A32	Ground	U_{low}	U_{low}	-

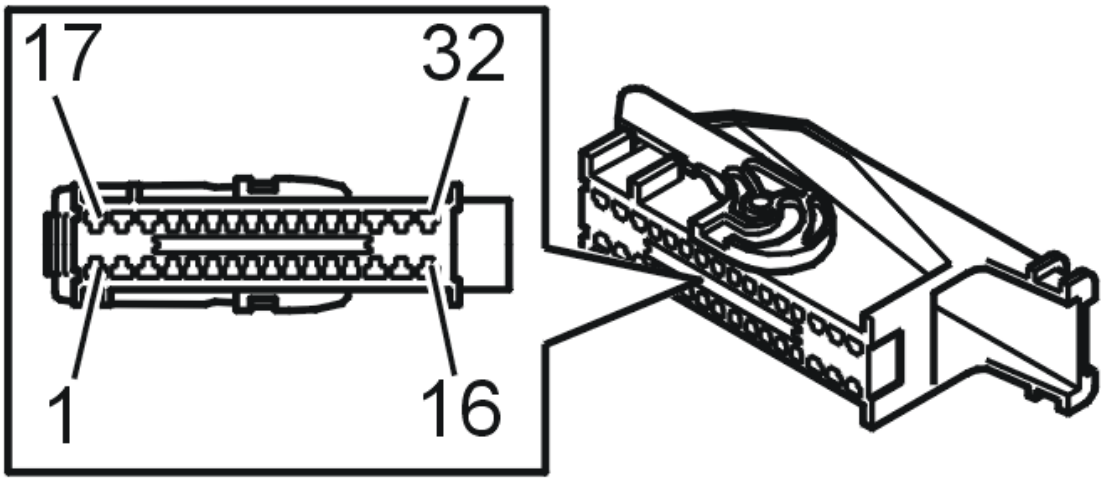

Fig. 14: Identifying Connector B
Courtesy of VOLVO CARS CORPORATION

Connector B					
Breakout box terminal	**Control module terminal**	**Signal type**	**Ignition off Active/Not active**	**Ignition on Active/Not active**	**Miscellaneous**
#1	#B1	Power window right rear door, up	U_{bat} /U_{low}	U_{bat} /U_{low}	Supplied with voltage via fuse and relay and grounded via relay integrates in

					Rear electronic module (REM).
#2	#B2	Power window right rear door, down	U_{bat} /U_{low}	U_{bat} /U_{low}	Supplied with voltage via fuse and relay and grounded via relay integrates in Rear electronic module (REM).
#3	#B3	Brake light	U_{bat} /U_{low}	U_{bat} /U_{low}	-
#4	#B4	Rear fog lamp	U_{low}	U_{bat} /U_{low}	-
#5	#B5	Reserve	-	-	-
#6	#B6	Reserve	-	-	-
#7	#B7	Back-up (reversing) lamps	U_{low}	U_{bat} /U_{low}	-
#8	#B8	Reserve	-	-	-
#9	#B9	Lock motor fuel tank filler cap, unlock signal	U_{bat} /U_{low}	U_{bat} /U_{low}	-
#10	#B10	Right turn signal lamp	U_{low}	U_{bat} /U_{low}	Pulsed signal, f = ca. 1.5 Hz
#11	#B11	Left turn signal lamp	U_{low}	U_{bat} /U_{low}	Pulsed signal, f = ca. 1.5 Hz
#12	#B12	Lock motor right rear door, unlock signal	U_{bat} /U_{low}	U_{bat} /U_{low}	-
#13	#B13	Reserve	-	-	-
#14	#B14	Reserve	-	-	-
#16	#B16	Reserve	-	-	-
#17	#B17	Subwoofer power supply	U_{bat}	U_{bat}	XC90
#18	#B18	Subwoofer power supply	U_{bat}	U_{bat}	XC90
#19	#B19	Power supply infotainment, rear A/C	U_{low}	U_{bat}	-
#20	#B20	Reserve	-	-	-
#21	#B21	Power supply, parking assistance module (PAM)	U_{low}	U_{bat}	-
#22	#B22	Power supply accessory electronic module (AEM)	U_{bat}	U_{bat}	-
#23	#B23	Right-hand back-up lamp	U_{low}	U_{bat} /U_{low}	-

#24	#B24	Lock motor double lock right rear door, signal	U_{bat} /U_{low}	U_{bat} /U_{low}	-
#25	#B25	Gas tank valve, power supply	U_{low}	U_{bat} /U_{low}	-
#26	#B26	Lock motor fuel tank filler cap/right rear door, lock signal	U_{bat} /U_{low}	U_{bat} /U_{low}	-
#27	#B27	Power supply RTI, CD changer	U_{bat}	U_{bat}	-
#28	#B28	Folding head restraints, right	U_{low}	U_{bat} /U_{low}	S60, S80
#29	#B29	X-power supply	U_{low}	U_{bat} (Ignition positions I and II), otherwise U_{low}	-
#30	#B30	Child-proof lock right	U_{bat}	U_{low} / U_{bat}	Supplied with voltage via fuse and relay and grounded via relay integrates in Rear electronic module (REM).
#31	#B31	Rear 12 V output, power supply	U_{bat}	U_{bat}	-
#32	#B32	Reserve	-	-	-

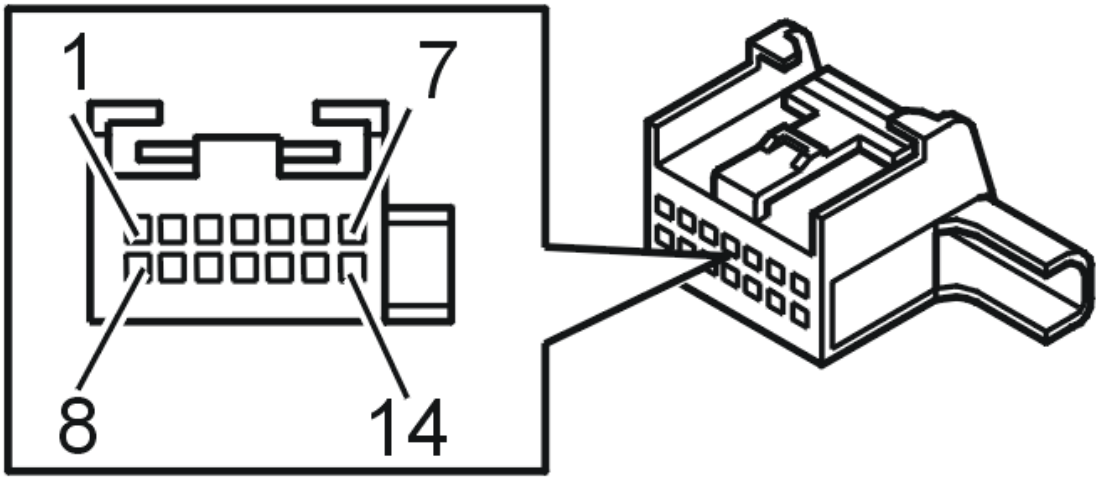

Fig. 15: Identifying Connector C Terminals
Courtesy of VOLVO CARS CORPORATION

Connector C					

Breakout box terminal	Control module terminal	Signal type	Ignition off Active/Not active	Ignition on Active/Not active	Miscellaneous
#41	#C1	Alarm LED	U = approximately 1.6V/ U_{low}	U_{low}	Pulsed signal, f = approximately 0.5Hz
#42	#C2	Reserve	-	-	-
#43	#C3	Switch left-hand rear door, signal	U_{low}	U_{low}	Grounded with door closed, open-circuit with door open
#44	#C4	Hood switch	U_{low}	U_{low}	Grounded with door closed, open-circuit with door open
#45	#C5	Lock switch left-hand rear door, signal	U_{bat} if door unlocked; U_{low} if door locked	U_{bat} if door unlocked; U_{low} if door locked	-
#46	#C6	Gas discharge lamp module (GDL) sensor	-	-	-
#47	#C7	LIN communication	During communication the voltage is 0 V - U_{bat}	During communication the voltage is 0 V - U_{bat}	-
#48	#C8	Glass breakage loop, pulsed signal	0-12 V	U_{low}	-
#49	#C9	Signal ground, position sensor for headlamp beam height control	U_{low}	U_{low}	-
#50	#C10	Lock switch child proof lock left-hand rear door, signal	U_{low} /U_{bat}	U_{low} /U_{bat}	-
#51	#C11	Power supply, position sensor for headlamp beam height control	U = 5 V	U = 5 V	-
#52	#C12	Switch left-hand front door, signal	U_{low}	U_{low}	Grounded with door closed, open-circuit with door open
#53	#C13	Communication CAN L low speed network	During communication the voltage is 1.5 - 2.5	During communication the voltage is 1.5 - 2.5	-

			V	V	
#54	#C14	Communication CAN_H low speed network	During communication the voltage is 2.0 - 3.5 V	During communication the voltage is 2.0 - 3.5 V	-

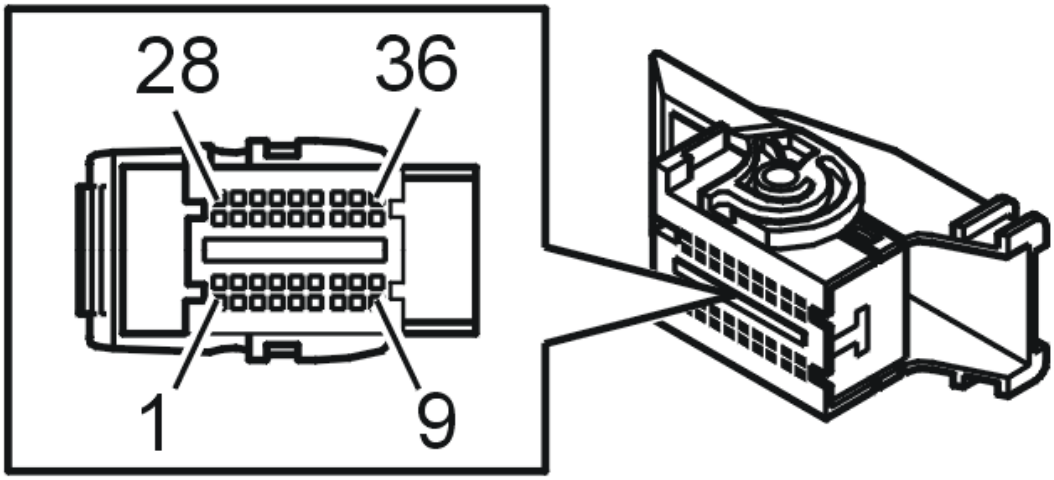

Fig. 16: Identifying Connector C
Courtesy of VOLVO CARS CORPORATION

Connector D					
Breakout box terminal	**Control module terminal**	**Signal type**	**Ignition off Active/Not active**	**Ignition on Active/Not active**	**Miscellaneous**
#1	#D1	Parking lamps	U_{bat} /U_{low}	U_{bat} /U_{low} (Ignition position I); U_{bat} (Ignition position II)	-
#2	#D2	Cargo compartment lighting	U_{low} /U_{bat}	U_{low} /U_{bat}	-
#3	#D3	LPG sensor, ground	U_{low}	U_{low}	-
#4	#D4	Lock switch child proof lock right-hand rear door, signal	U_{low} /U_{bat}	U_{low} /U_{bat}	-
#5	#D5	Rear right parking lamp	U_{bat} /U_{low}	U_{bat} /U_{low} (Ignition position I); U_{bat} (Ignition position II)	-
#6	#D6	Parking lamps left-hand rear	U_{bat} /U_{low}	U_{bat} /U_{low}	-

				(Ignition position I); U_{bat} (Ignition position II)	
#7	#D7	X-power supply to subwoofer module (SUB)	U= 10.3 V	U_{low}	-
#8	#D8	Signal ground fuel level sensor, CNG	U_{low}	U_{low}	-
#9	#D9	Reserve	-	-	-
#10	#D10	Reserve	-	-	-
#11	#D11	Cargo compartment lighting	U_{bat} /U_{low}	U_{bat} /U_{low}	S60, S80
#12	#D12	Ground	U_{low}	U_{low}	-
#13	#D13	Reserve	-	-	-
#14	#D14	Power supply, fuel level sensor, CNG	U_{low}	U ~ 5 V	-
#15	#D15	Input signal fuel level sensor (pressure), CNG	U_{low}	U=0.5 V- 4.5 V	Full (200 bar): 4.5 V Empty (0 bar): 0.5 V
#16	#D16	Reserve	-	-	-
#17	#D17	Serial communication (LIN)	During communication the voltage is 0 V - U_{bat}		-
#18	#D18	Brake light	U_{bat} /U_{low}	U_{bat} /U_{low}	S80
#19	#D19	Communication CAN_L low speed network, accessory electronic module (AEM)	During communication the voltage is 1.5 - 2.5 V	During communication the voltage is 1.5 - 2.5 V	-
#20	#D20	Communication CAN_L low speed network, road traffic information module (RTI)	During communication the voltage is 1.5 - 2.5 V	During communication the voltage is 1.5 - 2.5 V	-
#21	#D21	Communication CAN_H low speed network, road traffic information module (RTI)	During communication the voltage is 2.0 - 3.5 V	During communication the voltage is 2.0 - 3.5 V	-
#22	#D22	Reserve	-	-	-
#23	#D23	Reserve	-	-	-
#24	#D24	Reserve	-	-	-
#25	#D25	Reserve	-	-	-

#26	#D26	Serial communication (LIN), inclination sensor module (ISM) From and including structure week 201128 the following applies: Serial communication (LIN) alarm siren control module with alternatively without angle sensor (BBS/IBBS)	During communication the voltage is 0 V - U_{bat}	During communication the voltage is 0 V - U_{bat}	Communicates when the car is alarmed. Conditional on the car being equipped with an inclination sensor module (ISM). From and including structure week 201128 the following applies: Communicates when the car is alarmed.
#27	#D27	Input signal, fuel level sensor (temperature), CNG	U_{low}	U=0.5 V - 5 V	0°C ~ 4 V 25°C ~ 2.5 V
#28	#D28	Lock switch right-hand rear door, signal	U_{bat} if door unlocked; U_{low} if door locked	U_{bat} if door unlocked; U_{low} if door locked	-
#29	#D29	Switch right-hand front door, signal	U_{low}	U_{low}	Pin to ground with door closed, open-circuit with door open
#30	#D30	Communication CAN_H low speed network, accessory electronic module (AEM)	The voltage is 2.0-3.5 V during communication	During communication the voltage is 2.0 - 3.5 V	-
#31	#D31	Power supply inclination sensor module (ISM), output signal. From and including structure week 201128 terminal #31 is reserve.	U ~ U_{low} /U_{bat} From and including structure week 201128 terminal #31 is reserve.	U ~ U_{low} From and including structure week 201128 terminal #31 is reserve.	Supplied with voltage when the car is alarmed. Conditional on the car being equipped with an inclination sensor module (ISM). From and including structure week 201128 terminal #31 is reserve.
#32	#D32	Serial communication	During communication the	During communication the	-

		(LIN)	voltage is 0 V - U_{bat}	voltage is 0 V - U_{bat}	
#33	#D33	Switch right-hand rear door, signal	U_{low}	U_{low}	Pin to ground with door closed, open-circuit with door open
#34	#D34	Rear seat entertainment, power supply	U_{low}	U_{bat}	-
#35	#D35	Serial communication (LIN)	During communication the voltage is 0 V - U_{bat}	During communication the voltage is 0 V - U_{bat}	-
#36	#D36	LPG sensor	U_{low}	U ~ 5 V	-

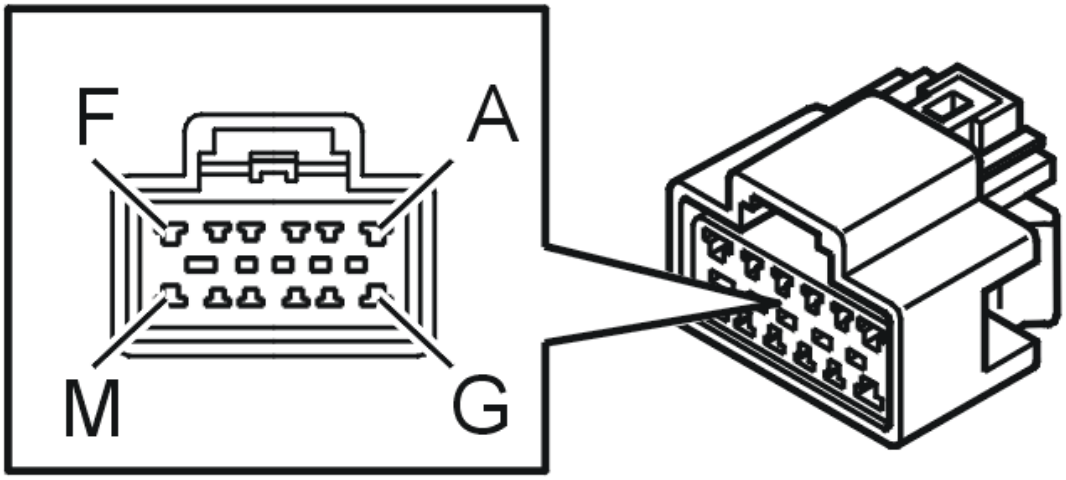

Fig. 17: Identifying Connector E Terminals
Courtesy of VOLVO CARS CORPORATION

Connector E					
-	**Control module terminal**	**Signal type**	**Ignition off Active/Not active**	**Ignition on Active/Not active**	**Miscellaneous**
-	#A	15-power supply, trailer module (TRM)	U_{low}	U_{bat} /U_{low}	-
-	#B	Stop lamps, trailer module (TRM)	-	-	-
-	#C	Turn signal lamp right input signal, trailer module	-	-	-

		(TRM)			
-	#D	Turn signal lamp left input signal, trailer module (TRM)	-	-	-
-	#E	Fog lamps, trailer module (TRM)	-	-	-
-	#F	30-power supply, trailer module (TRM)	U_{bat}	U_{bat}	-
-	#G	Power supply, trailer module (TRM)	U_{bat}	U_{bat}	-
-	#H	Parking lamps, trailer module (TRM)	U_{bat} /U_{low}	U_{bat}	-
-	#I	Turn signal lamp right, trailer module (TRM)	U_{bat} /U_{low}	U_{bat} /U_{low}	Pulsed signal, f = ca. 1.5 Hz Hazard warning signal flasher
-	#J	Turn signal lamp left, trailer module (TRM)	U_{bat} /U_{low}	U_{bat} /U_{low}	Pulsed signal, f = ca. 1.5 Hz Hazard warning signal flasher
-	#K	Back-up (reversing) lamps, trailer module (TRM)	U_{low}	U_{bat} /U_{low}	-
-	#L	30-power supply, trailer module (TRM)	U_{bat}	U_{bat}	-

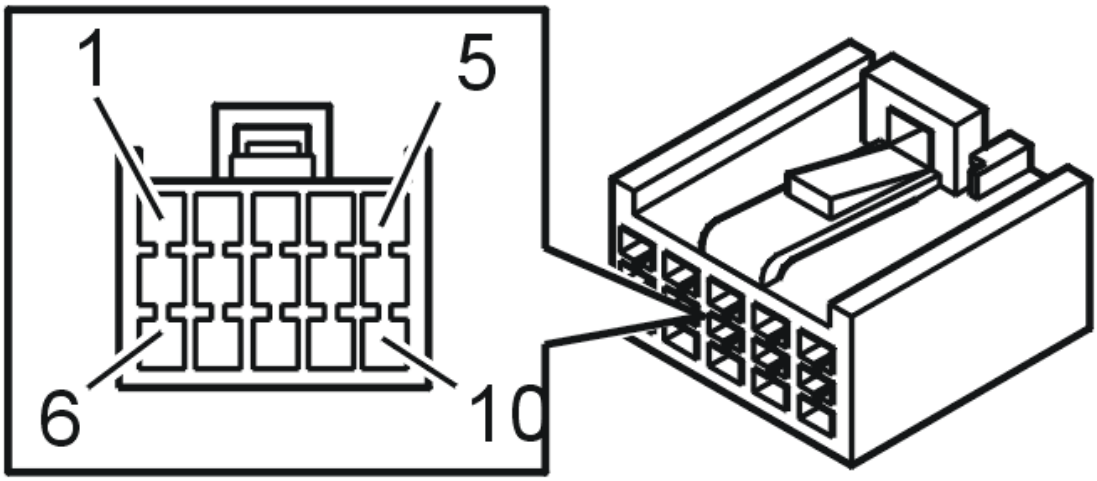

Fig. 18: Identifying Connector F Terminals
Courtesy of VOLVO CARS CORPORATION

Connector F					
Breakout box terminal	**Control module terminal**	**Signal type**	**Ignition off Active/Not active**	**Ignition on Active/Not active**	**Miscellaneous**
#41	#F1	Rear windshield wiper, power supply	U_{low}	U_{bat} /U_{low}	-
#42	#F2	Lock switch tailgate/trunk lid, signal	U_{low}	U_{low}	Pin to ground with tailgate closed, open-circuit with tailgate open
#43	#F3	Switch tailgate handle, signal	-	-	S60, S80
#44	#F4	High level stop lamp	U_{bat} /U_{low}	U_{bat} /U_{low}	XC90 The resistance must be around 10 kohms with the ignition off, not active.
#45	#F5	Ground, luggage compartment lighting and lock motor tailgate.	U_{low}	U_{low}	-
#46	#F6	Rear windshield wiper, power supply	U_{low}	U_{bat} (Ignition positions I and II), otherwise U_{low}	-
#47	#F7	Cargo compartment lighting	U_{low} /U_{bat}	U_{low} /U_{bat}	XC90
#48	#F8	Lock motor trunk lid/tailgate, unlock signal	U_{bat} /U_{low}	U_{low}	-
#49	#F9	Lock motor trunk lid/tailgate, lock signal	U_{bat} /U_{low}	U_{low}	Only XC90.
#50	#F10	License plate lighting	U_{bat} /U_{low}	U_{bat} / U_{low}	-

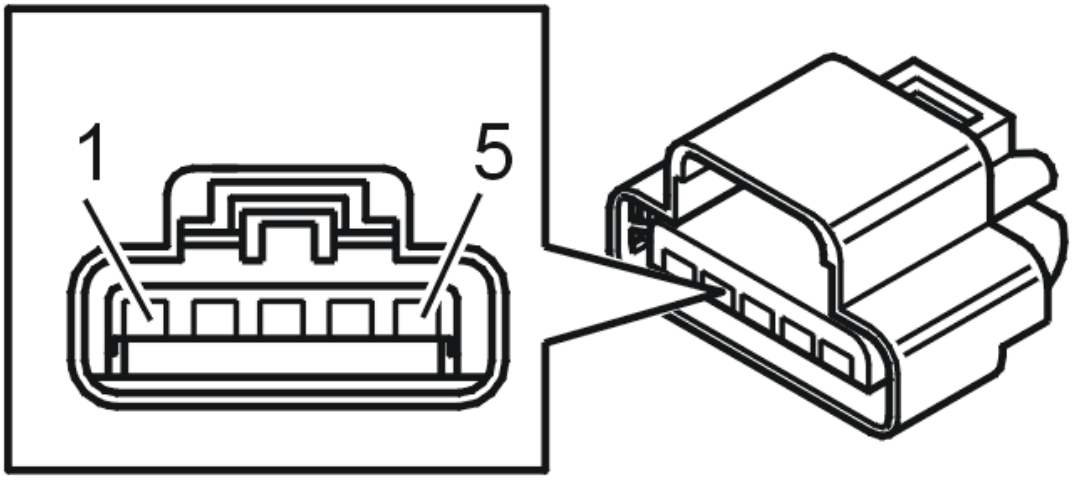

Fig. 19: Identifying Connector G Terminals
Courtesy of VOLVO CARS CORPORATION

Connector G					
-	**Control module terminal**	**Signal type**	**Ignition off Active/Not active**	**Ignition on Active/Not active**	**Miscellaneous**
-	#G1	Heated rear windshield	U_{low}	U_{bat} /U_{low}	XC90
-	#G2	Heated rear windshield	U_{low}	U_{bat} /U_{low}	XC90
-	#G3	Reserve	-	-	-
-	#G4	Reserve	-	-	-
-	#G5	Reserve	-	-	-

SIGNAL SPECIFICATION, UPPER ELECTRONIC MODULE (UEM) (2003-12)

SIGNAL DESCRIPTION, UPPER ELECTRONIC MODULE (UEM)

UPPER ELECTRONIC MODULE (UEM)

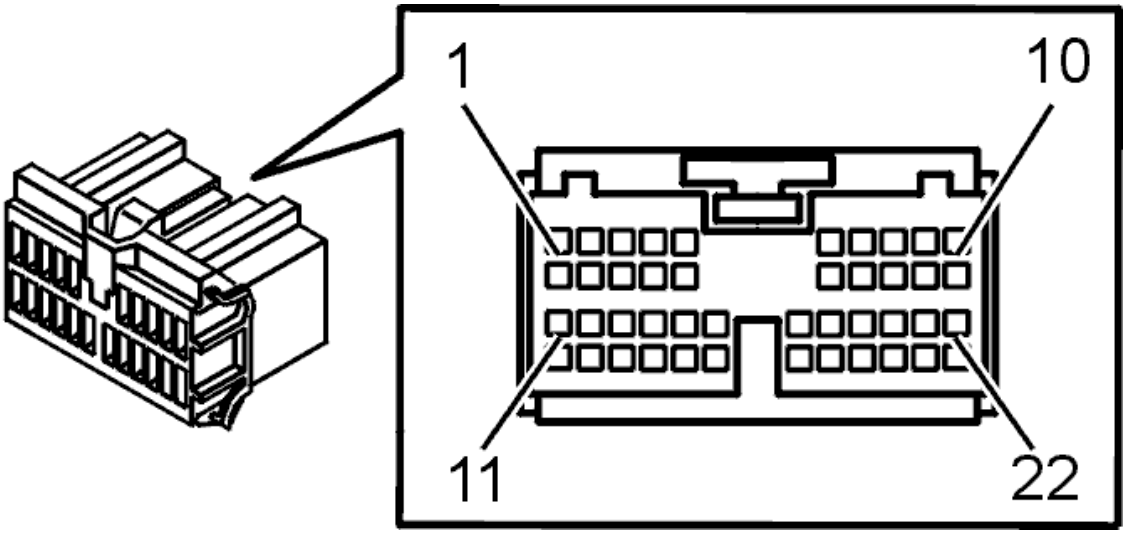

Fig. 20: Identifying Connector (F) Terminals
Courtesy of VOLVO CARS CORPORATION

Connector A, terminals #A1-#A22

The following values are measured between the relevant terminal in column 1 and terminal #A20 (signal ground) unless otherwise stated.

NOTE: Check the ground terminals before starting to take readings with the breakout box.

U = DC in volts (V).

U_{bat} = battery voltage in volts (V).

U_{low} = voltage near 0 V.

Terminal, breakout box	Terminal, control module	Signal type	Ignition off Active/not active	Ignition on Active/not active	Miscellaneous
#1	#A1	Power supply	U_{bat}	U_{bat}	-
#2	#A2	Third row reading lamps, control signal (XC90 only)	U_{bat} /0 V	U_{bat} /0 V	-
#3	#A3	Communication cable control modules (HS-CAN)	2.5-3.5 V	2.5-3.5 V	During communication.
#4	#A4	The front right reading lamp and general lighting, control signal	7-9 V/0 V	7-9 V/0 V	Active when the right front reading lamp or the general lighting is activated.

#5	#A5	Communication cable control modules (MS-CAN)	1.5-2.5 V	1.5-2.5 V	-
#6	#A6	The front right reading lamp, signal supply	U_{bat} /0 V	U_{bat} /0 V	Pulse width modulation (PWM) signal.
#7	#A7	Rear left reading lamp, signal supply	U_{bat} /0 V	U_{bat} /0 V	Active when the left rear reading lamp or the general lighting is activated. Pulse width modulation (PWM) signal.
#8	#A8	Extended X-supply	U_{bat} /0 V	U_{bat} /0 V	The power supply to the sun roof logic, mirror lamps in the sun visor, rain sensor, buttons for the headlining lighting and certain button lighting.
#9	#A9	Cargo compartment lighting (V70, V70 XC) / Third row reading lamps (XC90), power supply	U_{bat} /0 V	U_{bat} /0 V	Pulse width modulation (PWM) signal.
#10	#A10	Movement sensor (MMS) or movement sensor (IMS), power supply, (IMS replaces MMS for XC90 from and incl. model year 2012)	U_{bat} /0 V	U_{bat} /0 V	Supplies power to both MMS or movement sensor (IMS), (IMS replaces MMS for XC90 from and incl. model year 2012).
#11	#A11	Control module power supply	U_{bat}	U_{bat}	-
#12	#A12	Control module power supply	U_{bat}	U_{bat}	-
#13	#A13	Rain sensor, data signal	-	-	-
#14	#A14	Rear right reading lamp, signal supply	U_{bat} /0 V	U_{bat} /0 V	The signal is active when the button for the lamp is not pressed in.
#15	#A15	Rear left reading lamp, control signal	U_{bat} /0 V	U_{bat} /0 V	The signal is active when the button for the lamp is not

					pressed in.
#16	#A16	The front left reading lamp and general lighting, control signal	7-9 V/0 V	7-9 V/0 V	Active when the left front reading lamp or the general lighting is activated.
#17	#A17	The rear right reading lamp, signal supply	U_{bat} /0 V	U_{bat} /0 V	Active when the right rear reading lamp or the general lighting is activated. Pulse width modulation (PWM) signal.
#18	#A18	The front left reading lamp, signal supply	U_{bat} /0 V	U_{bat} /0 V	Pulse width modulation (PWM) signal.
#19	#A19	General lighting, signal supply	U_{bat} /0 V	U_{bat} /0 V	Pulse width modulation (PWM) signal.
#20	#A20	Signal ground	$U{\sim}U{=}_{low}$	$U{\sim}U{=}_{low}$	-
#21	#A21	Serial communication (Volcano lite)	0 V-U_{bat}	0 V-U_{bat}	The voltage is 0 V - Ubat during communication. Ubat is the default.
#22	#A22	Movement sensor (MMS) or movement sensor (IMS), (IMS replaces MMS for XC90 from and incl. model year 2012), data signal	U_{bat}	U_{bat}	Communication with both MMS or movement sensor (IMS) in XC90, (IMS replaces MMS in XC90 from and incl. model year 2012).

SUN ROOF (SUN ROOF MODULE (SRM))

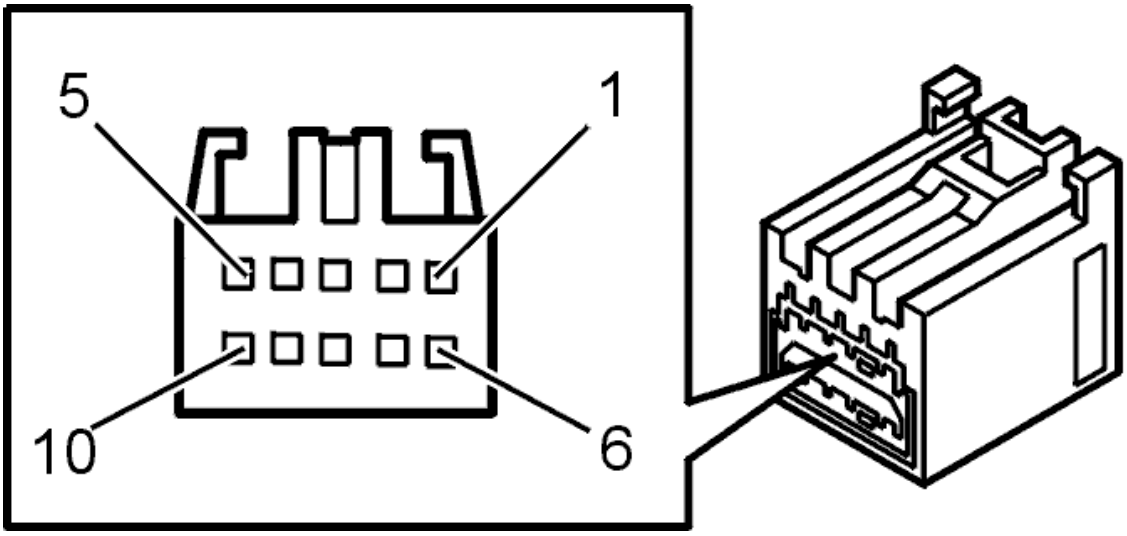

Fig. 21: Identifying Sunroof Module Connector A Terminals
Courtesy of VOLVO CARS CORPORATION

Connector A, terminals #A1-#A10

The following values are measured between the relevant terminal in column 1 and terminal #A5 (signal ground) unless otherwise stated.

U = DC in volts (V).

U_{bat} = battery voltage in volts (V).

U_{low} = voltage near 0 V.

Terminal, control module	Signal type	Ignition off Active/not active	Ignition on Active/not active	Miscellaneous
#A1	Power supply to the sun roof motor	U_{bat}	U_{bat}	-
#A2	Sun roof forward, control signal	U_{bat} /0 V	U_{bat} /0 V	Pulsed signal when active.
#A3	Sun roof tilt, control signal	U_{bat} /0 V	U_{bat} /0 V	Pulsed signal when active.
#A4	Serial communication (Volcano lite)	U_{bat}	U_{bat}	The voltage is 0 V - Ubat during communication. Ubat is the default.
#A5	Signal ground	U_{low}	U_{low}	-
#A6	Power supply to the electronics in the sun roof module (SRM)	U_{bat} (only for 5 minutes according to conditions on the right)	U_{bat}	Active when the ignition is off and neither of the front doors have been opened.
#A7	Sun roof auto, control signal	U_{bat} /0 V	U_{bat} /0 V	Pulsed signal. Active when switching.
#A8	Sun roof backward, control signal	U_{bat} /0 V	U_{bat} /0 V	Pulsed signal when active.
#A9	Power supply to sun roof switch	U_{bat} /U_{bat}	U_{bat} /U_{bat}	Pulsed signal when active.
#A10	Power ground	U_{low}	U_{low}	-

RAIN SENSOR

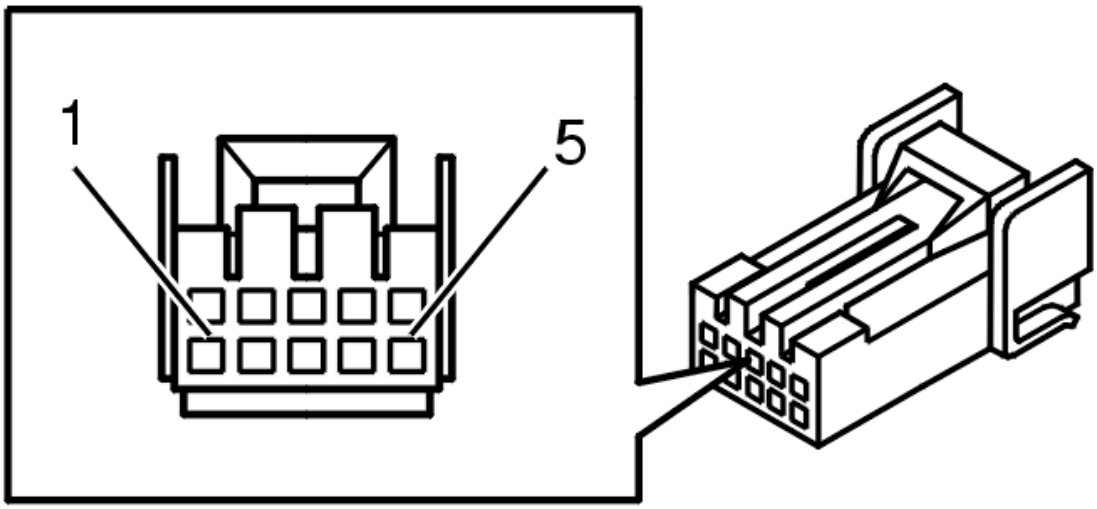

Fig. 22: 10 CD Changer Connector Terminals
Courtesy of VOLVO CARS CORPORATION

Connector A, terminals #A1-#A5

U = DC in volts (V).

U_{bat} = battery voltage in volts (V).

U_{low} = voltage near 0 V.

Terminal, control module	Signal type	Ignition off	Ignition on	Miscellaneous
#A1	Serial communication	-	-	Data signal
#A2	Ground	U_{low}	U_{low}	-
#A3	Power supply	U_{bat} /0 V	U_{bat} /0 V	-
#A4	Windscreen wiper position signal	-	U_{bat} /0V	When the windscreen wipers are in the parked position, U must be U_{bat} . When the windscreen wipers are operating U must be 0 V (grounded).
#A5	Not used	-	-	-

ELECTRICAL

Cables And Fuses - Specifications, Mechanical

WIRING

JUNCTION SLEEVE

Paint	Cable area (mm2)	Stripping length (mm)	P/N
green/white	0.3 - 0.5	5	9512783
red	0.5 - 1.0	6	9130467
blue	1.0 - 2.5	7	9130476
yellow	4.0 - 6.0	7	9130477

ELECTRICAL

Cables And Fuses - Specifications, Other

PROGRAMMABLE CUSTOMER PARAMETERS (2003-04)

PROGRAMMABLE CUSTOMER PARAMETERS

SEAT TEMPERATURE, FRONT SEATS

Cars with electrically heated front seats have two switches on the climate control panel, left and right front seats. There are two temperature levels for the front seats, high and low (two LEDs lit or one LED lit).

The temperature values for the front seats can be programmed/changed to different values and can also be set individually.

Both the high and low temperature settings can be programmed.

The factory settings are:

- +36°C/97°F for the high temperature setting (both LEDs lit)
- +32°C/90°F for the low temperature setting (one LED lit).

The parameters can be programmed between off and +43°C/109°F.

APPROACH LIGHTS

The approach lights are activated via the high beam flash when the engine is off and the key is out of the ignition. The length of time that low beam will be on can be programmed. The values that can be selected are 0, 30, 60 or 90 s.

DAYTIME RUNNING LAMPS

The way in which low beam will be switched on can be programmed in three ways:

- Low beam on in all switch positions except the parking light position (Flexnoll).
- The light switch has three positions: off, parking light and low beam (Flexstd).
- Low beam always on regardless of the position of the light switch (Flexlgt).

TIME DELAY, LOCKING THE FUEL TANK FILLER COVER

The time delay between the car being locked using a remote control or the key until the fuel tank filler cover locks can be programmed. There are two alternatives:

- 10 minute time delay
- 0 minute time delay.

SERVICE INTERVALS

NOTE: From and including model year 2002, the service reminder indicator (SRI) has been replaced with a text message display.

There are three parameters which can be programmed for the service interval. These parameters govern when the service reminder indicator (SRI) lights:

- Distance, indicates the mileage between service intervals
- Time, indicates the number of months between service interval
- Engine time, indicates the number of engine hours between service intervals.

The service reminder indicator (SRI) is lit by the parameter that is reached first.

All parameters are programmed at the factory. The values are market dependent.

The mileage can be set to miles or km.

ZEROS

The mileage display can be programmed to display zeros in the reading or not.

For example, the mileage of the car is 5000 km

With zeros selected this will be displayed as 005000.

If zeros are not selected this will be displayed as 5000.

OUTSIDE TEMPERATURE DISPLAY (UNIT FOR THE TEMPERATURE DISPLAY)

The combined instrument panel can be programmed for two temperature units, Celsius or Fahrenheit.

CLOCK, 12 OR 24 HOUR DISPLAY

The clock in the combined instrument panel can be set to display using the 12 or 24 hour clock

TRIP COMPUTER

Only applies to cars with trip computers.

The trip computer can be programmed with different units.

Mileage:

- miles

- km

Volume:

- liter

- US gallons

- GB gallons

Fuel consumption:

- l/km

- km/l (structure week 9950 onwards)

- miles/ US gallon

- miles/ GB gallon

INTERIOR LIGHTING PERIOD

The period of time after which the interior lighting will go out can be programmed.

The interior lighting can be set to light in three ways:

- When the car is unlocked with the remote control
- When shutting off the engine
- When switched on manually in the passenger compartment.

The programming parameters for unlocking the car with a remote control and switching off the engine are the same. The interval is between 5-255 s.

If the passenger compartment lighting is switched on manually, the lighting will go out after a set period. This period can be programmed from 5-255 minutes.

The lighting time is programmed via the vehicle communication socket under function group 3, upper electronic module (UEM), Programming the control module.

DEGREE OF ANTI-GLARE, REAR VIEW MIRROR

The rear view mirror has an automatic anti-glare function which can be adjusted to three levels:

- Light
- Normal
- Dark

Software is required for these settings.

The anti-dazzle setting is programmed via the vehicle communication socket under function group 3, upper electronic module (UEM), Programming the control module.

SETTING THE DRIVER'S SEAT USING THE REMOTE CONTROL

This only applies to cars with power driver's seats with memory.

When this function is activated, the position of the seat and door mirrors will be stored when the car is locked with the remote control. When the same remote control is used to unlock the car, the driver's seat and door mirrors will be set to the positions stored for that specific remote control. Up to three remote controls can be stored.

The parameters that can be programmed are:

- Seat operation via remote control, active
- Seat operation via remote control, not active

The setting for automatic adjustment of the front seats will remote control is programmed via the vehicle communication socket under function group 8, Power seat (power seat module (PSM)), Programming remote control settings.

PASSENGER COMPARTMENT VENTILATION FILTER COMPENSATION

Only applies to cars with passenger compartment ventilation filters.

This function compensates the fan speed according to the air resistance in the ventilation filter.

Available parameters:

- Activating compensation for the passenger compartment ventilation filter, On
- Activating compensation for the passenger compartment ventilation filter, Off

THE BLOWER FAN SPEED IN THE AUTO POSITION (ECC)

This only applies to cars with electronic climate control (climate control with temperature display).

This function allows the fan speed to be adjusted for the AUTO position. An increase in voltage increases the fan speed.

The air flow in AUTO position can be increased or reduced.

Available parameters:

- Fan speed, setting +1.0 V
- Fan speed, setting +0.5 V
- Fan speed, setting 0 V (factory setting)

- Fan speed, setting -0.5 V
- Fan speed, setting -1.0 V.

BLOWER FAN RUN-ON (ECC, MCC)

Only applies to cars with air conditioning (electronic or manual climate control).

This function is used to disable or enable blower fan run-on. Blower fan run-on dries out the evaporator and prevents bad smells.

Available parameters:

- Blower fan run-on = On
- Blower fan run-on = Off

FLOOR/DEFROSTER AIR DISTRIBUTION, PARKING HEATER (ECC)

This only applies to cars with electronic climate control (climate control with temperature display) and parking heaters.

This function is used to change the distribution of air between the floor and defroster when the parking heater is running.

Available parameters:

- 90/10 (90% floor, 10% defroster)
- 80/20 (80% floor, 20% defroster)
- 70/30 (70% floor, 30% defroster)
- 60/40 (60% floor, 40% defroster)
- 50/50 (50% floor, 50% defroster)
- 30/70 (30% floor, 70% defroster)
- 10/90 (10% floor, 90% defroster)

FLOOR/DEFROSTER AIR DISTRIBUTION, RESIDUAL HEATER (ECC)

This only applies to cars with electronic climate control (climate control with temperature display) and an electric water pump or parking heater.

This function is used to change the distribution of air between the floor and defroster when the residual heater is running.

Available parameters:

- 90/10 (90% floor, 10% defroster)
- 80/20 (80% floor, 20% defroster)

- 70/30 (70% floor, 30% defroster)
- 60/40 (60% floor, 40% defroster)
- 50/50 (50% floor, 50% defroster)
- 30/70 (30% floor, 70% defroster)
- 10/90 (10% floor, 90% defroster)

PASSENGER COMPARTMENT TEMPERATURE

The passenger compartment temperature in relation to the passenger compartment temperature switch position can be adjusted by programming a compensation value.

The passenger compartment temperature can be raised or lowered by a maximum of ±2°C (±4°F) from the normal value. This allows the temperature to be adjusted in accordance with the driver's wishes.

- 0 = -1.0°C/-2.0°F
- 1 = -0.5°C/-1.0°F
- 2 = 0.0°C/0.0°F (default value)
- 3 = +0.5°C/+1.0°F
- 4 = +1.0°C/+2.0°F.

VEHICLE COMMUNICATION INFORMATION, ACCESSORY ELECTRONIC MODULE (2003-12)

DESCRIPTION OF VEHICLE COMMUNICATION, ACCESSORY ELECTRONIC MODULE

CONTENTS

Select type of description.

- see **DESCRIPTION OF FROZEN VALUES. ACCESSORY ELECTRONIC MODULE (AEM)**
- see **STATUS IDENTIFIER, DESCRIPTION**
- see **COUNTERS, DESCRIPTION**

DESCRIPTION OF FROZEN VALUES. ACCESSORY ELECTRONIC MODULE (AEM)

EXPLANATION

Not all described parameters are implemented in the accessory electronic module (AEM). Parameters vary from system to system.

Frozen values are parameter values that are stored when a diagnostic trouble code (DTC) is stored.

BATTERY VOLTAGE, VALUE

Measurement range: 8-16 V.

Normal value when the alternator is charging: 13.0-14.5 V.

DISTANCE, VALUE

Measurement range: 0-1048575 km.

The value indicates the total mileage of the vehicle at the time the diagnostic trouble code (DTC) was generated.

PASSENGER COMPARTMENT TEMPERATURE, VALUE

Measurement range: -60 to 195°C.

OUTSIDE TEMPERATURE, VALUE

Measurement range: -128 to 127.75°C.

ENGINE RUNNING, STATUS

The status displays whether the engine was running when the diagnostic trouble code (DTC) was stored.

No = the engine was not running

Yes = the engine was running

TIME, VALUE

The value displays the time that has passed since the diagnostic trouble code (DTC) was stored.

POWER SUPPLY FOR THE REVERSE (REVERSING) WARNING SYSTEM, STATUS

NOTE: Does not apply to XC90 2003-.

Indicates the status of the power supply for the reverse (reversing) warning system when the diagnostic trouble code (DTC) was stored.

The status is listed at four different levels: Active, Not active, High or Low.

SOUND SIGNAL FOR THE REVERSE (REVERSING) WARNING SYSTEM, STATUS

NOTE: Does not apply to XC90 2003-.

Indicates the status of the sound signal (buzzer) from the reverse (reversing) warning system to the accessory electronic module (AEM) at the time the diagnostic trouble code (DTC) was generated.

The status is listed at three different levels: Sound constantly on, Sound off or Number of milliseconds the signal sounds.

POWER SUPPLY TO THE BUZZER CABLE FOR THE REVERSE (REVERSING) WARNING SYSTEM, STATUS

NOTE: Does not apply to XC90 2003-.

Indicates the status of the voltage on the buzzer cable from the reverse (reversing) warning system to the accessory electronic module (AEM) at the time the diagnostic trouble code (DTC) was generated.

The status is listed at two different levels: High or Low.

POWER SUPPLY TO THE RELAY FOR THE ENGINE BLOCK HEATER, STATUS

Indicates the status of the power supply to the relay for the engine block heater when the diagnostic trouble code (DTC) was stored.

The status is listed at four different levels: Active, Not active, High or Low.

POWER SUPPLY FOR REMOTE START, STATUS

Indicates the status of the power supply for the for the remote start when the diagnostic trouble code (DTC) was stored.

The status is listed at four different levels: Active, Not active, High or Low.

VOLTAGE ON THE SIGNAL CABLE FOR REMOTE START, STATUS

Indicates the status of the voltage on the signal cable from the remote start unit to the accessory electronic module (AEM) at the time the diagnostic trouble code (DTC) was generated.

The status is listed at two different levels: High or Low.

POWER SUPPLY FOR ALARM CABLE P0 OR P1, STATUS

Indicates the status of the power supply to alarm cable P0 or P1 when the diagnostic trouble code (DTC) was stored.

The status is listed according to four different levels for P0 and P1 respectively: Active, Not active, High or Low.

POWER SUPPLY FOR ALARM CABLE S0 OR S1, STATUS

Indicates the status of the power supply to alarm cable S0 or S1 when the diagnostic trouble code (DTC) was stored.

The status is listed according to four different levels for S0 and S1 respectively: Active, Not active, High or Low.

POWER SUPPLY FOR CARPHONE MUTE, STATUS

Indicates the status of the carphone mute signal from the accessory electronic module (AEM) at the time the diagnostic trouble code (DTC) was generated.

The status is listed at four different levels: Active, Not active, High or Low.

VOLTAGE ON THE CARPHONE MUTE CABLE, STATUS

Indicates the status of the voltage on the carphone mute cable to the accessory electronic module (AEM) at the time the diagnostic trouble code (DTC) was generated.

The status is listed at two different levels: High or Low.

RHEOSTAT SIGNAL, VALUE

Indicates the percentage value of the rheostat signal from the accessory electronic module (AEM) to the radio.

The value is between 0-100%.

SPEED SIGNAL, VALUE

Indicates a frequency based on the speed and wheel circumference using the formula: frequency = speed x 12/wheel circumference. The frequency signal is used to determine the volume of the radio.

The value is between 0-512 Hz.

POWER SUPPLY FOR AERIAL AMPLIFIER, STATUS

Indicates the status of the power supply for the aerial amplifier when the diagnostic trouble code (DTC) was stored.

The status is listed at four different levels: Active, Not active, High or Low.

VEHICLE COMMUNICATION INFORMATION, ACCESSORY USB UNIT (AUU) (2007-12)

DESCRIPTION OF PARAMETERS

PARAMETERS, STATUS

STATUS, FAULT COUNTER ON USB/MEDIA PORT

The parameter counts the number of times there has been a fault in the media port (USB and iPod connection). As no DTC is generated from a media port fault, this parameter can be used to indicated any fault related to this connection. Media port faults can be user-related, such as an inoperable USB accessory.

DESCRIPTION OF READING EXTENDED DIAGNOSTIC TROUBLE CODE (DTC) INFORMATION

see **DESCRIPTION OF FROZEN VALUES**

see **DESCRIPTION OF STATUS IDENTIFIER**

see **DESCRIPTION OF COUNTER**

DESCRIPTION OF FROZEN VALUES

EXPLANATION

Frozen values are parameter values that are stored when a diagnostic trouble code (DTC) is stored.

Not all parameters can be read off for all diagnostic trouble codes (DTCs). The parameter values can only be read off where they can provide more information about the prevailing circumstances when the diagnostic trouble code (DTC) was stored.

PARAMETERS, VALUE

TOTAL MILEAGE

Measurement range: 0 - 1, 000, 000 km.

The value indicates the vehicle's total mileage when the Diagnostic Trouble Code (DTC) was generated.

BATTERY VOLTAGE, CENTRAL ELECTRONIC MODULE (CEM)

Measurement range 0 - 63 V.

Normal range: 12.0 - 14.5 V.

The value indicates the supply voltage to the central electronic module (CEM) when the diagnostic trouble code (DTC) was stored.

PASSENGER COMPARTMENT TEMPERATURE

Measurement range: -40 to +215°C.

The value indicates the passenger compartment temperature when the diagnostic trouble code (DTC) was stored.

ENGINE RUNNING

The status displays whether the engine was running when the diagnostic trouble code (DTC) was stored.

Yes = the engine was running

No = the engine was not running

VEHICLE COMMUNICATION INFORMATION, CENTRAL ELECTRONIC MODULE (CEM) (2005-11)

DESCRIPTION OF ACTIVATIONS

PARAMETERS

LEFT LOW BEAM, ACTIVATED

Activates left low beam.

RIGHT LOW BEAM, ACTIVATED

Activates right low beam.

DAYTIME RUNNING LAMPS LEFT, ACTIVATED

Activates the daytime running lamps on the left-hand side of the vehicle.

DAYTIME RUNNING LAMPS RIGHT, ACTIVATED

Activate the daytime running lamps on the right-hand side of the vehicle.

PARKING LAMPS LEFT, ACTIVATED

Activates the parking lamps on the left-hand side of the vehicle.

FOG LAMPS FRONT, ACTIVATED

Activates the front fog lamps.

BRAKE LIGHTS, ACTIVATED

Activates the brake lights.

WINDSHIELD WASHERS, ACTIVATED

Activates the windshield washer.

TAILGATE WASHER, ACTIVATED

Activates the tailgate washer.

HEADLAMP WASHERS, ACTIVATED

Activates the headlamp washers.

FUEL PUMP RELAY, ACTIVATED

Activates the fuel pump relay that starts the fuel pump.

DESCRIPTION OF PARAMETERS

PARAMETERS

KEY POSITION, STATUS

Indicates the position of the ignition key.

Key not in = No key in the ignition switch.

POS0 = Position 0.

POSI = Position 1.

POSII = Position 2.

POSIII = Position 3.

STATUS S-SUPPLY, STATUS

Displays the status for S-supply.

Activated = The S-supply is activated

Not activated = The S-supply is not activated.

STATUS X-SUPPLY, STATUS 3

Displays the status for X-supply.

Activated = The X-supply is activated

Not activated = The X-supply is not activated.

STATUS 15-SUPPLY, STATUS

Displays the status for 15-supply.

Activated = The 15-supply is activated.

Not activated = The 15-supply is not activated.

STATUS 30-SUPPLY, STATUS

Displays the status for 30-supply.

Activated = The 30-supply is activated.

Not activated = The 30-supply is not activated.

STATUS 50-SUPPLY, STATUS

Displays the status for 50-supply.

Activated = The 50-supply is activated.

Not activated = The 50-supply is not activated.

EXTENDED X-SUPPLY (1), STATUS

Displays the status of the relay for extended X-supply (1). The extended X-supply (1) supplies power to:

Parking heater.

Certain climate control functions.

Activated = The extended X-supply (1) is activated.

Not activated = The extended X-supply (1) is not activated.

EXTENDED X-SUPPLY (2), STATUS

Displays the status of the relay for extended X-supply (2). The extended X-supply (2) supplies power to:

Transmission control module (TCM).

Activated = The extended X-supply (2) is activated.

Not activated = The extended X-supply (2) is not activated.

EXTENDED X-SUPPLY (3), STATUS

Displays the status of the relay for extended X-supply (3). The extended X-supply (3) supplies power to:

Infotainment.

Activated = The extended X-supply (3) is activated.

Not activated = The extended X-supply (3) is not activated.

EXTENDED X-SUPPLY (4), STATUS

Displays the status of the relay for extended X-supply (4). The extended X-supply (4) supplies power to:

TBD.

Activated = The extended X-supply is activated.

Not activated = The extended X-supply is not activated.

PARK NEUTRAL POSITION (PNP) RELAY, STATUS

Displays the status of relay for the park neutral position (PNP) switch.

Activated = The relay for the park neutral position (PNP) switch is activated. The gear selector CANNOT be moved from position P.

Not activated = The relay for the park neutral position (PNP) switch is not activated. The gear selector can be moved from position P.

PARK NEUTRAL POSITION (PNP) SOLENOID, STATUS

Displays the status of the solenoid for the park neutral position (PNP) switch.

Activated = The solenoid for the park neutral position (PNP) switch is activated. The gear selector cannot be moved from position P.

Not activated = The solenoid for the park neutral position (PNP) switch is not activated. The gear selector can be moved from position P.

STARTER MOTOR RELAY, STATUS

Displays the status of the relay for the starter motor.

Activated = The relay for the starter motor is activated, the starter motor is activated.

Not activated = The relay for the starter motor is not activated, the starter motor is not activated.

FUEL PUMP (FP) RELAY, STATUS

Displays the status of the fuel pump (FP) relay.

Activated = The relay for the fuel pump (FP) is activated.

Not activated = The relay for the fuel pump (FP) is not activated.

PASSENGER SEAT BELT REMINDER, STATUS

Displays the status of the passenger seat belt reminder.

Activated = The seat belt reminder is activated.

Not activated = The seat belt reminder is not activated.

HAZARD WARNING SIGNAL FLASHERS, STATUS

Displays the status of the hazard warning signal flasher switch.

Activated = The switch for the hazard warning signal flashers is activated.

Not activated = The switch for the hazard warning signal flashers is not activated.

WINDSHIELD WASHER FLUID LEVEL, STATUS

Displays the status of the windshield washer fluid level.

Above 1 liter = There is more than 1 liter of windshield washer fluid remaining in the reservoir.

Below 1 liter = There is less than 1 liter of windshield washer fluid remaining in the reservoir.

FRONT WASHER SWITCH, STATUS

Displays the status of the switch for the front washers.

Activated = The switch for the front washers is activated.

Not activated = The switch for the front washers is not activated.

FULL-SPEED, STATUS

Displays the status of the windshield wiper switch for full-speed.

Activated = The windshield wiper switch for full-speed is activated.

Not activated = The windshield wiper switch for full-speed is not activated.

LOW-SPEED, STATUS

Displays the status of the windshield wiper switch for low-speed.

Activated = The windshield wiper switch for low-speed is activated.

Not activated = The windshield wiper switch for low-speed is not activated.

INTERMITTENT WIPING SWITCH, STATUS

Displays the status of the switch for intermittent windshield wiping.

Activated = The switch for intermittent windshield wiping is activated.

Not activated = The switch for intermittent windshield wiping is not activated.

SINGLE WIPER SWEEP, STATUS

Displays the status of the switch for single wiper sweep.

Activated = The switch for a single wiper sweep is activated.

Not activated = The switch for a single wiper sweep is not activated.

RELAY FOR HIGH SPEED WINDSHIELD WIPING, STATUS

Displays the status of the relay for high-speed windshield wiping.

Activated = The relay for high speed windshield wiping is activated.

Not activated = The relay for high speed windshield wiping is not activated.

WINDSHIELD WIPER, STATUS

Displays the status of the windshield wiper.

Activated = The windshield wipers are activated.

Not activated = The windshield wipers are not activated.

WINDSHIELD WASHER, STATUS

Displays the status of the windshield washers.

Activated = The windshield washers are activated.

Not activated = The windshield washers are not activated.

TAILGATE WASHER, STATUS

Displays the status of the tailgate washer.

Activated = The tailgate washer is activated.

Not activated = The tailgate washer is not activated.

HEADLAMP WASHERS, STATUS

Displays the status of the headlamp washers.

Activated = The headlamp washers are activated.

Not activated = The headlamp washers are not activated.

RELAY, HORN, STATUS

Displays the status of the relay for the horn.

Activated = The horn relay is activated.

Not activated = The horn relay is not activated.

30 SUPPLY, VALUE

Measurement range 0 to +18 V.

Normal value when the generator (GEN) is charging: 13.0 - 14.5 V.

VEHICLE SPEED (KM/H), VALUE

Displays the vehicle speed in km/h.

Measurement range 0 to 255 km/h.

VEHICLE SPEED MPH, VALUE

Displays the vehicle speed in mph.

Measurement range 0 to 159 mph.

LAMP GROUP A, VALUE

Measurement range 0 to 100% of supply voltage.

The normal value when the supply voltage is 13.5 V is approximately 98%.

When the supply voltage exceeds 13 V, the voltage level is regulated using pulse width modulation. The value indicates what proportion of the voltage level is being used.

Lamp group A consists of:

- Daytime running lamps
- Low beam.

LAMP GROUP B, VALUE

Measurement range 0 to 100% of supply voltage.

The normal value when the supply voltage is 13.5 V is approximately 98%.

When the supply voltage exceeds 13 V, the voltage level is regulated using pulse width modulation. The value indicates what proportion of the voltage level is being used.

Lamp group B consists of:

- High beam
- Turn signal lamps
- Front fog lamps
- Parking lamps
- Stop lamps.

HEADLAMP RANGE ADJUSTMENT, VALUE

Measurement range 0 to 100%.

The normal value when the control for headlamp range adjustment is in the middle is approximately 55%.

The value controls the beam range for low beam.

FUEL LEVEL, LEFT-HAND SIDE, VALUE

Measurement range 0 to 40 liters.

Displays the remaining quantity of fuel in the left-hand side of the fuel tank.

FUEL LEVEL, RIGHT-HAND SIDE, VALUE

Measurement range 0 to 40 liters.

Displays the quantity of fuel remaining in the right-hand side of the fuel tank.

TWILIGHT SENSOR, VOLTAGE, VALUE

Measurement range 0 to 5 Volts.

Shows the current light intensity.

Increased light intensity reduces the voltage over the photodiode.

SOLAR SENSOR, VOLTAGE, VALUE

Measurement range 0 to 5 Volts.

Shows the current light intensity.

Increased light intensity reduces the voltage over the photodiode.

IMMOBILIZER

ID CODE RECEIVED

Shows if Central electronic module (CEM) has received any key code (Transponder ID-code). This applies regardless of if the key is stored as an approved key or not.

YES = central electronic module has received key code.

NO = central electronic module has not received key code.

HINT: However, a condition is that the key is of the right type, that is, that it is intended for this type of Volvo.

ID CODE STORED

Shows if the latest received key code (Transponder ID-code) is stored as an approved key code in the Central Electronic module's memory.

OK = latest received key code is stored.

Wrong=latest received key code is not stored.

RANDOM CODE TO TP

Shows if Central electronic module (CEM) sends a random code to the transponder in the key, which requires that the key code is stored.

YES = Central electronic module (CEM) sends random code to the transponder.

NO = Central electronic module (CEM) does not send random code to the transponder.

RESPONSE FROM TP

Shows if Central electronic module (CEM) receives any response from the key (via IAU), which requires that the key code is stored.

YES = Central electronic module (CEM) receives response from key.

NO = Central electronic module (CEM) does not receive any response from key.

HINT: YES, also shown with a key belonging to another vehicle of the same type, with the same key-ID but with another security code than the own vehicle's keys.

TP STATUS OK

Shows if all of the following conditions are fulfilled: 1) Key code (transponder ID-code) is stored. 2) The key has the own vehicle's security code (the key belongs to the vehicle). 3) Communication (random code and

response) is OK.

YES = all above conditions are fulfilled.

NO = any of the above conditions is not fulfilled.

KEY TYPE

Indicates whether the ignition key used is a MASTER KEY or a SERVICE KEY.

MAIN KEY = main key used as ignition key.

SERVICE KEY = service key used as ignition key.

KEY NUMBER

Shows which of the vehicle's keys is in the ignition. Each key programmed into the central electronic module (CEM) is given a running number from 1 to 6. NO. 1 - NO. 6.

NUMBER OF KEYS

Shows how many keys (key codes) are stored in Central Electronic module's memory, 1-6. Max. 6 keys can be stored.

IMMOBILIZER, CHECKING CONTROL MODULE

Shows if the CAN-signal containing Immo ECM data transmitted is received within a given (maximum) time. This signal is transmitted by the engine control module (ECM) to the central electronic module (CEM) on the high speed network, when the ignition is switched on.

OK= CAN-signal arrives within given time.

Wrong status= CAN-signal does not arrive within given time.

IMMOBILIZER, START PERMITTED

Shows if the CAN-signal that the Engine control module (ECM) sends on the high-speed network to Central electronic module (CEM) after finished IMMO CHECK, after ignition on, shows that Engine control module (ECM) allows start (POS) or not (NEG).

The condition for Engine control module (ECM) to allow start is that:

- the so-called transponder check was performed okay (transponder-ID is stored and the key's and Central electronic module (CEM) security code match).
- the so-called Immobilizer check was performed okay (codes in Central electronic module (CEM) and engine control module (ECM) match).

Start allowed = Engine control module (ECM) allows start.

Start not allowed = Engine control module (ECM) does not allow start.

VEHICLE COMMUNICATION, REAR ELECTRONIC MODULE (REM) (2005-12)

DESCRIPTION OF ACTIVATIONS

ACTIVATIONS

FOG LAMP, TRAILER

Activates the fog lamp on the trailer.

RELAY, GAS TANK VALVE

Activates the relay for the gas tank valve.

LICENSE PLATE LIGHTING

Activates the license plate lighting.

FOG LAMPS

Activates the rear fog lamps.

STOP (BRAKE) LAMPS

Activates the stop lamps.

BACK-UP (REVERSING) LAMPS

Activates the back-up (reversing) lamps.

RELAY, TAILGATE WIPER, HEAD RESTRAINT

Activates the relay for the tailgate wiper/head restraint.

LOCK MOTOR LEFT AND RIGHT REAR DOOR

Activating the lock motors for locking or unlocking the rear side doors.

There is a noise from the lock mechanism in the door and the door locks/unlocks.

NOTE: Activation is not permitted when normal locking/unlocking is carried out using the remote control for example.

LOCK MOTOR TRUNK LID/TAILGATE

Activating the lock motor for the trunk lid/tailgate.

There is noise from the lock mechanism and the trunk lid/tailgate locks/unlocks.

NOTE: Activation is not permitted when normal locking/unlocking is carried out using the remote control for example.

LOCK MOTOR FUEL TANK FILLER CAP

Activating the lock motor for the fuel tank filler cap.

There is noise from the lock mechanism and the fuel tank filler cap locks/unlocks.

NOTE: Activation is not permitted when normal locking/unlocking is carried out using the remote control for example

LOCK MOTOR CHILD-PROOF LOCK

Activating the child-proof lock in the rear doors.

There is noise from the lock mechanism and the rear doors cannot be opened from the inside.

NOTE: Activation is not permitted when normal locking/unlocking is carried out using the remote control for example.

DESCRIPTION OF PARAMETERS

PARAMETERS

RELAY EXTENDED X-SUPPLY (1), STATUS

Displays the status of the extended X-supply (1).

Activated = the extended X-supply is activated.

Not activated = the extended X-supply is not activated.

RELAY EXTENDED X-SUPPLY (2), STATUS

Displays the status of the extended X-supply (2).

Activated = the extended X-supply is activated.

Not activated = the extended X-supply is not activated.

RELAY EXTENDED X-SUPPLY (3), STATUS

Displays the status of the extended X-supply (3).

Activated = the extended X-supply is activated.

Not activated = the extended X-supply is not activated.

RELAY EXTENDED X-SUPPLY (4), STATUS

Displays the status of the extended X-supply (4).

Activated = the extended X-supply is activated.

Not activated = the extended X-supply is not activated.

FOG LAMP, TRAILER, STATUS

Display the status of the fog lamp on the trailer.

Activated = the fog lamp is activated.

Not activated = the fog lamp is not activated.

RELAY, GAS TANK VALVE, STATUS

Displays the status of the gas tank valve.

Activated = the valve is open.

Not activated = the valve is closed.

CAUSE OF UNLOCKING, STATUS

Displays the cause of unlocking:

- Unlocked using a key
- Unlocked using remote control
- Unlocked using a central locking switch
- Unlocked by the phone module (PHM)
- Airbag deployed.

SWITCH DRIVER'S DOOR, STATUS

Displays the status of driver's door switch.

Closed = the driver's door is closed.

Open = the driver's door is open.

SWITCH PASSENGER DOOR, STATUS

Displays the status of passenger door switch.

Closed = the passenger door is closed.

Open = the passenger door is open.

SWITCH LEFT-HAND REAR DOOR, STATUS

Displays the status of switch for the left-hand rear door.

Closed = the left-hand rear door is closed.

Open = the left-hand rear door is open.

SWITCH RIGHT-HAND REAR DOOR, STATUS

Displays the status of switch for the right-hand rear door.

Closed = the right-hand rear door is closed.

Open = the right-hand rear door is open.

SWITCH TRUNK LID/TAILGATE, STATUS

Displays the status of trunk lid/tailgate switch.

Closed = the trunk lid/tailgate is closed.

Open = the trunk lid/tailgate is open.

SWITCH HOOD, STATUS

Displays the status of the hood switch.

Closed = the hood is closed.

Open = the hood is open.

SWITCH HANDLE TRUNK LID (4 DOOR CARS), STATUS

Displays the status of the switch in the trunk lid handle.

Activated = handle affected.

Not active = handle not affected.

LOCK SWITCH, DRIVER'S DOOR, STATUS

Displays the status of the lock switch, driver's side. The rear electronic module (REM) receives the value from the driver door module (DDM) via the Control area network (CAN).

Locked = the lock switch on the driver's side is locked.

Unlocked = the lock switch on the driver's side is unlocked.

LOCK SWITCH, PASSENGER DOOR, STATUS

Displays the status of the lock switch on the passenger side. The rear electronic module (REM) receives the value from the passenger door module (PDM) via the Control area network (CAN).

Locked = the lock switch on the passenger side is locked.

Unlocked = the lock switch on the passenger side is unlocked.

LOCK SWITCH, LEFT-HAND REAR DOOR, STATUS

Displays the status of lock switch for the left-hand rear door.

Locked = the lock switch for the left-hand rear door is locked.

Unlocked = lock switch for the left-hand rear door is unlocked.

LOCK SWITCH, RIGHT-HAND REAR DOOR, STATUS

Displays the status of the lock switch for the right-hand rear door.

Locked = the lock switch for the right-hand rear door is locked.

Unlocked = lock switch for the right-hand rear door is unlocked.

LOCK SWITCH, TRUNK LID/TAILGATE, STATUS

Displays the status of the lock switch for the trunk lid/tailgate.

Locked = the lock switch for the trunk lid/tailgate is locked.

Unlocked = the lock switch for the trunk lid/tailgate is unlocked.

LOCK SWITCH CHILD-PROOF LOCK, LEFT-HAND/RIGHT-HAND REAR DOOR, STATUS

Displays the status of the lock switch for the child-proof lock.

Displays the status of the lock switch for the child-proof lock.

Locked = the lock switch for the child-proof lock is engaged (rear door is locked).

Unlocked = the lock switch for the child-proof lock is engaged (rear door is unlocked).

ALARM CAUSE, STATUS

Displays the status of the last alarm cause:

- Front door right
- Front door left
- Rear door right
- Rear door left
- Hood
- Luggage Compartment Lid
- Ignition switch
- Mass movement sensor, front (MMS) alternatively movement sensor (IMS)
- Vehicle tilt sensor
- Voltage drop siren
- Glass breakage sensor activated
- Mass movement sensor, rear (MMS)

GLASS BREAKAGE SENSOR, STATUS

Displays the status of the glass breakage sensor.

OK = the glass breakage wire is intact.

Glass breakage wire broken = the glass breakage wire is broken.

LICENSE PLATE LIGHTING, STATUS

Displays the status of the license plate lighting.

Activated = the license plate lighting is activated.

Not activated = the license plate lighting is not activated.

FOG LAMP, STATUS

Displays the status of the rear fog lamps.

Activated = The rear fog lamps are activated.

Not activated = The rear fog lamps are not activated.

STOP LAMP, STATUS

Displays the status of the stop lamp.

Activated = the stop lamp is activated.

Not activated = the stop lamp is not activated.

BACK-UP (REVERSING) LAMP, STATUS

Displays the status of the back-up (reversing) lamp.

Activated = the back-up (reversing) lamp is activated.

Not activated = the back-up (reversing) lamp is not activated.

POSITION SENSOR XENON LAMP, STATUS

Displays the status of the xenon lamp position sensor.

Not calibrated = the position sensors is not calibrated.

Calibrated = the position sensor is calibrated.

CALIBRATION RESULT POSITION SENSOR, STATUS

Displays the calibration result of the position sensor.

OK = Calibration is successful.

Not OK = Calibration is not successful.

RELAY, TAILGATE WASHER/HEAD RESTRAINT, STATUS

Displays the status of the windshield wiper/head restraint relay.

Activated = the relay is activated.

Not activated = the relay is not activated.

RELAY, REAR WINDSHIELD HEATING, STATUS

Displays the status of the rear windshield heating.

Activated = the relay is activated.

Not activated = the relay is not activated.

PARKING ASSISTANCE REAR, STATUS

Indicates if the rear electronic module (REM) detects that the rear parking assistance system is active or not.

On = The system for rear parking assistance is active.

Off = The system for rear parking assistance is not active.

PARKING ASSISTANCE FRONT, STATUS

Indicates if the rear electronic module (REM) detects that the front parking assistance system is active or not.

On = The system for front parking assistance is active.

Off = The system for front parking assistance is not active.

PARKING SENSOR 1-8, STATUS

Indicates whether the rear electronic module (REM) receives a status signal from the parking assistance module (PAM), indicating a fault in the parking sensor or its terminals.

OK = no fault was found in the parking sensor or its terminals.

Faulty = a fault was found in the parking sensor or its terminals.

NOTE: Sensor 5 - 8 only installed in the vehicle if the vehicle is equipped with front park assist. The control module will always respond OK if the status of sensors 5 - 8 is read off despite them not being installed in the vehicle.

DISTANCE TO THE REAR, VALUE

Displays the distance to objects which can been detected. The value of the read off parameter is the value transmitted by the rear electrical module on the control area network (CAN). The distance is presented as a number between 1 and 32.

1 = the distance from the rear bumper to the detected object is approximately 1.5 m or more.

2 - 31 = the distance from the rear bumper to the detected object is between approximately 1.5 m and approximately 0.3 m.

32 = the distance from the rear bumper to the detected object is approximately 0.3 m or less.

DISTANCE TO THE FRONT, VALUE

Displays the distance to objects which can been detected. The value of the read off parameter is the value transmitted by the rear electrical module on the control area network (CAN). The distance is presented as a number between 1 and 32.

1 = the distance from the front bumper to the detected object is approximately 0.8 m or more.

2 - 31 = the distance from the front bumper to the detected object is between approximately 0.8 m and approximately 0.3 m.

32 = the distance from the front bumper to the detected object is approximately 0.3 m or less.

INPUT SIGNAL FROM THE TEMPERATURE SENSOR (CNG), VALUE

Measurement range 0 to 5 V.

At 0°C ~ 4.5 V

At 25°C ~ 3.6 V

INPUT SIGNAL FROM THE PRESSURE SENSOR (CNG), VALUE

Measurement range 0 to 5 V.

Full (200 bar): 4.5 V.

Empty (0 bar): 0.5 V.

BATTERY VOLTAGE, REAR ELECTRONIC MODULE (REM)

Displays the power supply to the rear electronic module (REM).

Measurement range 0 to 25 V.

BATTERY VOLTAGE, CENTRAL ELECTRONIC MODULE (CEM)

The value indicates the battery voltage at the central electronic module (CEM). The rear electronic module (REM) receives the value from the central electronic module (CEM) via the Control area network (CAN).

Measurement range 5 to 30 V.

ELECTRICAL SYSTEM

Electrical System - Removal, Replacement And Installation

ELECTRICAL EQUIPMENT (EXECUTIVE; PREMIER; 2004)

CONTROL MODULE REAR SOUND SEPARATION, REPLACING

See **CONTROL MODULE REAR SOUND SEPARATION, REPLACING**

COOL BOX/ARMREST COMPONENTS, REPLACING

See **COOL BOX/ARMREST COMPONENTS, REPLACING**

DVD PLAYER, REPLACING

See **DVD PLAYER, REPLACING**

HEAD RESTRAINT WITH TV SCREEN, REPLACING

See **HEAD RESTRAINT WITH TV SCREEN, REPLACING**

INFRARED TRANSMITTER HEAD RESTRAINT, REPLACING

See **INFRARED TRANSMITTER HEAD RESTRAINT, REPLACING**

REAR SEAT ENTERTAINMENT MODULE (RSE), REPLACING

See **REAR SEAT ENTERTAINMENT MODULE (RSE), REPLACING**

ENGINE MECHANICAL

Electrical system

ENGINE MECHANICAL

OIL LEVEL SENSOR, REPLACING

NOTE: **As the illustrations in this service information are used for different model years and / or models, some variation may occur. However, the essential information in the illustrations is always correct.**

REMOVAL AND INSTALLATION

REMOVING THE OIL LEVEL SENSOR

WARNING: **Hot oil can scald. Avoid skin contact with engine oil, particularly if the engine oil is dirty. Immediately wash hands and any skin that has been in contact with oil. Use a suitable cleaning agent and warm water. Wear protective gloves when working with engine oil.**

Remove the splash guard under the engine. Only applies to cars with automatic transmissions.

Position the container under the engine oil trough.

Remove the oil plug.

Drain the engine oil. It is easier to drain the oil if the engine is at operating temperature.

Fig. 1: Identifying Engine Oil Level Sensor
Courtesy of VOLVO CARS CORPORATION

Remove:

- the screws for the sensor. Disconnect the connector for the sensor
- the sensor.

INSTALLING THE OIL LEVEL SENSOR

NOTE: For tightening torques, see TIGHTENING TORQUE .

Fig. 2: Identifying Engine Oil Level Sensor
Courtesy of VOLVO CARS CORPORATION

Install:

- the sensor
- screws for the sensor. Tighten. Connect the connector to the sensor
- the oil plug.

FINISHING

Fill with engine oil. Run the engine to operating temperature. Check for any oil leakage.

Install the splashguard under the engine. Only applies to cars with automatic transmissions.

Check the oil level. Top up if required.

PULSE WHEEL, DRIVE SHAFT, REPLACING

Special tools:

see **9995695**

NOTE: As the illustrations in this service information are used for different model years and / or models, some variation may occur. However, the essential information in the illustrations is always correct.

PREPARATION

Remove the drive shaft. See **REPLACING THE FRONT RIGHT DRIVE SHAFT** or **REPLACING THE FRONT LEFT DRIVE SHAFT** .

REMOVING THE PULSE WHEEL

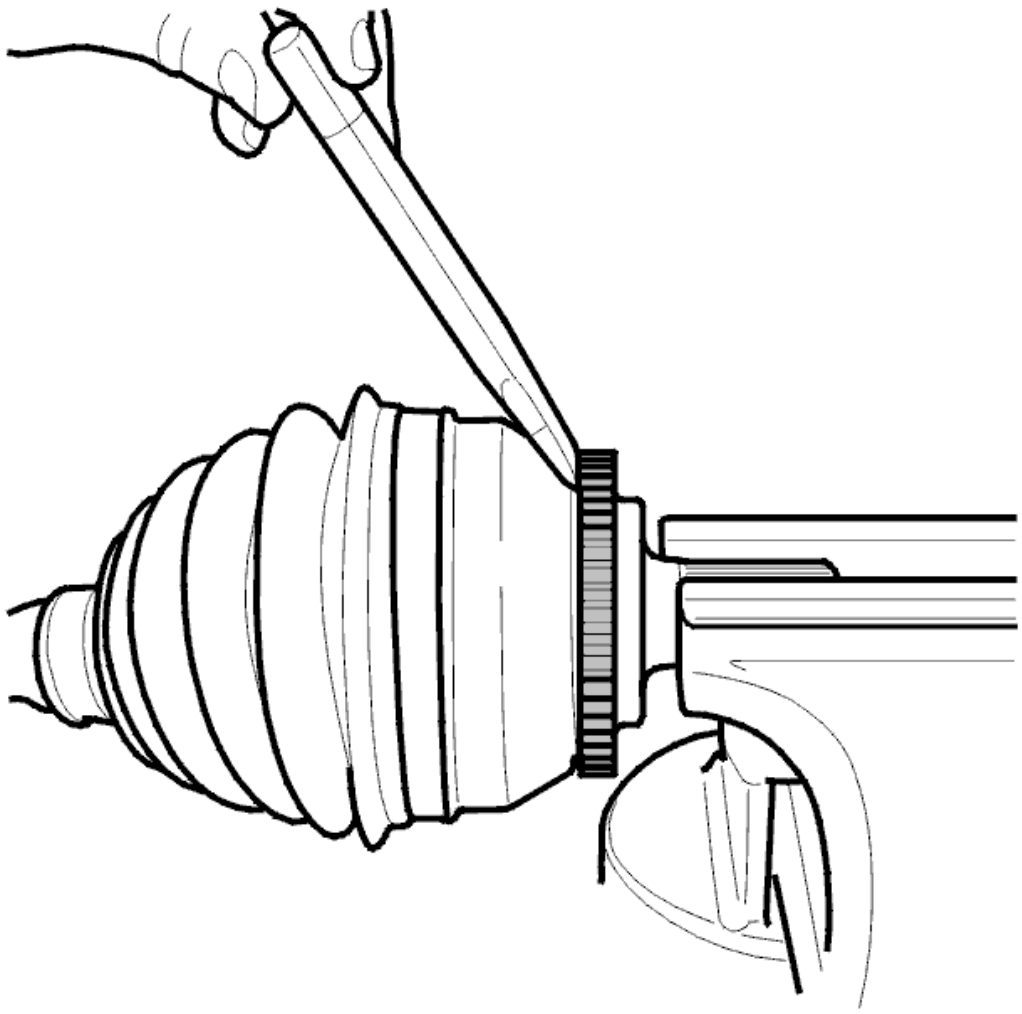

Fig. 3: Tapping Off Pulse Wheel Using A Hammer And Cold Chisel
Courtesy of VOLVO CARS CORPORATION

Secure the drive shaft in a vise with soft jaws.

Tap off the pulse wheel using a hammer and a cold chisel.

INSTALLING THE PULSE WHEEL

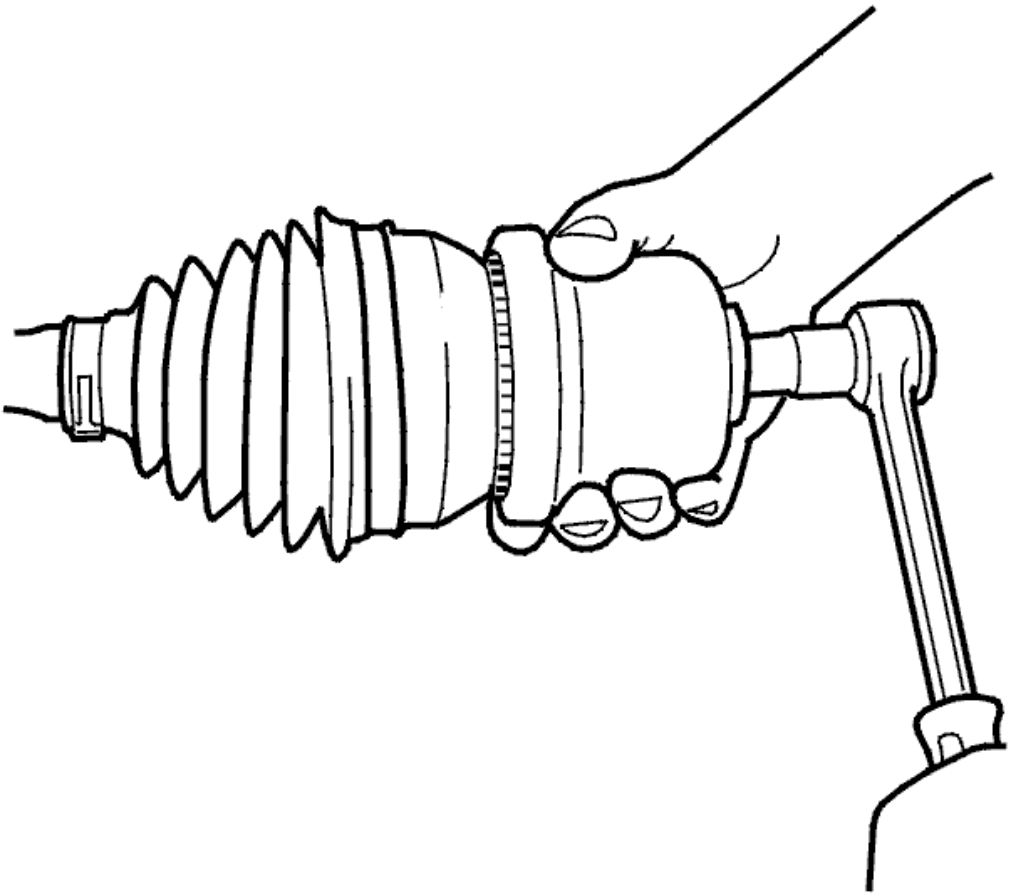

Fig. 4: Pressing Pulse Wheel Into Place
Courtesy of VOLVO CARS CORPORATION

Press the pulse wheel into place. Use tool see **9995695** and the screw for the drive shaft.

Install the drive shaft. See **REPLACING THE FRONT RIGHT DRIVE SHAFT** or **REPLACING THE FRONT LEFT DRIVE SHAFT** .

REPLACING THE OIL PRESSURE SENSOR

NOTE: **As the illustrations in this service information are used for different model years and / or models, some variation may occur. However, the essential information is always correct.**

REMOVING THE OIL PRESSURE SENSOR

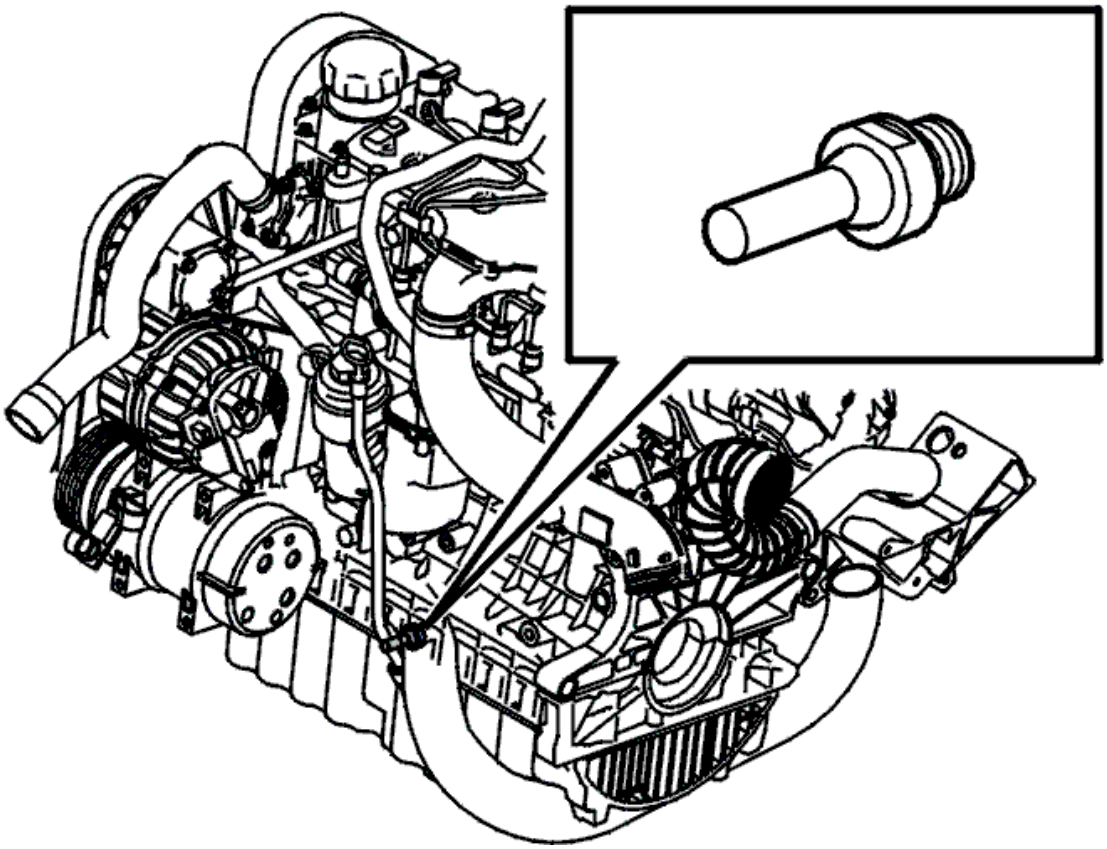

Fig. 5: Identifying Engine Oil Pressure Sensor
Courtesy of VOLVO CARS CORPORATION

Remove the hose from the charge air pipe.

Remove:

- the screw for the charge air pipe in the cylinder block
- the connector from the oil pressure sensor
- the oil pressure sensor. Use a long 24 mm socket.

Place paper underneath in case of oil leakage.

INSTALLING THE OIL PRESSURE SENSOR

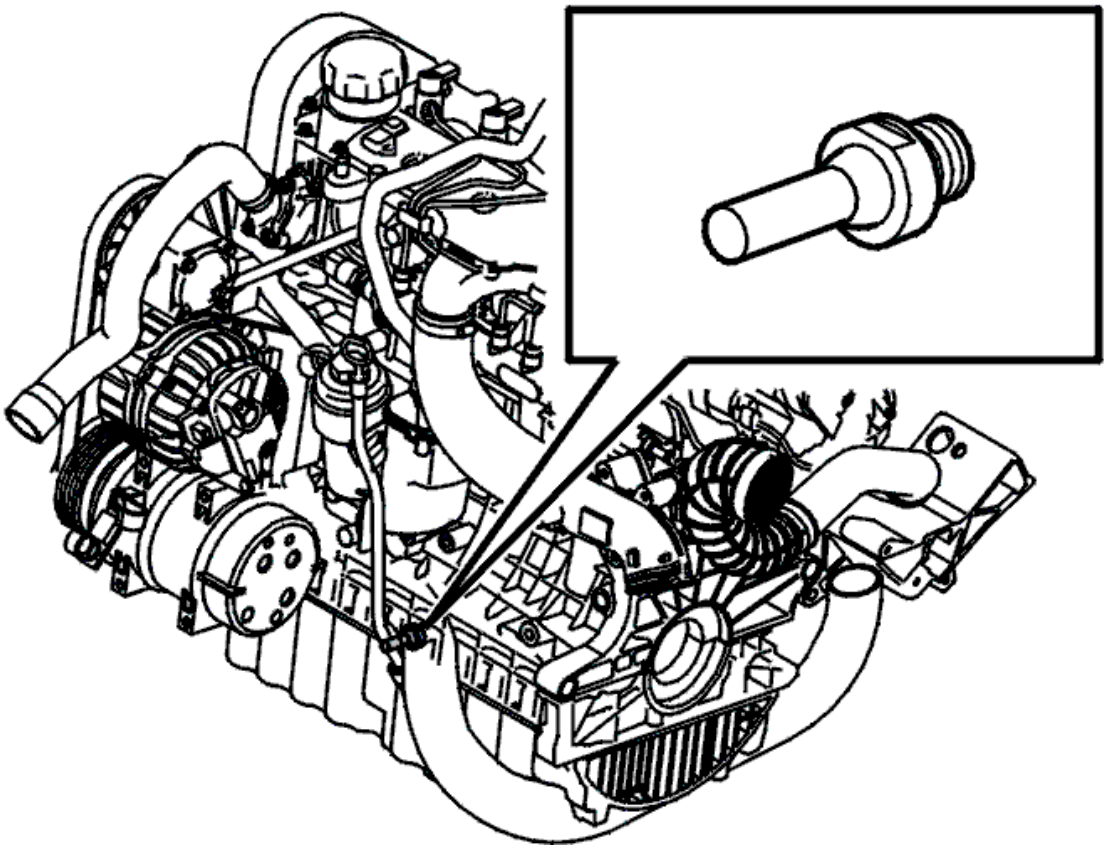

Fig. 6: Identifying Engine Oil Pressure Sensor
Courtesy of VOLVO CARS CORPORATION

Install:

- the new pressure sensor
- the connector
- the screw for the charge air pipe in the cylinder block
- the hose on the charge air pipe.

FAULT-TRACING

Electrical system

FAULT-TRACING

SIGNAL SPECIFICATION, REAR ELECTRONIC MODULE (REM)

REAR ELECTRONIC MODULE (REM) CONNECTORS A-E

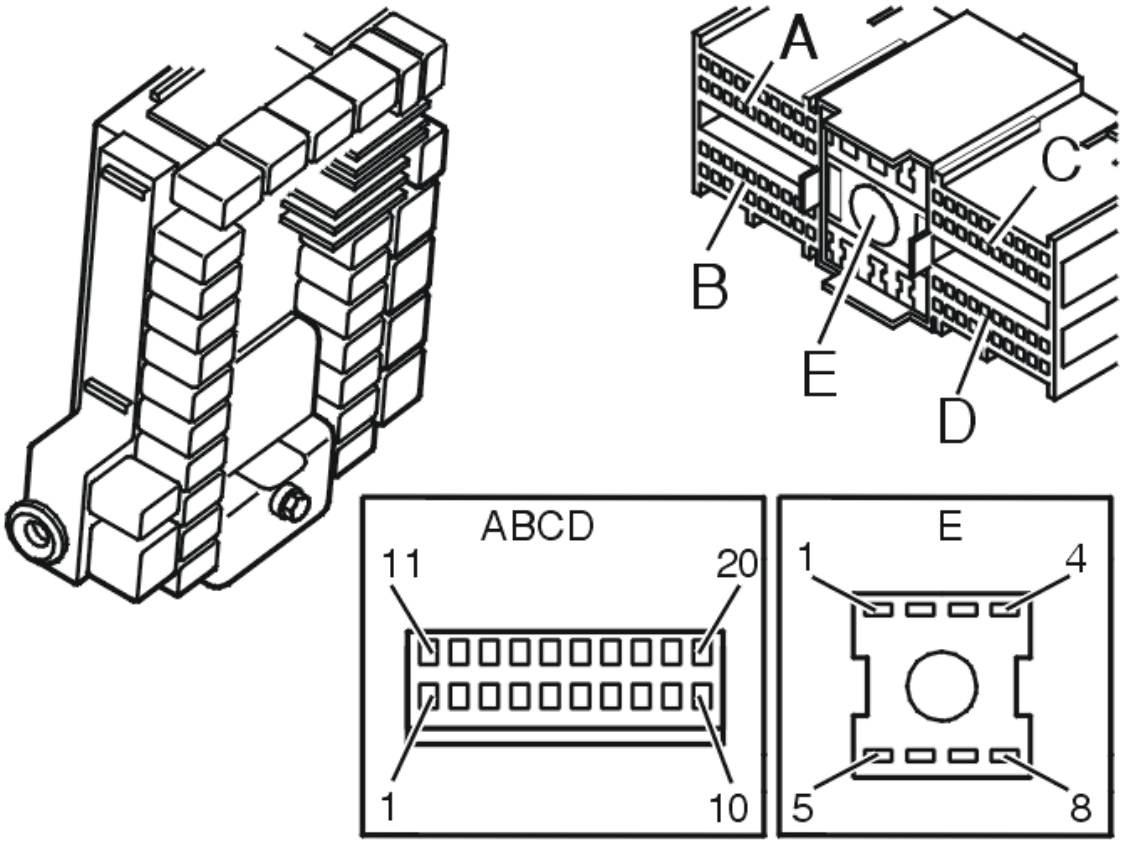

Fig. 1: Identifying Rear Electronic Module (REM) And Connector Terminals
Courtesy of VOLVO CARS CORPORATION

Connector A, terminals #A1-#A20

The following values are measured between the relevant terminal and terminal #E1 (power ground) unless otherwise stated.

The values are measured with the control module in "Active mode".

NOTE: **It is important to connect the breakout box and check the ground terminals before taking readings.**

U = DC in volts (V).

Ubat = battery voltage in volts (V).

Ulow = Voltage close to 0 V.

NC = Not connected

NC* = grounded via capacitor (C=22nF)

Terminal, breakout box	Terminal, control module	Signal type	Ignition off Active / not active	Ignition on Active / not active	Other
#A01	#A1	Spare input (30)	U~Ubat	U~Ubat	At no input
#A02	#A2	Fuel level sensor, left-hand side (+). Switched signal, 5/35 ms.	U~Ulow	U=0.54-3.96 V	Full: 0.54 V Empty: 3.96 V For Bi-fuel cars this applies to the LPG gas tank The terminal is not used if the tank is PZEVEVAP or EVAP 2.
#A03	#A3	Reserve output (switch to ground)	U~Ulow	U~Ulow	
#A04	#A4	Stop lamp, relay driver from the central electronic module (CEM)	U~Ulow / Ubat	U~Ulow / Ubat	
#A05	#A5	-	-	-	
#A06	#A6	Reserve, analog input signal	NC*	NC*	
#A07	#A7	Signal ground (-)	U~Ulow	U~Ulow	
#A08	#A8	Fuel level sensor, right-hand side (+). Switched signal, 5/35 ms.	U~Ulow	U=0.54-3.96 V	Full: 0.54 V Empty: 3.96 V
#A09	#A9	Spare input (30)	U~Ubat	U~Ubat	At no input
#A10	#A10	Fuel level sensor common ground	U~Ulow	U~Ulow	
#A11	#A11	Reserve, analog input signal	NC*	NC*	
#A12	#A12	Signal ground (-)	U~Ulow	U~Ulow	
#A13	#A13	Reserve output (switch to ground)	U~Ulow	U~Ulow	
#A14	#A14	CAN H	-	-	During

					communication U=2.0-3.5 V
#A15	#A15	Volcano Lite CAN H	-	-	During communication U=2.0-3.5 V
#A16	#A16	CAN L	-	-	During communication U=2.0-3.5 V
#A17	#A17	Volcano Lite CAN L	-	-	During communication U=2.0-3.5 V
#A18	#A18	Reserve	U~Ulow	U~Ulow	NC
#A19	#A19	Reserve output (switch to ground)	U~Ulow	U~Ulow	
#A20	#A20	-	-	-	
#A21	#B1	Spare input (GND)	U~Ulow	U~Ulow	At no input
#A22	#B2	Spare input (GND)	U~Ulow	U~Ulow	At no input
#A23	#B3	Reserve output (switch to ground)	U~Ulow	U~Ulow	
#A24	#B4	Reserve	U~Ulow	U~Ulow	NC
#A25	#B5	Power supply, fuel level sensor, CNG	U~Ulow	U~ 5V	Bi-fuel
#A26	#B6	Signal ground, position sensor for headlamp beam height control	U~Ulow	U~Ulow	
#A27	#B7	Reserve output (switch to ground)	U~Ulow	U~Ulow	
#A28	#B8	Analog input signal from the position sensor for headlamp beam height control.	U~Ulow	U=1.7-3.2V	NC
#A29	#B9	Reserve	U~Ulow	U~Ulow	NC
#A30	#B10	Power supply, position sensor for headlamp beam height control	U~Ulow	U=5 V	
#A31	#B11	Reserve	U~Ulow	U~Ulow	NC
#A32	#B12	Reserve	U~Ulow	U~Ulow	NC
#A33	#B13	Reserve	U~Ulow	U~Ulow	NC
#A34	#B14	Reserve	U~Ulow	U~Ulow	NC
#A35	#B15	Reserve	U~Ulow	U~Ulow	NC
#A36	#B16	Input signal fuel level sensor (pressure), CNG	U~Ulow	U=0.5V-4.5V	Full (200bar): 4.5V Empty (0 bar): 0.5V
#A37	#B17	Reserve	U~Ulow	U~Ulow	NC

#A38	#B18	Reserve	U~Ulow	U~Ulow	NC
#A39	#B19	Reserve	U~Ulow	U~Ulow	NC
#A40	#B20	Reserve	U~Ulow	U~Ulow	NC
#A41	#C1	Input signal, fuel level sensor (temperature), CNG	U~Ulow	U=0V-5V	0°C~4 V 25°C~2.5 V
#A42	#C2	Signal ground fuel level sensor, CNG	U~Ulow	U~Ulow	Bi-fuel
#A43	#C3	Reserve	U~Ulow	U~Ulow	NC
#A44	#C4	-	-	-	
#A45	#C5	-	-	-	
#A46	#C6	Reserve output (switch to ground)	U~Ulow	U~Ulow	
#A47	#C7	Reserve	U~Ulow	U~Ulow	NC
#A48	#C8	Reserve output (switch to ground)	U~Ulow	U~Ulow	
#A49	#C9	Reserve	U~Ulow	U~Ulow	NC
#A50	#C10	Reserve	U~Ulow	U~Ulow	NC
#A51	#C11	Reserve output (switch to ground)	U~Ulow	U~Ulow	
#A52	#C12	Reserve output (switch to ground)	U~Ulow	U~Ulow	
#A53	#C13	Reserve	U~Ulow	U~Ulow	NC
#A54	#C14	Reserve	U~Ulow	U~Ulow	NC
#A55	#C15	Reserve	U~Ulow	U~Ulow	NC
#A56	#C16	Reserve	U~Ulow	U~Ulow	NC
#A57	#C17	Spare input (30)	U~Ubat	U~Ubat	At no input
#A58	#C18	Spare input (30)	U~Ubat	U~Ubat	At no input
#A59	#C19	Reserve	U~Ulow	U~Ulow	NC
#A60	#C20	Reserve output (switch to ground)	U~Ulow	U~Ulow	
#B01	#D1	Relay driver, rear windshield heating	U~Ubat	U~Ulow / Ubat	Grounded when the relay is activated
#B02	#D2	Relay driver, rear 15l-supply	-	-	
#B03	#D3	Reserve	U~Ulow	U~Ulow	NC
#B04	#D4	Signal voltage, high mounted stop lamp	U~Ubat / Ulow	U~Ubat / Ulow	5 door
#B05	#D5	Reserve	5V / Ulow	5V / Ulow	NC
#B06	#D6	Serial communication, input signal from the level sensor control	During communication U=8-11 V	During communication U=8-11 V	Communicates when the car is alarmed.

		module			Conditional on the car being equipped with an inclination sensor module (ISM).
#B07	#D7	Input signal from the tailgate handle	U~Ulow / Ubat	U~Ulow / Ubat	Applies to 4-door models. Grounded when the tailgate handle is pressed in.
#B08	#D8	Spare input (30)	Ubat	Ubat	At no input
#B09	#D9	Spare input (30)	Ubat	Ubat	At no input
#B10	#D10	Spare input (30)	Ubat	Ubat	At no input
#B11	#D11	-	U~Ulow	U~Ulow	NC
#B12	#D12	Reserve, relay RMA 04	U~Ulow	U~Ulow	
#B13	#D13	Reserve, relay RMI 09	U~Ulow	U~Ulow	
#B14	#D14	Reserve, relay RMI 10	U~Ulow	U~Ulow	
#B15	#D15	Reserve, relay RMI 25	U~Ulow	U~Ulow	
#B16	#D16	Relay driver, warm-up cycle diesel filter	U~Ulow	U~Ulow / Ubat	
#B17	#D17	Reserve, relay RST 01	U~Ulow	U~Ulow	
#B18	#D18	Relay driver, rear X-supply	-	-	
#B19	#D19	Reserve output (switch to ground)	U~Ulow	U~Ulow	
#B20	#D20	Power supply to the tilt sensor. Output signal.	U~Ulow / Ubat	U~Ulow	Supplied with voltage when the car is alarmed. Conditional on the car being equipped with an inclination sensor module (ISM).

The power signals below are measured between the relevant terminal and terminal #E1 (power ground)

Terminal, breakout box	**Terminal, control module**	**Signal type**	**Ignition off Active / not active**	**Ignition on Active / not active**	**Other**
#B21	#E1	Power ground	U~Ulow	U~Ulow	
#B22	#E2	Power supply to the cargo compartment lighting. Output signal.	U~Ulow / Ubat	U~Ulow / Ubat	Applies to 4-door models. Activated when the trunk lid is

					open. Goes out after 30 minutes Goes out when driving forward with the trunk lid open. The ignition must be switched off before it lights again. Can be switched off via the upper electronic module (UEM).
#B23	#E3	Reserve	U~Ulow	U~Ulow	NC
#B24	#E4	Power supply to the rear fog lamp. Input signal.	U~Ubat	U~Ubat	
#B25	#E5	Reserve	U~Ulow	U~Ulow	NC
#B26	#E6	Power supply to the rear electronic module (REM)	U~Ubat	U~Ubat	
#B27	#E7	Reserve	U~Ulow	U~Ulow	NC
#B28	#E8	Reserve	U~Ulow	U~Ulow	NC

RESISTANCE VALUES, FUEL LEVEL SENSOR

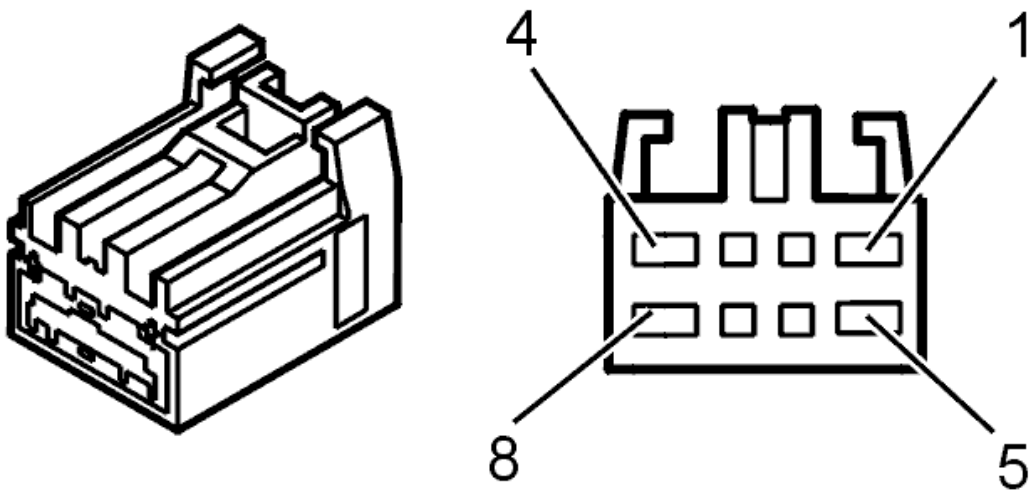

Fig. 2: Fuel Level Sensor Terminals
Courtesy of VOLVO CARS CORPORATION

Readings for the left fuel level sensor are taken between terminals #5 and #6.

Readings for the right fuel level sensor are taken between terminals #7 and #6.

The following table lists the fuel level sensor resistance and the corresponding fuel volume.

Resistance (ohm)	Fuel volume (liters)
12	40
38	35
66	30
96	25
130	20
171	15
223	10
297	5
383	1

SIGNAL SPECIFICATION, ABS CONTROL MODULE

All values given are between the relevant terminal in column 1 and terminal #A8 or #A24 (ground), unless otherwise indicated in brackets.

NOTE: **It is important that the breakout box is connected and that the ground terminals have been checked before readings are taken.**

U=	DC voltage in volts (V)	Ubat =	battery voltage (V)
I =	current in amperes (A)	Ulow =	voltage approximately 0 V

Breakout box terminal	Control module terminal	Signal type	Ignition on	Other
#A1	#1	Front left wheel sensor signal	Tooth against sensor: Iapprox.14 mA Uapprox.9 V Cover against sensor: Iapprox.7 mA Uapprox.10 V (at normal system voltage)	The wheel sensors generate a current for the control module. When the pulse wheel rotates, the sensor generates a pulsed current (quadratic wave) where the strength of the current depends on the position of the pulse wheel. The frequency increases with speed.
#A2	#2	Front left wheel sensor power supply	U = Ubat	-
#A3	#3	-	-	-
#A4	#4	15l-supply (power supply	U = Ubat	-

		from ignition switch)		
#A5	#5	Rear left wheel sensor signal	Tooth against sensor: Iapprox.14 mA Uapprox.9 V Cover against sensor: Iapprox.7 mA Uapprox.10 V (at normal system voltage)	The wheel sensors generate a current for the control module. When the pulse wheel rotates, the sensor generates a pulsed current (quadratic wave) where the strength of the current depends on the position of the pulse wheel. The frequency increases with speed.
#A6	#6	Rear left wheel sensor power supply	U = Ubat	-
#A7	#7	-	-	-
#A8	#8	Power and signal ground (measured to battery negative terminal)	Uapprox.Ulow	-
#A9	#9	30-supply inlet and outlet valves (power supply from the battery to the intake and exhaust valves)	Uapprox.Ubat	Power supply to the in and outlet valves and signal to the control module.
#A10	#10	Control modules communication cable (CAN L)	U=2-3V	-
#A11	#11	Control modules communication cable (CAN H)	U=2-3V	-
#A12	#12	-	-	-
#A13	#13	-	-	-
#A14	#14	Stop lamp switch signal (applies only to AWD TRACS)	Open: Uapprox.Ulow Closed: Uapprox.Ubat.	The stop lamp switch closes when braking.
#A15	#15	-	-	-
#A16	#16	-	-	-
#A17	#17	-	-	-
#A18	#18	Stop lamp switch signal	Open: Uapprox.Ulow Closed: Uapprox.Ubat	The stop lamp switch closes when braking.
#A19	#19	Front right wheel sensor signal	Tooth against sensor: Iapprox.14 mA Uapprox.9 V Cover against sensor: Iapprox.7 mA Uapprox.10 V (at normal system voltage)	The wheel sensors generate a current for the control module. When the pulse wheel rotates, the sensor generates a pulsed current (quadratic wave) where the strength of the

				current depends on the position of the pulse wheel. The frequency increases with speed.
#A20	#20	Power supply, rear right wheel sensor	U = Ubat	-
#A21	#21	-	-	-
#A22	#22	Power supply, rear right wheel sensor	U = Ubat	The wheel sensor receives 12 V from the control module.
#A23	#23	Rear right wheel sensor signal	Tooth against sensor: Iapprox.14 mA Uapprox.9 V Cover against sensor: Iapprox.7 mA Uapprox.10 V (at normal system voltage)	The wheel sensors generate a current for the control module. When the pulse wheel rotates, the sensor generates a pulsed current (quadratic wave) where the strength of the current depends on the position of the pulse wheel. The frequency increases with speed.
#A24	#24	Power and signal ground (measured to battery negative terminal)	Uapprox.Ulow	-
#A25	#25	30-supply pump motor (power supply from the battery)	Uapprox.Ubat	-

SIGNAL SPECIFICATION, AUDIO CONTROL MODULE

CONNECTING THE BREAKOUT BOX AND CHECKING THE GROUND TERMINAL

CAUTION: Before starting to measure, the breakout box must be connected and the ground connections must be checked. See CHECKING VOLTAGE / GROUND CONNECTION, MEDIA/INFOTAINMENT .

DEFINITIONS

DC voltage in volts (V)	U_{low} = Voltage near 0 V
	U_{bat} = Battery voltage

THE AUDIO CONTROL MODULE, GREEN CONNECTOR

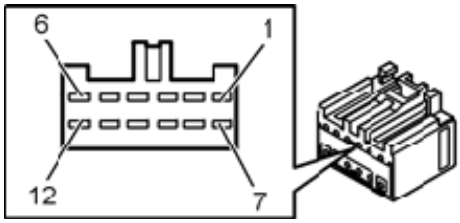

Fig. 3: Identifying Terminals Of Audio Control Module Gray Connector
Courtesy of VOLVO CARS CORPORATION

NOTE: The connectors on the adapter cable must have the correct color-coding for the signal table to match.

Before taking any readings, see **CHECKING VOLTAGE / GROUND CONNECTION, MEDIA/INFOTAINMENT** .

Control module terminal	Breakout box terminal	Signal type	Ignition on	Miscellaneous
A1	#15	30 supply	U_{bat}	-
A2	#16	15 supply	U_{bat}	-
A3	#17	Extra input (AUX input), left channel (+)	Analog input signal	-
A4	#18	Extra input (AUX-input), ground	$U=U_{low}$	-
A5	#19	Extra input (AUX input), right channel (+)	Analog input signal	-
A6	#20	-	-	-
A7	#21	CANH	Digital signal 2-3 V	-
A8	#22	CANL	Digital signal 2-3 V	-
A9	#23	Power supply, aerial amplifier	11 V	-
A10	#24	Audio channel (+), center loudspeaker	Alternating current at sound in center loudspeaker	-
A11	#25	Audio channel (-), center loudspeaker	Alternating current at sound in center loudspeaker	-
A12	#26	Ground	U_{low}	-

AUDIO CONTROL MODULE (AUM)/EXTERNAL AMPLIFIER TO LOUDSPEAKERS, GRAY CONNECTOR

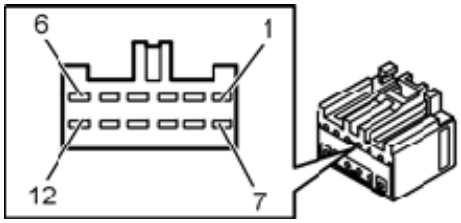

Fig. 4: Identifying Terminals Of Audio Control Module Gray Connector
Courtesy of VOLVO CARS CORPORATION

NOTE: The connectors on the adapter cable must have the correct color-coding for the signal table to match.

Before taking any readings, see **CHECKING VOLTAGE / GROUND CONNECTION, MEDIA/INFOTAINMENT** .

Control module terminal	Breakout box terminal	Signal type	Ignition on	Miscellaneous
B1	#1	Audio channel (+), loudspeaker left front	AC voltage (to pin 2) when sound in the left front loudspeakers	-
B2	#2	Audio channel (-), loudspeaker left front	AC voltage (to pin 1) when sound in the left front loudspeakers	-
B3	#3	-	-	-
B4	#4	-	-	-
B5	#5	Audio channel (+), loudspeaker right front	Alternating current (to pin 6) when sound in the right front loudspeakers	-
B6	#6	Audio channel (-), loudspeaker right front	Alternating current (to pin 5) when sound in the right front loudspeakers	-
B7	#7	Audio channel (+), loudspeaker left rear	Alternating current (to pin 8) when sound in the left rear loudspeakers	-
B8	#8	Audio channel (-), loudspeaker left rear	Alternating current (to pin 7) when sound in the left rear loudspeakers	-
B9	#9	-	-	-
B10	#10	-	-	-
B11	#11	Audio channel (+), loudspeaker right rear	Alternating current (to pin 12) when sound in the right rear loudspeakers	-
B12	#12	Audio channel (-), loudspeaker right rear	Alternating current (to pin 11) when sound in the	-

			right rear loudspeakers	

AUDIO CONTROL MODULE (TO AERIAL)

Before taking any readings, see **CHECKING VOLTAGE / GROUND CONNECTION, MEDIA/INFOTAINMENT** .

Control module terminal	Breakout box terminal	Signal type	Ignition on	Miscellaneous
C1	#45	Aerial signal, head aerial	Analogue signal	-
C2	#46	Power supply and aerial signal, sub aerial	Analogue signal	The aerial signal is retained over DC

AUDIO CONTROL MODULE (CABLE BETWEEN THE AUDIO MODULE AND THE AMPLIFIER)

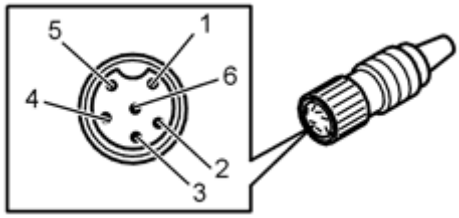

Fig. 5: Identifying Terminals Of Cable Between Audio Module And Amplifier
Courtesy of VOLVO CARS CORPORATION

Before taking any readings, see **CHECKING VOLTAGE / GROUND CONNECTION, MEDIA/INFOTAINMENT** .

Control module terminal	Breakout box terminal	Signal type	Ignition on	Miscellaneous
D1	#42	Audio channel, loudspeaker left front	Alternating current when sound at front left loudspeaker	-
D2	#43	Audio channel, loudspeaker right front	Alternating current when sound at front right loudspeaker	-
D3	#44	Audio channel, loudspeaker right rear	Alternating current when sound at right rear loudspeaker	-
D4	#45	Signal ground, audio channel	U_{low}	-
D5	#46	Audio channel, loudspeaker left rear	Alternating current when sound at left rear loudspeaker	-
D6	#47	Control signal (off / on)		-

		amplifier		

AUDIO CONTROL MODULE (CABLE BETWEEN THE AUDIO MODULE AND THE CD CHANGER/NAVIGATION UNIT)

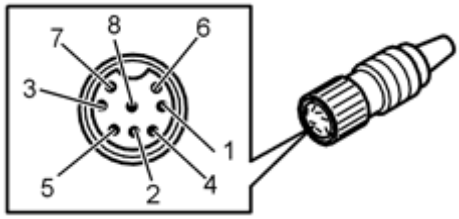

Fig. 6: Identifying Terminals Of Cable Between Audio Module And CD Changer/Navigation Unit
Courtesy of VOLVO CARS CORPORATION

Before taking any readings, see **CHECKING VOLTAGE / GROUND CONNECTION, MEDIA/INFOTAINMENT** .

Control module terminal	Breakout box terminal	Signal type	Ignition on	Miscellaneous
E1	#16	Clock signal to audio unit	Digital signal	-
E2	#17	Signal ground, sound	U_{low}	-
E3	#18	15 supply	U_{bat}	-
E4	#19	Data signal to audio unit	Digital signal	-
E5	#20	Busy signal to audio unit	Digital signal	-
E6	#21	Left audio channel	Alternating current when there is sound to the loudspeaker	-
E7	#22	Right audio channel	Alternating current when there is sound to the loudspeaker	-
E8	#23	Voice guide channel	Alternating current when there is sound to the loudspeaker	-
H		Screen ground, cable to audio unit	U_{low}	-

EXTERNAL AMPLIFIER

Before taking any readings, see **CHECKING VOLTAGE / GROUND CONNECTION, MEDIA/INFOTAINMENT** .

Control module terminal	Signal type	Ignition on	Miscellaneous
F1	30 supply		-

		U_{bat}	
F2	Ground	U_{low}	-

10CD CHANGER

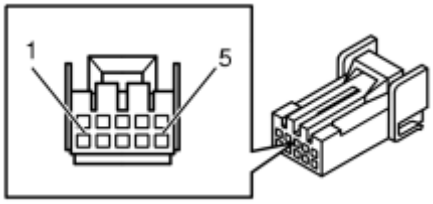

Fig. 7: Identifying 10-CD Changer Connector Terminals
Courtesy of VOLVO CARS CORPORATION

Before taking any readings, see **CHECKING VOLTAGE / GROUND CONNECTION, MEDIA/INFOTAINMENT** .

Control module terminal	Signal type	Ignition on	Miscellaneous
G1	30 supply	U_{bat}	-
G2	Ground	U_{low}	-
G3			
G4			
G5			

SIGNAL SPECIFICATION, KEYPAD UNIT / CARPHONE MODULE (PHM)

CONNECTING THE BREAKOUT BOX AND CHECKING THE GROUND TERMINAL

NOTE: **It is important to connect the breakout box and check ground terminals according to CHECKING THE GROUND TERMINAL, PHONE MODULE (PHM) before taking readings.**

DEFINITIONS

DC voltage in volts (V)	Ulow = Voltage near 0 V
	Ubat = Battery voltage

KEYPAD UNIT /CARPHONE CONTROL MODULE (PHM) (FOR HANDS-FREE LOUDSPEAKER AND HANDSET)

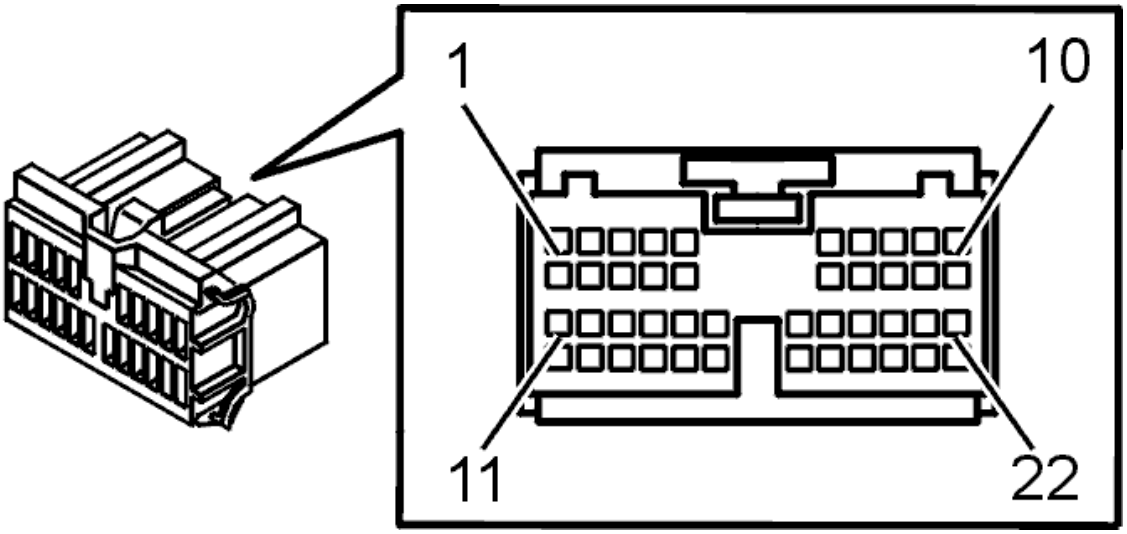

Fig. 8: Identifying Connector (F) Terminals
Courtesy of VOLVO CARS CORPORATION

Before measuring, read, see **CONNECTING THE BREAKOUT BOX AND CHECKING THE GROUND TERMINAL**.

Control module terminal	Breakout box terminal	Signal type	Ignition on	Other
A1	#1	Signal, handset microphone	Alternating current when there is sound to the handset microphone	-
A2	#2	Handset signal ground	Ulow	-
A3	#3	Power supply to the handset	Ubat	-
A4	#4	Signal, handset on cradle	8 V	-
A5	#5	-	-	-
A6	#6	30 supply	Ubat	-
A7	#7	-	-	-
A8	#8	Ground	Ulow	-
A9	#9	-	-	-
A10	#10	CANL	Digital signal	-
A11	#11	Signal, handset loudspeaker	Alternating current when there is sound from the handset loudspeaker	-
A12	#12	Signal (+), hands-free	Alternating current (to #13) when there is sound from the head restraint loudspeaker	-
A13	#13	Signal (-), hands-free	Alternating current (to #12) when there is sound from the head restraint loudspeaker	-

A14	#14	-	-	-
A15	#15	-	-	-
A16	#16	-	-	-
A17	#17	-	-	-
A18	#18	-	-	-
A19	#19	-	-	-
A20	#20	-	-	-
A21	#21	-	-	-
A22	#22	CANH	Digital signal	-

KEYPAD UNIT / CARPHONE MODULE (PHM) (TO CARPHONE BOX)

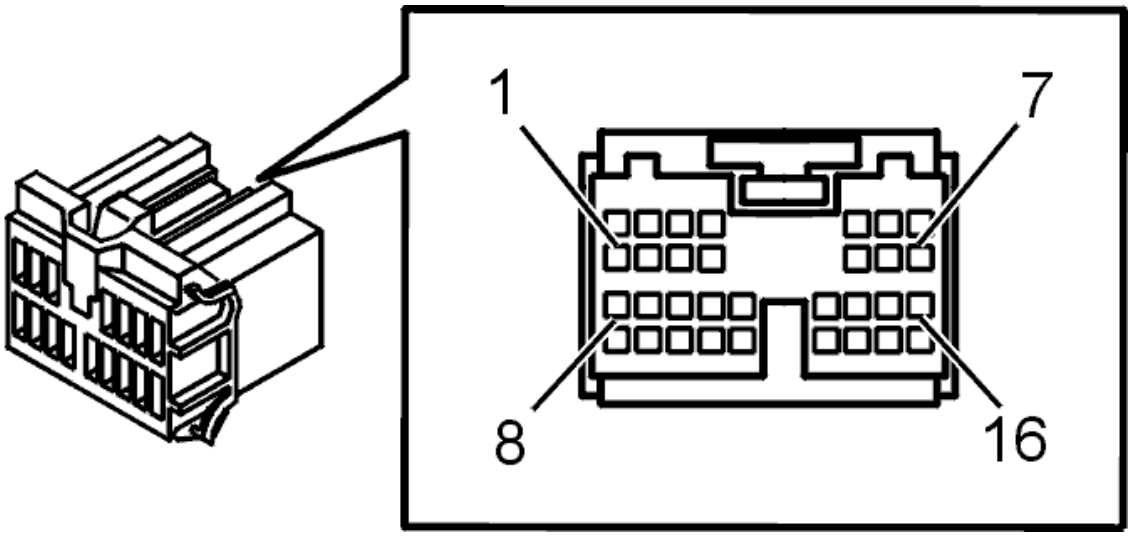

Fig. 9: Connector, Green (16- Pin)
Courtesy of VOLVO CARS CORPORATION

Before measuring, read, see **CONNECTING THE BREAKOUT BOX AND CHECKING THE GROUND TERMINAL**.

Control module terminal	Breakout box terminal	Signal type	Ignition on / carphone on	Other
B1	#25	Microphone signal	Alternating current when there is sound to the handset microphone	-
B2	#26	Analog ground reference	Ulow	-
B3	#27	-	-	-
B4	#28	-	-	-
B5	#29	Power supply to GSM unit	Ubat	-
B6	#30	Ground	Ulow	-
B7	#31	Mbus	Digital signal	-

B8	#32	Loudspeaker signal	Alternating current when there is sound in handset loudspeaker	-
B9	#33	Signal (-), hands-free	Alternating current when there is sound in the hands-free loudspeaker	-
B10	#34	Signal (+), hands-free	Alternating current when there is sound in the hands-free loudspeaker	-
B11	#35	-	-	-
B12	#36	-	-	-
B13	#37	-	-	-
B14	#38	Power supply to GSM unit	Ubat	-
B15	#39	Ground	Ulow	-
B16	#40	Signal ground (Mbus)	Ulow	-

CARPHONE BOX (TO KEYPAD UNIT / CARPHONE MODULE (PHM)

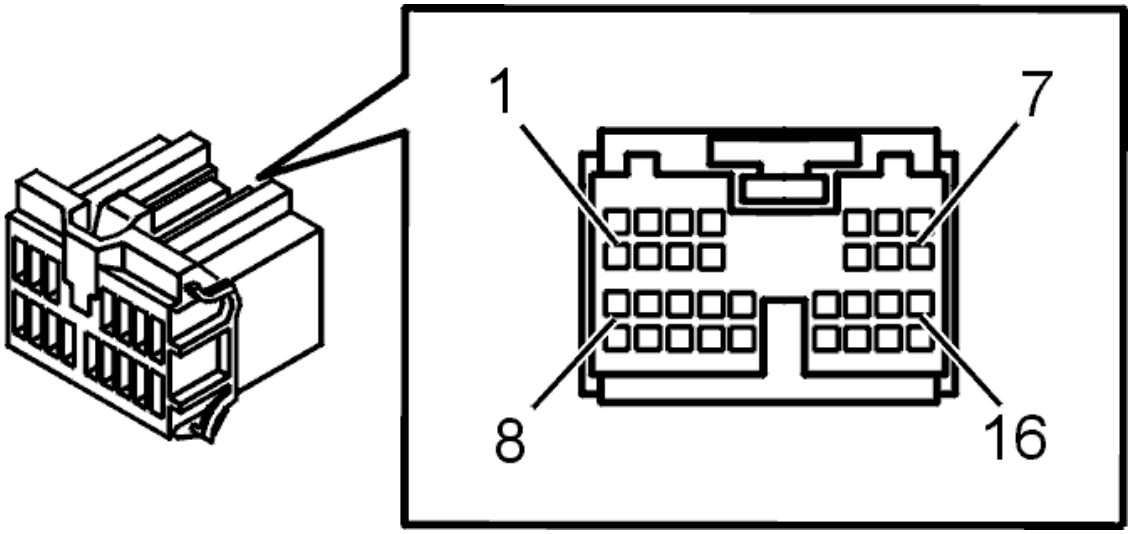

Fig. 10: Connector, Green (16- Pin)
Courtesy of VOLVO CARS CORPORATION

Before measuring, read, see **CONNECTING THE BREAKOUT BOX AND CHECKING THE GROUND TERMINAL**.

Stepper unit terminal	Breakout box terminal	Signal type	Ignition on	Other
C1	#25	Microphone signal	Alternating current when there is sound to the handset microphone	-
C2	#26	Analog ground reference	Ulow	-
C3	#27	-	-	-

C4	#28	-	-	-
C5	#29	Power supply to GSM unit	Ubat	-
C6	#30	Ground	Ulow	-
C7	#31	Mbus	Digital signal	-
C8	#32	Loudspeaker signal	Alternating current when there is sound in handset loudspeaker	-
C9	#33	Signal (-), hands-free	Alternating current when there is sound in the hands-free loudspeaker	-
C10	#34	Signal (+), hands-free	Alternating current when there is sound in the hands-free loudspeaker	-
C11	#35	-	-	-
C12	#36	-	-	-
C13	#37	-	-	-
C14	#38	Power supply to GSM unit	Ubat	-
C15	#39	Ground	Ulow	-
C16	#40	Signal ground (Mbus)	Ulow	-

CARPHONE (FOR HANDS-FREE MICROPHONE)

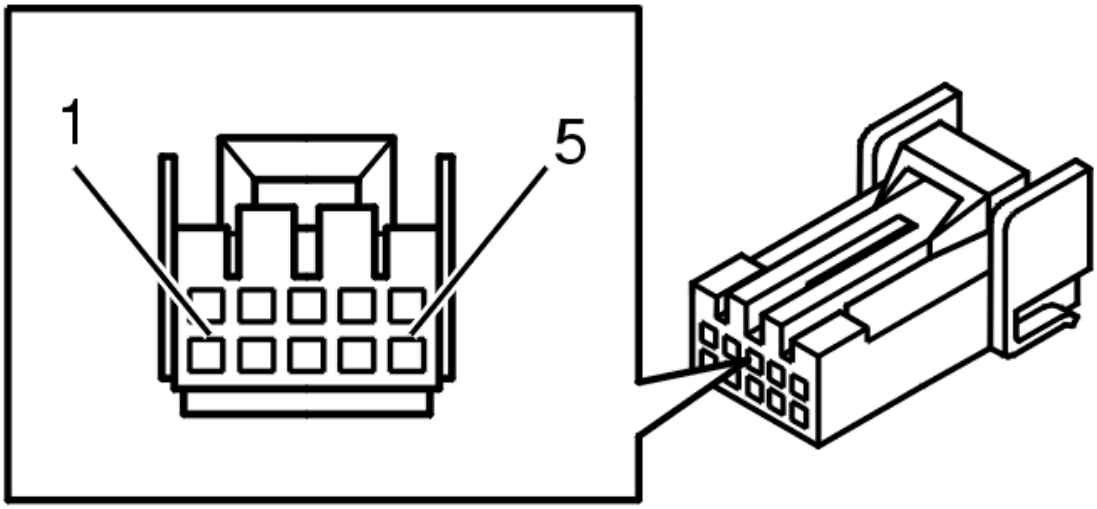

Fig. 11: 10 CD Changer Connector Terminals
Courtesy of VOLVO CARS CORPORATION

Before measuring, read, see **CONNECTING THE BREAKOUT BOX AND CHECKING THE GROUND TERMINAL**.

Pin no.	Signal type	Ignition on	Other
D1	Power supply and microphone	Analog signal	The microphone

	signal		signal is retained over DC
D2	-	-	-
D3	Signal ground, hands-free microphone	Ulow	-
D4	-	-	-
D5	-	-	-

HANDSET (FOR KEYPAD UNIT / CARPHONE MODULE (PHM))

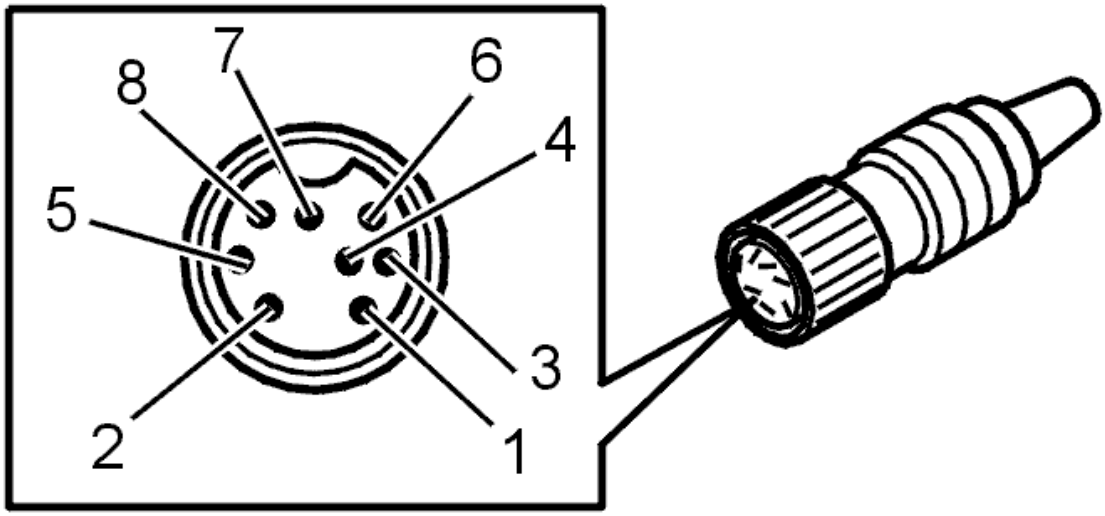

Fig. 12: Connector D, Handset Connector
Courtesy of VOLVO CARS CORPORATION

Before measuring, read, see **CONNECTING THE BREAKOUT BOX AND CHECKING THE GROUND TERMINAL**.

Stepper unit terminal	Breakout box terminal	Signal type	Ignition on	Other
E1	#32	-	-	-
E2	#33	-	-	-
E3	#34	Handset microphone signal	Alternating current when there is sound from the handset microphone	-
E4	#35	Handset speaker signal	Alternating current when there is sound in the handset loudspeaker	-
E5	#36	Ground	Ulow	-
E6	#37	Signal, handset on cradle	U = 8V	-
E7	#38	Handset power supply	Ubat	-
E8	#39	-	-	-

HANDS-FREE SPEAKERS (FOR KEYPAD UNIT / CARPHONE MODULE (PHM))

Graphic under process

Fig. 13: Identifying Engine Control Module
Courtesy of VOLVO CARS CORPORATION

Before measuring, read, see **CONNECTING THE BREAKOUT BOX AND CHECKING THE GROUND TERMINAL**.

Pin no.	Signal type	Ignition on	Other
F1	Signal (+) hands-free	Alternating current (to #2) when there is sound from the speakers	-
F2	Signal (-) hands-free	Alternating current (to #1) when there is sound from the speakers	-

SIGNAL SPECIFICATION, REAR SEAT ENTERTAINMENT MODULE (RSE), GENERATION 4.2

U=	DC voltage in volts (V)	U_{AC} =	AC voltage in volts (V)
U_{bat} =	Battery voltage (V)	f =	Frequency in Hertz (Hz)
U_{low} =	Voltage approximately 0 V	t =	Time in seconds
PWM =	Pulse width modulated signal as a %		

Damaged rear seat entertainment module (RSE).

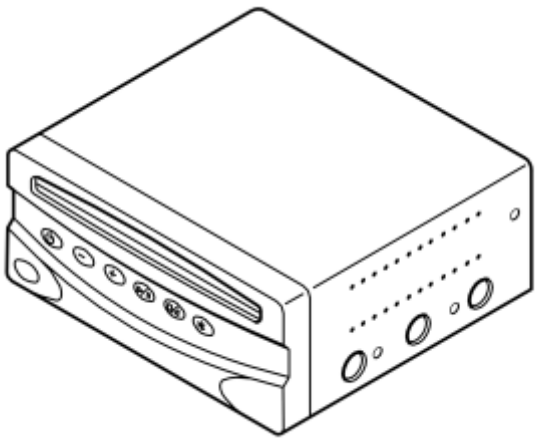

Fig. 14: Identifying Rear Seat Entertainment Module (RSE)
Courtesy of VOLVO CARS CORPORATION

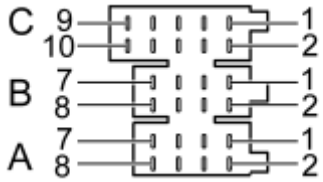

Fig. 15: Identifying Terminals
Courtesy of VOLVO CARS CORPORATION

SIGNAL TABLE

Terminal	Signal type	Ignition on	Miscellaneous
#A1	-	-	-
#A2	-	-	-
#A3	-	-	-
#A4	Power supply to control module	$U=U_{high}$	Direct from battery via fuse.
#A5	-	-	-
#A6	Power supply to control module	$U=U_{high}$	Via Central electronic module (CEM). For lighting in buttons.
#A7	Power supply to control module	$U=U_{high}$	Via Central electronic module (CEM). Indication of ignition on.
#A8	Ground terminal	$U=U_{low}$	-

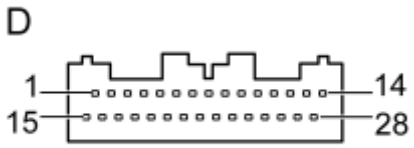

Fig. 16: Identifying 28-Bit Connector
Courtesy of VOLVO CARS CORPORATION

SIGNAL TABLE

Terminal	Signal type	Ignition on	Miscellaneous
#D1	-	-	-
#D2	-	-	-
#D3	Ground terminal	$U=U_{low}$	Ground for audio signal to AUX-input and Integrated Audio Module (IAM)
#D4	Audio signal (in)	-	Input signal from AV-panel. Left audio channel (+), RCA switch. Alternating current voltage during signal.
#D5	-	-	-
#D6	-	-	-
#D7	Video signal (in)	-	Input signal from video connection (+) on AV-panel. Analog signal.
#D8	-	-	-
#D9	Internal CAN (+)	U= 2.5-2.8 V	Connected to terminal #D10.
#D10	Internal CAN (+)	U= 2.5-2.8 V	Connected to terminal #D9.
#D11	-	-	-
#D12	Audio signal (out)	-	Signal to wire headsets via AV-panel. Left audio signal headset socket 1.
#D13	Audio signal (out)	-	Signal to wire headsets via AV- panel. Right audio signal headset socket 1.
#D14	Ground terminal	$U=U_{low}$	Ground connection wire headsets via AV-panel. Headset socket 1
#D15	-	-	-
#D16	Audio signal (out)	-	Output signal to AUX-input and Integrated Audio Module (IAM). Right audio signal.
#D17	Audio signal (out)	-	Output signal to AUX-input and Integrated Audio Module (IAM). Left audio signal.

#D18	Audio signal (in)	-	Input signal from AV-panel. Right audio channel (+), RCA switch. Alternating current voltage during signal.
#D19	Ground terminal	$U=U_{low}$	Ground connection for audio inputs on AV-panel.
#D20	-	-	-
#D21	Video signal (in)	-	Input signal from video connection (-) on AV-panel. Analog signal.
#D22	-	-	-
#D23	Internal CAN (-)	U= 2.5-2.8 V	Connected to terminal #D24.
#D24	Internal CAN (-)	U= 2.5-2.8 V	Connected to terminal #D23.
#D25	-	-	-
#D26	Ground terminal	$U=U_{low}$	Ground connection wire headsets via AV-panel. Headset socket 2.
#D27	Audio signal (out)	-	Signal to wire headsets via AV-panel. Left audio signal headset socket 2.
#D28	Audio signal (out)	-	Signal to wire headsets via AV-panel. Right audio signal headset socket 2.

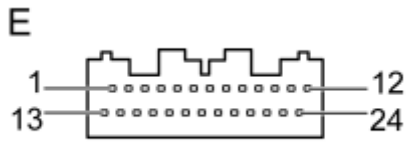

Fig. 17: Identifying 24-Bit Connector
Courtesy of VOLVO CARS CORPORATION

SIGNAL TABLE

Terminal	Signal type	Ignition on	Miscellaneous
#E1	Power supply	12 V	To left display screen terminal #2.
#E2	Wake-up signal	approximately 11-11.5 V	To left screen terminal #3. Upon start-up of the system and when there are communication faults with the screen, the voltages switches between 0 V and 11-11.5 V, 3 times.
#E3	CAN signal (+)	U= 2.5-2.8 V	Internal CAN network

			between control module and display screens. Left display screen terminal #4.
#E4	CAN signal (-)	U= 2.5-2.8 V	Internal CAN network between control module and display screens. Left display screen terminal #5.
#E5	IR control signal for system (in)	U=approx. 4 V when no IR signal received	From left screen terminal #12. Lowers upon signal receipt.
#E6	Ground terminal	$U=U_{low}$	For audio signal to left display screen #11.
#E7	Audio signal (out)	Analog signal	To left display screen terminal #9. Left audio channel.
#E8	Audio signal (out)	Analog signal	To left display screen terminal #10. Right audio channel.
#E9	-	-	-
#E10	Video signal (out)	Analog signal	To left display screen terminal #8. Video (+).
#E11	Video signal (out)	Analog signal	To left display screen terminal #7. Video (-).
#E12	Ground terminal	$U=U_{low}$	To left display screen terminal #1.
#E13	Power supply	12 V	To right display screen terminal #2.
#E14	Wake-up signal	approximately 11-11.5 V	To right screen terminal #3. Upon start-up of the system and when there are communication faults with the screen, the voltages switches between 0 V and 11-11.5 V, 3 times.
#E15	CAN signal (+)	U= 2.5-2.8 V	Internal CAN network between control module and display screens. Right display screen terminal #4.
#E16	CAN signal (-)	U= 2.5-2.8 V	Internal CAN network between control module and display screens. Right display screen terminal #5.
#E17	IR control signal for system (in)	U=approx. 4 V when no IR signal received	From right screen terminal #12. Lowers upon signal receipt.
#E18	Ground terminal	$U=U_{low}$	For audio signal to right display screen terminal #11.
			To right display screen

#E19	Audio signal (out)	Analog signal	terminal #10. Left audio channel.
#E20	Audio signal (out)	Analog signal	To right display screen terminal #9. Right audio channel.
#E21	-	-	-
#E22	Video signal (out)	Analog signal	To right display screen terminal #8. Video (+).
#E23	Video signal (out)	Analog signal	To right display screen terminal #7. Video (-).
#E24	Ground terminal	$U=U_{low}$	To right display screen terminal #1.

SIGNAL SPECIFICATION, RTI

CONNECTING THE BREAKOUT BOX AND CHECKING THE GROUND TERMINAL

NOTE: **Before taking readings, the breakout box must be connected and the ground terminal must be checked. See CONNECTING THE BREAKOUT BOX TO THE ROAD TRAFFIC INFORMATION (RTI) CONTROL MODULE .**

DEFINITIONS

DC voltage in volts (V)	Ulow = Voltage near V
	Ubat = Battery voltage

RTI CONTROL MODULE

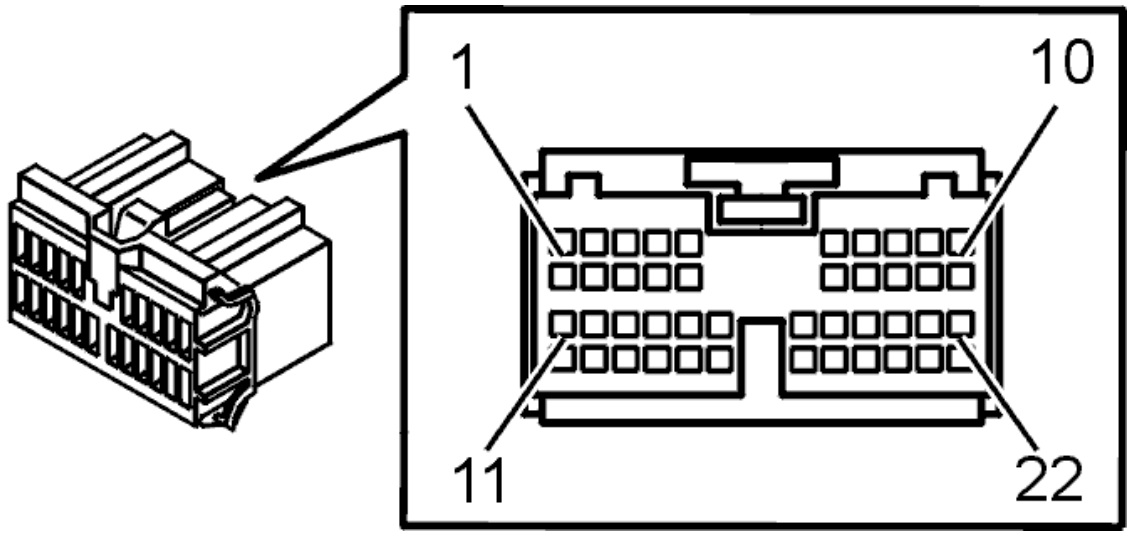

Fig. 18: Identifying Connector (F) Terminals
Courtesy of VOLVO CARS CORPORATION

Before taking any readings, see **CONNECTING THE BREAKOUT BOX AND CHECKING THE GROUND TERMINAL**.

The RTI control module terminals A1-A22 correspond to terminals #1-#22 on the breakout box.

Control module terminal	Breakout box terminal	Signal type	Ignition on	Other
A1	#1	30-supply (power supply from battery)	Ubat	-
A2	#2	-	-	-
A3	#3	-	-	-
A4	#4	-	-	-
A5	#5	-	-	-
A6	#6	-	-	-
A7	#7	Signal (+) with map information from the CD-ROM changer	Digital signal	V_H =0.68 +/- 0.2 V, V_L =0.5 +/- 0.1 V
A8	#8	-	-	-
A9	#9	-	-	-
A10	#10	CANH signal	U = 2-3 V	-
A11	#11	Ground (Measured to battery negative terminal)	Ulow	-
A12	#12	-	-	-
A13	#13	-	-	-
A14	#14	-	-	-
A15	#15	-	-	-
A16	#16	-	-	-
A17	#17	-	-	-
A18	#18	-	-	-
A19	#19	Signal (-) with map information from the CD-ROM changer	Digital signal	V_H =0.68 +/- 0.2 V, V_L =0.5 +/- 0.1 V
A20	#20	Screen ground, signal cables to CD-ROM changer	Ulow	-
A21	#21	-	-	-
A22	#22	CANL signal	U = 2-3 V	-

RTI CONTROL MODULE (TO TV RECEIVER)

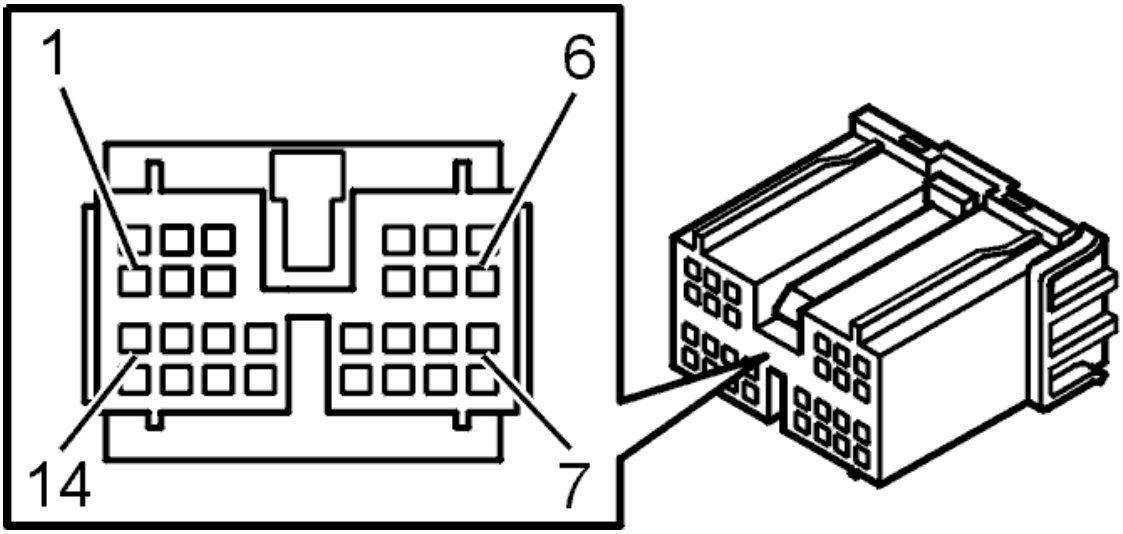

Fig. 19: Identifying M2D Control Module (FORTV Executive. Rear Seat Entertainment, Generation 3.1/3.2, Premier TV Receiver) Connector
Courtesy of VOLVO CARS CORPORATION

Before taking any readings, see **CONNECTING THE BREAKOUT BOX AND CHECKING THE GROUND TERMINAL**.

The RTI control module terminals B1-B14 correspond to terminals #43-#56 on the breakout box.

Control module terminal	Breakout box terminal	Signal type	Ignition on	Other
B1	#43	Video signal, TV	Analog signal	1 V p-p +/- 0.2 V
B2	#44	Synchronizing signal, TV	Digital signal	0-5 V
B3	#45	-	-	-
B4	#46	-	-	-
B5	#47	-	-	-
B6	#48	30 supply	Ubat	-
B7	#49	Signal ground, TV signals	Ulow	-
B8	#50	Screen ground, TV signals	Ulow	-
B9	#51	-	-	-
B10	#52	-	-	-
B11	#53	Signal, remote control TV	Digital signal	33.3 kHz carrier wave when the remote control is pressed
B12	#54	-	-	-
B13	#55	Ground (Measured to battery negative terminal)	Ulow	-
B14	#56	-	-	-

RTI CONTROL MODULE (TO DISPLAY)

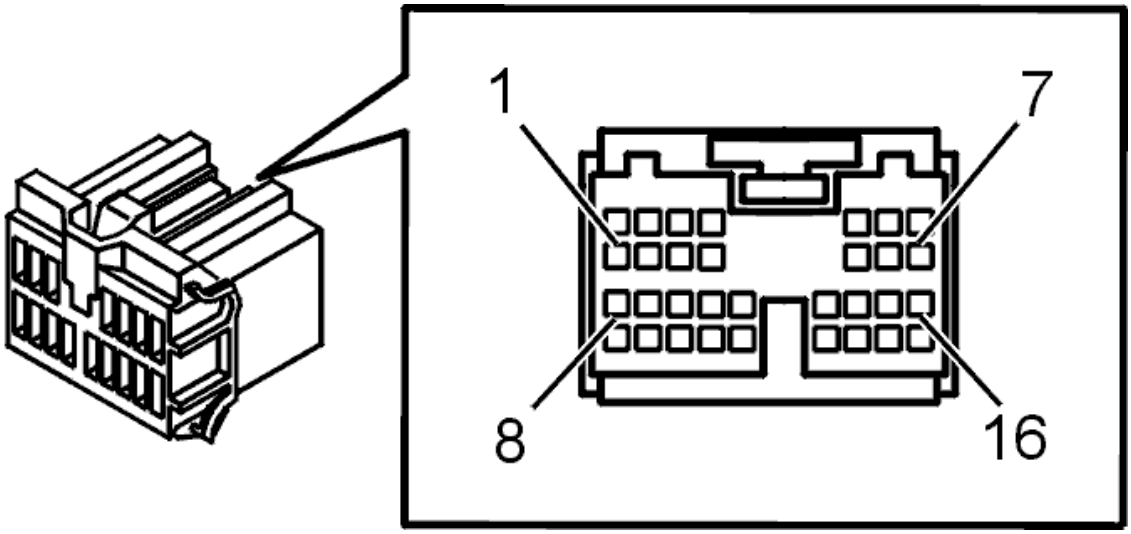

Fig. 20: Connector, Green (16- Pin)
Courtesy of VOLVO CARS CORPORATION

Before taking any readings, see **CONNECTING THE BREAKOUT BOX AND CHECKING THE GROUND TERMINAL**.

The RTI control module terminals C1-C16 correspond to terminals #25-#40 on the breakout box.

Control module terminal	Breakout box terminal	Signal type	Ignition on	Other
C1	#25	Color signal (red), screen	Analog signal when red color is displayed	0.714 V p-p
C2	#26	Color signal (blue), screen	Analog signal when blue color is displayed	0.714 V p-p
C3	#27	Screen ground, video signals	Ulow	-
C4	#28	-	-	-
C5	#29	-	-	-
C6	#30	-	-	-
C7	#31	-	-	-
C8	#32	Color signal (green), display	Analog signal when green color is displayed	0.714 V p-p
C9	#33	Composite synch, display	Analog signal	0-5 V
C10	#34	Screen ground, cable to the screen	Ulow	-
C11	#35	Signal, display remote control	Digital signal	38 kHz carrier wave when the remote control is

				pressed
C12	#36	Serial bus to the display	Digital signal	Half duplex, start-stop synchronizing, 2400 BPS
C13	#37	-	-	-
C14	#38	Video signal to display	Analog signal	1 V p-p +/- 0.2 V
C15	#39	-	-	-
C16	#40	-	-	-

RTI CONTROL MODULE (TO CD-ROM CHANGER)

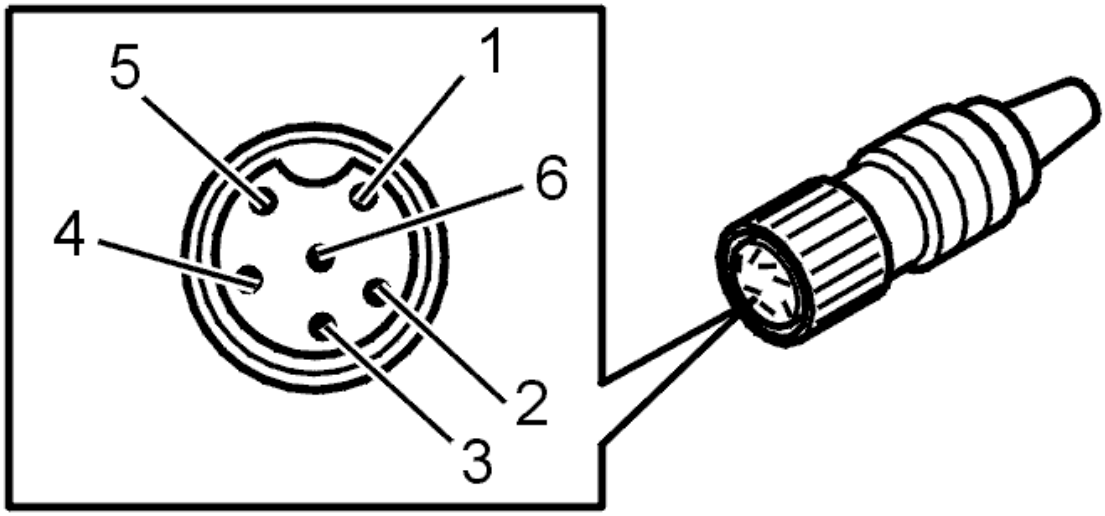

Fig. 21: Audio Control Module (Cable Between Audio Module & Amplifier)
Courtesy of VOLVO CARS CORPORATION

Before taking any readings, see **CONNECTING THE BREAKOUT BOX AND CHECKING THE GROUND TERMINAL**.

The RTI control module terminals D1-D6 correspond to terminals #42-#47 on the breakout box.

Control module terminal	Breakout box terminal	Signal type	Ignition on	Other
D1	#42	Clock signal from CD-ROM changer	Digital signal	Melbus protocol
D2	#43	Data signal from the CD ROM changer	Digital signal	Melbus protocol
D3	#44	-	-	-
D4	#45	Busy signal from CD-ROM changer	Digital signal	Melbus protocol
D5	#46	15 supply	Ubat	-

D6	#47	-	-	-
H		Screen ground, cable to the CD-ROM changer	Ulow	-

RTI CONTROL MODULE (TO AUDIO UNIT)

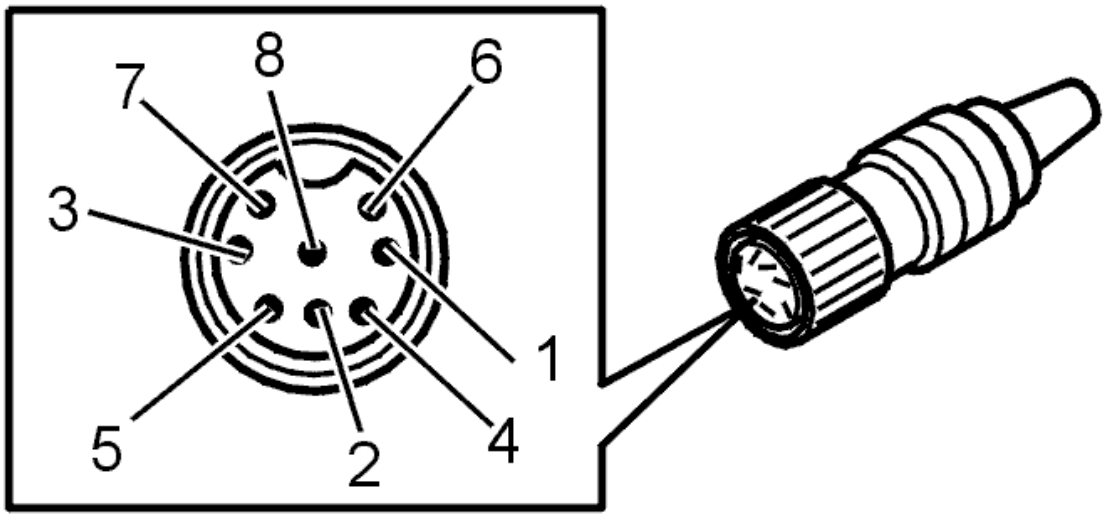

Fig. 22: Audio Control Module (Cable Between Audio Module & CD Changer/Navigation Unit)
Courtesy of VOLVO CARS CORPORATION

Before taking any readings, see **CONNECTING THE BREAKOUT BOX AND CHECKING THE GROUND TERMINAL**.

The RTI control module terminals E1-E8 correspond to terminal #16-#23 on the breakout box.

Control module terminal	Breakout box terminal	Signal type	Ignition on	Other
E1	#16	Clock signal to audio unit	Digital signal	Melbus protocol
E2	#17	Signal ground, sound	Ulow	-
E3	#18	15 supply	Ubat	-
E4	#19	Data signal to audio unit	Digital signal	Melbus protocol
E5	#20	Busy signal to audio unit	Digital signal	Melbus protocol
E6	#21	Left audio channel	Alternating current on sound to loudspeakers	150 mV rms +/- 38 mV (1 kHz 30% mod)
E7	#22	Right audio channel	Alternating current on sound to loudspeakers	150 mV rms +/- 38 mV (1 kHz 30% mod)
E8	#23	Voice guide channel	Alternating current on sound to loudspeakers (for voice guidance)	150 mV rms +/- 38 mV (1 kHz 30% mod)

H	Screen ground, cable to audio unit	Ulow	-	

RTI CONTROL MODULE (TO TV RECEIVER)

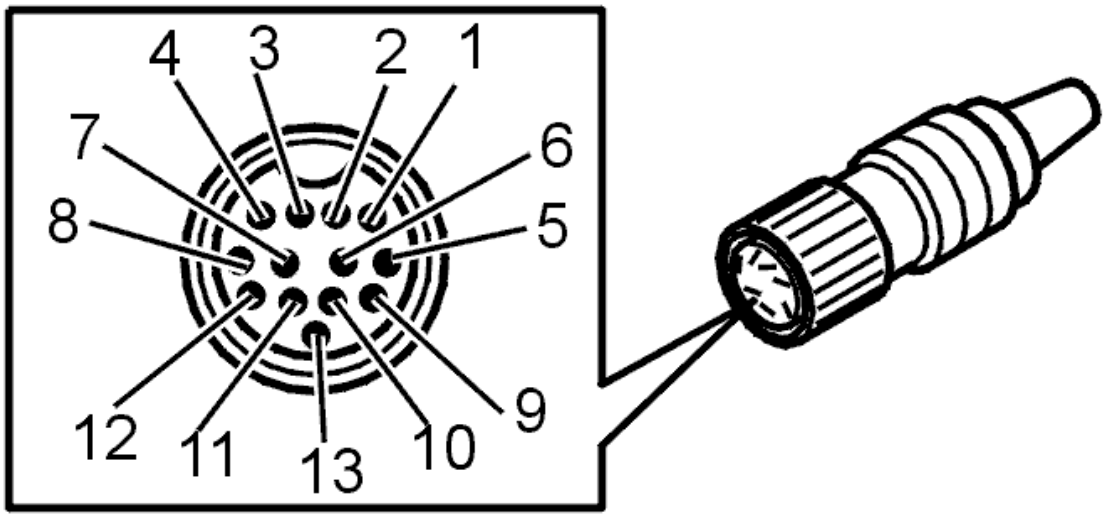

Fig. 23: Identifying RTI Control Module (To TV Receiver) Connector Terminals
Courtesy of VOLVO CARS CORPORATION

Before taking any readings, see **CONNECTING THE BREAKOUT BOX AND CHECKING THE GROUND TERMINAL**.

The RTI control module terminals F1-F13 correspond to terminals #1-#13 on the breakout box.

Control module terminal	Breakout box terminal	Signal type	Ignition on	Other
F1	#1	Signal ground	Ulow	-
F2	#2	Left audio channel	Alternating current when there is sound to the loudspeaker	150 mV rms +/- 38 mV (1 kHz 30% mod)
F3	#3	-	-	-
F4	#4	Right audio channel	Alternating current when there is sound to the loudspeaker	150 mV rms +/- 38 mV (1 kHz 30% mod)
F5	#5	-	-	-
F6	#6	Voice guide channel	Alternating current when there is sound to the loudspeaker (during voice guidance)	150 mV rms +/- 38 mV (1 kHz 30% mod)
F7	#7	-	-	-

F8	#8	-	-	-
F9	#9	-	-	-
F10	#10	15 supply	Ubat	-
F11	#11	Busy signal to TV receiver	Digital signal	Melbus protocol
F12	#12	Clock signal to TV receiver	Digital signal	Melbus protocol
F13	#13	Data signal to TV receiver	Digital signal	Melbus protocol
H	Screen ground, cable to TV receiver	Ulow	-	

RTI CONTROL MODULE (TO GPS ANTENNA, GRAY CONNECTOR)

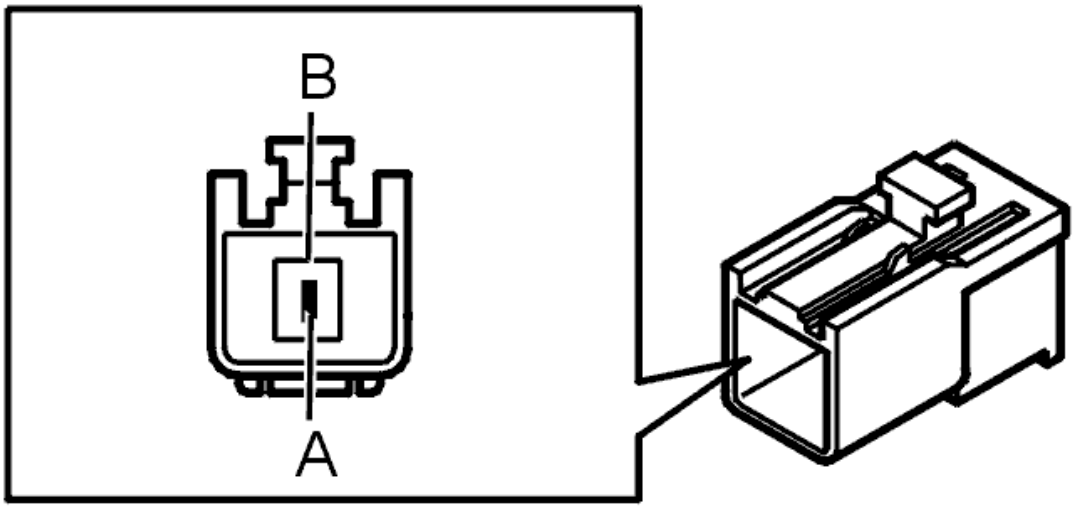

Fig. 24: Connector F, Carphone Antenna (Brown Connector), Single Hirose GT5
Courtesy of VOLVO CARS CORPORATION

Before taking any readings, see **CONNECTING THE BREAKOUT BOX AND CHECKING THE GROUND TERMINAL**.

Control module terminal	Signal type	Ignition on	Other
G1 (A)	Power supply and GPS signal	Analog signal	Supply 5 V (DC), signal 1.575 GHz
G2 (B)	Screen ground	Ulow	-

RTI CONTROL MODULE (TO TMC (FM-MPX) ANTENNA, BROWN CONNECTOR)

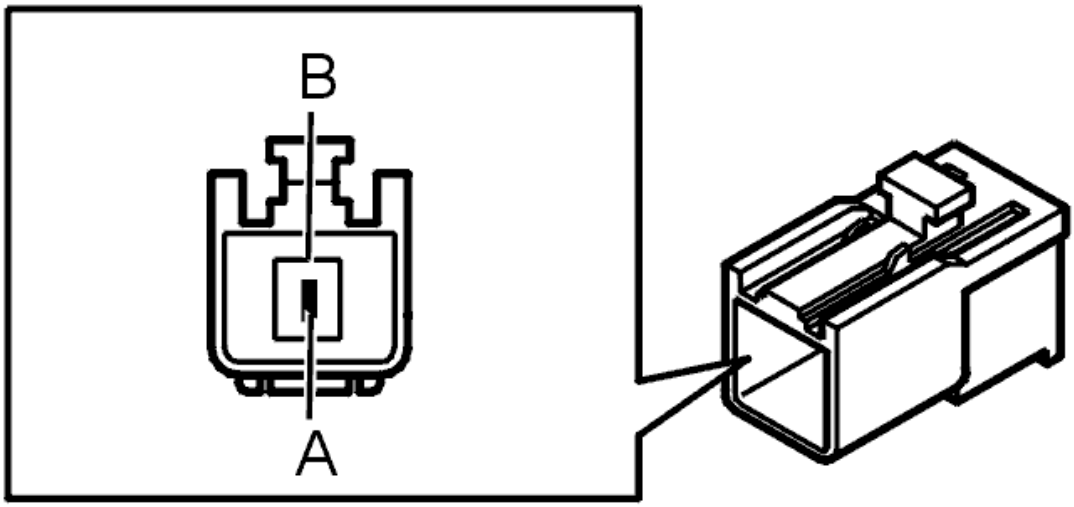

Fig. 25: Connector F, Carphone Antenna (Brown Connector), Single Hirose GT5
Courtesy of VOLVO CARS CORPORATION

Before taking any readings, see **CONNECTING THE BREAKOUT BOX AND CHECKING THE GROUND TERMINAL**.

Control module terminal	Signal type	Ignition on	Other
H1 (A)	Antenna signal	Analog signal	-
H2 (B)	Screen ground	Ulow	-

RTI CONTROL MODULE (TO FM-MPX ANTENNA, GREEN CONNECTOR)

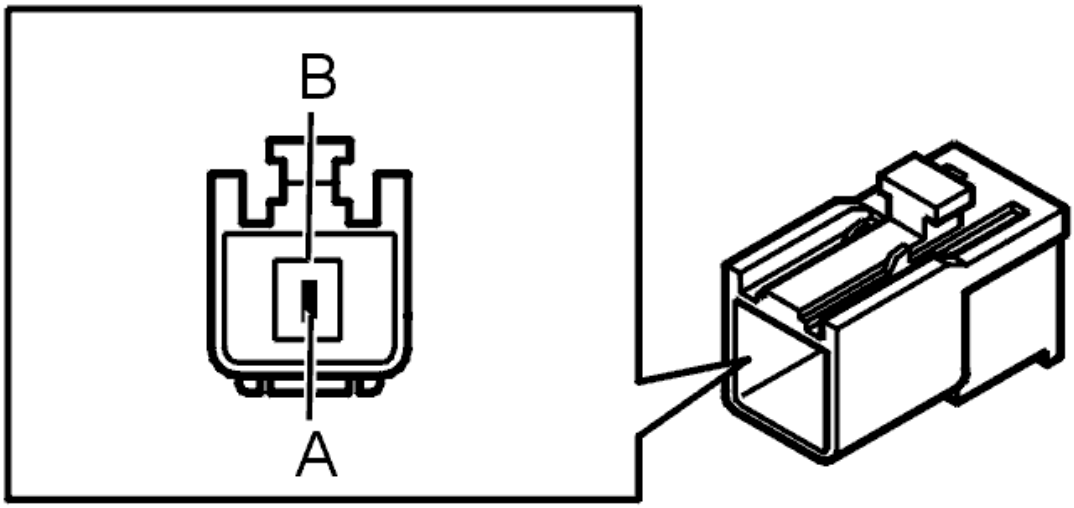

Fig. 26: Connector F, Carphone Antenna (Brown Connector), Single Hirose GT5
Courtesy of VOLVO CARS CORPORATION

Before taking any readings, see **CONNECTING THE BREAKOUT BOX AND CHECKING THE**

GROUND TERMINAL.

Control module terminal	Signal type	Ignition on	Other
I1 (A)	Antenna signal	Analog signal	-
I2 (A)	Screen ground	Ulow	-

DISPLAY (TO RTI CONTROL MODULE AND "CHASSIS")

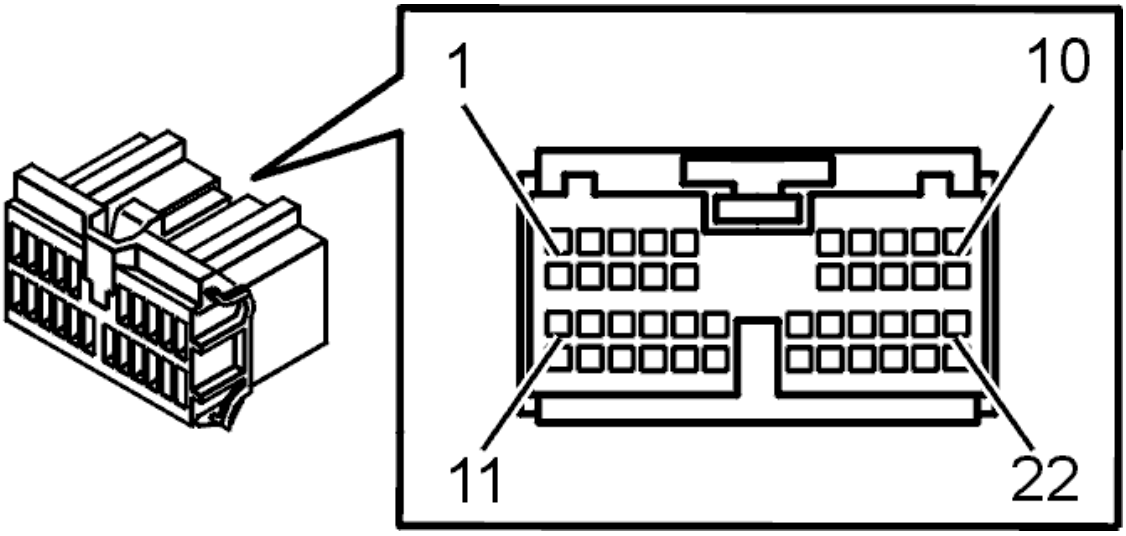

Fig. 27: Identifying Connector (F) Terminals
Courtesy of VOLVO CARS CORPORATION

Before taking any readings, see **CONNECTING THE BREAKOUT BOX AND CHECKING THE GROUND TERMINAL**.

Display terminals J1-J22 correspond to terminals #1-#22 on the breakout box.

Control module terminal	Breakout box terminal	Signal type	Ignition on	Other
J1	#1	Color signal (red), screen	Analog signal when red color is displayed	0.714 V p-p
J2	#2	Color signal (green), display	Analog signal when green color is displayed	0.714 V p-p
J3	#3	Color signal (blue), screen	Analog signal when blue color is displayed	0.714 V p-p
J4	#4	Synchronizing signal, TV	Digital signal	0-5 V
J5	#5	Screen ground, video signals	Ubat	-
J6	#6	Signal, display remote	Digital signal	38 kHz carrier wave

		control		when the remote control is pressed
J7	#7	-	-	-
J8	#8	Screen ground, cable to the screen	Ulow	-
J9	#9	Video signal to display	Analog signal	1 V p-p +/- 0.2 V
J10	#10	-	-	-
J11	#11	30-supply (power supply from battery)	Ubat	-
J12	#12	30-supply (power supply from battery)	Ubat	-
J13	#13	15 supply	Ubat	-
J14	#14	-	-	-
J15	#15	Ground (Measured to battery negative terminal)	Ulow	-
J16	#16	Ground (Measured to battery negative terminal)	Ulow	-
J17	#17	-	-	-
J18	#18	Serial bus from the control module	Digital signal	Half duplex, start-stop synchronizing, 2400 BPS
J19	#19	-	-	-
J20	#20	-	-	-
J21	#21	-	-	-
J22	#22	-	-	-

CD-ROM CHANGER (TO RTI CONTROL MODULE AND "CHASSIS")

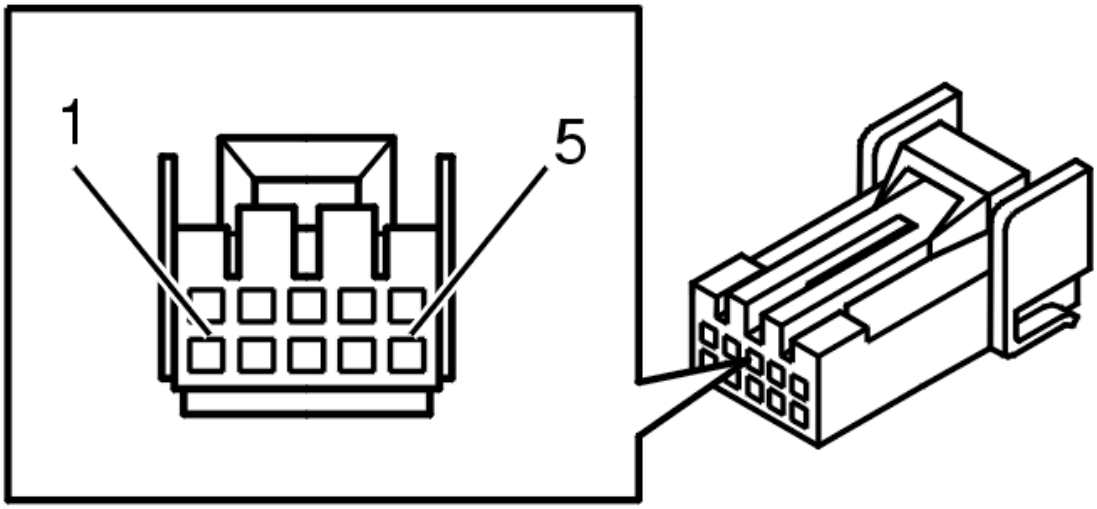

Fig. 28: 10 CD Changer Connector Terminals
Courtesy of VOLVO CARS CORPORATION

Before taking any readings, see **CONNECTING THE BREAKOUT BOX AND CHECKING THE GROUND TERMINAL**.

CD-ROM changer terminals K1-K5 correspond to #26-#30 on the breakout box.

Control module terminal	Breakout box terminal	Signal type	Ignition on	Other
K1	#26	Ground (Measured to battery negative terminal)	Ulow	-
K2	#27	30-supply (power supply from battery)	Ubat	-
K3	#28	Signal (+) with map information from the CD-ROM changer	Digital signal	V_H =0.68 +/- 0.2 V, V_L =0.5 +/- 0.1 V
K4	#29	Screen ground, signal cables to CD-ROM changer	Ulow	-
K5	#30	Signal (-) with map information from the CD-ROM changer	Digital signal	V_H =0.68 +/- 0.2 V, V_L =0.5 +/- 0.1 V

CD-ROM CHANGER (TO RTI CONTROL MODULE)

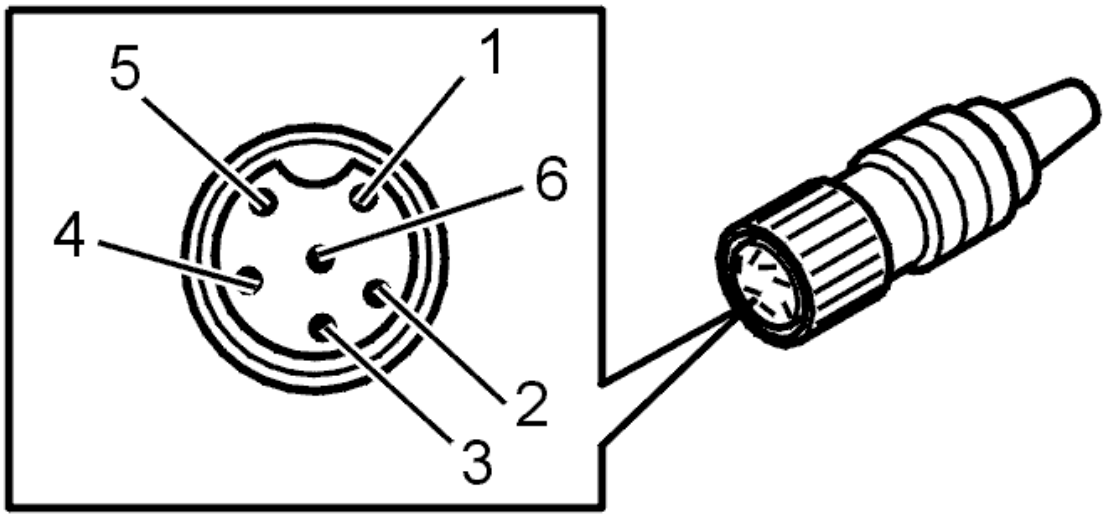

Fig. 29: Audio Control Module (Cable Between Audio Module & Amplifier)
Courtesy of VOLVO CARS CORPORATION

Before taking any readings, see **CONNECTING THE BREAKOUT BOX AND CHECKING THE GROUND TERMINAL**.

CD-ROM changer terminals L1-L6 correspond to #26-#31 on the breakout box.

Control module terminal	Breakout box terminal	Signal type	Ignition on	Other
L1	#26	Clock signal from the CD-ROM changer	Digital signal	Melbus protocol
L2	#27	Data signal from CD-ROM changer	Digital signal	Melbus protocol
L3	#28	-	-	-
L4	#29	Busy signal from the CD-ROM changer	Digital signal	Melbus protocol
L5	#30	15 supply	Ubat	-
L6	#31	-	-	-
H	Screen ground, cable to CD-ROM changer	Ulow	-	

TV RECEIVER (TO RTI CONTROL MODULE)

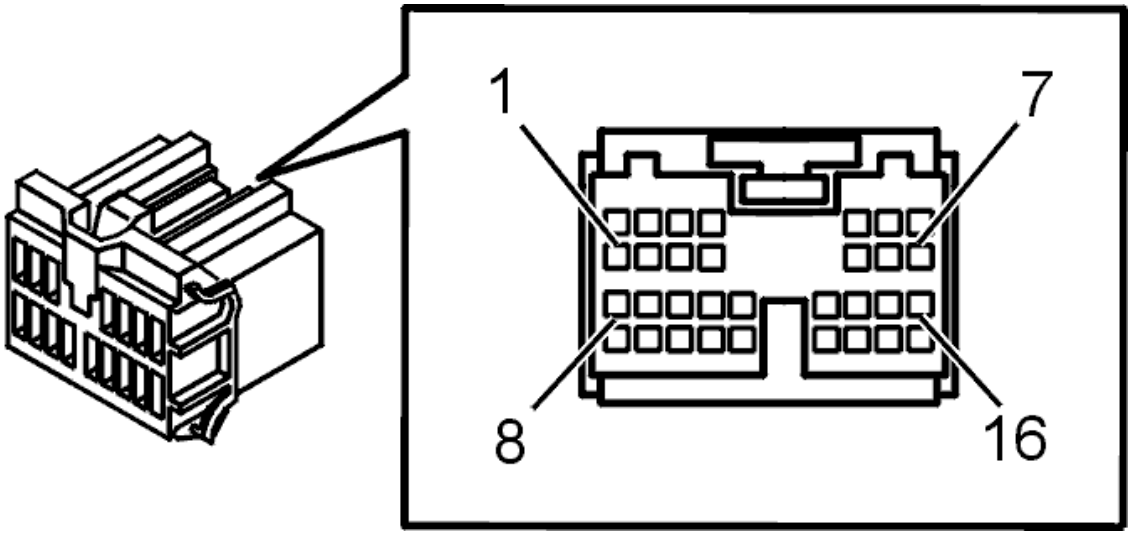

Fig. 30: Connector, Green (16- Pin)
Courtesy of VOLVO CARS CORPORATION

Before taking any readings, see **CONNECTING THE BREAKOUT BOX AND CHECKING THE GROUND TERMINAL**.

TV receiver terminals M1-M16 correspond to terminals #25-#40 on the breakout box.

Control module	Breakout box terminal	Signal type	Ignition on	Other

terminal				
M1	#25	Video signal, TV	Analog signal	1 V p-p +/- 0.2 V
M2	#26	Synchronizing signal, TV	Digital signal	0-5 V
M3	#27	-	-	-
M4	#28	-	-	-
M5	#29	-	-	-
M6	#30	-	-	-
M7	#31	30 supply	Ubat	-
M8	#32	Signal ground, TV signals	Ulow	-
M9	#33	Screen ground, TV signals	Ulow	-
M10	#34	-	-	-
M11	#35	-	-	-
M12	#36	-	-	-
M13	#37	Signal, remote control TV	Digital signal	33.3 kHz carrier wave when the remote control is pressed
M14	#38	-	-	-
M15	#39	Ground (Measured to battery negative terminal)	Ulow	-
M16	#40	-	-	-

TV RECEIVER (TO REVERSE CAMERA AND VIDEO)

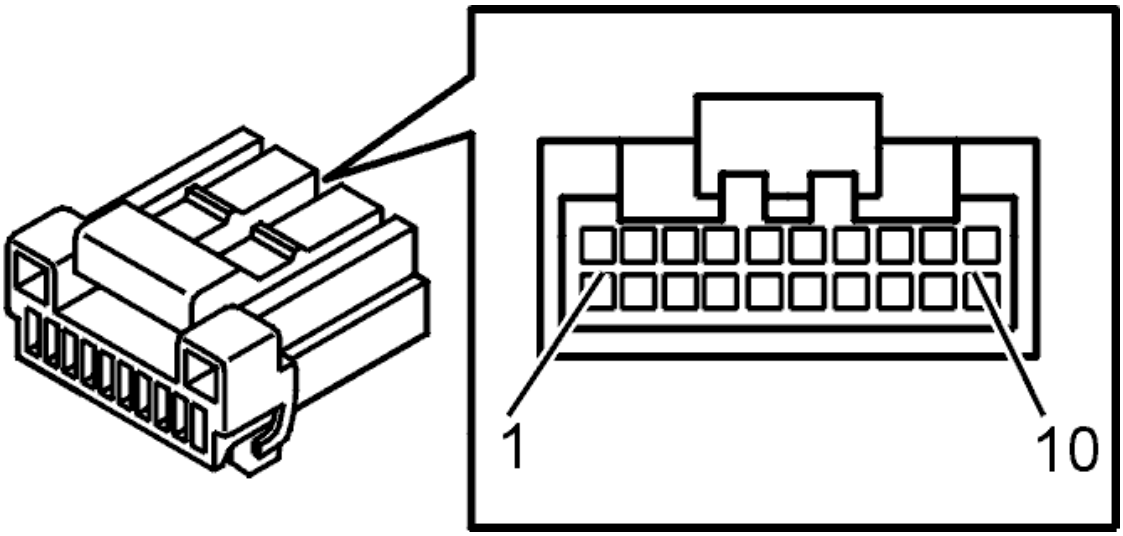

Fig. 31: Identifying Connector (D) Terminals
Courtesy of VOLVO CARS CORPORATION

Before taking any readings, see **CONNECTING THE BREAKOUT BOX AND CHECKING THE GROUND TERMINAL**.

TV receiver terminals N1-N10 correspond to #47-#56 on the breakout box.

Control module terminal	Breakout box terminal	Signal type	Ignition on	Other
N1	#47	-	-	-
N2	#48	Power supply, rear camera	Ubat	-
N3	#49	Video signal, rear camera	-	-
N4	#50	Video signal ground, rear camera	Ulow	-
N5	#51	Video signal	-	-
N6	#52	Signal ground, video signals	Ulow	-
N7	#53	Left audio channel	Alternating current when there is sound to the loudspeaker	150 mV rms +/- 38 mV (1 kHz 30% mod)
N8	#54	Right audio channel	Alternating current when there is sound to the loudspeaker	150 mV rms +/- 38 mV (1 kHz 30% mod)
N9	#55	signal ground, audio	Ulow	-
N10	#56	-	-	-

TV RECEIVER (TO RTI CONTROL MODULE)

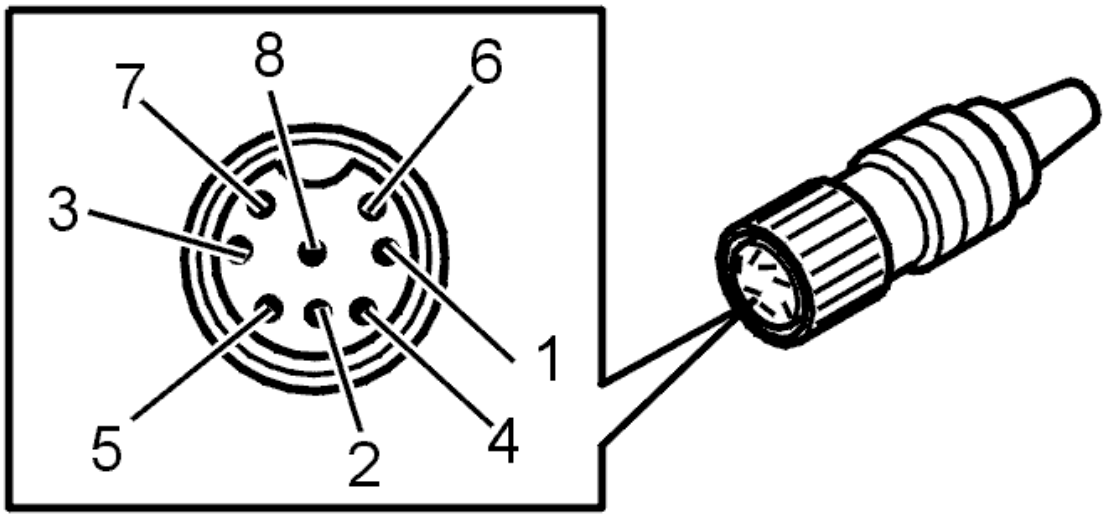

Fig. 32: Audio Control Module (Cable Between Audio Module & CD Changer/Navigation Unit)
Courtesy of VOLVO CARS CORPORATION

Before taking any readings, see **CONNECTING THE BREAKOUT BOX AND CHECKING THE GROUND TERMINAL**.

TV receiver terminals O1-O8 correspond to terminals #16-#23 on the breakout box.

Control module terminal	Breakout box terminal	Signal type	Ignition on	Other
O1	#16	Clock signal to TV receiver	Digital signal	Melbus protocol
O2	#17	Signal ground, sound	Ulow	-
O3	#18	15 supply	Ubat	-
O4	#19	Data signal to TV receiver	Digital signal	Melbus protocol
O5	#20	Busy signal to TV receiver	Digital signal	Melbus protocol
O6	#21	Left audio channel	Alternating current when there is sound to the loudspeaker	150 mV rms +/- 38 mV (1 kHz 30% mod)
O7	#22	Right audio channel	Alternating current when there is sound to the loudspeaker	150 mV rms +/- 38 mV (1 kHz 30% mod)
O8	#23	Voice guide channel	Alternating current when there is sound to the loudspeaker (during voice guidance)	-
H	Screen ground, cable to audio unit	Ulow	-	

TV RECEIVER (TO CD PLAYER)

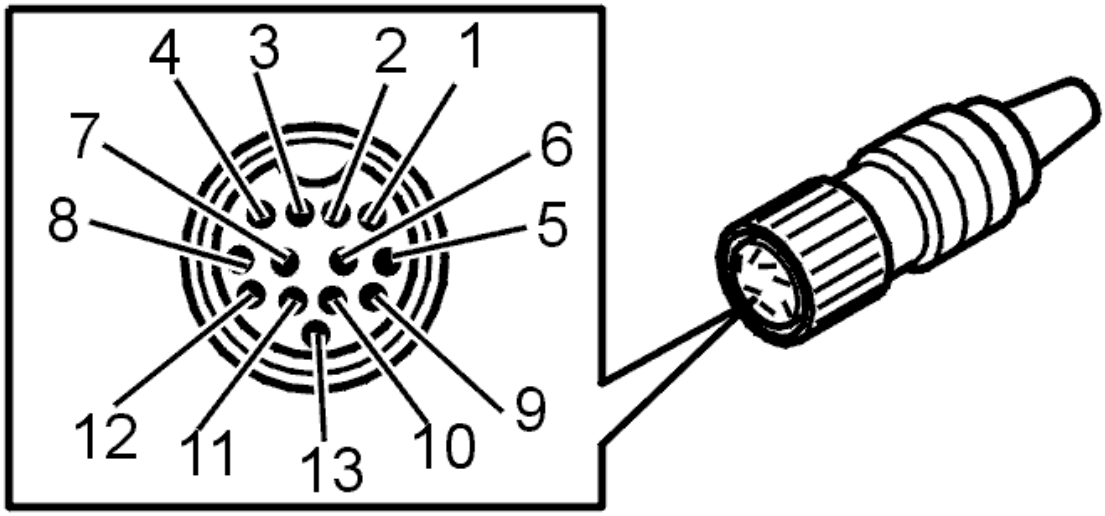

Fig. 33: Identifying RTI Control Module (To TV Receiver) Connector Terminals
Courtesy of VOLVO CARS CORPORATION

Before taking any readings, see **CONNECTING THE BREAKOUT BOX AND CHECKING THE GROUND TERMINAL**.

TV receiver terminals P1-P13 correspond to terminals #1-#13 on the breakout box.

Control module terminal	Breakout box terminal	Signal type	Ignition on	Other
P1	#1	signal ground	Ulow	-
P2	#2	Left audio channel	Alternating current when there is sound to the loudspeaker	150 mV rms +/- 38 mV (1 kHz 30% mod)
P3	#3	-	-	-
P4	#4	Right audio channel	Alternating current when there is sound to the loudspeaker	150 mV rms +/- 38 mV (1 kHz 30% mod)
P5	#5	-	-	-
P6	#6	Voice guide channel	Alternating current when there is sound to the loudspeaker (during voice guidance)	-
P7	#7	-	-	-
P8	#8	-	-	-
P9	#9	-	-	-
P10	#10	15 supply	Ubat	-
P11	#11	Busy signal to TV receiver	Digital signal	Melbus protocol
P12	#12	Clock signal to TV receiver	Digital signal	Melbus protocol
P13	#13	Data signal to TV receiver	Digital signal	Melbus protocol
H	Screen ground, cable to TV receiver	Ulow	-	

TV RECEIVER (TO TV TUNER A)

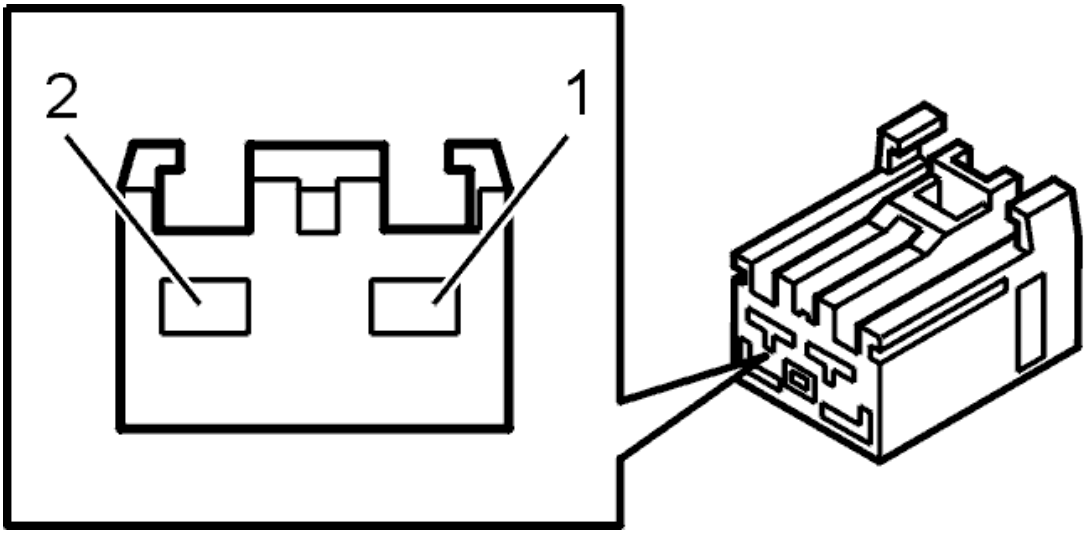

Fig. 34: Connector, Black (2-Pin)
Courtesy of VOLVO CARS CORPORATION

Before taking any readings, see **CONNECTING THE BREAKOUT BOX AND CHECKING THE GROUND TERMINAL**.

Control module terminal	Signal type	Ignition on	Other
Q1	Power supply and signal	Analog signal	The antenna signal is retained over DC EU: 48.5 -87.75 MHz 175.25 -229.75 MHz 471.25 -855.25 MHz JPN: 91.25 -103.75 MHz 175.25 -217.25 MHz 471.25 - 765.25 MHz
Q2	Power supply and signal	Analog signal	The antenna signal is retained over DC EU: 48.5 -87.75 MHz 175.25 -229.75 MHz 471.25 -855.25 MHz JPN: 91.25 -103.75 MHz 175.25 -217.25 MHz 471.25 - 765.25 MHz
H	Screen ground	Ulow	-

TV RECEIVER (TO TV TUNER B)

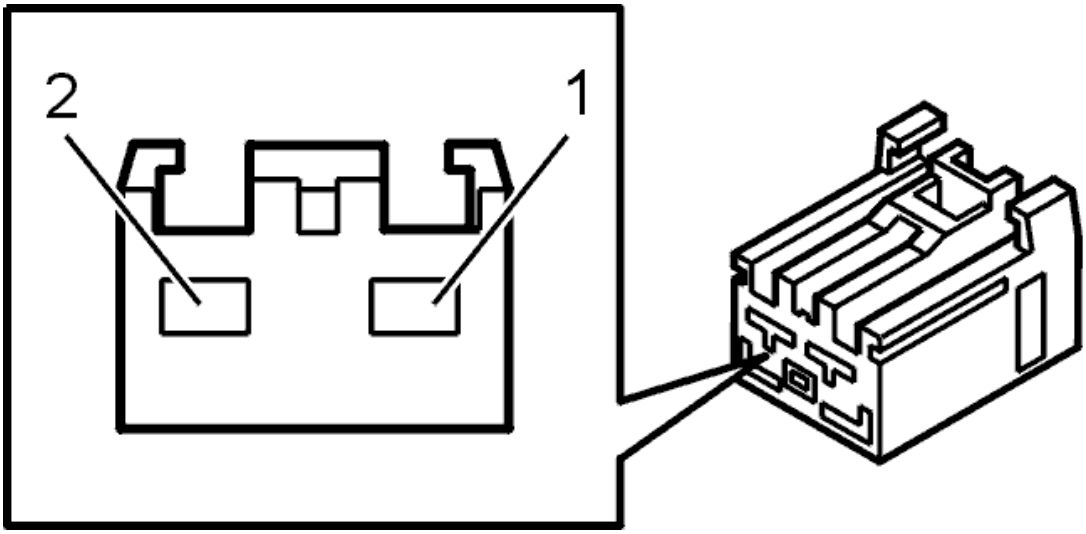

Fig. 35: Connector, Black (2-Pin)
Courtesy of VOLVO CARS CORPORATION

Before taking any readings, see **CONNECTING THE BREAKOUT BOX AND CHECKING THE GROUND TERMINAL**.

Control module terminal	Signal type	Ignition on	Other
R1	Power supply and signal	Analog signal	The antenna signal is retained over DC EU: 48.5 -87.75 MHz 175.25 -229.75 MHz 471.25 -855.25 MHz JPN: 91.25 -103.75 MHz 175.25 -217.25 MHz 471.25 - 765.25 MHz
R2	Power supply and signal	Analog signal	The antenna signal is retained over DC EU: 48.5 -87.75 MHz 175.25 -229.75 MHz 471.25 -855.25 MHz JPN: 91.25 -103.75 MHz 175.25 -217.25 MHz 471.25 - 765.25 MHz
H	Screen ground	Ulow	-

FAULT TRACING

Electrical system

FAULT TRACING

SIGNAL MISSING

GENERAL INFORMATION

NOTE: Illustrations shown are only examples.

HINT: For general information about CAN-troubleshooting, see: GENERAL INFORMATION ABOUT FAULT-TRACING IN THE CAN NETWORK

General about CAN-related diagnostic trouble codes.

CEM-DF01 - DF17 can only be stored in Central electronic module (CEM). These diagnostic trouble codes are stored when an electric fault is detected in CAN-lines. tart with these diagnostic trouble codes first.

CEM-1AXX only stored in Central electronic module (CEM). One diagnostic trouble code for every control module on the CAN-net. These diagnostic trouble codes indicate that Central electronic module (CEM) does not receive any reply from other control modules.

XXX-E000 (HS-CAN)/E001 (LS-CAN) can be stored in all CAN-connected control modules. These diagnostic trouble codes indicate that the control module has detected interference on the CAN-net.

XXX-E003 can be stored in all CAN-connected control modules except in Central electronic module (CEM). he control modules on the CAN-net listen for a message (identity number) that is sent out at regular intervals from Central electronic module (CEM). his diagnostic trouble code indicates that the control module has not received any identity number, or that the expected number is not correct. Interference on the CAN-net can also store this diagnostic trouble code.

NOTE: In case of CAN-related faults, it is likely that a combination of above diagnostic trouble codes occur.

NOTE: After fault with control modules that interfere with communication, other control modules may remain in Limp-Home (that is, they work with reduced functionality) even when the ignition has been turned off and on a few times. or certain faults in the CAN-net where control modules have stopped communicating, it may help to disconnect/reconnect the battery o "restart" the control module/CAN-net.

If a communication diagnostic trouble code can be read from the control module, the malfunction is probably intermittent.

Intermittent fault in the voltage supply and ground to a control module on the CAN network results in the Central electronic module (CEM) storing a diagnostic trouble code (DTC) for an open-circuit in communication with the control module where the voltage supply does not work. here will probably not be a diagnostic trouble code (DTC) in the control module where the open-circuit in the voltage supply occurred as the control module cannot store a diagnostic trouble code (DTC) when it is not supplied with power.

NOTE: **Central electronic module (CEM) should not be replaced in case of CAN-fault, unless troubleshooting reveals that Central electronic module (CEM) has an internal fault.**

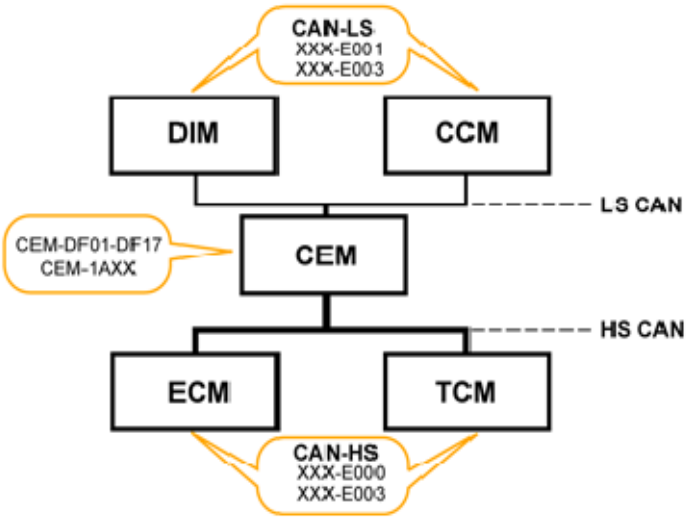

Fig. 1: High-Speed CAN And Low-Speed CAN Communication Diagram
Courtesy of VOLVO CARS CORPORATION

- **Continue**

  Refer to **CHECKING RESISTANCE IN CAN-NET**

CHECKING RESISTANCE IN CAN-NET

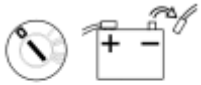

Fig. 2: Ignition Off And Disconnecting Battery Negative Lead
Courtesy of VOLVO CARS CORPORATION

- Ignition off
- Disconnect the battery negative lead
- Connect OBDII-Box **(951 3015)** to the diagnostics socket.

For general information about CAN-troubleshooting, see: **GENERAL INFORMATION ABOUT FAULT-TRACING IN THE CAN NETWORK**

Measure resistance between the following connections on the OBDII-box/diagnostics socket.

- #6 and #14. he resistance should be approx. 55 - 65 ohms.
- If resistance is approx. 120 ohms, this indicates open circuit in the circuit so that only one terminating resistor (120 ohms) has been measured.
- If resistance is above 1 kohms this indicates open circuit/high contact resistance somewhere in the circuit.
- If resistance is below 55 ohms this indicates short-circuiting/contact resistance between the CAN-lines somewhere in the circuit.

HINT: For HS-CAN the terminating resistors are located in Brake control module (BCM) and in Engine control module (ECM).

Twist the cable harness and wiggle connectors where they can be accessed along the cable harness during every measurement, and note if the resistance changes to detect intermittent short-circuits or open circuit.

NOTE: **Resistance measurement measures only main lines in the CAN-net (in circuit where both terminating resistors are found), not branches to certain control modules.**

Open circuit on branching without a terminating resistor cannot be detected with this measurement. However, short-circuiting on a branch can be detected. o measure resistance in the CAN-net to control modules located in a branching of their own, the measurement shall be done against the CAN-net at that control module. he values shall be as above.

NOTE: **After fault with control modules that interfere with communication, other control modules may remain in Limp-Home (that is, they work with reduced functionality) even when the ignition has been turned off and on a few times. or certain faults in the CAN-net where control modules have stopped communicating, it may help to disconnect/reconnect the battery o "restart" the control module/CAN-net.**

Remedy wiring as necessary.

Other information

- see
- see

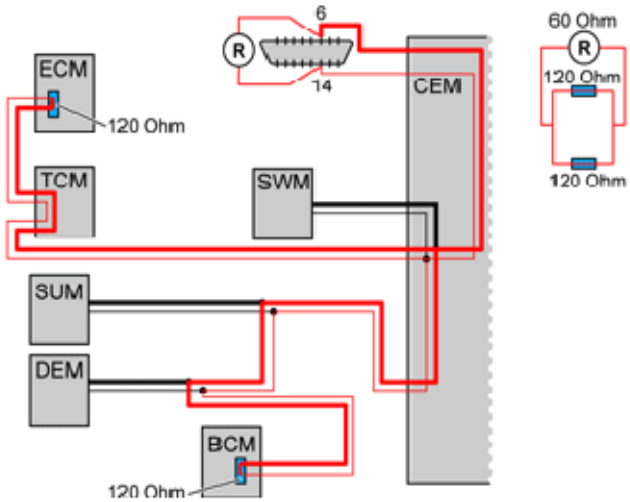

Fig. 3: Checking Resistance In CAN Lines
Courtesy of VOLVO CARS CORPORATION

Was a fault detected?

- **YES**

  Refer to **VERIFICATION**

- **NO**

  Refer to **CHECKING SHORT-CIRCUITING TO GROUND/VOLTAGE IN CAN-NET**

CHECKING THE TRAFFIC LOAD ON THE CAN CABLES

Fig. 4: Identifying Ignition ON
Courtesy of VOLVO CARS CORPORATION

- Connect the battery
- Ignition on.
- Connect OBDII-Box **(951 3015)** to the diagnostics socket.

  For general information about CAN-troubleshooting, see: **GENERAL INFORMATION ABOUT FAULT-TRACING IN THE CAN NETWORK**

  Faults in the CAN network may be due to a control module sending faulty messages that disrupt normal

communication. When messages are sent incorrectly, this results in a considerable increase in the amount of traffic on the CAN network. Check the load by measuring the average voltage value on the CAN cables in relation to ground.

Measure voltage between the following connections on the OBDII-box/diagnostics socket.

- #6 and #4 (ground). he voltage should be approx:2, - 3, V.
- #14 and #4 (ground). he voltage should be approx:1, - 2, V.
- #6 and #14. he voltage shall be between approx. 0.55-1.4 V. he voltage shall normally be between 0.55 - 0.90 V. higher voltage may indicate increased traffic on the CAN-net. n case of fault in communication/too high traffic on the CAN-net, the voltage is considerably higher than the above stated values.

NOTE: After fault with control modules that interfere with communication, other control modules may remain in Limp-Home even when the ignition has been turned off and on a few times. or certain faults in the CAN-net where control modules have stopped communicating, it may help to disconnect/reconnect the battery o "restart" the control module/CAN-net.

HINT: DiCE can be used as fault detection tool if fault is suspected on the CAN-net that cannot be detected with normal troubleshooting. Interference, intermittent faults, faulty messages on the CAN-net etc., are examples of such faults. he tool registers fault messages used on the CAN-net. Fault messages may be caused by short intermittent malfunctions on the CAN-net or by a control module sending fault messages. See tools:951 3010 as well as associated TJ 20402.

- Ignition on.
- Connect DiCE to the diagnostics socket.
- Note the blue LED-indicator. he indicator flashes to show detection of fault messages.

NOTE: Certain interference may occur without any real fault

Cable fault

- Shake the cables lightly and pull lightly on the connections during the check to locate any fault. Note the blue LED-indicator.

"Chatting" control modules

- "Chatting" control modules may be difficult to find and troubleshooting may take time. Let the vehicle stand with DiCE connected for an extended time period. Afterwards, activate functions to provoke a malfunction. It may take up to several hours before the fault messages are sent. When the indicator starts to flash, remove the fuse for one control module at a time until the indicator stops flashing. When the indicator stops flashing, restore the fuse for the relevant control module and check that the indicator starts to flash again. Then it is likely that the problem is identified.

Remedy wiring as necessary.

Other information

- see
- see

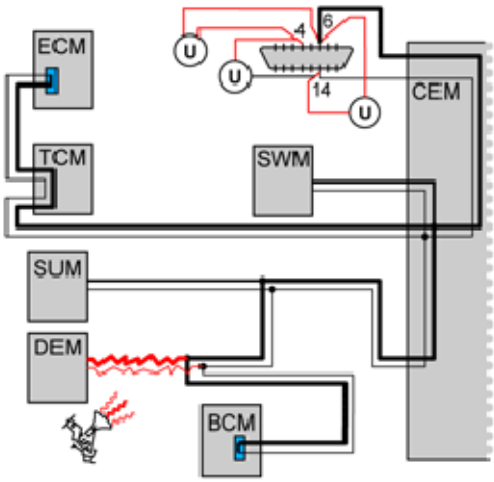

Fig. 5: Checking Traffic Load On CAN Cables
Courtesy of VOLVO CARS CORPORATION

Was a fault detected?

- **YES**

  Refer to **IDENTIFYING A CONTROL MODULE IN THE CAN NETWORK**

- **NO**

  Refer to **CHECKING VOLTAGE-DROP IN CABLE FOR CAN-H AND CAN-L, RESPECTIVELY**

IDENTIFYING A CONTROL MODULE IN THE CAN NETWORK

Fig. 6: Identifying Ignition ON
Courtesy of VOLVO CARS CORPORATION

For general information about CAN-troubleshooting, see: **GENERAL INFORMATION ABOUT FAULT-TRACING IN THE CAN NETWORK**

HINT: DiCE can be used as fault detection tool if fault is suspected on the CAN-net that cannot be detected with normal troubleshooting. Interference, intermittent faults, faulty messages on the CAN-net (chattering control modules) etc., are examples of such faults. he tool registers fault messages used on the CAN-net. Fault messages may be caused by short intermittent malfunctions on the CAN-net or by a control module sending fault messages. See tools:951 3010 (memory card) as well as associated TJ 20402.

If the load on the CAN network is too high, this may be due to a control module sending faulty messages on the CAN network (known as a disruptive control module). The fault may also be due to an intermittent short-circuit to supply voltage or ground in one of the CAN cables. This results in the control modules on the CAN network starting to send faulty messages. The faults can occur without a diagnostic trouble code (DTC) being stored by the control modules. The voltage can be measured between the CAN cables in order to check the load on the CAN network.

NOTE: **It is not necessarily the control module(s) that stored the diagnostic trouble code (DTC) that is communicating faultily. Faulty messages can come from any control module in the same section of the CAN network. However, faulty communication in one network cannot affect the communication on the other network. In other words, faulty communication on the LS-CAN cannot disrupt communication on the HS-CAN and vice versa.**

- Ignition on.
- Connect OBDII-Box **(951 3015)** to the diagnostics socket.

Check communication/load on CAN-net by measuring voltage between CAN-L and CAN-H. Measure voltage between the following connections on the OBDII-box/diagnostics socket.

- #6 and #14. he average value of the voltage must be approximately 0.6-1.4 V. he voltage shall normally be between 0.55 - 0.90 V. higher voltage may indicate increased traffic on the CAN-net. n case of fault in communication/too high traffic on the CAN-net, the voltage is considerably higher than the above stated values.

In order to identify which control module has faulty communication, cut the power supply to one control module at a time. Check the voltage in the CAN cables again. he easiest way to cut the power supply is to remove the fuse(s) for the relevant control module. Repeat until the voltage between the CAN wiring drops to the normal level.

NOTE: **When connecting and disconnecting individual control modules, other diagnostic trouble codes (DTCs) may be stored in certain control modules.**

HINT: When the suspected defective control module has been identified, connect and disconnect the supply voltage to the control module a number of times to verify that the malfunction appears and disappears. witch off the ignition between each check.

NOTE: **Do not cut the power to the central electronic module (CEM) unless it is the last control module left to check.**

A control module that is communicating incorrectly must be replaced. See Repairing and installing/Removing, replacing and installing.

NOTE: **After fault with control modules that interfere with communication, other control modules may remain in Limp-Home (that is, they work with reduced functionality) even when the ignition has been turned off and on a few times. or certain faults in the CAN-net where control modules have stopped communicating, it may help to disconnect/reconnect the battery o "restart" the control module/CAN-net.**

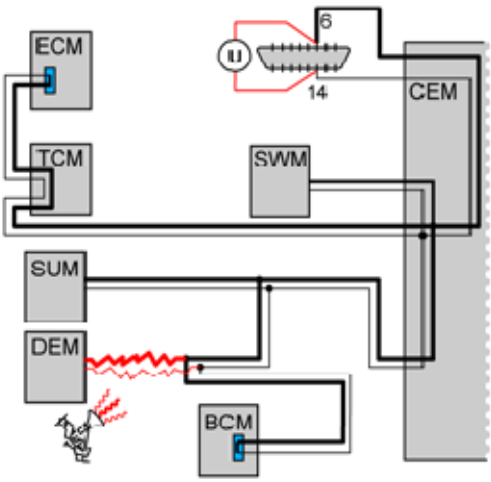

Fig. 7: Checking Communication/Load On CAN-Net Between CAN-L And CAN-H
Courtesy of VOLVO CARS CORPORATION

- **Continue**

  Refer to **VERIFICATION**

VERIFICATION

HINT: After rectifying a fault, a verification should be carried out.

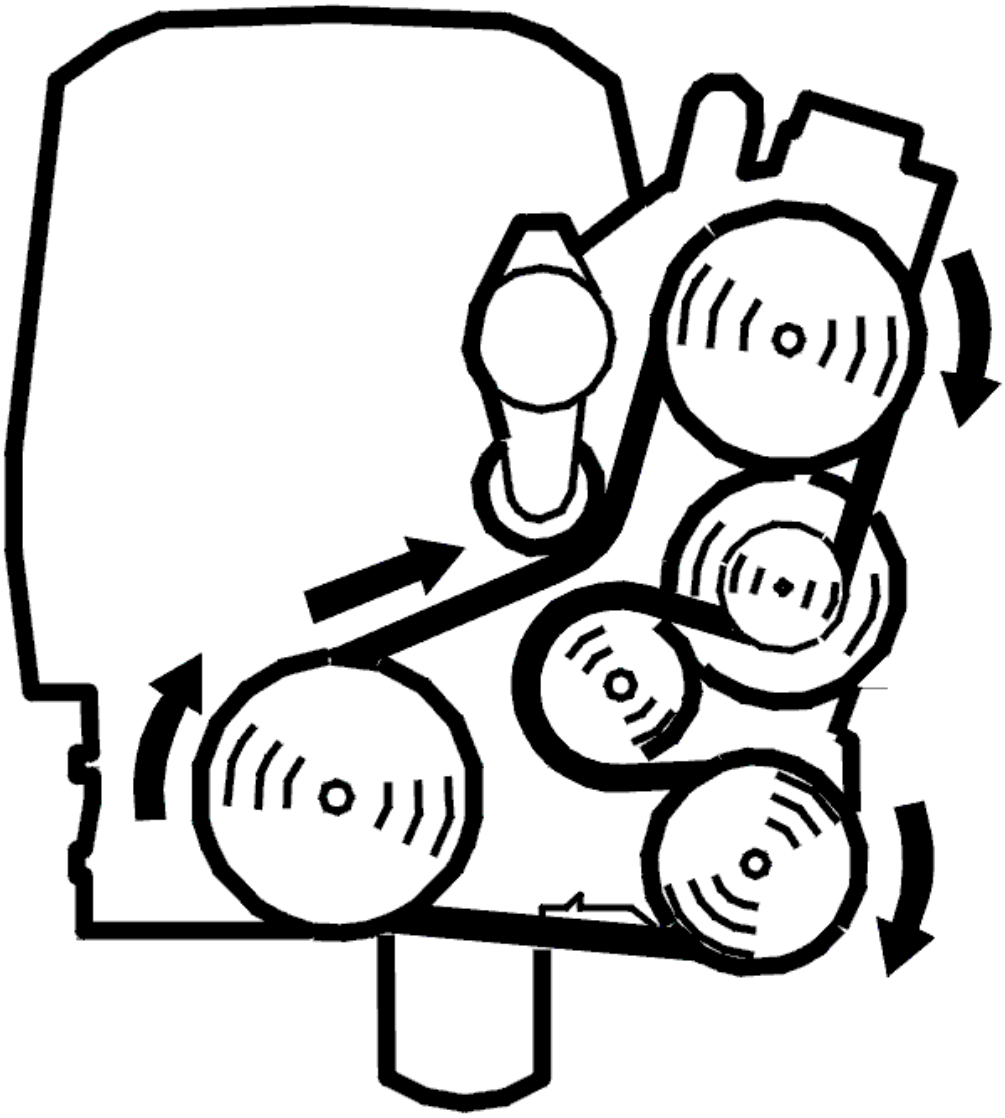

Fig. 8: Belt Routing / Engine Idling - Volvo
Courtesy of VOLVO CARS CORPORATION

Fig. 9: Identifying Ignition ON
Courtesy of VOLVO CARS CORPORATION

- Reinstall the connectors, components etc.
- Ignition on.

NOTE: **For certain faults in the CAN-net where control modules have stopped communicating, it may help to disconnect/reconnect the battery o "restart" the control module/CAN-net.**

- Erase diagnostic trouble codes (DTCs) in all control modules.
- Ignition off.
- Ignition on.
- Start the vehicle. Allow the vehicle to run for 10 minutes.
- Read out the diagnostic trouble codes in the vehicle via the DIAGNOSTICS tab.

Does the diagnostic trouble code (DTC) for faulty communication return?

- **YES**

  Refer to **INFORMATION**

- **NO**

  OKAY: Troubleshooting has been completed.

CHECKING SHORT-CIRCUITING TO GROUND/VOLTAGE IN CAN-NET

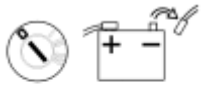

Fig. 10: Ignition Off And Disconnecting Battery Negative Lead
Courtesy of VOLVO CARS CORPORATION

- Ignition off.
- Disconnect the battery negative lead.
- Connect OBDII-Box **(951 3015)** to the diagnostics socket.

  For general information about CAN-troubleshooting, see: **GENERAL INFORMATION ABOUT FAULT-TRACING IN THE CAN NETWORK**

  Checking for a short-circuit to ground

  Measure resistance between the following connections on the OBDII-box/diagnostics socket.

  - #6 and #4 (ground). Measurement is shown in the illustration. he resistance should be above 1 kohms.
  - #14 and #4 (ground). he resistance should be above 1 kohms.

If resistance is below 1 kohms this indicates short-circuiting between the CAN-line and ground.

Checking for a short-circuit to voltage

Measure resistance between the following connections on the OBDII-box/diagnostics socket.

- #6 and #16 (voltage). Measurement is shown in the illustration. he resistance should be above 1 kohms.
- #14 and #16 (voltage). he resistance should be above 1 kohms.

If resistance is below 1 kohms this indicates short-circuiting between the CAN-line and voltage cable.

Twist the cable harness and wiggle connectors where they can be accessed along the cable harness during every measurement, and note if the resistance changes to detect intermittent short-circuits or open circuit.

HINT: Part the CAN-net at suitable points to decide where a short-circuit may be found.

NOTE: **After fault with control modules that interfere with communication, other control modules may remain in Limp-Home (that is, they work with reduced functionality) even when the ignition has been turned off and on a few times. or certain faults in the CAN-net where control modules have stopped communicating, it may help to disconnect/reconnect the battery o "restart" the control module/CAN-net.**

Remedy wiring as necessary.

Other information

- see
- see

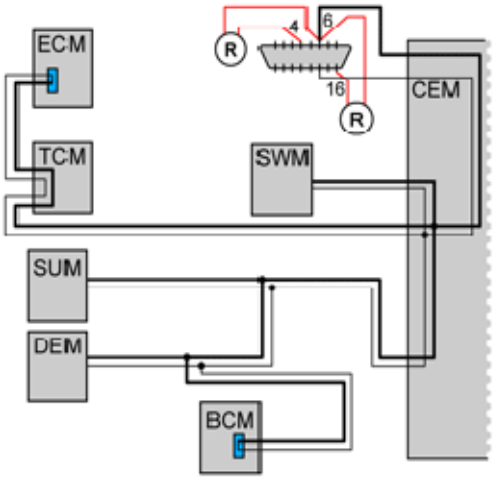

Fig. 11: CAN-Net Communication Diagram
Courtesy of VOLVO CARS CORPORATION

Was a fault detected?

- **YES**

  Refer to **VERIFICATION**

- **NO**

  Refer to **CHECKING THE TRAFFIC LOAD ON THE CAN CABLES**

CHECKING VOLTAGE-DROP IN CABLE FOR CAN-H AND CAN-L, RESPECTIVELY

Fig. 12: Identifying Ignition ON
Courtesy of VOLVO CARS CORPORATION

- Connect the battery.
- Ignition on.
- Connect OBDII-Box **(951 3015)** to the diagnostics socket.

  For general information about CAN-troubleshooting, see: **GENERAL INFORMATION ABOUT FAULT-TRACING IN THE CAN NETWORK**

  In principle, the voltage measured in each cable in the CAN-net shall be the same at each control module in the network. his means that the voltage-drop in the cable for CAN-H and CAN-L, respectively, between the control modules should be very low. f there is a voltage-difference in the CAN-lines between the diagnostics socket/Central electronic module (CEM) and a control module due to, e.., contact resistance in a connector or branching, communication may be lost/interfered with.

  Check if there is voltage-drop in the cable for CAN-H and CAN-L between the diagnostics socket/Central electronic module (CEM) and the control module where there is problem with communication.

  Carry out the following:

  Measure voltage between the following connections on the OBDII-box/diagnostics socket.

  - #6 and corresponding connection on relevant control module for CAN-H. he voltage shall be lower than 50 mV.
  - #14 and corresponding connection on relevant control module for CAN-L. he voltage shall be

lower than 50 mV.

If voltage is too high, this indicates too high contact resistance in cable, connector, or branching. heck the circuit between the diagnostics socket and control module in question for contact resistance and oxidation.

NOTE: **After fault with control modules that interfere with communication, other control modules may remain in Limp-Home (that is, they work with reduced functionality) even when the ignition has been turned off and on a few times. or certain faults in the CAN-net where control modules have stopped communicating, it may help to disconnect/reconnect the battery o "restart" the control module/CAN-net.**

Remedy wiring as necessary.

Other information

- see

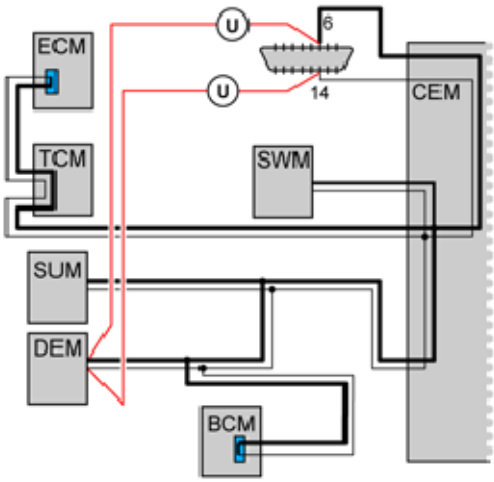

Fig. 13: CAN-Net Communication Diagram
Courtesy of VOLVO CARS CORPORATION

- **Continue**

Refer to **VERIFICATION**

INFORMATION

FAULT-TRACING INFORMATION

The fault should have been detected and remedied. As this is not the case fault-tracing has failed.

Exit fault-tracing for this diagnostic trouble code (DTC) or make another attempt.

OUTSIDE TEMPERATURE SENSOR

Electrical system

OUTSIDE TEMPERATURE SENSOR

OUTSIDE TEMPERATURE SENSOR

Temperature, °C	Resistance, ohms	Voltage, V
0	6318	3.99
10	3857	3.53
20	2424	3.01
30	1513	2.43
40	1034	1.96

ELECTRICAL

Electrical system

ELECTRICAL

CONNECTOR SEALED TYPE 1

Special tools:

see **9512631**

NOTE: **The illustrations in this service information are used for different model years and/or models. Some variation may occur. However, the essential information in the illustrations is always correct.**

DISMANTLING

NOTE: **The connector has no secondary lock.**

DISASSEMBLING PRIMARY LOCK

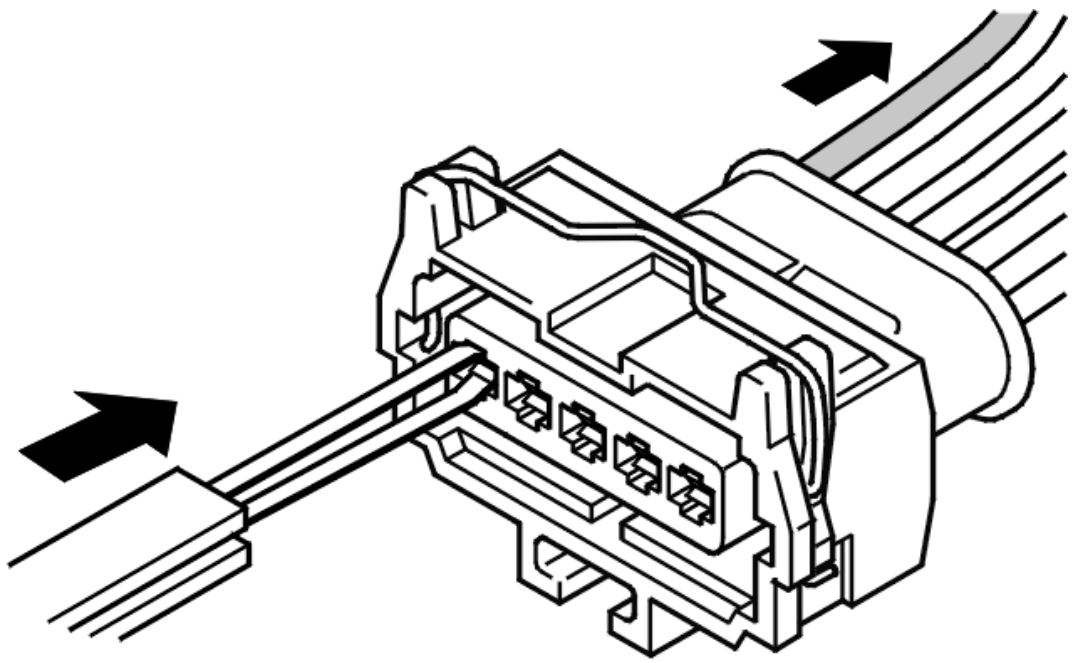

Fig. 1: Identifying Tool 951 2631 To Remove Primary Lock

Courtesy of VOLVO CARS CORPORATION

Use tool: see **9512631** to remove the primary lock. See the illustrations.

At the same time pull the cable carefully backwards.

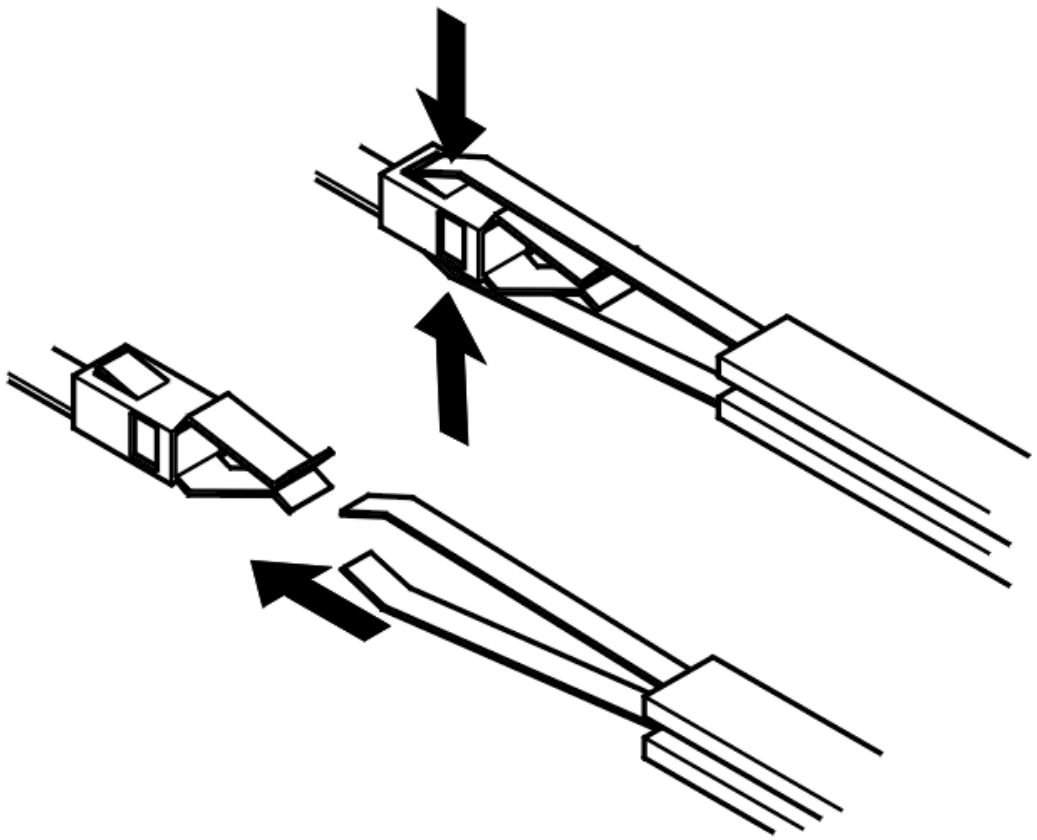

Fig. 2: Identifying Cable Terminal Insertion
Courtesy of VOLVO CARS CORPORATION

ASSEMBLING

ASSEMBLING PRIMARY LOCK

Check that the cable terminal is undamaged.

Press the cable terminal into the housing.

Check that the seal is correctly positioned and that the cable terminal is properly locked by pulling carefully on the cable.

CONNECTOR SEALED, TYPE 2

Special tools:

see **9512632**

see **9512639**

see **9512852**

see **9512853**

NOTE: **The illustrations in this service information are used for different model years and/or models. Some variation may occur. However, the essential information in the illustrations is always correct.**

DISASSEMBLY

DISASSEMBLING SECONDARY LOCK

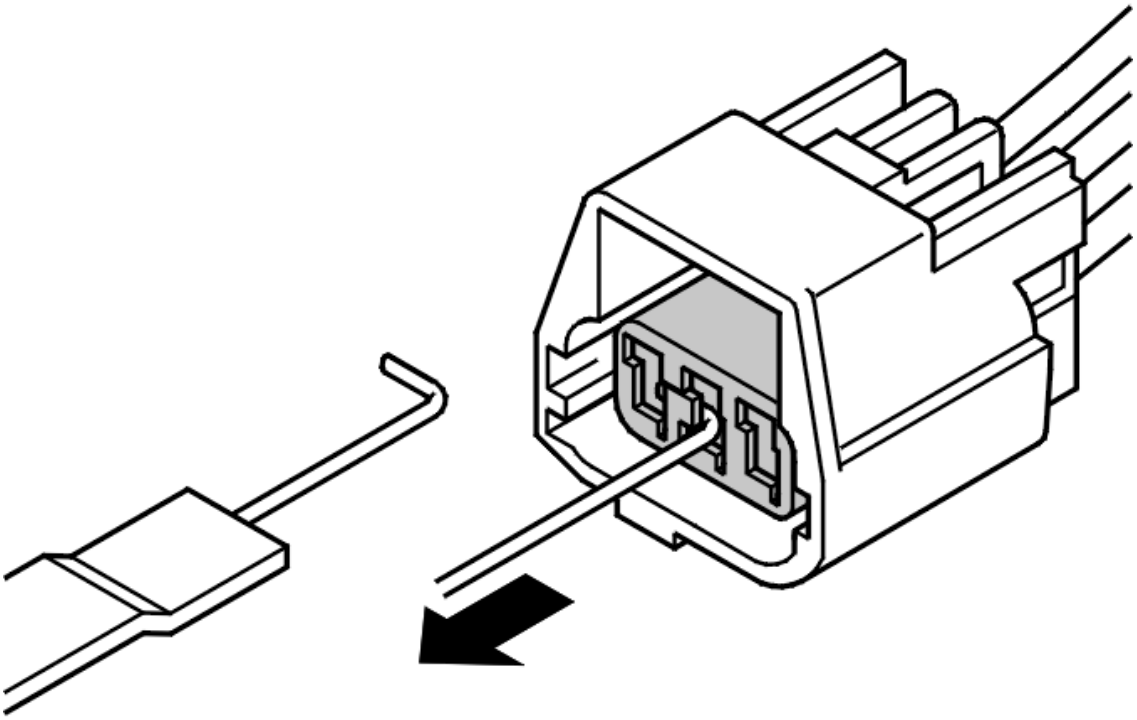

Fig. 3: Identifying Secondary Lock Pulled Out Using Tool 951 2853
Courtesy of VOLVO CARS CORPORATION

Release the catches and pull out the secondary lock. Use tool: see **9512853** or an electrician's screwdriver, as shown in the illustration.

DISASSEMBLING PRIMARY LOCK

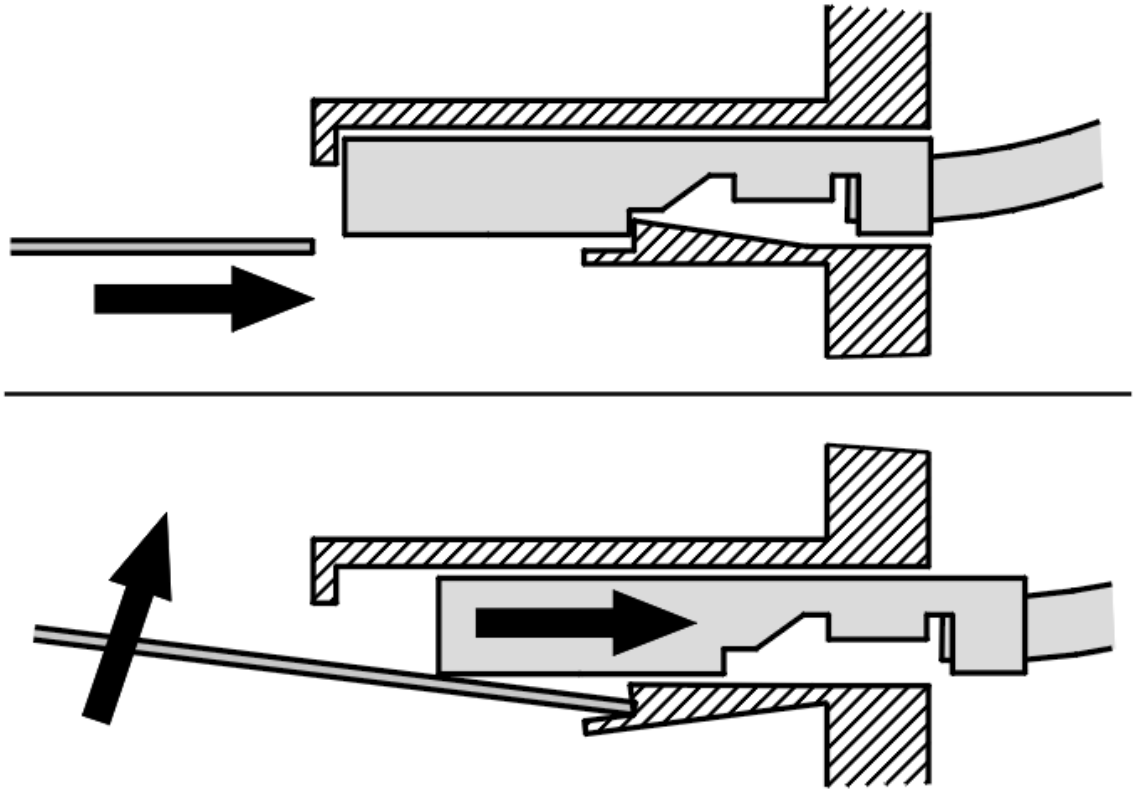

Fig. 4: Identifying Cable Pulled Backwards
Courtesy of VOLVO CARS CORPORATION

Use tool: see **9512632** and see **9512639** to remove the primary lock, see illustration.

At the same time pull the cable carefully backwards.

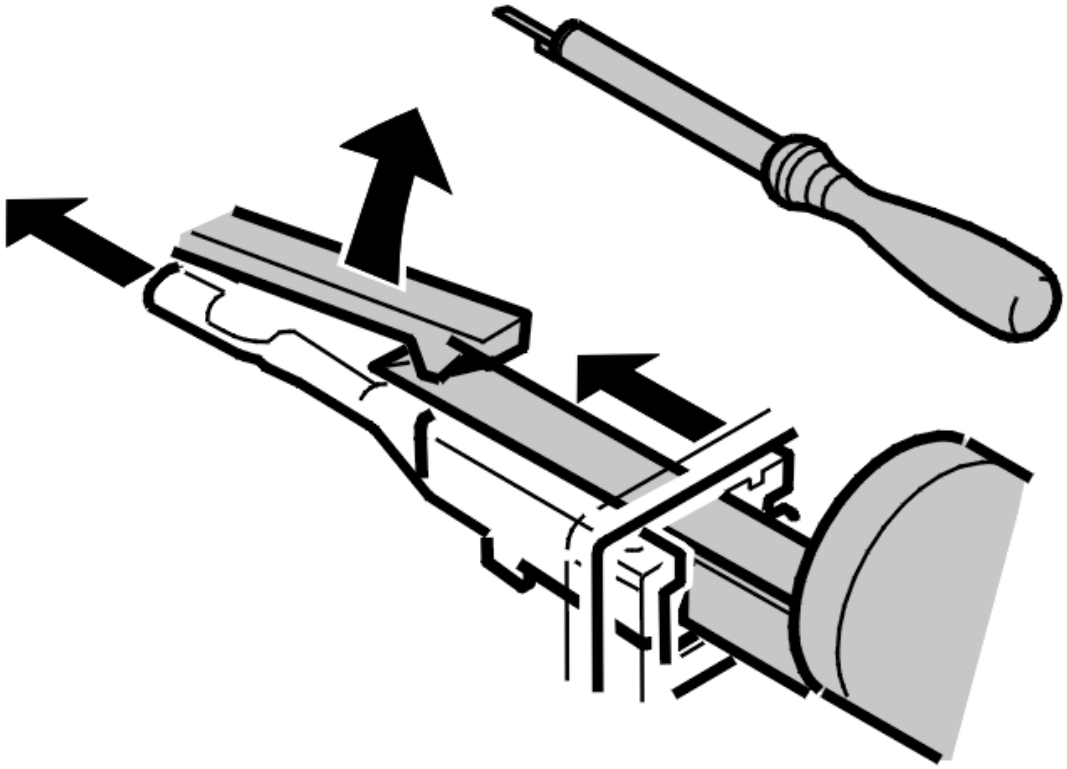

Fig. 5: Alternatively Using Tool 951 2852
Courtesy of VOLVO CARS CORPORATION

Alternatively use tool: see **9512852** see illustration.

NOTE: Tool see 9512852 can only be used for socket housings.

ASSEMBLY

ASSEMBLING PRIMARY LOCK

Check that the cable terminal is undamaged.

Press the cable terminal into the housing.

Check that the seal is correctly positioned and that the cable terminal is properly locked by pulling carefully on the cable.

ASSEMBLING SECONDARY LOCK

Press the secondary lock into place.

CONNECTOR SEALED, TYPE 3

Special tools:

see **9512637**

NOTE: **The illustrations in this service information are used for different model years and/or models. Some variation may occur. However, the essential information in the illustrations is always correct.**

DISASSEMBLY

DISASSEMBLING SECONDARY LOCK

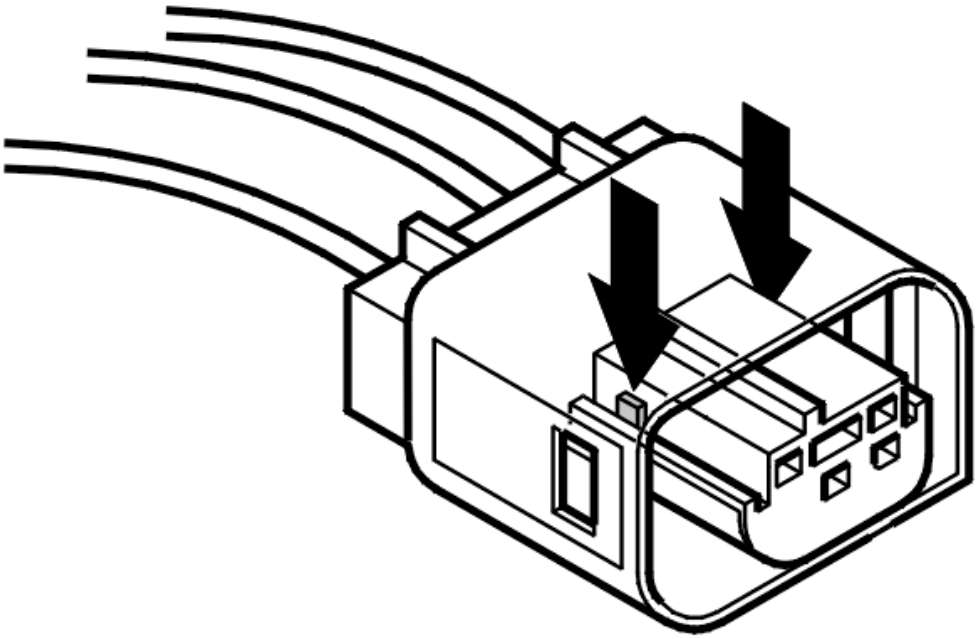

Fig. 6: Identifying Cable Terminal Locking Tab
Courtesy of VOLVO CARS CORPORATION

Adjust the lock pins using an electrician's screwdriver and press up the secondary lock, as shown in the illustration.

DISASSEMBLING PRIMARY LOCK

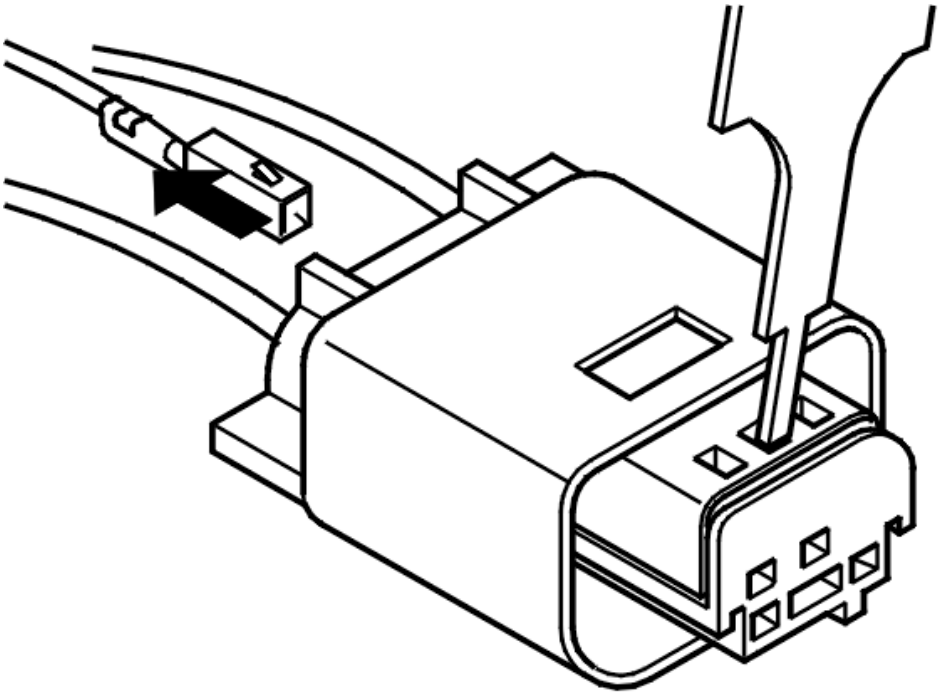

Fig. 7: Adjusting Lock Pins Using An Electrician's Screwdriver
Courtesy of VOLVO CARS CORPORATION

Use tool: see **9512637** to press down the cable terminal locking tab. See the illustration.

At the same time pull the cable carefully backwards.

ASSEMBLY

ASSEMBLING PRIMARY LOCK

Check that the cable terminal is undamaged.

Press the cable terminal into the housing.

Check that the seal is correctly positioned and that the cable terminal is properly locked by pulling carefully on the cable.

ASSEMBLING SECONDARY LOCK

Press the secondary lock into place.

CONNECTOR TYPE 1

Special tools:

see **9512636**

see **9512637**

NOTE: **The illustrations in this service information are used for different model years and/or models. Some variation may occur. However, the essential information in the illustrations is always correct.**

DISASSEMBLY

DISASSEMBLING SECONDARY LOCK

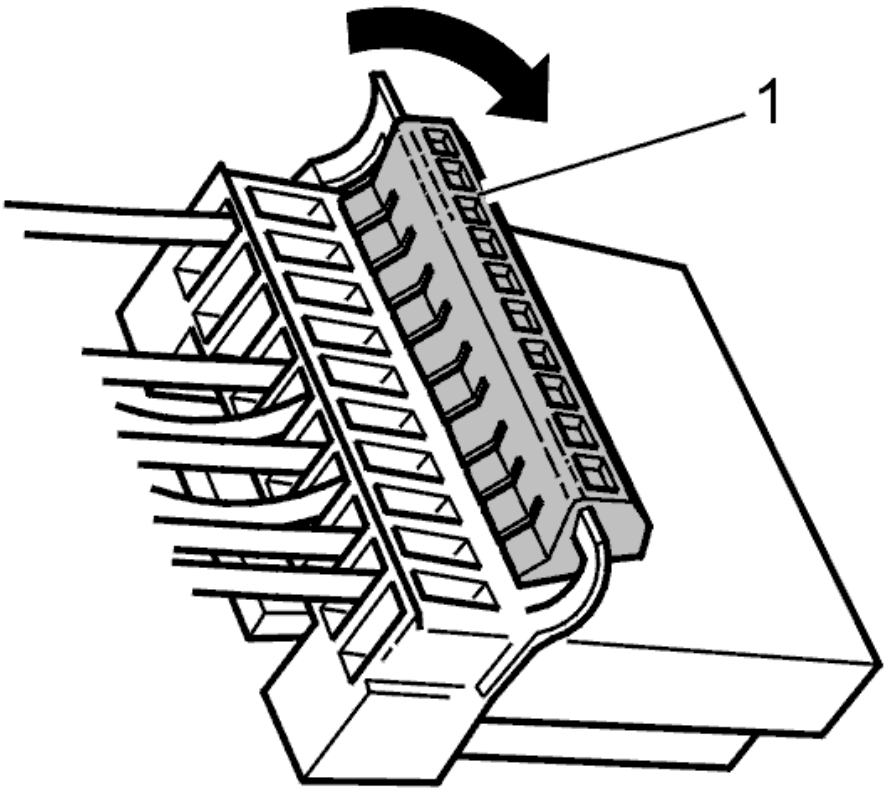

Fig. 8: Folding Up Secondary Lock
Courtesy of VOLVO CARS CORPORATION

Fold up the secondary lock (1), as shown in the illustration. Use a radio screwdriver.

DISASSEMBLING PRIMARY LOCK

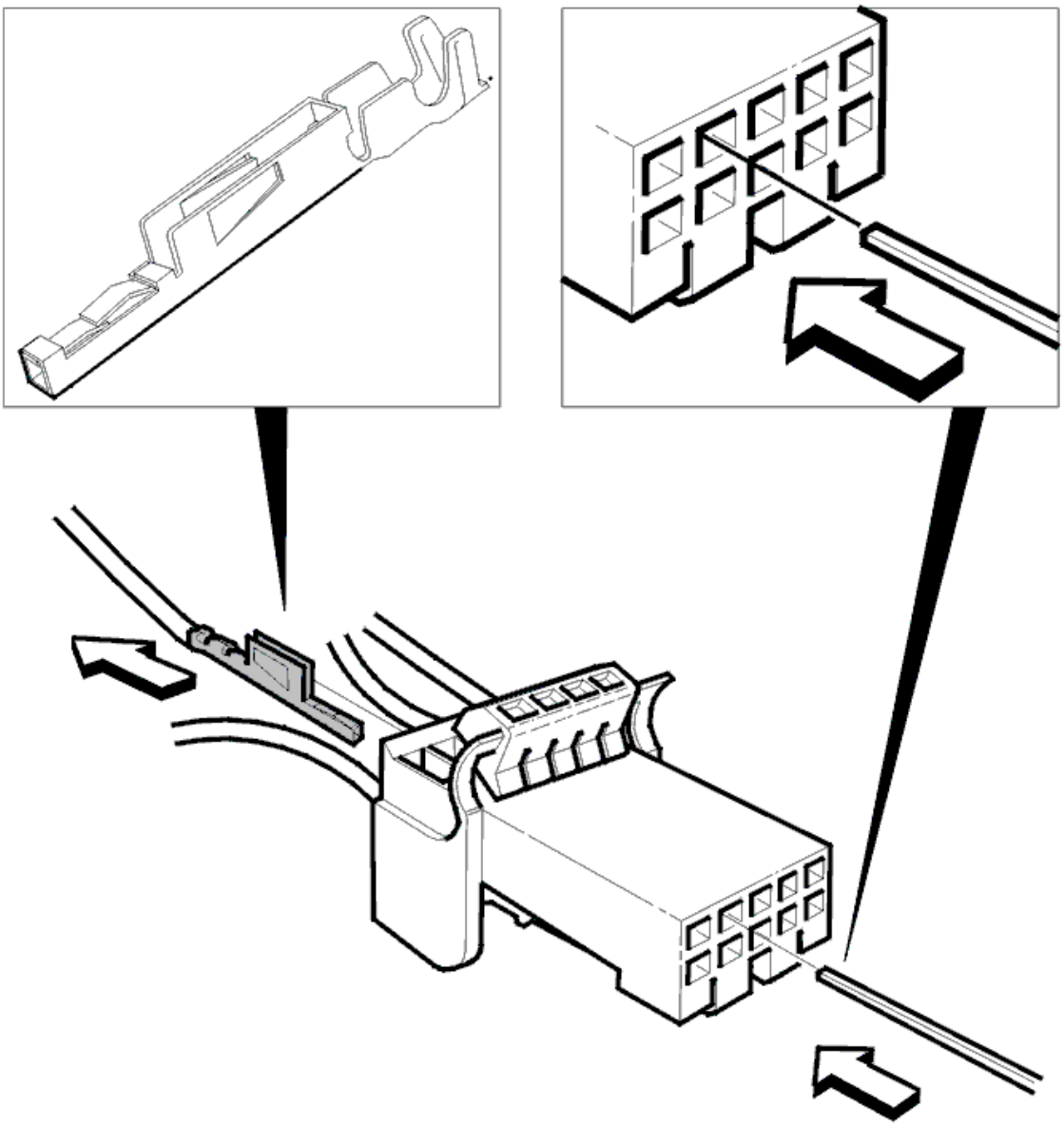

Fig. 9: Identifying Tool 951 2637 To Remove Primary Lock
Courtesy of VOLVO CARS CORPORATION

Use tool: see **9512636** and see **9512637** to remove the primary lock, see illustration.

At the same time pull the cable carefully backwards.

ASSEMBLY

ASSEMBLING PRIMARY LOCK

Check that the catches for the cable terminal are undamaged.

Press the cable terminal into the housing.

Check that the cable terminal is properly locked by pulling carefully on the cable.

ASSEMBLING SECONDARY LOCK

Press the secondary lock into place.

CONNECTOR TYPE 2

Special tools:

see **9512632**

see **9512633**

see **9512639**

see **9512852**

see **9512853**

NOTE: **The illustrations in this service information are used for different model years and/or models. Some variation may occur. However, the essential information in the illustrations is always correct.**

DISASSEMBLY

DISASSEMBLING SECONDARY LOCK

Pin housing

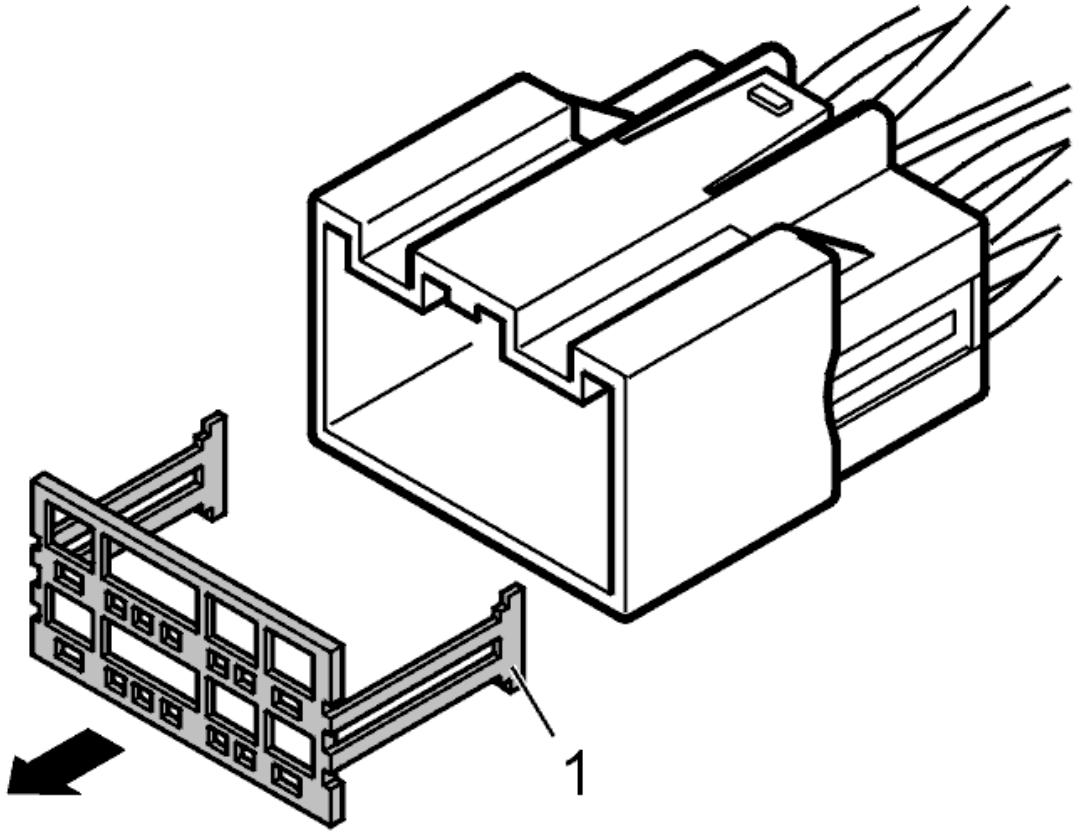

Fig. 10: Identifying Front Housing Section Released From Pin Housing
Courtesy of VOLVO CARS CORPORATION

Release the front housing section on the pin housing by pulling out the rear catches while at the same time pressing the housing section forwards.

Socket housing

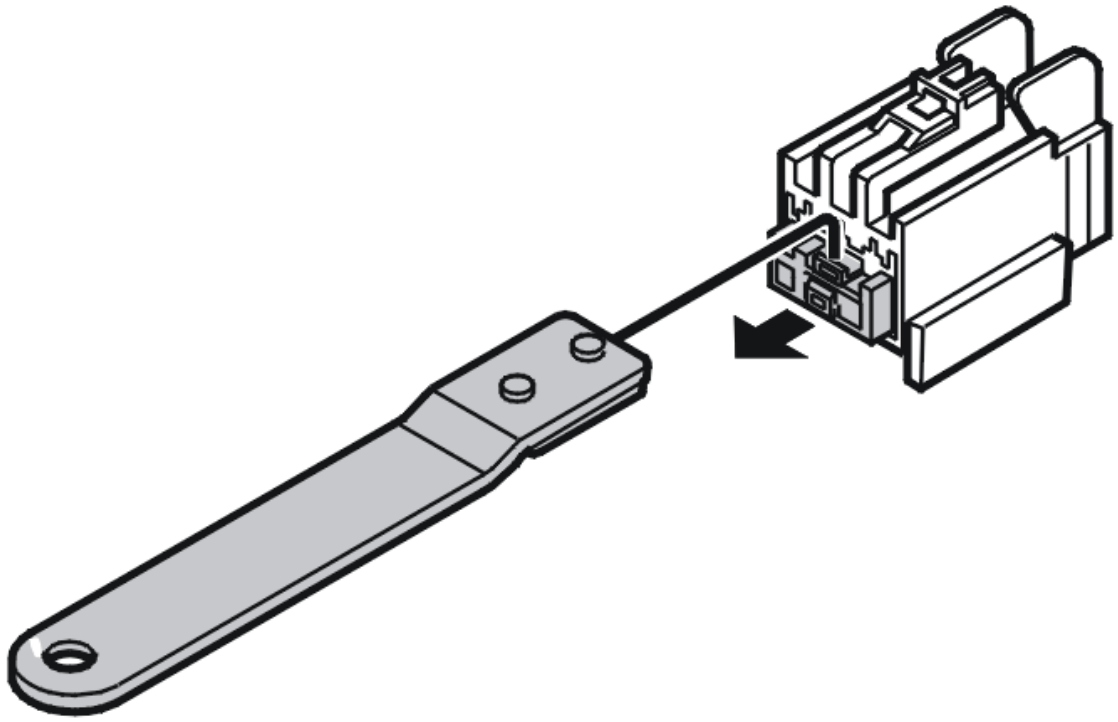

Fig. 11: Identifying Secondary Lock Pulled Out Using Tool 951 2853
Courtesy of VOLVO CARS CORPORATION

Release the catches and pull out the secondary lock. Use tool: see **9512853** or an electrician's screwdriver, see the illustration.

DISASSEMBLING PRIMARY LOCK

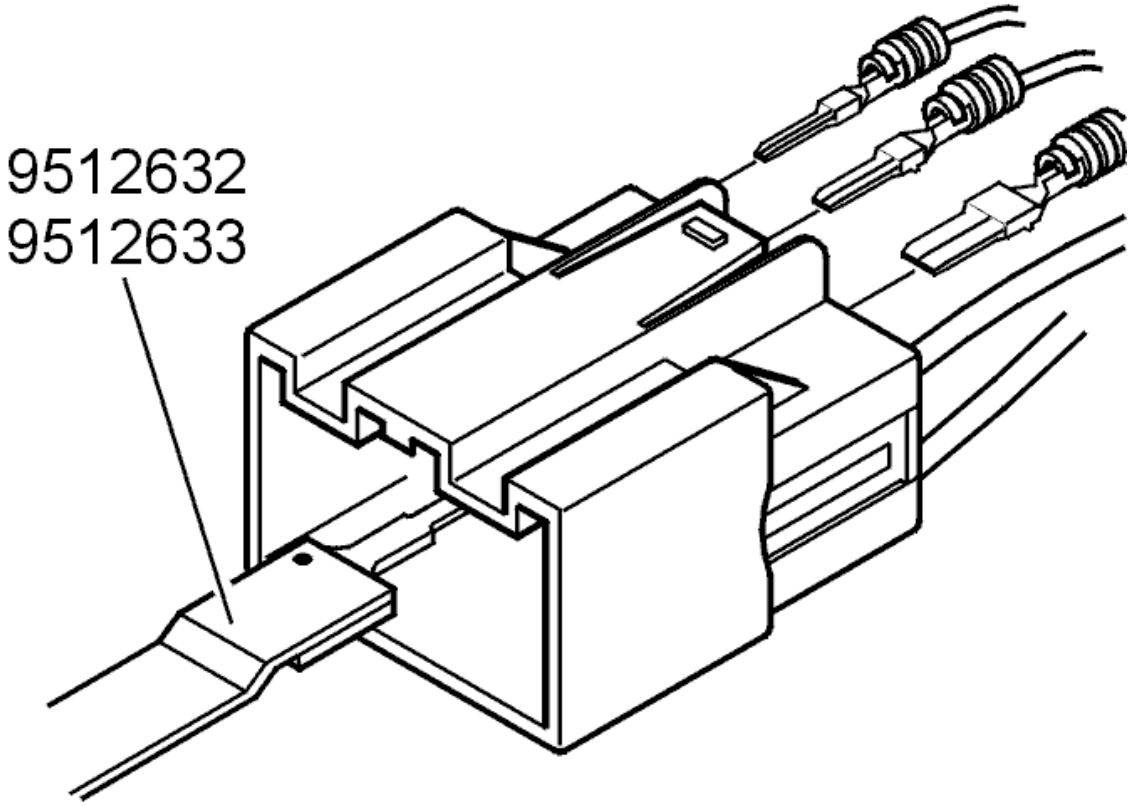

Fig. 12: Identifying Tools 951 2632 & 951 2633 At Primary Lock
Courtesy of VOLVO CARS CORPORATION

Use tool: see **9512632** , see **9512633** and see **9512639** to remove the primary lock, as shown in illustrations.

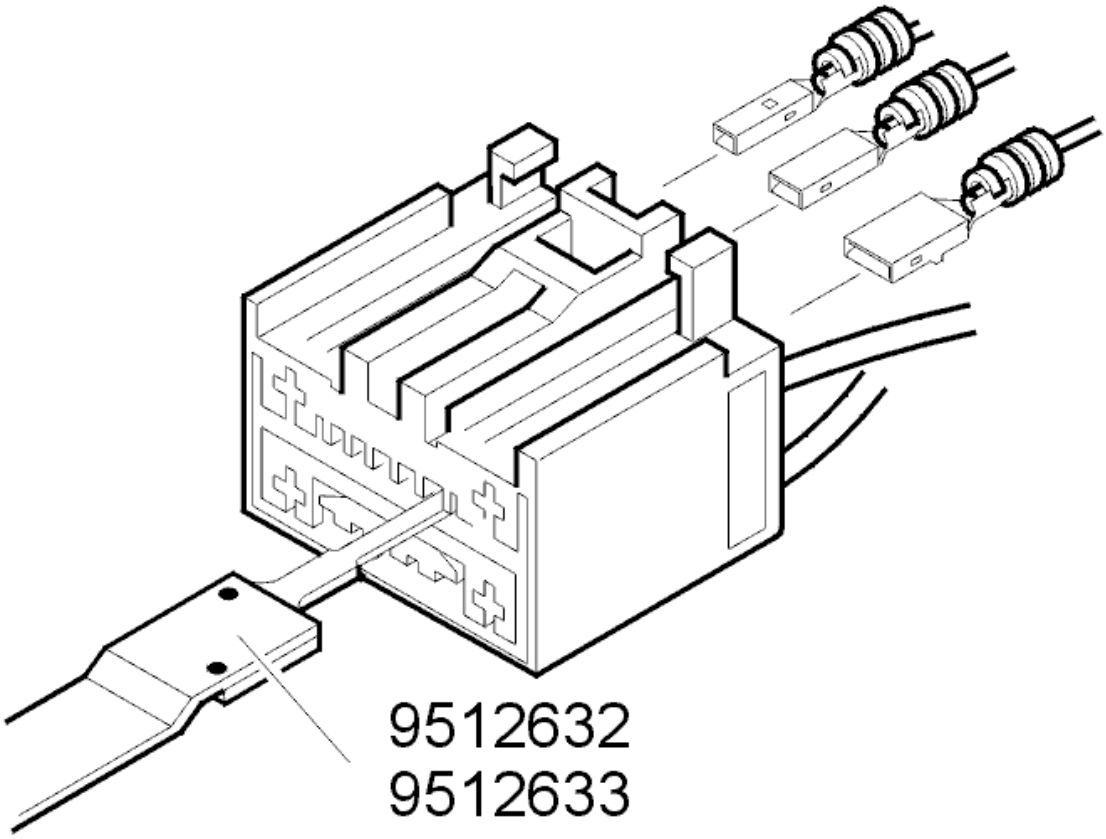

Fig. 13: Identifying Tools 951 2632 & 951 2633 At Primary Lock
Courtesy of VOLVO CARS CORPORATION

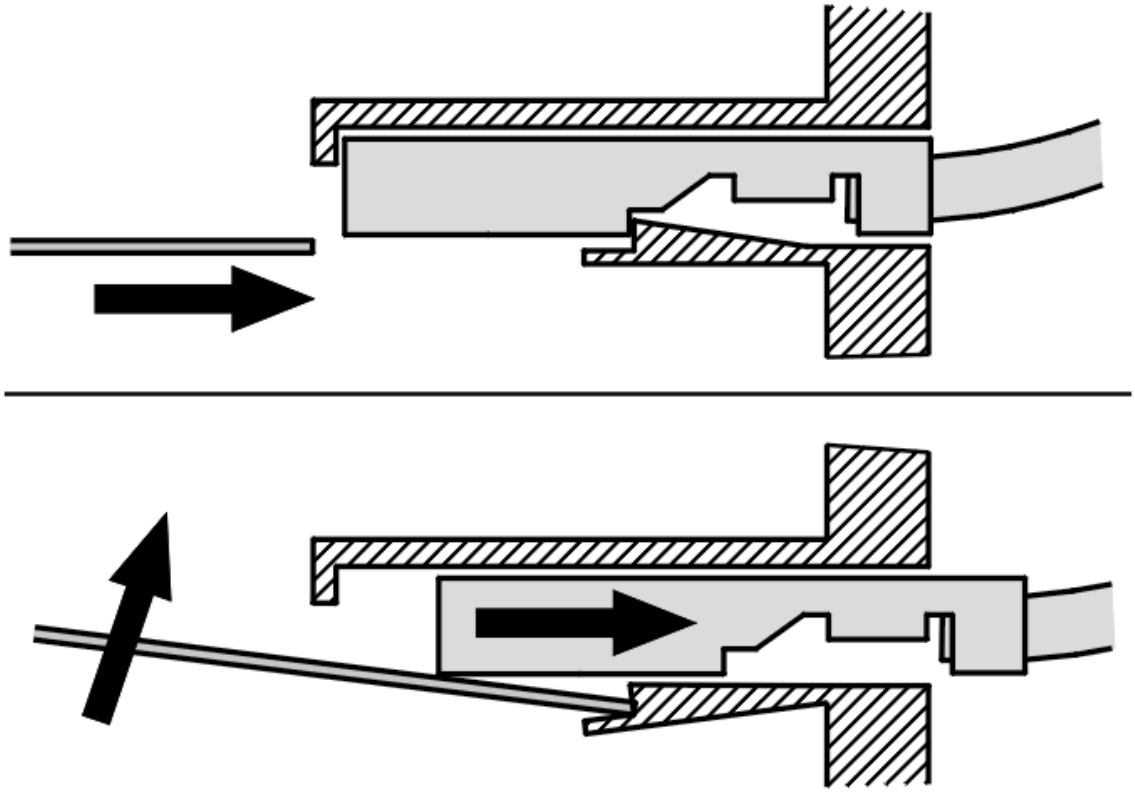

Fig. 14: Identifying Cable Pulled Backwards
Courtesy of VOLVO CARS CORPORATION

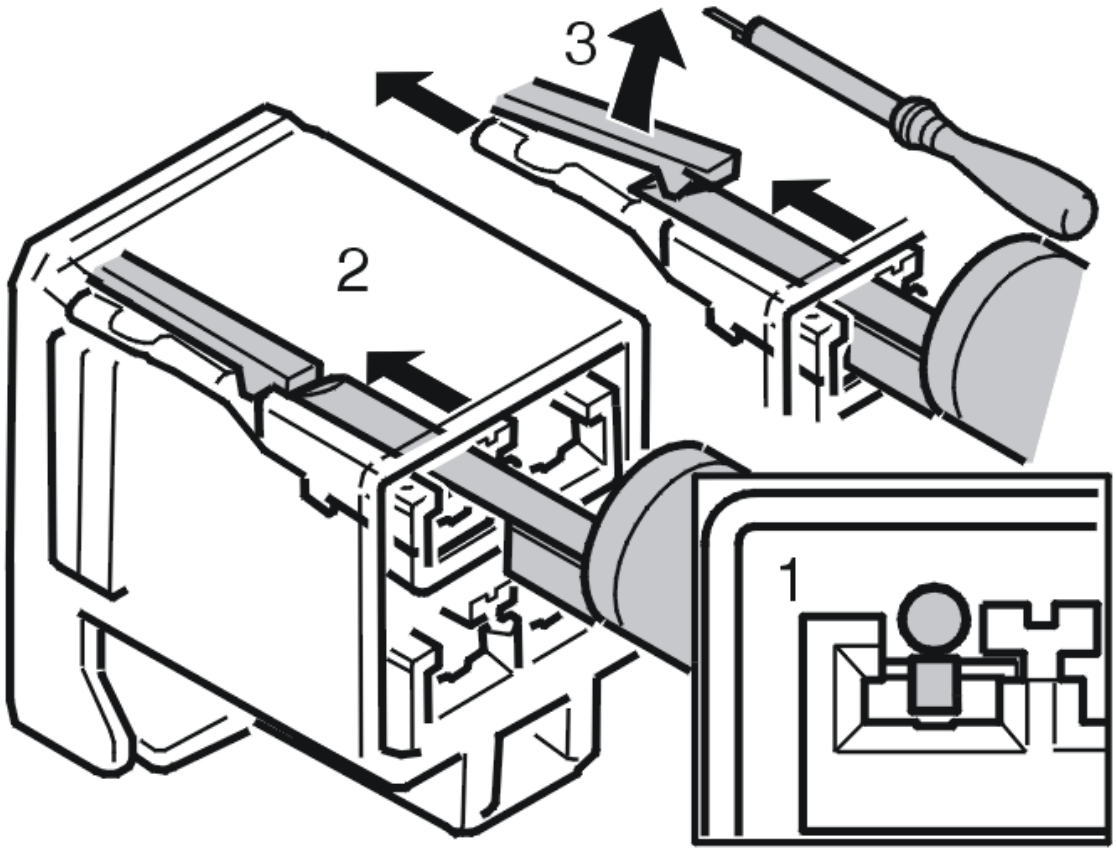

Fig. 15: Alternatively Using Tool 951 2852
Courtesy of VOLVO CARS CORPORATION

Alternatively use tool: see **9512852** , see illustration.

NOTE: Tool see 9512852 can only be used for socket housings.

ASSEMBLY

ASSEMBLING PRIMARY LOCK

Check that the cable terminal is undamaged.

Press the cable terminal into the housing.

Check that the cable terminal is properly locked by pulling carefully on the cable.

ASSEMBLING SECONDARY LOCK

Press the secondary lock into place.

CONNECTOR TYPE 3

Special tools:

see **9512630**

see **9512631**

NOTE: **The illustrations in this service information are used for different model years and/or models. Some variation may occur. However, the essential information in the illustrations is always correct.**

DISASSEMBLY

DISASSEMBLING SECONDARY LOCK

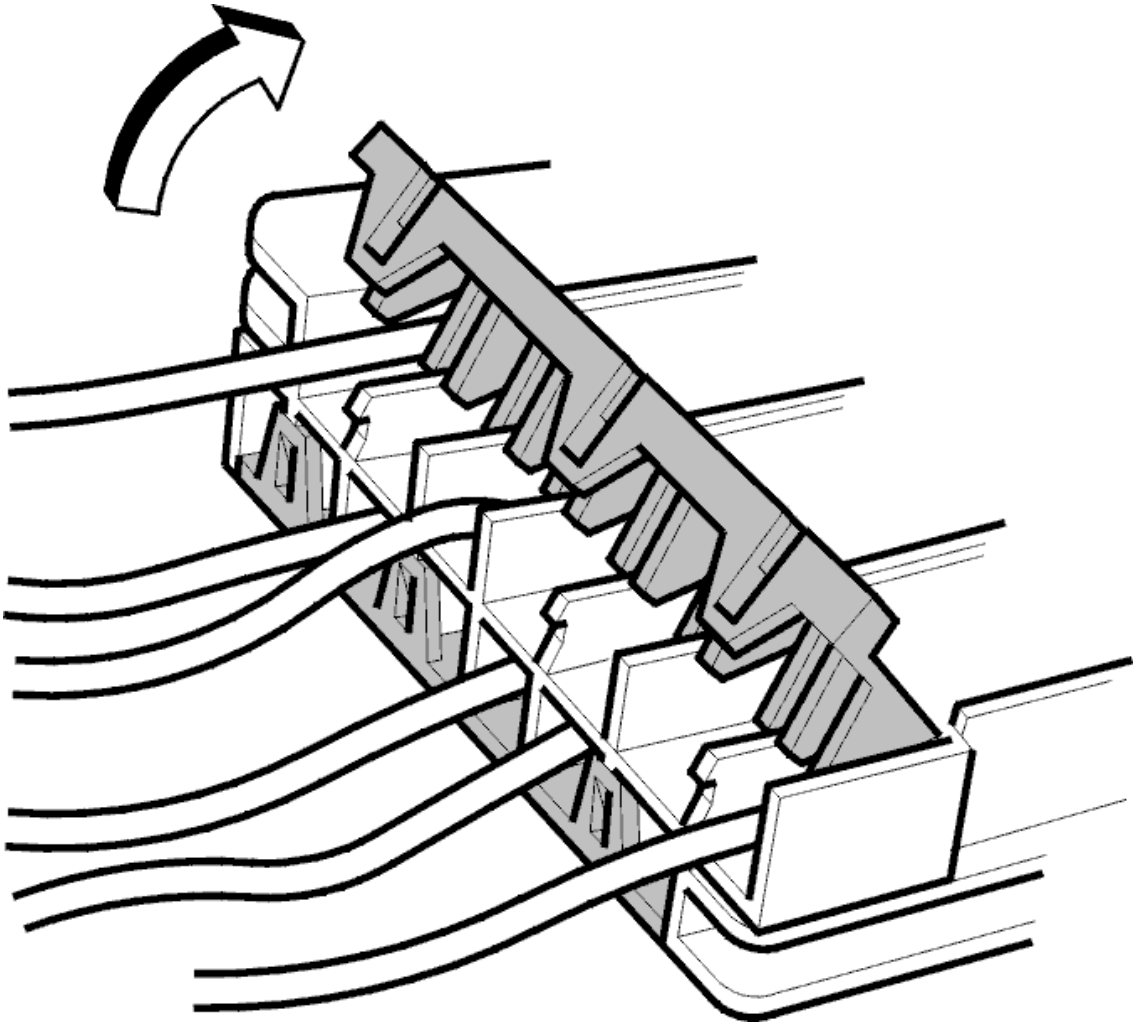

Fig. 16: Folding Up Secondary Lock
Courtesy of VOLVO CARS CORPORATION

Fold up the secondary lock. If necessary use an electrician's screwdriver.

DISASSEMBLING PRIMARY LOCK

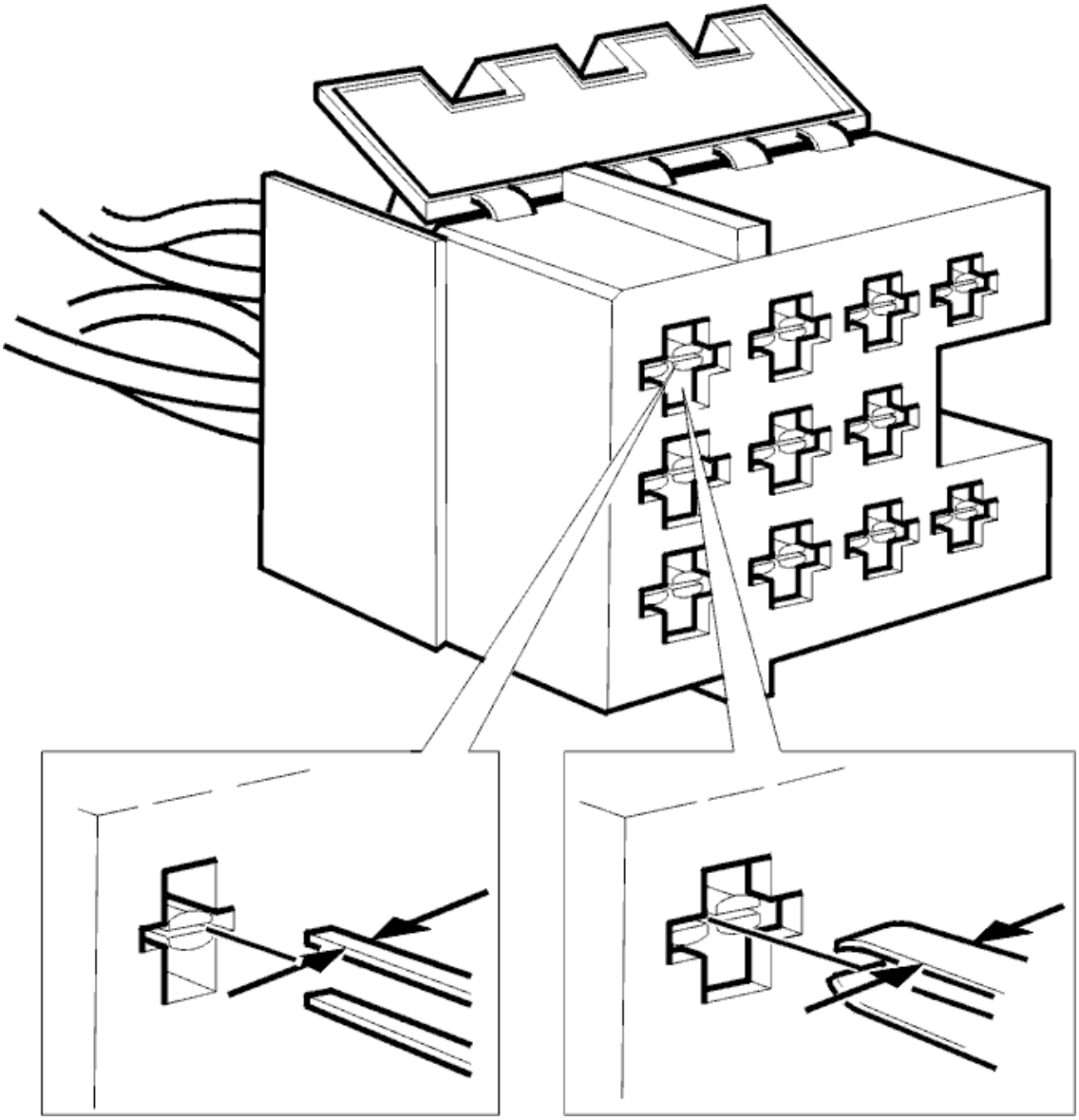

Fig. 17: Identifying Terminal Removal Tools
Courtesy of VOLVO CARS CORPORATION

Use tool: see **9512630** and see **9512631** to remove the primary lock, see illustration.

At the same time pull the cable carefully backwards.

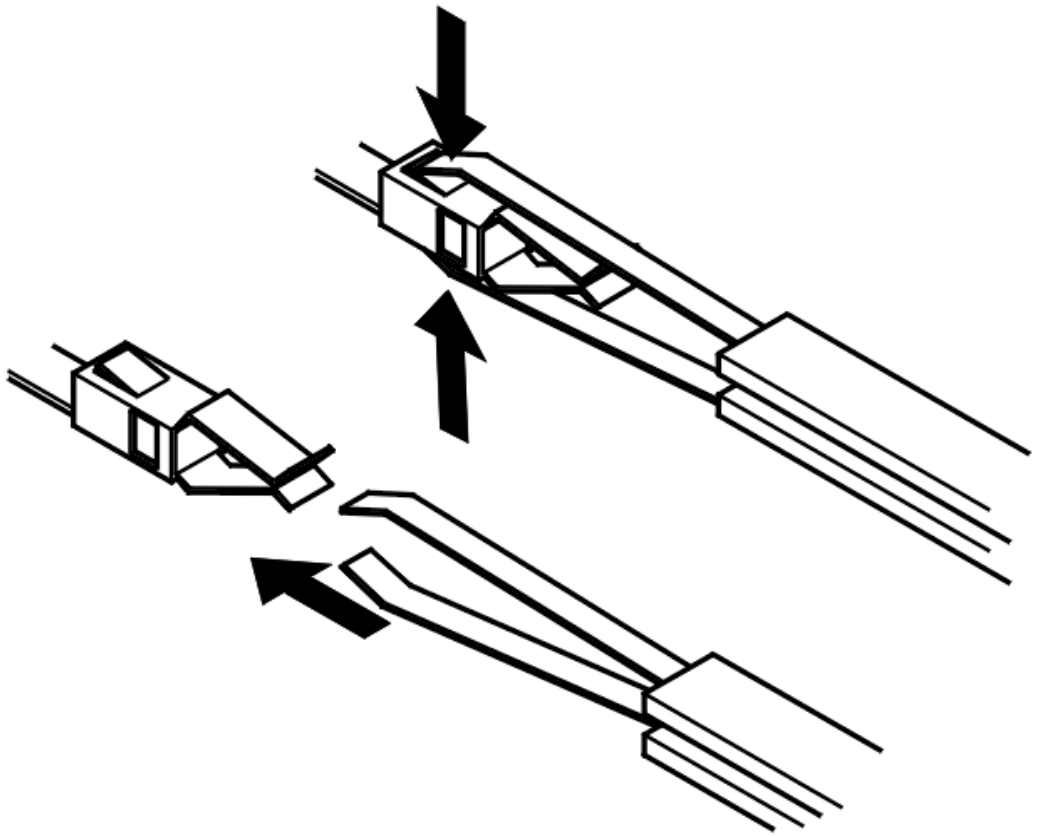

Fig. 18: Identifying Cable Terminal Insertion
Courtesy of VOLVO CARS CORPORATION

ASSEMBLY

ASSEMBLING PRIMARY LOCK

Check that the cable terminal is undamaged.

Press the cable terminal into the housing.

Check that the cable terminal is properly locked by pulling carefully on the cable.

ASSEMBLING SECONDARY LOCK

Press the secondary lock into place.

CONNECTOR TYPE 4

Special tools:

see **9512632**

see **9512639**

see **9512810**

see **9512852**

NOTE: **The illustrations in this service information are used for different model years and/or models. Some variation may occur. However, the essential information in the illustrations is always correct.**

DISASSEMBLY

DISASSEMBLING SECONDARY LOCK

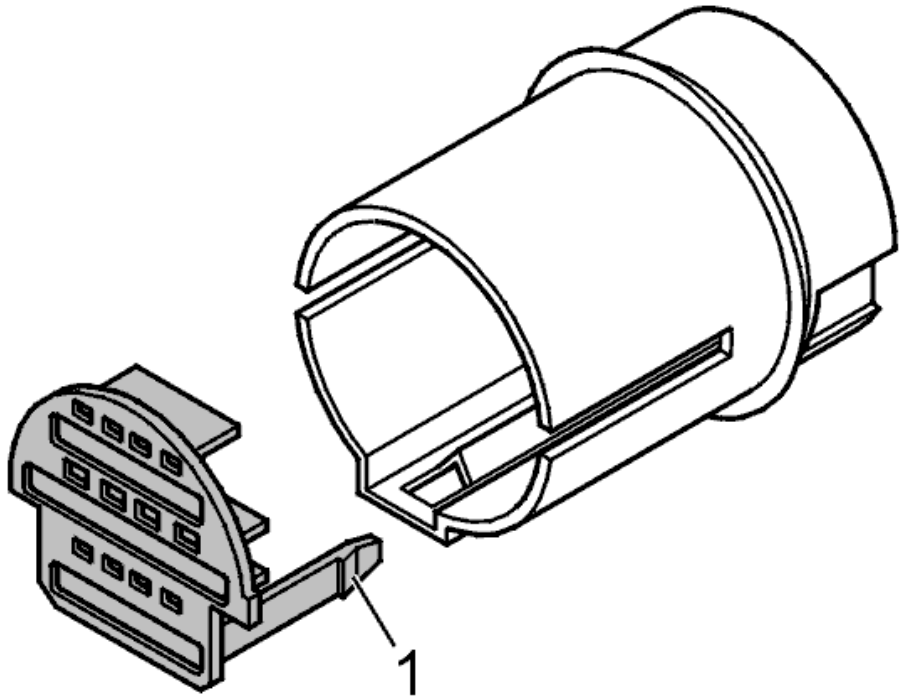

Fig. 19: 12 Pin Round Connector Secondary Lock (1 Of 2)
Courtesy of VOLVO CARS CORPORATION

Angle out the catches on both sides.

Pull out the secondary lock.

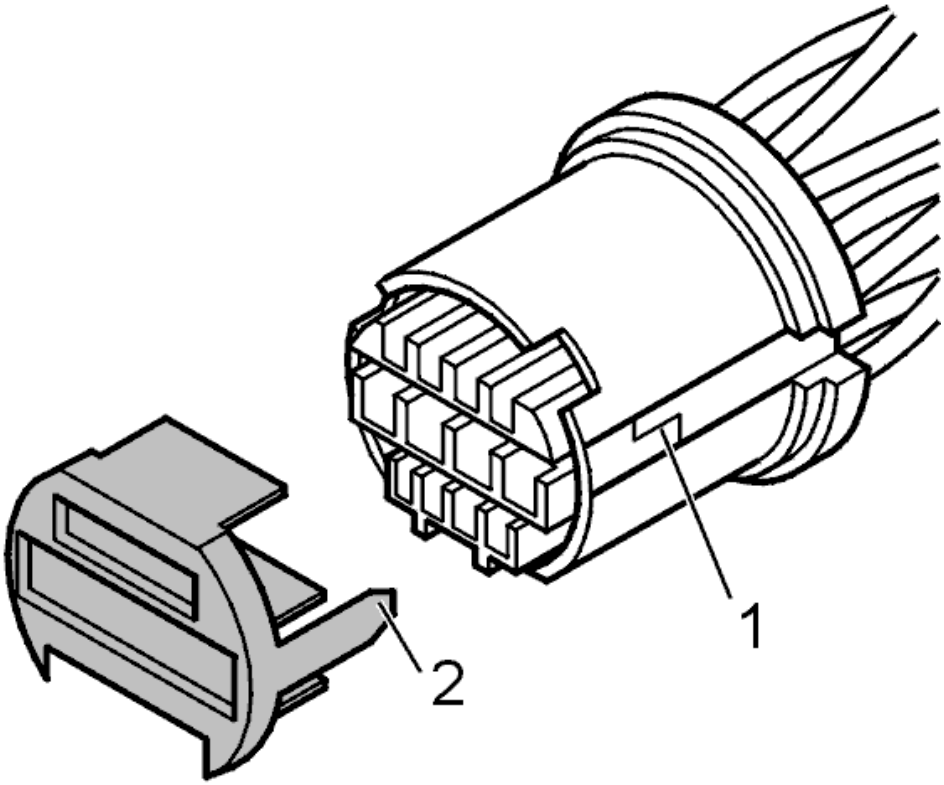

Fig. 20: 12 Pin Round Connector Secondary Lock (2 Of 2)
Courtesy of VOLVO CARS CORPORATION

DISASSEMBLING PRIMARY LOCK

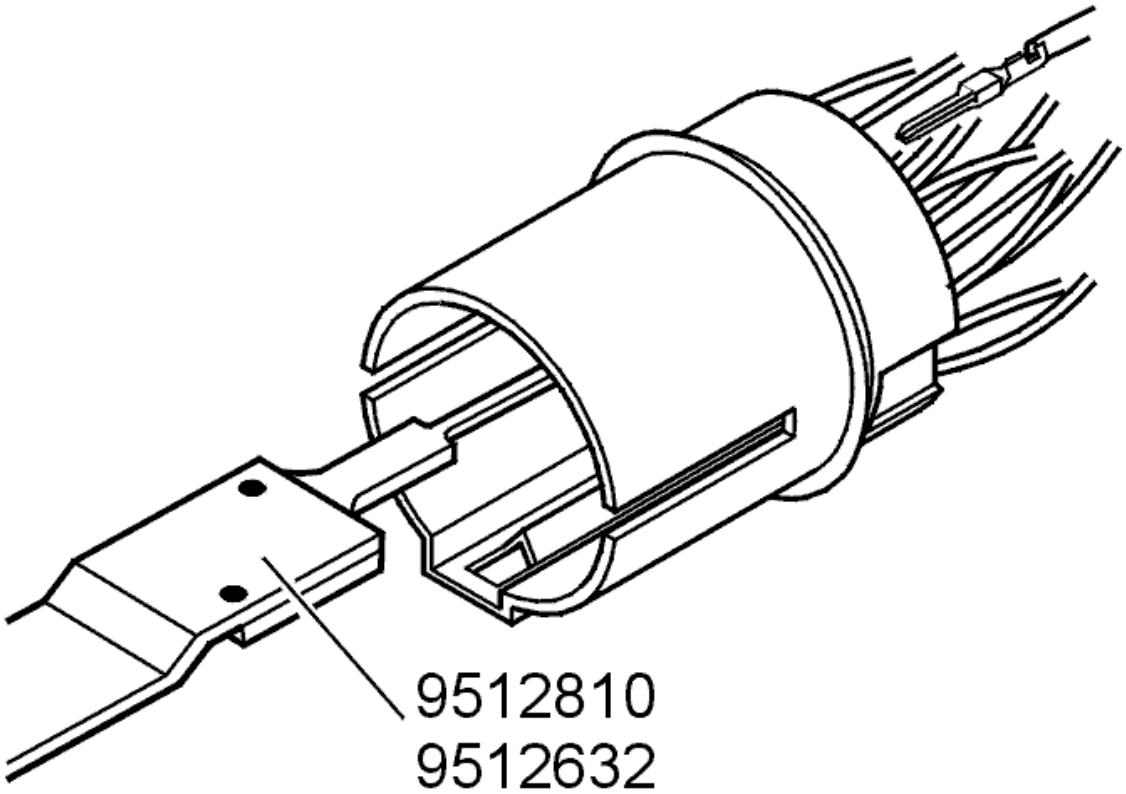

Fig. 21: Identifying Tools 951 2810, 951 2632, 951 2639 To Remove Primary Lock (1 Of 2)
Courtesy of VOLVO CARS CORPORATION

Use tool: see **9512810** , see **9512632** and see **9512639** to remove the primary lock, as shown in illustrations.

At the same time pull the cable carefully backwards.

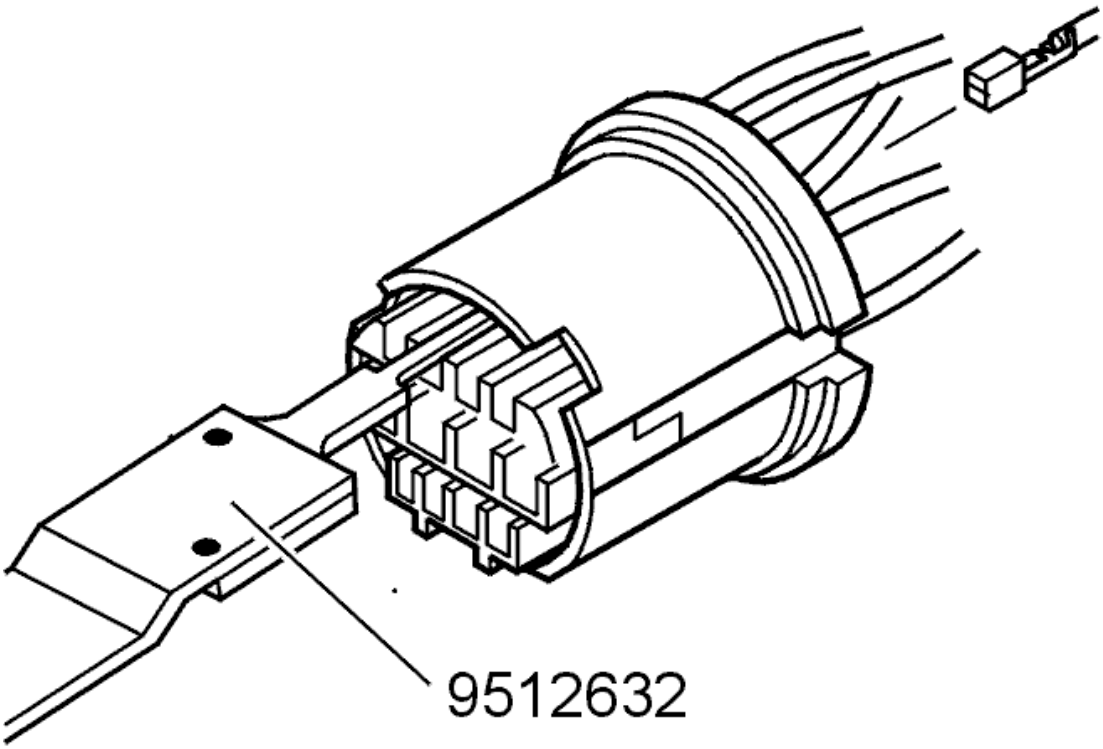

Fig. 22: Identifying Tools 951 2810, 951 2632, 951 2639 To Remove Primary Lock
Courtesy of VOLVO CARS CORPORATION

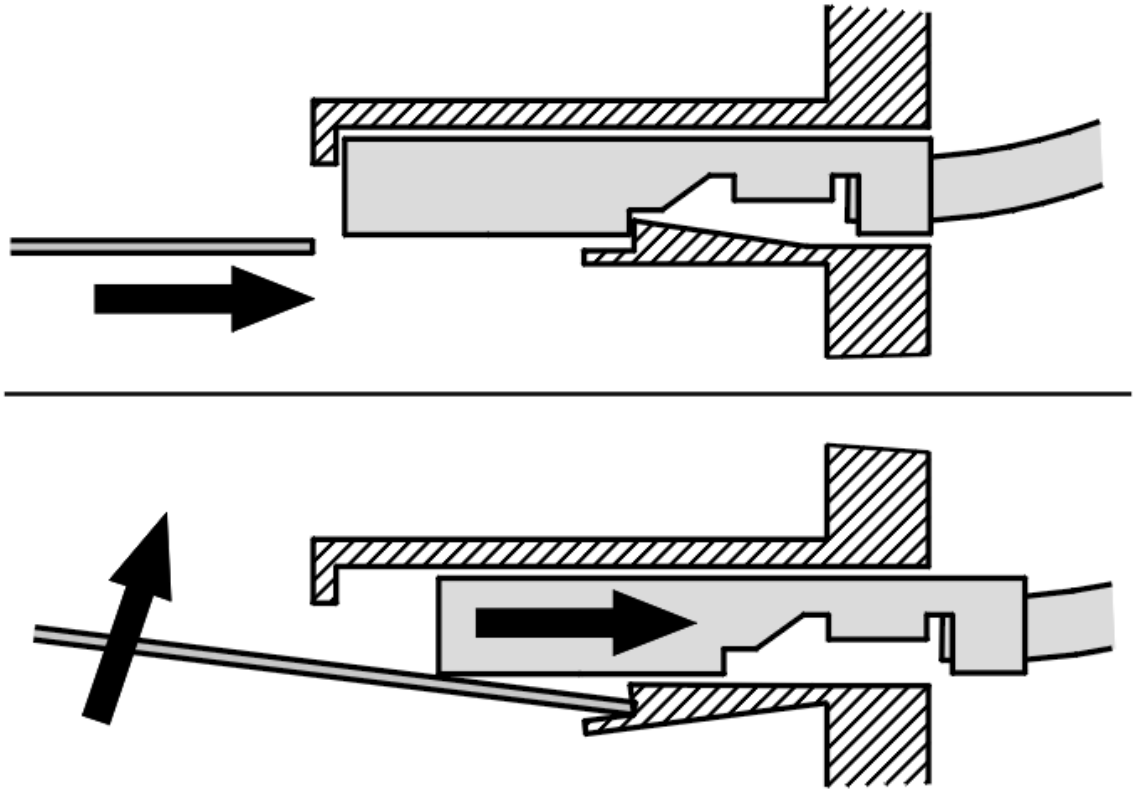

Fig. 23: Identifying Cable Pulled Backwards
Courtesy of VOLVO CARS CORPORATION

Alternatively use tool: see **9512852** , see illustration.

NOTE: Tool see 9512852 can only be used for socket housings.

ASSEMBLY

ASSEMBLING PRIMARY LOCK

Check that the cable terminal is undamaged.

Press the cable terminal into the housing.

Check that the cable terminal is properly locked by pulling carefully on the cable.

ASSEMBLING SECONDARY LOCK

Press the secondary lock into place.

CONNECTOR TYPE 5

Special tools:

see **9512632**

see **9512639**

see **9512852**

NOTE: **The illustrations in this service information are used for different model years and/or models. Some variation may occur. However, the essential information in the illustrations is always correct.**

DISASSEMBLY

DISASSEMBLING SECONDARY LOCK

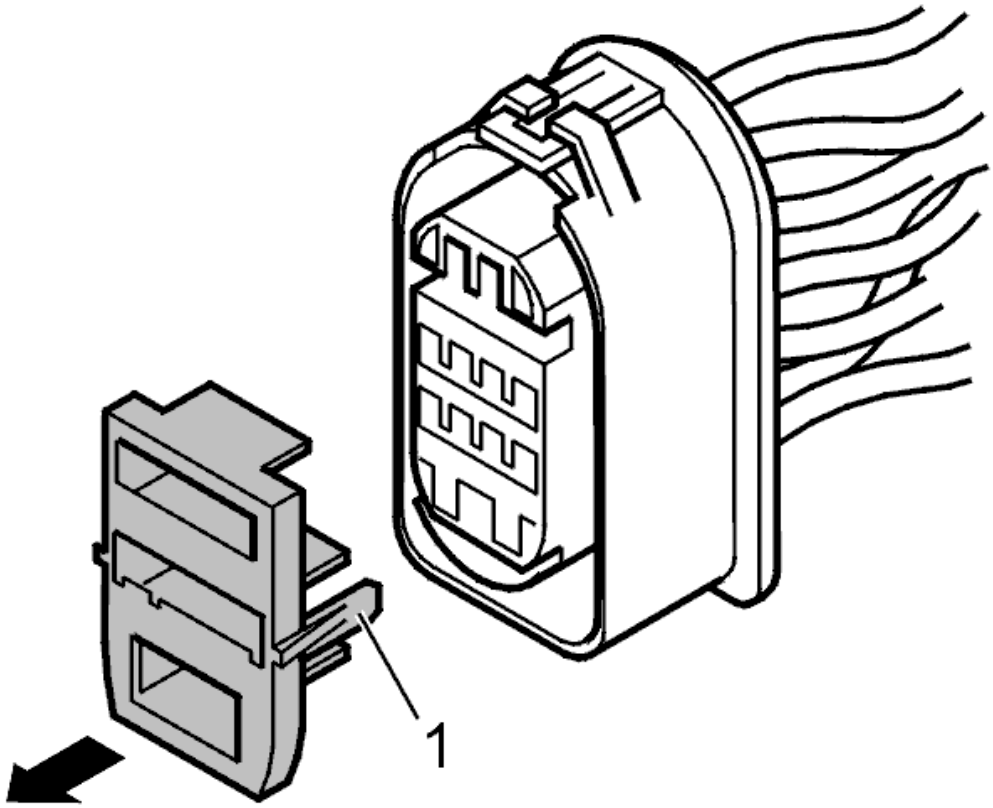

Fig. 24: Connector Secondary Lock (1 Of 2)
Courtesy of VOLVO CARS CORPORATION

Angle out the catches on both sides.

Pull out the secondary lock.

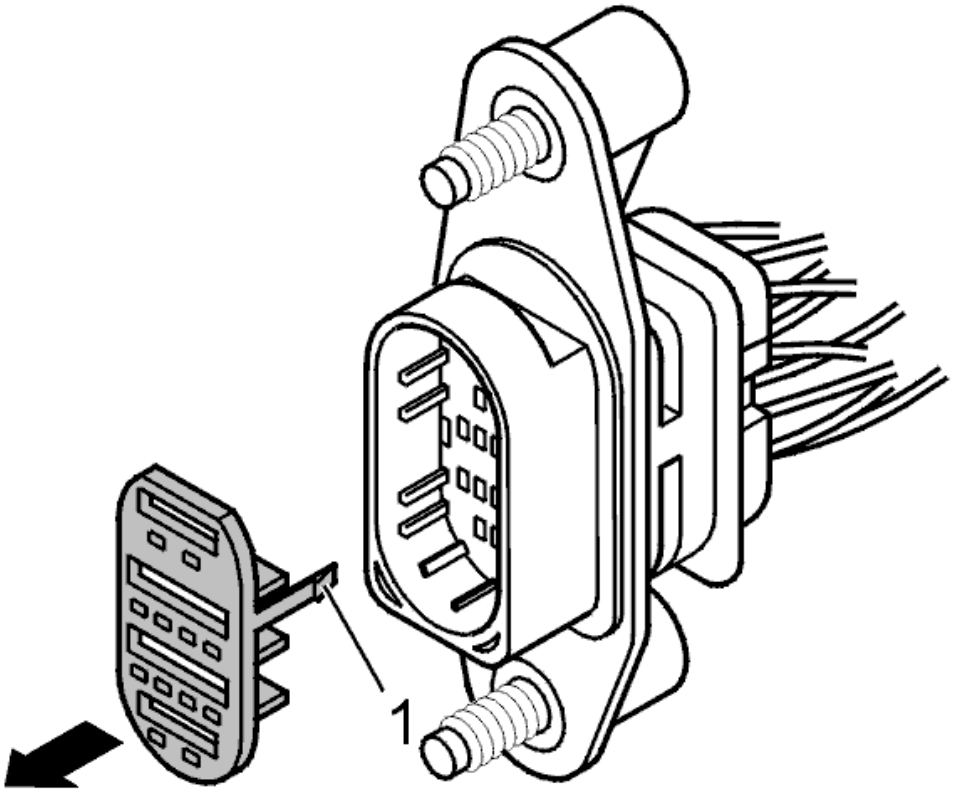

Fig. 25: Connector Secondary Lock (2 Of 2)
Courtesy of VOLVO CARS CORPORATION

DISASSEMBLING PRIMARY LOCK

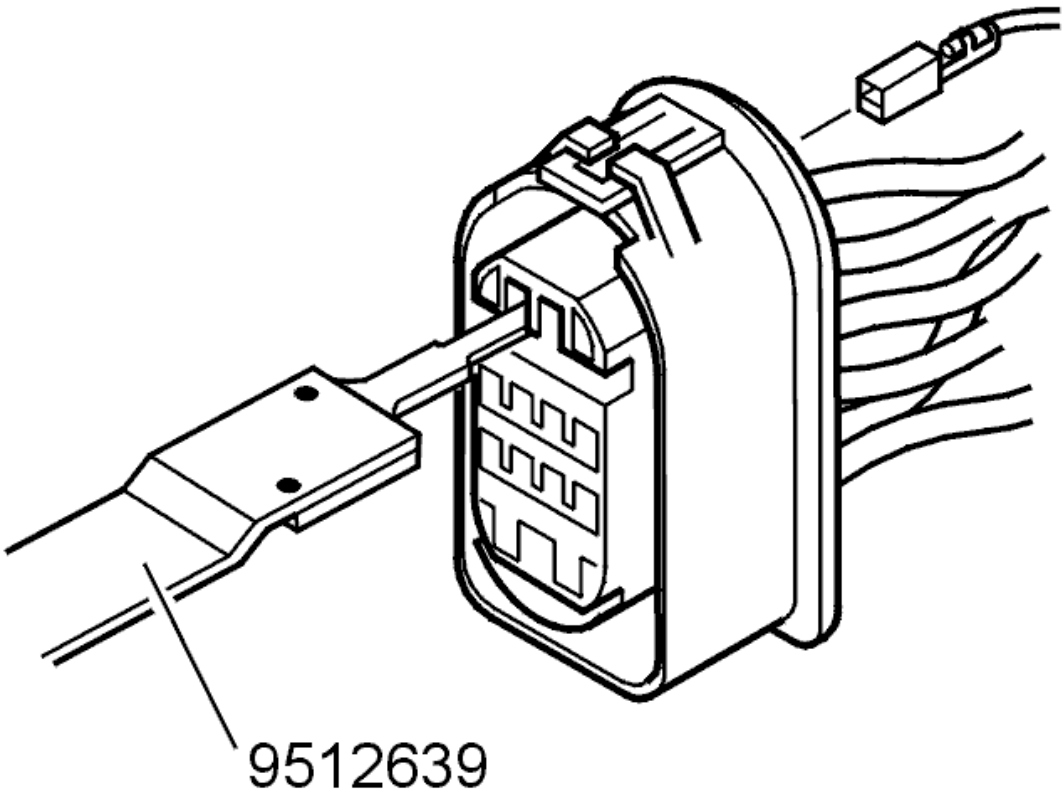

Fig. 26: Identifying Tool 951 2639 At Primary Lock
Courtesy of VOLVO CARS CORPORATION

Use tool: see **9512632** and see **9512639** to remove the primary lock, see illustration.

At the same time pull the cable carefully backwards.

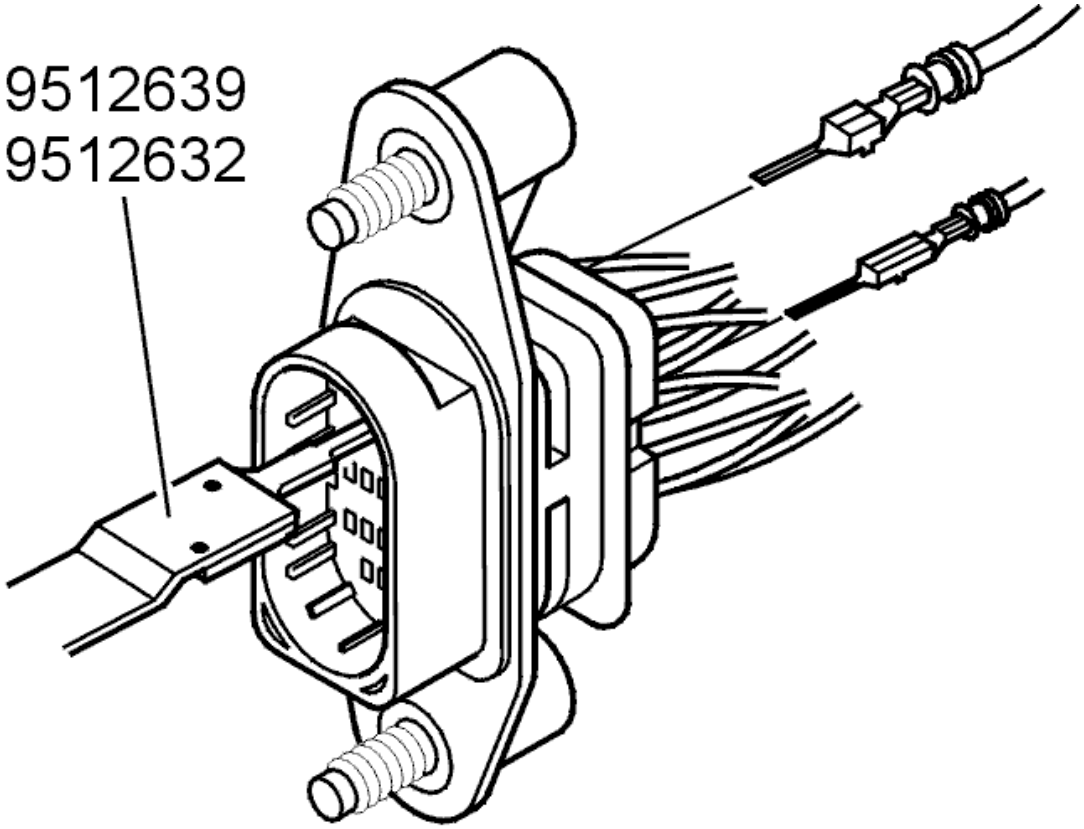

Fig. 27: Identifying Tools 951 2632, 951 2639 To Remove Primary Lock (2 Of 2)
Courtesy of VOLVO CARS CORPORATION

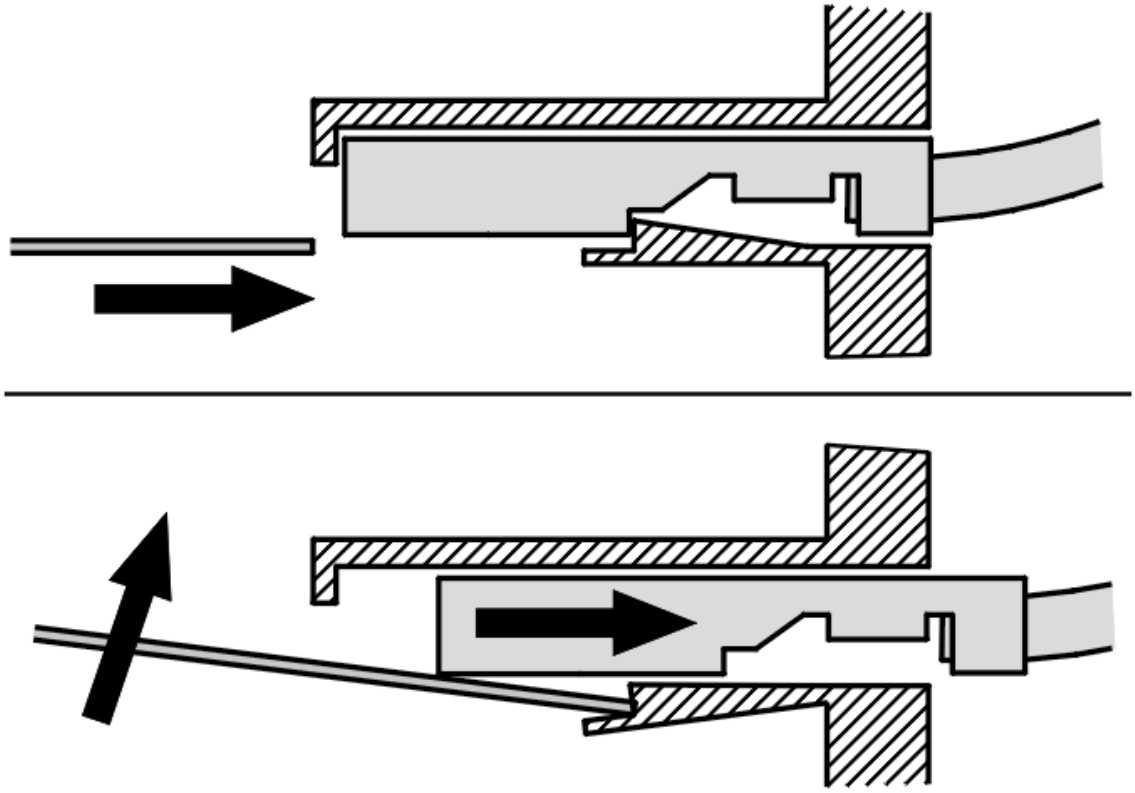

Fig. 28: Identifying Cable Pulled Backwards
Courtesy of VOLVO CARS CORPORATION

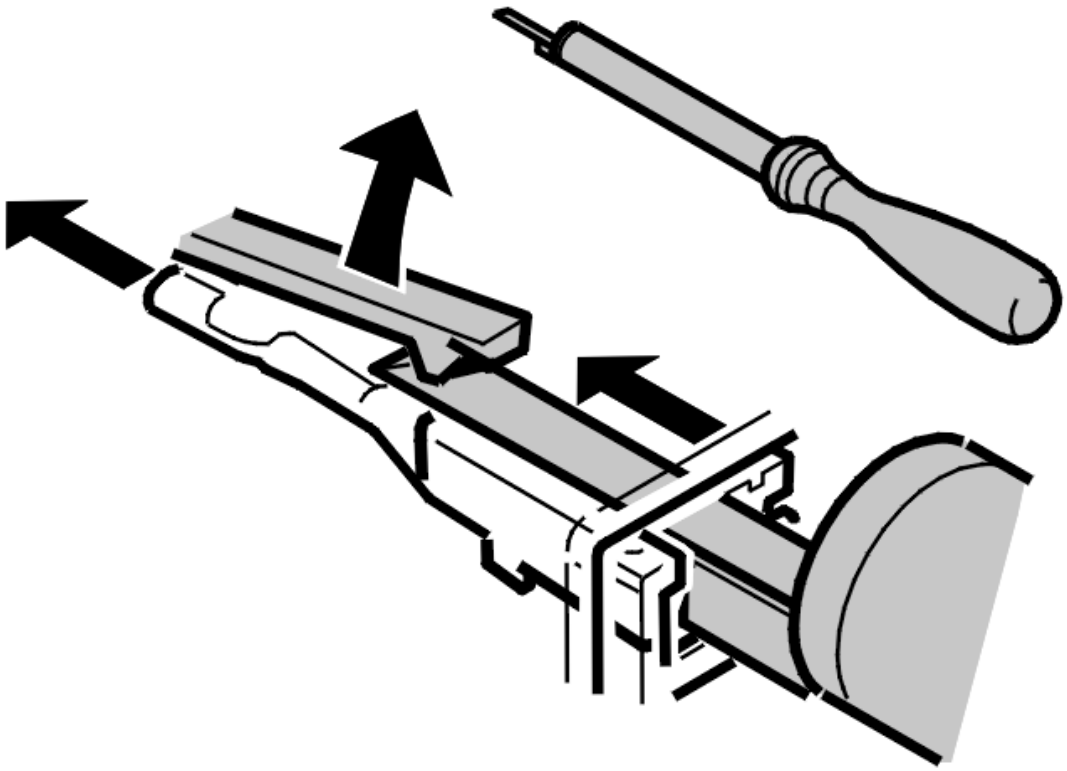

Fig. 29: Alternatively Using Tool 951 2852
Courtesy of VOLVO CARS CORPORATION

Alternatively use tool: see **9512852** , see illustration.

NOTE: Tool see 9512852 can only be used for socket housings.

ASSEMBLY

ASSEMBLING PRIMARY LOCK

Check that the cable terminal is undamaged.

Press the cable terminal into the housing.

Check that the cable terminal is properly locked by pulling carefully on the cable.

ASSEMBLING SECONDARY LOCK

Press the secondary lock into place.

CONNECTOR, REPLACING (VERSION 1)

Special tools:

see **9512632**

see **9512633**

see **9512639**

see **9512852**

see **9512811**

NOTE: **The illustrations in this service information are used for different model years and/or models. Some variation may occur. However, the essential information in the illustrations is always correct.**

DISASSEMBLY

DISASSEMBLING SECONDARY LOCK

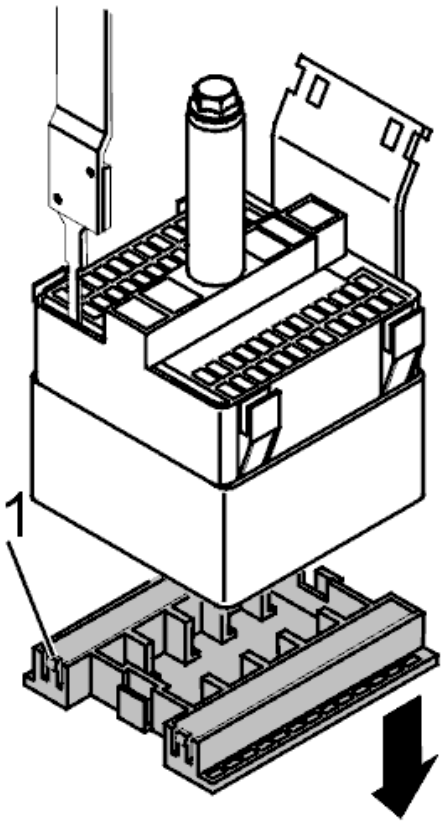

Fig. 30: Identifying Secondary Lock Pressed Out From Cable Side Using Tool 951 2811 (1 Of 2)
Courtesy of VOLVO CARS CORPORATION

Press the secondary lock out from the cable side, for example using tool: see **9512811** or an electrician's screwdriver, as shown in the illustration.

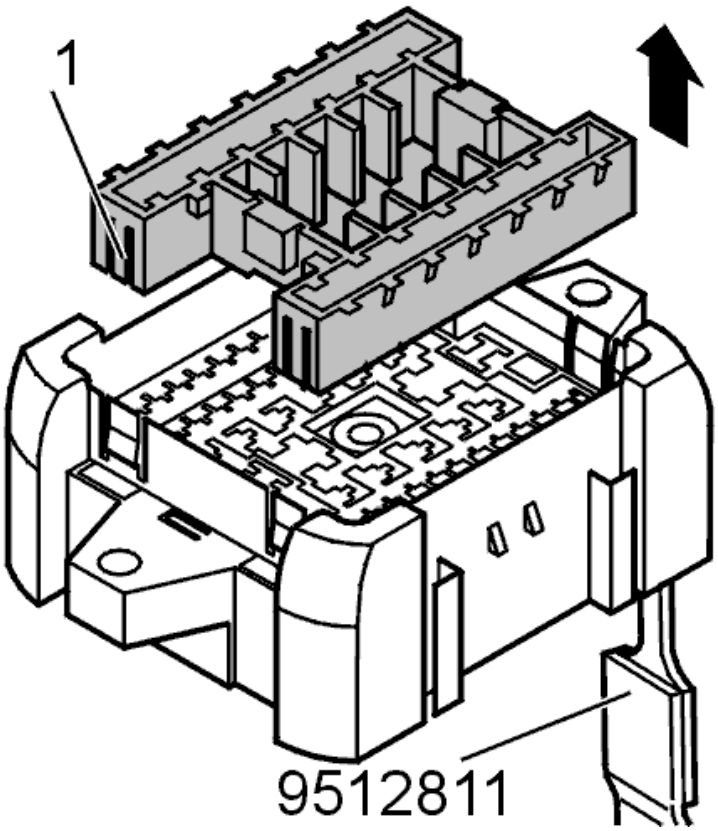

Fig. 31: Identifying Secondary Lock Pressed Out From Cable Side Using Tool 951 2811 (2 Of 2)
Courtesy of VOLVO CARS CORPORATION

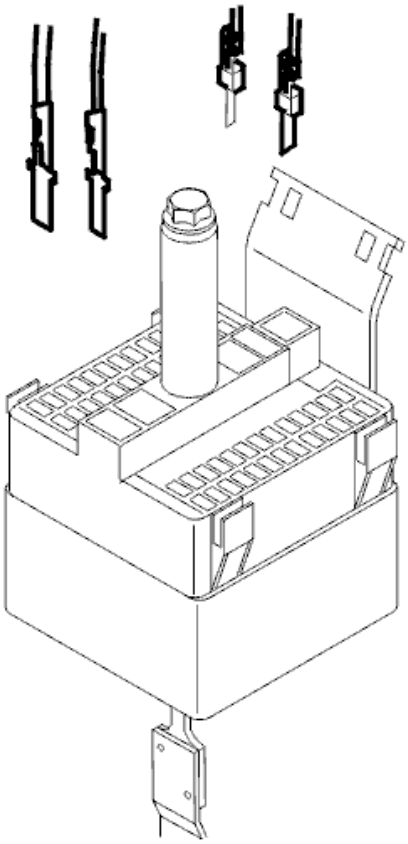

Fig. 32: Identifying Tools 951 2632, 951 2633, 951 2639 To Remove Primary Lock (1 Of 2)
Courtesy of VOLVO CARS CORPORATION

DISASSEMBLING PRIMARY LOCK

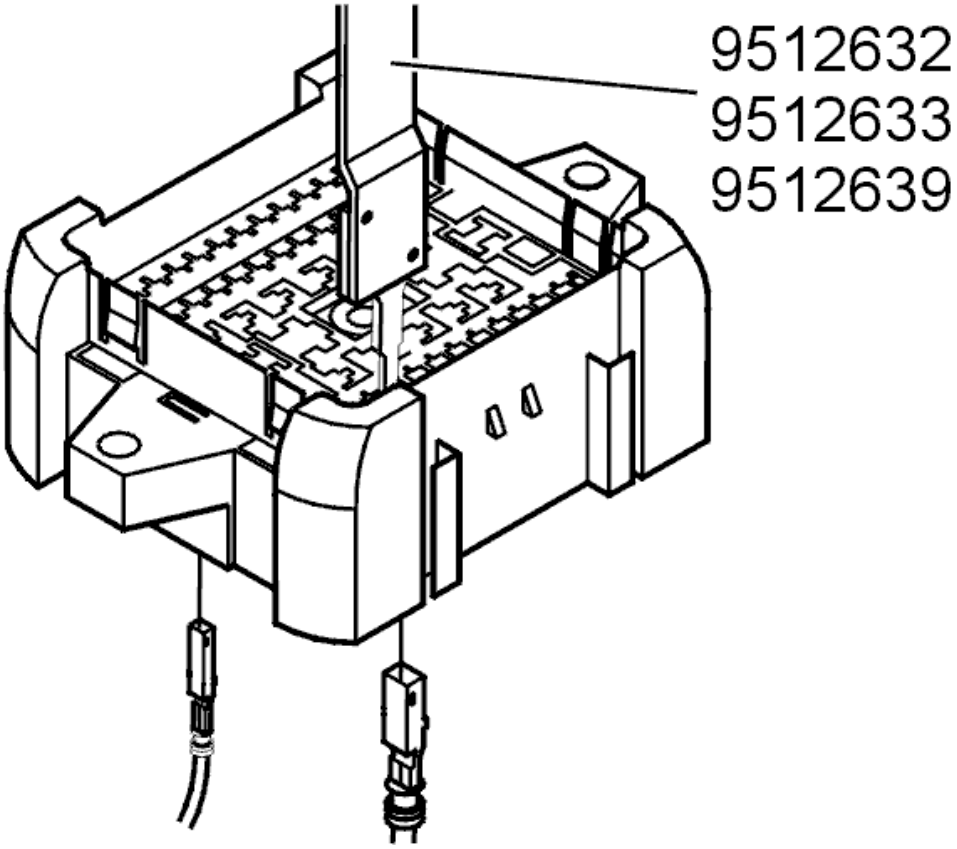

Fig. 33: Identifying Tools 951 2632, 951 2633, 951 2639 To Remove Primary Lock (2 Of 2)
Courtesy of VOLVO CARS CORPORATION

Use tool: see **9512632** , see **9512633** and see **9512639** to remove the primary lock, as shown in the illustration.

At the same time pull the cable carefully backwards.

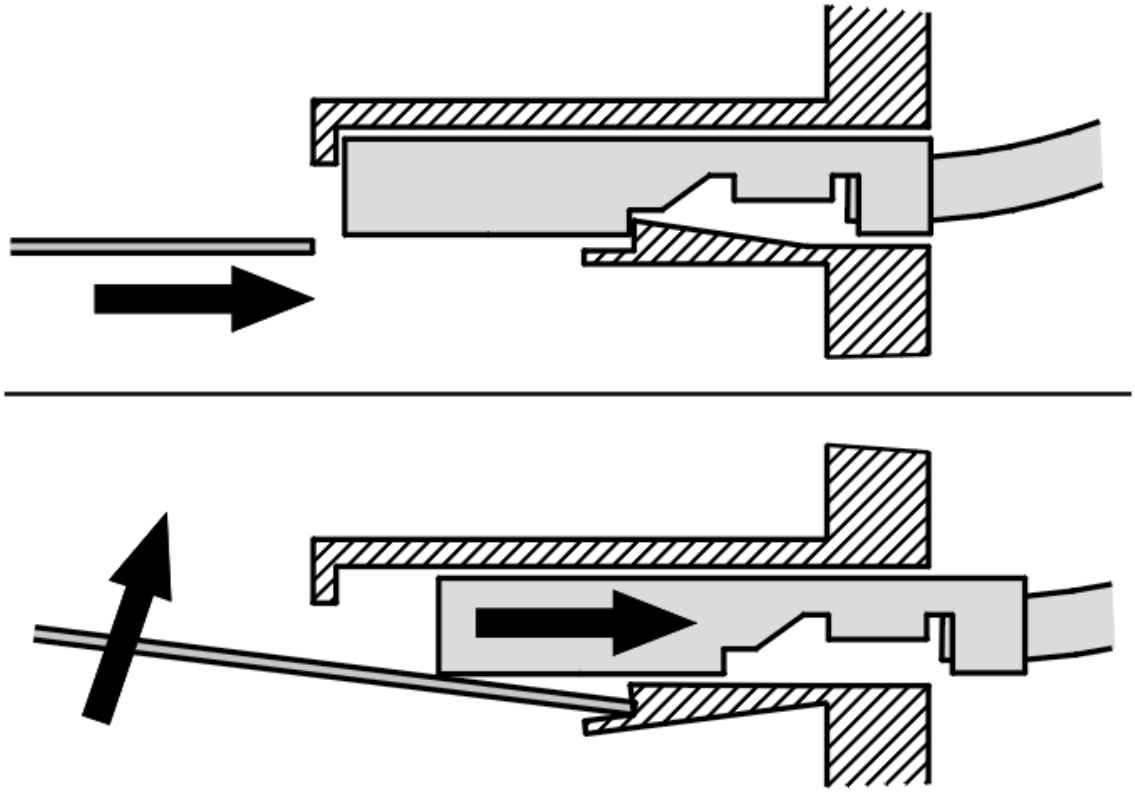

Fig. 34: Identifying Cable Pulled Backwards
Courtesy of VOLVO CARS CORPORATION

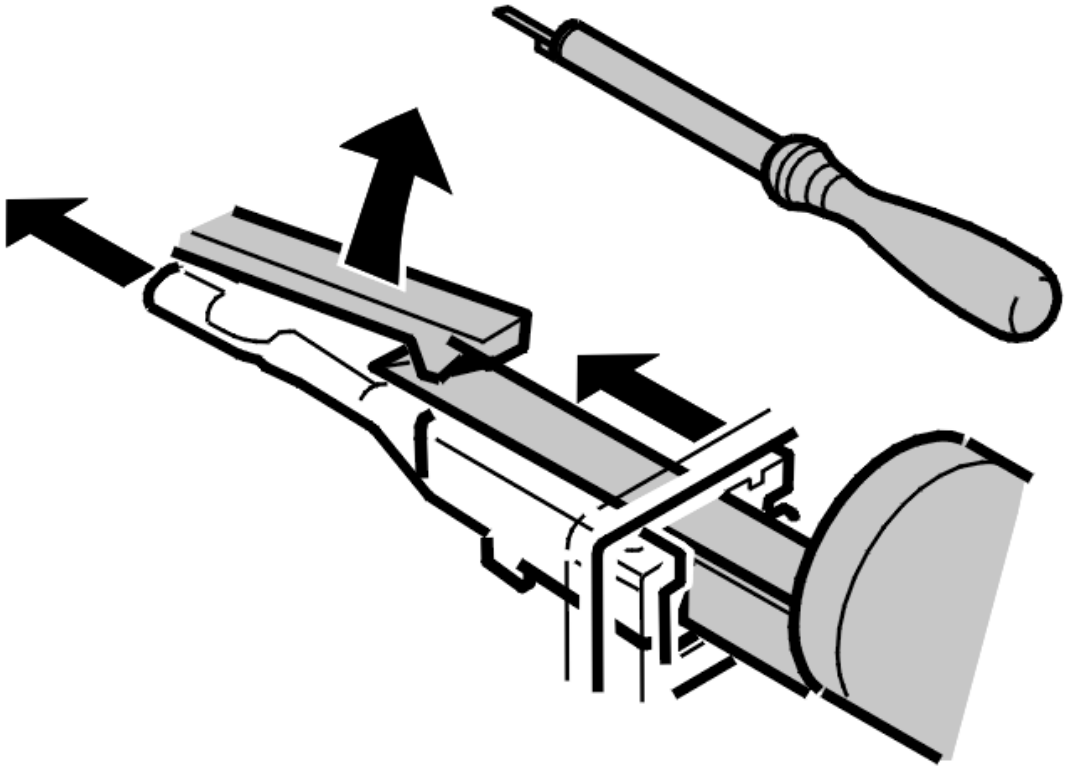

Fig. 35: Alternatively Using Tool 951 2852
Courtesy of VOLVO CARS CORPORATION

Alternatively use tool: see **9512852** as shown in the illustration

NOTE: Tools: see 9512852 can only be used for socket housing.

ASSEMBLY

ASSEMBLING PRIMARY LOCK

Check that the cable terminal is undamaged.

Press the cable terminal into the housing.

Check that the cable terminal is properly locked by pulling carefully on the cable.

ASSEMBLING SECONDARY LOCK

Press the secondary lock into place.

CONNECTOR, REPLACING (VERSION 2)

Special tools:

see **9512639**

see **9512637**

see **9512812**

see **9512633**

NOTE: The illustrations in this service information are used for different model years and/or models. Some variation may occur. However, the essential information in the illustrations is always correct.

DISASSEMBLY

DISASSEMBLING SECONDARY LOCK

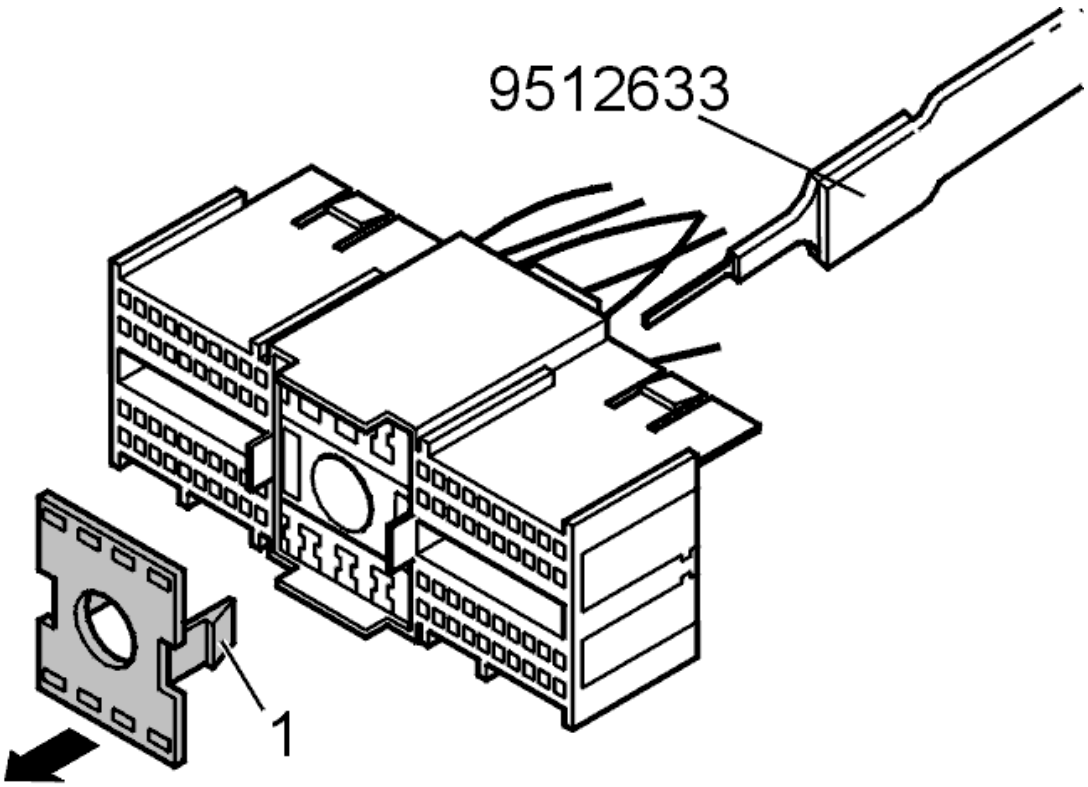

Fig. 36: Identifying Secondary Lock Pressed Out From Cable Side Using Tool 951 2633
Courtesy of VOLVO CARS CORPORATION

Press the secondary lock out from the cable side, for example using tool: see **9512633** or an electrician's screwdriver, as shown in the illustration.

DISASSEMBLING PRIMARY LOCK

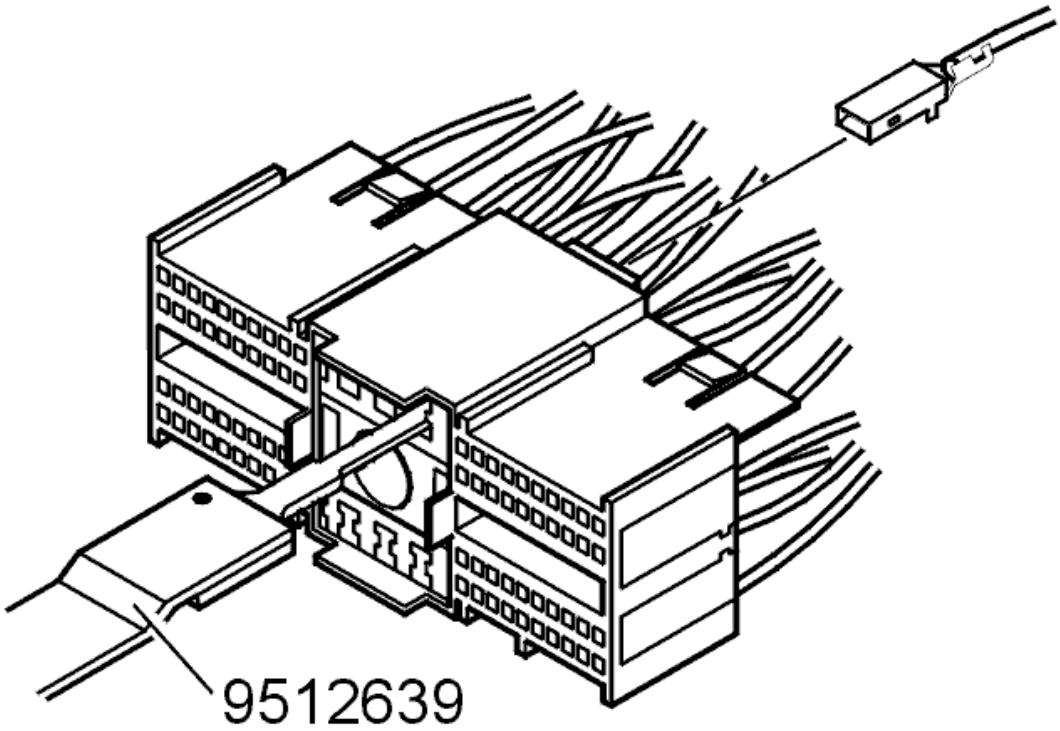

Fig. 37: Identifying Tool 951 2639 To Remove Center Cable Terminals
Courtesy of VOLVO CARS CORPORATION

To remove the center cable terminals, use tool: see **9512639** , see the illustration.

At the same time pull the cable carefully backwards.

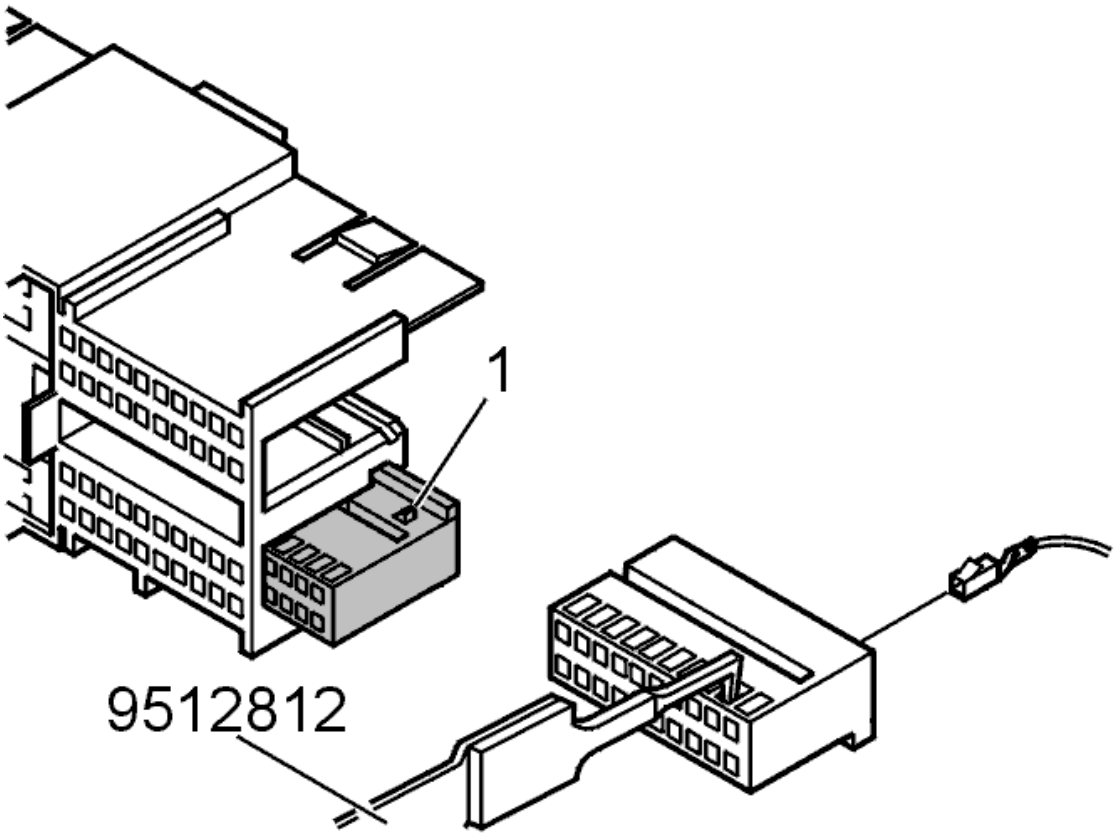

Fig. 38: Disconnecting Cable Terminals Using Tool 951 2812 Or 951 2637
Courtesy of VOLVO CARS CORPORATION

Release the inner housing section on the socket housing by lifting the sleeve beside the catch and pulling the housing section outwards.

Use tool: see **9512812** or see **9512637** . See the illustration.

At the same time pull the cable carefully backwards.

ASSEMBLY

ASSEMBLING PRIMARY LOCK

Check that the cable terminal is undamaged.

Press the cable terminal into the housing.

Check that the cable terminal is properly locked by pulling carefully on the cable.

ASSEMBLING SECONDARY LOCK

Slide the receptacle housing into the connector.

Press the secondary lock into place.

FUSEBOX, PASSENGER COMPARTMENT, REPLACING

REMOVAL

FUSE

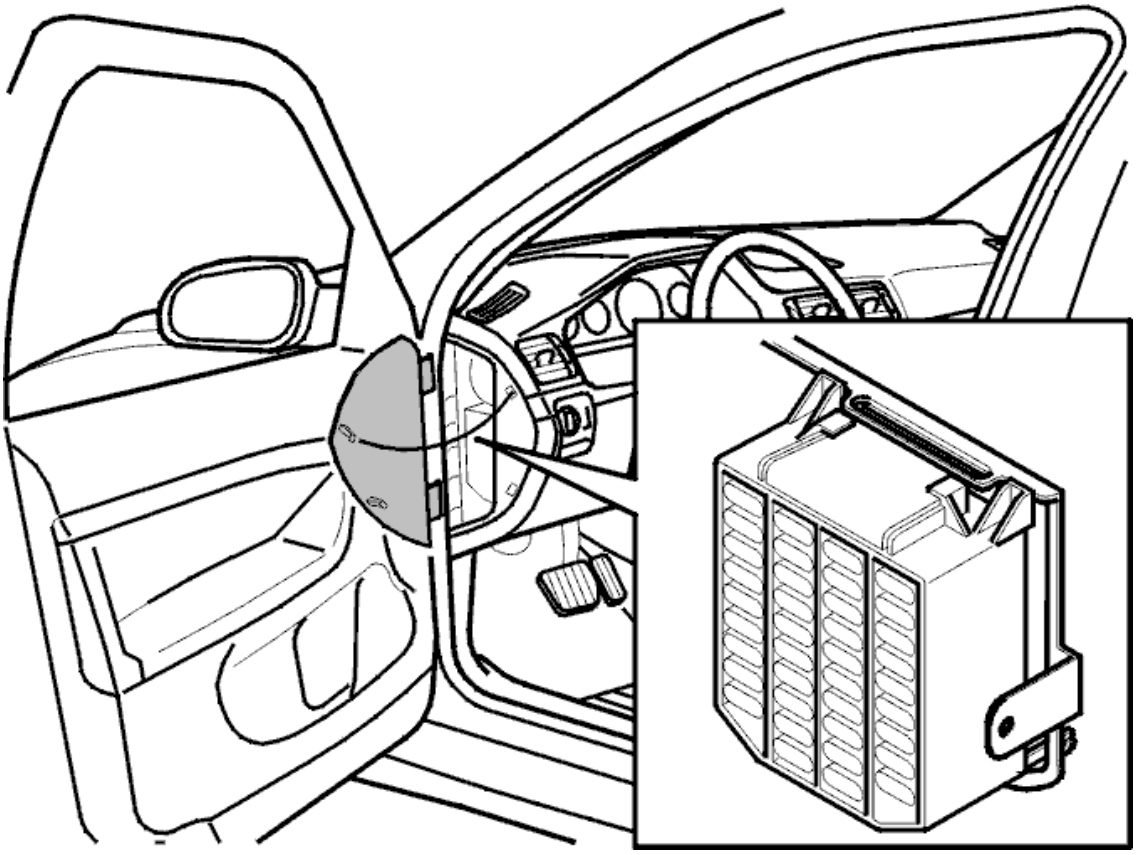

Fig. 39: Identifying Passenger Compartment Fusebox
Courtesy of VOLVO CARS CORPORATION

- Remove the cover
- Remove the relay / fuse.

FUSE LOCATION, 11C

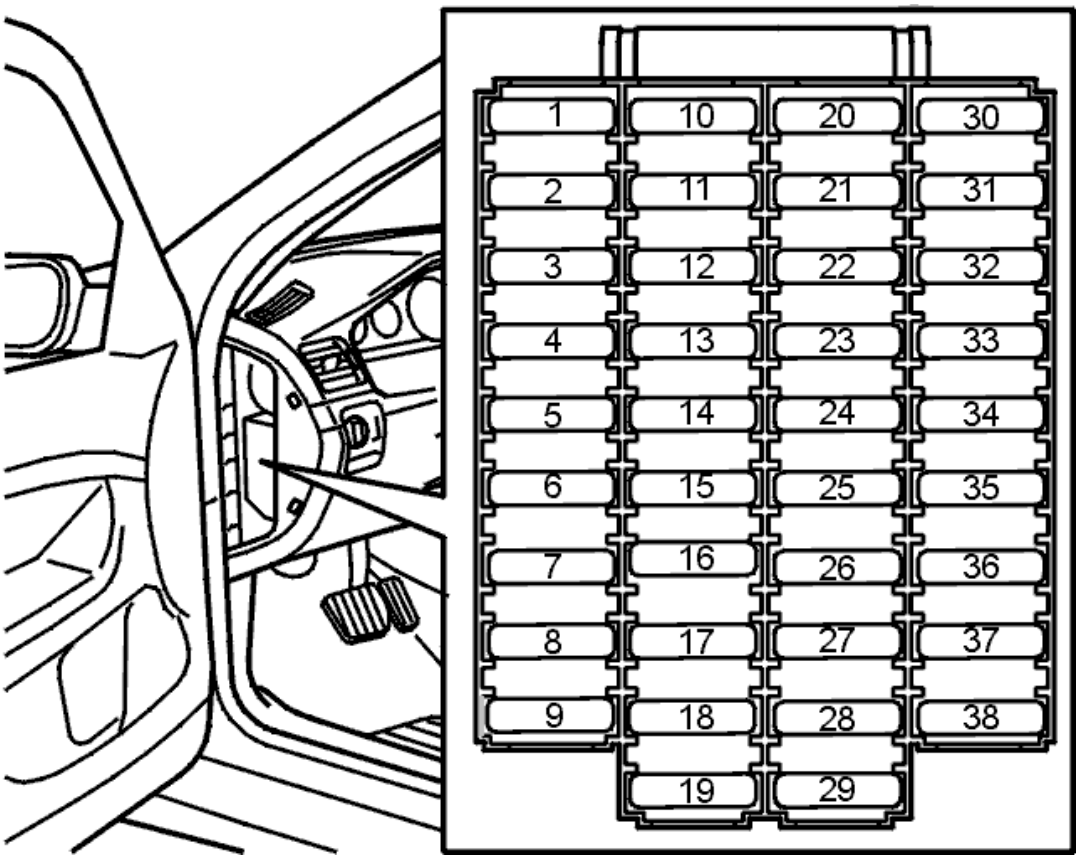

Fig. 40: Fuse Holder (Passenger Compartment)
Courtesy of VOLVO CARS CORPORATION

For the location of the fuses, see:

1. Decals at both the integrated relay box and fusebox in the car
2. Pocket data book
3. Owner's Manual.

FUSEBOX

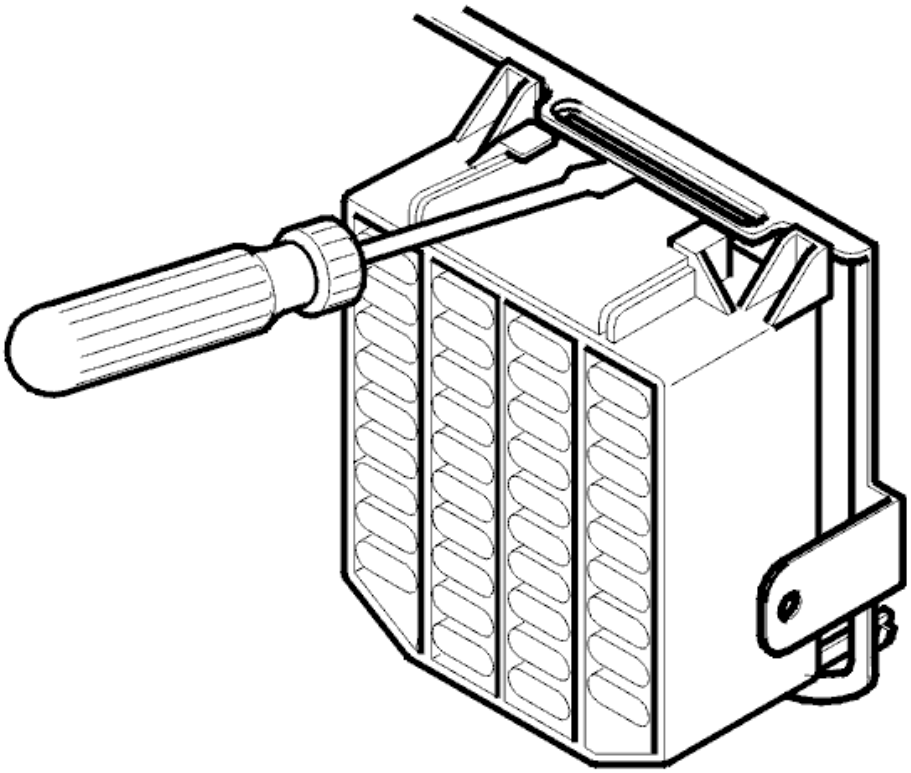

Fig. 41: Pressing Up Fusebox Catch Using Screwdriver
Courtesy of VOLVO CARS CORPORATION

- Remove the cover
- Remove the fusebox by pressing up the catch using a screwdriver and releasing the upper edge.

INSTALLATION

FUSEBOX

- Insert the lower catch. Press the fusebox into place
- Install sun roof.

FUSE

In reverse order.

OTHER INFORMATION

For the location of other relay and fuse boxes, see **RELAYS, FUSE BOXES AND WIRING**

INTEGRATED RELAY / FUSEBOX IN ENGINE COMPARTMENT (WITH 21 FUSES)

REMOVAL

LOCATION OF FUSE, 11B

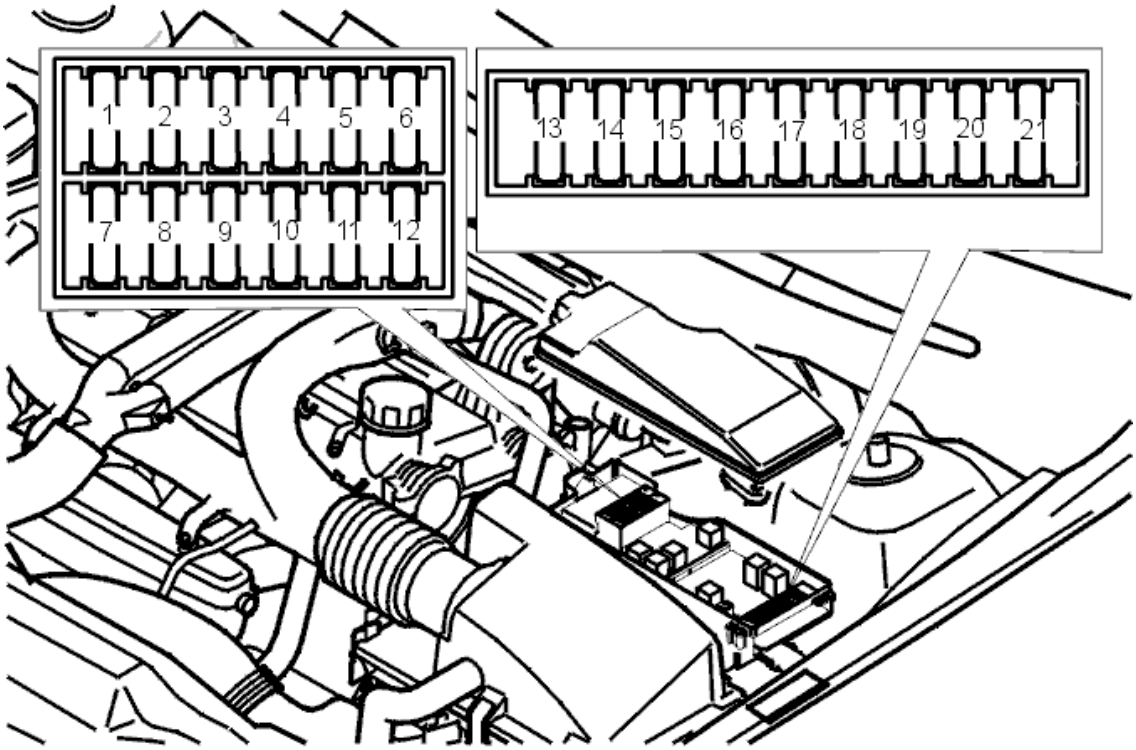

Fig. 42: Identifying Fuses In Engine Compartment Integrated Relay/Fusebox
Courtesy of VOLVO CARS CORPORATION

For the location of the fuses, see:

1. Decals at both the integrated relay box and fusebox in the car
2. Pocket data book
3. Owner's Manual.

RELAY LOCATION

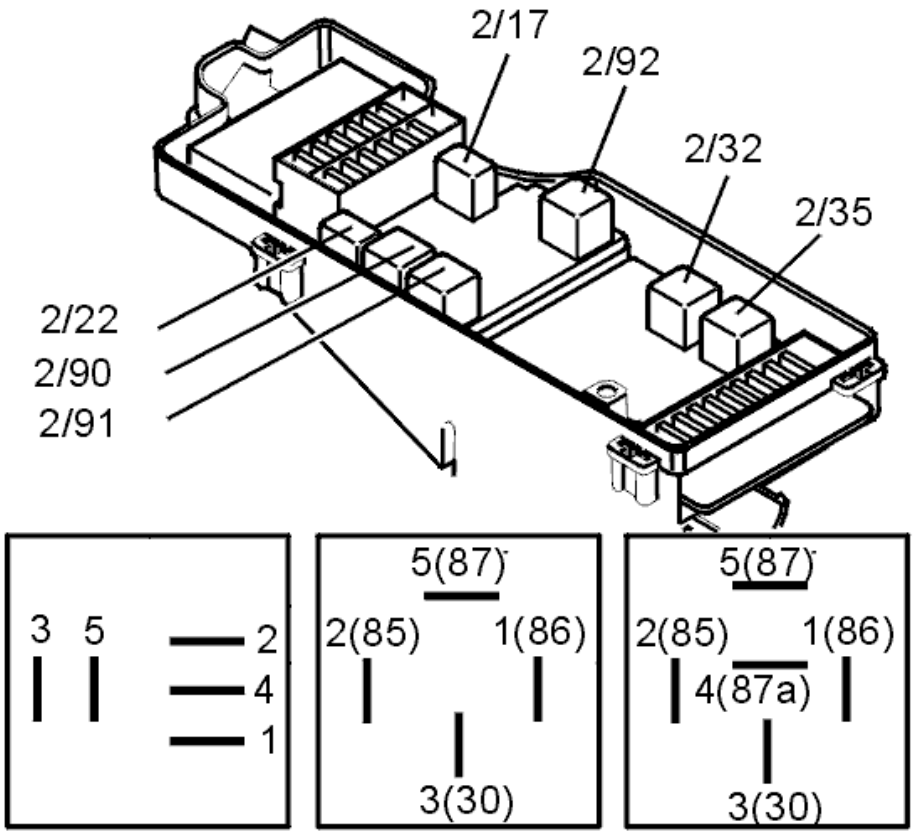

Fig. 43: Identifying Relay Location
Courtesy of VOLVO CARS CORPORATION

For the location of the relays, see:

1. Decals at both the integrated relay box and fusebox in the car
2. Pocket data book
3. Owner's Manual.

MAIN FUSE

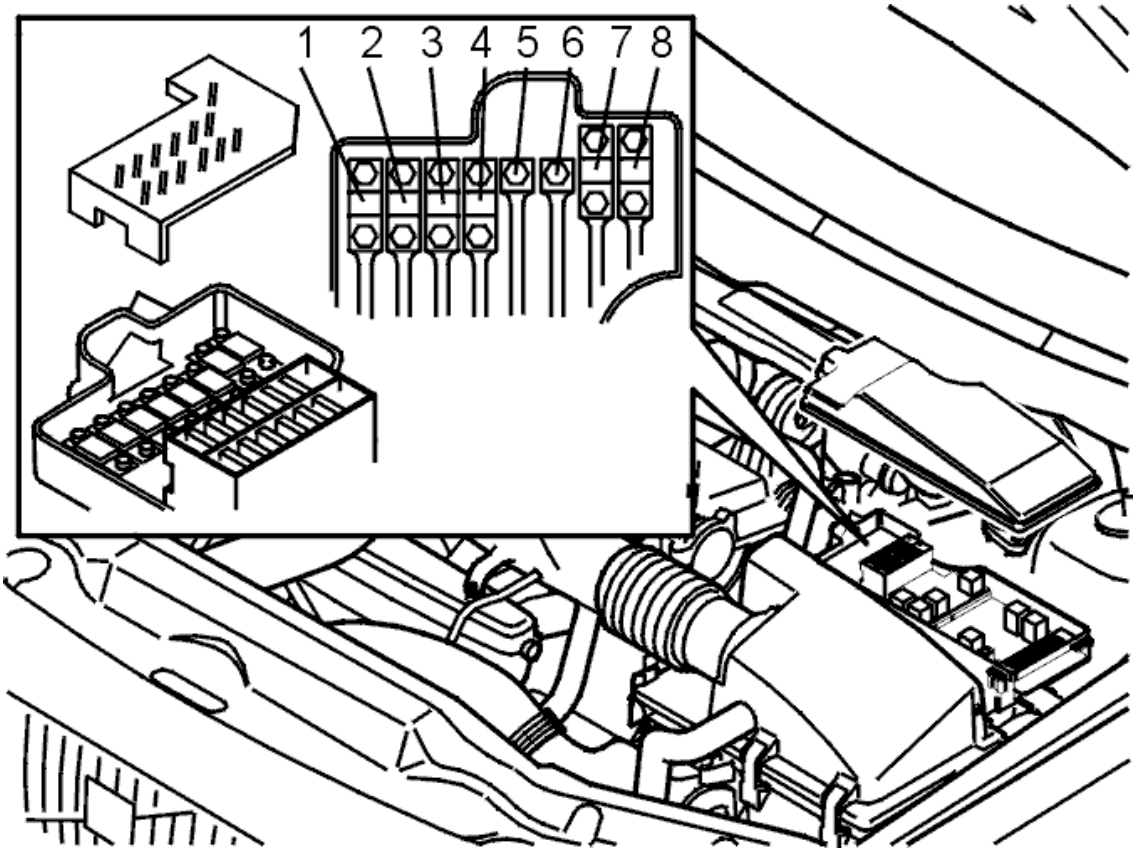

Fig. 44: Identifying Main Fuse
Courtesy of VOLVO CARS CORPORATION

Replacement

- Remove the cover
- Remove the nut
- Remove the fuse.

Main fuse location, 11A

1. Decals at respective integrated relay/fusebox in the car,
2. Pocket data book,
3. Owner's Manual.

INSTALLATION

NOTE: For tightening torques, see: TIGHTENING TORQUE .

FUSE AND RELAY

In reverse order.

OTHER INFORMATION

For the location of other relay and fuse boxes, see **RELAYS, FUSE BOXES AND WIRING** .

INTEGRATED RELAY / FUSEBOX IN ENGINE COMPARTMENT (WITH 24 FUSES)

EXPOSING

- Disconnect the battery lead. See **BATTERY, REPLACING**
- Disconnect the air cleaner (ACL) housing.

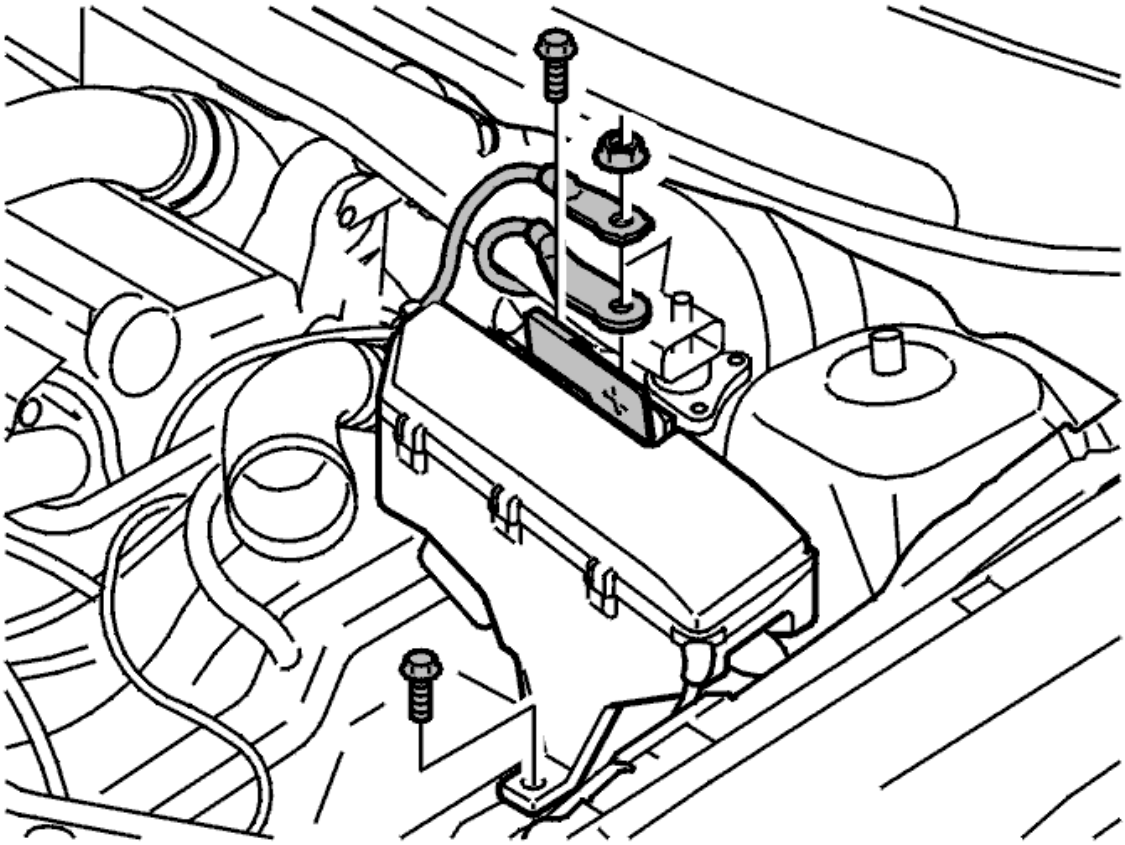

Fig. 45: Identifying Battery Leads, Screws And Nut
Courtesy of VOLVO CARS CORPORATION

- Remove the nut for the battery leads. Disconnect the battery leads
- Remove the screws on the left and right sides of the electrical box.

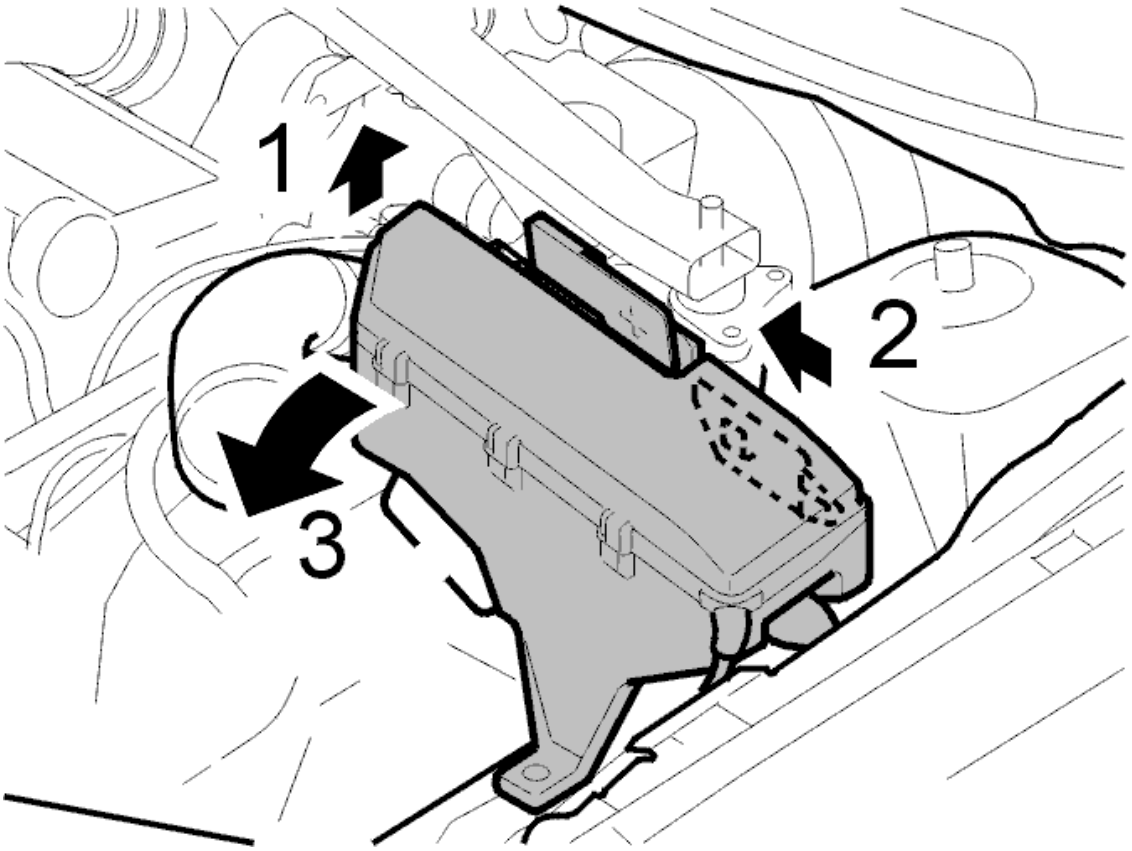

Fig. 46: Disconnecting Electrical Box From Spring Strut Housing
Courtesy of VOLVO CARS CORPORATION

- Disconnect the electrical box from the spring strut housing by pressing it in towards the engine compartment.

REMOVAL

LOCATION OF FUSE, 11B

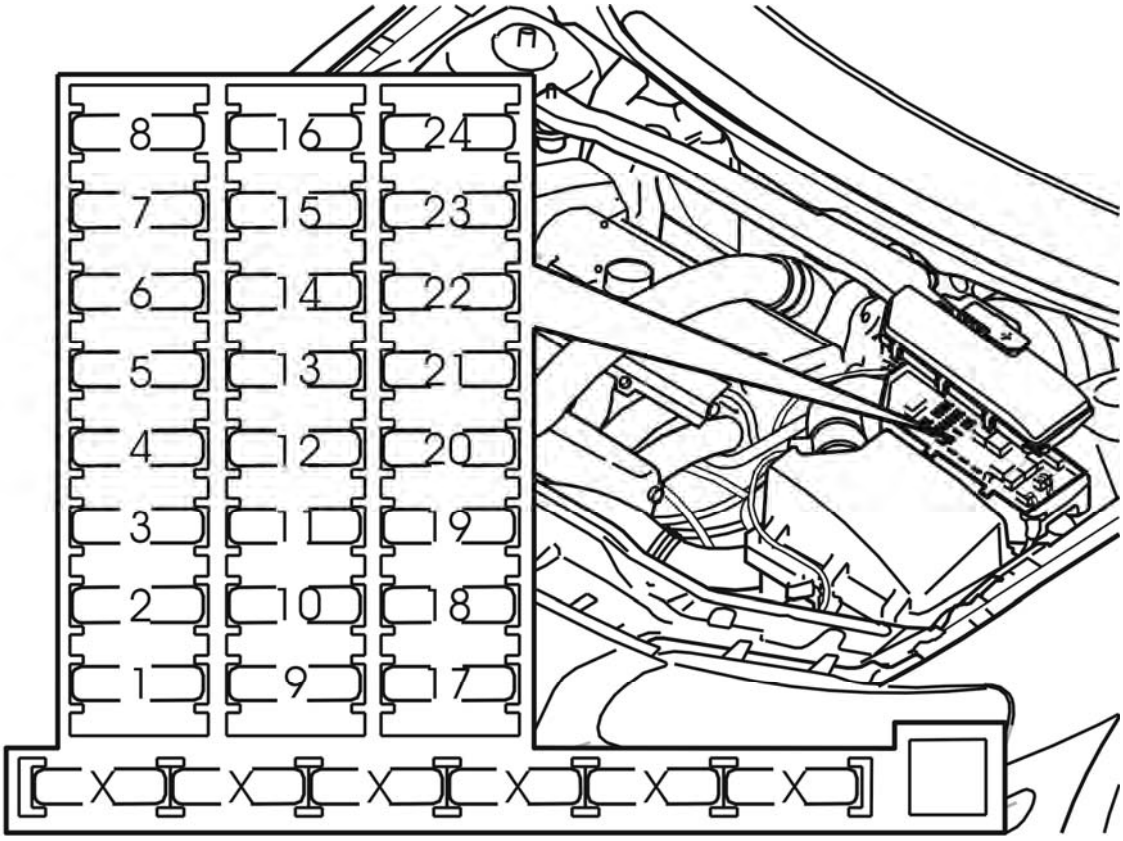

Fig. 47: Identifying Fuse 11B
Courtesy of VOLVO CARS CORPORATION

For the location of the fuses, see:

1. Decals at both the integrated relay box and fusebox in the car
2. Pocket data book
3. Owner's Manual.

RELAY LOCATION

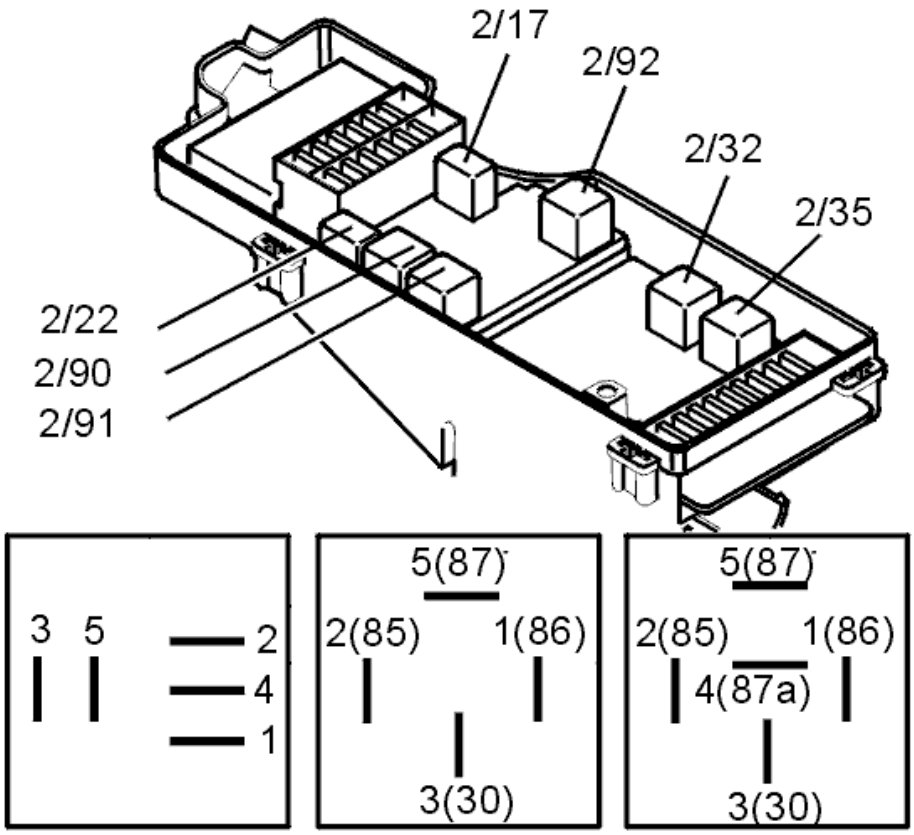

Fig. 48: Identifying Relay Location
Courtesy of VOLVO CARS CORPORATION

For the location of the relays, see:

1. Decals at both the integrated relay box and fusebox in the car
2. Pocket data book
3. Owner's Manual.

RELAY / FUSE

- Ignition off
- Remove the cover from the fusebox
- Remove the relay / fuse.

HOLDER

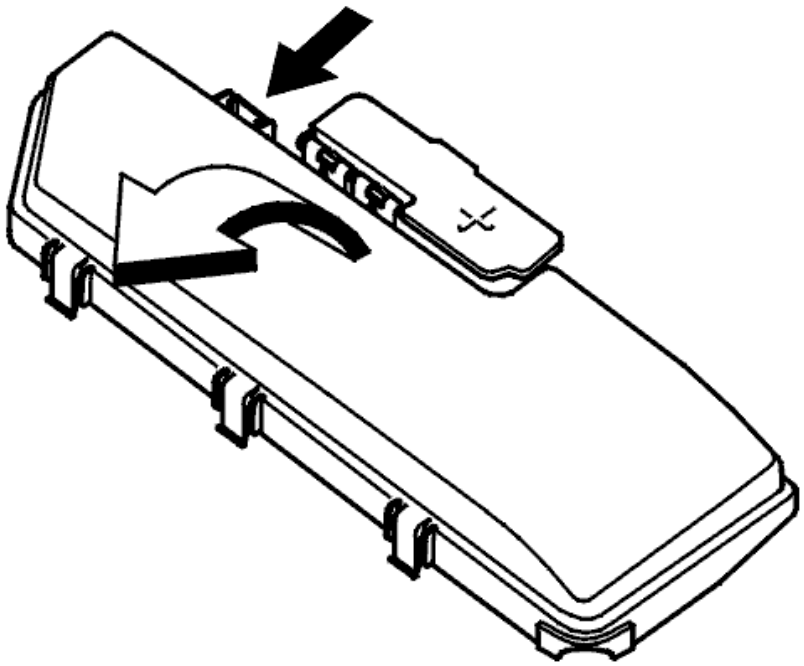

Fig. 49: Identifying Fusebox Cover
Courtesy of VOLVO CARS CORPORATION

- Disconnect the battery lead. See **BATTERY, REPLACING**
- Remove the cover from the fusebox
- Remove the battery leads from the holder
- Remove the screws from the holder.

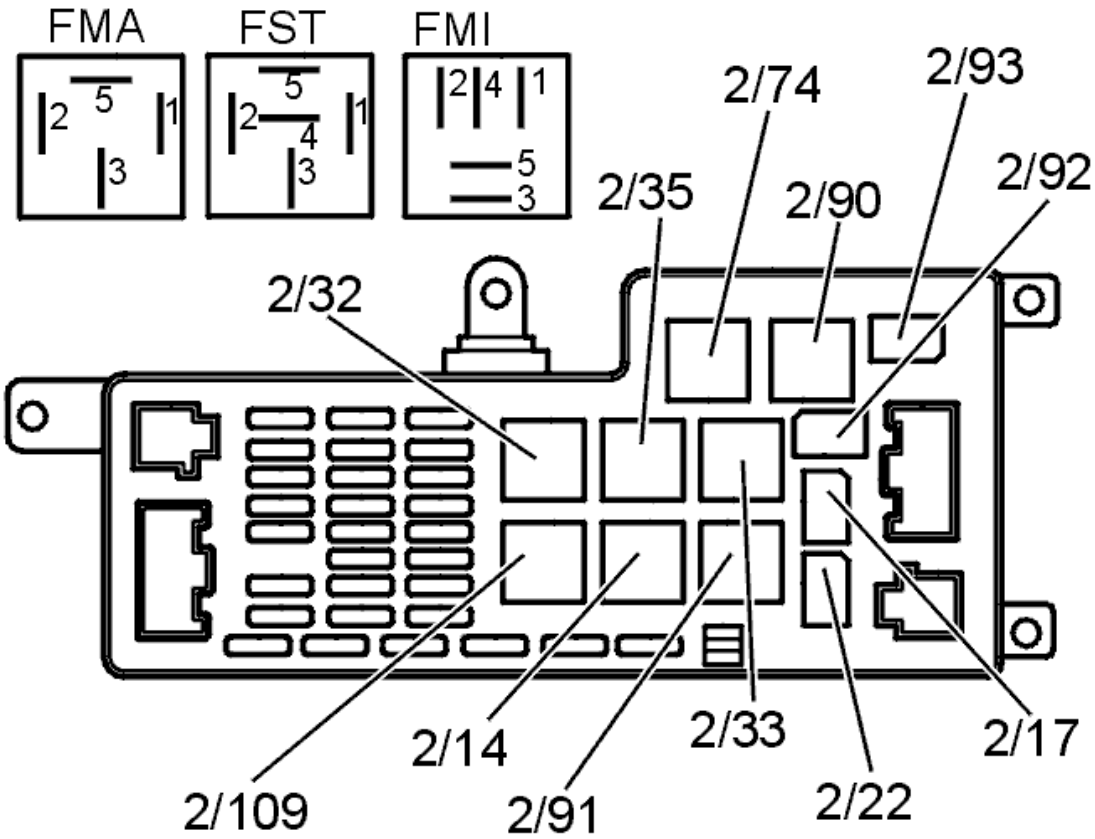

Fig. 50: Identifying Connectors
Courtesy of VOLVO CARS CORPORATION

- Lift up / detach the holder and seals for the cable harnesses
- Release the connectors.

MAIN FUSE

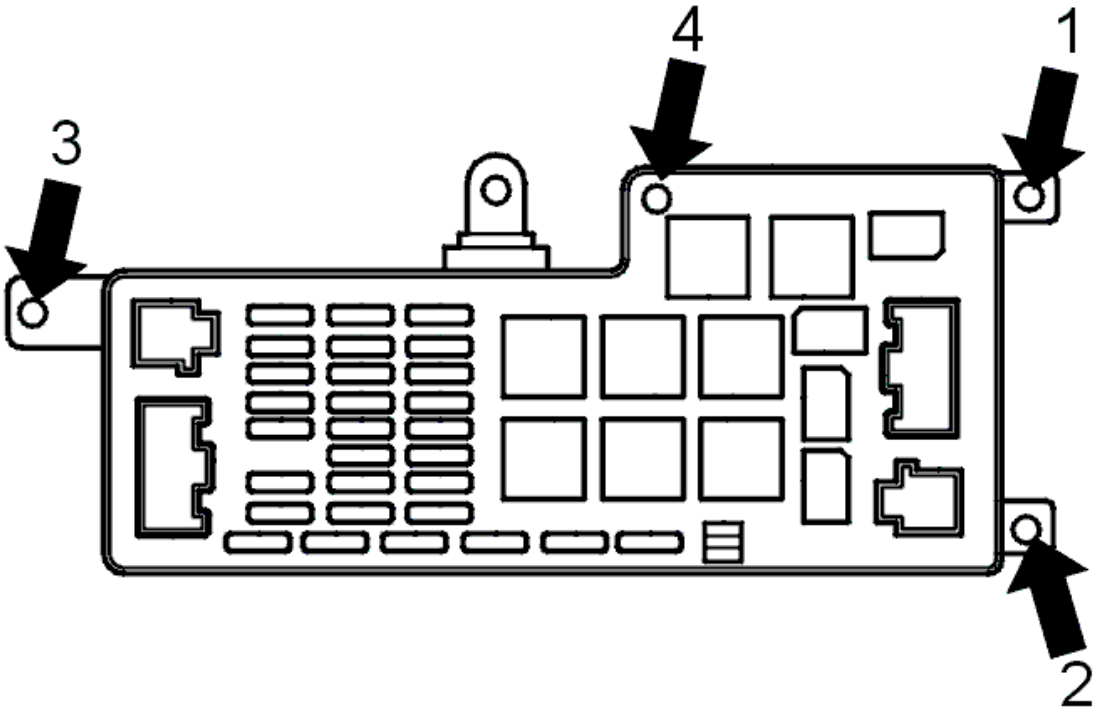

Fig. 51: Identifying Fuse Nuts
Courtesy of VOLVO CARS CORPORATION

- Release the holder. See **HOLDER**.

NOTE: The connectors do not need to be disconnected.

- Remove the nuts for the fuse
- Remove the fuse.

Main fuse location, 11A

1. Decals at respective integrated relay/fusebox in the car,
2. Pocket data book,
3. Owner's Manual.

CAPACITOR

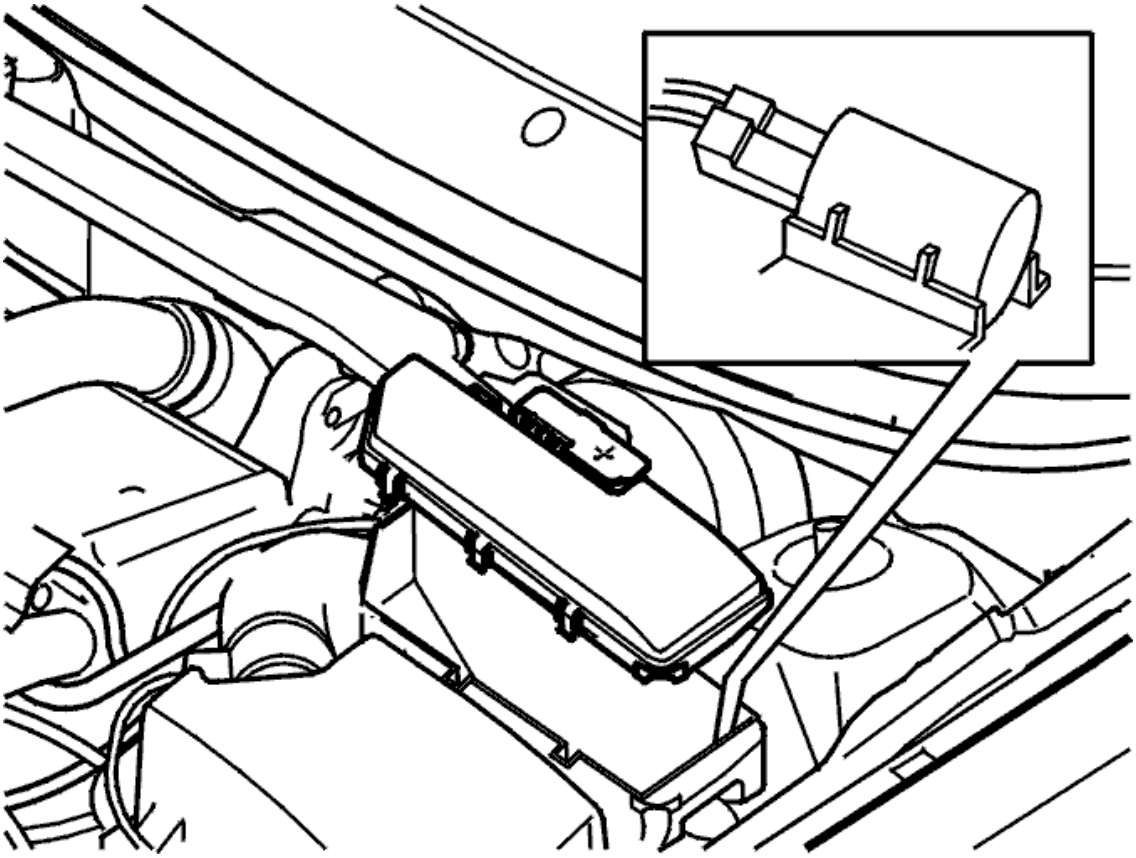

Fig. 52: Disconnecting Capacitor From Lower Section/Mounting Hooks
Courtesy of VOLVO CARS CORPORATION

- Remove the holder from the lower section. See **LOWER SECTION**
- Disconnect the capacitor from the lower section / mounting hooks.

LOWER SECTION

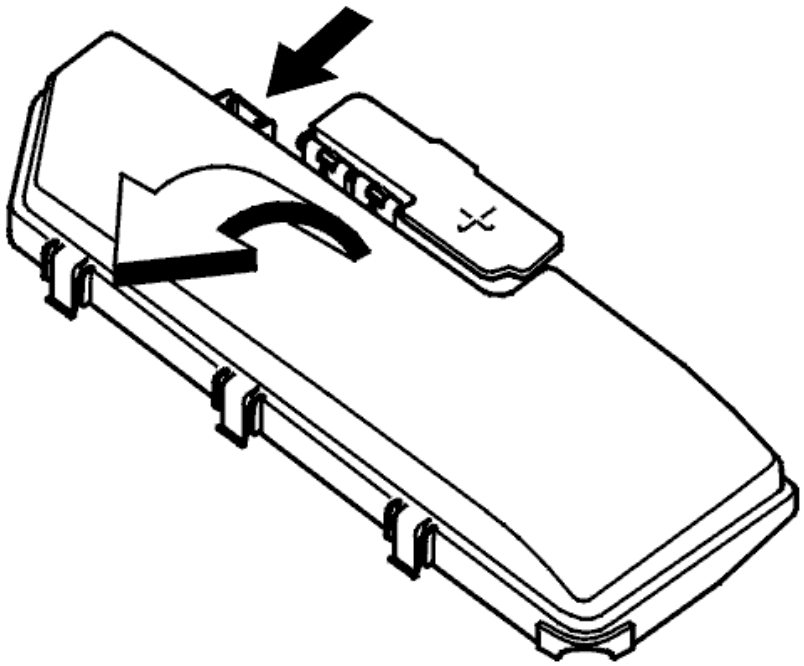

Fig. 53: Identifying Fusebox Cover
Courtesy of VOLVO CARS CORPORATION

- Disconnect the battery lead. See **BATTERY, REPLACING**
- Remove the cover from the fusebox.

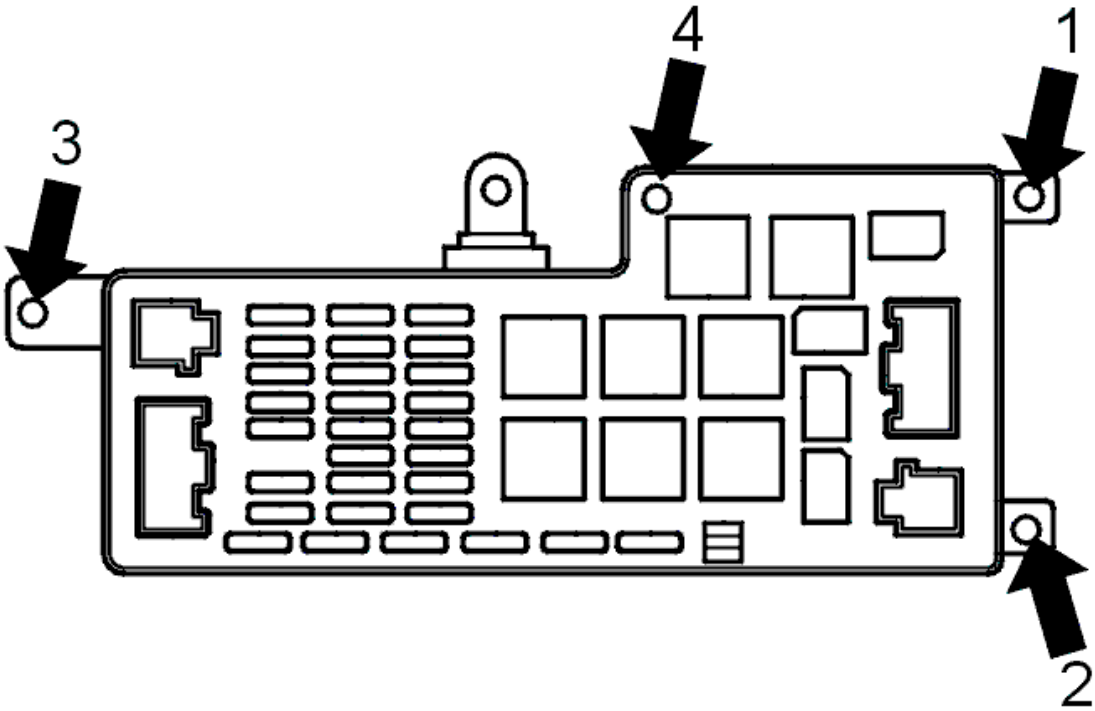

Fig. 54: Identifying Fuse Nuts
Courtesy of VOLVO CARS CORPORATION

- Remove the holder. See **HOLDER**
- Disconnect the air cleaner (ACL) housing
- Cut off the triple clamps for the battery leads.

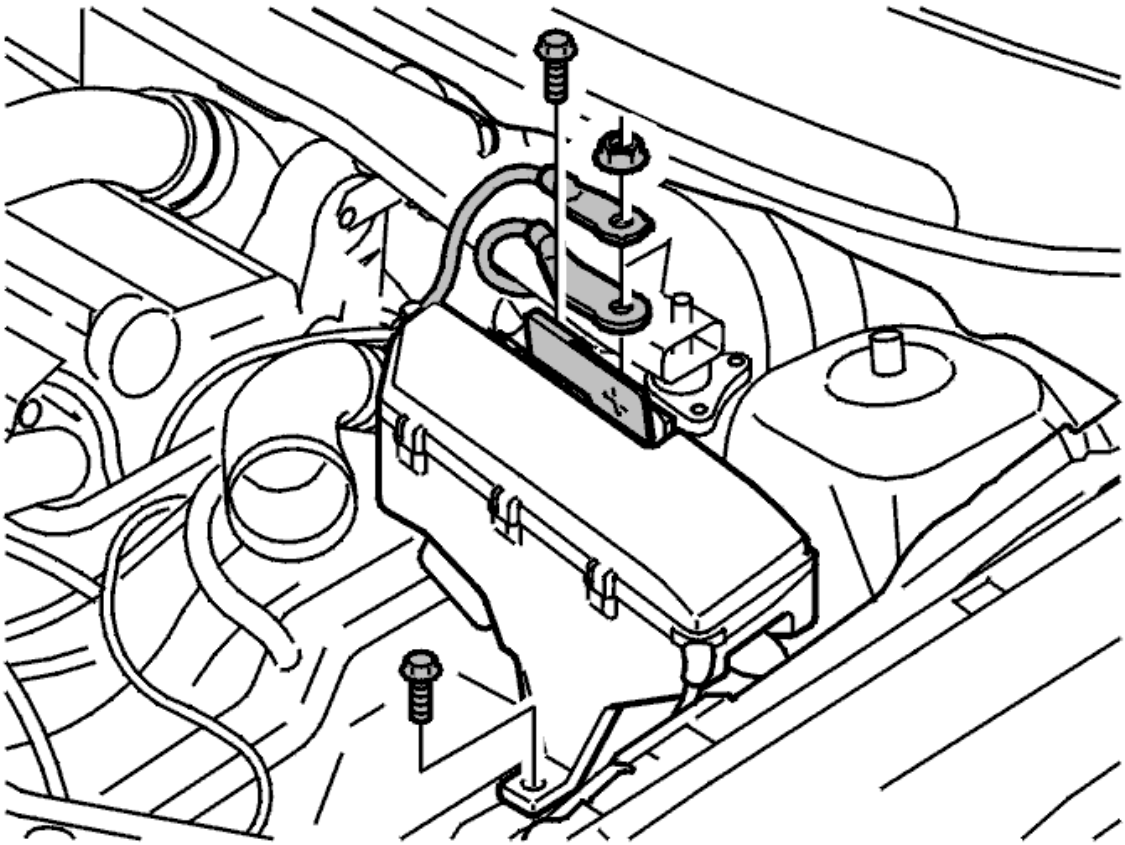

Fig. 55: Identifying Battery Leads, Screws And Nut
Courtesy of VOLVO CARS CORPORATION

- Remove the nut for the battery leads. Disconnect the battery leads
- Remove the screws on the left and right sides of the electrical box
- Disconnect the lower section of the electrical box from the spring strut housing by pressing it in towards the engine compartment.

INSTALLATION

In reverse order.

CAUTION: Ensure that the seals are correctly positioned when installing the holder.

NOTE: Tighten screw 4 in the integrated fuse / relay box. Tighten to 2 Nm.

Tighten to:

Battery lead, integrated relay / fusebox in engine compartment:**25Nm** .

Battery connections:**2.5 Nm** .

MEASURING INSTRUMENTS

Special tools:

see **9511351**

see **9511428**

see **9813195**

BREAKOUT BOX

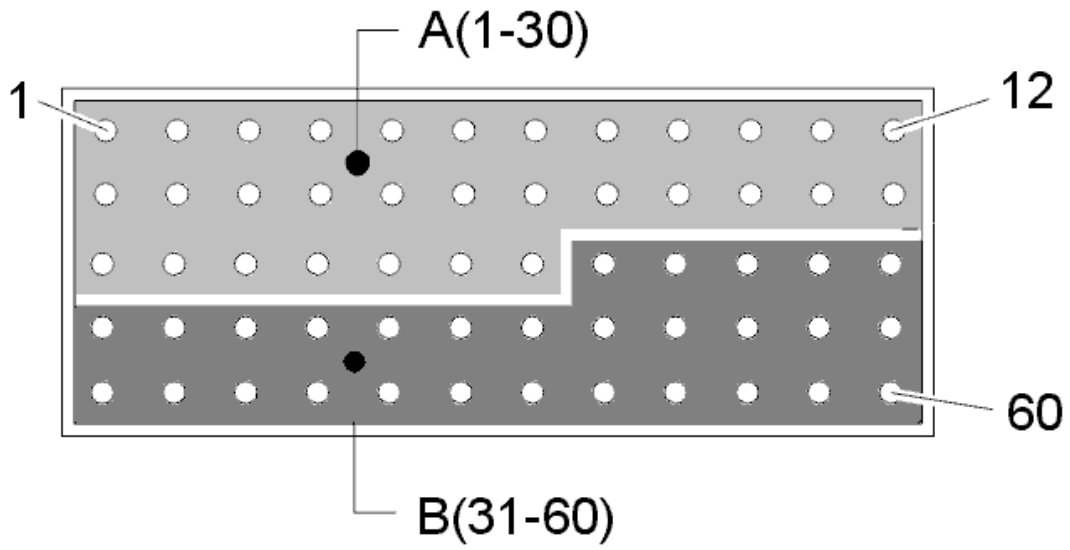

Fig. 56: Identifying Breakout Box Terminals
Courtesy of VOLVO CARS CORPORATION

To facilitate fault-tracing there is a breakout box see **9511428** and various cables with connectors (adapters) for connecting the breakout box to the different control systems and to the combined instrument panel.

Breakout box

Breakout box see **9511428** consists of a case with 60 measurement terminals and a cable with a connector.

The measurement terminals are numbered from 1-60 as illustrated.

CONTROL SYSTEM AW, ENGINE MANAGEMENT SYSTEM, LH AND EZK

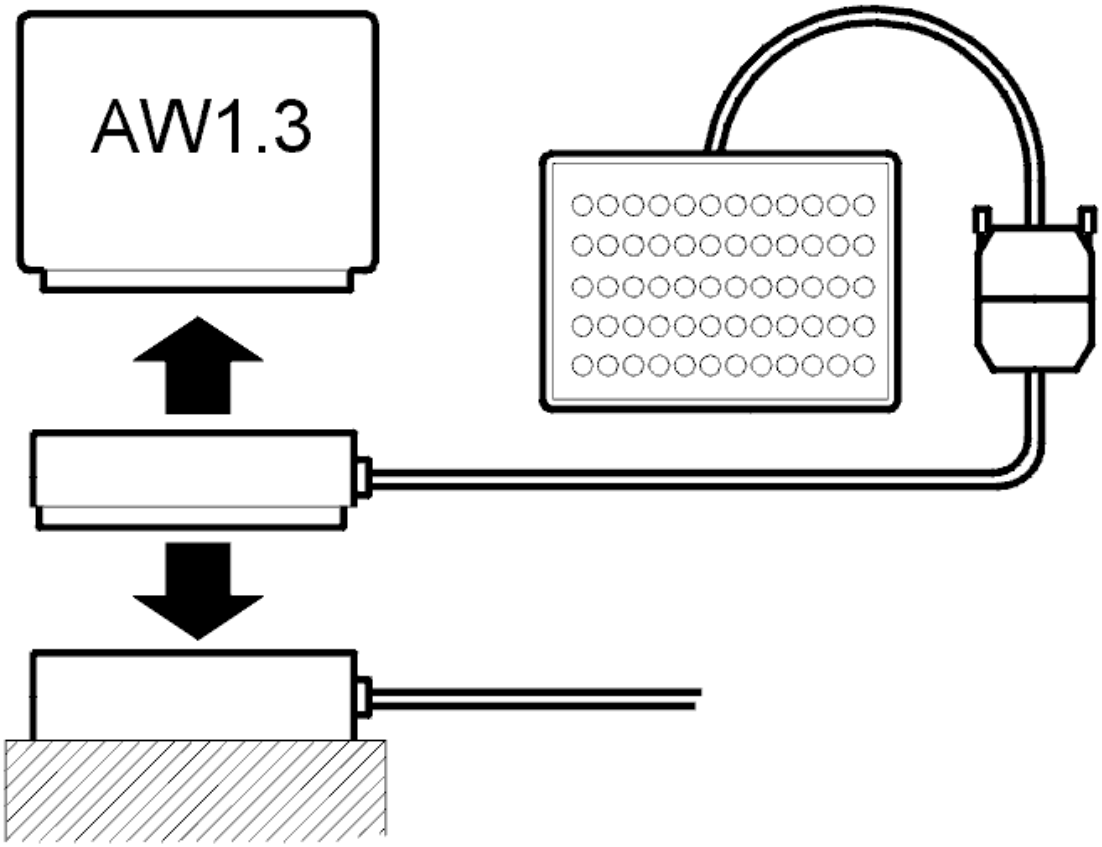

Fig. 57: Identifying AW, LH And EZK Control Systems
Courtesy of VOLVO CARS CORPORATION

To connect the breakout box to AW, LH and EZK control systems with 30+30-pin (A+B) connectors:

Connector A (engine side) uses measuring terminals 1-30 which correspond to #A1-#A30 on the control module.

Connector B (car side) uses measuring terminals 31-60 which correspond to #B1-#B30 on the control module.

To connect the breakout box use adapter see **9813195** .

ENGINE MANAGEMENT SYSTEMS FENIX AND MOTRONIC

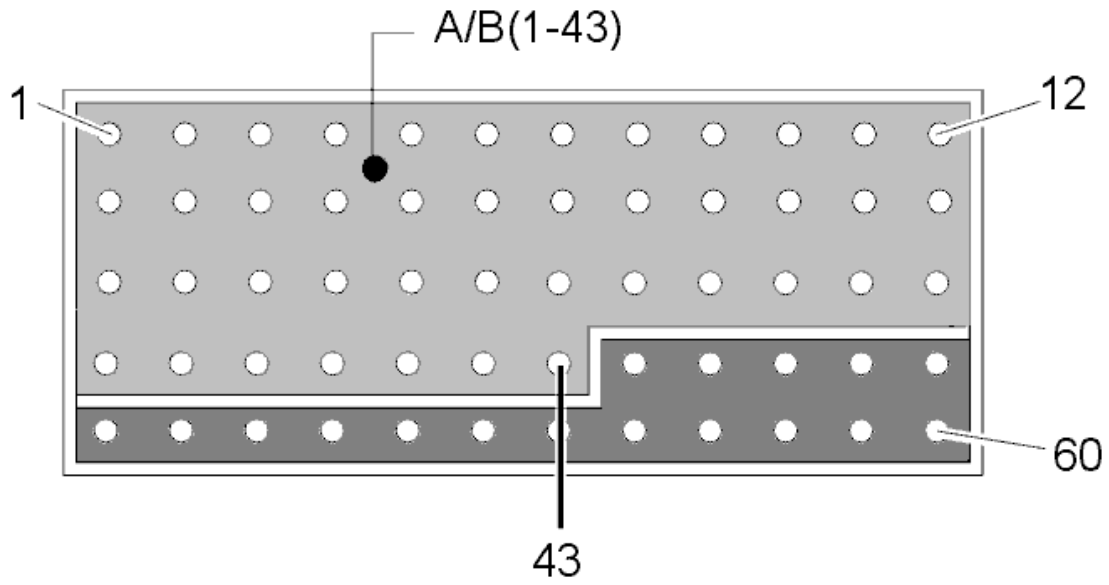

Fig. 58: Identifying 43-Pin Connector
Courtesy of VOLVO CARS CORPORATION

To connect the breakout box to the Fenix and Motronic control systems which have 43+43-pin connectors (A+B):

Use two breakout boxes (A and B) with adapter see **9511351** . The adapter is fitted with two connectors marked A and B.

Connector A (engine side) uses measurement terminals 1-43 on the breakout box A which correspond to #A1-#A43 on the control module.

Connector B (car side) uses measurement terminals 1-43 on the breakout box B which correspond to #B1-#B43 on the control module.

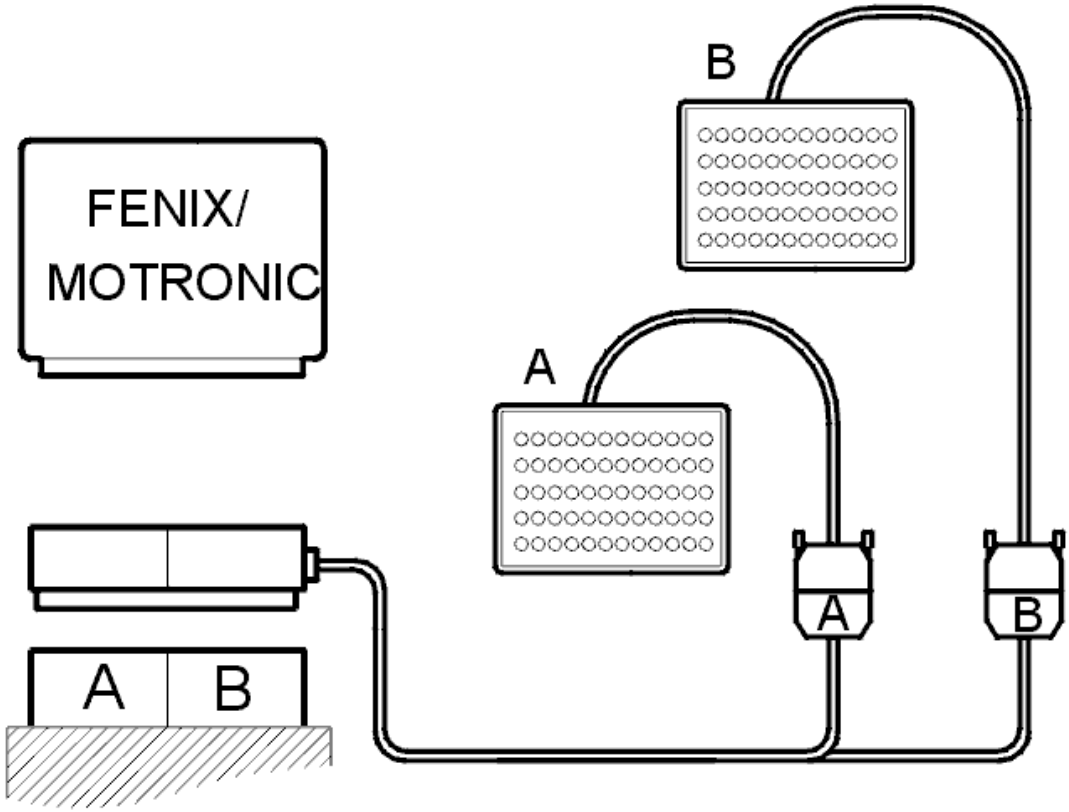

Fig. 59: Identifying Fenix/Motronic
Courtesy of VOLVO CARS CORPORATION

USING THE BREAKOUT BOX

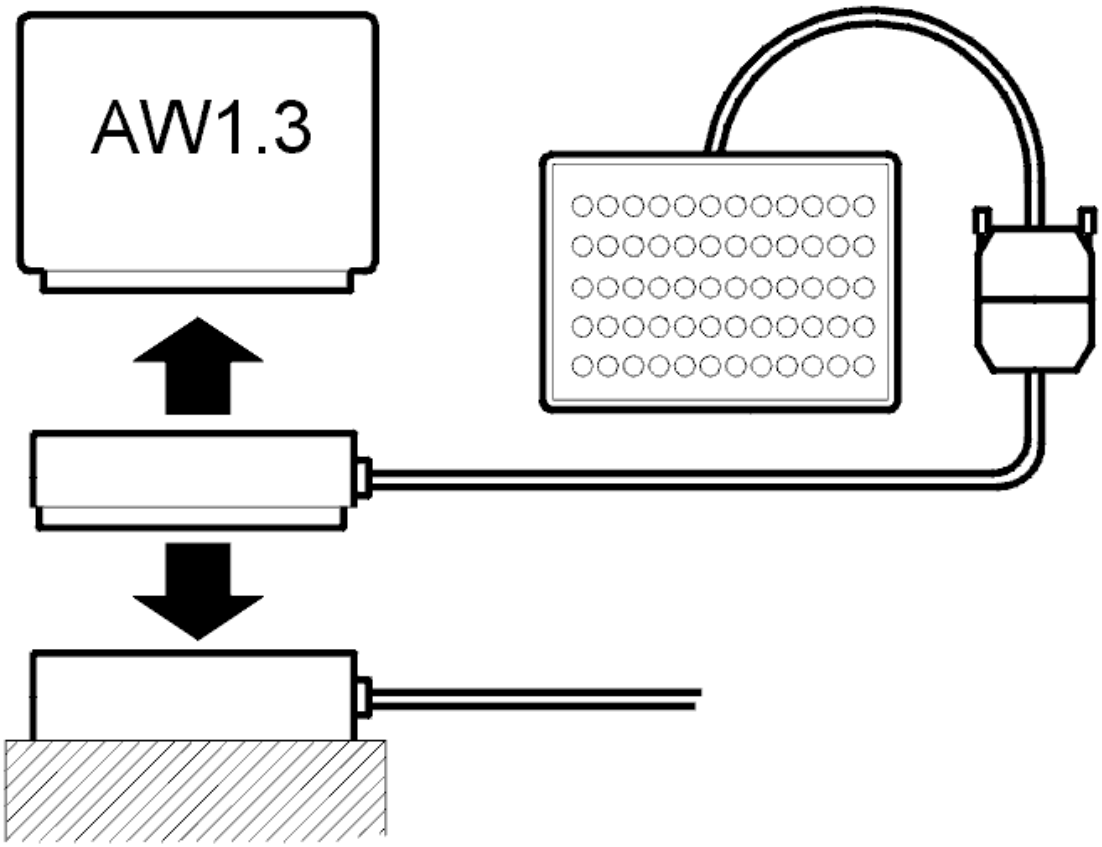

Fig. 60: Identifying AW, LH And EZK Control Systems
Courtesy of VOLVO CARS CORPORATION

1

Taking readings with the control module in circuit (circuit in operation)

Breakout box(es) and adapter see **9813195** or see **9511351** connected between control module and connector in control module box. This allows voltage readings to be taken with the engine running.

2

Taking readings with the control module disconnected (split circuit)

Breakout box(es) and adapter see **9813195** or see **9511351** connected either to the control module connector or the connector in the control module box. This allows resistance readings to be taken in each circuit without them being affected by other systems.

ELECTRICAL

Electrical system

ELECTRICAL

ACTIVATING COMPONENTS/FUNCTIONS

ACTIVATION OF COMPONENTS

Using this facility, a number of components can be activated to check their function. The following components can be activated:

GLOW PLUG

Activating the glow plug.

NOTE: Important: This function should be activated for no longer than 10-20 seconds.

HEATER FAN

Activating the heater fan.

A "buzzing" noise is heard from the heater fan when it is activated.

FUEL PUMP

Activating the fuel pump.

A "buzzing" noise is heard from the fuel pump when it is activated.

WARNING: The fuel pipe shall only be filled when replacing the pipe. If you fill with fuel for too long, there is a risk of smoke development or heater damage. However, it is necessary to fill the pipe when replacing the fuel pipe as the control unit only permits 3 heater start attempts. It shall take a maximum of 8-10 minutes to fill up with fuel when replacing the pipe.

WATER PUMP

Activating the water pump.

A "buzzing" noise is heard from the water pump when it is activated.

HEATER

Activating the heater.

In case of too low battery voltage or if the heater is in a state that prohibits activation, the heater will abort the activation. In order to enable start of the heater itself, battery voltage shall be normal, coolant temperature must be lower than +96 °C, and the heater's post-run/stop sequence must be completed. There must also be enough fuel in the tank.

CAUTION: If the heater or other components are not activated, try closing down the activation window and then starting the activation again using the VCT2000 (or appropriate scan tool).

COMPONENT SUPPLY VOLTAGE

Activating the relay that provides supply voltage to the water pump, fuel pump and heater fan.

CONNECTOR TYPES

NOTE: The illustrations in this service information are used for different model years and/or models. Some variation may occur. However, the essential information in the illustrations is always correct.

CONNECTORS, DESCRIPTION

The commonest types of connector and central electrical unit in the vehicle are listed here.

NOTE: When several tools are recommended for the same type of connector, choose the correct tool according to the size of the lock.

DISCONNECTING THE BATTERY NEGATIVE LEAD

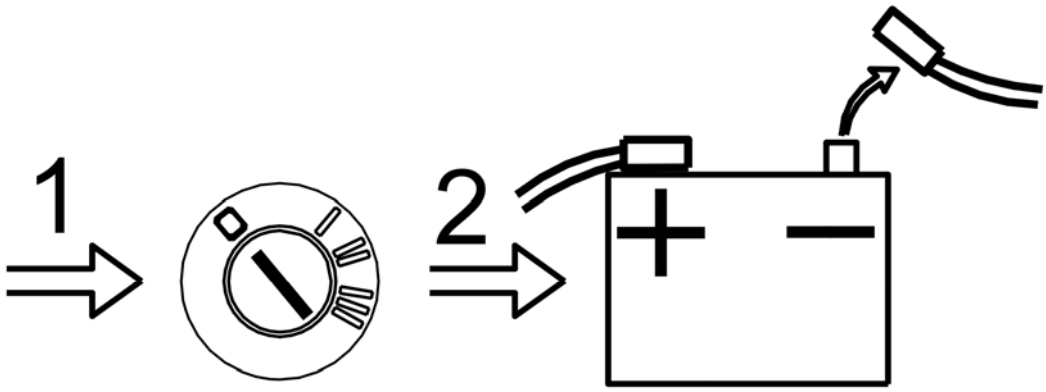

Fig. 1: Disconnecting Battery Negative Cable
Courtesy of VOLVO CARS CORPORATION

NOTE: **Disconnect the battery negative lead. See: BATTERY - DISCONNECTING AND CONNECTING .**

CONNECTOR

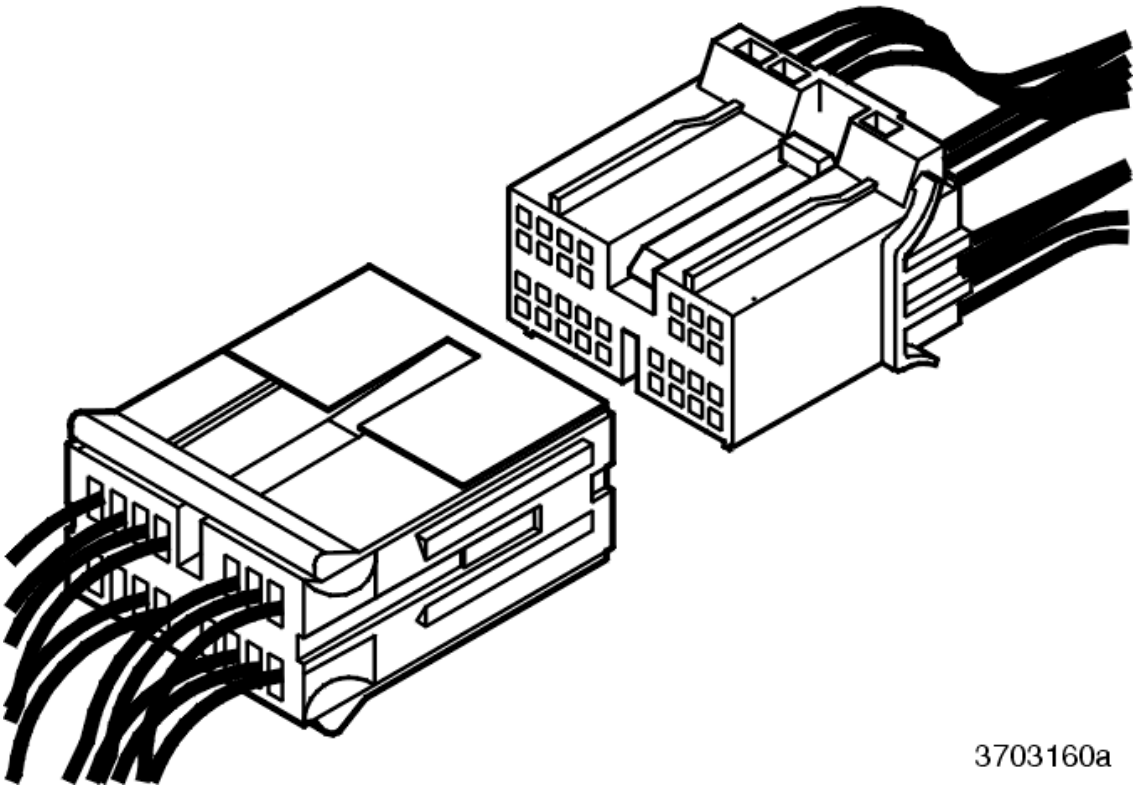

Fig. 2: Connector (1 Of 10)
Courtesy of VOLVO CARS CORPORATION

Connectors occur in a number of variants with different numbers of conductors. See: **CONNECTOR TYPE 1** .

CONNECTOR

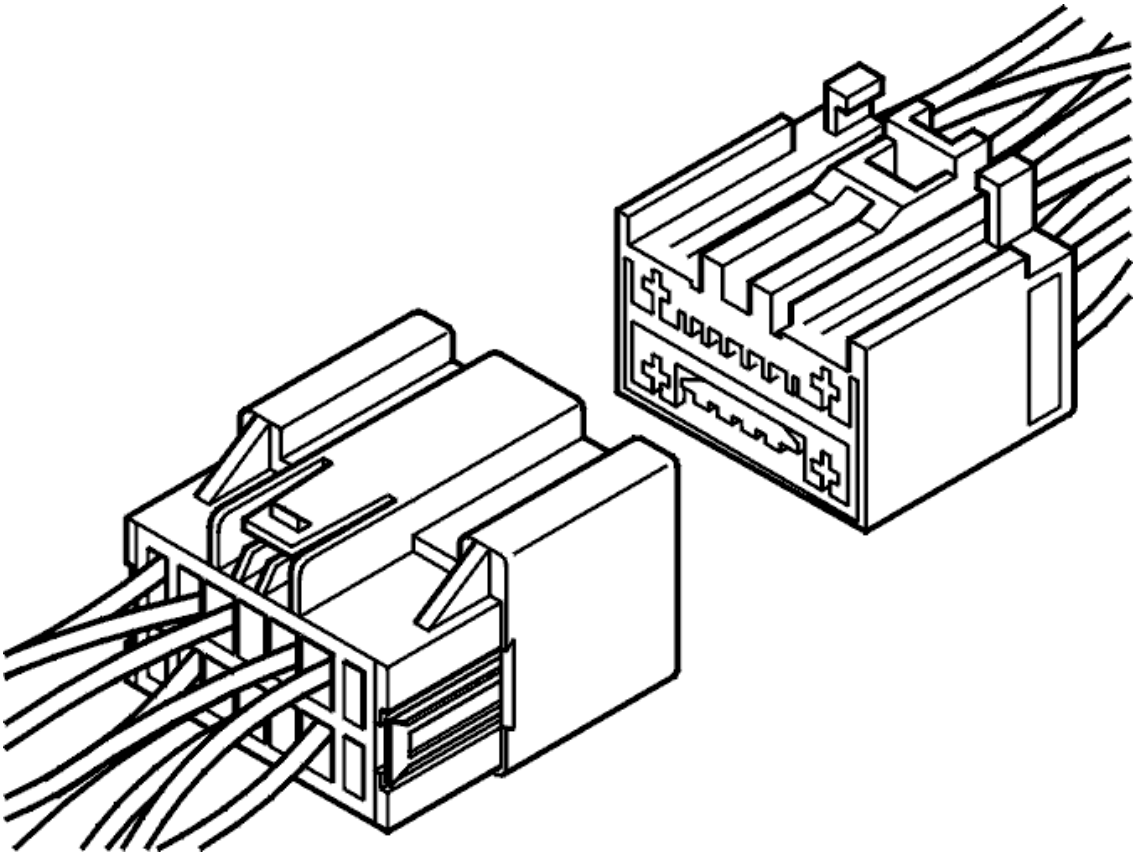

Fig. 3: Connector (2 Of 10)
Courtesy of VOLVO CARS CORPORATION

Connectors occur in a number of variants with different numbers of conductors. See: **CONNECTOR TYPE 2** .

CONNECTOR

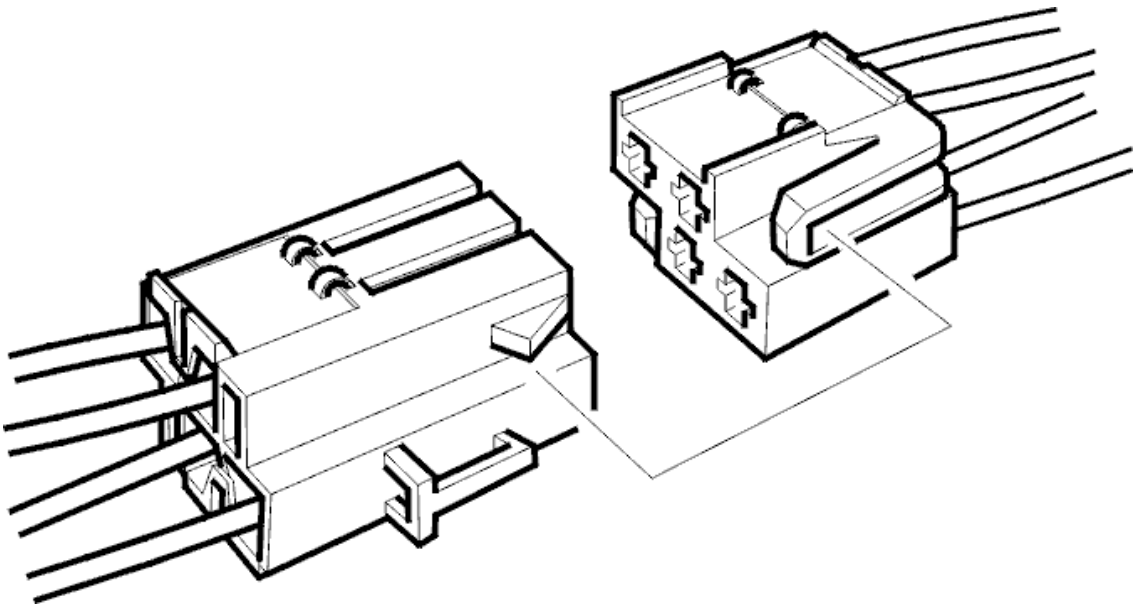

Fig. 4: Connector (3 Of 10)
Courtesy of VOLVO CARS CORPORATION

Connectors occur in a number of variants with different numbers of conductors. See: **CONNECTOR TYPE 3** .

CONNECTOR

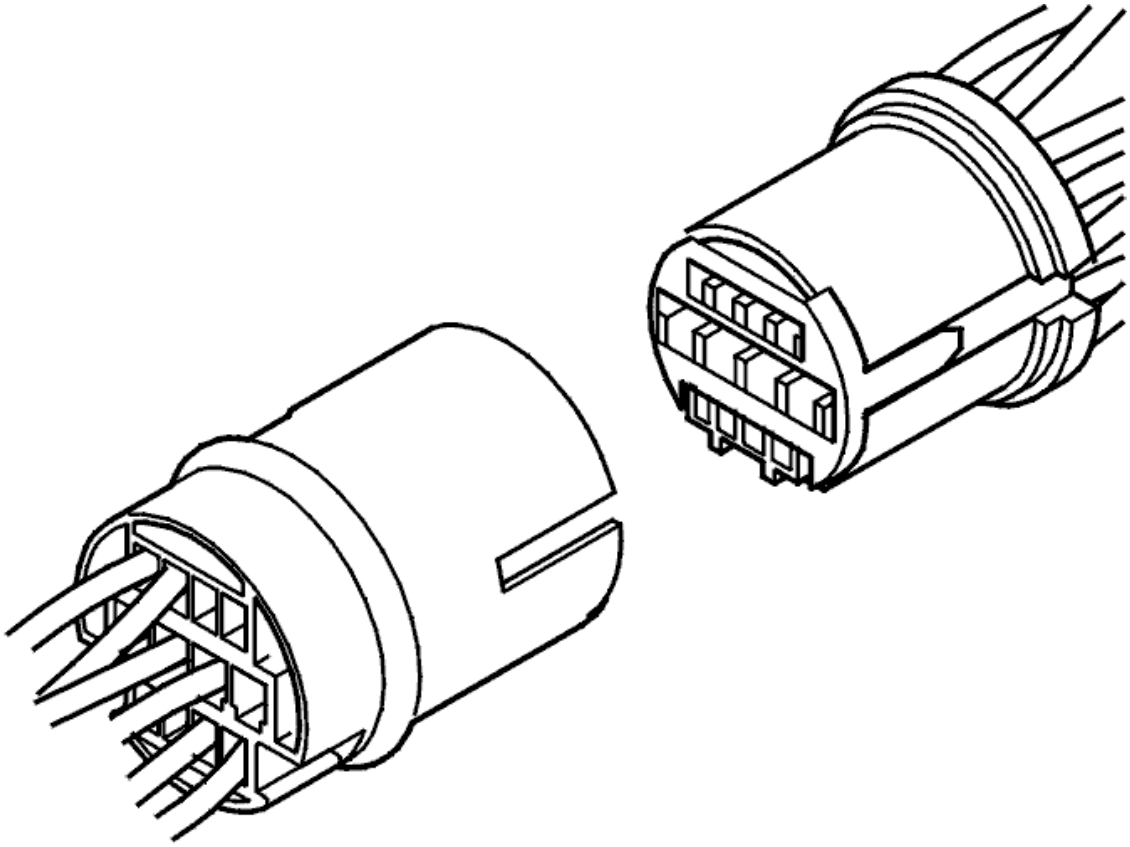

Fig. 5: Connector (4 Of 10)
Courtesy of VOLVO CARS CORPORATION

Connectors, see: **CONNECTOR TYPE 4** .

CONNECTOR

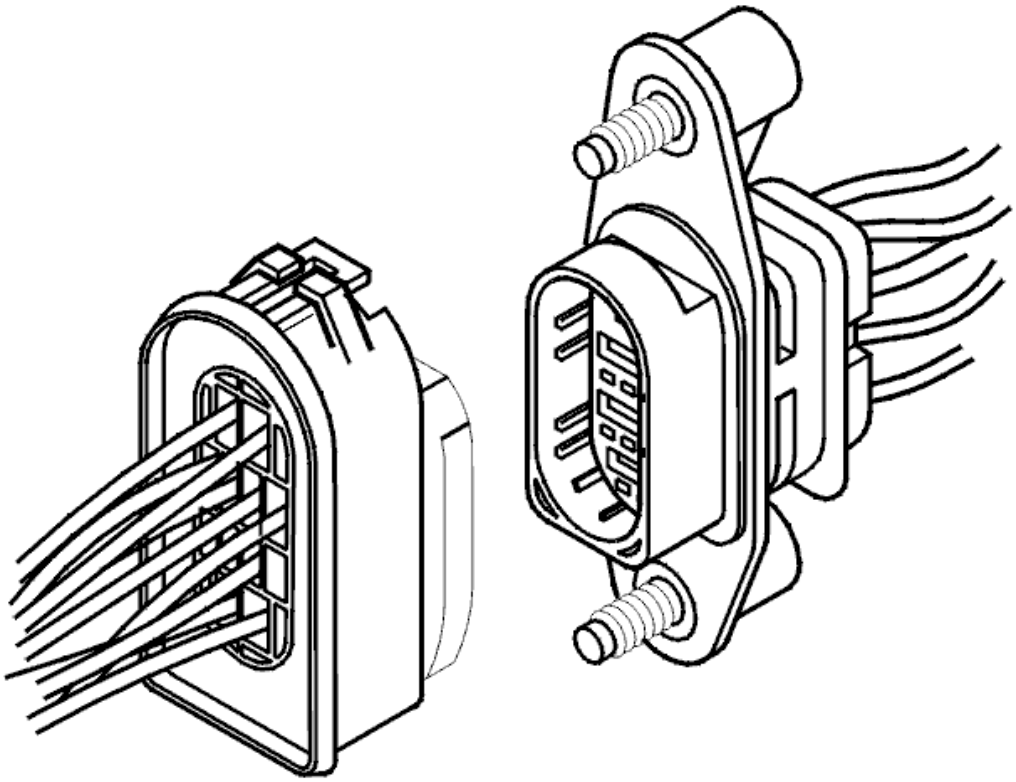

Fig. 6: Connector (5 Of 10)
Courtesy of VOLVO CARS CORPORATION

Connectors, see: **CONNECTOR TYPE 5** .

SEALED CONNECTOR

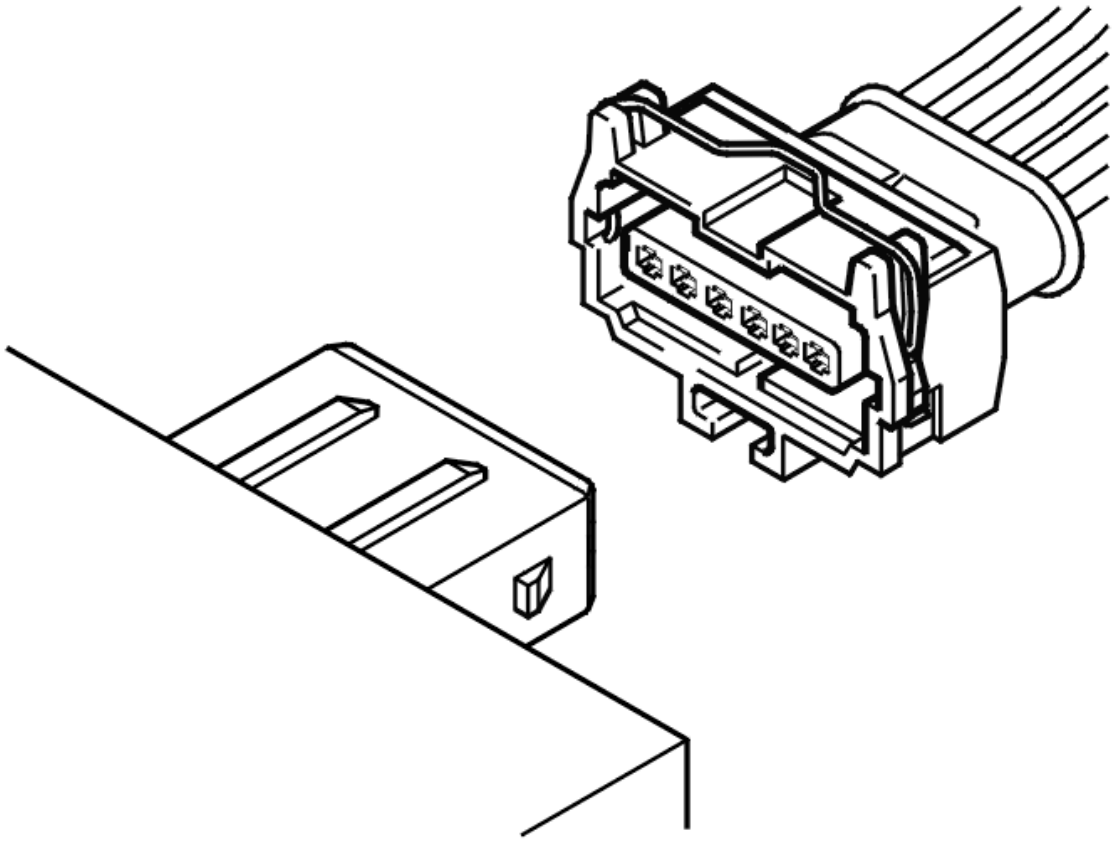

Fig. 7: Connector (6 Of 10)
Courtesy of VOLVO CARS CORPORATION

Sealed connectors occur in a number of variants with different numbers of conductors. See: **CONNECTOR SEALED TYPE 1** .

SEALED CONNECTOR

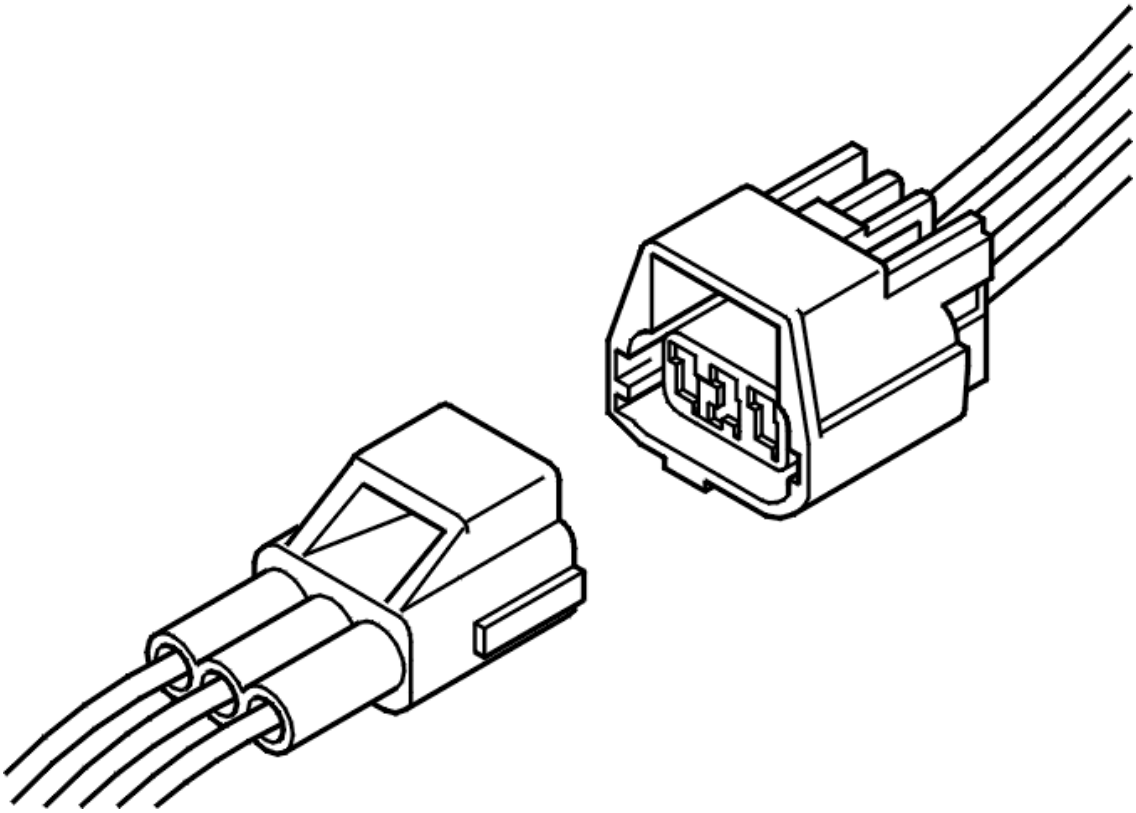

Fig. 8: Connector (7 Of 10)
Courtesy of VOLVO CARS CORPORATION

Sealed connectors occur in a number of variants with different numbers of conductors. See: **CONNECTOR SEALED, TYPE 2** .

SEALED CONNECTOR

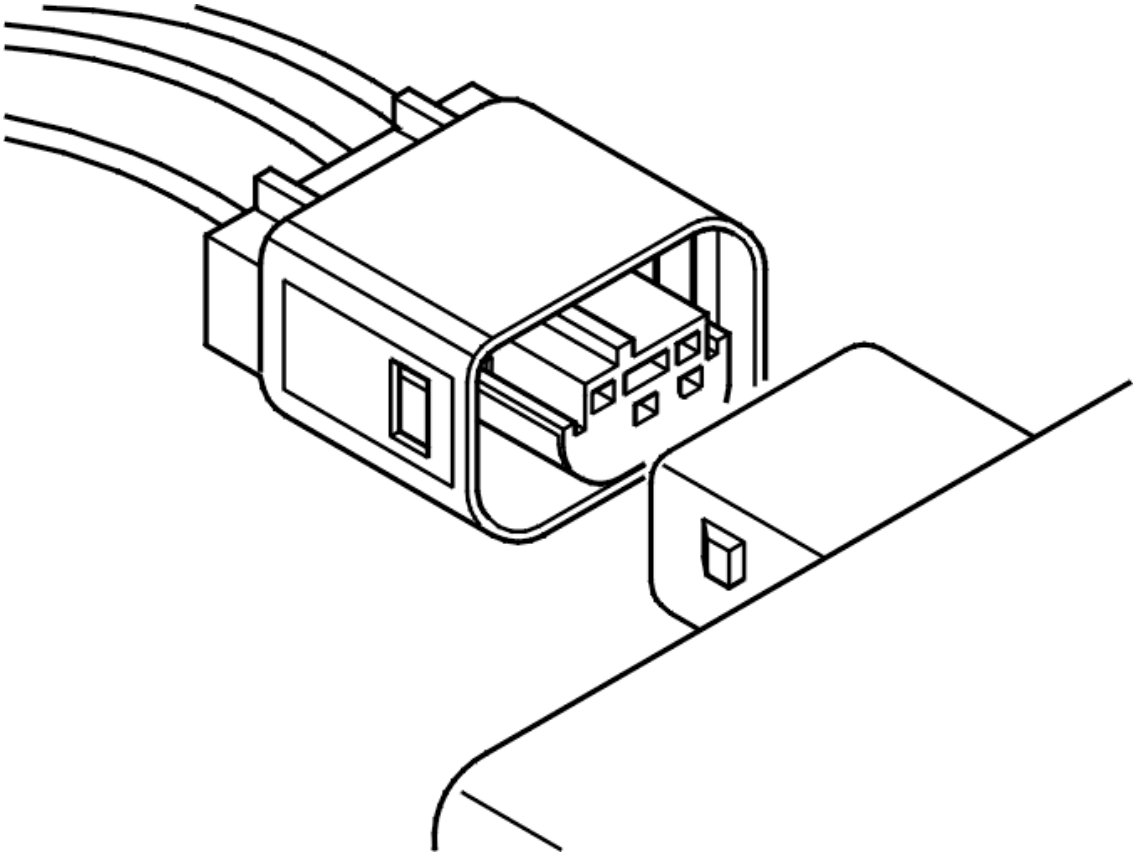

Fig. 9: Connector (8 Of 10)
Courtesy of VOLVO CARS CORPORATION

Sealed connectors occur in a number of variants with different numbers of conductors. See: **CONNECTOR SEALED, TYPE 3** .

CONNECTOR

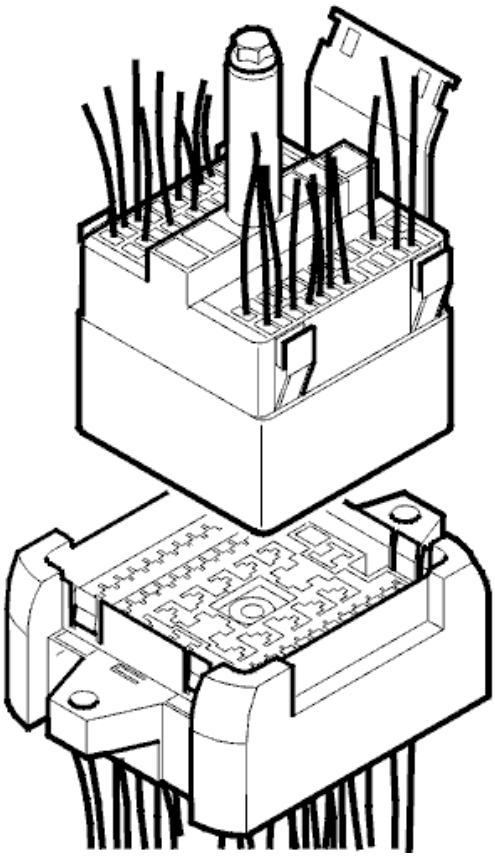

Fig. 10: Connector (9 Of 10)
Courtesy of VOLVO CARS CORPORATION

Connectors, see: **CONNECTOR, REPLACING** .

CONNECTOR

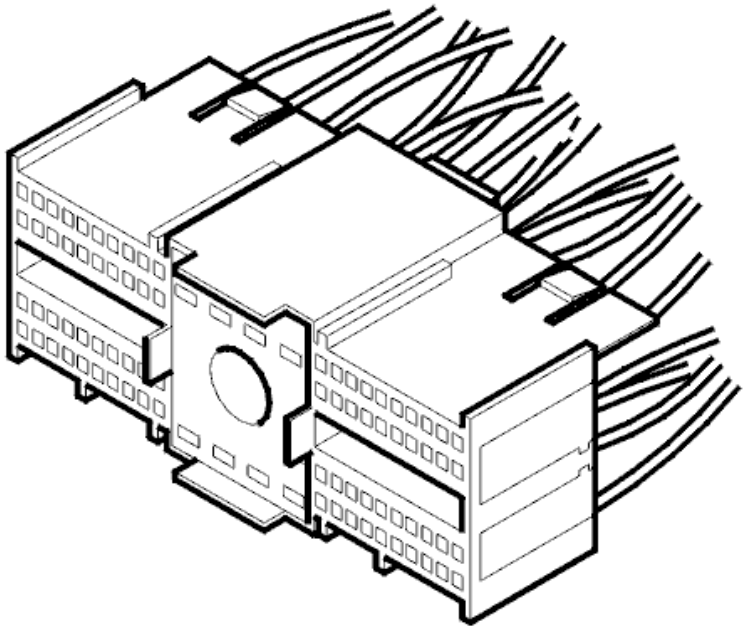

Fig. 11: Connector (10 Of 10)
Courtesy of VOLVO CARS CORPORATION

Connectors, see: **CONNECTOR, REPLACING** .

DATA LINK CONNECTOR (DLC)

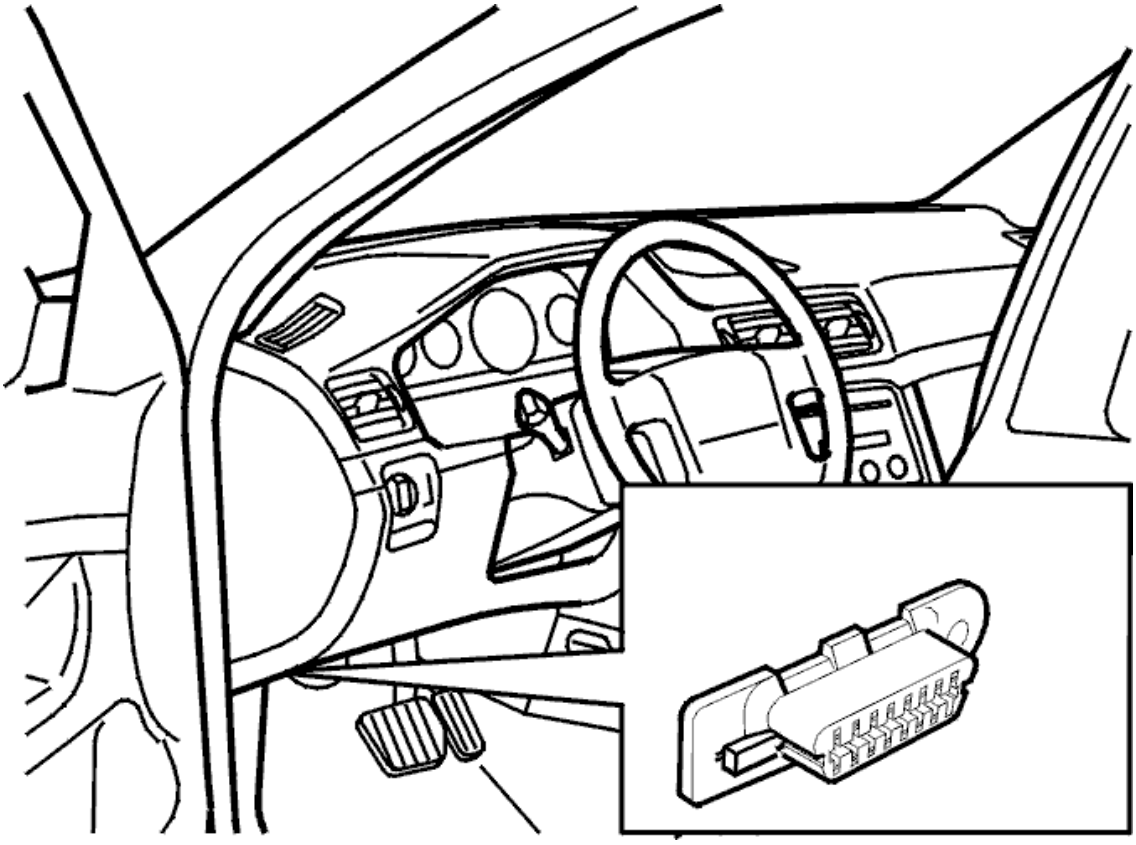

Fig. 12: Data Link Connector
Courtesy of VOLVO CARS CORPORATION

Data link connector (DLC). See: **DATA LINK CONNECTOR, REPLACING**.

CONNECTOR SUPPLEMENTAL RESTRAINT SYSTEM MODULE (SRS)

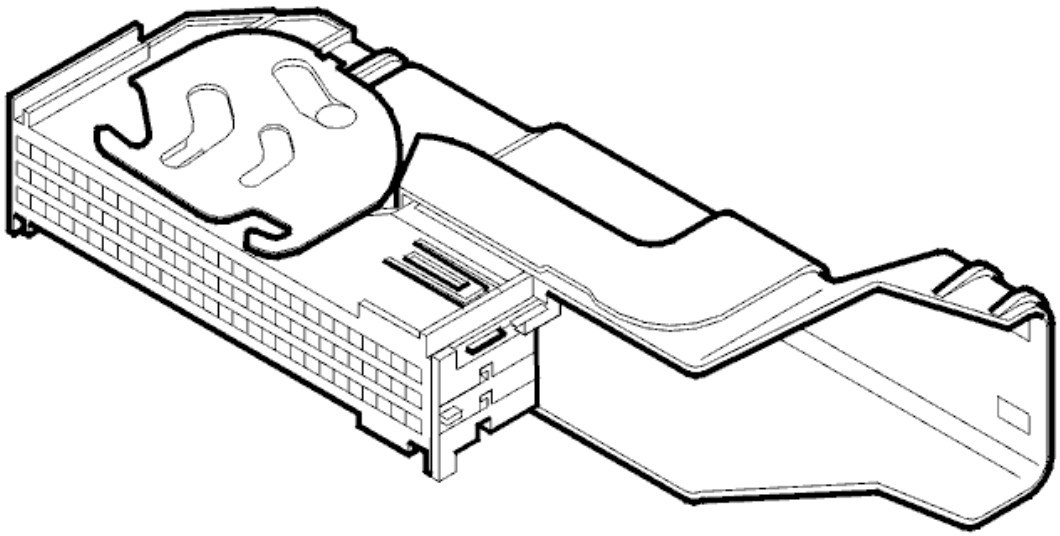

Fig. 13: Identifying SRS Module Connector
Courtesy of VOLVO CARS CORPORATION

Connector supplemental restraint system module (SRS). See: **CONNECTOR CONTROL MODULE EXTRA SAFETY SYSTEM**.

CONNECTOR BRAKE CONTROL MODULE (BCM)

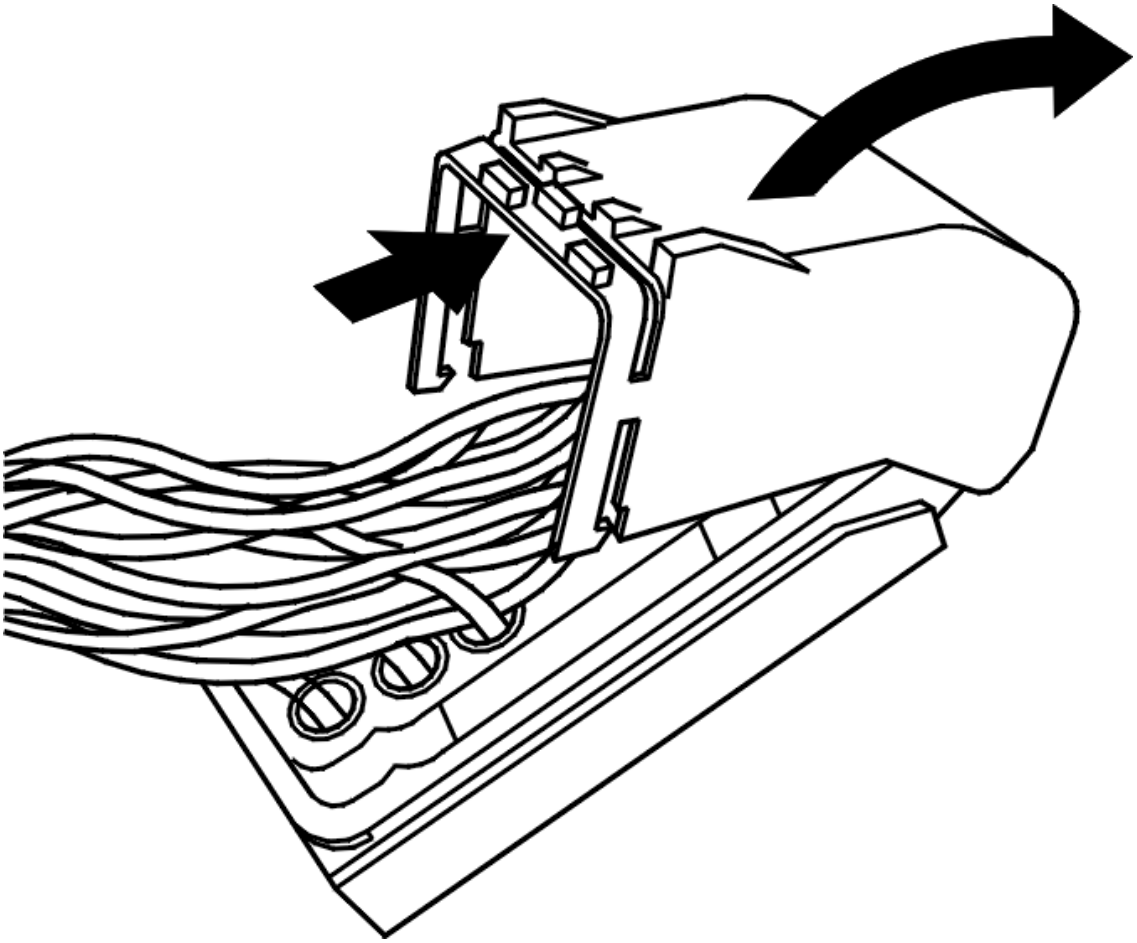

Fig. 14: Connector -- Brake Control Module
Courtesy of VOLVO CARS CORPORATION

Connector brake control module (BCM). See: **CONNECTOR ANTI-LOCK BRAKING SYSTEM MODULE (ABS)**.

DATA LINK CONNECTOR, REPLACING

Special tools	
	951 2636 Terminal removal tool (Color code: Blue) **Tool number:** 951 2636 **Tool description:** Terminal removal tool (Color code: Blue) **Tool boards:** 39

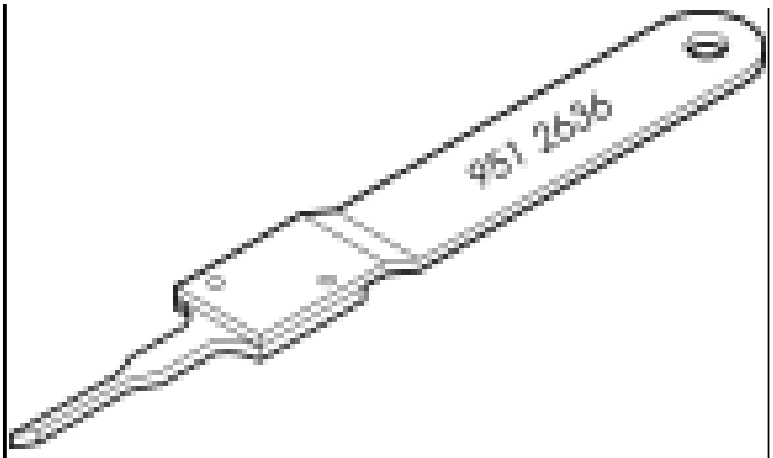

REMOVAL

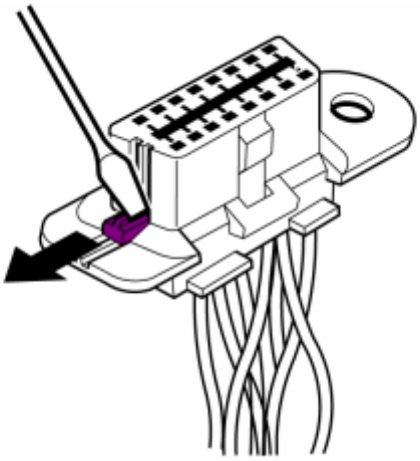

Fig. 15: Sliding Clip Back
Courtesy of VOLVO CARS CORPORATION

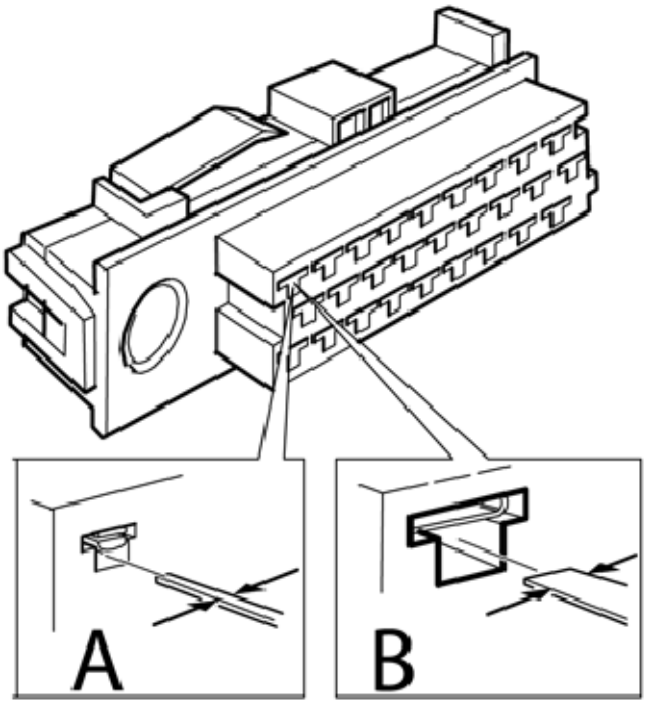

Fig. 16: Inserting Terminal Removal Tool
Courtesy of VOLVO CARS CORPORATION

see **9512636**

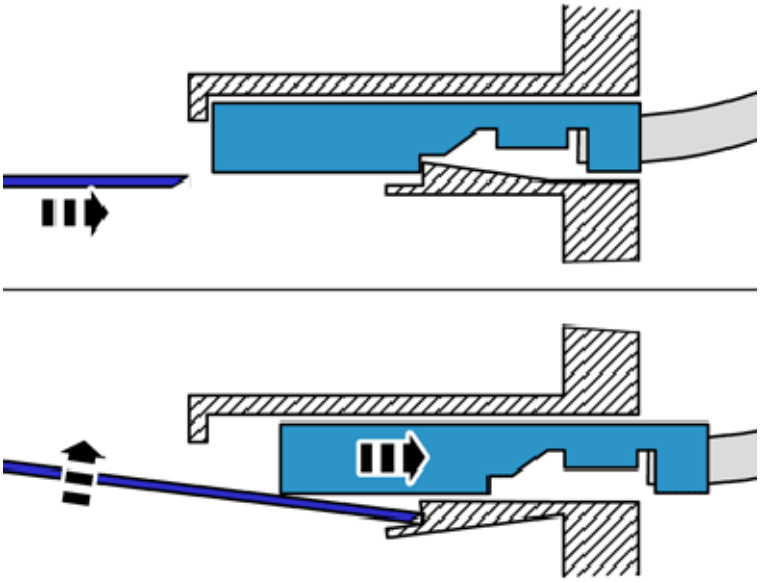

Fig. 17: Pressing Tab And Removing Wire
Courtesy of VOLVO CARS CORPORATION

CONNECTOR CONTROL MODULE EXTRA SAFETY SYSTEM

Special tools:

see **9512812**

see **9512637**

NOTE: The illustrations in this service information are used for different model years and/or models. Some variation may occur. However, the essential information in the illustrations is always correct.

DISASSEMBLY

DISASSEMBLING SECONDARY LOCK

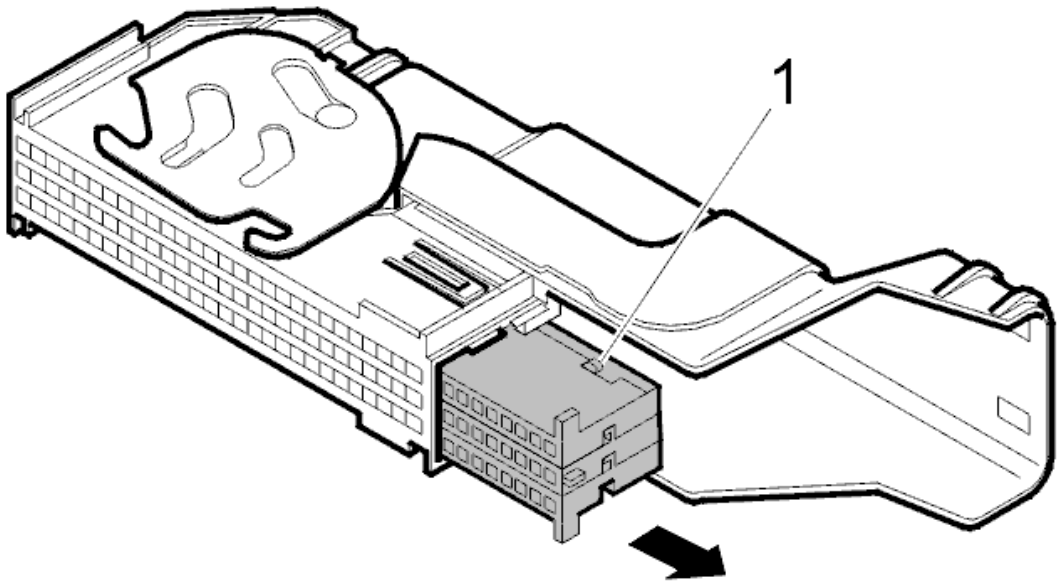

Fig. 18: Identifying Receptacle Housings Removal
Courtesy of VOLVO CARS CORPORATION

Press in the active catches on both sides of the socket housing and slide out the receptacle housings.

CAUTION: Disconnect and work with only one cable at a time to minimize the risk of mixing them up.

DISASSEMBLING PRIMARY LOCK

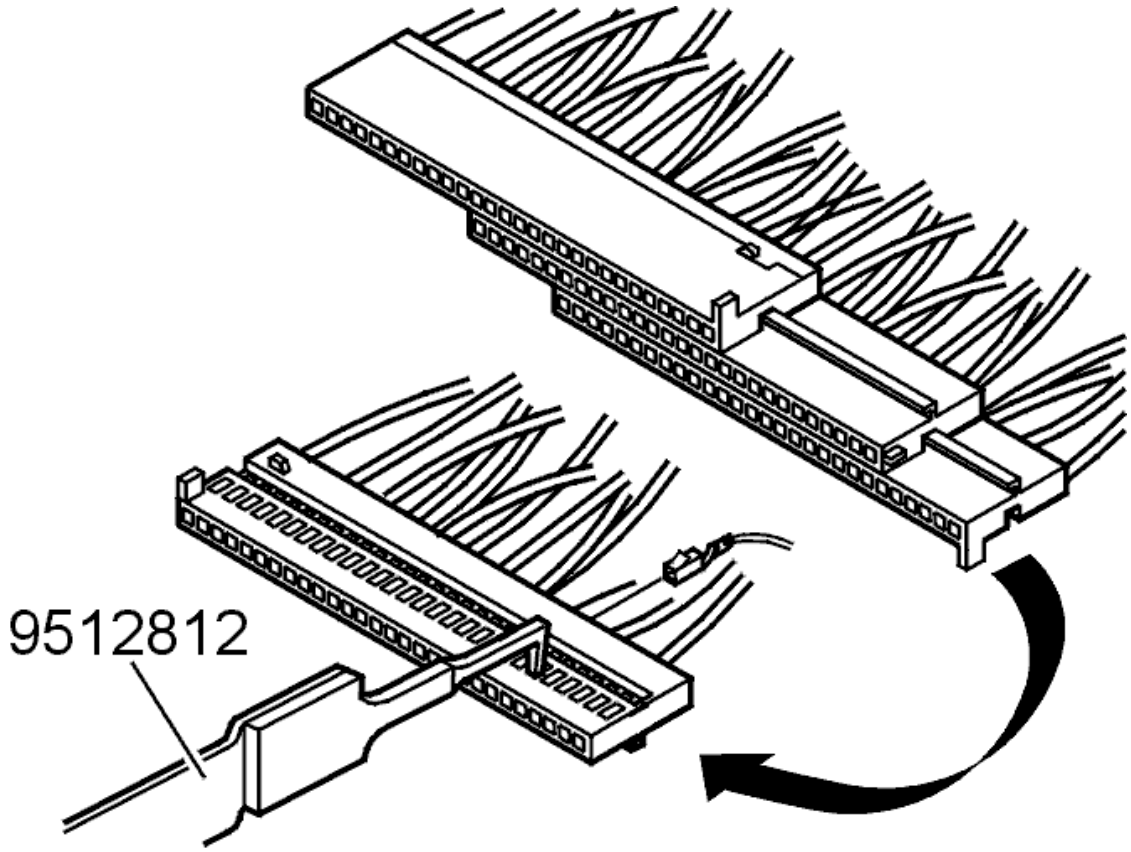

Fig. 19: Identifying Locking Tab Pressed In On Cable Terminal Using Special Tool 9512812
Courtesy of VOLVO CARS CORPORATION

Press in the locking tab on the cable terminal and carefully pull out the cable and the cable terminal. Use tool: see **9512812** or tool: see **9512637** , see the illustration.

ASSEMBLY

ASSEMBLING PRIMARY LOCK

Check that the cable terminal is undamaged.

Press the cable terminal into the housing.

Check that the cable terminal is properly locked by pulling carefully on the cable.

ASSEMBLING SECONDARY LOCK

Press the secondary lock into place.

CONNECTOR ANTI-LOCK BRAKING SYSTEM MODULE (ABS)

Special tools:

see **9512630**

see **9512631**

NOTE: The illustrations in this service information are used for different model years and/or models. Some variation may occur. However, the essential information in the illustrations is always correct.

DISASSEMBLY

DISASSEMBLING SECONDARY LOCK

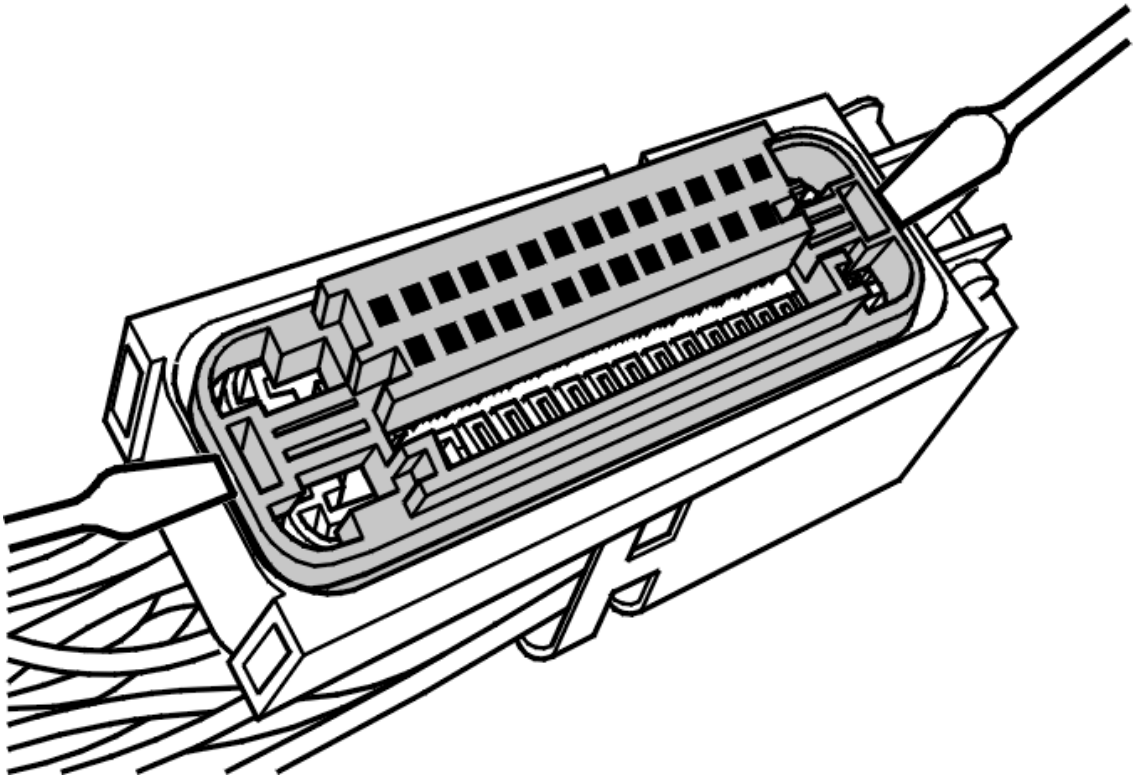

Fig. 20: Identifying Secondary Lock Released Using Electrician's Screwdriver
Courtesy of VOLVO CARS CORPORATION

Disconnect the secondary lock. Use an electrician's screwdriver, as shown in the illustration.

CAUTION: Disconnect and work with only one cable at a time to minimize the risk of mixing them up.

DISASSEMBLING PRIMARY LOCK

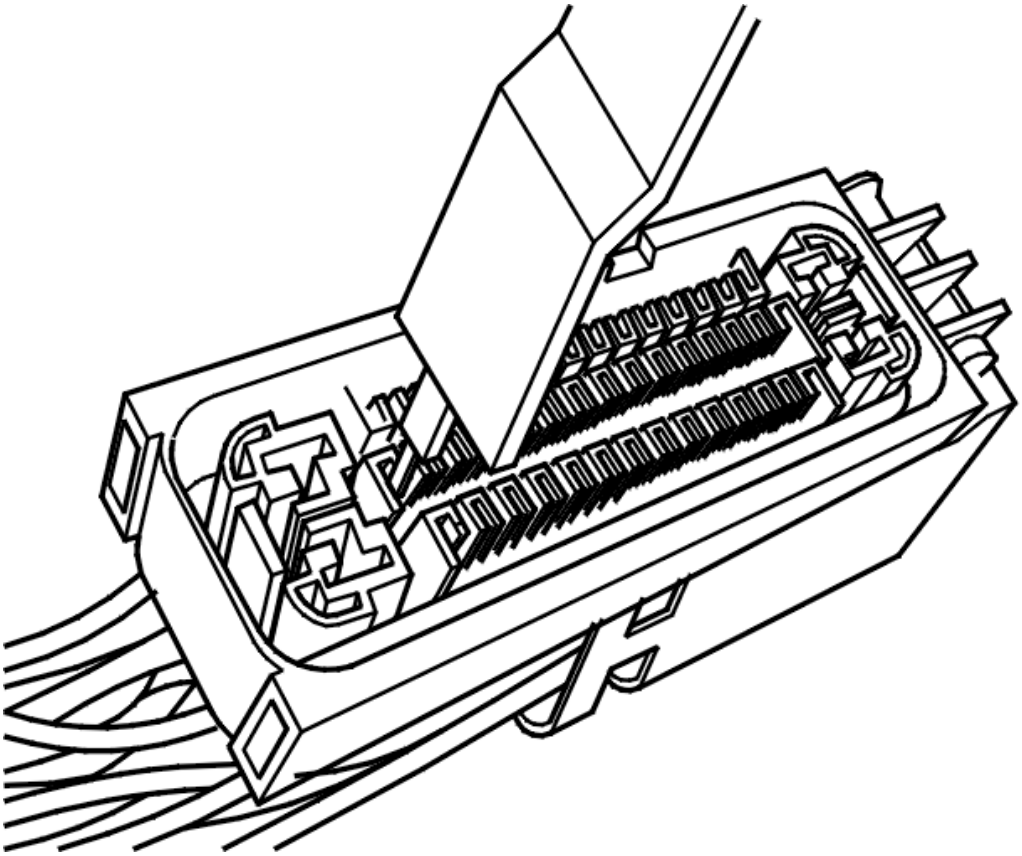

Fig. 21: Identifying Tools 951 2636 Or 951 2639 To Remove Primary Lock
Courtesy of VOLVO CARS CORPORATION

Use tool: see **9512630** and tool: see **9512631** to remove the primary lock. See the illustrations.

At the same time pull the cable carefully backwards.

ASSEMBLY

NOTE: **Wheel sensor cables are twisted pair (positive and negative signal) cables for each wheel. It is important that paired cables are twinned in the same way when they are reinstalled in the connector. The cables must be twisted approximately 3 times per 100 mm.**

ASSEMBLING PRIMARY LOCK

Check that the cable terminal is undamaged.

Press the cable terminal into the housing.

Check that the cable terminal is properly locked by pulling carefully on the cable.

ASSEMBLING SECONDARY LOCK

Press the secondary lock into place.

CONNECTING THE BREAKOUT BOX TO THE REAR ELECTRONIC MODULE (REM)

Special tools:

see **9511463**

see **9511508**

see **9511428**

see **9512888**

GENERAL INFORMATION

Check on the connectors that the male and female pins are intact and securely in place (cannot be pressed in), and check that the cables to the female pins are connected securely on the pins.

The breakout box is designed to facilitate the reading of control module input and output signals when the control module is connected as well as the resistance of cables and components when the control module is disconnected. Using the breakout box reduces the risk of unintentionally short-circuiting cables or damaging pins in the connectors.

CONNECTING THE BREAKOUT BOX

- Ignition off
- To expose the connectors for the phone module (PHM): **PHONE MODULE (PHM), REPLACING** .
- To expose the connectors for the handset: **HANDSET, REPLACING** .
- To expose the connector for the SIM-card reader: **INFOTAINMENT CONTROL MODULE (ICM), REPLACING** .

Connect breakout box see **9511428** to the adapter.

Phone module (PHM)

- Connect adapter see **9511463** to the control module's connector A.
- Connect adapter see **9512888** to the control module's connector B.
- For connector A, #A1-#A22 correspond to #1-#22 on the breakout box.
- For connector B, #B1-#B6 correspond to #21-#26 on the breakout box.

Handset

- Connect adapter see **9511508** to the handset's connector.
- For the connector, #1-#5 correspond to #21-#25 on the breakout box.

SIM-card holder

- Connect adapter see **9512888** to the SIM-card holder's connector.
- For the connector, #1-#6 correspond to #21-#26 on the breakout box.

ELECTRICAL

Engine with mountings and equipment-Ignition and control systems

ELECTRICAL

REPLACING RELAYS IN THE MAIN FUSE BOX AND OTHER RELAYS IN THE ENGINE COMPARTMENT

REMOVING

Remove:

- battery negative lead.
- relay. Position of relays as illustrated:**INSTALLING**.

INSTALLING

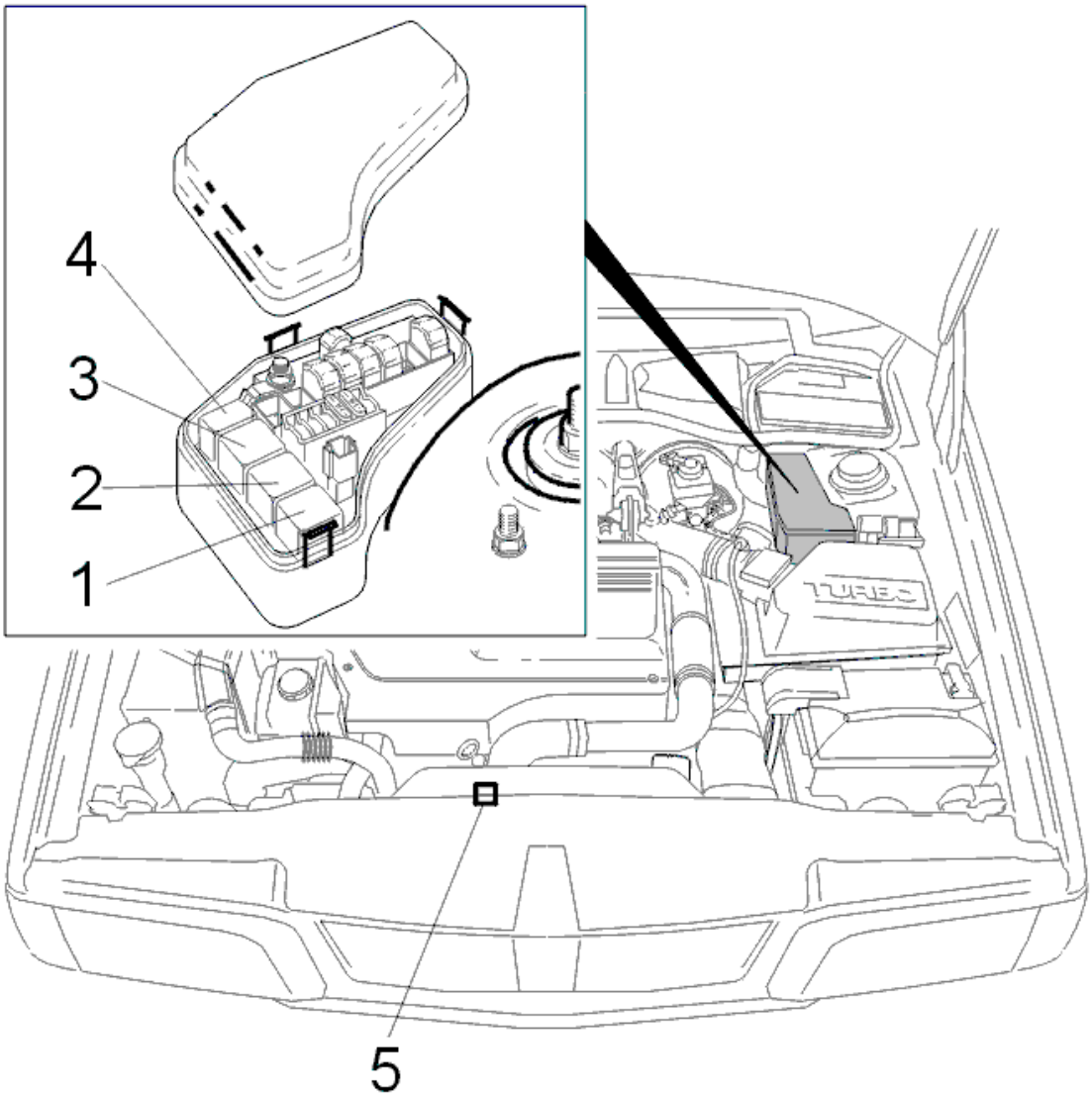

Fig. 1: Identifying Fuse Box
Courtesy of VOLVO CARS CORPORATION

Install relay.

Connect battery negative lead.

- Test relay function.

Relay position, engine compartment:

- 1) Main relay.
- 2) Pulsed secondary air injection system (PAIR) pump / Glow plug relay (Diesel).
- 3) Starter relay.
- 4) Air conditioning (A/C) relay.

- 5) Engine cooling fan (FC).

ELECTRICAL

General - Removal, Replacement And Installation

BATTERY, DISCONNECTING

NOTE BEFORE DISCONNECTING BATTERY CABLES

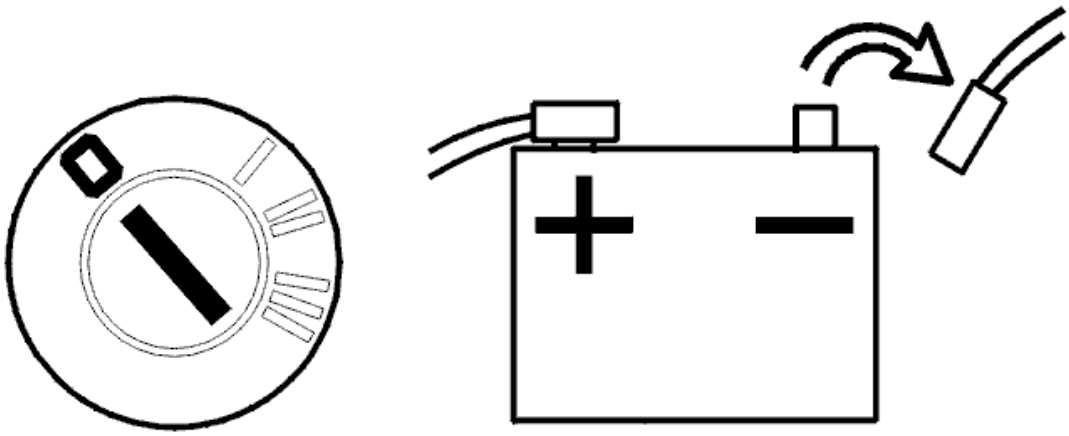

Fig. 1: Identifying Ignition In Off Position And Disconnecting Negative Cable From Battery
Courtesy of VOLVO CARS CORPORATION

WARNING: The SRS (supplemental restraint system) is active for a certain time after the power is cut. Therefore wait three minutes before starting work.

- If the malfunction indicator light in the combined instrument panel is illuminated, the diagnostic trouble codes for the management system must first be read out and remedied before battery power is cut off.
- The ignition should be off for at least five minutes before the battery is disconnected from the car to allow the control modules time to store information.
- If the vehicle is equipped with remote heating, the personal code is reset to the factory value (1234) if the battery is disconnected or is discharged.

CAUTION: Always disconnect the negative battery cable before disconnecting any positive cables.

NOTE BEFORE CONNECTING BATTERY CABLES

WARNING: Ensure that no live objects that can short-circuit the battery are under the battery's protective cover.

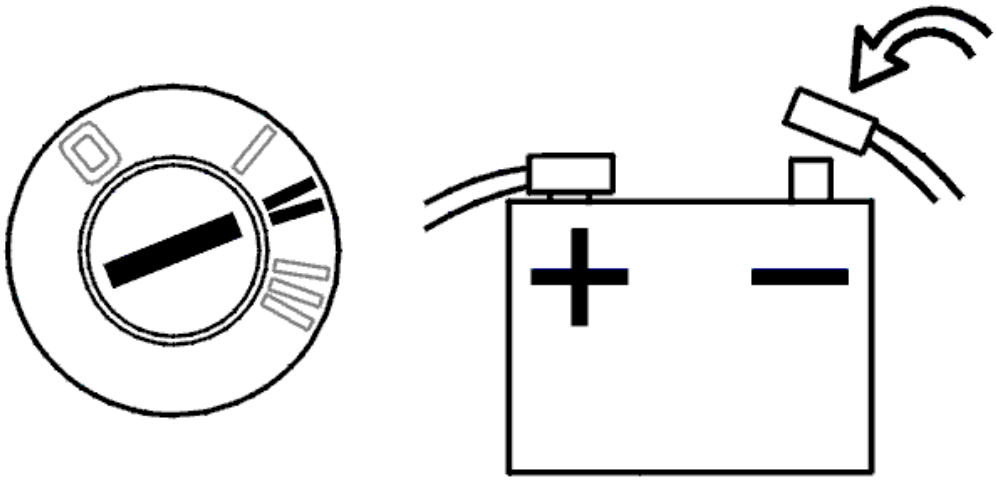

Fig. 2: Identifying Ignition Switch In ON Position And Connecting Negative Cable To Battery
Courtesy of VOLVO CARS CORPORATION

WARNING: **The key must be in position 2. No one must be in the car when the battery is connected. This is a safety precaution in case an airbag module activates when the power is connected.**

NOTE AFTER CONNECTING BATTERY CABLES

Initiation of the Upper Electronic Module (UEM)

Initiate the central locking system, interior lighting and sunroof by unlocking the car with the remote control, key or VIDA vehicle communication.

Windows

Initiate window positions. See VIDA Car communication, Initiating the window position.

Calibrating the passenger compartment fan.

- If the car is equipped with Manual Climate Control (MCC) or Standard climate control system, fan speed must be recalibrated if the battery has been disconnected.
  - Ignition on.
  - Turn the fan control to max.
  - Turn the fan control to min.
  - The calibration is complete.

Calibrating the sunroof

- For XC90, see **SUN ROOF MODULE (SRM), CALIBRATING**.

Engine

- If the battery was disconnected, the engine may need to run for a few minutes before it runs smoothly.

FINISHING

NOTE: Set the clock.

SUN ROOF MODULE (SRM), CALIBRATING

NOTE: The graphics in this service information are used for different model years and/or models. Some variation may occur. However, the essential information in the graphics is always correct.

CALIBRATION

CALIBRATING THE SUN ROOF MODULE (SRM)

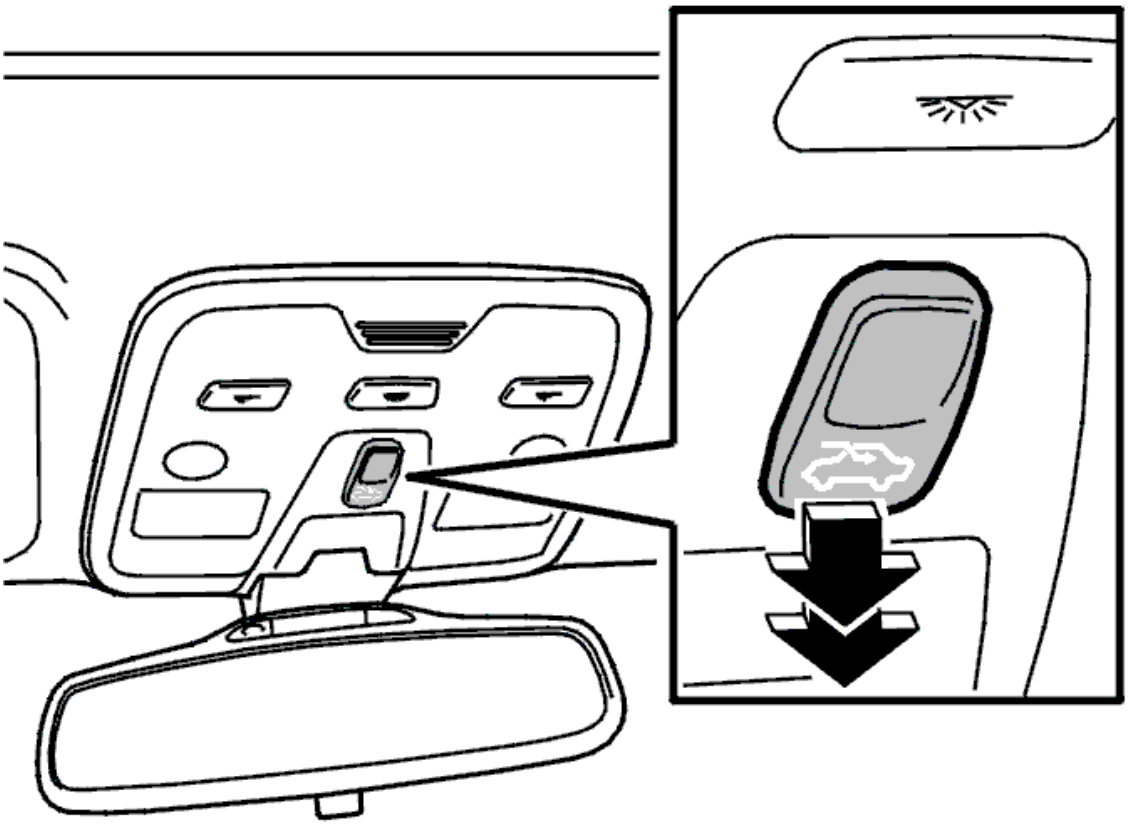

Fig. 3: Identifying Sun Roof Switch
Courtesy of VOLVO CARS CORPORATION

The sun roof must be closed.

Ignition in position I.

1. Press the sun roof switch so that the sun roof is in the tilt position. Release the switch.
2. Press the switch (in the tilt position) in again for at least 5 seconds so that the sun roof closes. Release the switch. The calibration is complete.

NOTE: If the sun roof has not moved to the correct position, carry out calibration again.

HINT: If the sun roof has still not moved to the correct position:

HINT: Press the sun roof switch so that the sun roof moves to the rearmost position (completely open).

HINT: Release the switch.

HINT: Press the switch (in the completely open position) in again for at least 5 seconds so that the sun roof closes.

HINT: Release the switch.

HINT: Close the sun roof and carry out calibration again. See steps, see 1 and 2 above.

For further information on the sunroof, see **DESIGN** and **FUNCTION**

ELECTRICAL

General - Specifications, Mechanical

TIGHTENING TORQUE

GENERAL TIGHTENING TORQUE

NOTE: **Screws coated with a locking fluid or self locking nuts must be replaced with new when reinstalled.**

See the table below to find the tightening torques for components not included in the summary.

Nuts and screws which are not self locking can be reused provided that they are in good condition.

TIGHTENING TORQUE

Applies to screwed joint with strength class 8.8.	
Thread	Tightening torque (Nm)
M5	5
M6	10
M7	17
M8	24
M10	50
M12	80
M14	130

SUMMARY OF TIGHTENING TORQUES FOR SPECIFIC COMPONENTS

NOTE: **Screws coated with locking fluid or sealant must always be replaced with new screws during reinstallation.**

Always use **new screws and nuts** when angle tightening. Any exceptions to this rule will be indicated in the method.

Angle-tightening in tight spaces. See **SCREWED JOINT, TORQUE/ANGLE TIGHTENING** .

Battery connector	2.5 Nm
Generator B+ terminal	15 Nm
Generator, fixed belt pulley	65 Nm
Generator, freewheel pulley	80 Nm
Starter motor	40 Nm
Starter motor B+ terminal	15 Nm
Windshield wiper arm	20 Nm

Rear window wiper arm	14 Nm
Upper screw of tail light, XC90	6 Nm
Lower screw of tail light, XC90	8 Nm
Tail light, other	10 Nm
Screw, speed sensor	10 Nm
Screw, left level sensor	60 Nm
Screw, washer fluid reservoir	17 Nm
Nut, generator cover	16 Nm

ELECTRICAL

General - Symptom Related Diagnostic Procedures

CHECK POWER STEERING FLUID, COOLANT ETC. IN THE GENERATOR (2003-12)

CHECK POWER STEERING FLUID, COOLANT ETC. IN THE GENERATOR

If, for any reason, there is power steering fluid, coolant etc on the generator's carbon brushes, slip rings or windings, there may be no charge.

Check for signs of oil or fluid on the outside of the reservoir, pump, pipe and hoses as well as on the generator. In the event of suspected spillage, remove the generator and check carbon brushes, slip rings and windings. If oil or fluid spillage is clearly visible the generator or parts of the generator must be replaced. If the cause of oil or fluid spillage is due to damaged parts, these must be replaced.

Remedy as necessary.

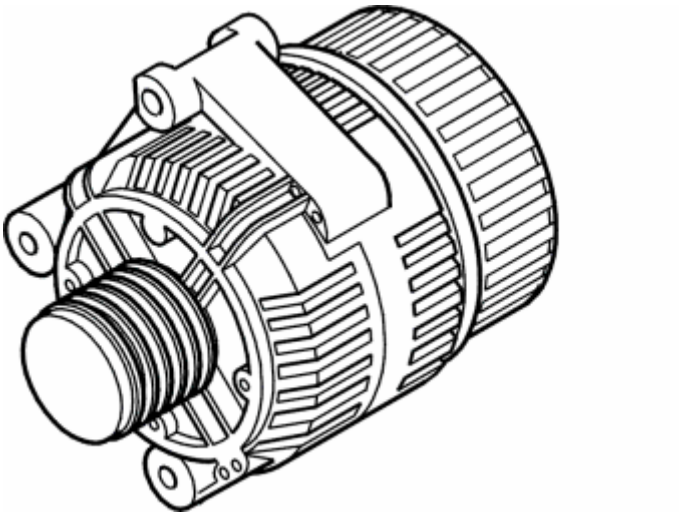

Fig. 1: Identifying Generator
Courtesy of VOLVO CARS CORPORATION

FAULT-TRACING INFORMATION

Condition

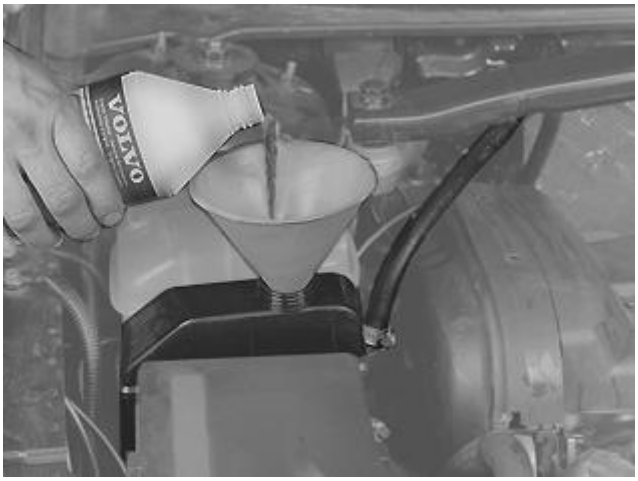

Fig. 2: Identifying Oil Level Topped Up In Servo Reservoir
Courtesy of VOLVO CARS CORPORATION

If, for any reason, there is power steering fluid, coolant etc on the generator's carbon brushes, slip rings or windings, there may be no charge.

Possible Source

- Oil or fluid in the generator.

Fault symptom[s]

- The battery discharges
- The "Generator not charging" warning lamp is lit when the engine is running.

CHECKING CABLE HARNESS (2003-12)

CHECKING CABLE HARNESS

Perform a general check of the engine's cable harness with regards to damage to the cables.

Remedy as necessary.

Other information

- see **CHECKING WIRING AND TERMINALS**

CHECKING FOR NOISE FROM THE STARTER MOTOR (2003-12)

CHECKING FOR NOISE FROM THE STARTER MOTOR

CHECKING FOR NOISE

Check for noise from the starter motor when a start is attempted. Only an "engagement sound" should be heard.

Noise can come from the starter mechanism, the electric motor and the bearing as well as from the starter collar and carrier.

When start attempts are stopped the starter motor should stop immediately without any noise.

In the event of noise, the starter motor or the starter collar or carrier should be replaced.

Remedy as necessary.

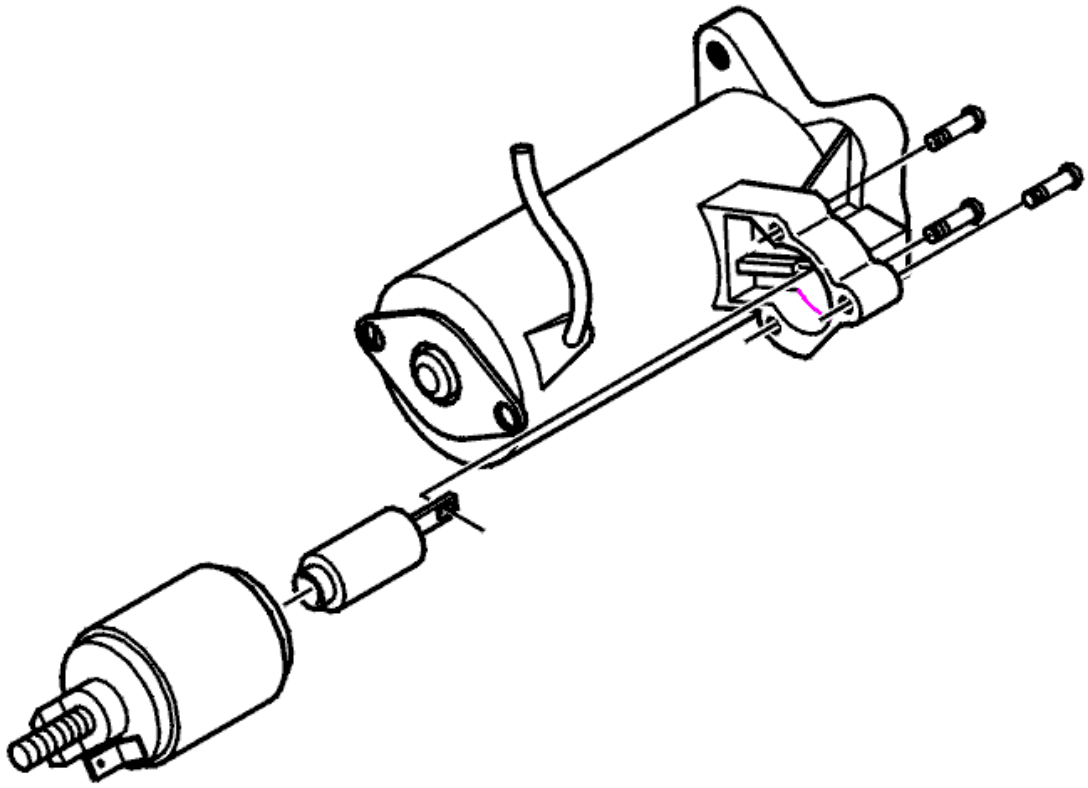

Fig. 3: Identifying Solenoid And Screws
Courtesy of VOLVO CARS CORPORATION

FAULT-TRACING INFORMATION

Condition

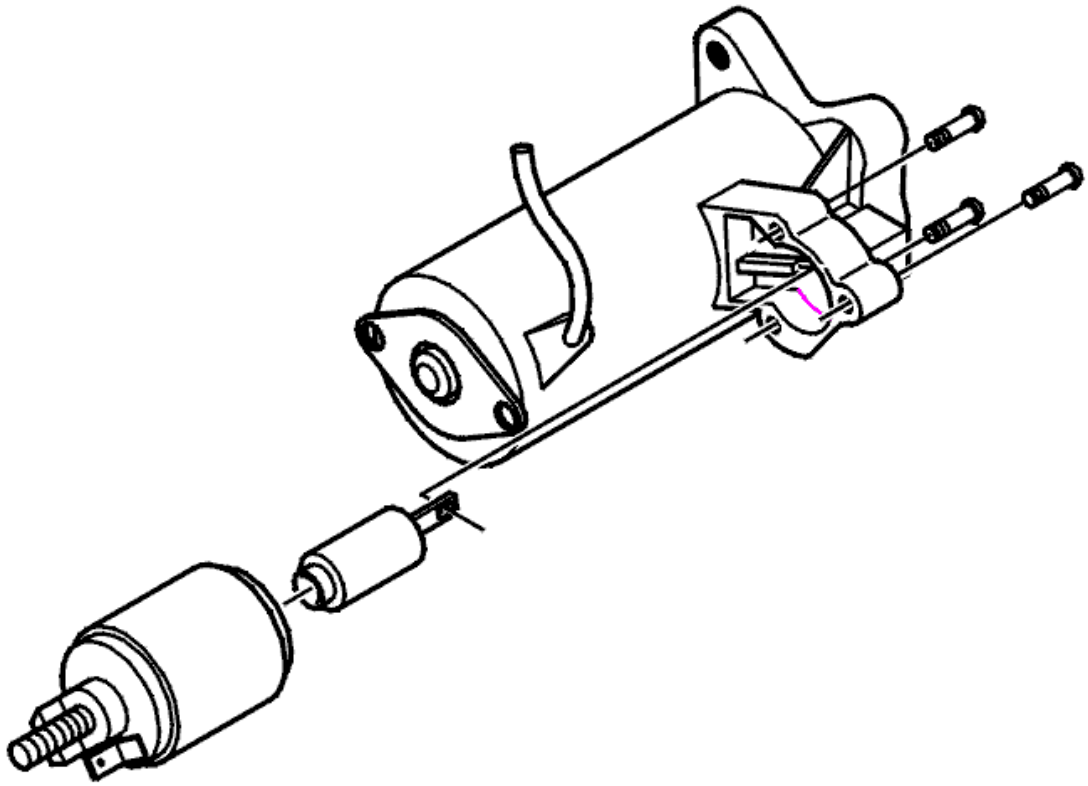

Fig. 4: Identifying Solenoid And Screws
Courtesy of VOLVO CARS CORPORATION

HINT: For vehicles with automatic start/stop of engine, the output and torque of the starter motor is increased. In addition, the gear ratio is changed, which means that the starter motor runs at higher speeds. This can cause the starter motor for vehicles with automatic start/stop of engine to be perceived as more audible.

If the starter motor bearing or starter drive and drive unit are defective, noise may occur when a start is attempted.

Possible Source

- Defective starter motor
- Defective starter collar or carrier.

Fault symptom[s]

- Noise from the starter motor.

CHECKING POWER CONSUMING COMPONENTS WHEN DRIVING (2003-12)

CHECKING POWER CONSUMING COMPONENTS WHEN DRIVING

The generator (GEN) has been designed to provide the car with sufficient current for normal electrical loads when driving. The battery functions as a buffer for extreme consumption or driving conditions. The battery may not charge sufficiently on cars with extra components or systems which consume energy when driving. The battery may not have time to charge if many start attempts are made with subsequently short journeys.

Check if the car is equipped with extra equipment which consumes energy.

Check if the car battery is the correct specification.

Remedy as necessary.

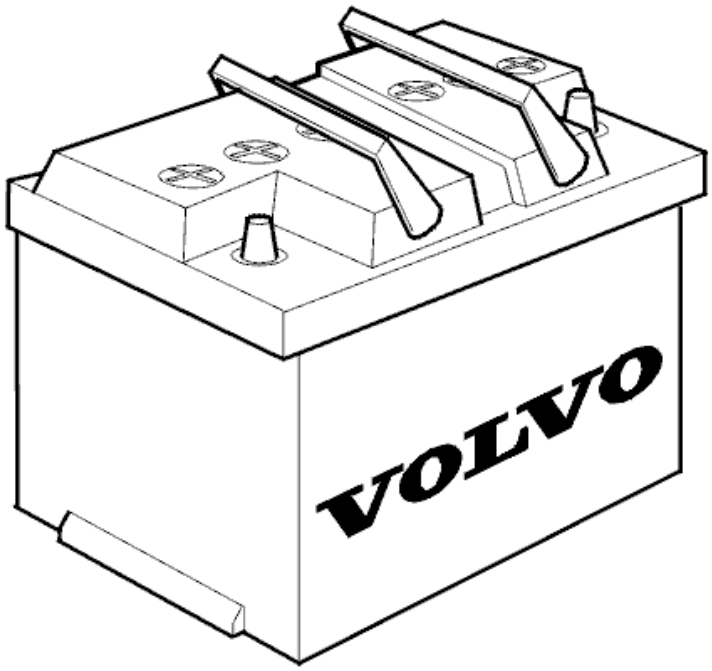

Fig. 5: Identifying Battery
Courtesy of VOLVO CARS CORPORATION

FAULT-TRACING INFORMATION

Condition

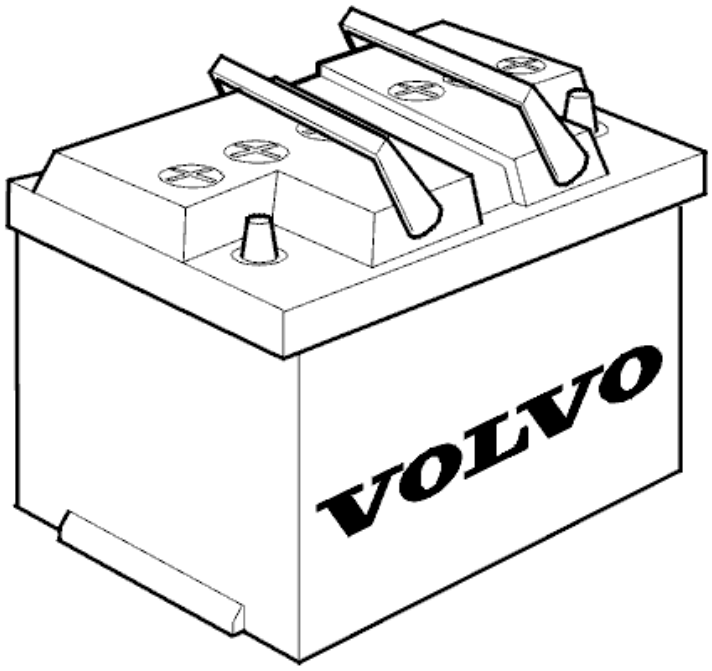

Fig. 6: Identifying Battery
Courtesy of VOLVO CARS CORPORATION

The battery may not charge sufficiently on cars with extra components or systems which consume energy when driving. The battery may not have time to charge if many start attempts are made with subsequently short journeys.

Possible Source

- Extra equipment which can consume energy.

Fault symptom[s]

- The battery discharges.

CHECKING RELEVANT DIAGNOSTIC TROUBLE CODES (DTCS) (2003-12)

CHECKING RELEVANT DIAGNOSTIC TROUBLE CODES (DTCS)

CHECK RELEVANT DIAGNOSTIC TROUBLE CODES FOR THE SYMPTOM STARTER MOTOR RUNS BUT ENGINE DOES NOT START

Check if any of the following diagnostic trouble codes have been generated in the vehicle. These should be remedied first.

- Diagnostic trouble codes in Central Electronic Module (CEM) for CAN-H, high-speed network.
- Diagnostic trouble codes in Central Electronic Module (CEM) for CAN-L, high-speed network.
- Diagnostic trouble codes (DTCs) in the central electronic module (CEM) with reference to communication with other control modules.
- Diagnostic trouble codes in Engine Control Module (ECM).

Secondly, symptom tests shall be performed for the symptom: Cranking motor running but engine does not start

Other diagnostic trouble codes (DTCs) stored in the control modules are not relevant for this symptom.

CHECKING RELEVANT DIAGNOSTIC TROUBLE CODES (DTCS) (2003-12)

CHECKING RELEVANT DIAGNOSTIC TROUBLE CODES (DTCS)

CHECKING THE RELEVANT DIAGNOSTIC TROUBLE CODES (DTCS) FOR THE STARTER MOTOR SYMPTOM DOES NOT RUN

Check if any of the following diagnostic trouble codes have been generated in the vehicle. These should be remedied first.

- Diagnostic trouble codes in the central electronic module (CEM) for the antenna ring and transponder. Diagnostic trouble codes for the antenna ring and transponder are related to the vehicle immobilizer.
- Diagnostic trouble codes in Central Electronic Module (CEM) with regards to S-voltage feed.
- Diagnostic trouble codes in central electronic module (CEM) with regards to relay Ext X2-power supply. Applies only to automatic transmissions.
- Diagnostic trouble codes in Central Electronic Module (CEM) with regards to communication with Transmission Control Module (TCM). Applies only to automatic transmissions.
- Diagnostic trouble codes in Transmission Control Module (TCM) with regards to gear position sensor. Applies only to automatic transmissions.

Secondly, symptom tests shall be performed for the symptom: Starter motor does not operate

Other diagnostic trouble codes (DTCs) stored in the control modules are not relevant for this symptom.

CHECKING S-VOLTAGE FEED (2003-04)

CHECKING S-VOLTAGE FEED

CAUTION: Avoid touching the pins in the control module and the corresponding connector on the cable harness. There is a risk of static discharge which could damage the control module. Discharge yourself and tools to be used by holding the tool's metal part and touching a body part on the car just before starting to work.

Fig. 7: Identifying Ignition In Off Position
Courtesy of VOLVO CARS CORPORATION

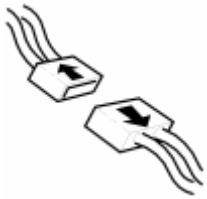

Fig. 8: Identifying Connectors
Courtesy of VOLVO CARS CORPORATION

- Ignition off.
- Insert the ignition key in the ignition switch.

  Check the S-voltage feed between the ignition and Central Electronic Module (CEM) for open circuit and short circuit. Check connectors for the ignition and Central Electronic Module (CEM) for contact resistance as well as damage to pins and connections.

  S voltage supply to the central electronic module (CEM) must be approximately battery voltage when the ignition key is in the ignition switch.

  Remedy as necessary.

  Other information

  - see **CONNECTING THE BREAKOUT BOX**
  - see **SIGNAL SPECIFICATION**
  - see **CHECKING WIRING AND TERMINALS**

Position	Terminal						
	30	15	15	X	15I	S	50
KeyOut	X						
0	X					X	
I	X			X		X	
II	X	X	X	X	X	X	
III	X	X	X			X	X

Fig. 9: Identifying Reference Chart For Checking S-Voltage Feed
Courtesy of VOLVO CARS CORPORATION

CHECKING THE AUXILIARIES BELT AND BELT TENSIONER (2003-06)

CHECKING THE AUXILIARIES BELT AND BELT TENSIONER

Check the tension of the auxiliaries belt. The belt tensioner must adjust the belt tension so that the belt does not slip on the generator pulley.

Check that the auxiliaries belt lies in the groove and runs in line with the pulleys.

Check the auxiliaries belt. Check for wear. An oily or damaged belt must be replaced.

Remedy as necessary.

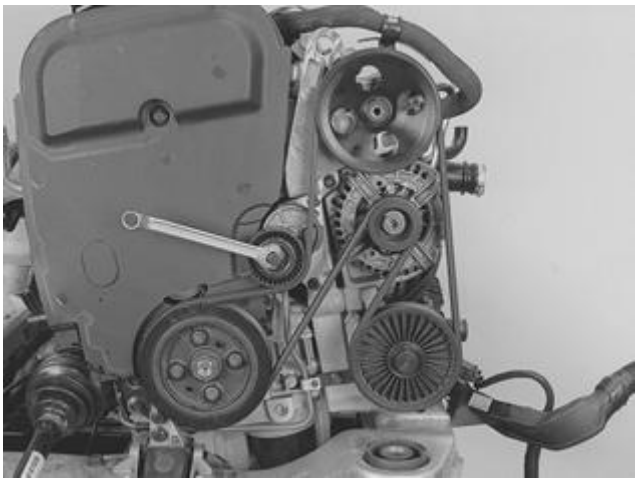

Fig. 10: Identifying Auxiliaries Belt And Pulleys
Courtesy of VOLVO CARS CORPORATION

FAULT-TRACING INFORMATION

Condition

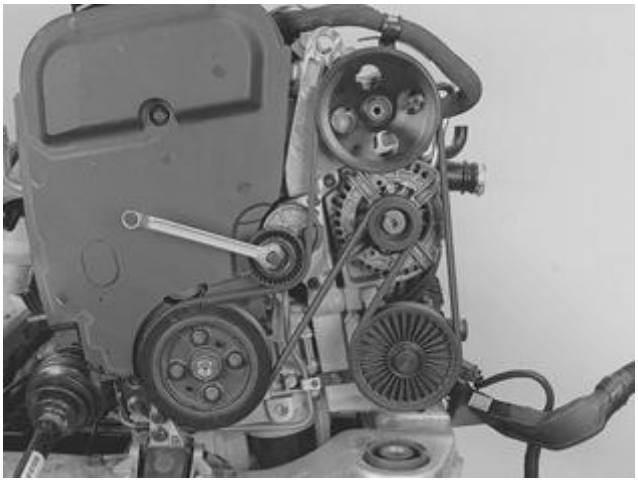

Fig. 11: Identifying Auxiliaries Belt And Pulleys
Courtesy of VOLVO CARS CORPORATION

The auxiliaries belt transfers power from the crankshaft pulley to the auxiliaries such as the power steering pump, air conditioning (A/C) compressor and generator (GEN). The belt tension is tensioned using an automatic belt tensioner. If the belt or belt tensioner is defective, the belt can slip at the belt pulleys, which means that the power that is to be transferred becomes friction heat between the belt and the pulley.

Possible Source

- Damaged auxiliary unit belt and belt tensioner.

Fault symptom[s]

- The battery discharges
- The "Generator not charging" warning lamp lights when the ignition is switched on
- Noise from the generator (GEN)
- Noise from the belt transmission.

CHECKING THE AUXILIARIES BELT AND BELT TENSIONER (B5254T2; 2007)

CHECKING THE AUXILIARIES BELT AND BELT TENSIONER

see **CHECKING THE AUXILIARIES BELT AND BELT TENSIONER**

FAULT-TRACING INFORMATION

see **FAULT-TRACING INFORMATION**

CHECKING THE AUXILIARIES BELT AND BELT TENSIONER (B8444S; 2007-11)

CHECKING THE AUXILIARIES BELT AND BELT TENSIONER

see **CHECKING THE AUXILIARIES BELT AND BELT TENSIONER**

FAULT-TRACING INFORMATION

see **FAULT-TRACING INFORMATION**

CHECKING THE BATTERY (2003-12)

CHECKING THE BATTERY

Check the battery. See **FAULT-TRACING AND TESTING THE BATTERY** . Check that the battery has the correct specification for the model.

Try a new battery if the specification is not OK.

NOTE: **If the car is equipped with a battery of different specification to the recommended battery but the battery is fault free, do not replace the battery.**

Remedy as necessary.

Other information

- To charge the battery, see **BATTERY, CHARGING** .

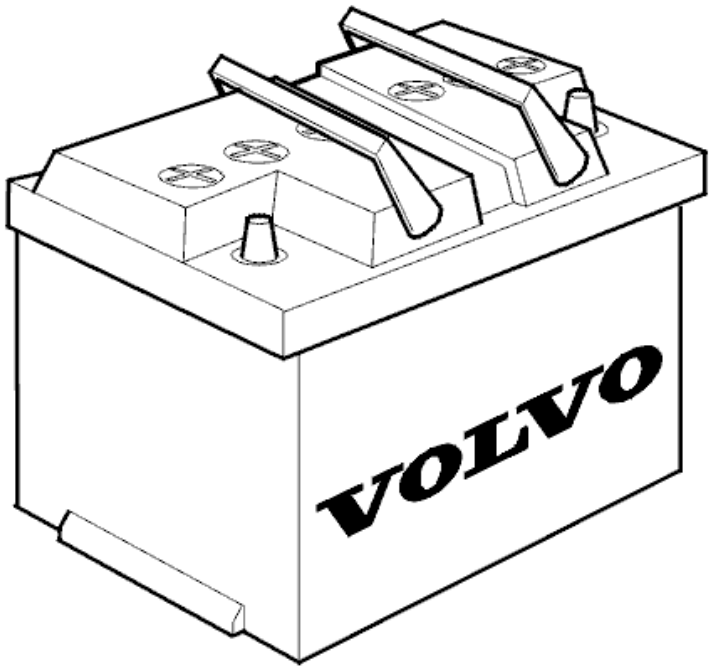

Fig. 12: Identifying Battery
Courtesy of VOLVO CARS CORPORATION

FAULT-TRACING AND TESTING THE BATTERY

NOTE: **As the graphics in this service information are used for different model years and/or models, some variation may occur. However, the essential information in the graphics is always correct.**

WARNING: **Oxyhydrogen is formed when batteries are being charged. Oxyhydrogen is extremely explosive. Smoking, welding, grinding and naked flames in the vicinity of the battery may result in the battery exploding causing personal injury and damage to the car. Only charge the battery in a well ventilated area. Ensure that ventilation is good**

WARNING: **Watch out for acid splash The battery contains sulfuric acid which can cause serious corrosive damage. If the electrolyte comes into contact with your eyes, skin or clothes - flush using large quantities of water. Contact a doctor immediately if acid splashes into eyes Use protective goggles when handling batteries.**

CLEANING AND CHECKING BATTERIES

CLEANING AND CHECKING BATTERIES EXTERNALLY

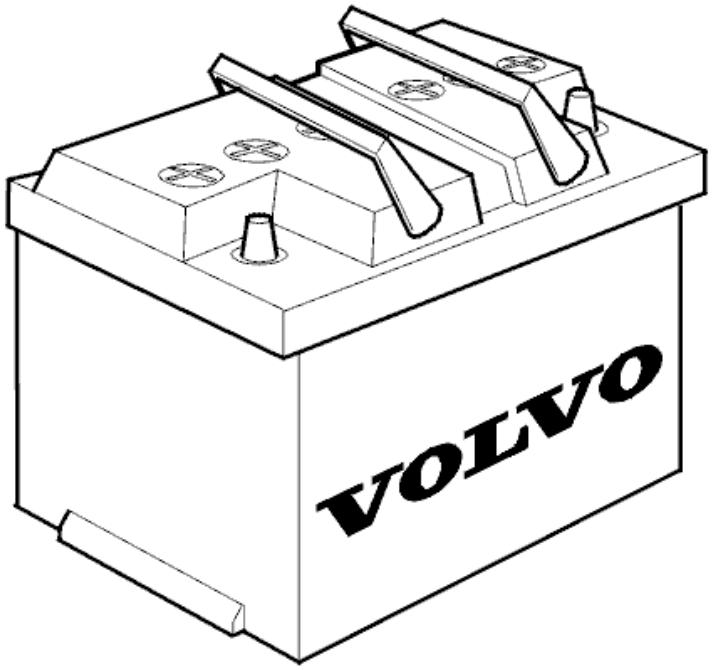

Fig. 13: Identifying Battery
Courtesy of VOLVO CARS CORPORATION

Cleaning

- Remove the battery from the car. Always disconnect the negative terminal first to prevent sparking
- Check that the battery is clean. Dirt can cause leakage currents between the battery posts
- Wash the battery using water. A mild cleaning agent can be used if necessary. Ensure that no dirt or water penetrates any of the cells
- Wipe clean and dry.

External checks

- Check the battery for signs of the following damage and remedy as necessary:
  - Dirty or loose posts
  - The battery is not secure and is loose in the engine compartment or cargo compartment
  - Worn, oxidized or damaged battery leads.

- Discard the battery if any of the following faults are found:
  - Cracked container

- Leakage
- Bent, loose or damaged terminals
- Battery damaged by freezing.

- Reinstall the battery in the car after checking it. Connect the positive terminal first
- Check that the battery is secure in the engine compartment or cargo compartment.

WARNING: The battery can develop oxyhydrogen, which is highly explosive. Ensure that any evacuation hose (the hose which evacuates oxyhydrogen from the cargo compartment) is correctly connected to the battery and that the hose leads downwards to the dedicated outlet in the bodywork

CHECKING THE ELECTROLYTE LEVEL

Check the electrolyte level. Top up the electrolyte if necessary. To check and top up, see **BATTERY ACID LEVEL, CHECKING** .

TESTING THE BATTERY

CHOOSING THE TEST METHOD

Select the method to be used to test the battery:

NOTE: There is now a new version of Volvo Battery Analyzer, Volvo Battery Analyzer 3200 . The main difference between the 3100 and the new 3200 is that it is possible to print via an IR port on the 3200. To print, see PRINT, VIEW OR EXPORT.

North America:

- see **TESTING WITH VOLVO BATTERY ANALYZER 3100/3200**

NOTE: North American dealers must always use Volvo Battery Analyzer 3100/3200.

Other markets:

- see **TESTING WITH VOLVO BATTERY ANALYZER 3100/3200**
- see **ALTERNATIVE TEST METHOD**

Volvo recommends that the battery is tested with the Volvo Battery Analyzer 3100/3200.

TESTING WITH VOLVO BATTERY ANALYZER 3100/3200

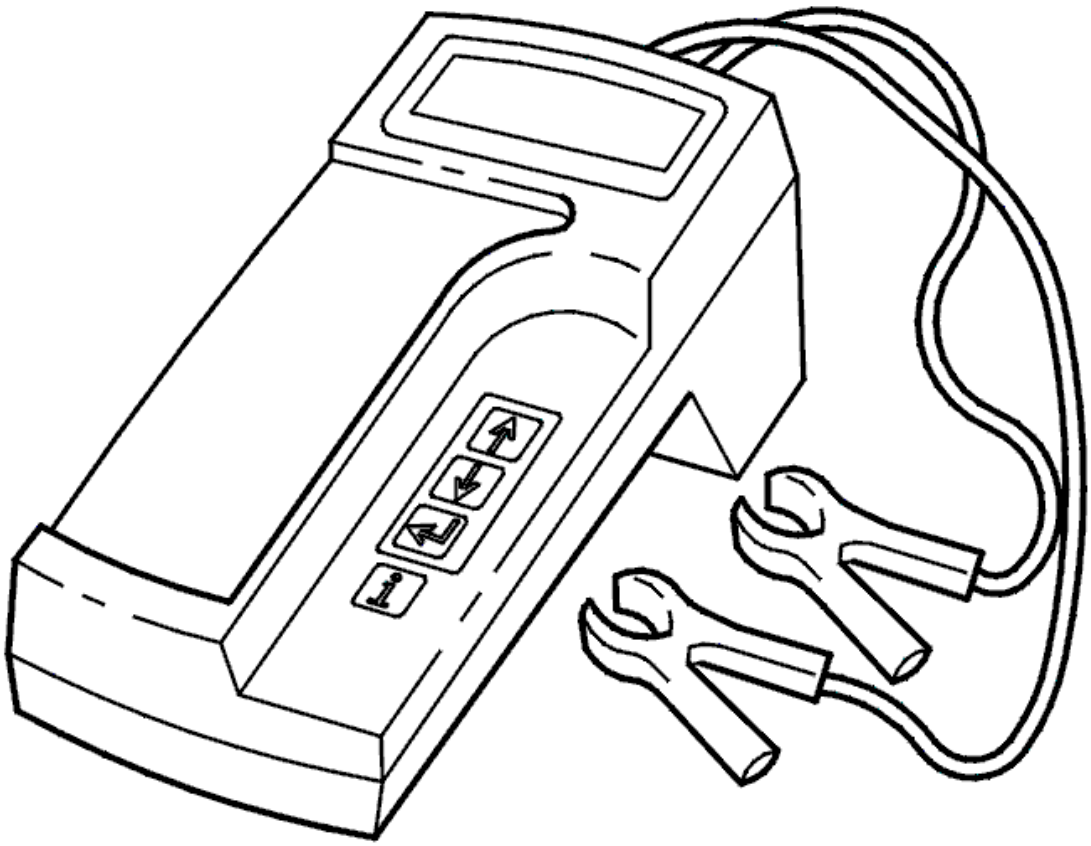

Fig. 14: Identifying Volvo Battery Analyzer 3100/3200
Courtesy of VOLVO CARS CORPORATION

Volvo Battery Analyzer 3100/3200 is used to test batteries as follows

Volvo Battery Analyzer 3100/3200 is used to test the battery. The following is a description of how the tool is used and the text shown in the display.

For further instructions, see the separate instruction card supplied with Volvo Battery Analyzer 3100/3200.

Setting the language

Set the language according to the instructions on the separate instruction card. English must be selected for markets where the relevant language cannot be selected for Volvo Battery Analyzer 3100/3200.

The display when testing batteries

Connect the tool cables directly to the battery.

The start window (below) is displayed for 3 seconds:

VOLVO 3100/3200 VERSION 1.0

NOTE: **The test tool must always be connected directly to the battery posts or to the cable terminals on the battery leads. The resistance of the battery leads may affect the readings and provide incorrect results if the tool is connected anywhere other than in the engine compartment.**

Scroll to select whether the test will take place inside or outside the vehicle (see the instruction card). Outside the car means that the battery is not connected to the vehicle's electrical system. Then press ENTER (see the instruction card).

NOTE: **It is important that the correct test mode is selected (inside or outside the vehicle) to obtain accurate results.**

SELECT TEST ^˘
IN-VEHICLE <--

SELECT TEST ^˘
OUT-OF-VEHICLE <--

Then select whether the battery to be tested is a genuine Volvo battery or another make.

BATTERY TYPE ^˘
VOLVO BATTERY <--

BATTERY TYPE ^˘
NON-VOLVO <--

Establish the test standard by checking the markings on the battery. CCA/SAE and DIN tests use different standards. Select the test standard. Press ENTER.

NOTE: **North American dealers must always select the CCA test**

NOTE: **It is essential that the battery markings are read correctly (i. e. whether the cold cranking amperes is listed according to the CCA/SAE or DIN standard. This is listed on the label on the battery. See BATTERY MARKING .**

SELECT MODE ^˘
BY CCA<--

SELECT MODE ^˘
BY DIN (A) <--

Scroll to the relevant value for the cold cranking amperes (cold cranking amperes according to CCA/SAE or DIN - listed on the battery). Press ENTER:

SELECT RATING ^˘
500 A <--

NOTE: The following display applies only to North America

SELECT RATING ^˘
500 CCA <--

The instrument now analyzes the battery and one of the following is displayed:

*** TESTING ***
500 A (SAE)

*** TESTING ***
500 A (DIN)

When the analysis is complete, the instrument will display one of the following results:

xxxx V
GOOD BATTERY

xxxx V
GOOD-RECHARGE

xxxx V
CHARGE & RETEST

xxxx V
REPLACE BATTERY

xxxx V
BAD CELL-REPLACE

NOTE: The text describes the condition of the battery.

The voltage displayed is an indication of the charge status of the battery.

After displaying the above result, the test instrument will shift between this result and the charge status. The state of charge (%) is displayed in intervals of 25%.

NOTE: The window for the state of charge is only displayed when testing VOLVO batteries.

GOOD BATTERY

If GOOD BATTERY is displayed, the following text for the state of charge will be shown:

STATE OF CHARGE: 75-100%

GOOD-RECHARGE/CHARGE & RETEST

If GOOD-RECHARGE or CHARGE & RETEST is displayed, one of the following alternatives for the state of charge will be shown in the display:

STATE OF CHARGE: 0-25%

STATE OF CHARGE: 25-50%

STATE OF CHARGE: 50-75%

CHARGE & RETEST means that the battery must be recharged and then tested again. The battery must be discarded if the same result is obtained.

REPLACE BATTERY/BAD CELL-REPLACE

If REPLACE BATTERY or BAD CELL-REPLACE is displayed, the following text for the state of charge will be shown:

STATE OF CHARGE: REPLACE BATTERY

REPLACE BATTERY means that the battery must be discarded.

ADDITIONAL FUNCTIONS OF THE VOLVO BATTERY ANALYZER 3100/3200

Test code

The INFORMATION (i) button (see the instruction card) can be pressed at any time when reading off the test results or state of charge to read off the test code. Press INFORMATION again to return to test results or state of charge. The test code is used when making warranty claims.

TEST CODE XXXX XXXX

NOTE: The test code is only accessible when testing genuine VOLVO batteries.

If the INFORMATION button is pressed after testing a battery other than a VOLVO original battery, the following message is displayed:

NON-VOLVO BATTERY TEST

Charging code

The ENTER button (see the instruction card) can be pressed at any time when reading off test results or the state of charge to obtain the charging code. Press ENTER again to return to the test results or state of charge.

CHARGE CODE XX

NOTE: This function is not used at present.

Eliminating surface charging

When testing in the car is selected and the tester detects surface charge, a message will be displayed requesting that the headlamps are switched on to remove the surface charge. For an explanation of surface charging, see **SURFACE CHARGING** .

1/ SURFACE CHARGE DETECTED

2/ TURN KEY ON HEADLAMPS ON

3/ LOAD ON DETECTED

4/ TURN KEY OFF HEADLAMPS OFF

5/ LOAD OFF DETECTED

After the tester has detected that the surface charge has gone, it will automatically carry out the test and display the results as described previously.

** RETESTING ** 500 A (SAE)

** RETESTING **
500 A (DIN)

If the surface charge is not removed correctly, a warning window will be displayed, followed by a message. These two windows will be displayed for 3 seconds each, followed by an appropriate remedy as in windows 2 and 4 above.

*** WARNING ***

LOAD ON
NOT DETECTED

LOAD OFF
NOT DETECTED

If this sequence is repeated for more than 30 seconds, the following window will be displayed. The tester must then be disconnected from the battery, reconnected and the test started from the beginning again.

DISCONNECT
AND RETEST

Testing before or after charging

To obtain a more exact test result, the tester will ask if it is testing before or after charging. Select the correct alternative. Then press the ENTER button (see the instruction card).

SELECT MODE ^˘
BEFORE CHARGE <--

SELECT MODE ^˘
AFTER CHARGE <--

Detecting system noise

If the tester detects system noise from the control modules, ignition system or another consumer the following message will be displayed. Switch off as many power consuming components as possible. The tester will retest automatically.

SYSTEM NOISE
CHECK LOADS

** RETESTING **
500 A (SAE)

** RETESTING **
500 A (DIN)

Temperature compensation

If the tester determines that the battery temperature may affect the test result, the following message is displayed. Check the temperature of the battery. Then select above or below 0°C (32°F). Then press ENTER (see the instruction card) to continue the test.

In cold conditions, measure the temperature of the battery container.

BATTERY TEMP. ^˘
ABOVE 0°C <--

BATTERY TEMP. ^˘
BELOW 0°C <--

The retest window will be displayed and then the test result.

** RETESTING **
500 A (SAE)

** RETESTING **
500 A (DIN)

Protection against 24-volt systems

If for any reason an attempt is made to test a battery other than a 12 volt battery, or if an attempt is made to test both the 12 volt batteries in a 24-volt system at the same time, the following warning window will be displayed:

NON 12 VOLT
BATTERY DETECTED

Message to check the connections

If a good connection to the battery is not obtained, the following message will be displayed. If this is the case, check the connections by working the cable terminals on the test tool forwards and backwards.

CHECK CONNECTION

ALTERNATIVE TEST METHOD

NOTE: **This method does not apply to North American dealers. North American dealers must always follow the Volvo Battery Analyzer 3100/3200 test method.**

Follow the steps below:

1. Checking the density of the acid

The density of the acid can be measured using an electrolyte gauge or a refractometer on the battery at room temperature.

Measure the density in all the cells. Check the following:

- If the density is above 1.225 g/cm^3 in each cell and the difference in density between the cells is less than 0.03 g/cm^3 , the battery must be tested for load. See point 4 below, *Load check*
- If the density is below 1.225 g/cm^3 in each cell and the difference in density between the cells is less than 0.03 g/cm^3 , the battery must be charged. See **BATTERY, CHARGING**
- If the density in two adjacent cells is considerably lower than in other cell (i. e. if the difference is greater than 0.03 g/cm^3 , there is probably leakage between the two cells. Discard the battery
- If the density is markedly lower in only one cell, the fault is probably a short-circuit. Check the battery acid for discoloration. Discard the battery.

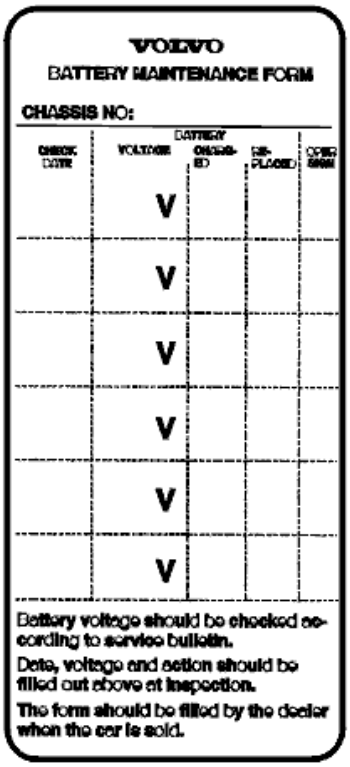
VOLVO

BATTERY MAINTENANCE FORM

CHASSIS NO:

CHECK DATE	BATTERY VOLTAGE	CHARGED	RE-PLACED	OPER SIGN
	V			
	V			
	V			
	V			
	V			
	V			

Battery voltage should be checked according to service bulletin.

Date, voltage and action should be filled out above at inspection.

The form should be filled by the dealer when the car is sold.

Fig. 15: Battery Maintenance Card
Courtesy of VOLVO CARS CORPORATION

2. Checking the stand-by voltage

Check the stand-by voltage as follows:

- Disconnect the cable from the battery negative terminal
- Leave the battery disconnected for at least 2 hours
- Measure the stand-by voltage using a digital multimeter. The battery must be recharged immediately if the stand-by voltage is lower than 12.45 V. For information about charging, see **BATTERY, CHARGING**
- If the car has not been delivered to a customer - update the Battery Maintenance Card, as shown
- Connect the battery negative terminal.

3. Charging

If the battery is not charged, it must be charged according to **BATTERY, CHARGING** .

Check that the battery takes the charge.

- If the charge is OK, the battery must be load tested. See point 4, *Load check*
- The battery may be sulfated if it does not charge. Sulfating means that the battery is damaged due to insufficient charge. Discard the battery.

4. Load check

During a load test, the load current must rise to at least 3 times the battery capacity in amperes (A).

For example: A battery with a capacity of 60 Ah must be loaded with a current of 180 A (= 3 x 60).

Read off the battery voltage after approximately 15 seconds. The voltage must then be 9.6 V. If this voltage is not reached there may be an open-circuit or a short-circuit in the battery.

- An **open-circuit** can be identified, for example, by the voltage dropping rapidly towards 0 V when the battery is loaded, or if the voltmeter does not give a reading when connected to the battery. Discard the battery if there is an open-circuit
- A **short-circuit** is most often evident under load when the short-circuited cell or cells begin to boil. Discard the battery if there is an short-circuit.

5. Self-discharge

If the battery has been checked according to points 1-4 above, but is not showing signs of the above faults, set the battery to self-discharge to check that the self-discharge is normal.

If the battery self-discharges abnormally and does not retain a charge for more than a couple of days, this may be a sign of a potential short-circuit. Discard the battery.

PRINT, VIEW OR EXPORT

PRINT, VIEW OR EXPORT THE MOST RECENT TEST RESULT (ONLY VOLVO BATTERY ANALYZER 3200)

1. Press the PRINT key. Hold the key down until the display shows
2. Choose between "Print", "View" or "Export" and confirm your choice
3. If you choose to print, you must first ensure that the printer is switched on and correctly positioned with the Volvo Battery Analyzer 3200
4. If you choose to export, you must first ensure that the printer is switched on and correctly positioned in relation to Volvo Battery Analyzer 3200.

SETTING ADAPTED PRINT-OUTS (ONLY VOLVO BATTERY ANALYZER 3200)

The print-out can be adapted to include the company name, address and telephone number.

NOTE: Volvo Battery Analyzer 3200 must not be connected to the car battery.

Press the PRINT key and hold it down until the display appears.

Use the arrow keys to scroll down to "Setting user address". Press the ENTER button.

Use the arrow keys to move to the required character or letter. Press the ENTER key to confirm your choice. Then proceed until all information has been entered.

The maximum number of rows is 6.

FAULT-TRACING INFORMATION

Condition

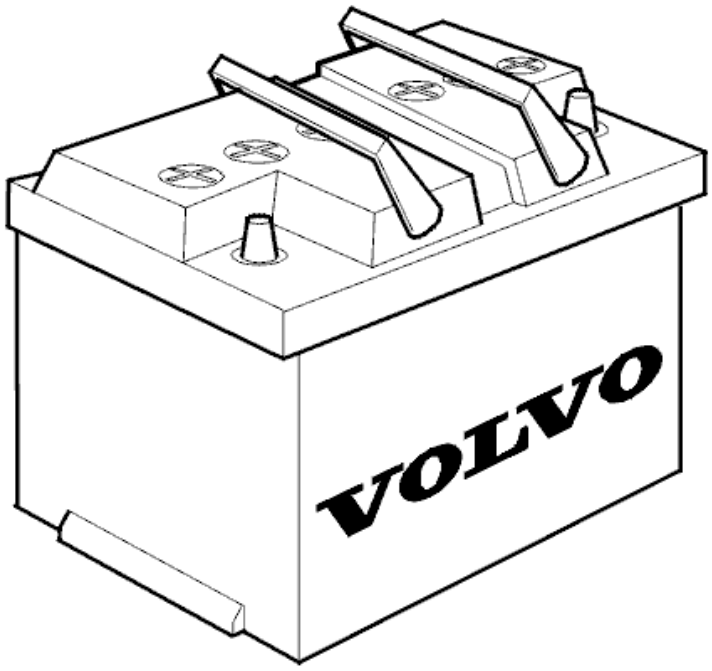

Fig. 16: Identifying Battery
Courtesy of VOLVO CARS CORPORATION

The function of the battery is to store electrical energy that can be used later when the generator (GEN) is not charging - for parking lamps and starting the engine for example. The battery also operates as an energy reserve when the capacity of the generator (GEN) is insufficient and needs to be supplemented.

For information on batteries, see **DESIGN AND FUNCTION** and **TERMINOLOGY**

Possible Source

- Damaged battery.

Fault symptom[s]

- The battery discharges
- The starter motor does not turn
- Low rotation speed in the starter motor.

CHECKING THE BATTERY AND CONNECTORS (2003-12)

CHECKING THE BATTERY AND CONNECTORS

NOTE: **This test assumes that no relevant diagnostic trouble codes (DTCs) are stored for the symptom.**

Check the battery leads at the battery, the bodywork and the starter motor.

If the terminals are not properly tightened, the battery cannot deliver sufficiently high voltage to the starter motor.

Remedy as necessary. Check the general condition of the battery. Use the battery tester.

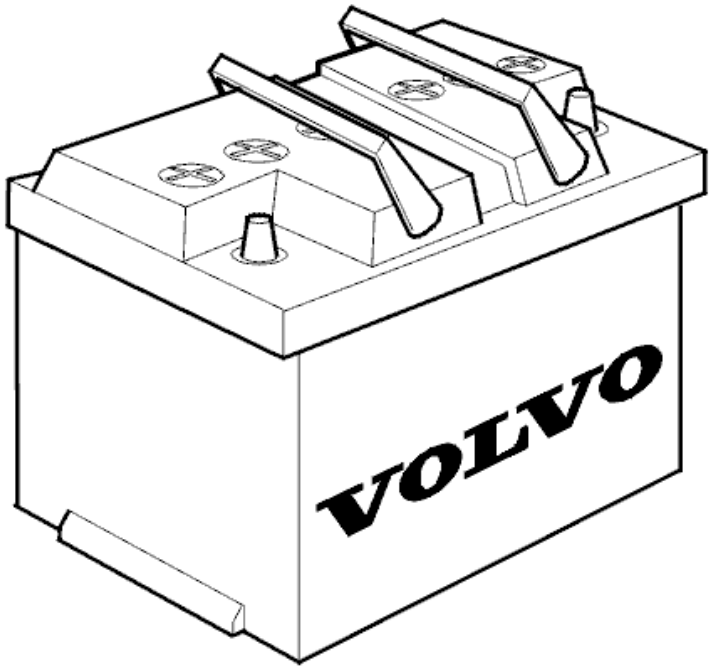

Fig. 17: Identifying Battery
Courtesy of VOLVO CARS CORPORATION

Were any faults found in the batteries?

- **YES**

  Refer to **CHECKING THE BATTERY**

- **NO**

  FAULT NOT FOUND: Troubleshooting has been completed.

CHECKING THE BATTERY

Check the battery. See **FAULT-TRACING AND TESTING THE BATTERY** . Check that the battery has the correct specification for the model.

Try a new battery if the specification is not OK.

NOTE: **If the car is equipped with a battery of different specification to the recommended battery but the battery is fault free, do not replace the battery.**

Remedy as necessary.

Other information

- To charge the battery, see **BATTERY, CHARGING** .

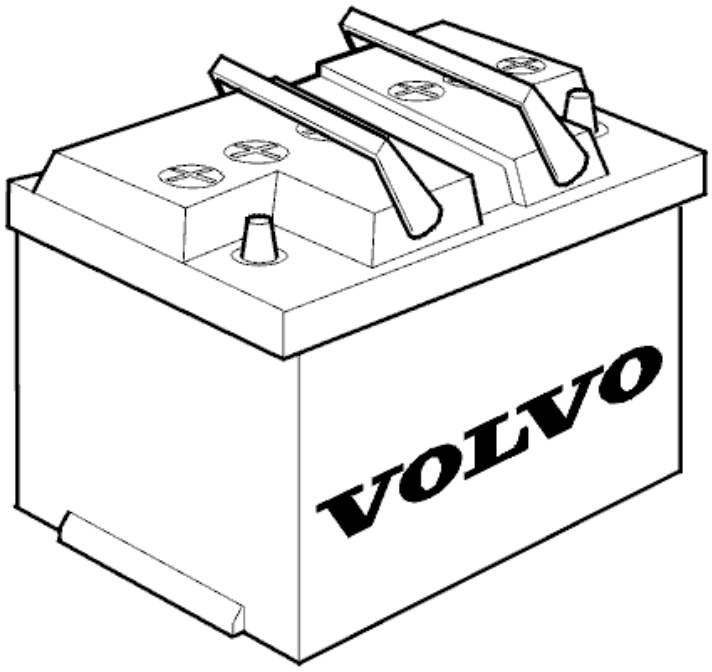

Fig. 18: Identifying Battery
Courtesy of VOLVO CARS CORPORATION

FAULT-TRACING INFORMATION

see **FAULT-TRACING INFORMATION**

CHECKING THE BEARING AND SECURING THE GENERATOR (GEN) (2003-06)

CHECKING THE BEARING AND SECURING THE GENERATOR (GEN)

Check that the generator (GEN) is correctly screwed into place.

Check that there is no play in the generator (GEN) bearings.

HINT: It is easier to check if the generator is secure and the bearing has no play by removing the accessory drive belt.

Remedy as necessary.

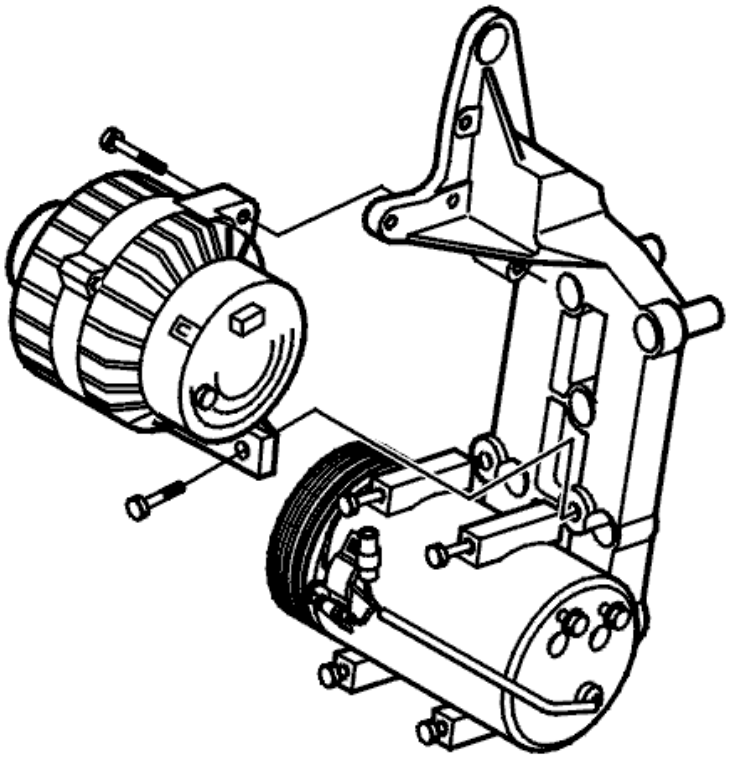

Fig. 19: Generator And Bracket
Courtesy of VOLVO CARS CORPORATION

FAULT-TRACING INFORMATION

Condition

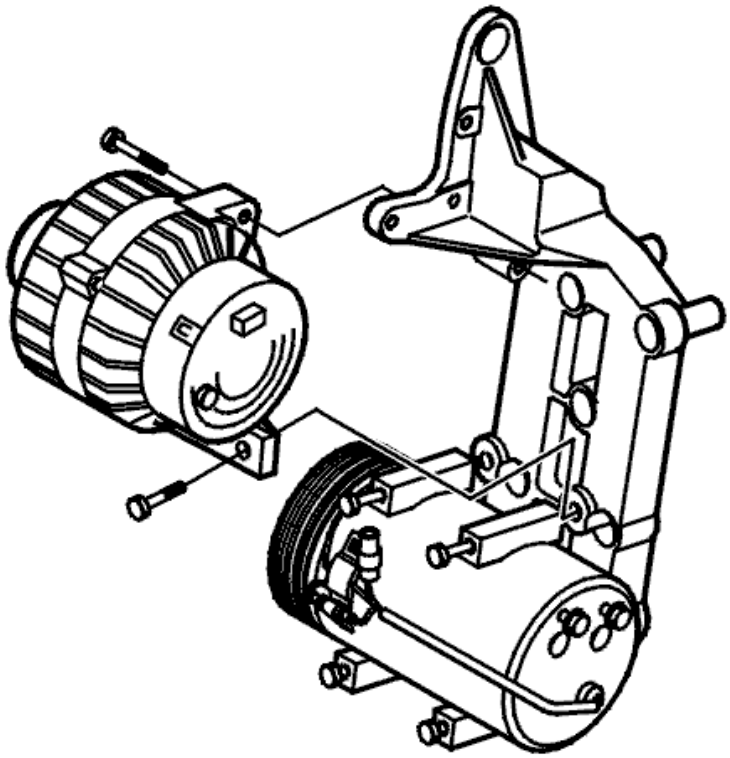

Fig. 20: Generator And Bracket
Courtesy of VOLVO CARS CORPORATION

If the generator (GEN) is not correctly installed it can result in noise from the generator (GEN) and auxiliaries belt.

Loose generator (GEN) bearings can cause noise in the generator (GEN).

Possible Source

- The generator (GEN) is not correctly installed
- Defective bearings.

Fault symptom[s]

- Noise from the generator (GEN)
- Noise from the belt transmission.

CHECKING THE BEARING AND SECURING THE GENERATOR (GEN) (B5254T2; 2007)

CHECKING THE BEARING AND SECURING THE GENERATOR (GEN)

see **CHECKING THE BEARING AND SECURING THE GENERATOR (GEN)**

FAULT-TRACING INFORMATION

see **FAULT-TRACING INFORMATION**

CHECKING THE BEARING AND SECURING THE GENERATOR (GEN) (B8444S; 2007-11)

CHECKING THE BEARING AND SECURING THE GENERATOR (GEN)

see **CHECKING THE BEARING AND SECURING THE GENERATOR (GEN)**

FAULT-TRACING INFORMATION

see **FAULT-TRACING INFORMATION**

CHECKING THE CONTROL SOLENOID AND STARTER MOTOR (2003-12)

CHECKING THE CONTROL SOLENOID AND STARTER MOTOR

PREPARATORY CHECKS

There are three starter motor checks that should be performed to avoid extra work.

The checks are and should be troubleshooted in the following order:

1. Checking voltage drop in the starter motor and battery circuits
2. Checking solenoid and starter motor
3. Checking the starter motor

Before continuing troubleshooting of the starter motor, check as above.

- **Continue**

  Refer to **CHECKING TERMINAL**

CHECKING TERMINAL

NOTE: **To carry out this test, the battery must be fault free and the starter motor relay must be checked and there must be no diagnostic trouble codes (DTCs) stored for the symptom.**

WARNING: **If the engine cooling fan (FC) is running, wait until it has stopped.**

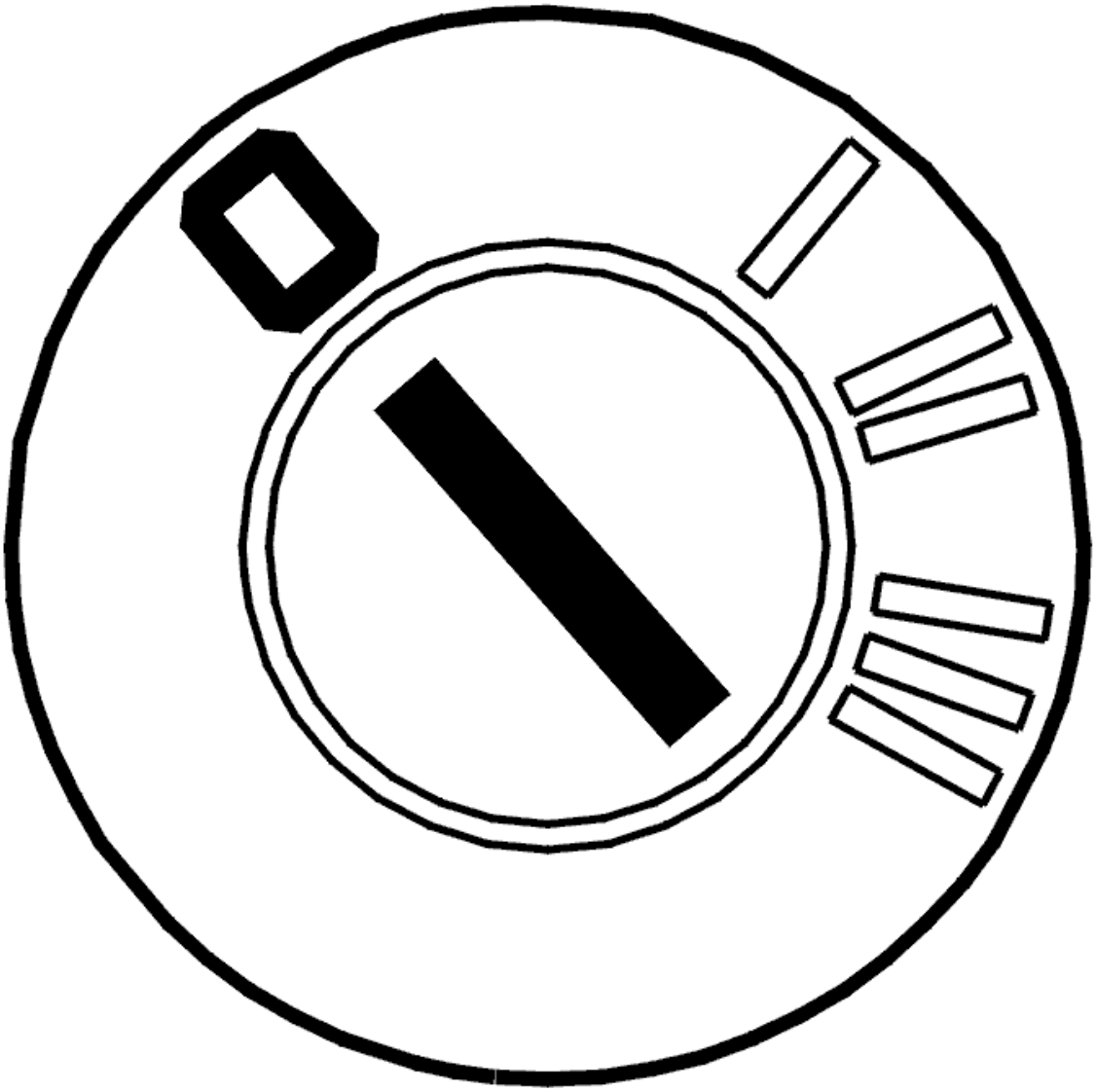

Fig. 21: Identifying Ignition OFF
Courtesy of VOLVO CARS CORPORATION

- Ignition off.
- The gear lever shall be in neutral position.
- Parking brake applied.
- Check the fuse for the starter motor.

  Check terminal #1(30). Check for:

  - Damaged terminal.
  - Loose terminal.
  - Rust, oxidation or other deposit.

  Remedy as necessary.

Check terminal #2(50). Check for:

- Damaged terminal.
- Loose terminal.
- Rust, oxidation or other deposit.

The terminal must be replaced if any of the above faults are found on terminal #2(50).

When replacing, connection with P/N 30765120 must be used. The terminal is supplied with corresponding cable. The cable must be adapted to a suitable length. The cable must not be stretched when the terminal is installed.

Remedy as necessary.

Other information

- see **CONNECTORS, REPAIR**
- see **JOINING THE CABLES**
- see **CABLE TERMINALS SURFACE TREATMENT**

Select an alternative to continue

1. If faults are found on any of the terminals and remedied. Refer to **VERIFICATION**.
2. If no faults are found on the terminals. Refer to **CHECKING THE CONTROL SOLENOID**.

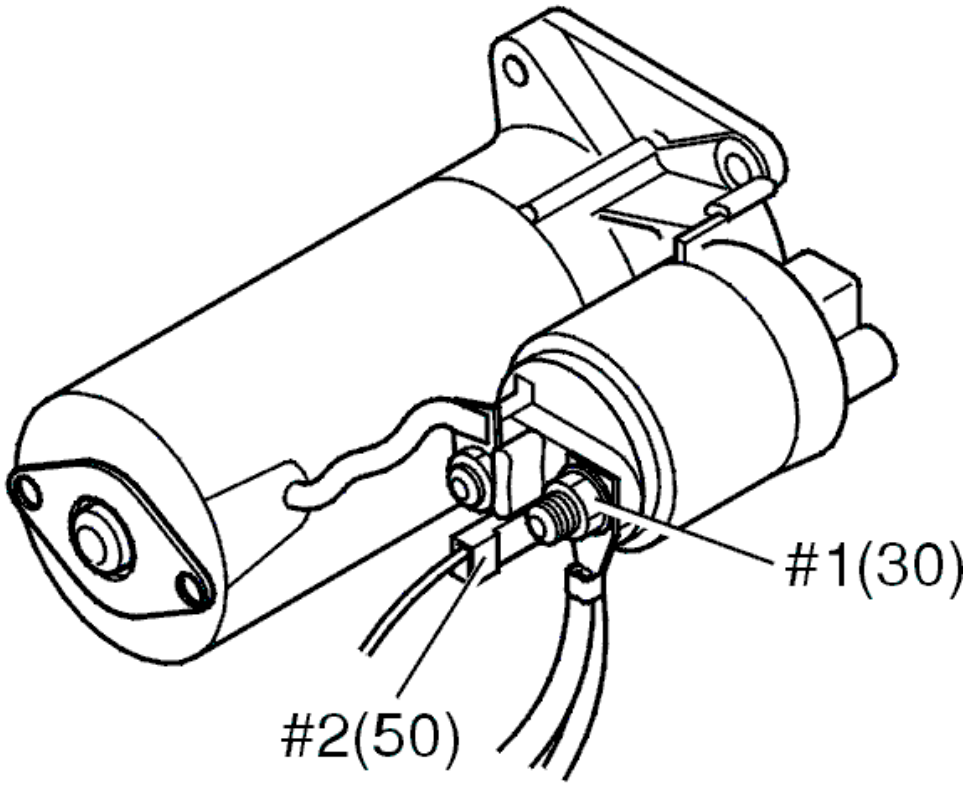

Fig. 22: Identifying Starter Motor Terminals
Courtesy of VOLVO CARS CORPORATION

CHECKING THE CONTROL SOLENOID

NOTE: **The test assumes that the battery is fault free, that the starter motor circuit has been checked and that no relevant diagnostic trouble codes (DTCs) for the symptom are stored.**

WARNING: **If the engine cooling fan (FC) is running, wait until it has stopped.**

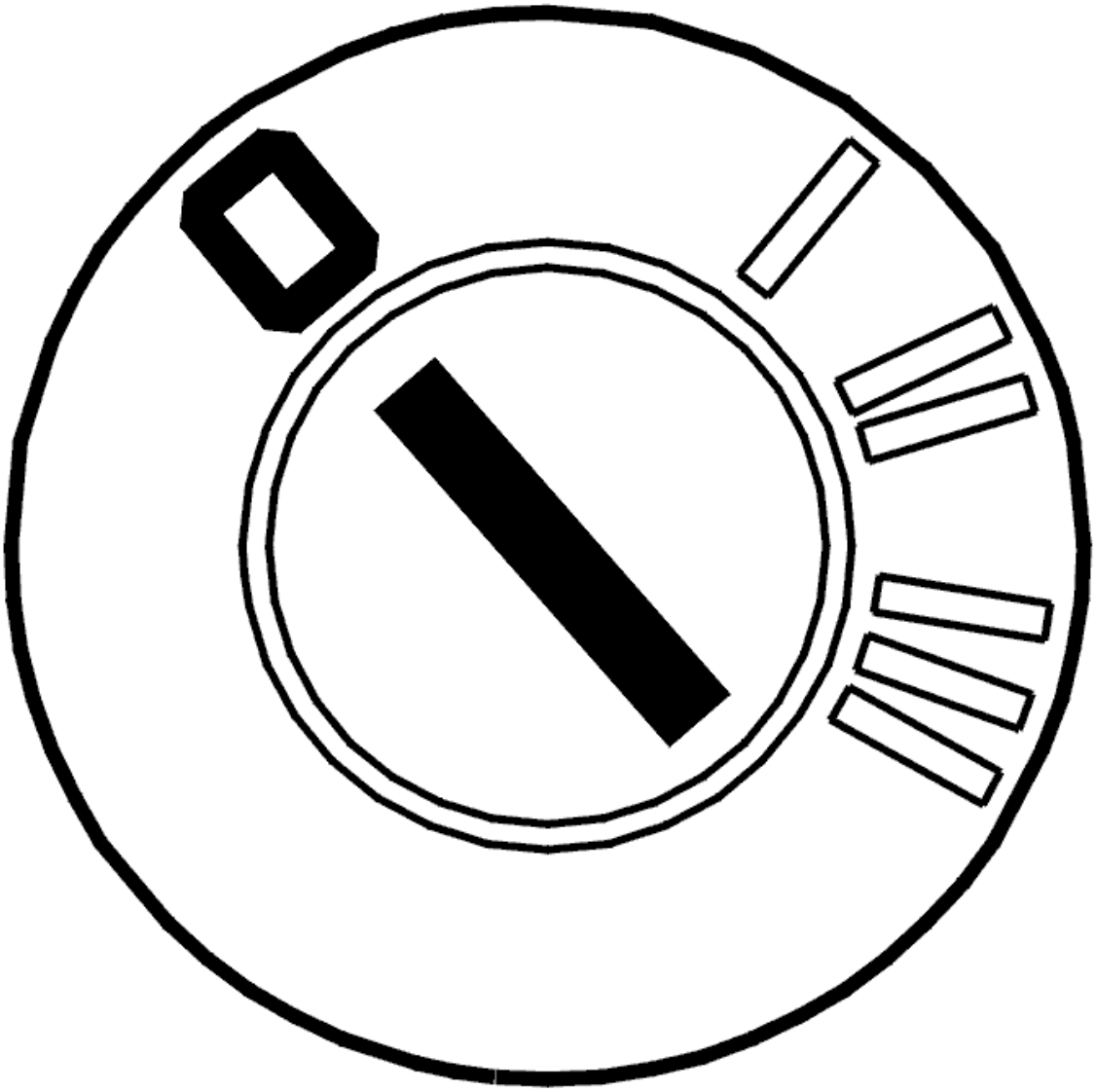

Fig. 23: Identifying Ignition OFF
Courtesy of VOLVO CARS CORPORATION

- Ignition off
- Select neutral (automatic transmissions: "N"). Apply the parking brake
- The function of the control solenoid must be checked by temporarily bridging the power supply for the control solenoid terminal #1 (30) and the control signal from the starter motor relay #2(50) on the **control solenoid** . The control solenoid should click when bridged.

Other information

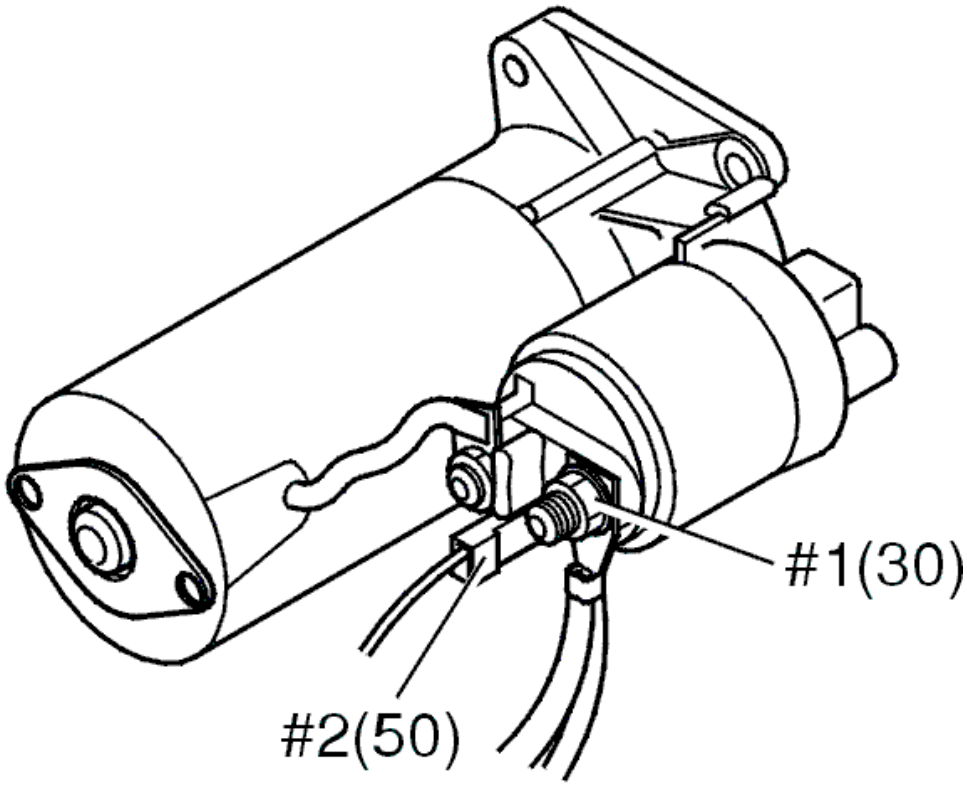

Fig. 24: Identifying Starter Motor Terminals
Courtesy of VOLVO CARS CORPORATION

Does the starter motor turn?

- **YES**

  Refer to **VOLTAGE-DROP IN CABLES TO SOLENOID**

- **NO**

  Refer to **CHECKING THE STARTER MOTOR**

VOLTAGE-DROP IN CABLES TO SOLENOID

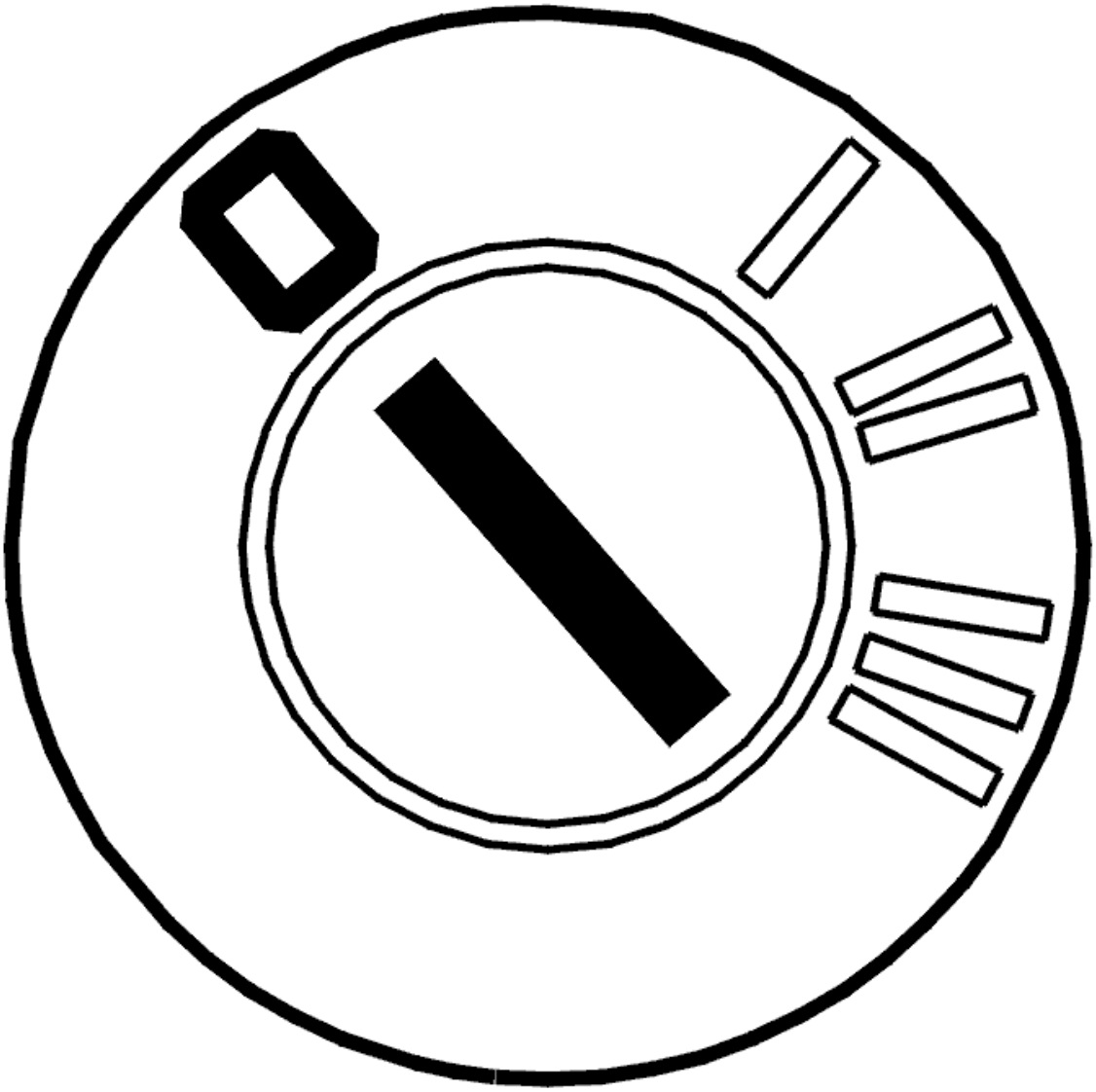

Fig. 25: Identifying Ignition OFF
Courtesy of VOLVO CARS CORPORATION

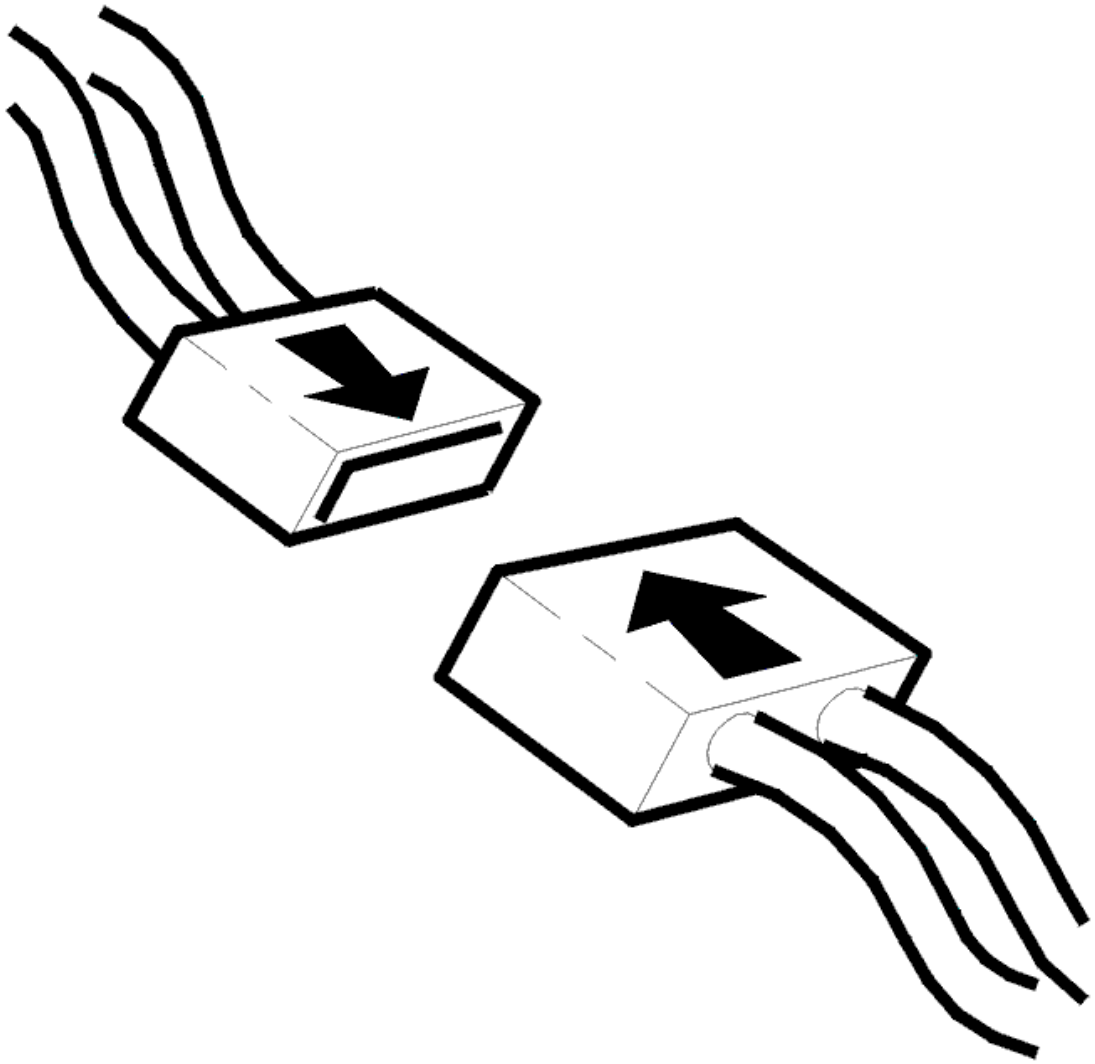

Fig. 26: Connecting Connector
Courtesy of VOLVO CARS CORPORATION

- Ignition off
- Reconnect the connectors and relay
- Connect a voltmeter to control solenoid terminal #2 (50)
- Check the voltage at the start position.

  If the voltage falls below approximately 9 V in the cranking position, there is a voltage drop in the wiring circuit for the solenoid.

  Select an alternative to continue

  1. For extended information about voltage drops in the solenoid wiring. Refer to **CHECKING VOLTAGE DROP IN THE STARTER MOTOR AND BATTERY CIRCUITS**.

2. The voltage dropped too low in the cranking position. A fault was found. Troubleshooting has been completed.
3. No fault detected during the test. Troubleshooting has been completed.

CHECKING THE STARTER MOTOR

There is an internal fault in the starter motor if the starter motor does not function despite having power supply.

Check the brush holders and carbon brushes for the starter motor. Check for wear.

Check if the starter motor rotor or other components have jammed so that the starter motor is blocked.

HINT: If the starter motor is blocked the interior lighting will dim when the starter motor is activated.

Try a new starter motor if no fault is found.

Remedy as necessary.

Other information:

- see **CHECKING WIRING AND TERMINALS**

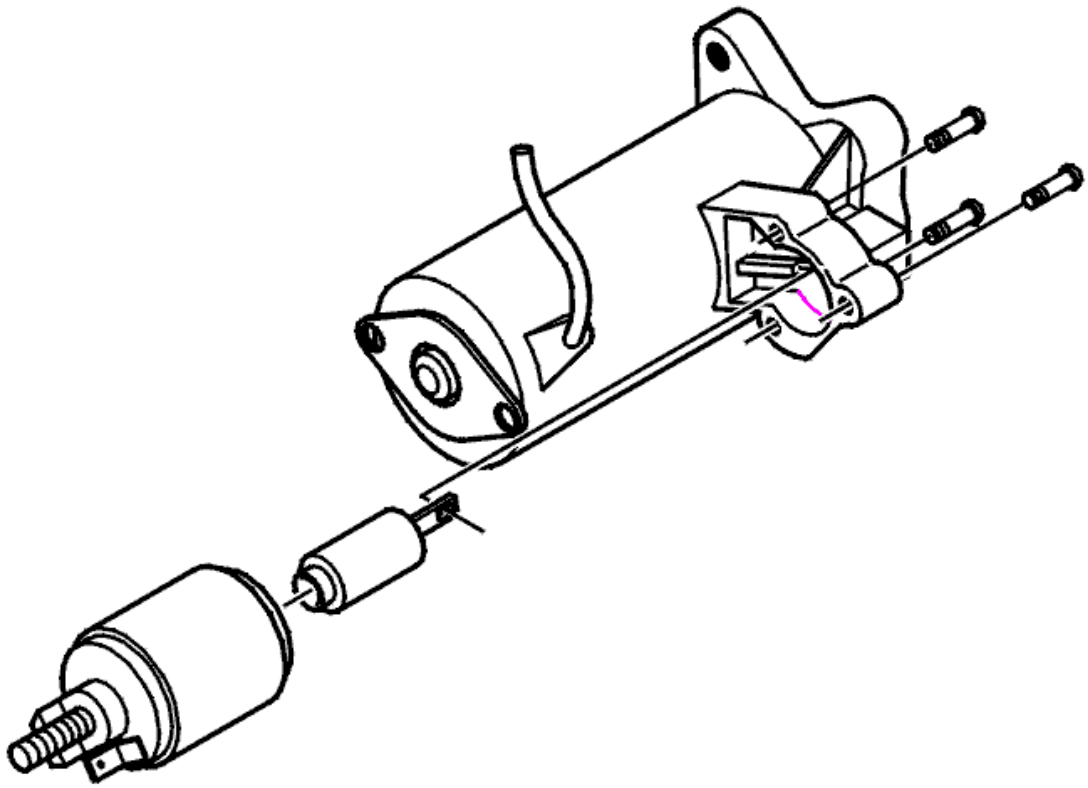

Fig. 27: Identifying Solenoid And Screws

Courtesy of VOLVO CARS CORPORATION

- **Continue**

  Refer to **VERIFICATION**

VERIFICATION

HINT: After carrying out the repair, check that the fault has been remedied.

WARNING: If the engine cooling fan (FC) is running, wait until it has stopped.

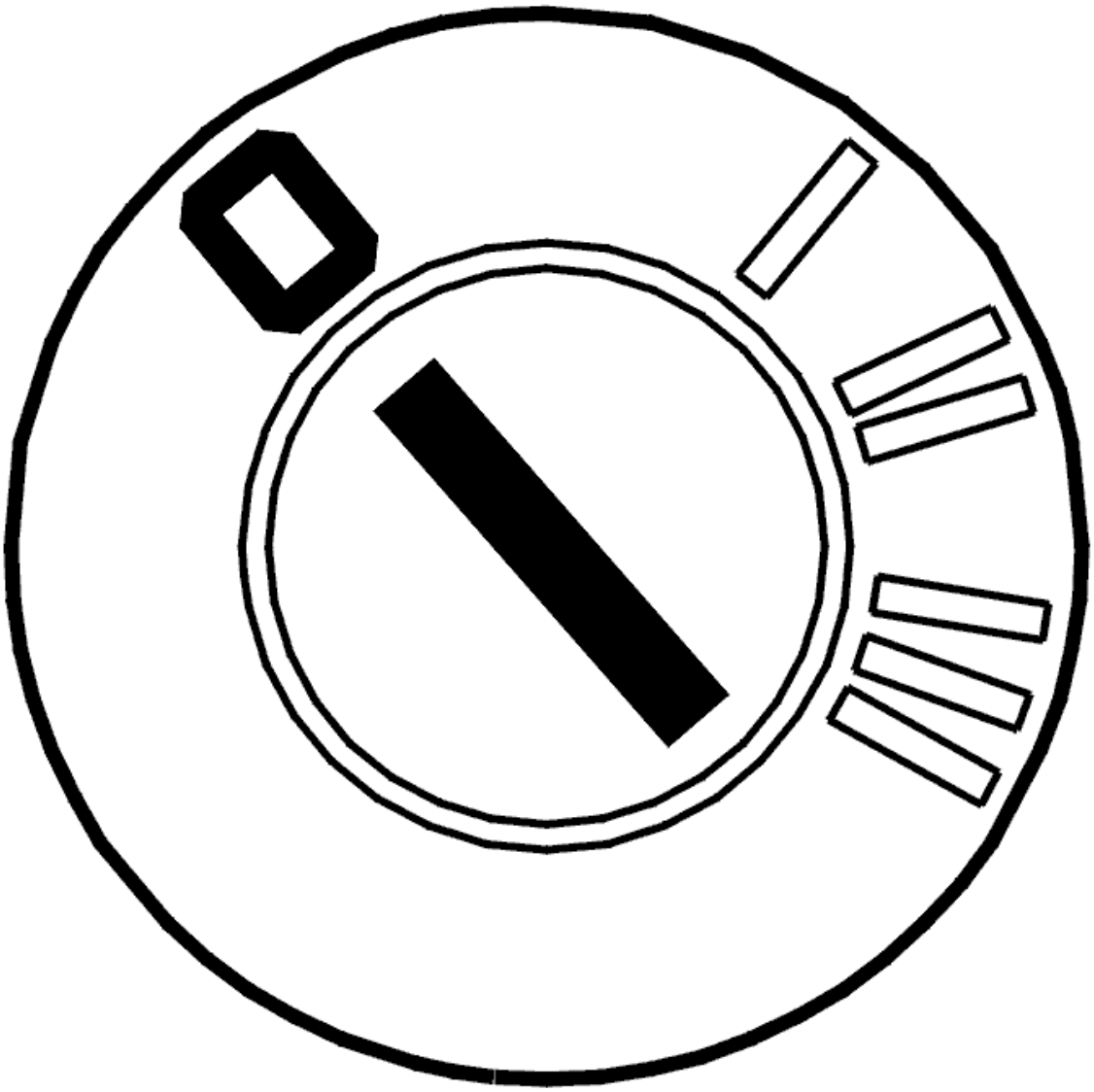

Fig. 28: Identifying Ignition OFF
Courtesy of VOLVO CARS CORPORATION

- Ignition off
- Reinstall the connectors, components etc.
- Select neutral (automatic transmissions: "N"). Apply the parking brake
- The function of the control solenoid must be checked by temporarily bridging the power supply for the control solenoid terminal #1 (30) and the control signal from the starter motor relay #2(50) on the **control solenoid** . The control solenoid should click when bridged.

  Other information

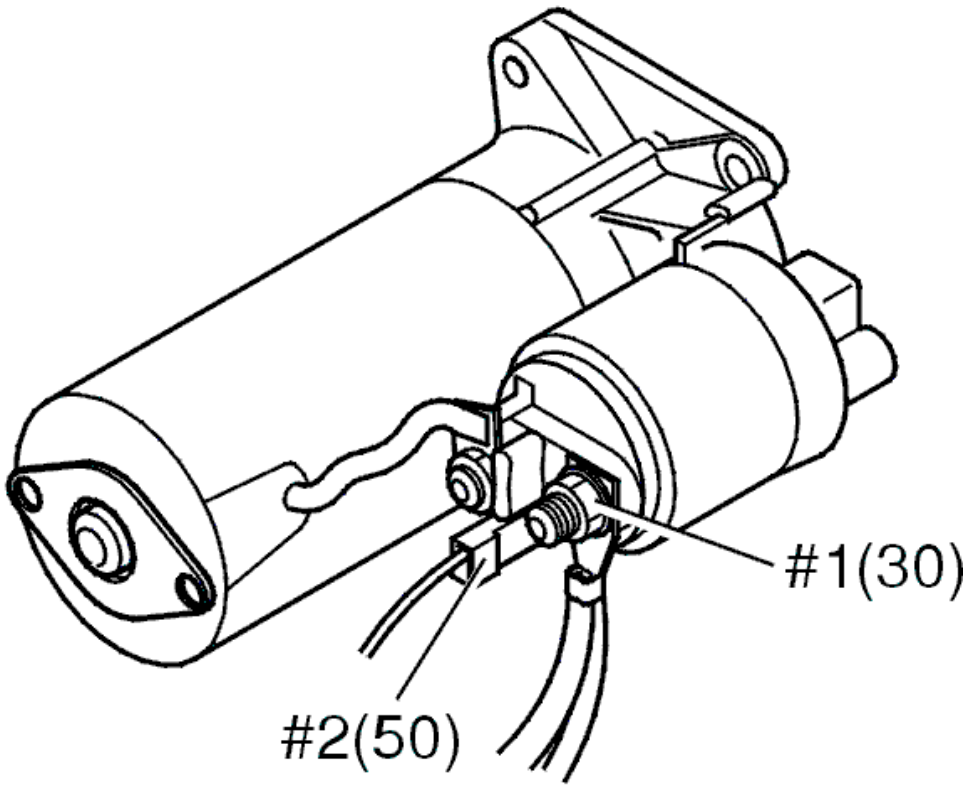

Fig. 29: Identifying Starter Motor Terminals
Courtesy of VOLVO CARS CORPORATION

Does the control solenoid click?

- **YES**

  OKAY: Troubleshooting has been completed.

- **NO**

  Refer to **INFORMATION**

CHECKING VOLTAGE DROP IN THE STARTER MOTOR AND BATTERY CIRCUITS

NOTE: **The conditions for this test are that:**

- **The battery is fully charged**
- **The car and engine temperatures exceed 20°C (68°F).**

WARNING: **If the engine cooling fan (FC) is running, wait until it has stopped.**

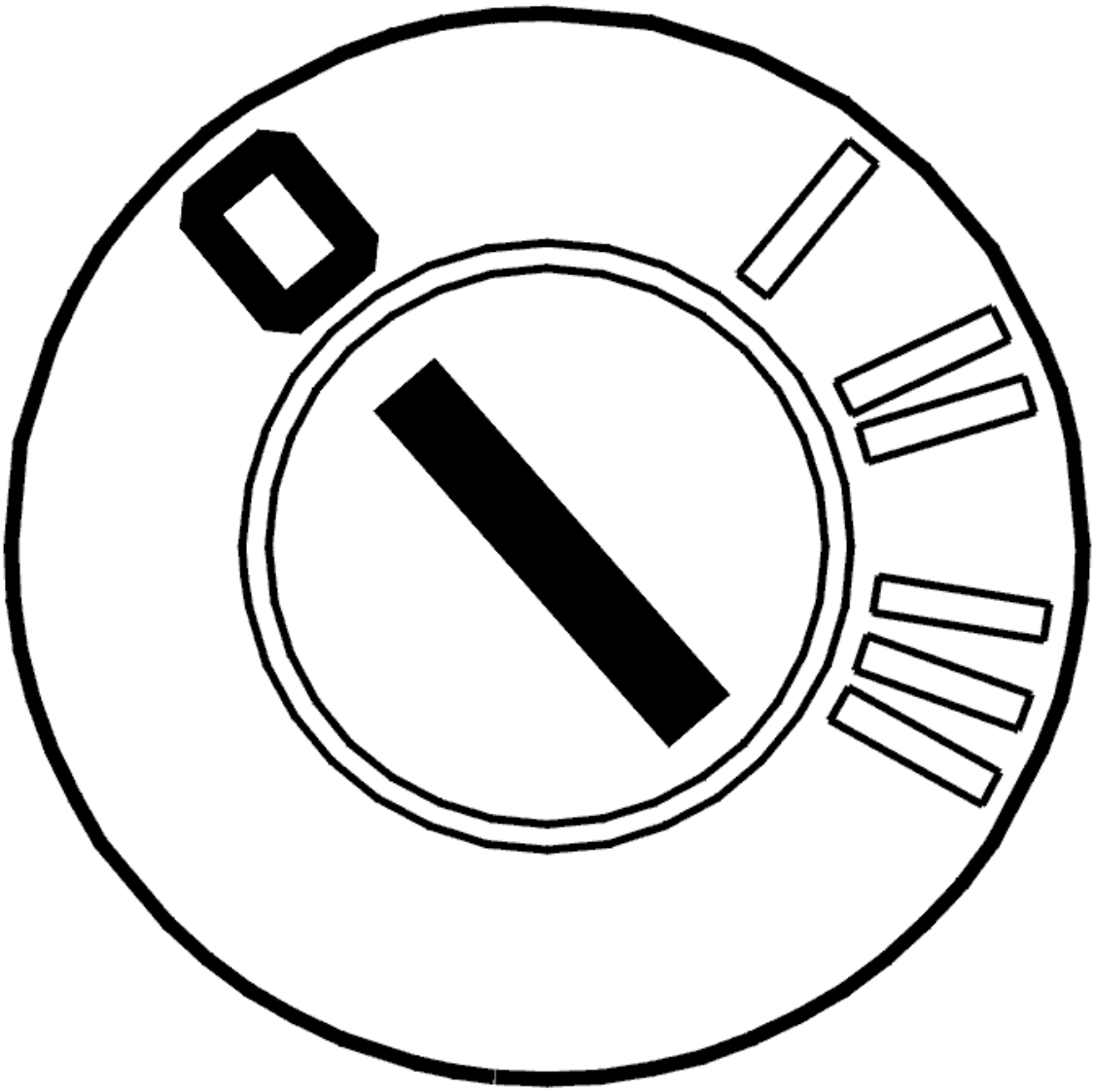

Fig. 30: Identifying Ignition OFF
Courtesy of VOLVO CARS CORPORATION

- Ignition off
- Select neutral (automatic transmissions: "N"). Apply the parking brake
- Expose the starter motor relay in the integrated relay/fusebox in the engine compartment. For the location

of the relays, see the wiring diagram. Remove the relay

- Expose the battery
- Connect a voltmeter between the battery positive and negative terminals
- Temporarily connect two cables to relay base terminals #3 (30) and #5 (87)
- Check the voltage of the **battery** while the starter motor is operating by temporarily short-circuiting the cables to each other so that the control solenoid is powered and the starter motor engages. Make a note of the value.

NOTE: Do not bridge directly in the relay base or the connections in the base may be damaged.

HINT: A starter motor relay without a protective cover can be used to create the short-circuit. Closes the switches manually.

The voltage can vary slightly depending on the engine compression action, therefore an average value should be taken

- Connect a voltmeter between the starter motor power supply terminal #1 (30) and the cylinder block
- Check the voltage across the **starter motor** while the starter motor is operating by temporarily short-circuiting the cables to each other so that the control solenoid is powered and the starter motor engages. Make a note of the value.

NOTE: Measure the voltage between the battery's positive pole and negative pole, as well as between the power supply to the starter motor terminal #1(30) and the starter motor's ground as shown.

The **difference** between the voltage at the battery and the starter motor respectively must **not** exceed 1 V. If the difference is greater it indicates excessively high resistance in the supply voltage to the starter motor and in the ground circuit from the battery.

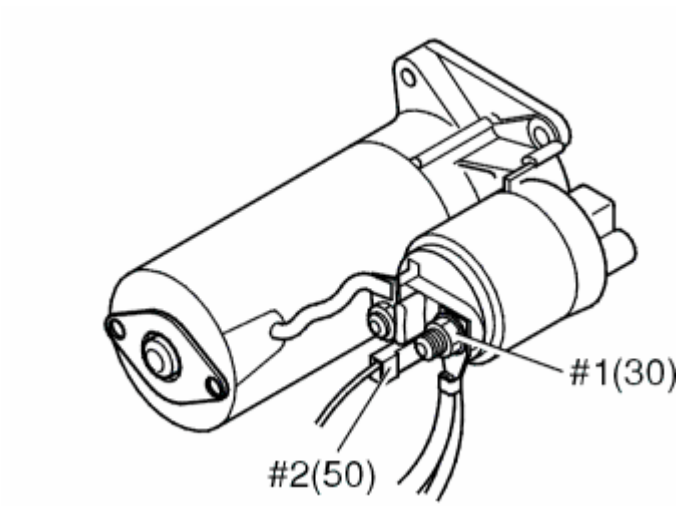

Fig. 31: Identifying Starter Motor Terminals

Courtesy of VOLVO CARS CORPORATION

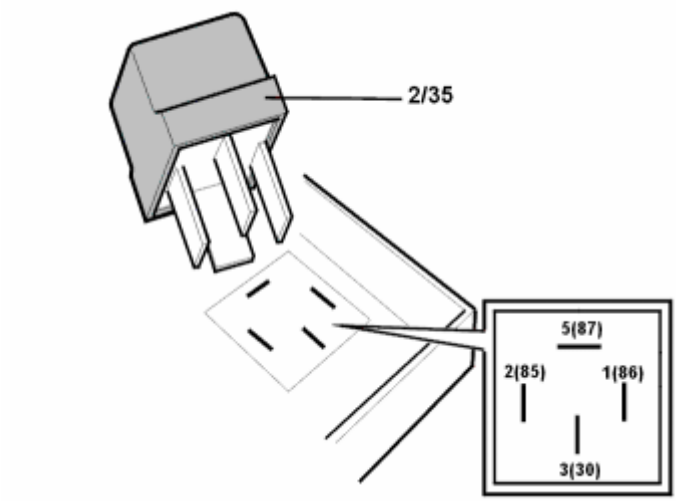

Fig. 32: Identifying Starter Motor Relay
Courtesy of VOLVO CARS CORPORATION

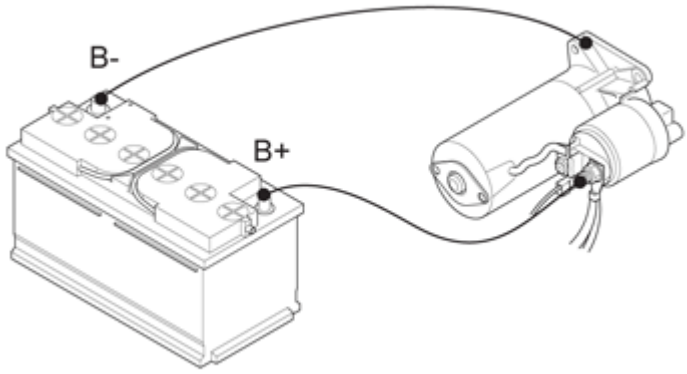

Fig. 33: Identifying Starter Motor Connections To Battery
Courtesy of VOLVO CARS CORPORATION

Is the value OK?

- **YES**

  FAULT NOT FOUND: Troubleshooting has been completed.

- **NO**

  Refer to **CHECKING WIRING AND TERMINALS IN THE POSITIVE AND NEGATIVE CIRCUITS**

CHECKING WIRING AND TERMINALS IN THE POSITIVE AND NEGATIVE CIRCUITS

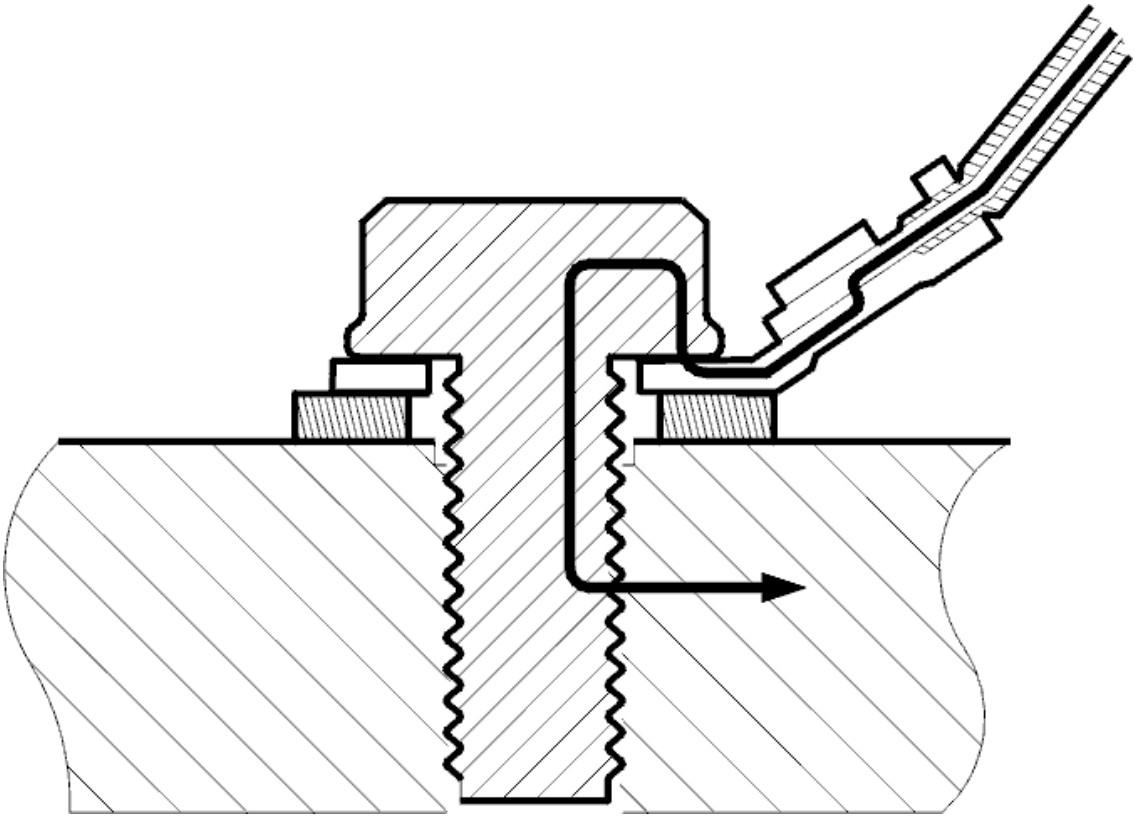

Fig. 34: Ground Points (1 Of 3)
Courtesy of VOLVO CARS CORPORATION

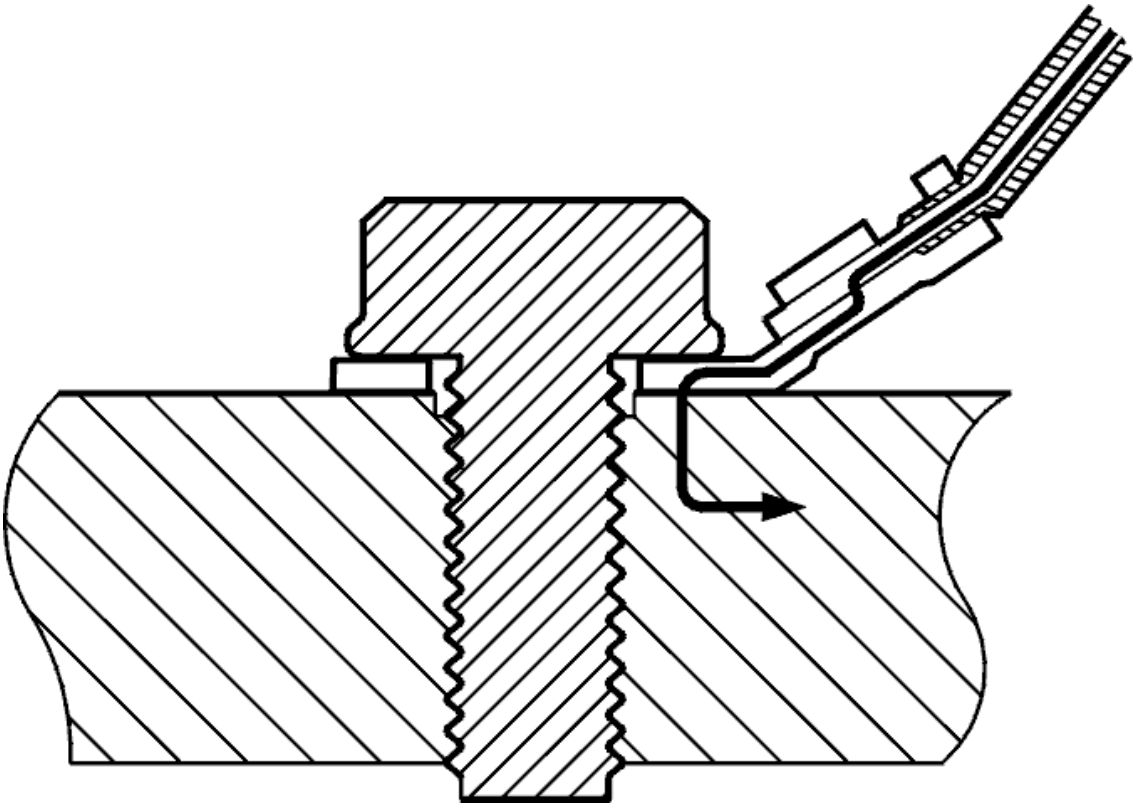

Fig. 35: Ground Points (2 Of 3)
Courtesy of VOLVO CARS CORPORATION

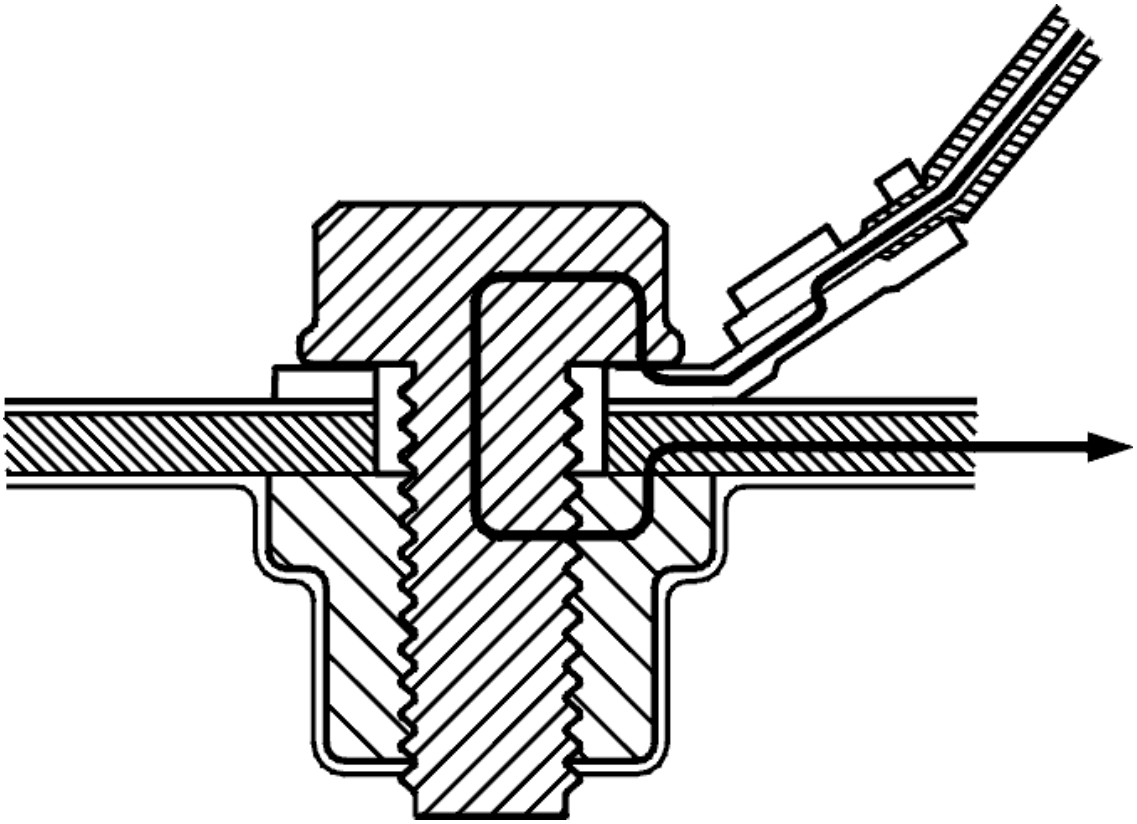

Fig. 36: Ground Points (3 Of 3)
Courtesy of VOLVO CARS CORPORATION

When the voltage drop is too high it indicates excessively high resistance in the circuit.

The ground terminals on a car are a vital part of the car electrical system as all sub-system voltage levels have the ground terminal as a reference (as 0 V). The three illustrations show the ground terminal screwed connections to the cylinder block (the left-hand illustrations) and to the chassis (right-hand illustration), and the path of the current in the joint. A poor contact on the ground terminal will have a negative impact on the car electrical systems. It is therefore very important that the ground terminal contact is in good order, that the screws are tight and the cable terminals are correctly crimped to the cable. Ground terminals where several cables are connected to one ground terminal are especially important.

NOTE: There should be no corrosion between the cable terminals and the screw head.

Check the starter motor terminal for power supply and the terminal for grounding to the cylinder block. Check for contact resistance and oxidation. Check the connection of the terminal to the cable in particular.

Check the engine ground terminal. Check for contact resistance and oxidation. Check the connection of the terminals to the cables in particular.

Check the start assistance terminals in the engine compartment. Check for contact resistance and oxidation. Check the connection of the terminals to the cable in particular.

Check the battery positive and negative terminals. Check for contact resistance and oxidation. Check the connection of the terminals to the cables in particular.

Check the terminal for the battery negative lead in the bodywork.

HINT: If it is necessary to locate a voltage drop in a circuit measure between different points in the circuit. The location of voltage drop in the circuit will be shown.

Remedy as necessary.

Other information

- see **CHECKING WIRING AND TERMINALS**
- **Continue**

  Refer to **VERIFICATION**

VERIFICATION

HINT: After carrying out the repair, check that the fault has been remedied.

WARNING: **If the engine cooling fan (FC) is running, wait until it has stopped.**

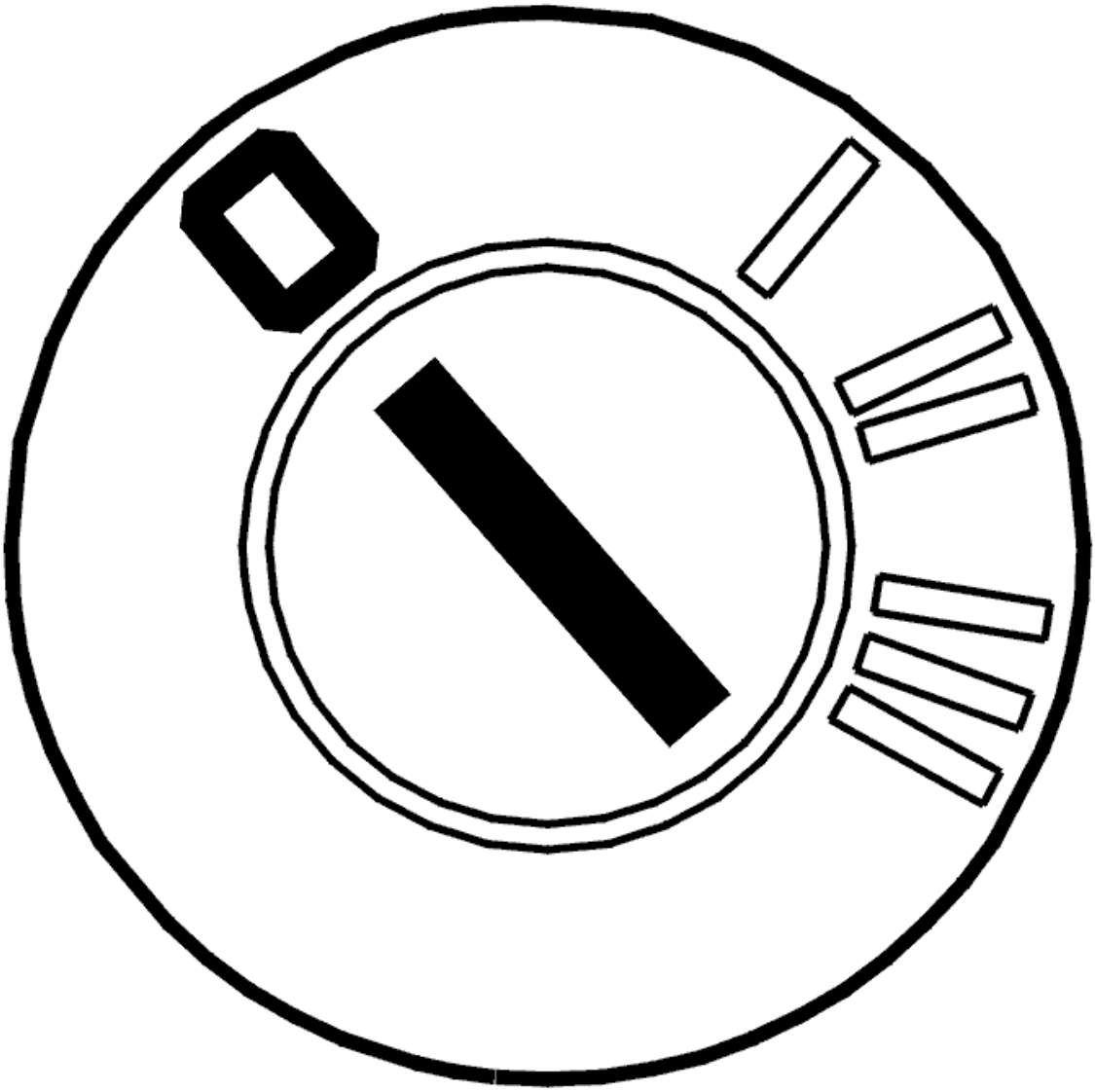

Fig. 37: Identifying Ignition OFF
Courtesy of VOLVO CARS CORPORATION

- Ignition off
- Reinstall the connectors, components etc.
- Select neutral (automatic transmissions: "N"). Apply the parking brake
- Expose the starter motor relay. Remove the relay. For the location of the relays, see the wiring diagram
- Expose the battery
- Connect a voltmeter between the battery positive and negative terminals
- Temporarily connect two cables to relay base terminals #3 (30) and #5 (87)
- Check the voltage of the **battery** while the starter motor is operating by temporarily short-circuiting the cables to each other so that the control solenoid is powered and the starter motor engages. Make a note of the value.

The voltage can vary slightly depending on the rate of engine compression, therefore an average value should be taken.

NOTE: Do not bridge directly in the relay base or the connections in the base may be damaged.

- Connect a voltmeter between the starter motor power supply terminal #1 (30) and the cylinder block
- Check the voltage across the **starter motor** while the starter motor is operating by temporarily short-circuiting the cables to each other so that the control solenoid is powered and the starter motor engages. Make a note of the value.

The **difference** between the voltage at the battery and the starter motor respectively must **not** exceed 1 V. If the difference is greater it indicates excessively high resistance in the supply voltage to the starter motor or in the ground circuit from the battery.

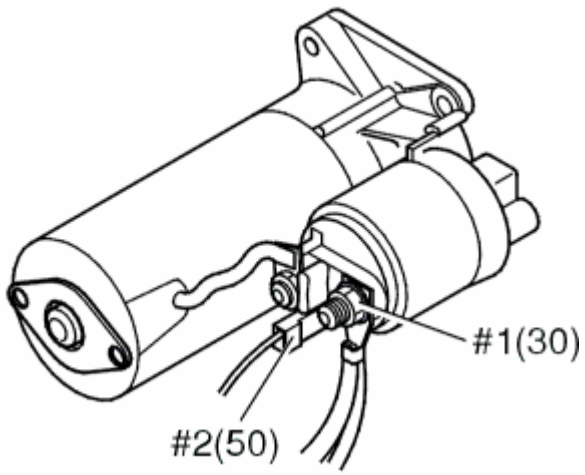

Fig. 38: Identifying Starter Motor Terminals
Courtesy of VOLVO CARS CORPORATION

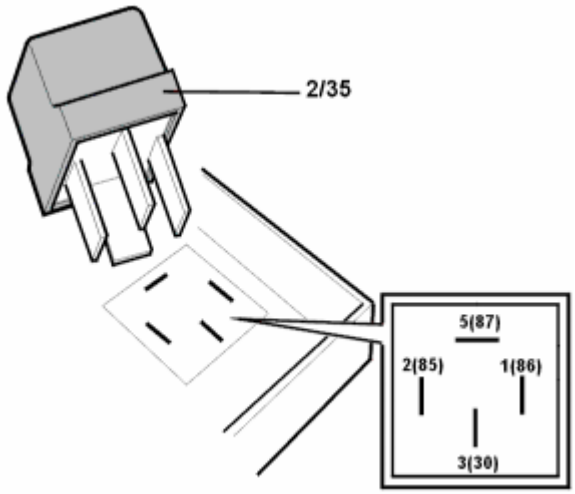

Fig. 39: Identifying Starter Motor Relay
Courtesy of VOLVO CARS CORPORATION

Is the value OK?

- **YES**

  OKAY: Troubleshooting has been completed.

- **NO**

  Refer to **INFORMATION**

INFORMATION

FAULT-TRACING INFORMATION

The fault should have been detected and remedied. As this is not the case fault-tracing has failed.

Exit fault-tracing for this diagnostic trouble code (DTC) or make another attempt.

CABLE TERMINALS SURFACE TREATMENT

GENERAL INFORMATION

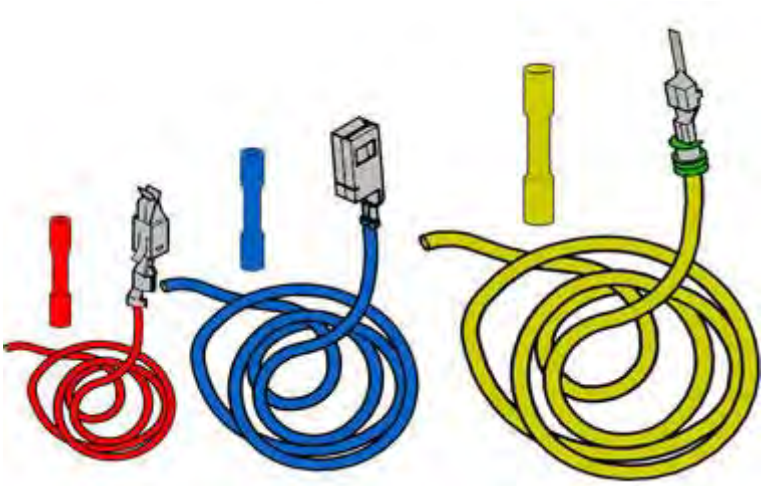

Fig. 40: Identifying Terminal With Integrated Cable
Courtesy of VOLVO CARS CORPORATION

Terminal with integrated cable designated "cable terminal", certain cases "service terminal".

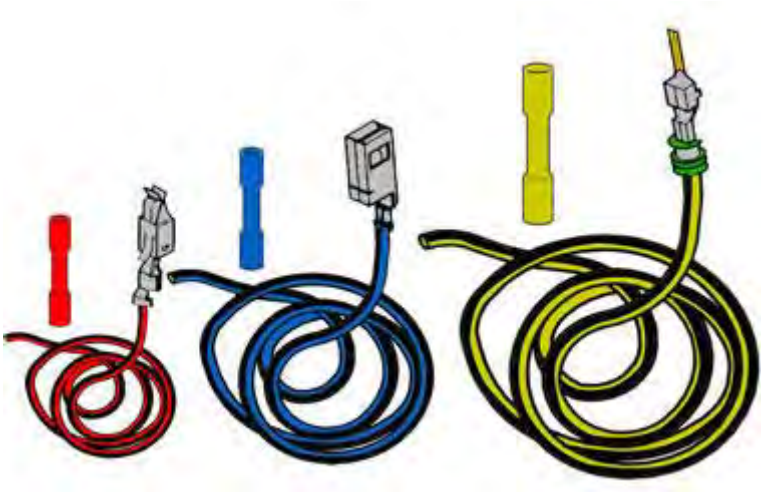

Fig. 41: Identifying Terminal With Integrated Cable
Courtesy of VOLVO CARS CORPORATION

Black marking = terminal's surface treatment is gold. Marking introduced running from second quarter 2008.

CAUTION: If new components are supplied with a section of new wiring, the equivalent wiring section in the vehicle must be substituted with the new section.

Due to oxidation and galvanic currents, female and male connections with the same surface treatment should be used.

Example of different surface treatments: Gold (Au), Silver (Ag), Tin (Sn)

- Silver + Tin = Permitted
- Tin + Gold = Not permitted
- Silver + Gold = Permitted

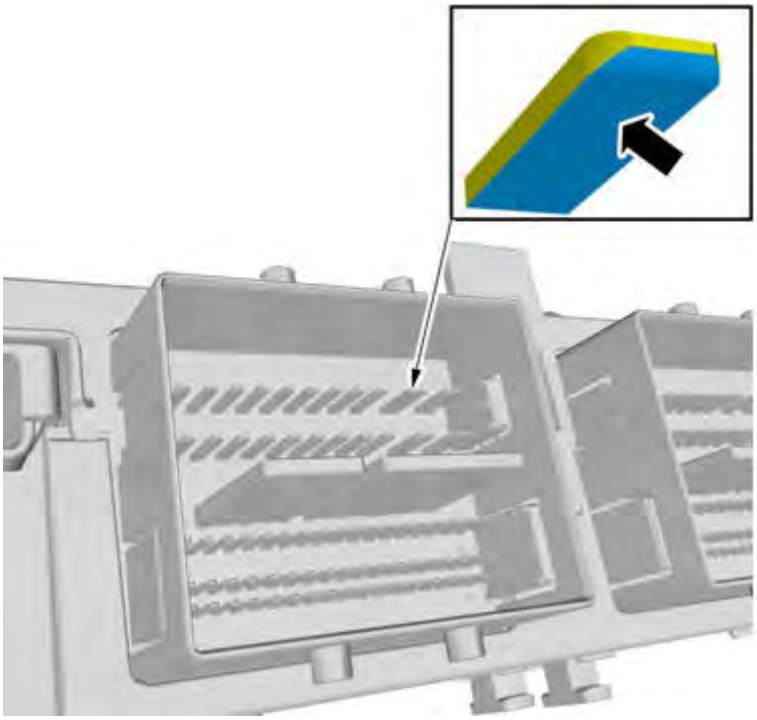

Fig. 42: Identifying Connector Pin With Surface Treatment
Courtesy of VOLVO CARS CORPORATION

The type of surface treatment on the connector can only be determined by inspection the male connector's pins with a magnifying glass.

CHECKING THE CONTROL SOLENOID AND STARTER MOTOR

PREPARATORY CHECKS

There are three starter motor checks that should be performed to avoid extra work.

The checks are and should be troubleshooted in the following order:

1. Checking voltage drop in the starter motor and battery circuits
2. Checking solenoid and starter motor
3. Checking the starter motor

Before continuing troubleshooting of the starter motor, check as above.

- **Continue**

  see **CHECKING TERMINAL**

CHECKING TERMINAL

NOTE: To carry out this test, the battery must be fault free and the starter motor relay

must be checked and there must be no diagnostic trouble codes (DTCs) stored for the symptom.

WARNING: **If the engine cooling fan (FC) is running, wait until it has stopped.**

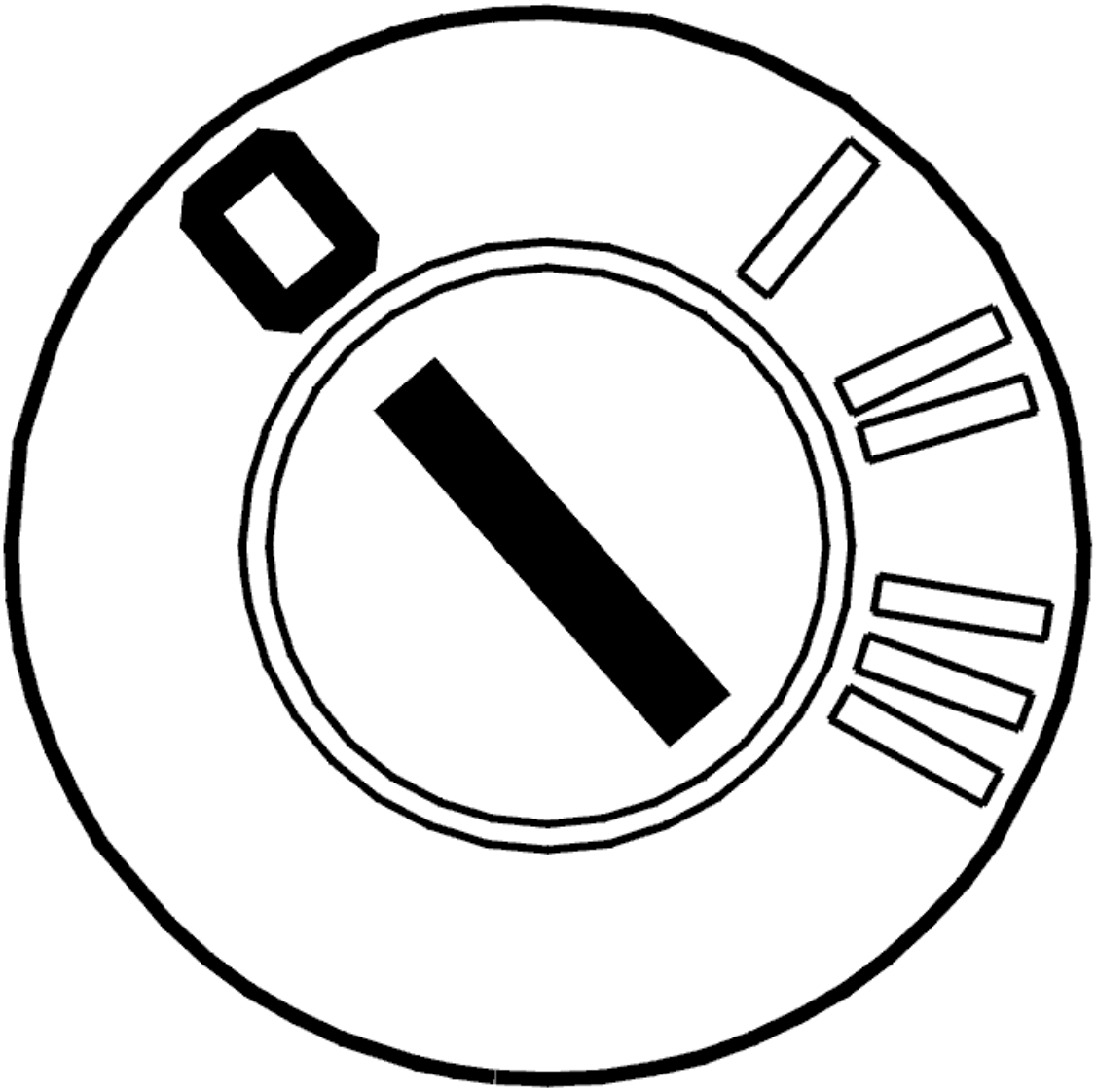

Fig. 43: Identifying Ignition OFF
Courtesy of VOLVO CARS CORPORATION

- Ignition off.
- The gear lever shall be in neutral position.
- Parking brake applied.
- Check the fuse for the starter motor.

Check terminal #1(30). Check for:

- Damaged terminal.
- Loose terminal.
- Rust, oxidation or other deposit.

Remedy as necessary.

Check terminal #2(50). Check for:

- Damaged terminal.
- Loose terminal.
- Rust, oxidation or other deposit.

The terminal must be replaced if any of the above faults are found on terminal #2(50).

When replacing, connection with P/N 30765120 must be used. The terminal is supplied with corresponding cable. The cable must be adapted to a suitable length. The cable must not be stretched when the terminal is installed.

Remedy as necessary.

Other information

- see **CONNECTOR**
- see **JOINING CABLES**
- see **CABLE TERMINALS SURFACE TREATMENT**

Select an alternative to continue

1. If faults are found on any of the terminals and remedied. Refer to **VERIFICATION**
2. If no faults are found on the terminals. Refer to **CHECKING THE CONTROL SOLENOID**

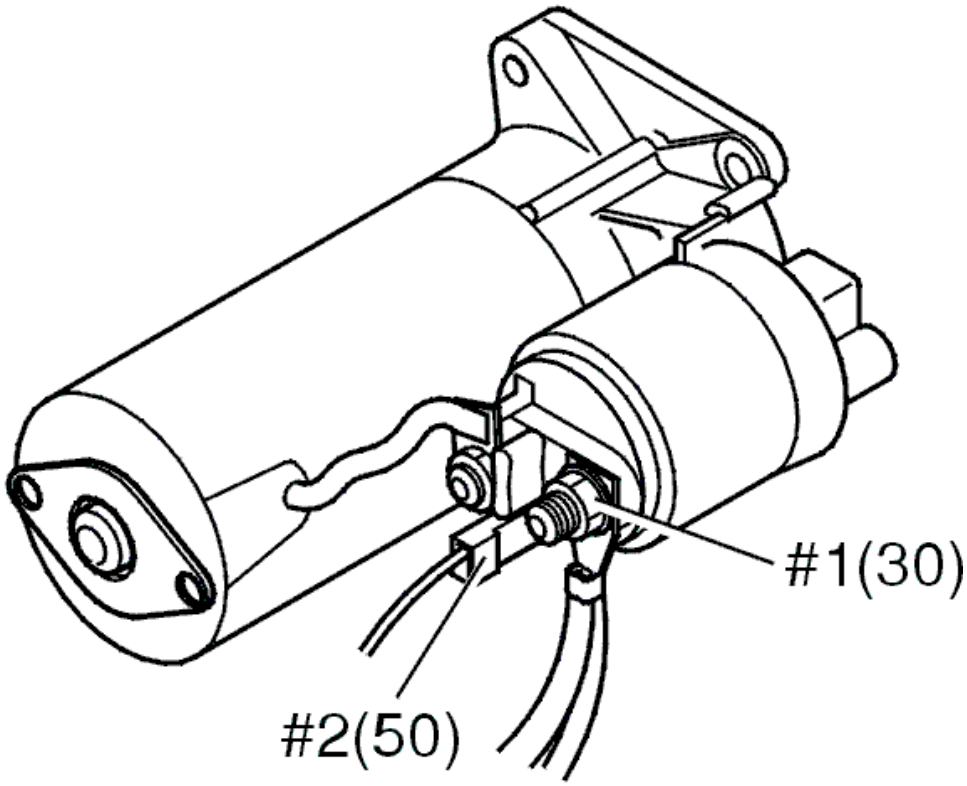

Fig. 44: Identifying Starter Motor Terminals
Courtesy of VOLVO CARS CORPORATION

CHECKING THE CONTROL SOLENOID

NOTE: **The test assumes that the battery is fault free, that the starter motor circuit has been checked and that no relevant diagnostic trouble codes (DTCs) for the symptom are stored.**

WARNING: **If the engine cooling fan (FC) is running, wait until it has stopped.**

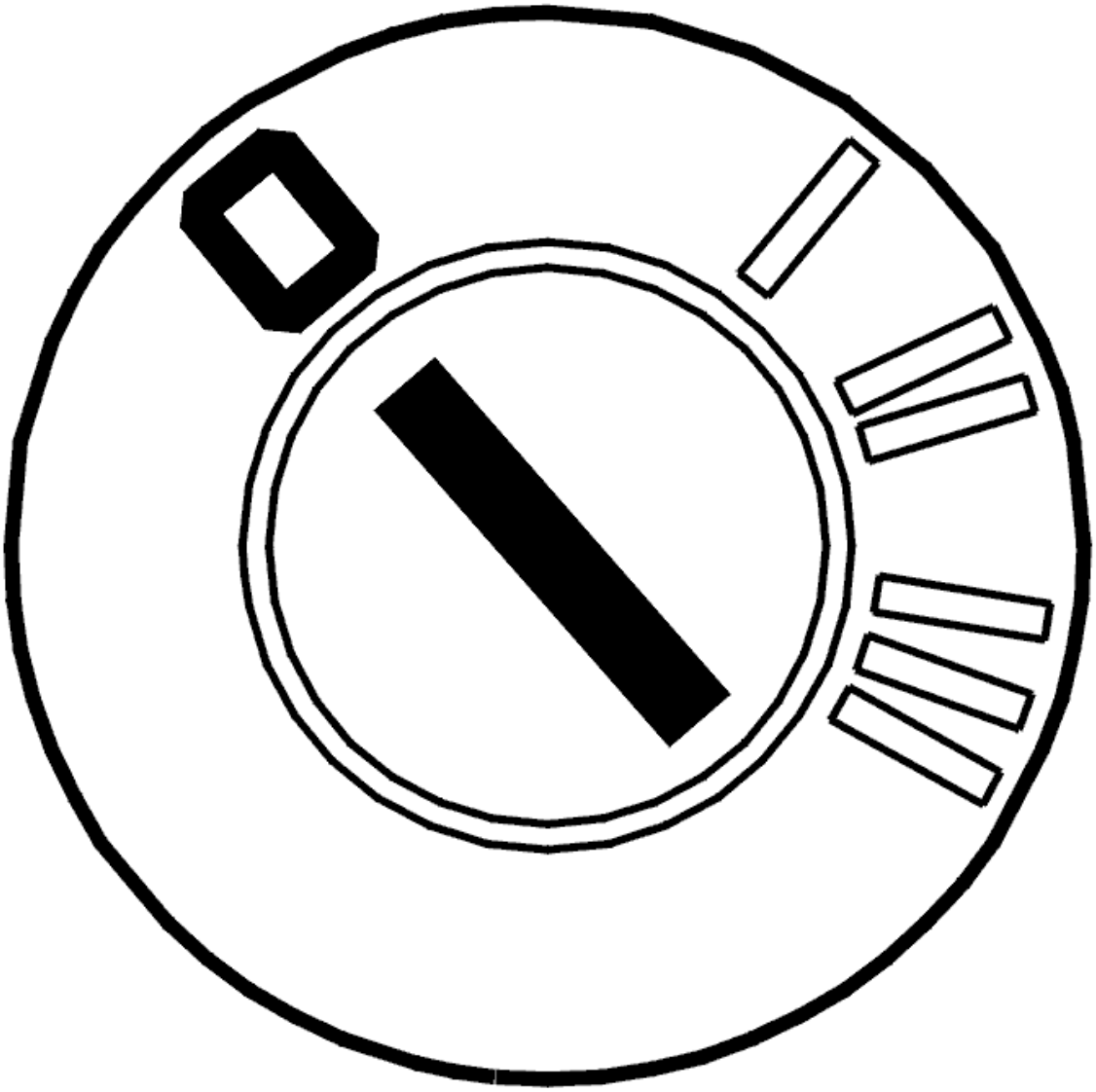

Fig. 45: Identifying Ignition OFF
Courtesy of VOLVO CARS CORPORATION

- Ignition off
- Select neutral (automatic transmissions: "N"). Apply the parking brake
- The function of the control solenoid must be checked by temporarily bridging the power supply for the control solenoid terminal #1 (30) and the control signal from the starter motor relay #2(50) on the **control solenoid** . The control solenoid should click when bridged.

Other information

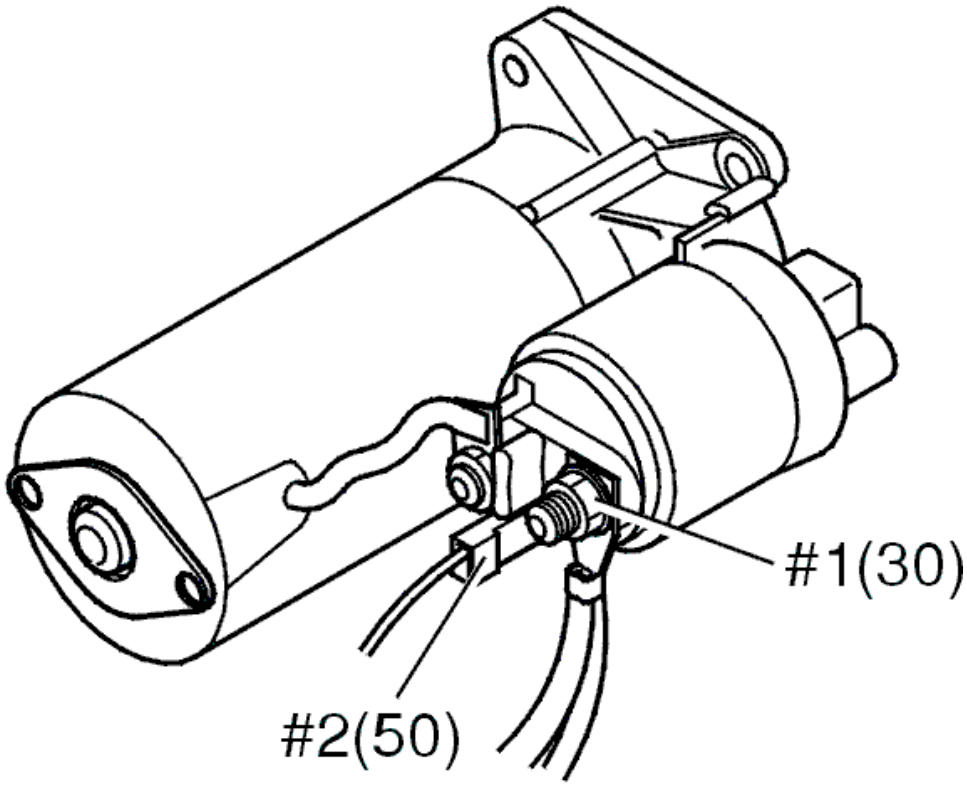

Fig. 46: Identifying Starter Motor Terminals
Courtesy of VOLVO CARS CORPORATION

Does the starter motor turn?

- **YES**

  see **VOLTAGE-DROP IN CABLES TO SOLENOID**

- **NO**

  see **CHECKING THE STARTER MOTOR**

VOLTAGE-DROP IN CABLES TO SOLENOID

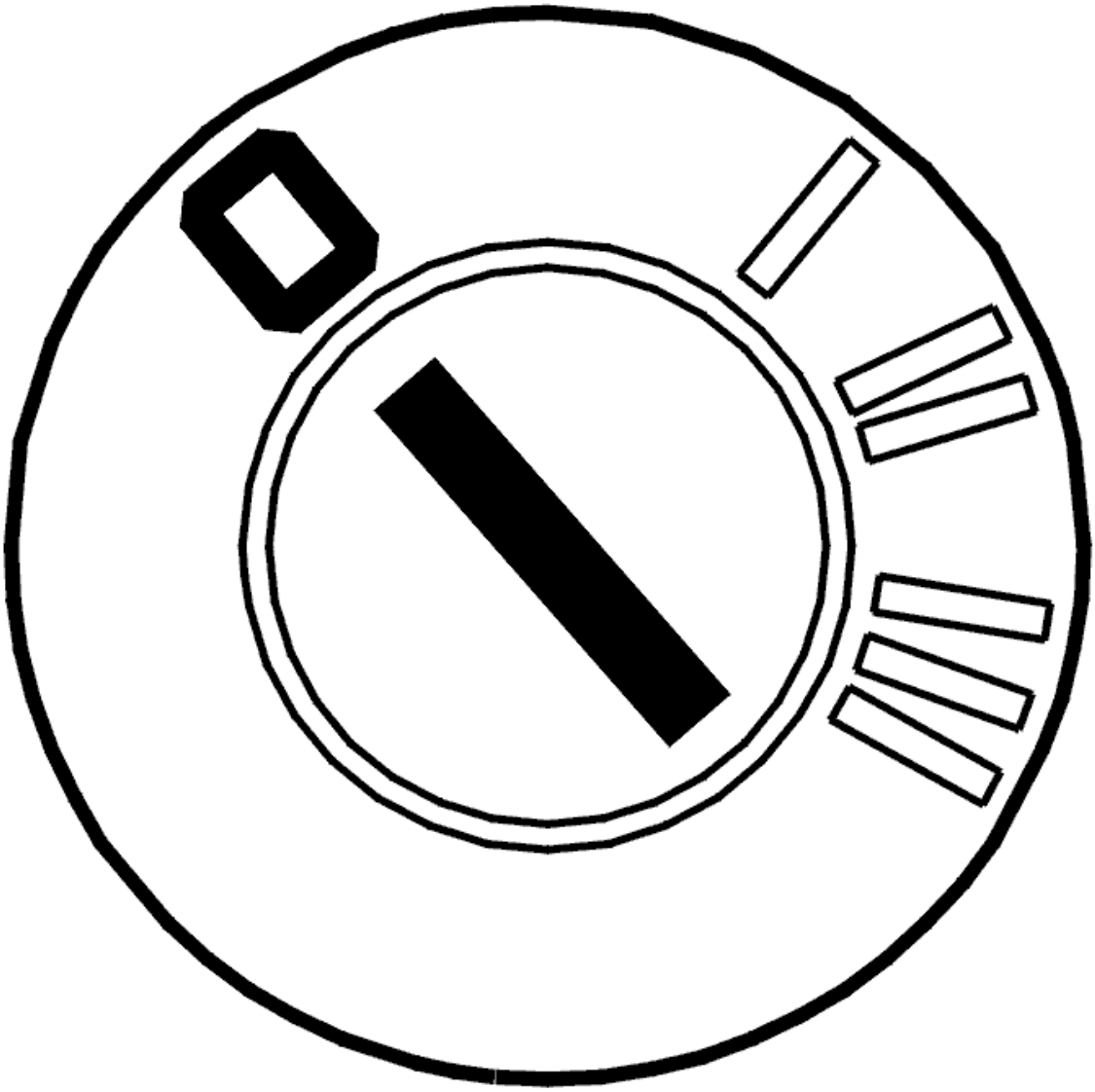

Fig. 47: Identifying Ignition OFF
Courtesy of VOLVO CARS CORPORATION

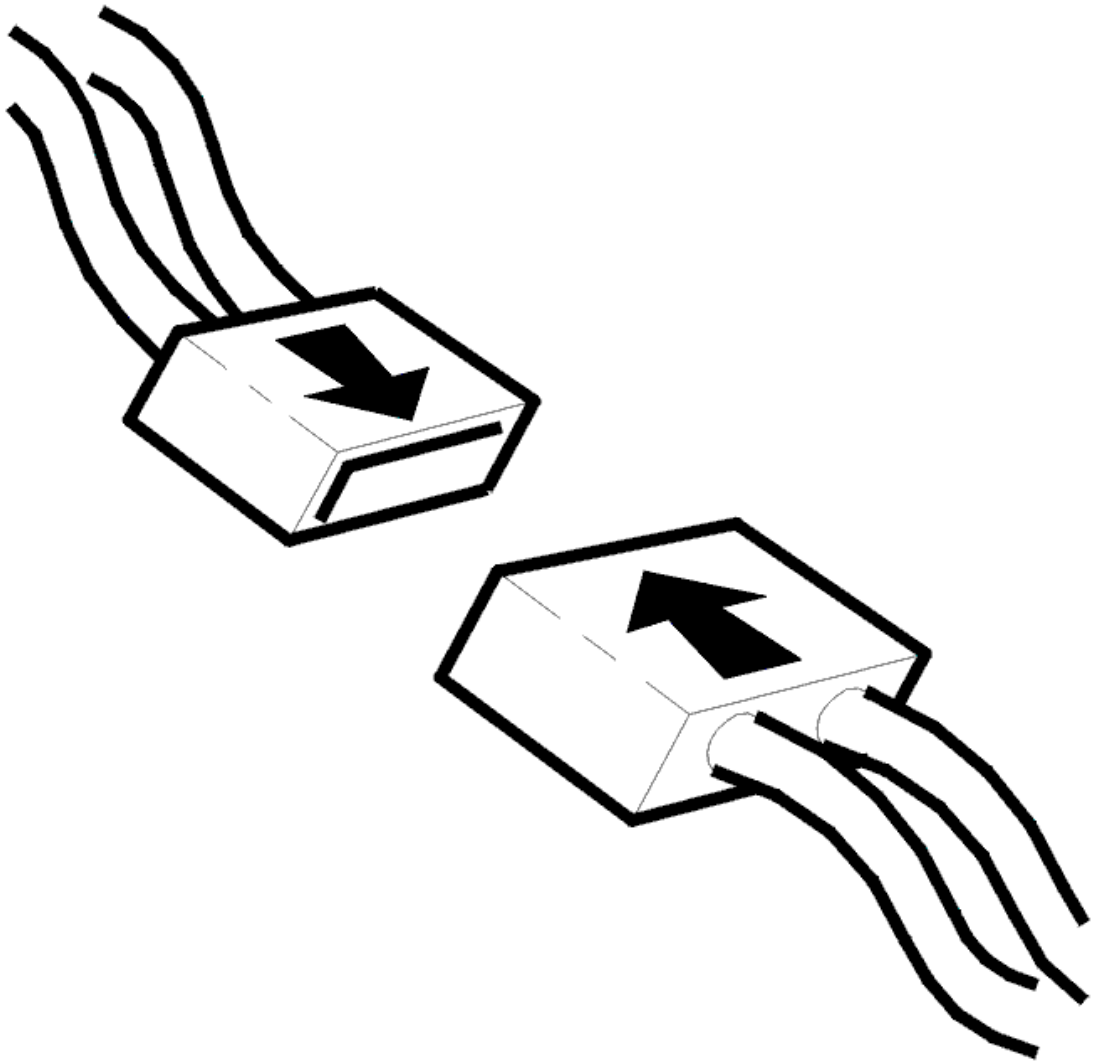

Fig. 48: Connecting Connector
Courtesy of VOLVO CARS CORPORATION

- Ignition off
- Reconnect the connectors and relay
- Connect a voltmeter to control solenoid terminal #2 (50)
- Check the voltage at the start position.

  If the voltage falls below approximately 9 V in the cranking position, there is a voltage drop in the wiring circuit for the solenoid.

  Select an alternative to continue

  1. For extended information about voltage drops in the solenoid wiring. Refer to **CHECKING VOLTAGE DROP IN THE STARTER MOTOR AND BATTERY CIRCUITS**

2. The voltage dropped too low in the cranking position. A fault was found. Troubleshooting has been completed.
3. No fault detected during the test. Troubleshooting has been completed.

CHECKING VOLTAGE DROP IN THE STARTER MOTOR AND BATTERY CIRCUITS

NOTE: The conditions for this test are that:

- **The battery is fully charged**
- **The car and engine temperatures exceed 20°C (68°F).**

WARNING: If the engine cooling fan (FC) is running, wait until it has stopped.

- Ignition off
- Select neutral (automatic transmissions: "N"). Apply the parking brake
- Expose the starter motor relay in the integrated relay/fusebox in the engine compartment. For the location of the relays, see the wiring diagram. Remove the relay
- Expose the battery
- Connect a voltmeter between the battery positive and negative terminals
- Temporarily connect two cables to relay base terminals #3 (30) and #5 (87)
- Check the voltage of the **battery** while the starter motor is operating by temporarily short-circuiting the cables to each other so that the control solenoid is powered and the starter motor engages. Make a note of the value!

NOTE: Do not bridge directly in the relay base or the connections in the base may be damaged.

HINT: A starter motor relay without a protective cover can be used to create the short-circuit. Closes the switches manually.

The voltage can vary slightly depending on the engine compression action, therefore an average value should be taken

- Connect a voltmeter between the starter motor power supply terminal #1 (30) and the cylinder block
- Check the voltage across the **starter motor** while the starter motor is operating by temporarily short-circuiting the cables to each other so that the control solenoid is powered and the starter motor engages. Make a note of the value.

NOTE: Measure the voltage between the battery's positive pole and negative pole, as well as between the power supply to the starter motor terminal #1 (30) and the starter motor's ground as shown.

The **difference** between the voltage at the battery and the starter motor respectively must **not** exceed 1 V. If the difference is greater it indicates excessively high resistance in the supply voltage to the starter motor and in the ground circuit from the battery.

CHECKING THE STARTER MOTOR

There is an internal fault in the starter motor if the starter motor does not function despite having power supply.

Check the brush holders and carbon brushes for the starter motor. Check for wear.

Check if the starter motor rotor or other components have jammed so that the starter motor is blocked.

HINT: If the starter motor is blocked the interior lighting will dim when the starter motor is activated.

Try a new starter motor if no fault is found.

Remedy as necessary.

Other information:

- see **CHECKING WIRING AND TERMINALS**

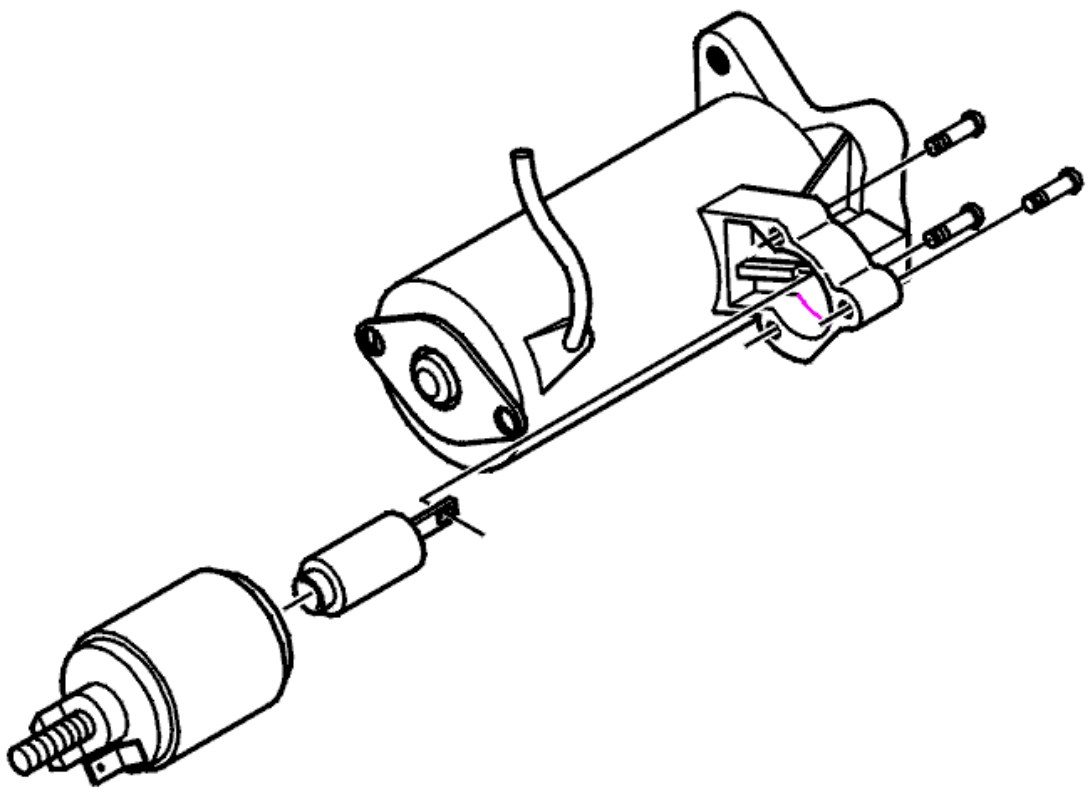

Fig. 49: Identifying Solenoid And Screws
Courtesy of VOLVO CARS CORPORATION

- **Continue**

  see **VERIFICATION**

VERIFICATION

HINT: After carrying out the repair, check that the fault has been remedied.

WARNING: If the engine cooling fan (FC) is running, wait until it has stopped.

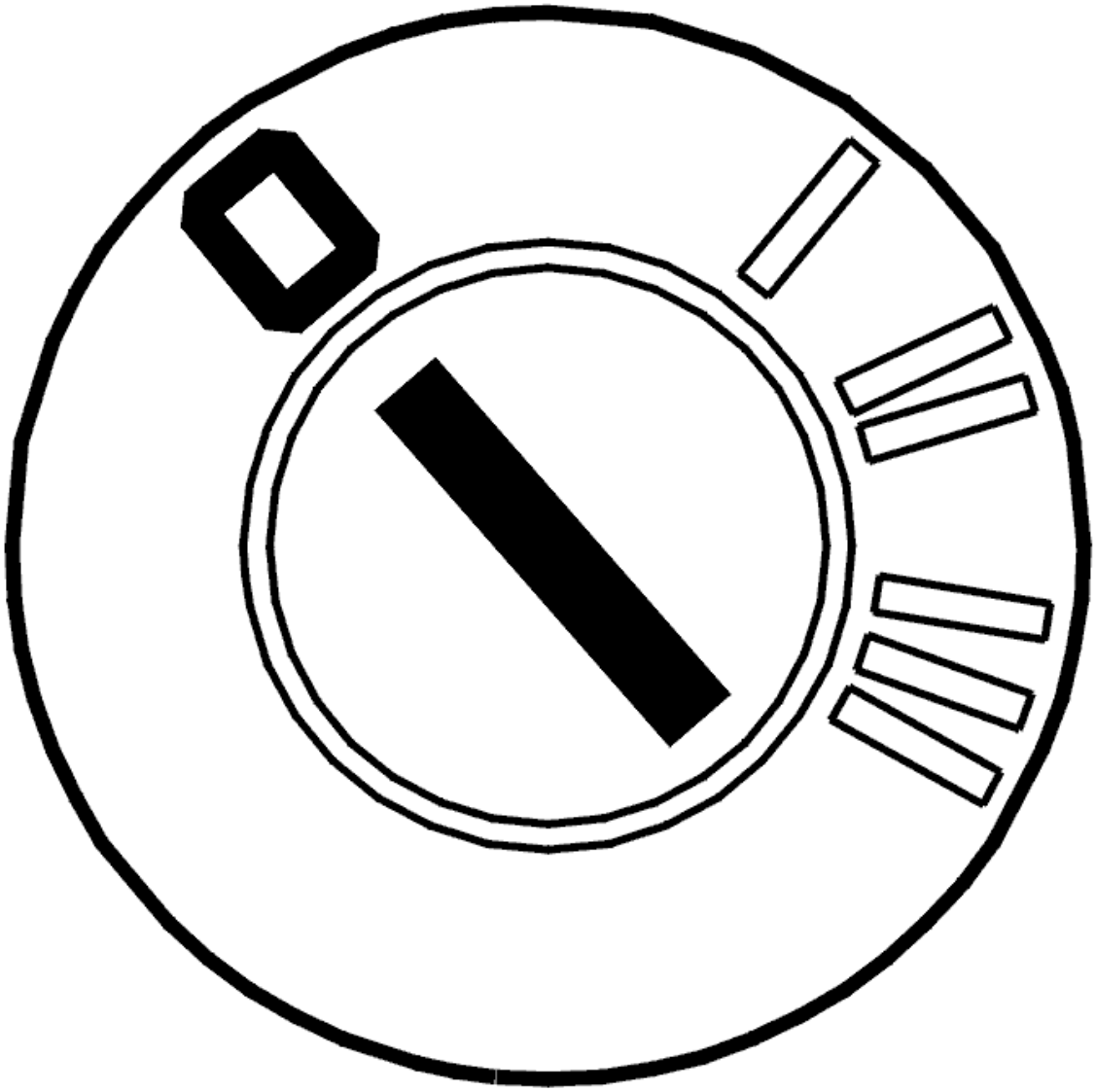

Fig. 50: Identifying Ignition OFF
Courtesy of VOLVO CARS CORPORATION

- Ignition off

- Reinstall the connectors, components etc.
- Select neutral (automatic transmissions: "N"). Apply the parking brake
- The function of the control solenoid must be checked by temporarily bridging the power supply for the control solenoid terminal #1 (30) and the control signal from the starter motor relay #2(50) on the **control solenoid** . The control solenoid should click when bridged.

  Other information

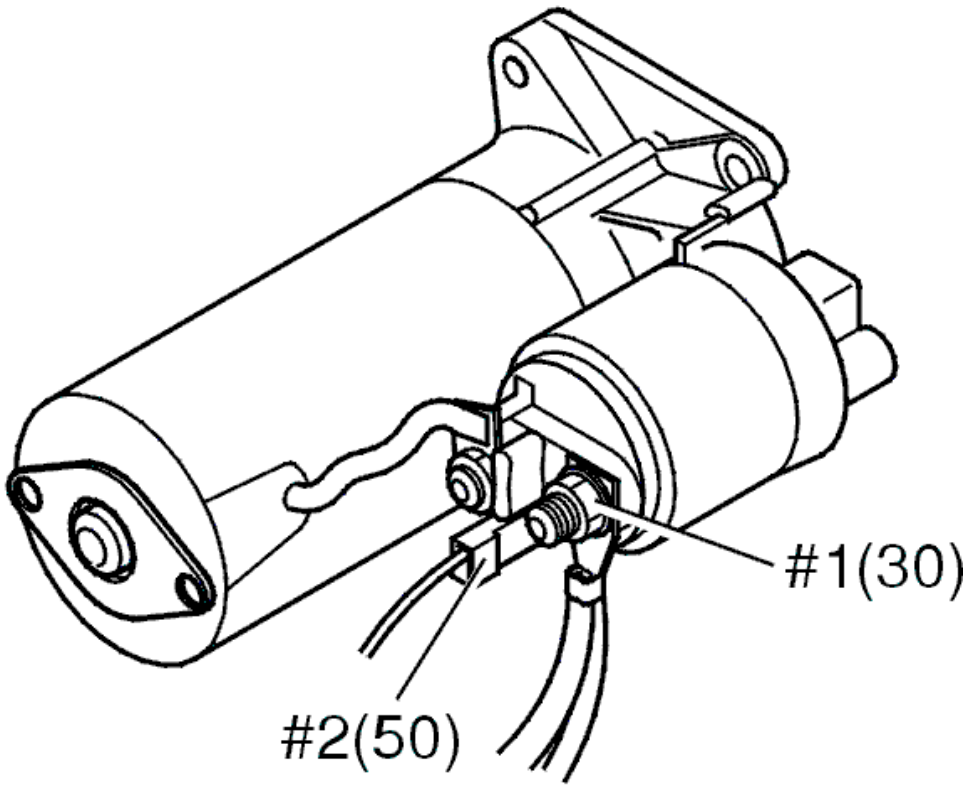

Fig. 51: Identifying Starter Motor Terminals
Courtesy of VOLVO CARS CORPORATION

Does the control solenoid click?

- **YES**

  OKAY: Troubleshooting has been completed.

- **NO**

  see **FAULT-TRACING INFORMATION**

FAULT-TRACING INFORMATION

- **FAULT TRACING FAILED:**

  The fault should have been detected and remedied. As this is not the case fault-tracing has failed. Exit fault-tracing for this diagnostic trouble code (DTC) or make another attempt.

- **NEW TRY**

  see **CHECKING THE CONTROL SOLENOID**

FAULT-TRACING INFORMATION

Condition

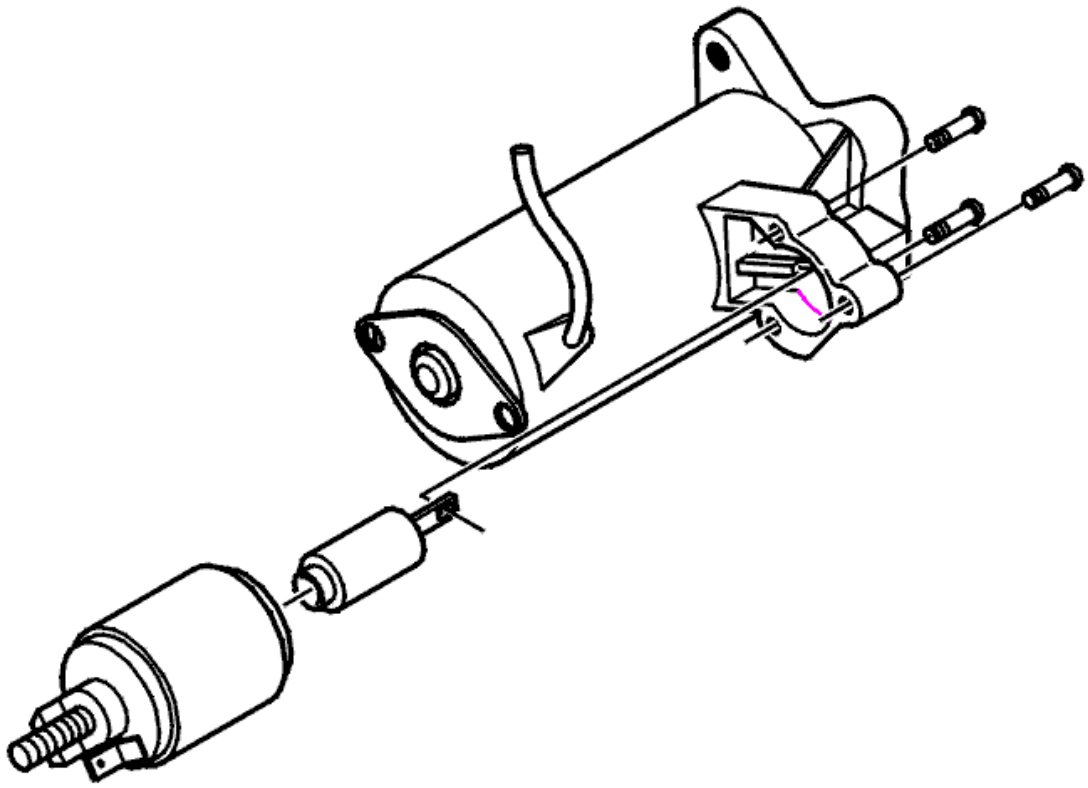

Fig. 52: Identifying Solenoid And Screws
Courtesy of VOLVO CARS CORPORATION

The starter motor cannot function correctly if there is a fault with the control solenoid, the carbon brushes or starter motor.

Possible Source

- Damaged terminal.
- Damaged control solenoid.

- Worn carbon brushes or brush springs
- Damaged starter motor.

Fault symptom[s]

- The starter motor does not turn.

CHECKING THE FREEWHEEL ON A GENERATOR (GEN) (2003-06)

CHECKING THE FREEWHEEL ON A GENERATOR (GEN)

NOTE: **This test is only carried out if the generator (GEN) is equipped with a freewheel. The cover over the pulley nut in the center of the pulley indicates whether a freewheel is installed.**

Check the function of the free wheel as follows.

Checking the function of the freewheel on the generator (GEN) in the car

- Ensure that no extra power consuming components are connected
- Start the engine. Rev the engine to 3000 RPM
- Check that only a faint clicking sound is heard when the freewheel engages and disengages
- Quickly switch off the engine. Check that the generator rotates for longer than the engine.

NOTE: **If it is cold, the battery charge warning lamp may light shortly after start-up because the freewheel needs to rotate and warm up the bearing grease before it locks and engages the rotor shaft. If the warning lamp remains lit, it may be an indication that the freewheel has not locked the pulley to the rotor shaft.**

Checking the function of the freewheel on a removed generator (GEN)

- Rotate the pulley counter-clockwise and brake the pulley heavily. The freewheel must grip the rotor shaft when rotating counter-clockwise
- Stop the rotation by braking the pulley. When braking the pulley, the freewheel mechanism should release so that the rotor shaft continues to rotate.

Remedy as necessary.

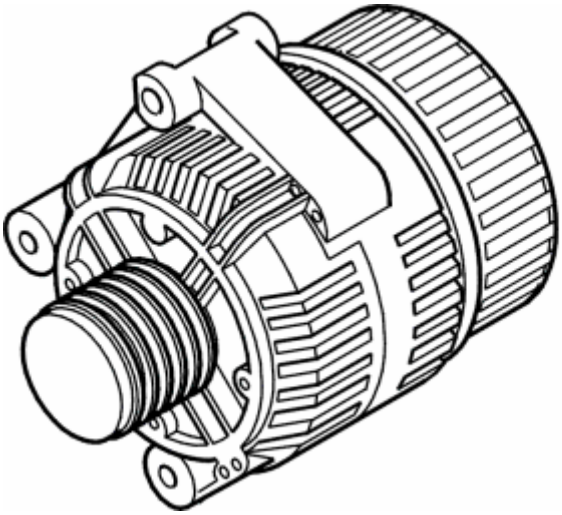

Fig. 53: Identifying Generator
Courtesy of VOLVO CARS CORPORATION

Were any faults found in the freewheel?

- **YES**

  Refer to **VERIFICATION**

- **NO**

  FAULT NOT FOUND: Troubleshooting has been completed.

VERIFICATION

HINT: After carrying out the repair, check that the fault has been remedied.

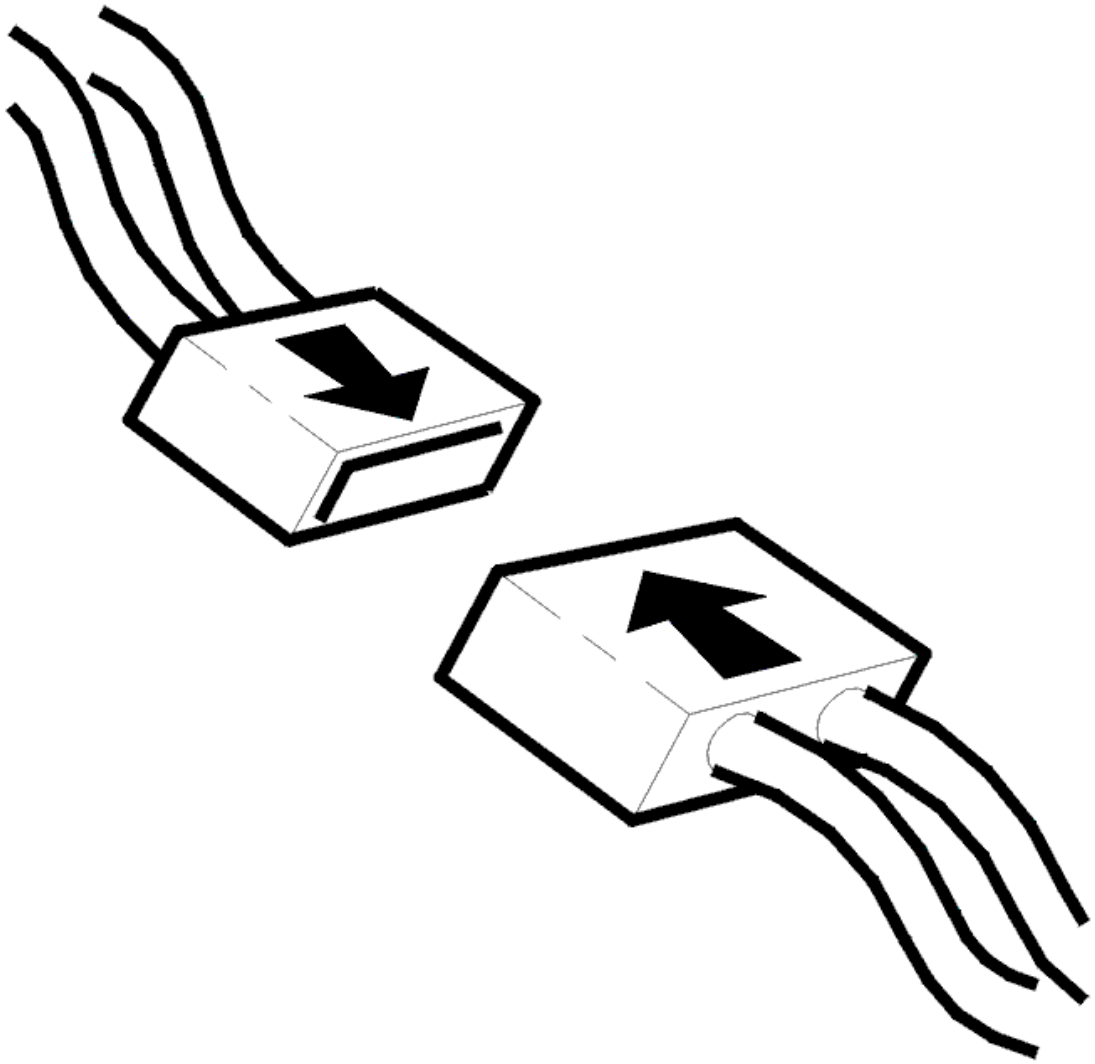

Fig. 54: Connecting Connector
Courtesy of VOLVO CARS CORPORATION

- Ignition off
- Reinstall the connectors, components etc.

Check the function of the free wheel as follows.

Checking the function of the freewheel on the generator (GEN) in the car

- Ensure that no extra power consuming components are connected
- Start the engine. Rev the engine to 3000 RPM
- Check that only a faint clicking sound is heard when the freewheel engages and disengages
- Quickly switch off the engine. Check that the generator rotates for longer than the engine.

NOTE: **If it is cold, the battery charge warning lamp may light shortly after start-up because the freewheel needs to rotate and warm up the bearing grease before it locks and engages the rotor shaft. If the warning lamp remains lit, it may be an indication that the freewheel has not locked the pulley to the rotor shaft.**

Checking the function of the freewheel on a removed generator (GEN)

- Rotate the pulley counter-clockwise and brake the pulley heavily. The freewheel must grip the rotor shaft when rotating counter-clockwise
- Stop the rotation by braking the pulley. When braking the pulley, the freewheel mechanism should release so that the rotor shaft continues to rotate.

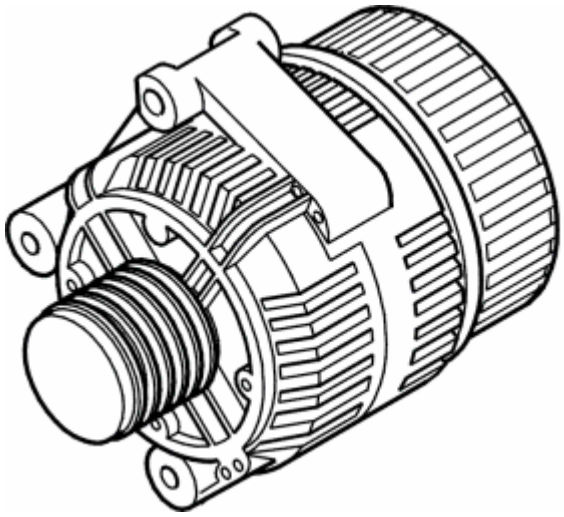

Fig. 55: Identifying Generator
Courtesy of VOLVO CARS CORPORATION

Is the function OK?

- **YES**

  OKAY: Troubleshooting has been completed.

- **NO**

  Refer to **INFORMATION**

INFORMATION

FAULT-TRACING INFORMATION

The fault should have been detected and remedied. As this is not the case fault-tracing has failed.

Exit fault-tracing for this diagnostic trouble code (DTC) or make another attempt.

FAULT-TRACING INFORMATION

Condition

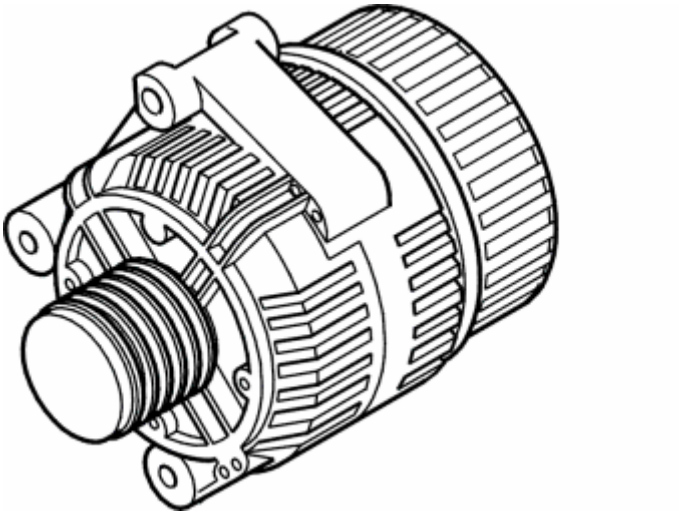

Fig. 56: Identifying Generator
Courtesy of VOLVO CARS CORPORATION

A freewheel between the rotor shaft and the pulley allows the generator rotor shaft to rotate freely in one direction. This means that any jerking in the belt transmission is minimized.

Possible Source

- Damaged freewheel.

Fault symptom[s]

- The "Generator not charging" warning lamp is lit when the engine is running
- The battery discharges
- Noise from the belt transmission
- The engine judders under acceleration
- Uneven idle
- Noise from the generator (GEN).

CHECKING THE FREEWHEEL ON A GENERATOR (GEN) (B5254T2; 2007)

CHECKING THE FREEWHEEL ON A GENERATOR (GEN)

see **CHECKING THE FREEWHEEL ON A GENERATOR (GEN)**

FAULT-TRACING INFORMATION

see **FAULT-TRACING INFORMATION**

CHECKING THE FREEWHEEL ON A GENERATOR (GEN) (B8444S; 2007-11)

CHECKING THE FREEWHEEL ON A GENERATOR (GEN)

see **CHECKING THE FREEWHEEL ON A GENERATOR (GEN)**

FAULT-TRACING INFORMATION

see **FAULT-TRACING INFORMATION**

CHECKING THE FUNCTION OF THE STARTER MOTOR AFTER START ATTEMPTS (2003-12)

CHECKING THE FUNCTION OF THE STARTER MOTOR AFTER START ATTEMPTS

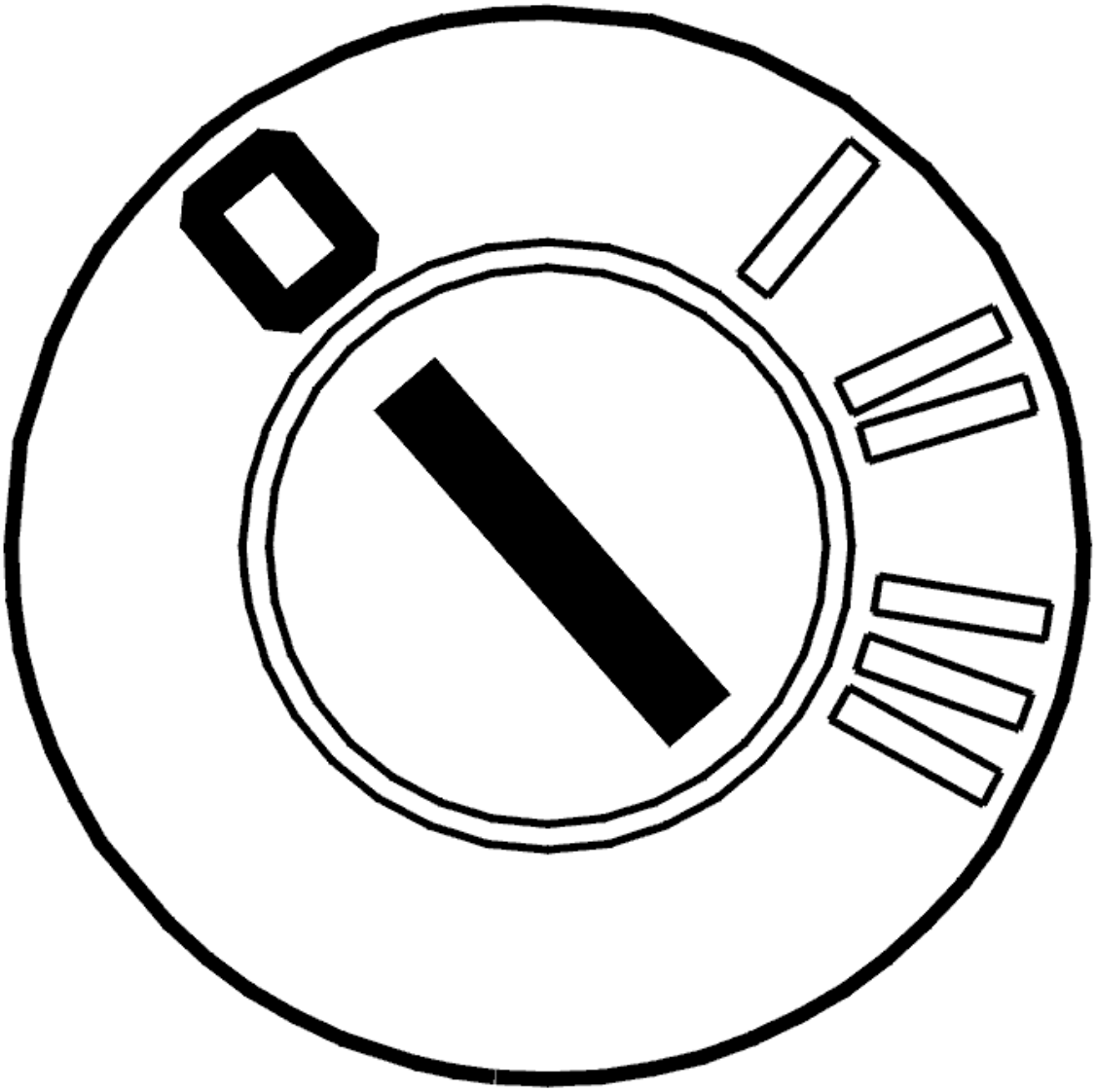

Fig. 57: Identifying Ignition OFF
Courtesy of VOLVO CARS CORPORATION

- Ignition off
- Select neutral (automatic transmissions: "N"). Apply the parking brake
- Expose the starter motor relay. Remove the relay. For the location of the relays, see the wiring diagram
- Temporarily connect two cables to relay base terminals #3 (30) and #5 (87)
- The function of the starter motor must be checked by temporarily short-circuiting the cables to each other so that the control solenoid is powered and the starter motor engages.

  HINT: A starter motor relay without a protective cover can be used to create the short-circuit. Closes the switches manually.

  NOTE: Do not bridge directly in the relay base or the connections in the base may be damaged.

Break the circuit after 5 seconds. The starter motor should then stop immediately.

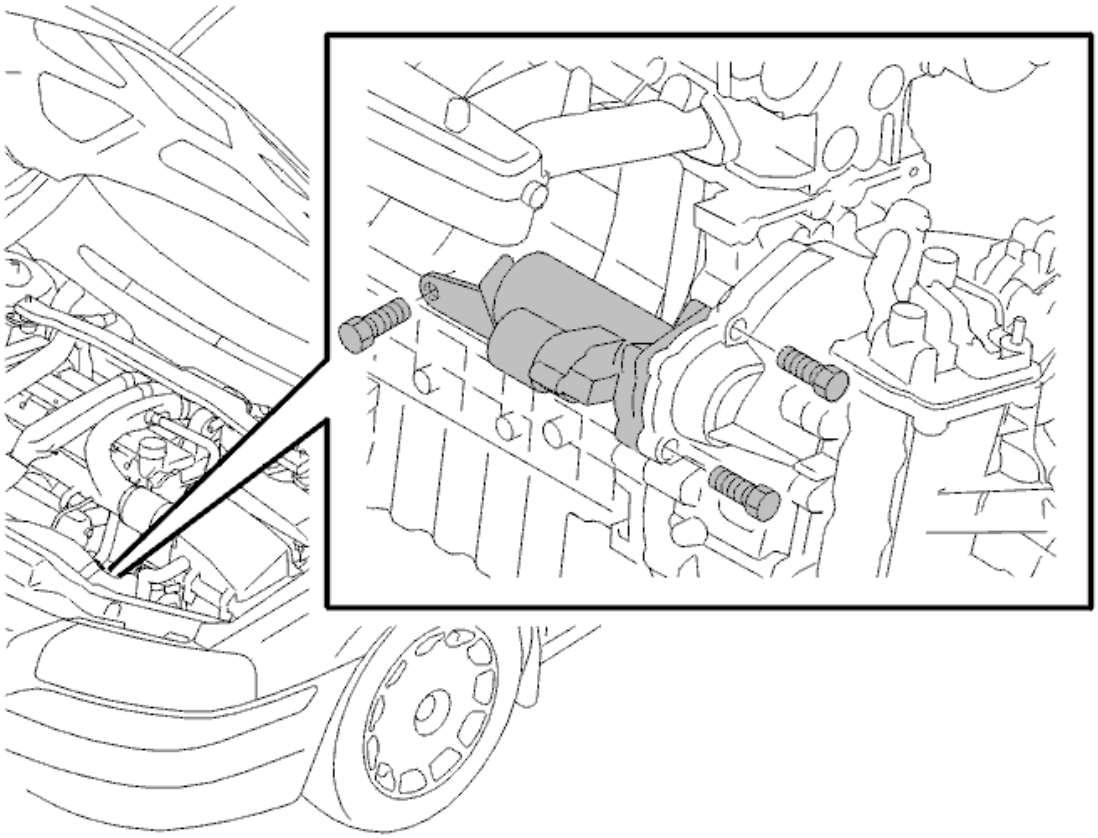

Fig. 58: Identifying Starter Motor And Screws
Courtesy of VOLVO CARS CORPORATION

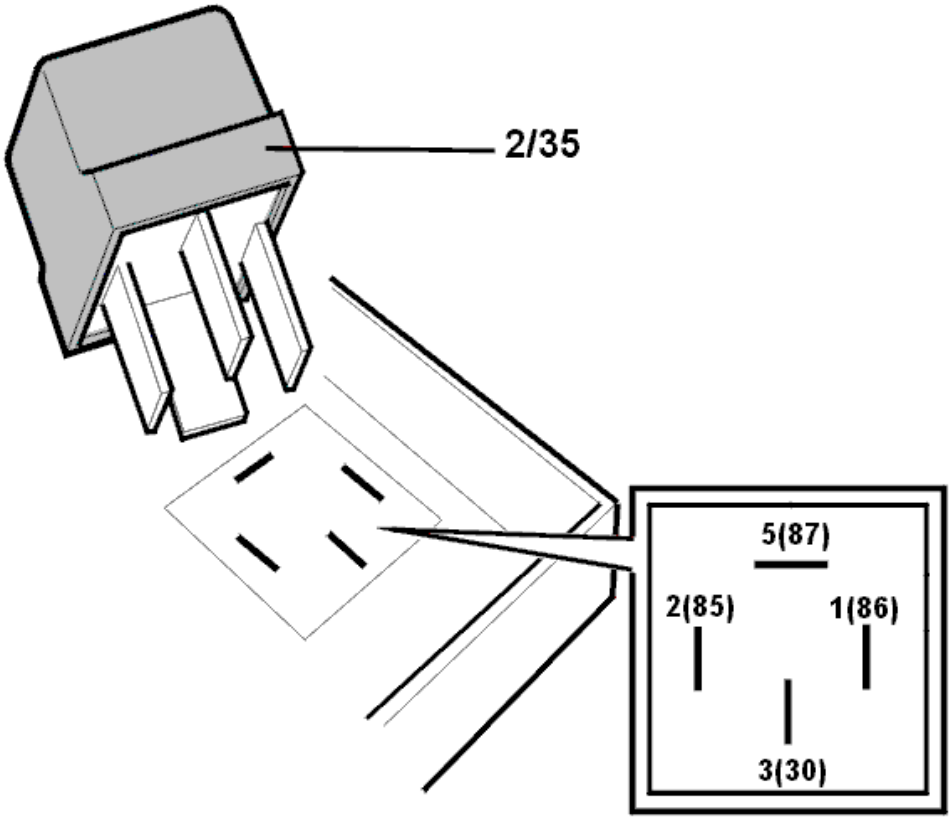

Fig. 59: Identifying Starter Motor Relay
Courtesy of VOLVO CARS CORPORATION

Did the starter motor stop immediately?

- **YES**

  Refer to **REPLACING THE COMPONENT**

- **NO**

  Refer to **REPLACING THE COMPONENT**

REPLACING THE COMPONENT

Try a new control solenoid. If this does not help, try a new starter motor.

HINT: Check that nothing is sticking in the control solenoid, linkage or in the drive gear in the starter motor.

Remedy as necessary.

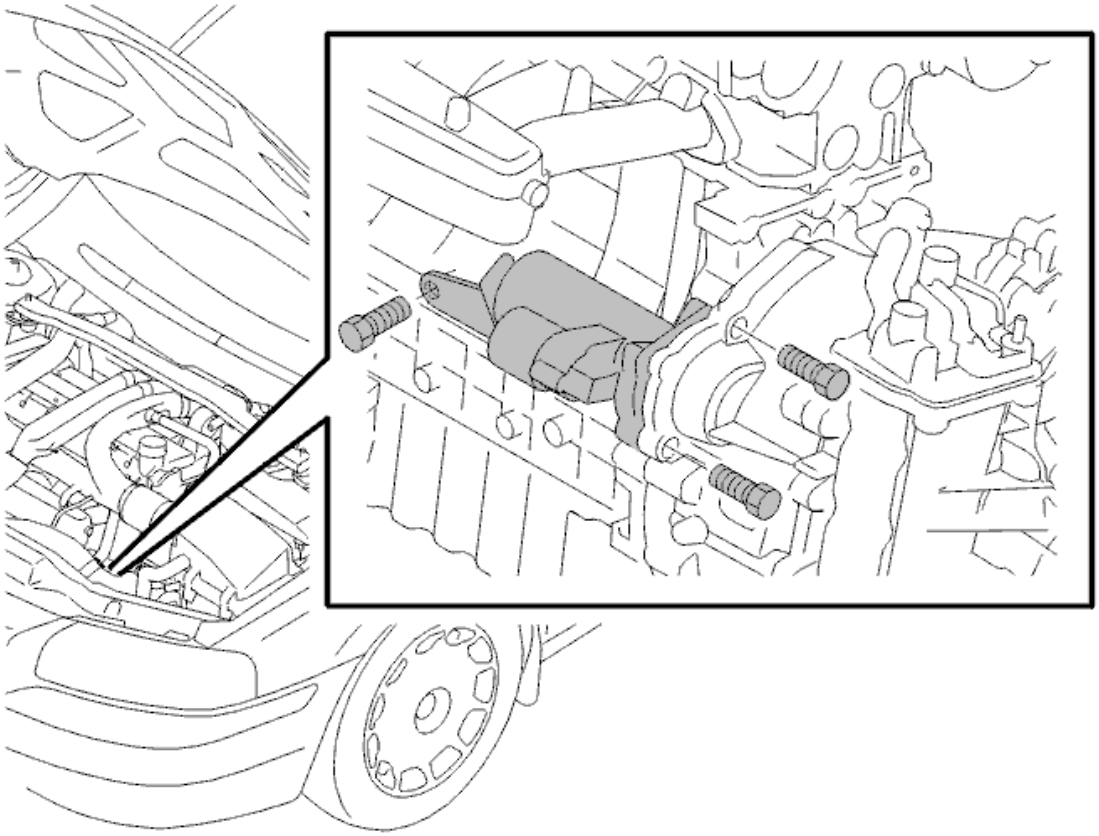

Fig. 60: Identifying Starter Motor And Screws
Courtesy of VOLVO CARS CORPORATION

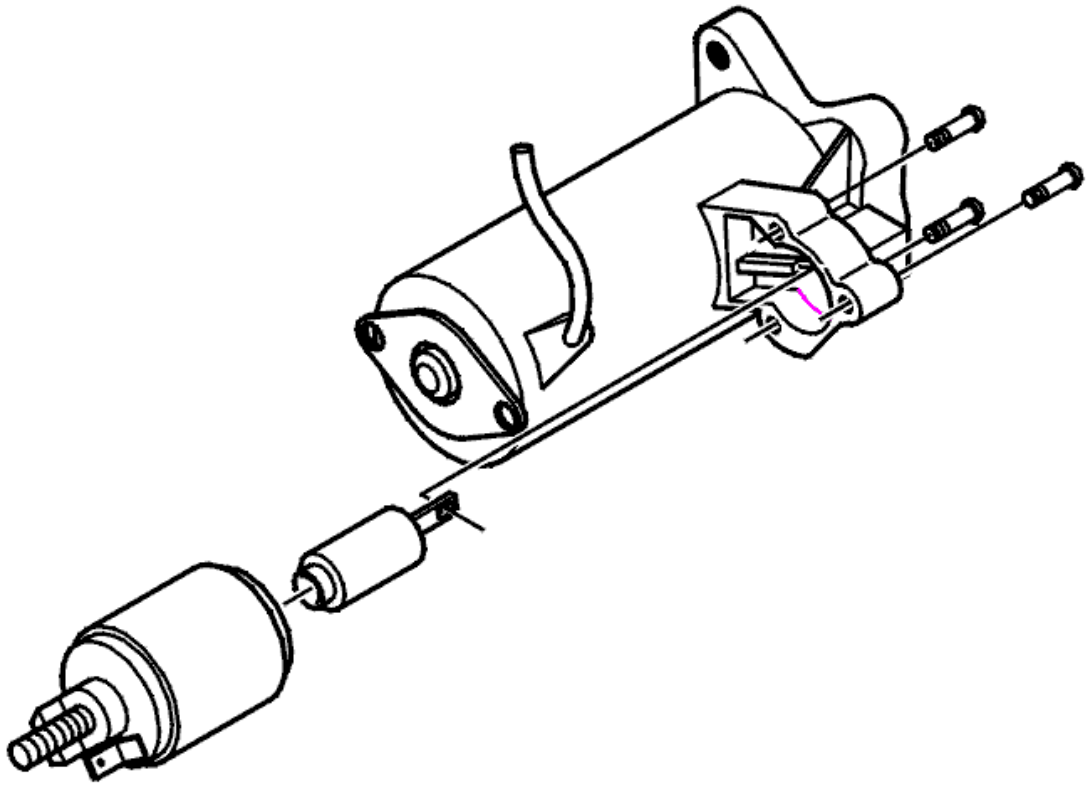

Fig. 61: Identifying Solenoid And Screws
Courtesy of VOLVO CARS CORPORATION

- **Continue**

  Refer to **VERIFICATION**

REPLACING THE COMPONENT

Try a new starter motor relay.

Remedy as necessary.

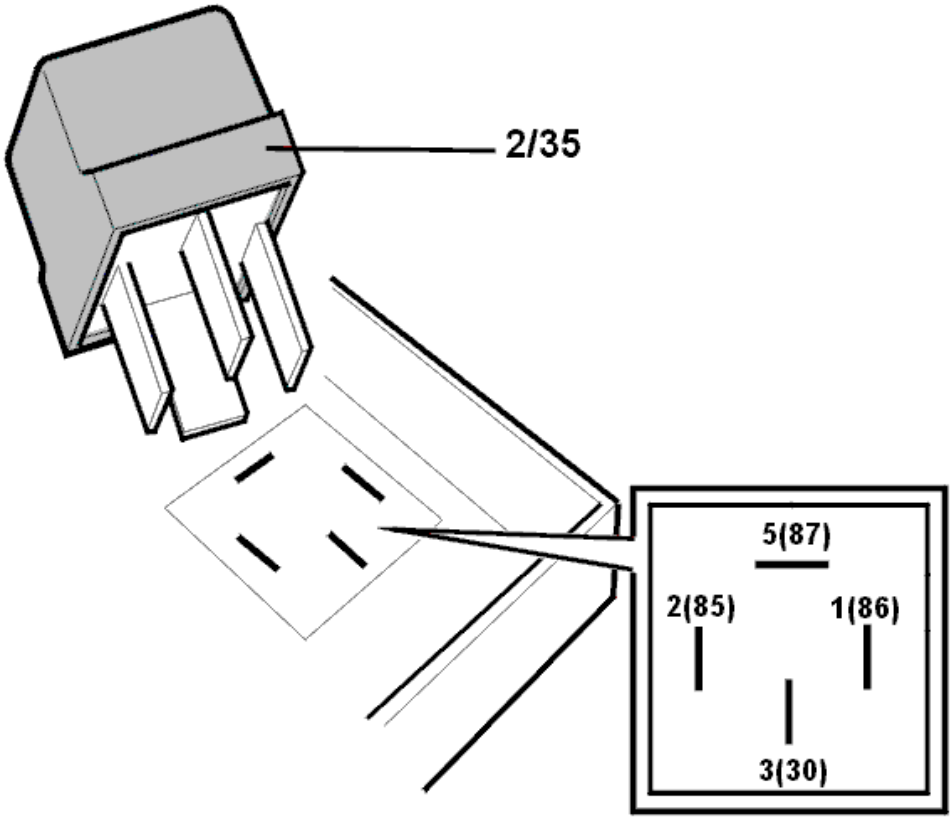

Fig. 62: Identifying Starter Motor Relay
Courtesy of VOLVO CARS CORPORATION

- **Continue**

  Refer to **VERIFICATION**

VERIFICATION

HINT: After carrying out the repair, check that the fault has been remedied.

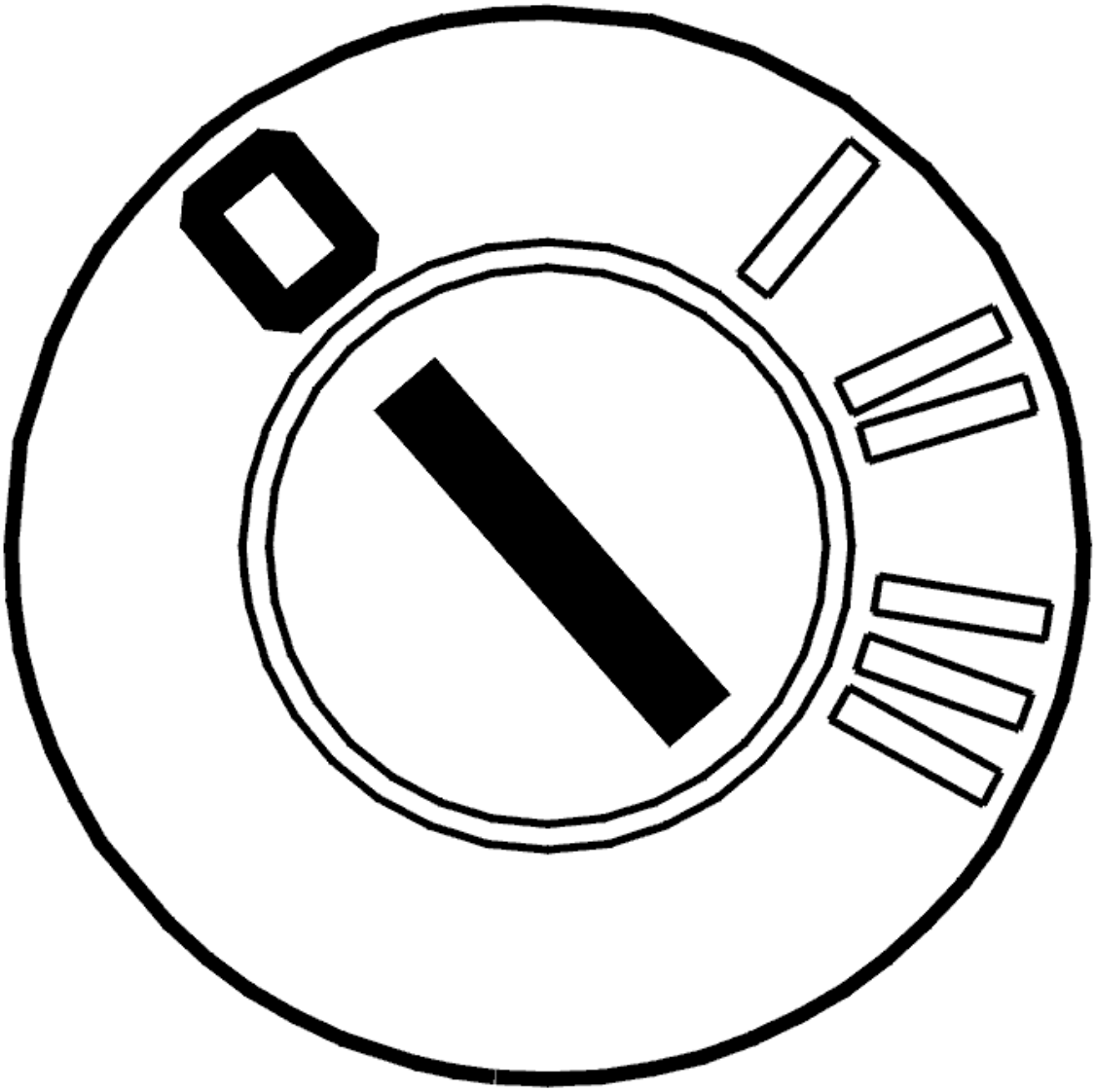

Fig. 63: Identifying Ignition OFF
Courtesy of VOLVO CARS CORPORATION

- Ignition off
- Reinstall the connectors, components etc.
- Select neutral (automatic transmissions: "N"). Apply the parking brake
- Expose the starter motor relay. Remove the relay. For the location of the relays, see the wiring diagram
- Temporarily connect two cables to relay base terminals #3 (30) and #5 (87)
- The function of the starter motor must be checked by temporarily short-circuiting the cables to each other so that the control solenoid is powered.

NOTE: **Do not bridge directly in the relay base or the connections in the base may be damaged.**

Break the circuit after 5 seconds. The starter motor should then stop immediately.

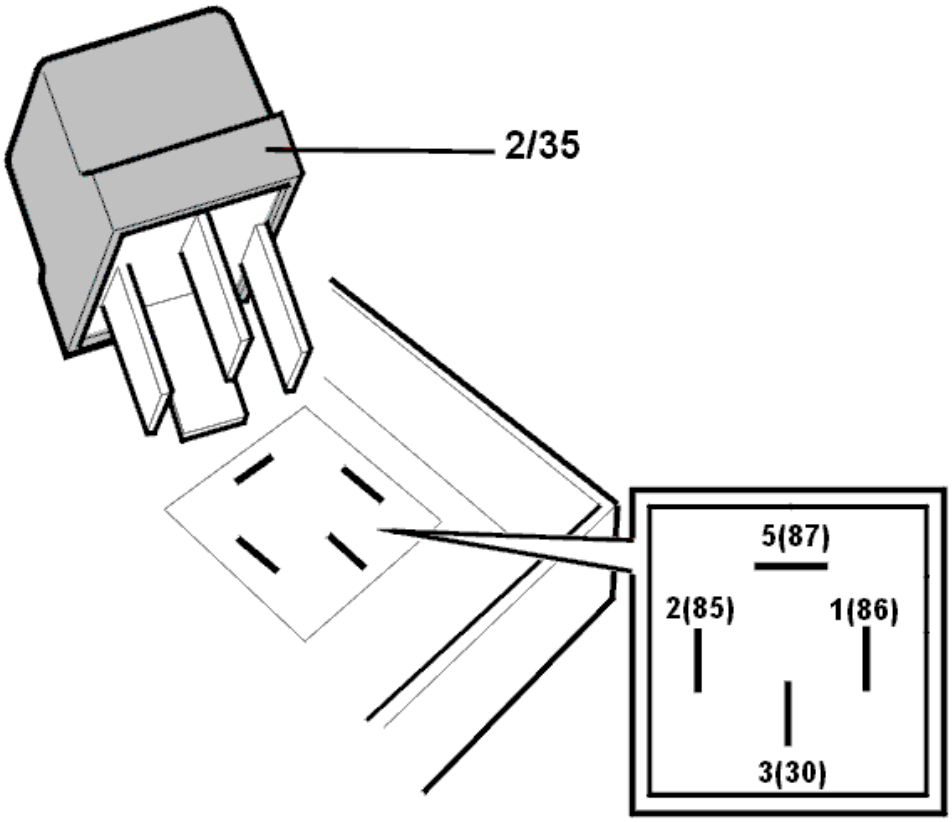

Fig. 64: Identifying Starter Motor Relay
Courtesy of VOLVO CARS CORPORATION

Is the function OK?

- **YES**

  OKAY: Troubleshooting has been completed.

- **NO**

  Refer to **INFORMATION**

INFORMATION

FAULT-TRACING INFORMATION

The fault should have been detected and remedied. As this is not the case fault-tracing has failed.

Exit fault-tracing for this diagnostic trouble code (DTC) or make another attempt.

FAULT-TRACING INFORMATION

Condition

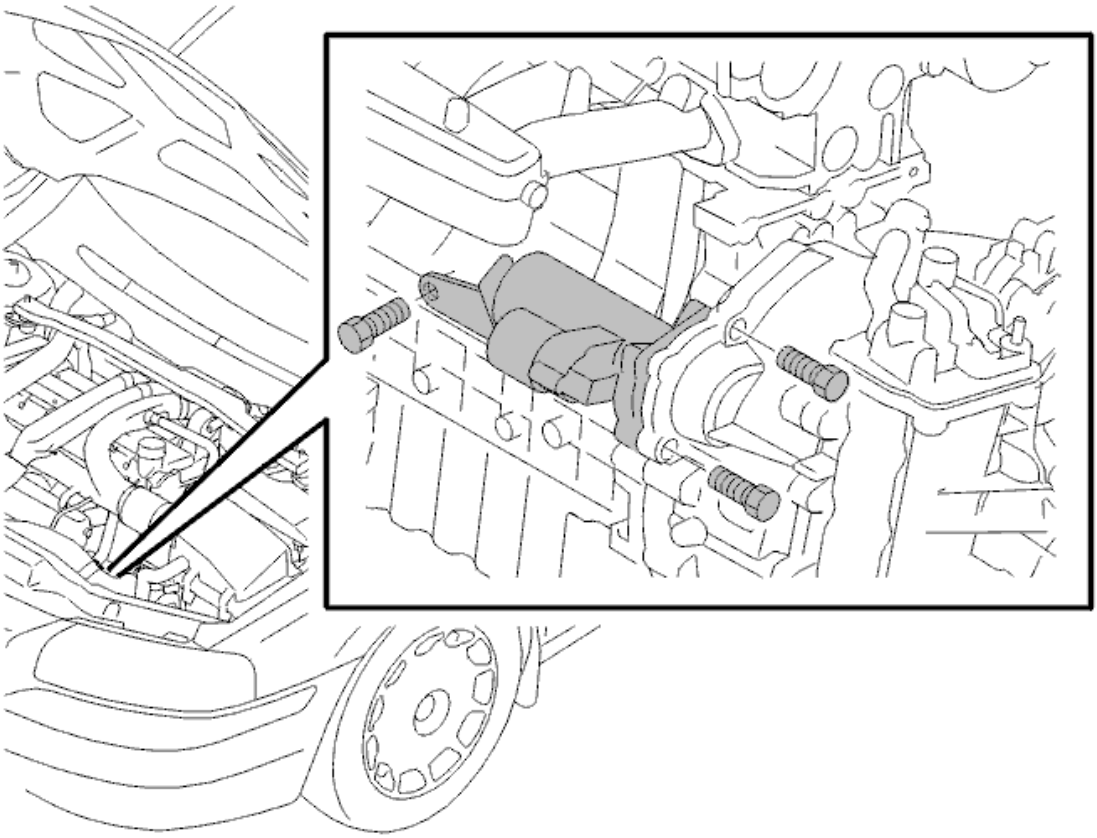

Fig. 65: Identifying Starter Motor And Screws
Courtesy of VOLVO CARS CORPORATION

If any of the starter motor relay, control solenoid or starter motor stick or are defective it can lead to the starter motor running after the ignition is switched off.

Possible Source

- The control signal to the starter motor relay is too high.
- Damaged starter motor relay.
- Damaged control solenoid.
- Damaged starter motor.

Fault symptom[s]

- The starter motor continues slowly when the ignition key has been released.

CHECKING THE FUNCTION OF THE WARNING LAMP IN THE COMBINED INSTRUMENT PANEL (DRIVER INFORMATION MODULE) (2003-04)

CHECKING THE FUNCTION OF THE WARNING LAMP FOR THE GENERATOR (GEN) IN THE COMBINED INSTRUMENT PANEL (DRIVER INFORMATION MODULE)

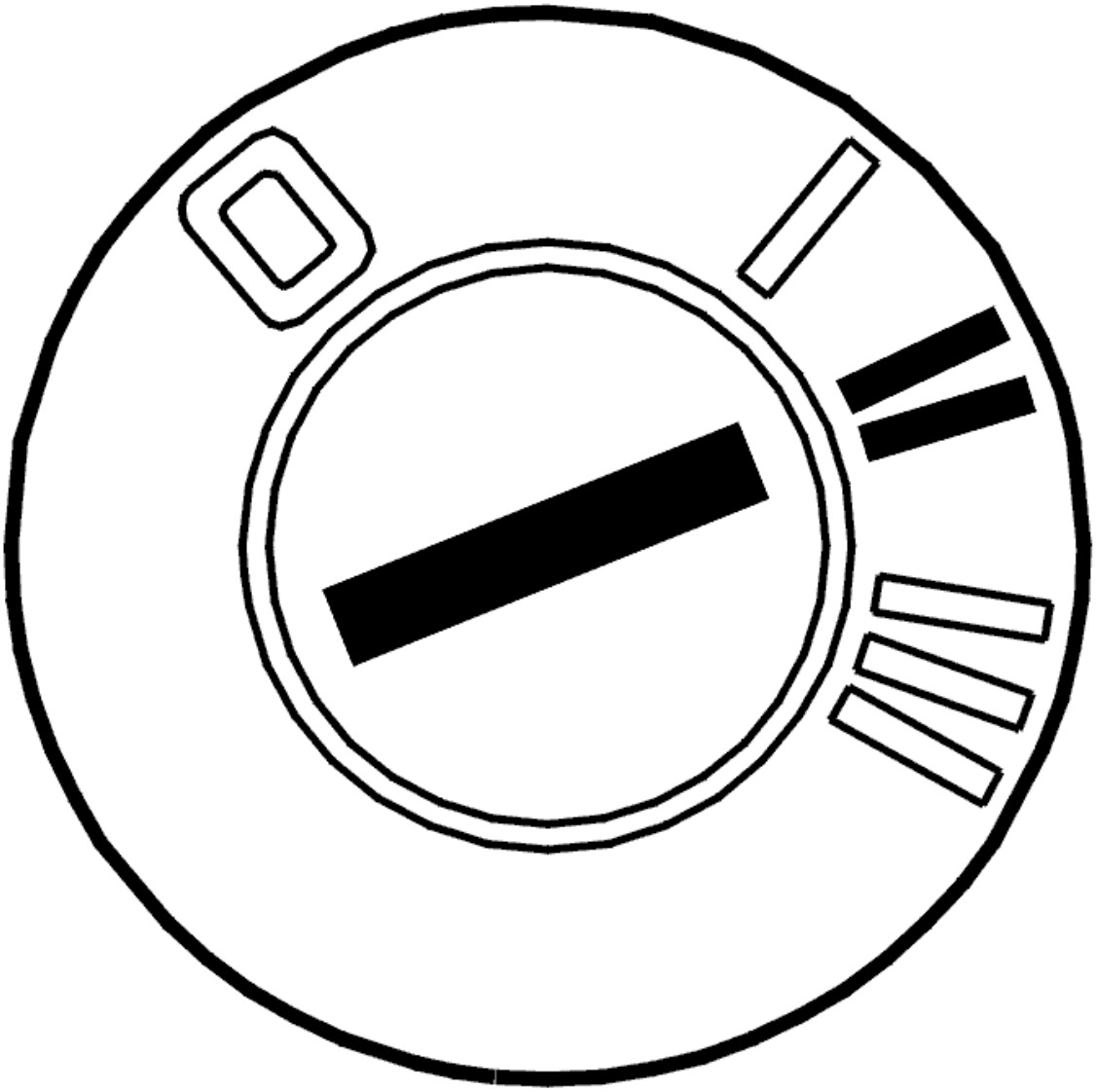

Fig. 66: Identifying Ignition ON
Courtesy of VOLVO CARS CORPORATION

- Ignition on.

  Check that the "Generator not charging" warning lamp lights when the ignition is switched on. The lamp will go out if the engine is not started 5 seconds after the ignition is switched on.

  If the engine is started, the lamps will go out if there is no fault.

  HINT: The warning lamp can also be tested by activating a test of needles and lamps. Check that the warning lamp for the generator (GEN) lights.

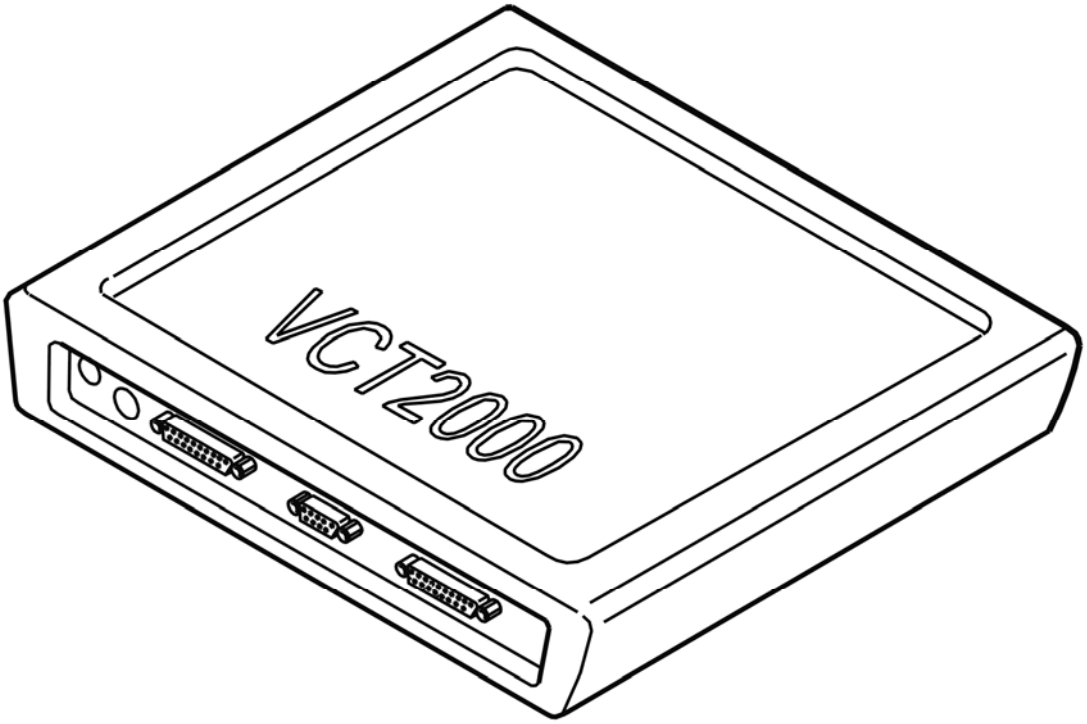

Fig. 67: Identifying VCT2000 Diagnostic Tool Symbol In VIDA
Courtesy of VOLVO CARS CORPORATION

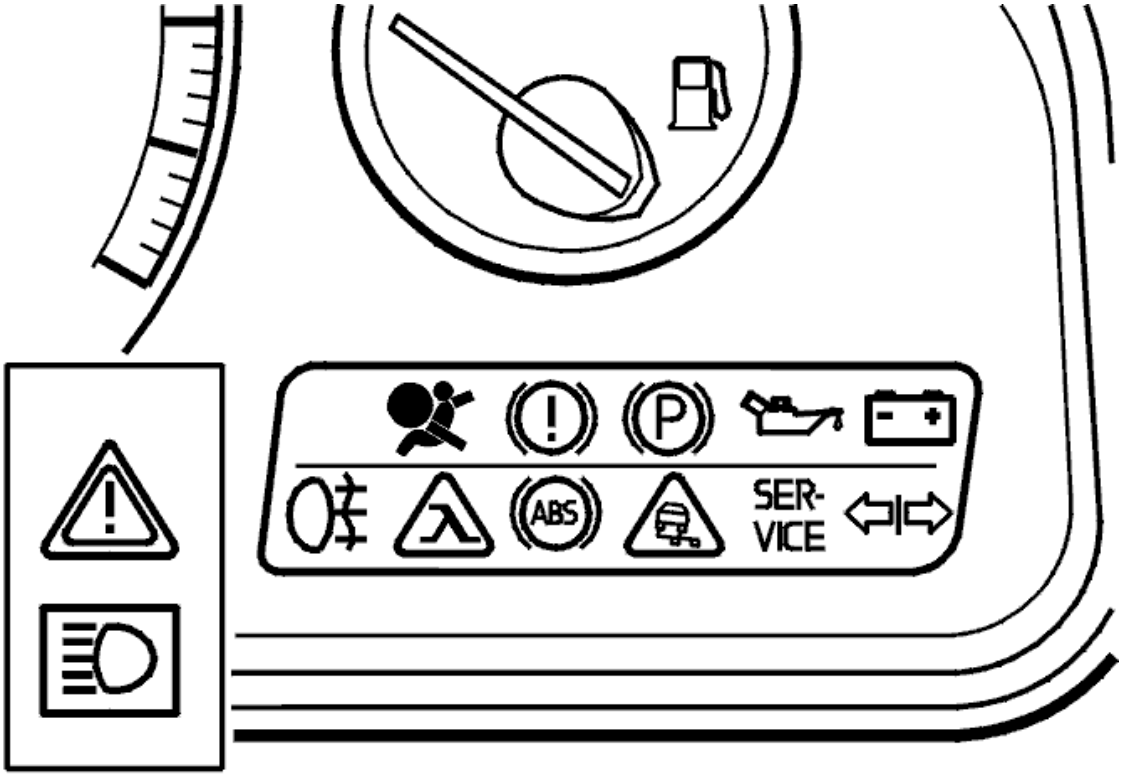

Fig. 68: Identifying ABS Warning Lamp
Courtesy of VOLVO CARS CORPORATION

Does the warning lamp for the generator (GEN)?

- **YES**

  FAULT NOT FOUND: Troubleshooting has been completed.

- **NO**

  Refer to **CHECKING THE BULB**

CHECKING THE BULB

Try a new bulb.

HINT: There is a fault in the combined instrument panel if the lamp lights continuously during the lamp test.

If that does not help, try a new combined instrument panel.

Remedy as necessary.

Other information

- see **DRIVER INFORMATION MODULE (DIM), REPLACING**
- see **CHECKING WIRING AND TERMINALS**

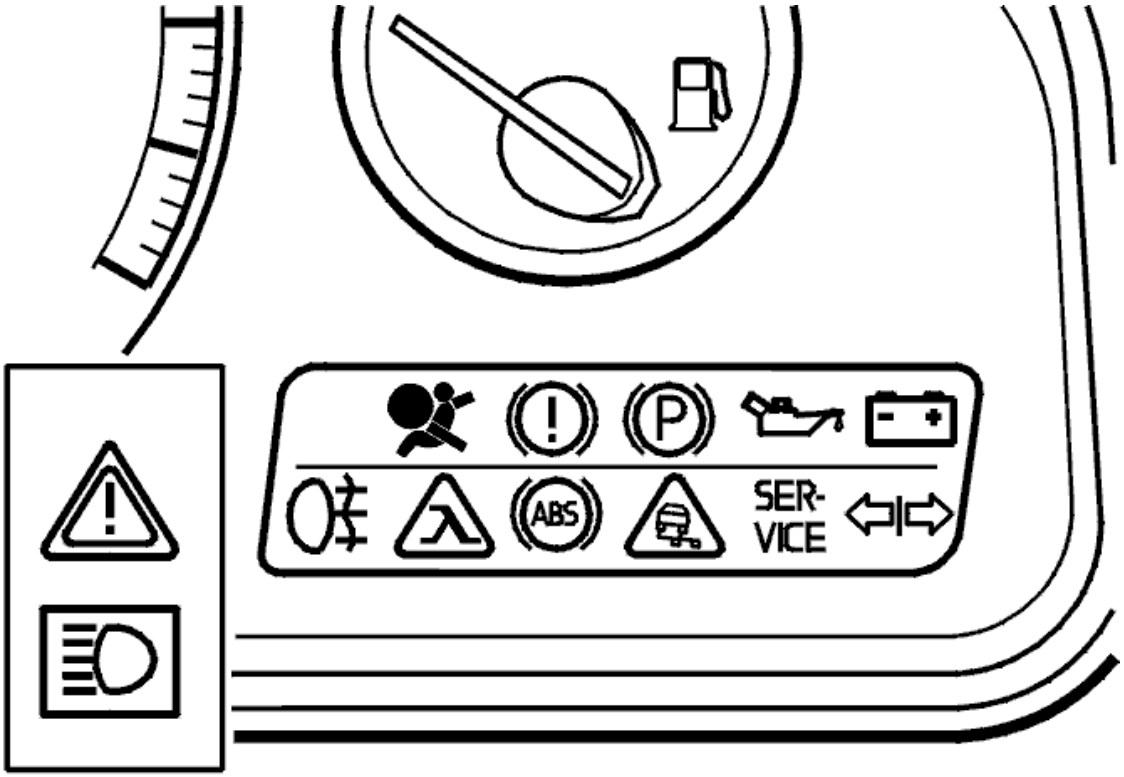

Fig. 69: Identifying ABS Warning Lamp
Courtesy of VOLVO CARS CORPORATION

- **Continue**

  Refer to **VERIFICATION**

VERIFICATION

HINT: After carrying out the repair, check that the fault has been remedied.

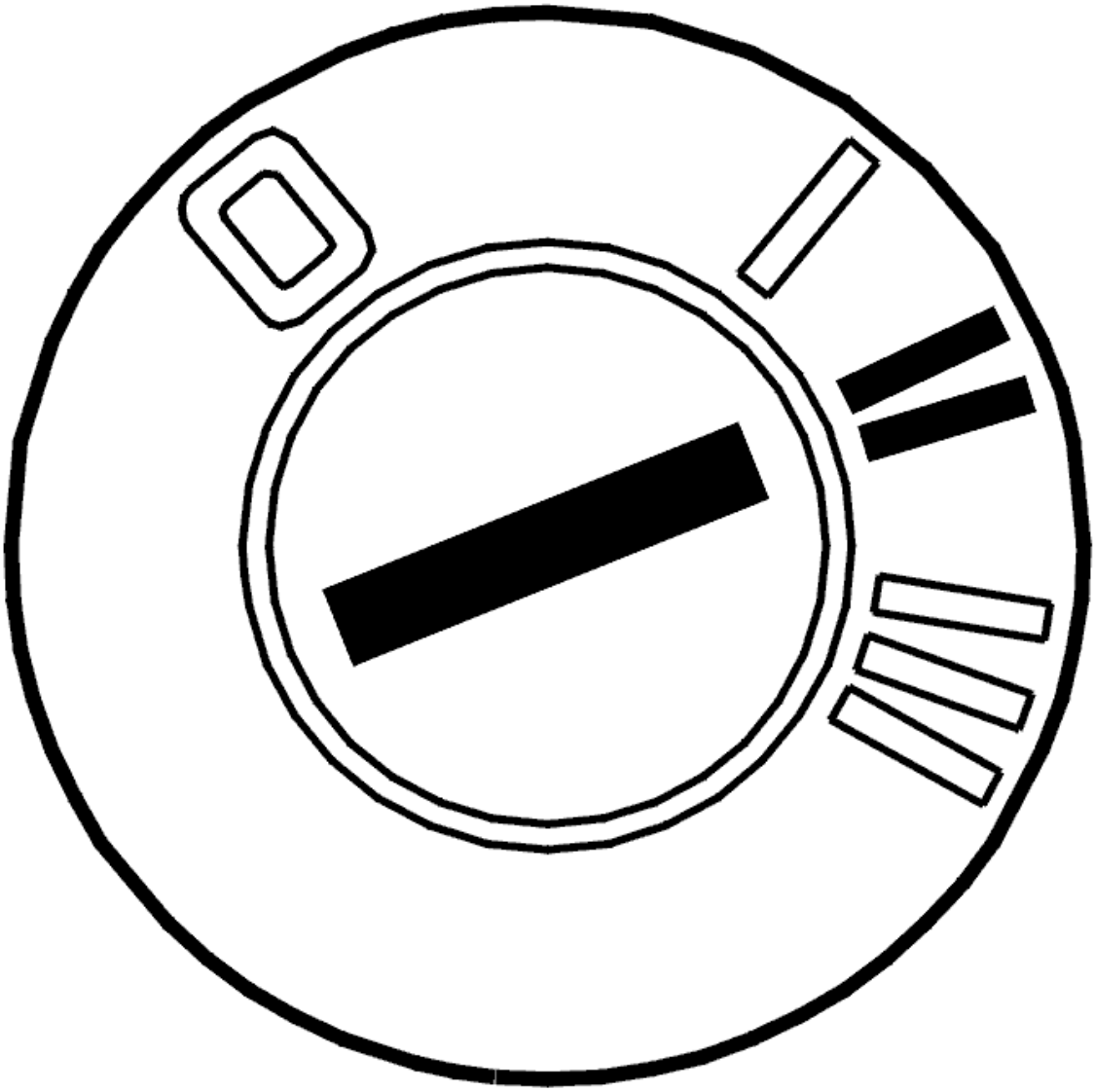

Fig. 70: Identifying Ignition ON
Courtesy of VOLVO CARS CORPORATION

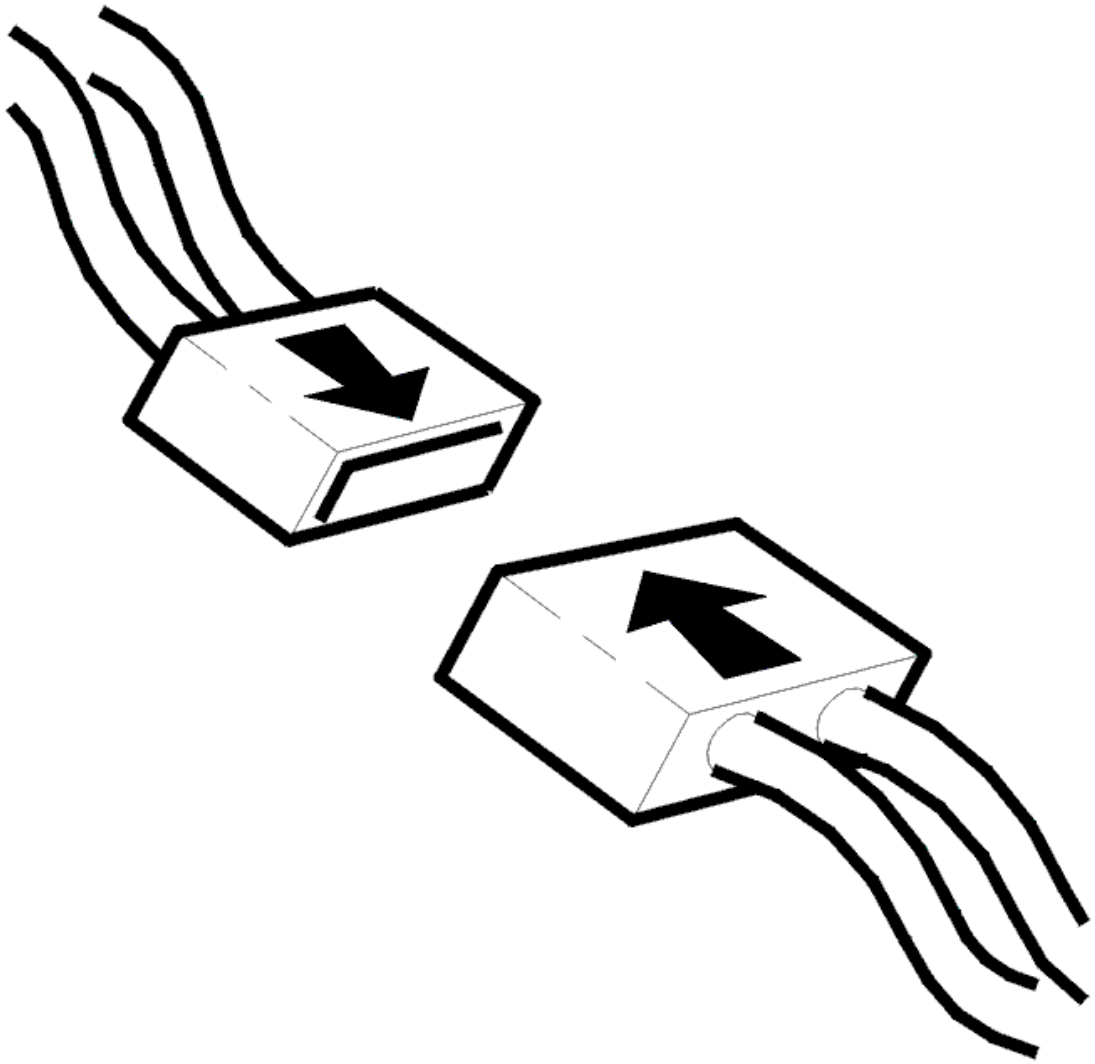

Fig. 71: Connecting Connector
Courtesy of VOLVO CARS CORPORATION

- Ignition off
- Reinstall the connectors, components etc.
- Ignition on.

  Check that the "Generator not charging" warning lamp lights when the ignition is switched on. The lamp will go out if the engine is not started 5 seconds after the ignition is switched on.

  If the engine is started, the lamps will go out if there is no fault.

  HINT: The warning lamp can also be tested by activating a test of needles and lamps. Check that the warning lamp for the generator (GEN) lights.

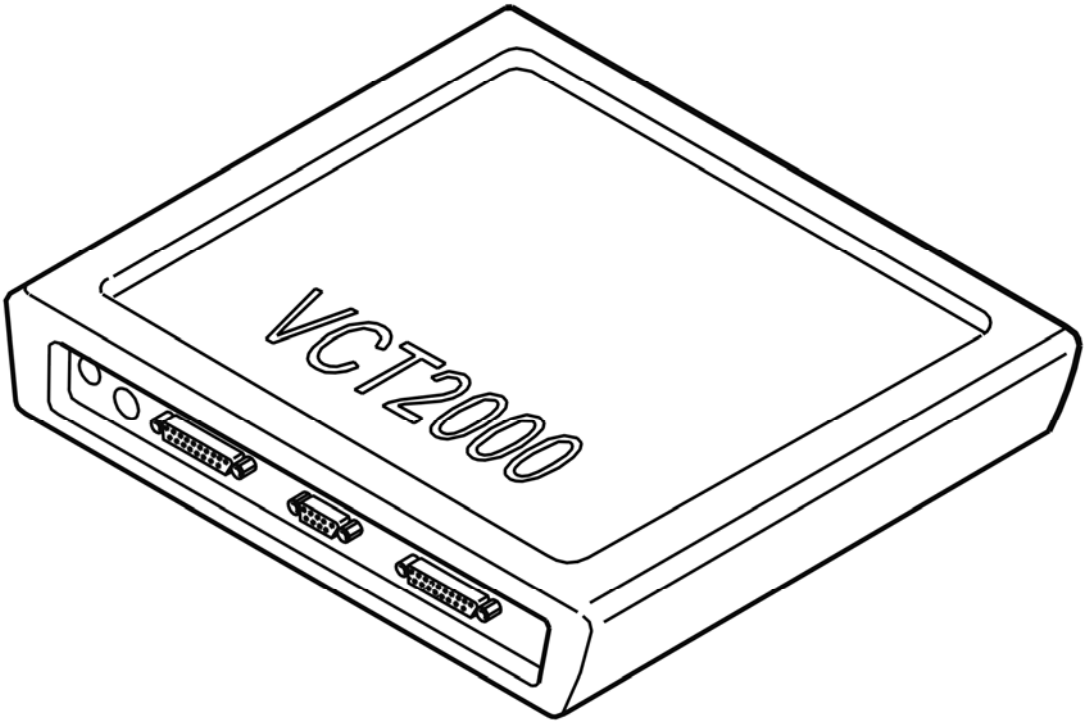

Fig. 72: Identifying VCT2000 Diagnostic Tool Symbol In VIDA
Courtesy of VOLVO CARS CORPORATION

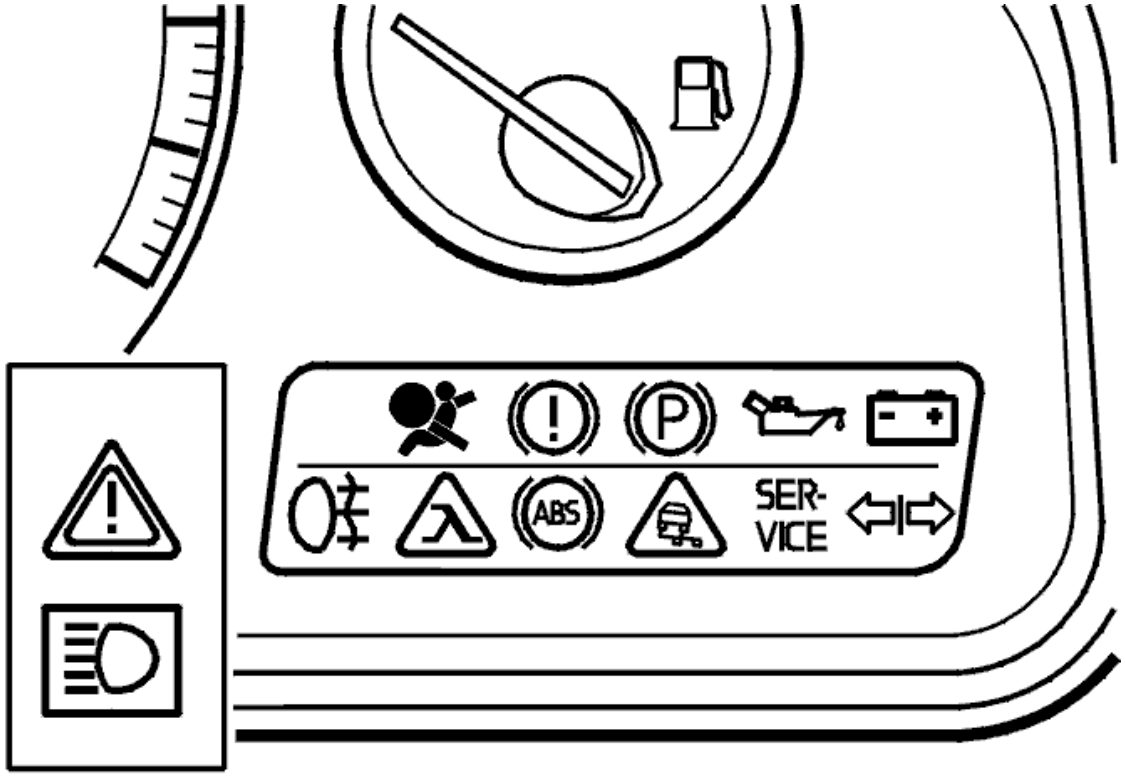

Fig. 73: Identifying ABS Warning Lamp
Courtesy of VOLVO CARS CORPORATION

Does the warning lamp light?

- **YES**

  VERIFIED: Troubleshooting has been completed.

- **NO**

  Refer to **INFORMATION**

INFORMATION

FAULT-TRACING INFORMATION

The fault should have been detected and remedied. As this is not the case fault-tracing has failed.

Exit fault-tracing for this diagnostic trouble code (DTC) or make another attempt.

FAULT-TRACING INFORMATION

Condition

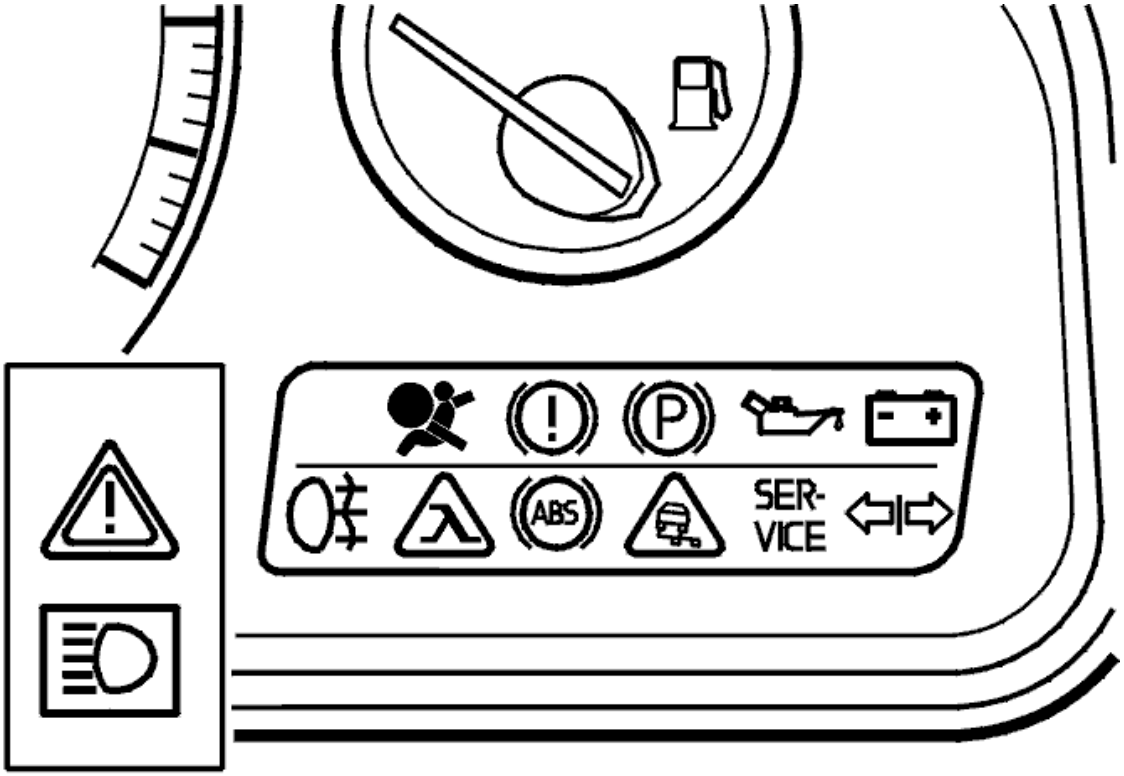

Fig. 74: Identifying ABS Warning Lamp
Courtesy of VOLVO CARS CORPORATION

If the warning lamp for the generator (GEN) is not functioning, it is not possible to, see whether the generator (GEN) is charging or not.

Possible Source

- Defective bulb in the combined instrument panel.

Fault symptom[s]

- The "Generator not charging" warning lamp does not light when the ignition is switched on
- The "Generator not charging" warning lamp is lit when the engine is running.

CHECKING THE GENERATOR (GEN) (2003-04)

CHECKING THE GENERATOR (GEN)

CHECKING THE GENERATOR CHARGE VOLTAGE

NOTE: The conditions for this test are that:

- **The battery is fully charged**
- **The power supply and ground terminals for the generator (GEN), battery and starter motor are fault-free**
- **The belt transmission is fault free**
- **The L signal between the generator (GEN) regulator and the central electronic module (CEM) are fault-free and that no diagnostic trouble codes (DTCs) for the L-signal are stored in the central electronic module (CEM).**

WARNING: **If the engine cooling fan (FC) is running, wait until it has stopped.**

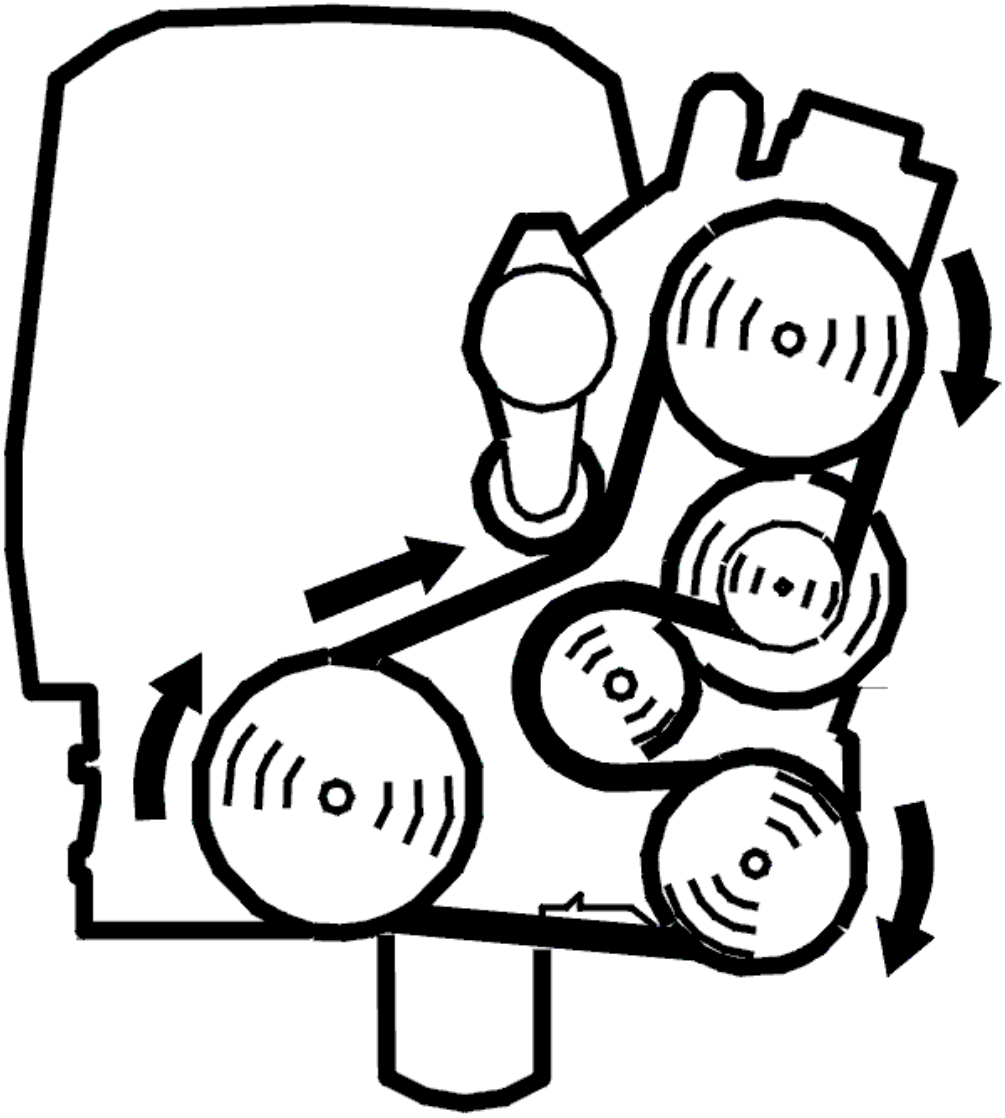

Fig. 75: Belt Routing/Engine Idling - Volvo
Courtesy of VOLVO CARS CORPORATION

- Connect a voltmeter to generator (GEN) B+ and ground.

  HINT: The appearance of the generator (GEN) face on D5252T engines differs from the illustration.

- Start the engine. Maintain a constant engine speed of approximately 2300 RPM
- Ensure that no additional power consuming components are connected.

  Check that the system voltage in the battery and charge circuits is normal. For information about the charge voltage and temperature dependency, see **GENERATOR (GEN)/CHARGE REGULATOR** .

  HINT: If the generator (GEN) is not charging try tapping the generator/regulator lightly. The regulator brushes can stick and therefore not come into contact with the slip rings on the rotor.

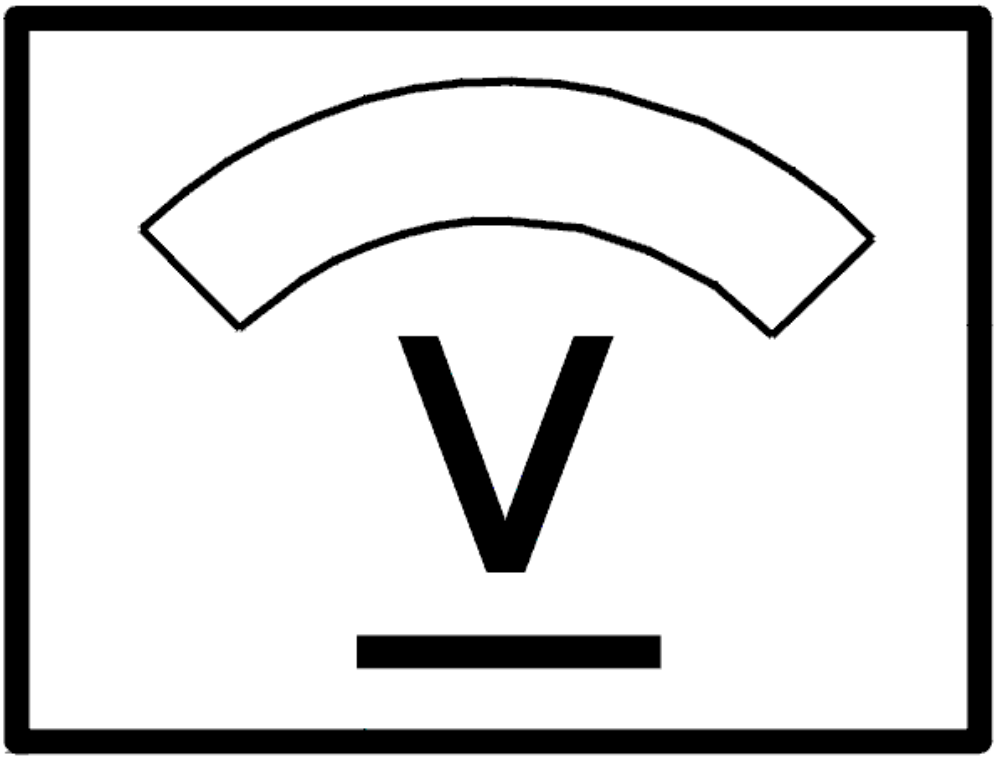

Fig. 76: Identifying Voltage Display

Courtesy of VOLVO CARS CORPORATION

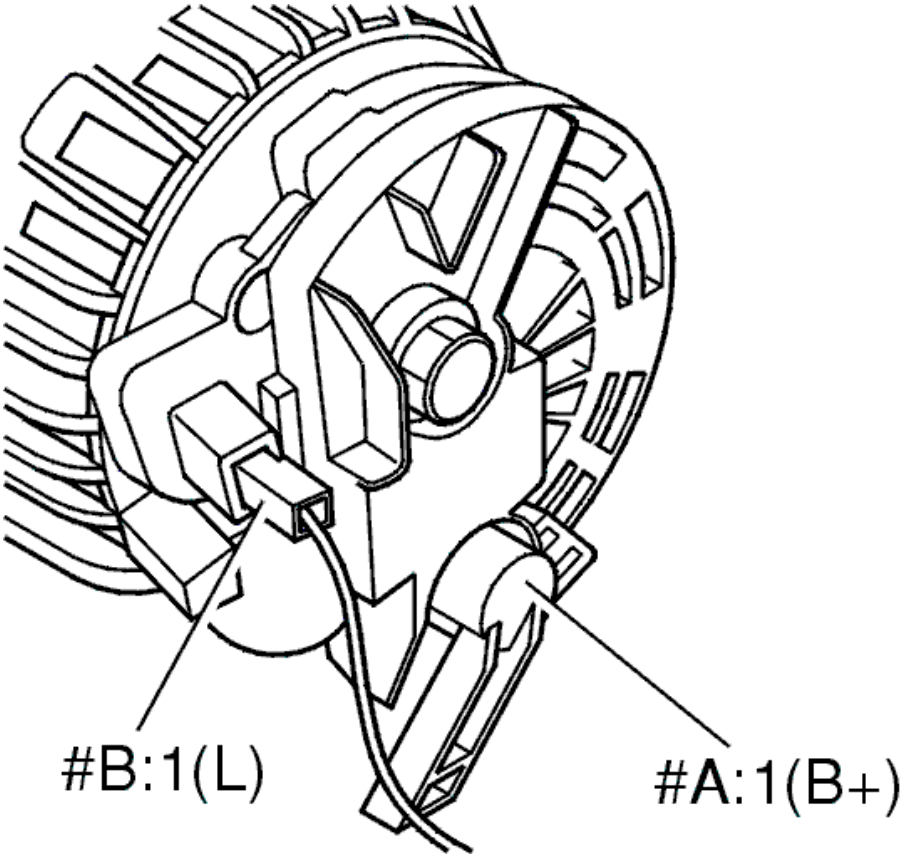

Fig. 77: Identifying Generator Terminals
Courtesy of VOLVO CARS CORPORATION

Is the charging voltage OK?

- **OK**

  FAULT NOT FOUND: Troubleshooting has been completed.

- **HIGH**

  Refer to **REPLACING THE COMPONENT**

- **LOW**

  Refer to **MECHANICALLY CHECKING THE REGULATOR AND GENERATOR (GEN)**

REPLACING THE COMPONENT

If the voltage is too high it means that the regulator is defective. Try a new charging regulator.

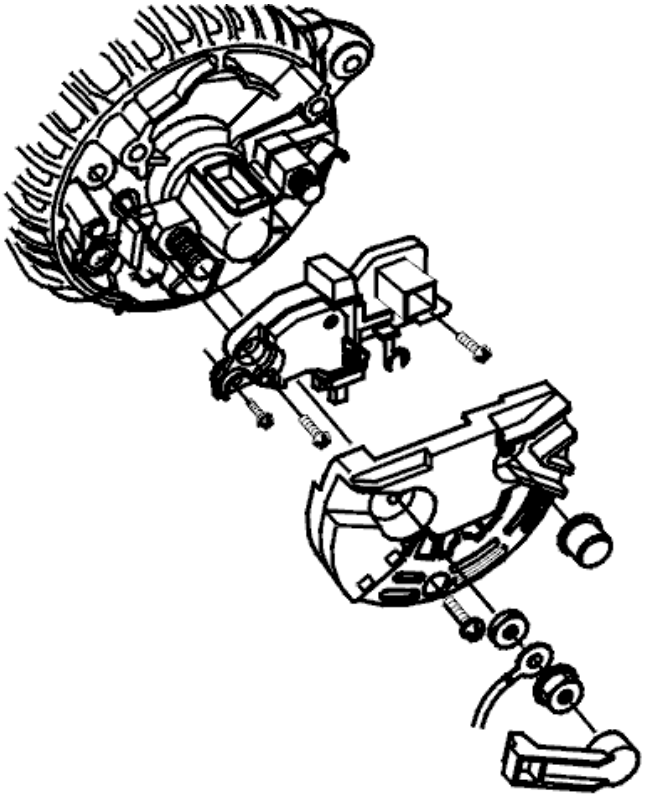

Fig. 78: Exploded View Of Generator
Courtesy of VOLVO CARS CORPORATION

- **Continue**

  Refer to **VERIFICATION**

MECHANICALLY CHECKING THE REGULATOR AND GENERATOR (GEN)

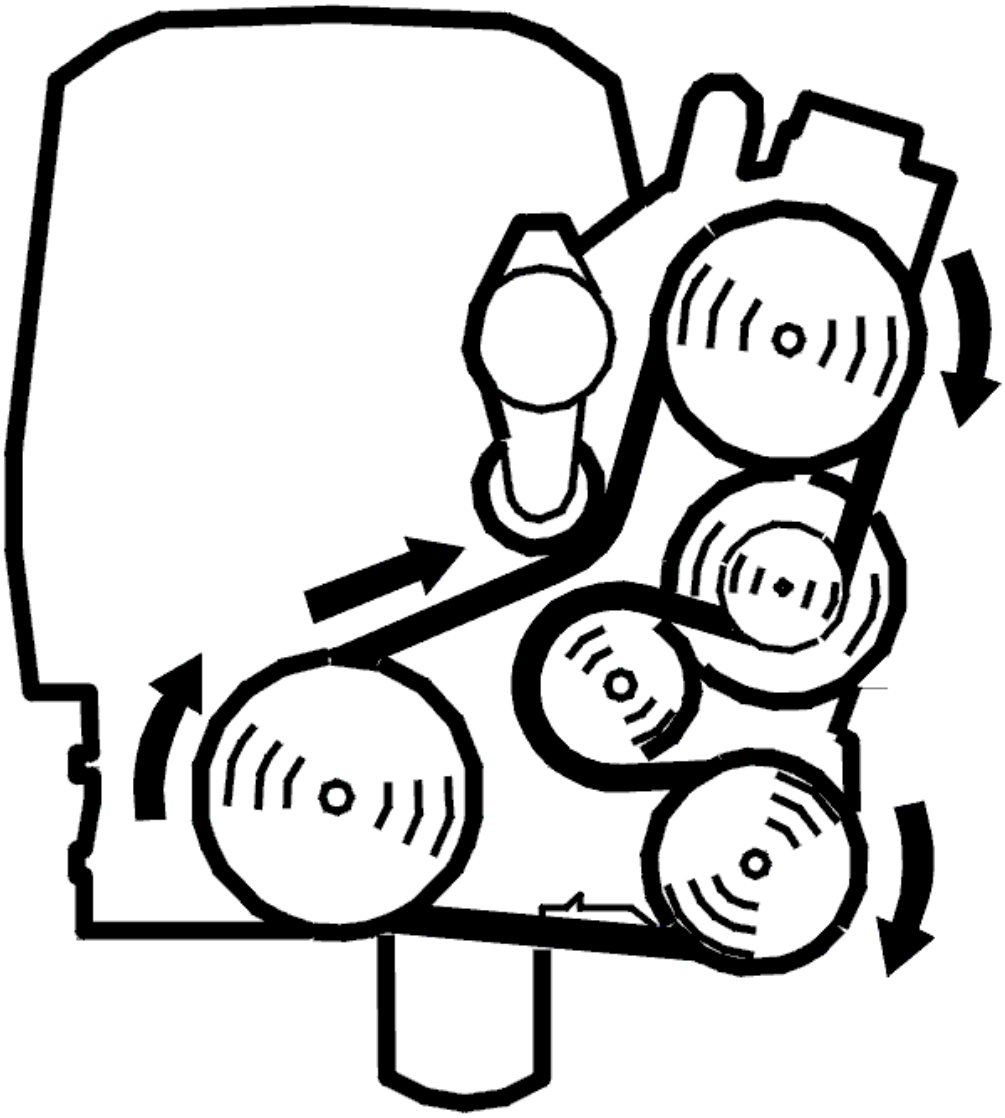

Fig. 79: Belt Routing/Engine Idling - Volvo
Courtesy of VOLVO CARS CORPORATION

- Ignition off
- Remove the charge regulator from the generator (GEN).

  Check the bushes. If the brushes are worn, replace the regulator. Check that the brushes can move in the regulator housing. The brushes are lightly sprung.

  For information about the minimum length of brushes, see **GENERATOR (GEN)/CHARGE REGULATOR** .

  Check the resistance of the rotor winding of the generator. Use an ohmmeter directly on the slip rings. For information about the resistance values, see **GENERATOR (GEN)/CHARGE REGULATOR** . If the value is incorrect the generator (GEN) must be replaced.

Remedy as necessary.

WARNING: If the engine cooling fan (FC) is running, wait until it has stopped.

- Reassemble the regulator, generator and terminals
- Connect a voltmeter to generator (GEN) B+ and ground
- Start the engine. Maintain a constant engine speed of approximately 2300 RPM
- Ensure that no additional power consuming components are connected.

Check that the system voltage in the battery and the charge circuits is now normal. For information about the charge voltage, see **GENERATOR (GEN)/CHARGE REGULATOR** .

If the voltage is now normal it means that the regulator was temporarily jammed or there was temporarily play in the regulator.

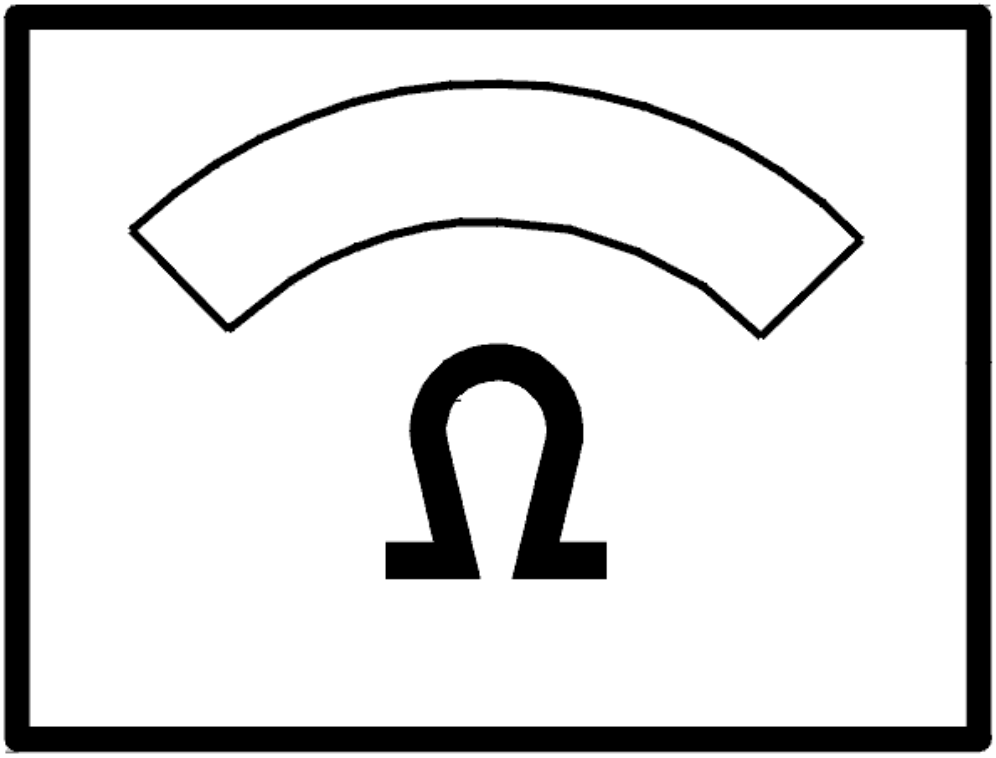

Fig. 80: Identifying Ohmmeter
Courtesy of VOLVO CARS CORPORATION

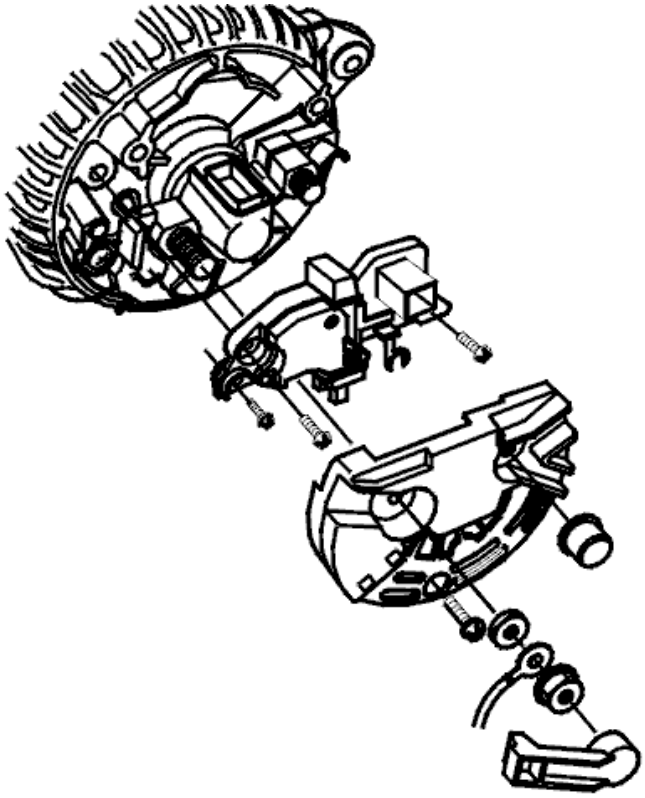

Fig. 81: Exploded View Of Generator
Courtesy of VOLVO CARS CORPORATION

Is the charging voltage OK?

- **YES**

  OKAY: Troubleshooting has been completed.

- **NO**

  Refer to **TRY A NEW CHARGING REGULATOR**

TRY A NEW CHARGING REGULATOR

NOTE: **There is an internal fault in the charge regulator or the generator (GEN) if the charge voltage is still incorrect. Try a new regulator.**

WARNING: **If the engine cooling fan (FC) is running, wait until it has stopped.**

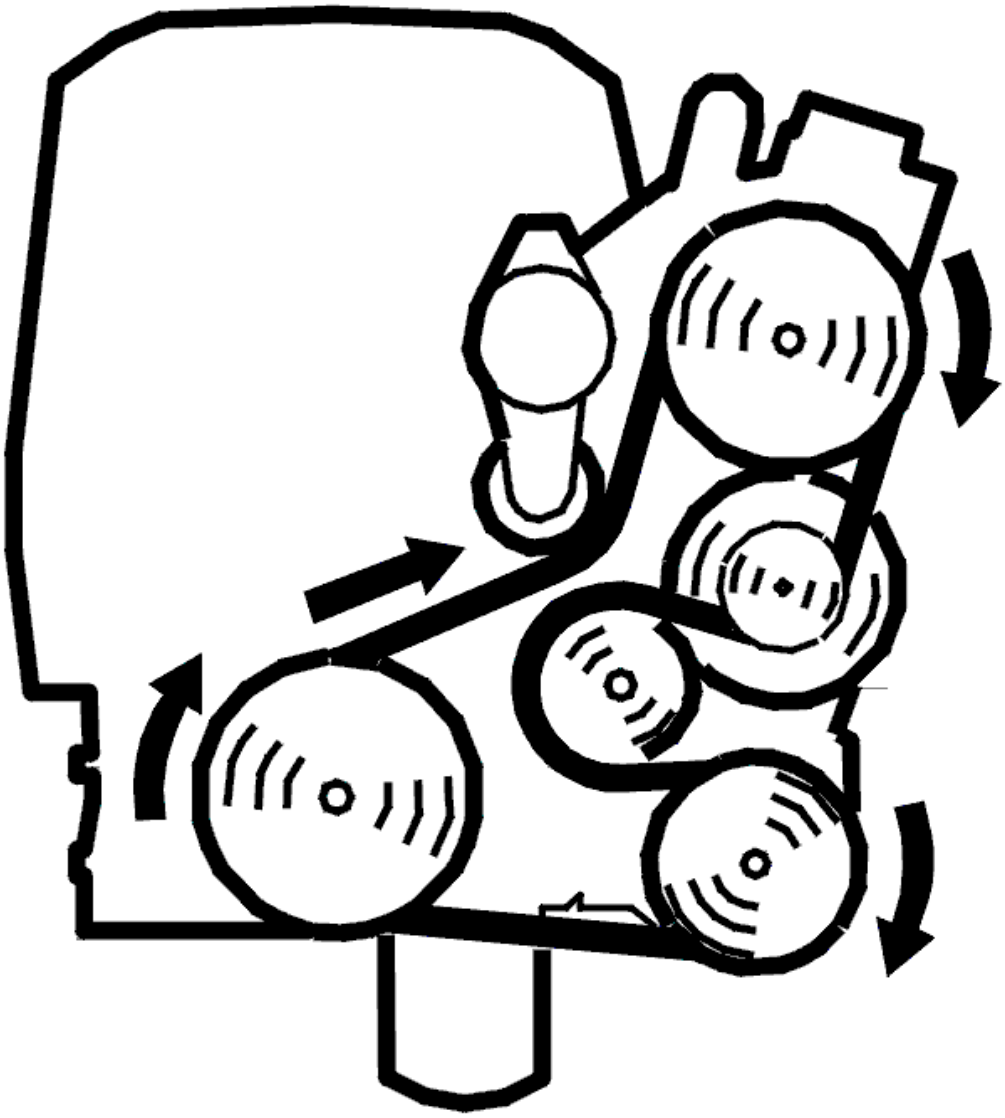

Fig. 82: Belt Routing/Engine Idling - Volvo
Courtesy of VOLVO CARS CORPORATION

- Reassemble the regulator, generator and terminals
- Connect a voltmeter to generator (GEN) B+ and ground
- Start the engine. Maintain a constant engine speed of approximately 2300 RPM
- Ensure that no additional power consuming components are connected.

Check that the system voltage in the battery and the charge circuits is now normal. For information about the charge voltage, see **GENERATOR (GEN)/CHARGE REGULATOR** .

If the voltage is now normal it means that the regulator is defective.

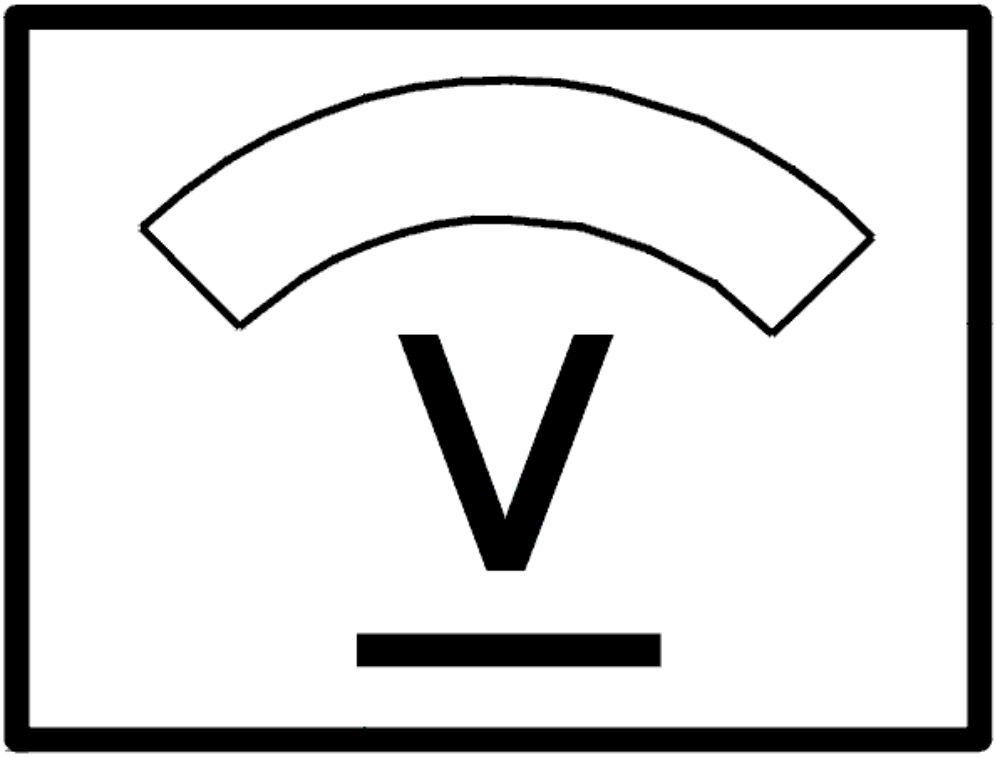

Fig. 83: Identifying Voltage Display
Courtesy of VOLVO CARS CORPORATION

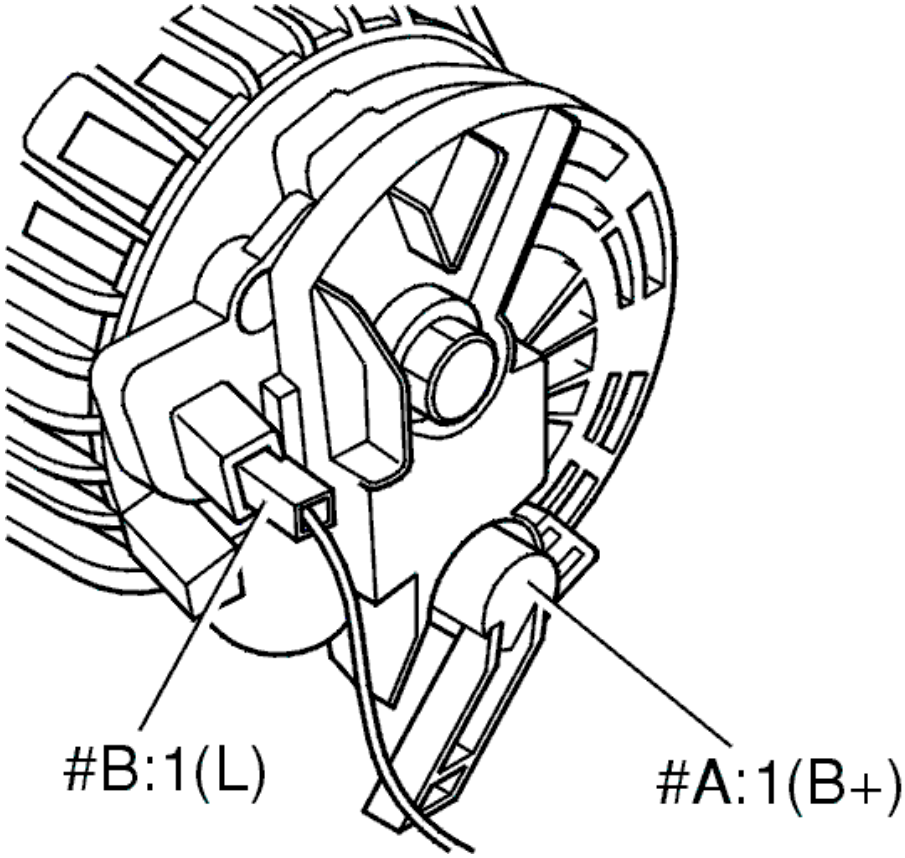

Fig. 84: Identifying Generator Terminals
Courtesy of VOLVO CARS CORPORATION

Is the charge voltage now OK?

- **YES**

  OKAY: Troubleshooting has been completed.

- **NO**

  Refer to **REPLACING THE COMPONENT**

REPLACING THE COMPONENT

The generator (GEN) is defective if the charge voltage is still incorrect and the new regulator has no effect. Try a new generator (GEN).

- **Continue**

  Refer to **VERIFICATION**

VERIFICATION

HINT: After carrying out the repair, check that the fault has been remedied.

WARNING: If the engine cooling fan (FC) is running, wait until it has stopped.

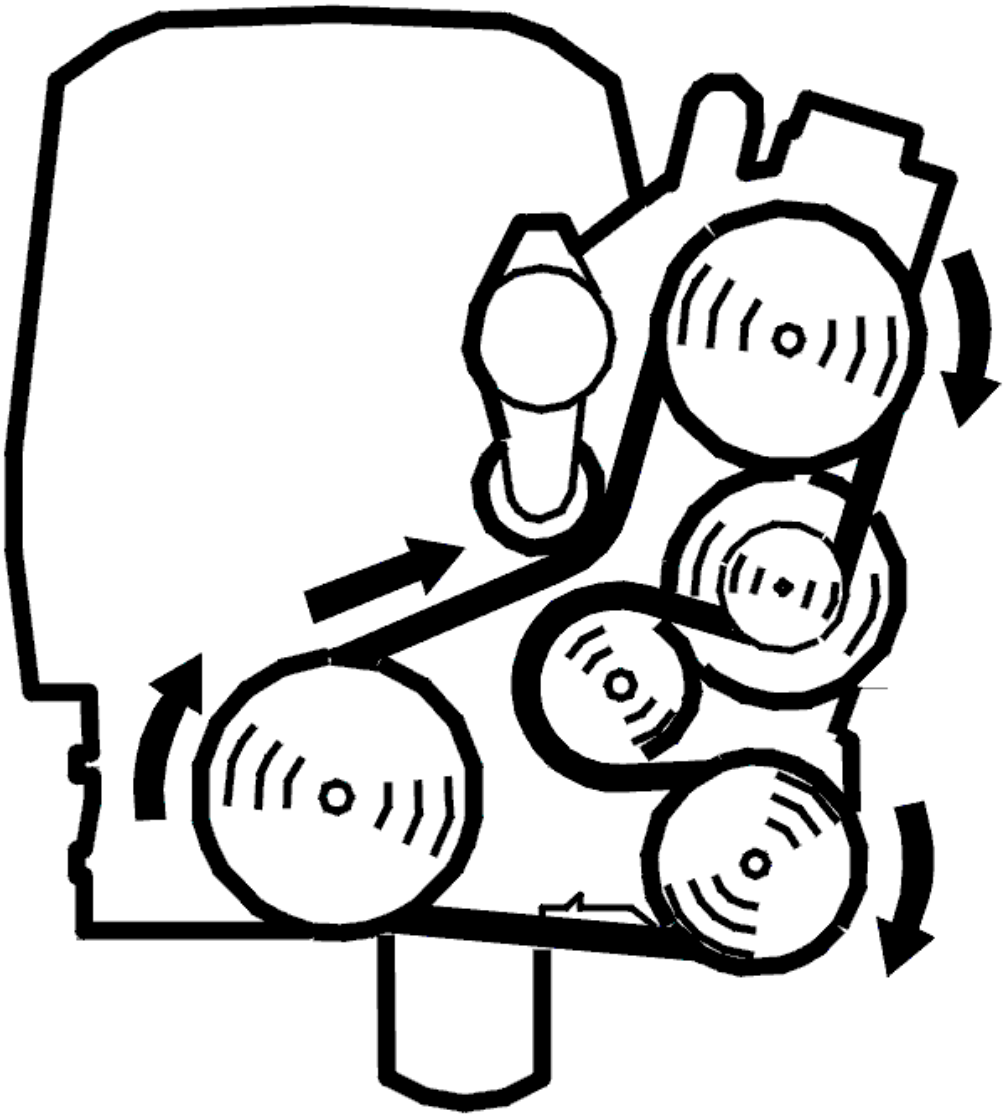

Fig. 85: Belt Routing/Engine Idling - Volvo
Courtesy of VOLVO CARS CORPORATION

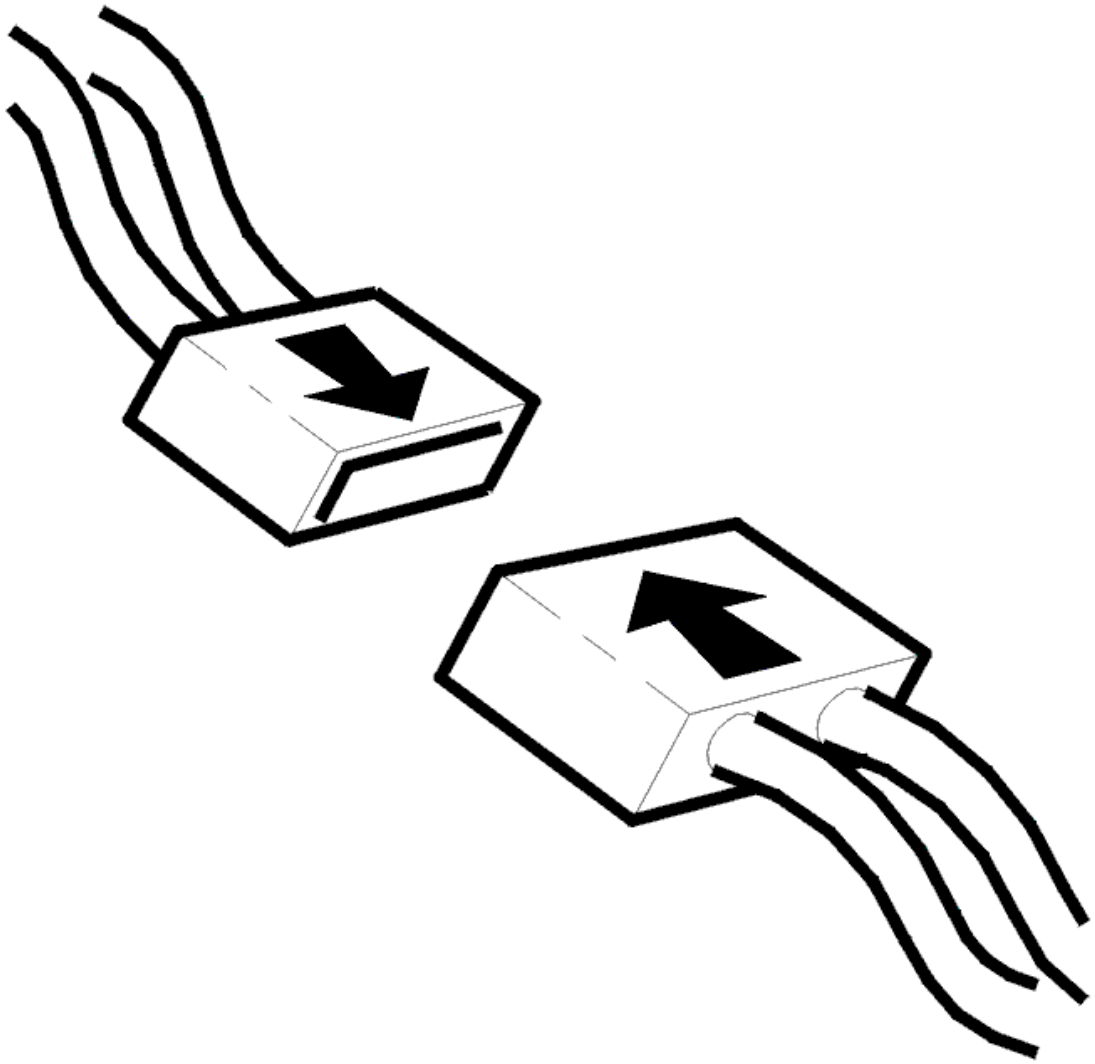

Fig. 86: Connecting Connector
Courtesy of VOLVO CARS CORPORATION

- Ignition off
- Reinstall the connectors, components etc.
- Connect a voltmeter to generator (GEN) B+ and ground
- Start the engine. Maintain a constant engine speed of approximately 2300 RPM
- Ensure that no additional power consuming components are connected.

  Check that the system voltage in the battery and charge circuits is normal. For information about the charge voltage, see **GENERATOR (GEN)/CHARGE REGULATOR** .

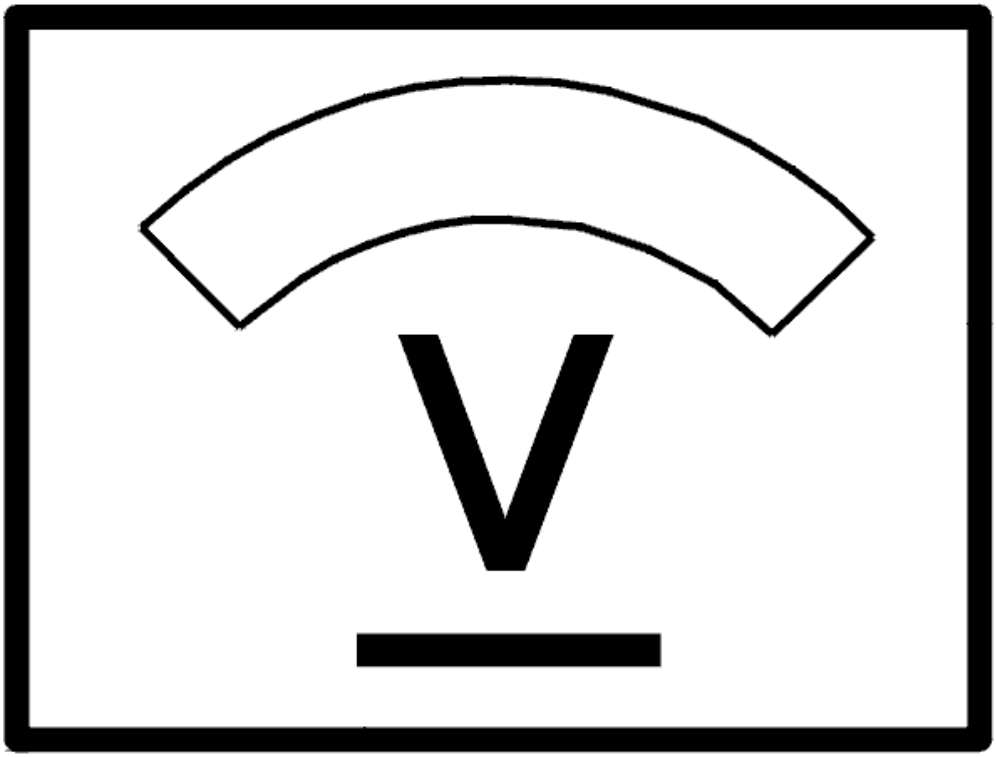

Fig. 87: Identifying Voltage Display
Courtesy of VOLVO CARS CORPORATION

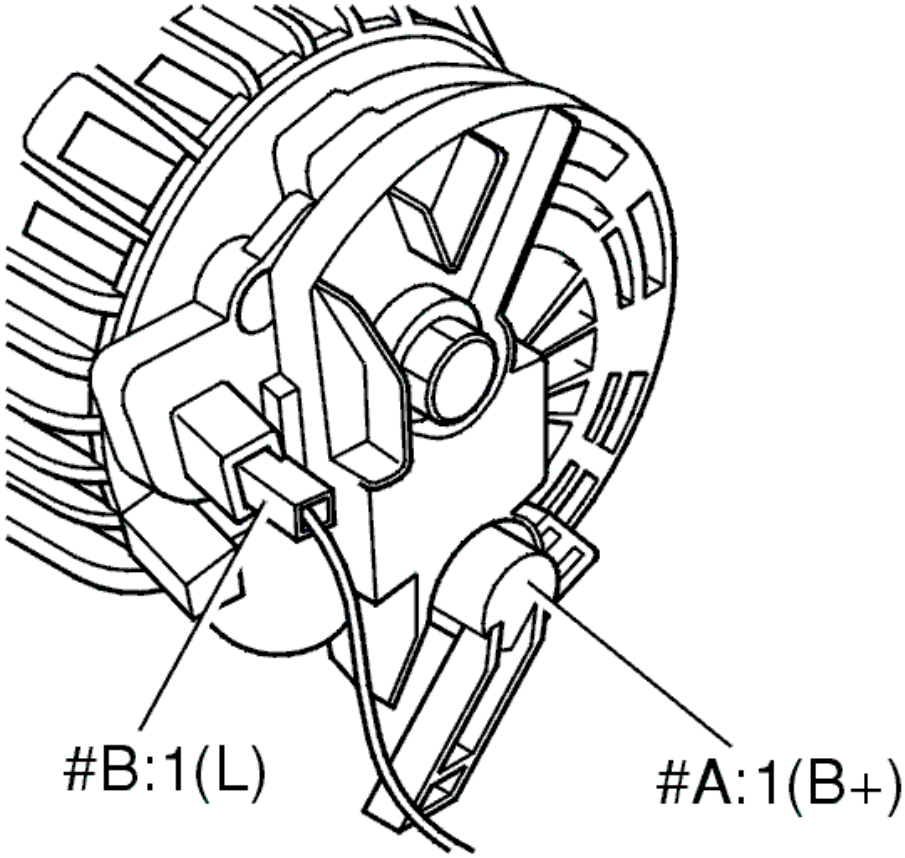

Fig. 88: Identifying Generator Terminals
Courtesy of VOLVO CARS CORPORATION

Is the value OK?

- **YES**

  VERIFIED: Troubleshooting has been completed.

- **NO**

  Refer to **INFORMATION**

INFORMATION

FAULT-TRACING INFORMATION

The fault should have been detected and remedied. As this is not the case fault-tracing has failed.

Exit fault-tracing for this diagnostic trouble code (DTC) or make another attempt.

FAULT-TRACING INFORMATION

Condition

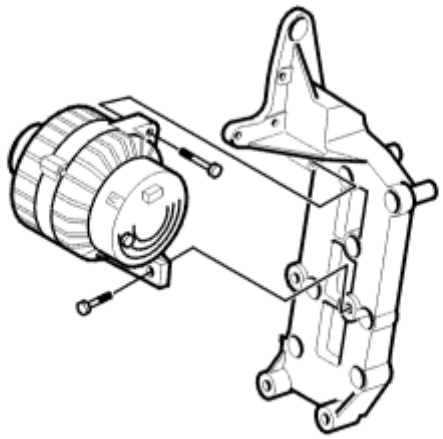

Fig. 89: Identifying Generator And Mounting Bolts
Courtesy of VOLVO CARS CORPORATION

The generator (GEN) has the task of supplying the power consuming components and battery with current. If the generator fails to charge the power consuming components will take their supply exclusively from the battery. In the end this will drain the battery completely.

Possible Source

- Damaged generator (GEN).

Fault symptom[s]

- The battery discharges
- Low rotation speed in the starter motor
- The "Generator not charging" warning lamp does not light when the ignition is switched on
- The "Generator not charging" warning lamp is lit when the engine is running
- The headlamp bulb blows
- The electrolyte in the battery boils when the engine is running.

CHECKING THE L SIGNAL FROM THE GENERATOR (GEN) CHARGE REGULATOR (2003-04)

CHECKING THE L SIGNAL FROM THE GENERATOR (GEN) CHARGE REGULATOR

WARNING: **If the engine cooling fan (FC) is running, wait until it has stopped.**

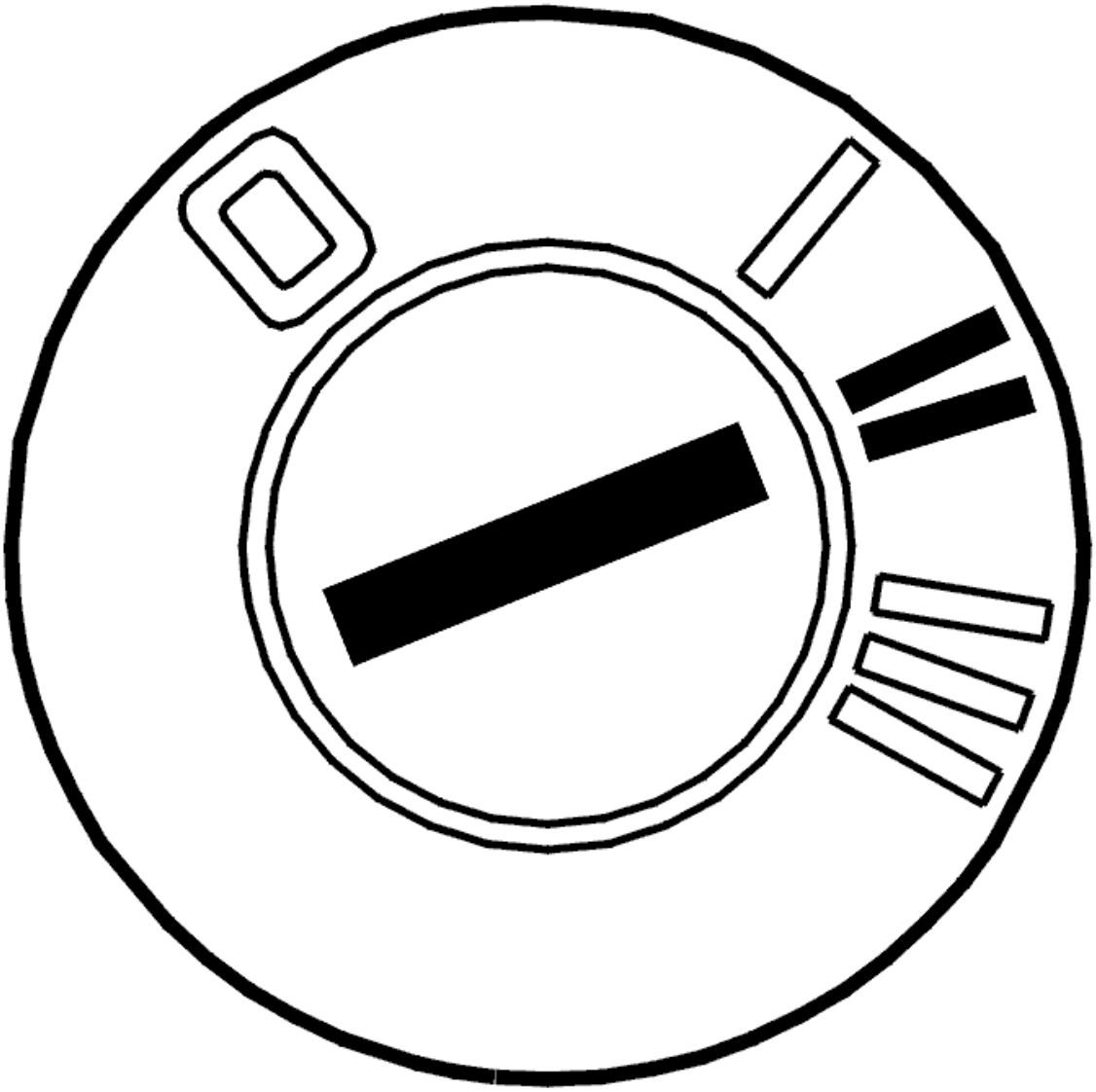

Fig. 90: Identifying Ignition ON
Courtesy of VOLVO CARS CORPORATION

- Ignition on.

  Read off the status of the L signal.

  The L signal between the governor and the central electronic module (CEM) is used both to pre-magnetize the generator (GEN) and to provide a signal to the central electronic module indicating that the generator (GEN) is not charging when the engine is running. For information about the L signal, see **DIAGNOSTIC FUNCTIONS** .

  When the connector for the L signal is disconnected at the generator (GEN) the value should read < 0.2 V with the ignition on. Disconnect the connector for the L signal from the generator (GEN). The value of the L signal must then change to > 0.8 V.

HINT: OnD5252Tengines the wiring for the L signal and DF signal are mounted in a common two pin connector. See the L and DF markings on the rear face of the generator (GEN).

NOTE: Diagnostic trouble codes (DTCs) may be stored in the central electronic module (CEM) when the L signal is disconnected. Erase any stored diagnostic trouble codes (DTCs) after fault-tracing.

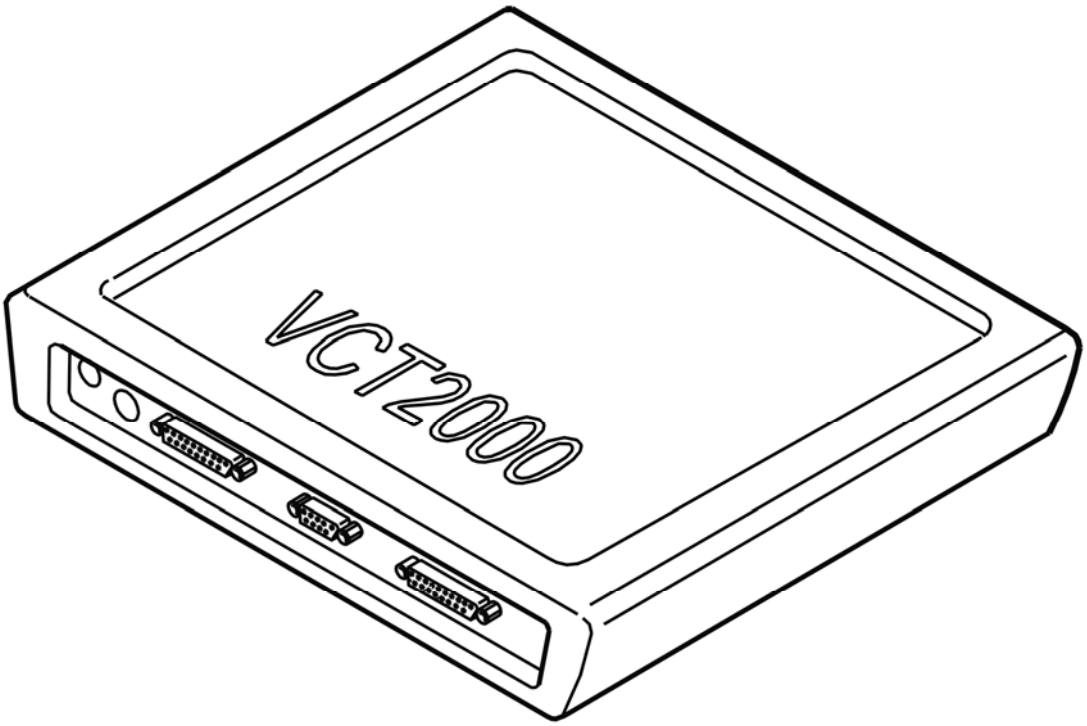

Fig. 91: Identifying VCT2000 Diagnostic Tool Symbol In VIDA
Courtesy of VOLVO CARS CORPORATION

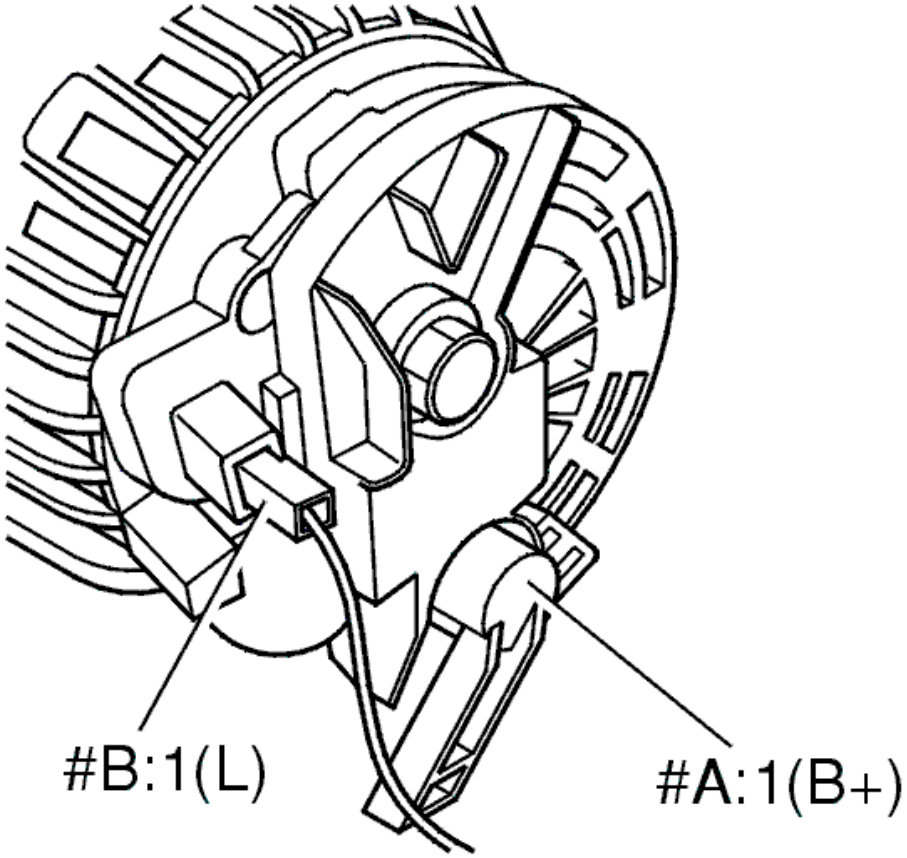

Fig. 92: Identifying Generator Terminals
Courtesy of VOLVO CARS CORPORATION

Is the value OK?

- **YES**

  FAULT NOT FOUND: Troubleshooting has been completed.

- **NO**

  Refer to **CHECKING WIRING AND TERMINALS**

CHECKING WIRING AND TERMINALS

Check the generator (GEN) connector for the L signal, connector A for the central electronic module (CEM) and the connector between them. Check for contact resistance and oxidation.

Check the signal cable between the generator (GEN) connector for the L signal terminal #L and central electronic module (CEM) terminal #A5 (#A5). Check for an open-circuit. Check for a short-circuit to ground. Check for a short-circuit to supply voltage.

HINT: Switch off the ignition. Read off the status of the L signal.

HINT: If the value continually displays > 0.8 V regardless of whether the connector is connected or not, there is an open-circuit or short-circuit to supply voltage.

HINT: If the value continually displays < 0.2 V regardless of whether the connector is connected or not, there is a short-circuit to ground.

WARNING: **If the engine cooling fan (FC) is running, wait until it has stopped.**

Remedy as necessary.

Other information

- To connect the breakout box to the central electronic module (CEM), see **CONNECTING THE BREAKOUT BOX**
- For information about central electronic module signals, see **SIGNAL SPECIFICATION**
- To fault-trace the wiring and terminals, see **CONTENTS** .

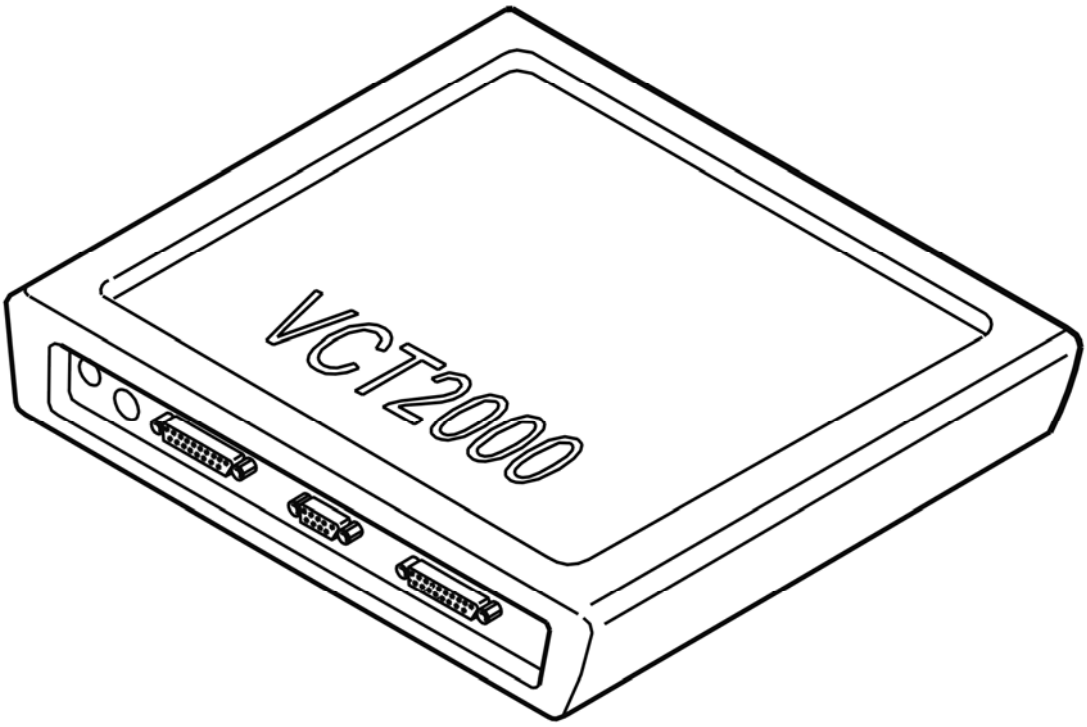

Fig. 93: Identifying VCT2000 Diagnostic Tool Symbol In VIDA
Courtesy of VOLVO CARS CORPORATION

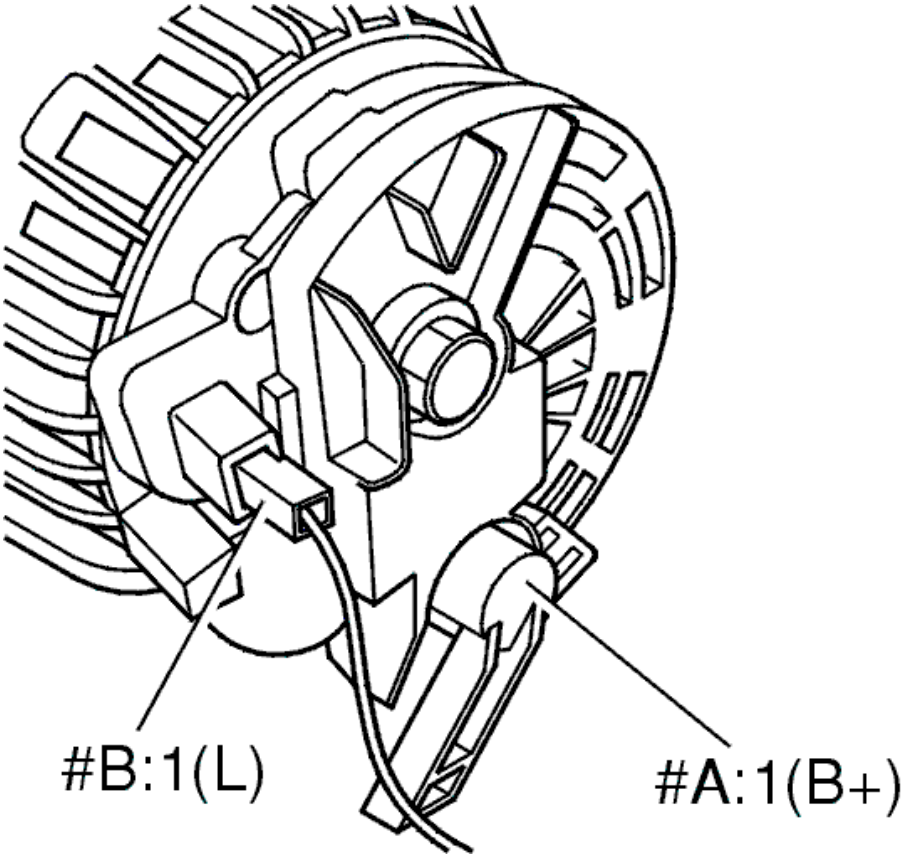

Fig. 94: Identifying Generator Terminals
Courtesy of VOLVO CARS CORPORATION

- **Continue**

  Refer to **VERIFICATION**

VERIFICATION

HINT: After carrying out the repair, check that the fault has been remedied.

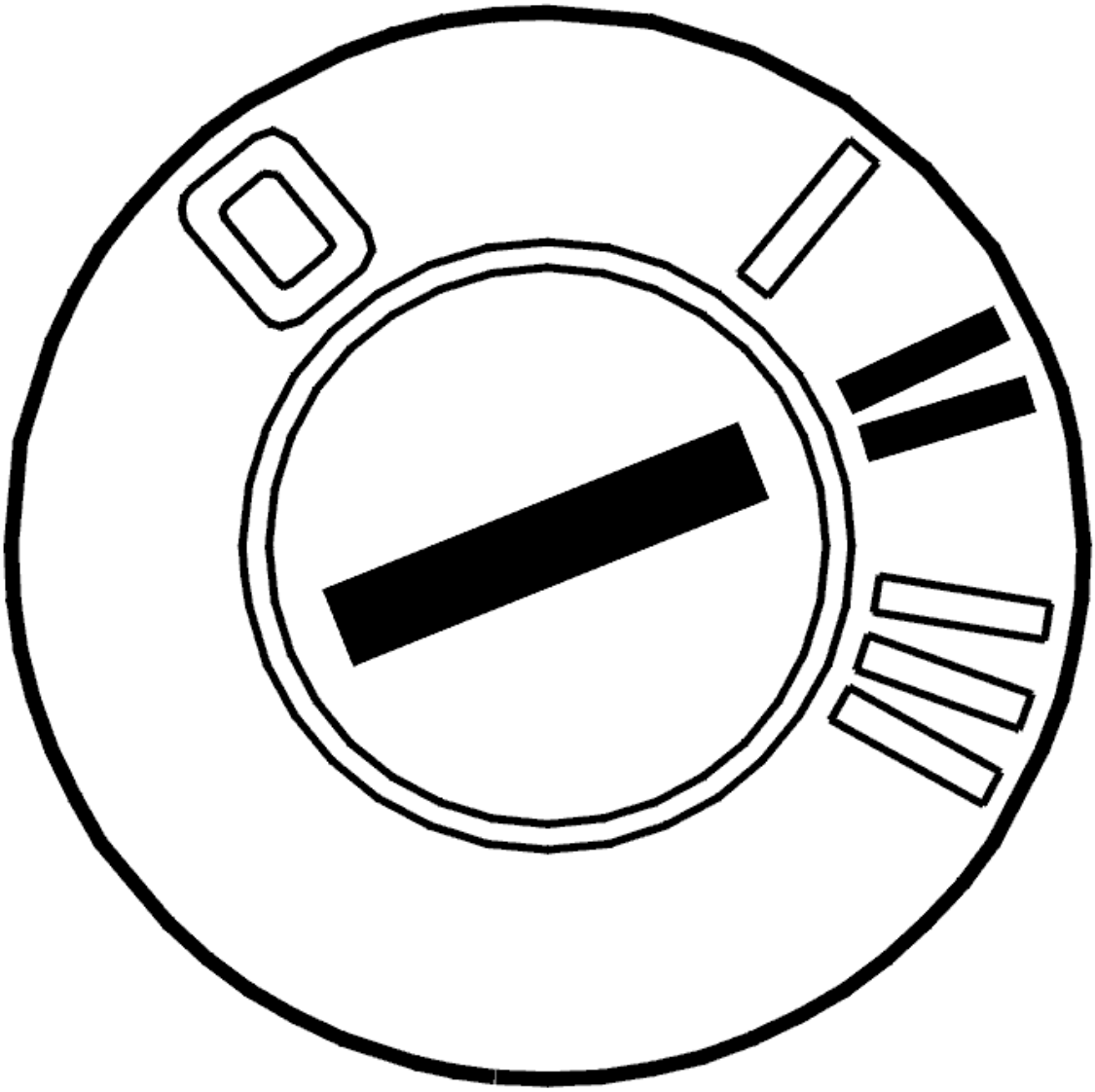

Fig. 95: Identifying Ignition ON
Courtesy of VOLVO CARS CORPORATION

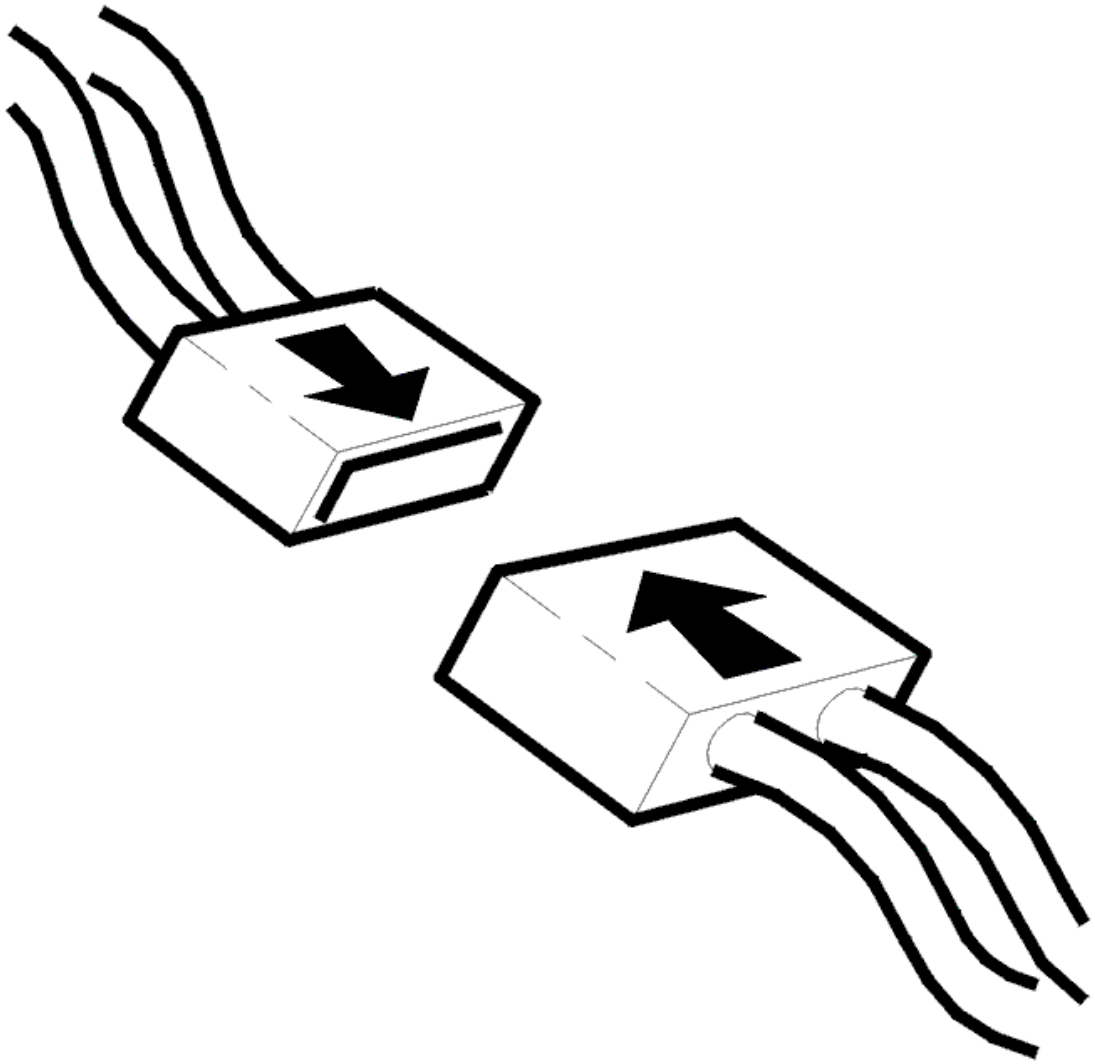

Fig. 96: Connecting Connector
Courtesy of VOLVO CARS CORPORATION

- Ignition off
- Reinstall the connectors, components etc.
- Ignition on.

Read off the status of the L signal.

The L signal between the governor and the central electronic module (CEM) is used both to pre-magnetize the generator (GEN) and to provide a signal to the central electronic module indicating that the generator (GEN) is not charging when the engine is running. For information about the L signal, see **DIAGNOSTIC FUNCTIONS** .

When the connector for the L signal is disconnected at the generator (GEN) the value should read < 0.2 V

with the ignition on. Disconnect the connector for the L signal from the generator (GEN). The value of the L signal must then change to > 0.8 V.

NOTE: **Diagnostic trouble codes (DTCs) may be stored in the central electronic module (CEM) when the L signal is disconnected. Erase any stored diagnostic trouble codes (DTCs) after fault-tracing.**

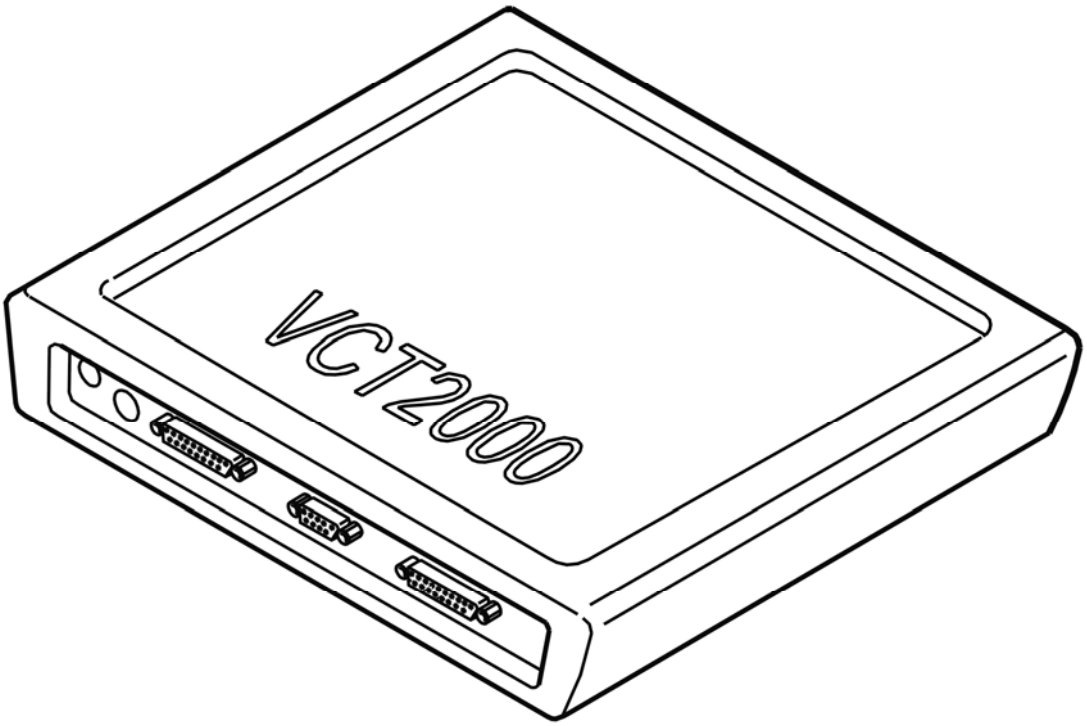

Fig. 97: Identifying VCT2000 Diagnostic Tool Symbol In VIDA
Courtesy of VOLVO CARS CORPORATION

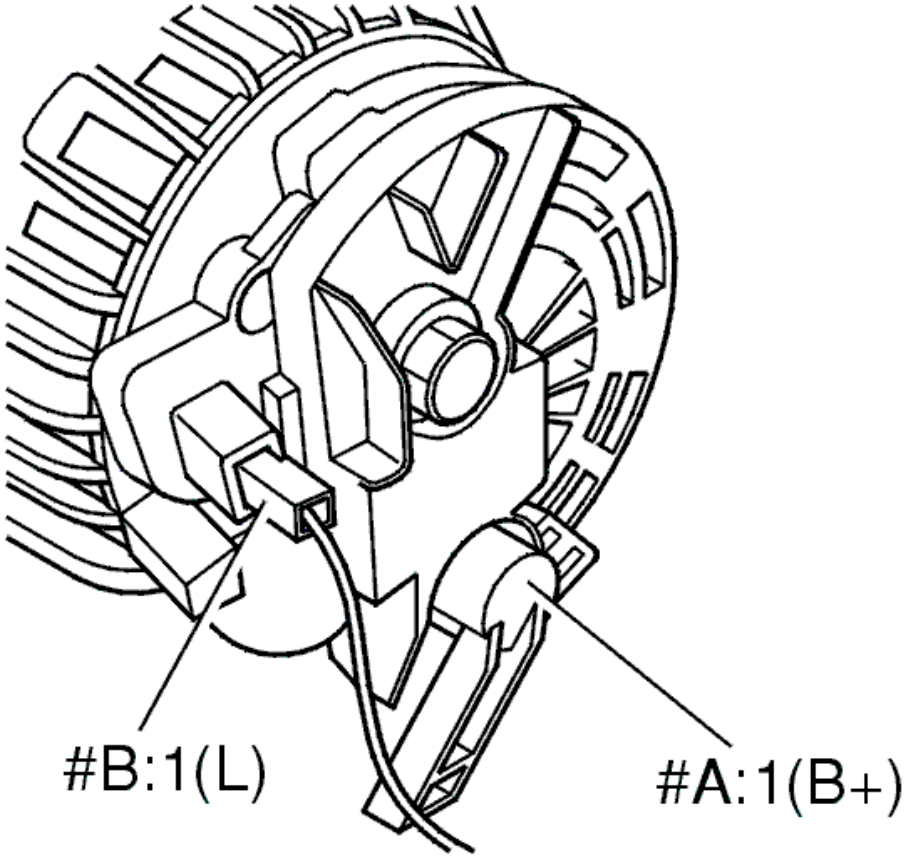

Fig. 98: Identifying Generator Terminals
Courtesy of VOLVO CARS CORPORATION

Is the value OK?

- **YES**

  VERIFIED: Troubleshooting has been completed.

- **NO**

  Refer to **INFORMATION**

INFORMATION

FAULT-TRACING INFORMATION

The fault should have been detected and remedied. As this is not the case fault-tracing has failed.

Exit fault-tracing for this diagnostic trouble code (DTC) or make another attempt.

FAULT-TRACING INFORMATION

Condition

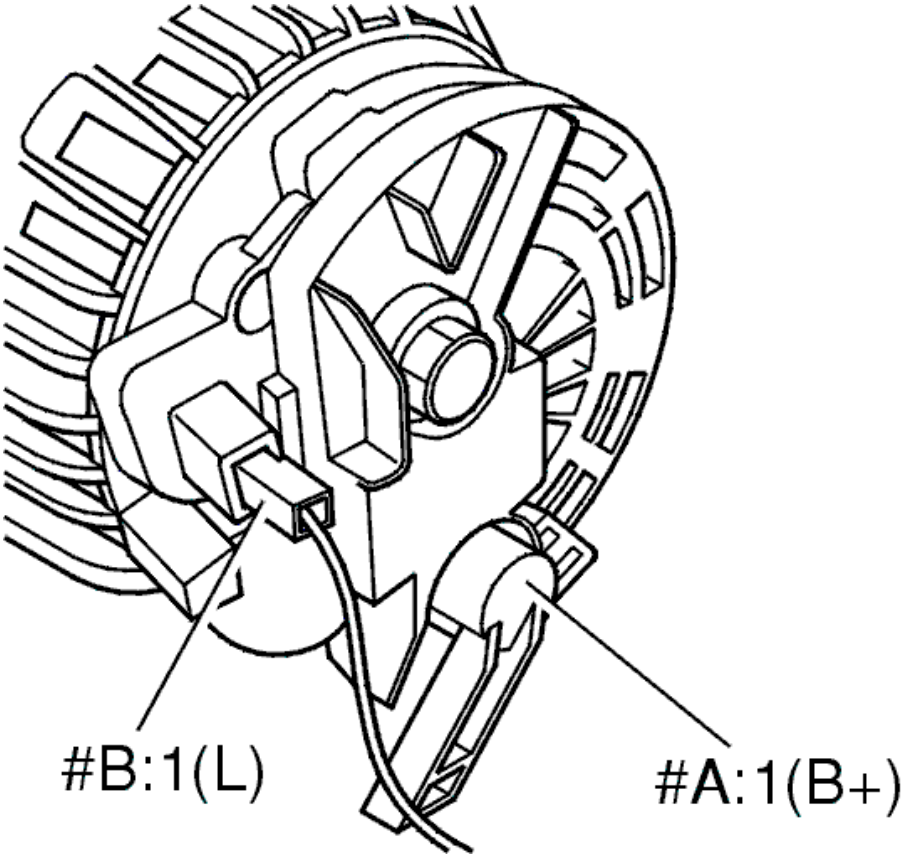

Fig. 99: Identifying Generator Terminals
Courtesy of VOLVO CARS CORPORATION

The L signal between the governor and the central electronic module (CEM) is used both to pre-magnetize the generator (GEN) and to provide a signal to the central electronic module indicating that the generator (GEN) is not charging when the engine is running. When the generator (GEN) starts charging, the charge increases in stages for a short time. At the same time the load on the engine also increases in stages. The generator (GEN) will not charge the battery if the L signal is missing.

NOTE: **The generator (GEN) regulator can self magnetize the rotor and start charging in this way. This only happens at speeds in excess of approximately 2300 RPM. There is no charge engagement by stages with self magnetization, the generator operates at full charge immediately.**

Possible Source

- Contact resistance or oxidation in the connectors
- Open-circuit in the L signal cable between the generator (GEN) and the central electronic module (CEM), short-circuit to ground or voltage.

Fault symptom[s]

- The battery discharges

- The "Generator not charging" warning lamp does not light when the ignition is switched on
- The "Generator not charging" warning lamp is lit when the engine is running.

CHECKING THE PARK/NEUTRAL POSITION (PNP) FUNCTION IN THE GEAR-SHIFT POSITION SENSOR (4T65 AWD; AW50/51 AWD; AW55-50/51SN; 2003-04)

CHECKING THE PARK/NEUTRAL POSITION (PNP) FUNCTION IN THE GEAR-SHIFT POSITION SENSOR

NOTE: **The test assumes that the battery is fault free, that the starter motor circuit has been checked and that no relevant diagnostic trouble codes (DTCs) for the symptom are stored.**

CAUTION: **Avoid touching the pins in the control module and the corresponding connector on the cable harness. There is a risk of static discharge which could damage the control module. Discharge yourself and tools to be used by holding the tool's metal part and touching a body part on the car just before starting to work.**

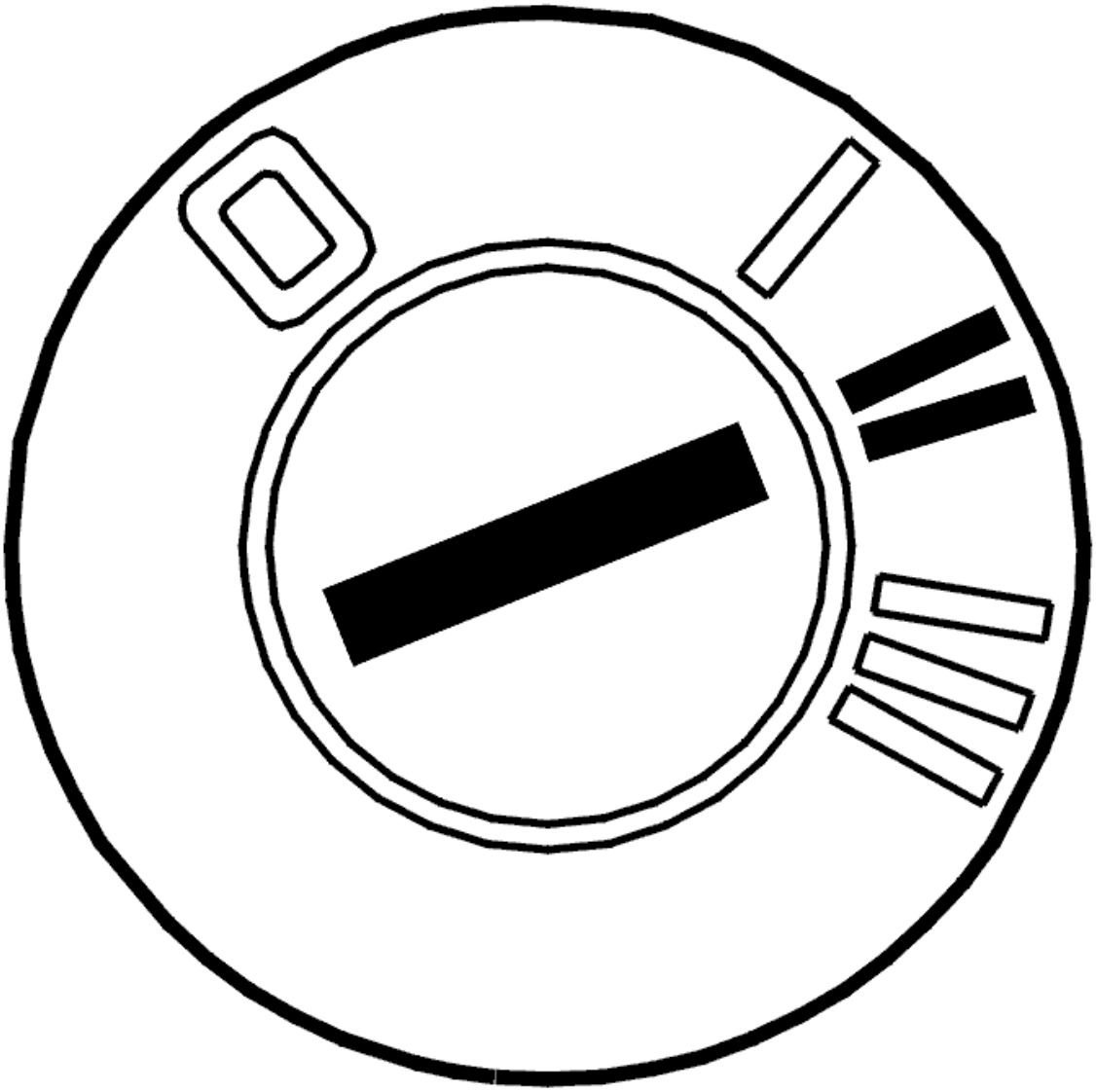

Fig. 100: Identifying Ignition ON
Courtesy of VOLVO CARS CORPORATION

- Ignition on.
- When gear position sensor is in position P or N, Central Electronic Module (CEM) receives signal that start is permitted via #D9.
- Move the gear selector to position P or N. Parking brake applied.

  Check the voltage between central electronic module (CEM) terminals #D9 and #E1.

  The voltage must be approximately 0 V.

  Other information

  - For connecting breakout box to Central Electronic Module (CEM): **CONNECTING THE**

BREAKOUT BOX

- Signal description Central Electronic Module (CEM): **SIGNAL SPECIFICATION**

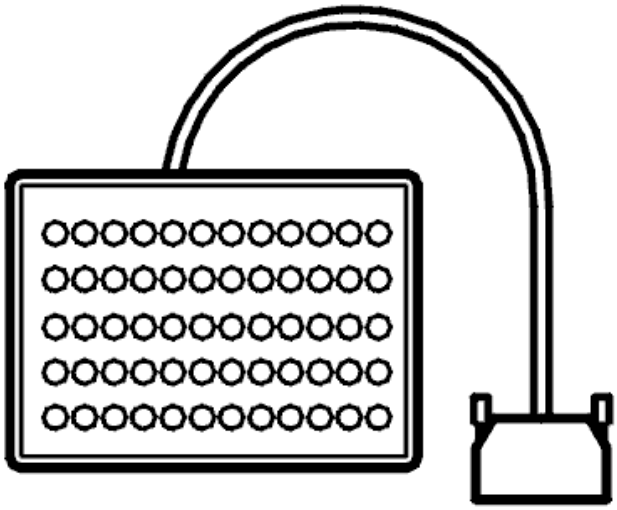

Fig. 101: Breakout Box
Courtesy of VOLVO CARS CORPORATION

Is the voltage OK?

- **YES**

  Refer to **REPLACING THE COMPONENT**

- **NO**

  Refer to **CHECKING WIRING AND TERMINALS**

REPLACING THE COMPONENT

CAUTION: Avoid touching the pins in the control module and the corresponding connector on the cable harness. There is a risk of static discharge which could damage the control module. Discharge yourself and tools to be used by holding the tool's metal part and touching a body part on the car just before starting to work.

If the voltage is approx. 0 V on #D9 in Central Electronic Module (CEM) then the gear selector circuit is working. Malfunction may be found in Central Electronic Module (CEM).

Try replacing the central electronic module (CEM).

NOTE: Before replacing the central electronic module (CEM) ensure that all other symptom tests have been carried out.

Other information:

- see **CENTRAL ELECTRONIC MODULE (CEM), REPLACING**

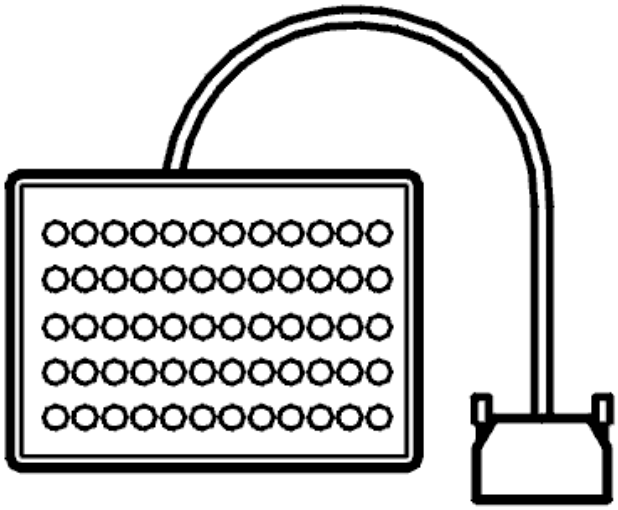

Fig. 102: Breakout Box
Courtesy of VOLVO CARS CORPORATION

CHECKING WIRING AND TERMINALS

CAUTION: Avoid touching the pins in the control module and the corresponding connector on the cable harness. There is a risk of static discharge which could damage the control module. Discharge yourself and tools to be used by holding the tool's metal part and touching a body part on the car just before starting to work.

The cable harness is different depending on type of engine and transmission.

For vehicles with automatic transmission AW50-42, AW55-50/51SN, AW50/51AWD

Check the cable between central electronic module (CEM) terminal #D9 and automatic transmission 8/37. Check for an open circuit. Check for a short-circuit to ground. Check for a short-circuit to voltage.

For vehicles with automatic transmission 4T65EV, 4T65EV-GT, 4T65AWD

Check the cable between central electronic module (CEM) terminal #D9 and transmission control module (TCM) terminal #A44. Check for an open circuit. Check for a short-circuit to ground. Check for a short-circuit to voltage.

Remedy as necessary.

Other information

- For connecting breakout box to Central Electronic Module (CEM):**CONNECTING THE BREAKOUT BOX**
- To connect the breakout box to the transmission control module (TCM), see **CONNECTING THE BREAKOUT BOX**
- Signal description Central Electronic Module (CEM): **SIGNAL SPECIFICATION**
- Signal description Transmission Control Module (TCM) AW55-50/51SN, AW50/51AWD: **SIGNAL DESCRIPTION. TRANSMISSION CONTROL MODULE (TCM)**
- Signal description Transmission Control Module (TCM) AW50-42: **SIGNAL DESCRIPTION. TRANSMISSION CONTROL MODULE (TCM)**
- Signal description Transmission Control Module (TCM) 4T65EV, 4T65EV-GT, 4T65AWD: **SIGNAL SPECIFICATION**

Was a fault detected?

- **YES**

  Refer to **VERIFICATION**

- **NO**

  FAULT NOT FOUND: Troubleshooting has been completed.

VERIFICATION

HINT: After carrying out the repair, check that the fault has been remedied.

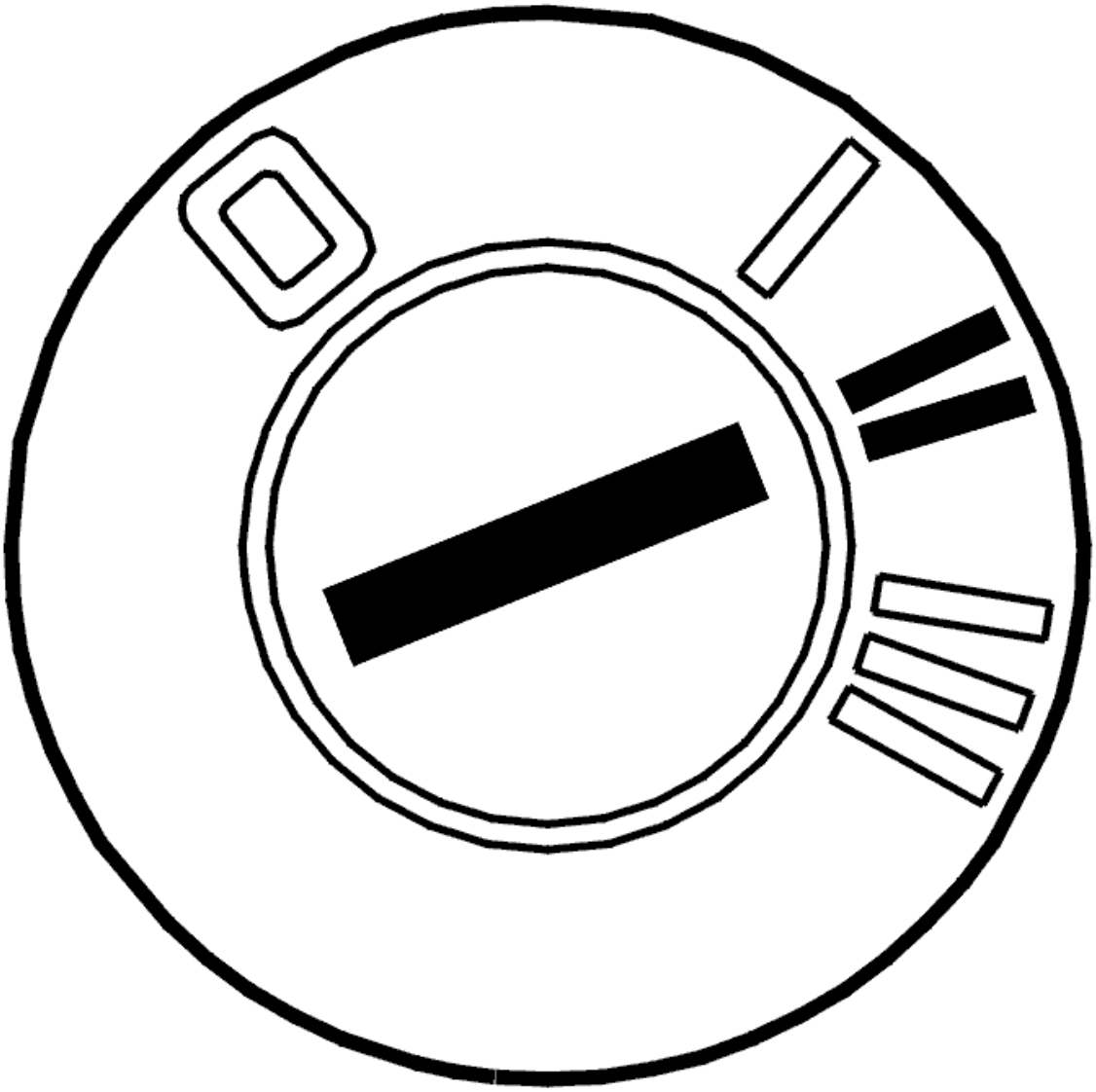

Fig. 103: Identifying Ignition ON
Courtesy of VOLVO CARS CORPORATION

- Ignition off.
- Gear shift sensor in position D.
- Try to start the engine. It should not now be possible to start the engine.
- Ignition off.
- Gear-shift position sensor in position P or N.
- Try to start the engine. It should now be possible to start the engine.

Was the function OK?

- **YES**

  VERIFIED: Troubleshooting has been completed.

- **NO**

  Refer to **INFORMATION**

INFORMATION

FAULT-TRACING INFORMATION

The fault should have been detected and remedied. As this is not the case fault-tracing has failed.

Exit fault-tracing for this diagnostic trouble code (DTC) or make another attempt.

CHECKING THE STAND-BY CURRENT CONSUMPTION (2003-04)

CHECKING THE STAND-BY CURRENT CONSUMPTION

The generator (GEN) has been designed to supply the car with sufficient current for normal electrical loads when driving. The battery functions as a buffer for extreme consumption or driving conditions. When the engine is switched off, it is the battery that supplies the car with energy. Components or functions which consume energy when the ignition is switched off are items such as the engine cooling fan (FC), blower fan, lighting, control modules etc. The control modules in the car consume energy for up to 10 minutes after the ignition was switched off.

Check the stand-by current consumption. See **STANDBY CURRENT, MEASURING/FAULT-TRACING** .

Other information

- For general information about electrical consumption, see **ELECTRICAL CONSUMPTION, GENERAL**
- For information about the stand-by consumption of components, see **STAND-BY CURRENT, CONSUMPTION VALUE** .

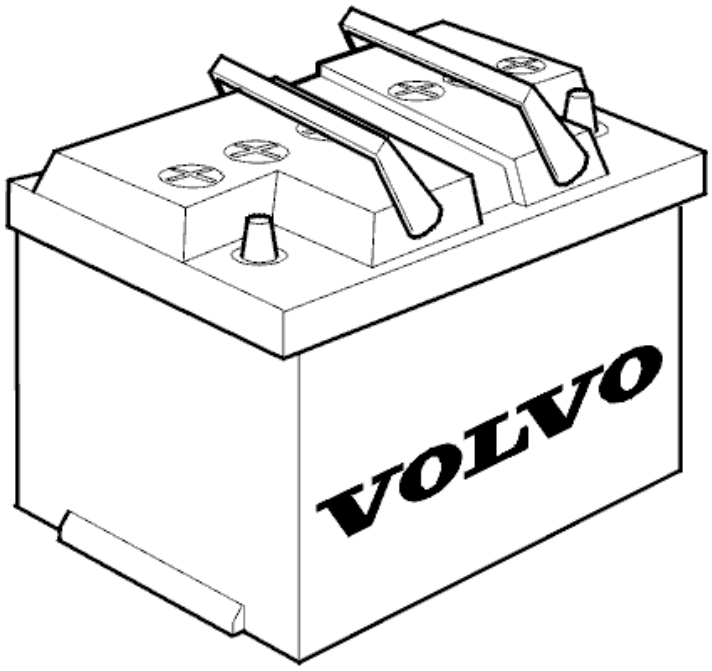

Fig. 104: Identifying Battery
Courtesy of VOLVO CARS CORPORATION

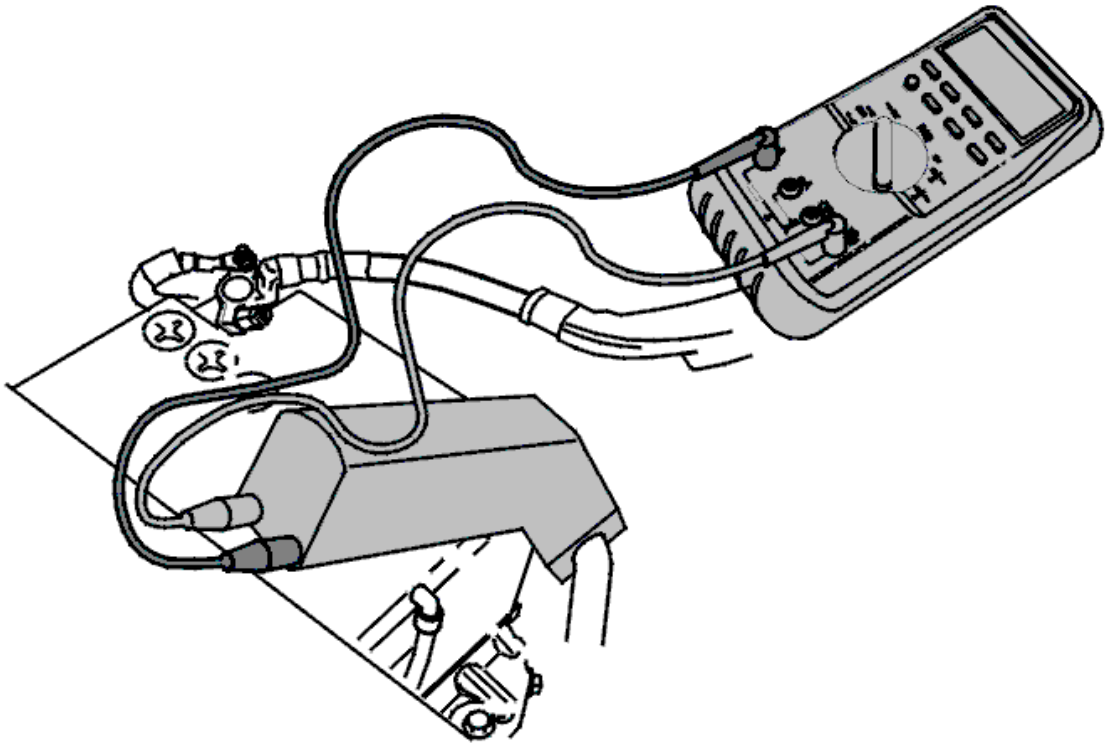

Fig. 105: Crocodile Clips And Multimeter
Courtesy of VOLVO CARS CORPORATION

FAULT-TRACING INFORMATION

Condition

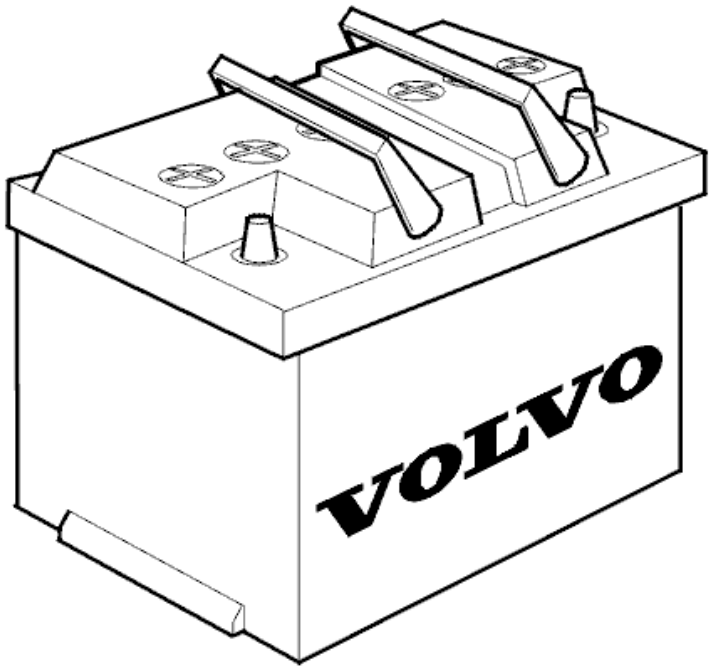

Fig. 106: Identifying Battery
Courtesy of VOLVO CARS CORPORATION

The battery may discharge too quickly if the stand-by current consumption for the electrical system in the car is too high.

Possible Source

- Too high stand-by current consumption of components
- Defective lighting functions where the contact breaker does not switch off the lighting.

Fault symptom[s]

- The battery discharges.

CHECKING THE STARTER MOTOR (2003-12)

CHECKING THE STARTER MOTOR

PREPARATORY CHECKS

There are three starter motor checks that should be performed to avoid extra work.

The checks are and should be troubleshooted in the following order:

1. Checking voltage drop in the starter motor and battery circuits
2. Checking solenoid and starter motor
3. Checking the starter motor

Before continuing troubleshooting of the starter motor, check as above.

- **Continue**

  Refer to **CHECKING THE STARTER MOTOR**

CHECKING THE STARTER MOTOR

Check the brush holders, brush springs and carbon brushes for the starter motor. Check for wear.

Check the commutator for the starter motor. Check for dirt, blockages etc.

Check the starter motor bearing. Check for play.

Try a new starter motor if no fault is found as above.

Remedy as necessary.

Other information

- see **CHECKING WIRING AND TERMINALS**

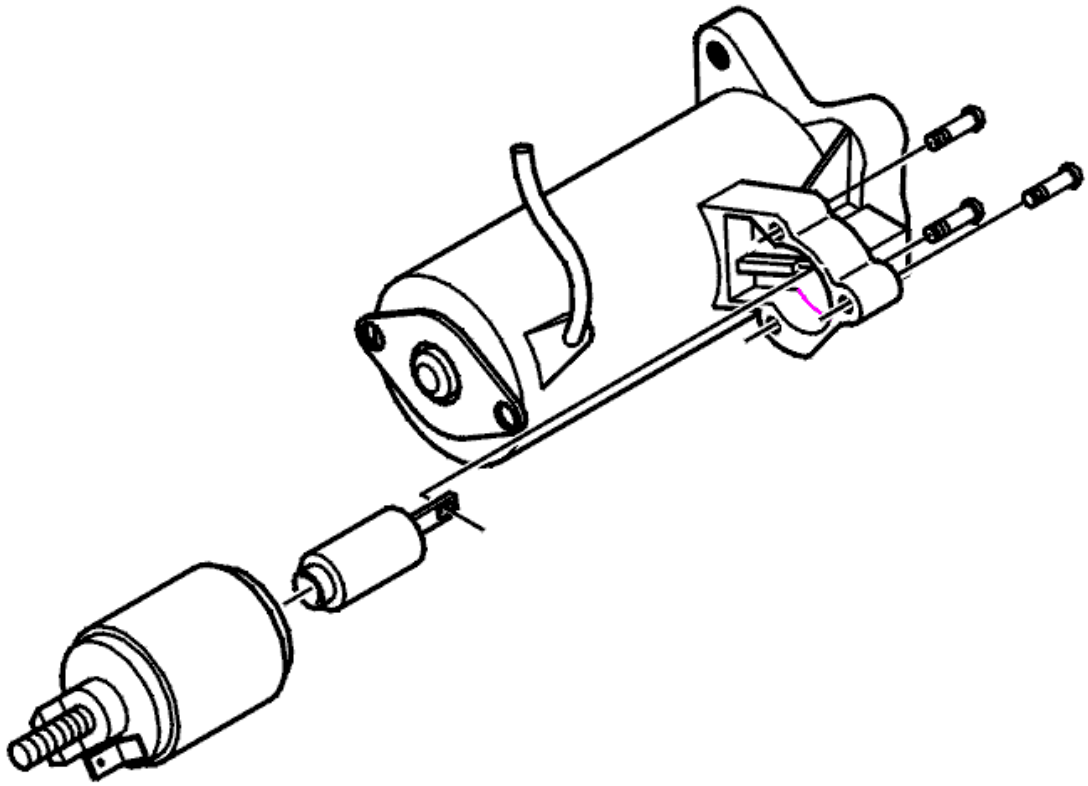

Fig. 107: Identifying Solenoid And Screws
Courtesy of VOLVO CARS CORPORATION

FAULT-TRACING INFORMATION

Condition

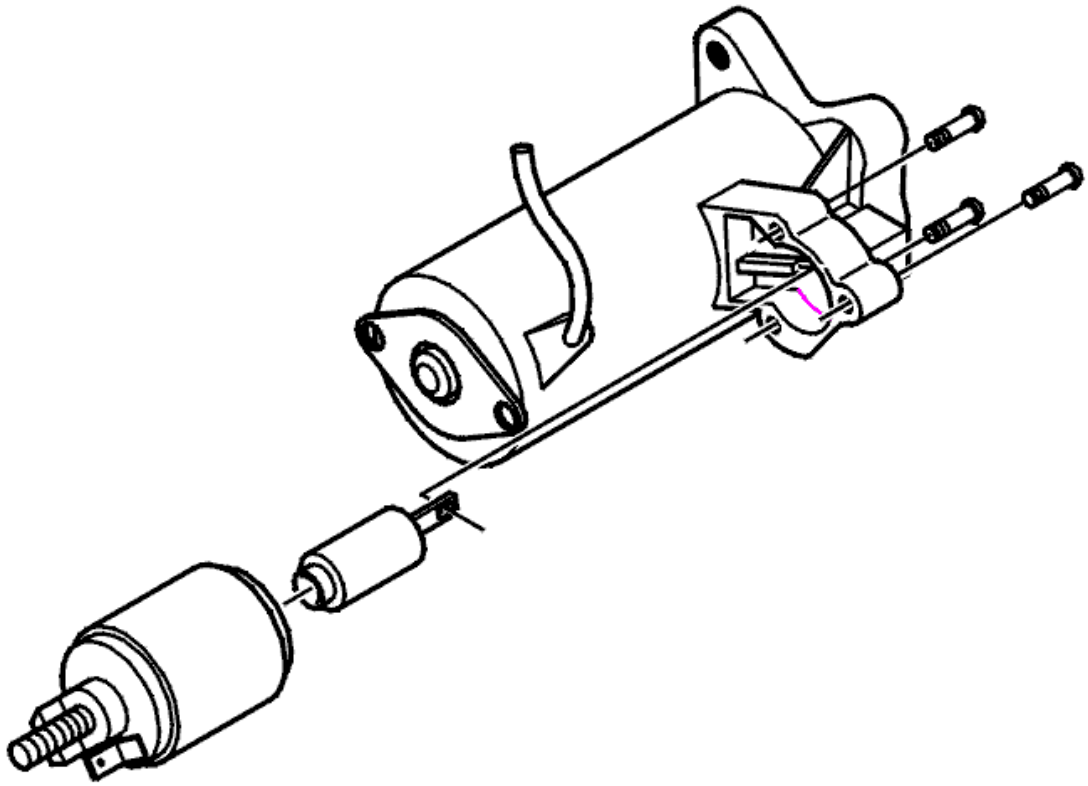

Fig. 108: Identifying Solenoid And Screws
Courtesy of VOLVO CARS CORPORATION

If the carbon brushes, brush springs, commutator or windings for the starter motor are defective, the starter motor will not be able to deliver full power.

Possible Source

- Great resistance in the starter circuit due to poor contact in connectors/transitions in the power supply side (B+).
- Great resistance in the starter circuit due to poor contact in connectors/transitions in the ground side (B-).
- Worn carbon brushes or too low pressure in the brush springs
- Large resistance because of a dirty commutator
- Short-circuit in the windings
- Defective bearing which makes the rotor drag against the pole pieces.
- Poor battery.

Fault symptom[s]

- Low rotation speed in the starter motor.

CHECKING THE STARTER MOTOR RELAY (2003-04)

CHECKING THE STARTER MOTOR RELAY

CHECKING THE POWER SECTION OF THE STARTER RELAY

NOTE: The test assumes that the battery is fault free, and that no relevant diagnostic trouble codes (DTCs) for the symptom are stored.

The signal chain to the starter motor can be checked quickly by short-circuiting the relay connections to the starter motor.

Move the gear selector to position P or N. Parking brake applied.

WARNING: The starter motor should operate when there is a short-circuit. Be very careful.

CAUTION: Use two cables with suitable cable terminal when short-circuiting so that the spark does not damage the relay socket.

Remove the starter motor relay and short-circuit the relay socket #3(30) with #5(87), that is, the relay circuit.

NOTE: Do not bridge directly in the relay base or the connections in the base may be damaged.

If the starter motor now operates there is no fault in the power section of the circuit.

Other information

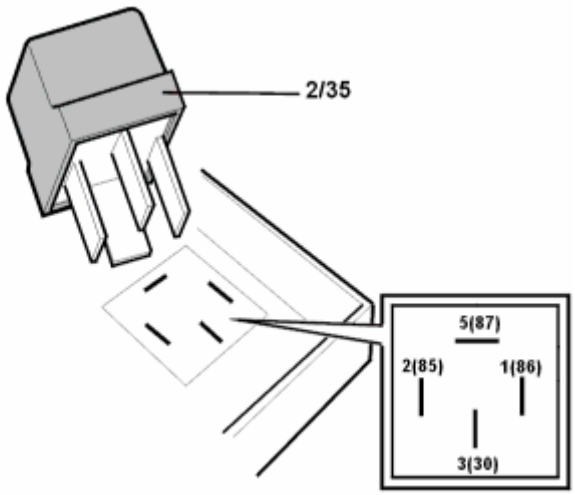

Fig. 109: Identifying Starter Motor Relay
Courtesy of VOLVO CARS CORPORATION

Does the starter motor run when the relay is short-circuited?

- **YES**

  Refer to **CHECKING THE RELAY AND START RELAY CONTROL SIGNAL**

- **NO**

  Refer to **CHECKING THE WIRING**

CHECKING THE RELAY AND START RELAY CONTROL SIGNAL

CAUTION: Avoid touching the pins in the control module and the corresponding connector on the cable harness. There is a risk of static discharge which could damage the control module. Discharge yourself and tools to be used by holding the tool's metal part and touching a body part on the car just before starting to work.

- It is possible to deduce whether the fault is in the wiring or in the relay by connecting a electrician's screwdriver over the relay socket coil.
- Move the gear selector to position P or N. Parking brake applied.

  Connect a test probe between relay connection #1(86) and #2(85) on the relay socket. Turn the ignition to start position (ignition position III) and observe the light.

  If the electrician's screwdriver lights, replace the relay.

  If the test probe is not lit, check the cable between the ignition's 50-feed #7 and relay socket #1 (86). Also check the cable between the relay socket #2 (85) and central electronic module (CEM) #A3.

  Check the central electronic module (CEM) connector. Check for contact resistance and oxidation.

  Remedy as necessary.

  Other information

  - For connecting breakout box to Central Electronic Module (CEM):**CONNECTING THE BREAKOUT BOX**
  - Signal description Central Electronic Module (CEM):**SIGNAL SPECIFICATION**
  - Use individual blade terminals to connect the electricians screwdriver
  - see **CONTENTS**

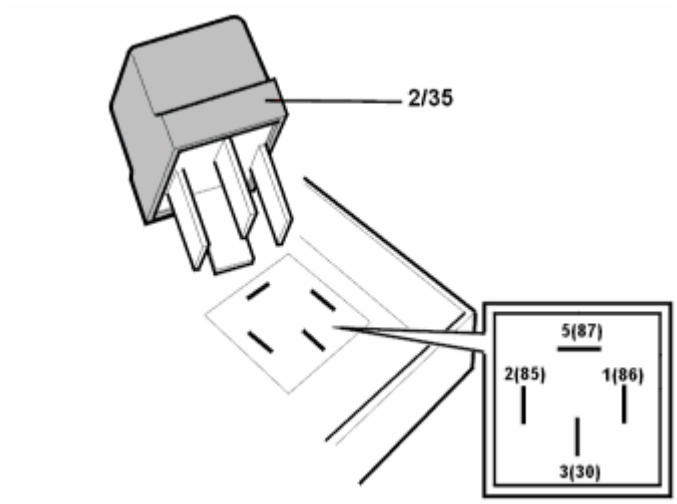

Fig. 110: Identifying Starter Motor Relay
Courtesy of VOLVO CARS CORPORATION

Were any defects found?

- **YES**

  Refer to **VERIFICATION**

- **NO**

  FAULT NOT FOUND: Troubleshooting has been completed.

CHECKING THE WIRING

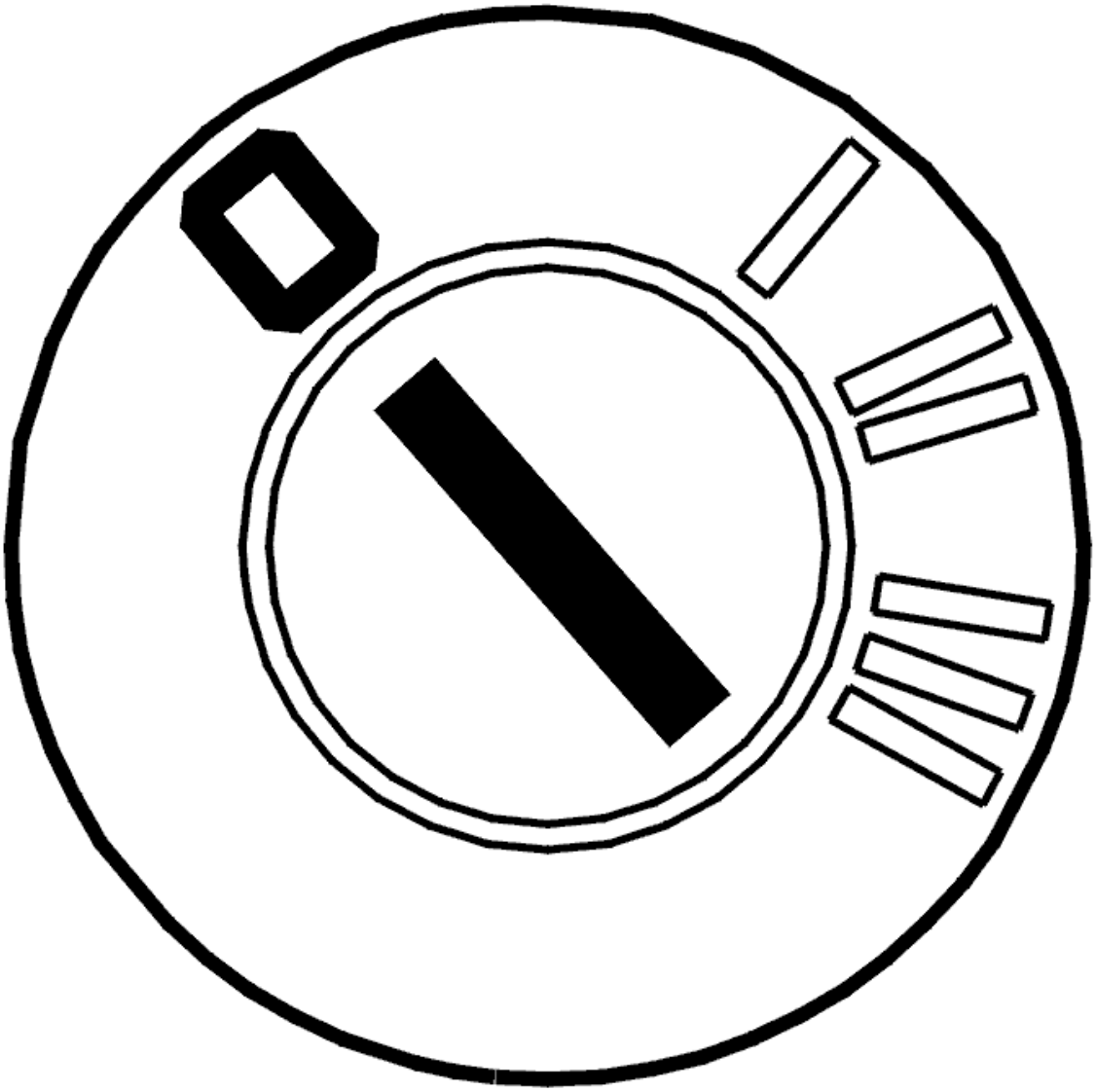

Fig. 111: Identifying Ignition OFF
Courtesy of VOLVO CARS CORPORATION

- Ignition off
- Move the gear selector to position P or N. Parking brake applied.

  Maintain the short-circuit between relay base terminals #3 (30) and #5 (87).

  Disconnect the control signal cable at solenoid terminal #2 (50). Connect an electrician's screwdriver between the solenoid and the ground terminal.

  In start position (ignition position III) the starter motor relay shall be engaged and the test probe shall be lit.

  If the electrician's screwdriver lights up, the supply to the solenoid is fault-free and the fault must be in the starter motor If the electrician's screwdriver does not light, check the fuse for the starter motor and

supply.

Other information

- Use individual blade terminals to connect the electrician's screwdriver.

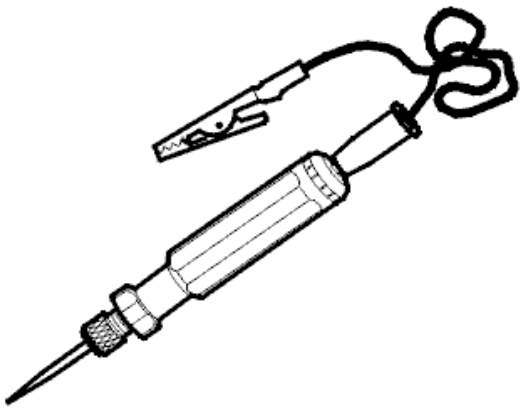

Fig. 112: Identifying Electrician's Screwdriver
Courtesy of VOLVO CARS CORPORATION

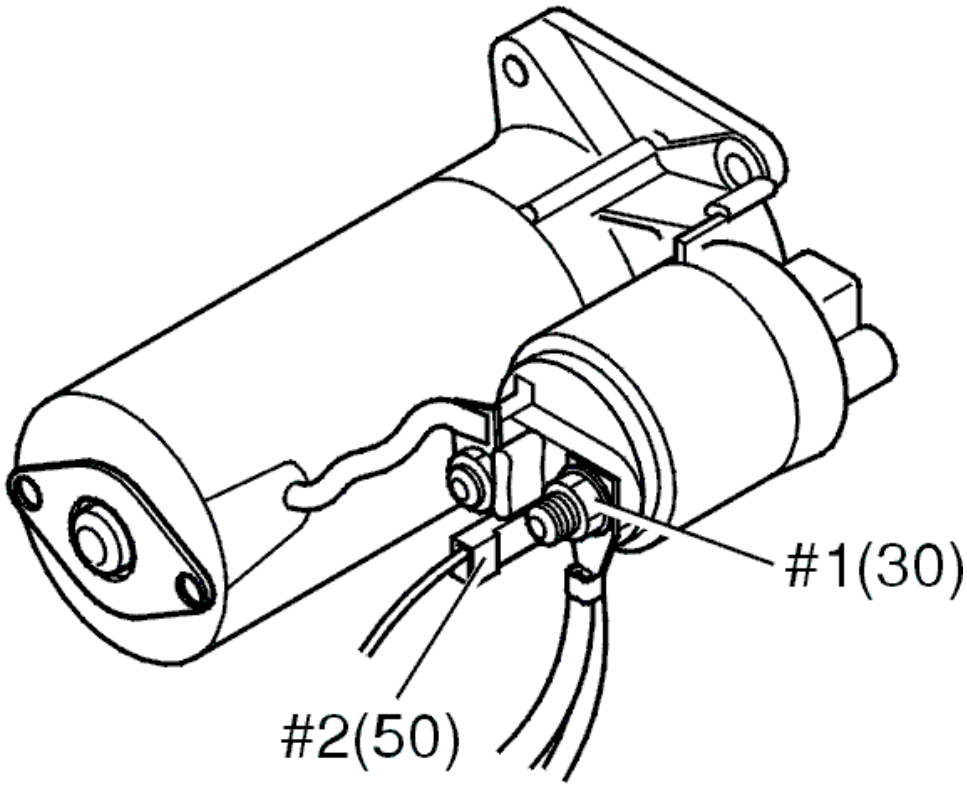

Fig. 113: Identifying Starter Motor Terminals
Courtesy of VOLVO CARS CORPORATION

VERIFICATION

HINT: After carrying out the repair, check that the fault has been remedied.

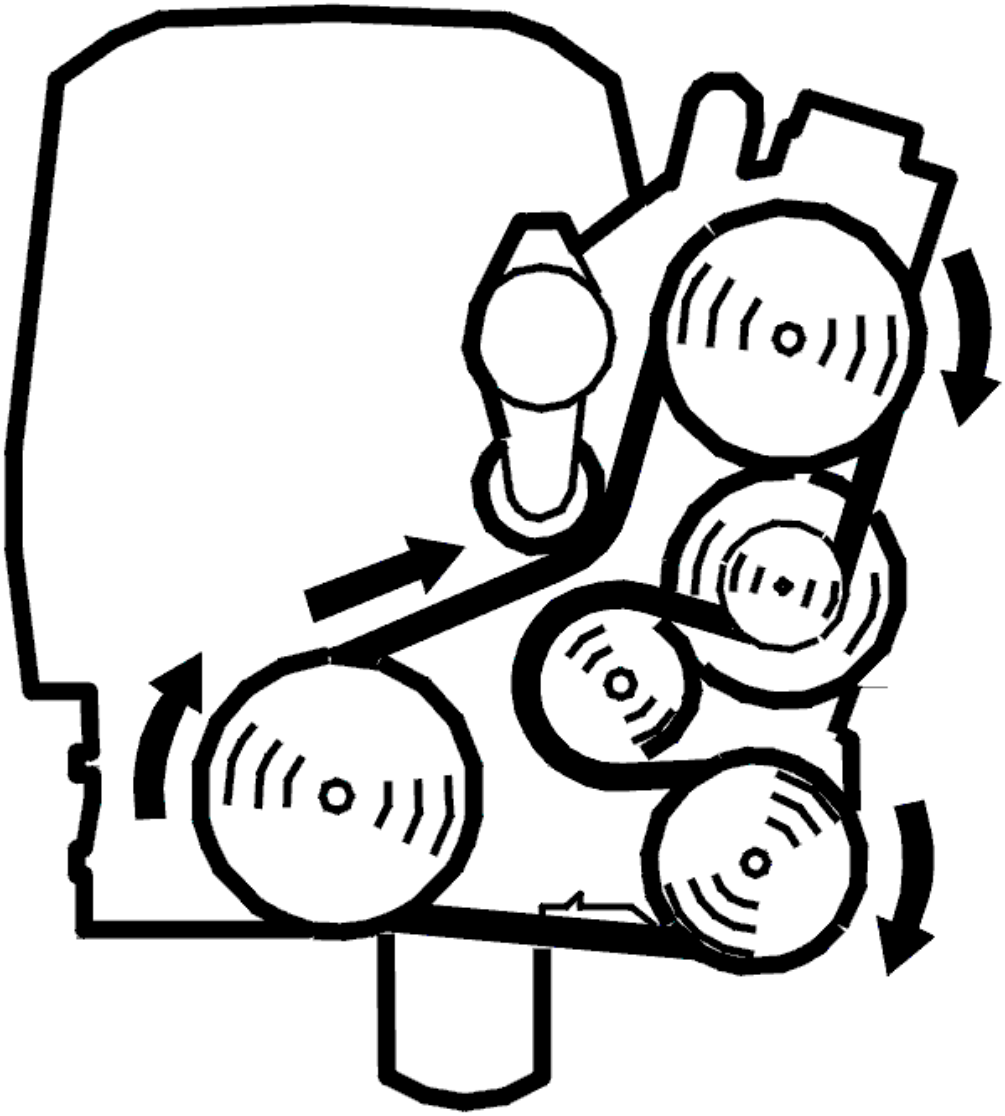

Fig. 114: Belt Routing/Engine Idling - Volvo
Courtesy of VOLVO CARS CORPORATION

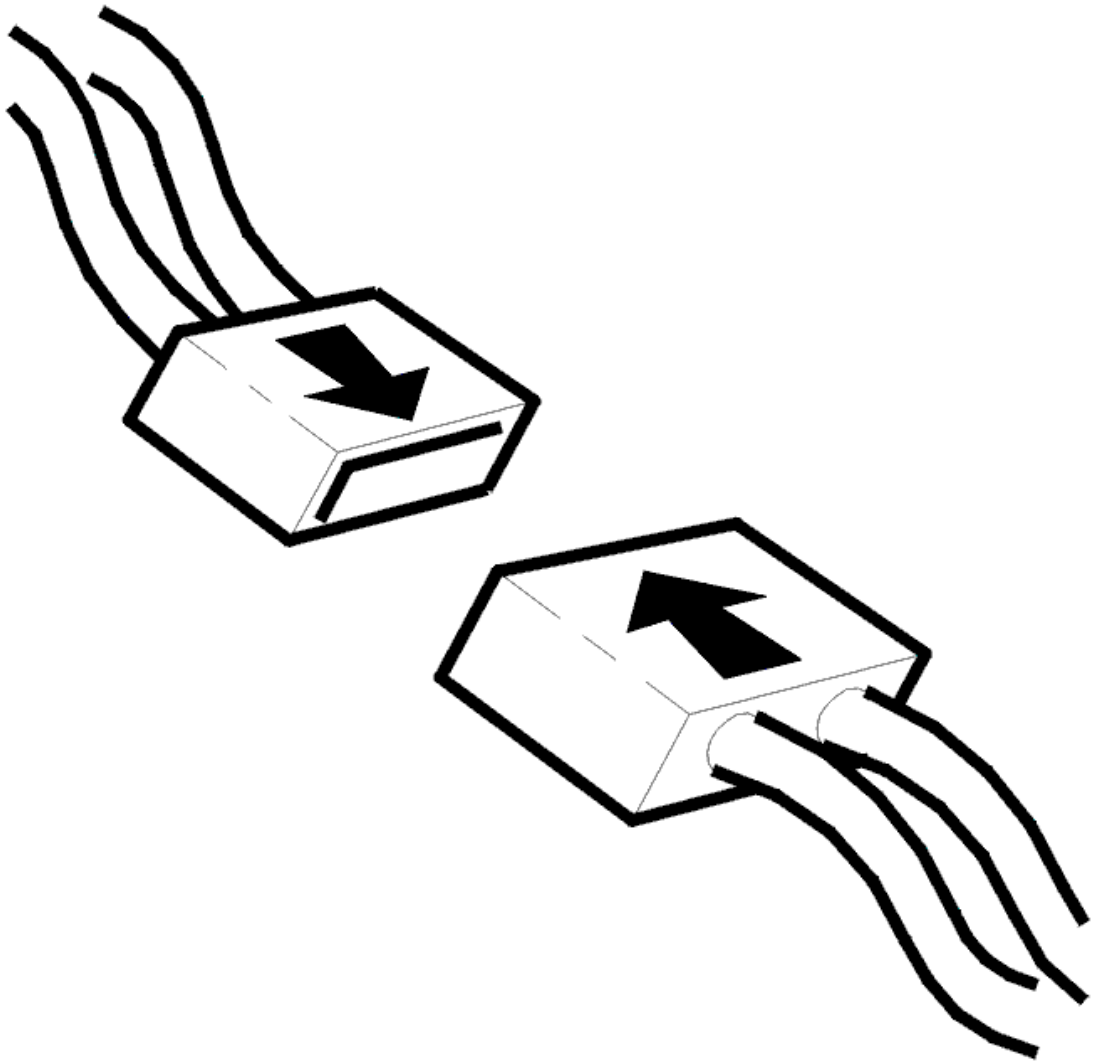

Fig. 115: Connecting Connector
Courtesy of VOLVO CARS CORPORATION

- Ignition off
- Reinstall the connectors, components etc.
- Move the gear selector to position P or N. Parking brake applied.

  Turn the ignition key to start position (key position III). The starter motor must run in starting position.

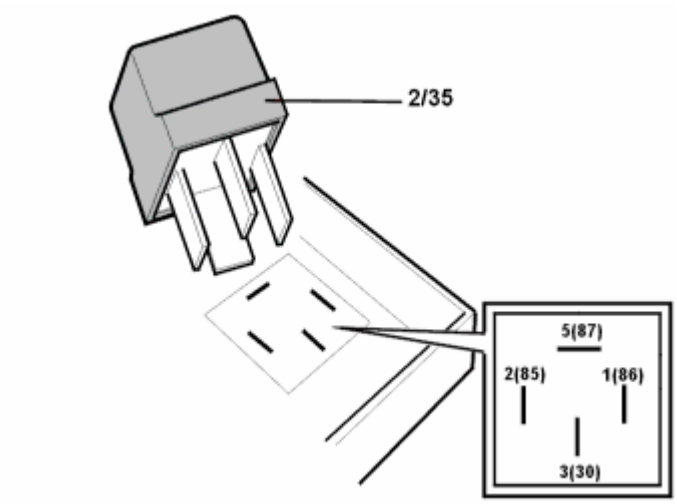

Fig. 116: Identifying Starter Motor Relay
Courtesy of VOLVO CARS CORPORATION

Does the starter motor work?

- **YES**

  OKAY: Troubleshooting has been completed.

- **NO**

  Refer to **INFORMATION**

INFORMATION

FAULT-TRACING INFORMATION

The fault should have been detected and remedied. As this is not the case fault-tracing has failed.

Exit fault-tracing for this diagnostic trouble code (DTC) or make another attempt.

FAULT-TRACING INFORMATION

Condition

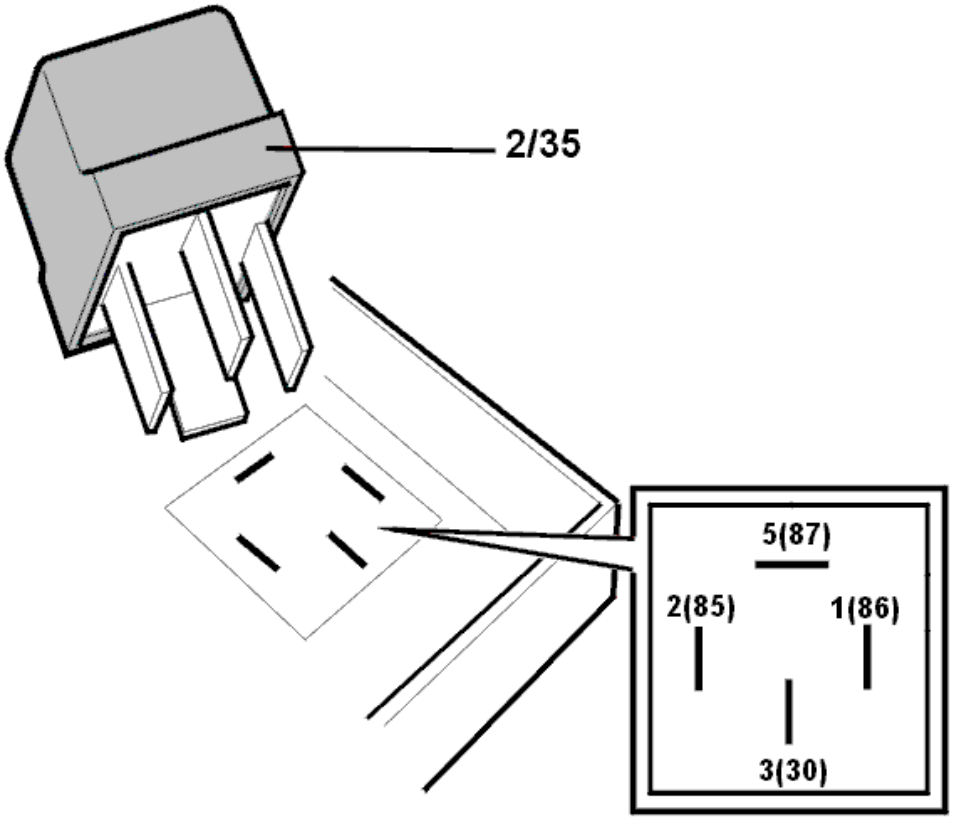

Fig. 117: Identifying Starter Motor Relay
Courtesy of VOLVO CARS CORPORATION

The starter motor will not be supplied with voltage if the circuit for the starter motor relay is defective.

Possible Source

- Open-circuit in the cable between the starter motor relay and the ignition switch
- Open-circuit in the cable between the starter motor relay and the fuse
- Open-circuit in the cable between the starter motor relay and the central electrical module (CEM)
- Open-circuit in the cable between the starter motor relay and the control solenoid
- Defective fuse
- Defective starter motor relay.

Fault symptom[s]

- The starter motor does not run.

CHECKING VOLTAGE DROP IN THE GENERATOR (GEN) AND BATTERY CIRCUITS (2003-12)

CHECKING VOLTAGE DROP IN THE GENERATOR (GEN) AND BATTERY CIRCUITS

NOTE: **The conditions for this test are that:**

- **The battery is fully charged**
- **The generator is charging normally**
- **The belt transmission is fault free**

WARNING: If the engine cooling fan (FC) is running, wait until it has stopped.

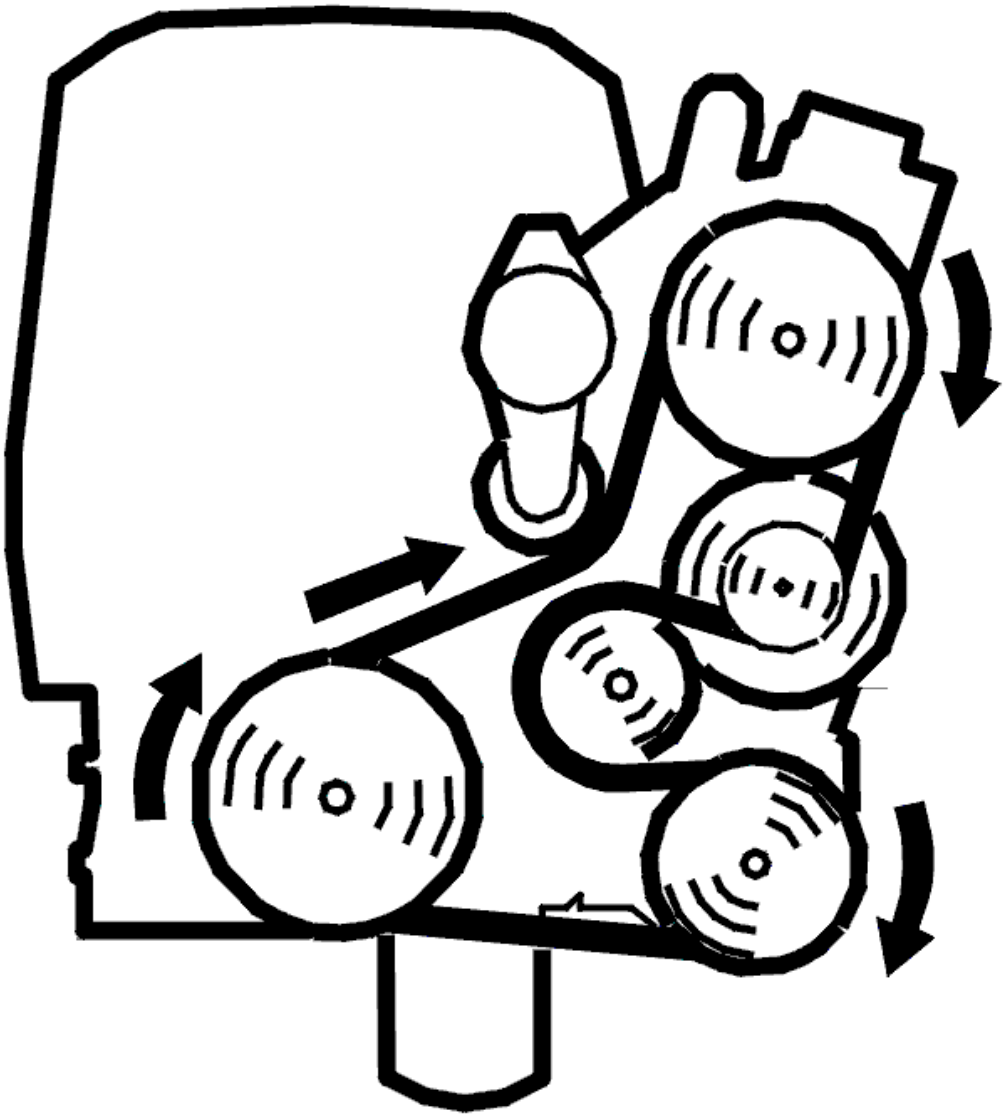

Fig. 118: Belt Routing/Engine Idling - Volvo
Courtesy of VOLVO CARS CORPORATION

- Expose the battery
- Connect a voltmeter between the generator (GEN) B+ and the battery positive terminal

- Ensure that no additional power consuming components are connected
- Start the engine. Maintain a constant engine speed of approximately 2300 RPM
- Check the voltage drop over the **positive circuit** . Make a note of the value.
- Then connect a voltmeter between the ground terminal (housing) for the generator (GEN) and the battery negative terminal
- Check the voltage drop over the **negative circuit** . Make a note of the value.

  Add the two voltage readings. The total voltage must not exceed 0.72 V.

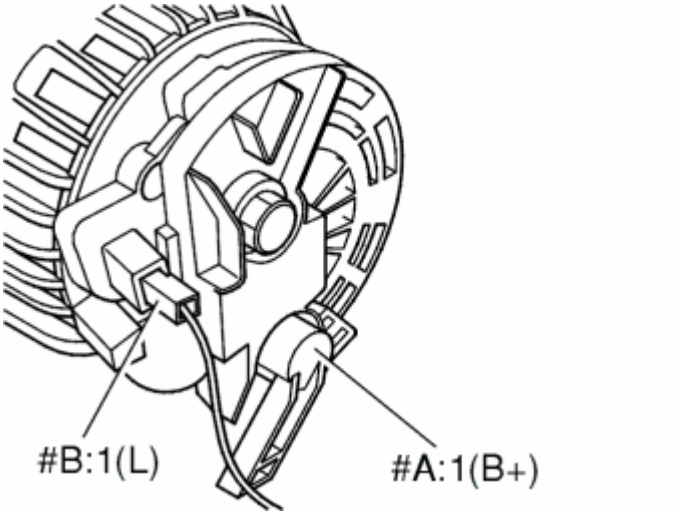

Fig. 119: Identifying Generator Terminals
Courtesy of VOLVO CARS CORPORATION

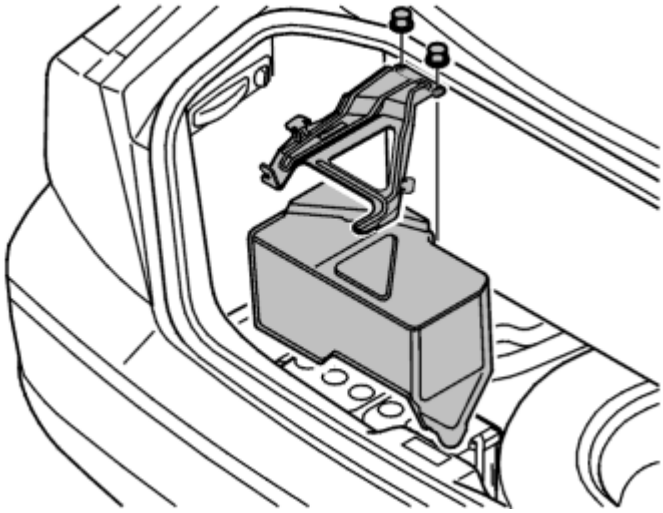

Fig. 120: Identifying Battery, Bracket, And Screws
Courtesy of VOLVO CARS CORPORATION

Is the value OK?

- **YES**

FAULT NOT FOUND: Troubleshooting has been completed.

- **NO**

  Refer to **CHECKING WIRING AND TERMINALS IN THE POSITIVE AND NEGATIVE CIRCUITS**

CHECKING WIRING AND TERMINALS IN THE POSITIVE AND NEGATIVE CIRCUITS

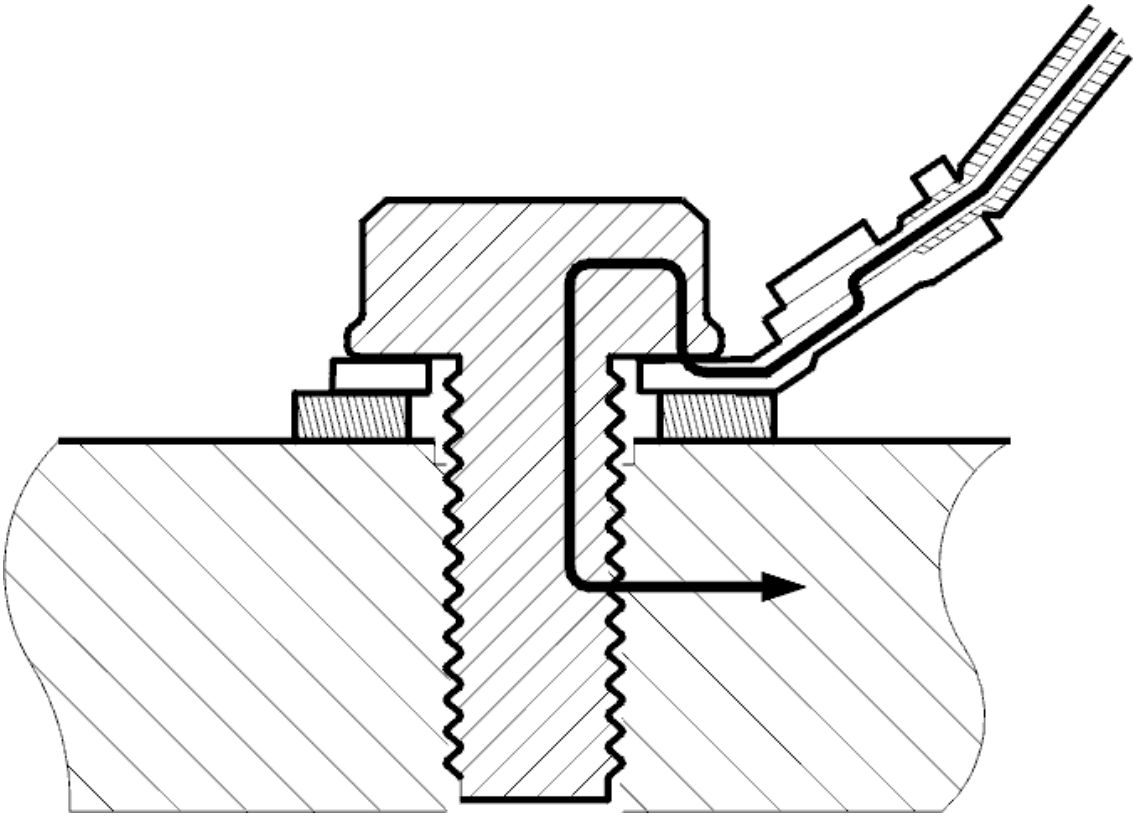

Fig. 121: Ground Points (1 Of 3)
Courtesy of VOLVO CARS CORPORATION

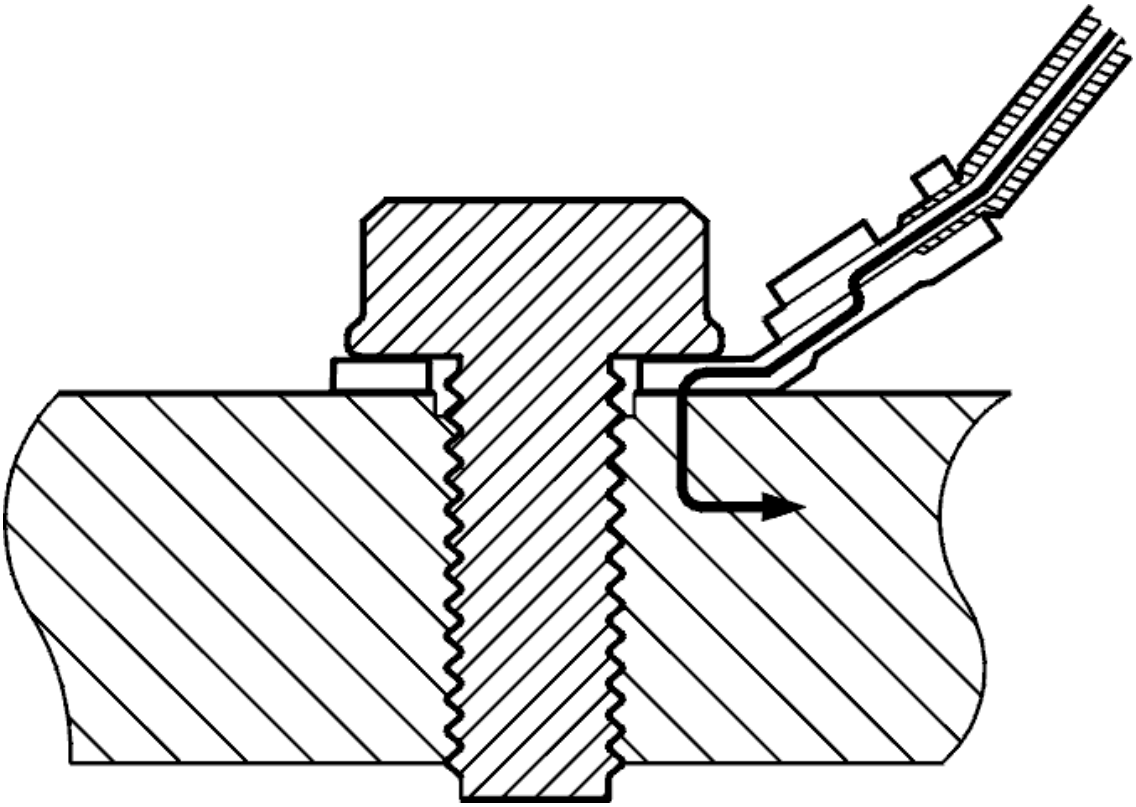

Fig. 122: Ground Points (2 Of 3)
Courtesy of VOLVO CARS CORPORATION

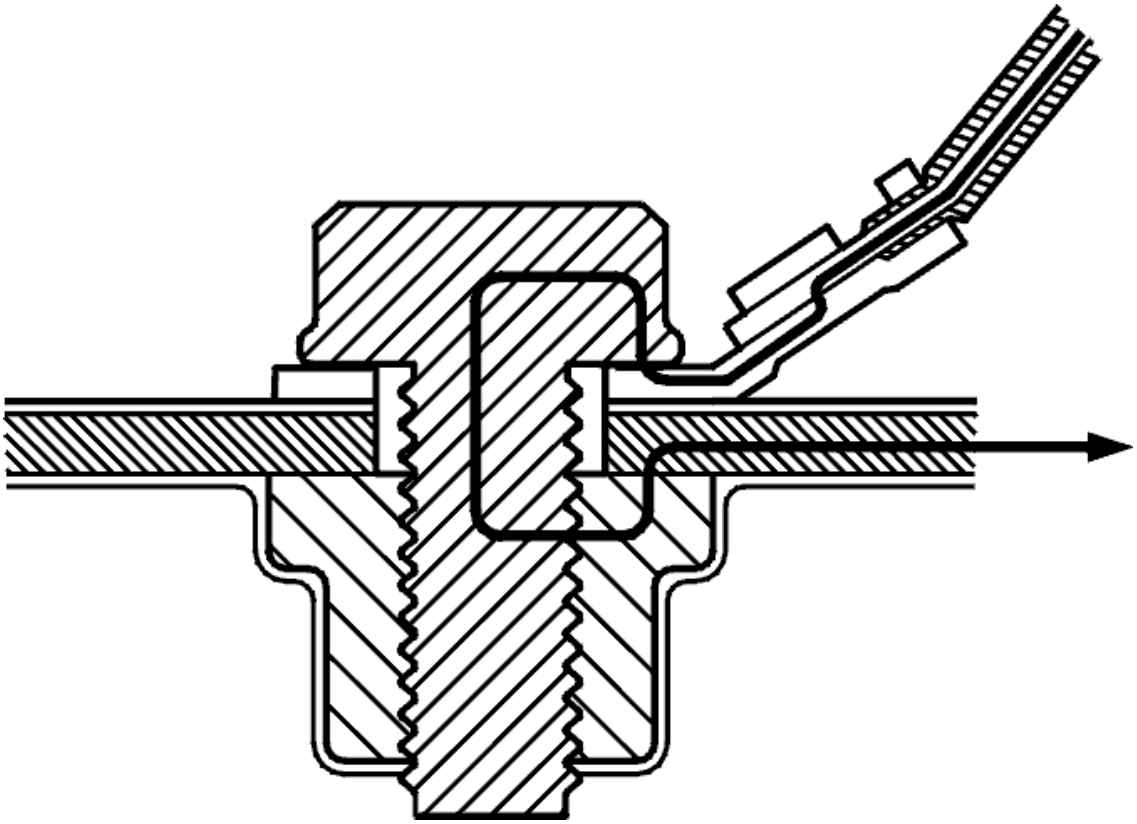

Fig. 123: Ground Points (3 Of 3)
Courtesy of VOLVO CARS CORPORATION

When the voltage drop is too high it indicates excessively high resistance in the circuit.

The ground terminals on a car are a vital part of the car electrical system as all sub-system voltage levels have the ground terminal as a reference (as 0 V). The three graphics show the ground terminal screwed connections to the cylinder block (the left-hand illustrations) and to the chassis (right-hand illustration), and the path of the current in the joint. A poor contact on the ground terminal will have a negative impact on the car electrical systems. It is therefore very important that the ground terminal contact is in good order, that the screws are tight and the cable terminals are correctly crimped to the cable. Ground terminals where several cables are connected to one ground terminal are especially important.

NOTE: There should be no corrosion between the cable terminals and the screw head.

Check the generator (GEN) B+ terminal and the generator (GEN) terminal to the cylinder block. Check for contact resistance and oxidation.

Check the start assistance terminals in the engine compartment. Check for contact resistance and oxidation. Check the connection of the special terminals to the cable in particular.

Check the positive power supply terminal at the starter motor in the engine compartment. Check for contact resistance and oxidation. Check the connection of the special terminals to the cable in particular.

Check the battery positive and negative terminals. Check for contact resistance and oxidation. Check the connection of the terminals to the cables in particular.

Check the terminal for the negative lead in the bodywork.

Check the remainder of the circuit between the generator B+ and battery positive terminals. Check for contact resistance and oxidation.

HINT: If it is necessary to locate a voltage drop in a circuit measure between different points in the circuit. The location of voltage drop in the circuit will be shown.

Remedy as necessary.

Other information

- see **CHECKING WIRING AND TERMINALS**

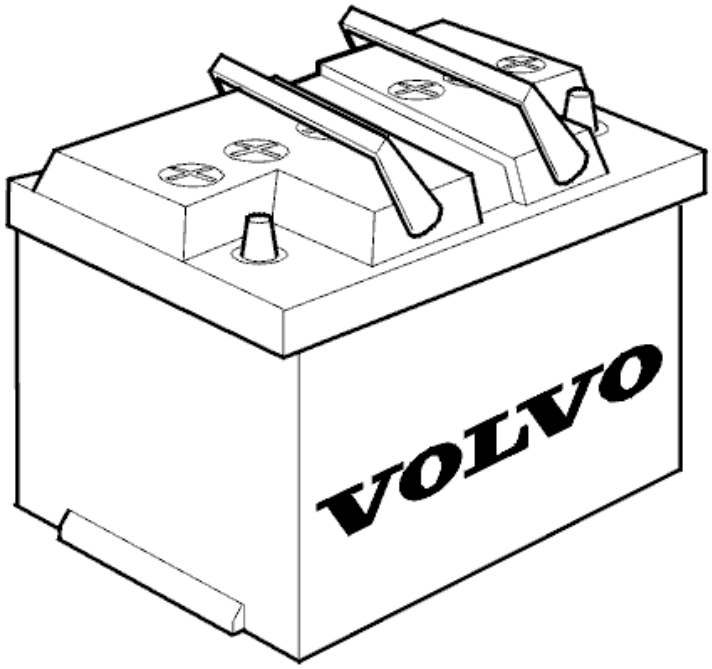

Fig. 124: Identifying Battery
Courtesy of VOLVO CARS CORPORATION

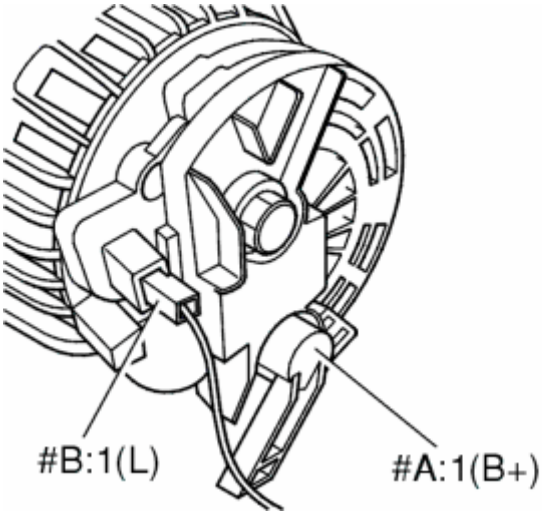

Fig. 125: Identifying Generator Terminals
Courtesy of VOLVO CARS CORPORATION

- **Continue**

  Refer to **VERIFICATION**

VERIFICATION

HINT: After carrying out the repair, check that the fault has been remedied.

WARNING: **If the engine cooling fan (FC) is running, wait until it has stopped.**

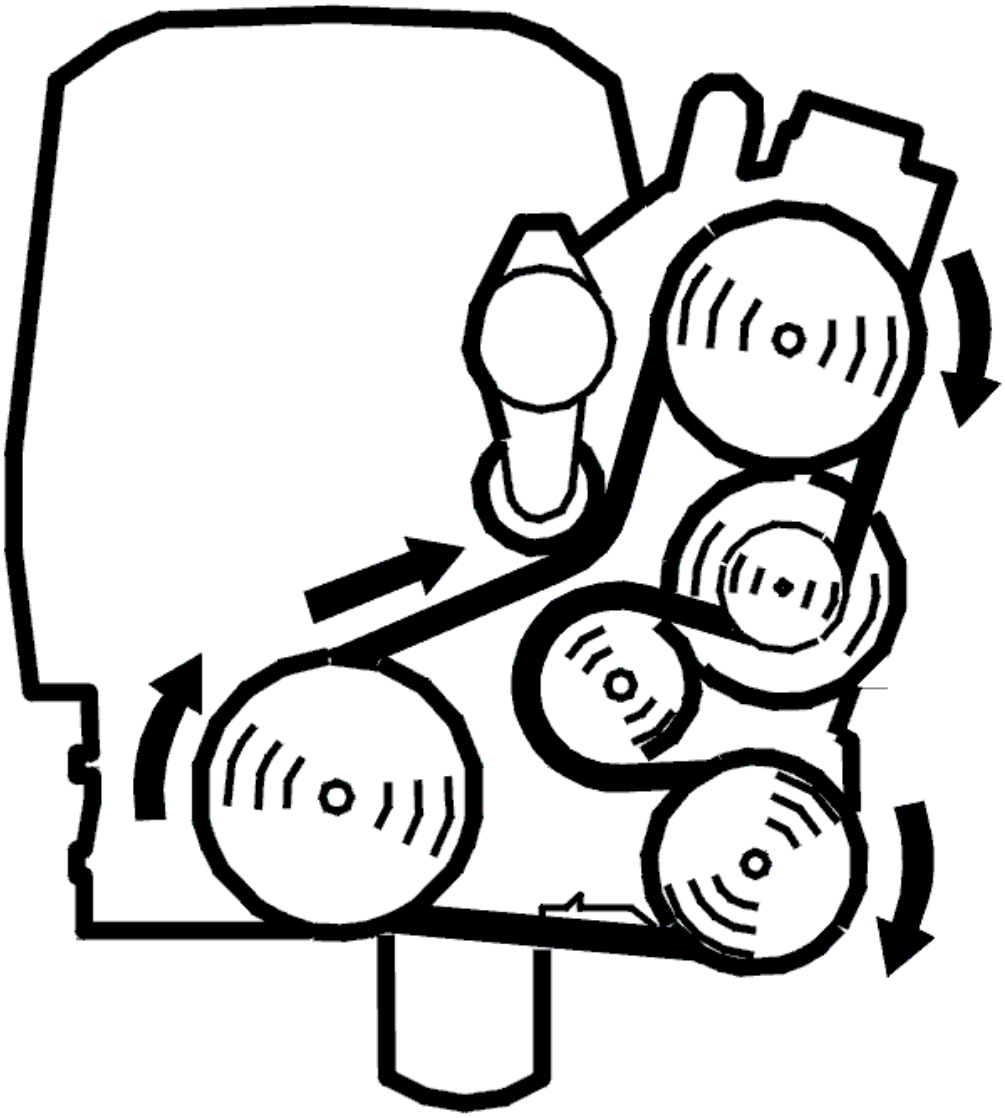

Fig. 126: Belt Routing/Engine Idling - Volvo
Courtesy of VOLVO CARS CORPORATION

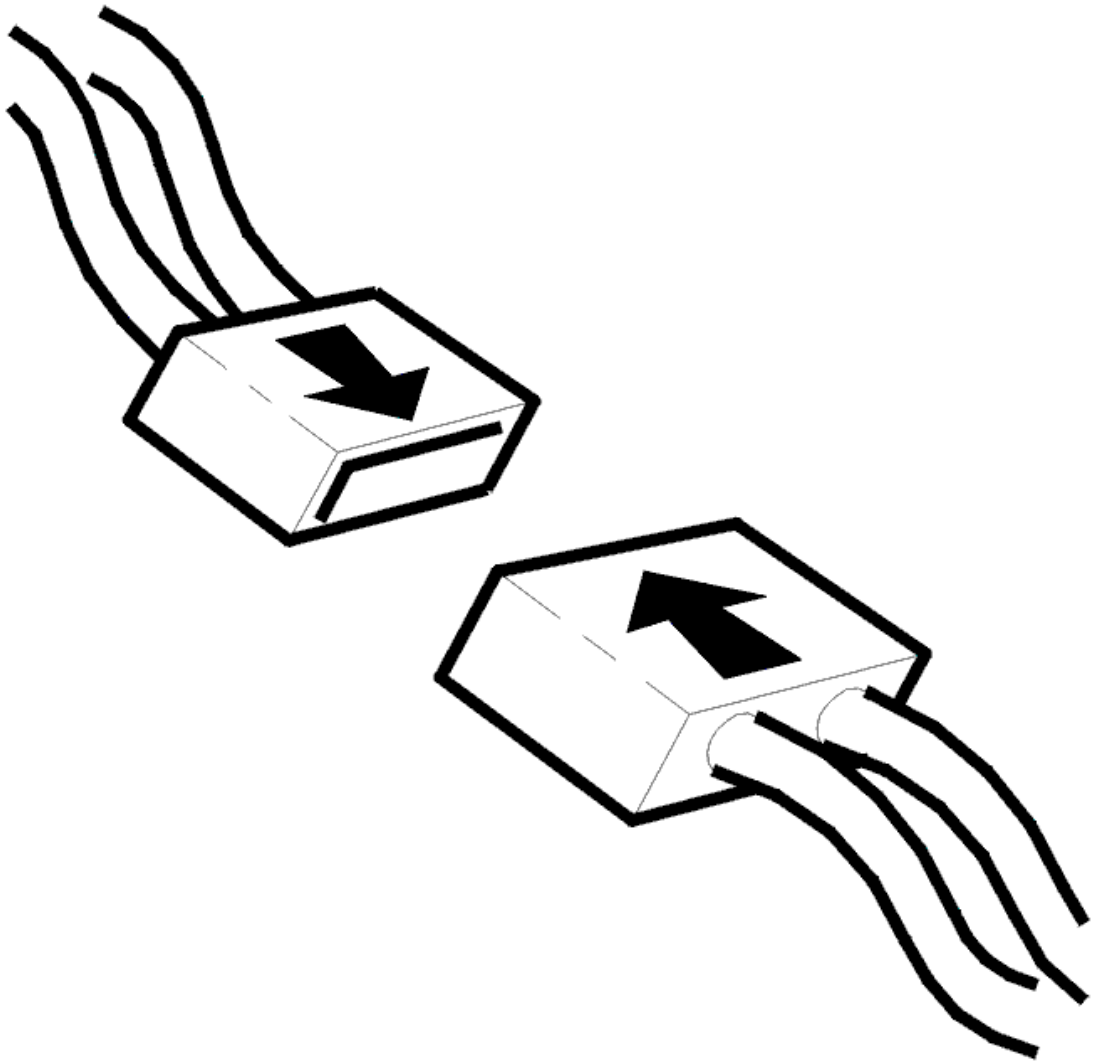

Fig. 127: Connecting Connector
Courtesy of VOLVO CARS CORPORATION

- Ignition off
- Reinstall the connectors, components etc.
- Expose the battery
- Connect a voltmeter between the generator (GEN) B+ and the battery positive terminal
- Ensure that no additional power consuming components are connected
- Start the engine. Maintain a constant engine speed of approximately 2300 RPM
- Check the voltage drop over the **positive circuit** . Make a note of the value.
- Then connect a voltmeter between the ground terminal (housing) for the generator (GEN) and the battery negative terminal
- Check the voltage drop over the **negative circuit** . Make a note of the value.

Add the two voltage readings. The total voltage must not exceed 0.72 V.

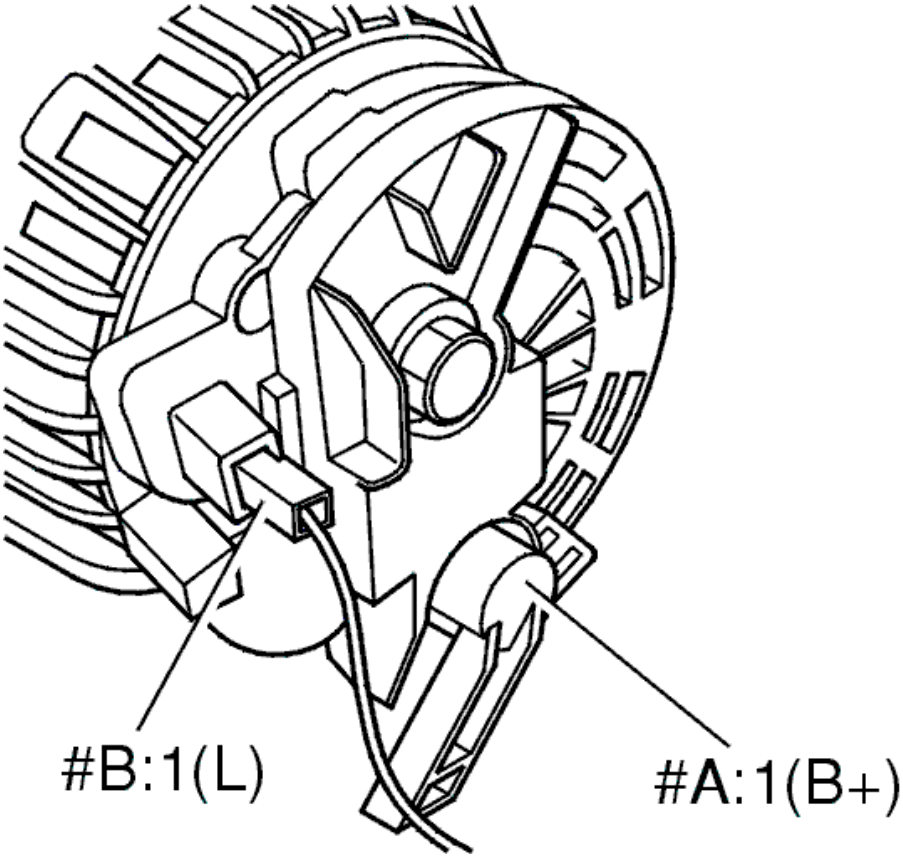

Fig. 128: Identifying Generator Terminals
Courtesy of VOLVO CARS CORPORATION

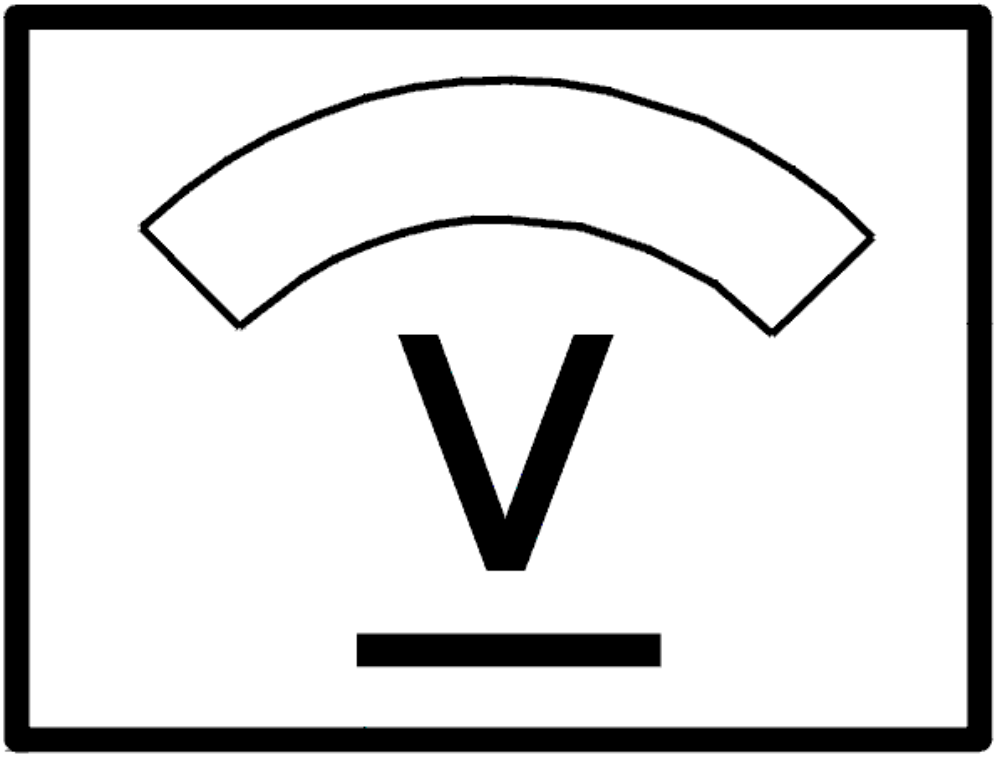

Fig. 129: Identifying Voltage Display
Courtesy of VOLVO CARS CORPORATION

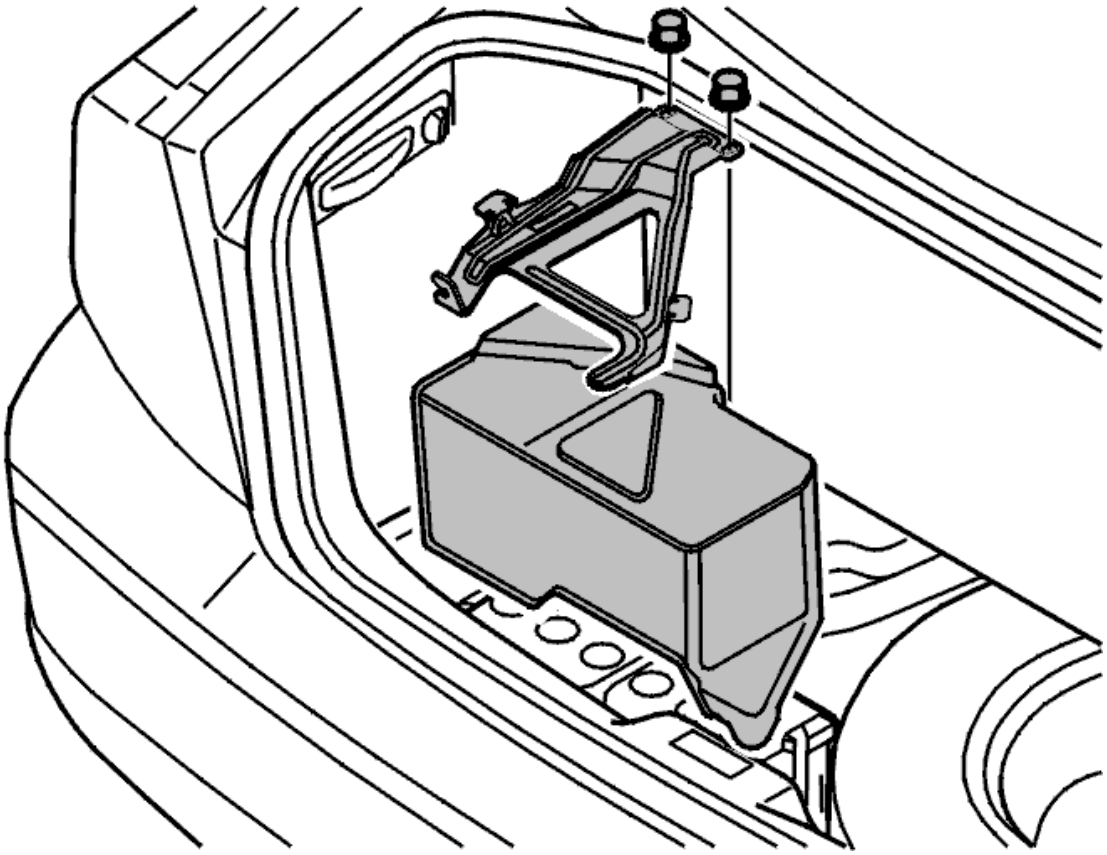

Fig. 130: Battery Mounting And Slash Guard
Courtesy of VOLVO CARS CORPORATION

Is the value OK?

- **YES**

  VERIFIED: Troubleshooting has been completed.

- **NO**

  Refer to **INFORMATION**

INFORMATION

FAULT-TRACING INFORMATION

The fault should have been detected and remedied. As this is not the case fault-tracing has failed.

Exit fault-tracing for this diagnostic trouble code (DTC) or make another attempt.

FAULT-TRACING INFORMATION

Condition

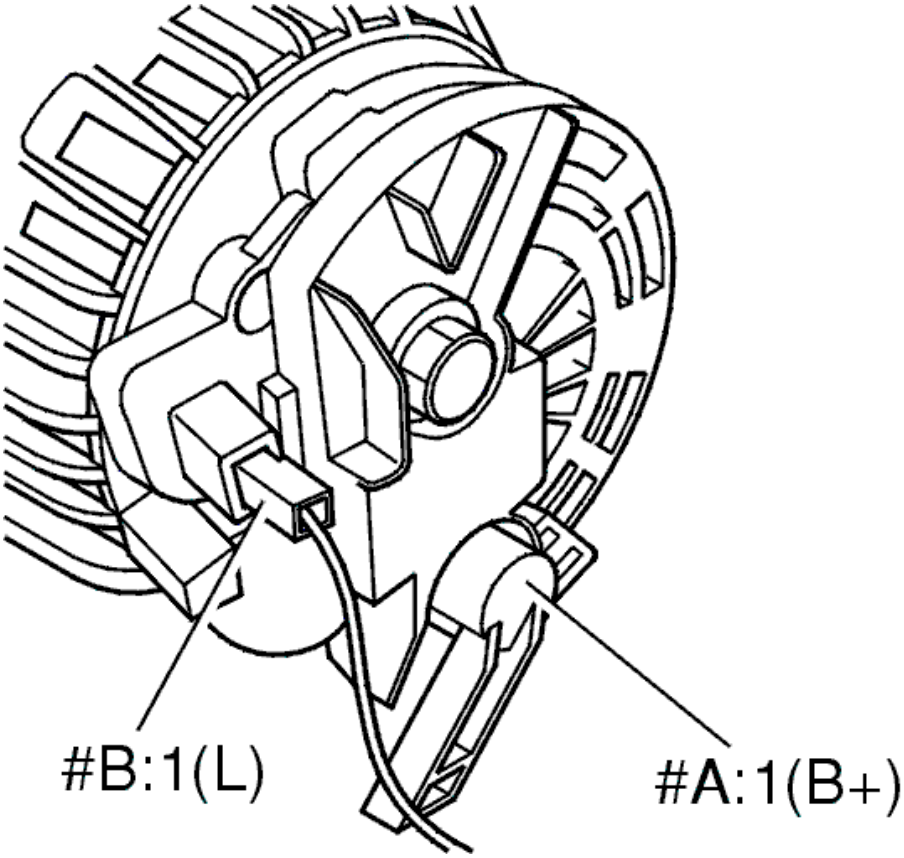

Fig. 131: Identifying Generator Terminals
Courtesy of VOLVO CARS CORPORATION

If the resistance in the circuit becomes too great the result will be a malfunction. The magnitude of the resistance before it causes a malfunction depends on the circuit load.

Possible Source

- Contact resistance and oxidation in the terminals.

Fault symptom[s]

- The battery discharges
- The "Generator not charging" warning lamp is lit with the engine running.

CHECKING VOLTAGE DROP IN THE STARTER MOTOR AND BATTERY CIRCUITS (2003-12)

CHECKING VOLTAGE DROP IN THE STARTER MOTOR AND BATTERY CIRCUITS

NOTE: The conditions for this test are that:

- **The battery is fully charged**
- **The car and engine temperatures exceed 20°C (68°F).**

WARNING: **If the engine cooling fan (FC) is running, wait until it has stopped.**

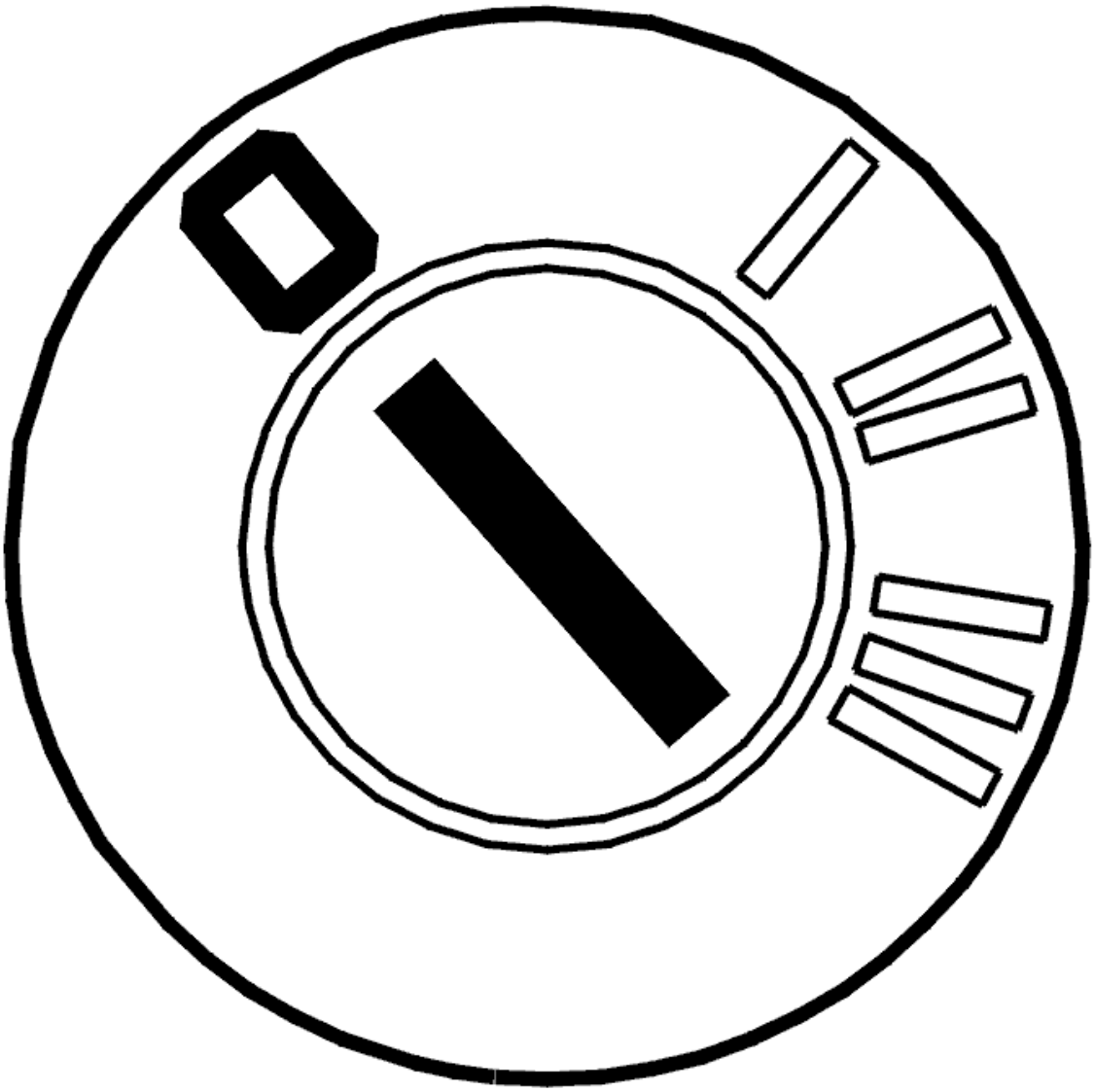

Fig. 132: Identifying Ignition OFF
Courtesy of VOLVO CARS CORPORATION

- Ignition off
- Select neutral (automatic transmissions: "N"). Apply the parking brake
- Expose the starter motor relay in the integrated relay/fusebox in the engine compartment. For the location of the relays, see the wiring diagram. Remove the relay
- Expose the battery

- Connect a voltmeter between the battery positive and negative terminals
- Temporarily connect two cables to relay base terminals #3 (30) and #5 (87)
- Check the voltage of the **battery** while the starter motor is operating by temporarily short-circuiting the cables to each other so that the control solenoid is powered and the starter motor engages. Make a note of the value.

NOTE: Do not bridge directly in the relay base or the connections in the base may be damaged.

HINT: A starter motor relay without a protective cover can be used to create the short-circuit. Closes the switches manually.

The voltage can vary slightly depending on the engine compression action, therefore an average value should be taken.

- Connect a voltmeter between the starter motor power supply terminal #1 (30) and the cylinder block
- Check the voltage across the **starter motor** while the starter motor is operating by temporarily short-circuiting the cables to each other so that the control solenoid is powered and the starter motor engages. Make a note of the value.

NOTE: Measure the voltage between the battery's positive pole and negative pole, as well as between the power supply to the starter motor terminal #1 (30) and the starter motor's ground as shown.

The **difference** between the voltage at the battery and the starter motor respectively must **not** exceed 1 V. If the difference is greater it indicates excessively high resistance in the supply voltage to the starter motor and in the ground circuit from the battery.

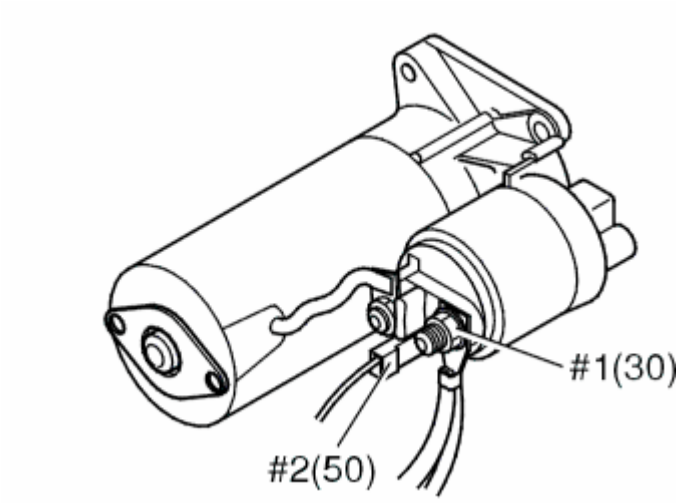

Fig. 133: Identifying Starter Motor Terminals
Courtesy of VOLVO CARS CORPORATION

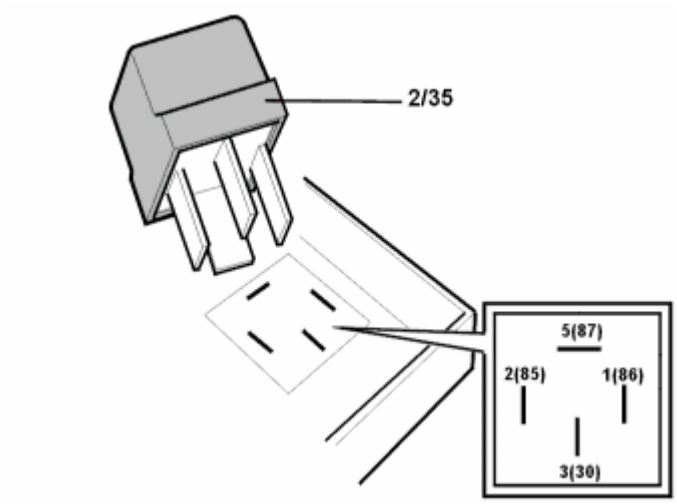

Fig. 134: Identifying Starter Motor Relay
Courtesy of VOLVO CARS CORPORATION

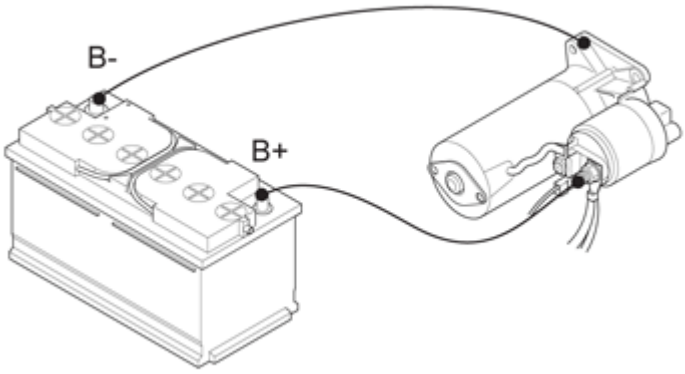

Fig. 135: Identifying Starter Motor Connections To Battery
Courtesy of VOLVO CARS CORPORATION

Is the value OK?

- **YES**

  FAULT NOT FOUND: Troubleshooting has been completed.

- **NO**

  Refer to **CHECKING WIRING AND TERMINALS IN THE POSITIVE AND NEGATIVE CIRCUITS**

CHECKING WIRING AND TERMINALS IN THE POSITIVE AND NEGATIVE CIRCUITS

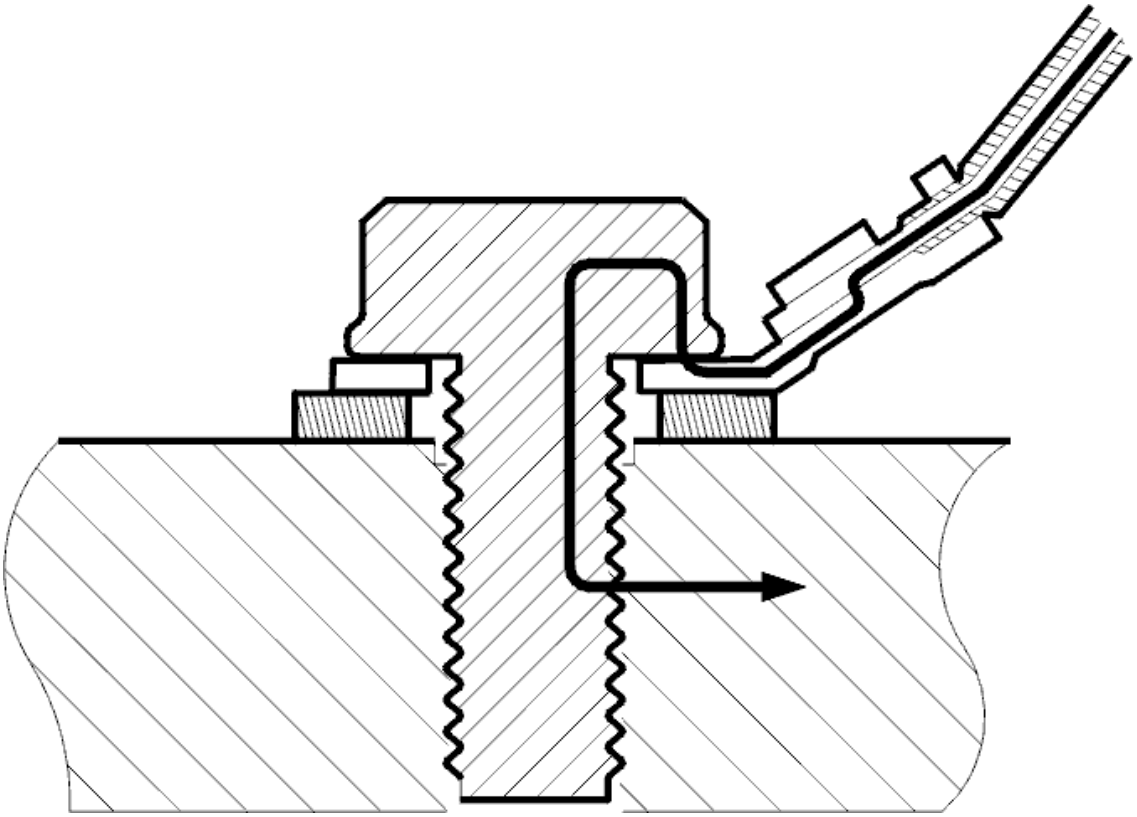

Fig. 136: Ground Points (1 Of 3)
Courtesy of VOLVO CARS CORPORATION

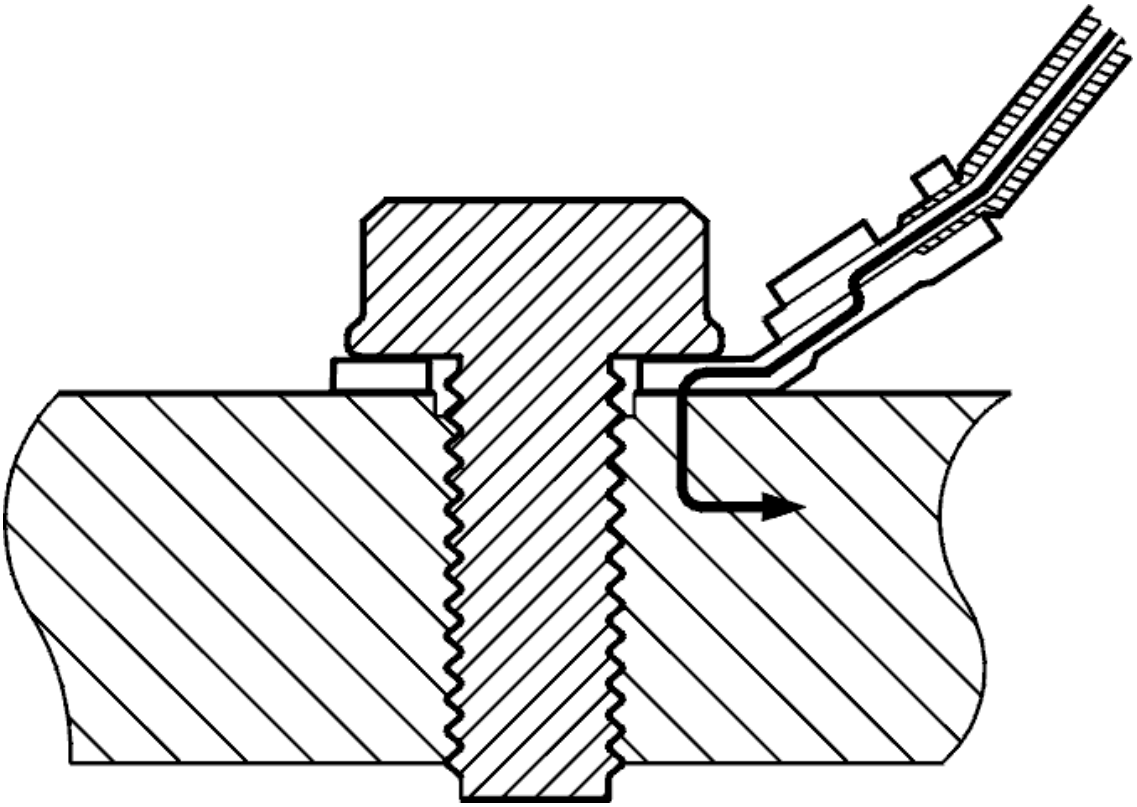

Fig. 137: Ground Points (2 Of 3)
Courtesy of VOLVO CARS CORPORATION

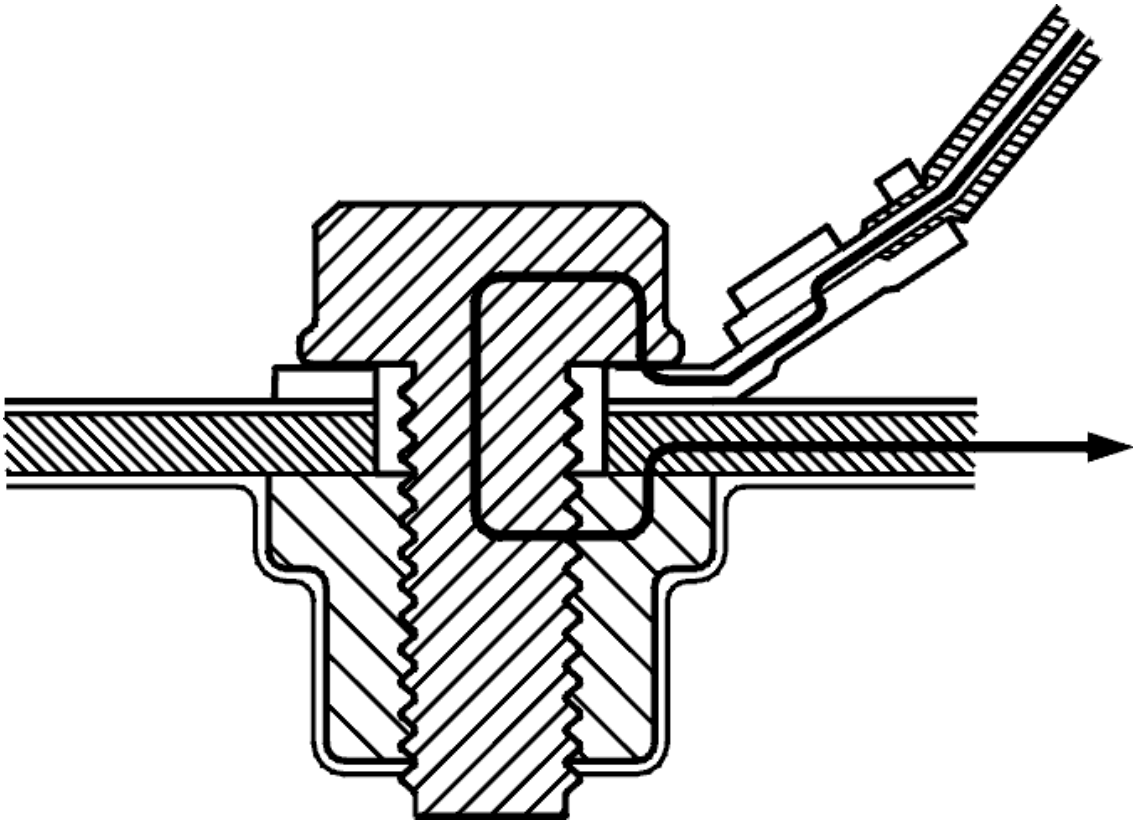

Fig. 138: Ground Points (3 Of 3)
Courtesy of VOLVO CARS CORPORATION

When the voltage drop is too high it indicates excessively high resistance in the circuit.

The ground terminals on a car are a vital part of the car electrical system as all sub-system voltage levels have the ground terminal as a reference (as 0 V). The three graphics show the ground terminal screwed connections to the cylinder block (the left-hand graphics) and to the chassis (right-hand graphic), and the path of the current in the joint. A poor contact on the ground terminal will have a negative impact on the car electrical systems. It is therefore very important that the ground terminal contact is in good order, that the screws are tight and the cable terminals are correctly crimped to the cable. Ground terminals where several cables are connected to one ground terminal are especially important.

NOTE: There should be no corrosion between the cable terminals and the screw head.

Check the starter motor terminal for power supply and the terminal for grounding to the cylinder block. Check for contact resistance and oxidation. Check the connection of the terminal to the cable in particular.

Check the engine ground terminal. Check for contact resistance and oxidation. Check the connection of the terminals to the cables in particular.

Check the start assistance terminals in the engine compartment. Check for contact resistance and oxidation. Check the connection of the terminals to the cable in particular.

Check the battery positive and negative terminals. Check for contact resistance and oxidation. Check the connection of the terminals to the cables in particular.

Check the terminal for the battery negative lead in the bodywork.

HINT: If it is necessary to locate a voltage drop in a circuit measure between different points in the circuit. The location of voltage drop in the circuit will be shown.

Remedy as necessary.

Other information

- see **CHECKING WIRING AND TERMINALS**
- **Continue**

  Refer to **VERIFICATION**

VERIFICATION

HINT: After carrying out the repair, check that the fault has been remedied.

WARNING: **If the engine cooling fan (FC) is running, wait until it has stopped.**

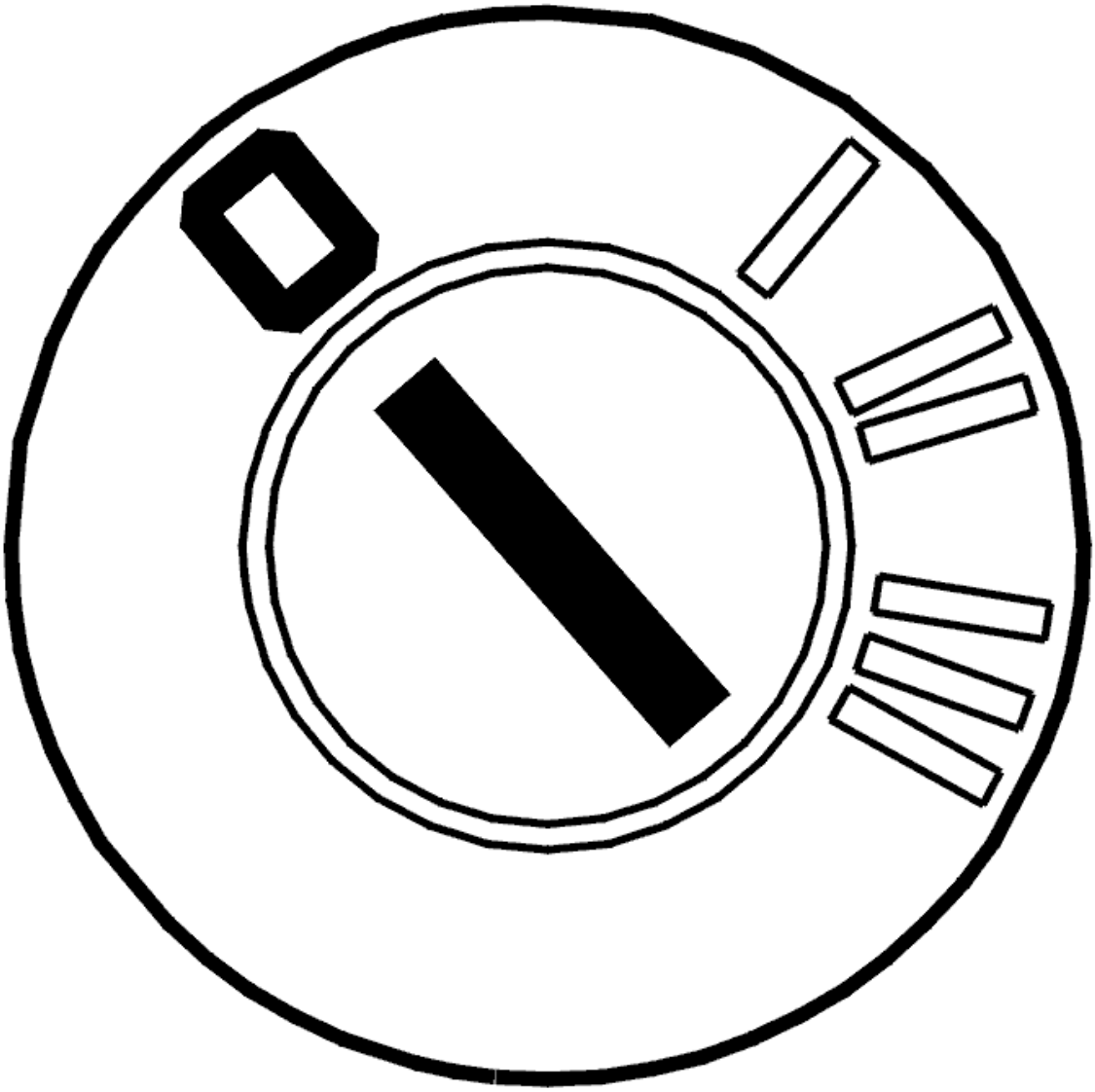

Fig. 139: Identifying Ignition OFF
Courtesy of VOLVO CARS CORPORATION

- Ignition off
- Reinstall the connectors, components etc.
- Select neutral (automatic transmissions: "N"). Apply the parking brake
- Expose the starter motor relay. Remove the relay.
- Expose the battery
- Connect a voltmeter between the battery positive and negative terminals
- Temporarily connect two cables to relay base terminals #3 (30) and #5 (87)
- Check the voltage of the **battery** while the starter motor is operating by temporarily short-circuiting the cables to each other so that the control solenoid is powered and the starter motor engages. Make a note of the value!

The voltage can vary slightly depending on the rate of engine compression, therefore an average value should be taken.

NOTE: Do not bridge directly in the relay base or the connections in the base may be damaged.

- Connect a voltmeter between the starter motor power supply terminal #1 (30) and the cylinder block
- Check the voltage across the **starter motor** while the starter motor is operating by temporarily short-circuiting the cables to each other so that the control solenoid is powered and the starter motor engages. Make a note of the value.

The **difference** between the voltage at the battery and the starter motor respectively must **not** exceed 1 V. If the difference is greater it indicates excessively high resistance in the supply voltage to the starter motor or in the ground circuit from the battery.

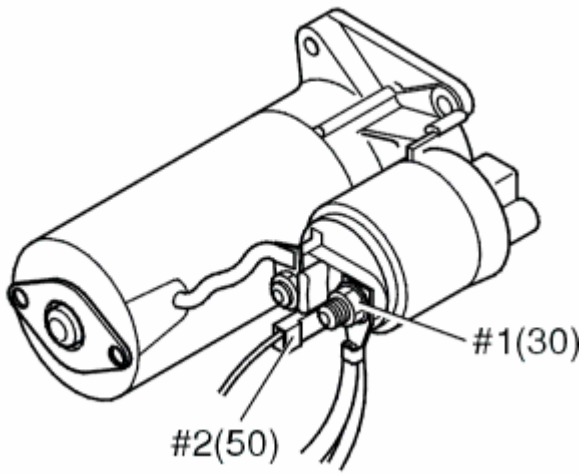

Fig. 140: Identifying Starter Motor Terminals
Courtesy of VOLVO CARS CORPORATION

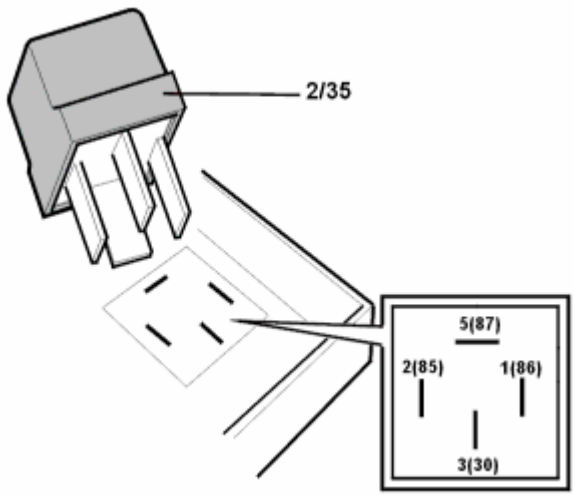

Fig. 141: Identifying Starter Motor Relay
Courtesy of VOLVO CARS CORPORATION

Is the value OK?

- **YES**

  OKAY: Troubleshooting has been completed.

- **NO**

  Refer to **INFORMATION**

INFORMATION

FAULT-TRACING INFORMATION

The fault should have been detected and remedied. As this is not the case fault-tracing has failed.

Exit fault-tracing for this diagnostic trouble code (DTC) or make another attempt.

FAULT-TRACING INFORMATION

Condition

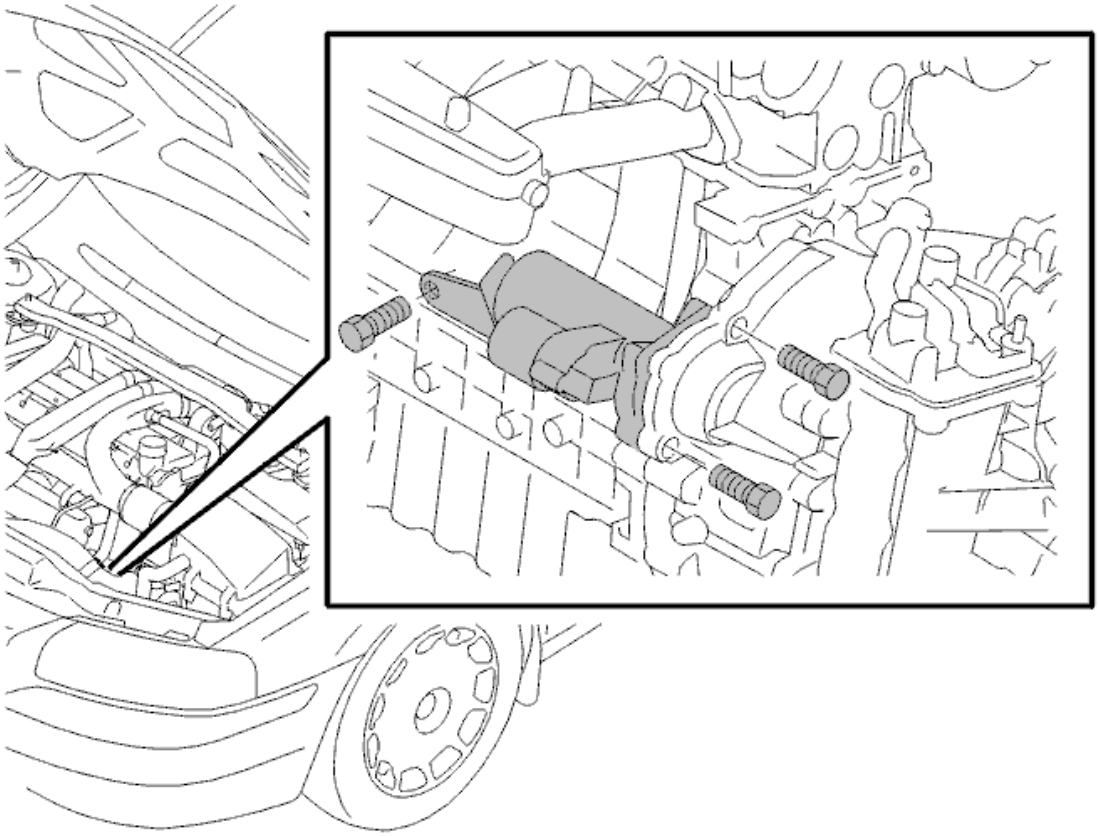

Fig. 142: Identifying Starter Motor And Screws
Courtesy of VOLVO CARS CORPORATION

If the resistance in the starter motor circuit is too large the starter motor will not be able to develop full power and will therefore rotate more slowly under load.

Possible Source

- Contact resistance and oxidation in the terminals.

Fault symptom[s]

- The starter motor does not turn
- Low rotation speed in the starter motor.

GENERAL INFORMATION

General Information - General Diagnostics And Tests

CHECKING WIRING AND TERMINALS (2003-12)

CHECKING WIRING AND TERMINALS

CONTENTS

Select appropriate fault-tracing on wiring and connectors.

- see **INSPECT TERMINALS VISUALLY**
- see **OPEN-CIRCUIT**
- see **SHORT-CIRCUIT TO GROUND**
- see **SHORT-CIRCUIT TO SUPPLY VOLTAGE**
- see **LOOSE CONNECTIONS (TERMINALS)**
- see **CONTACT RESISTANCE AND OXIDATION**
- see **INTERMITTENT FAULT-TRACING**

INSPECT TERMINALS VISUALLY

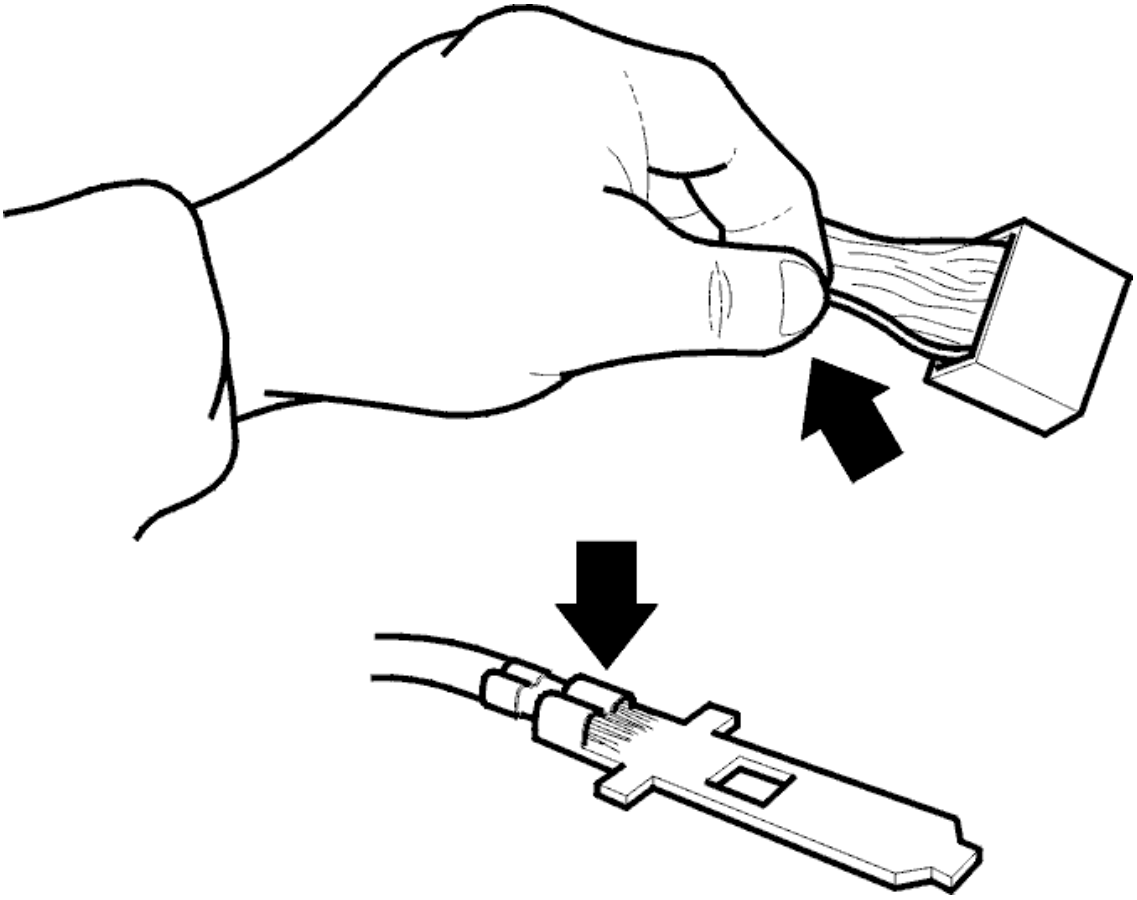

Fig. 1: Checking Contact Resistance & Oxidation
Courtesy of VOLVO CARS CORPORATION

NOTE: **When checking the engine control module (ECM), do not remove the control module from the car before the main relay has interrupted the power supply. This may take up to 4 minutes after the ignition has been switched off and the engine cooling fan (FC) has stopped running.**

Inspect the terminals visually when checking, or taking readings from, opened connectors.

Checks:

- Check for oxidation. This can cause poor connections in the terminals
- Check for damage to pins and terminals. Check that they are properly inserted into the connector. Check that the cable is properly connected to the pin or terminal. Check pins and terminals particularly carefully
- Using a loose male connector, test to, see if the female connector provides a good contact and that the pin remains in place when the male connector is pulled lightly
- Shake the cable lightly and pull on connectors during measurement to locate damage.

OPEN-CIRCUIT

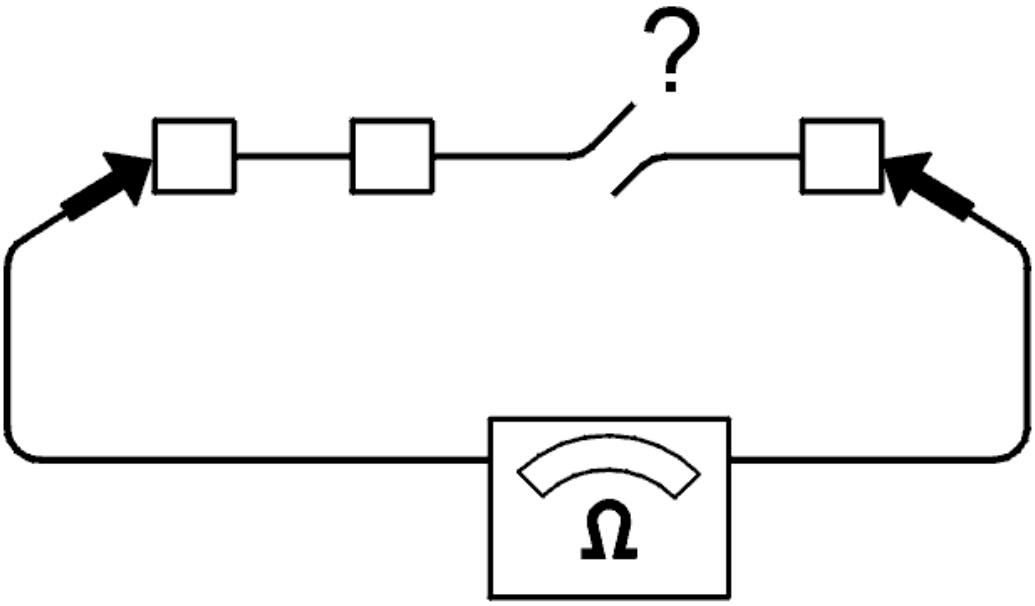

Fig. 2: Checking For Open Circuit
Courtesy of VOLVO CARS CORPORATION

CAUTION: Avoid touching control module connector pins and corresponding cable harness connectors. There is a risk of electrostatic discharge, which could damage the control module. Relieve any charge on yourself and the tools to be used by holding the metal part of the tool and touching part of the body just before starting work.

An open-circuit in a cable will be indicated by the loss of a function (or functions).

Chafed and broken leads are common causes of faults.

Checks:

- Disconnect the connectors at both ends of the cable.

Check the cables visually according to **INSPECT TERMINALS VISUALLY**.

Connect an ohmmeter between the ends of the cable.

The ohmmeter should read approximately 0 ohms if there is no open-circuit in the cable.

NOTE: **When taking readings from the female connector it is important to position a replacement part between the female connector and the measuring instrument. The replacement part consists of a piece of cable with a cable terminal at one end. Never insert an object into the female connector. There is a risk of damaging the female connector.**

Shake the cable lightly and pull on connectors during measurement to locate the damage.

If the reading is not correct. Replace the cable and/or continue according to **CONTACT RESISTANCE AND OXIDATION**.

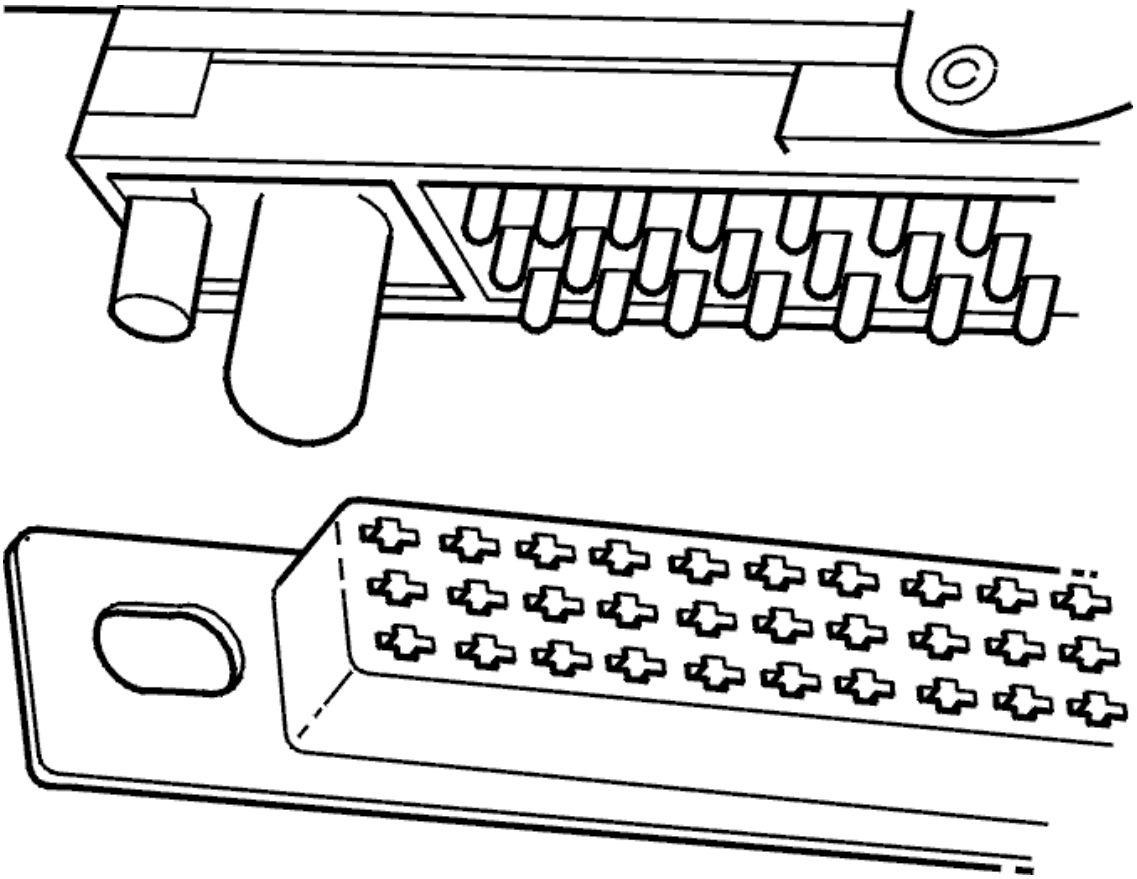

Fig. 3: Identifying Control Module Installation
Courtesy of VOLVO CARS CORPORATION

Always check the control module and control module box connectors to ensure that their pins and sockets are not bent or damaged, this may cause faults.

Check pins and terminals particularly carefully.

SHORT-CIRCUIT TO GROUND

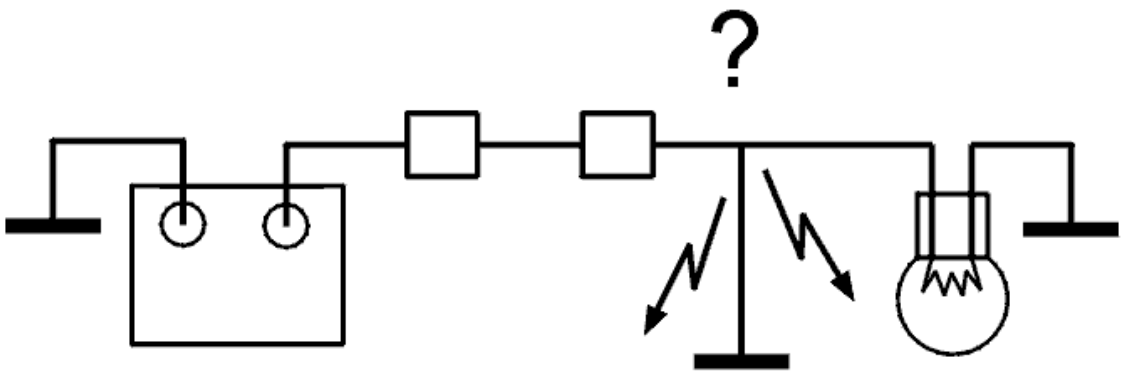

Fig. 4: Checking For Short Circuit To Ground
Courtesy of VOLVO CARS CORPORATION

CAUTION: Avoid touching control module connector pins and corresponding cable harness connectors. There is a risk of electrostatic discharge, which could damage the control module. Relieve any charge on yourself and the tools to be used by holding the metal part of the tool and touching part of the body just before starting work.

A short-circuit between a live cable and ground is often indicated by the loss of a function or a fuse blowing when a current is passed through the cable.

Checks:

- Check the cables visually according to **INSPECT TERMINALS VISUALLY**.

  Activate all switches and sensors in the circuit. Check whether the fuse blows

- Disconnect the connectors in the circuit to ensure that they do not affect readings.

Connect an ohmmeter between cable and ground.

The ohmmeter should read infinite resistance if no components are connected.

NOTE: **When taking readings from the female connector it is important to position a replacement part between the female connector and the measuring instrument. The replacement part consists of a piece of cable with a cable terminal at one end. Never insert an object into the female connector. There is a risk of damaging the female connector.**

Shake the cable lightly and pull on connectors during measurement to locate the damage.

If the reading is not correct, replace the cable and/or continue according to **CONTACT RESISTANCE AND OXIDATION**.

SHORT-CIRCUIT TO SUPPLY VOLTAGE

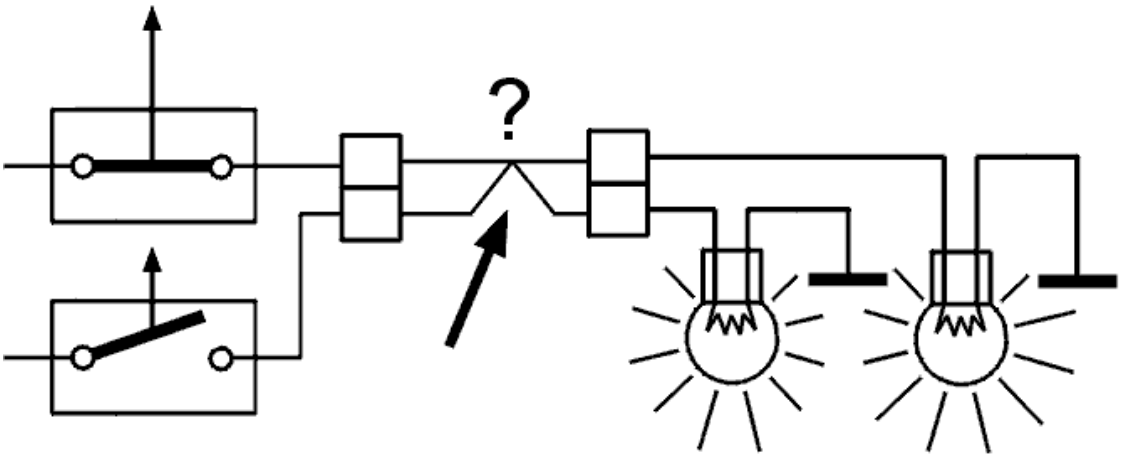

Fig. 5: Checking For Short Circuit
Courtesy of VOLVO CARS CORPORATION

CAUTION: **Avoid touching control module connector pins and corresponding cable harness connectors. There is a risk of electrostatic discharge, which could damage the control module. Relieve any charge on yourself and the tools to be used by holding the metal part of the tool and touching part of the body just before starting work.**

A short-circuit between a cable and supply voltage is often indicated by the loss of a function or a fuse blowing

when a current is passed through the cable.

Checks:

- Check the cables visually according to **INSPECT TERMINALS VISUALLY**.

  Use a voltmeter to take readings at various points in the circuit while operating switches and sensors.

The voltmeter reading depends on the circuit being tested and the positions of switches and sensors.

Use an ohmmeter between the suspect cables to detect short-circuits between them.

The ohmmeter should read infinite resistance between cables not connected to each other in the circuit.

NOTE: **When taking readings from the female connector it is important to position a replacement part between the female connector and the measuring instrument. The replacement part consists of a piece of cable with a cable terminal at one end. Never insert an object into the female connector. There is a risk of damaging the female connector.**

Shake the cable lightly and pull on connectors during measurement to locate the damage.

If the reading is not correct. Replace the cable and/or continue according to **CONTACT RESISTANCE AND OXIDATION**.

LOOSE CONNECTIONS (TERMINALS)

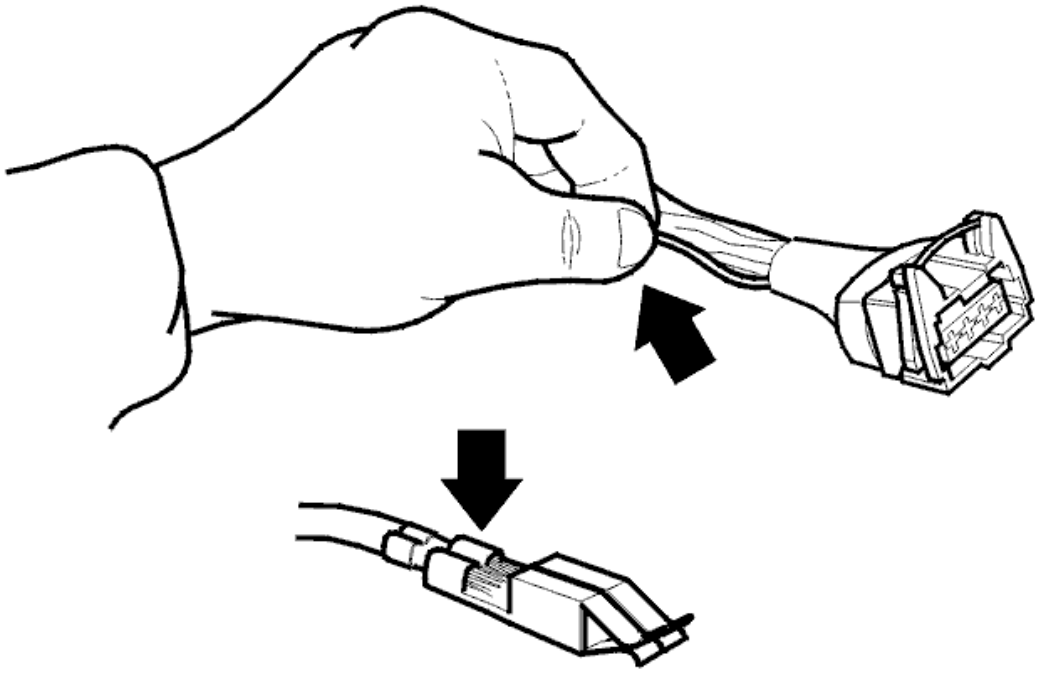

Fig. 6: Identifying Terminal Inspection
Courtesy of VOLVO CARS CORPORATION

Loose connections in terminals may be caused by oxidation of the pins and sockets, or by a faulty connection of a cable to its cable terminal.

Loose connections produce the same faults as an intermittent open-circuit in a cable.

Checks:

- Inspect terminals visually according to **INSPECT TERMINALS VISUALLY**.

  Continue according to **CONTACT RESISTANCE AND OXIDATION**.

CONTACT RESISTANCE AND OXIDATION

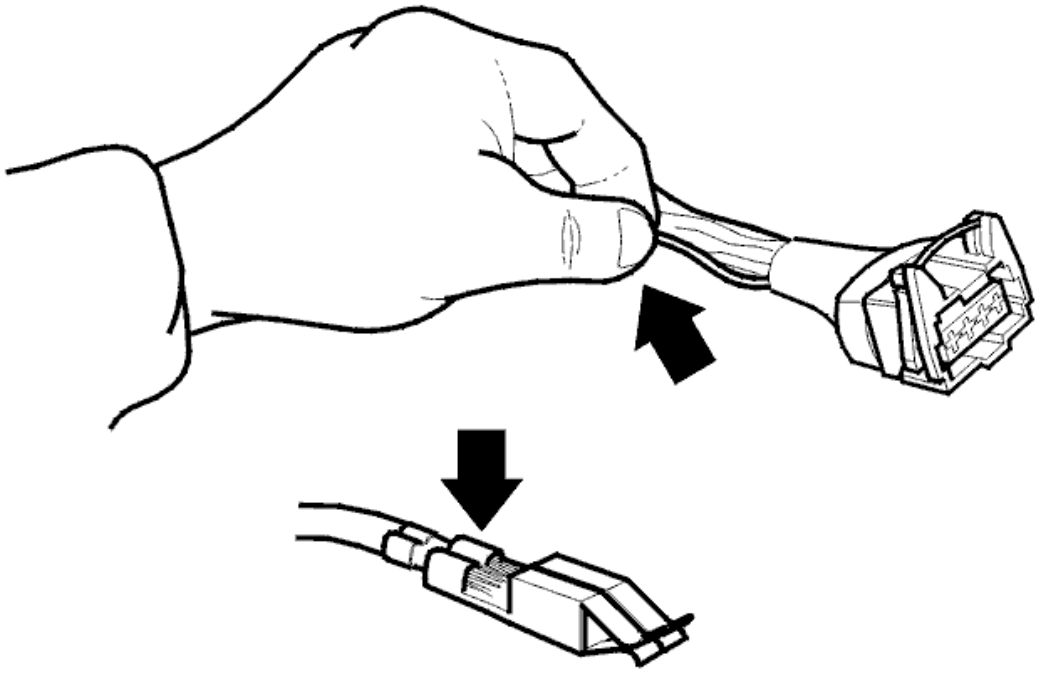

Fig. 7: Identifying Terminal Inspection
Courtesy of VOLVO CARS CORPORATION

CAUTION: Avoid touching control module connector pins and corresponding cable harness connectors. There is a risk of electrostatic discharge, which could damage the control module. Relieve any charge on yourself and the tools to be used by holding the metal part of the tool and touching part of the body just before starting work.

The resistance in switches, cables and terminals should be 0 ohms. There is sometimes some resistance in connections due to oxidation.

If resistance is too great there will be function problems. The magnitude of the resistance before it causes a malfunction depends on the circuit load. A guideline would be a few ohms.

NOTE: When taking readings from the female connector it is important to position a replacement part between the female connector and the measuring instrument. The replacement part consists of a piece of cable with a cable terminal at one end. Never insert an object into the female connector. There is a risk of damaging the female connector.

Cleaning female socket terminals and male pin terminals

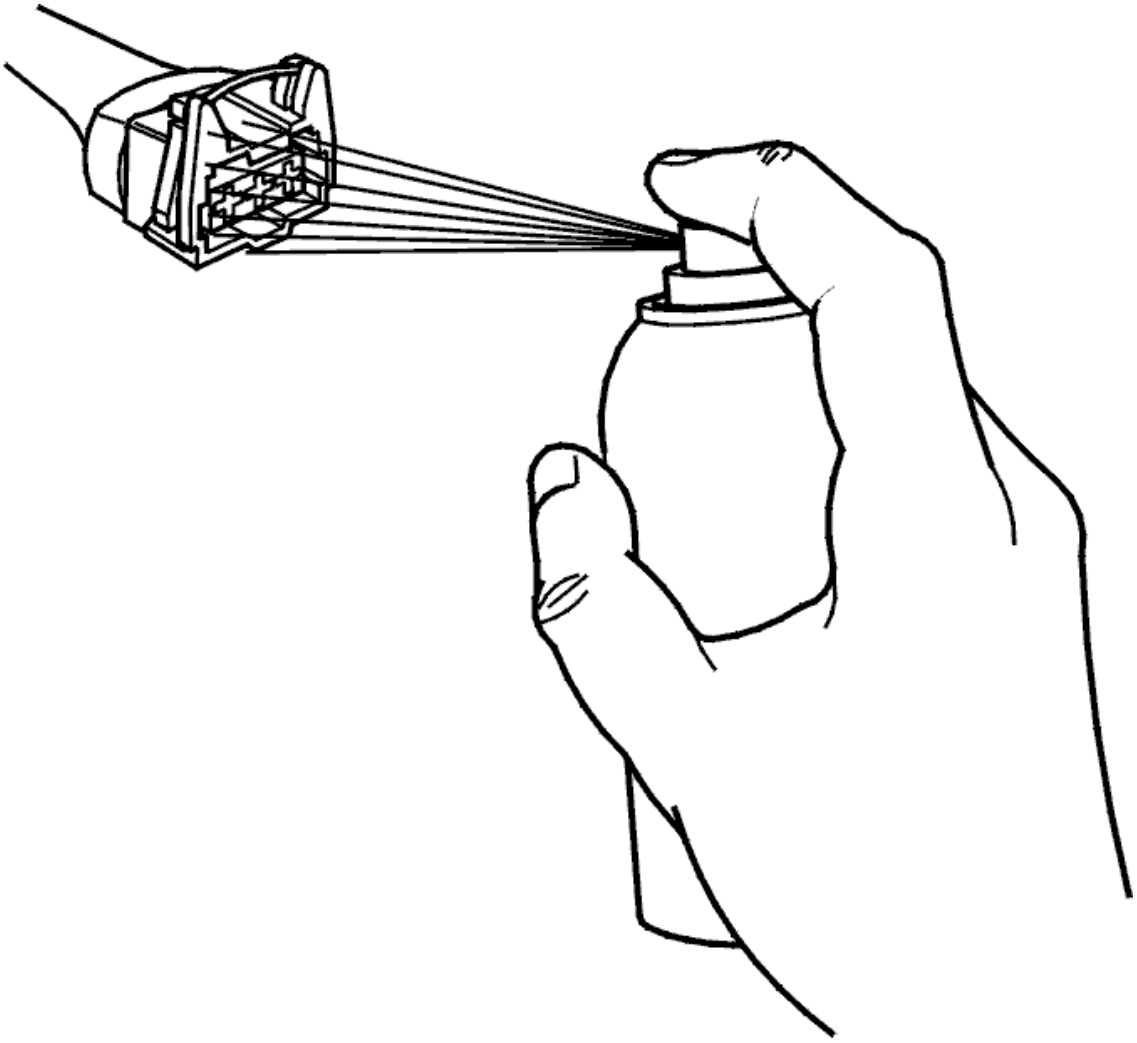

Fig. 8: Apply Rust Solvent Spray Or Grease To Connectors
Courtesy of VOLVO CARS CORPORATION

NOTE: **Do not apply rust solvent spray or grease to the catalyst monitor sensor or instrument cluster connectors.**

- Ignition off
- Disconnect the battery negative terminal
- Use compressed air to clean the disconnected connector
- Apply rust solvent spray 1161422 to the disconnected connectors
- Blow clean using compressed air.

Greasing female terminals

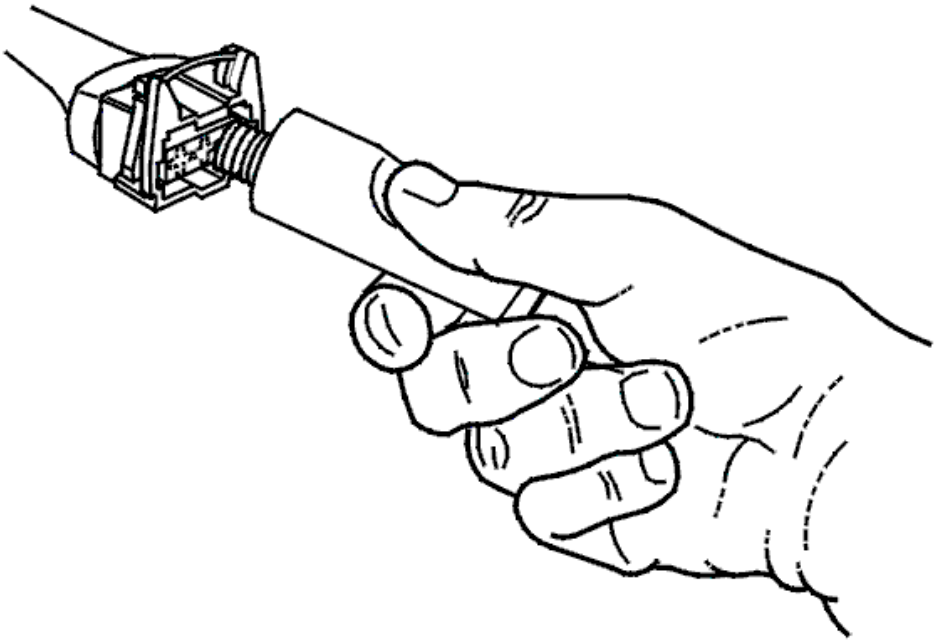

Fig. 9: Identifying Grease Pressed Into Terminals
Courtesy of VOLVO CARS CORPORATION

NOTE: Do not fill the protective cover with grease.

- Press grease, P/N 1161417-9, into the terminals directly from the tube
- Check that all the cavities in the connectors are filled
- Use a loose male pin to ensure that contact in sockets is good. The pin should remain in position when pulled gently.

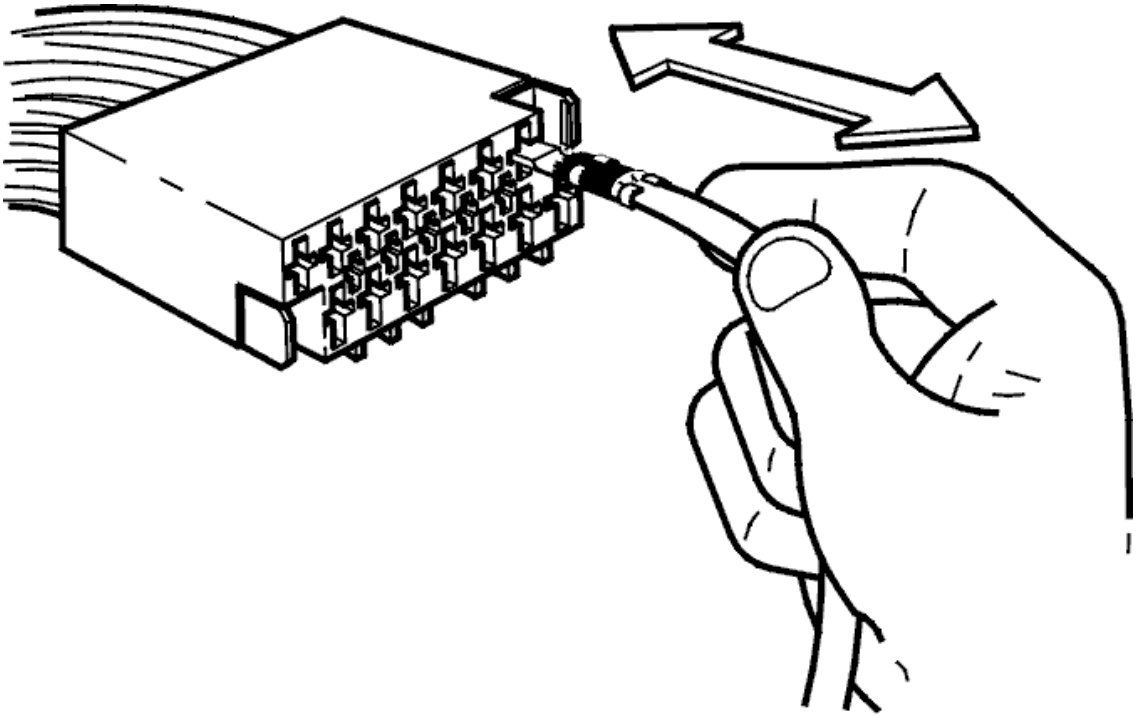

Fig. 10: Checking To Ensure Contact In Sockets Is Good
Courtesy of VOLVO CARS CORPORATION

INTERMITTENT FAULT-TRACING

The reason the car is in the workshop is because the customer has experienced abnormalities with the car. The symptoms experienced by the customer does not always coincide with a permanent fault. The fault might not occur when the customer arrives at the workshop but occurs on a single occasion.

In order to deduce the fault type is important to check the symptoms reported by the customer:

- How does the car behave? Is the car difficult to start, are the gears hard to shift, does the tachometer flicker etc.
- What are the circumstances when the fault occurs? under heavy load, is it dependent on the weather, outside temperature, on uneven roads, when making sharp turns, only when the engine is cold, under hard braking etc.

It is important to interview the customer about the surrounding circumstances in the event of a fault.

It may be an advantage to simulate the driving conditions for when the symptom occurs and carry out an analysis and deduce the fault. By deducing the fault, the symptom can be remedied so that the fault does not recur.

When a diagnostic trouble code (DTC) has been stored the freeze frames are also stored. These can be used to recreate the driving conditions for the diagnostic trouble code (DTC).

Tools:

- Reading off freeze frames, read off the freeze frame data for the relevant diagnostic trouble code (DTC)
- Status identifier, read off the status of the selected diagnostic trouble code (DTC)
- The counter indicates, amongst other things, how many fault free cycles have been carried out since the diagnostic trouble code (DTC) was stored.

INTERMITTENT ELECTRICAL FAULT

An intermittent electrical fault can be caused by faults in the wiring, components or connectors.

Possible fault causes for intermittent electrical faults are:

- Damaged terminal pins in the connector
- Loose connections in the connectors
- Poor ground connection (oxidation)
- Moisture, poor connections in the connector
- Defects, cracking, damage on the components
- Strong magnetic or other interference that has affected the control modules.

INTERMITTENT FUNCTIONAL FAULTS

Intermittent functional faults could be caused by mechanical defects in the components.

- Cracked or blocked hoses
- Incorrect oils, fluids
- Incorrect fuel
- Sticking mechanical components.

INTERMITTENT INTERNAL FAULTS

Intermittent internal faults could be due to:

- Electromechanical interference
- Power supply too low
- Oxidized ground terminal for the control module
- Defective internal components.

INTERMITTENT COMMUNICATION PROBLEMS

Intermittent communication problems could be due to:

- Electromechanical interference
- Oxidation/loose connections in the connectors
- Defective signal cables.

SIMULATING FAULT CAUSES

A large amount of input data is a required to recreate and simulate fault occurring circumstances.

Certain cases can be difficult to recreate. High speed driving and stalling to achieve high loads is not recommended.

In order to achieve high loads accelerate hard in quick succession a number of time instead.

Cases that are possible to simulate:

- high load
- moisture
- heat
- cold
- loose connections.

High load

High load can be simulated by accelerating hard repeatedly.

Moisture

Moisture can be simulated by spraying water on the suspected faulty component or connector using a spray bottle or hose.

Heat

Heat can be simulated by using a hot air gun or similar to heat up a suspected faulty component or connector.

In order to achieve a high engine temperature allow the engine to idle at a high load with the hood down to prevent air flowing through the engine compartment. Run the engine in hot conditions. Read off the engine coolant temperature (ECT) using VIDA, the temperature gauge in the combined instrument panel is progressive.

Cold

Cold can be simulated by cooling down the suspected faulty component or connector using a freeze spray.

Loose connections

Loose connections can be simulated by twisting and shaking the connector whilst the function is activated.

INTERMITTENT FAULT-TRACING (2003-12)

INTERMITTENT FAULT-TRACING

The reason the car is in the workshop is because the customer has experienced abnormalities with the car. The symptoms experienced by the customer does not always coincide with a permanent fault. The fault might not occur when the customer arrives at the workshop but occurs on a single occasion.

In order to deduce the fault type is important to check the symptoms reported by the customer:

- How does the car behave? Is the car difficult to start, are the gears hard to shift, does the tachometer flicker etc.
- What are the circumstances when the fault occurs? under heavy load, is it dependant on the weather, outside temperature, on uneven roads, when making sharp turns, only when the engine is cold, under hard braking etc.

It is important to interview the customer about the surrounding circumstances in the event of a fault.

It may be an advantage to simulate the driving conditions for when the symptom occurs and carry out an analysis and deduce the fault. By deducing the fault, the symptom can be remedied so that the fault does not recur.

When a diagnostic trouble code (DTC) has been stored the freeze frames are also stored. These can be used to recreate the driving conditions for the diagnostic trouble code (DTC).

Tools:

- Reading off freeze frames, read off the freeze frame data for the relevant diagnostic trouble code (DTC)
- Status identifier, read off the status of the selected diagnostic trouble code (DTC)
- The counter indicates, amongst other things, how many fault free cycles have been carried out since the diagnostic trouble code (DTC) was stored.

INTERMITTENT ELECTRICAL FAULT

An intermittent electrical fault can be caused by faults in the wiring, components or connectors.

Possible fault causes for intermittent electrical faults are:

- Damaged terminal pins in the connector
- Loose connections in the connectors
- Poor ground connection (oxidation)
- Moisture, poor connections in the connector
- Defects, cracking, damage on the components
- Strong magnetic or other interference that has affected the control modules.

INTERMITTENT FUNCTIONAL FAULTS

Intermittent functional faults could be caused by mechanical defects in the components.

- Cracked or blocked hoses

- Incorrect oils, fluids
- Incorrect fuel
- Sticking mechanical components.

INTERMITTENT INTERNAL FAULTS

Intermittent internal faults could be due to:

- Electromechanical interference
- Power supply too low
- Oxidized ground terminal for the control module
- Defective internal components.

INTERMITTENT COMMUNICATION PROBLEMS

Intermittent communication problems could be due to:

- Electromechanical interference
- Oxidation/loose connections in the connectors
- Defective signal cables.

SIMULATING FAULT CAUSES

A large amount of input data is a required to recreate and simulate fault occurring circumstances.

Certain cases can be difficult to recreate. High speed driving and stalling to achieve high loads is not recommended.

In order to achieve high loads accelerate hard in quick succession a number of time instead.

Cases that are possible to simulate:

- high load
- moisture
- heat
- cold
- loose connections.

High load

High load can be simulated by accelerating hard repeatedly.

Moisture

Moisture can be simulated by spraying water on the suspected faulty component or connector using a spray bottle or hose.

Heat

Heat can be simulated by using a hot air gun or similar to heat up a suspected faulty component or connector.

In order to achieve a high engine temperature allow the engine to idle at a high load with the hood down to prevent air flowing through the engine compartment. Run the engine in hot conditions. Read off the engine coolant temperature (ECT) using VIDA, the temperature gauge in the combined instrument panel is progressive.

Cold

Cold can be simulated by cooling down the suspected faulty component or connector using a freeze spray.

Loose connections

Loose connections can be simulated by twisting and shaking the connector whilst the function is activated.

ACCESSORIES AND EQUIPMENT

Other Electrical Equipment - Cleaning, Inspection And Adjustment

RAIN SENSOR

RAIN SENSOR CHECK (2003-04)

FUNCTION TEST

- Ignition in position 2
- Windshield wiper control stalk in the intermittent wiping position
- Spray water on the outside of the windshield (using a spray bottle) where the rain sensor is positioned
- The rain sensor should start the windshield wiper function and sweep over the windshield
- **HINT: Carry out the function test 3 times.**
- If the check is carried out with continuous sprays of water, the windshield wiper will function until the windshield above the rain sensor is dry.

RAIN SENSOR CHECK (2005-12)

FUNCTION TEST

- Ignition in position II.
- Control lever windshield wiper in resting position.
- Activate the rain sensor function by pressing in the button on the wiper lever. Then the windshield wipers run once back and forth.
- Spray water on the outside of the windscreen (using a spray bottle) where the rain sensor is positioned
- The rain sensor should start the windscreen wiper function and sweep over the windscreen

HINT: Carry out the function test 3 times.

- If the check is carried out with continuous sprays of water, the windscreen wiper will function until the windscreen above the rain sensor is dry.

WINDSHIELD WIPERS

CONTROL LINKS/WIPER MECHANISM, ADJUSTING (2003-12)

ADJUSTMENT

CONTROL ARMS

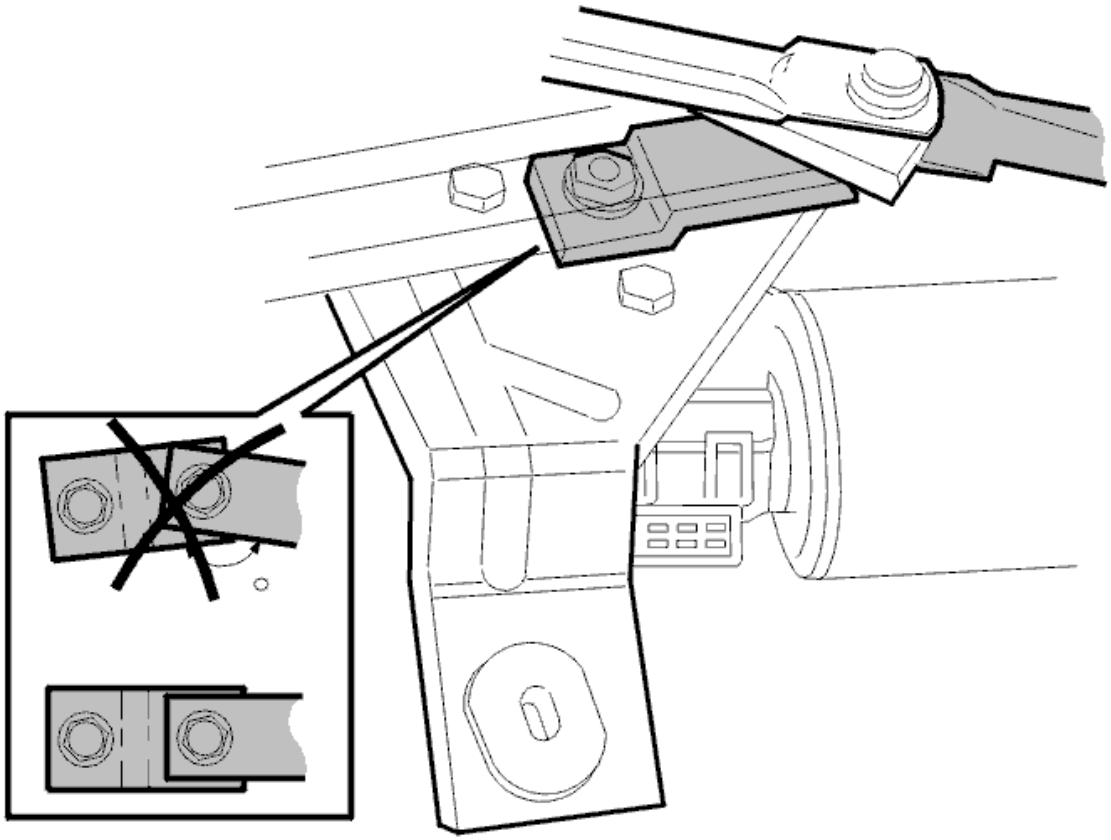

Fig. 1: Adjusting Position Of Crank Link
Courtesy of VOLVO CARS CORPORATION

- Detach the control arms from the link arm
- Remove the nut from the link arm
- Run the motor to the parked position
- Adjust the position of the link arm. The link arm must be parallel with the outer control arm
- Apply thread sealant liquid P/N 9961053-2 to the threads of the motor shaft
- Tighten the nut. Use a 20 mm fixed wrench on the link arm as a counterhold
- Install the control arms
- Test drive the mechanism.

OTHER INFORMATION

To replace windshield wiper components, see **WIPER MECHANISM WINDSHIELD, REPLACING** and **MOTOR WINDSHIELD WIPER, REPLACING** .

WIPER BLADE AND WIPER ARM, ADJUSTMENT (2003-04)

Special tools:

see **9512931**

PREPARATORY WORK

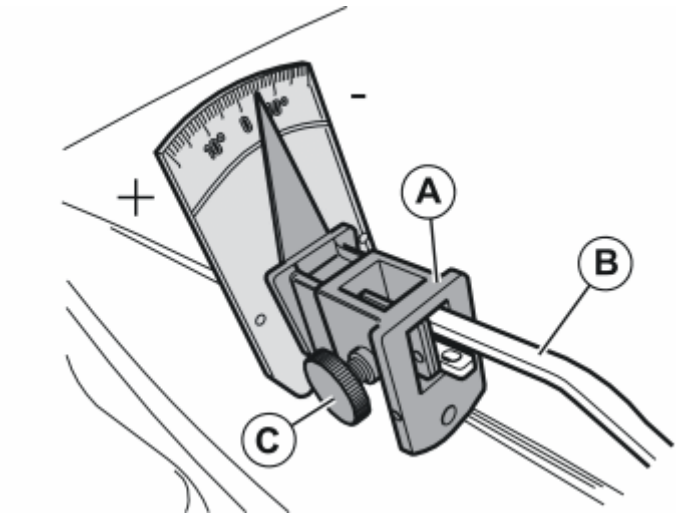

Fig. 2: Identifying Installation Of Tool On Wiper Arm
Courtesy of VOLVO CARS CORPORATION

Check that the wipers are in the parked position. Switch the wipers on and off again with the ignition switched on.

Fold out the wiper arm.

Remove the wiper blade.

Install the tool (A): see **9512931** on the wiper arm (B), as shown.

Tighten the tool (A) to the wiper arm (B) using screw (C).

Fold the wiper arm and tool towards the windscreen.

ADJUSTING THE WIPER ARM

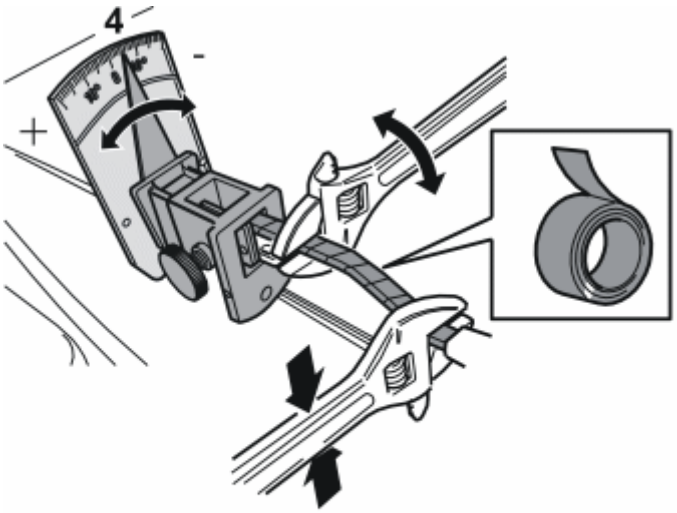

Fig. 3: Adjusting Wiper Arm
Courtesy of VOLVO CARS CORPORATION

Read the angle of the wiper arm to the windscreen from the scale of the tool.

Correct angle:

LHD **- 4°**

RHD + **4°** .

CAUTION: Do not damage the wiper arm surface. Use tape to protect the wiper arm.

Adjust the angle of the wiper arm as necessary. Turn the wiper arm using two wrenches as illustrated.

Fold the wiper arm out and remove the tool.

Install the wiper blade and fold the wiper arm down.

Test the function.

WIPER BLADE AND WIPER ARM, ADJUSTMENT (2005-12)

Special tools
T9512931 PROTRACTOR **Tool number:** T9512931

	Tool description: PROTRACTOR **Tool boards:** EU18-1/1; SV18-1/1; UK99
	T9997237 ADAPTER **Tool number:** T9997237 **Tool description:** ADAPTER **Tool boards:** 30

see **9512931** and see **9997237** .

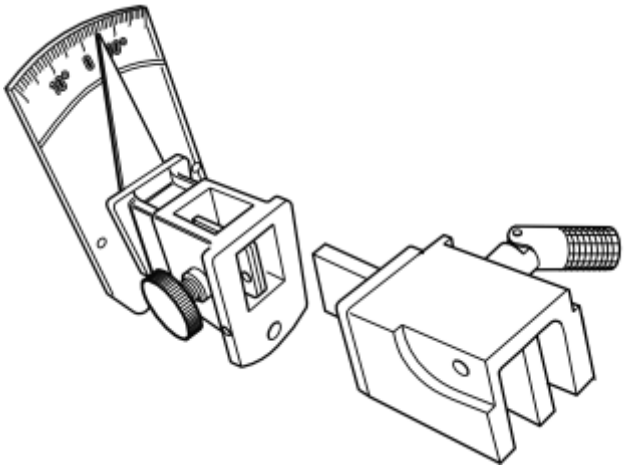

Fig. 4: Identifying Protractor And Adapter Wiper Blade Angle Adjusting Tools
Courtesy of VOLVO CARS CORPORATION

NOTE: Check that the wiper motor is in the parked position.

Remove the wiper blade.

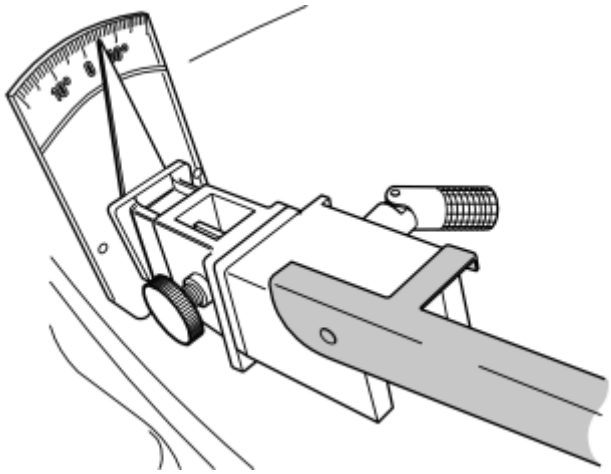

Fig. 5: Identifying Protractor And Adapter Wiper Blade Angle Adjusting Tools And Wiper Blade
Courtesy of VOLVO CARS CORPORATION

S40 and V50, early versions.

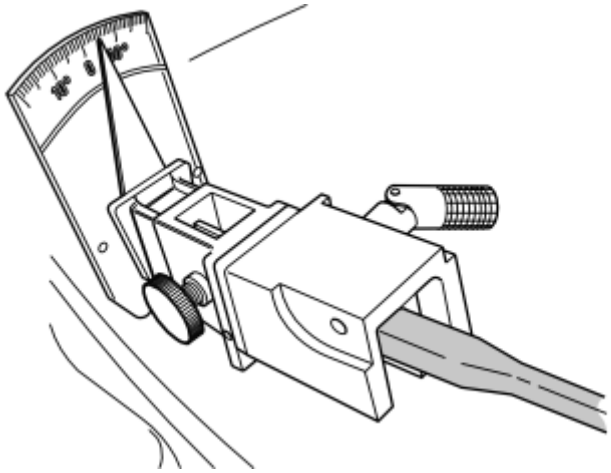

Fig. 6: Identifying Protractor And Adapter Wiper Blade Angle Adjusting Tools And Wiper Blade
Courtesy of VOLVO CARS CORPORATION

Others, model year 05 -.

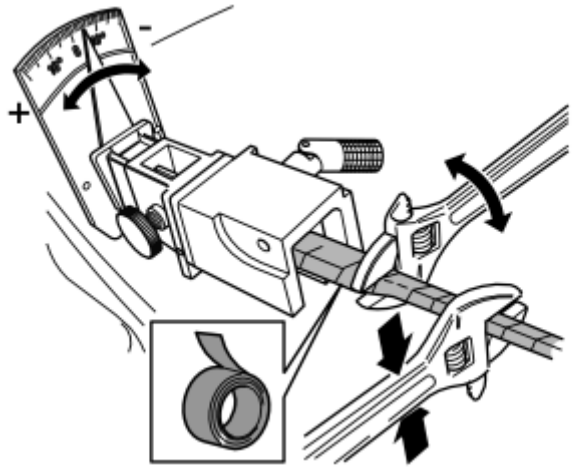

Fig. 7: Adjusting Wiper Blade Angle Using Wrenches
Courtesy of VOLVO CARS CORPORATION

Correct angle:

LHD **- 5°** .
RHD **+ 5°** .

NOTE: It is important that the protractor lies against the window.

CAUTION: Do not damage the wiper arm surface. Use tape to protect the wiper arm.

To install, reverse the removal procedure.

CONTACT REEL DRIVER AIRBAG MODULE

RESETTING

NOTE: **The graphics in this service information are used for different model years and/or models. Some variation may occur. However, the essential information in the graphics is always correct.**

UNSECURING THE CONTACT REEL

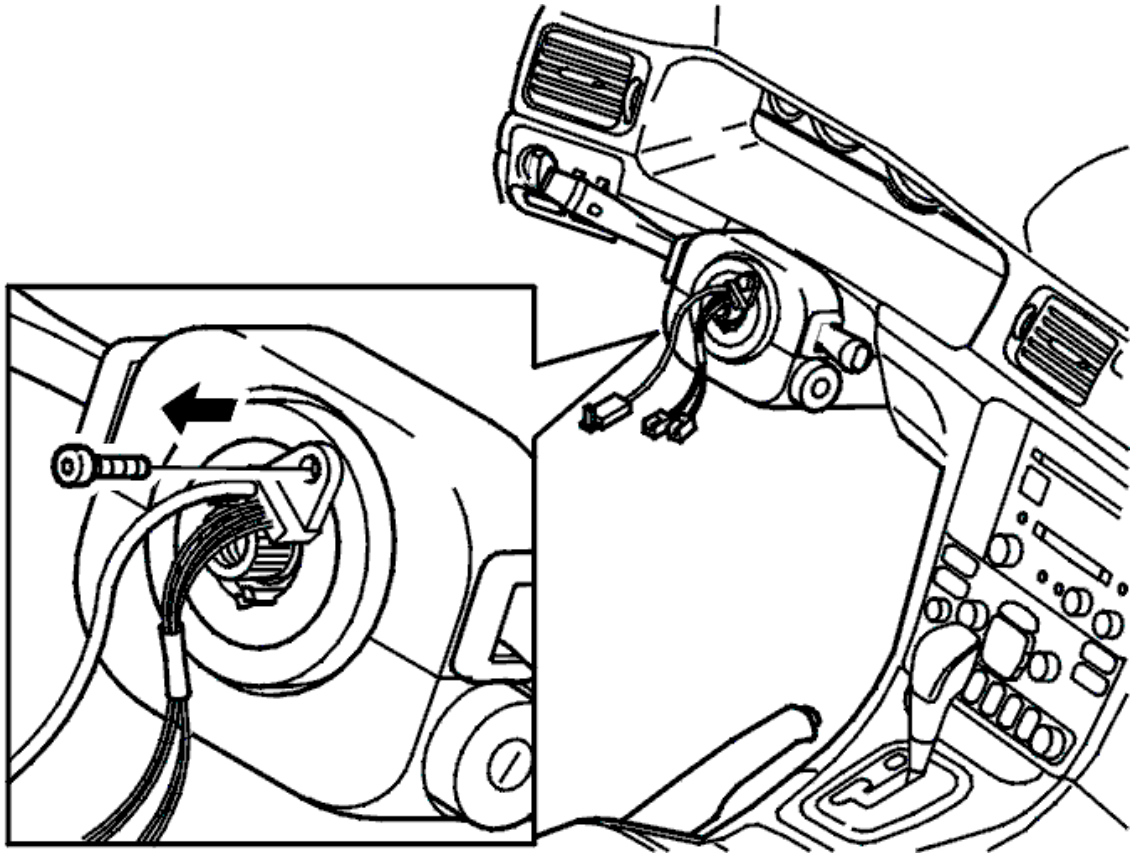

Fig. 8: Identifying Removal Of One Torx 20 Screw
Courtesy of VOLVO CARS CORPORATION

Remove one Torx 20 screw.

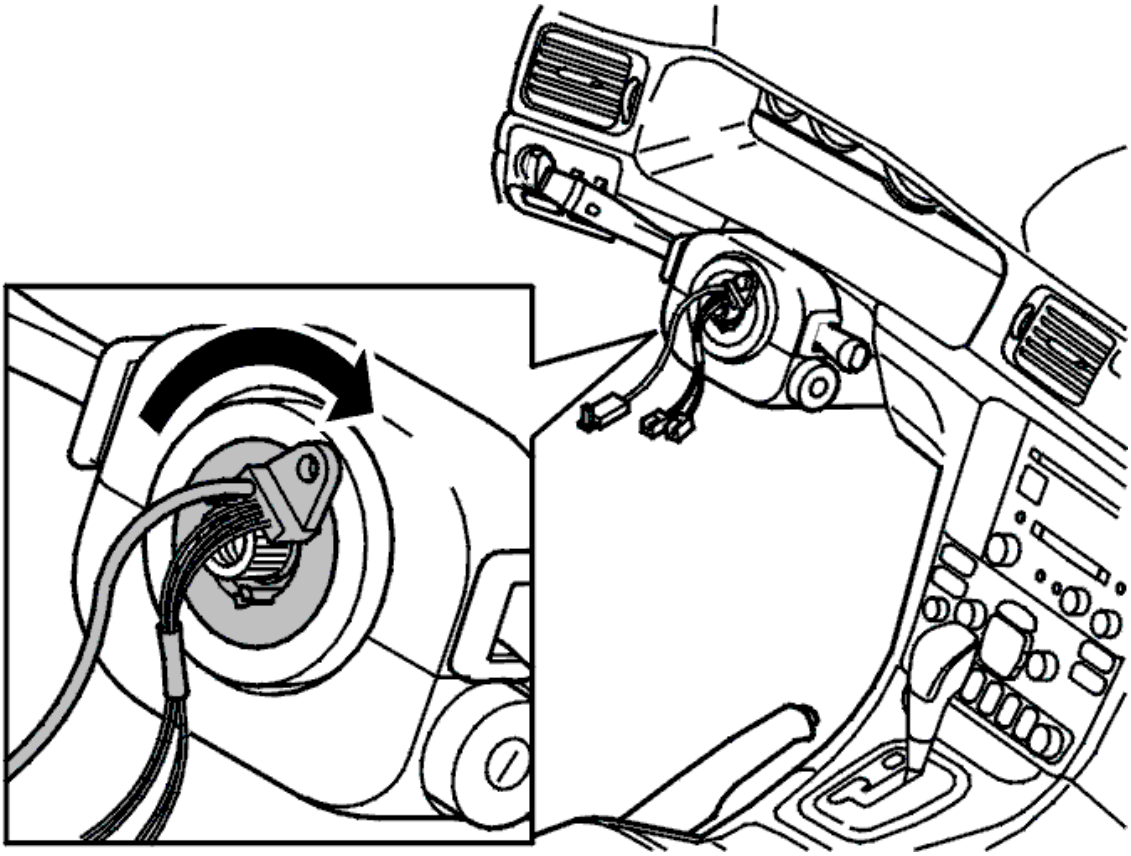

Fig. 9: Identifying Contact Reel Turned Clockwise To Limit Position
Courtesy of VOLVO CARS CORPORATION

Turn the contact reel clockwise to the limit position.

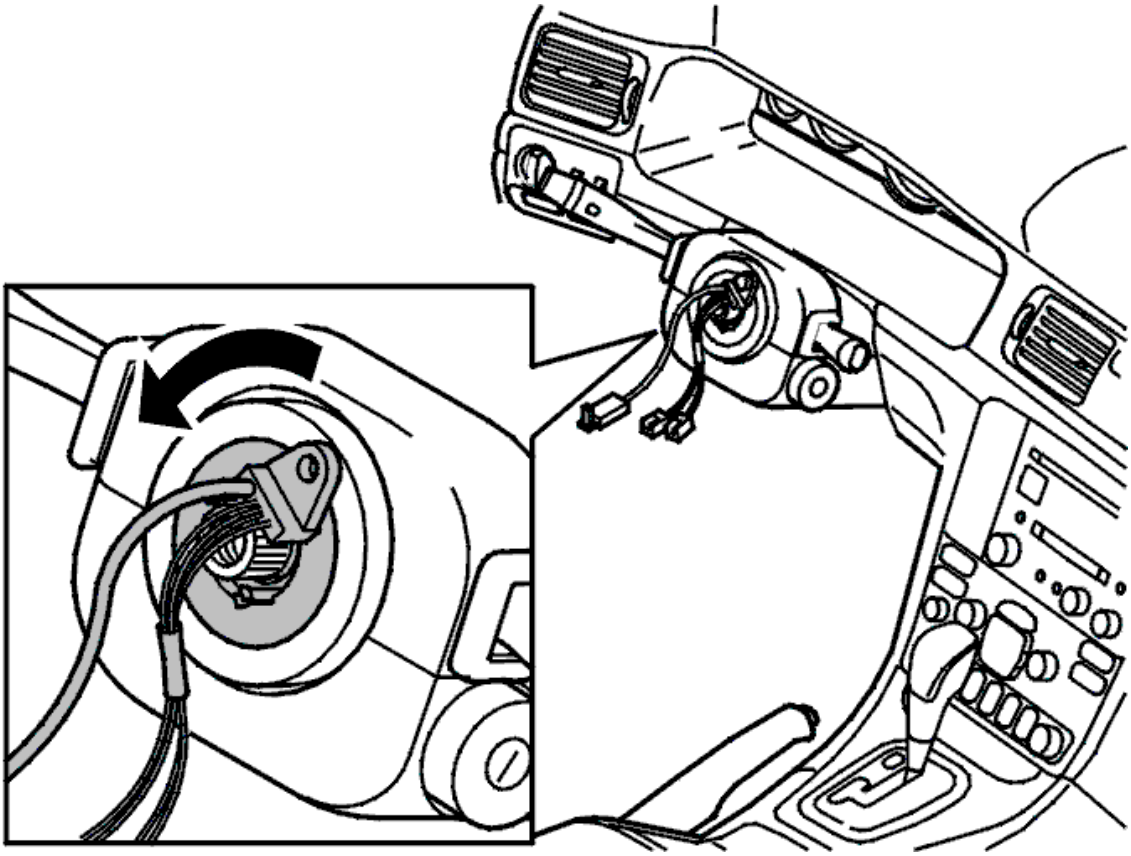

Fig. 10: Identifying Contact Reel Turned Counter-Clockwise Two Entire Turns
Courtesy of VOLVO CARS CORPORATION

Turn the contact reel counter-clockwise two entire turns. Then turn counter-clockwise further until the screw hole is at " one o'clock" as illustrated.

NOTE: On later models, the yellow marking must also be visible in the window.

SECURING THE CONTACT REEL

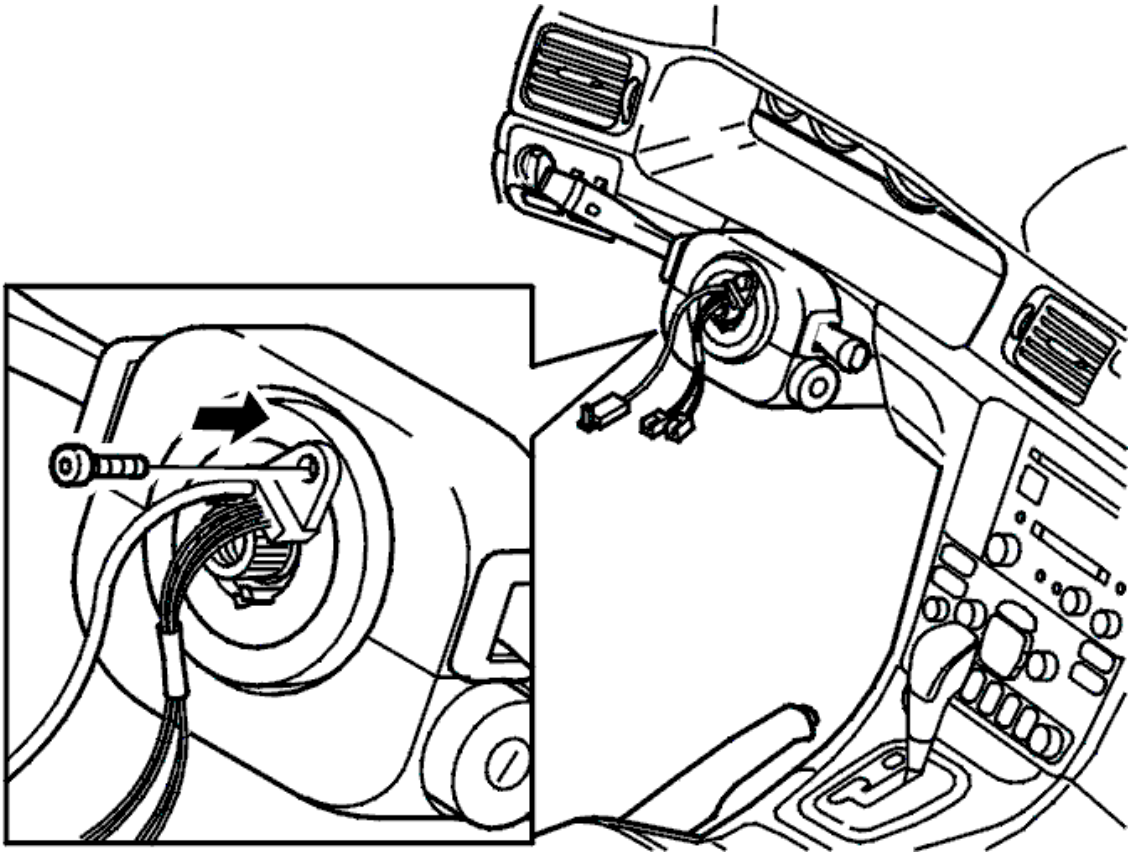

Fig. 11: Identifying Installation Of Screw
Courtesy of VOLVO CARS CORPORATION

Install the screw.

The contact reel is now reset and locked (secured).

ACCESSORIES AND BODY, CAB

Other Electrical Equipment - Component Location

AUTOMATIC MONITORING (2003-2011)

ALARM COMPONENTS

NOTE: **As the illustrations in this service information are used for different model years and / or models, some variation may occur. However, the essential information in the illustrations is always correct.**

Alarm Components

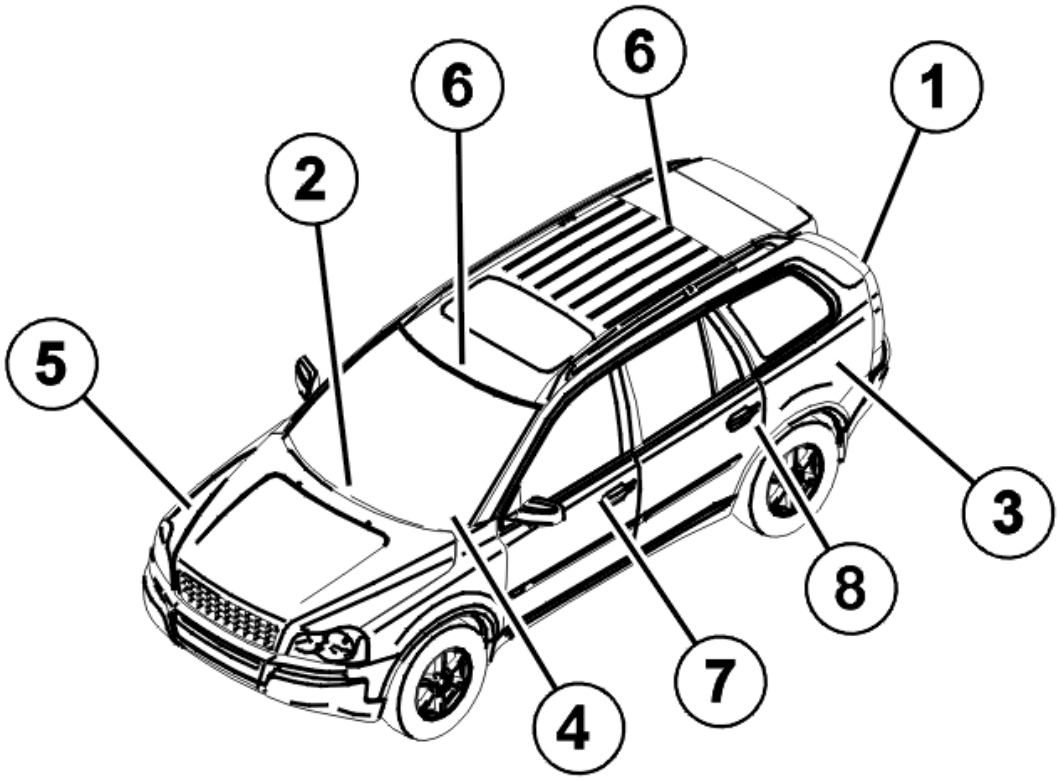

Fig. 1: Locating Lock And Alarm Components
Courtesy of VOLVO CARS CORPORATION

Lock And Alarm Components

1. Lock mechanism, trunk lid and switch, cargo compartment lighting
2. Sun sensor and alarm LED
3. Level sensor for the alarm

4. Immobilizer antenna unit
5. Siren
6. Volume sensor, alarm
7. Front door lock mechanism
8. Lock unit rear door.

ELECTRICAL COMPONENTS (2003-2011)

NOTE: **As the illustrations in this service information are used for different model years and / or models, some variation may occur. However, the essential information in the illustrations is always correct.**

WASHERS

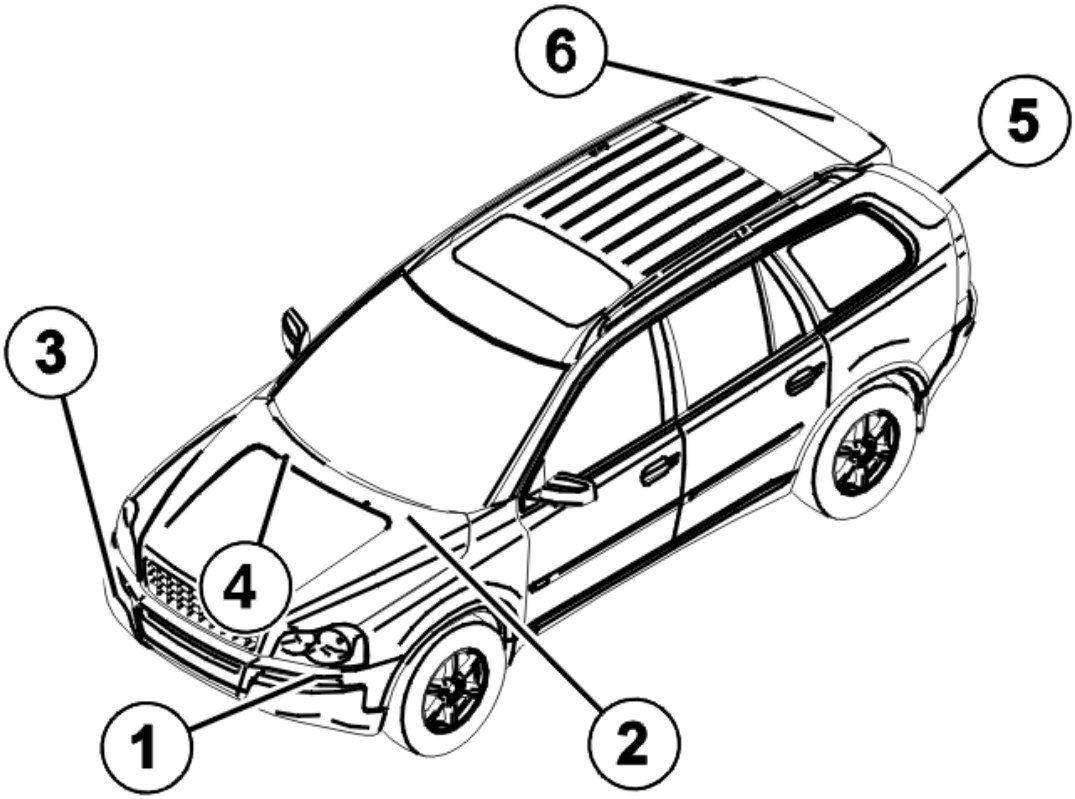

Fig. 2: Locating Cleaner Components
Courtesy of VOLVO CARS CORPORATION

1. High-pressure headlamp washer
2. Windshield wiper mechanism and wiper motor
3. Washer fluid reservoir
4. Windshield washer nozzle

5. Rear windshield wiper motor
6. Rear windshield washer nozzle.

ELECTRICAL CONNECTOR

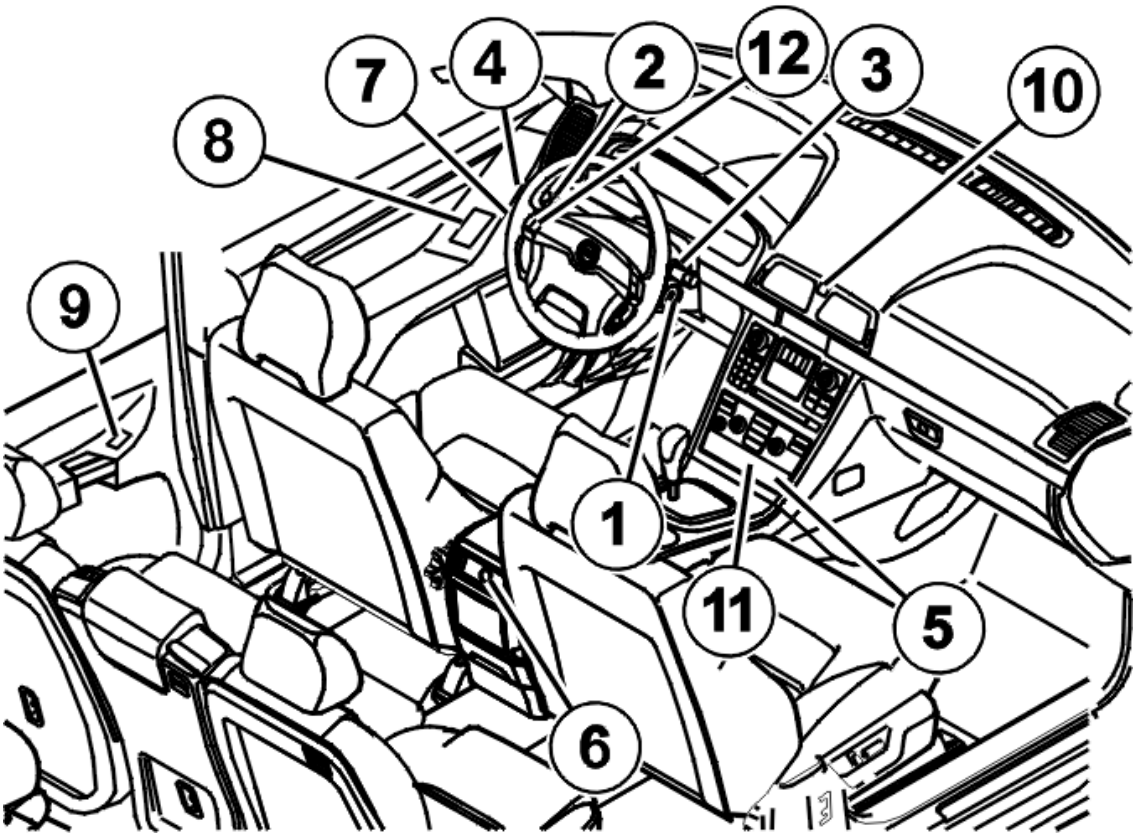

Fig. 3: Locating Electrical Connector Components
Courtesy of VOLVO CARS CORPORATION

1. Start switch
2. Turn signal lamp and dip switch
3. Windshield wiper and washer switch
4. Light switch
5. Front cigarette lighter and electrical socket
6. Rear cigarette lighter and electrical socket
7. Data Link Connector (DLC)
8. Door module, driver's door module and passenger door module
9. Switch power window rear side door
10. Switch for the hazard warning signal flasher
11. Dashboard environment panel switches
12. Keypad in the steering wheel.

AUTOMATIC MONITORING AND HORN

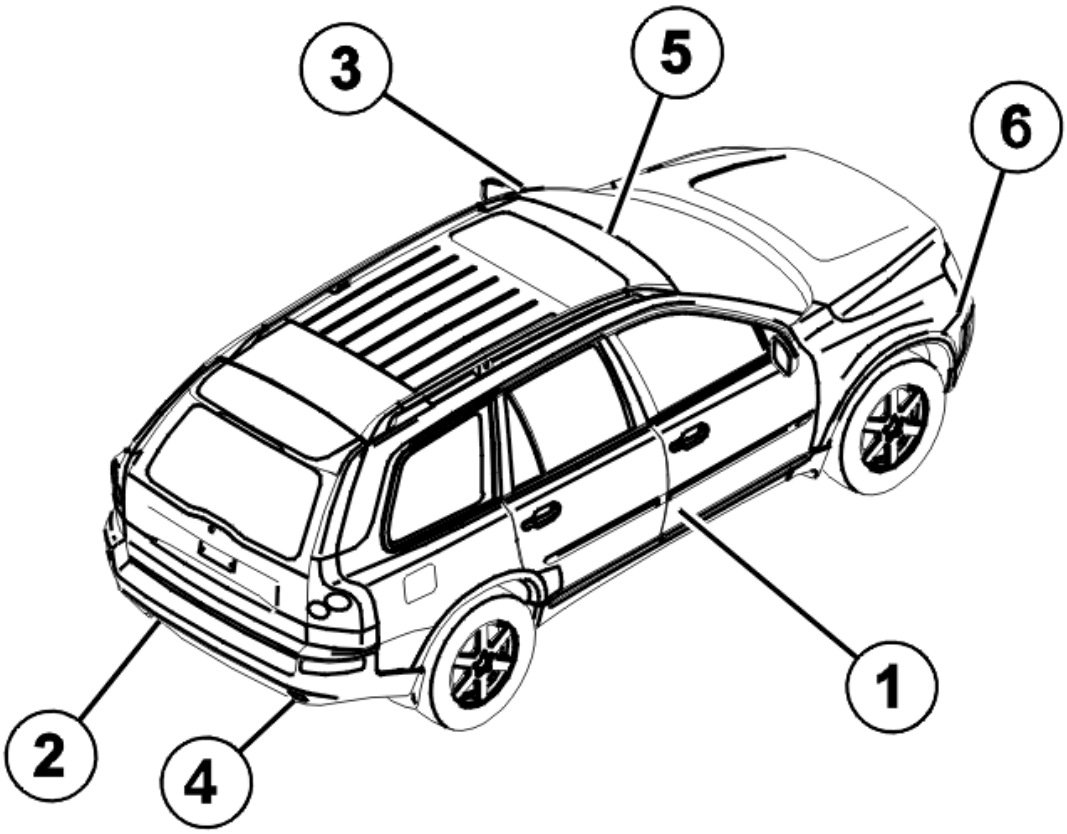

Fig. 4: Locating Automatic Monitoring And Horn Components
Courtesy of VOLVO CARS CORPORATION

1. Active yaw control sensor
2. Position sensor Bi-xenon lamps (rear axle)
3. Outer temperature sensor
4. Sensor back-up (reverse) warning
5. Rain sensor
6. Horn.

ACCESSORIES AND BODY, CAB

Other Electrical Equipment - Design and Function

ALARM (2003-2004)

SIGNALS

see **SIGNALS**

SYSTEM DESCRIPTION

see **SYSTEM DESCRIPTION**

SYSTEM OVERVIEW

see **SYSTEM OVERVIEW**

ALARM (2005-2012)

DESIGN

see **DESIGN**

DIAGNOSTIC FUNCTIONS

see **DIAGNOSTIC FUNCTIONS**

FUNCTION

see **FUNCTION**

SYSTEM OVERVIEW

see **SYSTEM OVERVIEW**

DIAGNOSIS (2003-2012)

BACKGROUND

see **BACKGROUND**

DIAGNOSTIC VERSIONS AND COMMUNICATION METHODS

see **DIAGNOSTIC VERSIONS AND COMMUNICATION METHODS**

DIAGNOSTICS AND SERVICES

see **DIAGNOSTICS AND SERVICES**

INTRODUCTION

see **INTRODUCTION**

PRACTICAL USE OF DIAGNOSTICS

see **PRACTICAL USE OF DIAGNOSTICS**

HEADLAMP WASHER (2003-2012)

HEADLAMP WASHER

see **HEADLAMP WASHER**

IMMOBILIZER (2005-2012)

DESIGN

see **DESIGN**

DIAGNOSTIC FUNCTIONS

see **DIAGNOSTIC FUNCTIONS**

FUNCTION

see **FUNCTION**

SYSTEM OVERVIEW

see **SYSTEM OVERVIEW**

IMMOBILIZER (2003-2004)

DESIGN

see **DESIGN**

DIAGNOSTIC FUNCTIONS

see **DIAGNOSTIC FUNCTIONS**

FUNCTION

see **FUNCTION**

SYSTEM OVERVIEW

see **SYSTEM OVERVIEW**

SOFTWARE DOWNLOADING (2003-2012)

DOWNLOADING SOFTWARE

see **DOWNLOADING SOFTWARE**

GENERAL

see **GENERAL**

ORDERING SOFTWARE PRODUCTS

see **ORDERING SOFTWARE PRODUCTS**

RESETTING CUSTOMER PARAMETERS

see **RESETTING CUSTOMER PARAMETERS**

SOFTWARE PRODUCTS

see **SOFTWARE PRODUCTS**

THE VOLVO CENTRAL DATABASE

see **THE VOLVO CENTRAL DATABASE**

ACCESSORIES AND BODY, CAB

Other Electrical Equipment - Installation Instructions, Accessories

ACCESSORY ELECTRONIC MODULE (AEM) (2003-2012)

ACCESSORY ELECTRONIC MODULE (AEM)

WARNING: The ignition must be in position "0" and the key removed from the ignition switch if any connector in the SRS system is to be unplugged. Then wait at least three minutes and disconnect the battery negative lead before unplugging any of the connectors. When work is completed, the ignition key must be turned to position "II" before reconnecting the battery negative lead.

NOTE: This accessory is connected to the electrical system of the car. It requires software unique to the car.

INSTALLATION

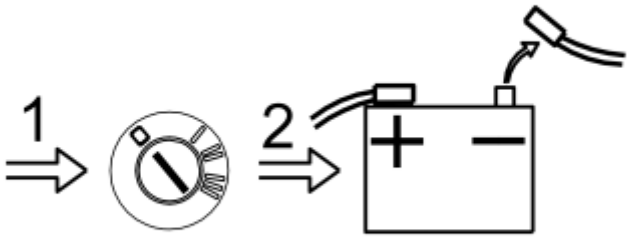

Fig. 1: Disconnect Battery Negative Lead
Courtesy of VOLVO CARS CORPORATION

- Turn the ignition switch to position 0.
- Disconnect the battery negative lead.

NOTE: Wait at least five minutes before disconnecting the connectors or removing other electrical equipment.

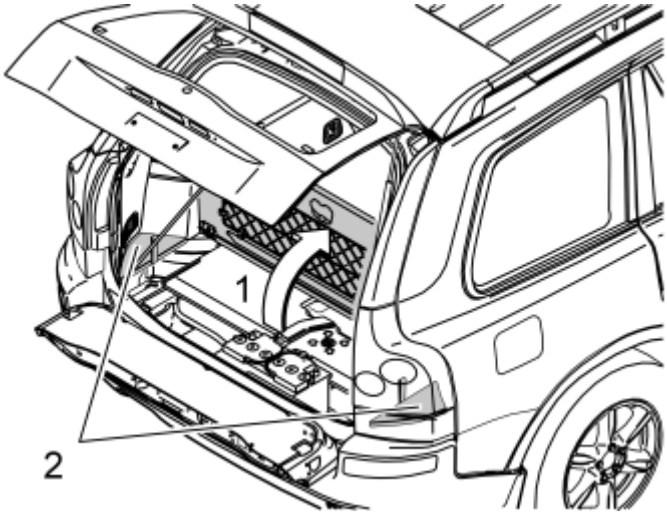

Fig. 2: Removing The Side Floor Hatches
Courtesy of VOLVO CARS CORPORATION

Applies to cars with two rows of seats

- Fold up the center rear floor hatch (1). If the floor hatch is equipped with a grocery bag holder on the underside, it is fixed with a strap on each short side of the storage box. These must be removed.
- Remove the storage box underneath.
- Remove the floor hatch completely by folding it down again almost completely and pulling it rearward out of its mountings.

Applies to cars with three rows of seats and integrated carrier bag holder on the underside of the center floor hatch

- Fold up the center rear floor hatch (1).
- Undo the two straps underneath the panel. Lift up the panel at the rear edge, fold the floor hatch down toward the panel and lift out the floor hatch with panel.

Applies to cars with three rows of seats without an integrated carrier bag holder

- Fold up the center rear floor hatch (1) at the rear edge and lift it out.
- Remove the two side floor hatches (2).

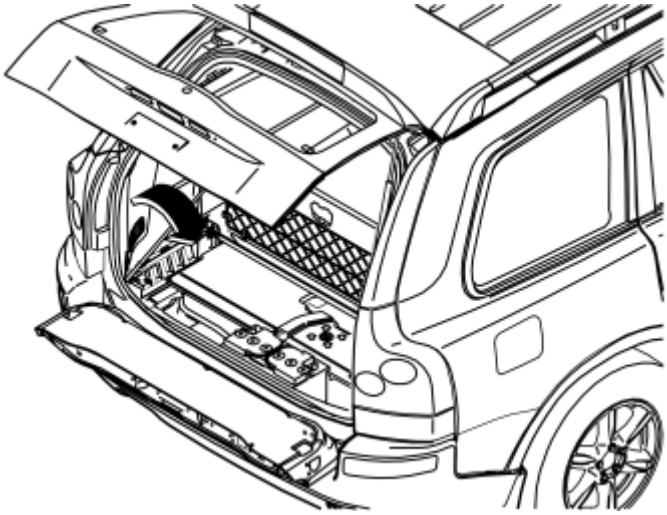

Fig. 3: Identifying Left-Hand Side Folding Side Panel
Courtesy of VOLVO CARS CORPORATION

- Remove the folding side panel from the left and right-hand side of the cargo compartment.

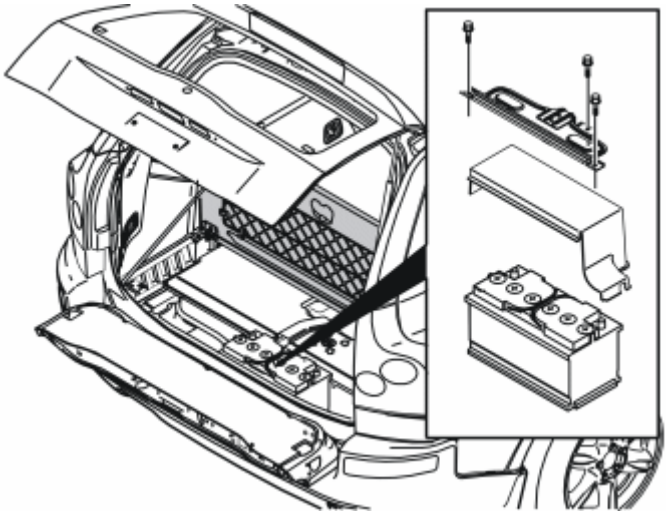

Fig. 4: Removing Three Screws In Battery Holder
Courtesy of VOLVO CARS CORPORATION

- Remove the three screws in the battery holder. Lift the battery holder out
- Remove the battery cover

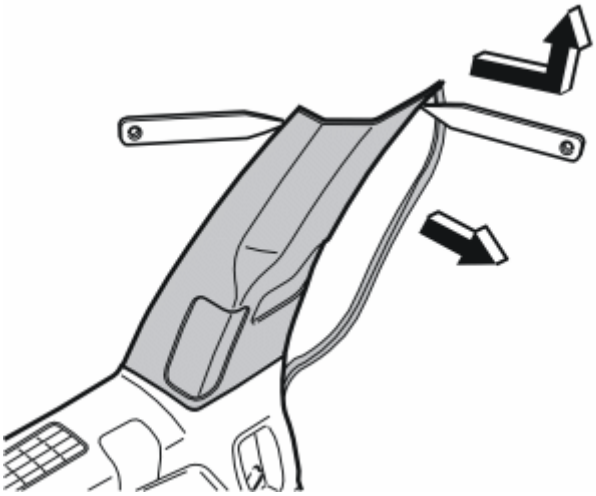

Fig. 5: Identifying Left-Hand C-Post Panel And Plastic Weatherstrip Tools
Courtesy of VOLVO CARS CORPORATION

- Pull off the rubber strip at the rear edge of the door opening for the left-hand rear door opposite the left C-post panel.
- Carefully pry off the left-hand C-post panel sides at the top. Use a plastic weatherstrip tool. Then pull until the three clips on the inside release. Do not damage the headlining or the panel
- If a headphone socket is mounted, disconnect the connector to such.
- Remove the panel by pulling upwards slightly and unhooking it from the side panel.

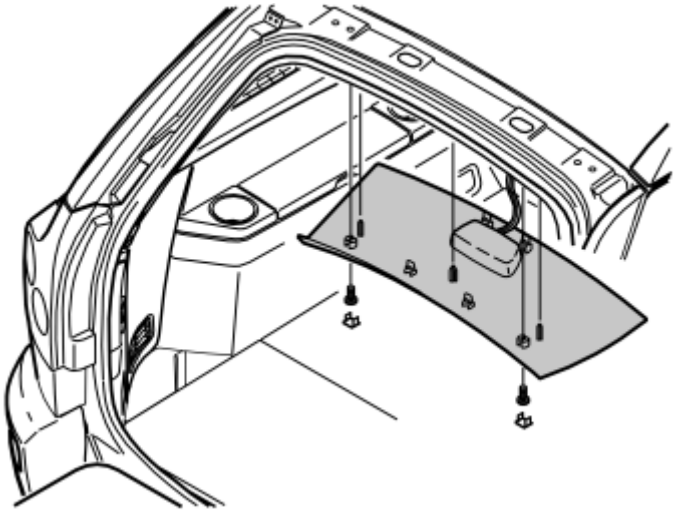

Fig. 6: Identifying Cover And Screws Underneath Rear Headlining
Courtesy of VOLVO CARS CORPORATION

- Remove the rear headlining covers and the screws under them.
- Carefully pry off the panel at the rear edge. Use a plastic weatherstrip tool
- Pull the rear edge of the panel downward until the four clips on the top release.
- If the car is equipped with lighting in the panel, disconnect the connector from such.

- Pull the panel backwards to release it.

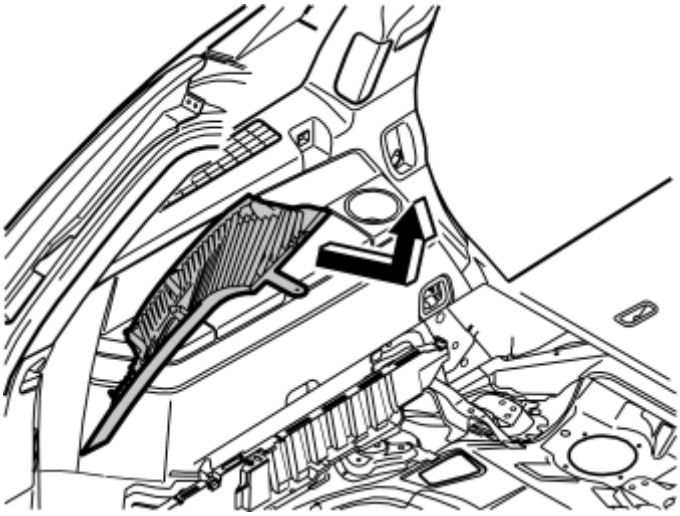

Fig. 7: Identifying D-Post Panel Removal From Side Panel
Courtesy of VOLVO CARS CORPORATION

- Carefully pull off the D-post panel. Start at the top edge then pull down until the three clips on the inside release. Do not damage the panel.
- Disconnect the connector on the D-post panel (if the car has a loudspeaker in the D-post, the connector is in the loudspeaker)
- Remove the panel by pulling upwards slightly and unhooking it from the side panel.

Illustration A shows the removal of the cover for the load securing eyelets

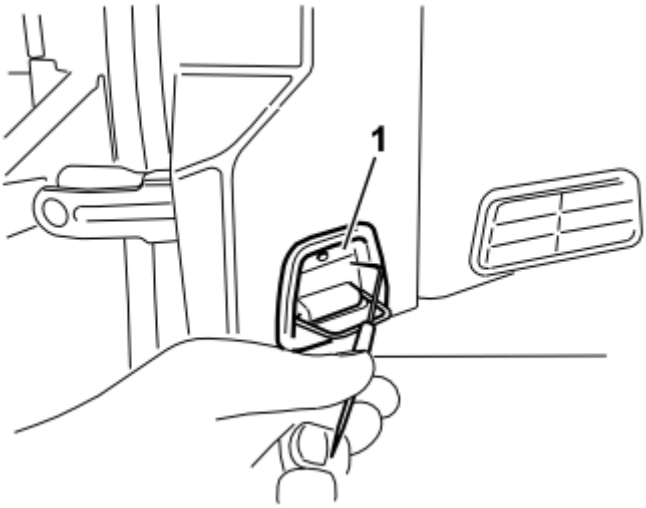

Fig. 8: Identifying Load Securing Eyelet
Courtesy of VOLVO CARS CORPORATION

- Fold out the load securing eyelet
- Insert a scriber with an angled tip into the hole in the top of the cover.

- Turn the scriber so that the angled tip engages in the reverse of the cover (1). Pull the cover off.

Illustration B applies to cars with two rows of seats

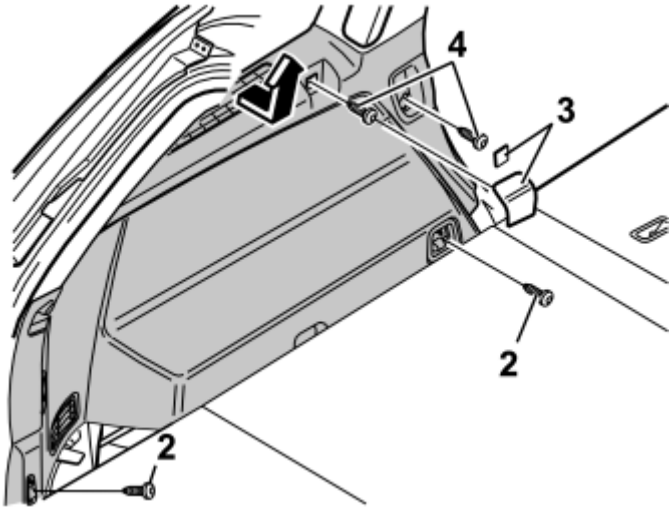

Fig. 9: Cars With Two Rows Of Seats
Courtesy of VOLVO CARS CORPORATION

Illustration C applies to cars with three rows of seats

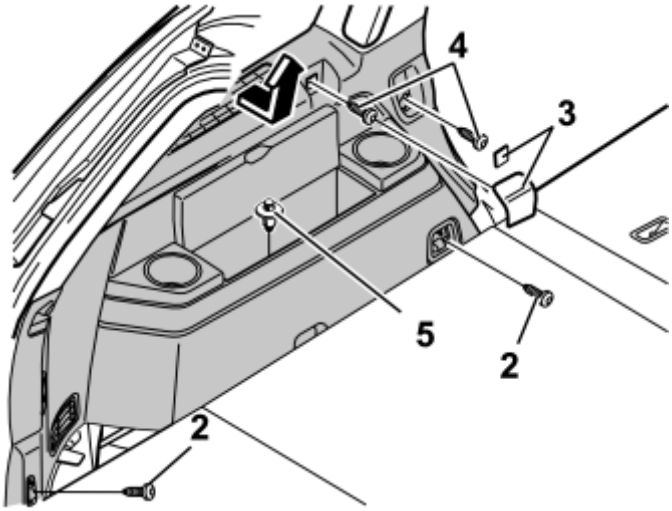

Fig. 10: Cars With Three Rows Of Seats
Courtesy of VOLVO CARS CORPORATION

- Fold up the seats in the third row (applies to cars with three rows of seats)
- Remove the screws (2) for the load securing eyelets in the left-hand side panel
- Remove the covers (3) over the front mountings for the left-hand side panel. Pry the covers off. Use a plastic weatherstrip tool or a small screwdriver
- Remove the screws (4)
- Remove the clip (5) at the bottom of the storage compartment in the panel (applies to cars with three rows

of seats).

- Remove the panel by pulling it out a bit at the top edge so that the clips on the inside release; then pull it straight up.

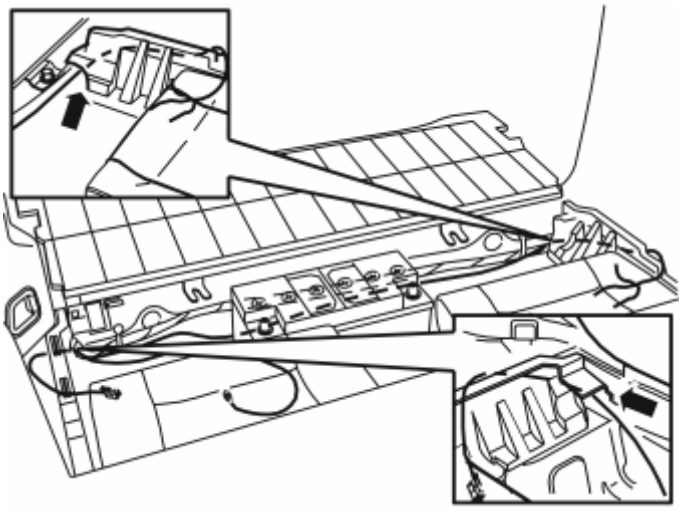

Fig. 11: Positioning The Wiring Harness
Courtesy of VOLVO CARS CORPORATION

- Take the wiring harness from the kit and position it behind the battery. The end with the black connector is drawn through the hole in the rear edge of the right-hand load floor support in to the space in the rear edge of the wheel housing. The other end is drawn in a similar fashion to the fuse box on the left-hand side.

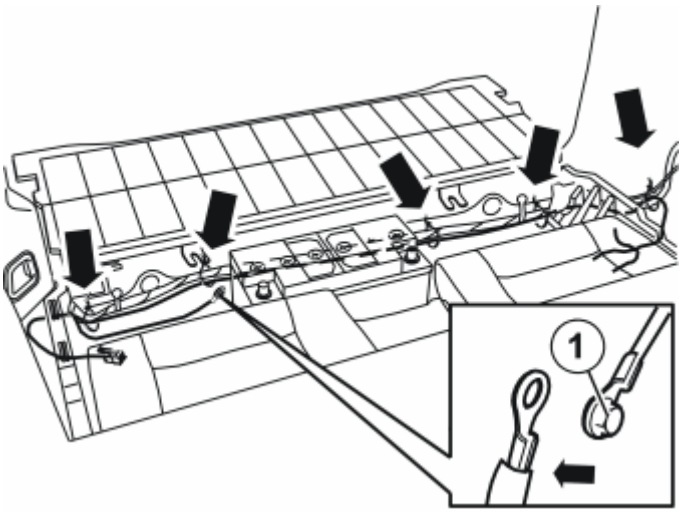

Fig. 12: Securing Wiring Harness With Cable Ties
Courtesy of VOLVO CARS CORPORATION

- Take five cable ties from the kit and secure the wiring harness to the existing wiring harness as illustrated.
- Remove the ground screw and connect the ground lead (1) of the new wiring harness. Tighten the ground screw securely.

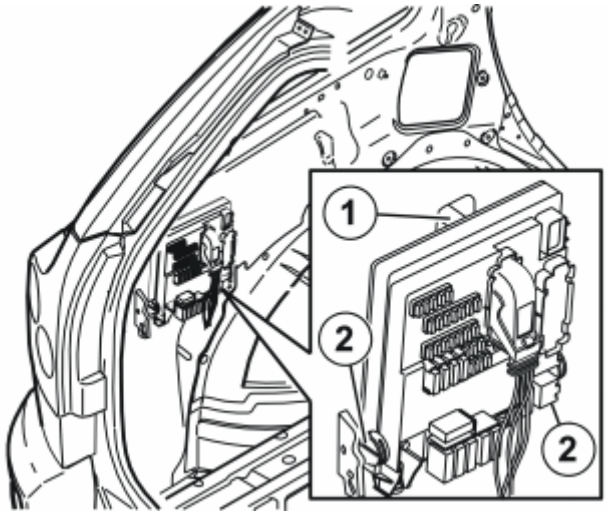

Fig. 13: Removing Rear Electronic Module
Courtesy of VOLVO CARS CORPORATION

- Remove the Rear Electronic Module (REM) by opening the lock (1) on the top of the unit. Tip the unit forward and lift it out of the mountings (2).

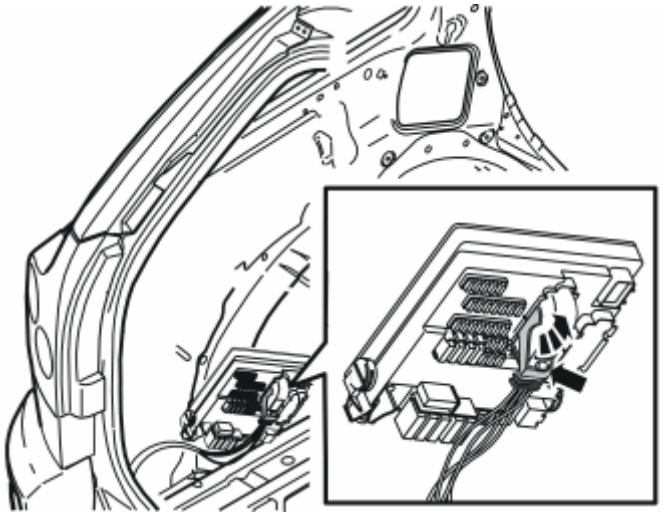

Fig. 14: Removing Connector
Courtesy of VOLVO CARS CORPORATION

- Press in the catch on the rear brown connector in the fuse holder in the cargo compartment, turn the lock arm up as far as it will go and pull out the connector.

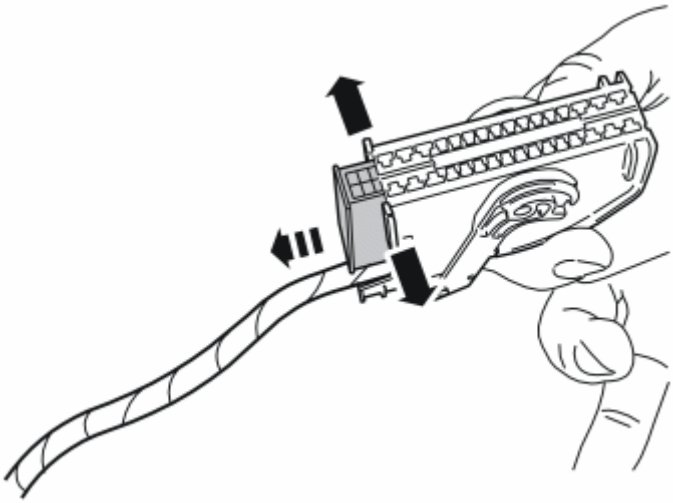

Fig. 15: Prying Apart Sides Of Connector Holder And Pulling Out Connector
Courtesy of VOLVO CARS CORPORATION

- Carefully prise apart the sides of the connector holder in the ends so that the connector can pass by the retaining hooks.
- Pull out the connector.

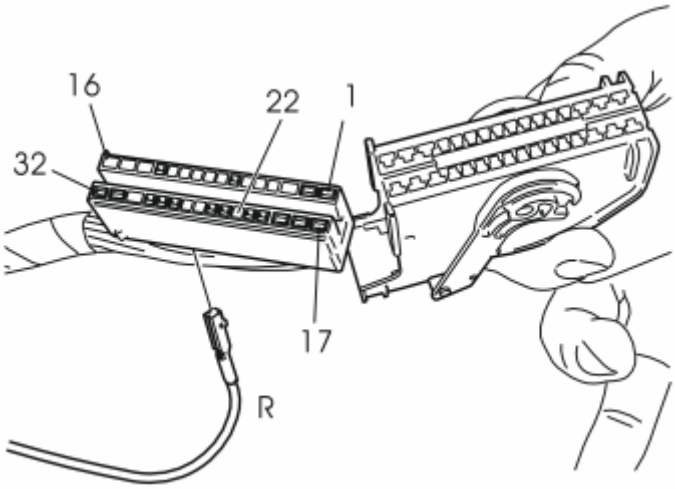

Fig. 16: Identifying Cable, Connector, And Fuse Holder
Courtesy of VOLVO CARS CORPORATION

- Connect the red (R) lead to position 22.
- Reinstall the connector in the holder
- Reinstall the connector in the fuse holder.

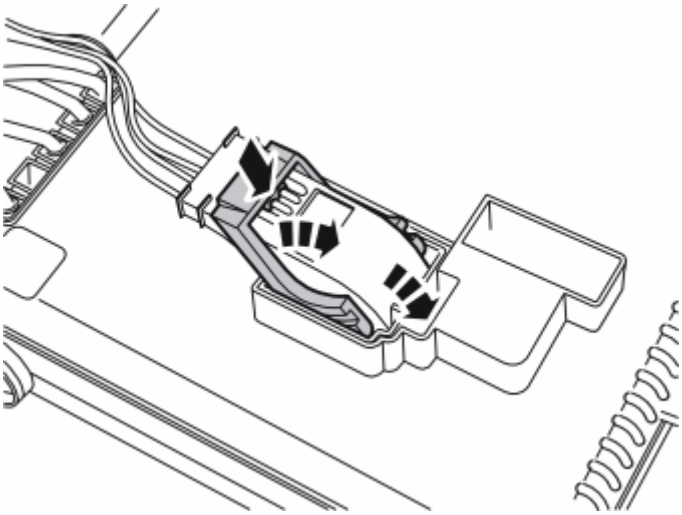

Fig. 17: Identifying Catch On Black Connector On Rear Of Fuse Holder
Courtesy of VOLVO CARS CORPORATION

- Press in the catch on the grey connector on the rear of the fuse holder in the cargo compartment, turn the lock arm up as far as it will go and pull out the connector.

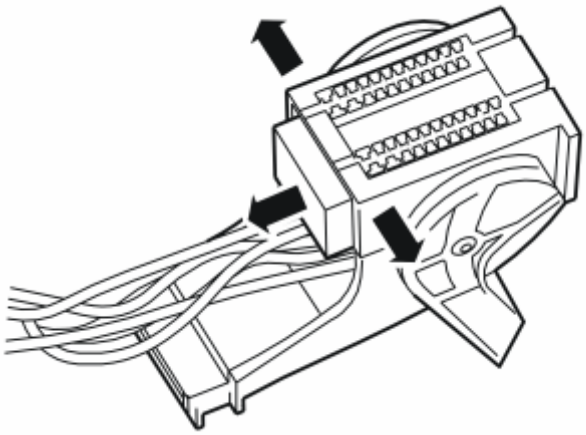

Fig. 18: Identifying Sides Of Connector Holder
Courtesy of VOLVO CARS CORPORATION

- Carefully prise apart the sides of the connector holder in the ends so that the connector can pass by the retaining hooks.
- Pull out the connector.

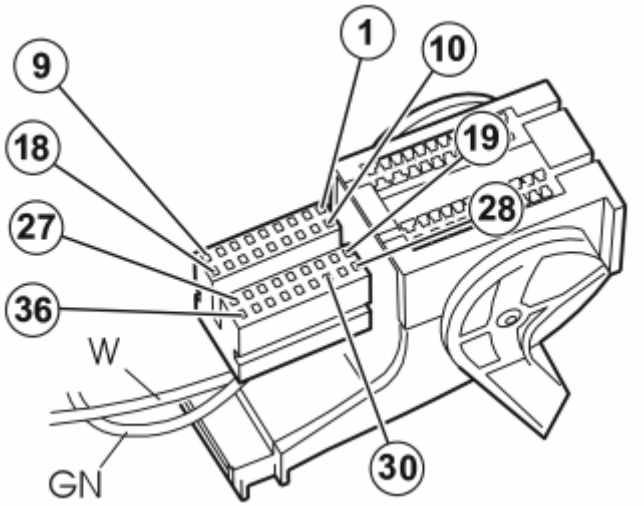

Fig. 19: Identifying Connector Cables
Courtesy of VOLVO CARS CORPORATION

NOTE: **Make a note of the position number of the connector. These are located on the ends of the connector and in the bottom of the fuse holder.**

- Connect the green (GN) lead to position 19 in the connector. Connect the white (W) lead to position 30.
- Reinstall the connector in the holder
- Reinstall the connector in the fuse holder.
- Refit the Rear Electronic Module (REM).

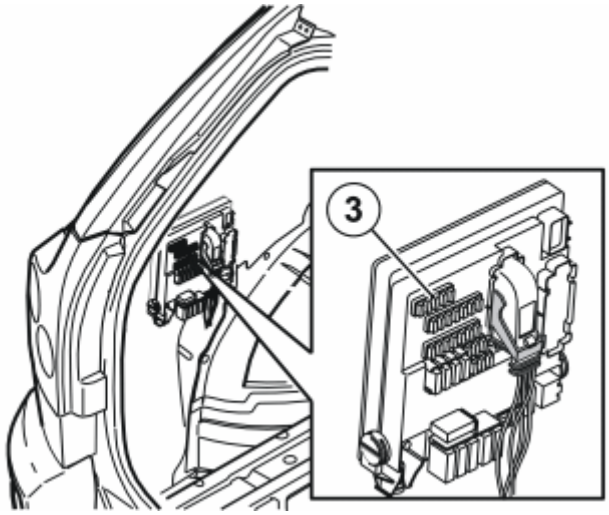

Fig. 20: Identifying Position 3 On The Fuse Holder
Courtesy of VOLVO CARS CORPORATION

- Fit fuse 15A from the kit in position 3 on the fuse holder.

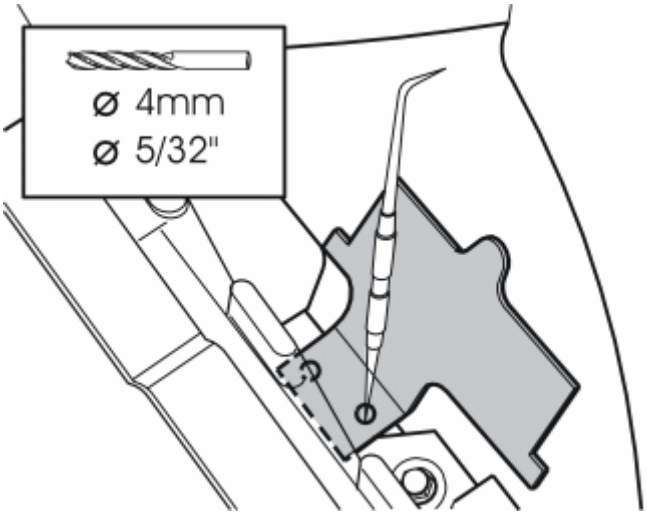

Fig. 21: Identifying Drilling Area And Dimensions
Courtesy of VOLVO CARS CORPORATION

- Remove the bracket from the kit. Position it in the recess on the right rear side member as illustrated.
- Mark out both holes for drilling.
- Drill out the holes. Use a **O4 mm (5/32")** drill bit.
- Remove any shavings.
- Treat the edges of the holes using a rust-proofing agent.

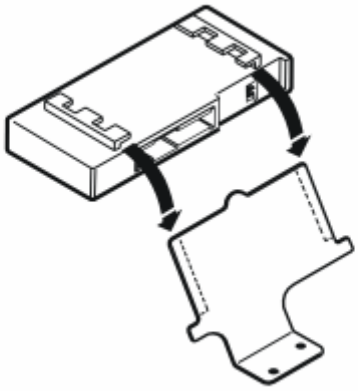

Fig. 22: Installing Control Module Into Bracket
Courtesy of VOLVO CARS CORPORATION

- Press the control module in the bracket.

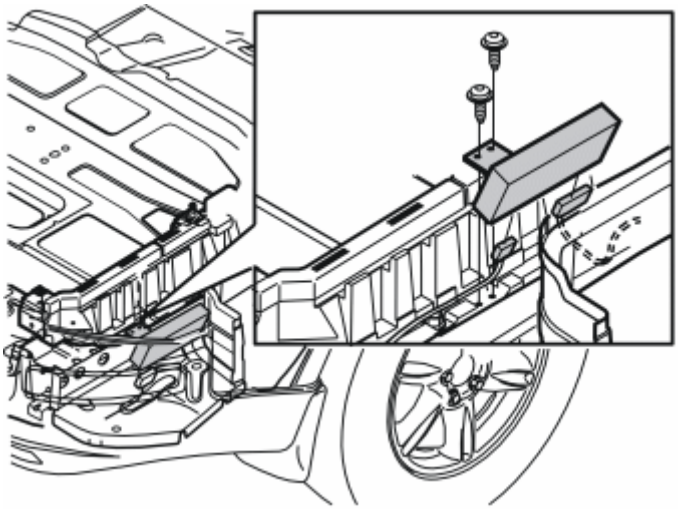

Fig. 23: Removing Panel By Pulling It Straight Up And Unhook It From Side Panel (1 Of 2)
Courtesy of VOLVO CARS CORPORATION

- Connect the routed connector to the control module.
- Position the bracket with control module on the right side of the right floor support over the drilled holes and fasten with the two screws.

Reinstall:

- the left-hand side panel using the screws and cover. Tighten the screws in the load securing eyelets. Tighten to **24 Nm (18 lbf. ft.)** .
- the covers for the load securing eyelets.
- D-post panel with connector.
- the connector for the rear roof lighting (if applicable)
- the rear headlining
- C-post panel.
- Turn the ignition key to position II.

Reinstall:

- the battery negative lead.
- protective cover and bracket for the battery.
- side floor hatches and folding panels.
- storage box and floor hatch.
- Program the software according to the service information in VIDA (Volvo scan tool).

CARS EQUIPPED WITH SRS/SIPS (AIRBAG)

WARNING: **Extra care must be taken when working on cars equipped with SRS/SIPS air bags. This is important to prevent:**

1. Personal injury

2. Damage to or malfunction of the SRS/SIPS system.

Work on the SRS/SIPS systems or related components must always be carried out by an authorized Volvo workshop.

Is the car equipped with SRS (supplemental restraint system)?

Cars equipped with a driver's airbag have the letters "SRS" imprinted on the center panel of the steering wheel. Cars equipped with driver's and passenger airbags are marked with "SRS" on both the steering wheel center panel and also on the dashboard close to the airbag.

If the car is equipped with SIPS (side impact protection system) a "SIPS" decal is marked on both the front seats.

Cars equipped with inflatable curtains have the marking "SRS" on one of the panels along the posts on the inside of the car.

Cars equipped with SRS (supplemental restraint system) also have an "SRS" decal on the front windscreen.

WARNING: **The air bag inflation areas must not be obstructed. Never place any objects, such as upholstery or accessories, within these areas. The panels must be able to open in the correct manner at the right time, otherwise there is an increased risk of personal injury in the event of a collision.**

Do not damage the SRS wiring.

Do not trap, chafe, pierce or damage the SRS wiring. SRS wiring has orange casing and/or is plaited.

Steering and front suspension

The contact reel in the SRS system can easily be damaged when working on the steering wheel, steering shaft or steering gear. Refer to the SRS (supplemental restraint system) Service Manual or service instructions in VIDA (Volvo Scan Tool) for information on carrying out such work. This is to prevent damage.

SRS warning lamp

If the SRS warning lamp lights after repairs have been carried out, take the car to an authorized Volvo workshop.

SUPPLEMENTAL RESTRAINT SYSTEM MODULE, SRS

XC90

The supplemental restraint system module (SRS) is located on the tunnel under the center console, in front of the parking brake.

ALARM SIREN (2003-2012)

ALARM SIREN

NOTE: This accessory requires software unique to the car.

INSTALLATION

- Raise the car
- Turn the wheels to the left.

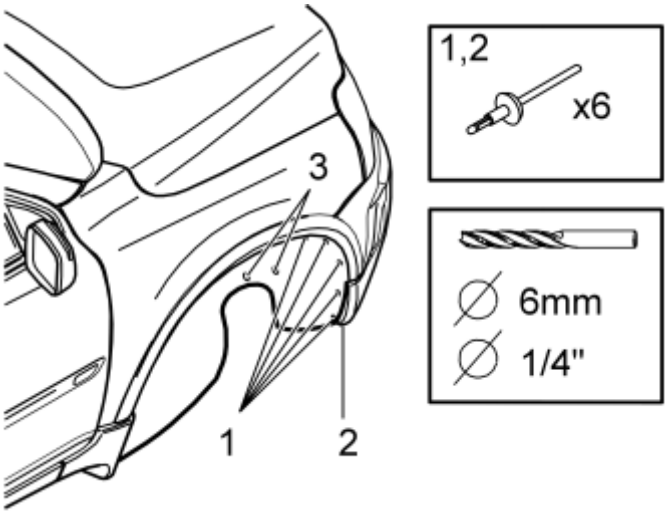

Fig. 24: Drilling Out Rivets
Courtesy of VOLVO CARS CORPORATION

- At the right-hand front wheel: drill out the five rivets (1) holding the wheel arch lining and the rivets (2) in the lower edge of the bumper. Use a **6 mm (1/4")** diameter drill bit.

Remove:

- any rivet remains
- the plastic nuts (3) holding the wheel arch lining in place
- the small protective panel.

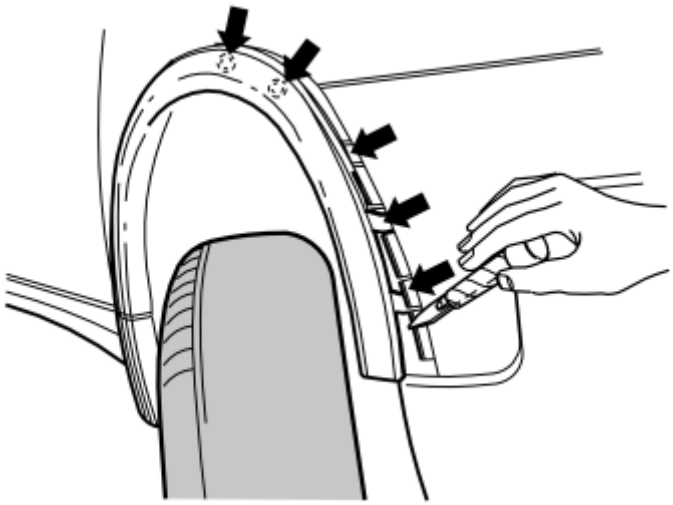

Fig. 25: Removing The Wheel Arch Extension
Courtesy of VOLVO CARS CORPORATION

- Carefully pry off the bottom edge of the wheel arch extension. Use a plastic straightening tool
- Pull off the wheel arch extension up to the highest point of the wheel arch. The three catches at the bottom edge and the two clips a little higher up must release
- Turn the wheels to the right.

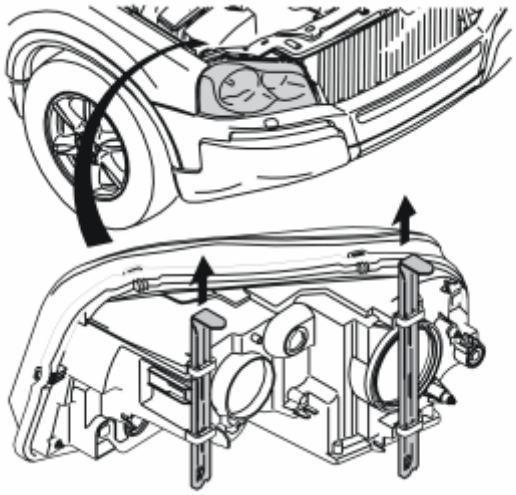

Fig. 26: Removing The Right-Hand Headlamp
Courtesy of VOLVO CARS CORPORATION

- Remove the right-hand headlamp. First pull up the two cotter pins. Then carefully pull the headlamp forward.

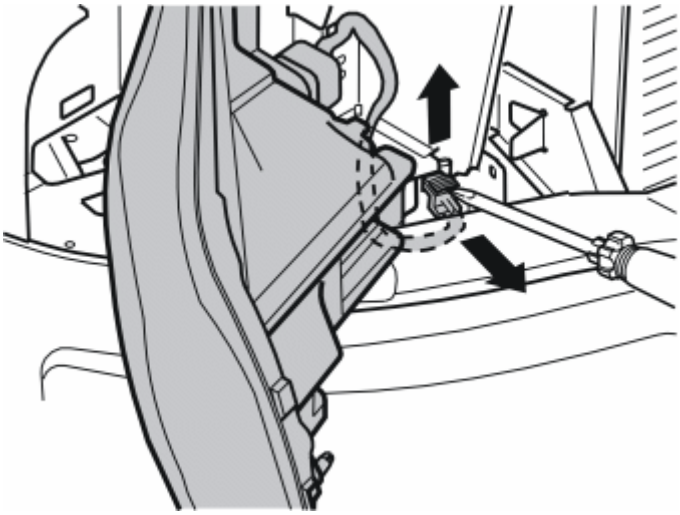

Fig. 27: Removing Headlamp Connect Catch
Courtesy of VOLVO CARS CORPORATION

- Carefully pry up the catch on the headlamp connector. Use a screwdriver
- Pull up the catch completely. Disconnect the connector. Place the headlamp to one side.

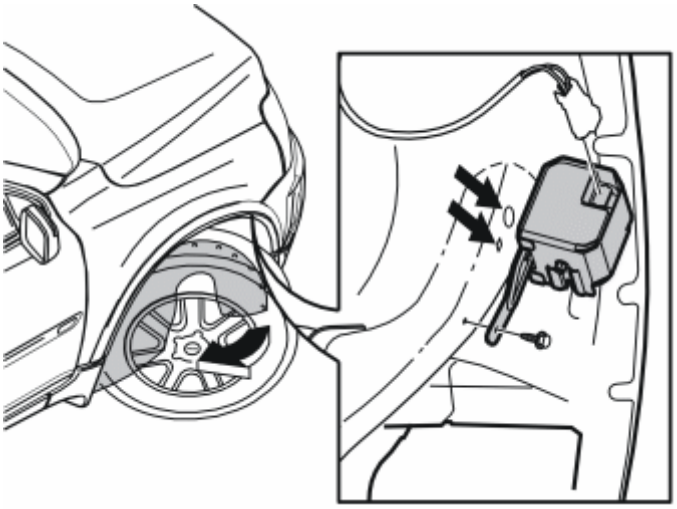

Fig. 28: Installing Siren
Courtesy of VOLVO CARS CORPORATION

- Fold down the front edge of the wheel arch lining towards the brake calliper. Secure it there
- Disconnect the pre-routed connector in the wheel arch
- Insert the upper locating pin for the siren into the upper hole in the wheel arch. Insert the lower locating pin in the lower hole
- Tighten the siren using the screw. Tighten to **10 Nm (7.5 lbf. ft.)**
- Connect the connector to the siren.

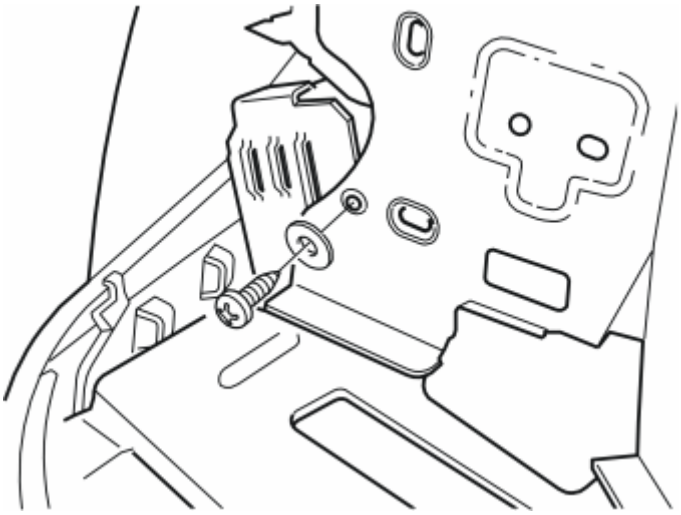

Fig. 29: Securing Siren To Front Cover Plate
Courtesy of VOLVO CARS CORPORATION

- Take the screw and washer from the kit. Secure the siren to the front cover plate through the existing hole
- Connect the connector to the headlamp
- Reinstall the headlamp. Ensure that the short, narrow lock pin is innermost and that the long, wide pin is outermost.

Reinstall:

- the wheel arch lining and the wheel arch extension. Rivet them into place. Use the rivets from the kit
- the small protective panel and the plastic nuts.

BONNET CATCH, REPLACEMENT

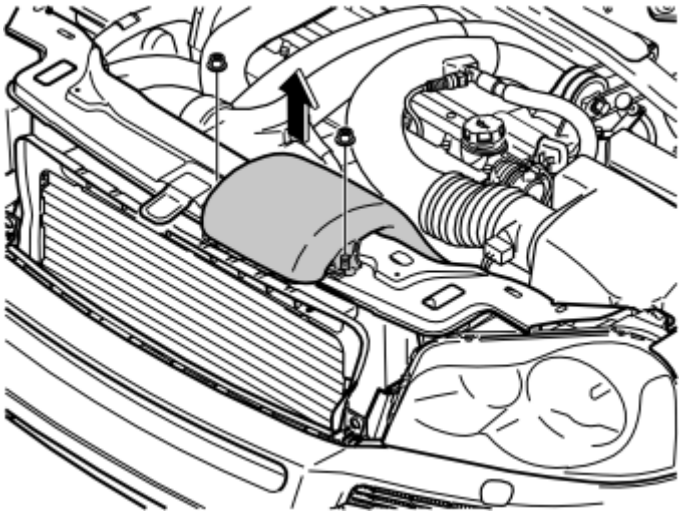

Fig. 30: Removing The Air Baffle
Courtesy of VOLVO CARS CORPORATION

- Remove the air baffle for the air cleaner box. First slacken off the screws. Then pull off the air baffle
- Undo the left-hand headlamp. Apply the same method previously used for the right-hand headlamp.

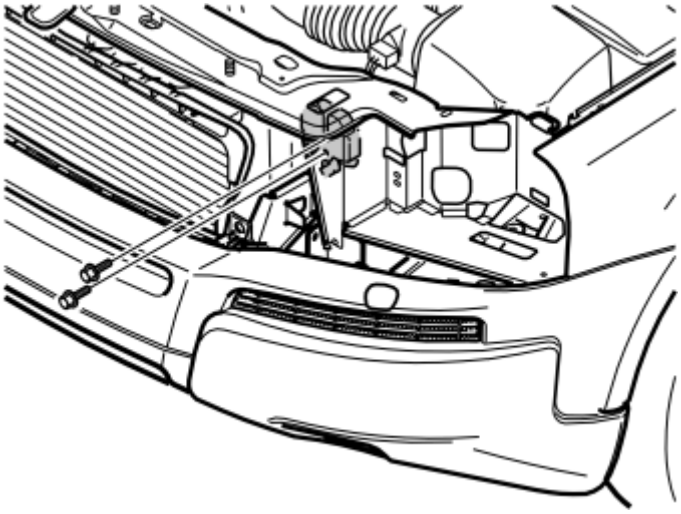

Fig. 31: Removing Screws From Bonnet Catch
Courtesy of VOLVO CARS CORPORATION

- Remove the screws for the bonnet catch.

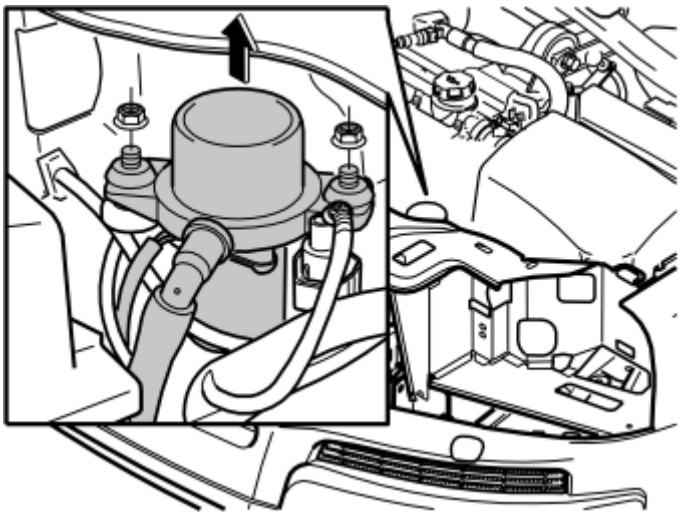

Fig. 32: Removing Vacuum Pump
Courtesy of VOLVO CARS CORPORATION

- Remove the nuts for the vacuum pump. Lift the pump from its mounting
- Fold it to the side.

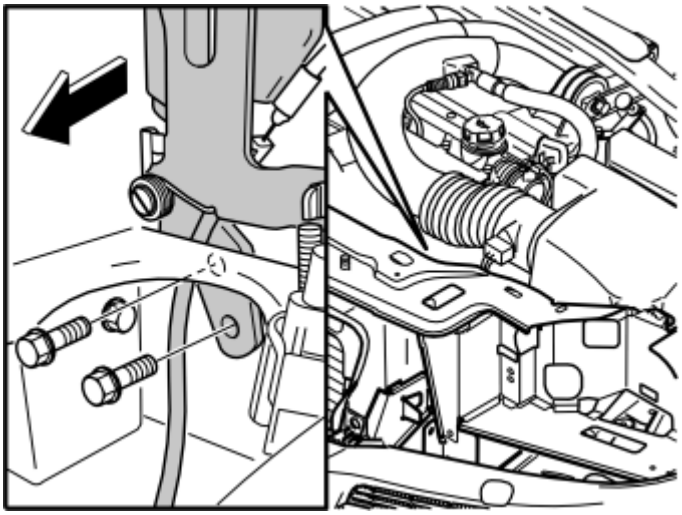

Fig. 33: Removing The Latch Screws
Courtesy of VOLVO CARS CORPORATION

- Remove the screws for the latch. Lift the latch out from the bonnet catch.

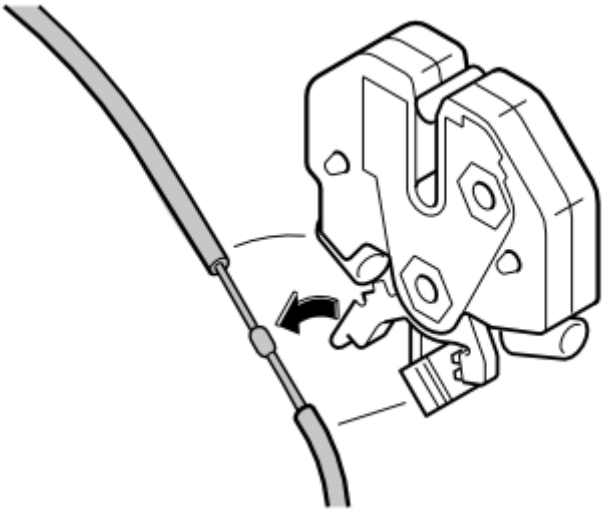

Fig. 34: Unhooking Cable From Bonnet Catch
Courtesy of VOLVO CARS CORPORATION

- Lift the bonnet catch. Unhook the cable from the bonnet catch. NOTE. Note the position of the mechanical lock cable.
- Take the new bonnet catch from the kit. Secure the mechanical cable to the catch in the same way as to the old catch.

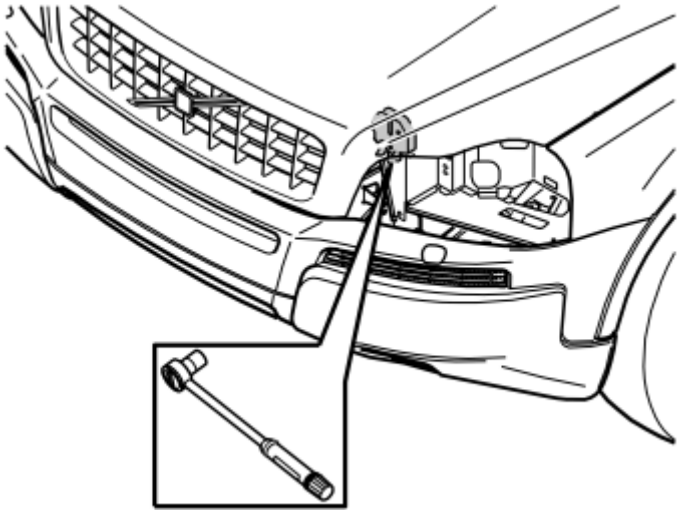

Fig. 35: Installing Bonnet Catch
Courtesy of VOLVO CARS CORPORATION

- Install the bonnet catch with the latch in position. Finger-tighten the screws.

Reinstall:

- the screws for the latch. Tighten the screws. Tighten to **24 Nm (18 lbf. ft.)**
- the vacuum pump. Tighten the nuts fully. Do not damage the rubber bushings
- the air baffle. Tighten the screws. Tighten to **10 Nm (7.5 lbf. ft.)**
- Close the bonnet. Then tighten the screws for the bonnet catch. Tighten to **10 Nm (7.5 lbf. ft.)**
- Open the bonnet. Install the headlamp according to the instruction in point 7.

FINISHING WORK

- Lower the car
- Program the software. See the service information in VIDA (Volvo Scan Tool).
- Check the function.

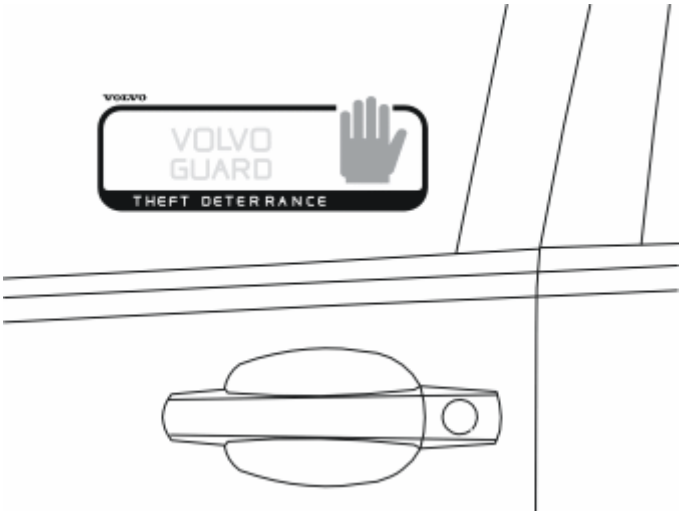

Fig. 36: Installing Decal
Courtesy of VOLVO CARS CORPORATION

- Install the decals on the front side windows.

MOVEMENT SENSOR, ALARM (2003-2012)

MOVEMENT SENSOR, ALARM

NOTE: This accessory requires software unique to the car.

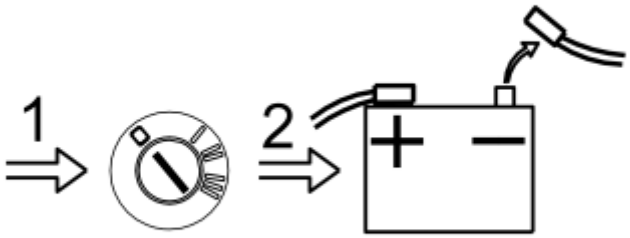

Fig. 37: Disconnect Battery Negative Lead
Courtesy of VOLVO CARS CORPORATION

- Turn the ignition key to position 0
- Disconnect the battery negative lead.

NOTE: Wait at least five minutes before disassembling the connectors or

removing other electrical equipment.

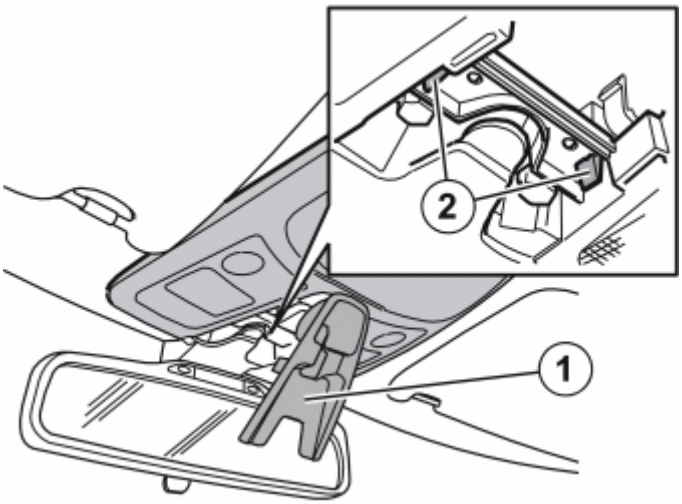

Fig. 38: Folding Down Cover And Squeezing Catches Together
Courtesy of VOLVO CARS CORPORATION

- Fold down the cover (1) by carefully pulling down the front edge of the cover
- Separate the catches (2). Pull down the front edge of the panel and then detach the rear edge.

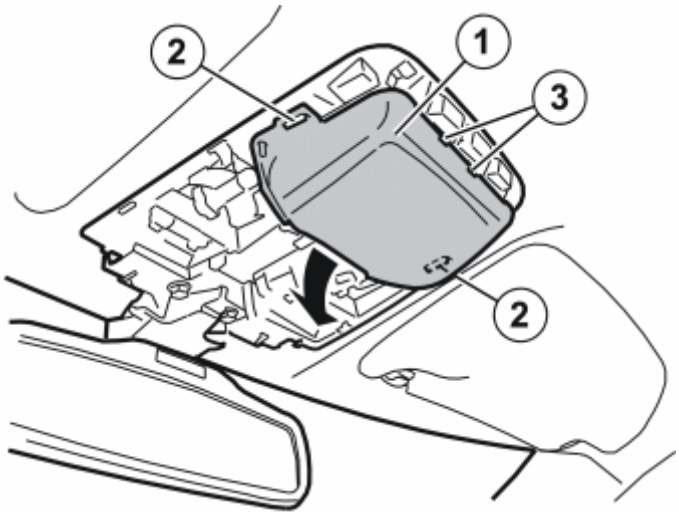

Fig. 39: Removing Front Interior Cover
Courtesy of VOLVO CARS CORPORATION

Applies to cars without a sun roof

- Remove the cover (1). First press out the catches (2) at the sides, fold down the front edge of the cover and then release the catches (3) at the rear edge.

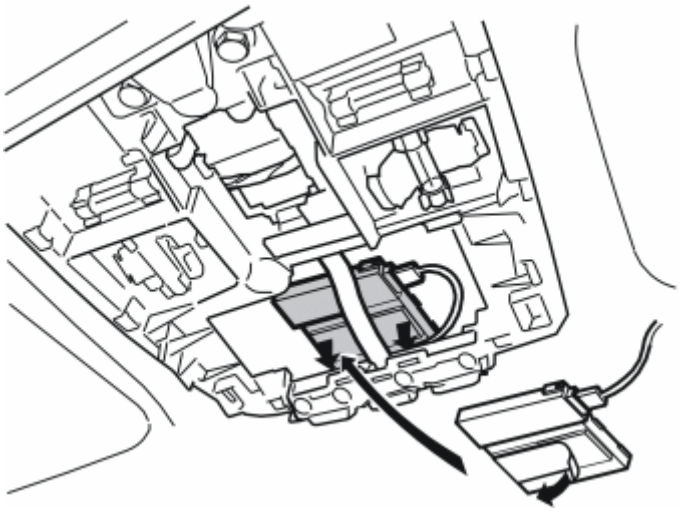

Fig. 40: Installing Sensor
Courtesy of VOLVO CARS CORPORATION

Applies to cars without a sun roof

- Take the sensor with the blue connector from the kit
- Find the existing cable for the movement sensor. The cable is taped to the headlining at the rear edge of the front roof lighting
- Connect the connector for the movement sensor
- Remove the backing from the tape on the movement sensor
- Press the movement sensor into place on top of the headlining slightly in from the edge.

NOTE: The sensor must be installed straight. The sensor must not be turned more than 5 degrees.

- Reinstall the interior lighting panel.

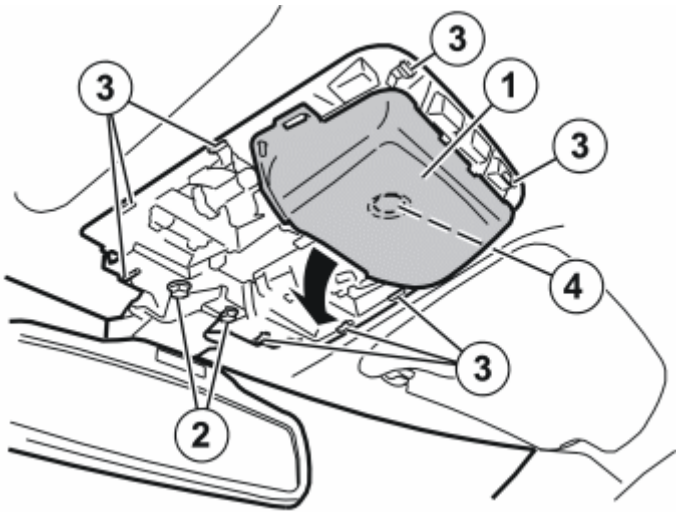

Fig. 41: Removing Front Interior Lighting

Courtesy of VOLVO CARS CORPORATION

- Remove the rear view mirror and the front interior lighting (1). First remove the two screws (2) and then press in the eight catches (3) around the interior lighting
- Carefully pull the components downwards and allow them to hang by their wiring. (The interior lighting is secured to the roof using the clip (4).).

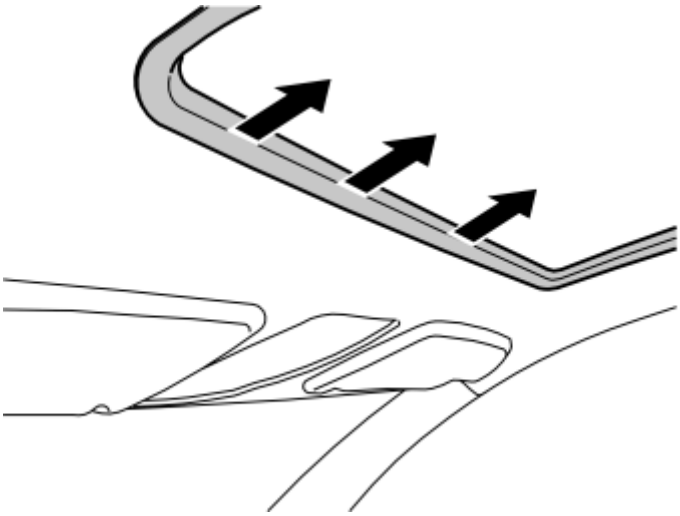

Fig. 42: Removing Sun Roof Surround
Courtesy of VOLVO CARS CORPORATION

Applies to cars with sunroof

- Pull off the sun roof surround at the front edge to lower the headlining slightly. The surround is securely positioned.

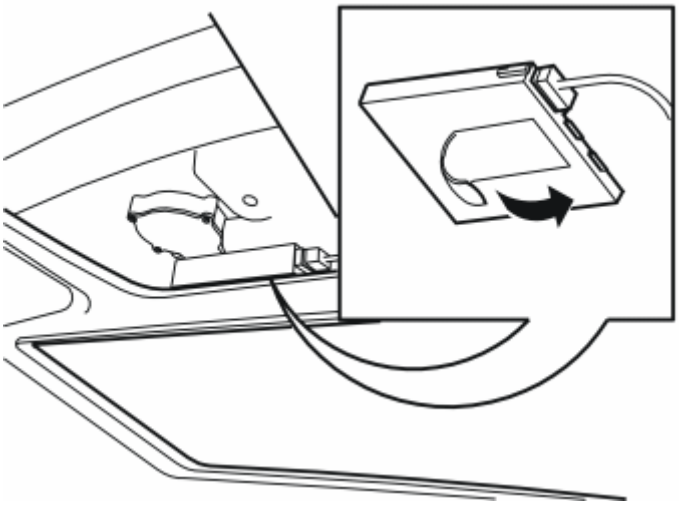

Fig. 43: Installing Sensor
Courtesy of VOLVO CARS CORPORATION

Applies to cars with sunroof

- Press down the headlining at the front edge of the sun roof. Position a shim between the headlining and the roof so that there is room to install the sensor
- Take the sensor with the blue connector from the kit
- Find the existing cable for the movement sensor. It is taped to the headlining at the front edge of the sun roof
- Connect the connector to the sensor. Remove the masking tape
- Press the movement sensor into place on top of the headlining, edge to edge with the rear edge for the cut-out for the interior lighting.

NOTE: The sensor must be installed straight. The sensor must not be turned more than 5 degrees.

- Reinstall the interior lighting. Tighten the rear view mirror. Tighten to **10 Nm (7.5 lbf. ft.)**
- Reinstall the interior lighting panel.

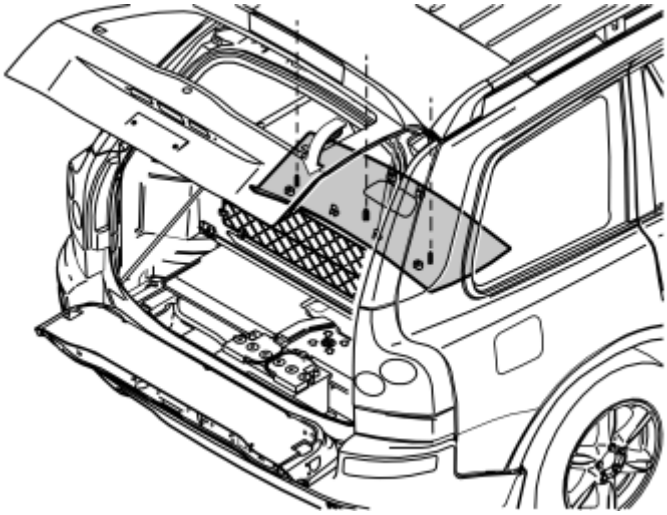

Fig. 44: Removing Panel
Courtesy of VOLVO CARS CORPORATION

- Remove the cover and the screws underneath for the rear headlining
- Carefully pry off the panel at the rear edge using a plastic weatherstrip tool
- Pull the rear edge of the panel downwards until all clips in the inside have released.

Applies to cars with three rows of seats

- Disconnect the connector for the rear roof lighting. Pull the panel backwards.

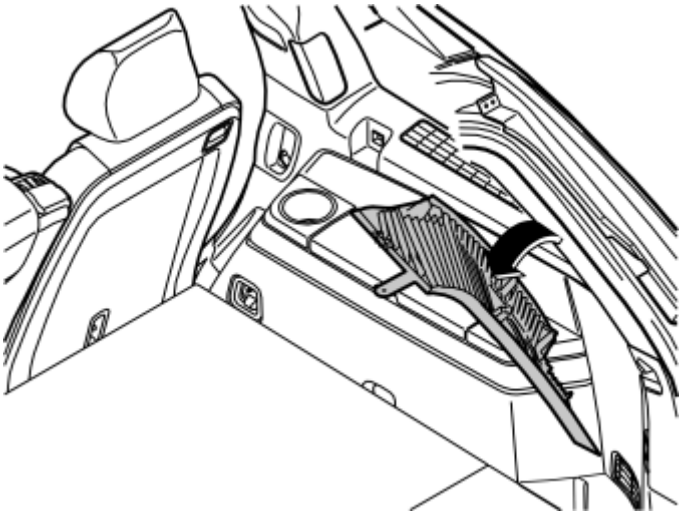

Fig. 45: Pull Off Top Edge Of Right-Hand D Pillar Panel
Courtesy of VOLVO CARS CORPORATION

- Carefully pull off the D-post panel on the right and left-hand side starting at the top edge. Then pull downwards until the three clips release
- Remove the panels by pulling them upwards slightly and unhooking them from the side panels. Disconnect the connectors for the D-post loudspeakers on cars equipped with them.

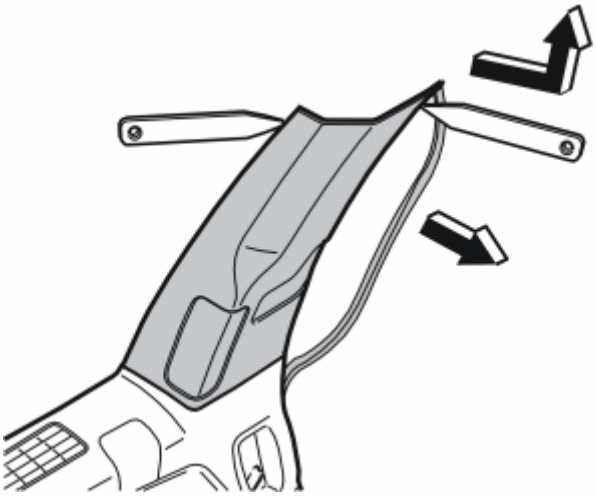

Fig. 46: Identifying Left-Hand C-Post Panel And Plastic Weatherstrip Tools
Courtesy of VOLVO CARS CORPORATION

- Pull off the rubber seals at the rear edges of the door openings for the left and right rear doors opposite the C-post panels
- Carefully pry off the C-post panels at the top edge of the sides using a plastic weatherstrip tool. Pull outwards until the three clips on the inside have released. Do not damage the headlining and panel
- Remove the panels by pulling them upwards slightly and unhooking them from the side panels. Disconnect the connectors for telephone receiver sockets on cars equipped with them.

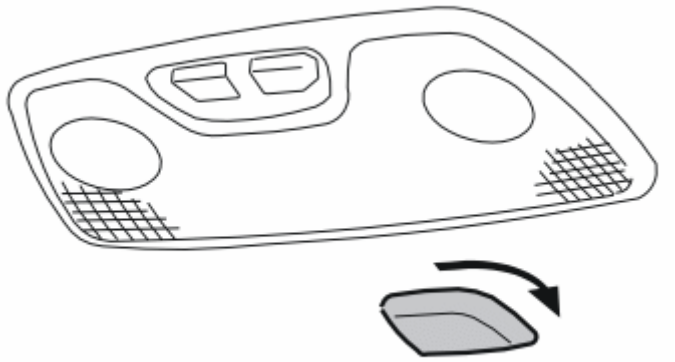

Fig. 47: Removing Clip Holding Head Lining
Courtesy of VOLVO CARS CORPORATION

- Remove the clip holding the headlining to the roof by turning the clip 90° The clip is positioned straight above the center seat in the second row of seats.

NOTE: Not all cars are equipped with the interior lighting illustrated.

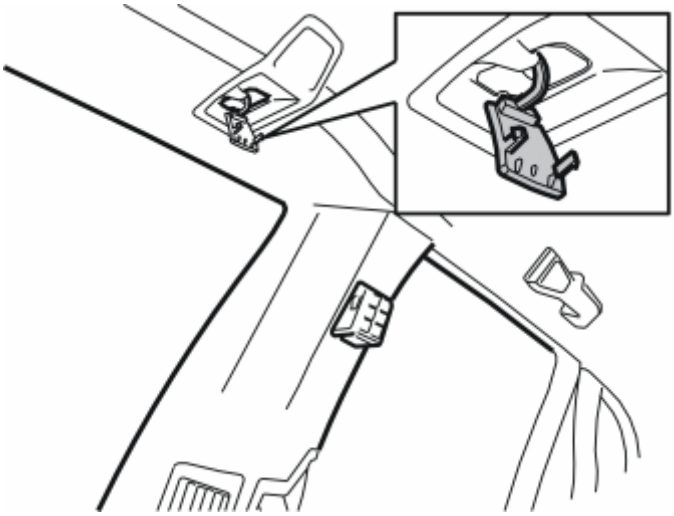

Fig. 48: Removing Cover
Courtesy of VOLVO CARS CORPORATION

- Carefully pry off the cover. Remove the two screws in the mountings above the rear side windows in the cargo compartment.

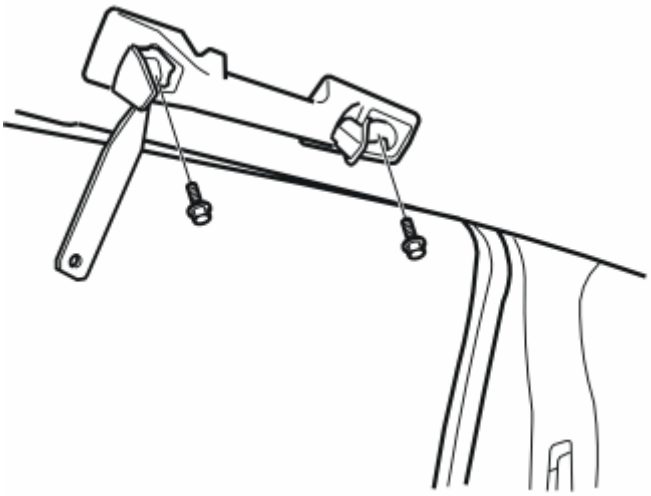

Fig. 49: Removing The Grab Handle
Courtesy of VOLVO CARS CORPORATION

- Detach the grab handles for the rear seats above the doors on the right and left-hand sides by first prying up the cover and then removing the screws
- Remove the rubber seals at the top edges of the right and left-hand doors so that the headlining lowers further. Ensure that it does not break.

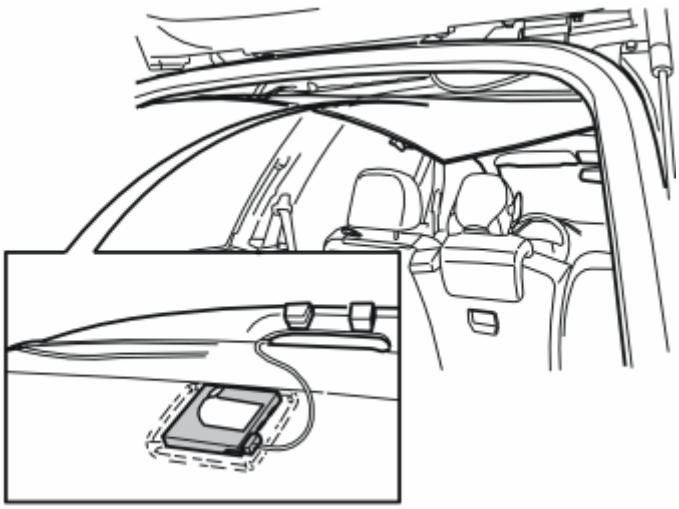

Fig. 50: Identifying Installation Of Sensor
Courtesy of VOLVO CARS CORPORATION

NOTE: Do not damage the headlining when installing the sensor.

- Take the sensor with the green connector from the kit
- Disconnect the existing taped connector from the headlining
- Connect the connector to the sensor
- Remove the backing from the tape on the sensor

- Position the sensor in the recess in the headlining.

NOTE: **The sensor must be installed in the recess in order to function correctly. Ensure that the sensor is positioned straight, it must not be turned more than a maximum of 5 degrees.**

- Counterhold the underneath of the headlining. Press the sensor between the spacers.
- Reinstall the clip in the headlining behind the center interior lighting
- Reinstall the three screws in the mountings above the rear side windows. Tighten the screws. Tighten to **50 Nm (37 lbf. ft.)**
- Reinstall both covers over the screws
- Tighten both grab handles. Tighten to **10 Nm (7.5 lbf. ft.)** . Press the covers into place
- Reinstall the C and D-post panels. Connect any connectors
- Connect the connector to the rear interior lighting.

Applies to cars with three rows of seats

- Reinstall the rear headlining.

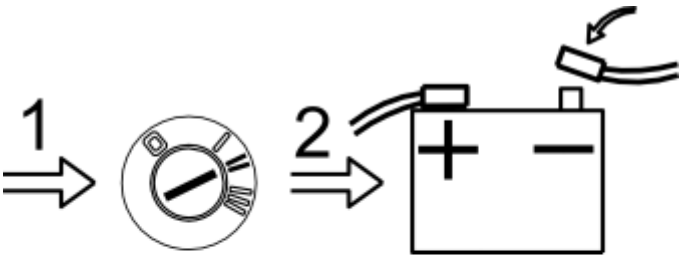

Fig. 51: Connecting Negative Battery Lead
Courtesy of VOLVO CARS CORPORATION

- Turn the ignition key to position II
- Connect the battery ground lead
- Program the function using VCT 2000 in VIDA (Volvo scan tool).

ALARM TILT SENSOR (2003-2012)

TILT SENSOR FOR THE ALARM

NOTE: This accessory requires software unique to the car.

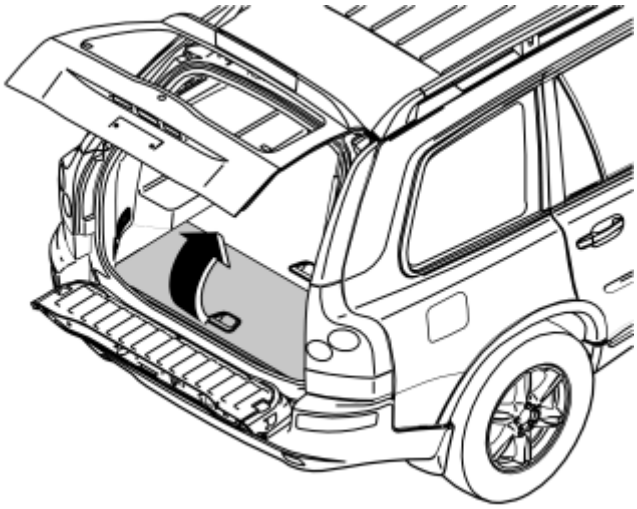

Fig. 52: Folding Floor Hatch Up
Courtesy of VOLVO CARS CORPORATION

- Fold the rear center floor hatch up.

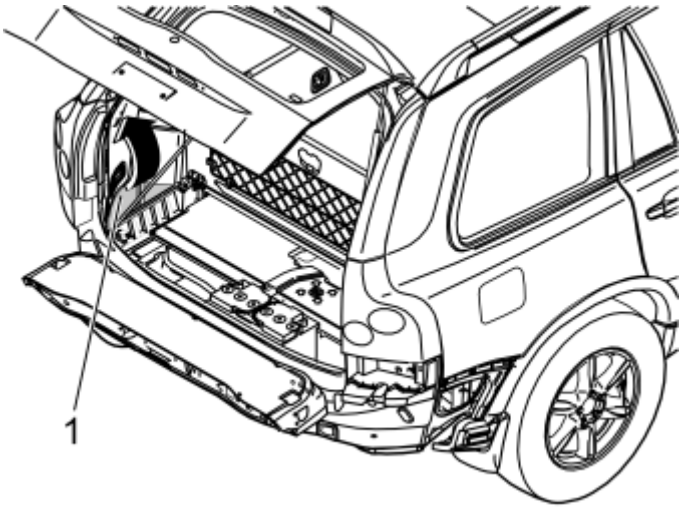

Fig. 53: Removing Left-Hand Side Floor Hatch
Courtesy of VOLVO CARS CORPORATION

- Remove the left-hand side floor hatch (1).

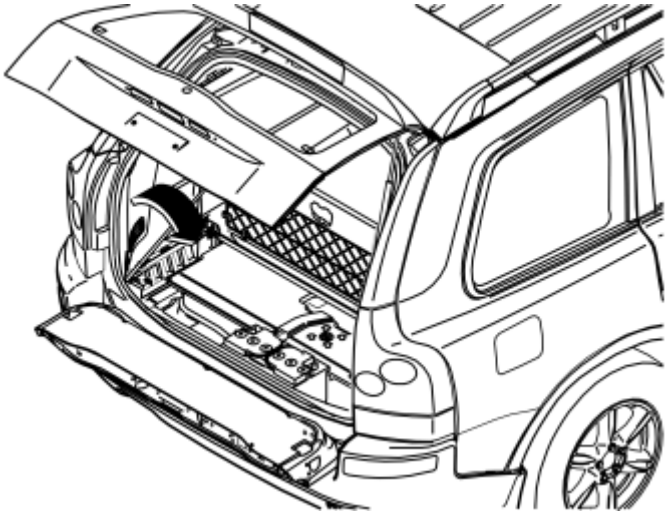

Fig. 54: Identifying Left-Hand Side Folding Side Panel
Courtesy of VOLVO CARS CORPORATION

- Remove the left-hand folding side panel.

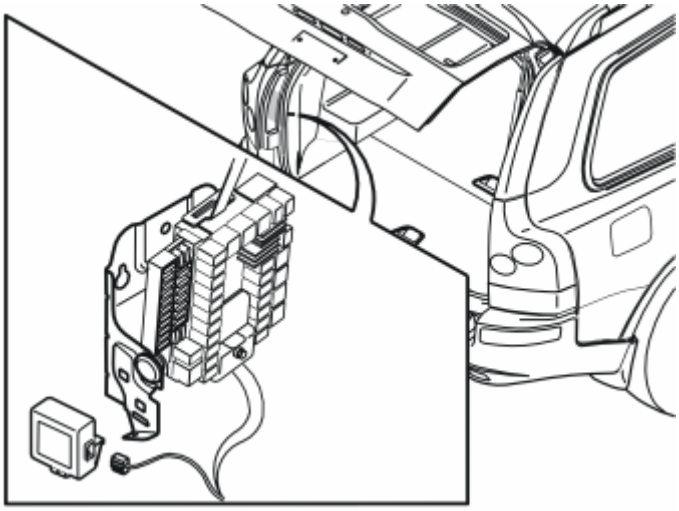

Fig. 55: Installing Tilt Sensor On The Fuse Holder Bracket
Courtesy of VOLVO CARS CORPORATION

- Disconnect the pre-routed green connector, taped on the cable harness under the fuse holder
- Connect the connector to the tilt sensor
- Install the tilt sensor on the fuse holder bracket. First hook the tilt sensor in the uppermost hole on the bracket. Then secure in the lower hole
- Reinstall the side panel
- Reinstall the side floor hatch and fold down the floor hatch.

- Program the software according to the service information in VIDA (Volvo scan tool).

PARKING ASSISTANCE MODULE (PAM), REAR (2003-2006)

ACCESSORY ELECTRONIC MODULE (AEM)

see **ACCESSORY ELECTRONIC MODULE (AEM)**

CARS EQUIPPED WITH SRS/SIPS (AIRBAG)

see **CARS EQUIPPED WITH SRS/SIPS (AIRBAG)**

PARKING ASSISTANCE MODULE (PAM), REAR

NOTE: **This accessory is connected to the electrical system of the car. It requires software unique to the car.**

INSTALLING THE SENSORS

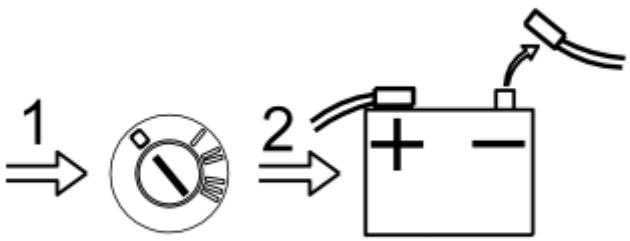

Fig. 56: Disconnect Battery Negative Lead
Courtesy of VOLVO CARS CORPORATION

- Turn the ignition key to position 0
- Disconnect the battery negative lead.

NOTE: **Wait at least five minutes before disconnecting the connectors or removing other electrical equipment.**

- Clean the bumper. Use a mild soap solution.

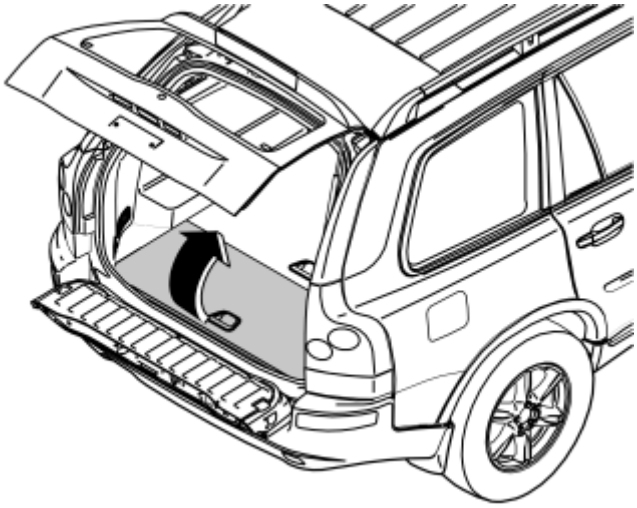

Fig. 57: Removing The Floor Hatch And Panel
Courtesy of VOLVO CARS CORPORATION

Applies to cars with two rows of seats

- Fold up the rear center floor hatch. If the floor hatch has a carrier bag holder on the underneath, it is secured by a strap on each of the shorter sides of the storage box. These straps must be undone
- Remove the storage box underneath and lift it out
- On two-wheel drive cars, remove the floor hatch completely by folding it back slightly and pulling it backwards out of its mountings.

Applies to cars with three rows of seats and the integrated carrier bag holder on the underside of the center floor hatch

- Fold up the rear center floor hatch
- Release the two straps on the panel underneath. Lift up the panel at the rear edge. Fold back the floor hatch towards the panel. Lift out the floor hatch and panel.

Applies to cars with three rows of seats without an integrated carrier bag holder

- Lift up the center, rear floor hatch at the rear edge and lift it out.

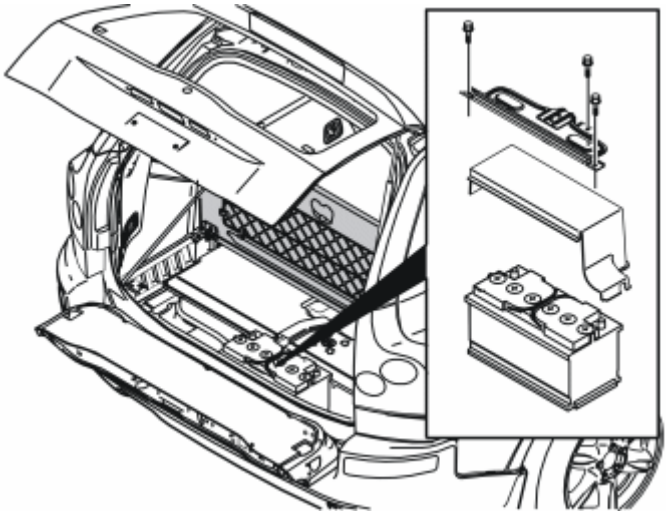

Fig. 58: Removing Three Screws In Battery Holder
Courtesy of VOLVO CARS CORPORATION

- Remove the three screws in the battery holder. Lift the battery holder out
- Remove the cover from the battery.

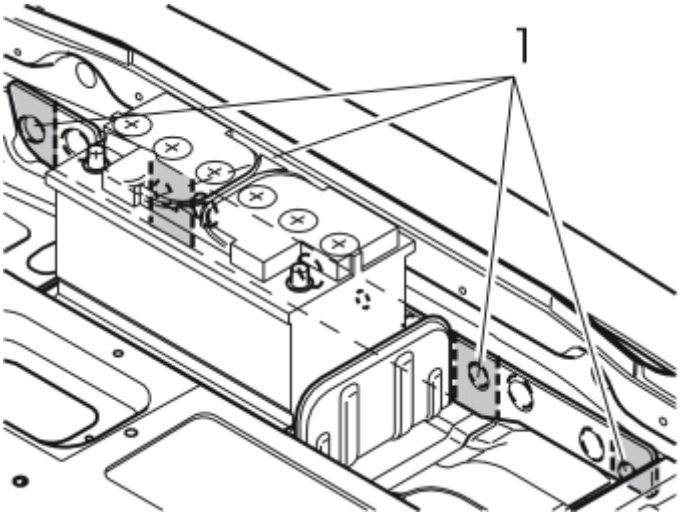

Fig. 59: Removing The Four Pre-Punched Sections
Courtesy of VOLVO CARS CORPORATION

- Remove the four pre-punched sections (1) from the insulation panel in the rear cross member
- Remove the four nuts holding the bumper.

Fig. 60: Removing Panel
Courtesy of VOLVO CARS CORPORATION

- Remove the panel under the rear lamps on the right and left-hand sides by carefully prying off. Use a weatherstrip tool.

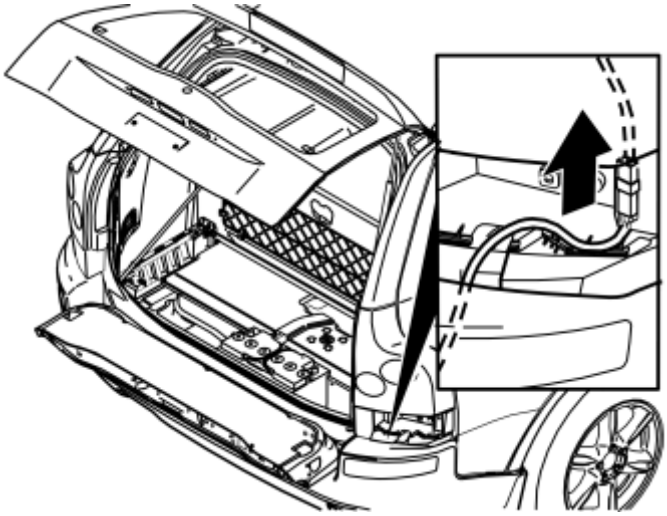

Fig. 61: Disconnecting Side Marker Lamps
Courtesy of VOLVO CARS CORPORATION

- Disconnect the connectors for the sidemarker lamps on the left and right-hand sides. The connectors must be left in place in their brackets.

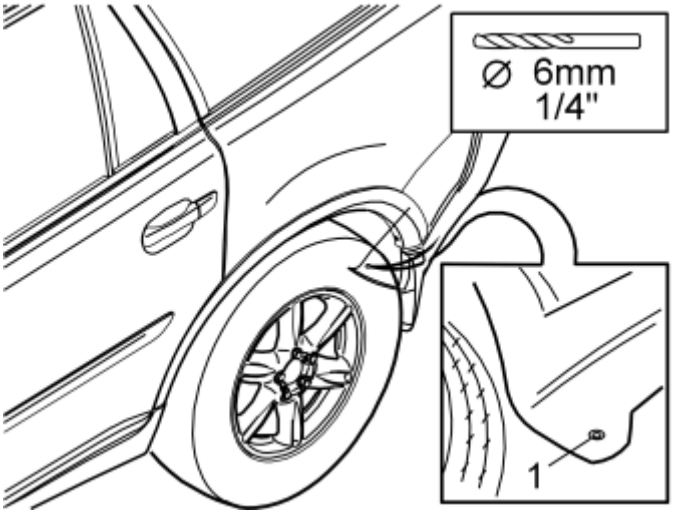

Fig. 62: Drilling Out Rivets
Courtesy of VOLVO CARS CORPORATION

- Drill out the rivets in the rear edge of the wheel arch on the right and left-hand sides. Use a **6 mm (1/4")** diameter drill bit
- Remove the remains of the rivets.

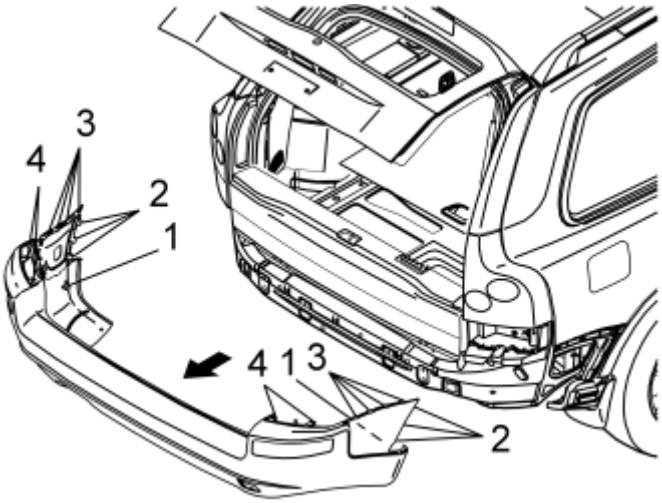

Fig. 63: Removing Bumper
Courtesy of VOLVO CARS CORPORATION

- Pull the ends of the bumper cover away from the body. Pull off the clips (1) at the bottom and continue up along the wing extensions and pull off the three vertically positioned clips (2)
- Pull out the ends some more until the four horizontally positioned clips (3) at the top of the wing extensions release
- Fold up the lower tailgate
- Pull the bumper back so that the two clips (4) which are accessible from the space under the rear lamps release
- Remove the bumper.

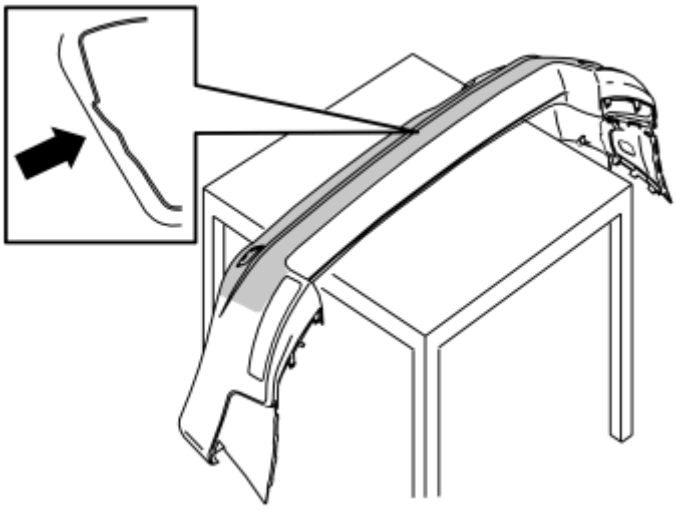

Fig. 64: Placing Bumper On Suitable Underlay
Courtesy of VOLVO CARS CORPORATION

- Place the bumper on a suitable underlay
- Clean the outside of the bumper
- Install the protective paper evenly distributed over the bumper.

NOTE: **The paper protects the bumper and must be left in place throughout the operation.**

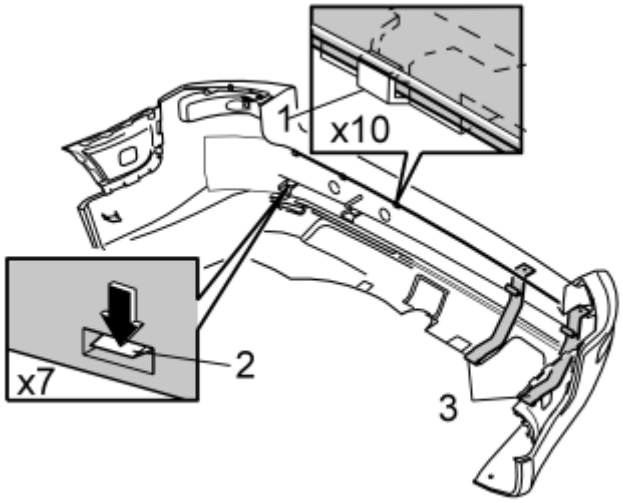

Fig. 65: Identifying Catches
Courtesy of VOLVO CARS CORPORATION

- Release the ten catches in the upper edge (1) of the bumper. Release the seven catches in the center (2) of the bumper
- Detach the two stays (3) from the lower edge of the bumper cover. Remove the rear section and the foam rubber from the bumper cover.

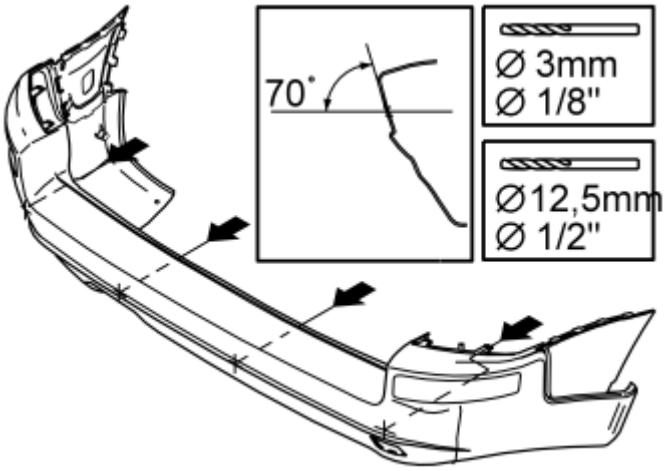

Fig. 66: Identifying Area And Dimension For Drilling
Courtesy of VOLVO CARS CORPORATION

- If necessary, clean the inside of the bumper cover to locate the four markings where the holes for the sensor holders will be drilled
- Pre-drill the holes. Use a **3 mm (1/8")** diameter drill bit. Drill out the holes. Use a **12.5 mm (1/2")** diameter drill bit.

NOTE: Ensure that the drill is horizontal when drilling.

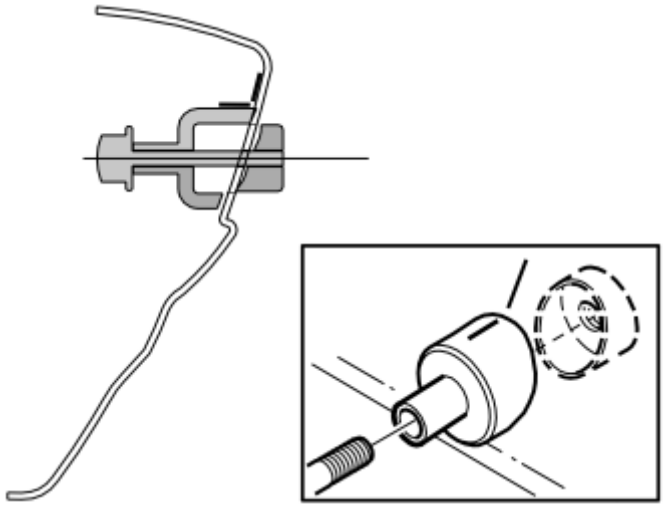

Fig. 67: Identifying Hole Cutter Is Correctly Positioned
Courtesy of VOLVO CARS CORPORATION

- Take the **27.5 mm (1 1/16")** diameter hole cutter (P/N 8671170). Install the hole cutter in the holes; with the screw and the counterhold on the inside and the cutting section on the outside as illustrated. Ensure that both parts of the hole cutter are correctly positioned against the surface of the bumper cover before starting to make holes
- Expand the holes

- The mark on the tool must be pointed upwards and correspond to the center marking on the cover.

NOTE: Clean the threads and surfaces of the tool after cutting each hole.

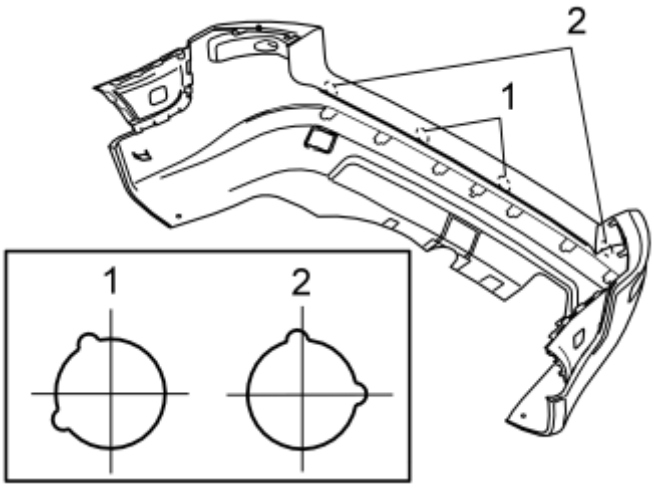

Fig. 68: Filling Out Two Semi-Circles
Courtesy of VOLVO CARS CORPORATION

- File out the two semi-circles marked around each hole. Use a small round file. These ensure that each sensor is correctly positioned and does not rotate. The two sensor holders which will be in the center (1) are the same. The two sensor holders which will be positioned to the sides (2) are different from each other and from the sensors in the center. The catches on the holders also have text indicating the correct location in the bumper.

NOTE: The marking may be difficult to see. Carefully check that each sensor holder is correctly positioned.

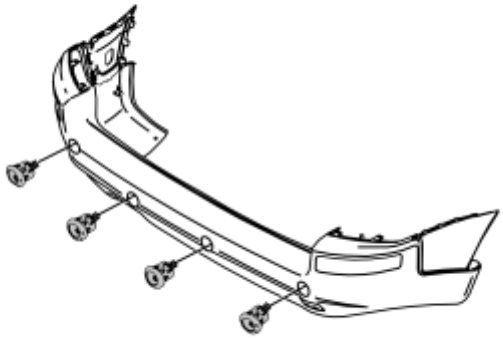

Fig. 69: Installing Sensor Holders
Courtesy of VOLVO CARS CORPORATION

- Ensure that the edge of the holes are smooth. File the holes if necessary
- Remove the protective paper around the holes
- Take the sensor holders from the kit. Press them into the correct positions in the bumper cover. Press the sensor holders firmly into place. Check that all the catches have engaged.

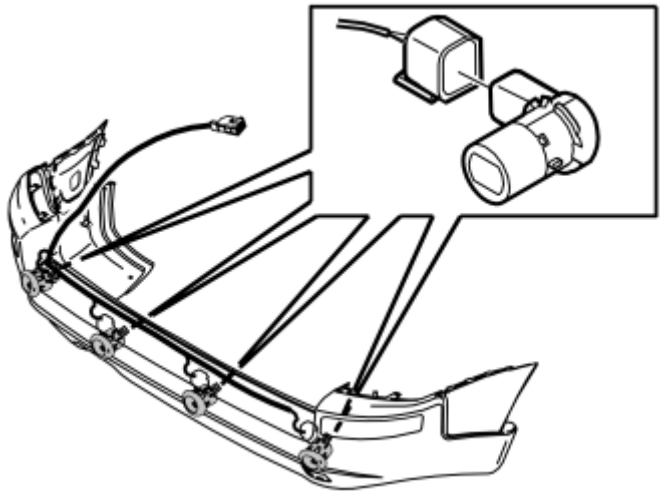

Fig. 70: Installing The Sensors
Courtesy of VOLVO CARS CORPORATION

- Take the sensors and the cable harness from the kit
- Connect the connectors on the cable harness to the connectors on the sensors. There must be a click which confirms that the catch has engaged
- Press the sensors into place with the cable harness in the relevant holder so that the connector is pointing to the left as illustrated.

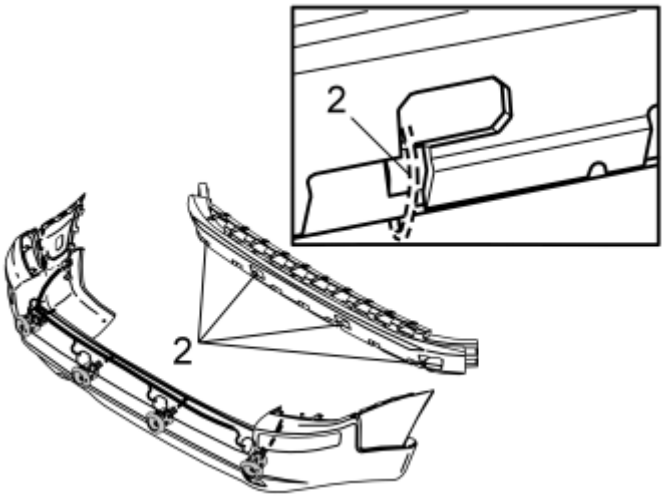

Fig. 71: Identifying Vertical Cable Routing In The Foam Rubber
Courtesy of VOLVO CARS CORPORATION

- Place the four cables from the sensors so that they are in the vertical cut-outs (2) in the foam rubber

- Press the rear section with the foam rubber into place in the bumper cover. Check that all the catches have engaged and that the stay has engaged around the bottom of the bumper cover.

APPLIES TO CARS WITH TOW HITCHES

NOTE: On cars with tow hitches, the cable harness for the sensors must be moved: This is to prevent damage from rubbing against the rear edge of the mounting at the sides of the tow hitch.

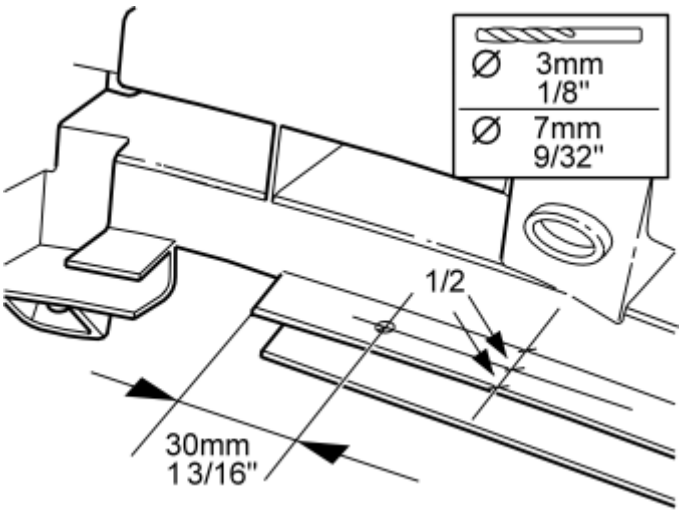

Fig. 72: Identifying Drill Hole Area And Dimensions
Courtesy of VOLVO CARS CORPORATION

- Measure up to drill the cable lead-in in the upper of the rear section plates as illustrated
- Pre-drill using a **3 mm (1/8")** diameter drill bit. Then drill out the hole to a diameter of **7 mm (9/32")** .

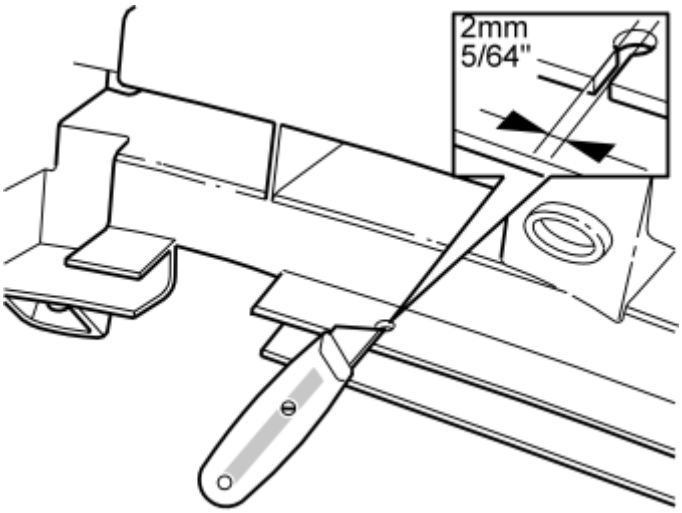

Fig. 73: Cutting Groove Into Plate
Courtesy of VOLVO CARS CORPORATION

- Cut a 2 mm (5/64") wide groove through the plate leading in to the hole.

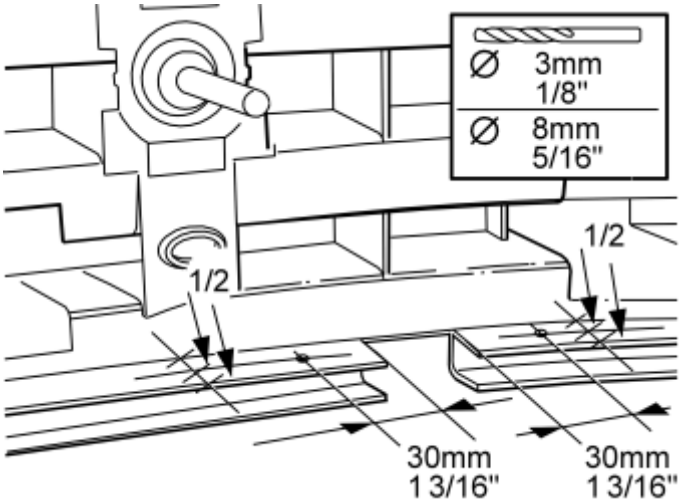

Fig. 74: Identifying Drill Hole Area And Dimensions
Courtesy of VOLVO CARS CORPORATION

- Measure up to drill the lead-in in the upper plate in the rear section on the left and right-hand sides of the cut-out as illustrated
- Pre-drill using a **3 mm (1/8")** diameter drill bit. Then drill out the hole to a diameter of **8 mm (5/16")** .

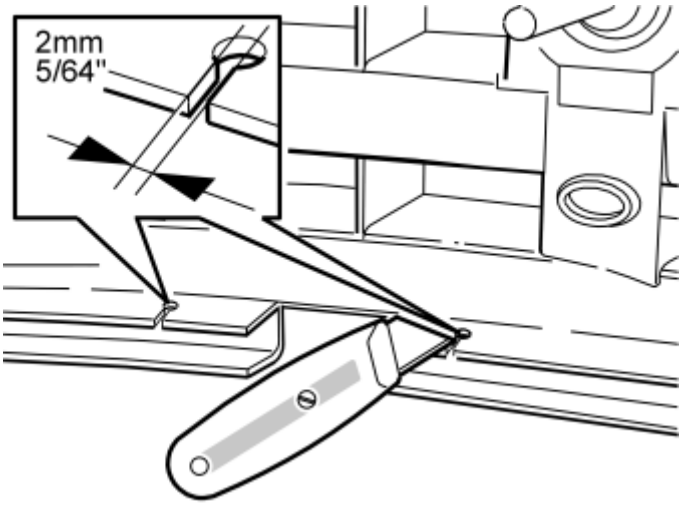

Fig. 75: Cutting Groove Into Plate
Courtesy of VOLVO CARS CORPORATION

- Cut a 2 mm (5/64") wide groove through the plate leading in to the hole
- Repeat the operation on the other side of the cut-out.

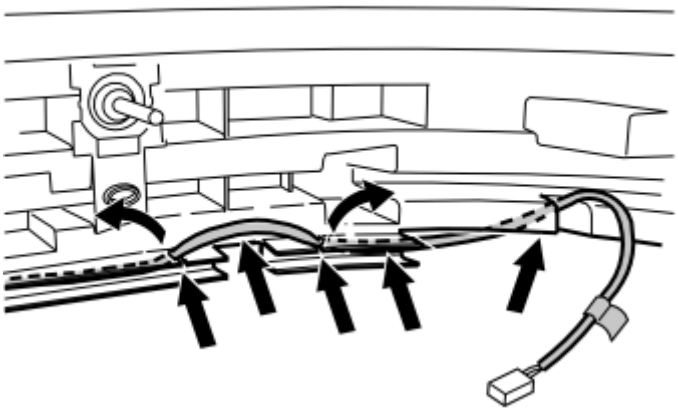

Fig. 76: Cable Routing On The Left-Hand Side Of The Bumper
Courtesy of VOLVO CARS CORPORATION

Cable routing on the left-hand side of the bumper

- Press up the tabs on the plates and insert the cable in the holes drilled earlier. Position the cable as illustrated
- Route the cable to the right-hand side of the existing cable duct as before.

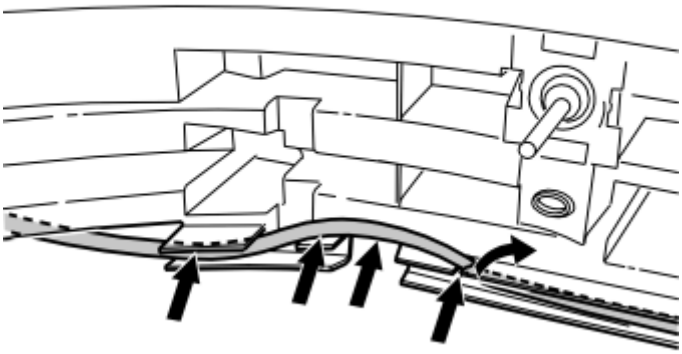

Fig. 77: Cable Routing On The Right-Hand Side Of The Bumper
Courtesy of VOLVO CARS CORPORATION

Cable routing on the right-hand side of the bumper

- Press up the tab on the plate. Insert the cable in the previously drilled hole. Position the cable as illustrated.

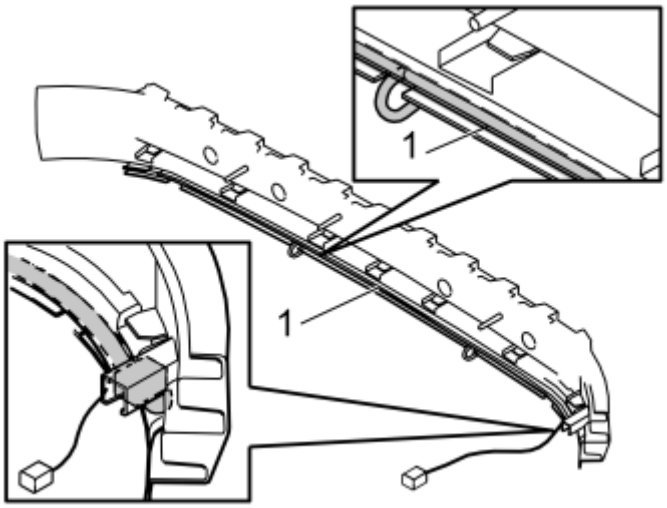

Fig. 78: Routing Cable Into Cable Duct
Courtesy of VOLVO CARS CORPORATION

- Press the large cable harness for the sensors into place in the existing cable duct (1) in the bottom of the rear section.

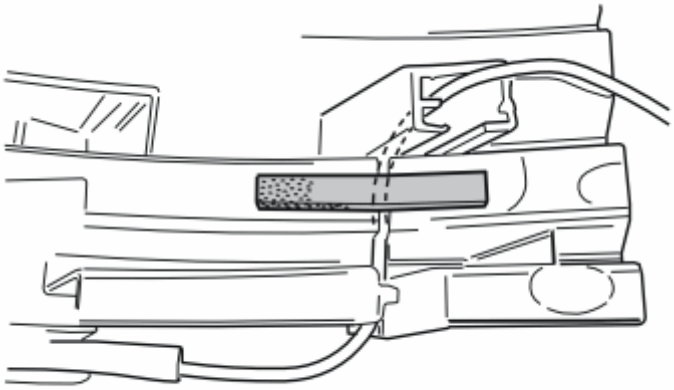

Fig. 79: Installing Foam Tape
Courtesy of VOLVO CARS CORPORATION

1. Take the piece of foam tape from the kit. Install the foam tape over the cable lead-in on the right-hand side of the rear section of the bumper so that the cable does not fall out.

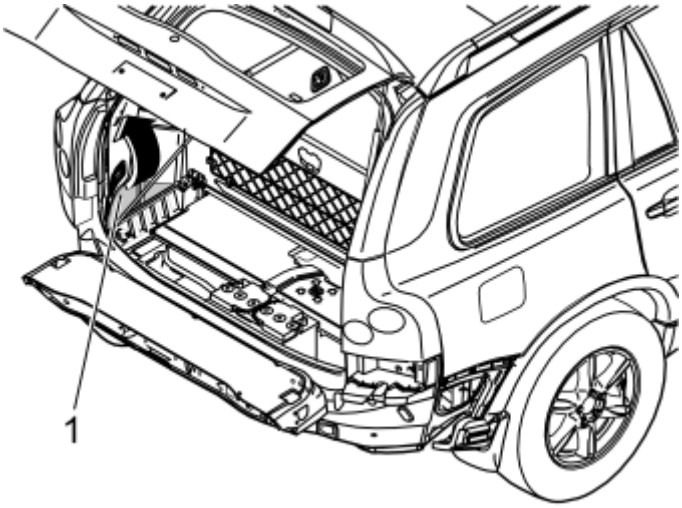

Fig. 80: Removing Left Front Floor Hatch
Courtesy of VOLVO CARS CORPORATION

- Remove the left-hand floor hatch (1).

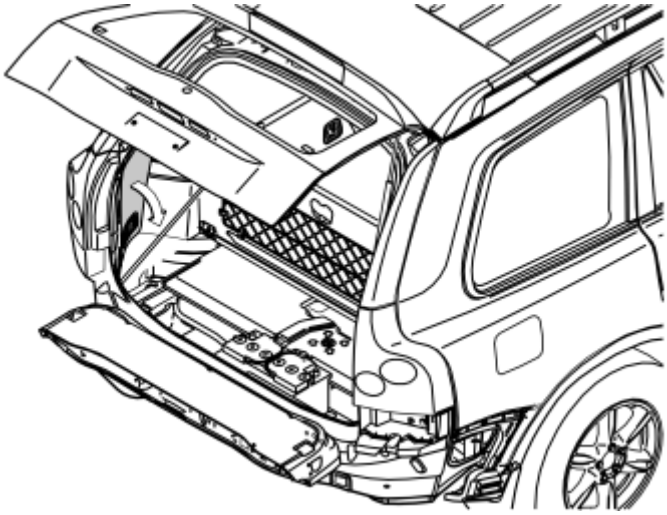

Fig. 81: Removing Folding Side Panel
Courtesy of VOLVO CARS CORPORATION

- Remove the folding side panel from the left-hand side in the cargo compartment.

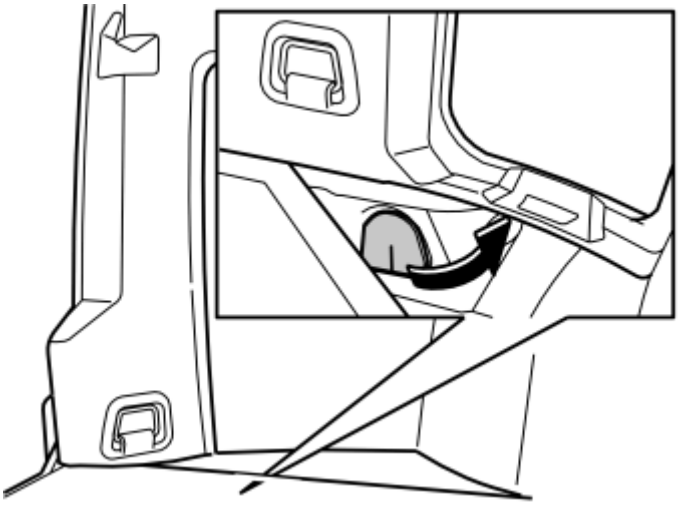

Fig. 82: Removing The Expanded Polystyrene Seal
Courtesy of VOLVO CARS CORPORATION

- Remove the expanded polystyrene seal on the left-hand side in the rear cross member under the left-hand side floor hatch. Do not damage the seal, it will be used again.

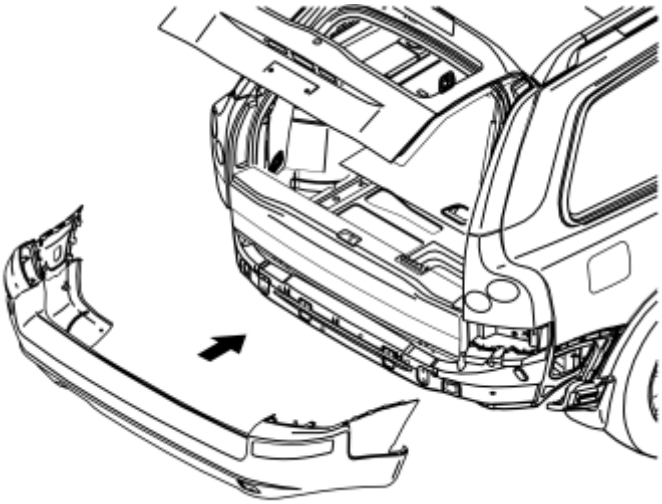

Fig. 83: Reinstalling The Bumper
Courtesy of VOLVO CARS CORPORATION

- Fold up the lower tailgate
- Reinstall the bumper. Insert the cable from the sensors in the large rectangular hole to the left in the rear cross member and then on to the hole where the expanded polystyrene seal was located. Ensure that the wiring for the sidemarker lamps is in the correct grooves in the spaces under the tail lamps
- Press the four clips for the bumper into place above the sidemarker lamps on the body. Then secure all the clips for the ends to the body
- Fold down the lower tailgate
- Tighten the bumper using the four nuts. Tighten to **16 Nm (12 lbf. ft.)**
- Take the new pieces of insulation and reinstall them above the holes for the bumper

- Connect the connectors to the sidemarker lamps
- Reinstall the covers under the tail lamps
- Rivet the bumper into place at the rear edges of the wheel arches on both sides. Use the rivets from the kit.

INSTALLING THE PARKING ASSISTANCE MODULE (PAM)

APPLIES TO FOUR WHEEL DRIVE CARS, AND ALL CARS FROM MODEL YEAR 2005-

NOTE: The relay does not need to be installed on four-wheel drive cars.

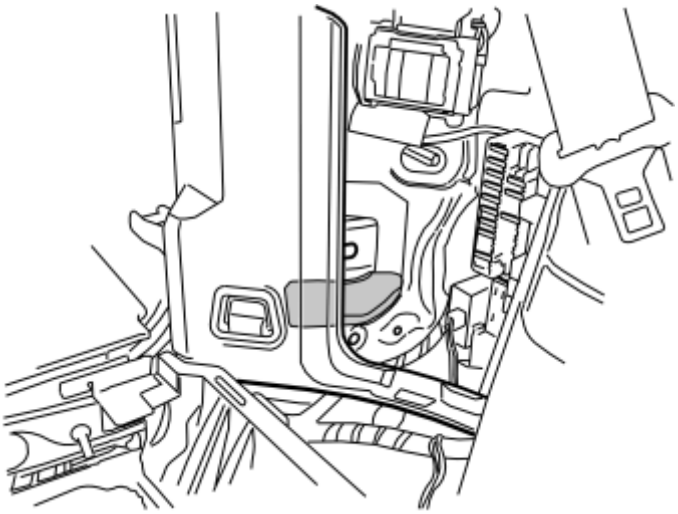

Fig. 84: Identifying Surface To Be Cleaned
Courtesy of VOLVO CARS CORPORATION

- Clean the flat surface on the panel behind the control module where the Velcro strips will be pressed into place. Use a mixture of 30% windscreen washer fluid and 70% water
- Wipe dry.

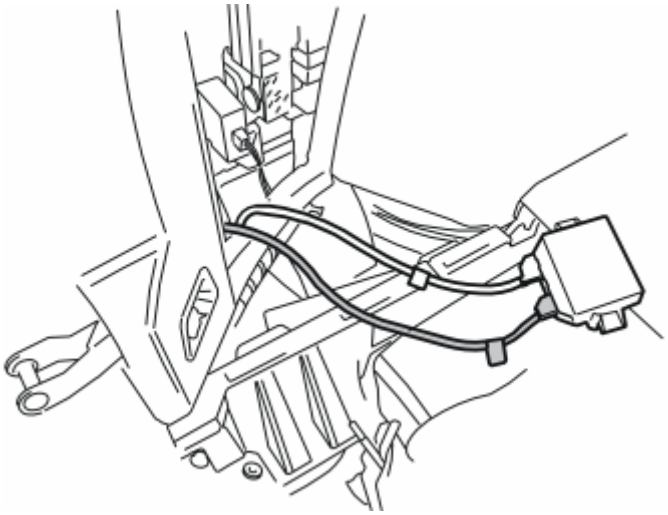

Fig. 85: Connecting The Control Module
Courtesy of VOLVO CARS CORPORATION

- Connect the control module to the pre-routed cable harness. Use the black connector from the existing cable harness
- Connect the cable harness from the sensors to the control module.

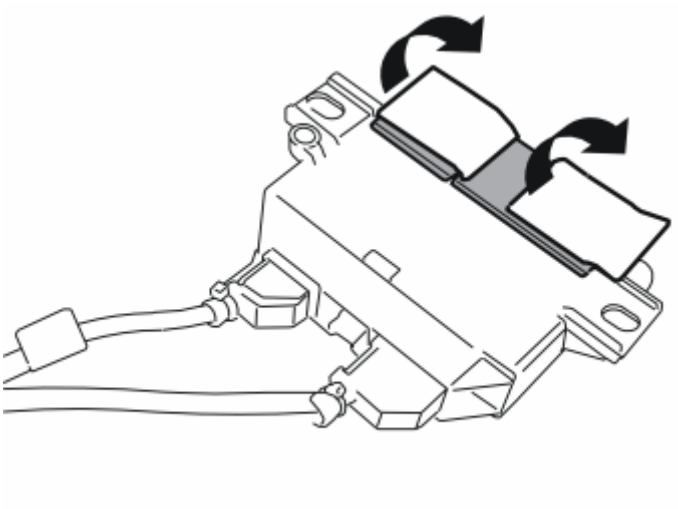

Fig. 86: Removing Backing From Velcro Strips
Courtesy of VOLVO CARS CORPORATION

- Remove the backing from the Velcro strips.

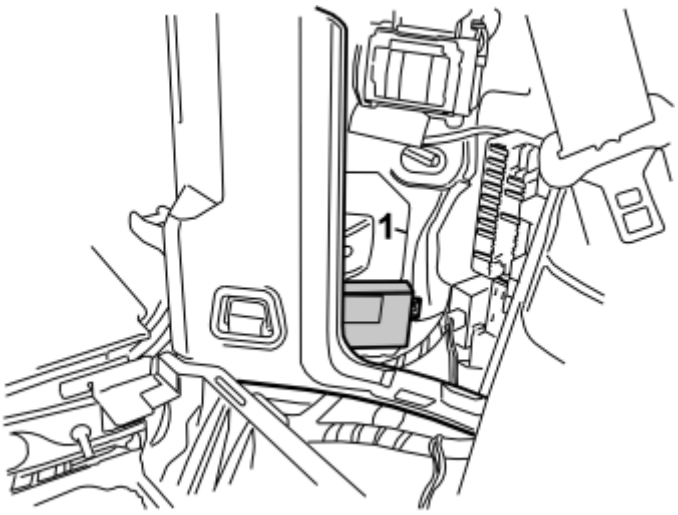

Fig. 87: Installing The Control Module
Courtesy of VOLVO CARS CORPORATION

- Press the control module firmly into place on the flat surface behind the panel as illustrated.

  The visible left side of the control module must be at the same height as the edge of the plate (1).

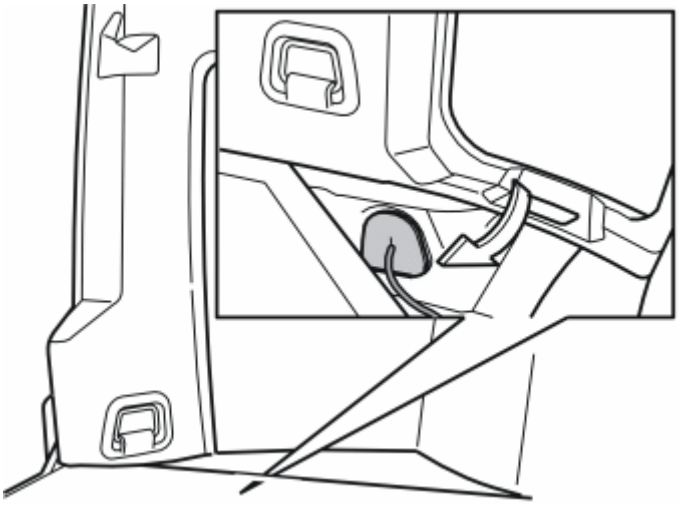

Fig. 88: Installing Cable Harness With The Expanded Polystyrene Seal
Courtesy of VOLVO CARS CORPORATION

- Reinstall the expanded polystyrene seal together with the cable harness from the sensors in the hole in the rear cross member.

INSTALLING THE PARKING ASSISTANCE MODULE (PAM) AND RELAY

APPLIES TO TWO WHEEL DRIVE CARS UP TO AND INCLUDING MODEL YEAR -2004

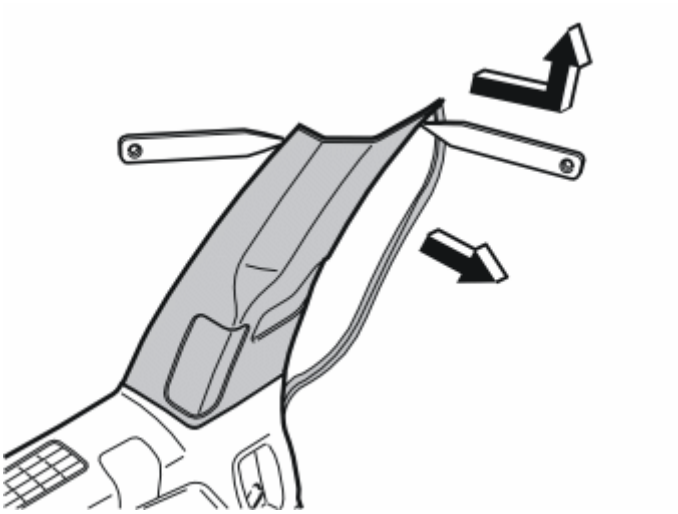

Fig. 89: Identifying Left-Hand C-Post Panel And Plastic Weatherstrip Tools
Courtesy of VOLVO CARS CORPORATION

- Pull off the rubber strip at the rear edge of the door opening to the left-hand rear door opposite the left C-post panel
- Carefully pry off the left-hand C-post panel sides at the top. Use a plastic weatherstrip tool. Then pull until the three clips on the inside release. Do not damage the headlining or the panel
- Remove the panel by pulling upwards slightly and unhooking it from the side panel.

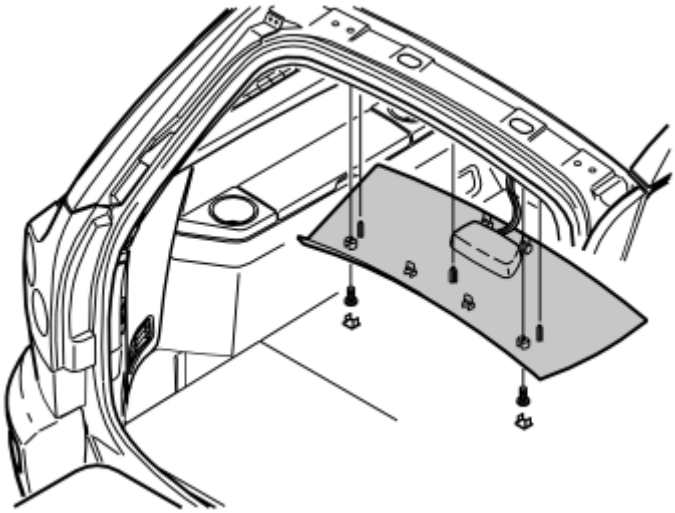

Fig. 90: Identifying Cover And Screws Underneath Rear Headlining
Courtesy of VOLVO CARS CORPORATION

- Remove the covers and the screws underneath for the rear headlining
- Carefully pry off the panel at the rear edge. Use a plastic weatherstrip tool
- Pull the rear edge of the panel downwards until the four clips on the top release
- If the car has lighting in the panel, disconnect the connector
- Pull the panel backwards to release it.

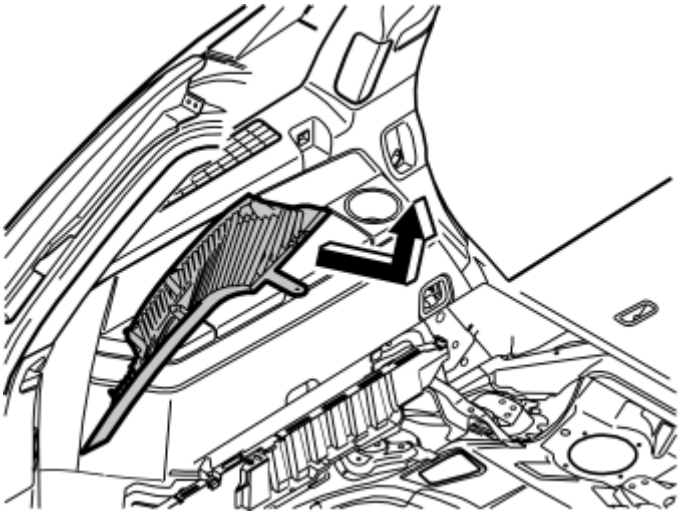

Fig. 91: Identifying D-Post Panel Removal From Side Panel
Courtesy of VOLVO CARS CORPORATION

- Carefully pull off the D-post panel. Start at the top edge then pull down until the three clips on the inside release. Do not damage the panel
- Disconnect the connector on the D-post panel (if the car has a loudspeaker in the D-post, the connector is in the loudspeaker)
- Remove the panel by pulling upwards slightly and unhooking it from the side panel.

Illustration A shows the removal of the cover for the load securing eyelets

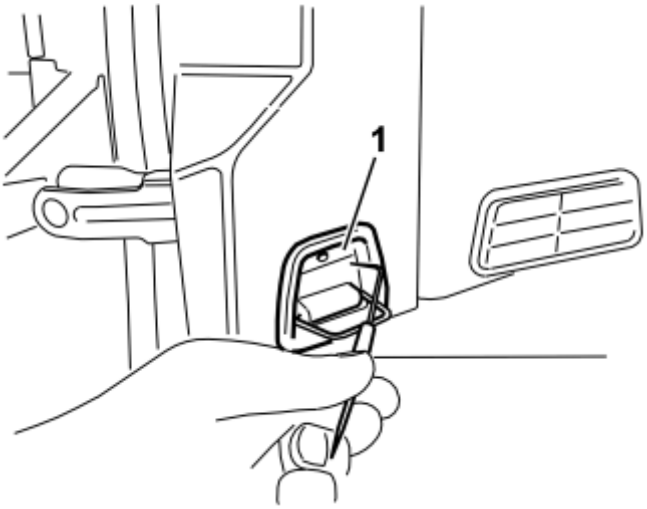

Fig. 92: Identifying Load Securing Eyelet
Courtesy of VOLVO CARS CORPORATION

- Fold out the load securing eyelet
- Insert a scriber with an angled tip into the hole in the top of the cover
- Turn the scriber so that the angled tip engages in the reverse of the cover (1). Pull the cover off.

Illustration B applies to cars with two rows of seats

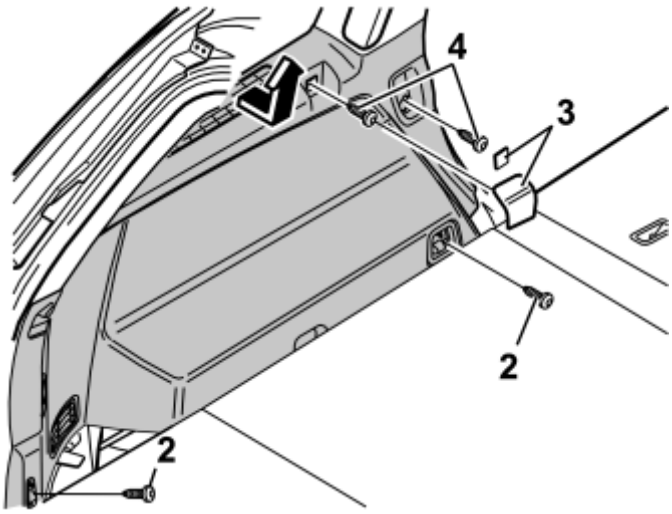

Fig. 93: Cars With Two Rows Of Seats
Courtesy of VOLVO CARS CORPORATION

Illustration C applies to cars with three rows of seats

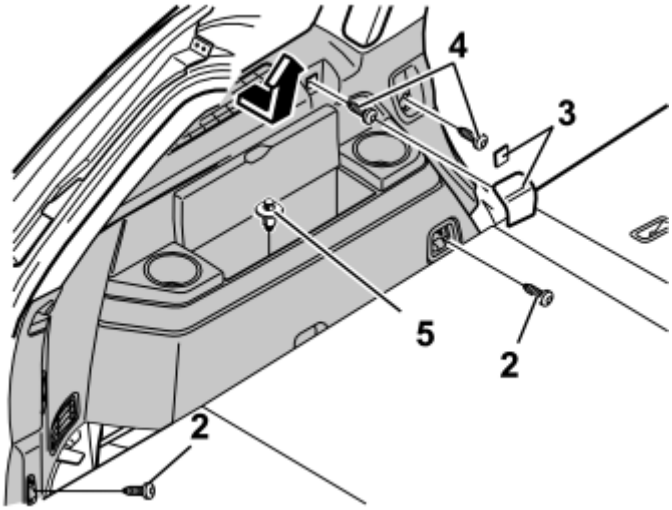

Fig. 94: Cars With Three Rows Of Seats
Courtesy of VOLVO CARS CORPORATION

- Remove the two screws (2) from under the cover
- Remove the covers (3) over the front mountings for the left-hand side panel. Pry the covers off. Use a plastic weatherstrip tool or a small screwdriver
- Remove the screws (4)
- Remove the clip (5) at the bottom of the storage compartment in the panel (Applies to cars with three rows of seats)
- Pull out the panel slightly at the top edge so that the clips on the inside release. Remove the panel by pulling it straight upwards.

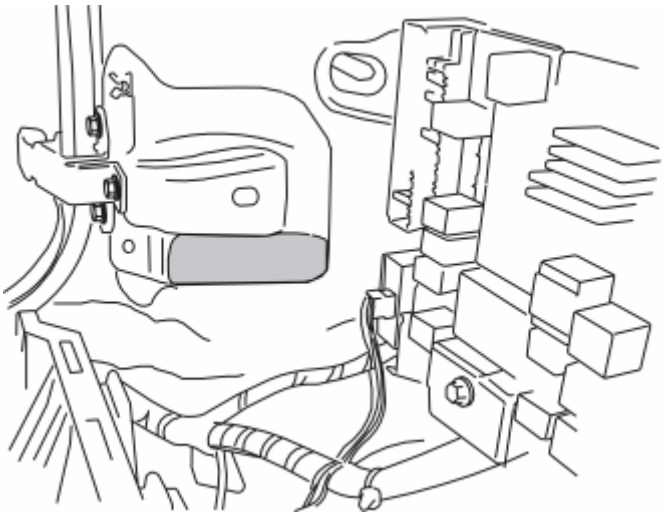

Fig. 95: Identifying Surface For Cleaning
Courtesy of VOLVO CARS CORPORATION

- Clean the flat surface where the Velcro strips will be applied. Use a mixture of 30% windscreen washer fluid and 70% water
- Wipe dry.

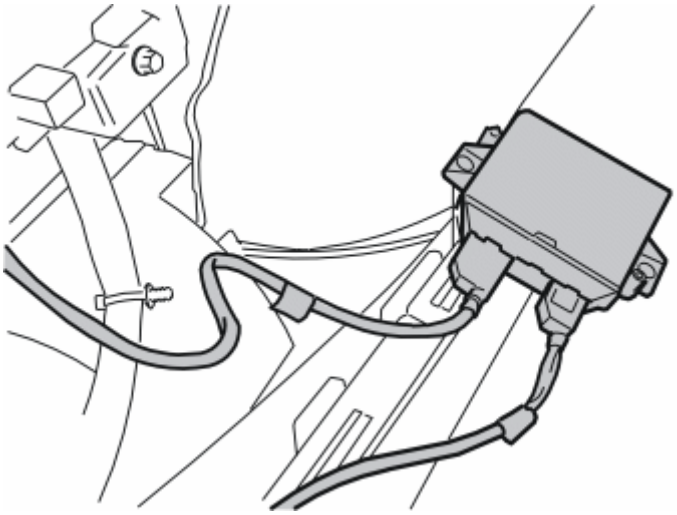

Fig. 96: Connecting The Control Module
Courtesy of VOLVO CARS CORPORATION

- Connect the control module to the pre-routed cable harness. Use the black connector from the existing cable harness
- Connect the cable harness from the sensors to the control module.

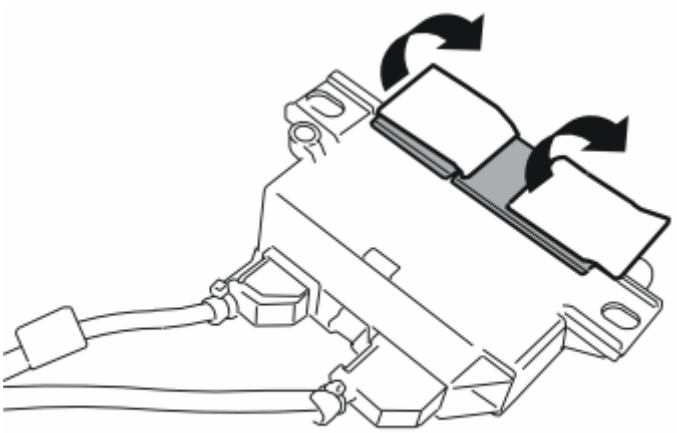

Fig. 97: Removing Film From Velcro Strips
Courtesy of VOLVO CARS CORPORATION

- Remove the backing from the Velcro strips.

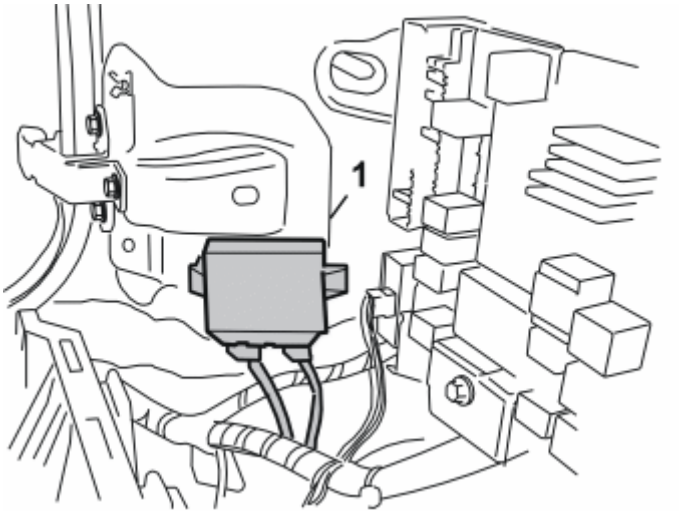

Fig. 98: Installing The Control Module
Courtesy of VOLVO CARS CORPORATION

- Press the control module firmly into place on the flat surface, with the wiring positioned behind the existing thick cable harness as illustrated.

  The left side of the control module must be at the same height as the edge of the plate (1).

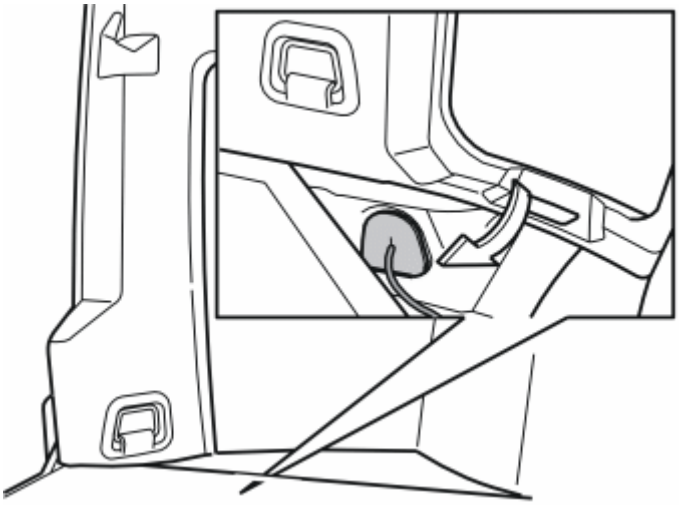

Fig. 99: Installing Cable Harness With The Expanded Polystyrene Seal
Courtesy of VOLVO CARS CORPORATION

- Reinstall the expanded polystyrene seal together with the cable harness from the sensors in the hole in the rear cross member.

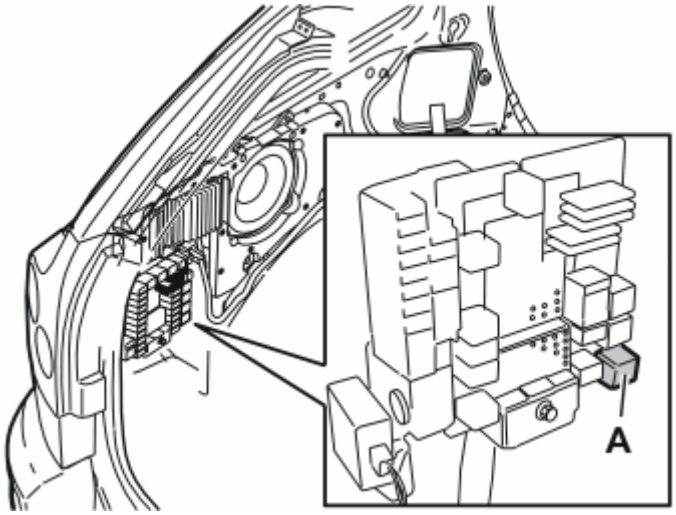

Fig. 100: Identifying Installed Relay
Courtesy of VOLVO CARS CORPORATION

- Take the relay from the kit. Install the relay in position MA1 in the lower front corner of the fuse holder.

INSTALLING THE SWITCH

- **Applies to cars from model year 2005-:**

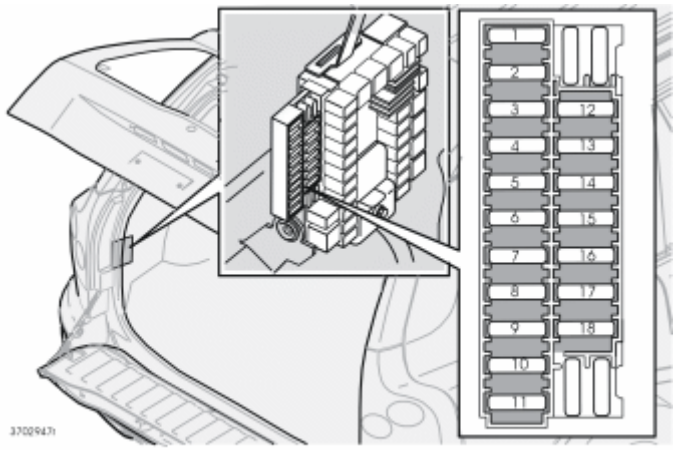

Fig. 101: Identifying Rear Fuse Holder
Courtesy of VOLVO CARS CORPORATION

- **Only applies to cars up to and including model year -2004:** Install a 20A fuse from the kit in position 15 in the rear fuse holder.

Illustration A

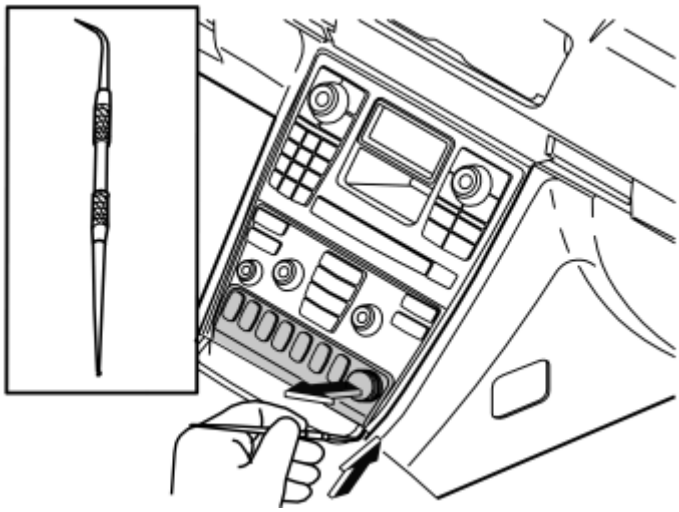

Fig. 102: Identifying Removing The Blind Cover Plug With A Scribe
Courtesy of VOLVO CARS CORPORATION

- Remove the blind cover plug from the 12V socket
- Take a scriber with an angled tip
- Insert the angled end of the scriber in the joint on the underneath of the surround for the switch unit.

Illustration B

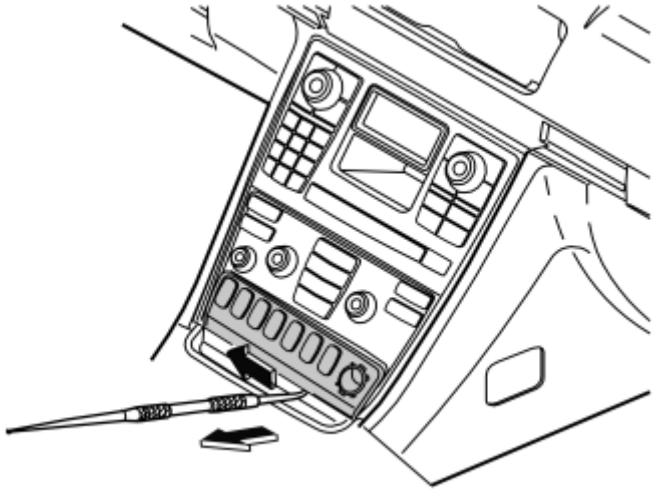

Fig. 103: Identifying Pulling Out The Surround Using The Scribe
Courtesy of VOLVO CARS CORPORATION

- Carefully pull out the surround using the scriber along the underneath of the surround. The surround is secured by three mounting lugs at the top and lower edges. Do not damage the surround
- Place the surround to one side.

HINT: The surround with four button spaces can be replaced by a surround with seven button spaces if necessary. This surround is purchased separately.

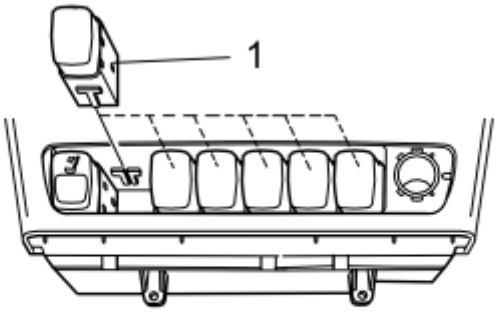

Fig. 104: Identifying Installation Of New Switch
Courtesy of VOLVO CARS CORPORATION

The switch can be installed in any location.

- Remove the switch blank. Install the new switch (1)
- Reinstall the surround and the blind cover plug for the 12V socket.

APPLIES ONLY TO TWO WHEEL DRIVE CARS UP TO AND INCLUDING MODEL YEAR -2004

Reinstall:

- the left-hand side panel using the screws and cover. Tighten the screws in the load securing eyelets. Tighten to **24 Nm (18 lbf. ft.)**
- the covers for the load securing eyelets
- The D-post panel with the connector
- the connector for the rear roof lighting (if applicable)
- the rear headlining
- the C-post panel.

FINISHING WORK

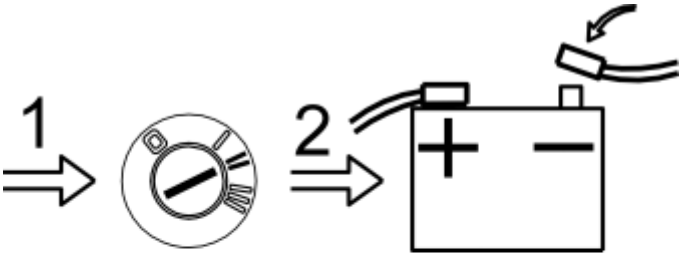

Fig. 105: Connecting Negative Battery Lead
Courtesy of VOLVO CARS CORPORATION

- Turn the ignition key to position II
- Reconnect the battery negative lead
- Reinstall the left-hand folding panel and the left floor hatch
- Reinstall the floor hatches and the storage compartment
- Program the software according to the service information in VIDA (Volvo scan tool).

SUPPLEMENTAL RESTRAINT SYSTEM MODULE, SRS

see **SUPPLEMENTAL RESTRAINT SYSTEM MODULE, SRS**

PARKING ASSISTANCE XC90 (05-) (2005-2006)

FRONT PARKING ASSISTANCE

NOTE: **During installation the underlying surface must maintain a temperature of at least +15° C (60° F).**

NOTE: **This accessory is connected to the car's electrical system. It requires software unique to the car.**

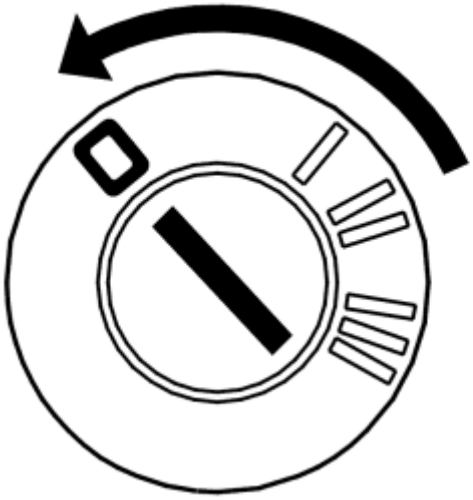

Fig. 106: Identifying Ignition Position 0
Courtesy of VOLVO CARS CORPORATION

- Turn the ignition key to position 0. Remove the ignition key from the ignition switch.

NOTE: **Wait at least one minute before unplugging the connectors or removing other electrical equipment.**

DETACH THE FRONT BUMPER

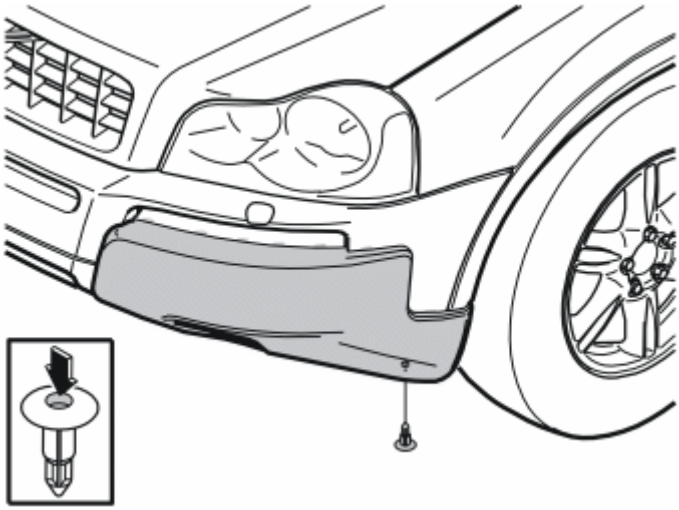

Fig. 107: Removing Clips
Courtesy of VOLVO CARS CORPORATION

- Open and raise the bonnet

Remove:

- the clips underneath the bumper, x 2 (1 on each side)

- Detach the sides of the bumper by pulling them diagonally up and outwards.

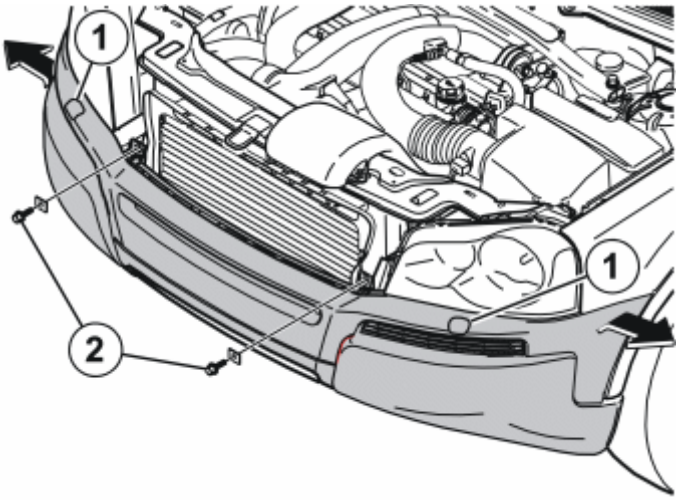

Fig. 108: Removing Covers
Courtesy of VOLVO CARS CORPORATION

Remove:

- The covers for the high-pressure headlamp washing (1)
- The covers for the screw mounting
- Screws (2) x 2

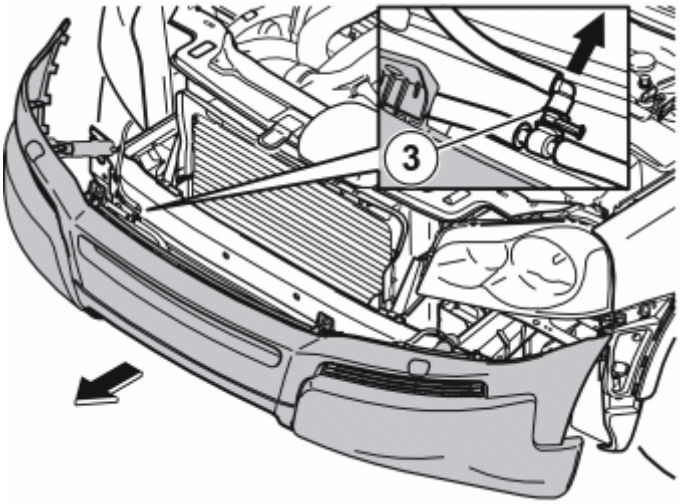

Fig. 109: Detaching The Snap-On Coupling
Courtesy of VOLVO CARS CORPORATION

- Pull the bumper straight out/forwards.
- Detach the snap-on coupling (3) for the washer hose.

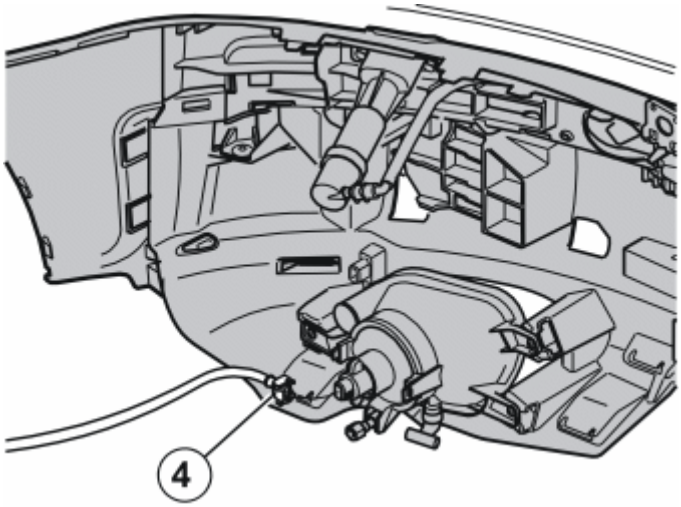

Fig. 110: Identifying Fog Lamp Connector
Courtesy of VOLVO CARS CORPORATION

- Detach the connectors for the fog lamps (4).
- Remove the bumper.

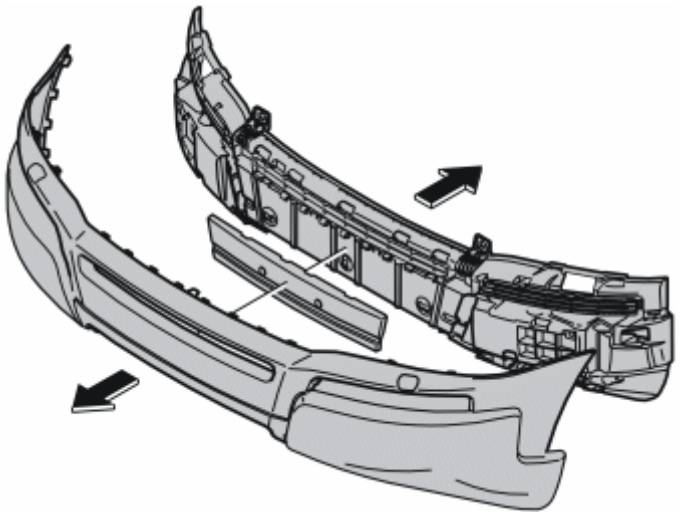

Fig. 111: Removing Rear Section From Bumper
Courtesy of VOLVO CARS CORPORATION

- Detach the two clips holding the rear section in the bumper by pressing the clips in the center and then pulling them out.
- Detach the rear section from the bumper by pulling apart all plastic catches.

NOTE: **The plastic catches are fitted securely. Detaching the catches requires considerable force so be careful with the bumper. Pull and coax from different angles until all catches have released.**

- Detach the bumper foam.

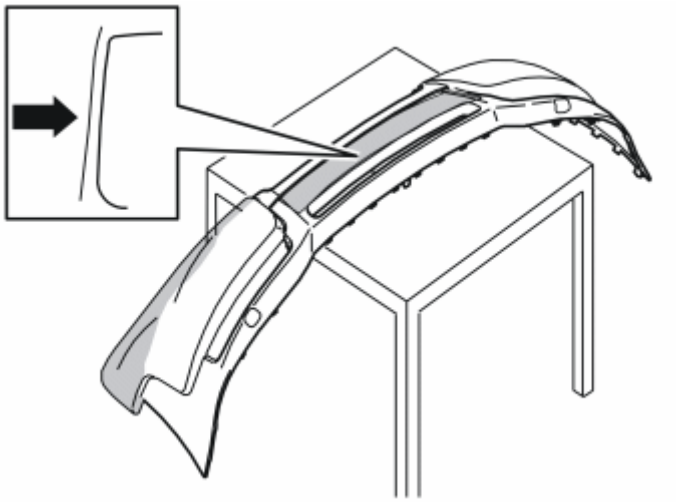

Fig. 112: Applying Protective Backing Paper To Bumper
Courtesy of VOLVO CARS CORPORATION

- Apply the protective backing paper to the bumper.
- Take the bumper bar from the kit.
- Separate the protective backing paper and affix on the bumper bar.

PREPARATIONS IN THE PASSENGER COMPARTMENT

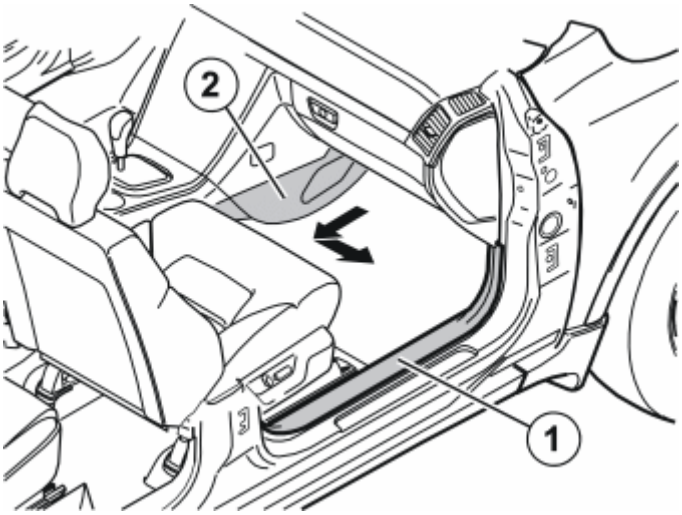

Fig. 113: Removing Sill And Right-Hand Panel
Courtesy of VOLVO CARS CORPORATION

- Detach the sill (1) and the right-hand panel (2) of the center console.

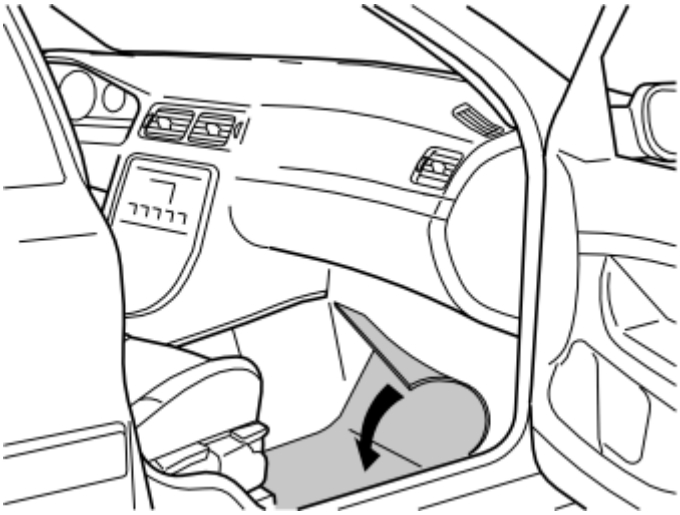

Fig. 114: Folding Aside Floor Carpet
Courtesy of VOLVO CARS CORPORATION

- Detach the floor carpet at the front passenger seat and fold it aside so that the hole to the engine compartment is visible.

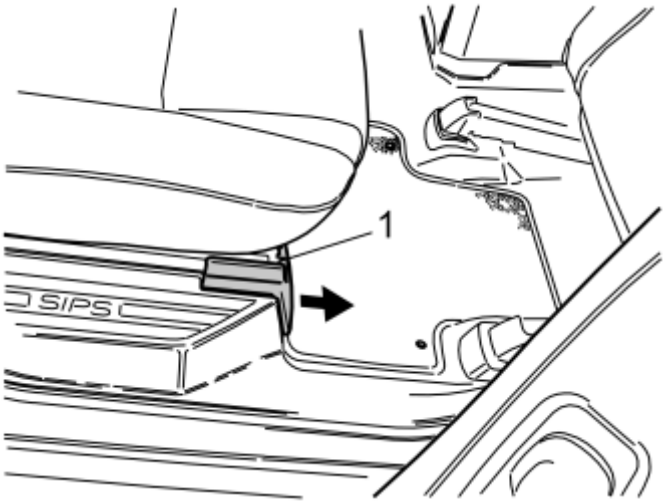

Fig. 115: Pushing Up Catch On Top Side
Courtesy of VOLVO CARS CORPORATION

- Remove the panel in the front right-hand seat mounting by pushing up the catch (1) on the top and pulling the panel forwards.

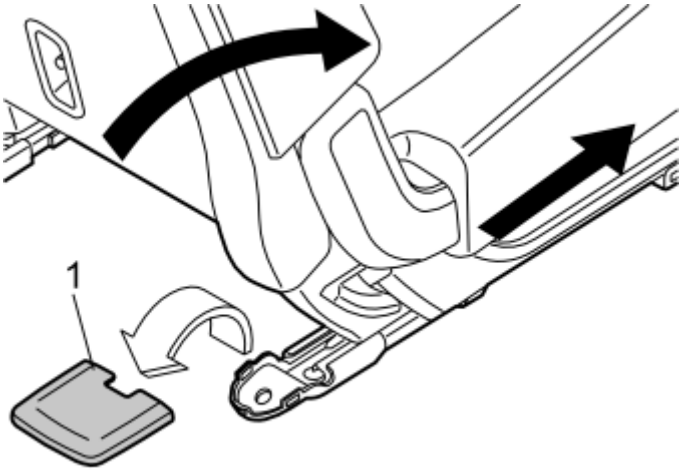

Fig. 116: Removing Cover Panel
Courtesy of VOLVO CARS CORPORATION

- Fold the backrest forward and push the seat as far forward as possible. (On cars with two rows of seats the second row is fixed.)
- Remove the cover (1) to the rear right-hand seat mounting by prizing it away at the rear edge.

Illustration A

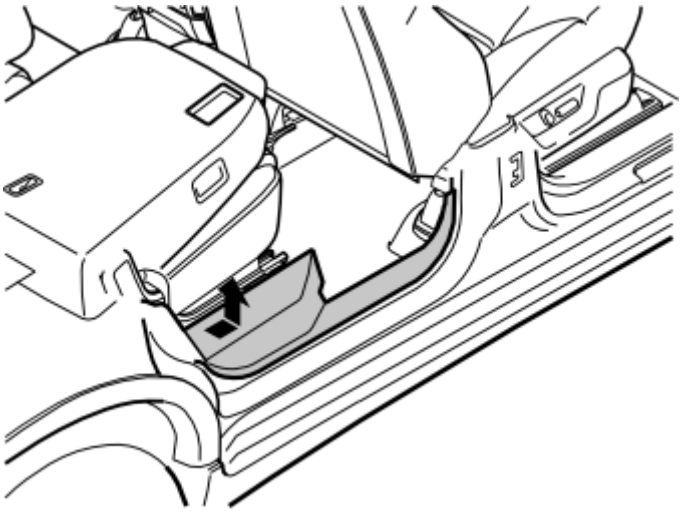

Fig. 117: Removing Sill Trim Panel
Courtesy of VOLVO CARS CORPORATION

- Detach the right-hand rear door's sill trim panel by pulling it away at the rear edge so that the clips release. Continue forward until the remaining clips have released.

Applies to cars with two rows of seats

- On cars with two rows of seats the seat cannot be pushed forward. To remove the sill trim panel, start by folding the backrest forward as the sill trim panel is pulled away at the rear edge. Following which, move

the backrest back so that the seat cushion can be raised, and in this way increase the space for removing the sill trim panel. It is fixed securely, so make sure that there is no damage to it or to adjoining components during removal.

Illustration B

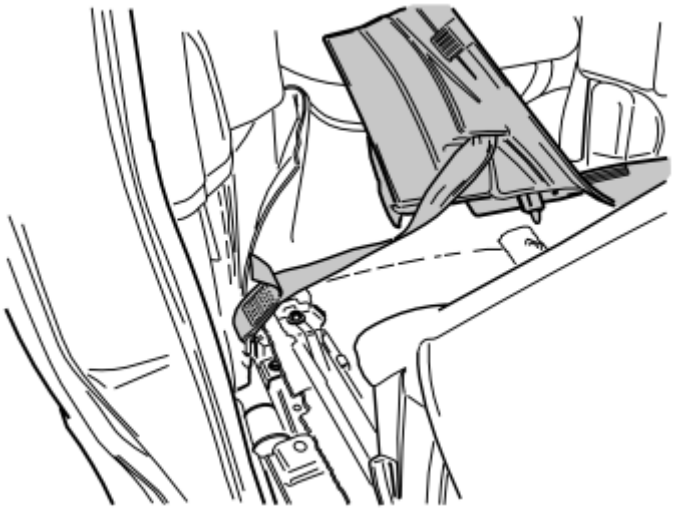

Fig. 118: Identifying Sill Trim Panel
Courtesy of VOLVO CARS CORPORATION

- Unhook the sill trim panel from the B-pillar panel and place it in the second/third row of seats.

PREPARATIONS IN THE CARGO COMPARTMENT

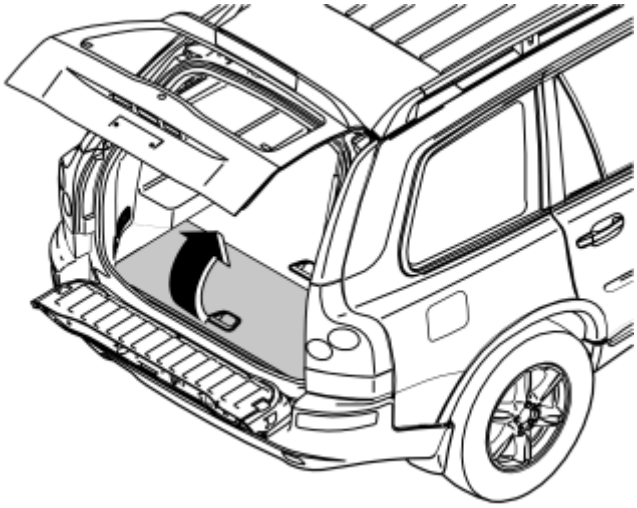

Fig. 119: Removing Floor Hatch With Panel
Courtesy of VOLVO CARS CORPORATION

Applies to cars with three rows of seats and integrated carrier bag holder on the underside of the center floor hatch

- Fold up the center floor hatch.
- Detach the two belts on the panel under the floor hatch and lift up the panel at the rear edge.
- Fold the floor hatch back and lift out the floor hatch with panel.

Applies to cars with three rows of seats without an integrated carrier bag holder

- Lift up the center rear floor hatch at the rear edge and lift it out.

Applies to cars with three rows of seats

- Remove the two center floor hatches by first lifting them up slightly at the rear edge and then pulling them away from their mountings at the front edge.
- If the center rear floor hatch is equipped with a carrier bag holder on the underside then the floor hatch is secured with a belt on each short side of the storage box. Detach these belts.
- Remove the two storage boxes under the floor hatch.

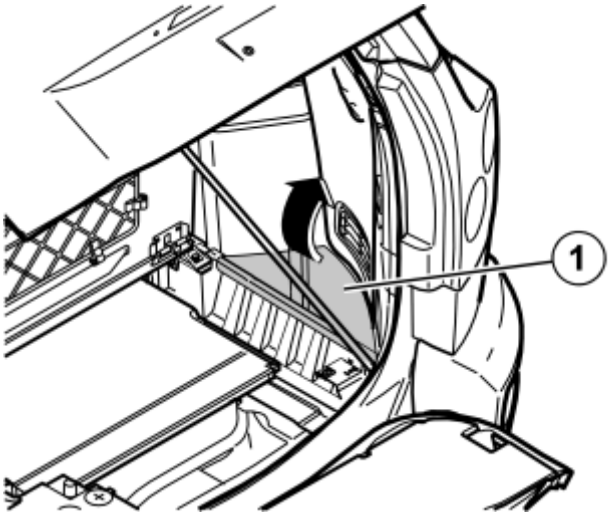

Fig. 120: Remove Right And Left Side Glove Box
Courtesy of VOLVO CARS CORPORATION

- Remove the right-hand side floor hatch (1).

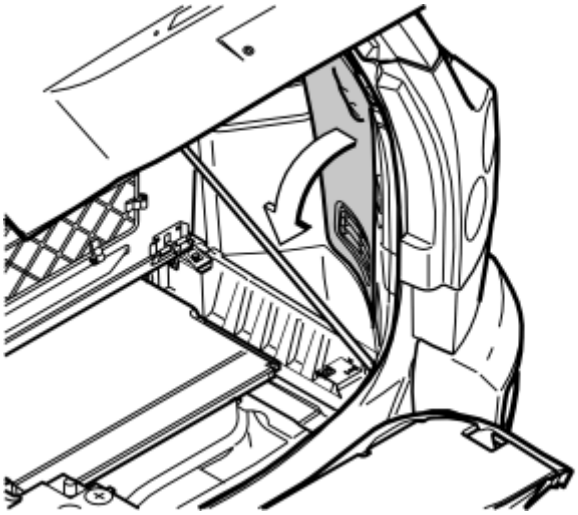

Fig. 121: Folding Side Panel From Right-Hand Side Of Cargo Compartment
Courtesy of VOLVO CARS CORPORATION

- Remove the folding side panel from the right-hand side of the cargo compartment.

INSTALLING THE CABLE HARNESS FROM THE BUMPER

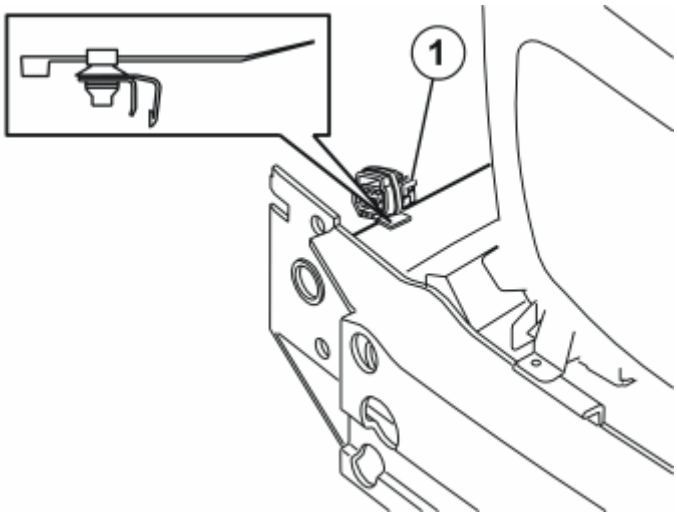

Fig. 122: Identifying Waterproof Connector
Courtesy of VOLVO CARS CORPORATION

- Take the short cable harness from the kit.
- Detach the smaller connector from the cable.
- Install the waterproof connector (1) with tie strap/metal clip from the kit.
- Secure the tie strap around the connector and install the metal clip around the panel edge on the right-hand side of the car.

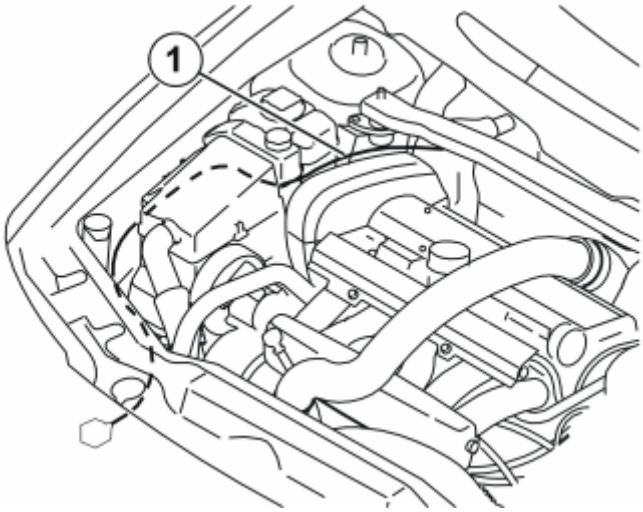

Fig. 123: Identifying Cable
Courtesy of VOLVO CARS CORPORATION

- Pull the end of the cable with the loose pins into the engine compartment.
- Route the cable (1) as illustrated. Place it under the cable duct and expansion tank so that it is concealed.

NOTE: Make sure that the cable is positioned so that it is not damaged by heat or wear.

- Clamp it in with tie straps from the kit.

CABLE ROUTING TO THE PASSENGER COMPARTMENT

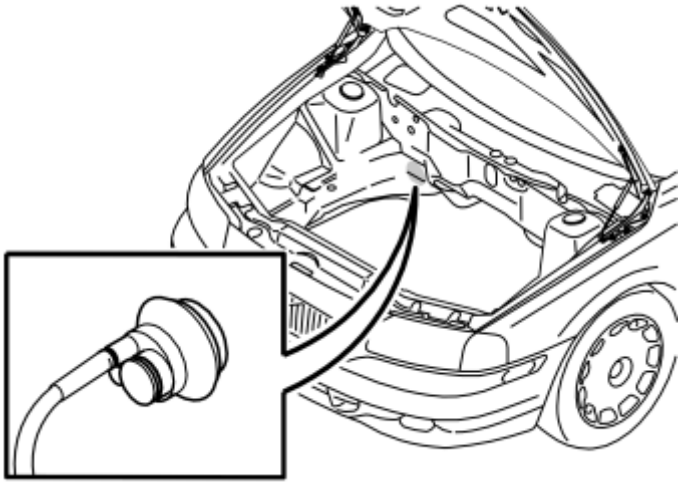

Fig. 124: Identifying Rubber Grommet
Courtesy of VOLVO CARS CORPORATION

- Raise the car.
- Remove the plug from the hole into the passenger compartment.

If the car has a rubber grommet without any space for more cables:

- Remove the existing rubber grommet and replace it with the rubber grommet from the kit. Cut off the tip of one of the rubber teats.

If the car has a rubber grommet with space for more cables:

- Cut off the tip of the unused rubber teat.

- Lubricate the cable with normal soap so that the cable slides easily in the rubber grommet.
- Thread the rubber grommet on the cable.
- Route the cable in through the hole and press in the rubber grommet so that it seals properly.
- Pull the cable again so that the correct length remains outside the passenger compartment.
- Make sure that the cable's heating hose is in contact against the rubber grommet and secure it with a tie strap.

CABLE ROUTING IN THE PASSENGER COMPARTMENT

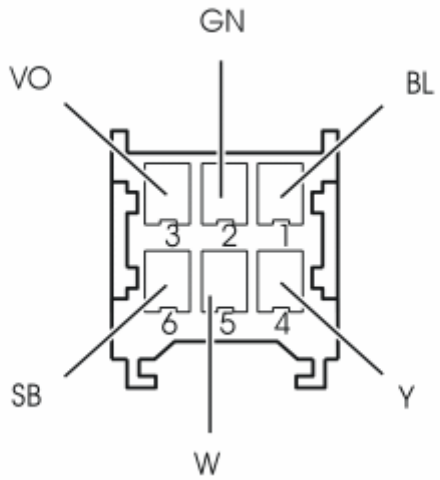

Fig. 125: Identifying Connector Terminals
Courtesy of VOLVO CARS CORPORATION

- Take the connector from the kit.
  1. Blue (BL)
  2. Green (GN)
  3. Violet (VO)
  4. Yellow (Y)
  5. White (W)
  6. Black (SB)
- Undo the catch
  1. Blue (BL)

2. Green (GN)
3. Violet (VO)
4. Yellow (Y)
5. White (W)
6. Black (SB)

- Install the cable end pins in the connector.
  1. Blue (BL)
  2. Green (GN)
  3. Violet (VO)
  4. Yellow (Y)
  5. White (W)
  6. Black (SB)

- Press back the connector's catch.

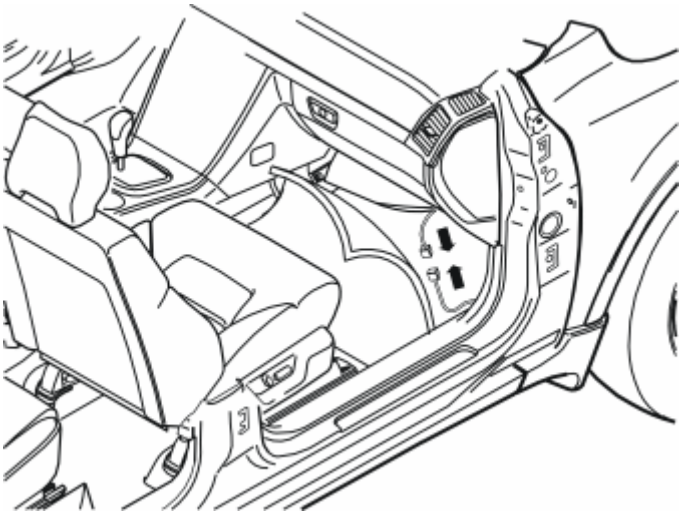

Fig. 126: Cable Routing To The ECU Control Module
Courtesy of VOLVO CARS CORPORATION

Cable routing to the ECU control module

- Take the long cable from the kit and connect it to the connector which has just been prepared.

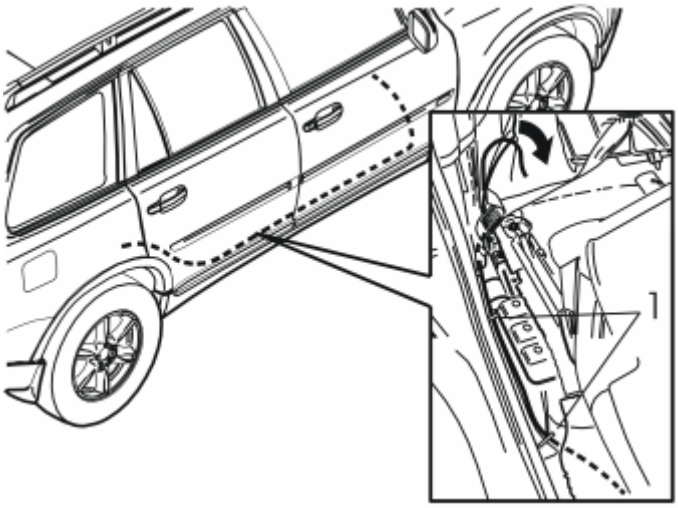

Fig. 127: Cable Clamped In At Air Duct
Courtesy of VOLVO CARS CORPORATION

- Guide the cable down between the carpet and the door sill as far as possible to the floor and route it along the right-hand side of the car on to the rear edge of the right-hand rear door's opening.
- Route the cable by the front right-hand seat mounting on the right-hand seat in the second row of seats.
- Pull away the mat from the front edge of the right-hand side panel in the cargo compartment.
- Route the cable harness along the right-hand side of the right-hand seat in the second row of seats, towards the front edge of the rear wheel housing.
- Route it further on the left-hand side of the seat belt's lower mounting, between the support bracket for the right-hand seat and wheel housing, and out at the left-hand side of the wheel housing.
- Clamp the cable harness into the hole in the seat mounting front member, and in the rear hole in the horizontal panel at the right-hand side of the seat. Use tie straps (1) from the kit.

CABLE ROUTING IN THE CARGO COMPARTMENT

Illustration A

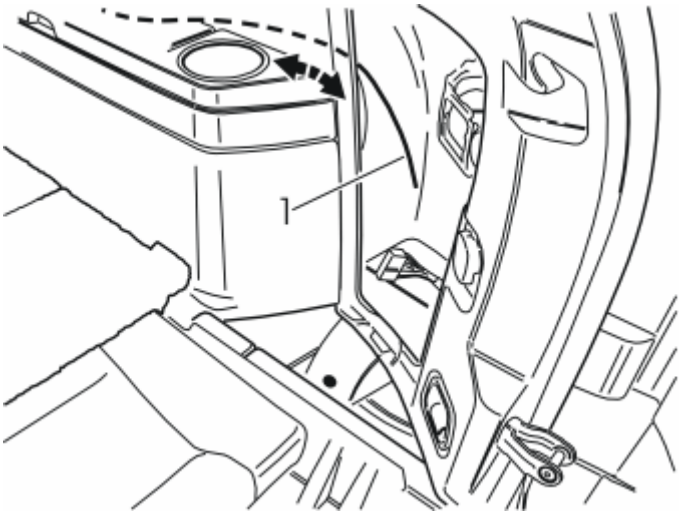

Fig. 128: Identifying Cable At Rear Edge Of Right-Hand Side Panel
Courtesy of VOLVO CARS CORPORATION

Applies to cars with three rows of seats

- Guide in a wire or cable (1) at the rear edge of the right-hand side panel and along its inside, above the load securing eyelet brackets.
- Route the wire/cable to the front edge of the side panel.

Illustration B

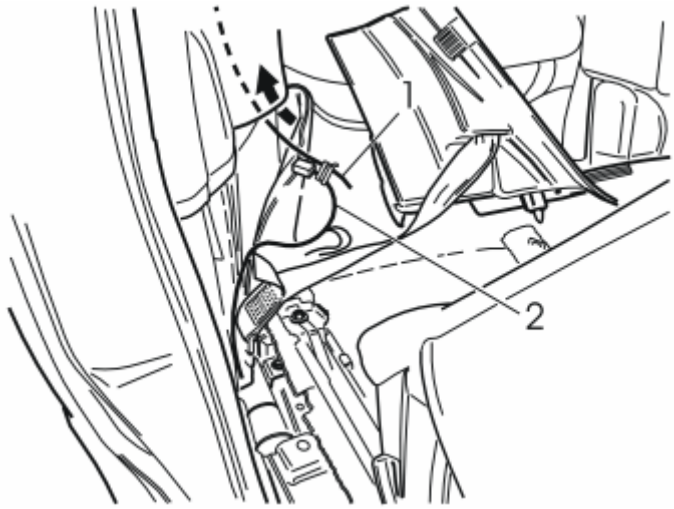

Fig. 129: Identifying Cable Harness
Courtesy of VOLVO CARS CORPORATION

- Tape the cable (2) to the wire and route it on at the rear edge of the side panel.

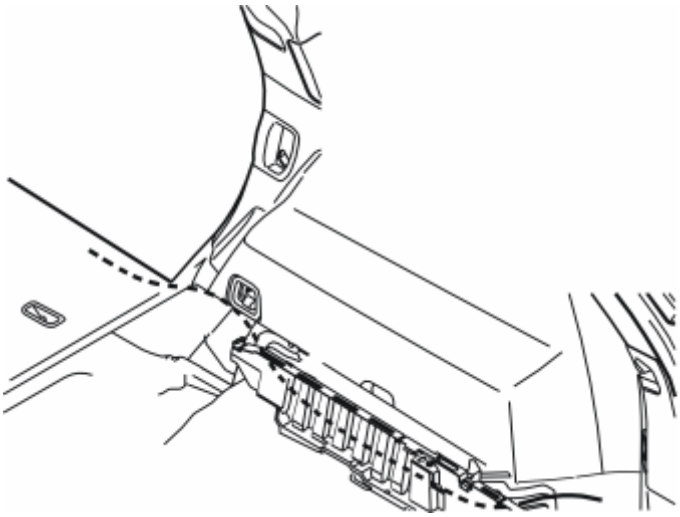

Fig. 130: Cable Routing
Courtesy of VOLVO CARS CORPORATION

Applies to cars with two rows of seats

- Route the cable on the left-hand side of the seat belt's mounting at the front edge of the wheel housing, inside the carpet at the front edge of the side panel, between the side panel and the rear cargo floor support, to the tailgate.

Illustration A

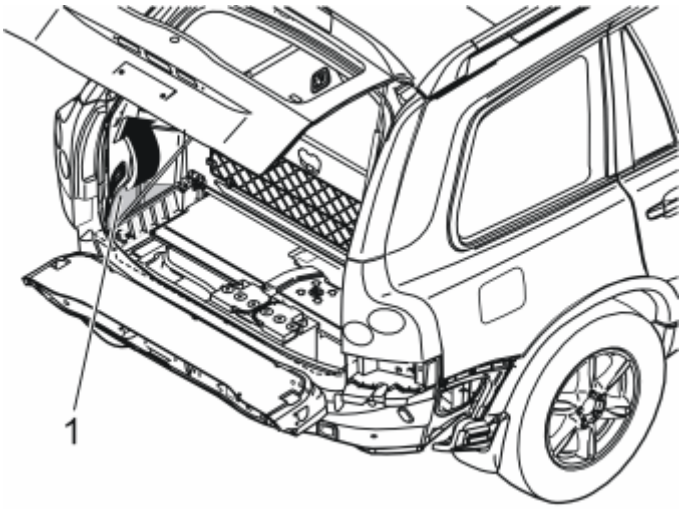

Fig. 131: Routing Cable
Courtesy of VOLVO CARS CORPORATION

- Continue to route the cable along the existing cable harness below the tailgate.
- Secure the cable with tie straps from the kit.
- Remove the left-hand floor hatch (1).

Illustration B

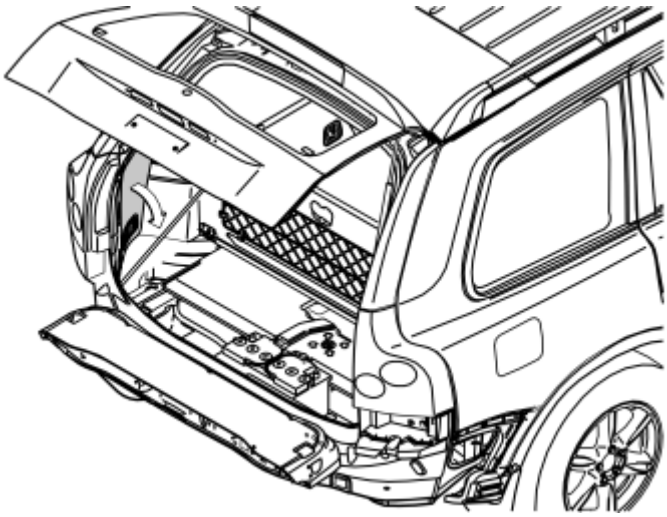

Fig. 132: Removing Folding Side panel

Courtesy of VOLVO CARS CORPORATION

- Remove the folding side panel from the left-hand side in the cargo compartment.

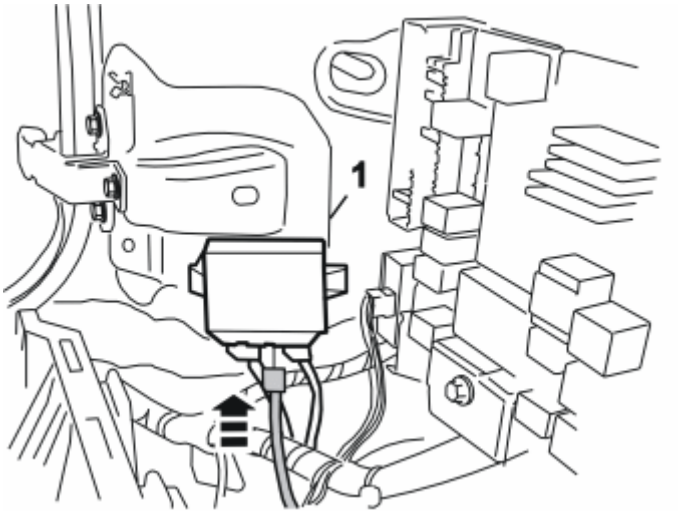

Fig. 133: Connecting Cable To Control Module
Courtesy of VOLVO CARS CORPORATION

- Connect the cable in an unused port in the control module which is secured with Velcro on the left-hand side in the cargo compartment behind the wheel housing.

NOTE: Make sure that the connector clicks into place and is properly secured.

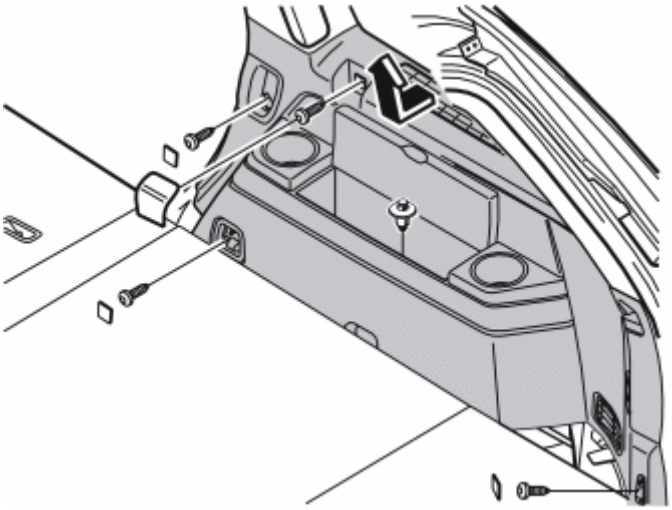

Fig. 134: Removing Rear Side Panel
Courtesy of VOLVO CARS CORPORATION

Applies when the rear side panel must be removed to facilitate cable routing. Remove:

- the hatch in the rear edge of the side panel.

- four covers.
- four screws.
- one clip.
- any A/C controls.
- Detach the C and D panels at the lower edge.
- Pull the side panel away and lift it off.

MAKING THE HOLES FOR THE SENSORS

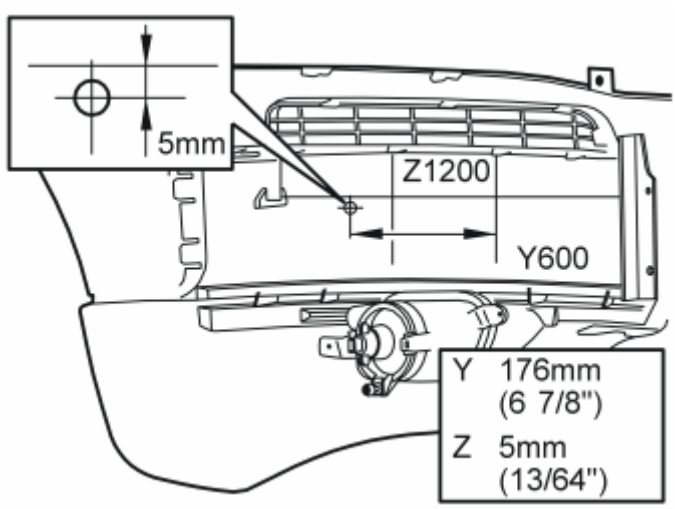

Fig. 135: Location And Dimensions Of Drilling Holes For Outer Sensors
Courtesy of VOLVO CARS CORPORATION

- Measure out and mark up for the holes for the outer sensors. Measure **176 mm (6 7/8")** from the line marked Y600. Mark up **5 mm (13/64")** below the line marked Z1200 as illustrated

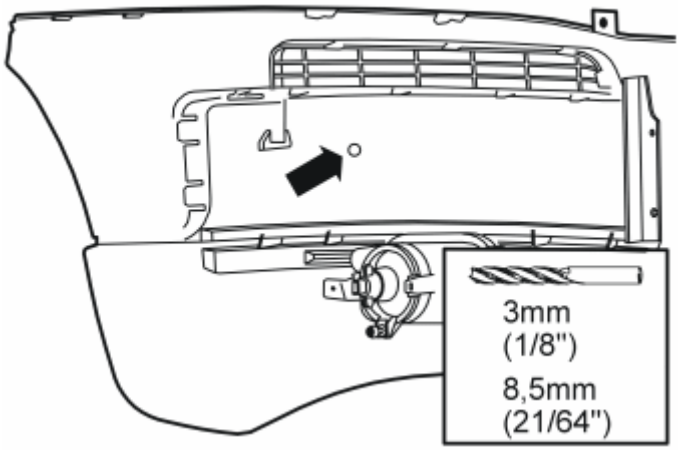

Fig. 136: Identifying Markings For Drilling
Courtesy of VOLVO CARS CORPORATION

- Pre-drill the holes in the markings on both sides with a **3 mm (1/8")** diameter drill bit. Following which, drill out the holes to **8.5 mm (21/64")** .

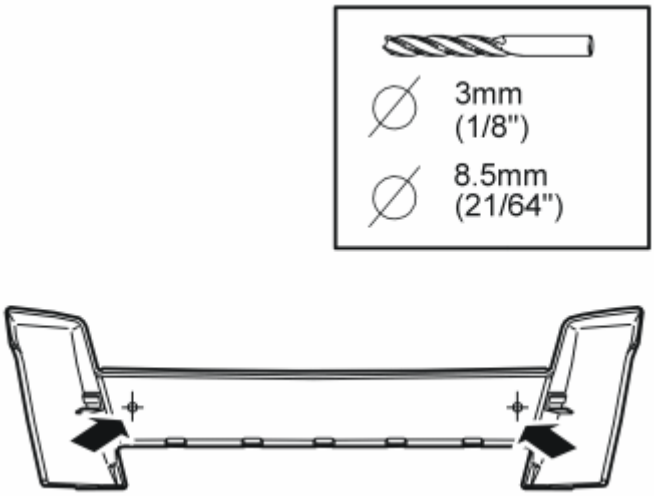

Fig. 137: Pre-Drill Holes In Bumper Bar
Courtesy of VOLVO CARS CORPORATION

- Take the bumper bar which had the protective tape affixed.
- Pre-drill the holes in the markings (1) on both sides with a **3 mm (1/8")** diameter drill bit. Following which, drill out the holes to **8.5 mm (21/64")** .

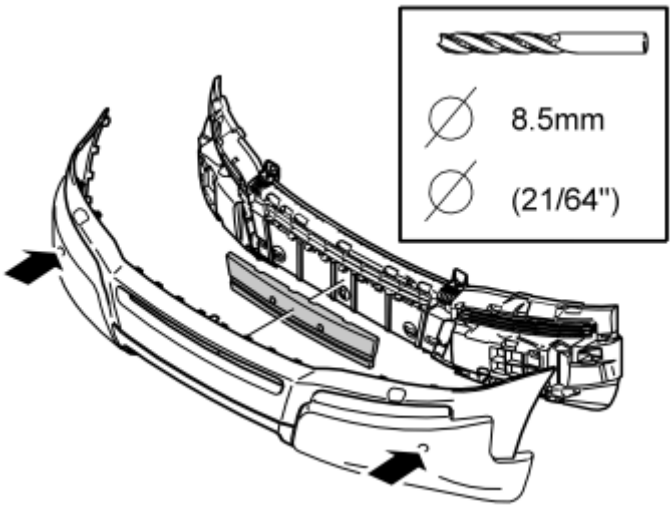

Fig. 138: Reinstalling Foam And Rear Section In The Bumper
Courtesy of VOLVO CARS CORPORATION

- Reinstall the foam and rear section loosely in the bumper but without securing it to all of the catches.
- Make sure that the rear section is in the correct position by engaging a few of the catches.
- Drill through the outer **8.5 mm (21/64")** holes in the side panels of the bumper and straight through the rear section.

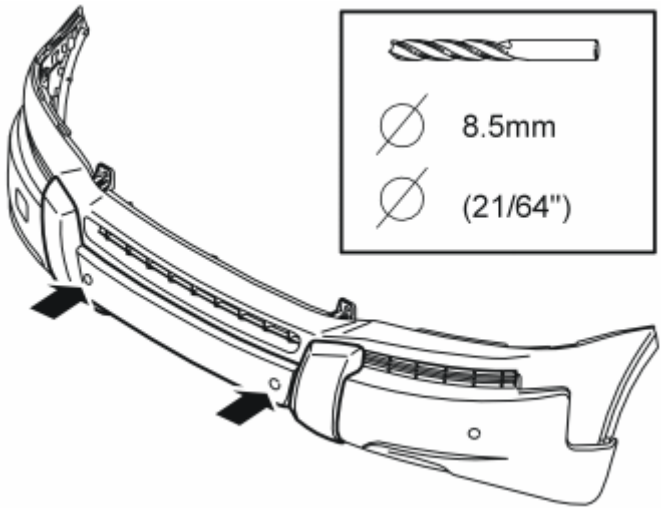

Fig. 139: Installing Bumper Bar
Courtesy of VOLVO CARS CORPORATION

- When installing the bumper bar, follow the enclosed separate installation instructions.

NOTE: **If the car already has a bumper bar then this must be removed and replaced with the bumper bar from the kit.**

NOTE: **Install the bumper bar temporarily in the correct position without securing it with tape.**

- Drill straight through the bumper bar's holes and through the bumper behind them.
- Remove the bumper bar again.

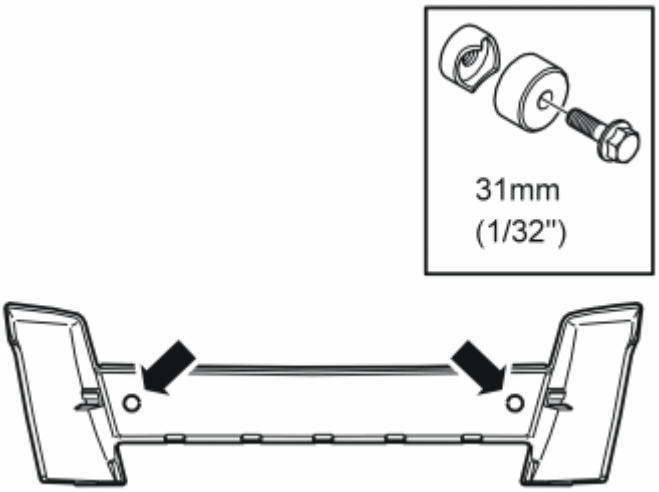

Fig. 140: Identifying Holes In The Bumper Bar
Courtesy of VOLVO CARS CORPORATION

- Open the holes in the bumper bar using a **31 mm (1 /32")** hole punching tool **part no. 9814069** .

- Open the outer drilled holes in the bumper using a **31 mm (1 /32")** hole punching tool **part no. 9814069** .
- The illustration shows the hole positions in the bumper bar.

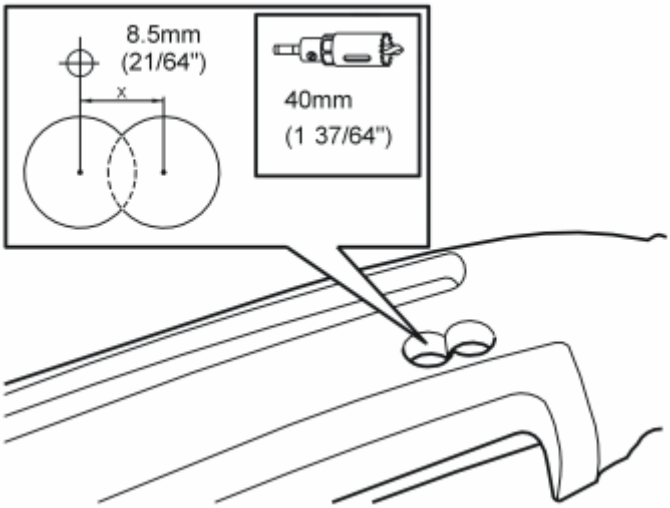

Fig. 141: Making Extra Recesses
Courtesy of VOLVO CARS CORPORATION

- Make extra recesses to the right of the **8.5 mm (21/64")** holes in the bumper. See Illustration A

NOTE: Applies only to the two inner holes in the bumper.

- Drill straight through the bumper, foam and rear section in one action.

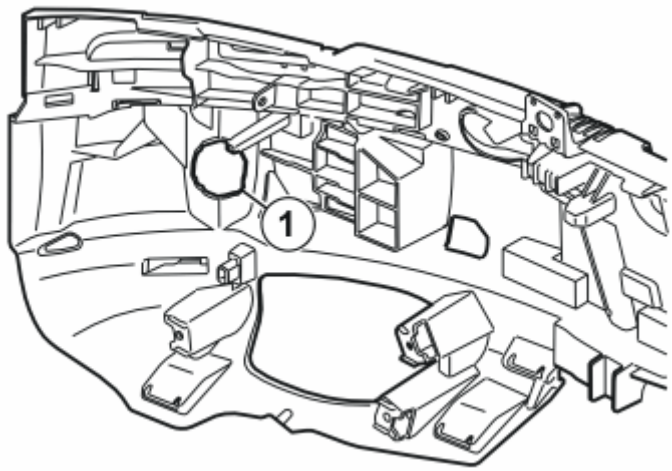

Fig. 142: Identifying Recess For Sensors
Courtesy of VOLVO CARS CORPORATION

- Detach the rear section, foam and bumper bar from the bumper and blow away all filings.
- Make recesses in the rear section for the sensors' connectors at the outer holes as illustrated. Use the 8.5 mm (21/64") holes as guides for the hole saw. A lathe hole saw can be used to make a single large hole.

Also, cut out a little extra to the right with a jig saw or similar.

HINT: If the recess is too small then the assembly of the bumper with all components will be troublesome and the sensor cables can then become damaged.

- Do this on both sides of the bumper.

INSTALLING THE SENSOR HOLDERS

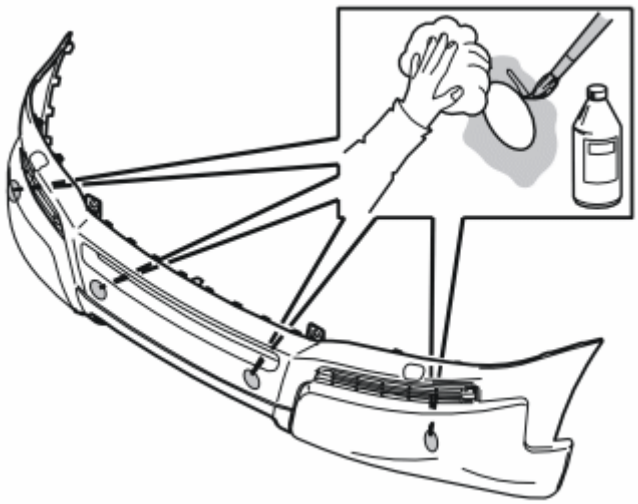

Fig. 143: Cleaning Out Inside Of Bumper Cover
Courtesy of VOLVO CARS CORPORATION

- Clean out the dirt out from the inside of the bumper cover using a mild soap solution.
- Clean around holes and their inner edges using a cleaning cloth, **part no. 9192678** , and allow to dry.
- Apply a thin layer of activator, **part no. 8637076** , on the cleaned surfaces around the inside of the holes and allow to dry.

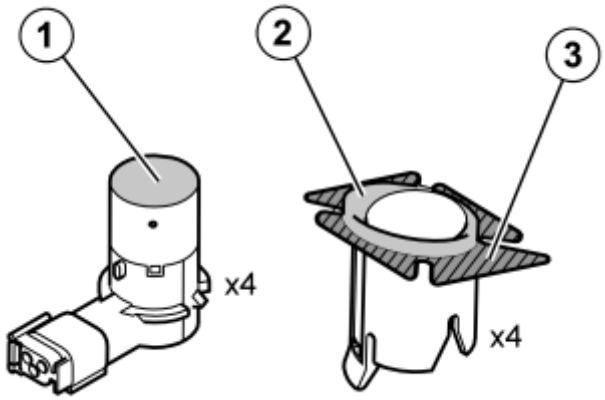

Fig. 144: Identifying Sensor Surface And Holders

Courtesy of VOLVO CARS CORPORATION

- Clean the sensor surface (1) on the sensors using a cleaning cloth.
- Clean surfaces 2 and 3 on the sensor holders using a cleaning cloth.
- Allow to dry.
- Apply a thin layer of activator on the cleaned surfaces and allow to dry.

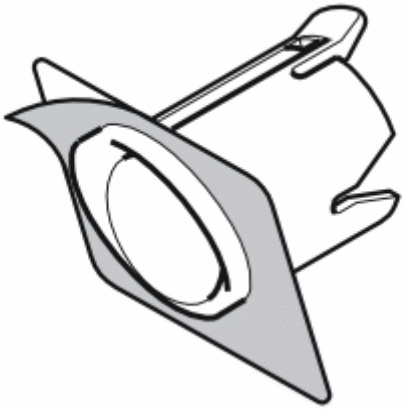

Fig. 145: Identifying Sensor Holders With Protective Tape
Courtesy of VOLVO CARS CORPORATION

- Remove the protective backing tape from one side of the tape. Apply the tape on the front side of the sensor holder.
- Carry out the procedure above for the three other sensor holders.
- Remove the protective film from the affixed pieces of tape on the sensor holders.
- Install the sensor holders with the narrow edge up. The top edge of the sensor holder must be horizontal with the bumper.

NOTE: The tape adheres immediately. Incorrect positioning of the sensor holders can result in the function being out of order completely or temporarily.

- Install the bumper bar, in accordance with the enclosed separate installation instructions.

INSTALLING THE SENSORS AND CABLE HARNESS

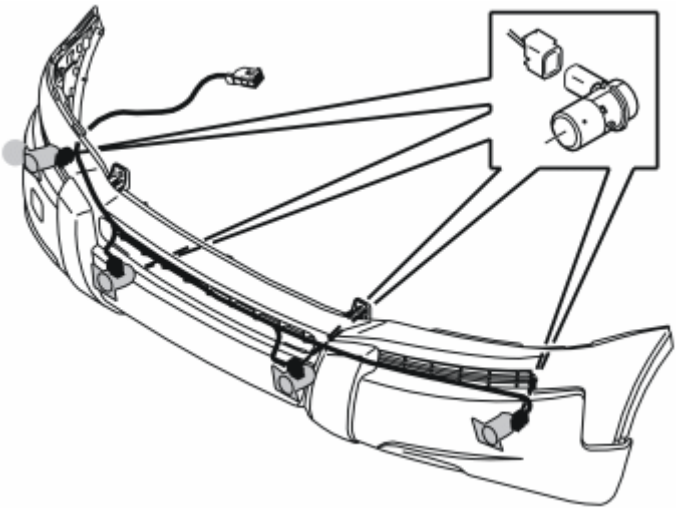

Fig. 146: Installing Sensors
Courtesy of VOLVO CARS CORPORATION

- Take the sensors and their cable harness from the kit.
- Fit the all of the sensors in the sensor holders so that they fasten securely.
- Connect the cable harness connectors to the sensors.

NOTE: **A click should be heard when connecting. The noise confirms that the catch has locked.**

- The cable harness must by secured up above the foam, along the edge inside the bumper cover. Secure the cable with butyl tape. Use activator (**part no. 8637076**) as a basis in order to increase adhesion.

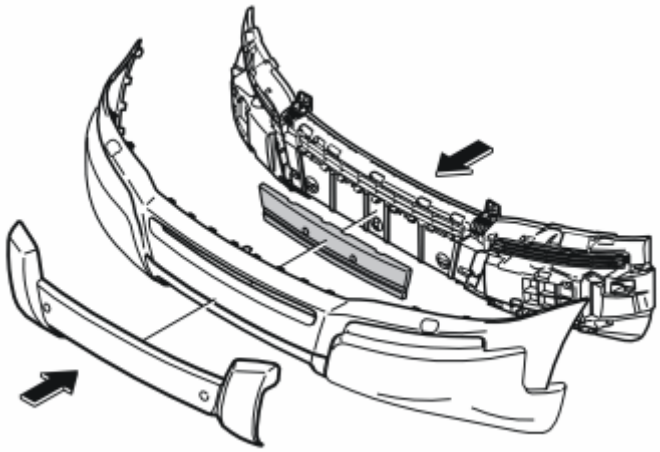

Fig. 147: Installing Foam And Plastic In The Bumper Cover
Courtesy of VOLVO CARS CORPORATION

- Reinstall the foam and the plastic in the bumper cover.

NOTE: Make sure that all catches fully engage.

- Check that the sensor cable is not routed between the bumper and the foam as it would then be awkward to assemble the components.

Illustration A

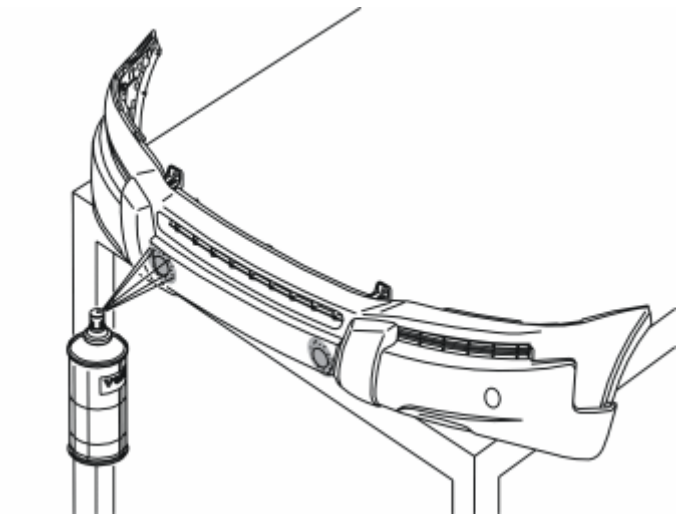

Fig. 148: Spraying Inner Sensors With Paint
Courtesy of VOLVO CARS CORPORATION

- Spray the inner sensors and the visible sections of their holders with Silverstone paint (part no. 9437338)

NOTE: Take care that the activator, and any previous layers of paint, has dried for at least ten minutes before the paint is sprayed on.

- Apply a maximum of two layers of paint.

NOTE: Only the inner sensors and their holders shall be painted with Silverstone.

CAUTION: Too many layers of paint may result in partial or complete malfunction.

Illustration B

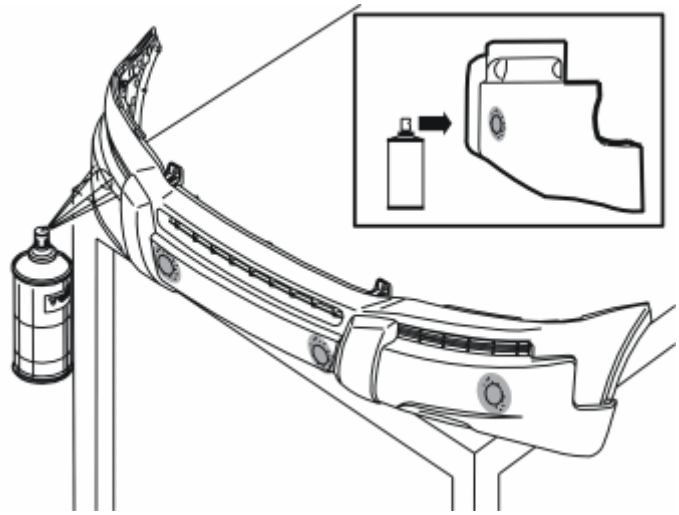

Fig. 149: Spraying Outer Sensors With Clear Coat
Courtesy of VOLVO CARS CORPORATION

- Take the clear coat included with the Silverstone paint. Spray the two outer sensors and the visible sections of their holders with clear coat.

NOTE: Clear coat must be applied to the sensors in order to obtain the correct function and protection against discoloration.

- Apply a maximum of two layers of clear coat.

CAUTION: Too many layers of clear coat may result in partial or complete malfunction.

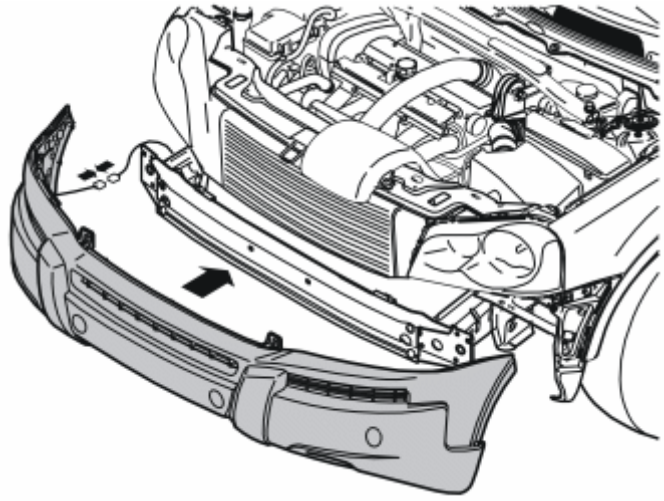

Fig. 150: Installing Bumpers
Courtesy of VOLVO CARS CORPORATION

- Hold the bumper up against the car and connect the connector for the sensors to the connector clamped to

the car.

- Reinstall the bumpers by repeating the installation instructions in reverse order.
- Clamp the sensor cable so that it is not chafed or causes noise.

Reinstall:

- the sills, front and rear.
- the side panels in the cargo compartment.
- the floor carpet.
- Program the software in accordance with the service information in VIDA (Volvo scan tool).

SWITCH ALARM (2003)

ALARM SWITCH

PREPARATIONS

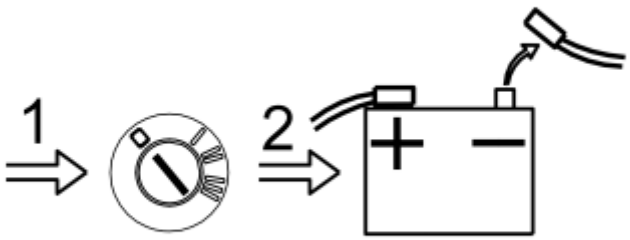

Fig. 151: Disconnect Battery Negative Lead
Courtesy of VOLVO CARS CORPORATION

- Turn the ignition switch to position 0.
- Disconnect the battery negative lead.

NOTE: Wait at least five minutes before disassembling the connectors or removing other electrical equipment.

INSTALLING THE SWITCH

Illustration A

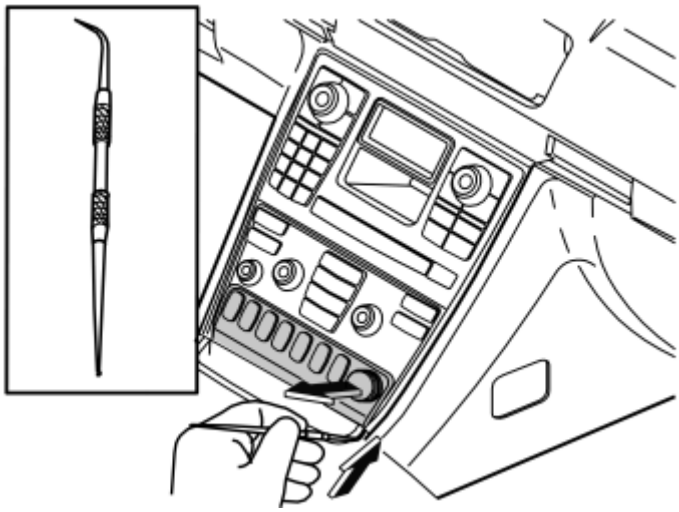

Fig. 152: Identifying Removing The Blind Cover Plug With A Scribe
Courtesy of VOLVO CARS CORPORATION

- Remove the blind cover plug from the 12V socket
- Take a scriber with an angled point. Insert the angled end of the scriber in the joint underneath, on one side of the surround for the switch unit.

Illustration B

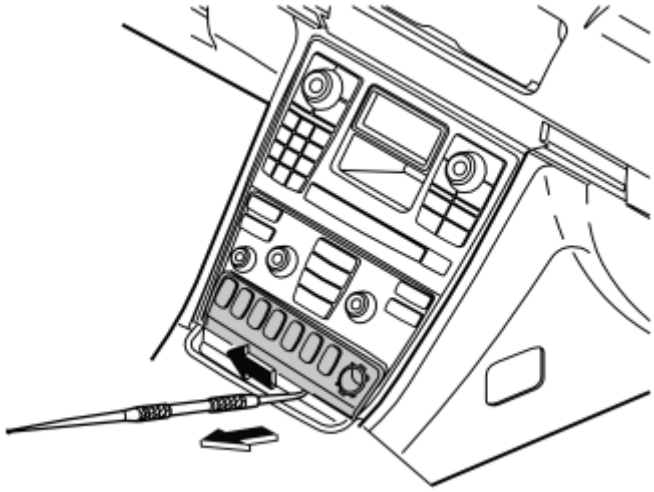

Fig. 153: Identifying Pulling Out The Surround Using The Scribe
Courtesy of VOLVO CARS CORPORATION

- Carefully pull out the surround from underneath using the scriber. The surround is secured with three mounting lugs at the top and lower edges.

NOTE: Do not damage the surround.

- Place the surround to one side.

HINT: The surround with three button spaces can be replaced with a surround with seven button spaces if necessary. This can be purchased separately.

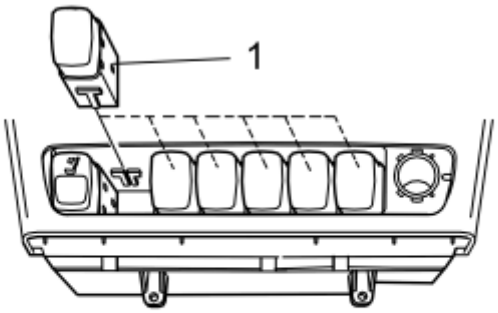

Fig. 154: Identifying Installation Of New Switch
Courtesy of VOLVO CARS CORPORATION

- Remove the switch blank. Install the new switch (1) in any location
- Reinstall the surround and blind cover plug for the 12V socket.

ALCOLOCK, INSTALLATION KIT (2003-2012)

ALCOLOCK, INSTALLATION KIT

INSTALLATION OF INSTALLATION KIT

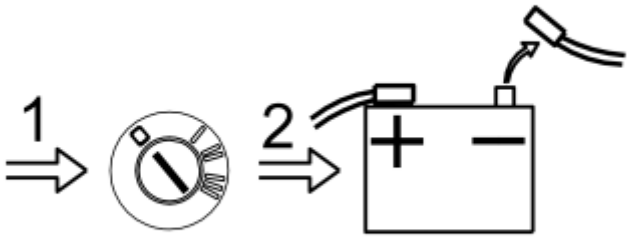

Fig. 155: Disconnect Battery Negative Lead
Courtesy of VOLVO CARS CORPORATION

- Turn the ignition switch to position 0.
- Disconnect the battery negative lead.

NOTE: Wait at least five minutes before disassembling the connectors or removing other electrical equipment.

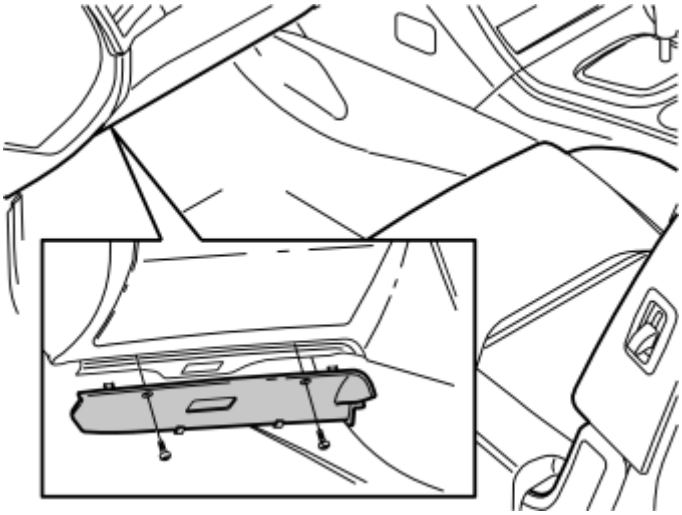

Fig. 156: Identifying Removal Of Screws And Soundproofing Panel
Courtesy of VOLVO CARS CORPORATION

- Remove the screws and the soundproofing panel on the driver's side.

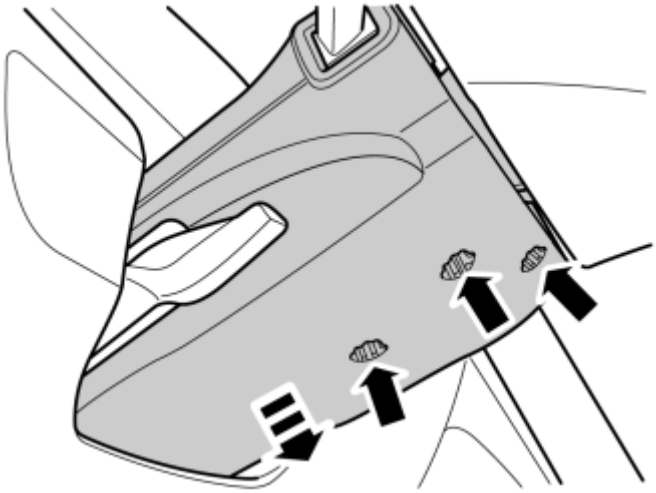

Fig. 157: Identifying Screws And Lower Cover For Steering Column
Courtesy of VOLVO CARS CORPORATION

- Unscrew the three screws and remove the lower cover for the steering column.

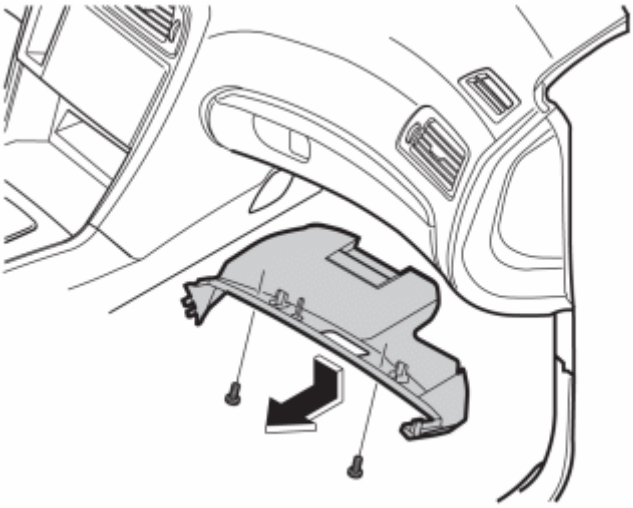

Fig. 158: Identifying Screws And Soundproofing Panel Removed
Courtesy of VOLVO CARS CORPORATION

- Remove the screws and the soundproofing panel on the passenger side.

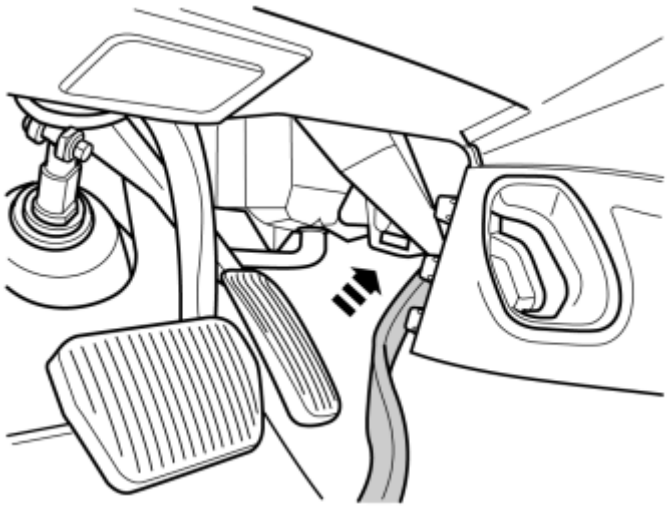

Fig. 159: Identifying Insertion Of Cable Harness Through Opening In Central Stack
Courtesy of VOLVO CARS CORPORATION

- Take the cable harness from the kit and insert it through the opening in the central stack as illustrated.

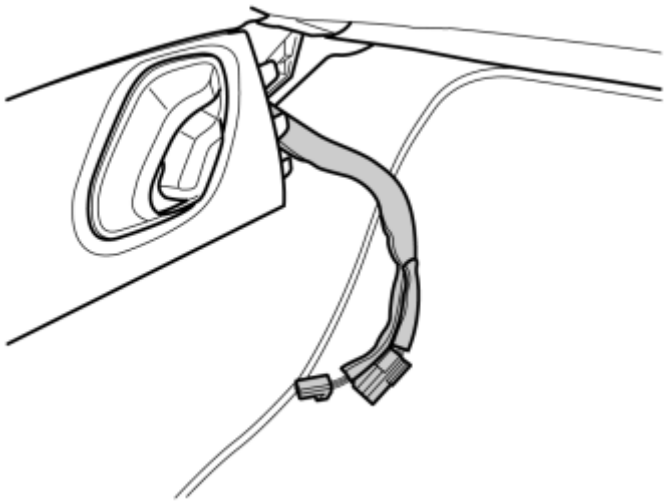

Fig. 160: Identifying Cable Harness Routed Through Central Stack And Out Through Opening
Courtesy of VOLVO CARS CORPORATION

- Route the cable harness straight through the central stack and out through the opening on the other side as illustrated.

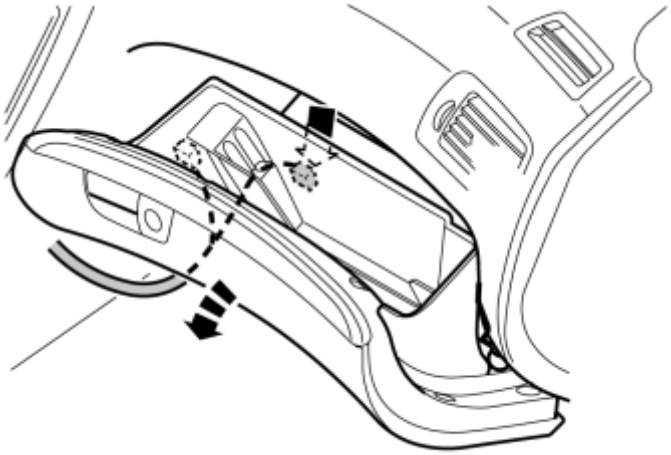

Fig. 161: Locating Connector In Glove Box For Lighting And Connecting To Connector From Cable Harness
Courtesy of VOLVO CARS CORPORATION

- Open the glove box.
- Locate the existing connector for the glove box lighting. It is inside the glove box but can be reached through the opening in the end piece of the glove box.
- Connect the connector from the cable harness to the existing connector. Place the wiring and connectors in their original position inside the glove box.
- Reinstall the soundproofing panel and tighten it with the screws.

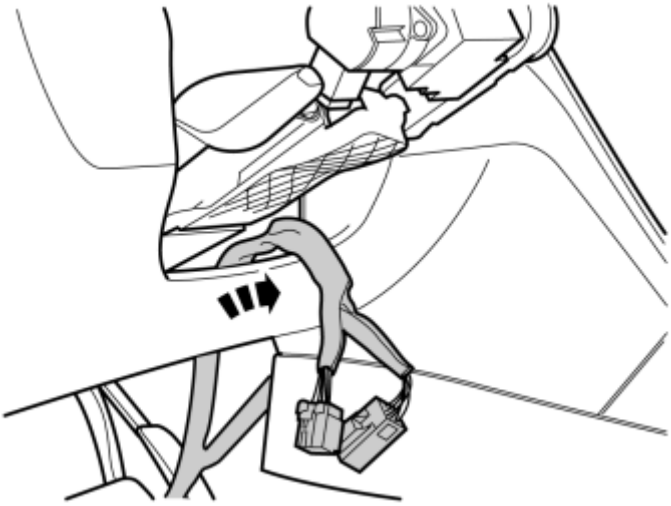

Fig. 162: Identifying Cable Harness Pulled Up Into Dashboard
Courtesy of VOLVO CARS CORPORATION

- Pull the cable harness up into the dashboard and out through the hole under the steering column.

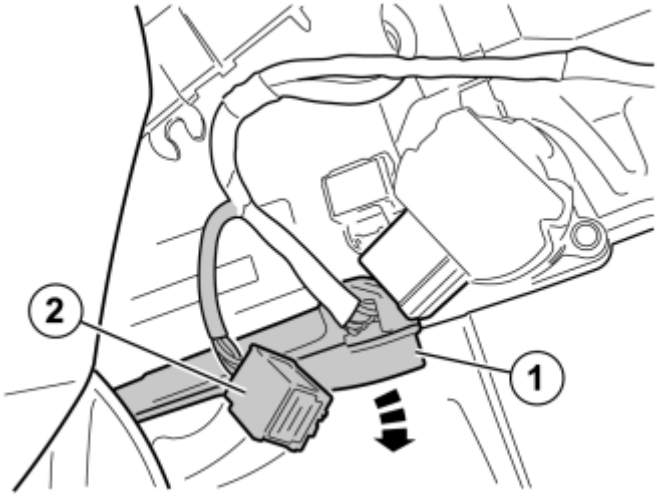

Fig. 163: Identifying Cable Duct And Connector For Ignition Switch
Courtesy of VOLVO CARS CORPORATION

- Remove the cable duct (1).
- disconnect the existing connector for the ignition switch (2).

NOTE: Pull the newly routed cable harness between the cable duct and steering column.

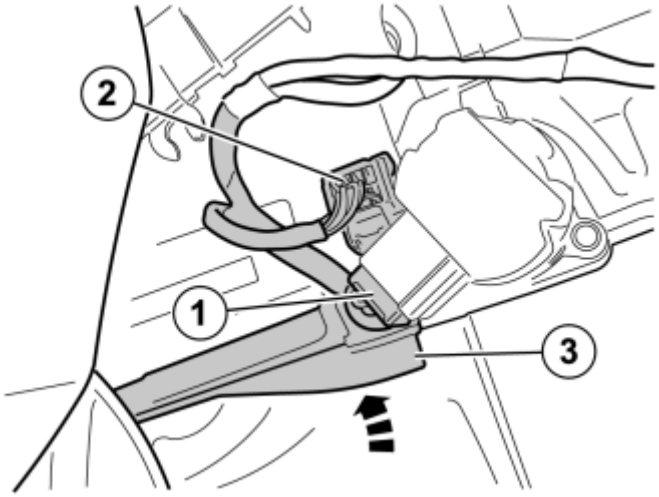

Fig. 164: Identifying Assembled Connectors, Steering Shaft And Cable Duct
Courtesy of VOLVO CARS CORPORATION

- Connect one connector from the cable harness to the ignition switch (1).
- Connect the other connector from the cable harness to the connector that was disconnected from the ignition switch. Install the assembled connectors between the steering shaft and cable duct (2).
- Reinstall the cable duct (3)

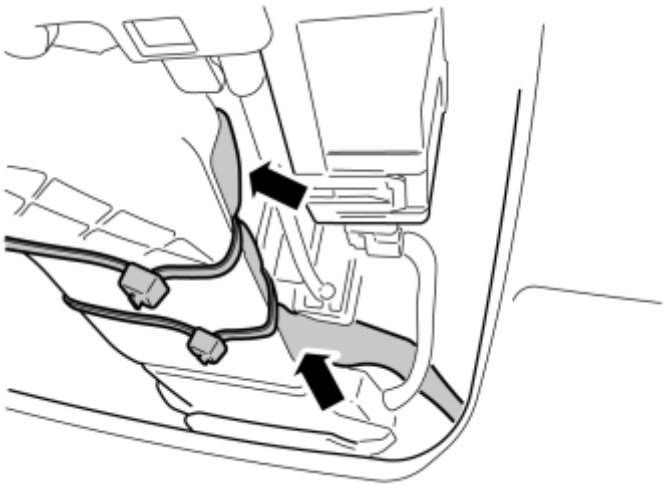

Fig. 165: Identifying Cable Harness Tied To Cable Duct Using Tie Straps
Courtesy of VOLVO CARS CORPORATION

- Tighten the cable harness at the cable duct using tie straps and ensure that the catches are located on the underside of the cable duct.

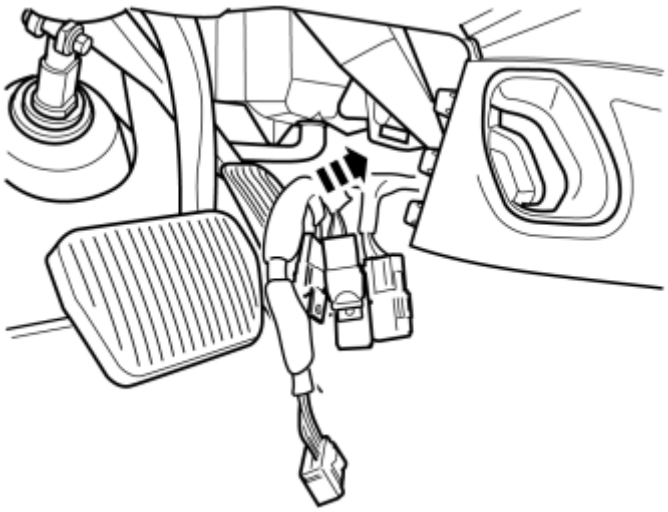

Fig. 166: Gathering Excess And Remaining Connectors On Cable Harness And Placing Under Heater Unit
Courtesy of VOLVO CARS CORPORATION

- Gather the excess and remaining connectors on the cable harness and place under the heater unit.
- Reinstall the sound proofing panel and tighten it with the screws.

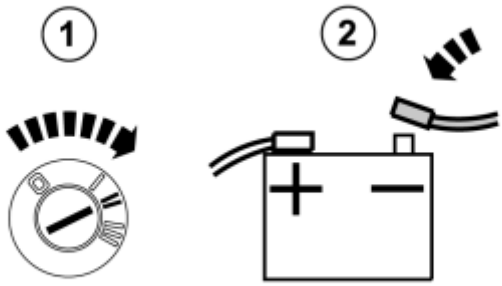

Fig. 167: Identifying Ignition In ON Position and Connecting Negative Battery Lead
Courtesy of VOLVO CARS CORPORATION

- Turn the ignition key to position II.
- Connect the battery negative lead.

POSITION DESCRIPTION OF CONNECTORS FOR ALCOLOCK

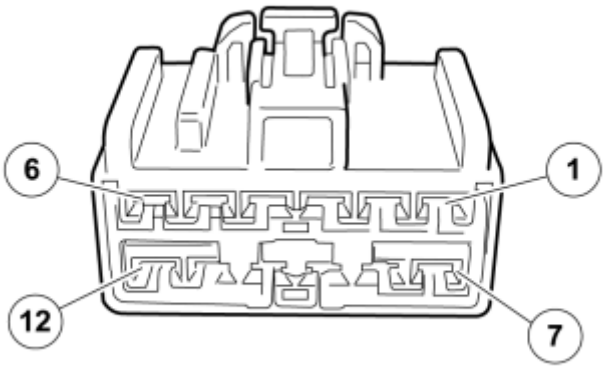

Fig. 168: Identifying Position Of Connectors For Alcolock
Courtesy of VOLVO CARS CORPORATION

1. 1 - 30+ FEED (Battery supply)
2. 2 - 15+ FEED (Ignition supply)
3. 3 - START-IN (kl50)
4. 4 - START-OUT (kl 50)
5. 5 - Preheat, act-low
6. 6 - GROUND- (ground 31)
7. 7 - 30+ FEED, CONTROLLED (controlled 30+ battery supply)

NOTE: **30+ battery supply (1) must only be used in exceptional cases when log function for disconnection of the alcolock is required. In all other cases, 30+ battery supply (7) should be used, to prevent shortening the service life of the battery.**

PARKING ASSISTANCE, CAMERA, (2007-2012)

PARKING ASSISTANCE, CAMERA

NOTE: **For cars with an accessory electronic module (AEM), the existing cable harness between the accessory electronic module (AEM) and the rear electronic module (REM) must be replaced (steps 51-66). The new cable harness is marked (A) in the kit image.**

INSTALLING THE CAMERA

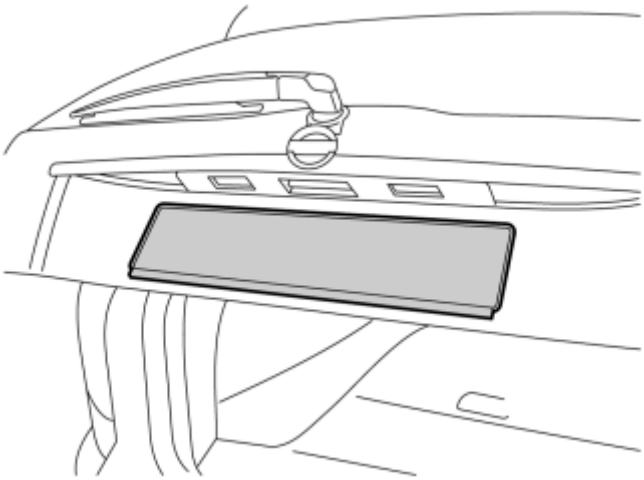

Fig. 169: Identifying Number Plate And Holder
Courtesy of VOLVO CARS CORPORATION

- Remove the number plate and holder.

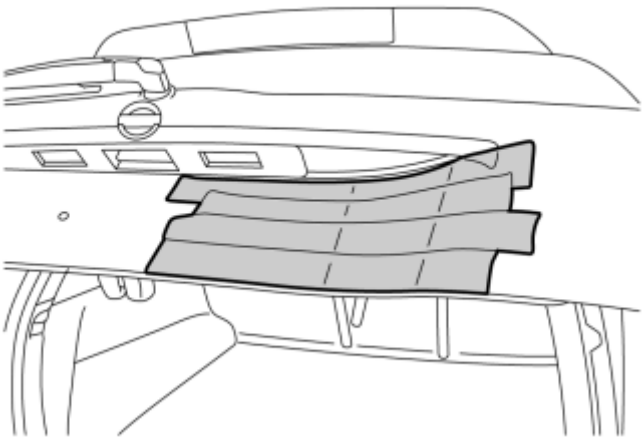

Fig. 170: Applying Tape To Boot Lid For Protection
Courtesy of VOLVO CARS CORPORATION

- Apply tape to the boot lid to protect the finish.

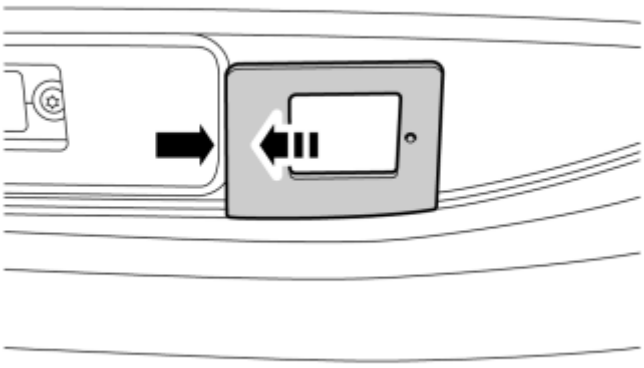

Fig. 171: Positioning The Template
Courtesy of VOLVO CARS CORPORATION

- Position the template as illustrated.

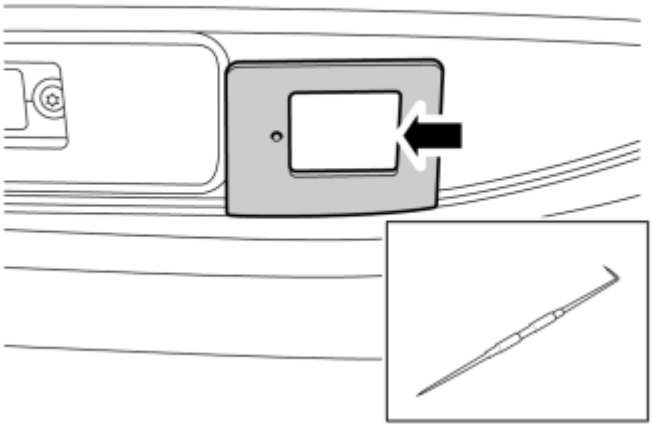

Fig. 172: Marking The Template's Inner Rectangle
Courtesy of VOLVO CARS CORPORATION

- Make a mark according to the template's inner rectangle.

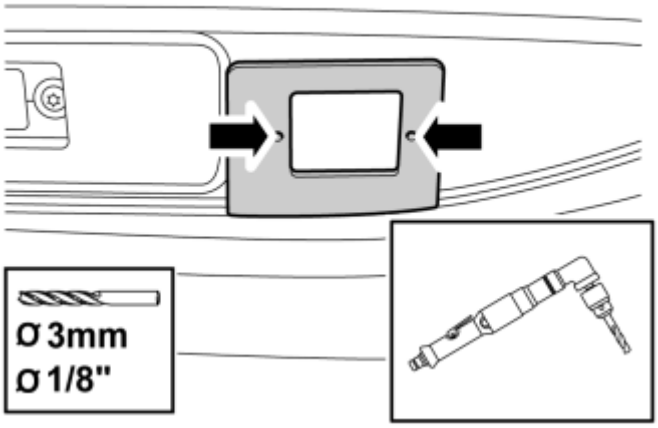

Fig. 173: Template Drill Holes
Courtesy of VOLVO CARS CORPORATION

- Use a short drill bit and drill holes according to the template.

NOTE: Do not drill through the template.

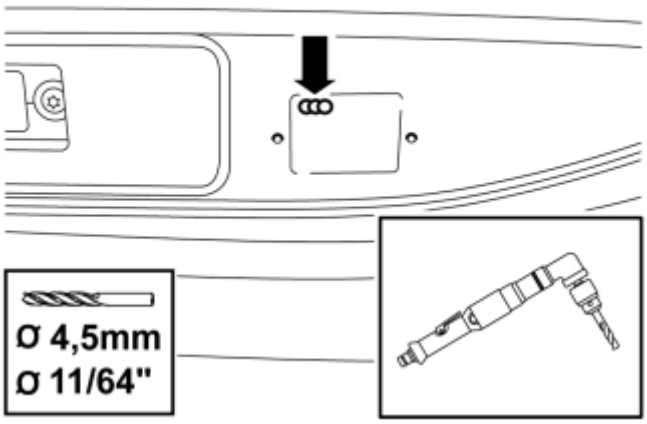

Fig. 174: Drilling Three Overlapping Holes
Courtesy of VOLVO CARS CORPORATION

- Drill three overlapping holes as illustrated.

NOTE: Use a short drill bit.

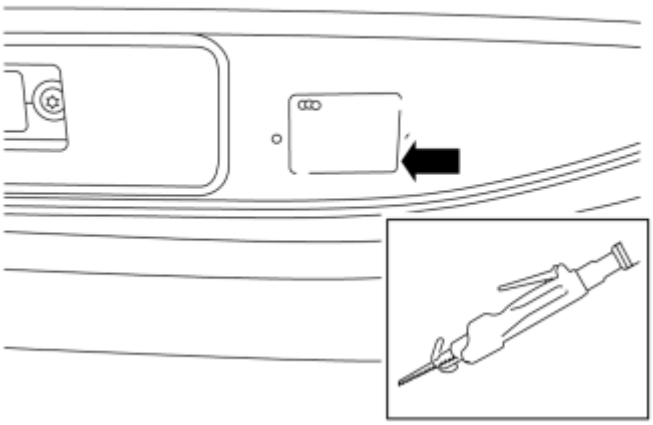

Fig. 175: Identifying Marked Cutting Area
Courtesy of VOLVO CARS CORPORATION

- Cut out along the inside of the marking. The marking should still be visible.
- Clean up the saw cuttings using a vacuum.

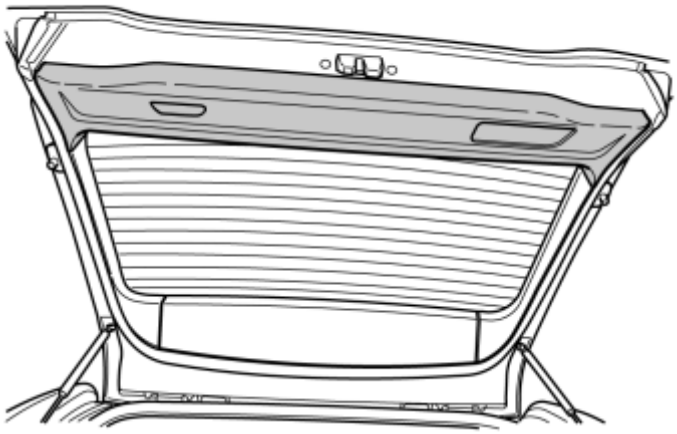

Fig. 176: Raise The Boot Lid Completely
Courtesy of VOLVO CARS CORPORATION

- Open the boot lid fully.

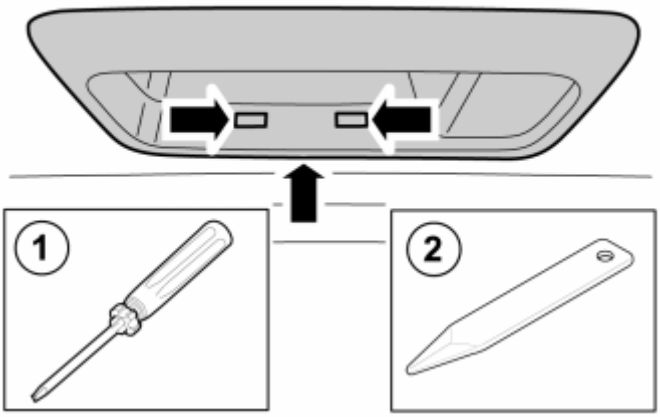

Fig. 177: Removing Border Around Handle
Courtesy of VOLVO CARS CORPORATION

- Remove the border around the handle by pressing in the two catches with a screwdriver (1) and at the same time pry up the outer edge using a weatherstrip tool (2).

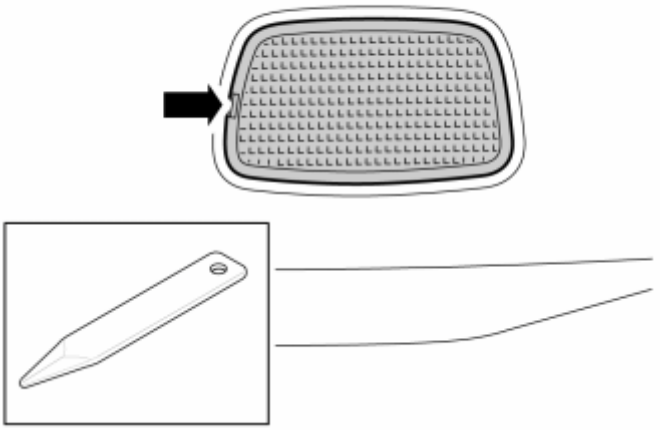

Fig. 178: Removing Lamp
Courtesy of VOLVO CARS CORPORATION

- Remove the lamp.
- Unplug the connector.

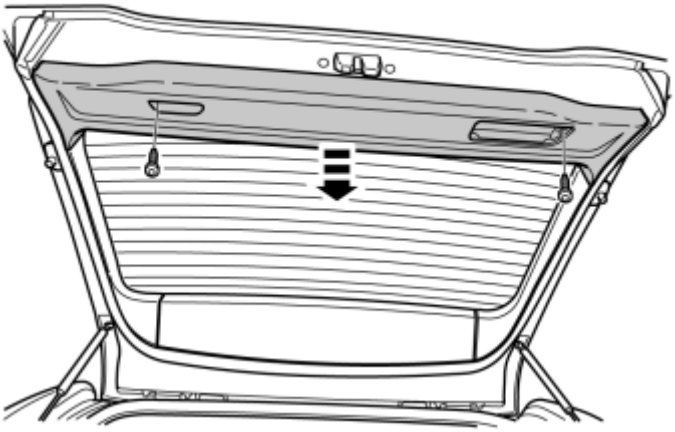

Fig. 179: Removing Panel
Courtesy of VOLVO CARS CORPORATION

- Remove the screws.
- Pull the panel downwards until all the clips release.

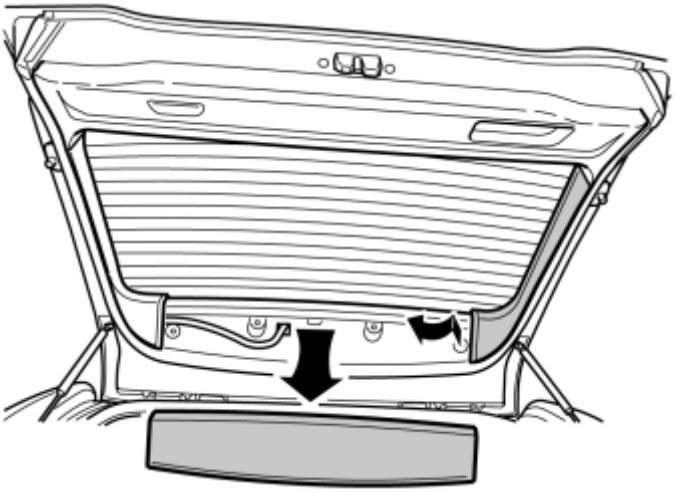

Fig. 180: Identifying Center And Right-Hand Side Panel
Courtesy of VOLVO CARS CORPORATION

- Remove the center panel and the right-hand side panel.

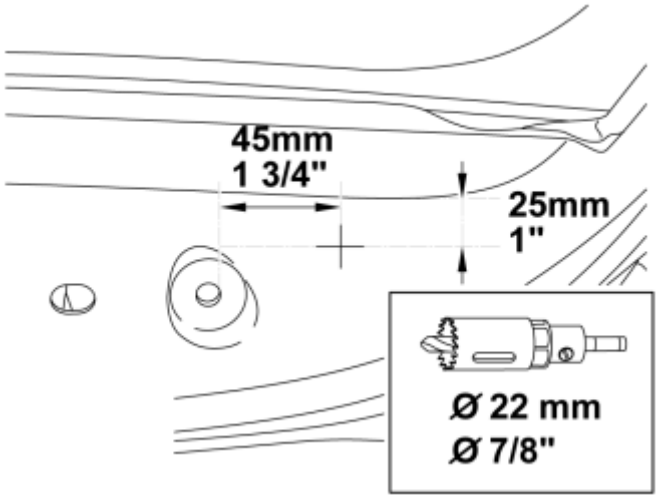

Fig. 181: Location And Dimensions Of The Cutting Area
Courtesy of VOLVO CARS CORPORATION

- Mark out and drill with the holesaw as illustrated.
- Vacuum.

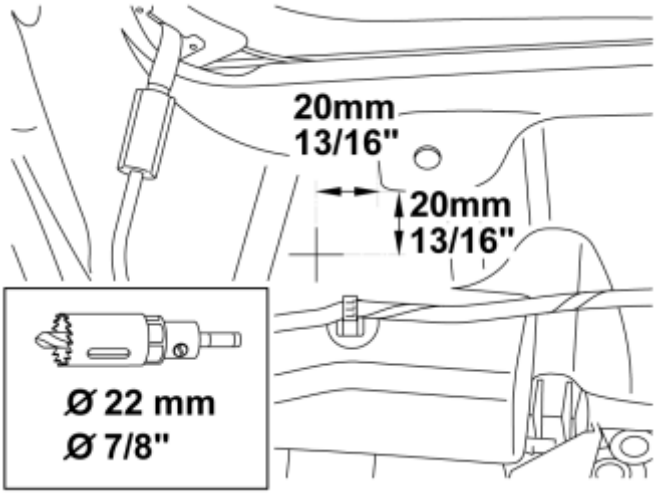

Fig. 182: Location And Dimensions Of The Cutting Area
Courtesy of VOLVO CARS CORPORATION

- Mark out and drill with the holesaw as illustrated.
- Vacuum.

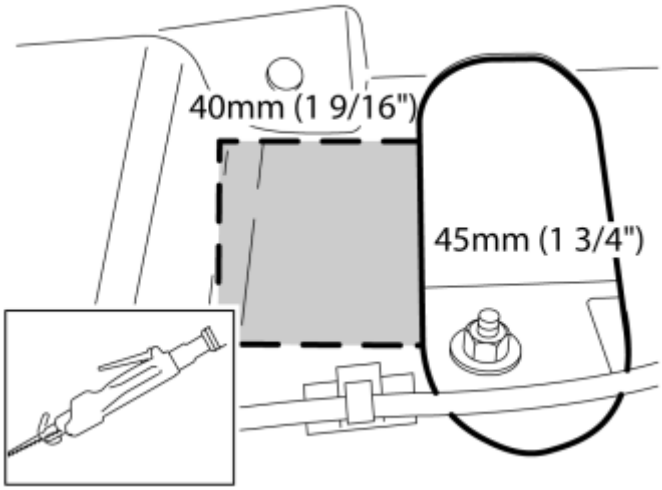

Fig. 183: Marking Area For Removal
Courtesy of VOLVO CARS CORPORATION

Applies to cars without vibration damper

- Mark out and saw out the hole as illustrated.
- Vacuum.

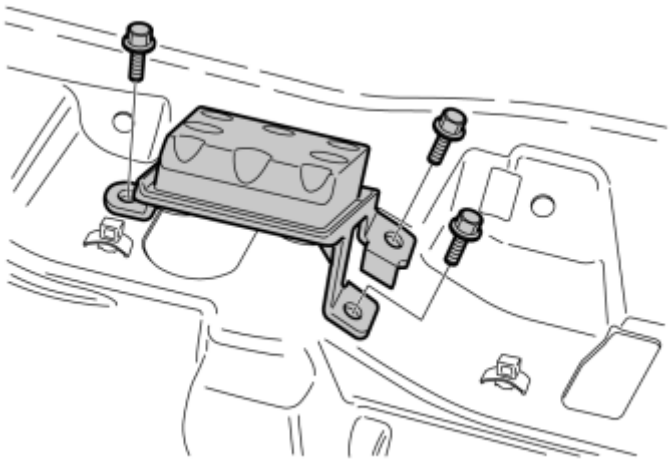

Fig. 184: Removing The Vibration Damper
Courtesy of VOLVO CARS CORPORATION

Applies to cars with vibration damper installed

- Remove the vibration damper by removing the three screws.

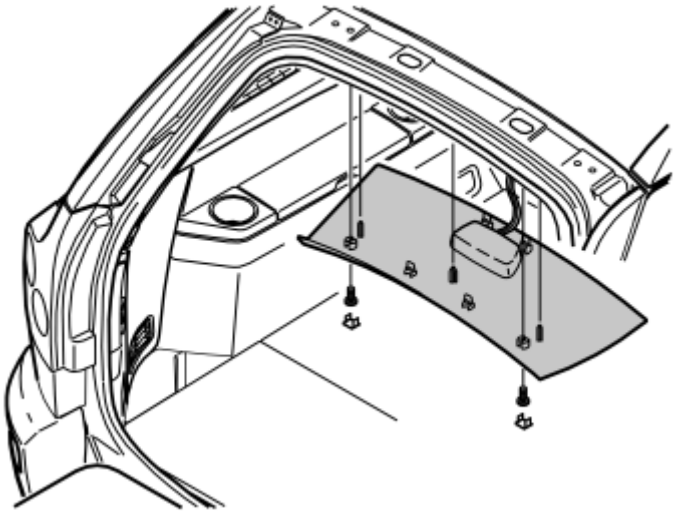

Fig. 185: Identifying Cover And Screws Underneath Rear Headlining
Courtesy of VOLVO CARS CORPORATION

- Remove the rear roof panel covers and the screws beneath them.
- Carefully pry off the panel at the rear edge. Use a plastic weatherstrip tool.
- Pull the rear edge of the panel downwards until the four clips on the top release.
- If the car is equipped with lighting in the panel, unplug the connector from the panel.
- Pull the panel backwards to release it.

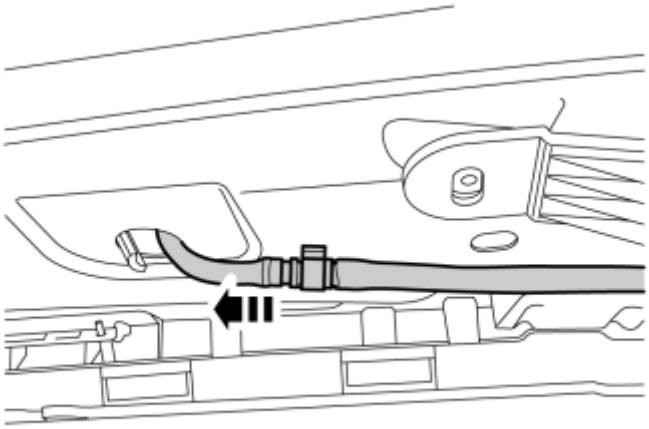

Fig. 186: Disconnecting Washer Hose
Courtesy of VOLVO CARS CORPORATION

- Disconnect the washer hose.

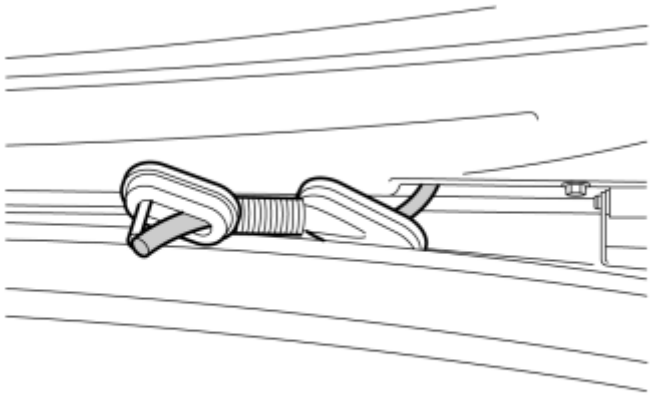

Fig. 187: Pulling Out The Washer Hose
Courtesy of VOLVO CARS CORPORATION

- Loosen the rubber pass-through and pull out the washer hose.

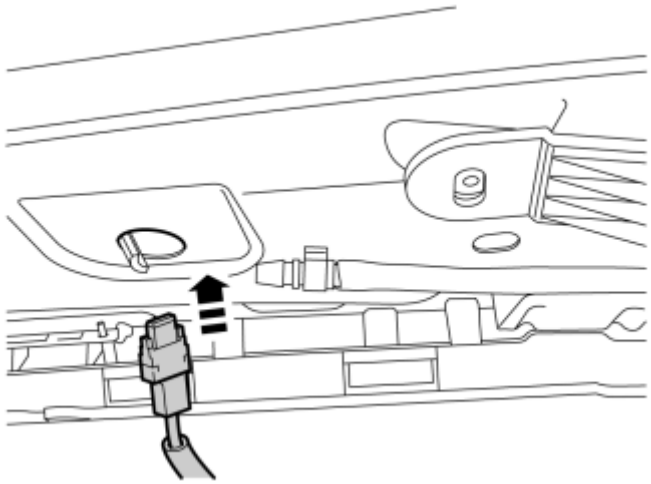

Fig. 188: Routing Cable Through Hole
Courtesy of VOLVO CARS CORPORATION

- Take the tail that is foam-covered about 100 mm on the cable to camera lens and thread through the hole.

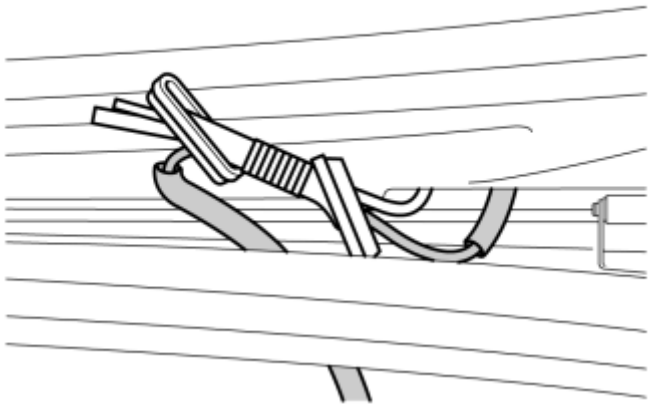

Fig. 189: Inserting Cable Through Rubber Grommet
Courtesy of VOLVO CARS CORPORATION

- Insert the cable through the rubber grommet. The end of the grommet that has a lip should sit in the body and the part without a lip should sit in the cargo compartment. The rubber grommet should sit on the part of the cable that is not foam-covered.

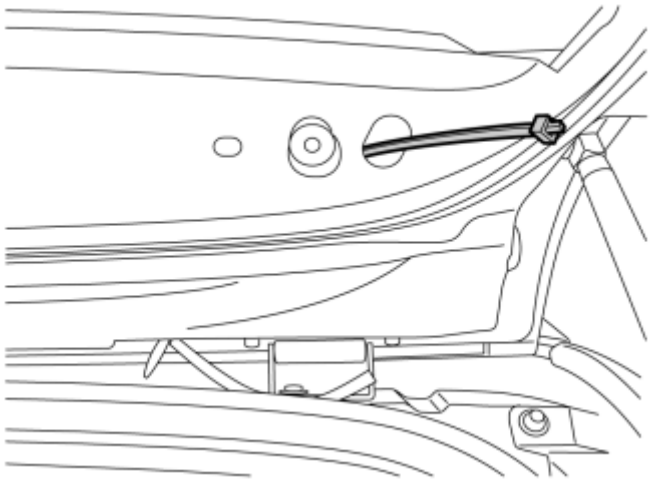

Fig. 190: Threading Wire Or Cable Through Drilled Hole
Courtesy of VOLVO CARS CORPORATION

- Thread a wire or cable through the drilled hole down to the washer hose.

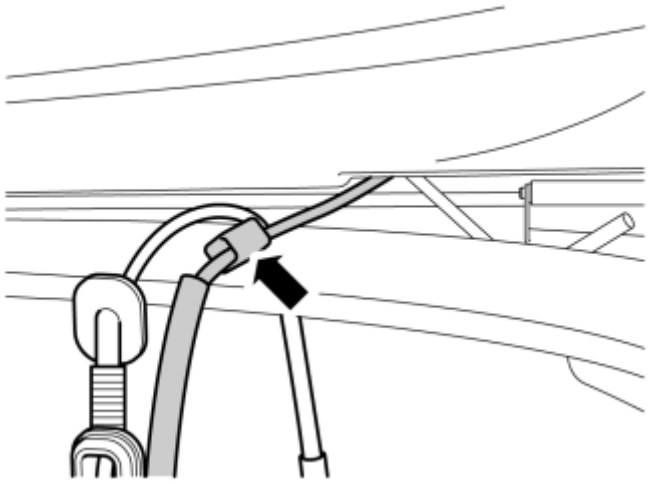

Fig. 191: Taping Cable
Courtesy of VOLVO CARS CORPORATION

- Tape the cable to the camera on the wire or cable that has been threaded through the hole.

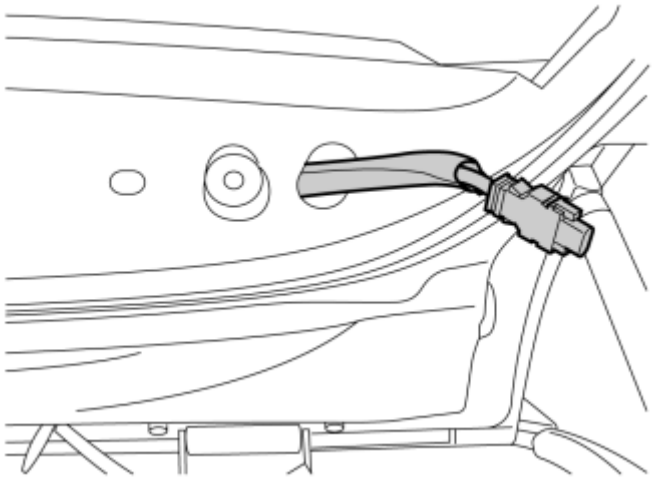

Fig. 192: Routing Cable Through Hole
Courtesy of VOLVO CARS CORPORATION

- Route the cable out through the hole.

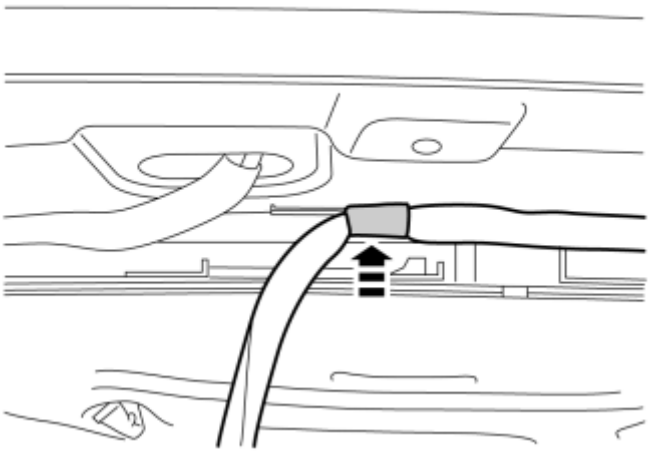

Fig. 193: Identifying Cable Clip
Courtesy of VOLVO CARS CORPORATION

- Press the cable clip in the hole. If the hole is being used, secure it by the existing cable with a cable tie.

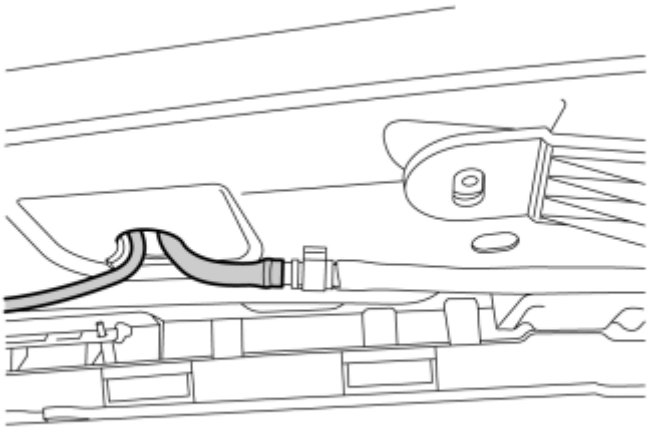

Fig. 194: Adjusting Cable Length From Clip To Pass-Through
Courtesy of VOLVO CARS CORPORATION

- Refit the rubber pass-through and adjust the length of the cable from the clip to the rubber pass-through.

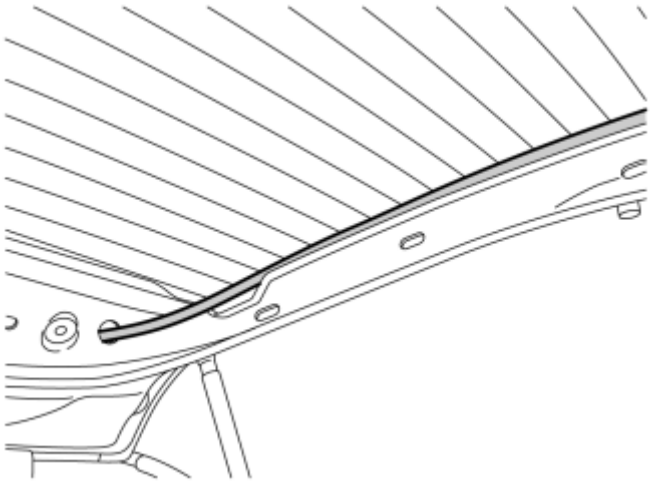

Fig. 195: Routing Cable
Courtesy of VOLVO CARS CORPORATION

- Route the cable between the rear window and lid as illustrated.

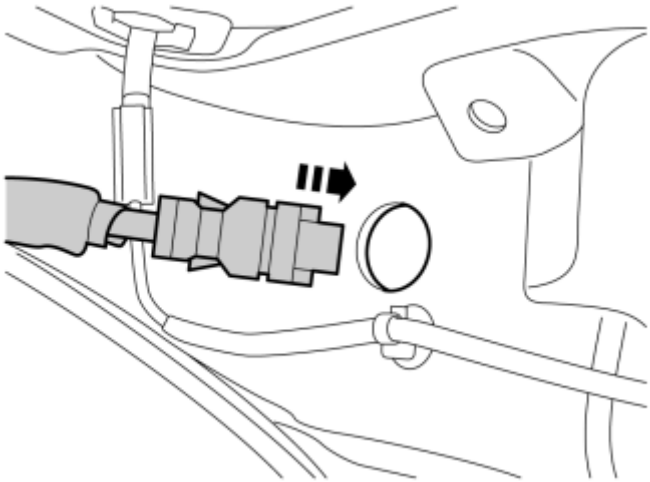

Fig. 196: Routing Cable Through Hole
Courtesy of VOLVO CARS CORPORATION

- Thread the cable through the hole.

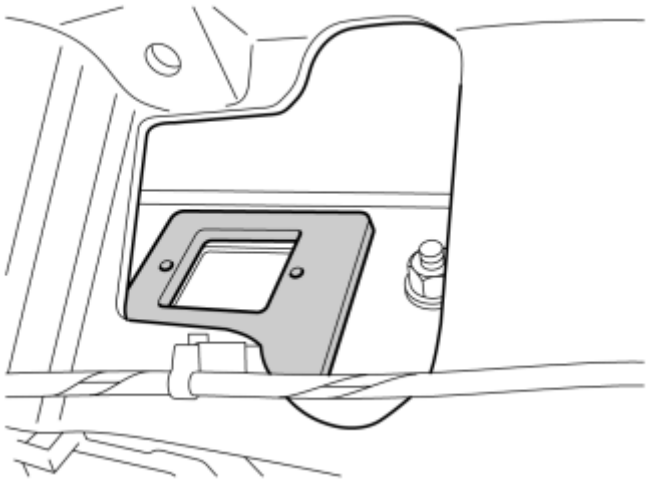

Fig. 197: Installing Template Over Hole
Courtesy of VOLVO CARS CORPORATION

- Place the template over the hole for the camera lens (inside the lid).

NOTE: Position it the same way/direction as when marking the hole in section 4.

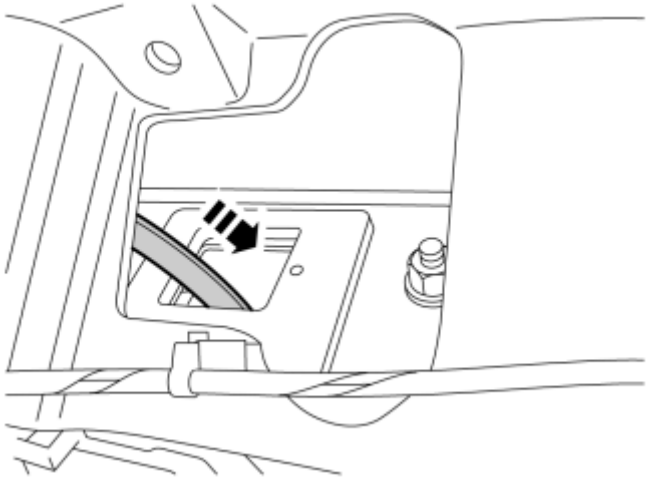

Fig. 198: Routing Cable Through Template And Hole
Courtesy of VOLVO CARS CORPORATION

- Route the cable through the template and hole.

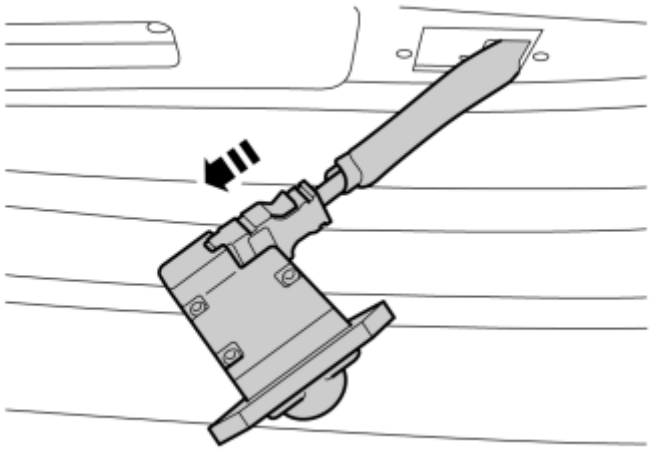

Fig. 199: Fitting Cable Connector On The Camera Lens
Courtesy of VOLVO CARS CORPORATION

- Fit the cable connector on the camera lens.

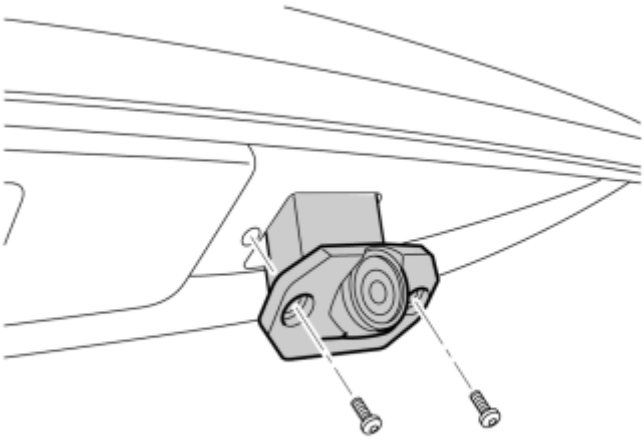

Fig. 200: Installing Camera
Courtesy of VOLVO CARS CORPORATION

- Screw the right-hand screw fully in the camera.
- Align the template so that the right-hand hole in the template is directly above the right-hand hole in the lid.

  Hold the template in position (inside the hole in the lid) and, at the same time, tighten the camera's right-hand screw so it holds.

- Align the left-hand holes with each other, fit the screw and tighten the camera.

CARGO COMPARTMENT, PREPARATIONS

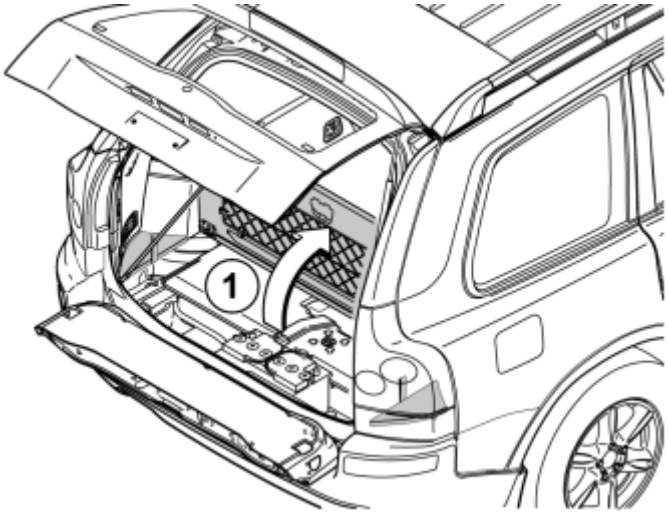

Fig. 201: Removing Floor Hatch
Courtesy of VOLVO CARS CORPORATION

Applies to cars with two rows of seats

- Fold up the floor hatch (1). If the floor hatch is equipped with a grocery bag holder, the holder is secured with a strap on both ends of the storage compartment. Detach the straps.
- Remove the storage compartment under the floor hatch.
- Remove the floor hatch by folding it almost completely closed and pulling it backwards from the mountings until it releases.

Applies to cars with three rows of seats and integrated carrier bag holder on the underside of the floor hatch

- Fold up the floor hatch (1).
- Detach the two straps on the panel under this. Lift up the rear edge of the panel, fold the floor hatch back towards the panel and lift out the floor hatch with the panel.

Applies to cars with three rows of seats without an integrated carrier bag holder

- Fold up the floor hatch (1) at the rear edge and lift it out.

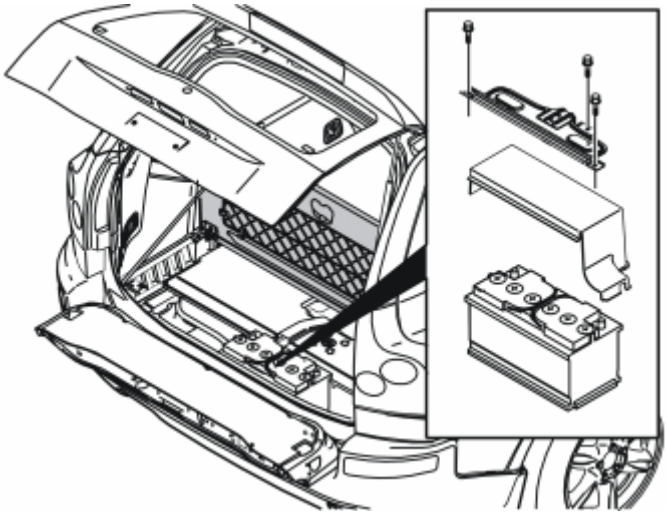

Fig. 202: Removing Three Screws In Battery Holder
Courtesy of VOLVO CARS CORPORATION

- Slide the driver's seat fully forwards and then fully upwards from the rear edge.
- Remove the three screws in the battery holder. Lift the battery holder out.
- Remove the battery cover.

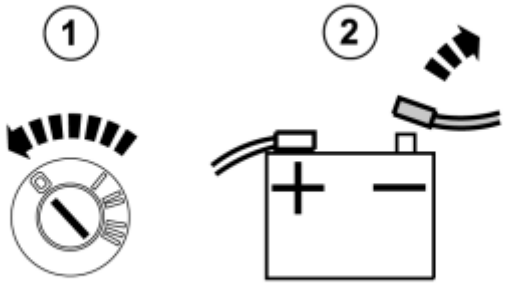

Fig. 203: Identifying Ignition Switch OFF & Disconnected Negative Battery Lead
Courtesy of VOLVO CARS CORPORATION

- Turn the ignition key to position 0.
- Disconnect the battery negative lead.

NOTE: **Wait at least three minutes before unplugging the connectors or removing other electrical equipment.**

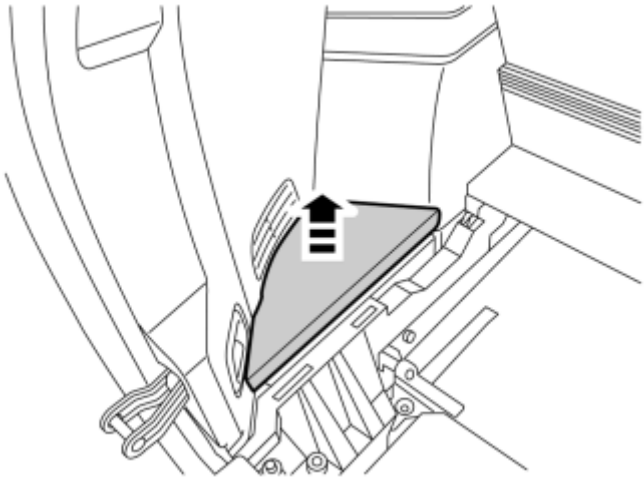

Fig. 204: Removing Hatch
Courtesy of VOLVO CARS CORPORATION

- Remove the hatch on the left-hand side of the cargo compartment.

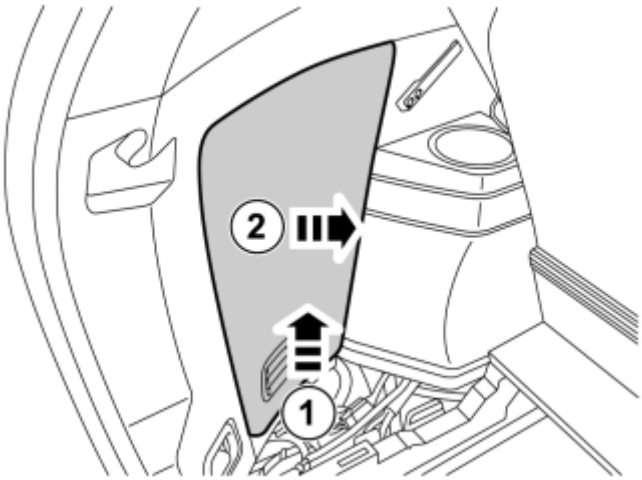

Fig. 205: Removing Side Rear Panel
Courtesy of VOLVO CARS CORPORATION

- Remove the panel.

REMOVAL, CONTINUED

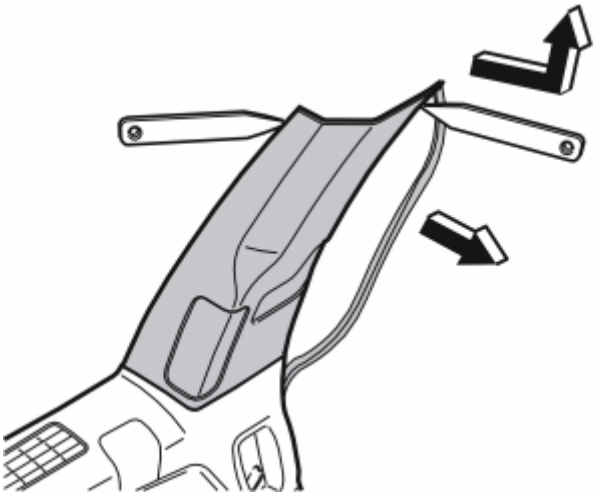

Fig. 206: Identifying Left-Hand C-Post Panel And Plastic Weatherstrip Tools
Courtesy of VOLVO CARS CORPORATION

- Pull off the rubber strip on the rear edge of the door opening for the left-hand rear door opposite the left C-post panel.
- Carefully pry off the left-hand C-post panel sides at the top. Use a plastic weatherstrip tool. Then pull until the three clips on the inside release. Do not damage the headlining or the panel.
- If a headphone socket is mounted, disconnect the connector to such.
- Remove the panel by pulling upwards slightly and unhooking it from the side panel.

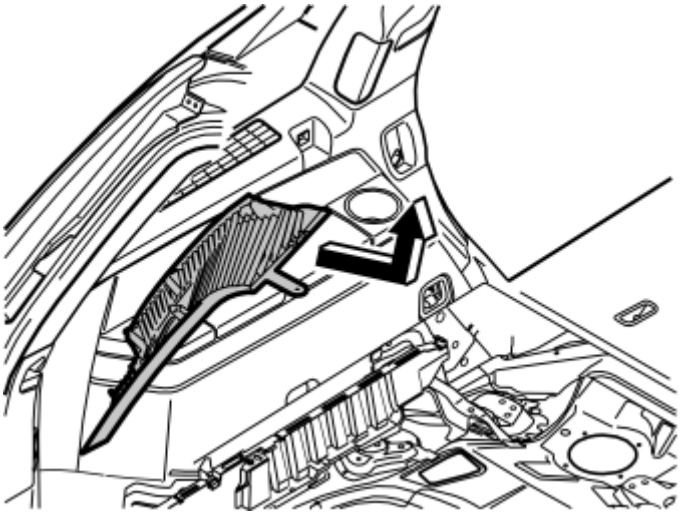

Fig. 207: Identifying D-Post Panel Removal From Side Panel
Courtesy of VOLVO CARS CORPORATION

- Carefully loosen the D-post panel. Start from the top and continue downwards until the three clips on the inside have released.
- Disconnect the connector on the D-post panel (if the car has a loudspeaker in the D-post, the connector is on the loudspeaker).
- Remove the panel by pulling upwards slightly and unhooking it from the side panel.

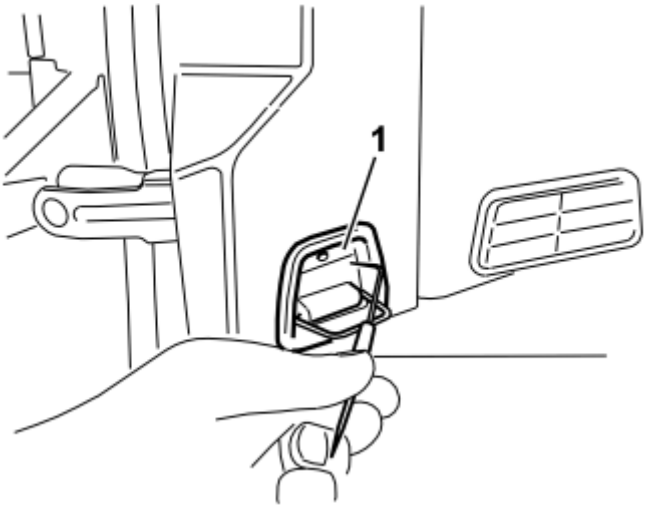

Fig. 208: Identifying Load Securing Eyelet
Courtesy of VOLVO CARS CORPORATION

- Fold out the load securing eyelet.
- Take a scriber or special tool part no.**9995919** and insert the angled tip in the hole in the top edge of the cover.
- Twist the scriber so it grips the rear of the cover (1) and pull it loose. This should be carried out on both the front and rear load securing eyelets.

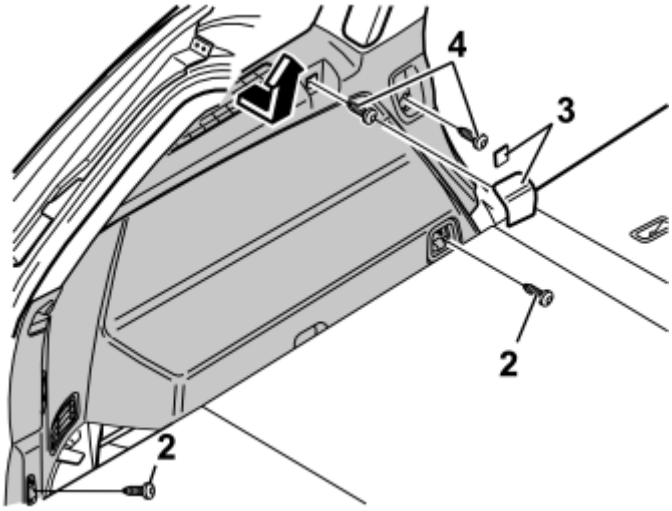

Fig. 209: Removing Rear Panel
Courtesy of VOLVO CARS CORPORATION

Applies to cars with two rows of seats

- Remove the screws (2) on the load securing eyelets.
- Remove the cover (3), by prying off using a weatherstrip tool or a small screw driver.
- Remove the screws (4).
- Remove the panel by pulling out the upper edge slightly so that the clips on the inside release. Pull the

panel straight up.

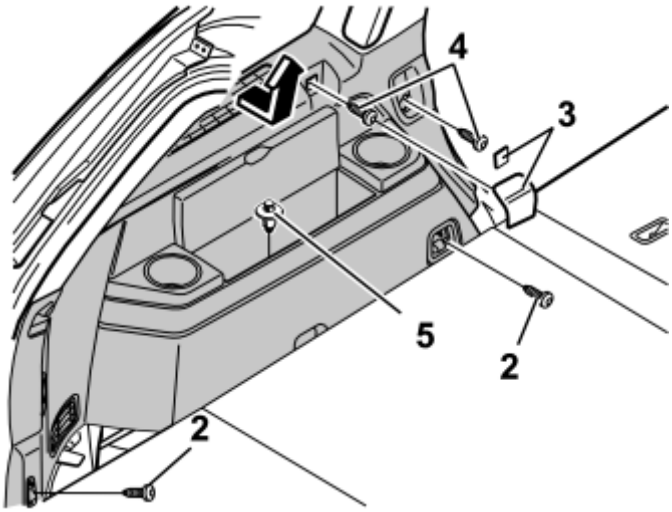

Fig. 210: Removing Rear Panel
Courtesy of VOLVO CARS CORPORATION

Applies to cars with three rows of seats

- Fold up the left-hand seat in the third row of seats.
- Remove the screws (2) on the load securing eyelets.
- Remove the cover (3), by prying off using a weatherstrip tool or a small screw driver.
- Remove the screws (4).
- Remove the clip (5) in the bottom of the storage compartment.
- Remove the panel by pulling out the upper edge slightly so that the clips on the inside release. Pull the panel straight up.

Fig. 211: Routing Cables
Courtesy of VOLVO CARS CORPORATION

- Route the cable as illustrated, down to the floor.

PREPARATIONS, PASSENGER COMPARTMENT

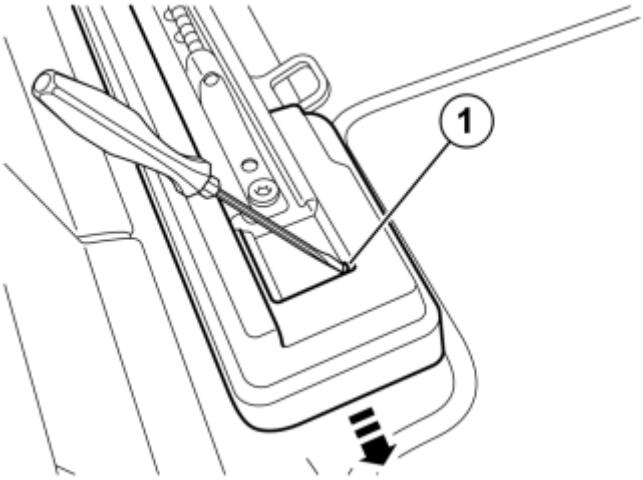

Fig. 212: Pressing The Catch Through The Seat Link
Courtesy of VOLVO CARS CORPORATION

- Insert a screwdriver through the hole (1) on the seat link and press in the catch. Move the link backwards by prizing with a screwdriver between the seat runner and the link.

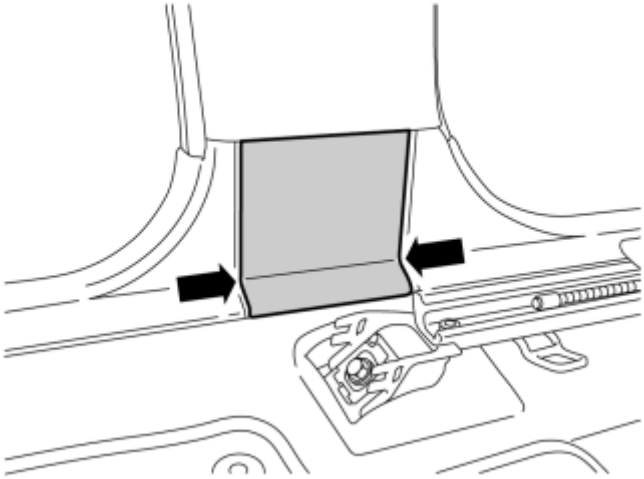

Fig. 213: Identifying Panel Between Door Sills
Courtesy of VOLVO CARS CORPORATION

- Carefully prise loose and remove the panel over the joint between the door sills.

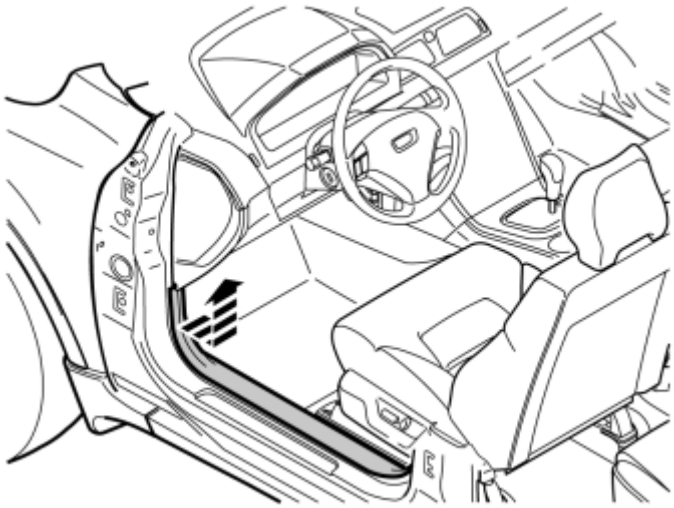

Fig. 214: Removing Sill Molding
Courtesy of VOLVO CARS CORPORATION

- Pull loose the sill molding on the front edge then straight up. Angle out the sill molding from the B-post panel.

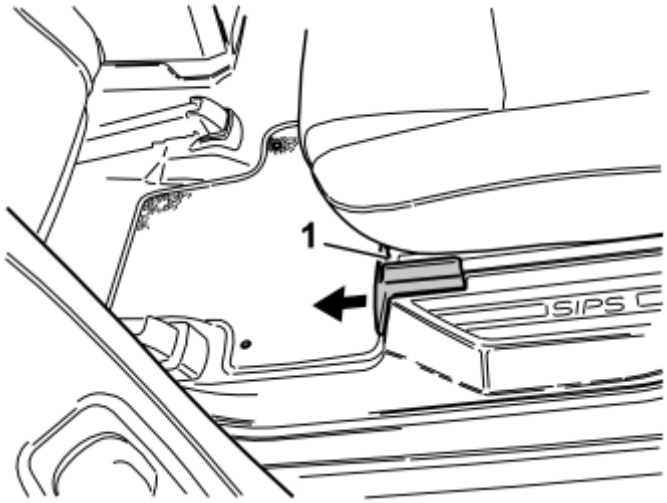

Fig. 215: Removing Front Seat Link
Courtesy of VOLVO CARS CORPORATION

- Press the catch (1) in and remove the front seat link.
- Remove the screw.

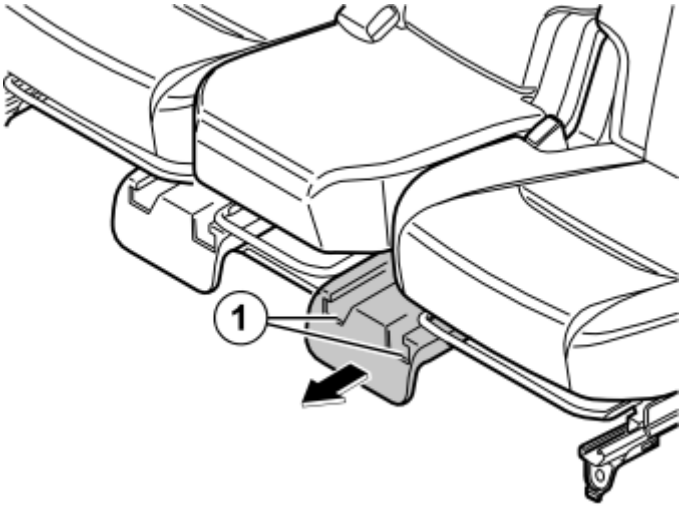

Fig. 216: Removing Seat Link
Courtesy of VOLVO CARS CORPORATION

- Press in the catches (1) and remove the seat link as illustrated.
- Remove the screw.

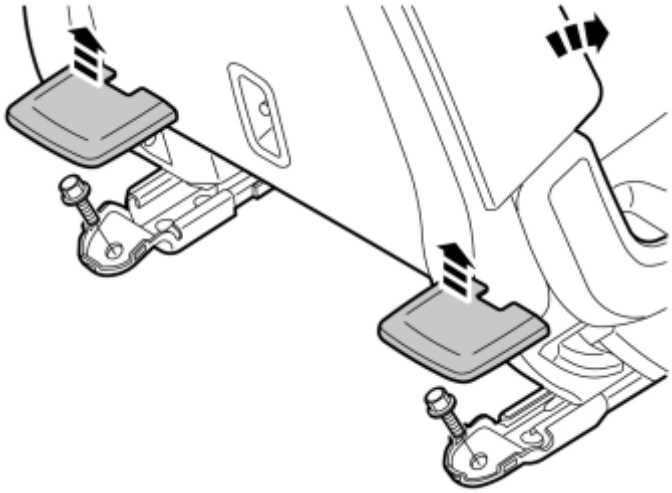

Fig. 217: Removing Seat
Courtesy of VOLVO CARS CORPORATION

- Fold down the backrest.
- Remove the seat links and bolts.
- Lift out the seat.

CAUTION: Exercise care when doing this so that the trim or door panels are not damaged.

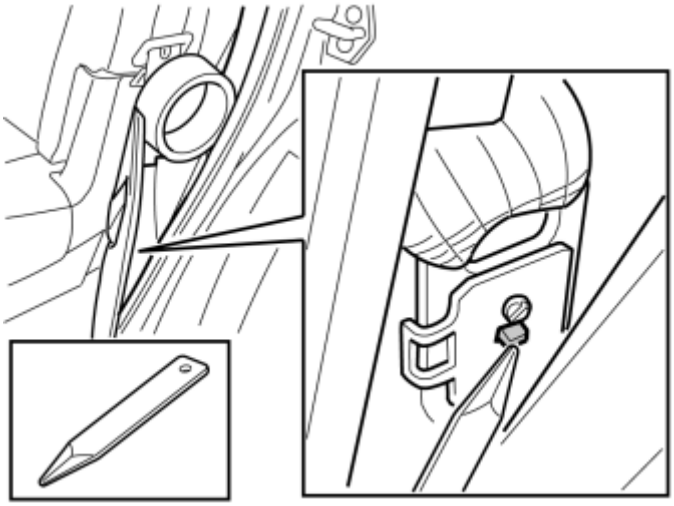

Fig. 218: Pressing Seat Belt Lock Lug
Courtesy of VOLVO CARS CORPORATION

- Loosen the upper part of the sill molding on the rear edge and loosen the seat belt from the end fitting. The belt is loosened by carefully pressing with a weatherstrip tool on the lock lug so that the seat belt releases from the end fitting.

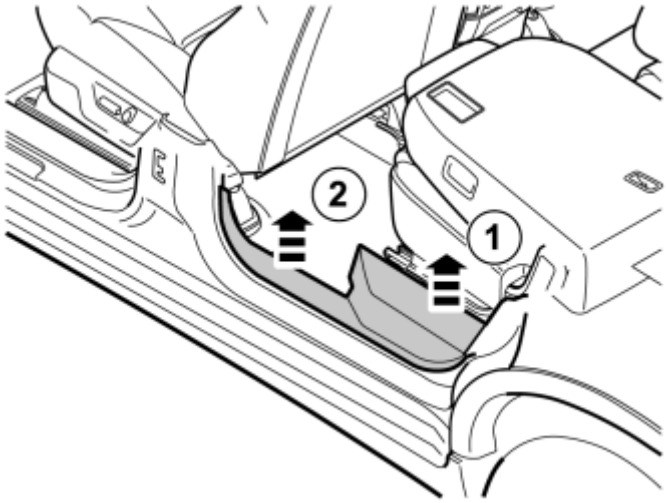

Fig. 219: Removing Sill Molding
Courtesy of VOLVO CARS CORPORATION

- Pull the sill molding upwards until the three clips release.
- Angle the sill molding out from the B-post panel.

APPLIES TO CARS WITH AN ACCESSORY ELECTRONIC MODULE (AEM) INSTALLED

REMOVAL, CABLE HARNESS

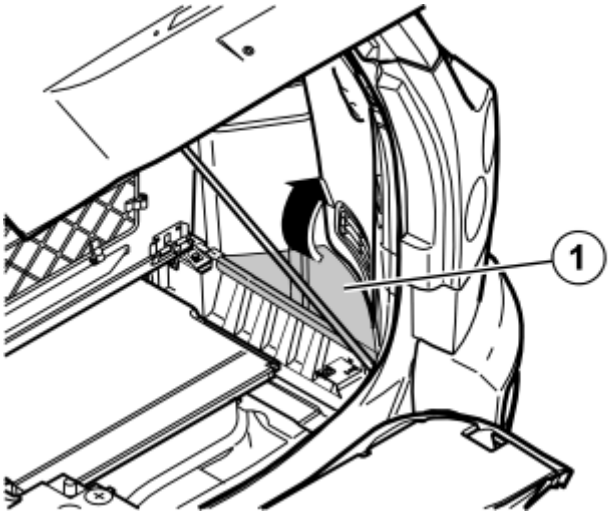

Fig. 220: Remove Right And Left Side Glove Box
Courtesy of VOLVO CARS CORPORATION

- Remove the right-hand side floor hatch (1) in the cargo compartment.

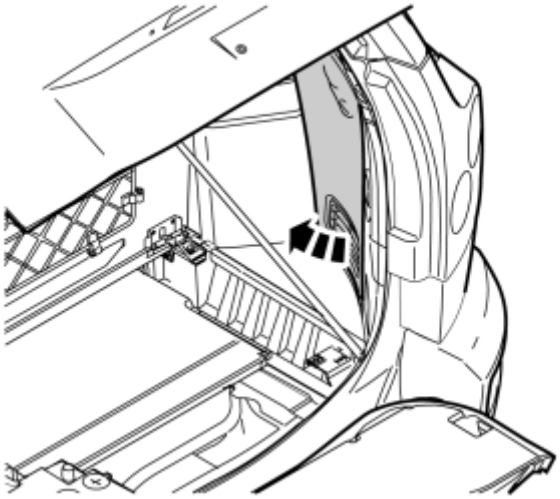

Fig. 221: Remove Folding Side Panel From Left And Right-Hand Sides In Cargo Compartment
Courtesy of VOLVO CARS CORPORATION

- Remove the lower folding side panel on the right-hand side.

Illustration A

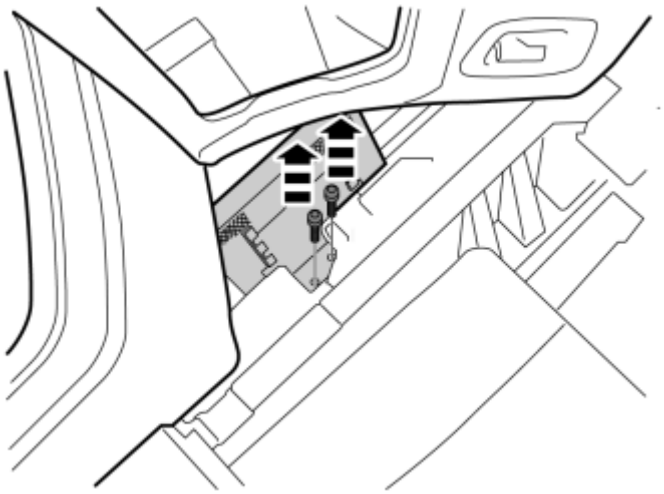

Fig. 222: Removing Accessory Electronic Module Bracket Screws
Courtesy of VOLVO CARS CORPORATION

- Remove the two screws in the bracket for the accessory electronic module (AEM).

Illustration B

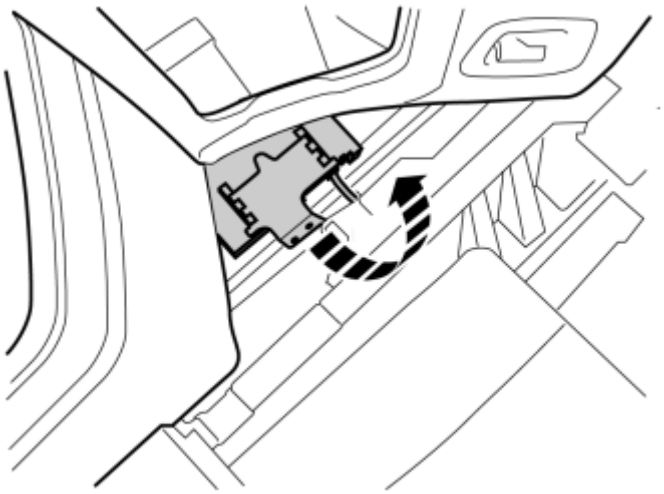

Fig. 223: Tilting Module For Pin Disconnection
Courtesy of VOLVO CARS CORPORATION

- Tilt the module so that the 4-pin black connector can be disconnected.

Illustration C

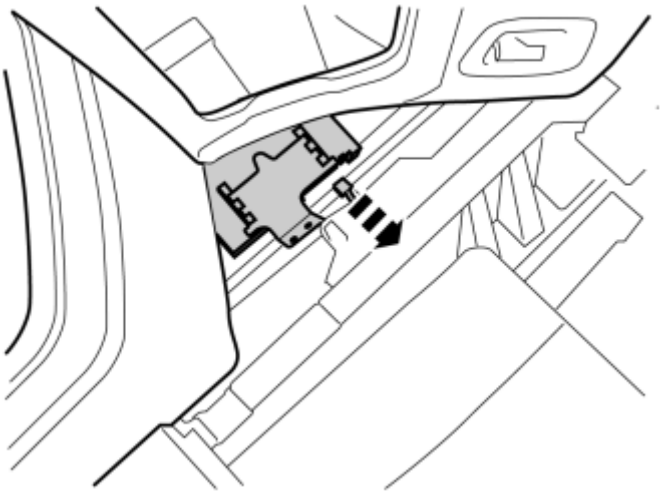

Fig. 224: Unplug Connector
Courtesy of VOLVO CARS CORPORATION

- Unplug the connector.

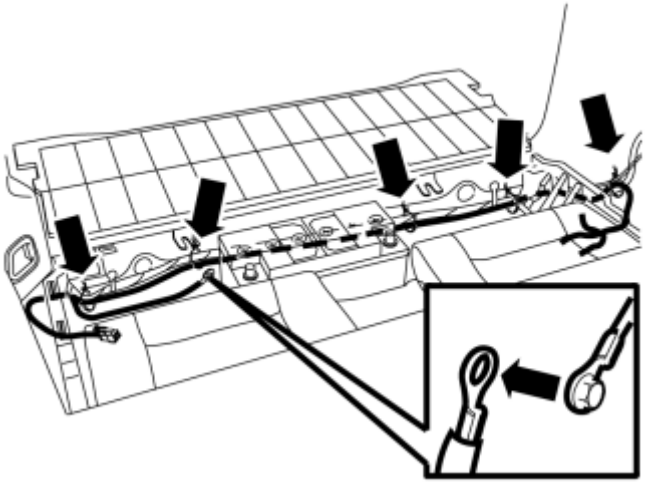

Fig. 225: Removing Cables To Access The Accessory Electronic Module
Courtesy of VOLVO CARS CORPORATION

- Remove the cable ties from around the cable harness to the accessory electronic module (AEM) along the rear member.
- Disconnect the ground lead.

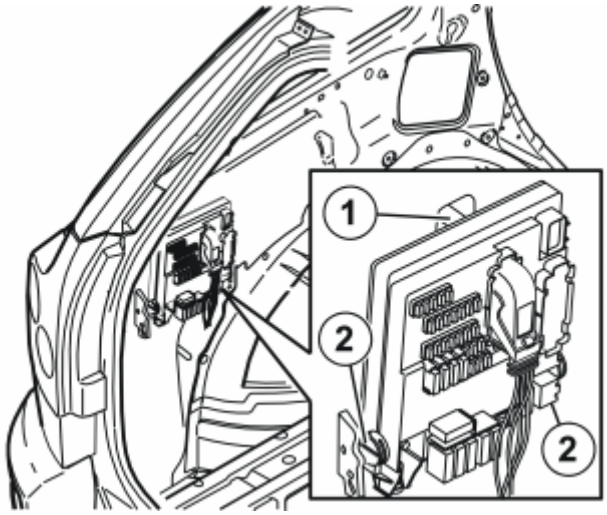

Fig. 226: Removing The Rear Electronic Module
Courtesy of VOLVO CARS CORPORATION

- Remove the Rear Electronic Module (REM) by opening the lock (1) on the top of the unit. Tip the unit forward and lift it out of the mountings (2).

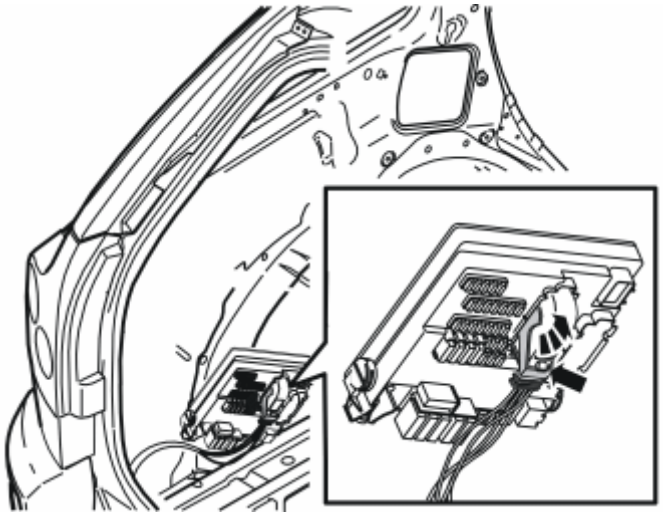

Fig. 227: Removing Fuse Holder Connector
Courtesy of VOLVO CARS CORPORATION

- Press in the catch on the rear brown connector in the fuse holder in the cargo compartment, turn the lock arm up as far as it will go and pull out the connector.

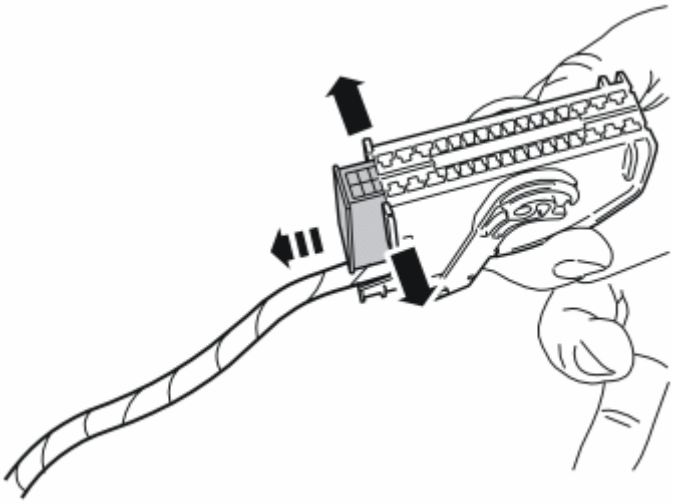

Fig. 228: Prying Apart Sides Of Connector Holder And Pulling Out Connector
Courtesy of VOLVO CARS CORPORATION

- Carefully prise apart the sides of the connector holder in the ends so that the connector can pass by the retaining hooks.
- Pull out the connector.

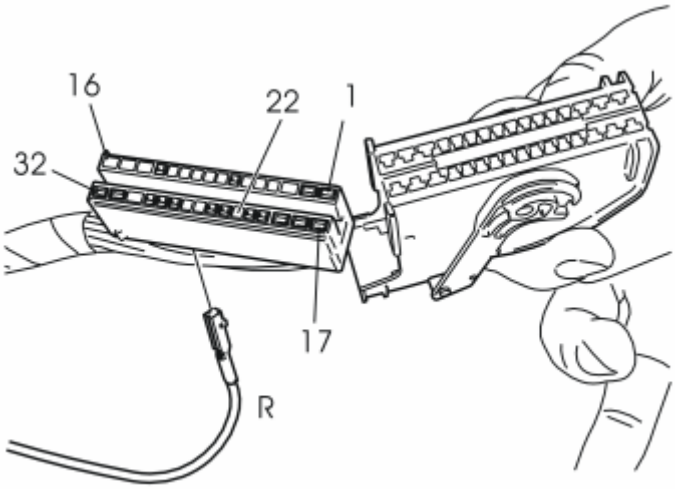

Fig. 229: Identifying Cable, Connector, And Fuse Holder
Courtesy of VOLVO CARS CORPORATION

- Remove the red (R) cable from terminal **22** .

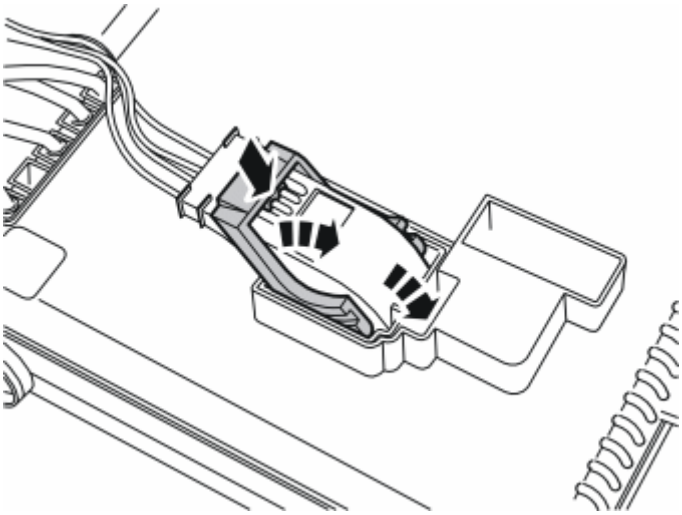

Fig. 230: Identifying Catch On Black Connector On Rear Of Fuse Holder
Courtesy of VOLVO CARS CORPORATION

- Press in the catch on the gray connector on the rear of the fuse holder in the cargo compartment. Turn the lock arm up as far as it will go and pull out the connector.

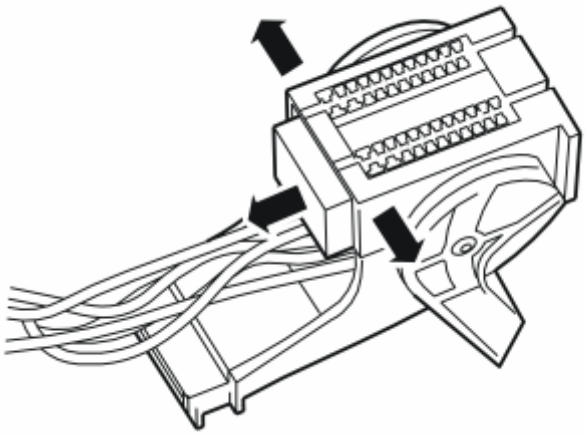

Fig. 231: Identifying Sides Of Connector Holder
Courtesy of VOLVO CARS CORPORATION

- Carefully prise apart the sides of the connector holder in the ends so that the connector can pass by the retaining hooks.
- Pull out the connector.

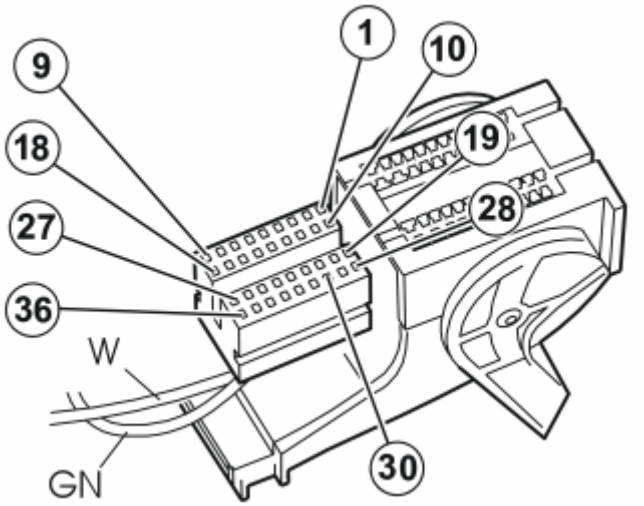

Fig. 232: Identifying Connector Cables
Courtesy of VOLVO CARS CORPORATION

- Remove the green (GN) cable from terminal **19** and white (W) from terminal **30** in the connector.
- Remove the entire cable harness and place to one side. This will not be reused.

INSTALLING THE CABLE HARNESS

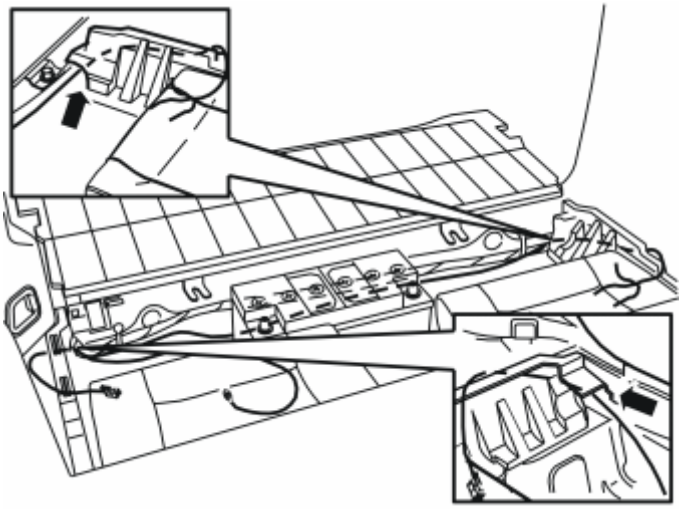

Fig. 233: Installing The Cable Harness
Courtesy of VOLVO CARS CORPORATION

- Take the new cable harness (purchased separately), marked **A** in the kit image and place it behind the battery.
- Pull the cable end with black 4-pin connector through the hole in the rear edge of the right-hand cargo floor support, up to the accessory electronic module (AEM). Route the other end in a corresponding way to the fuse holder on the left-hand side.

Illustration A

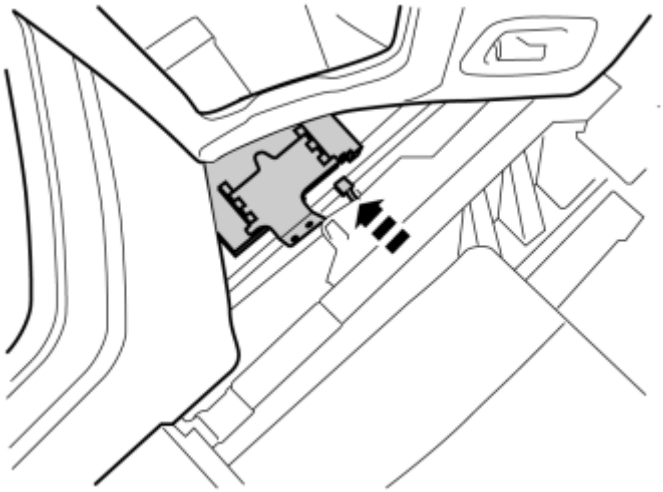

Fig. 234: Connecting the 4-Pin Black Connector
Courtesy of VOLVO CARS CORPORATION

- Connect the black 4-pin connector to the accessory electronic module (AEM).

Illustration B

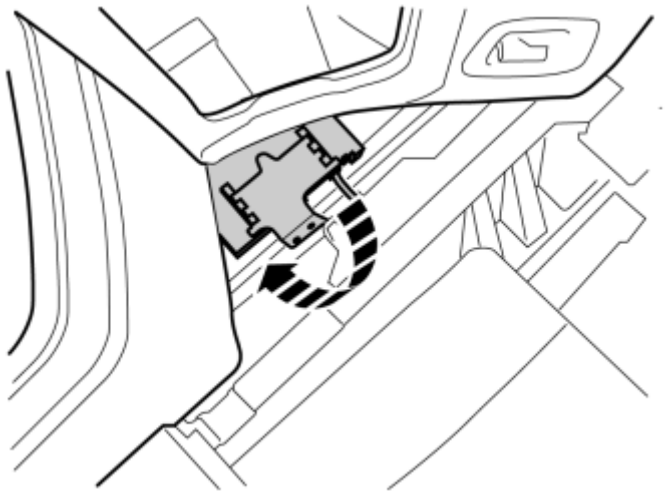

Fig. 235: Reinstall Module
Courtesy of VOLVO CARS CORPORATION

Illustration C

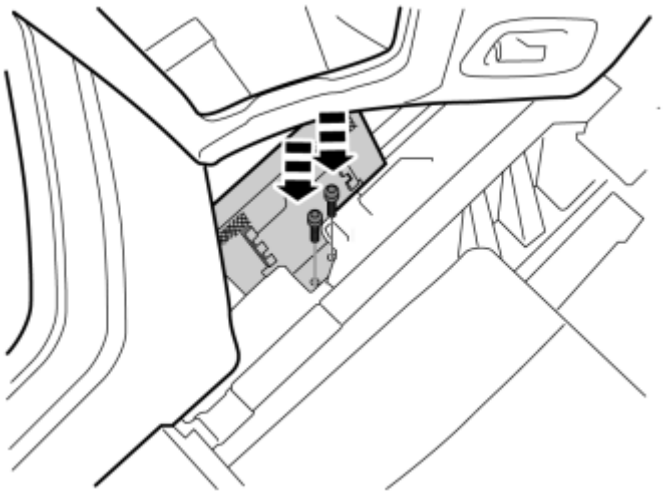

Fig. 236: Tighten Module Screws
Courtesy of VOLVO CARS CORPORATION

- Reinstall the module and tighten using the two screws.

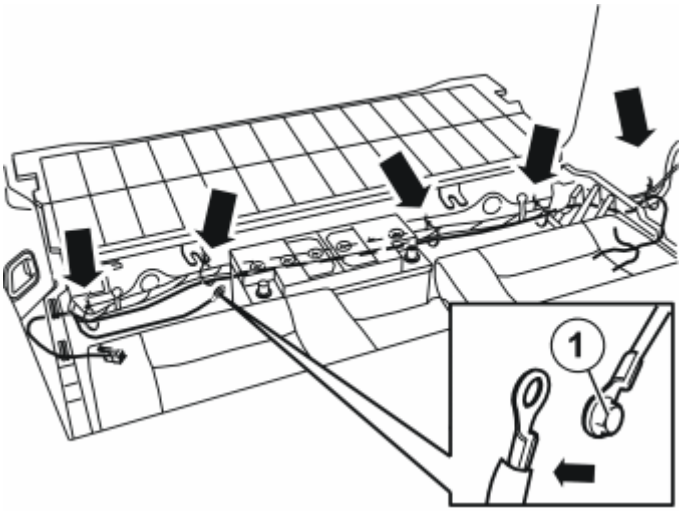

Fig. 237: Securing Wiring Harness Using Cable Ties
Courtesy of VOLVO CARS CORPORATION

- Take five cable ties from the kit and secure the wiring harness to the existing wiring harness as illustrated.
- Remove the ground screw and connect the ground lead (1) of the new wiring harness. Tighten the ground screw securely.

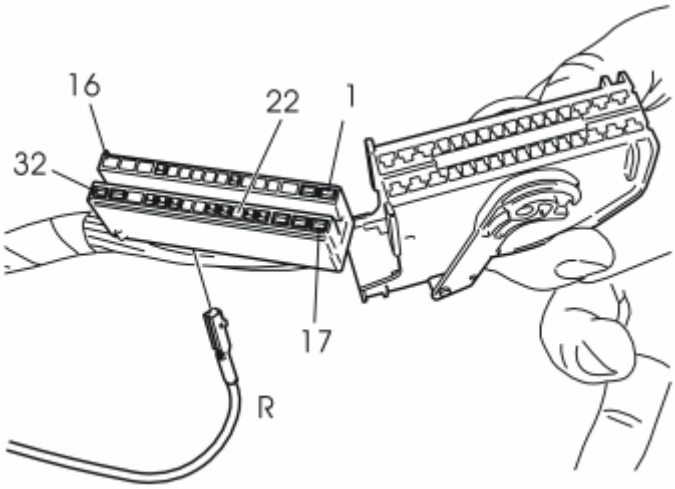

Fig. 238: Identifying Cable, Connector, And Fuse Holder
Courtesy of VOLVO CARS CORPORATION

- Connect the red (R) cable to terminal **22** in the brown connector which was disconnected from the fuse holder.
- Reinstall the connector in the holder
- Reinstall the connector in the fuse holder.

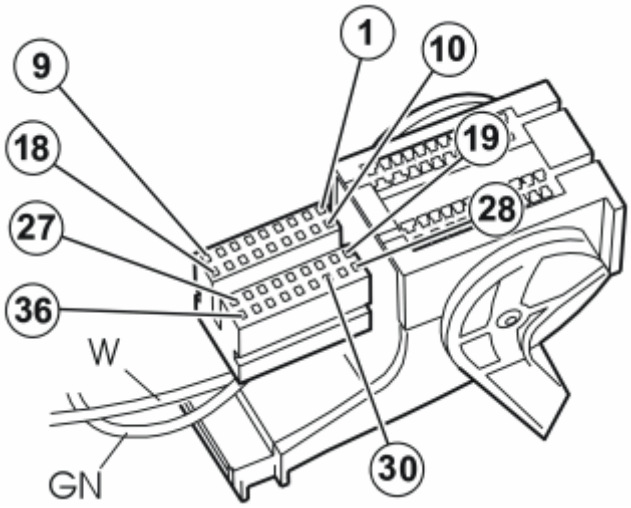

Fig. 239: Identifying Connector Cables
Courtesy of VOLVO CARS CORPORATION

- Connect the green (GN) cable to terminal **19** in the gray connector that was disconnected from the fuse holder, and the white (W) to terminal **30** .

NOTE: **Make a note of the position number of the connector. The position numbers are located on the ends of the connector and in the bottom of the electronic control module.**

- Reinstall the connector in the holder
- Reconnect the connector in the rear electronic control module (REM).
- Refit the Rear Electronic Module (REM).

INSTALLATION, PARKING ASSISTANCE CAMERA (PAC)

APPLIES TO CARS WITHOUT TRAILER MODULE (TRM)

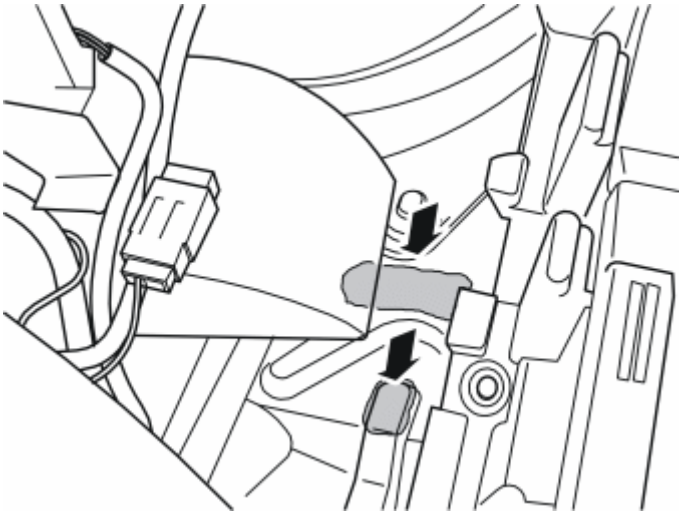

Fig. 240: Prepping The Surface Of The Marked Indicated Areas
Courtesy of VOLVO CARS CORPORATION

- Wash off the marked surfaces on the embossing on the back edge of left rear wheel housing using isopropanol. Wipe dry.

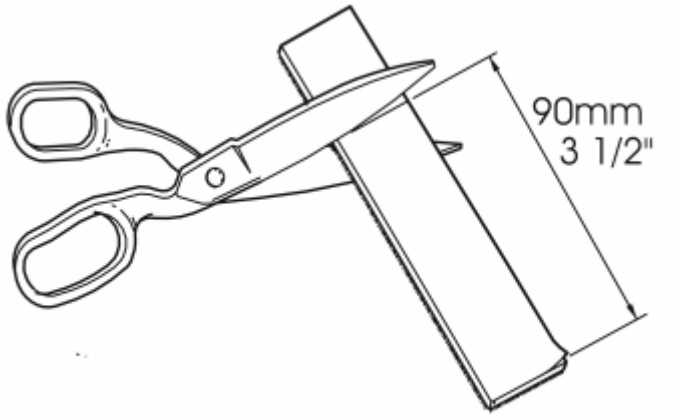

Fig. 241: Identifying Velcro Fastener
Courtesy of VOLVO CARS CORPORATION

- Take a Velcro fastener and cut it off **90 mm (3 1/2")** from the edge.

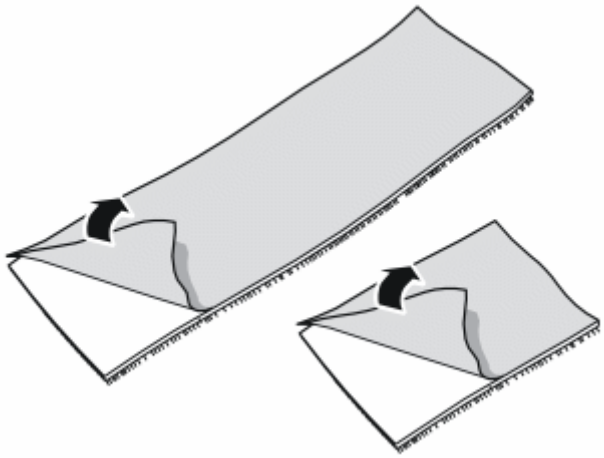

Fig. 242: Removing The Protective Film
Courtesy of VOLVO CARS CORPORATION

- Remove the protective tape from the Velcro fasteners.

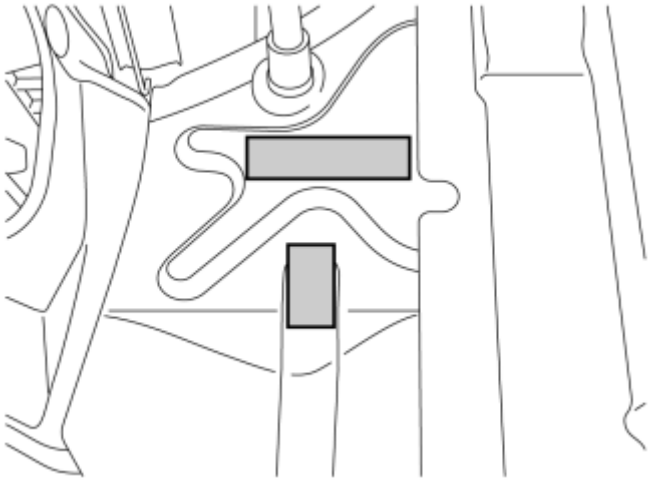

Fig. 243: Installing Velcro Fasteners
Courtesy of VOLVO CARS CORPORATION

- Attach both Velcro fasteners to the embossing as illustrated.

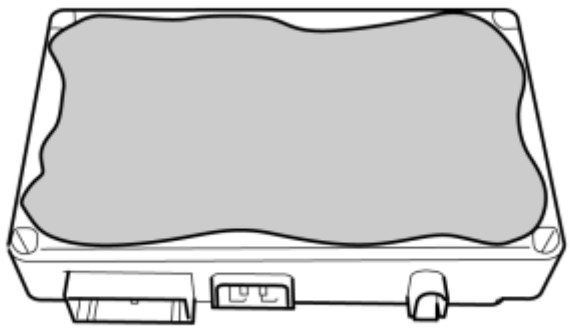

Fig. 244: Prepping Surface Of The Parking Assistance Camera Module
Courtesy of VOLVO CARS CORPORATION

- Clean the underneath of the parking assistance camera (PAC) using isopropanol.

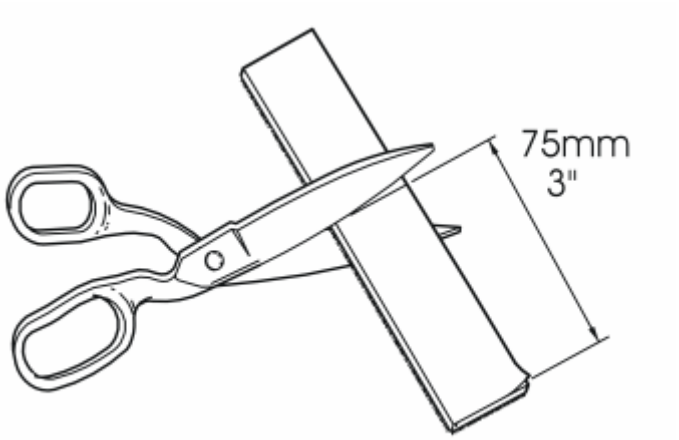

Fig. 245: Cutting Velcro Fastener
Courtesy of VOLVO CARS CORPORATION

- Take a Velcro fastener and cut it off **75 mm (3)** from the edge.

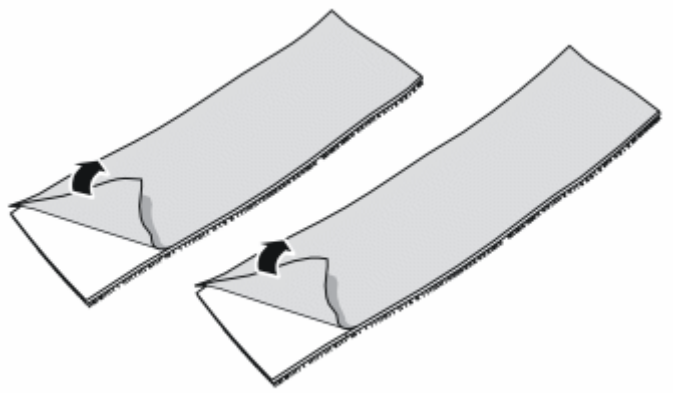

Fig. 246: Removing The Protective Film From Velcro Fasteners
Courtesy of VOLVO CARS CORPORATION

- Remove the protective tape from the Velcro fasteners.

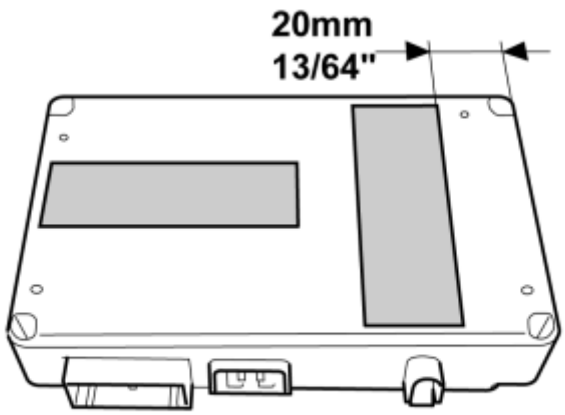

Fig. 247: Installing Velcro Fasteners
Courtesy of VOLVO CARS CORPORATION

- Secure the Velcro fasteners on the control module as illustrated.

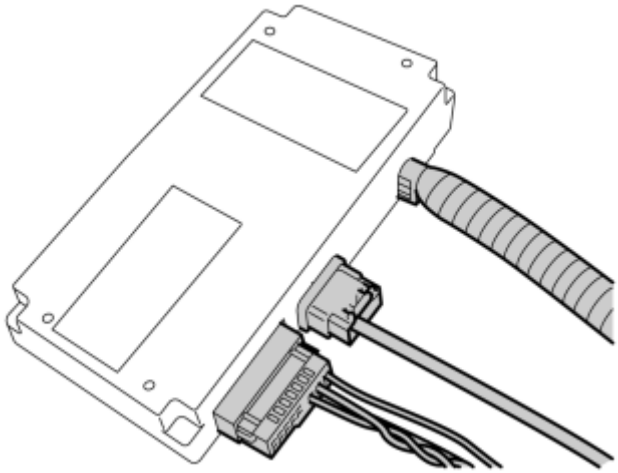

Fig. 248: Connecting Control Module
Courtesy of VOLVO CARS CORPORATION

- Connect the three connectors to the control module.

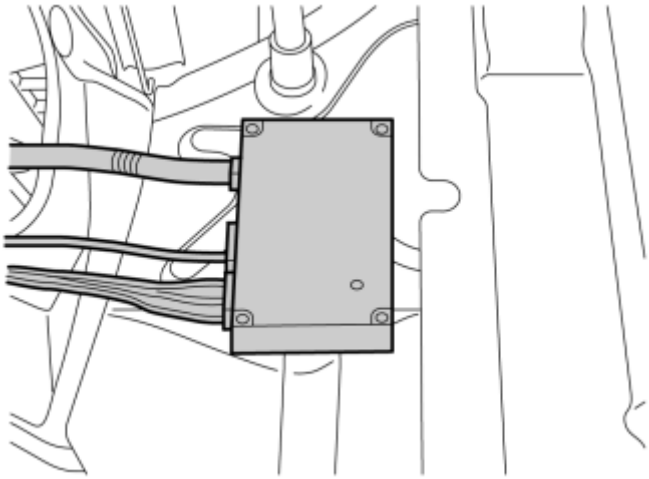

Fig. 249: Securing Control Module
Courtesy of VOLVO CARS CORPORATION

- Secure the control module on the newly attached Velcro fasteners. Press hard so that sits firmly.

APPLIES TO CARS WITH A TRAILER MODULE (TRM) INSTALLED

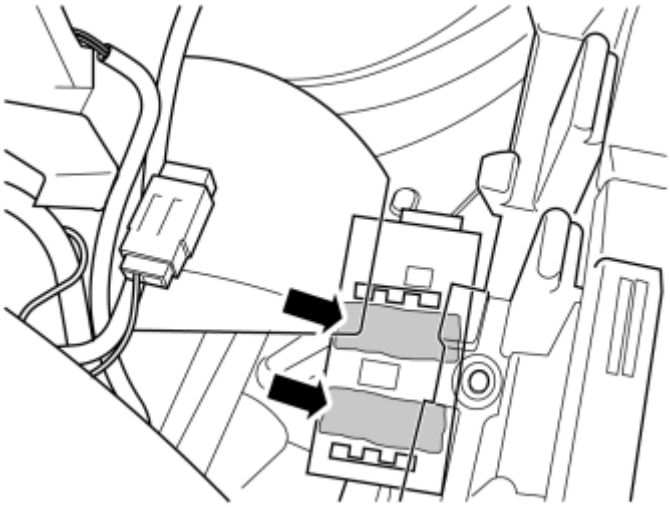

Fig. 250: Clean Trailer Module Surface
Courtesy of VOLVO CARS CORPORATION

- Clean the surfaces, as illustrated, on the trailer module (TRM) using isopropanol.

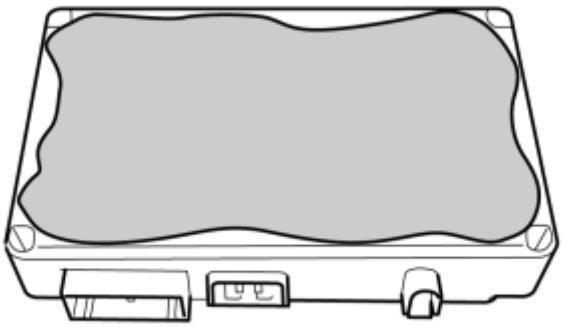

Fig. 251: Prepping Surface Of Parking Assistance Camera
Courtesy of VOLVO CARS CORPORATION

- Clean the underneath of the parking assistance camera (PAC) using isopropanol. Wipe dry.

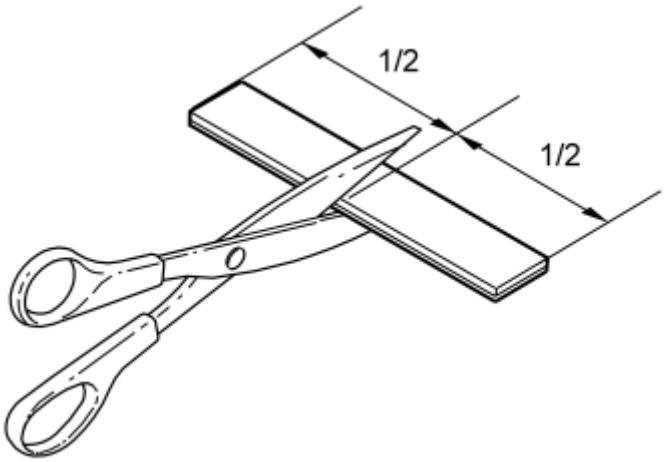

Fig. 252: Identifying Velcro Strip
Courtesy of VOLVO CARS CORPORATION

- Remove the two Velcro fasteners from the kit and cut them in the middle.

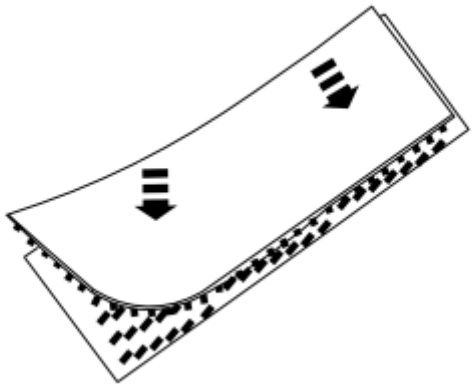

Fig. 253: Identifying Velcro Pieces Pressed Together
Courtesy of VOLVO CARS CORPORATION

- Press the Velcro pieces together.

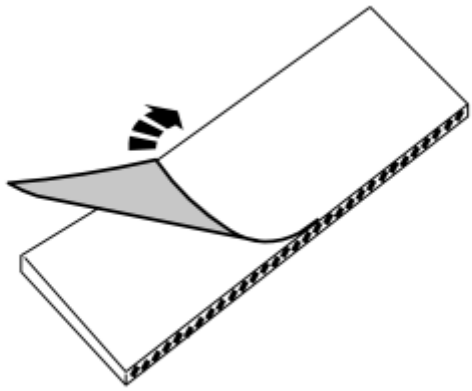

Fig. 254: Identifying Protective Backing Tape Removed From Velcro Strips
Courtesy of VOLVO CARS CORPORATION

- Remove the protective film on one side of the Velcro fasteners.

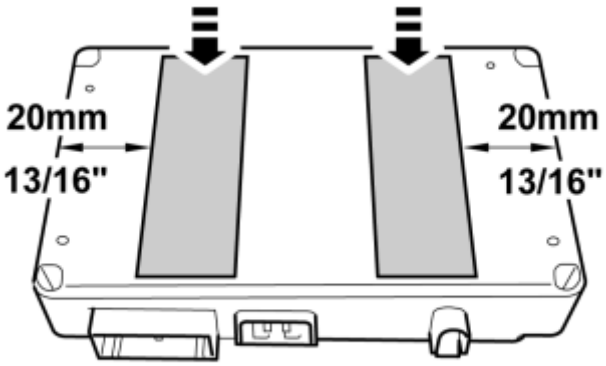

Fig. 255: Positioning Velcro Fasteners
Courtesy of VOLVO CARS CORPORATION

- Press the Velcro fasteners onto the parking assistance camera (PAC) as illustrated.

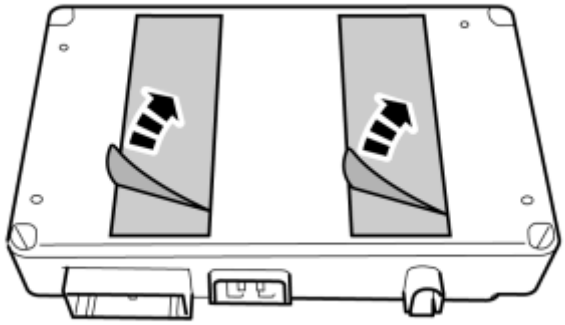

Fig. 256: Removing Protective Film
Courtesy of VOLVO CARS CORPORATION

- Remove the protective film from the Velcro fasteners.

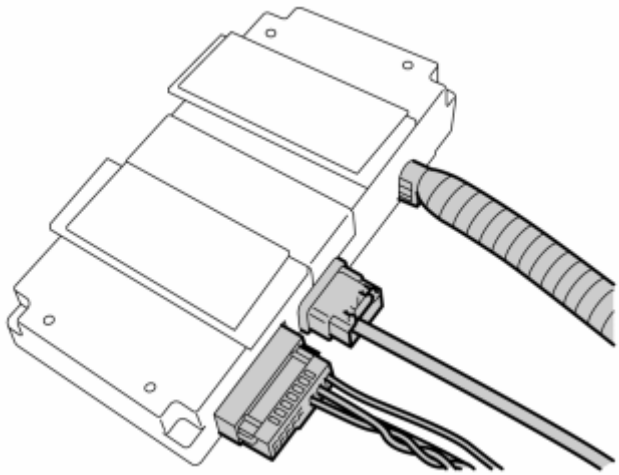

Fig. 257: Connecting Control Module
Courtesy of VOLVO CARS CORPORATION

- Connect the three connectors to the control module.

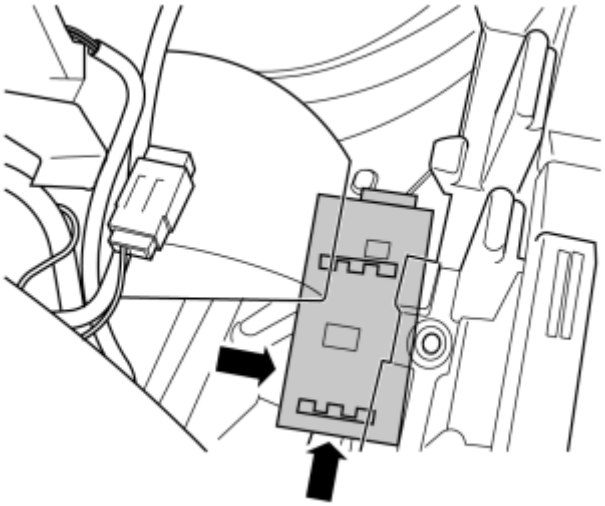

Fig. 258: Installing Parking Assistance Camera (PAC)
Courtesy of VOLVO CARS CORPORATION

- Place the parking assistance camera (PAC) on the trailer module (TRM). It must be positioned so that the modules are edge-to-edge at the rear edge.

CONNECTING THE REAR ELECTRONIC MODULE (REM)

APPLIES TO CARS WITHOUT AN ACCESSORY ELECTRONIC MODULE (AEM)

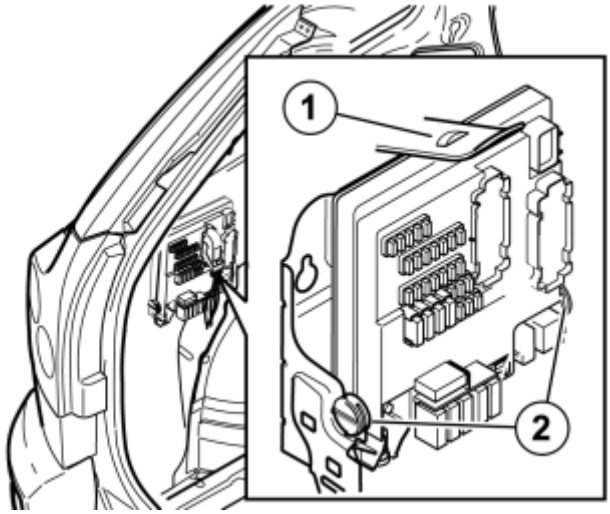

Fig. 259: Removing The Rear Electronic Module
Courtesy of VOLVO CARS CORPORATION

- Remove the Rear Electronic Module (REM) by opening the lock (1) on the top. Tip the module forward and lift it out of the mountings (2).

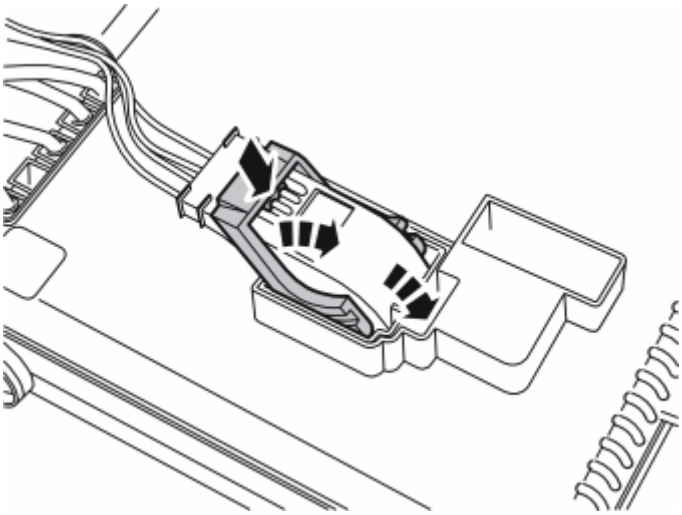

Fig. 260: Identifying Catch On Black Connector On Rear Of Fuse Holder
Courtesy of VOLVO CARS CORPORATION

- Press in the catch on the rear of the grey connector, twist the locking arm up as far as it will go and pull out the connector.

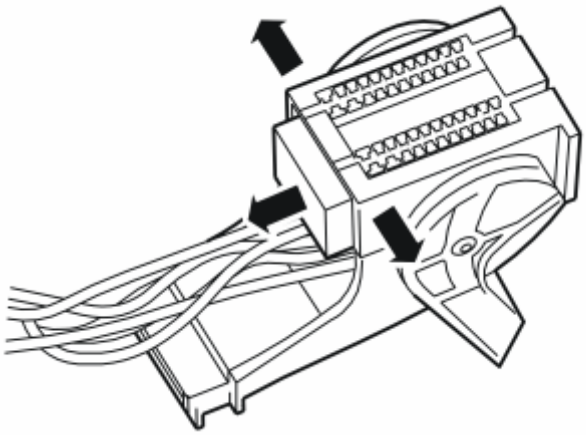

Fig. 261: Identifying Sides Of Connector Holder
Courtesy of VOLVO CARS CORPORATION

- Carefully prise apart the sides of the connector holder in the ends so that the connector can pass by the retaining hooks.
- Pull out the connector.

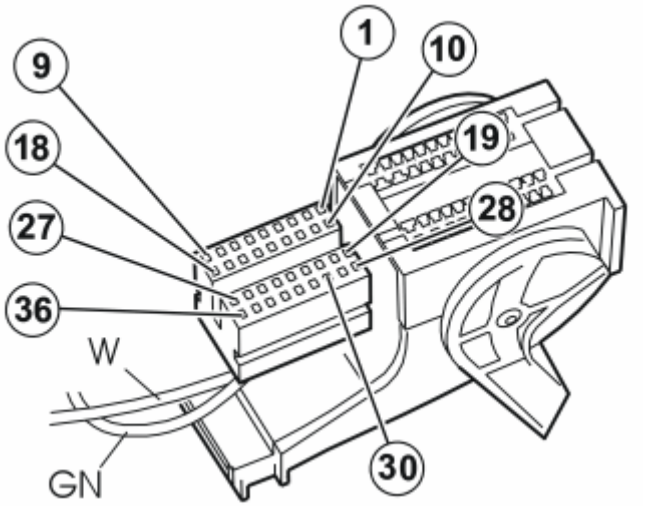

Fig. 262: Identifying Connector Terminals
Courtesy of VOLVO CARS CORPORATION

NOTE: **Make a note of the position number of the connector. The position numbers are located on the ends of the connector and in the bottom of the electronic control module.**

- Connect the green (GN) cable to terminal **19** in the connector. Connect the white (W) cable to terminal **30** .
- Reinstall the connector in the holder
- Reconnect the connector in the rear electronic control module (REM).
- Refit the Rear Electronic Module (REM).

APPLIES TO CARS WITH AN ACCESSORY ELECTRONIC MODULE (AEM) INSTALLED

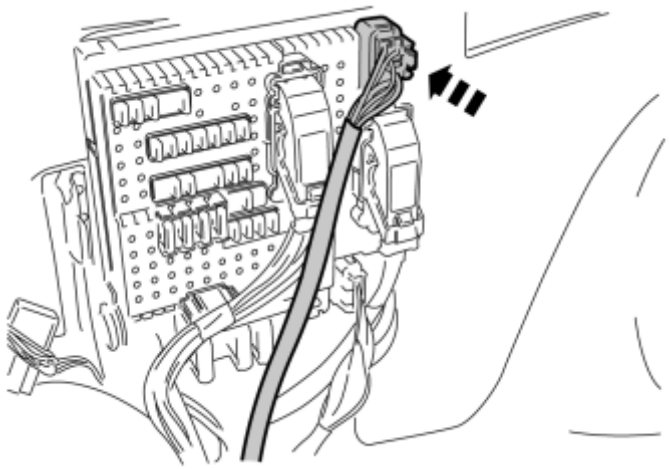

Fig. 263: Connecting Large Black Female Connector
Courtesy of VOLVO CARS CORPORATION

- Connect the large black female connector in the pre-routed cable harness, to the connector for towbar wiring in the fuse holder.

  Secure the excess of the large black male connector using a cable tie from the kit.

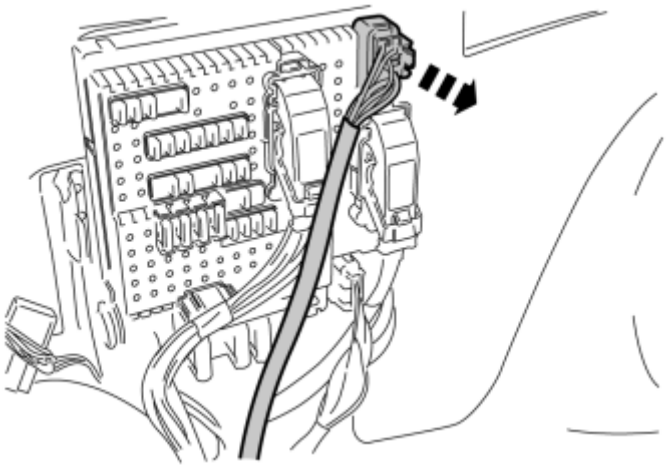

Fig. 264: Disconnecting The Towbar Wiring Connector
Courtesy of VOLVO CARS CORPORATION

Applies to cars with a towbar

- Disconnect the towbar wiring connector from the fuse holder.

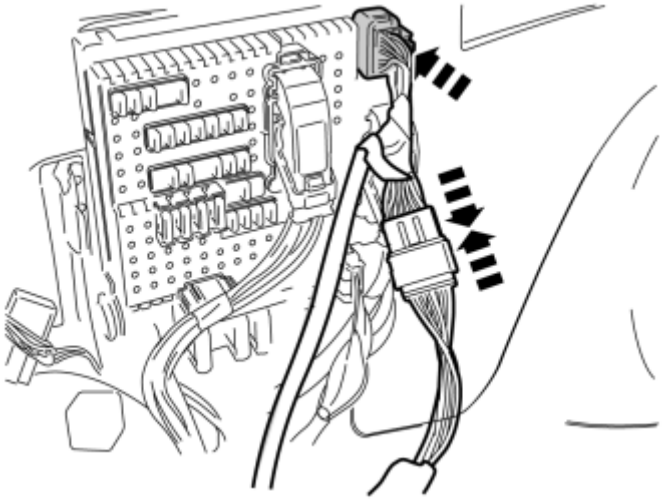

Fig. 265: Connecting Connections To Fuse Holder
Courtesy of VOLVO CARS CORPORATION

- Connect the large black female connector in the pre-routed cable harness to the fuse holder.
- Connect the towbar wiring connector, which was disconnected from the fuse holder to the corresponding one in the routed cable harness.

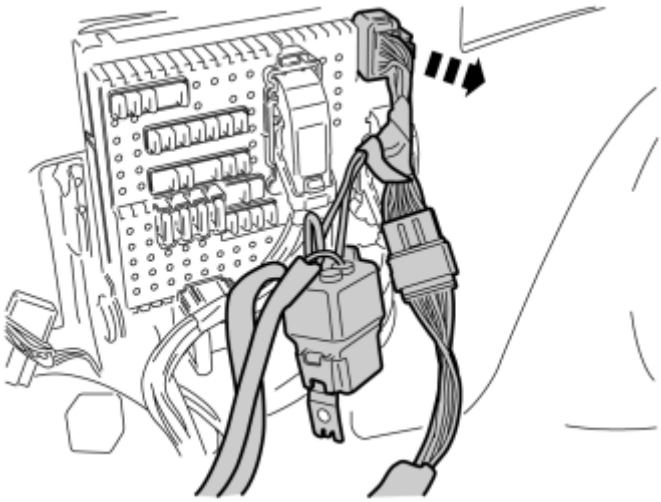

Fig. 266: Disconnecting Towbar Wiring Adapter
Courtesy of VOLVO CARS CORPORATION

Applies to cars with a towbar wiring adapter

- Disconnect the towbar wiring adapter's connector from the fuse holder.

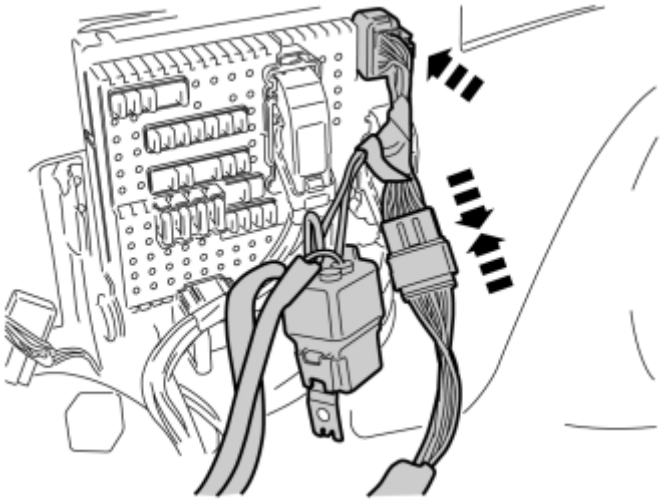

Fig. 267: Connecting Fuse Holder Connections
Courtesy of VOLVO CARS CORPORATION

- Connect the large black female connector in the pre-routed cable harness to the fuse holder.
- Connect the towbar wiring adapter's connector, which was disconnected from the fuse holder to the corresponding one in the routed cable harness.

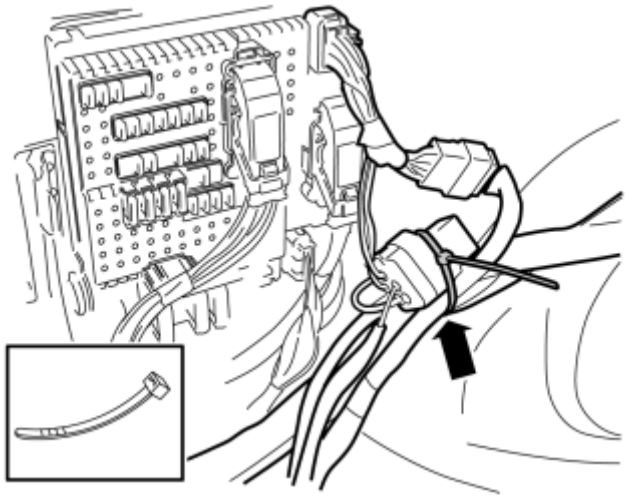

Fig. 268: Securing Cables And Fuse Holder Using Cable Ties
Courtesy of VOLVO CARS CORPORATION

- Secure the loose cables and the small fuse holder using a cable tie.

CONNECTION TO MULTIMEDIA MODULE (MMM)

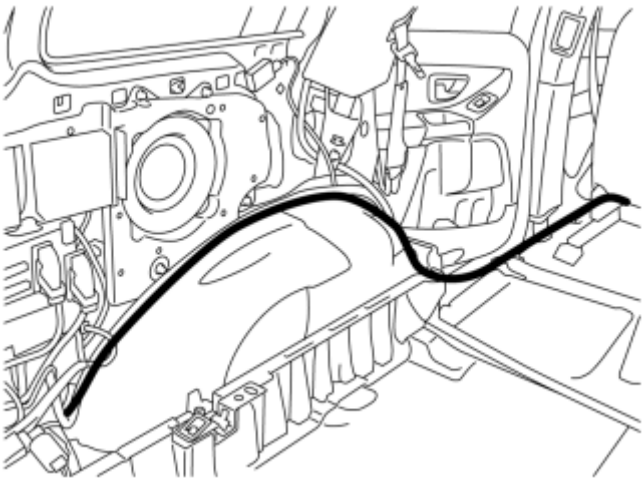

Fig. 269: Routing Adapter Cables
Courtesy of VOLVO CARS CORPORATION

- Route both adapter cables (5 way green and 12 way gray connector) along the molding and up to the driver's seat.

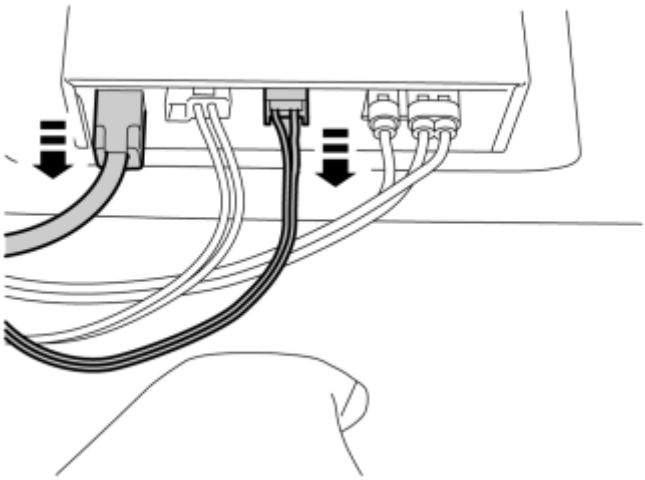

Fig. 270: Disconnecting Multimedia Module Connections
Courtesy of VOLVO CARS CORPORATION

- Disconnect the two connectors on the multimedia module (MMM).

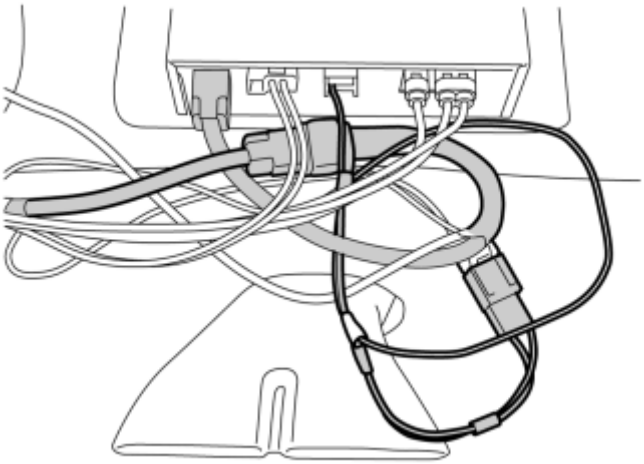

Fig. 271: Connecting Pre-Routed Adapter Cables
Courtesy of VOLVO CARS CORPORATION

- Connect the pre-routed adapter cables to the multimedia module (MMM) and to respective disconnected connectors.

NOTE: Route the new cables under the existing cables.

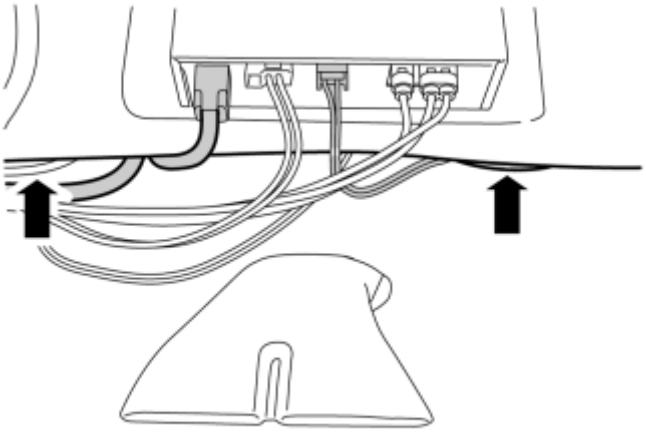

Fig. 272: Routing Excess Wiring
Courtesy of VOLVO CARS CORPORATION

- Place the connectors and excess wiring in the joint under the carpet.

INSTALLATION, GROUND STRIP

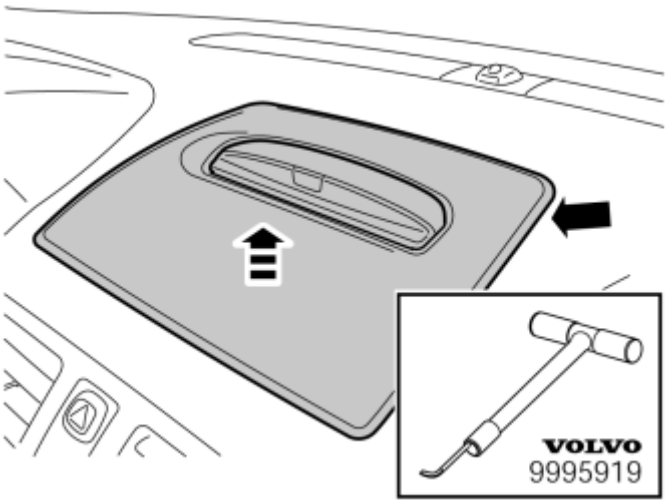

Fig. 273: Identifying Special Service Tool
Courtesy of VOLVO CARS CORPORATION

- Insert the tool's hook between the dashboard and the louvre. Turn the tool 90° and pull the louvre straight up.

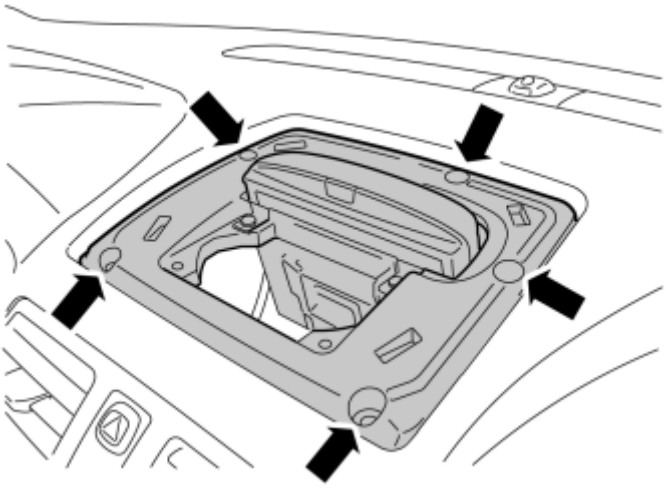

Fig. 274: Removing Assembly Screws
Courtesy of VOLVO CARS CORPORATION

- Remove the five screws.

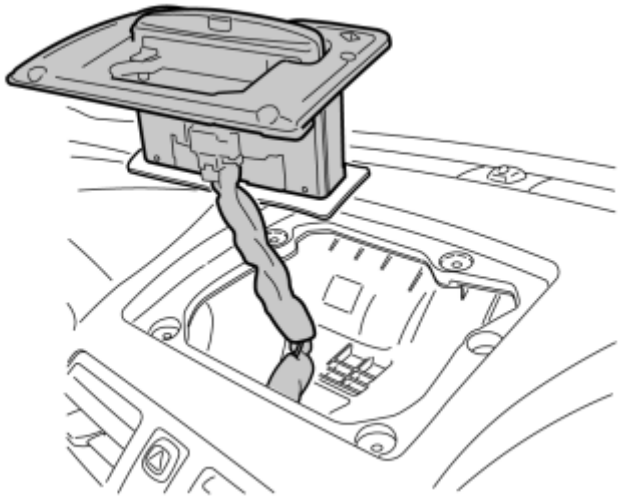

Fig. 275: Removing Monitor Unit
Courtesy of VOLVO CARS CORPORATION

Applies to cars without a centrally mounted loudspeaker

- Lift up the monitor unit and place it on the dashboard.

NOTE: Place some protection under the monitor unit so as not to damage the dashboard.

- Remove the three connectors.

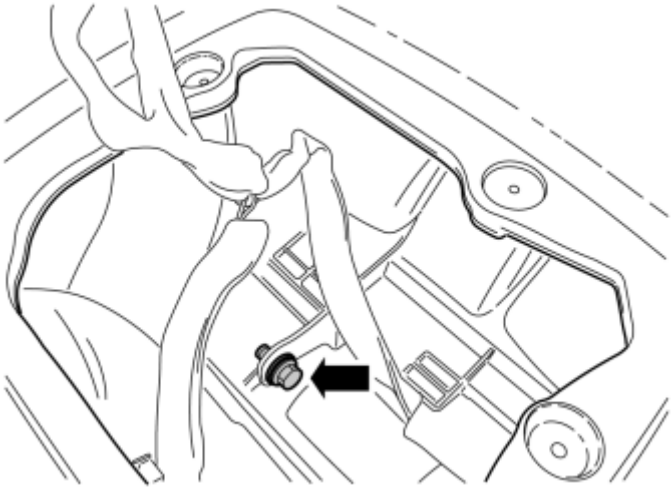

Fig. 276: Remove M6 Screw
Courtesy of VOLVO CARS CORPORATION

- Remove the M6 screw.

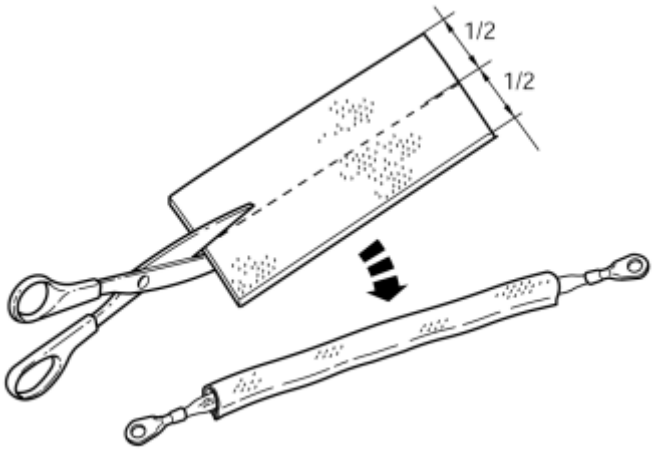

Fig. 277: Applying Tape To Earth Braid
Courtesy of VOLVO CARS CORPORATION

- Take the earth braid and foam tape bit from the kit.
- Cut off the foam tape lengthways in two equal pieces. Cover the earth braid with foam tape so that there is no foam tape on the cable terminals.

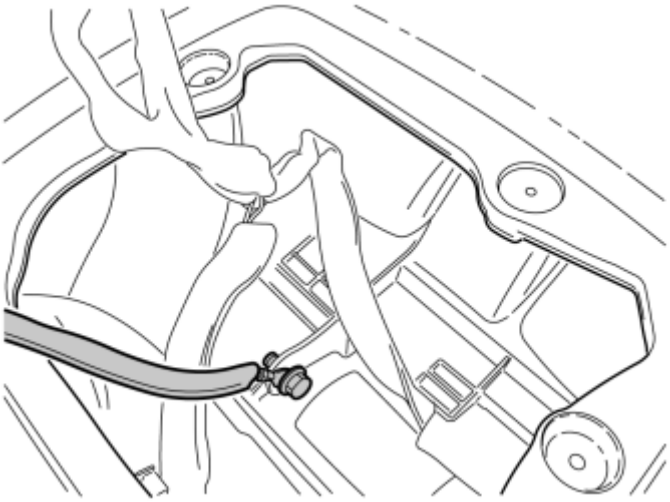

Fig. 278: Installing The Earth Braid
Courtesy of VOLVO CARS CORPORATION

- Fit the earth braid as illustrated. Use a new screw from the kit.

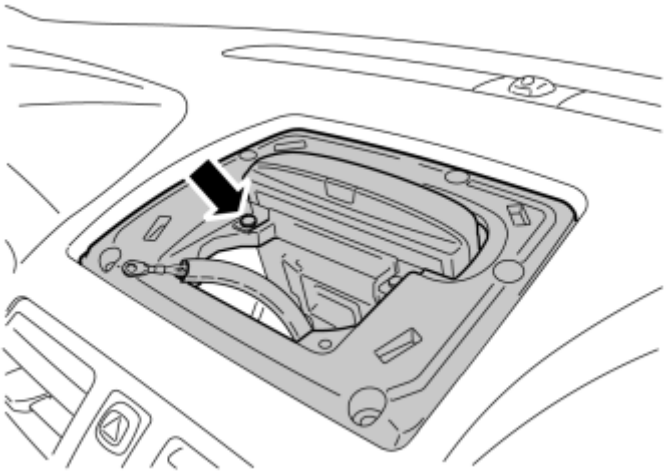

Fig. 279: Removing Left-Hand Screw For Monitor
Courtesy of VOLVO CARS CORPORATION

Applies to cars without a centrally mounted loudspeaker

- Refit the monitor unit and at the same time guide the earth braid up through the hole in front of the monitor.
- Remove the left-hand screw for the monitor.

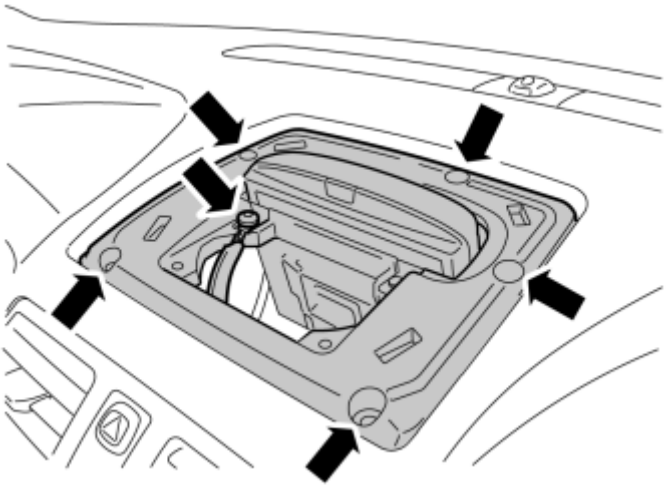

Fig. 280: Installing The Earth Braid
Courtesy of VOLVO CARS CORPORATION

Applies to cars without a centrally mounted loudspeaker

- Place the earth braid over the hole where the screw was positioned, fit the screw and tighten the earth braid.
- Refit the five screws for the monitor unit.
- Refit the louvre.

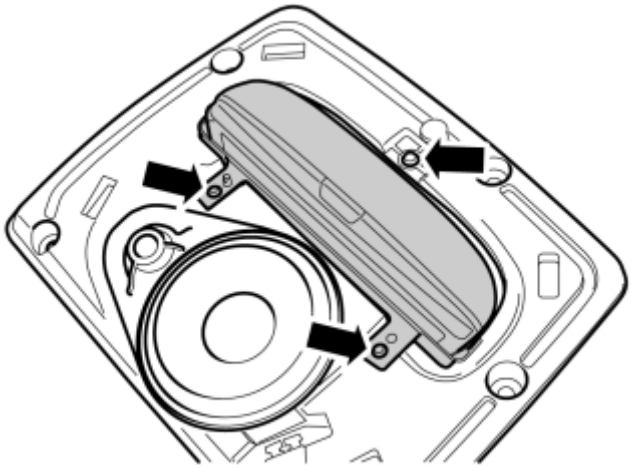

Fig. 281: Removing The Monitor
Courtesy of VOLVO CARS CORPORATION

Apply to cars with a centrally mounted loudspeaker

- Remove the three screws for the monitor.
- Remove the monitor by first angling it backwards at the lower edge and then guiding it out.

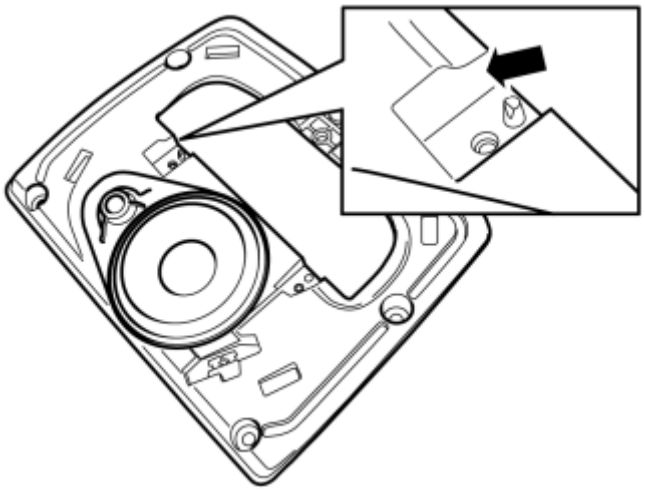

Fig. 282: Monitor Mounting Point
Courtesy of VOLVO CARS CORPORATION

- Locate the end by the left-hand mounting point for the monitor on the loudspeaker frame.

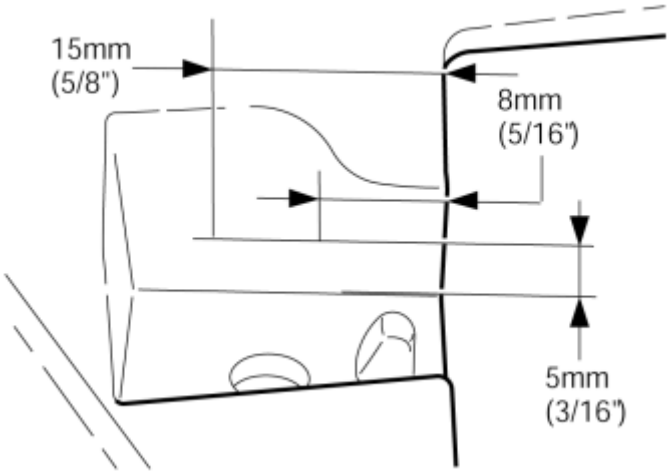

Fig. 283: Measuring And Marking Points
Courtesy of VOLVO CARS CORPORATION

- Measure and mark out two points according to the image.

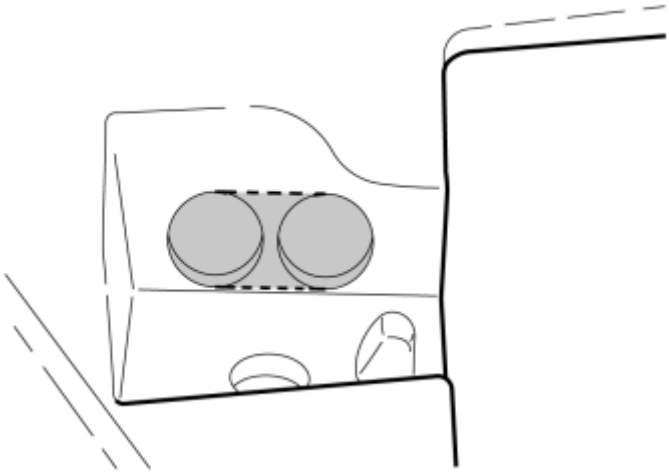

Fig. 284: Pre-Drilling Center Of Markings
Courtesy of VOLVO CARS CORPORATION

- Pre-drill in the centers of the markings using a **O 2mm (5/64")** diameter drill bit.
- Then drill out the holes. Use a **O 8mm " (5/16")** drill bit.
- Cut away the part between the drill holes as illustrated.

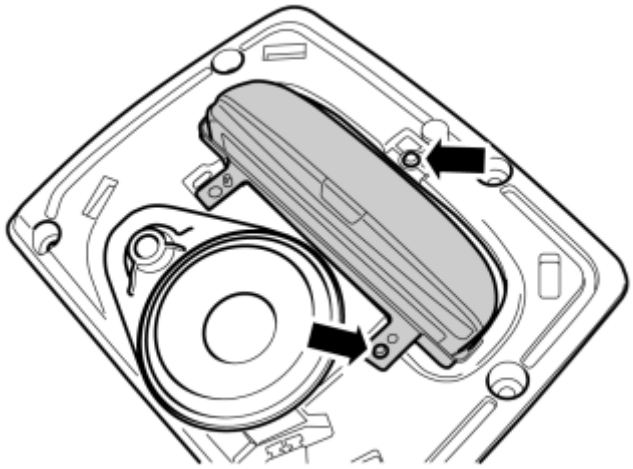

Fig. 285: Installing Monitor
Courtesy of VOLVO CARS CORPORATION

- Reinstall the monitor and tighten using two screws as illustrated.

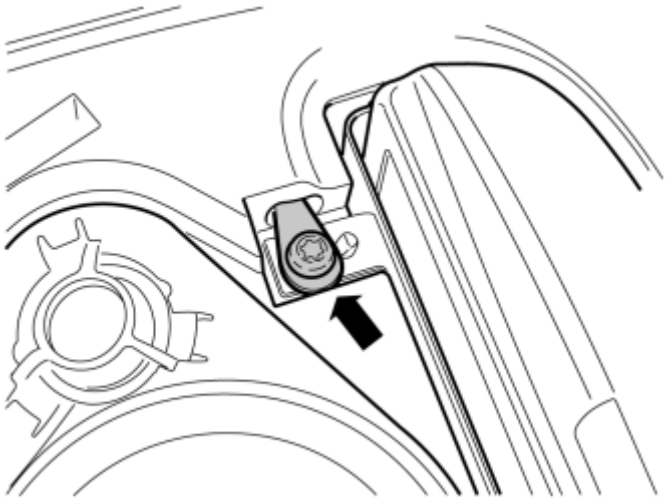

Fig. 286: Monitor Installation Screw
Courtesy of VOLVO CARS CORPORATION

- Take the loose end of the ground strip and thread it through the drilled holes from underneath.
- Secure the cable terminal using the screw for the monitor and tighten.
- Reinstall the monitor unit with its five screws.
- Refit the louvre.

FINISHING WORK

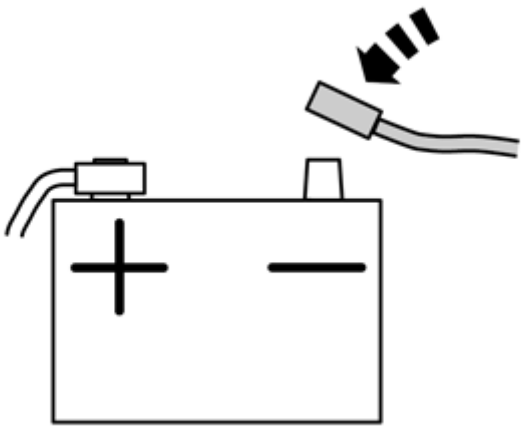

Fig. 287: Reconnecting The Battery
Courtesy of VOLVO CARS CORPORATION

Install:

- the sill trim panels.
- panel over the joint between the door sills.

- seat belt.

NOTE: **Check that the seat belt is secure by jerking it hard in an upwards direction.**

- seat, tighten the screws to **50 Nm (36.8 lbf. ft.)** .
- seat links.
- side panels.
- Reconnect the battery negative lead

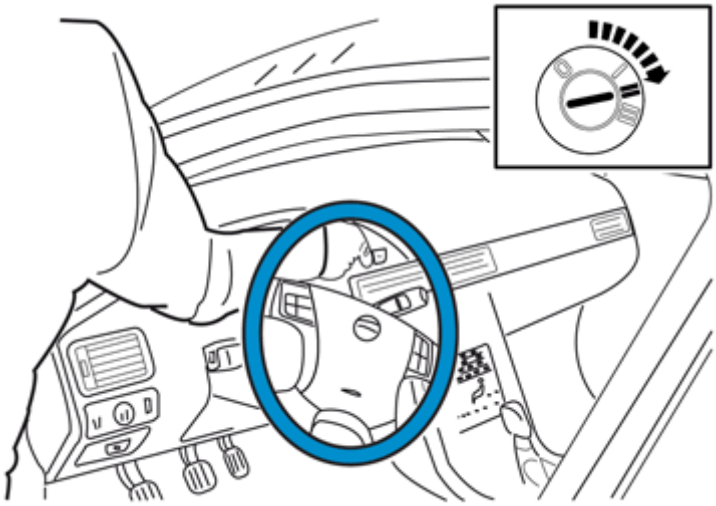

Fig. 288: Ignition Switched To Position II
Courtesy of VOLVO CARS CORPORATION

WARNING: **When the ignition is to be switched on for the first time after the battery has been disconnected, this must be done by standing outside the vehicle, stretching your arm in and avoiding the operating area for the airbags.**

- Set the ignition switch to position II.

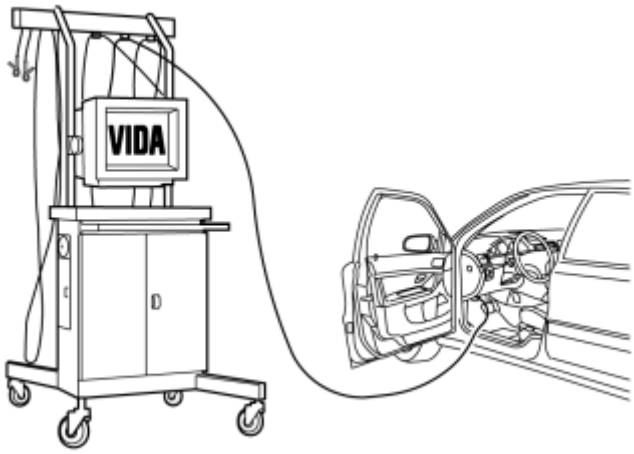

Fig. 289: Identifying VIDA (Service Information) To Program Software
Courtesy of VOLVO CARS CORPORATION

- Download software (application) for the accessory's function according to service information in VIDA (Volvo scan tool). See VIDA or accessories catalogue for article number on software.

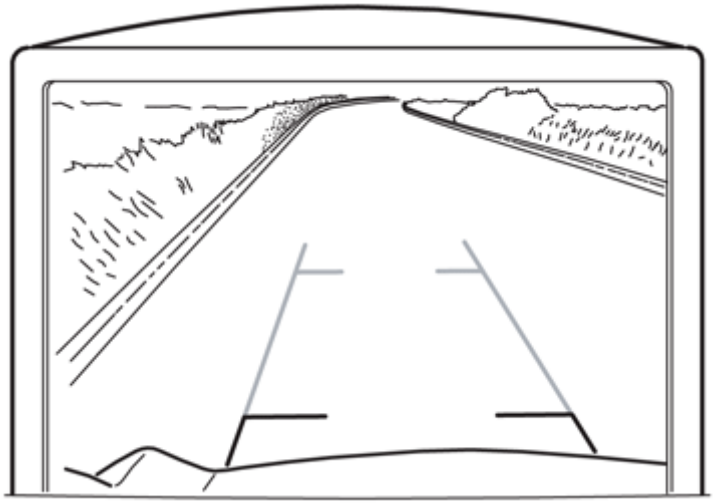

Fig. 290: Checking Support Lines Appear On Screen
Courtesy of VOLVO CARS CORPORATION

Perform a function test as follows

- Engage reverse gear
- Activate the screen for RTI
- Wait for the message "Update Environment" to appear on the screen
- Follow the on-screen instructions
- Switch off the ignition for at least 10 seconds. - Turn the ignition on
- Activate the screen for RTI

- Check that the support lines appear on the screen and that these react to steering wheel movements.

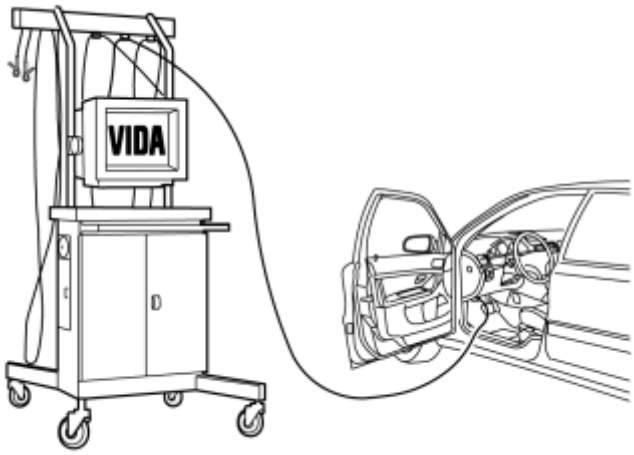

Fig. 291: Identifying VIDA (Service Information) To Program Software
Courtesy of VOLVO CARS CORPORATION

- Check the position of the camera using the calibration program. See VIDA (Volvo Scan Tool) under "Diagnostics/Vehicle communication/Advanced".

NOTE: **If the camera lens cannot be correctly positioned, remove the lens and drill out the two holes in the tailgate for the screws. If necessary, file the rectangular holes so that the camera lens can be adjusted to the correct position.**

- Refit the trunk lid's panels and lamp.
- Refit the floor hatches.

PARKING ASSISTANCE, REAR (2007-2012)

PARKING ASSISTANCE, REAR

PREPARATIONS

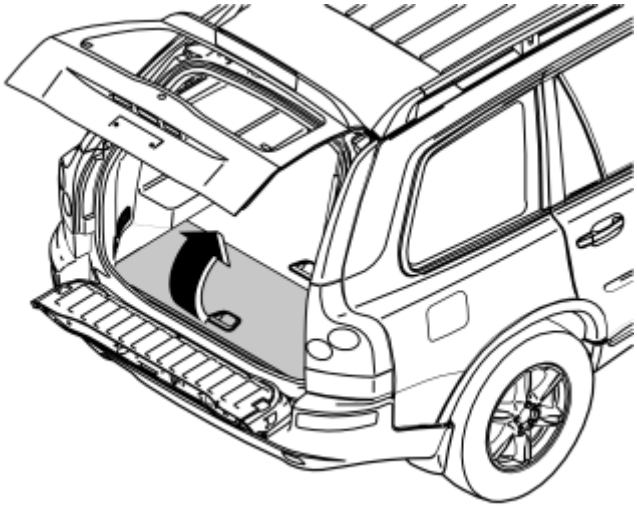

Fig. 292: Removing The Floor Hatch
Courtesy of VOLVO CARS CORPORATION

Applies to cars with two rows of seats

- Fold up the middle, rear floor hatch. Unhook the straps.
- Remove the storage box underneath and lift it out.
- Fold back the floor hatch. Pull the floor hatch backwards and lift it out.

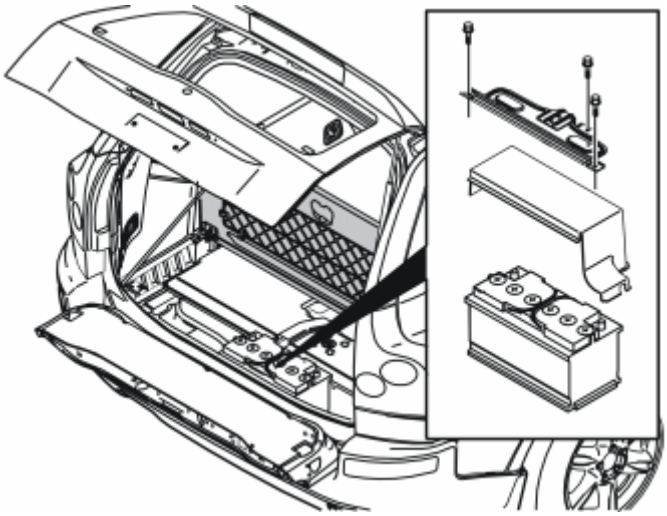

Fig. 293: Removing Three Screws In Battery Holder
Courtesy of VOLVO CARS CORPORATION

Remove:

- the three screws in the holder for the battery and lift it out.
- the battery cover.
- the holder for the tool bag.

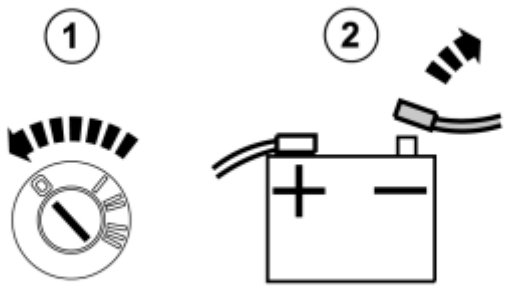

Fig. 294: Identifying Ignition Switch OFF & Disconnected Negative Battery Lead
Courtesy of VOLVO CARS CORPORATION

- Turn the ignition key to position 0.
- Disconnect the battery negative lead.

NOTE: Wait at least 2 minutes before disassembling the connectors or removing other electrical equipment.

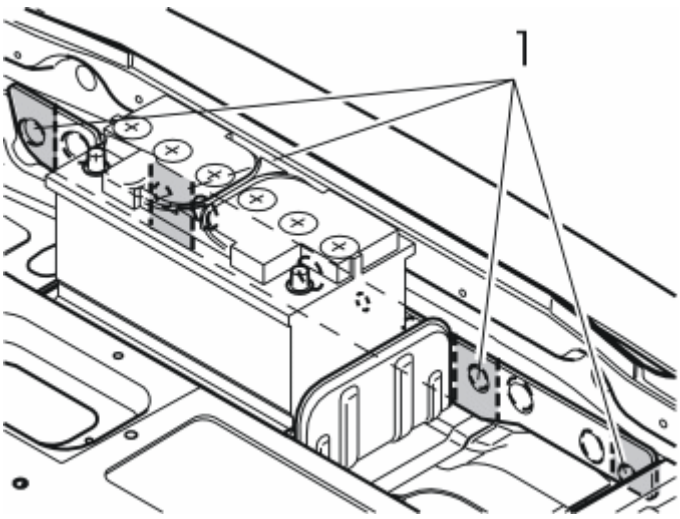

Fig. 295: Removing Pre-Punched Pieces From Insulation Panel
Courtesy of VOLVO CARS CORPORATION

- Remove the pre-punched pieces (1) from the insulation panel in the rear crossmember by cutting them off at the markings.
- Remove the four sleeve nuts holding the bumper in place. They are in the holes under the insulation panel. Lift them out and remove them using a magnet

Fig. 296: Removing Cover Panel
Courtesy of VOLVO CARS CORPORATION

- Remove the cover panel under the tail lamps on the right and left sides by carefully prying them loose using a weatherstrip tool.

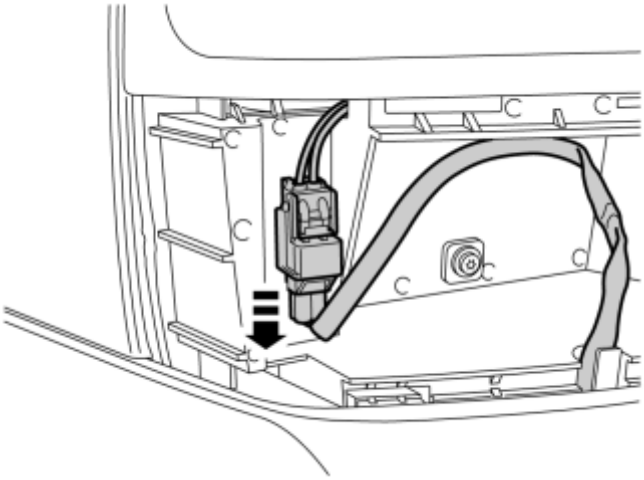

Fig. 297: Disconnecting Fog Lamp
Courtesy of VOLVO CARS CORPORATION

- Disconnect the connector for the fog lamp on the left-hand side. The upper part of the connector must remain on its holder.

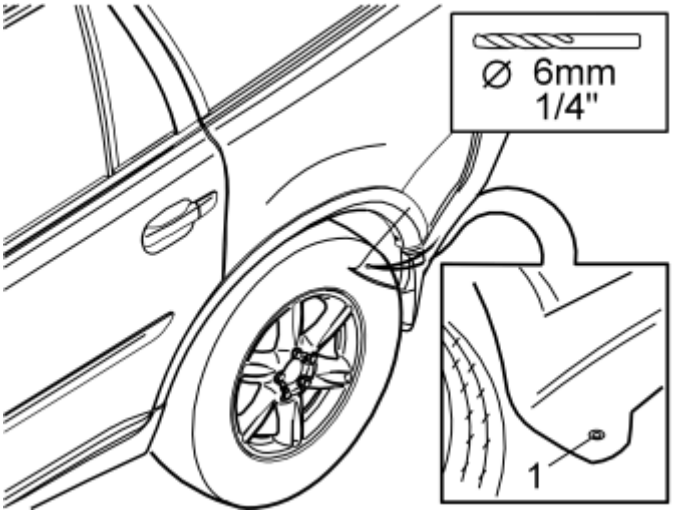

Fig. 298: Drilling Out Rivets
Courtesy of VOLVO CARS CORPORATION

NOTE: Carry out on the right and left-hand sides.

- Drill out the rivets on the underneath of the front edge using a **6 mm (1/4")** drill bit.

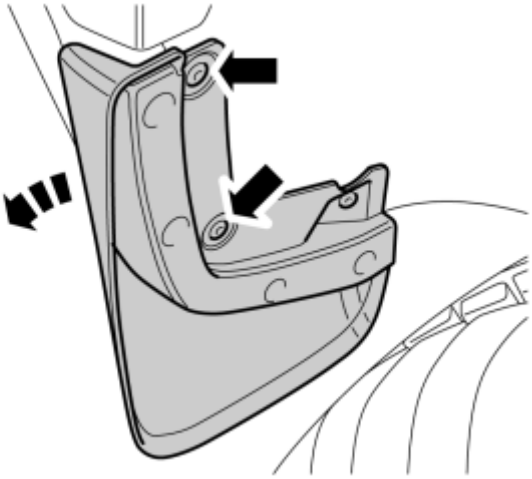

Fig. 299: Removing Mudguard
Courtesy of VOLVO CARS CORPORATION

Applies to cars with mudguards

- Drill out the two rivets using a **6 mm (1/4")** drill bit. Leave the inner rivet in place.
- Turn the mud guard outwards/downwards.

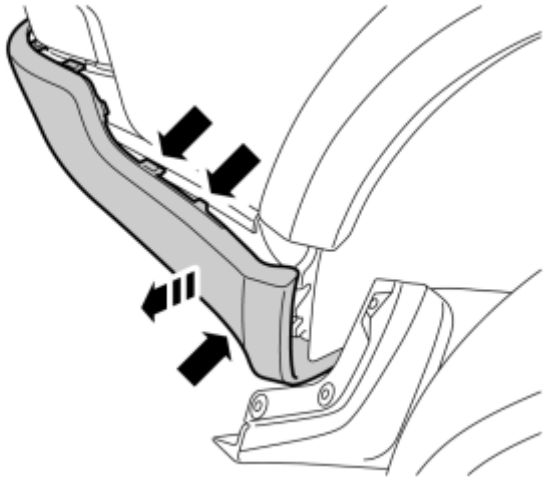

Fig. 300: Removing Lower Section Of Bumper Cover
Courtesy of VOLVO CARS CORPORATION

- Pull off the lower section of the bumper cover at the front edge so that the two hooks at the upper edge, and the hooks on the inside, release.

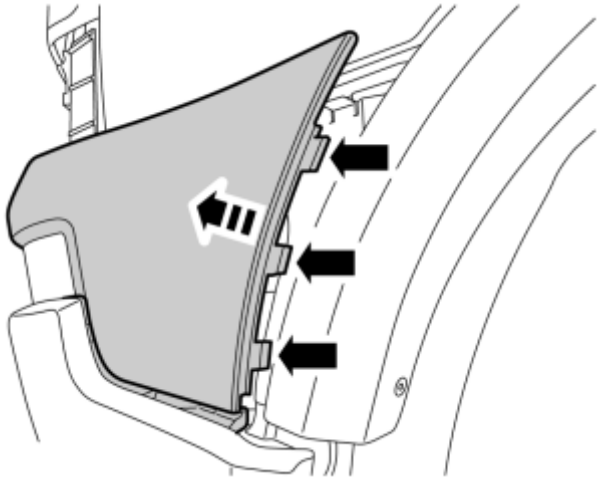

Fig. 301: Removing Bumper Cover
Courtesy of VOLVO CARS CORPORATION

- Grasp the lower edge of the upper section of the bumper cover. Pull straight out so that the three hooks release. The hooks may be hard to release, if so, release using a weatherstrip tool.
- Pull out the ends further until the four hooks, which are horizontally positioned at the upper edge, release.

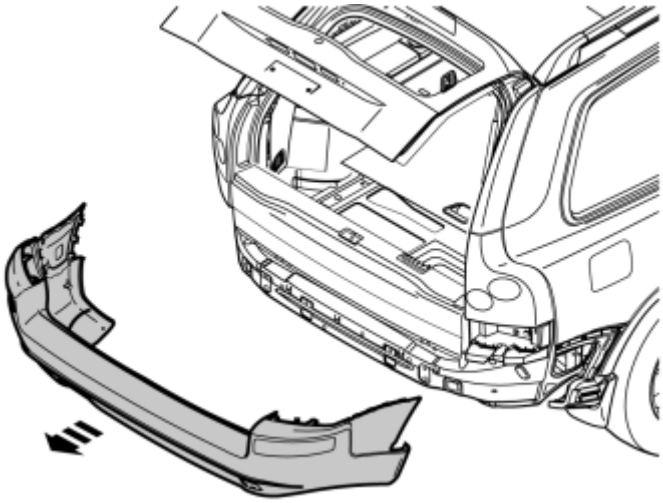

Fig. 302: Removing The Bumper
Courtesy of VOLVO CARS CORPORATION

- Fold up the lower tailgate.
- Pull the bumper backwards and remove the bumper.
- Place the bumper on a suitable surface that will not damage the paint.
- Remove the remaining parts of the removed rivets.

- Remove the two clips.

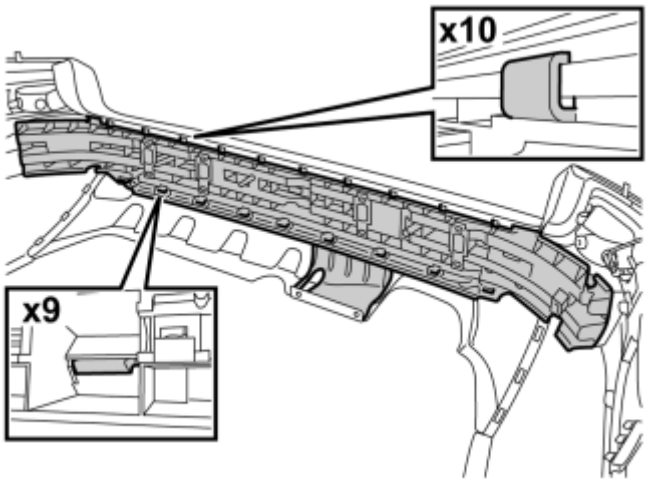

Fig. 303: Release And Unhook Catches
Courtesy of VOLVO CARS CORPORATION

- Unhook the ten catches at the upper edge of the bumper.
- Release the nine hooks in the middle of the bumper, at the same time as separating the inner and outer sections of the bumper.
- Remove the inner part of the bumper.

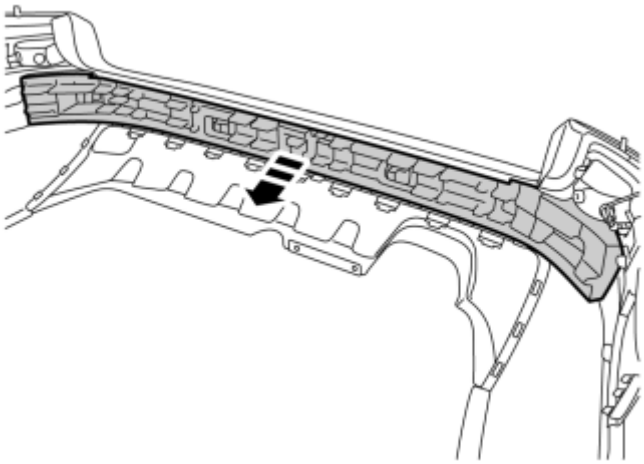

Fig. 304: Removing Polystyrene Support
Courtesy of VOLVO CARS CORPORATION

- Remove the polystyrene support.

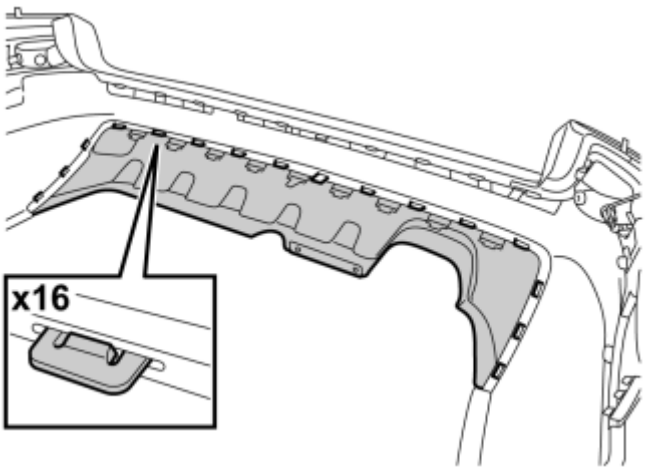

Fig. 305: Removing By Releasing Hooks
Courtesy of VOLVO CARS CORPORATION

- Remove the lower part by releasing the hooks.

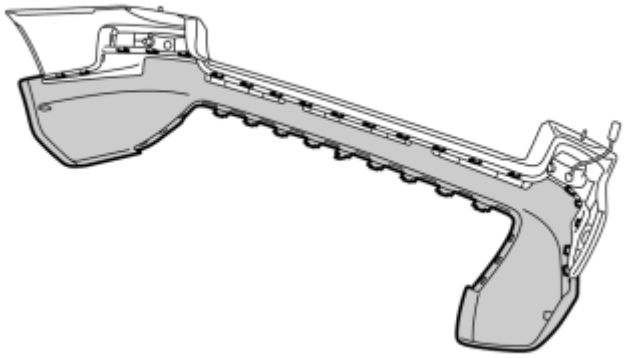

Fig. 306: Removing The Middle Section
Courtesy of VOLVO CARS CORPORATION

- Remove the middle section by unhooking the hooks. The middle section will no longer be used.

INSTALLING THE BUMPER SECTION WITH SENSORS

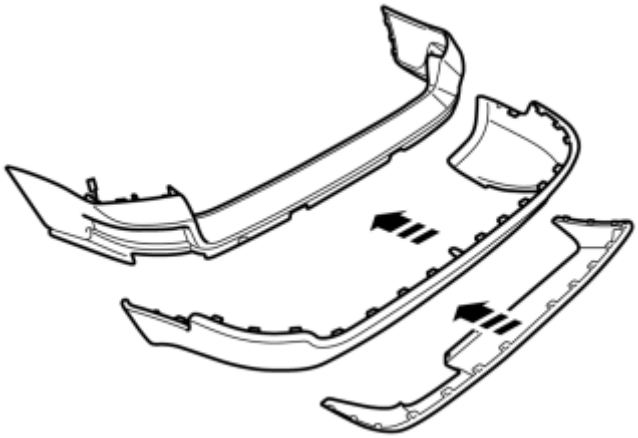

Fig. 307: Installing The Bumper Section With Pre-Mounted Sensor Holders
Courtesy of VOLVO CARS CORPORATION

- Install the new bumper section with the pre-mounted sensor holders.
- Install the lower section. Check that all hooks engage.

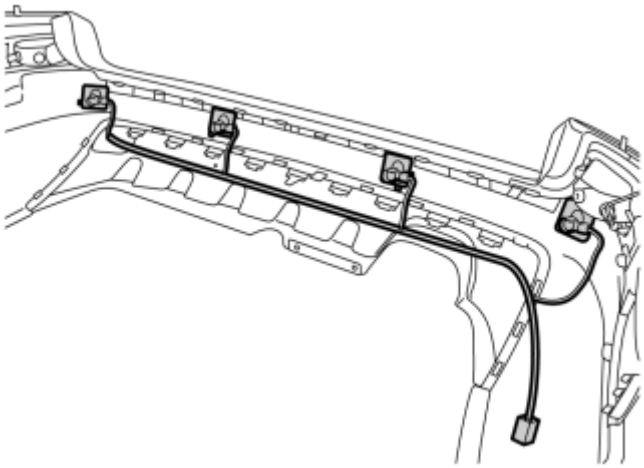

Fig. 308: Connecting Cable Harness And Sensors
Courtesy of VOLVO CARS CORPORATION

- Press the cable harness connectors into the sensor's connectors. A clicking noise should be heard, which confirms that the catches have activated.
- Press the sensors with cable harness in each holder with the connector pointing to the left, as illustrated.

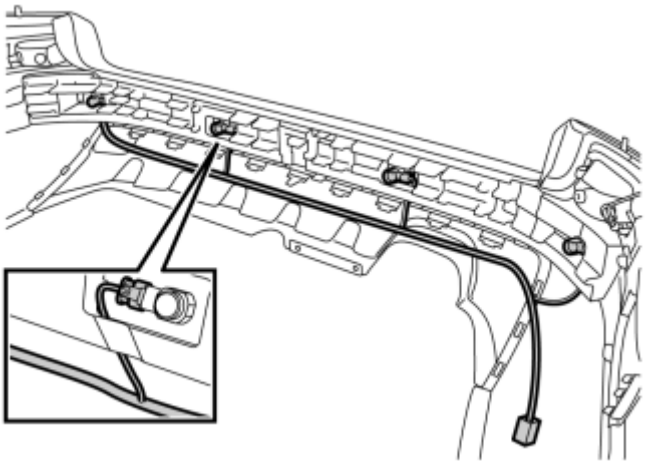

Fig. 309: Positioning cables
Courtesy of VOLVO CARS CORPORATION

- Install the polystyrene support. Position the four cables from the sensors so that they are in the cutouts for the polystyrene support.

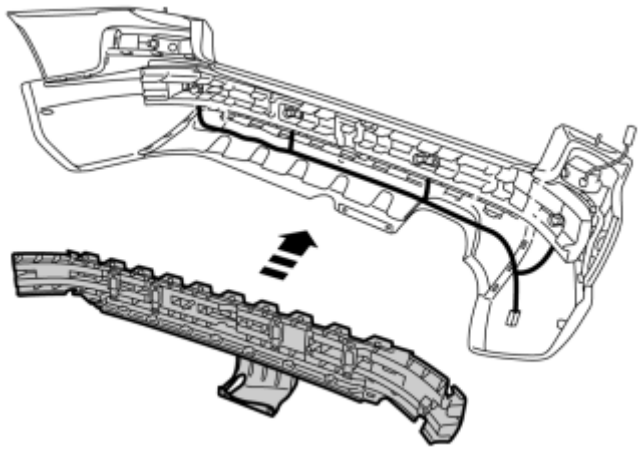

Fig. 310: Installing Inner Section
Courtesy of VOLVO CARS CORPORATION

- Install the inner section loosely against the outer section.

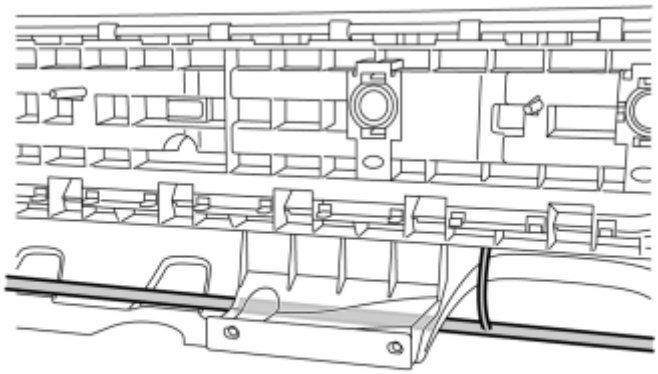

Fig. 311: Routing Cable Harness Over Inner Section
Courtesy of VOLVO CARS CORPORATION

- Route the cable harness over the inner section.
- Press the inner section against the outer section. Use a plastic or rubber mallet to facilitate installation. Check that all hooks engage.

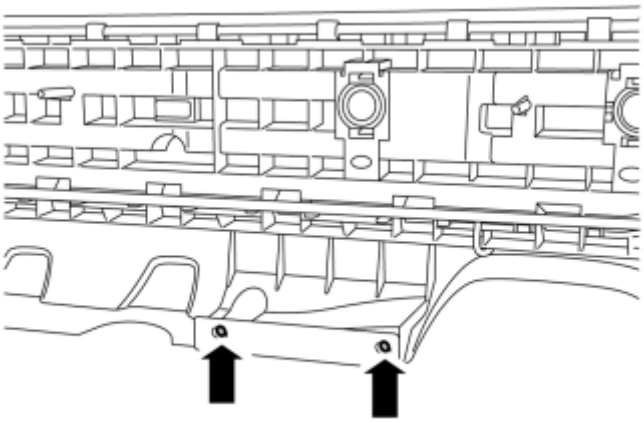

Fig. 312: Pressing Cable Harness Into Channel
Courtesy of VOLVO CARS CORPORATION

- Press the cable harness in the relevant channel on the inner section.
- Reinstall the two clips.

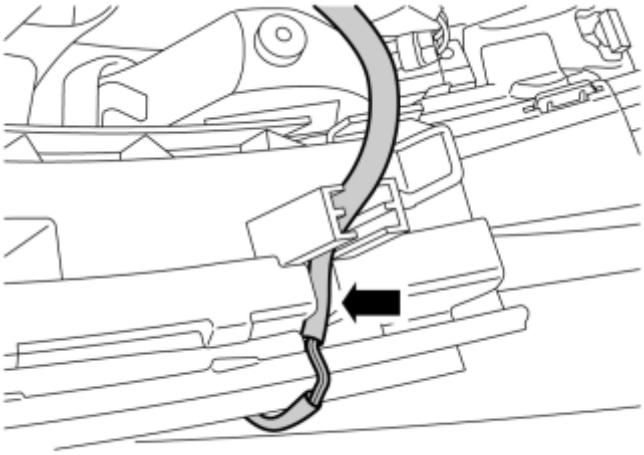

Fig. 313: Locking Cable Harness Into Hook
Courtesy of VOLVO CARS CORPORATION

- Press the cable harness so that the hooks lock the cable harness inside the protruding section.

INSTALLATION, CONTINUED

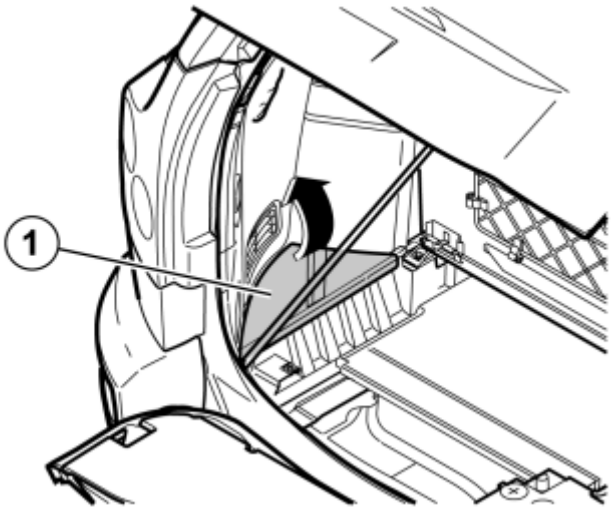

Fig. 314: Removing Floor Hatch
Courtesy of VOLVO CARS CORPORATION

- Remove the floor hatch (1) on the left-hand side.

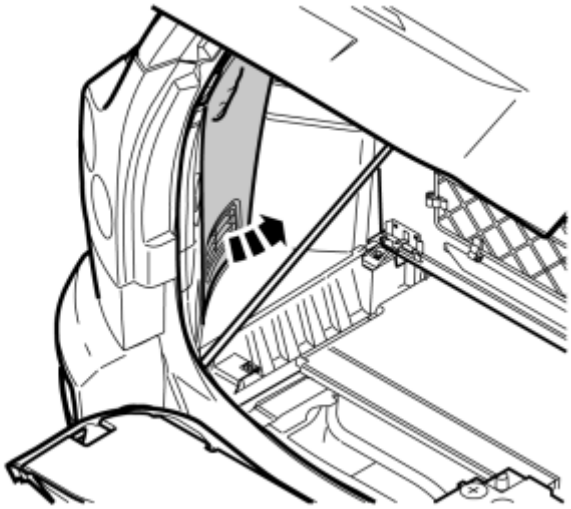

Fig. 315: Removing Side Panel
Courtesy of VOLVO CARS CORPORATION

- Remove the side panel on the left-hand side.

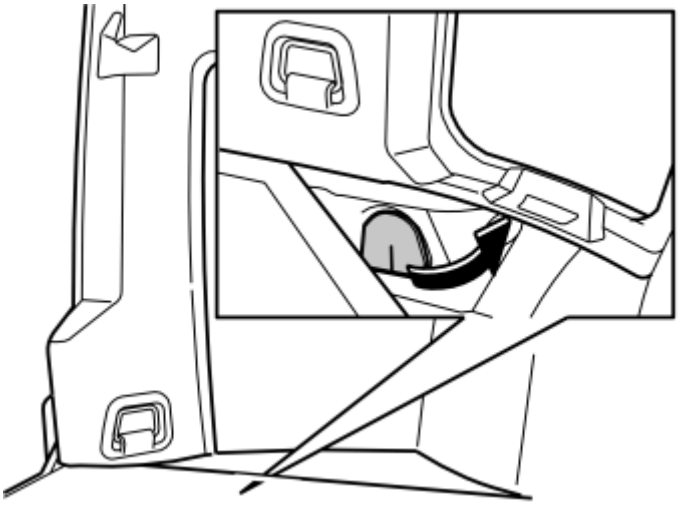

Fig. 316: Removing Foam Seal
Courtesy of VOLVO CARS CORPORATION

- Remove the foam seal on the left-hand side in the rear crossmember under the left-hand side floor hatch. Do not damage the seal, it will be reused.

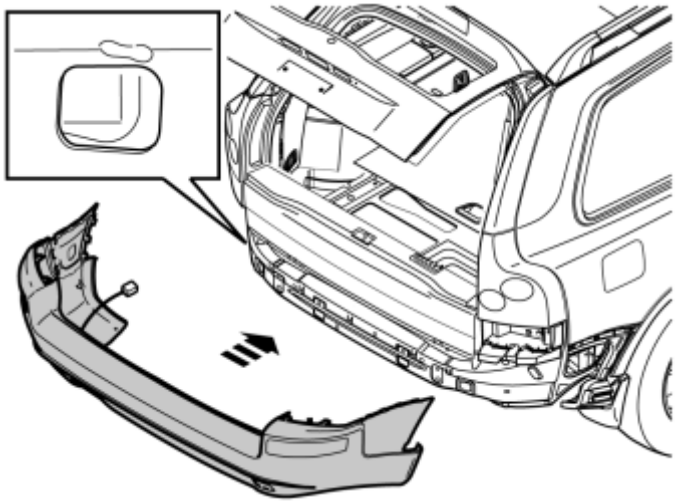

Fig. 317: Inserting And Routing Cable
Courtesy of VOLVO CARS CORPORATION

- Fold up the lower tailgate.
- Lift up the bumper, insert the cable from the sensors into the large rectangular hole to the left in the rear crossmember, and then into the hole where the foam seal was located.

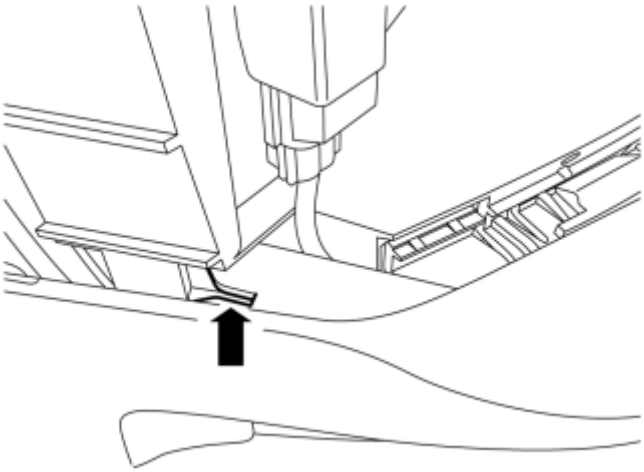

Fig. 318: Positioning Cable
Courtesy of VOLVO CARS CORPORATION

- Position the cable in its cutout between the plastic bracket and the bumper cover. Check that the guide on the side of the bumper cover is inside the plastic bracket.
- Press the bumper's four hooks at the rear edge into place.
- Press all the hooks for the ends into the body.
- Lower the lower tailgate.
- Tighten the bumper using the four sleeve nuts. Tighten to **16 Nm (12 lbf. ft.)** .

  HINT: To facilitate installation, secure the sleeve nut to the tool using butyl tape.

- Take the new pieces of insulation panel and place them over the holes for the bumper.
- Connect the connector to the fog lamp.
- Reinstall the cover panels under the tail lamps.
- Rivet the bumper at the rear edge of the wheel housing, on both sides. Use rivets from the kit.
- Turn back and rivet any mud guards.

INSTALLATION OF THE PARKING ASSISTANCE MODULE (PAM)

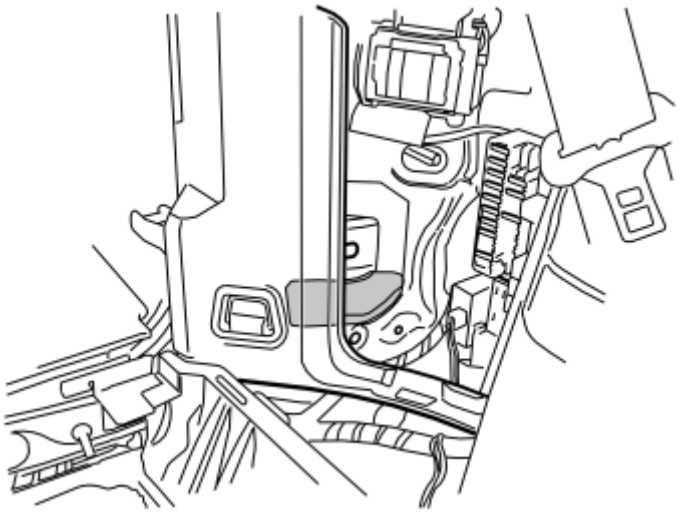

Fig. 319: Clean Flat Surface Of Reinforcements Panel's Lower Section
Courtesy of VOLVO CARS CORPORATION

- Clean the flat surface on the reinforcement panel's lower section, behind the side panel where the control module is to be secured. Use isopropanol.

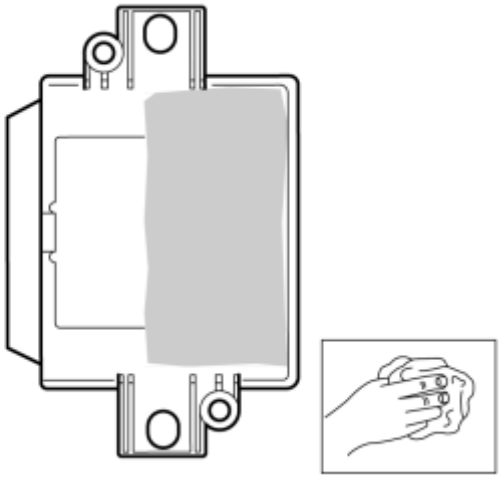

Fig. 320: Prepping Reverse Side Of Control Module
Courtesy of VOLVO CARS CORPORATION

- Clean the reverse of the control module using isopropanol.

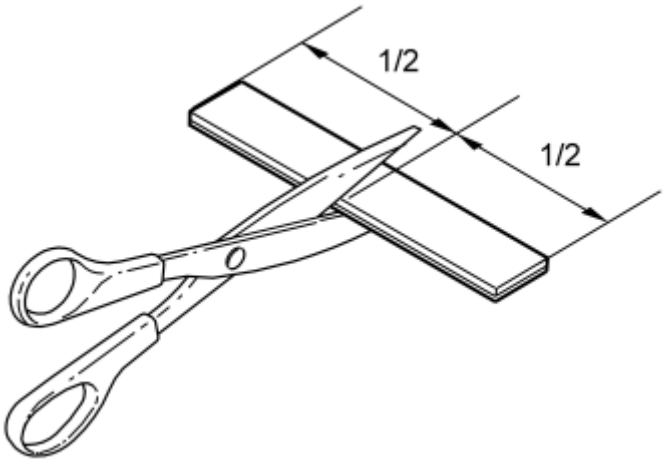

Fig. 321: Identifying Velcro Strip
Courtesy of VOLVO CARS CORPORATION

- Take the Velcro strips and cut them in the middle.
- Press them together.
- Remove the protective film from one side of the Velcro tape

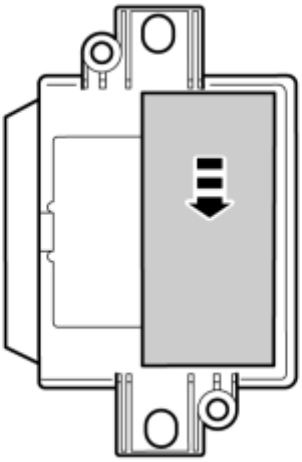

Fig. 322: Applying Tape To Reverse Side Of Control Module
Courtesy of VOLVO CARS CORPORATION

- Press the Velcro tape onto the reverse of the control module, edge to edge on the upper edge.

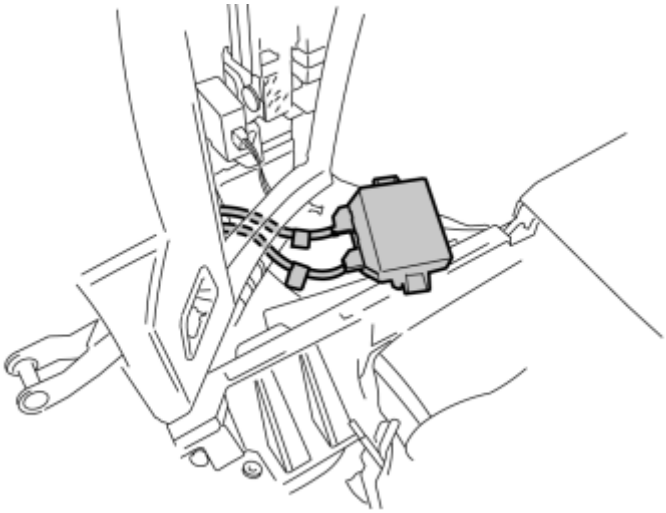

Fig. 323: Connecting Control Module
Courtesy of VOLVO CARS CORPORATION

- Locate the pre-routed cable harness with the light brown connector and connect it to the control module.
- Connect the cable harness from the sensors to the control module.

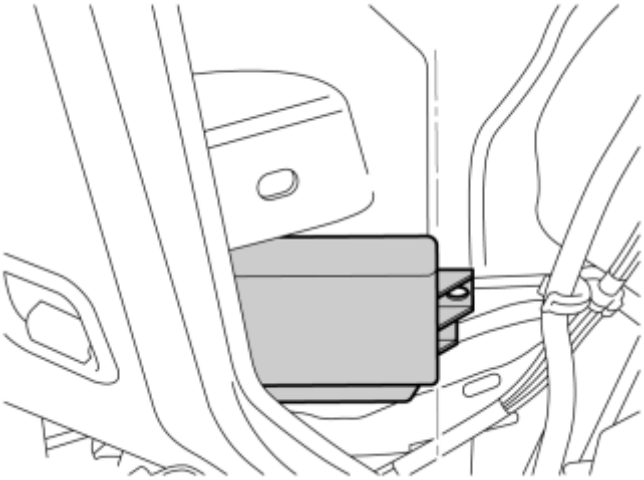

Fig. 324: Installing Control Module
Courtesy of VOLVO CARS CORPORATION

- Remove the protective film from the Velcro tape.
- Press the control module properly onto the flat surface behind the panel, as illustrated. The control module's left end must be edge to edge with the panel reinforcement's vertical edge.

INSTALLING THE SWITCH

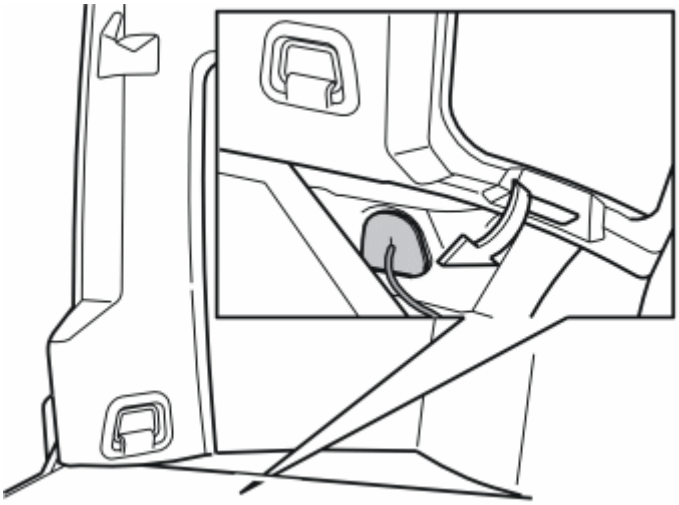

Fig. 325: Install The Foam Seal Together With The Cable Harness
Courtesy of VOLVO CARS CORPORATION

- Reinstall the foam seal together with the cable harness from the sensors, in the hole in the rear crossmember.

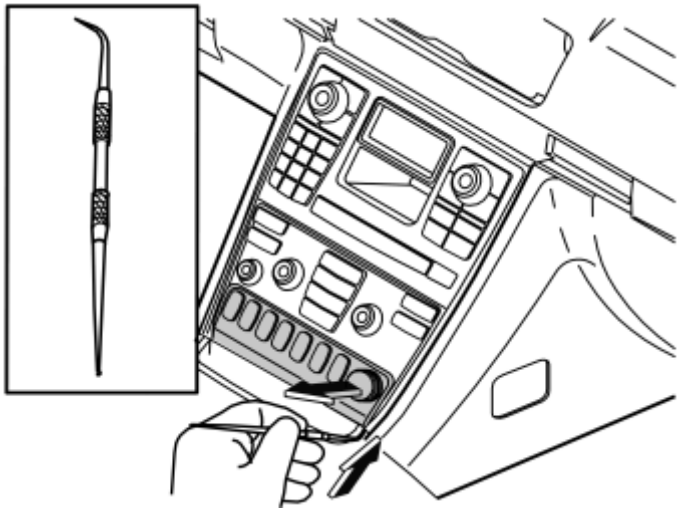

Fig. 326: Identifying Removing The Blind Cover Plug With A Scribe
Courtesy of VOLVO CARS CORPORATION

- Remove the cover plug to the 12V socket.
- Take a scriber with angled tip. Insert the angled end of the scriber in the joint on the underneath of the keypad surround.

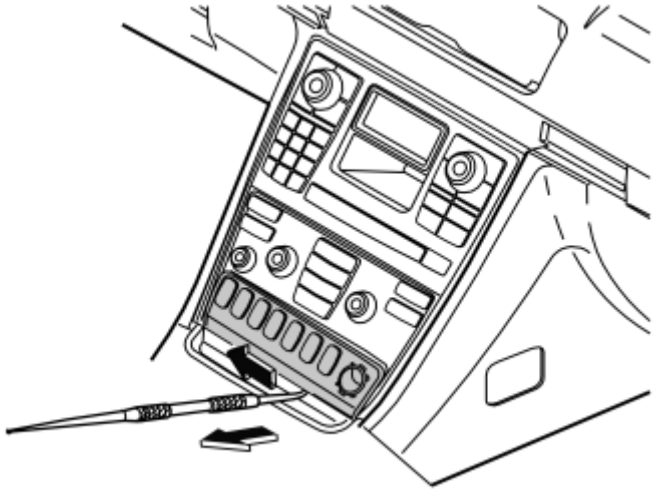

Fig. 327: Identifying Pulling Out The Surround Using The Scribe
Courtesy of VOLVO CARS CORPORATION

- Carefully pull out the surround using the scriber along the underneath of the surround. The surround is secured by three mounting lugs at the upper and lower edges. Do not damage the surround.
- Place the surround to one side.

  HINT: A surround with four button locations can be replaced with a surround with seven button locations if required. This is available for purchasing separately.

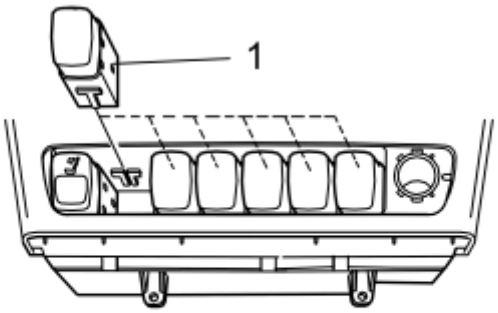

Fig. 328: Identifying Installation Of New Switch
Courtesy of VOLVO CARS CORPORATION

- The switch can be located in any available position. Remove the dummy button and install the new switch (1).
- Reinstall the surround and cover plug to the 12V socket.

FINISHING

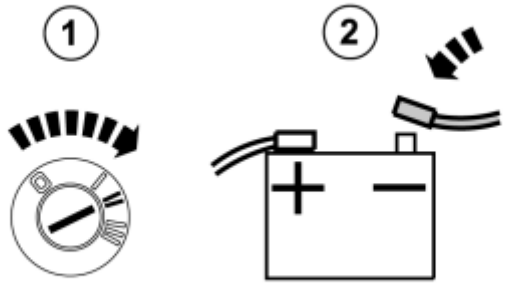

Fig. 329: Identifying Key Position And Battery Installation
Courtesy of VOLVO CARS CORPORATION

- Turn the ignition key to position II.
- Reconnect the battery negative lead
- Reinstall the cover and holder for the battery.
- Reinstall the holder for the tool bag.
- Reinstall the side compartment and floor hatches.
- Download the software for the accessory's function following the service information in VIDA (Volvo scan tool).

ACCESSORIES AND BODY, CAB

Other Electrical Equipment - Removal, Replacement And Installation

AUTOMATIC MONITORING (2003-2006)

ANTENNA UNIT, START INHIBITOR, REPLACING

see **ANTENNA UNIT, START INHIBITOR, REPLACING**

IGNITION KEY/REMOTE CONTROL, ADDING/REPLACING/ERASING

see **IGNITION KEY/REMOTE CONTROL, ADDING/REPLACING/ERASING**

MASS MOVEMENT SENSOR MODULE (MMS) FRONT, REPLACING

see **MASS MOVEMENT SENSOR MODULE (MMS) FRONT, REPLACING**

MASS MOVEMENT SENSOR MODULE (MMS) REAR, REPLACING

see **MASS MOVEMENT SENSOR MODULE (MMS) REAR, REPLACING**

PARKING ASSISTANCE MODULE (PAM), REPLACING

see **PARKING ASSISTANCE MODULE (PAM), REPLACING**

RAIN SENSOR

see **RAIN SENSOR**

REVERSE (REVERSING) WARNING SENSOR (PARKING ASSISTANCE MODULE (PAM)), REPLACING

Special tools:

see **9814214**

REMOVAL

NOTE: **As the illustrations in this service information are used for different model years and / or models, some variation may occur. However, the essential information in the illustrations is always correct.**

REMOVING THE REVERSE (REVERSING) WARNING SENSOR

NOTE: **The parking assistance module (PAM) is located behind the left-hand wheel**

arch in the cargo compartment.

Fig. 1: Identifying Ignition In OFF Position
Courtesy of VOLVO CARS CORPORATION

Ignition off.

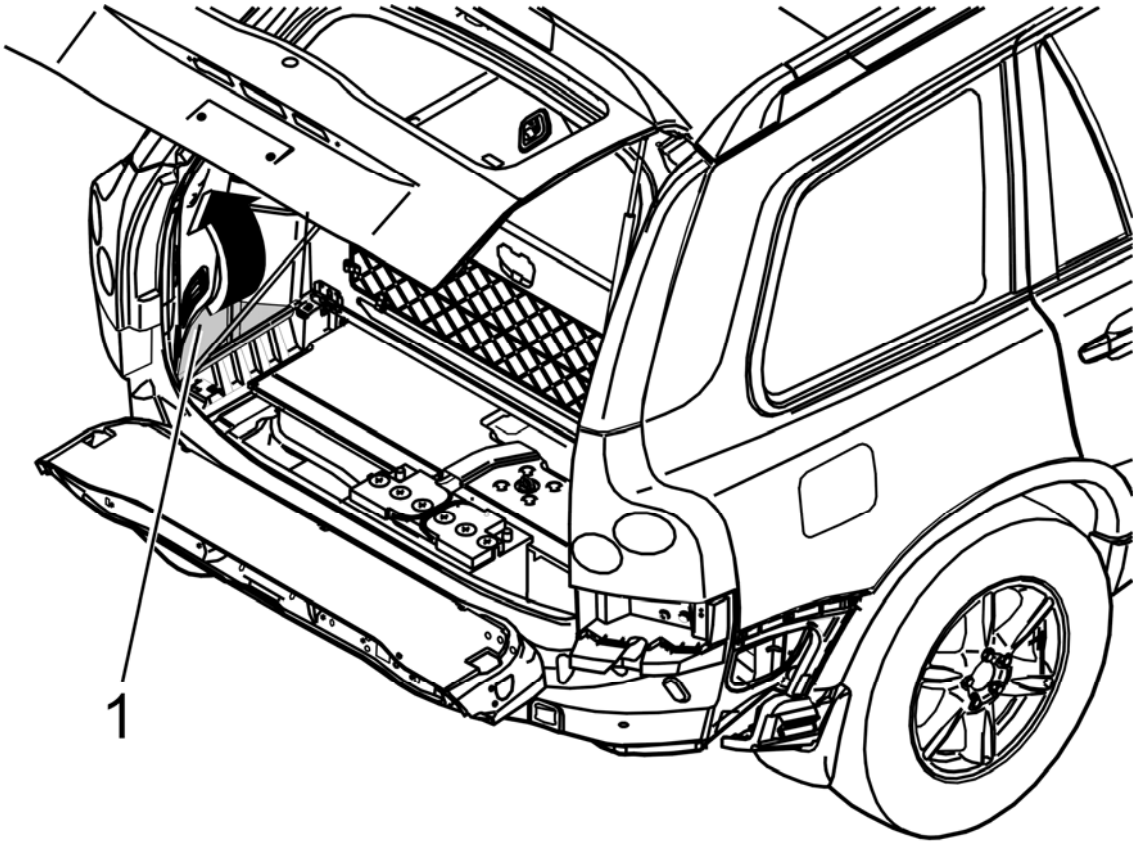

Fig. 2: Identifying Cargo Compartment Floor Corner Piece
Courtesy of VOLVO CARS CORPORATION

Fold up the floor hatch in the cargo compartment

Remove the corner piece (1) from the floor on the left-hand side. See the illustration.

DISCONNECTING THE CONNECTOR

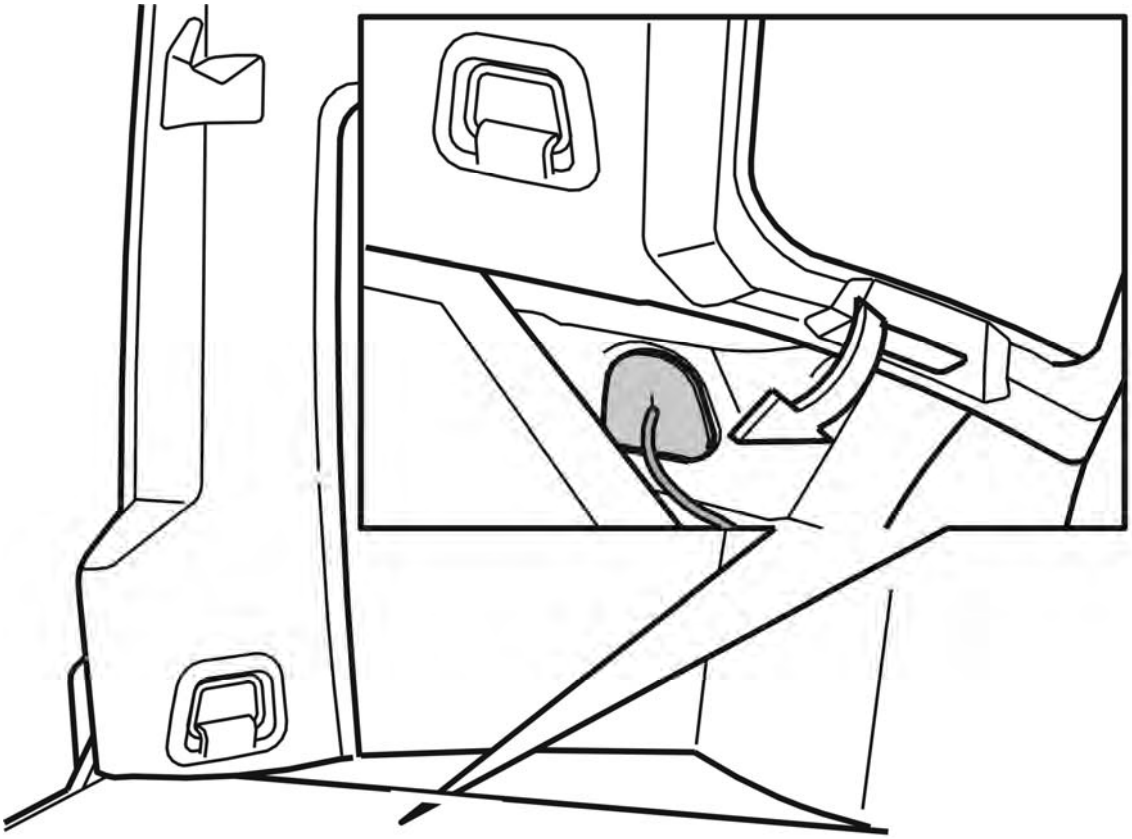

Fig. 3: View Of Cable From Sensors In The Bumper To The Control Module
Courtesy of VOLVO CARS CORPORATION

CAUTION: The following procedure must be carried out to ensure that the connector and wiring are not damaged when removing the bumper.

Follow the cable from the sensors in the bumper up to the control module for the reverse (reversing) warning system.

Disconnect the connector (the cable comes from the bumper).

NOTE: Disconnect the correct connector. The control module for the back-up (reversing) warning system has 2 connectors.

REMOVING REAR BUMPER

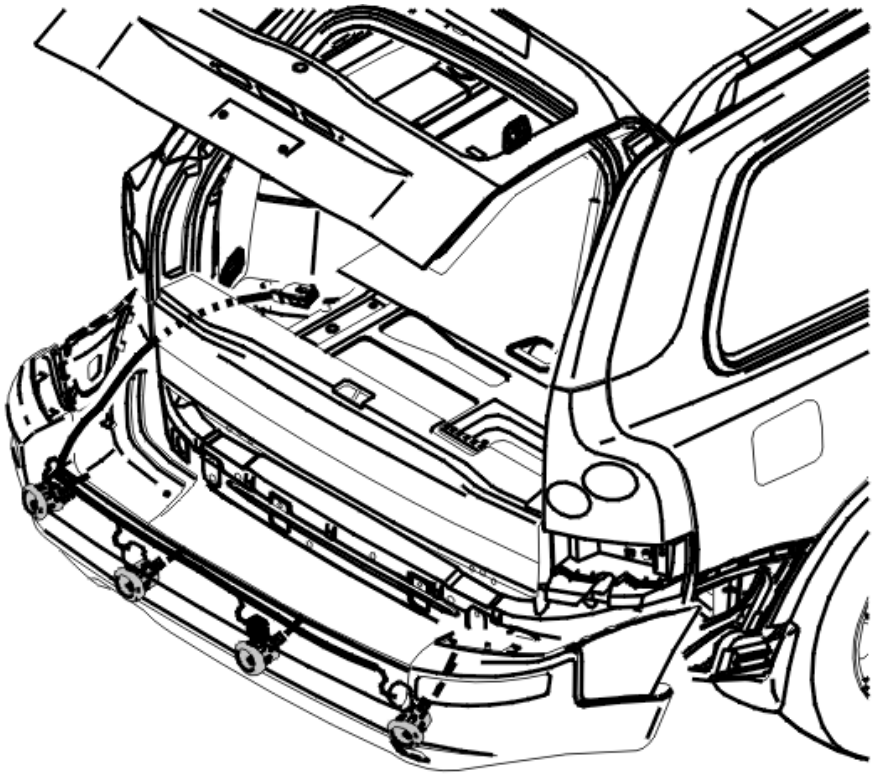

Fig. 4: View Of Cable Out The Hole In The Body
Courtesy of VOLVO CARS CORPORATION

Remove the rear bumper. See **CASING BUMPER REAR, REPLACING** .

Pull the cable out of the hole in the body.

REMOVING THE REVERSE (REVERSING) WARNING SENSOR

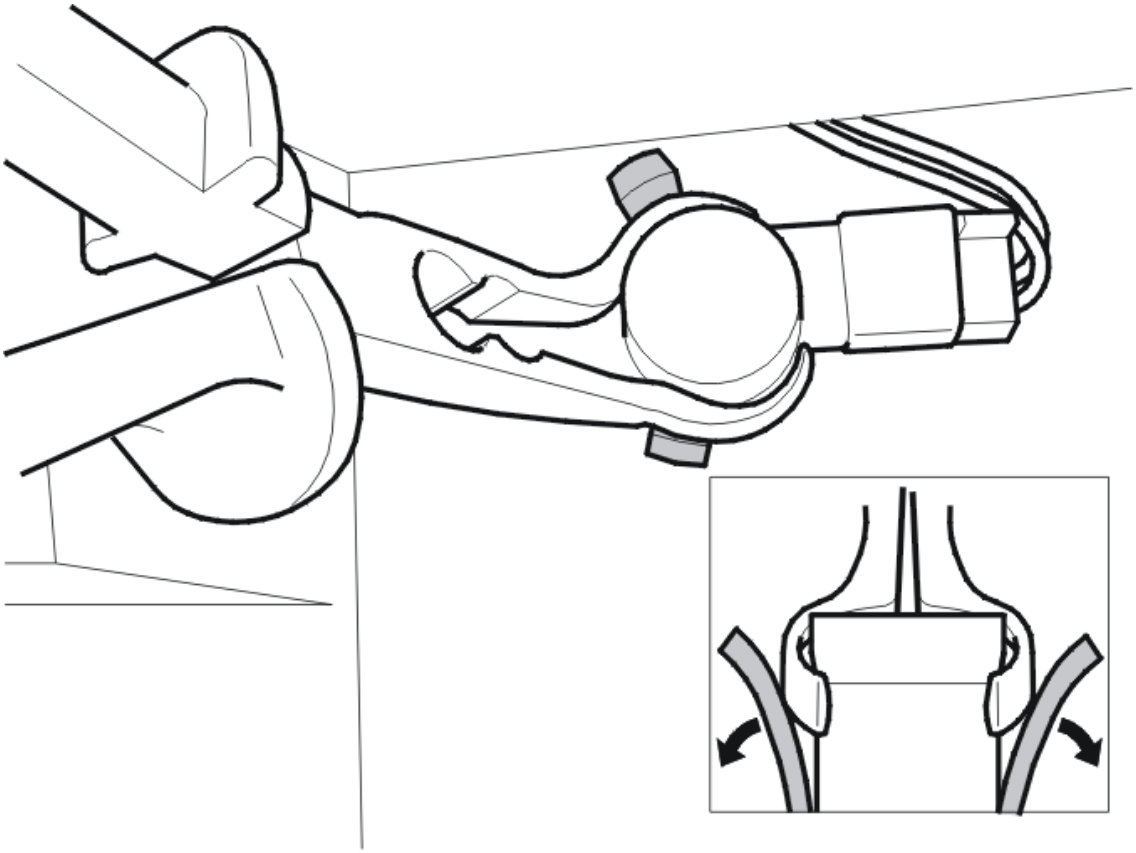

Fig. 5: Identifying Parking Assistance Sensor
Courtesy of VOLVO CARS CORPORATION

Press down the spark plug cap rod see **9814214** between the sensor and the two upright catches on the holder so that the catches release from the sensor.

Carefully pull up the sensor.

Disconnect the connector.

INSTALLATION

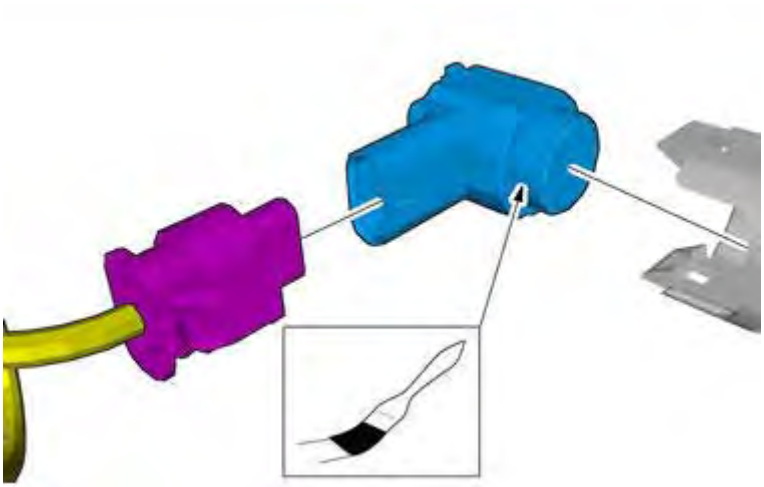

Fig. 6: Identifying (Reversing) Warning Sensor Preparation (1 of 2)
Courtesy of VOLVO CARS CORPORATION

Follow instructions for paint

Use: Soap solution

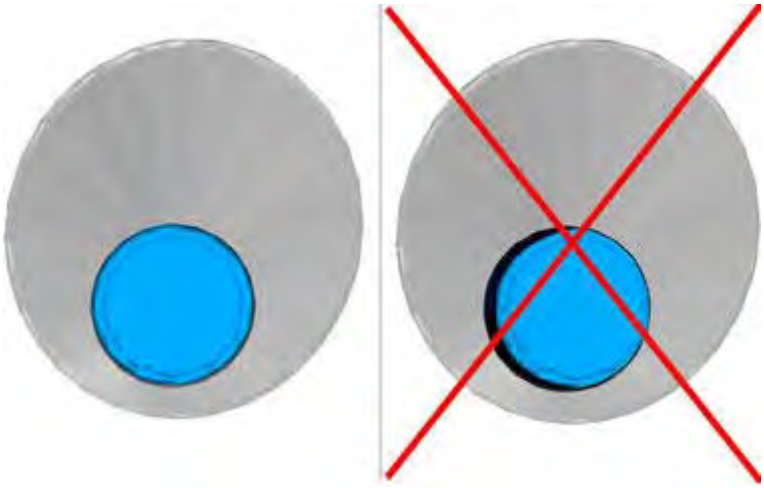

Fig. 7: Identifying (Reversing) Warning Sensor Preparation (2 of 2)
Courtesy of VOLVO CARS CORPORATION

INSTALLING THE REAR BUMPER

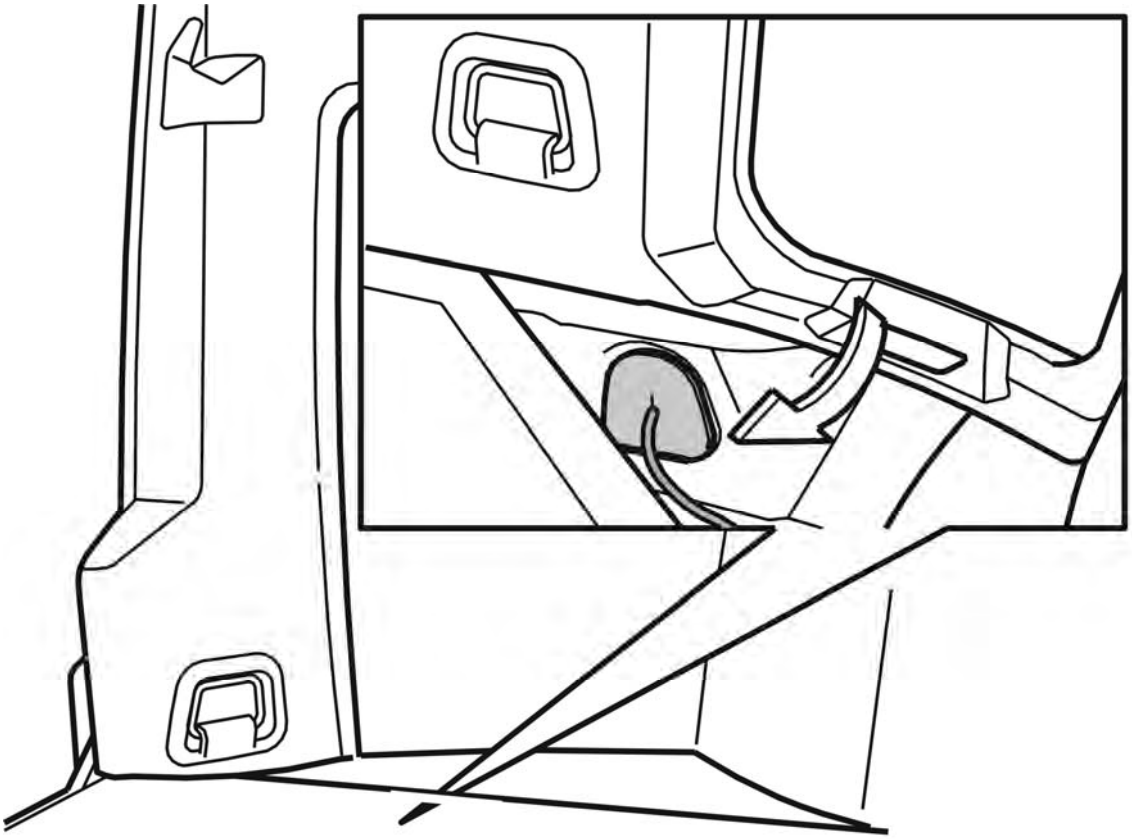

Fig. 8: View Of Cable From Sensors In The Bumper To The Control Module
Courtesy of VOLVO CARS CORPORATION

Route the cable through the lead-in in the rear section. See the illustration.

Install the rear bumper. See **CASING BUMPER REAR, REPLACING** .

INSTALLING THE CONNECTOR

Connect the connector to the parking assistance module (PAM).

- Install the parking assistance module (PAM)
- Reinstall the side panel.

Fold back the floor hatch.

Check the function.

SIREN, REPLACING

see **SIREN, REPLACING**

SUN SENSOR / ALARM LED, REPLACING

see **SUN SENSOR / ALARM LED, REPLACING**

TILT SENSOR ALARM, REPLACING

see **TILT SENSOR ALARM, REPLACING**

AUTOMATIC MONITORING (2007)

ANTENNA UNIT, START INHIBITOR, REPLACING

see **ANTENNA UNIT, START INHIBITOR, REPLACING**

IGNITION KEY/REMOTE CONTROL, ADDING/REPLACING/ERASING

see **IGNITION KEY/REMOTE CONTROL, ADDING/REPLACING/ERASING**

MASS MOVEMENT SENSOR MODULE (MMS) FRONT, REPLACING

see **MASS MOVEMENT SENSOR MODULE (MMS) FRONT, REPLACING**

MASS MOVEMENT SENSOR MODULE (MMS) REAR, REPLACING

see **MASS MOVEMENT SENSOR MODULE (MMS) REAR, REPLACING**

PARKING ASSISTANCE MODULE (PAM), REPLACING

see **PARKING ASSISTANCE MODULE (PAM), REPLACING**

PARKING CAMERA

see **PARKING CAMERA**

PARKING CAMERA MODULE

see **PARKING CAMERA MODULE**

RAIN SENSOR

see **RAIN SENSOR**

REVERSE (REVERSING) WARNING SENSOR (PARKING ASSISTANCE MODULE (PAM)), REPLACING

see **REVERSE (REVERSING) WARNING SENSOR (PARKING ASSISTANCE MODULE (PAM)), REPLACING**

SIREN, REPLACING

see **SIREN, REPLACING**

SUN SENSOR / ALARM LED, REPLACING

see **SUN SENSOR / ALARM LED, REPLACING**

TILT SENSOR ALARM, REPLACING

see **TILT SENSOR ALARM, REPLACING**

AUTOMATIC MONITORING (2008-2011)

ANTENNA UNIT, START INHIBITOR, REPLACING

REMOVAL

ANTENNA UNIT IMMOBILIZER

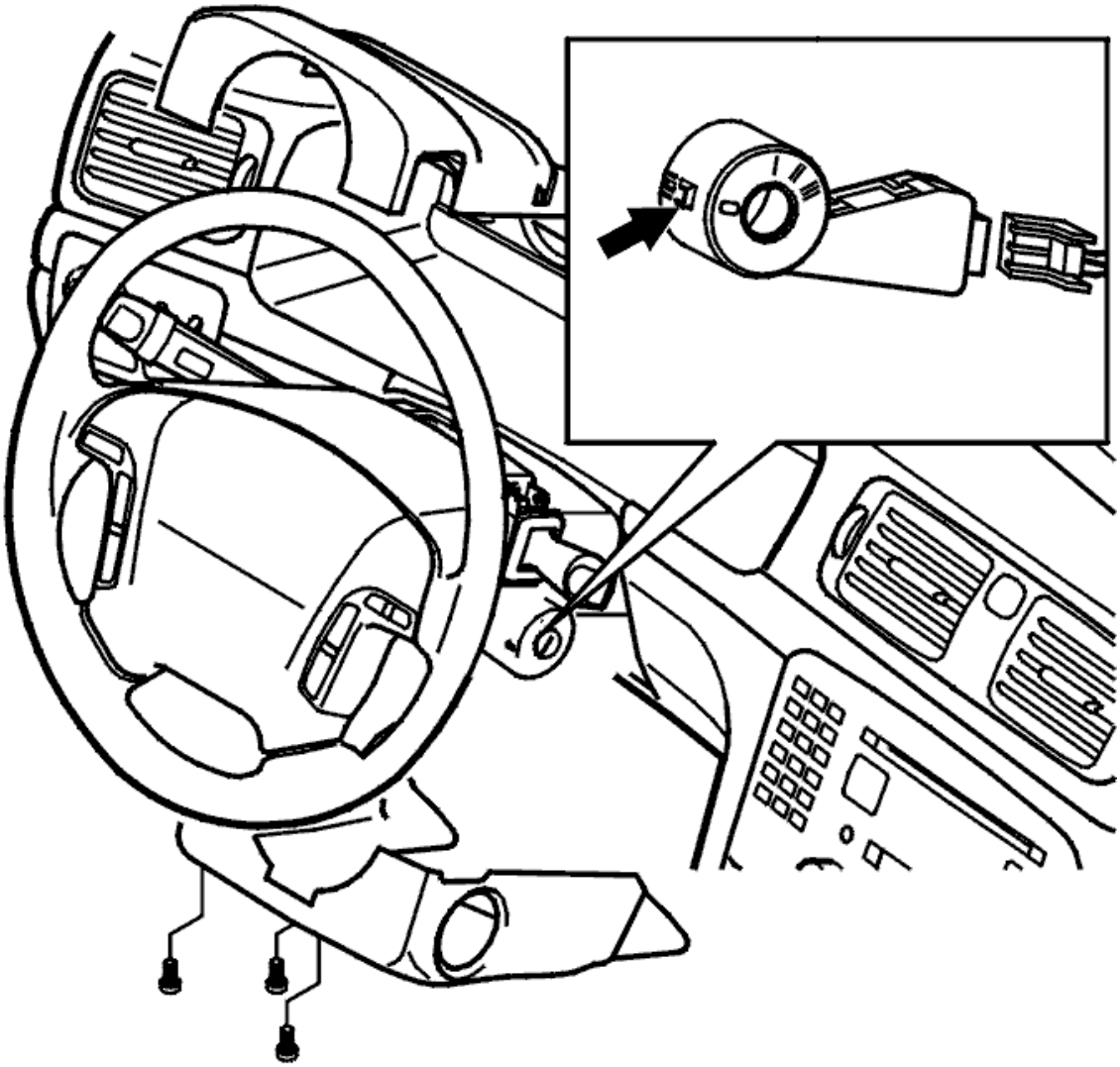

Fig. 9: Locating Steering Column Cover And Ignition
Courtesy of VOLVO CARS CORPORATION

- Ignition off
- Reset the lighting switch
- Remove the steering column covers. See **REPLACING THE STEERING COLUMN COVERS**
- Remove the mounting. Remove the holder and antenna unit
- Disconnect the connector
- Remove the antenna unit.

INSTALLATION

ANTENNA UNIT IMMOBILIZER

In reverse order.

IGNITION KEY/REMOTE CONTROL, ADDING/REPLACING/ERASING

NOTE: The illustrations in this service information are used for different model years and/or models. Some variation may occur. However, the essential information in the illustrations is always correct.

IGNITION KEY/REMOTE CONTROL, ADDING/REPLACING/ERASING

CAUTION: When replacing an ignition key or remote control, the new unit must be programmed.

Both software and the code on the packaging are required to add a new remote control.

Only the software is required to erase a remote control.

Only software is required to add an ignition key.

IGNITION KEY PROGRAMMING/ERASING

Order the software. See 9438428 .

REMOTE CONTROL PROGRAMMING/ERASING

Order the software. See 9438429 .

FINISHING

Check the function after programming an ignition key or remote control.

MODEL YEAR 2004

NOTE: 2004 sees the introduction of an ignition key integrated with the remote control.

REMOVING KEYS FROM THE REMOTE CONTROL

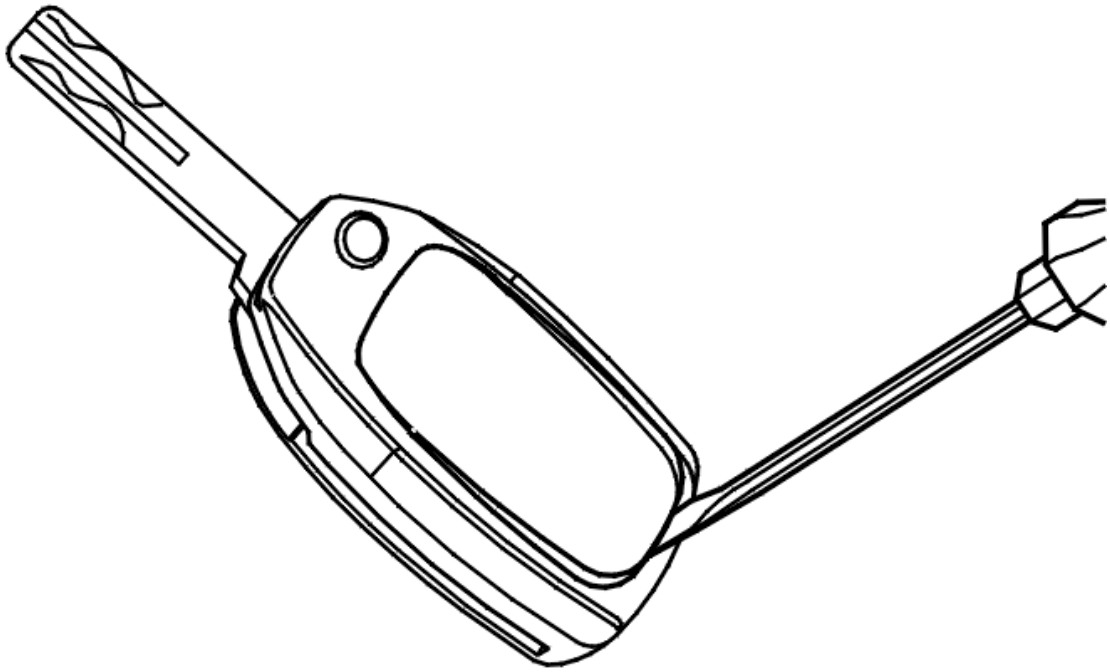

Fig. 10: Identifying Key Battery Cover Removal
Courtesy of VOLVO CARS CORPORATION

Fold out the key and remove the battery cover.

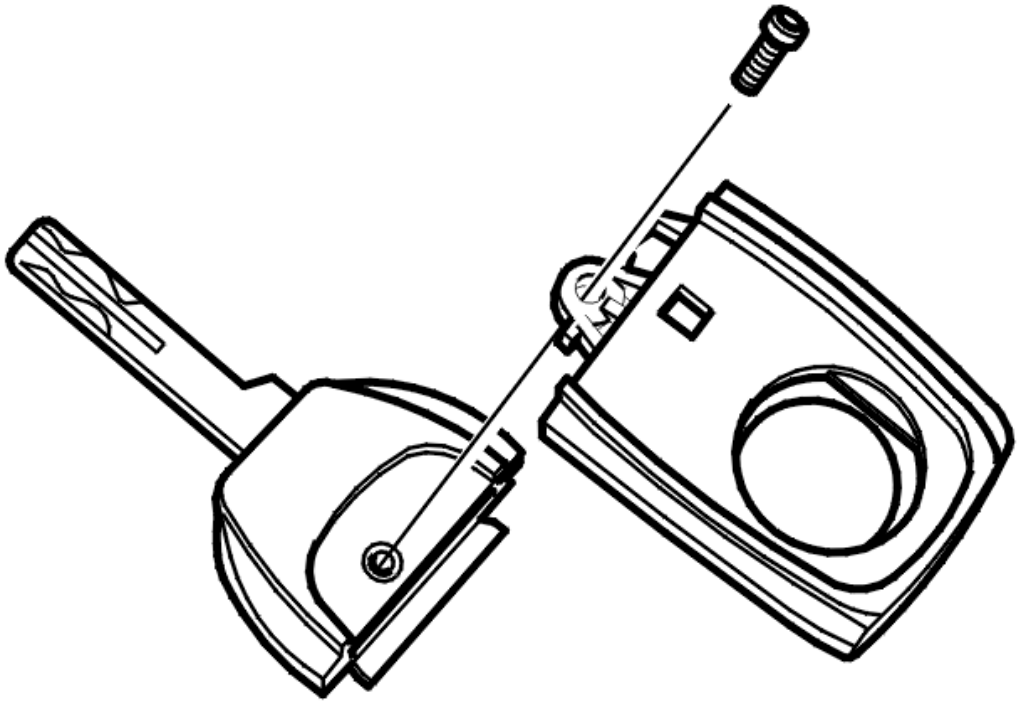

Fig. 11: Identifying Key, Remote Control Unit, And Screw
Courtesy of VOLVO CARS CORPORATION

Remove the screw and separate the unit.

INSTALLING KEYS IN THE REMOTE CONTROL

Install

- the key.

NOTE: Always use a new key when installing.

- the screw
- the cover.

MASS MOVEMENT SENSOR MODULE (MMS) FRONT, REPLACING

REMOVAL

NOTE: As the illustrations in this service information are used for different model years and / or models, some variation may occur. However, the essential information in the illustrations is always correct.

PREPARATORY WORK

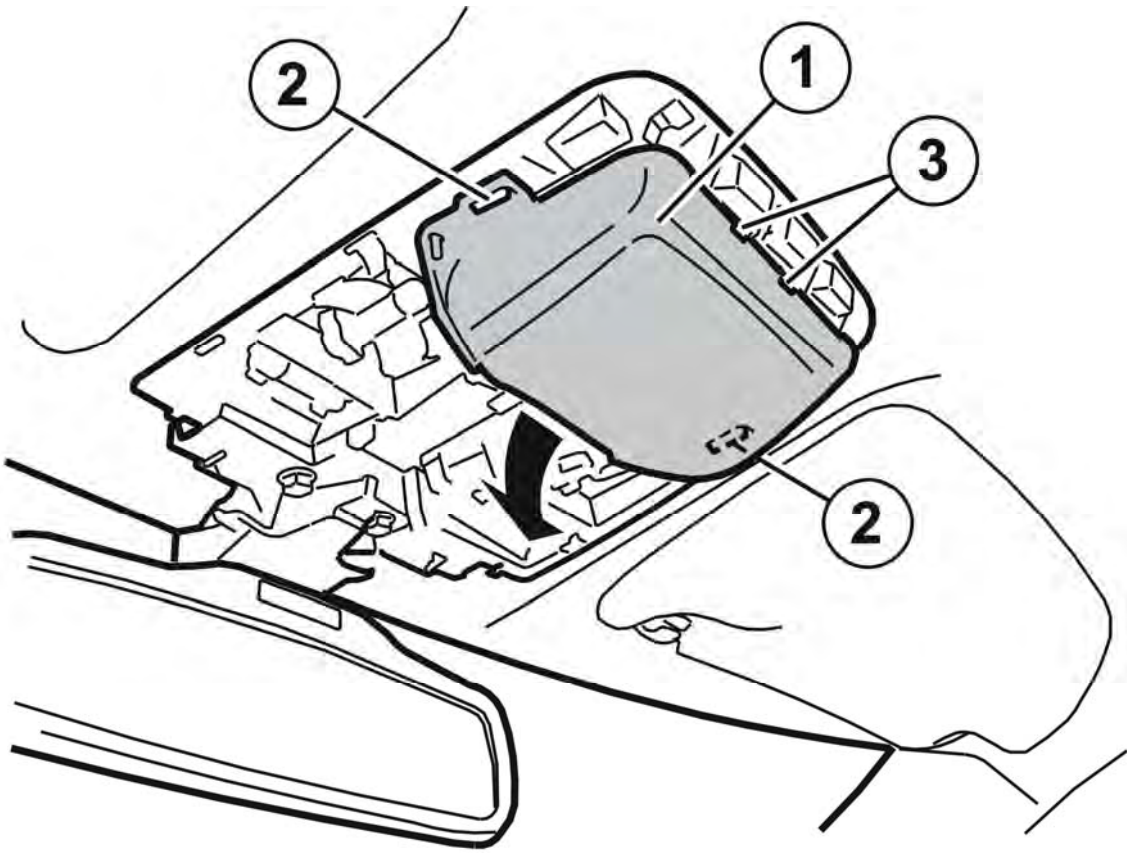

Fig. 12: Identifying Interior Lighting Cover And Clips
Courtesy of VOLVO CARS CORPORATION

Deactivate alarm.

Remove the lens from the interior lighting. See **BULB INTERIOR LIGHTING, REPLACING** .

Release the clips (1, 2, 3). Remove the cover. See the illustration.

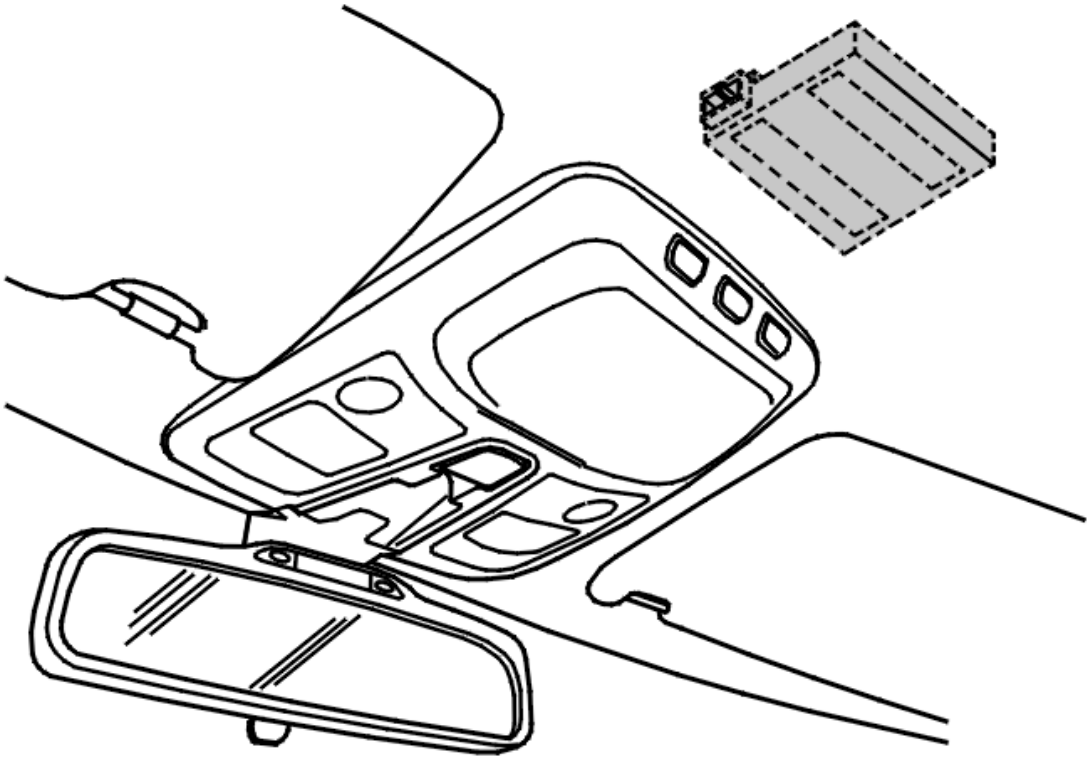

Fig. 13: Locating Mass Movement Sensor Module (MMS)
Courtesy of VOLVO CARS CORPORATION

HINT: The mass movement sensor module (MMS) is secured to the top of the headlining using double-sided adhesive tape.

REMOVING THE MASS MOVEMENT SENSOR MODULE (MMS)

Twist off the sensor.

Disconnect sensor connector.

Remove the sensor.

INSTALLATION

INSTALLING THE MASS MOVEMENT SENSOR MODULE (MMS)

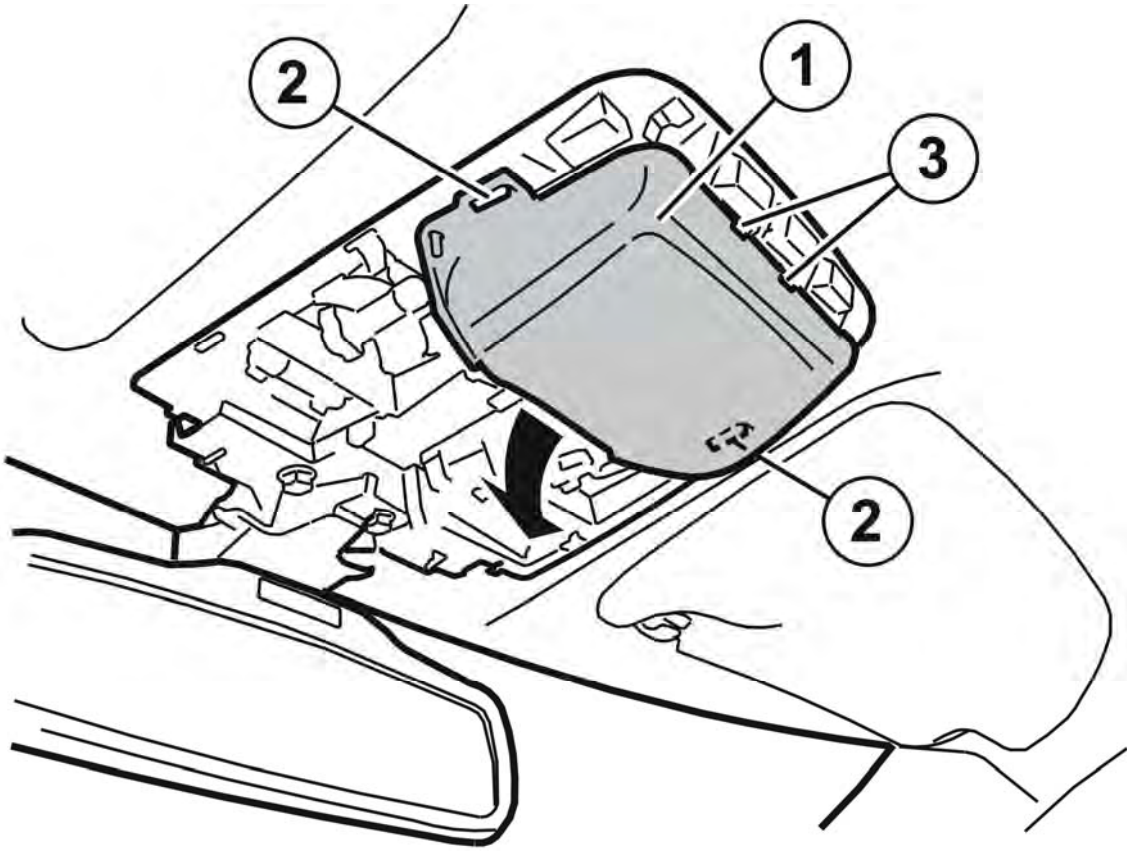

Fig. 14: Identifying Interior Lighting Cover And Clips
Courtesy of VOLVO CARS CORPORATION

NOTE: **The location of the mass movement sensor module (MMS) is important for the function of the alarm. The sensor must be installed in the center of the vehicle. (Equidistant to the center from both the left and right-hand A-posts.) The sensor must be installed so that it is straight. It must not be turned more than a maximum of 5° . The connector to the left as illustrated.**

Connect the connector.

Remove the protective film from the tape. Only use the tape supplied with the volume sensor.

Press the sensor into place in the top of the headlining using the tape. Press by hand for at least **15 seconds** .

FINISHING WORK

Reinstall cover.

Install the lens for the interior lighting. See **BULB INTERIOR LIGHTING, REPLACING** .

Test the function.

MASS MOVEMENT SENSOR MODULE (MMS) REAR, REPLACING

REMOVAL

NOTE: **As the illustrations in this service information are used for different model years and / or models, some variation may occur. However, the essential information in the illustrations is always correct.**

PREPARATORY WORK

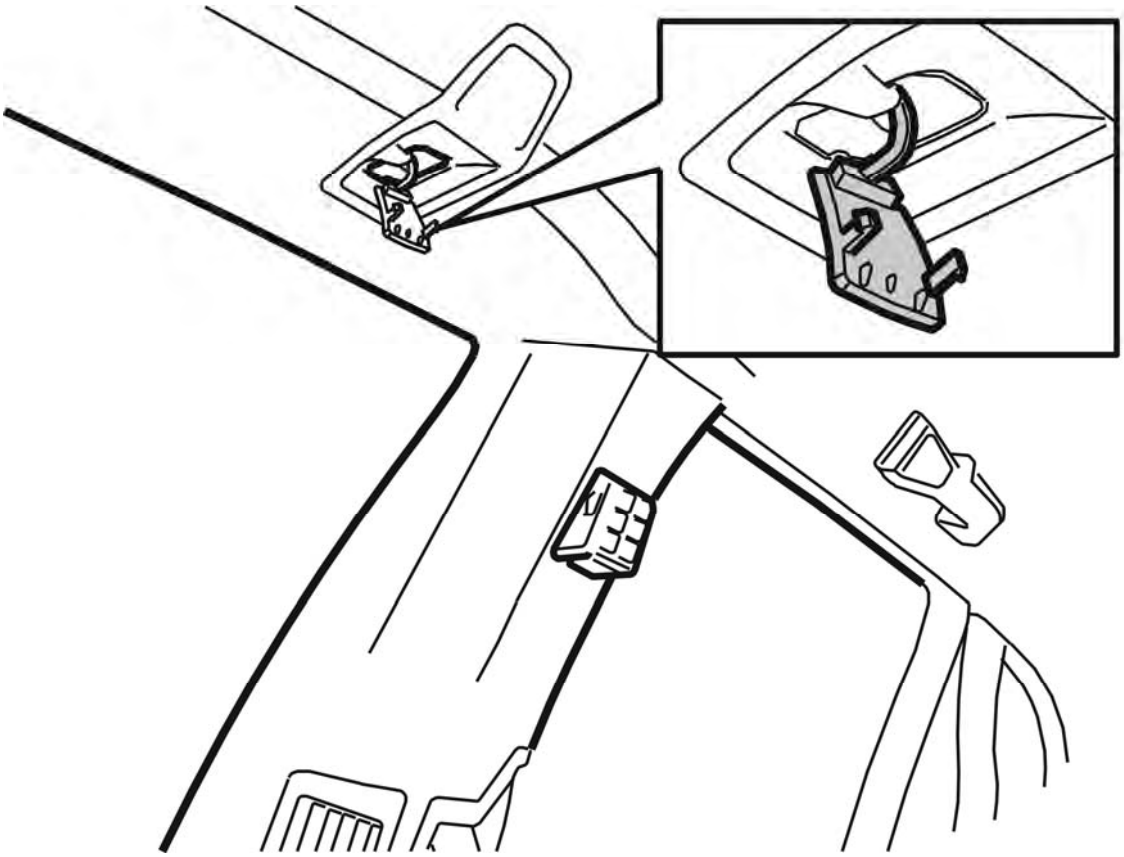

Fig. 15: Identifying Cover Over Cargo Net Holder Screws
Courtesy of VOLVO CARS CORPORATION

Deactivate alarm.

Remove:

- the panels for the D-posts. See **PANEL D-POST, REPLACING**
- the cantrail. See **PANEL CANTRAIL, REPLACING**
- the cover over the screws for the cargo net holder. See the illustration
- the screws for the cargo net holder.

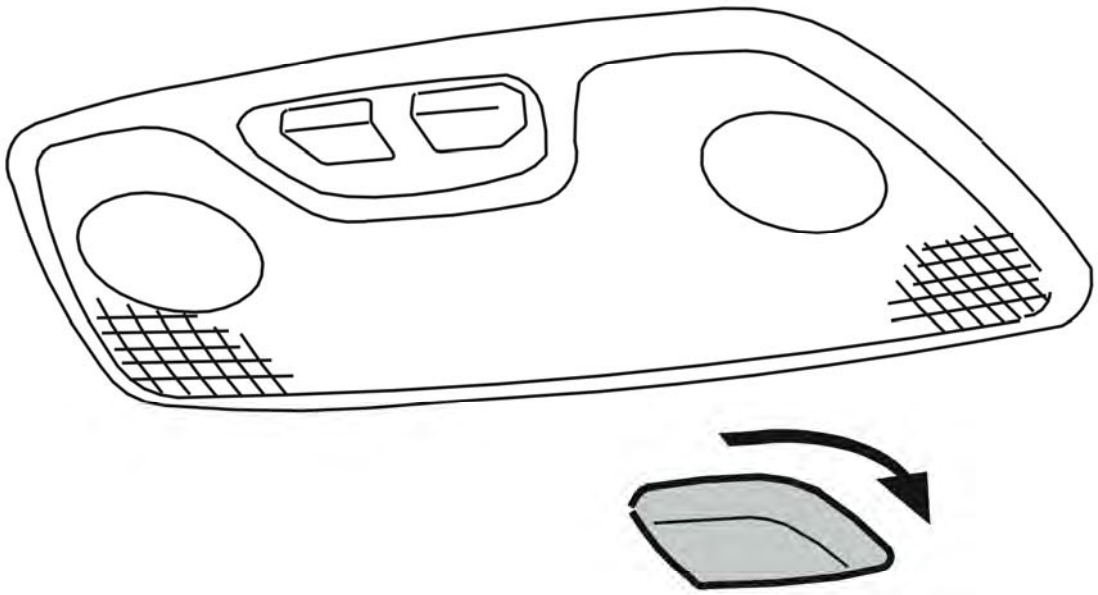

Fig. 16: Removing Headlining Clips
Courtesy of VOLVO CARS CORPORATION

Remove the clips for the headlining as illustrated.

REMOVING THE MASS MOVEMENT SENSOR MODULE (MMS)

HINT: The sensor is secured to the top of the headlining using double-sided adhesive tape.

NOTE: When working on the headlining, ensure that there are no creases.

Carefully bend down the headlining and twist off the sensor. Disconnect sensor connector.

INSTALLATION

INSTALLING THE MASS MOVEMENT SENSOR MODULE (MMS)

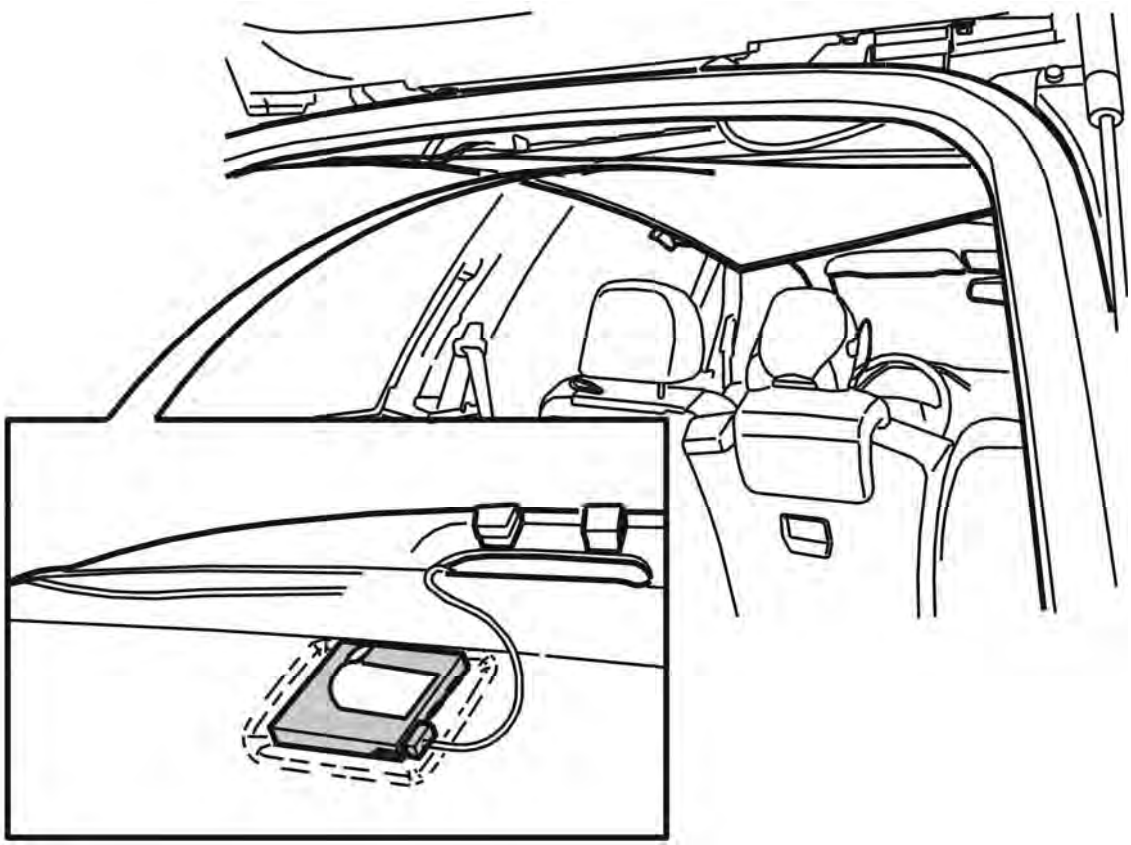

Fig. 17: Identifying Mass Movement Sensor Module (MMS) And Connector
Courtesy of VOLVO CARS CORPORATION

NOTE: **The location of the mass movement sensor module (MMS) is important for the function of the alarm. The sensor must be installed in the recess to function correctly. The sensor must be installed so that it is straight. It must not be turned more than a maximum of 5° . The connector must be to the right looking forwards in the car.**

Connect the connector.

Remove the protective film from the tape. Only use the tape supplied with the volume sensor.

Press the sensor into place in the top of the headlining using the tape. Press by hand for at least **15 seconds** .

FINISHING WORK

Install:

- the clips for the headlining
- the screws for the cargo net holder
- the covers over the screws for the cargo net holder
- the cantrail. See **PANEL CANTRAIL, REPLACING**

- the panels for the D-posts. See **PANEL D-POST, REPLACING** .

Test the function.

PARKING ASSISTANCE MODULE (PAM), REPLACING

NOTE: **As the illustrations in this service information are used for different model years and / or models, some variation may occur. However, the essential information in the illustrations is always correct.**

PREPARATORY WORK

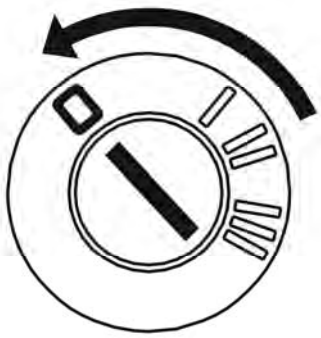

Fig. 18: Identifying Ignition In OFF Position
Courtesy of VOLVO CARS CORPORATION

Ignition off.

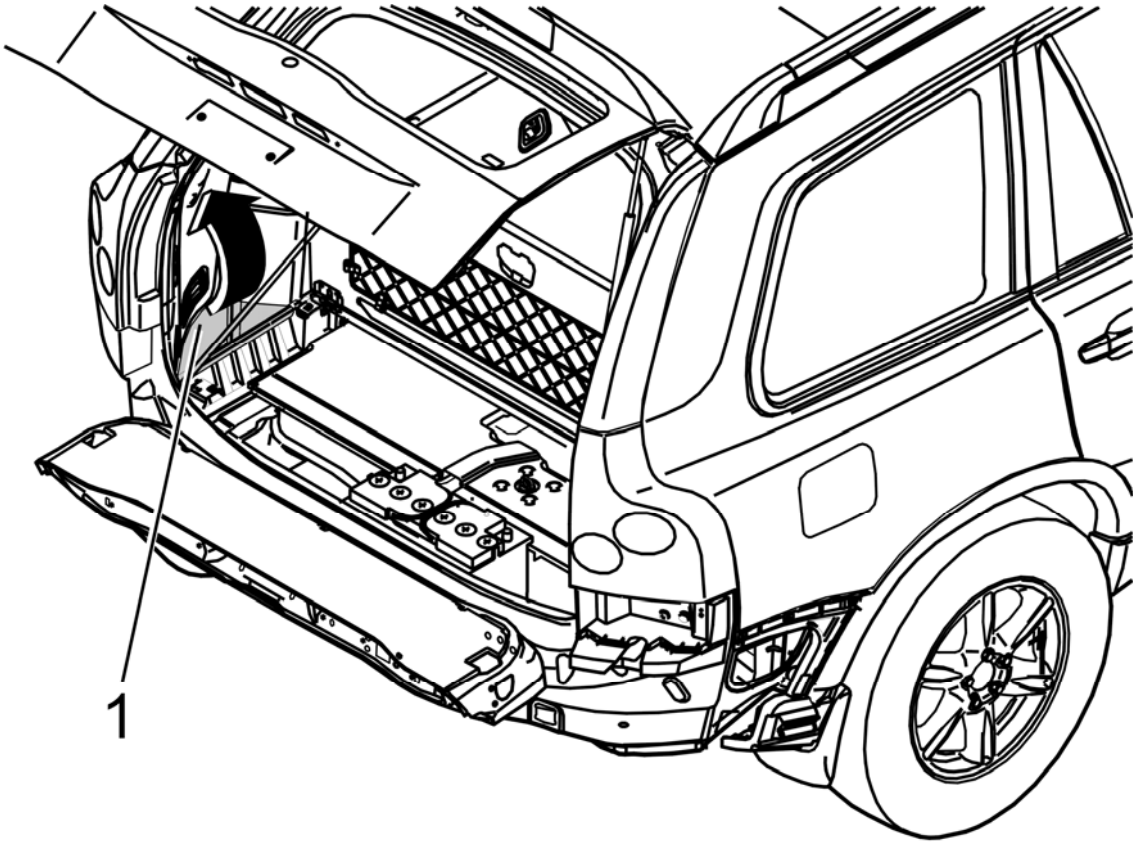

Fig. 19: Identifying Cargo Compartment Floor Corner Piece
Courtesy of VOLVO CARS CORPORATION

Fold up the cargo compartment floor and remove the corner piece (1) of the floor on the left-hand side. See the illustration.

REMOVING THE PARKING ASSISTANCE MODULE (PAM)

Remove the parking assistance module (PAM) from its Velcro mounting.

INSTALLING THE PARKING ASSISTANCE MODULE (PAM)

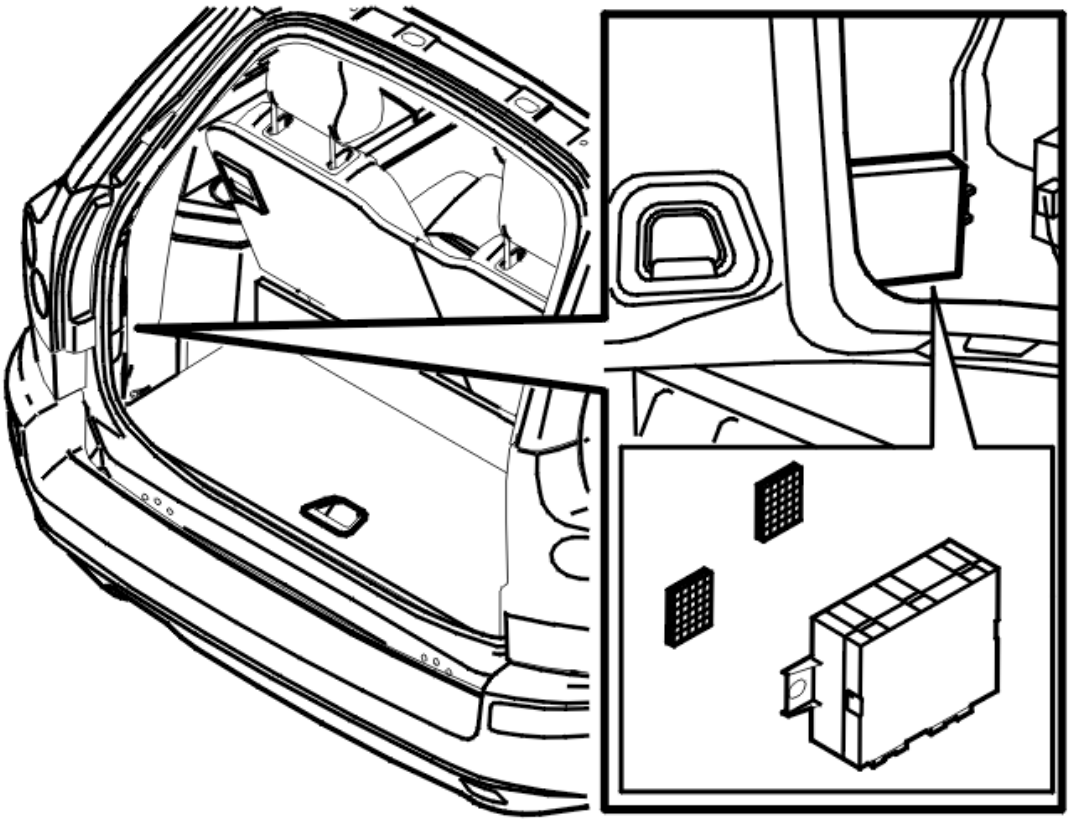

Fig. 20: Identifying Parking Assistance Module (PAM) Velcro Mounting
Courtesy of VOLVO CARS CORPORATION

Connect the connectors.

Install the parking assistance module (PAM) in the Velcro mounting. Check that the control module is secure.

Install the corner piece of the floor.

Install side panel.

Fold down the floor hatch.

Test the function.

PARKING CAMERA

REMOVE

NOTE: Removal steps in this procedure may contain installation details.

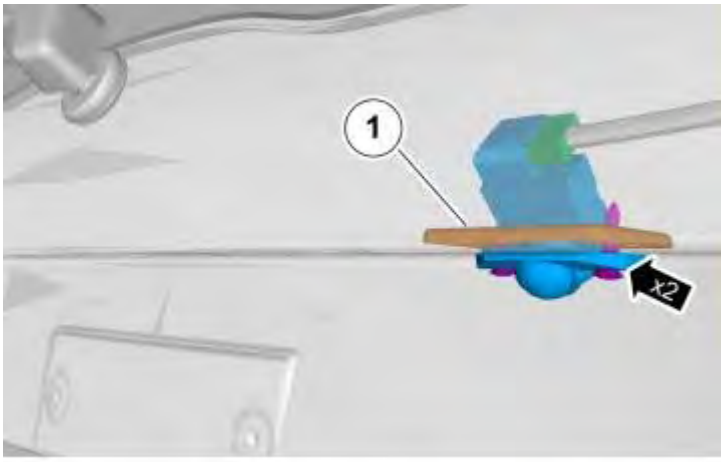

Fig. 21: Identifying Parking Camera Components
Courtesy of VOLVO CARS CORPORATION

CAUTION: Make sure that no components fall off when removing.

INSTALL

To install, reverse the removal procedure

Check camera position.

PARKING CAMERA MODULE

REMOVE

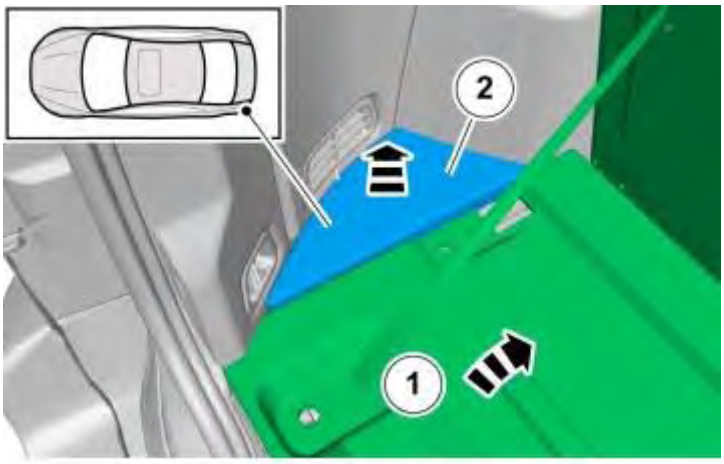

Fig. 22: Identifying Trunk Panel
Courtesy of VOLVO CARS CORPORATION

Fig. 23: Identifying Parking Camera Module
Courtesy of VOLVO CARS CORPORATION

INSTALL

To install, reverse the removal procedure

Order software for the control module. See: 30786009 .

RAIN SENSOR

REMOVE

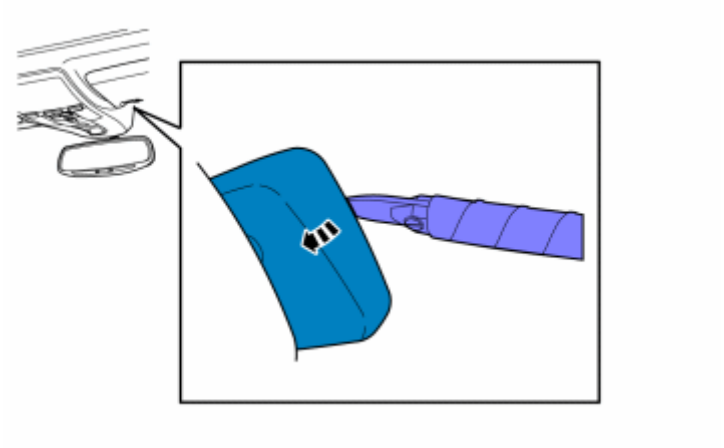

Fig. 24: Identifying Rain Sensor Removal (1 Of 3)
Courtesy of VOLVO CARS CORPORATION

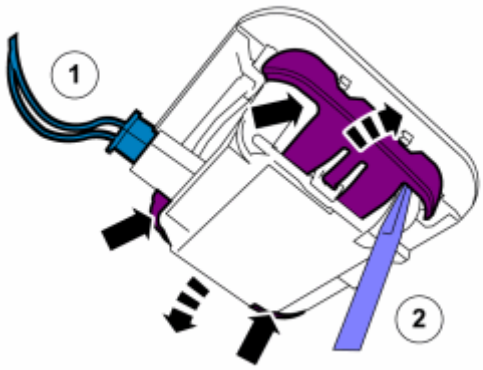

Fig. 25: Identifying Rain Sensor Removal (2 Of 3)
Courtesy of VOLVO CARS CORPORATION

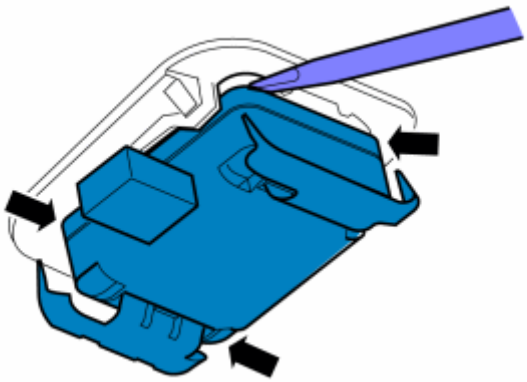

Fig. 26: Identifying Rain Sensor Removal (3 Of 3)
Courtesy of VOLVO CARS CORPORATION

CAUTION: Be extra careful when handling this component.

CAUTION: The silicone surface may not be touched, all types of dirt will damage the sensor and prevent its use.

INSTALL

To install, reverse the removal procedure

Check the function. See **FUNCTION TEST FOR THE RAIN SENSOR**

REVERSE (REVERSING) WARNING SENSOR (PARKING ASSISTANCE MODULE (PAM)), REPLACING

Special tools:

see **9814214**

REMOVAL

NOTE: **As the illustrations in this service information are used for different model years and / or models, some variation may occur. However, the essential information in the illustrations is always correct.**

REMOVING THE REVERSE (REVERSING) WARNING SENSOR

NOTE: **The parking assistance module (PAM) is located behind the left-hand wheel arch in the cargo compartment.**

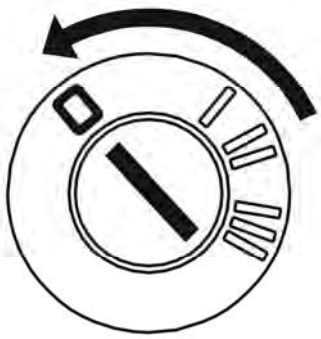

Fig. 27: Identifying Ignition In OFF Position
Courtesy of VOLVO CARS CORPORATION

Ignition off.

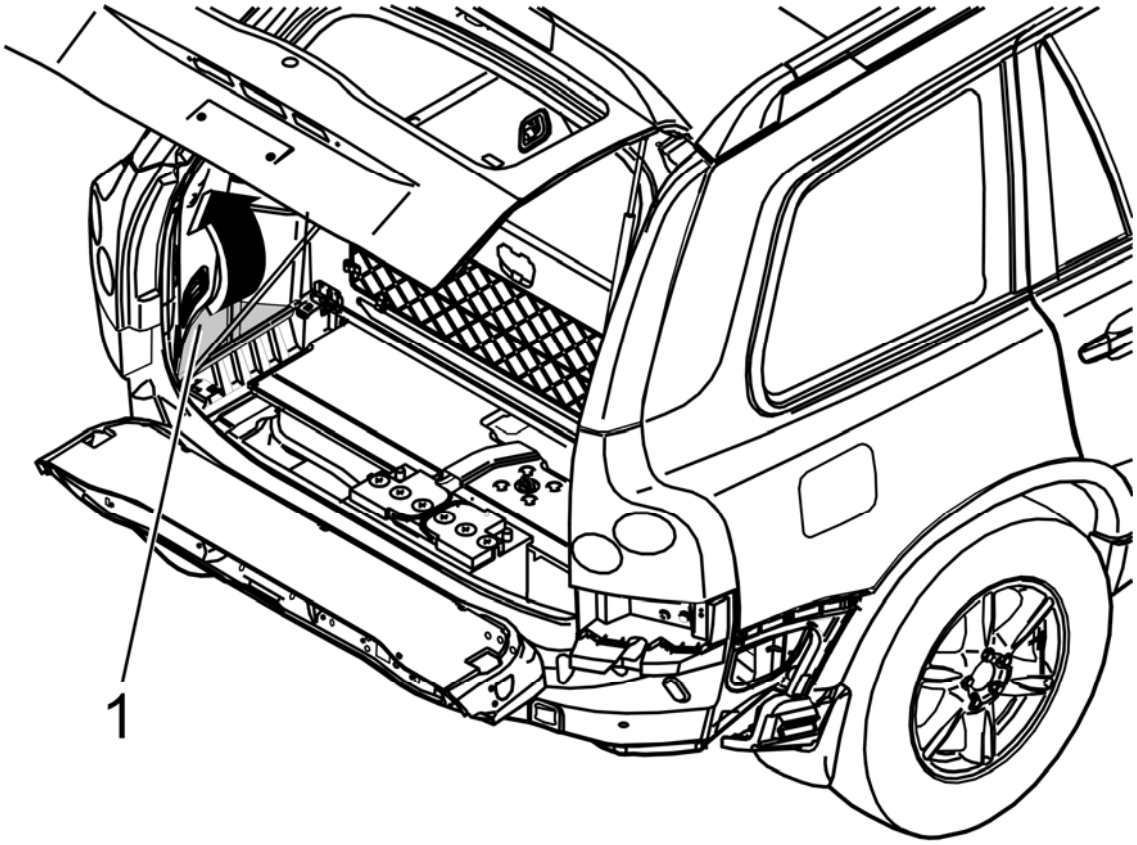

Fig. 28: Identifying Cargo Compartment Floor Corner Piece
Courtesy of VOLVO CARS CORPORATION

Fold up the floor hatch in the cargo compartment

Remove the corner piece (1) from the floor on the left-hand side. See the illustration.

DISCONNECTING CONNECTOR

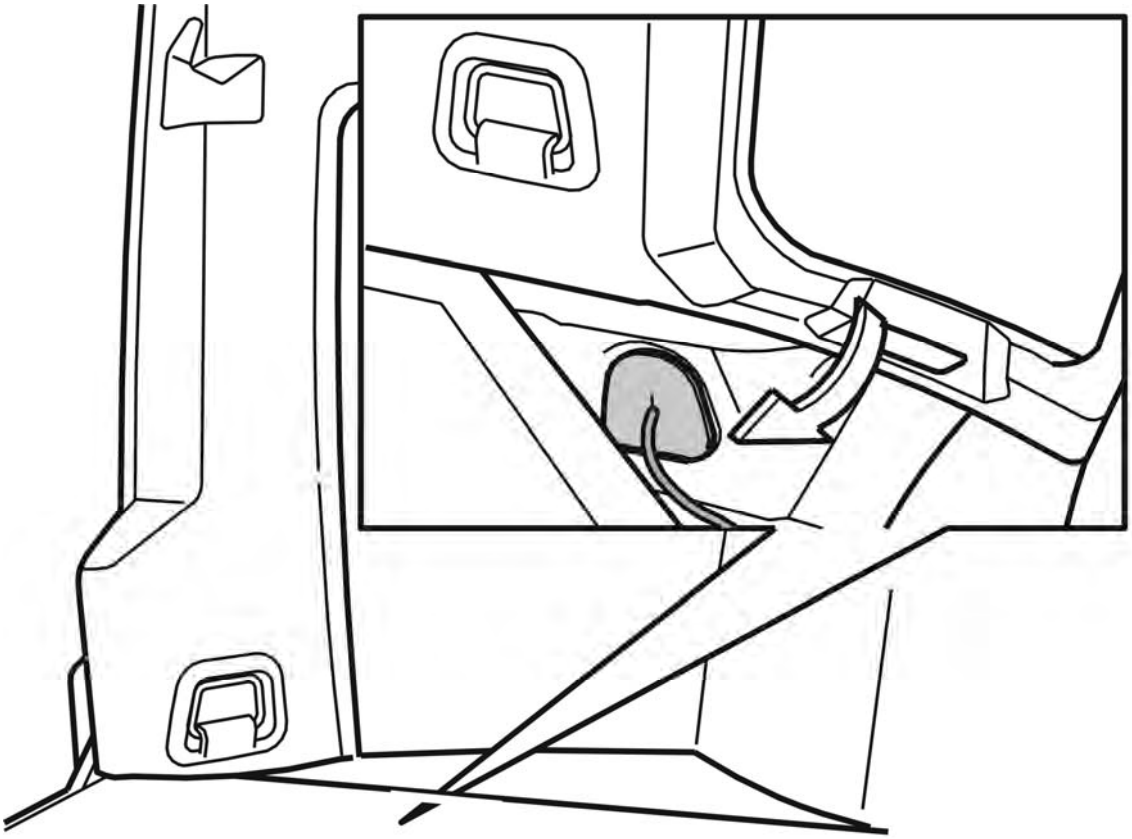

Fig. 29: View Of Cable From Sensors In The Bumper To The Control Module
Courtesy of VOLVO CARS CORPORATION

CAUTION: The following procedure must be carried out to ensure that the connector and wiring are not damaged when removing the bumper.

Follow the cable from the sensors in the bumper up to the control module for the reverse (reversing) warning system.

Disconnect the connector (the cable comes from the bumper).

NOTE: Disconnect the correct connector. The control module for the back-up (reversing) warning system has 2 connectors.

REMOVING REAR BUMPER

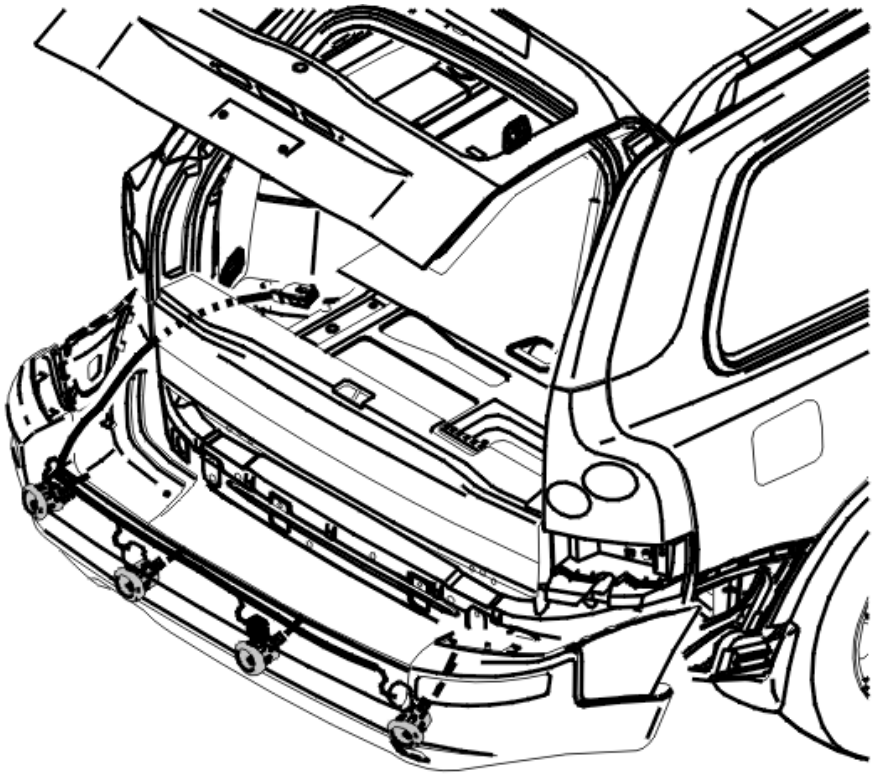

Fig. 30: View Of Cable Out The Hole In The Body
Courtesy of VOLVO CARS CORPORATION

Remove the rear bumper. See **CASING BUMPER REAR, REPLACING** .

Pull the cable out of the hole in the body.

REMOVING THE REVERSE (REVERSING) WARNING SENSOR

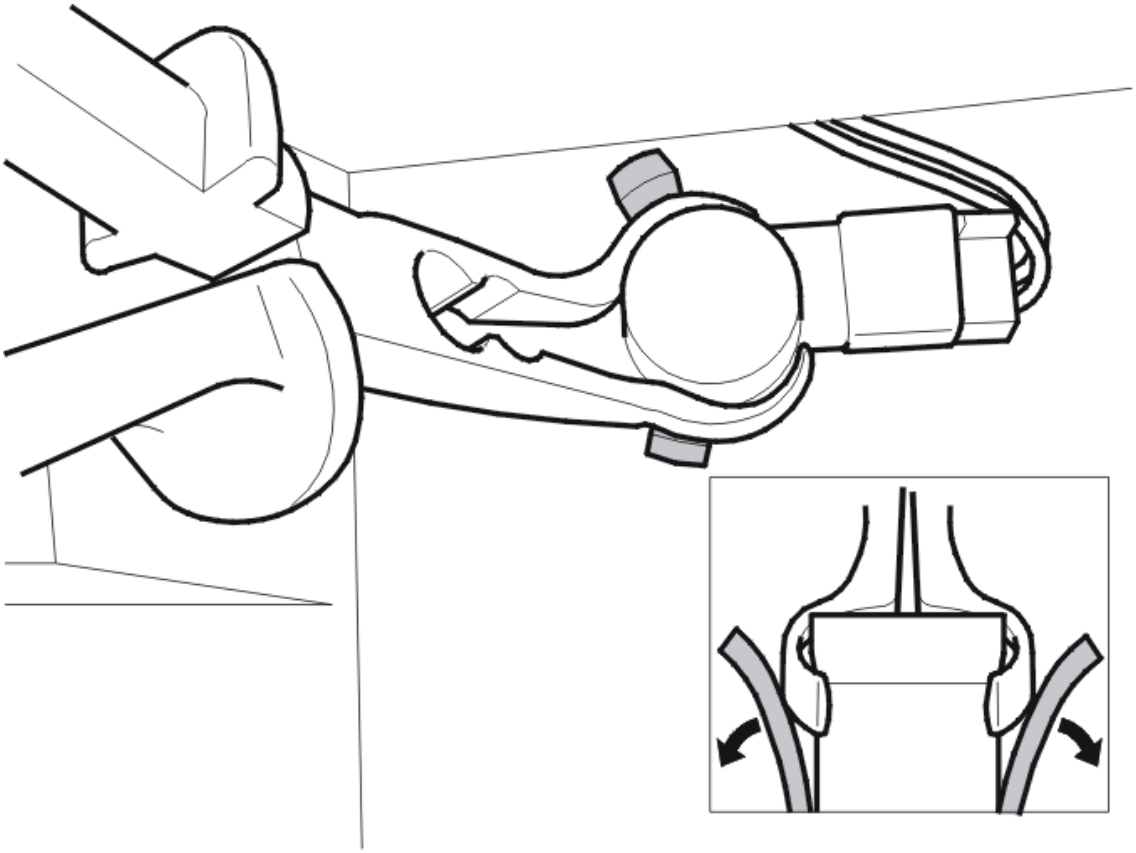

Fig. 31: Identifying Parking Assistance Sensor
Courtesy of VOLVO CARS CORPORATION

Press down the spark plug cap rod see **9814214** between the sensor and the two upright catches on the holder so that the catches release from the sensor.

Carefully pull up the sensor.

Disconnect the connector.

INSTALLATION

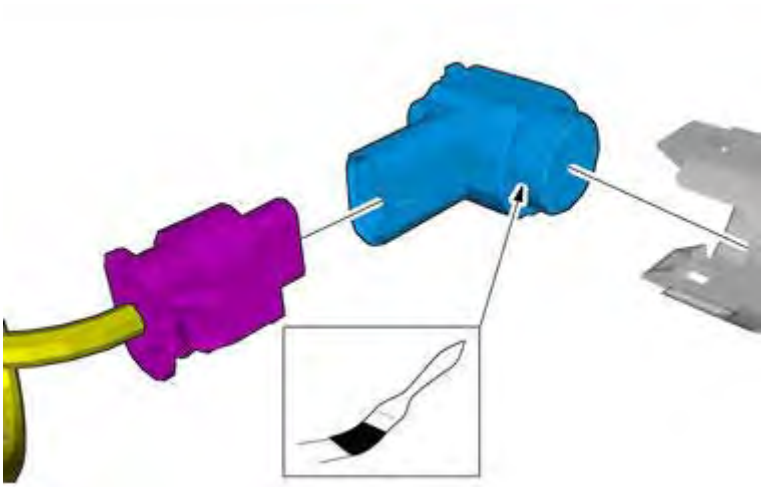

Fig. 32: Identifying (Reversing) Warning Sensor Preparation (1 of 2)
Courtesy of VOLVO CARS CORPORATION

Follow instructions for paint

Use: Soap solution

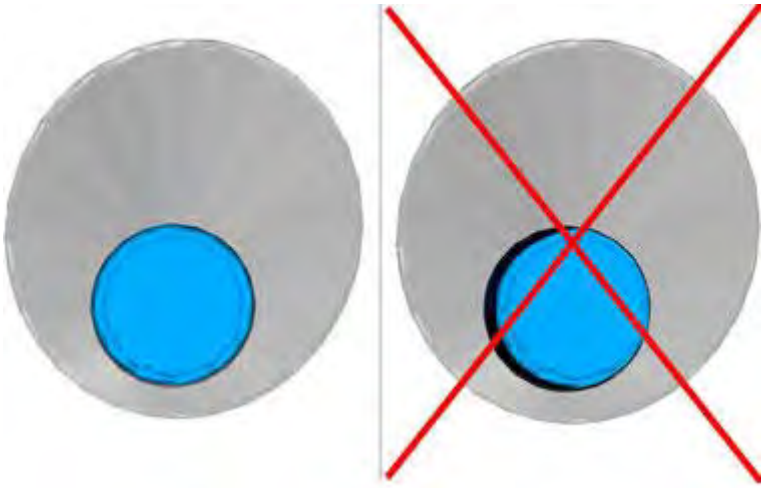

Fig. 33: Identifying (Reversing) Warning Sensor Preparation (2 of 2)
Courtesy of VOLVO CARS CORPORATION

INSTALL REAR BUMPER

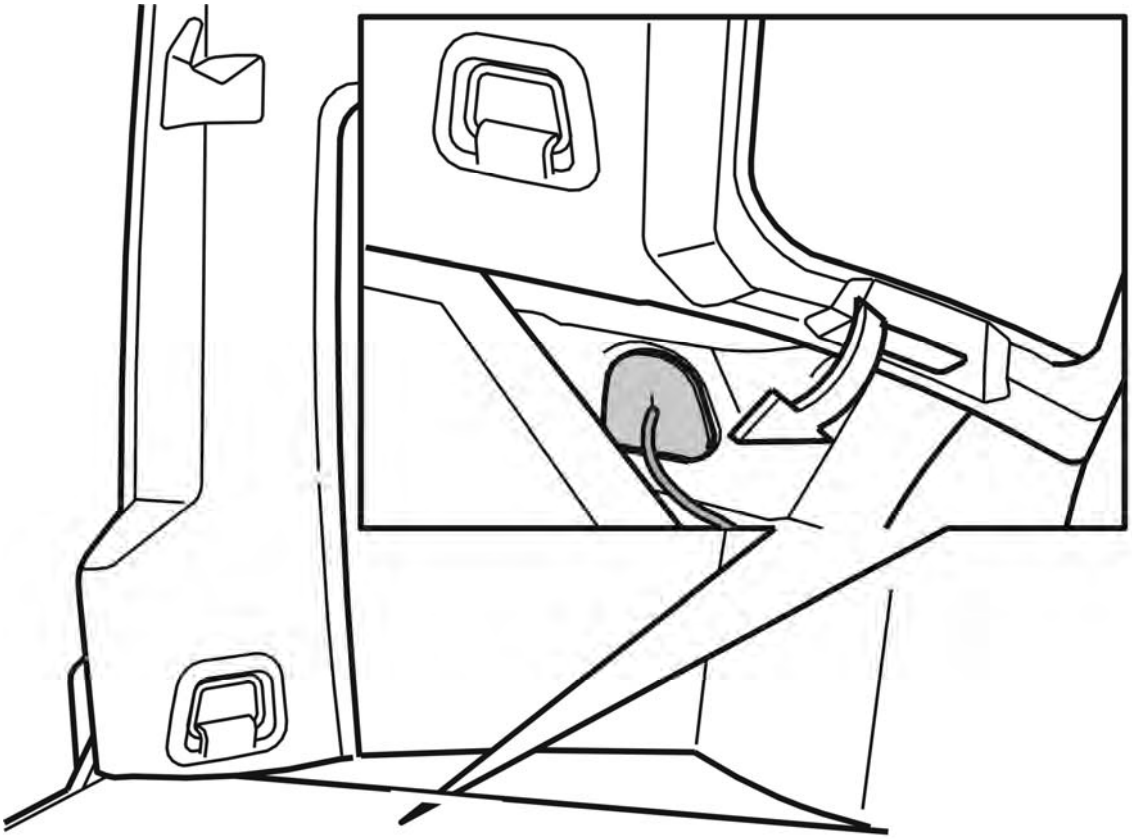

Fig. 34: View Of Cable From Sensors In The Bumper To The Control Module
Courtesy of VOLVO CARS CORPORATION

Route the cable through the lead-in in the rear section. See the illustration.

Install the rear bumper. See **CASING BUMPER REAR, REPLACING** .

INSTALL CONNECTOR

Connect the connector to the parking assistance module (PAM).

- Install the parking assistance module (PAM)
- Reinstall the side panel.

Fold back the floor hatch.

Check the function.

SIREN, REPLACING

REMOVAL

REMOVING THE SIREN

NOTE: **As the illustrations in this service information are used for different model years and / or models, some variation may occur. However, the essential information in the illustrations is always correct.**

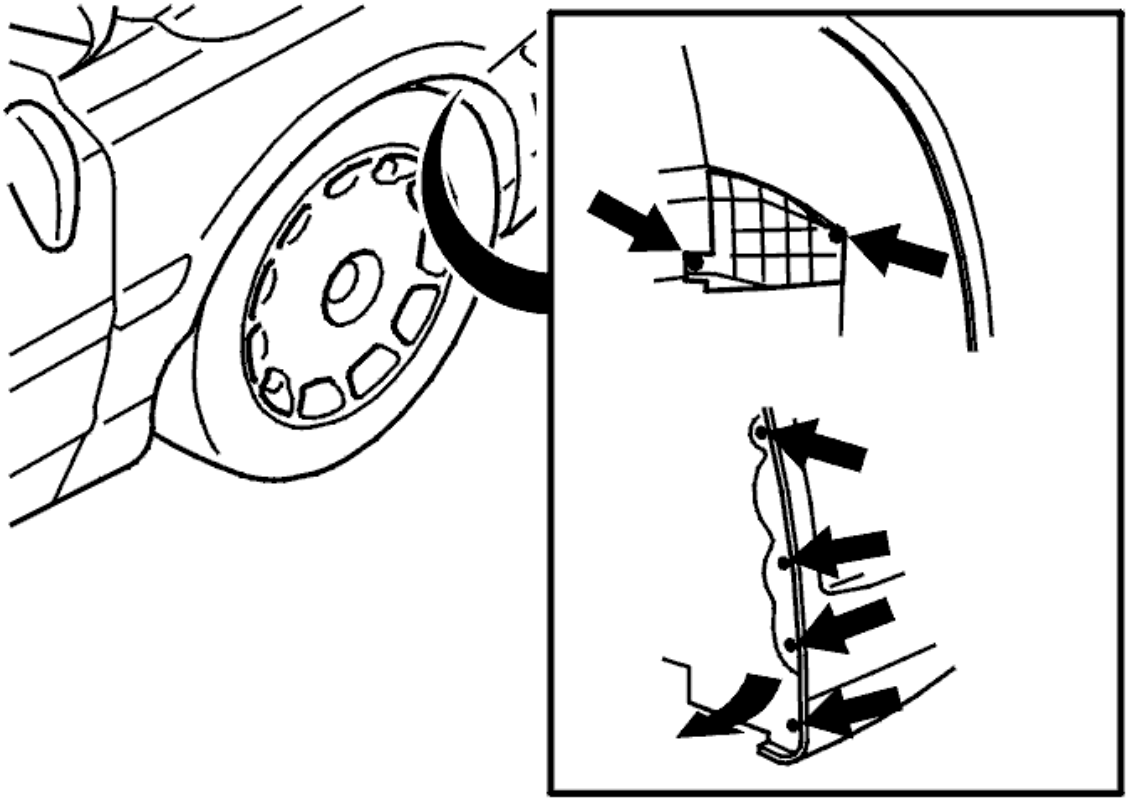

Fig. 35: Protective Panel In The Fender Liner, Plastic Nuts And Blind Rivets
Courtesy of VOLVO CARS CORPORATION

- Deactivate alarm
- Turn the front wheels to the right
- Drill out the rivets at the front edge of the fender liner. See **REMOVING RIVET**
- Remove the plastic nuts from the protective panel in the fender liner. Remove the protective panel
- Disconnect the molding and front edge of the fender liner. Move the fender lining and molding out of the way.

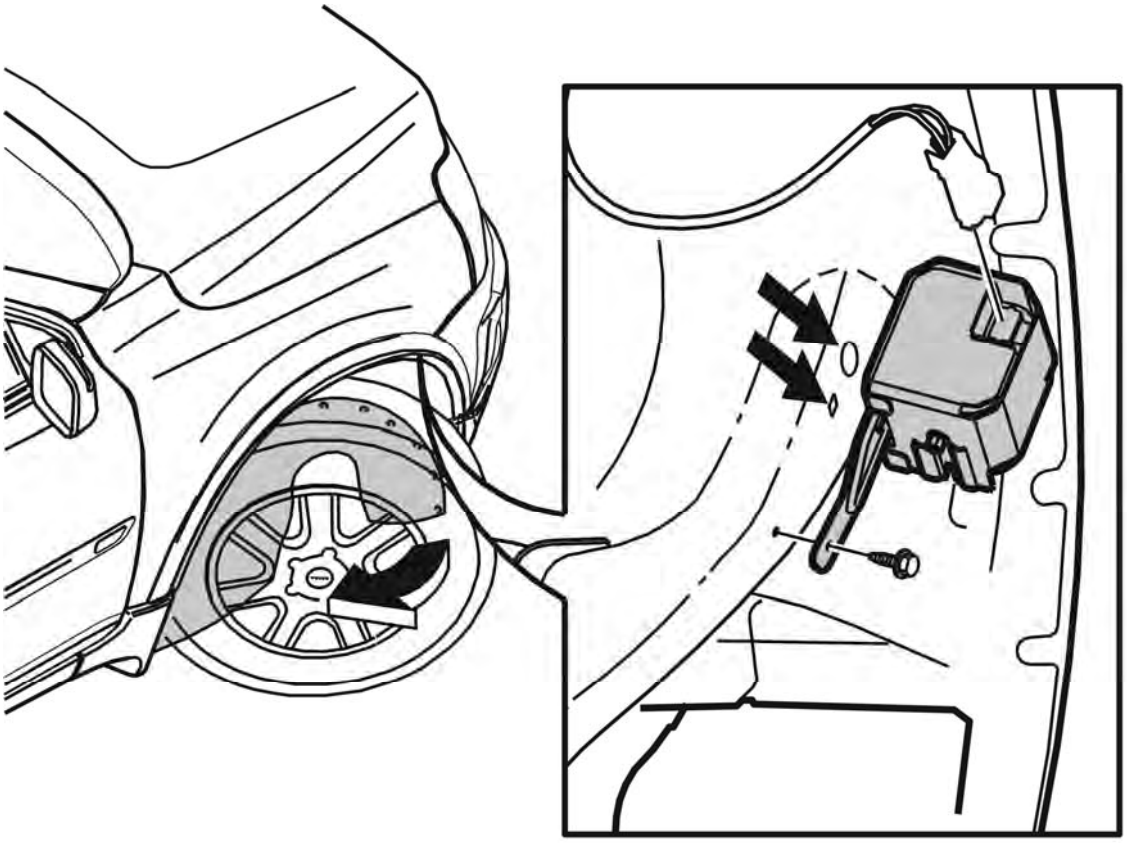

Fig. 36: View Of Front Edge Fender Liner Molding
Courtesy of VOLVO CARS CORPORATION

- Slacken off the screw for the siren bracket. If a security screw is used to secure the bracket, use nut nippers
- Lift the siren and angle it outwards so that the catches release
- Disconnect the connector.

INSTALLATION

NOTE: For tightening torques, see TIGHTENING TORQUE .

INSTALL SIREN

- Connect the connector
- Install the siren and bracket
- Install the screw.

FINISHING WORK

Remove any rivet metal shaving. Rivet the fender liner into place.

Install the splash guard.

NOTE: **The siren must be configured after replacement. This is carried out via VIDA communication.**

SUN SENSOR / ALARM LED, REPLACING

REMOVAL

SUN SENSOR AND ALARM LED

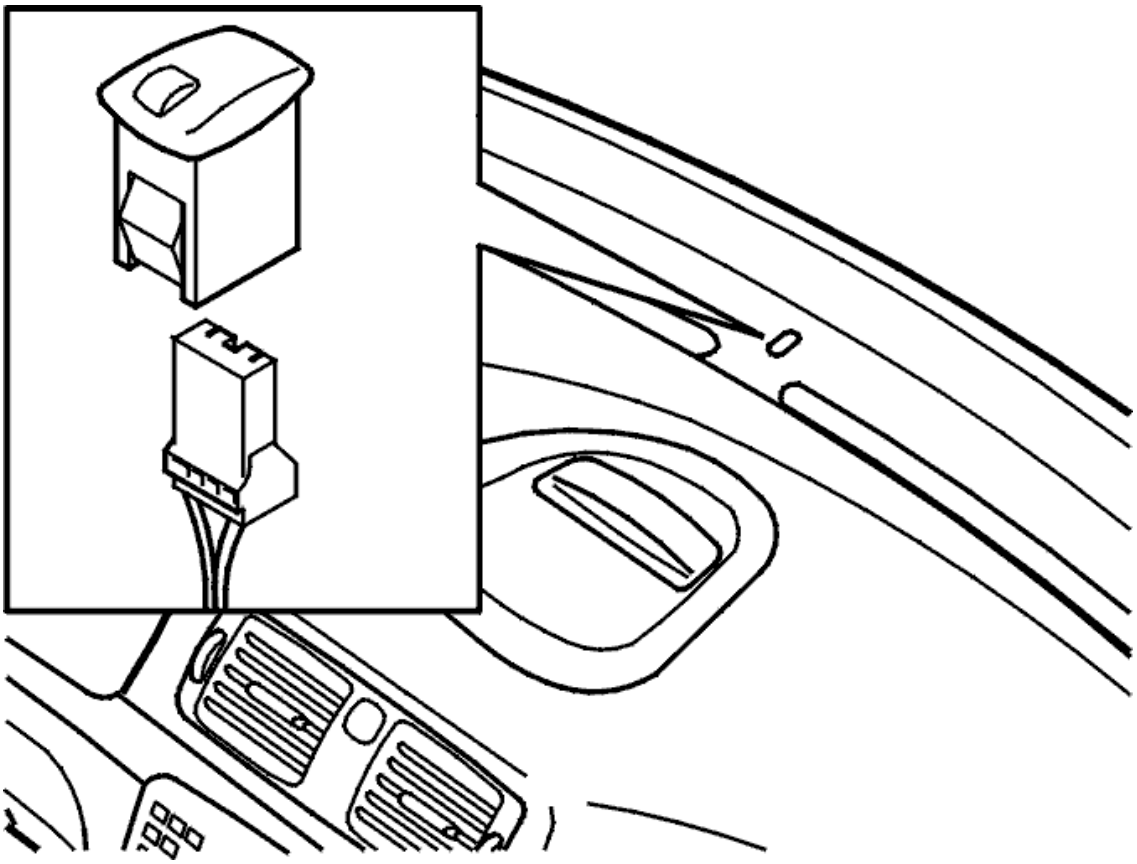

Fig. 37: Disconnecting Connector And Removing Sun Sensor
Courtesy of VOLVO CARS CORPORATION

- Remove the sun sensor and alarm LED. Use a weatherstrip tool
- Disconnect the connector.

INSTALLATION

SUN SENSOR AND ALARM LED

Install in reverse order.

TILT SENSOR ALARM, REPLACING

NOTE: **As the illustrations in this service information are used for different model years and / or models, some variation may occur. However, the essential information in the illustrations is always correct.**

PREPARATORY WORK

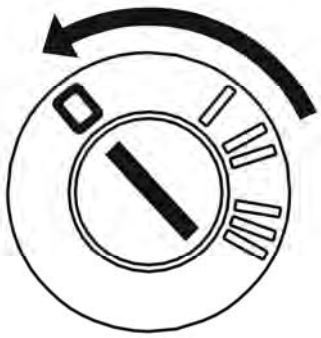

Fig. 38: Identifying Ignition In OFF Position
Courtesy of VOLVO CARS CORPORATION

Ignition off.

Deactivate alarm.

Remove the left-hand cover in the cargo compartment.

REMOVAL

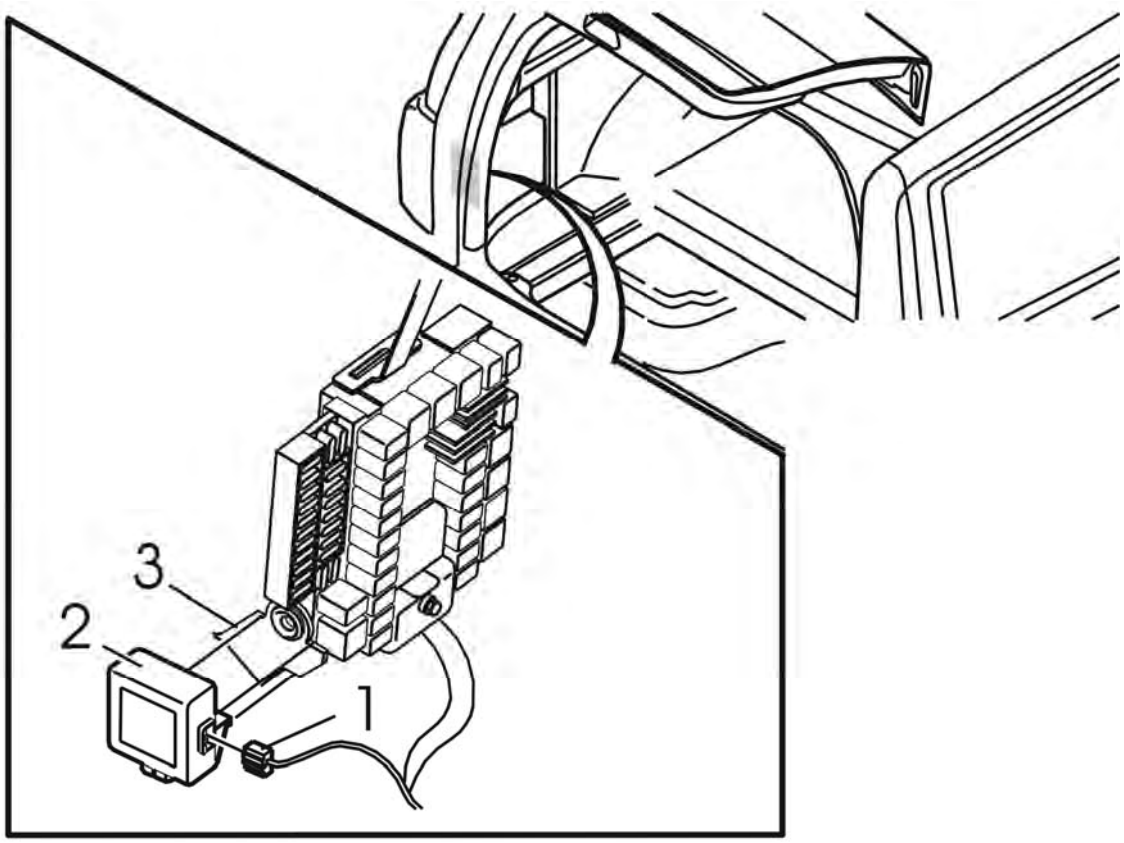

Fig. 39: Identifying Level Sensor For Alarm
Courtesy of VOLVO CARS CORPORATION

Press the catches down on the underneath of the sensor so that it releases from the bracket for the integrated relay/fusebox.

Then lift the sensor (2) outwards and upwards so that the upper channels release from the bracket (3).

Disconnect the connector (1)

INSTALL

Connect the connector (1).

Hook the upper part of the sensor (2) onto the bracket (3).

Press the lower edge into place so that the catches engage.

Install the cover.

Check the function

AUTOMATIC MONITORING (2011)

ANTI-THEFT PROTECTION SIREN

REMOVAL

NOTE: Removal steps in this procedure may contain installation details.

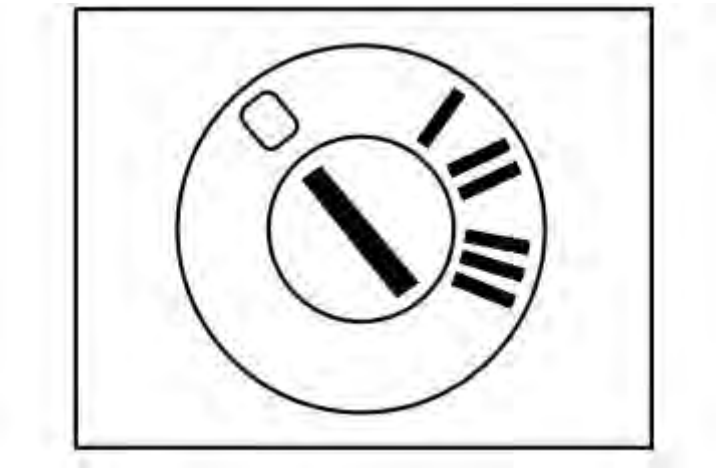

Fig. 40: Identifying Ignition In OFF Position
Courtesy of VOLVO CARS CORPORATION

Remove the wheel, see **WHEELS**

Perform removal pop rivet, see **REMOVING RIVET**

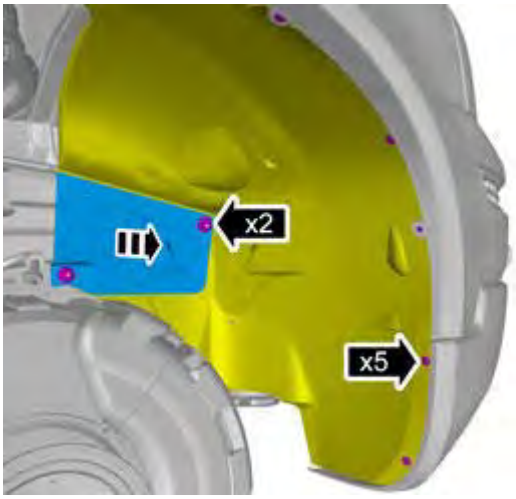

Fig. 41: Locating Pop Rivets
Courtesy of VOLVO CARS CORPORATION

Fig. 42: View Of Pulling Back Fender Molding
Courtesy of VOLVO CARS CORPORATION

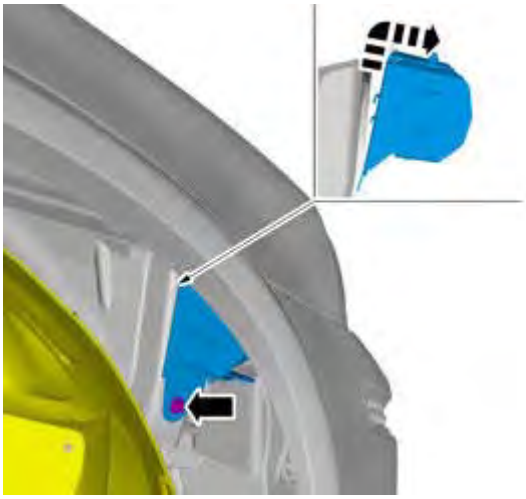

Fig. 43: Identifying Anti-Protection Siren Location
Courtesy of VOLVO CARS CORPORATION

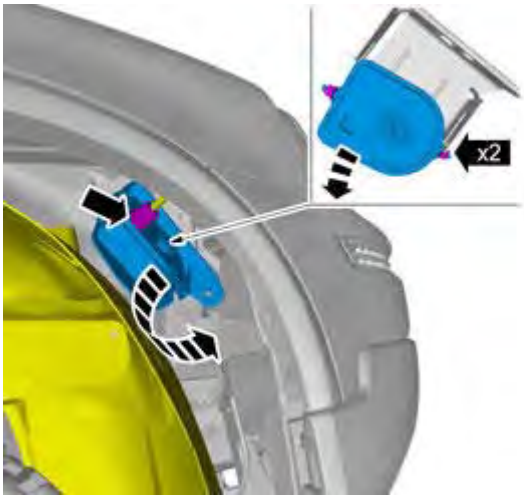

Fig. 44: View Of Anti-Protection Siren Connectors
Courtesy of VOLVO CARS CORPORATION

Tightening torque: M6, 10 Nm.

INSTALLATION

To install, reverse the removal procedure.

WHEELS

Materials	
Designation	**Part number**
Installation paste	1161397

REMOVAL

NOTE: Removal steps in this procedure may contain installation details.

Follow instructions for lifting points body frame

see **JACKING POINTS BODY FRAME**

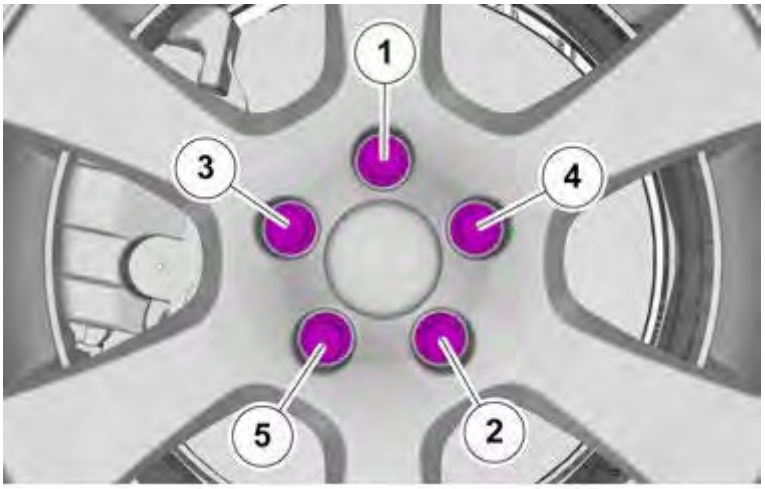

Fig. 45: Identifying Lug Nut Tightening Using Cross Pattern
Courtesy of VOLVO CARS CORPORATION

WARNING: **Make sure that the mating faces are clean and free of corrosion and foreign material.**

Use: Installation paste, 1161397

Tightening torque: Wheel to wheel hub

- Step 1: 20 Nm
- Step 2: 140 Nm

INSTALLATION

To install, reverse the removal procedure.

IGNITION KEY/REMOTE CONTROL, ADDING/REPLACING/ERASING

see **IGNITION KEY/REMOTE CONTROL, ADDING/REPLACING/ERASING**

PARKING ASSISTANCE MODULE (PAM), REPLACING

see **PARKING ASSISTANCE MODULE (PAM), REPLACING**

PARKING CAMERA

see **PARKING CAMERA**

PARKING CAMERA MODULE

see **PARKING CAMERA MODULE**

RAIN SENSOR

see **RAIN SENSOR**

REAR INTRUSION SENSOR

NOTE: Some variation may occur. However, the essential information in the illustrations is always correct.

REMOVAL AND INSTALLATION

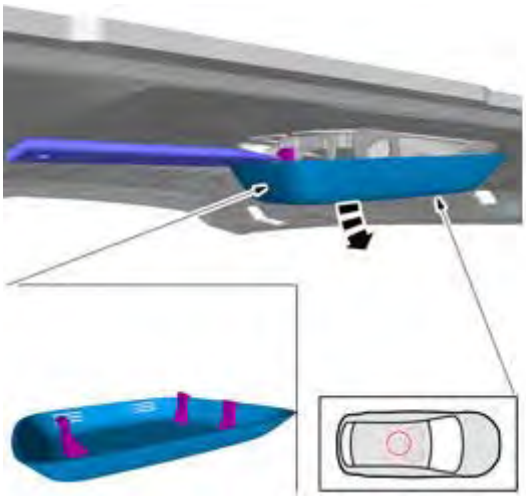

Fig. 46: Identifying Dome Light Cover
Courtesy of VOLVO CARS CORPORATION

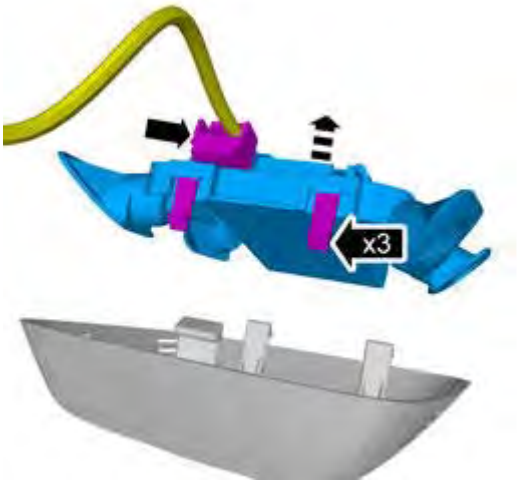

Fig. 47: Identifying Dome Light Cover Clips
Courtesy of VOLVO CARS CORPORATION

REVERSE (REVERSING) WARNING SENSOR (PARKING ASSISTANCE MODULE (PAM)), REPLACING

see **REVERSE (REVERSING) WARNING SENSOR (PARKING ASSISTANCE MODULE (PAM)), REPLACING**

SUN SENSOR / ALARM LED, REPLACING

see **SUN SENSOR / ALARM LED, REPLACING**

TILT SENSOR ALARM, REPLACING

see **TILT SENSOR ALARM, REPLACING**

WIPERS/WASHERS (2003-2004)

HIGH-PRESSURE WASHER HEADLAMP, REPLACING

NOTE: **As the illustrations in this service information are used for different model years and / or models, some variation may occur. However, the essential information in the illustrations is always correct.**

PREPARATORY WORK

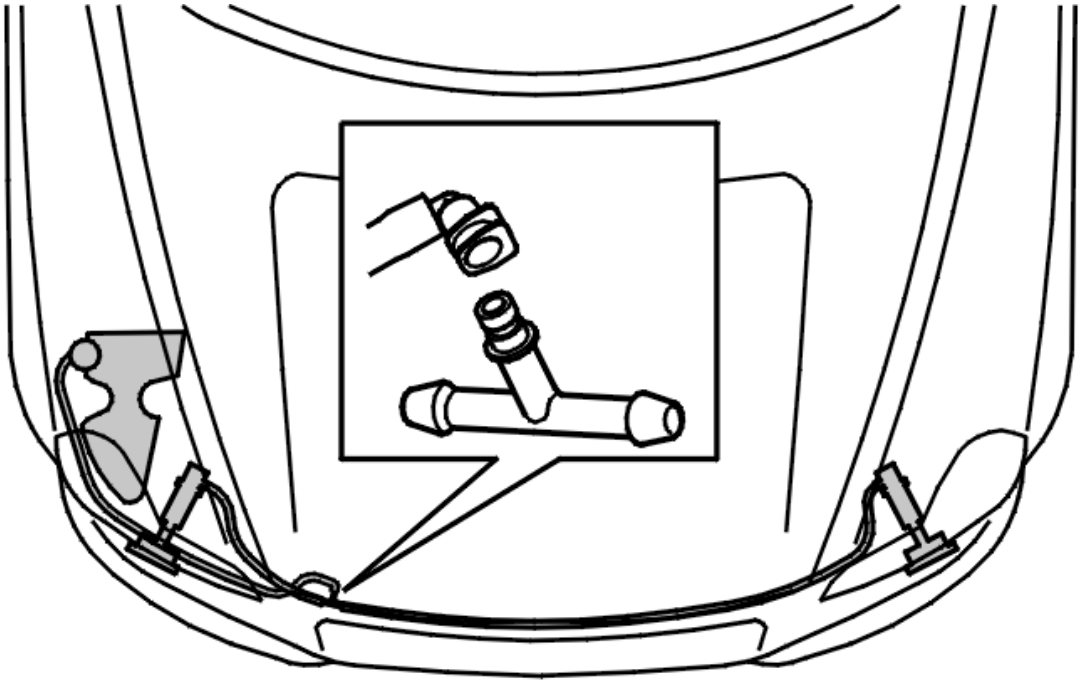

Fig. 48: View Of Headlamp Washer Connectors
Courtesy of VOLVO CARS CORPORATION

To replace the washer motor, see **WINDSHIELD WASHER FLUID RESERVOIR, REPLACING**.

Remove the headlamp. See **HEADLIGHT/BULB, REPLACING** . Remove the bumper cover on the right and left-hand sides. See **CASING BUMPER FRONT, REPLACING** .

REMOVAL

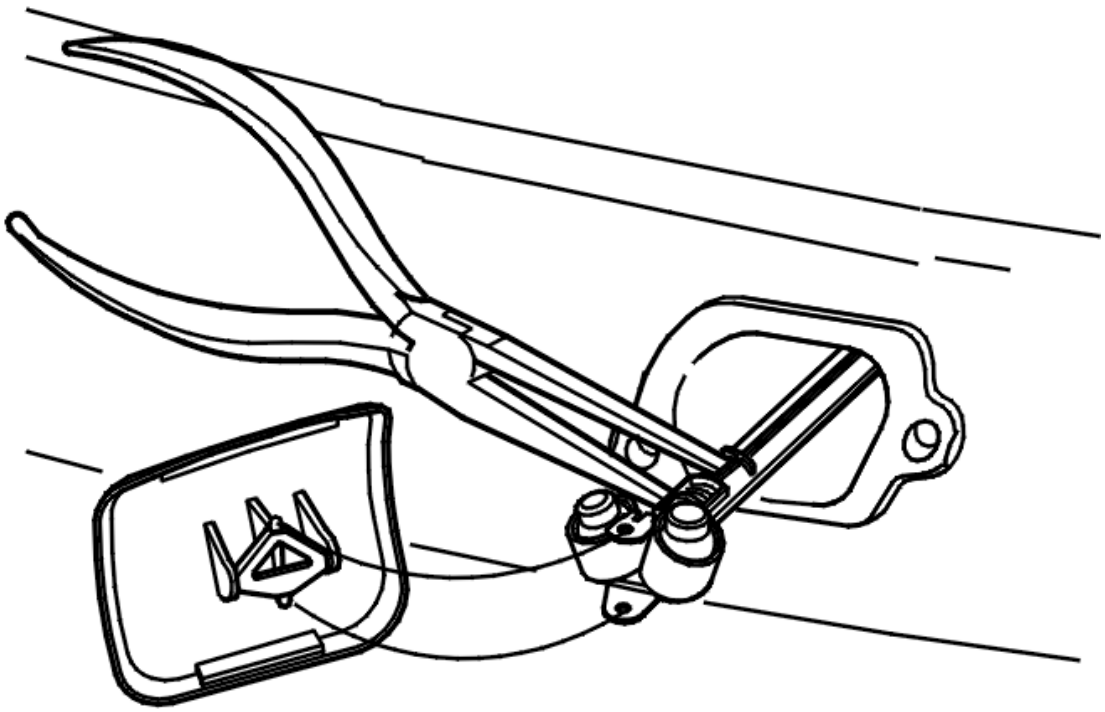

Fig. 49: Detach The Cover From The Nozzle
Courtesy of VOLVO CARS CORPORATION

Pull the cover straight out.

Detach the cover from the nozzle as illustrated.

Disconnect the washer hose.

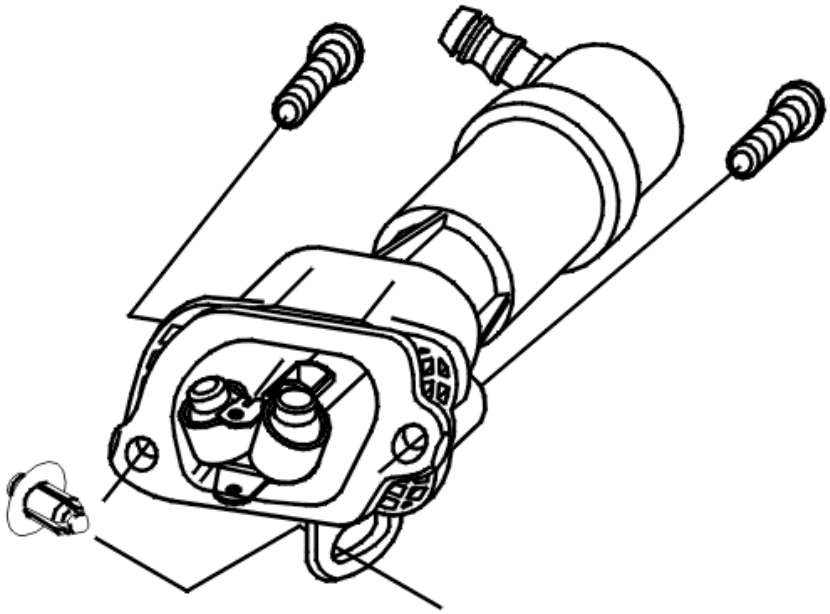

Fig. 50: Identifying Headlamp Washer Components
Courtesy of VOLVO CARS CORPORATION

Remove:

- the screws
- the clip
- the high-pressure washer.

INSTALLATION

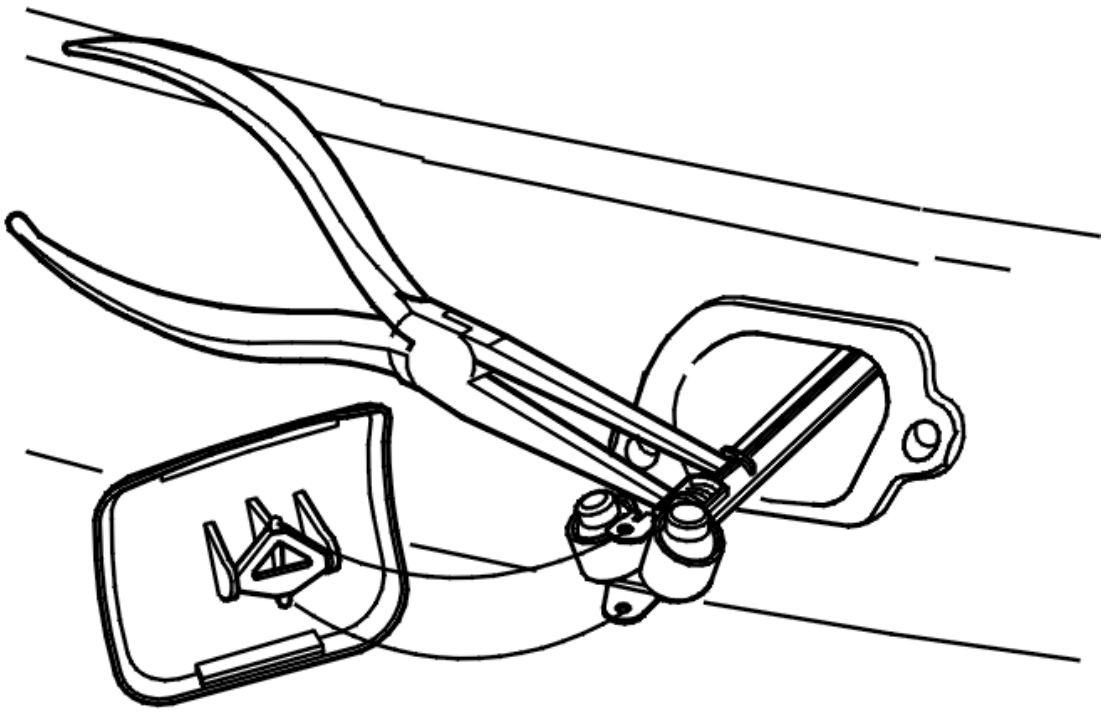

Fig. 51: Detach The Cover From The Nozzle
Courtesy of VOLVO CARS CORPORATION

Install:

- the screws
- the clip
- the washer hose.

Pull out the washer using pliers.

Install the cover.

Carefully release back.

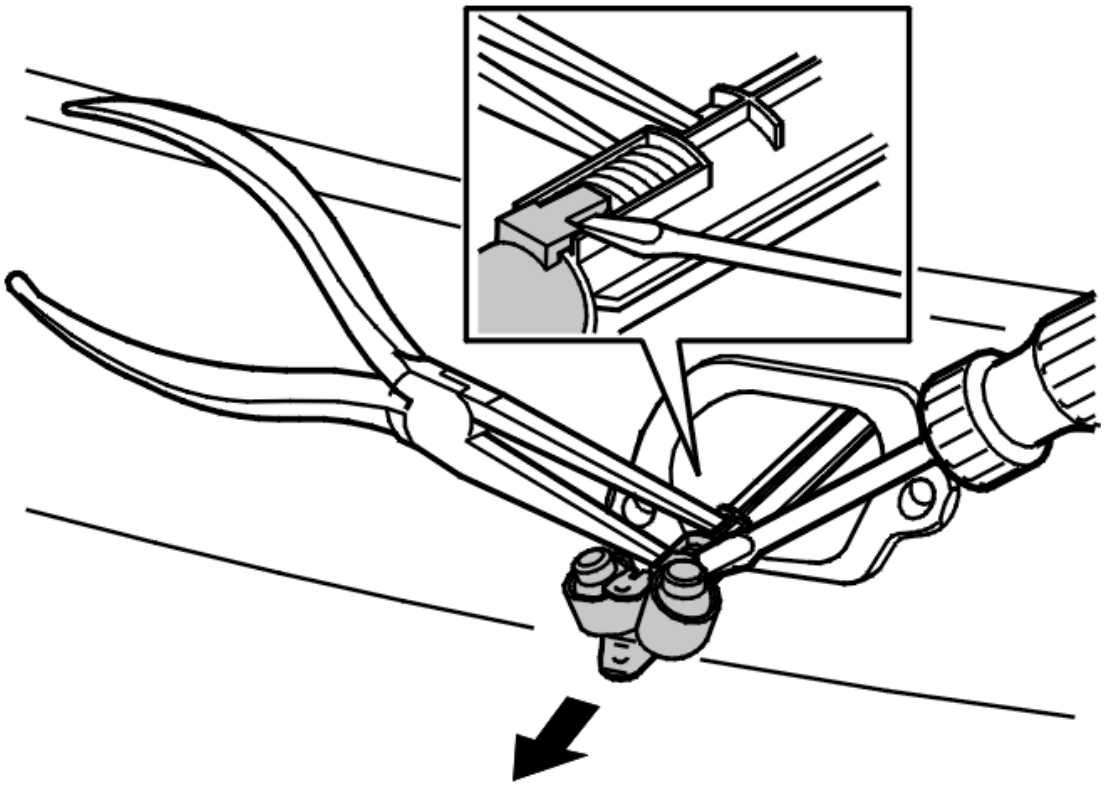

Fig. 52: Adjust The Alignment Of The Nozzle As Necessary
Courtesy of VOLVO CARS CORPORATION

Adjust the alignment of the nozzle as necessary as illustrated. The cover must be against the bumper cover without any play.

FINISHING WORK

Install the bumper cover. See **CASING BUMPER FRONT, REPLACING** .

Install the headlamp. See **HEADLIGHT/BULB, REPLACING** .

Test the function.

MOTOR TAILGATE WIPER, REPLACING

see **MOTOR TAILGATE WIPER, REPLACING**

MOTOR WINDSHIELD WIPER, REPLACING

see **MOTOR WINDSHIELD WIPER, REPLACING**

NOZZLE HIGH-PRESSURE WASHER HEADLAMP, REPLACING

see **NOZZLE HIGH-PRESSURE WASHER HEADLAMP, REPLACING**

TAILGATE WIPER ARM / BLADE, REPLACING

see **TAILGATE WIPER ARM / BLADE, REPLACING**

WASHER / WIPER SWITCH, REPLACING

see **WASHER / WIPER SWITCH, REPLACING**

WINDSHIELD WASHER FLUID RESERVOIR, REPLACING

NOTE: **As the illustrations in this service information are used for different model years and / or models, some variation may occur. However, the essential information in the illustrations is always correct.**

PREPARATORY WORK

Detach, see **CASING BUMPER FRONT, REPLACING** on the right-hand side.

LOCATION OF COMPONENTS

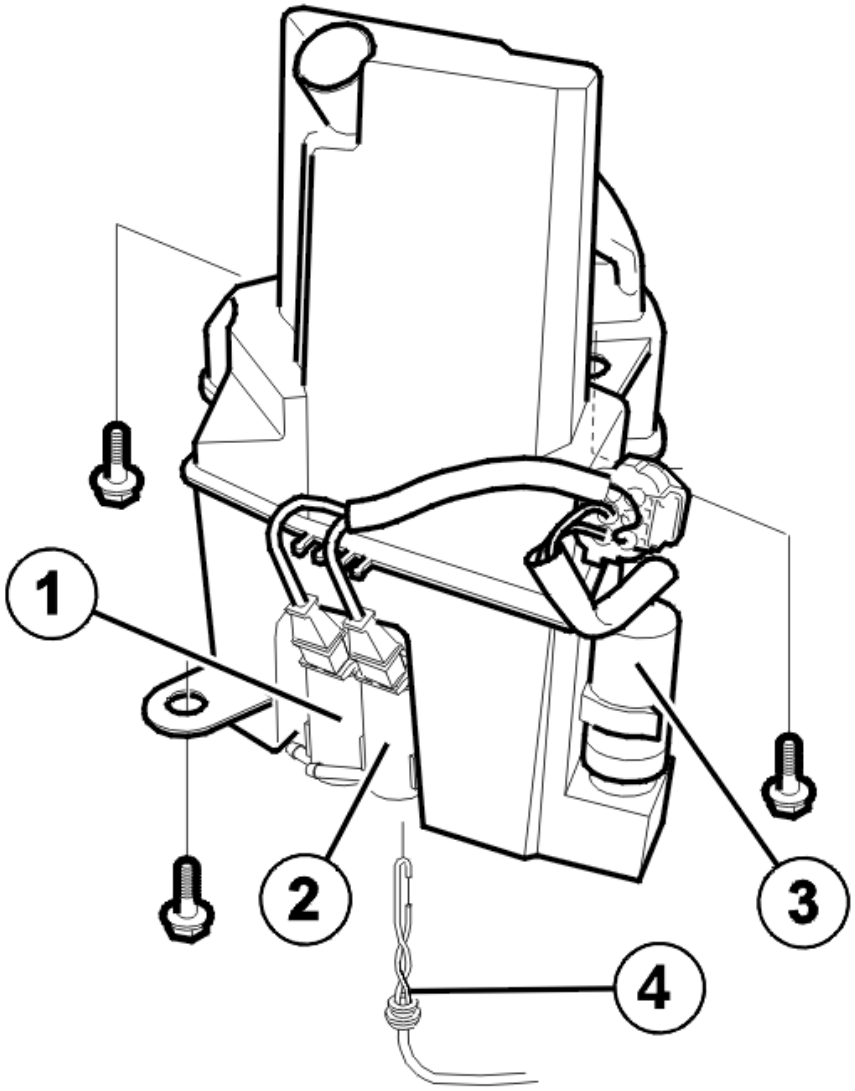

Fig. 53: Identifying Windshield Washer Fluid Reservoir Components
Courtesy of VOLVO CARS CORPORATION

1. Windshield washer motor
2. Rear windshield washer motor
3. Headlamp washer motor, high-pressure
4. Level sensor.

REMOVAL

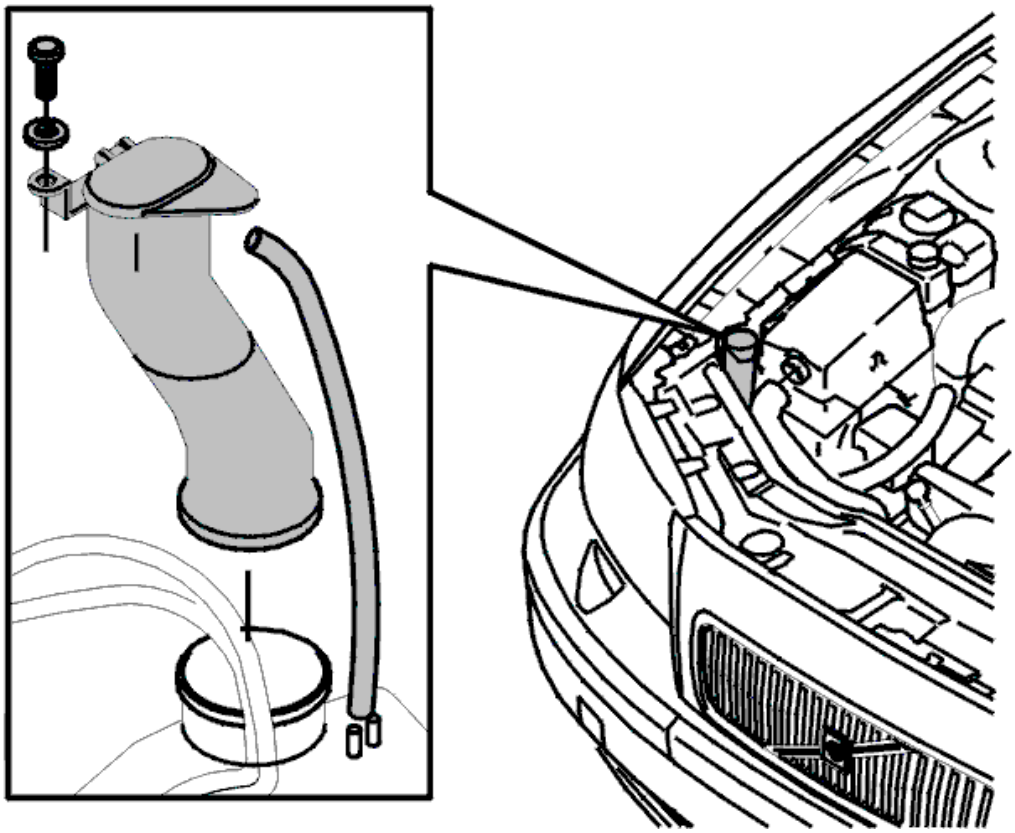

Fig. 54: Identifying Filler Pipe For Windshield Washer Fluid Reservoir
Courtesy of VOLVO CARS CORPORATION

Remove the screw for the fuel filler pipe.

Pull up the fuel filler pipe.

Detach the washer hoses at the washer motors (x3). Mark up the hoses. Drain or plug the reservoir.

Disconnect the connectors.

Remove the screws.

Push the bumper cover to one side and lift down the reservoir.

INSTALLATION

Push the bumper cover to one side and position the reservoir.

Install the screws.

Align the air hose. Install the 3 washer hoses according to the markings.

Connect the connectors.

Tighten the screws.

Press the filler pipe into place.

Install the screw and tighten.

FINISHING WORK

Install, see **CASING BUMPER FRONT, REPLACING** .

Fill with windshield washer fluid.

Test the function.

WIPER ARM / BLADE WINDSHIELD, REPLACING

see **WIPER ARM / BLADE WINDSHIELD, REPLACING**

WIPER MECHANISM WINDSHIELD, REPLACING

see **WIPER MECHANISM WINDSHIELD, REPLACING**

WIPERS/WASHERS (2005-2011)

HIGH-PRESSURE WASHER HEADLAMP, REPLACING

NOTE: **The illustrations in this service information are used for different model years and/or models. Some variation may occur. However, the essential information in the illustrations is always correct.**

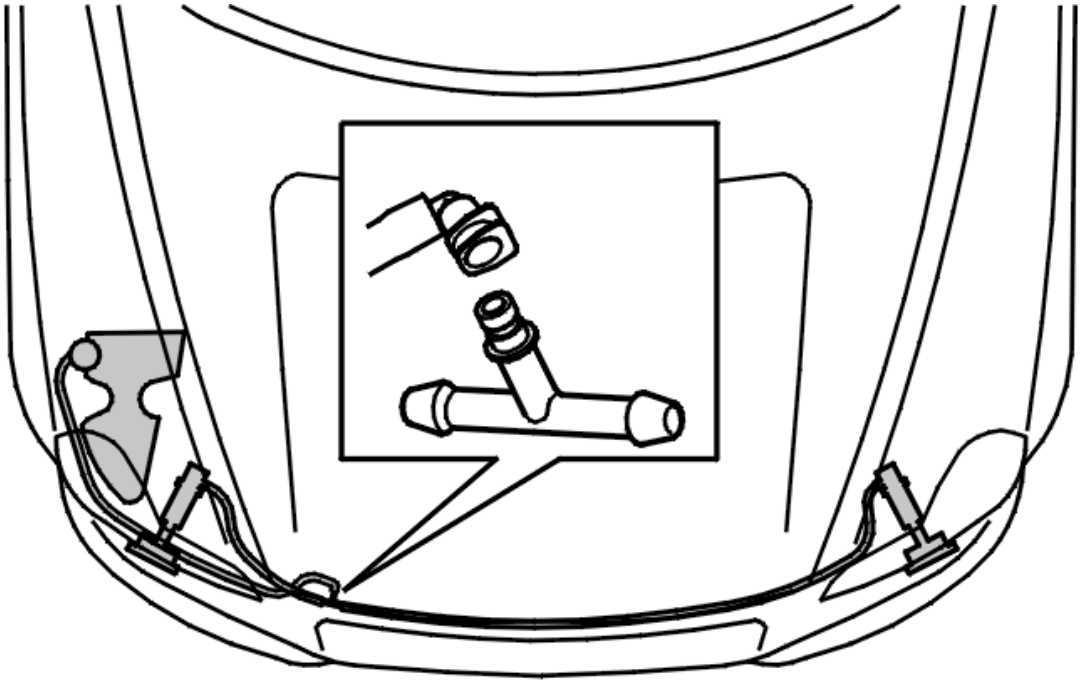

Fig. 55: View Of Headlamp Washer Connectors
Courtesy of VOLVO CARS CORPORATION

To replace the washer motor, see: **WINDSHIELD WASHER FLUID RESERVOIR, REPLACING**.

PREPARATORY WORK

Remove the headlamp. See: **HEADLIGHT/BULB, REPLACING** (2003-2006) or **HEADLIGHT/BULB, REPLACING** (2007-2012) and remove the bumper cover on the left and right sides. See: **CASING BUMPER FRONT, REPLACING** .

REMOVAL

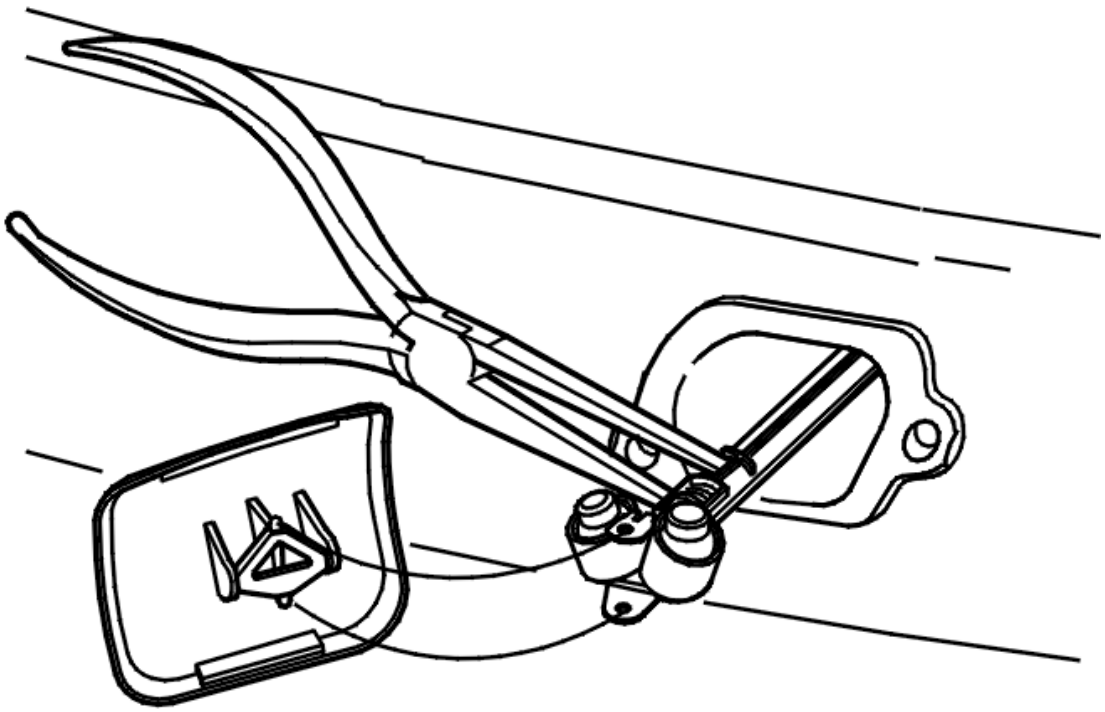

Fig. 56: Detach The Cover From The Nozzle
Courtesy of VOLVO CARS CORPORATION

Pull the cover straight out.

Detach the cover from the nozzle as illustrated.

Disconnect the washer hose.

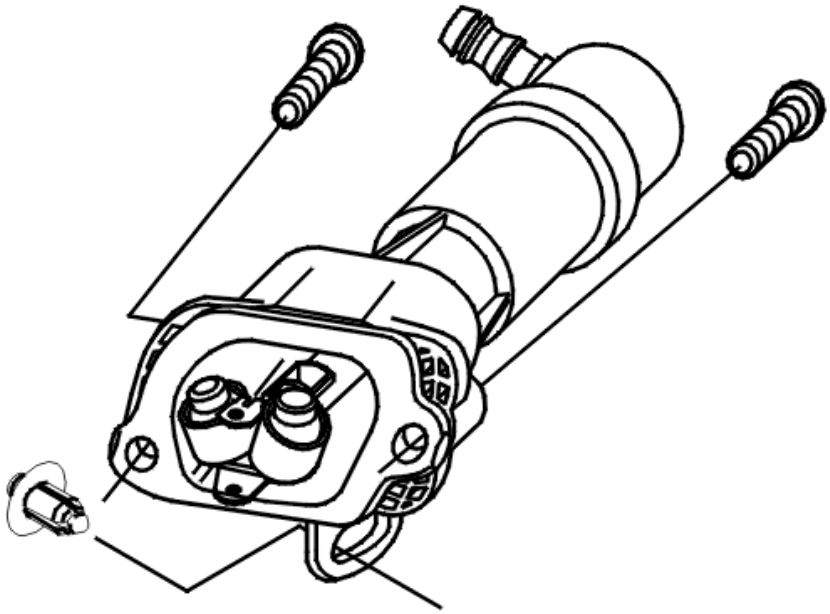

Fig. 57: Identifying Headlamp Washer Components
Courtesy of VOLVO CARS CORPORATION

Remove:

- the screws
- the clip
- the high-pressure washer.

INSTALLATION

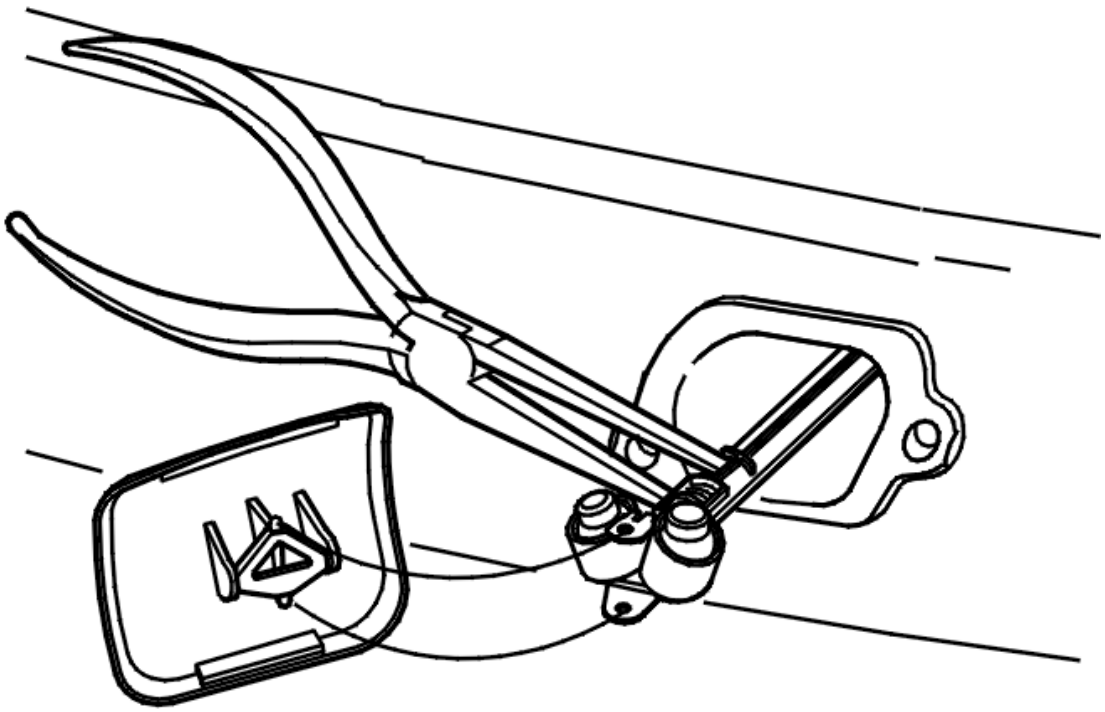

Fig. 58: Detach The Cover From The Nozzle
Courtesy of VOLVO CARS CORPORATION

Install:

- the screws
- the clip
- the washer hose.

Pull out the washer using pliers.

Install the cover.

Carefully release back.

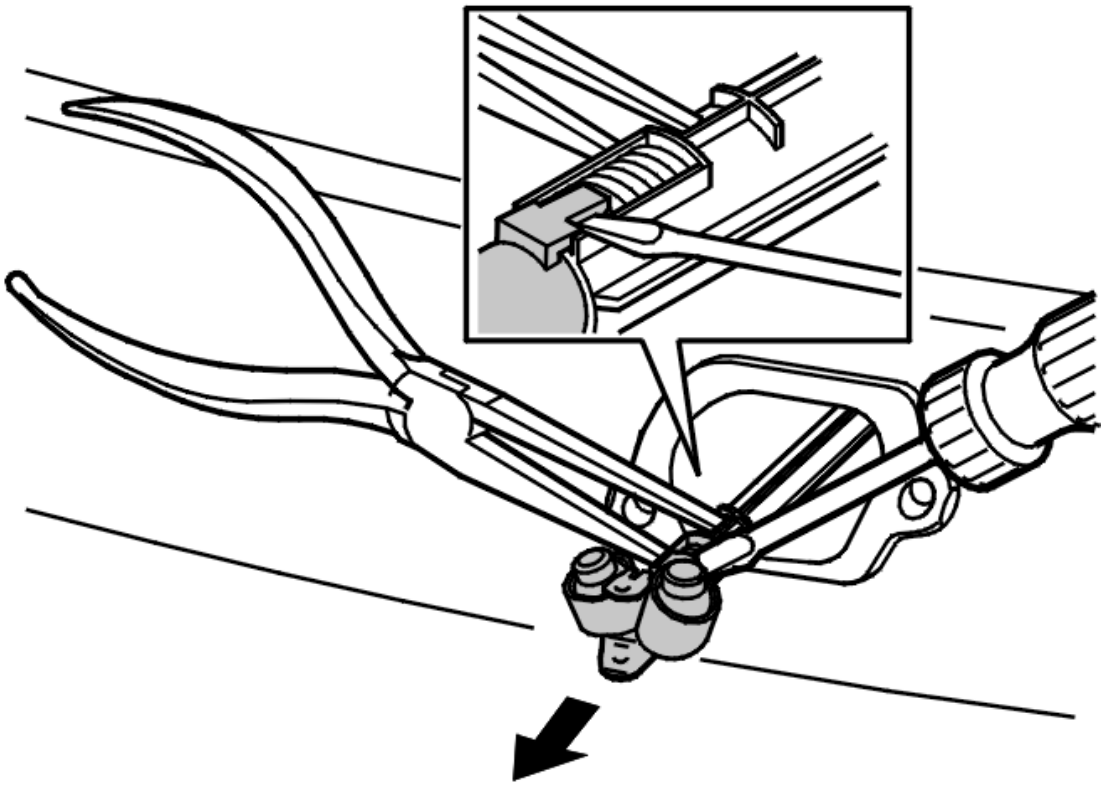

Fig. 59: Adjust The Alignment Of The Nozzle As Necessary
Courtesy of VOLVO CARS CORPORATION

Adjust the alignment of the nozzle as necessary as illustrated. The cover must be against the bumper cover without any play.

FINISHING WORK

Install the bumper cover. See: **CASING BUMPER FRONT, REPLACING** .

Install the headlamp. See: **HEADLIGHT/BULB, REPLACING** (2003-2006) or **HEADLIGHT/BULB, REPLACING** (2007-2012).

Test the function.

MOTOR TAILGATE WIPER, REPLACING

NOTE: **As the illustrations in this service information are used for different model years and / or models, some variation may occur. However, the essential information in the illustrations is always correct.**

PREPARATORY WORK

Remove:

- tailgate wiper arm, see **TAILGATE WIPER ARM / BLADE, REPLACING**
- tailgate panel, see **PANEL TAILGATE UPPER, REPLACING** .

REMOVAL

Disconnect the connector

Remove:

- the screws
- the mechanism and motor.

INSTALLATION

Install:

- the mechanism and motor
- the screws.

Connect the connector.

FINISHING WORK

Install:

- the tailgate panel according to **PANEL TAILGATE UPPER, REPLACING**
- tailgate wiper arm, see **TAILGATE WIPER ARM / BLADE, REPLACING**.

Test the function.

MOTOR WINDSHIELD WIPER, REPLACING

REMOVAL

PREPARATIONS

- Check that the wiper motor is in the parked position. Switch on the ignition. Switch the wipers on and off
- Switch off the ignition.

WINDSHIELD WIPER MOTOR

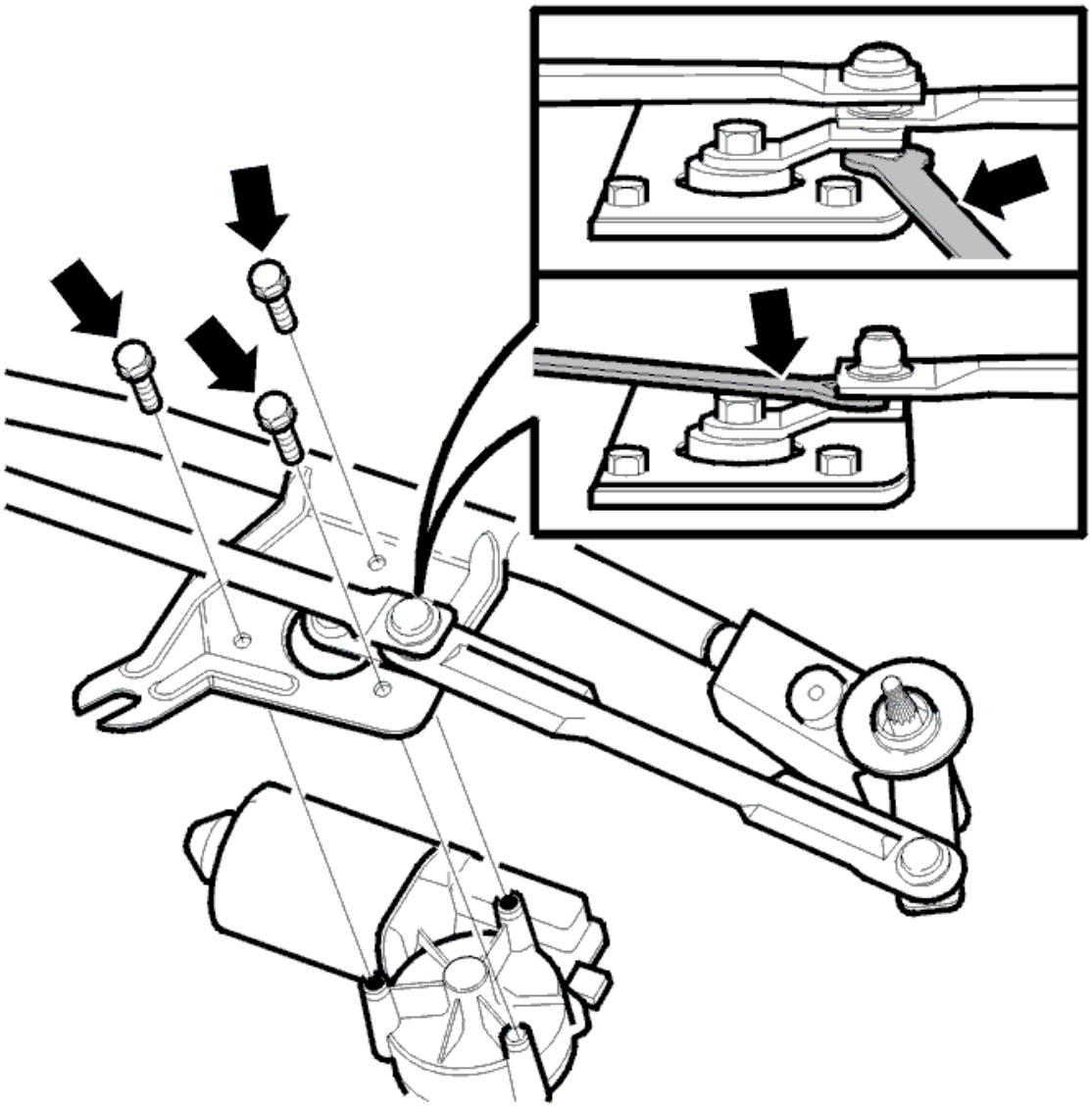

Fig. 60: Identifying Windshield Wiper Motor Assembly
Courtesy of VOLVO CARS CORPORATION

- Remove the wiper arms. See **WIPER ARM / BLADE WINDSHIELD, REPLACING**
- Remove the wiper mechanism. See **WIPER MECHANISM WINDSHIELD, REPLACING**
- Remove the upper control arm from the ball. Use a wrench
- Remove the lower control arm. Use a wrench
- Remove the 3 screws from the windshield wiper motor.

INSTALLATION

WINDSHIELD WIPER MOTOR

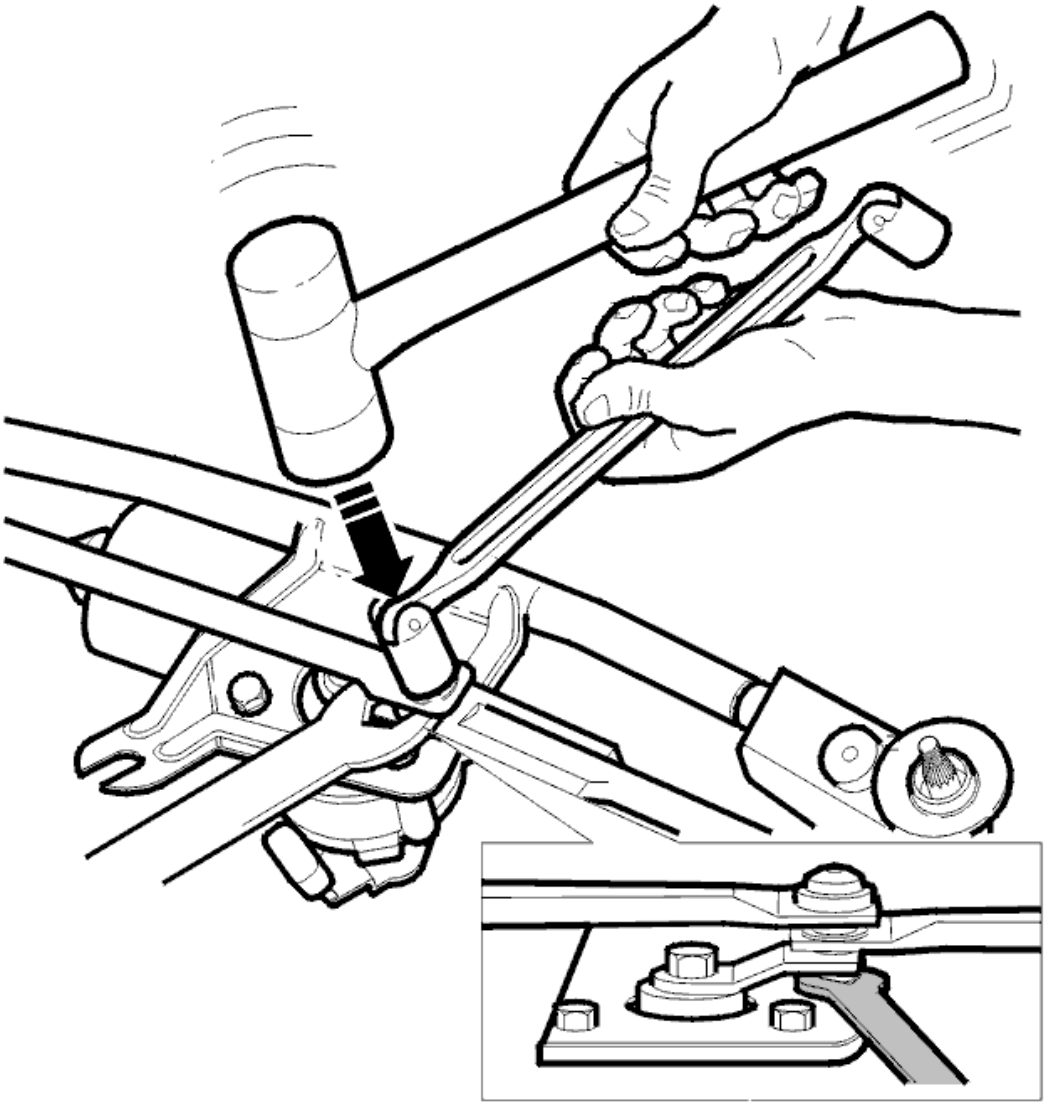

Fig. 61: Identifying Control Arm Tapped Into Place Using Sleeve And Mallet
Courtesy of VOLVO CARS CORPORATION

- Lubricate the ball on the link arm using grease
- Install the 3 screws for the windshield wiper motor
- Position a wrench as support between the link arm and the bracket and screw head. See illustration
- Position the control arm on the ball. Carefully tap the control arm into place. Use a sleeve and a mallet
- Install the wiper arm mechanism. See **WIPER MECHANISM WINDSHIELD, REPLACING**
- Install the wiper arms. See **WIPER ARM / BLADE WINDSHIELD, REPLACING**.

OTHER INFORMATION

To adjust the control arms. See **CONTROL LINKS / WIPER MECHANISM, ADJUSTING**.

CONTROL LINKS / WIPER MECHANISM, ADJUSTING

ADJUSTMENT

CONTROL ARMS

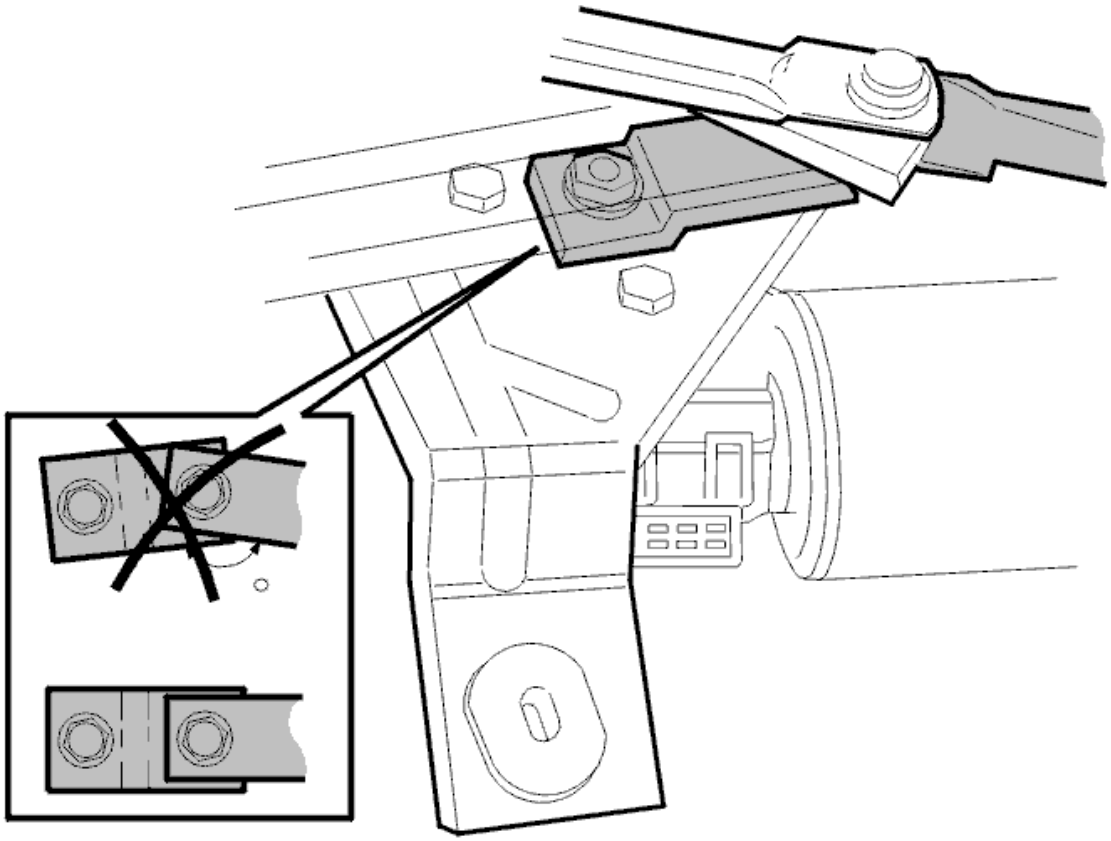

Fig. 62: Adjusting Position Of Crank Link
Courtesy of VOLVO CARS CORPORATION

- Detach the control arms from the link arm
- Remove the nut from the link arm
- Run the motor to the parked position
- Adjust the position of the link arm. The link arm must be parallel with the outer control arm
- Apply thread sealant liquid P/N 9961053-2 to the threads of the motor shaft
- Tighten the nut. Use a 20 mm fixed wrench on the link arm as a counterhold
- Install the control arms
- Test drive the mechanism.

OTHER INFORMATION

To replace windshield wiper components, see **WIPERS/WASHERS**.

NOZZLE HIGH-PRESSURE WASHER HEADLAMP, REPLACING

NOTE: **As the illustrations in this service information are used for different model years and / or models, some variation may occur. However, the essential information in the illustrations is always correct.**

PREPARATORY WORK

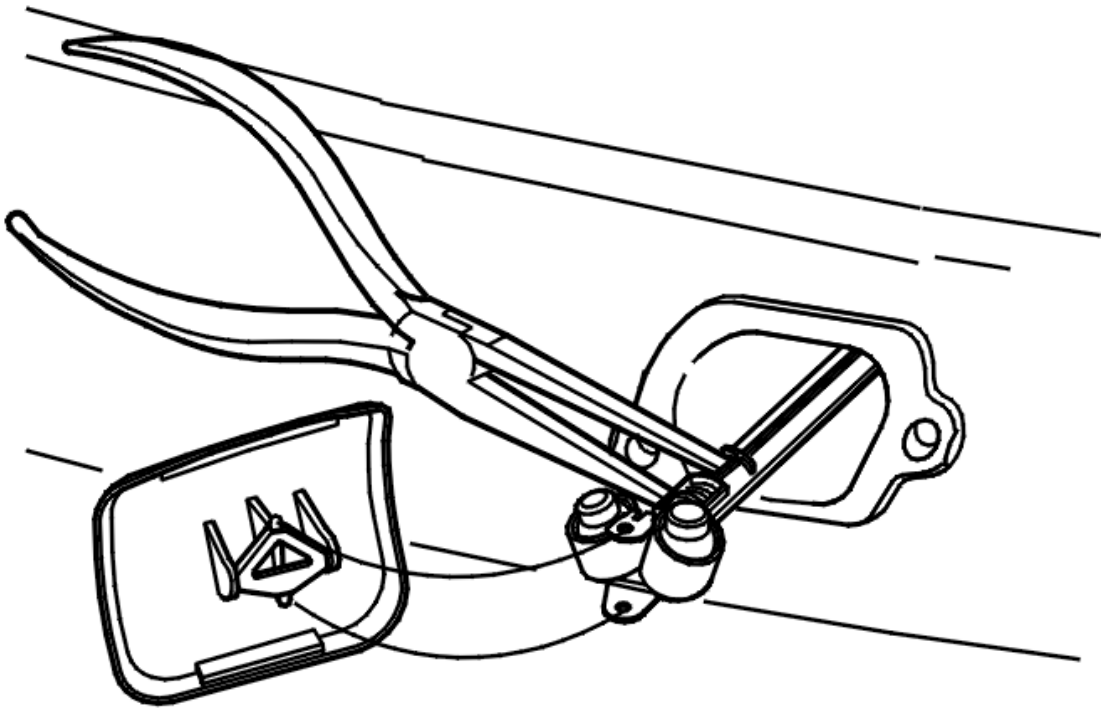

Fig. 63: Detach The Cover From The Nozzle
Courtesy of VOLVO CARS CORPORATION

Pull the cover straight out.

Detach the cover from the nozzle as illustrated.

Pull out the washer using pliers.

Lock the washer in the extended position.

NOTE: **Do not scratch the bumper.**

REMOVAL

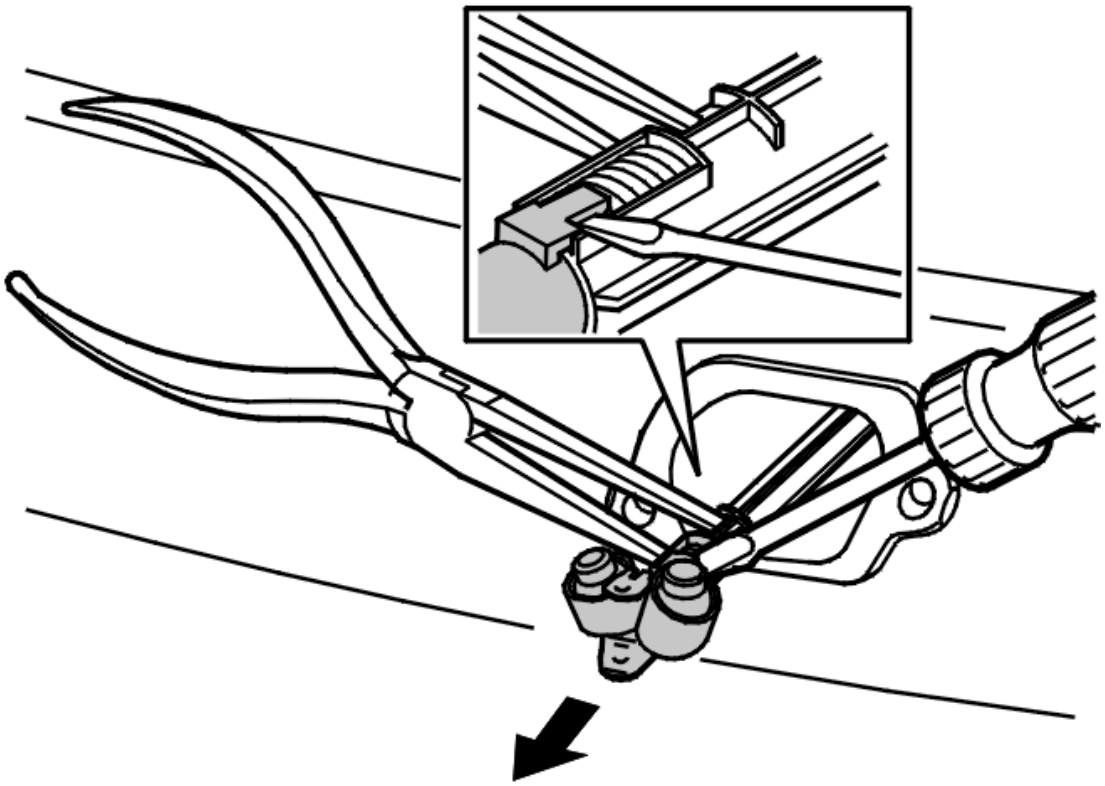

Fig. 64: Adjust The Alignment Of The Nozzle As Necessary
Courtesy of VOLVO CARS CORPORATION

Release the lock using a screwdriver.

Pull out the nozzle.

Release the washer.

INSTALLATION

Press the nozzle into place.

Pull out the washer using pliers.

Install the cover.

Carefully release the washer.

Adjust the alignment of the nozzle as necessary as illustrated. The cover must be against the bumper cover without any play.

Check the function

TAILGATE WIPER ARM / BLADE, REPLACING

Special tools:

see **9987693**

REMOVAL

NOTE: **As the illustrations in this service information are used for different model years and / or models, some variation may occur. However, the essential information in the illustrations is always correct.**

REMOVING TAILGATE WIPER

- Fold up the wiper arm
- Turn the blade 90° towards the arm and pull off the blade.

REMOVING TAILGATE WIPER ARM AND BLADE

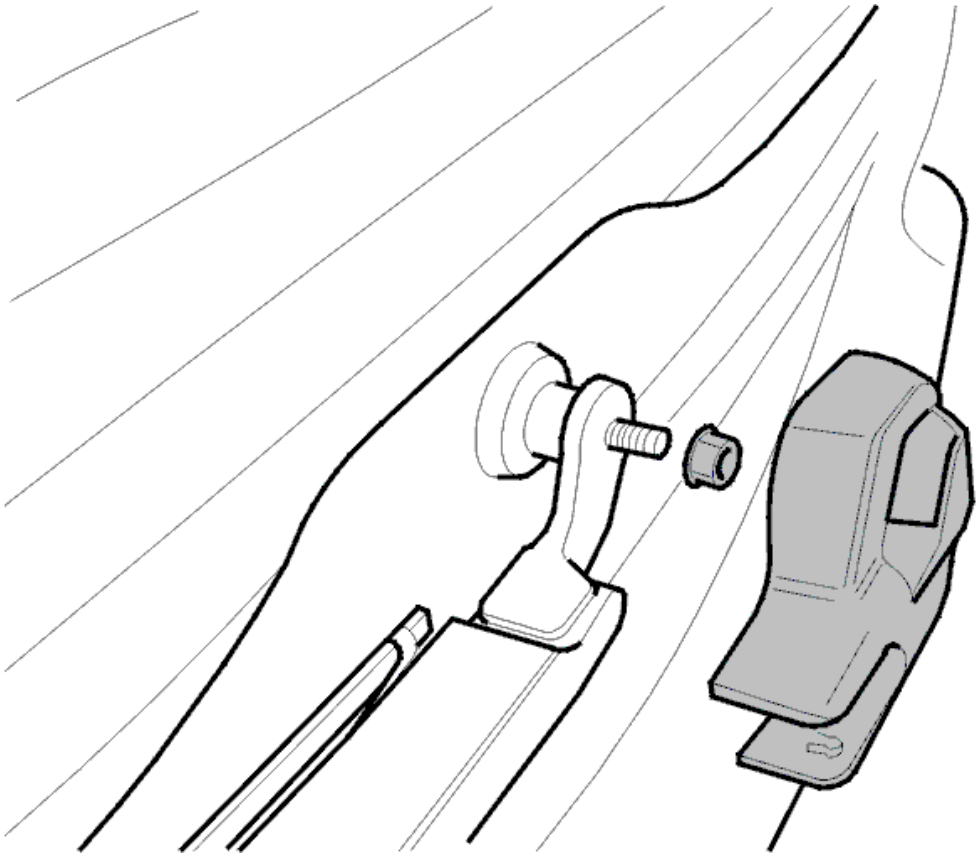

Fig. 65: Identifying Wiper Arm And Nut
Courtesy of VOLVO CARS CORPORATION

- Remove the cover

- Slacken off the nut a few turns. Use puller see **9987693** to remove the wiper arm
- Remove the nut
- Remove the wiper arm.

INSTALLATION

NOTE: For tightening torques, see TIGHTENING TORQUE .

INSTALLING TAILGATE WIPER ARM AND BLADE

- Reset the motor
- Position the arm with the nut. Adjust the arm so that the blade is in the middle of the black area on the windshield. Tighten the nut
- Test operate and reset the wiper. The blade must come to rest in the middle of the black area on the windshield. Alternatively, if the windshield is dry, approximately 10 mm below the upper edge of the field
- Install the cover.

WASHER / WIPER SWITCH, REPLACING

REMOVAL

WINDSHIELD WIPER AND WASHER SWITCH

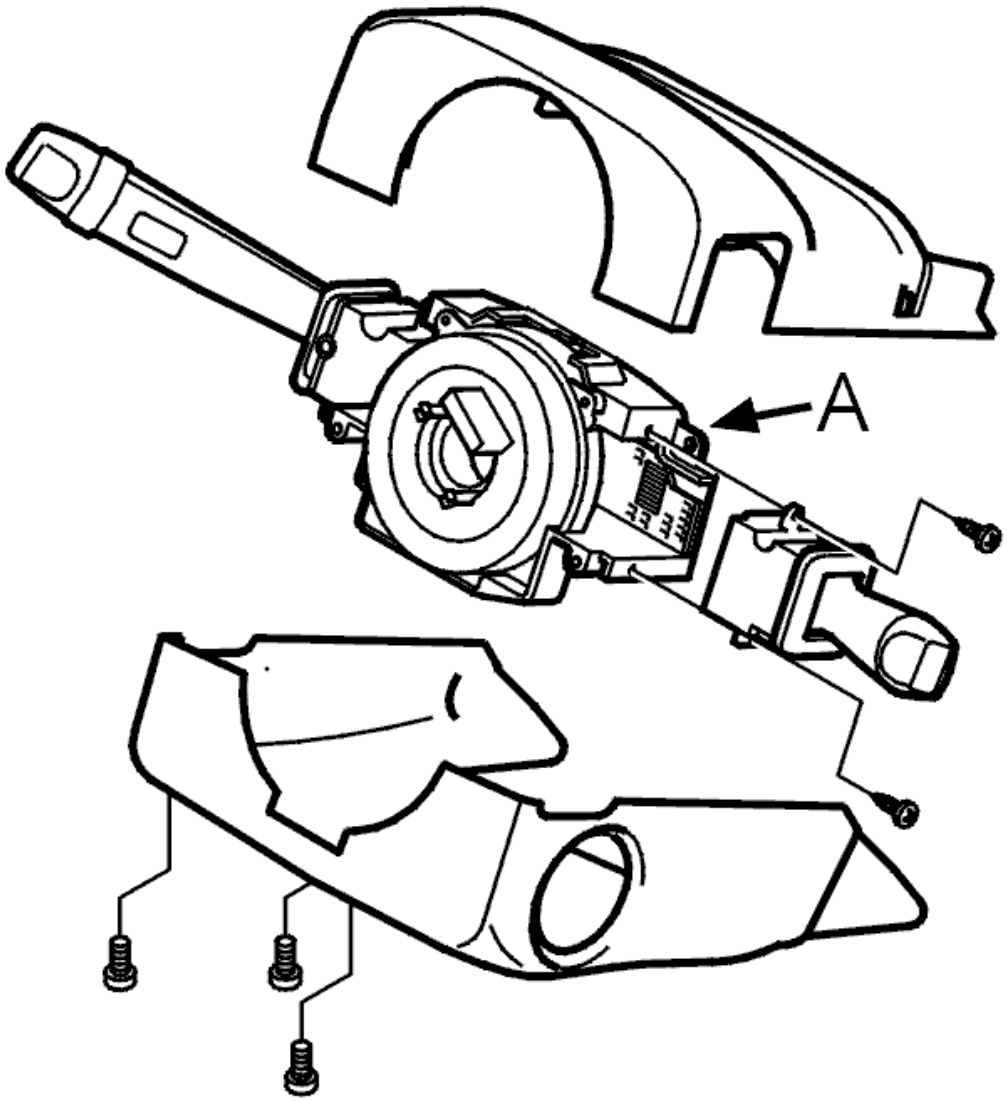

Fig. 66: Identifying Washer/Wiper Switch And Steering Column Covers
Courtesy of VOLVO CARS CORPORATION

- Ignition off
- Remove the upper and lower steering column covers. See **REPLACING THE STEERING COLUMN COVERS**
- Remove the 2 screws for the switch
- Remove the rubber boot.

NOTE: The pins on the switch are fragile.

- Carefully pull the switch straight out.

INSTALLATION

WINDSHIELD WIPER AND WASHER SWITCH

- Install the rubber boot.

NOTE: The pins on the switch are fragile.

- Insert the switch straight in from the side in the correct position. Carefully press the switch into the micro-switch. Ensure that the pins are in the correct positions in the micro-switch
- Install the screws for the switch
- Install the upper and lower steering column covers. See **REPLACING THE STEERING COLUMN COVERS** .

WINDSHIELD WASHER FLUID RESERVOIR, REPLACING

NOTE: The illustrations in this service information are used for different model years and/or models. Some variation may occur. However, the essential information in the illustrations is always correct.

PREPARATORY WORK

REMOVING THE RIGHT-HAND BUMPER COVER

Detach the right side of the bumper cover. See: **CASING BUMPER FRONT, REPLACING** .

LOCATION OF COMPONENTS

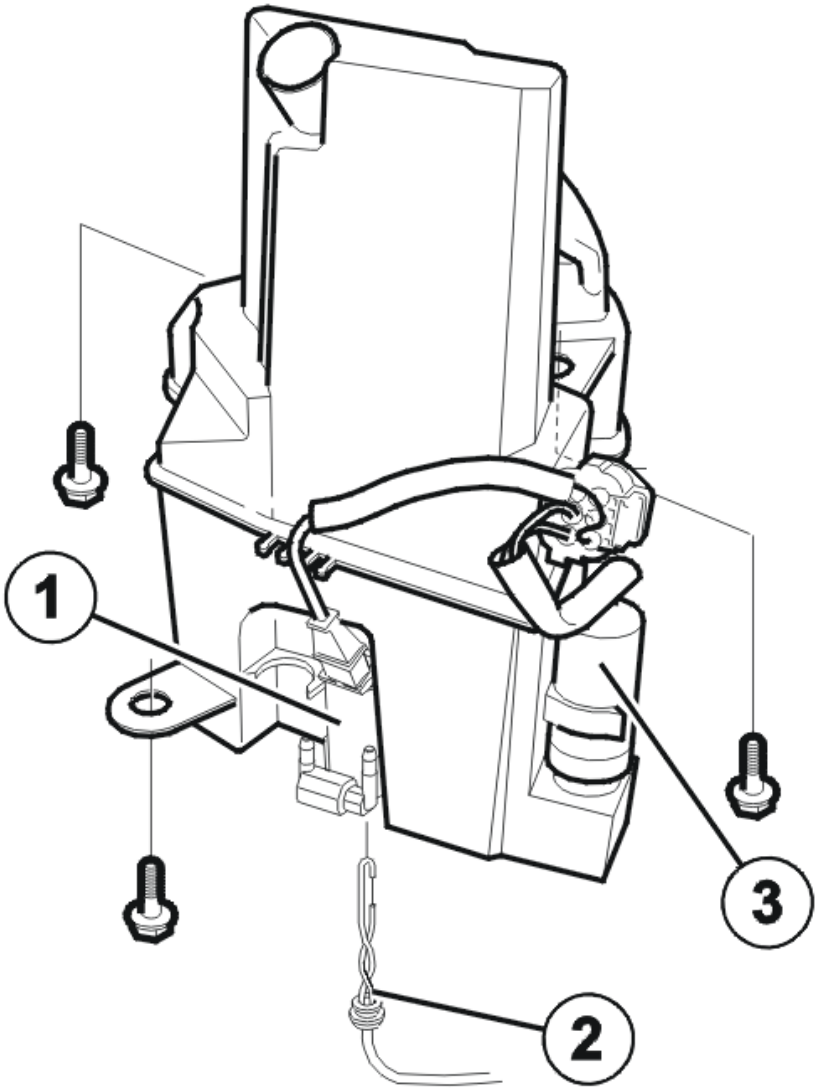

Fig. 67: Identifying Windshield Washer Fluid Reservoir Components
Courtesy of VOLVO CARS CORPORATION

1. Windshield washer motor
2. Level sensor
3. Headlamp washer motor, high-pressure.

REMOVAL

REMOVING THE WINDSHIELD WASHER FLUID RESERVOIR

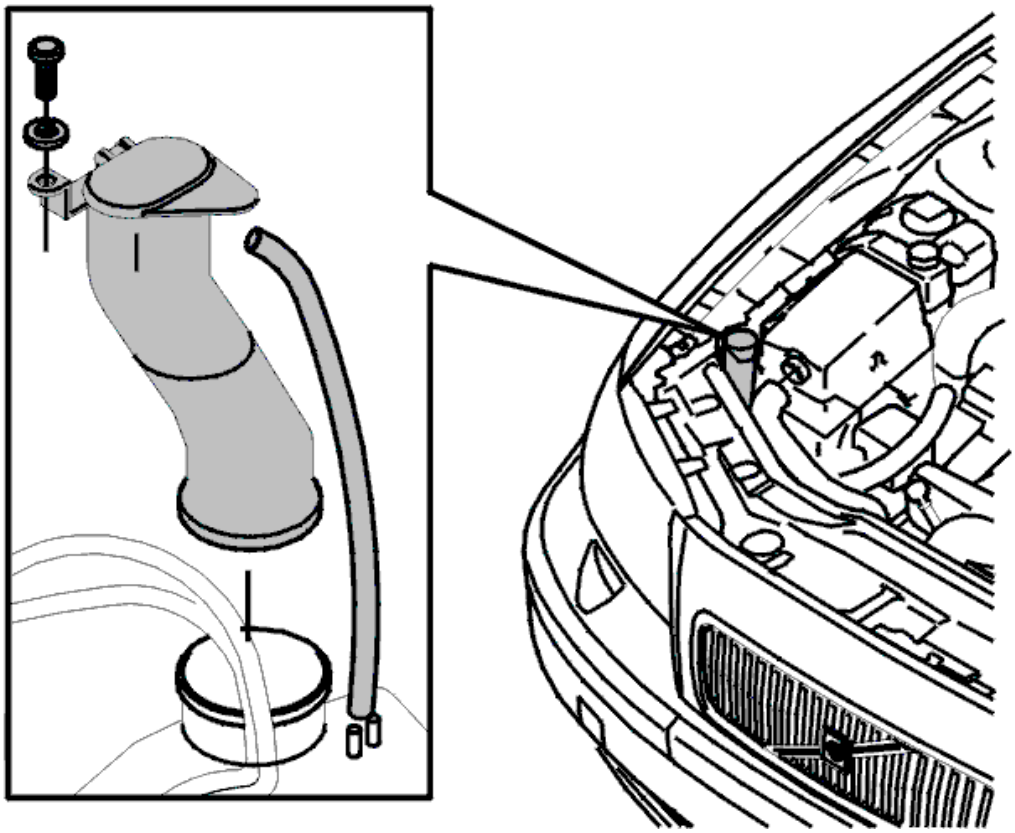

Fig. 68: Identifying Filler Pipe For Windshield Washer Fluid Reservoir
Courtesy of VOLVO CARS CORPORATION

Remove the screw for the fuel filler pipe.

Pull up the fuel filler pipe.

Disconnect the 3 hoses at the washer motors. Mark up the hoses.

Drain or plug the windshield washer reservoir.

Disconnect the connectors.

Remove the 3 screws.

Push the bumper cover to one side. Lift down the windshield washer reservoir.

INSTALLATION

INSTALLING THE WINDSHIELD WASHER FLUID RESERVOIR

Push the bumper cover to one side. Position the windshield washer reservoir.

Install the 3 screws. Tighten. See: **SUMMARY OF TIGHTENING TORQUES FOR SPECIFIC**

COMPONENTS .

Align the air hose. Install the 3 washer hoses according to the markings.

Connect the connectors.

Press the filler pipe into place.

Install the screw for the fuel filler pipe. Tighten.

FINISHING

INSTALLING THE RIGHT-HAND BUMPER COVER

Install the right side of the bumper cover. See: **CASING BUMPER FRONT, REPLACING** .

FUNCTION TEST

Fill with windshield washer fluid.

Test the function.

WIPER ARM / BLADE WINDSHIELD, REPLACING

REMOVAL

PREPARATIONS

- Check that the wiper motor is in the parked position. Switch on the ignition. Switch the wipers on and off
- Switch off the ignition.

WINDSHIELD WIPER BLADES

- Fold out the wiper arm
- Remove the wiper blade.

WINDSHIELD WIPER ARMS

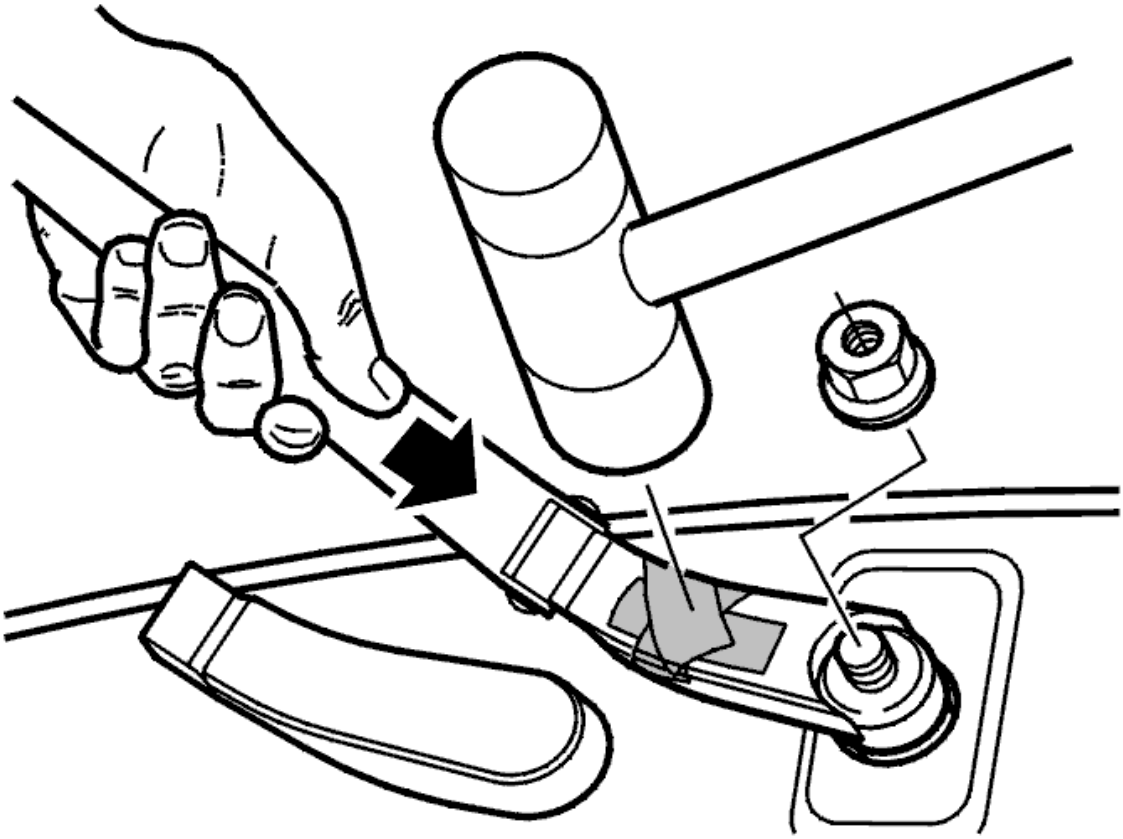

Fig. 69: Identifying Wiper Arm Pressed Downwards Using Plastic Mallet
Courtesy of VOLVO CARS CORPORATION

- Remove the protective cover from the nut
- Protect the rear edge of the hood and the wiper arm. Use tape for example (as illustrated)
- Slacken off the nut for the wiper arm a few turns. Leave the nut in place to protect the threads on the shaft journal
- Press the wiper arm downwards. Tap it gently. Use a plastic mallet (as illustrated)
- Remove the nut and wiper arm.

INSTALLATION

WINDSHIELD WIPER ARMS

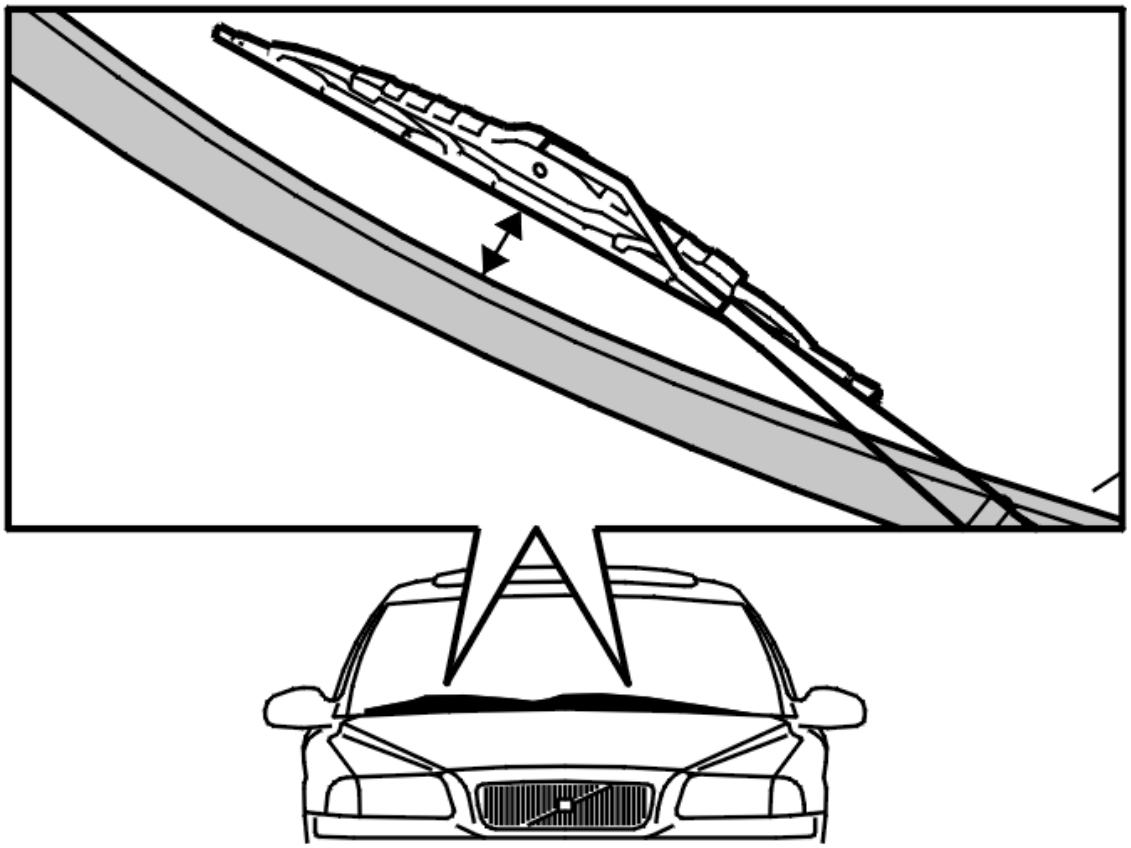

Fig. 70: Identifying Windshield Wiper Arms
Courtesy of VOLVO CARS CORPORATION

- Press the wiper arm into place on the shaft journal
- Screw the nut into place loosely
- Adjust the wiper arm to the correct position. See the illustration.

Driver's side

The distance from the center of the wiper blade to the upper edge of the trim strip must be 75 mm.

Passenger side

The distance from the center of the wiper blade to the upper edge of the trim strip must be 90 mm.

- Tighten the nut. Tighten to **20 Nm**
- Install the protective cover over the nut.

NOTE: Remove the masking tape from the wiper arms and the edge of the hood.

WINDSHIELD WIPER BLADES

In reverse order.

OTHER INFORMATION

To adjust the control arms. See **CONTROL LINKS / WIPER MECHANISM, ADJUSTING**.

WIPER MECHANISM WINDSHIELD, REPLACING

NOTE: **As the illustrations in this service information are used for different model years and / or models, some variation may occur. However, the essential information in the illustrations is always correct.**

REMOVAL

PREPARATIONS

- Check that the wiper motor is in the parked position. Switch on the ignition. Switch the wipers on and off
- Switch off the ignition.

WINDSCREEN WIPER MECHANISM

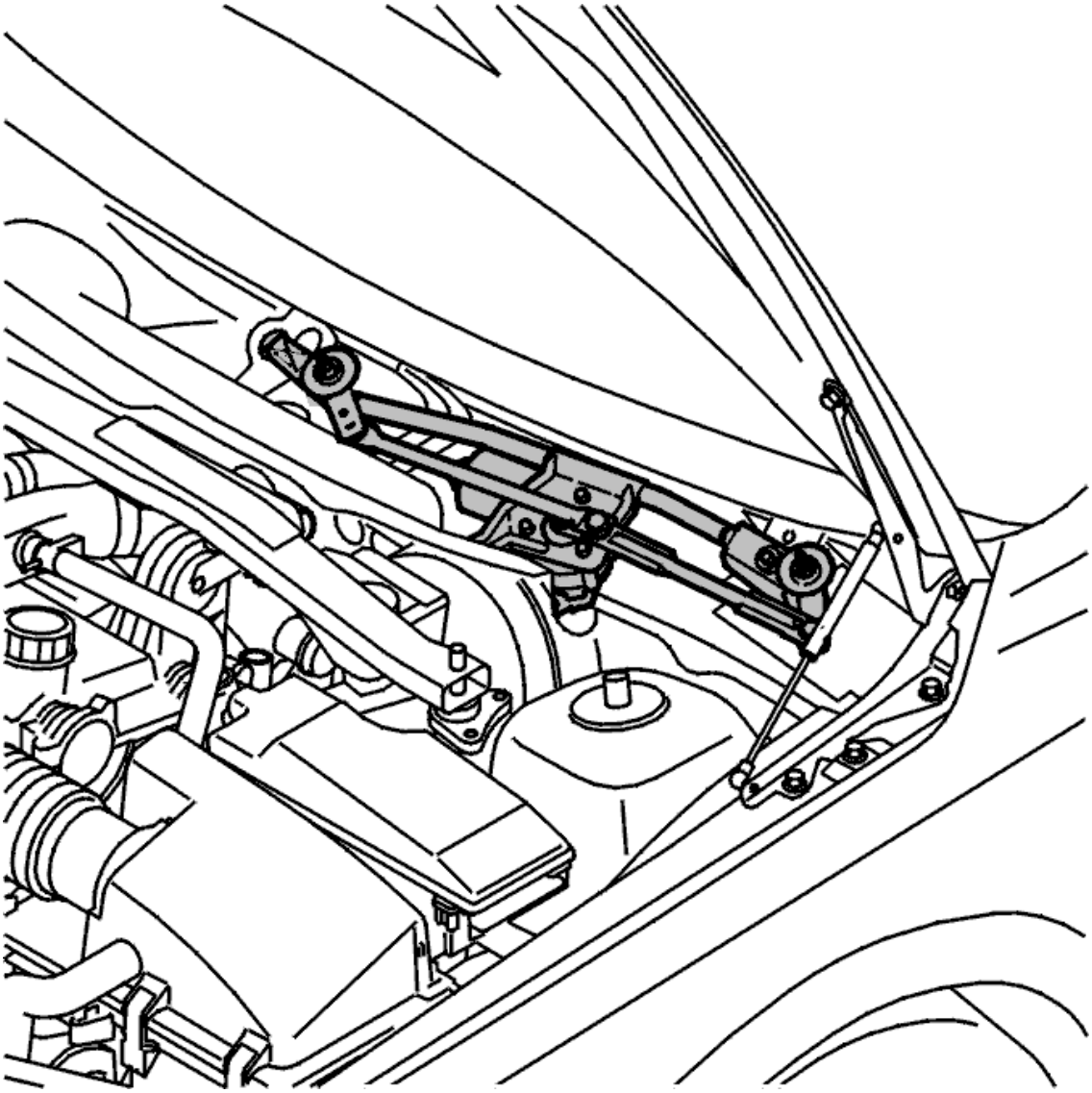

Fig. 71: Identifying Windshield Wiper Mechanism
Courtesy of VOLVO CARS CORPORATION

Remove:

- the windshield wiper arms. See **WIPER ARM / BLADE WINDSHIELD, REPLACING**.
- plenum chamber and gutter. See: **COWL, REPLACING**
- the cable ties.
- Disconnect the connectors for the wiper motor
- the screws for the mechanism. Remove the pin from the rubber bushing.

INSTALLATION

WINDSCREEN WIPER MECHANISM

- Lubricate the lug using a soap solution
- Install the mechanism in the correct position
- Tighten the screws
- Connect the connectors
- Tighten the screws. Tighten to **20 Nm** . Start with the outer screw (closest to the front wing)
- Install the plenum chamber/gutter. See: **COWL, REPLACING**
- Reset the wiper motor and mechanism by switching on the ignition and then turn the wiper switch on and off
- Install the wiper arms. See **WIPER ARM / BLADE WINDSHIELD, REPLACING**.

OTHER INFORMATION

To adjust the control arms. See **CONTROL LINKS / WIPER MECHANISM, ADJUSTING**.

ELECTRICAL COMPONENTS (2003)

DRIVER DOOR MODULE (DDM), REPLACING

PREPARATIONS

CAUTION: New software can only be ordered when the control module is installed in the car. VIDA reads off the new control module identity which is required to order the correct software.

Always check that the control module and control module box connectors do not have bent or damaged terminals or sockets. This may have been the cause of the fault.

REMOVING THE DRIVER DOOR MODULE (DDM)

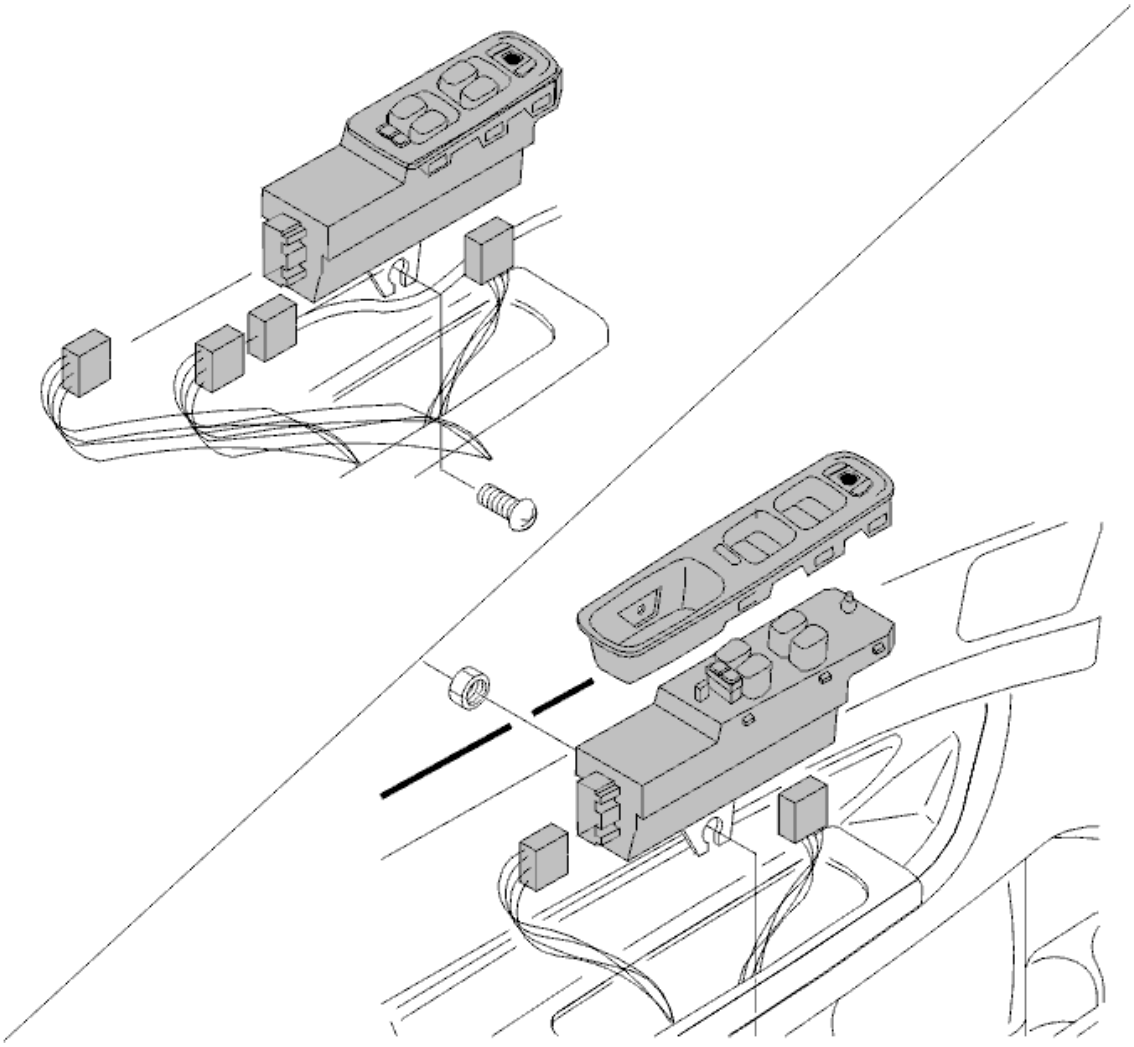

Fig. 72: Driver Door Module (DDM)
Courtesy of VOLVO CARS CORPORATION

Ignition off.

Remove:

- the door panel, see **PANEL FRONT SIDE DOOR, REPLACING** .
- the nut and screw holding the door module in place
- the connectors.

Pull up the rear edge of the control module.

Pull the control module backwards and upwards.

Detach the control module from the mounting on the door panel.

Press up the control module.

Disconnect the catches. Lift the upper panel from the control module.

NOTE: Check that the control module connectors are intact.

INSTALLING THE DRIVER DOOR MODULE (DDM)

Install the upper panel.

Position the control module in the hole on the door panel.

Check that the lower mounting for the control module is correctly located in the support on the door panel.

Press the control module into place.

Install:

- the connectors
- the nut and screw
- the door panel, see **PANEL FRONT SIDE DOOR, REPLACING** .

Ordering software

Order software for the driver door module (DDM). See 9438272 .

FINISHING

Initialize the window position in the communication input.

KEYPAD STEERING WHEEL, REPLACING

REMOVING THE KEYPAD

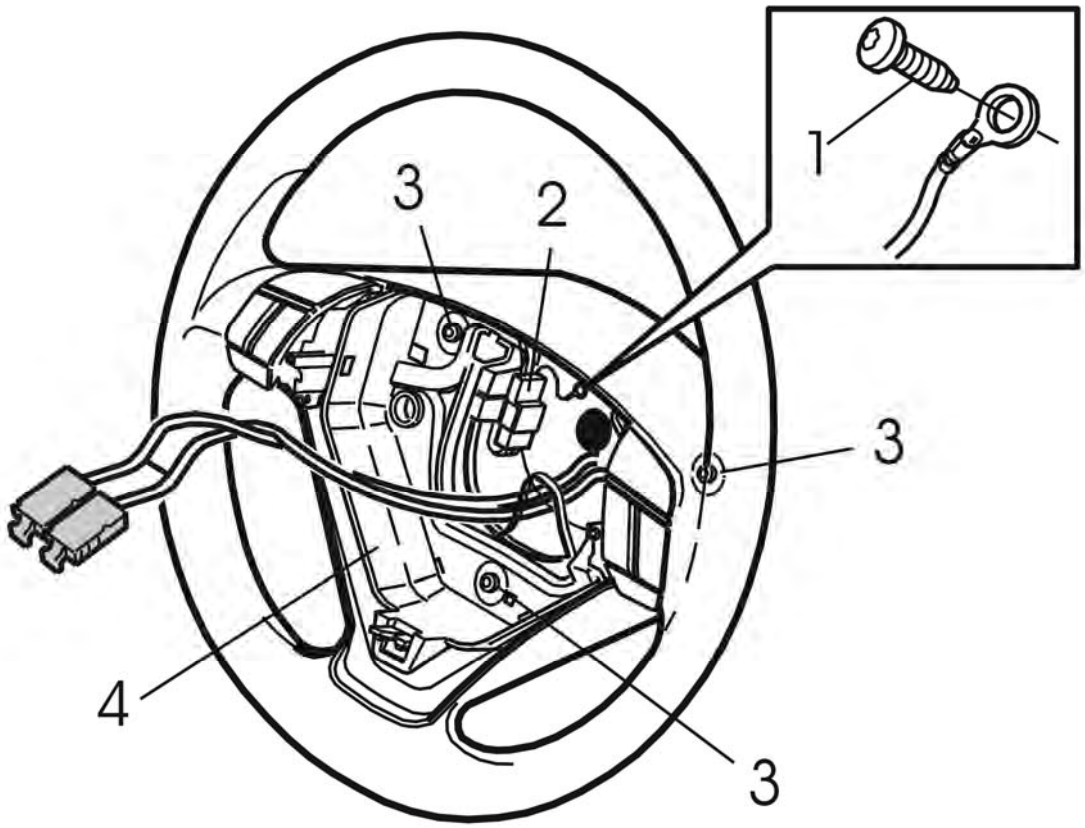

Fig. 73: Identifying Keypad Steering Wheel Assembly
Courtesy of VOLVO CARS CORPORATION

Remove the driver's airbag module. See **AIRBAG DRIVER'S SIDE (SRS), REPLACING** .

Remove screw (1).

Disconnect the ground lead.

Disconnect the green connector (2).

Remove the three screws (3). Remove the plastic bracket.

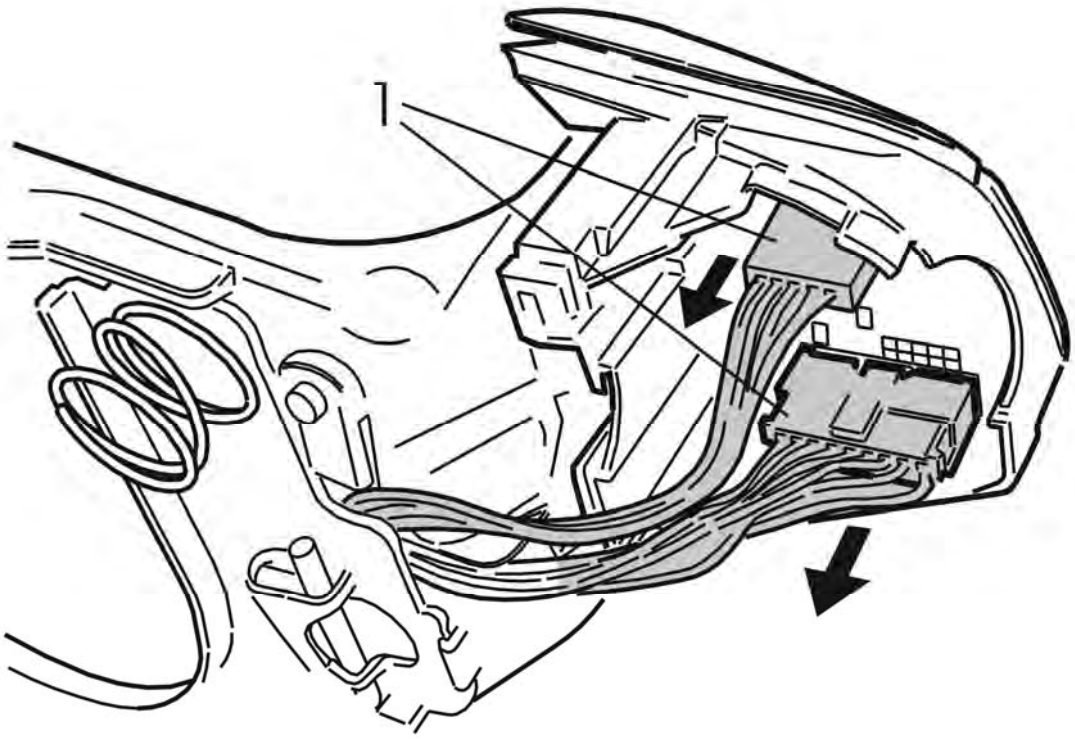

Fig. 74: Identifying Keypad Connectors
Courtesy of VOLVO CARS CORPORATION

Disconnect the connectors (1) for the keypad. Press the catches in.

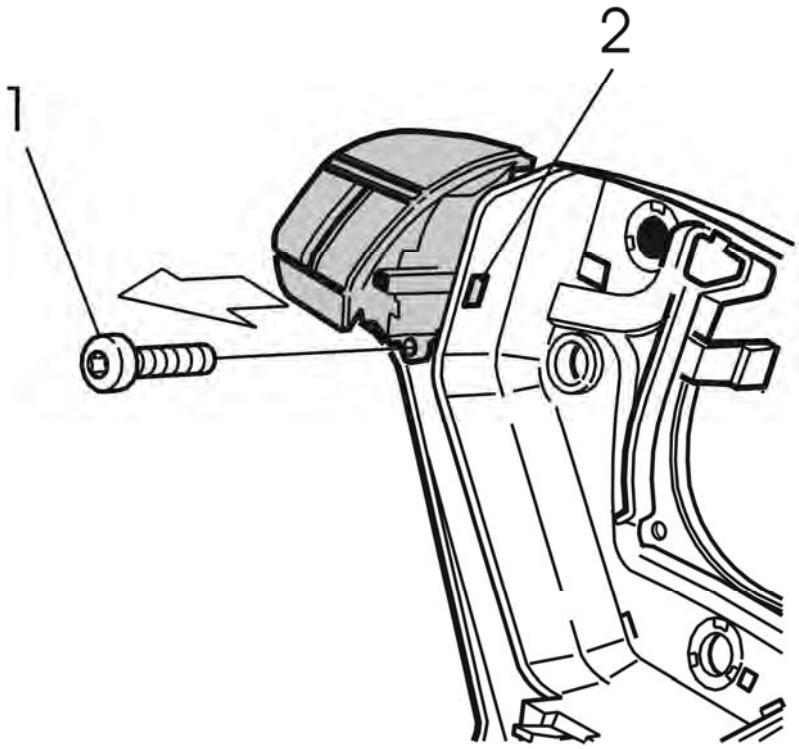

Fig. 75: Identifying Left Steering Wheel Keypad
Courtesy of VOLVO CARS CORPORATION

Remove the screw (1) from keypad.

Press in the catch (2) and pull the keypad from the socket.

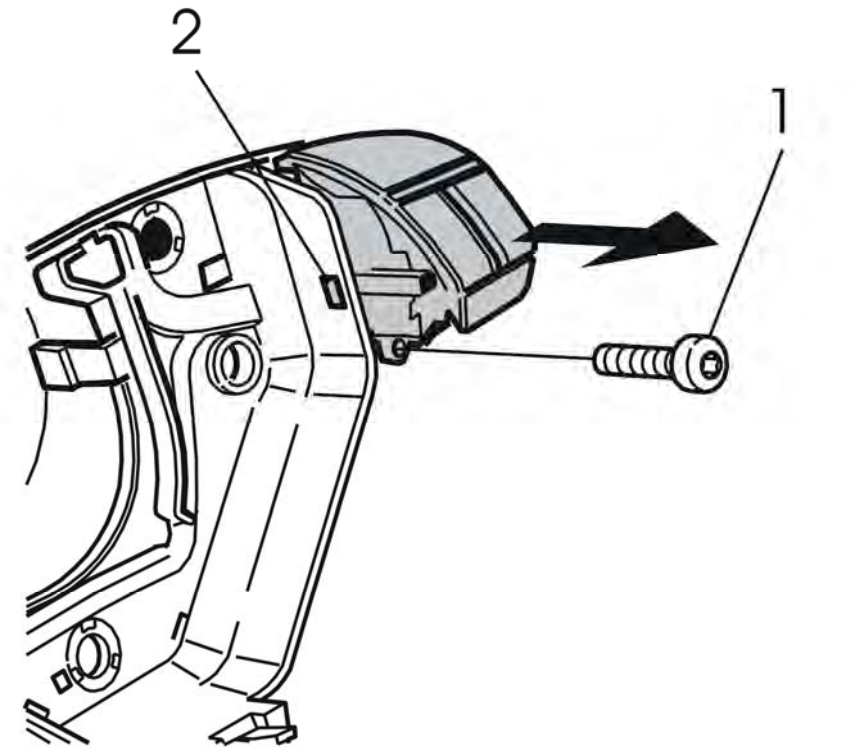

Fig. 76: Identifying Right Steering Wheel Keypad
Courtesy of VOLVO CARS CORPORATION

Remove the screw (1) from keypad.

Press in the catch (2) and pull the keypad from the socket.

INSTALLING KEYPAD

Install:

- the keypad
- the screw
- the connectors for the keypad
- the three screws
- the green connector
- the ground lead and screw
- the driver's airbag module. See **AIRBAG DRIVER'S SIDE (SRS), REPLACING** .

PASSENGER DOOR MODULE (PDM), REPLACING

PREPARATIONS

CAUTION: New software can only be ordered when the control module is installed in the car. VIDA reads off the new control module identity which is required to order the correct software.

Always check that the control module and control module box connectors do not have bent or damaged terminals or sockets. This may have been the cause of the fault.

REMOVING THE PASSENGER DOOR MODULE (PDM)

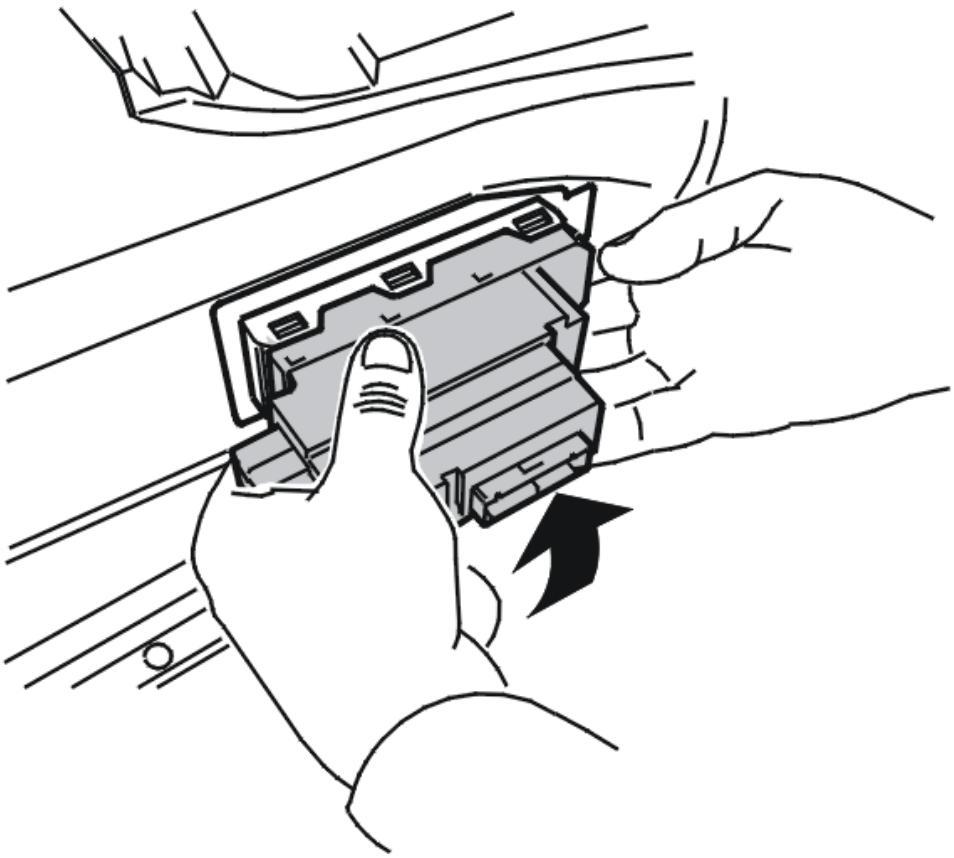

Fig. 77: Removing Passenger Door Module (PDM)
Courtesy of VOLVO CARS CORPORATION

Ignition off.

Remove:

- the door panel, see **PANEL FRONT SIDE DOOR, REPLACING** .
- the nut and screw holding the control module in place
- the connectors.

Grasp the underneath of the control module. Press upwards. Carefully pull the control module from the lower catches.

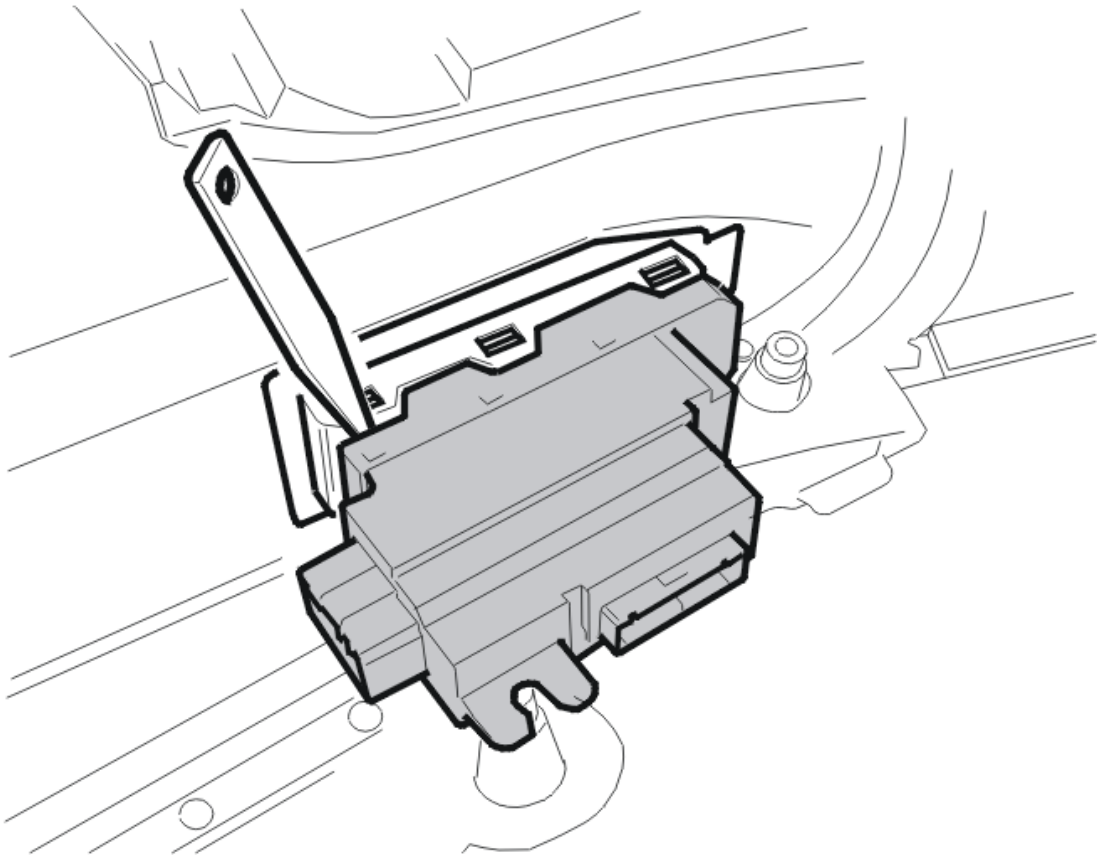

Fig. 78: Identifying Upper Catches Released Using Weatherstrip Tool
Courtesy of VOLVO CARS CORPORATION

Release the upper catches using a weatherstrip tool. Lift out the control module.

NOTE: Check that the control module connectors are intact.

INSTALLING THE PASSENGER DOOR MODULE (PDM)

Press the control module into place.

Install:

- the connectors
- the nut and screw
- the door panel, see **PANEL FRONT SIDE DOOR, REPLACING** .

Ordering software

Order software for the passenger door module (PDM). See 9438296 .

FINISHING

Initialize the window position in the communication input.

POSITION SENSOR BI-XENON LAMPS, REPLACING

NOTE: As the illustrations in this service information are used for different model years and / or models, some variation may occur. However, the essential information in the illustrations is always correct.

LOCATION

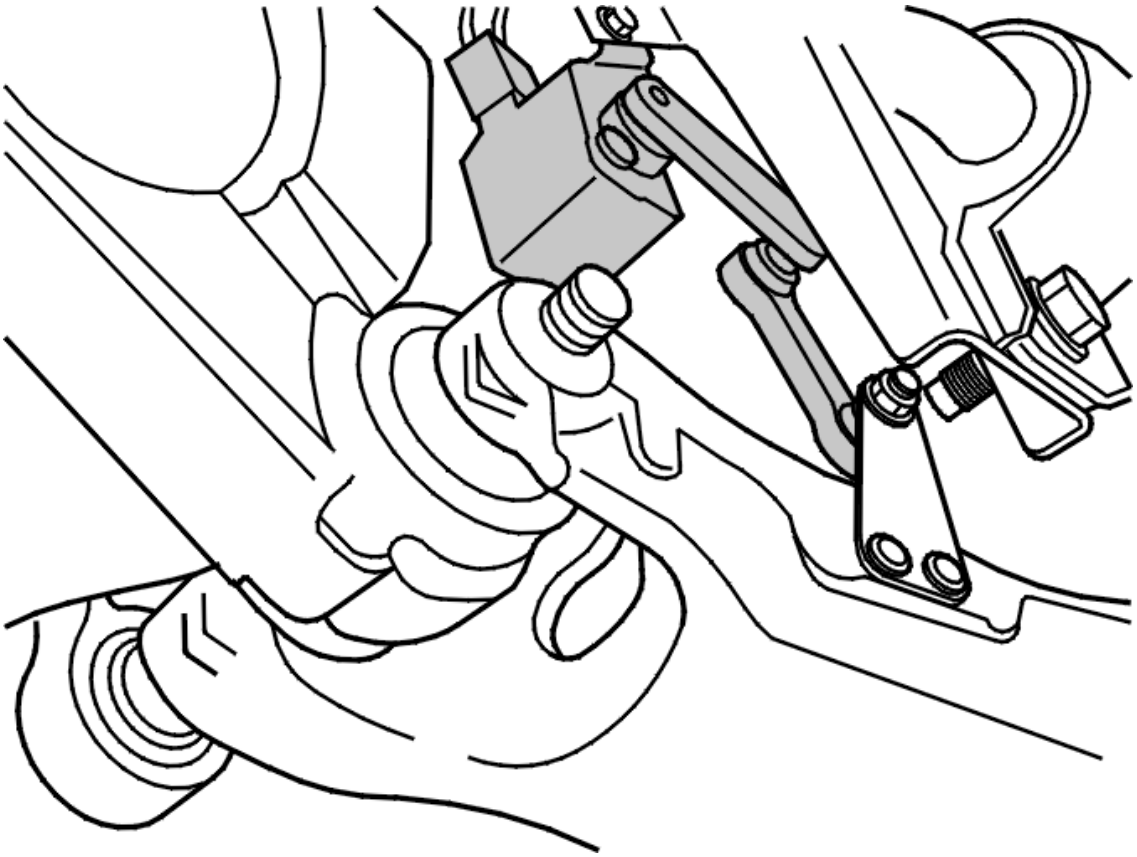

Fig. 79: Identifying Position Sensor
Courtesy of VOLVO CARS CORPORATION

The position sensor is by the rear axle on the left-hand side.

PREPARATORY WORK

Switch off the ignition.

Raise the car.

REMOVAL

Disconnect the connector.

Remove:

- The screw for the bracket
- The nut for the lever
- The position sensor and bracket.

Transfer the bracket to the new position sensor.

INSTALLATION

Install:

- The nut for the lever
- The position sensor and bracket
- The screw for the bracket. Tighten.

Connect the connector.

FINISHING WORK

After replacing the position sensor, the new sensor must be calibrated.

SWITCH HAZARD WARNING SIGNAL FLASHER, REPLACING

NOTE: **As the illustrations in this service information are used for different model years and / or models, some variation may occur. However, the essential information in the illustrations is always correct.**

PREPARATORY WORK

Remove the loudspeaker grille. Lift up the loudspeaker and / or the mounting for the display screen. See **DISPLAY SCREEN / LOUDSPEAKER, RTI (ROAD TRAFFIC INFORMATION), REPLACING** .

REMOVAL

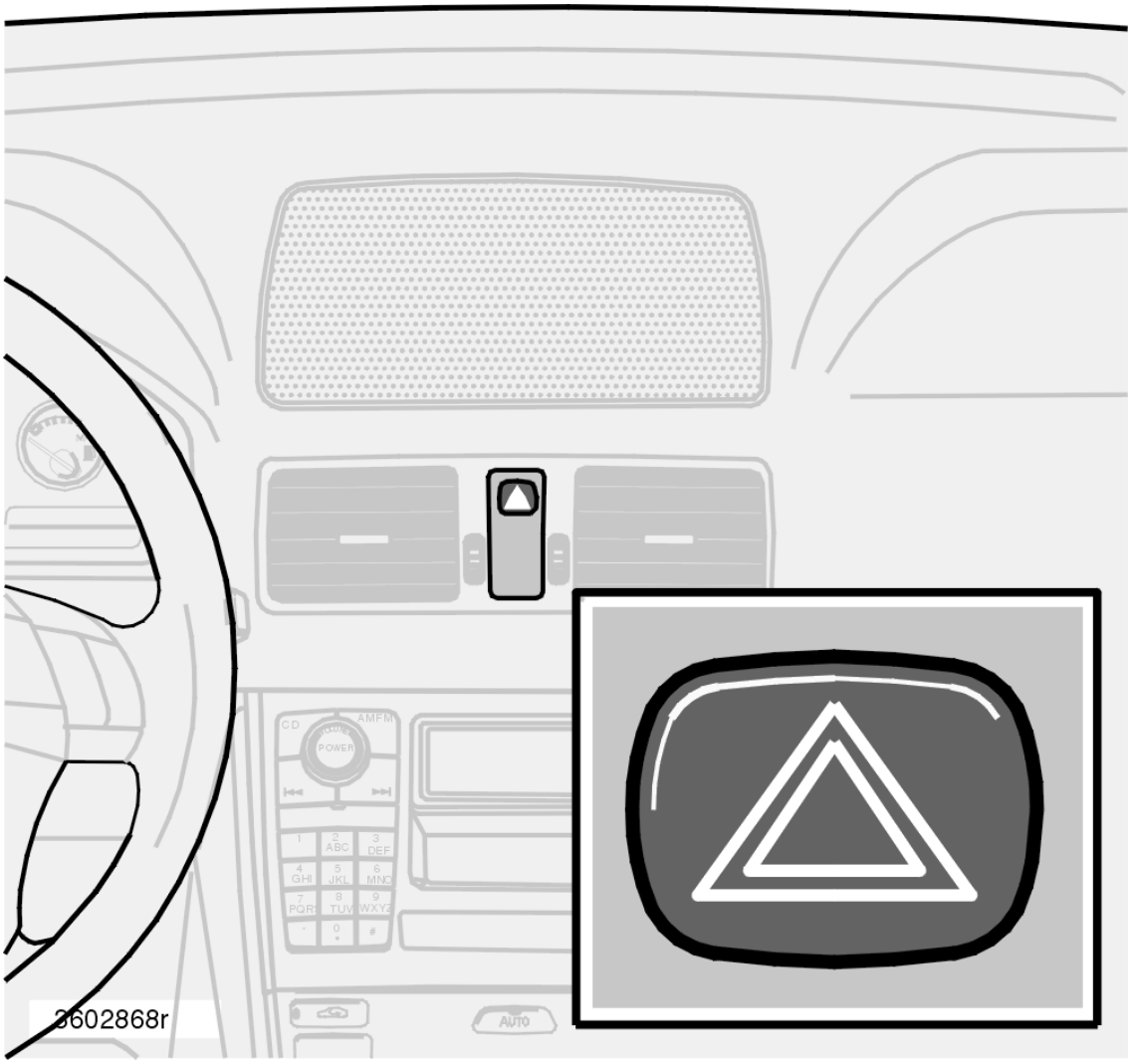

Fig. 80: Hazard Warning Signal Flasher Switch
Courtesy of VOLVO CARS CORPORATION

Press out the switch for the hazard warning signal flasher.

Disconnect the connector.

INSTALLATION

Connect the connector.

Press the switch for the hazard warning signal flasher into place.

FINISHING WORK

Install the loudspeaker and / or the mounting for the display screen. See **DISPLAY SCREEN / LOUDSPEAKER, RTI (ROAD TRAFFIC INFORMATION), REPLACING** .

Test the function.

SWITCH POWER WINDOW REAR SIDE DOOR, REPLACING

REMOVAL

SWITCH

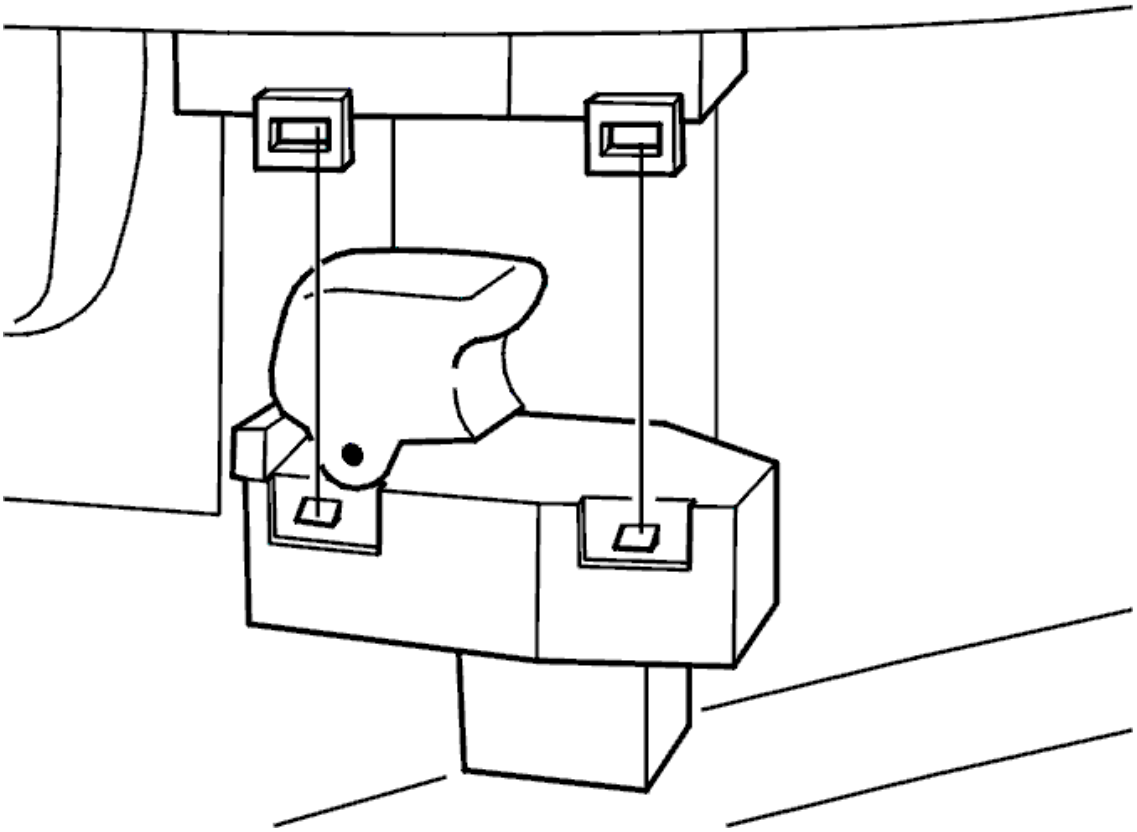

Fig. 81: Identifying Rear Side Door Power Window Switch
Courtesy of VOLVO CARS CORPORATION

- Remove the door panel. See **PANEL REAR SIDE DOOR, REPLACING**
- Disconnect the connector
- Release the catches. Press the switch up and off.

INSTALLATION

SWITCH

In reverse order

SWITCH SUN ROOF, REPLACING

REMOVAL

SUN ROOF SWITCH

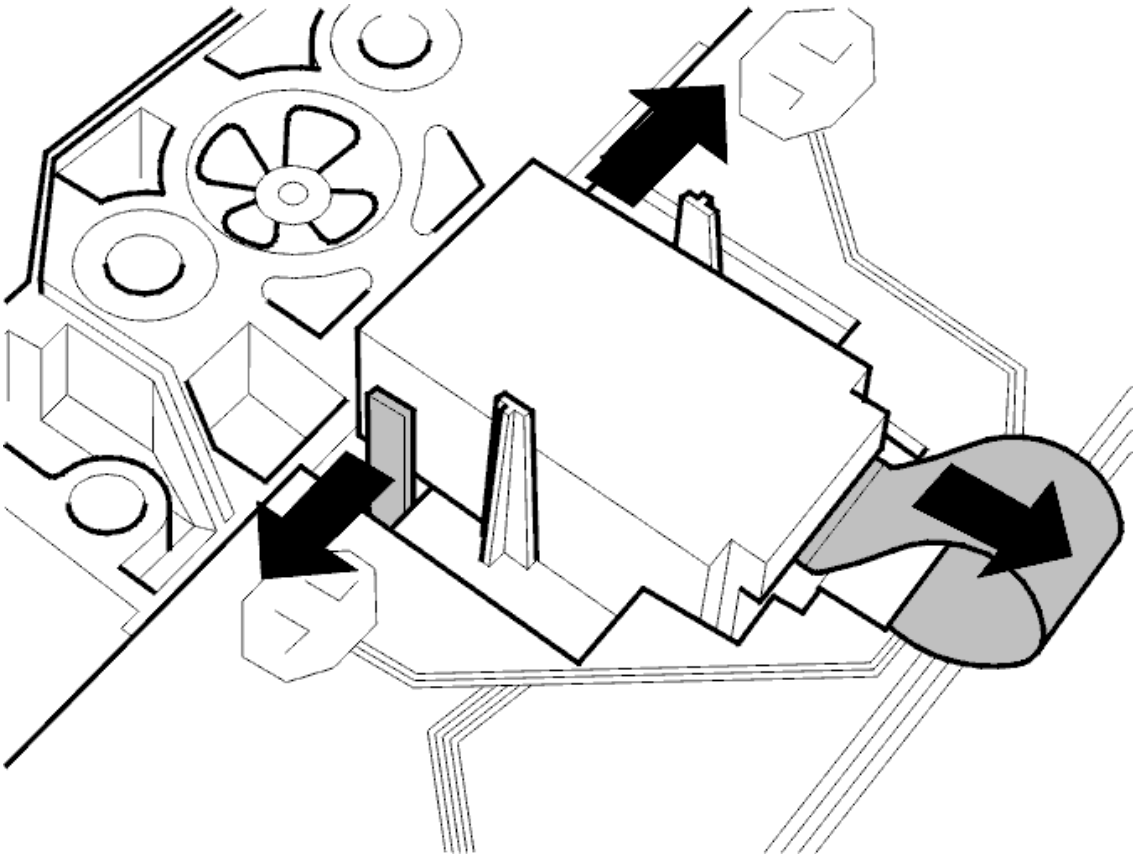

Fig. 82: Identifying Catches And Switch Removal
Courtesy of VOLVO CARS CORPORATION

- Ignition off
- Remove the interior lighting. See **INTERIOR LIGHTING, REPLACING**
- Press out the catches. Pull the switch outwards and upwards
- Pull out the catch. Pull out the tie strap.

INSTALLATION

SUN ROOF SWITCH

- Press in the tie strap. Press in the catch
- Correctly position the rear of the switch and press the switch into place
- Install the interior lighting. See **INTERIOR LIGHTING, REPLACING** .

SWITCHES CLIMATE CONTROL UNIT, REPLACING

NOTE: **As the illustrations in this service information are used for different model years and / or models, some variation may occur. However, the essential information**

in the illustrations is always correct.

PREPARATORY WORK

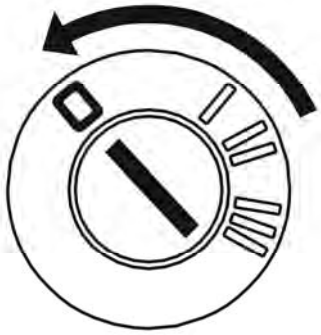

Fig. 83: Identifying Ignition In OFF Position
Courtesy of VOLVO CARS CORPORATION

Ignition off.

Remove the cover from the 12V socket.

REMOVAL

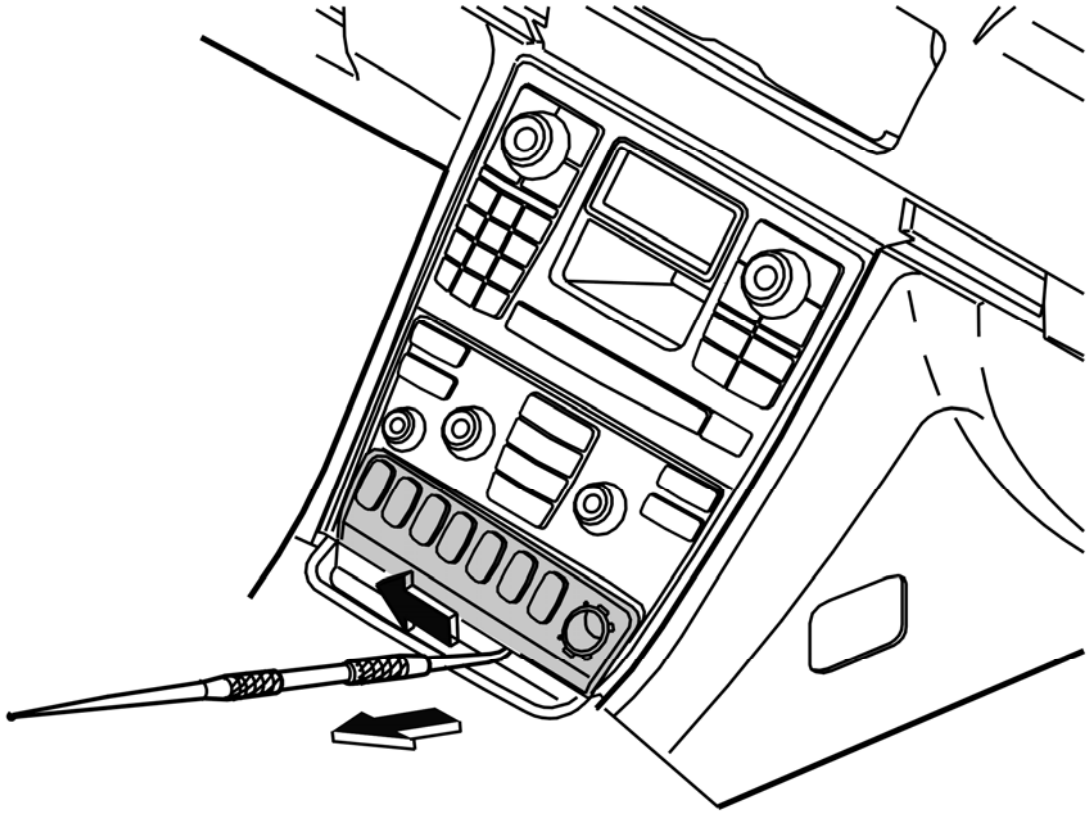

Fig. 84: Remove The Switch Panel
Courtesy of VOLVO CARS CORPORATION

Remove the switch panel as illustrated.

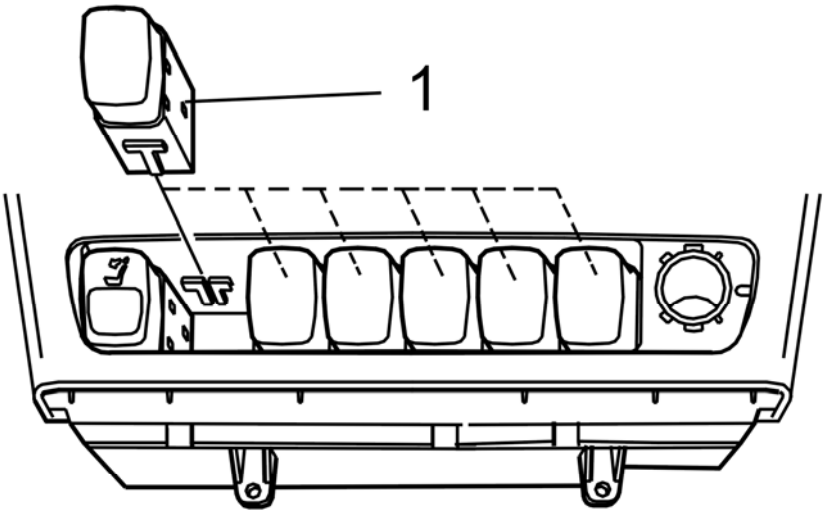

Fig. 85: Press Out The Switch
Courtesy of VOLVO CARS CORPORATION

Press out the switch (1).

INSTALLATION

Press the switch (1) into place in the panel.

Press the switch panel into place in the dashboard environment panel.

Install the cover for the 12V socket.

Test the function.

SWITCHES LIGHTS, REPLACING

NOTE: **As the illustrations in this service information are used for different model years and / or models, some variation may occur. However, the essential information in the illustrations is always correct**

PREPARATORY WORK

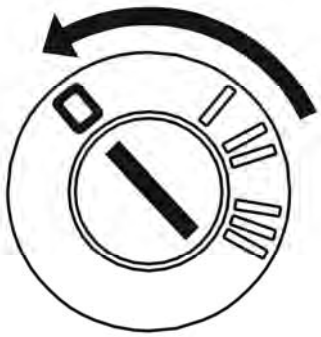

Fig. 86: Identifying Ignition In OFF Position
Courtesy of VOLVO CARS CORPORATION

Ignition off.

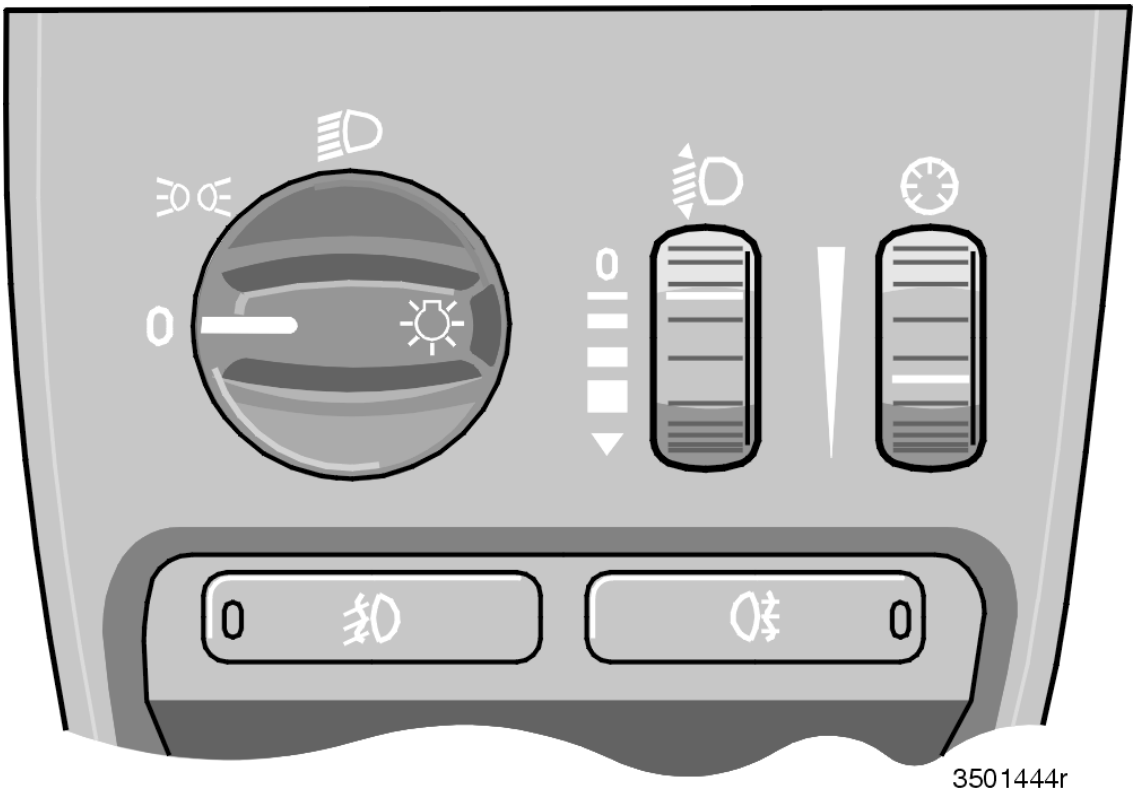

Fig. 87: Identifying Headlamp Switch And Lighting Level Switch
Courtesy of VOLVO CARS CORPORATION

Switch off the light switch.

Remove the fuse cover.

Remove the driver's side soundproofing panel. See **SOUNDPROOFING PANEL, REPLACING** .

REMOVAL

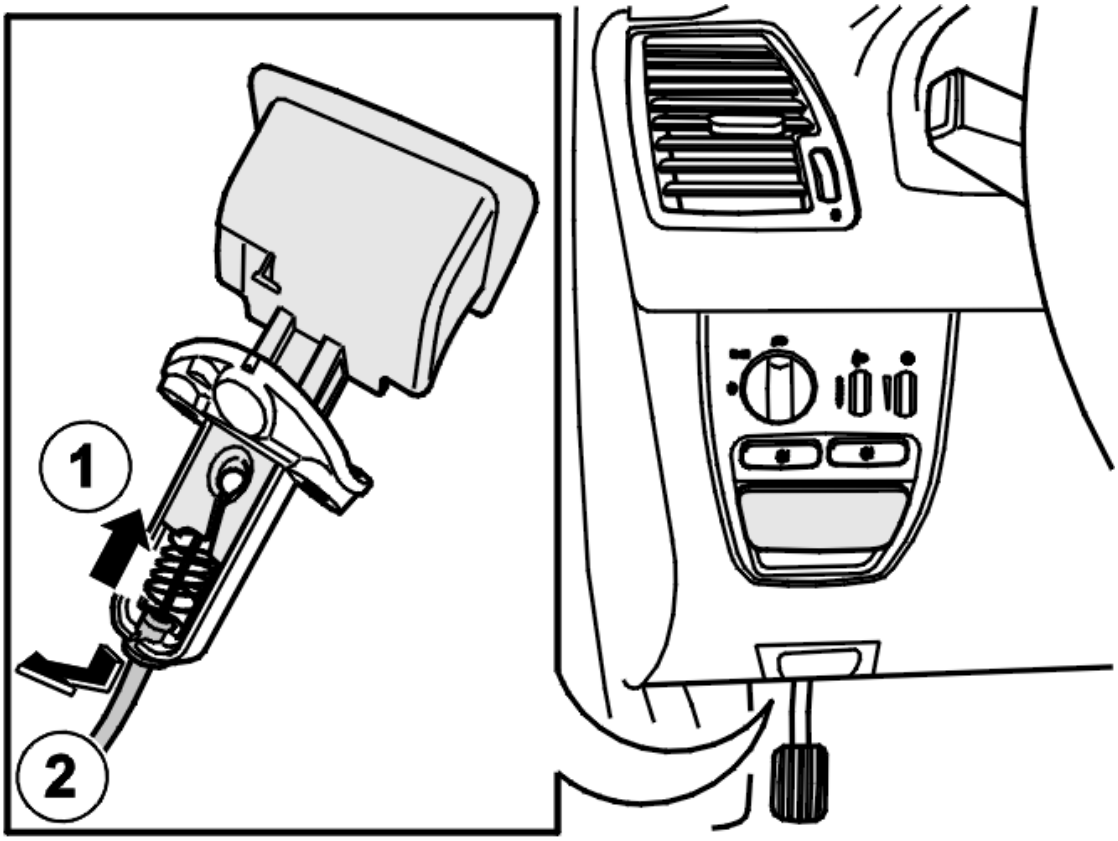

Fig. 88: Identifying Parking Brake Cable And Release Handle
Courtesy of VOLVO CARS CORPORATION

Unhook the cable for the parking brake release mechanism. See the illustration.

Remove the handle for the parking brake release mechanism.

Remove the screws and the bracket.

Press out the light switch and panel from inside.

Disconnect the connector.

REPLACING BULB

Twist counter-clockwise using a small screwdriver to remove the holder and bulb.

INSTALLATION

Install:

- Bulb
- Light switch and panel

- The screws and bracket. Tighten
- The handle for the parking brake release mechanism
- The cable.

FINISHING WORK

Install the soundproofing panel on the driver's side. See **SOUNDPROOFING PANEL, REPLACING** .

Install the cover on the fuse panel.

Test the function.

TURN SIGNAL SWITCH, REPLACING

REMOVAL

TURN SIGNAL LAMP AND DIP SWITCH

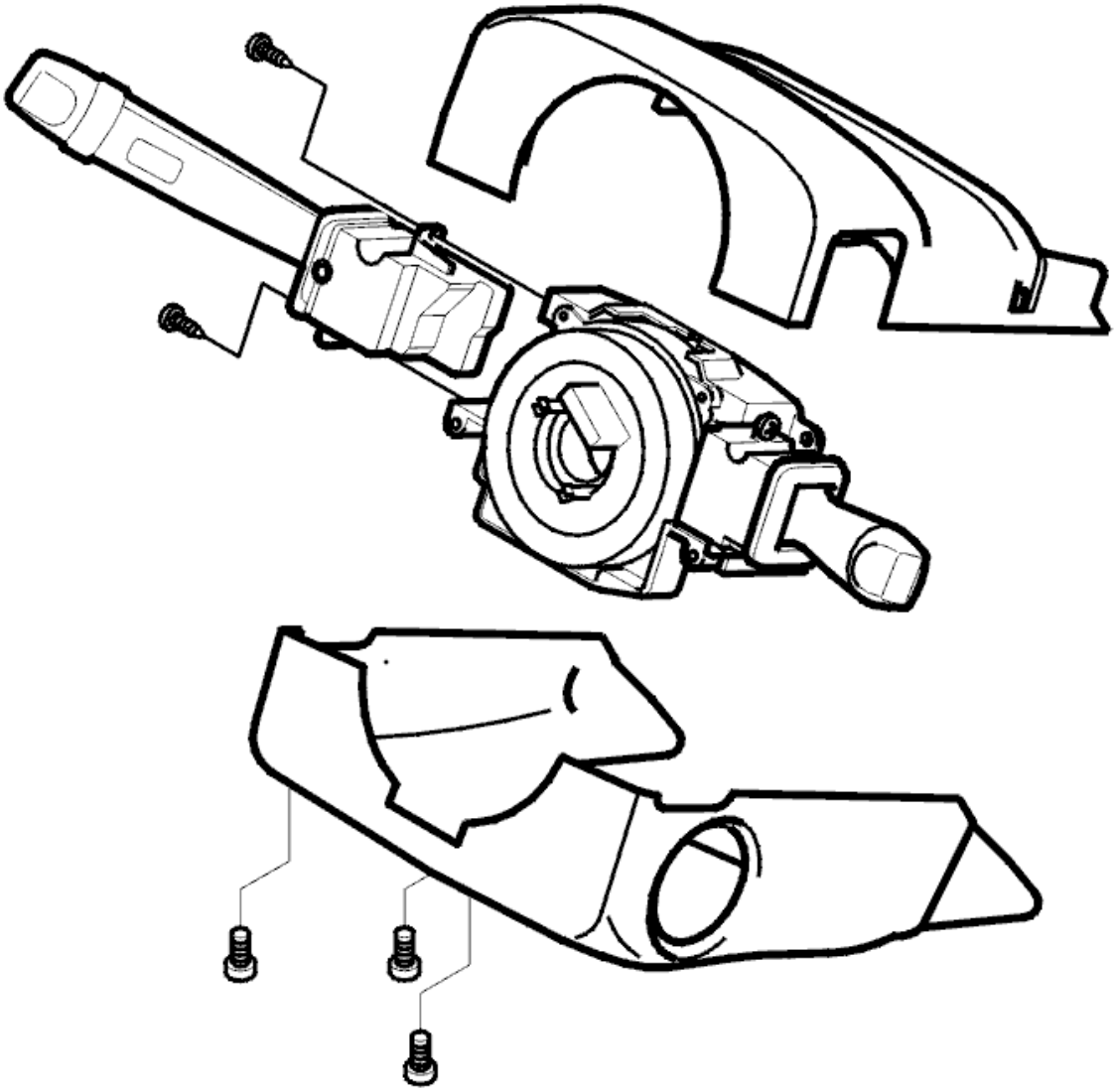

Fig. 89: Identifying Turn Signal Lamp Switch And Steering Column Covers
Courtesy of VOLVO CARS CORPORATION

- Ignition off
- Remove the upper and lower steering column covers. See **REPLACING THE STEERING COLUMN COVERS**
- Remove the 2 screws for the switch
- Remove the rubber boot.

NOTE: The pins on the switch are fragile.

- Carefully pull the switch straight out.

INSTALLATION

TURN SIGNAL LAMP AND DIP SWITCH

- Install the rubber boot.

NOTE: The pins on the switch are fragile.

- Insert the switch straight in from the side in the correct position. Carefully press the switch into the micro-switch. Ensure that the pins are in the correct positions in the micro-switch
- Install the screws for the switch
- Install the upper and lower steering column covers. See **REPLACING THE STEERING COLUMN COVERS** .

WINDOW CONTROL SWITCH BUTTON

Materials:	
Designation	**Part number**
Silicone grease- PTFE	1161 687

REMOVE

NOTE: Removal steps in this procedure may contain installation details.

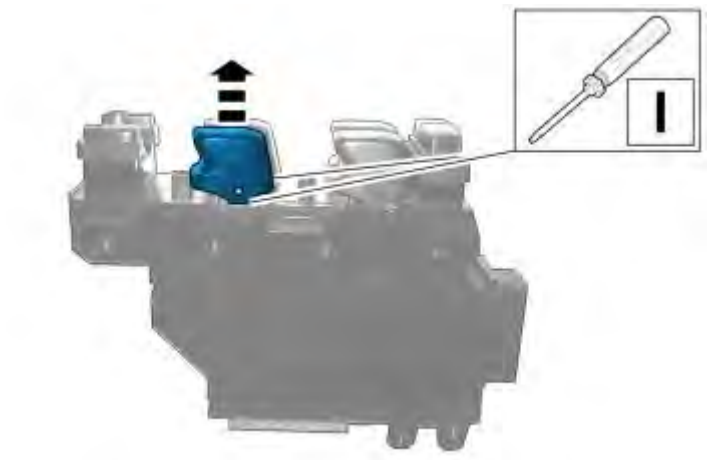

Fig. 90: Identifying Control Module PDM/DDM Removal Procedure
Courtesy of VOLVO CARS CORPORATION

Remove control module PDM/DDM, see **DRIVER'S DOOR MODULE / PASSENGER DOOR MODULE (DDM/PDM), REPLACING**

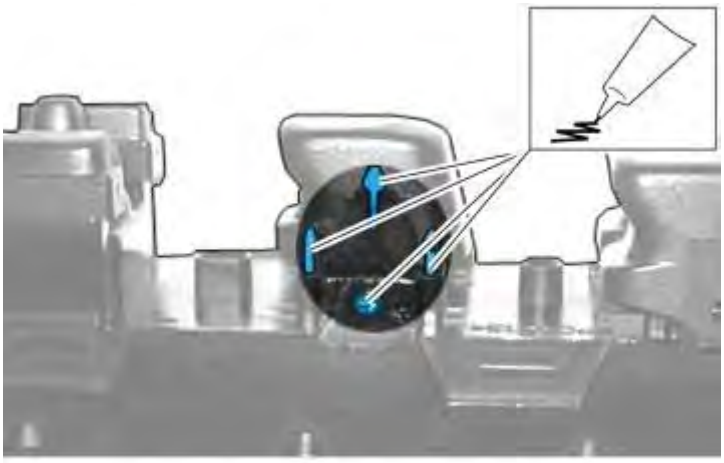

Fig. 91: Identifying Grease Locations
Courtesy of VOLVO CARS CORPORATION

Use: Silicone grease- PTFE, 1161 687

INSTALL

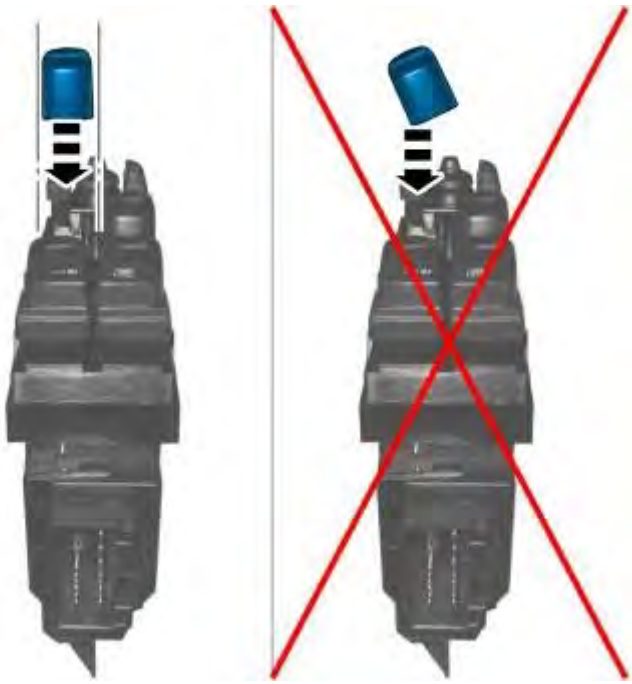

Fig. 92: Identifying Correct Control Module PDM/DDM Installation
Courtesy of VOLVO CARS CORPORATION

To install, reverse the removal procedure.

ELECTRICAL COMPONENTS (4T65 AWD; 2004-2006)

DRIVER DOOR MODULE (DDM), REPLACING

see **DRIVER DOOR MODULE (DDM), REPLACING**

KEYPAD STEERING WHEEL, REPLACING

see **KEYPAD STEERING WHEEL, REPLACING**

PASSENGER DOOR MODULE (PDM), REPLACING

see **PASSENGER DOOR MODULE (PDM), REPLACING**

POSITION SENSOR BI-XENON LAMPS, REPLACING

see **POSITION SENSOR BI-XENON LAMPS, REPLACING**

SWITCH HAZARD WARNING SIGNAL FLASHER, REPLACING

see **SWITCH HAZARD WARNING SIGNAL FLASHER, REPLACING**

SWITCH POWER WINDOW REAR SIDE DOOR, REPLACING

see **SWITCH POWER WINDOW REAR SIDE DOOR, REPLACING**

SWITCH SUN ROOF, REPLACING

see **SWITCH SUN ROOF, REPLACING**

SWITCHES CLIMATE CONTROL UNIT, REPLACING

see **SWITCHES CLIMATE CONTROL UNIT, REPLACING**

SWITCHES LIGHTS, REPLACING

see **SWITCHES LIGHTS, REPLACING**

TURN SIGNAL SWITCH, REPLACING

see **TURN SIGNAL SWITCH, REPLACING**

ELECTRICAL COMPONENTS (AW50/51 AWD; AW55-50/51SN; 2004-2007)

DRIVER DOOR MODULE (DDM), REPLACING

see **DRIVER DOOR MODULE (DDM), REPLACING**

KEYPAD STEERING WHEEL, REPLACING

see **KEYPAD STEERING WHEEL, REPLACING**

PASSENGER DOOR MODULE (PDM), REPLACING

see **PASSENGER DOOR MODULE (PDM), REPLACING**

POSITION SENSOR BI-XENON LAMPS, REPLACING

see **POSITION SENSOR BI-XENON LAMPS, REPLACING**

SWITCH HAZARD WARNING SIGNAL FLASHER, REPLACING

see **SWITCH HAZARD WARNING SIGNAL FLASHER, REPLACING**

SWITCH POWER WINDOW REAR SIDE DOOR, REPLACING

see **SWITCH POWER WINDOW REAR SIDE DOOR, REPLACING**

SWITCH SUN ROOF, REPLACING

see **SWITCH SUN ROOF, REPLACING**

SWITCHES CLIMATE CONTROL UNIT, REPLACING

see **SWITCHES CLIMATE CONTROL UNIT, REPLACING**

SWITCHES LIGHTS, REPLACING

see **SWITCHES LIGHTS, REPLACING**

TURN SIGNAL SWITCH, REPLACING

see **TURN SIGNAL SWITCH, REPLACING**

ELECTRICAL COMPONENTS (TF-80SC AWD; 2005-2011)

DRIVER DOOR MODULE (DDM), REPLACING

see **DRIVER DOOR MODULE (DDM), REPLACING**

KEYPAD STEERING WHEEL, REPLACING

see **KEYPAD STEERING WHEEL, REPLACING**

PASSENGER DOOR MODULE (PDM), REPLACING

see **PASSENGER DOOR MODULE (PDM), REPLACING**

POSITION SENSOR BI-XENON LAMPS, REPLACING

see **POSITION SENSOR BI-XENON LAMPS, REPLACING**

SWITCH HAZARD WARNING SIGNAL FLASHER, REPLACING

see **SWITCH HAZARD WARNING SIGNAL FLASHER, REPLACING**

SWITCH POWER WINDOW REAR SIDE DOOR, REPLACING

see **SWITCH POWER WINDOW REAR SIDE DOOR, REPLACING**

SWITCH SUN ROOF, REPLACING

see **SWITCH SUN ROOF, REPLACING**

SWITCHES CLIMATE CONTROL UNIT, REPLACING

see **SWITCHES CLIMATE CONTROL UNIT, REPLACING**

SWITCHES LIGHTS, REPLACING

see **SWITCHES LIGHTS, REPLACING**

TURN SIGNAL SWITCH, REPLACING

see **TURN SIGNAL SWITCH, REPLACING**

ELECTRICAL COMPONENTS (TF-80SC; 2011)

DRIVER DOOR MODULE (DDM), REPLACING

see **DRIVER DOOR MODULE (DDM), REPLACING**

KEYPAD STEERING WHEEL, REPLACING

see **KEYPAD STEERING WHEEL, REPLACING**

PASSENGER DOOR MODULE (PDM), REPLACING

see **PASSENGER DOOR MODULE (PDM), REPLACING**

POSITION SENSOR BI-XENON LAMPS, REPLACING

see **POSITION SENSOR BI-XENON LAMPS, REPLACING**

SWITCH HAZARD WARNING SIGNAL FLASHER, REPLACING

see **SWITCH HAZARD WARNING SIGNAL FLASHER, REPLACING**

SWITCH POWER WINDOW REAR SIDE DOOR, REPLACING

see **SWITCH POWER WINDOW REAR SIDE DOOR, REPLACING**

SWITCH SUN ROOF, REPLACING

see **SWITCH SUN ROOF, REPLACING**

SWITCHES CLIMATE CONTROL UNIT, REPLACING

see **SWITCHES CLIMATE CONTROL UNIT, REPLACING**

SWITCHES LIGHTS, REPLACING

see **SWITCHES LIGHTS, REPLACING**

TURN SIGNAL SWITCH, REPLACING

see **TURN SIGNAL SWITCH, REPLACING**

HORN AND MOUNTING (2003-2011)

HORN, REPLACING

REMOVAL

PREPARATORY WORK

NOTE: **As the illustrations in this service information are used for different model years and / or models, some variation may occur. However, the essential information in the illustrations is always correct.**

Remove the right-hand headlamp. See **HEADLIGHT/BULB, REPLACING** (2003-2006) or **HEADLIGHT/BULB, REPLACING** (2007-2012).

REMOVING THE HORN

HINT: Remove one of the horns from the bracket to facilitate removal and installation.

Slacken of the screw for the bracket.

Angle out the horn and the bracket.

Disconnect the connector.

INSTALLATION

INSTALLING THE HORN

Connect the connector.

Horn and bracket.

The screw. Tighten

FINISHING WORK

Install the right-hand headlamp. See **HEADLIGHT/BULB, REPLACING** (2003-2006) or **HEADLIGHT/BULB, REPLACING** (2007-2012).

Test the function.

ACCESSORIES AND BODY, CAB

Other Electrical Equipment - Service Programs

WIPER BLADE PROTECTION (2007-2011)

WIPER BLADE PROTECTION

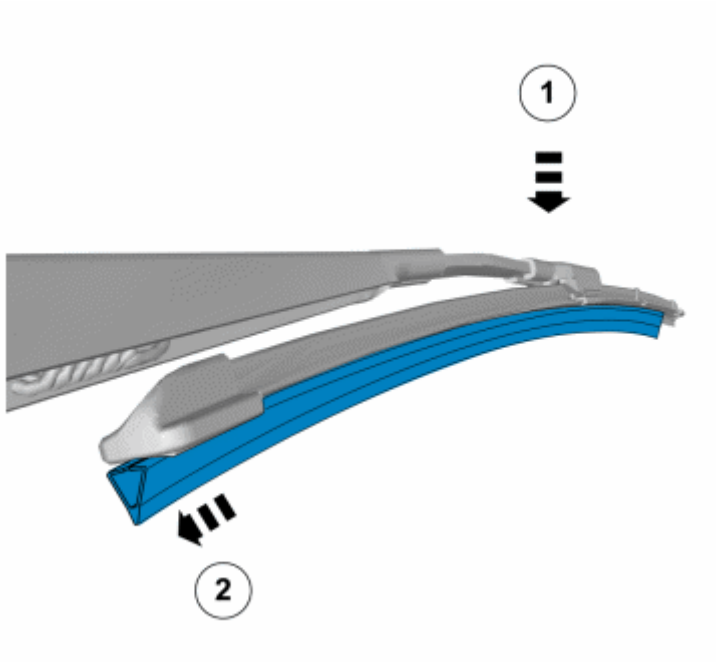

Fig. 1: Identifying Wiper Blade (1 of 2)
Courtesy of VOLVO CARS CORPORATION

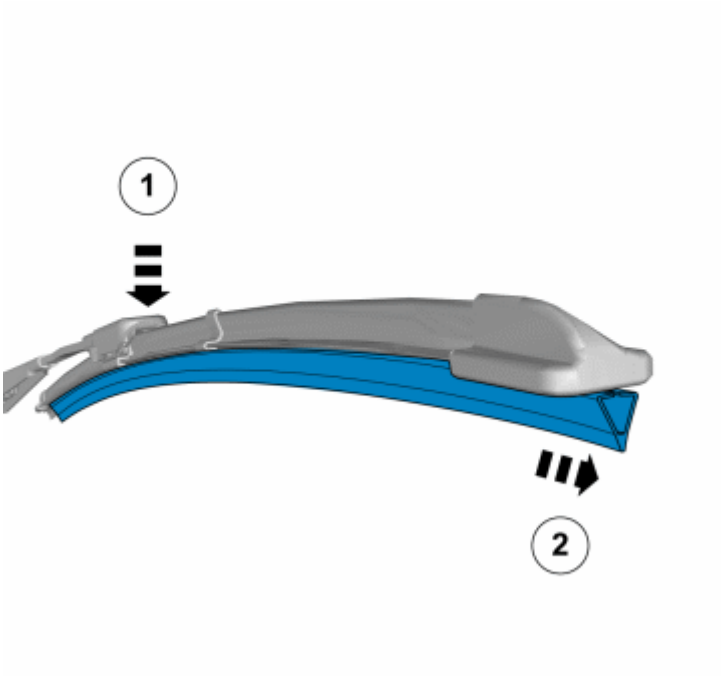

Fig. 2: Identifying Wiper Blade (2 of 2)
Courtesy of VOLVO CARS CORPORATION

REMOVING THE BATTERY ISOLATOR

REMOVING THE BATTERY ISOLATOR

see **REMOVING THE BATTERY ISOLATOR**

ACCESSORIES AND BODY, CAB

Other Electrical Equipment - Specifications, Electrical/Electronic

SIGNAL SPECIFICATION, PARKING ASSISTANCE MODULE (PAM) (2005-2011)

SIGNAL SPECIFICATION

General

All values specified below are between the relevant terminal and terminal #8 (power ground).

NOTE: It is important to check ground terminals before taking readings.

U=	DC voltage in volts (V)		
U_{bat} =	Battery voltage (V)		
U_{low} =	Voltage approximately 0 V		

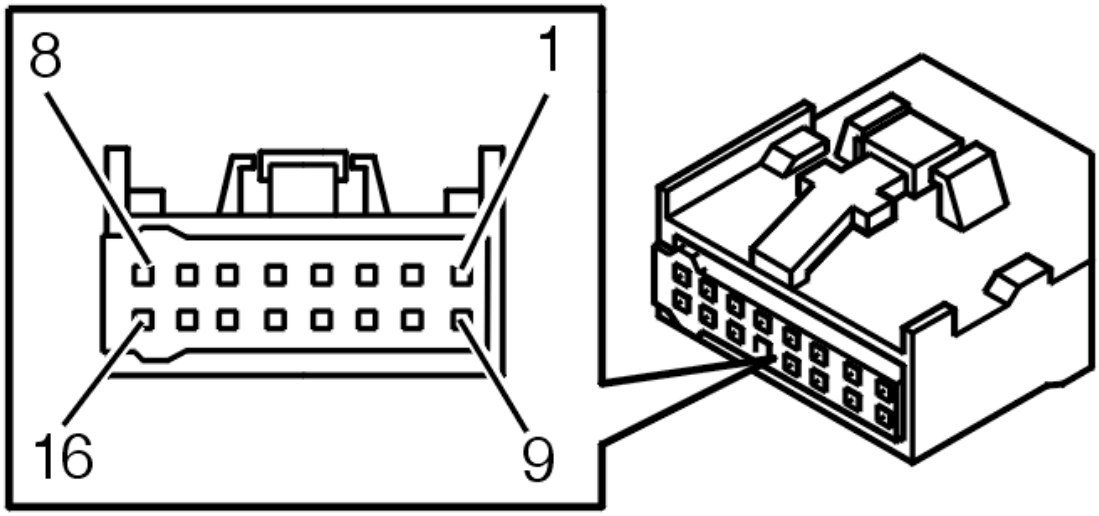

Fig. 1: Identifying Connector A
Courtesy of VOLVO CARS CORPORATION

SIGNAL TABLE, CONNECTOR A

Control module terminal	Signal type	Ignition off	Ignition on	Other
#A1	Voltage feed control module	U_{low}	U_{bat}	Ignition switch position II.
#A2	-	-	-	-

#A3	-	-	-	-
#A4	-	-	-	-
#A5	-	-	-	-
#A6	-	-	-	-
#A7	-	-	-	-
#A8	Ground	U_{low}	U_{low}	-
#A9	-	-	-	-
#A10	-	-	-	-
#A11	-	-	-	-
#A12	Serial communication (LIN)	-	During communication the voltage is 0V - U_{bat}	-
#A13	-	-	-	-
#A14	-	-	-	- - -
#A15	-	-	-	-
#A16	-	-	-	-

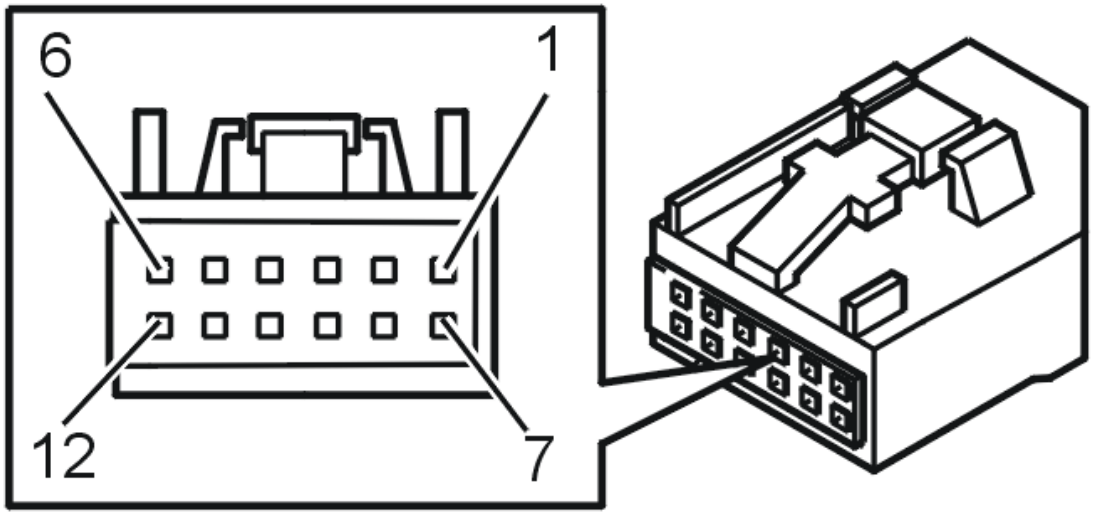

Fig. 2: Identifying Connector B
Courtesy of VOLVO CARS CORPORATION

SIGNAL TABLE, CONNECTOR B, CENTER TERMINAL

Control module terminal	Signal type	Ignition off	Ignition on	Other
#B1	Signal ground, front parking sensors	U_{low}	U_{low}	-
#B2	Voltage supply, front parking sensors	U_{low}	U_{bat}	-
#B3	-	-	-	-

#B4	-	-	-	-
#B5	Signal, parking sensor 5 (outer left front)	-	-	-
#B6	Signal, parking sensor 6 (inner left front)	-	-	-
#B7	Signal, parking sensor 7 (inner right front)	-	-	-
#B8	Signal, parking sensor 8 (outer right front)	-	-	-
#B9	-	-	-	-
#B10	-	-	-	-
#B11	-	-	-	-
#B12	-	-	-	-

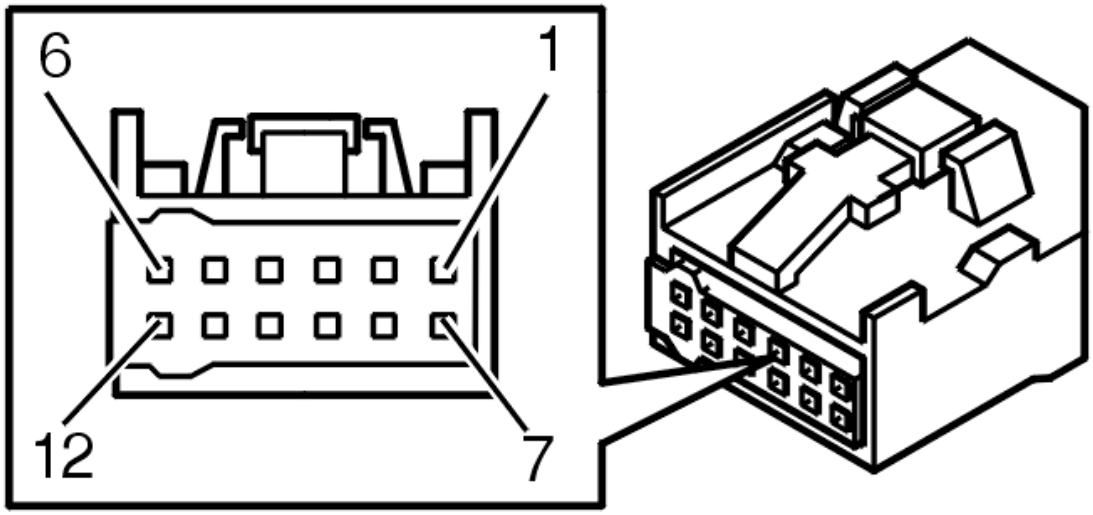

Fig. 3: Identifying Connector C
Courtesy of VOLVO CARS CORPORATION

SIGNAL TABLE, CONNECTOR C

Control module terminal	Signal type	Ignition off	Ignition on	Other
#C1	Signal ground, rear parking sensors	U_{low}	U_{low}	-
#C2	Signal, parking sensor 3 (inner right rear)	-	-	-
#C3	Signal, parking sensor 2 (inner left rear)	-	-	-
#C4	Signal, parking sensor 4 (outer right rear)	-	-	-
#C5	Signal, parking sensor 1 (outer left rear)	-	-	-

#C6	Voltage supply, rear parking sensors	U_{low}	U_{bat}	-
#C7	Signal ground, rear parking sensors	U_{low}	U_{low}	-
#C8	Signal ground, rear parking sensors	U_{low}	U_{low}	-
#C9	Signal ground, rear parking sensors	U_{low}	U_{low}	-
#C10	Voltage supply, rear parking sensors	U_{low}	U_{bat}	-
#C11	Voltage supply, rear parking sensors	U_{low}	U_{bat}	-
#C12	Voltage supply, rear parking sensors	U_{low}	U_{bat}	-

ACCESSORIES AND EQUIPMENT

Other Electrical Equipment - Symptom Verification

ALARM (2003)

ALARM

SYMPTOM AND FUNCTION DESCRIPTION

All alarm inputs are continuously monitored when the alarm is activated. The alarm is activated by pressing the button. A long flashing signal, from the vehicle's direction indicators, confirms that the alarm is activated and that the doors are locked. The alarm LED will start to flash directly after the system has been activated.

The alarm should trip when:

- Door, bonnet or boot lid are opened.
- The ignition switch is turned with a non-approved key or subjected to force.
- Movement detected in the passenger compartment (only applies if the vehicle is equipped with a movement sensor).
- The vehicle is lifted or towed away (only applies if the vehicle is equipped with a level movement sensor).
- Someone attempts to disconnect the siren or battery.

The siren is used as the sound source for the alarm function. The siren includes an internal battery which is charged when the lights are on. The climate affects the life of the battery. The battery cannot be replaced as a single component. Consequently the siren should be replaced at regular intervals.

HINT: For more information, see OTHER ELECTRICAL EQUIPMENT - DESIGN AND FUNCTION .

Verification

Check the different alarm system functions as follows:

NOTE: The alarm must not trip during testing. If the alarm goes off it should be possible to deactivate using the remote key's unlock button or by putting the remote key in the starter switch. A signal confirming alarm deactivation must be given by the direction indicators (two short flashes).

Testing the movement sensor

- Sit in the vehicle.
- Deactivate the movement sensor, then activate the alarm.
- Wait 30 seconds. Without moving.
- Test the movement senor in the passenger compartment by moving.

Testing the function of the indicator LED

- Check the LED status before and after alarm activation and with the ignition switched on.

Interpret LED indication flashing as follows:

- Unlit LED, indicates that the alarm is deactivated
- The LED flashes rapidly, after the alarm has been deactivated, up until the ignition is switched on. Indicates that the alarm has been tripped.
- The LED flashes once per second after the vehicle's direction indicators have produced one long flashing signal. Flashing indicates that the alarm is activated.

ALARM (2004-12)

ALARM

SYMPTOM AND FUNCTION DESCRIPTION

All alarm inputs are continuously monitored when the alarm is activated. The alarm is activated by pressing the button. A long flashing signal, from the vehicle's direction indicators, confirms that the alarm is activated and that the doors are locked. The alarm LED will start to flash directly after the system has been activated.

The alarm should trip when:

- Door, bonnet or boot lid are opened.
- The ignition switch is turned with a non-approved key or subjected to force.
- Movement detected in the passenger compartment (only applies if the vehicle is equipped with a movement sensor).
- The vehicle is lifted or towed away (only applies if the vehicle is equipped with a level movement sensor).
- Someone attempts to disconnect the siren or battery.
- The panic function is activated via the remote key.

The siren is used as the sound source for the alarm function. The siren includes an internal battery which is charged when the lights are on. The climate affects the life of the battery. The battery cannot be replaced as a single component. Consequently the siren should be replaced at regular intervals.

HINT: For more information, see OTHER ELECTRICAL EQUIPMENT - DESIGN AND FUNCTION .

Verification

Check the different alarm system functions as follows:

NOTE: The alarm shall trip during each test, a siren shall sound and all direction indicators flash. It should be possible to deactivate the alarm using the remote

key's unlock button or by inserting the remote key in the starter switch. A signal confirming alarm deactivation must be given by the direction indicators (two short flashes).

Testing the doors

- Open all windows.
- Deactivate the movement sensor, then activate the alarm.
- Wait 30 seconds.
- Open one of the doors by using the handle on the inside of the door.

Testing the hood

- Sit in the vehicle.
- Deactivate the movement sensor, then activate the alarm.
- Wait 30 seconds.
- Open the bonnet with the handle below the instrument panel.

Test of automatic activation (market dependent)

- Activate the alarm.
- Wait 30 seconds.
- Deactivate the alarm with the remote key. Do not open the doors or hoods.
- Wait two minutes. The vehicle shall automatically activate the alarm and lock the doors.

FRONT/REAR PARKING ASSISTANCE (2003-04)

FRONT/REAR PARKING ASSISTANCE

SYMPTOM AND FUNCTION DESCRIPTION

The parking assistance system is activated automatically when the vehicle starts. An LED illuminates in the button for park assist when the system is active.

- Parking assistance is active at speeds below 15 km/h. At higher speeds, the system deactivates. When the speed drops below 10 km/h, the system is activated again.
- The closer the vehicle gets to the object behind, the more frequent the signal occurs. At a distance of approx. 30 cm, the tone should be constant.

Rear parking assistance

- Parking assistance in reverse activates when reverse is engaged.
- The measurement range behind the vehicle is approximately 1.5 m.

- A message is shown in the text display, in the driver information module, in case of many malfunctions in the parking assistance system.
    - Horn.
    - Wet tires on asphalt.
    - Pneumatic brakes.
    - Exhaust pipe on motor bike.
- Snow and ice on the sensors can impair the function.
    - Horn.
    - Wet tires on asphalt.
    - Pneumatic brakes.
    - Exhaust pipe on motor bike.
- If a trailer is connected or a bicycle holder is on the tow hitch, the system must be switched off.
    - Horn.
    - Wet tires on asphalt.
    - Pneumatic brakes.
    - Exhaust pipe on motor bike.
- Under certain circumstances the park assist system may give false warning signals, which are caused by external sound sources, which produce the same ultrasound frequencies that the system works with. This does not indicate a fault in the system. Examples of such sources are:
    - Horn.
    - Wet tires on asphalt.
    - Pneumatic brakes.
    - Exhaust pipe on motor bike.

Verification

Access to the vehicle is necessary for the following checks.

- Ignition on or start the engine.
- Engage reverse gear.

Does text appear in the audio display when reverse gear is selected?

Is sound emitted from the loudspeakers, if there is an object behind the vehicle?

Test by placing an object or having a person stand behind the vehicle. Move the object/person both closer to and further away from the vehicle and check that the sound frequency increases the closer one gets. At a distance of approx. 30 cm, the tone should be constant.

On left-hand drive vehicles, the sound is emitted from the right-hand rear loudspeakers.

FRONT/REAR PARKING ASSISTANCE (2005-12)

FRONT/REAR PARKING ASSISTANCE

SYMPTOM AND FUNCTION DESCRIPTION

The parking assistance system is activated automatically when the vehicle starts. An LED illuminates in the button for park assist when the system is active.

- Parking assistance is active at speeds below 15 km/h. At higher speeds, the system deactivates. When the speed drops below 10 km/h, the system is activated again.
- The closer the vehicle gets to the object in front or behind, the more frequent the signals become. At a distance of approx. 30 cm, the tone should be constant.

Rear parking assistance

- Parking assistance in reverse activates when reverse is engaged.
- The measurement range behind the vehicle is approximately 1.5 m. The minimum size of the object that can be detected is a pipe shaped object with a minimum length of 850 mm and a minimum diameter of 85 mm.

Front parking assistance

- Parking assistance forwards is active at speeds below 15 km/h.
- The measurement range in front of the vehicle is approximately 0.8 m. The minimum size of the object that can be detected is a pipe shaped object with a minimum length of 850 mm and a minimum diameter of 85 mm.

- A message is shown in the text display, in the driver information module, in case of many malfunctions in the parking assistance system.
    - Horn.
    - Wet tires on asphalt.
    - Pneumatic brakes.
    - Exhaust pipe on motor bike.
- Snow and ice on the sensors can impair the function.
    - Horn.
    - Wet tires on asphalt.
    - Pneumatic brakes.
    - Exhaust pipe on motor bike.
- If a trailer is connected or a bicycle holder is on the tow hitch, the system must be switched off.
    - Horn.
    - Wet tires on asphalt.
    - Pneumatic brakes.
    - Exhaust pipe on motor bike.
- The front parking assistance cannot be combined with auxiliary lamps as the sensors react to them.

    - Horn.
    - Wet tires on asphalt.
    - Pneumatic brakes.
    - Exhaust pipe on motor bike.
- Under certain circumstances the park assist system may give false warning signals, which are caused by external sound sources, which produce the same ultrasound frequencies that the system works with. This does not indicate a fault in the system. Examples of such sources are:
    - Horn.
    - Wet tires on asphalt.
    - Pneumatic brakes.
    - Exhaust pipe on motor bike.

Verification

Access to the vehicle is necessary for the following checks.

- Ignition on or start the engine.
- Engage reverse gear.

Does the text appear in the audio display when reverse gear is selected?

Is sound emitted from the loudspeakers, if there is an object behind the vehicle?

Test by placing an object or having a person stand behind the vehicle. Move the object/person both closer to and further away from the vehicle and check that the sound frequency increases the closer one gets. At a distance of approx. 30 cm, the tone should be constant.

On left-hand drive vehicles, the sound is emitted from the right-hand rear loudspeakers.

If the vehicle is equipped with a front park assist system:

Does text appear in the audio display when the front sensors should detect an object in front of the vehicle?

Is sound emitted from the loudspeakers if there is an object in front of the vehicle?

Test this in the same way, by positioning a person or object in front of the vehicle. Sound should be heard from the loudspeaker.

HEADLAMP WASHER (2004)

HEADLAMP WASHER

SYMPTOM AND FUNCTION DESCRIPTION

This function is an option on some markets. Headlamp wipers are on certain models.

Headlamp washing is activated at the same time as windscreen wiper washing is activated. Cleaning is started by moving the stalk towards the steering wheel. The wipers operate for as long as washing is activated.

The headlamp wipers are not activated when only the windscreen wipers are activated but when windscreen washing is activated.

High pressure washing of the headlamps requires large amounts of washer fluid. To save on the amount of washer fluid, the washer is only activated every fifth time within a two minute period.

If the washer fluid level remains low, the supply of washer fluid to the headlamps is cut off. Headlamp washing will not occur when the washer fluid level is low.

Verification

- Switch on the ignition and check that no message regarding low washer fluid appears in the combined instrument panel.

  Check that the high pressure washer, and any wipers, activate for the headlamps when the windscreen washer is activated by moving the control stalk on the steering column.

When headlamp washing has occurred once, it will not occur again until 10 minutes have passed.

HEADLAMP WASHER (2005-12)

HEADLAMP WASHER

SYMPTOM AND FUNCTION DESCRIPTION

This function is an option on some markets. Headlamp wipers are on certain models.

Headlamp washing is activated at the same time as windscreen wiper washing is activated. Cleaning is started by moving the stalk towards the steering wheel. The wipers operate for as long as washing is activated.

The headlamp wipers are not activated when only the windscreen wipers are activated but when windscreen washing is activated.

High pressure washing of the headlamps requires large amounts of washer fluid. To save on the amount of washer fluid, the washer is only activated every fifth time within a ten minute period. If ten minutes have passed since washing was activated, washing will occur again when the windscreen washer is used.

If the washer fluid level remains low, the supply of washer fluid to the headlamps is cut off. Headlamp washing will not occur when the washer fluid level is low.

Verification

- Switch on the ignition and check that no message regarding low washer fluid appears in the combined instrument panel.

  Check that the high pressure washer, and any wipers, activate for the headlamps when the windscreen washer is activated by moving the control stalk on the steering column.

When headlamp washing has occurred once, it will not occur again until 10 minutes have passed.

WINDSHIELD WIPERS - RAIN SENSOR (2003-04)

WINDSCREEN WIPERS - RAIN SENSOR

SYMPTOM AND FUNCTION DESCRIPTION

The rain sensor senses the amount of water on the windscreen and can then activate and control the speed of the wipers automatically to obtain a good view. The rain sensor is in front of rear view mirror on the inside of the windscreen.

To activate the rain sensor the key must be in ignition position I or II, and the windscreen wipers must be switched off. The stalk for the windscreen wipers must always be in position **0** .

The sensor is then activated by pressing the small button on the stalk. An LED illuminates as a confirmation that the function has been activated.

There are two ways of activating the rain sensor:

- Press the small button on the stalk again so that the LED goes out.
- Activate one of the other functions for the windscreen wipers by moving the stalk downwards.

The rain sensor function switches off automatically when the key is removed from the ignition or five minutes after the ignition has been switched off if the key has not been removed.

If there is a fault with the rain sensor during the time the function is active, intermittent wiping at high speed is selected.

If the fault occurs whilst the function is not active, intermittent wiping will be activated the next time the rain sensor function is attempted to be activated. But then only with a fixed interval and no change depending on the amount of precipitation.

CAUTION: Remember that the rain sensor function must be off during automatic washing. The windscreen wipers can otherwise start and become damaged.

Verification

- Switch on the ignition and ensure that the stalk for the windscreen wipers is in position **0** .

- Press the button for the rain sensor and check that the LED in the button illuminates when the function is activated.
- Check that the windscreen wipers start when water hits the windscreen in front of the rain sensor.
- Check that the rain sensor function disengages by moving the stalk downwards to another wiper program. The LED on the button must go out.

WINDSHIELD WIPERS - RAIN SENSOR (2005-12)

WINDSCREEN WIPERS - RAIN SENSOR

SYMPTOM AND FUNCTION DESCRIPTION

The rain sensor senses the amount of water on the windscreen and can then activate and control the speed of the wipers automatically to obtain a good view. The rain sensor is in front of rear view mirror on the inside of the windscreen.

To activate the rain sensor the key must be in ignition position I or II, and the windscreen wipers must be switched off. The stalk for the windscreen wipers must always be in position **0** .

The sensor is then activated by pressing the small button on the stalk. An LED illuminates as a confirmation that the function has been activated.

There are two ways of activating the rain sensor:

- Press the small button on the stalk again so that the LED goes out.
- Activate one of the other functions for the windscreen wipers by moving the stalk downwards.

The rain sensor function switches off automatically when the key is removed from the ignition or five minutes after the ignition has been switched off if the key has not been removed.

If there is a fault with the rain sensor during the time the function is active, intermittent wiping at high speed is selected.

If the fault occurs whilst the function is not active, intermittent wiping will be activated the next time the rain sensor function is attempted to be activated. But then only with a fixed interval and no change depending on the amount of precipitation.

CAUTION: Remember that the rain sensor function must be off during automatic washing. The windscreen wipers can otherwise start and become damaged.

Verification

- Switch on the ignition and ensure that the stalk for the windscreen wipers is in position **0** .
- Press the button for the rain sensor and check that the LED in the button illuminates when the function is activated.

- Check that the windscreen wipers start when water hits the windscreen in front of the rain sensor.
- Check that the rain sensor function disengages by moving the stalk downwards to another wiper program. The LED on the button must go out.

WINDSHIELD WASHER (2003-12)

WINDSHIELD WASHER

SYMPTOM AND FUNCTION DESCRIPTION

Windscreen cleaning is started by moving the stalk towards the steering wheel.

The wipers operate for as long as washing is activated.

The rear washer is operated by moving the right-hand control stalk on the steering column away from the steering wheel. The wipers operate for as long as washing is activated.

The windscreen must be properly wet when the wipers operate, therefore, generous amounts of washer fluid should be used when cleaning.

Verification

- Switch on the ignition and check that no message regarding low washer fluid appears in the combined instrument panel.

  The capacity of the washer fluid reservoir is 4.5 liters and a message regarding low level appears when the volume in the reservoir is below 1 liter.

- Check that washing occurs on the windscreen when the right-hand control stalk is moved towards the steering wheel and that the windscreen wipers run for as long as washing is activated.
- Check that washing occurs on the rear windscreen when the right-hand control stalk is moved away from on the steering column and that the wipers run for as long as washing is activated.

WINDSHIELD WIPER (2003-04)

WINDSHIELD WIPER

SYMPTOM AND FUNCTION DESCRIPTION

The windscreen wipers are switched off as long as the right-hand stalk is in position **0** . The windscreen wipers are operated using the control stalk, which has four different positions:

- Intermittent wiping.

NOTE: This function is replaced by the rain sensor if the vehicle is equipped with one.

- Single sweep.
- Normal speed.
- High speed.

Intermittent wiping.

The time between the sweeps for intermittent wiping can be adjusted using the collar on the stalk. Turning the collar clockwise (upwards) increases the frequency of the wiper strokes.

Turning the collar anticlockwise (downwards) decreases the frequency of the wiper strokes.

Single sweep.

If the right-hand stalk is moved up, the wipers will only make one sweep.

Normal speed.

The windscreen wipers sweep at normal speed.

High speed.

The windscreen wipers sweep at high speed.

A signal tells the vehicle when the windscreen wipers are in the "parked position" in order to stop the wipers in the correct position.

The control for the rear windscreen wipers is on the end of the right-hand stalk. The rear wipers are operated via a button, which has two positions.

Upwards

- Rear windscreen intermittent wiping.

Downwards

- Normal speed of rear windscreen wipers.

The rear windscreen wiper (intermittent wiping) is also normally activated if the windscreen wipers are on and reverse gear is engaged. If the rear wiper is already engaged at normal speed when reverse gear is engaged, the engaged function does not change. The function can be reprogrammed so that the rear windscreen wiper is not activated when reverse gear is engaged and the windscreen wipers are on.

Verification

Access to the vehicle is necessary for the following checks.

- Activate ignition position II.
  - Intermittent wiping.
  - Single sweep.
  - Normal speed.
  - High speed.
- Check that the different positions of the windscreen wipers work properly.
  - Intermittent wiping.
  - Single sweep.
  - Normal speed.
  - High speed.
- Check that the interval reduces respectively increases if the collar on the control stalk is turned clockwise respectively anticlockwise.
- Check that intermittent wiping on the rear windscreen starts when the button on the end of the control stalk is set to the "upward" position.
- Check that wiping at normal speed starts when the button on the end of the control stalk is set to the "downwards" position.
- Check that rear windscreen wiping starts when reverse gear is engaged and the windscreen wiper is active (as long as the function has not been reprogrammed).

WINDSHIELD WIPER (2005-12)

WINDSHIELD WIPER

SYMPTOM AND FUNCTION DESCRIPTION

The windscreen wipers are switched off as long as the right-hand stalk is in position **0** . The windscreen wipers are operated using the control stalk, which has four different positions:

- Intermittent wiping.
- Single sweep.
- Normal speed.
- High speed.

Intermittent wiping.

The time between the sweeps for intermittent wiping can be adjusted using the collar on the stalk. Turning the collar clockwise (upwards) increases the frequency of the wiper strokes.

Turning the collar anti-clockwise (downwards) decreases the frequency of the wiper strokes.

Single sweep.

If the right-hand stalk is moved up, the wipers will only make one sweep.

Normal speed.

The windscreen wipers sweep at normal speed.

High speed.

The windscreen wipers sweep at high speed.

A signal tells the vehicle when the windscreen wipers are in the "parked position" in order to stop the wipers in the correct position.

The control for the rear windscreen wipers is on the end of the right-hand stalk. The rear wipers are operated via a button, which has two positions.

Upwards

- Rear windscreen intermittent wiping.

Downwards

- Normal speed of rear windscreen wipers.

The rear windscreen wiper (intermittent wiping) is also normally activated if the windscreen wipers are on and reverse gear is engaged. If the rear wiper is already engaged at normal speed when reverse gear is engaged, the engaged function does not change. The function can be reprogrammed so that the rear windscreen wiper is not activated when reverse gear is engaged and the windscreen wipers are on.

Verification

Access to the vehicle is necessary for the following checks.

- Activate ignition position II.
    - Intermittent wiping.
    - Single sweep.
    - Normal speed.
    - High speed.
- Check that the different positions of the windscreen wipers work properly.
    - Intermittent wiping.
    - Single sweep.
    - Normal speed.
    - High speed.
- Check that the interval reduces respectively increases if the collar on the control stalk is turned clockwise respectively anticlockwise.

- Check that intermittent wiping on the rear windscreen starts when the button on the end of the control stalk is set to the "upward" position.
- Check that wiping at normal speed starts when the button on the end of the control stalk is set to the "downwards" position.
- Check that rear windscreen wiping starts when reverse gear is engaged and the windscreen wiper is active (as long as the function has not been reprogrammed).

WIPER/UNUSUAL NOISE - REAR WINDOW (2006-12)

REAR WINDOW WIPER/UNUSUAL NOISE

SYMPTOM AND FUNCTION DESCRIPTION

NOTE: The symptom should always be verified together with the customer.

The following tips may be of help to decide if the symptom is due to a product feature or if continued troubleshooting is needed.

HINT: Working sound from wiper motor is OK up to vehicle speed of approx. 70 km/h.

WIPER/UNUSUAL NOISE - WINDSHIELD (2006-12)

WINDSHIELD WIPER/UNUSUAL NOISE

SYMPTOM AND FUNCTION DESCRIPTION

NOTE: The symptom should always be verified together with the customer.

The following tips may be of help to decide if the symptom is due to a product feature or if continued troubleshooting is needed.

HINT: Sound from windshield wipers may appear after car wash with wax.

ELECTRICAL

Power transmission

ELECTRICAL

CENTRAL ELECTRONIC MODULE (CEM), INFORMATION ABOUT INCORRECT REPLACEMENT

When analyzing replaced central electronic modules (CEM), it has become evident that many replacements have been carried out incorrectly. In order to identify the main cause for certain electrical fault symptoms more easily, this document describes the role of the central electronic module (CEM) in the vehicle and the CAN network.

This service information is also intended to clear up misunderstandings and, in the final analysis, to reduce the number of incorrect replacements of the central electronic module (CEM).

NOTE: **The central electronic module (CEM) contains vehicle-specific information that cannot be deleted after programming and cannot be used in another vehicle. For this reason, the control module must not be programmed for a vehicle for the purpose of fault-tracing. Do not condemn the central electronic module (CEM) in advance.**

Common misunderstandings

- CAN-related faults

  "Do not shoot the messenger". Although the central electronic module (CEM) monitors CAN communication and verifies that all control modules are in the system, the control module is not responsible for all CAN activity. When CAN-related diagnostic trouble codes (DTCs) are present in the central electronic module (CEM), the control module is often wrongly thought to be defective.

  The central electronic module (CEM) can identify faults in other control modules as well as in wiring. When the CAN bus is active, the control module checks specific signals from other control modules. The diagnostic trouble codes (DTCs) CEM-1A5X-1A6X indicate that the central electronic module (CEM) was unable to receive the anticipated signals from other control modules. For more information:**INFORMATION ABOUT THE CAN NETWORK, STRUCTURE AND FUNCTION**

  Diagnostic trouble codes (DTCs) CEM-DF03-DF16 indicate short-circuits between the CAN cables (green or white) to battery voltage or ground. This does not mean that the central electronic module (CEM) is damaged, but that the control module has detected a fault somewhere in the CAN network

  1. The first central electronic module (CEM) was defective
  2. The second central electronic module (CEM) is also defective, but with a different fault.
- Discharged battery

When fault-tracing a vehicle with battery problems, control modules with a constant power supply must be checked carefully. For example, is any lamp lit when it should be off? Is the power circuit for the blower fan still drawing current after the ignition key has been removed? Are the heater pads for the door mirrors constantly switched on? Is any relay constantly engaged? These are only a few examples. The wiring diagram of the relevant car must be used for further fault causes

1. The first central electronic module (CEM) was defective
2. The second central electronic module (CEM) is also defective, but with a different fault.

- Downloading software

  Since version 2000C, VIDA (Volvo scan tool) has a slightly different procedure for downloading software. This procedure must be followed when downloading software in, or replacing, the central electronic module (CEM). Incorrect downloading of software does not damage the control module, but can be difficult to rectify

  1. The first central electronic module (CEM) was defective
  2. The second central electronic module (CEM) is also defective, but with a different fault.

- Problems with the Immobilizer

  Immobilizer problems are rarely caused by faulty hardware in the central electronic module (CEM)

  1. The first central electronic module (CEM) was defective
  2. The second central electronic module (CEM) is also defective, but with a different fault.

- Incorrect relay activation

  Some central electronic modules (CEM) have been replaced mistakenly when all that was damaged was a system relay. Relays are very simple to replace and test in other positions or in another car. The control module is often incorrectly diagnosed due to a faulty system relay. The faulty relay may have been moved to a different location after the central electronic module (CEM) has been replaced.

  This gives the incorrect impression that:

  1. The first central electronic module (CEM) was defective
  2. The second central electronic module (CEM) is also defective, but with a different fault.

The relays that control the power supply from the central electronic module (CEM) to other control modules should permit simple fault-tracing. For example, if the diagnostic trouble codes (DTCs) CEM-1A54, (communication with the power seat module (PSM)), CEM-1A55 (communication with the climate control module (CCM)) and CEM-1A56 (communication with the driver information module (DIM)) are stored in the central electronic module (CEM), it is important to check the X-supply relay.

A few tips

- The monitoring function for the central electronic module (CEM) in VIDA (Volvo scan tool) is a good tool for determining whether a relay is engaged or whether an input is high or low. This function, alongside readings using the breakout box, solves many problems related to the function of the control

module. Note that only the coil in the relay for the control module is diagnosed, not the relay output

- When CAN-related diagnostic trouble codes (DTCs) are fault-traced, use the relevant "Data communication" pages in the wiring diagrams for the car model in question. These pages contain important information about how the control modules are connected in relation to each other. Parallel or in series
- The central electronic module (CEM) contains PIN codes for the immobilizer function but has nothing to do with the codes for remote controls or memories for power seats and mirrors with memory. (Remote control codes are stored in the upper electronic module (UEM), the power seats are controlled by the power seat module (PSM) and the mirror memories are in the driver's door module (DDM) and the passenger door module (PDM))
- The start relay that is activated by the central electronic module (CEM) has 0 V from the output from the control module in both activated and not activated modes. Do not rule out fault causes based solely on voltage readings. Check whether the relay is clicking or use a test lamp if necessary. The 0 V that is "supplied" by the central electronic module (CEM) in deactivated mode does not engage the relay coil
- The central electronic module (CEM) monitors CAN H (white cable) and CAN L (green cable). This does NOT mean that all CAN problems are related to this control module. The likelihood of the central electronic module (CEM) causing an E001 diagnostic trouble code (DTC) is no greater than this being caused by some other control module. When fault-tracing CAN-related faults in the central electronic module (CEM) or other control modules, measure the resistance in the CAN bus. Check behind the radio for short-circuited wiring, check the CAN cables for the supplemental restraint system module (SRS), the transmission control module (TCM) and the engine control module (ECM) as well as the connectors

NOTE: **Do not use an electrician's screwdriver or other tool when checking the connectors, as this may damage the connector. Male terminal P/N 9441394 (Female terminal P/N 9442486) can be used to check the affected connectors.**

NOTE: **If diagnostic trouble code (DTC) E001 is permanently stored in a control module and the wiring is OK, a good tip is to cut the power to the control modules that have stored E001 (except for the central electronic module (CEM)) and check whether the code disappears. Then restore the power supply to one control module at a time until the code recurs. If it is possible to communicate with the car in ignition positions 0 and 1 but not in position 2, look for a control module that is powered via the ignition switch (+15) to find the defective control module.**

-
-
- In order to isolate the OBD2 connector from the rest of the CAN network in the car, the central electronic module (CEM) contains four diagnostic relays. This means that the control module "opens" communication with both the low speed and specification networks via hardware. The command for opening communication is given over the communication cable from VIDA (Volvo scan tool) to the central electronic module (CEM).

  This means that if VIDA (Volvo scan tool) can communicate with at least one control module on the low speed network and one control module on the high speed network, the relays are working properly. Defective communication cable communication between VIDA and the central electronic module (CEM)

means that both networks are inaccessible. Where there is no communication between VIDA and the car, and the car is functioning properly, check the cable to scan tool.

- The central electronic module (CEM) is involved in the alarm function, but so are other control modules. For cars after model year 01, VIDA (Volvo scan tool) can be used to check the cause of the alarm. Verify correct function of door locks, the passenger door module (PDM), the driver's door module (DDM) and the upper electronic module (UEM) using the monitoring function in VIDA, for example

NOTE: **There is a considerable difference between "there are no diagnostic trouble codes (DTCs) in a control module" and "the control module is not reporting any diagnostic trouble codes (DTCs)". When diagnostic trouble codes (DTCs) are read from all control modules and there is a permanent CAN problem, the information can be misinterpreted. If a control module is not listed, it does not necessarily mean that the control module does not contain diagnostic trouble codes (DTCs). It may also mean that the control module is not responding.**

-
- The central electronic module (CEM) only sends the temperature of a serial cable to the seat heating module (SHM). If the serial cable reports good voltage values, it is unlikely that the central electronic module (CEM) is the cause of any problems with seat heating.

JOINING CABLES

Special tools	
	951 2620 Stripping tool (for wiring) **Tool number:** 951 2620 **Tool description:** Stripping tool (for wiring) **Tool boards:** 39
	951 2785 Crimping tool (included in 9512669) **Tool number:** 951 2785 **Tool description:** Crimping tool (included in 9512669) **Tool boards:** 39
	951 2850 Hot air gun (110 V US) **Tool number:** 951 2850 **Tool description:** Hot air gun (110 V US) **Tool boards:**
	951 2851 Hot-air gun (220V UK) **Tool number:** 951 2851 **Tool description:** Hot-air gun (220V UK) **Tool boards:** 08
	951 2777 Hot-air gun **Tool number:** 951 2777 **Tool description:** Hot-air gun **Tool boards:** 08

CONNECTING

NO TITLE

Perform cable harness SRS, see **WIRING HARNESS SUPPLEMENTAL RESTRAINT SYSTEM (SRS)**

NO TITLE

Battery, disconnection, see **BATTERY - DISCONNECTING AND CONNECTING**

NO TITLE

See information about cable terminals surface treatment, see **CABLE TERMINALS SURFACE TREATMENT**

NO TITLE

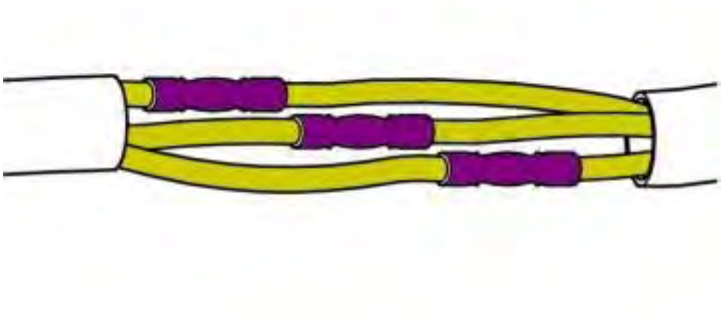

Fig. 1: Identifying Crimped Wires
Courtesy of VOLVO CARS CORPORATION

See information about junction sleeve, see **JUNCTION SLEEVE**.

NO TITLE

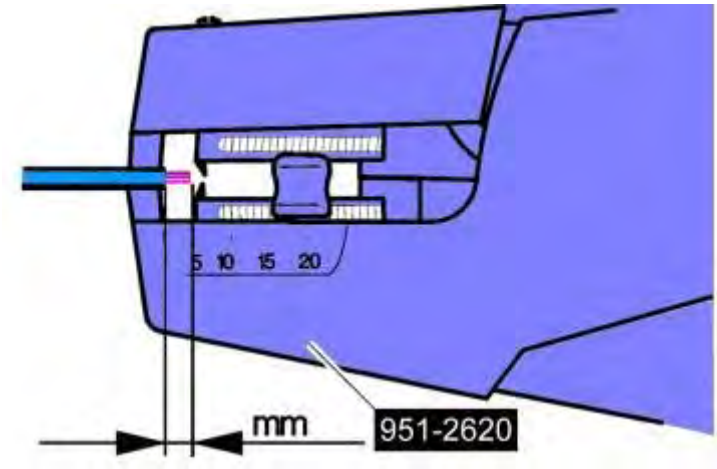

Fig. 2: Identifying Cable Stripping Length
Courtesy of VOLVO CARS CORPORATION

see **9512620**

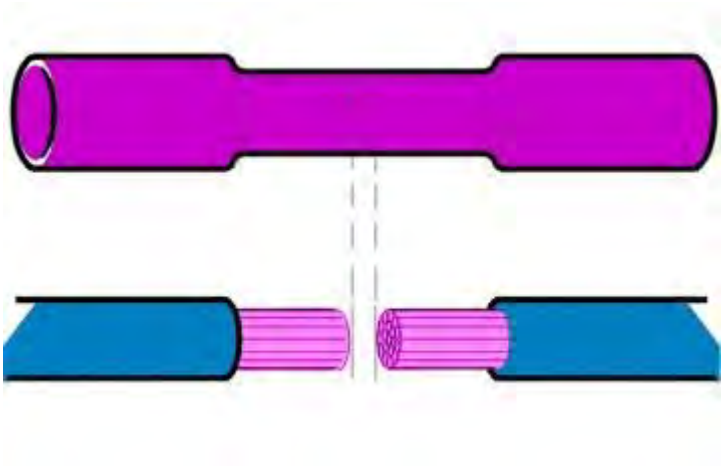

Fig. 3: Crimping Wires (1 Of 4)
Courtesy of VOLVO CARS CORPORATION

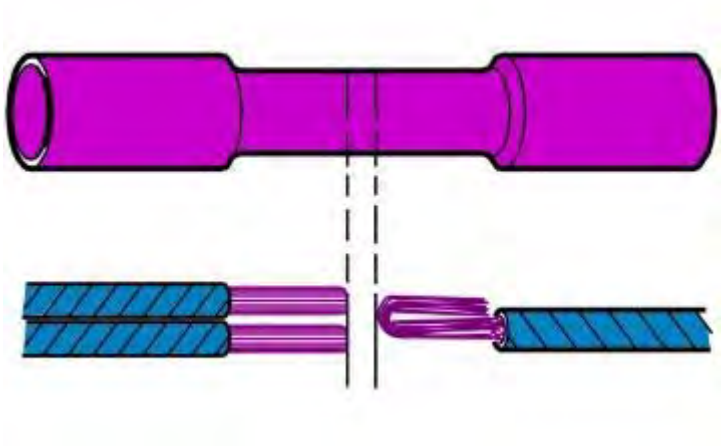

Fig. 4: Crimping Wires (2 Of 4)
Courtesy of VOLVO CARS CORPORATION

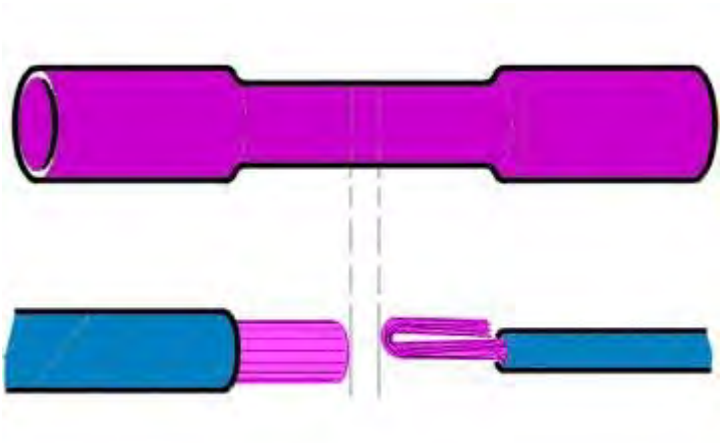

Fig. 5: Crimping Wires (3 Of 4)
Courtesy of VOLVO CARS CORPORATION

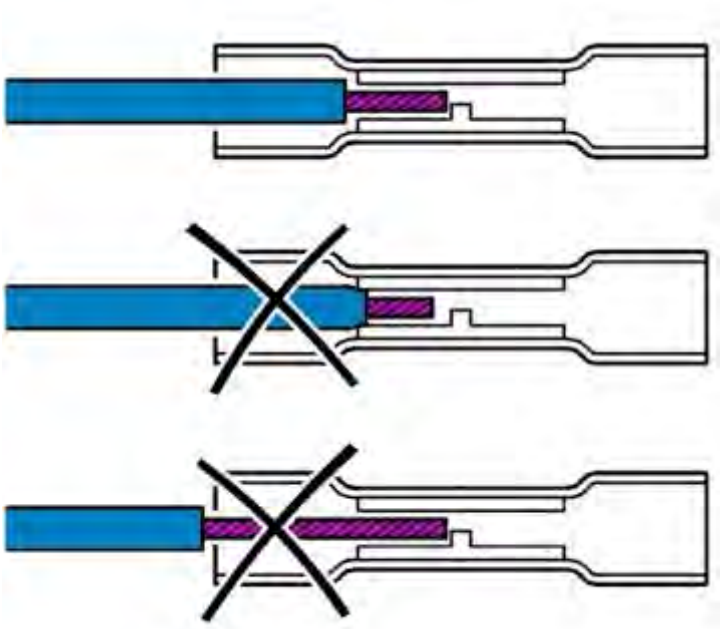

Fig. 6: Crimping Wires (4 Of 4)
Courtesy of VOLVO CARS CORPORATION

NO TITLE

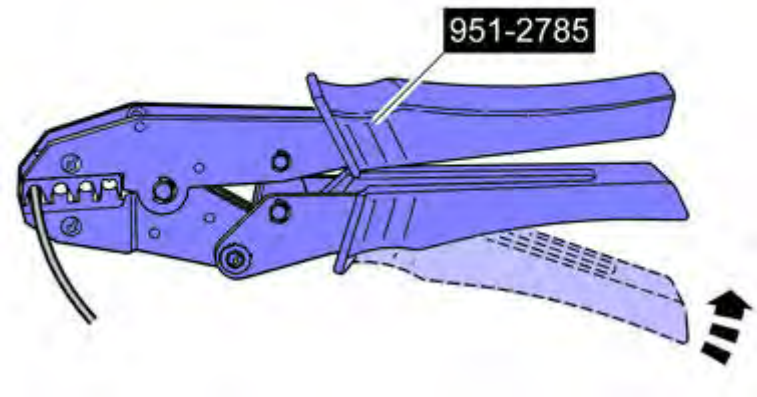

Fig. 7: Identifying Crimping Tool 951 2785
Courtesy of VOLVO CARS CORPORATION

see **9512785**

NO TITLE

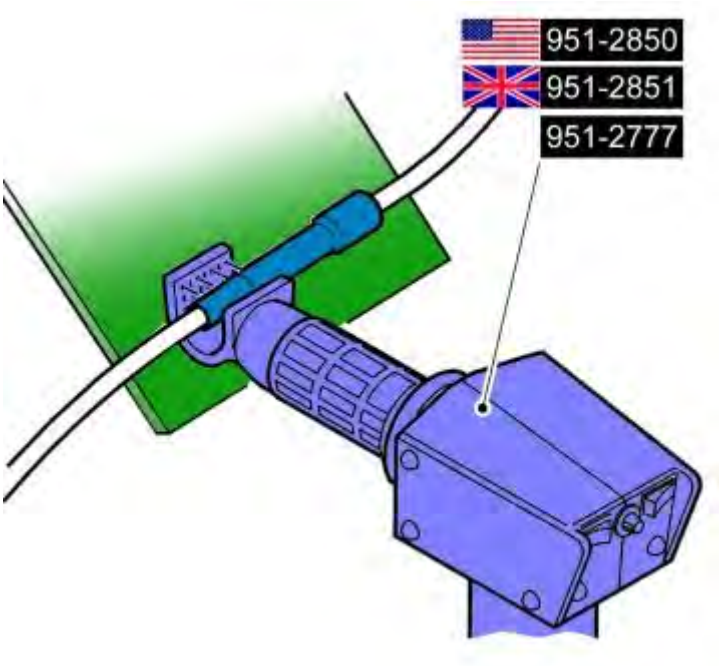

Fig. 8: Identifying Hot Air Gun
Courtesy of VOLVO CARS CORPORATION

see **9512850** see **9512851** see **9512777**

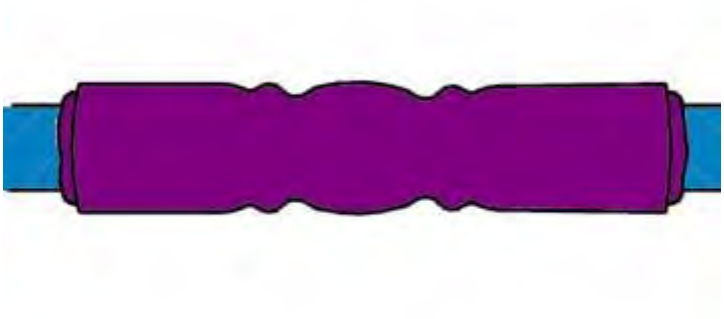

Fig. 9: Identifying Crimping Sleeve
Courtesy of VOLVO CARS CORPORATION

JUNCTION SLEEVE

Paint	Cable area (mm2)	Stripping length (mm)	P/N
green/white	0, 1 - 0, 5	5	9512783
red	0.5 - 1.0	6	9130467
blue	1.0 - 2.5	7	9130476
yellow	4.0 - 6.0	7	9130477

FAULT TRACING

Power transmission

FAULT TRACING

CHECKING WIRING AND TERMINALS. INTERMITTENT FAULTS

INSPECT TERMINALS VISUALLY

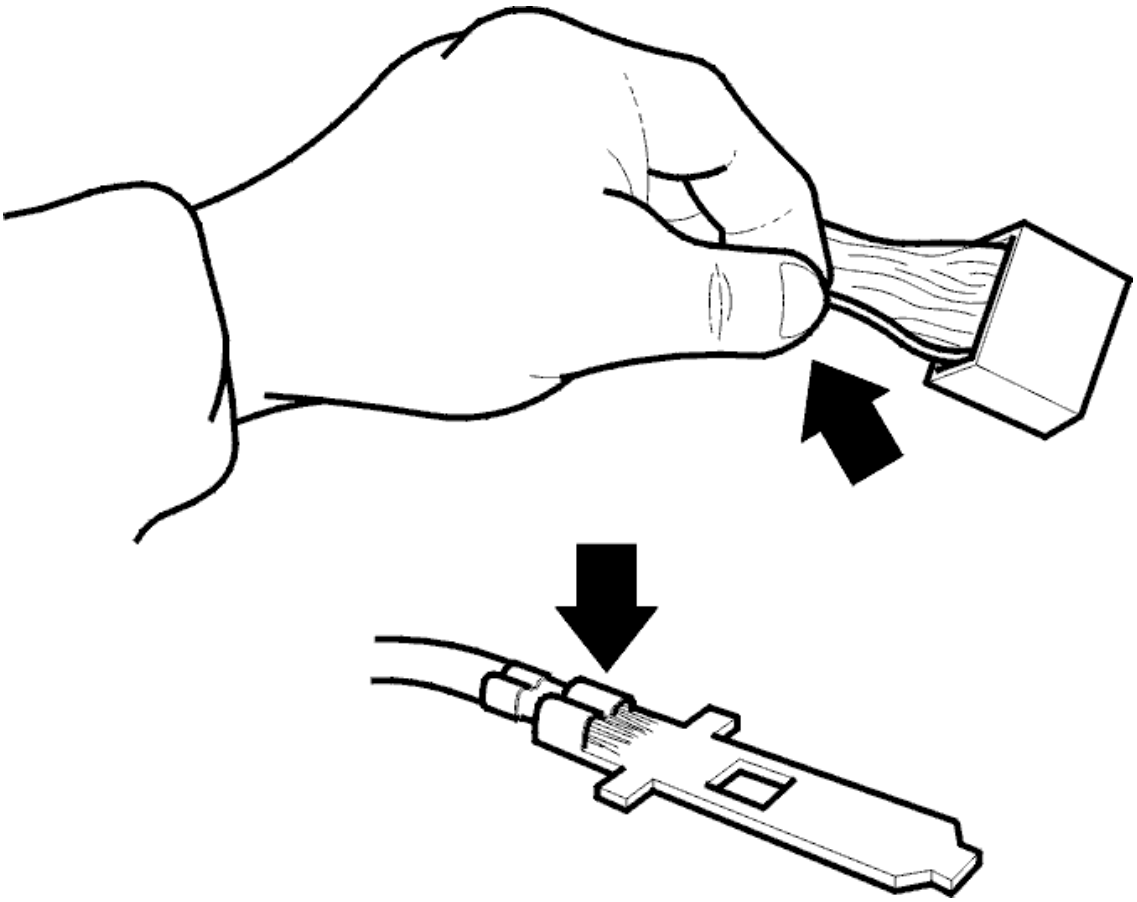

Fig. 1: Checking Contact Resistance & Oxidation
Courtesy of VOLVO CARS CORPORATION

NOTE: **When checking the engine control module (ECM), do not remove the control module from the car before the main relay has interrupted the power supply. This may take up to 4 minutes after the ignition has been switched off and the engine cooling fan (FC) has stopped running.**

Inspect the terminals visually when checking, or taking readings from, opened connectors.

Checks:

- Check for oxidation. This can cause poor connections in the terminals
- Check for damage to pins and terminals. Check that they are properly inserted into the connector. Check that the cable is properly connected to the pin or terminal. Check pins and terminals particularly carefully
- Using a loose male connector, test to, see if the female connector provides a good contact and that the pin remains in place when the male connector is pulled lightly
- Shake the cable lightly and pull on connectors during measurement to locate damage.

OPEN-CIRCUIT, INTERMITTENT FAULTS

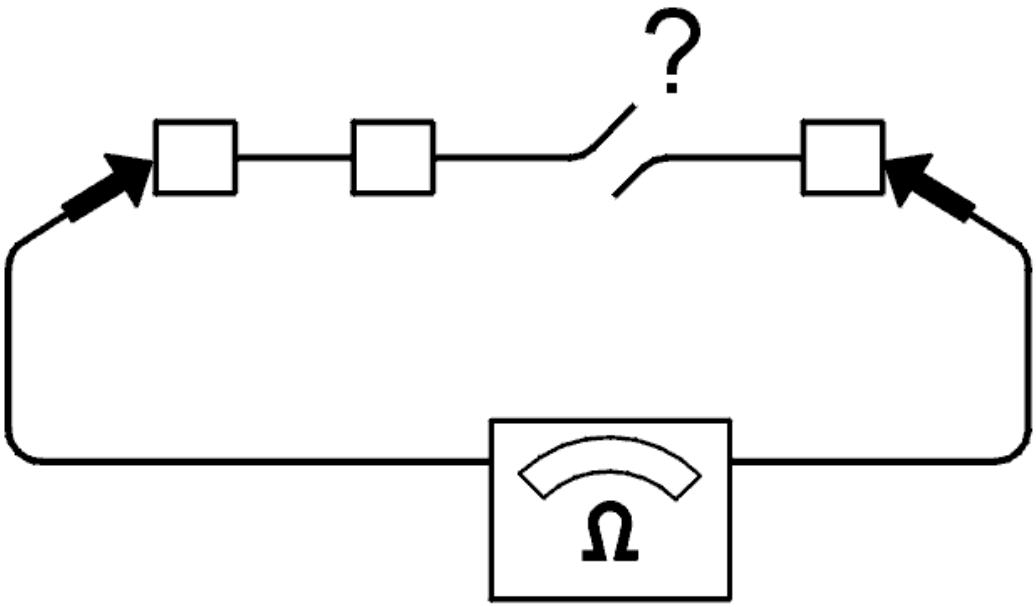

Fig. 2: Checking For Open Circuit
Courtesy of VOLVO CARS CORPORATION

An open-circuit in a cable will be indicated by the loss of a function (or functions).

Chafed and broken leads are common causes of faults.

Checks:

- Disconnect the connectors at both ends of the cable.

Check the cables visually according to **INSPECT TERMINALS VISUALLY**.

Connect an ohmmeter between the ends of the cable.

The ohmmeter should read approximately 0ohms if there is no open-circuit in the cable.

Shake the cable lightly and pull on connectors during measurement to locate the damage.

If the reading is not correct. Replace the cable and / or continue according to **CONTACT RESISTANCE AND OXIDATION**.

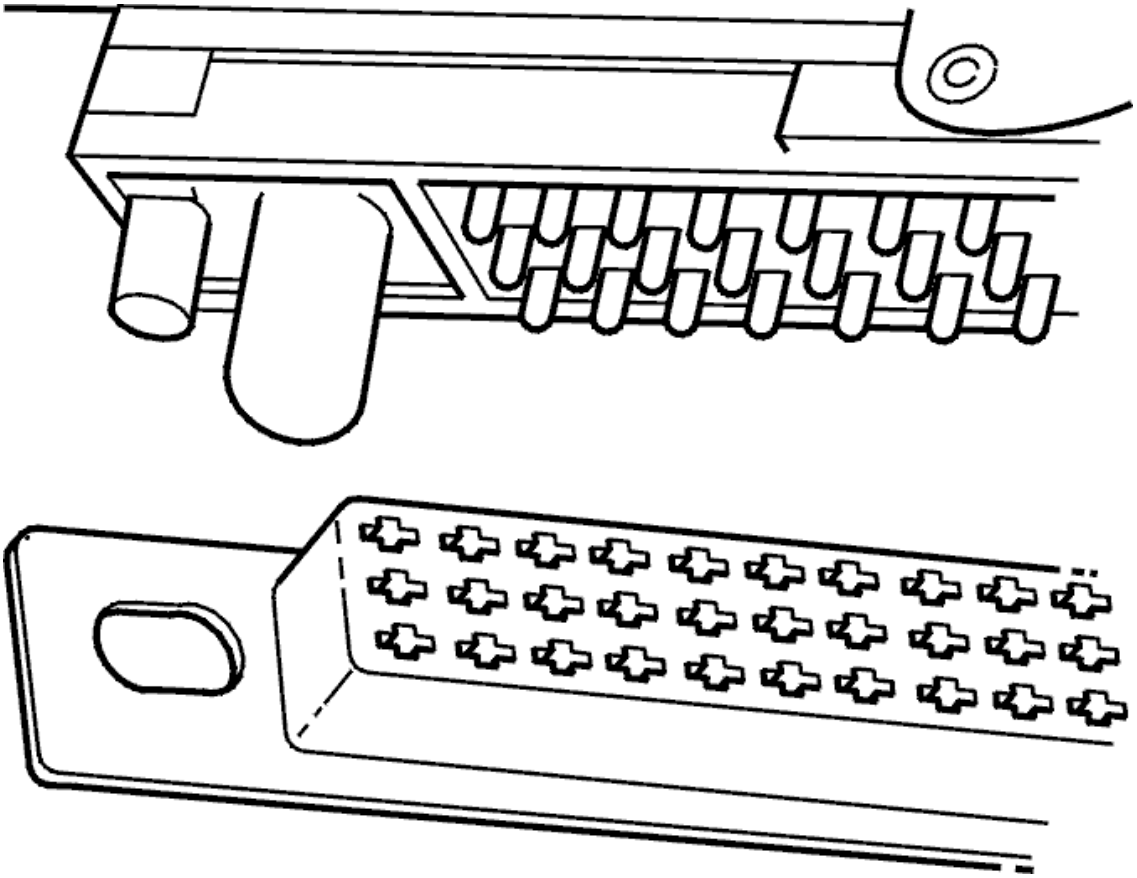

Fig. 3: Identifying Control Module Installation
Courtesy of VOLVO CARS CORPORATION

Always check the control module and control module box connectors to ensure that their pins and sockets are not bent or damaged, this may cause faults.

Check pins and terminals particularly carefully.

SHORT-CIRCUIT TO GROUND, INTERMITTENT FAULTS

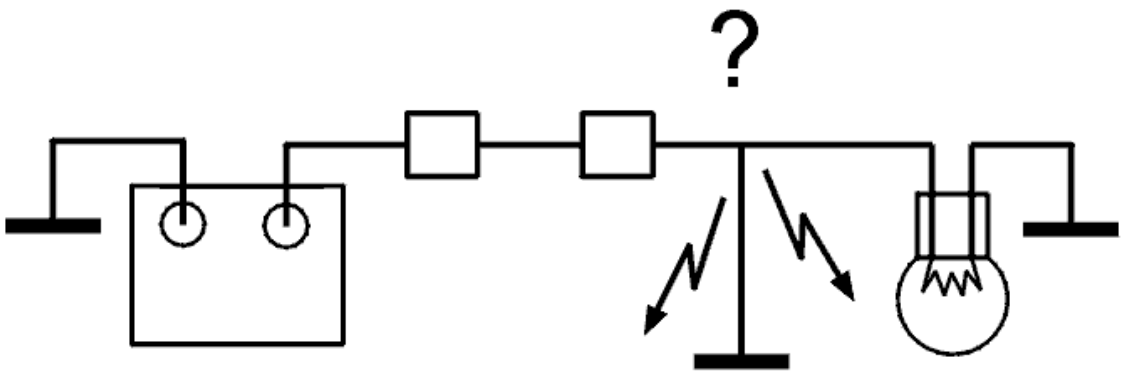

Fig. 4: Checking For Short Circuit To Ground
Courtesy of VOLVO CARS CORPORATION

A short-circuit between a live cable and ground is often indicated by the loss of a function or a fuse blowing when a current is passed through the cable.

Checks:

- Check the cables visually according to **INSPECT TERMINALS VISUALLY**.

  Activate all switches and sensors in the circuit. Check whether the fuse blows

- Disconnect the connectors in the circuit to ensure that they do not affect readings.

Connect an ohmmeter between cable and ground.

The ohmmeter should read infinite resistance if no components are connected.

Shake the cable lightly and pull on connectors during measurement to locate the damage.

If the reading is not correct, replace the cable and / or continue according to **CONTACT RESISTANCE AND OXIDATION**.

SHORT-CIRCUIT TO SUPPLY VOLTAGE, INTERMITTENT FAULTS

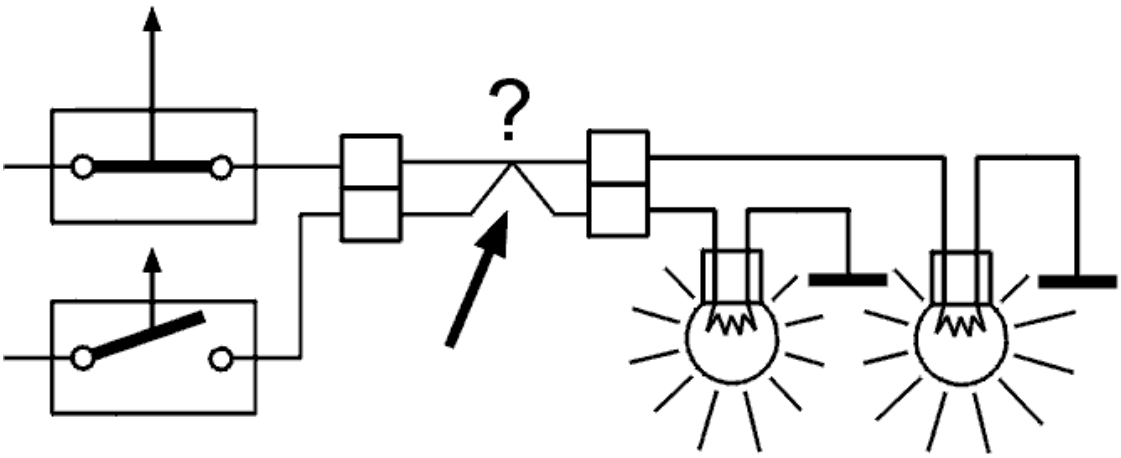

Fig. 5: Checking For Short Circuit
Courtesy of VOLVO CARS CORPORATION

A short-circuit between a cable and supply voltage is often indicated by the loss of a function or a fuse blowing when a current is passed through the cable.

Checks:

- Check the cables visually according to **INSPECT TERMINALS VISUALLY**.

  Use a voltmeter to take readings at various points in the circuit while operating switches and sensors.

The voltmeter reading depends on the circuit being tested and the positions of switches and sensors.

Use an ohmmeter between the suspect cables to detect short-circuits between them.

The ohmmeter should read infinite resistance between cables not connected to each other in the circuit.

Shake the cable lightly and pull on connectors during measurement to locate the damage.

If the reading is not correct. Replace the cable and / or continue according to **CONTACT RESISTANCE AND OXIDATION**.

LOOSE CONNECTIONS (TERMINALS)

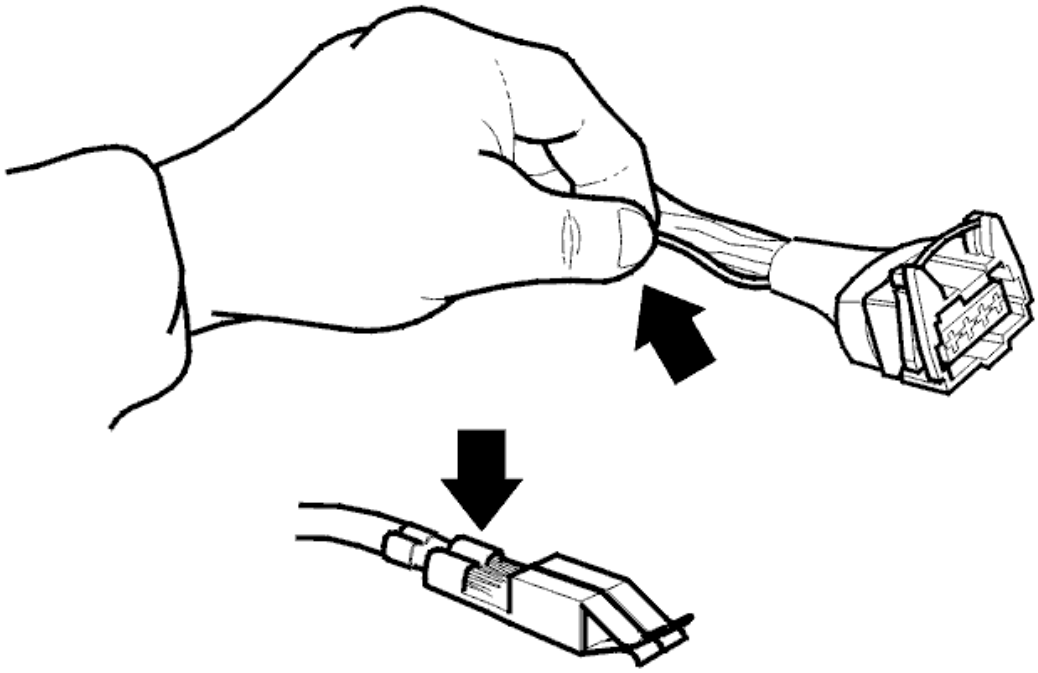

Fig. 6: Identifying Terminal Inspection
Courtesy of VOLVO CARS CORPORATION

Loose connections in terminals may be caused by oxidation of the pins and sockets, or by a faulty connection of a cable to its cable terminal.

Loose connections produce the same faults as an intermittent open-circuit in a cable.

Checks:

- Inspect terminals visually according to **INSPECT TERMINALS VISUALLY**.

  Continue according to **CONTACT RESISTANCE AND OXIDATION**.

CONTACT RESISTANCE AND OXIDATION

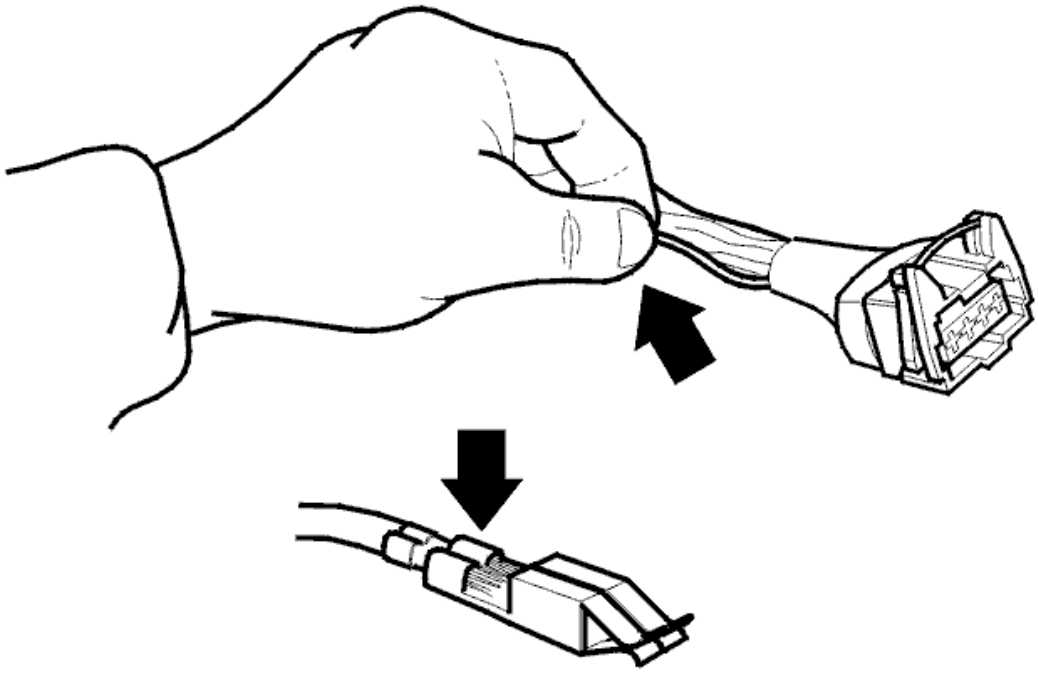

Fig. 7: Identifying Terminal Inspection
Courtesy of VOLVO CARS CORPORATION

In theory, the resistance across contacts, leads and terminals should be 0 ohms. However, there is always some resistance due to terminal oxidation.

If resistance is too great there will be function problems. The magnitude of the resistance before it causes a malfunction depends on the circuit load. A guideline would be a few ohms.

Cleaning female socket terminals and male pin terminals

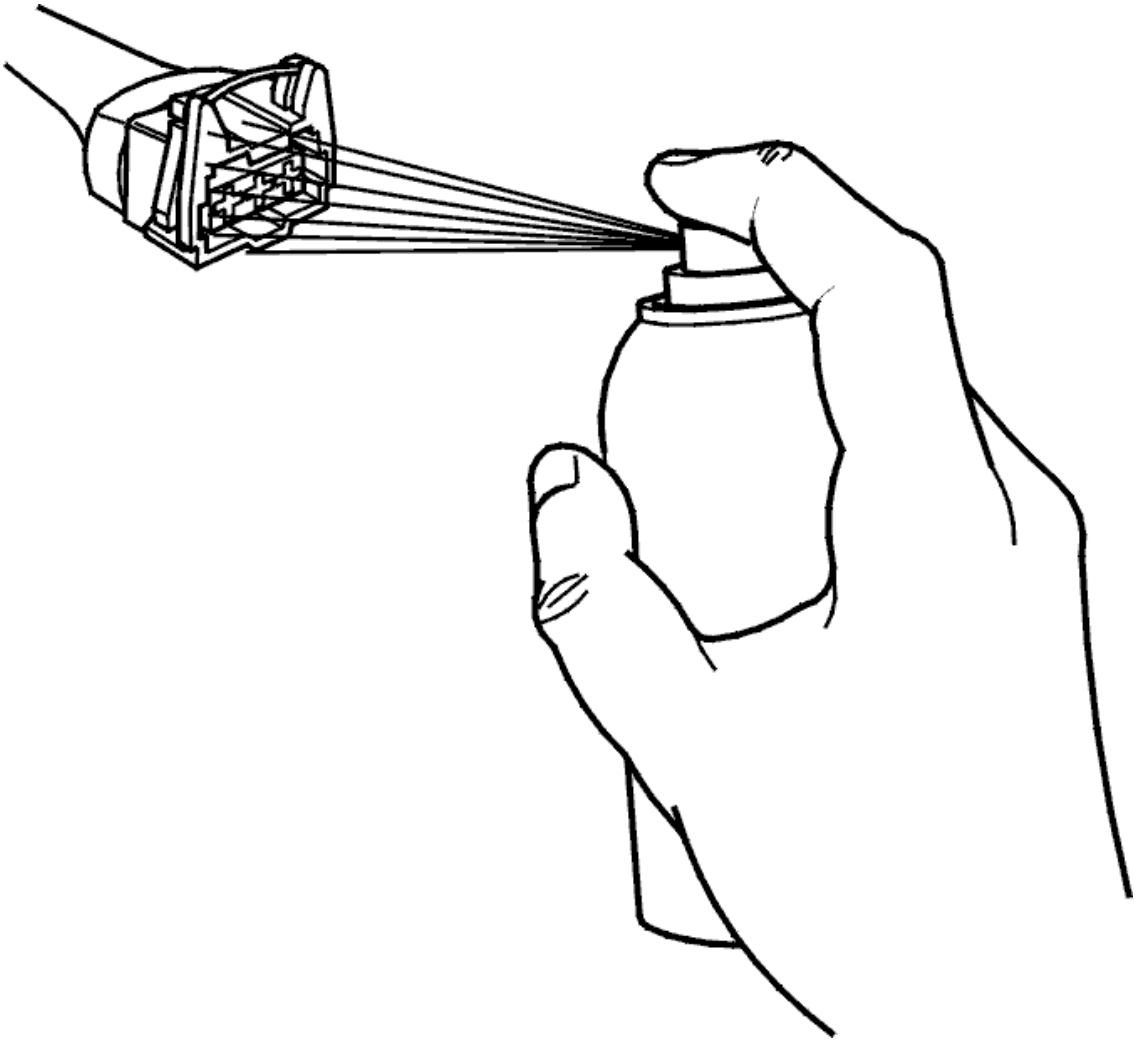

Fig. 8: Apply Rust Solvent Spray Or Grease To Connectors
Courtesy of VOLVO CARS CORPORATION

NOTE: **Do not apply rust solvent spray or grease to the catalyst monitor sensor or instrument cluster connectors.**

- Ignition off
- Disconnect the battery negative terminal
- Use compressed air to clean the disconnected connector
- Apply rust solvent spray 1161422 to the disconnected connectors
- Blow clean using compressed air.

Greasing female terminals

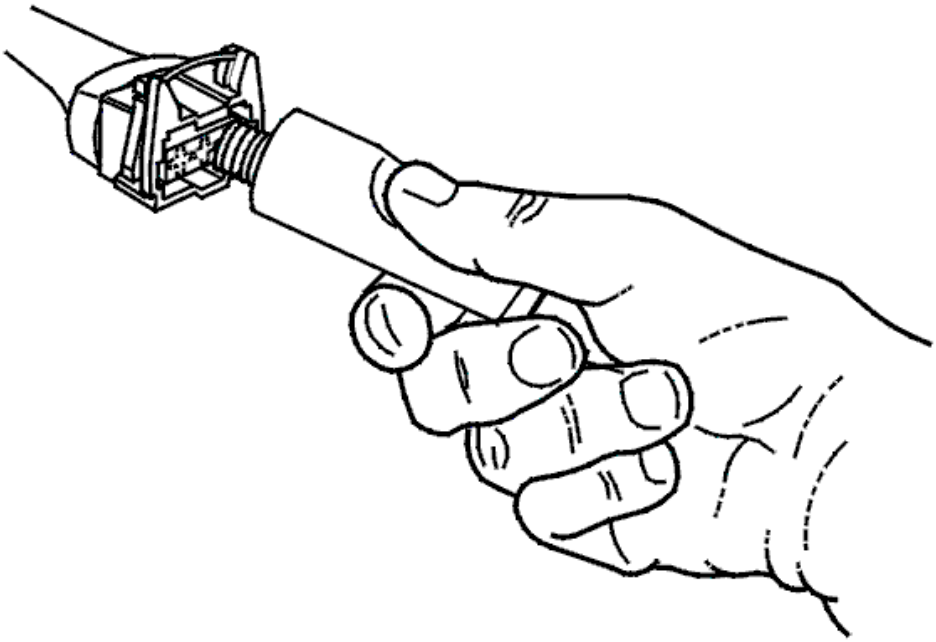

Fig. 9: Identifying Grease Pressed Into Terminals
Courtesy of VOLVO CARS CORPORATION

NOTE: Do not fill the protective cover with grease.

- Press grease, P/N 1161417-9, into the terminals directly from the tube
- Check that all the cavities in the connectors are filled
- Use a loose male pin to ensure that contact in sockets is good. The pin should remain in position when pulled gently.

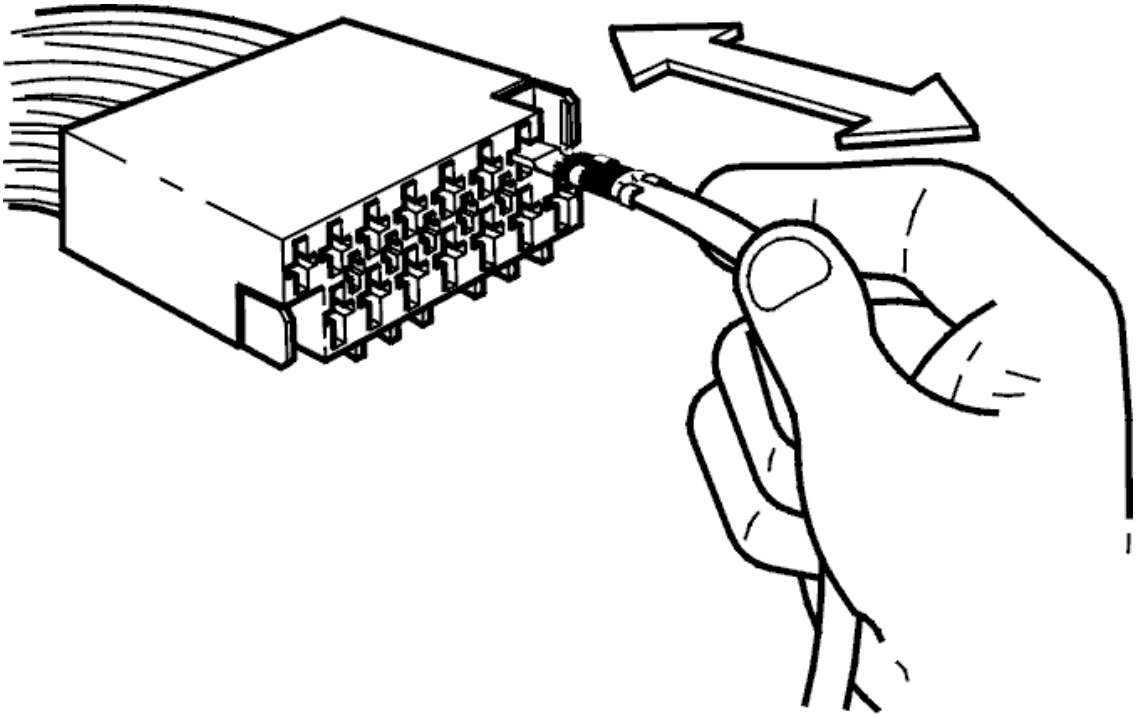

Fig. 10: Checking To Ensure Contact In Sockets Is Good
Courtesy of VOLVO CARS CORPORATION

CHECKING WIRING AND TERMINALS. PERMANENT FAULTS

CHECK TERMINALS VISUALLY

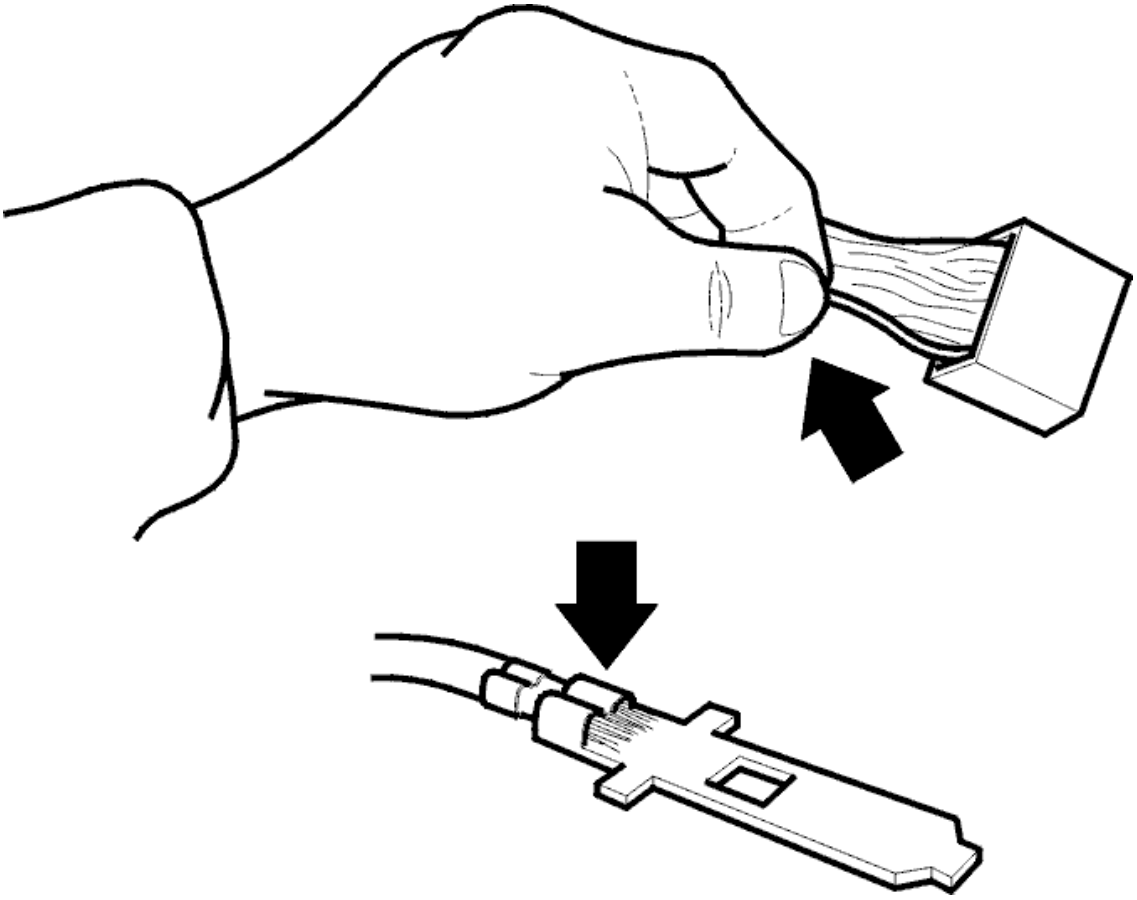

Fig. 11: Checking Contact Resistance & Oxidation
Courtesy of VOLVO CARS CORPORATION

NOTE: **When checking the engine control module (ECM), do not remove the control module from the car before the main relay has interrupted the power supply. This may take up to 4 minutes after the ignition has been switched off and the engine cooling fan (FC) has stopped running.**

Inspect the terminals visually when checking, or taking readings from, opened connectors.

Checks:

- Check for oxidation. This can cause poor connections in the terminals
- Check for damage to pins and terminals. Check that they are properly inserted into the connector. Check that the cable is properly connected to the pin or terminal. Check pins and terminals particularly carefully
- Use a separate male terminal to check the female terminal. Check that they are secure: Pull on the pin.

OPEN-CIRCUIT, PERMANENT FAULTS

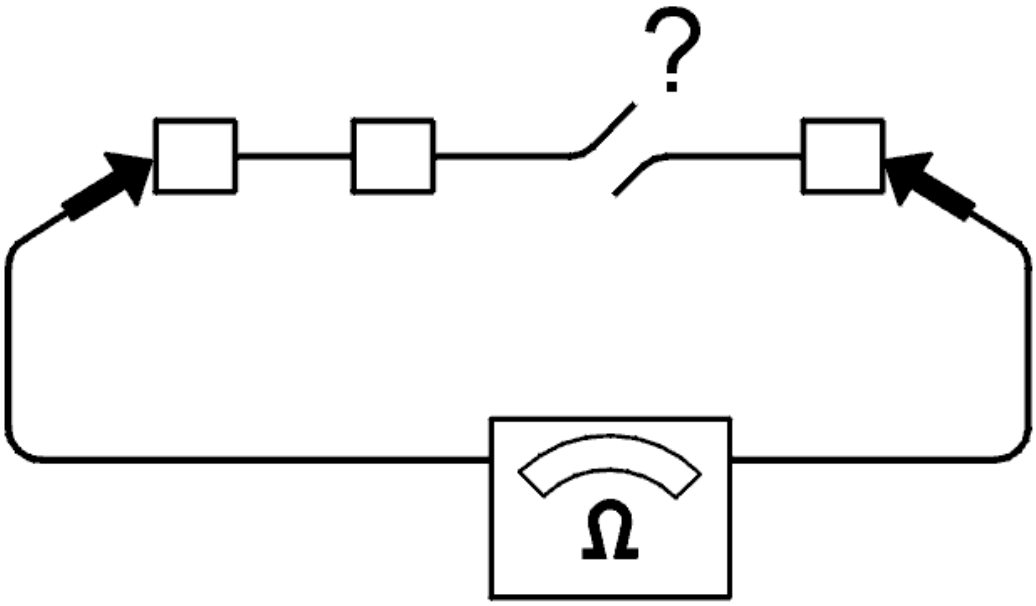

Fig. 12: Checking For Open Circuit
Courtesy of VOLVO CARS CORPORATION

An open-circuit in a cable is indicated by a loss of one or more functions.

Chafed and broken cables or terminals that have come loose are common causes of faults in electrical systems.

Checks:

- Disconnect the connectors at both ends of the cable.

Connect an ohmmeter between the ends of the cable.

The ohmmeter should read approximately 0 ohms if there is no open-circuit in the cable.

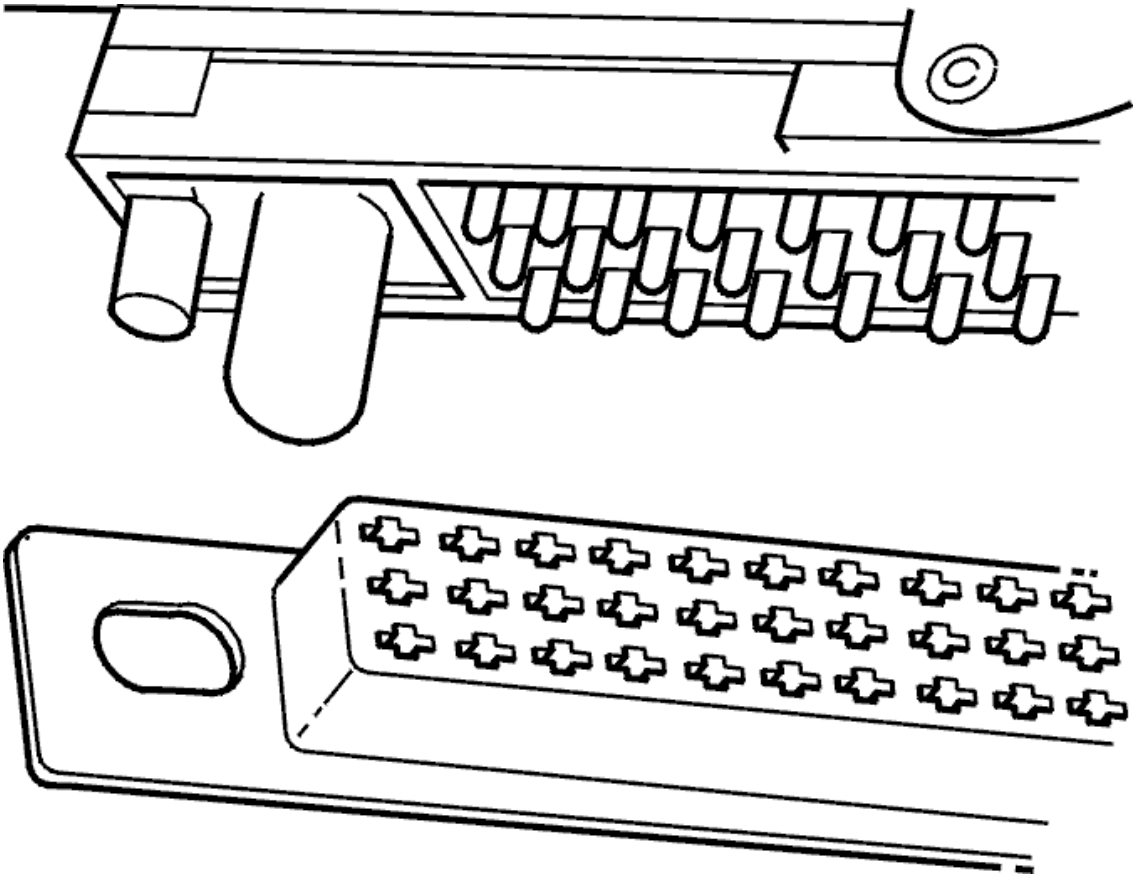

Fig. 13: Identifying Control Module Installation
Courtesy of VOLVO CARS CORPORATION

Always check the control module and control module box connectors to ensure that their pins and sockets are not bent or damaged, as this can cause faults.

Check pins and terminals particularly for this fault. See **CHECK TERMINALS VISUALLY**.

SHORT-CIRCUIT TO GROUND, PERMANENT FAULTS

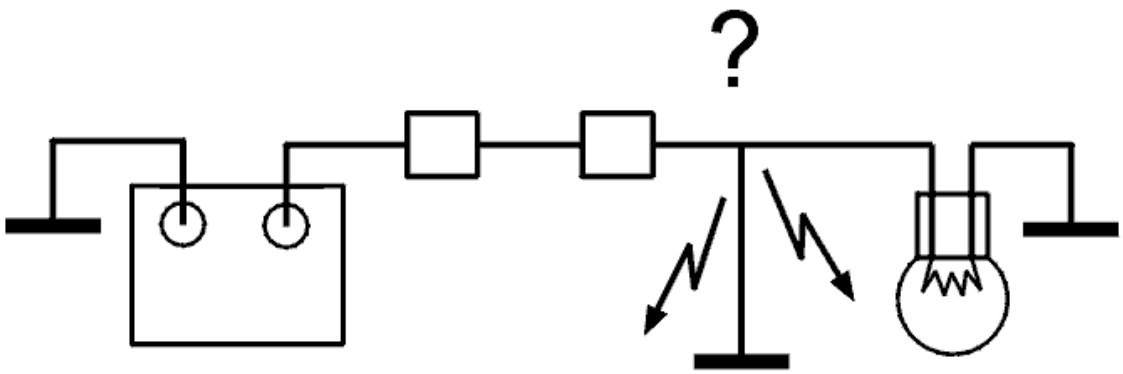

Fig. 14: Checking For Short Circuit To Ground
Courtesy of VOLVO CARS CORPORATION

A short-circuit between a live cable and ground is often indicated by the loss of a function or a fuse blowing when a current is passed through the cable.

Checks:

- Activate all switches and sensors in the circuit. Check whether the fuse blows
- Disconnect the connectors in the circuit to ensure that they do not affect readings.

Use an ohmmeter to take a resistance reading between the cable and ground.

The ohmmeter should read infinite resistance if no components are connected.

Check pins and terminals particularly for this fault. See **CHECK TERMINALS VISUALLY**.

SHORT-CIRCUIT TO SUPPLY VOLTAGE. PERMANENT FAULTS

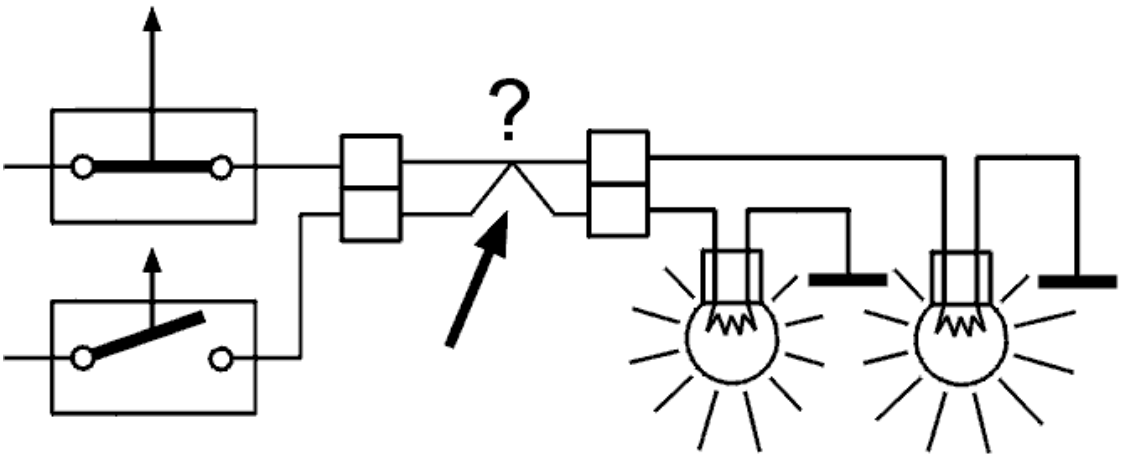

Fig. 15: Checking For Short Circuit
Courtesy of VOLVO CARS CORPORATION

A short-circuit between a cable and supply voltage is often indicated by the loss of a function or a fuse blowing when voltage is passed through the cable.

Checks:

- Use a voltmeter to take readings at various points in the circuit while operating switches and sensors.

Voltmeter readings will depend on which circuit is tested and the status of switches and sensors.

Use an ohmmeter between the suspect cables to detect short-circuits between them.

The ohmmeter should read infinite resistance between cables not connected to each other in the circuit.

Check pins and terminals particularly for this fault. See **CHECK TERMINALS VISUALLY**.

CONTACT RESISTANCE AND OXIDATION

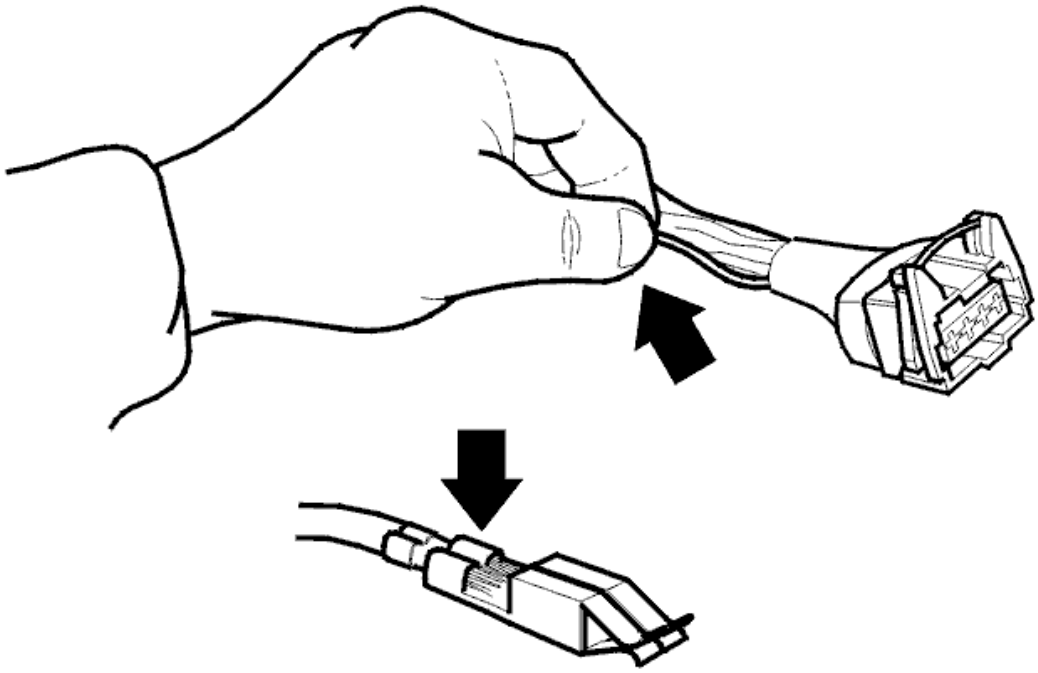

Fig. 16: Identifying Terminal Inspection
Courtesy of VOLVO CARS CORPORATION

In theory, the resistance across contacts, leads and terminals should be 0 ohms. However, there is always some resistance due to terminal oxidation.

If this resistance becomes too great the result will be a malfunction. The magnitude of the resistance before it causes a malfunction depends on the circuit load.

Checks:

- Check the cables visually according to **CHECK TERMINALS VISUALLY**.

Cleaning female socket terminals and male pin terminals

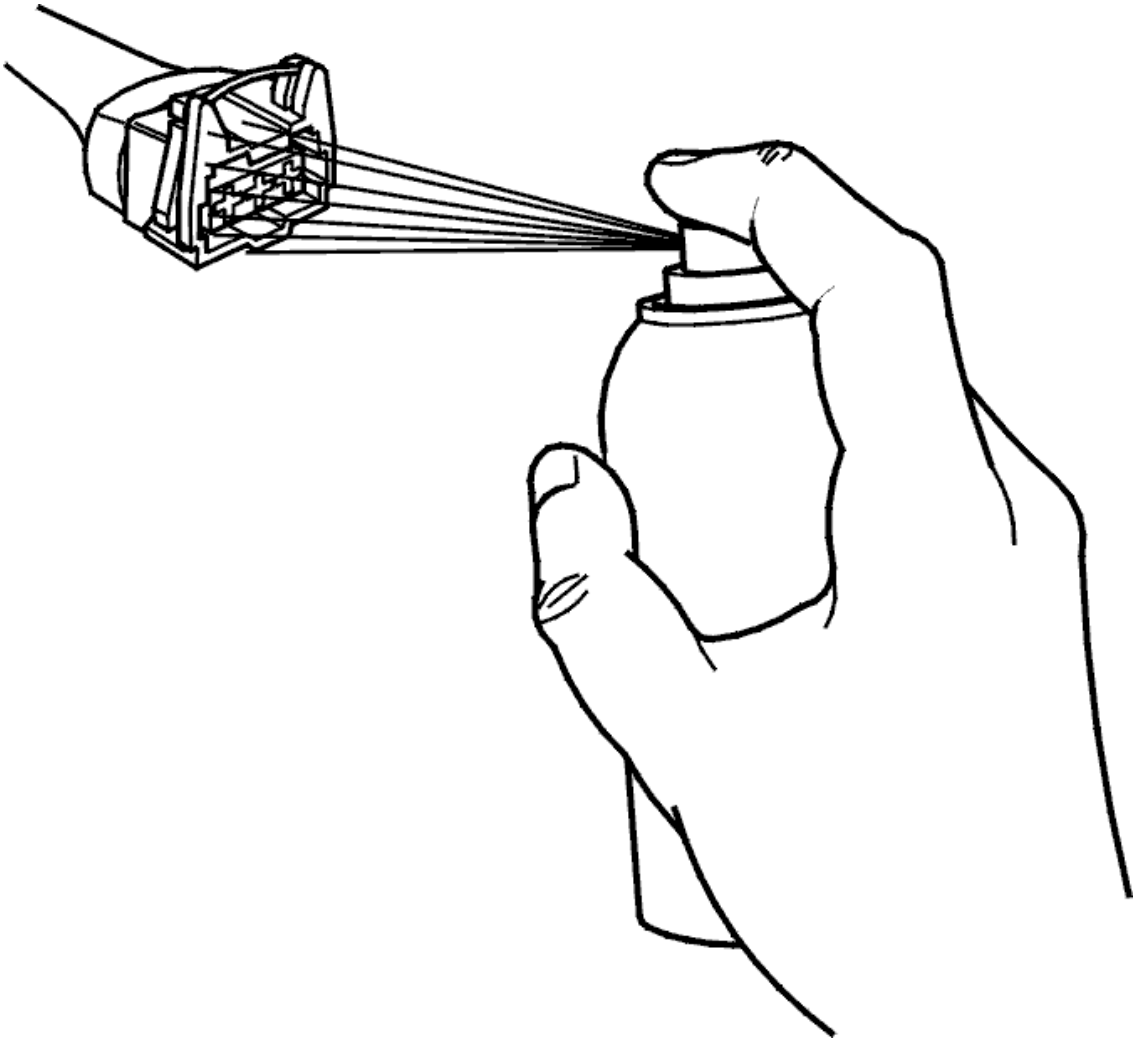

Fig. 17: Apply Rust Solvent Spray Or Grease To Connectors
Courtesy of VOLVO CARS CORPORATION

NOTE: **Do not apply rust solvent spray or grease to the catalyst monitor sensor or instrument cluster connectors.**

- Ignition off
- Disconnect the battery negative terminal
- Use compressed air to clean the disconnected connector
- Apply rust solvent spray 1161422 to the disconnected connectors
- Blow clean using compressed air.

Greasing female terminals

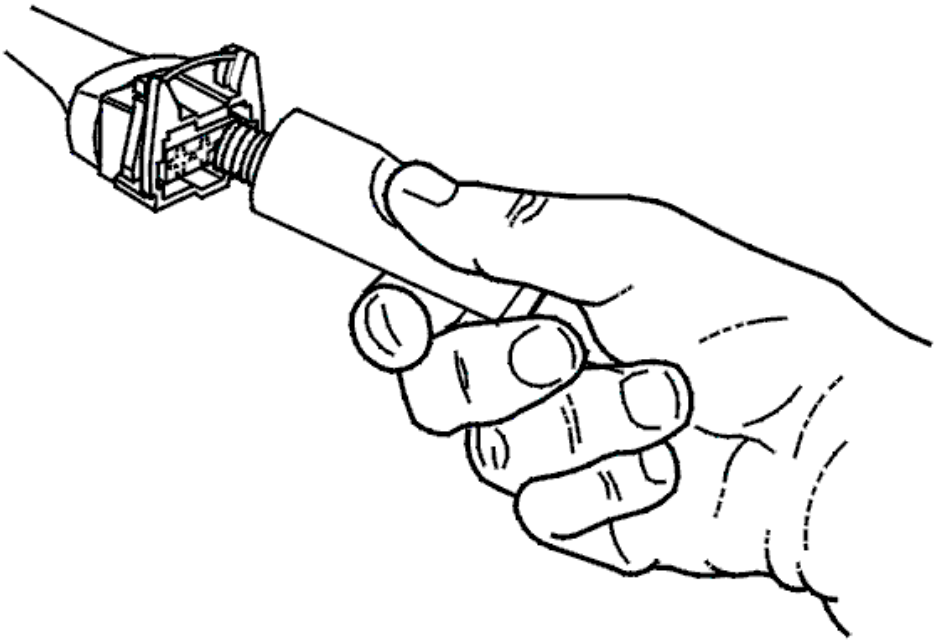

Fig. 18: Identifying Grease Pressed Into Terminals
Courtesy of VOLVO CARS CORPORATION

NOTE: Note Do not fill the protective cover with grease.

- Press grease, P/N 1161417-9, into the female sockets directly from tube
- Check that all the terminal cavities are filled
- Use a loose male pin to ensure that the connection in the sockets is good. The pin should remain in position when pulled gently.

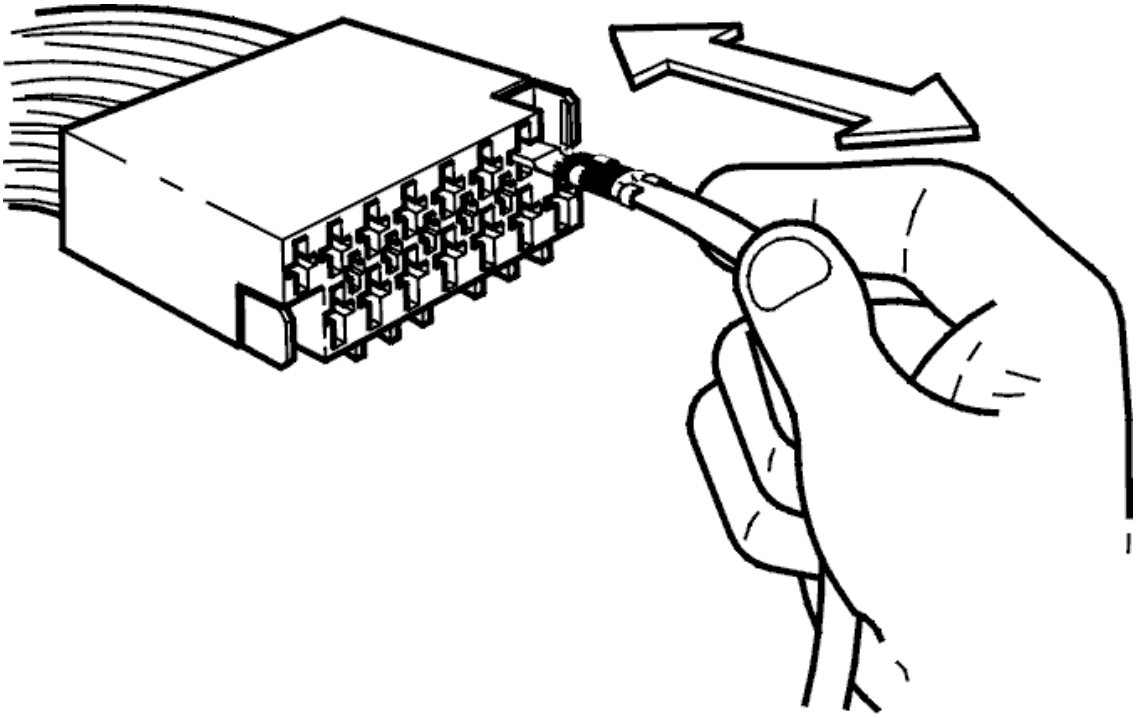

Fig. 19: Checking To Ensure Contact In Sockets Is Good
Courtesy of VOLVO CARS CORPORATION

CAN NETWORK

Power transmission

CAN NETWORK

INFORMATION ABOUT THE CAN NETWORK, STRUCTURE AND FUNCTION

This document explains how the structure of the CAN network, its function and how the on-board diagnostic system works. It also explains the circumstances under which diagnostic trouble codes (DTCs) are stored, as well as containing a few tips on how to conduct fault-tracing on the CAN network. Faults in the CAN network are often complicated to fault-trace because it is a distributed system and because diagnostic trouble codes (DTCs) are stored under different circumstances in different control modules.

The information in this document should ideally be used as a basis for understanding how the CAN network works, diagnostics for the system and how to carry out fault-tracing. There is no guarantee that it will help you find a fault source for a specific problem immediately. This document should be viewed as a supplement to the normal training information and is suitable for mechanics who have completed and understood the content of the "Volvo Automotive Networks" course.

Diagnostic functions in the central electronic module (CEM)

The central electronic module (CEM) is the only control module that monitors the voltage levels in the control area network (CAN). Only this control module can store diagnostic trouble codes (DTCs) for short-circuits between the CAN cables and ground or supply voltage (e. g. DTC CEM-DF14). However, other control modules can store diagnostic trouble codes (DTCs) for causes based on a short-circuit (e. g. DIM-E003). This is a small, but very important difference.

NOTE: **The fact that the central electronic module (CEM) contains more diagnostics functions that other control modules does not mean that this control module is the cause of the fault. Do not replace the central electronic module (CEM) in the event of CAN-related faults unless an internal fault has been confirmed through fault-tracing.**

The central electronic module (CEM) also has functions for determining whether other control modules have failed. All control modules on the CAN network must transmit and receive information. More specifically, all other control modules in the controller area network (CAN) must receive information from the central electronic module (CEM), and the central electronic module (CEM) must receive information from all other control modules in the controller area network (CAN). If a control module does not receive information from the central electronic module (CEM) it will store diagnostic trouble code (DTC) XXX-E003. If the central electronic module (CEM) cannot receive information from a control module it will store diagnostic trouble code (DTC) CEM-1A51 to CEM- 1A66 depending on which control module the central electronic module (CEM) is not receiving information from. For example, the climate control module (CCM) will store diagnostic trouble code (DTC) CCM-E003 if it does not receive information from the central electronic module (CEM), and the central electronic module (CEM) will store diagnostic trouble code (DTC) CEM-1A55 if it does not receive any information from the climate control module (CCM).

If there is an open-circuit in the CAN network, diagnostic trouble codes (DTCs) will be stored in pairs, one in the central electronic module (CEM) and one in the relevant control module. Note that this may result in the central electronic module (CEM) storing so many diagnostic trouble codes (DTCs) that it reaches its maximum (10).

These diagnostic trouble codes (DTCs) are explained in detail under Diagnostic trouble codes (DTCs) CEM-1A51 to CEM-1A66.

Diagnostic trouble codes (DTCs) for faults in the CAN network

Diagnostic trouble codes (DTCs) CEM-DF03 to CEM-DF16

The central electronic module (CEM) is the only control module that can detect a short-circuit to ground or to voltage. This is done by measuring the voltage level on the CAN cables via an internal voltmeter in the central electronic module (CEM) and as a result the diagnostic trouble codes (DTCs) CEM-DF03 to CEM-DF16 can be stored.

NOTE: There are different codes for the high speed and low speed networks. DF03, DF04, DF05 and DF06 refer to the low speed network while DF13, DF14, DF15 and DF16 refer to the high speed network.

There is no defined function for detecting an open-circuit in the CAN cables, but a number of diagnostic trouble codes (DTCs) will be stored as a result of an open-circuit. Diagnostic trouble codes (DTCs) CEM-DF03 to CEM-DF16 are the strongest indication of a fault in the CAN network, although the diagnostic trouble codes (DTCs) cannot localize the fault. Due to the criteria that cause these codes to be stored, diagnostic trouble codes (DTCs) can also be stored if the car is driven in areas with strong magnetic fields.

The CAN cables are monitored continuously for faults of this type. It can take up to ten seconds from the time the fault occurs until the diagnostic trouble code (DTC) is stored. Diagnostic trouble codes (DTCs) CEM-DF03 to CEM-DF16 are stored when the voltage on one of the CAN cables is higher than 4.5 V or lower than 0.5 V. A typical scenario when these codes are stored is when one of the CAN cables has been clamped together with a ground lead or a power supply cable.

Diagnostic trouble codes (DTCs) CEM-1A51 to CEM-1A66

The central electronic module (CEM) expects to receive a signal from each control module on the network. The control module stores a diagnostic trouble code (DTC) for faults in the communication with a control module, or "node not alive", if there is no communication for more than ten seconds.

The diagnostic trouble codes (DTCs) are normally stored in the event of an open-circuit in the CAN cables, a short-circuit to voltage or ground, when the control module has no supply voltage or if other circumstances cause the control module to stop communicating with the central electronic module (CEM). Combinations of diagnostic trouble codes (DTCs) CEM-1A51 to CEM-1A66 are very useful for localizing a fault in the network. See the section "Multiple diagnostic trouble codes (DTCs) and extended diagnostics".

If the status of diagnostic trouble codes (DTCs) CEM-1A51 to CEM-1A66 is intermittent, always check that communication is possible between all control modules when carrying out repairs. Then check the power supply

and ground for the affected control modules. The control module will not store a diagnostic trouble code (DTC) if it was without power when the fault occurred. The central electronic module (CEM) on the other hand will store diagnostic trouble code (DTC) CEM-1A5X or CEM-1A6X even if the control module has no power supply or is experiencing other CAN communication problems.

Diagnostic trouble code (DTC) XXX-E003 stored in control modules other than the central electronic module (CEM)

Diagnostic trouble code (DTC) XXX-E003 is stored when an incorrect CAN configuration ID is received from a control module within 5 seconds of start up. This means that the control module cannot receive the data message with the correct Master Configuration ID that the central electronic module (CEM) transmits. This is normally due to an open-circuit on the CAN cables or some other interference in communication.

The diagnostic trouble code (DTC) is intended to detect whether the central electronic module (CEM) has defective software, but is more common when there are faults in the CAN network or faults in the power supply to the control modules. A combination of E003- codes makes it easier to localize the fault, see the section on "Multiple diagnostic trouble codes (DTCs) and extended diagnostics". On the other hand, the diagnostic trouble code (DTC) is not stored at the same time in all control modules. This depends on the power supply to the control modules (e. g. X / 15 / 15I / 30).

The diagnostic trouble code (DTC) can be stored if incorrect software is downloaded into a control module or if a control module is moved from one car to another. This is why moving control modules between cars is not permitted. If several or all control modules have stored diagnostic trouble code (DTC) E003, this may be due to an incorrect signal configuration having been downloaded into the central electronic module (CEM). This is not particularly likely in practice, however, but is more often due to a physical fault in the CAN network.

X/ 15I / 15 supplied control modules can detect the fault five seconds after the control module has been powered up (ignition on). The control module compares its own CAN configuration ID (SW version) with the CAN configuration ID that is continuously transmitted by the central electronic module (CEM). Diagnostic trouble code (DTC) E003 is stored by the control module if the central electronic module (CEM) ID is absent or is different from the anticipated value five seconds after the control module has been powered up. An incorrect CAN configuration ID may be the result of a control module having been taken from one car and installed in another, although the diagnostic trouble code (DTC) is usually stored due to the signal being completely absent. A control module that is supplied directly from the battery (30) does not follow the same start up procedure as other control modules, but receives information about the position of the ignition key via the CAN network. This means that a 30-supplied control module will not store diagnostic trouble code (DTC) E003 5 seconds after the ignition is switched on if there is a permanent fault. The control modules will store the diagnostic trouble code (DTC) after a time-out lasting approximately ten minutes instead.

NOTE: This means that for a 30-supplied control module, the diagnostic trouble code (DTC) will be stored or not depending on when then fault occurred.

A typical reason for E003 being stored is an open-circuit in the CAN cables. In this case, the diagnostic trouble code (DTC) is often stored together the codes CEM-1A51 to CEM-1A66.

Diagnostic trouble codes (DTCs) E000 and E001 in a control module (E000=HS-CAN, E001=LS-CAN)

Diagnostic trouble code (DTC) E001 indicates a fault in the data communication on the CAN network. This can be due to interference of various types or if a control module is sending incorrect messages. Monitoring for this type of fault takes place continuously. The diagnostic trouble codes (DTCs) are originally intended to indicate contact bounces of if incorrect messages are sent over the network, but can also be stored in the event of a short-circuit between the two CAN cables or if communication only functions on one of the two cables. It takes a couple of seconds from the fault occurring to its detection.

Another important cause of these codes is if a control module has been disconnected from the network without the battery cable having been disconnected from the negative terminal (in such cases removing the ignition key does not help) or if the signal on the CAN cables is "weak" or disrupted. This can occur if communication is only working on one of the CAN cables or if one of the network resistors in the network is not working. The network resistors on the low speed network are located in the upper electronic module (UEM) and the rear electronic module (REM). On the high speed network, the resistors are located in the anti-lock brake system module (ABS)/brake control module (BCM) and in the electronic throttle module (ETM), except for Bosch EMS MY02 and later where the resistors are located in the brake control module (BCM) and the engine control module (ECM).

In certain cases, the diagnostic trouble code (DTC) may be stored if a control module sends data at the wrong transfer speed or if the crystal in a control module is defective.

Diagnostic trouble codes (DTCs) in the event of lost signal, rapid indication of faults on the CAN network

Some control modules, such as the engine control module (ECM), the electronic throttle module (ETM), the anti-lock brake system module (ABS) and the transmission control module (TCM) continually check the existence of each other and store diagnostic trouble codes (DTCs) in the event of missing signals. These diagnostic trouble codes (DTCs) are often due to different driving conditions and combinations of diagnostic trouble codes (DTCs) are often stored which can make fault-tracing more difficult. When attempting to recreate the fault, there is no guarantee that the same combination of diagnostic trouble codes (DTCs) will be stored. The detection of these diagnostic trouble codes (DTCs) is often more sensitive and they are usually stored more easily than CEM-1A51 to CEM-1A66 or CEM-DF03 to CEM-DF16. This can therefore be an indication of a short-term intermittent fault having occurred on the CAN network.

Below is a selection of diagnostic trouble codes (DTCs) that may or may not be stored in the event of an intermittent fault on the CAN network:

- ECM-928C (Bosch), ECM-922A (Denso), only when the engine is running. These diagnostic trouble codes (DTCs) indicate that the control signal for the cruise control is missing or could not be received by the engine control module (ECM)
- ECM-901A, ECM-901E, ECM-902A, ECM-911A, ECM-912A and ECM-913A for Bosch and ECM-901A, ECM-902A, ECM-911A, ECM-912A for Denso
- SRS-00D6, time-out for the seat belt buckle. This diagnostic trouble code (DTC) indicates that the supplemental restraints system module (SRS) has not received the status of the seat belt buckles from the central electronic module (CEM). The sensor for the seat belt buckles is directly linked to the central electronic module (CEM)
- SRS-00D5, status of the SRS indicator lamp in the driver information module (DIM)
- Discrepancies in the signal from the pedal position sensor between the directly connected signal and the signal over the CAN network. See the table below.

Engine control module (ECM) Bosch		
	ECM-959F	Fault when comparing the signals AP12T APU (Analog Pedal Unit) Analog and PWM (from the electronic throttle module (ETM))
Engine control module (ECM) Denso		
	ECM-9520	ETS, APM, PWM, electrical fault, signal too low
Monitoring the engine control module (ECM)		
Bosch		
	ECM-510F	No speed signal
Denso	ECM-510D	No speed signal
	ECM-A02B	No signal from the anti-lock brake system module (ABS)/brake control module (BCM)
	ECM-902A	Communication fault with the electronic throttle module (ETM)

Multiple diagnostic trouble codes (DTCs) and extended diagnostics (counters and freeze frames)

The detection time for faults in the CAN network varies depending on the diagnostic trouble code (DTC). This means that for different fault occurrences, different diagnostic trouble codes (DTCs) can be stored in different control modules. Several diagnostic trouble codes (DTCs) in different control modules can be confusing and must be investigated at the start of fault-tracing to check for any link between the various codes.

It is now possible to read off extended diagnostic trouble code (DTC) information, normally counters and frozen values. This can also help with fault-tracing on the CAN network as it can provide information about diagnostic trouble codes (DTCs) that are stored simultaneously. Remember that the function using counters can be implemented differently in different control modules, which can make it difficult to compare cycles between different control modules.

When performing fault-tracing on a car with many intermittent E003 and CEM-1A51 to CEM-1A66 diagnostic trouble codes (DTCs), this can be made easier by checking the affected control modules. Copy the diagram in the service manual, Data communication for the relevant car model, and write down all diagnostic trouble codes (DTCs) and counters at the relevant control modules. Check any conclusions can be drawn from where the diagnostic trouble codes (DTCs) are stored. If the diagnostic trouble codes (DTCs) are in control modules at one end of the CAN network, this can give an indication of where the fault may be located.

Limp-home modes and characteristics of control modules in the event of faults in the CAN network

When a control module cannot receive messages from the central electronic module (CEM) it will go into Limp-home mode. In such cases, the control module can retain part of its functionality. The remaining

functionality varies in different control modules. If a fault occurs after a control module has been started up, it will normally retain the most recent values as the Limp-home values. There are exceptions, such as the fuel gauge in the driver information module (DIM).

Some clear examples for the low speed side network:

- Driver information module (DIM):

  As the driver information module (DIM) only displays signals received from the CAN network, it will soon be evident if signals are lost. The display of various signals will disappear at slightly different times due to some filtering of the signals in the driver information module (DIM). The values on the gauges are normally frozen for around ten seconds before dropping to zero and the driver information module (DIM) shuts down. If only one control module has disappeared from the network, the driver information module (DIM) can display the first indication of this. An example of this is where the rear electronic module (REM) stops communicating, which is indicated by the fuel gauge dropping to zero

- Climate control module (CCM):

  This control module must retain some of its functionality even if the CAN communication is lost. It is also a very good indication of whether the CAN communication has been lost, as the LEDs will light up exactly ten seconds after the ignition key has been turned to positions one or two. Other symptoms: if the AC compressor is not working, apart from the first second when the function is checked by the engine control module (ECM), this can indicate a fault in the climate control module (CCM)>central electronic module (CEM)>engine control module (ECM) chain. Another very obvious symptom is that the blower fan continues to operate for up to ten minutes after the key is removed from the ignition switch. This is because the climate control module (CCM) is powered via Extended-X from the central electronic module (CEM). The climate control module (CCM) normally switches off the blower fan and other functions when it does not receive a signal over the CAN network after the ignition key has been removed. If there is no CAN communication, the climate control module (CCM) will continue to operate until the central electronic module (CEM) switches off the power supply

- Driver door module (DDM)/Passenger door module (PDM):

  The module will be set to a resting mode and no functions will be performed, such as setting the mirror or operating the power windows

- Power seat module (PSM):

  The memory function in the seat will not work. Stored positions for seats and mirrors will not work when the car is unlocked with a remote control

- Upper electronic module (UEM):

  The seat belt reminder will be lit, even though the belt is secured in the seat belt buckle. It will not be possible to lock or unlock the car using the remote control

- Audio module (AUM):

The radio retains most of its functionality. However, the buttons on the steering wheel will not work

- Rear electronic module (REM):

  The fuel gauge is not working and it will not be possible to lock/unlock the rear doors using the central locking switch. The heating loops in the rear windshield and the rear folding head restraints will not work

- Steering wheel angle sensor module (SAS):

  The anti-skid system will not work

- Steering wheel module (SWM):

  Buttons on the steering wheel and the turn signal lamp stalk will not work. However the horn will still work because it is connected directly to the central electronic module (CEM).

Some clear examples for the high speed network:

- Engines:

  Cannot be started as a result of no communication between the central electronic module (CEM) and transmission control module (TCM) + engine control module (ECM)

  - Level 1: No cruise control function
  - Level 2: Accelerator pedal "heavy". Poor response
  - Level 3: Present Limp-home mode. The engine speed (RPM) is controlled via the injectors.
- Electronic throttle module (ETM):

  The node has three Limp-home levels:

  - Level 1: No cruise control function
  - Level 2: Accelerator pedal "heavy". Poor response
  - Level 3: Present Limp-home mode. The engine speed (RPM) is controlled via the injectors.
- Transmission control module (TCM):

  It is not possible to use all the gears.

  NOTE: If the control module has gone into Limp-home due to an open-circuit in the CAN communication, the functionality will not return during the cycle, even in the event of the fault disappearing.

- Anti-lock brake system module(ABS)/Brake control module (BCM):

  The remaining functionality depends on what fault has occurred. In the event of a fault in the AYC sensor, the indicator lamp lights and DSTC stops working. Faults in the wheel sensors cause the indicator

lamp to light and the ABS function to disappear, although there is still braking assistance. The unit can lose certain diagnostics in Limp-home mode

- Central electronic module (CEM):

  Extremely large loss of function. It is worth noting that the control module has separate circuits for the high speed and low speed networks. This means that it is possible to communicate with the control module via the high speed network even when the low speed network has a fault.

Fault-tracing tips

If the central electronic module (CEM) has stored diagnostic trouble code (DTC) CEM-DF14 CAN low short-circuit to ground, this does **not** mean that the central electronic module (CEM) is necessarily the control module which short-circuits the cable. The short-circuit may be from any part of the cable to any ground terminal or ground lead. The fault may be in a cable harness, which is the most common situation, or in a control module. Note that the diagnostic trouble code (DTC) can be stored in some control modules but not in others, and that the short-circuit in this case can be far from the control module that stores the diagnostic trouble code (DTC).

Statistically there is a high likelihood of the fault being in the cable harness (check behind the audio module (AUM), at the supplemental restraint system module (SRS), the terminals for the CAN cables in the connectors on the transmission control module (TCM) and the engine control module (ECM). Note that terminal pins (P/N 9441394) can be used to check the mating surface in the female connectors for the CAN cables. If the mating surface is defective or the terminal pins detach too easily, the female connector socket must be replaced (P/N 9442486).

If diagnostic trouble code (DTC) E001 is stored continually and the cable harness is free of faults, all control modules containing diagnostic trouble code (DTC) E001, apart from the central electronic module (CEM), must be disconnected from the CAN network. Delete the diagnostic trouble codes (DTCs) in the remaining control modules and read off diagnostic trouble codes (DTCs) again to, see if the fault disappears. Then connect the control modules again, one by one, until the diagnostic trouble code (DTC) recurs. If VIDA (Volvo scan tool) can communicate with the car when the ignition key is in position 0 and 1 but not in position 2, the fault is probably in a 15-supplied control module.

The above method can also be used in other scenarios. On rare occasions, control modules can begin sending irrelevant messages on the CAN network. This can prevent the correct messages from getting through. The result can be one or more E003 or CEM-1A51 to 1A66 diagnostic trouble codes (DTCs). It may be difficult to determine which control module is causing the interference. In this case, the above method may be the only way of finding the fault source.

If none of the control modules on the LS-CAN respond but a response is received from the control modules on HS-CAN

The central electronic module (CEM) protects the CAN network from short-circuits caused by the data connection device. This is achieved with the aid of four internal relays, one for each CAN cable. The relays are closed when the central electronic module (CEM) receives a signal from VIDA (Volvo scan tool) on the communication cable.

If the above problem occurs, check the following:

1. The scan tool cable. This cable has given problems before. Try with a different cable and a different VCT2000 (or appropriate scan tool).
2. Continuity and signal level on the communication cable
3. Continuity and signal level in the CAN cables between the connector and the central electrical module (CEM).

If points one to three do not produce a result, the fault is probably a permanent cable fault in the CAN network or in a control module. Continue fault-tracing according to "CAN network hardware and measurement methods" below.

CAN network hardware and measurement methods

The CAN network is connected using resistors (120 ohms each) between the two CAN cables (green (GN) for CAN-L, white (W) for CAN-H) in some control modules. The two control modules in the low speed network (in principle the passenger compartment) that have resistors are the rear electronic module (REM) and the upper electronic module (UEM). In the high speed network (in principle the engine compartment), the position of resistors depends on the engine type and model year. For model years 99-01, the resistors are positioned in the anti-lock brake system module/brake control module (ABS/BCM) and the electronic throttle module (ETM). In cars from model year 02 with Bosch EMS, the electronic throttle module (ETM) is no longer part of the CAN network. The resistor in this case is located in the engine control module (ECM).

Measurement method

To localize a permanent fault in the CAN network, the resistance can be measured in the network. When taking resistance readings, the battery negative terminal must be disconnected and the resistance must be close to 60 ohms. An open-circuit in one or both CAN cables will produce a resistance of 120 ohms. The recommended approach is to measure the resistance using a breakout box connected to the central electronic module (CEM). This has the following advantages:

1. The reading is taken with the central electronic module (CEM) connected. Note that open-circuits in the anti-lock brake system module/brake control module (ABS/BCM), steering wheel angle sensor module (SAS), power seat module (PSM), passenger door module (PDM), driver's door module (DDM) audio module (AUM) will not affect the reading as these control modules are not connected in series. The reading only checks the "main artery in the CAN network". However, a short-circuit between the two cables will be detected
2. There is easy access to the low speed network, the high speed network and the cables between the central electronic module (CEM) and the connector
3. If a multimeter is connected, this can be positioned in front of the driver's seat and the cable harness/connectors can be twisted above the central electronic module (CEM). It is then easy to, see any changes in resistance
4. As in point 3, twist and turn the cables/junction behind the radio where the cables lie against the rear wall of the engine compartment
5. As in point 3, move the cables/junction connected to the cable harness in the headlining by the A-post
6. As in point 3, ask someone to twist and turn the cables under the cooling box for the central electronic module (CEM) and the transmission control module (TCM).

If for some reason it is not possible to use the breakout box for the central electronic module (CEM), the low speed network can be measured using the breakout box for the power seat module (PSM) or in its connector when the power seat module (PSM) is disconnected.

These measurements are particularly effective when diagnostic trouble codes (DTCs) CEM-1A51 to 1A66 and E003 or E001 are stored without diagnostic trouble codes (DTCs) CEM-DF03 to DF16 being stored. When taking resistance readings, also check that none of the cables are short-circuited to ground or voltage, which ought to have stored CEM-DF03 to DF16. The resistance should be several kohms.

For intermittent faults, the oscilloscope is very useful. The reading should be taken with all control modules connected and powered up using the breakout box. Check that the voltage on CAN-H never exceeds 4.5 V and that CAN-L is never below than 0.5 V. Note that the oscilloscope in VIDA (Volvo scan tool) is not sufficiently accurate (measurement speed too low) for detailed measurement of the traffic on the CAN network, but can give an indication of the voltage levels that exist and whether communication exists or not.

NOTE: **Never take readings directly in the connector using the test probes of the multimeter. This can result in damage to the connector and entail insufficient contact when the connector is reassembled. Use a terminal pin instead.**

FAULT TRACING

Power transmission

FAULT TRACING

COUNTERS, DESCRIPTION

Counter

A useful fault-tracing tool is the Diagnostic Trouble Code (DTC) counter. The control module stores 6 different counters for each Diagnostic Trouble Code (DTC), which describes the occurrence. The counters can be used to determine when and how often a fault has been detected. Using the counters for the Diagnostic Trouble Code (DTC) it is possible to, see if the fault has only been registered during the current operating cycle or whether it has been detected previously.
If a fault is intermittent it is possible to determine how intermittent the fault is by studying the values of the different counters.
Example:

- Counter 1 = 15 Counts the number of operating cycles since the fault was last validated.
- Counter 3 = 69 Counts the number of operating cycles since the fault was first validated.
- Counter 4 = 1 Counts how many times the fault has occurred since the first time the fault was first validated.
- Counter 5 = 91764 The counter adds the time in seconds for which the control module has been operating since the fault was first validated and the diagnostic trouble code (DTC) was stored.
- Counter 6 = 0 The counter adds the time in seconds for which the test, the diagnostic, has run since the fault was first validated and the diagnostic trouble code (DTC) was stored.
- Counter 7 = 0 The counter adds the time in seconds for which the fault has been validated since the fault was first validated and the diagnostic trouble code (DTC) was stored.

In the examples given above, counter 1 gives the number of operating cycles where the diagnostic was run without a fault being detected. Counting takes place from when the fault was last detected. Counter 3 is the total number of operating cycles regardless of whether the diagnostic was run or not. Counter 4 shows the number of operating cycles where the diagnostic detected a fault. Counters 3 and 4 start to count from the first operating cycle after the operating cycle when the fault was first detected.
In the example, counter 4 = 1, which means that the fault was detected twice. One can, see that no fault was detected during the relevant operating cycle. Depending on the number of operating cycles and the customer's driving pattern, it can assist in ruling out this control module from the customer's current problems. The counters can help us understand how intermittent the fault can be. If the counters 1 = 0, 3 = 0 and 4 = 0 it indicates that there have not been any operating cycles since the fault was detected and that the fault was probably generated in the workshop.
For an operating cycle to be recognized certain requirements may be necessary, for example, increasing the engine coolant temperature. In certain cases ignition on, ignition off and ignition on again are counted as an operating cycle.
Counter 5 can be useful if the fault was detected in this operating cycle. The time can be used to determine more exactly when the fault occurred.

NOTE:
Not all counters need be implemented in a control module, this varies from system to system. The possible counters are described below.

Counter	Function
A (see the graph in, see **Fig. 1**) Counter 1	The graph in, see **Fig. 1** illustrates the time at which a fault occurs. In the illustration the control module has detected a fault in the second cycle. This fault has then occurred a total of 5 times. The counter can be read off for each diagnostic trouble code (DTC) in the control module in which this is implemented. Operating cycles are marked with vertical lines. An operating cycle usually begins at ignition on and finishes when the ignition is switched off.
C#1 (see the graph in, see **Fig. 1**) Counter 2	Counts the number of operating cycles since the fault was *last* validated. This information can be used to determine whether the fault is active during the current operating cycle or not. The fault is present now if the value is zero. This counter is also used for most systems to give "Permanent fault" and " Intermittent fault" text messages in VIDA when reading off a diagnostic trouble code (DTC).
C#3 (see the graph in, see **Fig. 1**) Counter 3	Counts the number of operating cycles since the fault was *first* validated. When a fault has been validated, the counter will count up by 1 for each subsequent operating cycle. The same as counter C#1 but monitors the number of cycles since the first fault occurred.
C#4 (see the graph in, see **Fig. 1**) Counter 4	Counts the number of operating cycles in which the fault was validated since it was first validated. Counts the number of times the fault has occurred since the first time.
C#5 Counter 5	The counter assesses the number of seconds the control module has been operating since the fault was first validated and the diagnostic trouble code (DTC) was stored. The time the control module has been operating is only counted when it is active, not in "sleep mode".
C#6 Counter 6	The counter assesses the number of seconds the test (the diagnosis) has been operating since the fault was first validated and the diagnostic trouble code (DTC) was stored.
C#7 Counter 7	The counter assesses the number of seconds the fault has been valid since it was first validated and the diagnostic trouble code (DTC) was stored.

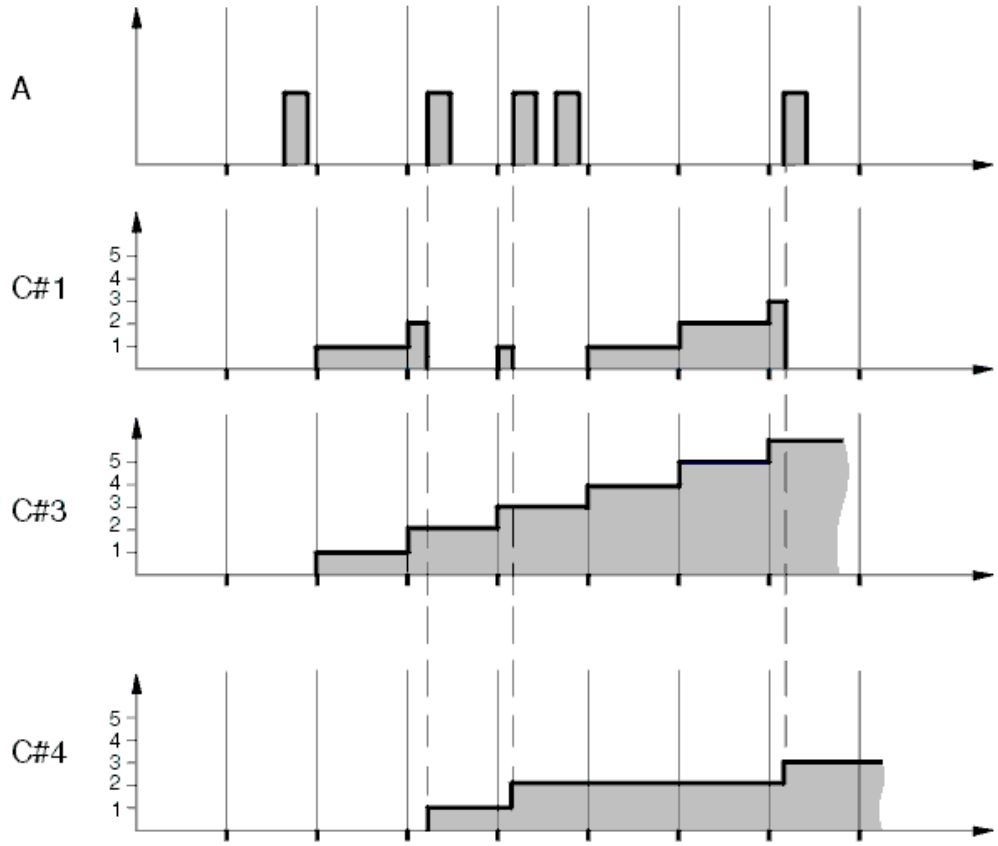

Fig. 1: Diagnostic Trouble Code (DTC) Counter Graph
Courtesy of VOLVO CARS CORPORATION

DESCRIPTION OF COUNTER

Counter
There are eight different counters that are stored individually for each diagnostic trouble code (DTC). For an intermittent malfunction, the values of the different counters can be studied to determine how intermittent the malfunction is. All counters do not need to be implemented in one control module, this varies from system to system. The possible counters are described below.

Counter	**Function**
C#1	Counts the number of operating cycles since the malfunction was *last* validated. This information can be used to determine whether the malfunction is active during the current operating cycle or not. The malfunction is present now if the value is zero.
C#2	Counts the number of operating cycles since the malfunction was *last* validated, where test for the diagnostic trouble code was performed without the malfunction being detected and validated. When a test is performed, no malfunction is detected, the counter will count up by 1 for each operating cycle.
C#3	Counts the number of operating cycles since the malfunction was validated *the*

	first time . For each completed operating cycle the counter will count up by 1.
C#4	Counts the number of operating cycles in which the malfunction was validated since it was first validated. Counts the number of times the malfunction has occurred since the first time.
C#5	Counts the number of warm-up cycles since the MIL-light has gone off.
C#6	The counter counts the number of internal detections of the malfunction that have been performed for the diagnostic trouble code. When this counter reaches + 127, the control module considers that the malfunction is active right now. When counter is at value -127 the malfunction is not active. The value is reset to zero at each new operating cycle. If the value increases toward +127 the control module has detected a malfunction and, for each internal test, the value counts up. When the malfunction is not active, the control module counts down to minimum -127. Value can only be changed when the control module has started the test for the diagnostic trouble code. The increments with which the control module counts up or down the value may vary between control modules.
C#7	Shows maximum value for current operating cycle.
C#8	Shows maximum value for current and/or earlier operating cycle.

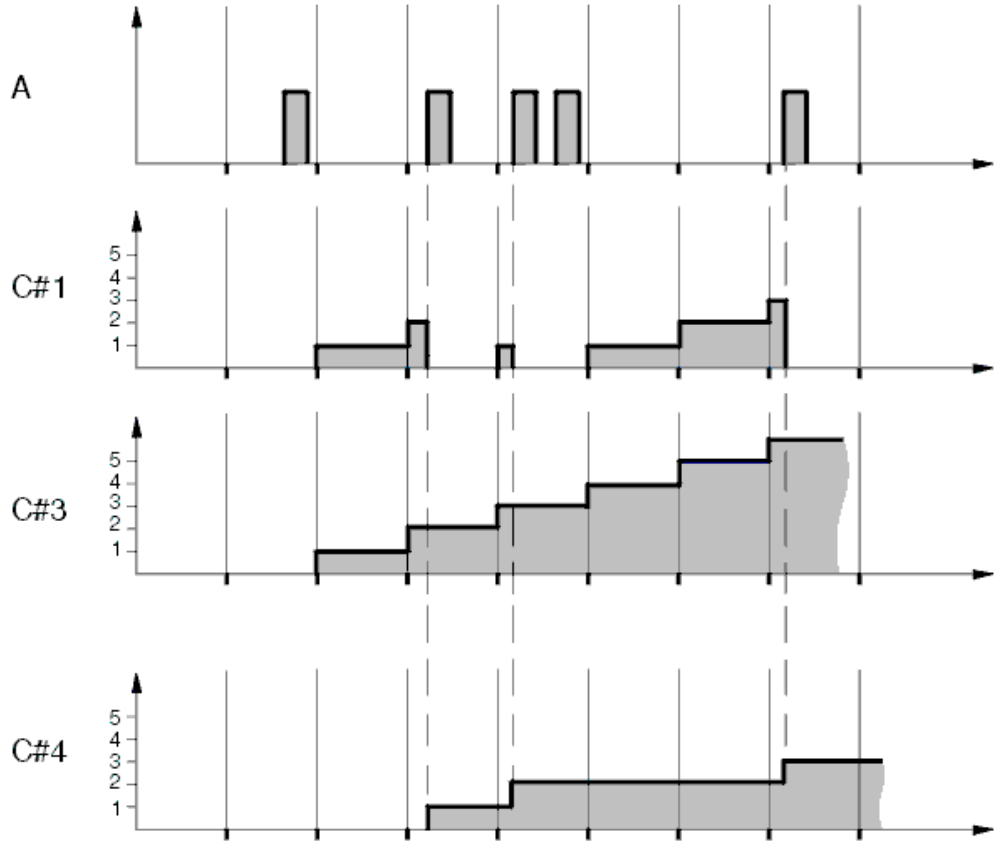

Fig. 2: Diagnostic Trouble Code (DTC) Counter Graph
Courtesy of VOLVO CARS CORPORATION

DESCRIPTION OF FROZEN VALUES

EXPLANATION

Frozen values are parameter values stored when a Diagnostic Trouble Code (DTC) is generated.

TOTAL MILEAGE, VALUE

The value indicates the total distance covered by the vehicle at the time the Diagnostic Trouble Code (DTC) was generated.

Measurement range: 0 -16, 777, 215 km.

MECU POWER SUPPLY, VALUE

The value indicates the voltage over the Central Electronic Module (CEM) when the Diagnostic Trouble Code (DTC) was generated.

Measurement range: 0 -64 V.

Normal range: 12.0 - 14.5 V.

OUTSIDE TEMPERATURE, VALUE

The value indicates the outside temperature at the time the Diagnostic Trouble Code (DTC) was generated.

Measurement range: -40 °C to +215 °C.

ENGINE STATUS

Indicates if the engine is running.

No = Engine off

Yes = Engine running

ENGINE START IN PROGRESS

Indicates if start attempt is in progress.

No = Engine not cranking

Yes = Engine cranking

ECU-TEMPERATURE

The value shows the temperature in Differential electronic module (DEM). The temperature sensor is located on the circuit board.

POWER SUPPLY, DIFFERENTIAL ELECTRONIC MODULE (DEM), VALUE

The value indicates the power supply to the Differential Electronic Module (DEM) when the Diagnostic Trouble Code (DTC) was generated.

Measurement range: 0 -25.5 V.

Normal range: 12.0 - 14.5 V.

WHEEL SPEED, VALUE

The value indicates the wheel speed when the Diagnostic Trouble Code (DTC) was generated.

Measurement range: 0 - 255 km/h.

POWER SUPPLY, PRESSURE REDUCING VALVE

The value displays the current through the pressure reducing valve.

Measurement range 0 - 4095 mA.

POWER SUPPLY, PUMP MOTOR

The value indicates the supply through the electrically driven feed pump when the Diagnostic Trouble Code (DTC) was generated.

Measurement range 0 - 8191 mA.

DEM STATUS

Indicates the status of the differential electronic module (DEM) (software related) when the diagnostic trouble code was stored.

OK = AOC unit (coupling) is operating normally.

Coupling fully open upon request = AOC unit (coupling) fully open (requested from Brake Control Module (BCM))

Coupling inactive or faulty (open) = AOC unit (coupling) is open due to a fault in the system.

Coupling closed = AOC unit (coupling) is closed due to a fault in the system.

AOC STATUS

Indicates the status of the Active on Demand Coupling when the diagnostic trouble code (DTC) was stored. The differential electronic module (DEM) obtains the signal from the brake control module (BCM). The signal is used to deactivate the Active on Demand Coupling during special driving conditions.

Normal operation = Request from the Brake Control Module (BCM) for the AOC unit (coupling) to operate normally.

Rapid opening = Request from the Brake Control Module (BCM) for the AOC unit (coupling) to open quickly.

Slow opening = Request from the Brake Control Module (BCM) for the AOC unit (coupling) to open slowly.

Error in BCM = An error has occurred in the Brake Control Module (BCM) which means that the Differential Electronic Module (DEM) opens the AOC unit (coupling).

Completely locked = Request from the brake control module (BCM) that the Active on Demand Coupling unit (clutch) should lock completely (maximum torque to the rear axle).

Torque limiting = Request from the brake control module (BCM) that the Active on Demand Coupling unit should limit the torque to the rear axle.....

DIAGNOSTIC INFORMATION, STATUS

Indicates the diagnostic status of the differential electronic module (DEM) when the diagnostic trouble code (DTC) was stored.

No diagnostic trouble code (DTC) = No diagnostic trouble code (DTC) is stored in the control module.

At least one diagnostic trouble code (DTC) = At least one diagnostic trouble code (DTC) is stored in the control module.

All diagnostic tests have not been carried out = All diagnostic tests in the control module have not been carried out.

All diagnostic tests have been carried out = All diagnostic tests in the control module have been carried out

BRAKE PEDAL, STATUS

Indicates the stop lamp switch position, activated or not activated, when the diagnostic trouble code (DTC) was stored.

Active = Brake light switch actuated.

Not active = Stop lamp switch off.

PARKING BRAKE, STATUS

Indicates the parking brake position, activated or not activated, when the diagnostic trouble code (DTC) was stored.

Active = Parking brake actuated.

Not active = Parking brake not applied.

ABS STATUS

Indicates the status of ABS control when the diagnostic trouble code (DTC) was stored. The differential electronic module (DEM) obtains the value via the control area network (CAN) from the brake control module (BCM).

Active = ABS modulation.

Inactive = No ABS modulation.

GAUGE (HIGH OIL TEMPERATURE), VALUE.

The value indicates the number of times the Differential Electronic Module (DEM) has disengaged the all-wheel drive due to excessively high oil temperature.

Measurement range: 0-65, 534 times.

ENGINE SPEED, VALUE

The value indicates the engine speed when the Diagnostic Trouble Code (DTC) was generated.

Measurement range:0-8191 r/min.

Idle speed: approx. 750 r/min.

ENGINE TORQUE

The value indicates an engine control module (ECM)-calculated torque, supplied to the Active on Demand Coupling input shaft (propeller shaft) when the diagnostic trouble code (DTC) was stored. Calculation includes the gear ratio of the transmission and the final drive. The differential electronic module (DEM) obtains the value via the controller area network (CAN) from the engine control module (ECM).

Measurement range: -16.376 Nm to +16.384 Nm.

REAR AXLE TORQUE, VALUE

The value indicates the torque transferred to the rear axle, calculated by the AOC unit (coupling) when the Diagnostic Trouble Code (DTC) was generated.

Measurement range: 0 -8191 Nm

REQUESTED ENGINE TORQUE

The value indicates the requested engine torque of the driver when the diagnostic trouble code (DTC) was stored. The differential electronic module (DEM) uses this information to correctly transfer torque to the rear axle.

Measurement range: -16.376 Nm to +16.375 Nm.

DESCRIPTION OF STATUS IDENTIFIER

Status identifier
There are different status identifiers that can be read out for each diagnostic trouble code (DTC). The control module tests each connection more or less continuously. By reading out the diagnostic trouble code (DTC) and the associated status identifier (which detects the malfunction and stores the DTC), information about the test is obtained. Not all status identifiers need to be implemented in one control module, this varies from system to system. All status identifiers are reset and start counting again each time the control module is powered up and when erasing diagnostic trouble codes (DTCs). The possible status identifiers are described below.

Status identifier	**Explanation**
SI#01	The malfunction is validated now. Shows if the control module detects the malfunction right now. It is only when the test is in progress that the control module can detect malfunction and generate diagnostic trouble code.
SI#02	The malfunction is validated in the current operating cycle. Shows if the control module has detected the malfunction any time during this operating cycle.
SI#03	Intermittent not yet confirmed diagnostic trouble code.
SI#04	Confirmed diagnostic trouble code.
SI#05	Test status in current and/or earlier operating cycle. Shows if control module has performed test for this diagnostic trouble code in current and/or earlier operating cycle.
SI#06	The malfunction is validated in an earlier operating cycle. Shows if the control module has detected the malfunction any time during an earlier operating cycle.
SI#07	Test status in current operating cycle. Shows if control module has performed test for this diagnostic trouble code in current operating cycle.
SI#08	Request activate warning light/text message. Information about the diagnostic trouble code activates a warning light or text message.

ELECTRICAL

Power transmission

ELECTRICAL

CABLE TERMINALS SURFACE TREATMENT

GENERAL INFORMATION

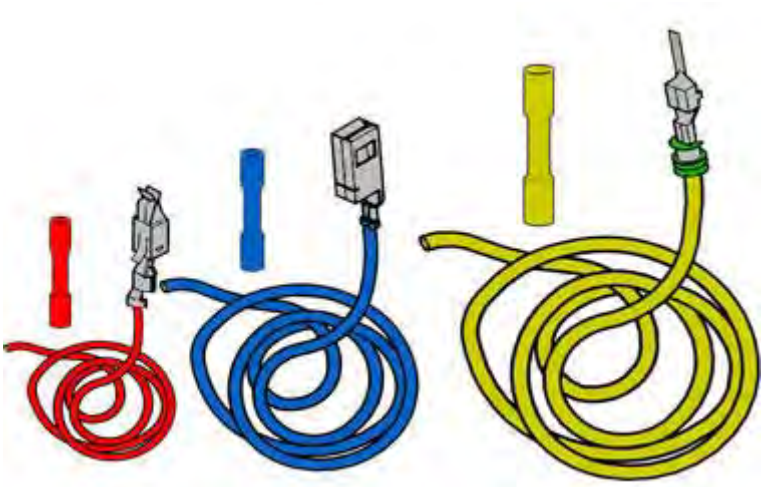

Fig. 1: Identifying Terminal With Integrated Cable
Courtesy of VOLVO CARS CORPORATION

Terminal with integrated cable designated "cable terminal", certain cases "service terminal".

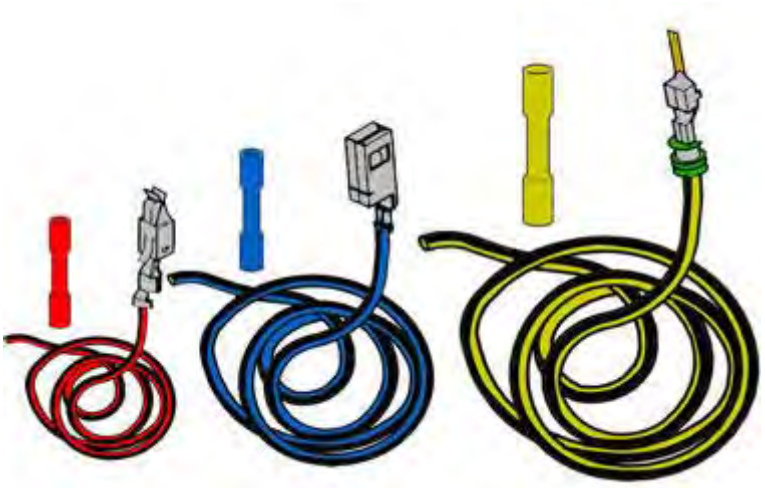

Fig. 2: Identifying Terminal With Integrated Cable
Courtesy of VOLVO CARS CORPORATION

Black marking = terminal's surface treatment is gold. Marking introduced running from second quarter 2008.

CAUTION: If new components are supplied with a section of new wiring, the equivalent wiring section in the vehicle must be substituted with the new section.

Due to oxidation and galvanic currents, female and male connections with the same surface treatment should be used.

Example of different surface treatments: Gold (Au), Silver (Ag), Tin (Sn)

- Silver + Tin = Permitted
- Tin + Gold = Not permitted
- Silver + Gold = Permitted

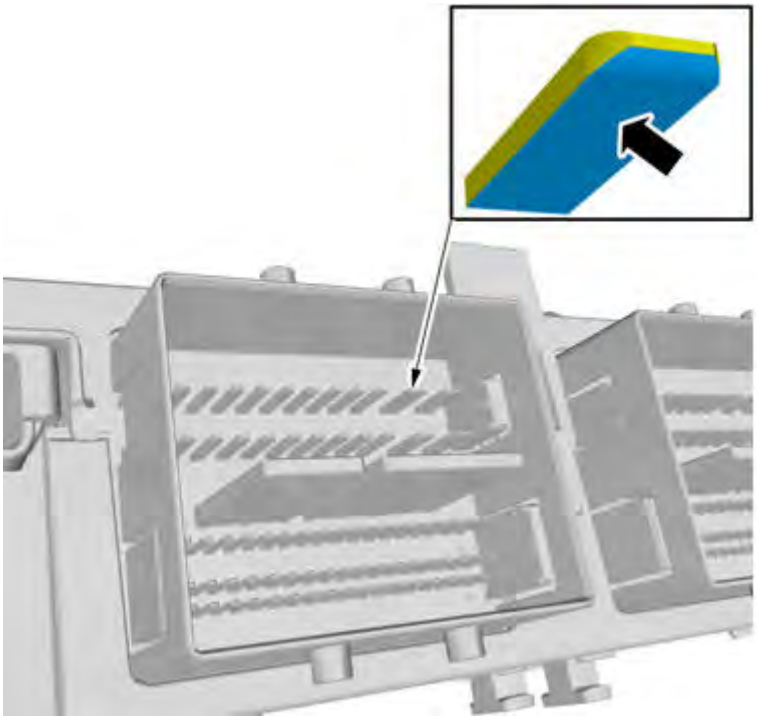

Fig. 3: Identifying Connector Pin With Surface Treatment
Courtesy of VOLVO CARS CORPORATION

The type of surface treatment on the connector can only be determined by inspection the male connector's pins with a magnifying glass.

INTEGRATED RELAY / FUSEBOX, REMOVING

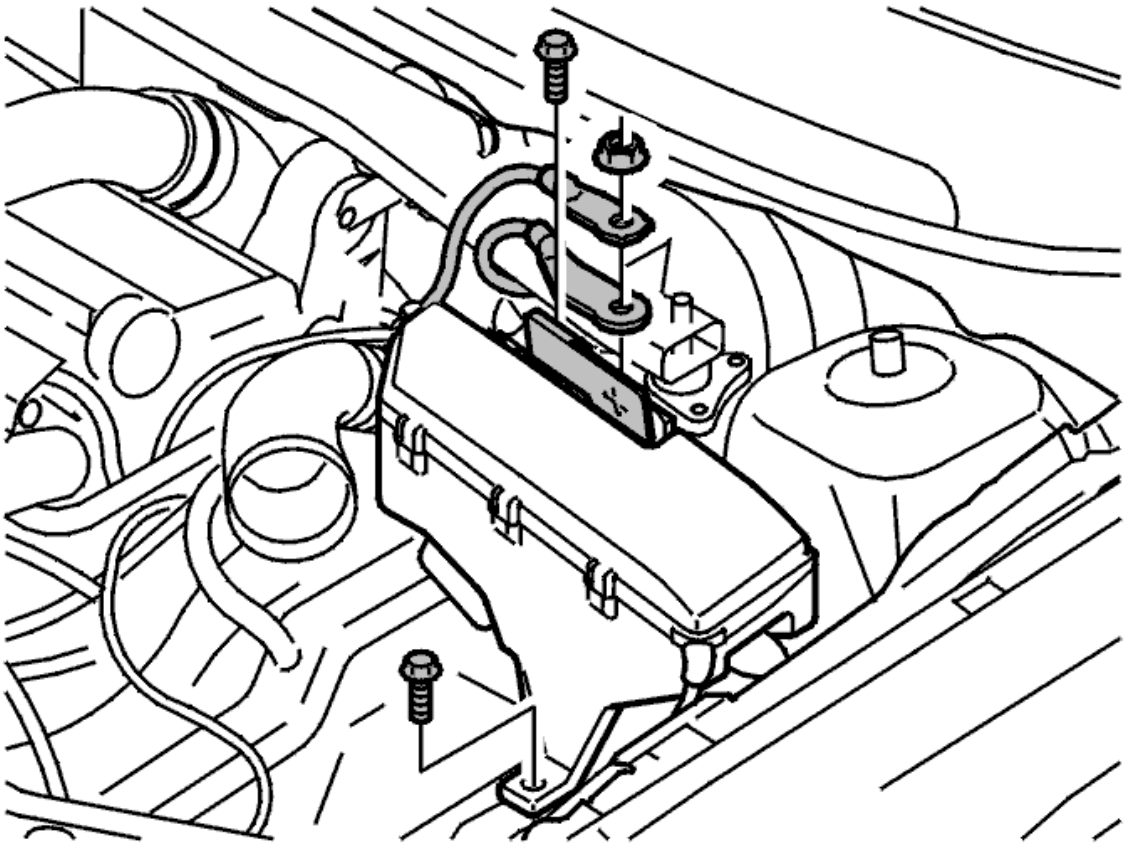

Fig. 4: Identifying Battery Leads, Screws And Nut
Courtesy of VOLVO CARS CORPORATION

- Remove the nut for the positive cables
- lift the cable terminals away from the screw
- remove both the screws.

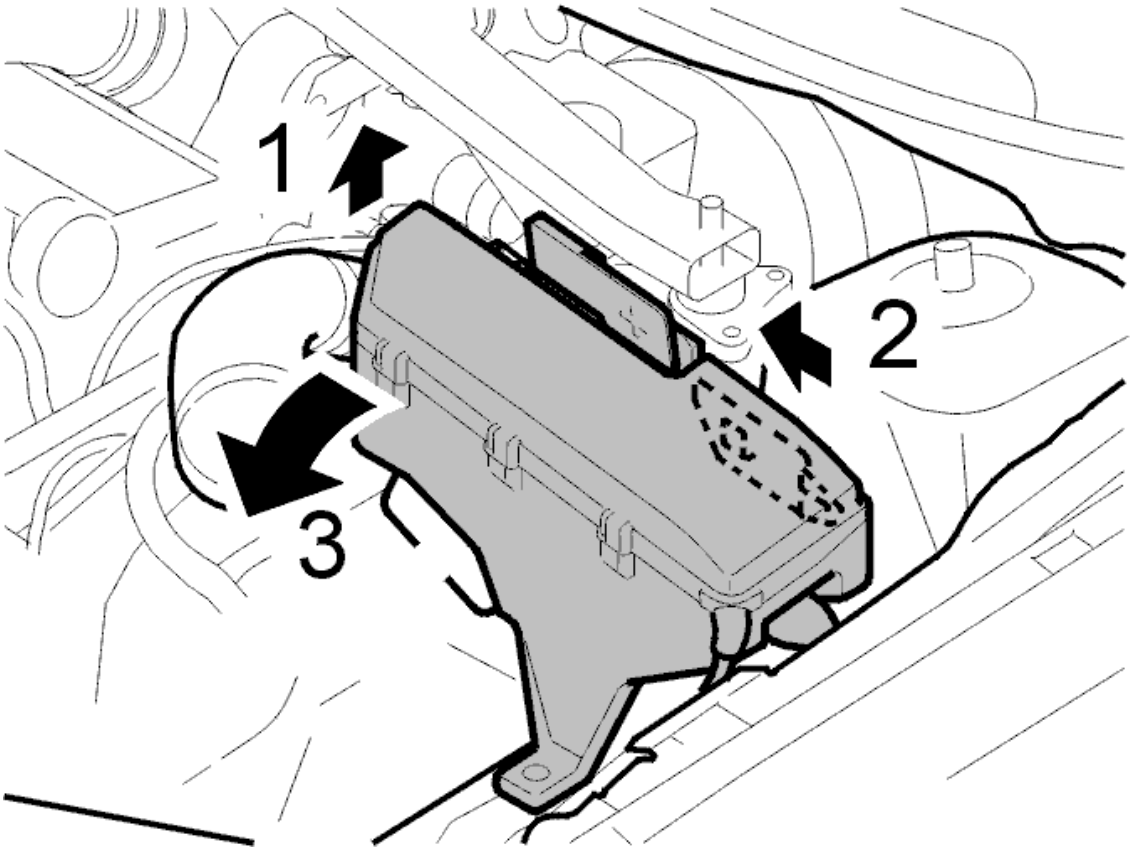

Fig. 5: Disconnecting Electrical Box From Spring Strut Housing
Courtesy of VOLVO CARS CORPORATION

Remove:

- Remove the integrated relay / fusebox from the bracket
- lift up the box at the front (1). Press the box (2) to the side. Then angle the box out of the bracket (3).

INTEGRATED RELAY / FUSEBOX, INSTALLING

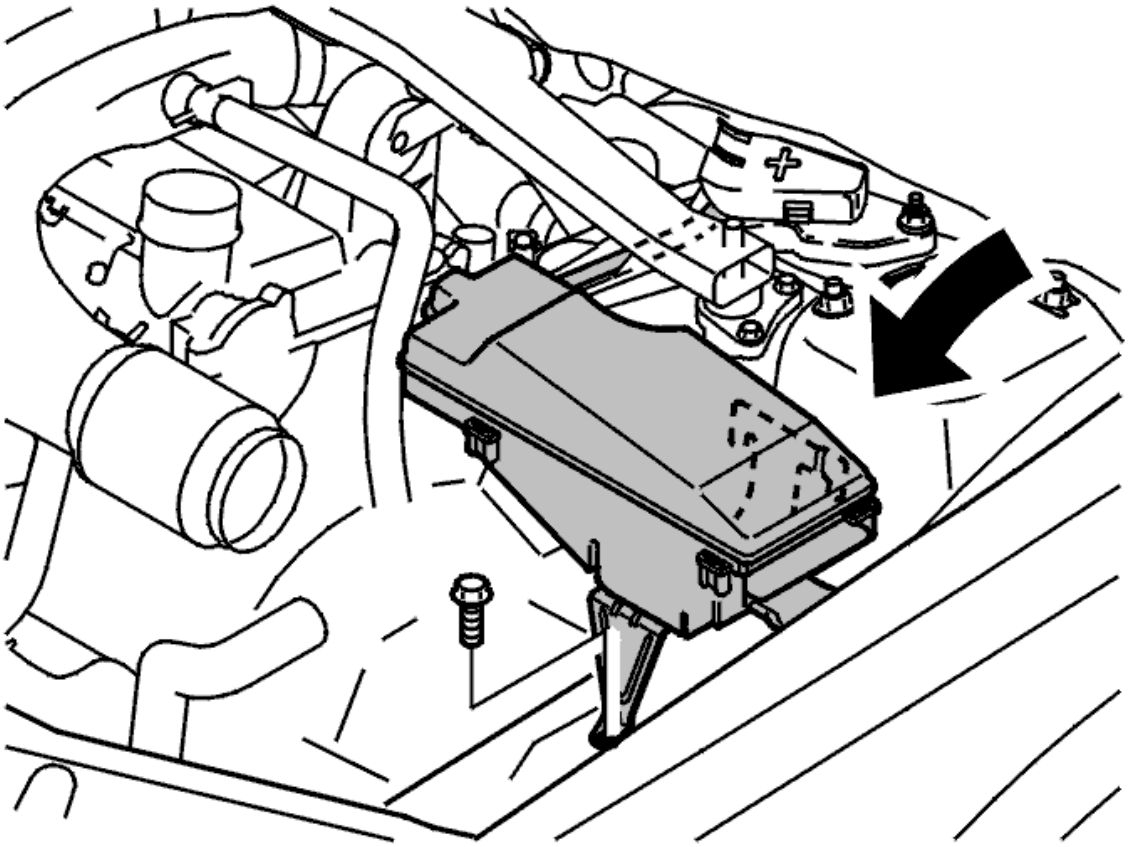

Fig. 6: Identifying Integrated Relay Fusebox Bracket
Courtesy of VOLVO CARS CORPORATION

Install:

- the bracket and the integrated relay / fusebox in the mounting
- screw in the bracket. Tighten to **10 Nm** .

PLASTIC CAP AND THE CABLE HOLDER, REMOVING

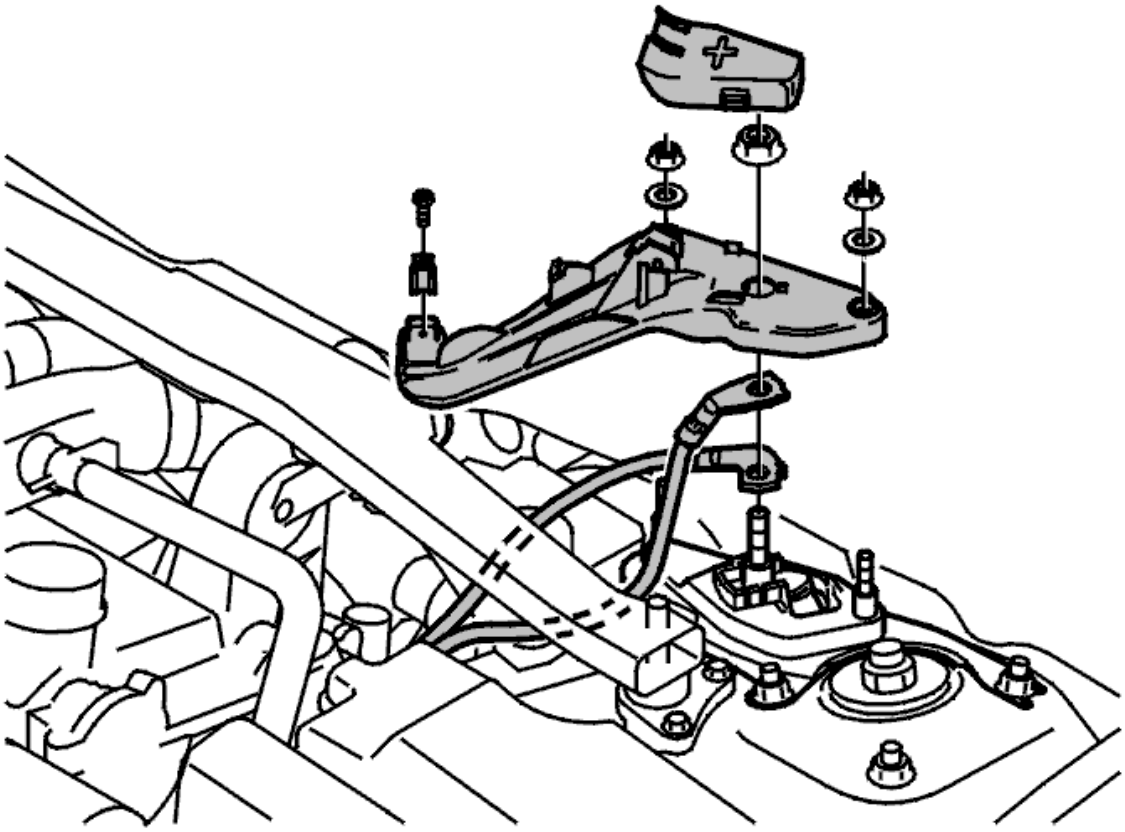

Fig. 7: Identifying Plastic Cap And Cable Holder
Courtesy of VOLVO CARS CORPORATION

Switch off the ignition.

Remove:

- the plastic cap over the positive cable
- the positive cable nut at the wheel arch. Fold the cable to one side
- the screw on the clamp around the positive cable
- the nuts on the cable holder.

ELECTRICAL

Power transmission

ELECTRICAL

RELAYS, FUSE BOXES AND WIRING

INTEGRATED RELAY / FUSEBOXES, WIRING

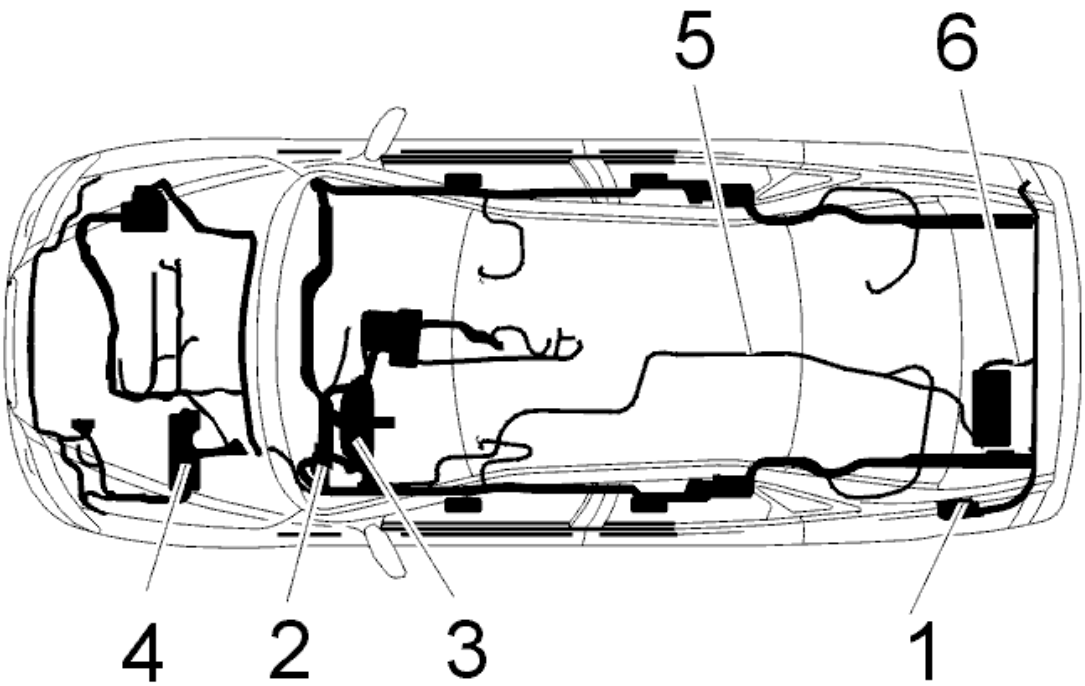

Fig. 1: Identifying Wiring Locations
Courtesy of VOLVO CARS CORPORATION

1. Integrated relay / fusebox in the cargo compartment, rear electronic module
2. Relay box in the passenger compartment, central electronic module (CEM)
3. Fusebox in the passenger compartment
4. Integrated relay / fusebox in engine compartment
5. Cable harness
6. Ground cable, battery.

ELECTRICAL

Power transmission

ELECTRICAL

BATTERY MARKING

Performance

The performance of a car battery is normally expressed as follows:

- Cold cranking amperes, CCA. See the explanation in, see **COLD CRANKING AMPERES**
- Reserve capacity, RC. See the explanation in, see **RESERVE CAPACITY, RC**
- Capacity, C20 (in certain cases). See the explanation in, see **CAPACITY** .

Recommended charge current

The cold cranking amperes according to the SAE and DIN norms and the corresponding capacity and recommended charge current are shown in the table below.

COLD CRANKING AMPERES ACCORDING TO THE SAE NORM AND THE CORRESPONDING CAPACITY AND RECOMMENDED CONSTANT CHARGE CURRENT

Cold cranking amperes (CCA) according to SAE	Capacity	Recommended constant charge current
420 A	45 Ah	4 A
440 A	50 Ah	4 A
520 A	50-60 Ah	5 A
600 A	65-70 Ah	6 A
680 A	90 Ah	7 A

COLD CRANKING AMPERES ACCORDING TO THE DIN NORM AND THE CORRESPONDING CAPACITY AND RECOMMENDED CONSTANT CHARGE CURRENT

Cold cranking amperes according to DIN	Capacity	Recommended constant charge current
250 A	45 Ah	4 A
310 A	63 Ah	5 A
420 A	72 Ah	7 A
590 A	60 Ah	9 A

Volvo battery labels

The illustrations show an example of how the battery labels may appear.

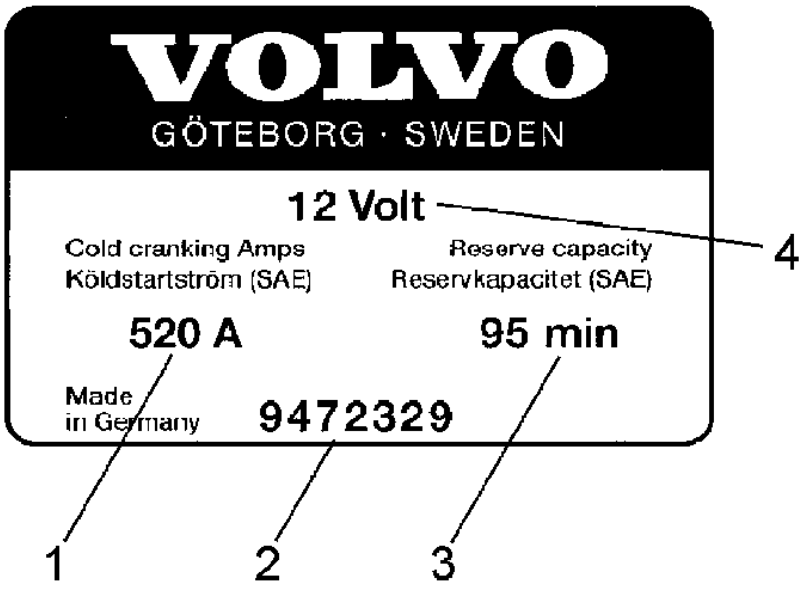

Fig. 1: European Battery Label
Courtesy of VOLVO CARS CORPORATION

European label

1. Cold cranking amperes, CCA, according to the SAE norm (520 A)
2. Volvo part number (9472329)
3. Reserve capacity, RC, according to the SAE norm (95 min)
4. The nominal terminal voltage of the battery (12 V)*.

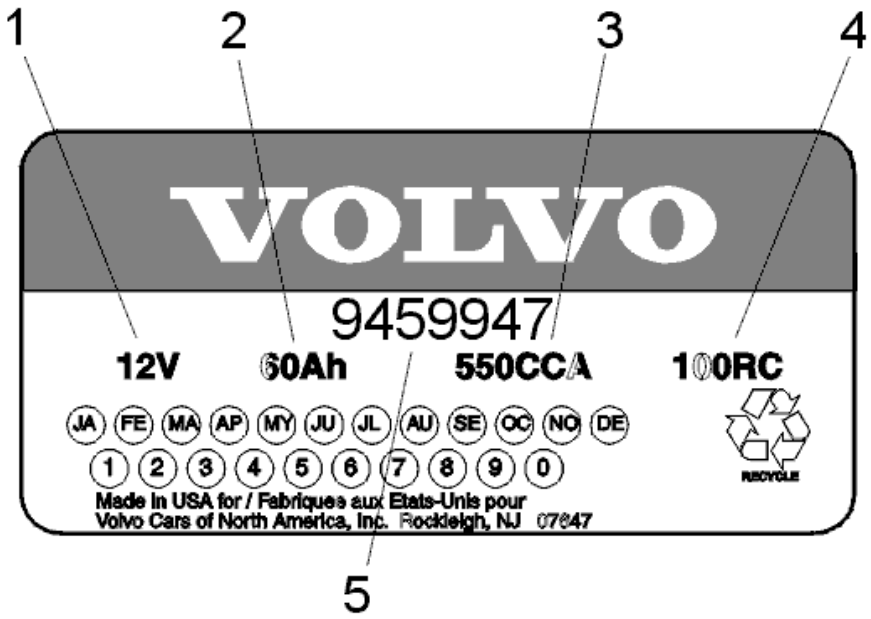

Fig. 2: American Battery Label
Courtesy of VOLVO CARS CORPORATION

American labels

1. The nominal terminal voltage of the battery (12 V)*
2. Capacity (60 Ah)
3. Cold cranking amperes, CCA (550 A)
4. Reserve capacity, RC (100 min)
5. Volvo part number (9459947).

* 12 V is the nominal terminal voltage. This means that the battery has a stand-by voltage of 12.72 V when fully charged. Note that a battery with a stand-by voltage of 12 V is only charged to approximately 35% of capacity (see the diagram in, see **ACID DENSITY**).

ELECTRICAL

Suspension and steering

ELECTRICAL

RELAY/FUSE BOX CARGO COMPARTMENT/REAR ELECTRONIC MODULE (REM), REPLACING

NOTE: **As the illustrations in this service information are used for different model years and / or models, some variation may occur. However, the essential information in the illustrations is always correct.**

EXPOSING THE INTEGRATED RELAY/FUSEBOX IN THE CARGO COMPARTMENT

Switch off the ignition.

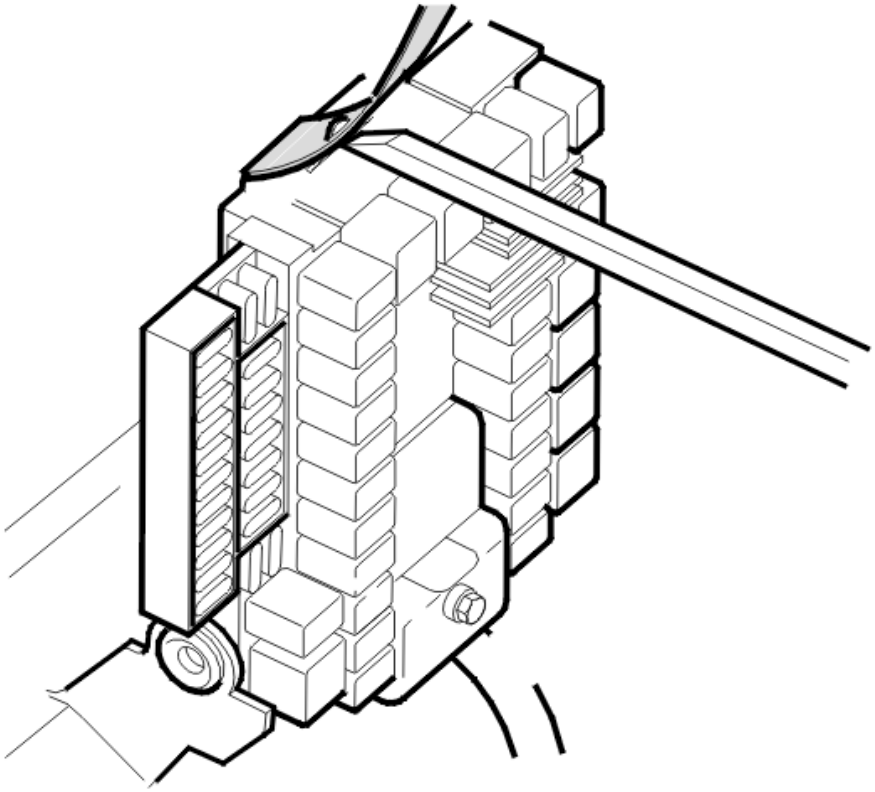

Fig. 1: Lifting Cargo Compartment/Rear Relay/Fusebox Catch
Courtesy of VOLVO CARS CORPORATION

Remove the left side panel in the cargo compartment.

Release the integrated relay/fusebox. Lift the catch by the upper edge and angle out the integrated

relay/fusebox.

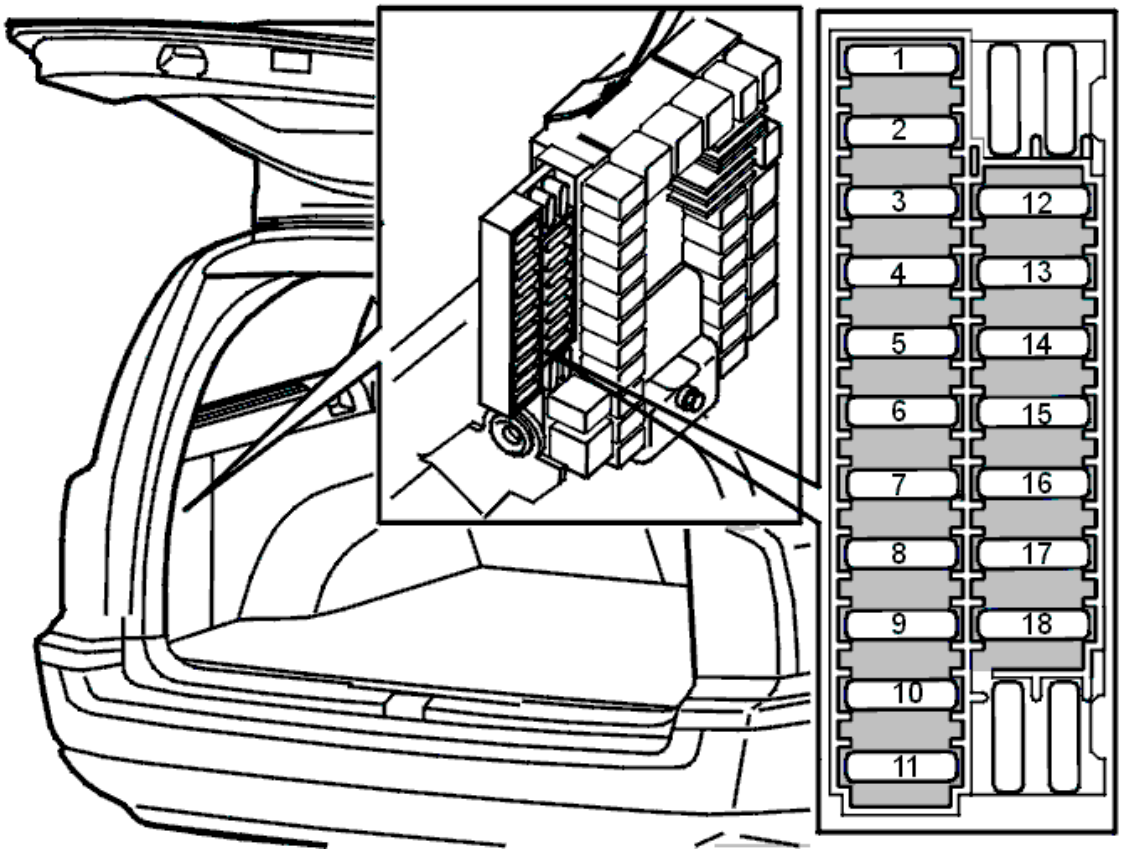

Fig. 2: Cargo Compartment/Rear Relay/Fusebox Fuse Locations
Courtesy of VOLVO CARS CORPORATION

HINT: The rear panel in the side panel of the cargo compartment can be removed to change fuses.

RELAY AND FUSE LOCATION, 11D

For the location of the relays and fuses, see:

1. Decals at both the integrated relay box and fusebox in the car
2. Pocket data book
3. Owner's Manual.

INSTALLING THE INTEGRATED RELAY / FUSEBOX IN THE CARGO COMPARTMENT

Align the integrated relay/fusebox in the grooves in the bracket and press into place.

Install the left side panel in the cargo compartment.

REPLACING THE REAR ELECTRONIC MODULE (REM)

The rear electronic module (REM) is a separate unit in the relay box in the cargo compartment.

CAUTION: New software can only be ordered when the control module is installed in the car. VIDA (Volvo scan tool) reads off the new control module identity which is required to order the correct software.

Release the relay and fuse box. See **EXPOSING THE INTEGRATED RELAY/FUSEBOX IN THE CARGO COMPARTMENT**.

REMOVING THE CONTROL MODULE

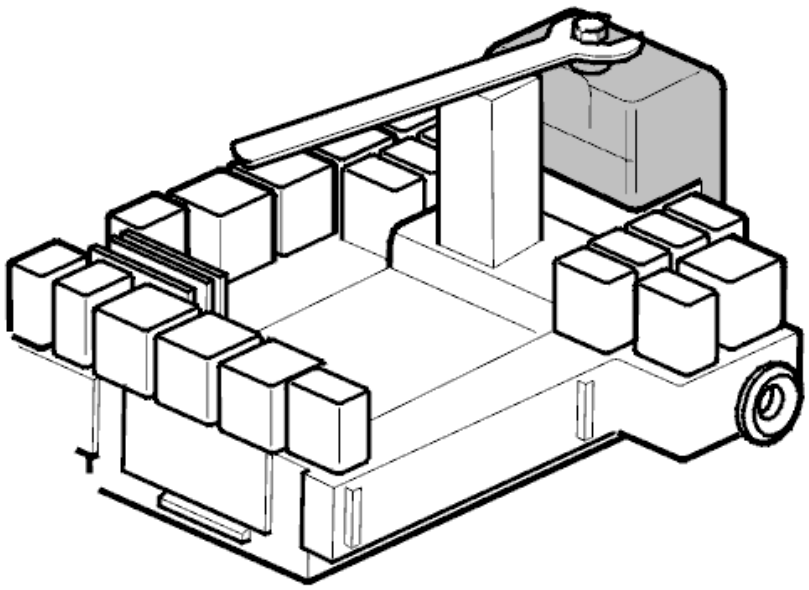

Fig. 3: Disconnecting Control Module Connector
Courtesy of VOLVO CARS CORPORATION

Unscrew the screw holding the connector so that it is free of its threads. Check that the screw is free with your fingers.

Disconnect the connector. Use an open spanner and a support. See the illustration.

NOTE: Do not damage the terminal pins. Always check that the control module and control module box connectors do not have bent or damaged terminals or socket / sleeves. This may have been the cause of the fault.

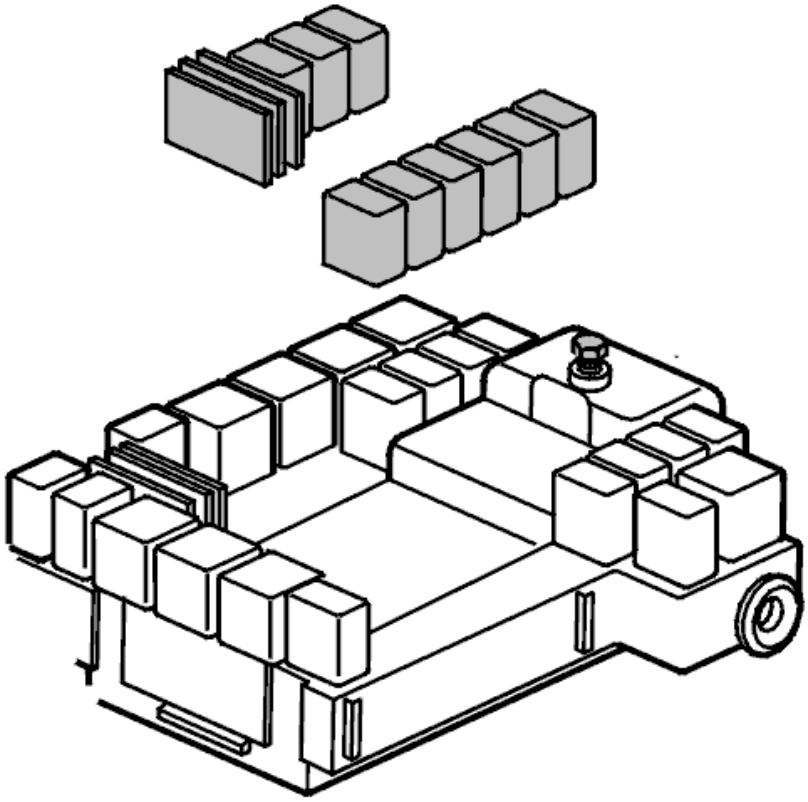

Fig. 4: Identifying Relay Box In Passenger Compartment/Cargo Compartment
Courtesy of VOLVO CARS CORPORATION

Remove all relays and shunts bridged to the control module. Note the locations.

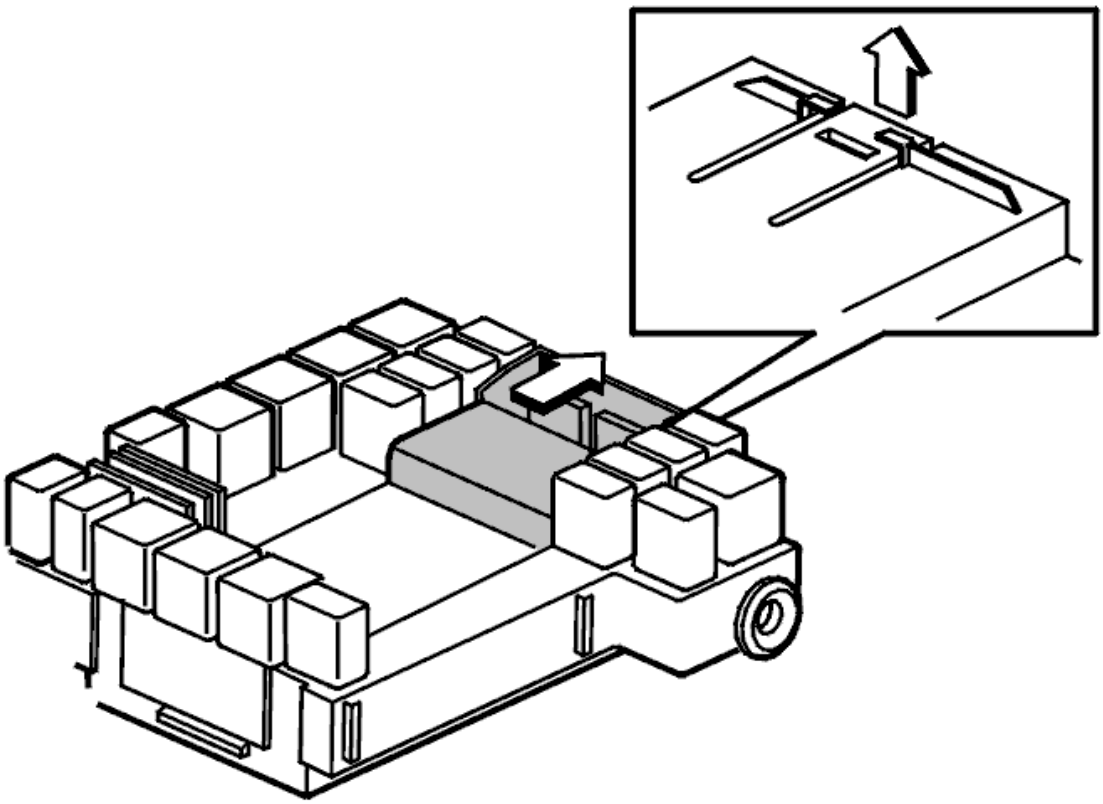

Fig. 5: Identifying Control Module Removal
Courtesy of VOLVO CARS CORPORATION

Release the catch on the rear. Use a screwdriver.

Lift and pull out the control module.

CHECK

Check that the control module connectors are intact.

INSTALLING THE CONTROL MODULE

- Press the control module into place so that the catch on the rear engages
- Position the connector. **Carefully** press the connector down.

NOTE: The pins are fragile. Check that the connector goes straight down into the control module.

- Tighten the screw for the connector
- Check that the connector cover is correctly positioned. Remedy if necessary
- Install the relays and shunts. Note their locations
- Install the integrated relay / fusebox. See **INSTALLING THE INTEGRATED RELAY / FUSEBOX**

IN THE CARGO COMPARTMENT.

ORDERING SOFTWARE

Order the software. See 9438285 .

ENGINE

Cooling System - Cleaning, Inspection and Adjustment

COOLING SYSTEM

COOLING SYSTEM - DRAINING, CHARGING AND BLEEDING

Special tools	
	T9512957 COOLANT FILLER **Tool number:** T9512957 **Tool description:** COOLANT FILLER **Tool boards:**
	T9512952 COVER **Tool number:** T9512952 **Tool description:** COVER **Tool boards:**

NOTE: Removal steps in this procedure may contain installation details.

WARNING: Read the health and safety instructions for the cooling system. See SAFETY INFORMATION COOLING SYSTEM .

WARNING: When releasing the cooling system pressure, cover the coolant expansion tank cap with a thick cloth.

Coolant must only be mixed with water of the correct quality. See **WATER QUALITY**

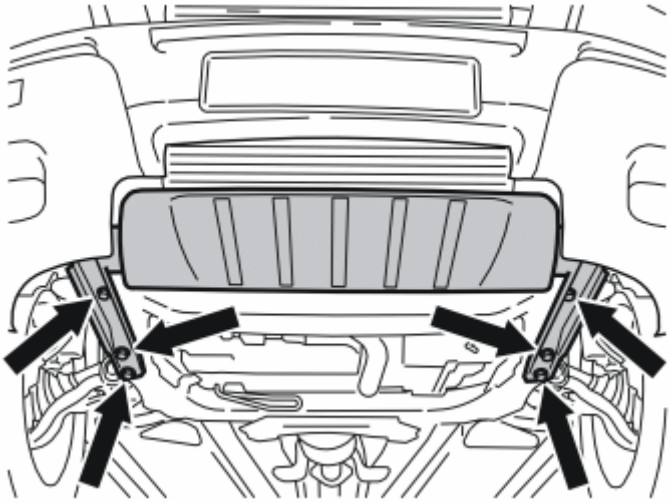

Fig. 1: Identifying Splash Panel
Courtesy of VOLVO CARS CORPORATION

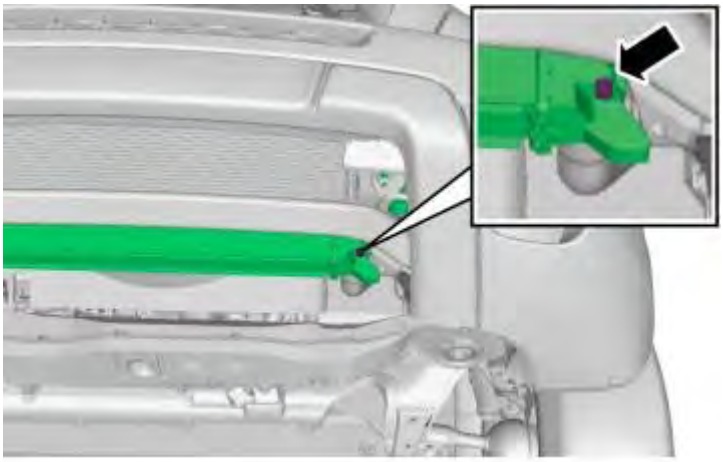

Fig. 2: Coolant Must Only Be Mixed With Water Of Correct Quality
Courtesy of VOLVO CARS CORPORATION

To install, reverse the removal procedure

Charge the cooling system. see **9512957** together with see **9512952** .

Warm the engine until the thermostat opens. Top off as necessary.

ENGINE

Cooling System - General Information

ENGINE COOLANT

WATER QUALITY

The water that may be used in Volvo engine cooling systems together with Volvo original coolant must meet certain requirements. Tap water, for example, contains too much chlorine, minerals and salts. Water that does not meet the requirements according to the specification can cause corrosion and deposits in the cooling system even if the water is mixed with coolant. See specification. See **WATER QUALITY**

If in doubt about whether the water meets the requirements according to the specification, Volvo original coolant must be mixed 50/50 with distilled water (battery water) or ready mixed Volvo original coolant must be used.

When changing coolant or components in the cooling system, the system must be flushed clean with water that meets the specification or with distilled water. Alternatively the cooling system can be flushed with ready mixed Volvo original coolant.

ENGINE

Cooling System - General Safety Information

HEALTH AND SAFETY INSTRUCTIONS

SAFETY INFORMATION COOLING SYSTEM

WARNING: **Anti-freeze (glycol) can be fatal if swallowed. Seek medical attention immediately.**

WARNING: **Great care must be taken when handling hot fluids.**

WARNING: **Anti-freeze can be absorbed through the skin in dangerous and harmful quantities.**

Always immediately wash off spilled fluid from affected skin.

WARNING: **Vapor can be emitted from the coolant's anti-freeze when heated. Avoid inhaling these vapors.**

WARNING: **Used anti-freeze must be handled according to the applicable environmental regulations. Anti-freeze must not come into contact with the exhaust system.**

ENGINE

Cooling System - Overhaul instructions

RADIATOR AND CONNECTIONS

RADIATOR MOUNTING, RECONDITIONING

NOTE: **As the illustrations in this service information are used for different model years and / or models, some variation may occur. However, the essential information in the illustrations is always correct.**

PREPARATORY WORK

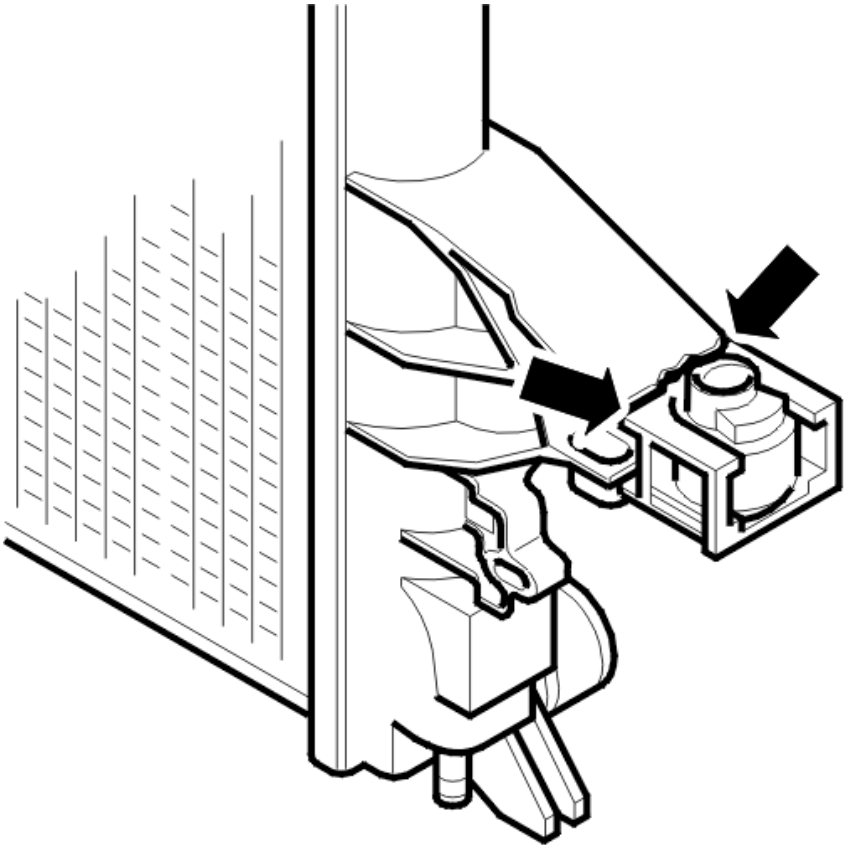

Fig. 1: Identifying Break Point
Courtesy of VOLVO CARS CORPORATION

Remove the radiator. See **RADIATOR AND CONNECTIONS** .

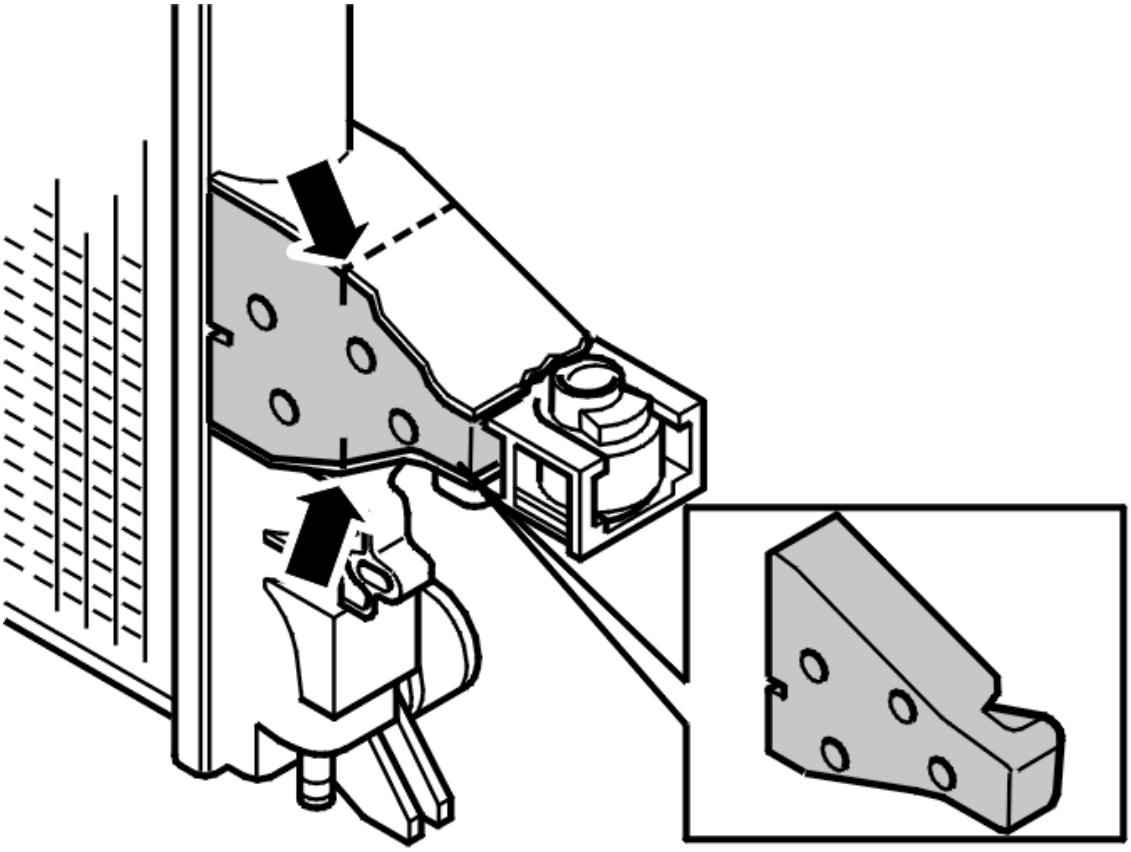

Fig. 2: Identifying Reinforcement Plate
Courtesy of VOLVO CARS CORPORATION

Position the reinforcement plate from the kit. Mark the cutting point.

NOTE: The cutting point is marked on the reinforcement plate.

Remove the reinforcement plate. Cut off the old mounting.

INSTALLING A NEW MOUNTING

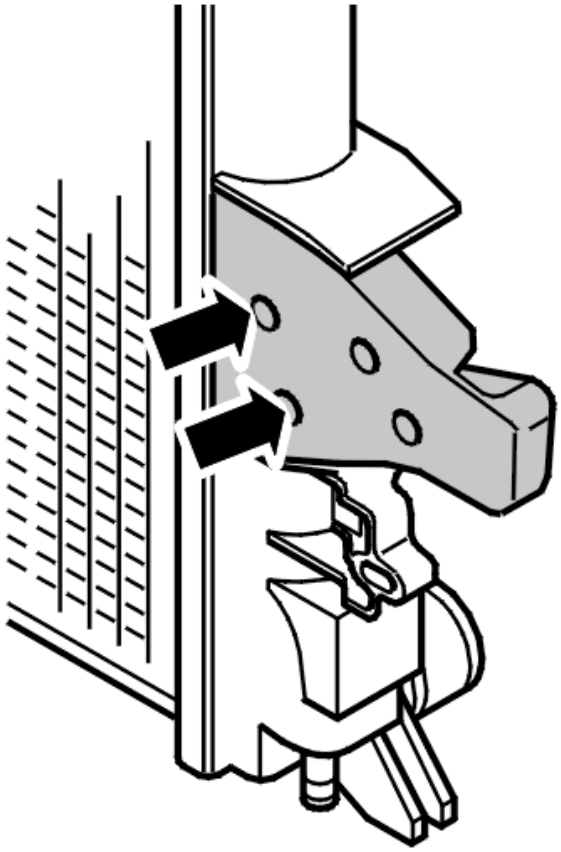

Fig. 3: Marking For Holes
Courtesy of VOLVO CARS CORPORATION

Position the new mounting. Make marks for holes.

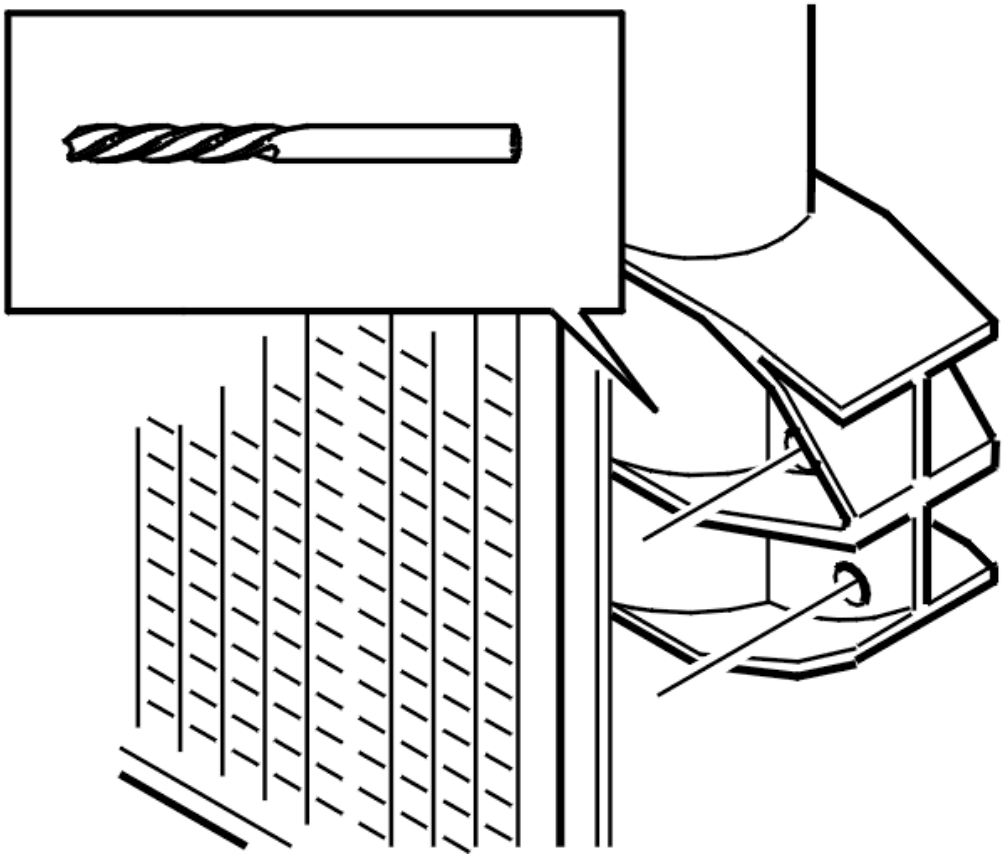

Fig. 4: Drilling Holes
Courtesy of VOLVO CARS CORPORATION

Drill using a **6 mm** diameter drill bit.

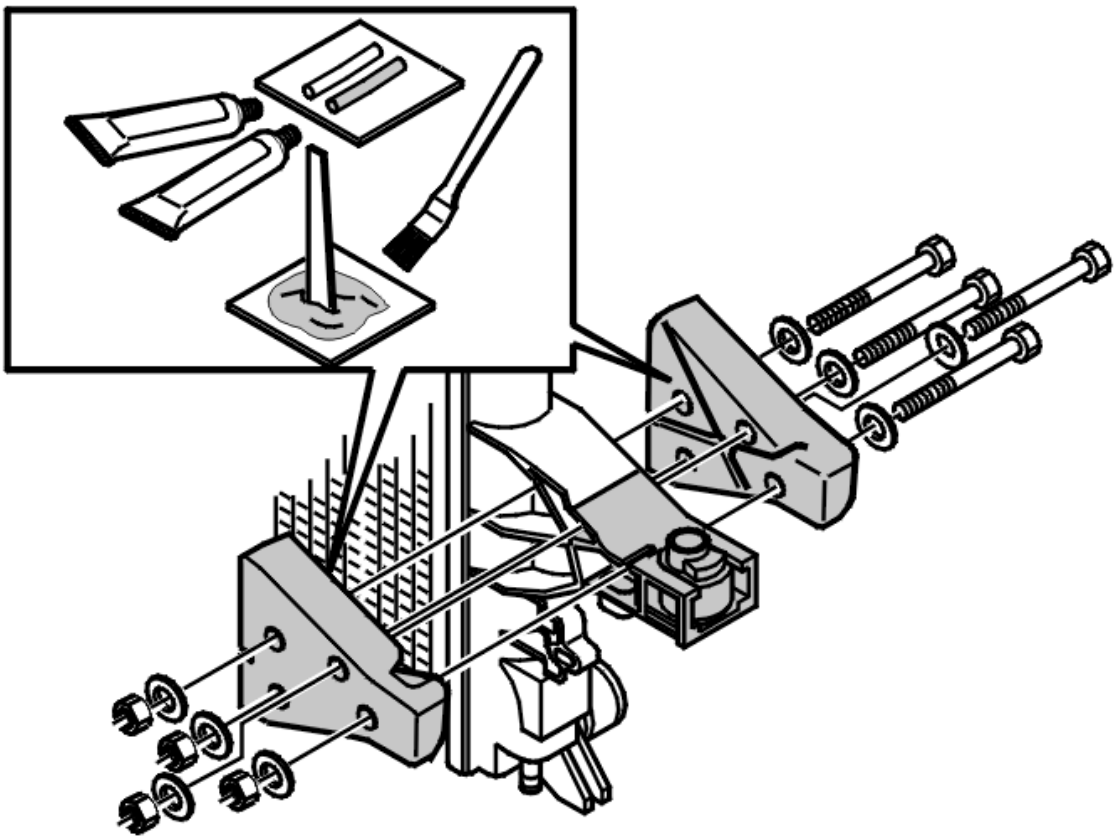

Fig. 5: Applying Adhesive
Courtesy of VOLVO CARS CORPORATION

Apply two part adhesive, part number 161 626-5, on the surfaces in contact with the radiator. Install the mounting.

Install the 4 M6 screws.

ENGINE

Cooling System - Removal, replacement and installation

CHARGE AIR COOLER (CAC) AND CONNECTIONS (2003-2007)

CHARGE AIR COOLER (CAC), REPLACING

NOTE: **As the illustrations in this service information are used for different model years and / or models, some variation may occur. However, the essential information in the illustrations is always correct.**

PREPARATORY WORK

REMOVING THE BATTERY LEAD AND DRAINING THE AIR CONDITIONING (A/C) SYSTEM

Disconnect the battery negative lead. See: **BATTERY, DISCONNECTING** .

Drain the air conditioning (A/C) system. See **REFRIGERANT, DRAINING** .

REMOVING THE SKIDPLATE

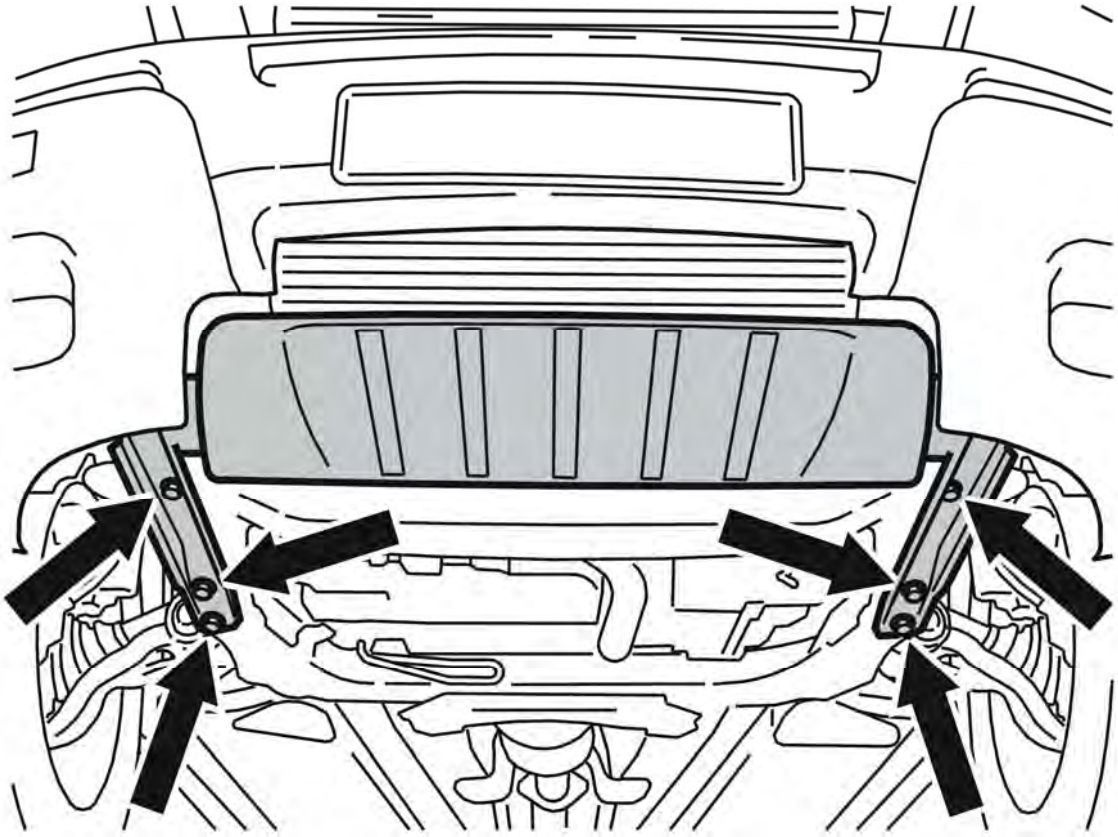

Fig. 1: Splash Guard. Protective Plate And Screws
Courtesy of VOLVO CARS CORPORATION

Remove the 6 screws.

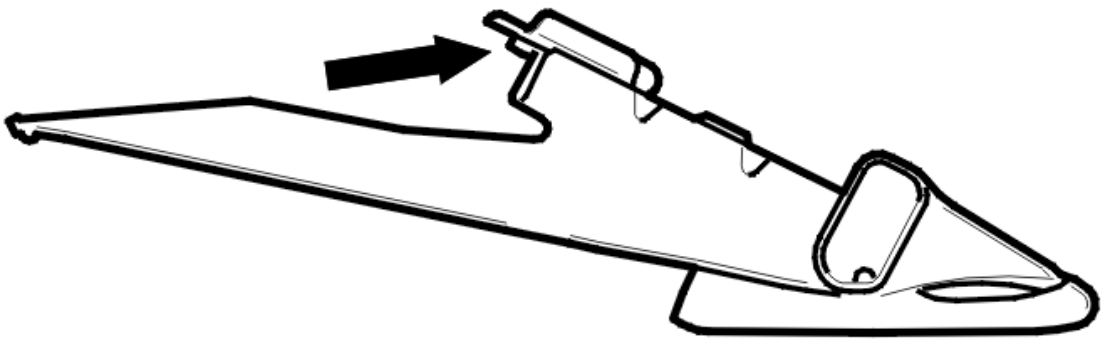

Fig. 2: Identifying Protective Plate
Courtesy of VOLVO CARS CORPORATION

Lift up and slide the plate forward.

Remove the splash guard.

NOTE: **There is a guide sleeve on the upper mounting for the plate. This must be lifted slightly so that the panel can be slid forward.**

DRAINING COOLANT

Block the lower hose with lock grip pliers.

Install a hose on the nipple at the radiator.

Feed the hose down to a container.

Open the nipple and drain off the coolant.

REMOVING THE CABLE DUCT AND AIR DUCT

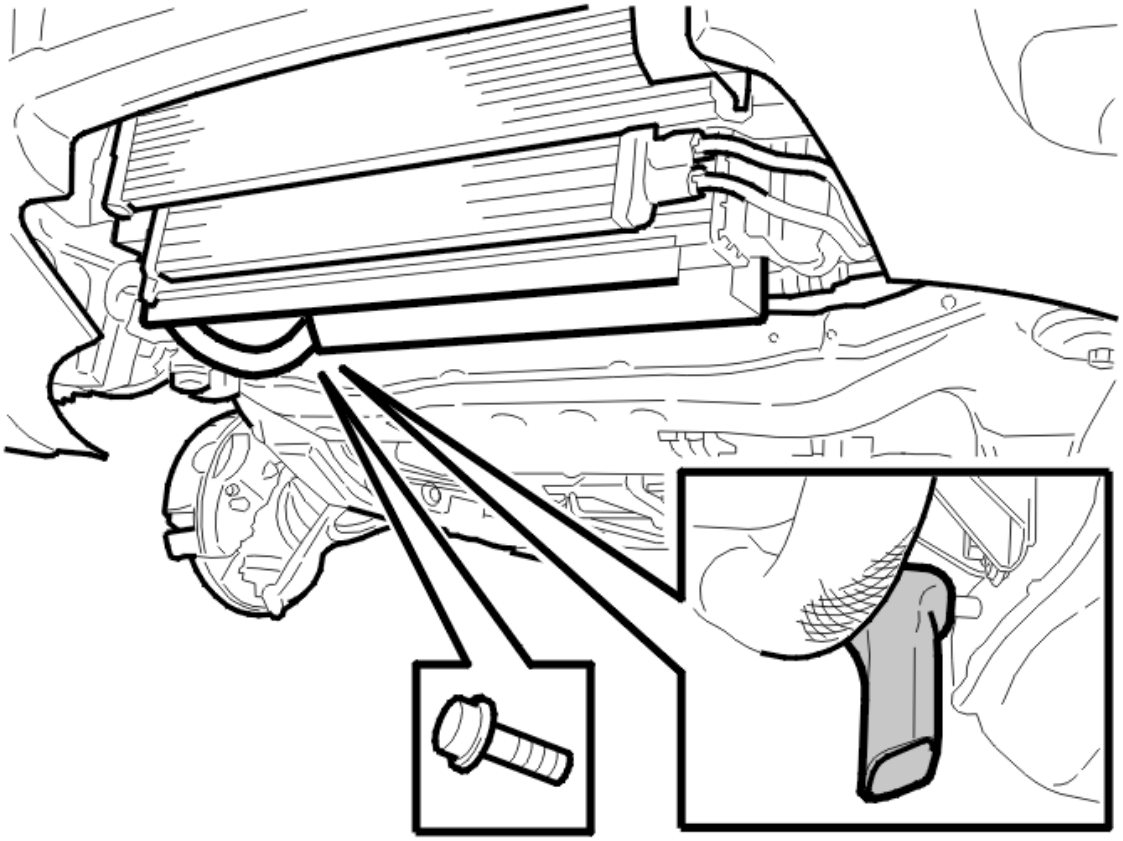

Fig. 3: Identifying Screw For The Cable Duct.
Courtesy of VOLVO CARS CORPORATION

Remove the screw for the cable duct. Place the cable duct on the sub-frame.

Pull the air duct from the clips on the sub-frame.

REMOVING THE OIL COOLER HOSES

Only applies to vehicles with automatic transmissions:

Remove the lower oil cooler hose from the air conditioning (A/C) aggregate.

Plug the openings in the hose and radiator.

NOTE: Collect the oil from the oil cooler in a container.

Lower the vehicle. Remove the upper oil cooler hose from the air conditioning (A/C) aggregate.

Plug the openings in the hose and radiator.

REMOVING THE CHARGE AIR PIPE/HOSE

Disconnect the charge air pipe from the charge air cooler (CAC) on the left-hand side. If necessary, use a hot air

gun to facilitate removal.

Remove the clamp. Remove the charge air hose on the right-hand side from the charge air cooler (CAC).

REMOVING THE UPPER COOLANT HOSES

Remove:

- the evacuation hose from the expansion tank and the clip mounting
- the upper radiator hose.

REMOVING THE RIGHT-HAND HEADLAMP

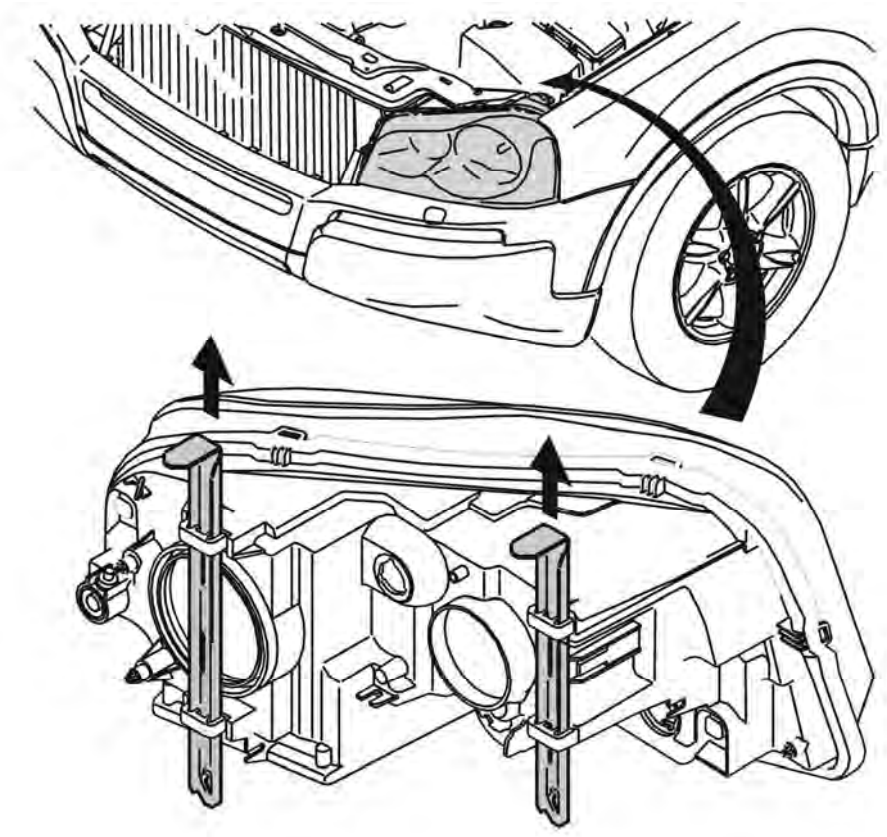

Fig. 4: Pulling Locking Plate Straight Up
Courtesy of VOLVO CARS CORPORATION

Pull the locking plate straight up.

Separate the connector.

Remove the headlamp.

REMOVING THE AIR CONDITIONING (A/C) PIPE

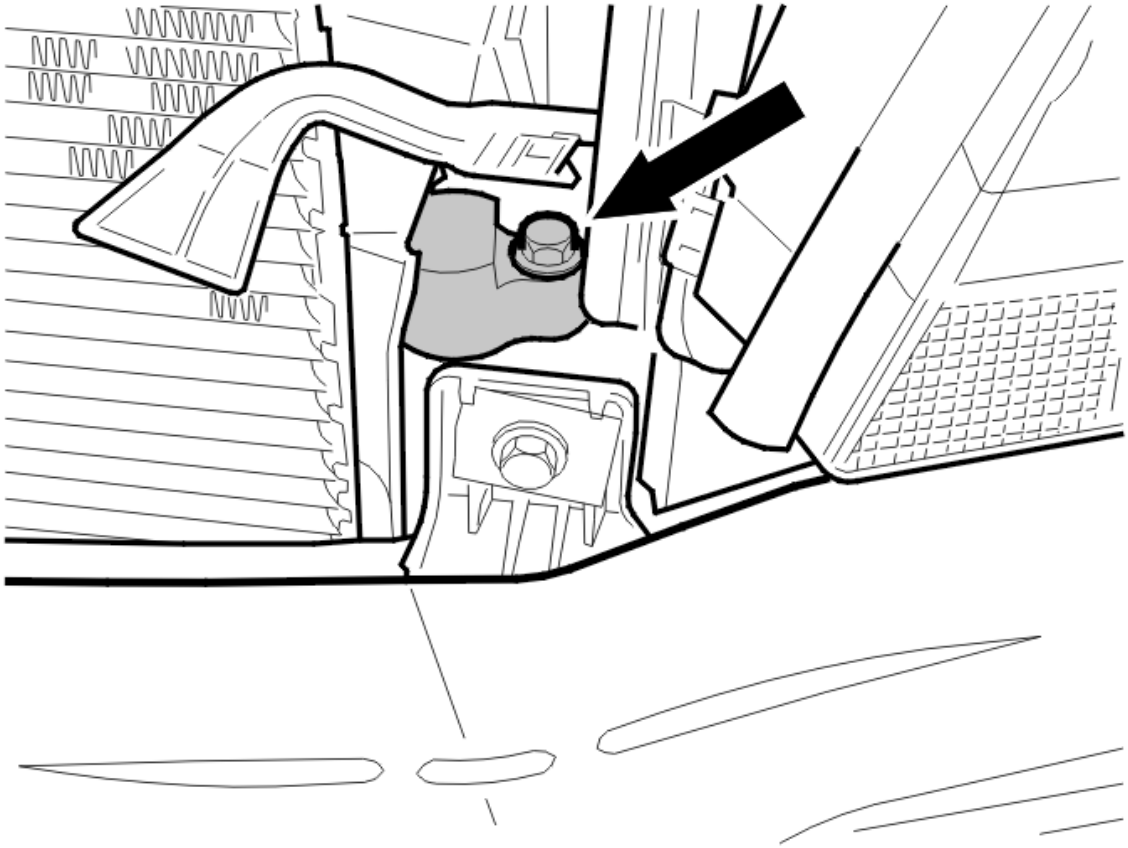

Fig. 5: Locating Air Conditioning Condenser Pipe
Courtesy of VOLVO CARS CORPORATION

Remove from the left-hand side:

- screw
- the air conditioning (A/C) pipe.

Seal the openings on the pipe and condenser.

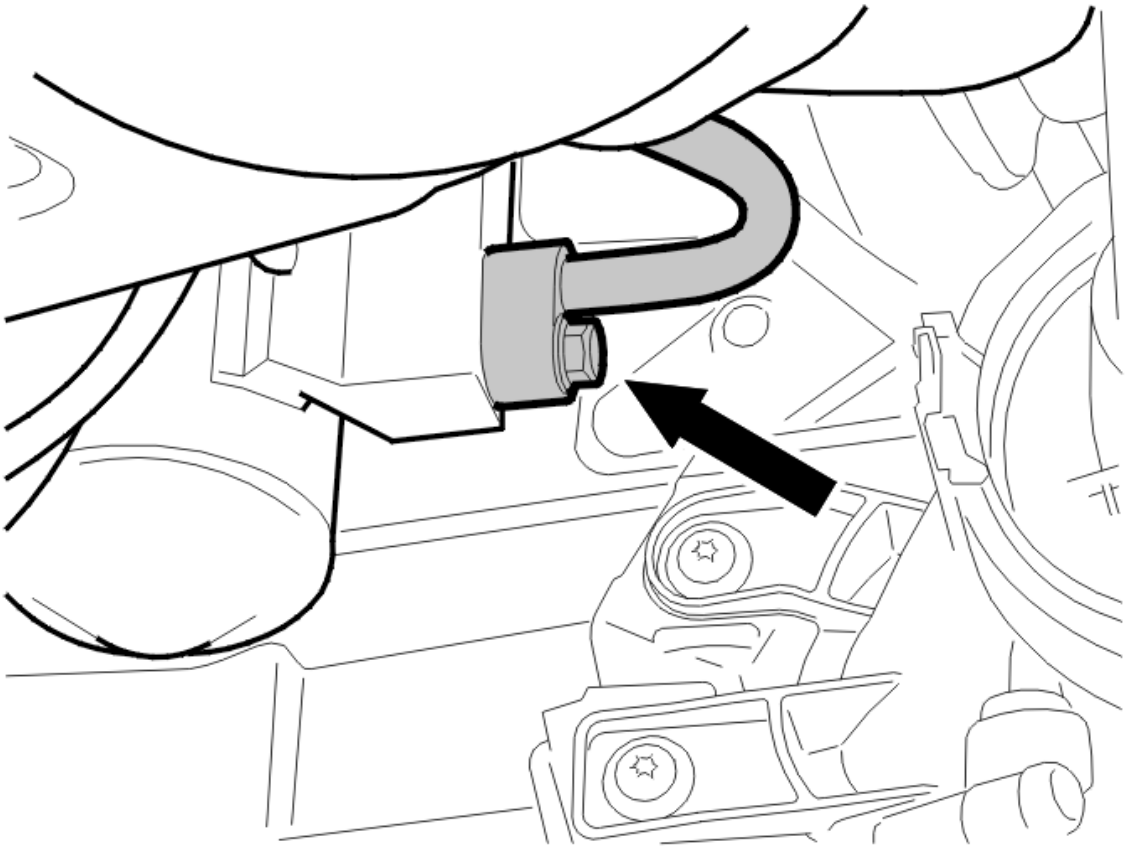

Fig. 6: Locating Air Conditioning Receiver Pipe
Courtesy of VOLVO CARS CORPORATION

Remove from the right-hand side:

- the connector

Raise the car

Remove:

- screw
- the air conditioning (A/C) pipe.

Seal the openings on the pipe and receiver.

HINT: Pull down and hang up the left-hand pipe so that the hose is positioned above the sub-frame.

REMOVING THE LOWER ENGINE COOLANT HOSE

Slacken off the hose clamp. Remove the hose from the radiator.

Fold the hose out of the way.

REMOVING THE RADIATOR ASSEMBLY

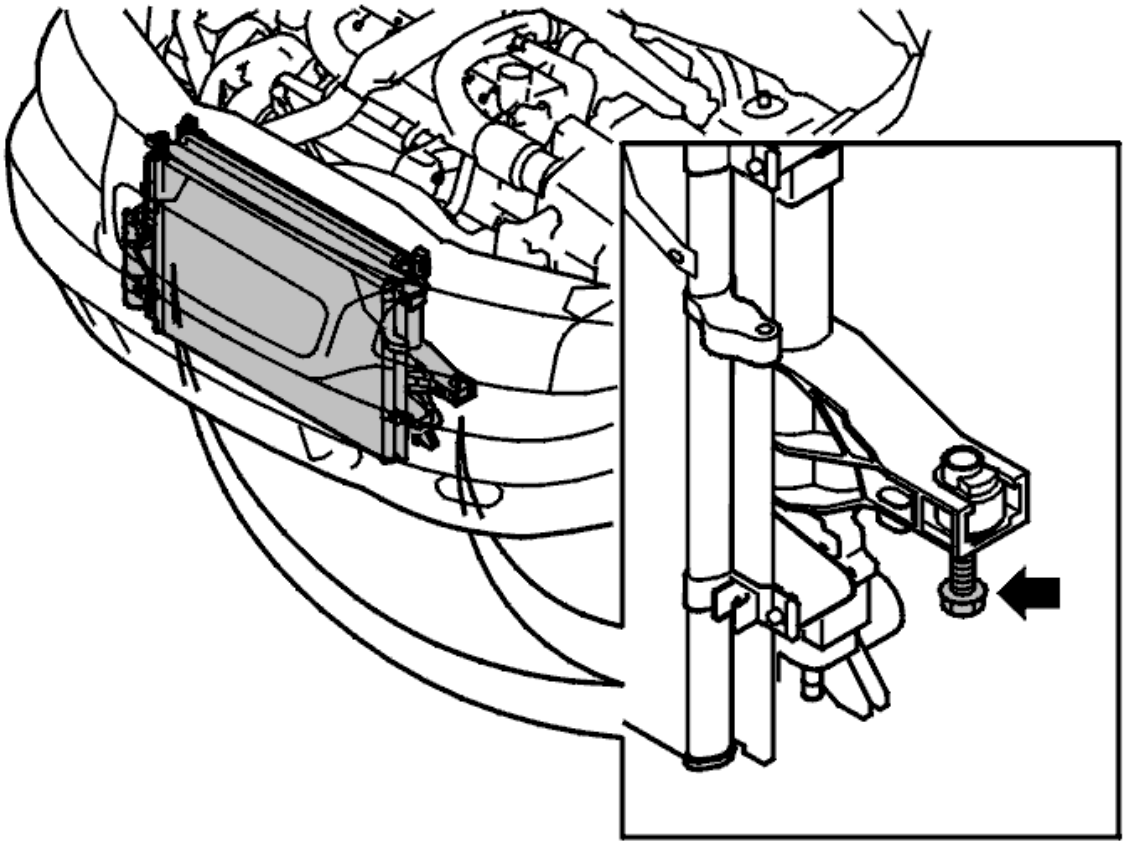

Fig. 7: Identifying Lower Mounting For Air Conditioning Aggregate
Courtesy of VOLVO CARS CORPORATION

NOTE: Two people are required for this procedure.

Hold up the air conditioning aggregate and slacken off the two mounting screws.

Carefully lower the air conditioning aggregate.

NOTE: Ensure that no hoses are trapped when removing the air conditioning aggregate.

REMOVING THE ENGINE COOLING FAN (FC)

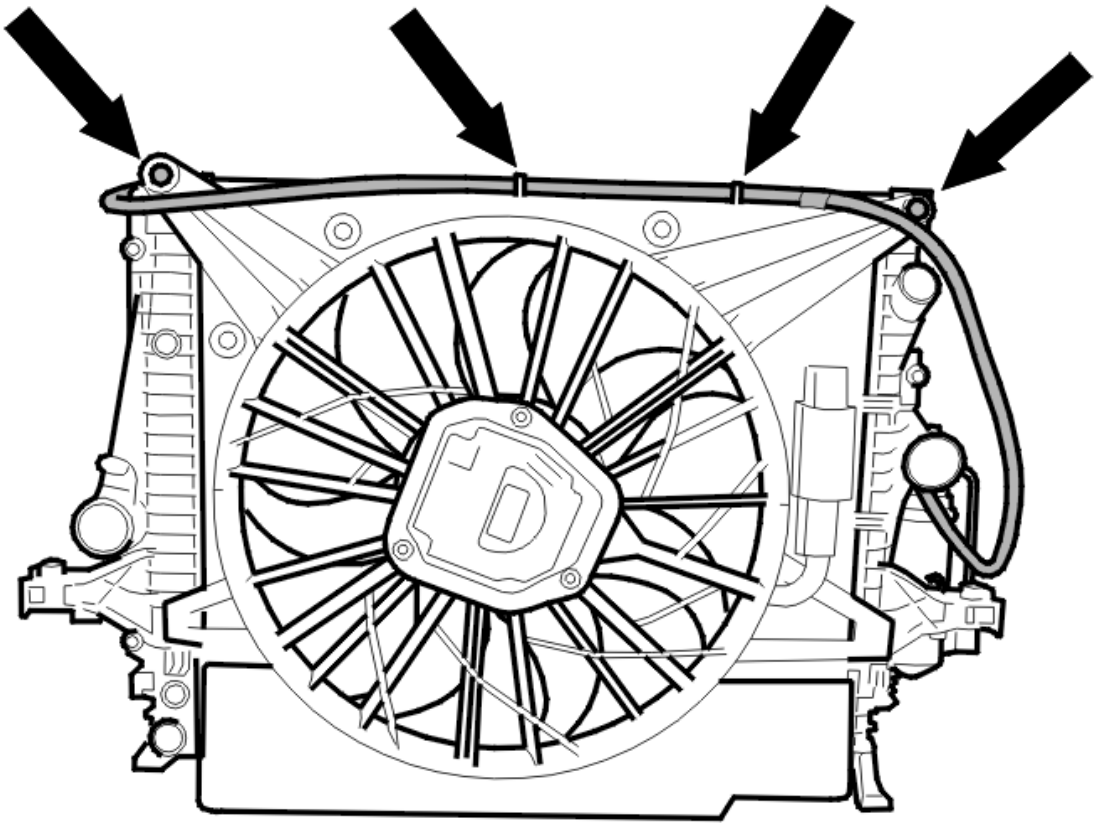

Fig. 8: Identifying Engine Cooling Fan
Courtesy of VOLVO CARS CORPORATION

Remove:

- the screws
- the evacuation hose from the clip mountings
- the engine cooling fan (FC).

REMOVING THE RADIATOR

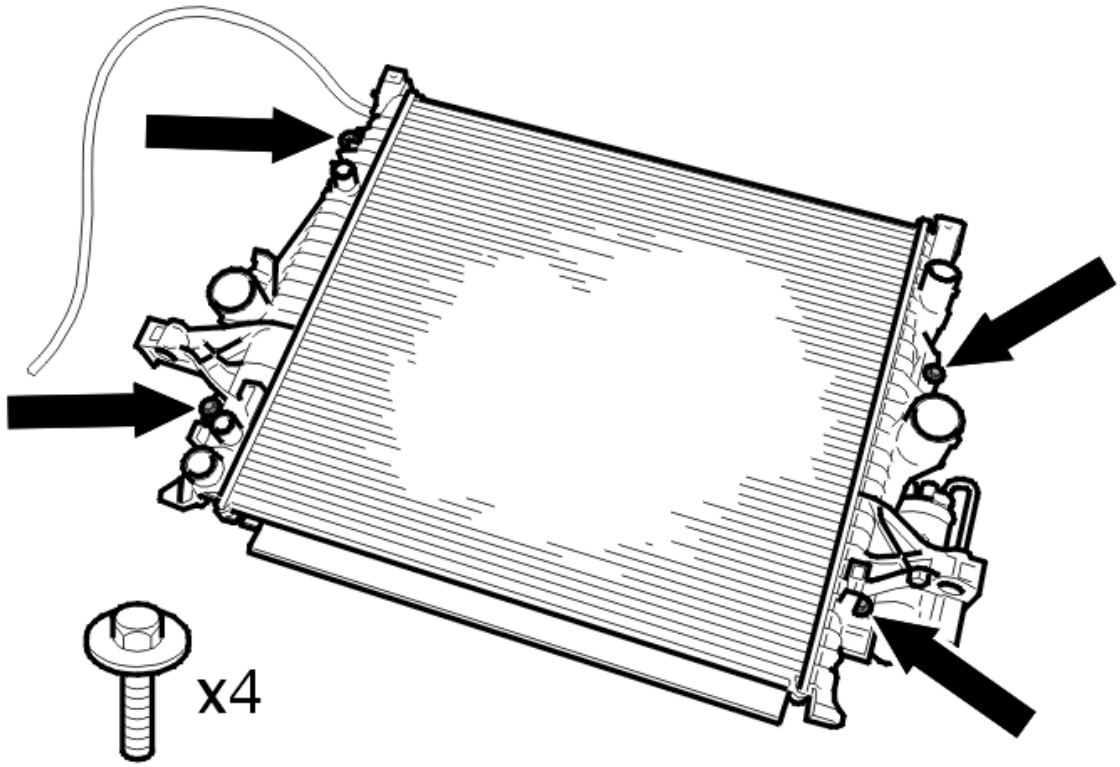

Fig. 9: Identifying The Air Conditioning Aggregate Screws
Courtesy of VOLVO CARS CORPORATION

Remove:

- the screws
- the air conditioning aggregate.

REMOVING THE CHARGE AIR COOLER (CAC)

Lift out the charge air cooler (CAC).

INSTALLING THE CHARGE AIR COOLER (CAC)

Position the charge air cooler (CAC) over the condenser.

INSTALLING THE RADIATOR

Position the radiator over the condenser and the charge air cooler (CAC).

Install the screws. Tighten to **10 Nm** .

INSTALLING THE ENGINE COOLANT FAN (FC)

Install:

- the engine cooling fan (FC)
- the screws. Tighten to **10 Nm**
- the evacuation hose in the clip mountings.

INSTALLING THE COOLER UNIT

NOTE: Two people are required for this procedure.

Lift up the air conditioning aggregate. Install the two mounting screws. Tighten to **24 Nm** .

NOTE: Ensure that the air conditioning aggregate is positioned correctly in the locating pins on top of the aggregate.

NOTE: Ensure that no hoses are trapped when installing the air conditioning aggregate.

INSTALLING THE LOWER ENGINE COOLANT HOSE

Install the hose. Tighten the clamp.

Remove the lock grip pliers.

INSTALLING THE CHARGE AIR PIPE/HOSE

Install:

- the charge air hose on the right-hand side
- the charge air pipe on the left-hand side.

Tighten the clamps.

INSTALLING THE AIR CONDITIONING (A/C) PIPE

HINT: Lubricate the O-rings. Use compressor oil.

Install on the right-hand side:

- the air conditioning (A/C) pipe. Use a new O-ring.
- the screw. Tighten to **10 Nm** .

Lower the vehicle.

Install the connector on the receiver.

Install on the left-hand side:

- the air conditioning (A/C) pipe. Use a new O-ring.
- the screw. Tighten to **24 Nm** .

Vacuum pump the air conditioning (A/C) system. See **VACUUM PUMPING** .

INSTALLING THE RIGHT-HAND HEADLAMP

Install:

- the connector
- the headlamp
- the locking plate.

INSTALLING THE UPPER ENGINE COOLANT HOSES

Install:

- the upper radiator hose.
- the evacuation hose on the expansion tank and clip mounting.

INSTALLING THE OIL COOLER HOSES

Only applies to vehicles with automatic transmissions:

Install the upper oil cooler hose.

Use a new O-ring.

Raise the car

Install the lower oil cooler hose.

Use a new O-ring.

INSTALLING THE CABLE DUCT AND AIR DUCT

Position the cable duct.

Install the screw. Tighten to **10 Nm** .

Install the air duct using the clip on the sub-frame.

INSTALLING THE SKID PLATE

Move the skid plate up into the bumper cover.

Press forward until the mounting brackets enter the sub-frame.

Install the screws. Tighten to **50 Nm** .

FINISHING

Fill the air conditioning (A/C) system. See **REFRIGERANT, FILLING** .

Check for leaks. See **LEAK TRACING, FLUORESCENT TRACING AGENT / UV LAMP**

Install the battery lead.

Top up the coolant.

Install the cap on the expansion tank.

Run the engine until the thermostat has opened.

Stop the engine. Top up if necessary.

Check for leaks.

COOLANT PUMP AND THERMOSTAT (B8444S; 2005-2011)

COOLANT PUMP, REPLACING

Special tools:

see **9512957**

see **9512953**

NOTE: The illustrations in this service information are used for different model years and/or models. Some variation may occur. However, the essential information in the illustrations is always correct.

NOTE: Raise the vehicle as described in, see JACKING POINTS, BODY .

REMOVAL

PREPARATORY WORK

Remove the expansion tank cap.

Raise the vehicle.

REMOVING PROTECTIVE PLATE

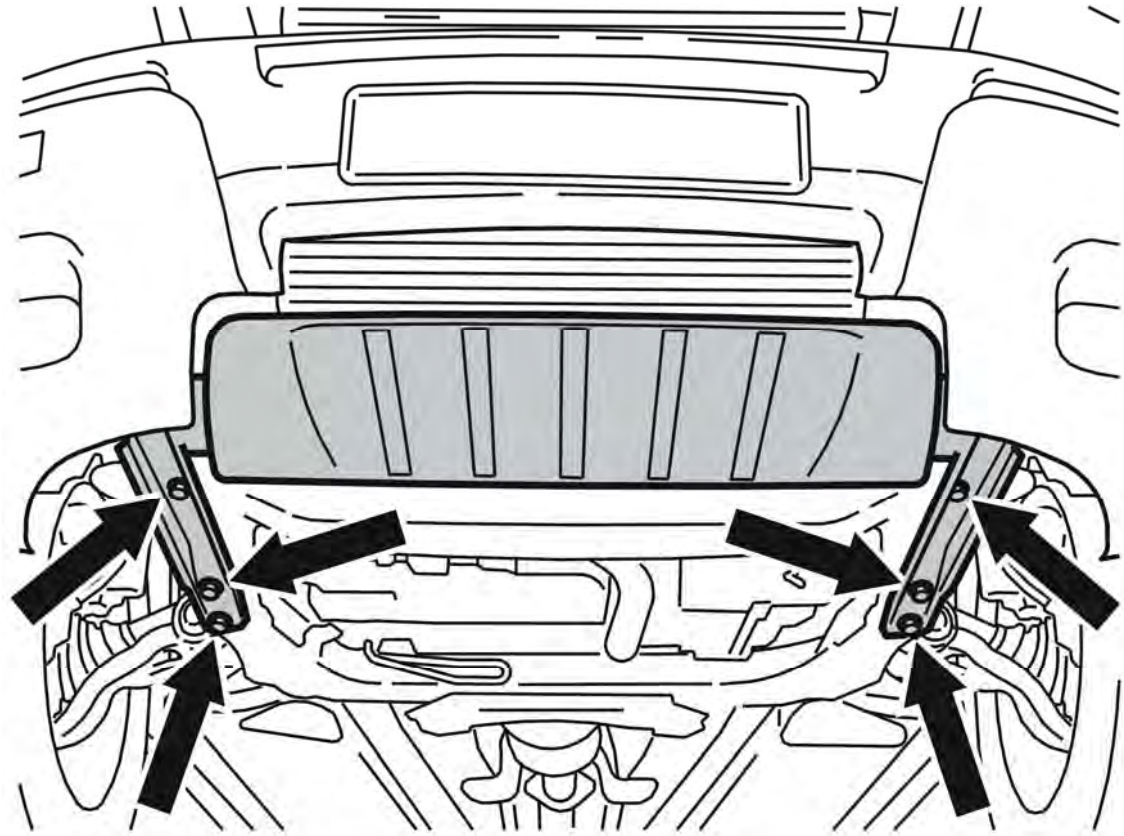

Fig. 10: Splash Guard. Protective Plate And Screws
Courtesy of VOLVO CARS CORPORATION

NOTE: There is a guide sleeve on the upper mounting for the plate. This must be lifted slightly so that the panel can be slid forward.

Remove the 6 screws.

Lift and slide the protective plate forward.

Remove the protective plate.

DRAINING COOLANT

Open the cock on the lower left edge of the radiator.

Drain the coolant into a clean receptacle.

Close the cock.

INSTALLING THE PROTECTIVE PLATE

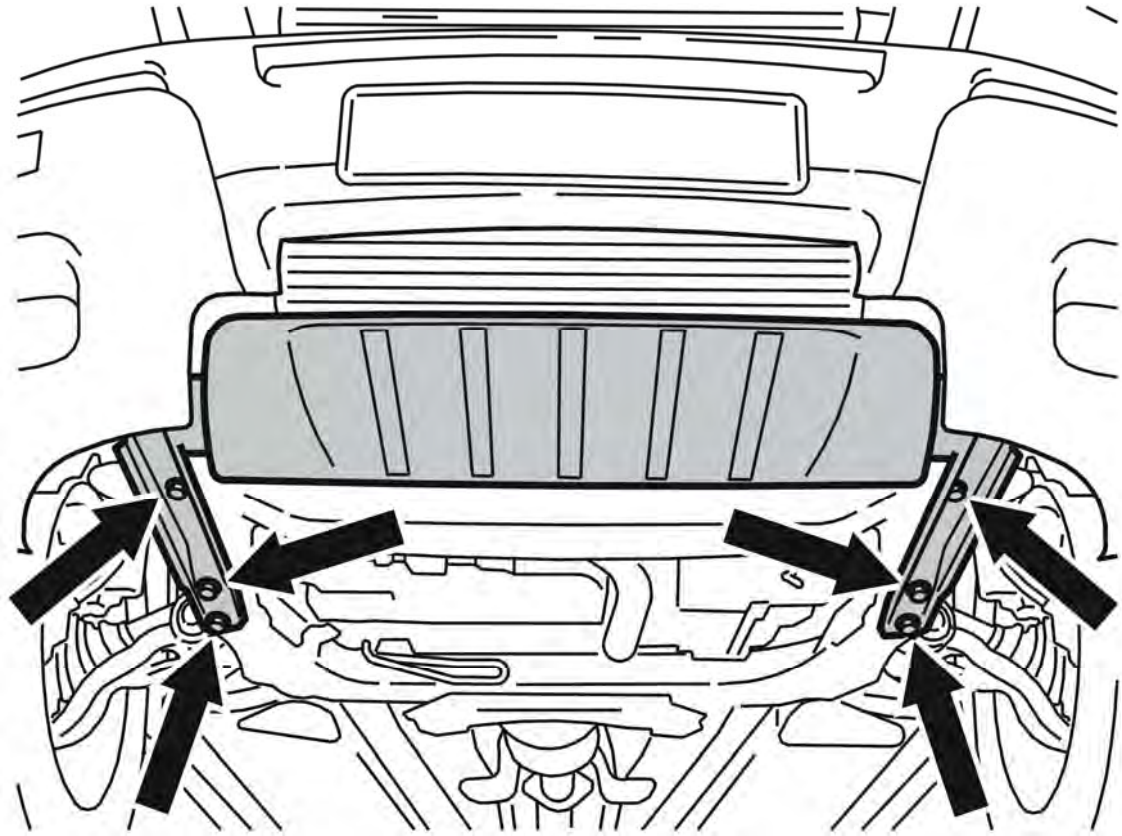

Fig. 11: Splash Guard. Protective Plate And Screws
Courtesy of VOLVO CARS CORPORATION

Install:

- the protective plate
- the 6 screws; tighten.

Lower the vehicle.

REMOVING THE COOLANT PUMP BELT PULLEY

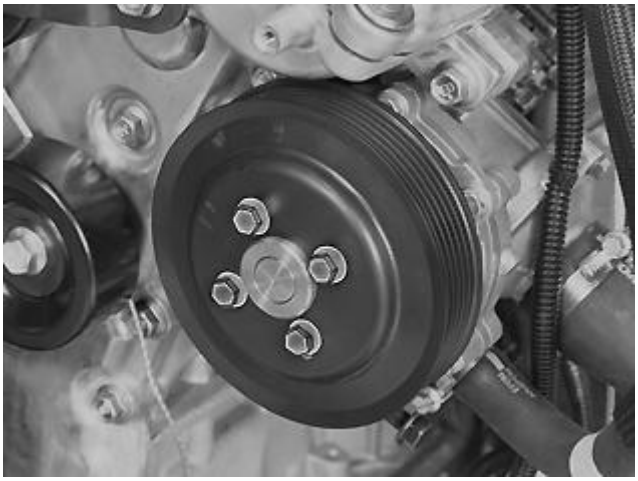

Fig. 12: Removing The Coolant Pump Belt Pulley
Courtesy of VOLVO CARS CORPORATION

Undo the 4 screws of the coolant pump belt pulley.

Loosen the screws a few turns.

REMOVING THE AUXILIARIES BELT

Remove the auxiliaries belt. See **AUXILIARIES BELT/BELT TENSIONER, REPLACEMENT** .

REMOVING THE COOLANT PUMP BELT PULLEY (Cont.)

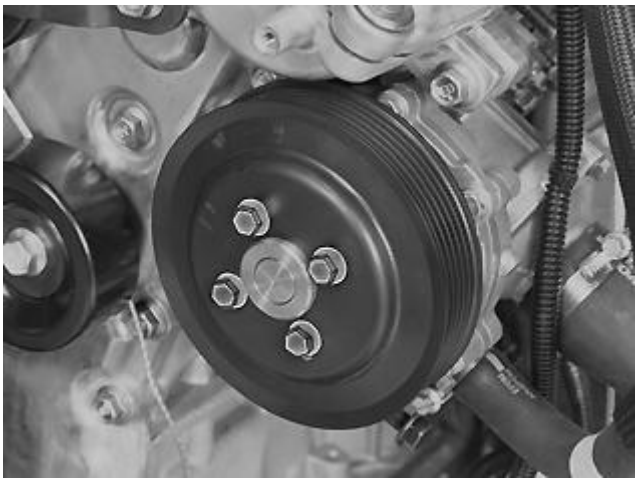

Fig. 13: Removing The Coolant Pump Belt Pulley
Courtesy of VOLVO CARS CORPORATION

Remove the 4 screws of the belt pulley.

REMOVING THE COOLANT PUMP

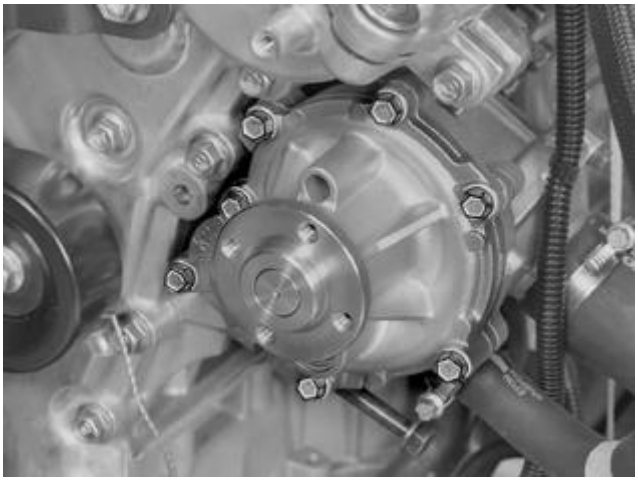

Fig. 14: Removing The Coolant Pump
Courtesy of VOLVO CARS CORPORATION

Remove:

- the 7 screws of the coolant pump
- the coolant pump; scrap the gasket.

INSTALLATION

NOTE: For tightening torques, see: TIGHTENING TORQUE .

INSTALLING THE COOLANT PUMP

Clean the gasket surface for the coolant pump.

Fig. 15: Removing The Coolant Pump
Courtesy of VOLVO CARS CORPORATION

Install:

- a new gasket
- the coolant pump
- the 7 M6 screws. Tighten.

INSTALLING THE COOLANT PUMP BELT PULLEY

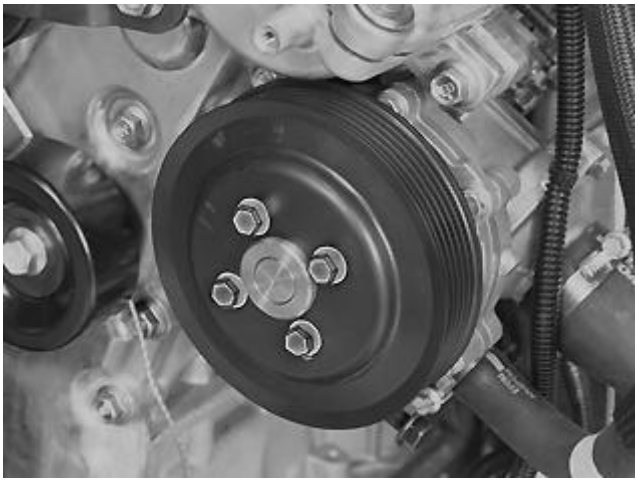

Fig. 16: Removing The Coolant Pump Belt Pulley
Courtesy of VOLVO CARS CORPORATION

Position the belt pulley but do not tighten the screws.

INSTALLING THE AUXILIARIES BELT

Install the auxiliaries belt. See **AUXILIARIES BELT/BELT TENSIONER, REPLACEMENT** .

INSTALLING THE COOLANT PUMP BELT PULLEY, CONTINUED

Tighten the 4 M6 screws of the belt pulley.

CHECK

CAUTION: Make sure the outlet hose of filling equipment is not blocked as this could damage the cooling system.

Fill with coolant using filling equipment see **9512957** and cover see **9512953** .

Start the engine and allow it to warm to normal operating temperature. Check for leaks and proper function. Fill up fluid as necessary.

THERMOSTAT, REPLACING

Special tools:

see **9512957**

see **9512953**

NOTE: **The illustrations in this service information are used for different model years and/or models. Some variation may occur. However, the essential information in the illustrations is always correct.**

NOTE: **Raise the vehicle as described in, see JACKING POINTS, BODY .**

REMOVAL

PREPARATORY WORK

Remove the expansion tank cap.

Raise the vehicle as described in, see **JACKING POINTS, BODY** .

REMOVING PROTECTIVE PLATE

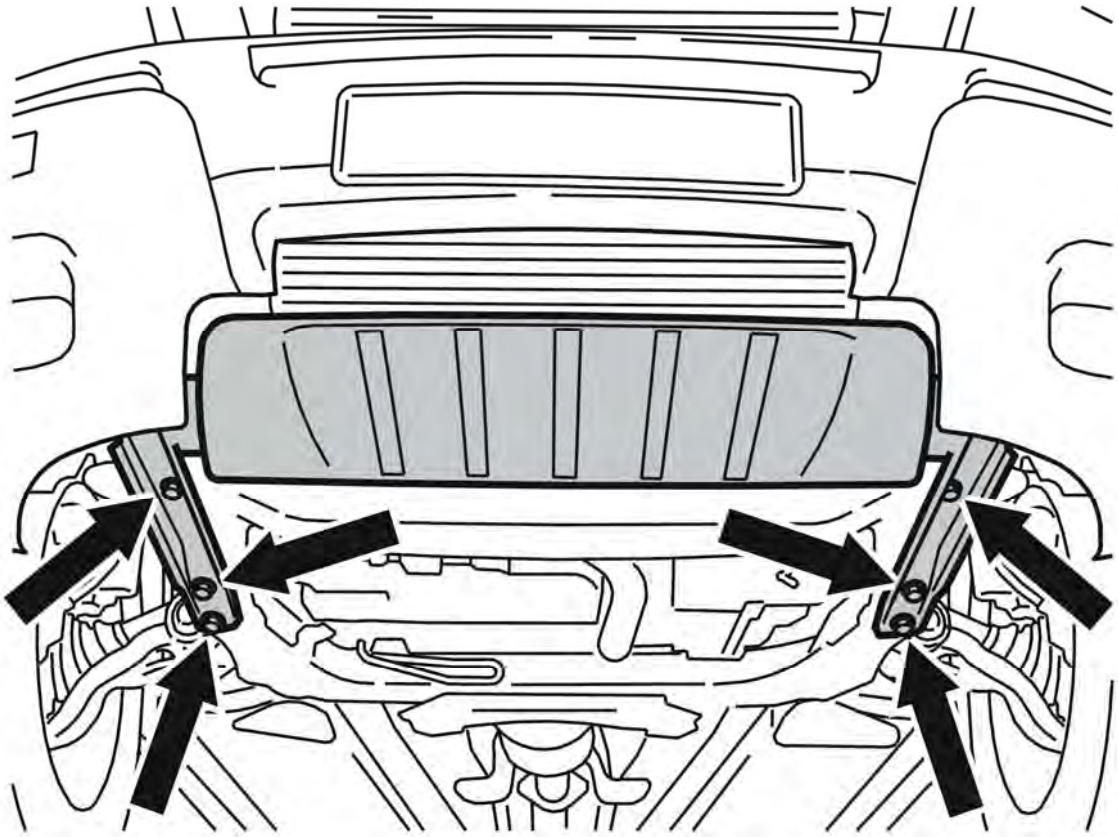

Fig. 17: Splash Guard. Protective Plate And Screws
Courtesy of VOLVO CARS CORPORATION

NOTE: **There is a guide sleeve on the upper mounting for the plate. This must be lifted slightly so that the panel can be slid forward.**

Remove the 6 screws.

Lift and slide the protective plate forward.

Remove the protective plate.

DRAINING COOLANT

Open the cock on the lower left edge of the radiator.

Drain the coolant into a clean receptacle.

Close the cock.

INSTALLING THE PROTECTIVE PLATE

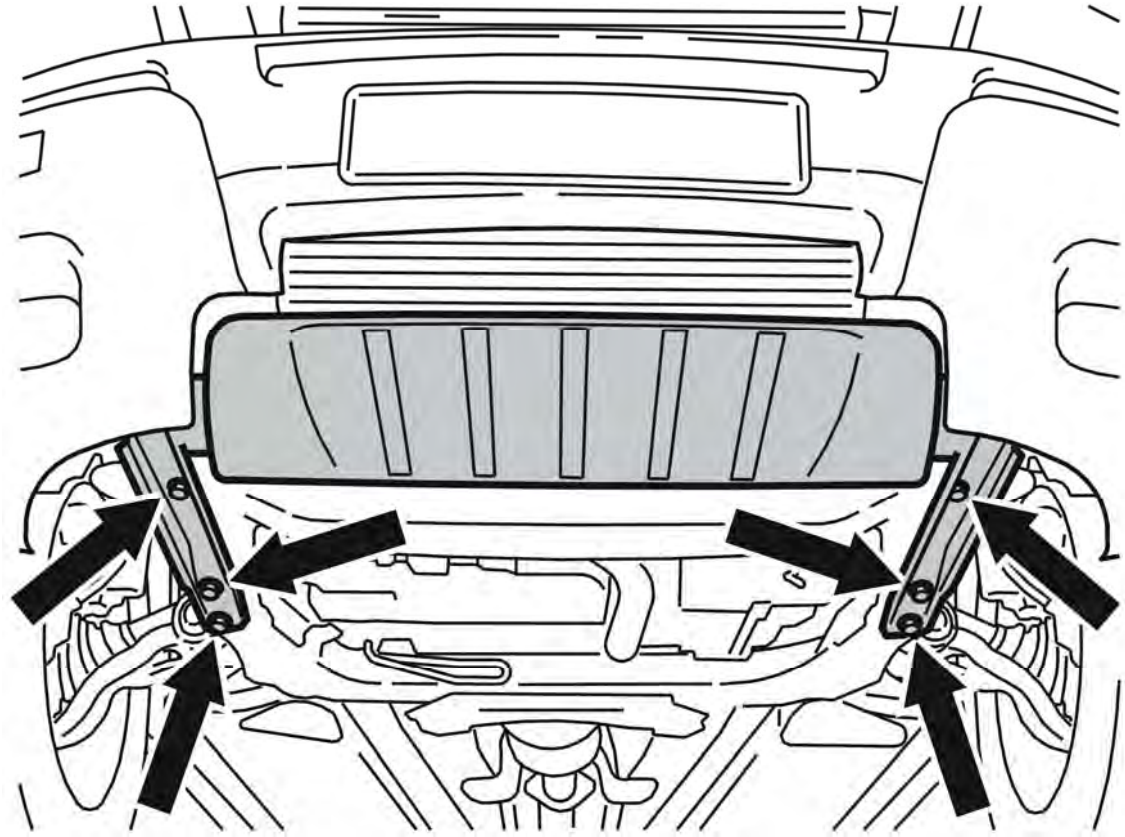

Fig. 18: Splash Guard. Protective Plate And Screws
Courtesy of VOLVO CARS CORPORATION

Install:

- the protective plate
- the 6 screws; tighten.

REMOVING THE LOWER ENGINE COVER

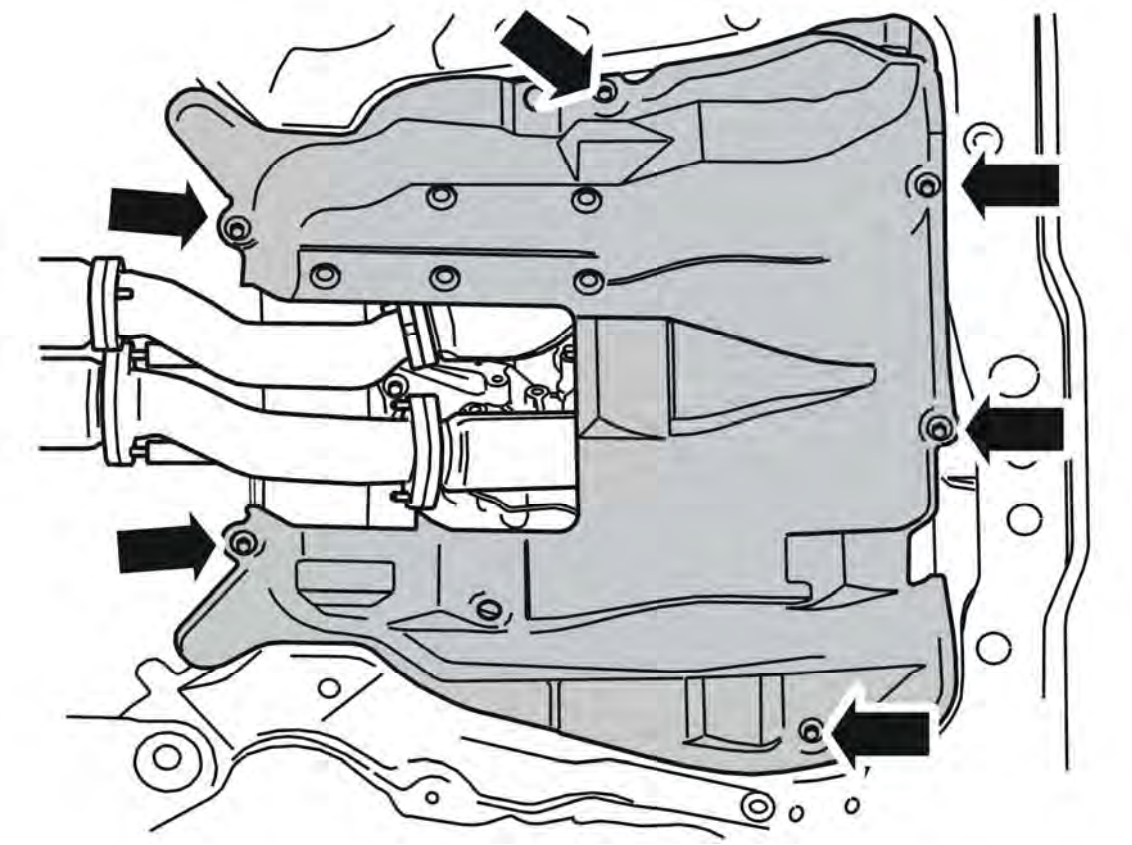

Fig. 19: Removing The Lower Engine Cover
Courtesy of VOLVO CARS CORPORATION

Remove:

- the 6 screws
- the lower engine cover.

REMOVING THE THERMOSTAT

Fig. 20: Identifying Thermostat
Courtesy of VOLVO CARS CORPORATION

NOTE: **Some coolant will escape from under the thermostat housing when the screws are loosened; wipe it up with paper or the like.**

Remove:

- 2 screws from the thermostat housing cover. Bend aside the radiator hose.

  HINT: The upper screw can be loosened more easily from above.

- the thermostat.

INSTALLATION

NOTE: **For tightening torques, see: TIGHTENING TORQUE .**

INSTALLING THE THERMOSTAT

Install:

- a new thermostat with a new gasket
- the cover with radiator hose. Tighten the 2 screws.

INSTALLING THE LOWER ENGINE COVER

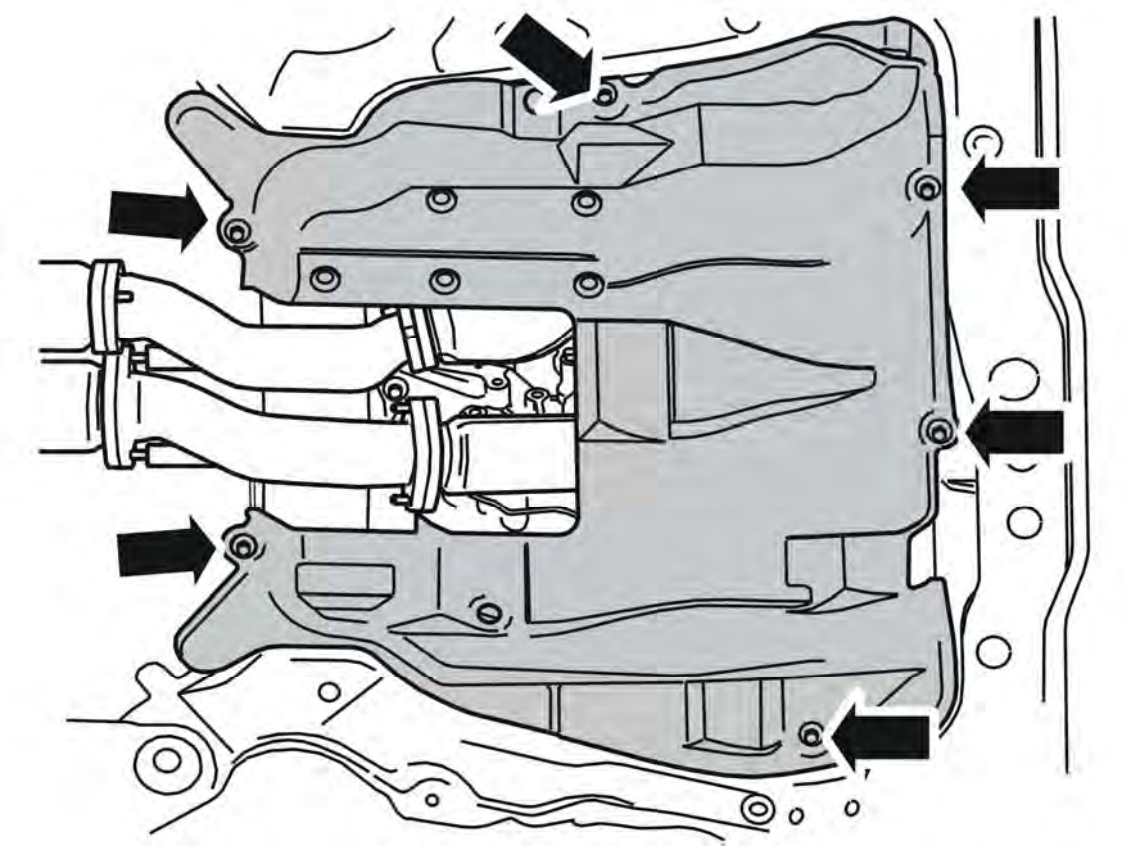

Fig. 21: Removing The Lower Engine Cover
Courtesy of VOLVO CARS CORPORATION

Install:

- the lower engine cover
- the 6 screws; tighten.

Lower the vehicle.

CHECK

CAUTION: Make sure the outlet hose of filling equipment is not blocked as this could damage the cooling system.

Fill with coolant using filling equipment see **9512957** and cover see **9512953** .

Start the engine and allow it to warm to normal operating temperature. Check for leaks and proper function. Fill up fluid as necessary.

ENGINE COOLANT PUMP AND THERMOSTAT (B5254T2; 2003-2004)

COOLANT PUMP, REPLACING

NOTE: **As the illustrations in this service information are used for different model years and / or models, some variation may occur. However, the essential information is always correct.**

REMOVING THE COOLANT PUMP

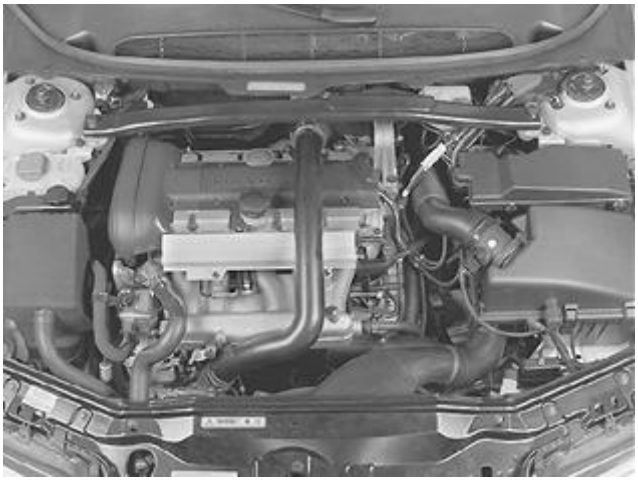

Fig. 22: Engine Compartment Components
Courtesy of VOLVO CARS CORPORATION

CAUTION: Remove the ignition key.

- Remove the expansion tank cap.
- Remove the splash guard under the engine
- Position a container under the engine drain cock. Drain the engine coolant.

  Avoid skin contact with the coolant.

- Transfer the container to the radiator draining tap. Drain off the remaining coolant
- Close the nipples
- Install the splashguard under the engine.

POSITION THE ENGINE ACCORDING TO THE MARKING

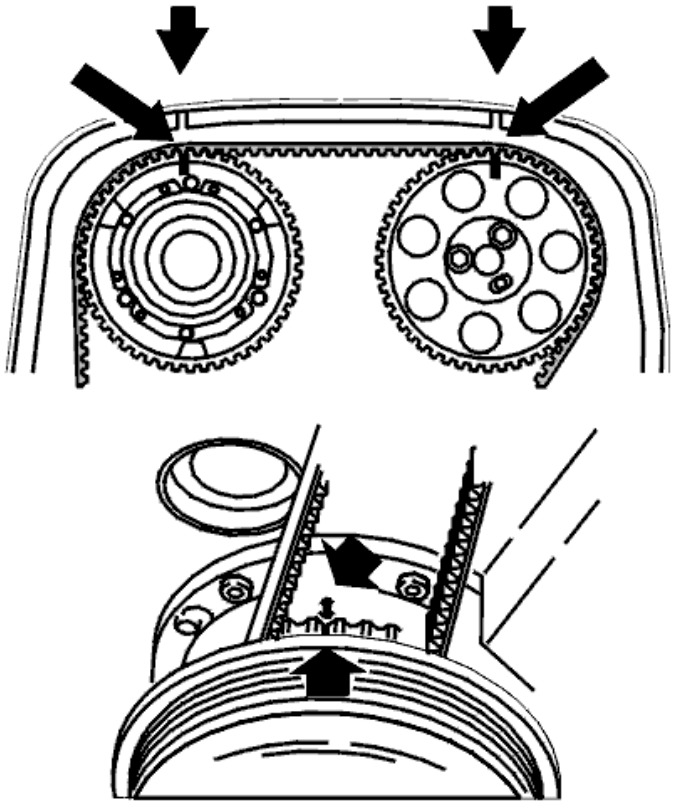

Fig. 23: Crankshaft And Camshafts Markings
Courtesy of VOLVO CARS CORPORATION

Remove

- the cross stay between the suspension turrets
- the servo reservoir and the expansion tank and place them on top of the engine.

WARNING: **Ensure that no power steering fluid is spilled. Extremely flammable.**

- the auxiliaries belt
- the front timing belt cover.

Raise the car.

- the right front wheel
- the nut for the cover in the right fender liner.

Install the upper timing belt cover.

Turn the crankshaft clockwise until the markings on the crankshaft and camshaft pulley correspond.

Turn the crankshaft a further 1/4 of a turn clockwise, then back counter-clockwise until the markings correspond.

Remove the upper timing belt cover.

REMOVING THE TIMING BELT

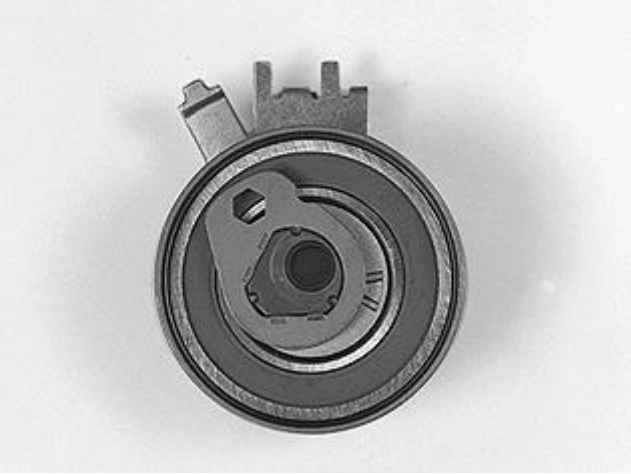

Fig. 24: Belt Tensioner
Courtesy of VOLVO CARS CORPORATION

Slacken off the belt tensioner.

Slacken off the center screw for the belt tensioner slightly.

Hold the center screw in place. Turn the tensioner eccentric clockwise to 10 o'clock using a 6 mm Allen key.

Unhook the timing belt.

REMOVE THE COOLANT PUMP

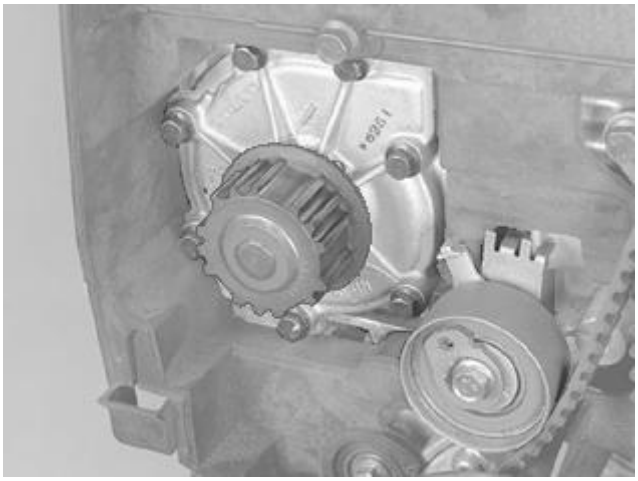

Fig. 25: Coolant Pump

Courtesy of VOLVO CARS CORPORATION

Remove the screws

- Tap the pump wheel with the shaft of a hammer and remove the pump
- Clean the gasket faces thoroughly.

REPLACE THE COOLANT PUMP

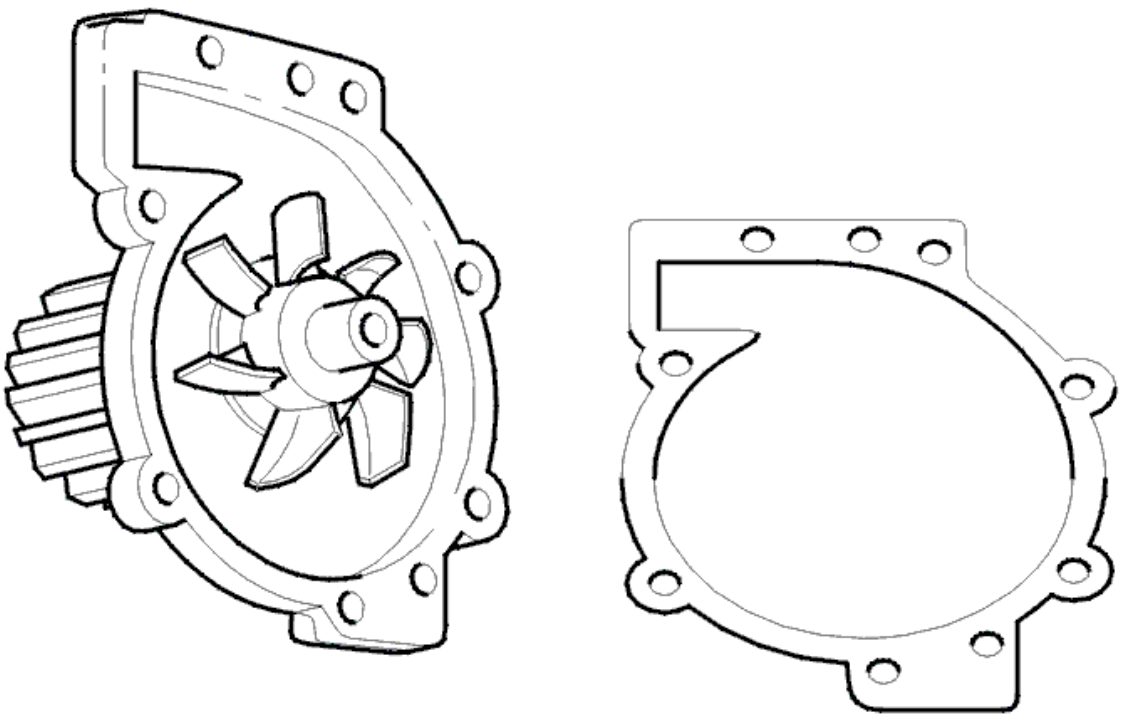

Fig. 26: Coolant Pump And Gasket
Courtesy of VOLVO CARS CORPORATION

Install:

- a new gasket
- a new pump.

Tighten the screws crosswise. Tighten to **17 Nm** .

INSTALLING THE TIMING BELT

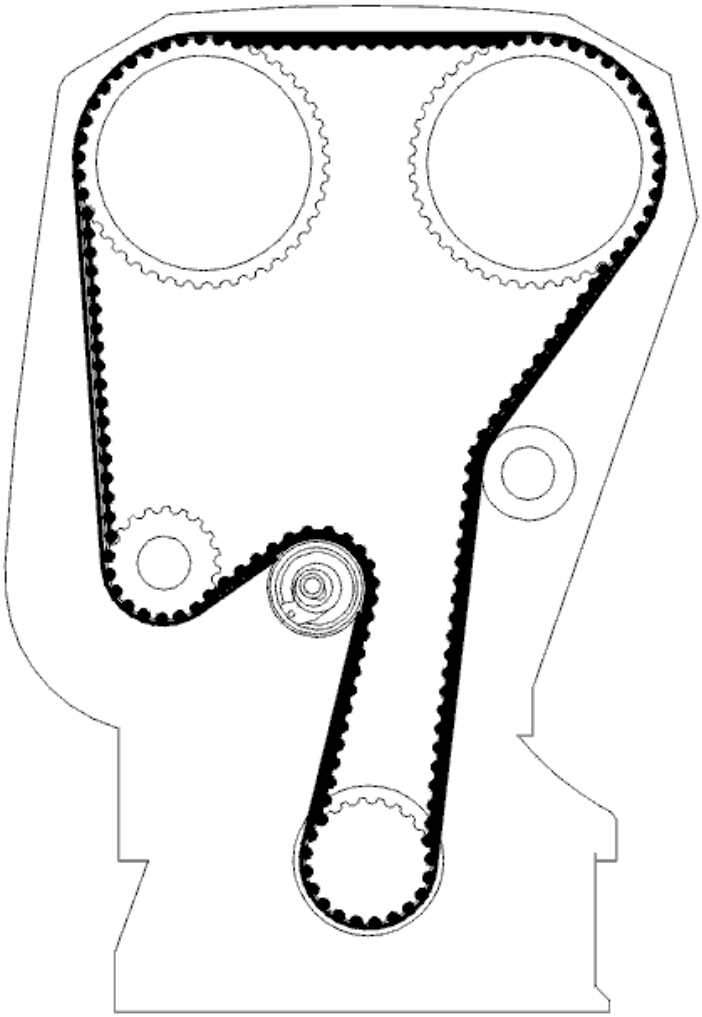

Fig. 27: Camshaft Belt Routing
Courtesy of VOLVO CARS CORPORATION

Install the belt in the following order:

- crankshaft
- the idler pulley
- intake camshaft pulley
- exhaust camshaft pulley
- water pump
- belt tensioner.

TENSION THE TIMING BELT

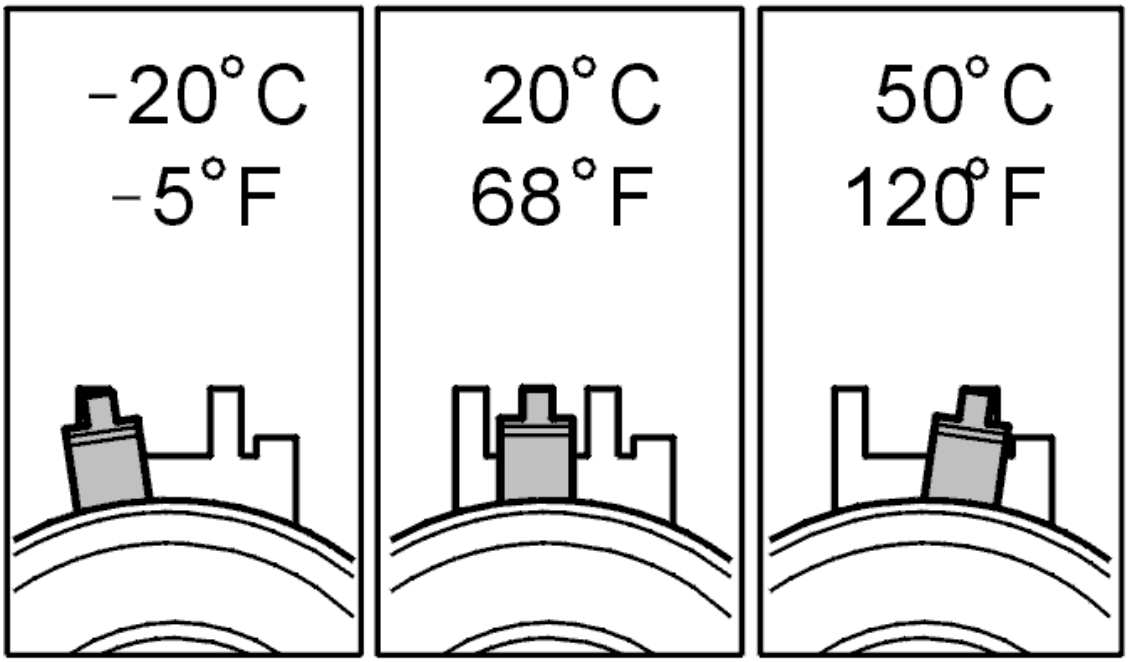

Fig. 28: Identifying Needle Position At Varying Temperatures
Courtesy of VOLVO CARS CORPORATION

This adjustment is carried out on a cold engine. A suitable temperature is approximately 20°C/68°F.

At higher temperatures (with the engine at operating temperature or a high outside temperature for example) the indicator is further to the right.

The illustration shows the needle position when adjusting the timing belt tensioner at different engine temperatures.

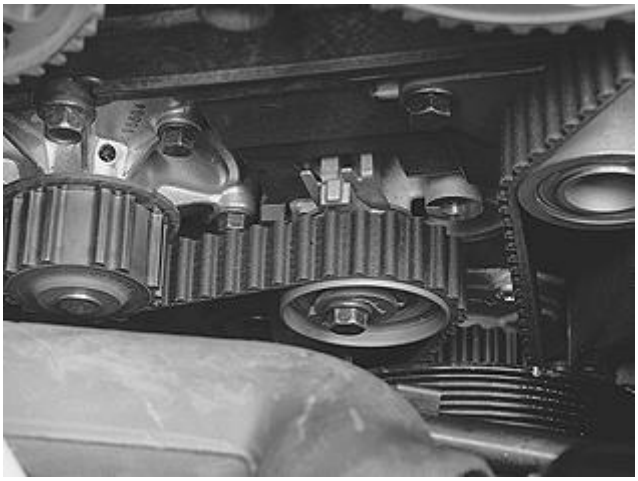

Fig. 29: Belt Between Intake Camshaft Pulley, Idler Pulley And Crankshaft
Courtesy of VOLVO CARS CORPORATION

Tension the timing belt as follows

- Carefully turn the crankshaft clockwise until the timing belt is tensioned.

  The belt must be tensioned between the intake camshaft pulley, the idler pulley and the crankshaft

- Hold the belt tensioner center screw secure. Turn the belt tensioner eccentric counter-clockwise until the tensioner indicator passes the marked position.

  Then turn the eccentric back so that the indicator reaches the marked position in the center of the window

- Hold the eccentric secure and tighten the center screw. Tighten to **20 Nm** .

Check that the indicator is in the correct position.

CHECK

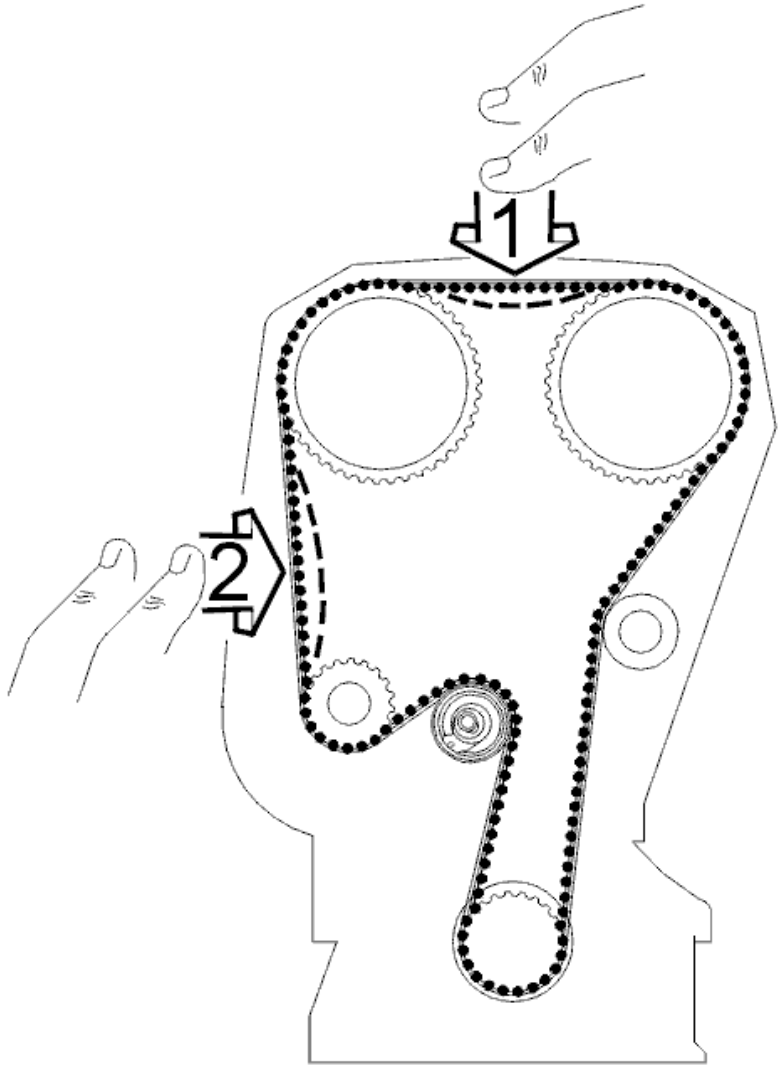

Fig. 30: Pressing Belt To Check That Indicator On Tensioner Moves Easily
Courtesy of VOLVO CARS CORPORATION

Checking markings:

- press the belt to check that the indicator on the tensioner moves easily
- install the upper timing belt cover
- turn the crankshaft 2 turns. Check that the markings on the crankshaft and camshaft pulley correspond
- also check that the indicator on the belt tensioner is within the marked area.

REINSTALL

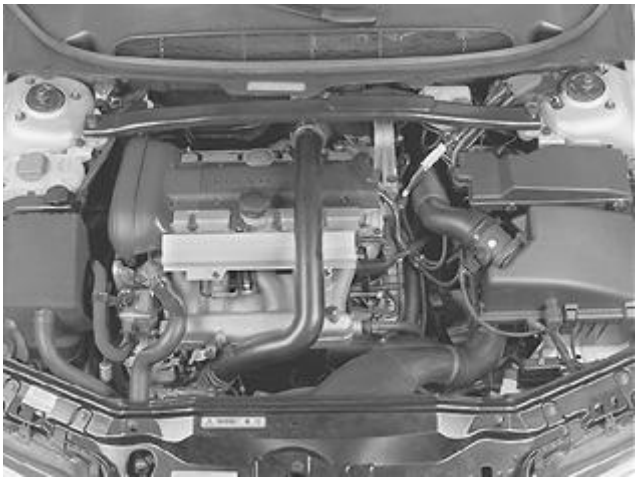

Fig. 31: Engine Compartment Components
Courtesy of VOLVO CARS CORPORATION

Reinstall the removed components:

- the upper timing belt cover
- the front timing belt cover.

  Tighten to **12 Nm**

- install the auxiliaries belt
- reinstall the servo reservoir and the expansion tank.

  Ensure that the hoses are correctly positioned

- the engine stabilizer brace. Tighten the screws at the suspension turrets. Tighten to **50 Nm** . Tighten the screw for the engine bracket. Tighten to **80 Nm**
- the cover in the fender liner
- the wheel. See **INSTALLING WHEELS** .

Fill the cooling system with Volvo original coolant.

Wipe clean and check the engine compartment.

CHECKING WORK

Function test

- Warm up the engine until the thermostat opens
- Top up the cooling system if necessary.

Check for leaks.

REPLACING THE THERMOSTAT AND/OR ENGINE COOLANT TEMPERATURE SENSOR

Special tools:

see **9512885**

REPLACING THE ENGINE COOLANT TEMPERATURE (ECT) SENSOR

REMOVING THE ENGINE COOLANT TEMPERATURE (ECT) SENSOR

Remove:

- the upper timing belt cover
- cable from the sensor
- the sensor from the thermostat housing. Use socket see **9512885** .

NOTE: Put paper underneath the sensor to prevent coolant spillage.

INSTALLING THE ENGINE COOLANT TEMPERATURE (ECT) SENSOR

Install:

- the sensor with a new seal
- Tighten to **22 Nm** , use socket see **9512885**
- the upper camshaft cover.

REPLACING THE THERMOSTAT

PREPARATION

Remove the cap from the expansion tank.

Install a hose clamp on the upper coolant hose.

Raise the car. Remove the lower splashguard.

Position a container under the engine drain cock. Drain 2 liters of engine coolant.

Close the cock. Install the lower splash guard. Lower the car.

Disconnect the sensor cable connector.

Remove the upper timing belt cover.

REMOVING THE THERMOSTAT

Remove

- the upper timing belt cover
- the auxiliaries belt.

Remove the delivery pipe from the power steering pump.

NOTE: Put paper under the generator (GEN) to avoid oil spillage.

Remove:

- the servo pump
- the connector from the sensor
- the thermostat housing from the cylinder head.

REPLACING THE THERMOSTAT

Remove the cover and the thermostat.

Install a new thermostat with a new gasket.

NOTE: Ensure that the thermostat is positioned correctly in the thermostat housing.

INSTALLING THE THERMOSTAT

CAUTION: For tightening torques not in the text, see TIGHTENING TORQUE .

Install:

- the thermostat housing. Use a new gasket
- the connector for the sensor
- the servo pump
- the delivery line for the power steering pump
- the upper timing belt cover.

FINISHING

Remove the hose clip.

Fill with coolant.

Install the cap on the expansion tank.

Test drive the engine until the thermostat has opened.

Check for leakage.

Top up the coolant and oil if necessary.

ENGINE COOLANT PUMP AND THERMOSTAT (B5254T2; 2005-2007)

COOLANT PUMP, REPLACING

see **COOLANT PUMP, REPLACING**

THERMOSTAT / TEMPERATURE SENSOR, ENGINE COOLANT, REPLACING

Special tools:

see **9512885**

see **9995722**

see **9997109**

see **9512953**

see **9512957**

NOTE: The illustrations in this service information are used for different model years and/or models. Some variation may occur. However, the essential information in the illustrations is always correct.

REMOVING / INSTALLING

REMOVING THE ENGINE COOLANT TEMPERATURE (ECT) SENSOR

Fig. 32: Identifying Engine Coolant Temperature (ECT) Sensor
Courtesy of VOLVO CARS CORPORATION

Remove:

- the upper timing belt cover. Disconnect the connector for the temperature sensor
- the temperature sensor from the thermostat housing. Use see **9512885** .

NOTE: Put paper underneath the sensor to prevent coolant spillage.

INSTALLING THE ENGINE COOLANT TEMPERATURE (ECT) SENSOR

Fig. 33: Identifying Engine Coolant Temperature (ECT) Sensor
Courtesy of VOLVO CARS CORPORATION

Install:

- the sensor with a new seal. Tighten. See: **SUMMARY OF SPECIFIC COMPONENTS AND TIGHTENING TORQUES** . Use: see **9512885**
- the upper timing belt cover.

REMOVAL

PREPARATION

Fig. 34: Coolant Drain Plug
Courtesy of VOLVO CARS CORPORATION

Remove the cap from the expansion tank. Install a hose clamp on the upper coolant hose.

The vehicle must be raised for this work. See: **JACKING POINTS, BODY** . Remove the lower cover plate.

Position a container under the engine drain cock. Drain **2 liters** of engine coolant.

Close the cock. Install the lower protective panel.

Lower the vehicle.

REMOVING THE ENGINE CONTROL MODULE (ECM)

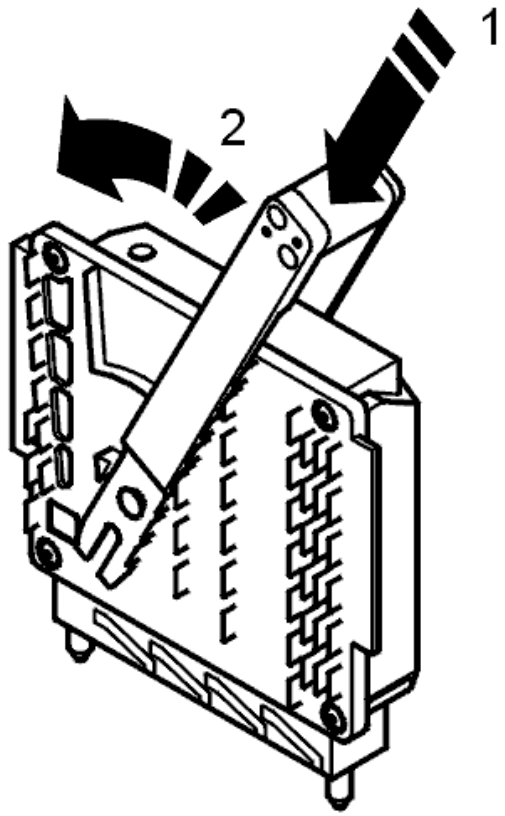

Fig. 35: Identifying Engine Control Module
Courtesy of VOLVO CARS CORPORATION

Ignition off. Wait for 2 minutes.

CAUTION: Do not touch the terminal pins on the control module with fingers. Static electricity may damage components in the engine control module (ECM).

Remove the cover over the control module box. Put the cover to one side.

Insert tool see **9995722** around the control module.

Move the upper section of the tool backwards as far as it will go. Pull up the tool. Carefully pull up the control module.

For vehicles with automatic transmissions repeat the above work.

Remove the surround from around the control module box.

REMOVING THE AUXILIARIES BELT

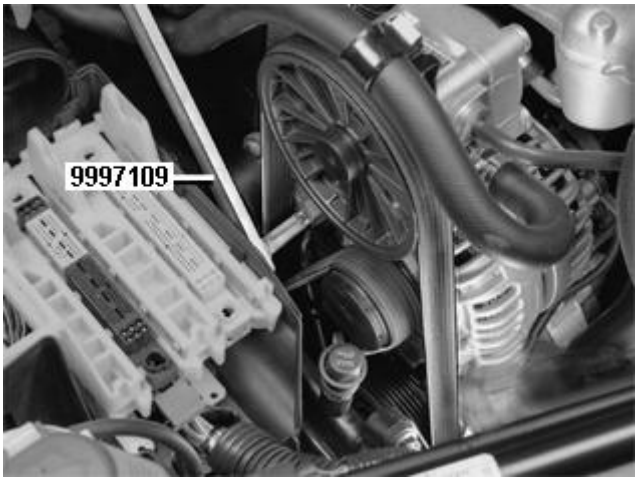

Fig. 36: Identifying Auxiliaries Belt And Special Tool 999 7109
Courtesy of VOLVO CARS CORPORATION

NOTE: Make a note of the routing of the belt.

Remove:

- the auxiliaries belt. Use see **9997109**
- the upper timing belt cover.

REMOVING THE POWER STEERING PUMP

Fig. 37: Identifying Power Steering Pump Screws, Auxiliaries Belt And Upper Camshaft Cover
Courtesy of VOLVO CARS CORPORATION

Remove the 3 x screws for the power steering pump. Place the power steering pump to one side.

REMOVING THE THERMOSTAT HOUSING

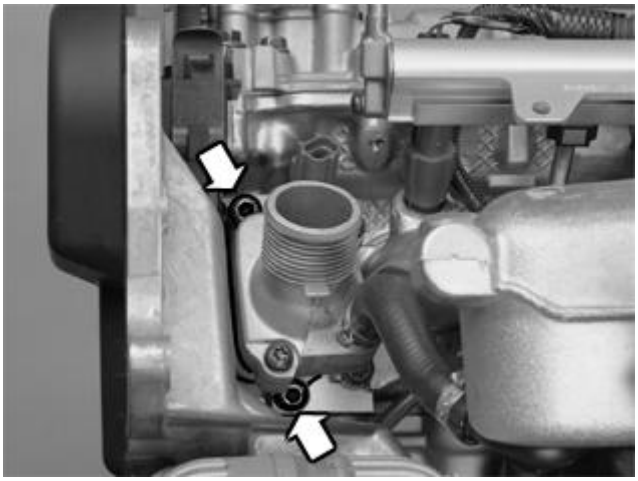

Fig. 38: Identifying Thermostat Housing
Courtesy of VOLVO CARS CORPORATION

Remove:

- the hose clamp to the upper radiator hose. Disconnect the hose from the thermostat housing
- the connector from the temperature sensor
- the 2 x screws for the thermostat housing at the section against the cylinder head
- the thermostat housing from the cylinder head
- the hose clamp for the water hose for heating crankcase ventilation.

Transfer the temperature sensor to the new thermostat housing.

INSTALLATION

NOTE: For tightening torques, see: TIGHTENING TORQUE .

INSTALLING THE THERMOSTAT HOUSING

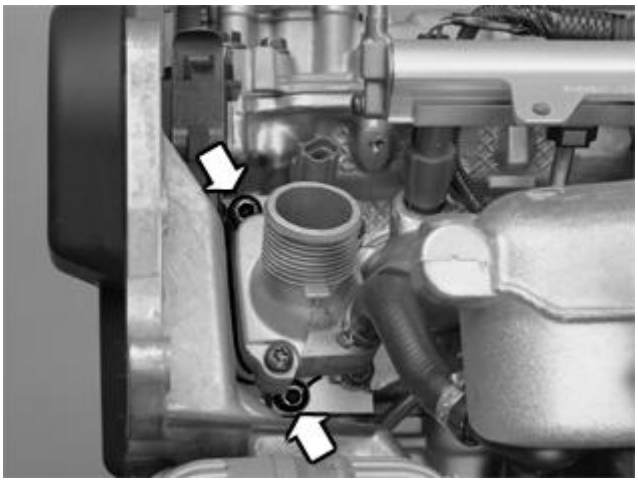

Fig. 39: Identifying Thermostat Housing

Courtesy of VOLVO CARS CORPORATION

Install:

- the hose for the water heated crankcase ventilation. Before installing the thermostat housing, use a new hose clamp
- a new gasket
- the thermostat housing assembly. Tighten the screws
- the upper radiator hose. Tighten the hose clamp.

Connect the connector for the temperature sensor.

FINISHING

Fig. 40: Identifying Power Steering Pump Screws, Auxiliaries Belt And Upper Camshaft Cover
Courtesy of VOLVO CARS CORPORATION

NOTE: Ensure that the auxiliaries belt is correctly positioned on all the pulleys.

Install:

- the power steering pump. Tighten the 3 x screws
- the auxiliaries belt. Use see **9997109**
- the upper camshaft cover.

INSTALLING CONTROL MODULES

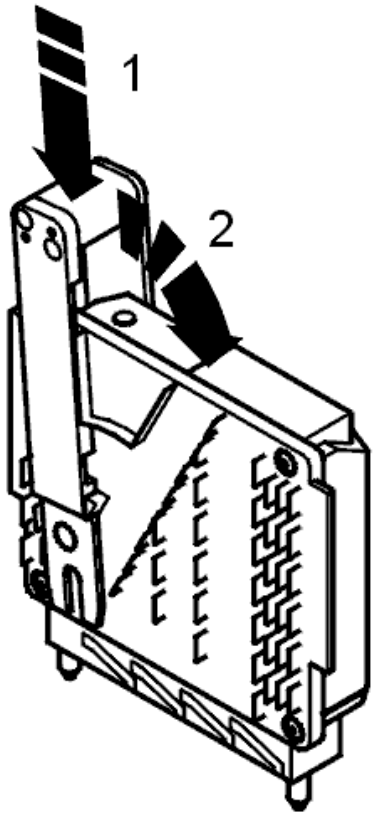

Fig. 41: Identifying Engine Control Module
Courtesy of VOLVO CARS CORPORATION

CAUTION: Check that no pins or sockets are damaged on the connector.

Install the surround for the control module box.

Carefully press the control module down into the grooves on the inside of the control module box. Press to the limit position

Insert tool see **9995722** around the control module.

Move the upper section of the tool forwards as far as it will go. Pull up the tool.

Press the cover into place over the control modules. Check that the air ducts are correctly positioned.

FINISHING

Remove the hose clip. Refill with coolant. Use filling equipment see **9512957** and cover see **9512953** . Install the cap on the expansion tank.

Test drive the engine until the thermostat has opened. Check for leakage. Top-up the coolant.

ENGINE COOLING FAN (B5254T2; 2003-2007)

ENGINE COOLING FAN (FC), REPLACING

NOTE: **The illustrations in this service information are used for different model years and/or models. Some variation may occur. However, the essential information in the illustrations is always correct.**

PREPARATORY WORK

Remove the battery lead. See **BATTERY, DISCONNECTING** .

REMOVAL

REMOVING THE PROTECTIVE PLATE (SKID PLATE)

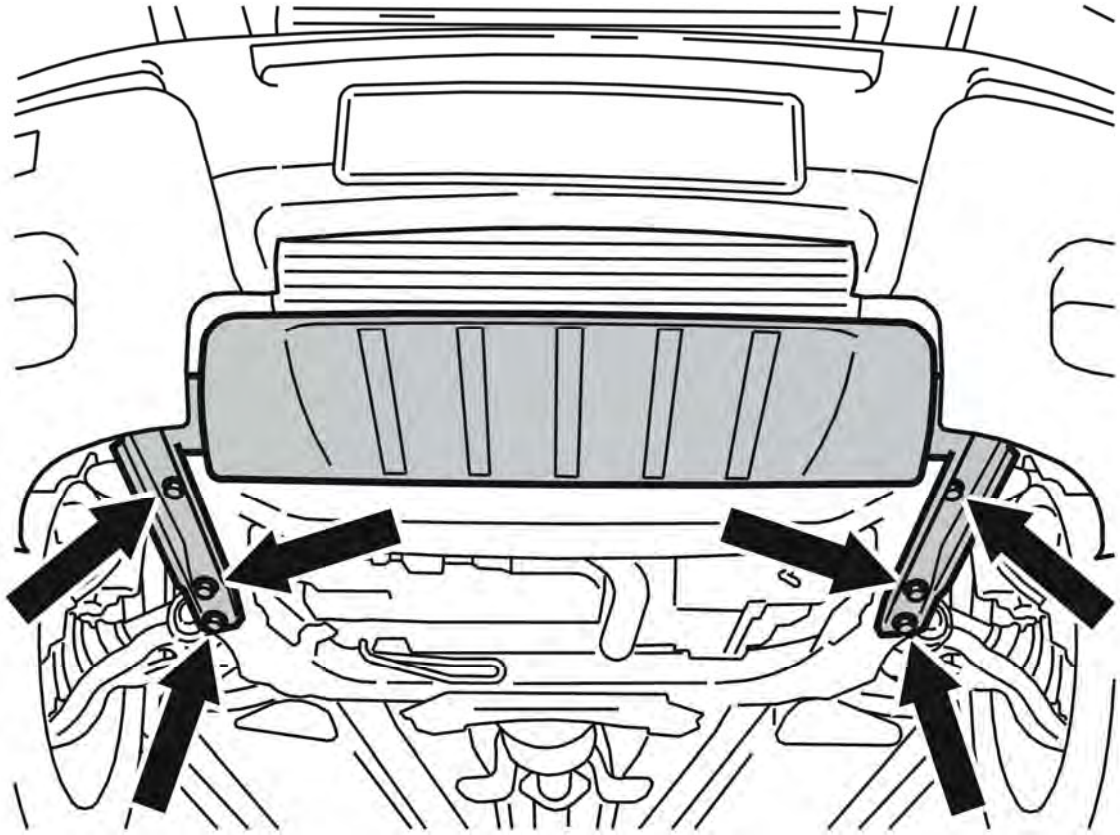

Fig. 42: Splash Guard. Protective Plate And Screws
Courtesy of VOLVO CARS CORPORATION

Remove 6 screws.

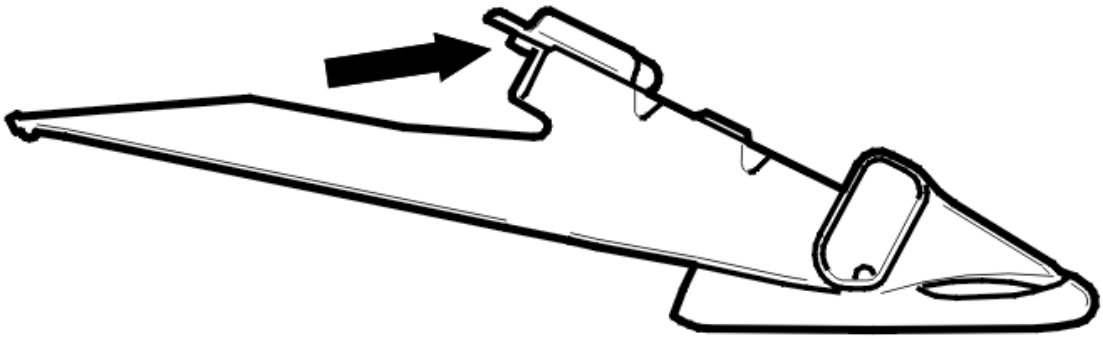

Fig. 43: Identifying Protective Plate
Courtesy of VOLVO CARS CORPORATION

Lift and slide the splash guard forward.

Remove the protective plate.

NOTE: **There is a guide sleeve on the upper mounting for the plate. This must be lifted slightly so that the panel can be slid forward.**

REMOVING THE RIGHT CHARGE AIR HOSE

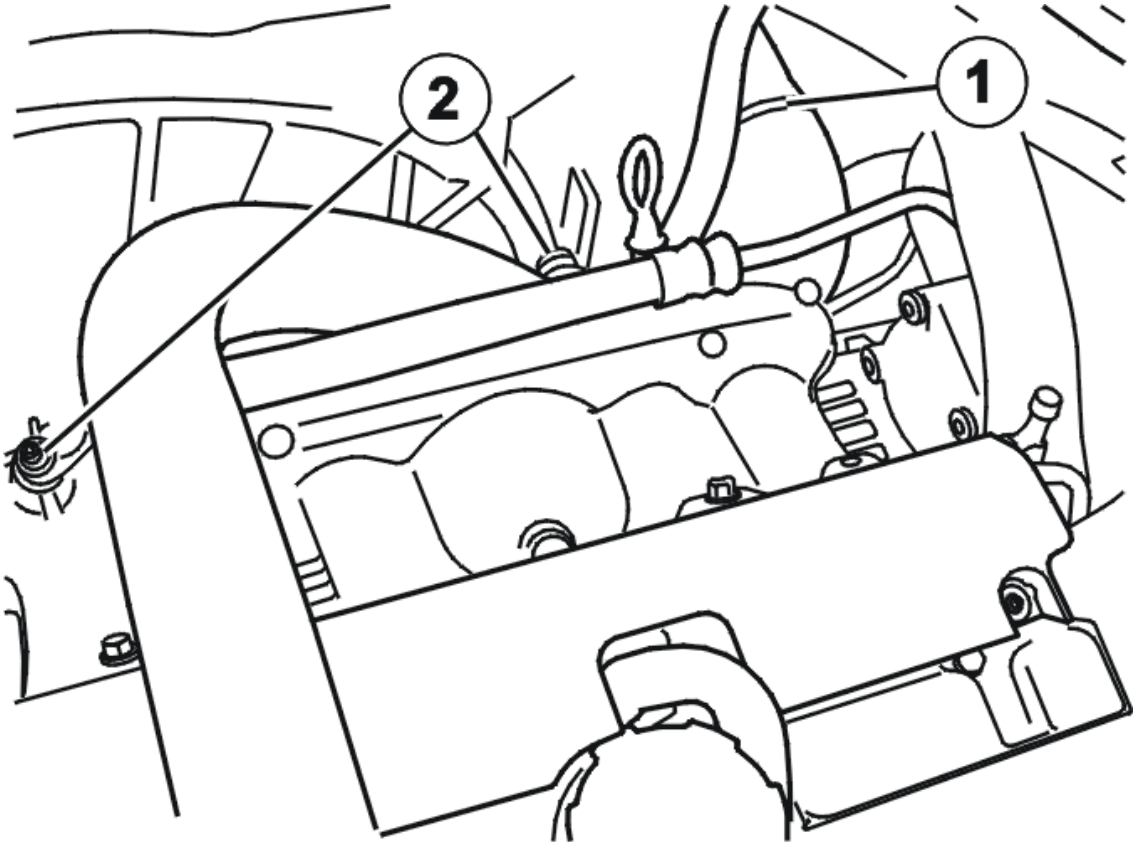

Fig. 44: Removing The Right Charge Air Hose
Courtesy of VOLVO CARS CORPORATION

Undo the clamp (1).

Remove:

- the 2 screws (2)
- the charge air hose from the charge air cooler. Bend down the hose and pipe.

REMOVING THE ENGINE COOLING FAN

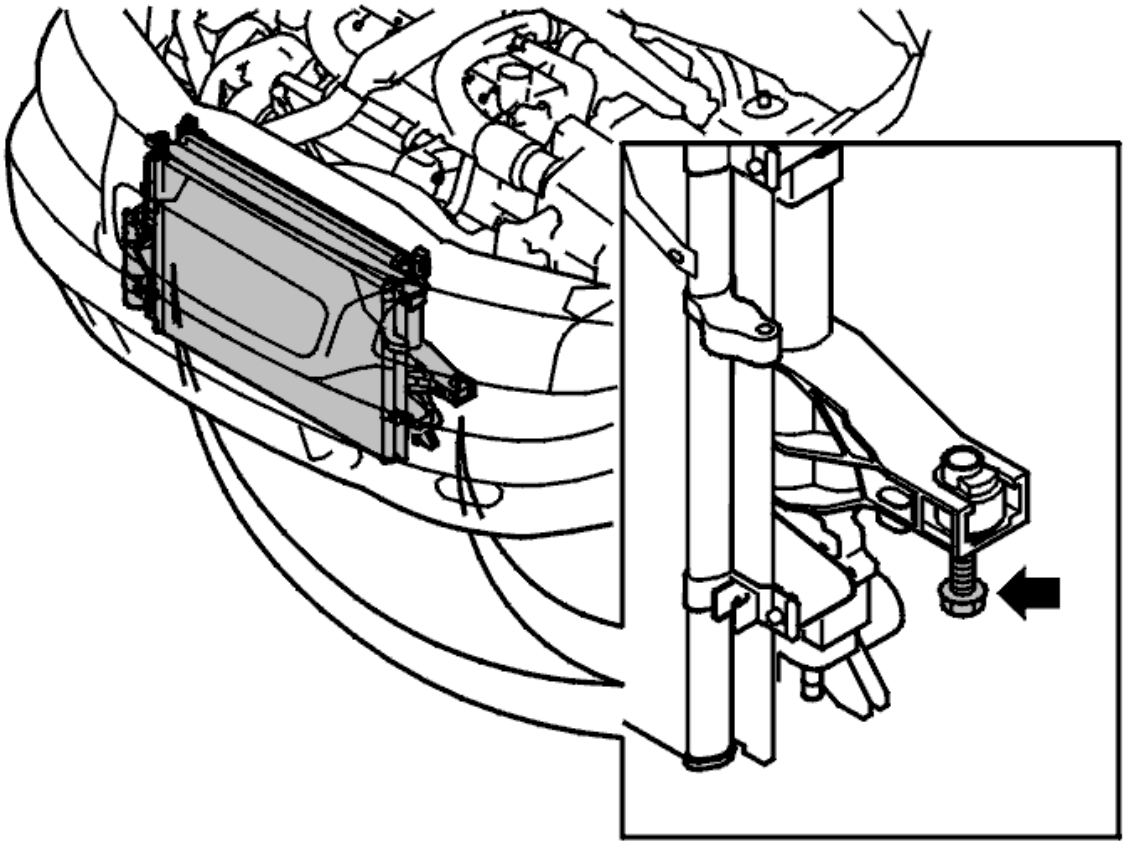

Fig. 45: Identifying Lower Mounting For Air Conditioning Aggregate
Courtesy of VOLVO CARS CORPORATION

For all:

Undo the mounting screws so that the radiator assembly is lowered approx. **20 mm** .

NOTE: Do not remove the screws completely.

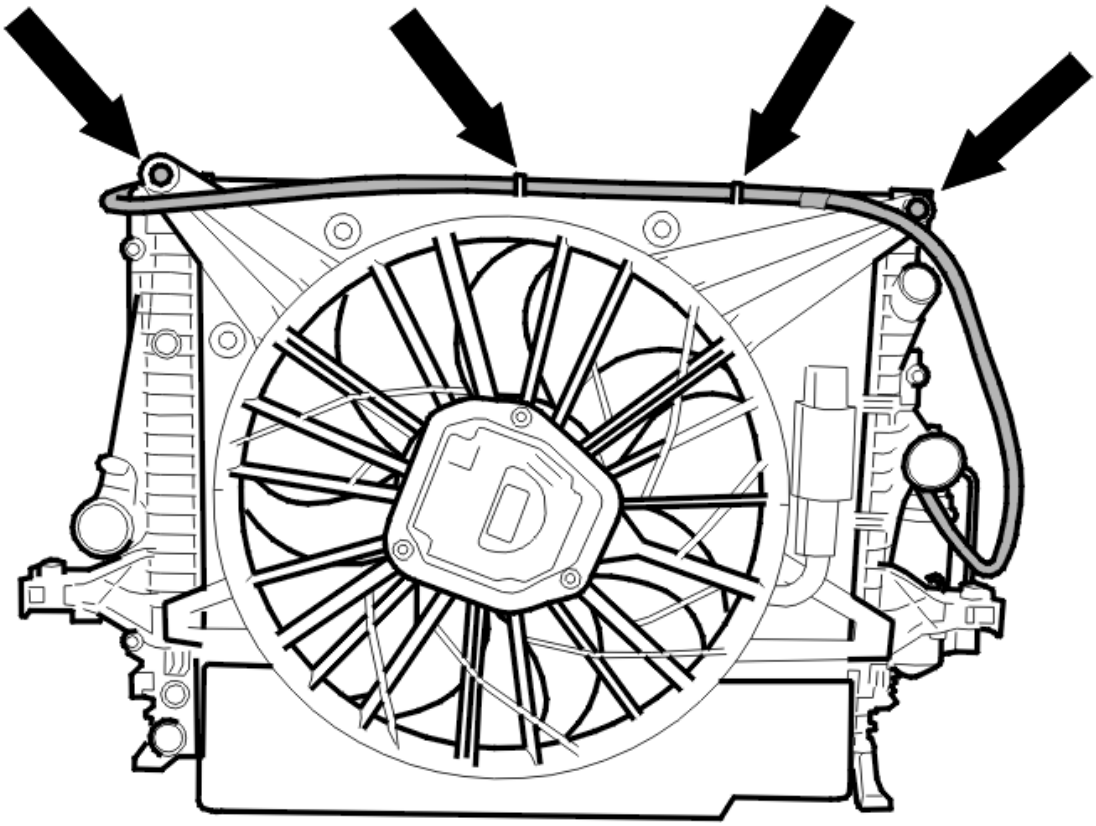

Fig. 46: Identifying Engine Cooling Fan
Courtesy of VOLVO CARS CORPORATION

Undo the connector and tie straps.

Move aside the cable harness.

Remove the screws of the engine cooling fan mounting.

Detach the hose of the expansion tank from the clip on the engine cooling fan.

Pull the fan upward to release it from the lower mounting.

Remove the fan downward.

NOTE: Ensure that no hoses are trapped when installing the engine cooling fan (FC).

INSTALLATION

NOTE: For tightening torques, see: TIGHTENING TORQUE .

INSTALLING THE ENGINE COOLING FAN

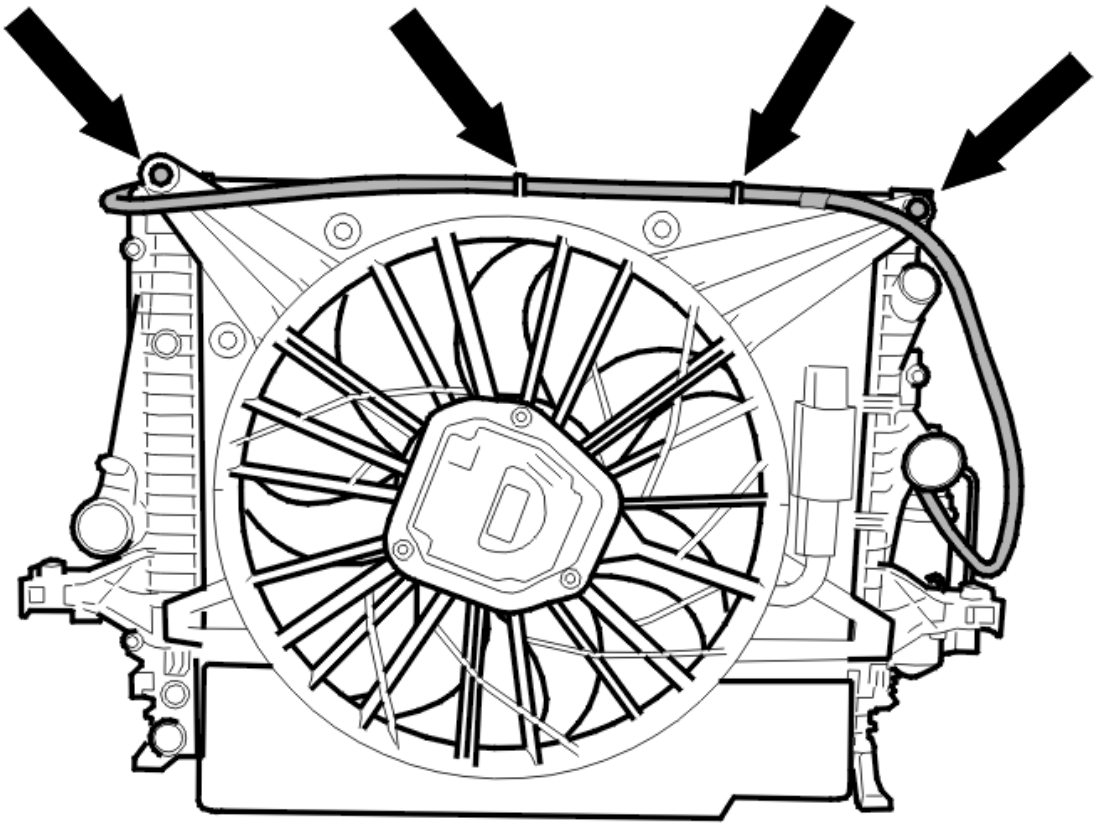

Fig. 47: Identifying Engine Cooling Fan
Courtesy of VOLVO CARS CORPORATION

Press down the cooling fan without fitting it into the lower mountings. Press the top edge of the fan forward and raise it so that it can be fitted into the lower mountings.

CAUTION: Make sure the hood cable is not pinched when the fan is installed.

Install:

- the engine cooling fan.
- the 2 M6 screws.
- the hose of the expansion tank in the fan cowling clip

Tighten the two mounting screws (M8) of the radiator assembly.

INSTALLING THE RIGHT CHARGE AIR HOSE

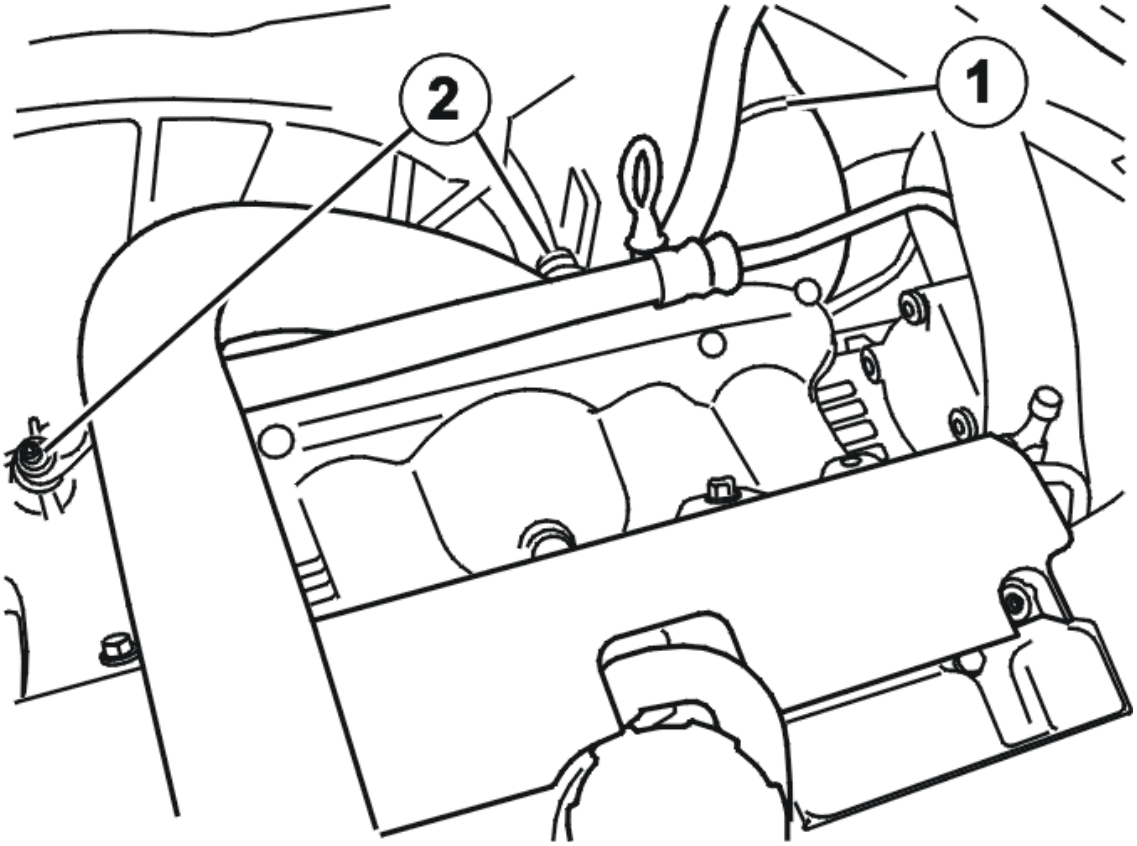

Fig. 48: Removing The Right Charge Air Hose
Courtesy of VOLVO CARS CORPORATION

For petrol engines only:

Install:

- the charge air hose to the charge air cooler
- 2 M5 screws (2). Tighten the clamp (1).

INSTALLING THE PROTECTIVE PLATE (SKID PLATE)

Raise the protective plate in the bumper shell.

Press forward until the mounting brackets engage in the subframe.

Install the screws, M10.

FINISHING

Install the batter cable.

ENGINE COOLING FAN (B6324S; 2007-2010)

ENGINE COOLING FAN (FC)

NOTE: Removal steps in this procedure may contain installation details.

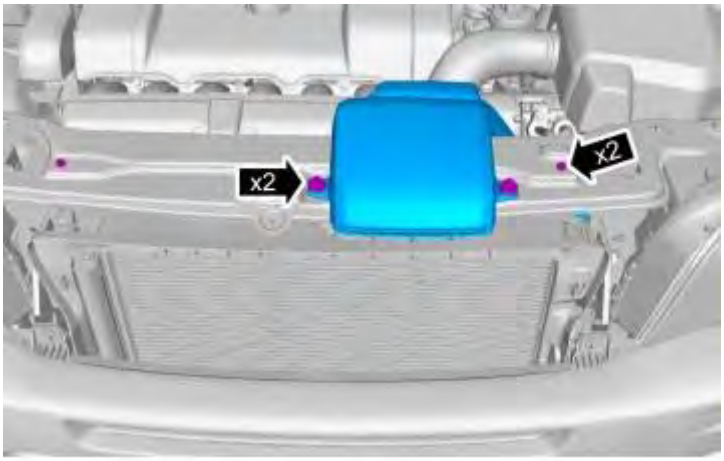

Fig. 49: Identifying Air Intake
Courtesy of VOLVO CARS CORPORATION

Drain the coolant. See **COOLING SYSTEM - DRAINING, CHARGING AND BLEEDING**

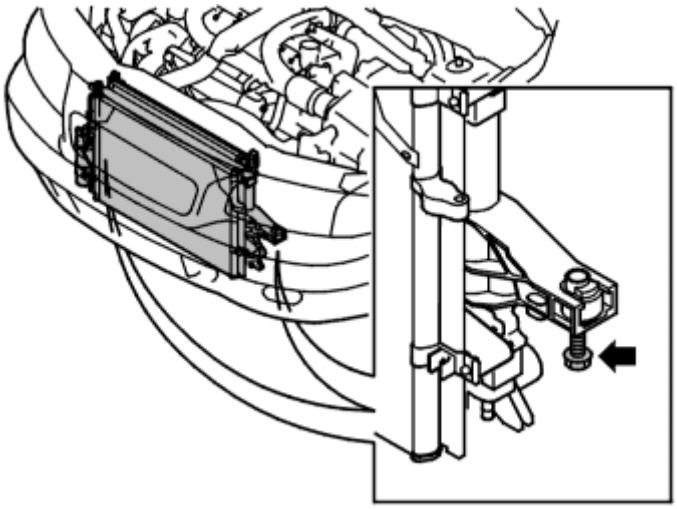

Fig. 50: Locating Screws
Courtesy of VOLVO CARS CORPORATION

NOTE: Do not remove the screws completely.

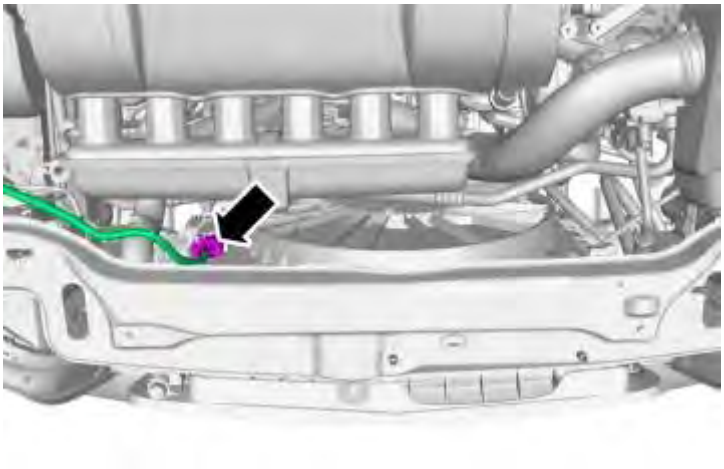

Fig. 51: Identifying Connector
Courtesy of VOLVO CARS CORPORATION

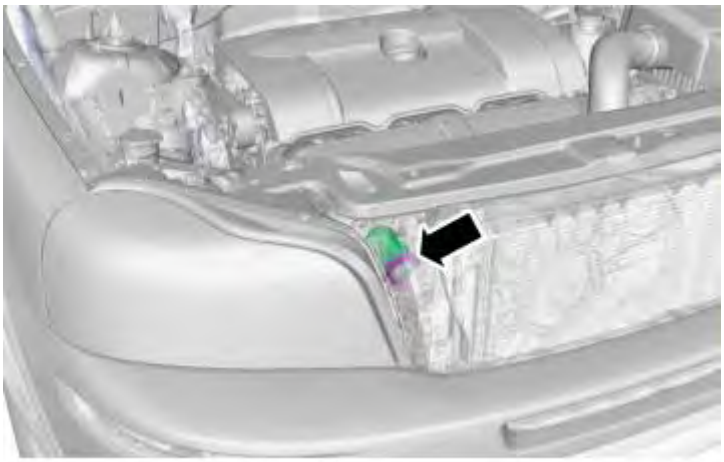

Fig. 52: Partial View of Disconnecting Hoses
Courtesy of VOLVO CARS CORPORATION

Use suitable paper to absorb any escaping fluid.

Fig. 53: Removing Fasteners
Courtesy of VOLVO CARS CORPORATION

Torque: M6

10 Nm

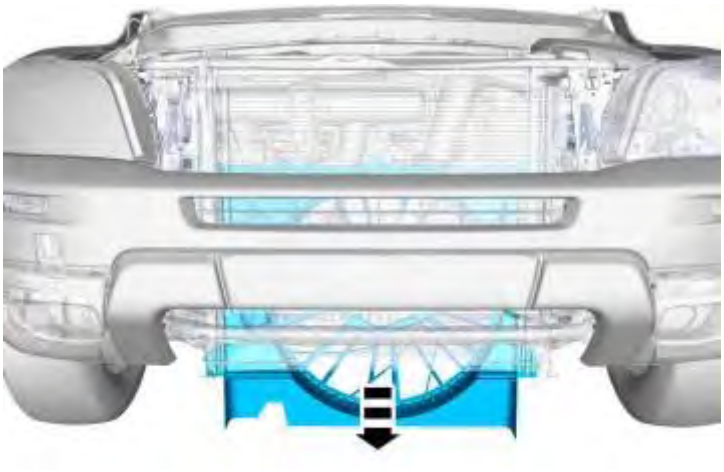

Fig. 54: Lowering Radiator
Courtesy of VOLVO CARS CORPORATION

To install, reverse the removal procedure

ENGINE COOLING FAN (B6324S5; 2011-2012)

ENGINE COOLING FAN (FC)

see **ENGINE COOLING FAN (FC)**

ENGINE COOLING FAN (FC) (B6294T; 2003-2006)

ENGINE COOLING FAN (FC), REPLACING

NOTE: **As the illustrations in this service information are used for different model years and / or models, some variation may occur. However, the essential information in the illustrations is always correct.**

PREPARATORY WORK

Remove the battery lead. See **BATTERY, DISCONNECTING** .

REMOVING THE SKID PLATE

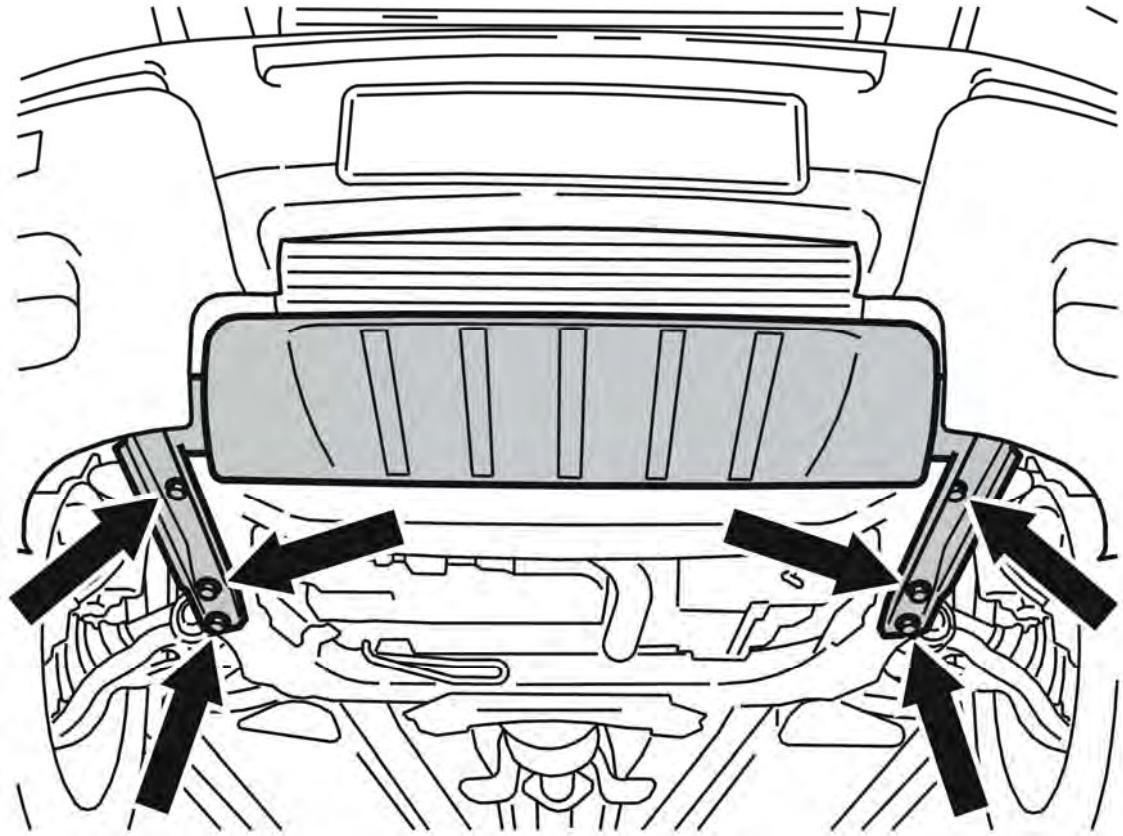

Fig. 55: Splash Guard. Protective Plate And Screws
Courtesy of VOLVO CARS CORPORATION

Remove the 6 screws.

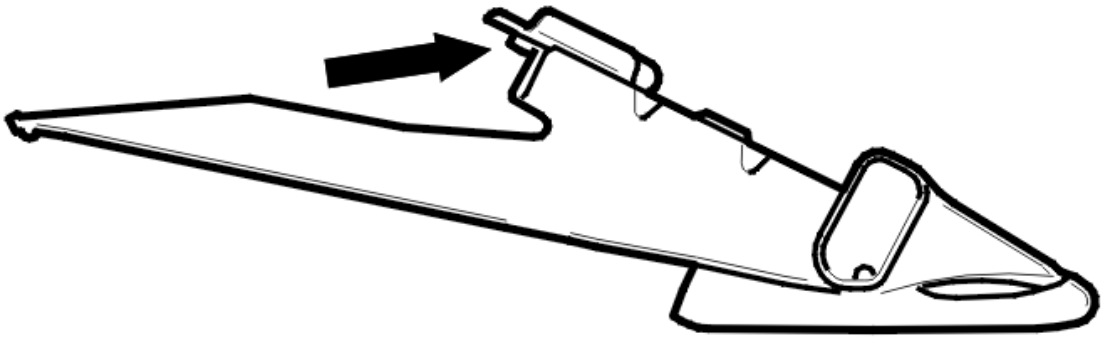

Fig. 56: Identifying Protective Plate
Courtesy of VOLVO CARS CORPORATION

Lift and slide the splash guard forward.

Remove the protective plate.

NOTE: There is a guide sleeve on the upper mounting for the plate. This must be lifted slightly so that the panel can be slid forward.

DRAINING COOLANT

Block the lower hose with lock grip pliers.

Install a hose on the nipple at the radiator.

Feed the hose down to a container.

Open the nipple and drain off the coolant.

REMOVING THE CABLE DUCT AND AIR DUCT

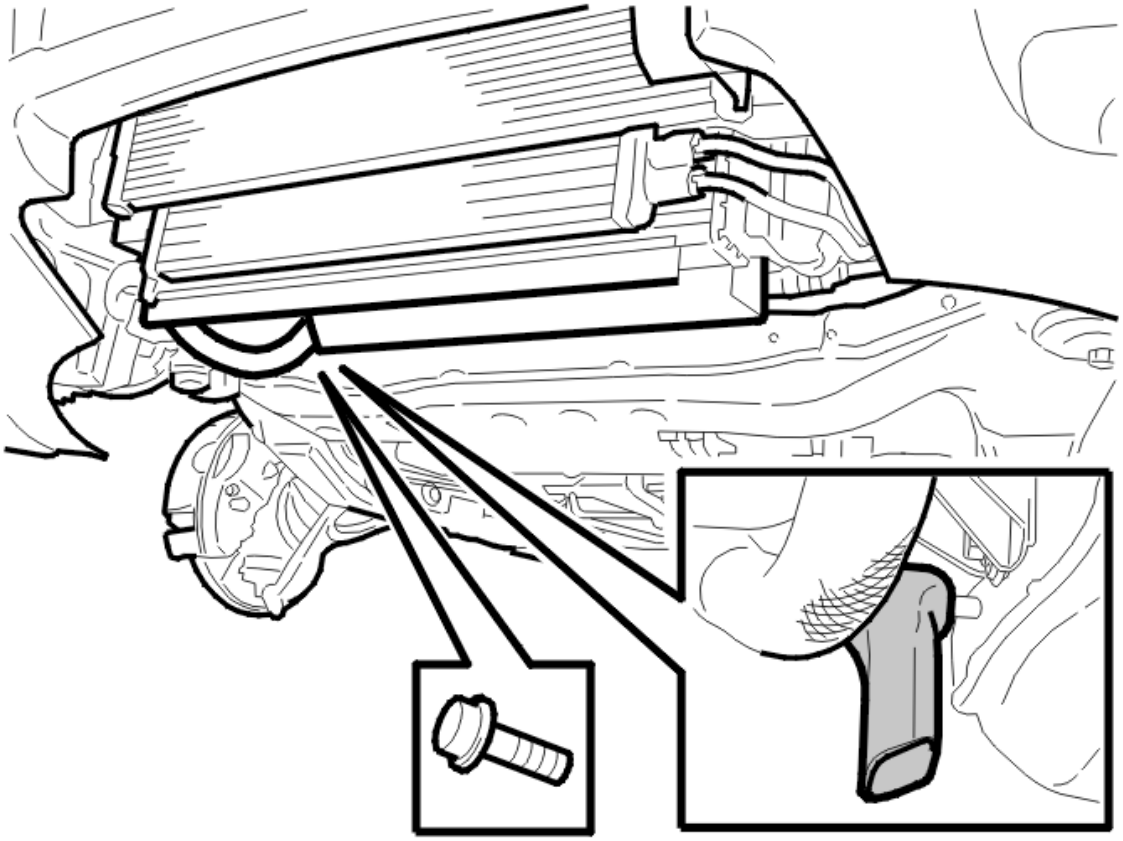

Fig. 57: Identifying Screw For The Cable Duct.
Courtesy of VOLVO CARS CORPORATION

Remove the screw for the cable duct. Place the cable duct on the sub-frame.

Pull the air duct from the clips on the sub-frame.

LOWERING THE AIR CONDITIONING AGGREGATE

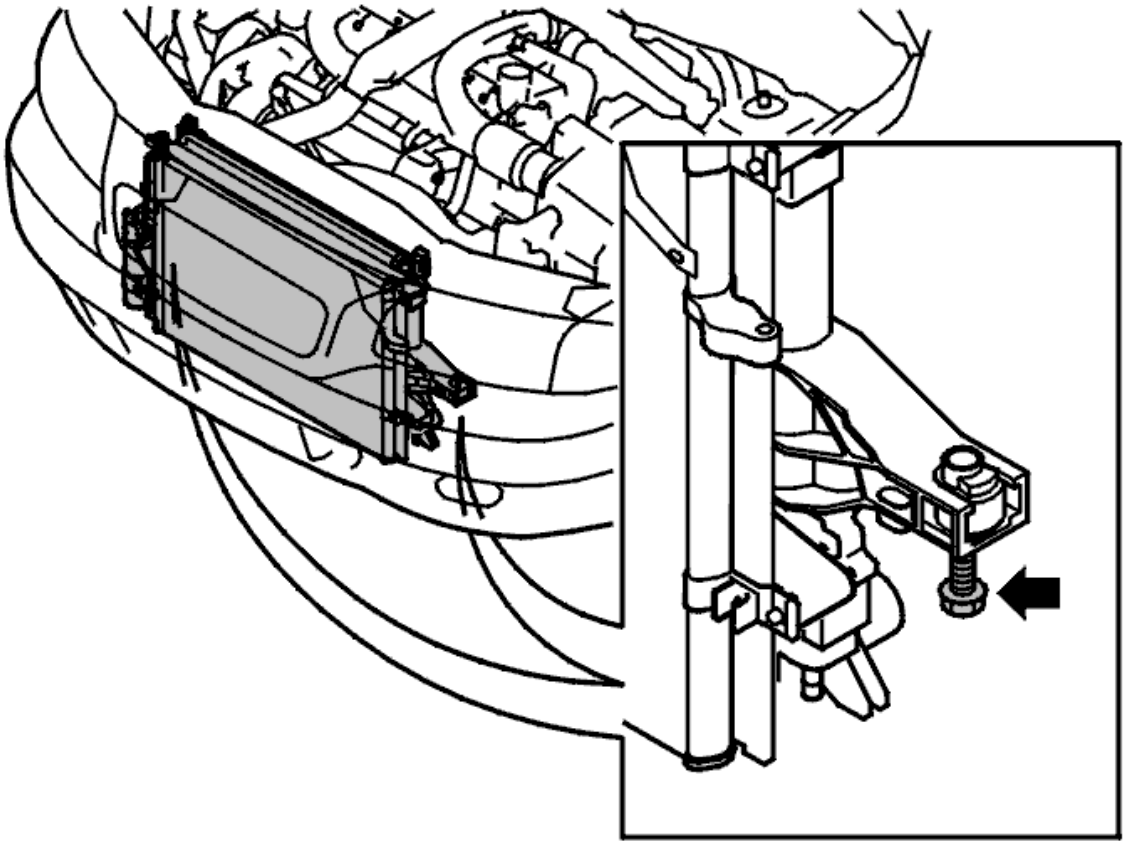

Fig. 58: Identifying Lower Mounting For Air Conditioning Aggregate
Courtesy of VOLVO CARS CORPORATION

Remove the lower radiator hose from the radiator.

Slacken off the mounting screws to lower the air conditioning aggregate 20mm.

NOTE: Do not remove the screws completely.

REMOVING THE OIL COOLER HOSES

NOTE: Only cars with automatic transmissions.

Remove the lower oil cooler hose from the cooler unit.

NOTE: Collect the oil from the oil cooler in a container.

Lower the car. Remove the upper oil cooler hose from the cooler unit.

REMOVING THE CHARGE AIR HOSE

Remove the clamp. Remove the charge air hose on the right-hand side from the charge air cooler (CAC).

REMOVING THE ENGINE COOLING FAN (FC)

Disconnect the connector and tie straps.

Push the cable harness to one side.

Remove the screws for the engine cooling fan (FC) mounting.

Disconnect the hose for the expansion tank from the clip on the engine cooling fan (FC).

Pull the engine cooling fan (FC) upwards to unhook it from the lower mounting.

Remove engine cooling fan (FC) downwards.

NOTE: Ensure that no hoses are trapped when installing the engine cooling fan (FC).

INSTALLING THE ENGINE COOLANT FAN (FC)

Install:

- the engine cooling fan (FC) from underneath
- the evacuation hose in the clips on the engine cooling fan (FC).

Hook the fan into the lower mountings.

Install the 2 M6 screws.

Position the cable harness in place. Connect the connectors and tie straps.

NOTE: Ensure that no hoses are trapped when installing the engine cooling fan (FC).

INSTALLING THE CHARGE AIR HOSE

Install the right-hand charge air hose. Tighten the clamp.

INSTALLING THE OIL COOLER HOSES

NOTE: Only cars with automatic transmissions.

Install the upper oil cooler hose. Use a new O-ring.

Raise the car.

Install the lower oil cooler hose. Use a new O-ring.

INSTALLING THE COOLER UNIT

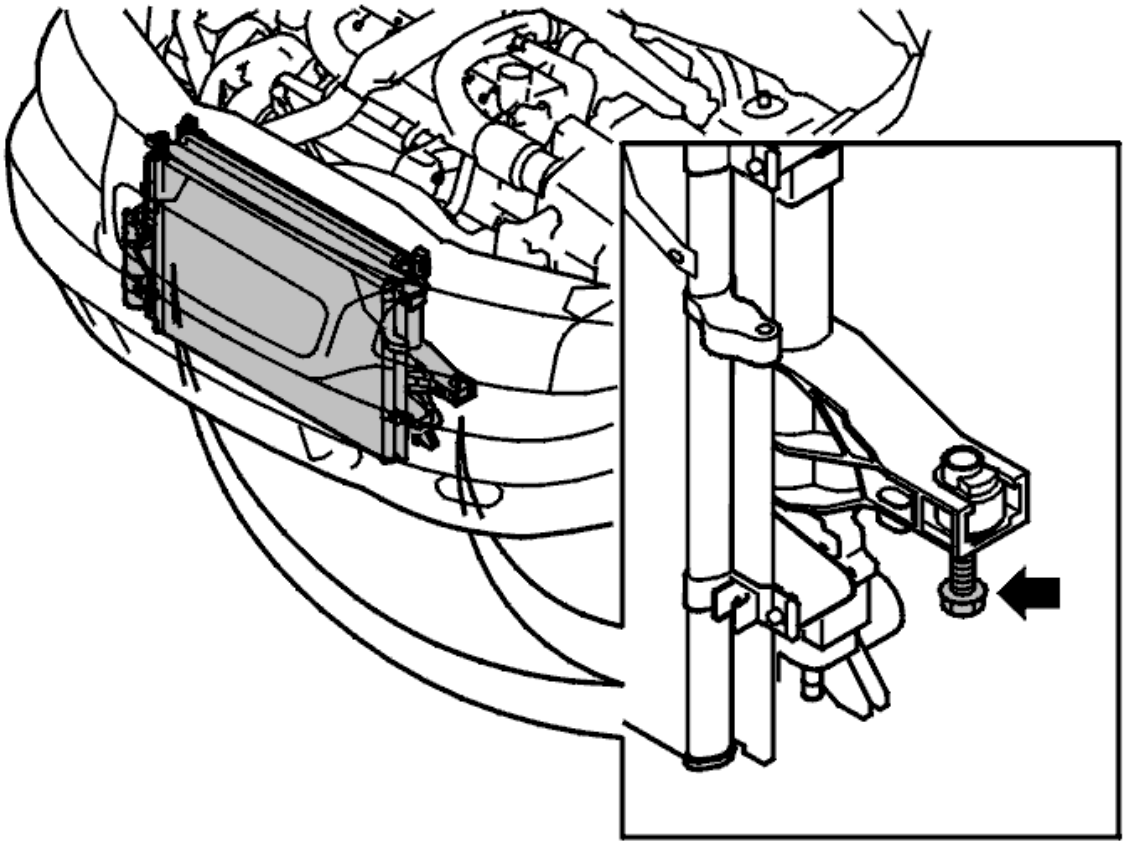

Fig. 59: Identifying Lower Mounting For Air Conditioning Aggregate
Courtesy of VOLVO CARS CORPORATION

Tighten the 2 x M8 mounting screws.

Install the lower radiator hose. Tighten the clamp.

Remove the lock grip pliers.

INSTALLING THE CABLE DUCT AND AIR DUCT

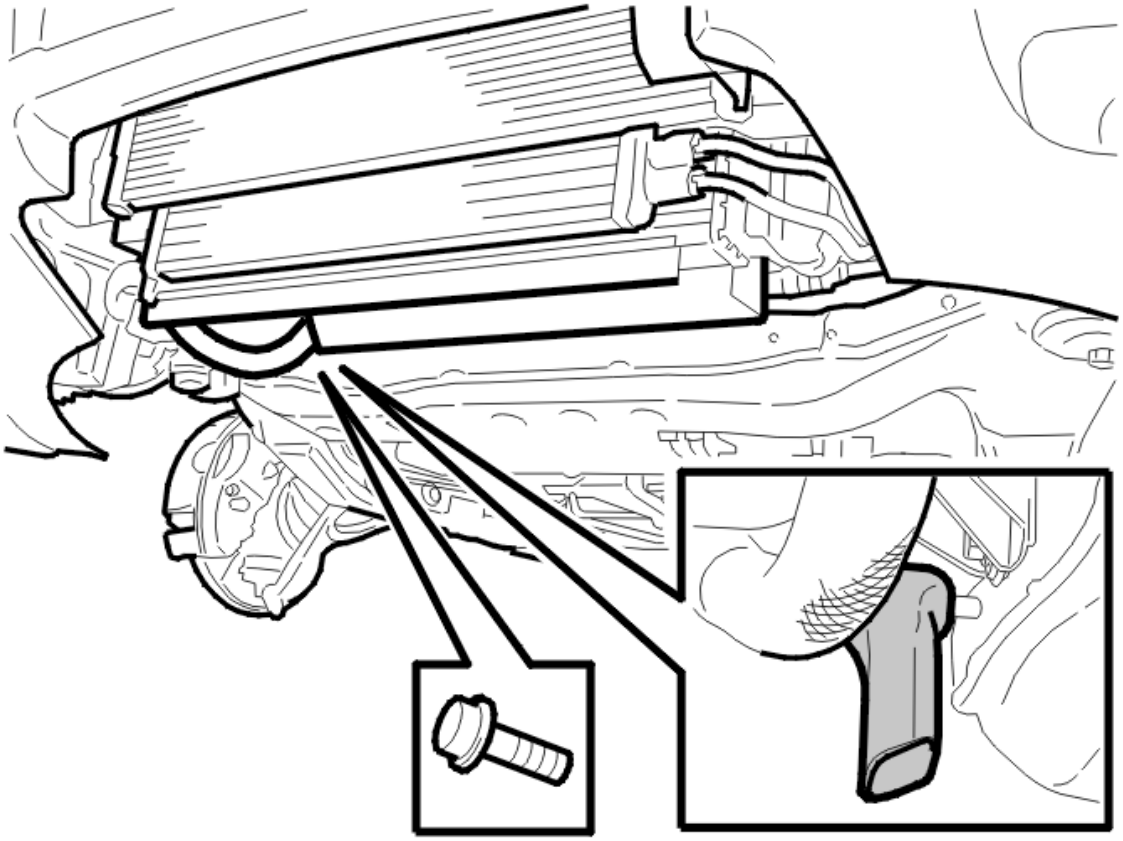

Fig. 60: Identifying Screw For The Cable Duct.
Courtesy of VOLVO CARS CORPORATION

Position the cable duct.

Install the M6 screw. Tighten.

Install the air duct using the clip on the sub-frame.

INSTALLING THE SKID PLATE

Move the skid plate up into the bumper wraparound.

Press forwards until the mounting brackets engage in the sub frame.

Install the M10 screws.

FINISHING

Top up the coolant.

Install the cap on the expansion tank.

Install the battery lead.

Run the engine until the thermostat has opened.

Stop the engine. Top up if necessary.

Check for leaks.

ENGINE COOLING FAN (FC) (B8444S; 2005-2011)

ENGINE COOLING FAN (FC), REPLACING

NOTE: The illustrations in this service information are used for different model years and/or models. Some variation may occur. However, the essential information in the illustrations is always correct.

PREPARATORY WORK

REMOVING COMPONENTS

Disconnect the battery negative lead. See: **BATTERY, DISCONNECTING**

REMOVAL

REMOVING THE AIR CLEANER (ACL) INLET PIPE

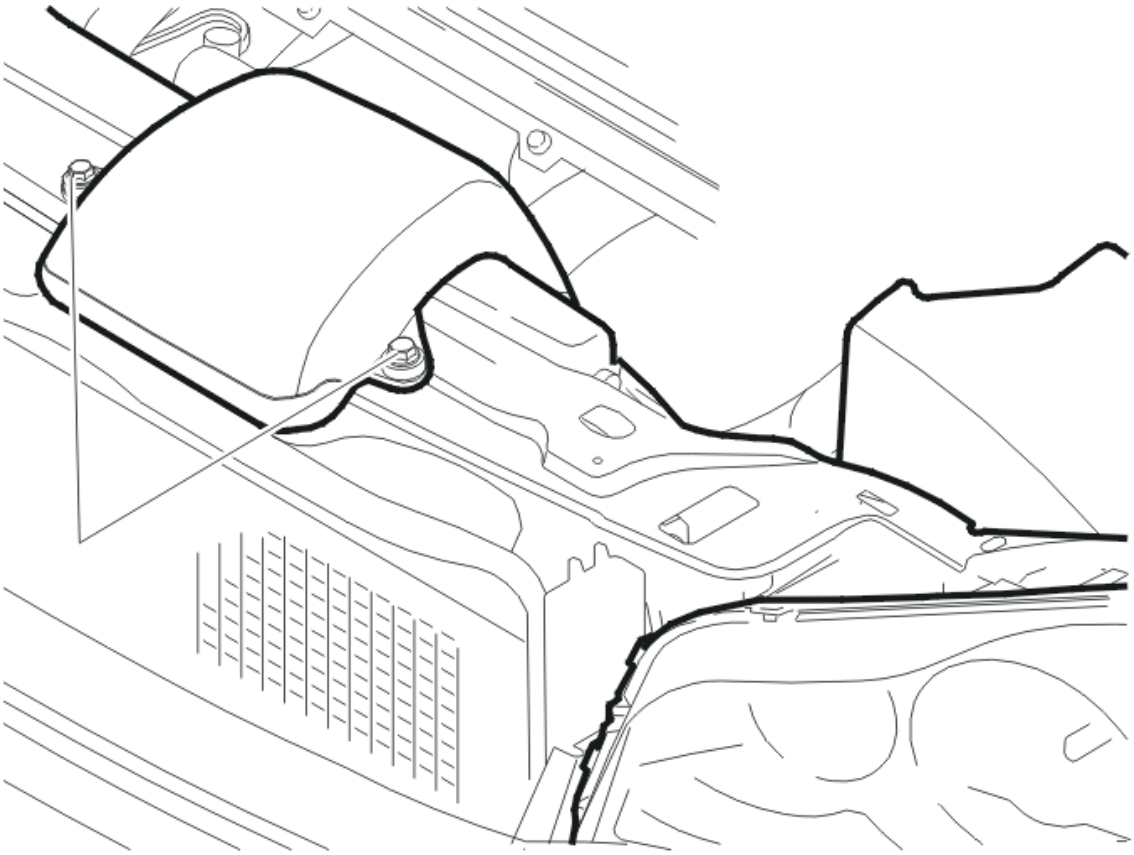

Fig. 61: Identifying Air Cleaner Inlet
Courtesy of VOLVO CARS CORPORATION

Remove:

- the bolts, x2
- the air cleaner (ACL) inlet pipe.

REMOVING THE SKIDPLATE

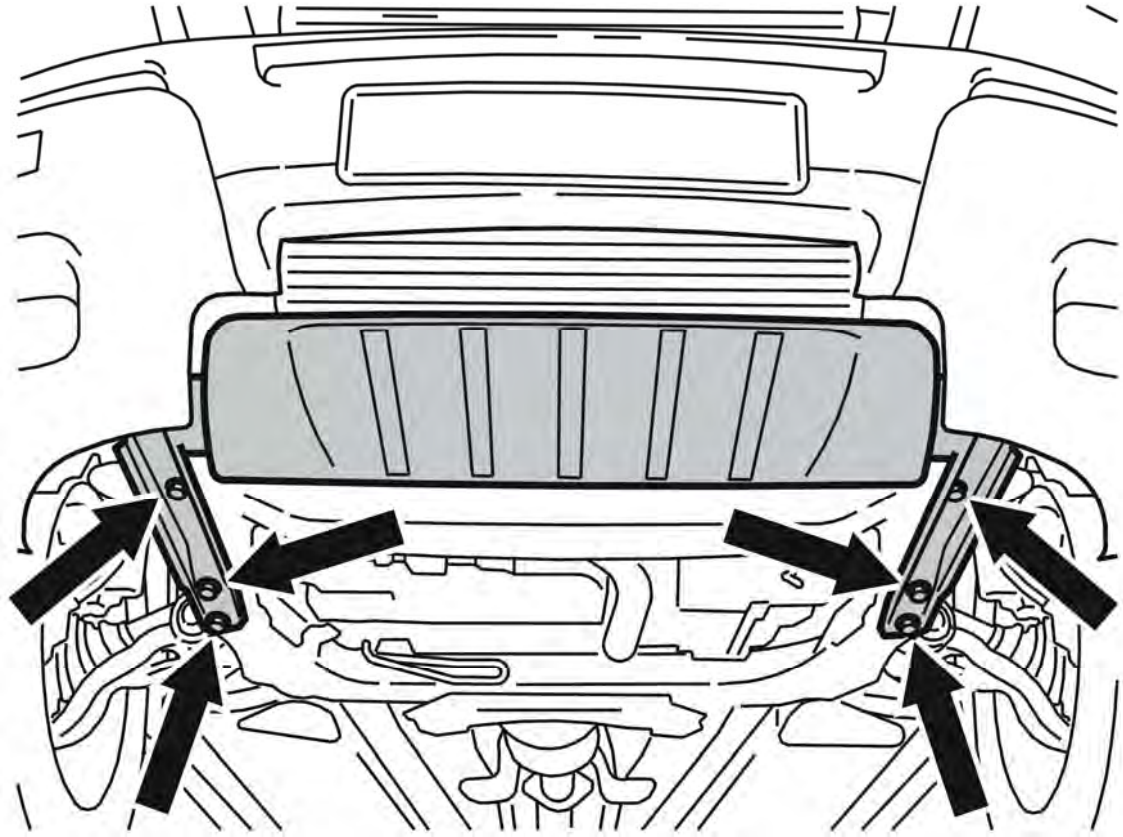

Fig. 62: Splash Guard. Protective Plate And Screws
Courtesy of VOLVO CARS CORPORATION

Remove the bolts, x6.

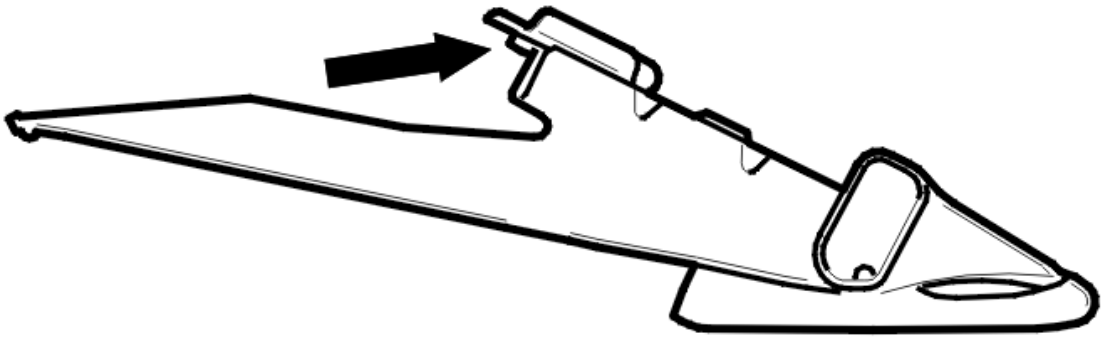

Fig. 63: Identifying Protective Plate
Courtesy of VOLVO CARS CORPORATION

NOTE: There is a guide sleeve on the upper mounting for the plate. This must be lifted slightly so that the panel can be slid forward.

Lift up and move the protective plate forward.

Remove the protective plate.

LOWERING THE AIR CONDITIONING AGGREGATE

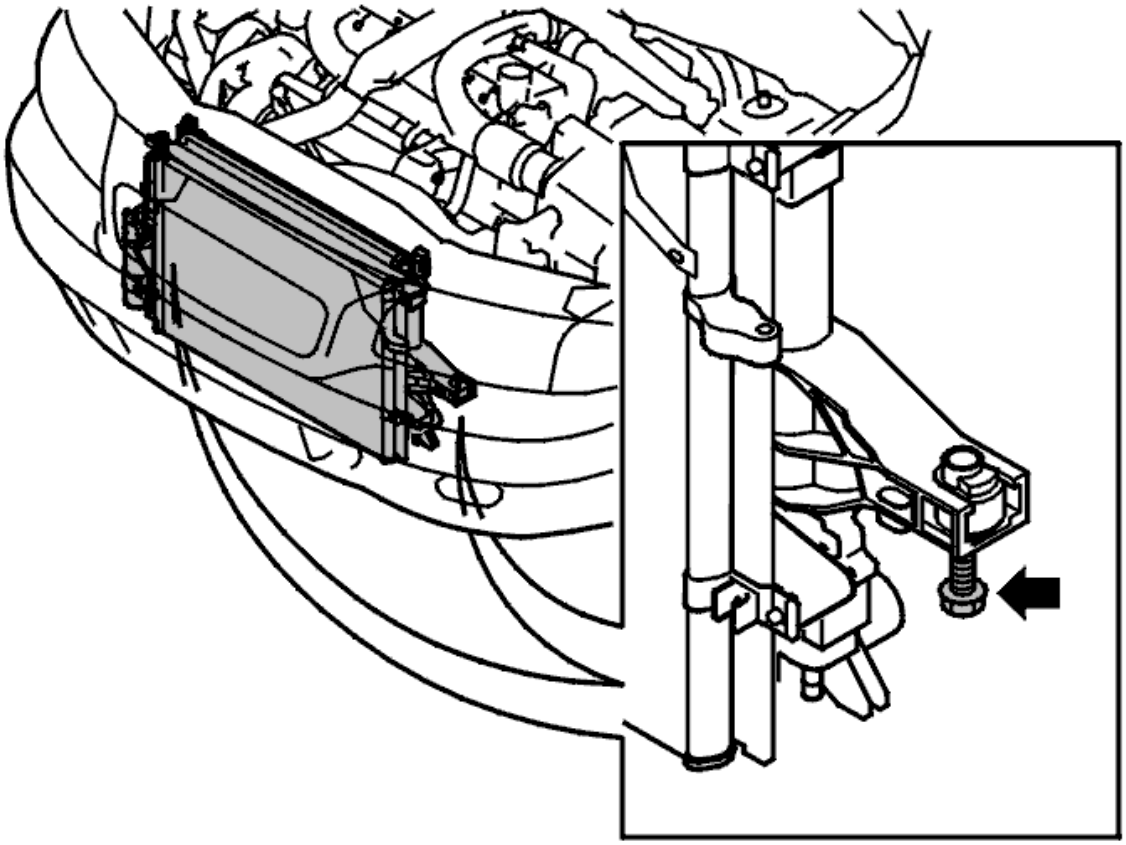

Fig. 64: Identifying Lower Mounting For Air Conditioning Aggregate
Courtesy of VOLVO CARS CORPORATION

NOTE: Do not unscrew the bolts completely.

Slacken off the mounting screws so that the air conditioning aggregate is lowered approximately 20 mm.

REMOVING THE ENGINE COOLING FAN (FC)

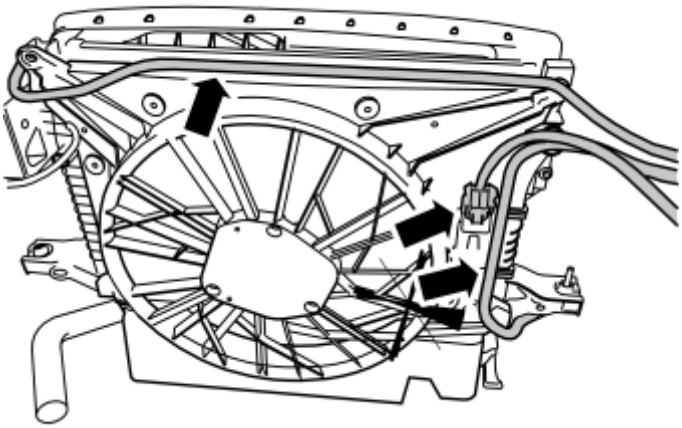

Fig. 65: Identifying Disconnections
Courtesy of VOLVO CARS CORPORATION

Remove:

- servo hose
- connector
- the hose from the expansion tank.

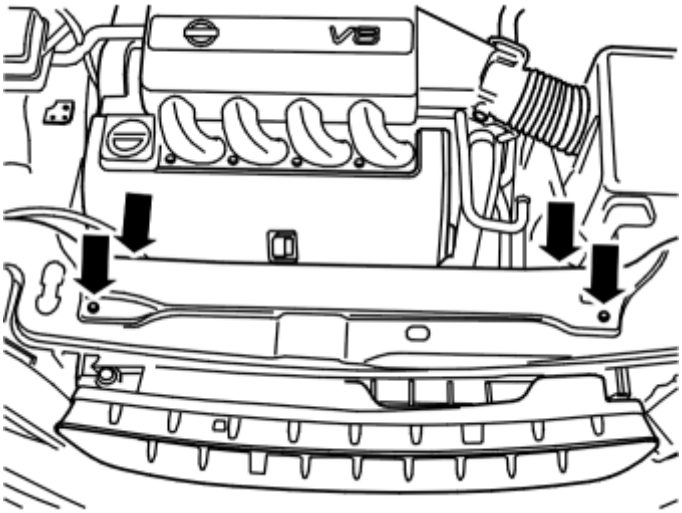

Fig. 66: Removing Engine Cooling Fan
Courtesy of VOLVO CARS CORPORATION

- 4 x screws
- dip stick
- engine cover front
- engine cooling fan.

INSTALLATION

INSTALLING THE ENGINE COOLING FAN (FC)

For tightening torques, see **TIGHTENING TORQUE**

NOTE: Ensure that no hoses are trapped when installing the engine cooling fan (FC).

Fig. 67: Identifying Area of Smoothing
Courtesy of VOLVO CARS CORPORATION

HINT: Smooth off the corner of the engine cooling fan cover to facilitate installation.

Install:

- the engine cooling fan (FC)
- the 4 x M6 screws
- the servo hose
- the connector
- the hose from the expansion tank
- the air cleaner intake pipe
- the 2 M6 screws.

INSTALLING THE RADIATOR UNIT

Tighten the 2 x M8 mounting screws.

FINISHING

INSTALLING THE SKID PLATE

Move the protective plate up in the bumper cover.

Press forward until the mounting brackets enter the subframe.

Fit the bolts, M10 x6.

Install the battery negative lead. See: **BATTERY, DISCONNECTING**

RADIATOR AND CONNECTIONS (B5254T2; 2003-2007)

RADIATOR, REPLACING

NOTE: **Since the illustrations in this service information are used for different model years and / or models, some variation may occur. However, the essential information in the illustrations is always correct.**

REMOVAL

REMOVING THE ENGINE COOLING FAN (FC)

Remove the electric cooling fan. See **ENGINE COOLING FAN (FC), REPLACING**.

DRAINING COOLANT

Block lower hose with lock grip pliers.

Install a hose on the nipple at the radiator.

Feed the hose down to a container.

Open the nipple and drain off the coolant.

REMOVING THE RADIATOR

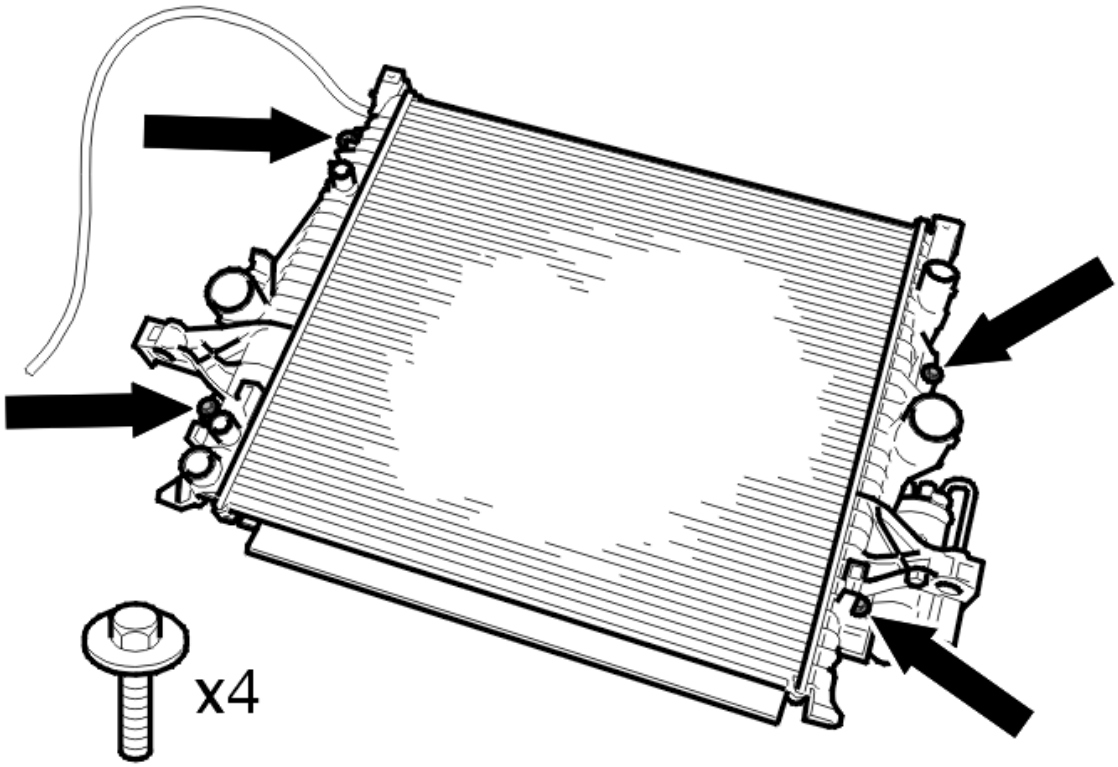

Fig. 68: Identifying The Air Conditioning Aggregate Screws
Courtesy of VOLVO CARS CORPORATION

Remove:

- the evacuation hose from the expansion tank
- the 4 bolts

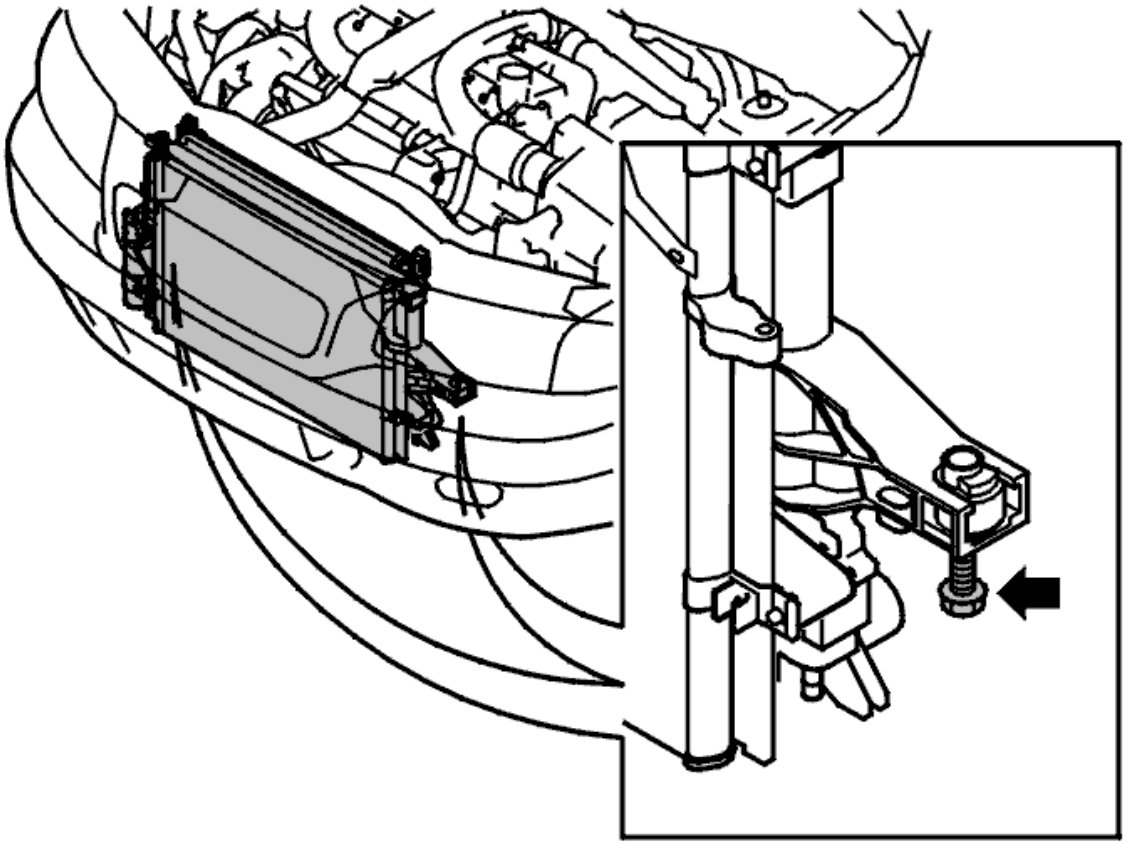

Fig. 69: Identifying Lower Mounting For Air Conditioning Aggregate
Courtesy of VOLVO CARS CORPORATION

Remove:

- the 2 mounting bolts
- the radiator.

INSTALLATION

INSTALLING THE RADIATOR

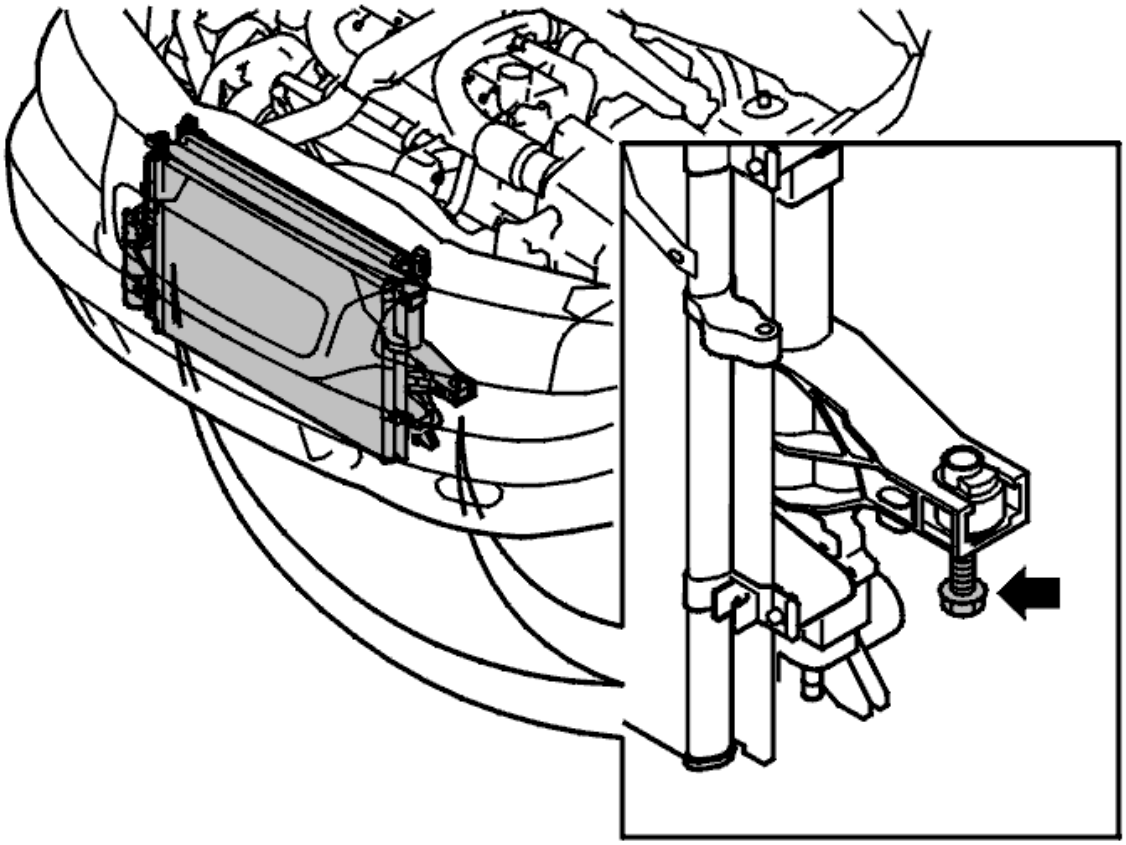

Fig. 70: Identifying Lower Mounting For Air Conditioning Aggregate
Courtesy of VOLVO CARS CORPORATION

Lift the radiator. Install the two M8 mounting bolts.

NOTE: **Make sure that the radiator is positioned correctly in the guide pins on top of the unit.**

NOTE: **Make sure that no hoses are trapped when installing the radiator.**

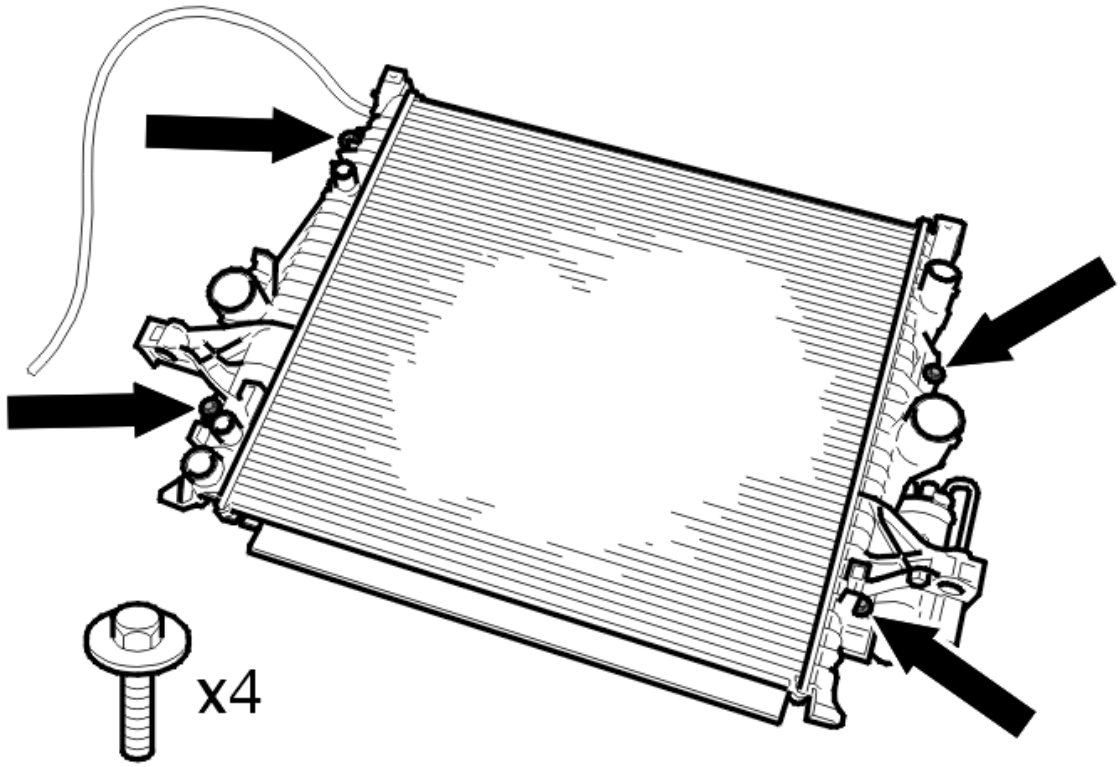

Fig. 71: Identifying The Air Conditioning Aggregate Screws
Courtesy of VOLVO CARS CORPORATION

Install:

- the evacuation hose from the expansion tank
- the 4 x M6 screws.

INSTALLING THE ENGINE COOLING FAN (FC)

Install the electric cooling fan. See: **ENGINE COOLING FAN (FC), REPLACING**.

RADIATOR AND CONNECTIONS (B6294T; 2003-2006)

RADIATOR, REPLACING

NOTE: **Since the illustrations in this service information are used for different model years and / or models, some variation may occur. However, the essential information in the illustrations is always correct.**

REMOVAL

REMOVING THE ENGINE COOLING FAN (FC)

Remove the electric cooling fan. See **ENGINE COOLING FAN (FC), REPLACING**.

DRAINING COOLANT

Block lower hose with lock grip pliers.

Install a hose on the nipple at the radiator.

Feed the hose down to a container.

Open the nipple and drain off the coolant.

REMOVING THE RADIATOR

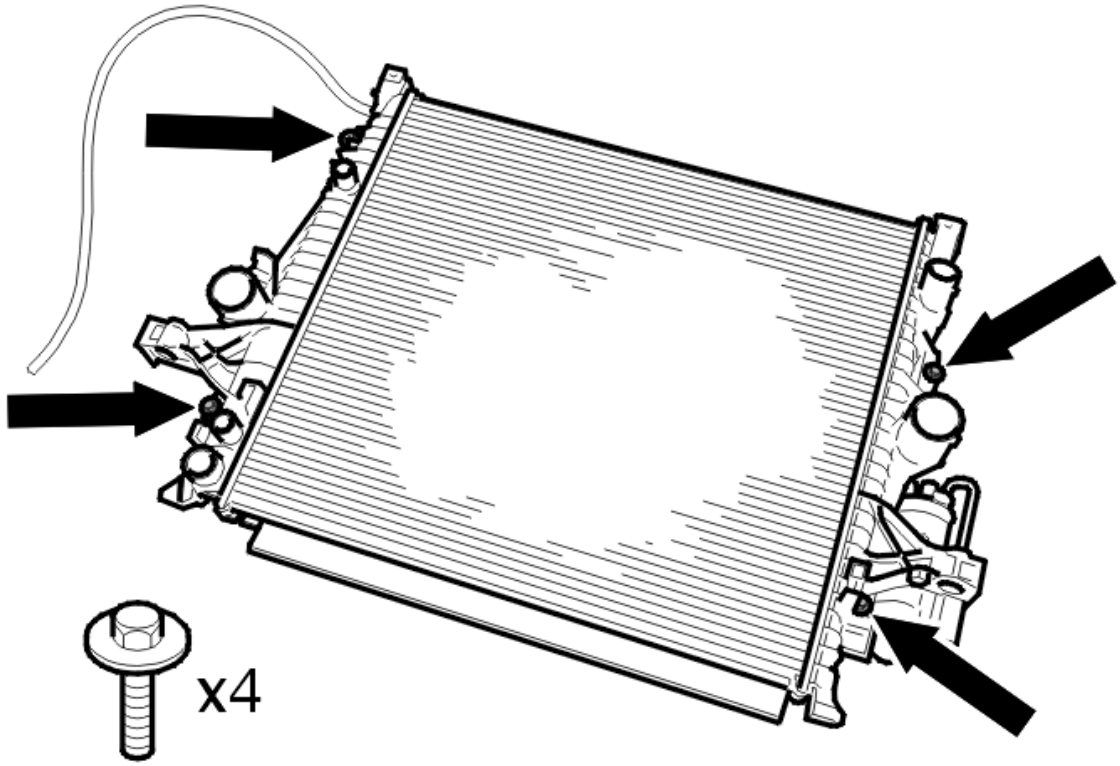

Fig. 72: Identifying The Air Conditioning Aggregate Screws
Courtesy of VOLVO CARS CORPORATION

Remove:

- the evacuation hose from the expansion tank
- the 4 bolts

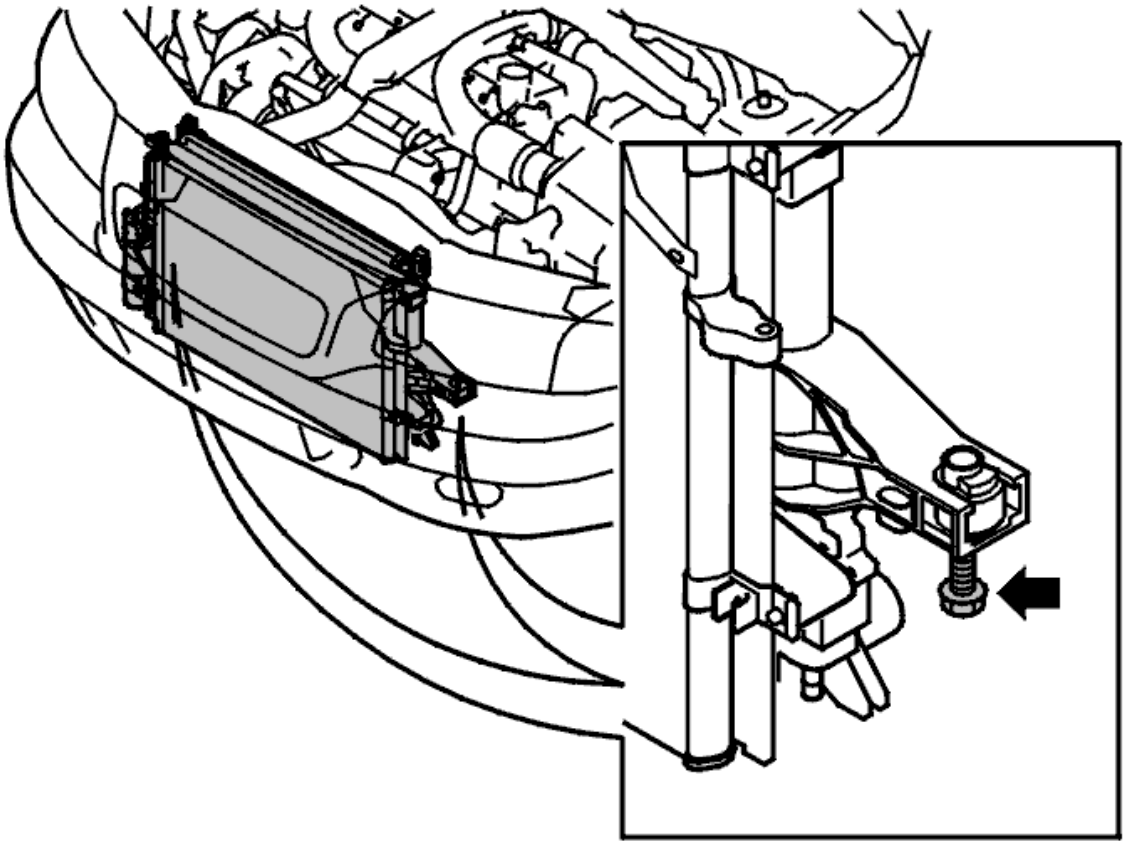

Fig. 73: Identifying Lower Mounting For Air Conditioning Aggregate
Courtesy of VOLVO CARS CORPORATION

Remove:

- the 2 mounting bolts
- the radiator.

INSTALLATION

INSTALLING THE RADIATOR

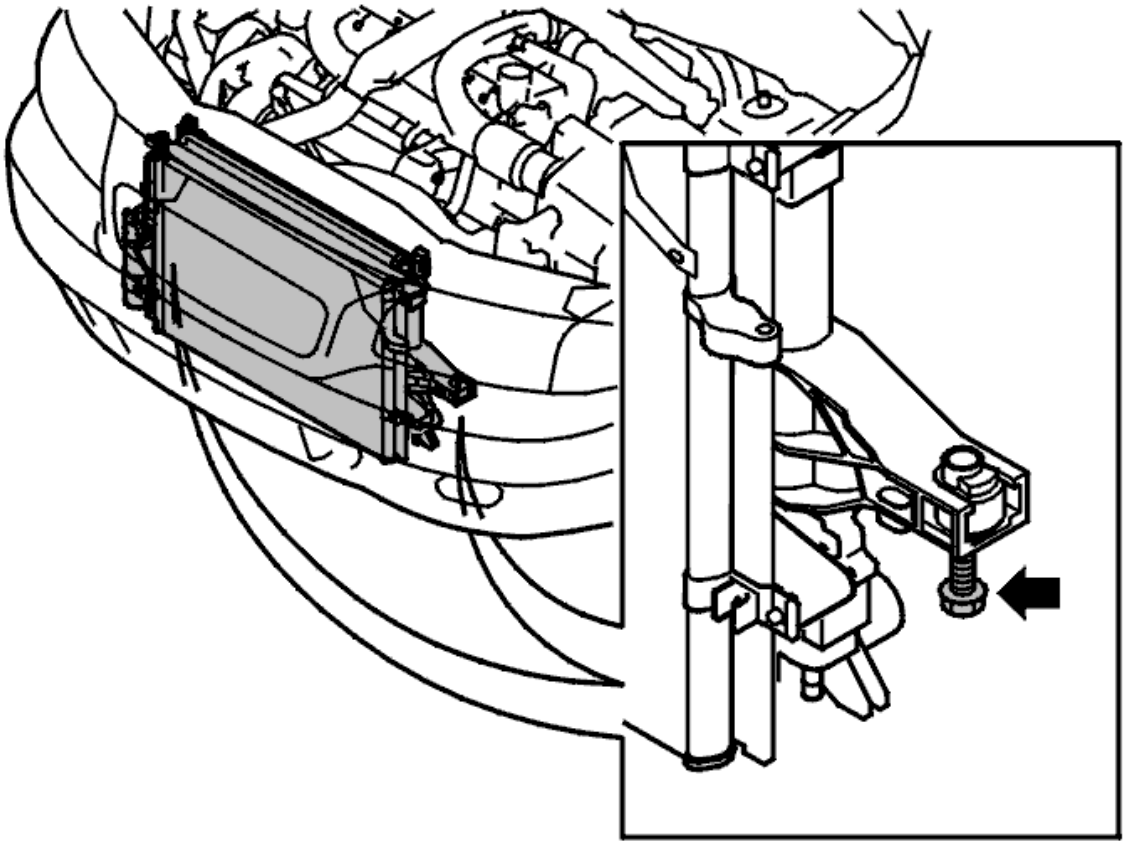

Fig. 74: Identifying Lower Mounting For Air Conditioning Aggregate
Courtesy of VOLVO CARS CORPORATION

Lift the radiator. Install the two M8 mounting bolts.

NOTE: **Make sure that the radiator is positioned correctly in the guide pins on top of the unit.**

NOTE: **Make sure that no hoses are trapped when installing the radiator.**

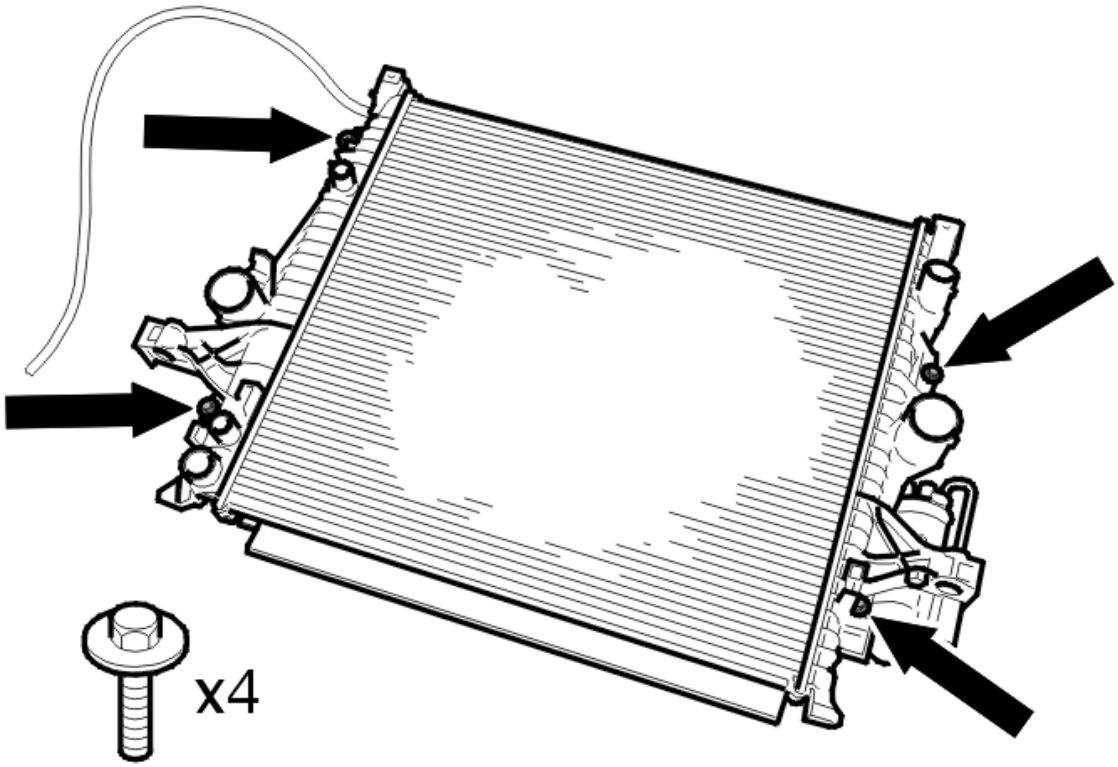

Fig. 75: Identifying The Air Conditioning Aggregate Screws
Courtesy of VOLVO CARS CORPORATION

Install:

- the evacuation hose from the expansion tank
- the 4 x M6 screws.

INSTALLING THE ENGINE COOLING FAN (FC)

Install the electric cooling fan. See: **ENGINE COOLING FAN (FC), REPLACING**.

RADIATOR AND CONNECTIONS (B6324S/5; 2007-2012)

RADIATOR, REPLACING

NOTE: **Since the illustrations in this service information are used for different model years and / or models, some variation may occur. However, the essential information in the illustrations is always correct.**

REMOVAL

REMOVING THE ENGINE COOLING FAN (FC)

Remove the electric cooling fan. See **ENGINE COOLING FAN (FC)**.

DRAINING COOLANT

Block lower hose with lock grip pliers.

Install a hose on the nipple at the radiator.

Feed the hose down to a container.

Open the nipple and drain off the coolant.

REMOVING THE RADIATOR

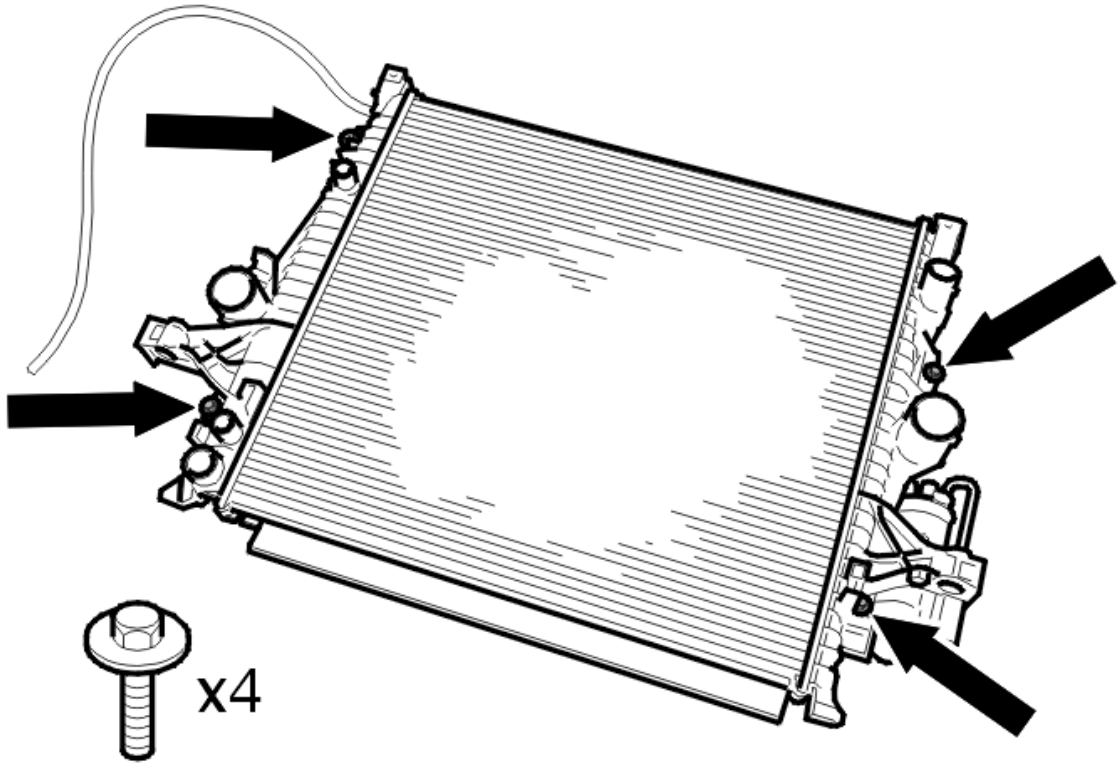

Fig. 76: Identifying The Air Conditioning Aggregate Screws
Courtesy of VOLVO CARS CORPORATION

Remove:

- the evacuation hose from the expansion tank
- the 4 bolts

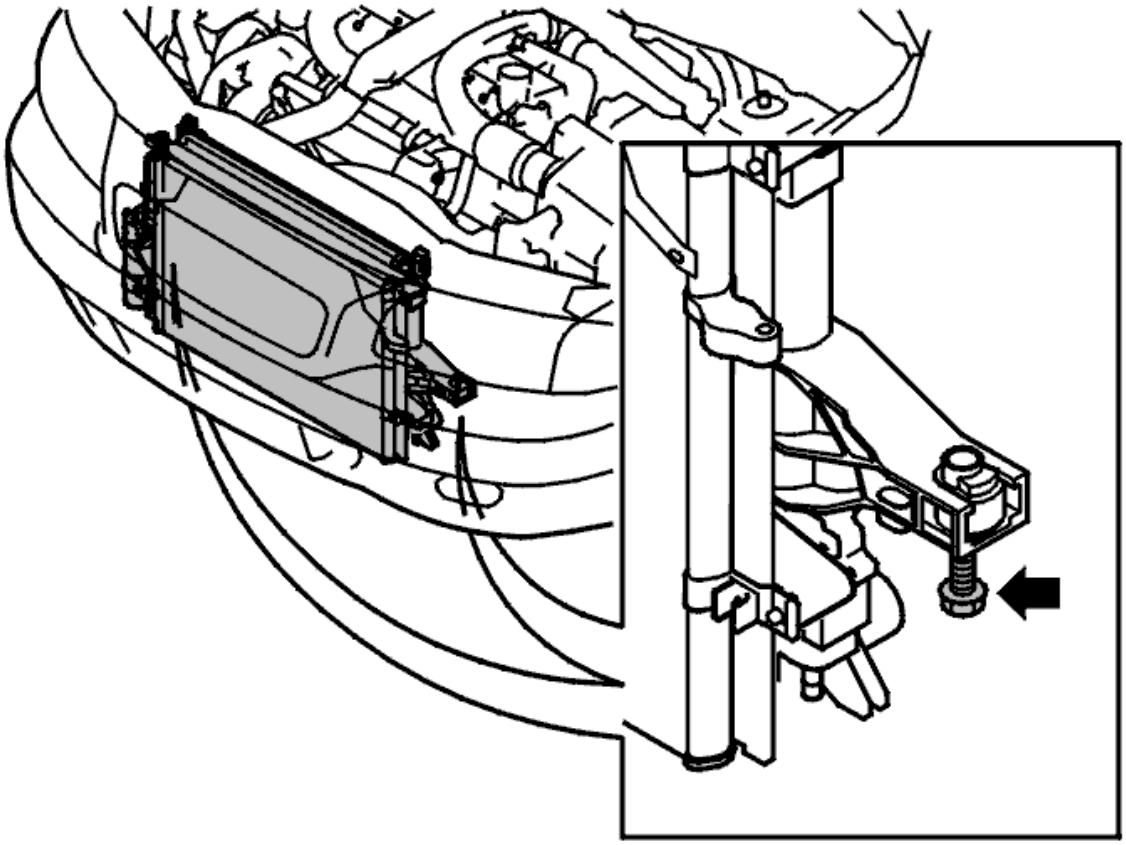

Fig. 77: Identifying Lower Mounting For Air Conditioning Aggregate
Courtesy of VOLVO CARS CORPORATION

Remove:

- the 2 mounting bolts
- the radiator.

INSTALLATION

INSTALLING THE RADIATOR

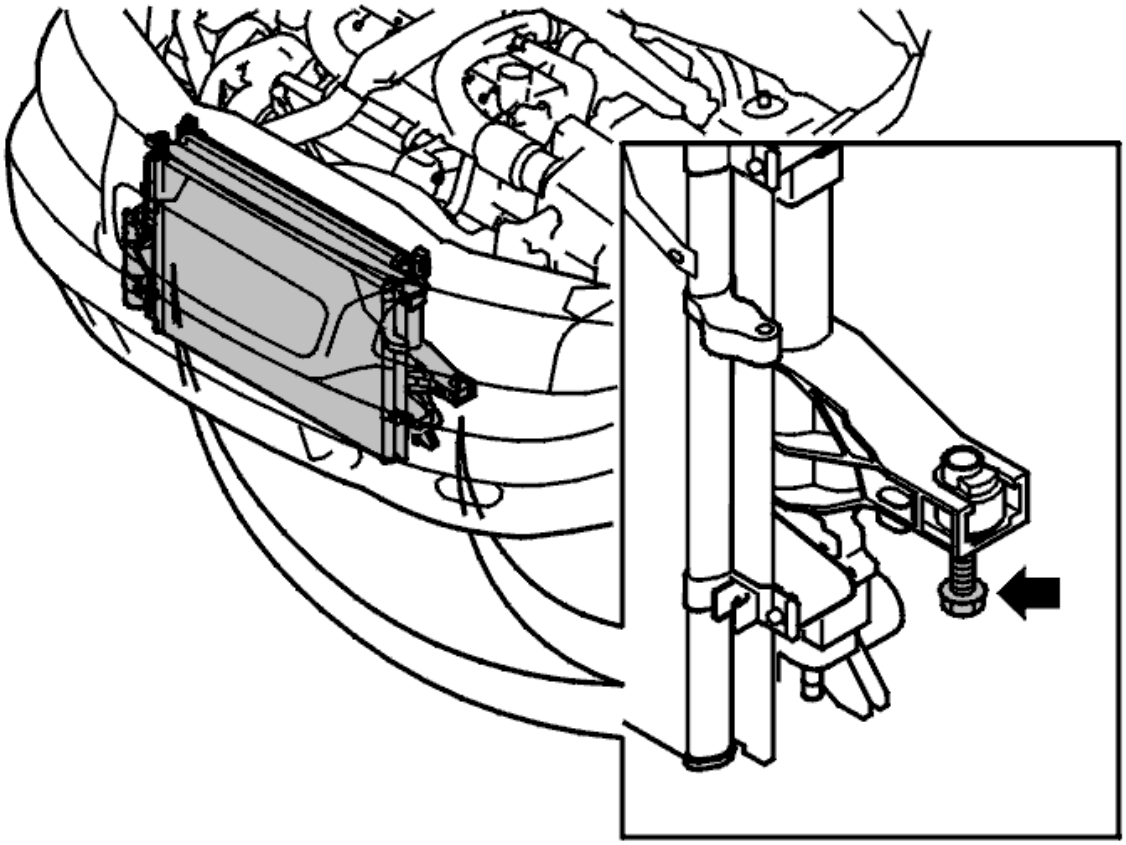

Fig. 78: Identifying Lower Mounting For Air Conditioning Aggregate
Courtesy of VOLVO CARS CORPORATION

Lift the radiator. Install the two M8 mounting bolts.

NOTE: **Make sure that the radiator is positioned correctly in the guide pins on top of the unit.**

NOTE: **Make sure that no hoses are trapped when installing the radiator.**

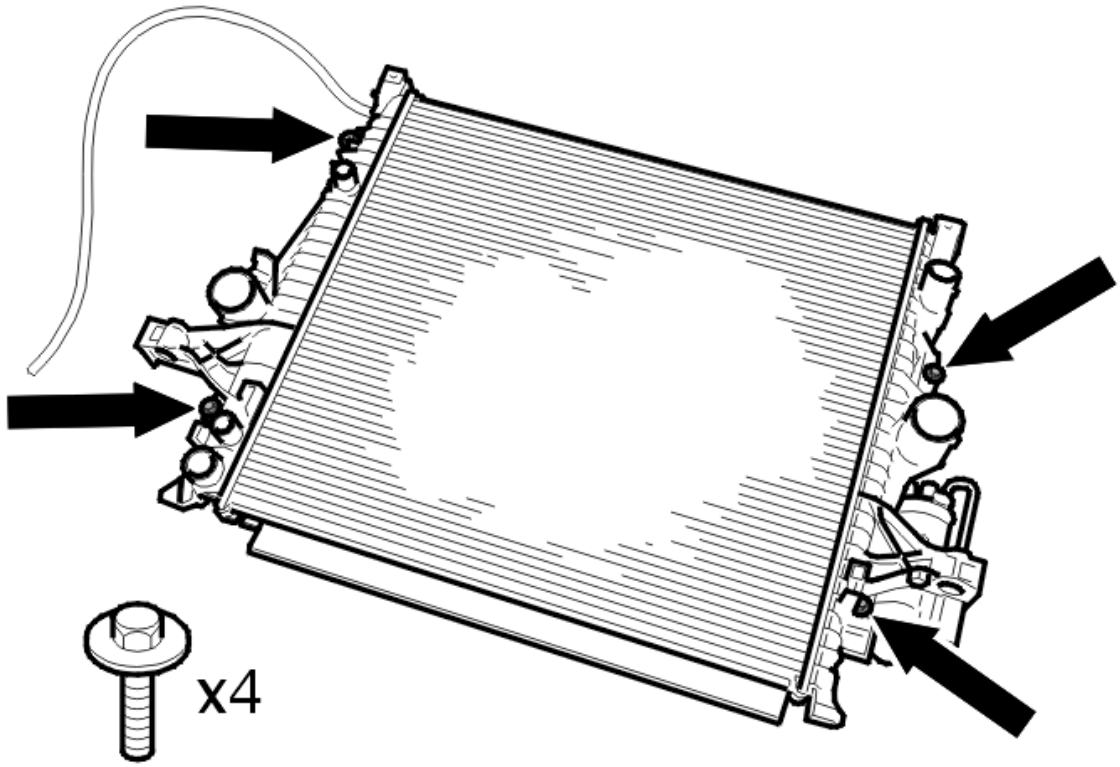

Fig. 79: Identifying The Air Conditioning Aggregate Screws
Courtesy of VOLVO CARS CORPORATION

Install:

- the evacuation hose from the expansion tank
- the 4 x M6 screws.

INSTALLING THE ENGINE COOLING FAN (FC)

Install the electric cooling fan. See: **ENGINE COOLING FAN (FC)**.

RADIATOR AND CONNECTIONS (B8444S; 2005-2011)

RADIATOR, REPLACING

NOTE: **Since the illustrations in this service information are used for different model years and / or models, some variation may occur. However, the essential information in the illustrations is always correct.**

REMOVAL

REMOVING THE ENGINE COOLING FAN (FC)

Remove the electric cooling fan. See **ENGINE COOLING FAN (FC), REPLACING**.

DRAINING COOLANT

Block lower hose with lock grip pliers.

Install a hose on the nipple at the radiator.

Feed the hose down to a container.

Open the nipple and drain off the coolant.

REMOVING THE RADIATOR

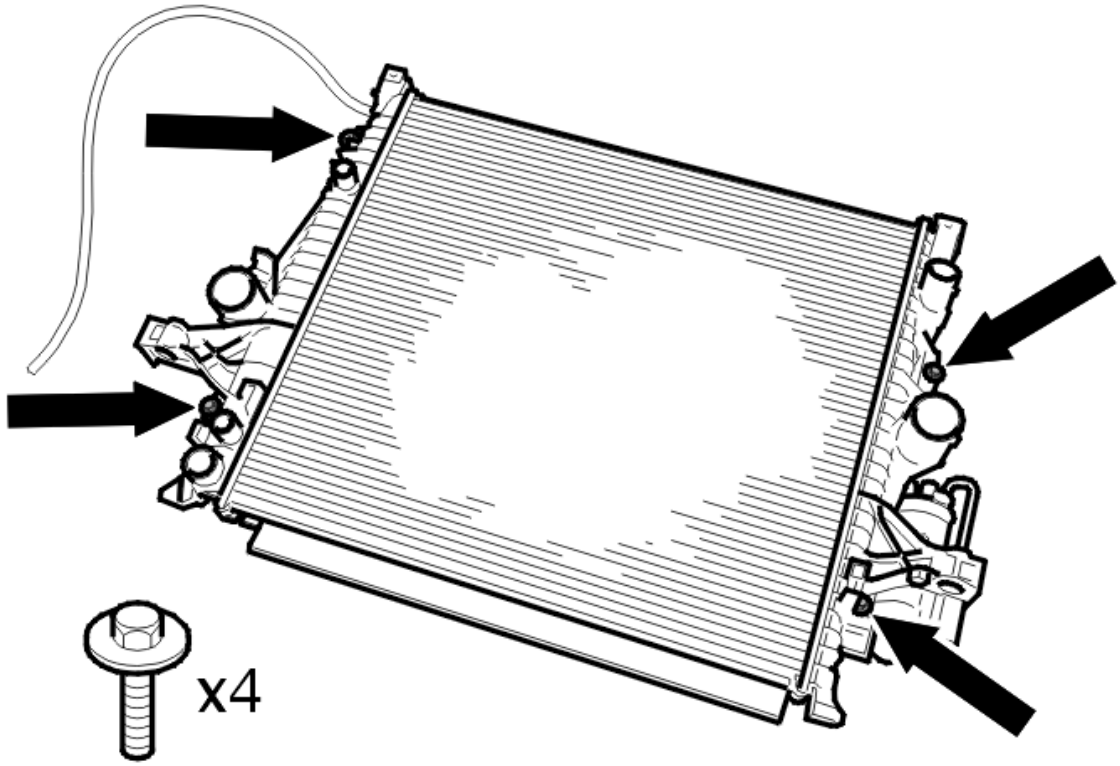

Fig. 80: Identifying The Air Conditioning Aggregate Screws
Courtesy of VOLVO CARS CORPORATION

Remove:

- the evacuation hose from the expansion tank
- the 4 bolts

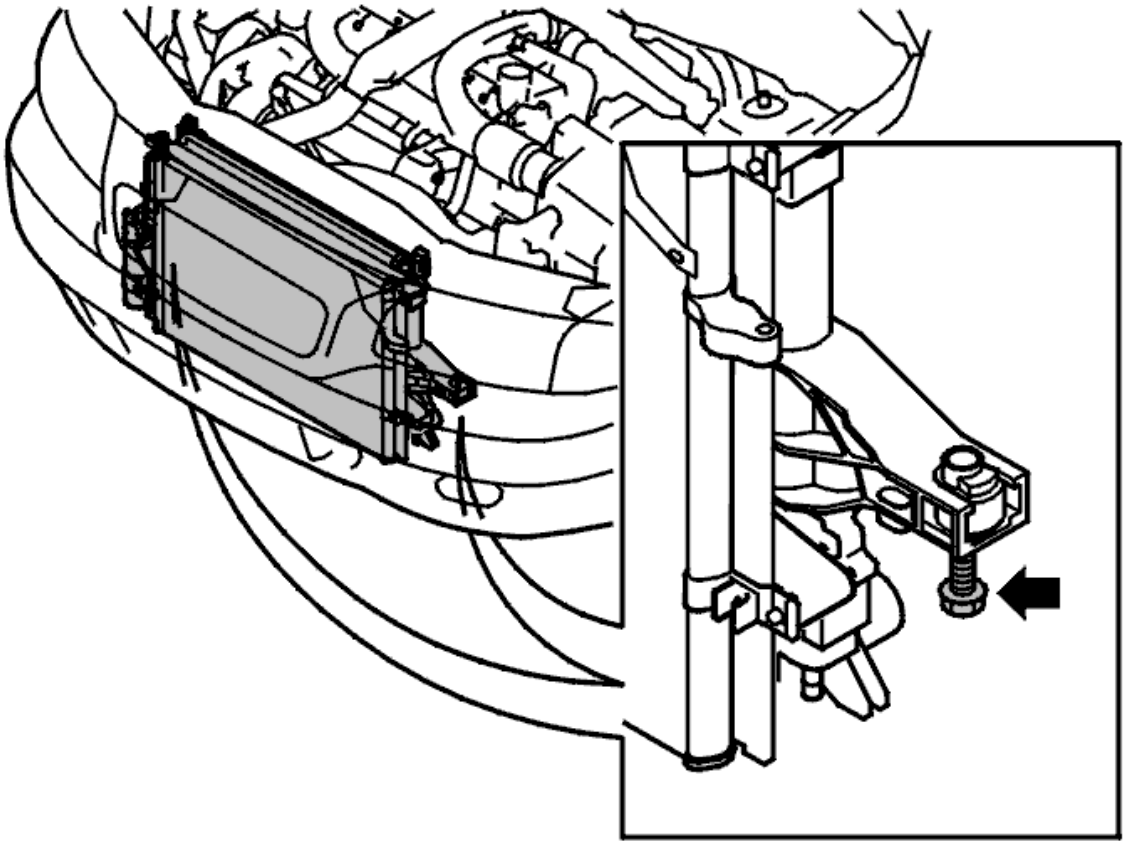

Fig. 81: Identifying Lower Mounting For Air Conditioning Aggregate
Courtesy of VOLVO CARS CORPORATION

Remove:

- the 2 mounting bolts
- the radiator.

INSTALLATION

INSTALLING THE RADIATOR

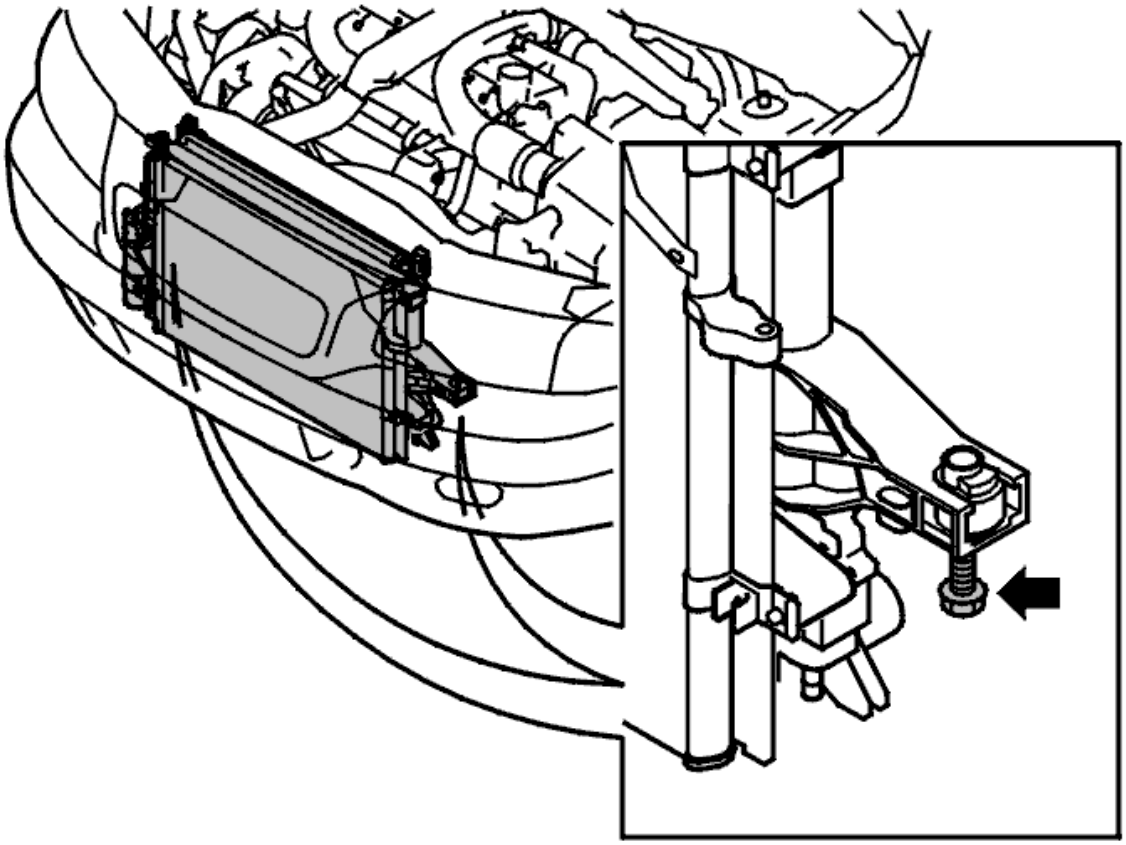

Fig. 82: Identifying Lower Mounting For Air Conditioning Aggregate
Courtesy of VOLVO CARS CORPORATION

Lift the radiator. Install the two M8 mounting bolts.

NOTE: **Make sure that the radiator is positioned correctly in the guide pins on top of the unit.**

NOTE: **Make sure that no hoses are trapped when installing the radiator.**

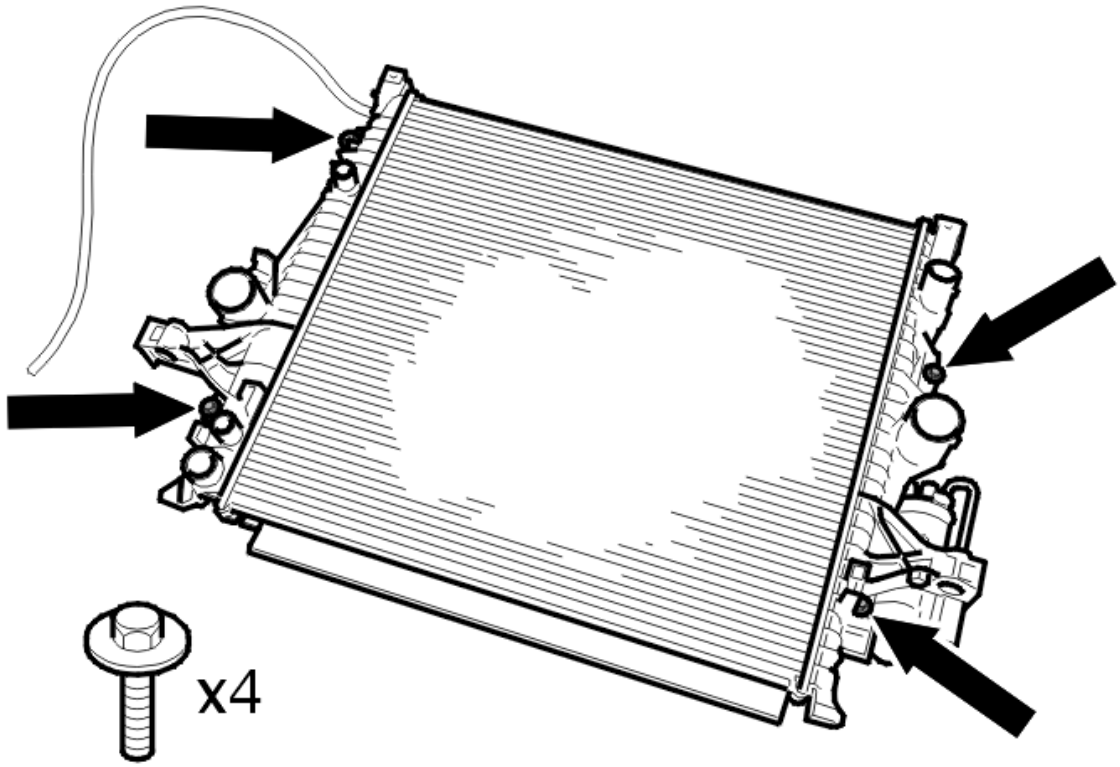

Fig. 83: Identifying The Air Conditioning Aggregate Screws
Courtesy of VOLVO CARS CORPORATION

Install:

- the evacuation hose from the expansion tank
- the 4 x M6 screws.

INSTALLING THE ENGINE COOLING FAN (FC)

Install the electric cooling fan. See:8, see **ENGINE COOLING FAN (FC), REPLACING**.

THE ENGINE COOLANT PUMP AND THE THERMOSTAT (B6294T; 2003-2006)

COOLANT PUMP, REPLACING

REMOVAL AND INSTALLATION

PREPARATION

NOTE: **As the illustrations in this service information are used for different model years and / or models, some variation may occur. However, the essential information**

in the illustrations is always correct.

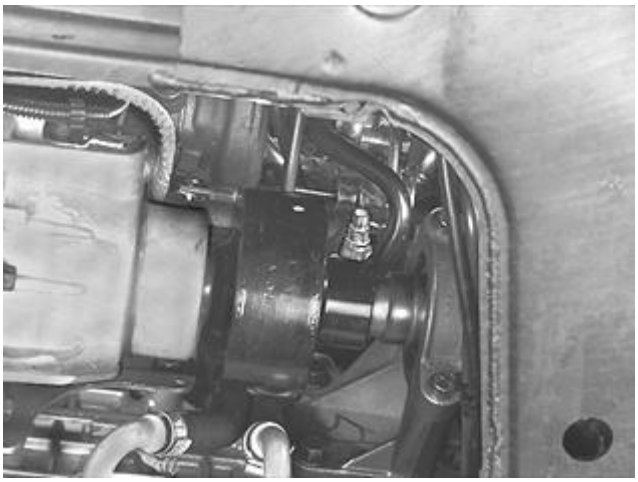

Fig. 84: Drain Cock And Drain Coolant
Courtesy of VOLVO CARS CORPORATION

Install lock grip pliers on the upper radiator hose.

Raise the car.

Remove the lower engine splash guard.

Install lock grip pliers on the lower radiator hose.

Open the engine nipple. Drain the coolant into a container. Close the nipple.

Remove the timing belt. See **REMOVAL** .

REPLACING THE COOLANT PUMP

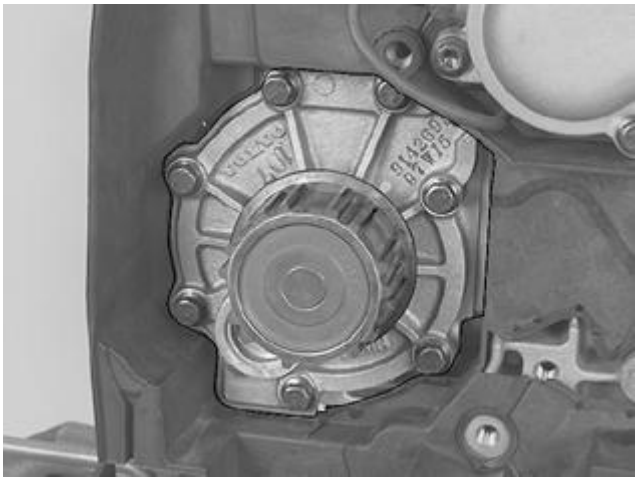

Fig. 85: Coolant Pump
Courtesy of VOLVO CARS CORPORATION

Remove the screws holding the pump at the cylinder block.

Tap the pump wheel using the shaft of a hammer. Remove the pump.

Carefully clean the gasket face.

Install a **new gasket** and the coolant pump. Tighten crosswise. Tighten to **17 Nm** .

FINISHING

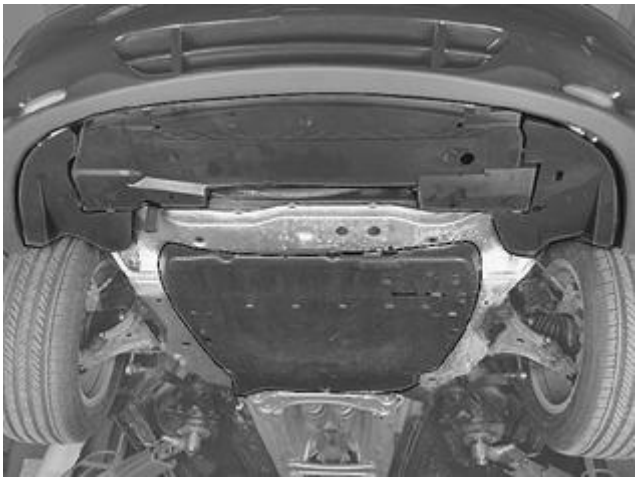

Fig. 86: Engine Splash Guard
Courtesy of VOLVO CARS CORPORATION

Install the timing belt. See **INSTALLATION** .

Remove the lock grip pliers from the lower coolant hose.

Install the lower engine splash guard.

Remove the lock grip pliers from the upper coolant hose.

Fill coolant and check the level.

Check the servo fluid level.

Test drive the engine.

THERMOSTAT, REPLACING

REMOVAL AND INSTALLATION

Remove the VVT solenoid. See **REPLACING THE VARIABLE VALVE TIMING SOLENOID**

REMOVING THE THERMOSTAT

NOTE: **Since the illustrations in this service information are used for different model years and/or models, some variation may occur. However, the essential information in the illustrations is always correct.**

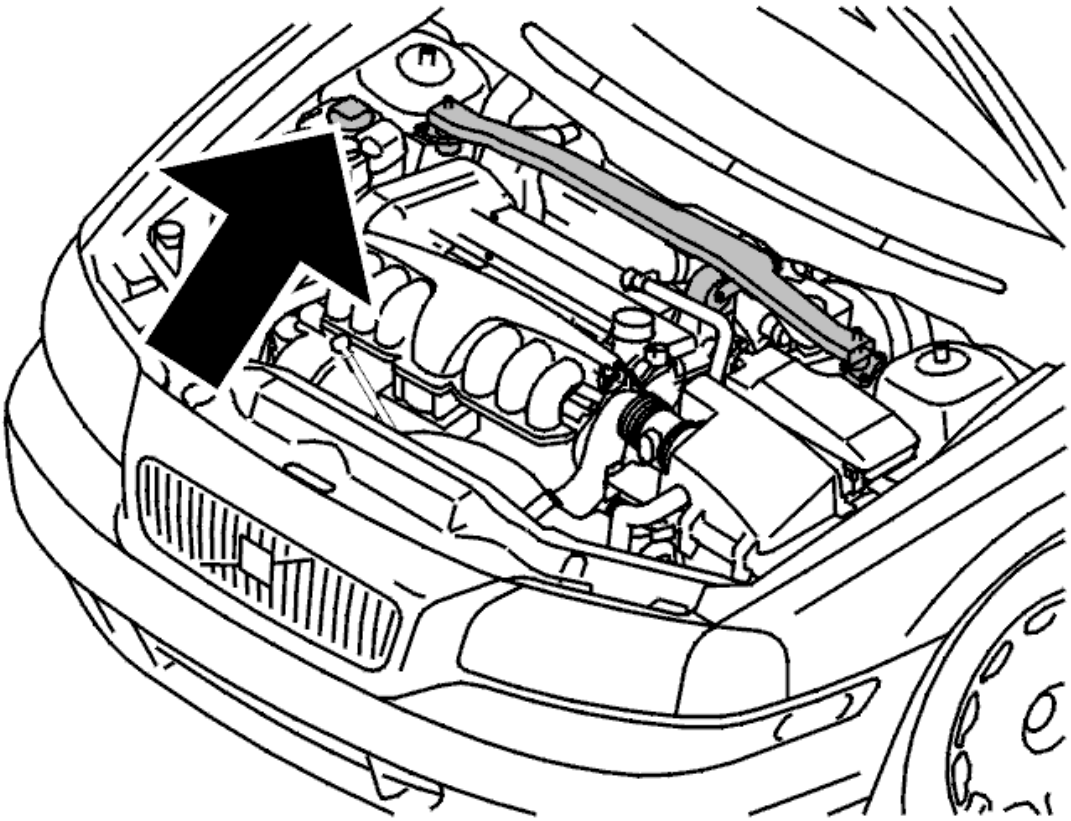

Fig. 87: Identifying Expansion Tank
Courtesy of VOLVO CARS CORPORATION

Remove:

- the clamp holding the return hose for the power steering
- the screw holding the engine stabiliser brace to the bracket on the engine
- the screws holding the engine stabiliser brace to the suspension turrets
- the engine stabiliser brace
- the expansion tank cap.

Raise the car. Remove the lower splashguard.

Position a container under the engine drain cock. Drain the coolant.

Close the cock.

Install the lower splash guard.

Lower the car.

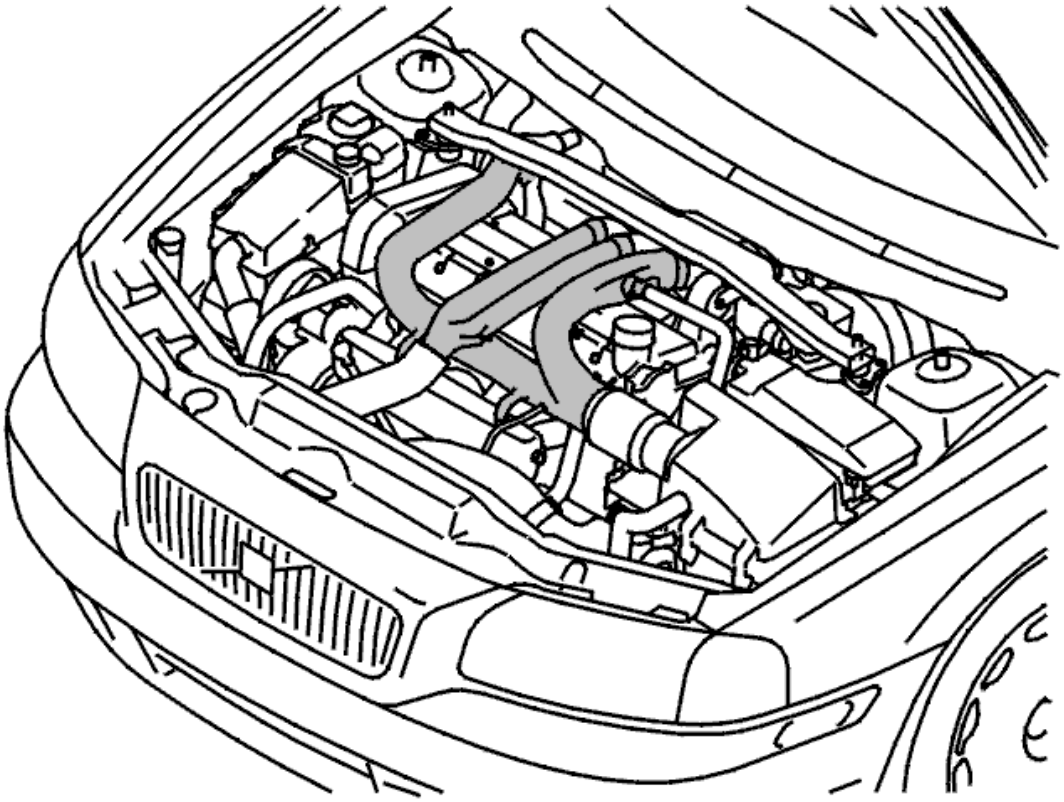

Fig. 88: Identifying Plastic Hoses Between Turbocharger, Charge Air Cooler & Air Cleaner/Turbocharger
Courtesy of VOLVO CARS CORPORATION

Remove:

- the plastic hoses between the turbocharger (TC) / charge air cooler and the air cleaner (ACL) / turbocharger (TC).

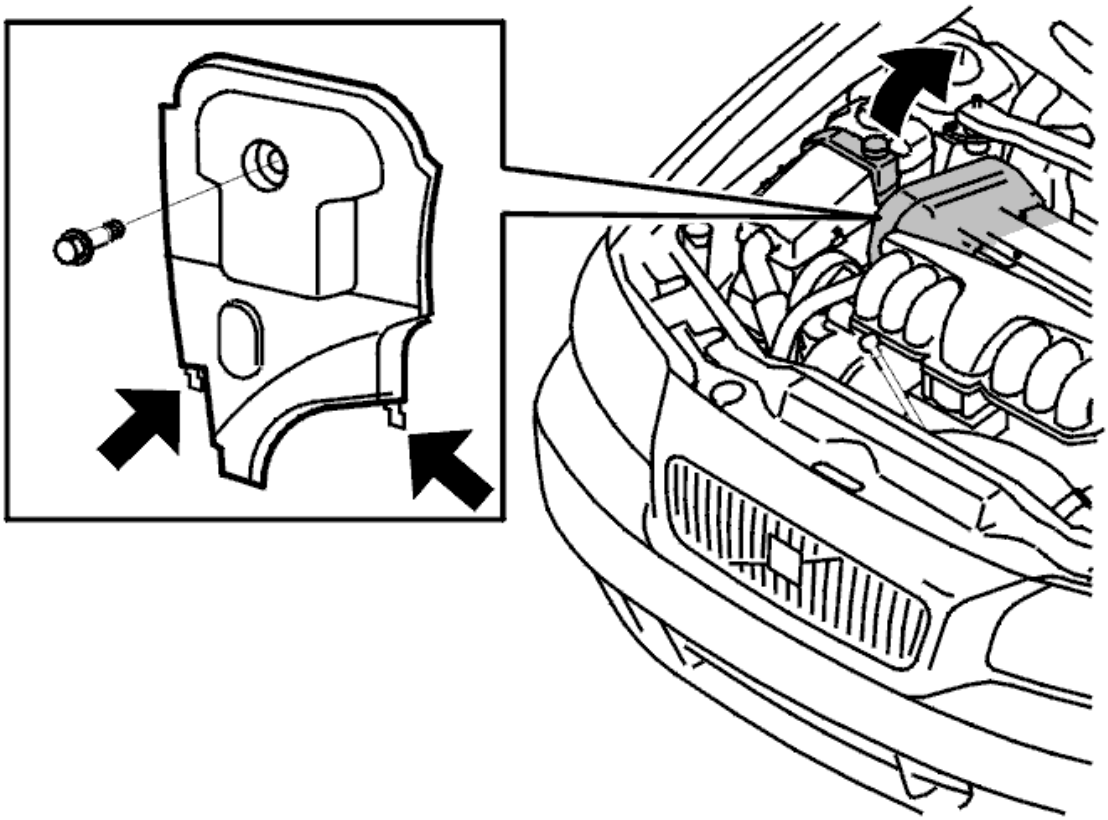

Fig. 89: Front Timing Belt Cover
Courtesy of VOLVO CARS CORPORATION

Lift up the servo reservoir and place it on top of the engine.

WARNING: **Seal the cap for the servo reservoir, so that no servo oil leaks out.**

Servo oil is highly flammable.

NOTE: **Make sure that the timing belt cover has cleared the nipple on the thermostat housing before the cover is pulled up.**

Remove:

- the front cover.
- the timing belt cover. Use weatherstrip tool

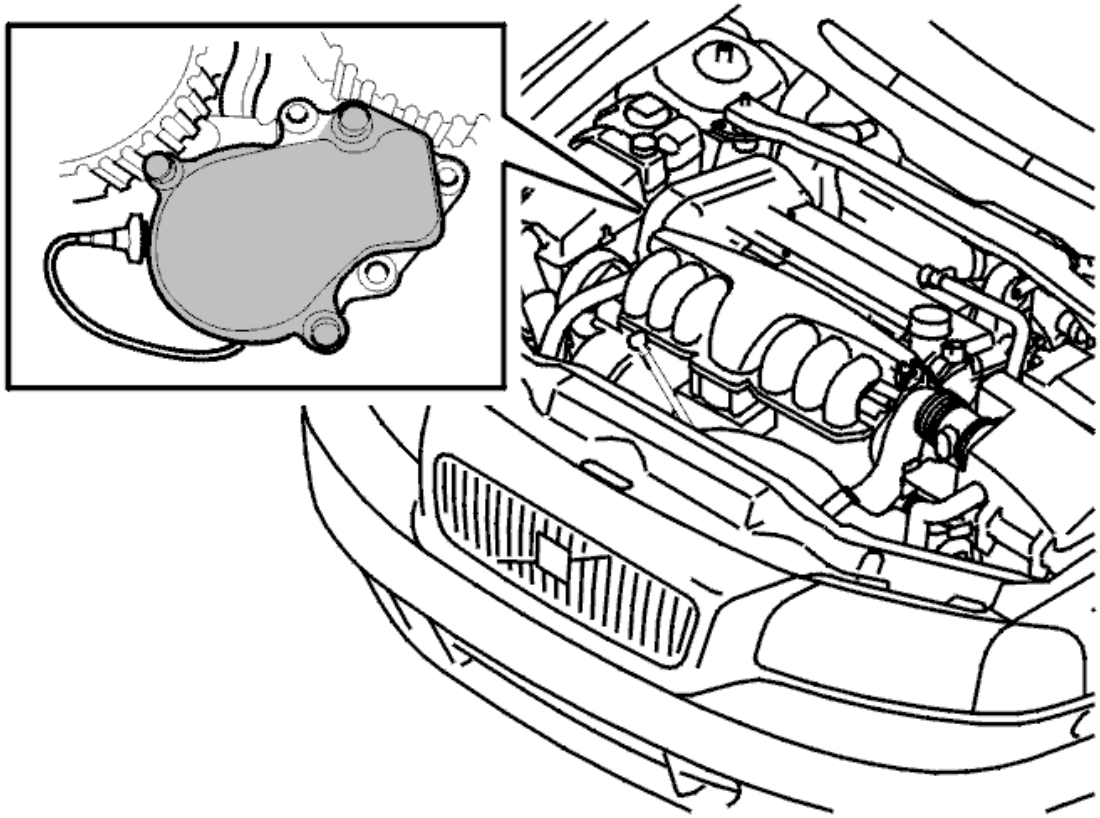

Fig. 90: Identifying Thermostat Housing & Cable Duct
Courtesy of VOLVO CARS CORPORATION

- the thermostat housing cover
- the thermostat.

INSTALLING THE THERMOSTAT

NOTE: For tightening torques, see TIGHTENING TORQUE .

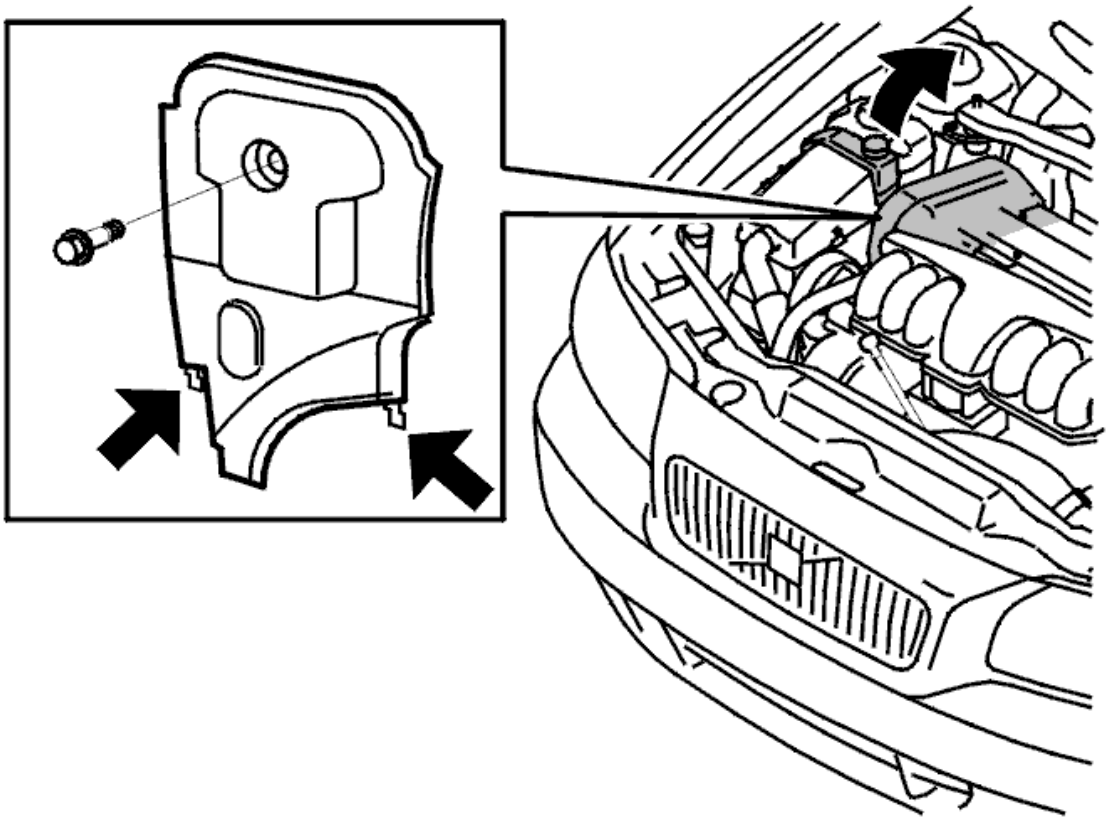

Fig. 91: Front Timing Belt Cover
Courtesy of VOLVO CARS CORPORATION

NOTE: **Clean all mating surfaces. Ensure that no dirt enters the fluid ducts.**

NOTE: **Ensure that the timing belt cover is in position before the cover is pressed in against the rear timing belt cover to prevent damage to the nipple on the thermostat housing.**

Install

- the new thermostat
- the cover of the thermostat housing with a **new gasket** . Tighten to **17 Nm**
- the front timing belt cover. The mudguard over the right drive shaft boot may come loose. If this happens, secure it from underneath
- the screw for the front timing belt cover. Tighten to **12 Nm** .

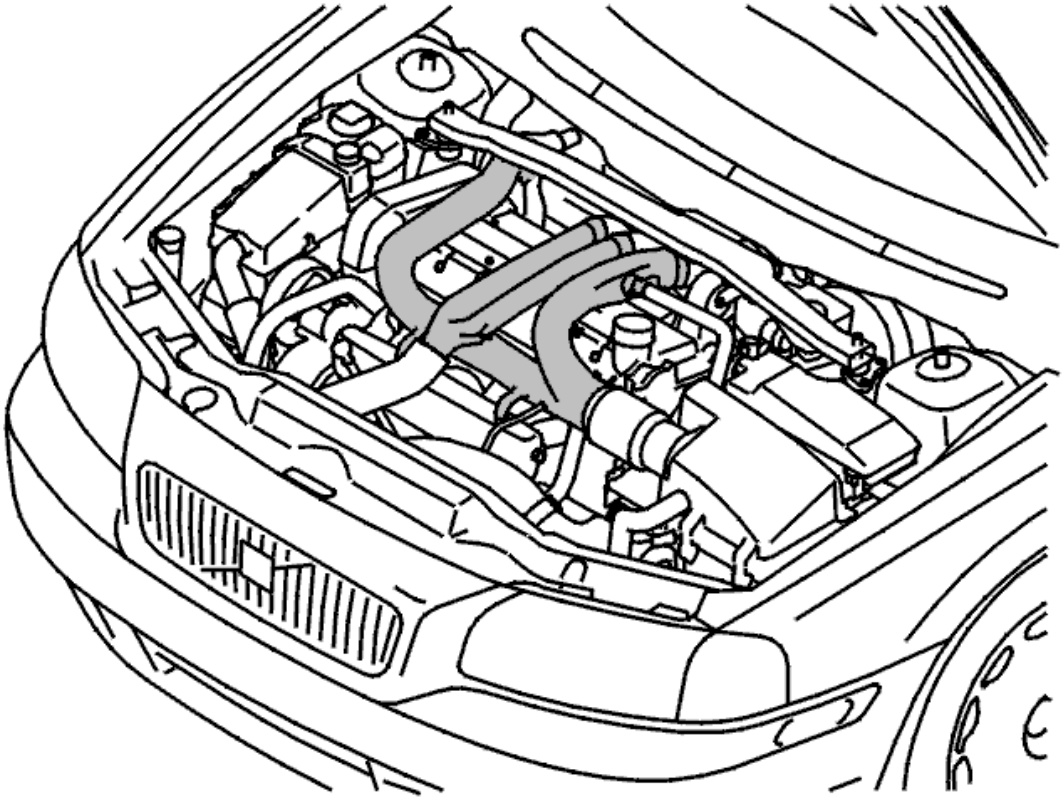

Fig. 92: Identifying Plastic Hoses Between Turbocharger, Charge Air Cooler & Air Cleaner/Turbocharger
Courtesy of VOLVO CARS CORPORATION

Install:

- the plastic hoses between the turbocharger (TC) / charge air cooler and the air cleaner (ACL) / turbocharger (TC).

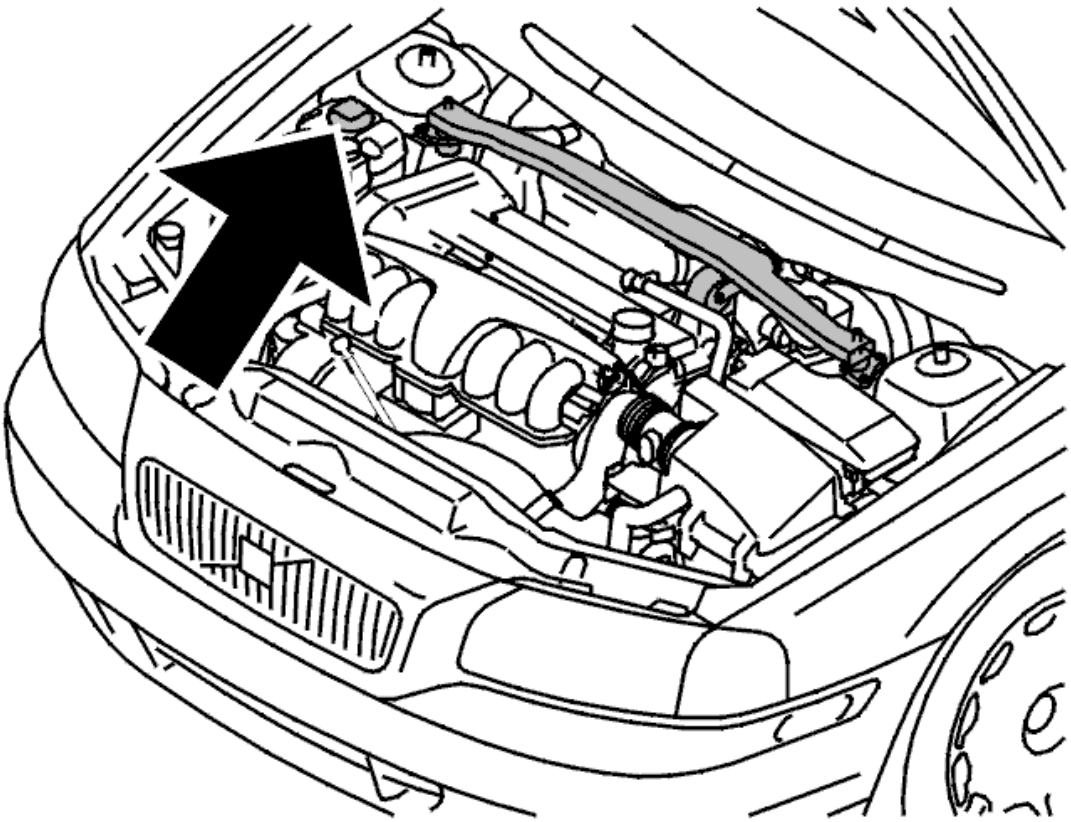

Fig. 93: Identifying Expansion Tank
Courtesy of VOLVO CARS CORPORATION

Install:

- the servo reservoir. Check that the hoses are correctly positioned
- the engine stabiliser brace
- the screws holding the engine stabiliser brace to the suspension turrets. Tighten to **50 Nm**
- the screw holding the engine stabiliser brace to the bracket on the engine. Tighten to **80 Nm**
- the clamp holding the return hose for the power steering.

Check the function

Fill with coolant.

Install the cap on the expansion tank.

Test drive the engine until the thermostat has opened.

Top up the coolant if necessary.

ENGINE COOLANT PUMP AND THERMOSTAT (B6324S; 2007-2010)

COOLANT PUMP

Special tools	
	T9512957 COOLANT FILLER **Tool number:** T9512957 **Tool description:** COOLANT FILLER **Tool boards:**
	T9512952 COVER **Tool number:** T9512952 **Tool description:** COVER **Tool boards:**

NOTE: Removal steps in this procedure may contain installation details.

Drain the cooling system. See **COOLING SYSTEM - DRAINING, CHARGING AND BLEEDING** .

Disconnect the battery. See **BATTERY, DISCONNECTING** .

Fig. 94: Removing Engine Cover
Courtesy of VOLVO CARS CORPORATION

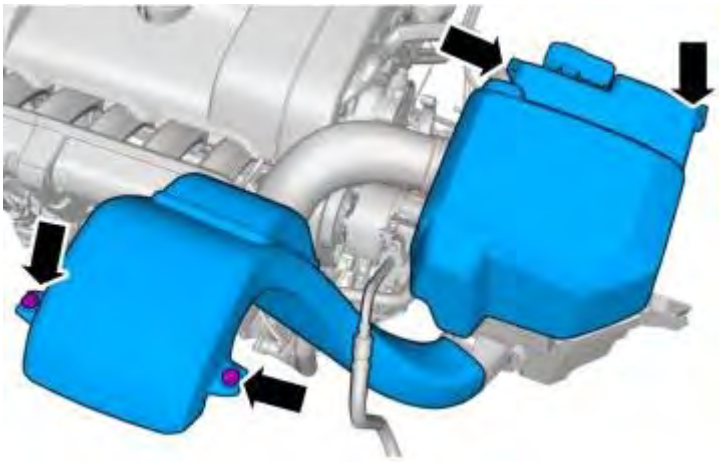

Fig. 95: Removing Air Intake and Cover
Courtesy of VOLVO CARS CORPORATION

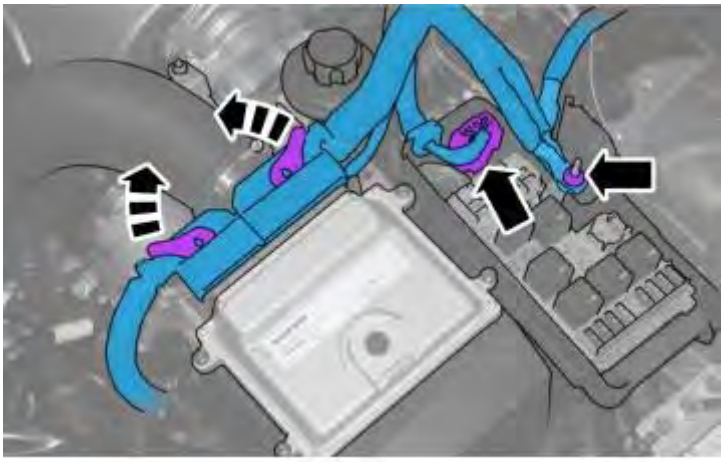

Fig. 96: Disconnecting Battery Leads
Courtesy of VOLVO CARS CORPORATION

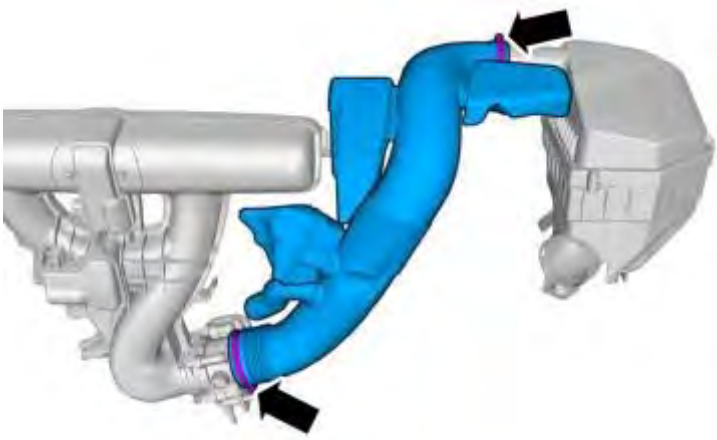

Fig. 97: Locating Air Tube Clamps
Courtesy of VOLVO CARS CORPORATION

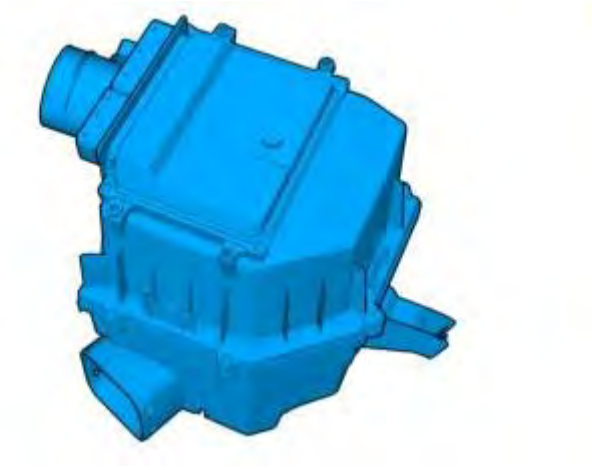

Fig. 98: Identifying Air Filter Housing
Courtesy of VOLVO CARS CORPORATION

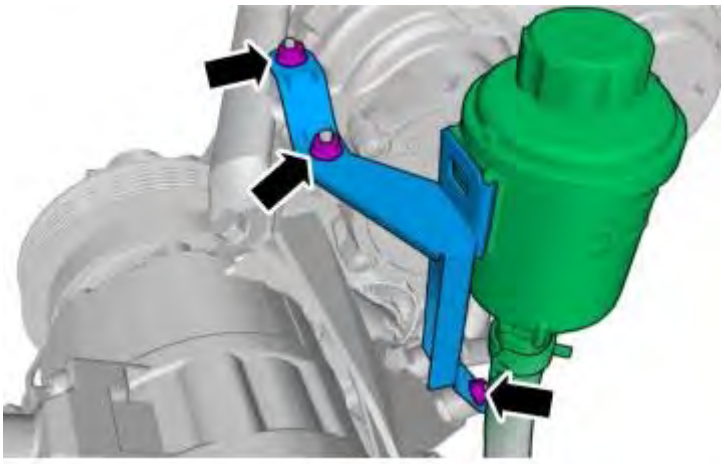

Fig. 99: Removing Steering Fluid Reservoir Bracket
Courtesy of VOLVO CARS CORPORATION

M6. See **TIGHTENING TORQUE**

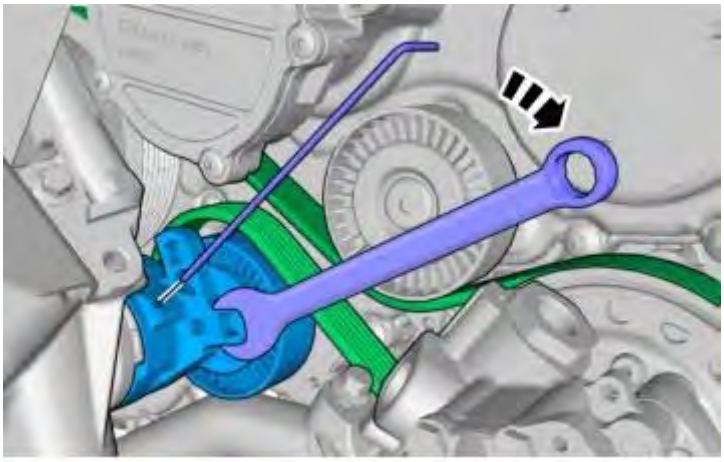

Fig. 100: Slackening The Tensioner
Courtesy of VOLVO CARS CORPORATION

slacken the tensioner and relive the tension on the belt.

and lock the tensioner in position.

When installing, check the belt's position on all belt grooves.

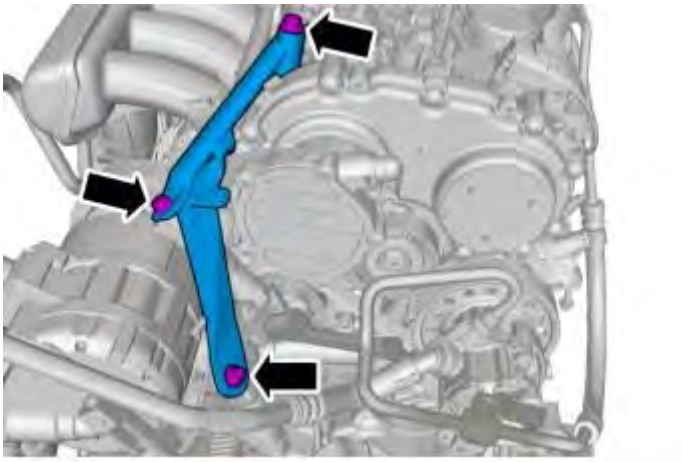

Fig. 101: Removing Brace
Courtesy of VOLVO CARS CORPORATION

M8. See **TIGHTENING TORQUE**

M10. See **TIGHTENING TORQUE**

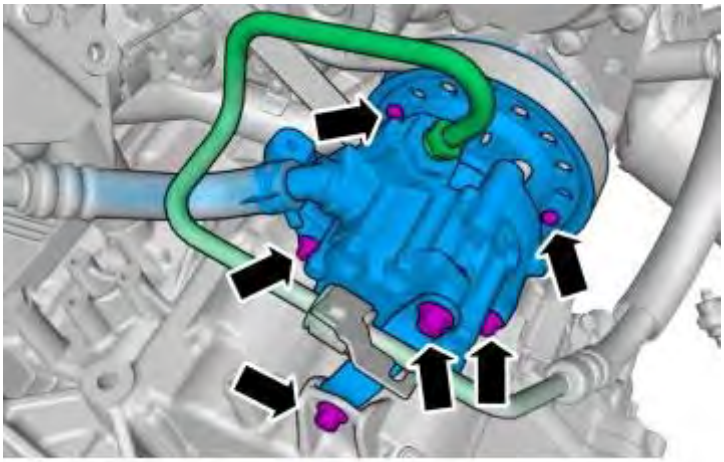

Fig. 102: Removing Power Steering Pump And Bracket
Courtesy of VOLVO CARS CORPORATION

1. the power steering pump bracket in the transmission. M8. See **TIGHTENING TORQUE**
2. the power steering pump's rear stay. M8. See **TIGHTENING TORQUE**

3. the water pump coupling/pulley. M5. See **TIGHTENING TORQUE**
4. Delivery line to power steering pump. See **TIGHTENING TORQUE**

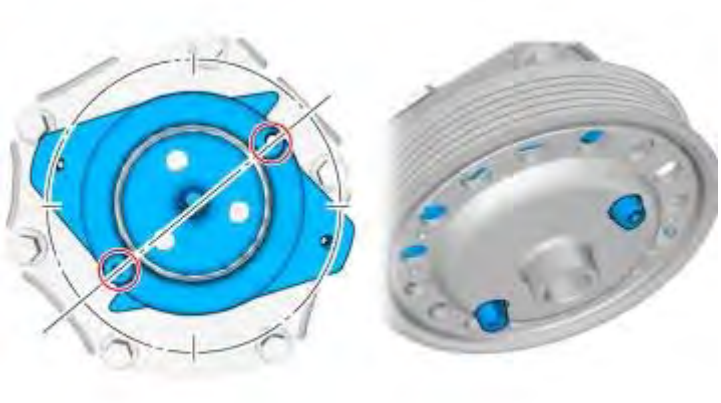

Fig. 103: Identifying Water Pump Coupling
Courtesy of VOLVO CARS CORPORATION

When removing

Remove the pins from the pulley. Rotate the power steering pump upward and rearward.

When installing

To facilitate fitting of the water pump coupling in the power steering pump pulley, turn the coupling until the spikes are in the 8 o'clock and 2 o'clock position as illustrated. Make sure that the pins stick out through the holes in the pulley.

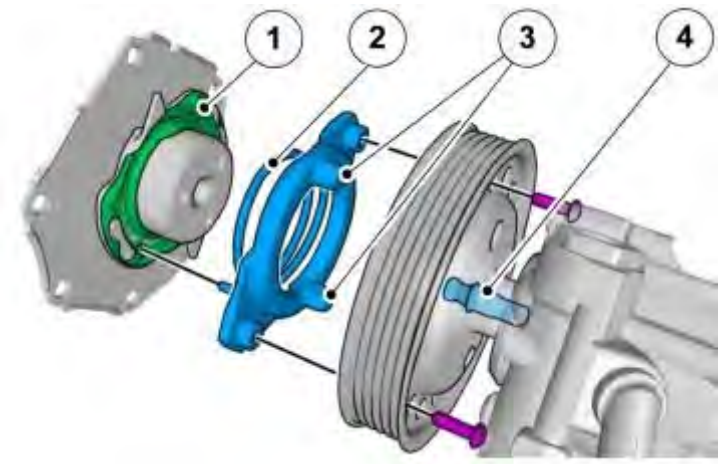

Fig. 104: Exploded View Of Water Pump Coupling
Courtesy of VOLVO CARS CORPORATION

When installing

Make sure that the coupling's spring (2) clicks in position at the bonded part of the water pump (1) and that the pins (3) enter the holes of the pulley.

Always use new centering pins (4).

To install, reverse the removal procedure

Refill the cooling system. see **9512957** with see **9512952** .

THERMOSTAT

NOTE: Removal steps in this procedure may contain installation details.

Drain the cooling system. See **COOLING SYSTEM - DRAINING, CHARGING AND BLEEDING**

Remove the intake manifold. See **INDUCTION PIPE**

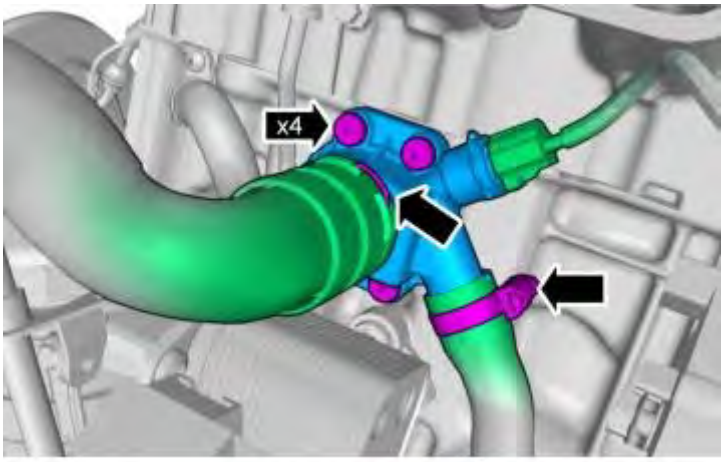

Fig. 105: Identifying Thermostat Housing and Attachments
Courtesy of VOLVO CARS CORPORATION

M6. See **TIGHTENING TORQUE**

To install, reverse the removal procedure

ENGINE COOLANT PUMP AND THERMOSTAT (B6324S5; 2011-2012)

COOLANT PUMP

see **COOLANT PUMP**

THERMOSTAT

see **THERMOSTAT**

ENGINE

Cooling System - Specifications, mechanical

ENGINE COOLANT

WATER QUALITY

Description	Quantity
Total fixed particles	< 340 ppm
Total hardness	< 9, 5µ° dH
Chloride	< 40 ppm
Sulphate	< 100 ppm
pH value	5, 5-9
Silicon	< 20 mg SiO2/l
Iron	< 0.10 ppm
Manganese	< 0.05 ppm
Conductivity	< 500 µS/cm
Organic content COD-Mn	< 115 mg/l

ENGINE

Cooling System - Symptom Verification

INFORMATION AND VERIFICATION. ENGINE BELT/SLIPPING/SQUEALING (2006-2012)

ENGINE BELT/SLIPPING/SQUEALING

SYMPTOM AND FUNCTION DESCRIPTION

NOTE: The symptom should always be verified together with the customer.

The following tips may be of help to decide if the symptom is due to a product feature or if continued troubleshooting is needed.

HINT: Squeaking may appear after, e. g., washing. The squeaking shall disappear when the motor is warm.

COOLING SYSTEM

Power transmission

COOLING SYSTEM

RADIATOR / CHARGE AIR COOLER (CAC), REPLACEMENT

Special tools:

see **9995972**

REMOVAL

REMOVING THE RADIATOR UNIT

- Remove the engine cooling fan (FC) according to **ENGINE COOLING FAN (FC), REPLACING** .

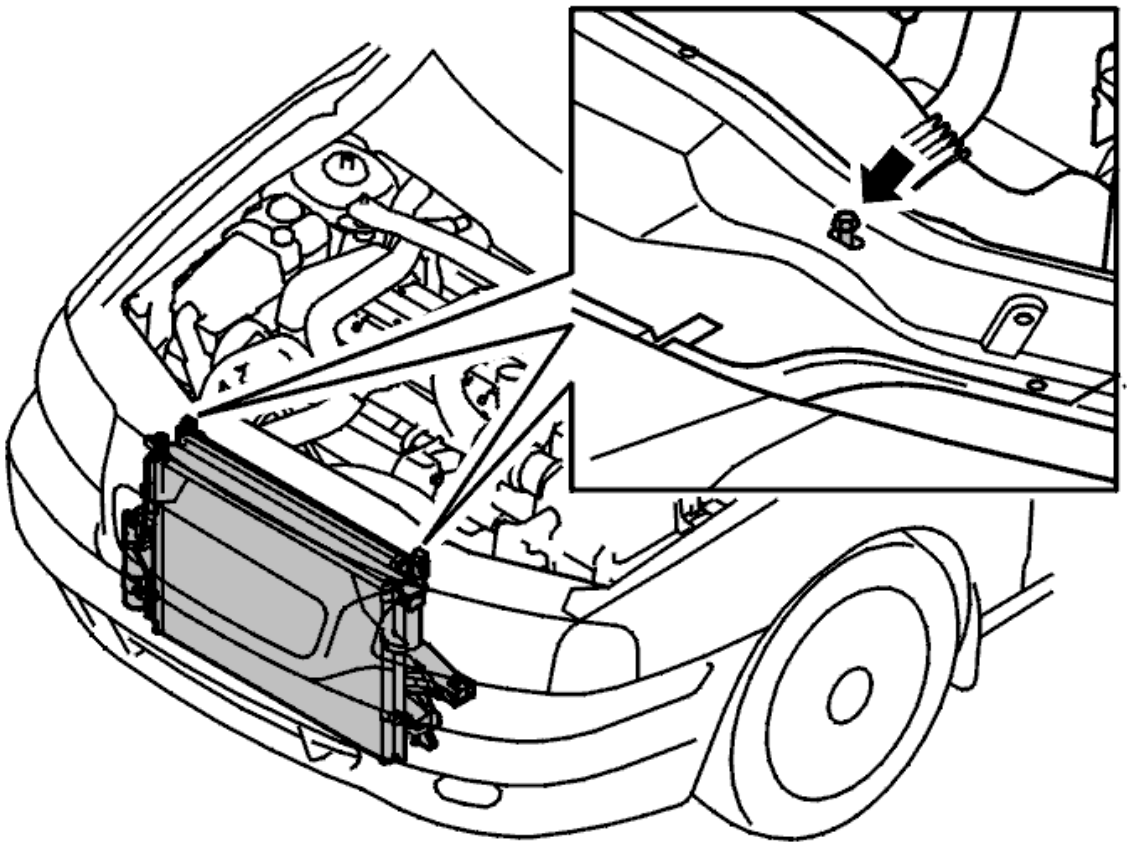

Fig. 1: Cooler Unit Screws
Courtesy of VOLVO CARS CORPORATION

- Disconnect the charge air pipe from the charge air cooler (CAC) on the left-hand side (turbocharged engines only). If necessary, use a hot air gun to make removal easier

- Remove the screws for the radiator unit on the front cover plate.

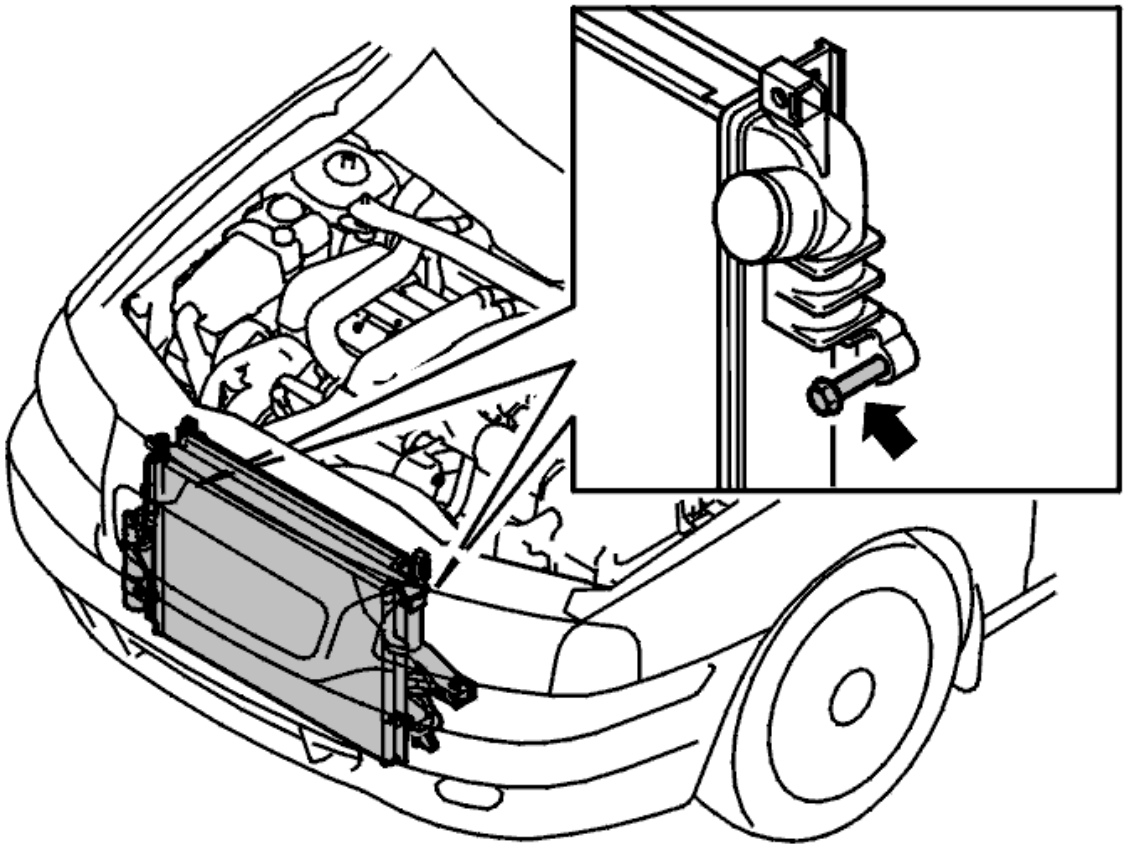

Fig. 2: Air Conditioning Aggregate And Receiver Drier
Courtesy of VOLVO CARS CORPORATION

Remove

- the two upper screws holding the radiator unit together
- the expansion tank cap.

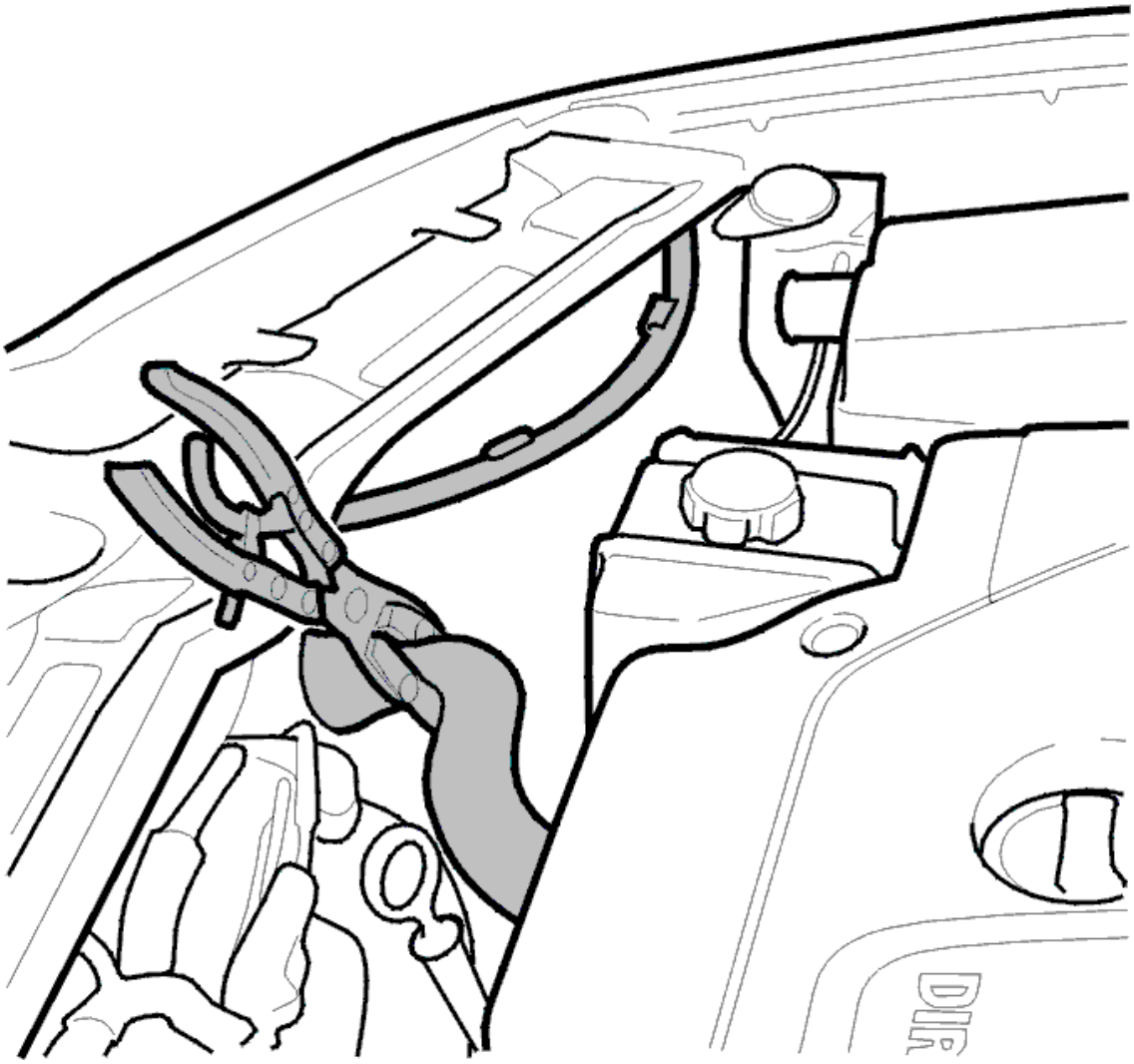

Fig. 3: Identifying Upper Radiator Hose And Lock Grip Pliers
Courtesy of VOLVO CARS CORPORATION

Block the upper radiator hose with lock grip pliers

WORK UNDER THE CAR

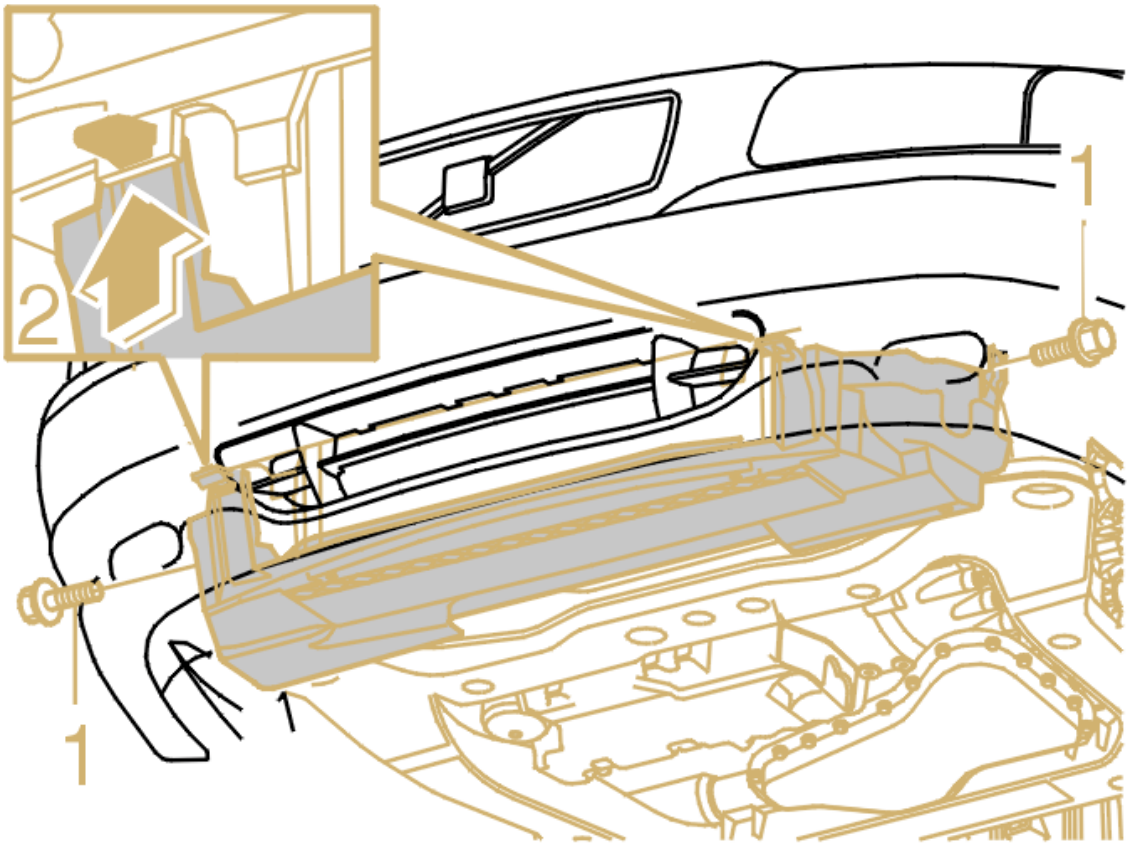

Fig. 4: Air Baffle
Courtesy of VOLVO CARS CORPORATION

Remove

- the air baffles
- the lower oil cooler hose from the radiator unit (automatics only)

NOTE: Collect the oil from the oil cooler in a container.

-
- the screw for the mounting for the cable duct for engine wiring at the front edge of the sub-frame.

DRAIN THE COOLANT

- Block the lower hose coolant hose with lock grip pliers
- Apply a hose on the nipple at the radiator
- Feed the hose down to a container
- Open the nipple and drain off the coolant.

WORK FROM ABOVE

- Remove the upper radiator hose. Place it to one side. Seal the openings.

WORK UNDER THE CAR

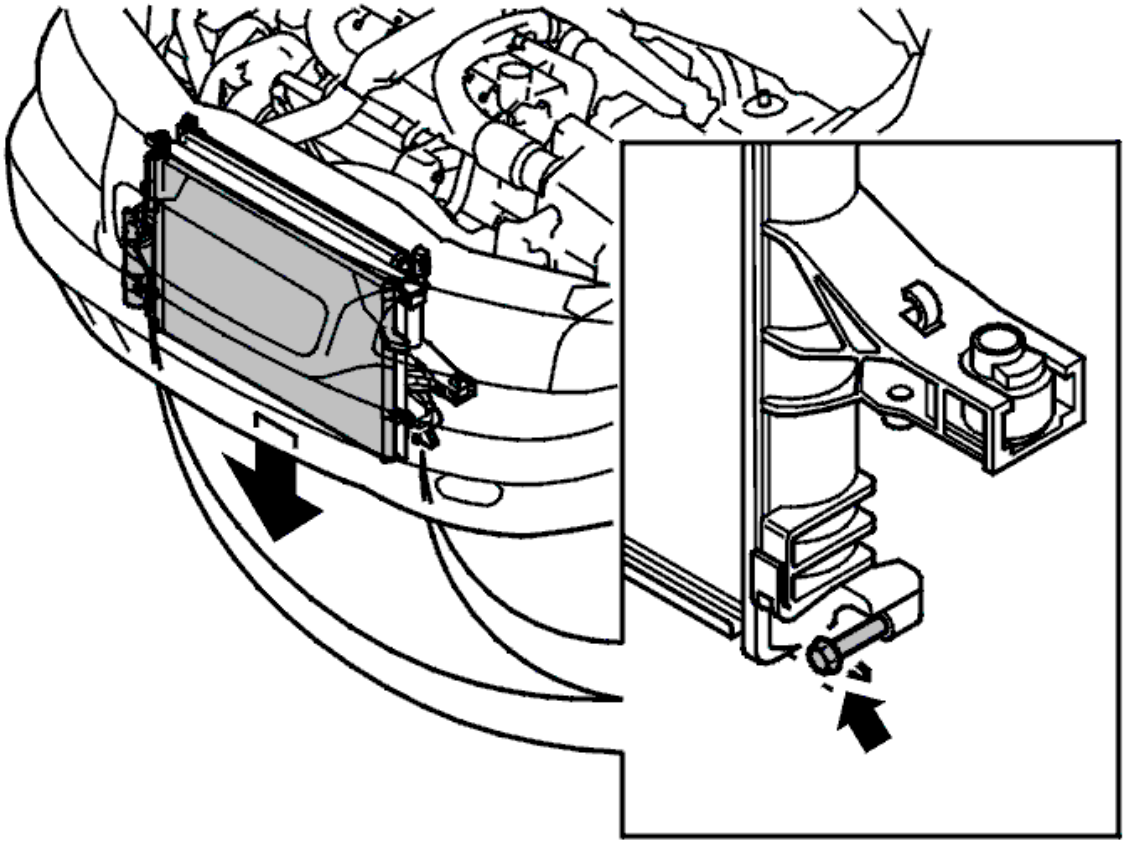

Fig. 5: Air Conditioning Aggregate Lower Screws
Courtesy of VOLVO CARS CORPORATION

- Disconnect the connector from the receiver drier and the cable from the holder
- Hang up the condenser using tie straps on the right-hand side in the pipe for the receiver drier and on the left-hand side in the pipe for the condenser
- Remove the lower screws holding the radiator unit.

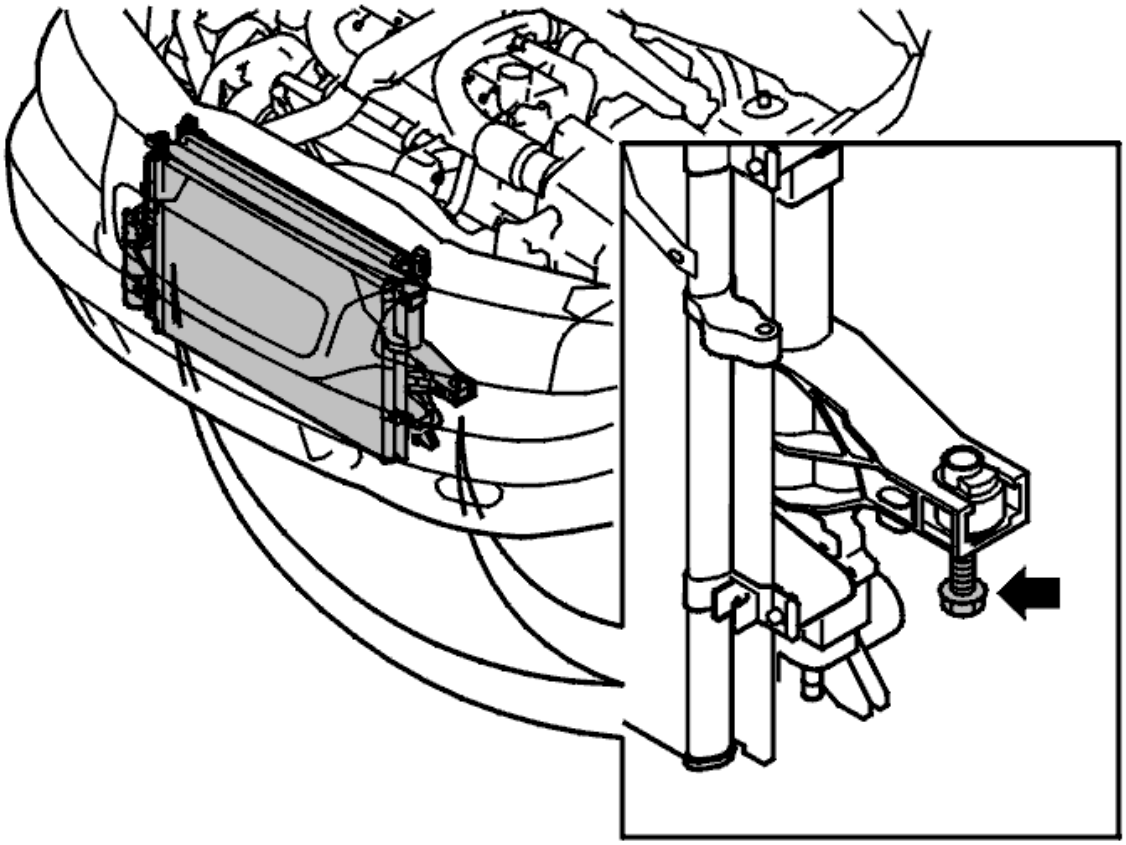

Fig. 6: Identifying Lower Mounting For Air Conditioning Aggregate
Courtesy of VOLVO CARS CORPORATION

- **The following requires two people:** Disconnect the radiator and the charge air cooler (CAC) firstly from the left and then from the right-hand side by removing the two screws
- On the right-hand side, press the cable duct and the compressor hose towards the engine. At the same time release the radiator and charge air cooler (CAC) downwards on the right-hand side. Then release the radiator and charge air cooler (CAC) on the left-hand side. Ensure that the mounting for the radiator and charge air cooler (CAC) passes the AC pipe
- Disconnect the hose from the radiator to the expansion tank
- Replace the radiator / charge air cooler (CAC).

INSTALLATION

INSTALLING THE RADIATOR AND CHARGE AIR COOLER (CAC)

- Hold the radiator unit and secure the hose from the expansion tank to the radiator
- Install the connector from the receiver drier and the cable from the holder.

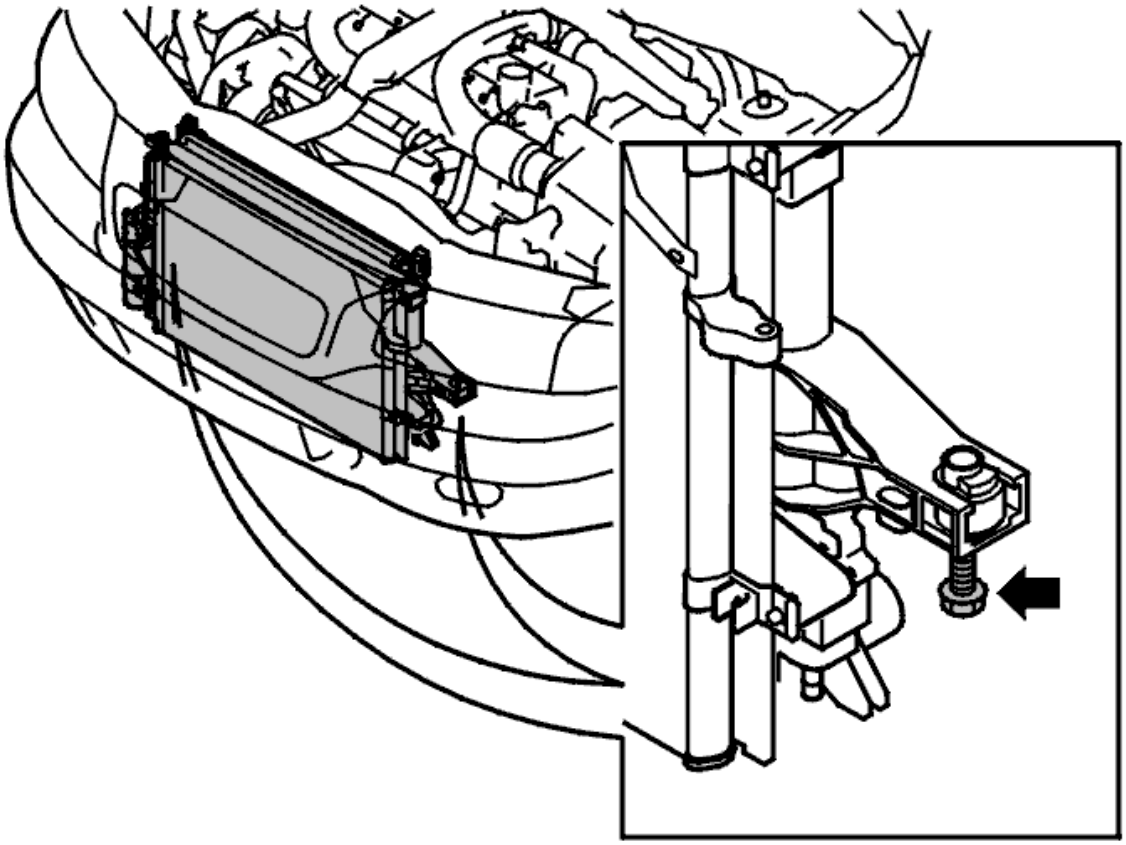

Fig. 7: Identifying Lower Mounting For Air Conditioning Aggregate
Courtesy of VOLVO CARS CORPORATION

- Lift up the radiator and charge air cooler (CAC) on the left-hand side. Ensure that the mounting for the charge air cooler (CAC) passes above the AC pipe. Lift the right-hand side while pressing the cable duct and the compressor hose towards the engine
- Thread the screws for the radiator and charge air cooler (CAC) into the member.

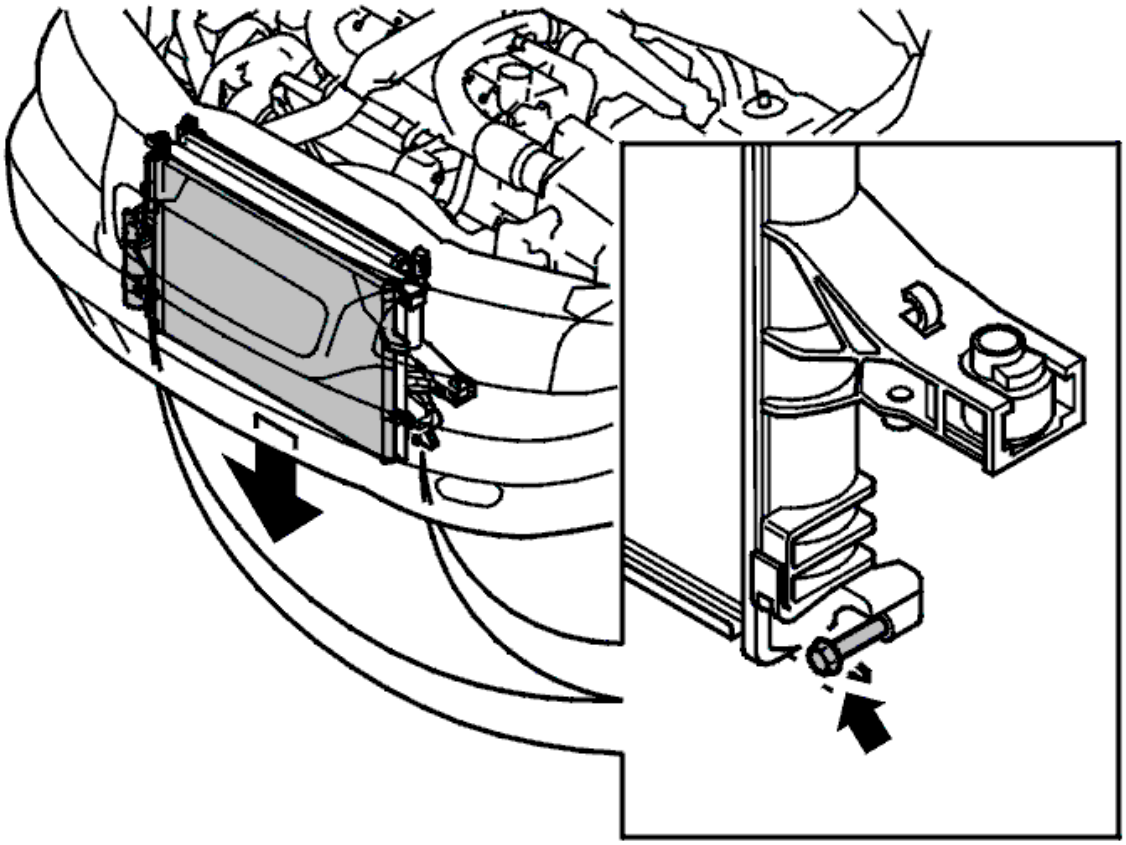

Fig. 8: Air Conditioning Aggregate Lower Screws
Courtesy of VOLVO CARS CORPORATION

- Install the lower screws to assemble the radiator unit. Tighten the screws. Tighten to **10 Nm**
- Remove the tie straps
- Check that the radiator unit is against the rubber seal
- Tighten the radiator unit to the member. Tighten to **25 Nm** .

- Install the lower radiator hose
- Remove the lock grip pliers
- Install the screw for the mounting for the engine wiring cable duct at the front edge of the sub-frame
- Install the lower oil cooler hose on the radiator unit (automatic gearboxes only).

WORK FROM ABOVE

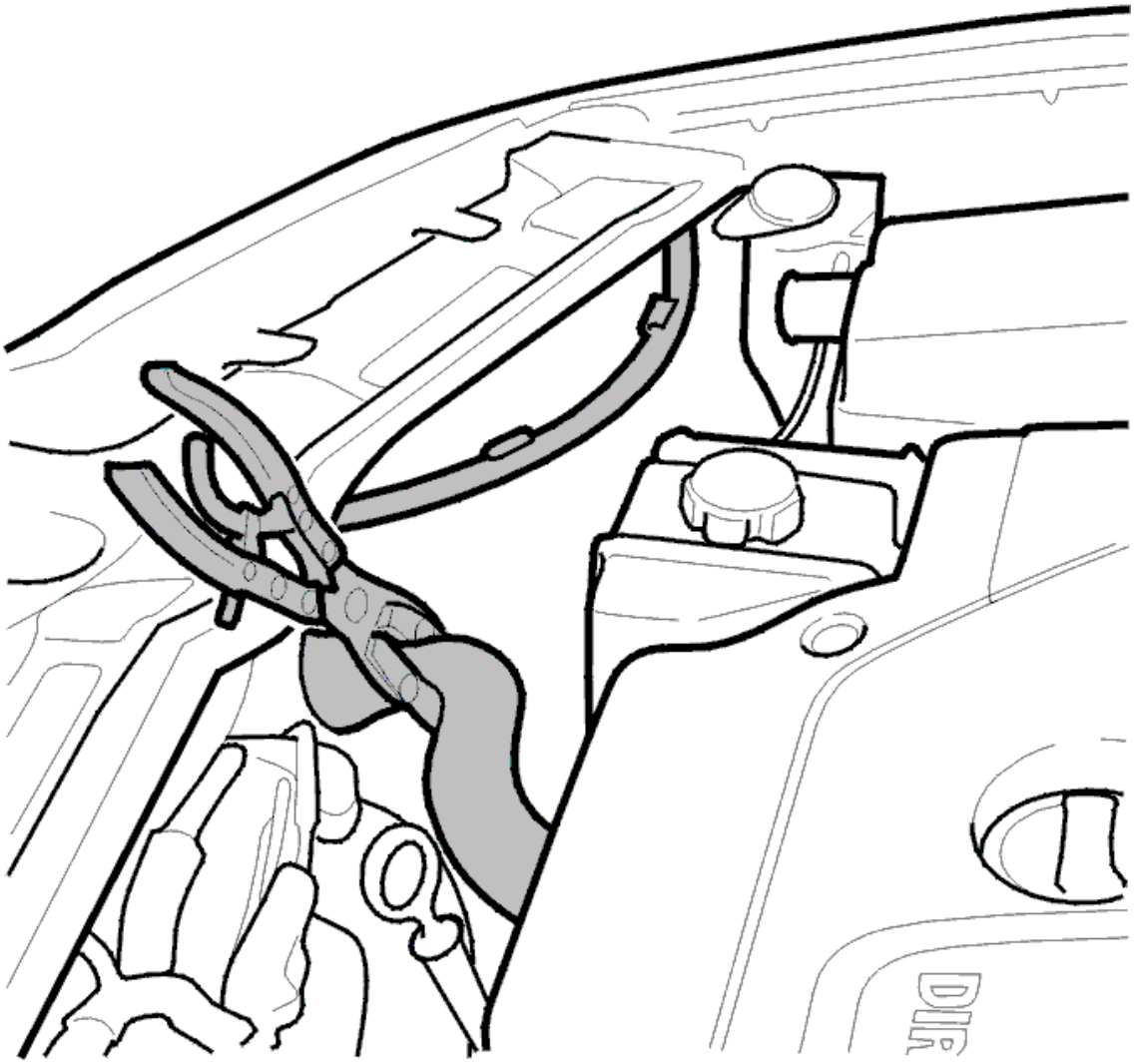

Fig. 9: Identifying Upper Radiator Hose And Lock Grip Pliers
Courtesy of VOLVO CARS CORPORATION

Install

- the upper radiator hose. Remove the lock grip pliers
- the charge air pipe to the charge air cooler (CAC) on the left-hand side (turbocharged engines only).

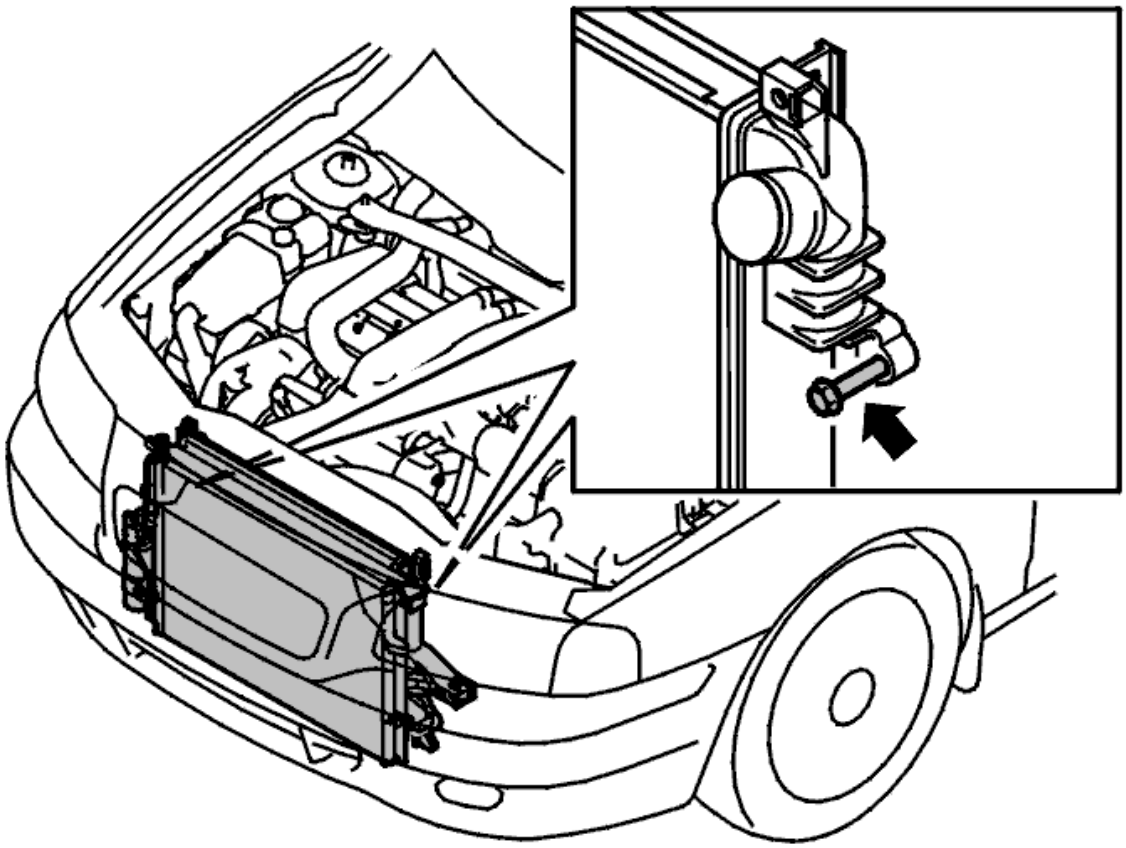

Fig. 10: Air Conditioning Aggregate And Receiver Drier
Courtesy of VOLVO CARS CORPORATION

- Install the upper screws to assemble the radiator unit. Tighten the screws
- Tighten to **10 Nm** .

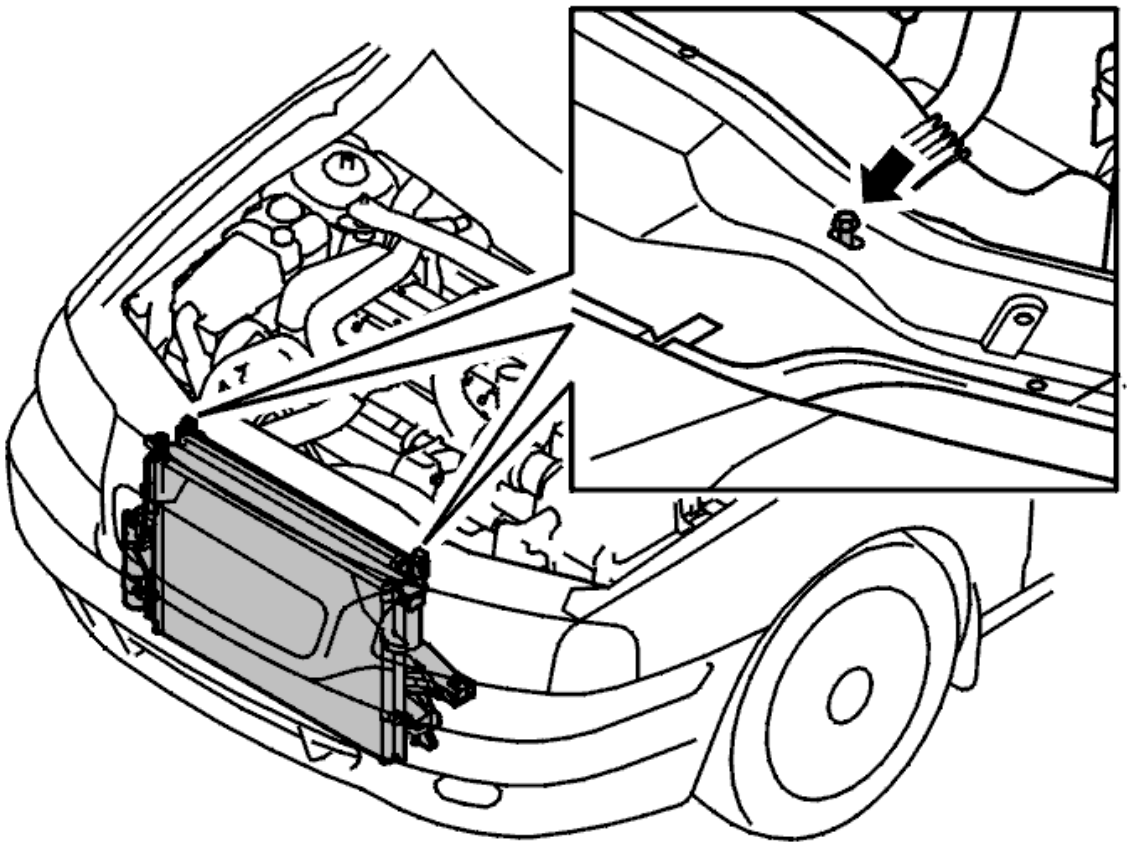

Fig. 11: Cooler Unit Screws
Courtesy of VOLVO CARS CORPORATION

- Install the screws for the radiator unit on the front cover plate
- Tighten to **10 Nm**

INSTALLING THE ENGINE COOLING FAN (FC)

To install the engine cooling fan (FC), see **ENGINE COOLING FAN (FC), REPLACING** .

TOPPING UP THE COOLANT

- Install the cap on the expansion tank
- Run the engine until the thermostat has opened
- Stop the engine. Top up if necessary.

COOLING SYSTEM

Electrical system

COOLING SYSTEM

LEVEL SENSOR, ENGINE COOLANT, REPLACING

REMOVAL

ENGINE COOLANT LEVEL SENSOR

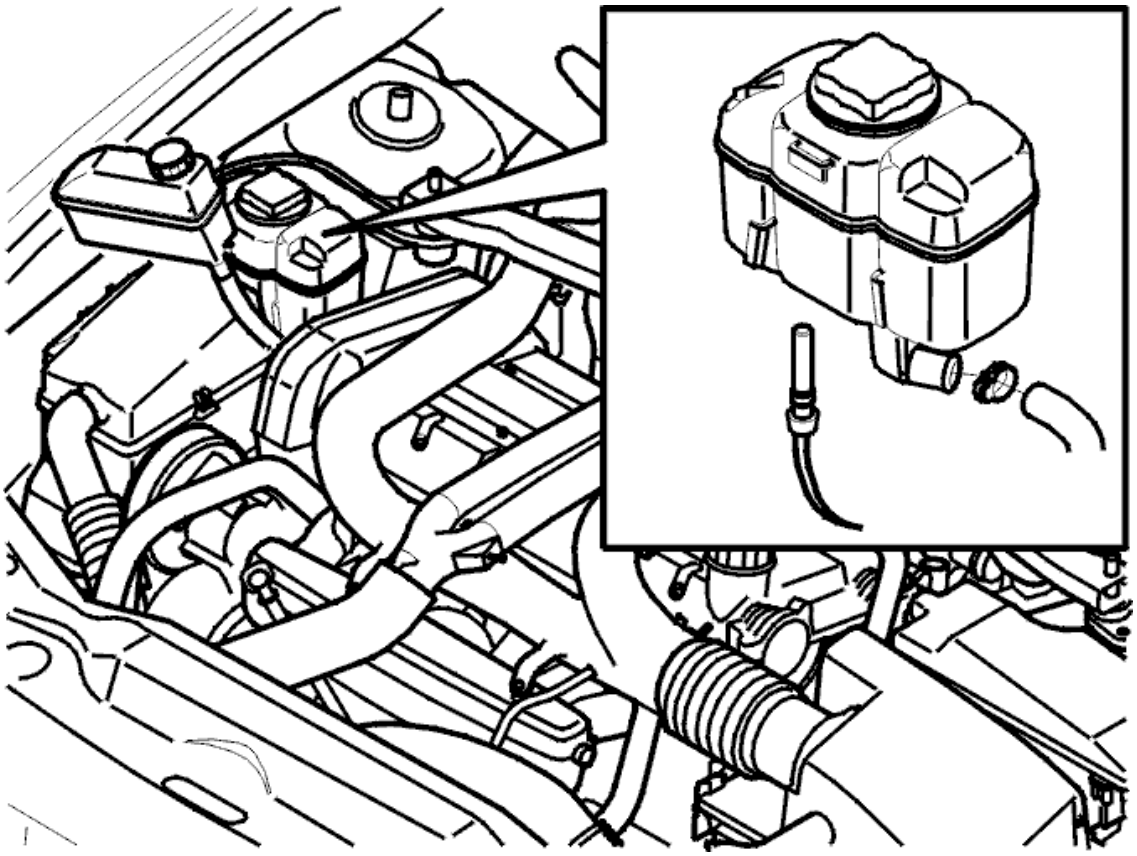

Fig. 1: Identifying Engine Coolant Expansion Tank And Engine Coolant Level Sensor
Courtesy of VOLVO CARS CORPORATION

- Remove the fluid reservoir for the power steering pump from the bracket. Place it to one side. To remove the fluid reservoir, see **FLUID RESERVOIR, REPLACING**.
- Disconnect the expansion tank and place to one side
- Remove the sensor using a screwdriver
- Disconnect the connector.

INSTALLATION

ENGINE COOLANT LEVEL SENSOR

In reverse order.

FLUID RESERVOIR, REPLACING

REMOVING THE FLUID RESERVOIR

Fig. 2: Identifying Lock Grip Pliers Installed On Return Hose From Fluid Reservoir
Courtesy of VOLVO CARS CORPORATION

- Install lock grip pliers on the return hose from the fluid reservoir as close to the power steering pump as possible.

NOTE: Place paper over the generator (GEN) as protection against oil.

- Remove the return hose from the power steering pump.

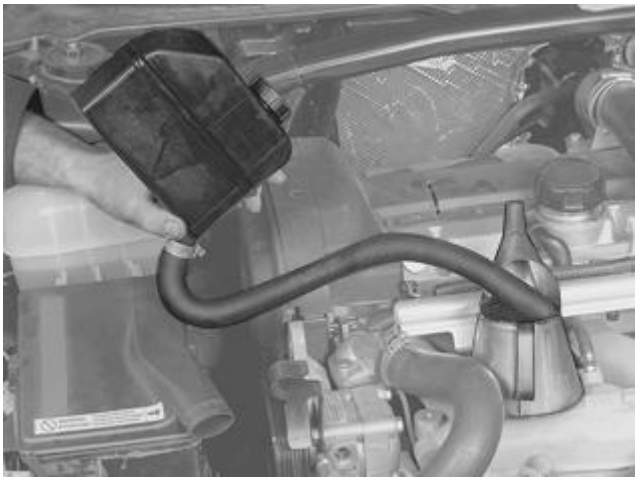

Fig. 3: Identifying Fluid Reservoir Lifted From Mounting
Courtesy of VOLVO CARS CORPORATION

- Lift the fluid reservoir from the mounting. Remove the lock grip pliers. Drain the oil into a container.

  WARNING: Avoid skin contact with the oil.

- Disconnect both the hoses from the reservoir
- Remove the reservoir.

INSTALLING FLUID RESERVOIR

- Install the reservoir in reverse order
- Remove the paper over the generator (GEN)
- Top up with oil. For the correct oil quality, see appropriate service information for specifications.

ENGINE

Engine - Cleaning, Inspection and Adjustment

CYLINDER LEAKAGE TEST

CYLINDER LEAKAGE TEST

GENERAL METHOD DESCRIPTION

THE CYLINDERS CAN BE CHECKED FOR LEAKAGE AS AN ALTERNATIVE TO A COMPRESSION TEST

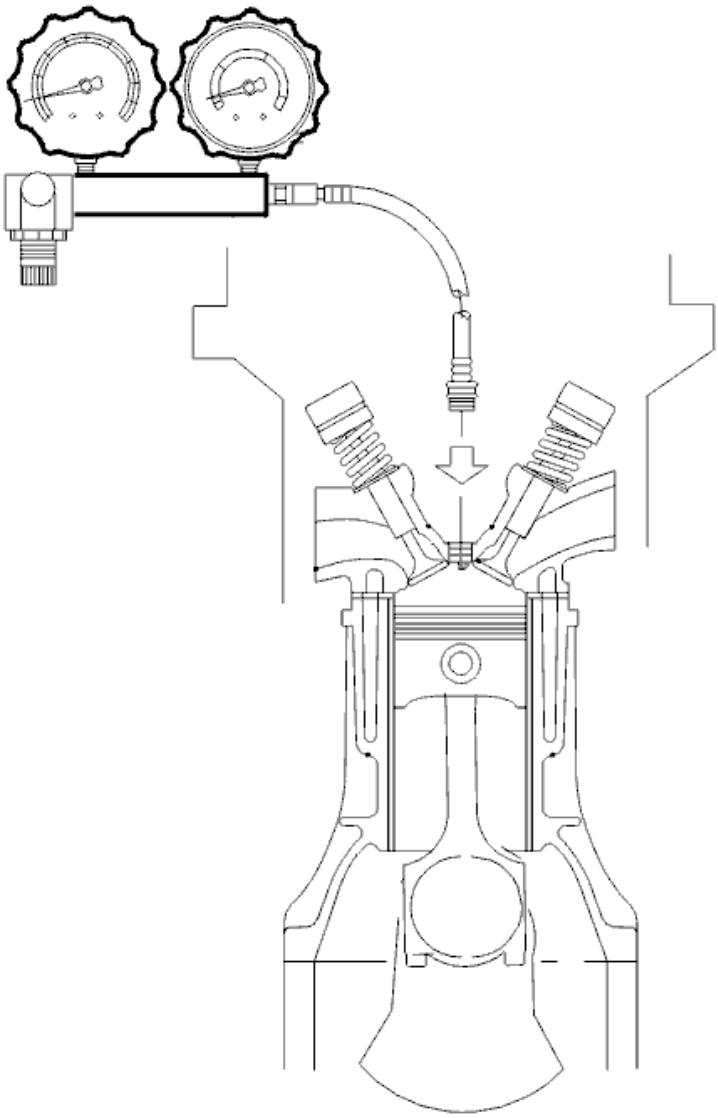

Fig. 1: Compression Gauge In Cylinder
Courtesy of VOLVO CARS CORPORATION

Using this method, the amount of leakage at the engine cylinders is measured and it is possible to locate the

source of any leaks.

A similar check can be performed using a compression gauge by injecting oil in the cylinder. However, this can cause a build-up of coke.

The result will not always be decisive or precise.

In addition, the VIDA station or the Volvo System Tester (VST) must always be connected afterwards to erase any diagnostic trouble codes (DTCs).

HOW IS THE CYLINDER CHECKED FOR LEAKAGE?

- The engine should be run to operating temperature so that the thermostat is open
- The piston in the cylinder that is being checked must be set to Top Dead Center (TDC) at the compression phase
- A metered air pressure is connected to the relevant cylinder via an adapter that is secured in the spark plug / glow plug well
- A gauge is used to measure the size of the leakage from the cylinder.

  This is a pressure sensor with a regulator and displays the size of the leak expressed as a percentage.

  This allows the extent of any problem to be determined.

FAULT-TRACING

The source of a leak can be located by analyzing sound at the following points.

Exhaust pipe	Faulty exhaust valve
Intake manifold / throttle body (TB)	Faulty intake valve
Dip stick hole / Crankcase ventilation	Faulty piston / piston ring
Adjacent cylinder	Faulty cylinder head gasket
Radiator	Faulty cylinder head gasket / cracked cylinder wall. Also check for bubbles in the expansion tank.

A mechanic's stethoscope or a rubber hose can be used as a listening device.

NOTE: There is leakage at the piston rings even on a perfect engine.

This is the only place where a small leak is permissible.

CHECK

If a leak is detected that is assumed to come from the valve system, first check that the piston in the relevant cylinder is at top dead Centre (TDC).

Then try to set the piston just prior to top dead Centre (TDC) and redo the test.

When repeating the leak test on the same engine, there are usually variations in the results of the measurements.

This is due to changes in the engine coolant temperature (ECT) and the piston not reaching the same position as in the previous test, and is affected by the amount of oil on the piston rings at the time.

OTHER INFORMATION

Use: see **9512775** .

ENGINE MOUNTING (2008-2012)

SUBFRAME, ADJUSTING

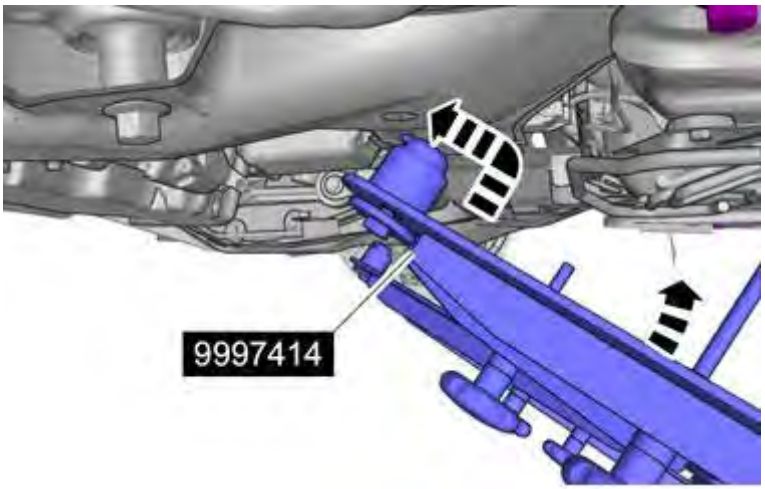

Fig. 2: Installing Position Setting Tool 9997414
Courtesy of VOLVO CARS CORPORATION

see **9997414**

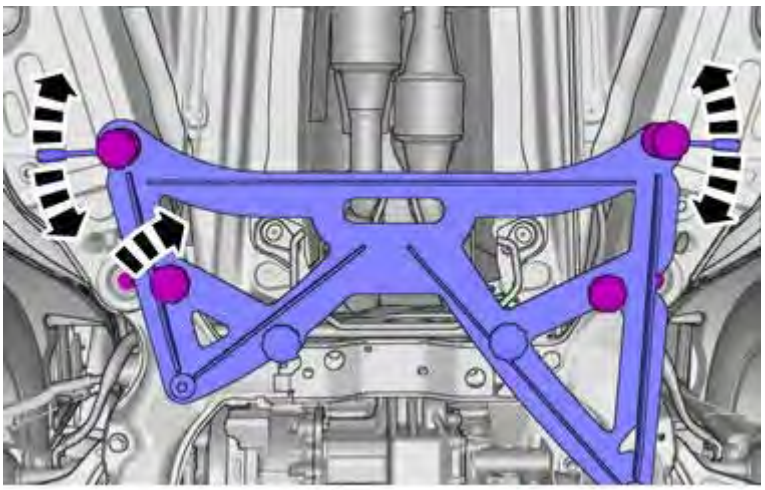

Fig. 3: Adjusting Position Setting Tool 9997414
Courtesy of VOLVO CARS CORPORATION

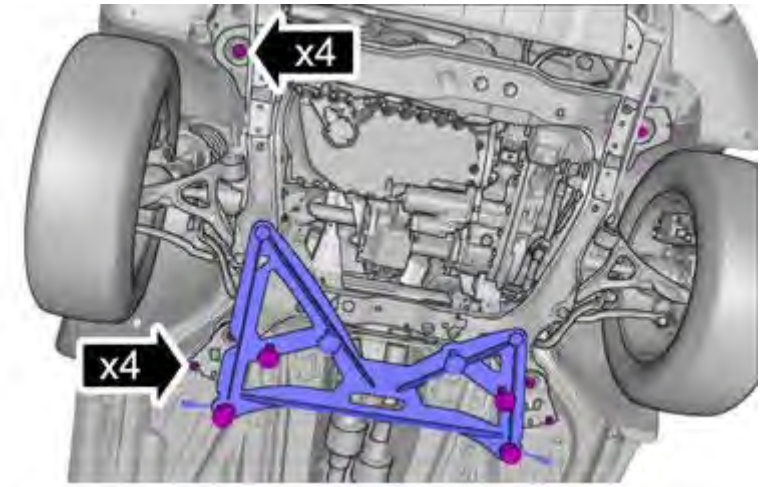

Fig. 4: Loosening/Tightening Subframe Bolts
Courtesy of VOLVO CARS CORPORATION

Tighten, see **TIGHTENING TORQUE**

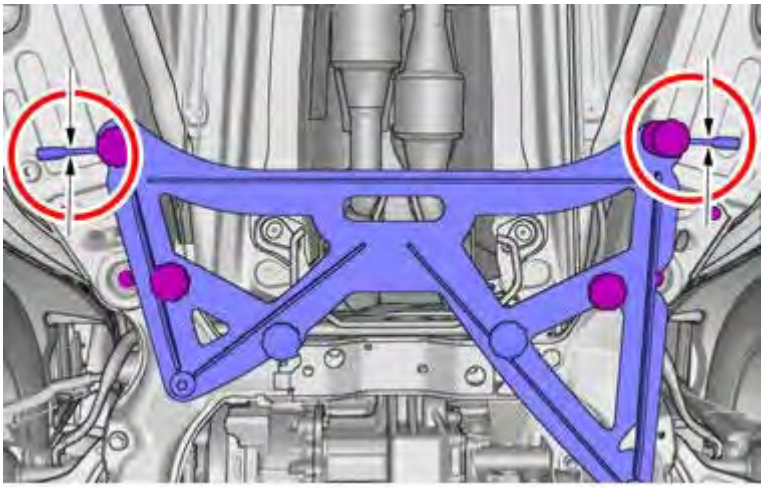

Fig. 5: Position Setting Tool 9997414
Courtesy of VOLVO CARS CORPORATION

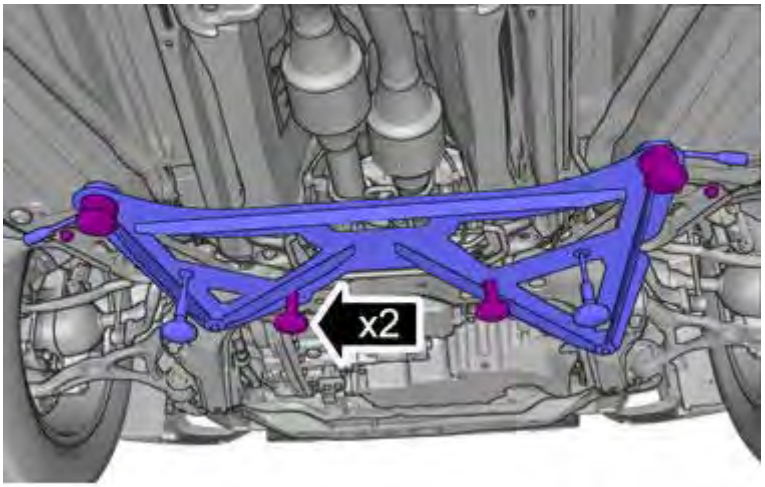

Fig. 6: Position Setting Tool 9997414
Courtesy of VOLVO CARS CORPORATION

NOTE: Alternative mounting screws depending on engine option.

LEAK DETECTING CYLINDER (B6324S; 2007-2012)

LEAK DETECTING CYLINDER

special tool	
	T9512775 CYLINDER LEAK TESTER **Tool number:** T9512775 **Tool description:** CYLINDER LEAK TESTER **Tool boards:** EU12-2/2; SV12-2/2; US12-2/2

PREPARATORY WORK

Run the engine to operating temperature so that the thermostat is open.

Remove the spark plugs. See **SPARK PLUGS**

CYLINDER LEAKAGE TEST

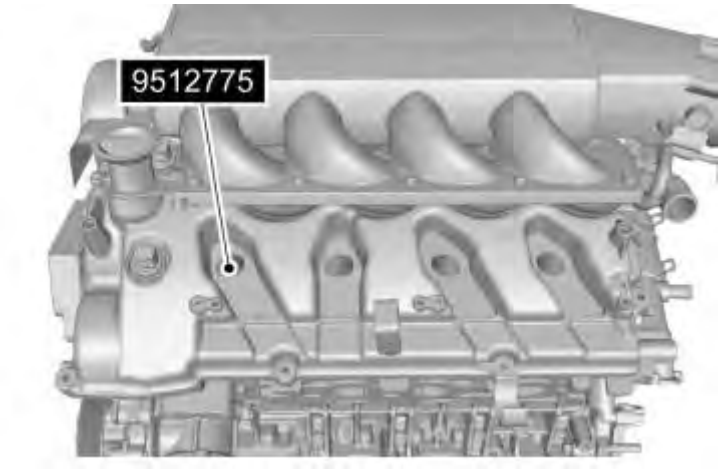

Fig. 7: Identifying Spark Plug Holes
Courtesy of VOLVO CARS CORPORATION

see **9512775**

Cylinder leakage test

- make sure that the piston to be measured is at top dead center in the compression phase.
- connect a metered air pressure to the relevant cylinder via an adapter that is secured in the spark plug / glow plug well.
- A gauge is used to measure the size of the leakage from the cylinder.

The gauge is a pressure sensor with a regulator and displays the size of the leak expressed as a percentage.

FAULT-TRACING

The source of a leak can be located by analyzing sound at the following points.

exhaust pipe	Faulty exhaust valve
Intake manifold / throttle body (TB)	Faulty intake valve
Dip stick hole / Crankcase ventilation	Faulty piston / piston ring
Adjacent cylinder	Faulty cylinder head gasket
Radiator	Faulty cylinder head gasket / cracked cylinder wall. Also check for bubbles in the expansion tank.

NOTE: There is leakage at the piston rings even on a perfect engine. This is the only place where a small leak is permissible.

CHECK

If a leak is detected that is assumed to come from the valve system, first check that the piston in the relevant cylinder is at top dead center (TDC). Then try to set the piston just before top dead center (TDC) and redo the test. When repeating the leak test on the same engine, there are usually variations in the results of the

measurements. This is due to changes in the engine coolant temperature (ECT) and the piston not reaching the same position as in the previous test, and is affected by the amount of oil on the piston rings at the time.

FINISHING

Install the spark plugs. See **SPARK PLUGS**

VALVE CLEARANCE (B6294T; 2003-2006)

CHECKING VALVE CLEARANCE

NOTE: As the illustrations in this service information are used for different model years and / or models, some variation may occur. However, the essential information in the illustrations is always correct.

PREPARATION (B6294S)

Fig. 8: View Of Ignition Coils & Connectors
Courtesy of VOLVO CARS CORPORATION

Remove

- the covers over the suspension turrets
- the engine stabilizer brace between the suspension turrets
- the upper timing cover
- the cover over the ignition coils
- the camshaft position (CMP) sensor housing. Place to one side
- the trigger wheel
- the clamps that hold the wiring to the rear of the cylinder head.

PREPARATION (B6284T)

Fig. 9: Engine Compartment Components
Courtesy of VOLVO CARS CORPORATION

Remove

- the covers over the suspension turrets
- the engine stabilizer brace between the suspension turrets
- plastic charge air / intake pipe over the engine
- the upper timing cover
- the cover over the ignition coils
- the cover at the rear edge of the intake camshaft
- the clamps that hold the wiring to the rear of the cylinder head.

PREPARATION (COMMON)

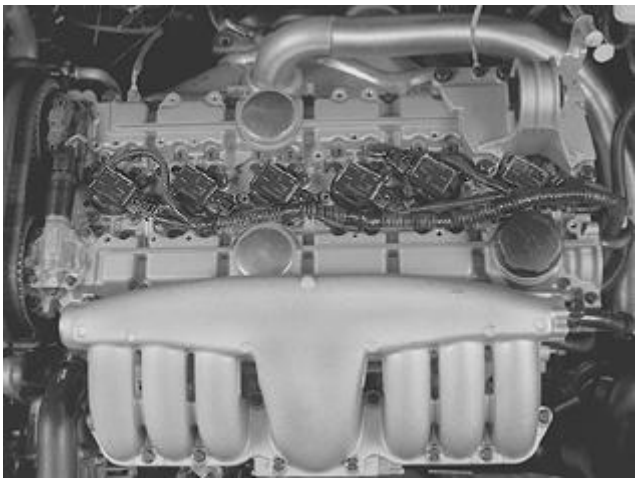

Fig. 10: View Of Ignition Coils & Connectors
Courtesy of VOLVO CARS CORPORATION

Remove

- ground strip from the engine stabilizer brace
- the screw from the upper mounting for the transmission dipstick pipe
- engine stabilizer brace
- ignition coils, **without** disconnecting connectors.

NOTE: Mark up before removal.

- both ground terminals
- the connector for the variable valve timing solenoid
- the connector for the engine coolant temperature (ECT) sensor.

Put the wiring and ignition coils to one side.

- the right front wheel
- the plastic nuts on the cover on the fender liner.

SETTING UP THE ENGINE IN TEST MODE

Fig. 11: Installing Tool 999 5755 At Rear Edge Of Intake Camshaft
Courtesy of VOLVO CARS CORPORATION

Install tool see **9995755** at the rear edge of the intake camshaft.

Turn the crankshaft in the direction of engine rotation (clockwise) until the marking on the tool ("In1/Ex3") is opposite the thin flange running straight over the entire top of the cylinder head.

Remove all plugs from the test holes.

NOTE: If the crankshaft is turned to far, it is essential that it is turned back at least a quarter of a turn so that it can then be turned clockwise to the correct position.

CHECKING VALVE CLEARANCE

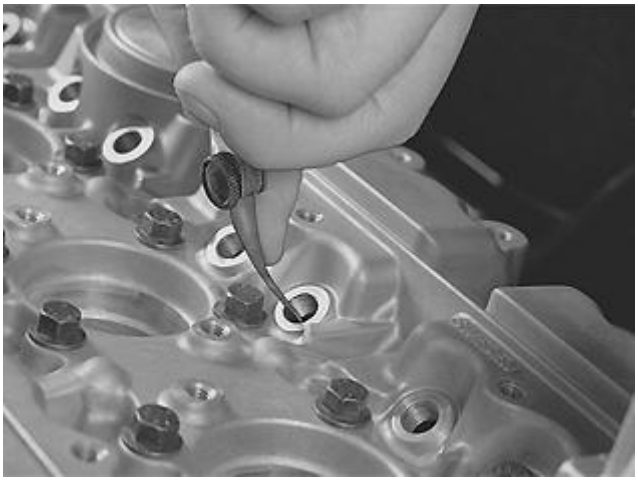

Fig. 12: Checking Valve Clearance
Courtesy of VOLVO CARS CORPORATION

Check the valve clearance with feeler gauge see **9995752** at the intake valves for cylinder 1 and the exhaust valves for cylinder 3.

Insert the feeler gauge through the inspection holes. Bend the feeler gauge with light finger pressure so that it follows the top of the valve lifter.

The correct measurement will not be obtained until the feeler gauge has gone in approximately **15 mm** .

Valve clearance intake valve.....0.15-0.45 mm
Valve clearance exhaust valve.....0.35-0.60 mm

CAUTION: This is only the check value.

NOTE: Carry out this check with the engine at room temperature.

Make a note of the valve clearance in the inspection form.

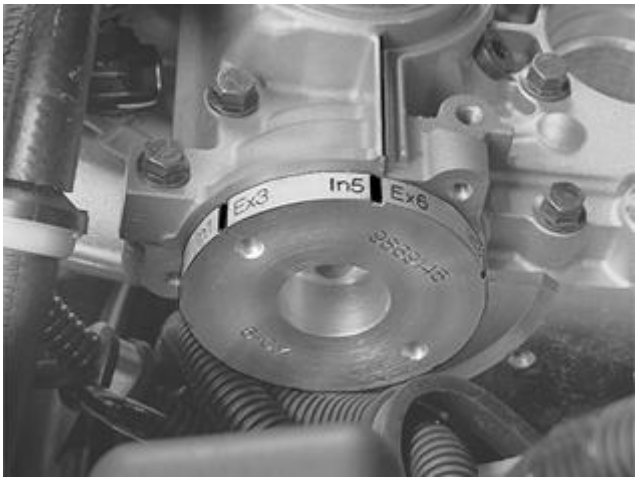

Fig. 13: Turning Crankshaft In Direction Of Engine Rotation Until Next Marking "In5/Ex6" Is Opposite Flange On Top Of Cylinder Head
Courtesy of VOLVO CARS CORPORATION

Next test measurement

Turn the crankshaft in the direction of engine rotation until the next marking "In5/Ex6" is opposite the flange on top of the cylinder head.

Perform the test measurement as described above.

Continue by measuring the remaining valve clearances according to the markings on tool 999 5755.

FINISHING WORK (COMMON)

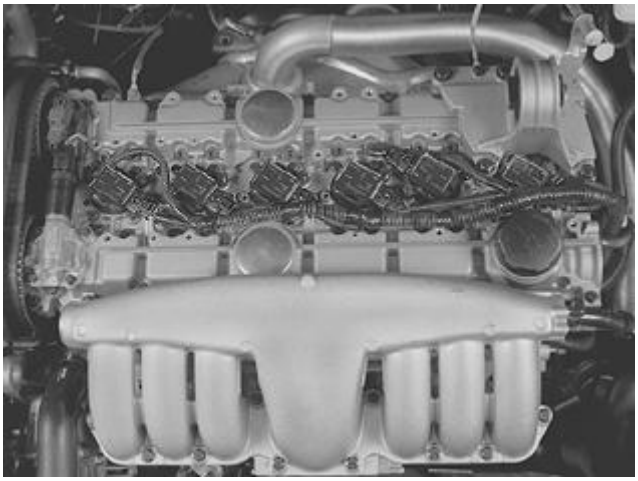

Fig. 14: View Of Ignition Coils & Connectors
Courtesy of VOLVO CARS CORPORATION

Install

- plugs in inspection holes. Tighten to **20 Nm** .

NOTE: Take care when tightening the plugs for the inspection holes.

Do not exceed the torque listed or the threads in the cam cover may strip.

- the ignition coils according to the earlier markings
- both ground terminals
- the connector for the variable valve timing solenoid
- the connector for the engine coolant temperature (ECT) sensor
- engine stabilizer brace. Tighten to **50 Nm**
- ground strip to the engine stabilizer brace
- the screw for the upper mounting for the transmission dipstick pipe.

Remove tool 999 5755.

FINISHING WORK (B6294S)

Fig. 15: View Of Ignition Coils & Connectors
Courtesy of VOLVO CARS CORPORATION

Install

- the trigger wheel. Tighten to **17 Nm** .

NOTE: Ensure that the trigger wheel is correctly positioned against the camshaft.

- the camshaft position (CMP) sensor housing
- the clamps that hold the wiring to the rear of the cylinder head
- the cover over the ignition coils
- the upper timing cover
- the engine stabilizer brace. Tighten the screws at the suspension turret. Tighten to **50 Nm** . Tighten the screw on the engine stabilizer brace. Tighten to **80 Nm**

- the covers over the suspension turrets
- the plastic nuts for the cover in fender liner
- the right front wheel, see **WHEELS** .

FINISHING WORK (B6284T)

Fig. 16: Engine Compartment Components
Courtesy of VOLVO CARS CORPORATION

Install

- new cover at the rear edge of the intake camshaft
- the clamps that hold the wiring to the rear of the cylinder head
- the cover over the ignition coils
- the upper timing cover
- plastic charge air / intake pipe over the engine. Tighten the clamps
- the engine stabilizer brace. Tighten the screws on the suspension turret. Tighten to **50 Nm** . Tighten the screws on the engine stabilizer brace. Tighten to **80 Nm**
- the covers over the suspension turrets
- plastic nuts on the cover in the fender liner
- the right front wheel, see **WHEELS** .

VALVE CLEARANCE, SETTING / ADJUSTING

NOTE: As the illustrations in this service information are used for different model years and / or models, some variation may occur. However, the essential information in the illustrations is always correct.

PREPARATION

Remove the cable from the battery negative terminal. First read, see **BATTERY, DISCONNECTING** .

Check the valve clearance. See **CHECKING VALVE CLEARANCE**.

NOTE: Make a note of the valve clearance in the inspection form

Fig. 17: Clamping the Hose at Expansion Tank
Courtesy of VOLVO CARS CORPORATION

Remove (B6284T)

- the camshaft position (CMP) sensor housing. Place to one side
- the trigger wheel
- the screw holding the control pipe for the pressure regulator to the top of the cylinder head
- the protective cover over the injector connectors.

Remove (B6294S)

- the cover at the rear of the exhaust camshaft
- the vacuum hoses from the intake manifold
- the screws at the intake manifold junction.

Lift out the upper section of the intake manifold. Remove the gasket. Install guard see **9995723** .

Remove (common)

- the ground strip from the firewall
- the connector for the variable valve timing solenoid
- the connector for the coolant temperature sensor
- the screw holding the cable duct for the temperature sensor to the top of the cylinder head
- the radiator breather tube from the expansion tank. Install lock grip pliers.

Lift up the brake fluid reservoir.

Disconnect the ABS sensor connector.

Place the brake fluid reservoir over the engine.

WARNING: Ensure that no fluid is spilled on the engine. It is extremely flammable

Disconnect the connector for the level sensor in the expansion tank.

Lift up and place the expansion tank on top of the engine.

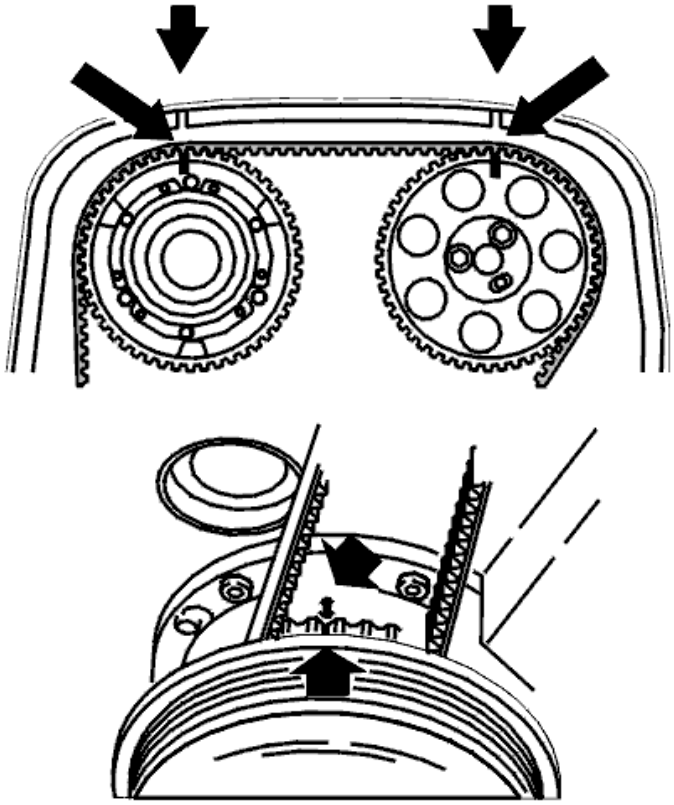

Fig. 18: Crankshaft And Camshafts Markings
Courtesy of VOLVO CARS CORPORATION

Remove

- the auxiliaries belt
- the front timing cover.

Position the upper timing cover.

Turn the crankshaft clockwise until the markings on the crankshaft belt pulley and the timing belt pulley are aligned with the markings on the oil pump and the upper timing cover.

Remove the upper timing cover.

CAUTION: Crankshaft and camshafts must not be turned more than is stated in the method description. If the shafts are turned in any other way the valves may be damaged.

REMOVING THE TIMING BELT

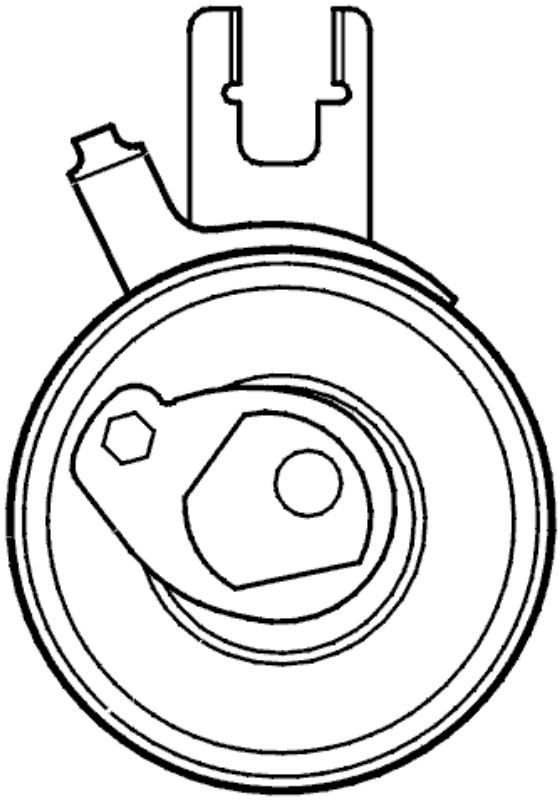

Fig. 19: Belt Tensioner
Courtesy of VOLVO CARS CORPORATION

Slacken off the center screw for the belt tensioner slightly.

Hold the center screw still. Turn the tensioner eccentric **clockwise** to 10 o'clock using a 6 mm Allen key.

Remove the timing belt from the camshaft pulleys.

REMOVING THE TIMING GEAR PULLEY

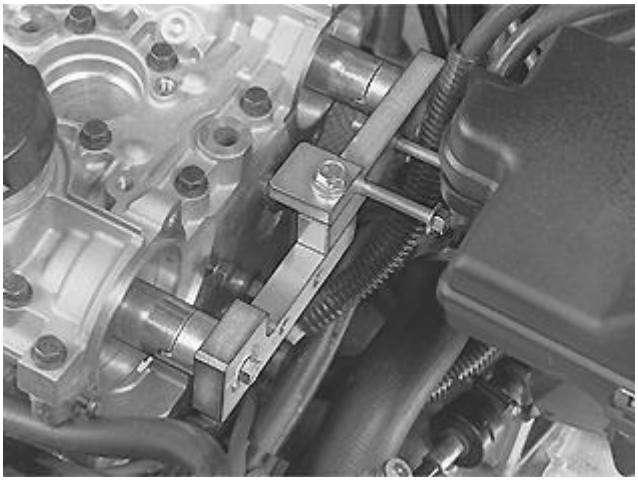

Fig. 20: Camshaft Adjustment Tool 999 5452 At Rear Of Camshafts
Courtesy of VOLVO CARS CORPORATION

Install camshaft adjustment tool see **9995452** at the rear of the camshafts.

Check that the screws securing the adjustment tool to the camshafts and the screw holding the tool together are well tightened

Remove (timing gear pulley with variable valve timing unit)

- the plug at the front of the variable valve timing unit (Tx55)
- the center screw in the variable valve timing unit (Tx55). Carefully pull out the variable valve timing unit with the timing gear pulley.

Remove (timing gear pulley without variable valve timing unit)

- the screws securing the timing gear pulley on the camshaft
- the timing gear pulley.

Remove tool 999 5452.

Reinstall the expansion tank and the brake fluid reservoir at the fender liner.

REMOVING THE CAMSHAFT COVER

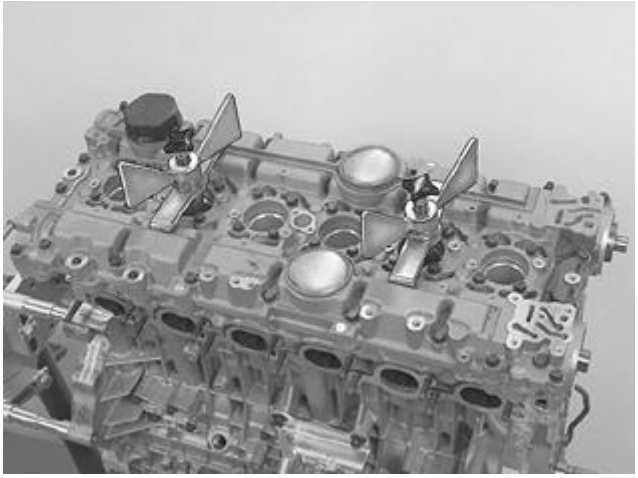

Fig. 21: Removing Camshaft Cover
Courtesy of VOLVO CARS CORPORATION

Remove

- the variable valve timing (VVT) solenoid
- spark plugs for cylinders 1 and 5.

Install 2 tools see **9995454** . Leave a 2-3 mm gap to the camshaft cover.

Ensure that the screw in the spark plug well is fully tightened.

Remove all the screws securing the camshaft cover to the cylinder head.

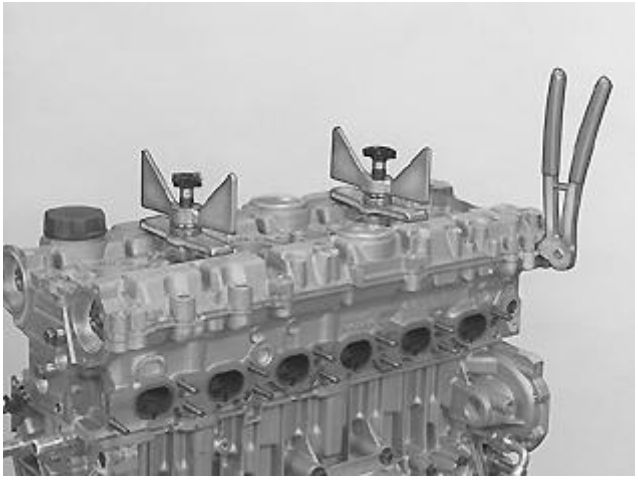

Fig. 22: Using Pliers 999 5670 To Lift Cover From Cylinder Head
Courtesy of VOLVO CARS CORPORATION

Use pliers see **9995670** to lift the cover from the cylinder head.

Install the pliers at the stop lugs. Start with cylinder 1 and work alternately backward.

Slacken off the wing nuts approximately 2 turns. Repeat the procedure with the pliers.

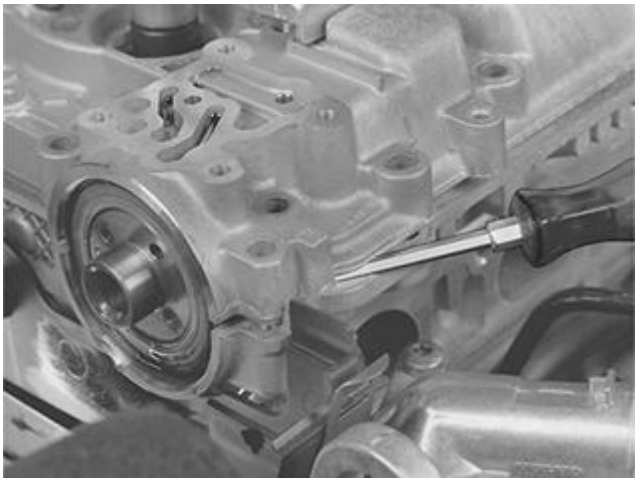

Fig. 23: Identifying Camshaft Seal Removal
Courtesy of VOLVO CARS CORPORATION

Carefully press the camshaft seals free.

NOTE: Take care not to damage the sealing surfaces on the camshafts.

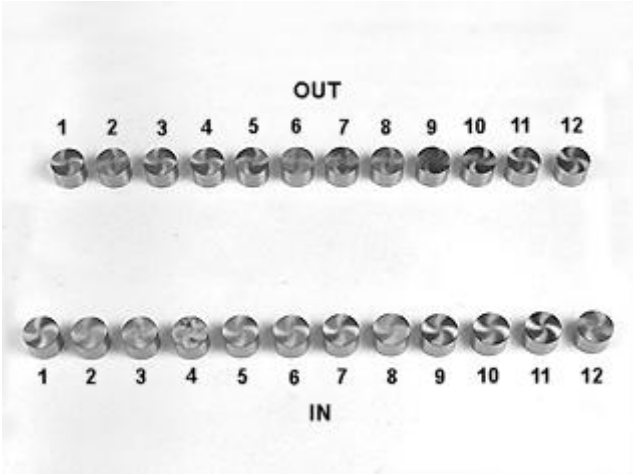

Fig. 24: Checking For Wear On Valve Lifters
Courtesy of VOLVO CARS CORPORATION

Remove

- tool 999 5454
- the camshaft cover
- the camshafts.

Lift out the valve lifters. Mark up the valve lifters so that the original positions can be established.

CLEANING

Use a razor blade or a gasket scraper and gasket solvent P/N 1161 440 on the camshaft cover.

WARNING: Use a fume hood or extractor when using gasket solvent

Use only a gasket scraper or razor blade on the cylinder head.

CAUTION: Take great care around the oil ducts for the variable valve timing solenoid. This applies to both the camshaft cover and the cylinder head. The solenoid is extremely sensitive to contaminants.

Dry and blow all surfaces clean.

PREPARATIONS

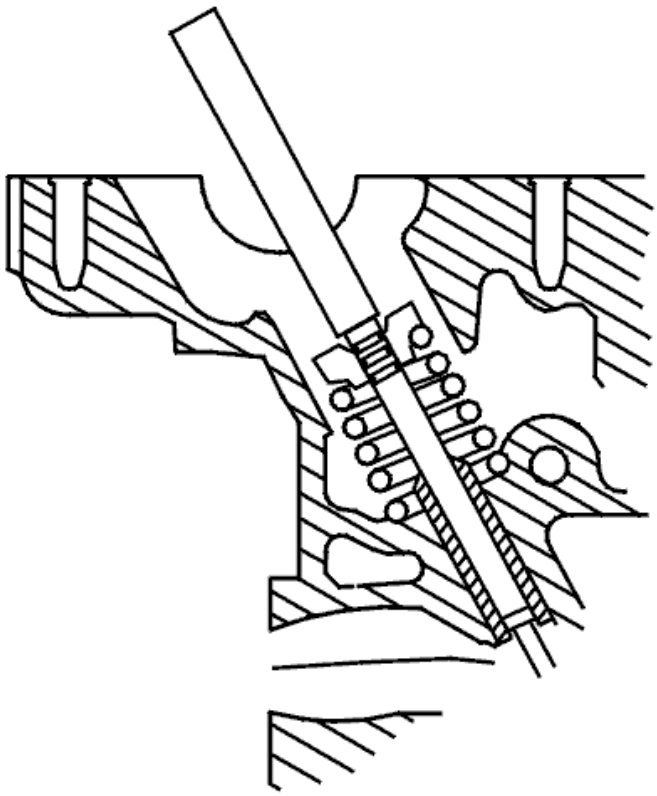

Fig. 25: Identifying Drift (Plastic, Aluminum Or Brass), Valve And Tappet Surface
Courtesy of VOLVO CARS CORPORATION

Carefully tap the end of the valve stem to ensure that the valve is correctly located in the seat.

Use a plastic, aluminum or brass drift to protect the valve and the surface of the valve lifter.

The sound made by tapping reveals if the valve is correctly seated.

INSTALLING THE CAMSHAFT AND VALVE LIFTER

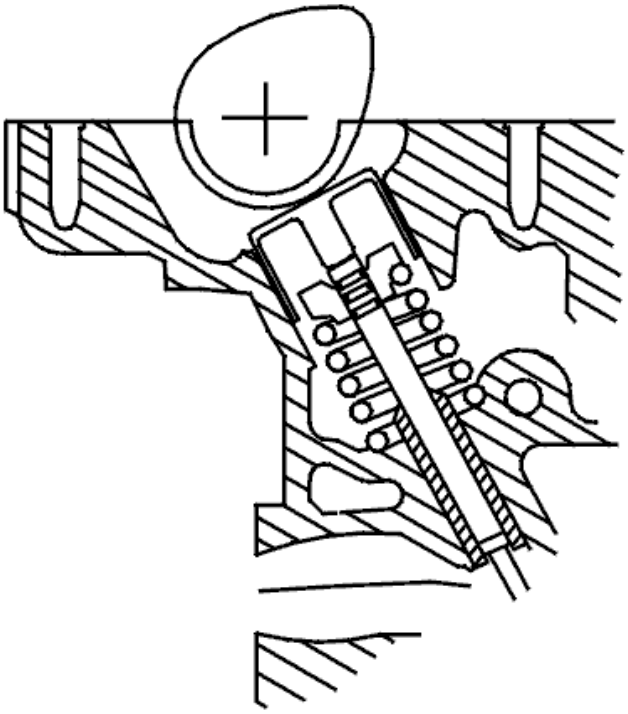

Fig. 26: Camshaft And Tappet
Courtesy of VOLVO CARS CORPORATION

Install both the valve lifters for the inlet valves at cylinder 1.

Check the notes made earlier. Select new valve lifters if necessary.

NOTE: **Only install two valve lifters. The valve lifters should be placed at the same cylinder**

Other valve lifters are available as replacement part / replacement part kits.

THE VALVE CLEARANCE ON A COLD ENGINE (APPROXIMATELY 20° C) SHOULD BE:

Inlet Valve	0.20 ± 0.03 mm.
Exhaust Valve	0.40 ± 0.03 mm.

NOTE: **The tolerances are less at setting When checking the valve clearance through the plug hole the tolerances are larger.**

Position the intake camshaft. Ensure that the lobes at cylinder 1 point upwards.

Apply a little oil to the cam lobe and the upper side of the valve lifter to facilitate later measurement.

INSTALLING THE CAMSHAFT PRESS

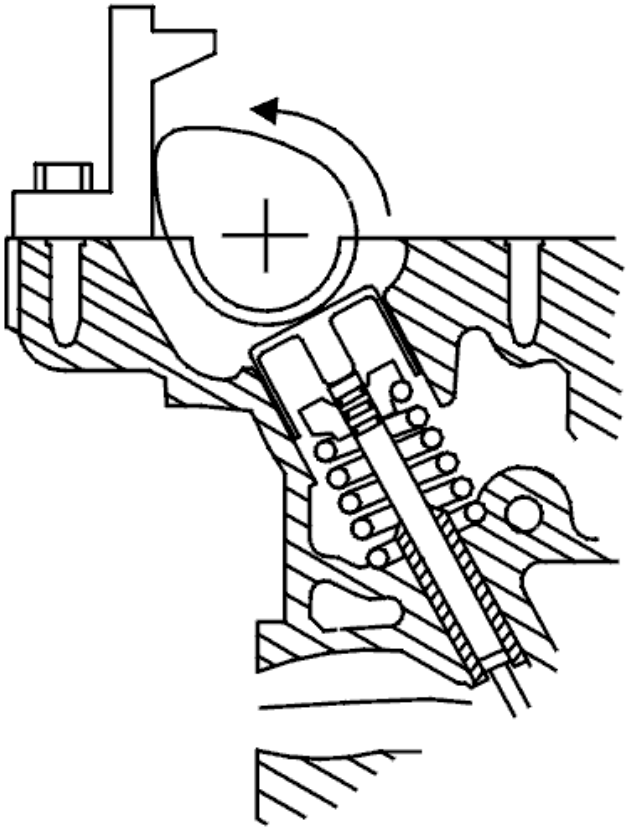

Fig. 27: Identifying Camshaft Turned Until Stopped Against Camshaft Press
Courtesy of VOLVO CARS CORPORATION

Install the lower section of the camshaft press see **9995765** at the inlet valves for cylinder 1.

Tighten the tool against the cylinder head. Tighten to **17 Nm** .

Turn the camshaft until it stops against the camshaft press.

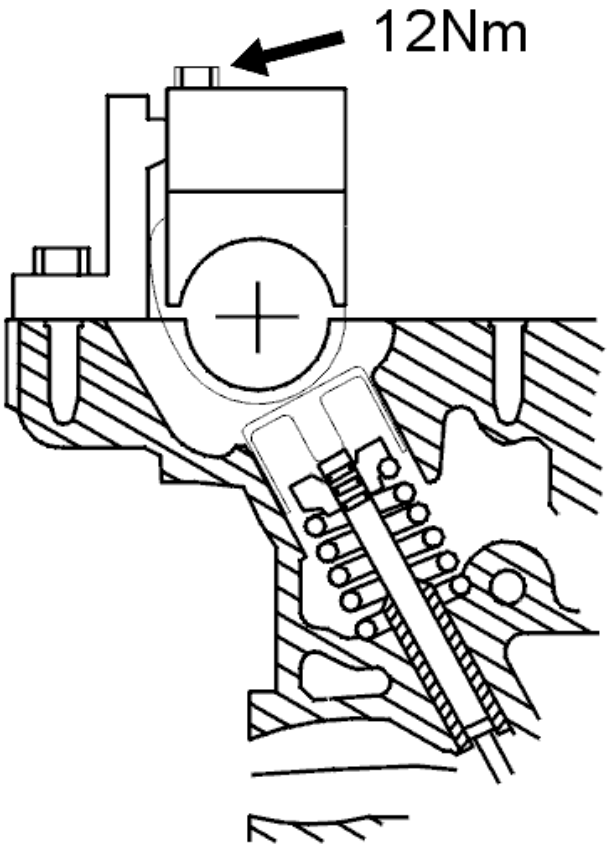

Fig. 28: Identifying Camshaft Tightening Screw
Courtesy of VOLVO CARS CORPORATION

Install the upper section of the camshaft press.

Tighten the screw which tensions the camshaft. Tighten to **12 Nm** .

CHECKING THE VALVE CLEARANCE

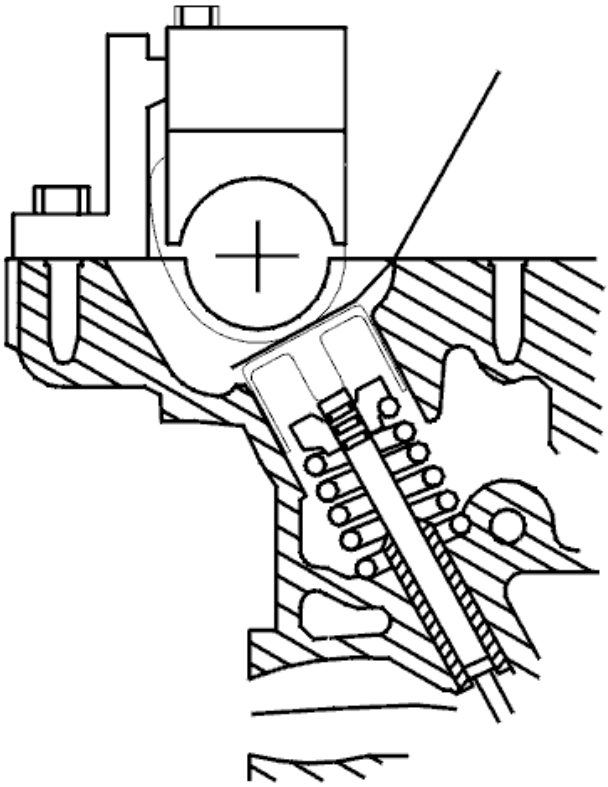

Fig. 29: Checking Valve Clearance
Courtesy of VOLVO CARS CORPORATION

NOTE: Measurements should only be taken on a cold engine. Suitable temperature is approximately 20° C / 68° F.

Use feeler gauge see **9995752** .

Press with a finger so that the feeler gauge lies parallel to the upper side of the tappet (see illustration).

Move the feeler gauge sideways when taking the reading in order to obtain as accurate a measurement as possible.

THE VALVE CLEARANCE MEASURED ON COLD ENGINES (APPROXIMATELY 20°C/68°F) SHOULD BE:

Inlet valve	0.20 ± 0.03 mm.
Exhaust valve:	0.40 ± 0.03 mm.

NOTE: The tolerances are less at setting When checking the valve clearance through the plug hole the tolerances are larger.

DIFFERENCES IN VALVE CLEARANCE FOR DIFFERENT ENGINES / AMBIENT TEMPERATURES:

- 0.01 mm at 15° C + 0.01 mm at 25° C + 0.02 mm at 30° C + 0.03 mm at 35° C + 0.04 mm at 45° C

CORRECTING MEASURED CLEARANCE

Lift out the upper section of the press tool.

Lift out the camshaft.

Adjust the play by replacing the valve lifters.

Other valve lifters are available as replacement part / replacement part kits.

Reinstall the camshaft and the upper section of the press tool. Tighten to **12 Nm** .

Take a new measurement. See **CHECKING THE VALVE CLEARANCE**.

WHEN THE CORRECT VALVE CLEARANCE IS REACHED

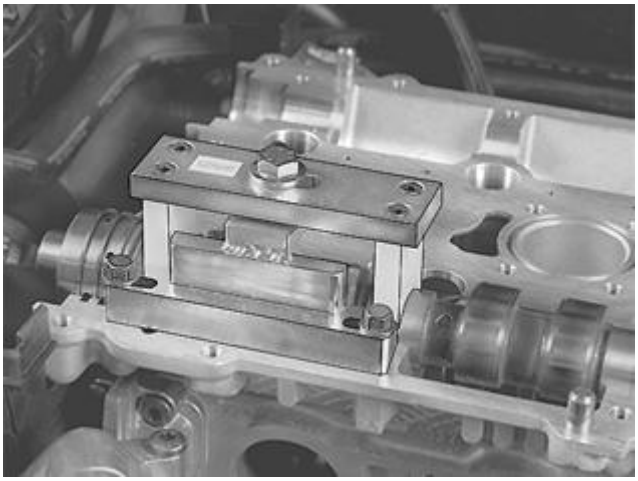

Fig. 30: Adjusting Valve Clearance
Courtesy of VOLVO CARS CORPORATION

Remove

- the press tool 999 5765
- the camshaft
- the valve lifters.

NOTE: Carefully mark the valve lifters so that exact reinstallation can be carried out.

Intake side:	**I1, I2, I3..... I12.**
Exhaust side:	**A1, A2, A3..... A12.**

Repeat the procedure for measuring the valve clearance for all cylinders on both the intake and exhaust sides. See **CHECKING THE VALVE CLEARANCE**.

INSTALLING VALVE LIFTERS AND CAMSHAFTS

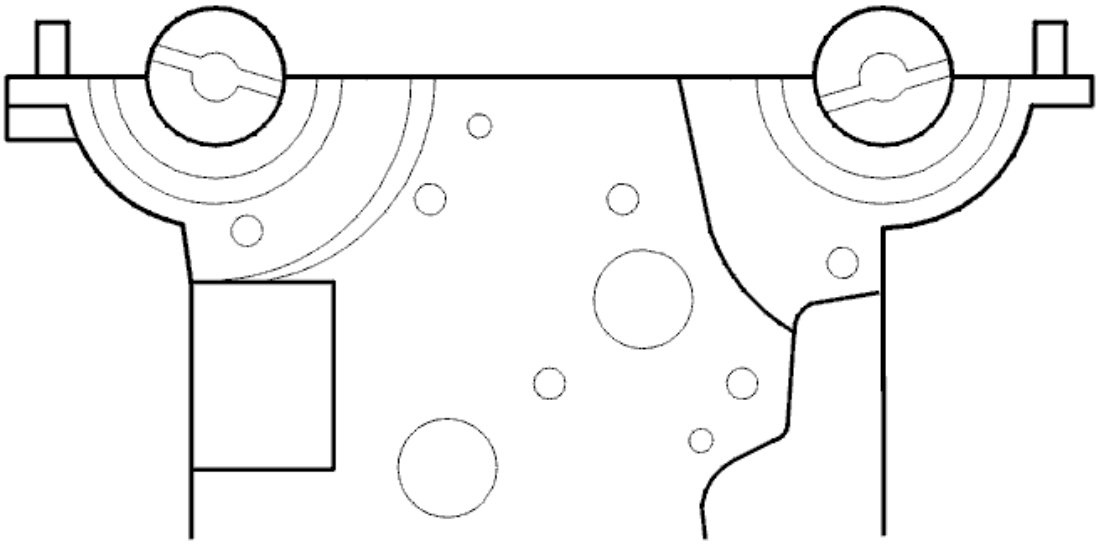

Fig. 31: Identifying Intake And Exhaust Camshafts
Courtesy of VOLVO CARS CORPORATION

NOTE: For tightening torques not in the text, see TIGHTENING TORQUE .

Lubricate the valve guide wells.

Install all the valve lifters.

Lubricate the camshaft bearing seats and the upper sides of the valve lifters.

Position the intake camshaft. Ensure that the groove at the rear edge of the camshaft is **above** an imaginary center line.

Position the exhaust camshaft. Ensure that the groove at the rear edge of the camshaft is **below** an imaginary

center line.

APPLYING LIQUID GASKET

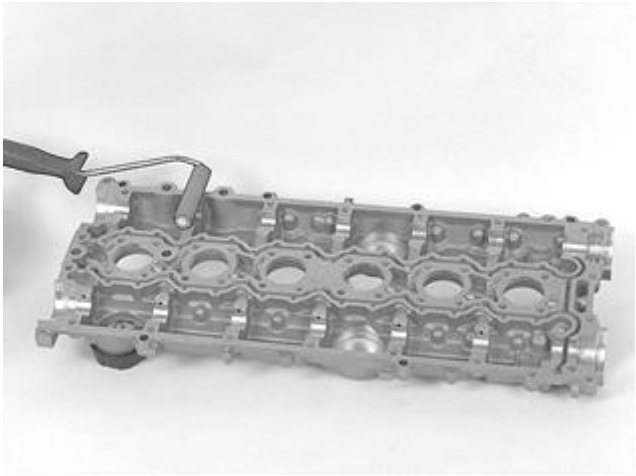

Fig. 32: Applying Liquid Gasket To Camshaft Cover
Courtesy of VOLVO CARS CORPORATION

Wipe the oil film off the mating surfaces on the camshaft cover and cylinder head.

Install new O-rings around the spark plug wells at the cylinder head.

Apply liquid gasket 1161 059 on the camshaft cover. Use roller see **9512767** .

NOTE: The surface must be completely covered without any excess.

CAUTION: Ensure that no liquid gasket gets in to the oil ducts.

INSTALLING THE CAMSHAFT COVERS

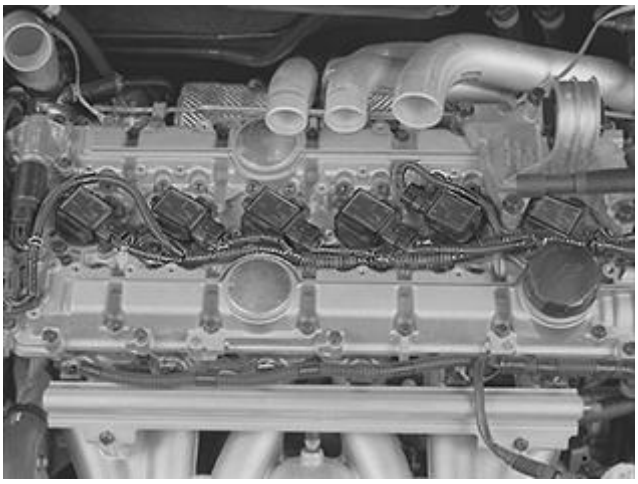

Fig. 33: Installing Camshaft Covers
Courtesy of VOLVO CARS CORPORATION

Lubricate the camshaft lobes, the camshaft bearing surfaces and the valve lifters.

Install the camshaft cover.

Install press tool see **9995454** (2x).

Tighten the camshaft cover screws alternately, keeping it parallel to the cylinder head with the press tools.

Install the intake manifold and lifting eyes, tighten screws from the middle and outwards.

Remove the press tool 999 5454

Install

- the spark plugs. Tighten to **30 Nm**
- the variable valve timing (VVT) solenoid with a new gasket
- the plugs for the test holes. Tighten to **20 Nm**
- the ignition coils according to the earlier marking
- the ground terminals between the ignition coils
- the upper engine stabilizer brace
- the cable duct for the coolant temperature sensor.

Connect the connectors for the

- the coolant temperature sensor
- Variable valve timing solenoid.

INSTALLING THE REAR CAMSHAFT SEAL

Fig. 34: Rear Camshaft Seal
Courtesy of VOLVO CARS CORPORATION

Use drift see **9995450** .

Lubricate the surface of the seal that the camshaft rotates against.

Press in the seal until the drift bottoms out.

NOTE: **If there are wear grooves on the camshaft, the seal can be pressed in a further 2 mm by reversing the sleeve.**

B6284T: The seal at the rear edge of the exhaust camshaft.

B6294S: The seal at the rear of the intake camshaft.

Install the camshaft adjustment tool see **9995452** at the rear of the camshafts.

Check that the screws securing the adjustment tool to the camshafts and the screws holding the tool together are well tightened.

INSTALLING THE FRONT CAMSHAFT SEAL

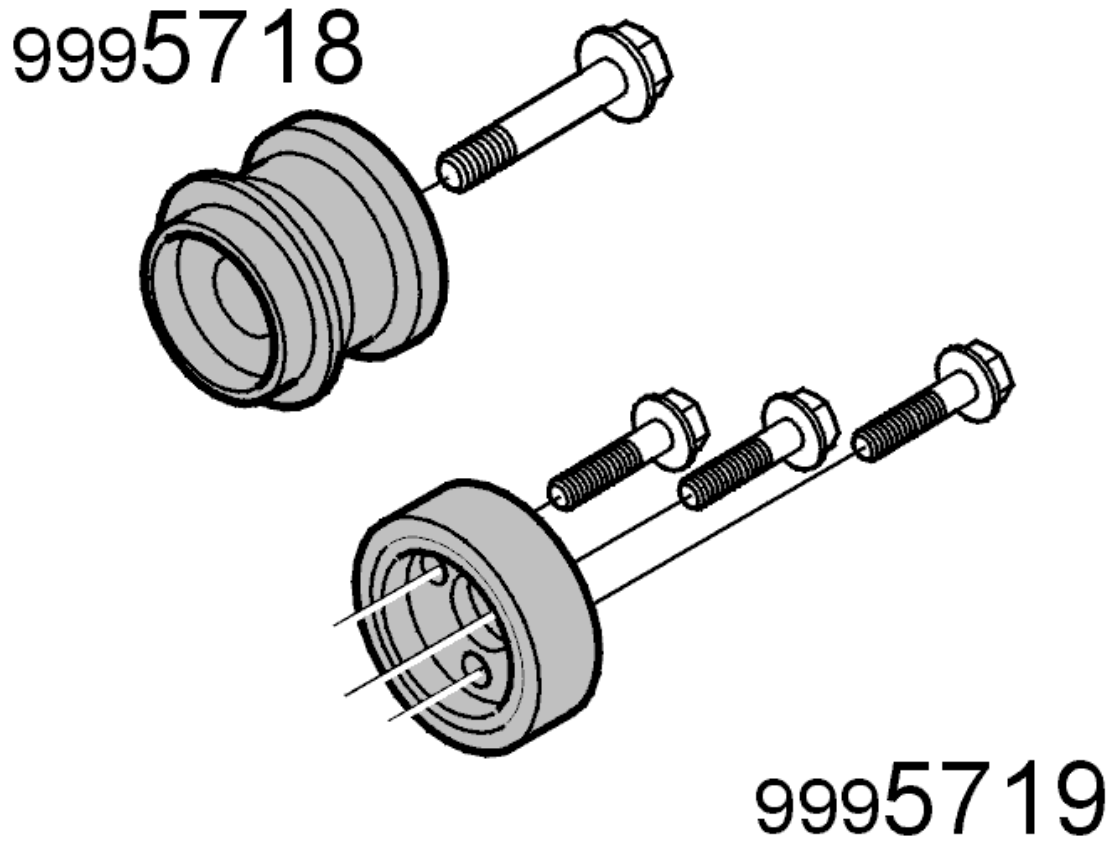

Fig. 35: Camshafts And Special Tools 99 5718 And 995719
Courtesy of VOLVO CARS CORPORATION

Lift up and position the brake fluid reservoir and the expansion tank on top of the engine.

Use drift see **9995718** on camshafts with variable valve timing units and drift see **9995719** on camshafts without variable valve timing.

Use new seals and lubricate the surface of the seal that the camshaft rotates against.

Use the variable valve timing unit / timing belt pulley mounting screws. Tighten the screws until the drift bottoms out.

Remove the drift.

FIXING THE CRANKSHAFT POSITION

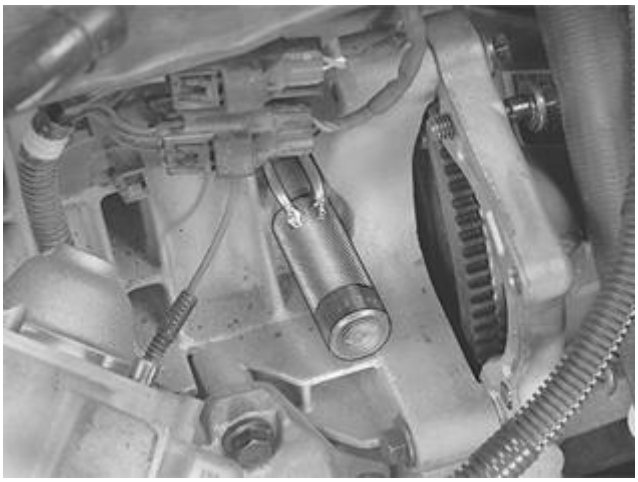

Fig. 36: Crankshaft
Courtesy of VOLVO CARS CORPORATION

Remove

- the air cleaner (ACL) intake pipe
- the mounting screws for the starter motor. Pull off the starter motor. Place the starter motor to one side
- the blind cover plug and the seal washer.

Turn the crankshaft **clockwise** .

Install the crankshaft stop see **9995451** Ensure that it bottoms out against the cylinder block.

Turn the crankshaft **counter-clockwise** until it stops against the crankshaft stop.

Check that the marking on the crankshaft timing gear pulley corresponds with the marking on the oil pump.

INSTALLING THE CAMSHAFTS TIMING GEAR PULLEYS (B6284T)

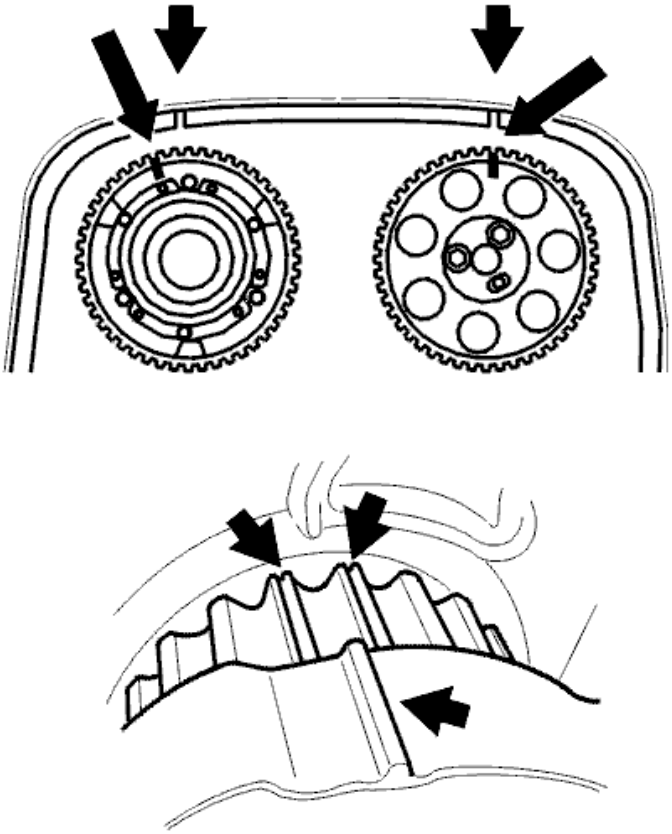

Fig. 37: Identifying Markings On Crankshaft Belt Pulley, Timing Belt Pulley, Oil Pump, And Upper Timing Belt Cover
Courtesy of VOLVO CARS CORPORATION

Timing gear pulleys with variable valve timing units

Slacken off, but do not remove the screws which secure the timing gear pulley to the variable valve timing unit.

Press the variable valve timing unit / timing gear onto the camshaft.

Install the center screw which secures the variable valve timing unit to the camshaft. Tighten slightly.

Position the upper timing cover.

Turn the timing gear pulley clockwise until the screws at the oval holes are in the limit position.

Continue turning clockwise until the timing gear pulley marking is **1 1/2 tooth** before the marking on the upper timing cover.

Check that the timing gear pulley is still in its limit position at the oval holes.

Tighten the center screw for the variable valve timing (VVT) unit. Tighten to **120 Nm** . Check that the variable

valve timing unit does not rotate when tightening.

Install the center plug. Tighten to **35 Nm** .

Timing gear pulleys without variable valve timing units

Install the timing gear pulley with two screws but do not tighten.

Check that the markings on the timing gear pulley and the upper timing cover correspond.

INSTALLING THE CAMSHAFTS TIMING GEAR PULLEYS (B6294S)

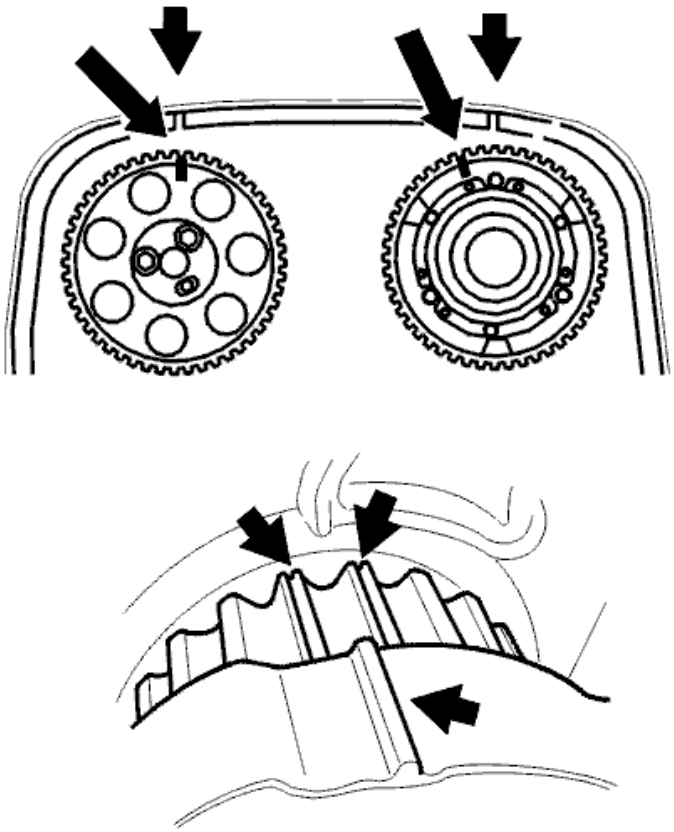

Fig. 38: Identifying Camshaft Timing Gear Pulleys
Courtesy of VOLVO CARS CORPORATION

Timing gear pulleys with variable valve timing units

Slacken off, but do not remove the screws which secure the timing gear pulley to the variable valve timing unit.

Press the variable valve timing unit / timing gear onto the camshaft.

Install the center screw which secures the variable valve timing unit to the camshaft. Tighten slightly.

Turn the variable valve timing unit anti-clockwise as far as it will go.

Slacken off the center screw

Position the upper timing cover.

Turn the timing gear pulley clockwise until the screws at the oval holes are in the limit position.

Continue turning clockwise until the timing gear pulley marking is **1 1/2 tooth** before the marking on the upper timing cover.

Check that the timing gear pulley is still in its limit position at the oval holes.

Tighten the center screw for the variable valve timing (VVT) unit. Tighten to **120 Nm** . Check that the variable valve timing unit does not rotate when tightening.

Install the center plug. Tighten to **35 Nm** .

Timing gear pulleys without variable valve timing units

Install the timing gear pulley with two screws but do not tighten.

Check that the markings on the timing gear pulley and the upper timing cover correspond.

INSTALLING THE TIMING BELT

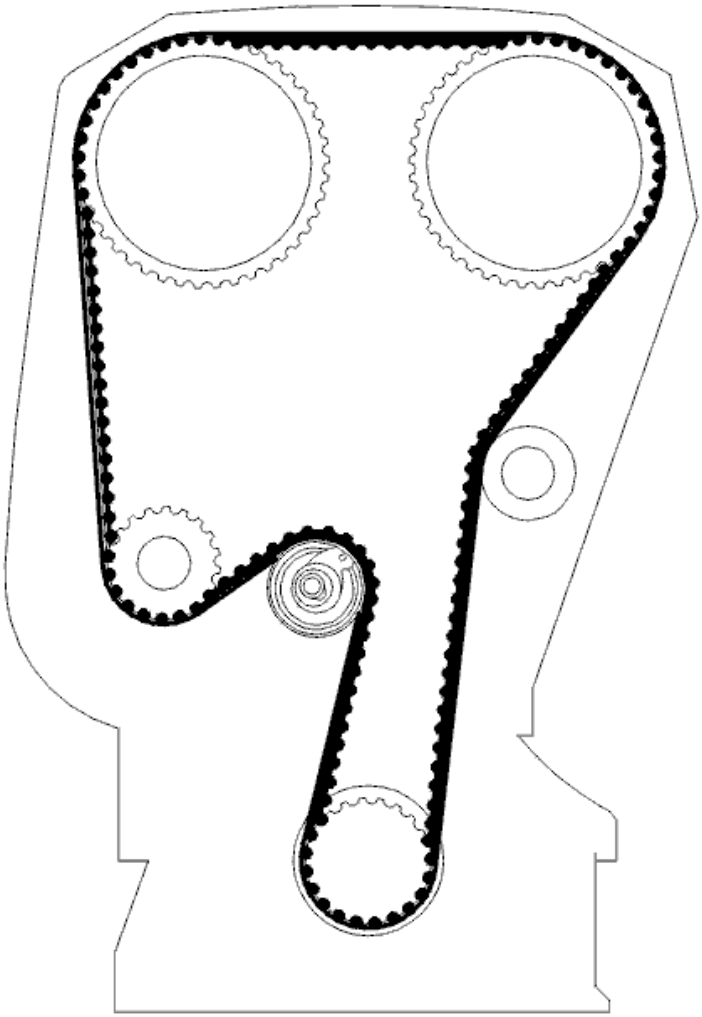

Fig. 39: Identifying Timing Belt Routing
Courtesy of VOLVO CARS CORPORATION

Tighten the center screw on the belt tensioner. Tighten to **5 Nm** .

Turn the variable valve timing unit clockwise until stop.

Hold it secure in the limit position.

Install the belt in the following order:

- crankshaft
- the idler pulley
- intake cam
- exhaust cam

- water pump
- belt tensioner.

NOTE: Adjust the timing gear pulleys so that the screws are not at a limit position in the oval holes. Also check that the markings correspond.

TENSIONING THE TIMING BELT

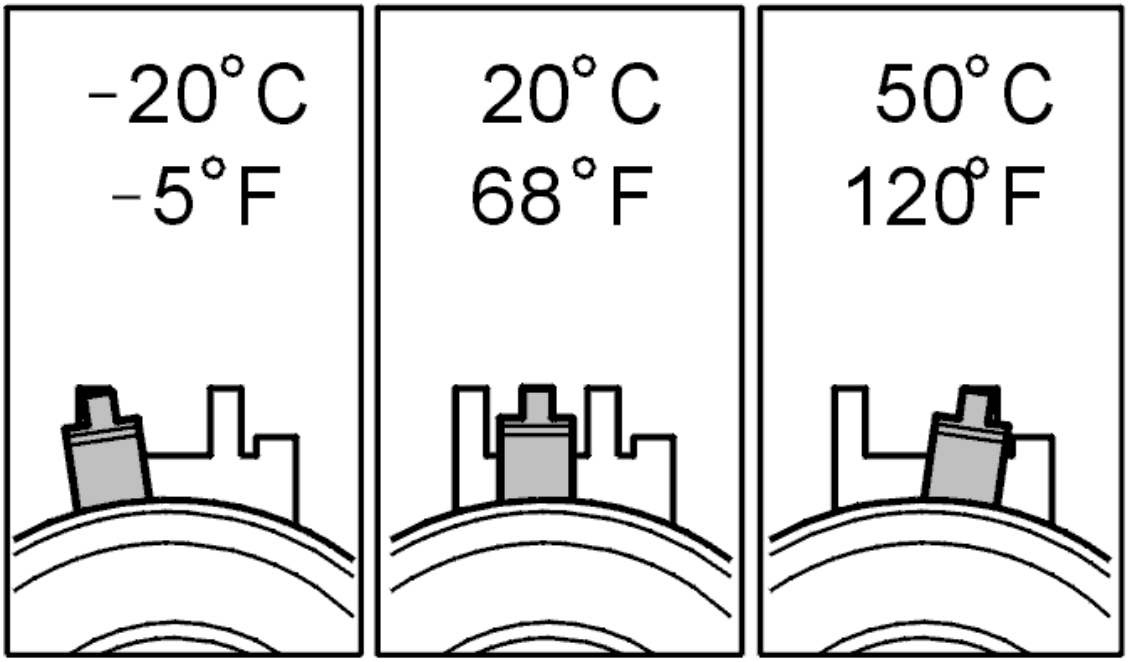

Fig. 40: Identifying Needle Position At Varying Temperatures
Courtesy of VOLVO CARS CORPORATION

This adjustment is always carried out on a cold engine. A suitable temperature is approximately 20°C.

At higher temperatures (with the engine at operating temperature or a high outside temperature for example) the indicator is further to the right.

The illustration shows the position of the indicator when aligning the timing belt tensioner at different temperatures.

Hold the center screw secure and turn the belt tensioner eccentric counter-clockwise until the tensioner indicator passes the marked position.

NOTE: Check that the variable valve timing unit is in its limit position.

Tighten the three screws at the timing gear pulley for the intake camshaft. Tighten to **10 Nm** .

Tighten the three screws at the timing gear pulley for the exhaust camshaft. Tighten to **20 Nm** .

Turn the eccentric on the belt tensioner back so that the indicator reaches the marked position in the center of the window. Remember to hold the center screw secure at the same time.

Hold the eccentric secure and tighten the center screw to **20 Nm** .

Check that the indicator is in the correct position.

Remove camshaft adjustment tool 999 5451 and crankshaft stop 999 5452.

Install the plug with a new blind cover plug. Tighten to **40 Nm** .

CHECKING THE MARKINGS AND BELT TENSION

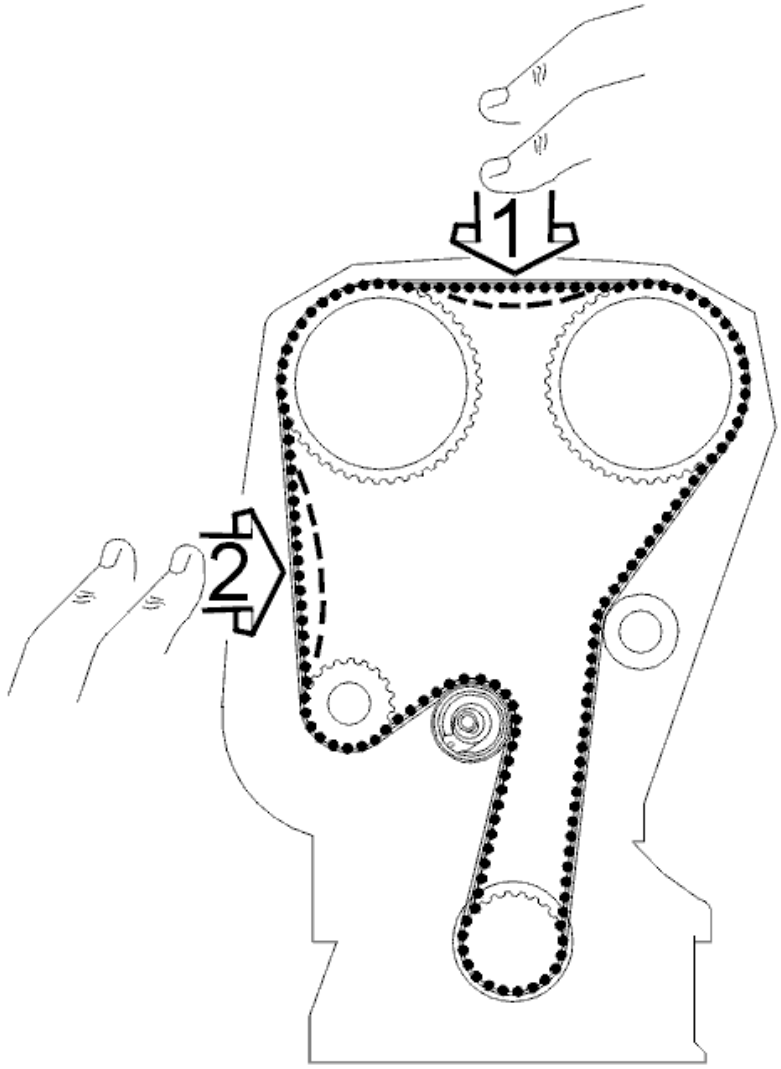

Fig. 41: Pressing Belt To Check That Indicator On Tensioner Moves Easily
Courtesy of VOLVO CARS CORPORATION

Press the timing belt to check that the indicator on the tensioner moves easily.

Turn the crankshaft two turns. Check that the markings on the crankshaft timing gear pulley and the camshaft timing gear pulley match up with the markings on the oil pump and upper timing cover respectively.

Check that the indicator on the belt tensioner is within the marked position.

Remove the upper timing cover.

FINISHING

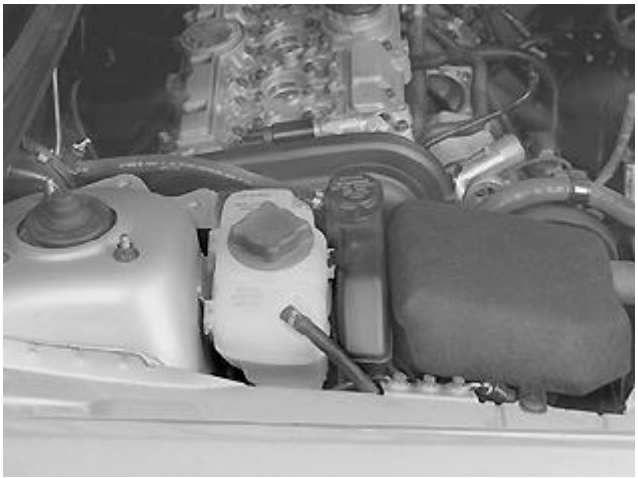

Fig. 42: Expansion Tank And Servo Oil Reservoir
Courtesy of VOLVO CARS CORPORATION

Install

- front timing cover
- the auxiliaries belt
- the expansion tank
- the servo oil reservoir
- the bleed hose for the expansion tank.

  Close the clamp and check that the hoses lie correctly.

Connect the connectors for the

- The ABS sensor by the right suspension turret
- the coolant level sensor in the expansion tank.

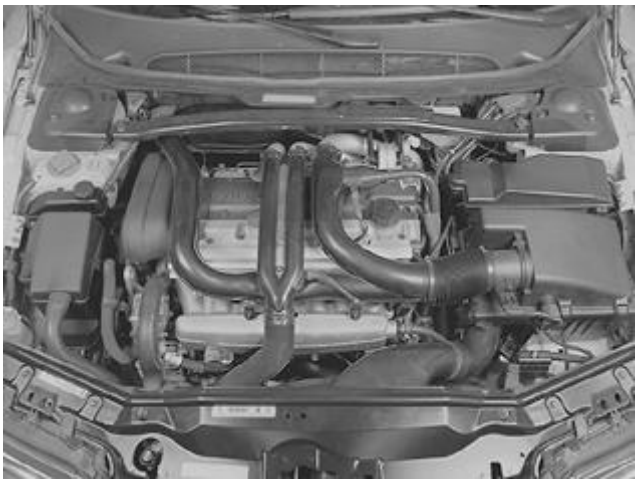

Fig. 43: Engine Compartment Components

Courtesy of VOLVO CARS CORPORATION

Install

- the starter motor
- the air cleaner (ACL) intake pipe
- the trigger wheel.

NOTE: Ensure that the trigger wheel is correctly positioned against the camshaft.

- the camshaft position (CMP) sensor housing
- the cover at the rear edge of the camshaft
- the screws holding both the ground strips from the firewall to the cylinder head
- the cover over the ignition coils
- the upper timing cover.

Install (B6284T)

- the protective cover over the injector connectors
- plastic charge air / intake pipe over the engine. Tighten the clamps
- the crankcase ventilation hose to the PTC valve. Use a new clamp
- the connector for the PTC valve
- the cover over the PTC valve
- EVAP, "bypass"hoses and control hoses for boost pressure.

Install (B6294S)

- the upper section of the intake manifold. Use a new gasket
- vacuum hoses to the intake manifold.

Install (common)

- the engine stabilizer brace between the suspension turrets Clamp the servo hose to the right mounting for the engine stabilizer brace in the bodywork
- the plastic nuts for the cover in fender liner
- the right front wheel. See **WHEELS**
- the cable to the battery negative terminal. See **BATTERY, DISCONNECTING** .

CHECK

Check the level in the expansion tank and the brake fluid reservoir.

Top up if necessary.

Test drive the engine until the thermostat opens and check for any leakage.

VALVE MECHANISM (B5254T2; 2003)

VALVE CLEARANCE

NOTE: **As the illustrations in this service information are used for different model years and / or models, some variation may occur. However, the essential information in the illustrations is always correct.**

PREPARATION

Fig. 44: Engine Compartment
Courtesy of VOLVO CARS CORPORATION

Remove, (turbocharged engines)

- the charge air pipe above the engine and holder at the rear of the engine
- the cover over the intake camshaft
- clamp the injectors cable harness.

Remove (common)

- the upper timing cover
- the cover over the ignition coils.

Remove (naturally aspirated engine)

- the inlet hose between the air cleaner (ACL) and throttle body (TB)
- the crankcase ventilation hose from the inlet hose. Place the inlet hose to one side
- the camshaft position (CMP) sensor housing. Place to one side
- the trigger wheel.

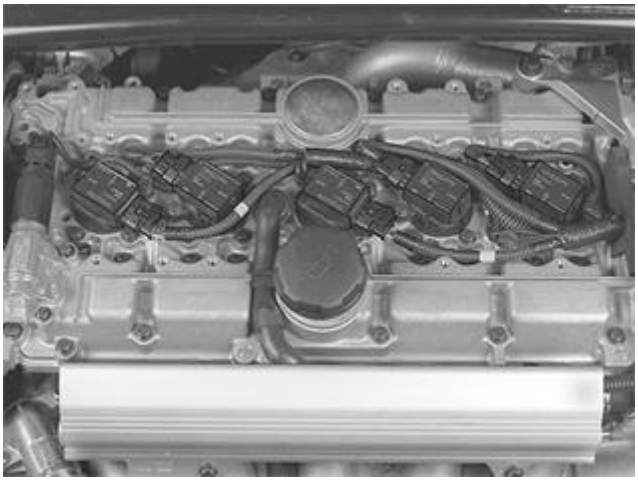

Fig. 45: Camshaft Covers
Courtesy of VOLVO CARS CORPORATION

Remove (common)

- the ignition coils **without** removing the connectors.

NOTE: Mark up before removal

- the two ground connections
- the connector for the variable valve timing solenoid
- the right front wheel
- the plastic nuts holding the cover for the fender liner.

SET THE ENGINE TO THE TEST POSITION

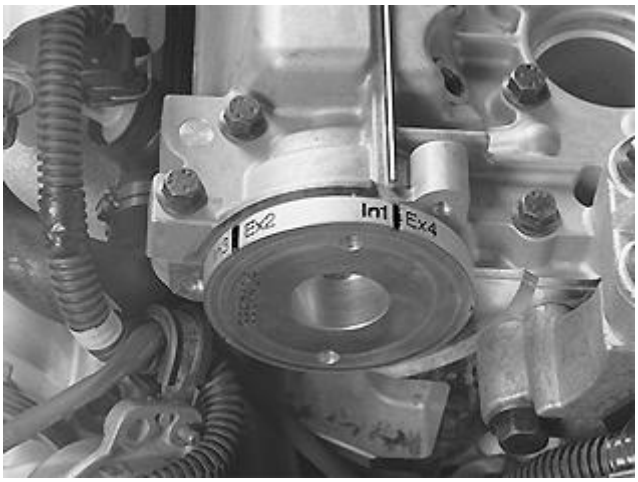

Fig. 46: Identifying Rear Intake Camshaft
Courtesy of VOLVO CARS CORPORATION

Install tool see **9995754** at the rear of the intake camshaft.

Turn the crankshaft in the direction of engine rotation (clockwise) until the marking on the tool (**In1/Ex4**) is in opposite the thin flange running straight over the top of the entire cylinder head.

Remove all plugs from the test holes.

NOTE: If the crankshaft is turned to far, it is essential that it is turned back at least a quarter of a turn so that it can then be turned clockwise to the correct position.

CHECK THE VALVE CLEARANCE

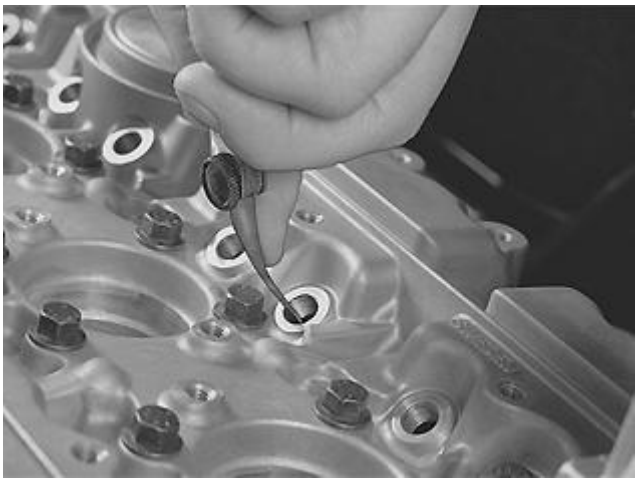

Fig. 47: Checking Valve Clearance
Courtesy of VOLVO CARS CORPORATION

Check the valve play with feeler gauge see **9995752** at cylinder. 1 intake valves and cylinder 4 exhaust valves.

Insert the feeler gauge through the inspection holes. Bend the feeler gauge with light finger pressure so that it follows the top of the valve lifter.

The correct measurement will not be obtained until the feeler gauge has gone in approximately **15 mm** .

REFERENCE VALUES

Valve:	Valve clearance:
Intake valve	0.15-0.45 mm.
Exhaust valve	0.35-0.60 mm.

CAUTION: This is only the check value.

NOTE: Carry out this check with the engine at room temperature.

Make a note of the valve clearance on a form.

NEXT TEST MEASUREMENT

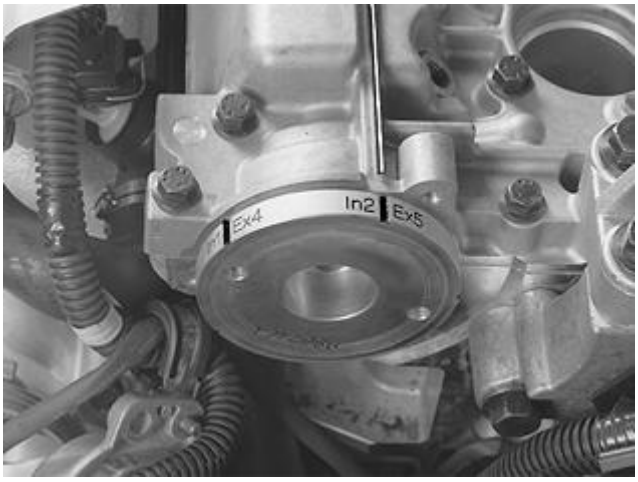

Fig. 48: Identifying Rear Intake Camshaft
Courtesy of VOLVO CARS CORPORATION

Turn the crankshaft in the direction of engine rotation until the next marking **In2/Ex5** is opposite the flange on top of the cylinder head. Perform the test measurement according to the previous description.

Continue by measuring the remaining valve clearances according to the markings on tool see **9995754** .

FINISHING

NOTE: For tightening torques not in the text, see TIGHTENING TORQUE .

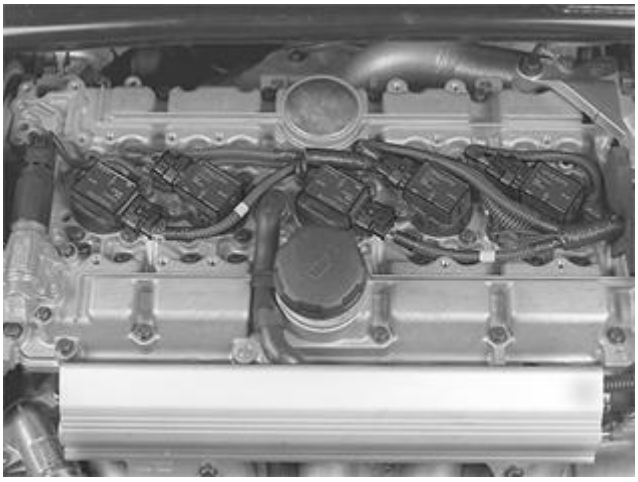

Fig. 49: Camshaft Covers
Courtesy of VOLVO CARS CORPORATION

Install (common)

- the plugs for the test holes. Tighten to **20 Nm**

- the ignition coils according to the earlier markings
- the ground connections
- the connector for the variable valve timing solenoid.

Remove tool see **9995754** .

Fig. 50: Engine Compartment
Courtesy of VOLVO CARS CORPORATION

Install (naturally aspirated engine)

- the trigger wheel. Tighten to **17 Nm** .

NOTE: Ensure that the trigger wheel is correctly positioned against the camshaft.

- the camshaft position (CMP) sensor housing
- the cover over the ignition coils
- the upper timing cover
- the crankcase ventilation hose on the inlet hose
- the inlet hose between the air cleaner (ACL) and throttle body (TB)
- the plastic nuts from the cover in the fender liner
- the right front wheel. See **WHEELS** .

Install (turbocharged engine)

- a new cover over the intake camshaft
- secure the cable harness for the injector
- charge air pipe above the engine and holder at the rear of the engine.

Install (common)

- the plastic nuts from the cover in the fender liner
- the right front wheel. See **WHEELS** .

VALVE CLEARANCE

see **VALVE CLEARANCE**

VALVE MECHANISM (B5254T2; 2004-2007)

VALVE CLEARANCE

Special tools:

see **9512767**

see **9995450**

see **9995451**

see **9995452**

see **9995454**

see **9995670**

see **9995718**

see **9995719**

see **9995752**

see **9995765**

NOTE: **As the illustrations in this service information are used for different model years and / or models, some variation may occur. However, the essential information in the illustrations is always correct.**

NOTE: **There are a number of versions of the variable valve timing unit. Therefore, it is extremely important to always read the information referring to the engine variant/model year to be worked on.**

PREPARATION

Remove the cable from the battery negative terminal. First read, see **BATTERY, DISCONNECTING** .

Check the valve clearance. See **CHECKING THE VALVE CLEARANCE**.

NOTE: Note the valve clearance in the inspection form

Fig. 51: Clamping the Hose at Expansion Tank
Courtesy of VOLVO CARS CORPORATION

Remove

- the cross stay between the suspension turrets
- the ground strip from the cylinder head
- the upper engine stabilizer brace
- the cover in the cylinder head at the rear of the exhaust camshaft
- the crankcase ventilation hose from the top of the camshaft cover
- the radiator breather tube from the expansion tank. Install lock grip pliers.

Lift up the brake fluid reservoir.

Disconnect the ABS sensor connector.

Place the brake fluid reservoir over the engine.

WARNING: Make sure that no fluid is spilled on the engine. It is extremely flammable

Disconnect the connector for the level sensor in the expansion tank.

Lift up and place the expansion tank on top of the engine.

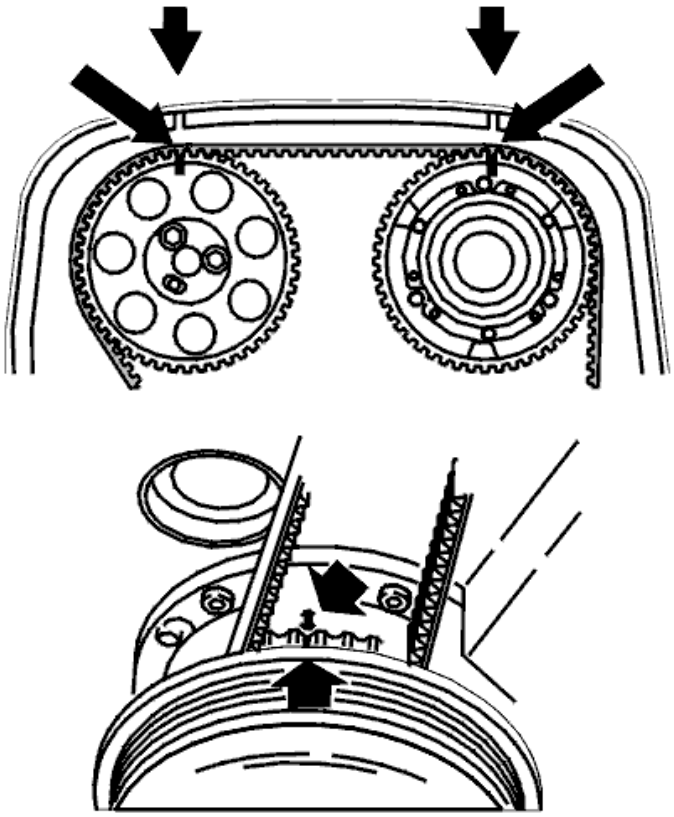

Fig. 52: Crankshaft And Camshafts Markings
Courtesy of VOLVO CARS CORPORATION

Remove

- the auxiliaries belt
- the front timing cover.

Position the upper timing cover.

Turn the crankshaft clockwise until the markings on the crankshaft belt pulley and the timing belt pulley are aligned with the markings on the oil pump and the upper timing cover.

Remove the upper timing cover.

CAUTION: Crankshaft and camshafts must not be turned more than is stated in the method description. If the shafts are turned in any other way the valves may be damaged.

REMOVING THE TIMING BELT

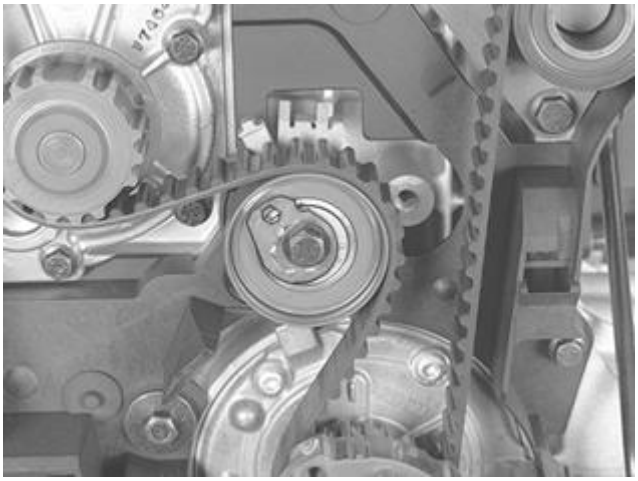

Fig. 53: Identifying Timing Belt
Courtesy of VOLVO CARS CORPORATION

Slacken off the center screw for the belt tensioner slightly.

Hold the center screw still. Turn the tensioner eccentric clockwise to 10 o'clock using a 6 mm Allen key.

Remove the timing belt from the camshaft pulleys.

REMOVING THE TIMING GEAR PULLEY

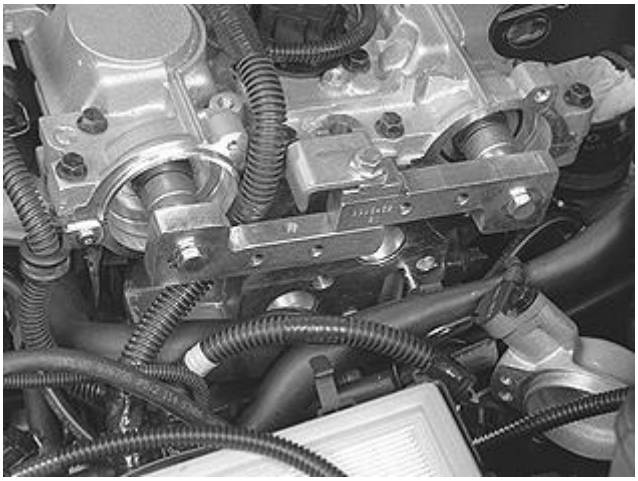

Fig. 54: Camshaft Adjustment Tool 999 5452 Installed
Courtesy of VOLVO CARS CORPORATION

Install gauge see **9995452** at the rear of the camshafts.

Check that the screws securing the adjustment tool to the camshafts and the screw holding the tool together are well tightened

Remove (timing gear pulley with variable valve timing unit)

- the plug at the front of the variable valve timing unit (Tx55)
- the center screw in the variable valve timing unit (Tx55). Carefully pull out the variable valve timing unit with the timing gear pulley.

Remove (timing gear pulley without variable valve timing unit)

- the screws securing the timing gear pulley on the camshaft
- the timing gear pulley.

Remove tool 999 5452.

Reinstall the expansion tank and the brake fluid reservoir at the wing liner.

REMOVING THE CAMSHAFT COVER

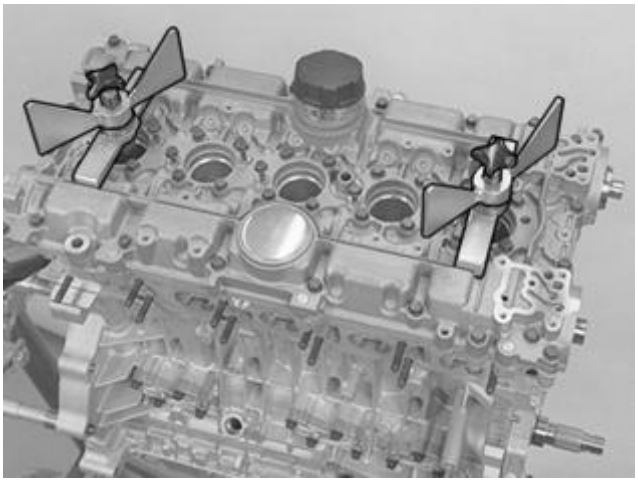

Fig. 55: Camshaft Cover And Variable Valve Timing Unit Control Valve
Courtesy of VOLVO CARS CORPORATION

Remove

- the variable valve timing (VVT) solenoid
- spark plugs for cylinders 1 and 5.

Install tool see **9995454** (2 pcs.) with 2-3 mm gap to the camshaft cover.

Ensure that the screw in the spark plug well is fully tightened.

Remove all the screws securing the camshaft cover to the cylinder head.

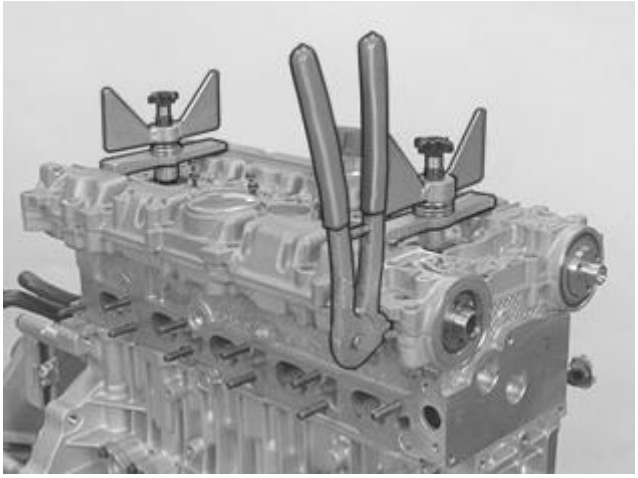

Fig. 56: Camshaft Cover With Pliers At Stop Lugs
Courtesy of VOLVO CARS CORPORATION

Use pliers see **9995670** to lift the cover from the cylinder head.

Install the pliers at the stop lugs. Start with cylinder 1 and work alternately backward.

Slacken off the wing nuts approximately 2 turns. Repeat the procedure with the pliers.

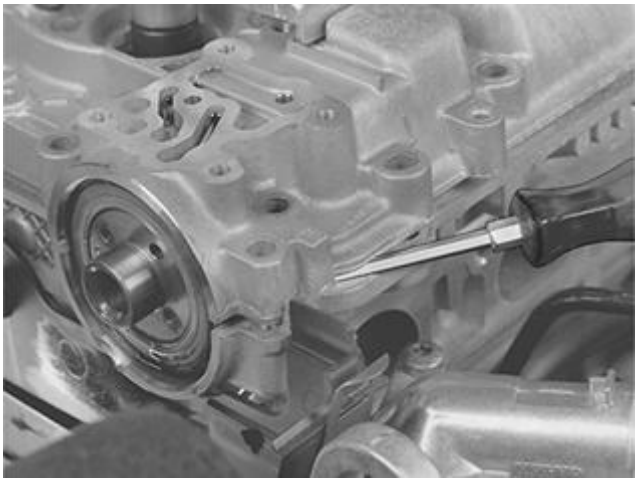

Fig. 57: Identifying Camshaft Seal Removal
Courtesy of VOLVO CARS CORPORATION

Carefully press the camshaft seals free.

NOTE: Be very careful to not damage the sealing surfaces on the camshafts.

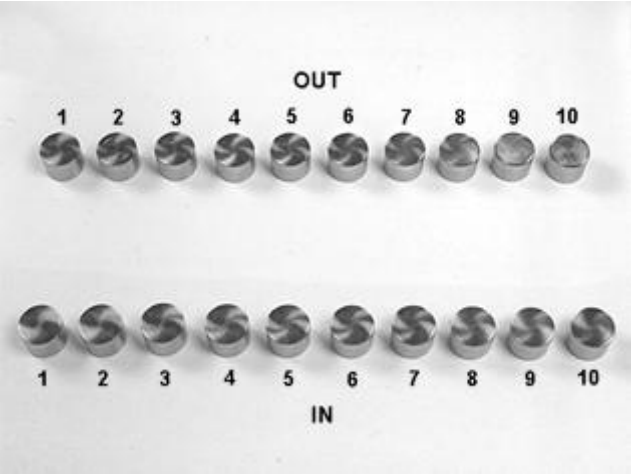

Fig. 58: Arranging/Tagging Removed Valve Lifters For Re-Installation
Courtesy of VOLVO CARS CORPORATION

Remove

- tool 999 5454
- the camshaft cover
- the camshafts.

Lift out the tappets. Mark up the tappets so that the original positions can be established.

CLEANING

Use a razor blade or a gasket scraper and gasket solvent P/N 1161 440 on the camshaft cover.

WARNING: Use a fume hood or extractor when working with gasket solvent

Use only a gasket scraper or razor blade on the cylinder head.

CAUTION: Be very careful around the oil channels for the variable valve timing solenoid. This applies to both the camshaft cover and the cylinder head. The solenoid is extremely sensitive to impurities.

Dry and blow all surfaces clean.

PREPARATIONS

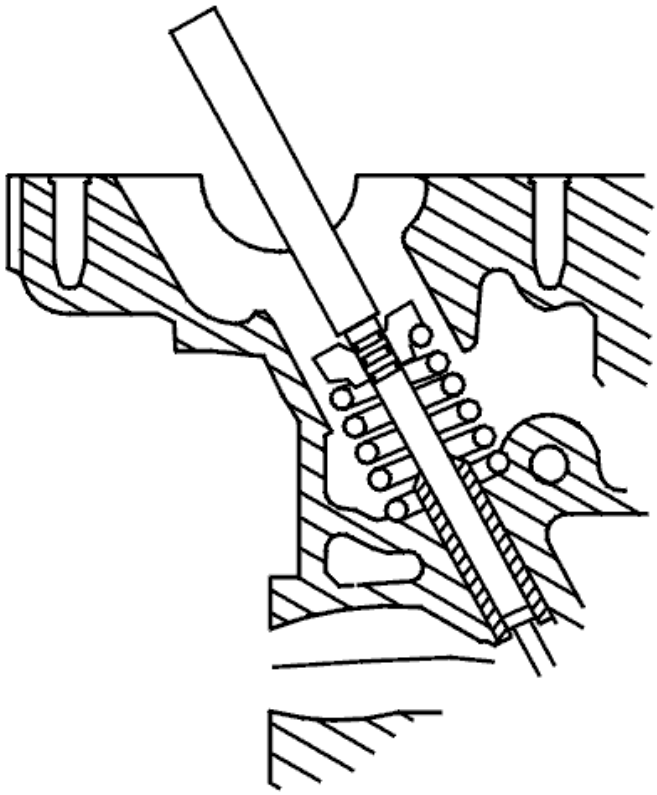

Fig. 59: Identifying Drift (Plastic, Aluminum Or Brass), Valve And Tappet Surface
Courtesy of VOLVO CARS CORPORATION

Carefully tap the end of the valve stem to ensure that the valve is correctly located in the seat.

Use a plastic, aluminum or brass drift to protect the valve and the surface of the tappet.

The sound made by tapping reveals if the valve is correctly seated.

INSTALLING THE CAMSHAFT AND TAPPET

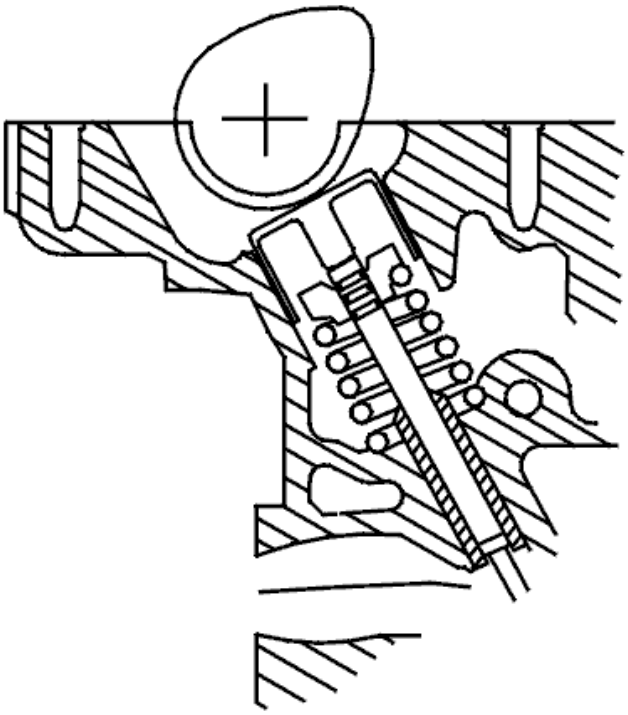

Fig. 60: Camshaft And Tappet
Courtesy of VOLVO CARS CORPORATION

Install both the tappets for the inlet valves at cylinder 1.

Check the notes made earlier. Select new tappets if necessary.

NOTE: Only install two tappets. The tappets should be placed by the same cylinder

Other tappets are available as replacement part / replacement part kits.

THE VALVE CLEARANCE ON A COLD ENGINE (APPROXIMATELY 20 °C) SHOULD BE:

Inlet valve:	0.20 ± 0.03 mm.
Exhaust valve:	0.40 ± 0.03 mm.

NOTE: The tolerances are less when setting When checking the valve clearance through the plug hole, the tolerances are larger.

Position the intake camshaft. Ensure that the lobes at cylinder 1 point upwards.

Apply a little oil to the cam lobe and the upper side of the tappet to facilitate later measurement.

INSTALLING THE CAMSHAFT PRESS

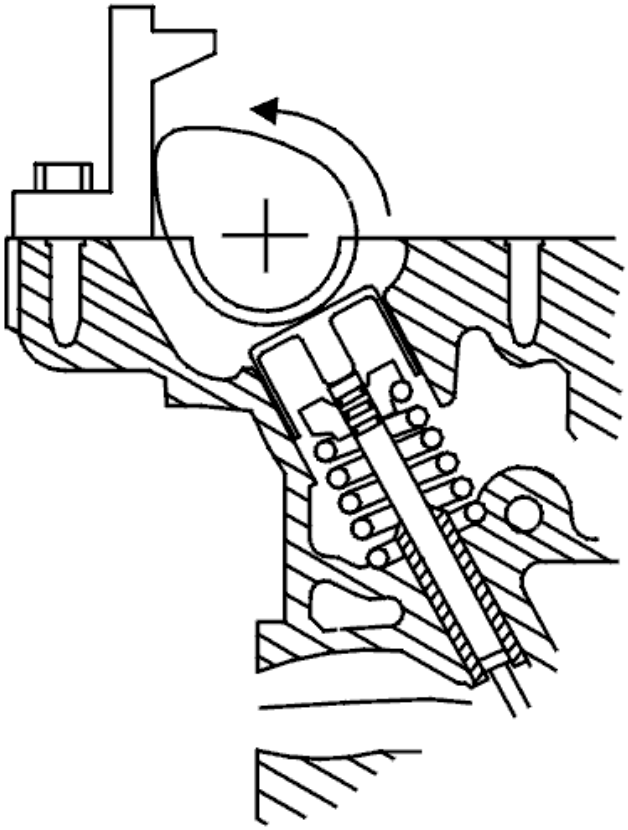

Fig. 61: Identifying Camshaft Turned Until Stopped Against Camshaft Press
Courtesy of VOLVO CARS CORPORATION

Install the lower section of camshaft press see **9995765** by the inlet valves for cylinder 1.

Tighten the tool against the cylinder head. Tighten to 17 Nm.

Turn the camshaft until it stops against the camshaft press.

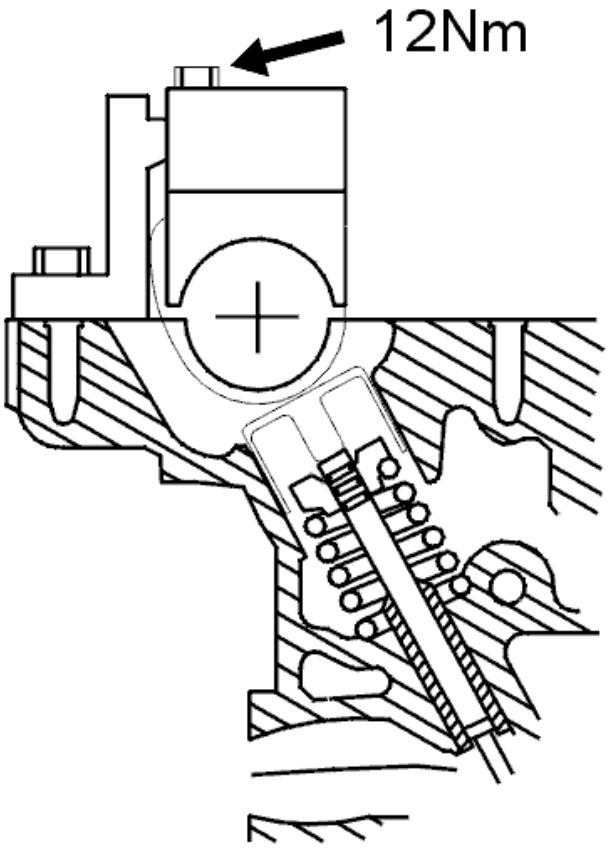

Fig. 62: Identifying Camshaft Tightening Screw
Courtesy of VOLVO CARS CORPORATION

Install the upper section of the camshaft press.

Tighten the screw which tensions the camshaft. Tighten to **12 Nm** .

CHECKING THE VALVE CLEARANCE

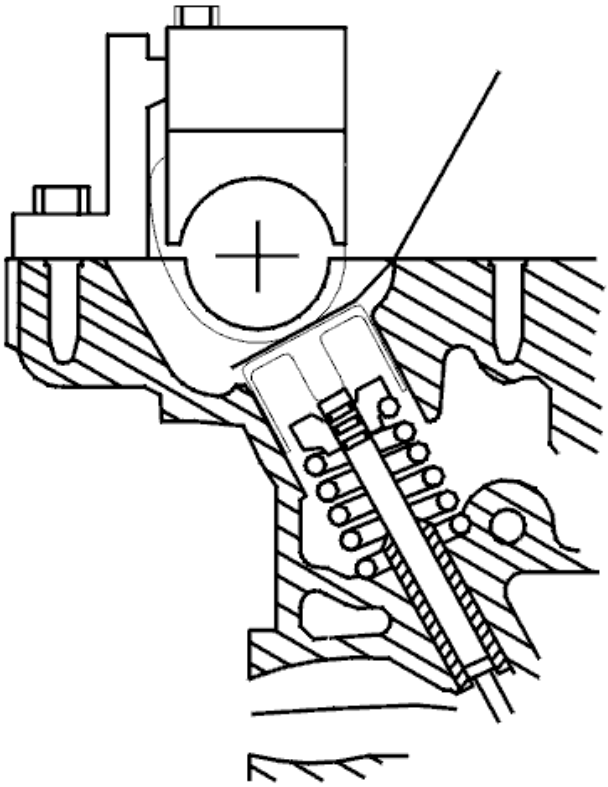

Fig. 63: Checking Valve Clearance
Courtesy of VOLVO CARS CORPORATION

NOTE: Measurements should only be taken on a cold engine. A suitable temperature is approximately 20 °C.

Use feeler gauge see **9995752** .

Press with a finger so that the feeler gauge lies parallel to the upper side of the tappet (see illustration).

Move the feeler gauge sideways when taking the reading in order to obtain as accurate a measurement as possible.

THE VALVE CLEARANCE MEASURED ON COLD ENGINES (APPROXIMATELY 20 °C) SHOULD BE:

Inlet valve:	0.20 ± 0.03 mm.
Exhaust valve	0.40 ± 0.03 mm.

NOTE: The tolerances are less when setting When checking the valve clearance through the plug hole, the tolerances are larger.

DIFFERENCES IN VALVE CLEARANCE FOR DIFFERENT ENGINES / AMBIENT TEMPERATURES:

- 0.01 mm at 15 °C + 0.01 mm at 25 °C + 0.02 mm at 30 °C + 0.03 mm at 35 °C + 0.04 mm at 45 °C

CORRECTING MEASURED CLEARANCE

Lift out the upper section of the press tool.

Lift out the camshaft.

Adjust the play by replacing the tappets.

Other tappets are available as replacement part / replacement part kits.

Reinstall the camshaft and the upper section of the press tool. Tighten to **12 Nm** .

Take a new measurement. See **CHECKING THE VALVE CLEARANCE**.

WHEN THE CORRECT VALVE CLEARANCE IS REACHED

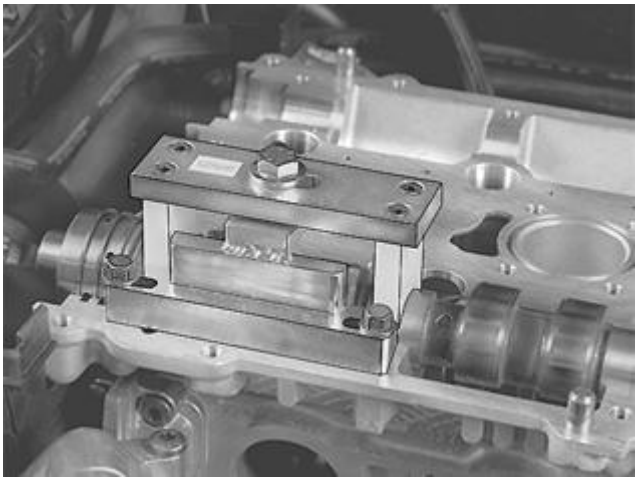

Fig. 64: Adjusting Valve Clearance
Courtesy of VOLVO CARS CORPORATION

Remove

- the press tool 999 5765
- the camshaft
- the tappets.

NOTE: Carefully mark the tappets so that exact reinstallation can be carried out.

Intake side:	**I1, I2, I3..... I10.**
Exhaust side:	**A1, A2, A3..... A10.**

Repeat the procedure for measuring the valve clearance for all cylinders on both the intake and exhaust sides. See **CHECKING THE VALVE CLEARANCE**.

INSTALLING TAPPETS AND CAMSHAFTS

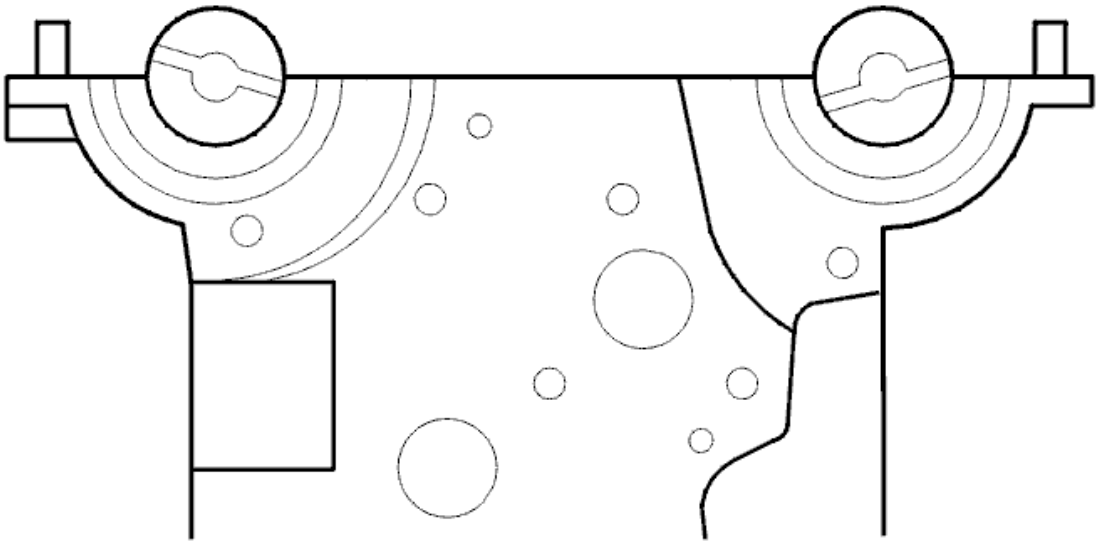

Fig. 65: Identifying Intake And Exhaust Camshafts
Courtesy of VOLVO CARS CORPORATION

NOTE: For tightening torques not in the text, see TIGHTENING TORQUE .

Lubricate the valve guide wells.

Install all the tappets.

Lubricate the camshaft bearing seats and the upper sides of the tappets.

Position the intake camshaft. Ensure that the groove at the rear edge of the camshaft is **above** an imaginary center line.

Position the exhaust camshaft. Ensure that the groove at the rear edge of the camshaft is **below** an imaginary

center line.

APPLYING LIQUID GASKET

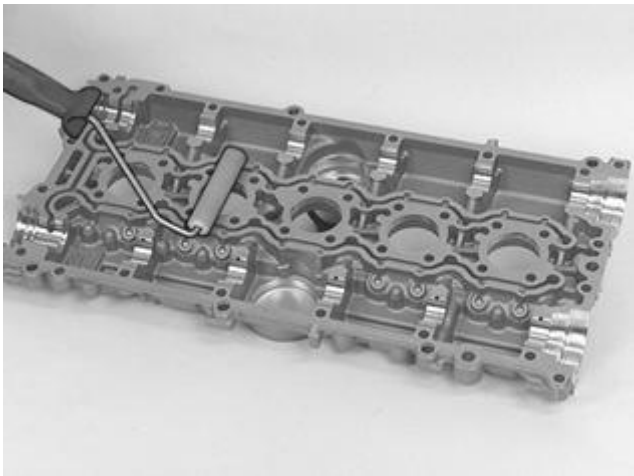

Fig. 66: Applying Liquid Gasket
Courtesy of VOLVO CARS CORPORATION

Wipe the oil film off the mating surfaces on the camshaft cover and cylinder head.

Install new O-rings around the spark plug wells at the cylinder head.

Apply liquid gasket 1161 059 on the camshaft cover. Use roller see **9512767** .

NOTE: The surface must be completely covered without any excess.

CAUTION: Make sure that no liquid gasket ends up in the oil channels.

INSTALLING THE CAMSHAFT COVERS

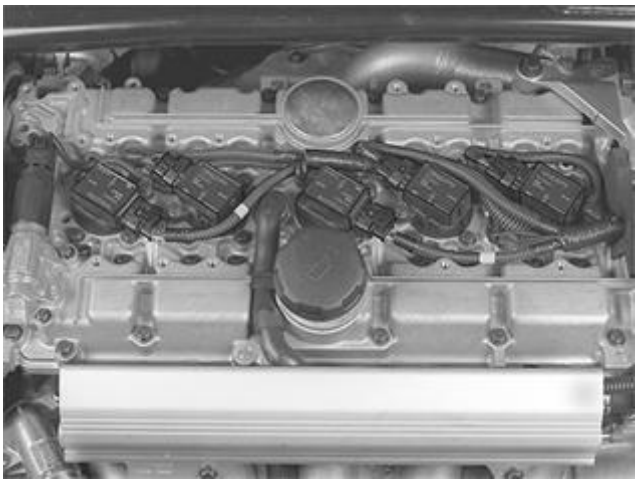

Fig. 67: Camshaft Covers
Courtesy of VOLVO CARS CORPORATION

Lubricate the camshaft lobes, the camshaft bearing surfaces and the tappets.

Install the camshaft cover.

Install press tool see **9995454** (2x).

Tighten the camshaft cover screws alternately, keeping it parallel to the cylinder head using the press tools.

Install all the screws. Tighten the screws from the middle and outwards.

Remove the press tool 999 5454

Install

- the variable valve timing (VVT) solenoid. Use a new gasket
- the spark plugs. Tighten to **30 Nm** .
- the plugs for the test holes. Tighten to **20 Nm**
- the crankcase ventilation hose to the top of the camshaft cover
- the ignition coils according to the earlier marking
- the ground terminals between the ignition coils.

INSTALLING THE REAR CAMSHAFT SEAL

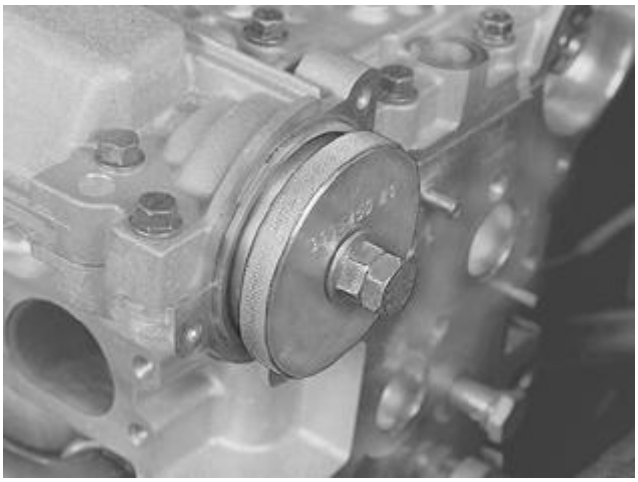

Fig. 68: Identifying Rear Camshaft Seal
Courtesy of VOLVO CARS CORPORATION

To clean the shaft journal and mating surface, use emery cloth P/N 951 1024.

NOTE: When cleaning work around the shaft journal, not in and out. It is essential that

any residue from the emery cloth and any other contaminants are completely removed before the new seal ring is installed.

Use drift see **9995450** .

Lubricate the surface of the seal that the camshaft rotates against.

Press in the seal until the drift bottoms out.

NOTE: **If there are wear grooves on the camshaft, the seal can be pressed in another 2 mm by reversing the tool's sleeve.**

Install camshaft adjustment tool see **9995452** at the rear of the camshafts.

Check that the screws securing the adjustment tool to the camshafts and the screws holding the tool together are well tightened.

INSTALLING THE FRONT CAMSHAFT SEAL

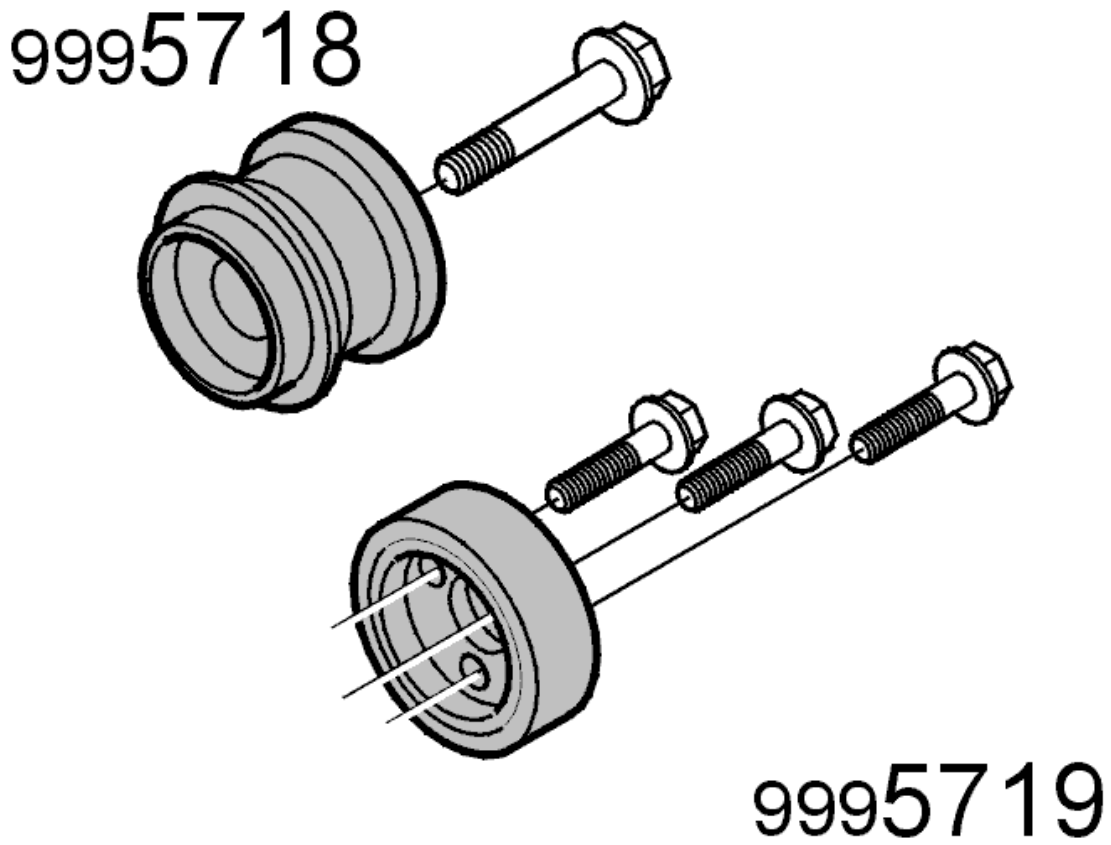

Fig. 69: Camshafts And Special Tools 99 5718 And 995719
Courtesy of VOLVO CARS CORPORATION

Lift up and position the brake fluid reservoir and the expansion tank on top of the engine.

Use drift see **9995718** for camshaft with variable valve timing unit and drift see **9995719** for camshaft without variable valve timing unit.

Use new seals and lubricate the surface of the seal that the camshaft rotates against.

Use the variable valve timing unit / timing belt pulley mounting screws. Tighten the screws until the drift bottoms out.

Remove the drift.

FIXING THE CRANKSHAFT POSITION

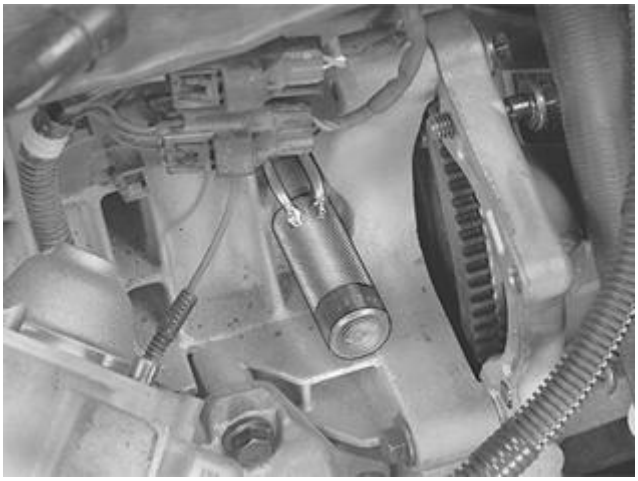

Fig. 70: Crankshaft
Courtesy of VOLVO CARS CORPORATION

Remove

- the mounting screws for the starter motor. Pull off the starter motor. Place the starter motor to one side
- the blind cover plug and the seal washer.

Turn the crankshaft slightly **clockwise** .

Install the crankshaft stop see **9995451** . Ensure that it bottoms out against the engine block.

Turn the crankshaft **counterclockwise** until it stops against the crankshaft stop.

Check that the marking on the crankshaft timing gear pulley corresponds with the marking on the oil pump.

INSTALLING AND ADJUSTING THE VVT UNIT/TIMING GEAR PULLEY ON THE CAMSHAFT

Install, see **VARIABLE VALVE TIMING UNIT, CHECKING AND ADJUSTING**

FINISHING

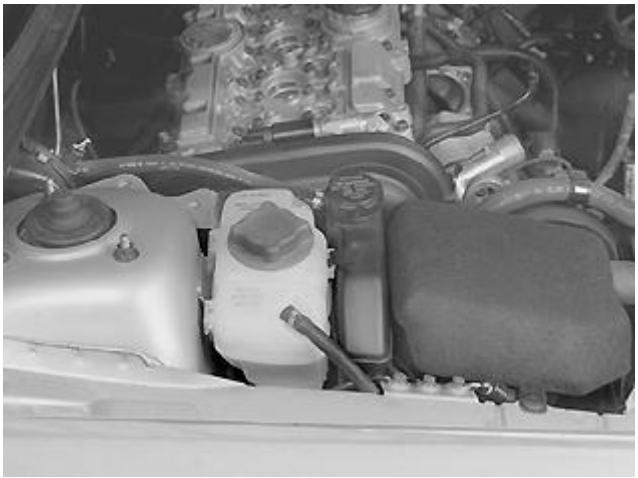

Fig. 71: Expansion Tank And Servo Oil Reservoir
Courtesy of VOLVO CARS CORPORATION

Install

- front timing cover
- the auxiliaries belt
- the expansion tank
- the servo oil reservoir
- the bleed hose for the expansion tank.

  Close the clamp and check that the hoses lie correctly.

Connect the connectors for the

- The ABS sensor by the right suspension turret
- the coolant level sensor in the expansion tank.

Install

- the starter motor
- the plastic nuts for the cover in the wing liner
- the right front wheel. See **WHEELS** .

Fig. 72: Engine Compartment Components
Courtesy of VOLVO CARS CORPORATION

Install

- the trigger wheel.

NOTE: **Make sure that the trigger wheel is correctly positioned against the camshaft.**

- the camshaft position (CMP) sensor housing
- the cover at the rear of the exhaust camshaft
- the screws holding both the ground strips from the bulkhead to the cylinder head
- the upper engine stabilizer brace
- the cover over the ignition coils
- the upper timing cover
- the crankcase ventilation hose on the inlet hose
- the inlet hose between the air cleaner (ACL) and throttle body (TB)
- the engine stabilizer brace between the suspension turrets. Secure the servo hose at the right mounting for the engine stabilizer brace in the bodywork
- the cable to the battery negative terminal. Also read, see **BATTERY, DISCONNECTING** .

CHECK

Check the level in the expansion tank and the brake fluid reservoir.

Test drive the engine until the thermostat opens and check for any leakage.

INFORMATION

The information does not apply to selected variant.

VALVE MECHANISM (B6324S; 2007-2010, B6324S5; 2011-2012)

VALVE CLEARANCE CHECK, ADJUSTMENT

Special tools	
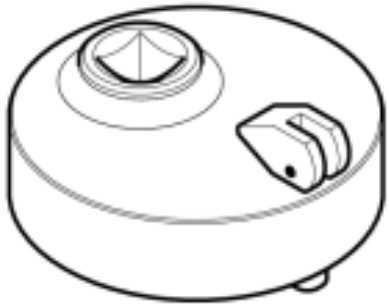	**T9997257 WRENCH** **Tool number:** T9997257 **Tool description:** WRENCH **Tool boards:**
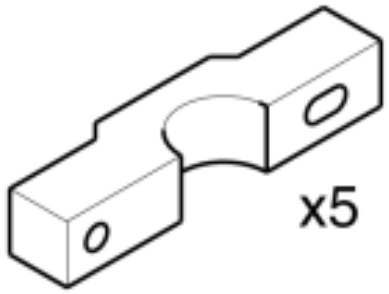	**T9997281 PRESS TOOL** **Tool number:** T9997281 **Tool description:** PRESS TOOL **Tool boards:**
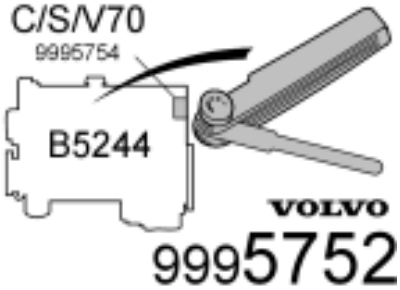	**T9995752 FEELER GAUGE (VALVE CLEARANCE/MECHANICAL LIFTER)** **Tool number:** T9995752 **Tool description:** FEELER GAUGE (VALVE CLEARANCE/MECHANICAL LIFTER) **Tool boards:**
	T9997261 POSITION SENSOR **Tool number:** T9997261 **Tool description:** POSITION SENSOR **Tool boards:**

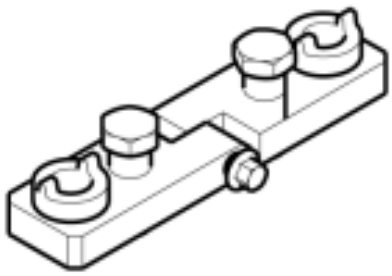

NOTE: Removal steps in this procedure may contain installation details.

Replace the valve cover as necessary. See **VALVE COVER**

PREPARATIONS

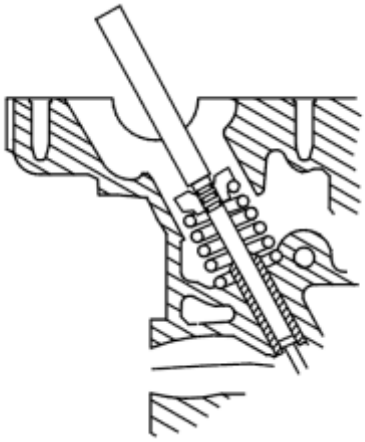

Fig. 73: Tapping Will Identify Position
Courtesy of VOLVO CARS CORPORATION

To ensure that the valves lie correctly in their seats, carefully tap on the valve stem ends. Use a drift made of plastic, brass or aluminum to protect the valve and the surface of the valve lifter. The sound that arises during tapping will indicate if the valve is properly positioned.

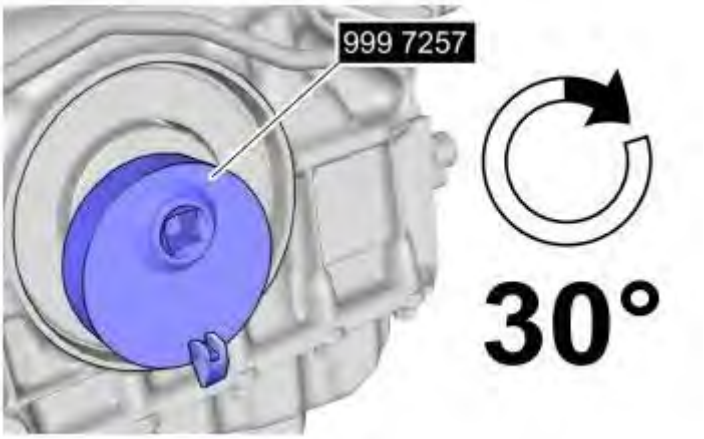

Fig. 74: Identifying Tool 9997257
Courtesy of VOLVO CARS CORPORATION

see **9997257**

Rotate the engine 30 degrees (clockwise) to prevent the valves from colliding with the pistons when the camshaft is rotated.

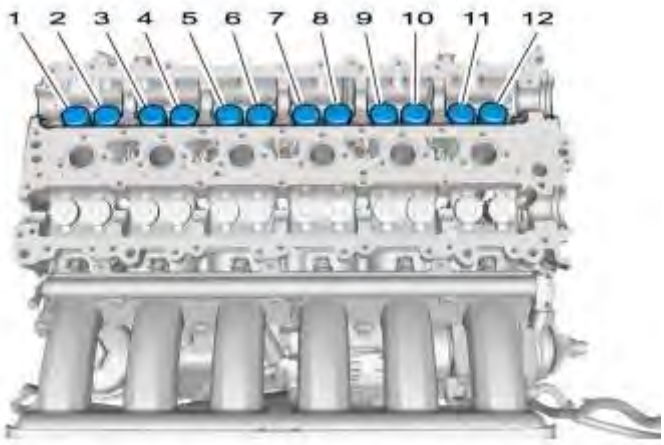

Fig. 75: Refitting All Exhaust Valve Lifters As Removed
Courtesy of VOLVO CARS CORPORATION

Refit all exhaust valve lifters following the markings made during removal.

If the markings are gone or if a new cylinder head is to be adjusted, use a valve tappet with a 2.905 mm thickness as base.

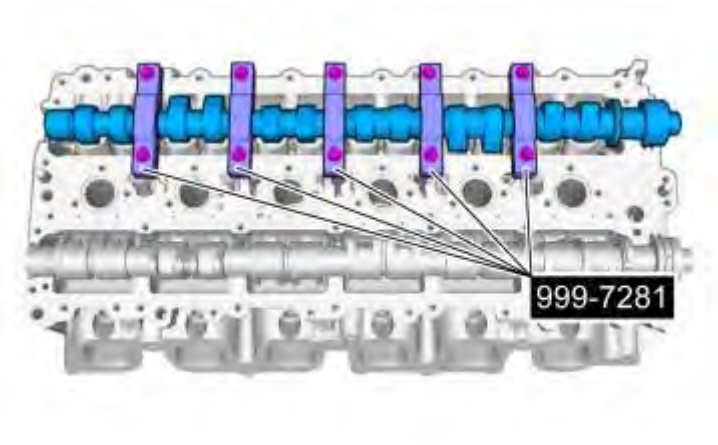

Fig. 76: Identifying Press Tools 9997281
Courtesy of VOLVO CARS CORPORATION

see **9997281**

Position the exhaust camshaft and screw it down toward its bearing seats. Start in the center and screw the bearing caps down alternatively. Do not tighten.

MEASURING VALVE CLEARANCE

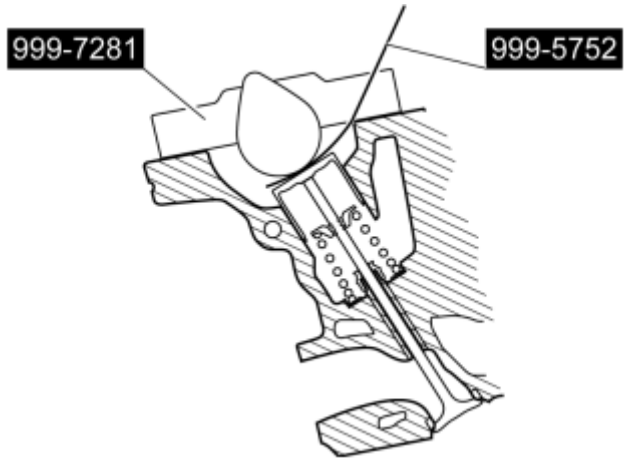

Fig. 77: View of Measuring Valve Clearance
Courtesy of VOLVO CARS CORPORATION

NOTE: Measurements should only be taken on a cold engine. A suitable temperature is approximately 20°C (68°F).

The camshaft cams on the cylinder whose valves are to be measured should point straight up in the direction of the valves.

Tighten the screws of the press tools. M7. See **TIGHTENING TORQUE**

see **9995752**

Press with your finger so that the feeler gauge lies parallel with the top of the lifter (see figure). In order to obtain as correct a reading as possible, move the feeler gauge laterally when measuring clearance.

Valve clearance measured on a cold engine (approx. 20°C/68°F) should be: Exhaust valve: 0.45 ± 0.05 mm.

Differences in valve clearance for different engines / ambient temperatures:	
- 0.01 mm	15°C
+ 0.01 mm	25°C
+ 0.02 mm	30°C
+ 0.03 mm	35°C
+ 0.04 mm	45°C

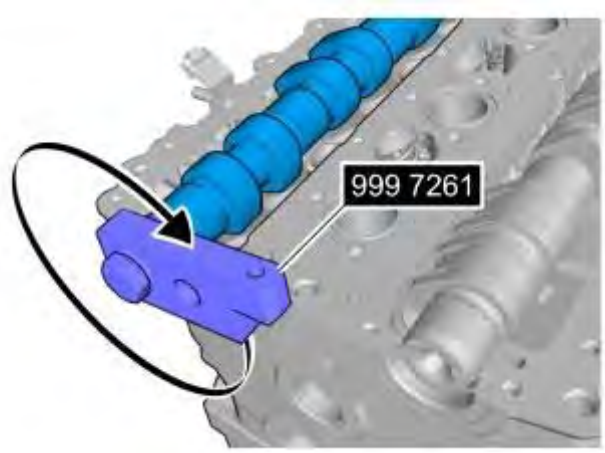

Fig. 78: Rotating Cam to Repeat Measurement
Courtesy of VOLVO CARS CORPORATION

see **9997261**

Repeat the work by loosening the screws of the press tools and rotating the camshaft until the next cam pair is correctly positioned. Tighten and continue measuring until all exhaust valves have been measured.

Note the results carefully.

CORRECTING MEASURED CLEARANCE

Remove the press tools. Lift off the camshaft. Adjust clearance by replacing the lifter. Alternative lifters are available as a spare part/spare part kit. Reinstall the camshaft and press tool. Tighten to 17 Nm. Check valve clearance again on the adjusted valves.

WHEN CORRECT VALVE CLEARANCE HAS BEEN MEASURED

Remove the press tools.

Install the valve cover. See **VALVE COVER** .

VALVE MECHANISM (B8444S; 2005-2011)

VALVE CLEARANCE, CHECKING

Special tools	
	T9995752 FEELER GAUGE (VALVE CLEARANCE/MECHANICAL LIFTER) **Tool number:** T9995752 **Tool description:** FEELER GAUGE (VALVE CLEARANCE/MECHANICAL LIFTER) **Tool boards:**

NOTE: **As the illustrations in this service information are used for different model years and / or models, some variation may occur. However, the essential information in the illustrations is always correct.**

PREPARATORY WORK

REMOVAL

Disconnect the battery negative cable. See: **BATTERY, DISCONNECTING** .

Remove the valve covers. See: **VALVE COVER/GASKET, REPLACING** .

MEASURING

MEASURING VALVE CLEARANCE

NOTE: **Measurements must only be taken on a cold engine. Suitable temperature is approximately 20 °C/68°F.**

CAUTION: Only turn the crankshaft in normal rotational direction (clockwise).

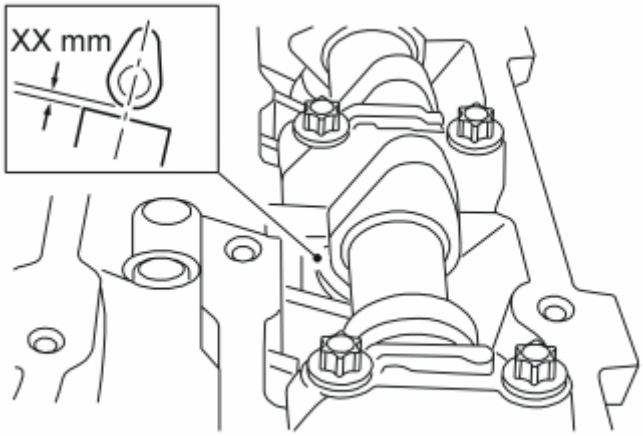

Fig. 79: Measuring The Valve Clearance
Courtesy of VOLVO CARS CORPORATION

Turn the crankshaft until the cam lobe is 180 ° to the valve lifter.

Measure the valve clearance between the camshaft and the valve lifter. Use: see **9995752** .**Note the measurement.**

THE VALVE CLEARANCE MEASUREMENTS ON A COLD ENGINE (APPROXIMATELY 20°C/68° F) MUST BE:

intake valve:	0.20 ± 0.03 mm
exhaust valve:	0.30 mm ± 0.03 mm

DIFFERENCES IN VALVE CLEARANCE FOR DIFFERENT ENGINES / AMBIENT TEMPERATURES:

15° C	- 0.01 mm
25° C	+ 0.01 mm
30° C	+ 0.02 mm
35° C	+ 0.03 mm
45° C	+ 0.04 mm

Repeat the procedure for the other camshaft lobes. **Note the measurements.**

If needed, adjust the valve clearance, see: **VALVE CLEARANCE, SETTING/ADJUSTING**

INSTALLATION

INSTALLING THE VALVE COVERS

Install the valve covers, see: .

VALVE CLEARANCE, SETTING/ADJUSTING

NOTE: **As the illustrations in this service information are used for different model years and / or models, some variation may occur. However, the essential information in the illustrations is always correct.**

PREPARATORY WORK

Disconnect the battery negative cable. See: **BATTERY, DISCONNECTING** .

Check valve clearance, see: **VALVE CLEARANCE, CHECKING**.

Remove the VVT units, see: **VVT UNIT, RIGHT CYLINDER HEAD** and **VVT UNIT, LEFT CYLINDER HEAD** .

ADJUSTMENT

ADJUSTING THE VALVE CLEARANCE

Remove the valve tappet. Read off the thickness from the underside.

Calculate the required thickness of the valve lifter to be used:**the thickness of the existing valve lifter + the measured valve clearance = required valve clearance.**

NOTE: **The number on the valve lifter corresponds to the thickness of the valve lifter.**

Install the correct valve tappet.

FINISHING

Install the VVT units, see: **VVT UNIT EXHAUST CAMSHAFT, REPLACING** .

Check the valve clearance, see: **VALVE CLEARANCE, CHECKING**.

VARIABLE VALVE TIMING UNIT AND VVT SOLENOID (B5254T2; 2003-2007)

VARIABLE VALVE TIMING UNIT, CHECKING AND ADJUSTING

See **VARIABLE VALVE TIMING UNIT, CHECKING AND ADJUSTING**.

For **B6XX4T (2003-2006)** . See **VARIABLE VALVE TIMING UNIT, CHECKING AND ADJUSTING**.

VARIABLE VALVE TIMING UNIT, CHECKING AND ADJUSTING

Special tools:

see **9995451**

see **9995452**

NOTE: **The illustrations in this service information are used for different model years and/or models. Some variation may occur. However, the essential information in the illustrations is always correct.**

INSTALLING AND ADJUSTING THE VARIABLE VALVE TIMING UNIT/TIMING GEAR PULLEY ON THE CAMSHAFT

NOTE: **This procedure must be carried out with precision as any deviation could generate a fault symptom.**

INSTALLING THE CRANKSHAFT ADJUSTMENT TOOL

Fig. 80: Identifying Starter Motor
Courtesy of VOLVO CARS CORPORATION

Remove the mounting screws for the starter motor.

Pull out the starter motor and place it to one side.

Remove the blind cover plug from the hole for the adjustment tool.

Turn the crankshaft clockwise slightly.

Install: see **9995451** . Ensure that the tool bottoms out against the cylinder block.

ALIGNING THE CRANKSHAFT

Turn the crankshaft counter-clockwise until it stops against the adjustment tool.

Check that the marking on the crankshaft timing gear pulley corresponds to the marking on the oil pump.

INSTALLING THE VARIABLE VALVE TIMING UNIT ON THE CAMSHAFT

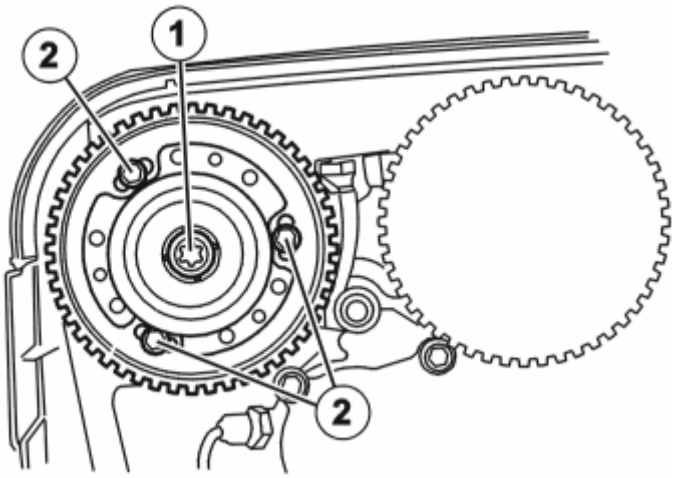

Fig. 81: Identifying Screws For Variable Valve Timing Unit And Timing Gear Pulley
Courtesy of VOLVO CARS CORPORATION

NOTE: Oil the center screw before installation

Push on the variable valve timing unit/timing gear pulley on the camshaft.

Install the center screw (1) which secures the variable valve timing unit to the camshaft. Tighten slightly.

Slacken off, but do not remove the screws (2) which secure the timing gear pulley to the variable valve timing unit.

Turn the timing gear pulley until the screws at the oval holes are in the center position. Tighten the screws (2) slightly.

Turn the variable valve timing unit clockwise to its limit position so that the unit is in its end position.

Position the upper timing cover

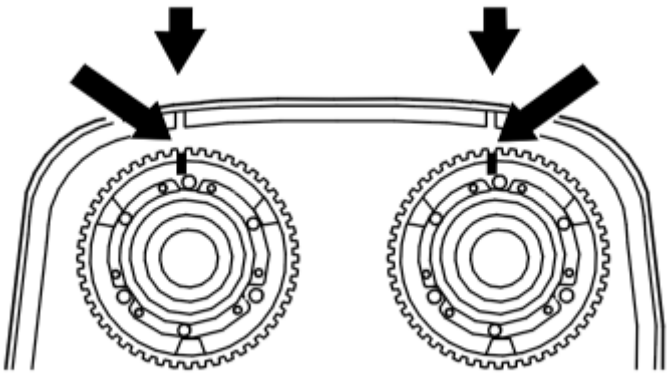

Fig. 82: Aligning Marking On Timing Gear Pulley With Marking On Upper Timing Cover
Courtesy of VOLVO CARS CORPORATION

Undo the center screw and continue turning clockwise until the timing gear pulley marking aligns with the marking on the upper timing cover.

Tighten the center screw in the variable valve timing unit. Tighten. See: **SUMMARY OF SPECIFIC COMPONENTS AND TIGHTENING TORQUES** .

INSTALLING THE TIMING BELT

Fig. 83: Identifying Timing Belt Routing
Courtesy of VOLVO CARS CORPORATION

NOTE: Variable valve timing units do not have return springs and are easily thrown out of position when the camshaft belt is installed. Check that the markings align.

Install the belt in the following order:

- the idler pulley
- intake cam
- exhaust cam
- water pump
- tension pulley.

TENSIONING OF CAMBELT

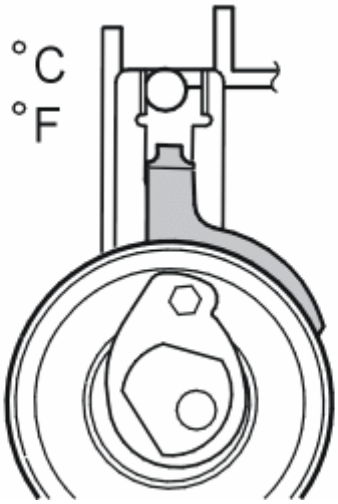

Fig. 84: Identifying Position Of Indicator When Tensioner At Approximately 20 Degrees C/68 Degrees F
Courtesy of VOLVO CARS CORPORATION

This adjustment is to be made with a cold engine.

A suitable temperature is approximately 20 °C/68 °F.

At a higher temperature, for example with a warm engine or a higher ambient temperature, the needle is further to the right.

The illustration shows the position of the indicator when aligning the timing belt tensioner at approximately 20 °C/68 °F.

NOTE: There are two different tensioners depending on model year.

Fix the belt tensioner center screw in position and turn the belt tensioner eccentric clockwise until the tensioner indicator passes the marked position and reaches the end position. Then turn the eccentric back so the indicator reaches the marked position illustrated. Tighten the center screw. See **SUMMARY OF SPECIFIC COMPONENTS AND TIGHTENING TORQUES** .

Check that the indicator is in the correct position.

TIGHTENING

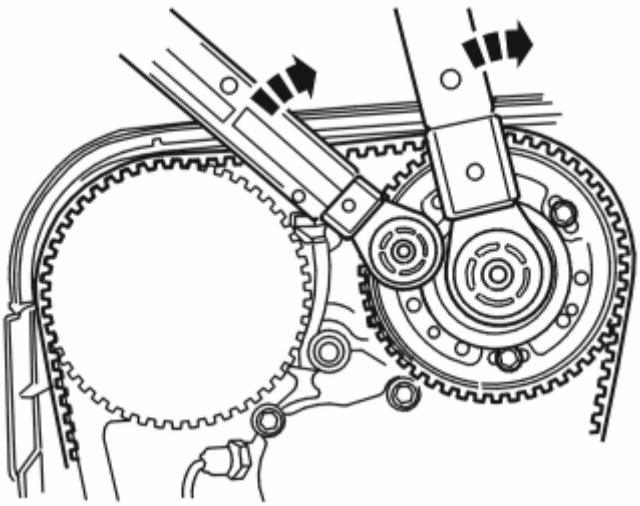

Fig. 85: Holding Center Plug At While Tightening The Camshaft Timing Gear Pulley Screws
Courtesy of VOLVO CARS CORPORATION

Slacken off the 3 x screws for the timing gear pulley slightly (applies to both timing gear pulleys).

Install the center plug in the variable valve timing unit. Tighten. See: **SUMMARY OF SPECIFIC COMPONENTS AND TIGHTENING TORQUES** .

Hold the center plug at 25 Nm at the same time as tightening the 3 x screws on the camshaft timing gear pulley. See **SUMMARY OF SPECIFIC COMPONENTS AND TIGHTENING TORQUES** .

Tighten the 3 x screws on the timing gear pulley for the intake camshaft. See: **SUMMARY OF SPECIFIC COMPONENTS AND TIGHTENING TORQUES** . This is to ensure that the variable valve timing (VVT) unit is in its end position when the timing gear pulley is tightened.

FINAL CHECK

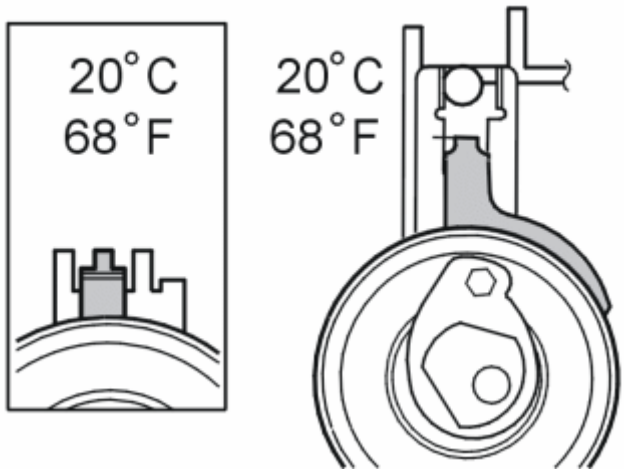

Fig. 86: Checking Markings And Belt Tension
Courtesy of VOLVO CARS CORPORATION

Remove:

- see **9995452** from the rear of the camshafts
- see **9995451** . Install new plugs with new sealing washers. Tighten. See: **SUMMARY OF SPECIFIC COMPONENTS AND TIGHTENING TORQUES** .

Checking the markings and belt tension.

Position the upper timing cover.

Turn the crankshaft 2 rotations. Check that the markings on the crankshaft and timing gear pulleys correspond.

Remove the upper timing cover.

VARIABLE VALVE TIMING UNIT, CHECKING AND ADJUSTING

Special tools:

see **9995451**

see **9995452**

INSTALLING AND ADJUSTING THE VARIABLE VALVE TIMING UNIT/TIMING GEAR PULLEY ON THE CAMSHAFT

NOTE: This procedure must be carried out with precision as any deviation could generate a fault symptom.

INSTALLING THE CRANKSHAFT ADJUSTMENT TOOL

Fig. 87: Identifying Starter Motor
Courtesy of VOLVO CARS CORPORATION

Remove the starter motor mounting screws. Pull out the starter motor and put it aside. Remove the plug of the gauge hole. Rotate the crankshaft slightly clockwise. Install: see **9995451** . Make sure that it bottoms against the engine block.

ALIGNING THE CRANKSHAFT

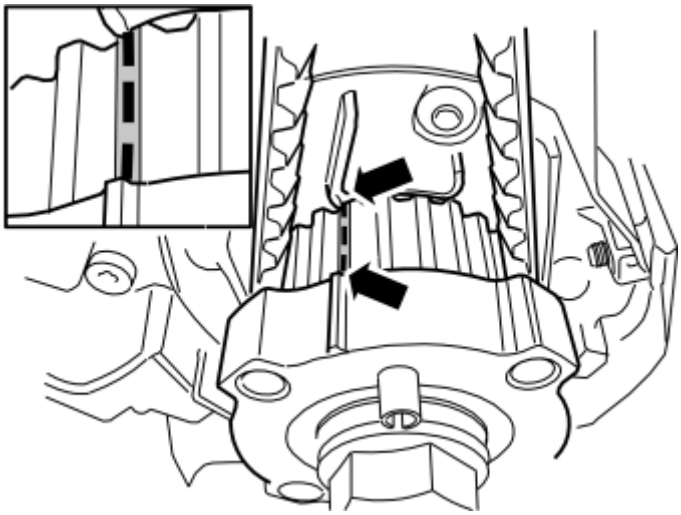

Fig. 88: Identifying Crankshaft Timing Gear Pulley & Oil Pump Alignment Marks
Courtesy of VOLVO CARS CORPORATION

Turn the crankshaft counterclockwise to its stop against the crankshaft adjustment tool. Check that the marking on the crankshaft timing gear pulley aligns with the marking on the oil pump.

INSTALLING THE VARIABLE VALVE TIMING UNIT ON THE CAMSHAFT

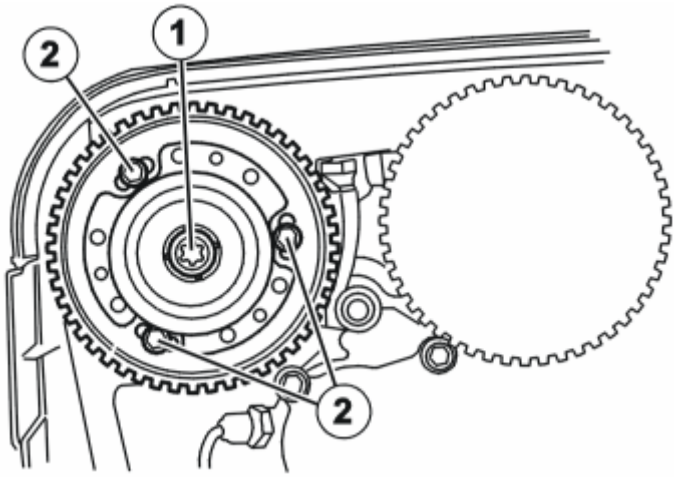

Fig. 89: Identifying Screws For Variable Valve Timing Unit And Timing Gear Pulley
Courtesy of VOLVO CARS CORPORATION

NOTE: Some engines have double VVT units/belt pulleys. If this is the case, the method is to be performed on both.

NOTE: Oil the center screw before installation.

Press the variable valve timing unit/timing gear pulley onto the camshaft. Install the center screw (1) that holds the variable valve timing unit to the camshaft. **Do not tighten yet** .

Slacken off, but do not remove the screws (2) which secure the timing gear pulley to the variable valve timing unit.

Position the upper timing cover.

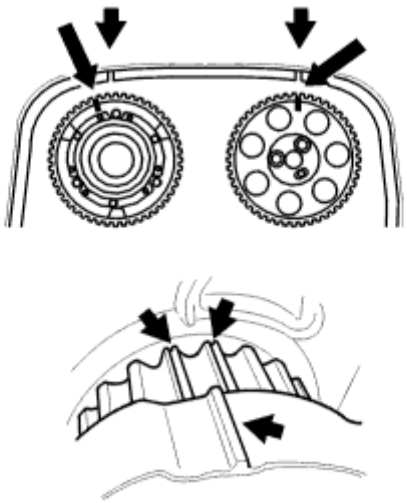

Fig. 90: Identifying Timing Gear Pulley Aligned To One Tooth Before Marking On Upper Timing Cover
Courtesy of VOLVO CARS CORPORATION

Turn the timing gear pulley so that the screws at the oval holes are in the limit position. Continue turning clockwise until the timing gear pulley's marking is 1 tooth before the marking on the upper timing cover.

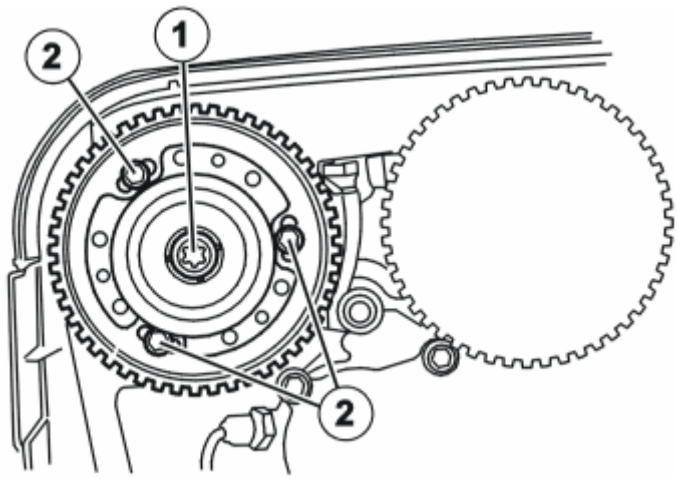

Fig. 91: Identifying Screws For Variable Valve Timing Unit And Timing Gear Pulley
Courtesy of VOLVO CARS CORPORATION

Check that the timing gear pulley is still in the **limit position** in the oval holes.

Tighten the center screw **(1)** in the VVT unit to **120 Nm** .

Check that the variable valve timing unit does not rotate when tightening. Install the center plug and tighten to **35 Nm** .

Install the belt pulley on the **intake camshaft** : Install the belt pulley on the intake camshaft with three screws; **do not tighten yet** .

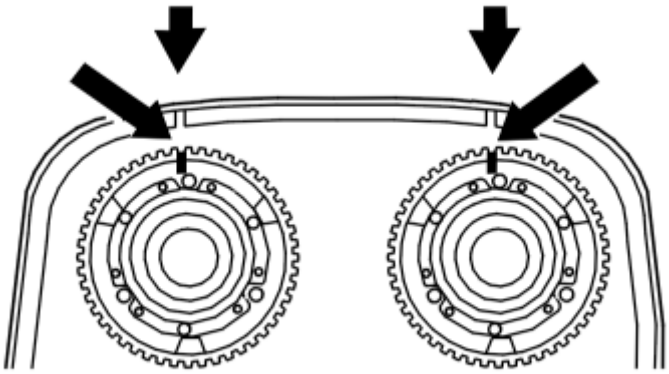

Fig. 92: Aligning Marking On Timing Gear Pulley With Marking On Upper Timing Cover
Courtesy of VOLVO CARS CORPORATION

Turn the timing gear pulley to the marking. Check that the markings on the timing gear pulley/intake camshaft and upper timing cover correspond.

INSTALLING THE TIMING BELT

Install the belt in the following order:

1. the belt pulley on the crankshaft
2. the idler pulley
3. cam wheel, intake camshaft
4. water pump
5. belt tensioner.

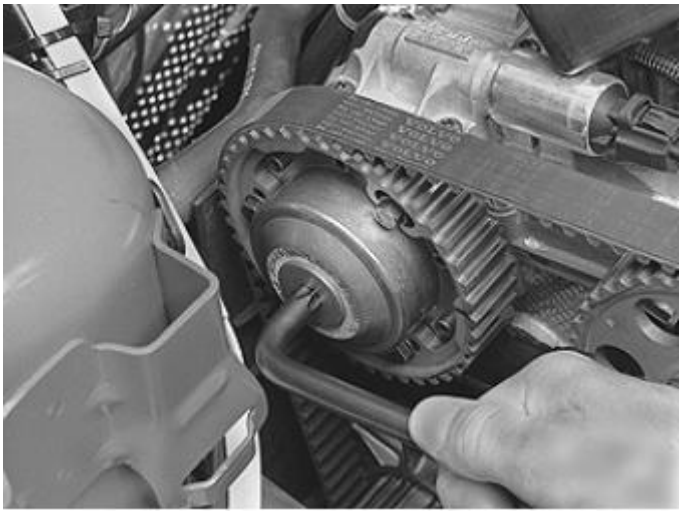

Fig. 93: Identifying Variable Valve Timing Unit Turned Clockwise To Stop
Courtesy of VOLVO CARS CORPORATION

Turn the variable valve timing unit clockwise to the stop.

NOTE: Hold the VVT unit fixed in the limit position clockwise when the belt if fitted.

Check that the markings on the belt pulley and the upper timing cover align.

INSTALL THE TIMING BELT (CONTINUED)

Fig. 94: Identifying Timing Belt Routing
Courtesy of VOLVO CARS CORPORATION

Fit the timing belt over the exhaust camshaft's cam wheel.

TIGHTEN THE TIMING BELT

ADJUST THE BELT TENSIONER

NOTE: **This adjustment is done on a cold engine. A suitable temperature is approximately 20° C/68° F.**

At higher temperatures (with the engine at operating temperature or a high outside temperatures for example) the indicator is further to the right. The illustration shows the position of the indicator when aligning the timing belt tensioner at different engine temperatures.

TENSION THE TIMING BELT AS FOLLOWS:

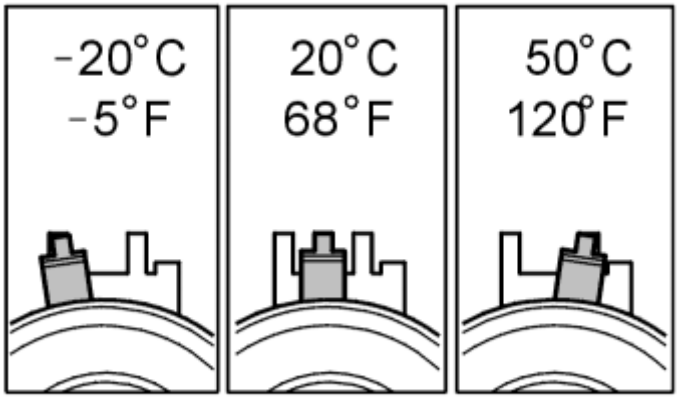

Fig. 95: Identifying Needle Position At Varying Temperatures
Courtesy of VOLVO CARS CORPORATION

Fix the belt tensioner center screw in position and turn the belt tensioner eccentric counterclockwise until the tensioner indicator passes the marked position.

Then turn the eccentric back so that the indicator reaches the marked position in relation to actual temperature.

At the same time, ensure that the center screw remains fixed. At 20° C/68° F, the indicator should be centered in the window.

If the indicator is not in the right position, the adjustment must be repeated.

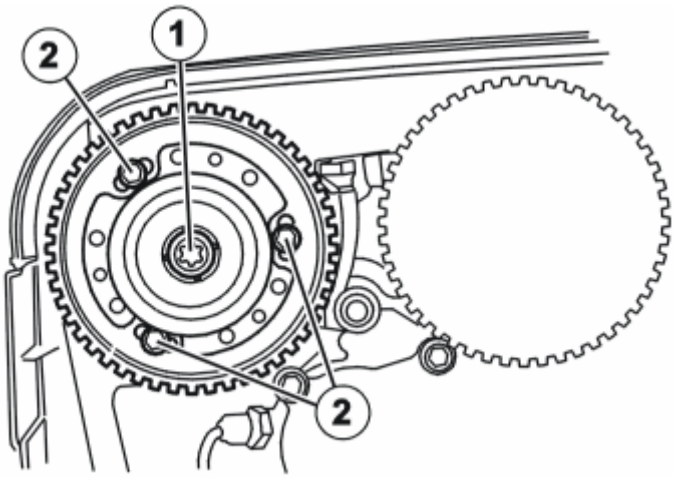

Fig. 96: Identifying Screws For Variable Valve Timing Unit And Timing Gear Pulley
Courtesy of VOLVO CARS CORPORATION

NOTE: The variable valve timing unit must not be released from the limit position until after the timing gear pulleys have been tightened.

Tighten the screws (2) on the timing gear pulley for the exhaust camshaft to **10 Nm** .

Tighten the screws on the timing gear pulley for the intake camshaft to **20 Nm** .

Remove:

- the camshaft adjustment tools see **9995452**
- the crankshaft stop see **9995451** .

Install the plug with a new sealing washer. Tighten to **40 Nm** .

CHECKING THE MARKINGS AND BELT TENSION

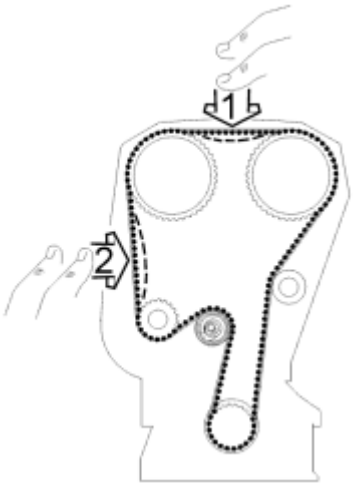

Fig. 97: Checking Belt Tension
Courtesy of VOLVO CARS CORPORATION

- press the belt to check that the indicator on the tensioner moves easily
- install the upper timing belt cover
- turn the crankshaft 2 rotations; check that the markings on the crankshaft and timing gear pulleys align
- check that the indicator on the belt tensioner is within the marked area.

VVT SOLENOID, CLEANING

CHECK

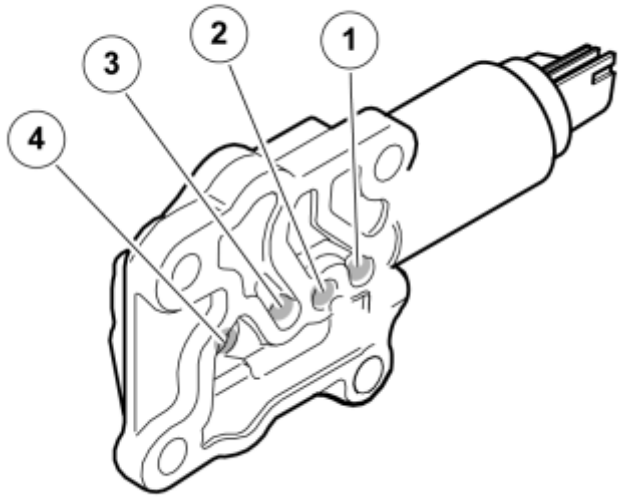

Fig. 98: Identifying Oil Feed Hole On VVT Solenoid
Courtesy of VOLVO CARS CORPORATION

Remove the VVT solenoid. See **REPLACING THE VARIABLE VALVE TIMING SOLENOID**

Blow compressed air into the oil feed hole (2). Air should come out through the B port (1)

If the duct seems to be blocked, go to the cleaning step.

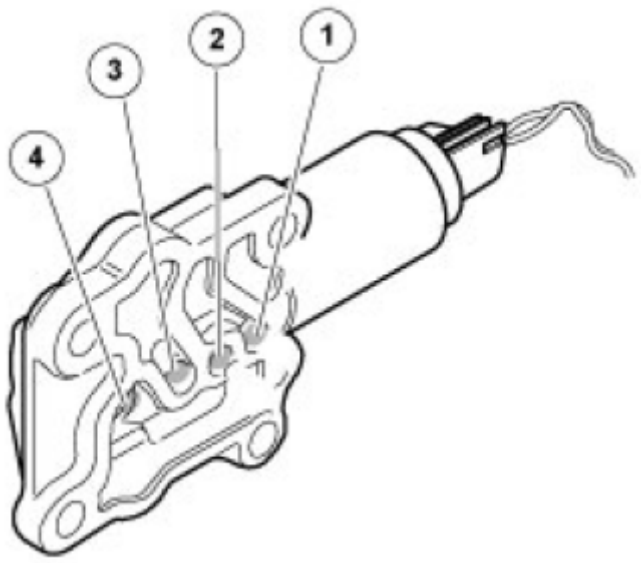

Fig. 99: Identifying Oil Feed Hole On VVT Solenoid
Courtesy of VOLVO CARS CORPORATION

Connect current to the solenoid.

The solenoid should click. It may be easier to hear the click with the solenoid in your hand.

Blow compressed air into the oil feed hole (2). Air should come out through the A port (3). If the piston jams or the solenoid does not work, the direction of flow will not change. If the duct seems to be blocked, go to the cleaning step.

CLEANING

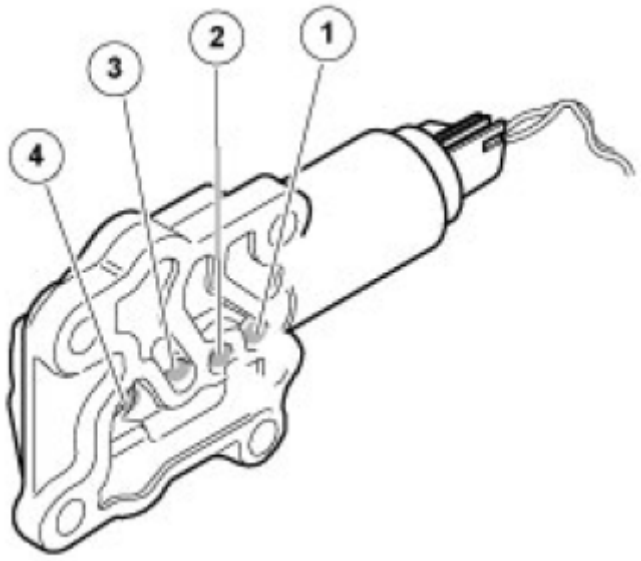

Fig. 100: Identifying Oil Feed Hole On VVT Solenoid
Courtesy of VOLVO CARS CORPORATION

Use: cleaner, 1161826 (1161828 US) Allow to act for 5 minutes.

Blow compressed air into all holes from both directions and look for contamination. Carry this out with current on and off to ensure that no dirt remains in the ducts.

Rinse with cleaning agent. **Use:** cleaning agent, 1161721 .

Blow again.

Lubricate the solenoid with engine oil to prevent it jamming.

After cleaning, check the function by repeating steps 1 and 2 again. If the solenoid still does not work after cleaning twice, replace the solenoid.

TEST DRIVING AND CHECKING

Erase Diagnostic Trouble Codes (DTCs).

Test drive the car.

Check that no new DTCs have been stored.

VARIABLE VALVE TIMING UNIT AND VVT SOLENOID (B6294T; 2003-2006)

VARIABLE VALVE TIMING UNIT, CHECKING AND ADJUSTING

Special tools:

see **9995451**

NOTE: The illustrations in this service information are used for different model years and/or models. Some variation may occur. However, the essential information in the illustrations is always correct.

CAUTION: This element must be carried out with precision as any deviation could generate a fault symptom.

INSTALLING THE CRANKSHAFT ADJUSTMENT TOOL

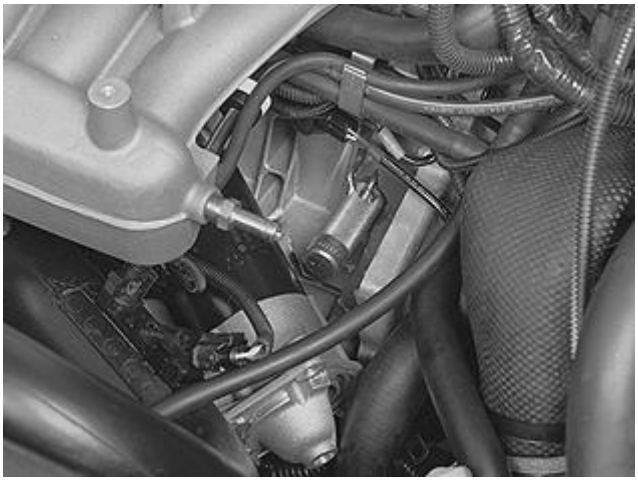

Fig. 101: Identifying Adjustment Special Tool 999 5451
Courtesy of VOLVO CARS CORPORATION

Remove the starter motor mounting screws. Pull out the starter motor and put it aside.

Remove the blind cover plug for the adjustment tool hole. Turn the crankshaft clockwise slightly. Install the adjustment tool see **9995451** . Ensure the adjustment tool bottoms against the engine block.

ALIGNING THE CRANKSHAFT

Turn the crankshaft counterclockwise to its stop against the crankshaft adjustment tool. Check that the marking on the crankshaft timing gear pulley aligns with the marking on the oil pump.

INSTALLING THE VARIABLE VALVE TIMING (VVT) UNIT ON THE EXHAUST CAMSHAFT

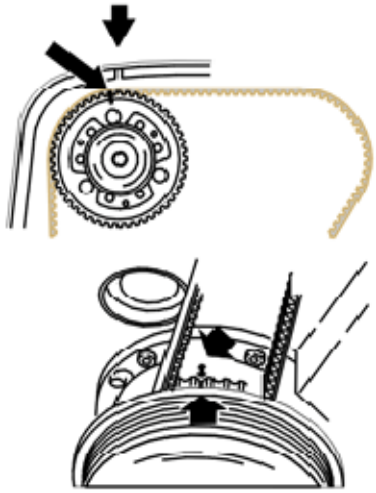

Fig. 102: Aligning Timing Gear Pulley Marking To One Cog Before Marking On Upper Timing Cover
Courtesy of VOLVO CARS CORPORATION

- Slacken off, but do not remove the screws which secure the timing gear pulley to the VVT unit
- Press the variable valve timing unit and timing gear onto the camshaft
- Install the center screw which secures the variable valve timing unit to the camshaft. Tighten slightly
- Turn the variable valve timing unit counter-clockwise as far as it will go. Slacken off the center screw
- Position the upper timing cover
- Turn the timing gear pulley clockwise until the screws at the oval holes are in the limit position. Continue turning clockwise until the timing gear pulley marking is **1 cogs** before the marking on the upper timing cover

NOTE: Do not turn anticlockwise during this procedure.

- Check that the timing gear pulley is still in the limit position in the oval holes
- Tighten the center screw in the VVT unit. See **TIGHTENING TORQUE** . Check that the variable valve timing unit does not rotate when tightening
- Install and tighten the Centre plug. See **TIGHTENING TORQUE** .

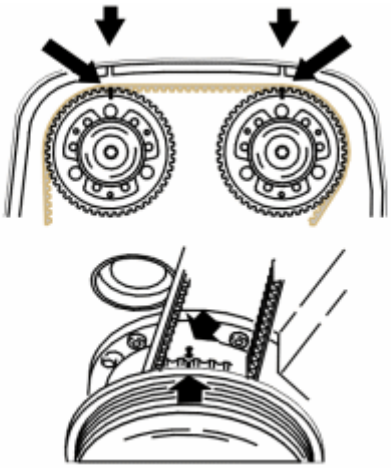

Fig. 103: Identifying Alignment Marks
Courtesy of VOLVO CARS CORPORATION

Turn the variable valve timing unit clockwise to the limit position. Turn the timing gear pulley so that the markings correspond.

INSTALLING THE VARIABLE VALVE TIMING (VVT) UNIT ON THE INTAKE CAMSHAFT

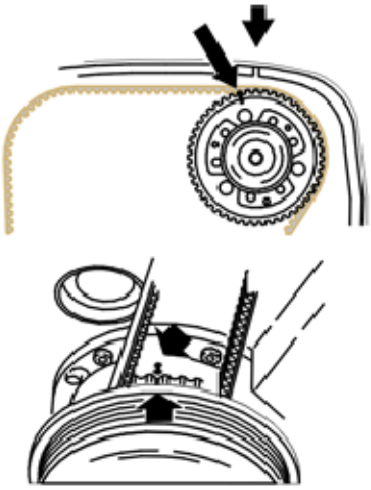

Fig. 104: Aligning Timing Belt Pulley Marking To 2 Cogs Before Marking On Upper Timing Case
Courtesy of VOLVO CARS CORPORATION

- Slacken off, but do not remove the screws which secure the timing gear pulley to the VVT unit
- Press the variable valve timing unit / timing gear onto the camshaft
- Install the center screw which secures the variable valve timing unit to the camshaft. Tighten slightly
- Turn the variable valve timing unit counter-clockwise as far as it will go
- Slacken off the center screw
- Turn the timing belt pulley clockwise until the screws at the oval holes are in the end-position. Continue turning clockwise until the timing belt pulley marking is **2 cogs** before the marking on the upper timing casing.

NOTE: Do not turn anticlockwise during this procedure.

- Check that the timing gear pulley is still in the limit position in the oval holes
- Tighten the center screw in the VVT unit. See **TIGHTENING TORQUE** . Check that the variable valve timing unit does not rotate when tightening
- Install and tighten the Centre plug. See **TIGHTENING TORQUE**

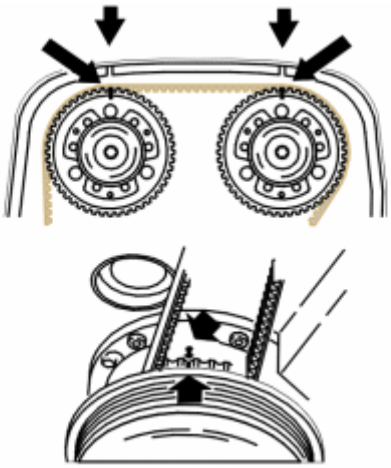

Fig. 105: Identifying Alignment Marks
Courtesy of VOLVO CARS CORPORATION

Turn the variable valve timing unit clockwise to the limit position. Turn the timing gear pulley so that the markings correspond.

INSTALLING THE CAMSHAFT BELT

Fig. 106: Identifying Camshaft Belt
Courtesy of VOLVO CARS CORPORATION

Tighten the timing belt tensioner center screw. Tighten to **5 Nm** .

Install the belt in the following order:

- crankshaft
- idler pulley
- intake cam
- exhaust cam
- water pump

- tension pulley

The variable valve timing units do not have a return spring and are easily dislodged when installing the timing belt. Check that the markings correspond.

NOTE: Adjust the timing gear pulleys so that the screws are not at the limit positions in any of the oval holes.

PREPARATIONS FOR ADJUSTING THE TIMING BELT

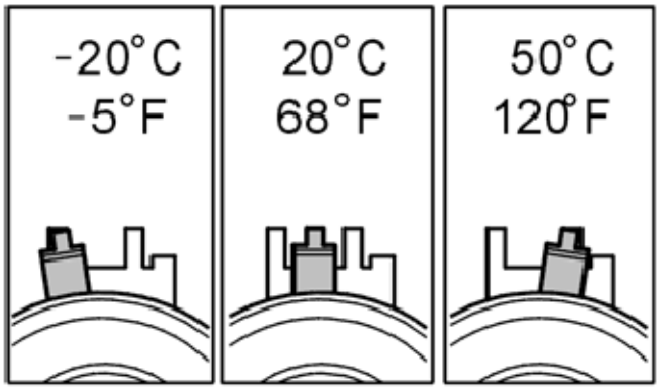

Fig. 107: Identifying Tensioner Indicator Positions At Different Engine Temperatures
Courtesy of VOLVO CARS CORPORATION

This setting is done on a cold engine. A suitable temperature is approximately **20°C/68°F** . At higher temperatures, for example if the engine is warm or ambient temperature is higher, the indicator assumes a position farther to the right. The illustration shows the indicator position at different engine temperatures.

ADJUSTING THE TIMING BELT

Hold the belt tensioner Centre screw fixed and turn the belt tensioner eccentric clockwise until the tensioner indicator passes the marked position.

Turn the eccentric back so that the indicator reaches the marked position in the Centre of the window. Remember to hold the Centre screw secure at the same time.

Hold the eccentric secure and tighten the center screw. Tighten to **25 Nm** .

Check that the indicator is in the correct position.

Check:

- that the timing gear pulley is not in the limit position in the oval holes
- the timing gear pulley so that the markings line up with the upper timing cover.

Tighten the screws for the timing gear pulleys. See **TIGHTENING TORQUE**

CHECKING THE MARKINGS AND BELT TENSION

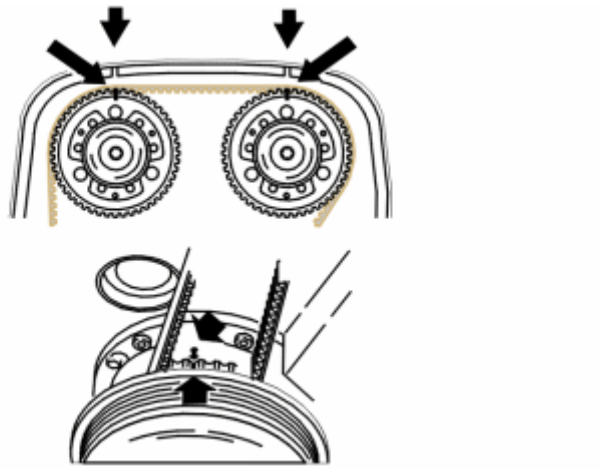

Fig. 108: Identifying Alignment Marks
Courtesy of VOLVO CARS CORPORATION

- Jerk the camshaft belt to check that the indicator on the tensioner moves easily
- Position the upper timing cover.
- Turn the crankshaft two turns. Check that the markings on the crankshaft timing gear pulley and the camshaft timing gear pulley match up with the markings on the oil pump and upper timing cover respectively
- Check that the indicator on the belt tensioner is within the marked position

VVT SOLENOID, CLEANING

CHECK

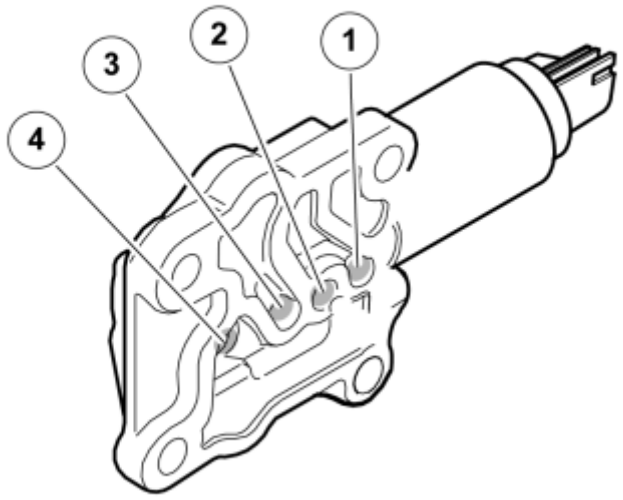

Fig. 109: Identifying Oil Feed Hole On VVT Solenoid
Courtesy of VOLVO CARS CORPORATION

Remove the VVT solenoid. See **REPLACING THE VARIABLE VALVE TIMING SOLENOID**

Blow compressed air into the oil feed hole (2). Air should come out through the B port (1)

If the duct seems to be blocked, go to the cleaning step.

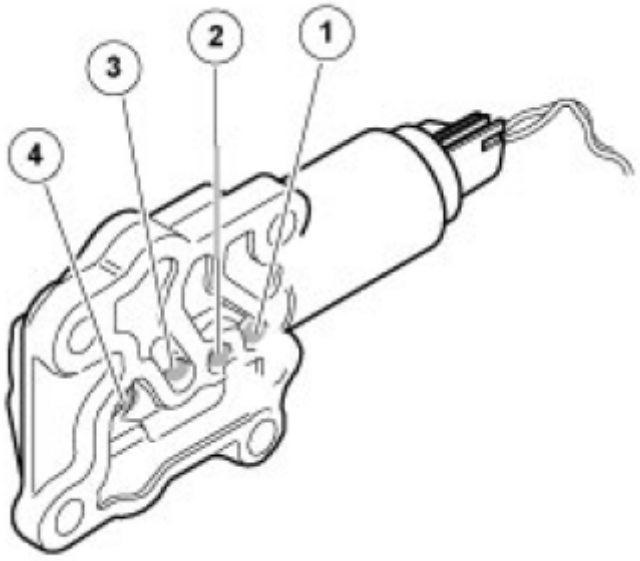

Fig. 110: Identifying Oil Feed Hole On VVT Solenoid

Courtesy of VOLVO CARS CORPORATION

Connect current to the solenoid.

The solenoid should click. It may be easier to hear the click with the solenoid in your hand.

Blow compressed air into the oil feed hole (2). Air should come out through the A port (3). If the piston jams or the solenoid does not work, the direction of flow will not change. If the duct seems to be blocked, go to the cleaning step.

CLEANING

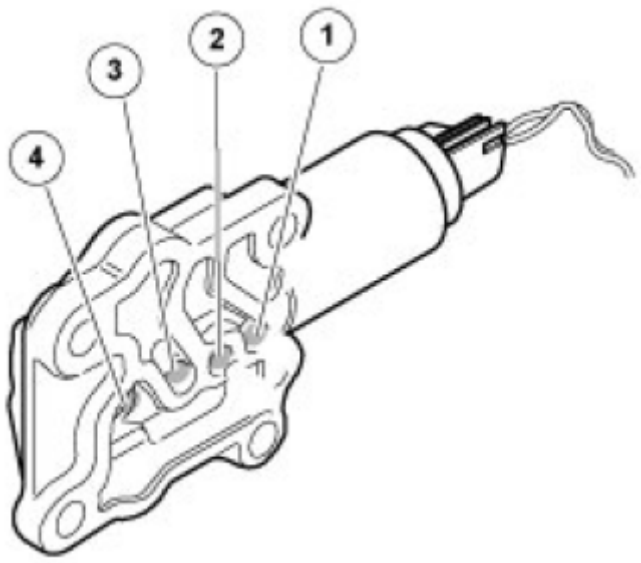

Fig. 111: Identifying Oil Feed Hole On VVT Solenoid
Courtesy of VOLVO CARS CORPORATION

Use: cleaner, 1161826 (1161828 US) Allow to act for 5 minutes.

Blow compressed air into all holes from both directions and look for contamination. Carry this out with current on and off to ensure that no dirt remains in the ducts.

Rinse with cleaning agent. **Use:** cleaning agent, 1161721 .

Blow again.

Lubricate the solenoid with engine oil to prevent it jamming.

After cleaning, check the function by repeating steps 1 and 2 again. If the solenoid still does not work after cleaning twice, replace the solenoid.

TEST DRIVING AND CHECKING

Erase Diagnostic Trouble Codes (DTCs).

Test drive the car.

Check that no new DTCs have been stored.

VARIABLE VALVE TIMING UNIT AND VVT SOLENOID (B6324S/5; 2007-2012)

CPS SOLENOID

Remove the CPS solenoid. See **CPS SOLENOID**

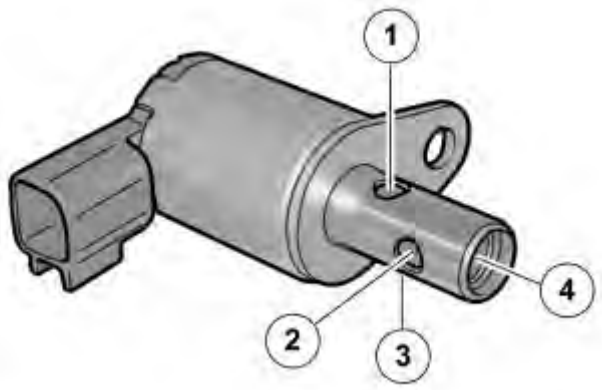

Fig. 112: Identifying CPS (Cam Profile Switch) Solenoid
Courtesy of VOLVO CARS CORPORATION

The CPS (Cam Profile Switch) solenoid has four inputs/outputs: (1.) Port T, (2.) Port A (3.) Port T and (4.) Port P

Fig. 113: Pressing The Valve In Slightly
Courtesy of VOLVO CARS CORPORATION

A CPS solenoid does not have a built in spring. It is therefore necessary to press the valve in slightly during fault-tracing to get the solenoid to work satisfactorily during the test. Use a short M8 screw or similar.

The lack of spring also means that it may sound as if something is loose inside the solenoid if it is shaken. This is completely normal.

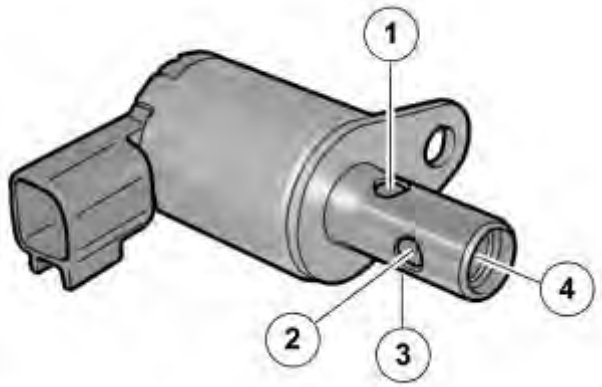

Fig. 114: Identifying CPS (Cam Profile Switch) Solenoid
Courtesy of VOLVO CARS CORPORATION

Press in the valve slightly.

Blow compressed air into the A port (2).

Air should come out through both return holes (1 and 3).

For further function checks, continue with "checks". If the duct appears to be blocked, go to "cleaning".

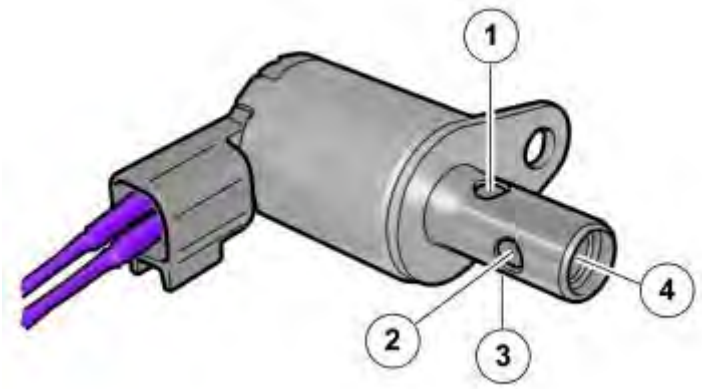

Fig. 115: Testing the Solenoid

Courtesy of VOLVO CARS CORPORATION

Press in the valve slightly. Connect current to the solenoid.

The solenoid should click.

It may be easier to hear the click if the solenoid is held.

Blow compressed air into the A port (2). Air should come out through the oil feed hole (4).

Note that there may be some leakage at both return holes (1 and 3).

Use: Cleaner, 1161826 (EU), 1161828 (US)

Allow the cleaner to act for 5 minutes.

Blow compressed air into all holes from both directions and look for contamination. Carry this out with current on and off to ensure that no dirt remains in the ducts.

Use: Cleaning agent, 1161721 Rinse with cleaner. Blow again.

Regrease the solenoid with engine oil to avoid sticking.

After cleaning, check the function by repeating steps 1 and 2.

If the solenoid still malfunctions after cleaning twice, replace the solenoid.

To install, reverse the removal procedure.

Erase DTCs and test drive the vehicle.

Check that no new DTCs have been stored.

VARIABLE CAMSHAFT TIMING OIL CONTROL SOLENOID

NOTE: Removal steps in this procedure may contain installation details.

Remove the VVT solenoid. See **VARIABLE CAMSHAFT TIMING OIL CONTROL SOLENOID**

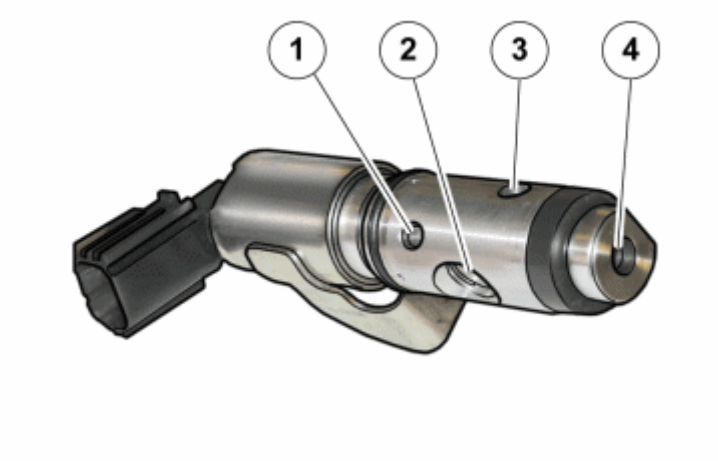

Fig. 116: Identifying Variable Valve Timing (VVT) Solenoid
Courtesy of VOLVO CARS CORPORATION

Blow compressed air into the oil feed hole (2). Air should come out through the A port (1)

Blow compressed air into the oil drain hole (4). Air should come out through the B port (3)

For further function checks continue with step "check function".

If the duct seems to be blocked, go to step "cleaning".

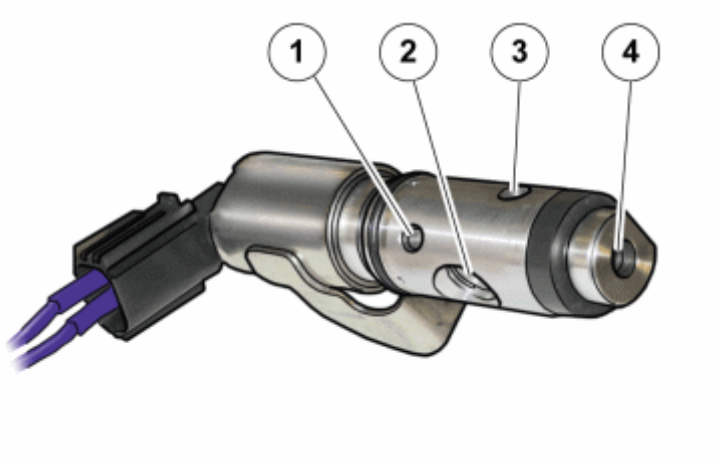

Fig. 117: Testing VVT Solenoid
Courtesy of VOLVO CARS CORPORATION

Connect current to the solenoid. The solenoid should click.

It may be easier to hear the click if the solenoid is held.

Blow compressed air into the oil feed hole (2). Air should come out through the B port (3)

If the piston is sticking or the solenoid is not working, the direction of flow will not change. If the duct appears

to be blocked, go to step "cleaning".

Use: cleaner, 1161826 (1161828 US)

Use cleaner. Allow it to act for 5 minutes.

Blow compressed air into all holes from both directions and look for contamination. Carry this out with current on and off to ensure that no dirt remains in the ducts.

Use: cleaning agent, 1161721

Rinse with cleaner.

Blow again.

Regrease the solenoid with engine oil to avoid sticking.

After cleaning, check the function by repeating steps 1 and 2.

If the solenoid still malfunctions after cleaning twice, replace the solenoid.

To install, reverse the removal procedure.

Erase Diagnostic Trouble Codes (DTCs).

Test drive the vehicle and check that no new diagnostic trouble codes (DTCs) are stored.

ENGINE

Engine - Overhaul instructions

BALANCE SHAFT (B8444S; 2003-2012)

BALANCE SHAFT BEARING

Special tools	
	T9997245 SCREW **Tool number:** T9997245 **Tool description:** SCREW **Tool boards:**
	T9997246 PRESS TOOL **Tool number:** T9997246 **Tool description:** PRESS TOOL **Tool boards:**
	T9997248 POSITION SETTING TOOL **Tool number:** T9997248 **Tool description:** POSITION SETTING TOOL **Tool boards:**
	T9997025 DRIFT HALDEX CLUTCH **Tool number:** T9997025 **Tool description:** DRIFT HALDEX CLUTCH **Tool boards:**
	T9997247 DRIFT **Tool number:** T9997247 **Tool description:** DRIFT **Tool boards:**

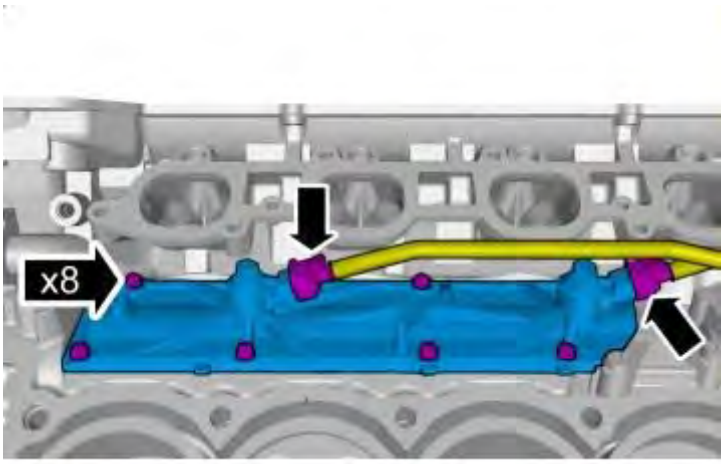

Fig. 1: Removing/Installing Connectors and Plate
Courtesy of VOLVO CARS CORPORATION

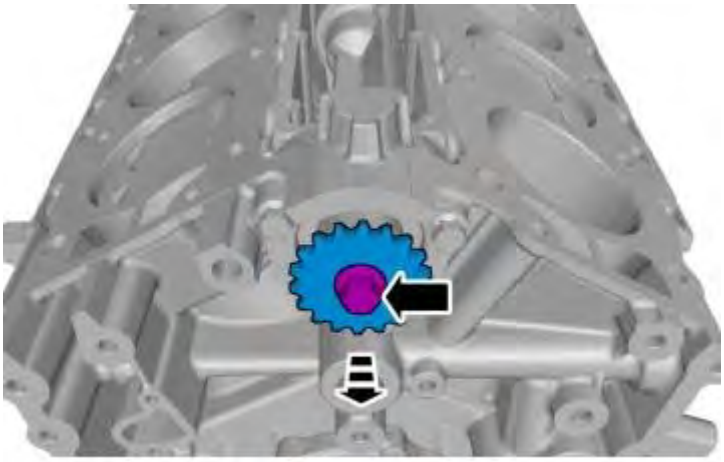

Fig. 2: Removing Balance Shaft Gear
Courtesy of VOLVO CARS CORPORATION

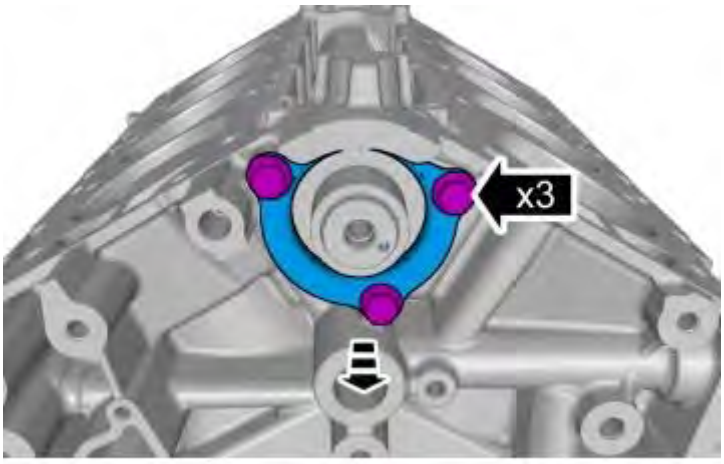

Fig. 3: Identifying Retainer Bolts
Courtesy of VOLVO CARS CORPORATION

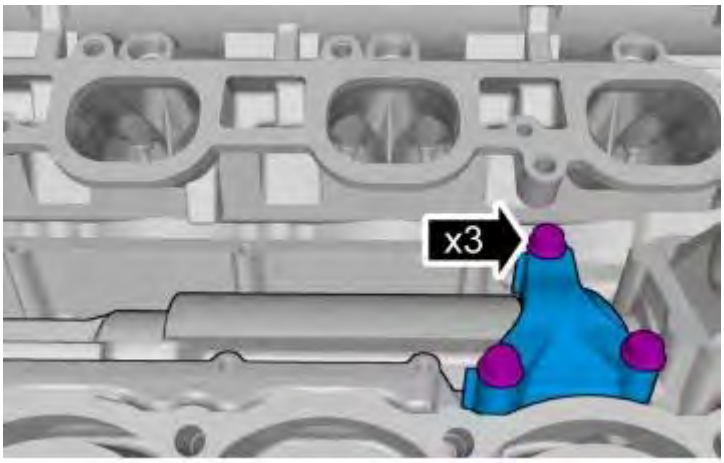

Fig. 4: Remove/Install Rear Bearing Cap
Courtesy of VOLVO CARS CORPORATION

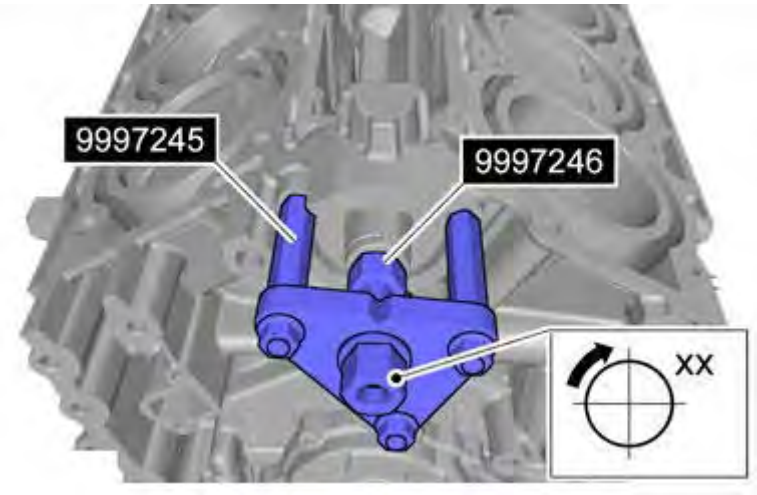

Fig. 5: Identifying Puller 9997245 Installed
Courtesy of VOLVO CARS CORPORATION

see **9997245** see **9997246**

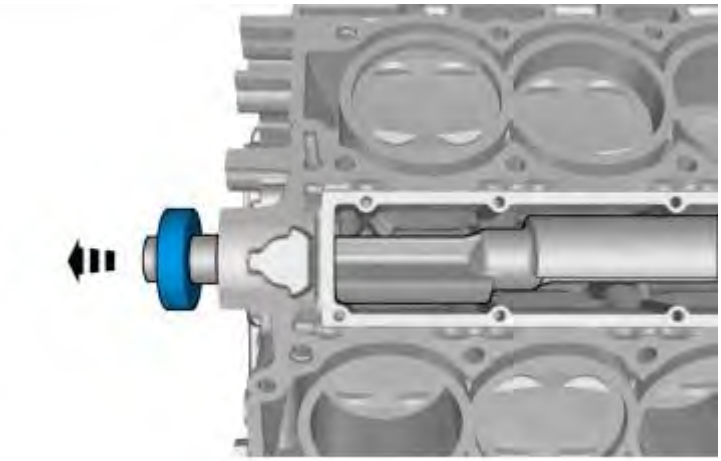

Fig. 6: Removing Bearing
Courtesy of VOLVO CARS CORPORATION

CAUTION: Note the position of each component before removal.

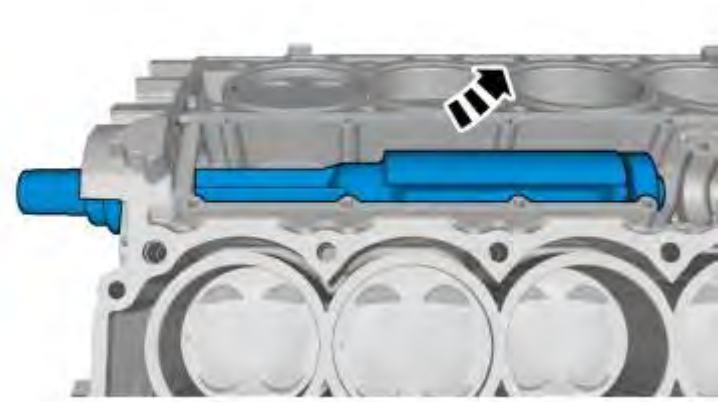

Fig. 7: Removing Balance Shaft
Courtesy of VOLVO CARS CORPORATION

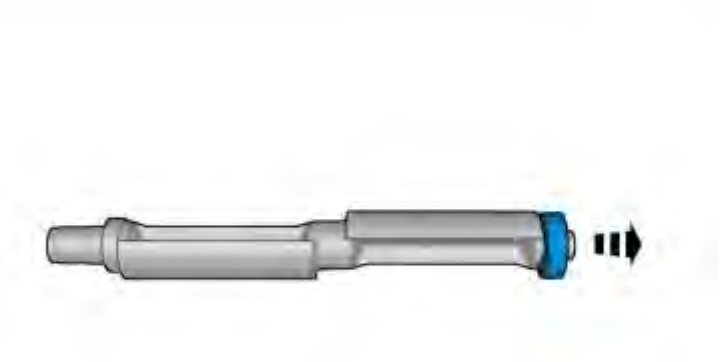

Fig. 8: Removing Rear Bearing
Courtesy of VOLVO CARS CORPORATION

VEHICLES WITH ENGINE SERIAL NUMBER UP TO 6833.

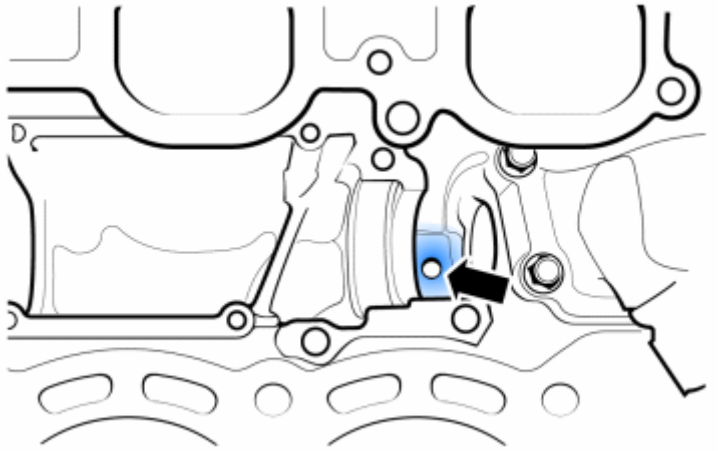

Fig. 9: Locating Hole
Courtesy of VOLVO CARS CORPORATION

VEHICLES WITH ENGINE SERIAL NUMBER UP TO 6833.

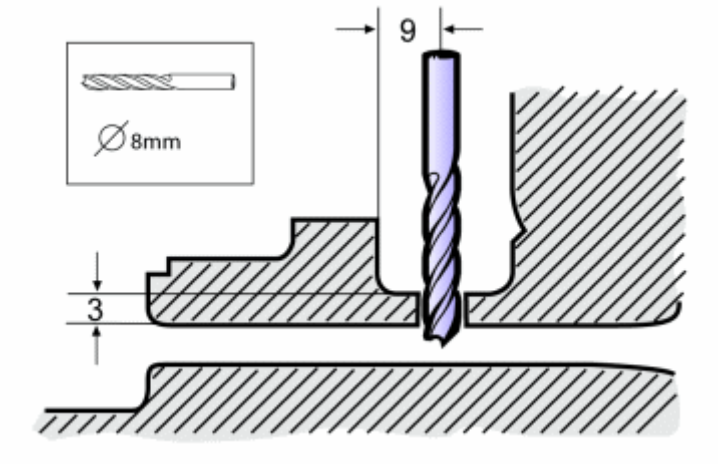

Fig. 10: Enlarging Hole to 8mm
Courtesy of VOLVO CARS CORPORATION

ALL VEHICLES

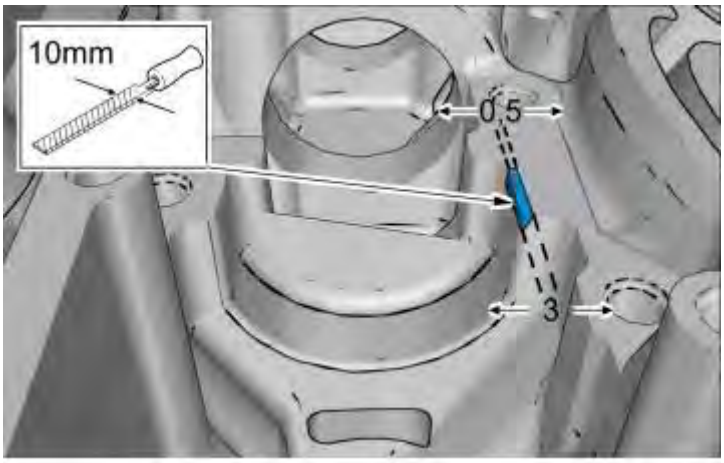

Fig. 11: Adding a Bevel Edge
Courtesy of VOLVO CARS CORPORATION

CAUTION: Make sure that the area around the component is clean and free of foreign material.

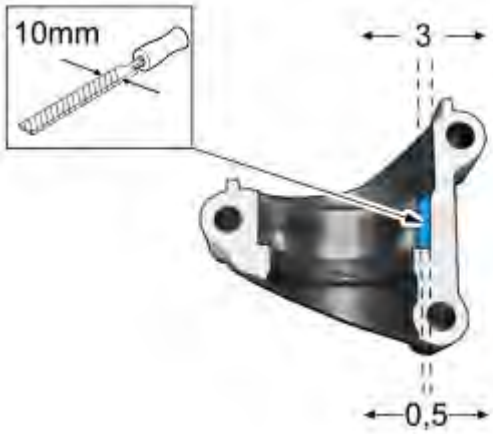

Fig. 12: Adding a Bevel Edge
Courtesy of VOLVO CARS CORPORATION

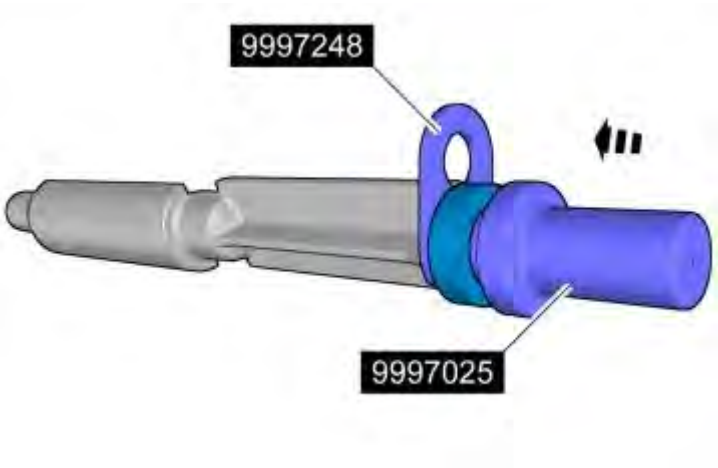

Fig. 13: Installing New Bearing Using Position Setter 9997248
Courtesy of VOLVO CARS CORPORATION

see **9997248** see **9997025**

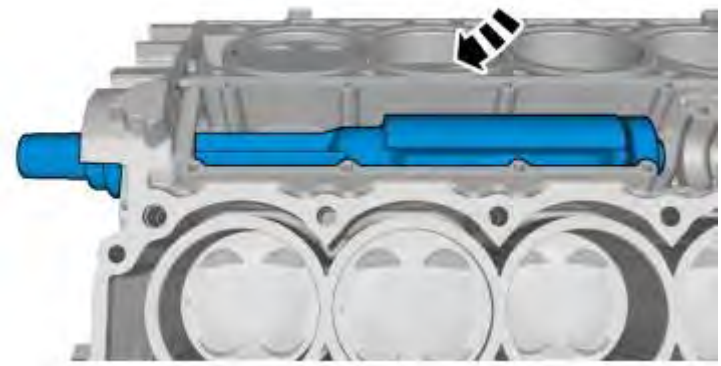

Fig. 14: Installing Balance Shaft
Courtesy of VOLVO CARS CORPORATION

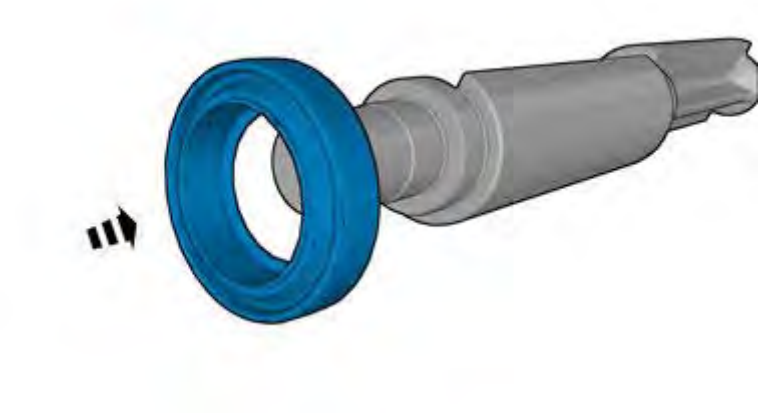

Fig. 15: Locating Seal
Courtesy of VOLVO CARS CORPORATION

NOTE: **Make sure that these components are installed to the noted removal position.**

NOTE: **Make sure that the seal is correctly located.**

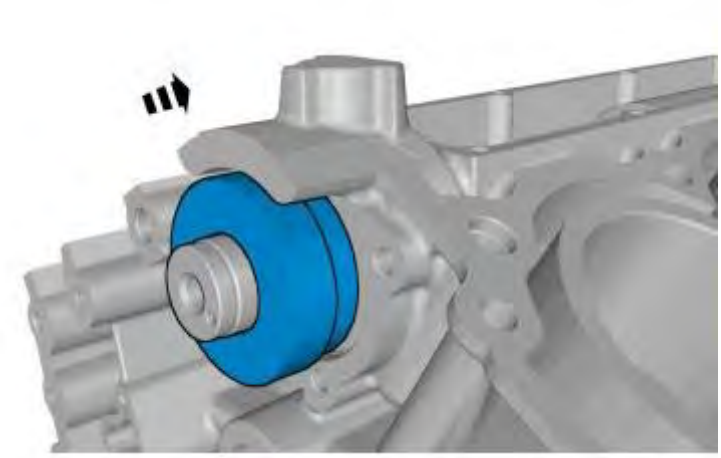

Fig. 16: Positioning Bearing
Courtesy of VOLVO CARS CORPORATION

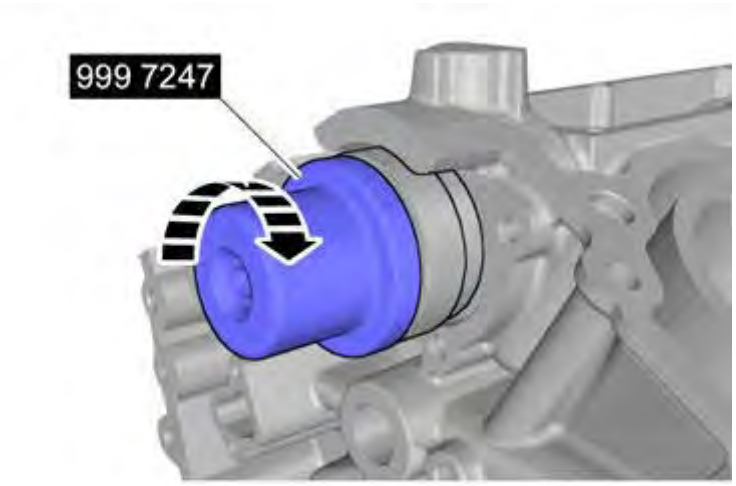

Fig. 17: Locating Seal
Courtesy of VOLVO CARS CORPORATION

see **9997247**

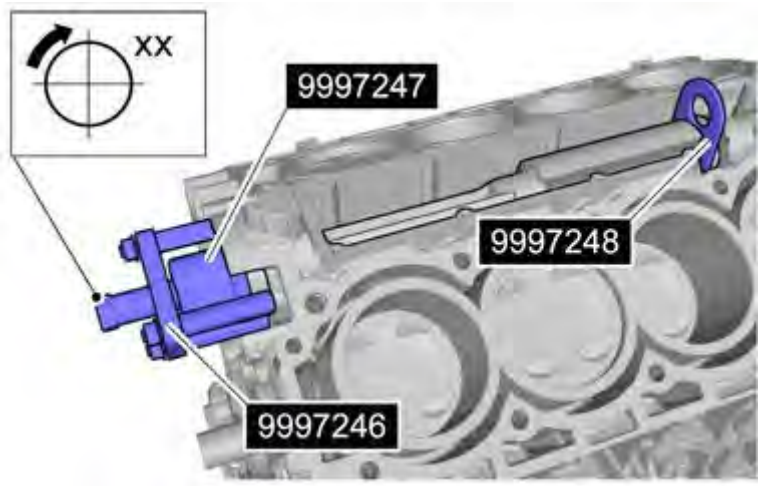

Fig. 18: Installing with Tools 9997246, 9997247, 9997248
Courtesy of VOLVO CARS CORPORATION

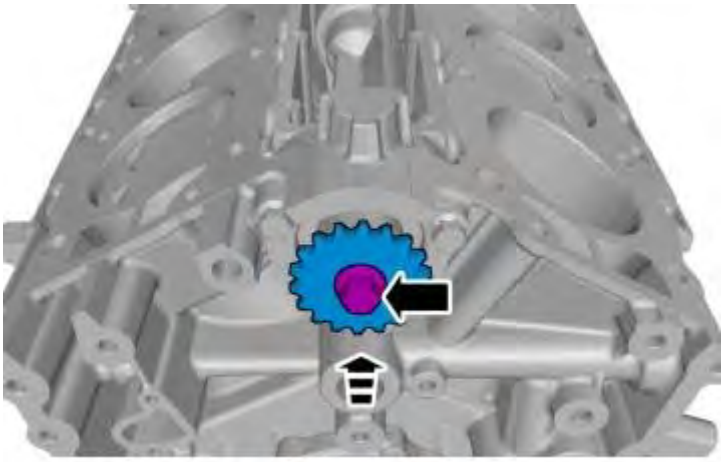

Fig. 19: Installing (Retainer) and Gear
Courtesy of VOLVO CARS CORPORATION

Torque: M10

50 Nm

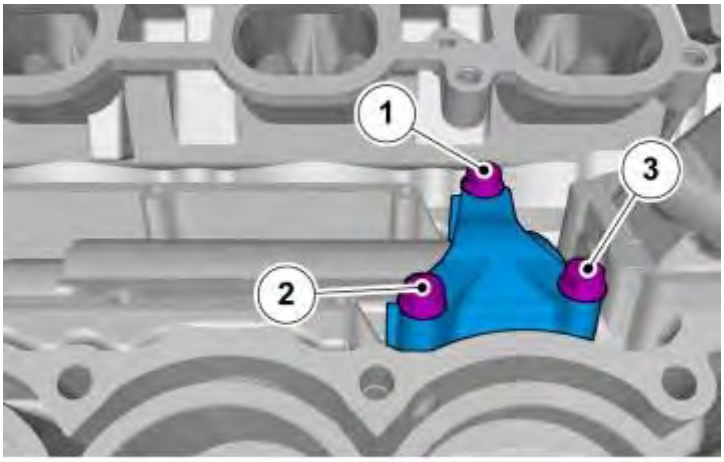

Fig. 20: Installing Bearing Holder
Courtesy of VOLVO CARS CORPORATION

Torque: M8

24 Nm

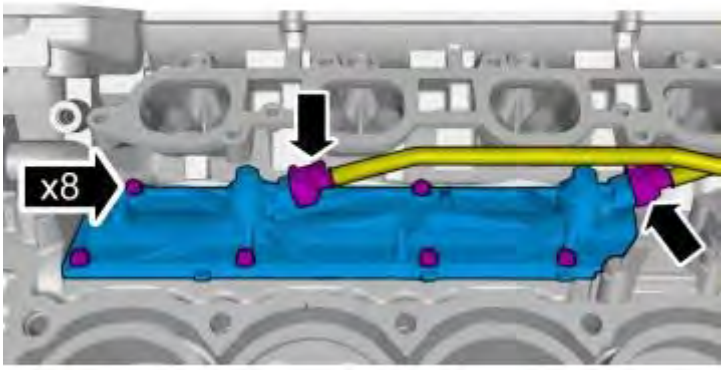

Fig. 21: Removing/Installing Connectors and Plate
Courtesy of VOLVO CARS CORPORATION

Torque: M6

10 Nm

BELT DRIVE (B5254T2; 2005-2007)

BELT DRIVE, ASSEMBLY

Special tools:

see **9995747**

see **9995451**

see **9995452**

see **9995433**

NOTE: **As the illustrations in this service information are used for different model years and / or models, some variation may occur. However, the essential information in the illustrations is always correct.**

TIGHTENING TORQUE

For tightening torques not in the text, see **TIGHTENING TORQUE** .

INSTALLING THE WATER PUMP

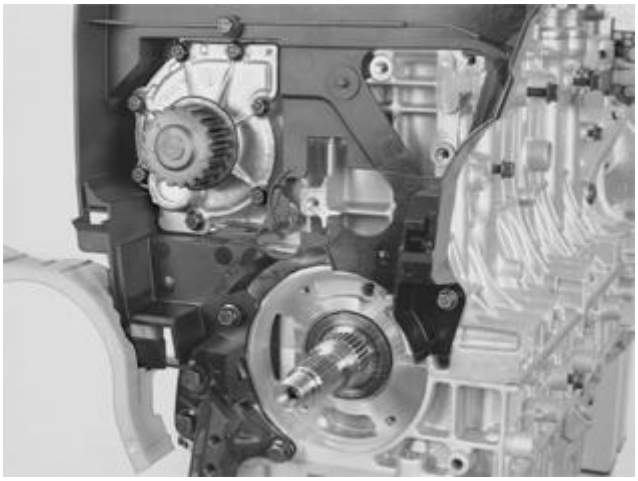

Fig. 22: Identifying Water Pump
Courtesy of VOLVO CARS CORPORATION

Install the rear timing cover.

Screw into place at the three mounting points.

Install the water pump with a **new gasket** .

Apply thread sealant, P/N 11-61 056, to all the screws for the water pump. Tighten the screws crosswise.

INSTALLING THE OIL PUMP

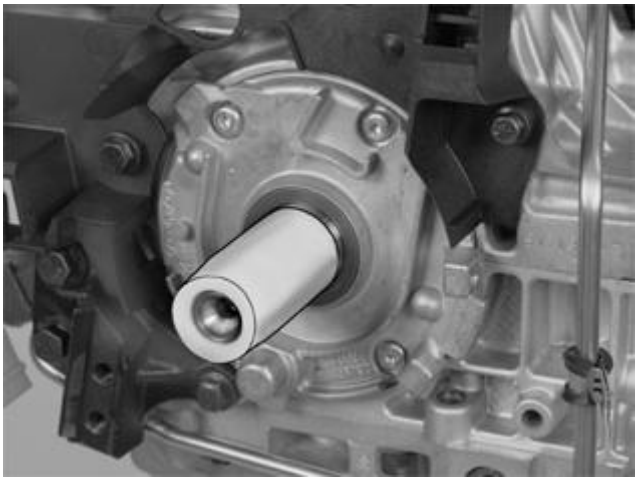

Fig. 23: Identifying Oil Pump And Special Tool 999 5747
Courtesy of VOLVO CARS CORPORATION

Use a new gasket and a new O-ring around the oil pump housing and new screws. Alternatively, apply thread sealant 11 61 056 to the underside of the old screw heads.

Screw sliding sleeve see **9995747** into place at the front of the crankshaft journal.

Press in the pump over the sliding sleeve.

Install the screws as a guide.

Carefully tap in the oil pump with a rubber mallet.

Tighten the oil pump crosswise. See **SUMMARY OF SPECIFIC COMPONENTS AND TIGHTENING TORQUES** .

Remove the sliding sleeve see **9995747** .

INSTALLING FRONT CRANKSHAFT SEAL

See **OIL PUMP / CRANKSHAFT SEAL, FRONT, REPLACING** .

INSTALLING THE CRANKSHAFT TIMING GEAR PULLEY

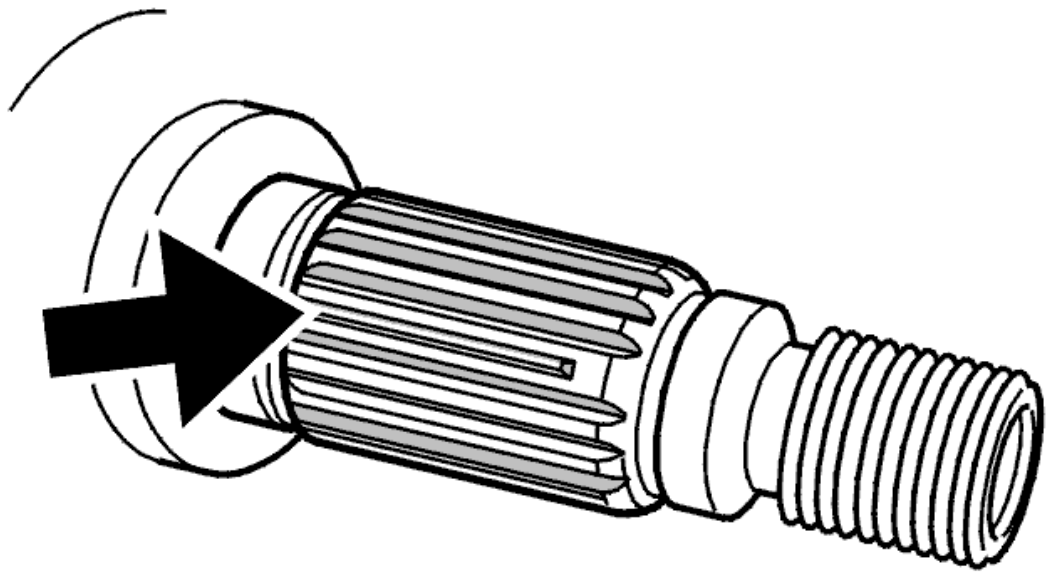

Fig. 24: Crankshaft Timing Gear Pulley
Courtesy of VOLVO CARS CORPORATION

NOTE: **The timing gear pulley can only be installed in one position on the crankshaft journal splines (see the illustration).**

Carefully tap in the timing gear pulley with a rubber mallet.

INSTALLING THE IDLER PULLEY AND BELT TENSIONER

Fig. 25: Identifying Idler Pulley And Belt Tensioner
Courtesy of VOLVO CARS CORPORATION

Install:

- idler pulley. Tighten
- the belt tensioner and the center screw so that the tensioner fork is centered over the cylinder block rib. Do **not** tighten
- the lower belt guard at the oil pump
- the fuel delivery line.

INSTALLING THE TIMING GEAR PULLEY FOR THE CAMSHAFTS

NOTE: **The purpose of the "Installing the timing gear pulley" section described here is to ensure that the VVT unit is correctly positioned and to reset the camshaft timing gear pulley to the correct position using the markings made at the factory. This is to ensure that the conditions are correct for any later fault-tracing.**

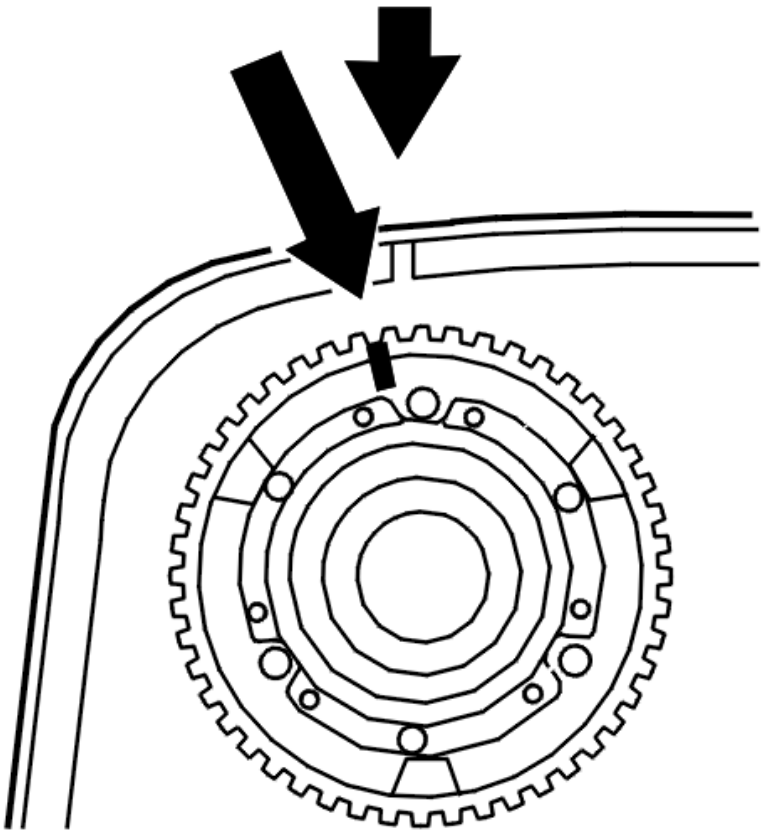

Fig. 26: Identifying Timing Gear Markings
Courtesy of VOLVO CARS CORPORATION

NOTE: Do not turn counter clockwise during this procedure.

Slacken off, but do not remove, the screws which secure the timing gear pulley to the variable valve timing unit.

Press the variable valve timing unit and timing gear pulley onto the camshaft.

Install the center screw which secures the variable valve timing unit to the camshaft. Tighten slightly. Turn the variable valve timing unit **counter-clockwise** as far as it will go. Remove the center screw.

Position the upper timing cover.

Turn the timing gear pulley **clockwise** until the screws at the oval holes are in the limit position. Continue turning **clockwise** until the timing gear pulley marking is **1 cogs** before the marking on the upper timing cover.

Check that the timing gear pulley is still in the limit position in the oval holes. Tighten the center screw in the variable valve timing unit. Tighten. See **SUMMARY OF SPECIFIC COMPONENTS AND TIGHTENING TORQUES** .

Check that the variable valve timing unit does not rotate when tightening. Install and tighten the center plug. See **SUMMARY OF SPECIFIC COMPONENTS AND TIGHTENING TORQUES** .

Turn the variable valve timing unit **clockwise** to the limit position.

Turn the timing gear pulley so that the markings correspond.

INSTALLING THE VARIABLE VALVE TIMING (VVT) UNIT ON THE INTAKE CAMSHAFT

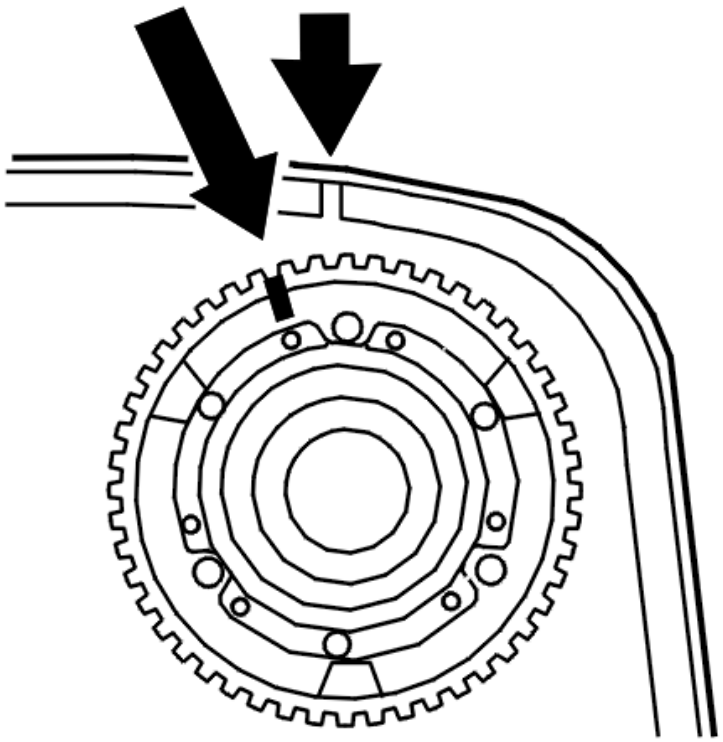

Fig. 27: Identifying Timing Gear Markings
Courtesy of VOLVO CARS CORPORATION

NOTE: Do not turn counter clockwise during this procedure.

Slacken off, but do not remove, the screws which secure the timing gear pulley to the variable valve timing unit. Press the variable valve timing unit and timing gear pulley onto the camshaft.

Install the center screw which secures the variable valve timing unit to the camshaft. Tighten slightly.

Turn the variable valve timing unit **counter-clockwise** as far as it will go. Remove the center screw. Position the upper timing cover.

Turn the timing gear pulley **clockwise** until the screws at the oval holes are in the limit position. Continue turning **clockwise** until the timing gear pulley marking is **1 1/2 cogs** before the marking on the upper timing cover.

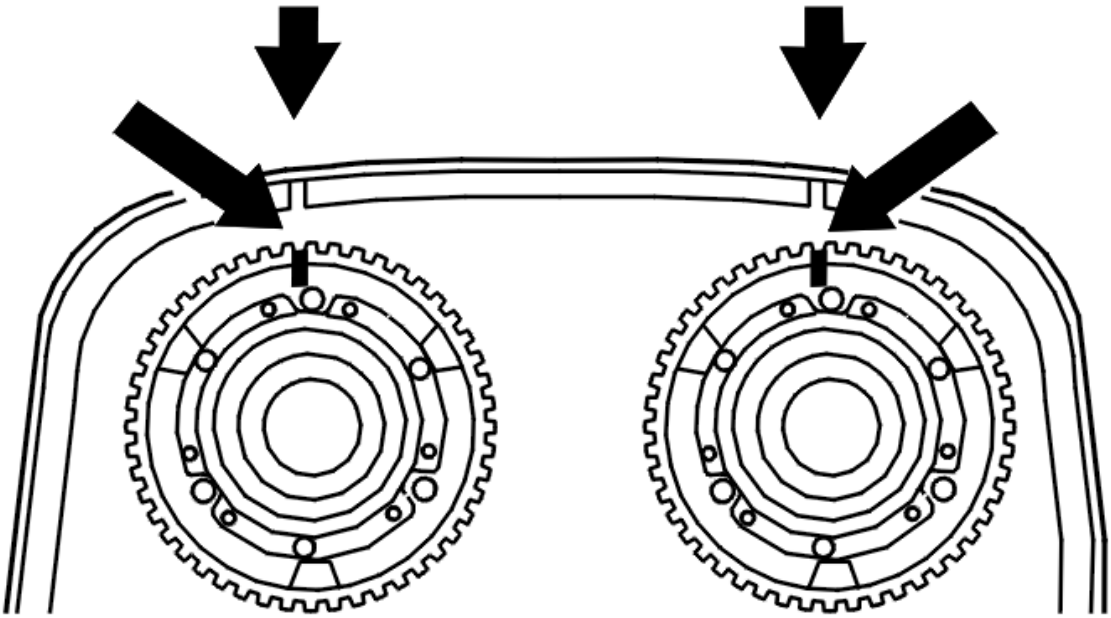

Fig. 28: Identifying Timing Gear Pulley & Upper Timing Cover Markings Aligned
Courtesy of VOLVO CARS CORPORATION

Check that the timing gear pulley is still in the limit position in the oval holes.

Tighten the center screw in the VVT unit. See **SUMMARY OF SPECIFIC COMPONENTS AND TIGHTENING TORQUES** .

Check that the variable valve timing unit does not rotate when tightening. Install the center plug. Tighten. See **SUMMARY OF SPECIFIC COMPONENTS AND TIGHTENING TORQUES** .

Turn the variable valve timing unit clockwise to the limit position. Turn the timing gear pulley so that the markings correspond.

FINISHING

Tighten the center screw on the timing belt tensioner. Tighten to **5 Nm** .

INSTALLING THE TIMING BELT

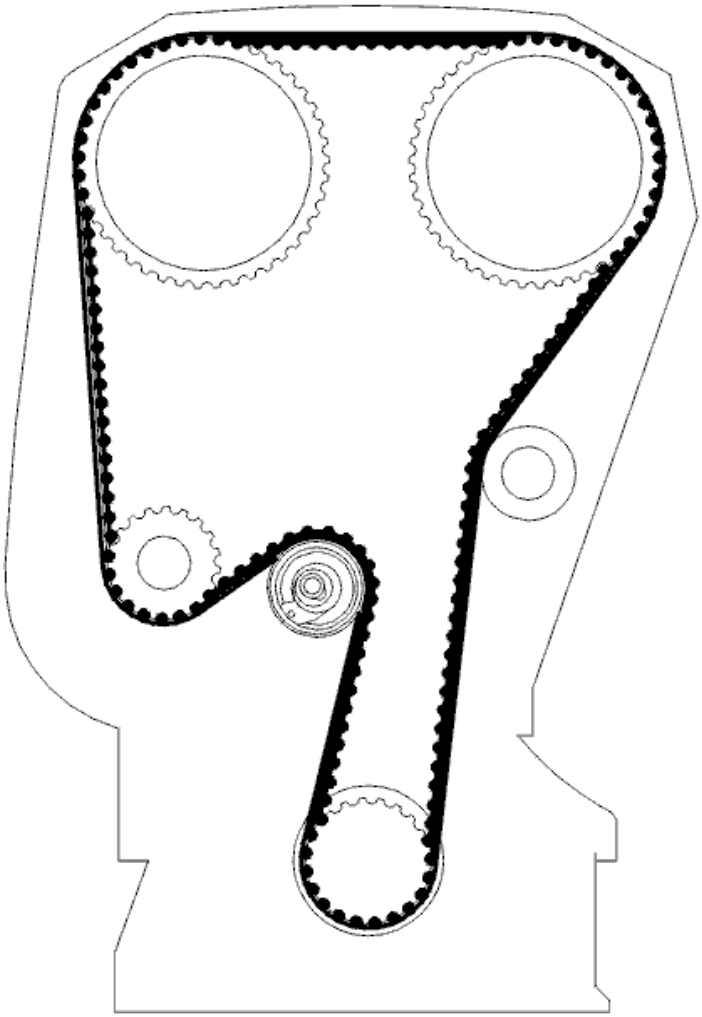

Fig. 29: Camshaft Belt Routing
Courtesy of VOLVO CARS CORPORATION

Install the belt in the following order:

- crankshaft
- the idler pulley
- intake camshaft
- exhaust camshaft
- coolant pump
- belt tensioner.

NOTE: **The variable valve timing units do not have a return spring and are easily dislodged when reinstalling the timing belt. Check that the markings are**

correct.

ADJUSTING THE TIMING BELT

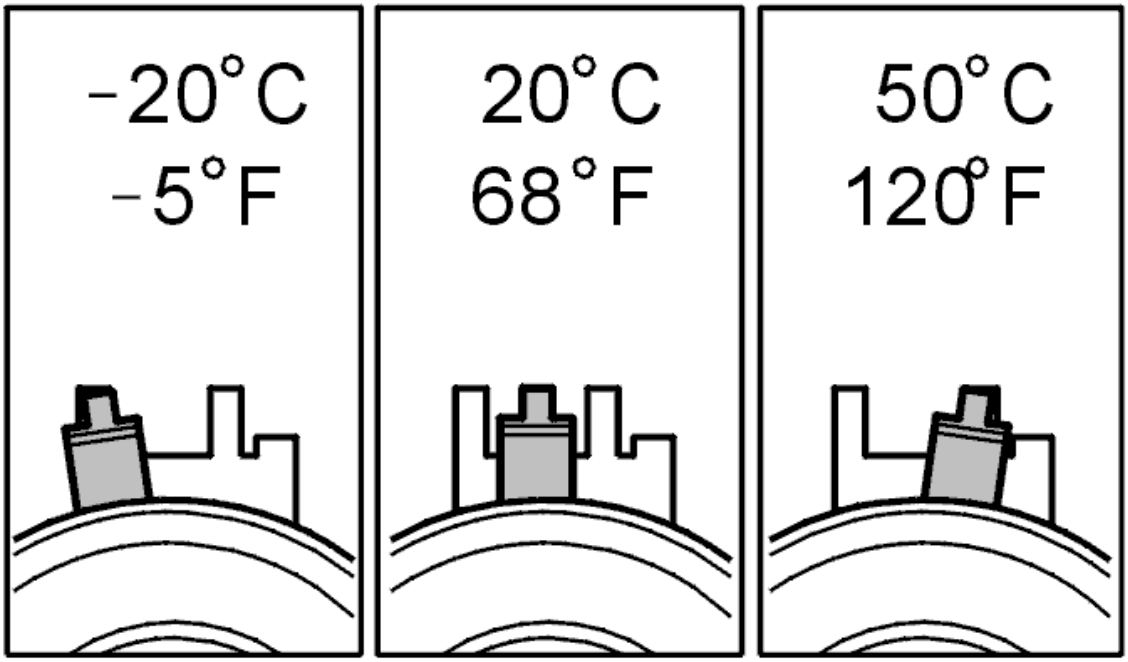

Fig. 30: Identifying Needle Position At Varying Temperatures
Courtesy of VOLVO CARS CORPORATION

This adjustment is to be made with a cold engine. A suitable temperature is approximately **20°C/68°F** .

At higher temperatures (with the engine at operating temperature or a high outside temperature for example) the indicator is further to the right.

The illustration shows the position of the indicator when aligning the timing belt tensioner at different temperatures.

Hold the center screw secure and turn the belt tensioner eccentric clockwise until the tensioner indicator passes the marked position and reaches the limit position.

Tighten the 3 screws on the exhaust camshaft timing gear pulley. Tighten. See **TIGHTENING TORQUE** .

Tighten the 3 screws on the intake camshaft timing gear pulley. Tighten. See **TIGHTENING TORQUE** .

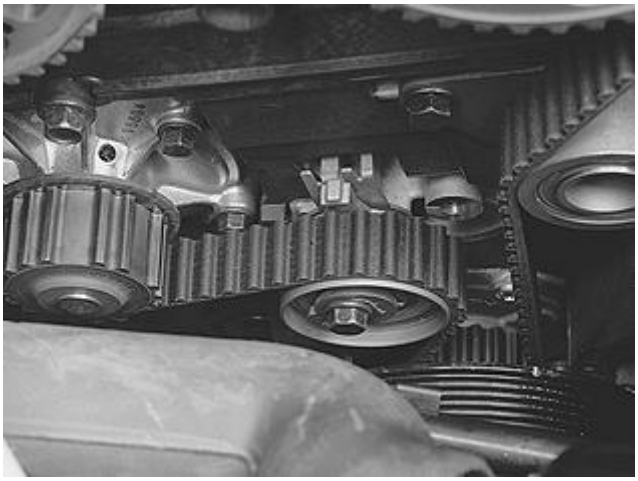

Fig. 31: Viewing Belt Between Tensioner Pulley, Idler Pulley And Crankshaft
Courtesy of VOLVO CARS CORPORATION

NOTE: Check that the variable valve timing units are in the limit position.

Turn the eccentric back so that the indicator reaches the marked position in the center of the window.

Remember to hold the center screw secure at the same time.

Hold the eccentric secure. Tighten the center screw. Tighten. See **SUMMARY OF SPECIFIC COMPONENTS AND TIGHTENING TORQUES** .

Check that the indicator is in the correct position.

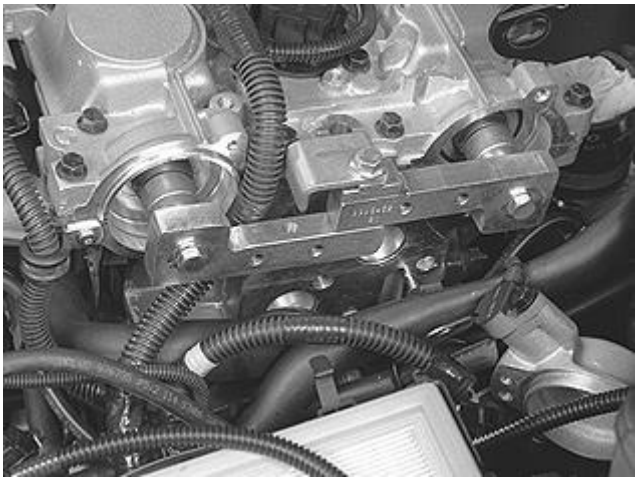

Fig. 32: Camshaft Adjustment Tool 999 5452 Installed
Courtesy of VOLVO CARS CORPORATION

Remove:

- camshaft adjustment tools see **9995452** from the rear edge of the camshafts

- crankshaft stop see **9995451**
- the plug with a new sealing washer. Tighten. See **TIGHTENING TORQUE** .

CHECKING THE MARKINGS AND BELT TENSION

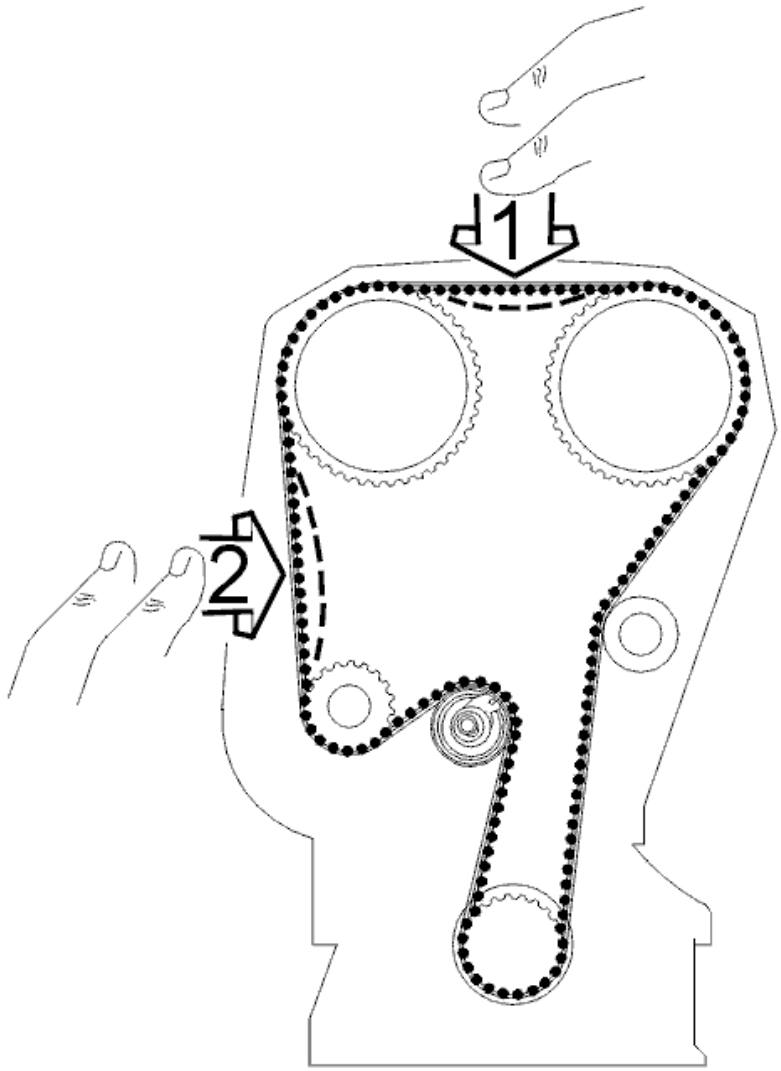

Fig. 33: Checking Timing Belt Tension
Courtesy of VOLVO CARS CORPORATION

Press the timing belt to check that the indicator on the belt tensioner moves easily.

Position the upper timing cover.

Turn the crankshaft 2 rotations and check that the markings on the crankshaft and camshaft pulleys correspond.

Check that the indicator on the belt tensioner is within the marked area.

Remove the upper timing cover.

INSTALLING THE VIBRATION DAMPER

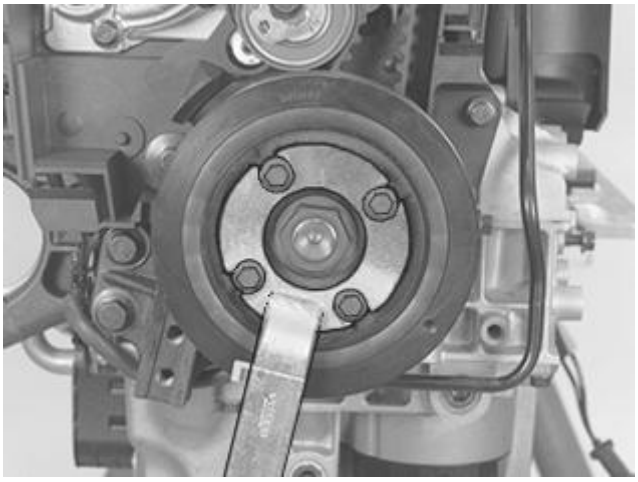

Fig. 34: Identifying Vibration Damper And Special Tool 999 5433
Courtesy of VOLVO CARS CORPORATION

Install:

- the vibration damper. Use counterhold see **9995433**
- the crankshaft center nut. Tighten. See **SUMMARY OF SPECIFIC COMPONENTS AND TIGHTENING TORQUES** . Remove counterhold see **9995433**
- the 4 screws. Tighten. See **SUMMARY OF SPECIFIC COMPONENTS AND TIGHTENING TORQUES** . Use the crankshaft center screw as a counterhold.

CHECKING THE MARKINGS AND BELT TENSION

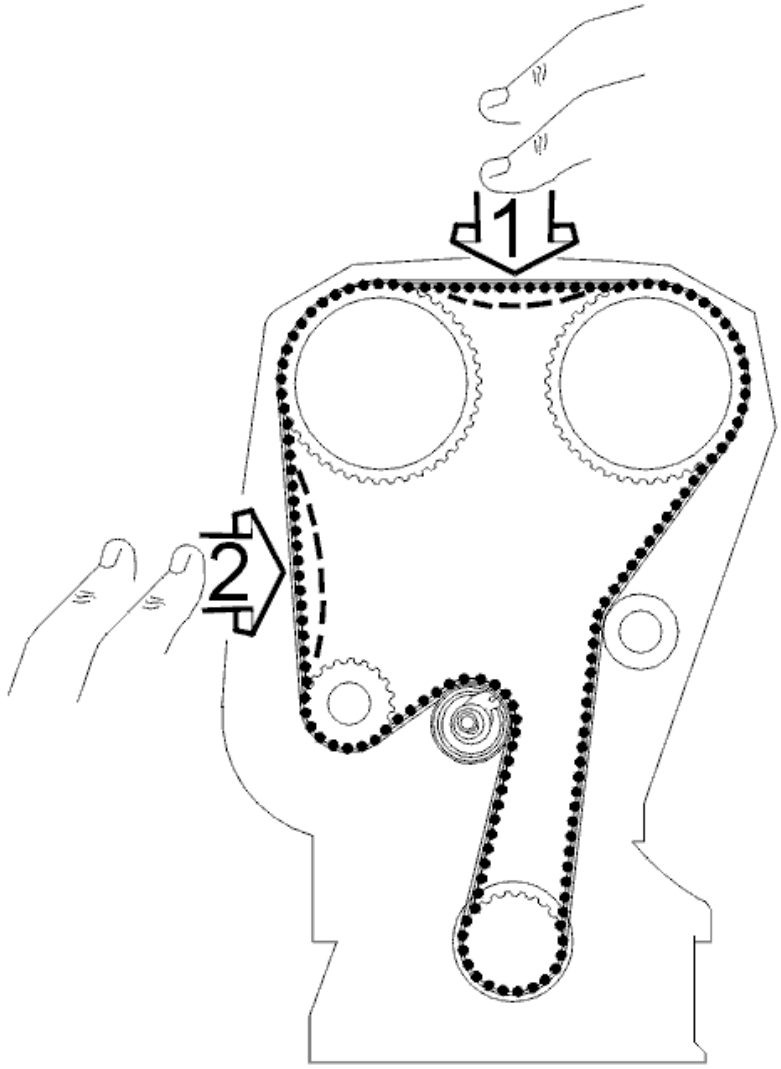

Fig. 35: Checking Timing Belt Tension
Courtesy of VOLVO CARS CORPORATION

Press the timing belt to check that the indicator on the belt tensioner moves easily.

Position the upper timing cover.

Turn the crankshaft two turns. Check that the markings on the crankshaft and timing gear pulley match up with the markings on the oil pump and upper timing cover respectively.

Check that the indicator on the belt tensioner is within the marked area.

OIL PUMP / CRANKSHAFT SEAL, FRONT, REPLACING

Special tools:

see **9995433**

see **9986187**

see **9995919**

see **9995455**

see **9512050**

NOTE: **As the illustrations in this service information are used for different model years and / or models, some variation may occur. However, the essential information is always correct.**

REMOVAL

REMOVING THE ENGINE COMPONENTS

Fig. 36: Engine Compartment Components
Courtesy of VOLVO CARS CORPORATION

WARNING: **Ensure that the no servo oil overflows from the servo and expansion tanks. Extremely flammable.**

CAUTION: **Remove the ignition key.**

Remove:

- the cross stay between the suspension turrets
- the upper timing belt cover
- the servo reservoir and expansion tank. Lift them up and place them on top of the engine

- the auxiliaries belt
- the front timing belt cover.

ENGINE ADJUSTMENT ACCORDING THE MARKINGS

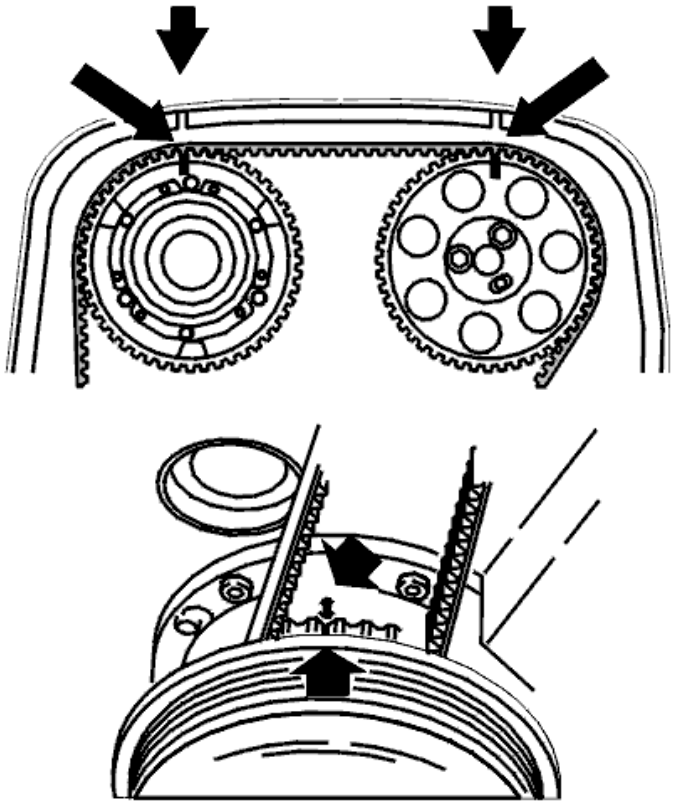

Fig. 37: Crankshaft And Camshafts Markings
Courtesy of VOLVO CARS CORPORATION

Raise the vehicle. See: **JACKING POINTS, BODY** .

Remove the right-hand front wheel.

Install the upper timing belt cover.

Turn the crankshaft **clockwise** until the markings on the crankshaft and camshaft pulleys correspond.

Turn a further **1/4** turn clockwise and then back counter-clockwise until the markings correspond.

Remove the upper camshaft cover.

REMOVING TIMING BELT

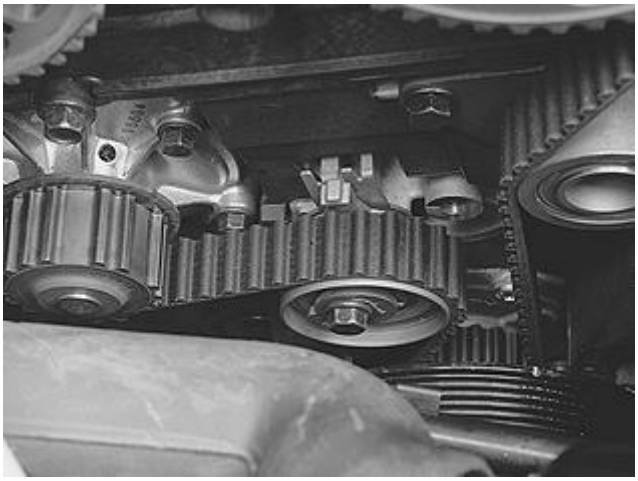

Fig. 38: Viewing Belt Between Tensioner Pulley, Idler Pulley And Crankshaft
Courtesy of VOLVO CARS CORPORATION

Slacken off the center screw for the belt tensioner slightly.

Hold the center screw in place. Turn the tensioner eccentric clockwise to 10 o'clock. Use a 6 mm Allen key.

Remove the timing belt.

REMOVING THE VIBRATION DAMPER

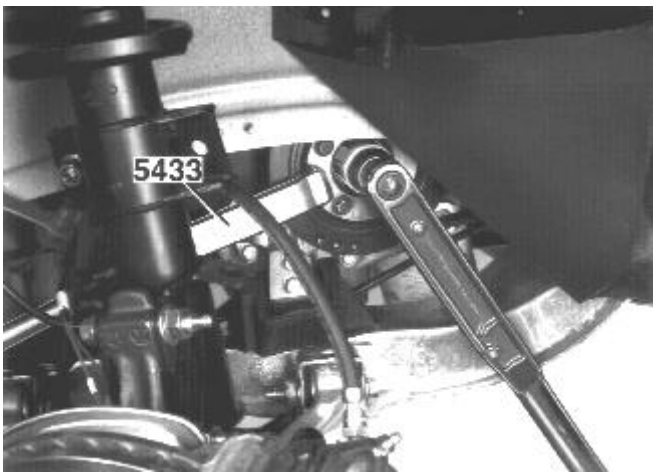

Fig. 39: Identifying Vibration Damper & Counterhold 9995433
Courtesy of VOLVO CARS CORPORATION

Install counterhold: see **9995433** .

Counterhold and remove the crankshaft center nut.

Work the vibration damper loose and remove by hand.

Remove the camshaft belt.

REMOVING THE CRANKSHAFT PULLEY

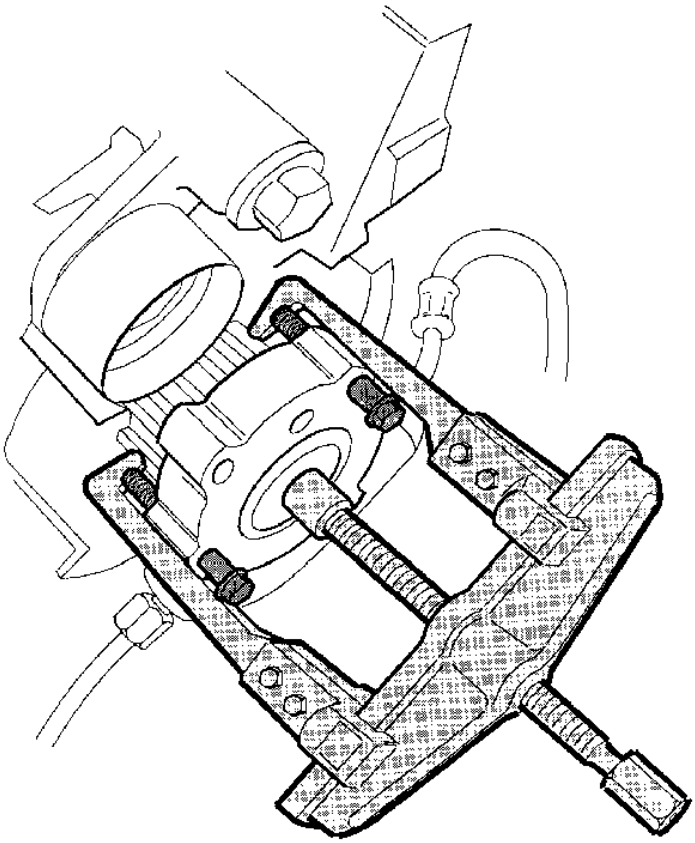

Fig. 40: Identifying Crankshaft Belt Pulley Removal
Courtesy of VOLVO CARS CORPORATION

Use: see **9986187** and two of the vibration damper screws.

Tighten both the screws by hand to stop in the pulley.

CAUTION: Ensure that the tool claws do not damage the pulley teeth.

Install the puller so that the claws engage in the screws, not in the camshaft pulley.

WHEN ONLY REPLACING THE FRONT CRANKSHAFT SEAL

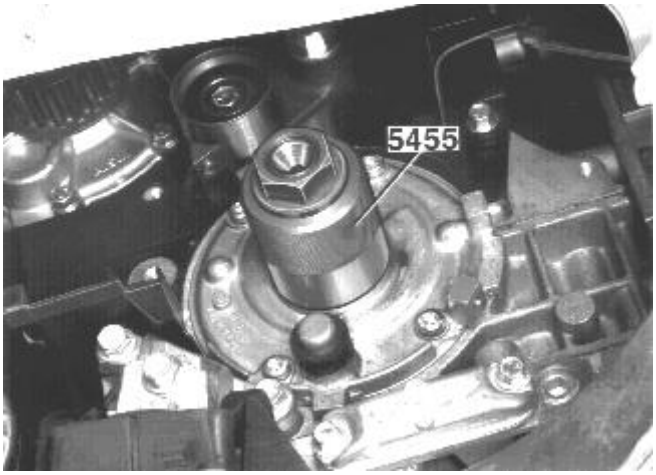

Fig. 41: Identifying Seal Installation Using Tool 9995455
Courtesy of VOLVO CARS CORPORATION

CAUTION: Ensure that the crankshaft does not rotate when pressing in the crankshaft seal.

Remove the old seal using a groove-cut chisel or: see **9995919** .

Clean the mating surface.

Grease and install a new seal.

Use tool: see **9995455** .

Press in the seal using a drift and the crankshaft center nut. As illustrated.

REMOVING THE OIL PUMP

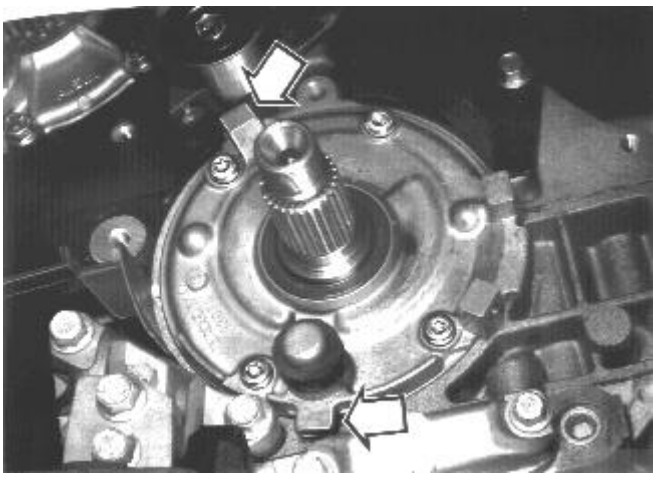

Fig. 42: Identifying Oil Pump Stop Lugs
Courtesy of VOLVO CARS CORPORATION

Remove:

- the 4 x oil pump screws
- the oil pump. **Carefully** break at the stop lugs. Use a groove-cut chisel.

Clean the gasket face and the mating surfaces.

INSTALLATION

NOTE: For tightening torques, see: TIGHTENING TORQUE .

INSTALLING THE OIL PUMP

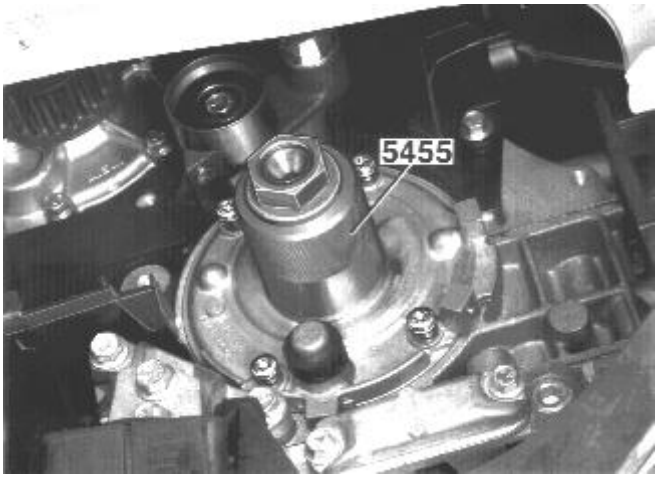

Fig. 43: Identifying Oil Pump And Special Tool 999 5455
Courtesy of VOLVO CARS CORPORATION

Install:

- a new oil pump
- a new gasket.

CAUTION: Ensure that the sealing ring in the oil pump is not damaged during installation

Carefully insert the oil pump over the end of the crankshaft.

Install 4 x new screws as guides.

NOTE: Ensure that the crankshaft does not rotate when drawing in the pump.

Pull in the oil pump with drift: see **9995455** and the crankshaft center nut.

Tighten the screws alternately.

NOTE: The timing gear pulley can only be in one position on the splines on the end of the crankshaft.

Install the crankshaft timing gear pulley.

Carefully tap alternately around the pulley until end position is reached.

INSTALLING THE VIBRATION DAMPER

Fig. 44: Identifying Vibration Damper & Counterhold 9995433
Courtesy of VOLVO CARS CORPORATION

Install the vibration damper.

Tighten the center nut. See: **SUMMARY OF SPECIFIC COMPONENTS AND TIGHTENING TORQUES** .

Use: see **9995433** .

Remove the counterhold. Tighten and angle-tighten the screws. Use protractor: see **9512050** .

INSTALLING TIMING BELT

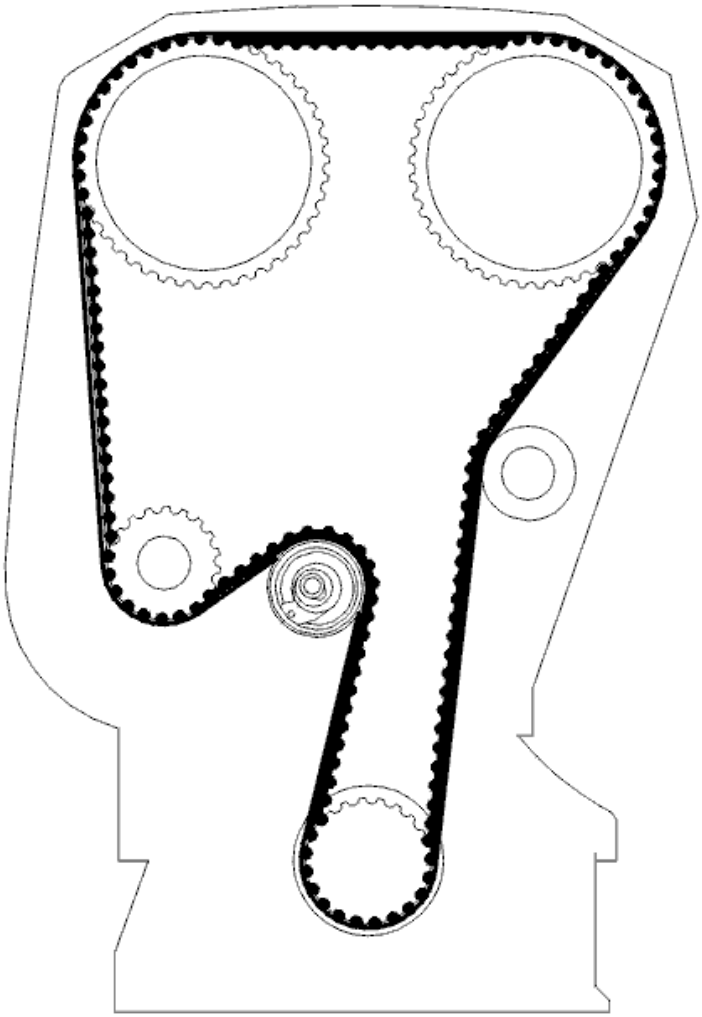

Fig. 45: Camshaft Belt Routing
Courtesy of VOLVO CARS CORPORATION

Install the upper timing belt cover.

Check that the markings on the crankshaft and camshaft timing gear pulley correspond.

Install the belt in the following order:

- crankshaft
- the idler pulley
- intake camshaft
- exhaust camshaft
- water pump
- belt tensioner.

INSTALLING THE TIMING BELT

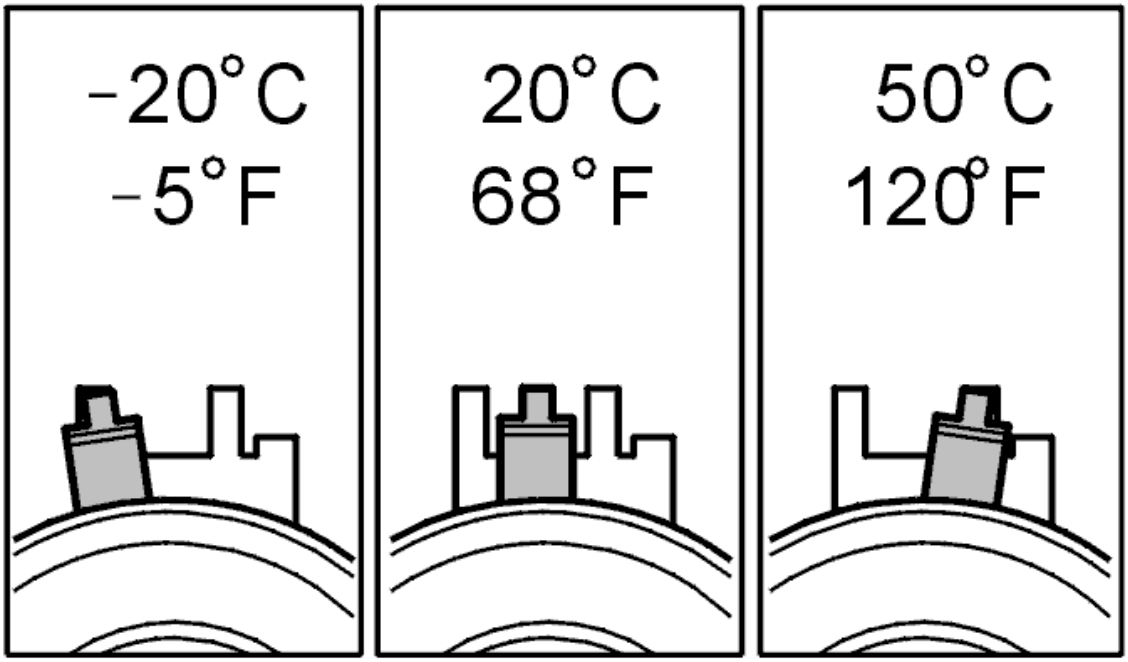

Fig. 46: Identifying Needle Position At Varying Temperatures
Courtesy of VOLVO CARS CORPORATION

This adjustment is to be made with a cold engine. Suitable temperature is approximately 20°C/68°F.

At higher temperatures (with the engine at operating temperature or a high outside temperature for example) the indicator is further to the right.

The illustration shows the position of the indicator when aligning the timing belt tensioner at different temperatures.

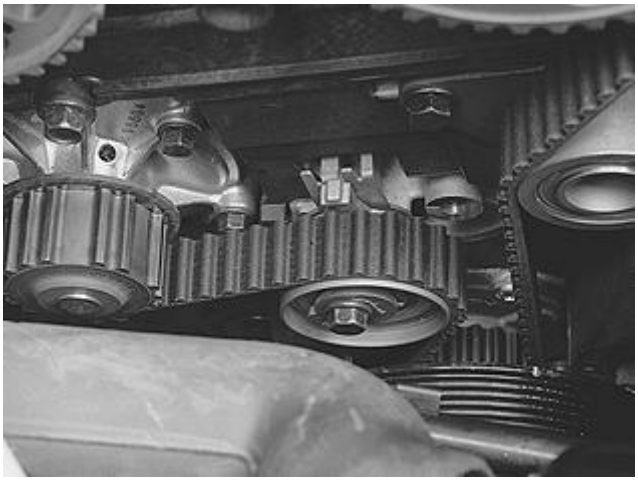

Fig. 47: Viewing Belt Between Tensioner Pulley, Idler Pulley And Crankshaft
Courtesy of VOLVO CARS CORPORATION

Turn the crankshaft carefully clockwise until the timing belt is in tensioned positioned (tensioned between intake cam, idler pulley and crankshaft).

Hold the belt tensioner center screw secure. Turn the belt tensioner eccentric counter-clockwise until the tensioner indicator passes the marked position. Turn the eccentric back until the indicator reaches the marked position in the center of the window.

Hold the eccentric secure. Tighten the center screw. See: **SUMMARY OF SPECIFIC COMPONENTS AND TIGHTENING TORQUES** . Ensure that the indicator is in the correct position.

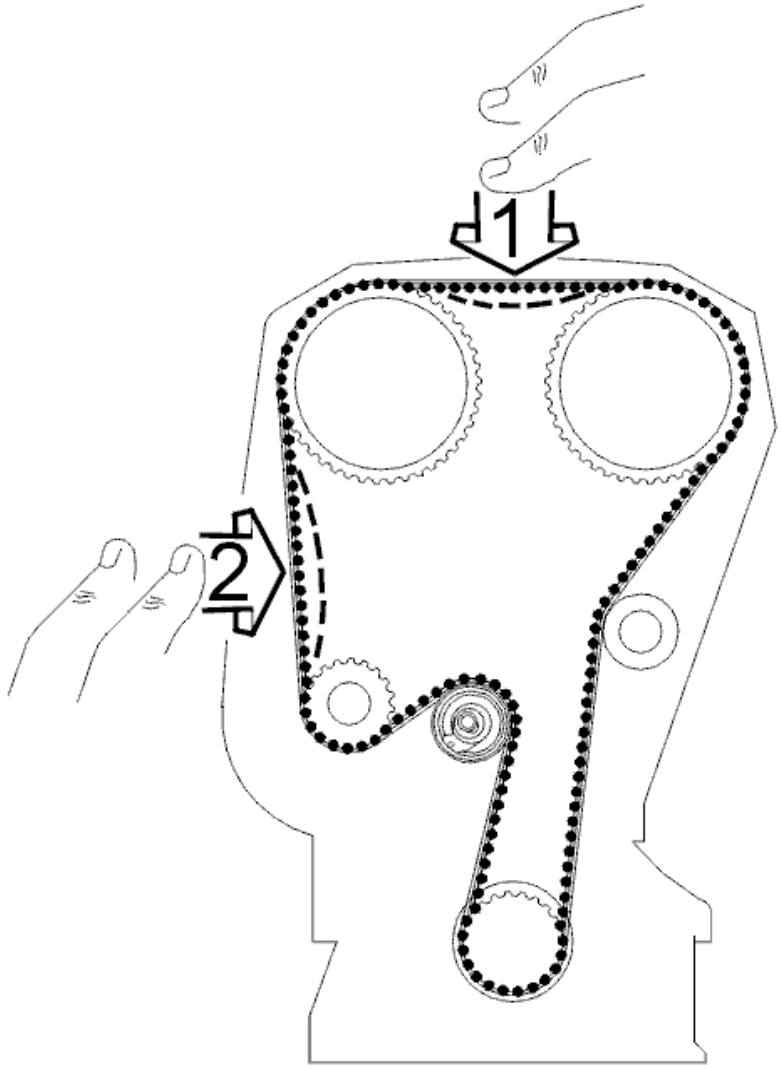

Fig. 48: Pressing Belt To Check That Indicator On Tensioner Moves Easily
Courtesy of VOLVO CARS CORPORATION

Press the belt to, see that the indicator on the tensioner moves easily.

Install the upper camshaft cover.

Turn the crankshaft two turns. Check that the markings on the crankshaft and camshaft pulley correspond.

Check that the indicator on the belt tensioner is within the marked position.

Install:

- the nuts for the cover in the fender liner
- the wheel. See: **INSTALLING WHEELS** .

FINISHING

Fig. 49: Engine Compartment Components
Courtesy of VOLVO CARS CORPORATION

Install:

- the front camshaft cover
- the upper camshaft cover
- the auxiliaries belt
- the expansion tank and servo reservoir.

NOTE: Ensure that the hoses are correctly positioned.

- the engine stabilizer brace. Tighten the screws on the suspension turret.

CHECK THE FUNCTION

Check the oil level. Top up as necessary.

Start the engine.

Check that there is no oil leakage.

Stop the engine and give the oil time to run down into the oil pan.

Then check the oil level.

Top up if necessary.

Wipe the engine compartment clean.

Ensure that the steering wheel and the gear selector lever are clean.

BELT DRIVE, DISMANTLING

Special tools:

see **9995304**

see **9995433**

see **9995747**

NOTE: **As the illustrations in this service information are used for different model years and / or models, some variation may occur. However, the essential information in the illustrations is always correct.**

ALIGNING THE ENGINE ACCORDING TO THE MARKING

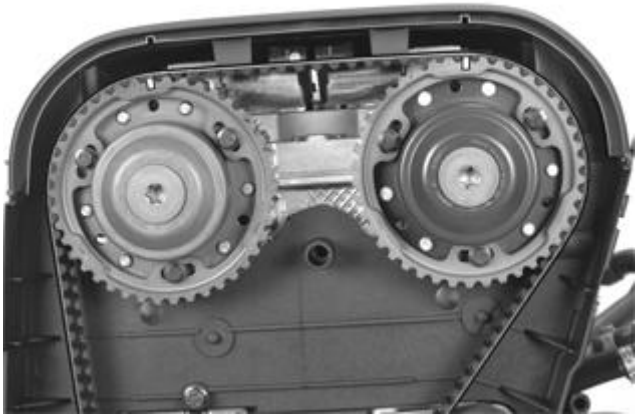

Fig. 50: Identifying Alignment Markings On Upper Timing Belt Cover And Pulleys
Courtesy of VOLVO CARS CORPORATION

Install the upper timing belt cover.

Turn the crankshaft clockwise until the markings on the crankshaft belt pulley and the timing belt pulley are aligned with the markings on the oil pump and the upper timing belt cover.

Remove the upper timing cover.

REMOVING THE VIBRATION DAMPER

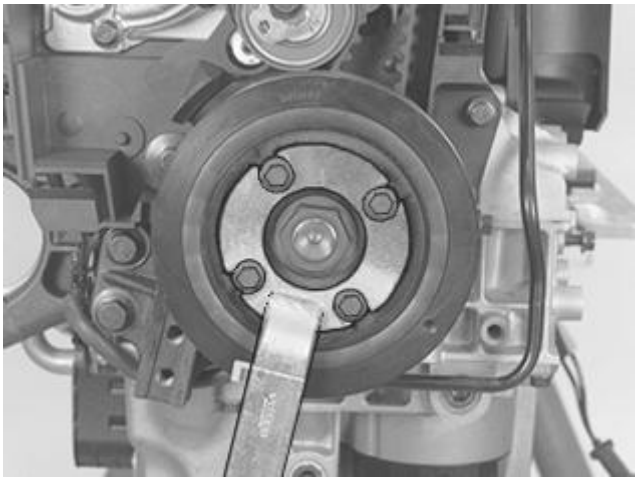

Fig. 51: Identifying Vibration Damper And Special Tool 999 5433
Courtesy of VOLVO CARS CORPORATION

Remove the 4 screws. Use the crankshaft center nut as a counterhold.

Install counterhold see **9995433** . Remove the center nut.

Remove counterhold see **9995433** .

Work the vibration damper loose.

REMOVING THE TIMING BELT

Fig. 52: Identifying Belt Tensioner And Timing Gear Pulley
Courtesy of VOLVO CARS CORPORATION

Slacken off the center screw for the belt tensioner slightly.

Hold the center screw in place. Turn the belt tensioner eccentric clockwise to 10 o'clock using a 6mm Allen key.

Remove the timing belt from the timing gear pulley for the camshafts.

Remove the timing belt.

REMOVING THE CRANKSHAFT PULLEY

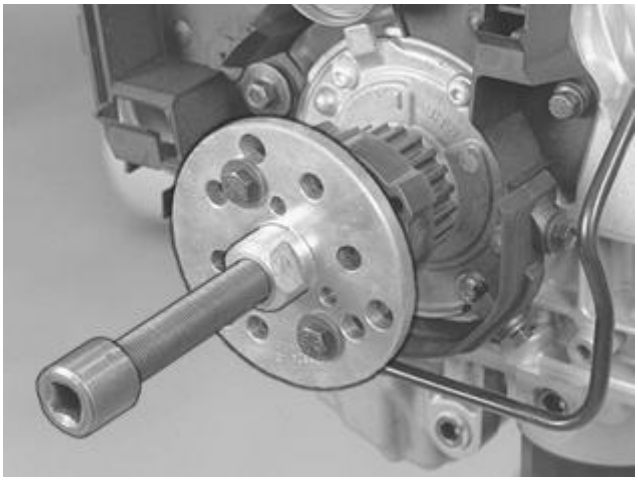

Fig. 53: Removing Crankshaft Pulley with Tool 9995304
Courtesy of VOLVO CARS CORPORATION

CAUTION: The crankshaft must not rotate.

Use puller see **9995304** and two 45 mm M8 screws with washers.

Pull off the timing gear pulley.

REMOVING THE BELT TENSIONER AND IDLER PULLEY

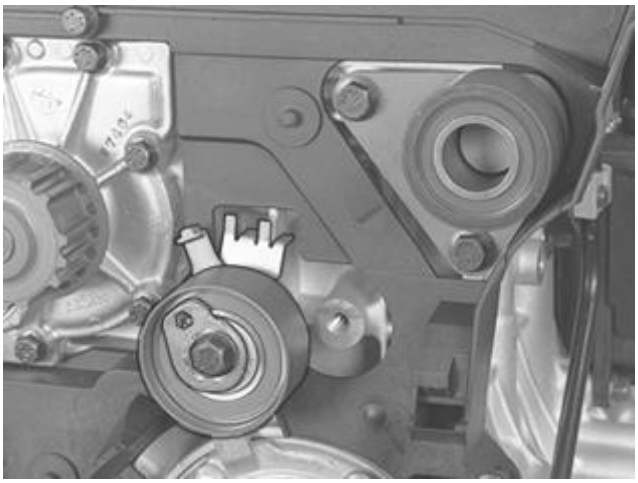

Fig. 54: Belt Tensioner And Idler Pulley
Courtesy of VOLVO CARS CORPORATION

Remove the belt tensioner and idler pulley.

Check the rolling surface and the bearings.

Check for any noise. Check for any play in the bearings.

Check that the rolling surfaces are smooth and clean.

REMOVING THE OIL PUMP

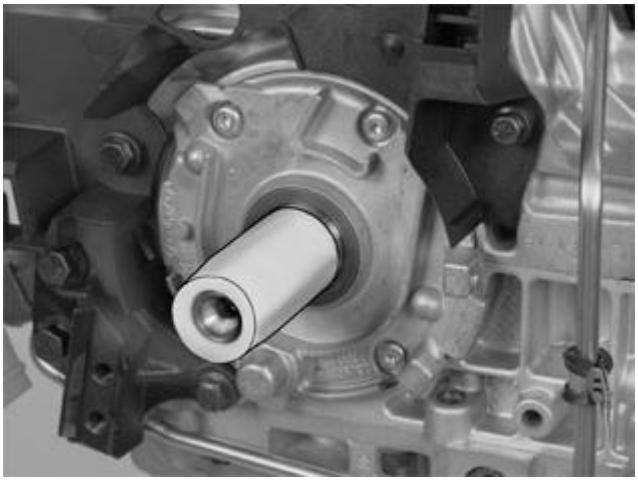

Fig. 55: Identifying Oil Pump And Special Tool 999 5747
Courtesy of VOLVO CARS CORPORATION

Remove the belt protection from the oil pump.

Remove the 4 screws for the oil pump.

Carefully work the oil pump out. Use a groove-cut chisel with stop lugs.

Carefully draw the oil pump past the end of the crankshaft.

Carefully clean the gasket face and mating surfaces.

Remove tool see **9995747** .

CHECKING THE OIL PUMP

Fig. 56: Identifying Oil Pump Replacement Components
Courtesy of VOLVO CARS CORPORATION

Unscrew the oil pump. Note the position of the outer/inner pump wheel and the piston/spring for the relief valve.

Clean and check all components.

Check for damage and wear. Replace the oil pump in the event of a fault.

When replacing the sealing ring.

Carefully tap the sealing ring out. Use a carefully selected drift and hammer.

A new sealing ring is first installed after the pump has been installed in the cylinder block.

ASSEMBLING THE OIL PUMP

Fig. 57: Identifying Oil Pump Assembly
Courtesy of VOLVO CARS CORPORATION

Place the inner and outer pump wheels in the oil pump housing.

The inner pump wheel has a inset surface around the hole for alignment to the crankshaft. The inset surface should be positioned towards the sealing ring in the oil pump housing.

Install the spring and piston for the relief valve. Screw the pump together. Tighten the screws. See: **TIGHTENING TORQUE** .

REMOVING THE COOLANT PUMP/TIMING BELT COVER

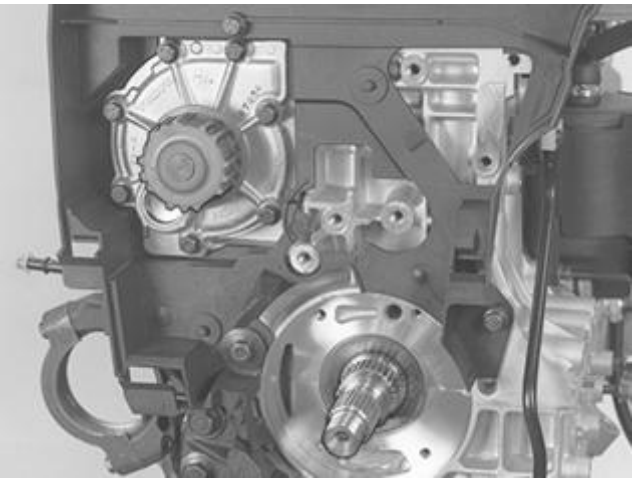

Fig. 58: Coolant Pump And Timing Belt Cover
Courtesy of VOLVO CARS CORPORATION

Remove the screws.

Carefully tap the pump pulley with a rubber mallet.

Work the pump loose.

Carefully clean the gasket face and mating surfaces.

Remove the inner timing belt cover.

REMOVING THE THERMOSTAT AND THERMOSTAT HOUSING

Remove the cover over the thermostat (Tx40).

Lift out the thermostat

Remove the hose for the water heated crankcase ventilation.

Remove the thermostat housing from the cylinder head.

Carefully clean the gasket face and mating surfaces.

Remove the fuel pressure line.

CHECKING THE OPENING FUNCTION OF THE THERMOSTAT

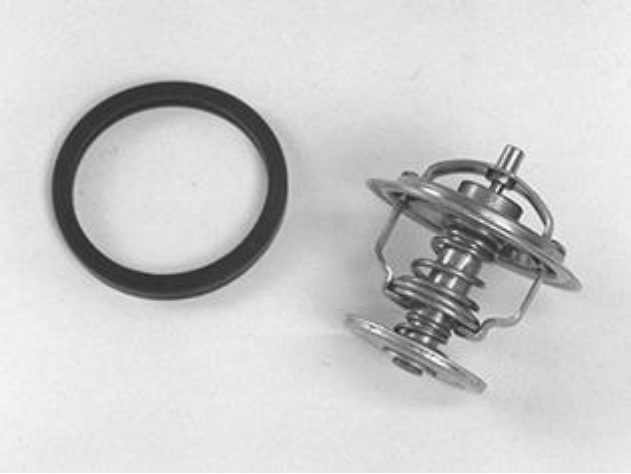

Fig. 59: Identifying Thermostat
Courtesy of VOLVO CARS CORPORATION

The thermostat can be tested in warm water.

Maximum opening must occur within 2 minutes in water at opening temperature.

Marking.....90° C Starts to open at.....90°C Fully open at.....105°C

BELT DRIVE (B6294T; 2003-2006)

BELT DRIVE, ASSEMBLING

NOTE: **The illustrations in this service information are used for different model years and/or models. Therefore there may be some variation. However, the essential information in the illustrations is always correct.**

TIGHTENING

For tightening torques not in the text, see **TIGHTENING TORQUE** .

INSTALLING THE THERMOSTAT HOUSING AND WATER PUMP

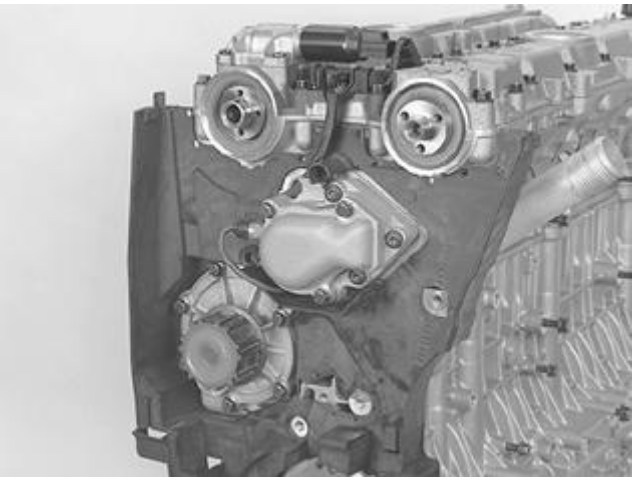

Fig. 60: Installing Thermostat Housing And Water Pump
Courtesy of VOLVO CARS CORPORATION

Install

- the coolant outlet pipe on the cylinder head.

  Use a new gasket. Tighten to **17 Nm** .

- the rear timing cover. Screw the cover into place at the three mounting points
- thermostat housing / cable duct. Use a new gasket. Ensure that the coolant temperature sensor cable and cable duct are correctly positioned.
- the thermostat. Use a new gasket
- the thermostat cover. Tighten
- the water pump with new gasket. Apply thread sealant, P/N 11-61 056, to all the screws for the water pump. Tighten alternately.

INSTALLING THE OIL PUMP

Fig. 61: Installing Oil Pump

Courtesy of VOLVO CARS CORPORATION

Use a new gasket and new O-ring around the pump housing.

Screw sliding sleeve see **9995747** into place at the front of the crankshaft journal.

Press in the pump over the sliding sleeve.

Apply thread sealant, P/N 11-61 056 to all the screws for the oil pump.

Install the screws as a guide.

Carefully tap in the oil pump with a rubber mallet.

Tighten the oil pump crosswise.

Remove the sliding sleeve 999 5747.

Install the fuel delivery line.

INSTALLING THE CRANKSHAFT TIMING GEAR PULLEY

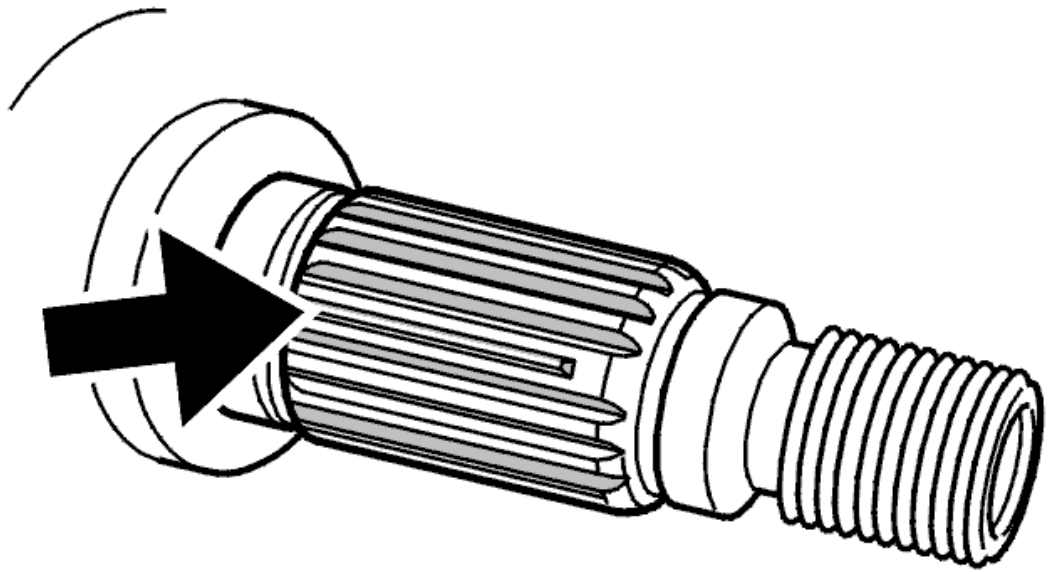

Fig. 62: Crankshaft Timing Gear Pulley
Courtesy of VOLVO CARS CORPORATION

NOTE: **The timing gear pulley can only be installed in one position at the splines on the crankshaft journal (see the illustration).**

Carefully tap in the timing gear pulley with a rubber mallet.

INSTALLING THE IDLER PULLEY AND BELT TENSIONER

Install

- idler pulley. Tighten
- the tensioner damping unit.
- the belt tensioner and the center screw. Ensure that the tensioner fork is centered over the cylinder block rib. Do not tighten
- the lower belt guard at the oil pump
- the fuel delivery line.

CHECKING AND ADJUSTING THE VARIABLE VALVE TIMING UNIT

Check and adjust the variable valve timing unit. See: **VARIABLE VALVE TIMING UNIT, CHECKING AND ADJUSTING** .

INSTALLING THE VIBRATION DAMPER

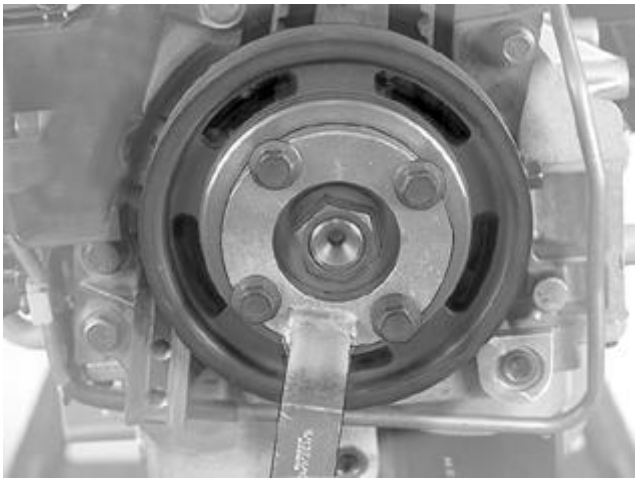

Fig. 63: Removing/Installing Vibration Damper
Courtesy of VOLVO CARS CORPORATION

Install

- the crankshaft pulley for the auxiliaries belt
- counterhold see **9995433** .
- the crankshaft center nut. Tighten to **300 Nm** .

Remove counterhold 999 5433.

Install the vibration damper. Use new screws. Tighten to **35 Nm** . Angle tighten **50°** . Use the crankshaft center nut as a counterhold.

DISMANTLING THE BELT DRIVE

Special tools:

see **9995304**

see **9995433**

see **9995456**

NOTE: **The illustrations in this service information are used for different model years and / or models. Therefore there may be some variation. However, the essential information in the illustrations is always correct.**

ALIGNING THE ENGINE ACCORDING TO THE MARKING

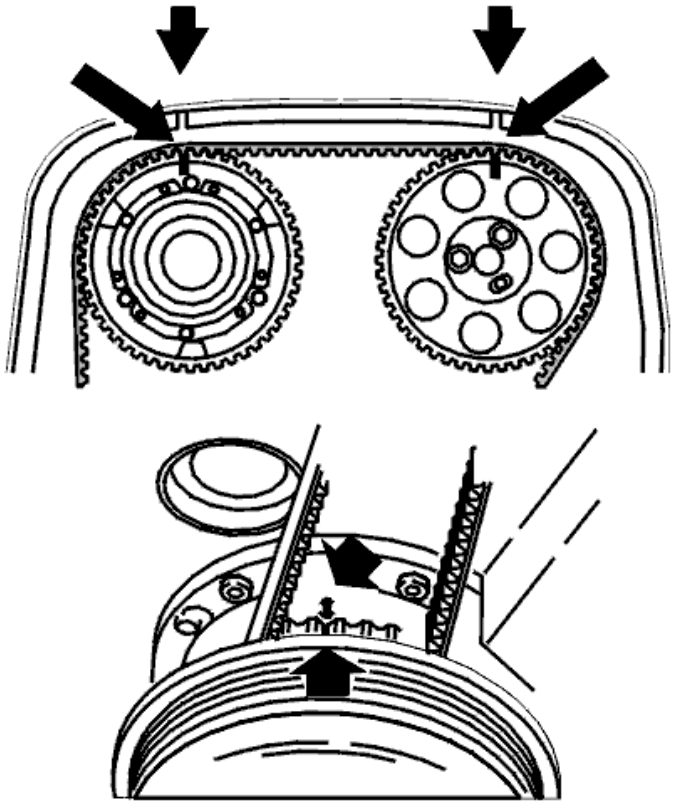

Fig. 64: Crankshaft And Camshafts Markings
Courtesy of VOLVO CARS CORPORATION

Install the upper timing belt cover.

Turn the crankshaft clockwise until the markings on the crankshaft belt pulley and the timing belt pulley are aligned with the markings on the oil pump and the upper timing belt cover

Remove the upper timing belt cover.

REMOVING THE VIBRATION DAMPER

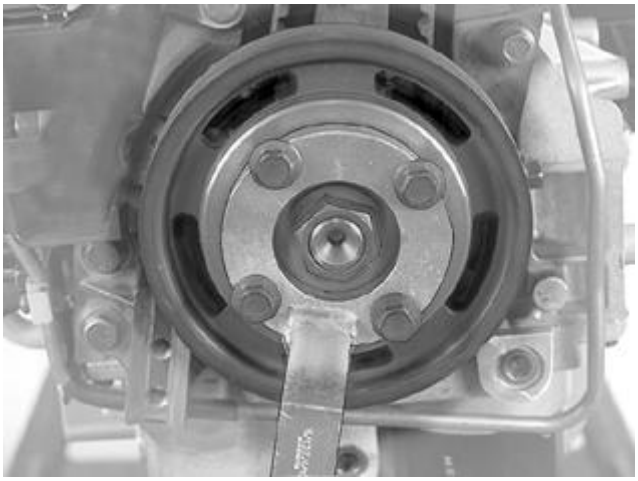

Fig. 65: Removing/Installing Vibration Damper
Courtesy of VOLVO CARS CORPORATION

Remove the 4 screws. Use the crankshaft center nut as a counterhold.

Install counterhold see **9995433** . Remove the center nut.

Remove counterhold 999 5433.

Work / pull the auxiliaries belt pulley loose.

REMOVING THE TIMING BELT

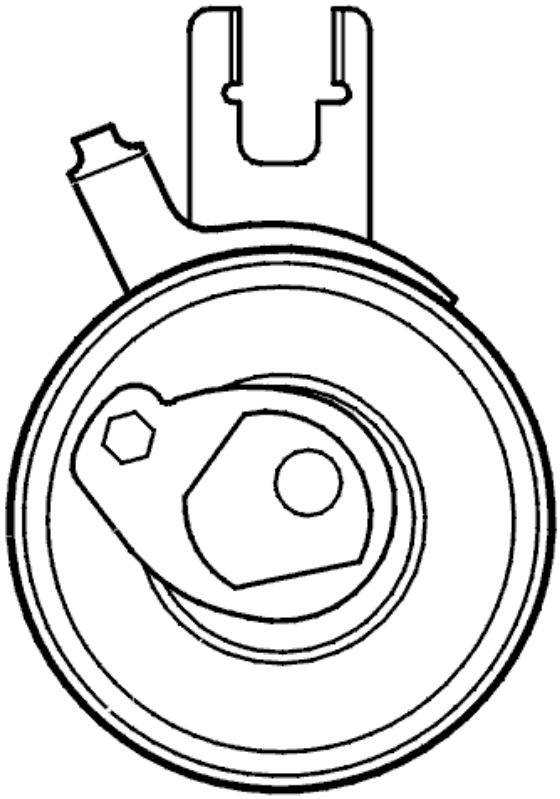

Fig. 66: Identifying Belt Tensioner
Courtesy of VOLVO CARS CORPORATION

Slacken off the center screw for the belt tensioner slightly.

Hold the center screw in place. Turn the eccentric on the tensioner counter-clockwise to the 10 o'clock position using a 6mm Allen key.

Unhook and remove the timing belt.

CAUTION: Do not turn the camshafts or the crankshaft when the timing belt has been removed.

REMOVING THE CRANKSHAFT PULLEY

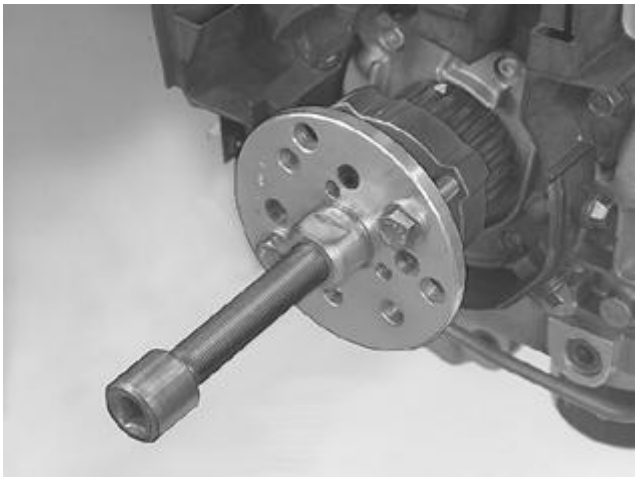

Fig. 67: Removing/Installing Crankshaft Pulley
Courtesy of VOLVO CARS CORPORATION

Use puller see **9995304** and two 50 mm M10 screws with washers.

Pull off the timing gear pulley.

CAUTION: The crankshaft must not rotate.

REMOVING THE BELT TENSIONER AND IDLER PULLEY

Remove the belt tensioner and idler pulley.

Check the rolling surface and the bearings.

Check for any noise. Check for any play in the bearings.

Check that the rolling surfaces are smooth and clean.

REMOVING OIL PUMP

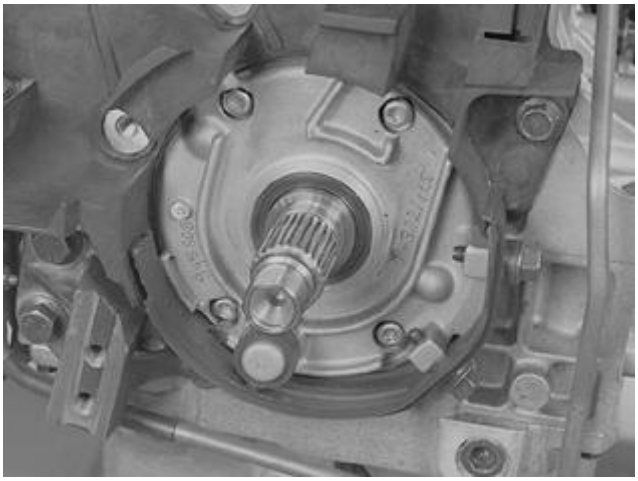

Fig. 68: Removing Oil Pump
Courtesy of VOLVO CARS CORPORATION

Remove

- the fuel pressure pipe
- the belt guard from the oil pump
- the four oil pump screws.

Carefully work the oil pump out. Use a groove-cut chisel with stop lugs.

Carefully draw the oil pump past the end of the crankshaft.

Carefully clean the gasket face and mating surfaces.

CHECKING THE OIL PUMP

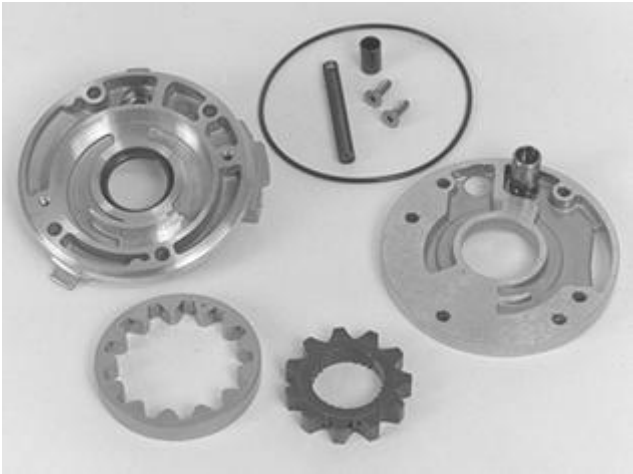

Fig. 69: Identifying Oil Pump Replacement Components
Courtesy of VOLVO CARS CORPORATION

Disassemble the oil pump.

Clean and check all components.

Check for damage and wear.

In particular check the half-moon shaped insert (the surface between the suction and pressure sides).

Replace the oil pump in the event of a fault.

Assemble the oil pump.

Tighten the screws. Tighten to 6 Nm.

REMOVING THE COOLANT PUMP

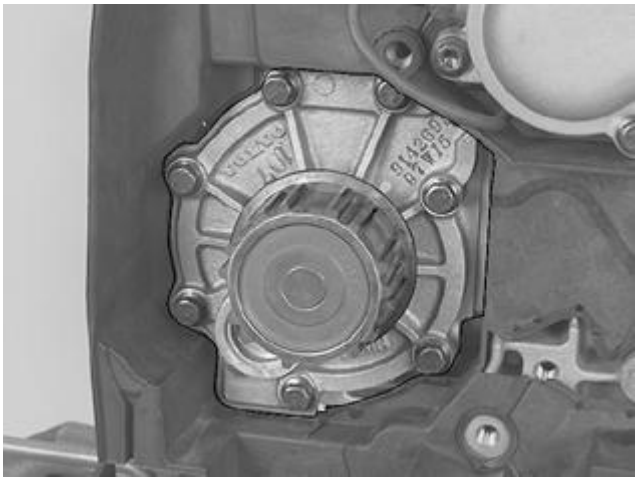

Fig. 70: Identifying Coolant Pump
Courtesy of VOLVO CARS CORPORATION

Remove the screws.

Carefully tap the pump pulley with a rubber mallet.

Work the pump loose.

Carefully clean the gasket face and mating surfaces.

REMOVING THE THERMOSTAT AND THERMOSTAT HOUSING

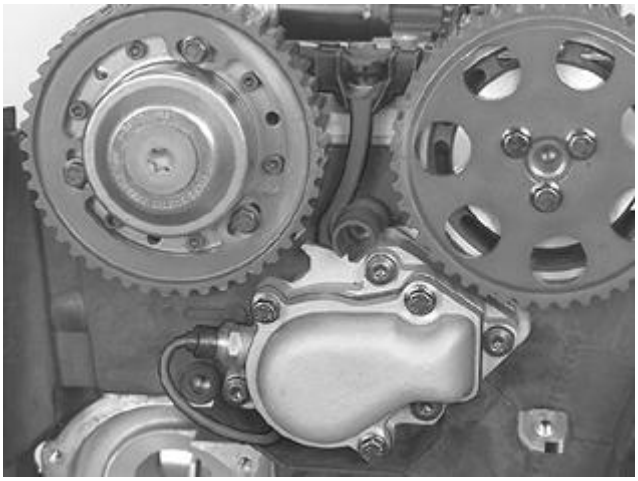

Fig. 71: Removing Thermostat And Thermostat Housing
Courtesy of VOLVO CARS CORPORATION

Remove the cover over the thermostat (Tx40).

Lift out the thermostat and remove the gasket.

Remove the screw for the engine coolant temperature sensor cable duct.

Remove the thermostat housing from the cylinder head.

Carefully clean the gasket face and mating surfaces.

CHECKING THE OPENING FUNCTION OF THE THERMOSTAT

The thermostat can be tested in warm water.

Maximum opening must occur within 2 minutes in water at opening temperature.

Marking.....90° C Starts to open at.....90°C Fully open at.....105°C

BELT TRANSMISSION (B5254T2; 2003-2004)

BELT TRANSMISSION, ASSEMBLY

Special tools:

see **9995747**

NOTE: **As the illustrations in this service information are used for different model years and / or models, some variation may occur. However, the essential information**

in the illustrations is always correct.

TIGHTENING TORQUE

For tightening torques not in the text, see **TIGHTENING TORQUE** .

INSTALLING THE WATER PUMP

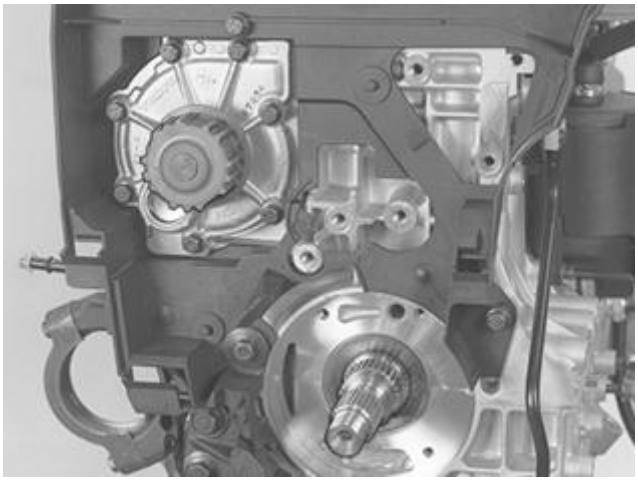

Fig. 72: Coolant Pump And Timing Belt Cover
Courtesy of VOLVO CARS CORPORATION

Install the rear timing cover.

Screw into place at the three mounting points.

Install the water pump with a **new gasket** .

Apply thread sealant, P/N 11-61 056, to all the screws for the water pump. Tighten crosswise.

INSTALLING THE OIL PUMP

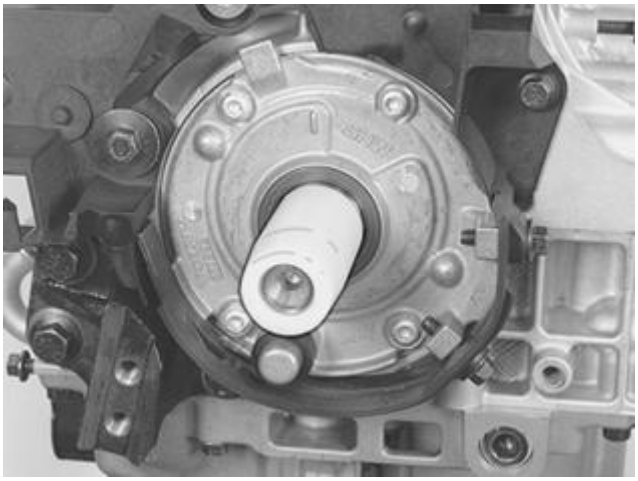

Fig. 73: Identifying Oil Pump
Courtesy of VOLVO CARS CORPORATION

Use a **new gasket** and a **new O-ring** around the oil pump housing.

Screw sliding sleeve **999 5747** into place at the front of the crankshaft journal.

Press in the pump over the sliding sleeve.

Apply thread sealant, P/N 11-61 056, to all the screws for the oil pump.

Install the screws as a guide.

Carefully tap in the oil pump with a rubber mallet.

Tighten the oil pump crosswise. Tighten to **10 Nm** .

Remove sliding sleeve **999 5747** .

INSTALLING THE CRANKSHAFT TIMING GEAR PULLEY

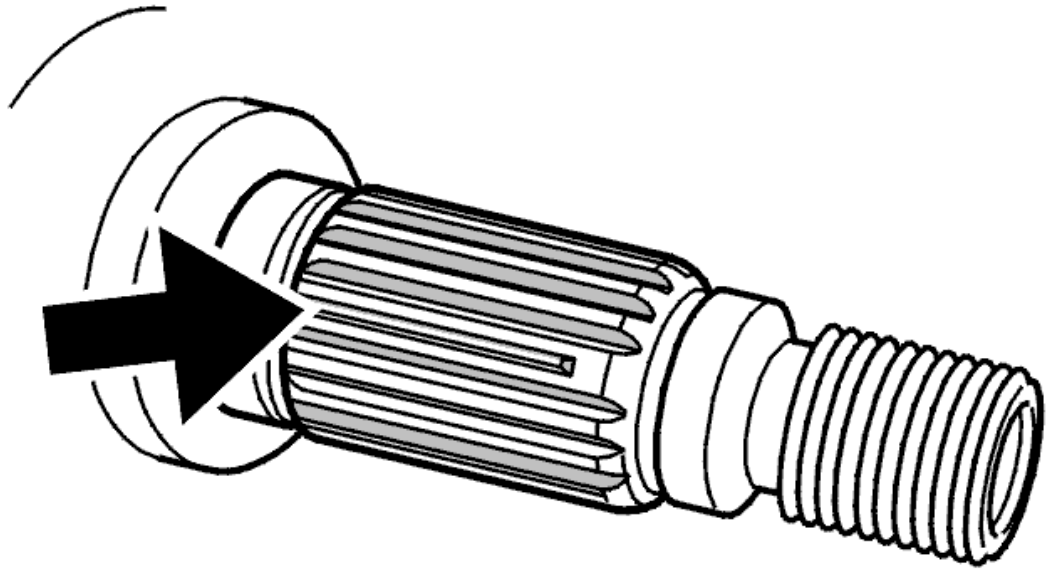

Fig. 74: Crankshaft Timing Gear Pulley
Courtesy of VOLVO CARS CORPORATION

NOTE: **The timing gear pulley can only be installed in one position on the crankshaft journal splines (see the illustration).**

Carefully tap in the timing gear pulley with a rubber mallet.

INSTALLING THE IDLER PULLEY AND BELT TENSIONER

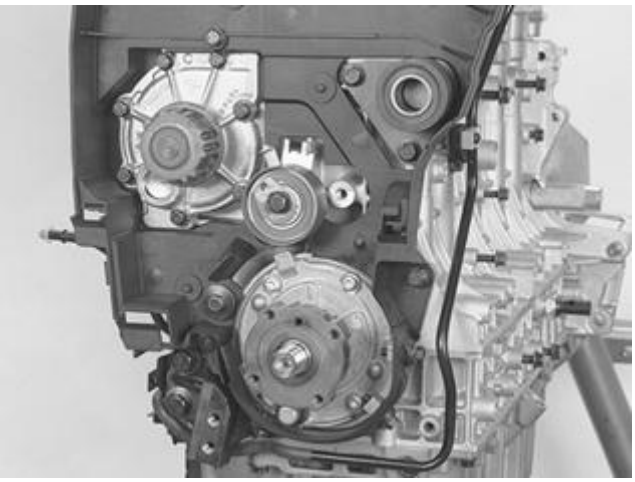

Fig. 75: Identifying Idler Pulley And Belt Tensioner
Courtesy of VOLVO CARS CORPORATION

Install

- idler pulley. Tighten
- the belt tensioner and the center screw so that the tensioner fork is centered over the cylinder block rib. Do **not** tighten
- the lower belt guard at the oil pump
- the fuel delivery line.

INSTALLING THE TIMING GEAR PULLEY FOR THE CAMSHAFTS

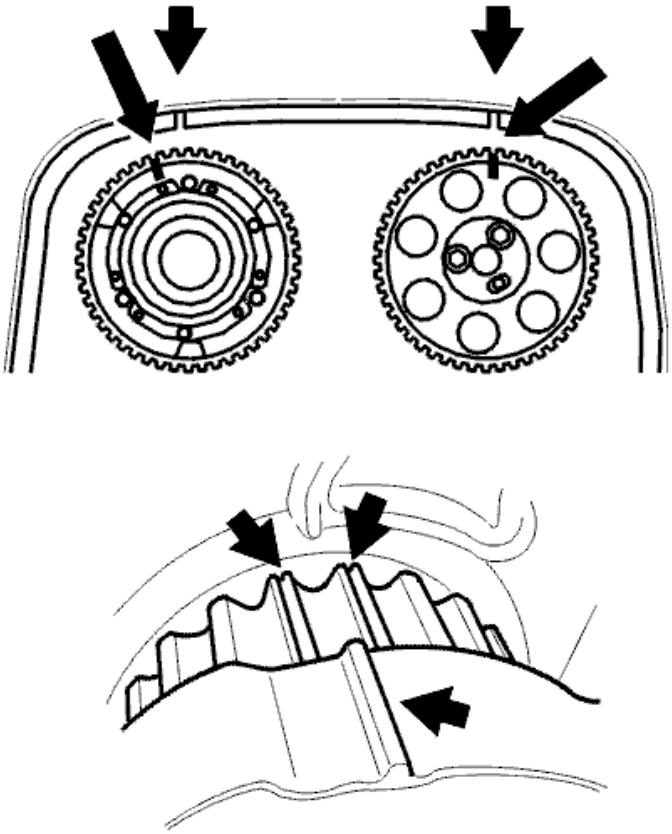

Fig. 76: Identifying Markings On Crankshaft Belt Pulley, Timing Belt Pulley, Oil Pump, And Upper Timing Belt Cover
Courtesy of VOLVO CARS CORPORATION

Timing gear pulleys with variable valve timing unit

Check that the screws holding the timing gear pulley to the variable valve timing unit have been slackened off.

Press the variable valve timing unit and timing gear pulley onto the camshaft.

Install the center screw which secures the variable valve timing unit to the camshaft. Do **not** tighten.

Position the upper timing cover.

Turn the timing gear pulley clockwise until the screws at the oval holes are in their respective limit positions.

Hold the variable valve timing unit. Turn clockwise until the timing gear pulley marking is 1 cog before the marking on the upper timing cover.

Check that the timing gear pulley is still in the limit position in the oval holes.

Tighten the center screw for the variable valve timing (VVT) unit. Tighten to **120 Nm** .

NOTE: Check that the VVT unit does not rotate when tightening.

Install the center plug. Tighten to **35 Nm** .

Timing gear pulleys without variable valve timing units

Install the timing gear pulley on the camshaft with two screws. Do **not** tighten.

Adjust the timing gear pulley so that the markings on the timing gear pulley and the upper timing cover correspond.

INSTALLING THE TIMING BELT

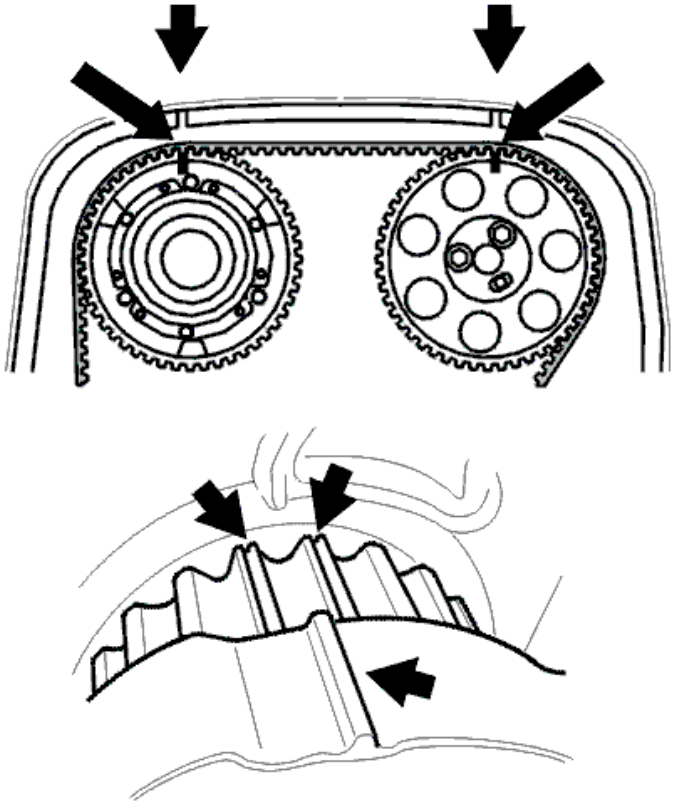

Fig. 77: Checking That Markings On Timing Gear Pulleys And Upper Timing Cover Correspond
Courtesy of VOLVO CARS CORPORATION

Tighten the center screw on the timing belt tensioner. Tighten to **5 Nm** .

Turn the variable valve timing unit clockwise until stop. Use a Tx 55 Torx wrench applied at the center plug.

Hold the variable valve timing unit secure in the limit position.

Install the timing belt in the following order:

1. Crankshaft

2. Idler pulley

3. Intake camshaft

4. Exhaust camshaft

5. Coolant pump

6. Belt tensioner

NOTE: **Adjust the timing gear pulleys so that the screws are not at a limit position in the oval holes.**

Check that the markings on the timing gear pulleys and the upper timing cover correspond.

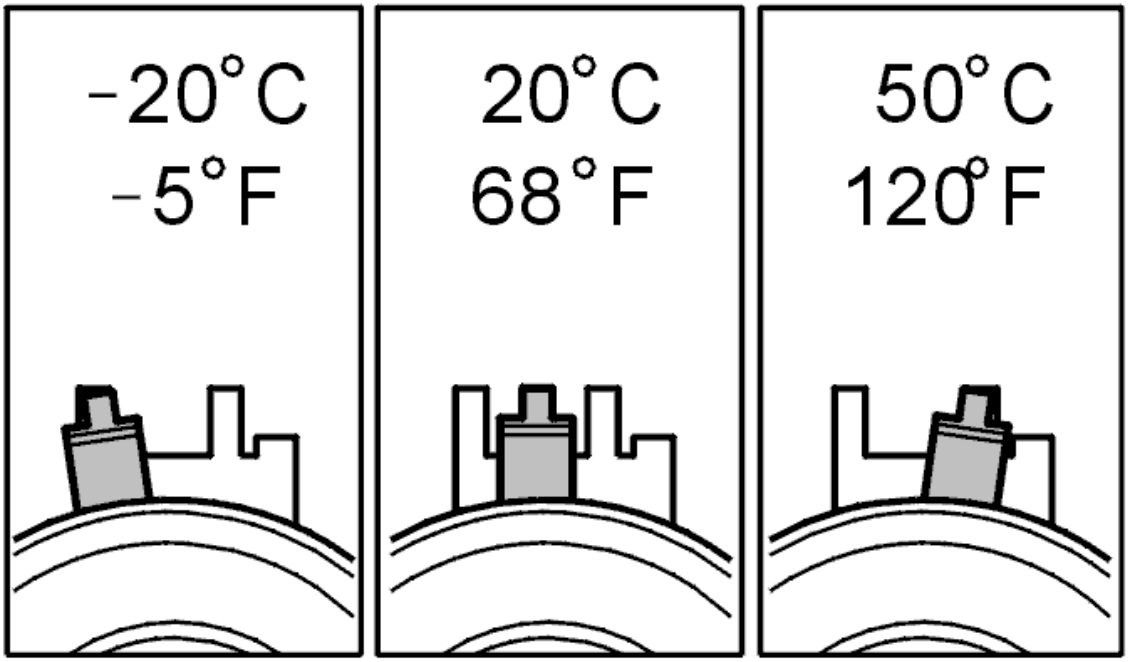

Fig. 78: Identifying Needle Position At Varying Temperatures
Courtesy of VOLVO CARS CORPORATION

Tighten the timing belt

This adjustment is carried out on a cold engine. A suitable temperature is approximately 20°C/68°F.

At a higher temperature, for example with a warm engine or a higher ambient temperature, the needle is further to the right.

The illustration shows the position of the indicator when aligning the timing belt tensioner at different temperatures.

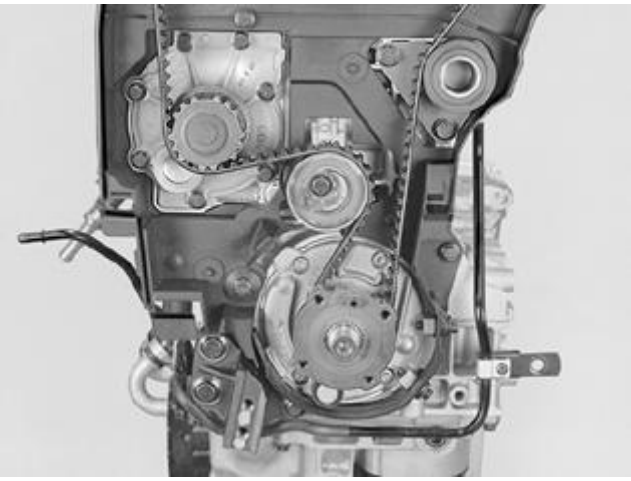

Fig. 79: Center Screw And Belt Tensioner
Courtesy of VOLVO CARS CORPORATION

Hold the center screw secure and turn the eccentric on the belt tensioner anti-clockwise until the tensioner indicator reaches the limit position.

Tighten the three screws securing the timing gear pulley for the exhaust camshaft to the variable valve timing unit. Tighten to **10 Nm** .

Install the third screw at the timing gear pulley for the intake camshaft. Tighten the screws. Tighten to **20 Nm** .

NOTE: **The VVT unit must not be released from the limit position until after the timing gear pulleys have been tightened.**

Turn the eccentric back (clockwise) so that the indicator reaches the marked position in the center of the window. Remember to hold the center screw secure at the same time.

Hold the eccentric secure and tighten the center screw. Tighten to **20 Nm** .

Check that the indicator is in the correct position.

Remove

- the camshaft adjustment tools see **9995451**
- the crankshaft stop see **9995452**

  Install the plug with **a new blind cover plug** . Tighten to **40 Nm** .

Check

Press the toothed belt to check that the indicator on the tensioner moves easily.

INSTALLING THE VIBRATION DAMPER

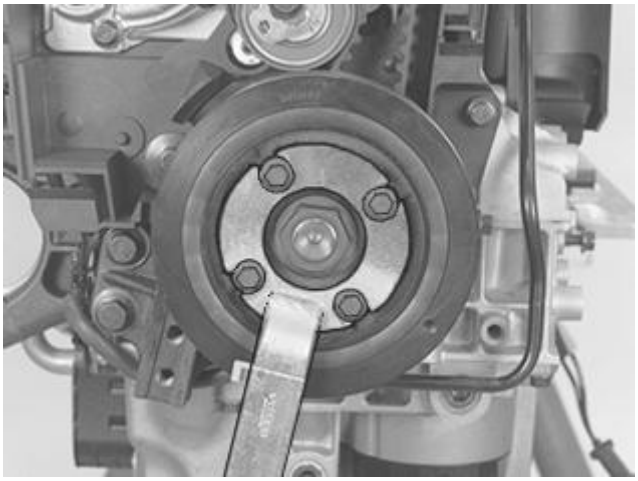

Fig. 80: Identifying Vibration Damper And Special Tool 999 5433
Courtesy of VOLVO CARS CORPORATION

Install the vibration damper. Use counterhold see **9995433** .

Tighten the center nut to **180 Nm** .

Remove counterhold 999 5433.

Tighten the four screws. Tighten to **25 Nm** . Angle tighten **30°** . Use the crankshaft center screw as a counterhold.

CHECKING THE MARKINGS AND BELT TENSION

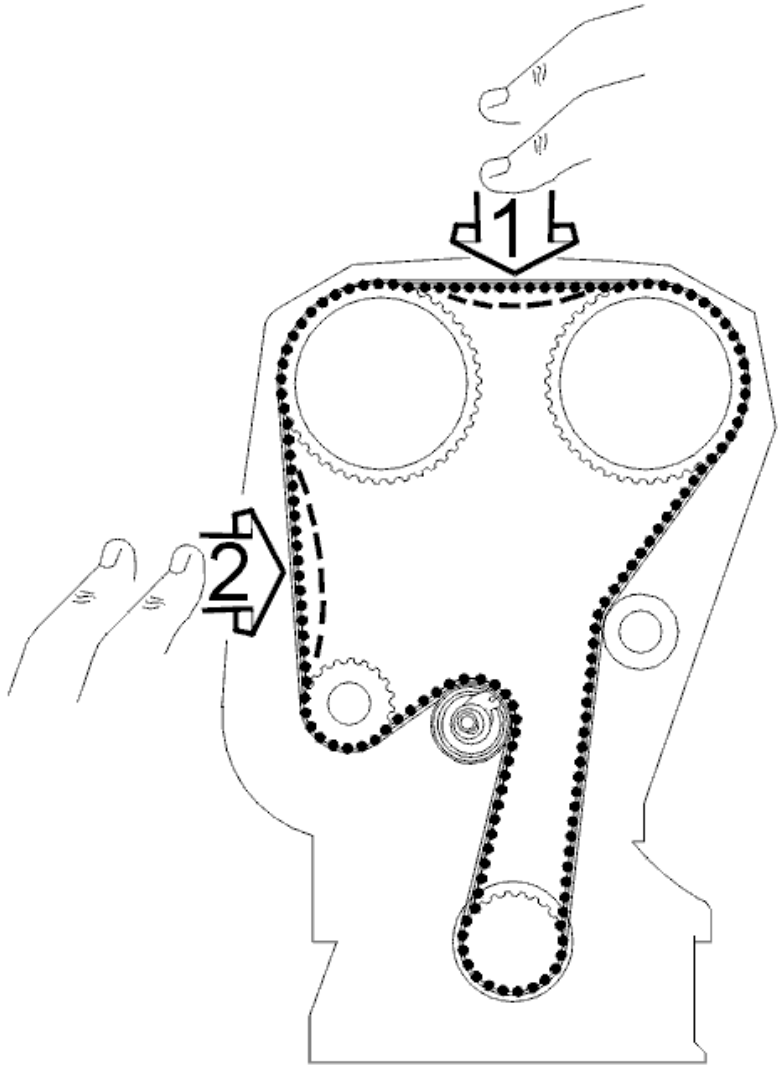

Fig. 81: Checking Timing Belt Tension
Courtesy of VOLVO CARS CORPORATION

Press the timing belt to check that the indicator on the belt tensioner moves easily.

Position the upper timing cover.

Turn the crankshaft two turns. Check that the markings on the crankshaft and timing gear pulley match up with the markings on the oil pump and upper timing cover respectively.

Check that the indicator on the belt tensioner is within the marked area.

DISMANTLING THE BELT TRANSMISSION

Special tools:

see **9995304**

see **9995433**

NOTE: **As the illustrations in this service information are used for different model years and / or models, some variation may occur. However, the essential information in the illustrations is always correct.**

ALIGNING THE ENGINE ACCORDING TO THE MARKING

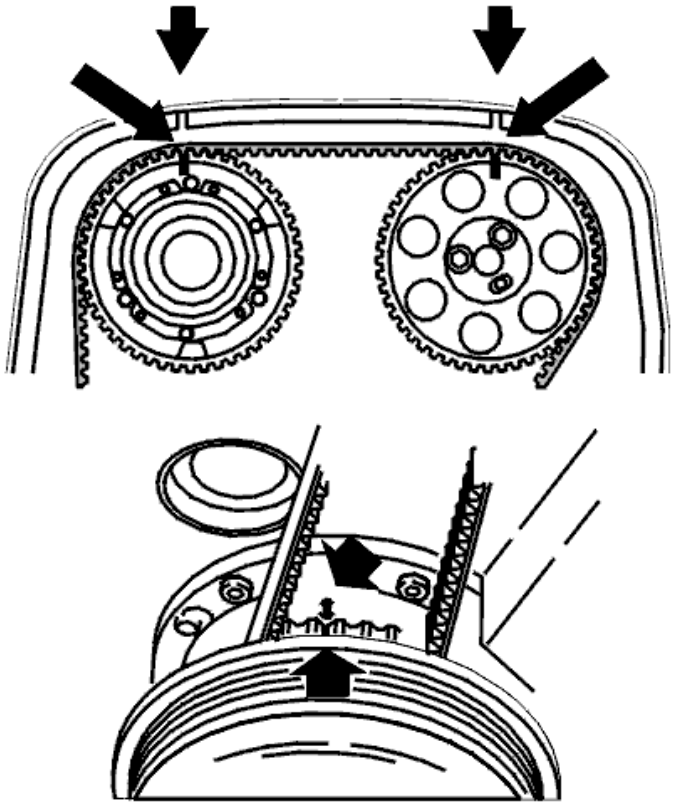

Fig. 82: Crankshaft And Camshafts Markings
Courtesy of VOLVO CARS CORPORATION

Install the upper timing belt cover.

Turn the crankshaft clockwise until the markings on the crankshaft belt pulley and the timing belt pulley are aligned with the markings on the oil pump and the upper timing belt cover

Remove the upper timing belt cover.

REMOVING THE VIBRATION DAMPER

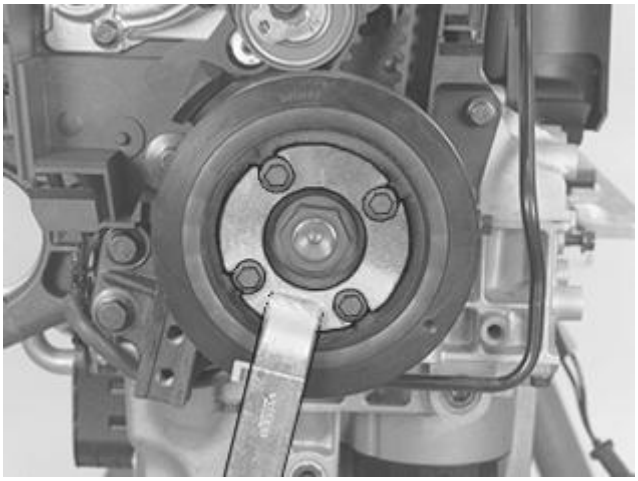

Fig. 83: Identifying Vibration Damper And Special Tool 999 5433
Courtesy of VOLVO CARS CORPORATION

Remove the 4 screws. Use the crankshaft center nut as a counterhold.

Install the counterhold see **9995433** and remove the center nut.

Remove counterhold 999 5433.

Work the vibration damper loose.

REMOVING THE TIMING BELT

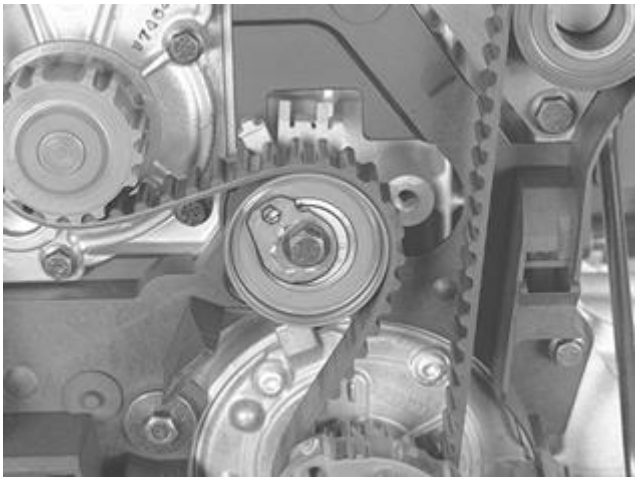

Fig. 84: Identifying Timing Belt
Courtesy of VOLVO CARS CORPORATION

Slacken off the center screw for the belt tensioner slightly.

Hold the center screw secure. Turn the belt tensioner eccentric clockwise with a 6mm Allen key to 10 o'clock.

Remove the timing belt from the timing gear pulley for the camshafts.

Remove the timing belt.

REMOVING THE CRANKSHAFT PULLEY

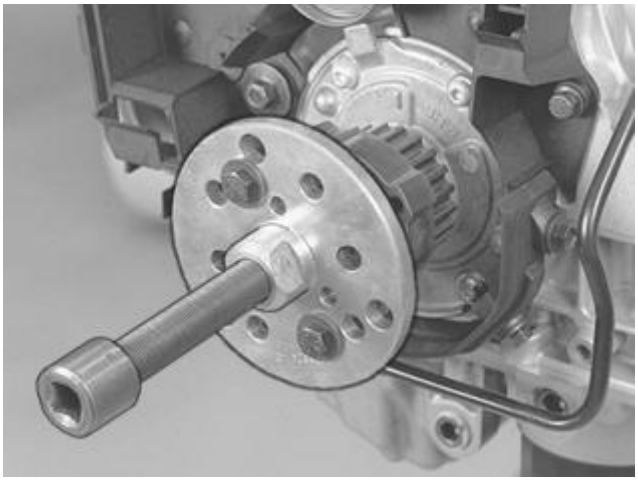

Fig. 85: Removing Crankshaft Pulley with Tool 9995304
Courtesy of VOLVO CARS CORPORATION

Use puller see **9995304** and two screws (M8 x 45 mm) with washers.

Pull off the timing gear pulley.

CAUTION: The crankshaft must not rotate

REMOVING THE BELT TENSIONER AND IDLER PULLEY

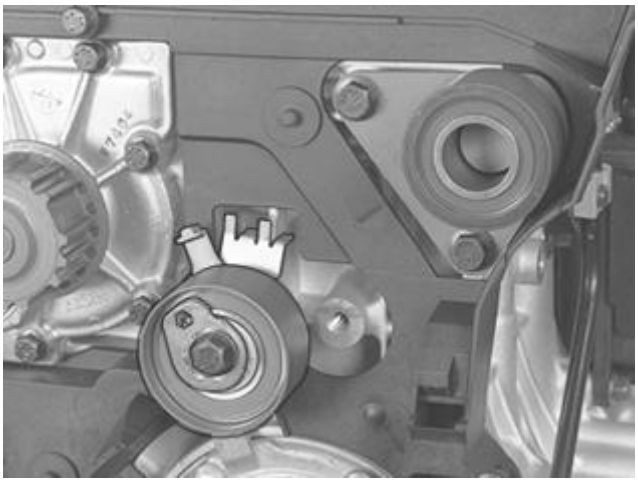

Fig. 86: Belt Tensioner And Idler Pulley
Courtesy of VOLVO CARS CORPORATION

Remove the belt tensioner and idler pulley.

Check the rolling surface and the bearings.

Check for any noise. Check for any play in the bearings.

Check that the rolling surfaces are smooth and clean.

REMOVING OIL PUMP

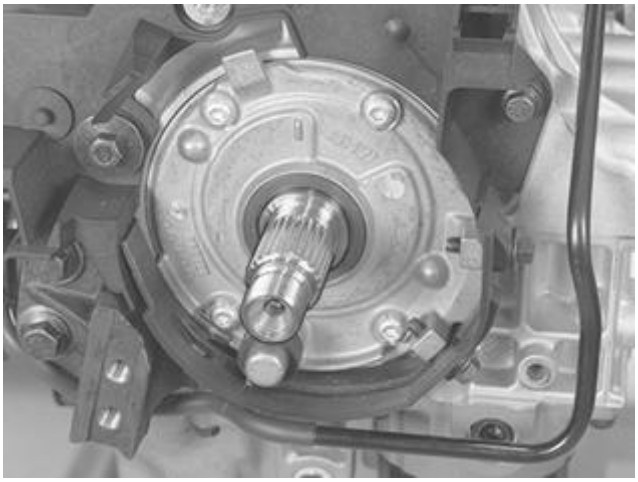

Fig. 87: Identifying Oil Pump
Courtesy of VOLVO CARS CORPORATION

Remove the belt protection from the oil pump.

Remove the four oil pump screws.

Carefully wiggle out the oil pump. Use a screwdriver at the pry lugs.

Carefully draw the oil pump past the end of the crankshaft.

Carefully clean the gasket face and mating surfaces.

CHECKING THE OIL PUMP

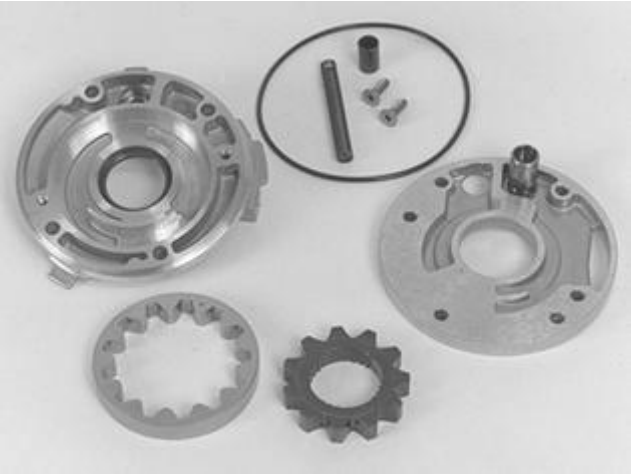

Fig. 88: Identifying Oil Pump Replacement Components
Courtesy of VOLVO CARS CORPORATION

Disassemble the oil pump.

Clean and check all components.

Check for damage and wear.

Replace the oil pump in the event of a fault.

Assemble the oil pump. Tighten to **6 Nm** .

REMOVING THE COOLANT PUMP / TIMING BELT COVER

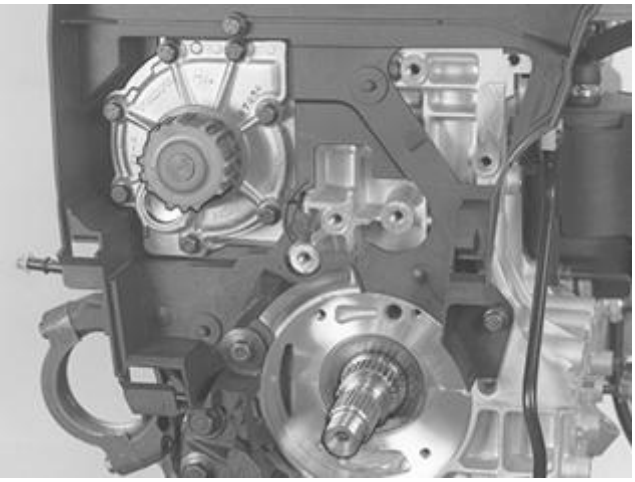

Fig. 89: Coolant Pump And Timing Belt Cover
Courtesy of VOLVO CARS CORPORATION

Remove the screws.

Carefully tap the pump pulley with a rubber mallet.

Work the pump loose.

Carefully clean the gasket face and mating surfaces.

Remove the inner timing belt cover.

REMOVING THE THERMOSTAT AND THERMOSTAT HOUSING

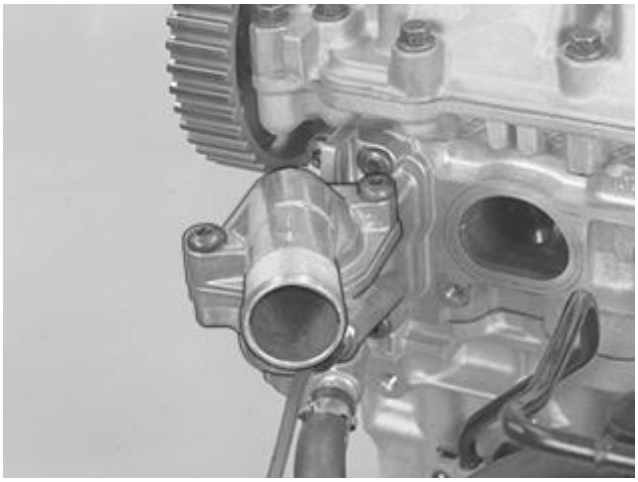

Fig. 90: Identifying Thermostat And Thermostat Housing
Courtesy of VOLVO CARS CORPORATION

Remove the cover over the thermostat (Tx40).

Lift out the thermostat

Remove the hose for the water heated crankcase ventilation.

Remove the thermostat housing from the cylinder head.

Carefully clean the gasket face and mating surfaces.

Remove the fuel pressure line.

CHECKING THE OPENING FUNCTION OF THE THERMOSTAT

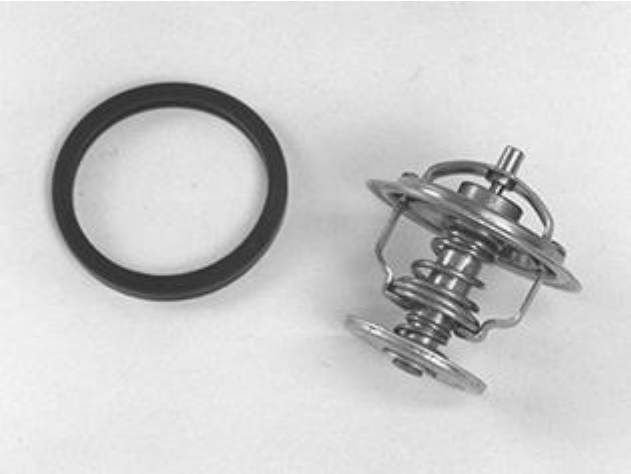

Fig. 91: Identifying Thermostat
Courtesy of VOLVO CARS CORPORATION

The thermostat can be tested in warm water.

Maximum opening must occur within 2 minutes in water at opening temperature.

Marking.....90° C Starts to open at.....90°C Fully open at.....105°C

CAULKING (B5254T2; 2003-2007)

CAULKING

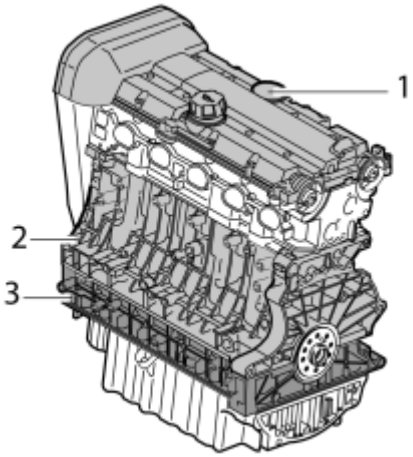

Fig. 92: Bearing Housing, Cylinder Block And Intermediate Section
Courtesy of VOLVO CARS CORPORATION

On engines manufactured of aluminum the camshaft bearing housing (1) cylinder block (2) and the intermediate section (3) may be caulked.

NOTE: The cylinder heads that are chill-cast may not be caulked.

Each individual case is assessed as to whether caulking can be carried out or not depending on the location of the oil leakage.

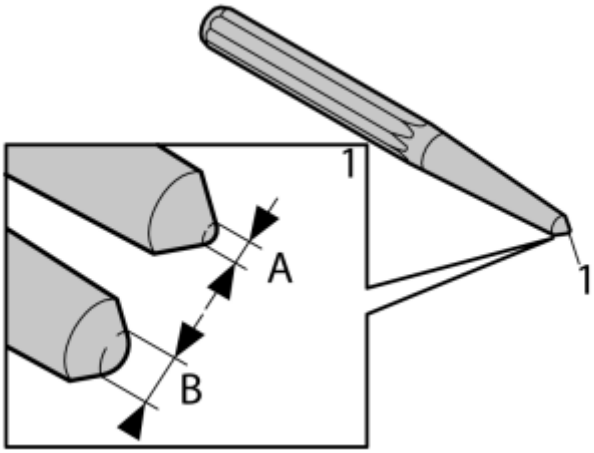

Fig. 93: Identifying Center Punch And Rounded Tips
Courtesy of VOLVO CARS CORPORATION

Caulking involves in the event of leakage knocking the material together using a special caulking tool.

Two caulking tools are required. Use center punches (1). Grind down the tips so they become round. One is to be ground so the rounded tip (A) is 2 mm. The other is ground so the rounded tip (B) is 4 mm.

NOTE: Use the protective goggles supplied with the leak tracing kit.

Use: Isopropanol, 1161721

Use an UV light to localize the pore. Carefully wash round the pore with Isopropanol. Check with a UV light that all the oil has been removed.

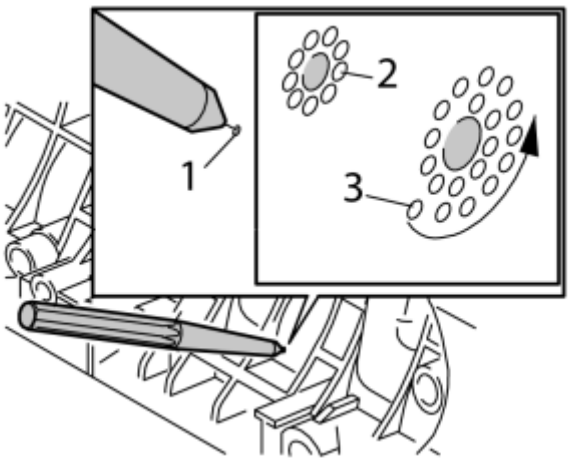

Fig. 94: Identifying Tool Angle And Pores

Courtesy of VOLVO CARS CORPORATION

WARNING: Use protective goggles.

If the pore is small, it is sufficient to place the tool (2 mm) directly on the pore and hit it with a copper or plastic hammer. If the pore is larger, angle the tool (2 mm) and drive the material in a circle toward the pore (2). If there is a lip around the pore, caulking (tool 4 mm) should be carried out in a spiral form toward the pore (3).

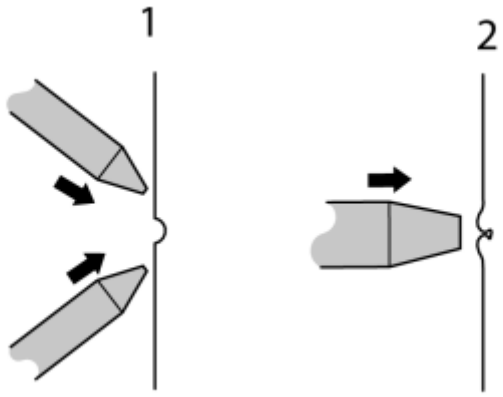

Fig. 95: Driving Material Toward Pore Using 2 mm Tool
Courtesy of VOLVO CARS CORPORATION

Drive the material toward the pore (1) using the 2 mm tool. Seal using the 4 mm tool (2).

Use: Isopropanol, 1161721

Wash with Isopropanol. Check with a UV lamp that there is no oil around the leakage point.

Test drive for 45 minutes as set out below to reach an oil temperature of about 80°C.

1. Allow the engine to idle for 20 minutes.
2. Test drive the car for 15 minutes.
3. Allow the engine to idle for a further 10 minutes.

Check using a UV light that the sealed area no long leaks. If leakage remains, repeat the caulking.

CAULKING (B6324S; 2007-2010)

CAULKING

see **CAULKING**

CAULKING (B6324S5; 2011-2012)

CAULKING

see **CAULKING**

CAULKING (B8444S; 2005-2011)

CAULKING

see **CAULKING**

CRANK MECHANISM (B5254T2; 2003-2004)

CRANK MECHANISM, ASSEMBLING

Special tools:

see **9512767**

see **9991801**

see **9995676**

see **9995746**

NOTE: **Since the illustrations in this service information are used for different model years and/or models, some variation may occur. However, the essential information in the illustrations is always correct.**

TIGHTENING TORQUE

For tightening torques not in the text, see **TIGHTENING TORQUE** .

CLEANING

Ensure that the all components are **completely** clean.

Blow clean the oil ducts in the block, intermediate section and oil pan.

INSTALLING THE PISTON COOLING VALVE AND NOZZLES

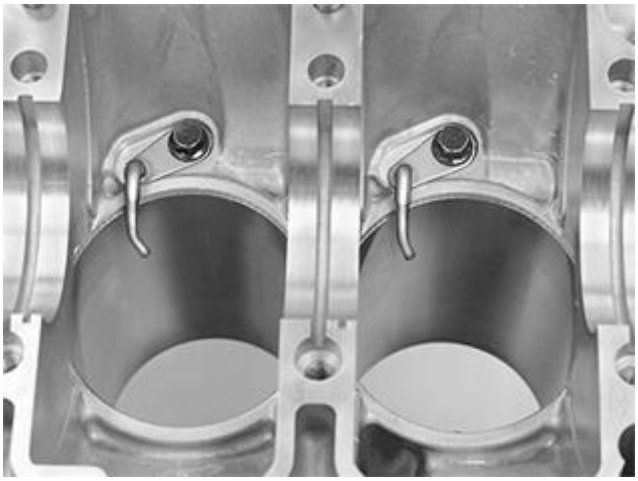

Fig. 96: Identifying Piston Cooling Nozzles
Courtesy of VOLVO CARS CORPORATION

Install the piston cooling nozzles. Tighten to **17 Nm** .

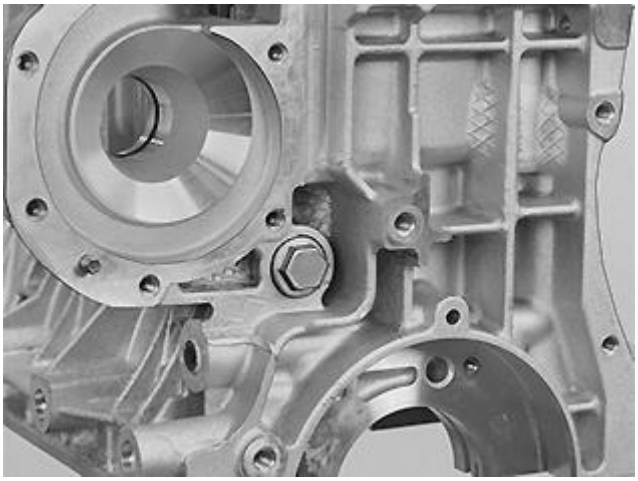

Fig. 97: Identifying Piston Cooling Valve
Courtesy of VOLVO CARS CORPORATION

Install the piston cooling valve. Use a seal washer. Tighten to **38 Nm** .

CLASSIFICATION OF MAIN BEARINGS

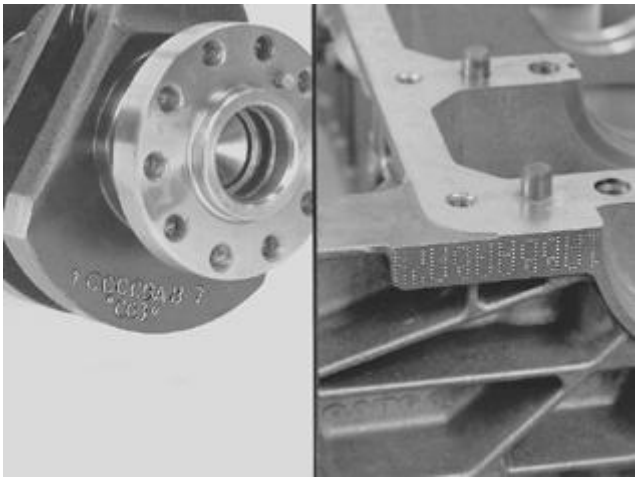

Fig. 98: Classification Of Main Bearings
Courtesy of VOLVO CARS CORPORATION

Wipe clean the bearing recesses in the block and the intermediate section.

Check that the components are clean and undamaged.

Check the classification of the block and crankshaft.

The classification marking is at the rear edge of the block and the crankshaft. The classification is read from digits 1 to 7. The first letter after digit 1 is the classification of main bearing 1. The bearing positions are numbered starting at the front of the engine.

SELECTING BEARINGS

Cylinder block classification / Crankshaft classification	**A small diameter**		**B medium-diameter**		**C large diameter**	
	block	intermediate section	block	intermediate section	block	intermediate section
A small	yellow medium	yellow medium	yellow medium	blue thick	blue thick	blue thick
B medium	red thin	yellow medium	yellow medium	yellow medium	yellow medium	blue thick
C large	red thin	red thin	red thin	yellow medium	yellow medium	yellow medium

Install the main bearings in the cylinder block and the intermediate section. See the table.

The axial bearing is positioned at bearing recess 5.

CAUTION: When reusing old bearing halves, make sure that they are positioned correctly with regards to crankshaft's rotational direction.

For example: The marking on the block at bearing recess 1 is B. The marking on the crankshaft at the corresponding bearing recess is C.

Therefore the bearing in the block is marked red and the bearing in the intermediate section is marked yellow.

NOTE: The thickest bearing halves must always be installed in the intermediate section. This is in order to obtain a center line that is as straight as possible.

THE INTERMEDIATE SECTION

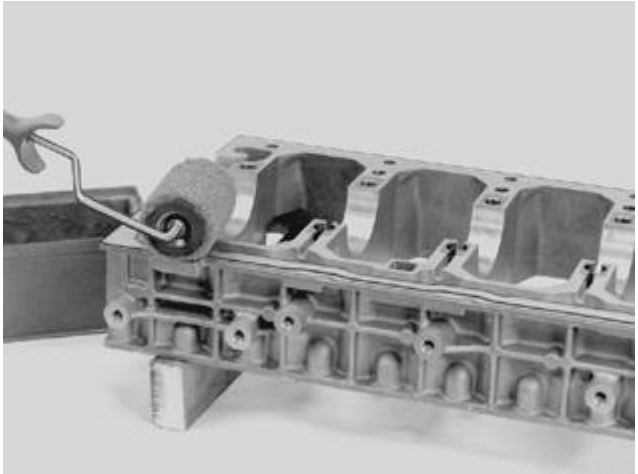

Fig. 99: Applying Liquid Gasket 11 61 059 On Intermediate Section
Courtesy of VOLVO CARS CORPORATION

Wipe the surfaces dry.

Apply liquid gasket 11 61 059 on the intermediate section. The surface must be completely covered without any excess. Use roller see **9512767**

Thoroughly lubricate all the bearing shells and the surface of the axial bearing.

TIGHTENING THE INTERMEDIATE SECTION

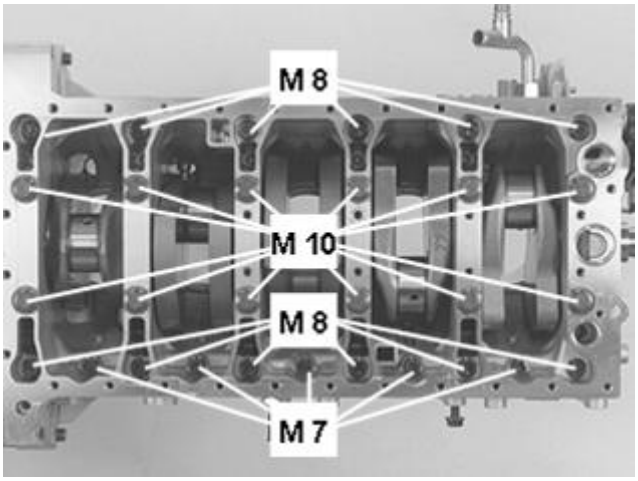

Fig. 100: Identifying Intermediate Section Bolts
Courtesy of VOLVO CARS CORPORATION

Install the two old screws for the flywheel and carrier plate at the rear edge of the crankshaft.

Lift these and the front of the crankshaft.

Carefully position the crankshaft in the block.

The crankshaft must **not** be turned before the intermediate section has been torque tightened. Position the intermediate section.

Lubricate and install all the screws.

NOTE: Use new M10 bolts.

Install the intermediate section and the screws on the exhaust side at bearing recesses 2 and 5.

CAUTION: The M8 bolts on the exhaust side have two different lengths.

Pull down the intermediate section.

Tighten the screws in the following order:

1. All M10 screws.....20 Nm
2. All M10 bolts.....45 Nm
3. All M8 bolts.....24 Nm
4. All M7 bolts.....17 Nm
5. Angle-tighten all M10 screws.....90°

Tighten the screws in sequence from the center and outwards.

MARKING THE CONNECTING ROD (WHERE APPLICABLE)

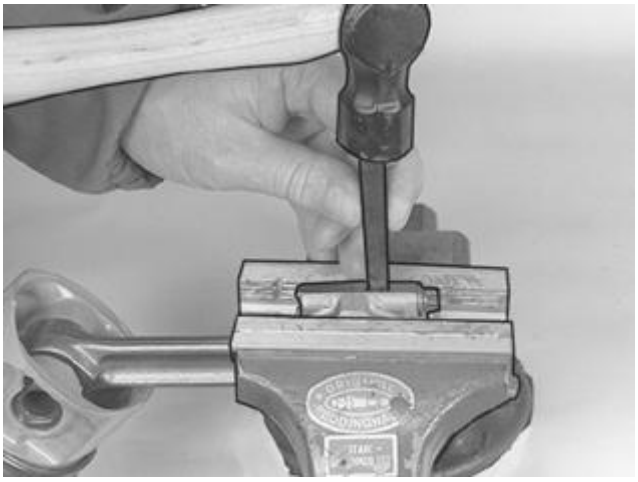

Fig. 101: Marking Both Halves With Cylinder Number Using A Center Punch Or Number Punch
Courtesy of VOLVO CARS CORPORATION

Assemble the connecting rod. Check that the cover is facing the correct direction. Tighten to **20 Nm** .

Secure the large end of the connecting rod in a vise with soft jaws (copper or aluminum).

Mark both halves with the cylinder number. Use a center punch or number punch.

The bearing shell with the black color coding on the side must be installed in the connecting rod.

INSTALLING PISTON RINGS

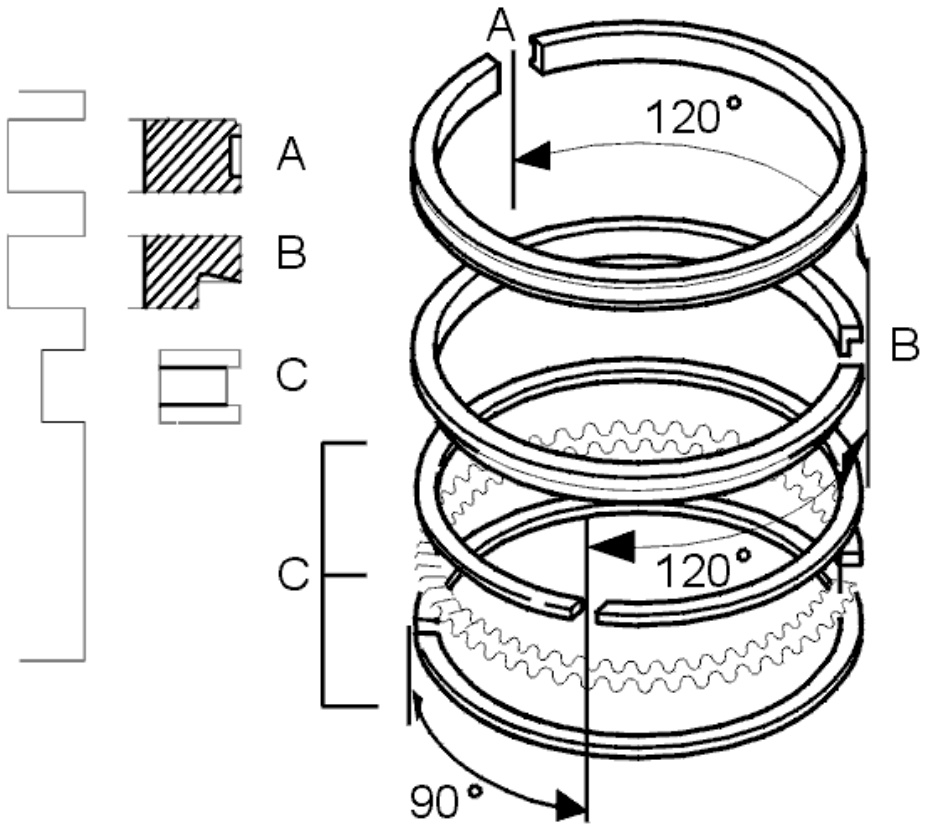

Fig. 102: Compression Rings -- Late Version
Courtesy of VOLVO CARS CORPORATION

Use piston ring pliers.

Turn the piston rings so that the openings are offset as illustrated.

A=Compression ring. The text on the piston ring must be upwards.

B=Scraper ring. Chamfered edge must face downwards.

C=Oil ring. Three sections, identical on all sides.

First install the expander ring (C), then the two other rings over the expander ring.

CAUTION: Make sure that the piston rings are not stuck but can be turned easily.

NOTE: Incorrect positioning increases oil consumption.

ASSEMBLING PISTONS AND CONNECTING RODS

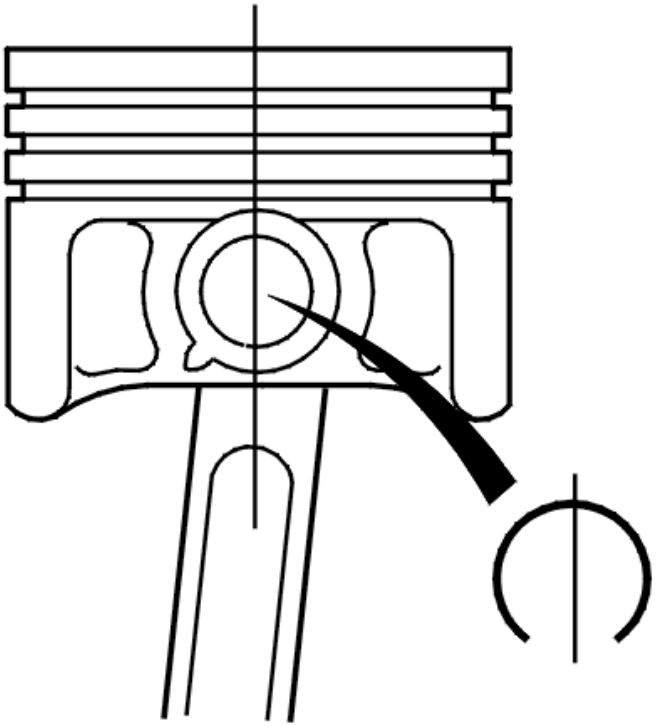

Fig. 103: Arrow On Top Of Piston
Courtesy of VOLVO CARS CORPORATION

There is an arrow on top of the piston. This must be turned forwards in the cylinder block.

The connecting rods are symmetrical and can be turned freely. Marked rods however must be turned in the same direction.

Assemble the connecting rod and piston with the piston pin.

Check that the classification of each cylinder/piston diameter and that any numbering of the connecting rod correspond.

Install both the snap rings on the piston pin. Check that the snap rings are positioned correctly in the piston. The opening must be vertical.

WARNING: **The lock ring can easily fly off. Protect your eyes**

Wipe clean around the bearing recess in the connecting rod and the cap.

Install the bearing shells.

If new bearing shells are used, these must be checked for color coding.

NOTE: Bearing shell with a black color marking on the side shall be installed in the connecting rod.

CAUTION: If reusing bearing shells, they must be installed in the same position as before. Make sure that they are positioned correctly with regards to the crankshaft's rotational direction.

INSTALLING THE PISTONS IN THE CYLINDER BORES

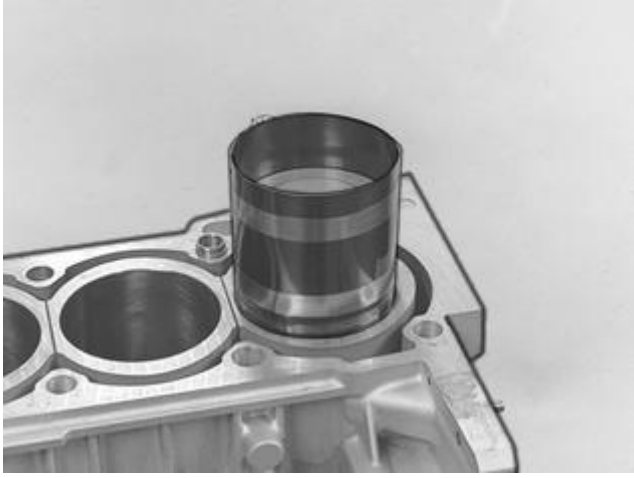

Fig. 104: Identifying Cylinder Ring Compressor
Courtesy of VOLVO CARS CORPORATION

Use a cylinder ring compressor.

Lubricate the cylinder bore, the pistons and the bearing shells.

Turn the crankshaft so that the connecting rod pin is at bottom dead center (BDC) for the cylinder the piston is to be inserted in.

Ensure that the engine is in a position where the cylinder bore forms as vertical a line as possible.

NOTE: The piston's arrow (on top of the piston) must point forwards, and make sure that the classification matches

Carefully press or tap the piston down (using the shaft of a hammer or similar).

When the piston releases from the piston ring compressor, turn the engine 180° in the stand.

Install tool see **9995746** in the connecting rod.

Pull the connecting rod until it secures against the big end journals.

TIGHTENING THE CONNECTING ROD COVER

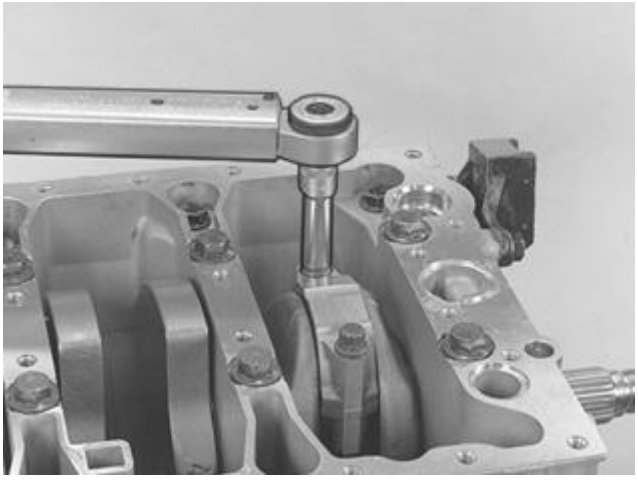

Fig. 105: Identifying Connecting Rod Cover (Bearing Cap)
Courtesy of VOLVO CARS CORPORATION

Install the cover. Check that any markings correspond.

Lubricate and install new seals. Tighten in two stages:

Tighten the connecting rod cap. Acc. to **TIGHTENING TORQUE**

Check that the connecting rod can be moved sideways.

NOTE: The crankshaft must not be rotated before the connecting rod cover has been tightened.

INSTALLING THE OIL PUMP SUCTION PIPE

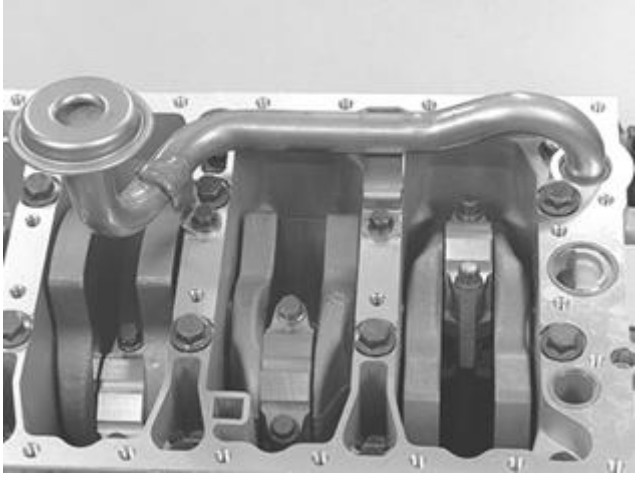

Fig. 106: Identifying Oil Pump Suction Pipe
Courtesy of VOLVO CARS CORPORATION

Install a **new sealing ring** on the suction pipe.

Carefully press the suction pipe down into the intermediate section.

Check that the sealing ring is correctly positioned.

Tighten.

Install **new sealing rings** for the oil pan oil ducts.

INSTALLING THE OIL PAN

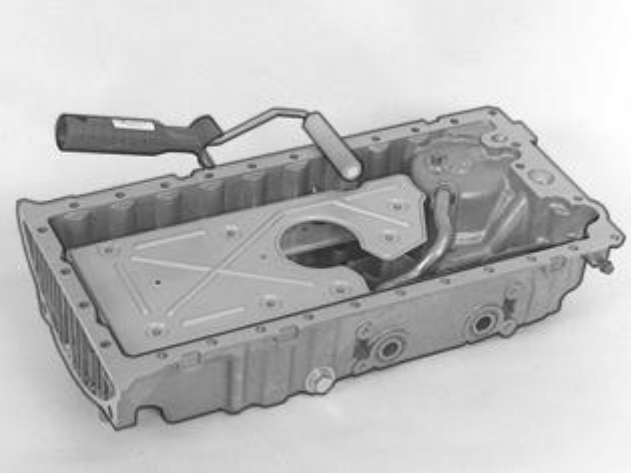

Fig. 107: Applying Liquid Gasket To Oil Pan
Courtesy of VOLVO CARS CORPORATION

Wipe the surfaces dry.

Apply liquid gasket 11 61 059 on the oil sump. Use roller see **9512767** .

The surface must be completely covered without any excess.

Position the pan and install all screws

CAUTION: Check that the rear edge of the oil pan is in line with the rear edge of the cylinder block. Permissible tolerance ± 0.025 mm. Use a steel ruler and feeler gauge.

Tighten the screws from the rear of the pan and forward.

INSTALLING THE OIL COOLER

Fig. 108: Identifying Oil Cooler
Courtesy of VOLVO CARS CORPORATION

Install

- **new sealing rings** in the sump
- the oil cooler. Tighten
- the oil filter.

INSTALLING THE REAR CRANKSHAFT SEAL

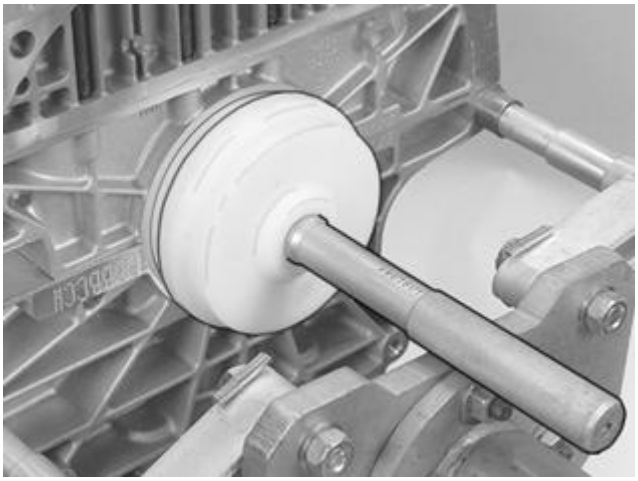

Fig. 109: Identifying Rear Crankshaft Seal
Courtesy of VOLVO CARS CORPORATION

Use standard handle see **9991801** and drift see **9995676** .

Lubricate the drift face and thread the sealing ring onto the drift.

Tap in the seal until the drift bottoms against the block.

DISASSEMBLING THE CRANKSHAFT ASSEMBLY

Special tools:

see **9995458**

see **9995679**

NOTE: **As the illustrations in this service information are used for different model years and / or models, some variation may occur. However, the essential information in the illustrations is always correct.**

PREPARATION

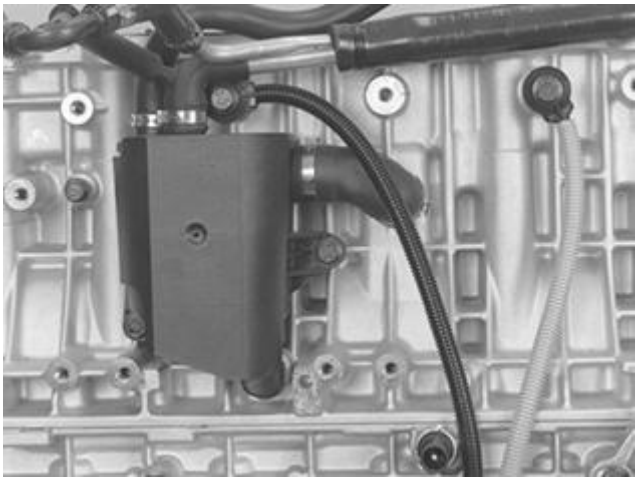

Fig. 110: Identifying Oil Trap, Knock Sensors, Front Engine Mounting And Oil Pressure Switch
Courtesy of VOLVO CARS CORPORATION

Remove

- oil trap
- knock sensors (KS)
- the front engine mounting
- the oil pressure switch.

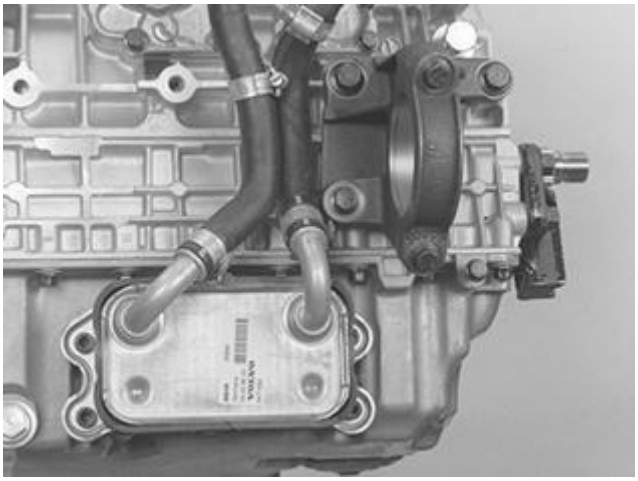

Fig. 111: Identifying Oil Cooler And Rubber Seals
Courtesy of VOLVO CARS CORPORATION

Remove

- the bearing retainer for the right drive shaft
- the oil cooler and the rubber seals.

REMOVING THE OIL FILTER AND OIL PAN

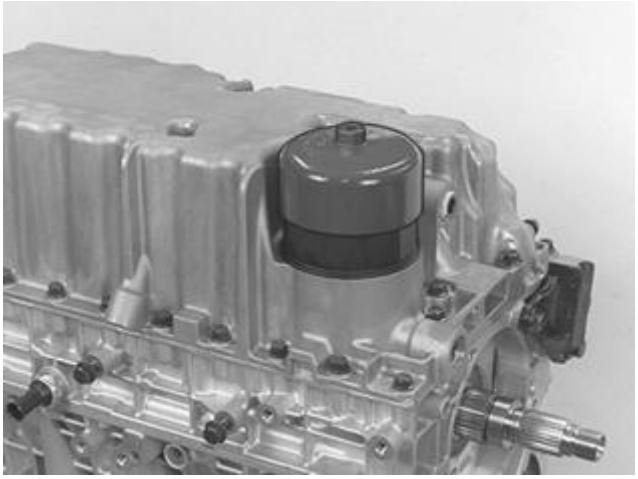

Fig. 112: Identifying Oil Filter
Courtesy of VOLVO CARS CORPORATION

Remove the oil filter. Use tool: see **9995679** .

Remove the screws securing the oil pan to the intermediate section.

Carefully tap the side of the oil pan with a rubber mallet.

Lift out the oil pan.

REMOVING THE SUCTION PIPE FROM THE OIL PUMP

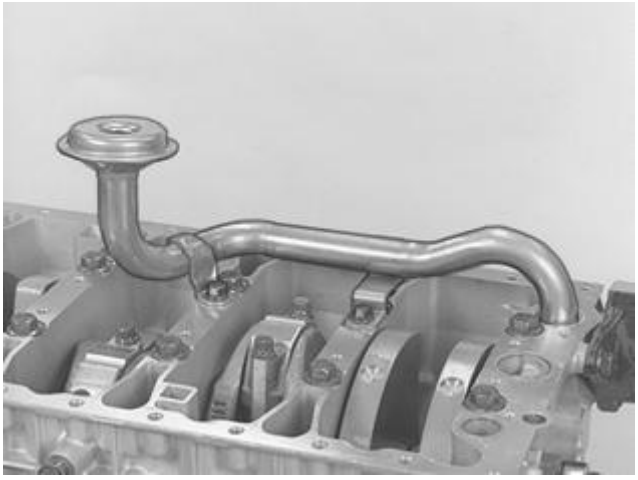

Fig. 113: Identifying Oil Pump Suction Pipe
Courtesy of VOLVO CARS CORPORATION

Remove the O-rings from the oil ducts.

Remove the screws securing the suction pipe to the intermediate section.

Work loose and lift out the suction pipe.

Remove the suction pipe O-ring.

Check the pipe and the strainer.

CHECKING MARKINGS

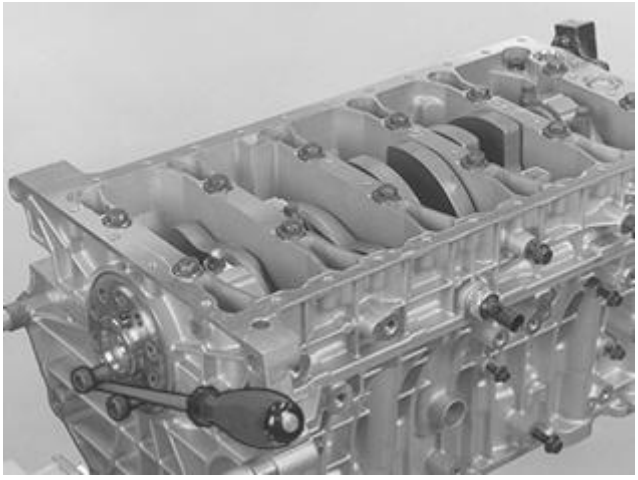

Fig. 114: Identifying Markings On Caps And Connecting Rods
Courtesy of VOLVO CARS CORPORATION

Install the two old screws for the flywheel and carrier plate at the rear edge of the crankshaft.

Turn the crankshaft so the piston in cylinder 1 is at bottom dead center (BDC).

Check that there are markings on the cap and connecting rods. Check which way the markings are positioned (exhaust and intake side). Make a note of this.

If necessary mark with a center punch or a number punch. See **MARKING THE CONNECTING ROD (WHERE APPLICABLE)**.

NEW CONNECTING ROD

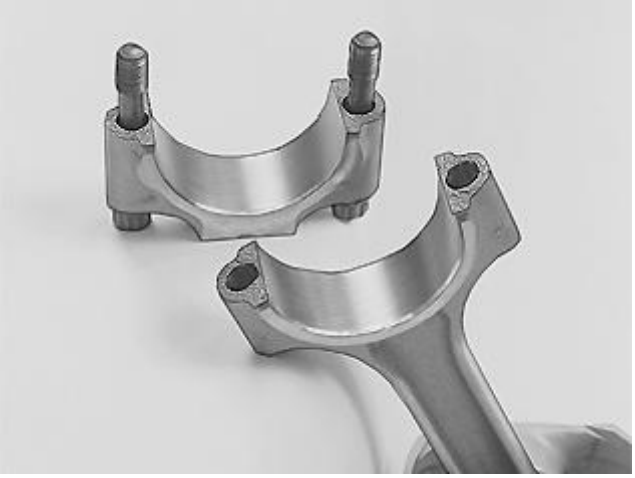

Fig. 115: View of Connecting Rod Big End
Courtesy of VOLVO CARS CORPORATION

A new connecting rod has been introduced on certain engines.

The mating surface between the cap and the connecting rod is not machined. It is aligned through a dedicated fracture surface.

CAUTION: If the cap is turned the wrong way and tightened, the structure of the fracture surface will be damaged and the connecting rod must then be discarded.

NOTE: Blow the fracture surface clean with compressed air before reinstalling the cap.

REMOVING THE PISTONS FROM THE CYLINDER BLOCK

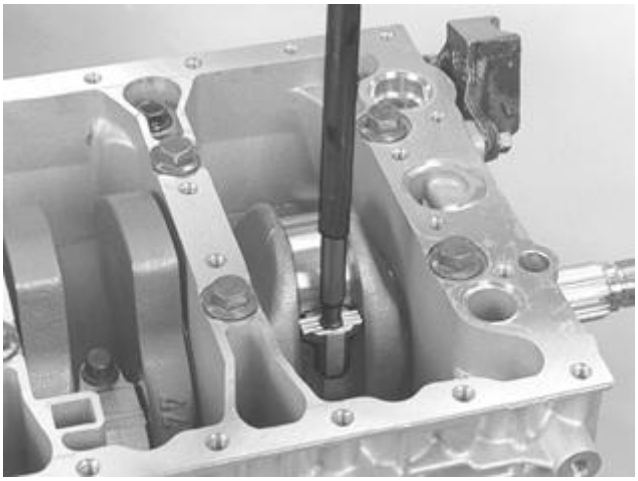

Fig. 116: Identifying Piston And Connecting Rod Removal Tool
Courtesy of VOLVO CARS CORPORATION

Remove the screws for the connecting rod cover.

Lift off the cover. Ensure that the bearing cover comes with it.

CAUTION: The bearing covers are not interchangeable. Also note the position of the bearing covers in relation to the rotation of the crankshaft.

Install tool in the connecting rod and push out the connecting rod/piston.

Hold by hand so that the piston does not fall to the floor. Ensure that the bearing cover comes with it.

Place the piston and connecting rod in such a way that they can be reinstalled in the correct cylinder.

Continue with cylinders 2, 3, 4 and 5 as above.

CAUTION: The bearing covers are not interchangeable. Also note the position of the bearing covers in relation to the rotation of the crankshaft.

REMOVING THE SCREWED JOINT FROM THE INTERMEDIATE SECTION

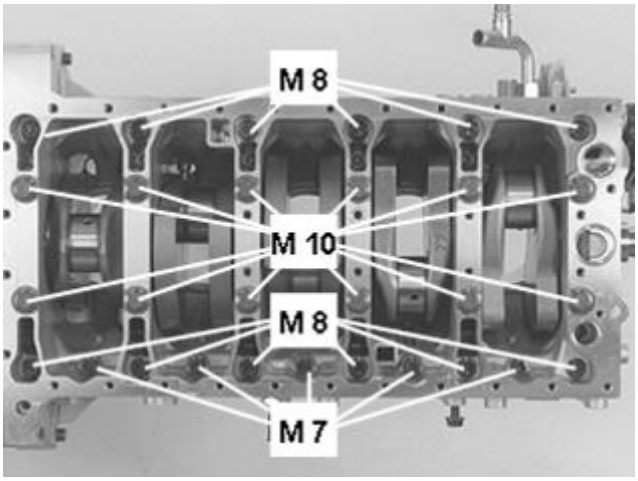

Fig. 117: Identifying Intermediate Section Bolts
Courtesy of VOLVO CARS CORPORATION

First remove the M7 screws from the intermediate section.

Then remove the M8 screws. Start at the outer edges and work alternately towards the center.

Remove the M10 screws in the same way.

SEPARATING THE INTERMEDIATE SECTION FROM THE CYLINDER BLOCK

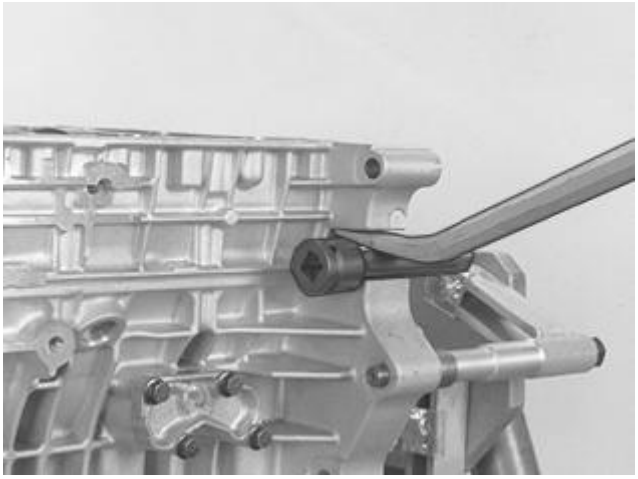

Fig. 118: Identifying Intermediate Section Pried From Cylinder Block
Courtesy of VOLVO CARS CORPORATION

Carefully pry the intermediate section from the cylinder block so that there is a gap of approximately 6-8 mm.

Then carefully tap off (on the exhaust side) the intermediate section with a rubber mallet.

Lift out the intermediate section. Ensure that the bearing covers for the intermediate section come with it.

CAUTION: The bearing covers are not interchangeable.

Also not the position of the upper half of the axial bearing for the direction of rotation of the crankshaft.

The crankshaft must not now be turned.

Ensure that the screws for the flywheel and carrier plate, which were installed earlier, are properly tightened. Lift them and the front of the crankshaft.

Carefully lift the crankshaft straight up.

Remove the remaining bearing covers.

NOTE: The bearing covers for the different bearing seatings are not interchangeable.

REMOVING THE PISTON COOLING VALVE AND NOZZLES

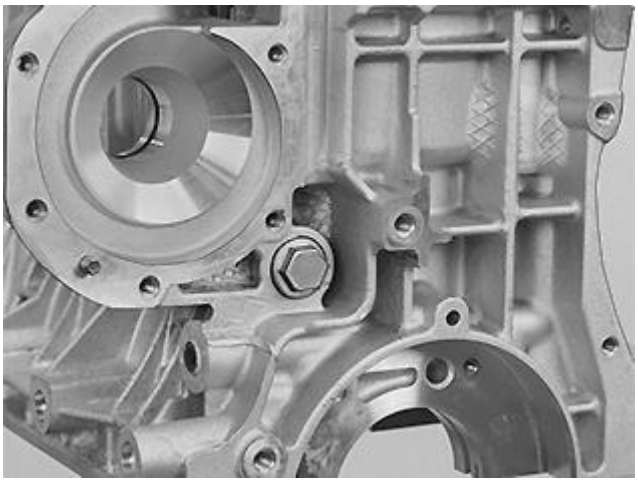

Fig. 119: Identifying Piston Cooling Valve
Courtesy of VOLVO CARS CORPORATION

Remove the piston cooling valve at the front of the engine.

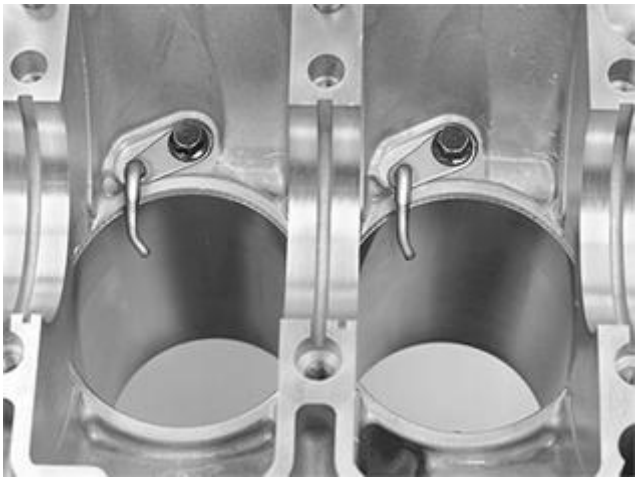

Fig. 120: Identifying Piston Cooling Nozzles
Courtesy of VOLVO CARS CORPORATION

Remove the piston cooling nozzles.

CLEANING

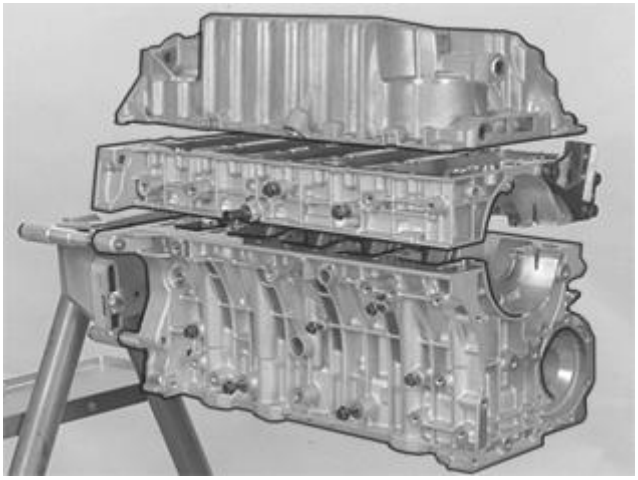

Fig. 121: Identifying Cylinder Block, Intermediate Section And Oil Pan
Courtesy of VOLVO CARS CORPORATION

Clean the gasket surfaces on the cylinder block, intermediate section and oil pan.

Use a razor blade or a gasket scraper and / or gasket solvent (**P/N 116 1440**).

WARNING: **A fume bonnet or extractor must be used when using gasket solution.**

CRANK MECHANISM, ASSEMBLING

Special tools:

see **9512767**

see **9991801**

see **9995676**

NOTE: **As the illustrations in this service information are used for different model years and / or models, some variation may occur. However, the essential information in the illustrations is always correct.**

TIGHTENING TORQUE

For tightening torques not in the text, see **TIGHTENING TORQUE** .

CLEANING

Ensure that the all components are **completely** clean.

Blow clean the oil ducts in the block, intermediate section and oil pan.

CLASSIFICATION OF MAIN BEARINGS

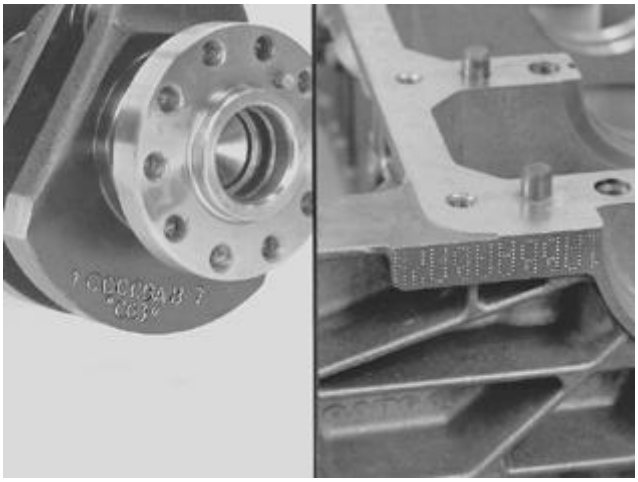

Fig. 122: Classification Of Main Bearings
Courtesy of VOLVO CARS CORPORATION

Wipe clean the bearing recesses in the block and the intermediate section.

Check that the components are clean and undamaged.

Check the classification of the block and crankshaft.

The classification marking is at the rear edge of the block and the crankshaft. The classification is read from digits 1 to 7. The first letter after digit 1 is the classification of main bearing 1. The bearing positions are numbered starting at the front of the engine.

SELECTING BEARINGS

Cylinder block classification / Crankshaft classification	**A small diameter**		**B medium-diameter**		**C large diameter**	
	block	intermediate section	block	intermediate section	block	intermediate section
A small	yellow medium	yellow medium	yellow medium	blue thick	blue thick	blue thick
B medium	red thin	yellow medium	yellow medium	yellow medium	yellow medium	blue thick
C large	red thin	red thin	red thin	yellow medium	yellow medium	yellow medium

Install the main bearings in the cylinder block and the intermediate section. See the table.

The axial bearing is positioned at bearing recess 5.

For example: The marking on the block at bearing recess 1 is B. The marking on the crankshaft at the corresponding bearing recess is C.

Therefore the bearing in the block is marked red and the bearing in the intermediate section is marked yellow.

NOTE: The thickest of the bearing caps must always be installed in the intermediate section. This is keep the center line as straight as possible.

THE INTERMEDIATE SECTION

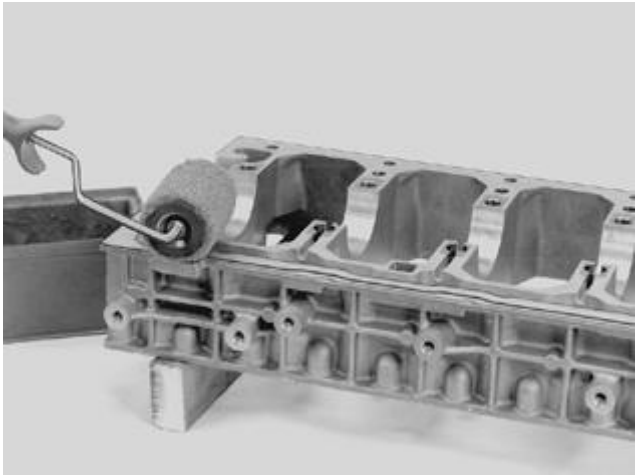

Fig. 123: Applying Liquid Gasket 11 61 059 On Intermediate Section
Courtesy of VOLVO CARS CORPORATION

Wipe the surfaces dry.

Apply liquid gasket 11 61 059 to the intermediate section. The surface must be completely covered without any excess. Use roller see **9512767**

Thoroughly lubricate all the bearing shells and the surface of the axial bearing.

TIGHTENING THE INTERMEDIATE SECTION

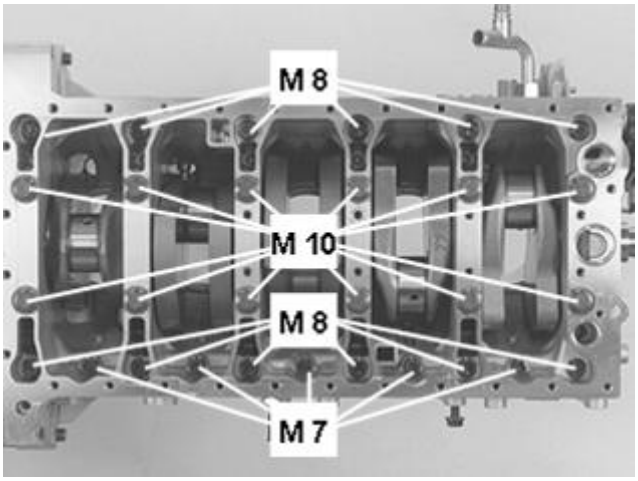

Fig. 124: Identifying Intermediate Section Bolts
Courtesy of VOLVO CARS CORPORATION

Install the two old screws for the flywheel and carrier plate at the rear edge of the crankshaft.

Lift these and the front of the crankshaft.

Carefully position the crankshaft in the block.

The crankshaft must **not** be turned before the intermediate section has been torque tightened. Position the intermediate section.

Install all screws. Draw the intermediate section down towards the block.

NOTE: Use new M10 screws.

Tighten in the numerical order illustrated.

Tighten the screws in the following order.

1. All M10 screws.....20 Nm
2. All M10 screws.....45 Nm
3. All M8 screws.....24 Nm
4. All M7 screws.....17 Nm

5. Angle-tighten all M10 screws.....90°

MARKING THE CONNECTING ROD (WHERE APPLICABLE)

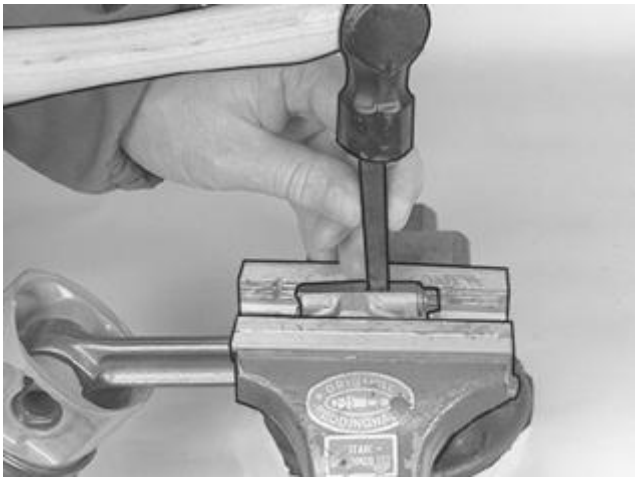

Fig. 125: Marking Both Halves With Cylinder Number Using A Center Punch Or Number Punch
Courtesy of VOLVO CARS CORPORATION

Assemble the connecting rod. Check that the cover is facing the correct direction. Tighten to **20 Nm** .

Secure the large end of the connecting rod in a vise with soft jaws (copper or aluminum).

Mark both halves with the cylinder number. Use a center punch or number punch.

INSTALLING PISTON RINGS

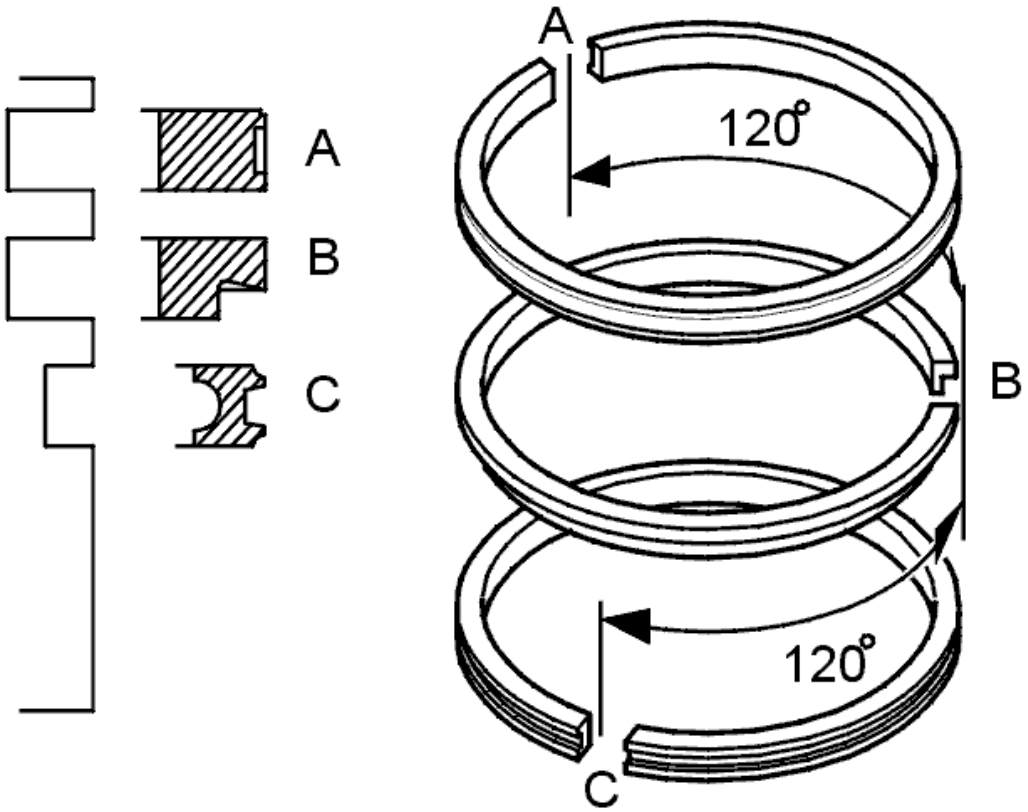

Fig. 126: Identifying Piston Ring Assembly
Courtesy of VOLVO CARS CORPORATION

Use piston ring pliers.

Turn the piston rings so that the openings are offset as illustrated.

A=Compression ring. The text on the piston ring must be upwards.

B=Scraper ring. Chamfered edge must face downwards.

C=Oil ring. Three sections, identical on all sides.

First install the expander ring (C), then the two other rings over the expander ring.

CAUTION: Ensure that the piston rings can be turned easily.

NOTE: Incorrect positioning increases oil consumption.

ASSEMBLING PISTONS AND CONNECTING RODS

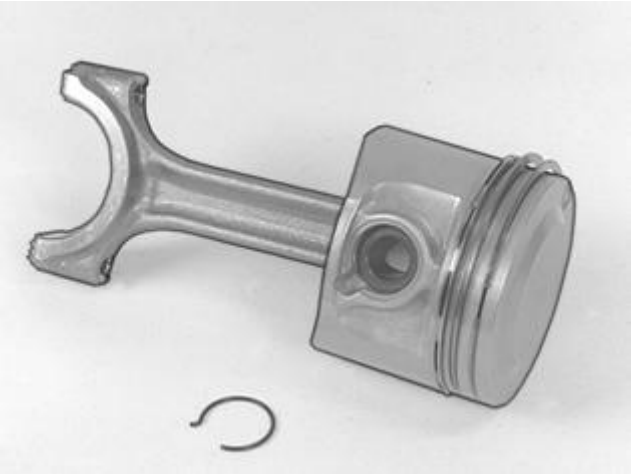

Fig. 127: Identifying Piston, Connecting Rod, And Piston Pin Snap Ring
Courtesy of VOLVO CARS CORPORATION

There is an arrow on top of the piston. This must be turned forwards in the cylinder block.

The connecting rods are symmetrical and can be turned freely. Marked rods however must be turned in the same direction.

Assemble the connecting rod and piston with the piston pin.

Check that the classification and any numbering for each cylinder and piston diameter correspond.

Install both the snap rings on the piston pin. Check that the snap rings are positioned correctly in the piston.

Wipe clean around the bearing recess in the connecting rod and the cap.

Install the bearing shells.

If new bearing shells are used, these must be checked for color coding.

NOTE: The bearing shell with a black color coding on the side must be installed in the connecting rod.

CAUTION: If reusing the bearing shells, they must be installed in the same position as before.

INSTALLING THE PISTONS IN THE CYLINDER BORES

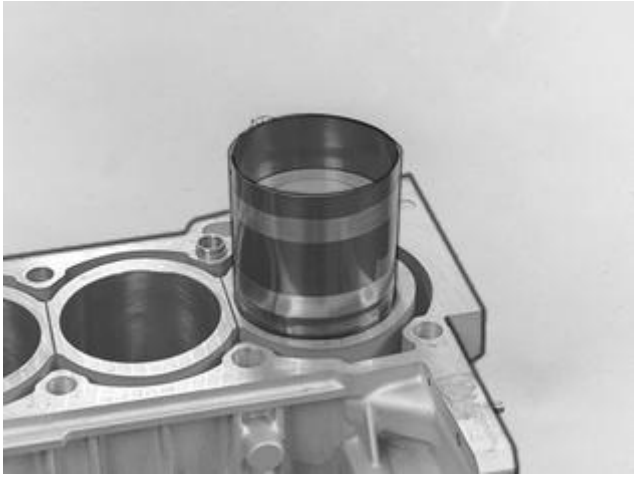

Fig. 128: Identifying Cylinder Ring Compressor
Courtesy of VOLVO CARS CORPORATION

Use a cylinder ring compressor.

Lubricate the cylinder bore, the pistons and the bearing shells.

Turn the crankshaft so that the connecting rod pin is at bottom dead center (BDC) for the cylinder the piston is to be inserted in.

Ensure that the engine is in a position where the cylinder bore forms as vertical a line as possible.

NOTE: The arrow on top of the piston must point forwards. Ensure that the classifications correspond

Carefully press or tap the piston down (using the shaft of a hammer or similar).

When the piston has released from the piston ring compressor, remove it and press the piston down until the connecting rod reaches the connecting rod pin.

TIGHTENING THE CONNECTING ROD COVER

Fig. 129: Identifying Connecting Rod Cover (Bearing Cap)
Courtesy of VOLVO CARS CORPORATION

Turn the engine 180° in the stand.

Install the cover. Check that any markings correspond.

Lubricate and install new seals. Tighten in two stages:

1. **20 Nm** .

2. Angle-tighten **90°** .

Check that the connecting rod can be moved sideways.

NOTE: **The crankshaft must not be rotated before the connecting rod cover has been tightened.**

INSTALLING THE OIL PUMP SUCTION PIPE

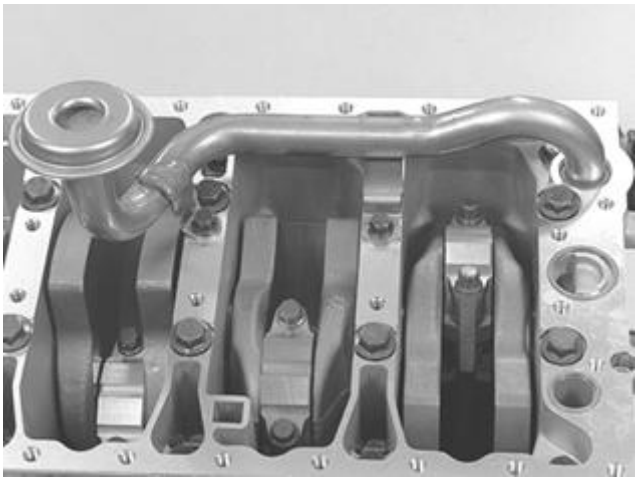

Fig. 130: Identifying Oil Pump Suction Pipe
Courtesy of VOLVO CARS CORPORATION

Install a **new sealing ring** on the suction pipe.

Carefully press the suction pipe down into the intermediate section.

Check that the sealing ring is correctly positioned.

Tighten.

Install **new sealing rings** for the oil pan oil ducts.

INSTALLING THE OIL PAN

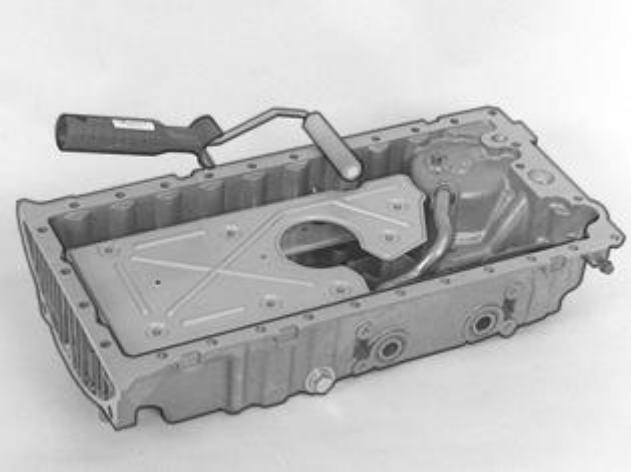

Fig. 131: Applying Liquid Gasket To Oil Pan
Courtesy of VOLVO CARS CORPORATION

Wipe the surfaces dry.

Apply liquid gasket 11 61 059 to the oil pan. Use roller see **9512767** .

The surface must be completely covered without any excess.

Position the pan and install all screws

CAUTION: Check that the rear edge of the oil pan is in line with the rear edge of the cylinder block. Permissible tolerance ± 0.025 mm. Use a steel ruler and feeler gauge.

Tighten the screws from the rear of the pan and forward.

INSTALLING THE OIL COOLER

Fig. 132: Identifying Oil Cooler
Courtesy of VOLVO CARS CORPORATION

Install **new sealing rings** in the oil pan.

Install the oil cooler. Tighten.

INSTALLING THE REAR CRANKSHAFT SEAL

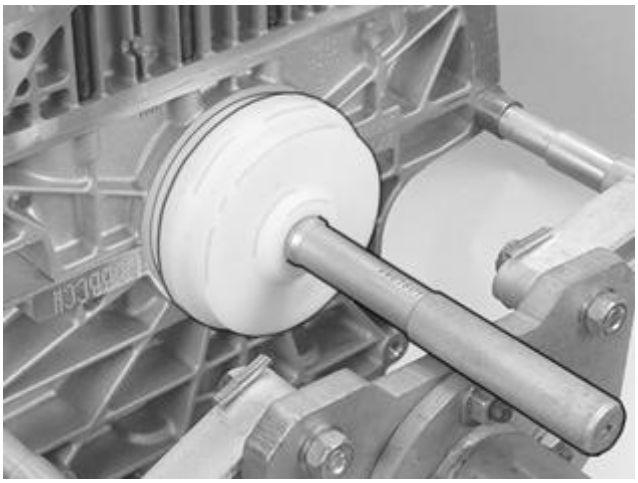

Fig. 133: Identifying Rear Crankshaft Seal
Courtesy of VOLVO CARS CORPORATION

Use standard handle see **9991801** and drift see **9995676** .

Lubricate the drift face and thread the sealing ring onto the drift.

Tap in the seal until the drift bottoms against the block.

MEASURING THE CRANKSHAFT ASSEMBLY

NOTE: **The illustrations in this service information are used for different model years and / or models. Therefore there may be some variation. However, the essential information in the illustrations is always correct.**

MEASURING THE CRANKSHAFT

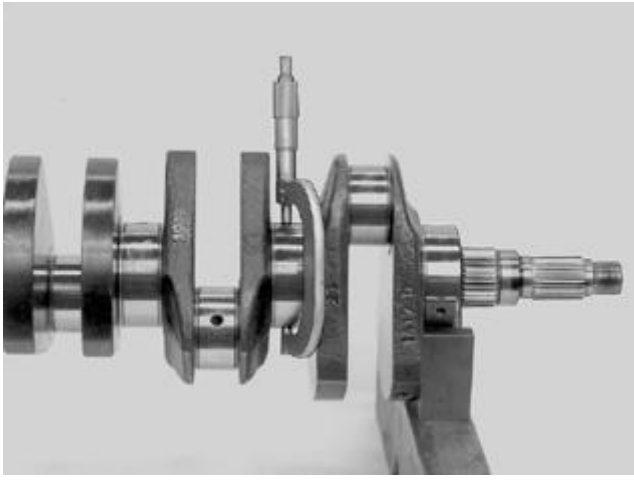

Fig. 134: Identifying Measurement Of Bearing Journal
Courtesy of VOLVO CARS CORPORATION

Use a micrometer.

Measure the out-of-round and taper of the bearing journal. Measure at a number of points laterally and longitudinally.

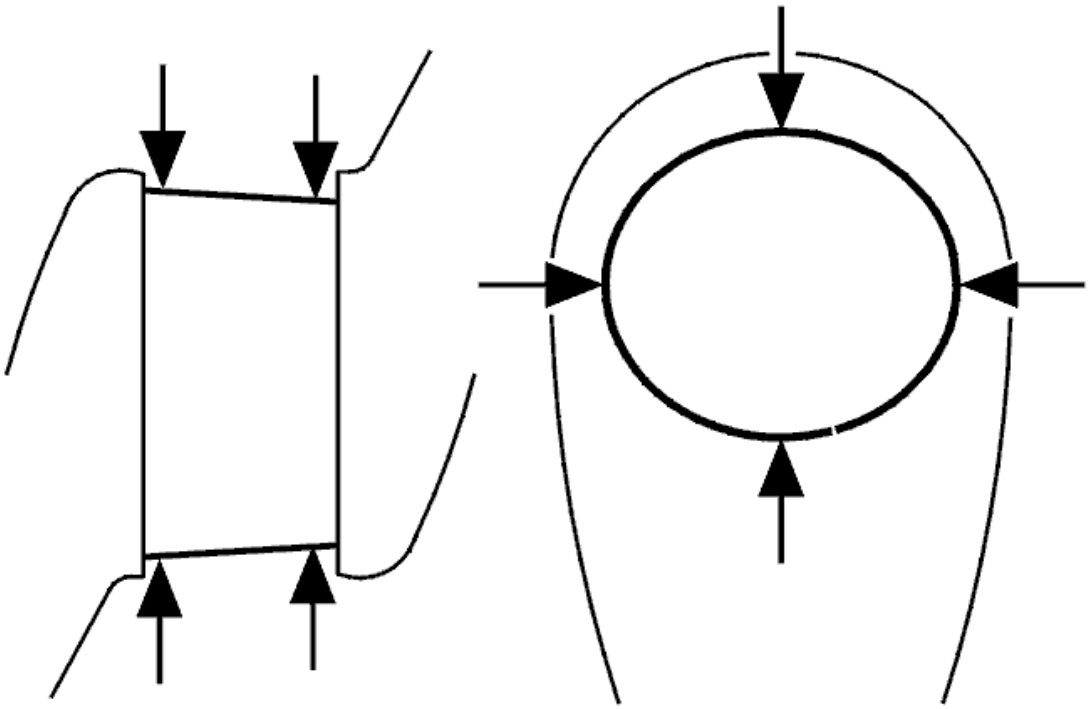

Fig. 135: Measuring Points, Connecting Rod Bearing Journals And Main Bearing Journals
Courtesy of VOLVO CARS CORPORATION

For the correct values for the connecting rod bearing journals and main bearing journals, see **CRANK MECHANISM** .

CHECK THE OUT-OF-TRUE OF THE CRANKSHAFT

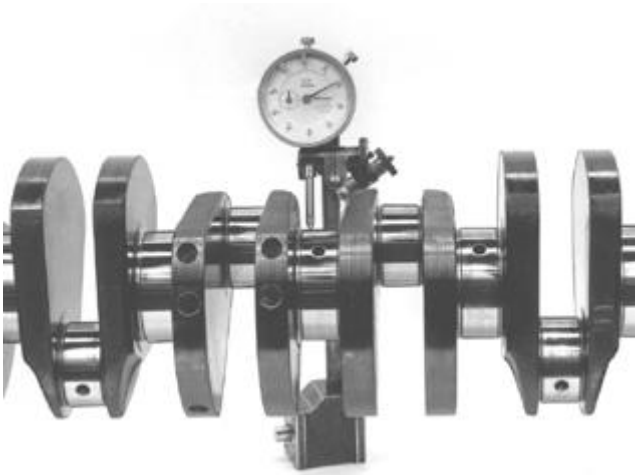

Fig. 136: Identifying Measurement Of Radial Runout Using A Dial Indicator And Magnetic Holder
Courtesy of VOLVO CARS CORPORATION

Use a dial indicator and magnetic holder.

Position the crankshaft with the two outer main bearings in the V block.

Turn the crankshaft and measure the radial runout on the other main bearing journals.

For the correct values, see **CRANK MECHANISM** .

REMOVING THE PISTON RINGS

Fig. 137: Identifying Piston Rings And Piston Ring Pliers
Courtesy of VOLVO CARS CORPORATION

Use piston ring pliers.

Remove coke deposits. Scrape the piston ring grooves clean with a groove cleaner or a broken and filed piston ring.

Check for damage, wear and cracks.

CHECKING PISTON RING AXIAL CLEARANCE

Fig. 138: Checking Piston Ring Axial Clearance
Courtesy of VOLVO CARS CORPORATION

Use **new** piston rings.

For the correct values, see **PISTONS (ENGINE CAPACITIES)** .

CHECKING THE PISTON DIAMETER

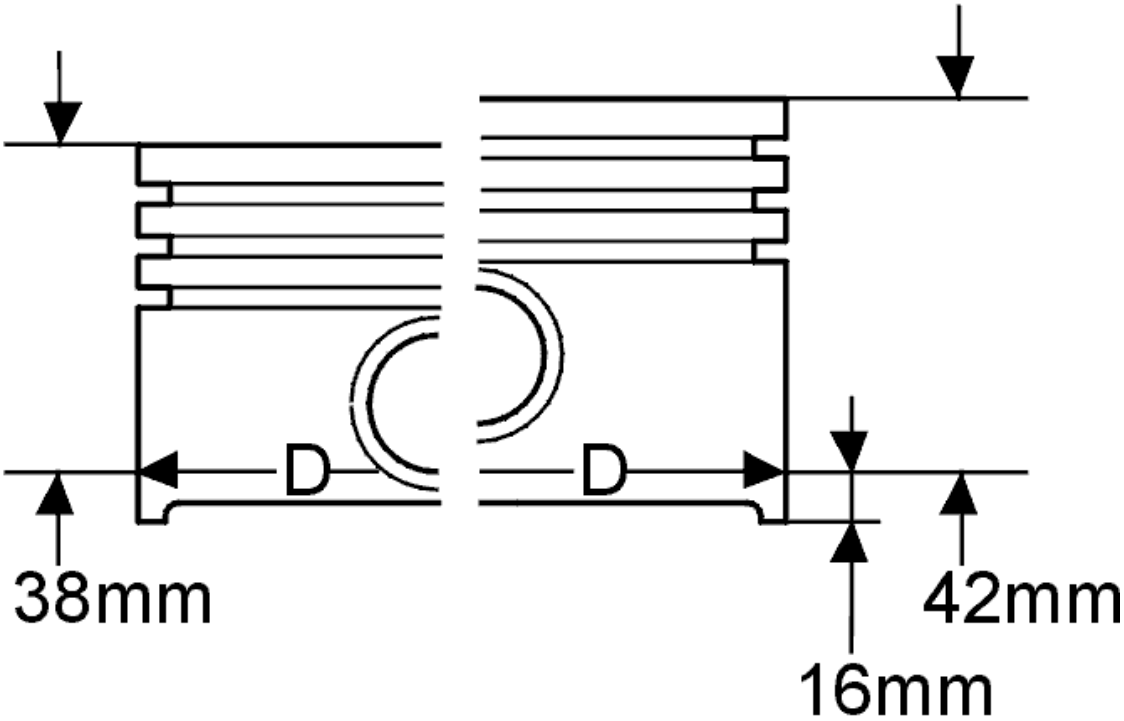

Fig. 139: Checking Piston Diameter
Courtesy of VOLVO CARS CORPORATION

Use a micrometer and vernier calliper.

For the correct values, see **PISTONS (ENGINE CAPACITIES)** .

CALCULATING THE RUNNING CLEARANCE OF THE PISTON

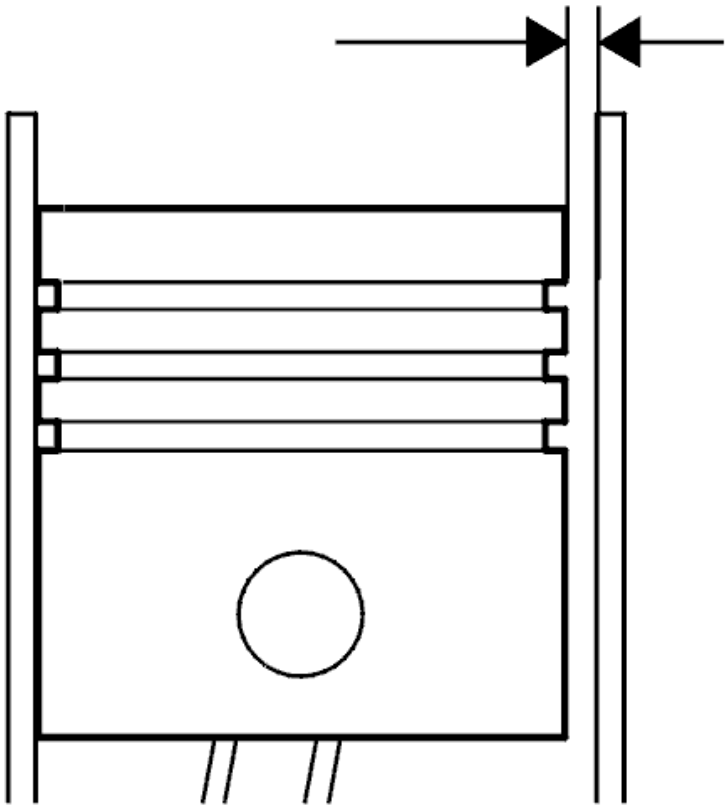

Fig. 140: Calculating Running Clearance Of Piston
Courtesy of VOLVO CARS CORPORATION

For the correct values, see **PISTONS (ENGINE CAPACITIES)** .

DISASSEMBLING CONNECTING RODS AND PISTONS

Fig. 141: Identifying Lock-Ring And Groove-Cut Chisel
Courtesy of VOLVO CARS CORPORATION

Check first that the piston and connecting rod are marked.

Piston marking: Scrape the piston pin clean. If the marking is unclear, mark the piston with the cylinder number and an arrow pointing to the front of the engine. Use a marker pen.

Connecting rod marking: See **MARKING THE CONNECTING ROD (WHERE APPLICABLE)**.

Carefully push out the lock-ring using a groove-cut chisel.

WARNING: **The circlip can easily come off. Wear protective goggles**

Press out the piston pin with your thumb.

Clean and check the connecting rods, caps and screws for damage, signs of wear or cracks.

CHECKING THE ALIGNMENT OF THE PISTON PINS IN THE PISTONS

Fig. 142: Checking Alignment Of Piston Pin With Piston
Courtesy of VOLVO CARS CORPORATION

The piston pin must not be loose. It should be possible to push it through the hole using thumb pressure.

Replace the piston if the play is too great.

CHECKING THE ALIGNMENT OF THE PISTON PINS IN THE CONNECTING RODS

Fig. 143: Checking Alignment Of Piston Pin With Connecting Rod
Courtesy of VOLVO CARS CORPORATION

The piston pin should slide through the hole with light thumb pressure.

If the play is too great measure the piston pin.

Use a micrometer.

See **PISTONS (ENGINE CAPACITIES)** for the correct diameter of the gudgeon pin.

NEW CONNECTING ROD

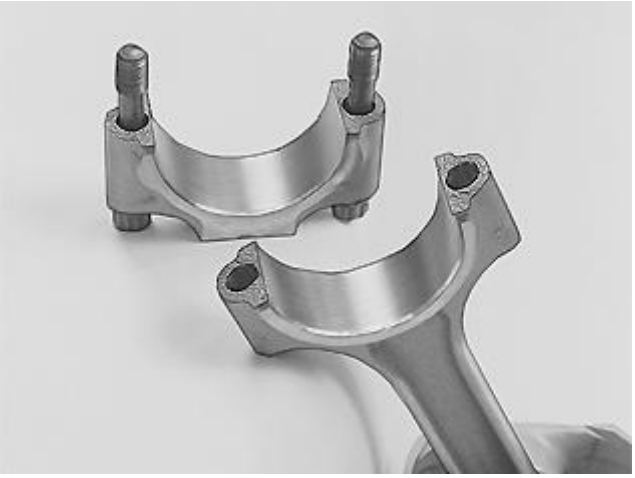

Fig. 144: View of Connecting Rod Big End
Courtesy of VOLVO CARS CORPORATION

A new connecting rod has been introduced on certain engines.

The mating surface between the cap and the connecting rod is not machined. It is aligned through a dedicated fracture surface.

CAUTION: If the cap is turned the wrong way and tightened, the structure of the fracture surface will be damaged and the connecting rod must then be discarded.

NOTE: Blow the fracture surface clean with compressed air before reinstalling the cap.

CHECKING THE BEARING RECESS IN THE CONNECTING ROD BIG END

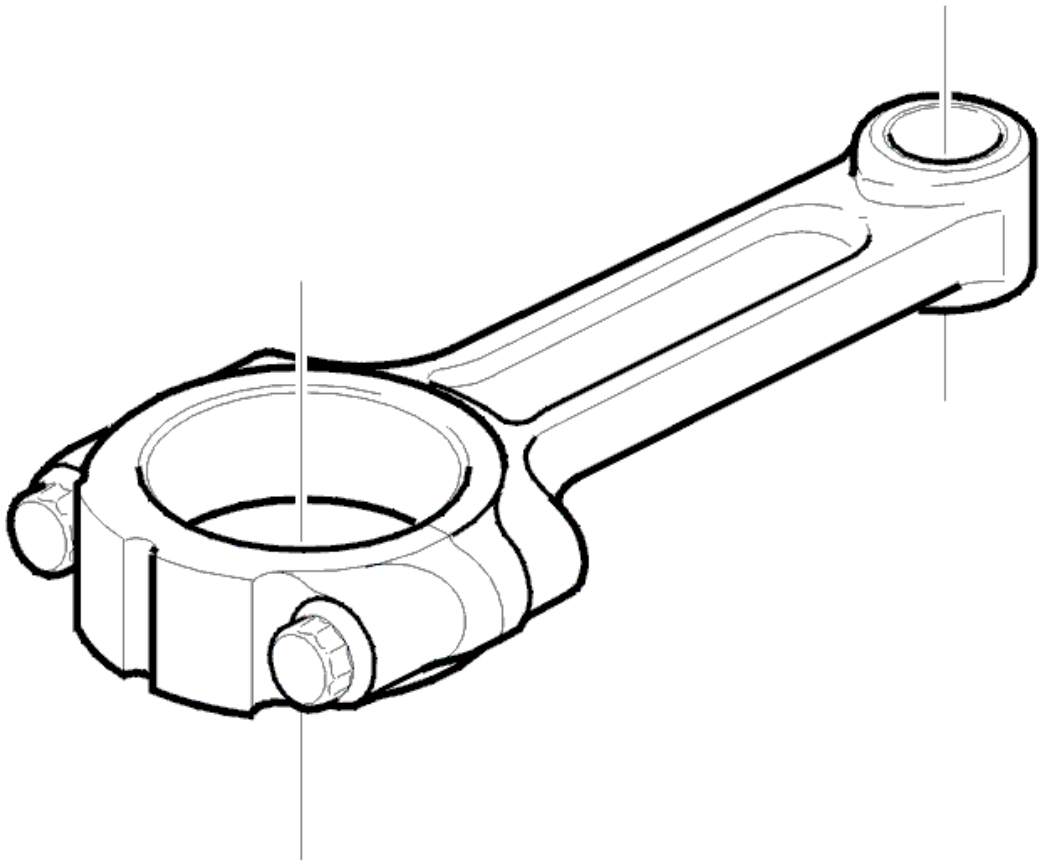

Fig. 145: Measuring Out-Of-Round With Bore Gauge.
Courtesy of VOLVO CARS CORPORATION

Visually check the bearing shells.

If in doubt measure out-of-round. Use a bore gauge.

For the correct diameter of the bearing recess, see **CRANK MECHANISM** .

CHECKING THE CONNECTING ROD IN A CONNECTING ROD ALIGNER

Check for out-of-true and twisting.

CAUTION: Check that the aligner fork is unburred and round at the handle.

Remove and apply the expander at the big end between each alignment

operation.

CRANK MECHANISM (B5254T2; 2005-2007)

CRANK MECHANISM, ASSEMBLING

Special tools:

see **9512767**

see **9991801**

see **9995676**

see **9995746**

NOTE: **As the illustrations in this service information are used for different model years and / or models, some variation may occur. However, the essential information in the illustrations is always correct.**

NOTE: **For tightening torques not in the text, see TIGHTENING TORQUE .**

CLEANING

Ensure that the all components are **completely** clean.

Blow clean the oil ducts in the block, intermediate section and sump.

INSTALLING THE PISTON COOLING VALVE AND NOZZLES

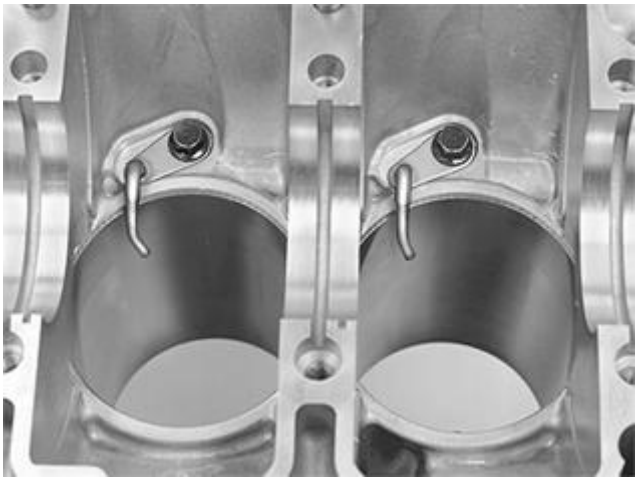

Fig. 146: Identifying Piston Cooling Nozzles
Courtesy of VOLVO CARS CORPORATION

Install the piston cooling nozzles. Tighten the screws.

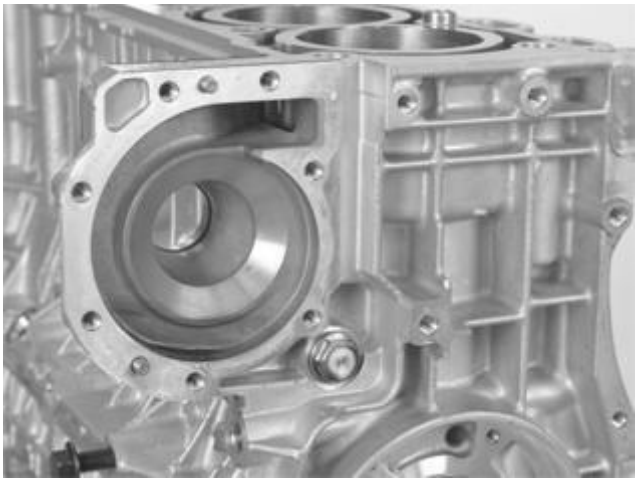

Fig. 147: Identifying Piston Cooling Valve
Courtesy of VOLVO CARS CORPORATION

Install the piston cooling valve. Use a seal washer. Tighten. See **SUMMARY OF SPECIFIC COMPONENTS AND TIGHTENING TORQUES** .

CLASSIFICATION OF MAIN BEARINGS

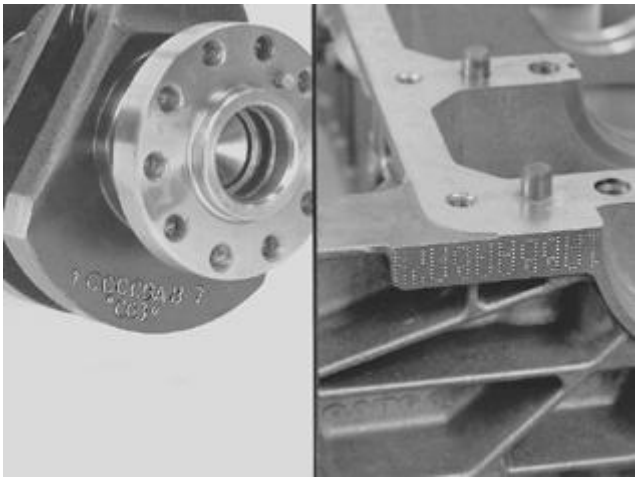

Fig. 148: Classification Of Main Bearings
Courtesy of VOLVO CARS CORPORATION

Wipe clean the bearing recesses in the block and the intermediate section.

Check that the components are clean and undamaged.

Check the classification of the block and crankshaft.

The classification marking is at the rear edge of the block and the crankshaft. The classification is read from digit 1 to 7. The first letter after digit 1 is the classification of main bearing 1. The bearing recesses are

numbered starting at the front of the engine.

SELECTING BEARINGS

NOTE: Always use new bearings.

Bearing halves with grooves are always installed in the engine block.

Install the main bearings in the cylinder block and the intermediate section. See the table. The axial bearing is positioned at bearing recess 5

2 \ 1	A		B		C	
A	Y	Y	Y	B	B	B
B	R	Y	Y	Y	Y	B
C	R	R	R	Y	Y	Y
D	Y	B	B	B	B	B
E	Y	B	B	B	B	B
F	Y	Y	Y	B	B	B
G	Y	Y	Y	B	B	B
H	Y	Y	Y	B	B	B
J	Y	Y	Y	B	B	B
K	Y	Y	Y	B	B	B
L	R	Y	Y	Y	Y	B
M	R	Y	Y	Y	Y	B
N	R	Y	Y	Y	Y	B
O	R	Y	Y	Y	Y	B
p	R	Y	Y	Y	Y	B
R	R	R	R	Y	Y	Y
S	R	R	R	Y	Y	Y
T	R	R	R	Y	Y	Y
V	R	R	R	Y	Y	Y
X	R	R	R	Y	Y	Y
Y	R	R	R	Y	R	Y
Z	R	R	R	Y	R	Y
	3	4	3	4	3	4

Fig. 149: Classification Chart
Courtesy of VOLVO CARS CORPORATION

1. Classification cylinder block
2. Classification crankshaft
3. cylinder block
4. Intermediate section

Example. The marking on the block at bearing position 1 is B. The marking on the crankshaft at the corresponding bearing position is C. This gives a red marked bearing in the block and a yellow marked bearing in the intermediate section.

NOTE: The thickest of the bearing caps must always be installed in the intermediate section. This is to keep the center line as straight as possible.

APPLYING LIQUID GASKET

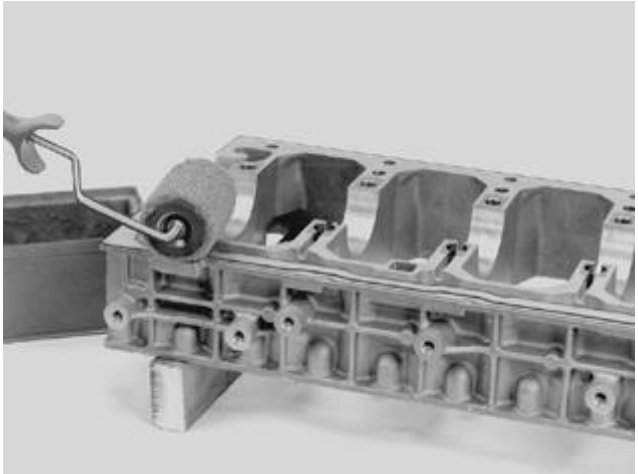

Fig. 150: Applying Liquid Gasket 11 61 059 On Intermediate Section
Courtesy of VOLVO CARS CORPORATION

Wipe the surfaces dry. Apply liquid gasket 11 61 059 to the intermediate section.

The surface must be completely covered without any excess. Use roller see **9512767** . Thoroughly lubricate all the bearing shells and the thrust bearing's surface.

TIGHTENING THE INTERMEDIATE SECTION

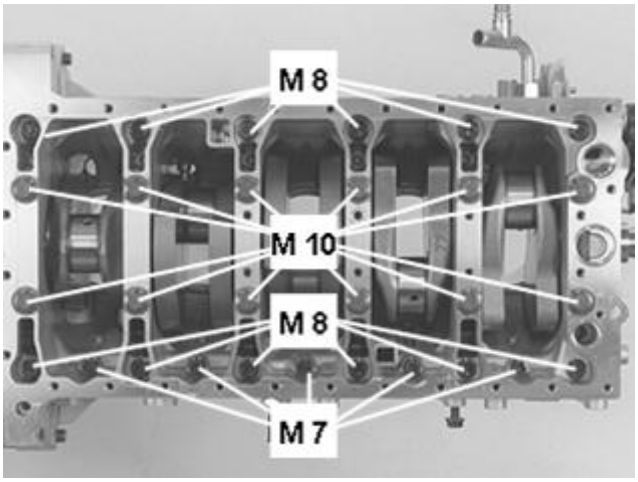

Fig. 151: Identifying Intermediate Section Bolts
Courtesy of VOLVO CARS CORPORATION

Install the two old screws for the flywheel and carrier plate at the rear edge of the crankshaft. Lift these and the front of the crankshaft.

Carefully position the crankshaft in the block. The crankshaft must **not** be turned before the intermediate section has been torque tightened. Position the intermediate section. Lubricate and install all the screws.

NOTE: Use new M10 screws.

CAUTION: The M8-screws on the exhaust side are two different lengths.

Install the intermediate section and the screws on the exhaust side at bearing recesses 2 and 5.

Pull down the intermediate section. Tighten the screws. See **SUMMARY OF SPECIFIC COMPONENTS AND TIGHTENING TORQUES** .

MARKING THE CONNECTING ROD (WHERE APPLICABLE)

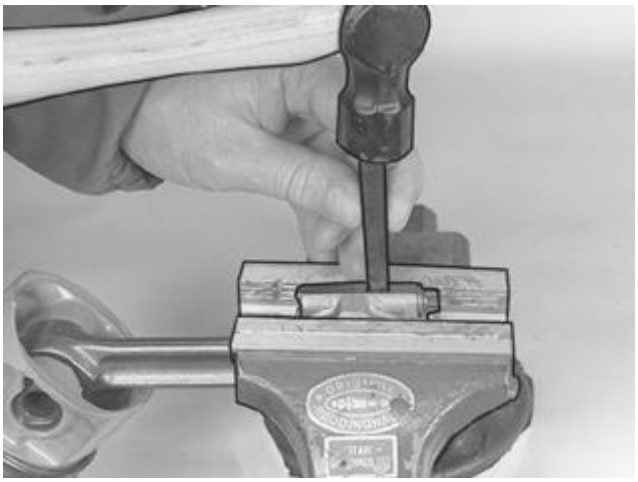

Fig. 152: Marking Both Halves With Cylinder Number Using A Center Punch Or Number Punch
Courtesy of VOLVO CARS CORPORATION

Assemble the connecting rod. Check that the cover is facing the correct direction. Tighten to **20 Nm** .

Secure the large end of the connecting rod in a vice with soft jaws (copper or aluminum). Mark both halves with the cylinder number. Use a center punch or number punch.

SELECTING PISTON

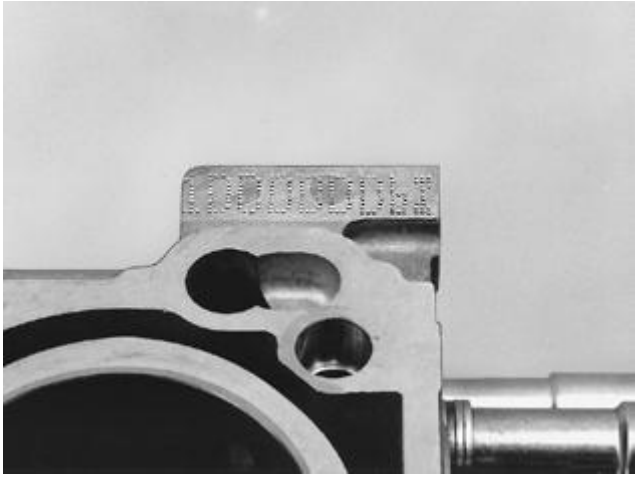

Fig. 153: Classification Marking
Courtesy of VOLVO CARS CORPORATION

For every cylinder there is a classification letter stamped (C, D, E) on the top of the engine block.

First letter after the digit 1 corresponds to the classification of the cylinder bore in cylinder 1 and is then followed by cyl. 2, 3, 4, 5.

Cylinder selection is determined by the classification of the cylinder bore. For example: Cylinder class D must have pistons marked D etc.

INSTALLING PISTON RINGS

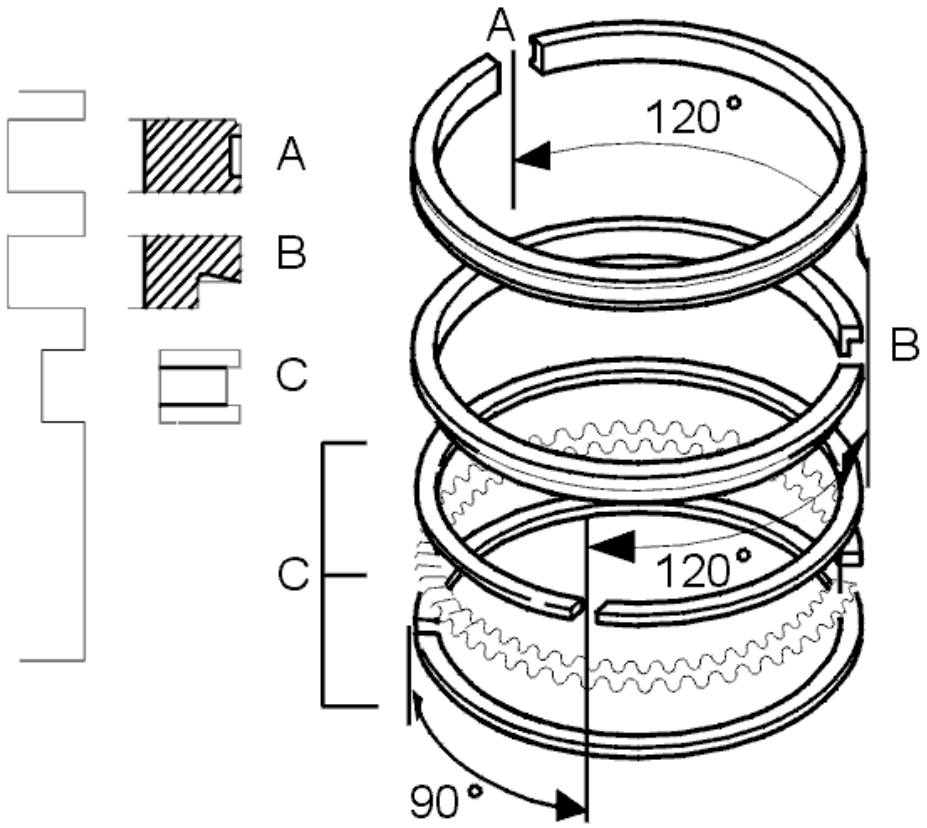

Fig. 154: Compression Rings -- Late Version
Courtesy of VOLVO CARS CORPORATION

CAUTION: Ensure that the piston rings can be turned easily.

NOTE: Incorrect positioning may result in higher oil consumption.

Use piston ring pliers. Turn the piston rings so that the openings are offset as illustrated.

A=Compression ring. The text on the piston ring must be upwards.

B=Scraper ring. Chamfered edge must face downwards.

C=Oil ring. Three sections, identical on all sides. First install the expander ring (C), then the two other rings over the expander ring.

ASSEMBLING PISTONS AND CONNECTING RODS

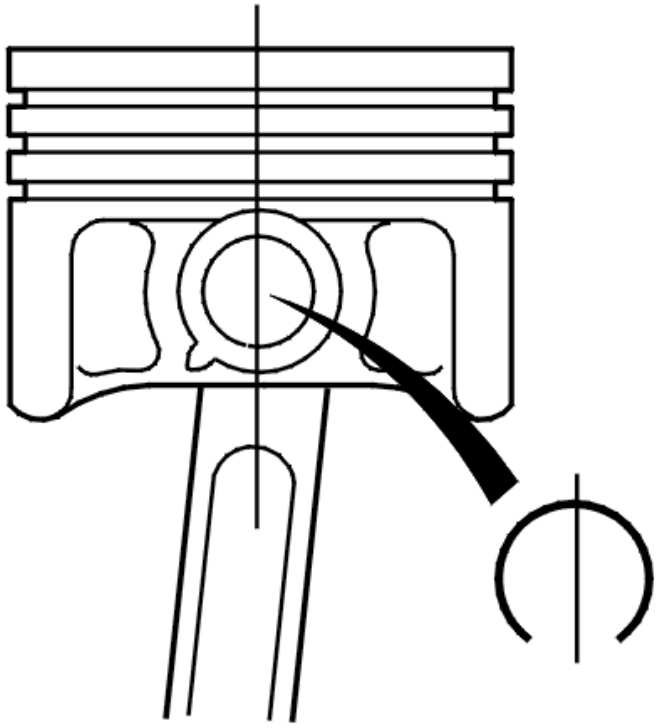

Fig. 155: Arrow On Top Of Piston
Courtesy of VOLVO CARS CORPORATION

WARNING: **The snap ring can easily come off. Wear protective goggles**

There is an arrow marking on the upper side of the cylinder. This must be turned forwards in the cylinder block.

The connecting rods are symmetrical and can be turned freely. Marked rods however must be turned in the same direction.

Assemble the connecting rod and piston with the piston pin. Check that the classification and any numbering for each cylinder/piston diameter and connecting rod correspond.

Install both the snap rings on the piston pin. Check that the snap rings are positioned correctly in the piston. The opening must be vertical.

Wipe clean around the bearing recess in the connecting rod and the cap.

INSTALLING BIG END BEARING SHELLS

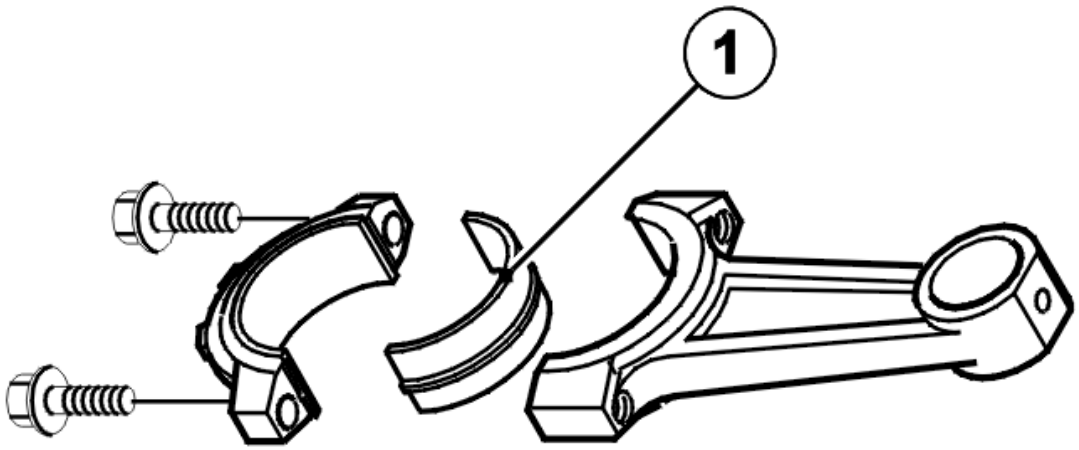

Fig. 156: Identifying Bearing Shell Color Code Location
Courtesy of VOLVO CARS CORPORATION

Always use new bearings.

Check these for color marking. The bearing shell with a black color coding on the side (1) must be installed in the connecting rod.

INSTALLING THE PISTONS IN THE CYLINDER BORES

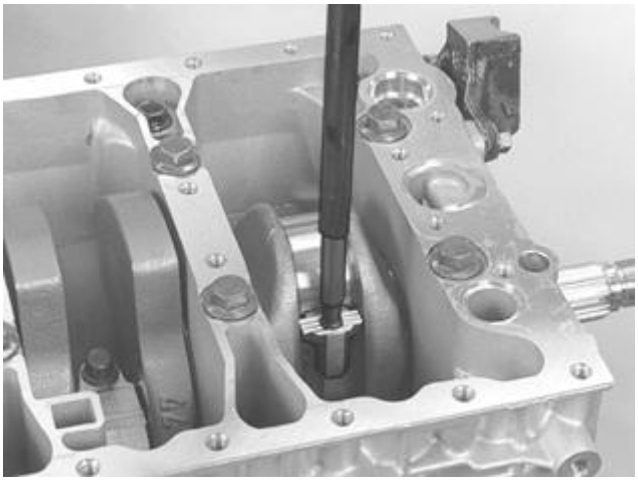

Fig. 157: Identifying Piston And Connecting Rod Removal Tool

Courtesy of VOLVO CARS CORPORATION

NOTE: The arrow on top of the piston must point forwards. Ensure that the classifications correspond.

Use a cylinder ring compressor.

Lubricate the cylinder bore, the pistons and the bearing shells.

Turn the crankshaft so that the connecting rod pin is at bottom dead center (BDC) for the cylinder the piston is to be inserted in.

Ensure that the engine is in a position where the cylinder bore forms as vertical a line as possible.

Carefully press or tap the piston down (using the shaft of a hammer or similar). When the piston releases from the piston ring compressor, turn the engine **180°** in the stand.

Install tool see **9995746** in the connecting rod. Pull the connecting rod until it secures against the big end journals.

TIGHTENING THE CONNECTING ROD COVER

Fig. 158: Identifying Connecting Rod Cover (Bearing Cap)
Courtesy of VOLVO CARS CORPORATION

NOTE: The crankshaft must not be rotated before the connecting rod cover has been tightened.

Install the cap. Check that any markings correspond.

Lubricate and install new screws. Tighten the screws. See **TIGHTENING TORQUE** .

Check that the connecting rod can be moved sideways.

INSTALLING THE OIL PUMP SUCTION PIPE

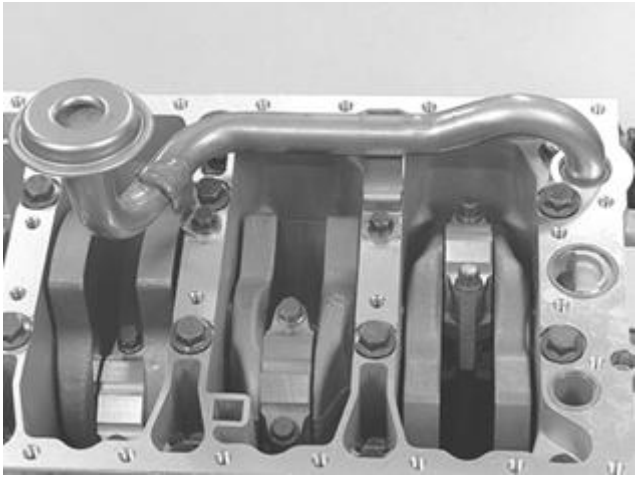

Fig. 159: Identifying Oil Pump Suction Pipe
Courtesy of VOLVO CARS CORPORATION

Install a new seal ring on the suction line.

Carefully press the suction pipe down into the intermediate section. Check that the sealing ring is correctly positioned.

Tighten the screws. Install new sealing rings for the oil ducts to the sump.

INSTALLING THE SUMP

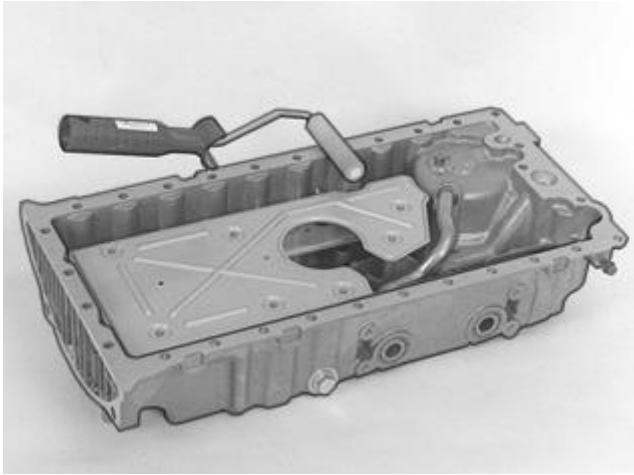

Fig. 160: Applying Liquid Gasket To Oil Pan
Courtesy of VOLVO CARS CORPORATION

CAUTION: Check that the rear edge of the oil sump is in line with the rear edge of the engine block. Permitted tolerance± 0.025 mm . Use a steel ruler and feeler gauge.

Wipe the surfaces dry.

Apply liquid gasket 11 61 059 on the oil sump. Use roller see **9512767** . The surface must be completely covered without any excess. Install the oil sump and install all bolts.

Tighten the screws. Start with the rear edge of the sump and work alternately forwards.

INSTALLING THE OIL COOLER

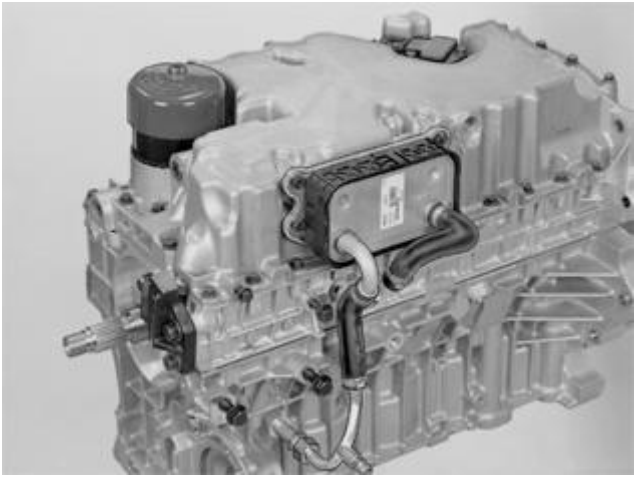

Fig. 161: Identifying Oil Cooler
Courtesy of VOLVO CARS CORPORATION

Install:

- new sealing rings in the oil pan
- the oil cooler. Tighten the screws
- the oil filter.

CLEANING

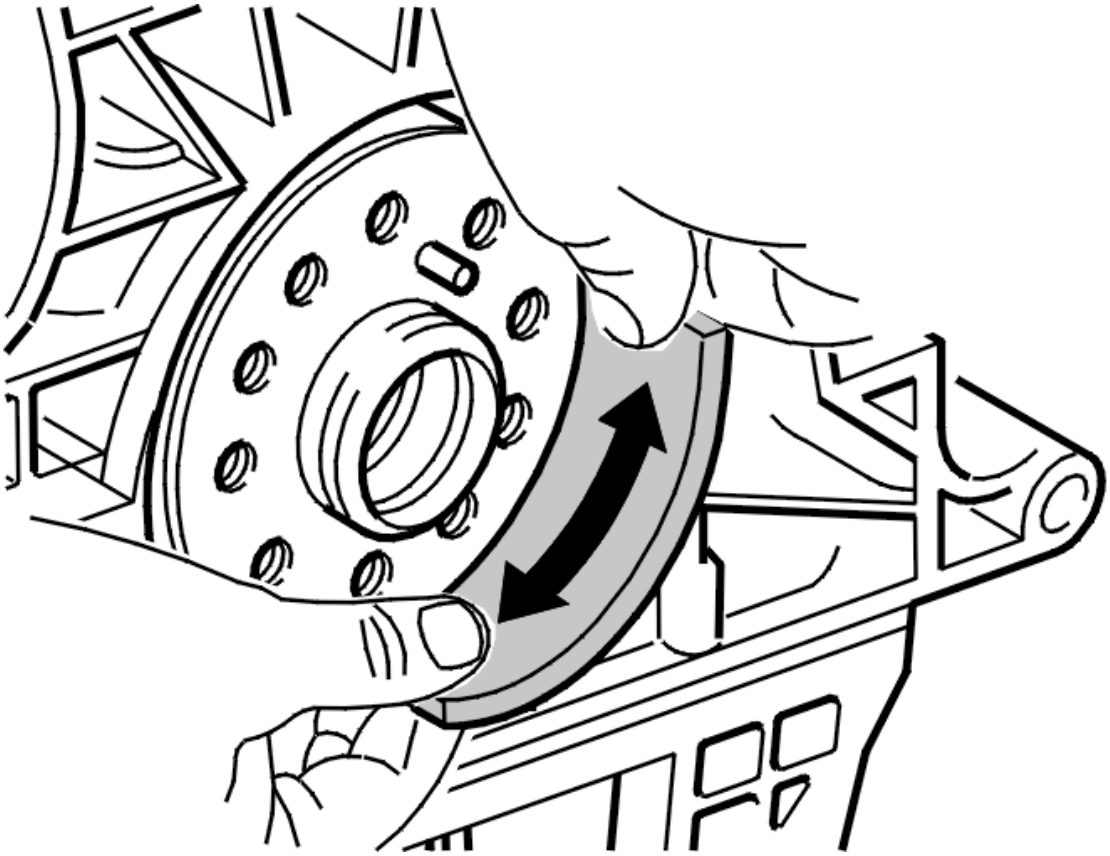

Fig. 162: Cleaning Around Crankshaft Flange
Courtesy of VOLVO CARS CORPORATION

CAUTION: Carry out cleaning work around the flange, not in and out. No grinding tools or similar may be used. It is extremely important that there is no thread sealant residue or other dirt. This could cause leakage.

NOTE: Use emery cloth 9511024 to clean the crankshaft end.

If necessary, wash off the oil on the rear cylinder block surface. Blow clean using compressed air.

When cleaning, work around the shaft journal, not in and out. It is essential that any residue from the emery cloth and any other contaminants are completely removed before the new sealing ring is installed.

INSTALLING THE REAR CRANKSHAFT SEAL

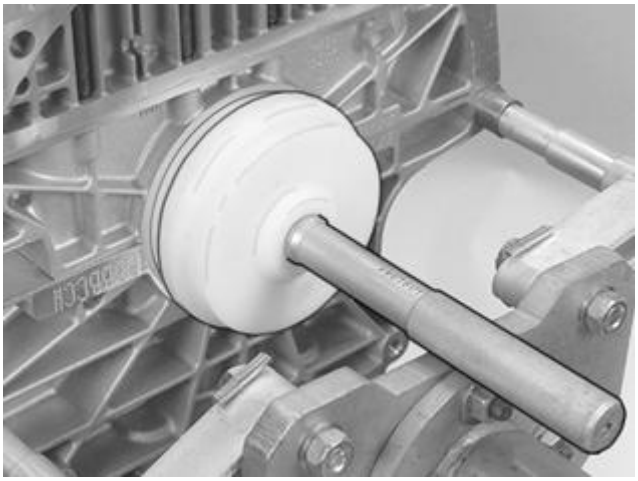

Fig. 163: Identifying Rear Crankshaft Seal
Courtesy of VOLVO CARS CORPORATION

Use standard handle see **9991801** and drift see **9995676** .

Lubricate the drift face. Thread the seal onto the drift. Tap in the seal until the drift bottoms against the block.

CRANKSHAFT ASSEMBLY, DISASSEMBLING

Special tools:

see **9995458**

see **9995679**

NOTE: **As the illustrations in this service information are used for different model years and / or models, some variation may occur. However, the essential information in the illustrations is always correct.**

PREPARATION

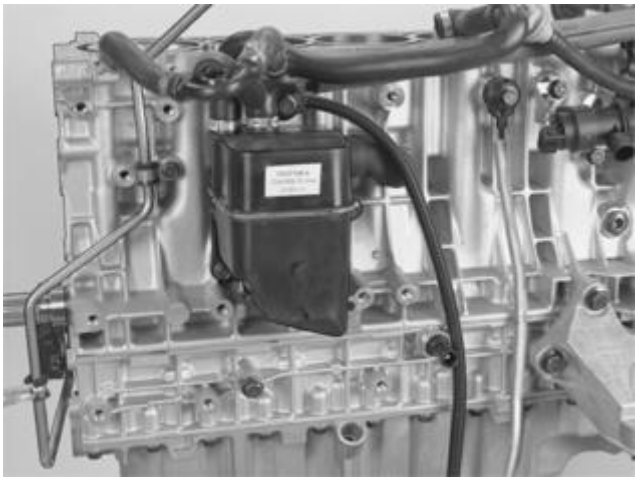

Fig. 164: Identifying Oil trap, Knock Sensors, Front Engine Mounting, Oil Pressure Switch, and EVAP Valve With Hoses
Courtesy of VOLVO CARS CORPORATION

Remove:

- the oil trap
- the knock sensors (KS)
- the front engine mounting
- the oil pressure switch
- Evaporative emission system (EVAP) valve with hoses.

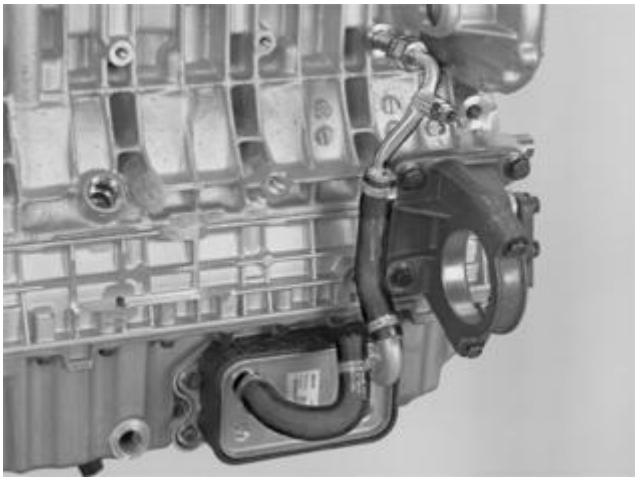

Fig. 165: Identifying Right Driveshaft Bearing Retainer, Oil Cooler And Pipes
Courtesy of VOLVO CARS CORPORATION

Remove:

- the bearing retainer for the right drive shaft
- the oil cooler and the rubber seals including hoses and pipes.

REMOVING THE OIL FILTER AND OIL PAN

Fig. 166: Identifying Oil Filter And Oil Pan
Courtesy of VOLVO CARS CORPORATION

Remove:

- the oil filter. Use tool see **9995679**
- the screws holding the oil pump to the intermediate section.

Carefully tap the side of the oil pan with a rubber mallet.

Lift out the oil pan.

REMOVING THE SUCTION PIPE FROM THE OIL PUMP

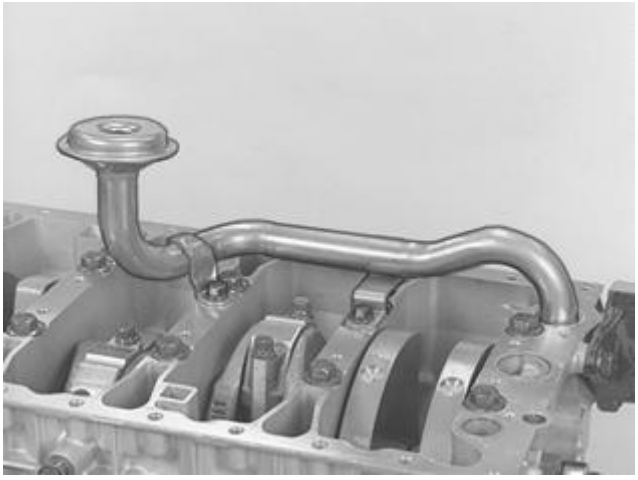

Fig. 167: Identifying Oil Pump Suction Pipe
Courtesy of VOLVO CARS CORPORATION

Remove:

- the O rings for the oil ducts

- the retaining screws holding the suction pump to the intermediate section. Work / lift out the suction pipe
- the O-ring for the suction pipe.

Check the pipe and the strainer. Check for cracks and impurities.

CHECKING MARKINGS

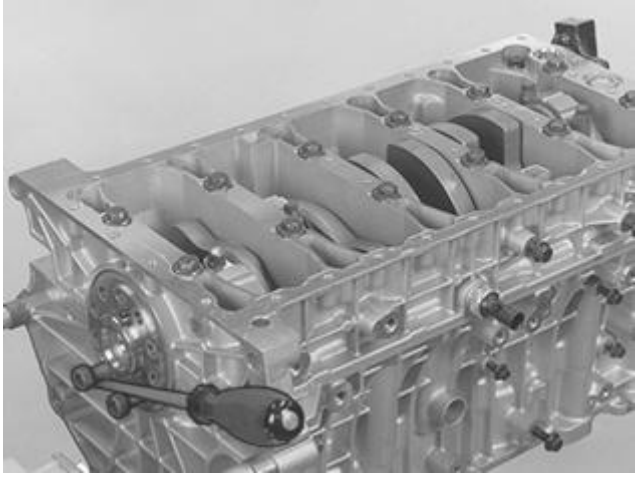

Fig. 168: Identifying Markings On Caps And Connecting Rods
Courtesy of VOLVO CARS CORPORATION

Install the two old screws for the flywheel and carrier plate at the rear edge of the crankshaft.

Turn the crankshaft so the piston in cylinder 1 is at bottom dead center (BDC).

Check that there are markings on the cap and connecting rods. Check which way the markings are positioned (exhaust and intake side). Make a note of this.

If necessary mark with a center punch or a number punch. See **MARKING THE CONNECTING ROD (WHERE APPLICABLE)**.

NEW CONNECTING ROD

Fig. 169: Identifying Piston And Connecting Rod With Bearings
Courtesy of VOLVO CARS CORPORATION

A new connecting rod has been introduced on certain engines.

The mating surface between the cap and the connecting rod is not machined. It is aligned through a dedicated fracture surface.

CAUTION: If the cap is turned the wrong way and tightened, the structure of the fracture surface will be damaged and the connecting rod must then be discarded.

NOTE: Blow the fracture surface clean using compressed air before installing the cap.

REMOVING THE PISTONS FROM THE CYLINDER BLOCK

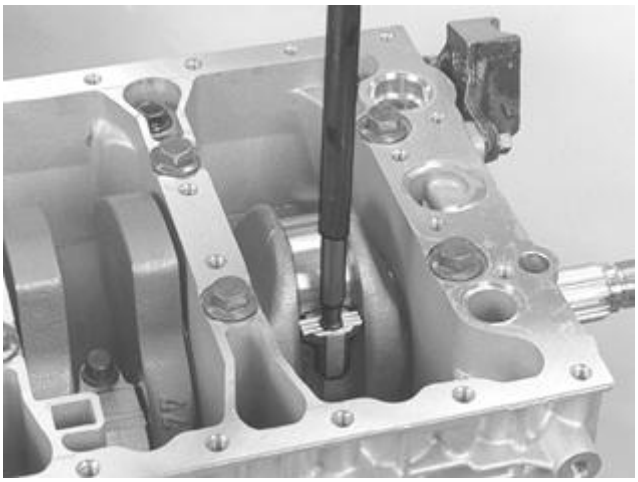

Fig. 170: Identifying Piston And Connecting Rod Removal Tool
Courtesy of VOLVO CARS CORPORATION

CAUTION: The bearing covers are not interchangeable. Also note the position of the

bearing caps in relation to the rotation of the crankshaft.

Remove the screws for the connecting rod cover.

Lift off the cover. Ensure that the bearing cover comes with it.

Install tool in the connecting rod. Press out the connecting rod and piston.

Hold by hand so that the piston does not fall to the floor. Ensure that the bearing cover comes with it.

Place the piston and connecting rod in such a way that they will be reinstalled in the correct cylinder.

Continue with cylinders 2, 3, 4 and 5 as above.

CHECK

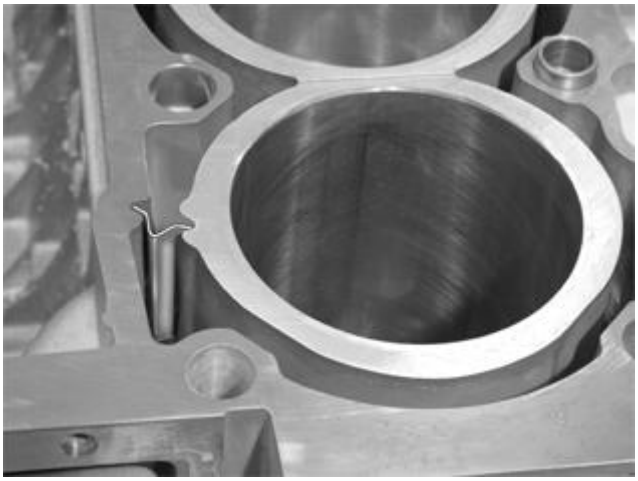

Fig. 171: Identifying Coolant Guide And Cylinder
Courtesy of VOLVO CARS CORPORATION

Check that the coolant guide is in place. Secure if necessary.

REMOVING THE SCREWED JOINT FROM THE INTERMEDIATE SECTION

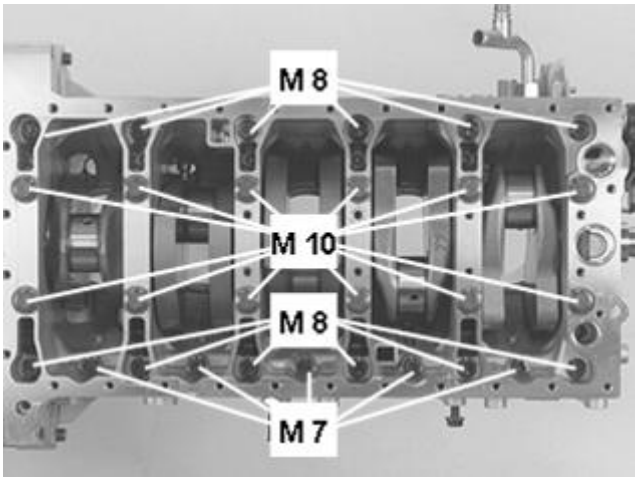

Fig. 172: Identifying Intermediate Section Bolts
Courtesy of VOLVO CARS CORPORATION

First remove the M7 screws from the intermediate section.

Then remove the M8 screws. Start at the outer edges and work alternately towards the center.

Remove the M10 screws in the same way.

SEPARATING THE INTERMEDIATE SECTION FROM THE CYLINDER BLOCK

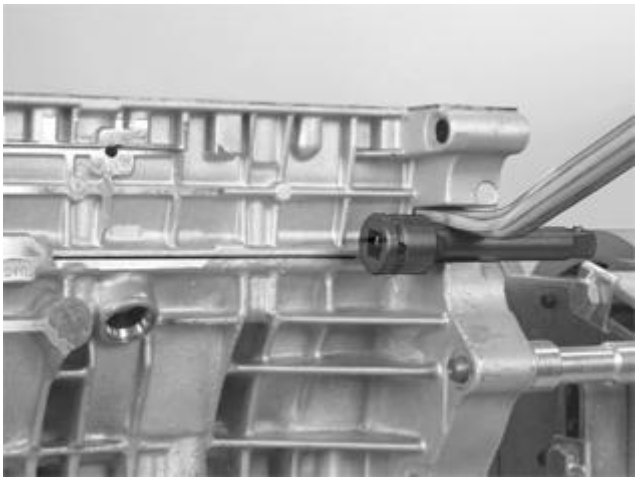

Fig. 173: Identifying Intermediate Section And Cylinder Block
Courtesy of VOLVO CARS CORPORATION

CAUTION: The bearing covers are not interchangeable.

Also note the position of the upper half of the axial bearing for the direction of rotation of the crankshaft.

The crankshaft must not rotate.

Carefully pry the intermediate section from the cylinder block so that there is a gap of approximately **6-8 mm** .

Then carefully tap off (on the exhaust side) the intermediate section with a rubber mallet.

Lift out the intermediate section. Ensure that the bearing covers for the intermediate section come with it.

NOTE: The bearing covers for the different bearing recesses are not interchangeable.

Ensure that the screws for the flywheel and carrier plate, which were installed earlier, are properly tightened. Lift them and the front of the crankshaft.

Carefully lift the crankshaft straight up.

Remove the remaining bearing covers.

REMOVING THE PISTON COOLING VALVE AND NOZZLES

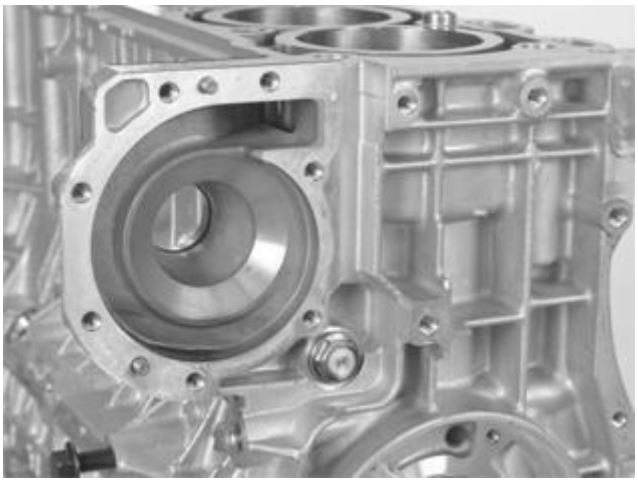

Fig. 174: Identifying Piston Cooling Valve
Courtesy of VOLVO CARS CORPORATION

Remove the piston cooling valve at the front of the engine.

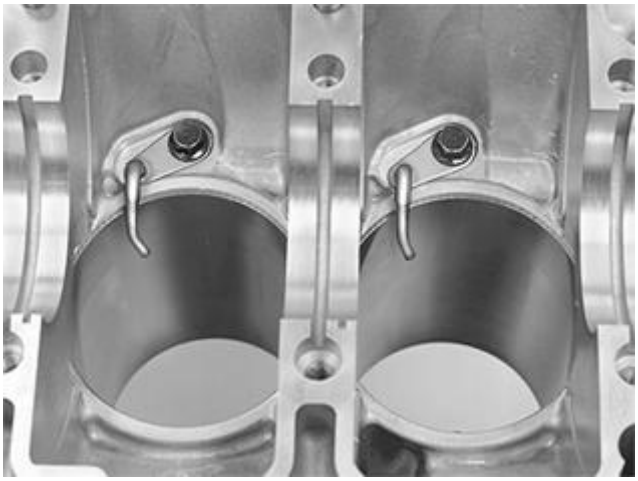

Fig. 175: Identifying Piston Cooling Nozzles
Courtesy of VOLVO CARS CORPORATION

Remove the piston cooling nozzles.

CLEANING

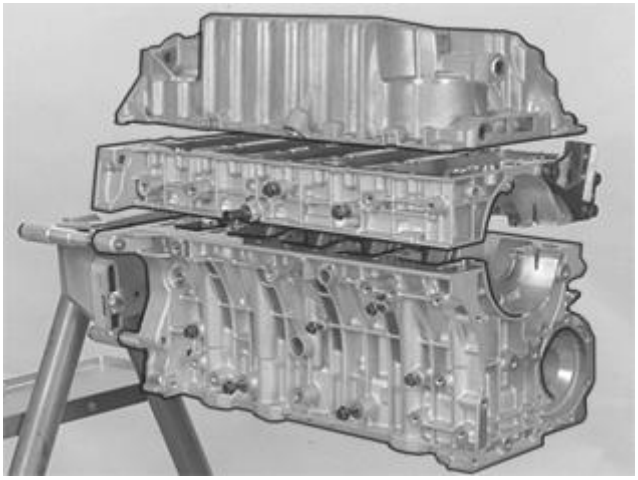

Fig. 176: Identifying Cylinder Block, Intermediate Section And Oil Pan
Courtesy of VOLVO CARS CORPORATION

WARNING: **A fume hood or extractor must be used when using gasket solution.**

Clean the gasket surfaces on the cylinder block, intermediate section and oil pan.

Use a razor blade or a gasket scraper and / or gasket solvent (**P/N 116 1440**).

CRANK MECHANISM (B6294T; 2003-2006)

ASSEMBLING THE CRANK MECHANISM

Special tools:

see **9512767**

see **9991801**

see **9995676**

see **9995746**

NOTE: **The illustrations in this service information are used for different model years and / or models. Therefore there may be some variation. However, the essential information in the illustrations is always correct.**

TIGHTENING TORQUES

For tightening torques not in the text, see **TIGHTENING TORQUE** .

CLEANING

Ensure that the all components are **completely** clean.

Blow clean the oil ducts in the block, intermediate section and sump.

INSTALLING THE PISTON COOLING VALVE AND NOZZLES

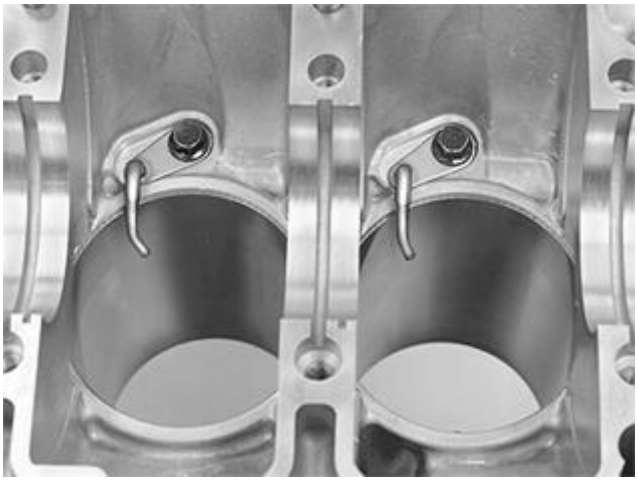

Fig. 177: Identifying Piston Cooling Nozzles
Courtesy of VOLVO CARS CORPORATION

Install the piston cooling nozzles. Tighten to **17 Nm** .

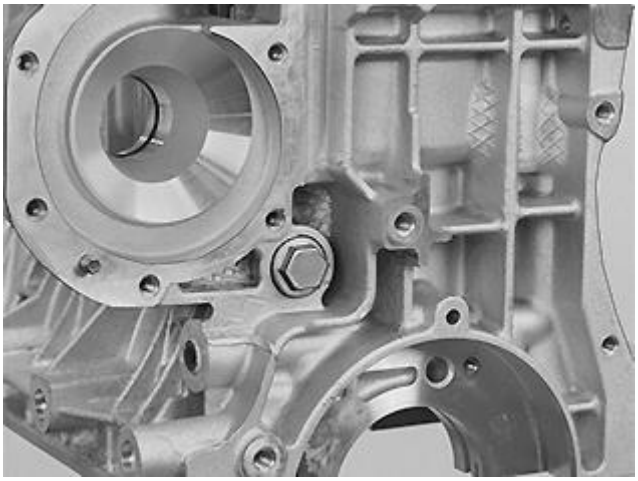

Fig. 178: Identifying Piston Cooling Valve
Courtesy of VOLVO CARS CORPORATION

Install the piston cooling valve. Use a seal washer. Tighten to **38 Nm** .

CLASSIFICATION OF MAIN BEARINGS

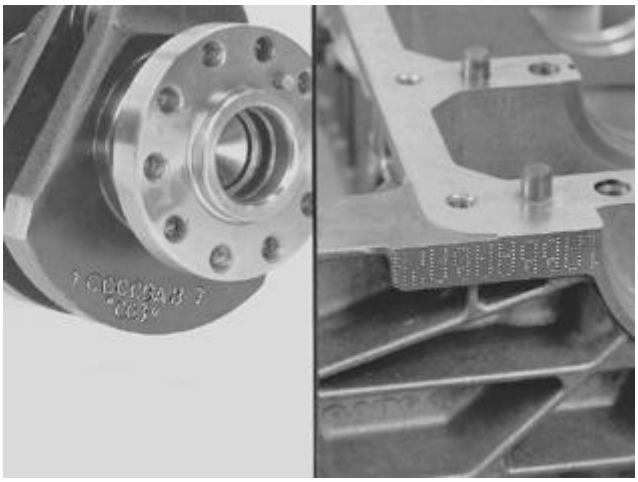

Fig. 179: Classification Of Main Bearings
Courtesy of VOLVO CARS CORPORATION

Wipe clean the bearing recesses in the block and the intermediate section.

Check that the components are clean and undamaged.

Check the classification of the block and crankshaft.

The classification marking is at the rear edge of the block and the crankshaft. The classification is read from digits 1 to 7. The first letter after digit 1 is the classification of main bearing 1. The bearing positions are numbered starting at the front of the engine.

SELECTING BEARINGS

Cylinder block classification / Class of crank-shaft	A small diameter		B medium diameter		C large diameter	
	block	intermediate section	block	intermediate section	block	intermediate section
A small	yellow medium	yellow medium	yellow medium	blue thick	blue thick	blue thick
B medium	red thin	yellow medium	yellow medium	yellow medium	yellow medium	blue thick
C large	red thin	red thin	red thin	yellow medium	yellow medium	yellow medium

Install the main bearings in the cylinder block and the intermediate section. See the table.

The axial bearing is positioned at bearing recess 6.

CAUTION: When reusing old bearing covers, ensure that they are correctly positioned for the direction of rotation of the crankshaft.

For example: The marking on the block at bearing position 1 is B. The marking on the crankshaft at the corresponding bearing position is C. This gives a red marked bearing in the block and a yellow marked bearing in the intermediate section.

NOTE: The thickest of the bearing caps must always be installed in the intermediate section. This is keep the center line as straight as possible.

THE INTERMEDIATE SECTION

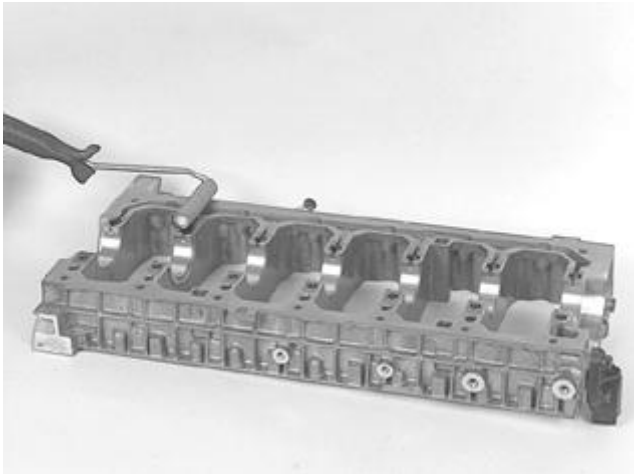

Fig. 180: Apply Liquid Gasket To Intermediate Section
Courtesy of VOLVO CARS CORPORATION

Wipe the surfaces dry.

Apply liquid gasket 11 61 059 to the intermediate section. The surface must be completely covered without any excess. Use roller see **9512767** .

Thoroughly lubricate all the bearing shells and the surface of the axial bearing.

TIGHTENING THE INTERMEDIATE SECTION

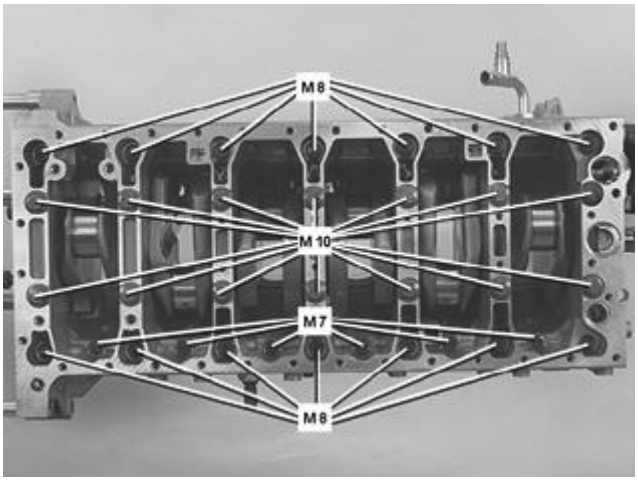

Fig. 181: Identifying Intermediate Section Bolts
Courtesy of VOLVO CARS CORPORATION

Install the two old screws for the flywheel and carrier plate at the rear edge of the crankshaft.

Lift in these and the front of the crankshaft.

Carefully position the crankshaft in the block.

The crankshaft must **not** be turned before the intermediate section has been torque tightened.

Position the intermediate section.

Lubricate and install all the screws.

Install the intermediate section and the screws on the exhaust side at bearing recesses 2 and 6.

Pull the intermediate section down against the cylinder block.

CAUTION: The M8 screws on the exhaust side are two different lengths.

NOTE: Use new M10-screws.

TIGHTEN THE SCREWS IN THE FOLLOWING ORDER:

1. All M10 screws.....20 Nm
2. All M10 screws.....45 Nm
3. All M8 screws.....24 Nm
4. All M7 screws.....17 Nm
5. Angle-tighten all M10 screws.....90°

Tighten the screws in sequence from the center and outwards.

MARKING THE CONNECTING ROD (WHERE APPLICABLE)

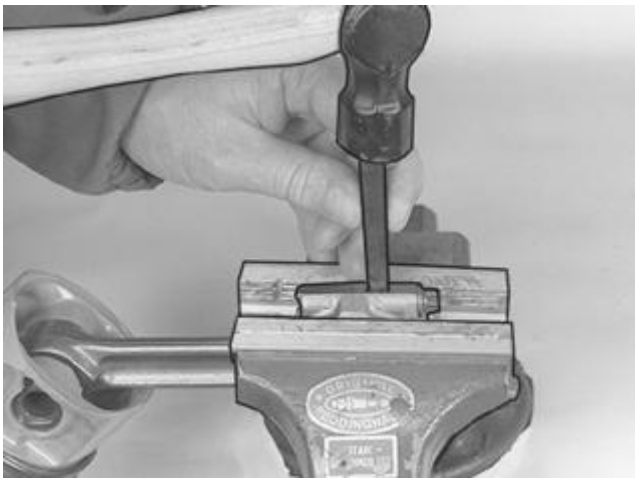

Fig. 182: Marking Both Halves With Cylinder Number Using A Center Punch Or Number Punch
Courtesy of VOLVO CARS CORPORATION

Assemble the connecting rod. Check that the cover is facing the correct direction. Tighten to **20 Nm** .

Secure the large end of the connecting rod in a vise with soft jaws (copper or aluminum).

Mark both halves with the cylinder number. Use a center punch or number punch.

INSTALLING PISTON RINGS

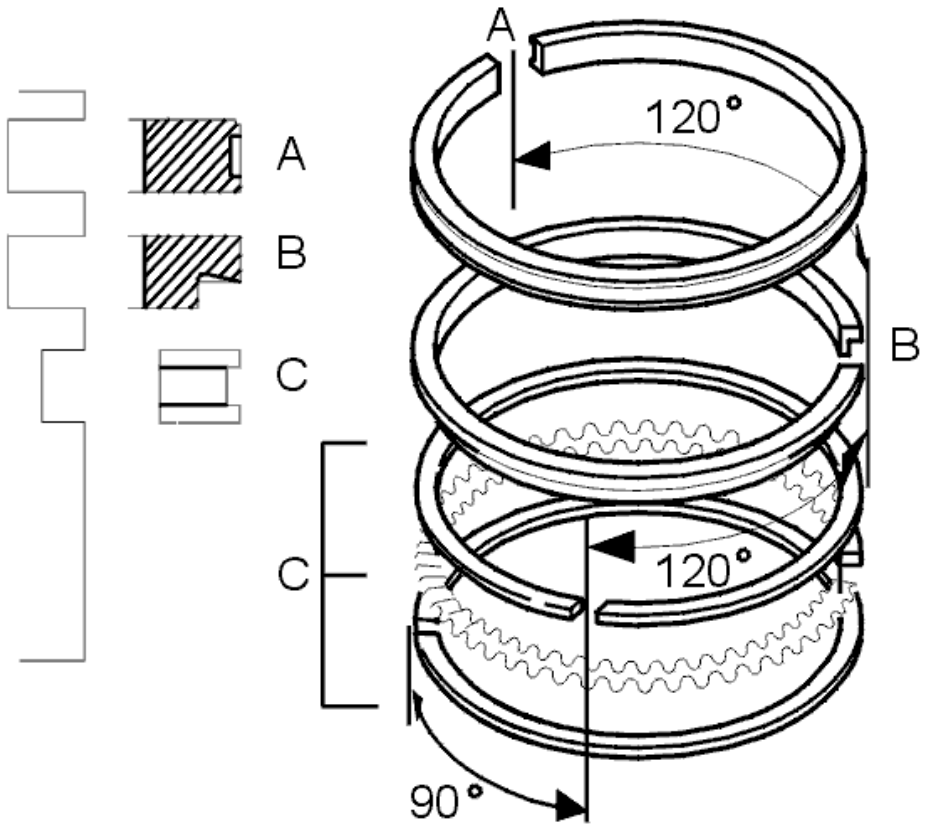

Fig. 183: Compression Rings -- Late Version
Courtesy of VOLVO CARS CORPORATION

Use piston ring pliers.

Turn the piston rings so that the openings are offset as illustrated.

A=Compression ring. The text on the piston ring must be upwards.

B=Scraper ring. Chamfered edge must face downwards.

C=Oil ring. Three sections, identical on all sides.

First install the expander ring (C), then the two other rings over the expander ring.

CAUTION: Ensure that the piston rings can be turned easily.

NOTE: Incorrect positioning increases oil consumption.

ASSEMBLING PISTONS AND CONNECTING RODS

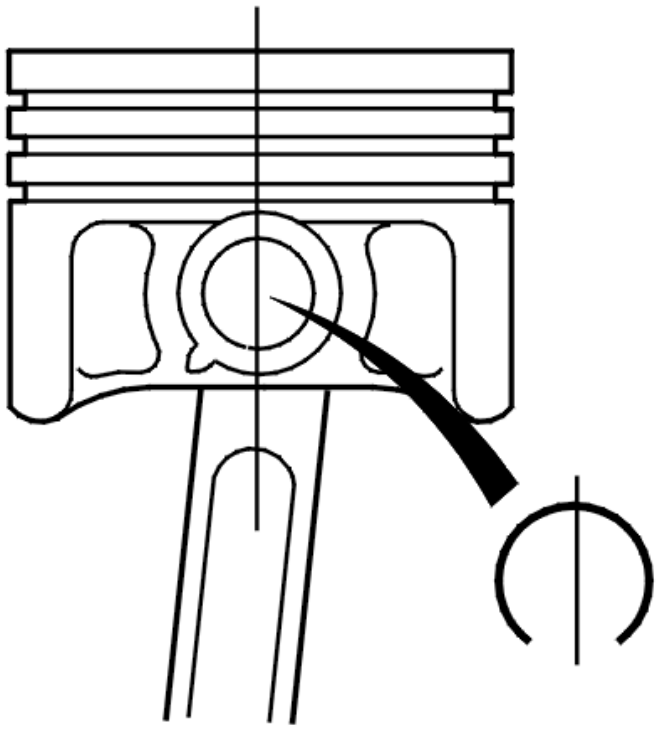

Fig. 184: Arrow On Top Of Piston
Courtesy of VOLVO CARS CORPORATION

There is an arrow on top of the piston. This must be turned forwards in the cylinder block.

The connecting rods are symmetrical and can be turned freely. Marked rods however must be turned in the same direction.

Assemble the connecting rod and piston with the piston pin.

Check that the classification and any numbering for each cylinder / piston diameter correspond.

Install both the snap rings on the piston pin. Check that the snap rings are positioned correctly in the piston. The opening must be vertical.

WARNING: The snap ring can easily come off. Wear protective goggles

Wipe clean around the bearing recess in the connecting rod and the cap.

Install the bearing shells.

CAUTION: If reusing the bearing shells, they must be installed in the same position

as before.

Ensure that the bearing shells are correctly positioned in relation to the direction of rotation of the crankshaft.

INSTALLING THE PISTONS IN THE CYLINDER BORES

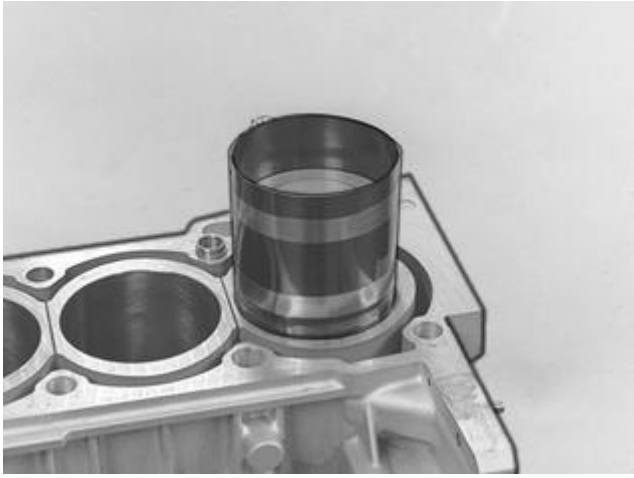

Fig. 185: Identifying Cylinder Ring Compressor
Courtesy of VOLVO CARS CORPORATION

Use a cylinder ring compressor.

Lubricate the cylinder bore, the pistons and the bearing shells.

Turn the crankshaft so that the connecting rod pin is at bottom dead center (BDC) for the cylinder the piston is to be inserted in.

Ensure that the engine is in a position where the cylinder bore forms as vertical a line as possible.

NOTE: The arrow on top of the piston should point forward. Ensure that the classification corresponds

Carefully press or tap the piston down (using the shaft of a hammer or similar).

When the piston releases from the piston ring compressor, remove the piston ring compressor and turn the engine 180° in the stand.

Install tool see **9995746** in the connecting rod.

Pull the connecting rod until it secures against the big end journals.

TIGHTENING THE CONNECTING ROD COVER

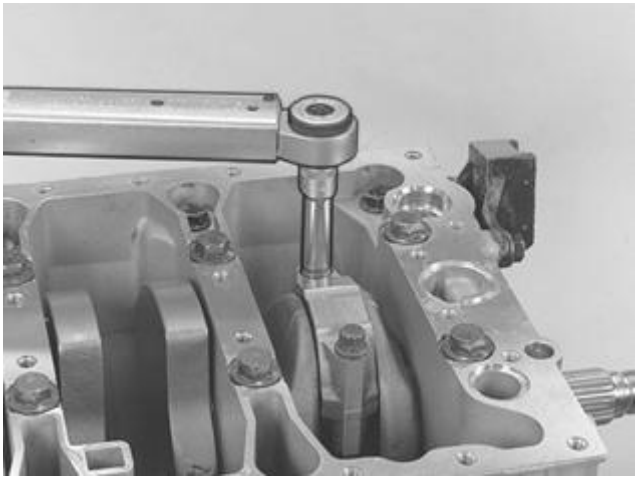

Fig. 186: Identifying Connecting Rod Cover (Bearing Cap)
Courtesy of VOLVO CARS CORPORATION

Install the cover. Check that any markings correspond.

Lubricate and install new seals. Tighten in two stages:

1. **20 Nm** .

2. Angle-tighten **90°** .

Check that the connecting rod can be moved sideways.

NOTE: The crankshaft must not be rotated before the connecting rod cover has been tightened.

INSTALLING THE OIL PUMP SUCTION PIPE

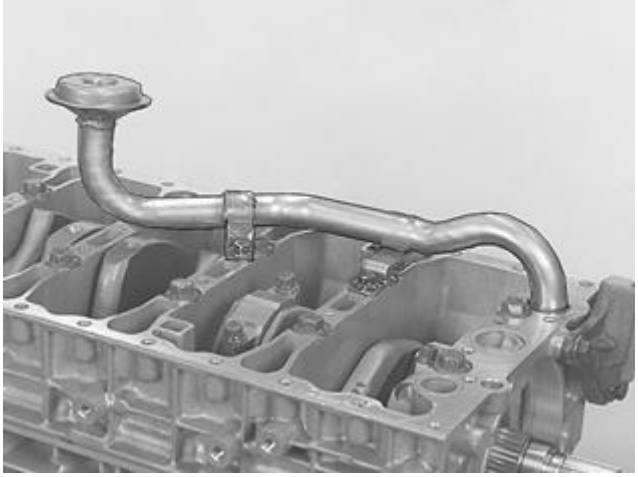

Fig. 187: Removing/Installing Suction Pipe From Oil Pump
Courtesy of VOLVO CARS CORPORATION

Install a **new sealing ring** on the suction pipe.

Carefully press the suction pipe down into the intermediate section.

Check that the sealing ring is correctly positioned.

Install the screws and tighten.

Install **new sealing rings** for the oil pan oil ducts.

INSTALLING THE OIL PAN

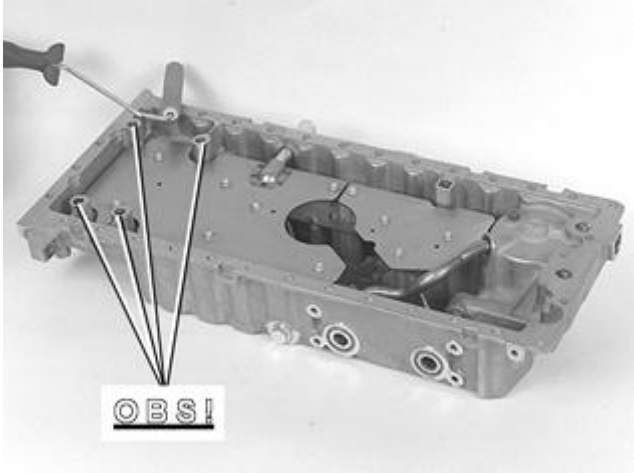

Fig. 188: Applying Liquid Gasket To Oil Pan
Courtesy of VOLVO CARS CORPORATION

Wipe the mating surfaces dry.

Apply liquid gasket 11 61 059 to the oil pan. Use roller see **9512767** .

NOTE: Ensure that the area around the screw holes is also covered with liquid gasket.

The surface must be completely covered without any excess.

Position the pan and install all screws

CAUTION: Check that the rear edge of the oil pan is in line with the rear edge of the cylinder block. Permissible tolerance ± 0.025 mm. Use a steel ruler and feeler gauge.

Tighten the screws from the rear of the pan and forward.

INSTALLING THE OIL COOLER

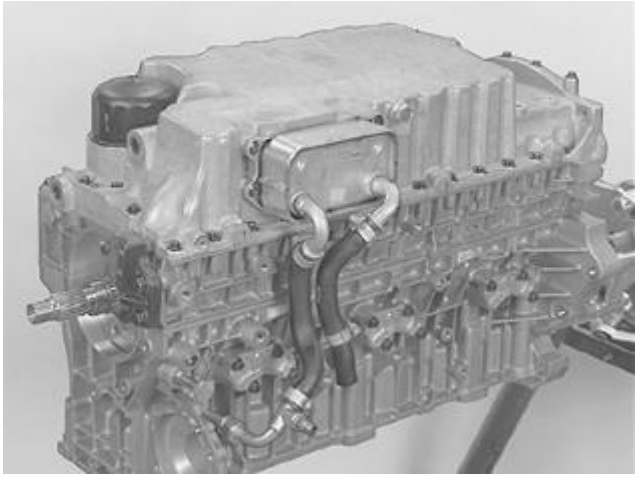

Fig. 189: Installing Oil Cooler
Courtesy of VOLVO CARS CORPORATION

Install

- **new sealing rings** in the oil pan
- the oil cooler. Tighten
- the oil filter.

INSTALLING THE REAR CRANKSHAFT SEAL

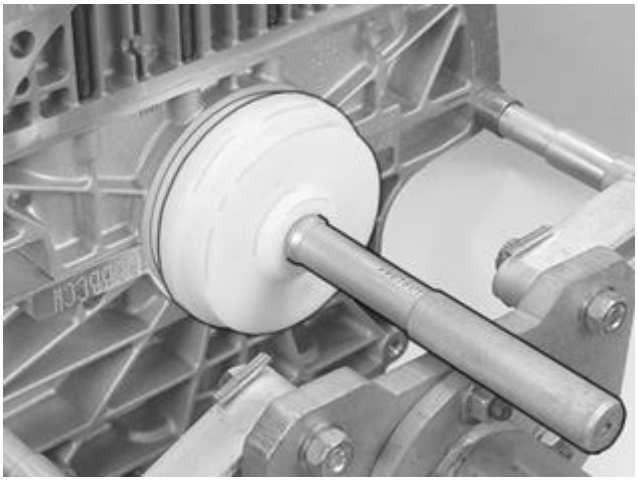

Fig. 190: Identifying Rear Crankshaft Seal
Courtesy of VOLVO CARS CORPORATION

Use standard handle see **9991801** and drift see **9995676** .

Lubricate the drift face and thread the sealing ring onto the drift.

Tap in the seal until the drift bottoms against the block.

DISASSEMBLING THE CRANKSHAFT ASSEMBLY

Special tools:

see **9995458**

see **9995679**

NOTE: **The illustrations in this service information are used for different model years and / or models. Therefore there may be some variation. However, the essential information in the illustrations is always correct.**

PREPARATION

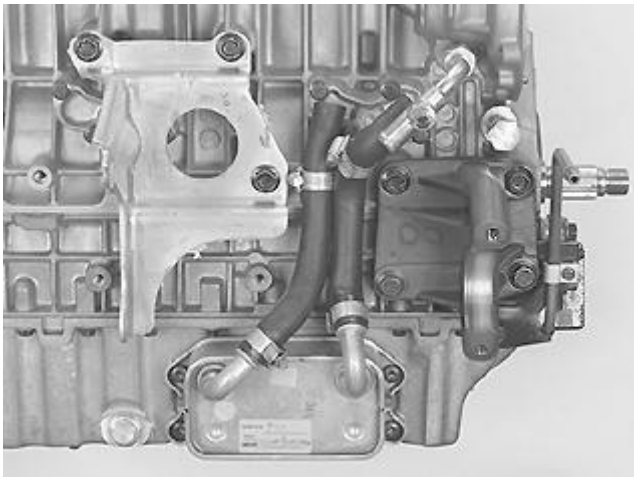

Fig. 191: View Of Engine, Rear
Courtesy of VOLVO CARS CORPORATION

Remove

- the oil trap
- the knock sensors (KS)
- the front engine mounting
- the bracket for the transmission mounting
- the bearing seat for the right drive shaft
- the oil cooler and rubber seals.

REMOVING THE OIL FILTER AND OIL PAN

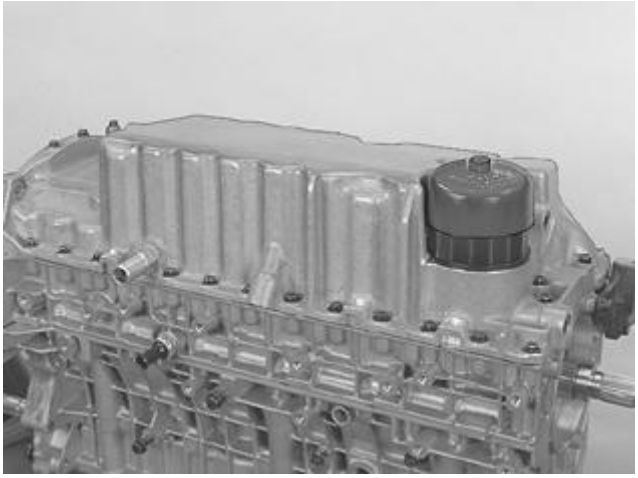

Fig. 192: Removing Oil Filter And Oil Pan
Courtesy of VOLVO CARS CORPORATION

Remove the oil filter. Use tool see **9995679** .

Remove

- the lower torque rod bracket
- the retaining screws holding the oil pump to the intermediate section.

Carefully tap the side of the oil pan with a rubber mallet.

Lift out the oil pan.

REMOVING THE SUCTION PIPE FROM THE OIL PUMP

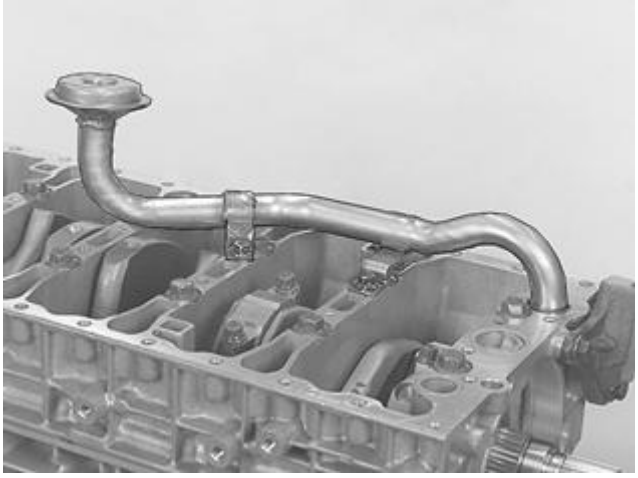

Fig. 193: Removing/Installing Suction Pipe From Oil Pump
Courtesy of VOLVO CARS CORPORATION

Remove the suction pipe.

Remove the O-rings from the oil ducts.

Remove the screws securing the suction pipe to the intermediate section.

Work loose and lift out the suction pipe.

Remove the suction pipe O-ring.

Check the pipe and the strainer. Clean thoroughly.

CHECKING MARKINGS

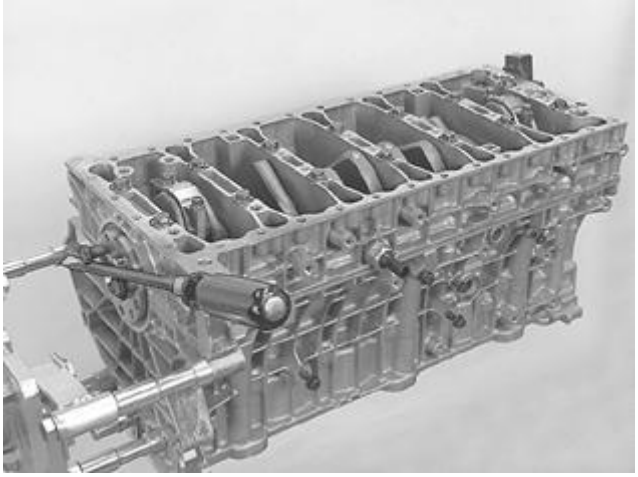

Fig. 194: Checking Markings
Courtesy of VOLVO CARS CORPORATION

Install the two old screws for the flywheel and carrier plate at the rear edge of the crankshaft.

Turn the crankshaft so the piston in cylinder 1 is at bottom dead center (BDC).

Check that there are markings on the cap and connecting rods and check which way the markings are positioned (exhaust / intake side). Note this.

If necessary mark with a center punch or a number punch (see later section).

NEW CONNECTING ROD

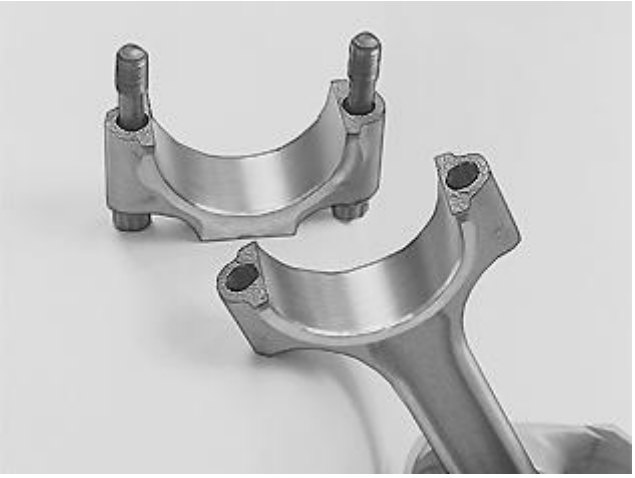

Fig. 195: View of Connecting Rod Big End
Courtesy of VOLVO CARS CORPORATION

A new connecting rod has been introduced on B6294S engines.

The mating surface between the cap and the connecting rod is not machined. It is aligned through a dedicated fracture surface.

CAUTION: If the cap is turned the wrong way and tightened, the structure of the fracture surface will be damaged and the connecting rod must then be discarded.

NOTE: Blow the fracture surfaces clean using compressed air before reinstalling the cap.

REMOVING THE PISTONS FROM THE CYLINDER BLOCK

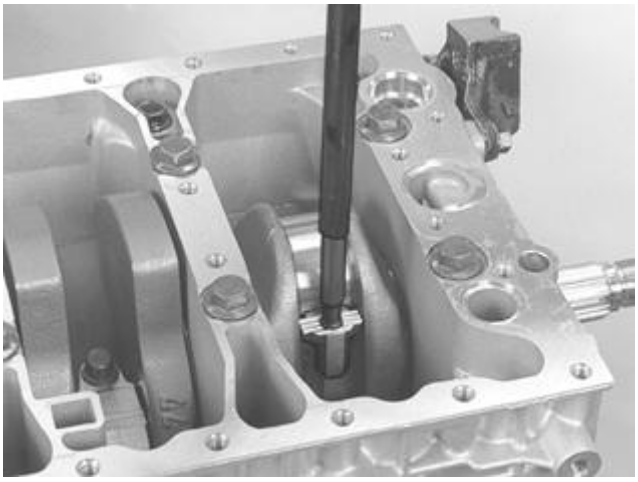

Fig. 196: Identifying Piston And Connecting Rod Removal Tool
Courtesy of VOLVO CARS CORPORATION

Remove the screws for the connecting rod cover.

Lift off the cover. Ensure that the bearing cover comes with it.

CAUTION: The bearing covers are not interchangeable.

Install tool see **9995746** with thread adapter 5746-1 in the connecting rod. Press out the connecting rod and piston.

Hold by hand so that the piston does not fall to the floor. Ensure that the bearing cover comes with it.

Place the piston and connecting rod in such a way that they can be reinstalled in the correct cylinder.

Continue with cylinders 2, 3, 4, 5 and 6 as above.

CAUTION: The bearing covers are not interchangeable.

REMOVING THE SCREWED JOINT FROM THE INTERMEDIATE SECTION

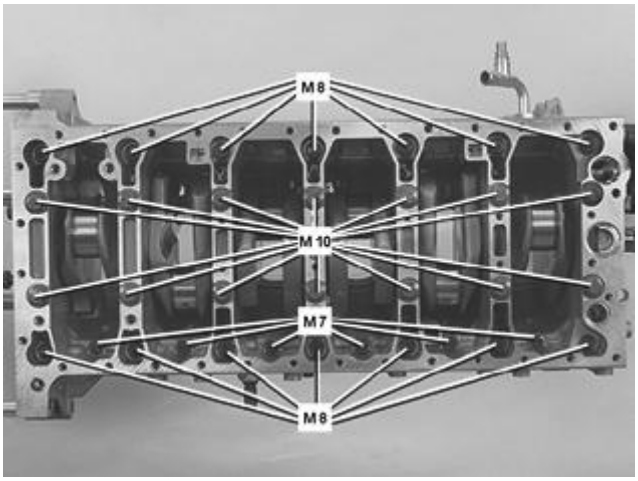

Fig. 197: Identifying Intermediate Section Bolts
Courtesy of VOLVO CARS CORPORATION

First remove the M7 screws from the intermediate section.

Then remove the M8 screws. Start at the outer edges and work alternately towards the center.

Remove the M10 screws in the same way.

SEPARATING THE INTERMEDIATE SECTION FROM THE CYLINDER BLOCK

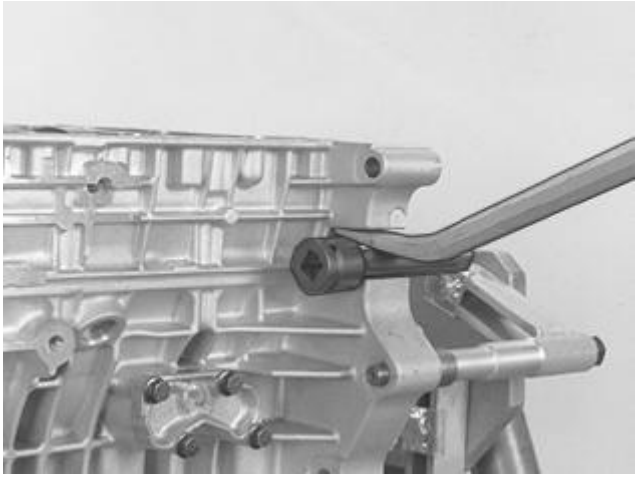

Fig. 198: Identifying Intermediate Section Pried From Cylinder Block
Courtesy of VOLVO CARS CORPORATION

Carefully pry the intermediate section from the cylinder block so that there is a gap of approximately 6-8 mm.

Then carefully tap off (on the exhaust side) the intermediate section with a rubber mallet.

Lift out the intermediate section. Ensure that the bearing covers for the intermediate section come with it.

CAUTION: The bearing covers are not interchangeable.

The crankshaft must not now be turned.

Ensure that the screws for the flywheel and carrier plate, which were installed earlier, are properly tightened. Lift them and the front of the crankshaft.

Carefully lift the crankshaft straight up.

Remove the remaining bearing covers.

NOTE: The bearing covers for the different bearing recesses are not interchangeable.

REMOVING THE PISTON COOLING VALVE AND NOZZLES

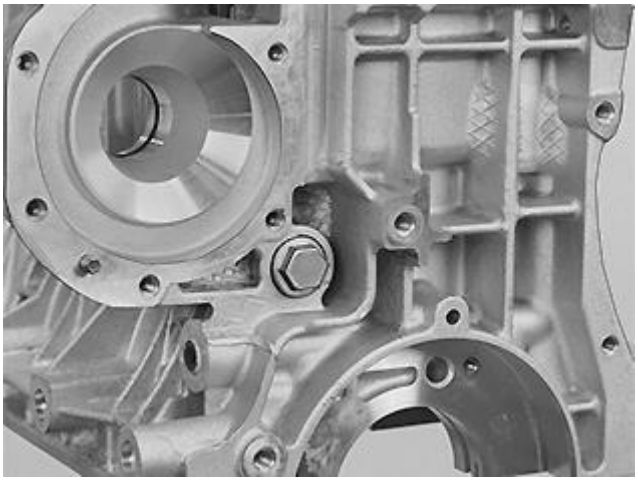

Fig. 199: Identifying Piston Cooling Valve
Courtesy of VOLVO CARS CORPORATION

Remove the piston cooling valve at the front of the engine.

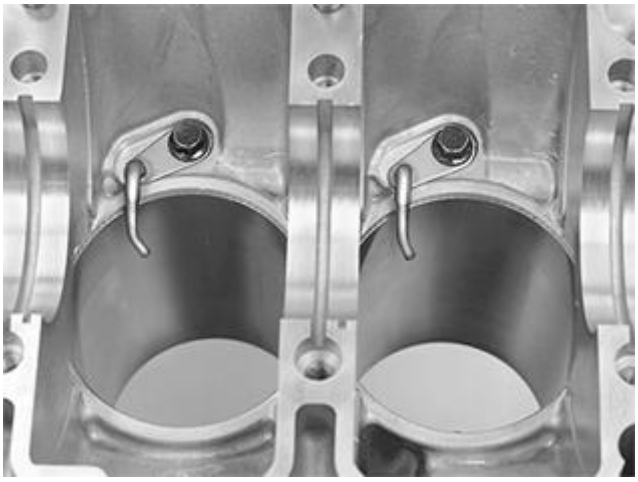

Fig. 200: Identifying Piston Cooling Nozzles
Courtesy of VOLVO CARS CORPORATION

Remove the piston cooling nozzles.

CLEANING

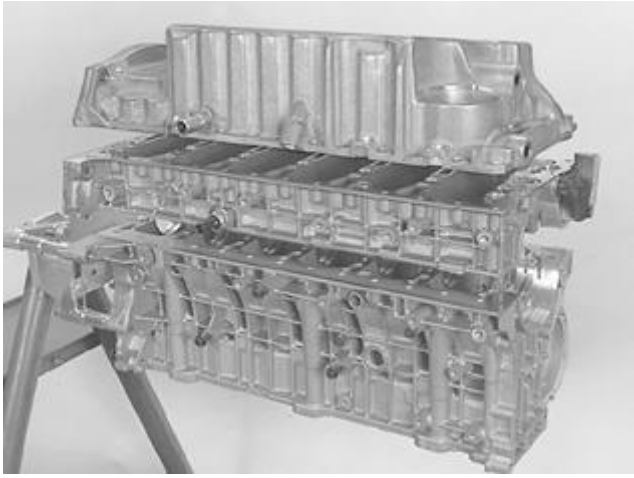

Fig. 201: Cleaning Gasket Surfaces On Cylinder Block, Intermediate Section And Oil Pan
Courtesy of VOLVO CARS CORPORATION

Clean the gasket surfaces on the cylinder block, intermediate section and oil pan.

Use a razor blade or a gasket scraper and gasket solvent (**P/N 116 1440**).

WARNING: A fume hood or extractor must be used when using gasket solution.

MEASURING THE CRANKSHAFT ASSEMBLY

NOTE: The illustrations in this service information are used for different model years and / or models. Therefore there may be some variation. However, the essential information in the illustrations is always correct.

MEASURING THE CRANKSHAFT

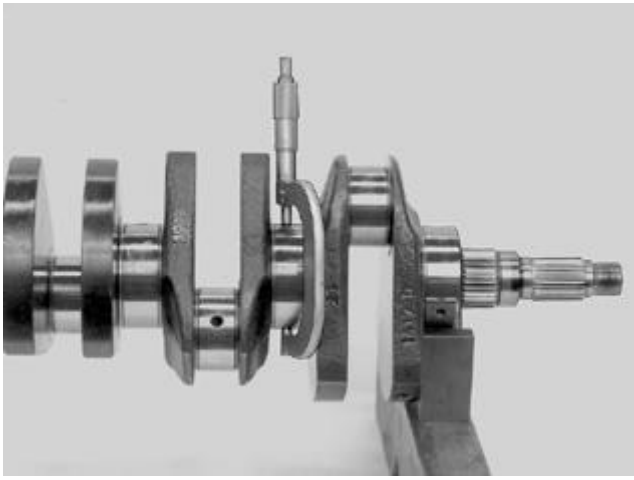

Fig. 202: Identifying Measurement Of Bearing Journal
Courtesy of VOLVO CARS CORPORATION

Use a micrometer.

Measure the out-of-round and taper of the bearing journal. Measure at a number of points laterally and longitudinally.

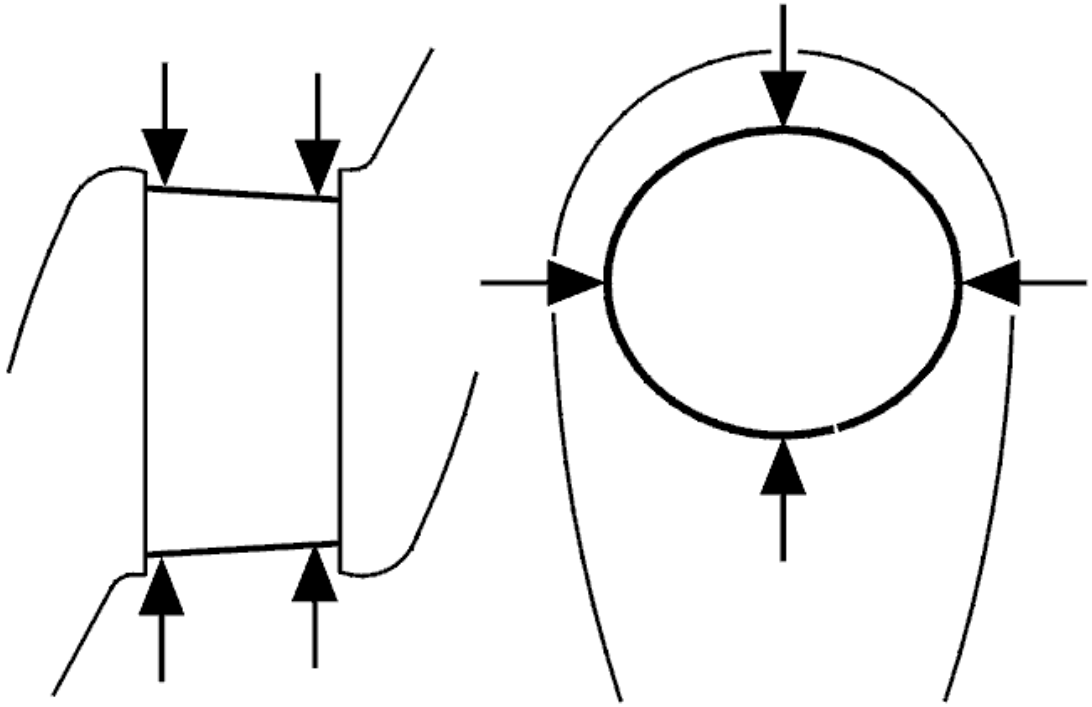

Fig. 203: Measuring Points, Connecting Rod Bearing Journals And Main Bearing Journals
Courtesy of VOLVO CARS CORPORATION

For the correct values for the connecting rod bearing journals and main bearing journals, see **CRANK MECHANISM** .

CHECK THE OUT-OF-TRUE OF THE CRANKSHAFT

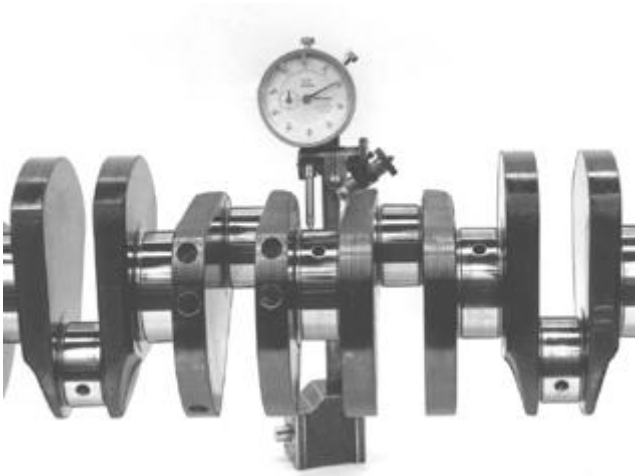

Fig. 204: Identifying Measurement Of Radial Runout Using A Dial Indicator And Magnetic Holder
Courtesy of VOLVO CARS CORPORATION

Use a dial indicator and magnetic holder.

Position the crankshaft with the two outer main bearings in the V block.

Turn the crankshaft and measure the radial runout on the other main bearing journals.

For the correct values, see **CRANK MECHANISM** .

REMOVING THE PISTON RINGS

Fig. 205: Identifying Piston Rings And Piston Ring Pliers
Courtesy of VOLVO CARS CORPORATION

Use piston ring pliers.

Remove coke deposits. Scrape the piston ring grooves clean with a groove cleaner or a broken and filed piston ring.

Check for damage, wear and cracks.

CHECKING PISTON RING AXIAL CLEARANCE

Fig. 206: Checking Piston Ring Axial Clearance
Courtesy of VOLVO CARS CORPORATION

Use **new** piston rings.

For the correct values, see **PISTONS** .

CHECKING THE PISTON DIAMETER

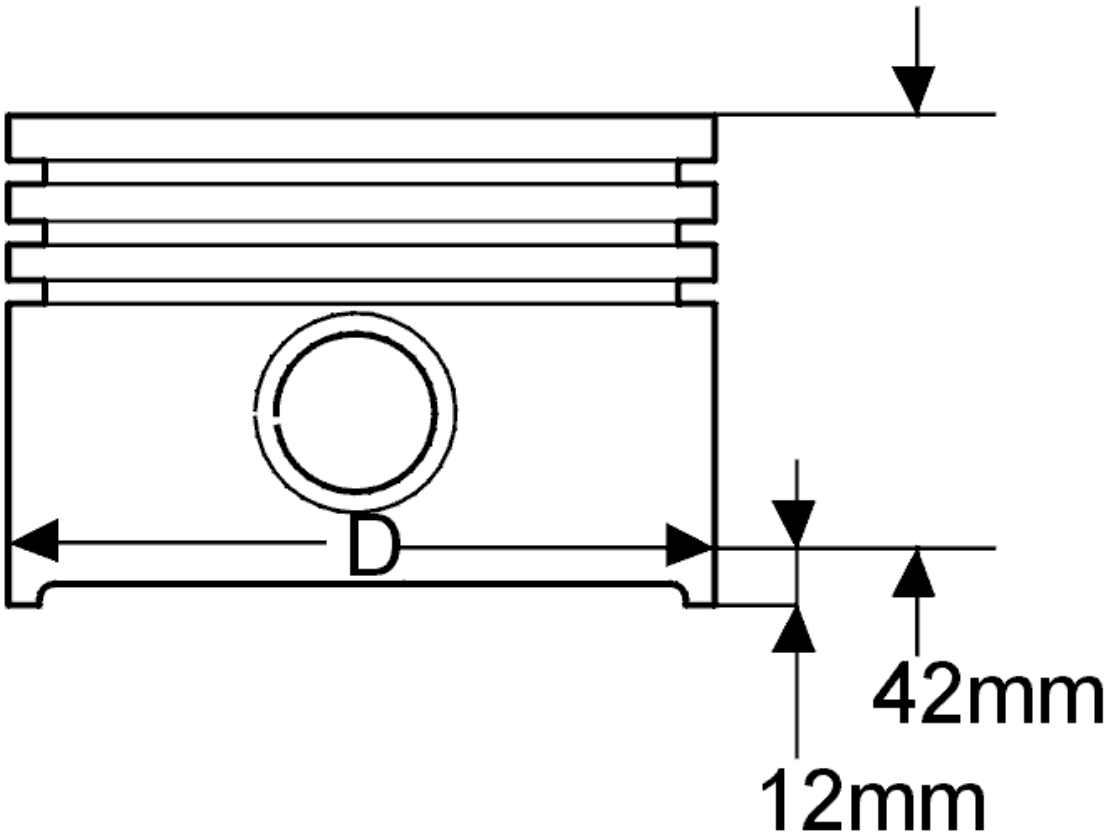

Fig. 207: Checking Piston Diameter
Courtesy of VOLVO CARS CORPORATION

Use a micrometer and Vernier caliper.

For the correct values, see **PISTONS** .

CALCULATING THE RUNNING CLEARANCE OF THE PISTON

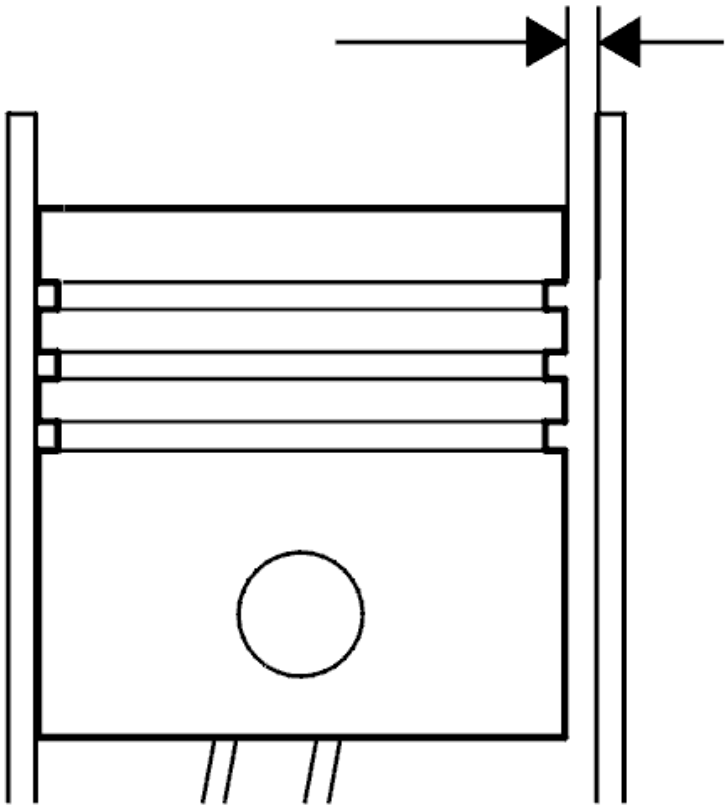

Fig. 208: Calculating Running Clearance Of Piston
Courtesy of VOLVO CARS CORPORATION

For the correct values, see **PISTONS** .

DISASSEMBLING CONNECTING RODS AND PISTONS

Fig. 209: Identifying Lock-Ring And Groove-Cut Chisel
Courtesy of VOLVO CARS CORPORATION

Check first that the piston and connecting rod are marked.

Piston marking: Scrape the piston pin clean. If the marking is unclear, mark the piston with the cylinder number and an arrow pointing to the front of the engine. Use a marker pen.

Connecting rod marking: See **ASSEMBLING THE CRANK MECHANISM**.

Carefully push out the lock-ring using a groove-cut chisel.

WARNING: **The snap ring can easily come off. Wear protective goggles**

Press out the piston pin with your thumb. Clean and check the connecting rods, caps and screws for damage, signs of wear or cracks.

CHECKING THE ALIGNMENT OF THE PISTON PINS IN THE PISTONS

Fig. 210: Checking Alignment Of Piston Pin With Piston
Courtesy of VOLVO CARS CORPORATION

The piston pin must not be loose. It should be possible to push it through the hole using thumb pressure.

Replace the piston if the play is too great.

CHECKING THE ALIGNMENT OF THE PISTON PINS IN THE CONNECTING RODS

Fig. 211: Checking Alignment Of Piston Pin With Connecting Rod
Courtesy of VOLVO CARS CORPORATION

The piston pin should slide through the hole with light thumb pressure.

If the play is too great measure the piston pin.

Use a micrometer.

For the correct diameter of the piston pin, see **PISTONS** .

NEW CONNECTING ROD

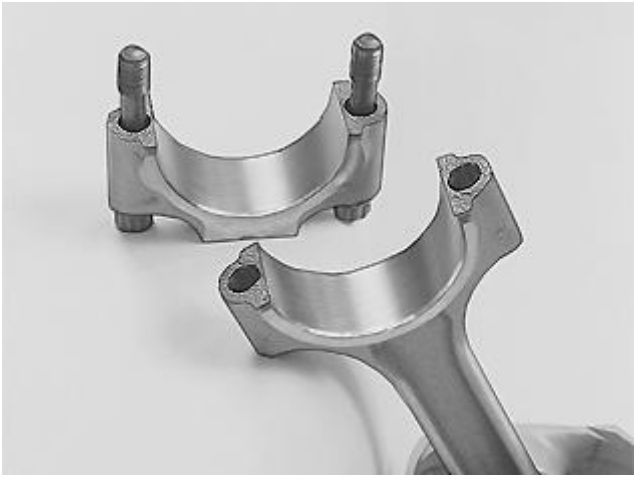

Fig. 212: View of Connecting Rod Big End
Courtesy of VOLVO CARS CORPORATION

A new connecting rod has been introduced on B6294S engines.

The mating surface between the cap and the connecting rod is **not** machined. It is aligned through a dedicated fracture surface.

CAUTION: If the cap is turned the wrong way and tightened, the structure of the fracture surface will be damaged and the connecting rod must then be discarded.

NOTE: Blow the fracture surface clean with compressed air before reinstalling the cap.

CHECKING THE BEARING RECESS IN THE CONNECTING ROD BIG END

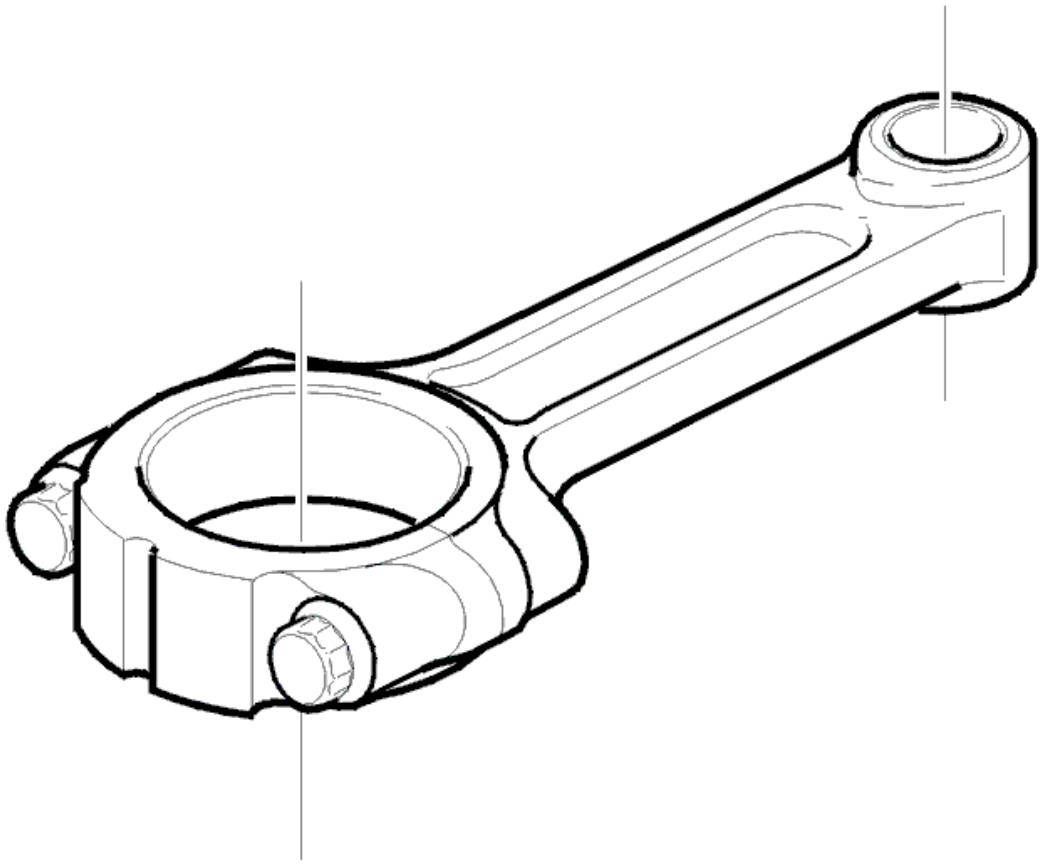

Fig. 213: Measuring Out-Of-Round With Bore Gauge.
Courtesy of VOLVO CARS CORPORATION

Visually check the bearing shells.

If in doubt measure out-of-round.

Use a bore gauge.

For the correct diameter of the bearing recess, see **CRANK MECHANISM** .

CHECKING THE CONNECTING ROD IN A CONNECTING ROD ALIGNER

Check for out-of-true and twisting.

CAUTION: Check that the aligner fork is unburred and round at the handle.

Remove and apply the expander at the big end between each alignment operation.

CRANK MECHANISM (B6324S/5; 2007-2012)

CRANK MECHANISM, DISMANTLING

Special tools	
	T9995746 HOLDER (REMOVAL-PISTON/CONNECTING ROD) B 200-B 6304 **Tool number:** T9995746 **Tool description:** HOLDER (REMOVAL-PISTON/CONNECTING ROD) B 200-B 6304 **Tool boards:**

Materials	
Designation	**Part number**
Gasket solution	1161440

NOTE: Some variation may occur. However, the essential information in the illustrations is always correct.

NOTE: Removal steps in this procedure may contain installation details.

Release the engine. See **ENGINE BODY, EXPOSING**

Remove the following components:

- oil pump and line. See **OIL PUMP**
- front crankshaft seal. See **CRANKSHAFT FRONT SEAL**

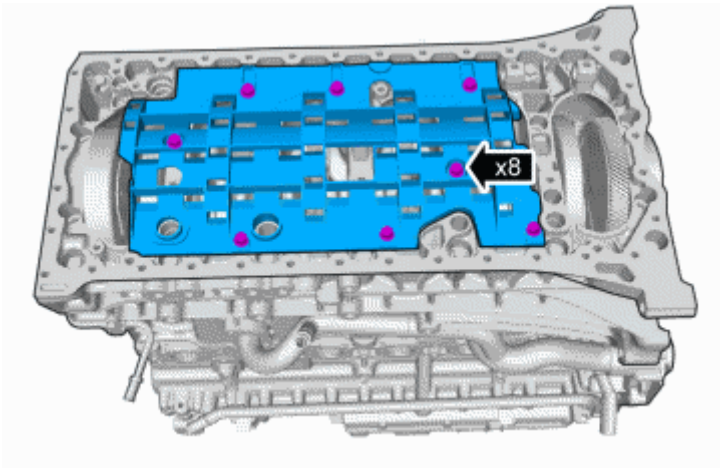

Fig. 214: View of Deflector Plate
Courtesy of VOLVO CARS CORPORATION

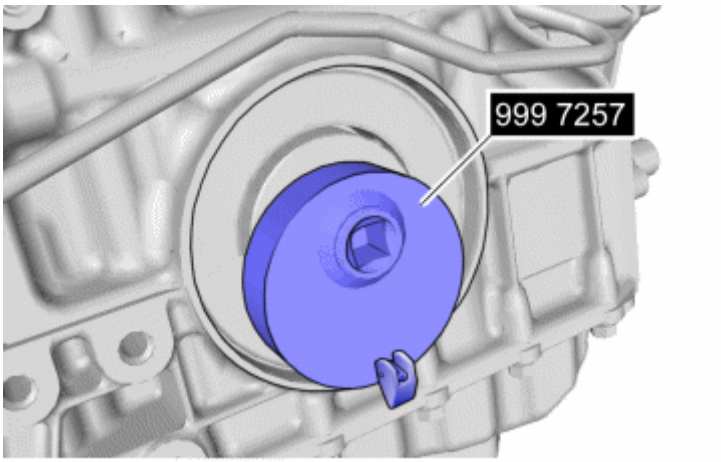

Fig. 215: Identifying Tool 9997257
Courtesy of VOLVO CARS CORPORATION

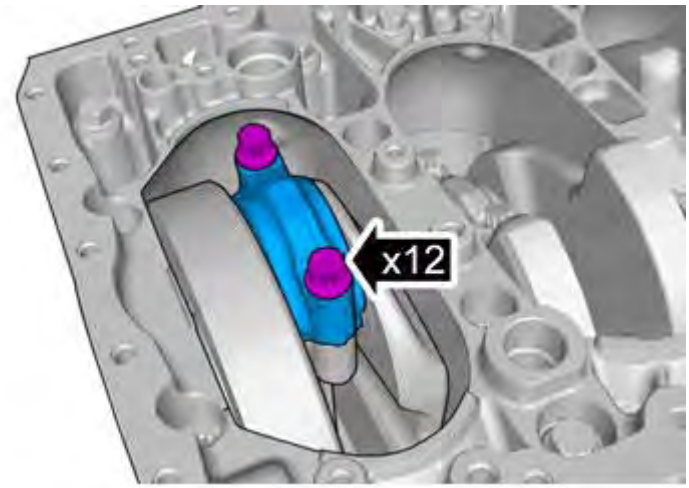

Fig. 216: Identifying Position Of Components Before Removal

Courtesy of VOLVO CARS CORPORATION

NOTE: Note the position of each component before removal.

NOTE: Make sure that these components are installed to the noted removal position.

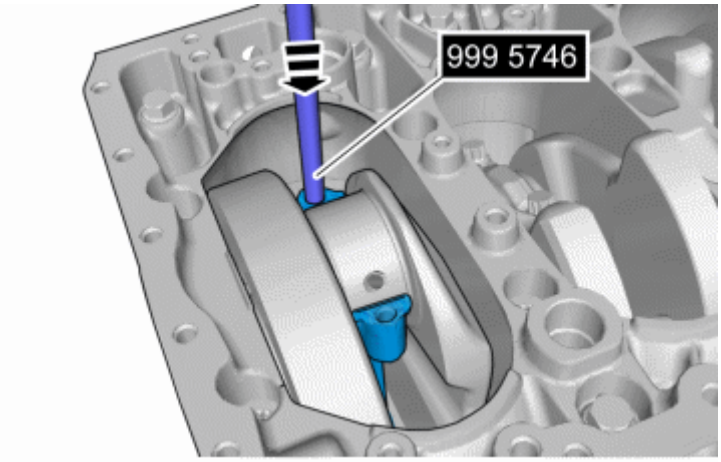

Fig. 217: Removing Piston With Tool 9995746
Courtesy of VOLVO CARS CORPORATION

NOTE: Make sure that these components are installed to the noted removal position.

see **9995746**

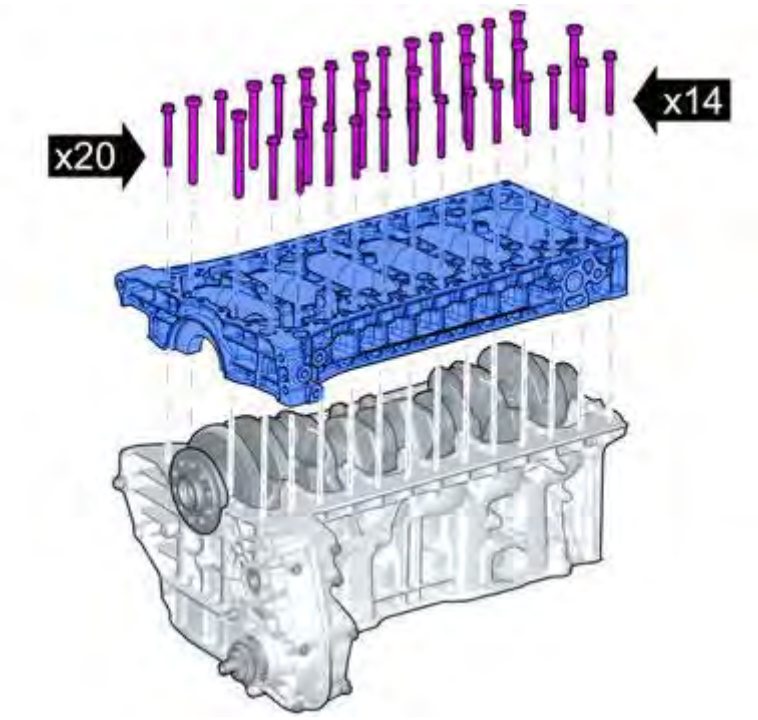

Fig. 218: Identifying Position Of Components Before Removal
Courtesy of VOLVO CARS CORPORATION

NOTE: Make sure that these components are installed to the noted removal position.

see **9995746**

1. **Torque:** M8

   24 Nm

2. **Torque:** M10

   50 Nm

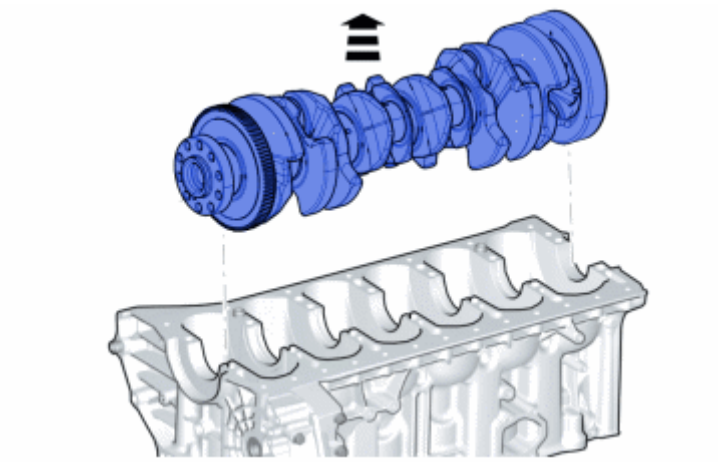

Fig. 219: Identifying Crankshaft Removed
Courtesy of VOLVO CARS CORPORATION

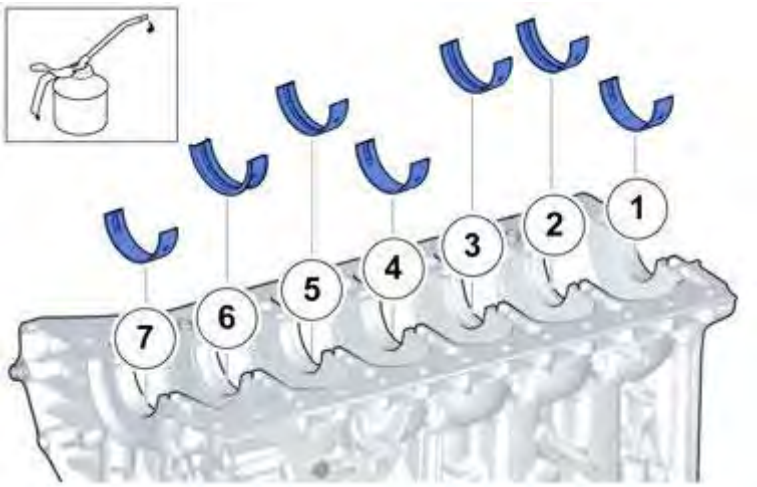

Fig. 220: Identifying Position Of Components Before Removal
Courtesy of VOLVO CARS CORPORATION

NOTE: **Note the position of each component before removal.**

NOTE: **Make sure that these components are installed to the noted removal position.**

WARNING: **Use extraction equipment.**

Clean the gasket surfaces on the cylinder block, intermediate section and sump.

and/or

Use: Gasket solution, 1161440

MEASURING THE CRANKSHAFT ASSEMBLY

Special tools	
	T9995418 MEASURING INSTRUMENT KIT (HUB AND BRAKE DISC RUNOUT, B-VER) **Tool number:** T9995418 **Tool description:** MEASURING INSTRUMENT KIT (HUB AND BRAKE DISC RUNOUT, B-VER) **Tool boards:**
	T9999696 MAGNETIC BASE **Tool number:** T9999696 **Tool description:** MAGNETIC BASE **Tool boards:**
	T9813134 DIAL INDICATOR **Tool number:** T9813134 **Tool description:** DIAL INDICATOR **Tool boards:**

Materials	
Designation	**Part number**
Gasket Solvent	1161847

RECONDITIONING

CAUTION: **Make sure that the component is clean, free of foreign material and lubricant.**

NOTE: **If the specified value is exceeded, a new component must be installed.**

See information about specifications. See **ENGINE**

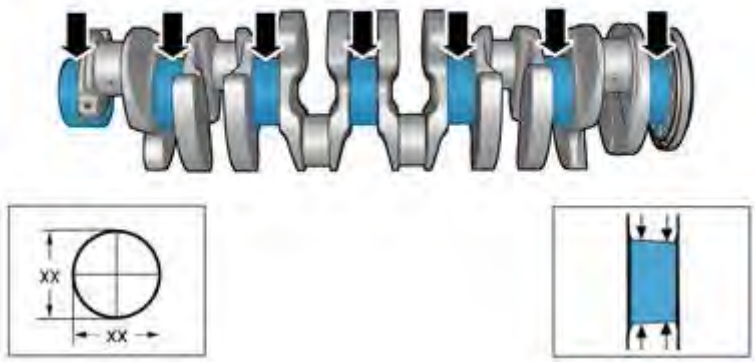

Fig. 221: Locating Measuring Points, Main Bearings
Courtesy of VOLVO CARS CORPORATION

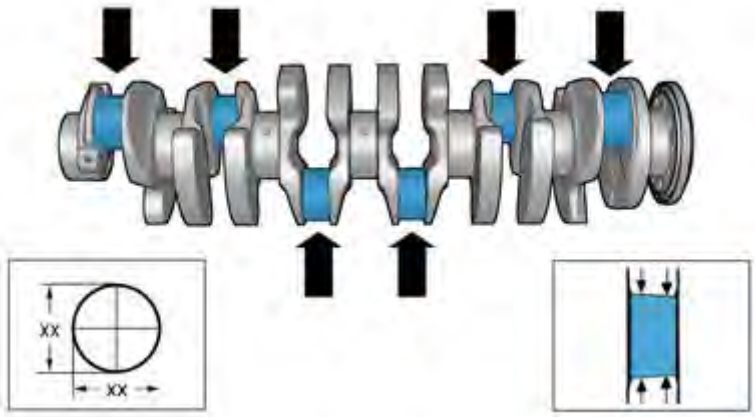

Fig. 222: Locating Measuring Points, Rod Bearings
Courtesy of VOLVO CARS CORPORATION

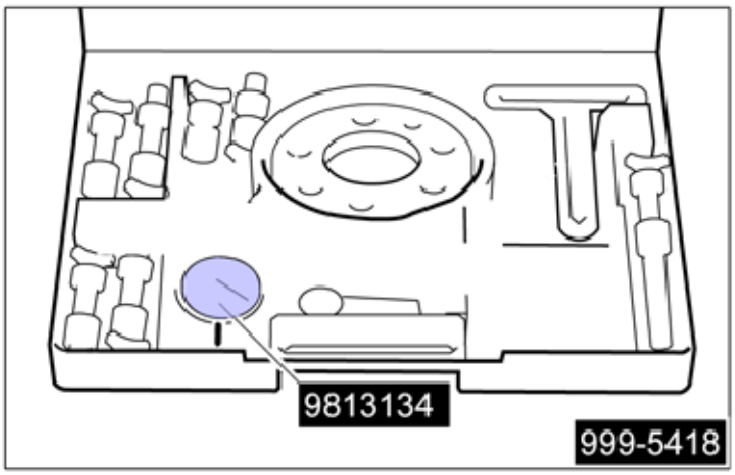

Fig. 223: Identifying Measuring Tool Kit 9995418
Courtesy of VOLVO CARS CORPORATION

see **9995418**

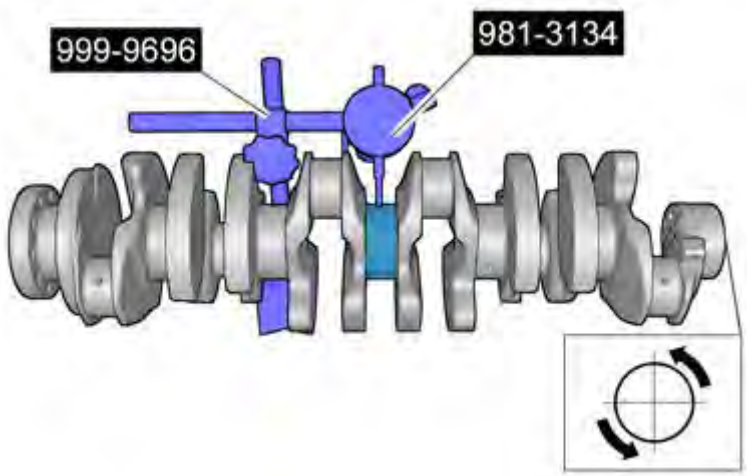

Fig. 224: Measuring Crankshaft Runout with Tools 9999696, 9813134
Courtesy of VOLVO CARS CORPORATION

see **9999696** see **9813134**

Fig. 225: Remove Using Piston Ring Pliers
Courtesy of VOLVO CARS CORPORATION

NOTE: Make sure that the component is clean and free of foreign material.

Use: Gasket Solvent 1161847

Fig. 226: Measuring Groove with Feeler Gauge
Courtesy of VOLVO CARS CORPORATION

NOTE: Make sure that new components are installed.

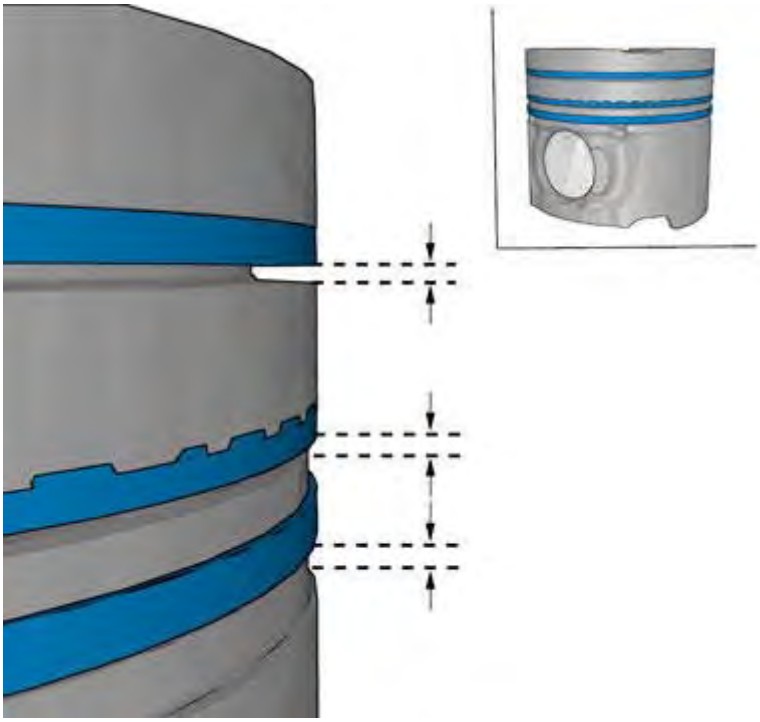

Fig. 227: Measuring Clearance with Feeler Gauge
Courtesy of VOLVO CARS CORPORATION

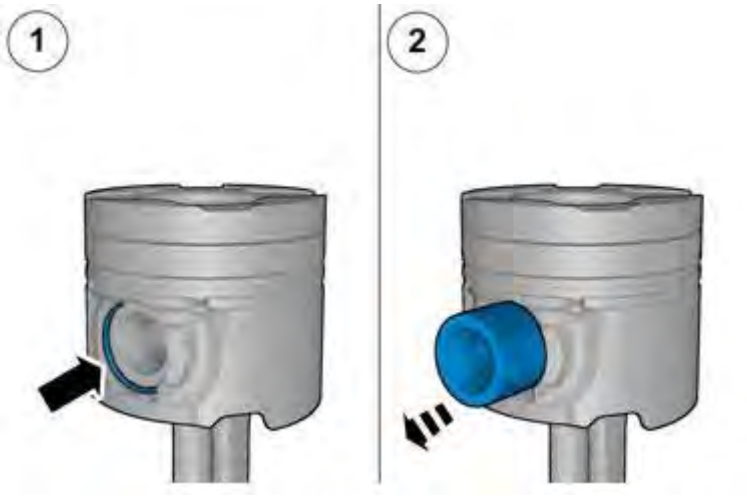

Fig. 228: Removing Snap Ring and Piston Pin
Courtesy of VOLVO CARS CORPORATION

WARNING: Wear safety goggles.

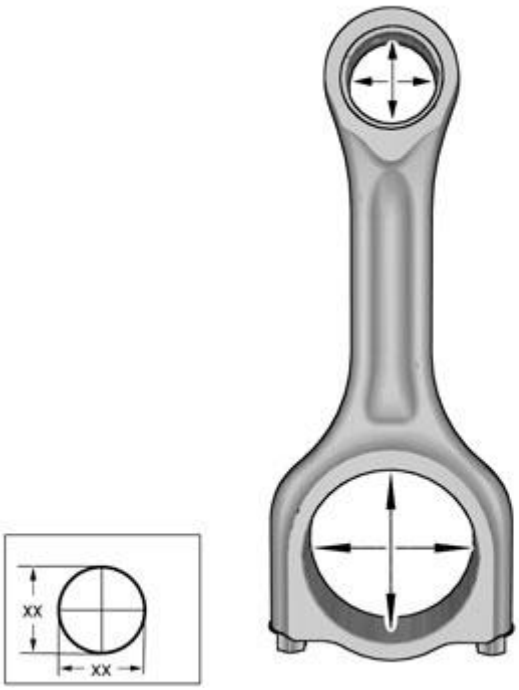

Fig. 229: Special Tool Required (Hole Indicator)
Courtesy of VOLVO CARS CORPORATION

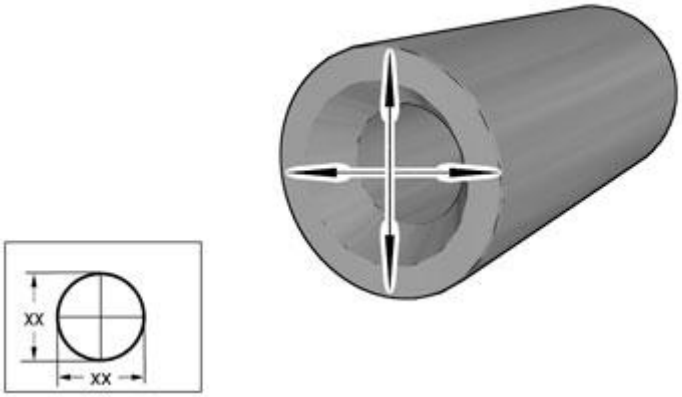

Fig. 230: Measuring Piston Pin for Wear
Courtesy of VOLVO CARS CORPORATION

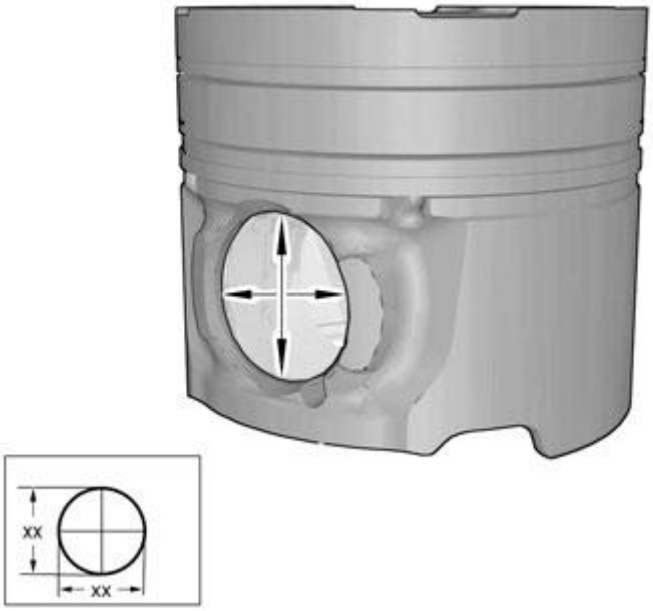

Fig. 231: Measuring Piston Pin Hole for Wear
Courtesy of VOLVO CARS CORPORATION

Fig. 232: Measuring Piston for Wear
Courtesy of VOLVO CARS CORPORATION

CRANK MECHANISM (B8444S; 2005-2011)

CRANK MECHANISM, ASSEMBLING

Special tools	
	T9995746 HOLDER (REMOVAL-PISTON/CONNECTING ROD) B 200-B 6304 **Tool number:** T9995746 **Tool description:** HOLDER (REMOVAL-PISTON/CONNECTING ROD) B 200-B 6304 **Tool boards:**
	T9995679 OIL FILTER WRENCH (D VERSION) **Tool number:** T9995679 **Tool description:** OIL FILTER WRENCH (D VERSION) **Tool boards:**
	T9997194 DRIFT **Tool number:** T9997194 **Tool description:** DRIFT **Tool boards:**

Materials	
Designation	**Part number**
Engine oil	
Liquid gasket	30757050

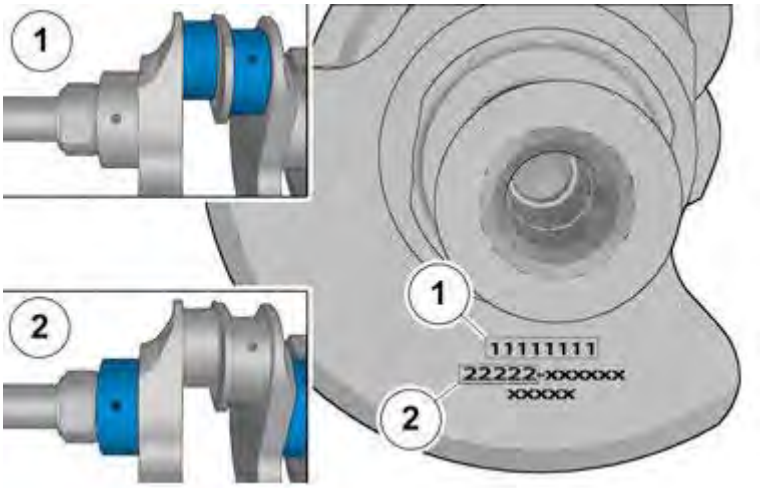

Fig. 233: Locating Crankshaft Specifications
Courtesy of VOLVO CARS CORPORATION

See information about specifications. See **ENGINE**

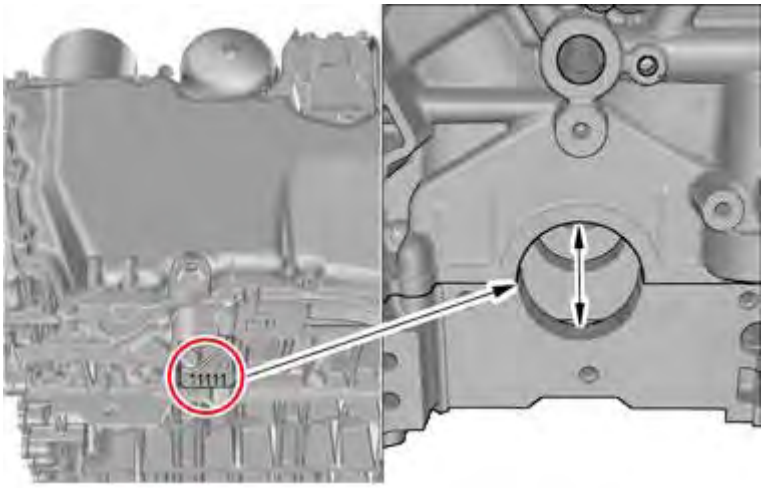

Fig. 234: Locating Main Bearing Specifications
Courtesy of VOLVO CARS CORPORATION

See information about specifications. See **ENGINE**

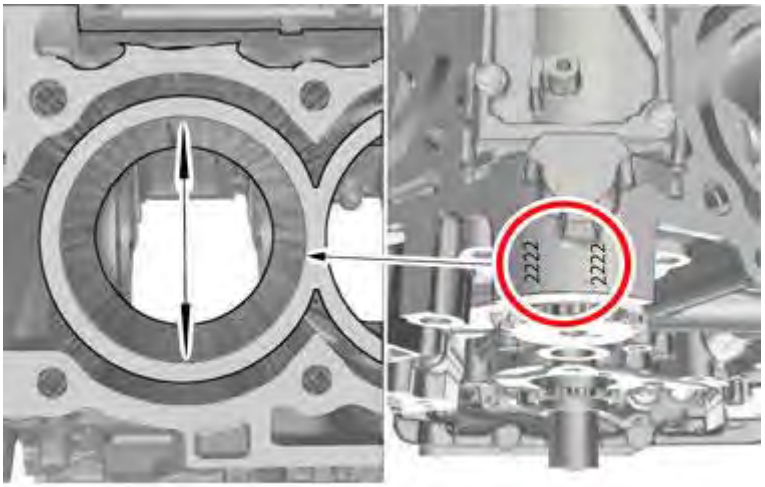

Fig. 235: Locating Cylinder Specifications
Courtesy of VOLVO CARS CORPORATION

See information about specifications. See **ENGINE**

Fig. 236: Identifying Classification of Components
Courtesy of VOLVO CARS CORPORATION

NOTE: **Make sure that the classification of the components correspond with each other.**

NOTE: **Make sure that these components are installed to the noted removal position.**

For information about classification. See **ENGINE**

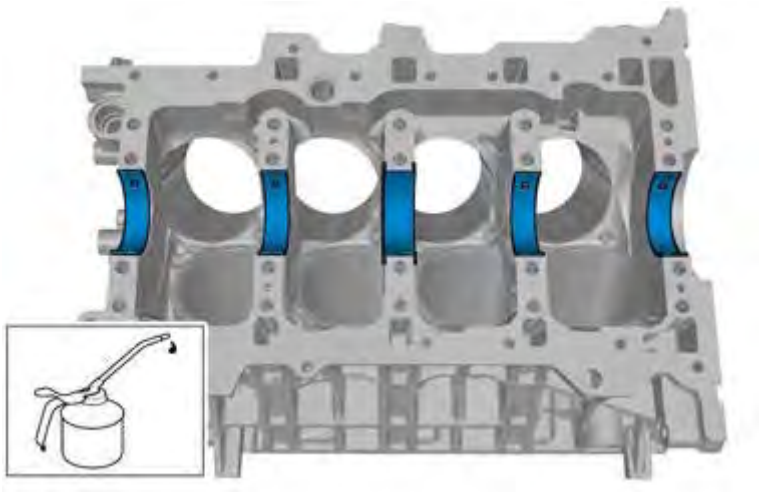

Fig. 237: Applying Engine Oil to Main Bearings
Courtesy of VOLVO CARS CORPORATION

CAUTION: Make sure that the area around the component is clean and free of foreign material.

Use: Engine oil,

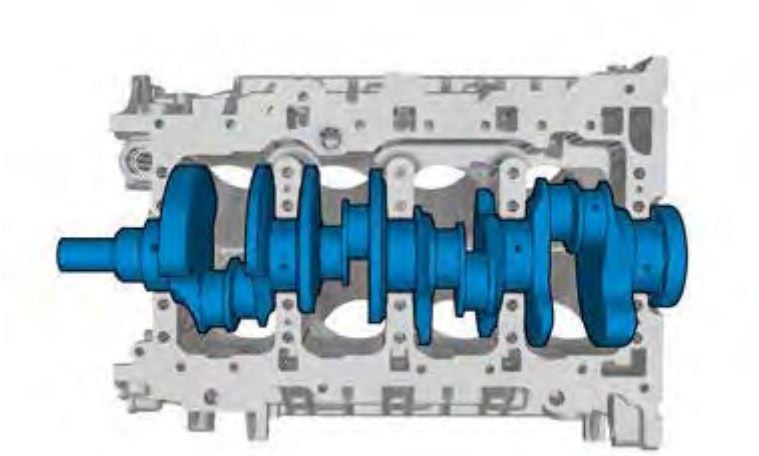

Fig. 238: Crankshaft Ready To Remove/Install
Courtesy of VOLVO CARS CORPORATION

CAUTION: Take extra care when handling the components.

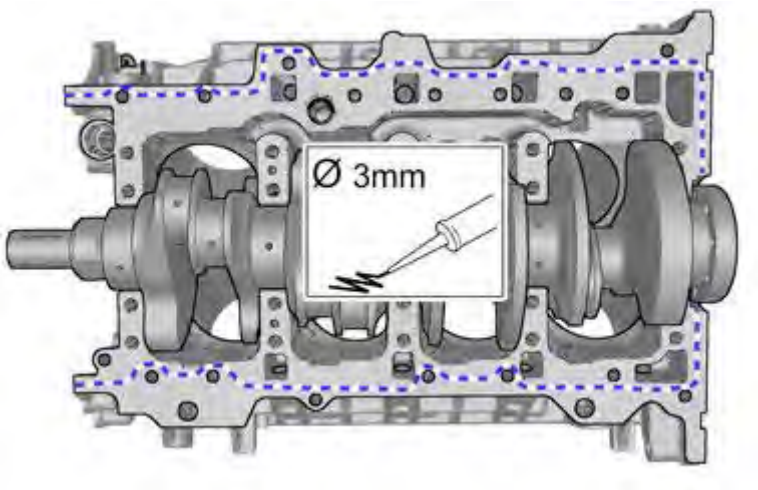

Fig. 239: Apply Liquid Gasket 30757050
Courtesy of VOLVO CARS CORPORATION

CAUTION: Make sure that the mating faces are clean and free of foreign material.

NOTE: The component must be installed within 5 minutes of applying the sealant.

Use: Liquid gasket, 30757050

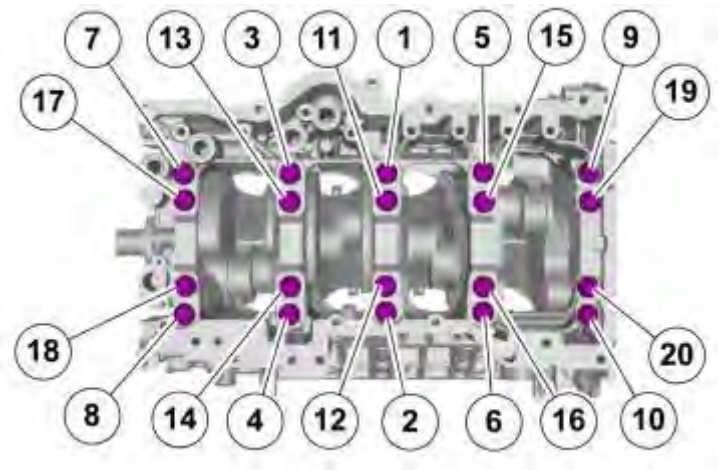

Fig. 240: Identifying Torque Sequence (Preliminary)
Courtesy of VOLVO CARS CORPORATION

CAUTION: Make sure that the mating faces are clean and free of foreign material.

Torque: Intermediate section to engine block

40 Nm

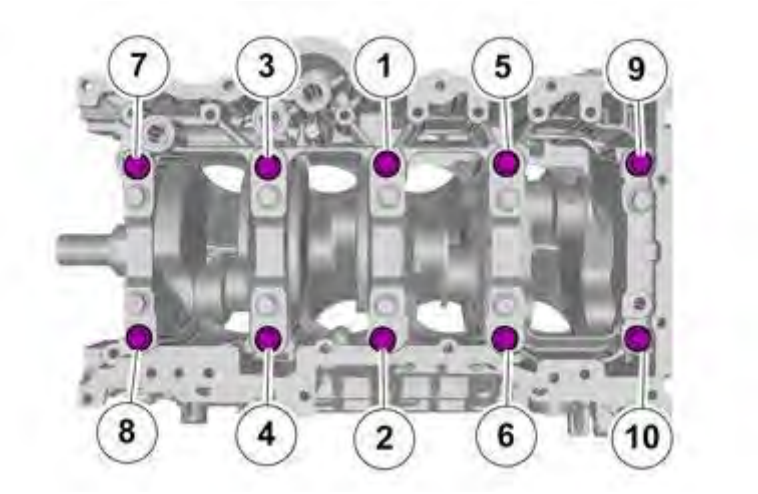

Fig. 241: Identifying Torque Sequence (Step 1)
Courtesy of VOLVO CARS CORPORATION

Torque: Intermediate section for engine block step 1

90 Degree

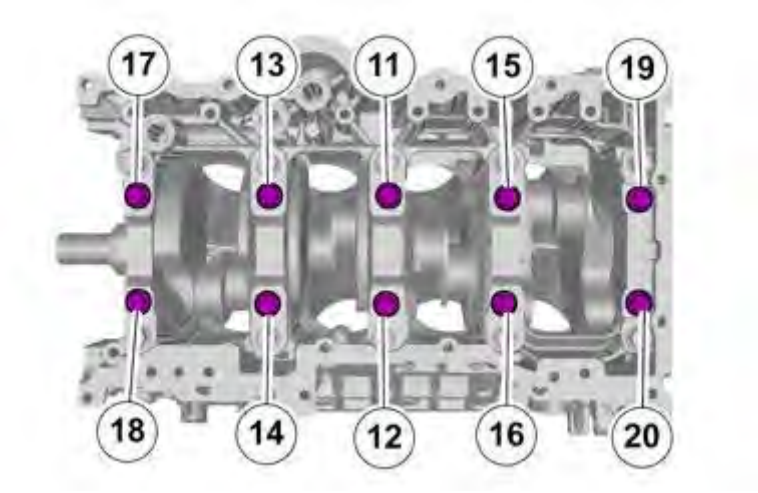

Fig. 242: Identifying Torque Sequence (Step 2)
Courtesy of VOLVO CARS CORPORATION

Torque: Intermediate section for engine block step 2

110 Degree

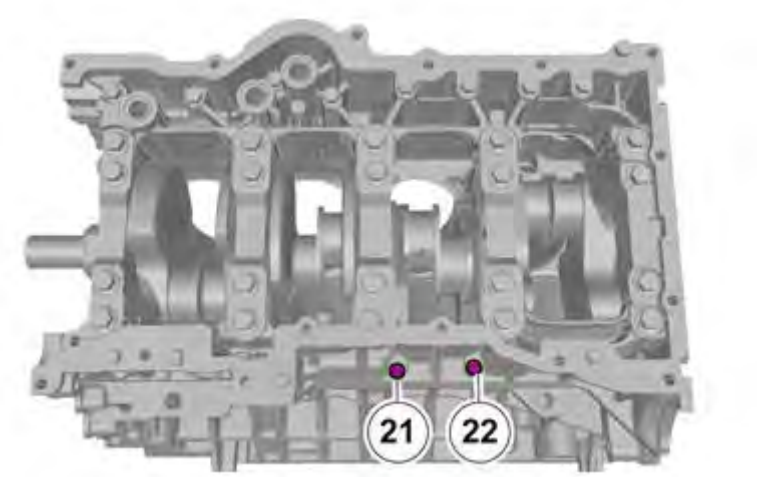

Fig. 243: Identifying Torque Sequence (Step3)
Courtesy of VOLVO CARS CORPORATION

Torque: Intermediate section for engine block step 3

20 Nm

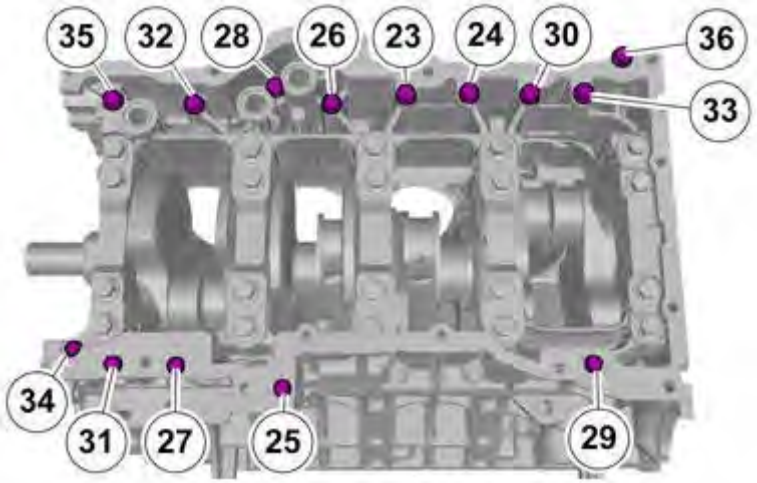

Fig. 244: Identifying Torque Sequence (Step 4)
Courtesy of VOLVO CARS CORPORATION

Torque: Intermediate section for engine block step 4

24 Nm

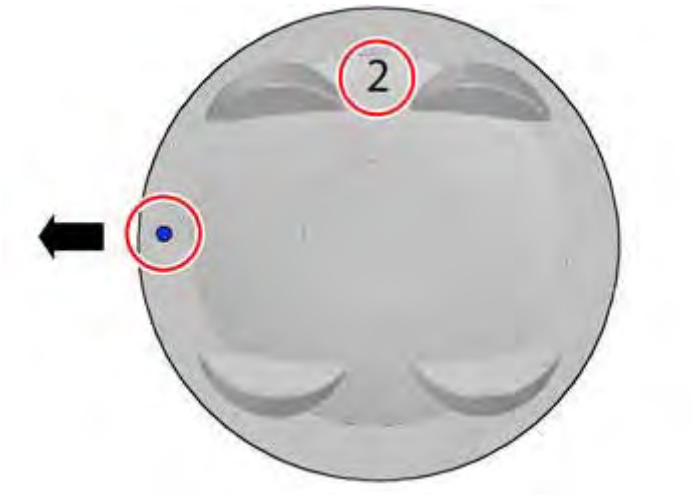

Fig. 245: Identifying Dot and Classification on Piston Top
Courtesy of VOLVO CARS CORPORATION

NOTE: **Make sure that the classification of the components correspond with each other.**

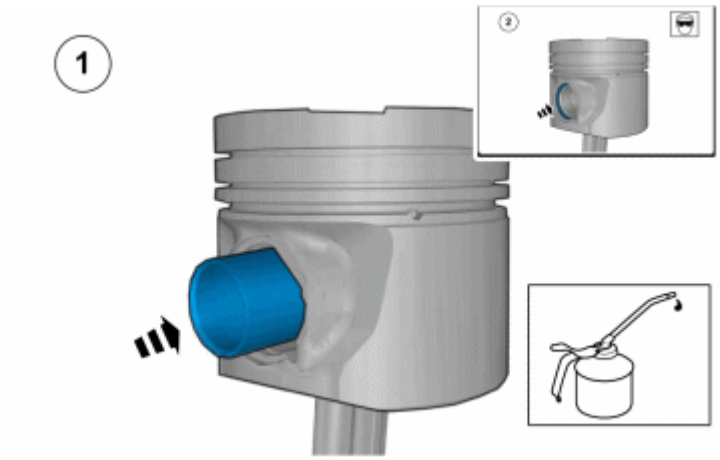

Fig. 246: Installing Pin And Snap Ring
Courtesy of VOLVO CARS CORPORATION

Fig. 247: Identifying Classification
Courtesy of VOLVO CARS CORPORATION

NOTE: **Make sure that the classification of the components correspond with each other.**

NOTE: **Make sure that these components are installed to the noted removal position.**

For information about classification. See **ENGINE**

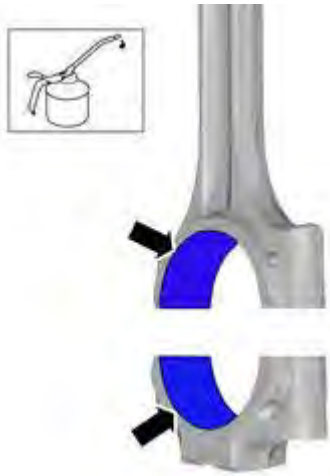

Fig. 248: Rod Bearings Installed with Engine Oil
Courtesy of VOLVO CARS CORPORATION

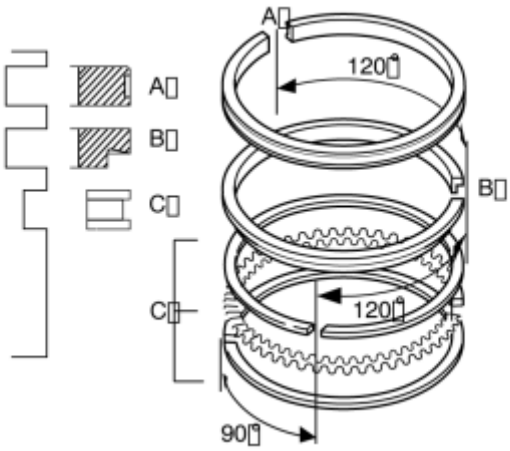

Fig. 249: Arrangement of Piston Ring Assembly
Courtesy of VOLVO CARS CORPORATION

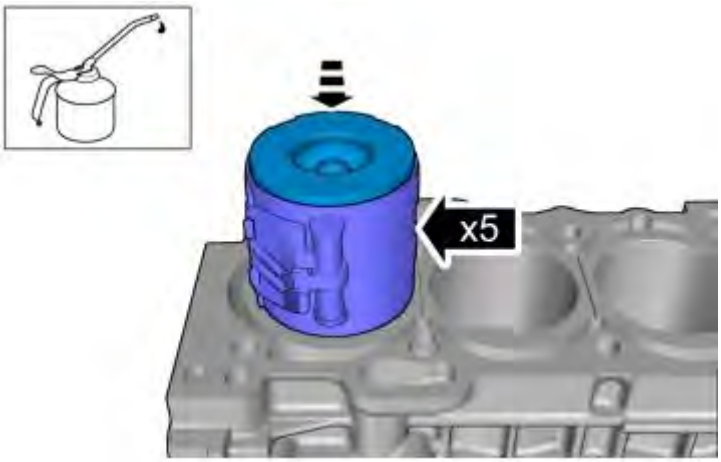

Fig. 250: Identifying Ring Compressor Tool
Courtesy of VOLVO CARS CORPORATION

CAUTION: Take extra care when handling the components.

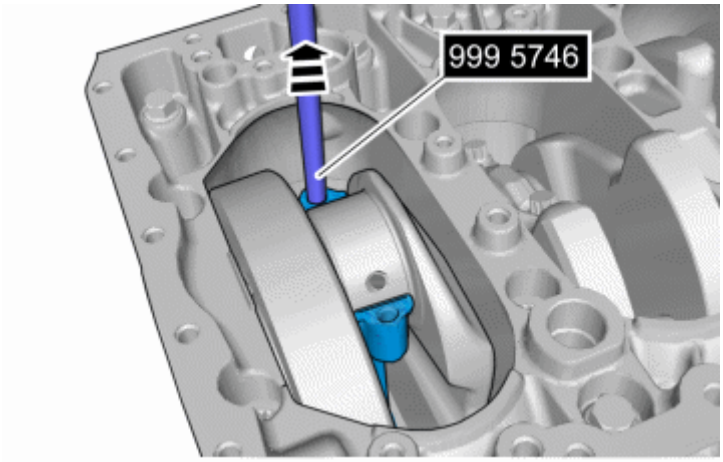

Fig. 251: Identifying Connecting Rod Special Tool (9995746)
Courtesy of VOLVO CARS CORPORATION

CAUTION: Take extra care when handling the components.

see **9995746**

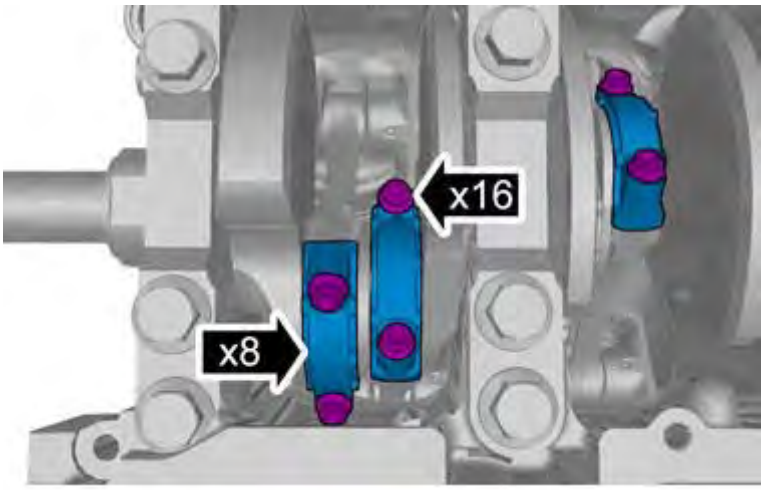

Fig. 252: Identifying 8 Caps and 16 bolts
Courtesy of VOLVO CARS CORPORATION

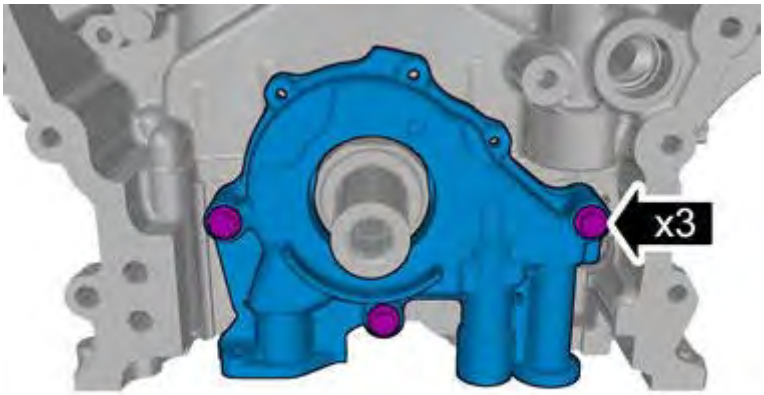

Fig. 253: Removing/Installing Oil Pump
Courtesy of VOLVO CARS CORPORATION

Torque: M6

10 Nm

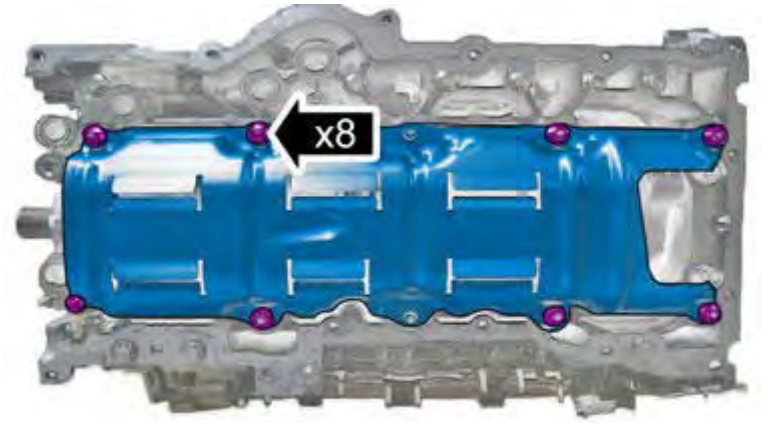

Fig. 254: Identifying Deflector Plate
Courtesy of VOLVO CARS CORPORATION

Torque: M8

24 Nm

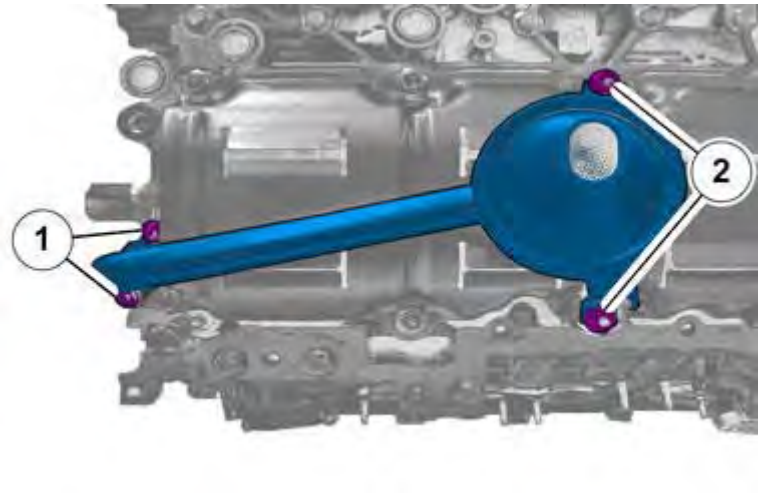

Fig. 255: Installing Pick-up Tube
Courtesy of VOLVO CARS CORPORATION

1. **Torque:** M6

   10 Nm

2. **Torque:** M8

   24 Nm

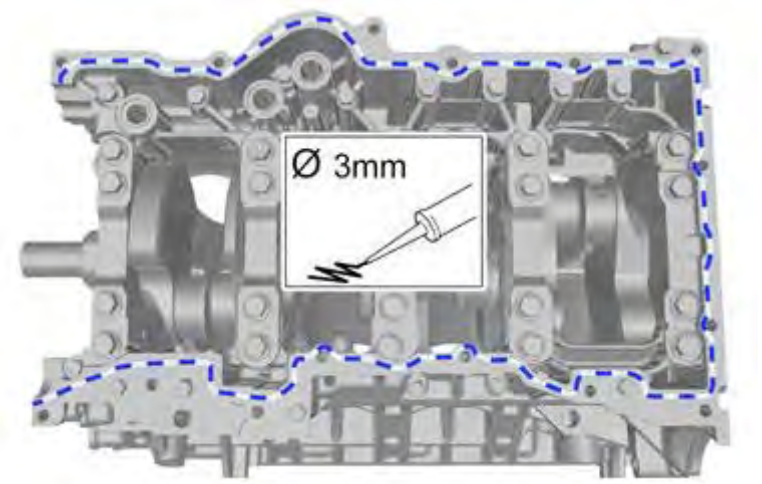

Fig. 256: Applying Liquid Gasket 30757050
Courtesy of VOLVO CARS CORPORATION

CAUTION: Make sure that the mating faces are clean and free of foreign material.

NOTE: The component must be installed within 5 minutes of applying the sealant.

Use: Liquid gasket, 30757050

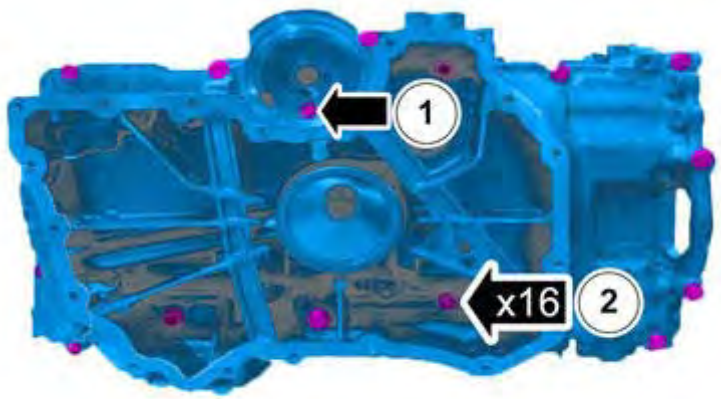

Fig. 257: Identifying Oil Pan Section and Bolts
Courtesy of VOLVO CARS CORPORATION

CAUTION: Make sure that the mating faces are clean and free of foreign material.

1. **Torque:** M6

   10 Nm

2. **Torque:** M8

   24 Nm

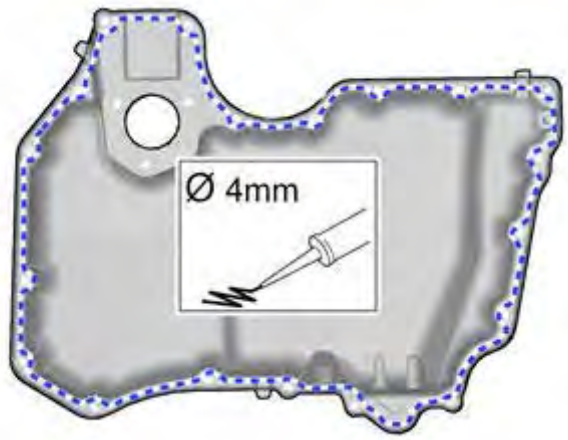

Fig. 258: Liquid gasket, 30757050
Courtesy of VOLVO CARS CORPORATION

NOTE: **The component must be installed within 5 minutes of applying the sealant.**

Use: Liquid gasket, 30757050

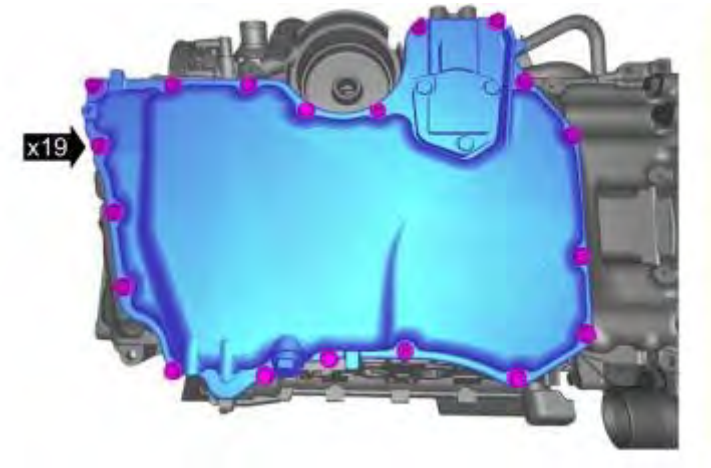

Fig. 259: Removing/Installing Oil Pan and Bolts
Courtesy of VOLVO CARS CORPORATION

Torque: M6

10 Nm

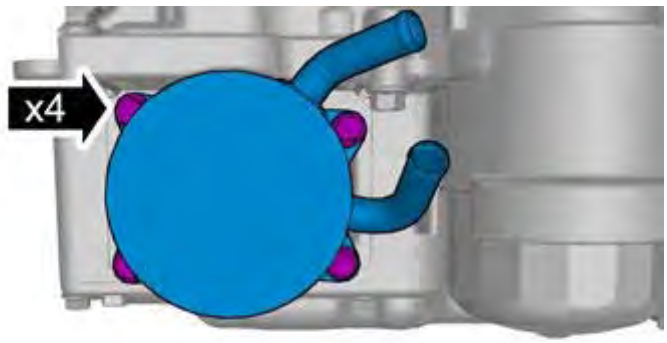

Fig. 260: Identifying Oil Cooler and Bolts
Courtesy of VOLVO CARS CORPORATION

Torque: M6

10 Nm

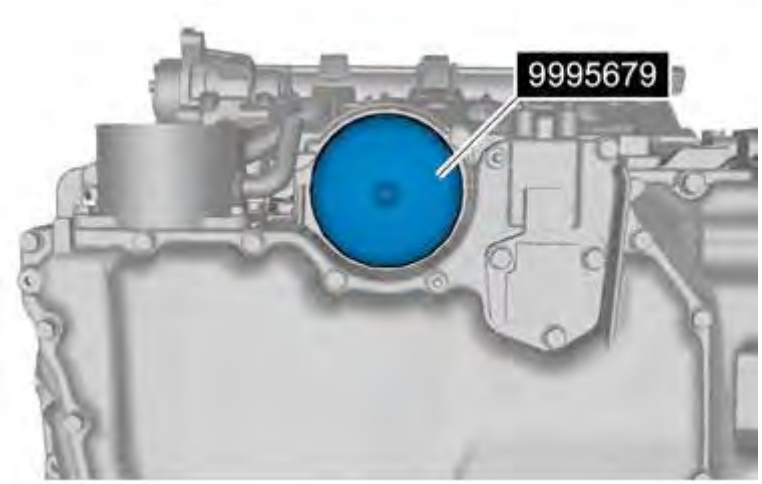

Fig. 261: Removing/Installing Oil Filter with Tool 9995679
Courtesy of VOLVO CARS CORPORATION

see **9995679**

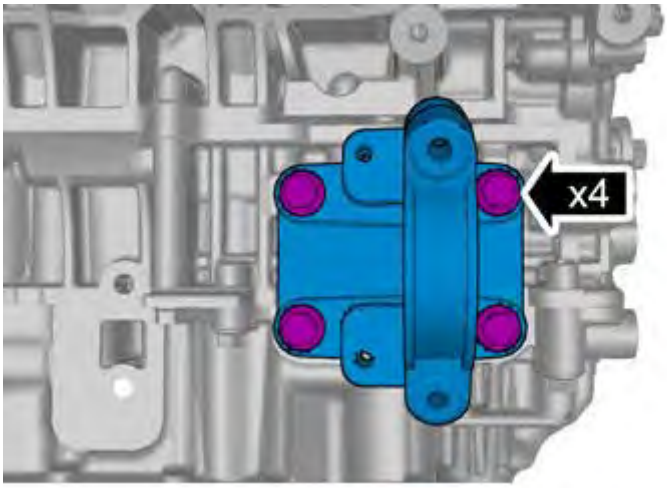

Fig. 262: Identifying Axle Shaft Support
Courtesy of VOLVO CARS CORPORATION

Torque: M10

50 Nm

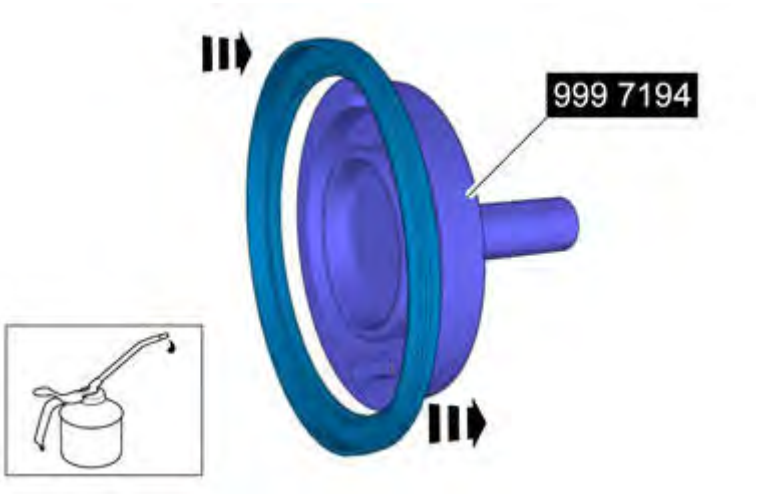

Fig. 263: Positioning Seal On Tool 9997194 with Engine Oil
Courtesy of VOLVO CARS CORPORATION

see **9997194**

Use: Engine oil,

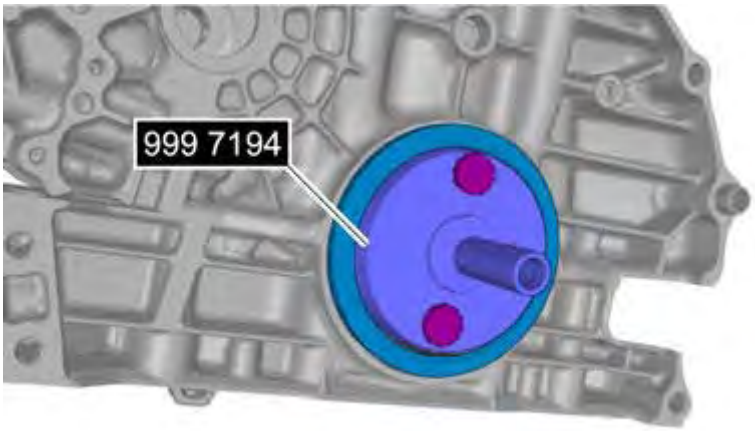

Fig. 264: Identifying Crankshaft With Tool Installed
Courtesy of VOLVO CARS CORPORATION

CAUTION: Make sure that the mating faces are clean and free of foreign material.

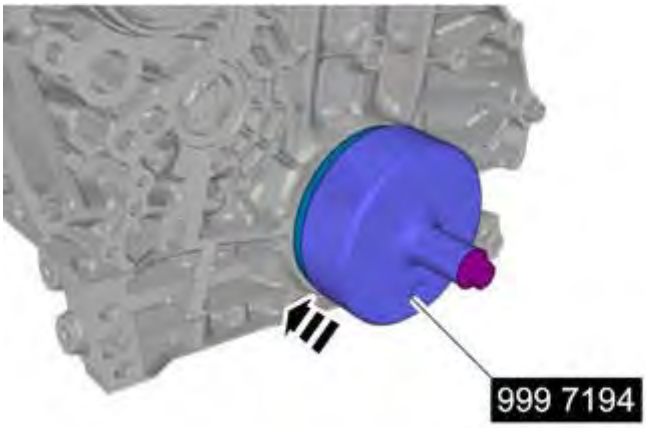

Fig. 265: Installing Seal with Tool 9997194
Courtesy of VOLVO CARS CORPORATION

CRANK MECHANISM, DISMANTLING

	Special tools
	T9995651 PULLER (REAR SEAL CRANKSHAFT) D5252T **Tool number:** T9995651 **Tool description:** PULLER (REAR SEAL CRANKSHAFT) D5252T **Tool boards:**
	T9995679 OIL FILTER WRENCH (D VERSION) **Tool number:** T9995679 **Tool description:** OIL FILTER WRENCH (D VERSION) **Tool boards:**
	T9995746 HOLDER (REMOVAL-PISTON/CONNECTING ROD) B 200-B 6304 **Tool number:** T9995746 **Tool description:** HOLDER (REMOVAL-PISTON/CONNECTING ROD) B 200-B 6304 **Tool boards:**

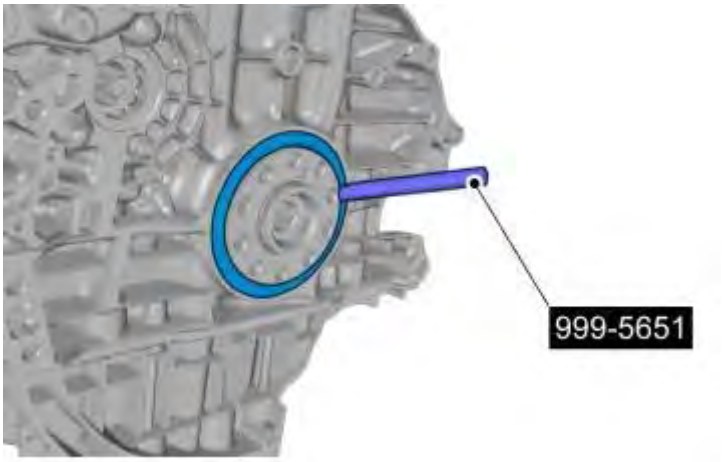

Fig. 266: Removing Seal with Tool 9995651

Courtesy of VOLVO CARS CORPORATION

see **9995651**

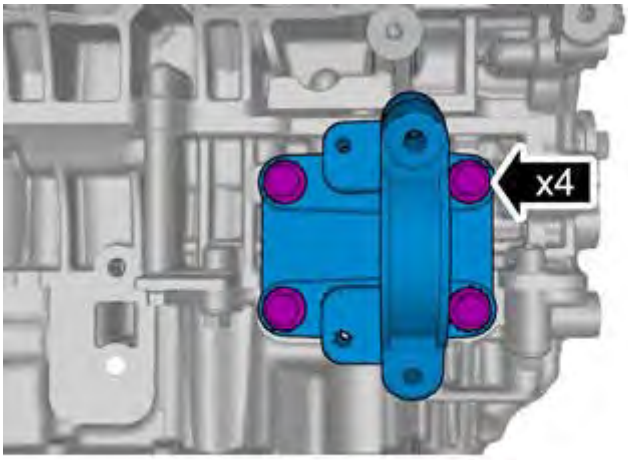

Fig. 267: Identifying Axle Shaft Support
Courtesy of VOLVO CARS CORPORATION

Fig. 268: Removing/Installing Oil Filter with Tool 9995679
Courtesy of VOLVO CARS CORPORATION

see **9995679**

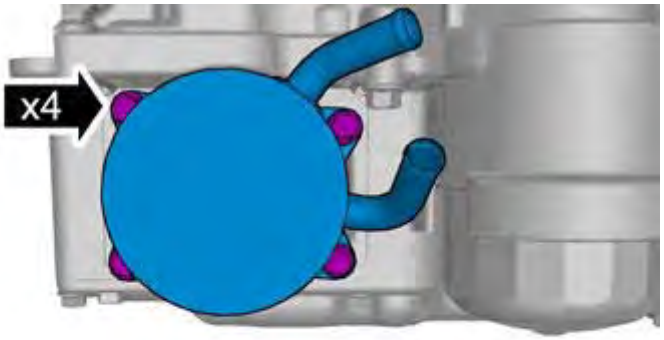

Fig. 269: Identifying Oil Cooler and Bolts
Courtesy of VOLVO CARS CORPORATION

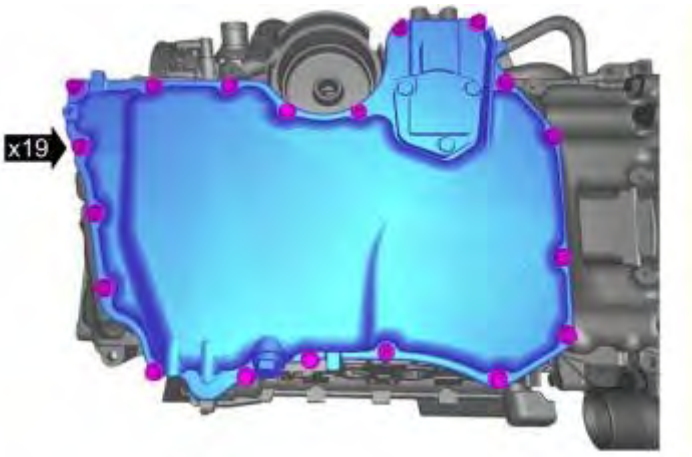

Fig. 270: Removing/Installing Oil Pan and Bolts
Courtesy of VOLVO CARS CORPORATION

Fig. 271: Removing Oil Pan Section

Courtesy of VOLVO CARS CORPORATION

CAUTION: Take extra care when handling the components.

CAUTION: Take extra care not to damage the mating faces.

NOTE: Only use moderate force.

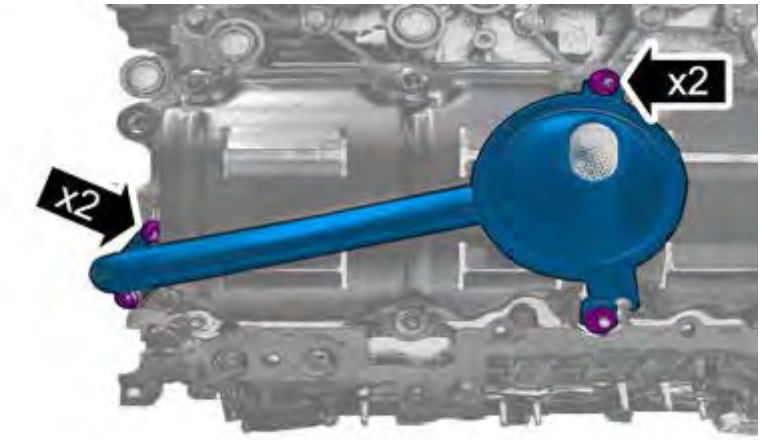

Fig. 272: Removing Oil Pickup Tube
Courtesy of VOLVO CARS CORPORATION

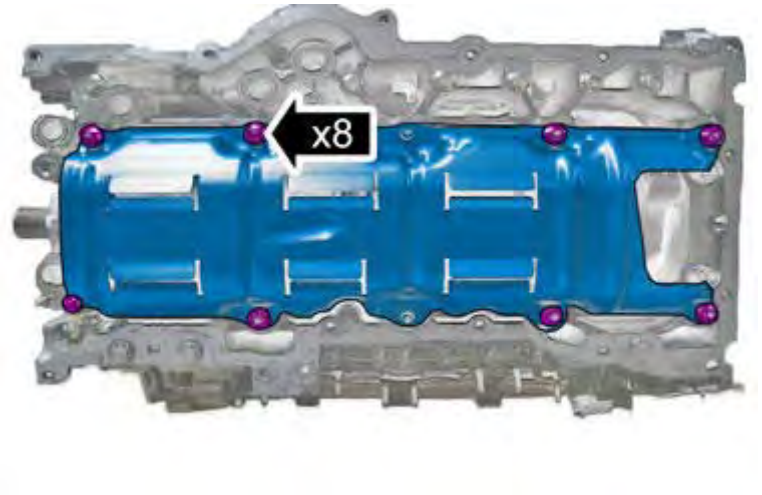

Fig. 273: Identifying Deflector Plate
Courtesy of VOLVO CARS CORPORATION

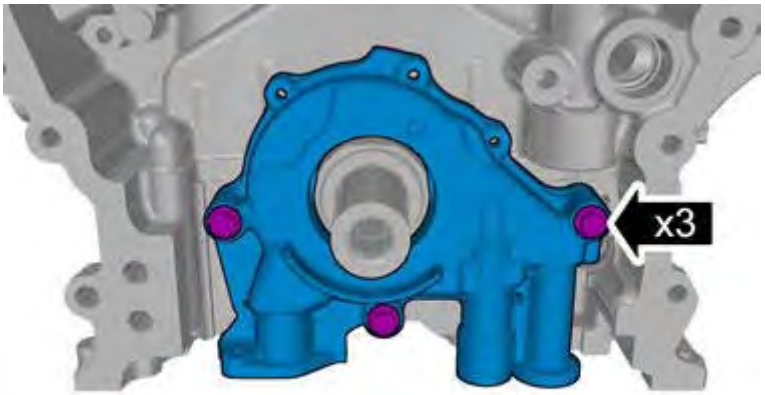

Fig. 274: Removing/Installing Oil Pump
Courtesy of VOLVO CARS CORPORATION

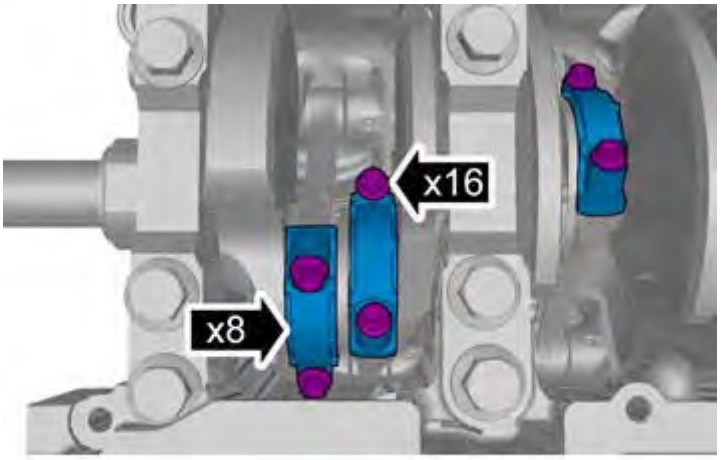

Fig. 275: Identifying Position Of Components Before Removal
Courtesy of VOLVO CARS CORPORATION

CAUTION: Note the position of each component before removal.

NOTE: Note the position of the bearings.

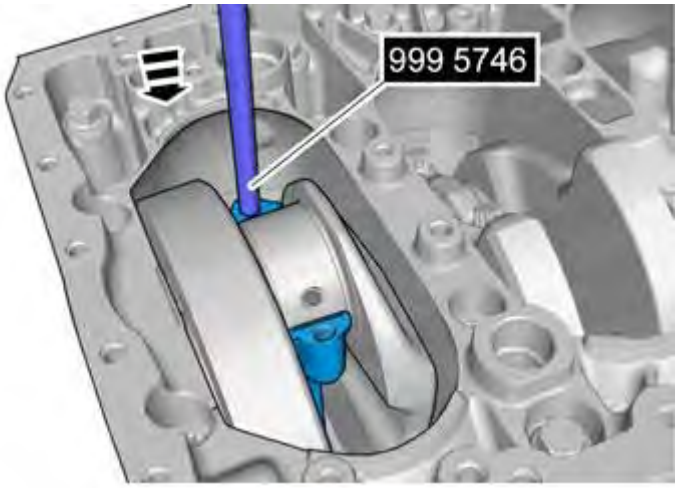

Fig. 276: Identifying Connecting Rod Special Tool (9995746)
Courtesy of VOLVO CARS CORPORATION

CAUTION: Take extra care when handling the components.

CAUTION: Note the position of each component before removal.

NOTE: Note the position of the bearings.

see **9995746**

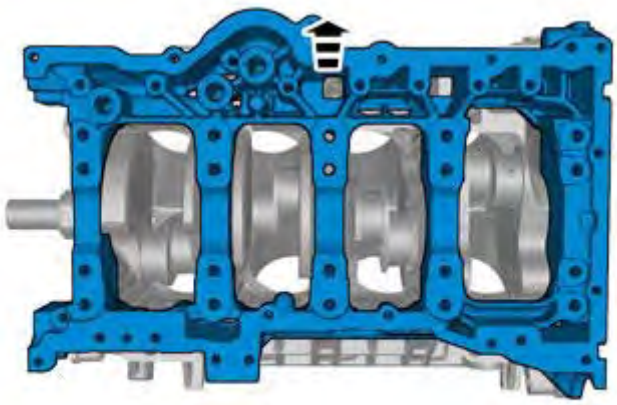

Fig. 277: Removing Intermediate Section
Courtesy of VOLVO CARS CORPORATION

CAUTION: Take extra care when handling the components.

CAUTION: Take extra care not to damage the mating faces.

NOTE: Only use moderate force.

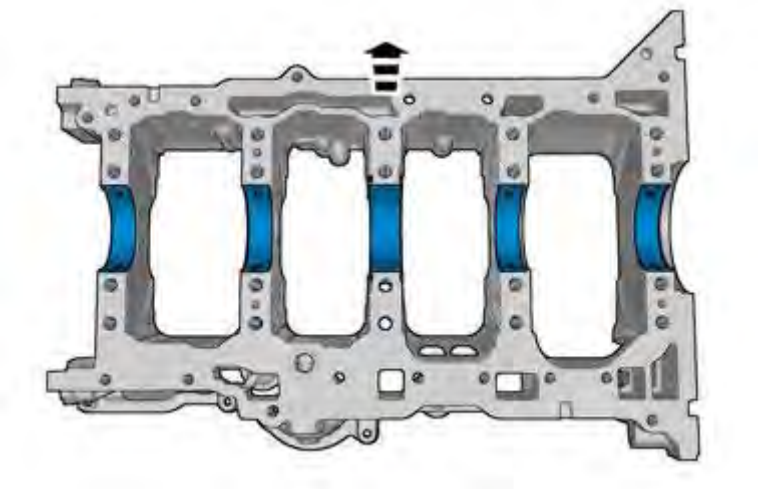

Fig. 278: Noting Positions Of The Bearings
Courtesy of VOLVO CARS CORPORATION

NOTE: Note the position of the bearings.

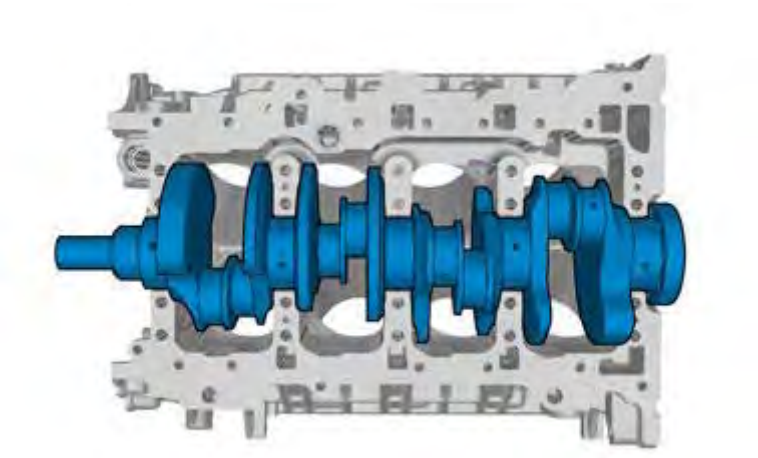

Fig. 279: Crankshaft Ready To Remove/Install
Courtesy of VOLVO CARS CORPORATION

CAUTION: Take extra care when handling the components.

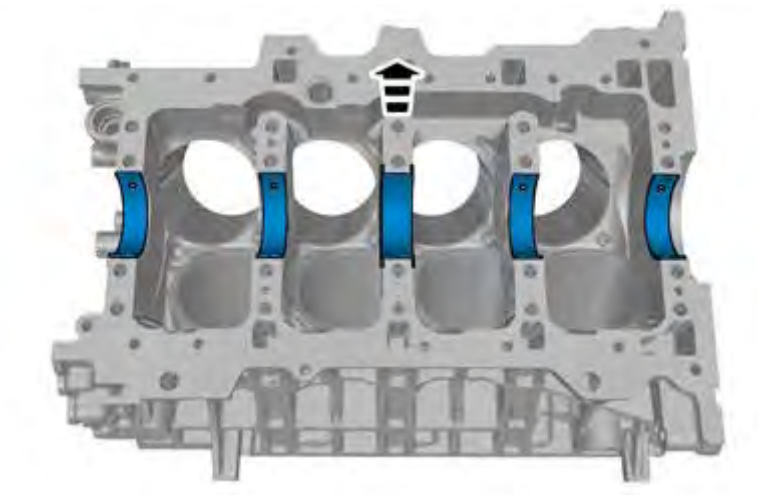

Fig. 280: Noting Positions Of The Bearings
Courtesy of VOLVO CARS CORPORATION

NOTE: Note the position of the bearings.

CYLINDER BLOCK (B5254T2; 2003-2004)

CYLINDER BLOCK, MEASUREMENT

MEASURING THE CYLINDER BORE

As the illustrations in this service information are used for different model years and / or models, some variation may occur. However, the essential information in the illustrations is always correct.

Fig. 281: Identifying Measurement Of Cylinder Bore
Courtesy of VOLVO CARS CORPORATION

First clean the cylinder bores and check them visually.

Measure the cylinder bores. Use a bore gauge (50-100 mm), a micrometer and a micrometer stand.

Set the micrometer to **maximum cylinder bore diameter tolerance** using the marking on the cylinder block.

Calibrate the bore gauge in the micrometer.

CHECKING FOR WEAR

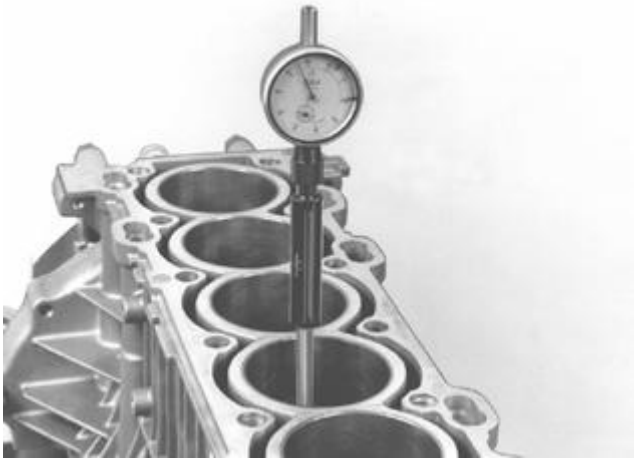

Fig. 282: Checking For Wear
Courtesy of VOLVO CARS CORPORATION

Take measurements for the **greatest amount of wear** across the engine, just before the upper limit position.

Take measurements for the **lowest amount of wear** along the length of the engine, at the lower limit position.

CLASSIFICATION MARKING

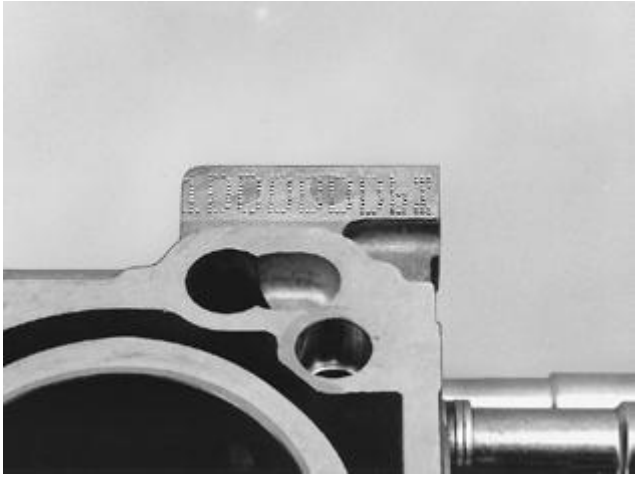

Fig. 283: Classification Marking
Courtesy of VOLVO CARS CORPORATION

Each cylinder is stamped with a classification letter (C, D or E) at the rear edge of the cylinder block.

Cylinder bore diameter: See **CYLINDER BLOCK** .

CYLINDER BLOCK (B6294T; 2003-2006)

CYLINDER BLOCK

MEASURING THE CYLINDER BORE

As the illustrations in this service information are used for different model years and / or models, some variation may occur. However, the essential information in the illustrations is always correct.

Fig. 284: Identifying Measurement Of Cylinder Bore
Courtesy of VOLVO CARS CORPORATION

First clean the cylinder bores and check them visually.

Measure the cylinder bores. Use a bore gauge (50-100 mm), a micrometer and a micrometer stand.

Set the micrometer to **maximum cylinder bore diameter tolerance** using the marking on the cylinder block.

Calibrate the bore gauge in the micrometer.

CHECKING FOR WEAR

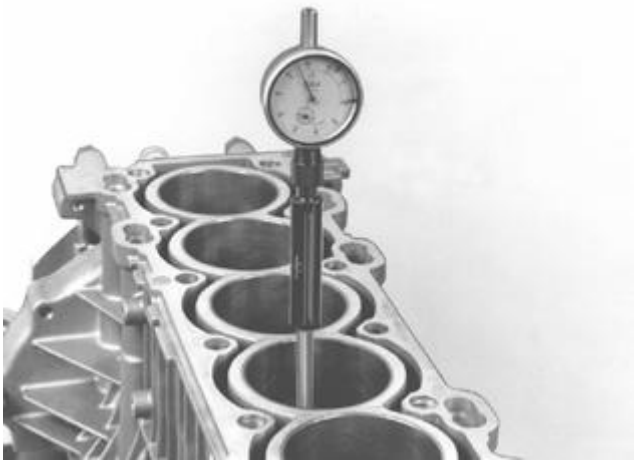

Fig. 285: Checking For Wear
Courtesy of VOLVO CARS CORPORATION

Take measurements for the **greatest amount of wear** across the engine, just before the upper limit position.

Take measurements for the **lowest amount of wear** along the length of the engine, at the lower limit position.

CLASSIFICATION MARKING

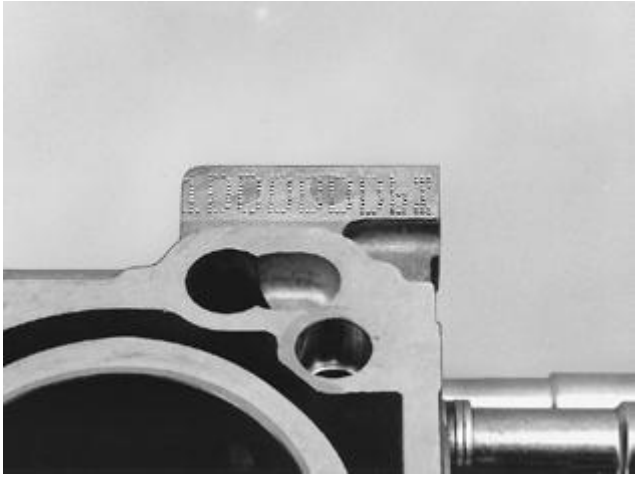

Fig. 286: Classification Marking
Courtesy of VOLVO CARS CORPORATION

Each cylinder is stamped with a classification letter (C, D or E) at the rear edge of the cylinder block.

Cylinder bore diameter: See **Fig. 298** .

SPECIFICATIONS, MECHANICAL

NOTE: **The illustrations in this service information are used for different model years and / or models. Therefore there may be some variation. However, the essential information in the illustrations is always correct.**

ENGINE MANUFACTURE NUMBER, ENGINE SERIAL NUMBER AND TYPE

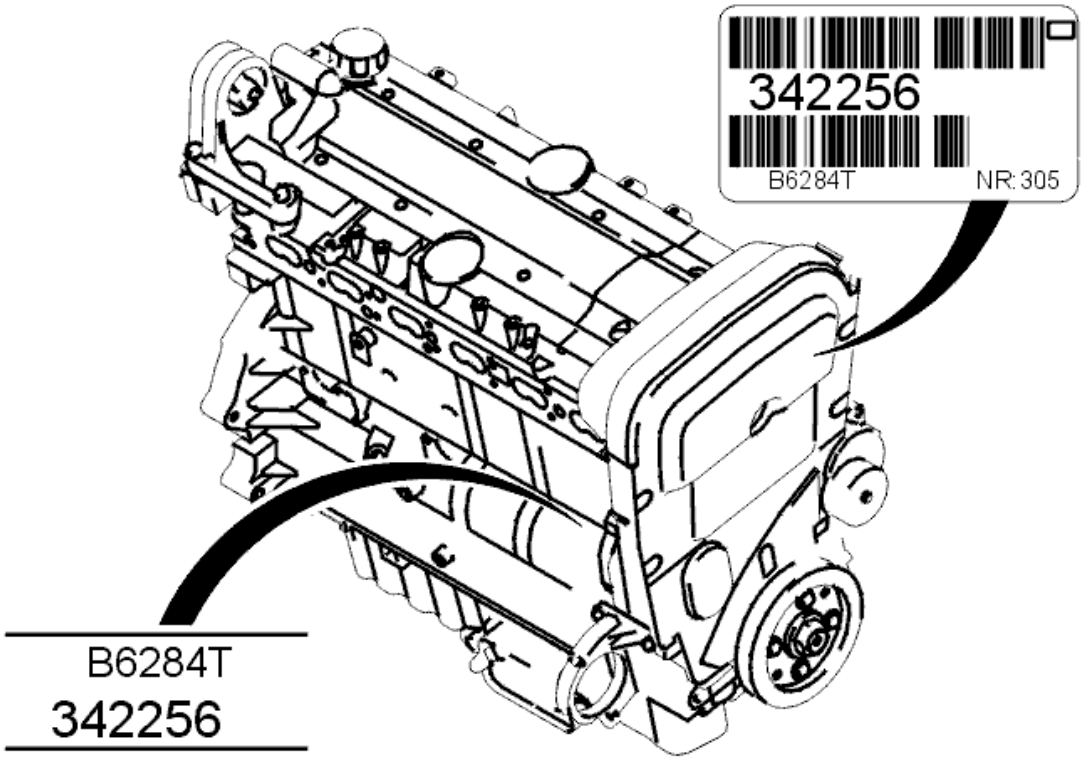

Fig. 287: Engine Manufacture Number, Engine Serial Number And Type
Courtesy of VOLVO CARS CORPORATION

The engine manufacture number and type are stamped on the right side of the cylinder block.

There is also a decal on the timing cover with the engine type, manufacture number and serial number.

CLASSIFICATION OF MAIN BEARINGS

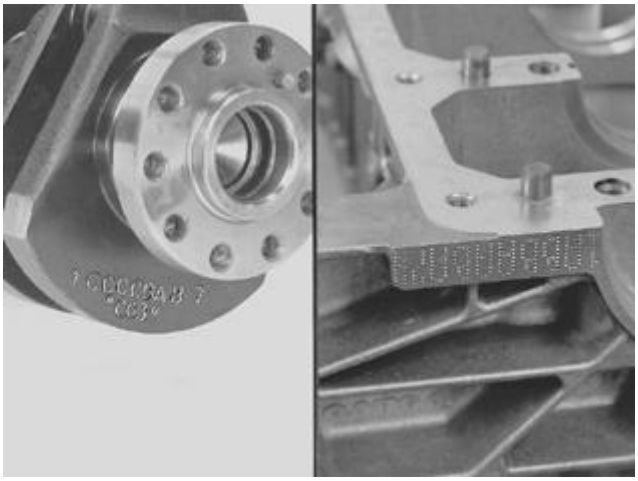

Fig. 288: Classification Of Main Bearings
Courtesy of VOLVO CARS CORPORATION

The marking is stamped on the cylinder block and crankshaft.

Cylinder block classification / Crankshaft classification	A small diameter		B medium diameter		C large diameter	
	block	intermediate section	block	intermediate section	block	intermediate section
A small	yellow medium	yellow medium	yellow medium	blue thick	blue thick	blue thick
B medium	red thin	yellow medium	yellow medium	yellow medium	yellow medium	blue thick
C large	red thin	red thin	red thin	yellow medium	yellow medium	yellow medium

OTHER GENERAL DATA

	B6284T	**B6294S**
No. of cylinders	6	6
Bore mm	81.0	83.0
Stroke mm	90.0	90.0
Cylinder displacement dm^3 (litres)	2.780	2.920
Firing order	1-5-3-6-2-4	1-5-3-6-2-4
Compression Mpa	1.3-1.5	1.3-1.5
Maximum difference between highest / lowest Mpa	0.2	0.2
Total weight, (incl. auxiliary equipment and oil) kg	approximately 190	approximately 180

PISTONS

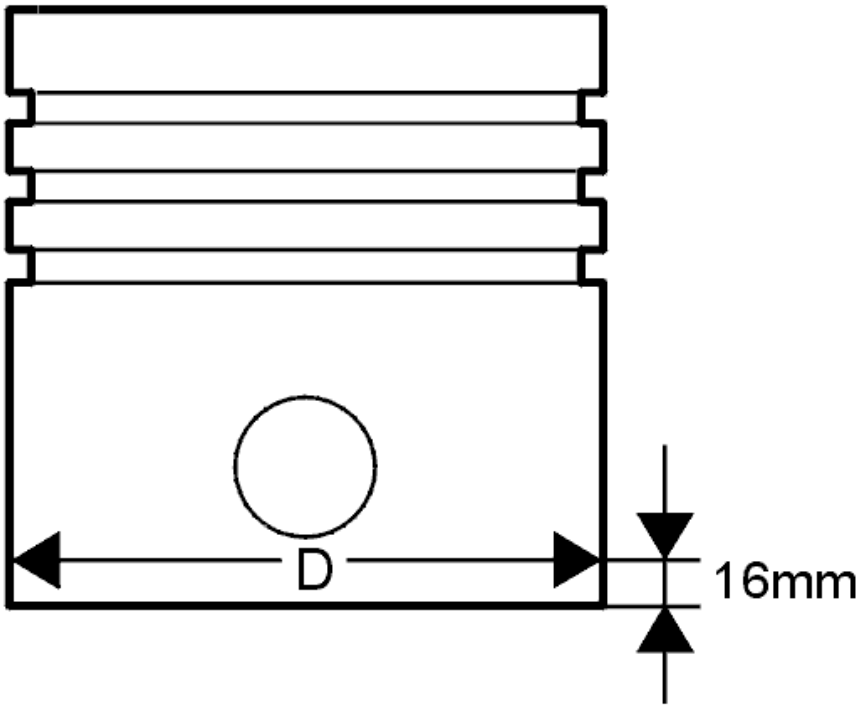

Fig. 289: Checking Piston Diameter Using Micrometer And Vernier Caliper
Courtesy of VOLVO CARS CORPORATION

PISTON DIAMETER (D)

Standard	B6284T	B6294S
C-marked..... (mm)	80.98-80.99	82.98-82.99
D-marked..... (mm)	80.99-81.00	82.99-83.00
E-marked..... mm	81.00-81.01	83.00-83.01

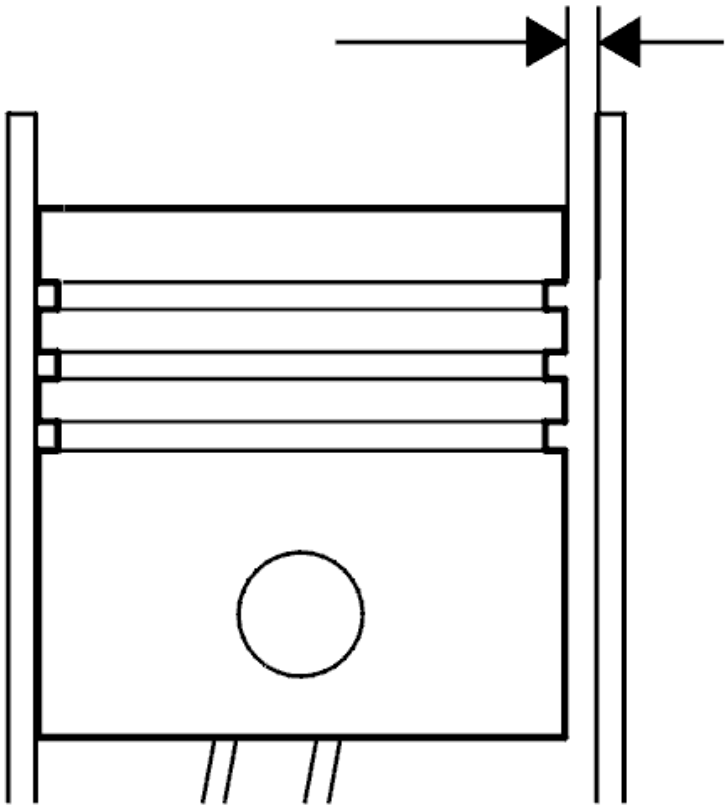

Fig. 290: Calculating Running Clearance Of Piston
Courtesy of VOLVO CARS CORPORATION

PISTON RUNNING CLEARANCE (EXAMPLE)

Measured cylinder diameter.....	81.015 mm
Measured piston diameter.....	80.995 mm
The piston running clearance is.....	0.020 mm
The piston running clearance must be 0.010-0.030 mm.	

Piston rings

Fig. 291: Checking Piston Ring Axial Clearance
Courtesy of VOLVO CARS CORPORATION

AXIAL CLEARANCE B6294S

Upper compression ring.....0.030-0.070 mm
Lower compression ring.....0.030-0.070 mm
Oil scraper ring.....0.038-0.142 mm

AXIAL CLEARANCE B6284T

Upper compression ring.....0.050-0.090 mm
Lower compression ring.....0.030-0.070 mm
Oil ring.....0.020-0.060 mm

DIMENSIONS B6294S

Upper compression ring.....1.20 mm
Lower compression ring.....1.50 mm
Oil ring.....2.50 mm

DIMENSIONS, B6284T

Upper compression ring.....1.20 mm
Lower compression ring.....1.75 mm
Oil ring.....3.00 mm

PISTON PIN, DIAMETER

B6284T.....23.0 +0/-0.004 mm
B6294S.....21.0 +0/-0.004 mm

VALVES

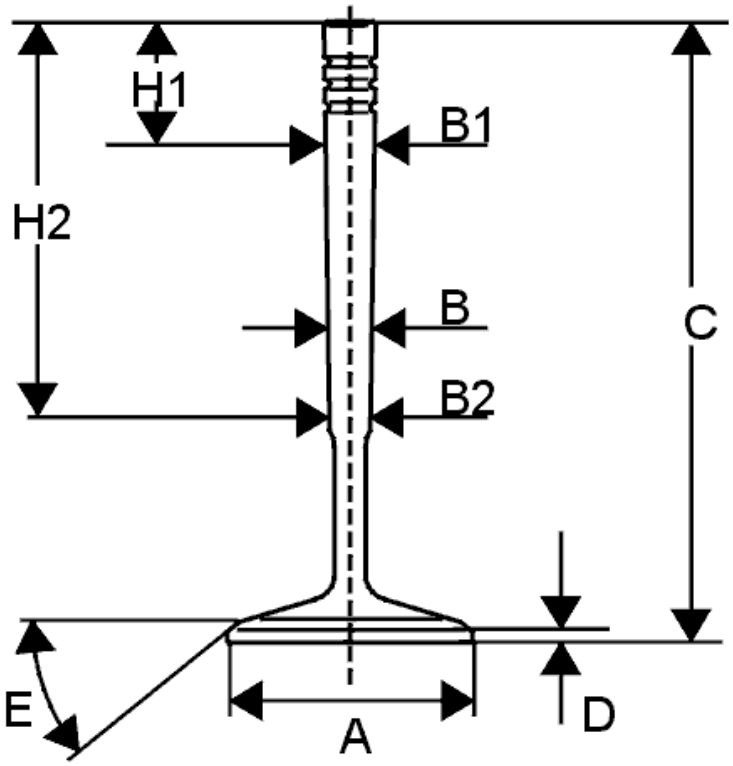

Fig. 292: Identifying Cylinder Head Valve Dimensions
Courtesy of VOLVO CARS CORPORATION

VALVE CROWN DIAMETER (A)

Inlet	B6284T.....31.00 ± 0.15 mm
	B6294S.....32.00± 0.15 mm
Exhaust	B6284T.....27.00 ±0.15 mm
	B6294S.....27.00 ± 0.15 mm

VALVE STEM DIAMETER (B)

Inlet	B6284T.....6.970 +0/-0.015 mm
	B6294S.....6.963± 0.007 mm

VALVE STEM DIAMETER (B1)

Exhaust	B6284T (H1=22.7 mm).....6.962 ± 0.007 mm
	B6294S (H1=17.4 mm).....6.963± 0.007 mm

VALVE STEM DIAMETER (B2)

Exhaust	B6284T (H2=65.1 mm).....6.954 ± 0.007 mm
	B6294S (H2=70.4 mm).....6.953± 0.007 mm

TOTAL VALVE LENGTH (C)

Inlet	B6284T.....104.25 ± 0.22 mm
	B6294S.....104.25± 0.22 mm
Exhaust	B6284T.....103.30 ±0.27 mm
	B6294S.....130.30±0.22 mm

DISC EDGE HEIGHT (D)

Inlet and exhaust.....1.5 mm
Minimum height after grinding.....1.2 mm

MATING SURFACE ANGLE (E)

Inlet.....44.5°
Exhaust.....44.5°

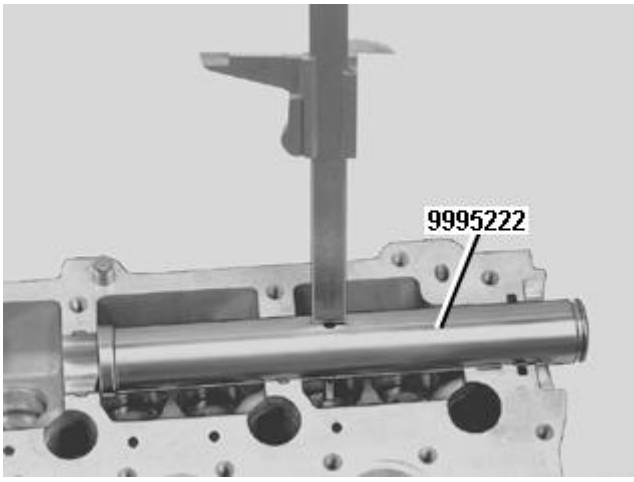

Fig. 293: Camshaft Adjustment Tool
Courtesy of VOLVO CARS CORPORATION

VALVE STEM VERTICAL POSITION

Valve stem height.....48.5± 0.4 mm
Maximum machining of the valve stem.....0.4 mm

VALVE SEATS

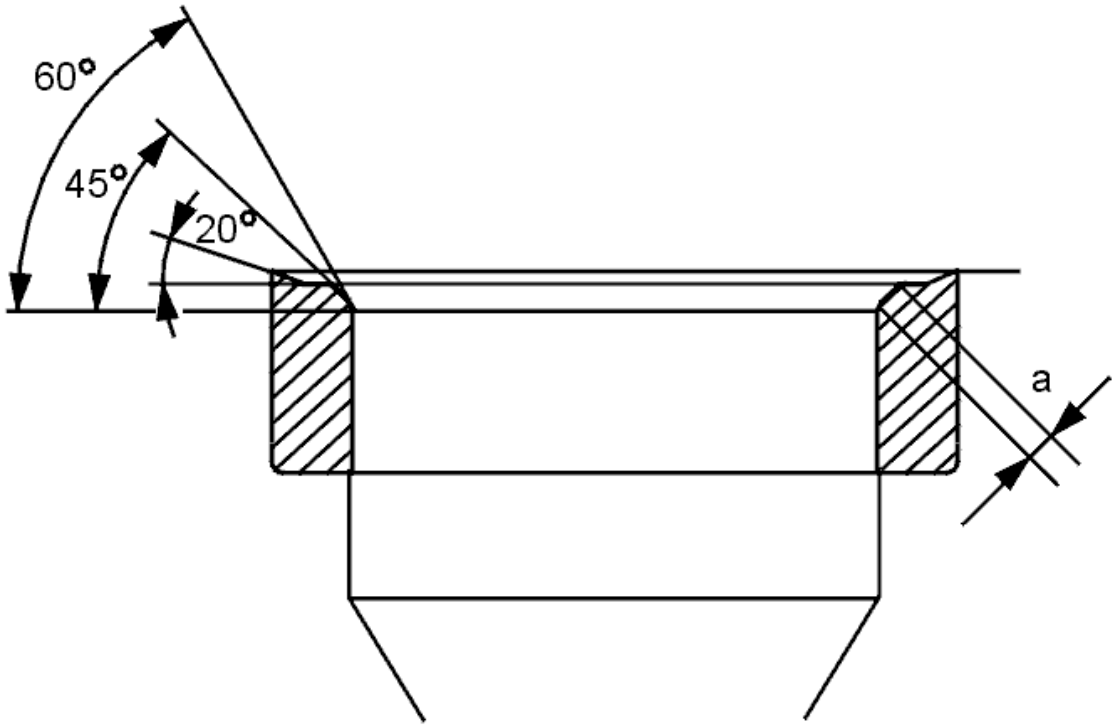

Fig. 294: Valve seats
Courtesy of VOLVO CARS CORPORATION

Angles: Inlet and exhaust matching surface angles.....45° Upper reduction angle.....20° Lower reduction angle.....60° Valve seat width (a) Inlet.....1.4-1.8 mm Exhaust.....1.8-2.2 mm

TAPPETS

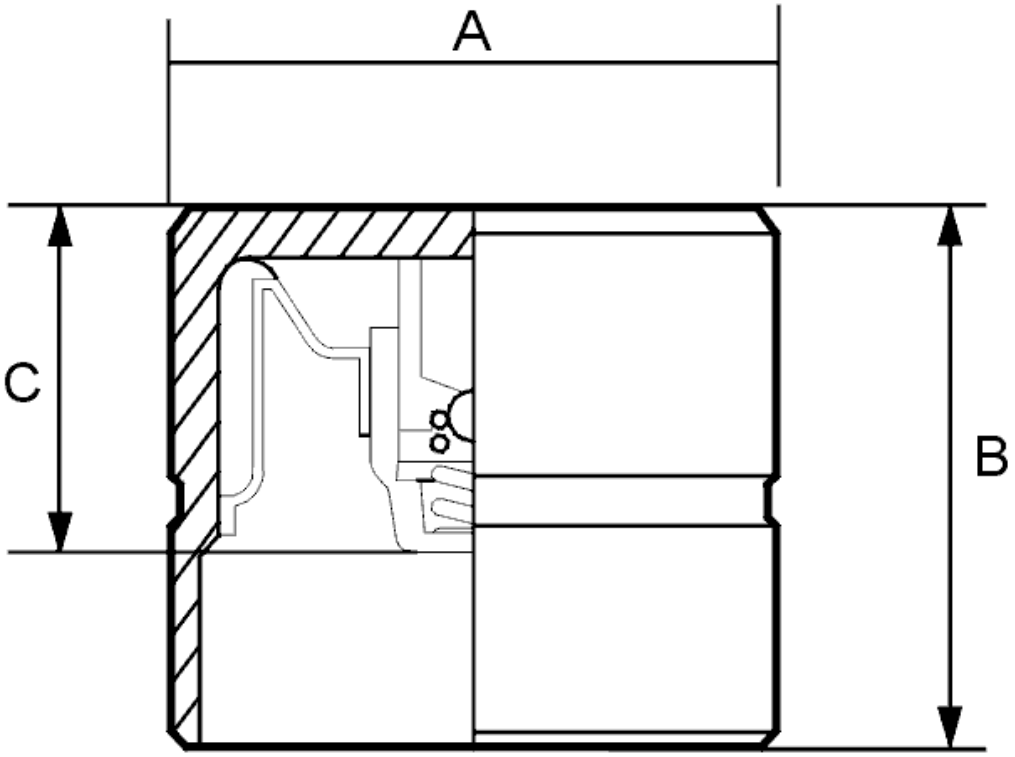

Fig. 295: Identifying Tappet Dimensions
Courtesy of VOLVO CARS CORPORATION

TAPPETS, DIMENSIONS

External diameter (A).....32 +0.025/-0.041 mm.
External height (B).....26± 0.5 mm.
Clearance, top of tappets
Unloaded (C1)..... min 18.40/max 20.40 mm.
Compressed (C2).....16.35 +0.25/-0.10

VALVE SPRINGS

VALVE SPRINGS, DIMENSIONS

Variant	Length	Type
All	43.3 +1.5/-0.5	Conical

VALVE GUIDES

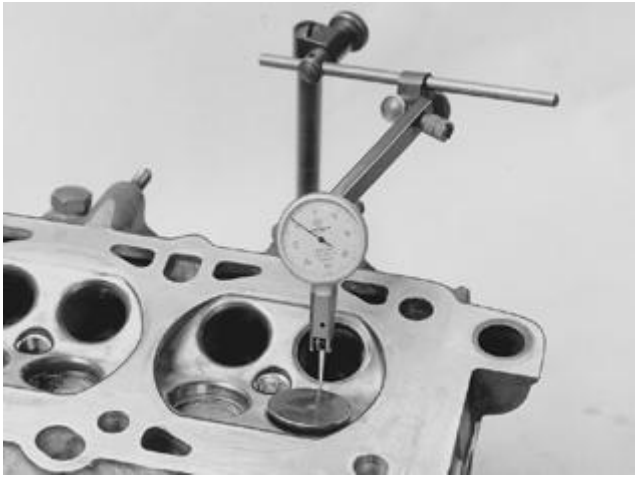

Fig. 296: Identifying Measurement Of Wear In Valve Guides Using A Dial Indicator And Magnetic Holder
Courtesy of VOLVO CARS CORPORATION

CLEARANCE BETWEEN NEW COMPONENTS:

Inlet and exhaust.....0.03-0.06 mm

MAXIMUM PLAY FOR USED COMPONENTS:

Inlet and exhaust.....0.15 mm

CAMSHAFTS

Engine type	Camshaft			
	Marking		Maximum lift height	
	Inlet	Exhaust	Inlet	Exhaust
B6284T	1275360	1275361	7.95	7.95
B6294S	1275358	1275359	9.00	9.00

CYLINDER HEAD

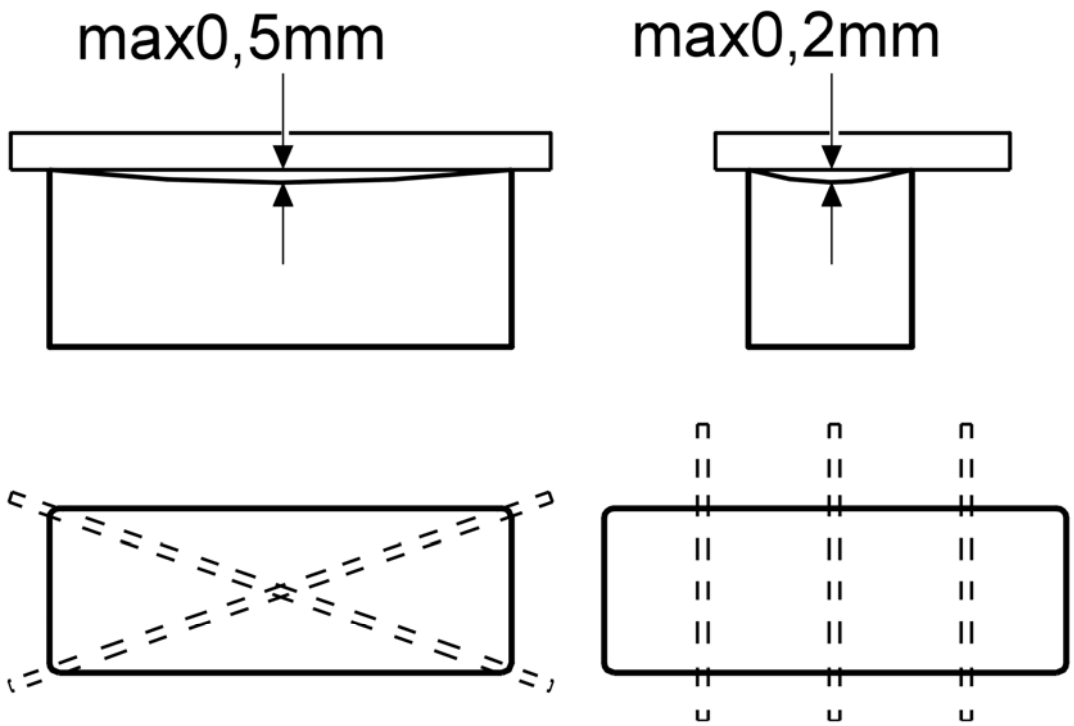

Fig. 297: Cylinder Head -- Specifications
Courtesy of VOLVO CARS CORPORATION

MAXIMUM OUT-OF-TRUE

Front-rear.....0.50 mm
Lateral.....0.20 mm
Cylinder head height.....129.0 ± 0.05
Maximum machining.....0.30 mm

CAUTION: Scratches and corrosion to the cylinder head gasket face should only be machined on a flat cylinder head.

CYLINDER BORE DIAMETER

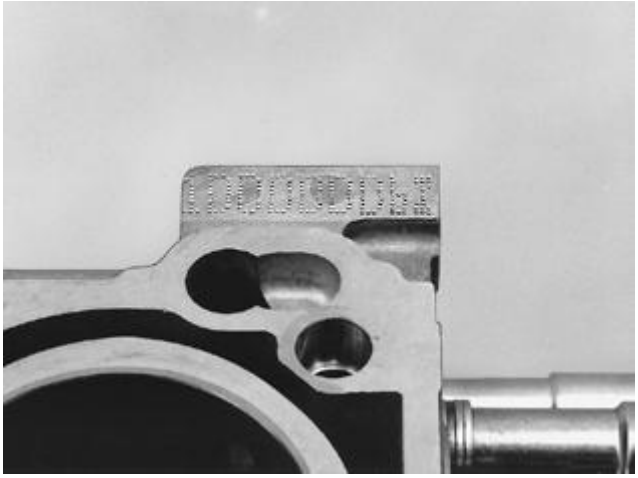

Fig. 298: Classification Marking
Courtesy of VOLVO CARS CORPORATION

Standard	B6284T	B6294S
C-marked (mm)	81.00-81.01	83.00-83.01
D-marked (mm)	81.01-81.02	83.01-83.02
E-marked (mm)	81.02-81.03	83.02-83.03

CRANK MECHANISM

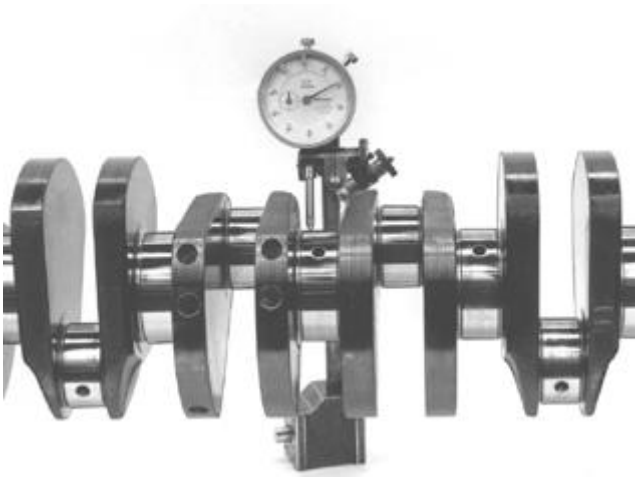

Fig. 299: Identifying Measurement Of Radial Runout Using A Dial Indicator And Magnetic Holder
Courtesy of VOLVO CARS CORPORATION

CRANKSHAFT

Main bearing journal radial run out..... maximum 0.040 mm
Axial play (Measured in the engine with the intermediate section tightened).....0.08-0.19 mm
Main bearing journal radial runout.....0.020-0.043 mm

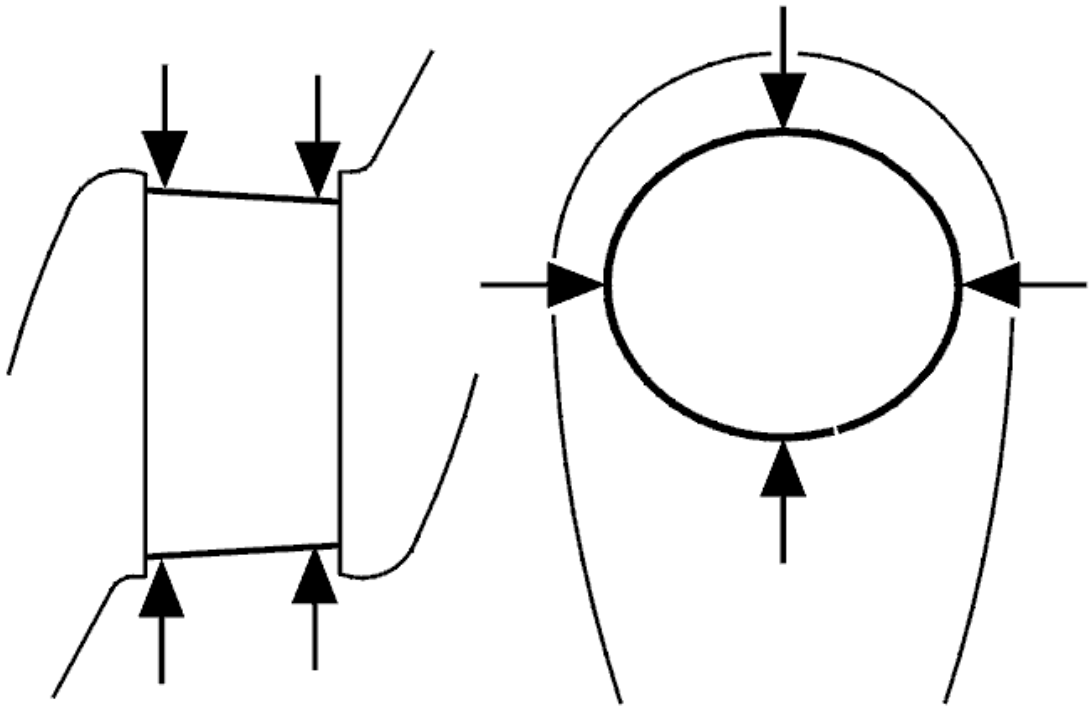

Fig. 300: Measuring Points, Connecting Rod Bearing Journals And Main Bearing Journals
Courtesy of VOLVO CARS CORPORATION

BIG END JOURNALS

Diameter[1] .....50.000 +0/-0.016 mm
Bearing recess width.....26.0 ± 0.1 mm
Maximum out-of-round.....0.004 mm
Maximum taper.....0.004 mm
[1] The variation in diameter for each bearing journal must not exceed 0.008 mm.

MAIN BEARING JOURNALS

Diameter[1] .....65.000 +0.003/-0.016 mm
Axial bearing width dimension.....26.00 +0/-0.04 mm
Maximum out-of-round.....0.004 mm
Maximum taper.....0.004 mm
[1] The variation in diameter for each bearing journal must not exceed 0.008 mm.

Fig. 301: Checking Bearing Recess In Connecting Rod Big End
Courtesy of VOLVO CARS CORPORATION

CONNECTING RODS

Bearing end diameter, big end.....53.00 +0.013/-0 mm
Maximum ovality.....0.006 mm

ENGINE OIL

FILLING WITH OIL AFTER RECONDITIONING

Oil volume, including filter.....7.2 litres

OIL GRADE

According to API Service..... lowest SG
According to CCMC..... class G4/G5.
According to ACEA..... class A2/A3.

OIL PRESSURE (MINIMUM)

12.5 r/s (750 r/min).....0.10 Mpa[1]
67.7 r/s (4000 r/min).....0.35 Mpa[1]
Maximum oil pressure (the relief valve opens).....0.65 Mpa
[1] The oil pressure listed is for an oil temperature of 100°C, which is reached after 10-15 minutes driving.

THERMOSTAT

Marking.....90
Starts to open at.....90°C
Fully open at.....105°C

FUEL LINE PRESSURE

Desired value	

Relative pressure	380 kPa
Absolute pressure	480 kPa

CYLINDER HEAD (B5254T2; 2003-2004)

INSTALLING THE CYLINDER HEAD

Special tools:

see **9512050**

see **9512767**

see **9995450**

see **9995451**

see **9995452**

see **9995454**

see **9995718**

see **9995719**

NOTE: **Since the illustrations in this service information are used for different model years and/or models. Some variation may occur. However, the essential information in the illustrations is always correct.**

TIGHTENING TORQUE

For tightening torques not in the text, see **TIGHTENING TORQUE** .

ALIGNING THE CRANKSHAFT

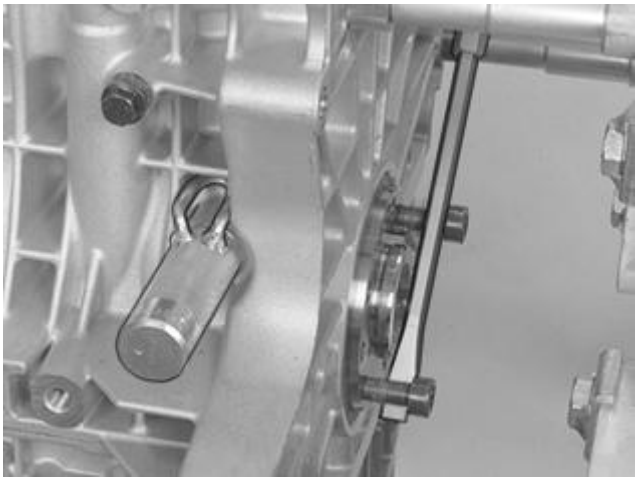

Fig. 302: Aligning Crankshaft
Courtesy of VOLVO CARS CORPORATION

Turn the crankshaft **counter-clockwise** (viewed from the rear of the engine) until the piston in cylinder 1 reaches top dead center (TDC).

Continue turning **counter-clockwise** until the piston in cylinder 1 is approximately 2-3 cm before top dead center (BTDC).

Install the crankshaft stop see **9995451** . Ensure that it bottoms out against the cylinder block.

Now turn the crankshaft **clockwise** (viewed from the rear of the engine) until the crankshaft counter-weight is in contact with the crankshaft stop.

INSTALLING THE CYLINDER HEAD

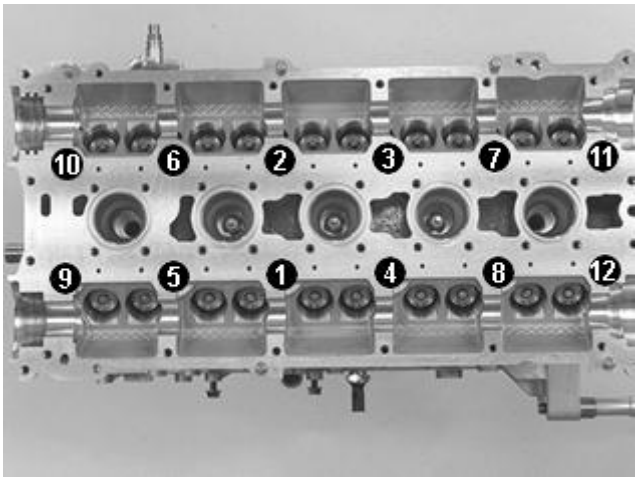

Fig. 303: Identifying Cylinder Head Screws Tightening Sequence
Courtesy of VOLVO CARS CORPORATION

Install a **new cylinder head gasket** .

Install the cylinder head.

Use **new screws** .

Lubricate and install all the screws.

Tighten the screws in the following order. Tighten the screws alternately from the center and outwards.

1. **20 Nm**
2. **60 Nm**
3. Angle-tighten **130°** . Use protractor see **9512050** .

NOTE: **If the valves have been replaced, the valve clearance must be adjusted. See VALVE CLEARANCE**

INSTALLING TAPPETS AND CAMSHAFTS

See **VALVE CLEARANCE** .

APPLYING LIQUID GASKET

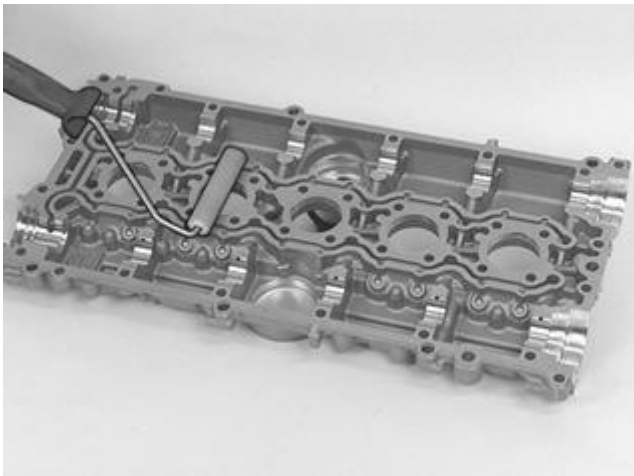

Fig. 304: Applying Liquid Gasket
Courtesy of VOLVO CARS CORPORATION

Wipe the oil film off the mating surfaces on the camshaft cover and cylinder head.

Install **new O-rings** around the spark plug wells at the cylinder head.

Apply liquid gasket 11 61 059 to the camshaft cover. **The surface must be fully covered without any excess.** Use roller see **9512767**

NOTE: **Make sure that no liquid gasket gets in to the oil channels.**

INSTALLING THE CAMSHAFT COVERS

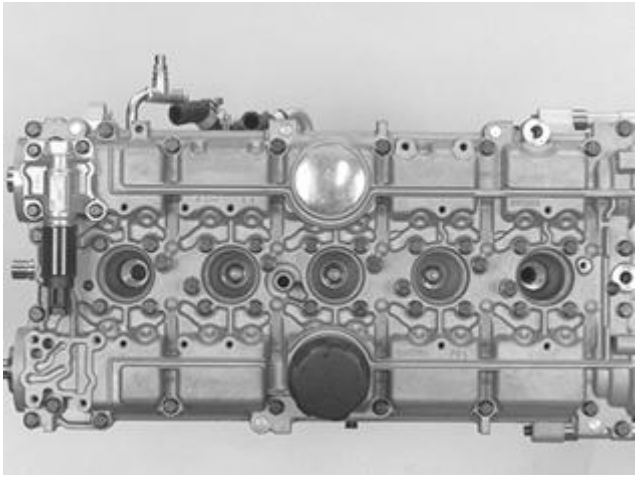

Fig. 305: Camshaft Covers
Courtesy of VOLVO CARS CORPORATION

Lubricate the camshaft lobes, the camshaft bearing surfaces and the tappets.

Install the camshaft cover.

Install 2 press tools see **9995454** .

Pull the camshaft cover alternately down, keeping it parallel to the cylinder head with the press tools

Install all the screws and tighten.

Remove the press tools.

Install the spark plugs. Tighten to **30 Nm** .

Install the control valve for the variable valve timing unit with a new gasket. Tighten.

INSTALLING THE FRONT CAMSHAFT SEAL

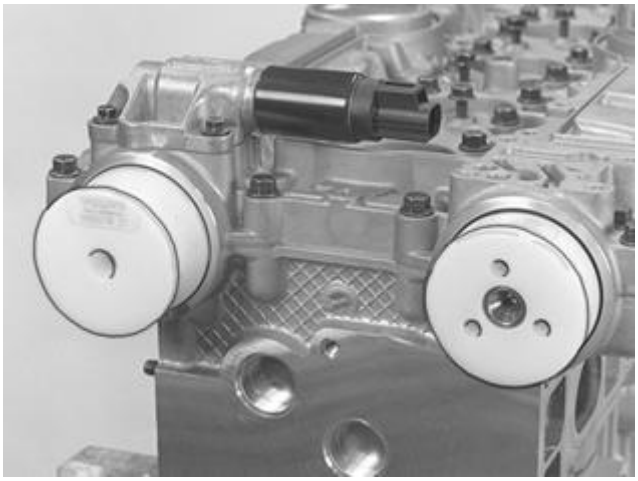

Fig. 306: Front Camshaft Seal
Courtesy of VOLVO CARS CORPORATION

Use drift see **9995718** on camshafts with VVT units. Use drift see **9995719** on camshafts without VVT.

Use new seals. Lubricate the surface of the seal that the camshaft rotates against.

Tap in the seal until the drift bottoms against the end of the camshaft.

INSTALLING THE REAR CAMSHAFT SEAL

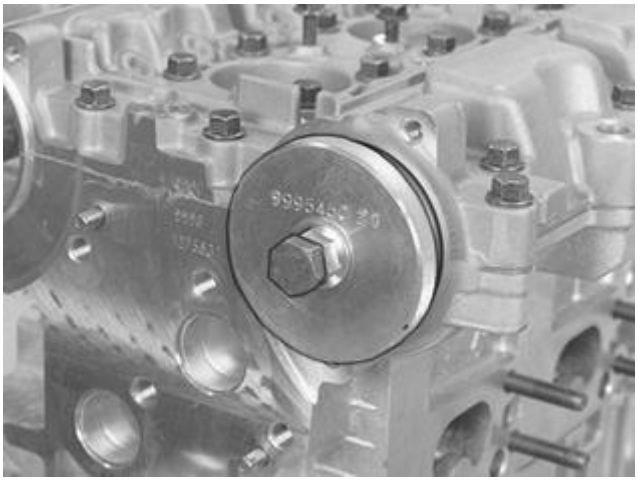

Fig. 307: Identifying Rear Camshaft Seal
Courtesy of VOLVO CARS CORPORATION

Use drift see **9995450** .

Lubricate the surface of the seal that the camshaft rotates against.

Install the seal.

Press in the seal until the drift bottoms out.

NOTE: **If there are wear grooves on the camshaft, the seal can be pressed in another 2 mm by reversing the tool's sleeve.**

SECURING THE CAMSHAFTS

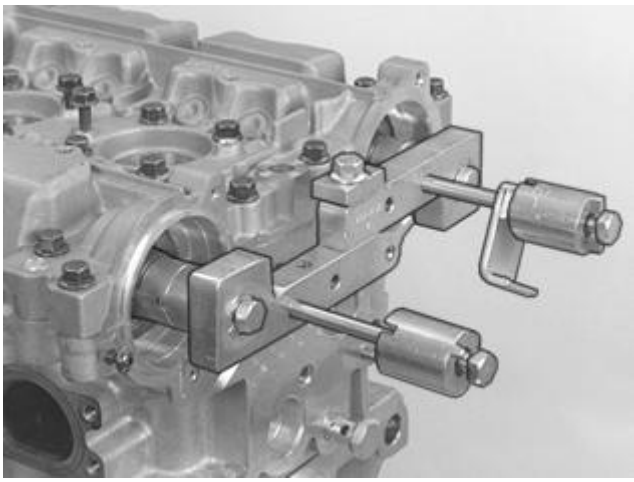

Fig. 308: Camshaft Adjustment Tool
Courtesy of VOLVO CARS CORPORATION

Use camshaft tool see **9995452** .

NOTE: **The camshafts must not be turned more than is listed in the text below. The valves may be damaged**

Screw the adjustment tool sections together into one.

Check that the screws retaining the adjustment tool to the camshafts and the screws holding the tool together are well tightened.

MEASURING AND RECONDITIONING THE CYLINDER HEAD

Special tools:

see **9986052**

see **9995219**

see **9995222**

see **9995379**

see **9995748**

see **9995764**

NOTE: **The illustrations in this service information are used for different model years and / or models. Therefore there may be some variation. However, the essential information in the illustrations is always correct.**

REMOVING TAPPETS

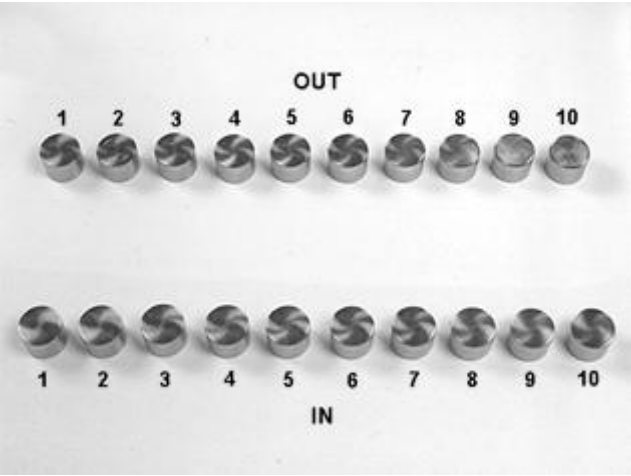

Fig. 309: Arranging/Tagging Removed Valve Lifters For Re-Installation
Courtesy of VOLVO CARS CORPORATION

Lift out the tappets. Mark up the tappets so that the original positions can be established.

Use a suction cup to remove the tappets.

Check for wear on the tappets. Measure if necessary.

Tappets, dimensions: See **TAPPETS** .

REMOVING VALVES

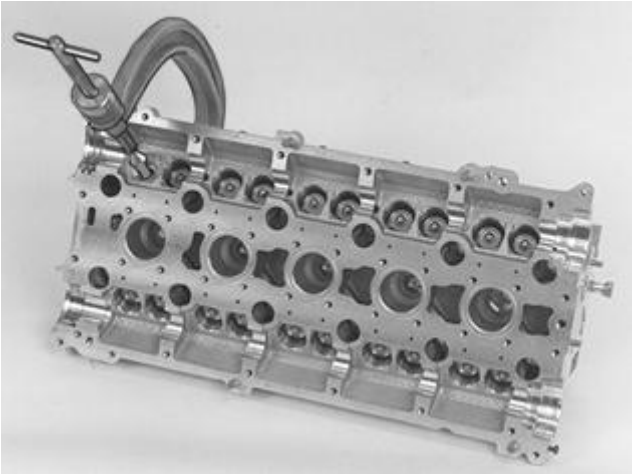

Fig. 310: Identifying Tool 998 6052-0 - Valve Spring Compressor
Courtesy of VOLVO CARS CORPORATION

Use valve spring compressor see **9986052** with attachment claw see **9995748** .

Remove

- the valve locks
- the upper valve collars
- the valve springs
- the valves.

NOTE: Keep track of the position of the moving parts.

REMOVING VALVE STEM SEALS

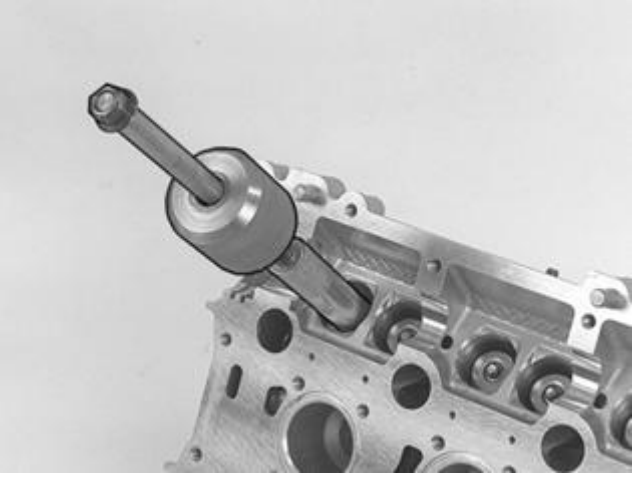

Fig. 311: Identifying Valve Stem Seal Special Tool 999 5219
Courtesy of VOLVO CARS CORPORATION

Use tool see **9995219** .

Remove the valve stem seals and the lower valve collars.

Clean the cylinder head:

- the gasket faces
- the combustion chambers
- the inlet and exhaust ports
- the valve seats.

CHECKING THE CYLINDER HEAD

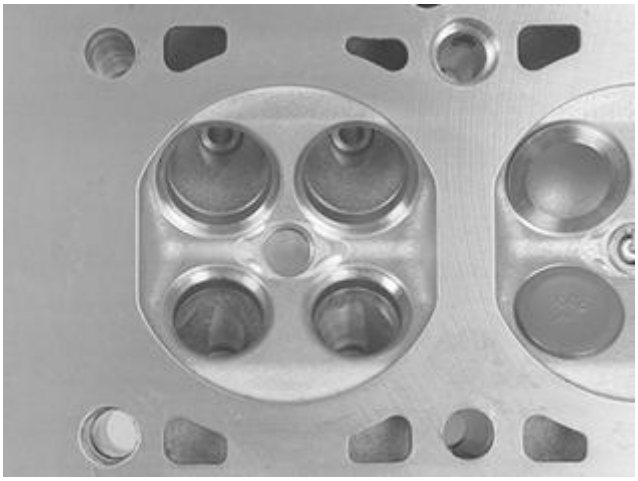

Fig. 312: Inspecting Combustion Chamber
Courtesy of VOLVO CARS CORPORATION

Clean the spark plug threads (tap M14 x 1.25).

Clean the valves, valve springs and collars.

Visually check for damage.

Regrind the seats if unsure about cracks. See **VALVE SEATS** .

Checking the cylinder head for distortion

Check the flatness of the cylinder head. Use a steel rule and feeler gauges. See **CYLINDER HEAD** .

CHECKING FOR WEAR IN THE VALVE GUIDES

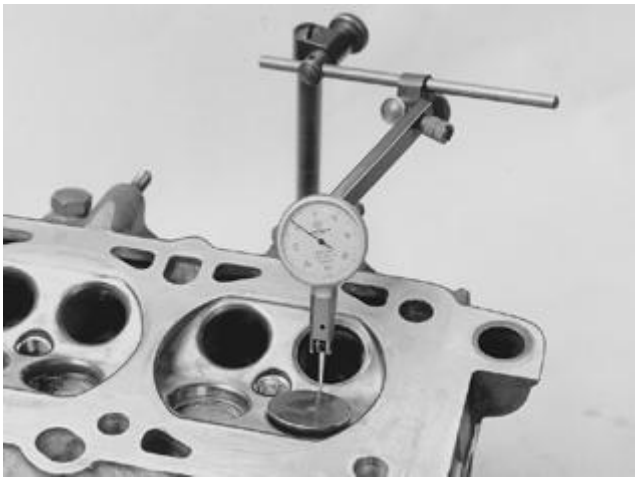

Fig. 313: Identifying Measurement Of Wear In Valve Guides Using A Dial Indicator And Magnetic Holder
Courtesy of VOLVO CARS CORPORATION

Measure the wear in the valve guides. Use a dial indicator and magnetic holder. Lift the valve approximately 2-3 mm from the seat when carrying out the check.

Play between the valve and valve guide: See **VALVE GUIDES** .

CHECKING THE HEIGHT OF THE VALVE STEMS

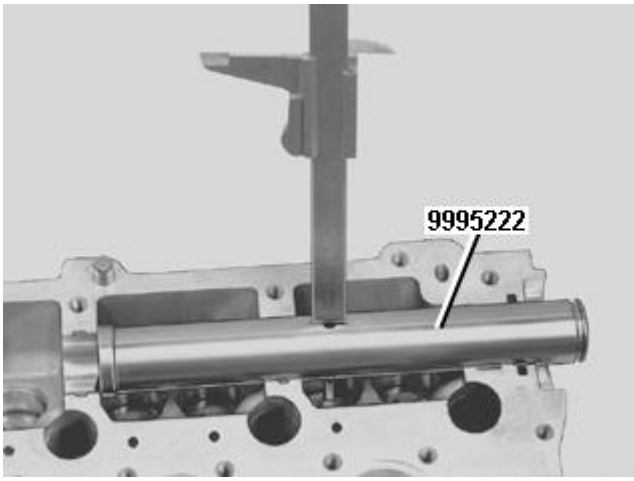

Fig. 314: Camshaft Adjustment Tool
Courtesy of VOLVO CARS CORPORATION

Use camshaft adjustment tool see **9995222** .

Position the camshaft adjustment tool in the camshaft bearing recesses.

Measure the height of the valve stem using Vernier calipers through the hole in camshaft adjustment tool. See **VALVES** .

INSTALLING VALVE STEM SEALS

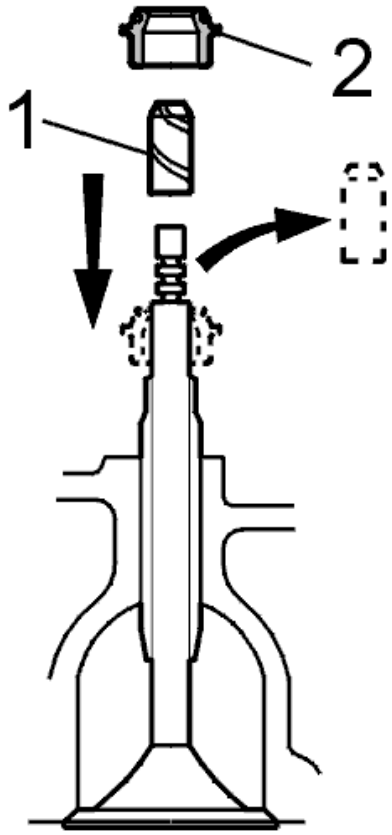

Fig. 315: Identifying Protective Sleeve And Valve Stem Seal
Courtesy of VOLVO CARS CORPORATION

Lubricate the valve stems and the upper ends of the valve guides.

Install

- the lower valve spring collars
- the valves in their positions.

Install the protective sleeve (included in the gasket kit) on the valve stem.

NOTE: The protective sleeve must be installed on the valve stem when the valve stem seal is installed.

Lubricate the protective sleeve (1) and install it on the valve stem.

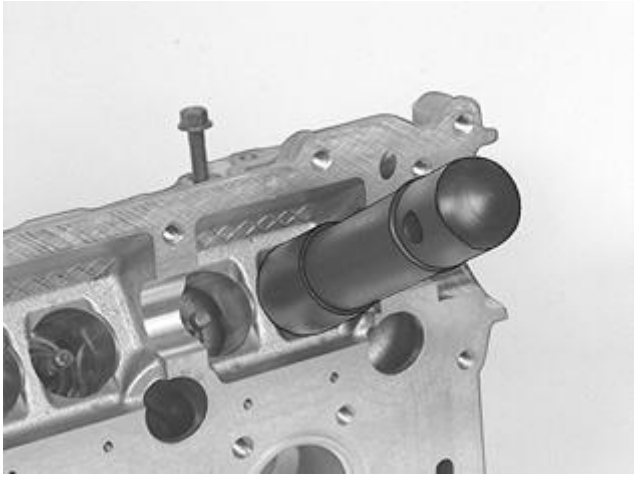

Fig. 316: Identifying Valve Stem Seal
Courtesy of VOLVO CARS CORPORATION

Lubricate the valve stem seal (2).

Press down the seal past the protective sleeve with your finger.

Press the seal down. Use tool see **9995764** . Press with manual force until the tool stops against the lower valve spring washer.

Remove the tool. Pull off the protective socket.

INSTALLING VALVE SPRINGS

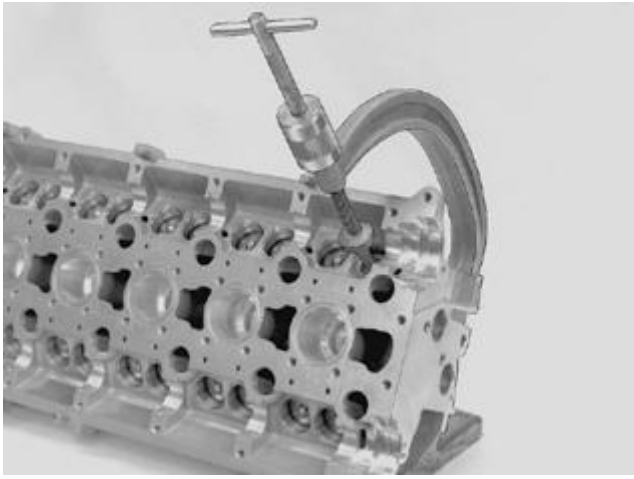

Fig. 317: Compressing Valve Spring Using Valve Spring Compressor (9986052) and Adapter (9995748)
Courtesy of VOLVO CARS CORPORATION

Install the valve spring. Install the valve spring washer.

Compress the valve spring so that the three valve lock tracks are visible. Use valve spring compressor see **9986052** with attachment claw see **9995748** .

NOTE: **Do not compress more than is absolutely necessary. The valve stem seal may be damaged.**

Install the valve locks.

Check that valve locks are in the correct position when the spring is not loaded.

Repeat the procedure with the remaining valves.

REMOVING THE CYLINDER HEAD

Special tools:

see **9995199**

see **9995452**

see **9995454**

see **9995670**

NOTE: **As the illustrations in this service information are used for different model years and / or models, some variation may occur. However, the essential information in the illustrations is always correct.**

REMOVING THE CAMSHAFT PULLEYS

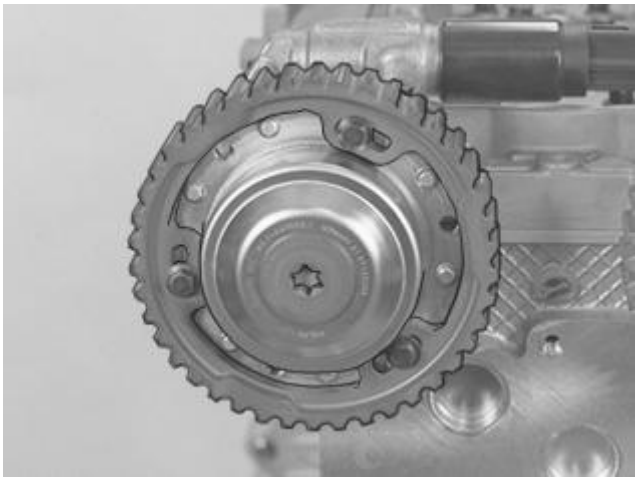

Fig. 318: Identifying Camshaft Pulley
Courtesy of VOLVO CARS CORPORATION

Install tool see **9995452** on the rear edge of the camshafts.

Slacken off the screws securing the timing gear pulley to the variable valve timing unit.

Remove the plug at the front edge of the variable valve timing unit (Tx 55).

Remove the center screw from the variable valve timing unit (Tx 55).

Carefully pull out the camshaft pulley with the variable valve timing unit.

The following applies to camshafts without variable valve timing:

Remove the screws.

Pull off the camshaft pulley.

Remove tool 999 5452

CAUTION: The camshafts must not be turned when the timing belt has been removed.

REMOVING THE CAMSHAFT COVER

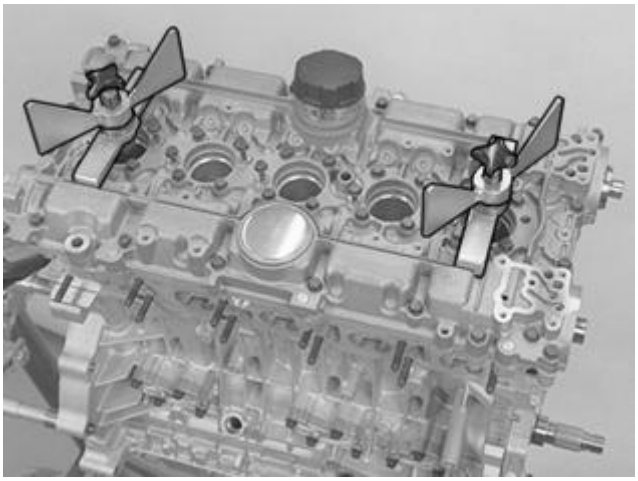

Fig. 319: Camshaft Cover And Variable Valve Timing Unit Control Valve
Courtesy of VOLVO CARS CORPORATION

Remove the control valve from the variable valve timing unit.

Remove the spark plugs from cylinders 1 and 5.

Install 2 tools see **9995454** , leaving a 2-3 mm gap to the camshaft cover.

Ensure that the screw in the spark plug well is tightened as far as it will go.

Remove all the screws securing the camshaft cover to the cylinder head

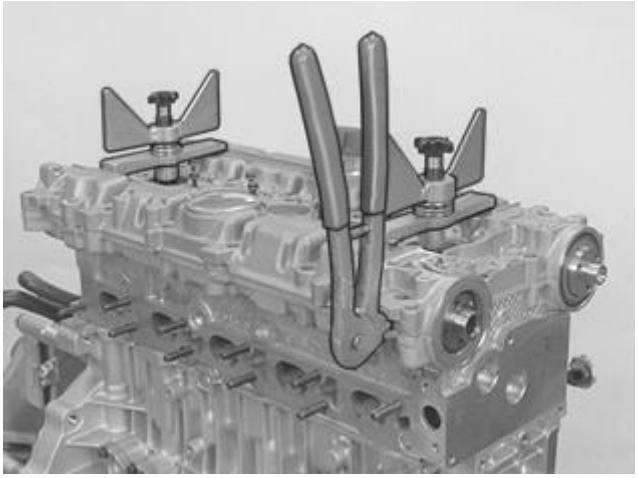

Fig. 320: Camshaft Cover With Pliers At Stop Lugs
Courtesy of VOLVO CARS CORPORATION

Remove

- the camshaft cover with pliers see **9995670** by the snap-in lugs.

  Start with cylinder 1 and work alternately backward

- the wing nuts approximately 2 turns. Repeat the procedure with the pliers.

Remove

- tool 999 5454
- the camshaft seals at both the front and rear edges
- the camshaft cover
- the camshafts. Work loose and lift at the same time.

NOTE: Take care not to damage the axial bearings.

REMOVING THE CYLINDER HEAD

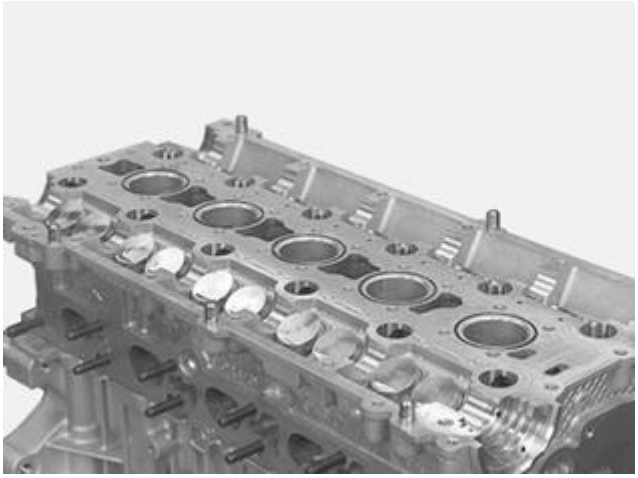

Fig. 321: View of Cylinder Head
Courtesy of VOLVO CARS CORPORATION

Remove the pipe screw for the water heated crankcase ventilation at the rear edge of the cylinder head.

Slacken off the screwed joint for the cylinder head. Start at the sides and work alternately towards the center.

Lift out the cylinder head.

NOTE: Take care not to damage the mating surfaces.

CYLINDER HEAD (B5254T2; 2005-2007)

CYLINDER HEAD, DISMANTLING/ASSEMBLING

Special tools:

see **9986052**

see **9995219**

see **9995748**

see **9997012**

NOTE: The illustrations in this service information are used for different model years and / or models. Therefore there may be some variation. However, the essential information in the illustrations is always correct.

REMOVING TAPPETS

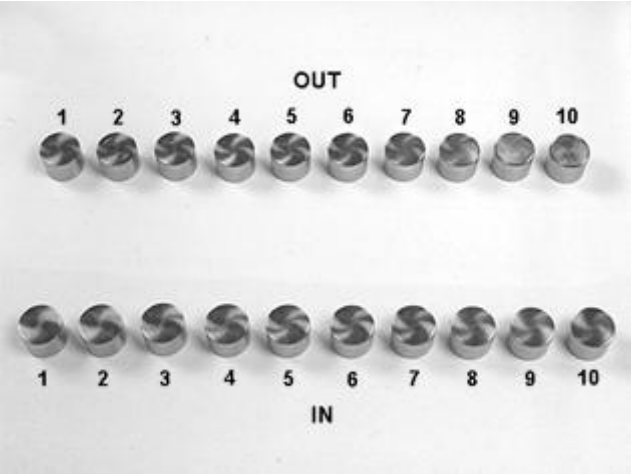

Fig. 322: Arranging/Tagging Removed Valve Lifters For Re-Installation
Courtesy of VOLVO CARS CORPORATION

NOTE: Magnets must not be used when lifting out the tappets.

Lift out the tappets. Mark up the tappets so that the original positions can be established.

Use a suction cup to remove the tappets.

Check for wear on the tappets.

REMOVING VALVES

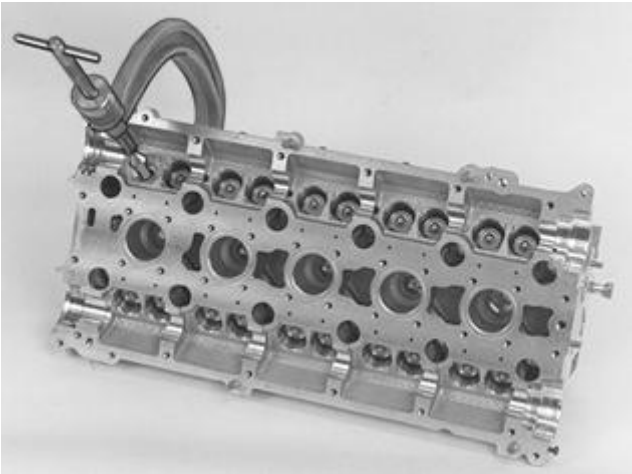

Fig. 323: Identifying Tool 998 6052-0 - Valve Spring Compressor
Courtesy of VOLVO CARS CORPORATION

Use valve spring compressor see **9986052** with attachment claw see **9995748** .

Remove:

- the valve locks
- the upper valve collars
- the valve springs
- the valves.

NOTE: Keep careful track of the position of the moving parts.

REMOVING VALVE STEM SEALS

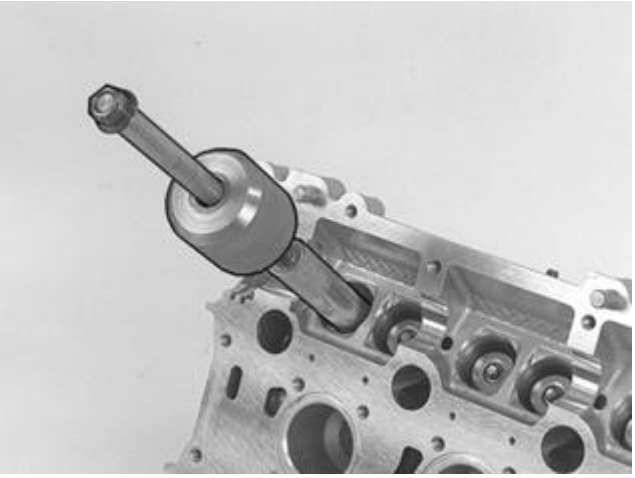

Fig. 324: Identifying Valve Stem Seal Special Tool 999 5219
Courtesy of VOLVO CARS CORPORATION

Use tool see **9995219** .

Remove the valve stem seals and the lower valve collars.

Clean the cylinder head:

- the gasket faces
- the combustion chambers
- the inlet and exhaust ports
- the valve seats.

CHECKING THE CYLINDER HEAD

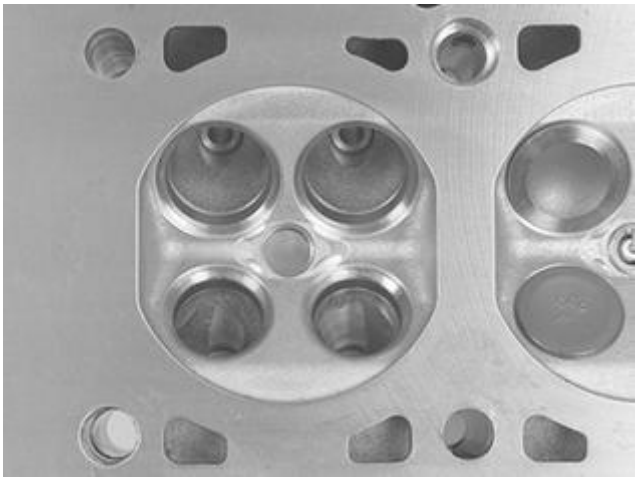

Fig. 325: Inspecting Combustion Chamber
Courtesy of VOLVO CARS CORPORATION

Clean the spark plug threads (tap M14 x 1.25).

Clean the valves, valve springs and collars.

Visually check for damage.

If you are unsure, replace the cylinder head.

CHECKING FOR WEAR IN THE VALVE GUIDES

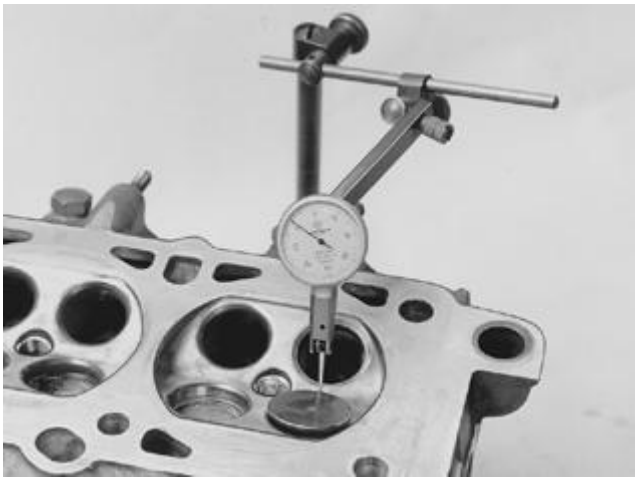

Fig. 326: Identifying Measurement Of Wear In Valve Guides Using A Dial Indicator And Magnetic Holder
Courtesy of VOLVO CARS CORPORATION

Measure the wear in the valve guides. Use a dial indicator and magnetic holder. Lift the valve approximately **2-3 mm** from the seat when carrying out the check.

Clearance between the valve and valve guide:

Clearance between new components: Inlet/Exhaust: **0.03 -0.06 mm** .

Maximum play for used components: Inlet/Exhaust: **0.15 mm** .

INSTALLING VALVE STEM SEALS

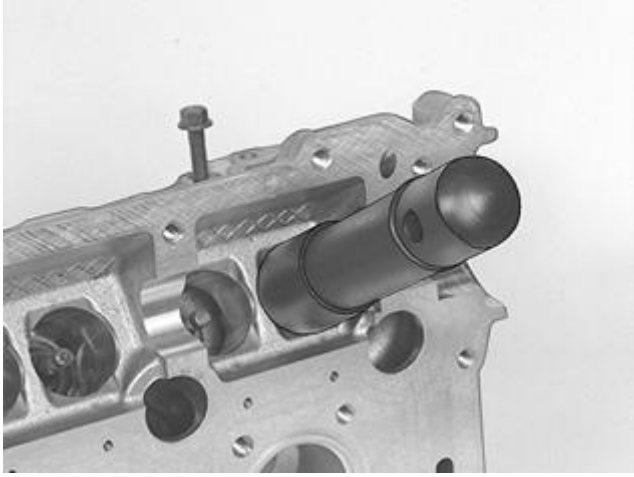

Fig. 327: Identifying Valve Stem Seal
Courtesy of VOLVO CARS CORPORATION

Lubricate:

- the upper end of the valve guides
- the valve stem seal.

Install:

- the lower valve spring collars
- the valve stem seal.

Press down the seal. Use tool see **9997012** . Press with hand force until the tool stops against the lower valve spring washer. Remove the tool.

Repeat the procedure with the remaining valve stem seals.

INSTALLING THE VALVE / VALVE SPRINGS

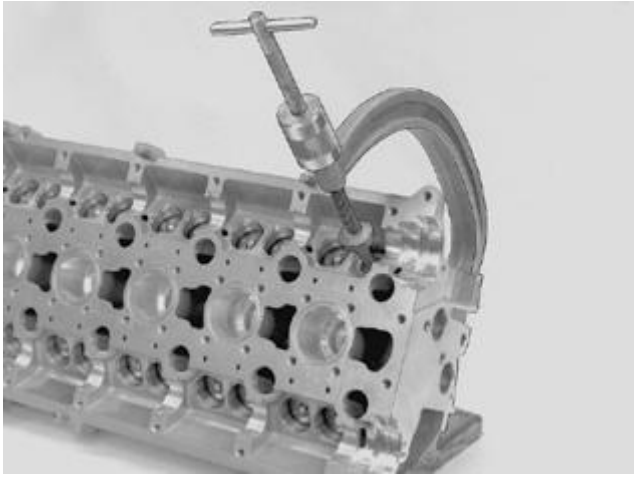

Fig. 328: Compressing Valve Spring Using Valve Spring Compressor (9986052) and Adapter (9995748)
Courtesy of VOLVO CARS CORPORATION

Lubricate the valve stem.

Install:

- the valve
- the valve spring
- the upper valve spring washer.

CAUTION: Do not compress more than is absolutely necessary, the valve stem seal may be damaged.

Compress the valve spring so that the three valve lock tracks are visible.

Use valve spring compressor see **9986052** and press foot see **9995748** . Install the valve collets. Check that valve collets are in the correct position when the spring is not loaded.

Repeat the procedure with the remaining valves.

CYLINDER HEAD, INSTALLING

Special tools:

see **9512767**

see **9995450**

see **9995451**

see **9995452**

see **9995454**

see **9995718**

NOTE: **As the illustrations in this service information are used for different model years and / or models, some variation may occur. However, the essential information in the illustrations is always correct.**

NOTE: **For tightening torques not in the text, see TIGHTENING TORQUE .**

ALIGNING THE CRANKSHAFT

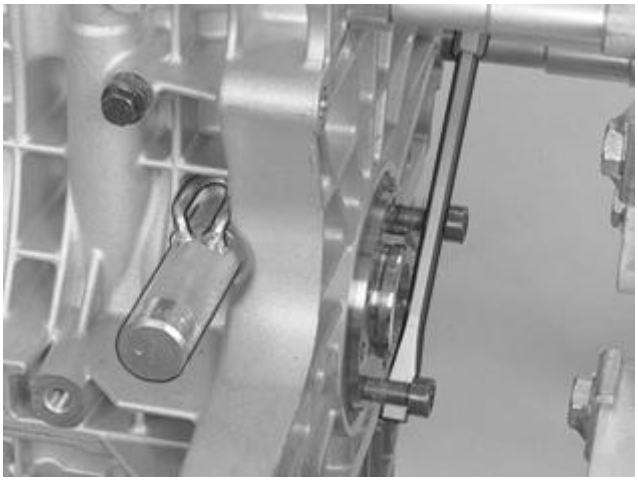

Fig. 329: Aligning Crankshaft
Courtesy of VOLVO CARS CORPORATION

Turn the crankshaft **counter-clockwise** (viewed from the rear of the engine) until the piston in cylinder 1 reaches top dead center (TDC).

Continue turning **counter-clockwise** until the piston in cylinder 1 is approximately 2-3 cm before top dead center (BTDC).

Install the crankshaft stop see **9995451** Ensure that it bottoms out against the cylinder block.

Now turn the crankshaft **clockwise** (viewed from the rear of the engine) until the crankshaft counter-weight is in contact with the crankshaft stop.

INSTALLING THE CYLINDER HEAD

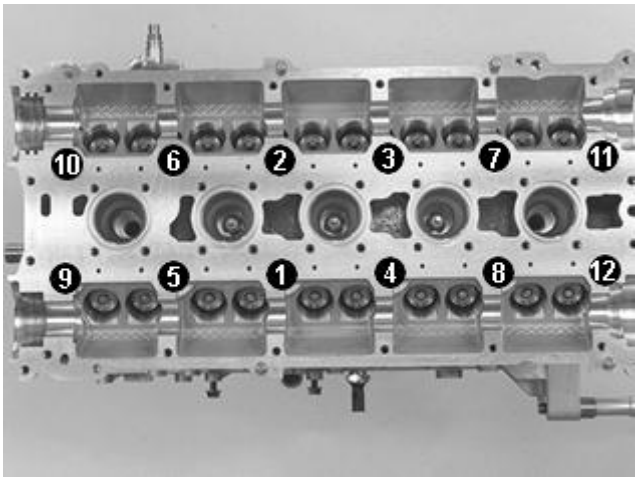

Fig. 330: Identifying Cylinder Head Screws Tightening Sequence
Courtesy of VOLVO CARS CORPORATION

Install a **new cylinder head gasket** .

Install the cylinder head.

Use **new screws** .

Lubricate and install all the screws.

Tighten. See **TIGHTENING TORQUE** .

INSTALLING VALVE LIFTERS AND CAMSHAFTS

See **VALVE CLEARANCE** .

APPLYING LIQUID GASKET

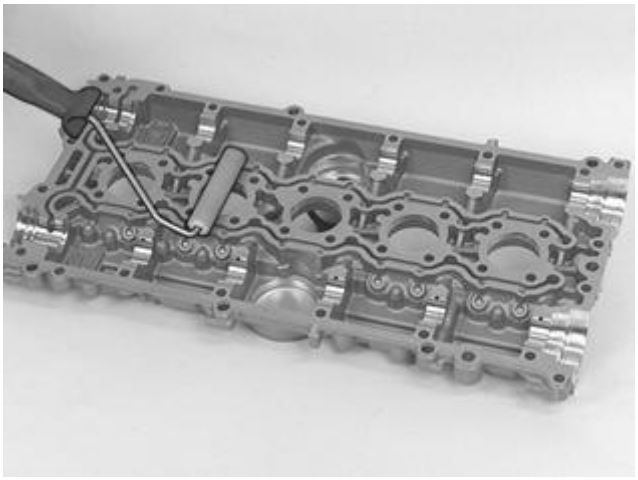

Fig. 331: Applying Liquid Gasket
Courtesy of VOLVO CARS CORPORATION

Wipe the oil film off the mating surfaces on the camshaft cover and cylinder head.

Install **new O-rings** around the spark plug wells at the cylinder head.

Apply liquid gasket 11 61 059 to the camshaft cover. **The surface must be completely covered without any excess.** Use roller see **9512767**

NOTE: Ensure that no liquid gasket gets in to the oil ducts.

INSTALLING THE CAMSHAFT COVERS

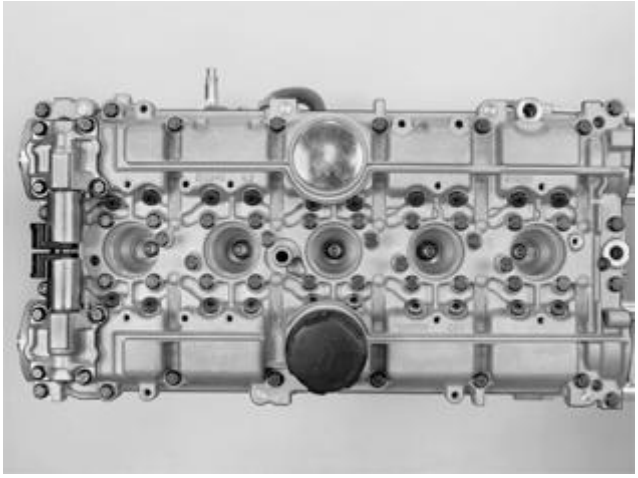

Fig. 332: Identifying Camshaft Covers
Courtesy of VOLVO CARS CORPORATION

Lubricate the camshaft lobes, the camshaft bearing surfaces and the valve lifters.

Install the camshaft cover.

Install 2 press tools see **9995454** .

Tighten the camshaft cover screws alternately, keeping it parallel to the cylinder head using the press tools.

Install all the screws and tighten.

Remove the press tools.

Install the spark plugs. Tighten. See **TIGHTENING TORQUE** .

Install the control valve for the variable valve timing unit with a new gasket. Tighten.

CLEANING

To clean the camshaft journal and mating surface, use emery cloth P/N **951 1024** .

NOTE: **When cleaning work around the shaft journal, not in and out. It is essential that any residue from the emery cloth and any other contaminants are completely removed before the new sealing ring is installed.**

INSTALLING THE FRONT CAMSHAFT SEAL

Fig. 333: Identifying Drift Tool 999 5718
Courtesy of VOLVO CARS CORPORATION

Use drift see **9995718** .

Use new seals.

Lubricate the surface of the seal that the camshaft rotates against.

Tap in the seal until the drift bottoms against the end of the camshaft.

INSTALLING THE REAR CAMSHAFT SEAL

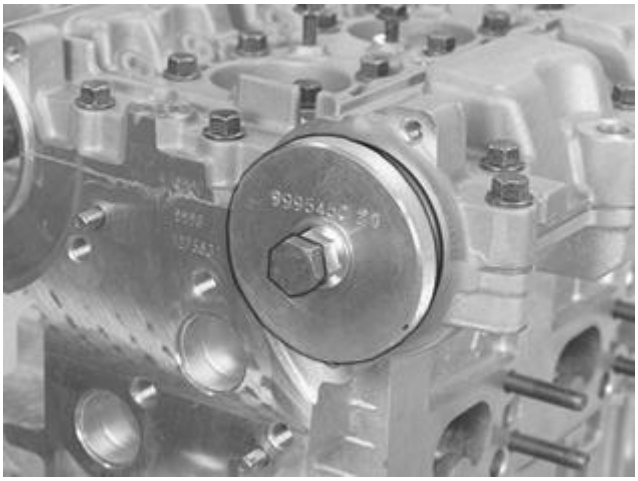

Fig. 334: Identifying Rear Camshaft Seal
Courtesy of VOLVO CARS CORPORATION

Use drift see **9995450** .

Lubricate the surface of the seal that the camshaft rotates against.

Install the seal.

Press in the seal until the drift bottoms out.

Continue the work with the next sealing ring.

NOTE: **If there are grooves on the camshaft, the seal can be pressed in a further 2 mm by reversing the sleeve.**

SECURING THE CAMSHAFTS

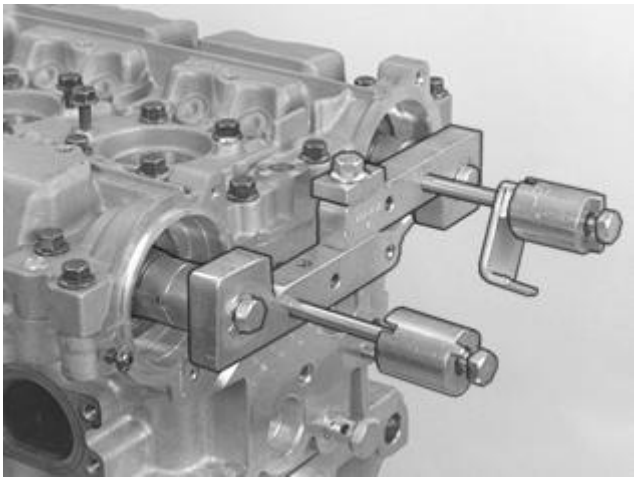

Fig. 335: Camshaft Adjustment Tool
Courtesy of VOLVO CARS CORPORATION

Use camshaft adjustment tool see **9995452** .

NOTE: The camshafts must not be turned more than is listed in the text below. The valves may be damaged

Screw the adjustment tool sections together into one.

Check that the screws retaining the adjustment tool to the camshafts and the screws holding the tool together are well tightened.

CYLINDER HEAD, REMOVING

Special tools:

see **9995452**

see **9995454**

see **9995670**

NOTE: As the illustrations in this service information are used for different model years and / or models, some variation may occur. However, the essential information in the illustrations is always correct.

REMOVING THE CAMSHAFT PULLEYS

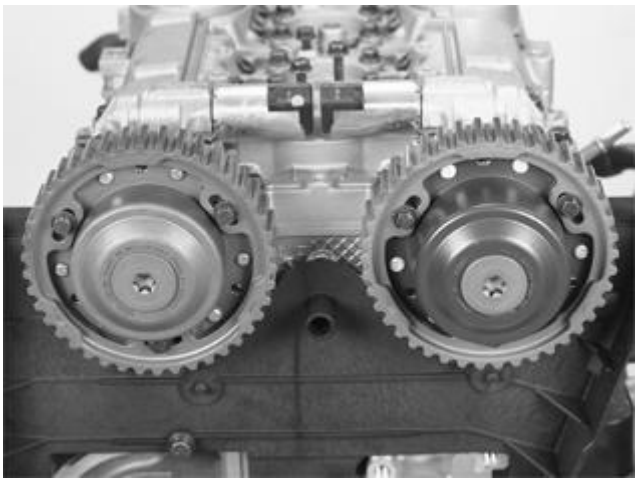

Fig. 336: Identifying Camshaft Pulleys
Courtesy of VOLVO CARS CORPORATION

CAUTION: The camshafts must not be turned when the timing belt has been removed.

Install tool see **9995452** at the rear of the camshafts.

Slacken off the screws securing the timing gear pulley to the variable valve timing unit.

Remove the plug at the front edge of the variable valve timing unit (Tx 55).

Remove the center screw from the variable valve timing unit (Tx 55).

Carefully pull out the camshaft pulley with the variable valve timing unit.

Continue with the next variable valve timing unit.

Remove:

- rear timing cover
- tool see **9995452** .

REMOVING THE CAMSHAFT COVER

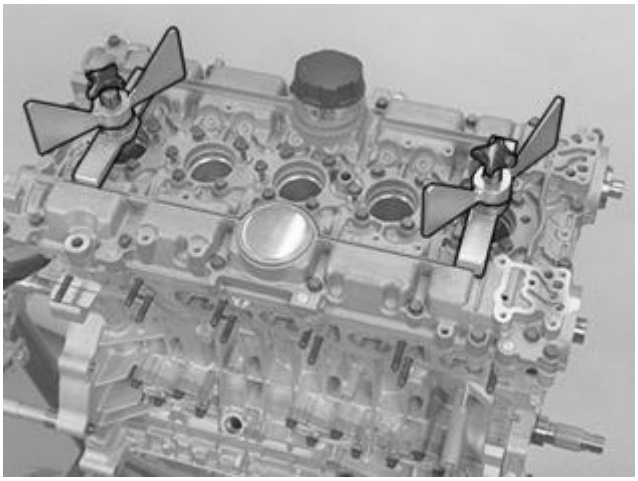

Fig. 337: Camshaft Cover And Variable Valve Timing Unit Control Valve
Courtesy of VOLVO CARS CORPORATION

Remove:

- the control valves for the variable valve timing units
- the spark plugs for cylinders 1 and 5.

Install tool see **9995454** (2 x). Leave a **2-3 mm** gap to the camshaft cover.

Ensure that the screw in the spark plug well is tightened as far as it will go.

Remove all the screws securing the camshaft cover to the cylinder head.

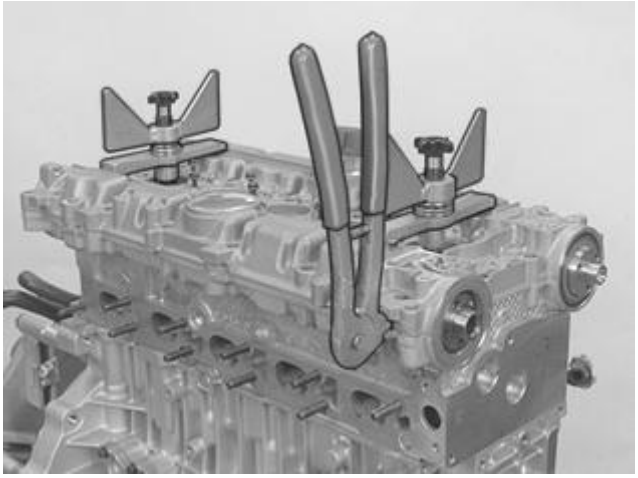

Fig. 338: Camshaft Cover With Pliers At Stop Lugs
Courtesy of VOLVO CARS CORPORATION

Remove:

- camshaft cover with pliers see **9995670** at the stop lugs. Start with cylinder 1 and work alternately backwards
- the wing nuts approximately 2 turns. Repeat the procedure with the pliers.

NOTE: Do not damage the axial bearings.

Remove:

- tool see **9995454**
- the camshaft seals at both the front and rear edges
- the camshaft cover
- the camshafts. Work loose and lift at the same time.

REMOVING THE CYLINDER HEAD

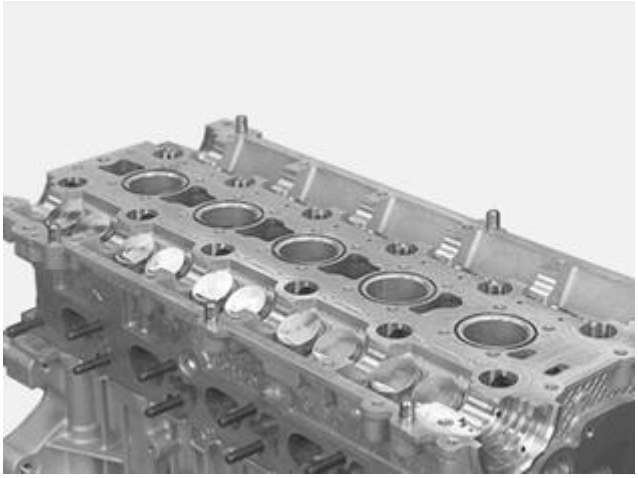

Fig. 339: View of Cylinder Head
Courtesy of VOLVO CARS CORPORATION

NOTE: Do not damage the mating surface.

Remove the pipe screw for the water heated crankcase ventilation at the rear edge of the cylinder head.

Slacken off the screwed joint for the cylinder head. Start at the sides and work alternately towards the center.

Lift out the cylinder head.

CYLINDER HEAD (B6294T; 2003-2006)

INSTALLING THE CYLINDER HEAD

Special tools:

see **9512050**

see **9512767**

see **9995450**

see **9995451**

see **9995452**

see **9995454**

see **9995718**

see **9995719**

NOTE: The illustrations in this service information are used for different model years and / or models. Therefore there may be some variation. However, the essential information in the illustrations is always correct.

TIGHTENING TORQUE

For tightening torques not in the text, see **TIGHTENING TORQUE** .

ALIGNING THE CRANKSHAFT

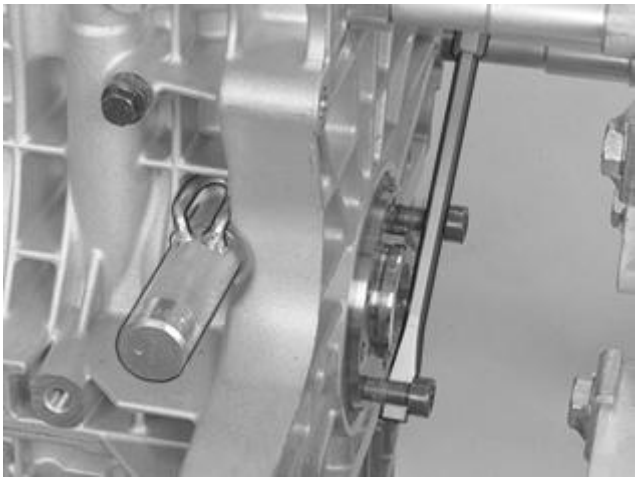

Fig. 340: Aligning Crankshaft
Courtesy of VOLVO CARS CORPORATION

Turn the crankshaft **counter-clockwise** (viewed from the rear of the engine) until the piston in cylinder 1 reaches top dead center (TDC).

Install the crankshaft stop see **9995451** . Ensure that it bottoms out against the cylinder block.

Now turn the crankshaft **clockwise** (viewed from the rear of the engine) until the crankshaft counter-weight is in contact with the crankshaft stop

INSTALLING THE CYLINDER HEAD

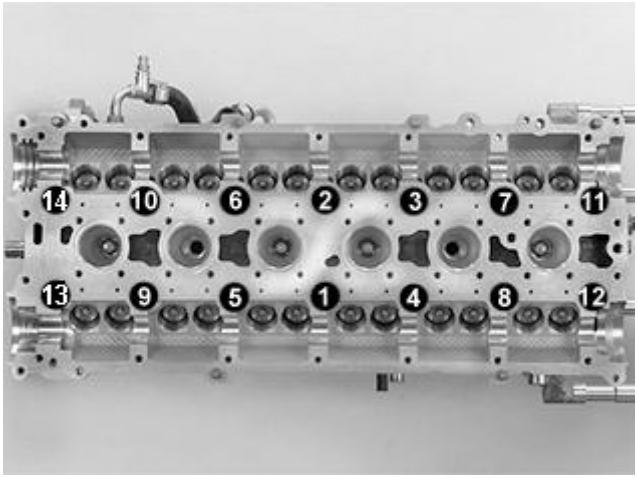

Fig. 341: Cylinder Head Screw Tightening Sequence
Courtesy of VOLVO CARS CORPORATION

Install a **new cylinder head gasket** .

Install the cylinder head.

Use **new screws** .

Lubricate and install all the screws.

Tighten the screws as illustrated. Tighten the screws in the following order.

1. **20 Nm**
2. **60 Nm**
3. Angle-tighten **130°** . Use protractor see **9512050** .

INSTALLING TAPPETS AND CAMSHAFTS

See **VALVE CLEARANCE, SETTING / ADJUSTING** .

APPLYING LIQUID GASKET

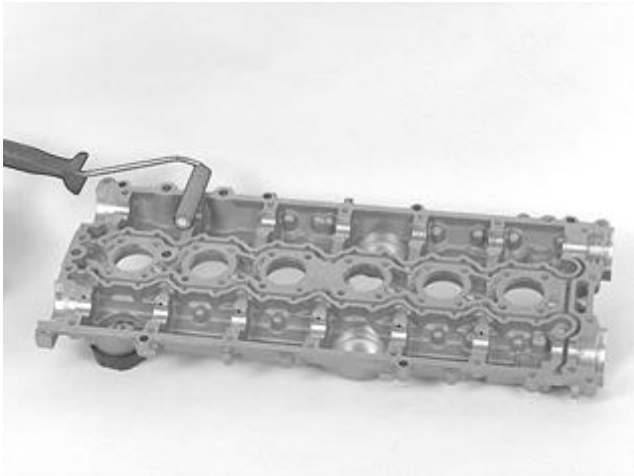

Fig. 342: Applying Liquid Gasket To Camshaft Cover
Courtesy of VOLVO CARS CORPORATION

Wipe the oil film off the mating surfaces on the camshaft cover and cylinder head.

Install **new O-rings** around the spark plug wells at the cylinder head.

Apply liquid gasket 11 61 059 to the camshaft cover. **The surface must be fully covered without any excess.** Use roller see **9512767**

NOTE: Ensure that no liquid gasket gets in to the oil ducts.

INSTALLING THE CAMSHAFT COVERS

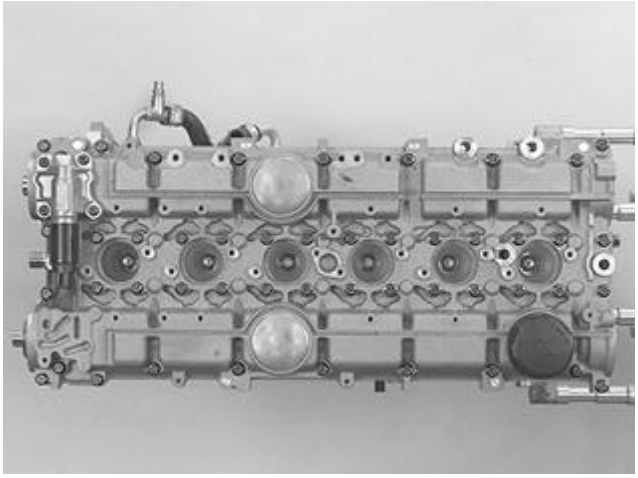

Fig. 343: Installing Camshaft Covers
Courtesy of VOLVO CARS CORPORATION

Lubricate the camshaft lobes, the camshaft bearing surfaces and the tappets.

Install the camshaft cover.

Install 2 press tools see **9995454** .

Pull the camshaft cover alternately down, keeping it parallel to the cylinder head with the press tools

Install all the screws and tighten.

Remove the press tools.

Install the spark plugs. Tighten to **30 Nm** .

Install the control valve for the variable valve timing unit with a new gasket. Tighten.

INSTALLING THE FRONT CAMSHAFT SEAL

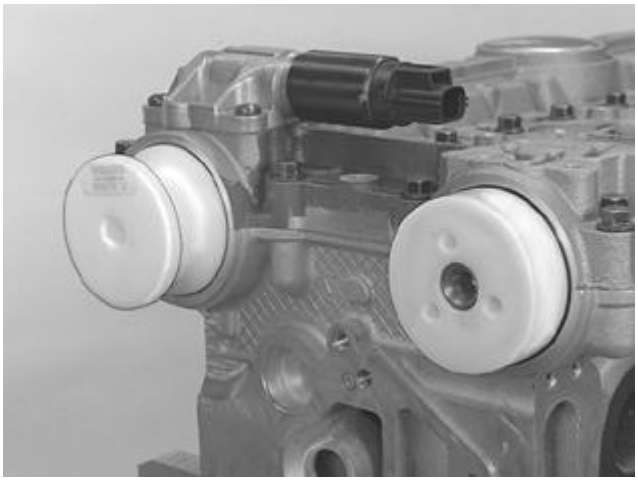

Fig. 344: Installing Front Camshaft Seal
Courtesy of VOLVO CARS CORPORATION

Use drift see **9995718** on camshafts with VVT units. Use drift see **9995719** on camshafts without VVT.

Lubricate the surface of the seal that the camshaft rotates against.

Carefully tap in the seal until the drift bottoms against the end of the camshaft.

INSTALLING THE REAR CAMSHAFT SEAL

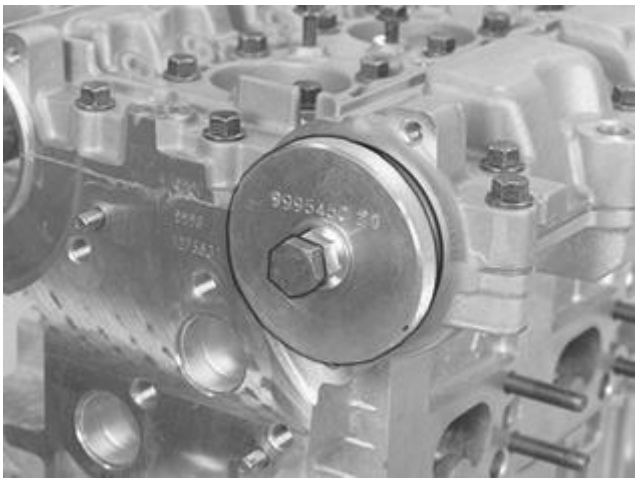

Fig. 345: Identifying Rear Camshaft Seal
Courtesy of VOLVO CARS CORPORATION

Turbocharged engines = seal at the exhaust camshaft.

Naturally aspirated engines = seal at the intake camshaft.

Use drift see **9995450** .

Lubricate the surface of the seal that the camshaft rotates against.

Press in the seal until the drift bottoms out.

NOTE: If there are grooves on the camshaft, the seal can be pressed in a further 2 mm by reversing the sleeve.

SECURING THE CAMSHAFTS

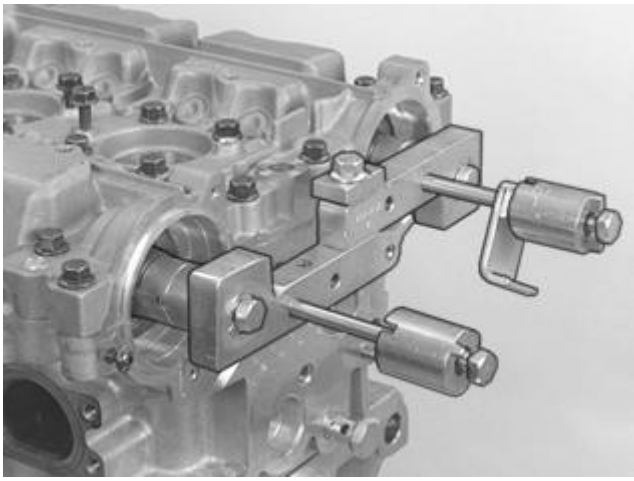

Fig. 346: Camshaft Adjustment Tool
Courtesy of VOLVO CARS CORPORATION

Use camshaft tool see **9995452** .

CAUTION: The camshafts must not be turned more than is absolutely necessary to install the adjustment tools. The valves may be damaged

Screw the adjustment tool sections together into one.

Check that the screws retaining the adjustment tool to the camshafts and the screws holding the tool together are well tightened.

MEASURING AND RECONDITIONING THE CYLINDER HEAD

Special tools:

see **9986052**

see **9995219**

see **9995222**

see **9995379**

see **9995748**

see **9995764**

NOTE: The illustrations in this service information are used for different model years and / or models. Therefore there may be some variation. However, the essential information in the illustrations is always correct.

REMOVING VALVE LIFTERS FROM THE CYLINDER HEAD

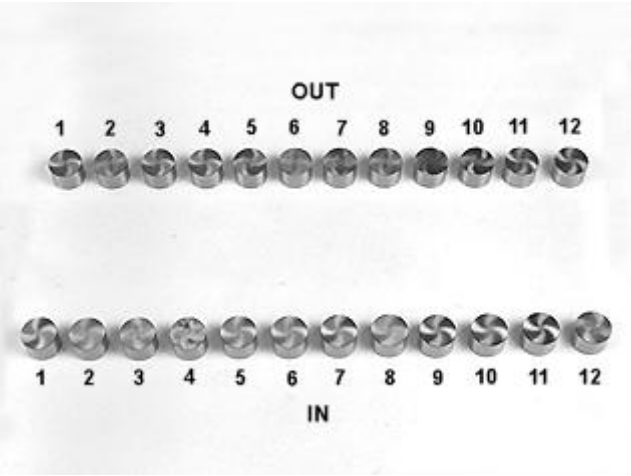

Fig. 347: Checking For Wear On Valve Lifters
Courtesy of VOLVO CARS CORPORATION

Lift out the valve lifters. Mark up the valve lifters so that the original positions can be established.

Use a suction cup to remove the valve lifters.

Check for wear on the valve lifters. Measure if necessary.

Valve lifters, dimensions: See **TAPPETS** .

REMOVING VALVES

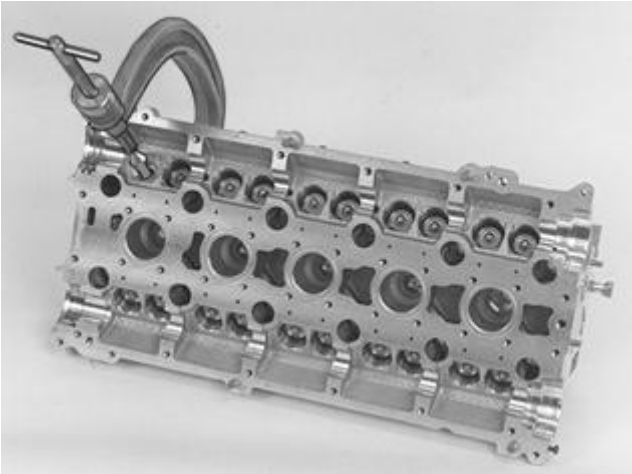

Fig. 348: Identifying Tool 998 6052-0 - Valve Spring Compressor
Courtesy of VOLVO CARS CORPORATION

Use valve spring compressor see **9986052** with attachment claw see **9995748** .

Remove

- the valve locks
- the upper valve collars
- the valve springs
- the valves.

NOTE: Keep track of the position of the moving parts.

REMOVING VALVE STEM SEALS

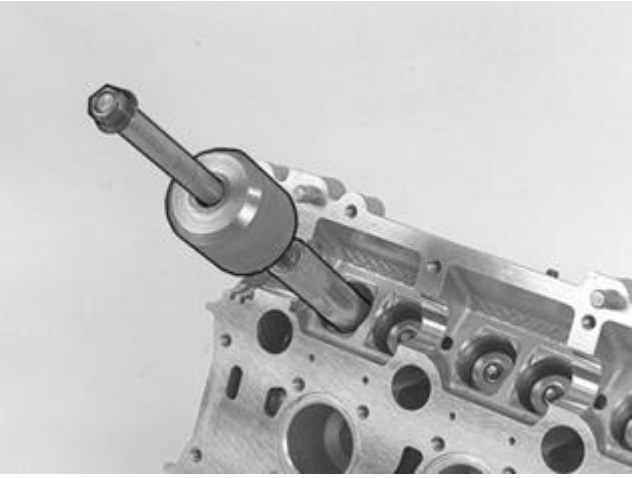

Fig. 349: Identifying Valve Stem Seal Special Tool 999 5219
Courtesy of VOLVO CARS CORPORATION

Use tool see **9995219** .

Remove the valve stem seals and the lower valve collars.

Clean the cylinder head:

- the gasket faces
- the combustion chambers
- the inlet and exhaust ports
- the valve seats.

CHECKING THE CYLINDER HEAD

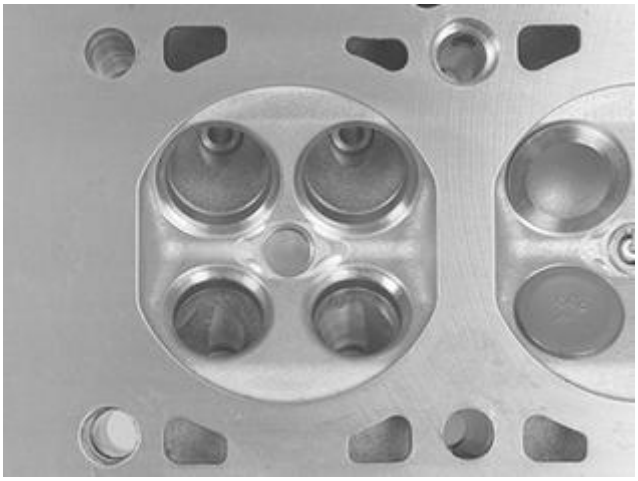

Fig. 350: Inspecting Combustion Chamber
Courtesy of VOLVO CARS CORPORATION

Clean the spark plug threads (tap M14 x 1.25).

Clean the valves, valve springs and collars.

Visually check for damage.

Regrind the seats if unsure about cracks. See **VALVE SEATS** .

Checking the cylinder head for distortion

Measure cylinder head distortion Use a steel ruler and feeler gauge. See **CYLINDER HEAD** .

CHECKING FOR WEAR IN THE VALVE GUIDES

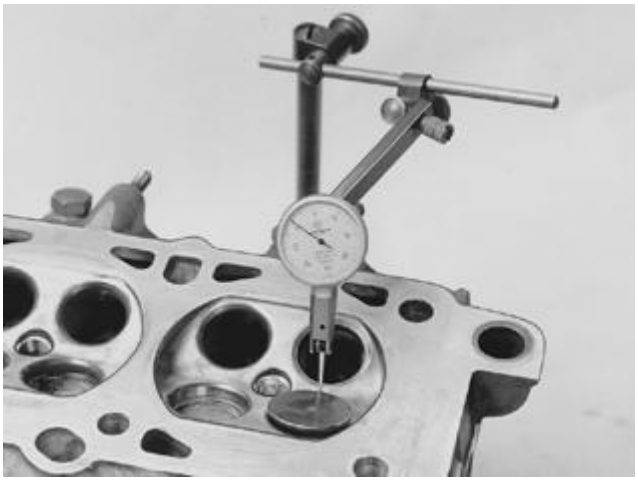

Fig. 351: Identifying Measurement Of Wear In Valve Guides Using A Dial Indicator And Magnetic Holder
Courtesy of VOLVO CARS CORPORATION

Measure the wear in the valve guides. Use a dial indicator and magnetic holder. Lift the valve approximately 2-3 mm from the seat when carrying out the check.

Clearance between the valve and valve guide: See **VALVE GUIDES** .

CHECKING THE VERTICAL POSITION OF THE VALVE STEM

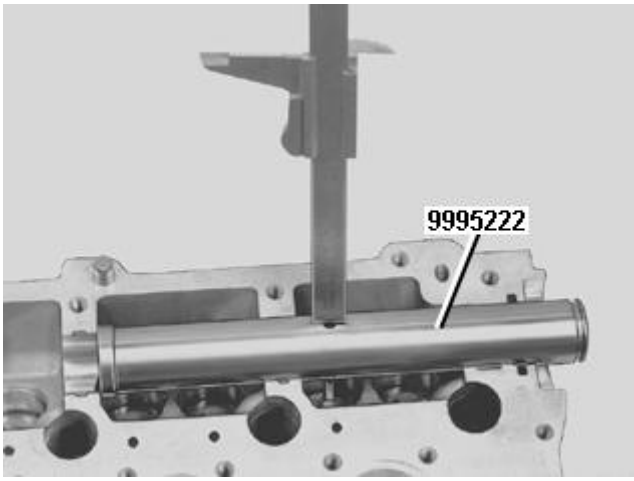

Fig. 352: Camshaft Adjustment Tool
Courtesy of VOLVO CARS CORPORATION

Use camshaft adjustment tool see **9995222** .

Position the camshaft adjustment tool in the camshaft bearing recesses.

Measure the height of the valve stem using a feeler gauge through the hole in the camshaft adjustment tool. See **VALVES** .

INSTALLING VALVE STEM SEALS

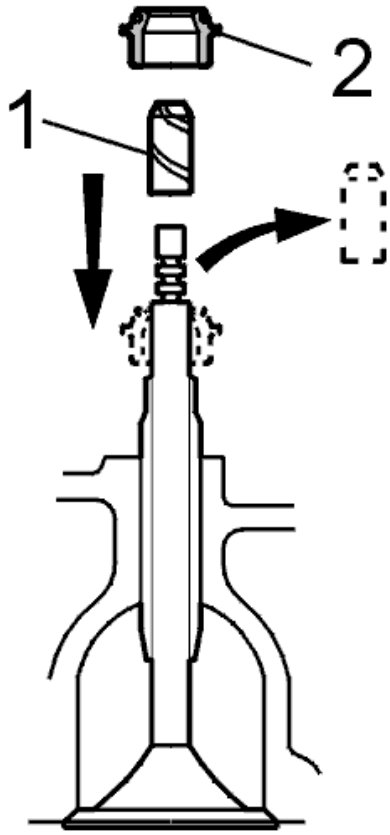

Fig. 353: Identifying Protective Sleeve And Valve Stem Seal
Courtesy of VOLVO CARS CORPORATION

Lubricate the valve stems and the upper ends of the valve guides.

Install

- the lower valve spring collars
- the valves in their positions.

Install the protective sleeve (included in the gasket kit) on the valve stem.

NOTE: The protective sleeve must be installed on the valve stem when the valve stem seal is installed.

Lubricate the protective sleeve (1) and install it on the valve stem.

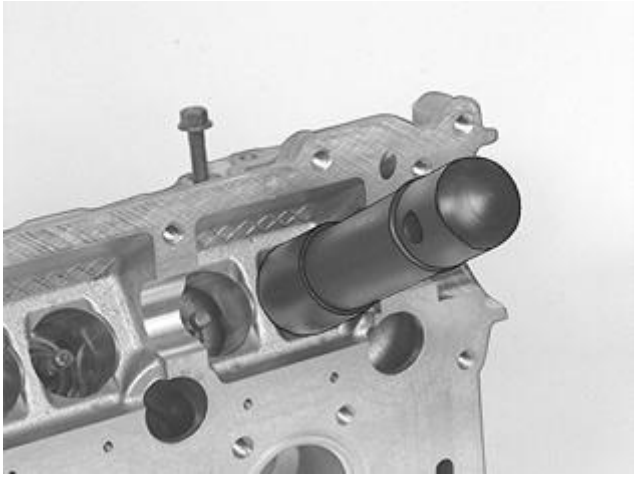

Fig. 354: Identifying Valve Stem Seal
Courtesy of VOLVO CARS CORPORATION

Lubricate the valve stem seal (2).

Press down the seal past the protective sleeve with your finger.

Press the seal down. Use tool see **9995764** . Press down by hand until the tool stops against the lower valve spring washer.

Remove the tool. Pull off the protective socket.

INSTALLING VALVE SPRINGS

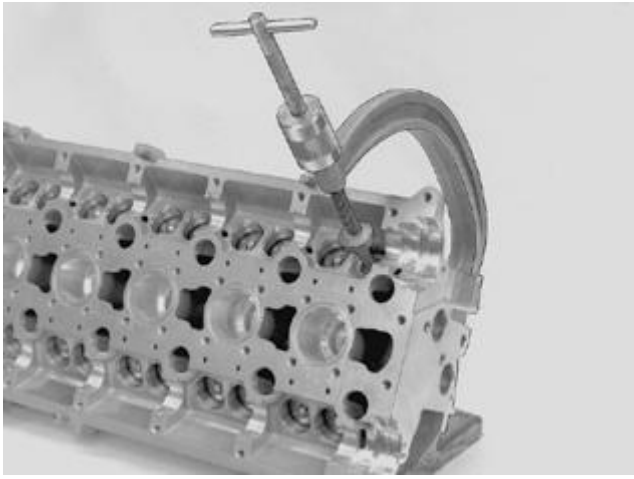

Fig. 355: Compressing Valve Spring Using Valve Spring Compressor (9986052) and Adapter (9995748)
Courtesy of VOLVO CARS CORPORATION

Install the valve spring. Install the valve spring washer.

Compress the valve spring so that the three valve lock tracks are visible. Use valve spring compressor see **9986052** with attachment claw see **9995748** .

NOTE: **Do not compress more than is absolutely necessary. The valve stem seal may be damaged.**

Install the valve locks.

Check that valve locks are in the correct position when the spring is not loaded.

Repeat the procedure with the remaining valves.

REMOVING THE CYLINDER HEAD

NOTE: **The illustrations in this service information are used for different model years and / or models. Therefore there may be some variation. However, the essential information in the illustrations is always correct.**

REMOVING THE CAMSHAFT VARIABLE VALVE TIMING UNIT / TIMING BELT PULLEY

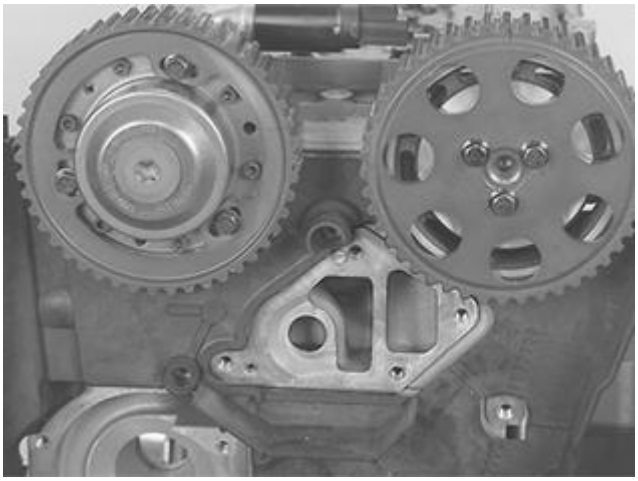

Fig. 356: Camshaft Variable Valve Timing Unit/Timing Belt Pulley
Courtesy of VOLVO CARS CORPORATION

Camshafts with variable valve timing

Install tool see **9995452** at the rear of the camshafts.

Remove the plug at the front edge of the variable valve timing unit (Tx 55).

Remove the center screw from the variable valve timing unit (Tx 55).

Carefully pull out the camshaft pulley with the variable valve timing unit.

Camshafts without variable valve timing

Remove the screws.

Pull off the camshaft pulley.

Remove tool 999 5452.

Remove the inner timing cover.

CAUTION: The camshafts must not be turned when the timing belt has been removed.

REMOVING THE CAMSHAFT COVER

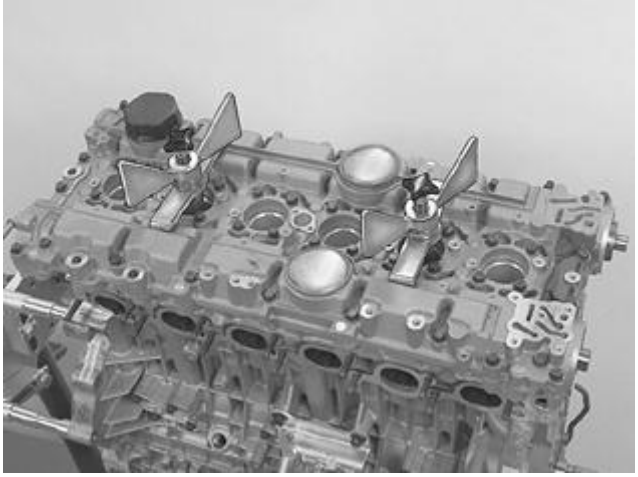

Fig. 357: Removing Camshaft Cover
Courtesy of VOLVO CARS CORPORATION

Remove the control valve from the variable valve timing unit.

Remove the spark plugs from cylinders 2 and 5.

Install 2 tools . Leave a 2-3 mm gap to the camshaft cover. Ensure that the screw in the spark plug well is tightened as far as it will go.

Remove all the screws securing the camshaft cover to the cylinder head.

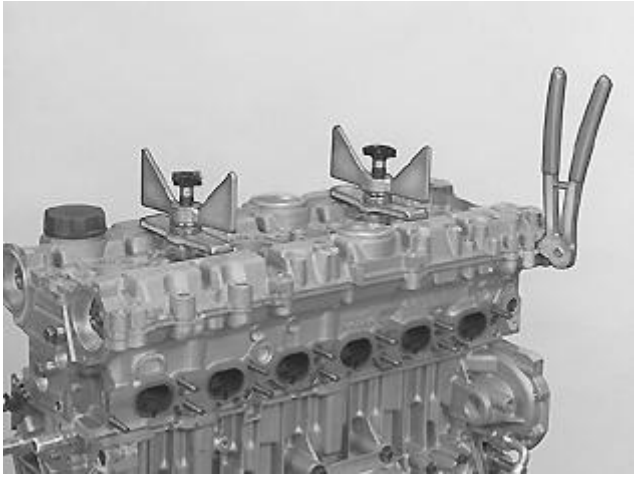

Fig. 358: Using Pliers 999 5670 To Lift Cover From Cylinder Head
Courtesy of VOLVO CARS CORPORATION

Remove

- camshaft cover with pliers see **9995670** at the stop lugs.

  Start at cylinder 1 and work alternately backwards

- the wing nuts approximately 2 turns.

  Repeat the procedure with the pliers.

Remove

- tool 999 5454
- the camshaft seals at both the front and rear edges
- the camshaft cover
- the camshafts. Work loose and lift at the same time.

NOTE: Take care not to damage the thrust washers.

REMOVING THE CYLINDER HEAD

Fig. 359: Removing Cylinder Head
Courtesy of VOLVO CARS CORPORATION

Remove the pipe screws for the coolant heated crankcase ventilation at the rear edge of the cylinder head (applies only to B6284T).

Slacken off the screwed joint for the cylinder head. Start at the sides and work alternately towards the center.

Lift out the cylinder head.

NOTE: Take care not to damage the mating surfaces.

CYLINDER HEAD (B8444S; 2005-2011)

CYLINDER HEAD, DISMANTLING/ASSEMBLING

Special tools	
	T9997417 Valve compressor **Tool number:** T9997417 **Tool description:** Valve compressor **Tool boards:**
	T9986052 VALVE SPRING B21 D16 D24 **Tool number:** T9986052 **Tool description:** VALVE SPRING B21 D16 D24 **Tool boards:**
	T9995219 GRIP TOOL (VALVE GUIDE-SEAL) B16-D24 **Tool number:** T9995219 **Tool description:** GRIP TOOL (VALVE GUIDE-SEAL) B16-D24 **Tool boards:**
	T9997012 DRIFT VALVE STEM SEAL DIESEL **Tool number:** T9997012 **Tool description:** DRIFT VALVE STEM SEAL DIESEL **Tool boards:**

Materials	
Designation	**Part number**
Micrometer	
Feeler gauge	

RECONDITIONING

CAUTION: Make sure that the area around the component is clean and free of foreign material.

NOTE: If the specified value is exceeded, a new component must be installed.

See information about specifications. See **ENGINE**

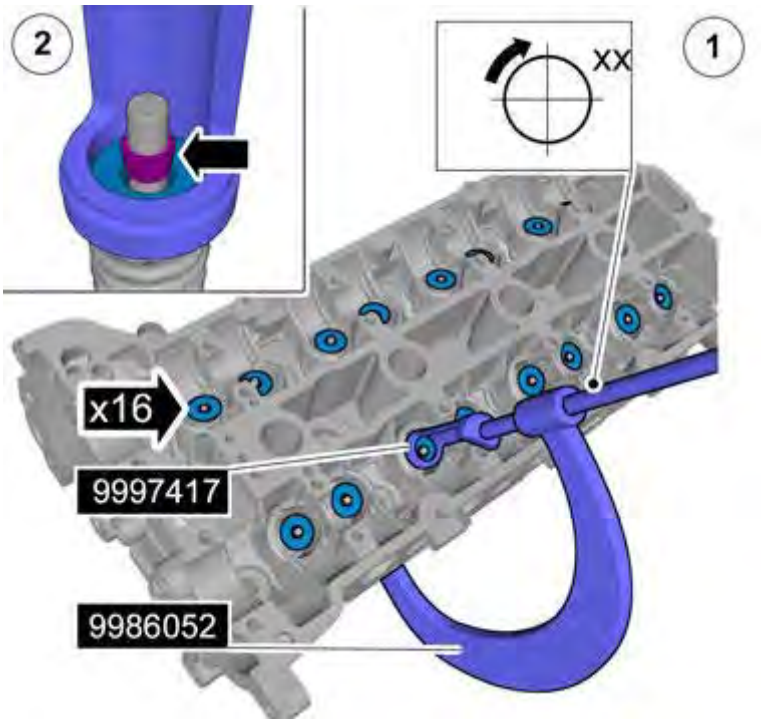

Fig. 360: Identifying Valve Spring Compressor 9997417
Courtesy of VOLVO CARS CORPORATION

CAUTION: Note the position of each component before removal.

NOTE: Only use moderate force.

see **9997417** see **9986052**

Fig. 361: Identifying Position Of Components Before Removal
Courtesy of VOLVO CARS CORPORATION

CAUTION: Note the position of each component before removal.

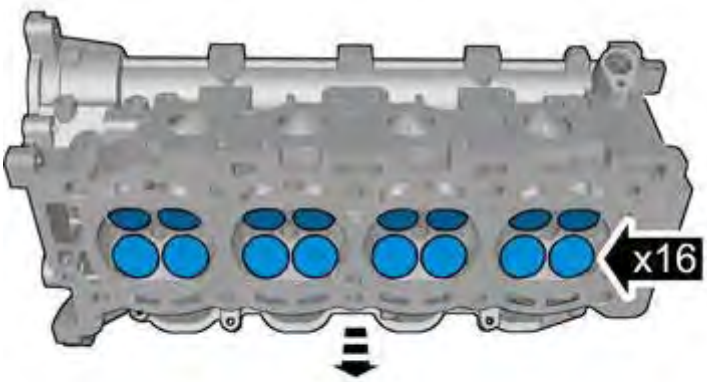

Fig. 362: Identifying Position Of Components Before Removal
Courtesy of VOLVO CARS CORPORATION

CAUTION: Note the position of each component before removal.

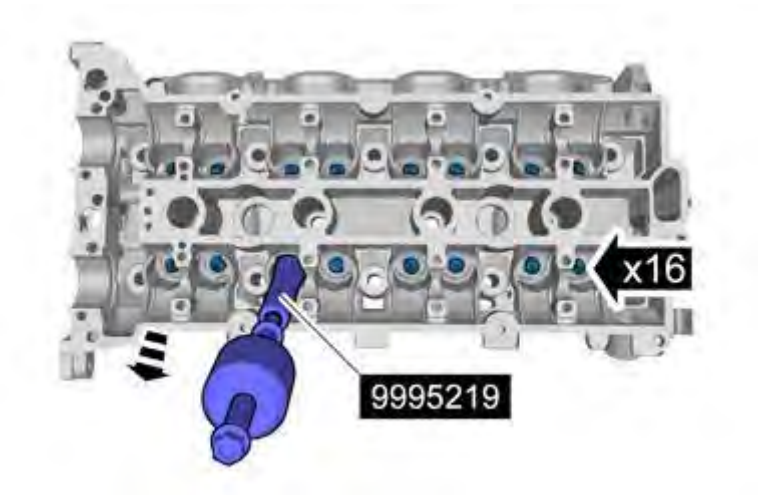

Fig. 363: Identifying Seal Puller 9995219
Courtesy of VOLVO CARS CORPORATION

see **9995219**

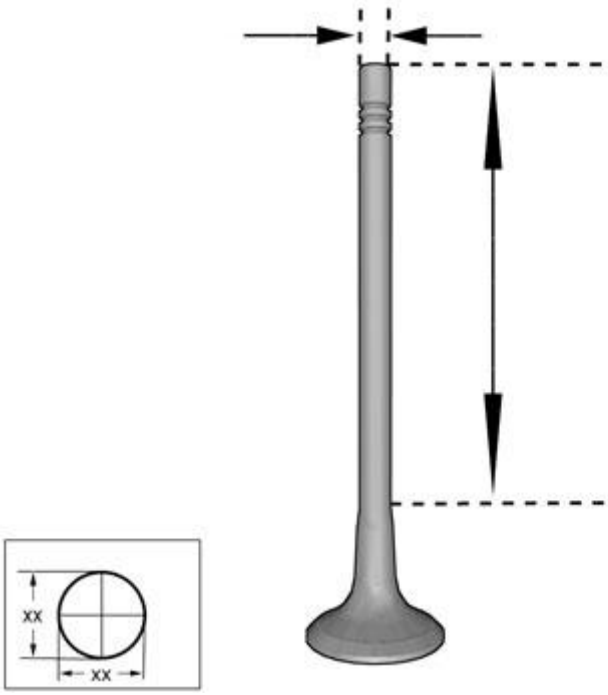

Fig. 364: Measuring Valve Stem with Micrometer
Courtesy of VOLVO CARS CORPORATION

Use: Micrometer,

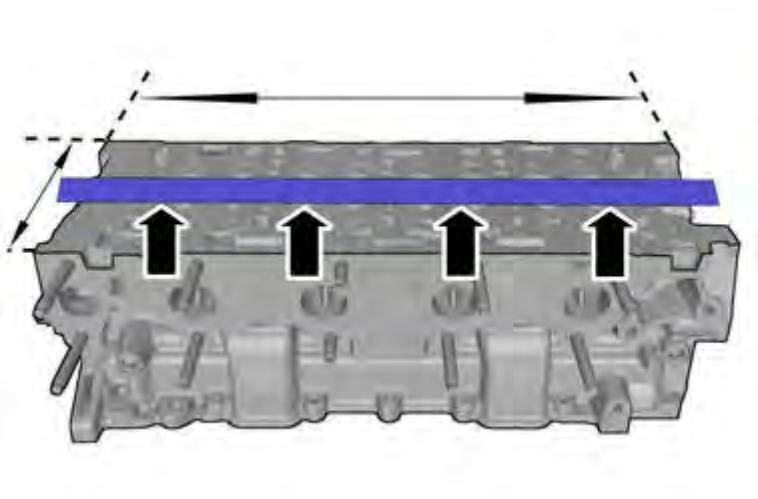

Fig. 365: Identifying Surface Flatness
Courtesy of VOLVO CARS CORPORATION

Use: Feeler gauge,

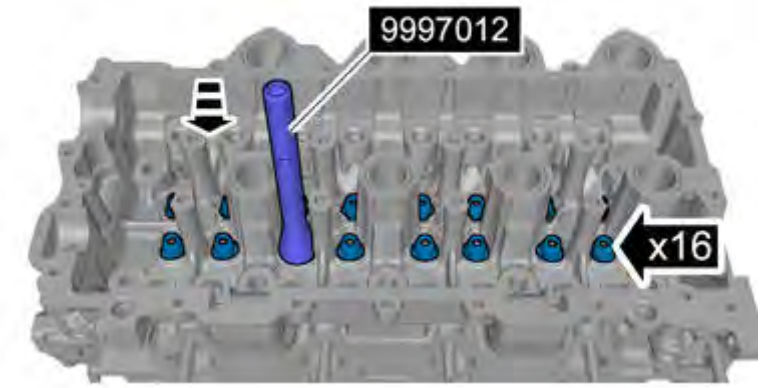

Fig. 366: View Of Drift, Valve Stem Seal Installing
Courtesy of VOLVO CARS CORPORATION

NOTE: Only use moderate force.

see **9997012**

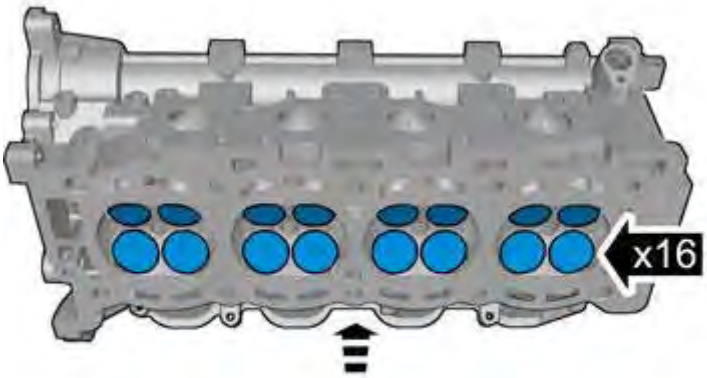

Fig. 367: Reinstalling Components as Noted Before Removal
Courtesy of VOLVO CARS CORPORATION

NOTE: **Make sure that these components are installed to the noted removal position.**

Fig. 368: Identifying Position Of Components Before Removal
Courtesy of VOLVO CARS CORPORATION

NOTE: **Make sure that these components are installed to the noted removal position.**

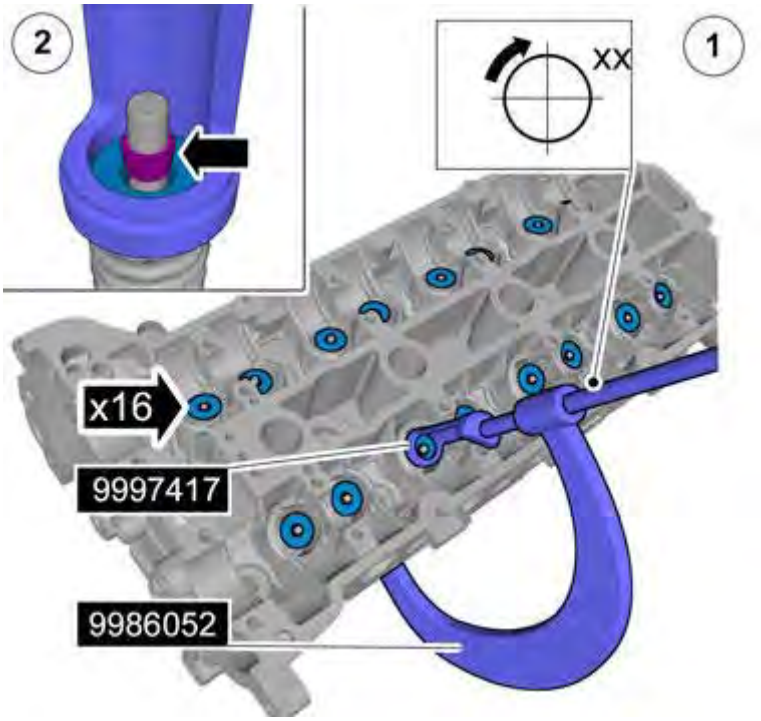

Fig. 369: Identifying Valve Spring Compressor 9997417
Courtesy of VOLVO CARS CORPORATION

NOTE: Only use moderate force.

INSTALLING THE CYLINDER HEAD

Special tools:

see **9512050**

NOTE: As the illustrations in this service information are used for different model years and / or models, some variation may occur. However, the essential information in the illustrations is always correct.

PREPARATORY WORK

When replacing the cylinder head, the valve clearance must be checked. See: **VALVE CLEARANCE, SETTING/ADJUSTING** .

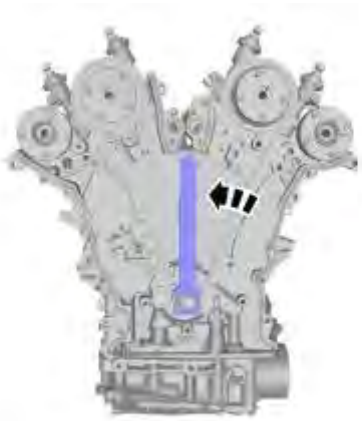

Fig. 370: Turning The Crankshaft Back 45°
Courtesy of VOLVO CARS CORPORATION

Turn the crankshaft back approximately 45°, so that the position setting tool is straight up, so that the camshafts can rotate freely.

INSTALLATION

NOTE: For tightening torques, see: GENERAL TIGHTENING TORQUE .

INSTALLING THE CYLINDER HEAD

Fig. 371: Applying Sealant 307 57050 On Both Sides
Courtesy of VOLVO CARS CORPORATION

NOTE: Ensure that all studs at the exhaust ports are tightened.

Lubricate the studs. Use paste 116 1408.

Install:

- **new** cylinder head gasket. Apply sealing compound 307 57050 on both sides. See the illustration.
- the cylinder head
- the **new** lubricated screws.

Tighten the screws in a circle from the inside and outwards. Use protractor: see **9512050** . Tighten. See **SUMMARY OF TIGHTENING TORQUES FOR SPECIFIC COMPONENTS** .

INSTALLING THE CAMSHAFTS

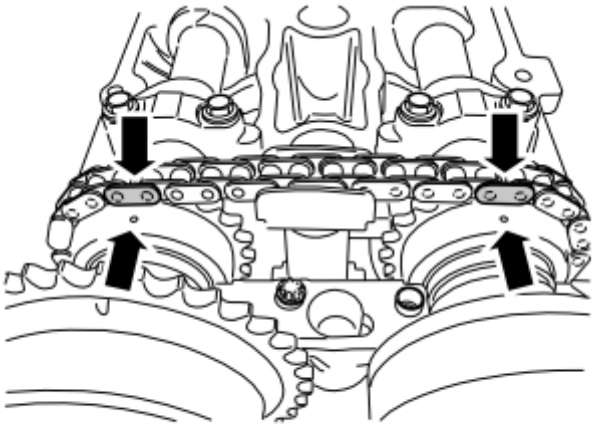

Fig. 372: Checking Alignment Marks
Courtesy of VOLVO CARS CORPORATION

Install:

- the camshafts
- the chain tensioner

NOTE: Adjust the VVT units' marking to the camshaft chain color marking (see illustration).

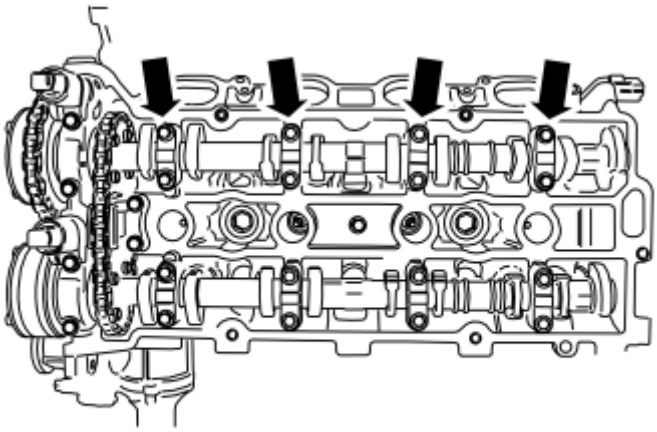

Fig. 373: Identifying Intake Camshaft Caps
Courtesy of VOLVO CARS CORPORATION

Install:

- the intake camshaft caps
- the 16 x M6 screws. Tighten, see: **SUMMARY OF TIGHTENING TORQUES FOR SPECIFIC COMPONENTS** .

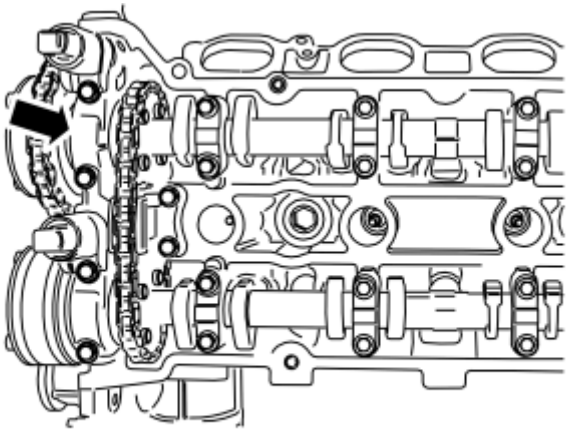

Fig. 374: Identifying Front Bearing Assembly
Courtesy of VOLVO CARS CORPORATION

Install:

- **new** filter, x 2
- the cap, 4 x M6. Tighten, see: **SUMMARY OF TIGHTENING TORQUES FOR SPECIFIC COMPONENTS**
- the screws for the chain tensioner, 2 x M6. Tighten. See **SUMMARY OF TIGHTENING TORQUES**

FOR SPECIFIC COMPONENTS .

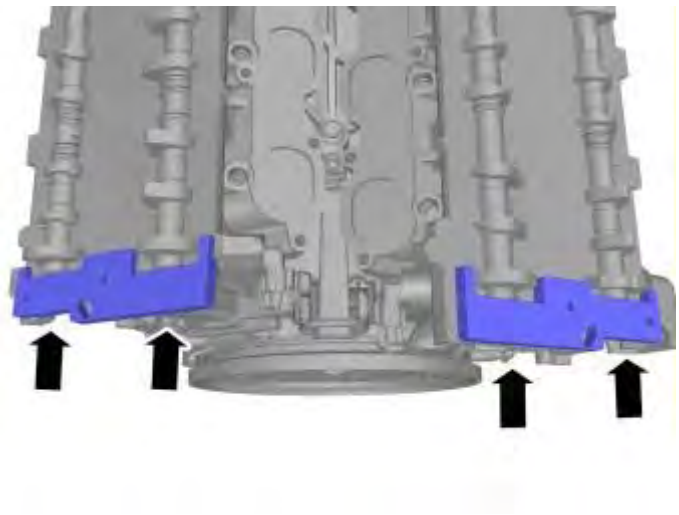

Fig. 375: Viewing Camshaft Adjustment Tools
Courtesy of VOLVO CARS CORPORATION

Install:

- camshaft adjustment tools

REMOVING THE CYLINDER HEAD

NOTE: **As the illustrations in this service information are used for different model years and / or models, some variation may occur. However, the essential information in the illustrations is always correct.**

PREPARATORY WORK

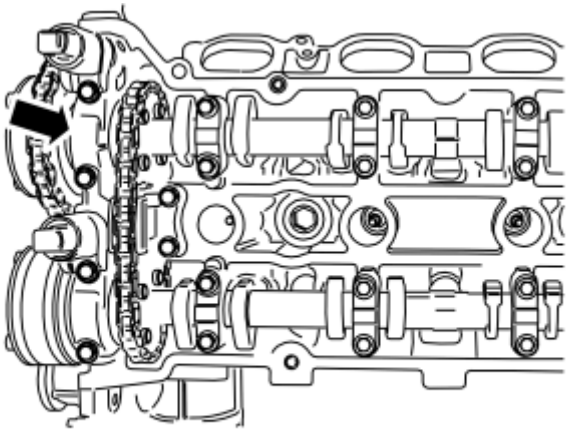

Fig. 376: Identifying Front Bearing Assembly
Courtesy of VOLVO CARS CORPORATION

Remove:

- the cover, 4 x M6
- chain tensioner screws, 2 x M6
- filter x 2, discarded.

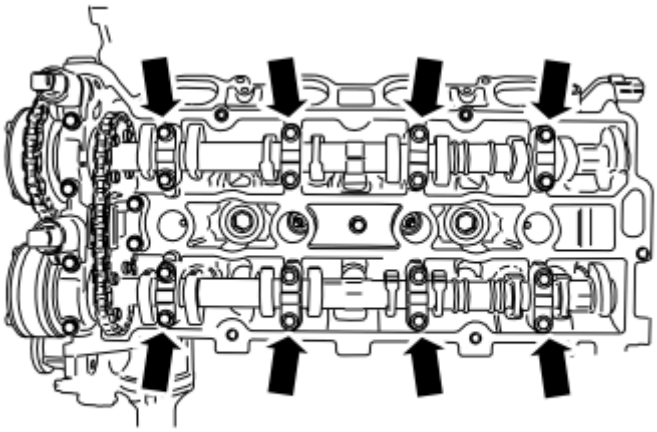

Fig. 377: Identifying Cam Bearing Caps
Courtesy of VOLVO CARS CORPORATION

Remove the cover on the intake camshafts, 16 x M6.

NOTE: To prevent damaging the components, ensure that the camshaft is not against the lifter.

Note the location.

Lift out the camshafts.

REMOVAL

REMOVING THE CYLINDER HEAD

CAUTION: Do not damage the gasket mating surfaces. The cylinder head gasket has very little chance of sealing any damage to the gasket mating surface.

Remove the cylinder head's screwed joint, start with the screws closest the ends, then work alternately towards the middle.

Remove:

- the screws

- the cylinder head.

Place the cylinder head upside down on a clean, dry absorbent covered (paper wipes for example) surface. This is to prevent damage to the gasket surface of the cylinder head.

Scrap the gasket.

ENGINE BLOCK, INSTALLING (B5254T2; 2003-2007)

ENGINE BLOCK, INSTALLING COMPONENTS

NOTE: **As the illustrations in this service information are used for different model years and / or models, some variation may occur. However, the essential information in the illustrations is always correct.**

INSTALLING ENGINE BLOCK COMPONENTS

NOTE: **Always use new seal washers and gaskets**

Install

- thermostat housing (B52x4x)
- knock sensor (KS)
- flame trap
- the pipe screw for the water-heated crankcase ventilation.

IF IN DOUBT ABOUT THE ORDER OF ASSEMBLY SEE:

B5xx4x	See **ENGINE BODY, EXPOSING**
B6xx4x	See **ENGINE BODY, EXPOSING**

Install the flywheel and carrier plate. See **CRANKSHAFT SEAL REAR, REPLACING**.

FOR THE CORRECT TIGHTENING TORQUES SEE:

B5xx4x	See **TIGHTENING TORQUE**
B6xx4x	See **TIGHTENING TORQUE**

The ignition coil alignment and the wiring routing follows the illustrations below.

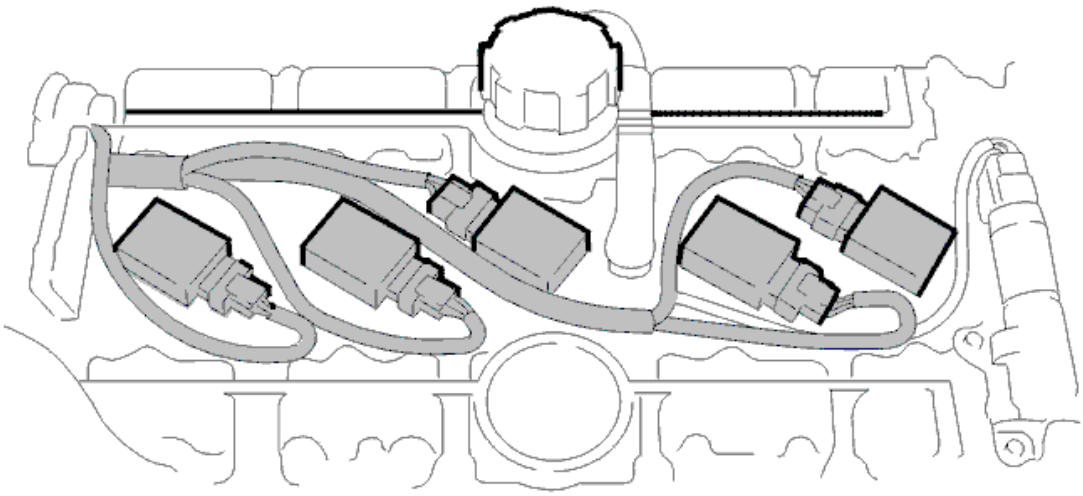

Fig. 378: Identifying Ignition Coils B5xx4x
Courtesy of VOLVO CARS CORPORATION

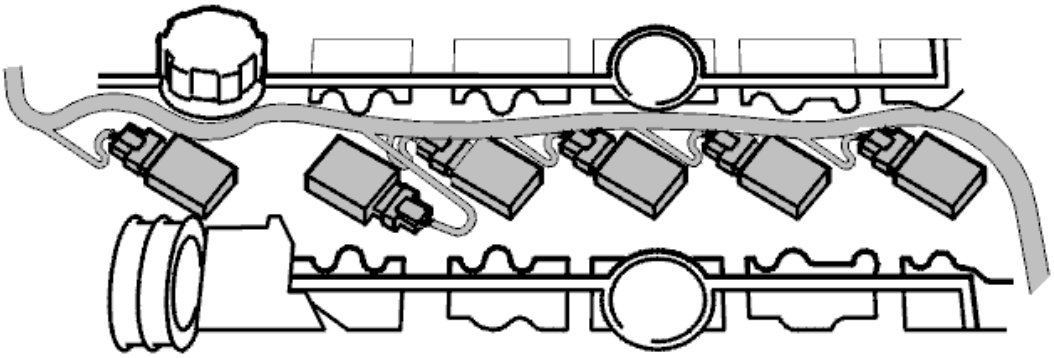

Fig. 379: Identifying Ignition Coils - B6xx4x
Courtesy of VOLVO CARS CORPORATION

CRANKSHAFT SEAL REAR, REPLACING

Special tools:

see **9995112**

see **9995651**

see **9991801**

see **9995678**

see **9997174**

see **9512050**

NOTE: **As the illustrations in this service information are used for different model years and / or models, some variation may occur. However, the essential information is always correct.**

REMOVING THE FLYWHEEL AND CARRIER PLATE

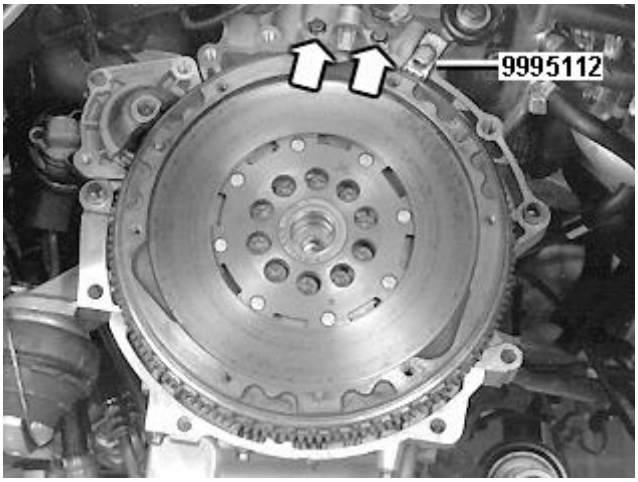

Fig. 380: Locking Flywheel With Tool 9995112
Courtesy of VOLVO CARS CORPORATION

Remove the gearbox:

- For gasoline 4T65 2003- see **TRANSMISSION, REMOVING** .
- For gasoline AW50AWD 2003- see **TRANSMISSION, REMOVING**
- For gasoline AW55-50 2004- see **TRANSMISSION, REMOVING** .

Remove the flywheel / carrier plate. Use gear sector see **9995112** as a counterhold when slackening off the screws.

REMOVING THE SEAL

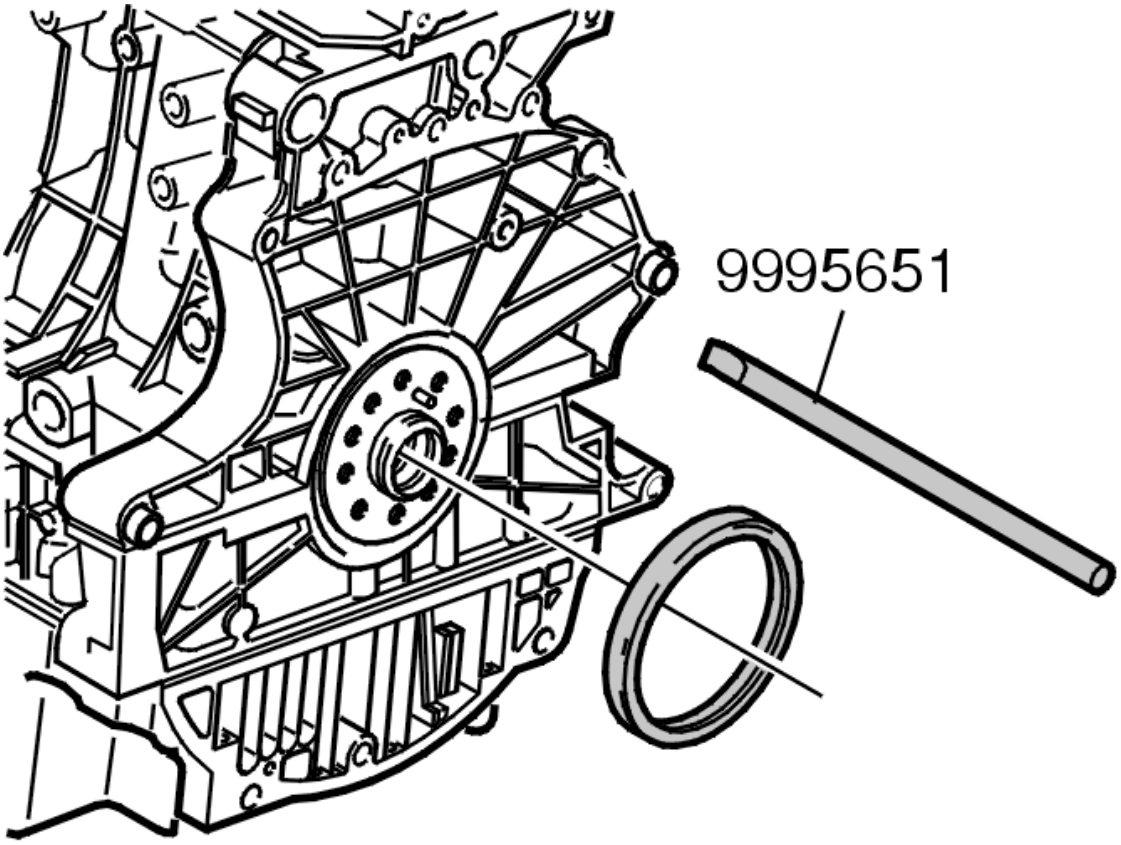

Fig. 381: Identifying Old Seal And Special Tool Extractor 999 5651
Courtesy of VOLVO CARS CORPORATION

NOTE: Do not damage the mating surfaces of the crankshaft and cylinder block

Remove the old seal using extractor see **9995651** .

Clean around the crankshaft flange at the front and rear. Remove any thread sealant residue from the screw holes.

If necessary wash off the oil on the rear cylinder block surface and the gearbox clutch housing. Blow clean using compressed air.

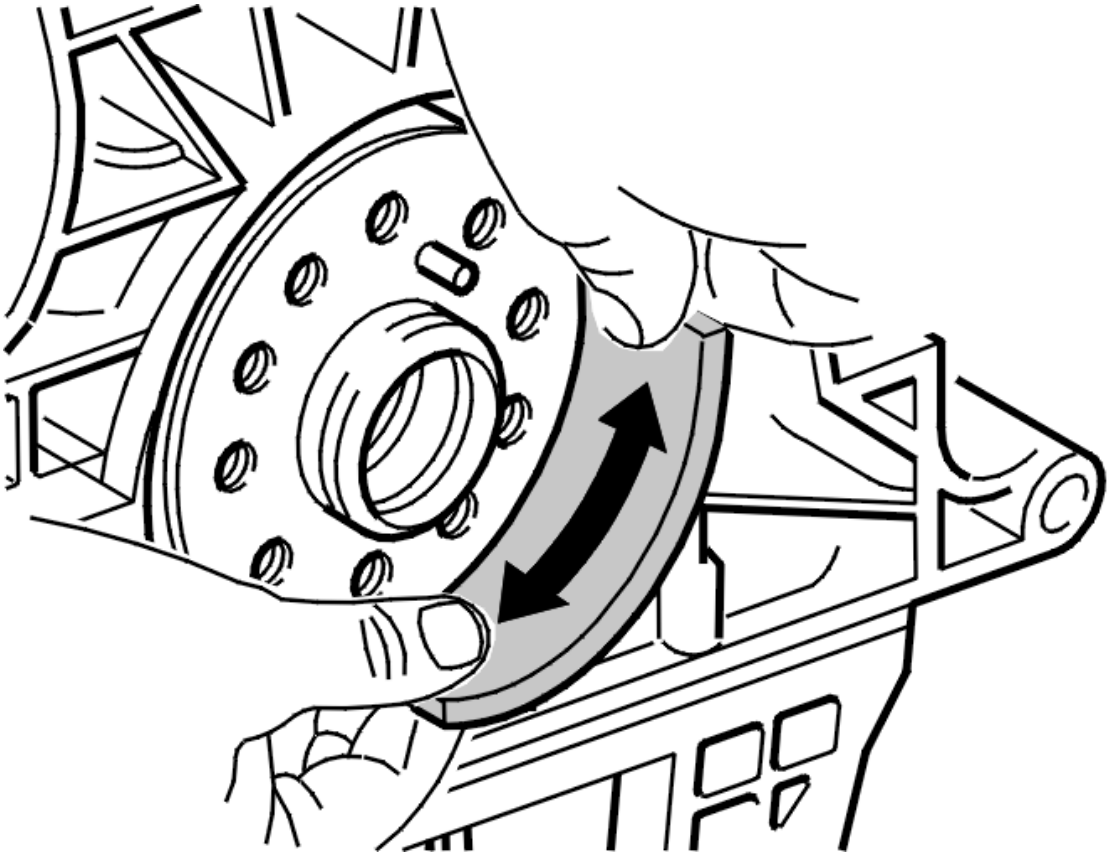

Fig. 382: Cleaning Around Crankshaft Flange
Courtesy of VOLVO CARS CORPORATION

CAUTION: When cleaning work around the flange, not in and out. No grinding tools or similar may be used.

It is extremely important that there is no thread sealant residue or other dirt. This could cause leakage.

NOTE: To clean the crankshaft, use cloth 9511024.

INSTALLING THE SEALING RING

CAUTION: Only Volvo approved engine oil may be used. Grease must not be used at all. It attracts dirt and results in the build up of coke.

Lubricate the sealing ring mating surface against the cylinder block and the lips of the seal.

Fig. 383: Identifying Sealing Ring
Courtesy of VOLVO CARS CORPORATION

Fig. 384: Identifying Sealing Ring
Courtesy of VOLVO CARS CORPORATION

Thread the seal onto the beveled section of the inner section of tool see **9997174** with the felt side of the seal outwards. Install the drift on the crankshaft, 2 x screws, for the flywheel. Pull in the seal using the outer section of the drift: see **9997174** using the screw in the center of the tool. The seal is in position when the outer drift bottoms out against the inner drift. Remove the tool: see **9997174** . Discard the old screws for the flywheel.

INSTALLING FLYWHEEL AND CARRIER PLATE

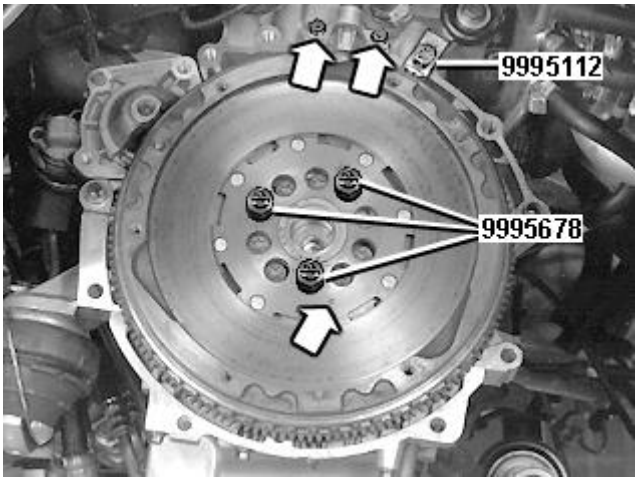

Fig. 385: Identifying 3 Flywheel Studs
Courtesy of VOLVO CARS CORPORATION

CAUTION: Ensure that the surface of the crankshaft and the mating surfaces for the flywheel / carrier plate are clean. Ensure that there is no thread sealant residue in the screw holes.

Install:

- the flywheel and carrier plate
- the 3 studs see **9995678** distributed as illustrated. Turn the short thread length towards the crankshaft.

NOTE: Check that the locating pin on the crankshaft is positioned opposite the hole in the flywheel / carrier plate. The position of the guide hole is marked.

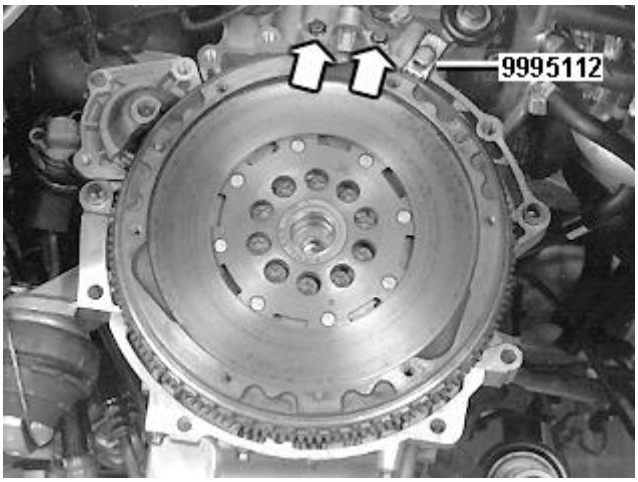

Fig. 386: Locking Flywheel With Tool 9995112
Courtesy of VOLVO CARS CORPORATION

CAUTION: It is important that the flywheel and carrier plate bear on the crankshaft

flange before the other screws are installed.

Always use new screws. Ensure that the thread sealant on the new screws is intact. If not apply a few drops of sealant 1161056 to the thread.

- Align gear sector: see **9995112** .
- Pull the flywheel / carrier plate towards the crankshaft using the 3 nuts on special tool see **9995678** . The turned section of the nut must be turned towards the flywheel / carrier plate.
- Install the other screws. Tighten. See **SUMMARY OF SPECIFIC COMPONENTS AND TIGHTENING TORQUES** .
- Replace the 3 special screws with new standard screws. Tighten. See **SUMMARY OF SPECIFIC COMPONENTS AND TIGHTENING TORQUES** .
- Then angle tighten all 10 screws crosswise. Use see **9512050** . Tighten. See **SUMMARY OF SPECIFIC COMPONENTS AND TIGHTENING TORQUES** .
- Ensure that the flywheel sensor and bracket are installed. Install the clutch driven plate and clutch.

INSTALLING THE GEARBOX

Install the gearbox:

- For gasoline 4T65 2003- see **TRANSMISSION, INSTALLING (2003, 2004)** or **TRANSMISSION, INSTALLING (2005, 2006)** .
- For gasoline AW50AWD 2003- see **TRANSMISSION, INSTALLING**
- For gasoline AW55-50 2004- see **TRANSMISSION, INSTALLING** .

CHECKING THE ENGINE:

Test drive the car to check the function of the engine and the gearbox.

ENGINE BODY, EXPOSING

Special tools:

see **9989721**

see **9992520**

see **9995112**

see **9995297**

NOTE: **As the illustrations in this service information are used for different model years and / or models, some variation may occur. However, the essential information in the illustrations is always correct.**

REMOVING THE GEARBOX

HINT: Remove the lower screws (these are difficult to access) between the gearbox and engine before removing the engine and gearbox unit. The engine and gearbox unit must be placed on a suitable surface.

HINT: Relieve the transmission. Loose the remaining screws and remove the transmission carefully.

Remove the clutch. See **PRESSURE PLATE / CLUTCH DRIVEN PLATE, REPLACING**.

REMOVING THE FLYWHEEL AND CARRIER PLATE

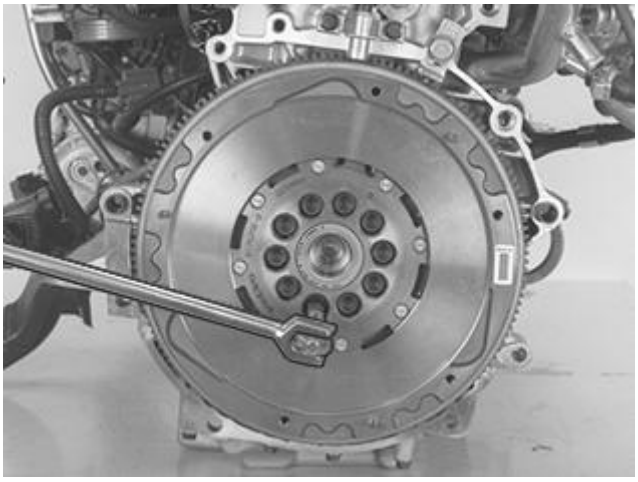

Fig. 387: Viewing Flywheel And Carrier Plate
Courtesy of VOLVO CARS CORPORATION

Install gear sector see **9995112** .

Remove all screws except for the uppermost screw which secures the flywheel to the crankshaft. Slacken off the uppermost screw. Leave it in place, screwed in a few turns.

Carefully work the flywheel and carrier plate loose. If necessary, use 2 groove-cut chisels. Apply these between the cylinder block and the flywheel and carrier plate.

Hold the flywheel and carrier plate and remove the final screw.

Install the engine in a stand

Use mounting stand see **9992520** , fixture see **9995297** and screw set see **9989721** .

EXPOSING THE ENGINE

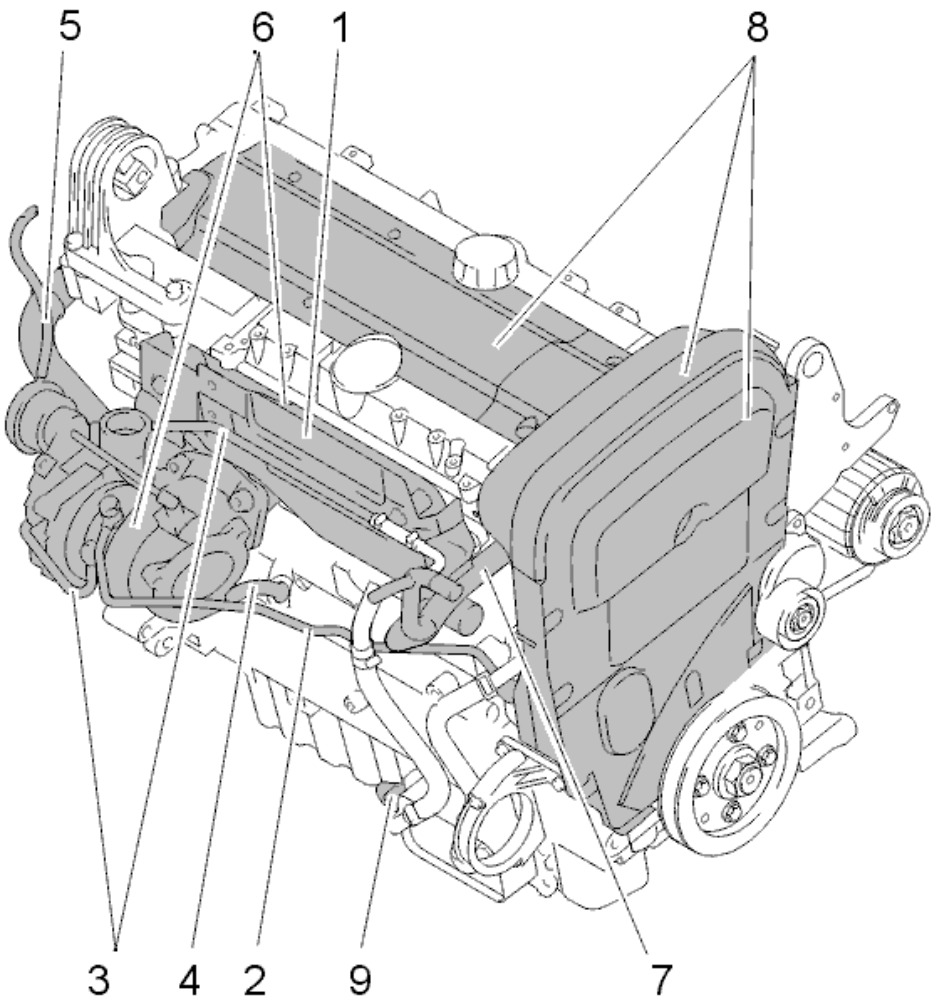

Fig. 388: Identifying Engine Components To Be Removed (1 Of 2)
Courtesy of VOLVO CARS CORPORATION

REMOVE

1. The heat deflector plate.	6. The exhaust manifold including the turbocharger (TC).
2. The oil pressure pipe.	7. The coolant pipe (water pump inlet).
3. The coolant pipes, (turbocharger (TC) inlet / outlet).	8. The upper and front timing covers and the cover over the ignition coils.
4. The oil return line.	9. Drain the engine oil.
5. The turbocharger (TC) control hoses and the valve.	

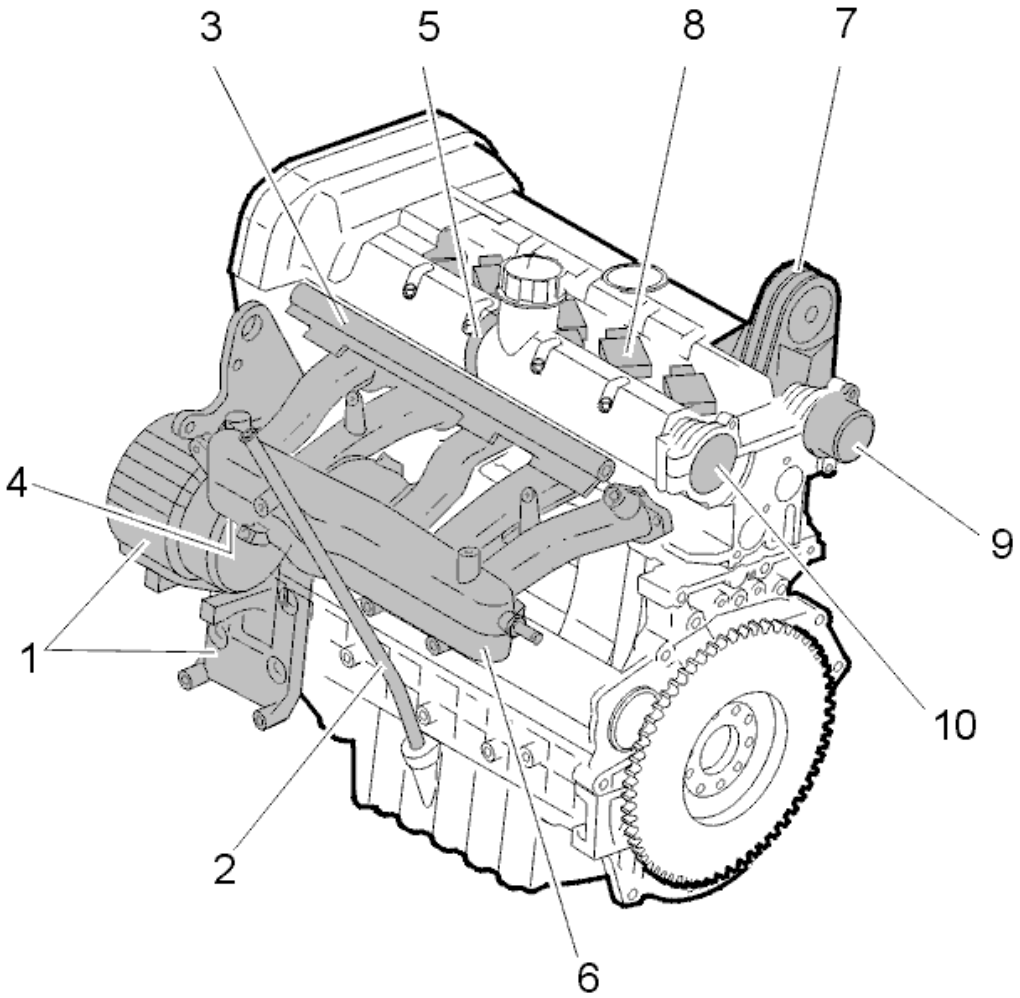

Fig. 389: Identifying Engine Components To Be Removed (2 Of 2)
Courtesy of VOLVO CARS CORPORATION

REMOVE

1. The generator (GEN) and the auxiliary equipment bracket.
2. The dipstick pipe.
3. The fuel rail.
4. The pipe screw for the water heated crankcase ventilation.
5. The crankcase ventilation hose on top of the camshaft cover.
6. The intake manifold.
7. The torque rod bracket.
8. The engine wiring assembly.
9. The ignition coils.
10. The camshaft position sensor (CMP) housing and trigger wheel.
11. The cover.

PRESSURE PLATE / CLUTCH DRIVEN PLATE, REPLACING

Special tools:

see **9995112**

see **9995662**

see **9995663**

see **9995675**

see **9995677**

NOTE: **Removing the gearbox:**

To remove the transmission, see TRANSMISSION - REMOVAL, REPLACEMENT AND INSTALLATION .

NOTE: **The illustrations show a self-adjusting clutch. Where there are differences, these are noted.**

REMOVAL

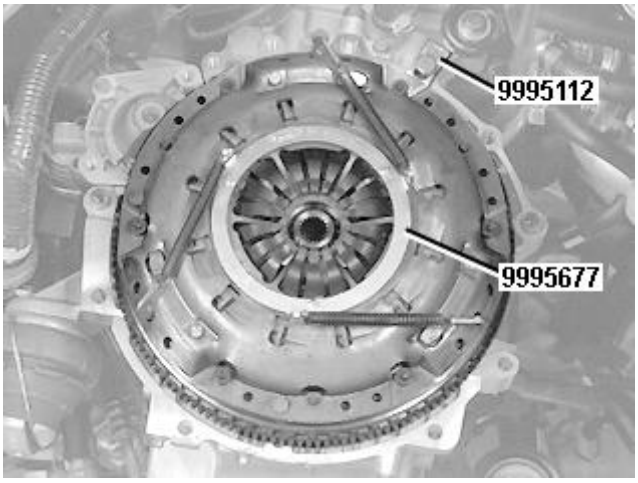

Fig. 390: Blocking The Flywheel Using Gear Sector 999 5112
Courtesy of VOLVO CARS CORPORATION

Use gear sector see **9995112** .

Applies only to certain engine versions with self adjusting clutches:

Secure the clutch automatic adjustment.

Use counterhold see **9995677** . Locate the counterhold, see below.

ALIGNING THE COUNTERHOLD FOR AUTOMATIC CLUTCH ADJUSTMENT

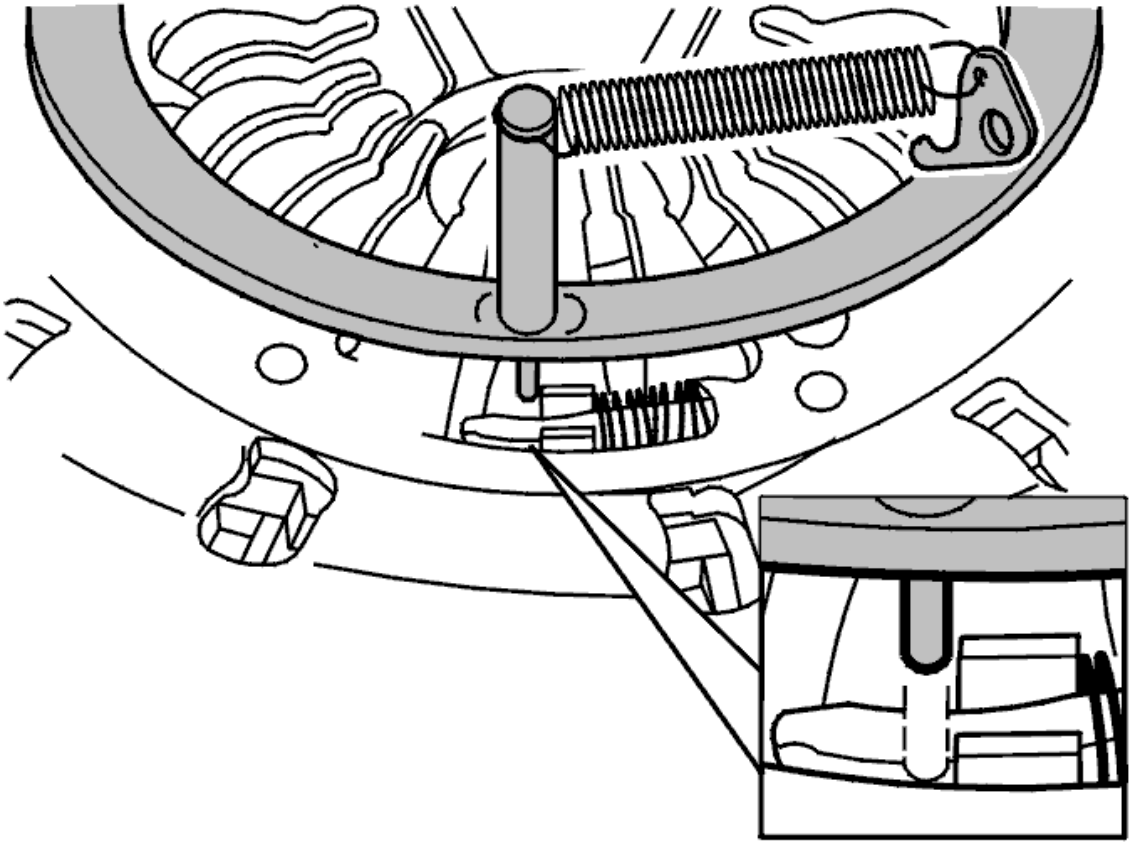

Fig. 391: Aligning Counterhold For Automatic Clutch Adjustment
Courtesy of VOLVO CARS CORPORATION

Applies only to certain engine versions with self adjusting clutches:

The three pins on the counterhold lock the automatic adjustment.

Position the tool as illustrated.

Ensure that all the three pins (see the illustration) go into the groove in front of the tensioner springs for the automatic adjuster.

Press the ring against the pressure plate. Pull out the counterhold springs. Secure the three hooks in the center holes of the outer edge. .

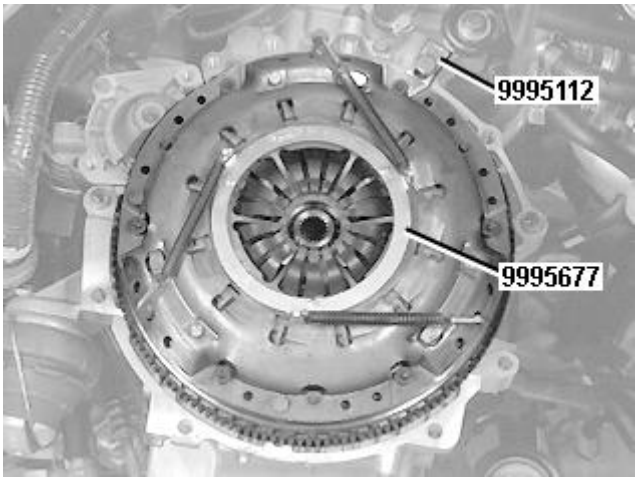

Fig. 392: Blocking The Flywheel Using Gear Sector 999 5112

Use gear sector **9995112** .

Applies only to certain engine versions with self adjusting clutches:

Secure the clutch automatic adjustment.

Use counterhold **9995677** . Locate the counterhold, see below.

INSTALLING THE COMPRESSION TOOL

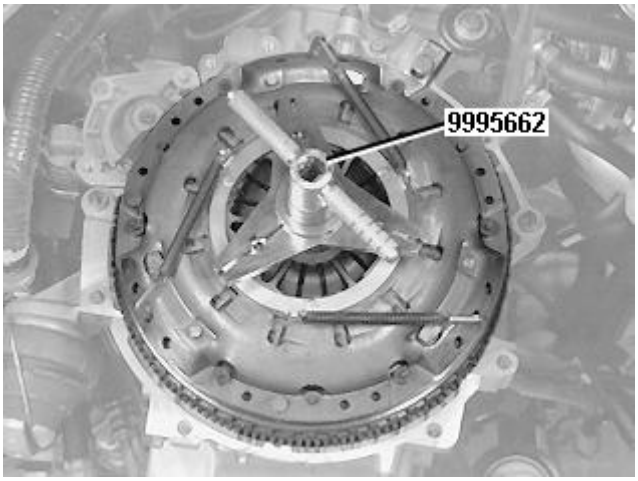

Fig. 393: Compression Tool 999 5662 Installed
Courtesy of VOLVO CARS CORPORATION

Install compression tool see **9995662** , together with the conversion kit on the clutch. The tool is modified as described in the tool bulletin.

Ensure that the hooks grip correctly, although without clamping the adjuster springs.

Centre the compression tool and tighten the screw to light contact against the diaphragm spring. At the same

time, check that the hooks on the tool are in position.

Applies only to clutches without self adjustment:

Note the position of the handle with slots. Then screw in by **not more than two turns** .

Remove the clutch and clutch driven plate

Applies only to certain engine versions with self adjusting clutches:

Compress the clutch so that the automatic adjuster is not under load.

If the clutch is worn, the counterhold turns the automatic adjustment to the original position marking.

The marking consists of two stamped arrows.

Then continue to screw in the compression tool until the diaphragm spring has pressed the pressure plate to a free position.

A click can be heard when the clutch pressure plate snaps out.

Remove the clutch and clutch driven plate

RELIEVING THE LOAD FROM THE CLUTCH DIAPHRAGM SPRING

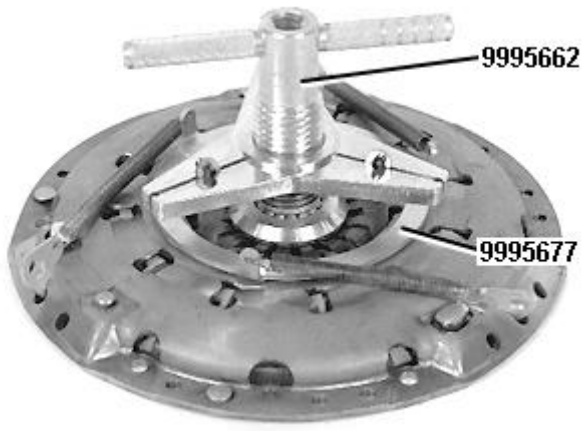

Fig. 394: Identifying Clutch Diaphragm Spring
Courtesy of VOLVO CARS CORPORATION

NOTE: **Do not allow the diaphragm spring to be under load for a long period of time. Relieve the load as soon as possible. Leave the compression tool in position.**

Applies only to certain engine versions with self adjusting clutches:

NOTE: **Keep fingers away from the three clutch rivets when relieving a load or removing the compression tool. There is a risk of clamping injuries.**

CHECKING THE CLUTCH

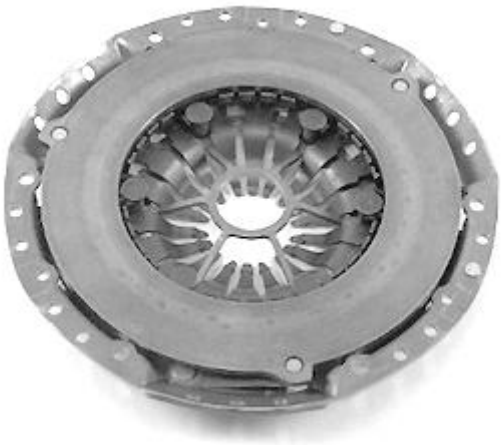

Fig. 395: Check The Clutch
Courtesy of VOLVO CARS CORPORATION

Wipe the clutch using a dry cloth.

Check carefully for over heating damage, cracking, scoring or other damage to the friction surface

Check that spring is not damaged or broken.

CHECKING THE PRESSURE PLATE FOR OUT-OF-TRUE

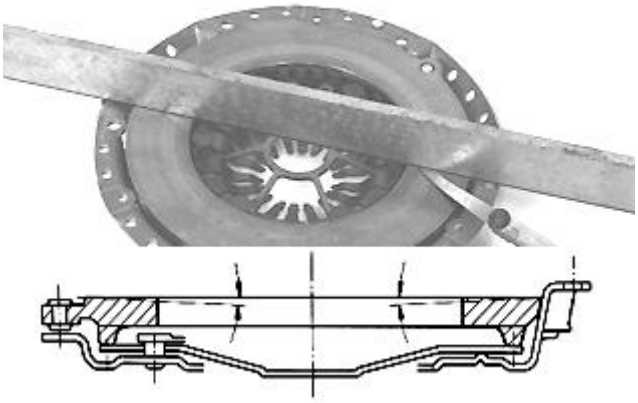

Fig. 396: Checking Pressure Plate For Out-Of-True
Courtesy of VOLVO CARS CORPORATION

Wipe the pressure plate friction area clean.

Check any out-of-true carefully. Use a ruler and a feeler gauge. Out-of-true is permitted in one direction only.

Out-of-true must **not** exceed **0.2 mm** . If out-of-true is greater, replace the clutch.

The clutch must be replaced as a complete unit.

CHECKING THE CLUTCH DRIVEN PLATE

Fig. 397: Checking Clutch Driven Plate
Courtesy of VOLVO CARS CORPORATION

Wipe off the clutch driven plate using a dry cloth. The cloth must be free of oil and contaminants.

Check the clutch carefully for signs of wear, damage through overheating, cracking or other damage.

NOTE: **The clutch driven plate must always be replaced if there are no radial ripples remaining on the friction coating. The clutch driven plate must also be changed if there is oil or grease on it.**

CHECKING THAT THERE ARE NO CRACKS OR LARGE SCRATCHES ON THE FLYWHEEL

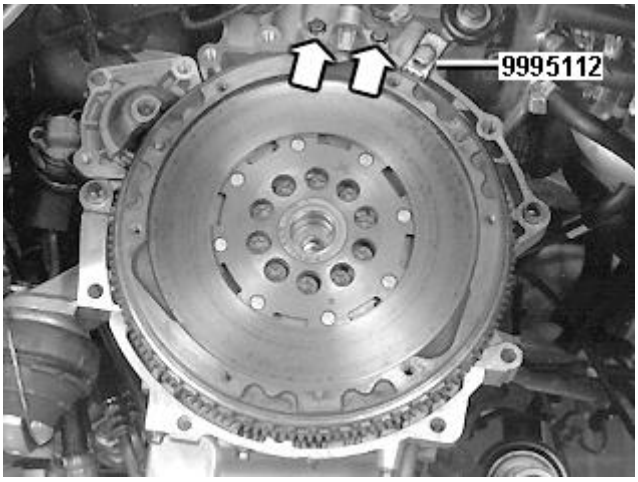

Fig. 398: Locking Flywheel With Tool 9995112
Courtesy of VOLVO CARS CORPORATION

To replace the flywheel, see **ENGINE - REMOVAL, REPLACEMENT AND INSTALLATION - 2 OF 2** .

INSTALLATION

INSTALLING THE CENTERING TOOL FOR THE CLUTCH DRIVEN PLATE

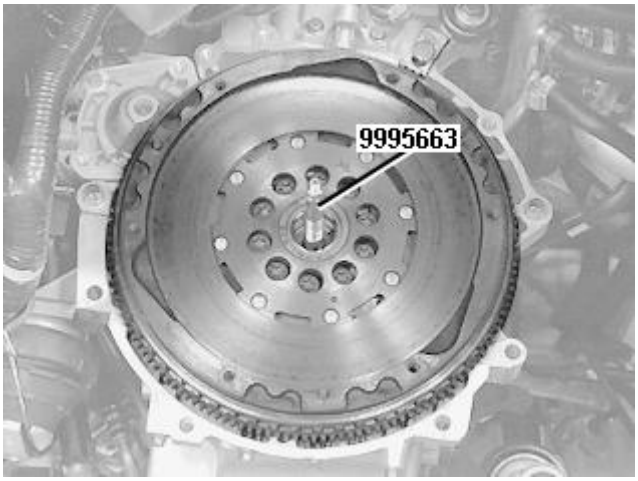

Fig. 399: Centering Tool Installed On Clutch Driven Plate
Courtesy of VOLVO CARS CORPORATION

Use centering tool see **9995663** , or together with see **9995675** . The drift is modified as described in the Tool bulletin. The conversion kit is included.

Remove the cone from the centering tool.

Install the centering tool in the flywheel center as far in as possible.

Use a spanner as a counterhold. Tighten the outer socket so that the drift expander locks the centering tool.

Feel to, see that the centering tool is secured in the crankshaft.

INSTALLING THE CLUTCH DRIVEN PLATE

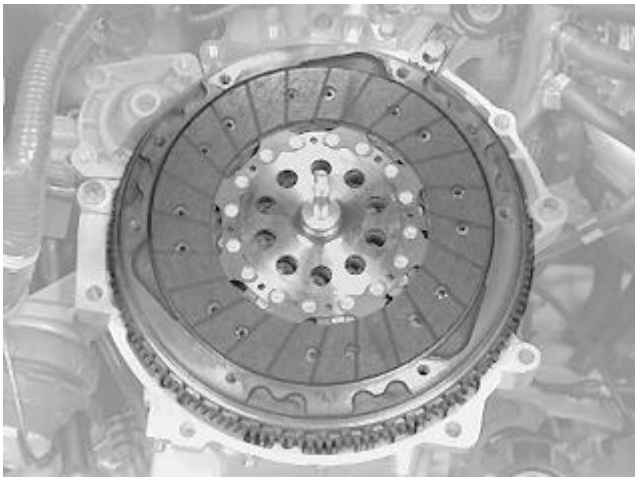

Fig. 400: Clutch Driven Plate
Courtesy of VOLVO CARS CORPORATION

CAUTION: Turn the slightly longer part of the clutch driven plate hub in towards the flywheel. There is a marking on the clutch driven plate .

Install the cone on the centering tool. Tighten the cone **(by hand)** . Secure the clutch driven plate.

NOTE: Tightening tools must not be used on the cone or damage may be caused to the clutch driven plate.

INSTALLING THE TOOLS ON THE CLUTCH

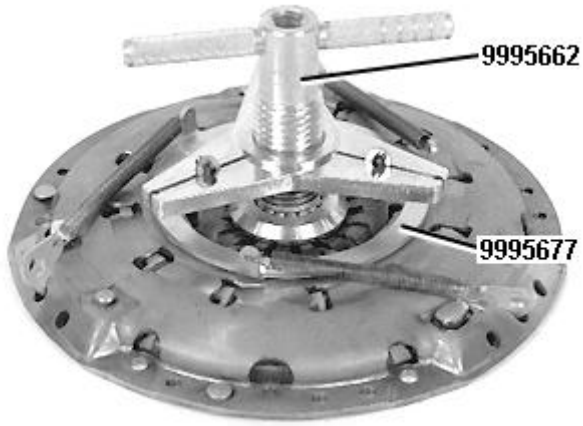

Fig. 401: Identifying Clutch Diaphragm Spring
Courtesy of VOLVO CARS CORPORATION

Install counterhold see **9995677** , see ALIGNING THE COUNTERHOLD in **Fig. 416** .

Install the compression tool see **9995662** , see **INSTALLING THE COMPRESSION TOOL** .

First tighten the center screw on the compression tool to light contact. Then compress the clutch.

NOTE: When the center screw comes into contact with the diaphragm spring, the screw should, for a loose clutch, be tightened a maximum of 4-4.5 turns.

Applies only to certain engine versions with self adjusting clutches:

NOTE: When the center screw comes into contact with the diaphragm spring, the screw should, for a loose clutch, be tightened 4.5 - 5 turns or until a clear click is heard .

INSTALLING THE CLUTCH

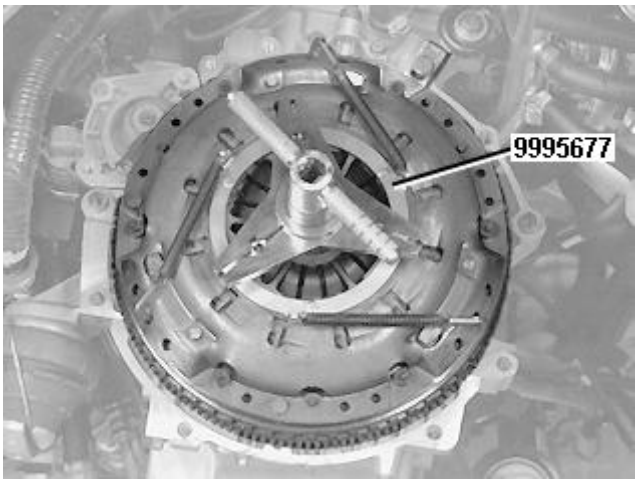

Fig. 402: Clutch Automatic Adjustment Using Counterhold 999 5677
Courtesy of VOLVO CARS CORPORATION

Applies only to certain engine versions with self adjusting clutches:

Check that the clutch automatic adjustment is secured with counterhold see **9995677** .

Applies to all clutch versions:

Install the clutch and locate the guide pins.

Check that the clutch is in contact with the flywheel all around its circumference.

Carefully tighten the six screws, crosswise, so that the clutch is guided up onto the guide pins and lies in contact all around with the flywheel.

Tighten the screws crosswise. Tighten to **25 Nm** .

REMOVING THE TOOLS

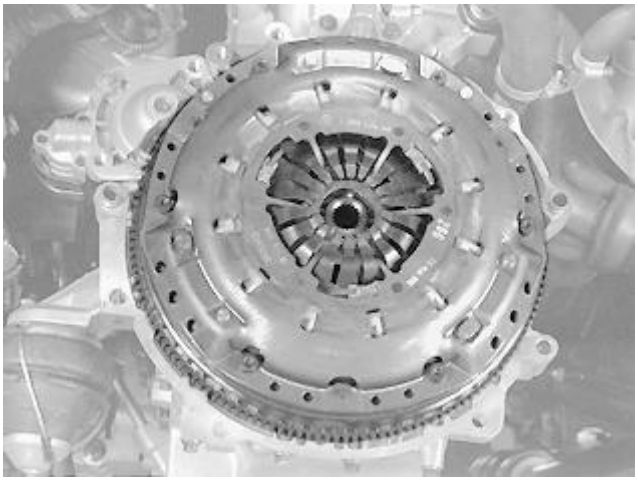

Fig. 403: Clutch Assembly
Courtesy of VOLVO CARS CORPORATION

Screw out the center screw. Remove the compression tool.

NOTE: **Applies only to certain engine versions with self adjusting clutches: Keep fingers away from the three clutch rivets when relieving a load or removing the compression tool. There is a risk of clamping injuries.**

Applies to all clutch versions:

Remove the hooks. Remove the counterhold.

Remove the centering cone from the clutch driven plate.

Remove the socket. Tap the centering tool lightly with a rubber mallet so that the expander releases. Use a rubber mallet so that the threads are not damaged. Remove the centering tool.

Remove the flywheel gear sector.

NOTE: **Installing the gearbox:**

To install the transmission, see TRANSMISSION - REMOVAL, REPLACEMENT AND INSTALLATION .

SEALING MICRO-ENCLOSED SCREWS

NOTE: **Micro-enclosed screws are used where the seal requirements are high. Loose screws are replaced or sealed with new sealing compound. Sealant "HYDRAULIC THREADSEAL" has P/N 11 61 056-5 and sealing must be carried out according to the instructions on the packet.**

The screws to be sealed with "HYDRAULIC THREAD SEAL" and their positions

are shown below.

NOTE: **As the illustrations in this service information are used for different model years and / or models, some variation may occur. However, the essential information in the illustrations is always correct.**

SEALANT

Fig. 404: Hydraulic Thread Sealant
Courtesy of VOLVO CARS CORPORATION

"Hydraulic thread sealant"

- P/N 11 61 056-5
- Use a brush and/or the packet spout to apply the sealant to the screw.
- Avoid skin contact with the sealant.

ENGINE INTAKE SIDE

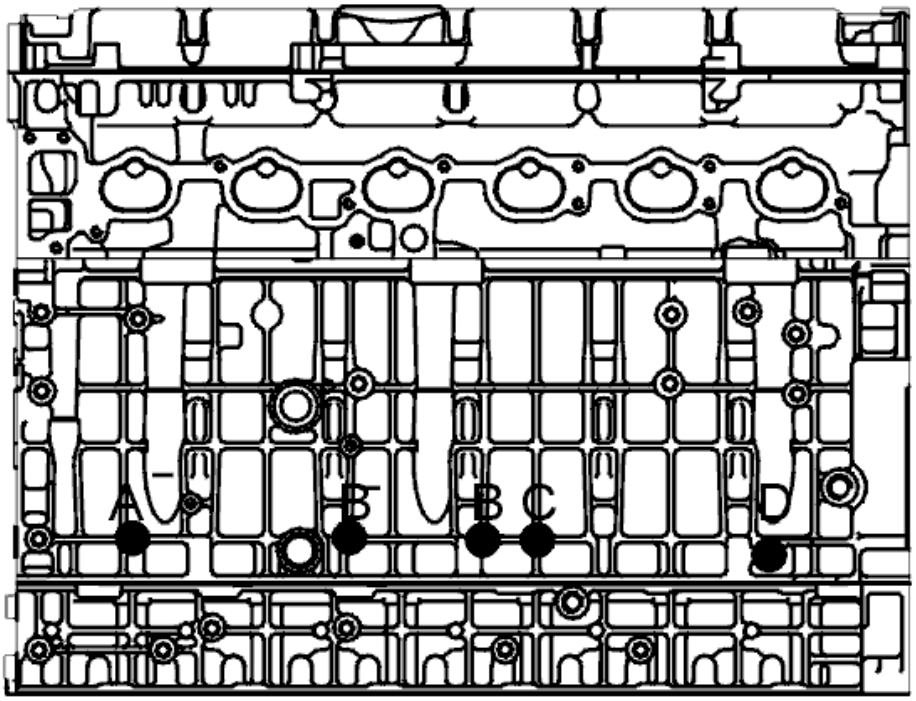

Fig. 405: Engine Intake Side
Courtesy of VOLVO CARS CORPORATION

Location	Designation	Number	P/N
A	Auxiliary equipment bracket screw	1	946671-5
B	Air conditioning (A/C) stay screw (for cars with air conditioning (A/C))	1	965180-3
B	Intake manifold stay screw (cars without AC)	1	946173-2
C	Starter motor mounting screw	1	946173-2
D	Engine mounting screw	1	946470-2

ENGINE EXHAUST SIDE

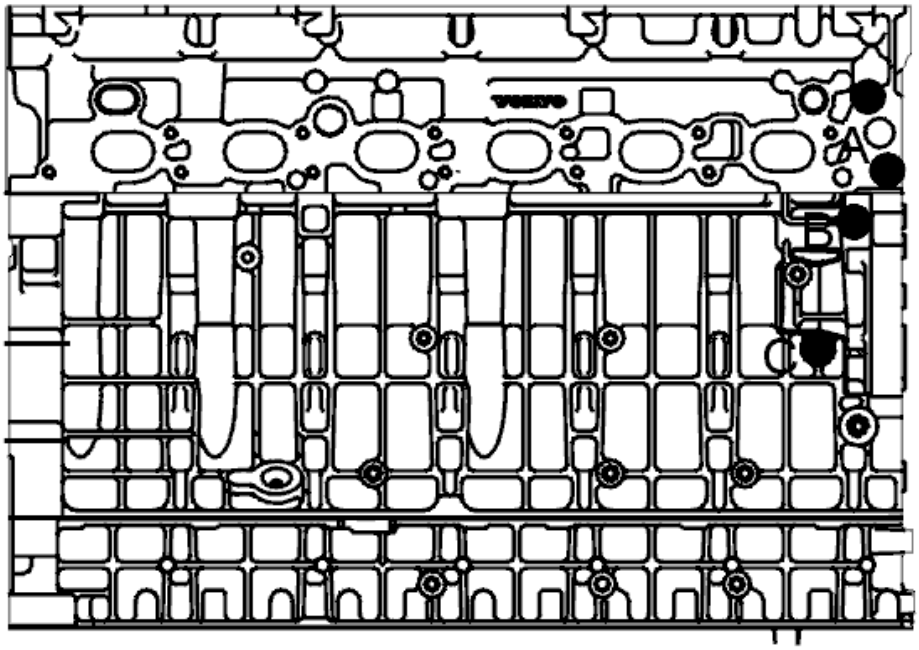

Fig. 406: Engine Exhaust Side
Courtesy of VOLVO CARS CORPORATION

Location	Designation	Number	P/N
A	Coolant manifold screw (M7 X 20) with flange height 7mm including gasket	2	975880-6
A	Coolant manifold screw (M7 X 25) with flange height 9mm including gasket	2	979090-8
B	Plug water pump housing	1	968144-6
C	Drain cock	1	9135268-2

REAR OF ENGINE

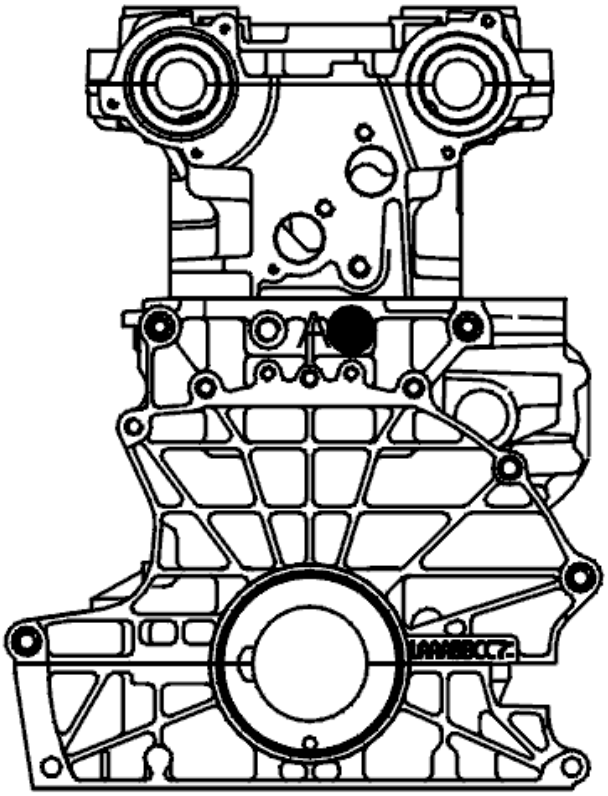

Fig. 407: Identifying Rear Of Engine
Courtesy of VOLVO CARS CORPORATION

Location	Designation	Number	P/N
A	Nipple	1	976040-6

ENGINE FRONT

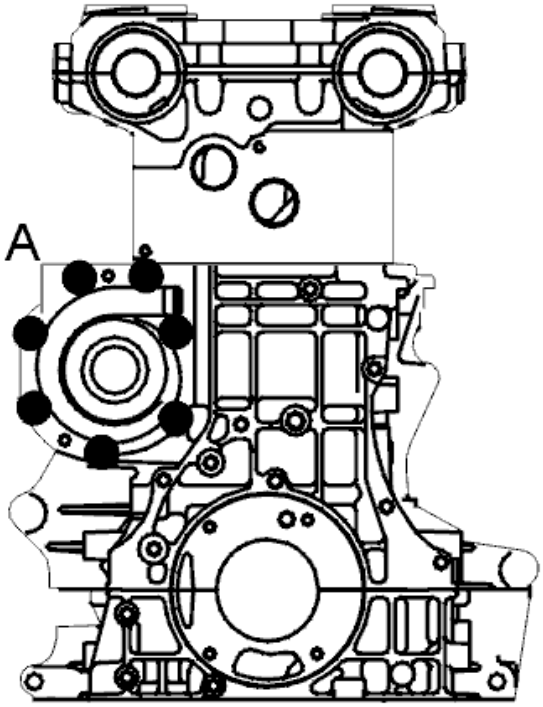

Fig. 408: Engine Front
Courtesy of VOLVO CARS CORPORATION

Location	Designation	Number	P/N
A	Coolant pump screw	7	977744-2

ENGINE BLOCK, INSTALLING (B6294T; 2003-2006)

ENGINE BLOCK, INSTALLING COMPONENTS

see **ENGINE BLOCK, INSTALLING COMPONENTS**

EXPOSING THE ENGINE BODY

Special tools:

see **9989721**

see **9992520**

see **9995112**

see **9995297**

NOTE: **The illustrations in this service information are used for different model years and / or models. Therefore there may be some variation. However, the essential information in the illustrations is always correct.**

REMOVING THE TRANSMISSION

HINT: Remove the lower screws (these are difficult to access) between the transmission and engine before removing the engine and transmission unit. The engine and transmission unit must be placed on a suitable surface.

HINT: Take the weight off the transmission. Remove the remaining screws. Carefully remove the transmission.

Remove the clutch

- for **M65** see **PRESSURE PLATE / CLUTCH DRIVEN PLATE, REPLACING** .

REMOVING THE FLYWHEEL AND CARRIER PLATE

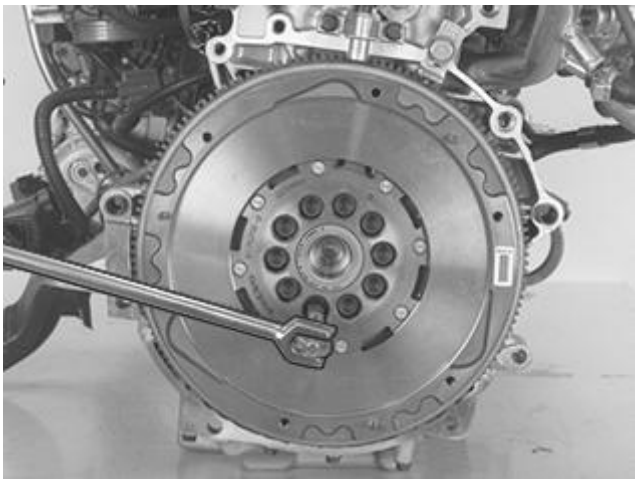

Fig. 409: Viewing Flywheel And Carrier Plate
Courtesy of VOLVO CARS CORPORATION

Install gear sector see **9995112** .

Remove all screws except for the uppermost screw which secures the flywheel to the crankshaft. Slacken off the uppermost screw. Leave it in place, screwed in a few turns.

Carefully work the flywheel and carrier plate loose. Use 2 groove-cut chisels. Apply these between the cylinder block and the flywheel and carrier plate.

Hold the flywheel and carrier plate and remove the final screw.

Install the engine in a stand

Use mounting stand see **9992520** , fixture see **9995297** and screw set see **9989721** .

EXPOSING THE ENGINE

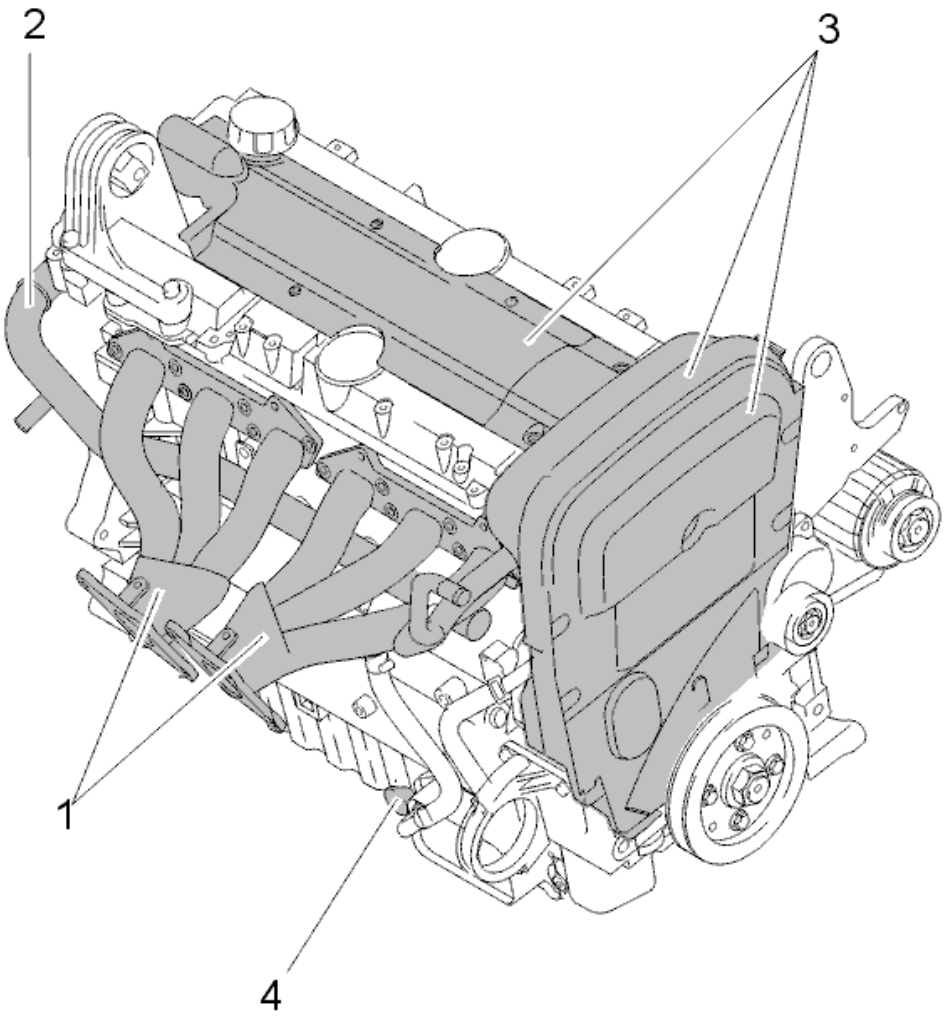

Fig. 410: Engine (B6xx4S) Components (1 Of 2)
Courtesy of VOLVO CARS CORPORATION

REMOVE (B6XX4S)

1. The heat deflector plate above the manifold.	3. The upper and front timing covers and the cover over the ignition coils.
2. The coolant pipe (water pump inlet).	4. Drain the engine oil.

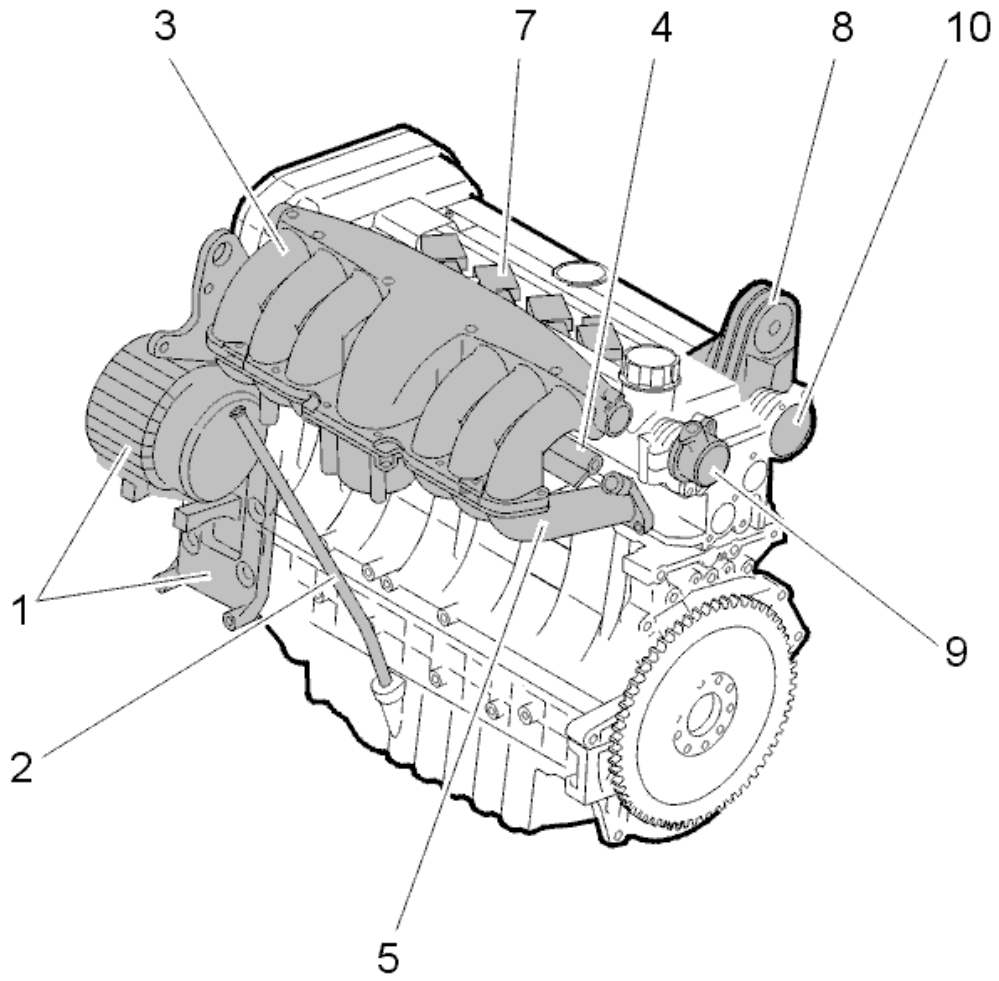

Fig. 411: Engine (B6xx4S) Components (2 Of 2)
Courtesy of VOLVO CARS CORPORATION

REMOVE (B6XX4S)

1. The generator (GEN) and the auxiliary equipment bracket.	6. The engine wiring assembly.
2. The dipstick pipe.	7. The ignition coils.
3. The intake manifold upper section.	8. The torque rod bracket.
4. The fuel rail.	9. The camshaft position sensor (CMP) housing and trigger wheel.
5. The intake manifold lower section.	10. The cover.

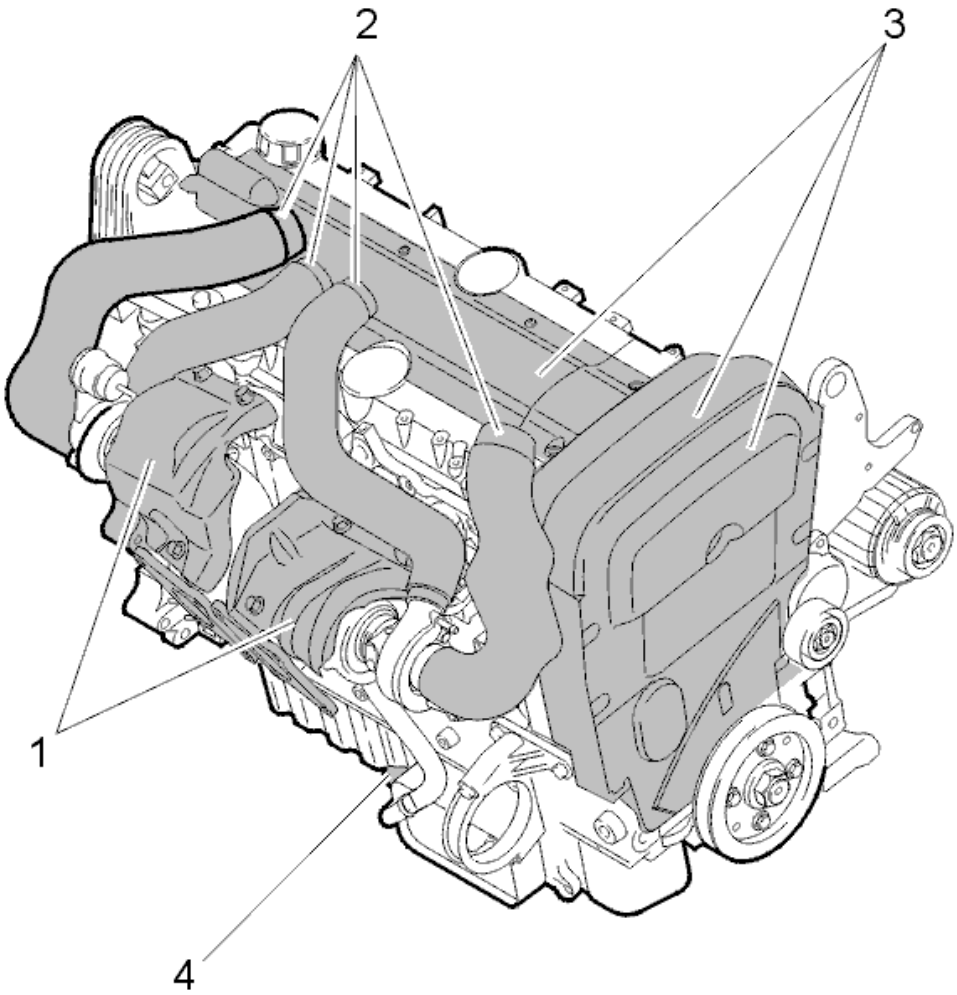

Fig. 412: Engine (B6xx4T) Components (1 Of 3)
Courtesy of VOLVO CARS CORPORATION

REMOVE (B6XX4T)

1. The heat deflector plates.	3. The upper and front timing covers and the cover over the ignition coils.
2. The turbocharger unit intake and exhaust manifolds.	4. Drain the engine oil.

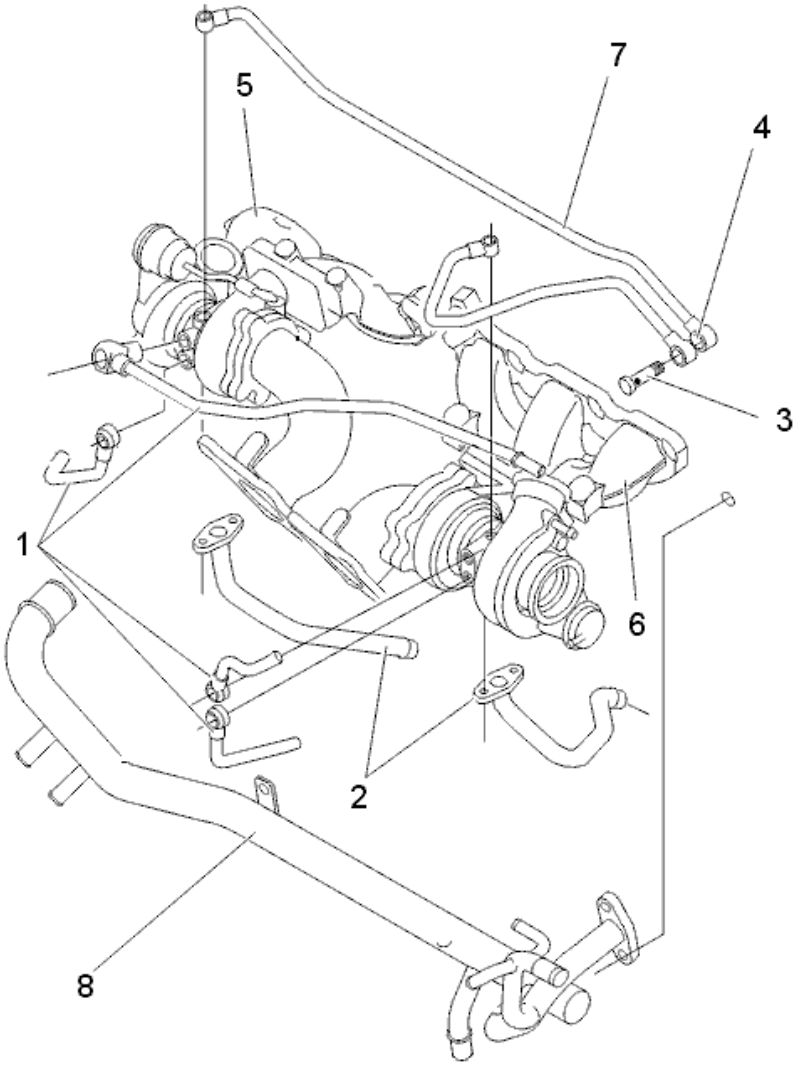

Fig. 413: Engine (B6xx4T) Components (2 Of 3)
Courtesy of VOLVO CARS CORPORATION

REMOVE (B6XX4T)

1. The coolant pipes, (turbocharger (TC) inlet / outlet	5. Exhaust manifold including turbocharger (TC) cylinders 1, 2, 3.
2. The oil return line.	6. Exhaust manifold including turbocharger (TC) cylinders 4, 5, 6.
3. The pipe screws for the oil pressure pipe terminal by the cylinder block.	7. The oil pressure pipe to the turbocharger (TC) cylinders 4, 5, 6.
4. The oil pressure pipe to the turbocharger (TC) cylinders 1, 2, 3.	8. The coolant pipe (water pump inlet).

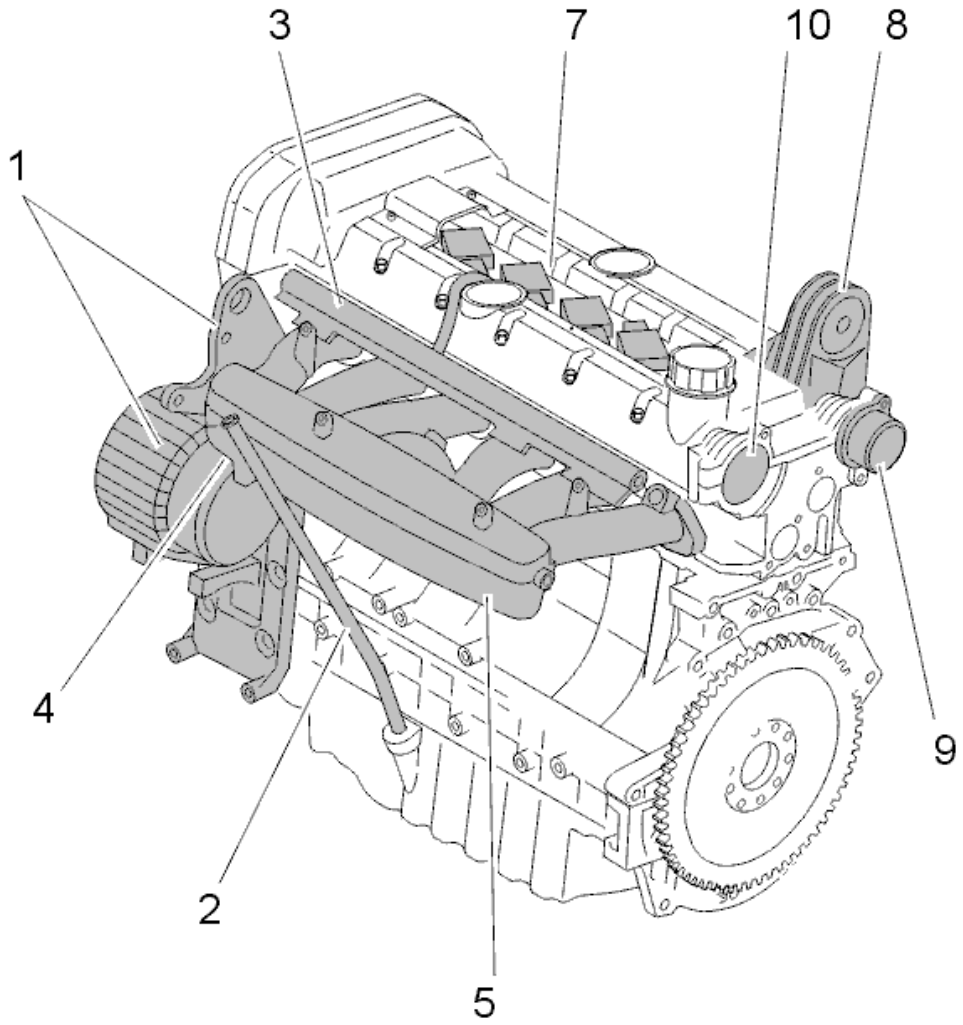

Fig. 414: Engine (B6xx4T) Components (3 Of 3)
Courtesy of VOLVO CARS CORPORATION

REMOVE (B6XX4T)

1. The generator (GEN) and the auxiliary equipment bracket.	6. The engine wiring assembly.
2. The dipstick pipe.	7. The ignition coils.
3. Fuel rail.	8. The torque rod bracket.
4. The pipe screw for the water heated crankcase ventilation.	9. The camshaft position sensor (CMP) housing and trigger wheel.
5. The intake manifold.	10. The cover.

PRESSURE PLATE / CLUTCH DRIVEN PLATE, REPLACING

Special tools:

see **9995112**

see **9995662**

see **9995663**

see **9995675**

see **9995677**

NOTE: **To remove the transmission, see TRANSMISSION - REMOVAL, REPLACEMENT AND INSTALLATION .**

REMOVAL

BLOCKING THE FLYWHEEL

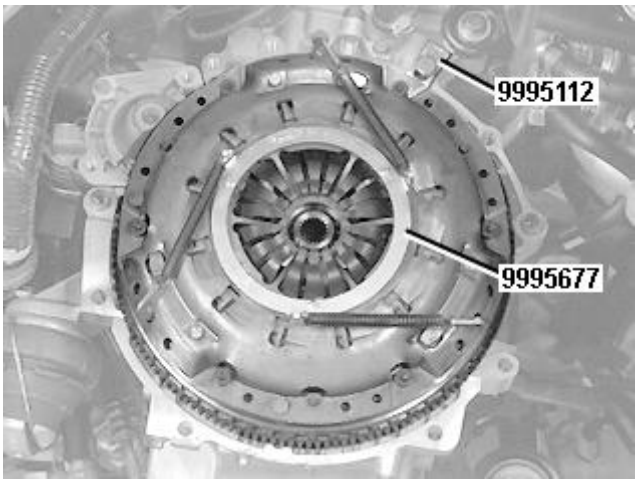

Fig. 415: Blocking The Flywheel Using Gear Sector 999 5112
Courtesy of VOLVO CARS CORPORATION

Use gear sector see **9995112** .

Applies only to certain engine versions with self adjusting clutches:

Secure the clutch automatic adjustment.

Use counterhold see **9995677** . Locate the counterhold, see below.

ALIGNING THE COUNTERHOLD FOR AUTOMATIC CLUTCH ADJUSTMENT

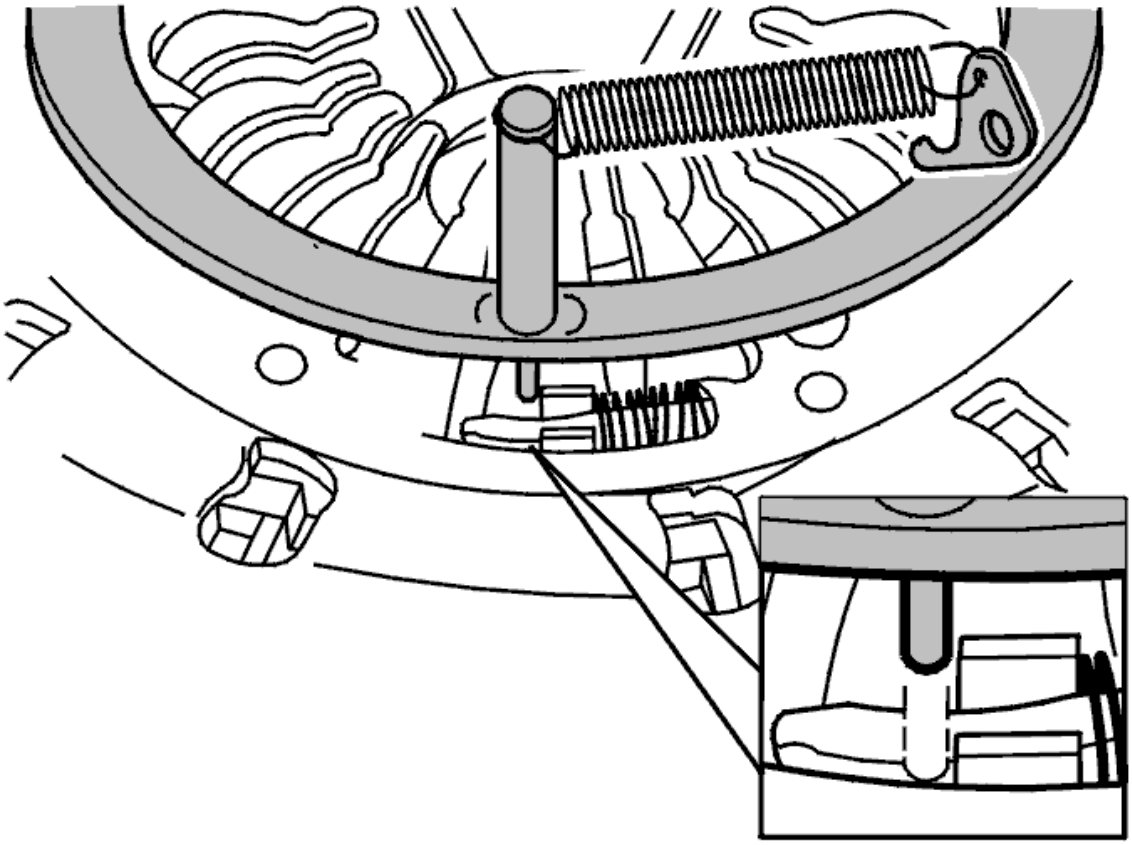

Fig. 416: Aligning Counterhold For Automatic Clutch Adjustment
Courtesy of VOLVO CARS CORPORATION

Applies only to certain engine versions with self adjusting clutches:

The three pins on the counterhold lock the automatic adjustment.

Position the tool as illustrated.

Ensure that all the three pins (see the illustration) go into the groove in front of the tensioner springs for the automatic adjuster.

Press the ring against the pressure plate. Pull out the counterhold springs. Secure the three hooks in the center holes of the outer edge.

INSTALLING THE COMPRESSION TOOL

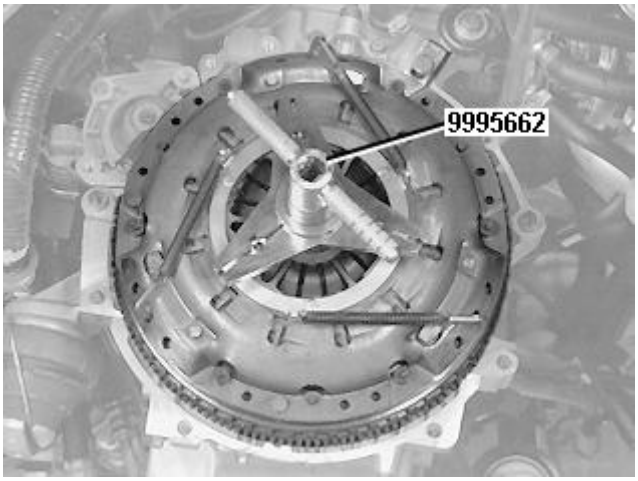

Fig. 417: Compression Tool 999 5662 Installed
Courtesy of VOLVO CARS CORPORATION

Install compression tool see **9995662** , together with the conversion kit on the clutch. The tool is modified as described in the tool bulletin.

Ensure that the hooks grip correctly, although without clamping the adjuster springs.

Centre the compression tool and tighten the screw to light contact against the diaphragm spring. At the same time, check that the hooks on the tool are in position.

Applies only to clutches without self adjustment:

Note the position of the handle with slots. Then screw in by **not more than two turns** .

Remove the clutch and clutch driven plate

Applies only to certain engine versions with self adjusting clutches:

Compress the clutch so that the automatic adjuster is not under load.

If the clutch is worn, the counterhold turns the automatic adjustment to the original position marking.

The marking consists of two stamped arrows.

Then continue to screw in the compression tool until the diaphragm spring has pressed the pressure plate to a free position.

A click can be heard when the clutch pressure plate snaps out.

Remove the clutch and the clutch driven plate .

RELIEVING THE LOAD FROM THE CLUTCH DIAPHRAGM SPRING

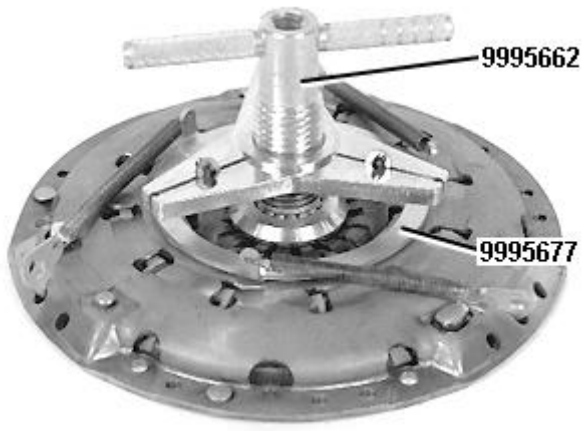

Fig. 418: Identifying Clutch Diaphragm Spring
Courtesy of VOLVO CARS CORPORATION

NOTE: **Do not allow the diaphragm spring to be under load for a long period of time. Relieve the load as soon as possible. Leave the compression tool in position.**

Applies only to certain engine versions with self adjusting clutches:

NOTE: **Keep fingers away from the three clutch rivets when relieving a load or removing the compression tool. There is a risk of clamping injuries.**

CHECKING THE CLUTCH

Fig. 419: Check The Clutch
Courtesy of VOLVO CARS CORPORATION

Wipe the clutch using a dry cloth.

Check carefully for over heating damage, cracking, scoring or other damage to the friction surface

Check that spring is not damaged or broken.

CHECKING THE PRESSURE PLATE FOR OUT-OF-TRUE

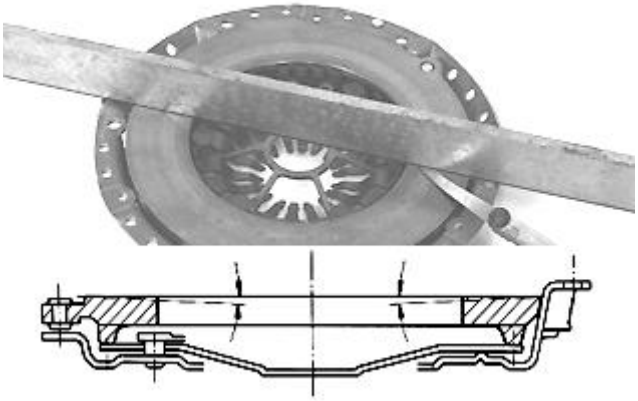

Fig. 420: Checking Pressure Plate For Out-Of-True
Courtesy of VOLVO CARS CORPORATION

Wipe the pressure plate friction area clean.

Check any out-of-true carefully. Use a ruler and a feeler gauge. Out-of-true is permitted in one direction only.

Out-of-true must **not** exceed **0.2 mm** . If out-of-true is greater, replace the clutch.

The clutch must be replaced as a complete unit.

CHECKING THE CLUTCH DRIVEN PLATE

Fig. 421: Checking Clutch Driven Plate
Courtesy of VOLVO CARS CORPORATION

Wipe off the clutch driven plate using a dry cloth. The cloth must be free of oil and contaminants.

Check the clutch carefully for signs of wear, damage through overheating, cracking or other damage.

NOTE: **The clutch driven plate must always be replaced if there are no radial ripples remaining on the friction coating. The clutch driven plate must also be changed if there is oil or grease on it.**

CHECKING THAT THERE ARE NO CRACKS OR LARGE SCRATCHES ON THE FLYWHEEL

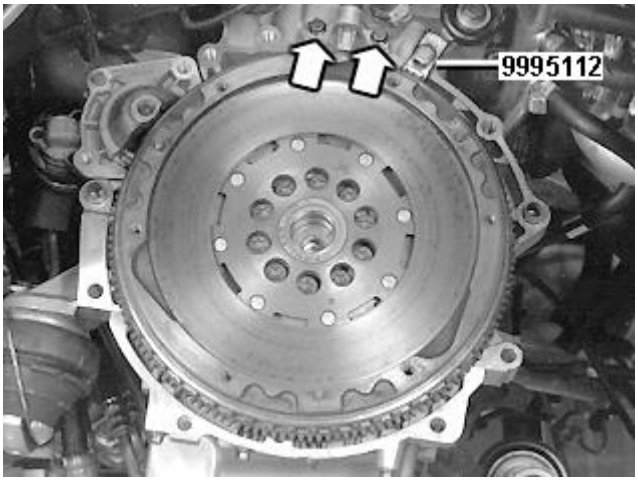

Fig. 422: Locking Flywheel With Tool 9995112
Courtesy of VOLVO CARS CORPORATION

Replacing flywheel. See **ENGINE - REMOVAL, REPLACEMENT AND INSTALLATION - 2 OF 2** .

INSTALLATION

INSTALLING THE CENTERING TOOL FOR THE CLUTCH DRIVEN PLATE

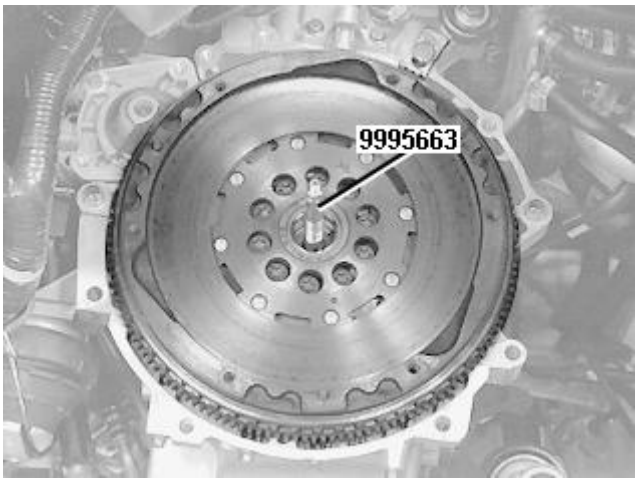

Fig. 423: Centering Tool Installed On Clutch Driven Plate
Courtesy of VOLVO CARS CORPORATION

Use centering tool see **9995663** , or together with see **9995675** . The drift is modified as described in the Tool

bulletin. The conversion kit is included.

Remove the cone from the centering tool.

Install the centering tool in the flywheel center as far in as possible.

Use a spanner as a counterhold. Tighten the outer socket so that the drift expander locks the centering tool.

Feel to, see that the centering tool is secured in the crankshaft.

INSTALLING THE CLUTCH DRIVEN PLATE

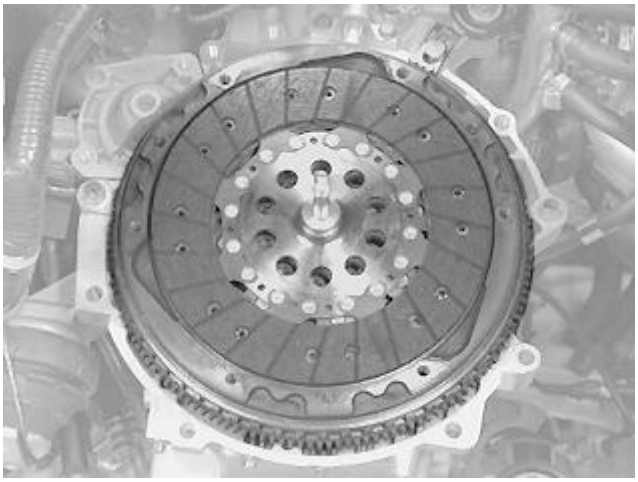

Fig. 424: Clutch Driven Plate
Courtesy of VOLVO CARS CORPORATION

CAUTION: Turn the slightly longer part of the clutch driven plate hub in towards the flywheel. There is a marking on the clutch driven plate .

Install the cone on the centering tool. Tighten the cone **(by hand)** . Secure the clutch driven plate.

NOTE: Tightening tools must not be used on the cone or damage may be caused to the clutch driven plate.

INSTALLING THE TOOLS ON THE CLUTCH

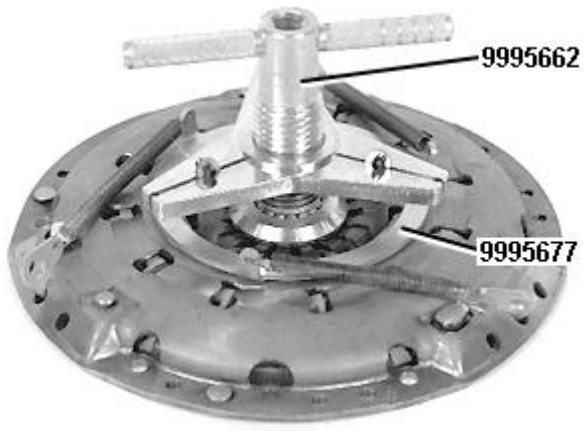

Fig. 425: Identifying Clutch Diaphragm Spring
Courtesy of VOLVO CARS CORPORATION

Install counterhold see **9995677** , see ALIGNING THE COUNTERHOLD in **Fig. 416** .

Install the compression tool see **9995662** , see **INSTALLING THE COMPRESSION TOOL** .

First tighten the center screw on the compression tool to light contact. Then compress the clutch.

NOTE: **When the center screw comes into contact with the diaphragm spring, the screw should, for a loose clutch, be tightened a maximum of 4-4.5 turns.**

Applies only to certain engine versions with self adjusting clutches:

NOTE: **When the center screw comes into contact with the diaphragm spring, the screw should, for a loose clutch, be tightened 4.5 - 5 turns or until a clear click is heard .**

INSTALLING THE CLUTCH

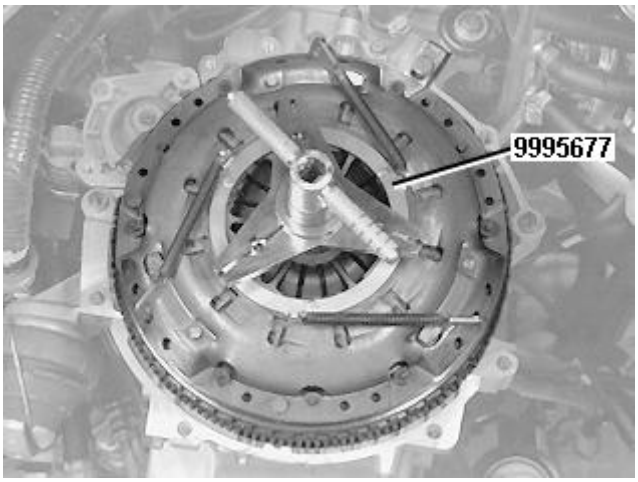

Fig. 426: Clutch Automatic Adjustment Using Counterhold 999 5677
Courtesy of VOLVO CARS CORPORATION

Applies only to certain engine versions with self adjusting clutches:

Check that the clutch automatic adjustment is secured with counterhold see **9995677** .

Applies to all clutch versions:

Install the clutch and locate the guide pins.

Check that the clutch is in contact with the flywheel all around its circumference.

Carefully tighten the six screws, crosswise, so that the clutch is guided up onto the guide pins and lies in contact all around with the flywheel.

Tighten the screws crosswise. Tighten to **25 Nm** .

REMOVING THE TOOLS

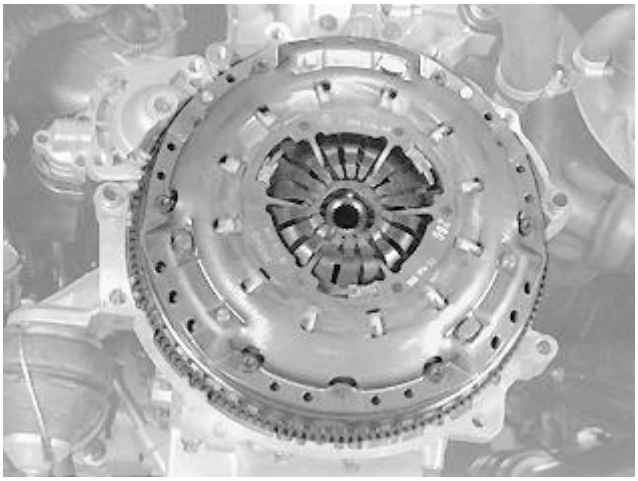

Fig. 427: Clutch Assembly
Courtesy of VOLVO CARS CORPORATION

Screw out the center screw. Remove the compression tool.

NOTE: **Applies only to certain engine versions with self adjusting clutches: Keep fingers away from the three clutch rivets when relieving a load or removing the compression tool. There is a risk of clamping injuries.**

Applies to all clutch versions:

Remove the hooks. Remove the counterhold.

Remove the centering cone from the clutch driven plate.

Remove the socket. Tap the centering tool lightly with a rubber mallet so that the expander releases. Use a rubber mallet so that the threads are not damaged. Remove the centering tool.

Remove the flywheel gear sector.

NOTE: **Installing the gearbox:**

To install the transmission, see TRANSMISSION - REMOVAL, REPLACEMENT AND INSTALLATION .

SEALING MICRO-ENCLOSED SCREWS

see **SEALING MICRO-ENCLOSED SCREWS**

ENGINE BLOCK, INSTALLING (B6324S/5; 2007-2012)

ENGINE BLOCK, INSTALLING COMPONENTS

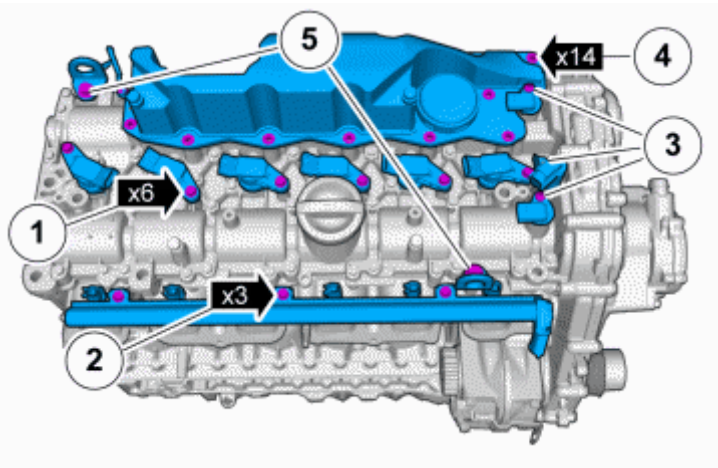

Fig. 428: Installing Components
Courtesy of VOLVO CARS CORPORATION

Install the following items:

1. ignition coils

   Torque: M6

   10 Nm

2. fuel rails/fuel injectors

   Torque: M6

   10 Nm

3. the sensor

   Torque: M6

   10 Nm

4. cover crankcase ventilation

   Torque: M6

   10 Nm

5. lifting eyes

   Torque: M10

   50 Nm

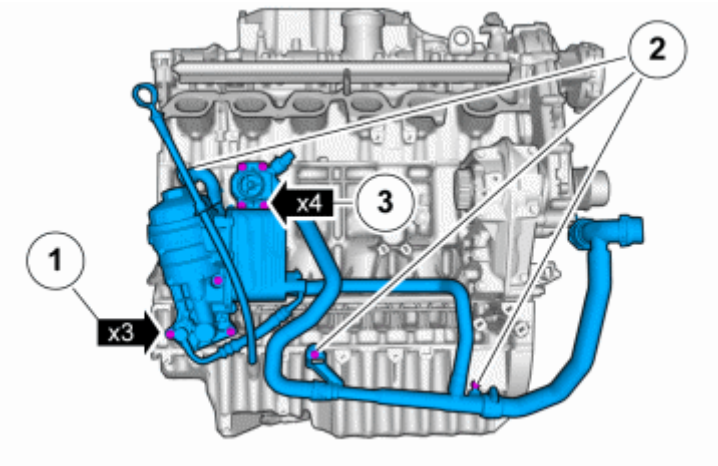

Fig. 429: Installing Oil/Cooling Components
Courtesy of VOLVO CARS CORPORATION

1. Oil trap

   Torque: M6

   10 Nm

2. water pipe

   Torque: M7

   17 Nm

3. the thermostat housing

Torque: M6

10 Nm

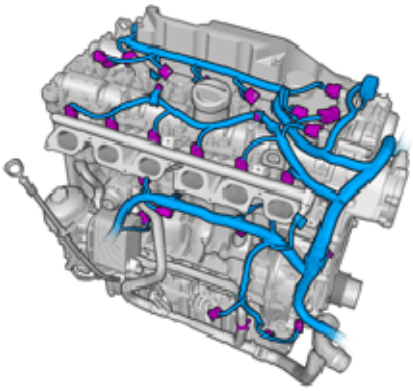

Fig. 430: Identifying Wiring Harness
Courtesy of VOLVO CARS CORPORATION

Install the cable harness.

Torque: M6

10 Nm

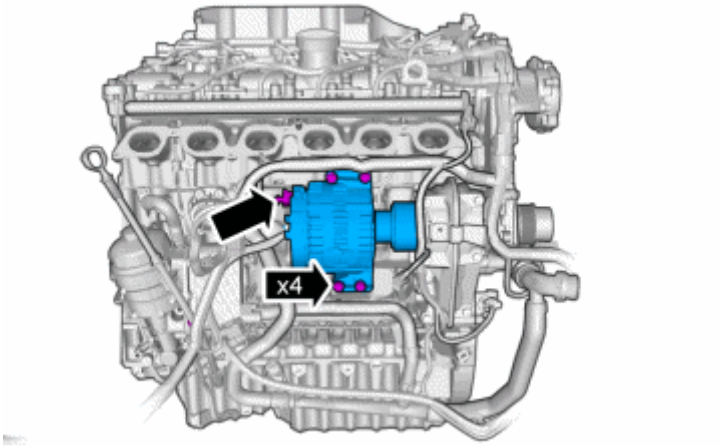

Fig. 431: Installing The Generator
Courtesy of VOLVO CARS CORPORATION

Install the generator. See **GENERATOR**

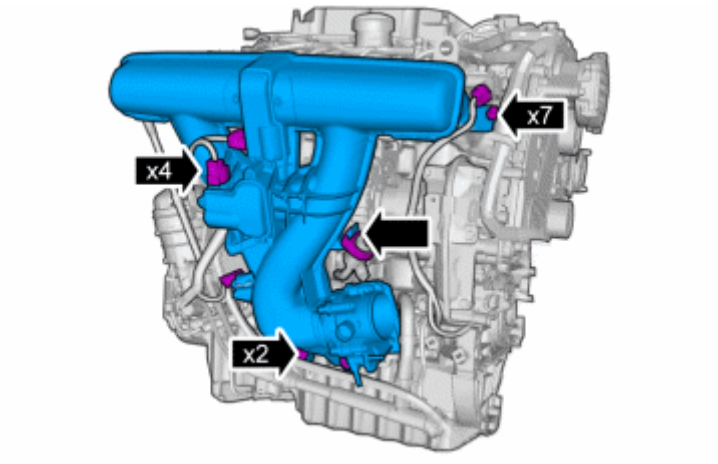

Fig. 432: Remove/Install Intake Manifold
Courtesy of VOLVO CARS CORPORATION

Install intake manifold. See **INDUCTION PIPE**

Fig. 433: Removing/Installing Adapter
Courtesy of VOLVO CARS CORPORATION

see **9995297** see **9992520** see **9989721**

Install carrier plate. See **CARRIER PLATE**

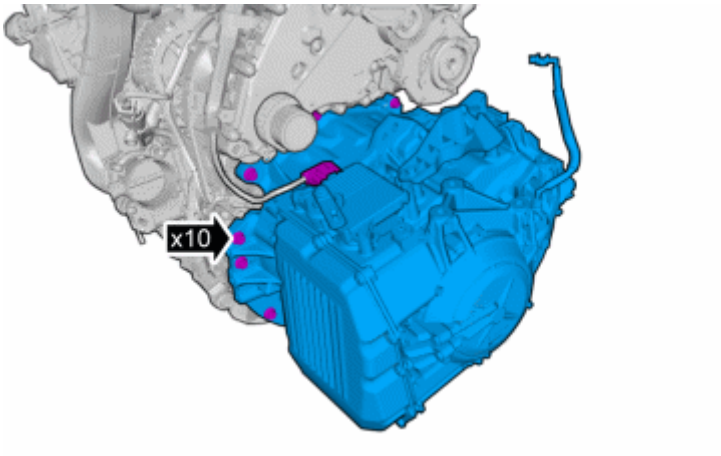

Fig. 434: View of Transmission Installed
Courtesy of VOLVO CARS CORPORATION

Install transmission. See **TRANSMISSION** (B6324S, TF-80SC; 2007-2010) or **TRANSMISSION** (B6324S, TF-80SC AWD; 2007-2010)

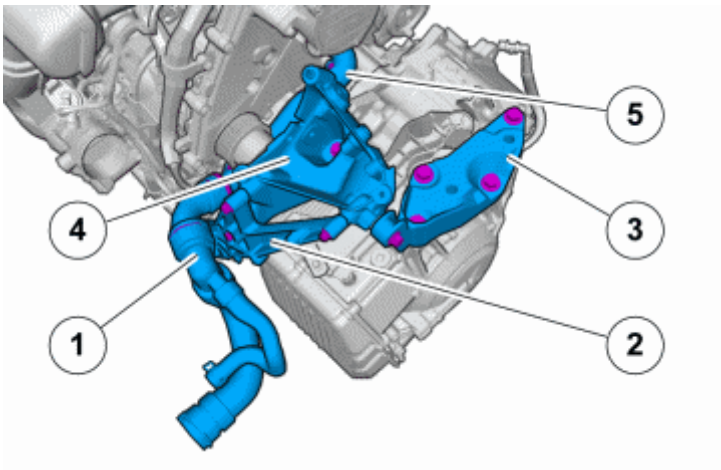

Fig. 435: Identifying Auxiliary Brackets
Courtesy of VOLVO CARS CORPORATION

Install the following items:

1. radiator hose
2. front auxiliary unit console, see **AUXILIARY BRACKETS**
3. console transmission
4. AC-console
5. water pipe

Torque: M6

10 Nm

Install the engine. See **ENGINE, INSTALLING**

ENGINE BODY, EXPOSING

Drain the engine oil. See **OIL FILTER**

Remove the engine. See **ENGINE, REMOVAL**

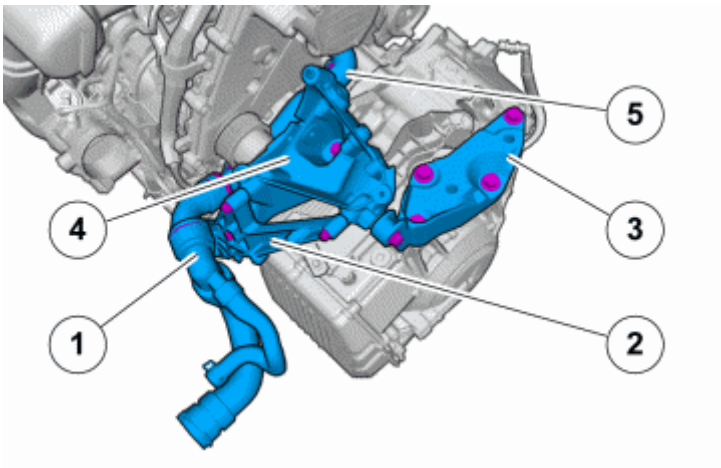

Fig. 436: Identifying Auxiliary Brackets
Courtesy of VOLVO CARS CORPORATION

Remove the following components:

1. radiator hose
2. front auxiliary unit console
3. console transmission
4. AC-console
5. water pipe

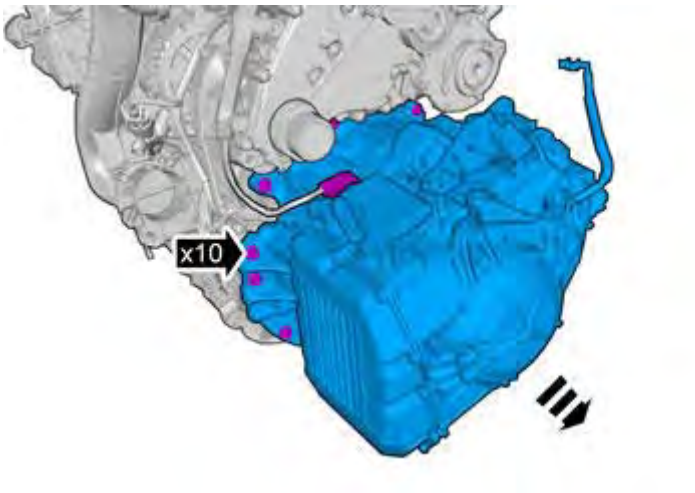

Fig. 437: Removing Transmission
Courtesy of VOLVO CARS CORPORATION

Remove drive flange plate/flywheel. See **CARRIER PLATE**

Fig. 438: Removing/Installing Adapter
Courtesy of VOLVO CARS CORPORATION

Install the following items:

- see **9992520**
- see **9995297**
- see **9989721**

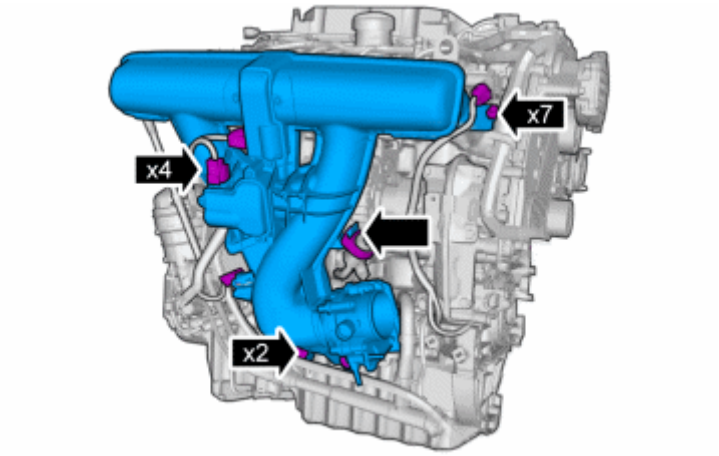

Fig. 439: Remove/Install Intake Manifold
Courtesy of VOLVO CARS CORPORATION

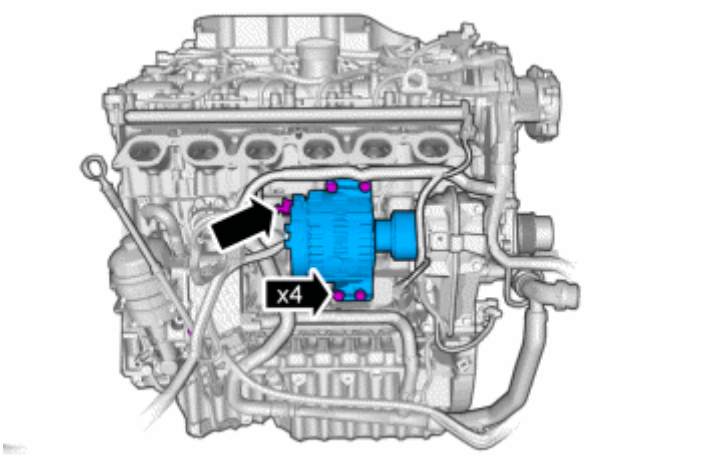

Fig. 440: Installing The Generator
Courtesy of VOLVO CARS CORPORATION

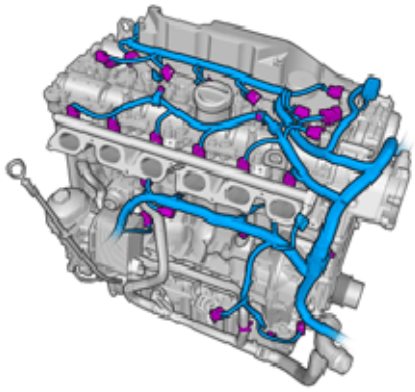

Fig. 441: Identifying Wiring Harness
Courtesy of VOLVO CARS CORPORATION

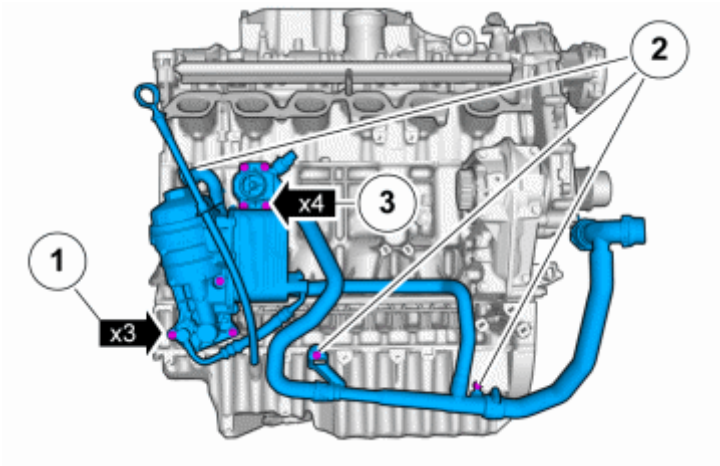

Fig. 442: Installing Oil/Cooling Components

Courtesy of VOLVO CARS CORPORATION

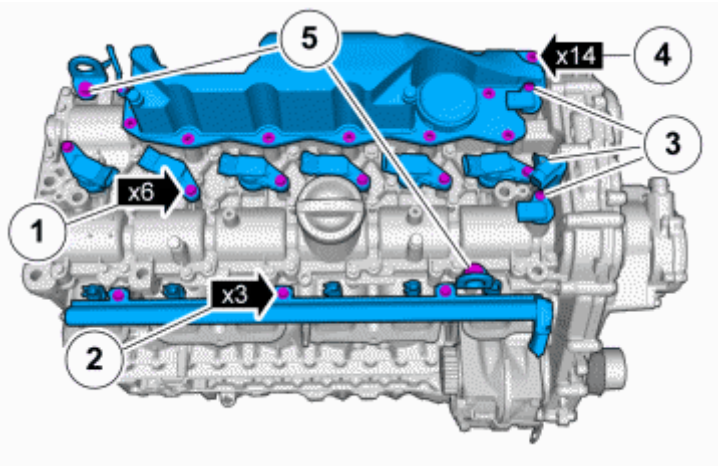

Fig. 443: Installing Components
Courtesy of VOLVO CARS CORPORATION

ENGINE BLOCK, INSTALLING(B8444S; 2005-2011)

ENGINE BLOCK, INSTALLING COMPONENTS

NOTE: **As the illustrations in this service information are used for different model years and / or models, some variation may occur. However, the essential information in the illustrations is always correct.**

INSTALLATION

Install:

- engine cable harness, note the position of the connectors
- manifold, see: **EXHAUST MANIFOLD/GASKET, CYLINDER 1, 3, 5 AND 7 (BANK 1), REPLACING**
- manifold, see: **EXHAUST MANIFOLD/GASKET, CYLINDER 2, 4, 6 AND 8 (BANK 2), REPLACING**
- the alternator, see: **GENERATOR (GEN), REPLACEMENT** .

ENGINE BODY, EXPOSING

Special tools:

see **9992520**

see **9995297**

see **9989721**

NOTE: **As the illustrations in this service information are used for different model years and / or models, some variation may occur. However, the essential information in the illustrations is always correct.**

REMOVAL

REMOVING THE TRANSMISSION

HINT: Remove the lower screws (these are difficult to access) between the transmission and engine before the engine/transmission unit is placed on a suitable surface. Remove the remaining screws. Carefully remove the transmission. For automatic transmissions remove the converter screws.

REMOVING THE FLYWHEEL AND CARRIER PLATE

Remove the carrier plate. See: **REMOVAL** .

PLACE THE ENGINE IN A STAND

Use see **9992520** , see **9995297** and see **9989721** .

drain the oil. See: **OIL/OIL FILTER, REPLACING** .

EXPOSING

EXPOSING THE ENGINE

Remove:

- engine cable harness, note the position of the connectors
- manifold, see: **EXHAUST MANIFOLD/GASKET, CYLINDER 1, 3, 5 AND 7 (BANK 1), REPLACING**
- manifold, see: **EXHAUST MANIFOLD/GASKET, CYLINDER 2, 4, 6 AND 8 (BANK 2), REPLACING**
- the alternator, see: **GENERATOR (GEN), REPLACEMENT** .

GEAR HOUSING (B6324S/5; 2007-2012)

GEAR HOUSING, RECONDITIONING

Special tools	
	T9995670 PLIERS (REMOVING VALVES/CAMSHAFT COVER) B4184-B6304 **Tool number:** T9995670 **Tool description:** PLIERS (REMOVING VALVES/CAMSHAFT COVER) B4184-B6304 **Tool boards:**
	T9997315 PULLER **Tool number:** T9997315

	Tool description: PULLER **Tool boards:**
	T9997258 ANVIL BLOCK **Tool number:** T9997258 **Tool description:** ANVIL BLOCK **Tool boards:**
	T9997259 PULLER **Tool number:** T9997259 **Tool description:** PULLER **Tool boards:**
	T9997317 ANVIL BLOCK **Tool number:** T9997317 **Tool description:** ANVIL BLOCK **Tool boards:**
	T9997329 ANVIL BLOCK **Tool number:** T9997329 **Tool description:** ANVIL BLOCK **Tool boards:**
	T9997318 PRESS TOOL **Tool number:** T9997318 **Tool description:** PRESS TOOL **Tool boards:**
	T9997328 PRESS TOOL **Tool number:** T9997328 **Tool description:** PRESS TOOL **Tool boards:**
	T9997319 PRESS TOOL **Tool number:** T9997319 **Tool description:** PRESS TOOL **Tool boards:**
	T9997320 PRESS TOOL **Tool number:** T9997320 **Tool description:** PRESS TOOL **Tool boards:**
	T9997337 ANVIL BLOCK **Tool number:** T9997337 **Tool description:** ANVIL BLOCK **Tool boards:**
	T9997322 ANVIL BLOCK **Tool number:** T9997322 **Tool description:** ANVIL BLOCK **Tool boards:**
	T9997321 PRESS TOOL **Tool number:** T9997321 **Tool description:** PRESS TOOL **Tool boards:**

	T9997324 PRESS TOOL **Tool number:** T9997324 **Tool description:** PRESS TOOL **Tool boards:**
	T9997323 PRESS TOOL **Tool number:** T9997323 **Tool description:** PRESS TOOL **Tool boards:**
	T9997325 PRESS TOOL **Tool number:** T9997325 **Tool description:** PRESS TOOL **Tool boards:**
	T9997326 PRESS TOOL **Tool number:** T9997326 **Tool description:** PRESS TOOL **Tool boards:**
	T9997327 PRESS TOOL **Tool number:** T9997327 **Tool description:** PRESS TOOL **Tool boards:**
	T9997316 PUNCH **Tool number:** T9997316 **Tool description:** DRIFT **Tool boards:**
	T9997260 DRIFT **Tool number:** T9997260 **Tool description:** DRIFT **Tool boards:**

Materials	
Designation	**Part number**
Isopropanol	1161721
Metal adhesive	1161722
Liquid gasket	1161771

CAUTION: The component being removed is paired to the component it is installed to. If either component is damaged, install new components.

Remove the Transmission Accessory Drive Component, rear. See:**REAR END ACCESSORY DRIVE**

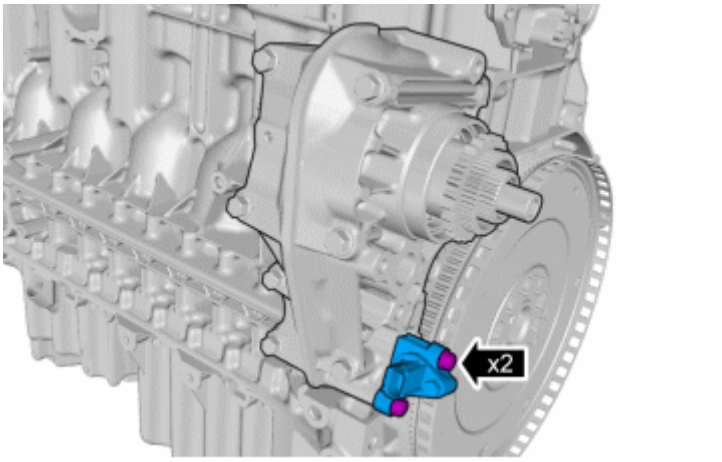

Fig. 444: Identifying Crank Position Sensor
Courtesy of VOLVO CARS CORPORATION

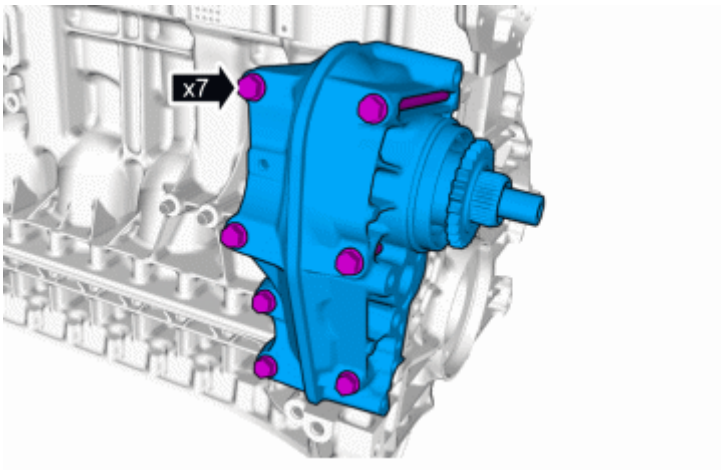

Fig. 445: Identifying 7 Bolts
Courtesy of VOLVO CARS CORPORATION

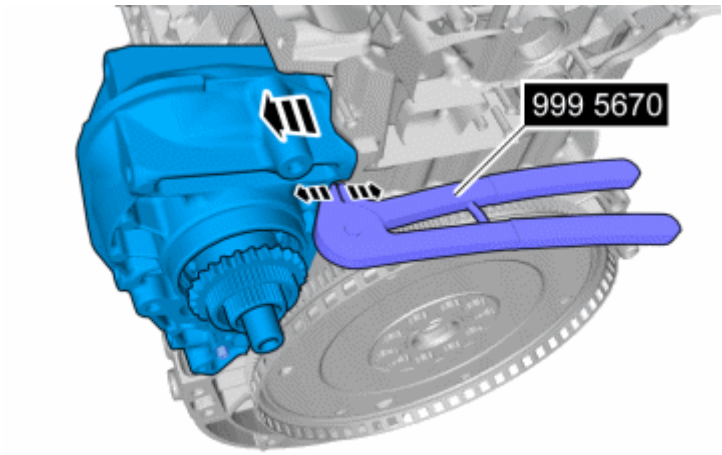

Fig. 446: Remove/Install Components with Tool 9995670
Courtesy of VOLVO CARS CORPORATION

CAUTION: The component being removed is paired to the component it is installed to. If either component is damaged, install new components.

CAUTION: Take extra care when handling the components.

see **9995670**

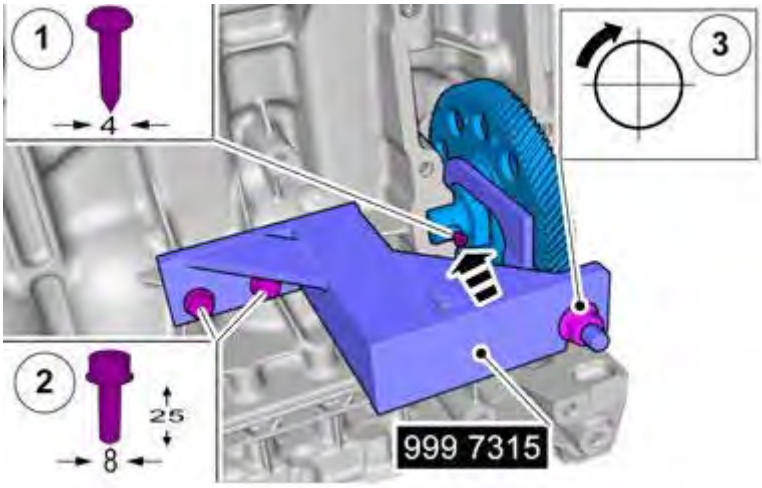

Fig. 447: Identifying Pulling Tool 9997315
Courtesy of VOLVO CARS CORPORATION

CAUTION: Take extra care when handling the component.

see **9997315**

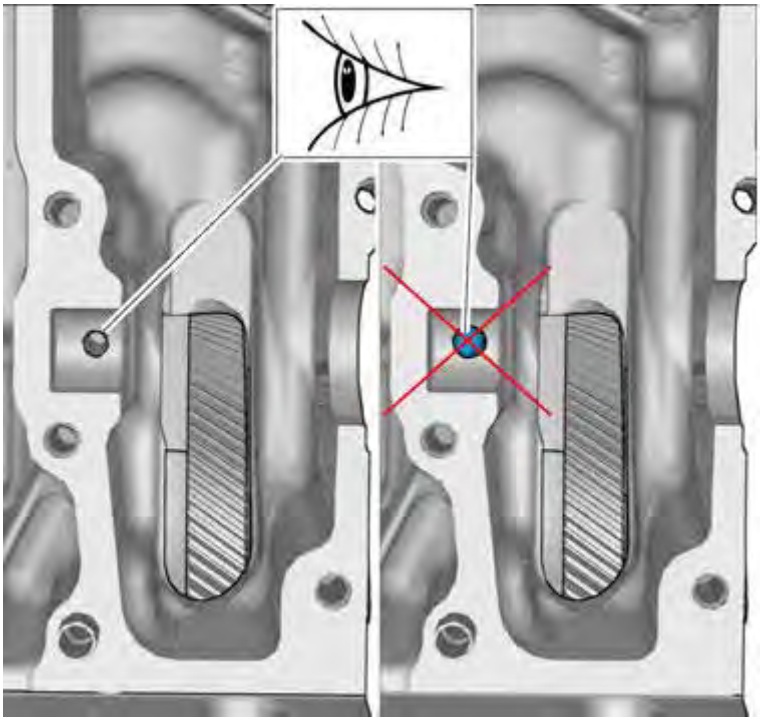

Fig. 448: Visual Inspection For Debris
Courtesy of VOLVO CARS CORPORATION

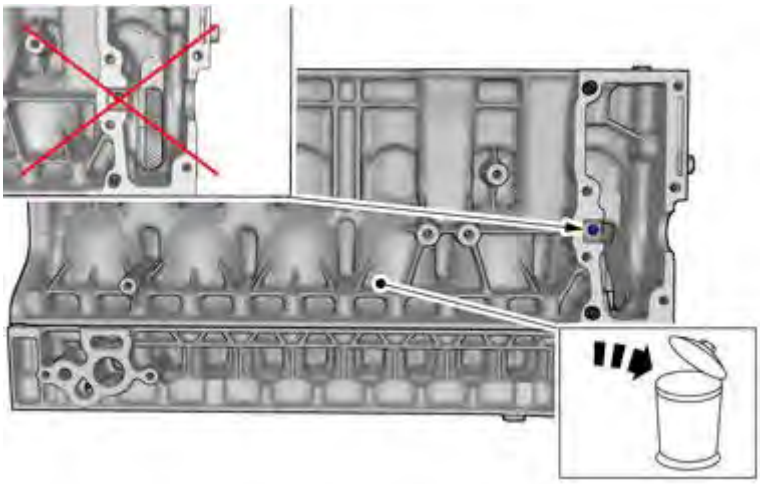

Fig. 449: Discard Unusable Component
Courtesy of VOLVO CARS CORPORATION

Make sure that new component is installed.

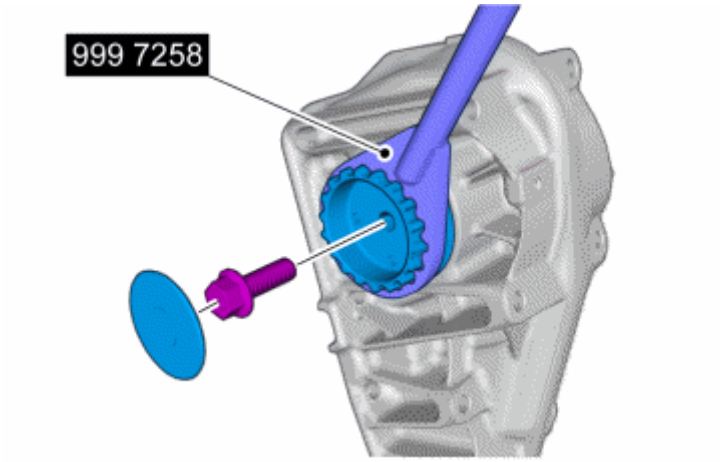

Fig. 450: Installing Intermediate Shaft, Alternator Side
Courtesy of VOLVO CARS CORPORATION

see **9997258**

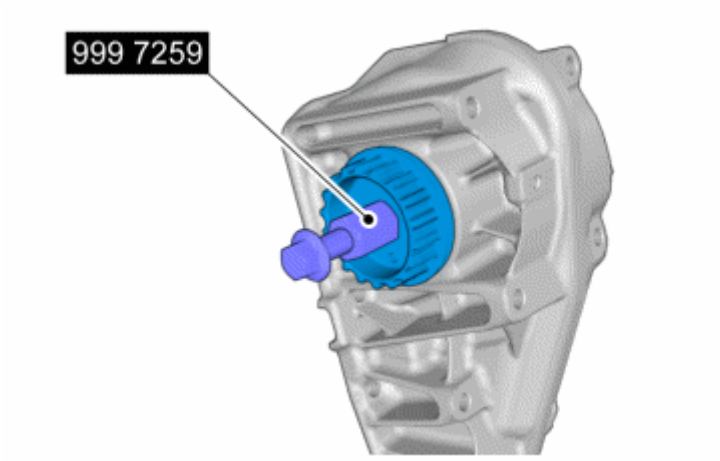

Fig. 451: Pulling Tool 9997259 Installed
Courtesy of VOLVO CARS CORPORATION

see **9997259**

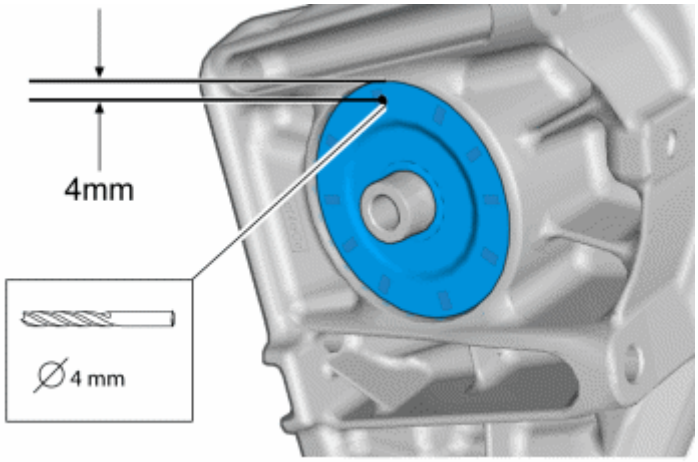

Fig. 452: Installing a Hole
Courtesy of VOLVO CARS CORPORATION

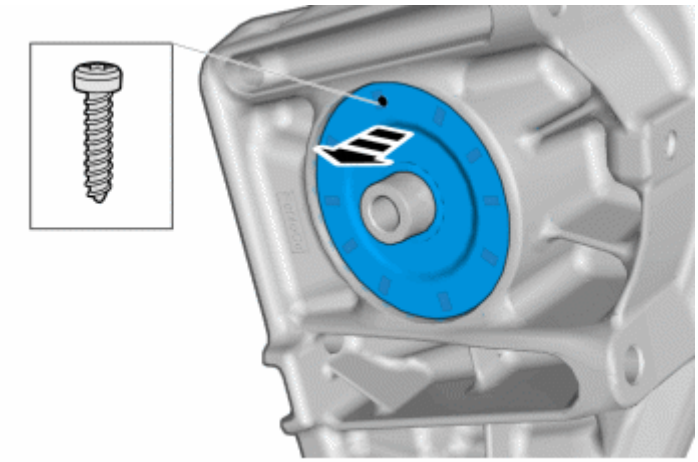

Fig. 453: Removing Seal
Courtesy of VOLVO CARS CORPORATION

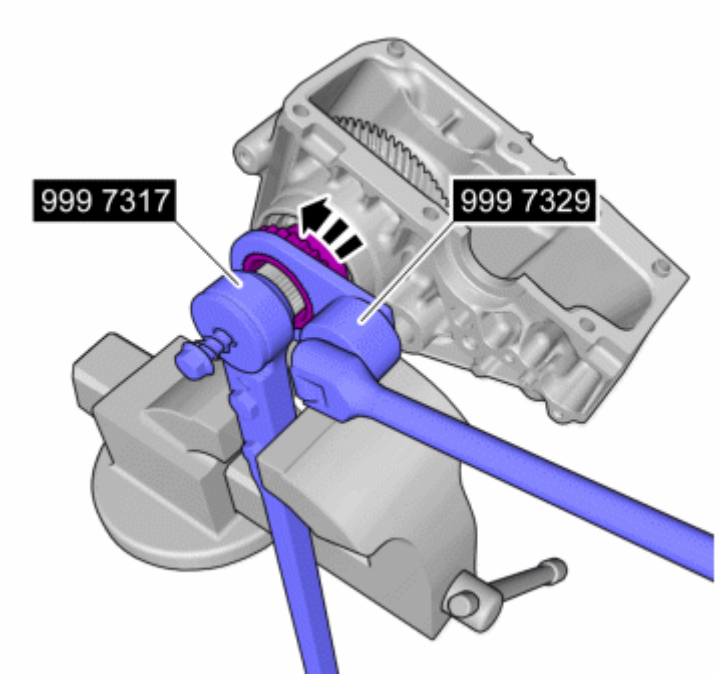

Fig. 454: Removal With Counterhold Tools 9997317, 9997329
Courtesy of VOLVO CARS CORPORATION

NOTE: This step requires considerable force.

see **9997317**

see **9997329**

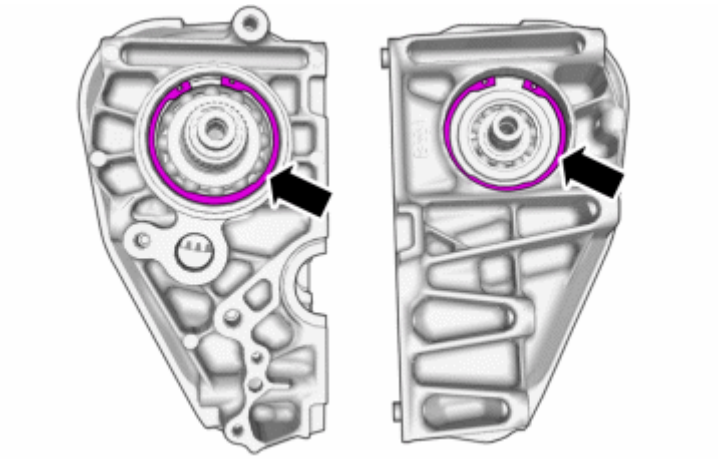

Fig. 455: Removing/Installing The Snap Rings
Courtesy of VOLVO CARS CORPORATION

Remove the snap rings on both sides.

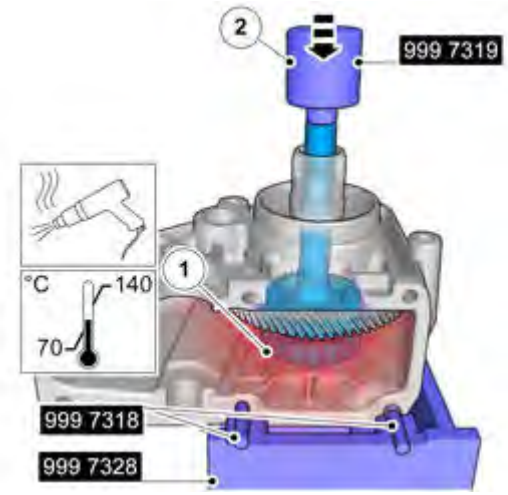

Fig. 456: Locating Press Tools 9997318, 9997328, 9997319
Courtesy of VOLVO CARS CORPORATION

see **9997318** see **9997328** see **9997319**

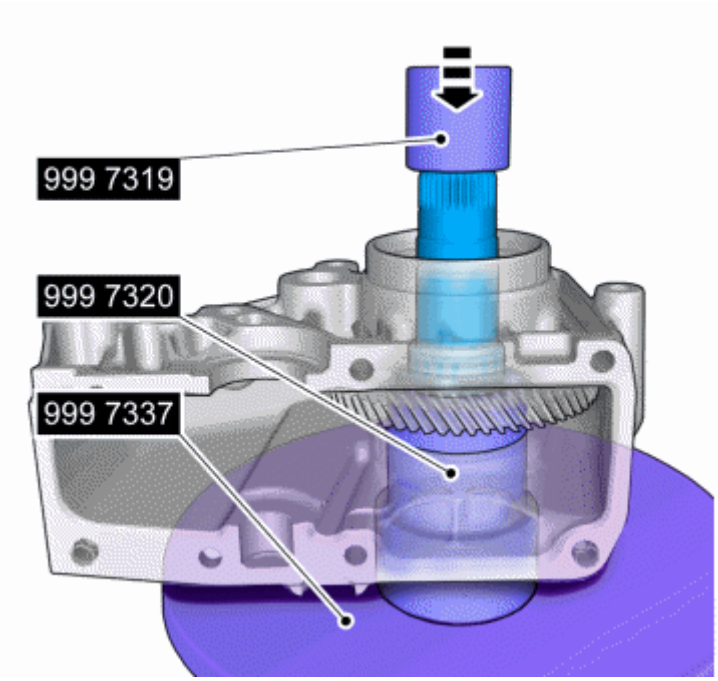

Fig. 457: Press Apart with Tools, 9997320, 9997337, 9997319
Courtesy of VOLVO CARS CORPORATION

see **9997320** see **9997337** see **9997319**

This procedure releases the cam drive shaft's pulley.

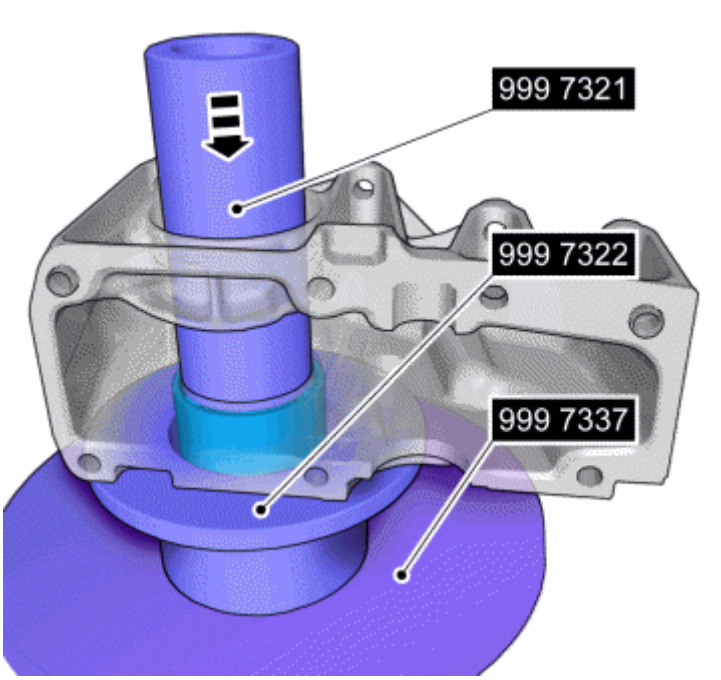

Fig. 458: Pressing Tools, 9997322, 9997337, 9997321
Courtesy of VOLVO CARS CORPORATION

see **9997322** see **9997337** see **9997321**

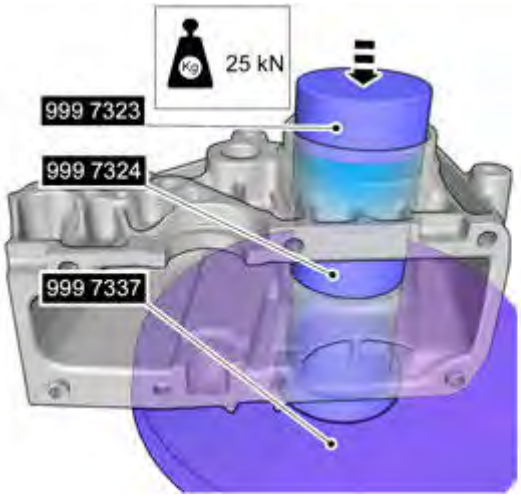

Fig. 459: Identifying Press Tools 9997324, 9997337, 9997323
Courtesy of VOLVO CARS CORPORATION

NOTE: do not release the transportation protection ring in the bearing

NOTE: Make sure that a new component is installed.

see **9997324** see **9997337** see **9997323**

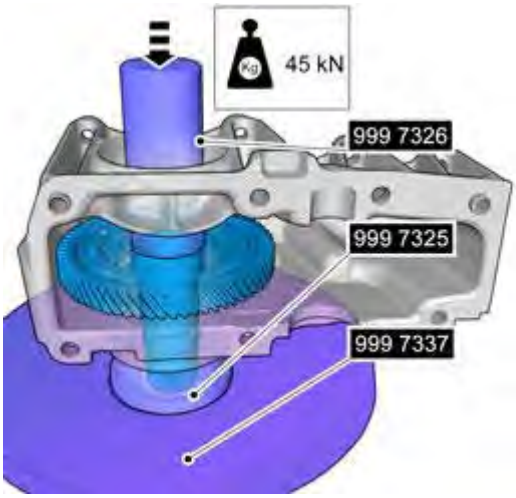

Fig. 460: Pressing Together with Tools 9997325, 9997337, 9997326
Courtesy of VOLVO CARS CORPORATION

see **9997325** see **9997337** see **9997326**

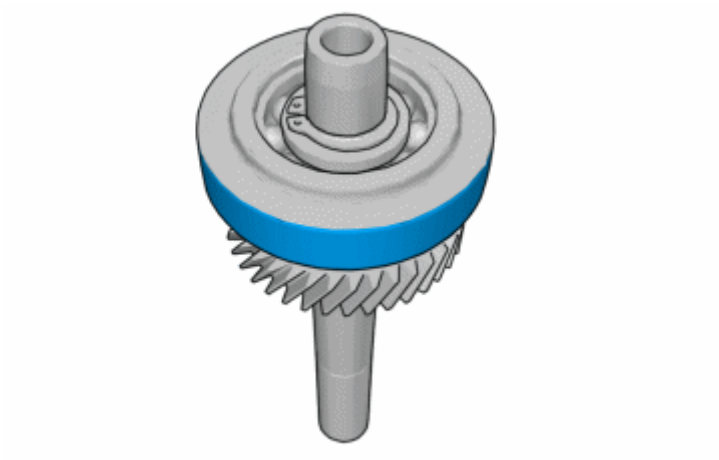

Fig. 461: Isopropanol, 1161721
Courtesy of VOLVO CARS CORPORATION

CAUTION: Make sure that the area around the component is clean and free of foreign material

Use: Isopropanol, 1161721

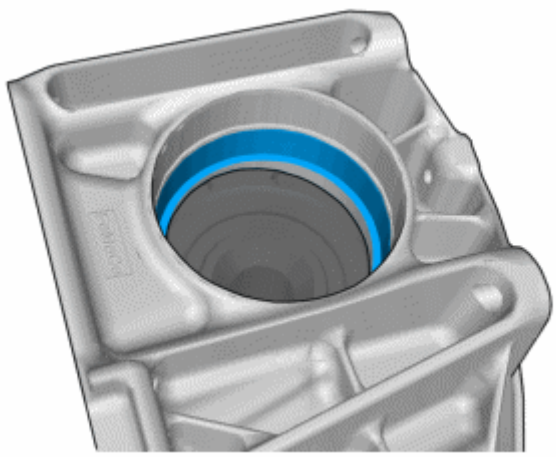

Fig. 462: Cleaning with Isopropanol, 1161721
Courtesy of VOLVO CARS CORPORATION

CAUTION: Make sure that the area around the component is clean and free of foreign material

Use: Isopropanol, 1161721

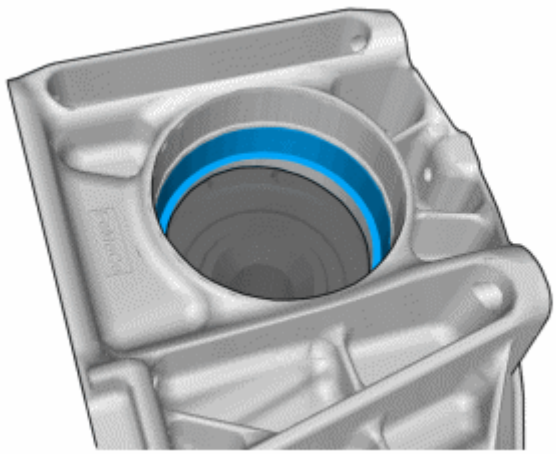

Fig. 463: Cleaning with Isopropanol, 1161721
Courtesy of VOLVO CARS CORPORATION

CAUTION: Touching the adhesive surface will impair rebonding.

Use: Metal adhesive, 1161722

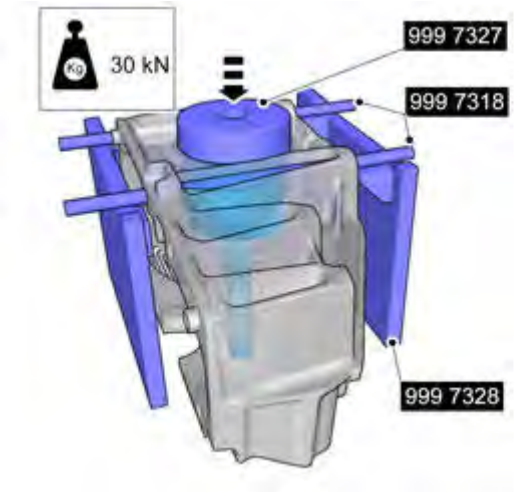

Fig. 464: Pressing with Tools 9997328, 9997318, 9997327
Courtesy of VOLVO CARS CORPORATION

see **9997328** see **9997318** see **9997327**

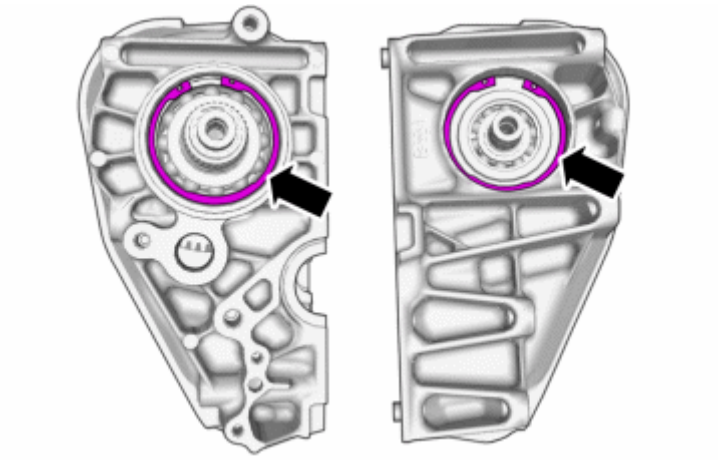

Fig. 465: Removing/Installing The Snap Rings
Courtesy of VOLVO CARS CORPORATION

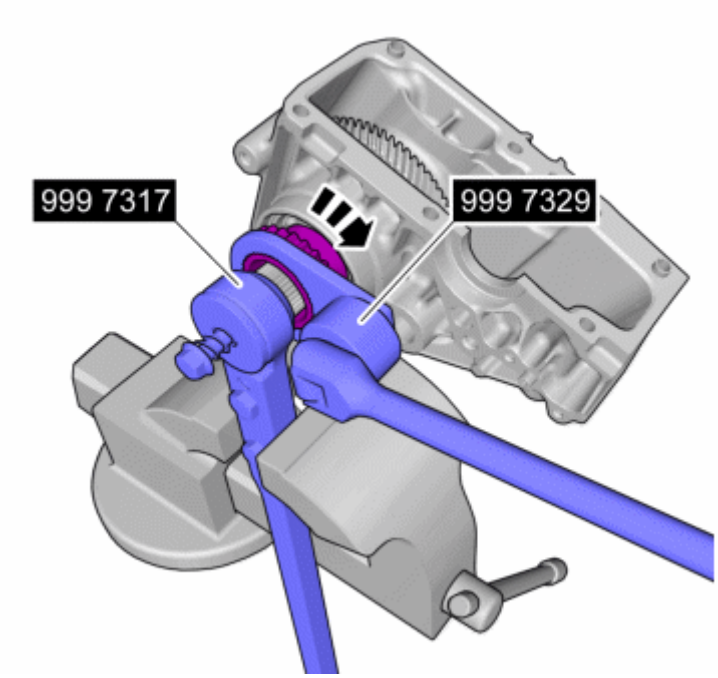

Fig. 466: Installing Chain Wheel With Tools 9997317, 9997329
Courtesy of VOLVO CARS CORPORATION

see **9997317** see **9997329**

Chain wheel. See **TIGHTENING TORQUE**

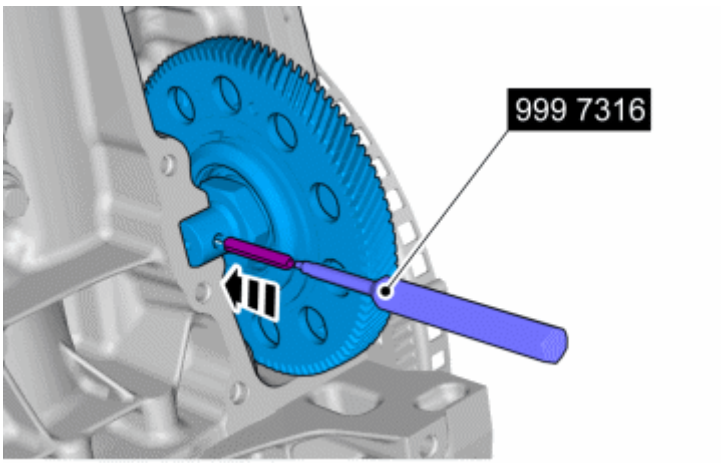

Fig. 467: Driving Pin with Tool 9997316
Courtesy of VOLVO CARS CORPORATION

CAUTION: Take extra care when handling the component.

see **9997316**

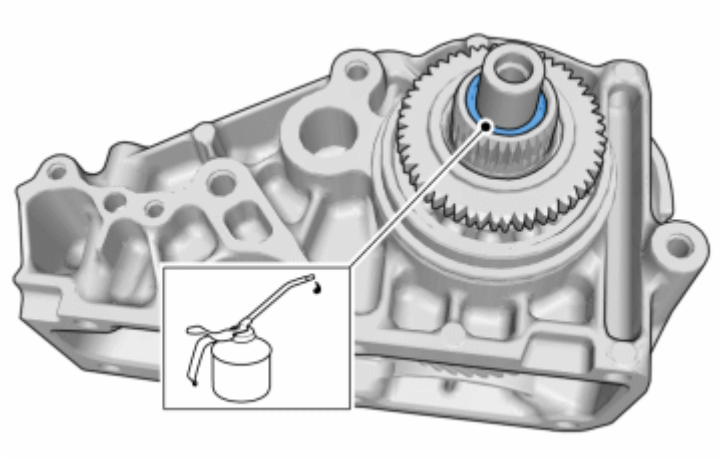

Fig. 468: Lubricate Before Installing
Courtesy of VOLVO CARS CORPORATION

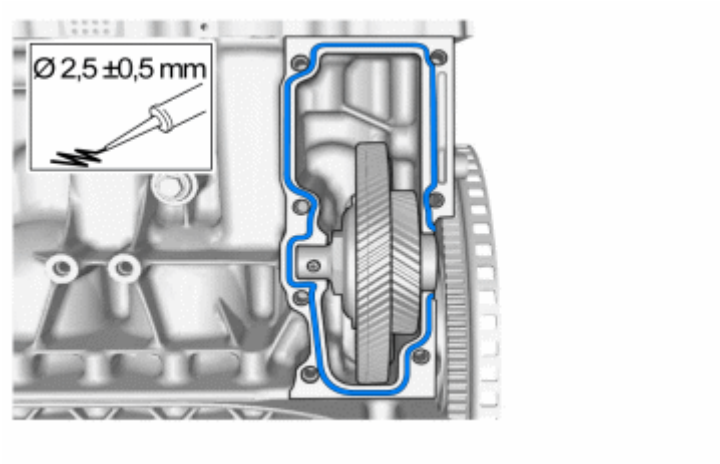

Fig. 469: Applying Liquid gasket, 1161771
Courtesy of VOLVO CARS CORPORATION

NOTE: **Make sure that the mating faces are clean and free of foreign material.**

NOTE: **The component must be installed within 5 minutes of applying the sealant.**

Use: Liquid gasket, 1161771

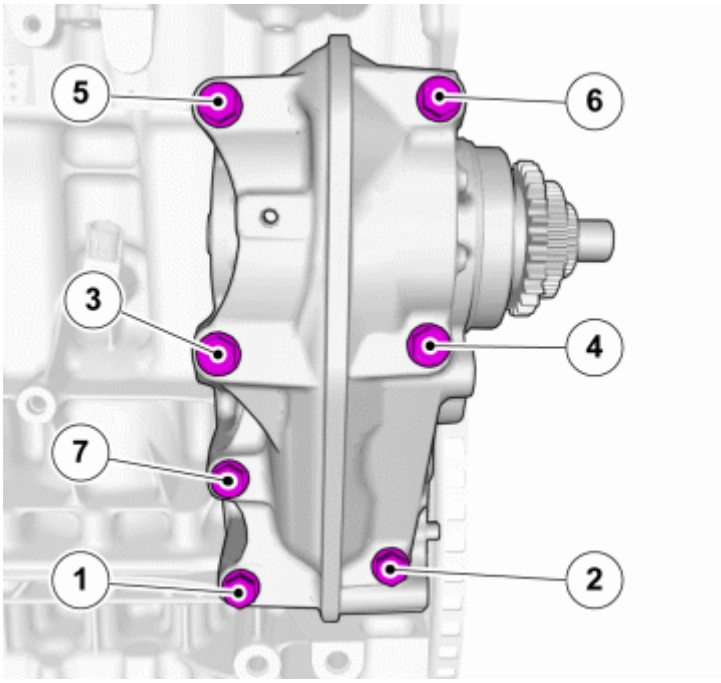

Fig. 470: Identifying Torque Sequence
Courtesy of VOLVO CARS CORPORATION

Gear housing. See **TIGHTENING TORQUE**

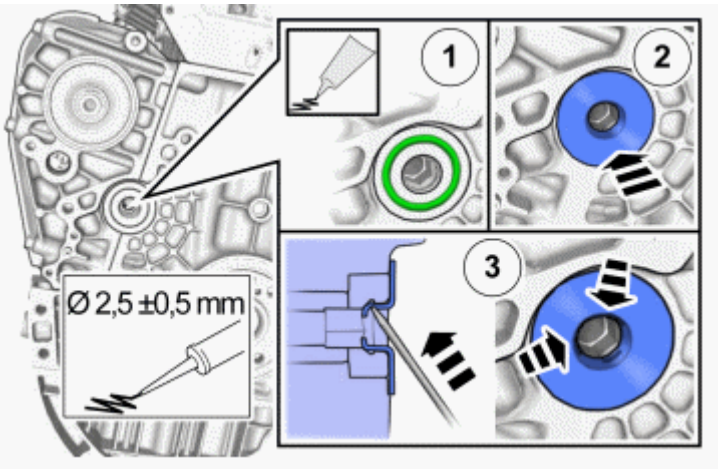

Fig. 471: Apply Liquid gasket, 1161771
Courtesy of VOLVO CARS CORPORATION

NOTE: Make sure that the mating faces are clean and free of foreign material.

1. **Use:** Liquid gasket, 1161771

   NOTE: Make sure that a new component is installed. Only use moderate force.

2.

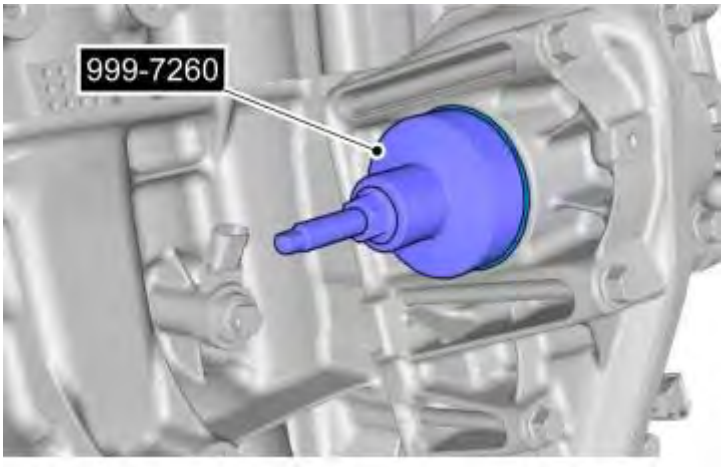

Fig. 472: Seal Installation With Tool 9997260
Courtesy of VOLVO CARS CORPORATION

NOTE: Use a new seal.

see **9997260**

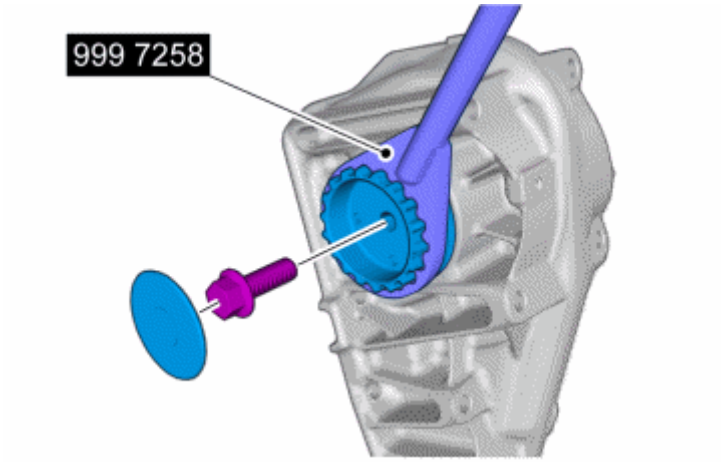

Fig. 473: Installing Intermediate Shaft, Alternator Side
Courtesy of VOLVO CARS CORPORATION

see **9997258**

Intermediate shaft, alternator side. See **TIGHTENING TORQUE**

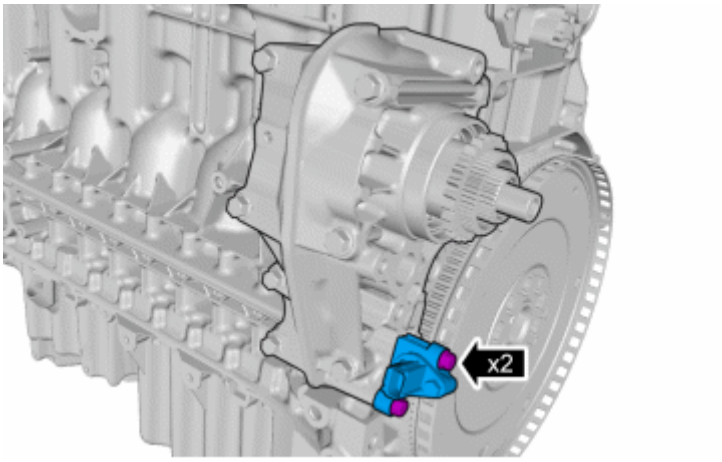

Fig. 474: Identifying Crank Position Sensor
Courtesy of VOLVO CARS CORPORATION

M6. See **TIGHTENING TORQUE**

REAR END ACCESSORY DRIVE

Special tools	
	999 5670 Pliers (removing valve/camshaft cover) B4184-B6304 **Tool number:** 999 5670 **Tool description:** Pliers (removing valve/camshaft cover) B4184-B6304 **Tool boards:** 21
	999 7315 Puller **Tool number:** 999 7315 **Tool description:** Puller **Tool boards:** 21
	999 7316 Drift **Tool number:** 999 7316 **Tool description:** Drift **Tool boards:** 21

Materials	
Designation	**Part number**
Chemical gasket	1161771
Thread sealant	1161056

REMOVAL

Remove the following items:

- Gasket, inner timing cover, see **GASKET, INNER TIMING COVER**
- alternator, see **ALTERNATOR AND REGULATOR - REMOVAL, REPLACEMENT AND INSTALLATION**

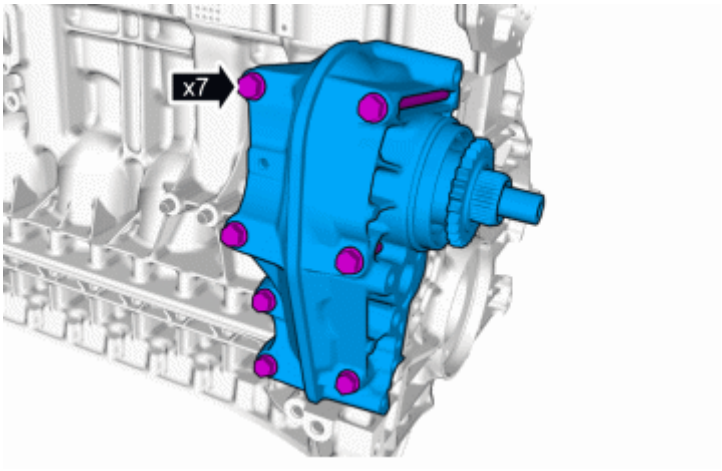

Fig. 475: Identifying 7 Bolts
Courtesy of VOLVO CARS CORPORATION

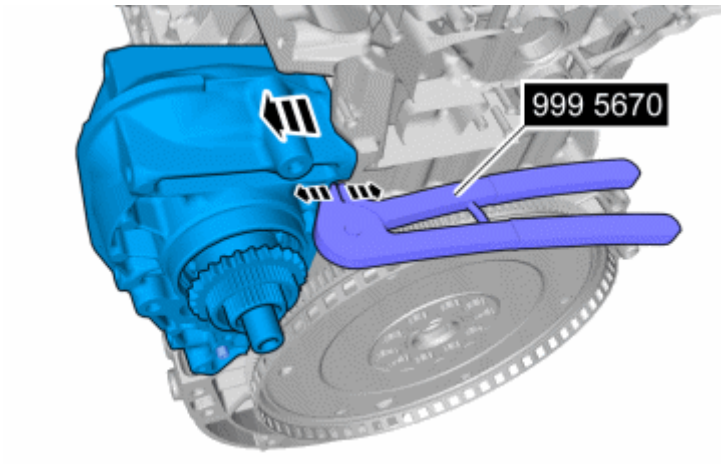

Fig. 476: Remove/Install Components with Tool 9995670
Courtesy of VOLVO CARS CORPORATION

CAUTION: The components are paired. If one component is damaged, both components shall be replaced at the same time.

CAUTION: Take extra care when handling the components.

see **9995670**

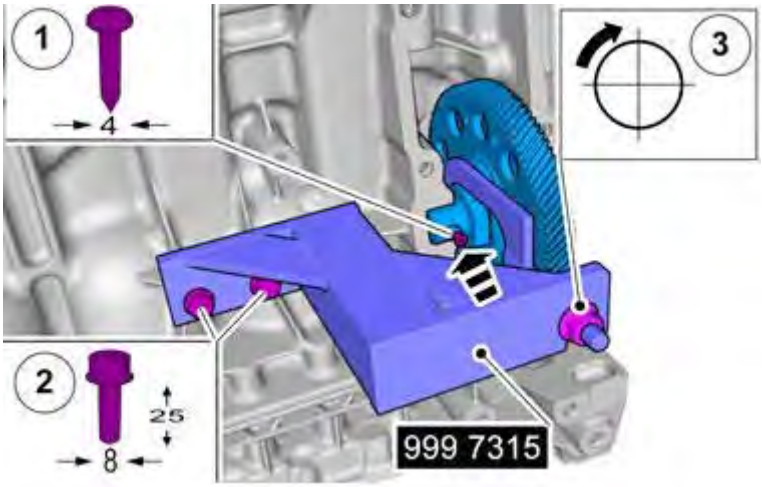

Fig. 477: Identifying Pulling Tool 9997315
Courtesy of VOLVO CARS CORPORATION

CAUTION: Take extra care when handling the components.

see **9997315**

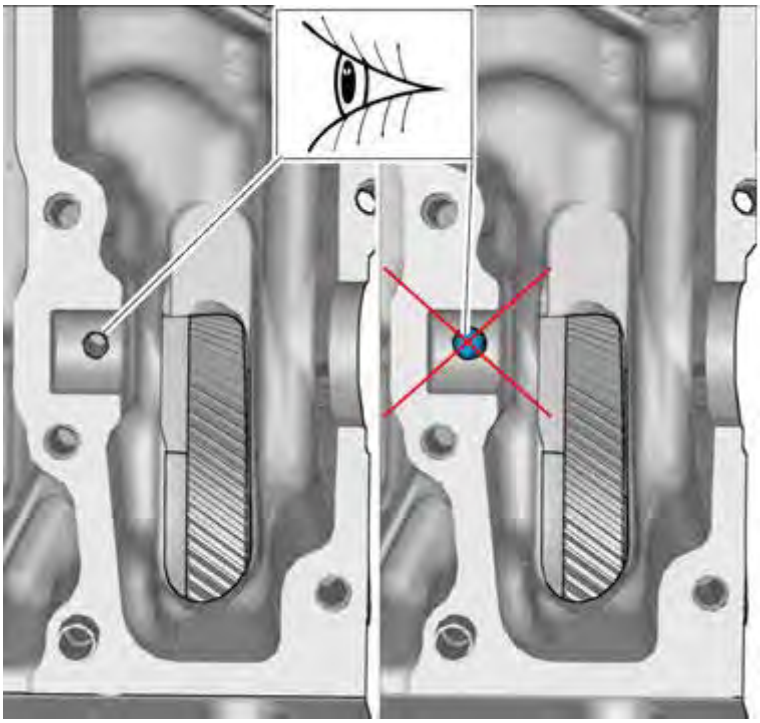

Fig. 478: Visual Inspection For Debris
Courtesy of VOLVO CARS CORPORATION

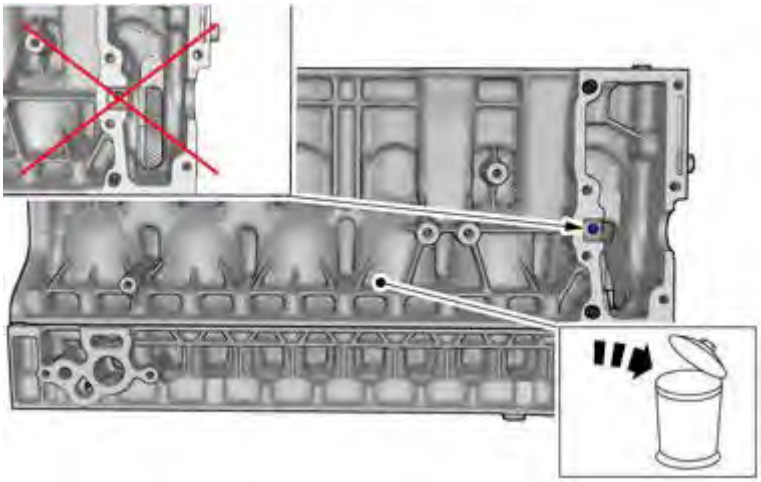

Fig. 479: Discard Unusable Component
Courtesy of VOLVO CARS CORPORATION

INSTALLATION

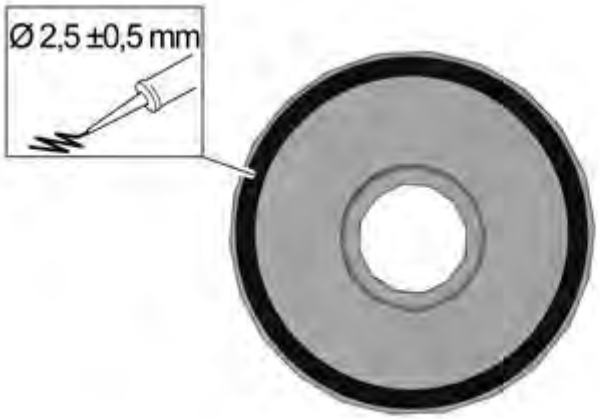

Fig. 480: Chemical gasket, 1161771
Courtesy of VOLVO CARS CORPORATION

Use: Chemical gasket, 1161771

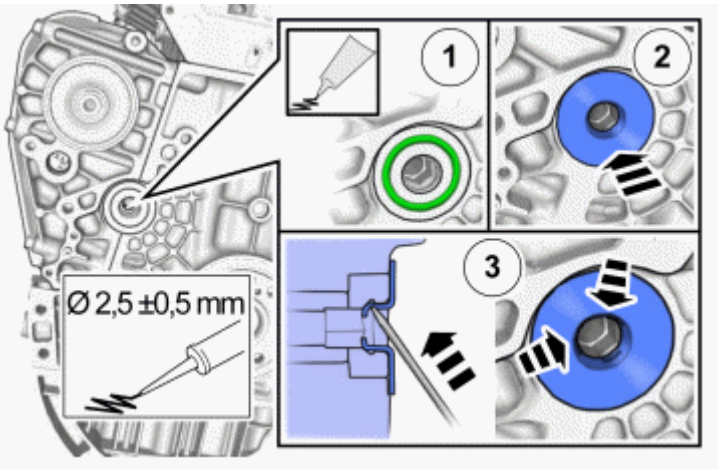

Fig. 481: Apply Liquid gasket, 1161771
Courtesy of VOLVO CARS CORPORATION

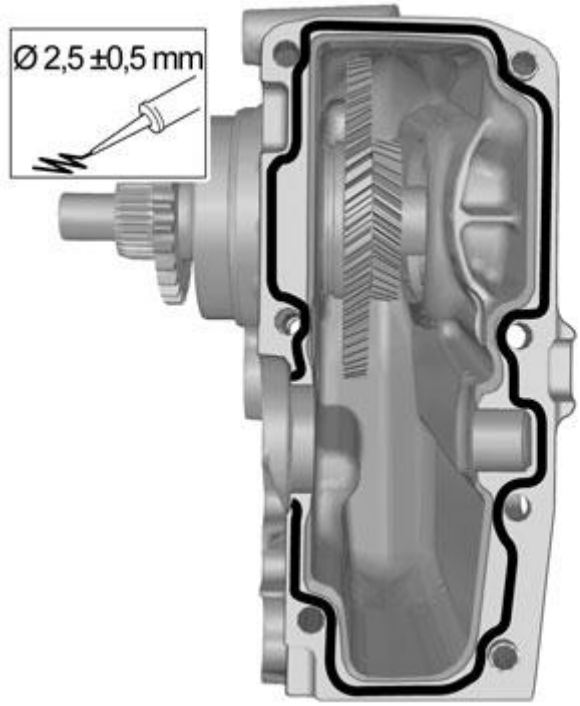

Fig. 482: Chemical gasket, 1161771
Courtesy of VOLVO CARS CORPORATION

Use: Chemical gasket, 1161771

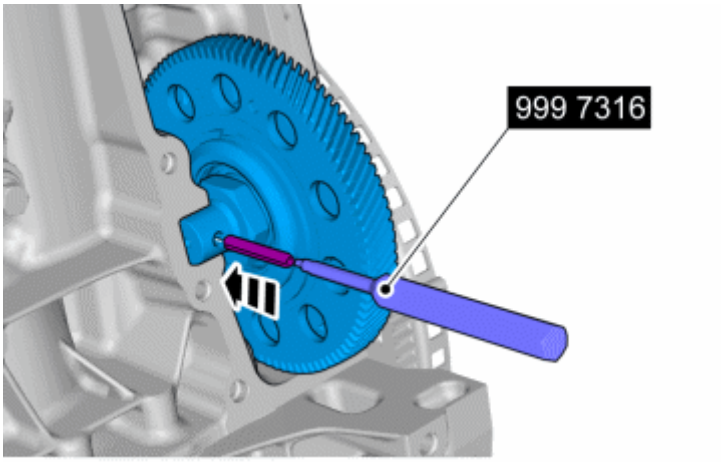

Fig. 483: Driving Pin with Tool 9997316
Courtesy of VOLVO CARS CORPORATION

CAUTION: Take extra care when handling the components.

see **9997316**

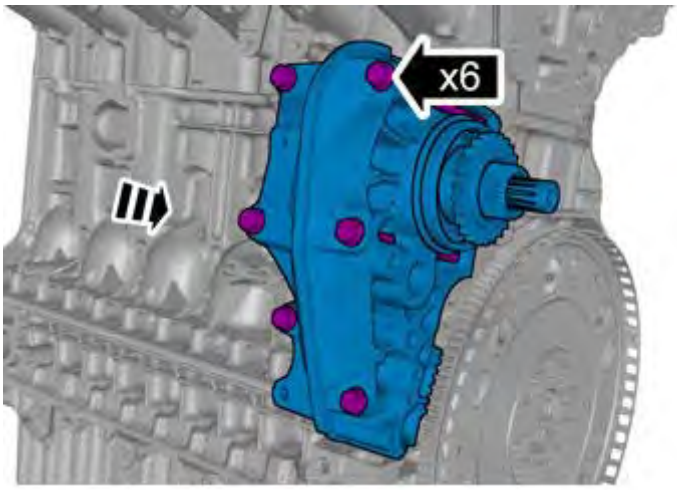

Fig. 484: Identifying 6 Bolts
Courtesy of VOLVO CARS CORPORATION

NOTE: Only tighten the bolt finger tight at this stage.

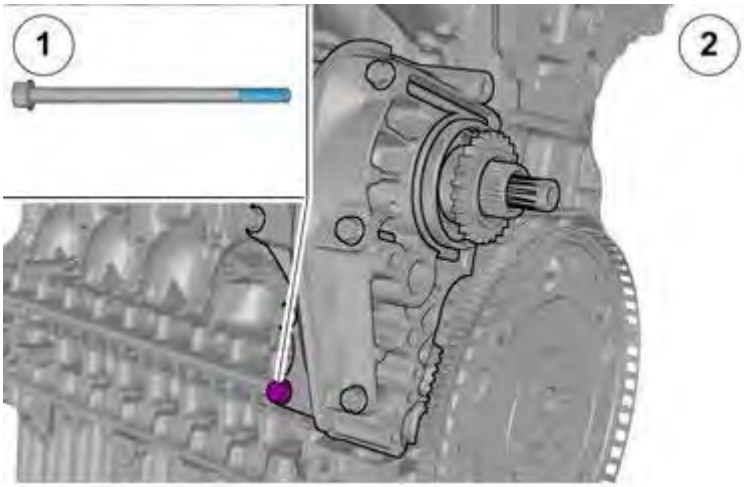

Fig. 485: Thread sealant, 1161056
Courtesy of VOLVO CARS CORPORATION

1. **Use:** Thread sealant, 1161056

NOTE: **Only tighten the bolt finger tight at this stage.**

2.

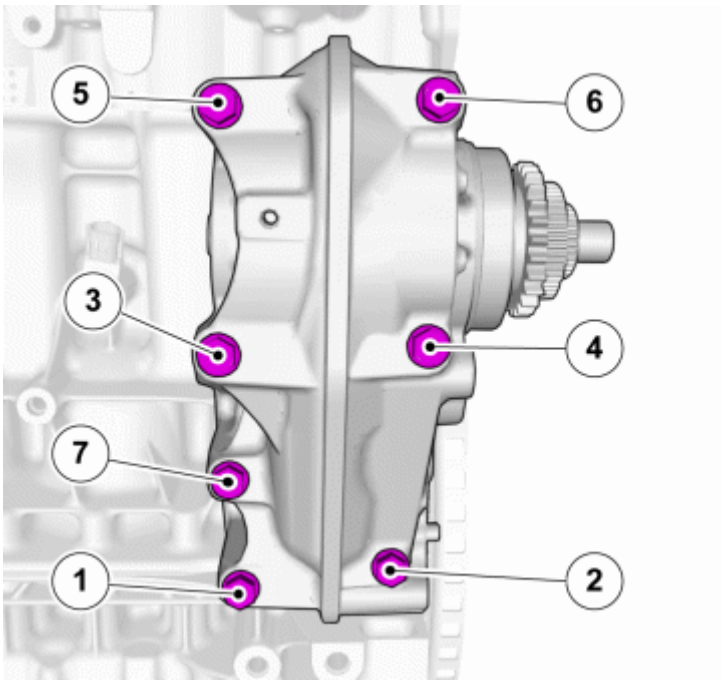

Fig. 486: Identifying Torque Sequence
Courtesy of VOLVO CARS CORPORATION

Torque: Gear housing

• Stage 1: 10 Nm

• Stage 2: 24 Nm

Install the following items:

- alternator, see **ALTERNATOR AND REGULATOR - REMOVAL, REPLACEMENT AND INSTALLATION**
- Gasket, inner timing cover, see **GASKET, INNER TIMING COVER**

TIMING CHAIN (B8444S; 2005-2011)

TIMING CHAIN, ASSEMBLING

Materials	
Designation	**Part number**
Liquid gasket	30757050

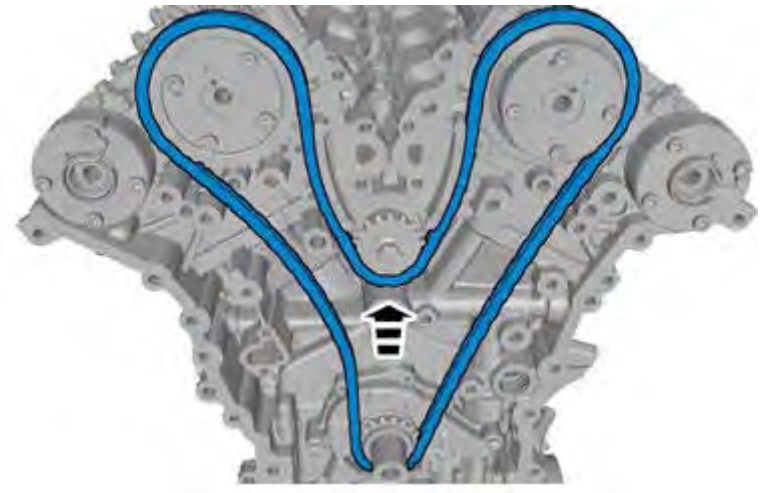

Fig. 487: Timing Chain, Assembling
Courtesy of VOLVO CARS CORPORATION

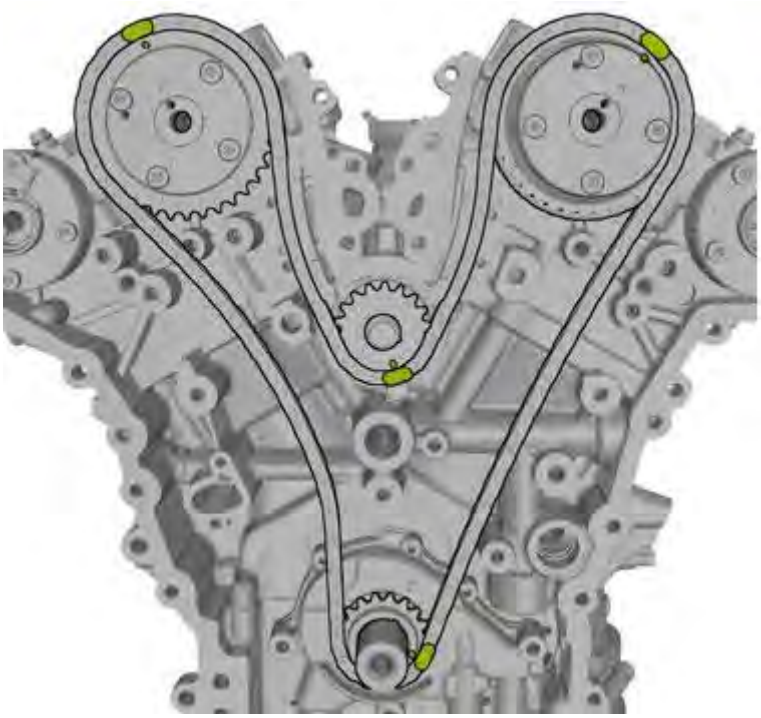

Fig. 488: Locating Timing Marks
Courtesy of VOLVO CARS CORPORATION

NOTE: Make sure that these components are installed to the noted removal position.

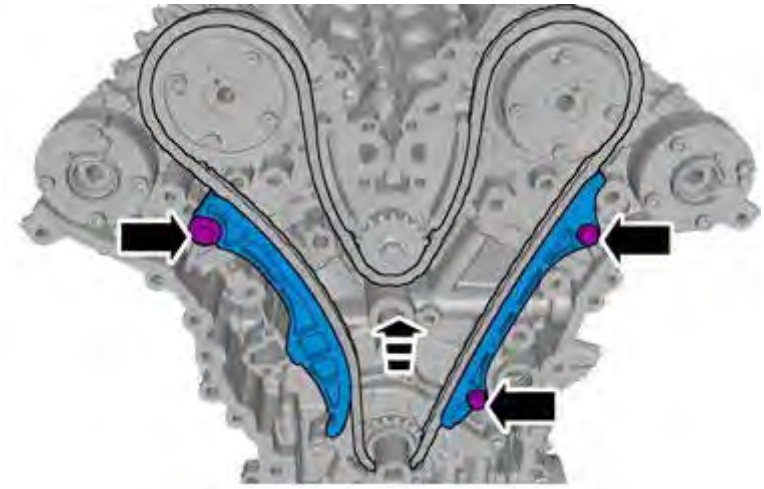

Fig. 489: Identifying Chain Guides/Bolts
Courtesy of VOLVO CARS CORPORATION

Torque: M8

24 Nm

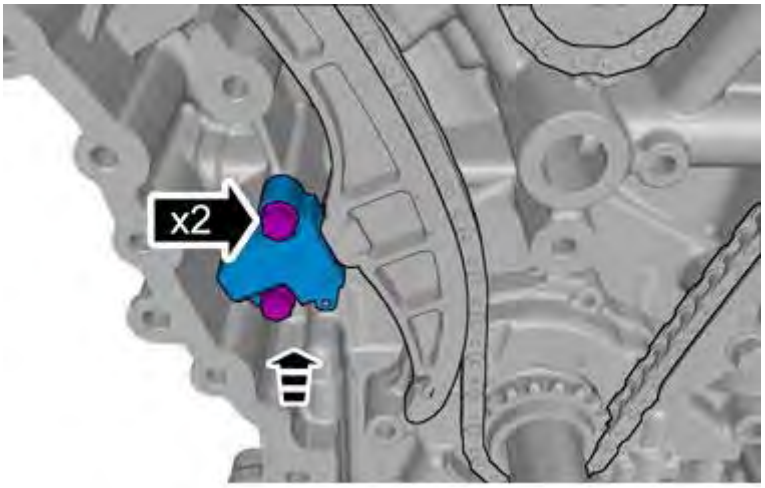

Fig. 490: Locating Tensioner Bolts
Courtesy of VOLVO CARS CORPORATION

Torque: M6

10 Nm

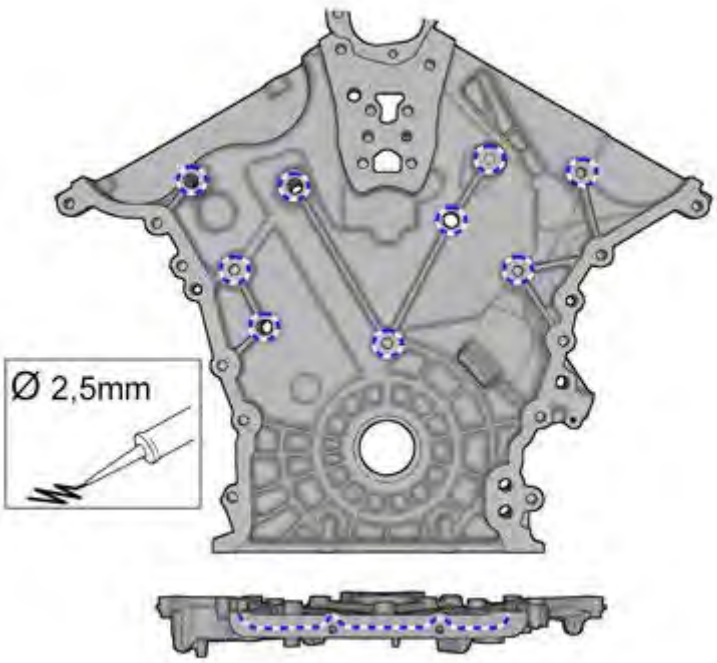

Fig. 491: Liquid gasket, 30757050
Courtesy of VOLVO CARS CORPORATION

CAUTION: Take extra care not to damage the mating faces.

NOTE: **Make sure that the mating faces are clean and free of foreign material.**

NOTE: **The component must be installed within 5 minutes of applying the sealant.**

Use: Liquid gasket, 30757050

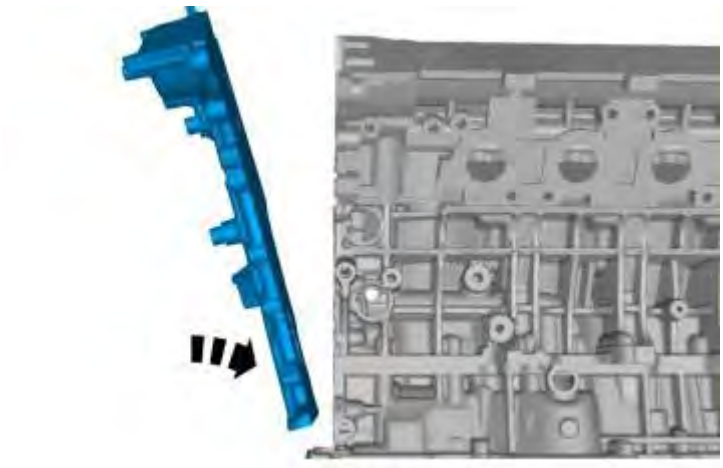

Fig. 492: Installing Lower End First
Courtesy of VOLVO CARS CORPORATION

Fig. 493: Remove/Install Timing Cover Fasteners
Courtesy of VOLVO CARS CORPORATION

Torque: M8

24 Nm

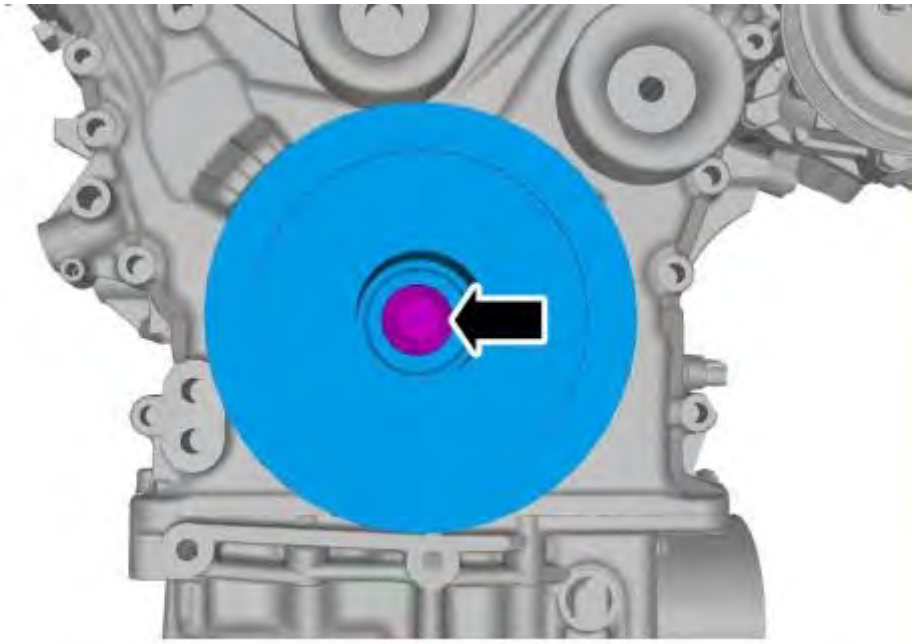

Fig. 494: Identifying Bolt, Vibration Damper
Courtesy of VOLVO CARS CORPORATION

Torque: Center nut vibration damper (crankshaft)

• Stage 1: 120 Nm

• Stage 2: Loosen the screw 360 degree

• Stage 3: 50 Nm

• Stage 4: 90 degree

- Step 1:120 Nm
- Step 2: Slacken the screw 360 degrees
- Step 3:50 Nm
- Step 4: 90 degrees

TIMING CHAIN, DISMANTLING

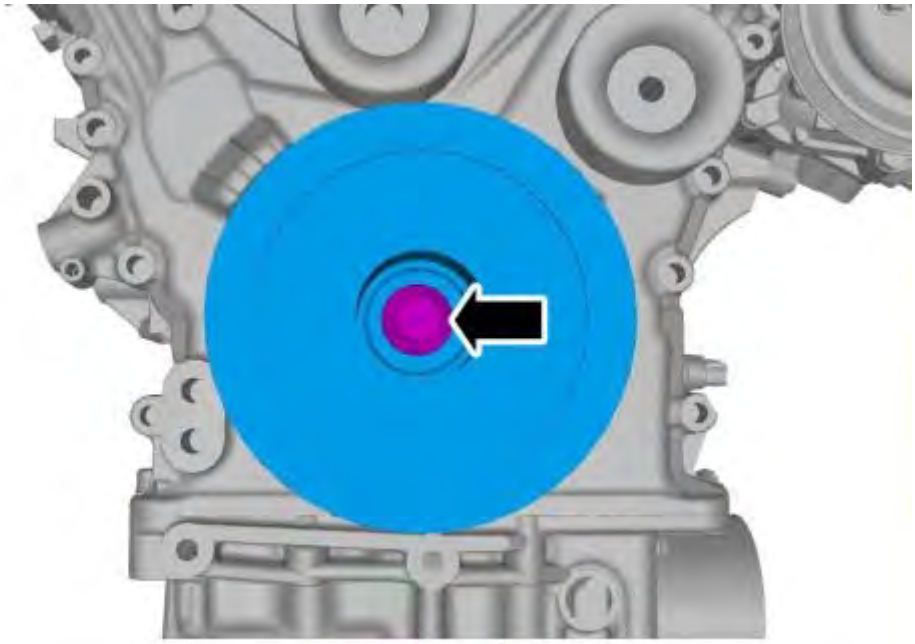

Fig. 495: Identifying Bolt, Vibration Damper
Courtesy of VOLVO CARS CORPORATION

Fig. 496: Remove/Install Timing Cover Fasteners
Courtesy of VOLVO CARS CORPORATION

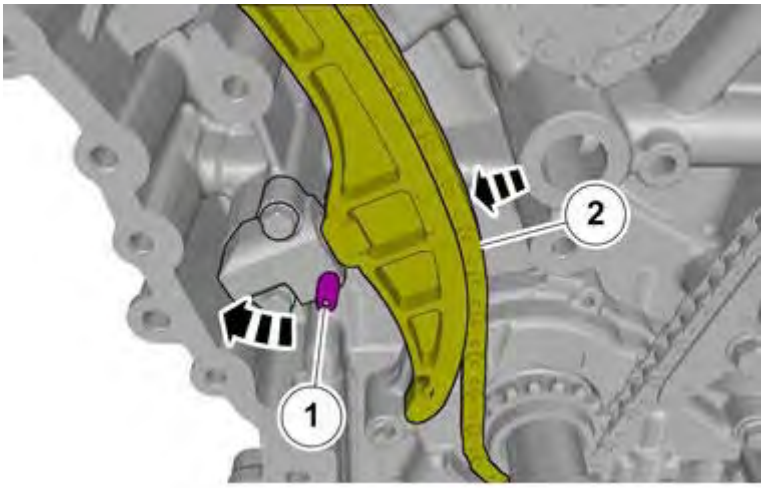

Fig. 497: Retracting and Locking Tensioner
Courtesy of VOLVO CARS CORPORATION

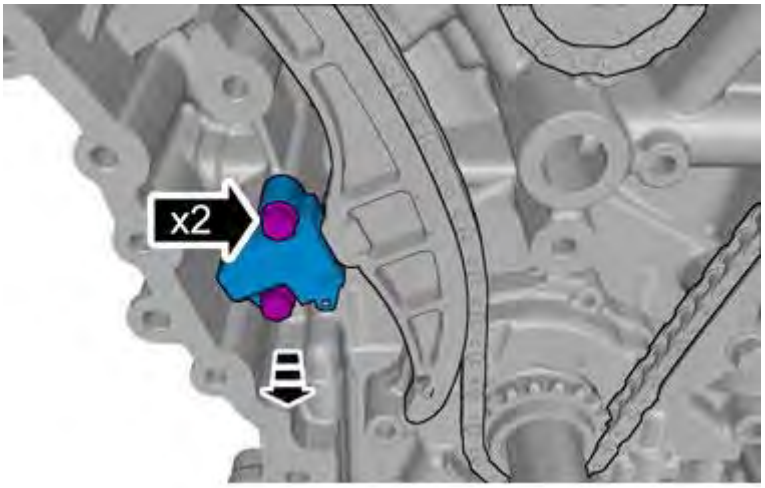

Fig. 498: Removing Tensioner
Courtesy of VOLVO CARS CORPORATION

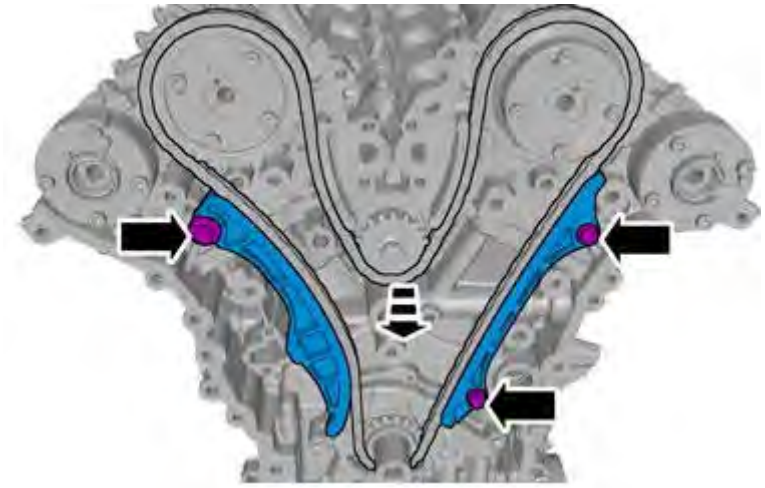

Fig. 499: Identifying Chain Guides
Courtesy of VOLVO CARS CORPORATION

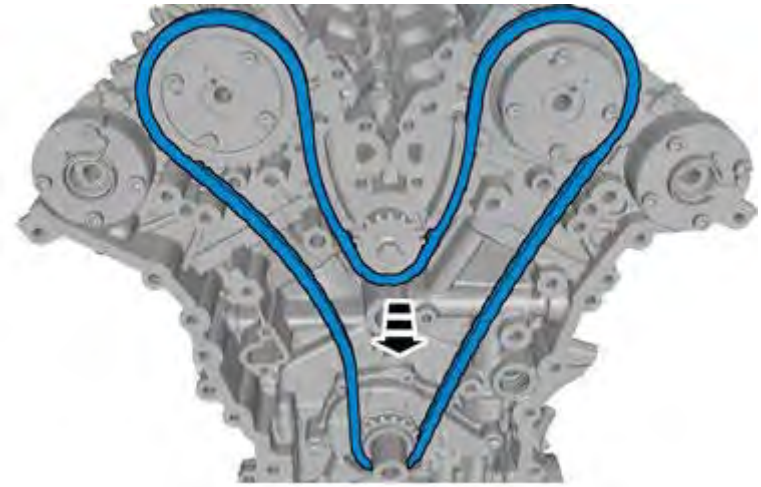

Fig. 500: Removing Chain
Courtesy of VOLVO CARS CORPORATION

ENGINE

Engine - Specifications, mechanical

LUBRICANTS, ENGINE

LUBRICANTS, ENGINE

LUBRICANTS, ENGINE

Engine	Service interval (km/miles)	Volume (liters)	Grade	Viscosit y	Part number
B8444S	12.000/7.500	Approx. 6.7	ILSAC GF-4 API SL / ACEA A1/B1	SAE 5W-30	1161754, -755, -756
B6324S, Model year 2007	12.000/7.500	Approx. 7.7	ILSAC GF-4 API SL / ACEA A1/B1	SAE 5W-30	1161754, -755, -756
B6324S, Model year 2008-	12.000/7.500	Approx. 7.4	ILSAC GF-4 API SL / ACEA A1/B1	SAE 5W-30	1161754, -755, -756
B6324S5, Model year 2011-	12.000/7.500	Approx. 6.8	ILSAC GF-4 API SL / ACEA A1/B1	SAE 5W-30	1161754, -755, -756
B6304S	12.000/7.500	Approx. 6.6	ILSAC GF-4 API SL / ACEA A1/B1	SAE 5W-30	1161754, -755, -756
B6294S	12.000/7.500	Approx. 6.6	ILSAC GF-4 API SL / ACEA A1/B1	SAE 5W-30	1161754, -755, -756
B6294T	12.000/7.500	Approx. 6.6	ILSAC GF-4 API SL / ACEA A1/B1	SAE 5W-30	1161754, -755, -756
B6284T	12.000/7.500	Approx. 6.6	ILSAC GF-4 API SL / ACEA A1/B1	SAE 5W-30	1161754, -755, -756
B5244S	12.000/7.500	Approx. 5.8	ILSAC GF-4 API SL / ACEA A1/B1	SAE 5W-30	1161754, -755, -756
B5244S6	12.000/7.500	Approx. 5.8	ILSAC GF-4 API SL / ACEA A1/B1	SAE 5W-30	1161754, -755, -756
B5244T4	12.000/7.500	Approx. 5.8	ILSAC GF-4 API SL / ACEA A1/B1	SAE 5W-30	1161754, -755, -756
B5244T5	12.000/7.500	Approx. 5.8	ILSAC GF-4 API	SAE 5W-30	1161754, -755, -

			SL / ACEA A1/B1		756
B5254T2	12.000/7.500	Approx. 5.8	ILSAC GF-4 API SL / ACEA A1/B1	SAE 5W-30	1161754, -755, -756
B5254T3	12.000/7.500	Approx. 5.8	ILSAC GF-4 API SL / ACEA A1/B1	SAE 5W-30	1161754, -755, -756
B5254T4	12.000/7.500	Approx. 5.5	ILSAC GF-4 API SL / ACEA A1/B1	SAE 5W-30	1161754, -755, -756

Oil grade **ACEA A1/B1** can be replaced with **WSS-M2C913-B** or with **ACEA A5/B5** , not vice versa.

MECHANICAL SPECIFICATIONS (B5254T2)

SPECIFICATIONS, MECHANICAL

NOTE: **As the illustrations in this service information are used for different model years and / or models, some variation may occur. However, the essential information in the illustrations is always correct.**

ENGINE MANUFACTURE NUMBER, ENGINE SERIAL NUMBER AND TYPE

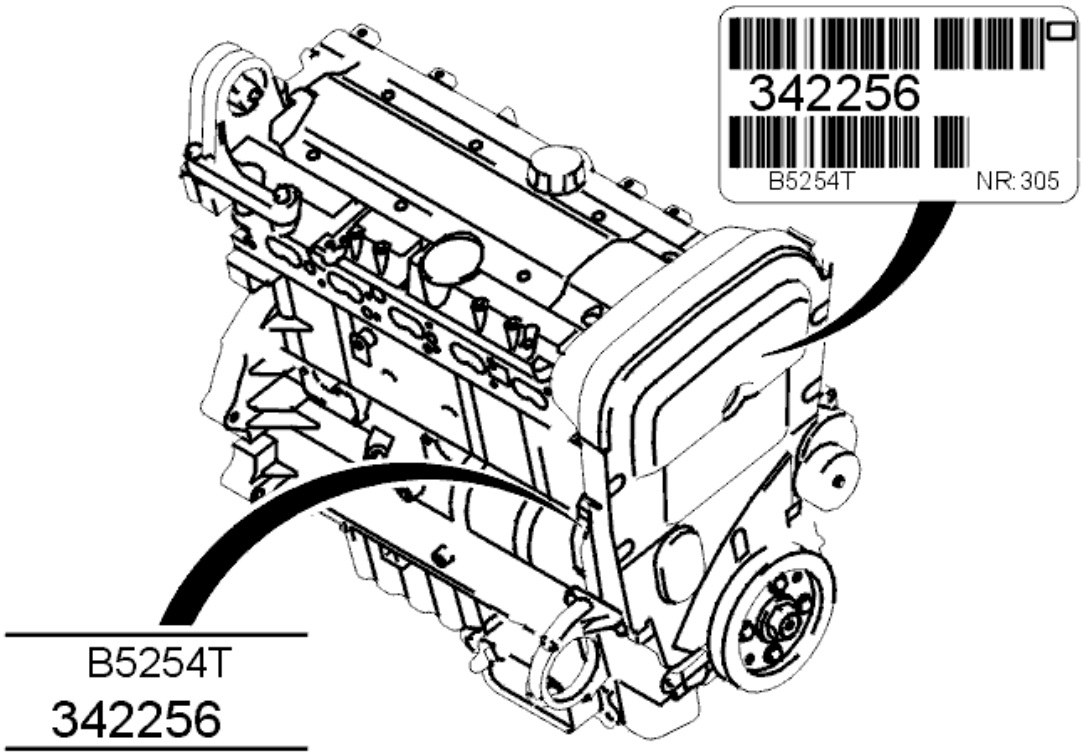

Fig. 1: Engine Manufacture Number, Engine Serial Number & Type
Courtesy of VOLVO CARS CORPORATION

The engine serial number and type are stamped on the left side of the cylinder block at the top of the mounting for the water pump.

There is also a decal on the timing casing with the engine type, manufacturing number, and serial number.

CLASSIFICATION OF MAIN BEARINGS

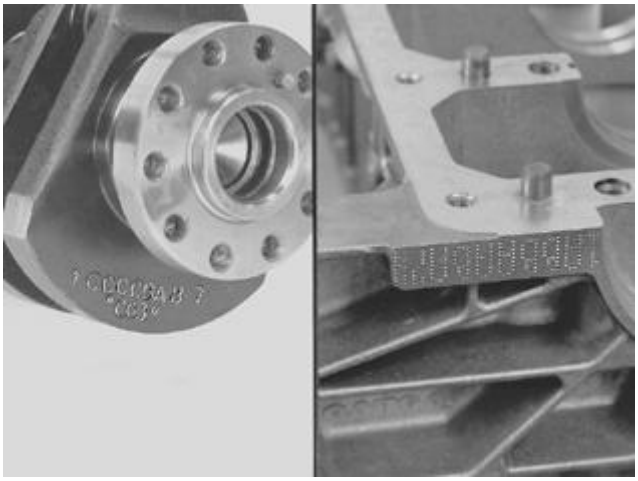

Fig. 2: Classification Of Main Bearings

Courtesy of VOLVO CARS CORPORATION

The marking is stamped on the cylinder block and crankshaft.

2 ↓ / 1 →	A		B		C	
A	Y	Y	Y	B	B	B
B	R	Y	Y	Y	Y	B
C	R	R	R	Y	Y	Y
D	Y	B	B	B	B	B
E	Y	B	B	B	B	B
F	Y	Y	Y	B	B	B
G	Y	Y	Y	B	B	B
H	Y	Y	Y	B	B	B
J	Y	Y	Y	B	B	B
K	Y	Y	Y	B	B	B
L	R	Y	Y	Y	Y	B
M	R	Y	Y	Y	Y	B
N	R	Y	Y	Y	Y	B
O	R	Y	Y	Y	Y	B
p	R	Y	Y	Y	Y	B
R	R	R	R	Y	Y	Y
S	R	R	R	Y	Y	Y
T	R	R	R	Y	Y	Y
V	R	R	R	Y	Y	Y
X	R	R	R	Y	Y	Y
Y	R	R	R	Y	R	Y
Z	R	R	R	Y	R	Y
	3	4	3	4	3	4

Fig. 3: Classification Chart
Courtesy of VOLVO CARS CORPORATION

1. Classification cylinder block
2. Classification crankshaft
3. Cylinder block
4. Intermediate section

GENERAL DATA (ENGINE CAPACITIES)

	B5204T5	B5234T3	B5244T2	B5244T3	B5254T2	B5254T4
Output (kw at rpm)	132/5280	184/5220	195/5700	147/6000	154/5000	220/5500 (man) / 6000 (aut)
Maximum						

torque (Nm at rpm)	240/2220-5280	330/2520-5220	350/2400-5100	285/1800-4980	320/1500-4500	400/2100-5100 (man)
						350/1900-6000 (aut)
Max rpm	6200	6200	6200	6200	6500	6500
Idling (rpm)	670	670	850	670	670	720
No. of cylinders	5	5	5	5	5	5
Cylinder bore (mm)	81	81	83	83	83	83
Stroke (mm)	77	90	90	90	93.2	93.2
Cylinder displacement (dm^3 =litres)	1984	2319	2435	2435	2521	2521
Firing sequence	1-2-4-5-3	1-2-4-5-3	1-2-4-5-3	1-2-4-5-3	1-2-4-5-3	1-2-4-5-3
Compression ratio	9.5:1	8.5:1	8.5:1	9.0:1	9.0:1	8.5:1
Weight, complete, including oil (kg)	approximately 177	approximately 177	approximately 177	approximately 177	approximately 177	approximately 177

CYLINDER BLOCK

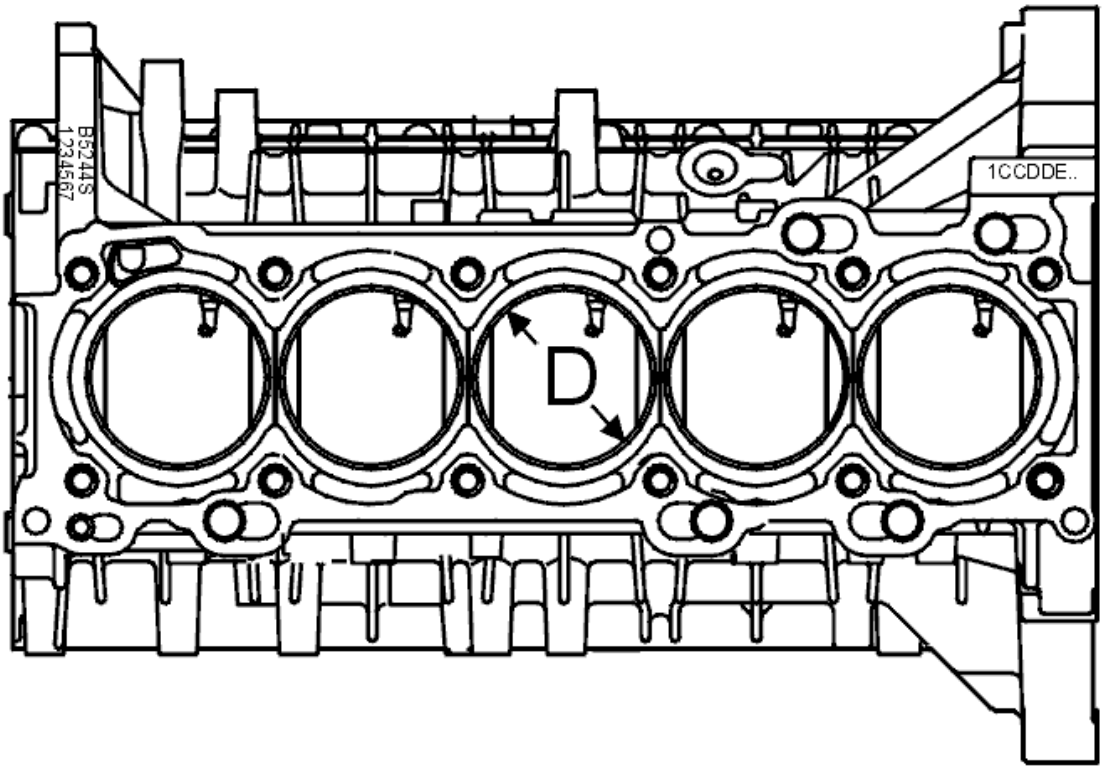

Fig. 4: Cylinder Block
Courtesy of VOLVO CARS CORPORATION

BORE (D) IN MM

Standard	B5204Tx	B5234Tx	B5244Tx	B5254Tx
C-marked[1]	81.000-81.010	81.000-81.010	83.000-83.010	83.000-83.010
D-marked[1]	81.010-81.020	81.010-81.020	83.010-83.020	83.010-83.020
E-marked[1]	81.020-81.030	81.020-81.030	83.020-83.030	83.020-83.030

[1] The bore classification is stamped on top of the engine block. For example: 1CCDDE is read as cyl 1=C, cyl 2=C, cyl 3=D, cyl 4=D, cyl 5=E.

PISTONS (ENGINE CAPACITIES)

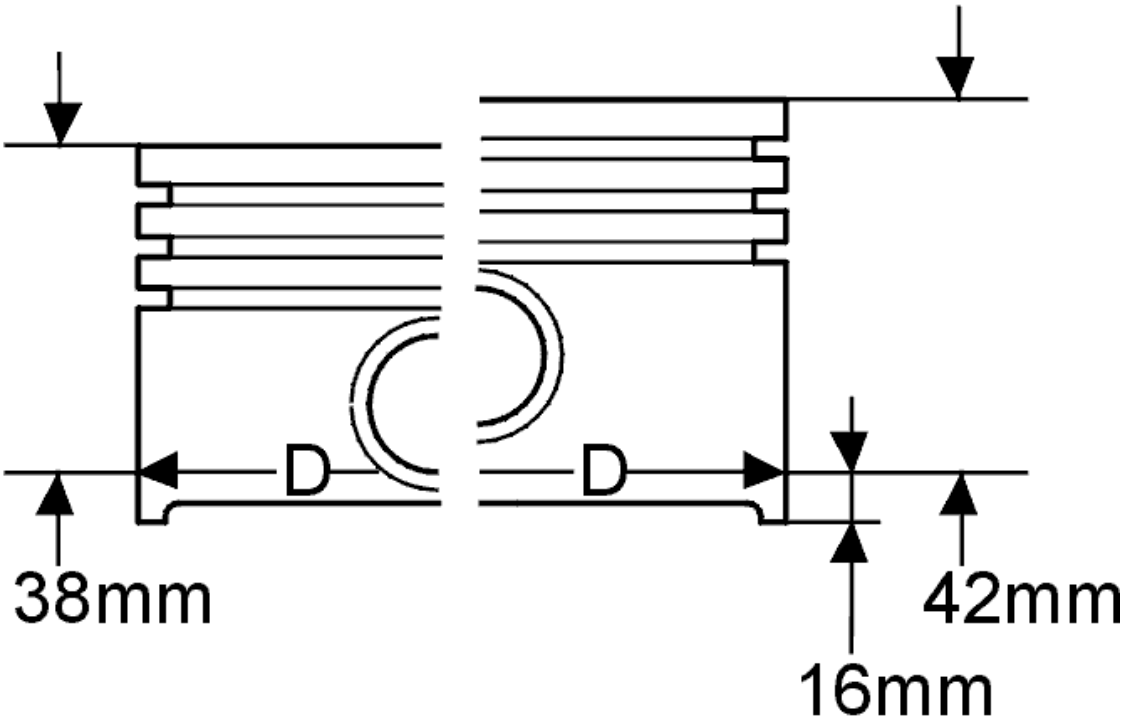

Fig. 5: Checking Piston Diameter
Courtesy of VOLVO CARS CORPORATION

BORE (D) IN MM

Standard	**B5204T5** Measured 16 mm from the bottom of the piston	**B5234T3** Measured 42 mm from the top of the piston	**B5244T2** Measured 42 mm from the top of the piston	**B5244T3** Measured 38 mm from the top of the piston	**B5254Tx**
C-marked[1]	80.980-80.990	80.980-80.990	82.980-82.990	82.980-82.990	
D-marked[1]	80.990-81.000	80.990-81.000	82.990-83.000	82.990-83.000	
E-marked[1]	81.000-81.010	81.000-81.010	83.000-83.010	83.000-83.010	

[1] Classification is marked on the top of the piston.

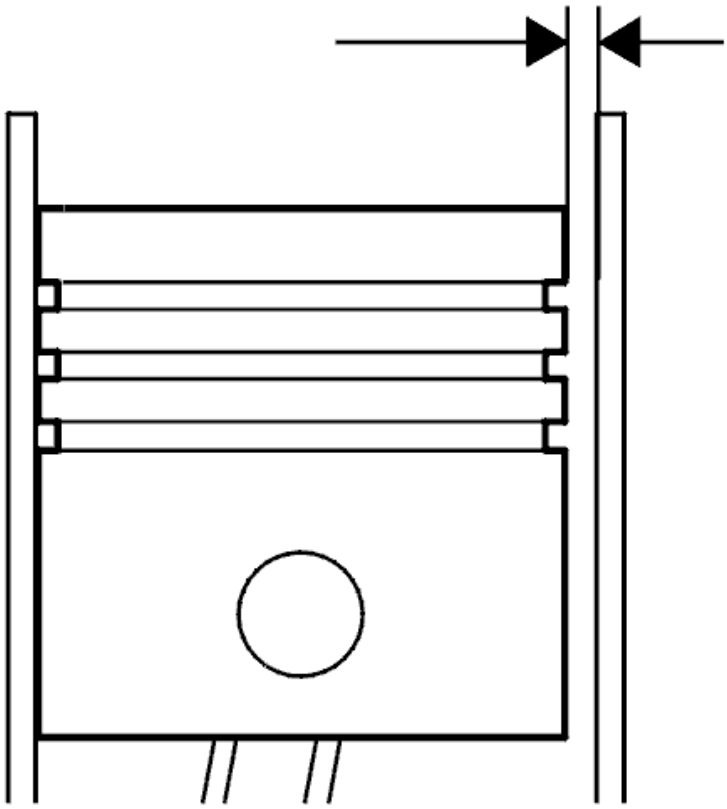

Fig. 6: Calculating Running Clearance Of Piston
Courtesy of VOLVO CARS CORPORATION

PISTON RUNNING CLEARANCE (EXAMPLE)

Measured cylinder diameter	83.015 mm
Measured piston diameter	82.995 mm
The piston running clearance is	0.020 mm
Piston running clearance must be	.010-0.030 mm

Piston rings

Fig. 7: Checking Piston Ring Axial Clearance
Courtesy of VOLVO CARS CORPORATION

AXIAL CLEARANCE

Upper compression ring.....0.030-0.070 mm
Lower compression ring.....0.030-0.070 mm
Oil control ring assembly.....0.038-0.142 mm

COMPRESSION RING DIMENSION

Upper.....1, 200 -0.010/-0.030 mm
Lower.....1, 500 -0.010/-0.030 mm

DIMENSION, THREE PIECE OIL RING

Spring.....1.510 ± 0.020 mm
Rail.....0.460 ± 0.011 mm

Piston pin

	B52x4Tx (excluding B5244T3)	**B5244T3**
Diameter (mm)	23.000 +0/-0.004	21.000 +0/-0.004
Length (mm)	61.000 +0/-0.200	60.000 +0/-0.200

VALVES

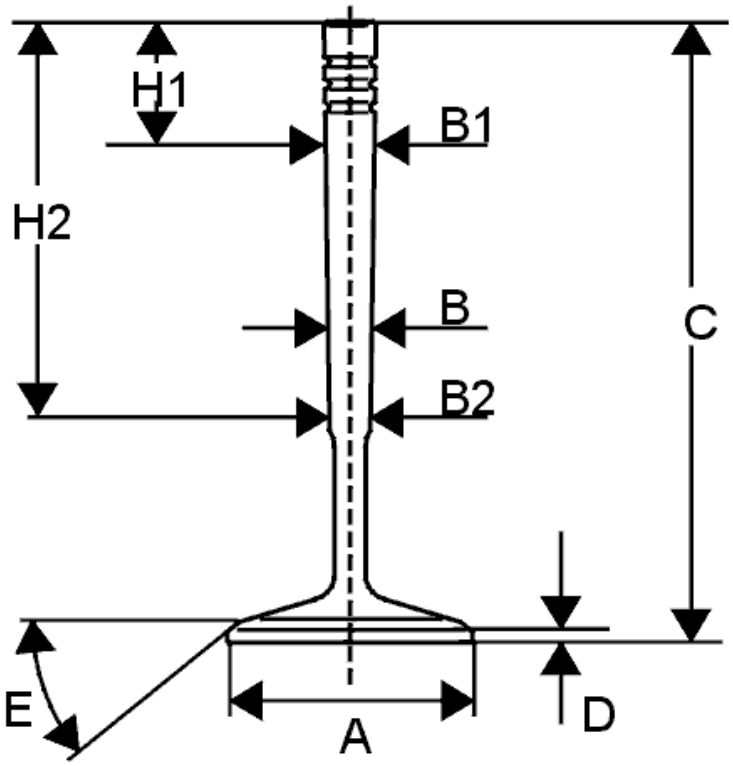

Fig. 8: Identifying Cylinder Head Valve Dimensions
Courtesy of VOLVO CARS CORPORATION

VALVE CROWN DIAMETER (A)

Inlet.....31.00 ± 0.15 mm Exhaust.....27.00± 0.15 mm

VALVE STEM DIAMETER (B)

Inlet (early versions).....6.970 +0/-0.015mm Inlet (late versions).....5.970 +0/-0.015mm

VALVE STEM DIAMETER (B1/B2)

Exhaust (early versions)	
H1 = 22.7 mm	B1 = 6, 962 ± 0.007 mm
H2 = 65.1	B2 = 6, 954 ± 0.007 mm
Exhaust (late versions)	
H1 = 22.7 mm	B1 = 5.962 ± 0.007 mm
H2 = 65.1	B2 = 5954 ± 0.007 mm

TOTAL VALVE LENGTH (C)

Inlet.....102.00 ± 0.07 mm
Exhaust.....101.05± 0.07 mm

DISC EDGE HEIGHT (D)

Inlet and exhaust.....1.50 mm
Minimum height after grinding.....1.20 mm

VALVE ANGLE

Inlet and exhaust.....44.5°

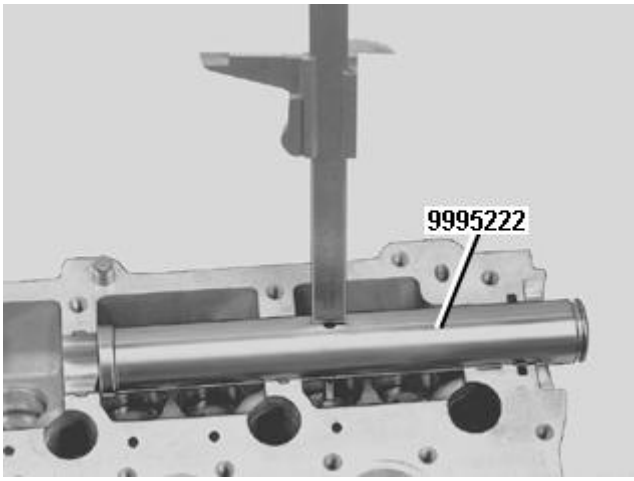

Fig. 9: Camshaft Adjustment Tool
Courtesy of VOLVO CARS CORPORATION

VALVE STEM VERTICAL POSITION

Valve stem height.....48.4± 0.5 mm
Maximum machining of the valve stem.....0.5 mm

VALVE SEATS

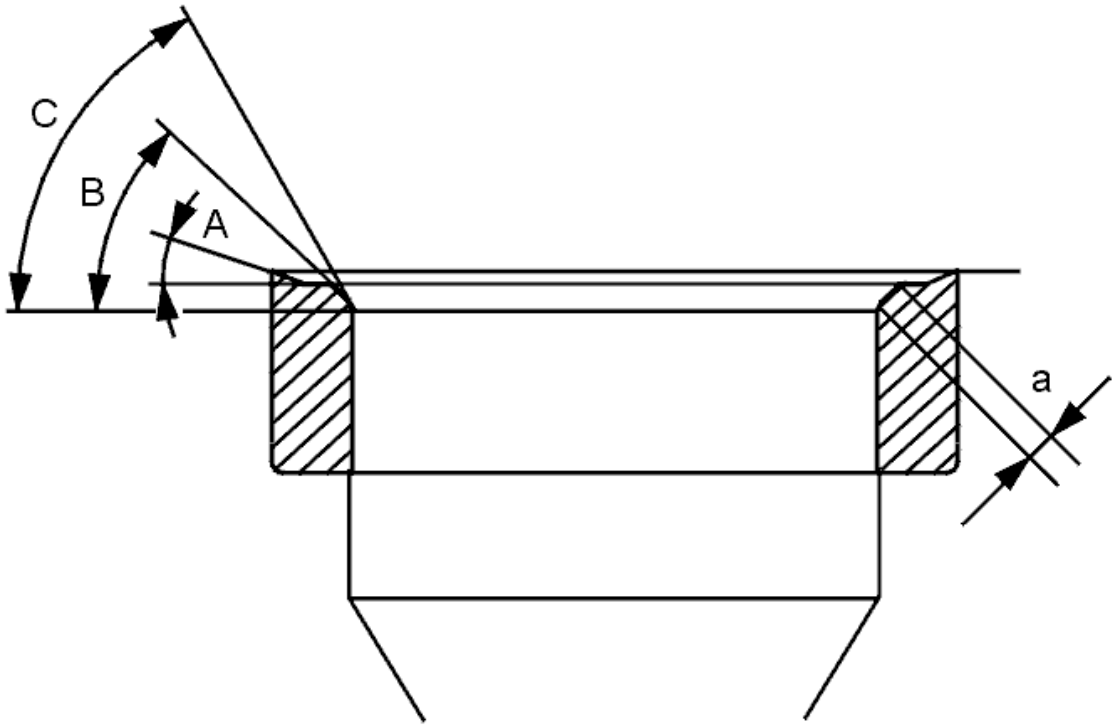

Fig. 10: Identifying Valve Seat Angles
Courtesy of VOLVO CARS CORPORATION

Upper reduction angle (A)
Inlet.....20°
Exhaust.....15°
Matching surface angle (B)
Inlet/Exhaust.....45°
Lower reduction angle (C)
Inlet/Exhaust.....60°
Valve seat, width (a)
Inlet.....1.4-1.8 mm
Exhaust.....1.8-2.2 mm

TAPPETS

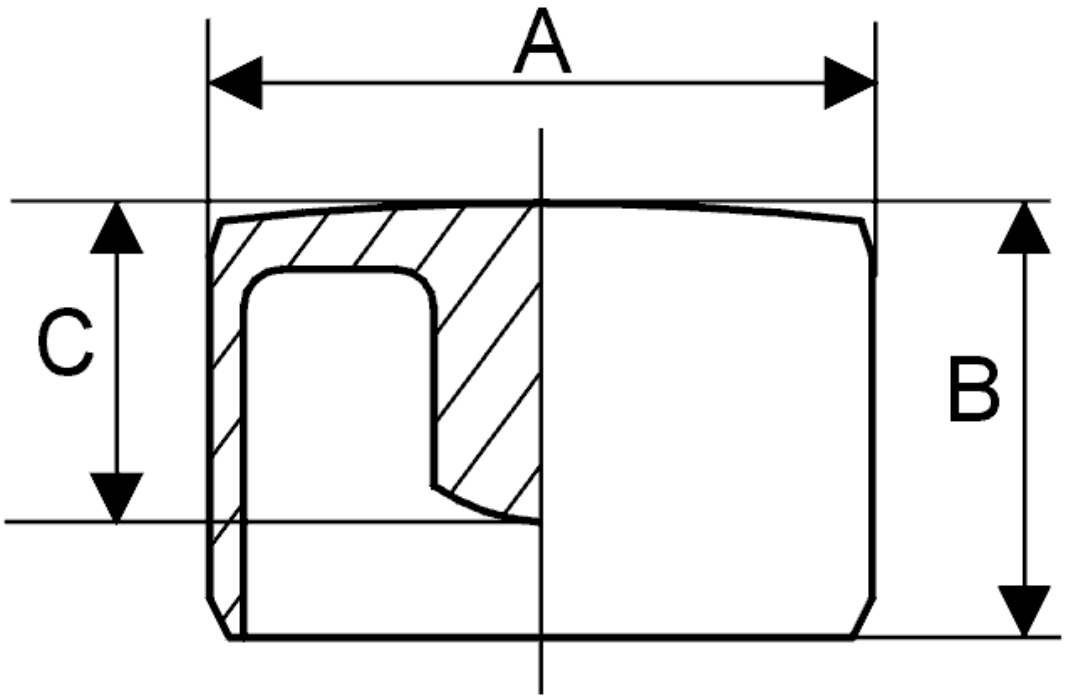

Fig. 11: Identifying Tappet Dimensions
Courtesy of VOLVO CARS CORPORATION

TAPPETS, DIMENSIONS

Tappets, dimensions
External diameter (A).....32.000 +0.025/-0.041 mm
External height (B).....26.0± 0.5 mm
Solid valve lifter shaft length (C)
15.96 mm at 0.02 mm intervals up to 16.16 mm. The dimensions are listed on the inside of each valve lifter.

VALVE SPRINGS

VALVE SPRINGS

Length.....45.1 + 1.5/-0.5 mm
Type..... Conical

VALVE GUIDES

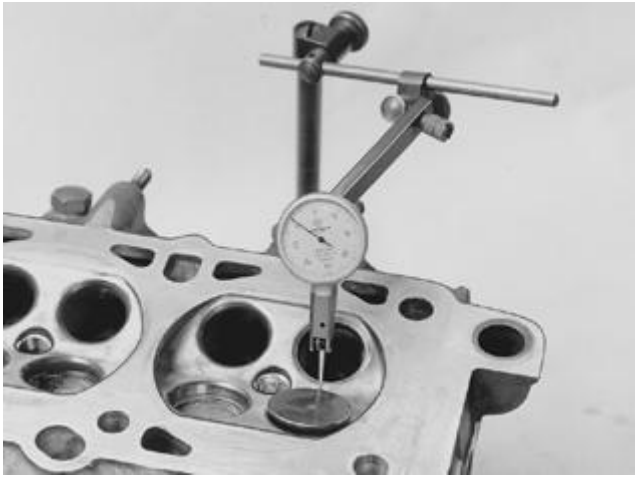

Fig. 12: Identifying Measurement Of Wear In Valve Guides Using A Dial Indicator And Magnetic Holder
Courtesy of VOLVO CARS CORPORATION

CLEARANCE BETWEEN NEW COMPONENTS:

Inlet/Exhaust.....0.03-0.06 mm

MAXIMUM PLAY FOR USED COMPONENTS:

Inlet/Exhaust.....0.15 mm

CAMSHAFTS

Inlet camshaft	Part number	Maximum lift height (mm)	Exhaust camshaft	Part number	Maximum lift height (mm)
B5204Tx excluding T4	9207943	8.40	**B5204Tx**	9207944	9.05
B5204T4	9207941	8.15			
B5234Tx	9207943	8.40	**B5234Tx**	9207944	9.05
B5244Tx excluding T2, T3	9207942	8.40	**B5244Tx** excluding T3	9207944	9.05
B5244T2	9497231	8.40	**B5244T3**	9497822	9.05
B5244T3	9497823	8.45	**B5254Tx**	9207944	9.05
B5254Tx	9207942	8.40			

CYLINDER HEAD

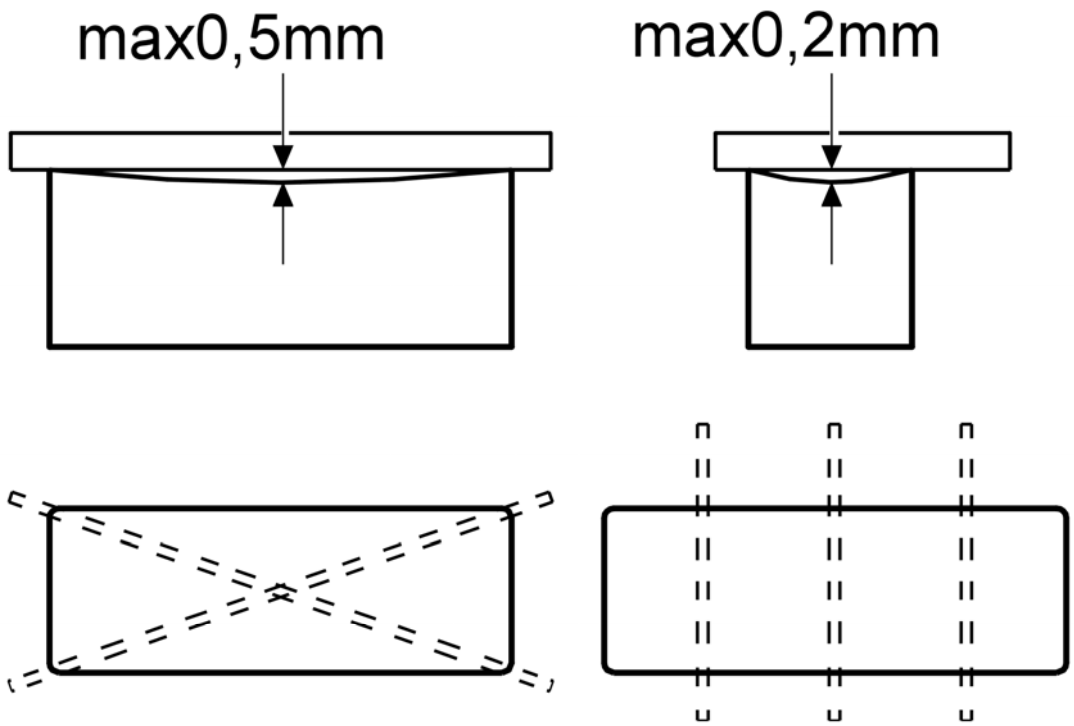

Fig. 13: Cylinder Head -- Specifications
Courtesy of VOLVO CARS CORPORATION

MAXIMUM OUT-OF-TRUE

Front-rear.....0.50 mm
Lateral.....0.20 mm
Cylinder head height.....129.00± 0.05 mm
Maximum machining.....0.30 mm

CAUTION: Scratches and corrosion to the cylinder head gasket face should only be machined on a flat cylinder head.

CRANK MECHANISM

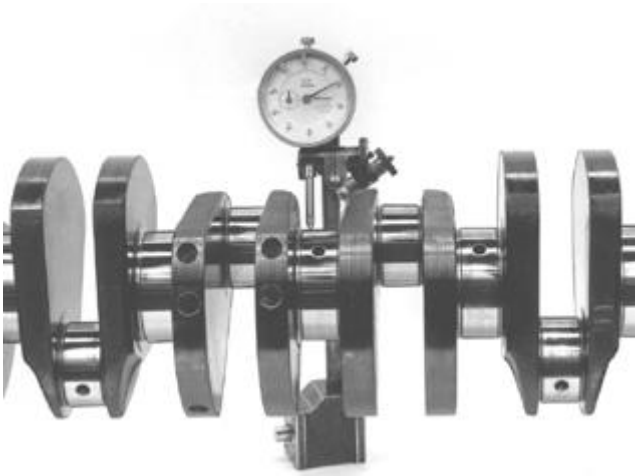

Fig. 14: Identifying Measurement Of Radial Runout Using A Dial Indicator And Magnetic Holder
Courtesy of VOLVO CARS CORPORATION

CRANKSHAFT

Main bearing journal radial runout..... maximum 0.040 mm
Axial play (Measured in the engine with the intermediate section tightened).....0.08-0.19 mm
Main bearing journal radial runout.....0.020-0.043 mm

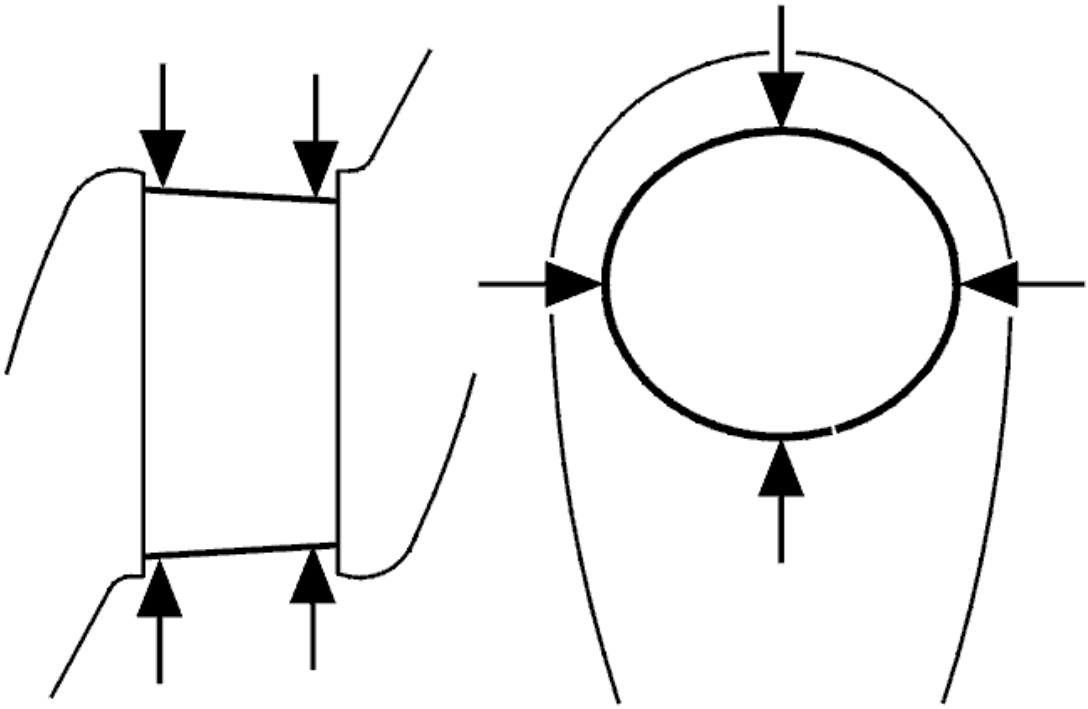

Fig. 15: Checking Taper and Out-of-Round
Courtesy of VOLVO CARS CORPORATION

BIG END JOURNALS

Diameter, standard[1] .....50.000 +0/-0.016
Bearing recess width.....26.0 ± 0.1 mm
Maximum out-of-round.....0.004 mm
Maximum taper.....0.004 mm
[1] The variation in diameter for each bearing journal must not exceed 0.008 mm.

MAIN BEARING JOURNALS

Diameter, standard[1] .....65.000 +0.003/-0.016 mm
Axial bearing width.....26.00 +0/-0.04mm
Maximum out-of-round.....0.004 mm
Maximum taper.....0.004 mm
[1] The variation in diameter for each bearing journal must not exceed 0.008 mm.

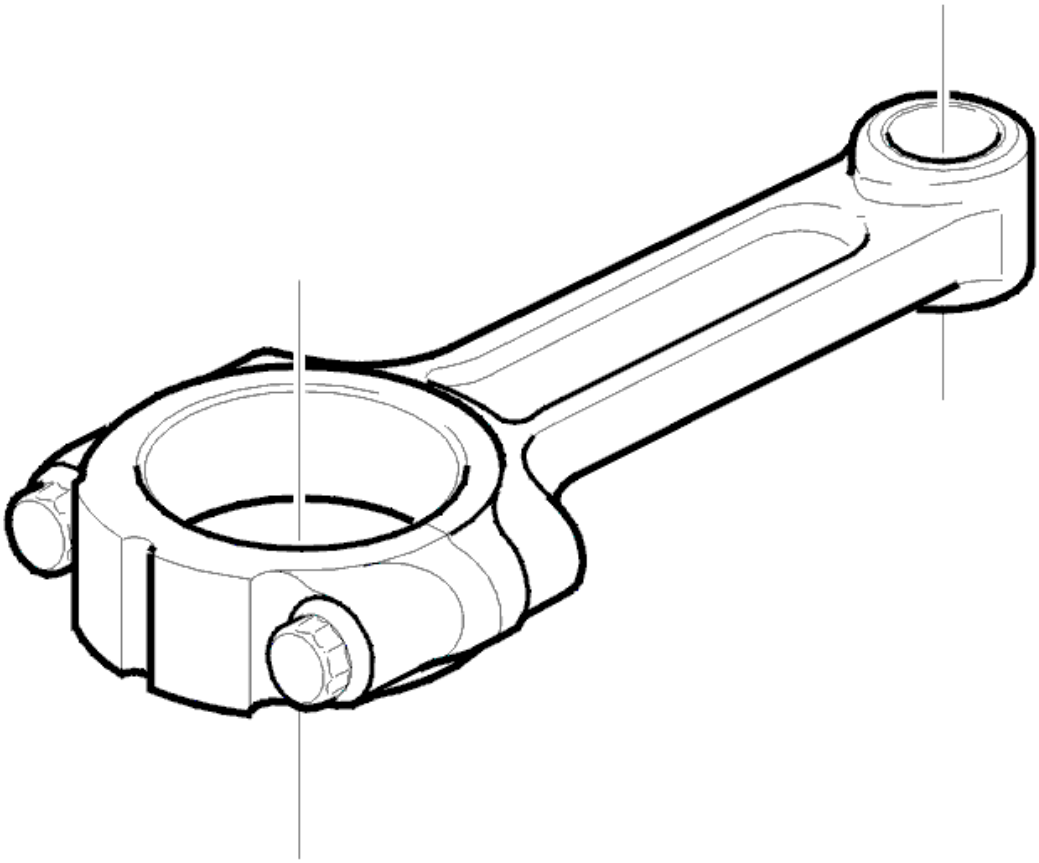

Fig. 16: Identifying Connecting Rod
Courtesy of VOLVO CARS CORPORATION

DIAMETER, BEARING RECESSES

Designation	**B52x4Tx** excluding B5244T3	**B5244T3**
Big end (mm)	53.000 -0/+0.013	53.000 -0/+0.013
Small end (mm)	21.000 +0.011/+0.005	23.000 +0.011/+0.005
Max. ovality in the bearing recesses	0.006	0.006
Length big end-small end (mm)	147	139.5

ENGINE OIL

FILLING WITH OIL AFTER RECONDITIONING.

Oil volume including filter.....6.6 litres

OIL GRADE

According to API Service..... lowest SH or SJ.
According to ACEA..... Grade A2, A2/B2, A3 or A3/B3.

OIL PRESSURE (MIN.)

13.3 r/s (800 rpm).....0.10 Mpa[1]
14.2 r/s (850 rpm).....0.10 Mpa[1]
66.7 r/s (4000 rpm).....0.35 Mpa[1]
Maximum oil pressure (the relief valve opens).....0.48 Mpa
[1] The oil pressure given is for an oil temperature of 100 °C, which is reached after 10-15 minutes driving.

FUEL LINE PRESSURE

Desired value	
Relative pressure	380 kPa
absolute pressure	480 kPa

COOLING SYSTEM

THERMOSTAT

Marking.....90
Starts to open at.....90°C
Fully open at.....105°C

TIGHTENING TORQUE

GENERAL TIGHTENING TORQUE

NOTE: **Screws coated with a locking fluid or self locking nuts must be replaced with new when reinstalled.**

See the table below to find the tightening torques for components not included in the summary.

Nuts and screws which are not self locking can be reused provided that they are in good condition.

Applies to screwed joint with strength class 8.8.	
Thread	Tightening torque (Nm)
M5	5
M6	10
M7	17
M8	24
M10	50
M12	80
M14	130

SUMMARY OF SPECIFIC COMPONENTS AND TIGHTENING TORQUES

NOTE: **Screws coated with locking fluid or sealant must always be replaced with new screws during reinstallation.**

Always use **new screws and nuts** when angle tightening. Any exceptions to this rule will be indicated in the method.

Angle-tightening in tight spaces. See **SCREWED JOINT, TORQUE/ANGLE TIGHTENING** .

Exhaust system (to the turbocharger (TC))	24 Nm
Cylinder head Tighten the screws in sequence from the center and outwards.	Stage 1.....20 Nm Stage 2.....60 Nm Stage 3.....130°
Manifold (cylinder head side)	25 Nm
Pipe screw (coolant pipe / turbocharger (TC))	26 Nm
Pipe screw (water heated crankcase ventilation.)	26 Nm
Pipe screw (oil pressure line / turbocharger (TC))	26 Nm
Pipe screw (oil pressure line / engine block)	38 Nm
Sub-frame nut (lower torque rod)	Stage 1.....65 Nm Stage 2.....60°

Subframe screws (start on the left-hand side, then the right-hand side)	Stage 1.....105 Nm Stage 2.....120°
Subframe bracket	50 Nm
Intake manifold	19 Nm
Catalytic converter (to the turbocharger (TC)) (to the exhaust system)	 25 Nm 24 Nm
Knock sensor (KS)	20 Nm
Piston cooling valve (piston cooling oil duct, in cylinder block)	36 Nm
Timing gear pulley (camshafts without variable valve timing)	20 Nm
Timing gear pulley (camshafts with variable valve timing)	10 Nm
Heated oxygen sensor (HO2S)	45 Nm
Carrier plate	Stage 1.....45 Nm Stage 2.....50°
Intermediate section Tighten the screws in sequence from the center and outwards.	Stage 1 M10.....20 Nm Stage 2 M10.....45 Nm Stage 3 M8.....24 Nm Stage 4 M7.....17 Nm Stage 5 M10.....90°
Torque converter	50 Nm
Engine mounting Right side (M10x35 to cylinder block)	Stage 1.....35 Nm Stage 2.....60°
Engine mounting Right side (M8x23 to cylinder block)	Stage 1.....20 Nm Stage 2.....60°
Right-hand engine pad for the subframe (Only applies to XC90)	Stage 1.....120 Nm Stage 2.....40°
Lower torque rod, transmission screw	Stage 1.....35 Nm Stage 2.....40°
Lower torque rod, sub-frame nut	Stage 1.....65 Nm Stage 2.....60°
Oil filter (environmental filter)	25 Nm
Oil trap	15 Nm
Oil pan plug	38 Nm
Oil pump (countersunk Allen, M6x20, holds the pump housing together)	6 Nm
Oil return line (turbocharger (TC))	12 Nm
Oil pan (Applies to B5254T4)	the screws (1, 2, 3 and 4). Tighten to.....3 Nm the screws (5). Tighten to.....25 Nm. Then tighten

	to 48 Nm
Oil pressure switch	27 Nm
Stud (at exhaust port, manifold, turbocharger (TC))	20 Nm
Plug (check hole for gauging valve clearance)	20 Nm
Plug (gauge hole / crankshaft seal)	38 Nm
Belt tensioner (mechanical)	20 Nm
Flywheel	Stage 1.....45 Nm Stage 2.....65°
Vibration damper -2002 (flanged screws x4)	Stage 1.....25 Nm Stage 2.....30°
Vibration damper 2002- /flanged screws x4	Stage 1.....25 Nm Stage 2.....60°
(center nut)	180 Nm
Temperature sensor (coolant)	22 Nm
Timing cover, (front/rear)	12 Nm
Timing cover, (upper)	8 Nm
Turbocharger (TC) (to manifold, without gasket)	25 Nm
Turbocharger (TC) (to manifold, with gasket)	37 Nm
Spark plugs	30 Nm
Connecting rod cap (connecting rod with treated toothed surface between the connecting rod and cap, screw with waist)	Stage 1.....20 Nm Stage 2.....90°
Connecting rod cap (connecting rod with fracture surface between the connecting rod and cap, fully threaded screw)	Stage 1.....30 Nm Stage 2.....90°
Transmission screw (lower torque rod)	Stage 1.....35 Nm Stage 2.....40°
Variable valve timing center screw	120 Nm
Variable valve timing center plug	35 Nm

MECHANICAL SPECIFICATIONS (B6294T)

SPECIFICATIONS

NOTE: **The illustrations in this service information are used for different model years and / or models. Therefore there may be some variation. However, the essential information in the illustrations is always correct.**

ENGINE MANUFACTURE NUMBER, ENGINE SERIAL NUMBER AND TYPE

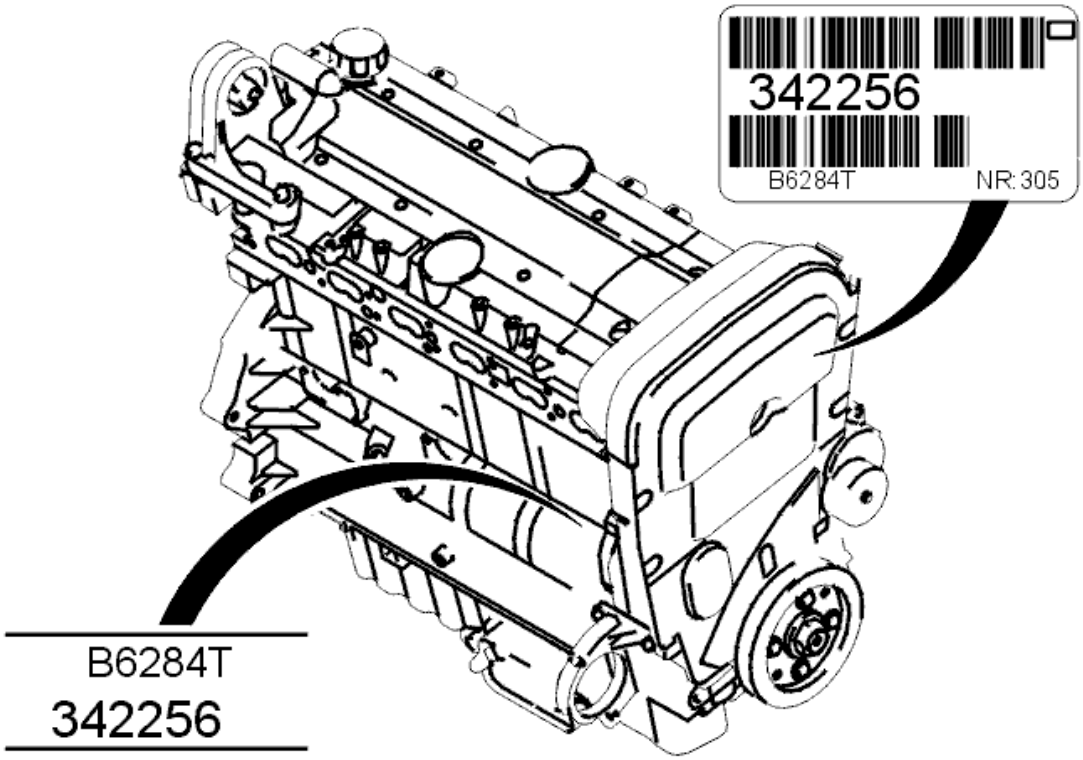

Fig. 17: Engine Manufacture Number, Engine Serial Number And Type
Courtesy of VOLVO CARS CORPORATION

The engine serial number and type are stamped on the left side of the cylinder block at the top of the mounting for the water pump.

There is also a decal on the timing cover with the engine type, manufacture number and serial number.

CLASSIFICATION OF MAIN BEARINGS

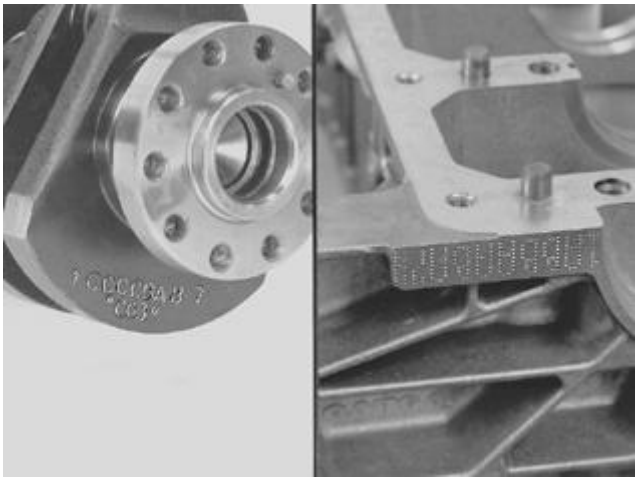

Fig. 18: Classification Of Main Bearings
Courtesy of VOLVO CARS CORPORATION

The marking is stamped on the cylinder block and crankshaft.

Cylinder block classification / Crankshaft classification	A small diameter		B medium diameter		C large diameter	
	block	intermediate section	block	intermediate section	block	intermediate section
A small diameter	yellow medium	yellow medium	yellow medium	blue thick	blue thick	blue thick
B medium diameter	red thin	yellow medium	yellow medium	yellow medium	yellow medium	blue thick
C large diameter	red thin	red thin	red thin	yellow medium	yellow medium	yellow medium

GENERAL DATA

	B6284T	**B6294S**
Output (kW) at rpm	200/5400	147/6000
Maximum torque (Nm) at rpm	280/4200	380/2100-4980
Maximum engine speed (rpm)	6200	6500
Idling speed	650	650
No. of cylinders	6	6
Bore mm	81.0	83.0
Stroke mm	90.0	90.0

Cylinder displacement cm^3	2783	2922
Firing order	1-5-3-6-2-4	1-5-3-6-2-4
Compression ratio	8.5:1	10.3:1
Total weight, (including oil)..... kg	approximately 190	approximately 180

CYLINDER BLOCK

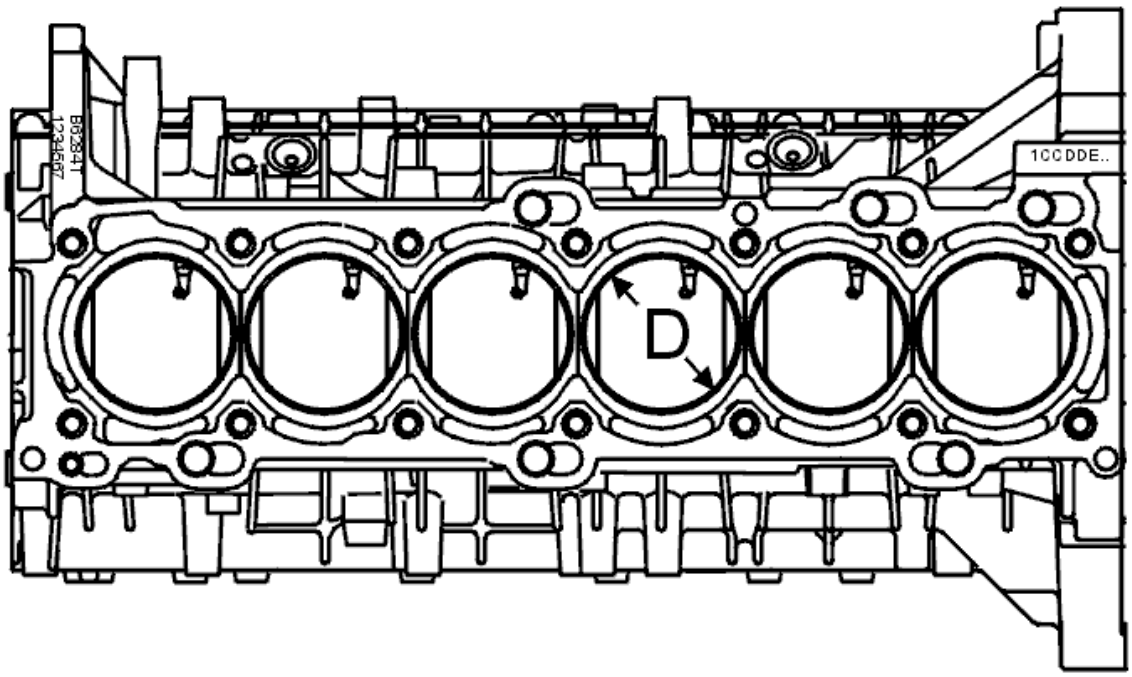

Fig. 19: Identifying Cylinder Bore
Courtesy of VOLVO CARS CORPORATION

BORE (D) IN MM

Standard	**B6284T**	**B6294S**
C-marked [1]	81.00-81.01	83.00-83.01
D-marked [1]	81.01-81.02	83.01-83.02
E-marked [1]	81.02-81.03	83.02-83.03

[1] The bore classification is stamped on top of the engine block.

Example: 1CCDDEE Is read as follows: Cylinder 1=C; Cylinder 2=C; Cylinder 3=D; Cylinder 4=D; Cylinder 5 =E; Cylinder 6=E.

PISTONS

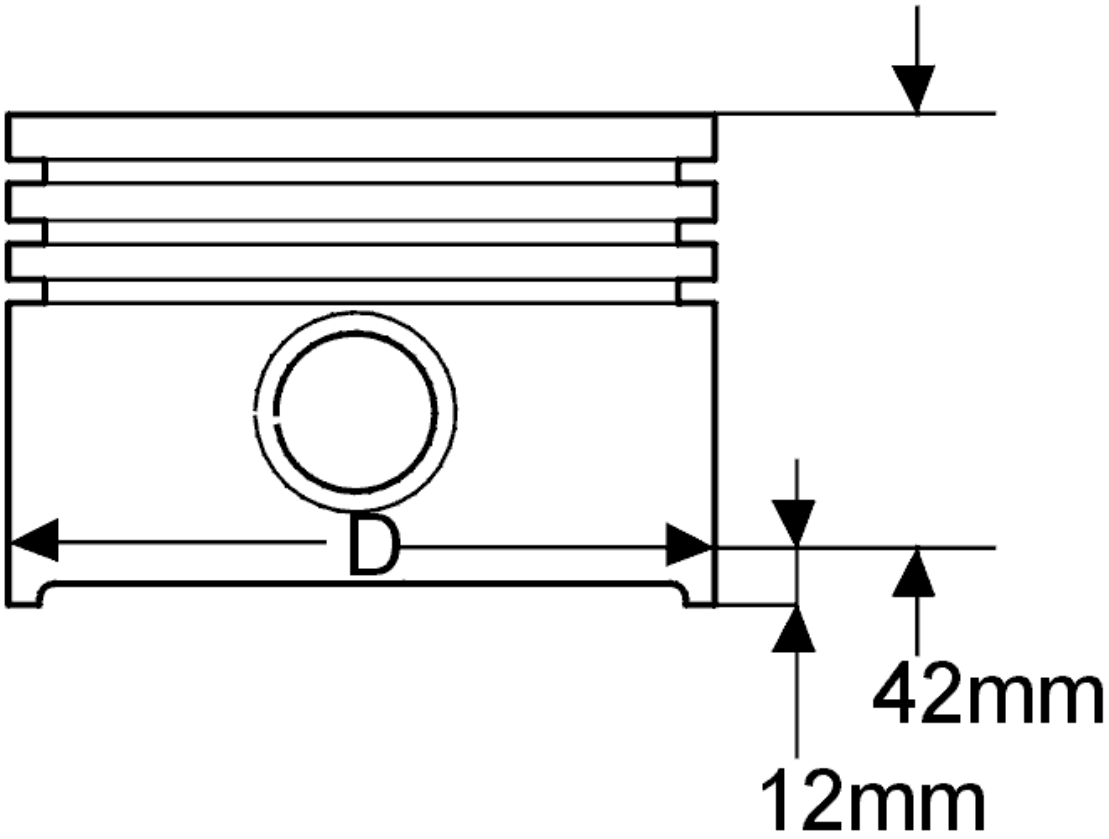

Fig. 20: Checking Piston Diameter
Courtesy of VOLVO CARS CORPORATION

PISTON DIAMETER (D)

Standard	**B6284T** **The diameter is measured 42 mm from the top of the piston**	**B6294S** **The diameter is measured 12 mm from the bottom of the piston**
C-marked [1]	80.98-80.99	82.98-82.99
D-marked [1]	80.99-81.00	82.99-83.00
E-marked [1]	81.00-81.01	83.00-83.01

[1] The classification is marked on the top of the piston.

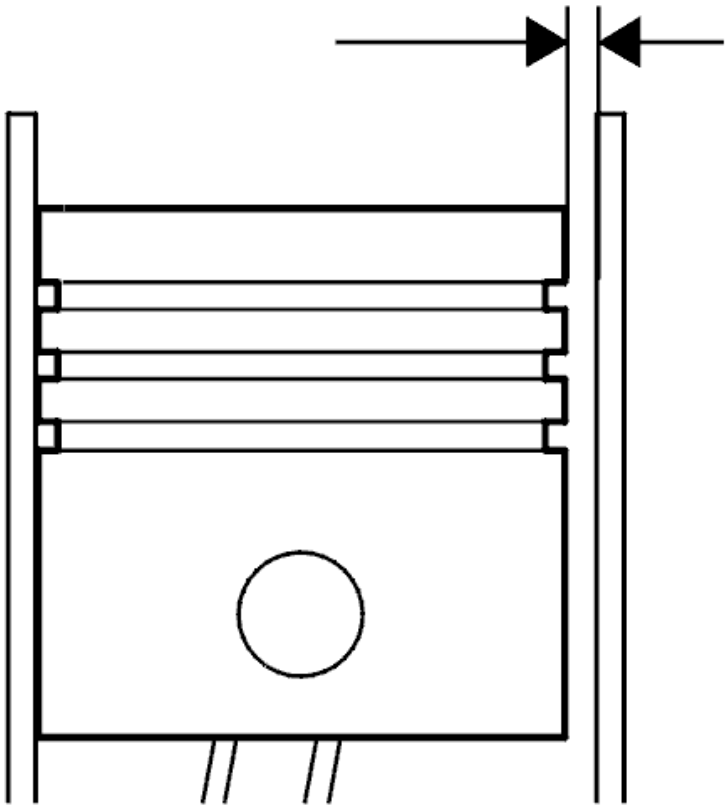

Fig. 21: Calculating Running Clearance Of Piston
Courtesy of VOLVO CARS CORPORATION

PISTON RUNNING CLEARANCE (EXAMPLE)

Measured cylinder diameter.....	81.015 mm
Measured piston diameter.....	80.995 mm
The piston running clearance is.....	0.020 mm
The piston running clearance must be 0.010-0.030 mm.	

Piston rings

Fig. 22: Checking Piston Ring Axial Clearance
Courtesy of VOLVO CARS CORPORATION

AXIAL CLEARANCE

Upper compression ring.....0.030-0.070 mm
Lower compression ring.....0.030-0.070 mm
Oil control ring assembly.....0.038-0.142 mm

COMPRESSION RING DIMENSION

Upper.....1.200 -0.010/-0.030mm
Lower.....1.500 -0.010/-0.030mm

DIMENSION, THREE PIECE OIL RING

Spring.....1.510 ± 0.020 mm
Rail.....0.460 ± 0.011 mm

PISTON PIN

B6284T
Diameter.....23.000 +0/-0.004 mm
Length.....61.000 +0/-0.200 mm
B6294S
Diameter.....21.000 +0/-0.004 mm
Length.....57.000 +0/-0.200 mm

VALVES

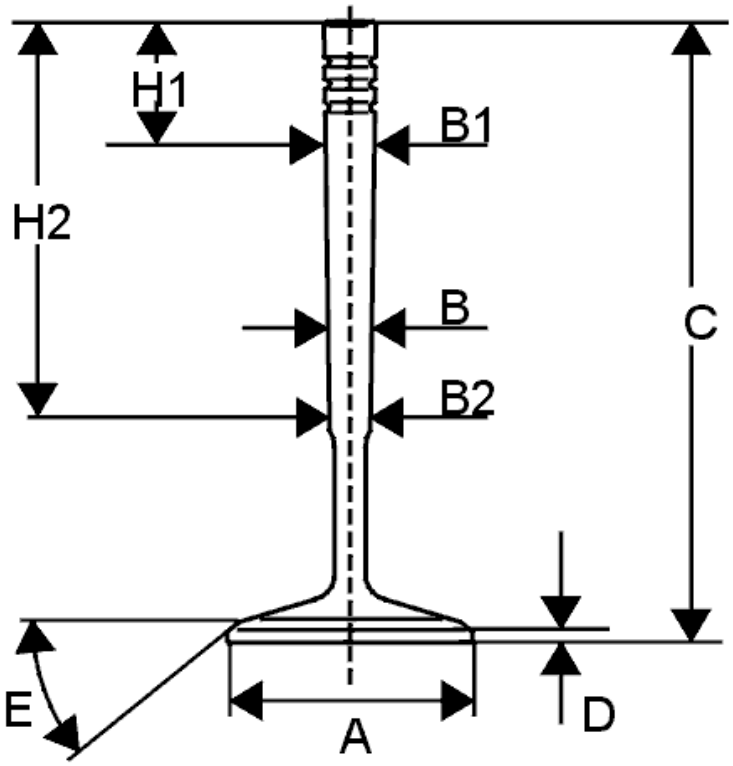

Fig. 23: Identifying Cylinder Head Valve Dimensions
Courtesy of VOLVO CARS CORPORATION

VALVE CROWN DIAMETER (A)

B6284T Inlet.....31.00 ± 0.15 mm Exhaust.....27.00± 0.15 mm
B6294S Inlet.....32.00 ± 0.15 mm Exhaust.....27.00± 0.15 mm

VALVE STEM DIAMETER (B)

B6284T Inlet (early versions).....6.970 +0/-0.015 mm Inlet (late versions).....5.970 +0/-0.015 mm
B6294S Inlet (early versions).....6, 963± 0.007 mm Inlet (late versions).....5.970 +0/-0.015 mm

VALVE STEM DIAMETER (B1/B2)

B6284T Exhaust (early versions)

H1 = 22.7 mm.....**B1** = 6.962 ± 0.007 mm **H2** = 65.1 mm.....**B2** = 6.954 ± 0.007 mm Exhaust (late versions) **H1** = 22.7 mm.....**B1** = 5.962 ± 0.007 mm **H2** = 65.1 mm.....**B2** = 5.954 ± 0.007 mm
B6294S Exhaust (early versions, alternative 1) **H1** = 17.4 mm.....**B1** = 6.963 ± 0.007 mm **H2** = 70.4 mm.....**B2** = 6.953 ± 0.007 mm Exhaust (early versions, alternative 2) **H1** = 22.7 mm.....**B1** = 6.962 ± 0.007 mm **H2** = 65.1 mm.....**B2** = 6.954 ± 0.007 mm Exhaust (late versions) **H1** = 22.7 mm.....**B1** = 5.962 ± 0.007 mm **H2** = 65.1 mm.....**B2** = 5.954 ± 0.007 mm

TOTAL VALVE LENGTH (C)

Inlet.....102.00 ± 0.07 mm Exhaust.....101.05 ± 0.07 mm

DISC EDGE HEIGHT (D)

Inlet and exhaust.....1.50 mm Minimum height after grinding.....1.20 mm

MATING SURFACE ANGLE (E)

Inlet and exhaust.....44.5°

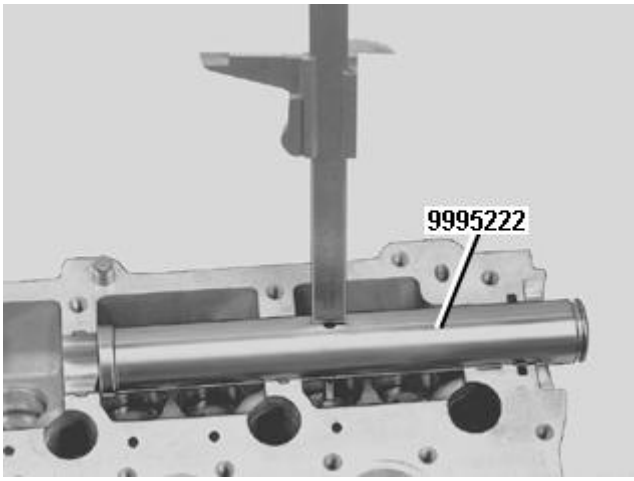

Fig. 24: Camshaft Adjustment Tool
Courtesy of VOLVO CARS CORPORATION

VALVE STEM VERTICAL POSITION

Valve stem height.....48.4± 0.5 mm
Maximum machining of the valve stem.....0.5 mm

VALVE SEATS

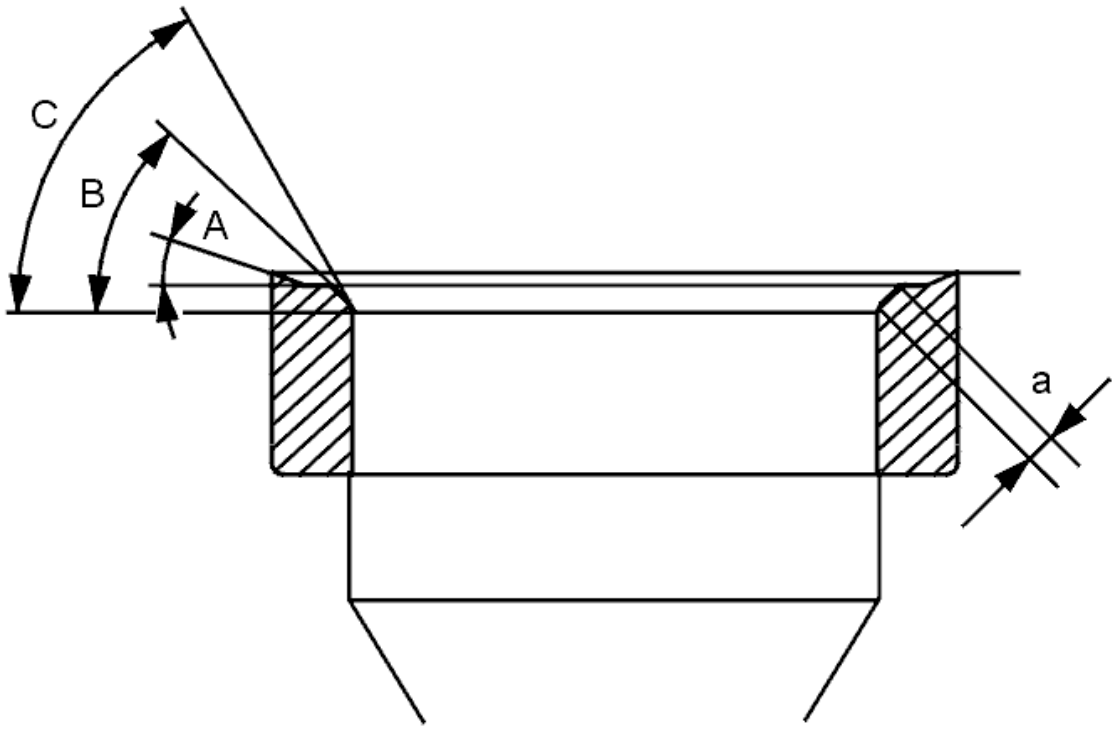

Fig. 25: Identifying Valve Seat Angles
Courtesy of VOLVO CARS CORPORATION

Upper reduction angle (A)
Inlet.....20°
Exhaust.....15°
Matching surface angle (B)
Inlet and exhaust.....45°
Lower reduction angle (C)
Inlet and exhaust.....60°
Valve seat, width (a)
Inlet.....1.4-1.8 mm
Exhaust.....1.8-2.2 mm

TAPPETS

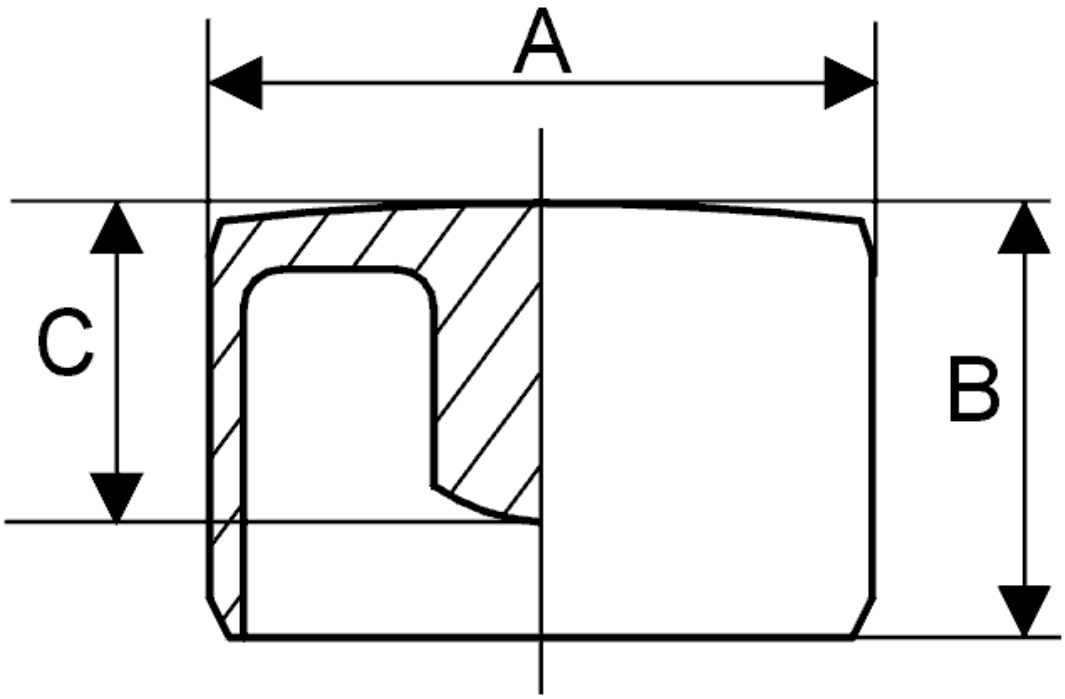

Fig. 26: Identifying Tappet Dimensions
Courtesy of VOLVO CARS CORPORATION

Tappets, dimensions
External diameter (A).....32.000 +0.025/-0.041 mm.
External height (B).....26.0± 0.5 mm.
Solid valve lifter shaft length (C)
15.96 mm at 0.02 mm intervals up to 16.16 mm.
The dimensions are listed on the inside of each valve lifter.

VALVE SPRINGS

VALVE SPRINGS, DIMENSIONS

Length.....45.1 +1.5/-0.5 mm
Type..... Conical

VALVE GUIDES

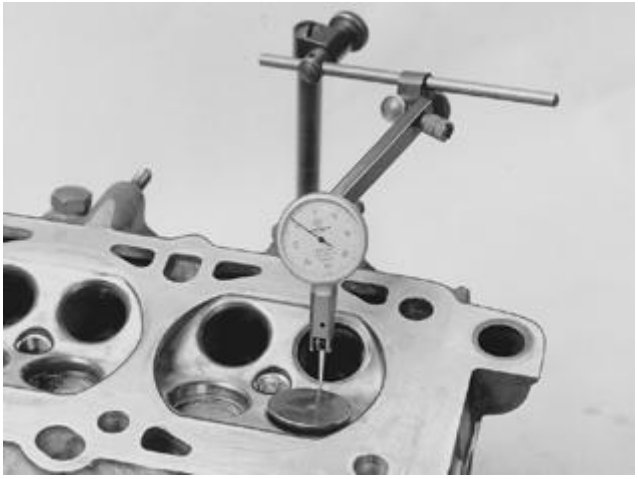

Fig. 27: Identifying Measurement Of Wear In Valve Guides Using A Dial Indicator And Magnetic Holder
Courtesy of VOLVO CARS CORPORATION

CLEARANCE BETWEEN NEW COMPONENTS

Inlet and exhaust.....0.03-0.06 mm

MAXIMUM PLAY FOR USED COMPONENTS

Inlet and exhaust.....0.15 mm

CAMSHAFTS

Engine type	Camshaft			
	Marking/ P/N		Maximum lift height	
	Intake	Exhaust	Intake	Exhaust
B6284T	9471686	9471685	8.40	9.05
B6294S	9471687	9465131	9.20	8.80

CYLINDER HEAD

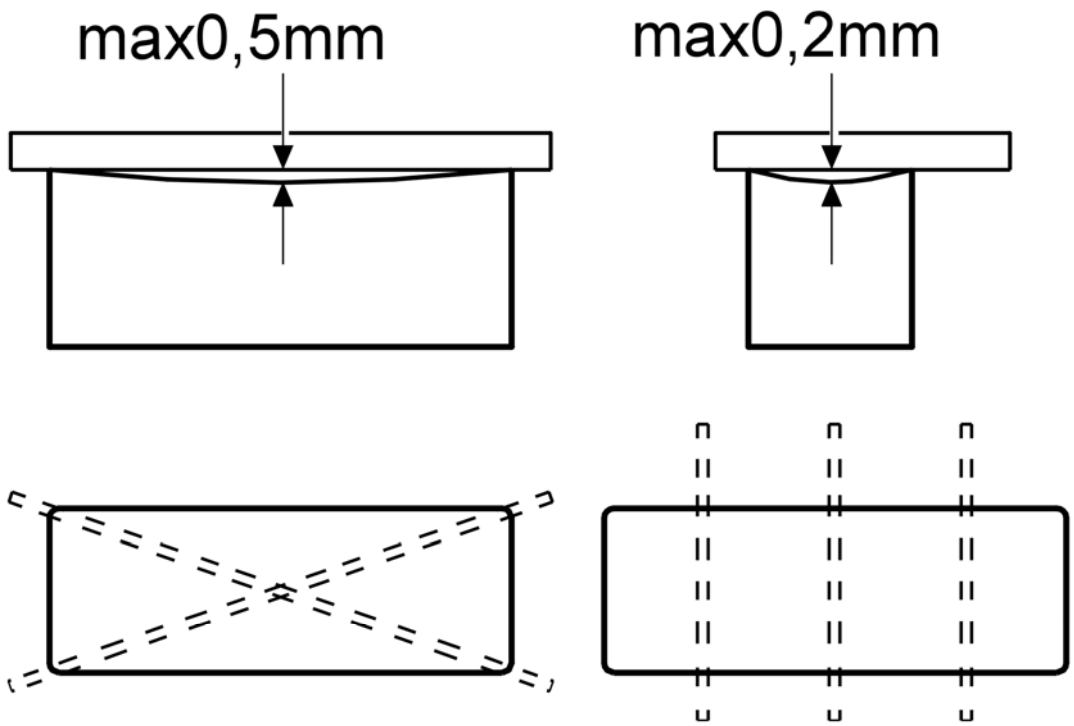

Fig. 28: Cylinder Head -- Specifications
Courtesy of VOLVO CARS CORPORATION

MAXIMUM OUT-OF-TRUE

Front-rear.....0.50 mm
Lateral.....0.20 mm
Cylinder head height, new cylinder head.....129.0± 0.05
Maximum machining.....0.30 mm

CAUTION: Scratches and corrosion on the cylinder head gasket face against the cylinder block must only be machined on a flat cylinder head.

CRANK MECHANISM

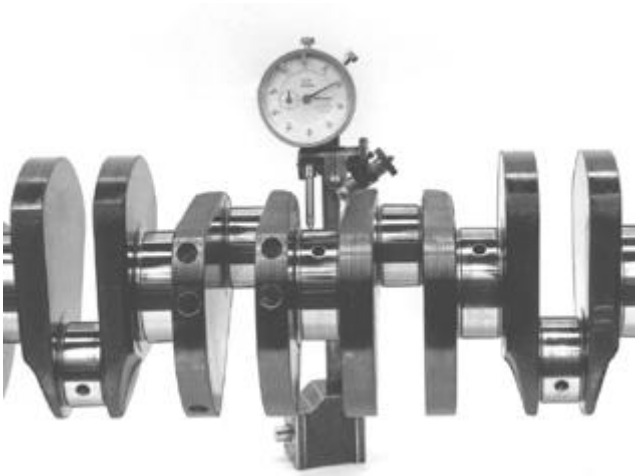

Fig. 29: Identifying Measurement Of Radial Runout Using A Dial Indicator And Magnetic Holder
Courtesy of VOLVO CARS CORPORATION

CRANKSHAFT

Main bearing journal radial runout..... maximum 0.040 mm
Axial play (Measured in the engine with the intermediate section tightened).....0.08-0.19 mm
Main bearing journal radial runout.....0.020-0.043 mm

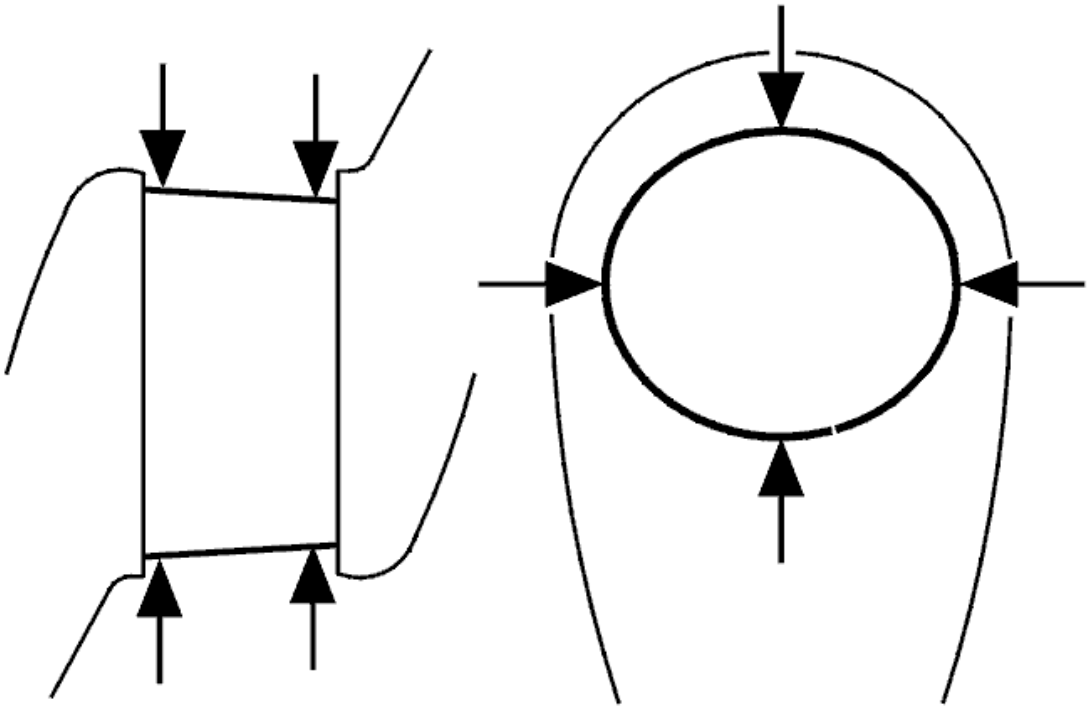

Fig. 30: Checking Taper and Out-of-Round
Courtesy of VOLVO CARS CORPORATION

BIG END JOURNALS

Diameter[1] .....50.000 +0/-0.016 mm
Bearing recess width.....26.0 ± 0.1 mm
Maximum out-of-round.....0.004 mm
Maximum taper.....0.004 mm
[1] The variation in diameter for each bearing journal must not exceed 0.008 mm.

MAIN BEARING JOURNALS

Diameter[1] .....65.000 +0.003/-0.016 mm
Axial bearing width dimension.....26.00 +0/-0.04 mm
Maximum out-of-round.....0.004 mm
Maximum taper.....0.004 mm
[1] The variation in diameter for each bearing journal must not exceed 0.008 mm.

CONNECTING RODS

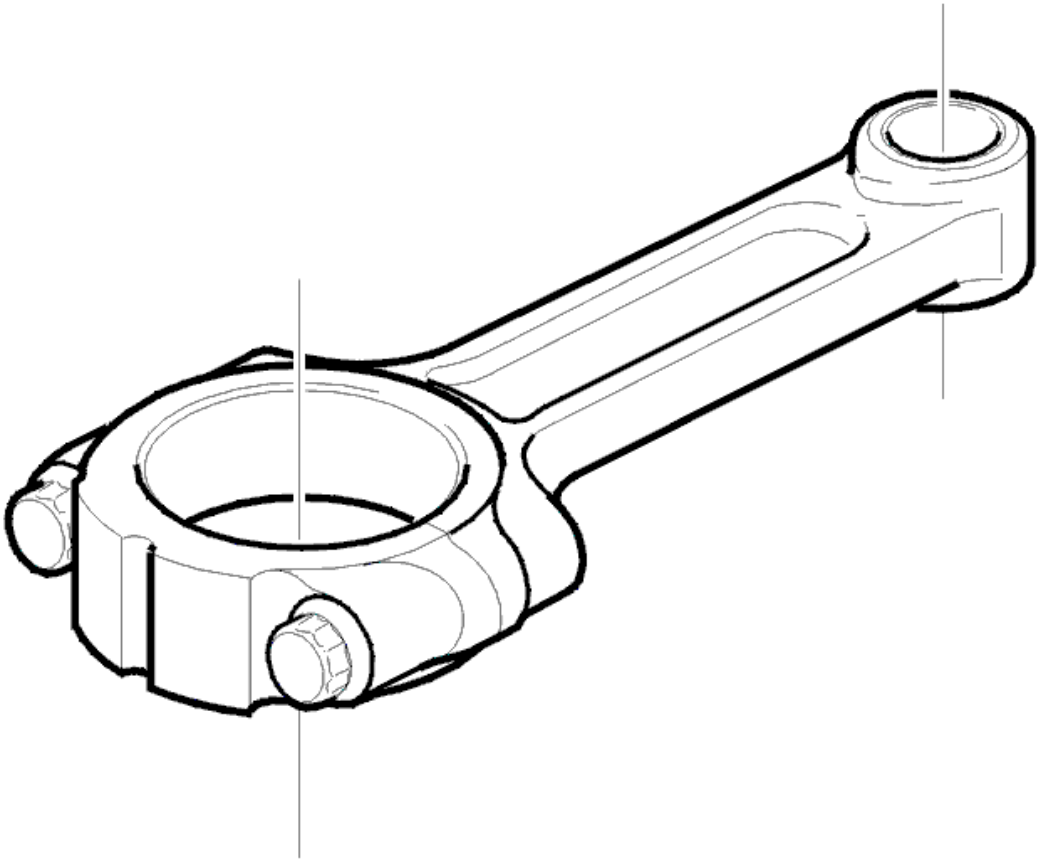

Fig. 31: Identifying Connecting Rod
Courtesy of VOLVO CARS CORPORATION

DIAMETER, BEARING RECESSES

Designation	B6284T	B6294S
Big end	53.000 -0/+0.013 mm	53.000 -0/+0.013 mm
Small end	23.000 +0.011/+0.005 mm	21.000 +0.011/+0.005 mm
Maximum ovality in the bearing recesses	0.006 mm	0.006 mm
Length big end-small end	139.5 mm	147 mm

LUBRICATION AND OIL SYSTEM

ENGINE OIL, FILLING WITH OIL AFTER RECONDITIONING

Oil volume, including filter.....7.2 litres

OIL GRADE

According to API Service..... lowest SH or SJ
According to ACEA..... Grade A2, A2/B2, A3 or A3/B3

OIL PRESSURE

12.5 r/s (750 r/min).....0.10 Mpa[1]
67.7 r/s (4000 r/min).....0.35 Mpa[1]
Maximum oil pressure (the relief valve opens).....0.65 Mpa
[1] The oil pressure given is for an oil temperature of 100 °C, which is reached after 10-15 minutes driving.

FUEL LINE PRESSURE

Desired value	
Relative pressure	380 kPa
Absolute pressure	480 kPa

COOLING SYSTEM

THERMOSTAT

Marking.....90
Starts to open at.....90°C
Fully open at.....105°C

TIGHTENING TORQUE

GENERAL TIGHTENING TORQUE

NOTE: Screws coated with a locking fluid or self locking nuts must be replaced with new when reinstalled.

See the table below to find the tightening torques for components not included in the summary.

Nuts and screws which are not self locking can be reused provided that they are in good condition.

Torque Specifications

Applies to screwed joint with strength class 8.8.	
Thread	Tightening torques (Nm)
M5	5
M6	10
M7	17
M8	24
M10	50
M12	80

M14	130

SUMMARY OF TIGHTENING TORQUES FOR SPECIFIC COMPONENTS

NOTE: Screws coated with locking fluid or sealant must always be replaced with new screws during reinstallation.

Always use **new screws and nuts** when angle tightening. Any exceptions to this rule will be indicated in the method.

Angle-tightening in tight spaces. See **SCREWED JOINT, TORQUE/ANGLE TIGHTENING** .

Exhaust bend (to the turbocharger (TC))	24 Nm
Cylinder head Tighten the screws in sequence from the center and outwards.	Stage 1.....20 Nm Stage 2.....60 Nm Stage 3.....130°
Manifold (cylinder head side)	25 Nm
Sub-frame nut (lower torque rod)	Stage 1.....65 Nm Stage 2.....60°
Pipe screws (water heated crankcase ventilation.)	26 Nm
Pipe screws (coolant pipe / turbocharger (TC))	26 Nm
Pipe screws (oil pressure line / turbocharger (TC))	18 Nm
Pipe screws (oil pressure line / engine block)	38 Nm
Subframe screws (start on the left-hand side, then the right-hand side)	Stage 1.....105 Nm Stage 2.....120°
Intake manifold (joint upper / lower section)	19 Nm
Intake manifold (cylinder head side)	19 Nm
Centre screw for the timing belt	25 Nm
Knock sensor (KS)	20 Nm
Piston cooling valve (piston cooling oil duct)	35 Nm
Timing gear pulley (camshafts without variable valve timing)	20 Nm
Timing gear pulley (camshafts with variable valve timing)	10 Nm
Carrier plate	Stage 1.....45 Nm

	Stage 2..... angle-tighten 50°
Intermediate section Tighten the screws in sequence from the center and outwards.	Stage 1 M10.....20 Nm Stage 2 M10.....45 Nm Stage 3 M8.....24 Nm Stage 4 M7.....17 Nm Stage 5 M10.....90°
Torque converter	50 Nm
Engine mounting Right side (M10x35 to cylinder block)	Stage 1.....35 Nm Stage 2.....60°
Engine mounting Right side (M8x23 to cylinder block)	Stage 1.....20 Nm Stage 2.....60°
Right-hand engine pad for the subframe (Only applies to XC90)	Stage 1.....120 Nm Stage 2.....40°
Lower torque rod, gearbox screw.	Stage 1.....35 Nm Stage 2.....40°
Lower torque rod, sub-frame nut	Stage 1.....65 Nm Stage 2.....60°
Oil filter (environmental filter)	25 Nm
Oil trap	15 Nm
Sump plug	38 Nm
Oil pump (20 countersunk M6 Allen screws hold the pump housing together)	6 Nm
Oil return line (turbocharger (TC))	12 Nm
Oil pressure switch	50 Nm
Stud (at exhaust port, manifold, turbocharger (TC))	20 Nm
Plug (check hole for gauging valve clearance)	20 Nm
Plug (gauge hole / crankshaft seal)	38 Nm
Belt tensioner (mechanical belt tensioner)	25 Nm
Tensioner pulley (lever mechanical belt tensioner)	30 Nm
Flywheel	Stage 1.....45 Nm Stage 2.....65°
Vibration damper	Stage 1.....35 Nm Stage 2.....50°
Temperature sensor (coolant)	22 Nm
Front timing cover	12 Nm

Upper timing cover	8 Nm
Pressure control valve (piston cooling oil duct)	35 Nm
Turbocharger (TC) (to manifold)	25 Nm
Spark plugs	30 Nm
Crankshaft center nut	300 Nm
Connecting rod cap	Stage 1.....20 Nm Stage 2.....90°
Variable valve timing / center screw	120 Nm
Variable valve timing / center plug	35 Nm

MECHANICAL SPECIFICATIONS (B6324S; 2007-2010)

ENGINE

MARKING

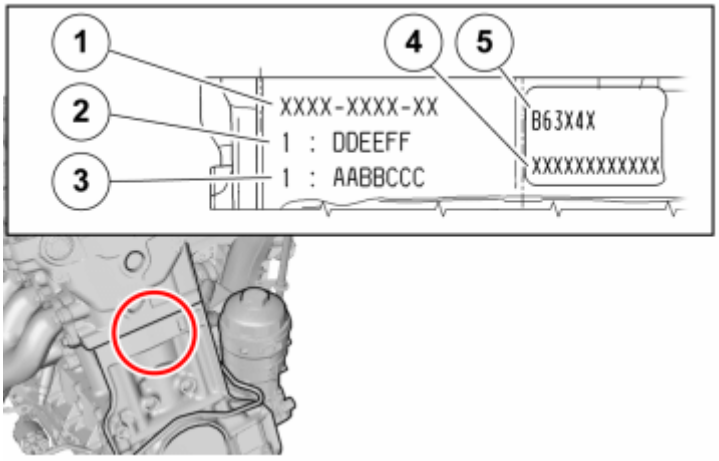

Fig. 32: Identifying Engine Specifications
Courtesy of VOLVO CARS CORPORATION

1. P/N
2. Cylinder class
3. Bearing class
4. Engine serial number
5. Engine type

GENERAL DATA

	B6324S	**B6304T2**
Engine code	98	99

Power (kw / rpm)	175 / 6200	210 / 5400
Max torque (Nm / rpm)	320 / 3200	400 / 1500-4800
Max rpm	6500 stationary / 6750 transient	6500 stationary / 6750 transient
Idling (rpm)	650	650
Cylinder bore (mm)	84, 00	82, 00
Stroke (mm)	96, 00	93, 20
Swept volume (litres)	3, 192	2, 953
Firing sequence	1-5-3-6-2-4	1-5-3-6-2-4
Compression ratio	10, 8	9, 3
Weight, including oil (kg)	186, 5	190, 9

PISTONS

Fig. 33: Identifying Piston
Courtesy of VOLVO CARS CORPORATION

Piston dimensions (diameter) nominal per class		
C-marked[1] ..... mm	83, 967 +/-0, 007	81, 955 +/-0, 005
D-marked[1] ..... mm	83, 977 +/-0, 007	81, 965 +/-0, 005
E-marked[1] ..... mm	83, 987 +/-0, 007	81, 975 +/-0, 005
TDC 0.4-marked[1] ..... mm	84, 367 +/-0, 007	82, 355 +/-0, 005
[1] Classification is marked on the top of the piston.		

PISTON RUNNING CLEARANCE

Tolerance piston/cylinder - top..... mm	0, 026 - 0, 050	0, 04-0, 06

PISTON RINGS

Top ring..... mm	Height: 1, 20 - 0, 01/-0, 03 Axial clearance: 0, 03 - 0, 07	Height: 1, 20 - 0, 01/-0, 03 Axial clearance: 0, 03 - 0, 07
2nd ring..... mm	Height: 1.50 - 0.01/-0.03 Axial clearance: 0.03 - 0.07	Height: 1.50 - 0.01/-0.03 Axial clearance: 0.03 - 0.07
Oil ring..... mm	Height: 2.00 - 0.01/-0.136 Axial clearance: 0.02-0.166	Height: 2.00 - 0.01/-0.136 Axial clearance: 0.02-0.166

PISTON PIN

Diameter/tolerance..... mm	21, 000 0, 000/-0, 004	21, 000 0, 000/-0, 004

VALVES

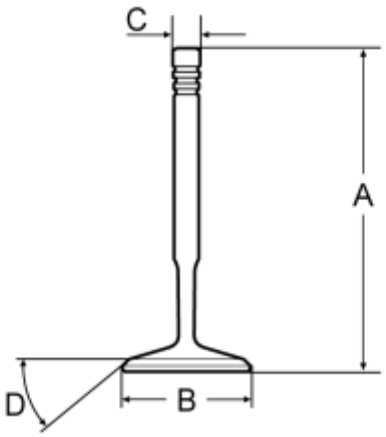

Fig. 34: Identifying Valve Measurements
Courtesy of VOLVO CARS CORPORATION

Intake		
Length (A)..... mm	106, 19 +/-0, 07	128, 42 +/-0, 27
Diameter on crown (B)..... mm	33, 00 +/-0, 15	31, 00 +/-0, 15
Diameter on shaft (C)..... mm	5, 970 0/-0, 015	5, 970 0/-0, 015
Valve seat angle (D).....°	44, 5	44, 5
Valve angle.....°	18, 75	18, 75
Clearance in guide.....µm	30 - 60	30 - 60
Valve clearance..... mm	-	0, 20 +/-0, 05
Exhaust		
Length (A)..... mm	129, 96 +/-0, 27	129, 96 +/-0, 27
Diameter on crown (B)..... mm	28 +/-0, 15	27 +/-0, 15
Diameter on shaft (C)..... mm	5, 962 - 5, 952 +/-0, 007	5, 962 - 5, 952 +/-0, 007

Valve seat angle (D).....°	44, 5	44, 5
Valve angle (D).....°	18, 75	18, 75
Clearance in guide.....µm	31 - 70	31 - 70
Valve clearance..... mm	0, 45 +/-0, 05	0, 45 +/-0, 05

VALVE SEATS

Seat angle.....°	45, 00 +/-0, 01	45, 00 +/-0, 01

TAPPETS

Diameter..... mm	32, 000 -0, 025/-0, 041	32, 000 -0, 025/-0, 041
Thickness..... mm	2, 950 - 3, 685 +/-0, 010	2, 950 - 3, 685 +/-0, 010

VALVE SPRINGS

Height unloaded..... mm	45, 4 +1, 5/-0, 5	45, 4 +1, 5/-0, 5

CAMSHAFTS

Inlet		
Lift height high lift..... mm	10	8, 45
Lift height low lift..... mm	3, 6	8, 45
Exhaust		
Lift height..... mm	10	9, 45

CYLINDER HEAD

Max. distortion..... mm	0, 5	0, 5
Max. distortion, transverse..... mm	0, 3	0, 3
Height..... mm	149, 40 +/-0, 15	149, 40 +/-0, 15
Max. machining [1] ..... mm	0, 3	0, 3
[1] Note. Always remove 0.3 mm when facing and then use a rebuild gasket, which is 0.3 mm thicker.		

CLASSIFICATION OF MAIN BEARINGS

Marking crank/block	The crankshaft is marked on the shank that the ring gear is on. Read from rear edge.
Classification	Table Main bearing journal classes below

CRANKSHAFT

Max. radial run-out main bearing pin (relative main bearing 1 & 7)..... mm	0, 08	0, 08
Main bearing axial clearance..... mm	0, 08 - 0, 27	0, 08 - 0, 27

BIG END JOURNALS

Diameter standard..... mm	50, 000 +0, 000/-0, 019	50, 000 +0, 000/-0, 019
Bearing recess width..... mm	26, 0 +/-0, 1	26, 0 +/-0, 1
Maximum out-of-round..... mm	0, 004	0, 004
Max. parallelity (against main bearing center shaft)..... mm	0, 015	0, 015
Max. straightness deviation..... mm	0, 004	0, 004
Max. diameter variation..... mm	0, 01	0, 01

MAIN BEARING JOURNALS

Diameter, standard..... mm	65, 000 +0, 004/-0, 015	65, 000 +0, 004/-0, 015
Bearing position width dimension..... mm	26, 00 +/-0, 15	26, 00 +/-0, 15
Max. out-of-round..... mm	0, 003	0, 003
Max. straightness deviation..... mm	0, 003	0, 003
Max. diameter variation..... mm	0, 006	0, 006

CONNECTING RODS

Diameter bearing position big-end..... mm	53, 000 0, 000/- 0, 013	53, 000 0, 000/- 0, 013
Diameter bearing position small-end..... mm	21, 000 +0, 005/+0, 011	21, 000 +0, 005/+0, 011
Maximum ovality in the bearing recesses..... mm	0, 006	0, 006
Length big-end - small end..... mm	147, 5	147, 5

OIL PUMP

	B6324S	**B6304T2**
Flank clearance oil pump.....µm	87 +/-22	87 +/-22

OIL PRESSURE

13.3 r/s (800 rpm)..... Mpa	min. 0.10	min. 0.10
66.7 r/s (4000 rpm)..... Mpa	min. 0.35	min. 0.35
Maximum oil pressure (the relief valve opens)..... Mpa	0, 45	0, 45

THERMOSTAT

Starts to open at.....° C	90	90
Fully open at.....° C	105	105

MAIN BEARING CLASSES

2 ↓ / 1 →		69,0000		69,0010		69,0020		69,0030		69,0040		69,0050		69,0060		69,0070		69,0080		69,0090		69,0100		69,0110		69,0120		69,0130		69,0140	
		D		E		F		G		H		J		K		L		M		N		O		P		R		S		T	
64,986	D	Y	Y	Y	B	Y	B	Y	B	Y	B	Y	B	B	B	B	B	B	B	B	B	B	B	B	B	B	B	B	B	B	B
64,987	E	Y	Y	Y	Y	Y	B	Y	B	Y	B	Y	B	Y	B	B	B	B	B	B	B	B	B	B	B	B	B	B	B	B	B
64,988	F	Y	Y	Y	Y	Y	Y	Y	B	Y	B	Y	B	Y	B	Y	B	B	B	B	B	B	B	B	B	B	B	B	B	B	B
64,989	G	Y	Y	Y	Y	Y	Y	Y	Y	Y	B	Y	B	Y	B	Y	B	Y	B	B	B	B	B	B	B	B	B	B	B	B	B
64,990	H	Y	Y	Y	Y	Y	Y	Y	Y	Y	Y	Y	B	Y	B	Y	B	Y	B	Y	B	B	B	B	B	B	B	B	B	B	B
64,991	J	Y	Y	Y	Y	Y	Y	Y	Y	Y	Y	Y	Y	Y	B	Y	B	Y	B	Y	B	Y	B	B	B	B	B	B	B	B	B
64,992	K	R	Y	Y	Y	Y	Y	Y	Y	Y	Y	Y	Y	Y	Y	Y	B	Y	B	Y	B	Y	B	Y	B	B	B	B	B	B	B
64,993	L	R	Y	R	Y	Y	Y	Y	Y	Y	Y	Y	Y	Y	Y	Y	Y	Y	B	Y	B	Y	B	Y	B	Y	B	B	B	B	B
64,994	M	R	Y	R	Y	R	Y	Y	Y	Y	Y	Y	Y	Y	Y	Y	Y	Y	Y	Y	B	Y	B	Y	B	Y	B	Y	B	B	B
64,995	N	R	Y	R	Y	R	Y	R	Y	Y	Y	Y	Y	Y	Y	Y	Y	Y	Y	Y	Y	Y	B	Y	B	Y	B	Y	B	Y	B
64,996	O	R	Y	R	Y	R	Y	R	Y	R	Y	Y	Y	Y	Y	Y	Y	Y	Y	Y	Y	Y	Y	Y	B	Y	B	Y	B	Y	B
64,997	P	R	Y	R	Y	R	Y	R	Y	R	Y	R	Y	Y	Y	Y	Y	Y	Y	Y	Y	Y	Y	Y	Y	Y	B	Y	B	Y	B
64,998	R	R	R	R	Y	R	Y	R	Y	R	Y	R	Y	R	Y	Y	Y	Y	Y	Y	Y	Y	Y	Y	Y	Y	Y	Y	B	Y	B
64,999	S	R	R	R	R	R	Y	R	Y	R	Y	R	Y	R	Y	R	Y	Y	Y	Y	Y	Y	Y	Y	Y	Y	Y	Y	Y	Y	B
65,000	T	R	R	R	R	R	R	R	Y	R	Y	R	Y	R	Y	R	Y	R	Y	Y	Y	Y	Y	Y	Y	Y	Y	Y	Y	Y	Y
65,001	V	R	R	R	R	R	R	R	R	R	Y	R	Y	R	Y	R	Y	R	Y	R	Y	Y	Y	Y	Y	Y	Y	Y	Y	Y	Y
65,002	X	R	R	R	R	R	R	R	R	R	R	R	Y	R	Y	R	Y	R	Y	R	Y	R	Y	Y	Y	Y	Y	Y	Y	Y	Y
65,003	Y	R	R	R	R	R	R	R	R	R	R	R	R	R	Y	R	Y	R	Y	R	Y	R	Y	R	Y	Y	Y	Y	Y	Y	Y
65,004	Z	R	R	R	R	R	R	R	R	R	R	R	R	R	R	R	Y	R	Y	R	Y	R	Y	R	Y	R	Y	Y	Y	Y	Y
		3	4			3	4			3	4			3	4			3	4			3	4			3	4			3	4

Fig. 35: Main Bearing Selection Chart (1 of 2)
Courtesy of VOLVO CARS CORPORATION

	5		6		7
Red	1,9880	1,9934	1,9920	1,9974	
Yellow	1,9935	1,9984	1,9975	2,0024	
Blue	1,9985	2,0040	2,0025	2,0080	
	min	max	min	max	

Fig. 36: Main Bearing Selection Chart (2 of 2)
Courtesy of VOLVO CARS CORPORATION

1. Classification cylinder block
2. Classification crankshaft

3. Cylinder block
4. Intermediate section
5. Main bearing
6. Throw-out bearing
7. Thickness

TIGHTENING TORQUE

GENERAL TIGHTENING TORQUE

NOTE: Screws coated with a locking fluid or self locking nuts must be replaced with new when reinstalled.

See the table below to find the tightening torques for components not included in the summary.

Nuts and screws which are not self locking can be reused provided that they are in good condition.

Applies to screwed joint with strength class 8.8.	
Thread	Tightening torques (Nm)
M5	5
M6	10
M7	17
M8	24
M10	50
M12	80
M14	130

SUMMARY OF TIGHTENING TORQUES FOR SPECIFIC COMPONENTS

NOTE: Screws coated with locking fluid or sealant must be replaced with new when reinstalled.

Always use **new screws and nuts** when angle tightening. Any exceptions to this rule will be indicated in the method.

Angle-tightening in tight spaces. See **SCREWED JOINT, TORQUE/ANGLE TIGHTENING** .

Function group 21	
Center screw, exhaust camshaft	Stage 1.....**75 Nm** Stage 2.....**90°**
Center screw, intake camshaft	**110 Nm**
Cylinder head The screws are tightened in sequence as described	Stage 1.....**45 Nm** Stage 2.....**45 Nm**

in the method.	Stage 3.....**90°** Stage 4.....**180°**
Intermediate shaft drive wheel, alternator side	**44 Nm**
Intermediate shaft drive wheel, auxiliaries side	**60 Nm**
Drive wheel, alternator	**75 Nm**
Drain nipple (on water pipe)	**7 Nm**
Manifold (toward cylinder head)	**25 Nm**
Sub-frame screw (start on the left-hand side, then the right)	Stage 1.....**105 Nm** Stage 2.....**120°**
Sleeves under cylinder head screws	**10 Nm (left-threaded)**
Inner timing cover adjuster screw	**3 Nm**
Chain wheel	**400 Nm**
Knock sensor (KS)	**20 Nm**
Carrier plate	Stage 1.....**45 Nm** Stage 2.....**50°**
Intermediate shaft alternator side	**40 Nm**
Right-hand engine pad to engine	Step 1.....**30 Nm** Stage 2.....**75°**
Right-hand engine pad to subframe	Stage 1.....**120 Nm** Stage 2.....**40°**
Lower torque rod to subframe	**110 Nm**
Flywheel	Stage 1.....**45 Nm** Stage 2.....**60°**
Connecting rod cap	Stage 1.....**12 Nm** Stage 2.....**20 Nm** Stage 3.....**90°**
Valve cover/cam carrier cover	Standard torque, but to be tightened in sequence. See method.
Gear housing	Stage 1.....**10 Nm** Step 2.....**24 Nm**
Pressure line to power steering pump	**30 Nm**
Outer timing cover	Standard torque, but to be tightened in sequence. See method.
Function group 22	
Oil filter cover	**25 Nm**
Oil pan plug	**38 Nm**
Piston cooling valve	**32 Nm**
Cover plug (beneath piston cooling valve)	**38 Nm**
Function group 25	
Catalytic converter to manifold	**27 Nm**
Heated oxygen sensor (HO2S)	**45 Nm**
Throttle body	**8 Nm**
Function group 28	

Coolant temperature sensor	**20 Nm**
Spark plugs	**28 Nm**
Knock sensor (KS)	**20 Nm**
Function group 33	
Battery positive cable to starter solenoid	**11 Nm**
Starter motor B+ terminal	**11 Nm**
Start impulse cable	**8, 5 Nm**

MECHANICAL SPECIFICATIONS (B6324S5; 2011-2012)

ENGINE

MARKING

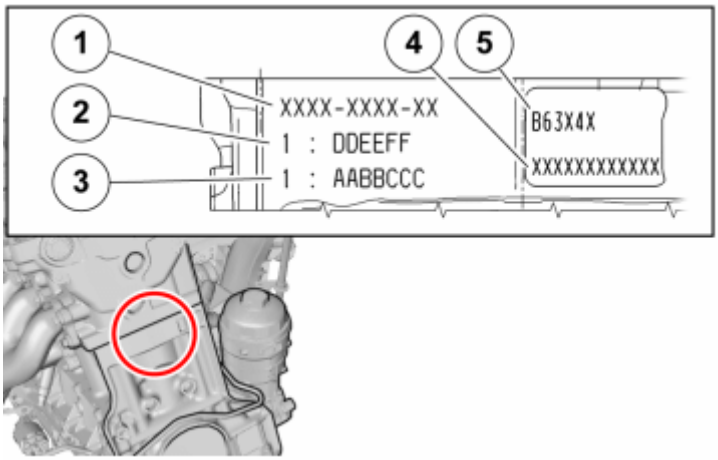

Fig. 37: Identifying Engine Specifications
Courtesy of VOLVO CARS CORPORATION

1. P/N
2. Cylinder class
3. Bearing class
4. Engine serial number
5. Engine type

GENERAL DATA

	B6324S4	**B6324S5**
Engine code	94	95
Power (kw / rpm)	170 / 6200	179 / 5400
Max torque (Nm / rpm)	300 / 3200	320 / 1500-4800
Max rpm	6500 stationary / 6750 transient	6500 stationary / 6750 transient

Idling (rpm)	590	590
Stroke (mm)	96.00	93.2
Swept volume (litres)	3.192	3.192
Firing sequence	1-5-3-6-2-4	1-5-3-6-2-4
Compression ratio	10.3	10.8
Weight, including oil (kg)	181.5	182.5

CYLINDER

Cylinder dimensions (diameter) nominal per class	**B6324S4/B6324S5**
C-marked[1] ..... mm	82.00 +0.01/ +0.00
D-marked[1] ..... mm	82.00 +0.02/+0.01
E-marked[1] ..... mm	82.00 +0.03/+0.02

COOLING DUCT, ENGINE BLOCK

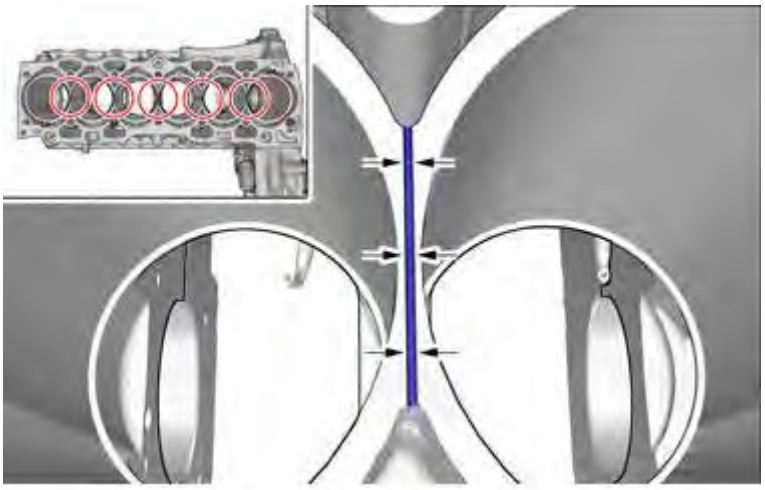

Fig. 38: Identifying Cooling Passage
Courtesy of VOLVO CARS CORPORATION

Length..... mm	0.85-1.15

PISTONS

Fig. 39: Identifying Piston
Courtesy of VOLVO CARS CORPORATION

Piston dimensions (diameter) nominal per class	
C-marked[1] ..... mm	81.95
D-marked[1] ..... mm	81.96
E-marked[1] ..... mm	81.97
TDC 0.4-marked[1] ..... mm	82.35
[1] Classification is marked on the top of the piston.	

PISTON RUNNING CLEARANCE

Tolerance piston/cylinder - top..... mm	0.04-0.06

PISTON RINGS

Top ring..... mm	Height: 1.20 - 0.01/-0.03 Axial clearance: 0.03 - 0.07
2nd ring..... mm	Height: 1.50 - 0.01/-0.03 Axial clearance: 0.03 - 0.07
Oil ring..... mm	Height: 2.00 - 0.01/-0.136 Axial clearance: 0.02-0.166

PISTON PIN

Diameter/tolerance..... mm	21.00

VALVES

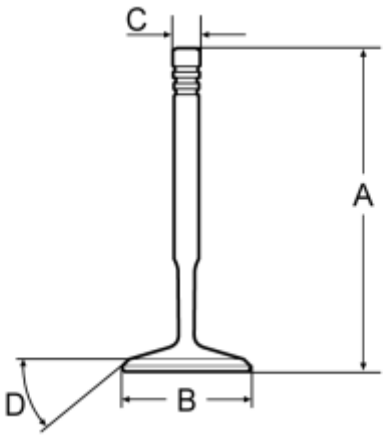

Fig. 40: Identifying Valve Measurements
Courtesy of VOLVO CARS CORPORATION

Intake	
Length (A)..... mm	128.42 +/-0.27
Diameter on crown (B)..... mm	31.00 +/-0.15
Diameter on shaft (C)..... mm	5.97
Valve seat angle (D).....°	44.5
Valve angle.....°	18.75
Clearance in guide.....µm	30 - 60
Valve clearance..... mm	0.20 +/-0.05
Exhaust	
Length (A)..... mm	129.96 +/-0.27
Diameter on crown (B)..... mm	27 +/-0.15
Diameter on shaft (C)..... mm	5.96 - 5.95
Valve seat angle (D).....°	44.5
Valve angle (D).....°	18.75
Clearance in guide.....µm	31 - 70
Valve clearance..... mm	0.45 +/-0.05

VALVE SEATS

Seat angle.....°	45.00 +/-0.01

TAPPETS

Diameter..... mm	32.00 -0.02/-0.04
Thickness..... mm	2.95 - 3.68 +/-0.01

VALVE SPRINGS

Height unloaded..... mm	45.4 +1.5/-0.5

CAMSHAFTS

Inlet	
Lift height high lift..... mm	8.45
Lift height low lift..... mm	8.45
Exhaust	
Lift height..... mm	9.45

CYLINDER HEAD

Max. distortion..... mm	0.5
Max. distortion, transverse..... mm	0.3
Height..... mm	149.40 +/-0.15

CLASSIFICATION OF MAIN BEARINGS

Marking crank/block	The crankshaft is marked on the shank that the ring gear is on. Read from rear edge.
Classification	Table Main bearing journal classes below

CRANKSHAFT

Max. radial run-out main bearing pin (relative main bearing 1 & 7)..... mm	0.08
Main bearing axial clearance..... mm	0.08 - 0.27

BIG END JOURNALS

Diameter standard..... mm	50.00
Bearing recess width..... mm	26.0 +/-0.1
Max. parallelity (against main bearing center shaft)..... mm	0.015
Max. diameter variation..... mm	0.01

MAIN BEARING JOURNALS

Diameter standard..... mm	65.00
Bearing recess width..... mm	26.00 +/-0.15

CONNECTING RODS

Diameter bearing position big-end..... mm	53.00
Diameter bearing position small-end..... mm	21.00
Maximum ovality in the bearing recesses..... mm	0.006
Length big-end - small end..... mm	147.5

OIL PUMP

Flank clearance Oil pump.....µm	87 +/-22

OIL PRESSURE

13.3 r/s (800 rpm)..... Mpa	min. 0.10
66.7 r/s (4000 rpm)..... Mpa	min. 0.35
Maximum oil pressure (the relief valve opens)..... Mpa	0.45

THERMOSTAT

Starts to open at.....°C	90
Fully open at.....°C	105

MAIN BEARING CLASSES

1 →

2 ↓

		69,0000		69,0010		69,0020		69,0030		69,0040		69,0050		69,0060		69,0070		69,0080		69,0090		69,0100		69,0110		69,0120		69,0130		69,0140	
		D		E		F		G		H		J		K		L		M		N		O		P		R		S		T	
64,986	D	Y	Y	Y	B	Y	B	Y	B	Y	B	Y	B	B	B	B	B	B	B	B	B	B	B	B	B	B	B	B	B	B	B
64,987	E	Y	Y	Y	Y	Y	B	Y	B	Y	B	Y	B	Y	B	B	B	B	B	B	B	B	B	B	B	B	B	B	B	B	B
64,988	F	Y	Y	Y	Y	Y	Y	Y	B	Y	B	Y	B	Y	B	Y	B	B	B	B	B	B	B	B	B	B	B	B	B	B	B
64,989	G	Y	Y	Y	Y	Y	Y	Y	Y	Y	B	Y	B	Y	B	Y	B	Y	B	B	B	B	B	B	B	B	B	B	B	B	B
64,990	H	Y	Y	Y	Y	Y	Y	Y	Y	Y	Y	Y	B	Y	B	Y	B	Y	B	Y	B	B	B	B	B	B	B	B	B	B	B
64,991	J	Y	Y	Y	Y	Y	Y	Y	Y	Y	Y	Y	Y	Y	B	Y	B	Y	B	Y	B	Y	B	B	B	B	B	B	B	B	B
64,992	K	R	Y	Y	Y	Y	Y	Y	Y	Y	Y	Y	Y	Y	Y	Y	B	Y	B	Y	B	Y	B	Y	B	B	B	B	B	B	B
64,993	L	R	Y	R	Y	Y	Y	Y	Y	Y	Y	Y	Y	Y	Y	Y	Y	Y	B	Y	B	Y	B	Y	B	Y	B	B	B	B	B
64,994	M	R	Y	R	Y	R	Y	Y	Y	Y	Y	Y	Y	Y	Y	Y	Y	Y	Y	Y	B	Y	B	Y	B	Y	B	Y	B	B	B
64,995	N	R	Y	R	Y	R	Y	R	Y	Y	Y	Y	Y	Y	Y	Y	Y	Y	Y	Y	Y	Y	B	Y	B	Y	B	Y	B	Y	B
64,996	O	R	Y	R	Y	R	Y	R	Y	R	Y	Y	Y	Y	Y	Y	Y	Y	Y	Y	Y	Y	Y	Y	B	Y	B	Y	B	Y	B
64,997	P	R	Y	R	Y	R	Y	R	Y	R	Y	R	Y	Y	Y	Y	Y	Y	Y	Y	Y	Y	Y	Y	Y	Y	B	Y	B	Y	B
64,998	R	R	R	R	Y	R	Y	R	Y	R	Y	R	Y	R	Y	Y	Y	Y	Y	Y	Y	Y	Y	Y	Y	Y	Y	Y	B	Y	B
64,999	S	R	R	R	R	R	Y	R	Y	R	Y	R	Y	R	Y	R	Y	Y	Y	Y	Y	Y	Y	Y	Y	Y	Y	Y	Y	Y	B
65,000	T	R	R	R	R	R	R	R	Y	R	Y	R	Y	R	Y	R	Y	R	Y	Y	Y	Y	Y	Y	Y	Y	Y	Y	Y	Y	Y
65,001	V	R	R	R	R	R	R	R	R	R	Y	R	Y	R	Y	R	Y	R	Y	R	Y	Y	Y	Y	Y	Y	Y	Y	Y	Y	Y
65,002	X	R	R	R	R	R	R	R	R	R	R	R	Y	R	Y	R	Y	R	Y	R	Y	R	Y	Y	Y	Y	Y	Y	Y	Y	Y
65,003	Y	R	R	R	R	R	R	R	R	R	R	R	R	R	Y	R	Y	R	Y	R	Y	R	Y	R	Y	Y	Y	Y	Y	Y	Y
65,004	Z	R	R	R	R	R	R	R	R	R	R	R	R	R	R	R	Y	R	Y	R	Y	R	Y	R	Y	R	Y	Y	Y	Y	Y
		3	4			3	4			3	4			3	4			3	4			3	4			3	4			3	4

Fig. 41: Main Bearing Selection Chart (1 of 2)
Courtesy of VOLVO CARS CORPORATION

	5		6		
Red	1,9880	1,9934	1,9920	1,9974	7
Yellow	1,9935	1,9984	1,9975	2,0024	
Blue	1,9985	2,0040	2,0025	2,0080	
	min	max	min	max	

Fig. 42: Main Bearing Selection Chart (2 of 2)
Courtesy of VOLVO CARS CORPORATION

1. Classification cylinder block
2. Classification crankshaft
3. Cylinder block
4. Intermediate section
5. Main bearing
6. Throw-out bearing
7. Thickness

MECHANICAL SPECIFICATIONS, NOMINAL (B8444S)

SPECIFICATIONS, MECHANICAL

ENGINE DATA

Designation	
Code	B8444S
Firing sequence	1-8-4-3-6-5-7-2
Cylinder diameter	94 mm
Stroke length	79.5 mm
Stroke volume	4 414 cm3
Compression ratio	10, 4:1
Engine output at 5 850 rpm	232 kW (315 hp)
Torque at 3 900 rpm	440 Nm
Idling speed	675 rpm

CAPACITIES - ENGINE OIL

Designation	Liters

First fill, including oil filter	7, 50
Filling during servicing, including oil filter	5, 5-6, 7
Filling during servicing, no oil filter	5, 0-6, 2

CYLINDER BLOCK

Designation	mm
Cylinder diameter	94
Crankshaft bearing position, diameter	65

PISTONS

Designation	mm
Piston diameter	94
Piston ring gap	
- upper compression ring	1, 2
- lower compression ring	1, 2
- oil scraper ring	2, 5

CRANKSHAFT

Designation	mm
Crankshaft pivot, diameter	65

WRIST PIN

Designation	mm
Wrist pin, length	63
Wrist pin, diameter	22

OIL PRESSURE, SPECIFICATIONS

Designation	bar
Oil pressure at idle	1, 0 - 2, 0
Oil pressure at 2 000 r/min	2, 3 - 3, 7

FUEL LINE PRESSURE

Designation	kPa
Relative pressure	380 +/- 30
Residual pressure	380 +/- 30

TIGHTENING TORQUE

GENERAL TIGHTENING TORQUE

NOTE: Screws coated with a locking fluid or self locking nuts must be replaced with new when reinstalled.

See the table below to find the tightening torques for components not included in the summary.

Nuts and screws which are not self locking can be reused provided that they are in good condition.

Applies to screwed joint with strength class 8.8.	
Thread	Tightening torques (Nm)
M5	5
M6	10
M7	17
M8	24
M10	50
M12	80
M14	130

SUMMARY OF TIGHTENING TORQUES FOR SPECIFIC COMPONENTS

NOTE: Screws coated with locking fluid or sealant must be replaced with new when reinstalled.

Always use **new screws and nuts** when angle tightening. Any exceptions to this rule will be indicated in the method.

Angle-tightening in tight spaces. See **SCREWED JOINT, TORQUE/ANGLE TIGHTENING** .

Function group 21	
Cylinder head (NOTE! The screws are tightened in sequence from the center outwards)	Stage 1.....**40 Nm** Stage 2.....**90°**
Manifold (toward cylinder head)	**25 Nm**
Intake manifold (upper/lower section)	**19 Nm**
Intake manifold (upper/lower section)	**19 Nm**
Knock sensor	**20 Nm**
Sub-frame (start on the left-hand side, then the right)	Stage 1.....**105 Nm** Stage 2.....**120°**
Carrier plate	**80 Nm**
Intermediate section for engine block step 1	Stage 1.....**40 Nm** Step 2 1 - 10.....**90°** 11 - 20.....**110°**
Intermediate section for engine block step 2	21 - 22.....**20 Nm**

	23 - 36.....**24 Nm**
Right-hand engine pad to subframe	Stage 1.....**120 Nm** Stage 2.....**40°**
Oscillation damper Center screw (front edge of crankshaft)	Stage 1.....**120 Nm** Loosen the screw at least **1 turn** Stage 2.....**50 Nm 90°**
Valve cover	**10 Nm**
Cap connecting rod	Step 1.....**20 Nm** Stage 2.....**85°**
Function group 22	
Oil filter (environmental filter)	**25 Nm**
Oil plug	**50 Nm**
Oil sump	**11 Nm**
Oil pressure switch	**14 Nm**
Function group 25	
Heated oxygen sensor (HO2S)	**45 Nm**
Stud (at exhaust port, manifold, turbocharger)	**10 Nm**
Auxiliaries/belt tensioner, center screw	**90 Nm**
Coolant temperature sensor	**20 Nm**
Spark plugs	**25 Nm**
Function group 33	
Starter motor B+ terminal	**11 Nm**

MECHANICAL SPECIFICATIONS WITH TOLERANCES (B8444S)

ENGINE

ENGINE DATA

Designation	
Code	B8444S
Firing sequence	1-8-4-3-6-5-7-2
Cylinder diameter	94 mm
Cylinder stroke	79.5 mm
Stroke volume	4 414 cm3
Compression ratio	10, 4:1
Engine output at 5 850 rpm	232 kW (315 hp)
Torque at 3 900 rpm	440 Nm
Idling speed	675 rpm

CYLINDER BLOCK

CYLINDER DIAMETER

Marking	Diameter (mm)
1	94.000 - 94.010
2	94.010 - 94.020
3	94.020 - 94.030

MAIN BEARING POSITION

Marking	Diameter (mm)
1	70.000 - 70.006
2	70.006 - 70.012
3	70.012 - 70.019

CYLINDER HEAD

Designation	mm
Max. out-of-true, front-rear	0, 2
Max. out-of-true, transverse	0, 2
Height	118, 65

PISTONS

PISTON DIAMETER

Marking	Dimension (mm)
3	94.000 - 94.010
2	93.990 - 94.000
1	93.980 - 93.990

Designation	mm
Piston ring gap	
- upper compression ring	1, 2
- lower compression ring	1, 2
- oil scraper ring	2, 5

CRANKSHAFT

CRANKSHAFT PIVOT, DIAMETER

Marking	Dimension (mm)
0	64.994 - 65.000
1	64.988 - 64.994
2	64.982 - 64.988
3	64.976 - 64.982

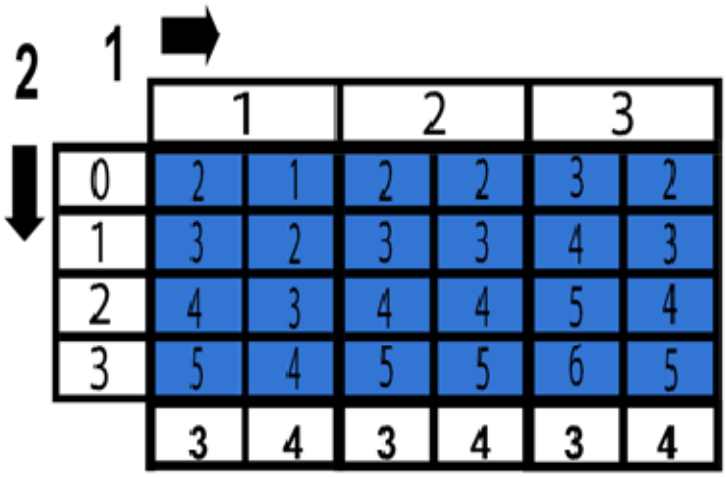

Fig. 43: Classification Of Main Bearings
Courtesy of VOLVO CARS CORPORATION

1. Classification cylinder block
2. Classification crankshaft
3. Cylinder block
4. Intermediate section

CONNECTING ROD

BIG END PIN, DIAMETER

Marking	Dimension (mm)
1	50.992 - 51.000
2	50.984 - 50.992
3	50.976 - 50.984

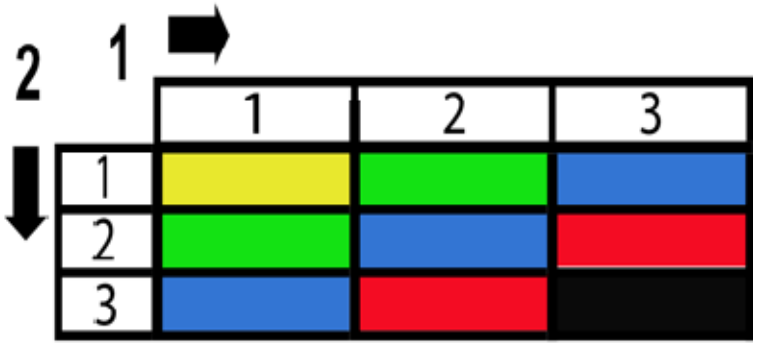

Fig. 44: Classification Of Connecting Rod Bearings
Courtesy of VOLVO CARS CORPORATION

1. Marking Dimension Connecting rod
2. Marking Dimension Crankshaft

PISTON PIN

Designation	mm
Wrist pin, length	63
Wrist pin, diameter	22

VALVES

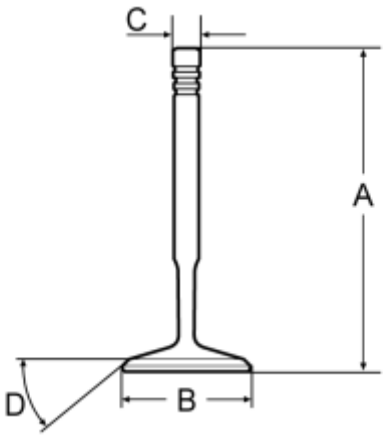

Fig. 45: Identifying Valve Measurements
Courtesy of VOLVO CARS CORPORATION

Intake	
Designation	mm
Length (A)	95, 2
Diameter on crown (B)	30.0
Diameter on shaft (C)	5.5
Valve seat angle (D)	44.5
Valve angle (D).	19

Exhaust	
Designation	mm
Length (A)	94.9
Diameter on crown (B)	30.0
Diameter on shaft (C)	5.5
Valve seat angle (D)	44.5
Valve angle (D).	19

TAPPETS

Designation	mm
Diameter	31

OIL PRESSURE, SPECIFICATIONS

Designation	bar
Oil pressure at idle	1.0 - 2.0
Oil pressure at 2 000 r/min	2.3 - 3.7

FUEL LINE PRESSURE

Designation	kPa
Relative pressure	380 +/- 30
Residual pressure	220 +/- 30

ENGINE

Engine Control - Removal, replacement and installation

ACCELERATOR PEDAL MECHANISM (2003-2012)

ACCELERATOR PEDAL (AP), REPLACING

REMOVAL

ACCELERATOR PEDAL (AP)

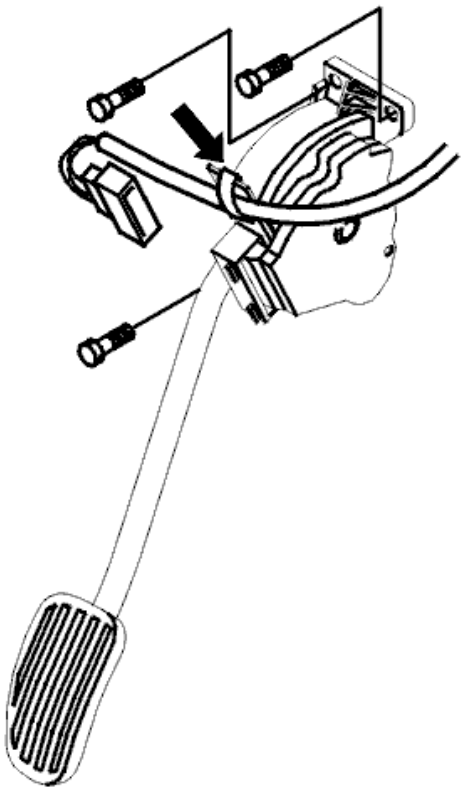

Fig. 1: Identifying Accelerator Pedal
Courtesy of VOLVO CARS CORPORATION

- Remove the soundproofing panel. See **REMOVING SOUNDPROOFING PANELS**
- Remove the screws
- Cut off the clamp
- Disconnect the connector
- Remove the accelerator pedal (AP).

INSTALLATION

ACCELERATOR PEDAL (AP)

In reverse order.

SOUNDPROOFING PANEL, REPLACING

REMOVING SOUNDPROOFING PANELS

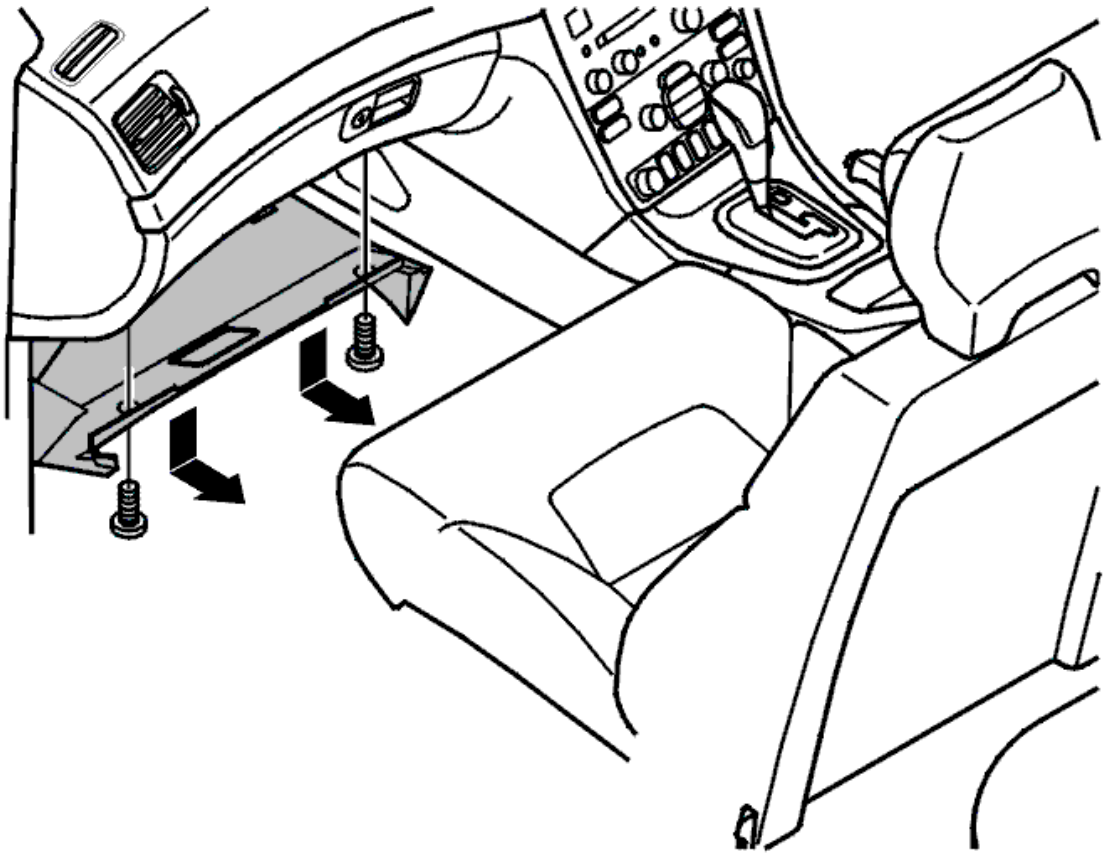

Fig. 2: Identifying Soundproofing Panel Pulled Straight Down
Courtesy of VOLVO CARS CORPORATION

Remove two screws.

Remove the panel by pulling it straight down.

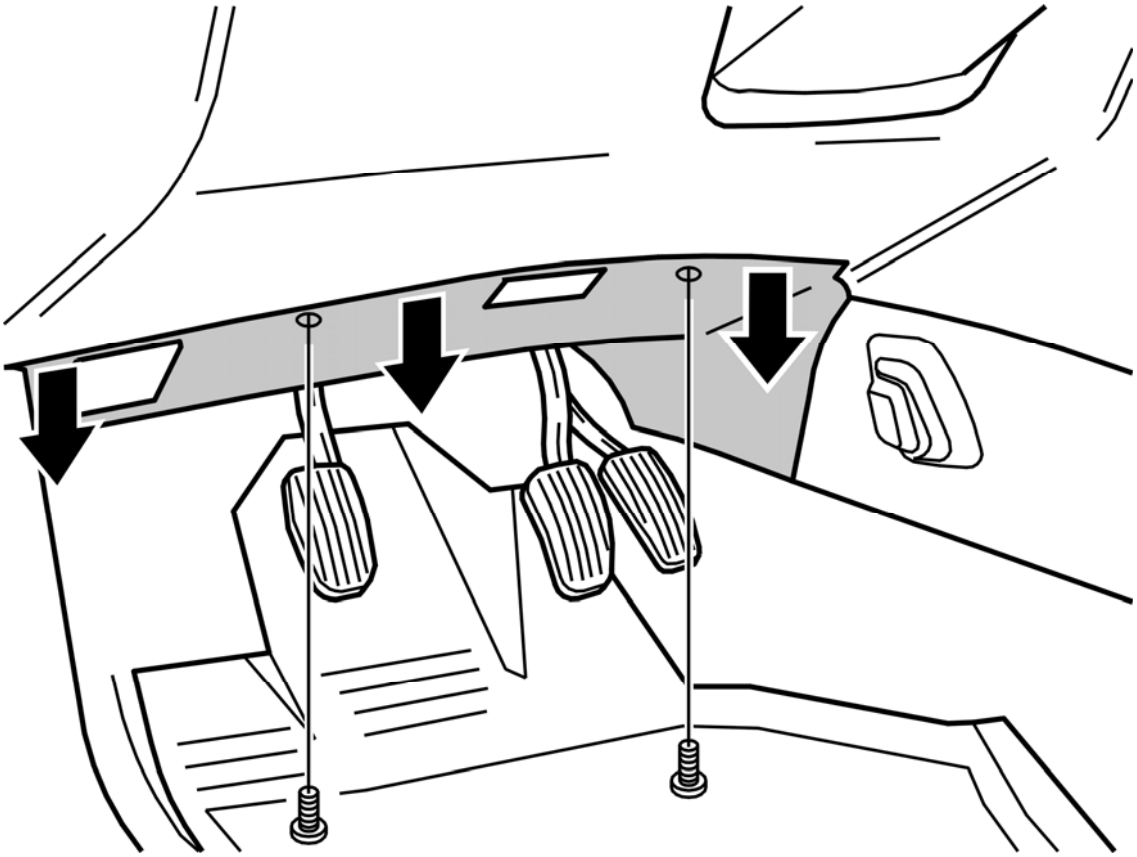

Fig. 3: Identifying Soundproofing Panel & Dashboard
Courtesy of VOLVO CARS CORPORATION

Remove two screws.

Remove the panel by pulling it straight down.

INSTALLING SOUNDPROOFING PANEL

Install:

In reverse order.

COOLING SYSTEM

Power transmission

COOLING SYSTEM

ENGINE COOLING FAN (FC), REPLACING

REMOVING THE ENGINE COOLING FAN (FC)

Fig. 1: Evaporative Emission System Valve And Engine Cooling Fan Shroud
Courtesy of VOLVO CARS CORPORATION

Remove the intake pipe for the air cleaner housing (ACL). Disconnect both the connectors for the engine cooling fan (FC).

Remove:

- The evaporative emission system (EVAP) valve from the engine cooling fan (FC) shroud
- the hose clamps and charge air pipe/hose on the right-hand side (turbo charged engines only).

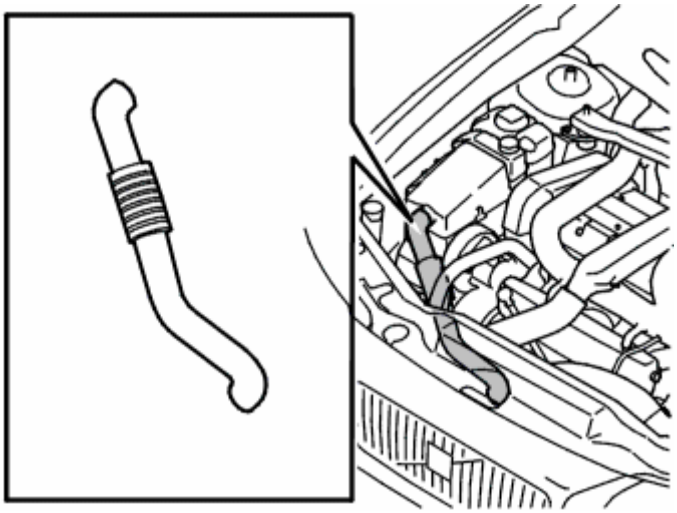

Fig. 2: Expansion Tank Hose
Courtesy of VOLVO CARS CORPORATION

Remove the four tie straps that hold the cable harness secure at the fan shroud.

NOTE: Certain vehicles have three tie straps and a clip holding the cable harness at the fan shroud.

Lift out the hose for the expansion tank from the holders on top of the fan shroud

Remove:

- the cool box plastic hose from the fan shroud.
- both the screws holding the fan shroud.

Release the hose for the coolant reservoir from the fan shroud.

INSTALLATION

INSTALLING THE ENGINE COOLING FAN (FC) AND FAN SHROUD

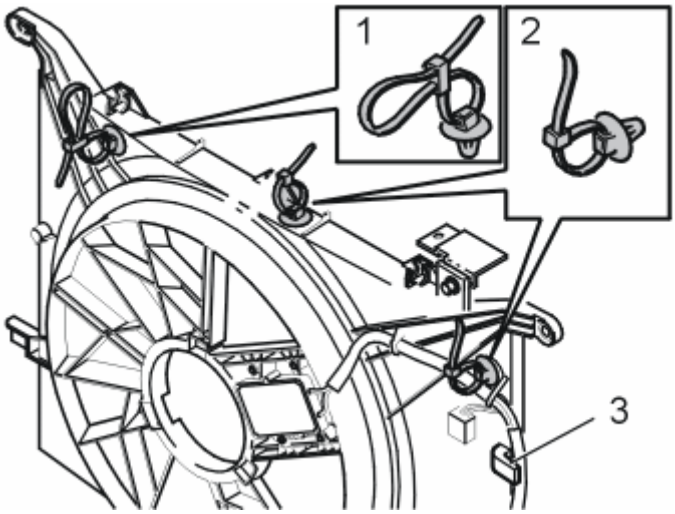

Fig. 3: Cable Harness Secured Using Tie Straps
Courtesy of VOLVO CARS CORPORATION

Carefully lower the fan shroud and align with the holders. Route the cable harness behind the holder (3).

Tighten both the mounting screws

Press the hose down from the expansion tank into the holder on the fan shroud

Transfer the clips from two tie-straps to the tie straps that have two catches (1).

Secure the cable harness by the fan shroud using tie straps (1) and (2).

Install:

- the canister purge (CP) valve
- the hose clamp and charge air pipe/hose on the right-hand side (turbo charged engines only)
- the intake manifold to the air cleaner (ACL) housing.

Connect the engine cooling fan (FC) connectors.

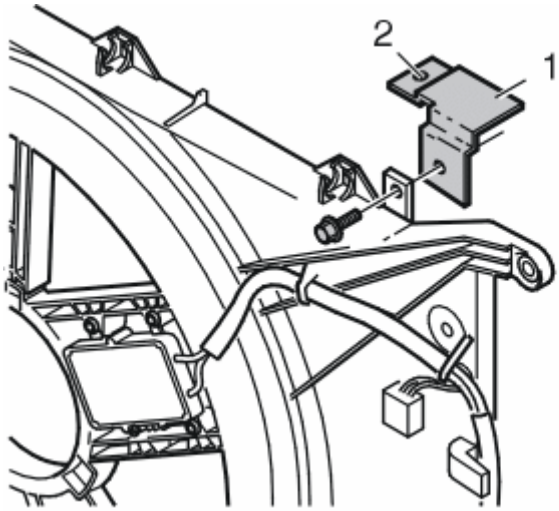

Fig. 4: Fan Shroud Bracket
Courtesy of VOLVO CARS CORPORATION

Transfer the bracket (1) to the new fan shroud.

Install the connectors for the fan on the bracket using the holder from the service kit (2).

ENGINE ELECTRICAL

Body and interior

ENGINE ELECTRICAL

ENGINE CONTROL MODULE (ECM), REPLACING

Special tools:

see **9995722**

POINTS TO OBSERVE WHEN REPLACING THE ENGINE CONTROL MODULE (ECM)

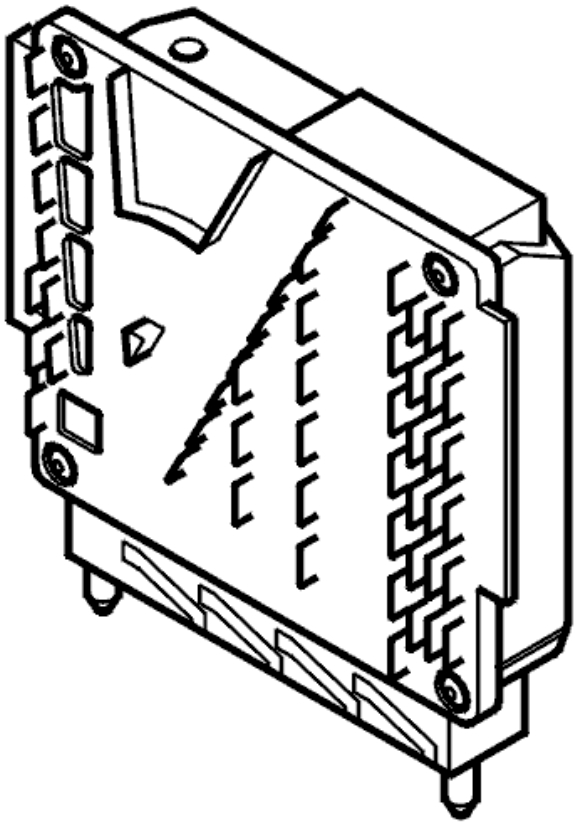

Fig. 1: Engine Control Module
Courtesy of VOLVO CARS CORPORATION

CAUTION: New software can only be ordered when the control module is installed in the vehicle. VIDA reads off the new control module identity which is required to order the correct software.

The software can only be ordered when the new control module is installed in the car.

CAUTION: Wait 2 minutes after the ignition has been switched off. The main relay must be voltage-free before the control module can be removed from the car. If the engine cooling fan runs on after the ignition has been switched off, wait until it stops and then wait for another 2 minutes.

CAUTION: Always check that the control module and control module box connector pins and sleeves are not bent or damaged. This may have caused the fault.

REMOVING THE ENGINE CONTROL MODULE (ECM)

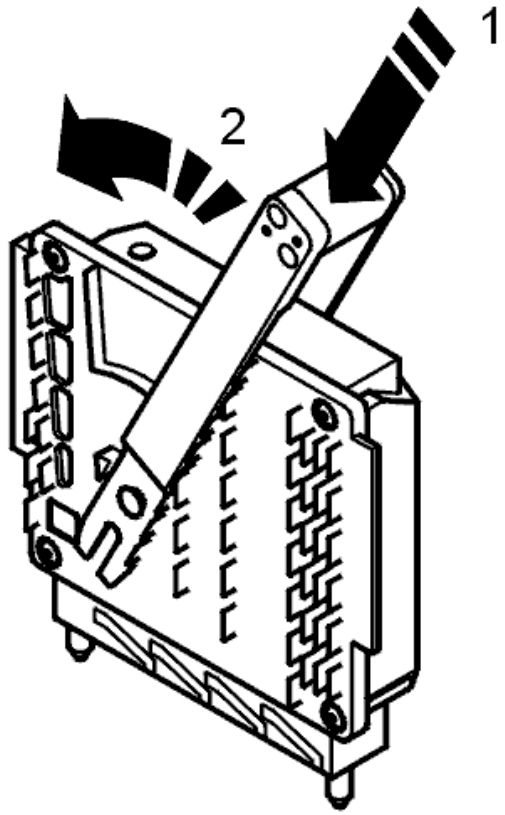

Fig. 2: Identifying Engine Control Module
Courtesy of VOLVO CARS CORPORATION

- Ignition off. Wait for 2 minutes
- Remove the cover over the control module box. Put the cover to one side

NOTE: Do not touch the control module terminal pins with your fingers. Static electricity may damage components in the control module.

-
- Insert tool see **9995722** around the control module.
- Move the upper section of the tool backwards as far as it will go. Pull up the tool

- Carefully pull up the control module.

INSTALLING THE ENGINE CONTROL MODULE (ECM)

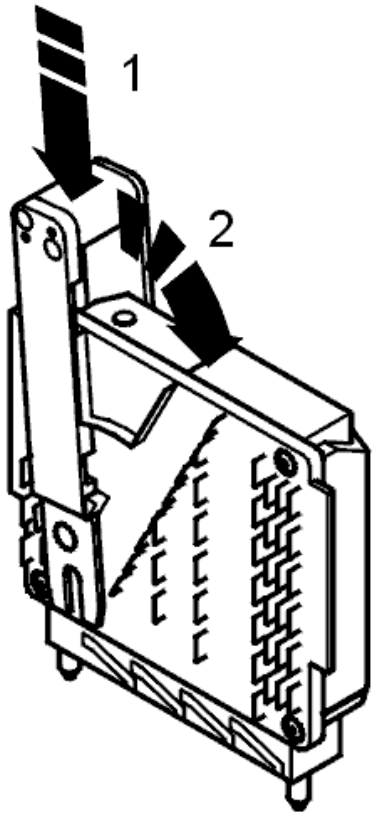

Fig. 3: Identifying Engine Control Module
Courtesy of VOLVO CARS CORPORATION

- Check that no pins or sockets are damaged on the connector.
- Carefully press the control module down into the grooves on the inside of the control module box. Press to the limit position
- Insert tool see **9995722** around the control module.
- Move the upper section of the tool forwards as far as it will go. Pull up the tool
- Press the cover into place over the control modules
- Check that the air ducts are correctly positioned.

FINISHING

Check that no diagnostic trouble codes have been stored during the repair.

Test drive the car. Check the function of the engine.

ENGINE MECHANICAL

Body and interior

ENGINE MECHANICAL

UPPER TORQUE ROD

NOTE: Removal steps in this procedure may contain installation details.

Fig. 1: Identifying Reservoir Bolt & Fastener
Courtesy of VOLVO CARS CORPORATION

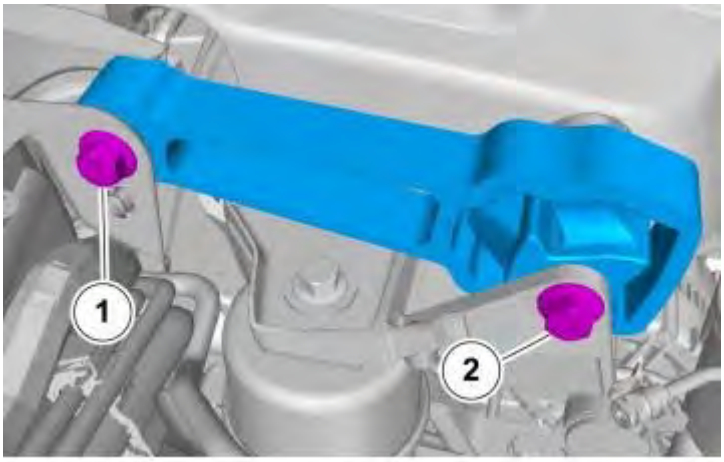

Fig. 2: Identifying Upper Torque Rod Bolts
Courtesy of VOLVO CARS CORPORATION

1. **Torque:** Upper torque rod to spring strut turret

   110 Nm

2. **Torque:** Upper torque rod to engine mount bracket

110 Nm

To install, reverse the removal procedure

ENGINE MECHANICAL

Electrical system

ENGINE MECHANICAL

OIL LEVEL SENSOR, REPLACING

NOTE: **As the illustrations in this service information are used for different model years and / or models, some variation may occur. However, the essential information in the illustrations is always correct.**

REMOVAL AND INSTALLATION

REMOVING THE OIL LEVEL SENSOR

WARNING: **Hot oil can scald. Avoid skin contact with engine oil, particularly if the engine oil is dirty. Immediately wash hands and any skin that has been in contact with oil. Use a suitable cleaning agent and warm water. Wear protective gloves when working with engine oil.**

Remove the splash guard under the engine. Only applies to cars with automatic transmissions.

Position the container under the engine oil trough.

Remove the oil plug.

Drain the engine oil. It is easier to drain the oil if the engine is at operating temperature.

Fig. 1: Identifying Engine Oil Level Sensor
Courtesy of VOLVO CARS CORPORATION

Remove:

- the screws for the sensor. Disconnect the connector for the sensor
- the sensor.

INSTALLING THE OIL LEVEL SENSOR

NOTE: For tightening torques, see TIGHTENING TORQUE .

Fig. 2: Identifying Engine Oil Level Sensor
Courtesy of VOLVO CARS CORPORATION

Install:

- the sensor
- screws for the sensor. Tighten. Connect the connector to the sensor
- the oil plug.

FINISHING

Fill with engine oil. Run the engine to operating temperature. Check for any oil leakage.

Install the splashguard under the engine. Only applies to cars with automatic transmissions.

Check the oil level. Top up if required.

PULSE WHEEL, DRIVE SHAFT, REPLACING

Special tools:

see **9995695**

NOTE: As the illustrations in this service information are used for different model years and / or models, some variation may occur. However, the essential information in the illustrations is always correct.

PREPARATION

Remove the drive shaft. See **REPLACING THE FRONT RIGHT DRIVE SHAFT** or **REPLACING THE FRONT LEFT DRIVE SHAFT** .

REMOVING THE PULSE WHEEL

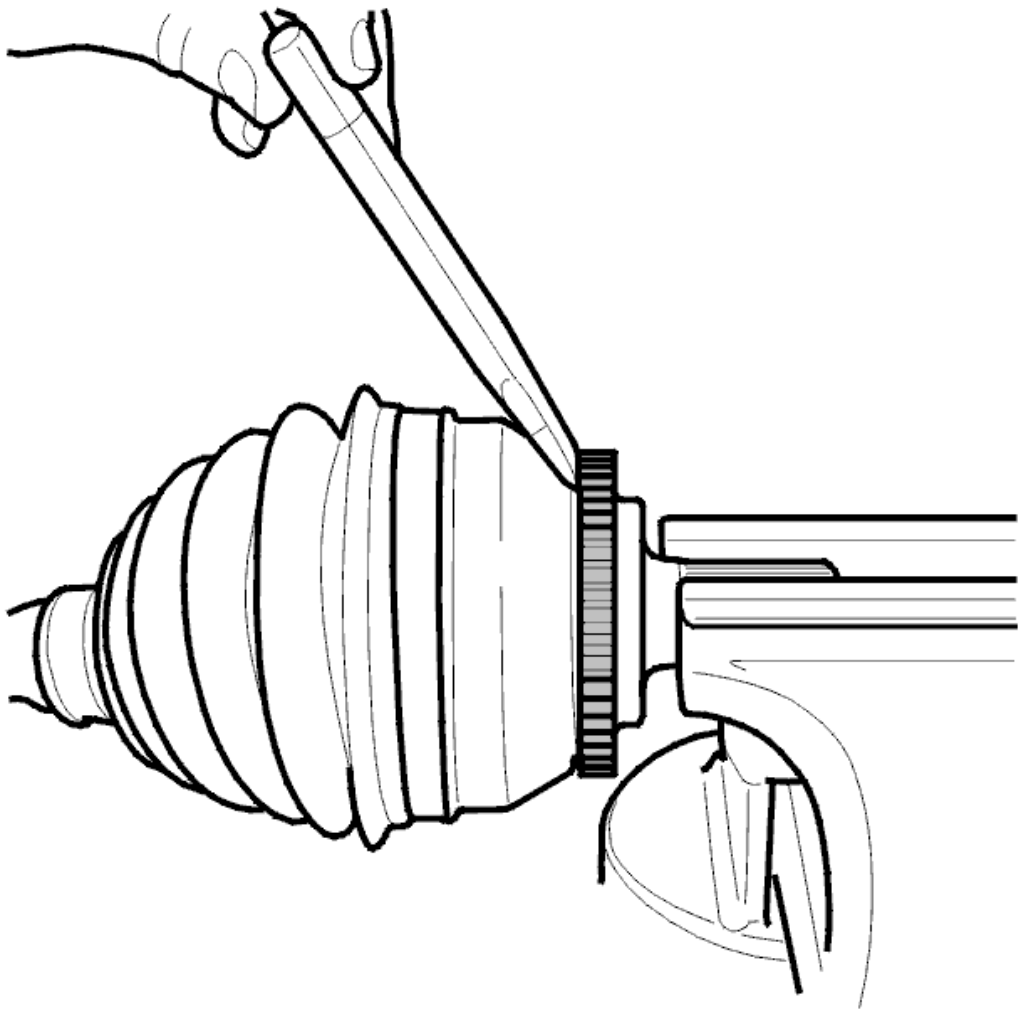

Fig. 3: Tapping Off Pulse Wheel Using A Hammer And Cold Chisel
Courtesy of VOLVO CARS CORPORATION

Secure the drive shaft in a vise with soft jaws.

Tap off the pulse wheel using a hammer and a cold chisel.

INSTALLING THE PULSE WHEEL

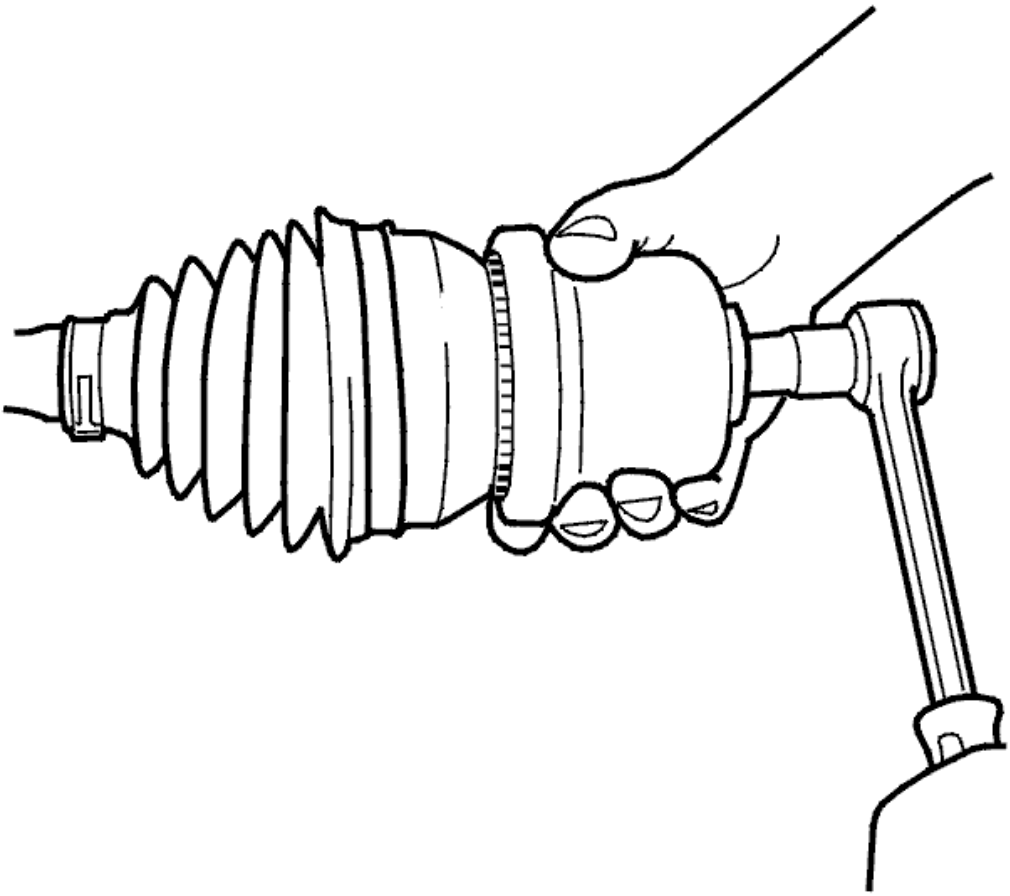

Fig. 4: Pressing Pulse Wheel Into Place
Courtesy of VOLVO CARS CORPORATION

Press the pulse wheel into place. Use tool see **9995695** and the screw for the drive shaft.

Install the drive shaft. See **REPLACING THE FRONT RIGHT DRIVE SHAFT** or **REPLACING THE FRONT LEFT DRIVE SHAFT** .

REPLACING THE OIL PRESSURE SENSOR

NOTE: **As the illustrations in this service information are used for different model years and / or models, some variation may occur. However, the essential information is always correct.**

REMOVING THE OIL PRESSURE SENSOR

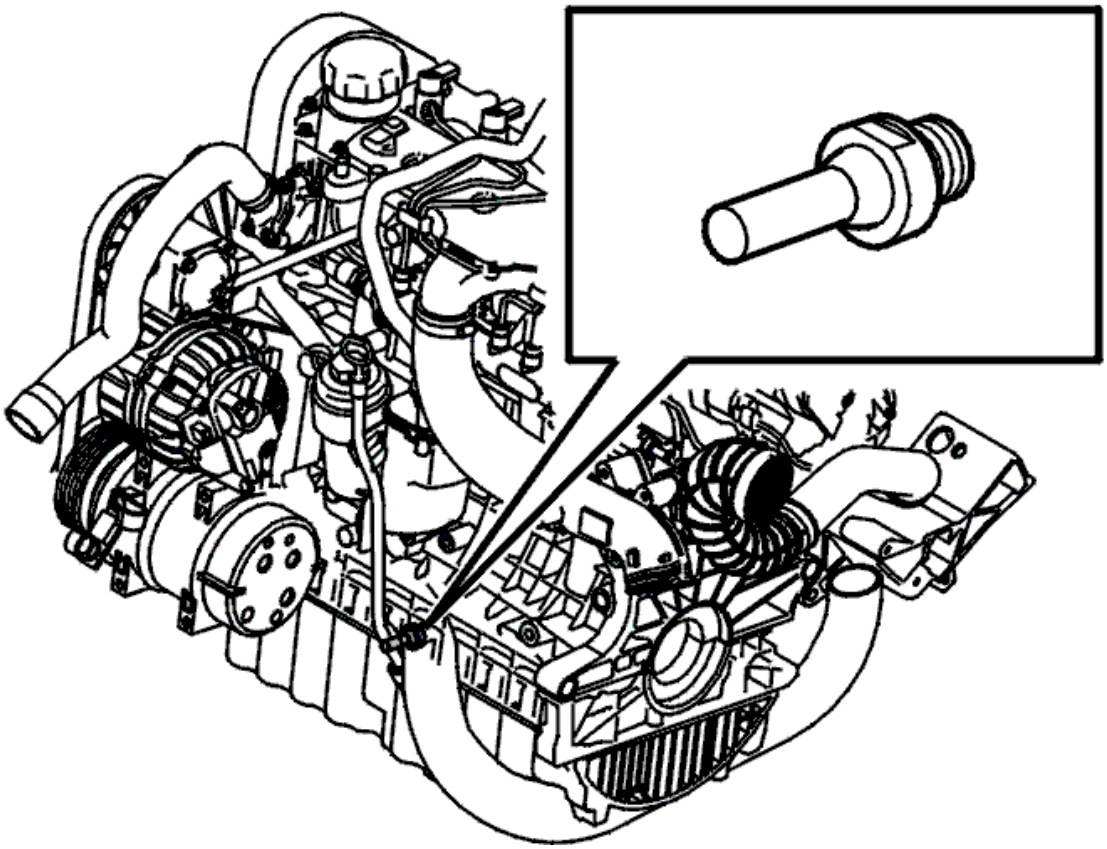

Fig. 5: Identifying Engine Oil Pressure Sensor
Courtesy of VOLVO CARS CORPORATION

Remove the hose from the charge air pipe.

Remove:

- the screw for the charge air pipe in the cylinder block
- the connector from the oil pressure sensor
- the oil pressure sensor. Use a long 24 mm socket.

Place paper underneath in case of oil leakage.

INSTALLING THE OIL PRESSURE SENSOR

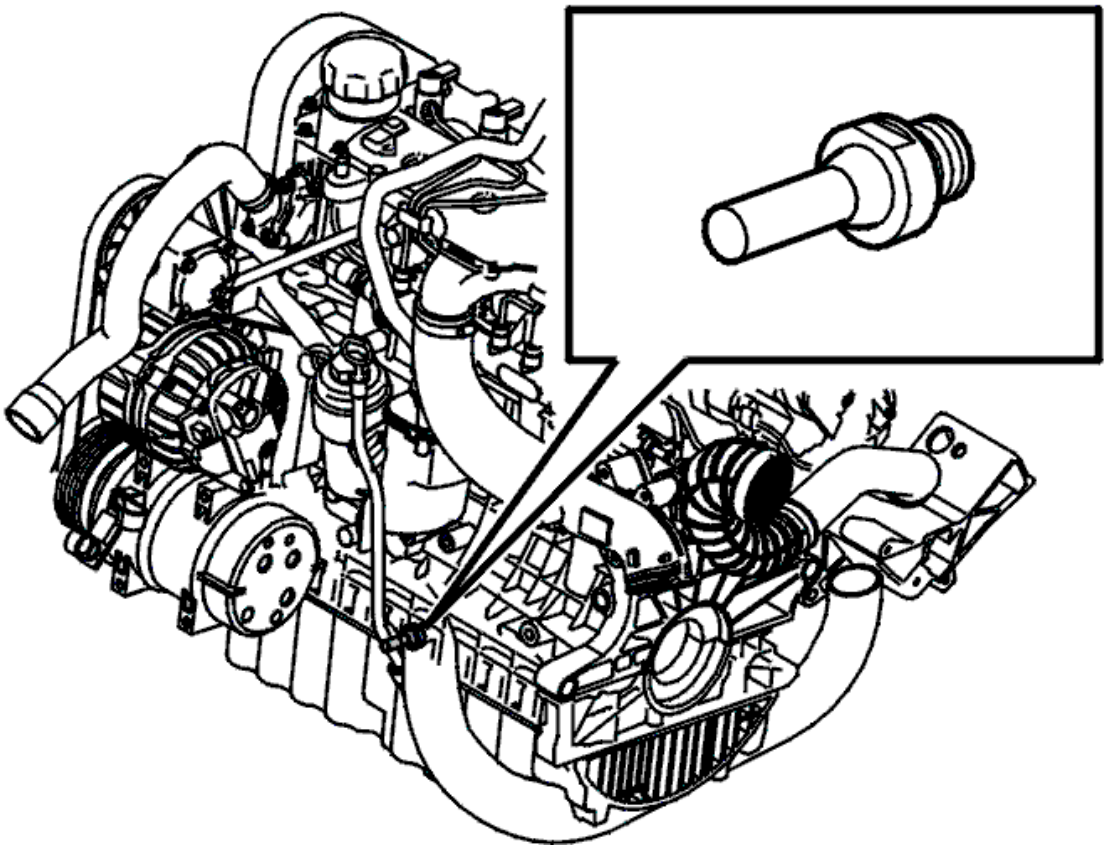

Fig. 6: Identifying Engine Oil Pressure Sensor
Courtesy of VOLVO CARS CORPORATION

Install:

- the new pressure sensor
- the connector
- the screw for the charge air pipe in the cylinder block
- the hose on the charge air pipe.

ENGINE MECHANICAL

Engine with mountings and equipment-Ignition and control systems

ENGINE MECHANICAL

REPLACING SPARK PLUGS

NOTE: **As the illustrations in the information are used for different model years and / or models, certain variations may occur. However, the essential information in the illustrations is always correct.**

REMOVING SPARK PLUGS:

Fig. 1: Identifying Camshaft Components
Courtesy of VOLVO CARS CORPORATION

Remove:

- any charge air pipe over the engine.

  Seal the openings.

- the upper camshaft belt cover.
- the cover over the ignition coils.

REMOVE THE SPARK PLUGS

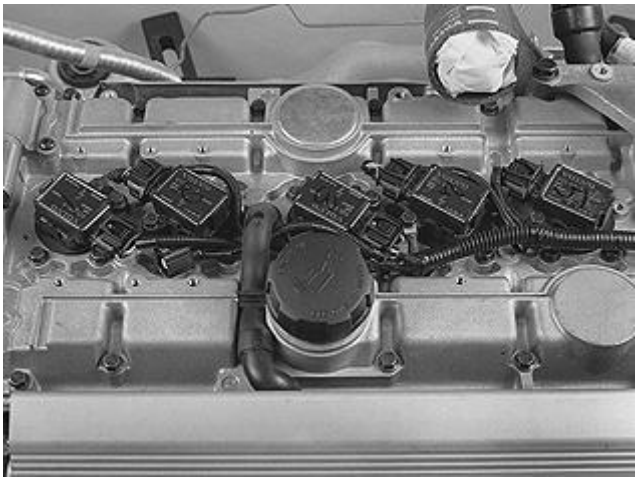

Fig. 2: Identifying Charge Air Pipe Sealed With Paper Wipe
Courtesy of VOLVO CARS CORPORATION

Mark up the ignition coils.

Remove:

- the ignition coils.

  Mark up their locations.

  Put the ignition coils to one side without disconnecting the connectors.

- the spark plugs.

REPLACE THE SPARK PLUGS

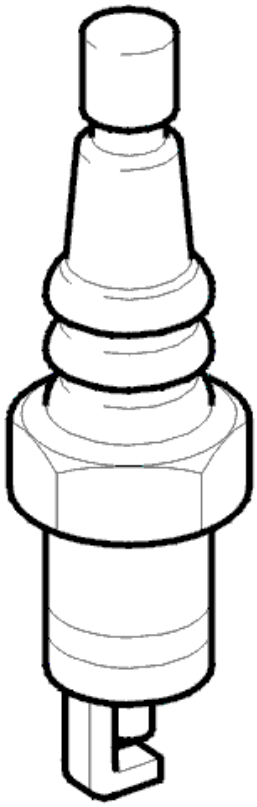

Fig. 3: Identifying Spark Plug
Courtesy of VOLVO CARS CORPORATION

Install new spark plugs:

- Check the spark plug gap.

  NOTE: **Turbocharged engines:**

  Correct spark gap: 0.7 - 0.8 mm (0.02- 0.03 in).

- Lubricate the spark plug threads with paste.

  P/N: 116 1408.

  Tighten to **30 Nm (22 lb. ft)** .

SPARK PLUGS WITH 3 ELECTRODES

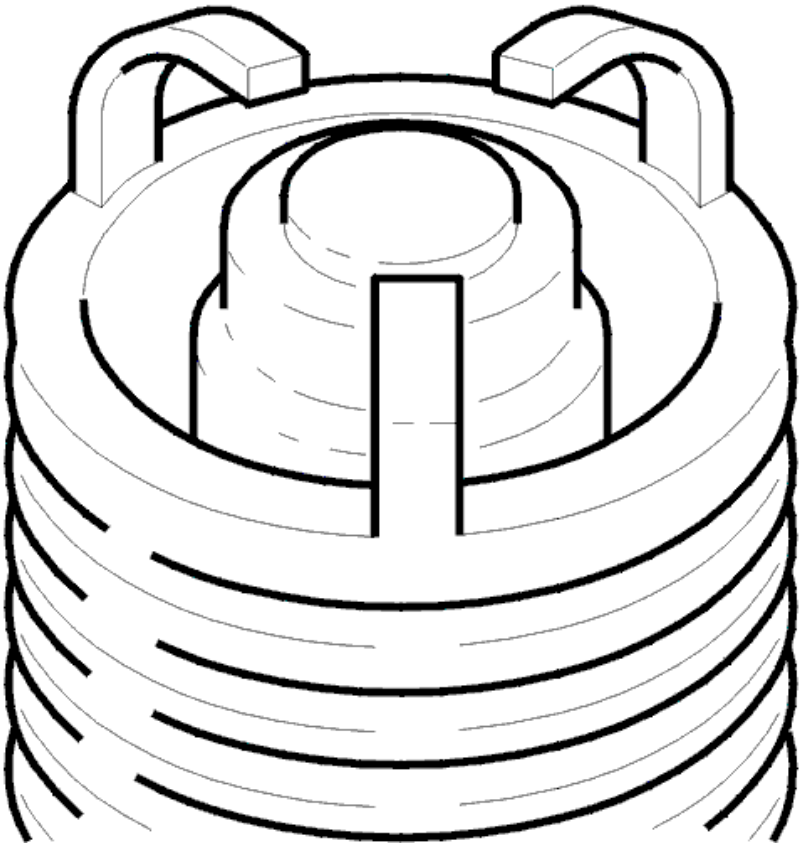

Fig. 4: Identifying Spark Plug With 3 Electrodes
Courtesy of VOLVO CARS CORPORATION

Normally aspirated engine:

NOTE: **Spark plugs with 3 electrodes.**

Cannot be adjusted.

The gaps listed and that can be measured are between the insulator and side electrode.

Nominal measurement: 0.5 mm (0.02 in).

- Lubricate the spark plug threads with paste.

  P/N: 116 1408.

  Tighten to **30 Nm (22 lb. ft)** .

Fig. 5: Identifying Camshaft Components
Courtesy of VOLVO CARS CORPORATION

Install:

- the ignition coils.

  Check the marking.

  Tighten to **10 Nm (7.4 lb. ft)** .

- the cover over the ignition coils.

  Tighten to **8 Nm (6 lb. ft)** .

- the upper camshaft belt cover.

  Tighten to **8 Nm (6 lb. ft)** .

- any charge air pipe over the engine.

  Remove the seals from the openings.

CHECKING WORK

Function test:

- start the engine and check that it functions normally.

Wipe the steering wheel and gear selector lever clean.

ENGINE MECHANICAL

Power transmission

ENGINE MECHANICAL

AIR CLEANER (ACL) HOUSING, REMOVING

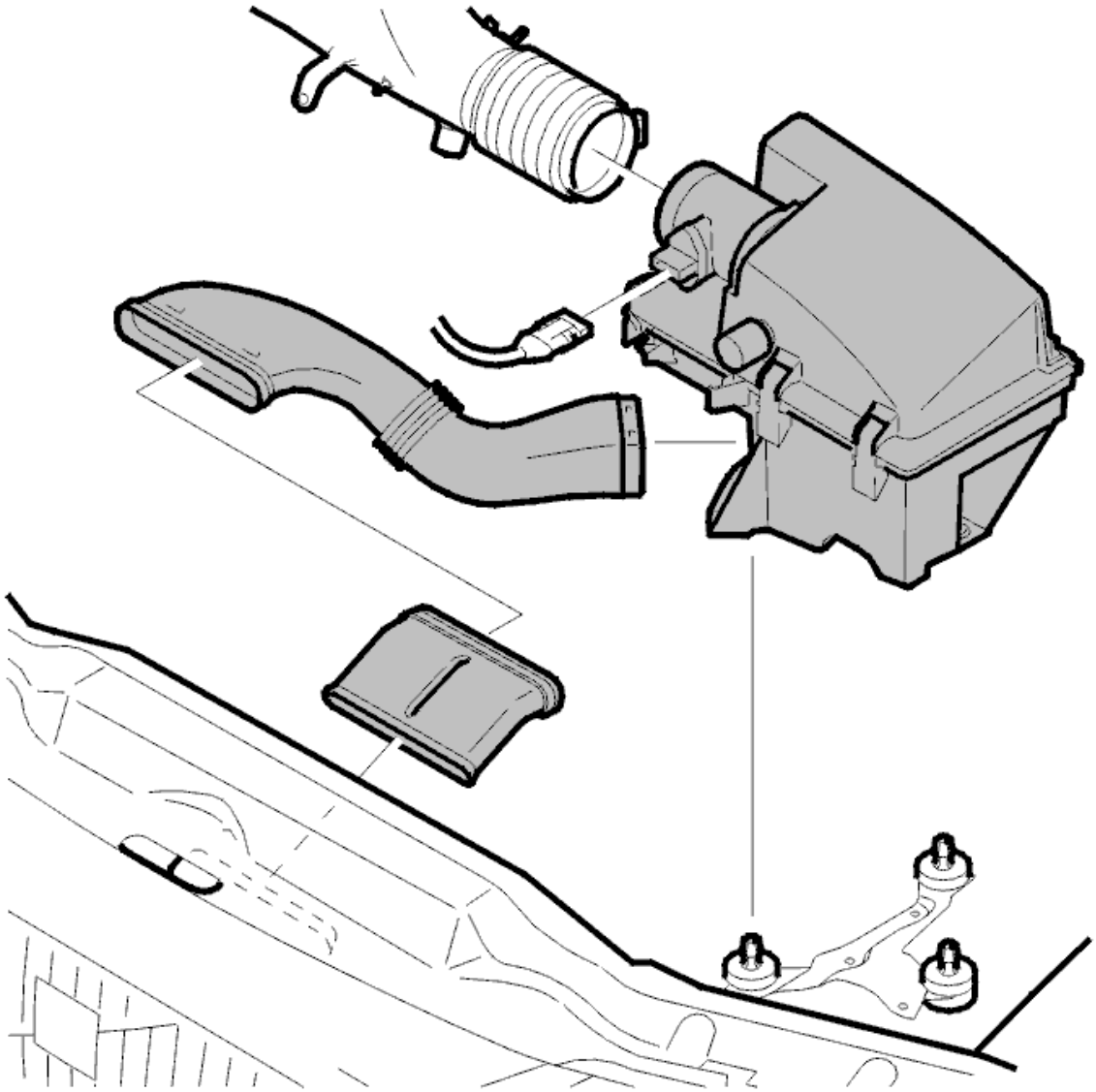

Fig. 1: Air Cleaner (ACL) Housing
Courtesy of VOLVO CARS CORPORATION

Pull the air intake backwards (towards the engine) so that it disconnects from its mounting under the front cover plate.

Disconnect the hose clamp for the air hose.

Remove all the air hoses and connectors from the air cleaner (ACL).

Remove the air cleaner (ACL) housing from its mountings. Pull it straight up.

AIR CLEANER (ACL) HOUSING, INSTALLING

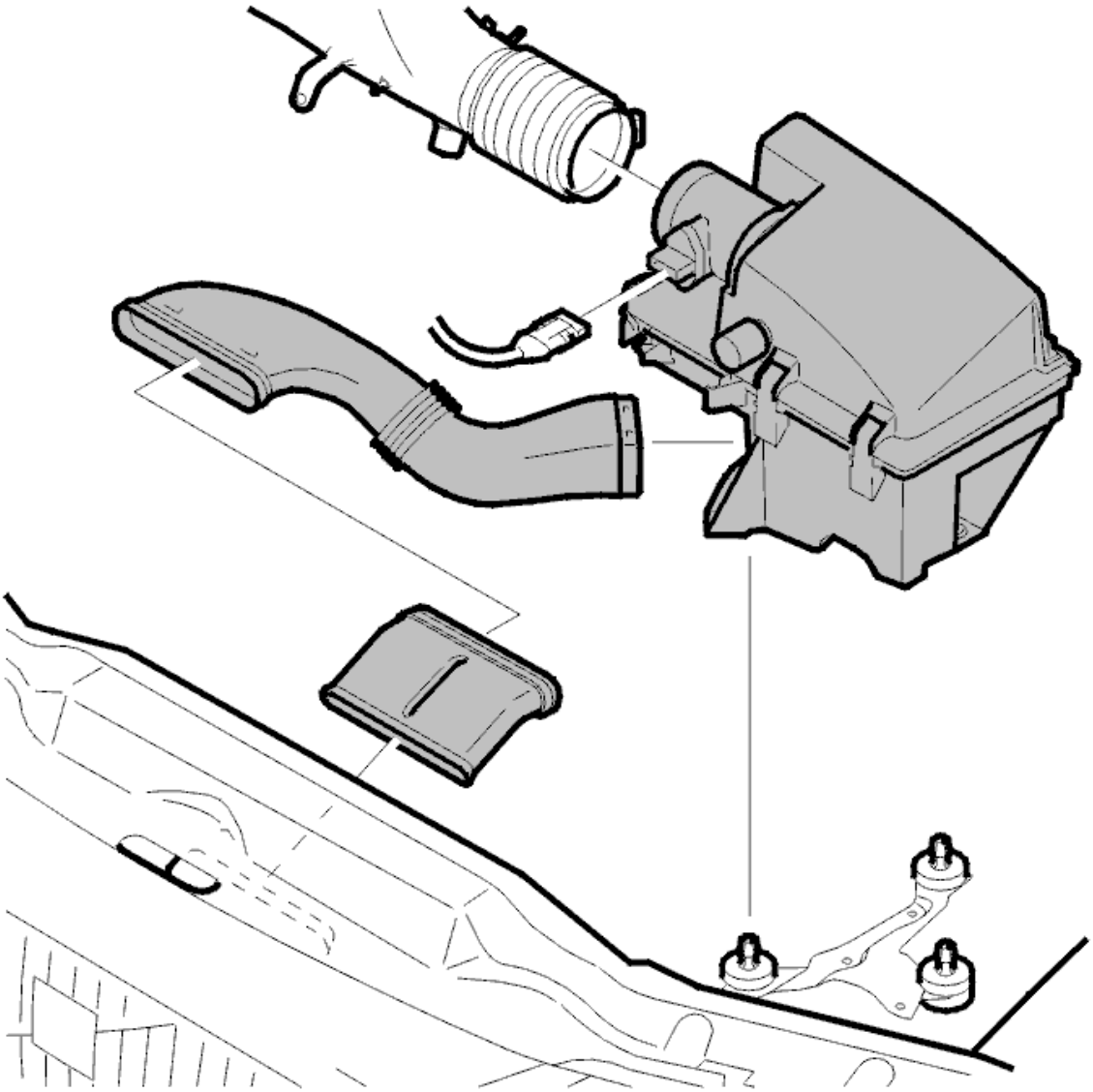

Fig. 2: Air Cleaner (ACL) Housing
Courtesy of VOLVO CARS CORPORATION

Connect all the air hoses and connectors to the air cleaner (ACL) housing.

Tighten the hose clamp.

Fold the air intake in under the front cover plate.

Locate it in its mounting and press it into place.

The positioning of the air intake can be seen through an oblong hole in the front cover plate.

CAMSHAFT SEAL, REPLACING

Special tools	
	999 5651 Extractor (crankshaft rear seal) D5252T **Tool number:** 999 5651 **Tool description:** Extractor (crankshaft rear seal) D5252T **Tool boards:** 21
	999 7364 Drift **Tool number:** 999 7364 **Tool description:** Drift **Tool boards:** 21
	999 5718 Drift (installing/sealing camshaft with VVT) **Tool number:** 999 5718 **Tool description:** Drift (installing/sealing camshaft with VVT) **Tool boards:** 21

REMOVAL

Remove the variable valve timing unit, see **VVT UNIT** .

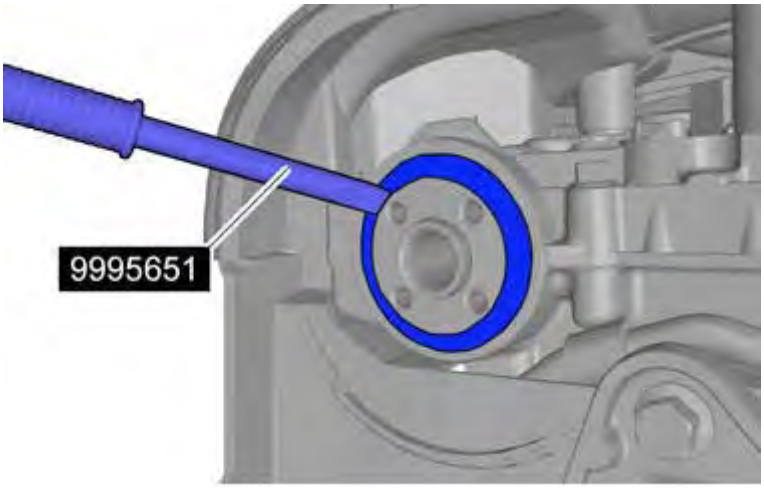

Fig. 3: Removing Cam Seal with Special Tool (9995651)
Courtesy of VOLVO CARS CORPORATION

see **9995651**

INSTALLATION

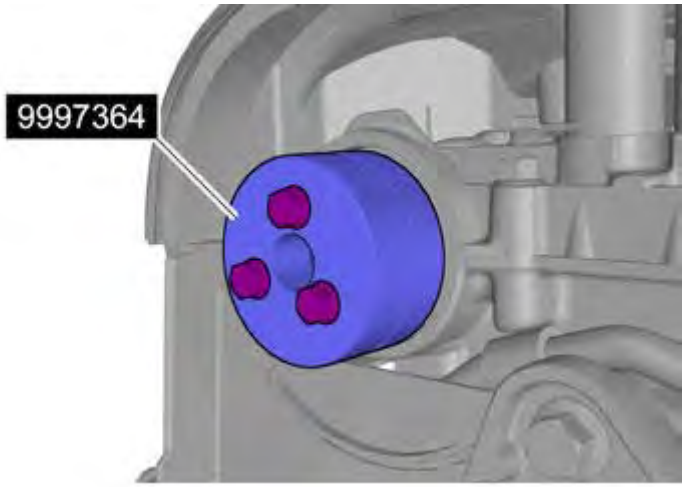

Fig. 4: Installing Cam Seal without VVT using Special Tool (9997364)
Courtesy of VOLVO CARS CORPORATION

see **9997364**

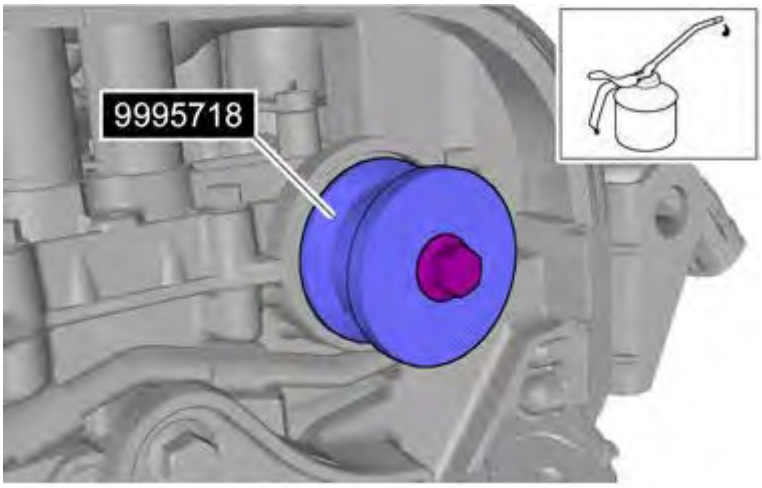

Fig. 5: Installing Cam Seal with VVT-Special Tool (9995718)
Courtesy of VOLVO CARS CORPORATION

see **9995718**

To install, reverse the removal procedure.

ENGINE MECHANICAL

Power transmission

ENGINE MECHANICAL

INDUCTION PIPE

REMOVAL

NO TITLE

Perform draining, see **FUEL SYSTEM PRESSURE RELEASE**

NO TITLE

Perform draining, see **COOLING SYSTEM - DRAINING, CHARGING AND BLEEDING**

NO TITLE

Disconnect power steering pump, see **POWER STEERING PUMP**

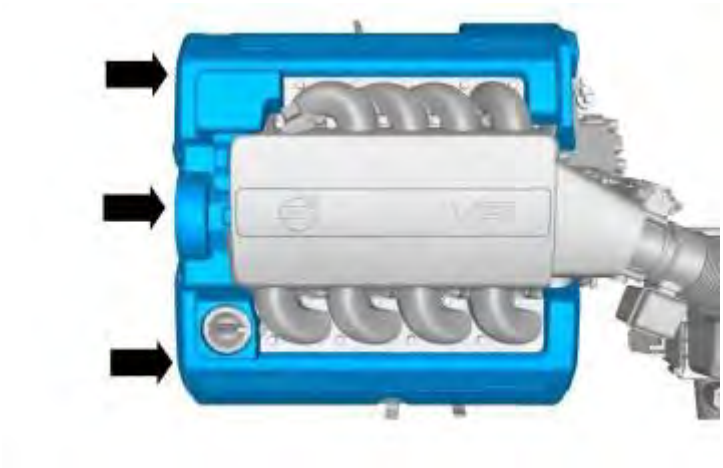

Fig. 1: Identifying Manifold Cover
Courtesy of VOLVO CARS CORPORATION

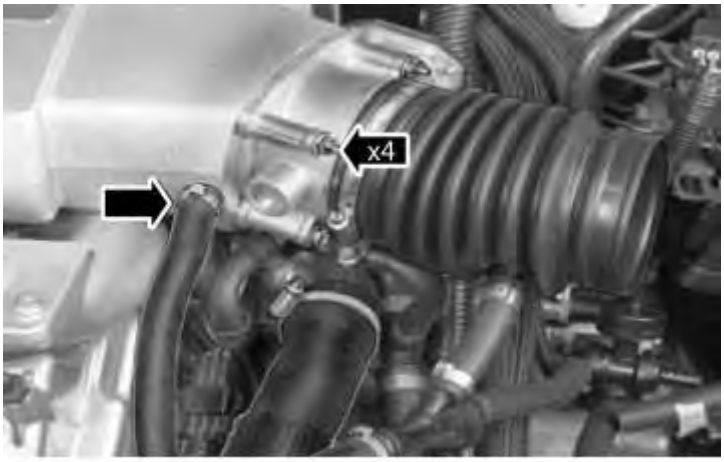

Fig. 2: Identifying Air Induction Screws And By-Pass Hoses
Courtesy of VOLVO CARS CORPORATION

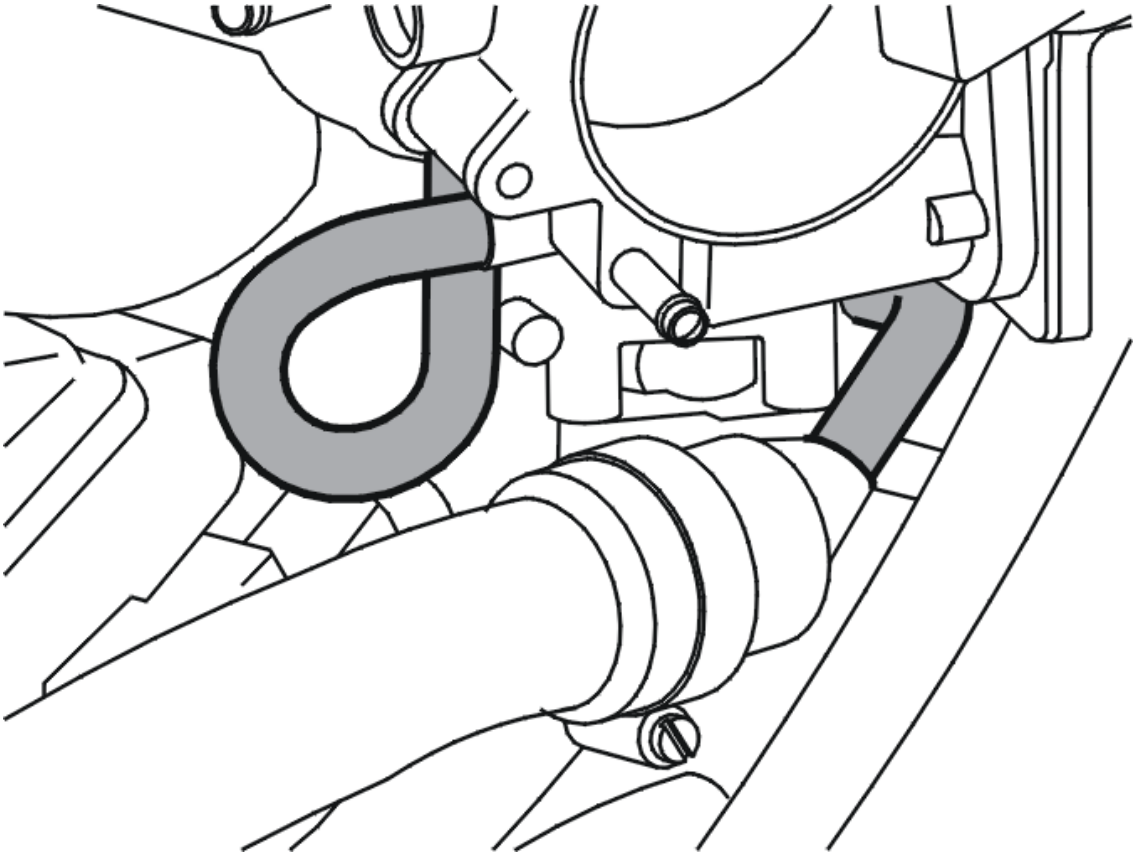

Fig. 3: Identifying Air Hoses
Courtesy of VOLVO CARS CORPORATION

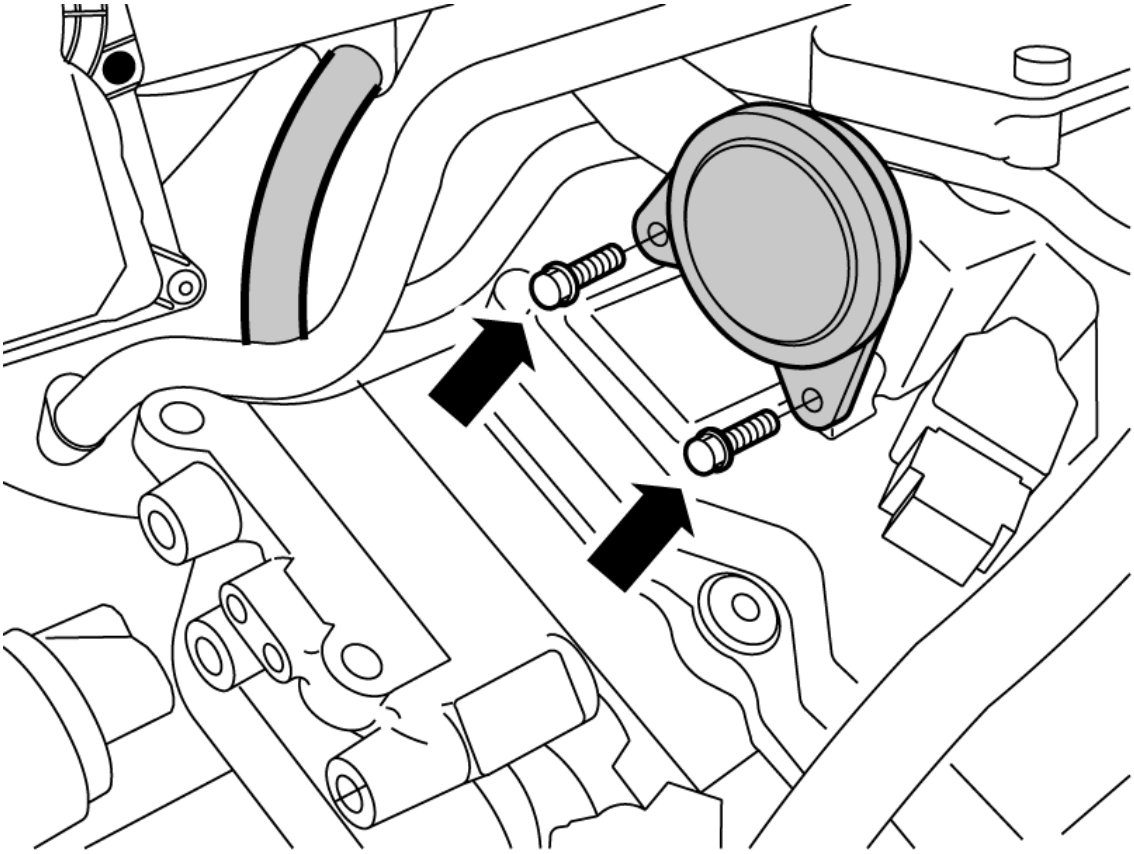

Fig. 4: Identifying Lid
Courtesy of VOLVO CARS CORPORATION

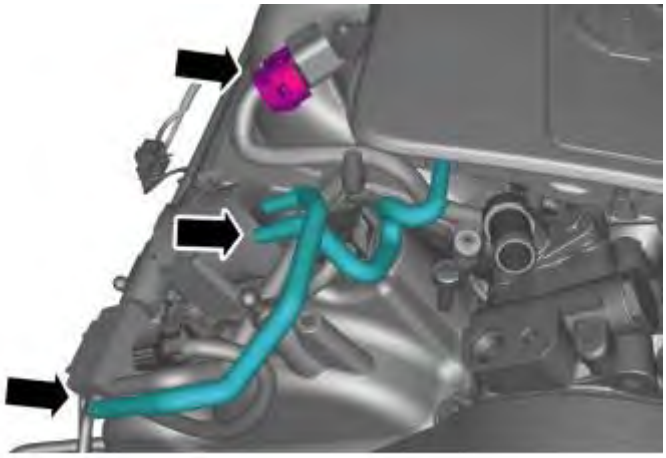

Fig. 5: Identifying Hoses
Courtesy of VOLVO CARS CORPORATION

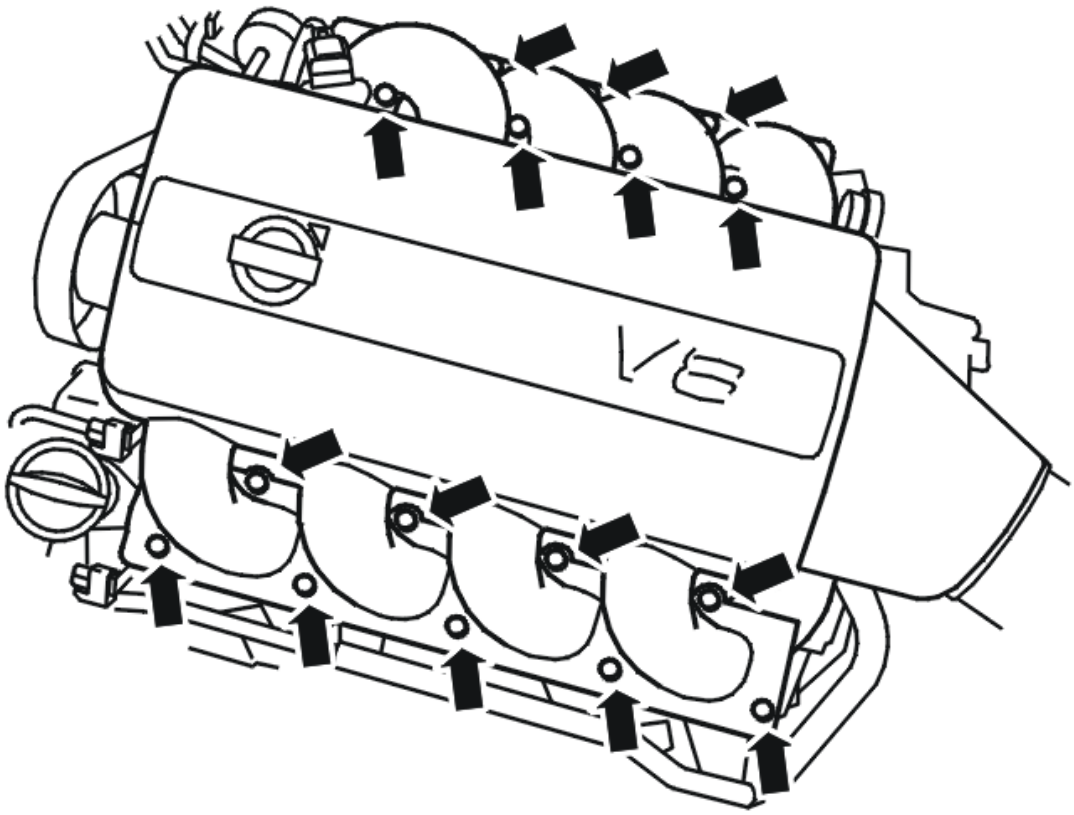

Fig. 6: Identifying Intake Manifold Bolts
Courtesy of VOLVO CARS CORPORATION

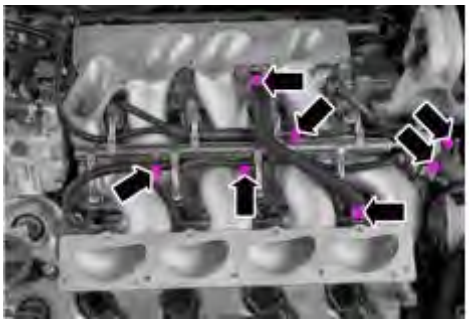

Fig. 7: Identifying Hose Clamps
Courtesy of VOLVO CARS CORPORATION

Fig. 8: Identifying Air Injection Ports At Base Of Manifold
Courtesy of VOLVO CARS CORPORATION

INSTALLATION

Fig. 9: Identifying Air Injection Ports At Base Of Manifold
Courtesy of VOLVO CARS CORPORATION

Torque: Induction pipe

19 Nm

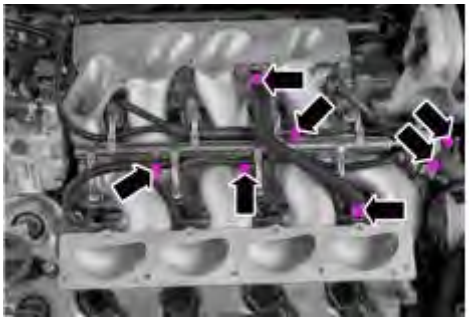

Fig. 10: Identifying Hose Clamps
Courtesy of VOLVO CARS CORPORATION

Torque: M6

10 Nm

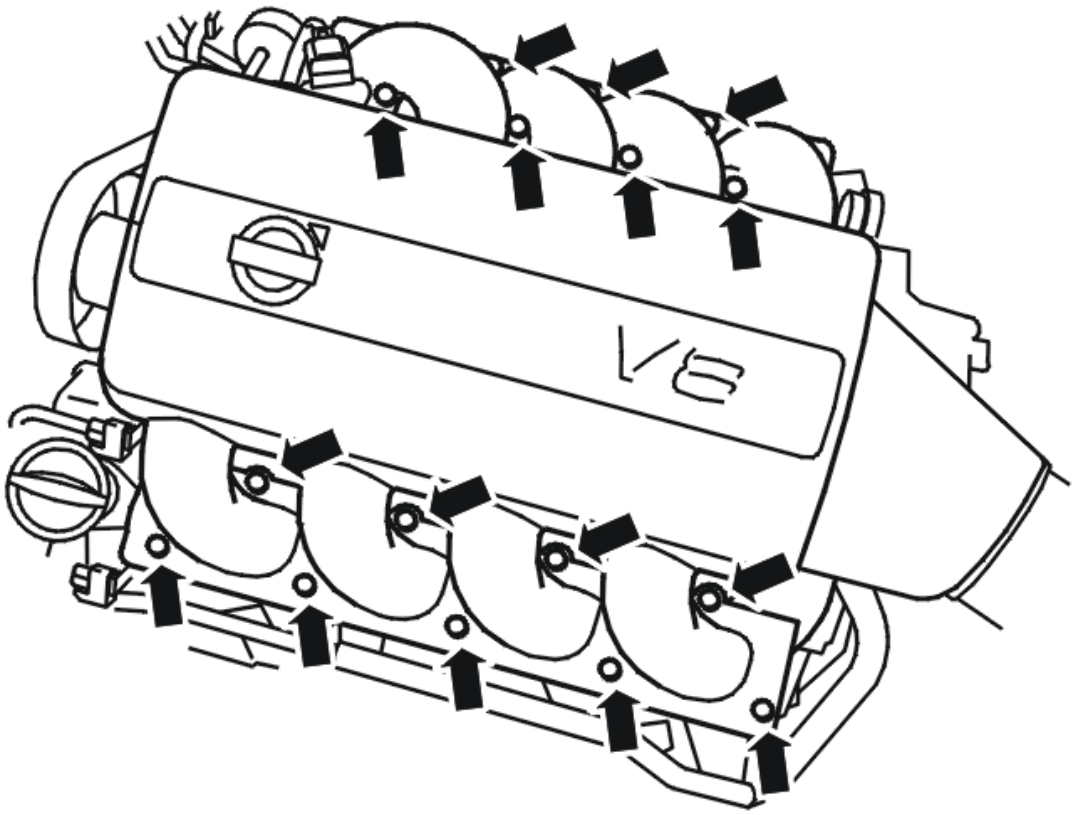

Fig. 11: Identifying Intake Manifold Bolts
Courtesy of VOLVO CARS CORPORATION

Torque: Induction pipe

19 Nm

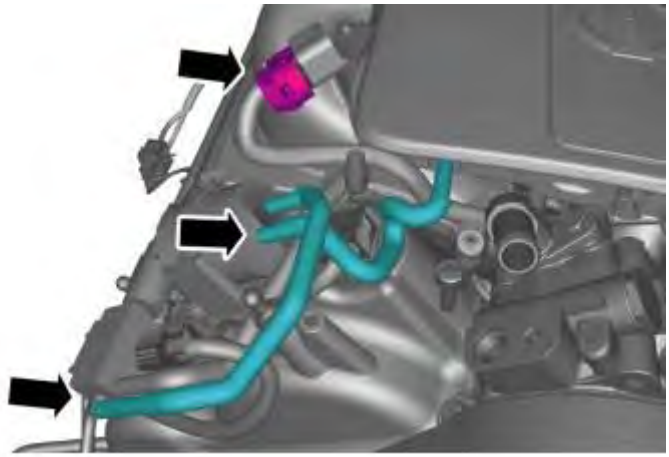

Fig. 12: Identifying Hoses
Courtesy of VOLVO CARS CORPORATION

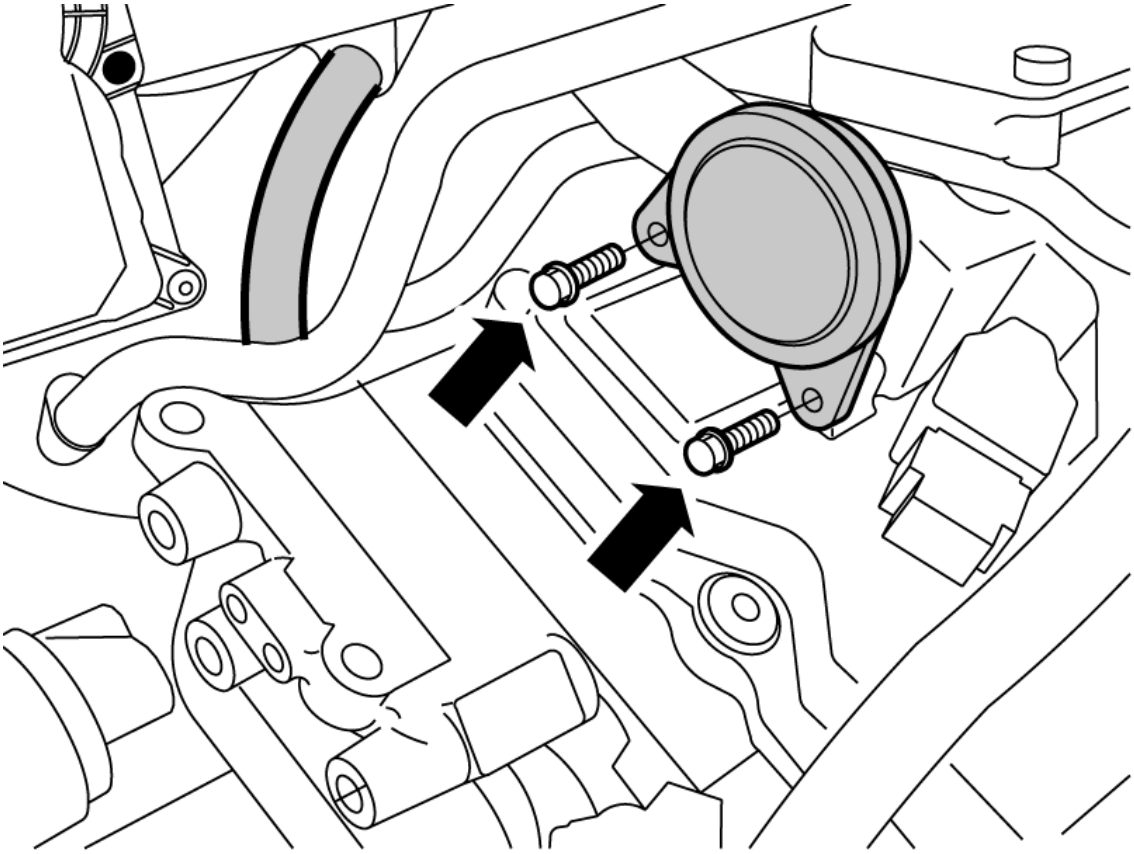

Fig. 13: Identifying Lid
Courtesy of VOLVO CARS CORPORATION

Torque: M6

10 Nm

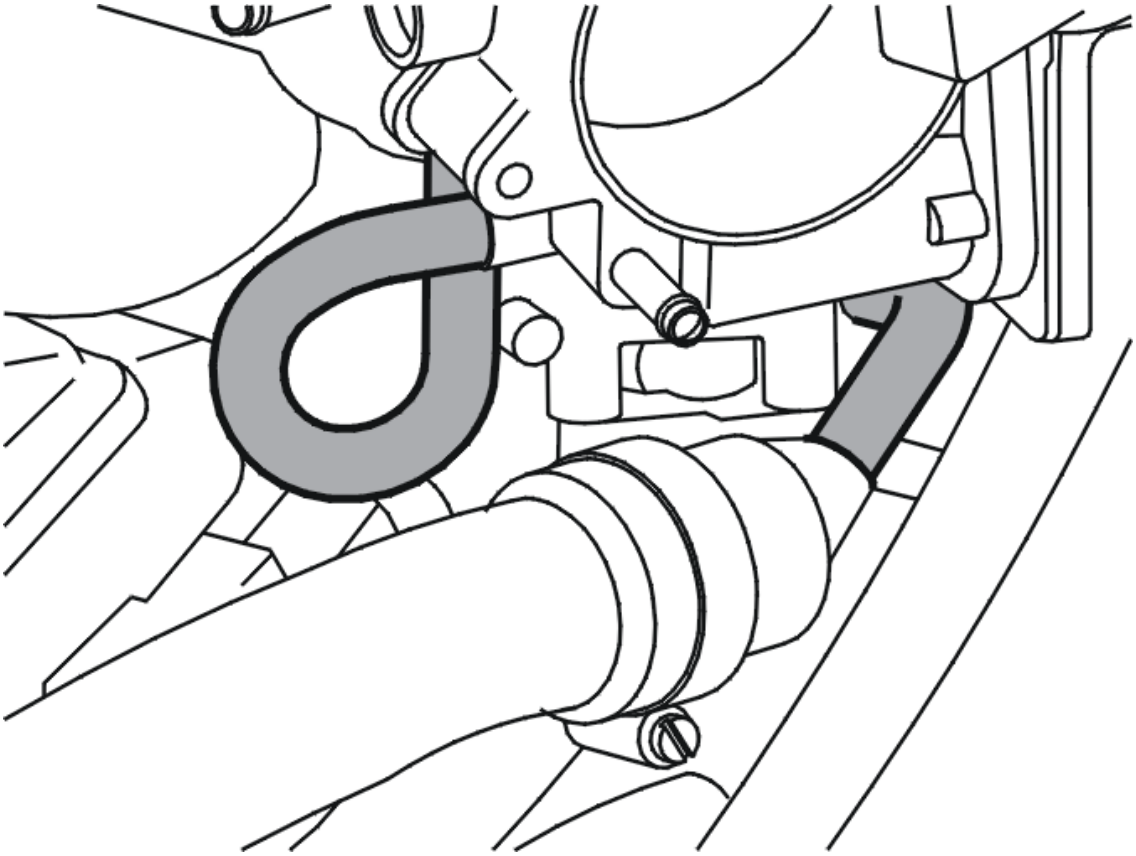

Fig. 14: Identifying Air Hoses
Courtesy of VOLVO CARS CORPORATION

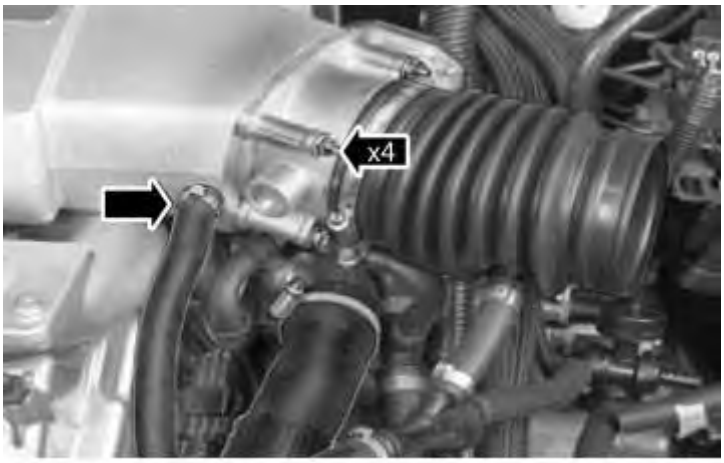

Fig. 15: Identifying Air Induction Screws And By-Pass Hoses
Courtesy of VOLVO CARS CORPORATION

Torque: M6

10 Nm

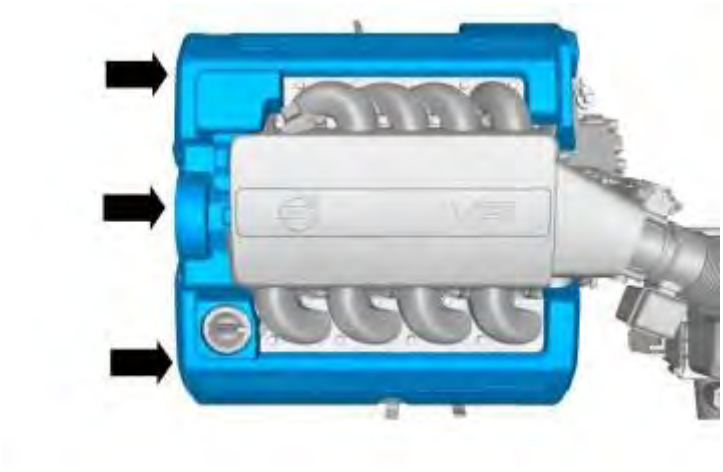

Fig. 16: Identifying Manifold Cover
Courtesy of VOLVO CARS CORPORATION

NO TITLE

Install pump power steering, see **POWER STEERING PUMP**

NO TITLE

Perform filling, see **COOLING SYSTEM - DRAINING, CHARGING AND BLEEDING**

ENGINE MECHANICAL

Power transmission

ENGINE MECHANICAL

TIMING BELT

Special tools	
	999 5433 COUNTERHOLD (VIBRATION DAMPENER)B6304 B5254 **Tool number:** 999 5433 **Tool description:** COUNTERHOLD (VIBRATION DAMPENER)B6304 B5254 **Tool boards:** 21

REMOVAL

NOTE: Removal steps in this procedure may contain installation details.

Remove the following items:

- Engine support insulator, right, see **ENGINE SUPPORT INSULATOR, RIGHT**
- Tensioner accessory drive belt, see **AUXILIARIES BELT / BELT TENSIONER, REPLACING**

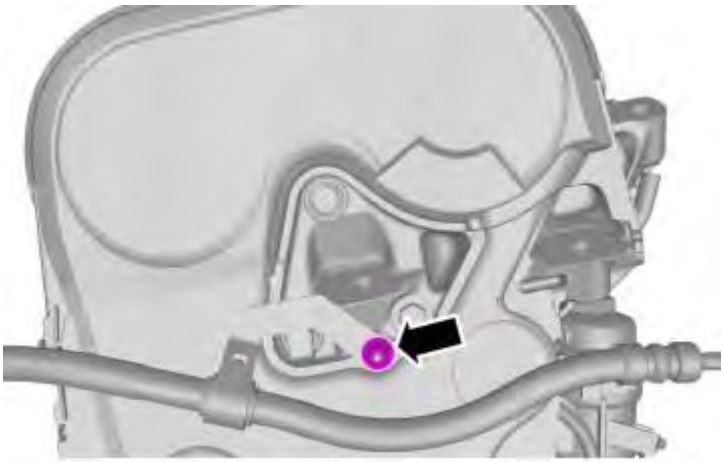

Fig. 1: Hose and Bracket
Courtesy of VOLVO CARS CORPORATION

Torque: M6

10 Nm

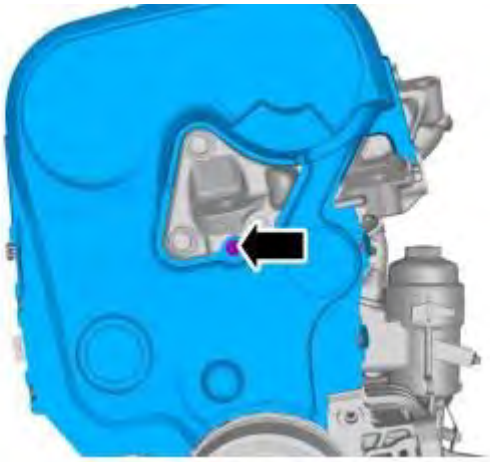

Fig. 2: Timing Belt Cover Bolt
Courtesy of VOLVO CARS CORPORATION

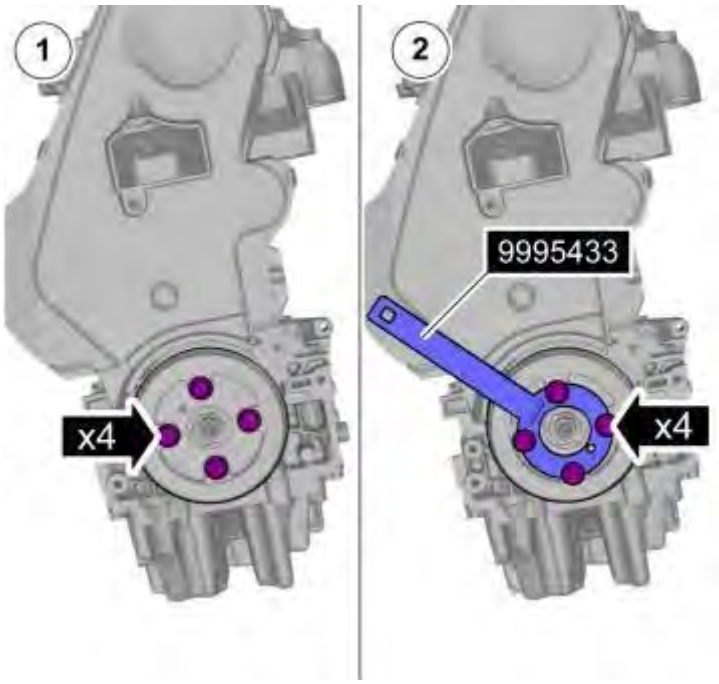

Fig. 3: Install Special Tool (9995433)
Courtesy of VOLVO CARS CORPORATION

see **9995433**

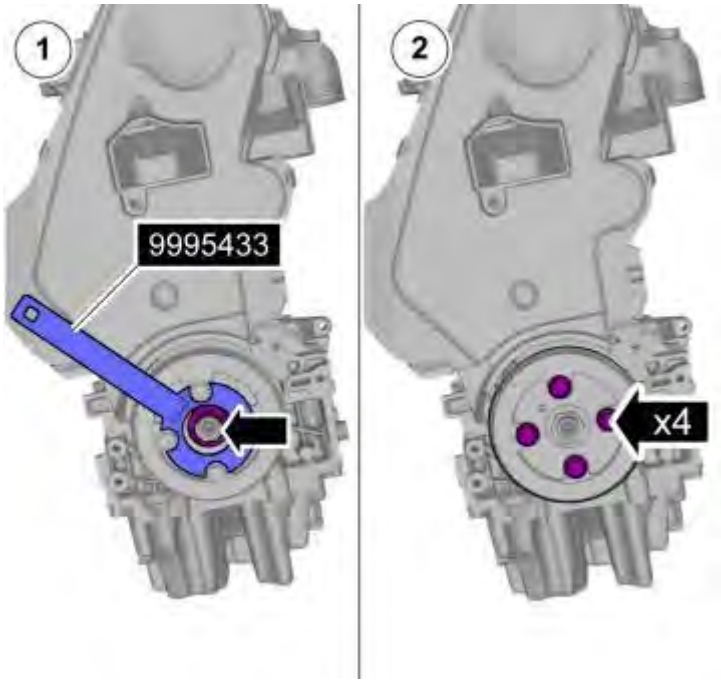

Fig. 4: Remove/Install Crank Nut Using Special Tool (9995433)
Courtesy of VOLVO CARS CORPORATION

see **9995433**

Fig. 5: Remove Vibration Damper Pulley
Courtesy of VOLVO CARS CORPORATION

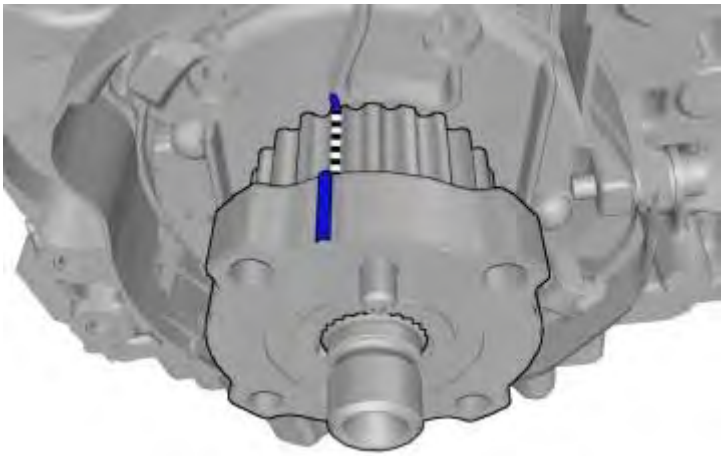

Fig. 6: Identifying Position of Crank Sprocket at TDC #1
Courtesy of VOLVO CARS CORPORATION

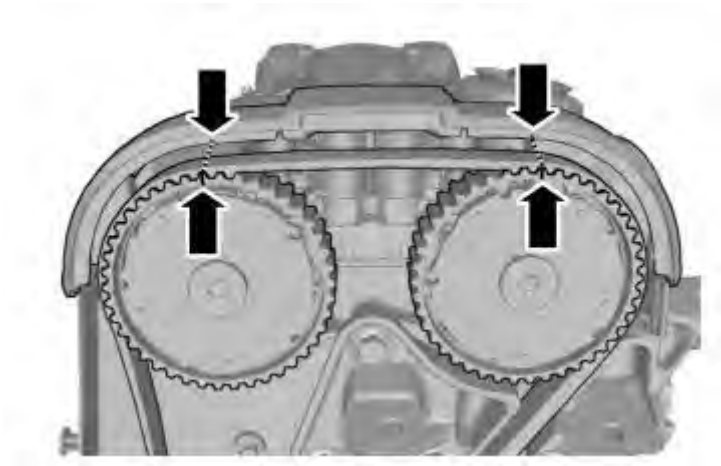

Fig. 7: Mark Position of Cam Sprockets at TDC #1
Courtesy of VOLVO CARS CORPORATION

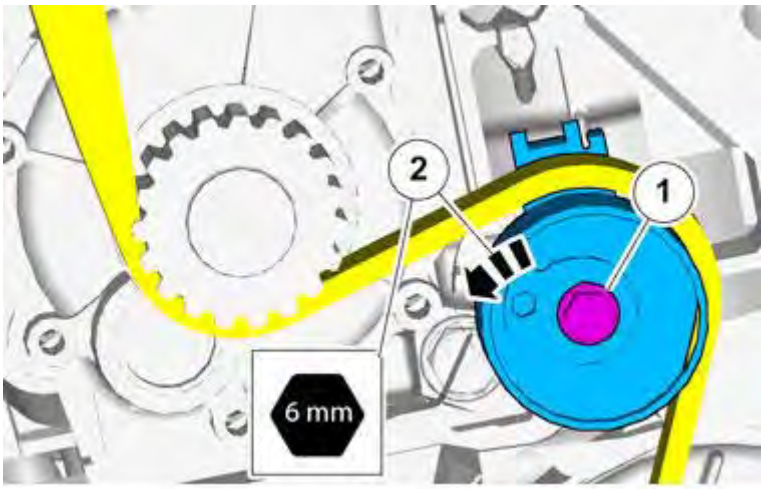

Fig. 8: Loosen Bolt and Tensioner

Courtesy of VOLVO CARS CORPORATION

NOTE: Do not loosen the bolts more than one turn.

1. **Torque:** M8

   24 Nm

2.

Fig. 9: Idler Pulley Bolts
Courtesy of VOLVO CARS CORPORATION

NOTE: The component can be reused unless it has been subjected to abnormal mechanical stress, damage or oil contamination.

Torque: M8

24 Nm

INSTALLATION

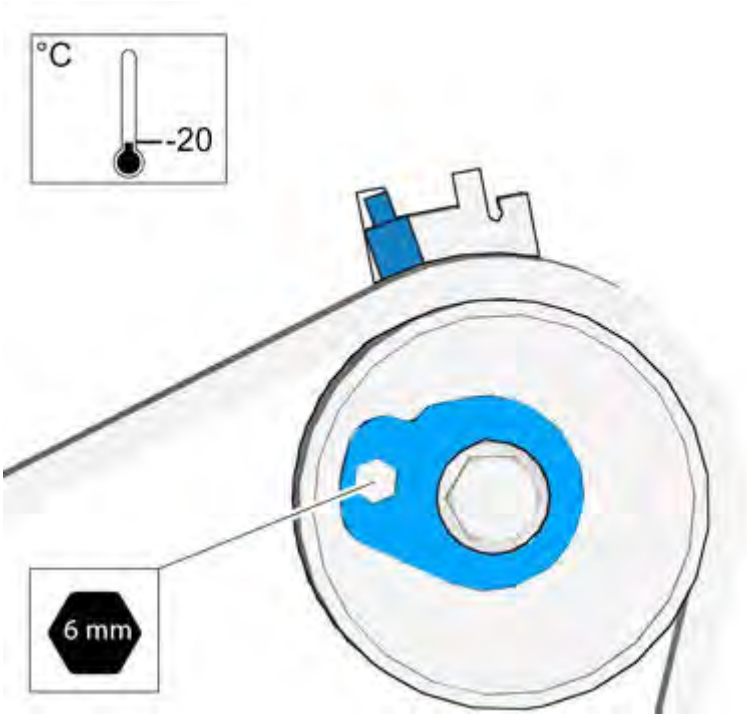

Fig. 10: Identifying Cold Setting (-4Degrees F)
Courtesy of VOLVO CARS CORPORATION

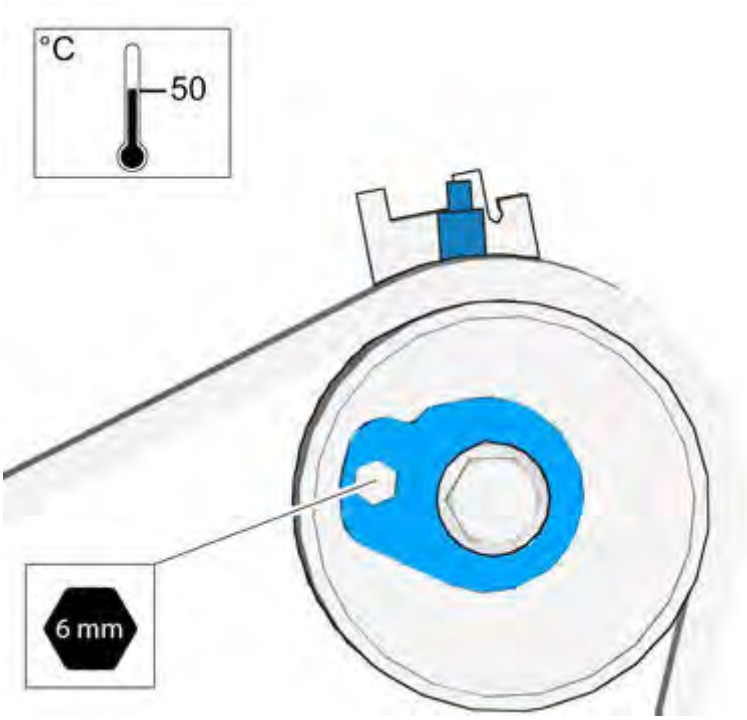

Fig. 11: Identifying Hot Setting (122Degrees F)
Courtesy of VOLVO CARS CORPORATION

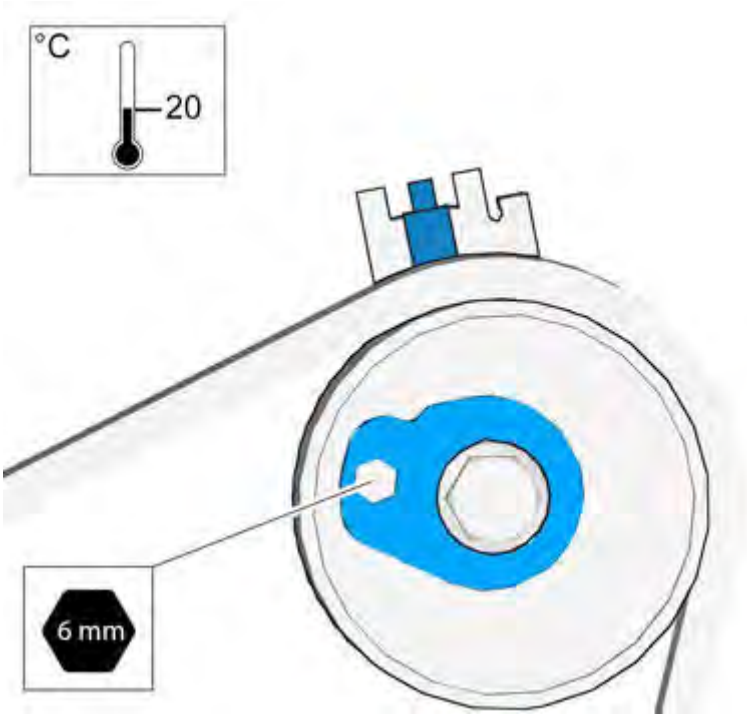

Fig. 12: Identifying Room Temp Setting (68Degrees F)
Courtesy of VOLVO CARS CORPORATION

To install, reverse the removal procedure.

ENGINE MECHANICAL

Power transmission

ENGINE MECHANICAL

VVT UNIT

Special tools	
	999 5452 CAMSHAFT ADJUSTMENT TOOL(alignment-camshaft)B6304 **Tool number:** 999 5452 **Tool description:** CAMSHAFT ADJUSTMENT TOOL(alignment-camshaft)B6304 **Tool boards:** 21
	999 5451 ADJUSTMENT TOOL(ALIGNMENT-CRANKSHAFT) B6304 B5254 **Tool number:** 999 5451 **Tool description:** ADJUSTMENT TOOL(ALIGNMENT-CRANKSHAFT) B6304 B5254 **Tool boards:** 21

REMOVAL

Remove the following items:

- air cleaner (ACL) housing, see **INTAKE AND EXHAUST SYSTEM - REMOVAL, REPLACEMENT AND INSTALLATION**
- timing belt, see **TIMING BELT**
- starter motor, see **STARTING SYSTEM - REMOVAL, REPLACEMENT AND INSTALLATION**

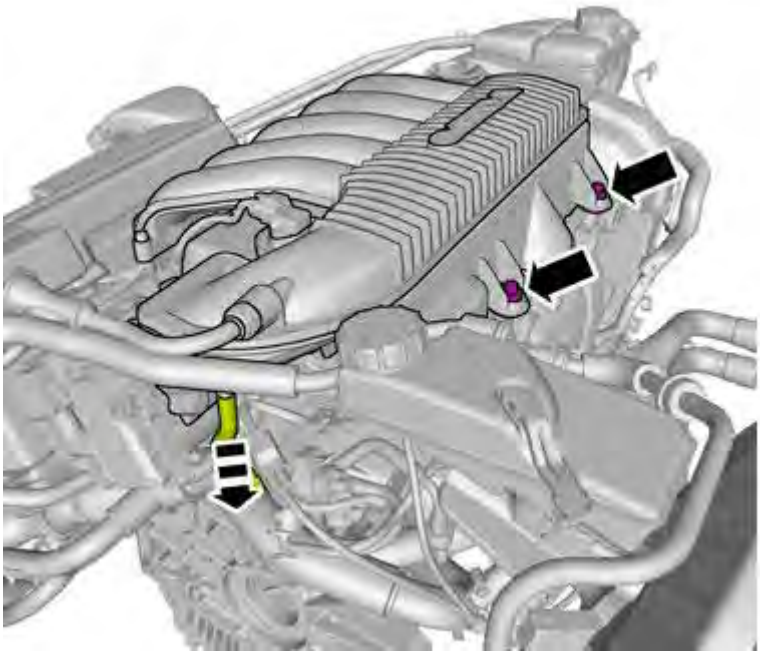

Fig. 1: Intake Plenum, Rear View
Courtesy of VOLVO CARS CORPORATION

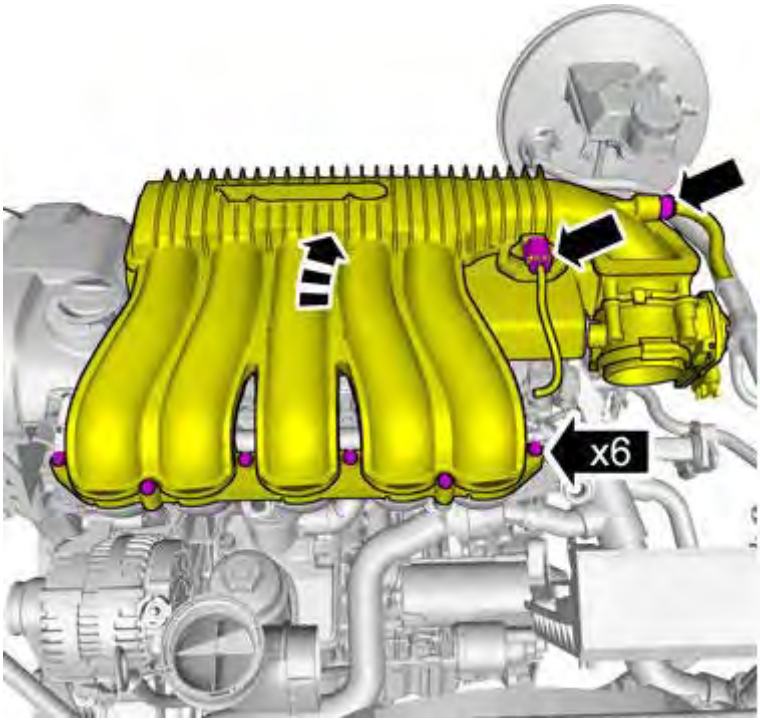

Fig. 2: Intake Plenum, Front View
Courtesy of VOLVO CARS CORPORATION

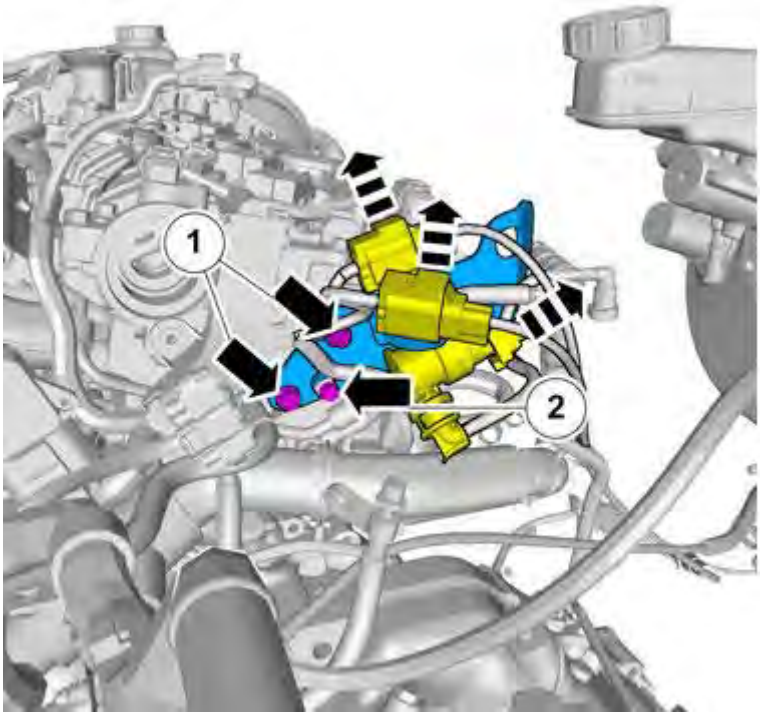

Fig. 3: Lift Hook Bolts
Courtesy of VOLVO CARS CORPORATION

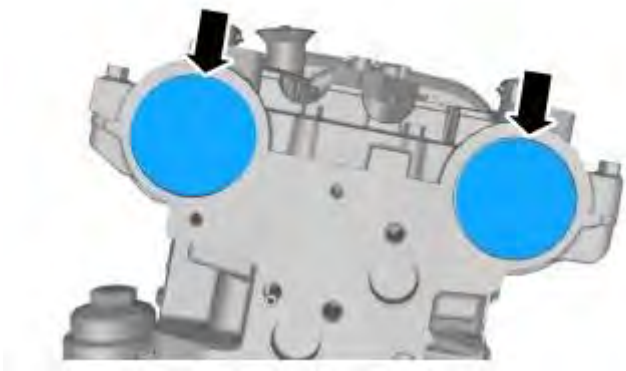

Fig. 4: Cam Plugs
Courtesy of VOLVO CARS CORPORATION

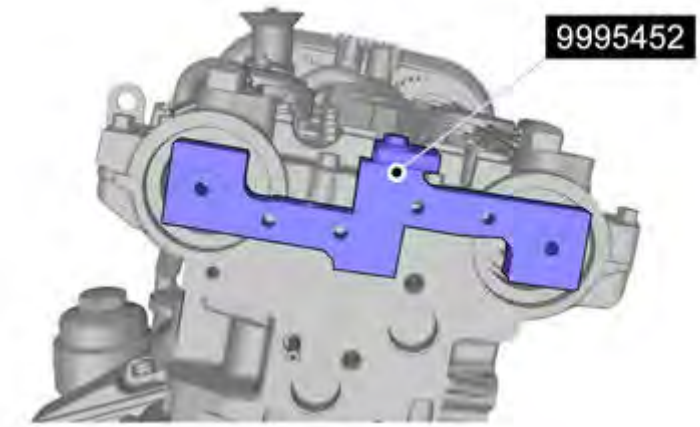

Fig. 5: Cam Alignment Tool (9995452) Installed
Courtesy of VOLVO CARS CORPORATION

see **9995452**

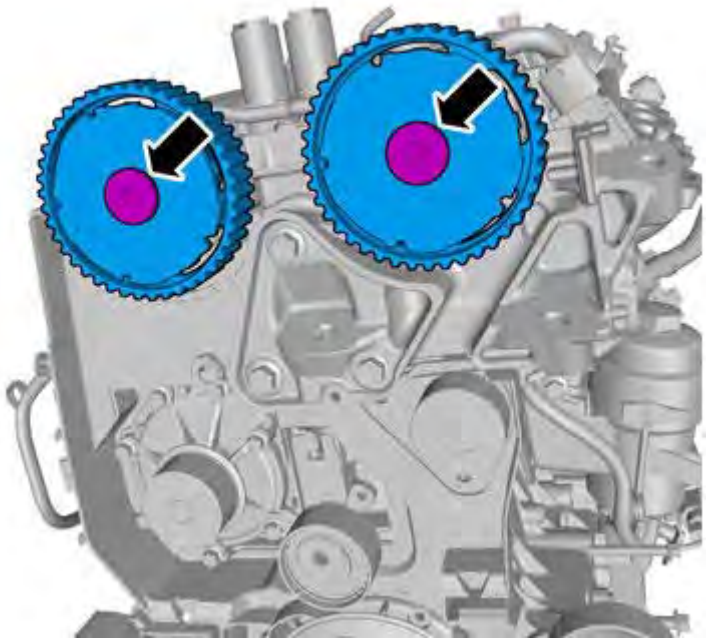

Fig. 6: Installing VVT Units
Courtesy of VOLVO CARS CORPORATION

Replace camshaft seal, see **CAMSHAFT SEAL**

INSTALLATION

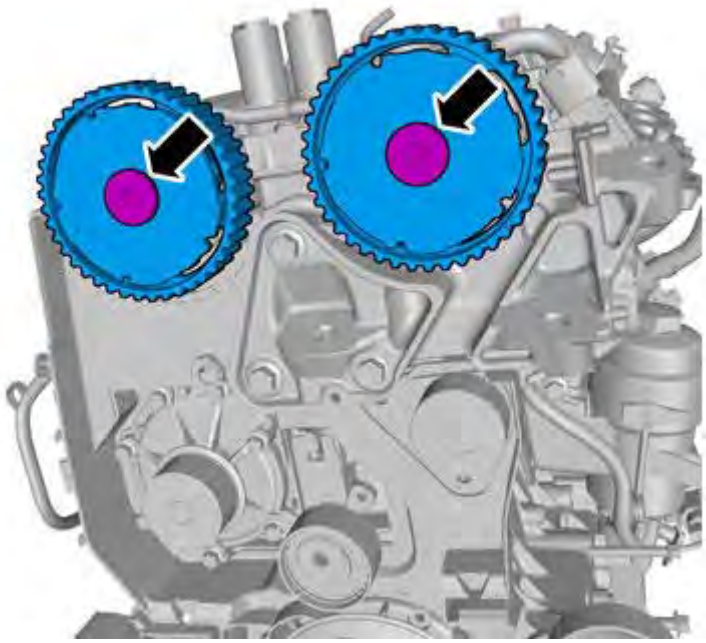

Fig. 7: Installing VVT Units
Courtesy of VOLVO CARS CORPORATION

NOTE: Only tighten the bolts finger tight at this stage.

Fig. 8: Crankshaft Holder Tool (9995451) Installed
Courtesy of VOLVO CARS CORPORATION

see **9995451**

Install timing belt, see **TIMING BELT**

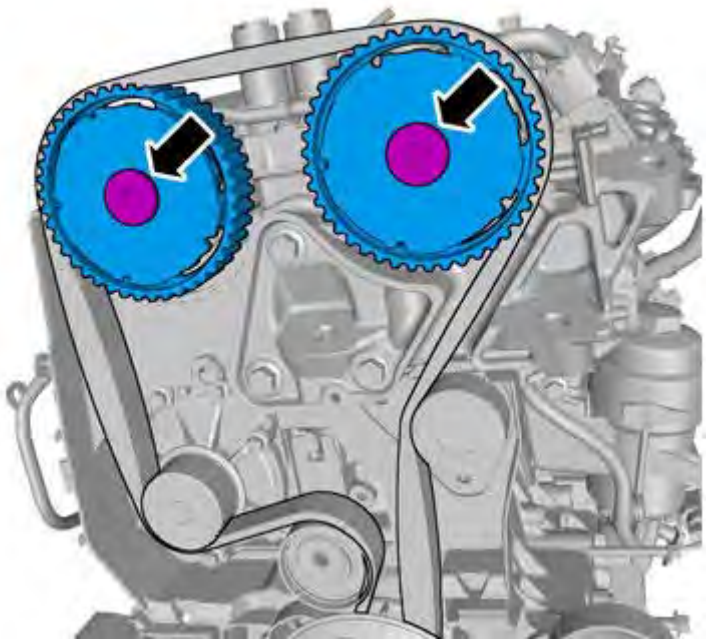

Fig. 9: Torque VVT Unit Bolts to Specification
Courtesy of VOLVO CARS CORPORATION

Torque: VVT unit, center screw

120 Nm

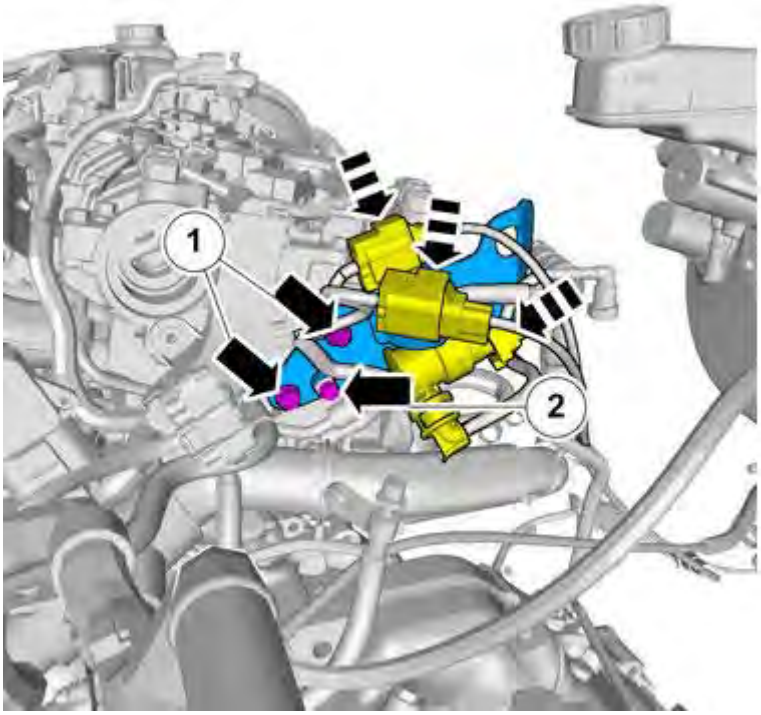

Fig. 10: Install Lift Hook, Bolts
Courtesy of VOLVO CARS CORPORATION

1. **Torque:** M10

   50 Nm

2. **Torque:** M6

   10 Nm

Install the following items:

- starter motor, see **STARTING SYSTEM - REMOVAL, REPLACEMENT AND INSTALLATION**
- timing belt, see **TIMING BELT**

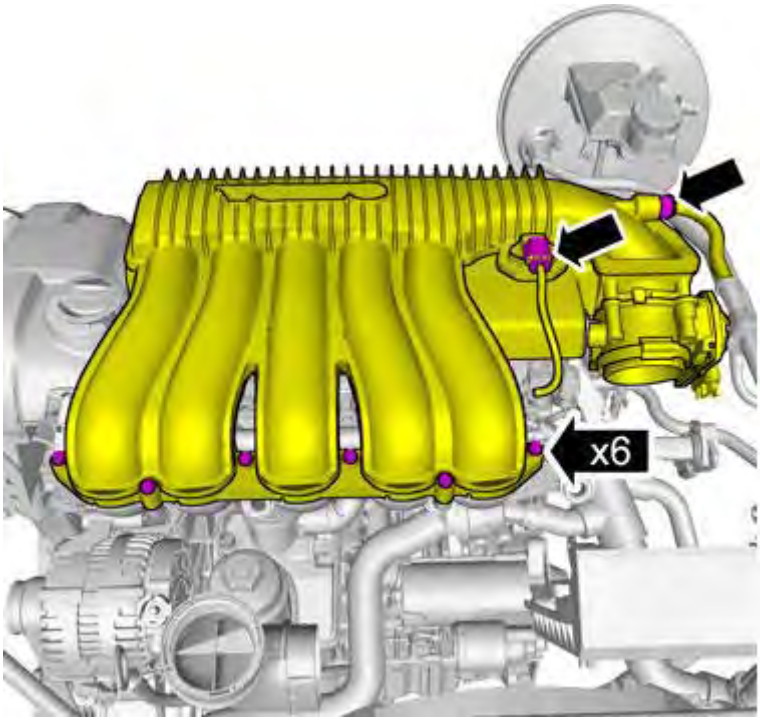

Fig. 11: Installing Intake Plenum, Front View
Courtesy of VOLVO CARS CORPORATION

Torque: M6

10 Nm

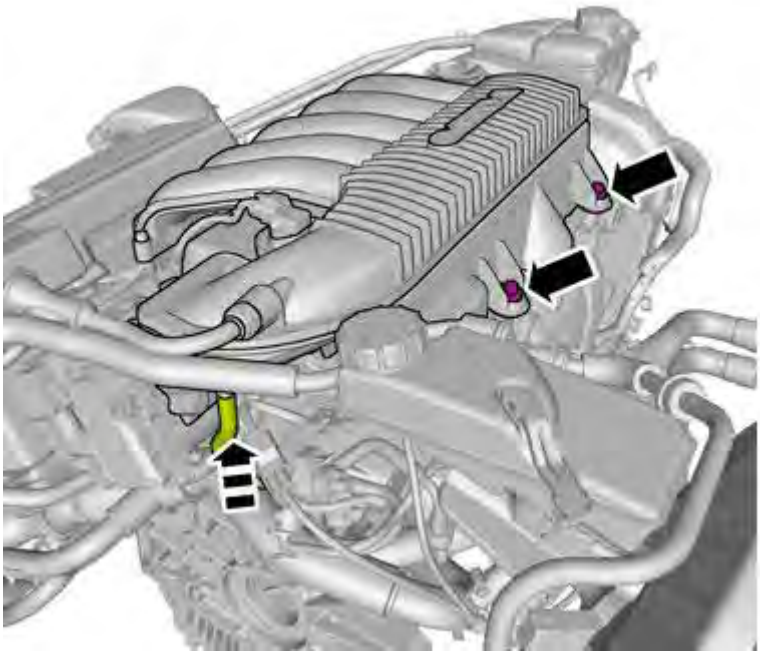

Fig. 12: Installing Intake Plenum, Rear View
Courtesy of VOLVO CARS CORPORATION

Torque: M6

10 Nm

Install the air filter housing, see **INTAKE AND EXHAUST SYSTEM - REMOVAL, REPLACEMENT AND INSTALLATION**

GENERAL INFORMATION

Engine with mountings and equipment-Cooling system

FRONT TIMING COVER, REPLACING

REMOVAL AND INSTALLATION

REMOVING THE FRONT TIMING COVER

NOTE: **Since the illustrations in this service information are used for different model years and/or models. Some variation may occur. However, the essential information in the illustrations is always correct.**

Fig. 1: Identifying Thermostat Housing Locks
Courtesy of VOLVO CARS CORPORATION

Loosen hose thermostat housing-expansion tank from the thermostat housing by pressing in the locks, then press in the connection against the thermostat housing, then pull out the connection.

Fig. 2: Expansion Tank
Courtesy of VOLVO CARS CORPORATION

NOTE: **Make sure that the belt cover has cleared the nipple on the thermostat housing before the cover is pulled up, to prevent damaging the nipple.**

Remove:

- the air duct, cover, surround and control module box
- the hose between the thermostat housing and the expansion tank
- the front timing belt cover.

INSTALLING THE FRONT TIMING COVER

Fig. 3: Front Timing Cover
Courtesy of VOLVO CARS CORPORATION

NOTE: **Make sure that the belt cover is in position before the cover is pressed in against the rear timing casing, to prevent damage to the nipple on the thermostat housing.**

Install:

- the front timing belt cover
- the hose between the thermostat housing and the expansion tank
- the surround, cover and air ducts for the control module box.

GENERAL INFORMATION

Engine with mountings and equipment-Engine

ENGINE MECHANICAL

INSTALLING THE COMPRESSION TOOL

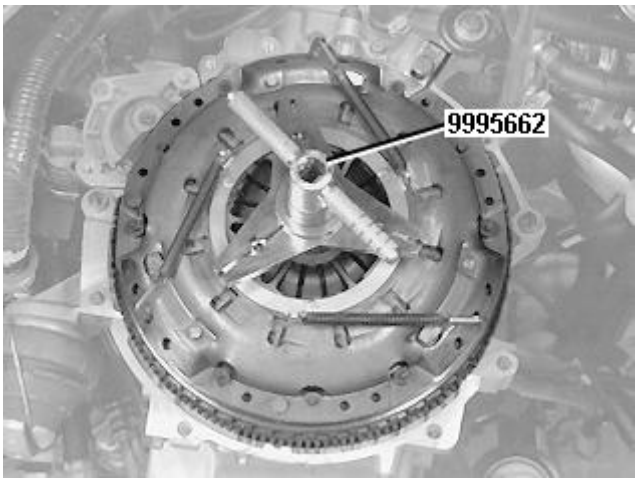

Fig. 1: Compression Tool 999 5662 Installed
Courtesy of VOLVO CARS CORPORATION

Install compression tool see **9995662** , together with the conversion kit on the clutch. The tool is modified as described in the tool bulletin.

Ensure that the hooks grip correctly, although without clamping the adjuster springs.

Centre the compression tool and tighten the screw to light contact against the diaphragm spring. At the same time, check that the hooks on the tool are in position.

Applies only to clutches without self adjustment:

Note the position of the handle with slots. Then screw in by **not more than two turns** .

Remove the clutch and clutch driven plate

Applies only to certain engine versions with self adjusting clutches:

Compress the clutch so that the automatic adjuster is not under load.

If the clutch is worn, the counterhold turns the automatic adjustment to the original position marking.

The marking consists of two stamped arrows.

Then continue to screw in the compression tool until the diaphragm spring has pressed the pressure plate to a

free position.

A click can be heard when the clutch pressure plate snaps out.

Remove the clutch and clutch driven plate

REPLACING THE TORQUE ROD

REMOVING THE TORQUE ROD

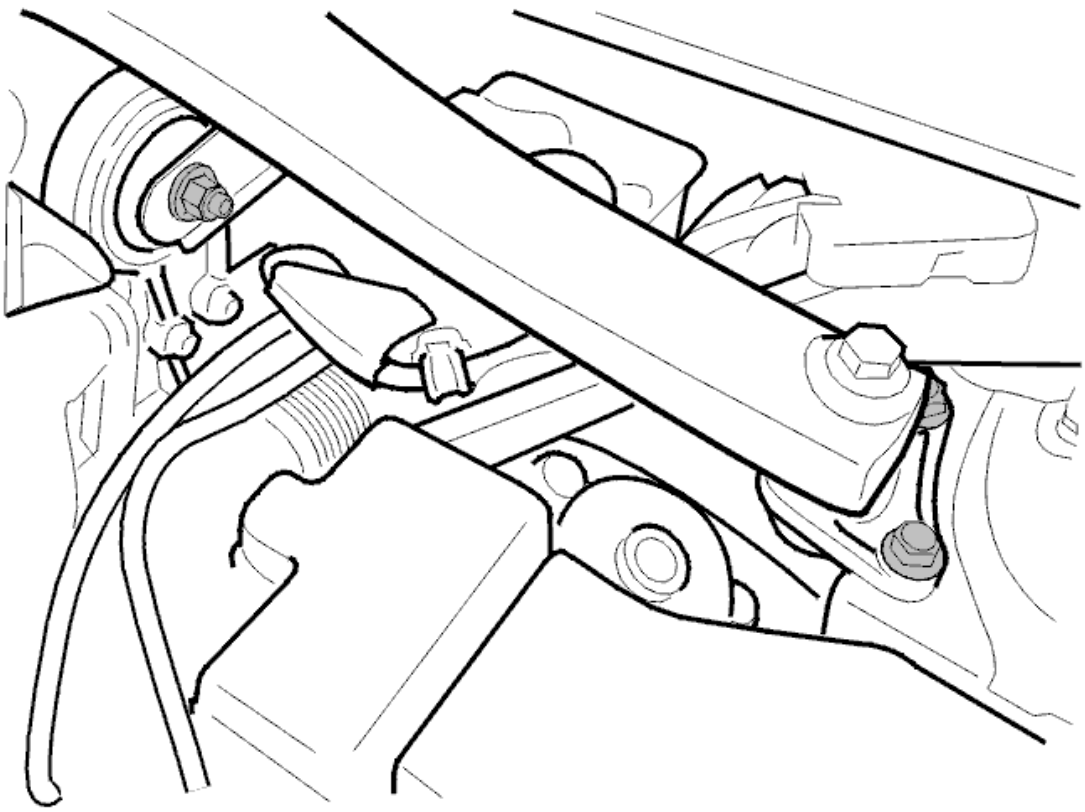

Fig. 2: Engine Stabilizer Brace
Courtesy of VOLVO CARS CORPORATION

Remove

- the protective cover over the engine
- the screw for the torque rod mounting in the torque bracket on the engine
- the screws at the suspension turrets
- the torque rod.

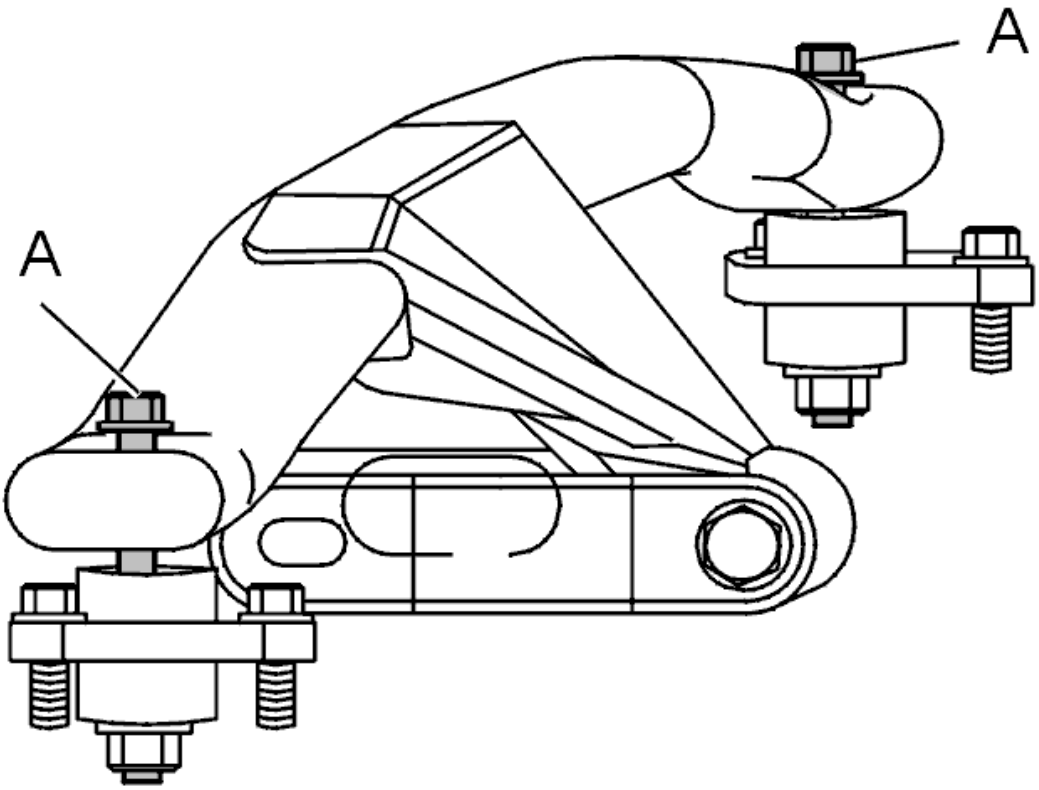

Fig. 3: Identifying Torque Rod And Brackets
Courtesy of VOLVO CARS CORPORATION

Transfer

- the brackets (A) on the left and right-hand sides to the new torque rod. Do not tighten yet.

INSTALLING THE TORQUE ROD

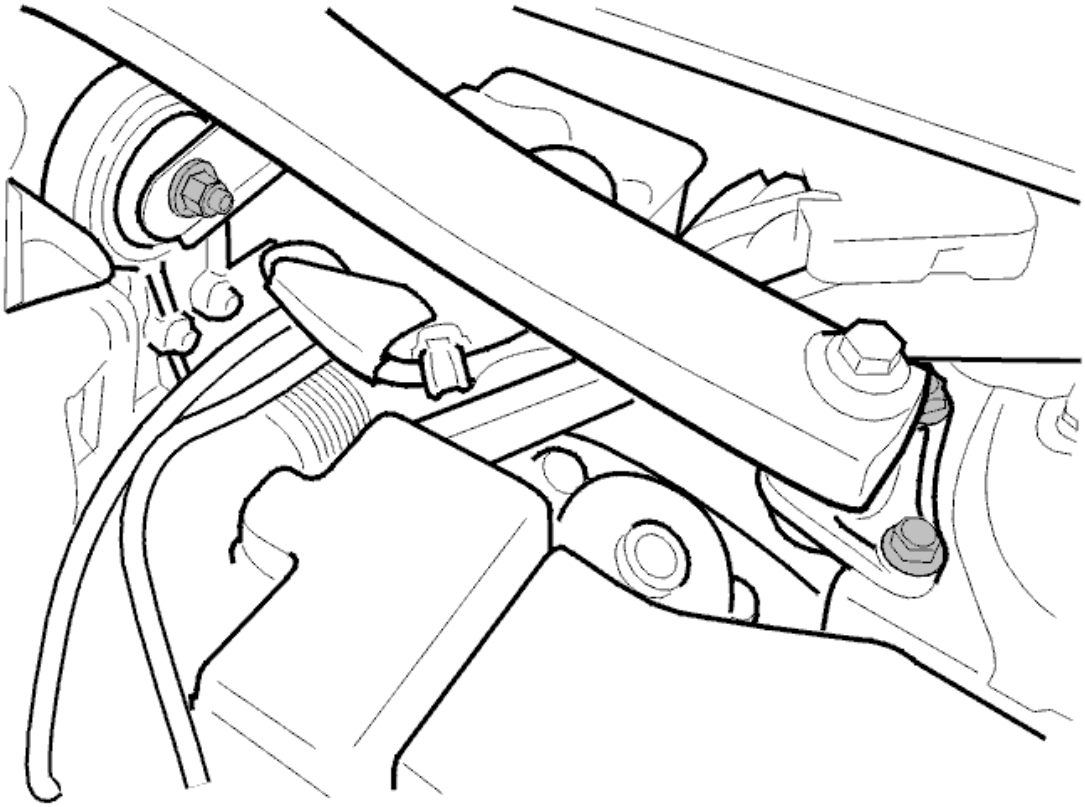

Fig. 4: Engine Stabilizer Brace
Courtesy of VOLVO CARS CORPORATION

Install

- the torque rod
- the screws for the brackets at the suspension turrets. Tighten to **50 Nm**
- the screw and nut for the torque rod mounting in the torque bracket on the engine. Tighten to **80 Nm** .

Tighten the torque rod to the brackets. Tighten to **80 Nm** .

Install the splashguard over the engine.

GENERAL INFORMATION

Engine with mountings and equipment-Fuel system

FUEL SYSTEM PRESSURE RELEASE

PRESSURE REDUCTION

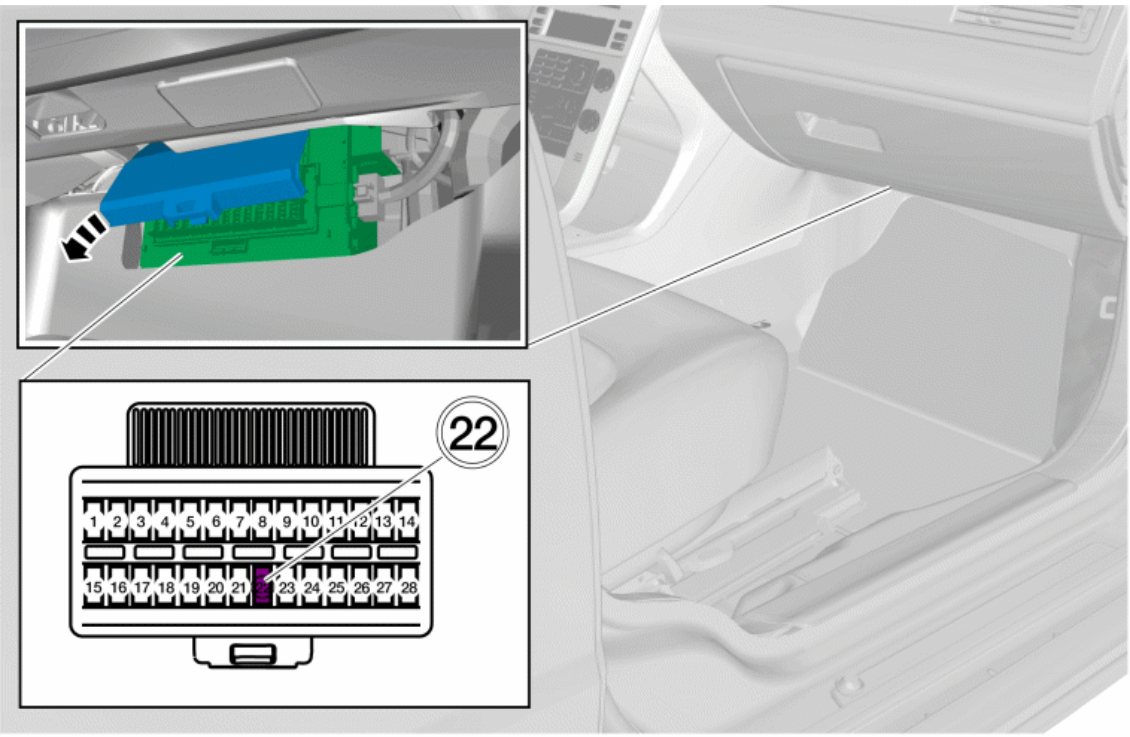

Fig. 1: Identifying Fuel Pump Fuse Location
Courtesy of VOLVO CARS CORPORATION

WARNING: **The fuel system remains under pressure for a long time after the ignition has been switched off. The fuel pressure must be released before beginning any repairs. Failure to follow the instructions can result in personal injury.**

REMOVAL

REMOVING THE FUSE FOR THE FUEL PUMP

Remove the fuel pump's fuse.

Start the engine and let it idle until it stops.

Turn the engine using the starter motor for approximately 5 seconds until the pressure in the fuel rail has been reduced.

INSTALLATION

INSTALLING THE FUSE FOR THE FUEL PUMP

Install the fuse for the fuel pump (FP).

ENGINE MECHANICAL

Engine with mountings and equipment-Ignition and control systems

ENGINE MECHANICAL

VVT SOLENOID, INSPECTION AND CLEANING

INSPECTION

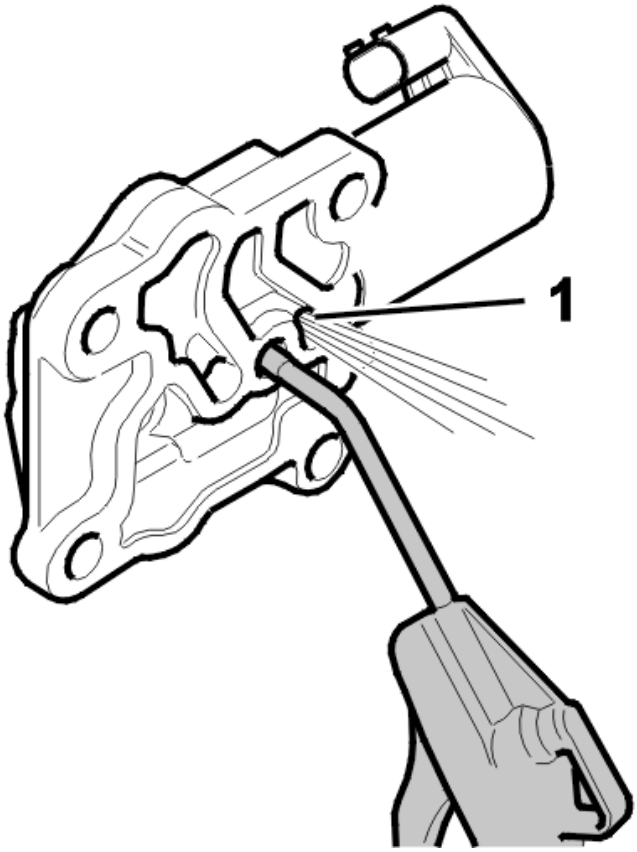

Fig. 1: Identifying Inspection Of VVT Solenoid
Courtesy of VOLVO CARS CORPORATION

Remove VVT solenoid from camshaft cover.

Blow through center hole with compressed air.

Air should emerge from inner hole (1) nearest coil.

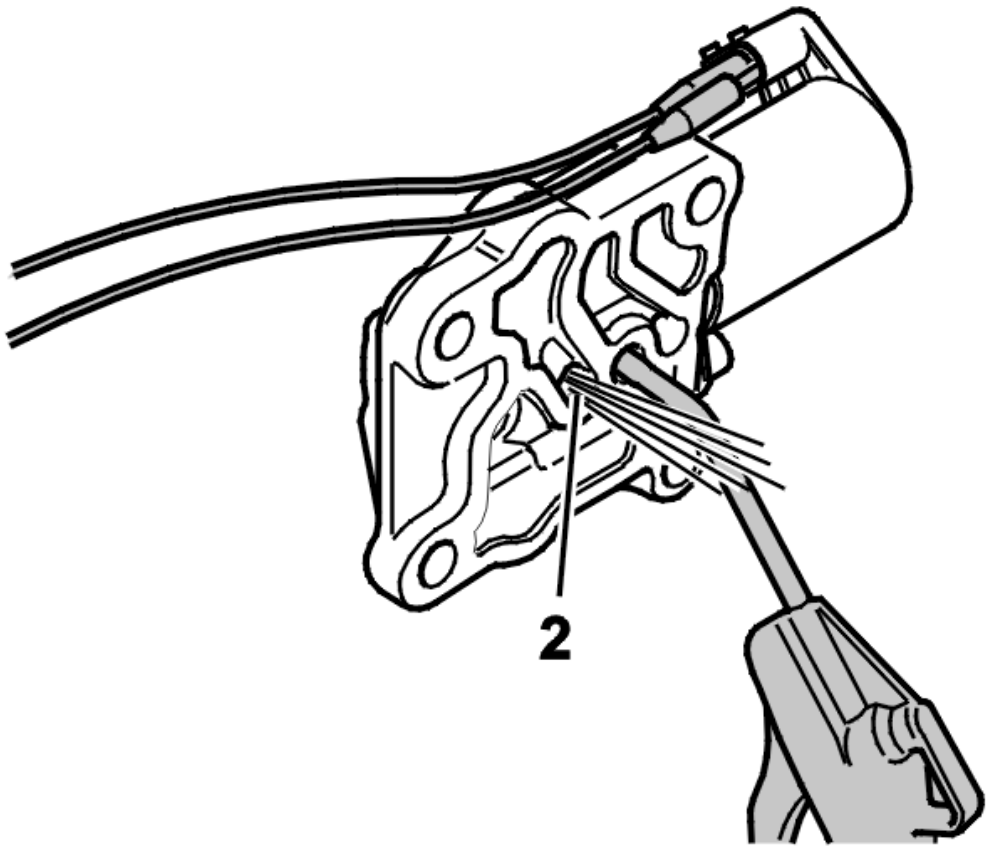

Fig. 2: Identifying Inspection Of VVT Solenoid While Is Connected
Courtesy of VOLVO CARS CORPORATION

Connect power to solenoid. Solenoid should click.

Blow through center hole with compressed air.

Air should emerge from outer hole (2).

If plunger is sticking or solenoid fails to operate electrically, the direction of flow will be unchanged.

VVT SOLENOID, CLEANING

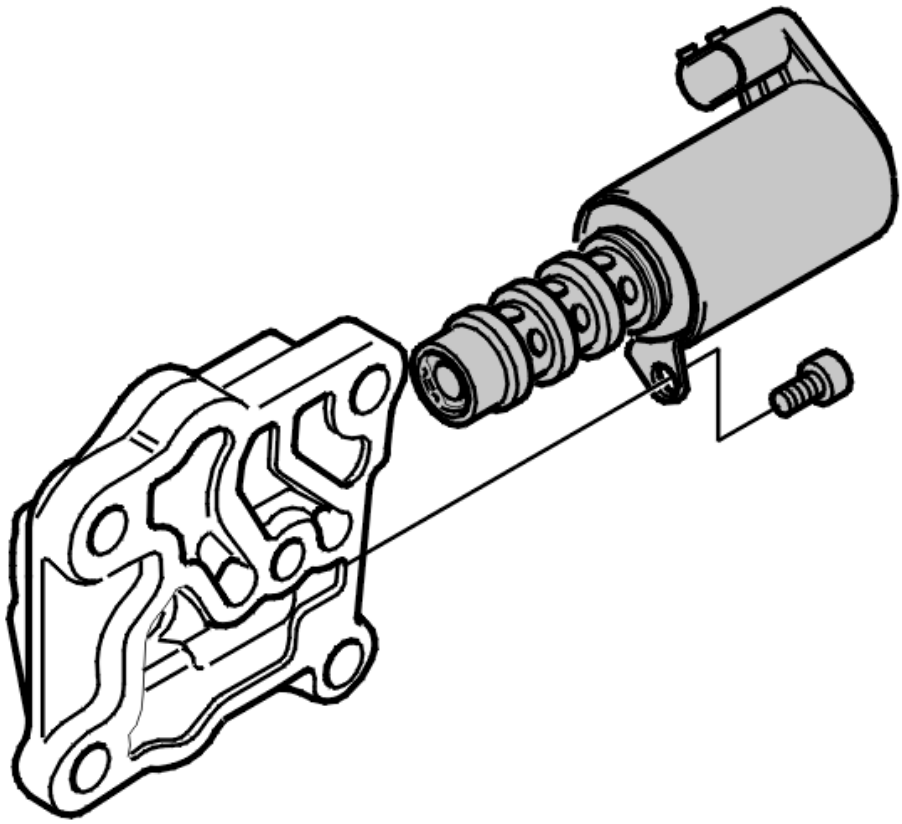

Fig. 3: Identifying Solenoid
Courtesy of VOLVO CARS CORPORATION

Remove solenoid from aluminum housing.

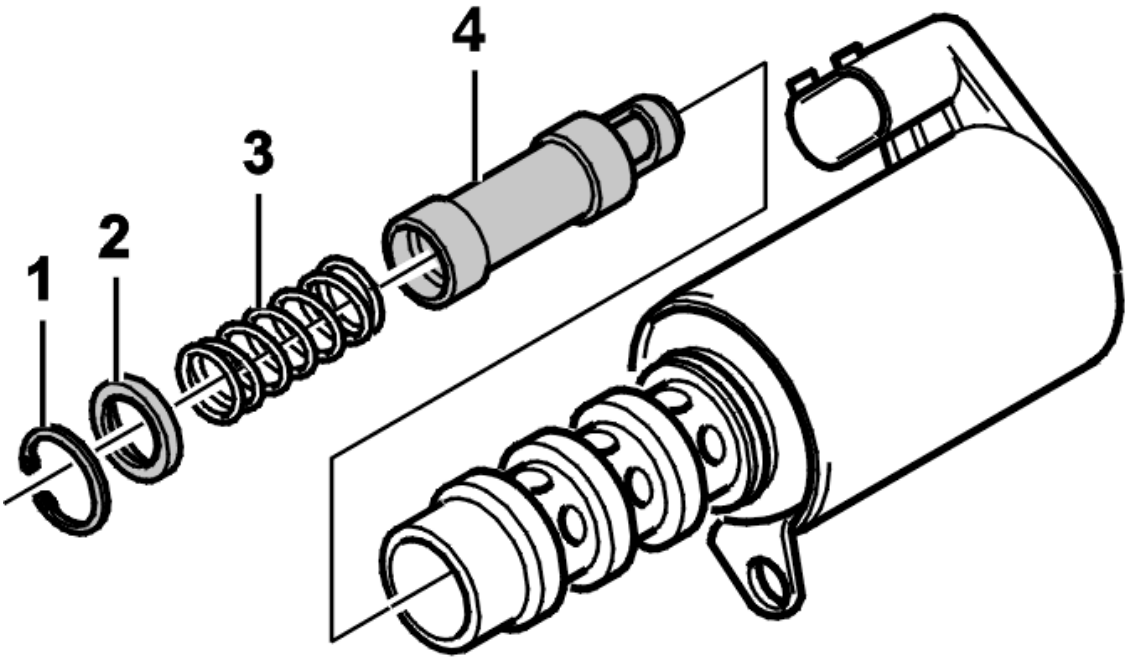

Fig. 4: Exploded View Of Solenoid
Courtesy of VOLVO CARS CORPORATION

Remove:

- snap ring (1)
- washer (2), spring (3) and plunger (4).

Inspect and clean all parts.

Blow out aluminum housing.

Oil parts with engine oil.

Reassemble solenoid.

Check operation as described in operations 1 and 2.

Reinstall solenoid in car using new seal.

TESTING

Erase diagnostic trouble codes.

Test-drive car.

Check that no new diagnostic trouble codes are displayed.

If new codes are displayed, continue troubleshooting.

FUEL

Engine with mountings and equipment-Ignition and control systems

FUEL

RIGHT SIDE FUEL PUMP WITH LEVEL SENSOR

REMOVAL

PREPARATION

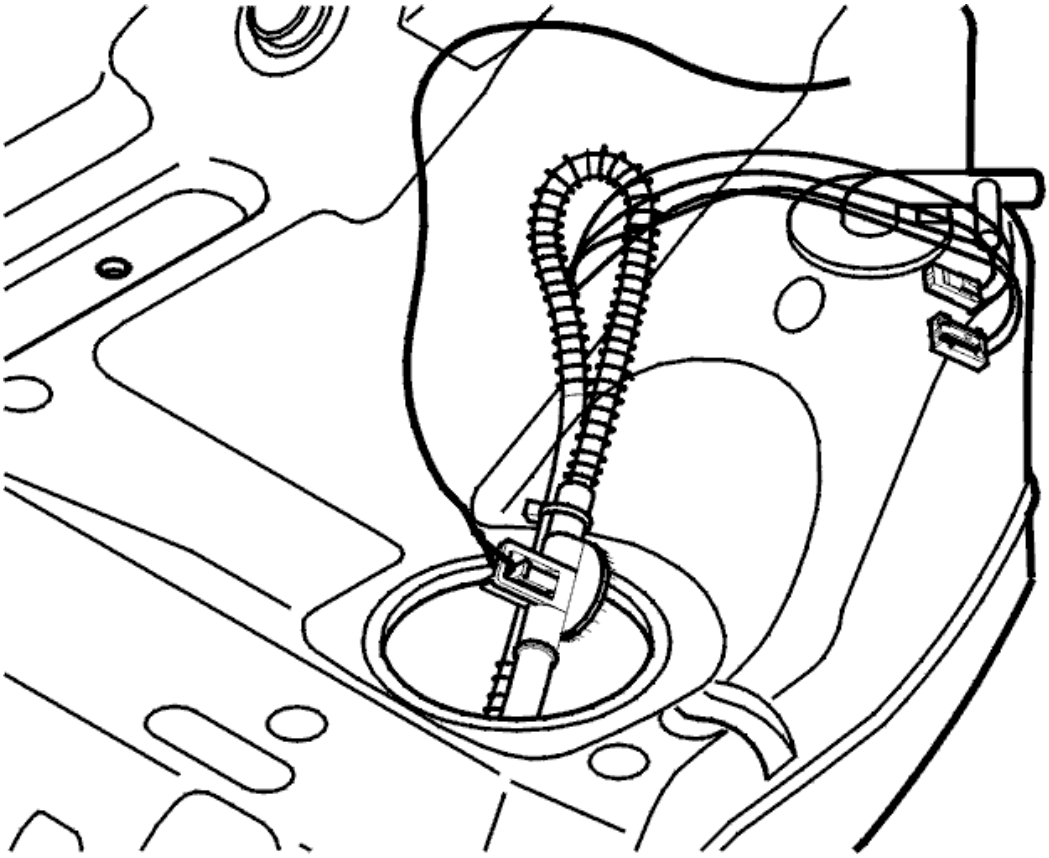

Fig. 1: Identifying Left-Hand Fuel Level Sensor And Connectors
Courtesy of VOLVO CARS CORPORATION

- Remove left side fuel level sensor as described in, see **LEVEL SENSOR FUEL TANK LEFT, REPLACING**
- Attach a piece of string or steel wire onto attachments for wire and tube system on left side fuel gauge sensor.

RIGHT SIDE FUEL PUMP WITH LEVEL SENSOR

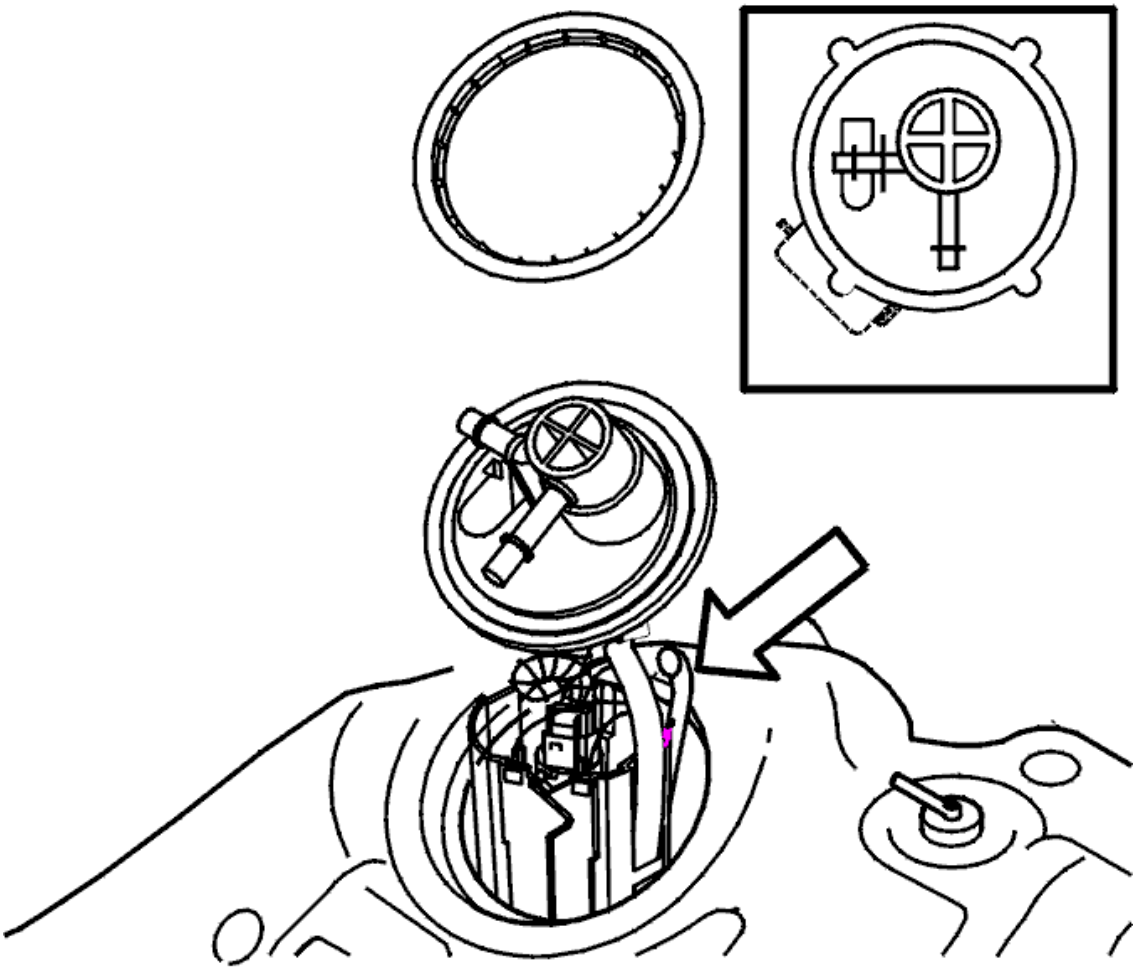

Fig. 2: Identifying Right Side Fuel Pump Hatch And Seal
Courtesy of VOLVO CARS CORPORATION

- Remove hatch and seal from fuel pump
- Loosen fuel pipe
- Loosen fuel pump lock ring using special tool see **9995720**
- Pull up fuel pump to position 1 (see illustration) and release plastic tube.

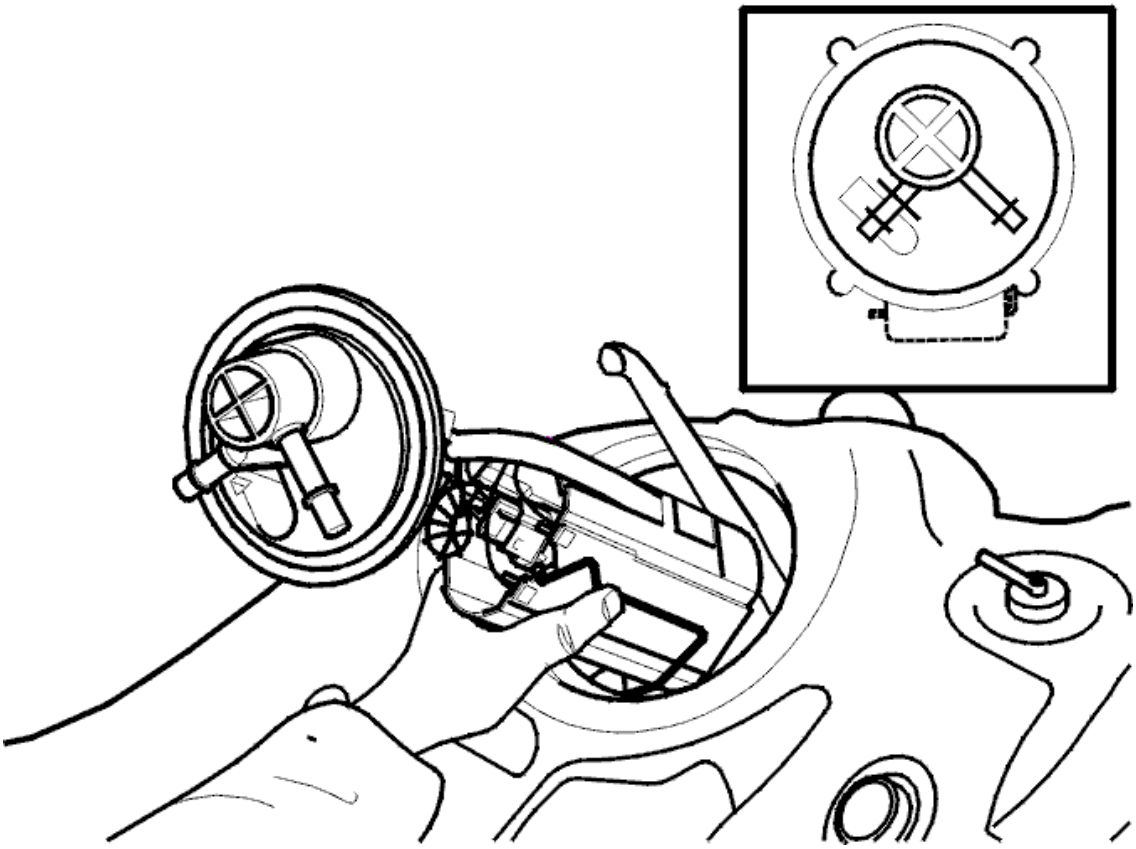

Fig. 3: Identifying Fuel Pump
Courtesy of VOLVO CARS CORPORATION

- Turn fuel pump to position 2 (see illustration)
- Hold float against pump housing, then turn fuel pump forwards and lift it up
- Pull wire and tube system out using string or steel wire.

LEVEL SENSOR WITH CABLE AND PIPE SYSTEM

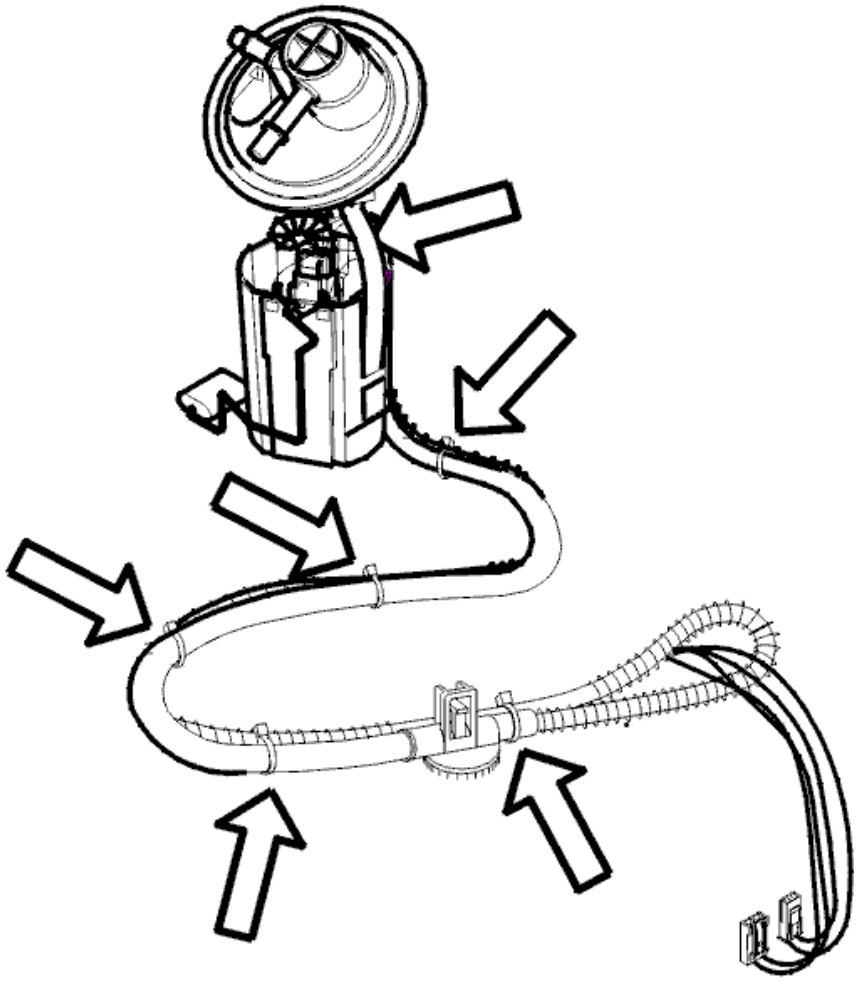

Fig. 4: Fuel Pump Tie Straps
Courtesy of VOLVO CARS CORPORATION

- Remove fuel pump with wire and tube system
- Release six clamps. Note clamp positions
- Position fuel pump correctly, loosen fixings and push level sensor up.

INSTALLATION

LEVEL SENSOR WITH CABLE AND PIPE SYSTEM

- Position level sensor and press firmly
- Pull out wire next to wire and tube system and install clamps. Note clamp positions.

RIGHT SIDE FUEL PUMP WITH LEVEL SENSOR

- Attach a piece of string or steel wire onto attachments for wire and tube system on left side fuel gauge sensor
- Install wire and tube system into fuel tank
- Pull wire and tube system towards opening for left side level sensor, and feed through.

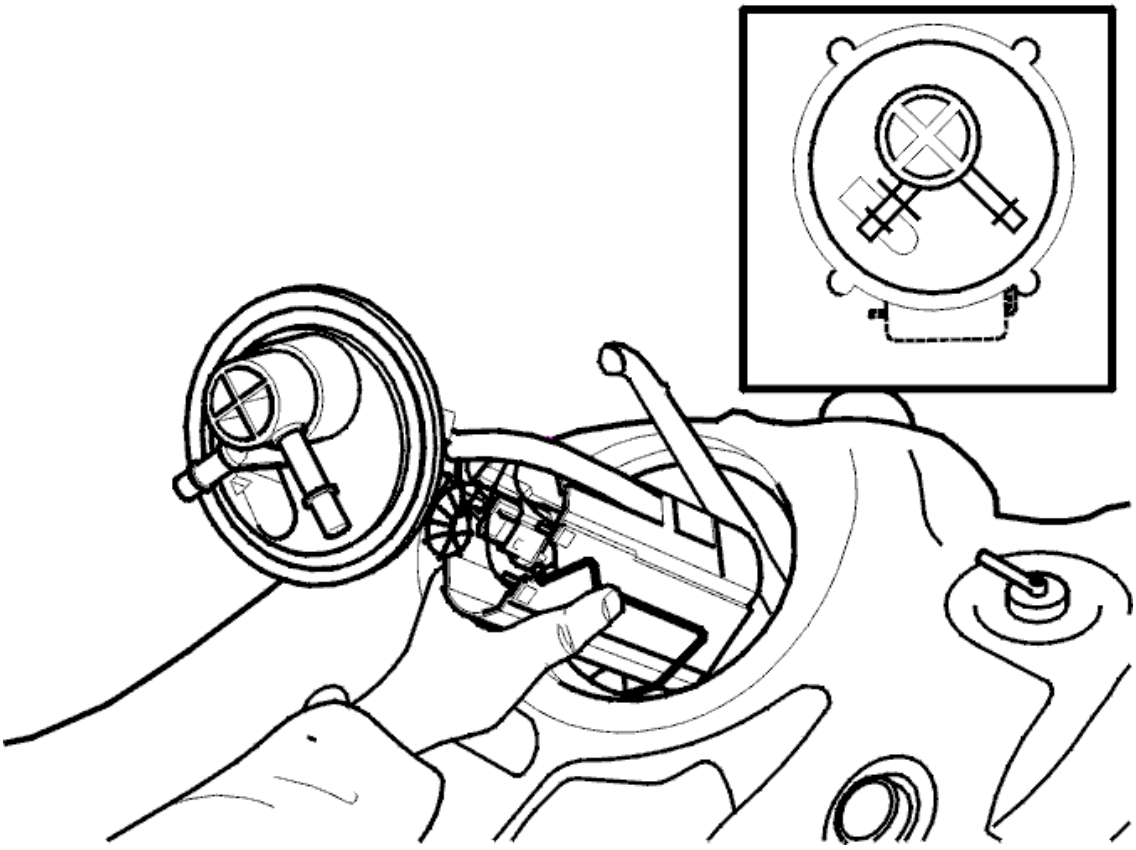

Fig. 5: Identifying Fuel Pump
Courtesy of VOLVO CARS CORPORATION

- Loosen plastic tube from slot in pump housing
- Hold float against pump housing and install fuel pump in position 2 (see illustration).

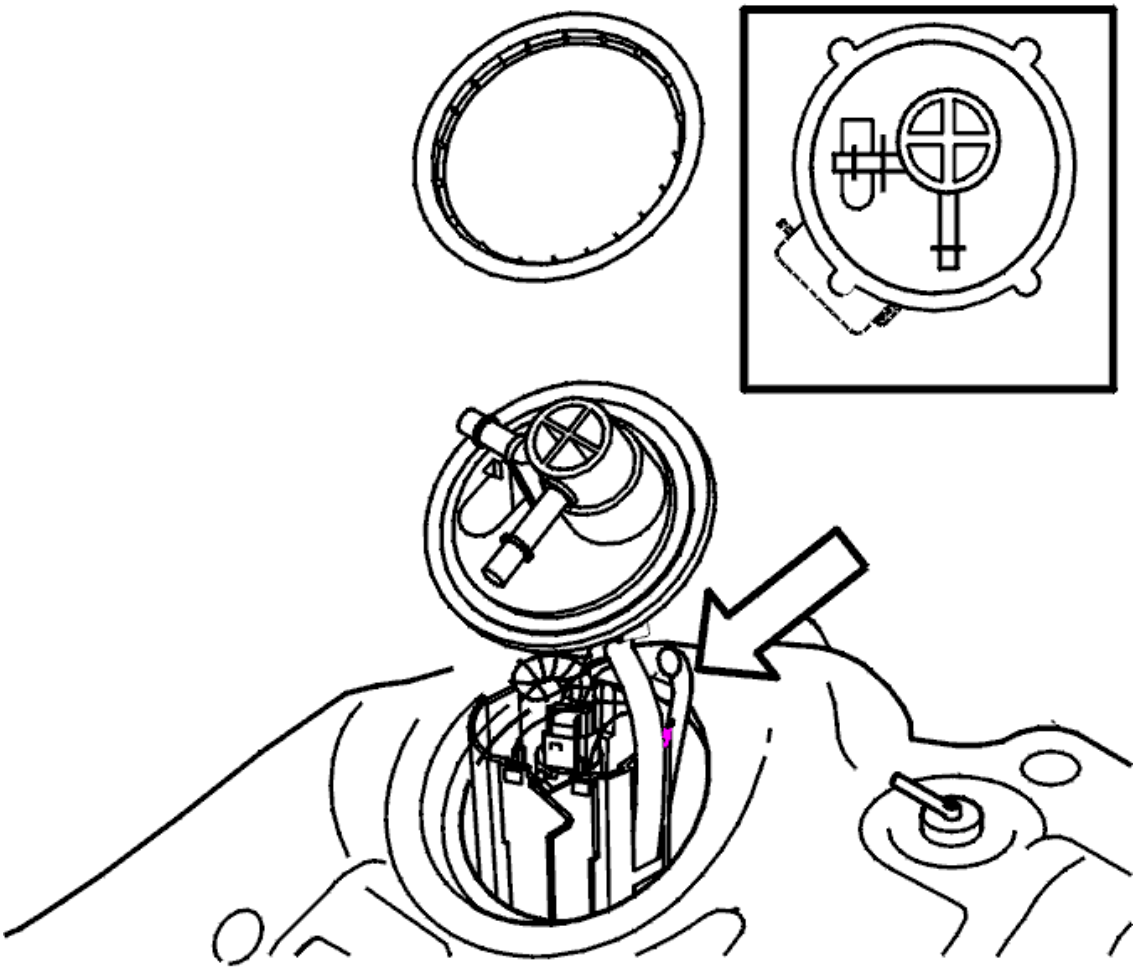

Fig. 6: Identifying Right Side Fuel Pump Hatch And Seal
Courtesy of VOLVO CARS CORPORATION

- Turn fuel pump to position 1 (see illustration)
- Press plastic tube firmly into slot in pump housing
- Press fuel pump down in hole
- Install lock ring and tighten by hand.

NOTE: Markings on cover and fuel tank.

- Tighten lock ring using special tool see **9995720** .
- Install seal and hatch onto fuel pump.

SAFETY INFORMATION, GASOLINE

WARNING: Risk of explosion and fire.

Make sure there are no open flames or sparks in the vicinity of fuel

system components. It is possible that there is no obvious warning in the form of odor or irritation before a poisonous or hazardous situation arises. This could be immediate or delayed.

WARNING: Gasoline for engine operation can contain considerable amounts of benzene, which is toxic if inhaled. The concentration of gasoline fumes must be kept very low. Make sure there is suitable ventilation when handling and using gasoline.

The greatest of care must be taken to avoid the serious consequences of inhaling if there is fume build-up from spills in enclosed spaces.

High concentrations cause eye/nose/throat irritation, nausea, headaches, depression and signs of insobriety. Very high concentrations result in quick loss of consciousness.

Special methods are to be applied to clean and maintain gasoline storage tanks. Gasoline must not be used as a cleaner. Gasoline must not be taken into the mouth.

• In the event of skin contact: Take extreme care when handling hot fluids. Always wash spilled fluid off of exposed skin immediately.

• In the event of consumption: Consumption can result in mouth and skin irritation and absorption from the stomach can result in drowsiness and loss of consciousness. Small amounts could be fatal to children.

• In the event of inhalation: Inhaling fluid into the lungs, through vomiting, is extremely dangerous. Gasoline dries out the skin. Long-term or repeated exposure can cause irritation and skin inflammation.

• In the event of contact with the eyes: Fluid in the eyes causes severe pain.

CAUTION: Fuel injection equipment is manufactured with extremely tight tolerances and minimum clearance.

CAUTION: It is vital that the utmost cleanliness is upheld when working with these components. Make sure the area around the vehicle is as clean and free of dust as possible.

ENGINE MECHANICAL

Engine with mountings and equipment-Ignition and control systems

ENGINE MECHANICAL

CHECK FOR AIR LEAKS IN THE INTAKE SYSTEM

PREPARATIONS

Check that all hoses are undamaged and are in place with their hose clips tightened.

CONNECTING

Remove fresh air hose from mass air flow (MAF) sensor.

Install tool see **9995545** with pressure regulator see **9995544** on fresh air hose and tighten hose clamp.

Use hose clip to seal crankcase ventilation hose.

Remove oil filler cap.

Remove the lower hose from the canister purge (CP) valve.

CHECK

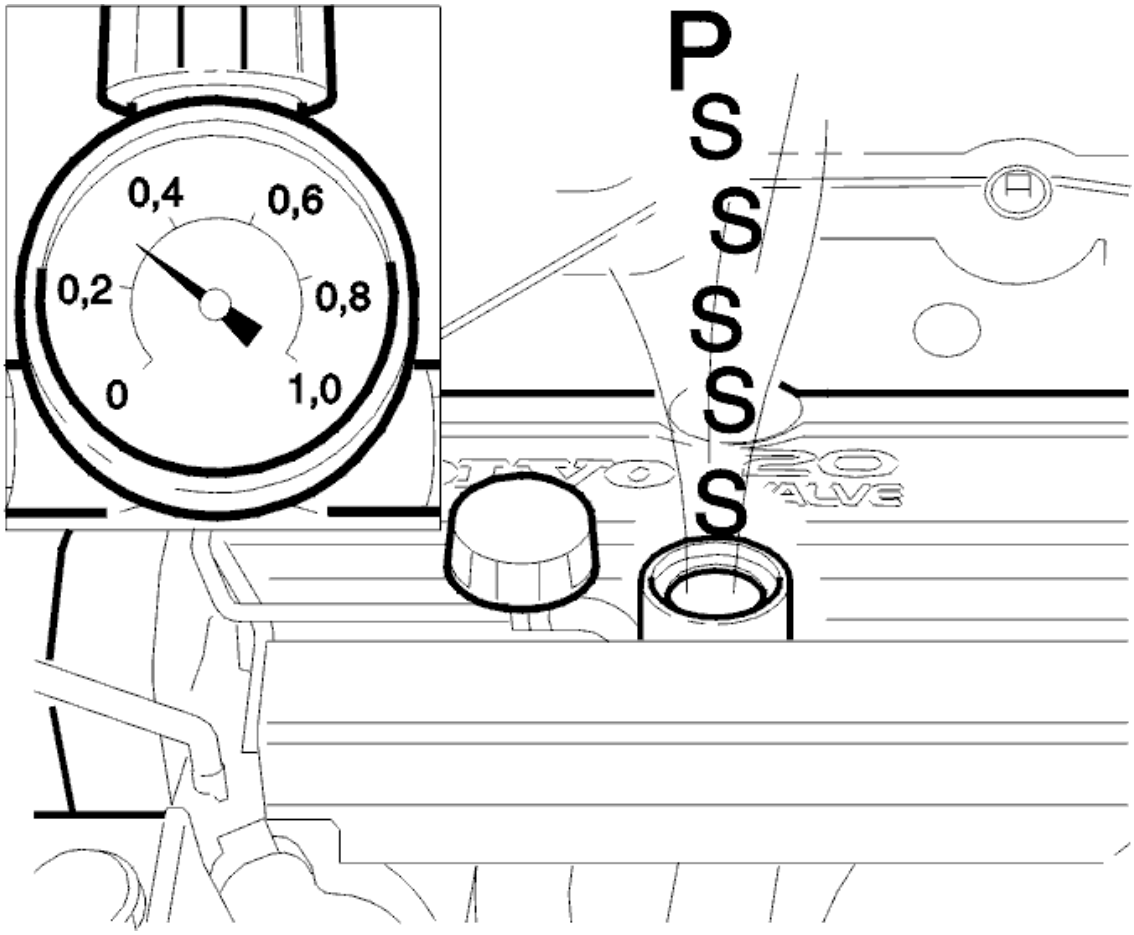

Fig. 1: Gentle Hissing Sound Heard From Oil Filler Opening
Courtesy of VOLVO CARS CORPORATION

Connect the compressed air hose and adjust the regulator to obtain a pressure of **maximum 0.3 bar** .

A gentle hissing sound can be heard from the oil filler opening. This is due to the opening of an intake valve and the leakage of cylinder pressure past the piston rings.

If a leak is suspected spray a soap solution onto the area.

Small bubbles are permissible between throttle body (TB) and intake hose (if made of plastic). No bubbles are permissible with rubber hose.

Check for air leakage from canister purge (CP) valve. No leakage is permissible.

COMPRESSION TEST

Special tools:

see **1158540**

see **9999689**

NOTE: **As the illustrations in the information are used for different model years and / or models, certain variations may occur. However, the essential information in the illustrations is always correct.**

IGNITION SYSTEM

Fig. 2: Identifying Low & High Voltage Circuit Caution
Courtesy of VOLVO CARS CORPORATION

CAUTION: The ignition system operates at high ignition charges and produces dangerous voltages in both the low and high voltage circuits.

There is dangerous voltage throughout the entire ignition system including connectors etc.

CONDITIONS

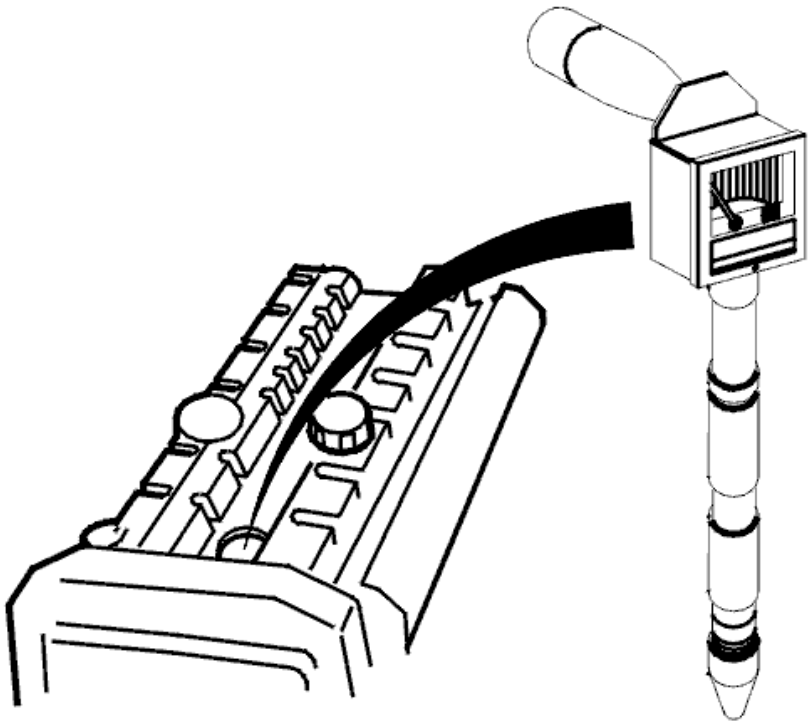

Fig. 3: Compression Testing
Courtesy of VOLVO CARS CORPORATION

The engine compression must always be checked at wide open throttle (WOT) and the engine at operating temperature .

PREPARATIONS

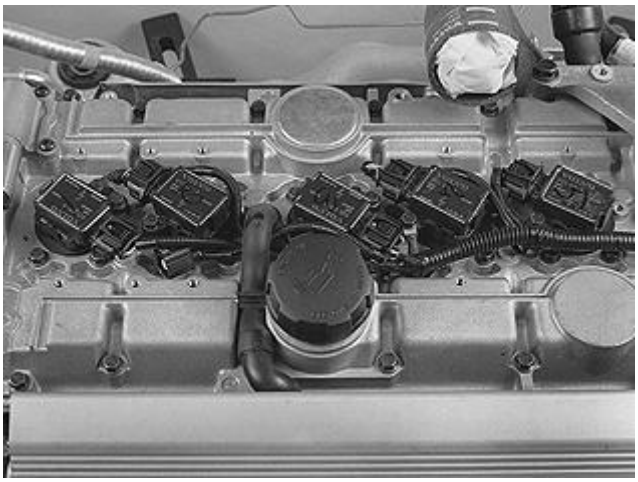

Fig. 4: Identifying Charge Air Pipe Sealed With Paper Wipe
Courtesy of VOLVO CARS CORPORATION

Remove (applies to turbocharged engines):

- the charge air pipe over the engine to improve accessibility.

  Seal the charge air pipe with paper wipe as shown in the illustration.

Remove:

- the upper camshaft belt cover.
- the cover over the ignition coils.
- the ignition coils.

  Mark up and put to one side without disconnecting the connectors.

- the spark plugs.

NOTE: Separate the connector for the engine speed (RPM) sensor.

COMPRESSION TESTING

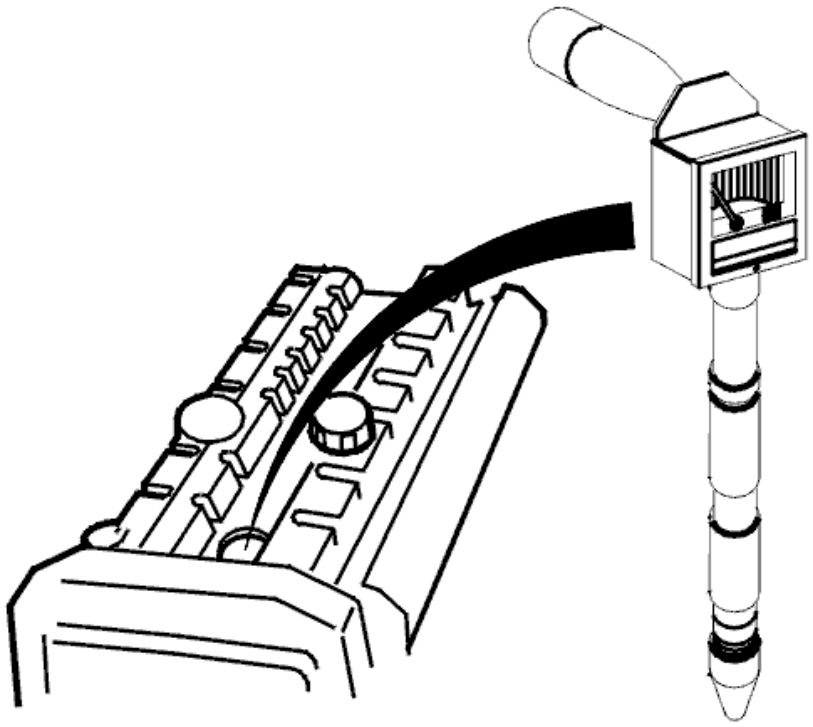

Fig. 5: Compression Testing
Courtesy of VOLVO CARS CORPORATION

NOTE: **Compression testing should always be carried out at wide open throttle (WOT) and with the engine at operating temperature.**

Diagnostic trouble codes (DTCs) will be stored because the engine speed (RPM) sensor and (where applicable) the camshaft position (CMP) sensor have been disconnected.

Have an assistant hold the accelerator pedal (AP) depressed at wide open throttle (WOT) during the compression test.

The starter motor is activated with the ignition key.

The ignition must be switched off after each cylinder has been compression tested.

NOTE: **It will no longer be possible to control the throttle if the ignition is on for longer than 2 minutes.**

The throttle function is controlled by the control module.

Use compression meter see **9999689**

with extension sleeve see **1158540** .

Engine type:	Normal value MPa:
Turbo	1.1 - 1.3
Turbo type LT	1.2 - 1.4
Normally aspirated engine	1.3 - 1.5

INSTALL

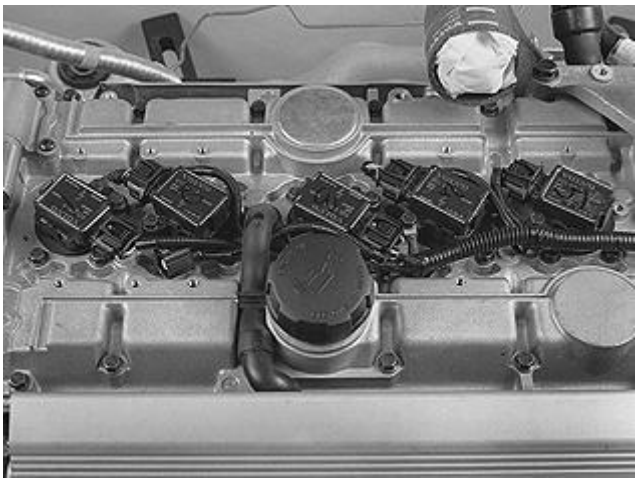

Fig. 6: Identifying Charge Air Pipe Sealed With Paper Wipe
Courtesy of VOLVO CARS CORPORATION

Install:

- the spark plugs.

  Tightening torque **30 Nm (22 lb. ft)** .

- the ignition coils.

  Tightening torque **10 Nm (7.4 lb. ft)** .

INSTALL

Fig. 7: Identifying Camshaft Components
Courtesy of VOLVO CARS CORPORATION

Install:

- the cover over the ignition coils.

  Tightening torque **8 Nm (6 lb. ft)** .

- the upper camshaft belt cover.

  Tightening torque **8 Nm (6 lb. ft)** .

- the disassembled connectors.

Applies only to turbocharged engines:

Install the charge air pipe.

Remove the seals.

Tighten the mountings and hose clamps.

ERASE DIAGNOSTIC TROUBLE CODES (DTCS) AND CHECK

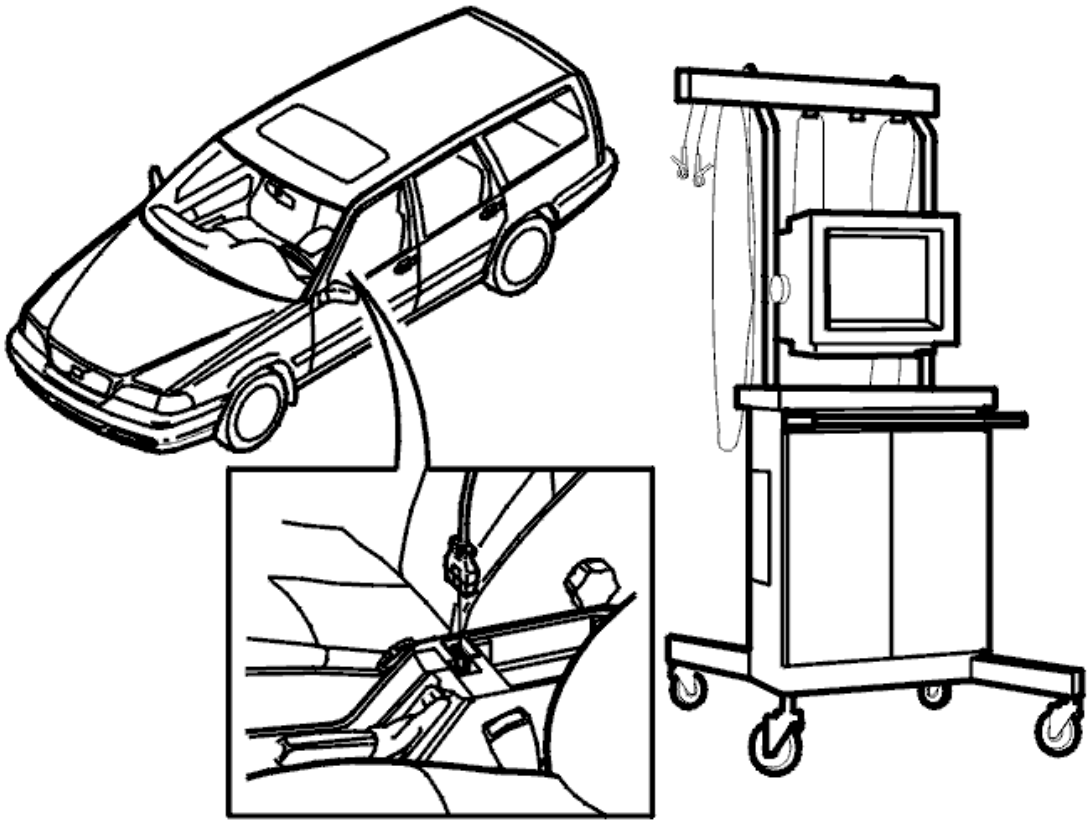

Fig. 8: Identifying VIDA Station
Courtesy of VOLVO CARS CORPORATION

Erase diagnostic trouble codes (DTCs)

Start the engine and check that it functions normally.

Use VIDA (Volvo scan tool) to check which diagnostic trouble codes (DTCs) have been stored.

Erase the diagnostic trouble codes (DTCs).

Check the engine compartment and wipe it clean.

GENERAL INFORMATION

Engine with mountings and equipment-Intake and exhaust system

FUEL LINE LOCK, REMOVAL AND INSTALLATION

REMOVING LOCK

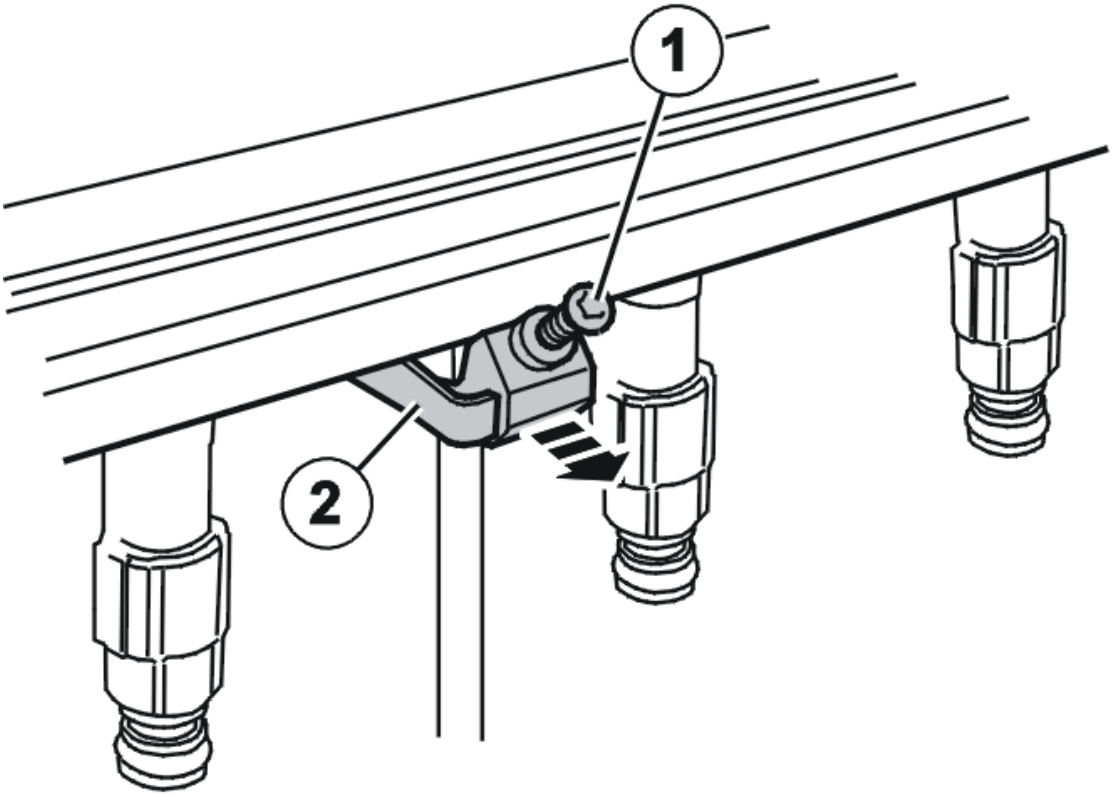

Fig. 1: Identifying Secondary Lock & Screw
Courtesy of VOLVO CARS CORPORATION

Unscrew the screw (1).

Bend out the secondary lock (2). Pull out the catch.

Remove the fuel rail.

INSTALLING THE LOCK

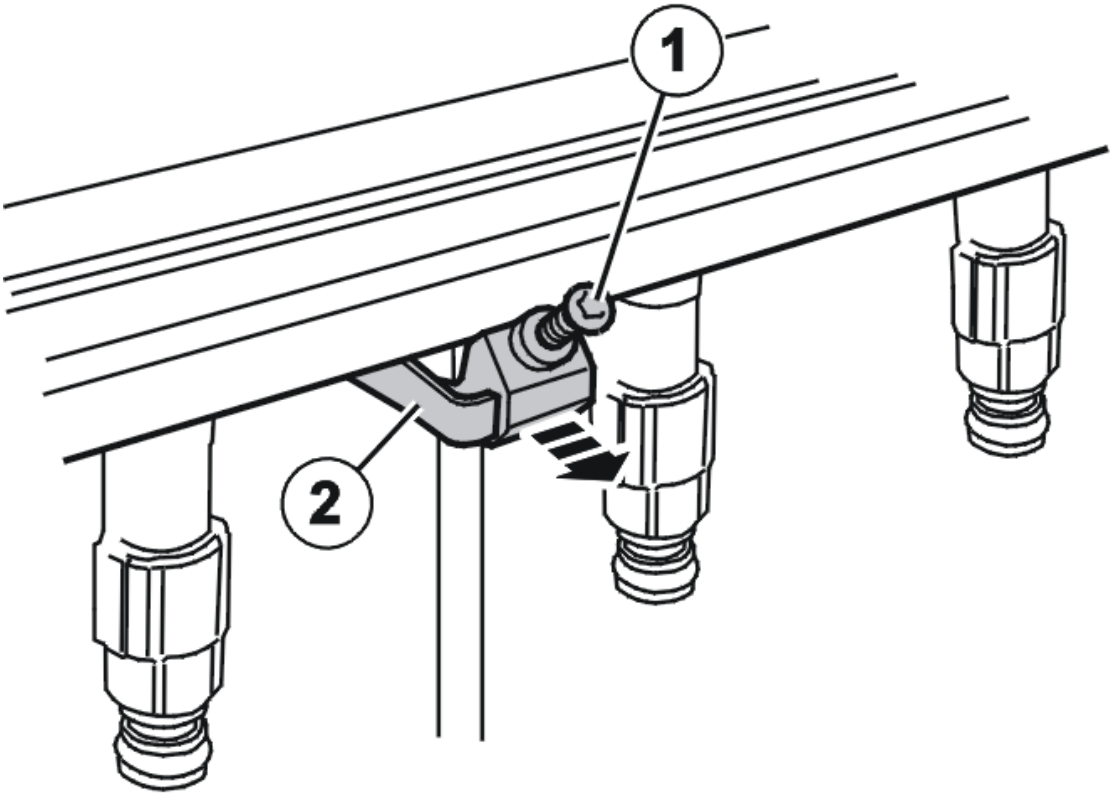

Fig. 2: Identifying Secondary Lock & Screw
Courtesy of VOLVO CARS CORPORATION

NOTE: Screw in the screw until it takes.

Install the fuel rail.

Press in the secondary lock (2).

Screw the screw (1) right in.

EXHAUST

Engine with mountings and equipment-Ignition and control systems

EXHAUST

CATALYTIC CONVERTER DIAGNOSTIC

CATALYTIC CONVERTER DIAGNOSTIC

The three-way catalytic converter (TWC) stores oxygen found in the exhaust gases and uses it to make toxic gases more environmentally friendly. The catalytic converter is a three-way catalytic converter (TWC) in which HC (hydrocarbons) and CO (carbon monoxide) are oxidized and NOx (nitrous oxide) is reduced. As the three-way catalytic converter (TWC) ages its ability to store oxygen drops. This reduces the conversion capacity of the three-way catalytic converter (TWC). To avoid dangerous emissions the engine control module (ECM) checks three-way catalytic converter (TWC) efficiency. In brief, this check is carried out as follows.

Two heated oxygen sensors (HO2S) are used to check the catalytic converter; one upstream and one downstream of the catalytic converter. The main function of the heated oxygen sensors (HO2S) is to measure the oxygen content in the exhaust gases so that the engine control module (ECM) can maintain the engine fuel/air mixture at around lambda=1.

The catalytic converter diagnostic consists of two checks. The first checks how quickly the three-way catalytic converter (TWC) begins to operate, and the second is a response time check. When starting cold the control module checks how quickly the three-way catalytic converter (TWC) begins to operate. If the target lambda is already varying during this check, the following check is not carried out.

When the engine is at operating temperature, lambda variations are created (Dither function) by the diagnostic, adding a deviation to the target lambda signal which the fuel control system regulates towards. The deviation changes between positive and negative values so that the fuel/air mixture changes between rich and lean. The discharge through the three-way catalytic converter (TWC) is determined by studying the variation of lambda and the response from the rear probe.

On a poorly performing three-way catalytic converter (TWC), the deviation changes can easily be calculated by the rear probe response time. On an efficient three-way catalytic converter (TWC) this is more difficult, because the variations take too long to go through.

CHECKING FOR AIR LEAKAGE IN THE EXHAUST SYSTEM

Special tools:

see **9995544**

see **9997085**

NOTE: The illustrations in this service information are used for different model years and / or models. Some variation may occur. However, the essential information

in the illustrations is always correct.

PREPARATORY WORK

REMOVING COMPONENTS

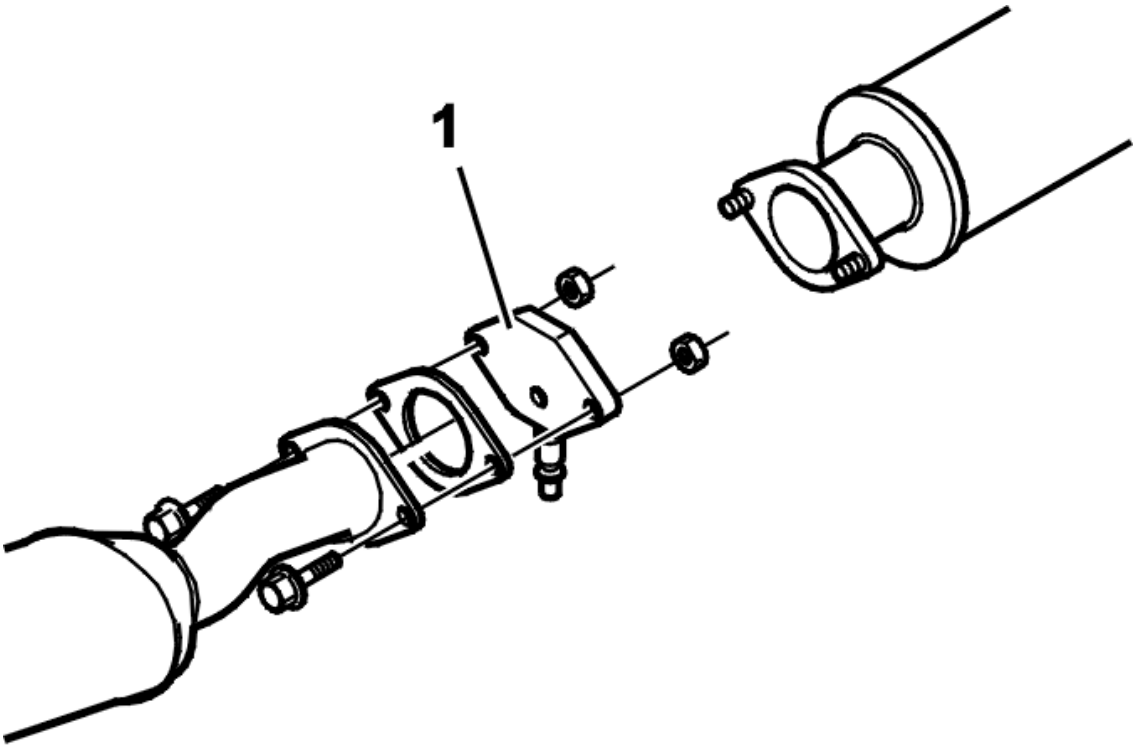

Fig. 1: Identifying Exhaust System / Catalytic Converter Connector Components & Adaptor
Courtesy of VOLVO CARS CORPORATION

Remove:

- the nut where the three-way catalytic converter (TWC) and exhaust system separate

NOTE: Use rust solvent or similar on the nuts.

- the gasket. Separate the exhaust system from the three-way catalytic converter (TWC).

INSTALLING TOOL

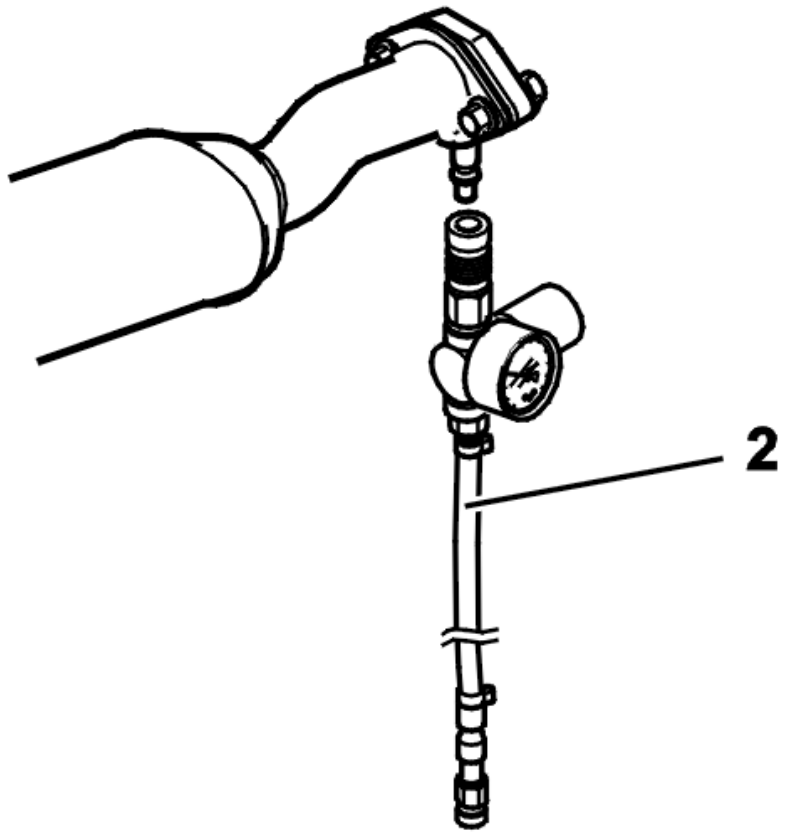

Fig. 2: Identifying Adaptor & Pressure Regulator
Courtesy of VOLVO CARS CORPORATION

Install:

- The tool (1) see **9997085** using a new gasket
- pressure regulator see **9995544** on tool see **9997085** . Adjust the pressure to **0.4 bar** .

CLEANING AND CHECKING

CHECK

Check the exhaust system by spraying a soap solution on all joints and connections between the cylinder head and the rear heated oxygen sensor (HO2S). Only very small and slow bubbles are permissible.

FINISHING

REMOVING TOOLS

Remove:

- pressure regulator see **9995544**
- tool see **9997085** .

INSTALLING COMPONENTS

Install:

- a **new** gasket where the exhaust system and three-way catalytic converter (TWC) divide
- a **new** nut for the exhaust system. Tighten.

Start the engine. Check for leaks where the three-way catalytic converter (TWC) and the exhaust system divide.

FUEL

Engine with mountings and equipment-Ignition and control systems

FUEL

TAKING FUEL PRESSURE READINGS WHILE DRIVING THE CAR

Special tools:

see **9995011**

see **9512614**

see **9812270**

see **9812273**

see **9812282**

INSTALLING TEST EQUIPMENT

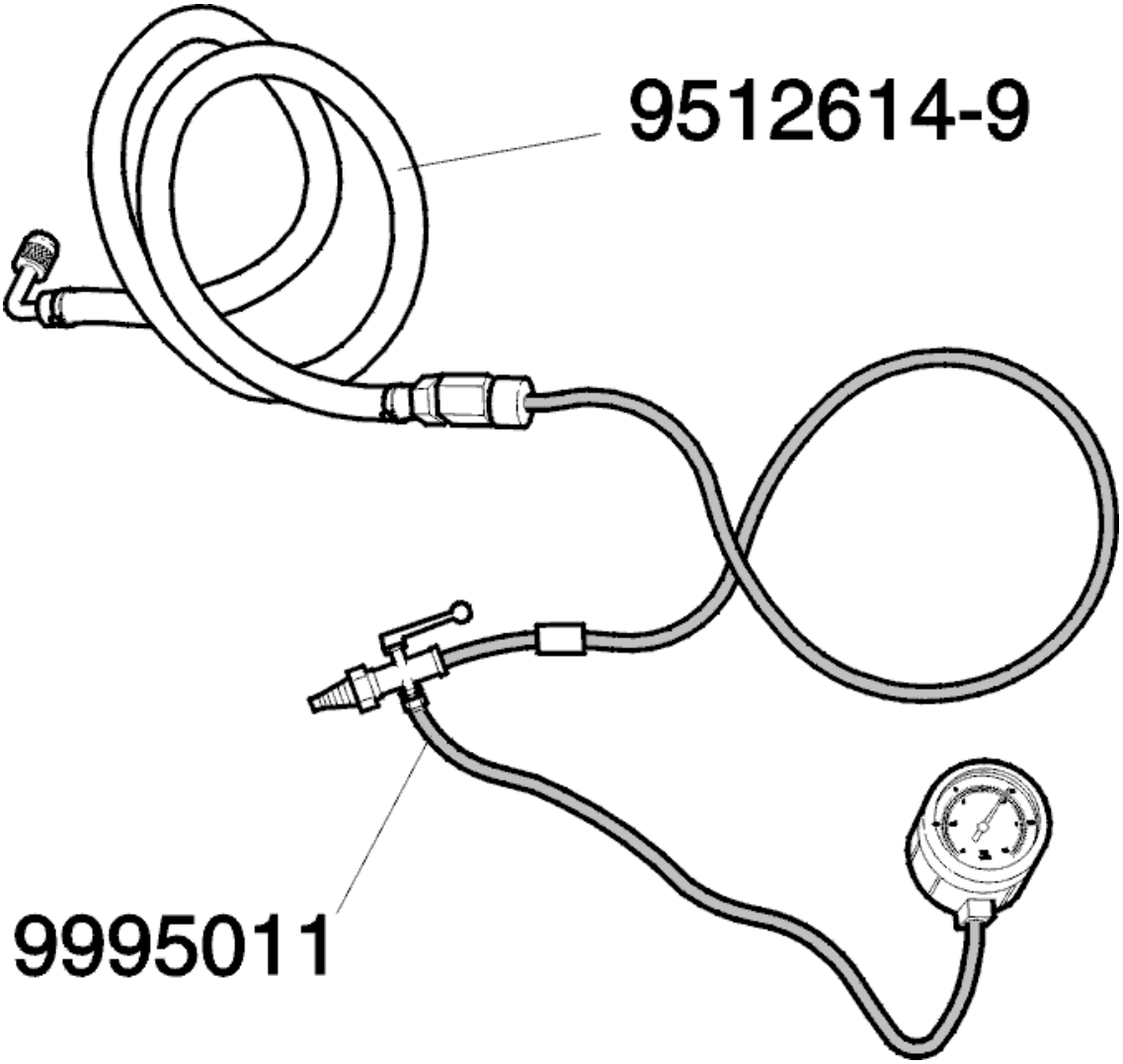

Fig. 1: Identifying Fuel Pressure Gauge And Adapter Hose
Courtesy of VOLVO CARS CORPORATION

Corrective actions:

- Assemble fuel pressure gauge see **9995011** and new adapter hose **951 2614** .
- Use foam wrapping around the fuel pressure gauge and all metal joints to avoid scratching the interior of the car or damaging the exterior paintwork.

CONNECTING FUEL PRESSURE GAUGE

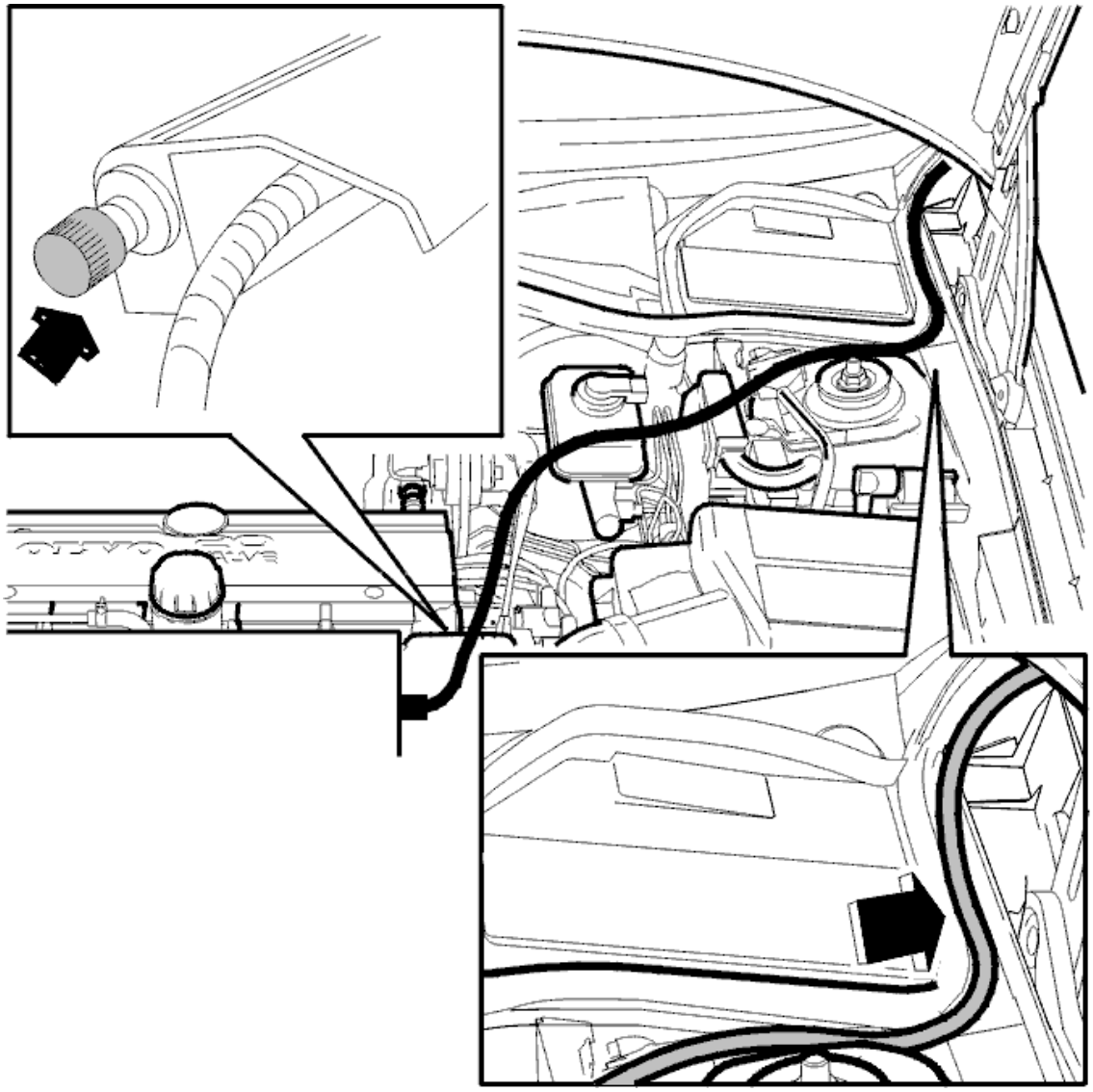

Fig. 2: Identifying Adapter Hose And Fuel Pressure Line Nipple
Courtesy of VOLVO CARS CORPORATION

Corrective actions:

- Remove protective cap from the fuel pressure line nipple.
- Install the adapter hose nipple loosely on the nipple on the fuel pressure line. The nipple will be tightened later.
- Arrange hose as shown in the illustration.

CAUTION: Ensure that the hose follows the rubber trim on the plenum chamber and then out of the engine compartment at the rear corner of the hood, with the adapter hose joint at the T-valve outside the engine room, so that neither the bonnet or the hose are damaged when the hood is closed. In addition check that hose cannot contact the throttle control reel.

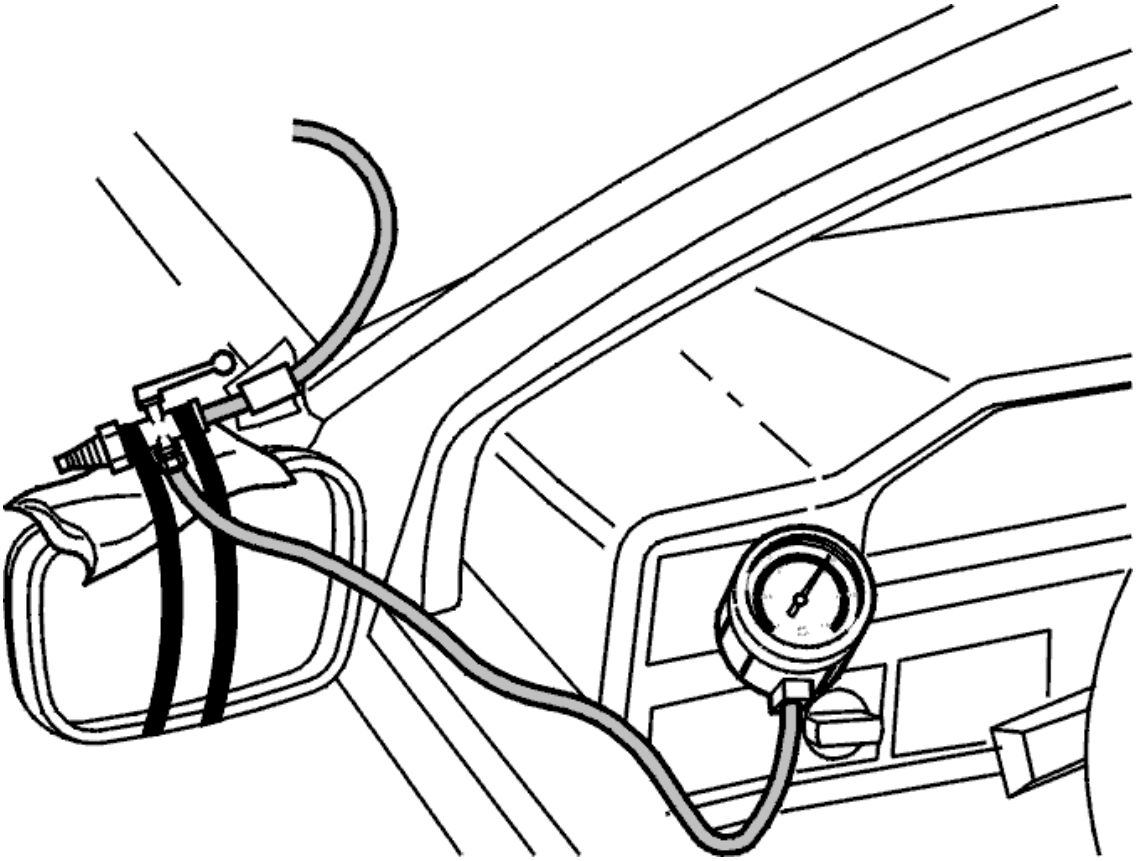

Fig. 3: Identifying Fuel Pressure Gauge
Courtesy of VOLVO CARS CORPORATION

- Install the T-valve to the left door mirror using tape.

NOTE: **Protect the door mirror and wing edge with foam protection as shown in the illustration.**

CONNECTING FUEL DRAINING UNIT

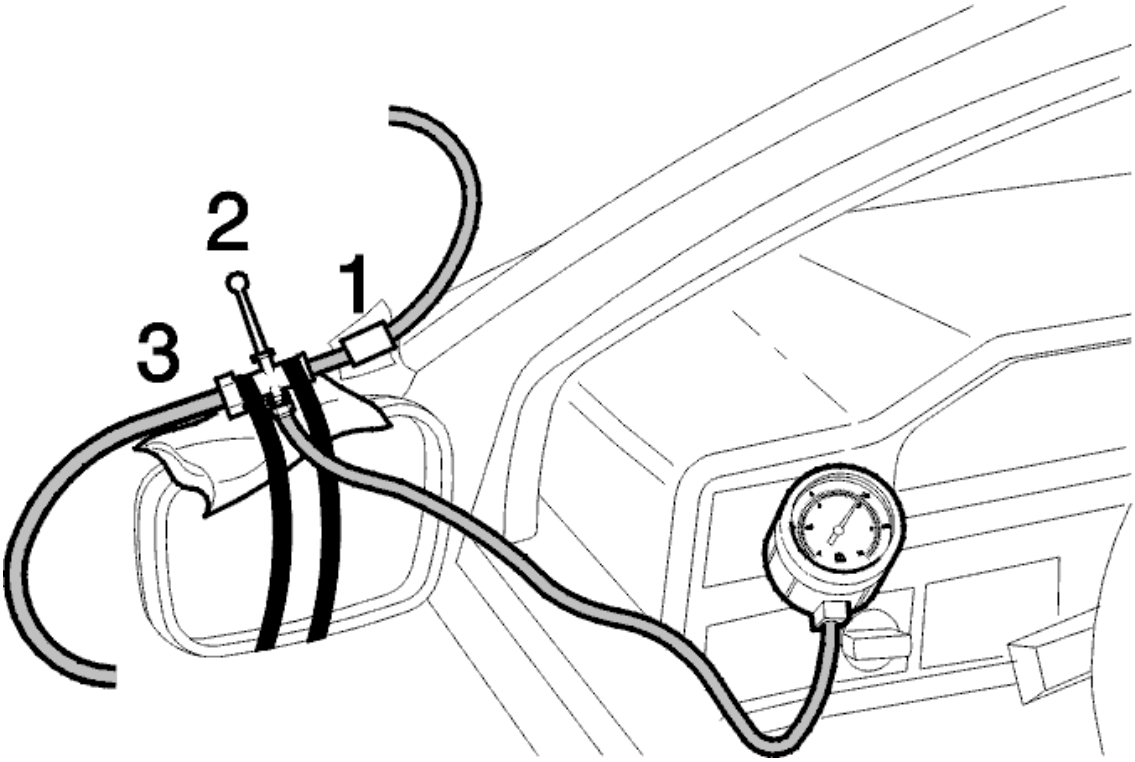

Fig. 4: Connecting Fuel Drainage Unit Hose To T-Valve
Courtesy of VOLVO CARS CORPORATION

The unit must be operating when the measuring equipment's hose is connected to the engine in order to reduce the risk of fuel spillage.

Corrective actions:

- Connect the fuel drainage unit hose to the T-valve on the door mirror (position 3 in illustration).
- Turn the T-valve cock to the middle position (position 2 in the illustration).
- Start the evacuation unit to get suction in the measurement unit hose to the engine.

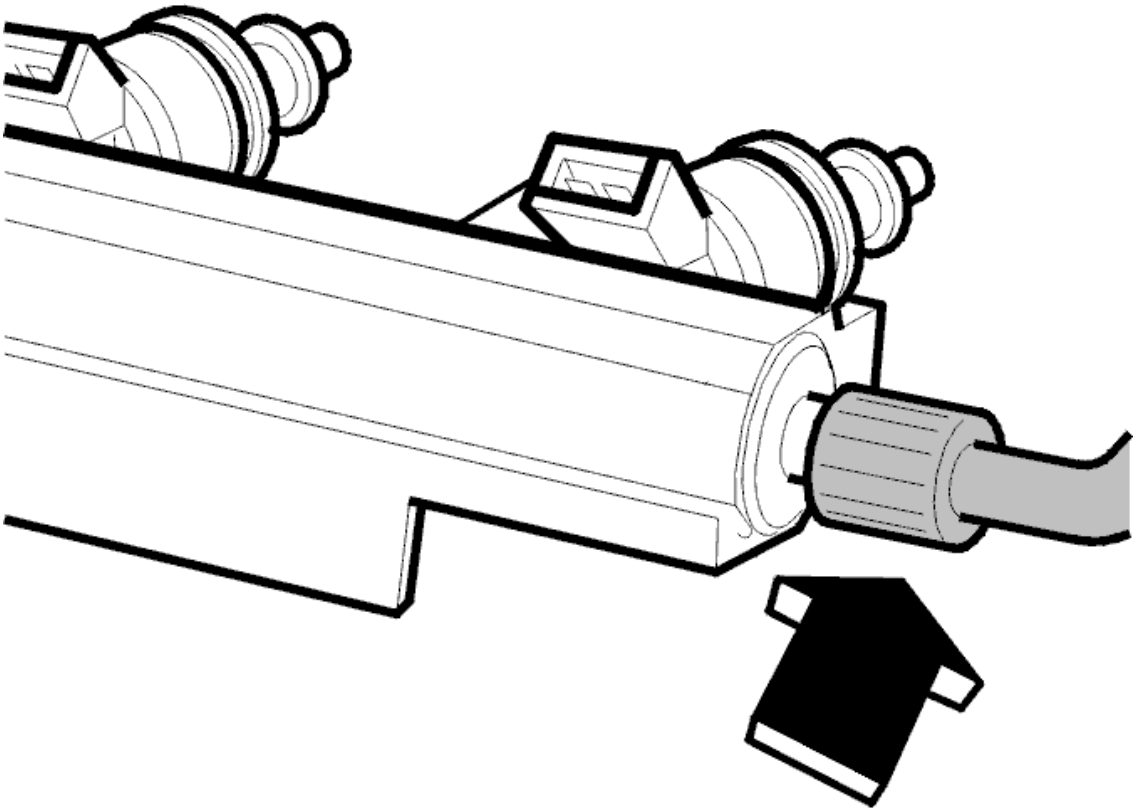

Fig. 5: Identifying Fuel Rail Nipple
Courtesy of VOLVO CARS CORPORATION

Corrective actions:

- Tighten nipple on fuel rail.

CAUTION: Note Check that there is no fuel leakage and that the evacuation unit is operating while the nipple is connected to the engine.

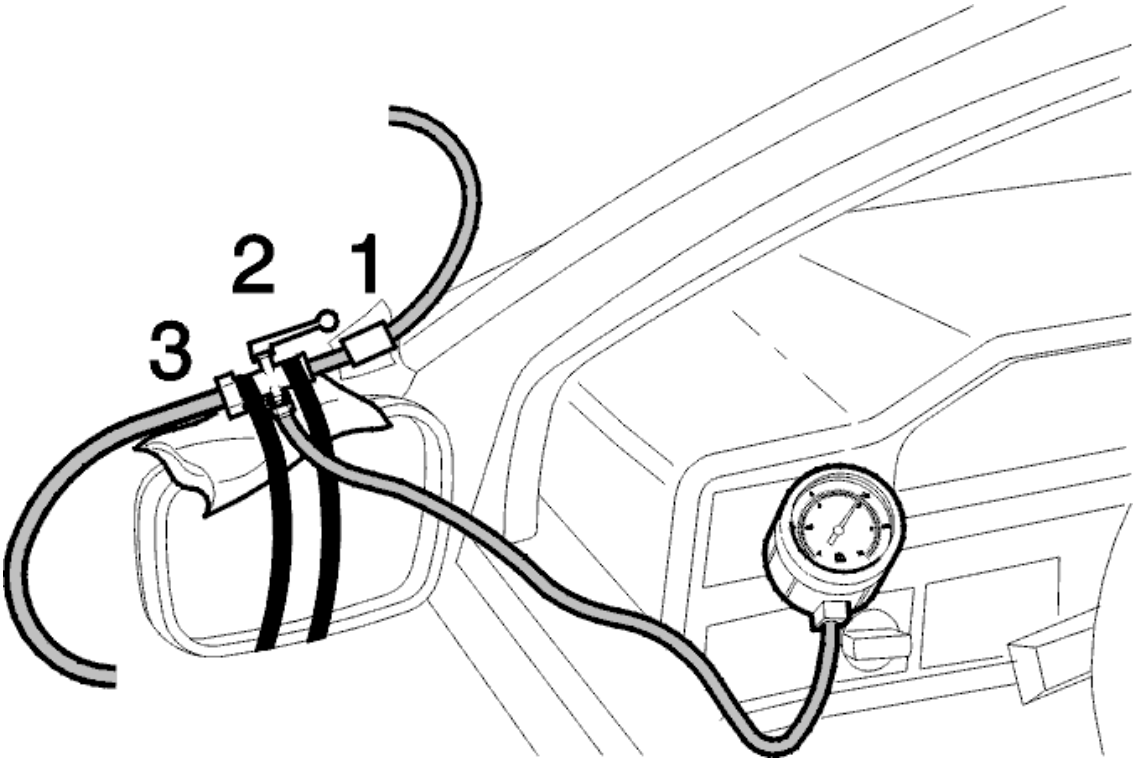

Fig. 6: Connecting Fuel Pressure Gauge (T-Valve Cock Toward Engine)
Courtesy of VOLVO CARS CORPORATION

- Turn the T-valve cock so that it is pointing toward the engine (position 1 in the illustration) to shut off the suction from the evacuation equipment.

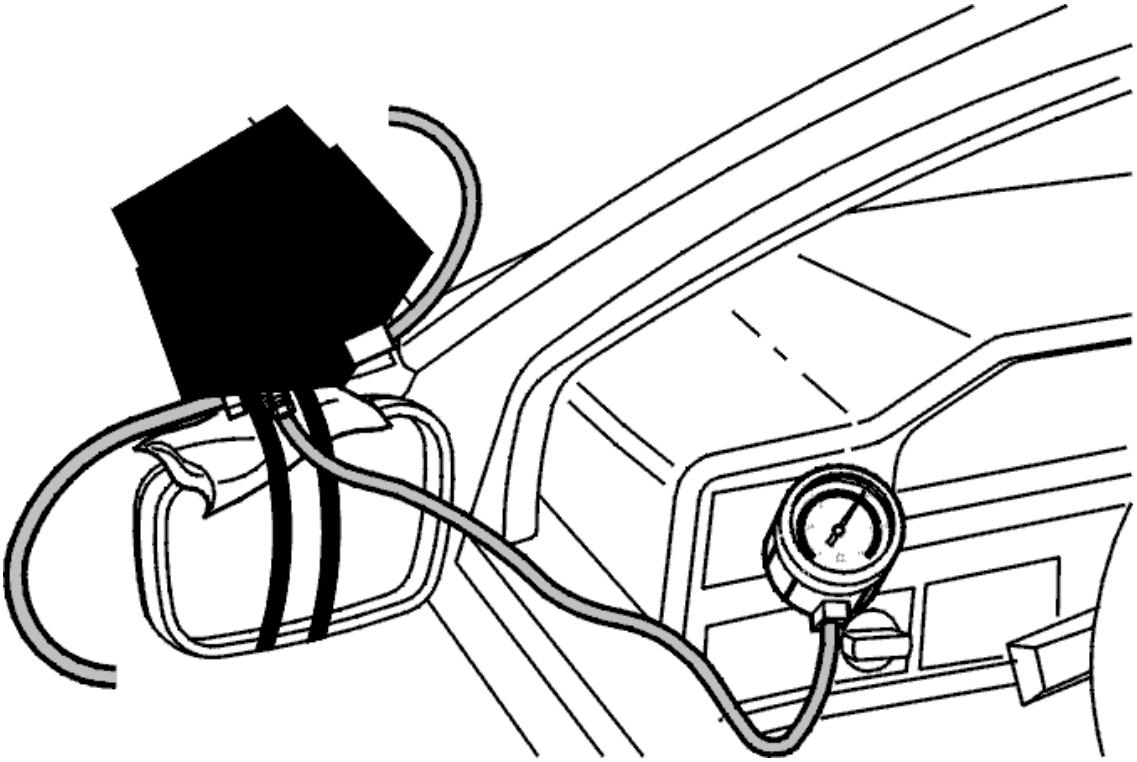

Fig. 7: Identifying Tie Strap To Lock The Cock in Position Towards Engine
Courtesy of VOLVO CARS CORPORATION

- Use a tie strap to lock the cock in the position toward the engine.

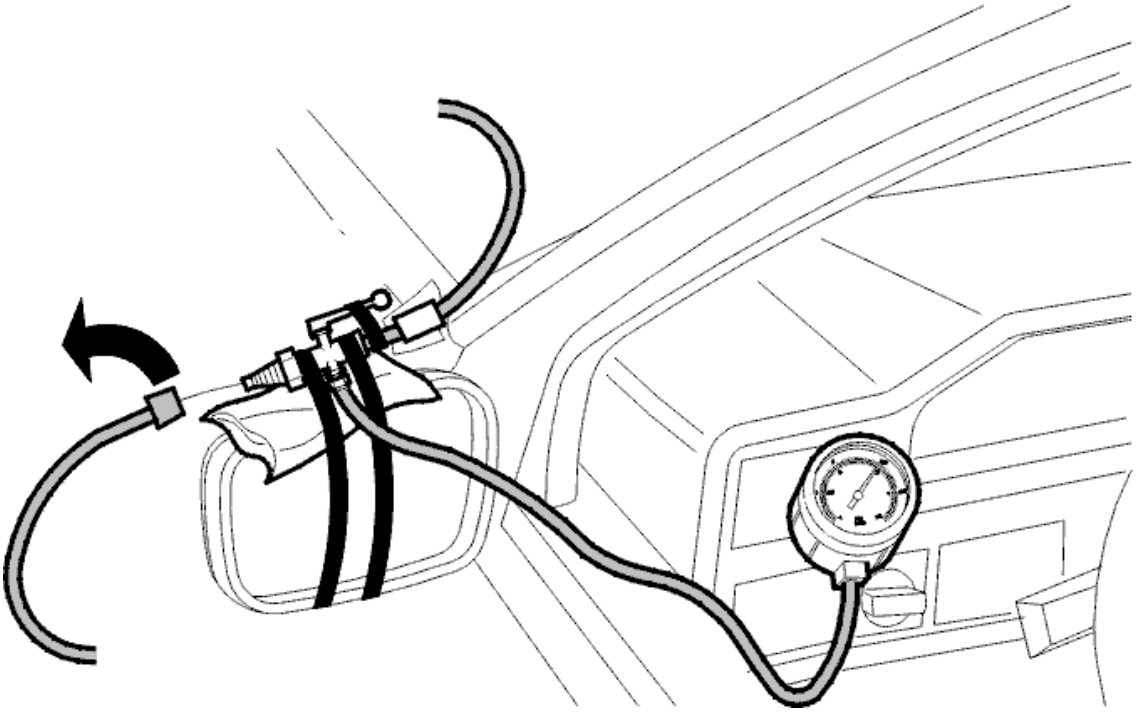

Fig. 8: Identifying Drain Unit Hose Removal From T-Valve Hose Connector
Courtesy of VOLVO CARS CORPORATION

- Remove the draining unit hose from the T-valve hose connector.
- Turn off the evacuation unit when the hose is empty.
- Arrange the measuring equipment hose along the rubber list on plenum chamber cover at the left bonnet hinge in such a position that the hose and bonnet are not damaged.
- Carefully close the hood.

MEASURING FUEL PRESSURE

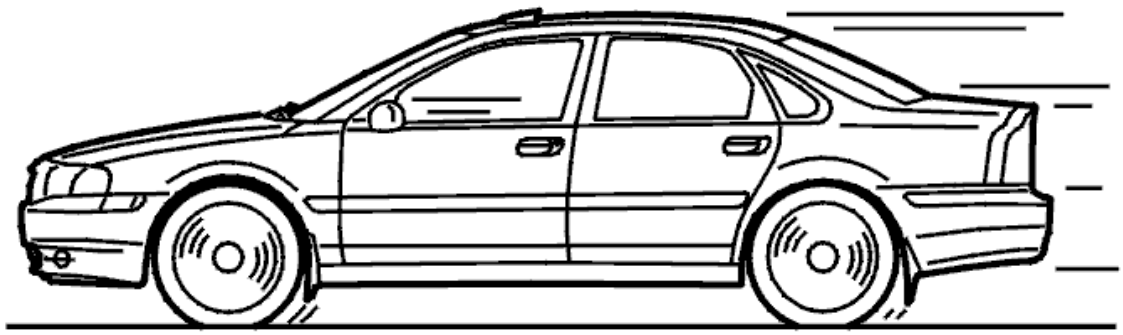

Fig. 9: Identifying Test Drive
Courtesy of VOLVO CARS CORPORATION

Corrective actions:

- Start the engine.
- Drive the car and read off fuel pressure while the car is being driven. The fuel pressure should be:**375-395 kPa (54.4 - 57.3 psi)** .

CAUTION: Note At constant engine loads the fuel pressure should be stable. At acceleration or during engine braking the fuel pressure may vary between the maximum and minimum readings.

REMOVING FUEL PRESSURE GAUGE

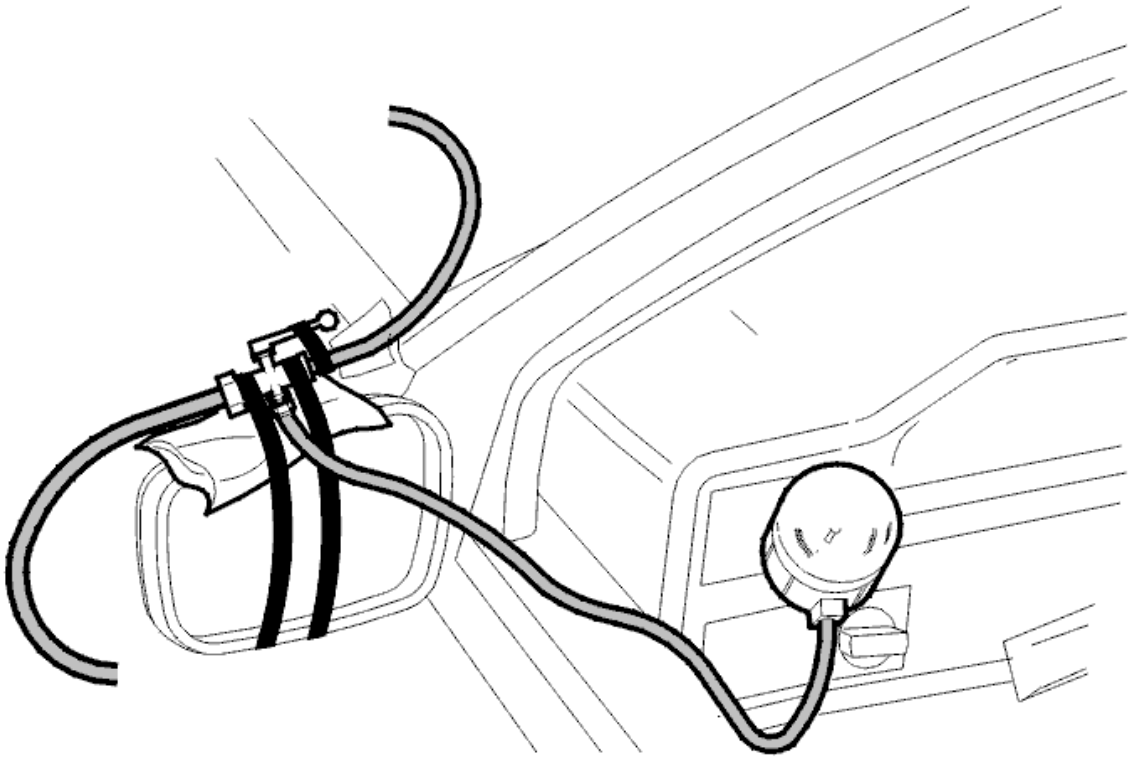

Fig. 10: Connecting Draining Unit Hose To Hose Nipple On Door Mirror
Courtesy of VOLVO CARS CORPORATION

Corrective actions:

- Connect the evacuation unit hose to the hose nipple on the door mirror (see black arrow in illustration).
- Start the evacuation unit so there is suction in the hose.

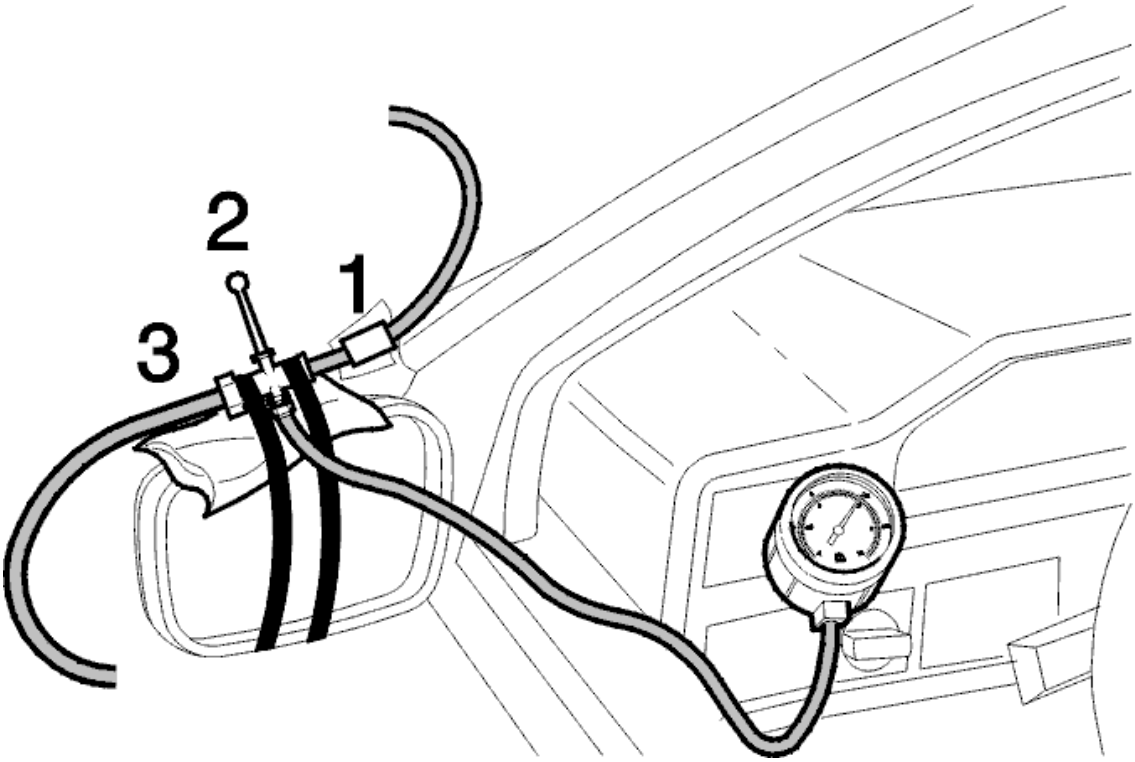

Fig. 11: Connecting Fuel Drainage Unit Hose To T-Valve
Courtesy of VOLVO CARS CORPORATION

Corrective actions:

- Remove the tie strap locking the cock on the T-nipple.
- Turn the cock to the middle position (position 2) to obtain suction in the hose to the nipple in the fuel manifold on the engine.

REMOVING FUEL DRAINING UNIT

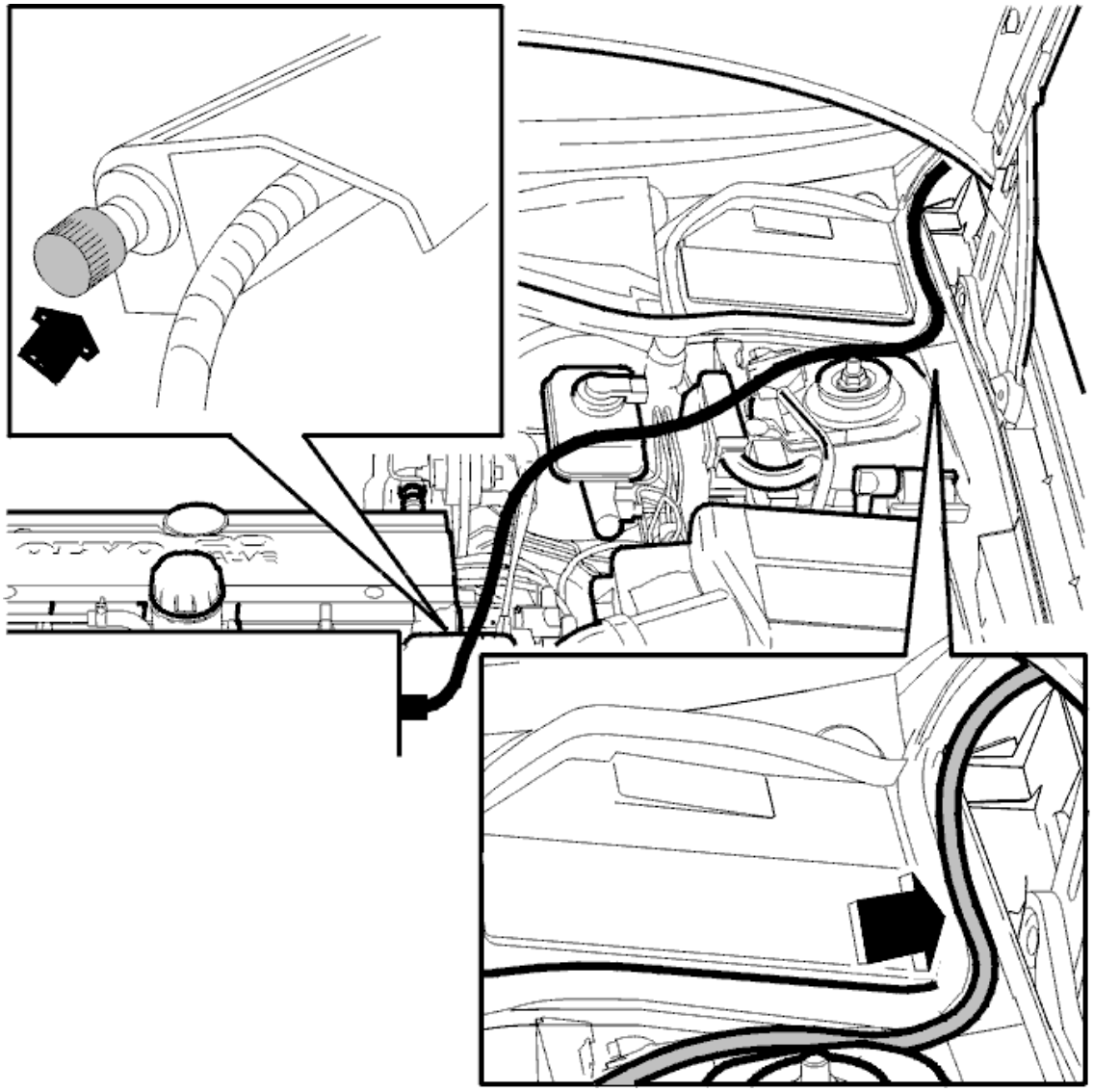

Fig. 12: Identifying Adapter Hose And Fuel Pressure Line Nipple
Courtesy of VOLVO CARS CORPORATION

Corrective actions:

- Remove adapter hose from the engine.
- Wait a minute or so for the hose to empty.
- Turn off the draining unit.
- Remove the measurement equipment and hoses from the car.

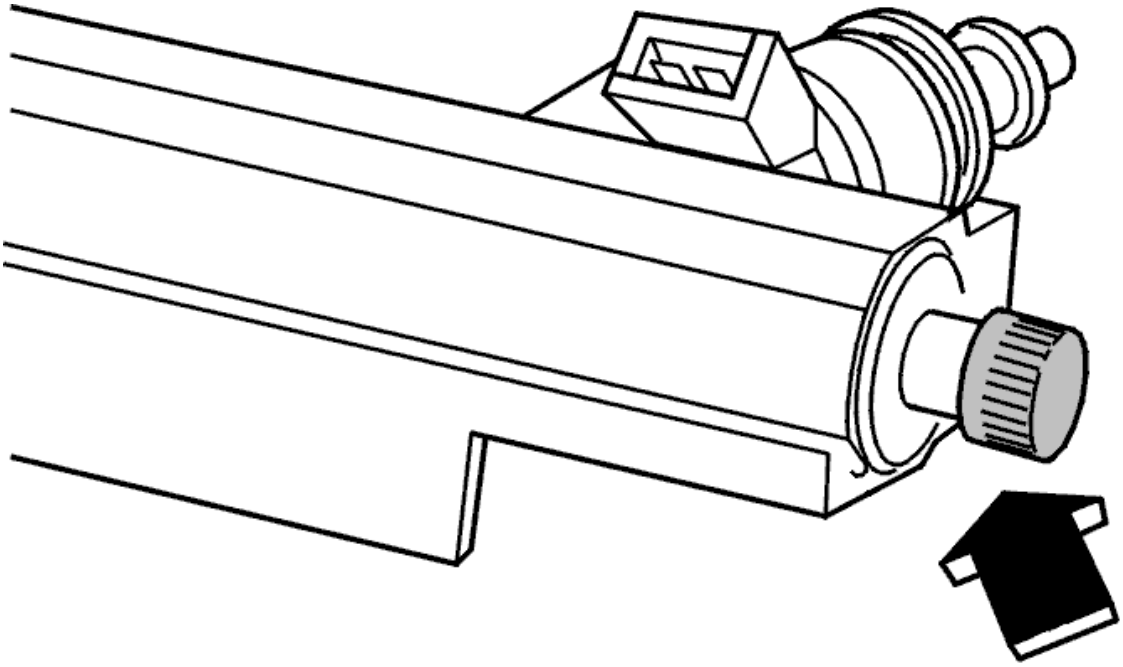

Fig. 13: Identifying Fuel Rail Protective Cap
Courtesy of VOLVO CARS CORPORATION

- Reinstall the protective cap on the fuel rail.

TEST PHASES, QUICK TEST FUEL TANK SYSTEM (B5254T2; B6294T; 2003-2004)

REFERENCE

Reference phase for leakage, and operating check of the leak diagnostic unit (DMTL), is in progress.

If no fault is detected during this phase, the check for major leakage starts.

If a fault is detected during this phase the test is stopped and the parameter "DMTL, test status" shows "Fault Found". The diagnostic trouble code (DTC) for the detect fault is stored in the Engine control module (ECM).

MAJOR LEAK

Investigation of the fuel tank system in progress.

If no fault is detected during this phase, the check for minor leakage starts.

If leakage is detected during this phase the test is stopped and the parameter "Tank system test result" shows "Major leak found". The diagnostic trouble code (DTC) is stored in the Engine control module (ECM).

MINOR LEAK

Investigation of the fuel tank system in progress.

If leakage is detected during this phase the test is stopped and the parameter "Tank system test result" shows "Minor leak found". The diagnostic trouble code (DTC) is stored in the Engine control module (ECM).

NOT IN PROGRESS

Leakage diagnosis not in progress. Quick-test tank system has not started, has been finished, or has been blocked.

TEST PHASES, QUICK TEST FUEL TANK SYSTEM (B6324S)

REFERENCE

Reference phase for leakage, and operating check of the leak diagnostic unit (DMTL), is in progress.

If no fault is detected during this phase, the check for major leakage starts.

If a fault is detected during this phase the test is stopped and the parameter "DMTL, test status" shows "Fault Found". The diagnostic trouble code (DTC) for the detect fault is stored in the Engine control module (ECM).

MAJOR LEAK

Investigation of the fuel tank system in progress.

If no fault is detected during this phase, the check for minor leakage starts.

If leakage is detected during this phase the test is stopped and the parameter "Tank system test result" shows "Major leak found". The diagnostic trouble code (DTC) is stored in the Engine control module (ECM).

MINOR LEAK

Investigation of the fuel tank system in progress.

If leakage is detected during this phase the test is stopped and the parameter "Tank system test result" shows "Minor leak found". The diagnostic trouble code (DTC) is stored in the Engine control module (ECM).

NOT IN PROGRESS

Leakage diagnosis not in progress. Quick-test tank system has not started, has been finished, or has been blocked.

TEST PRESSURIZING THE TANK SYSTEM

Special tools:

see **9995646**

see **9995544**

SAFETY

First read, see **SAFETY REGULATIONS FOR HANDLING FUEL** .

NOTE: The tank must not be more than 85% full when test pressurizing.

PREPARATION

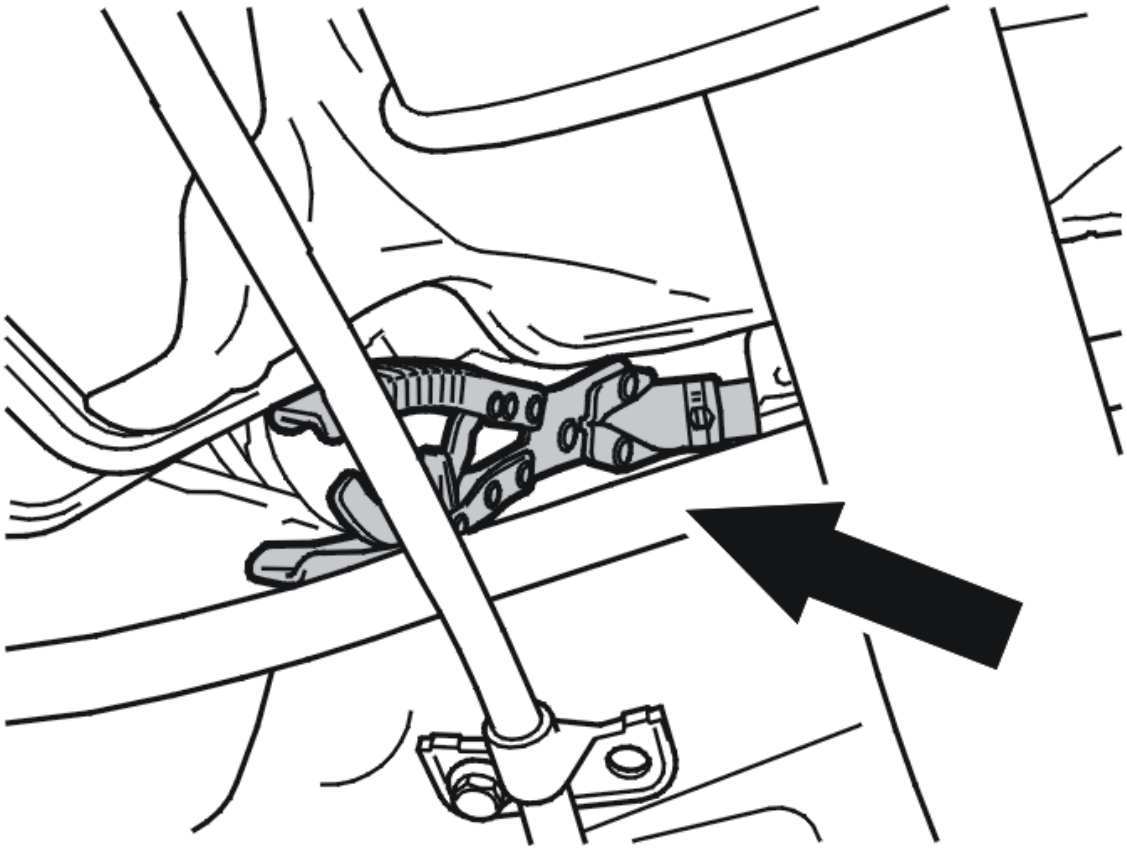

Fig. 14: Blocking Hose Between Leak Diagnostic Module And Leak Diagnostic Module Filter By Clamping Hose Using Hose Clips
Courtesy of VOLVO CARS CORPORATION

Ignition off.

Block the hose between the leak diagnostic module and the leak diagnostic module filter by clamping the hose using hose clips.

CONNECTING THE MANOMETER

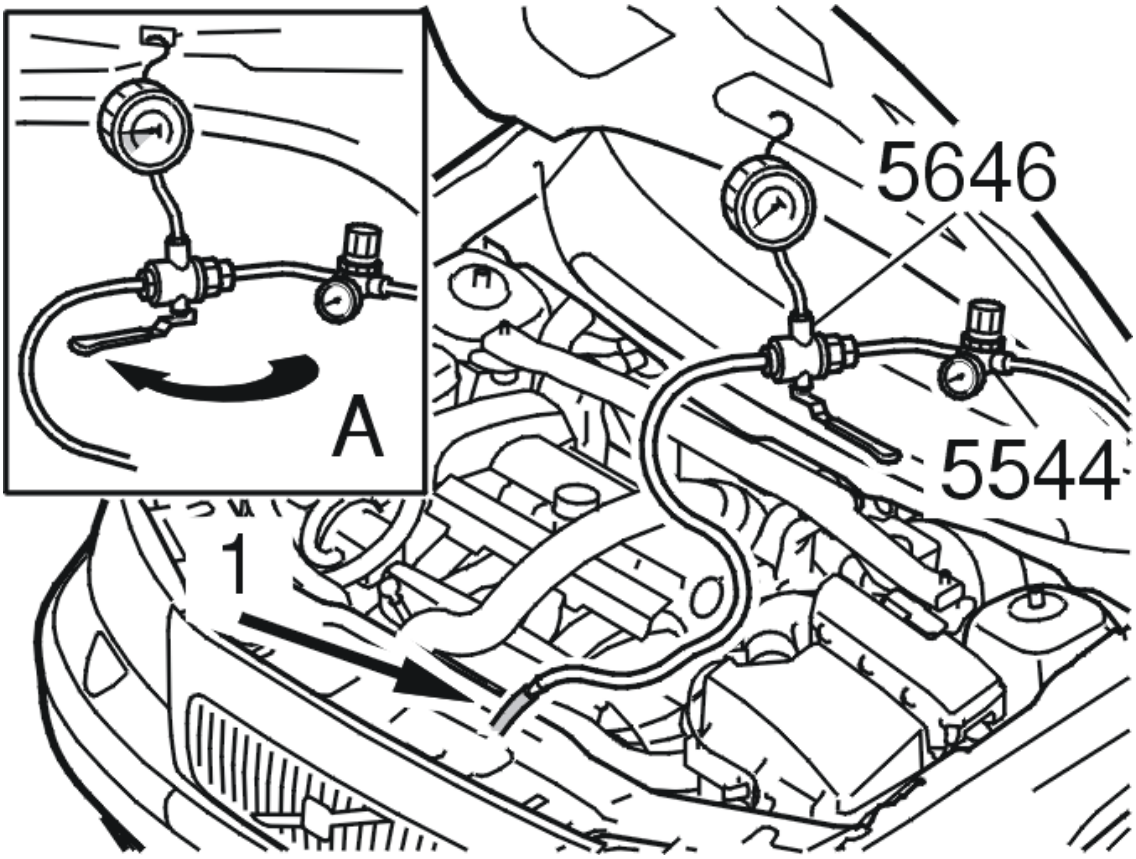

Fig. 15: Hose, EVAP Canister And EVAP Canister Purge Valve
Courtesy of VOLVO CARS CORPORATION

Expose the canister purge (CP) valve.

Disconnect the hose (1) between the EVAP canister and the EVAP canister purge valve.

Connect manometer see **9995646** to the hose (1) and the pressure regulator see **9995544** to the manometer.

CAUTION: The cock should face the pressure regulator.

Connect compressed air to the pressure regulator

Set the pressure to a **maximum of 7 kPa** (read off from manometer 999 5646).

Pressurize the fuel tank system by turning the cock at right angles to the hoses.

Allow pressure to build up in the tank system.

Check that the system does not leak.

Stop the pressurization by turning the cock towards the hose (1) as illustrated by "**A** " in, see **Fig. 15**.

NOTE: **A certain amount of leakage may occur from the leak diagnostic unit. The pressure may therefore drop when the pressurization is stopped. This is normal. The leakage is caused because the pressurization is not carried out using the leak diagnostic unit.**

CAUTION: Never leave the car unattended with the tank system pressurized

RESETTING

Remove the manometer. Reconnect the hose to the EVAP canister purge valve.

Remove the hose clip from the hose to the filter.

ENGINE

Fuel System - Cleaning, Inspection and Adjustment

FUEL TANK SYSTEM (B5254T2; 2003-2007; B6294T; 2003-2006)

FUEL TANK SYSTEM, CHECK

NOTE: This instruction is deliberately written for use with different types of leak detecting equipment. Therefore certain components may differ on different equipment.

SAFETY

First read, see **SAFETY REGULATIONS FOR HANDLING FUEL** .

NOTE: Follow the safety precautions for the equipment. Follow the instructions for connecting, disconnecting, use and maintenance.

HINT: Be aware of the risks of igniting the fuel. Do not let the temperature of the tank fall below 0 °C when carrying out checks.

CAUTION: Never leave the car unattended with the tank system pressurized

PREPARATION

Ignition off.

Seal the intake air hose for the carbon filter container. (A rubber plug is sufficient on certain models.)

Expose the evaporative emission system (EVAP) valve.

Disconnect the hose (1) between the carbon filter container and the evaporative emission system (EVAP) valve.

DETERMINE THE SIZE OF THE LEAK

Calibrate the equipment in relation to the definition of a major or minor leak for the relevant vehicle. See the instructions provided by the equipment supplier.

Connect the leak detecting equipment hose for **gas** to the detached hose.

Pressurize the fuel tank system. Check the result against the default value to determine the size of the leak.

HINT: The supplier's instructions often contain useful tips to facilitate carrying out checks.

Complete pressurization.

LOCATING LEAKAGE

Connect the leak detecting equipment hose for **smoke** to the detached hose.

Fill the tank system with smoke. The time taken to fill the system depends on the size and volume of the system, and the performance of the equipment.

Visually check the evaporative emission (EVAP) system, using a halogen and / or UV lamp.

HINT: The supplier's instructions often contain useful tips to facilitate leak tracing.

Stop filling with smoke.

RESETTING

Reinstall the hose between the carbon filter container and evaporative emission system (EVAP) valve.

Install the evaporative emission system (EVAP) valve.

Remove the seal at the intake air hose for the carbon filter container.

FUEL TANK, FUEL LINES AND EVAPORATIVE SYSTEM (2003-2012)

FUEL TANK, DRAINING

Special tools	
	T9995720 Key (remove/install nut fuel pump) **Tool number:** T9995720 **Too description:** Key (remove/install nut fuel pump) **Tool boards:**
	T9995721 Adapter (Fuel/Use with 9812270.-2273,-2282) **Tool number:** T9995721 **Tool description:** Adapter (Fuel/Use with 9812270.-2273,-2282) **Tool boards:**
	T9997314 WRENCH **Tool number:** T9997314 **Tool description:** WRENCH **Tool boards:**
	T9814070 Fuel tank drainer **Tool number:** T9814070 **Tool description:** Fuel tank drainer **Tool boards:**

Special tools:

see **9995720**

see **9995721**

see **9997314**

see **9814070**

NOTE: **As the illustrations in this service information are used for different model years and / or models, some variation may occur. However, the essential information in the illustrations is always correct.**

PREPARATION

Remove the key from the ignition switch.

NOTE: **Ensure that nobody can insert the ignition key during work.**

WARNING: **RISK OF EXPLOSION THE USE OF A FRESH AIR MASK IS RECOMMENDED.**

NOTE: **Before draining the fuel, see: SAFETY REGULATIONS FOR HANDLING FUEL .**

Drain the fuel lines. See: **FUEL SYSTEM, DRAINING**

Insert the heavy duty hose 1.3 metres into the fuel filler pipe, measured from the edge of the opening of the filler pipe.

Pump until air comes out.

Remove the outer rear seats. See **UPHOLSTERY BACKREST CUSHION OUTER (SECOND ROW)** .
Remove the centre rear seat. See **UPHOLSTERY BACKREST CUSHION CENTER (SECOND ROW), REPLACING** .

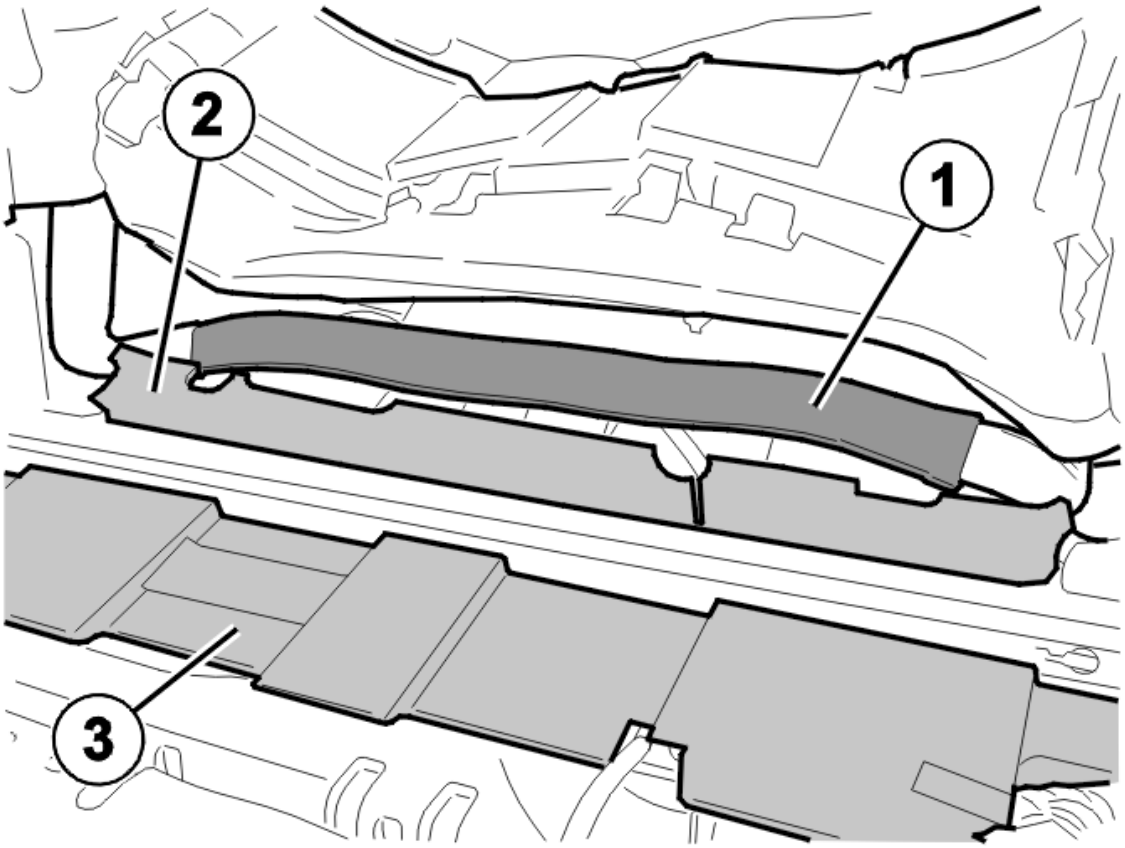

Fig. 1: Exposing Fuel Pump Access
Courtesy of VOLVO CARS CORPORATION

Fold the carpet back.

Remove:

- ventilation pipe (1), only applies to 7-seater vehicles
- the insulation block (2)
- the insulation block (3).

REMOVING THE CAP OVER THE LEVEL SENSOR

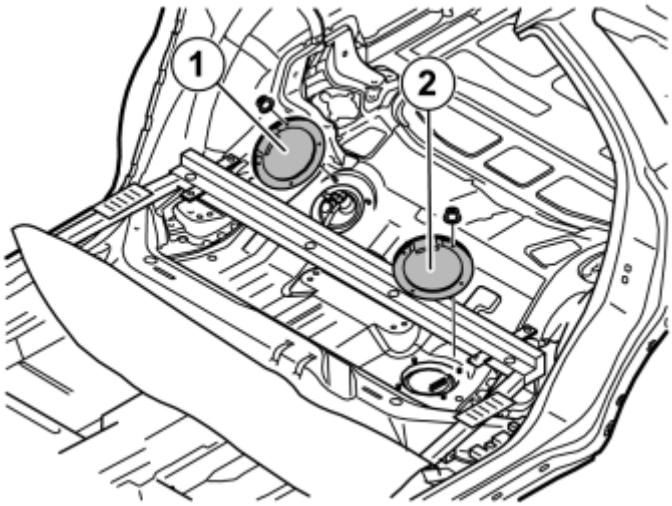

Fig. 2: Removing The Covers
Courtesy of VOLVO CARS CORPORATION

Remove the covers (1, 2) over the level sensor.

Disconnect the connector from the fuel pump on the right-hand side.

Disconnect the hoses from the fuel pump on the right-hand side.

Cover the area around the cover and between the doors with absorbent material.

CAUTION: Make sure dirt does not enter the fuel tank.

DRAINING THE FUEL TANK

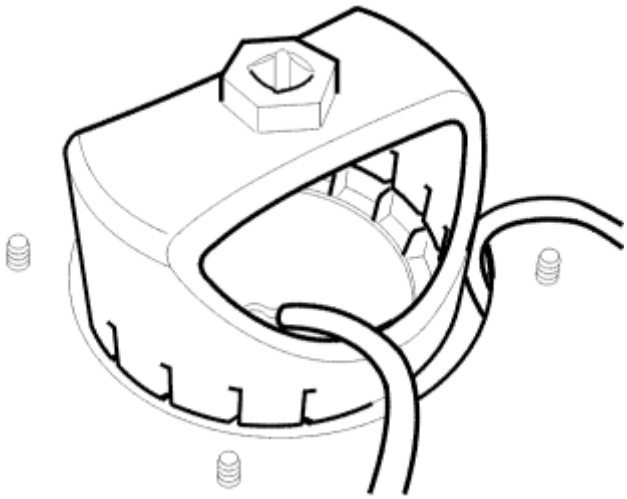

Fig. 3: Removing The Screw On The Fuel Pump
Courtesy of VOLVO CARS CORPORATION

Special tools: see **9814070** see **9995720** .

Clean and remove all dirt from the right and left-hand combined tank units.

Remove the screw on the fuel pump. Insert the heavy duty hose and suck out the remains from the bottom of the right-hand side of the fuel tank.

Connect hose see **9995721** to the heavy duty hose. Suck out the remains from the bottom of the level sensor reservoir.

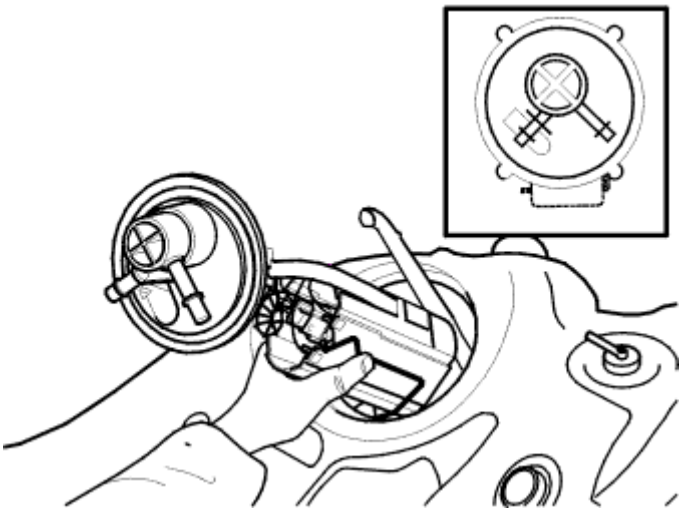

Fig. 4: Removing The Overflow Pipe
Courtesy of VOLVO CARS CORPORATION

Carefully remove the overflow pipe from the reservoir.

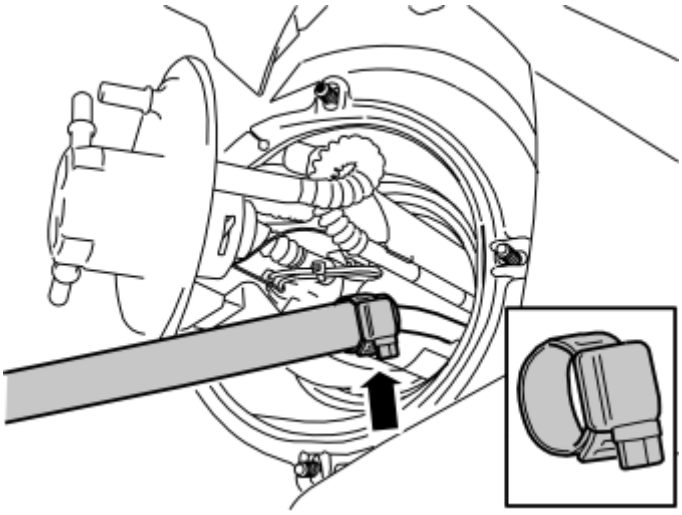

Fig. 5: Connecting The Thin Hose To The Overflow Pipe.
Courtesy of VOLVO CARS CORPORATION

Remove the thin hose see **9995721** from the heavy duty hose. Connect the thin hose to the overflow pipe. Use a

hose clamp.

Pump until a lot of air comes out.

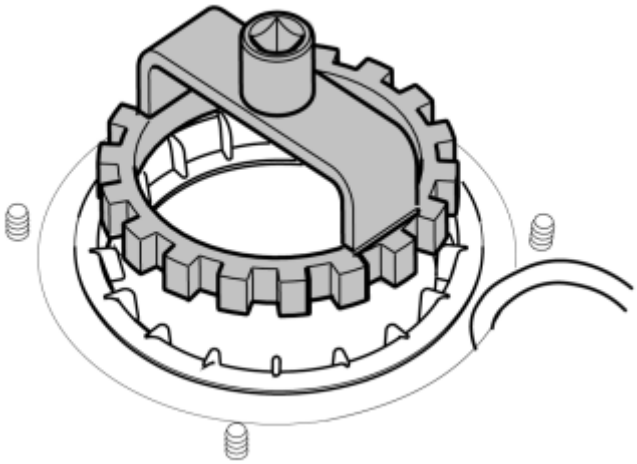

Fig. 6: Using Wrench 9997314
Courtesy of VOLVO CARS CORPORATION

Open the left-hand level sensor, use wrench see **9997314** . Insert the heavy duty hose and suck out the remains from the bottom of the left-hand side of the fuel tank.

INSTALLING THE RIGHT-HAND LEVEL SENSOR

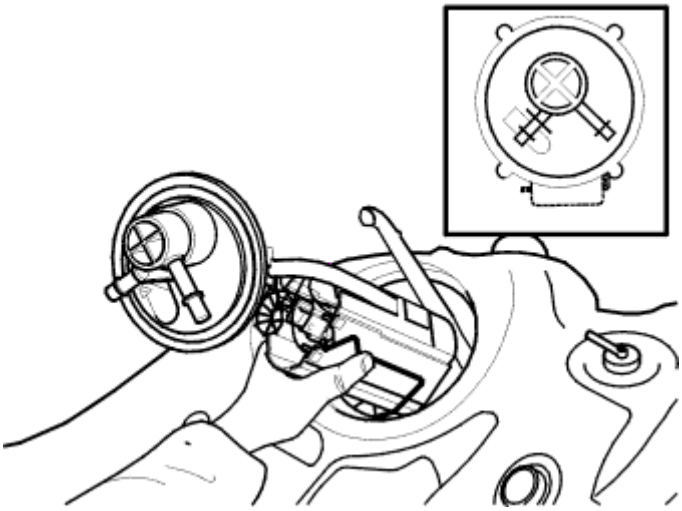

Fig. 7: Removing The Overflow Pipe
Courtesy of VOLVO CARS CORPORATION

Place the overflow pipe approximately half a centimetre to the left-hand side.

Grip around the right level sensor reservoir. Pinch the level sensor reservoir so that the float is held in its lowest position.

Lower the reservoir carefully while rotating it backwards around the front-rear shaft on the float.

Install the overflow pipe on the reservoir.

INSTALLING THE LEFT-HAND LEVEL SENSOR

Install a new O-ring, lubricated with lubricant, P/N 1161580.

Push down the left-hand level sensor so that the raised rectangular section on the level sensor runs along the car.

Check that the O-ring is not trapped.

Tighten the screw to **60 Nm** . Use wrench see **9997314** .

Wipe up any fuel spillage.

Position the wiring in the cut-out in the rubber ring

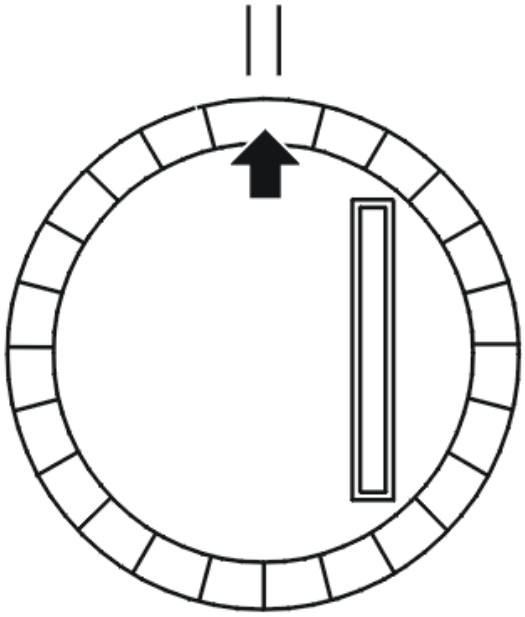

Fig. 8: Checking Arrow On Cover
Courtesy of VOLVO CARS CORPORATION

NOTE: **Check that the arrow on the cover is between the markings on the tank. If the arrow is outside the markings the fuel gauge sensor will give an incorrect value**

and the float may catch against the inner wall of the tank. If not: Slacken off the screw and adjust the position of the sensor. Tighten as above.

RIGHT-HAND LEVEL SENSOR, CONTINUED

Install a new O-ring, lubricated with lubricant, P/N 1161580.

Press the right-hand level sensor down so that the fuel line connections are pointing forwards and to the right.

Check that the O-ring is not trapped.

Tighten the screw to **60 Nm** . Use wrench see **9995720** .

Install the hoses on the level sensor.

Wipe up any fuel spillage.

Position the wiring in the cut-out in the rubber ring.

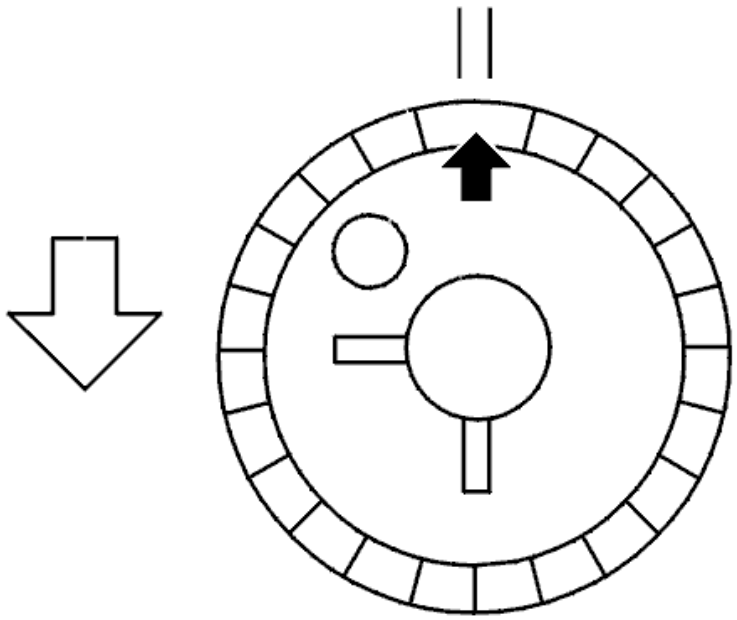

Fig. 9: Checking Arrow On Cover
Courtesy of VOLVO CARS CORPORATION

NOTE: **Check that the arrow on the cover is between the markings on the tank. If the**

arrow is outside the markings the fuel gauge sensor will give an incorrect value and the float may catch against the inner wall of the tank. If not: Slacken off the screw and adjust the position of the sensor. Tighten as above.

Install on both sides:

- the wiring in the sockets on the rubber seal
- the cover over the level sensors and tighten the nuts to 6 Nm.

Connect the wiring and the connectors.

Fold the carpet down

Install:

- the center rear seat. See **UPHOLSTERY BACKREST CUSHION CENTER (SECOND ROW), REPLACING**
- the outer rear seat. See **UPHOLSTERY BACKREST CUSHION OUTER (SECOND ROW)** .

FUEL TANK, FUEL LINES AND EVAPORATIVE SYSTEM (B5254T2; 2003-2007)

EVAPORATION SYSTEM EMISSIONS, LEAK DETECTION

NOTE: The illustrations in this service information are used for different model years and/or models. Some variation may occur. However, the essential information in the illustrations is always correct.

SMOKE MACHINE

The smoke machine generates smoke that is used to detect leaks in the EVAP- system. Follow the instructions that are supplied with the smoke machine to use it and to check for leaks.

Information

To be able to check for leaks in the whole EVAP-system, the connections must be disconnected and the smoke machine must be connected in such a way that the smoke is not stopped by non-return valves or by the EVAP-pump being closed. Two persons should help each other when checking for leaks. One that operates the smoke machine and one that visually checks for leaks.

HINT: To, see the smoke easier, use a powerful light with flood lights.

The smoke contains a colouring agent that leaves invisible marks in case of leaks. These marks are seen as small green spots when they are illuminated with UV-light and yellow screened glasses are used for viewing.

CONNECTING SMOKE MACHINE

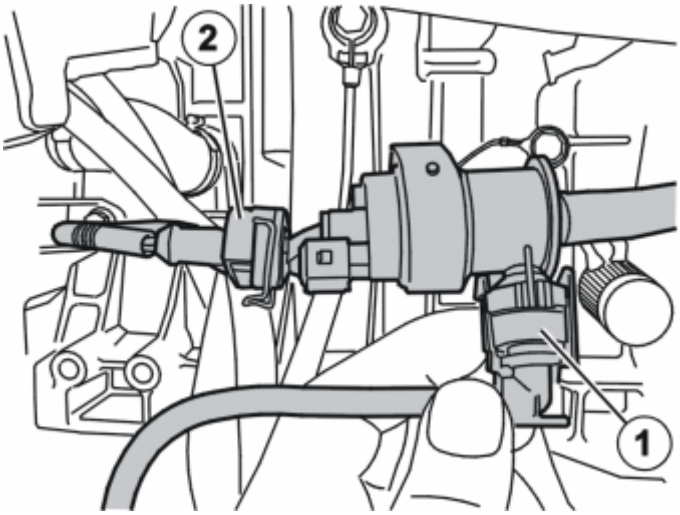

Fig. 10: EVAP-Pump And Outlet Hose
Courtesy of VOLVO CARS CORPORATION

This shows the procedure for a 5-cylinder turbo engine.

Other engine alternatives have similar EVAP-systems.

Disconnect the EVAP-pump, located under the inlet manifold in front of the engine in rubber mounting. Press together the lock on the outlet hose (1) and pull it loose. Press aside the lock on the connector (2) and disconnect it.

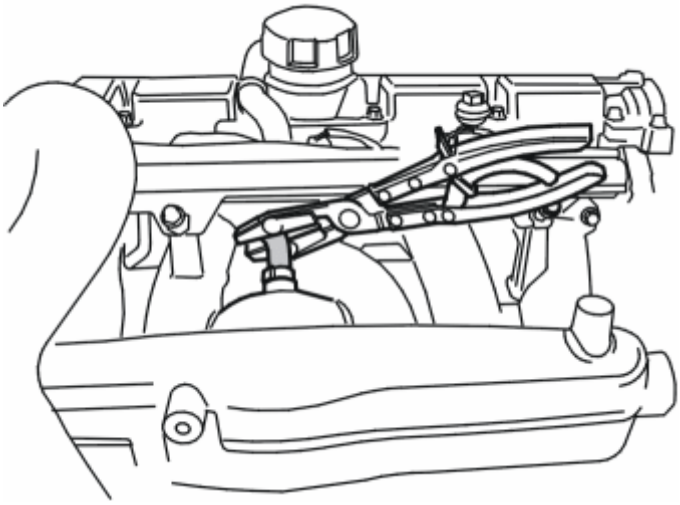

Fig. 11: Clamping Shut Hose Closest To Connection To Inlet Manifold With Locking Pliers
Courtesy of VOLVO CARS CORPORATION

Clamp shut the hose closest to the connection to inlet manifold with locking pliers.

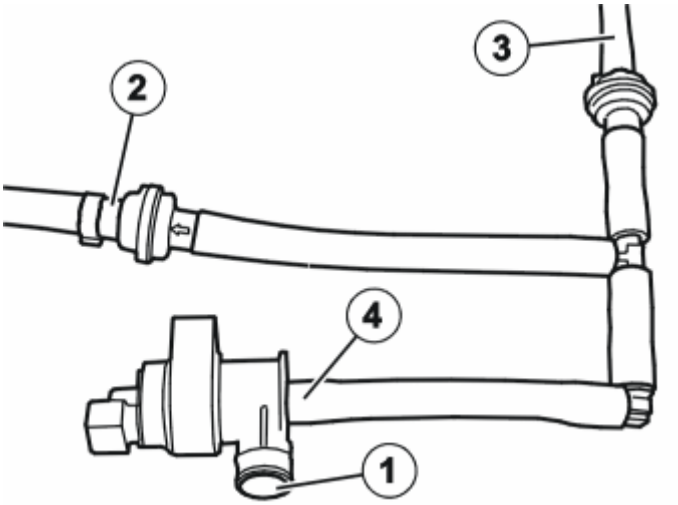

Fig. 12: EVAP-Pump With Quick-Coupling
Courtesy of VOLVO CARS CORPORATION

The EVAP-pump sucks in hydrocarbons through the line mounted with quick-coupling (1). The hose (2) receives vacuum since it is connected to the inlet manifold.

The non-return valve results in gas only being able to flow in to the inlet. The other hose (3) leads in to the connection before the turbo.

Disconnect the hose (4) at the EVAP-pump. Connect the smoke machine to the hose that you just disconnected. Fill the hoses with smoke and check that the hoses and non-return valves are intact.

CHECK FOR LEAKS IN PLASTIC HOSE TO CARBON CANISTER

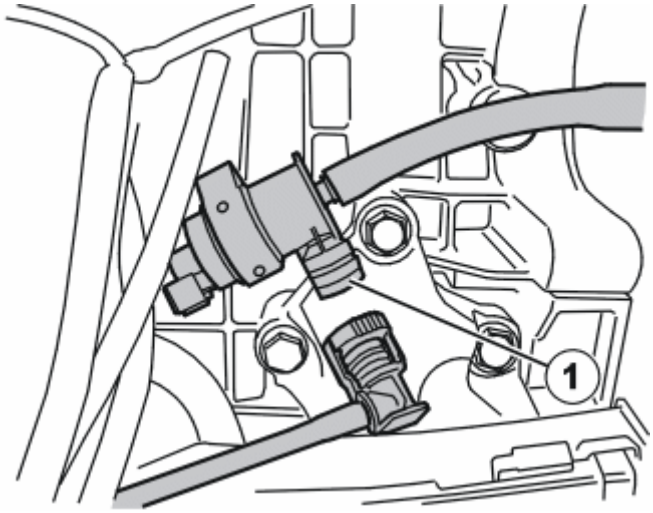

Fig. 13: Identifying Carbon Canister
Courtesy of VOLVO CARS CORPORATION

Insert the smoke machine's tapered nozzle in the line that was installed with quick-coupling in the EVAP-pump (1). Lift up the vehicle. See: **JACKING POINTS, BODY** .

Fill the system with smoke. Check that there are no leaks in the hose to the carbon canister.

NOTE: It is natural that smoke seeps out at the tank pipe.

FINISHING

Install:

- the hose on the EVAP-pump
- the hose with quick-coupling
- the connector
- the EVAP-pump with its rubber mount.

NOTE: Make sure that the locks on the quick-coupling and connector are locked securely.

Remove the lock grip pliers.

FUEL SYSTEM, DRAINING

Special tools:

see **9812270**

see **9812273**

see **9812282**

see **9995480**

see **9995484**

SAFETY

See **SAFETY REGULATIONS FOR HANDLING FUEL** .

ENGAGEMENT

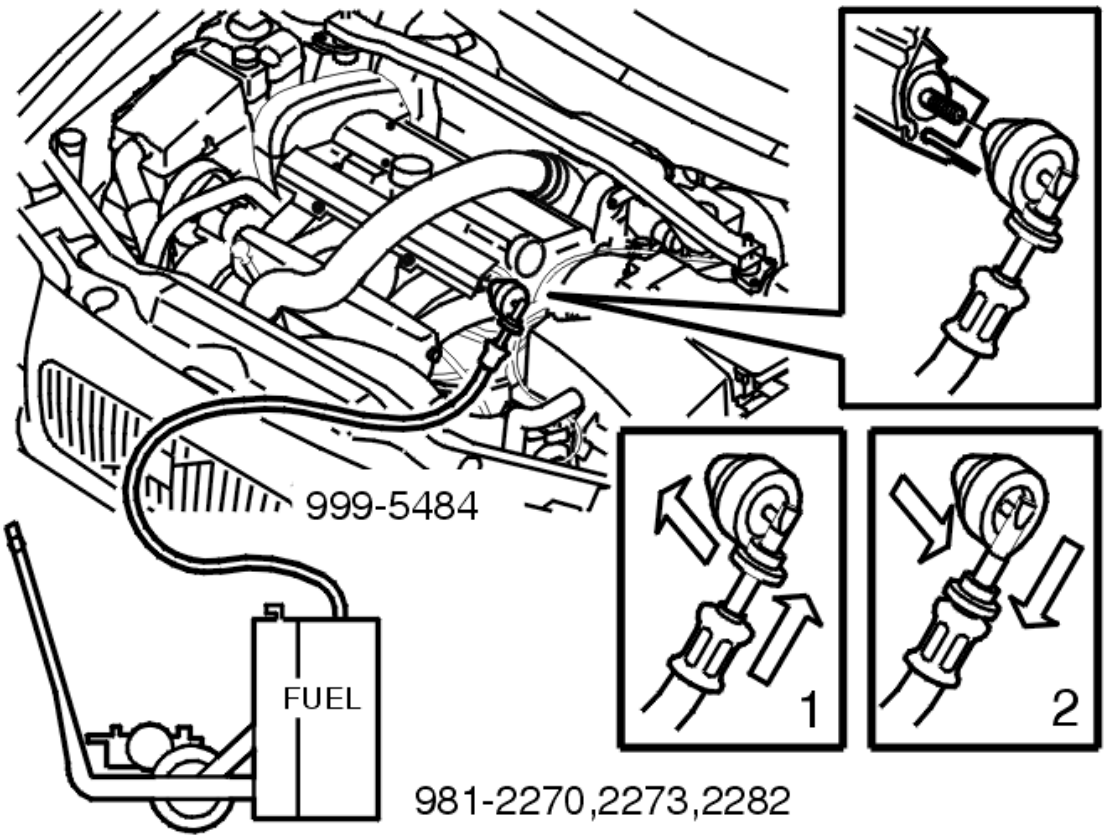

Fig. 14: Connecting Adapter
Courtesy of VOLVO CARS CORPORATION

Remove the cover on the valve which is positioned on the fuel rail.

Connect adapter see **9995484** to fuel draining unit see **9812270** , see **9812273** and see **9812282** .

Connect the adapter to the valve on the fuel rail in the **locked** position (valve closed).

Start the fuel drainage unit.

Unlock the adapter (valve open).

Raise the car.

DRAINING THE FUEL SYSTEM

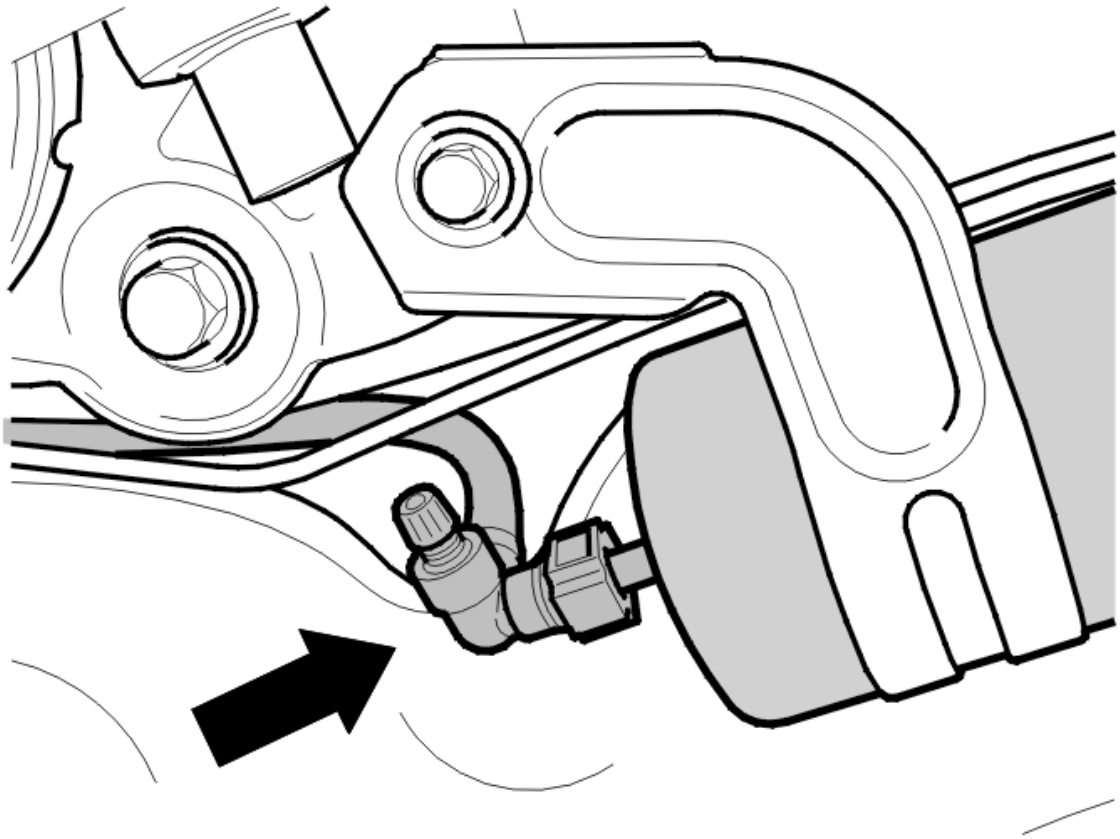

Fig. 15: Connecting Venting Hose 9995480
Courtesy of VOLVO CARS CORPORATION

Remove the cover on the valve cap positioned at the fuel filter.

Connect venting hose see **9995480** to the valve prior to the fuel filter.

It takes approximately **2 minutes** to evacuate the system.

INSTALLATION

Reinstall the components in reverse order.

CAUTION: Do not forget to reinstall the valve caps.

FUEL TANK, FUEL LINES AND EVAPORATIVE SYSTEM (B6294T; 2003-2006)

EVAPORATION SYSTEM EMISSIONS, LEAK DETECTION

see **EVAPORATION SYSTEM EMISSIONS, LEAK DETECTION**

FUEL SYSTEM, DRAINING

see **FUEL SYSTEM, DRAINING**

FUEL TANK, FUEL LINES AND EVAPORATIVE SYSTEM (B6324S; 2007-2010)

EVAPORATION SYSTEM EMISSIONS, LEAK DETECTION

see **EVAPORATION SYSTEM EMISSIONS, LEAK DETECTION**

FUEL SYSTEM, DRAINING

Special tools:

see **9812270**

see **9812273**

see **9812282**

see **9995480**

see **9995484**

DRAINING

SAFETY

First, see **SAFETY REGULATIONS FOR HANDLING FUEL** .

ENGAGEMENT

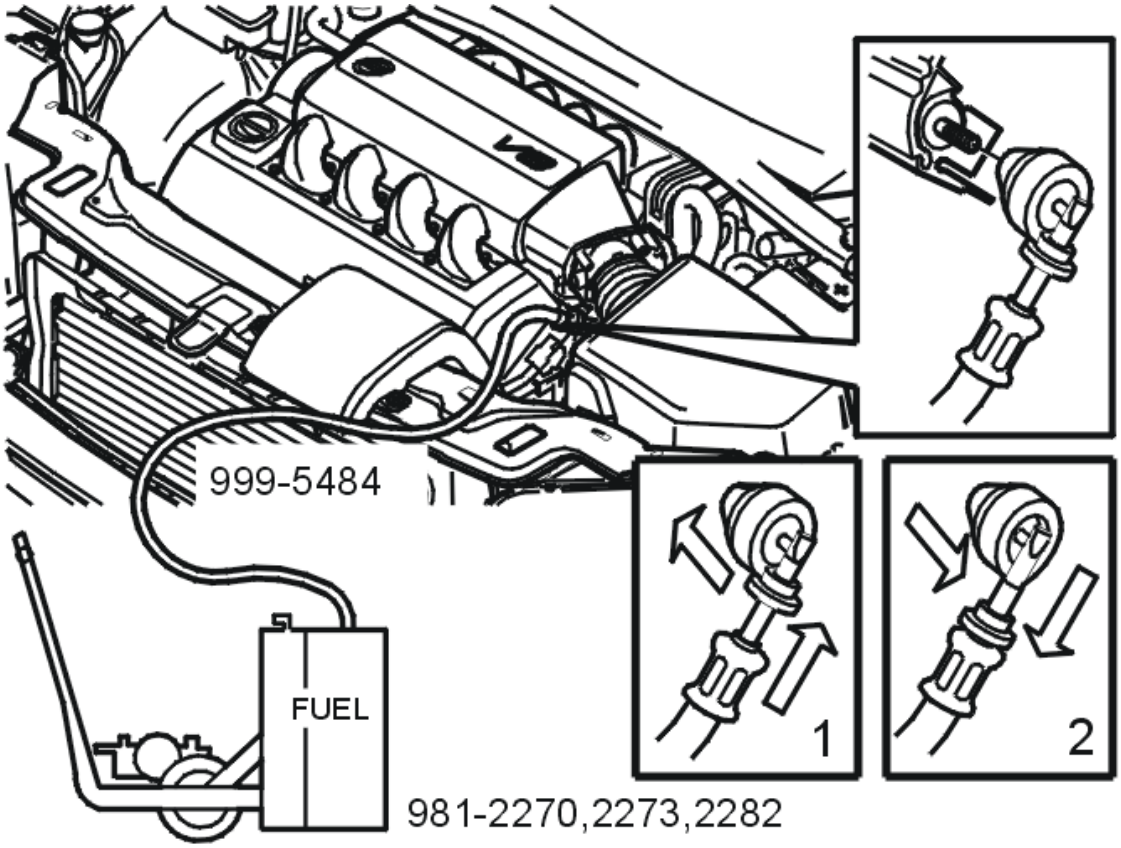

Fig. 16: Connecting Test Adapter
Courtesy of VOLVO CARS CORPORATION

Remove the cover on the valve which is positioned on the fuel rail.

Connect adapter see **9995484** to fuel draining unit see **9812270** , see **9812273** and see **9812282** .

Connect the adapter to the valve on the fuel rail in the **locked** position (valve closed).

Start the fuel drainage unit.

Unlock the adapter (valve open).

Raise the vehicle. See **JACKING POINTS, BODY** .

DRAINING THE FUEL SYSTEM

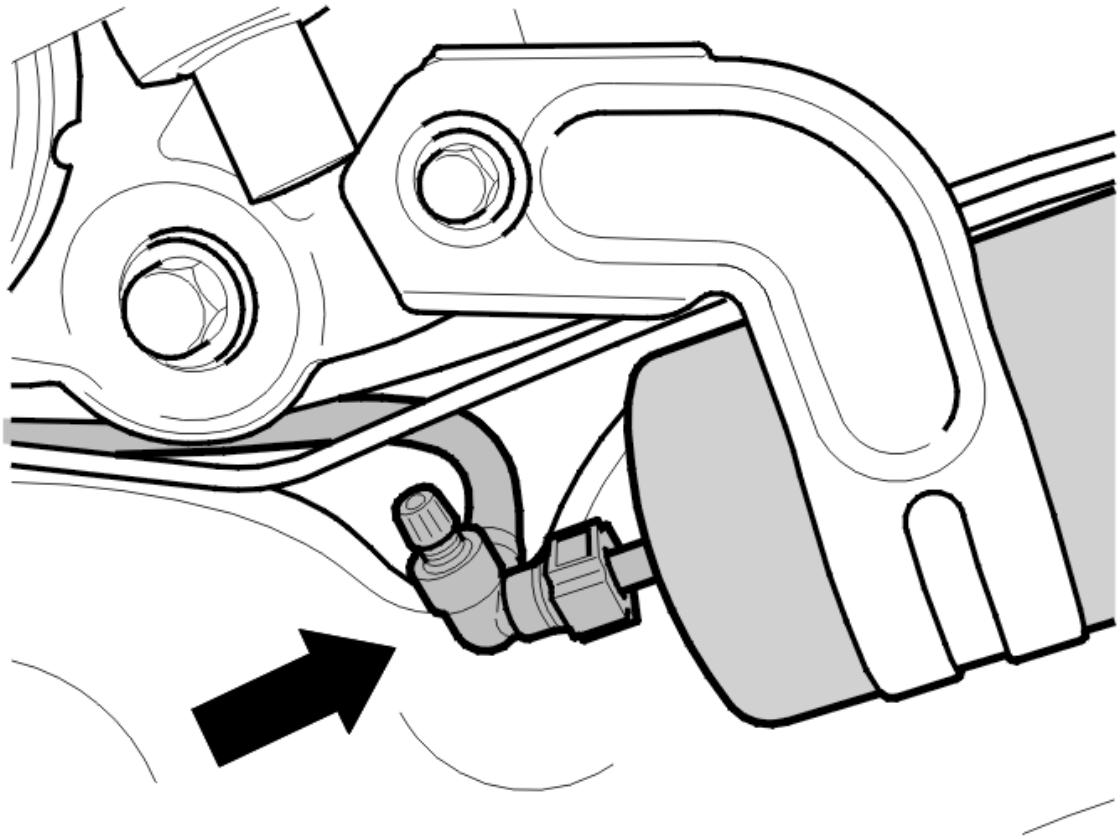

Fig. 17: Connecting Venting Hose 9995480
Courtesy of VOLVO CARS CORPORATION

Remove the cover on the valve cap positioned at the fuel filter.

Connect venting hose see **9995480** to the valve prior to the fuel filter.

It takes approximately **2 minutes** to drain the system.

INSTALLATION

CAUTION: Do not forget to reinstall the covers over the valves.

Reinstall the components in reverse order.

FUEL TANK, FUEL LINES AND EVAPORATIVE SYSTEM (B6324S5; 2011-2012)

EVAPORATION SYSTEM EMISSIONS, LEAK DETECTION

see **EVAPORATION SYSTEM EMISSIONS, LEAK DETECTION**

FUEL SYSTEM, DRAINING

see **FUEL SYSTEM, DRAINING**

FUEL TANK, FUEL LINES AND EVAPORATIVE SYSTEM (B8444S; 2005-2011)

EVAPORATION SYSTEM EMISSIONS, LEAK DETECTION

see **EVAPORATION SYSTEM EMISSIONS, LEAK DETECTION**

FUEL SYSTEM, DRAINING

see **FUEL SYSTEM, DRAINING**

CONTROL SYSTEM (B5254T2; 2003-2007)

FUEL SYSTEM PRESSURE, CHECKING

Special tools	
	T9995011 MANOMETER (FUEL PRESSURE) CI, LH, LE **Tool number:** T9995011 **Tool description:** MANOMETER (FUEL PRESSURE) CI, LH, LE **Tool boards:**
	T9989725 ADAPTER(-5011 CONNECTION TANK DRAINING UNIT) **Tool number:** T9989725 **Tool description:** ADAPTER(-5011 CONNECTION TANK DRAINING UNIT) **Tool boards:**
	T9995479 ADAPTER (CHECK-FUEL PRESSURE) **Tool number:** T9995479 **Tool description:** ADAPTER (CHECK-FUEL PRESSURE) **Tool boards:**
	T9812270 PUMP TROLLEY **Tool number:** T9812270 **Tool description:** PUMP TROLLEY **Tool boards:**
	T9812273 PUMP (UNLEADED) **Tool number:** T9812273 **Tool description:** PUMP (UNLEADED) **Tool boards:**
	T9812282 TANK(UNLEADED GASOLINE) **Tool number:** T9812282 **Tool description:** TANK(UNLEADED GASOLINE) **Tool boards:**

Check the fuel pressure

Absolute pressure: Fuel pressure in fuel system + air pressure.

Relative pressure: Fuel pressure in fuel system.

The air pressure is approx. 100 kPa at sea level. VIDA measures the fuel pressure in absolute pressure. External pressure gauge (pressure gauge) measures the fuel pressure in relative pressure.

Fuel line pressure. See **SPECIFICATIONS, MECHANICAL**

The following method must be used when reading the fuel line pressure on the fuel rail:

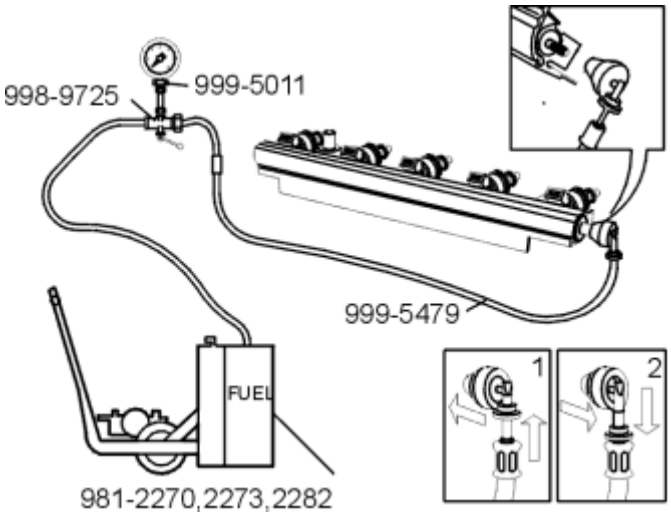

Fig. 18: Fuel Pressure Gauge
Courtesy of VOLVO CARS CORPORATION

Engagement of fuel pressure gauge.

Supplement the pressure gauge with adapter and nipple before use.

- see **9995011**
- see **9989725**
- see **9995479**

Connect the adapter to the valve on the fuel rail in the locked position (image 1, valve closed).

Set the cock on the pressure gauge in the direction of the nipple.

see **9995479**

Connect the pressure gauge's other connection to the fuel drain equipment.

- see **9812270**
- see **9812273**

- see **9812282**

Unlock the adapter (valve open).

Start the engine.

Read off the relative pressure.

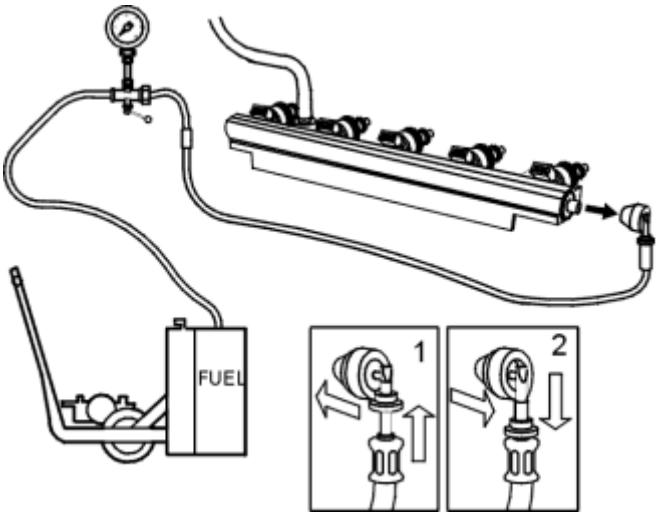

Fig. 19: Fuel Pressure Gauge Adapter
Courtesy of VOLVO CARS CORPORATION

Disengagement of fuel pressure gauge.

Ignition off.

Start the draining unit.

Set the cock on the pressure gauge to the central position.

Secure the adapter (image 1, valve closed).

Remove the adapter from the valve.

Stop the draining unit.

Reset the equipment.

CONTROL SYSTEM (B6294T; 2003-2006)

FUEL SYSTEM PRESSURE, CHECKING

Special tools	

	T9995011 MANOMETER (FUEL PRESSURE) CI, LH, LE **Tool number:** T9995011 **Tool description:** MANOMETER (FUEL PRESSURE) CI, LH, LE **Tool boards:**
	T9989725 ADAPTER(-5011 CONNECTION TANK DRAINING UNIT) **Tool number:** T9989725 **Tool description:** ADAPTER(-5011 CONNECTION TANK DRAINING UNIT) **Tool boards:**
	T9995479 ADAPTER (CHECK-FUEL PRESSURE) **Tool number:** T9995479 **Tool description:** ADAPTER (CHECK-FUEL PRESSURE) **Tool boards:**
	T9812270 PUMP TROLLEY **Tool number:** T9812270 **Tool description:** PUMP TROLLEY **Tool boards:**
	T9812273 PUMP (UNLEADED) **Tool number:** T9812273 **Tool description:** PUMP (UNLEADED) **Tool boards:**
	T9812282 TANK(UNLEADED GASOLINE) **Tool number:** T9812282 **Tool description:** TANK(UNLEADED GASOLINE) **Tool boards:**

Check the fuel pressure

Absolute pressure: Fuel pressure in fuel system + air pressure.

Relative pressure: Fuel pressure in fuel system.

The air pressure is approx. 100 kPa at sea level. VIDA measures the fuel pressure in absolute pressure. External pressure gauge (pressure gauge) measures the fuel pressure in relative pressure.

Fuel line pressure. See **SPECIFICATIONS**

The following method must be used when reading the fuel line pressure on the fuel rail:

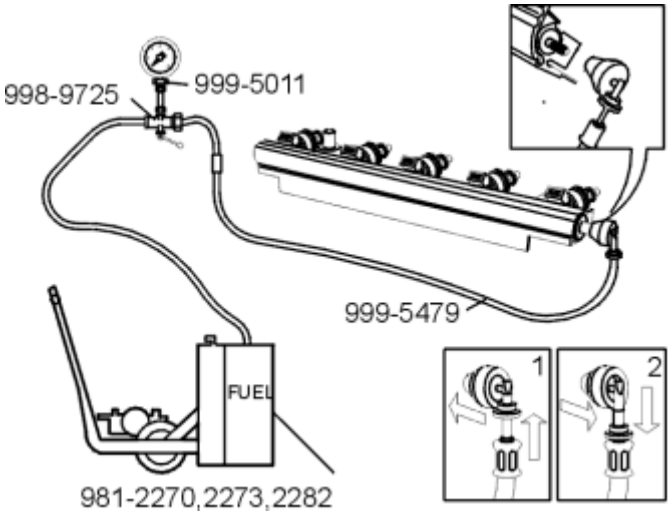

Fig. 20: Fuel Pressure Gauge
Courtesy of VOLVO CARS CORPORATION

Engagement of fuel pressure gauge.

Supplement the pressure gauge with adapter and nipple before use.

- see **9995011**
- see **9989725**
- see **9995479**

Connect the adapter to the valve on the fuel rail in the locked position (image 1, valve closed).

Set the cock on the pressure gauge in the direction of the nipple.

see **9995479**

Connect the pressure gauge's other connection to the fuel drain equipment.

- see **9812270**
- see **9812273**
- see **9812282**

Unlock the adapter (valve open).

Start the engine.

Read off the relative pressure.

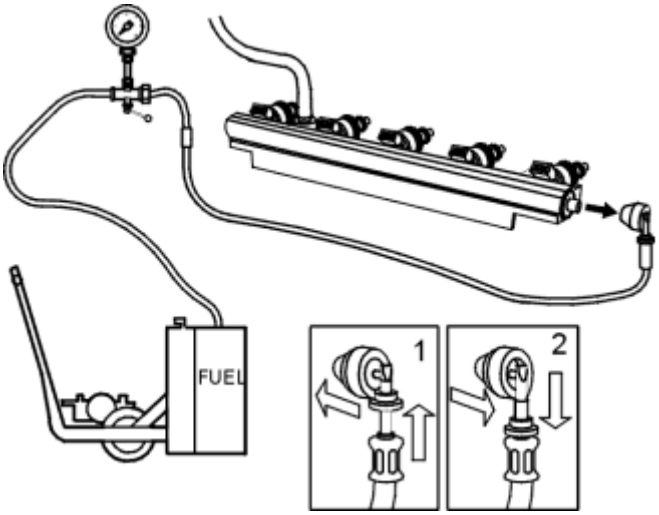

Fig. 21: Fuel Pressure Gauge Adapter
Courtesy of VOLVO CARS CORPORATION

Disengagement of fuel pressure gauge.

Ignition off.

Start the draining unit.

Set the cock on the pressure gauge to the central position.

Secure the adapter (image 1, valve closed).

Remove the adapter from the valve.

Stop the draining unit.

Reset the equipment.

CONTROL SYSTEM (B6324S; 2007-2010)

FUEL SYSTEM PRESSURE, CHECKING

Special tools	
	T9995011 MANOMETER (FUEL PRESSURE) CI, LH, LE **Tool number:** T9995011 **Tool description:** MANOMETER (FUEL PRESSURE) CI, LH, LE **Tool boards:**
	T9989725 ADAPTER(-5011 CONNECTION TANK DRAINING UNIT) **Tool number:** T9989725 **Tool description:** ADAPTER(-5011 CONNECTION TANK DRAINING UNIT) **Tool boards:**

	T9812270 PUMP TROLLEY **Tool number:** T9812270 **Tool description:** PUMP TROLLEY **Tool boards:**
	T9812273 PUMP (UNLEADED) **Tool number:** T9812273 **Tool description:** PUMP (UNLEADED) **Tool boards:**
	T9812282 TANK(UNLEADED GASOLINE) **Tool number:** T9812282 **Tool description:** TANK(UNLEADED GASOLINE) **Tool boards:**
	T9997268 ADAPTER **Tool number:** T9997268 **Tool description:** ADAPTER **Tool boards:**

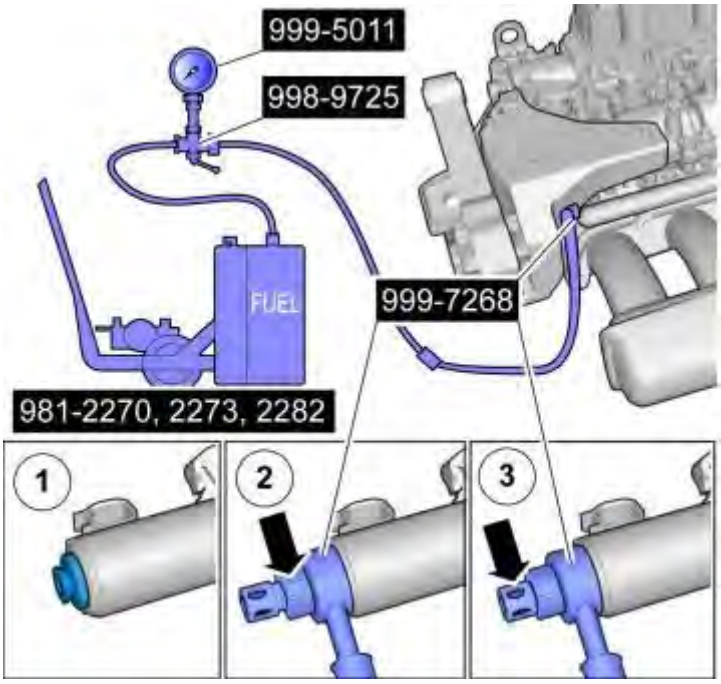

Fig. 22: Identifying Pressure Testing
Courtesy of VOLVO CARS CORPORATION

Attach the following items:

- see **9995011**
- see **9989725**
- see **9812270**
- see **9812273**
- see **9812282**

Remove the cover (1).

Attach the following items:

- see **9997268**
- the screw (2), tighten

Release the valve with the screw (3).

Start the engine and check the fuel pressure.

The fuel pressure must be approximately 380 kPa ±30. The pressure can however rise to 420 kPa within a few minutes after start.

Switch off the engine and check the residual pressure.

Model	Residual pressure
S80 (07-) B6324S, US	250 - 350 kPa ±30
S80 (07-) B6324S, EU	200 - 300 kPa ±30
XC90 B6324S	380 - 520 kPa ±30

CONTROL SYSTEM (B6324S5; 2011-2012)

FUEL SYSTEM PRESSURE, CHECKING

see **FUEL SYSTEM PRESSURE, CHECKING**

CONTROL SYSTEM (B8444S; 2005-2011)

FUEL SYSTEM PRESSURE, CHECKING

Special tools	
	T9995011 MANOMETER (FUEL PRESSURE) CI, LH, LE **Tool number:** T9995011 **Tool description:** MANOMETER (FUEL PRESSURE) CI, LH, LE **Tool boards:**
	T9995479 ADAPTER (CHECK-FUEL PRESSURE) **Tool number:** T9995479 **Tool description:** ADAPTER (CHECK-FUEL PRESSURE) **Tool boards:**

Depressurize the fuel system. See **FUEL SYSTEM, DRAINING**

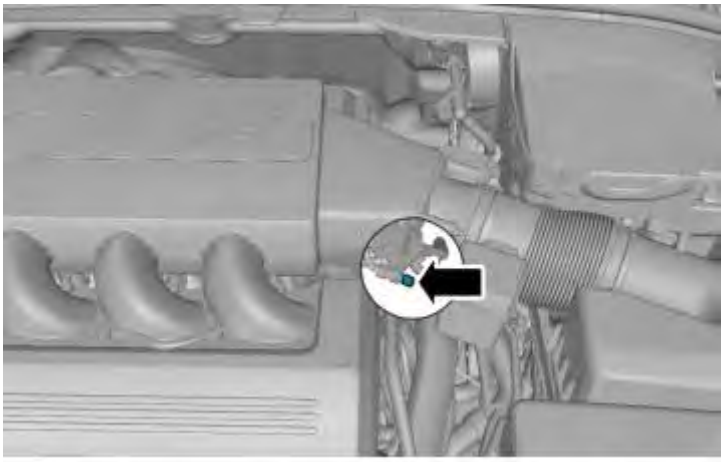

Fig. 23: Locating Test Port
Courtesy of VOLVO CARS CORPORATION

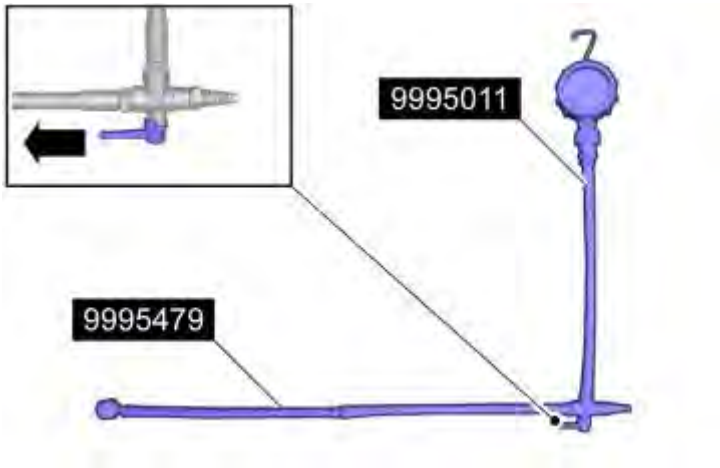

Fig. 24: Identifying Tools 9995011 and 9995479
Courtesy of VOLVO CARS CORPORATION

see **9995011**

see **9995479**

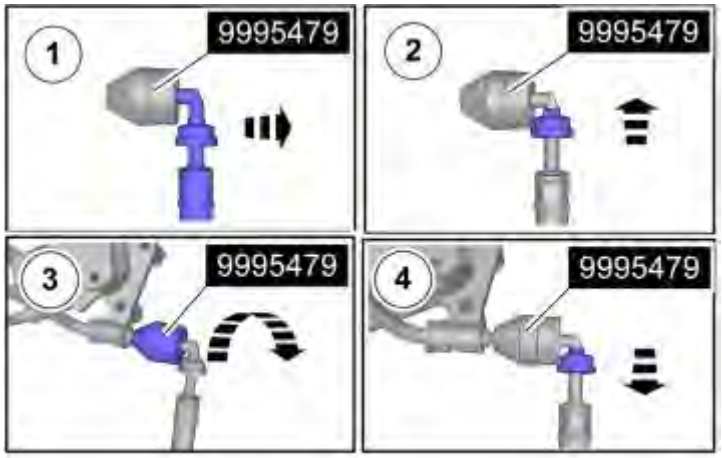

Fig. 25: Identifying Gauge Installation
Courtesy of VOLVO CARS CORPORATION

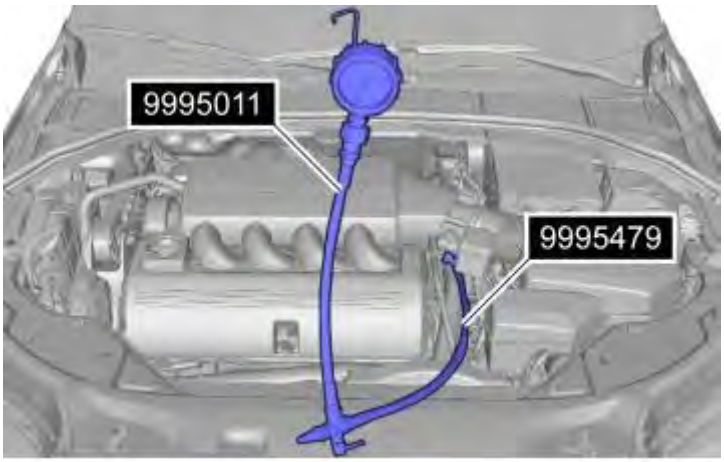

Fig. 26: Identifying Gauge Installed
Courtesy of VOLVO CARS CORPORATION

see **9995011**

see **9995479**

Start the engine and check the fuel line pressure. See **SPECIFICATIONS, MECHANICAL (2005-2010)**

Switch off the engine and check the residual pressure. See **SPECIFICATIONS, MECHANICAL (2005-2010)**

Depressurize the fuel system. See **FUEL SYSTEM, DRAINING**

Remove in reverse order.

ENGINE

Fuel System - Removal, replacement and installation

MASS AIR FLOW (MAF) SENSOR (B5254T2; 2003-2004)

MASS AIR FLOW (MAF) SENSOR, REPLACING

MASS AIR FLOW (MAF) SENSOR, REPLACING

REMOVAL AND INSTALLATION

NOTE: **As the illustrations in this service information are used for different model years and / or models, some variation may occur. However, the essential information in the illustrations is always correct.**

REMOVING THE AIR CLEANER (ACL)

Fig. 1: Engine Compartment Components
Courtesy of VOLVO CARS CORPORATION

Remove:

- the turbocharger control valve from the air cleaner (ACL) housing
- the screws in the front panel for the inlet hose
- the screws in the air cleaner (ACL) housing for the inlet hose
- the inlet hose
- the nuts for the air cleaner (ACL) housing
- the hose clamp for the mass air flow (MAF) sensor. Disconnect the connector for the mass air flow (MAF) sensor
- the air cleaner (ACL) assembly.

REMOVING THE MASS AIR FLOW (MAF) SENSOR

Remove:

- the screws for the mass air flow (MAF) sensor
- the mass air flow (MAF) sensor.

INSTALLING THE MASS AIR FLOW (MAF) SENSOR

Install:

- the mass air flow (MAF) sensor
- the screws. Tighten.

Fig. 2: Engine Compartment Components
Courtesy of VOLVO CARS CORPORATION

- air cleaner (ACL) assembly
- the hose clamp for the mass air flow (MAF) sensor
- the nuts for the air cleaner (ACL) housing. Tighten
- the inlet hose
- the screws for the inlet hose. Tighten
- the turbocharger control valve on the air cleaner (ACL).

Connect the connector to the mass air flow (MAF) sensor.

MASS AIR FLOW (MAF) SENSOR (B5254T2; 2005-2007)

MASS AIR FLOW (MAF) SENSOR, REPLACING

NOTE: As the illustrations in this service information are used for different model years and / or models, some variation may occur. However, the essential information

in the illustrations is always correct.

REMOVING THE MASS AIR FLOW (MAF) SENSOR

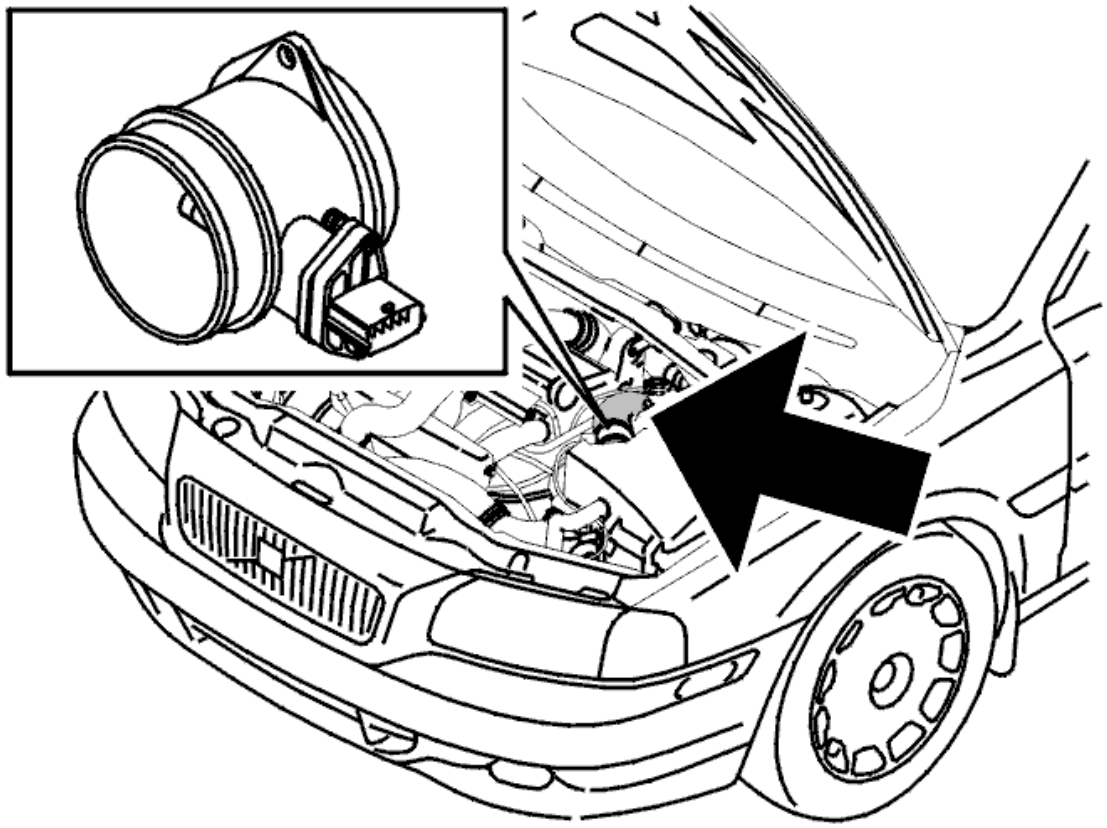

Fig. 3: Locating Mass Air Flow Sensor
Courtesy of VOLVO CARS CORPORATION

Remove:

- the inlet hose from the mass air flow (MAF) sensor
- the connector from the mass air flow (MAF) sensor
- the screws securing the mass air flow (MAF) sensor to the air cleaner (ACL) cover.

Pull and work the mass air flow (MAF) sensor loose from the air cleaner (ACL) cover.

INSTALLING THE MASS AIR FLOW (MAF) SENSOR

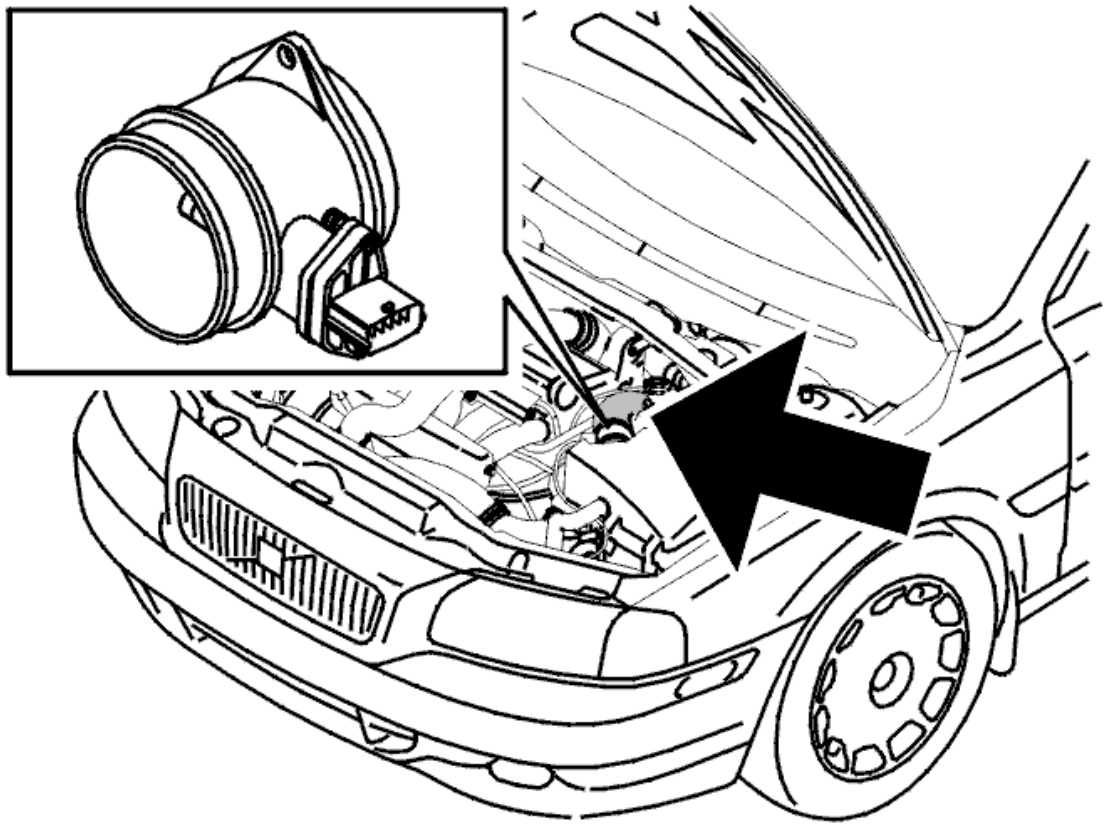

Fig. 4: Locating Mass Air Flow Sensor
Courtesy of VOLVO CARS CORPORATION

NOTE: Apply water to the O-ring in the air cleaner (ACL) cover to facilitate installation of the mass air flow (MAF) sensor.

Install the new mass air flow (MAF) sensor.

Press the mass air flow (MAF) sensor into place.

Install the screws. Tighten.

Install the inlet hose on the mass air flow (MAF) sensor. Tighten the hose clamp.

Press the connector for the mass air flow (MAF) sensor into place.

MASS AIR FLOW (MAF) SENSOR (B6294T; 2003-2006)

MASS AIR FLOW (MAF) SENSOR, REPLACING

REMOVING THE MASS AIR FLOW (MAF) SENSOR

Remove

- the inlet hose from the mass air flow (MAF) sensor
- the connector from the mass air flow (MAF) sensor
- the screws securing the mass air flow (MAF) sensor on the air cleaner (ACL) cover.

Pull and work the mass air flow (MAF) sensor loose from the air cleaner (ACL) cover.

INSTALLING THE MASS AIR FLOW (MAF) SENSOR

NOTE: Apply water to the O-ring in the air cleaner (ACL) cover to facilitate installation of the mass air flow (MAF) sensor.

Install a new mass air flow (MAF) sensor.

Press the mass air flow (MAF) sensor into position.

Install the screws. Tighten.

Install the inlet hose on the mass air flow (MAF) sensor. Tighten the hose clamp.

Press the mass air flow (MAF) sensor connector into position.

MASS AIR FLOW (MAF) SENSOR (B8444S; 2005-2011)

MASS AIR FLOW (MAF) SENSOR, REPLACING

NOTE: The illustrations in this service information are used for different model years and/or models. Some variation may occur. However, the essential information in the illustrations is always correct.

REMOVAL

REMOVING THE MASS AIR FLOW SENSOR

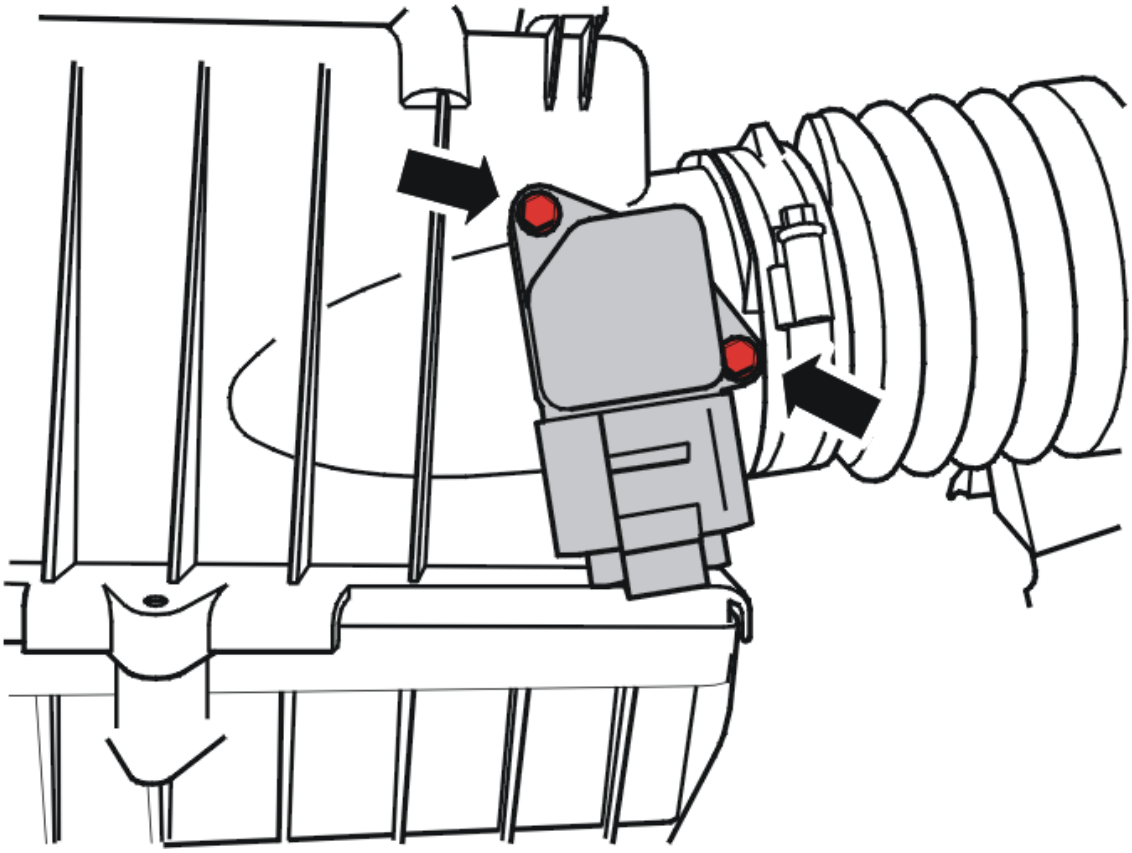

Fig. 5: Identifying Mass Air Flow Sensor
Courtesy of VOLVO CARS CORPORATION

Remove:

- the cover over the air cleaner module by pulling it straight up
- the connector to the mass air flow sensor
- the 2 screws
- the mass air flow sensor.

INSTALLATION

NOTE: For tightening torques, see: TIGHTENING TORQUE .

INSTALLING THE MASS AIR FLOW SENSOR

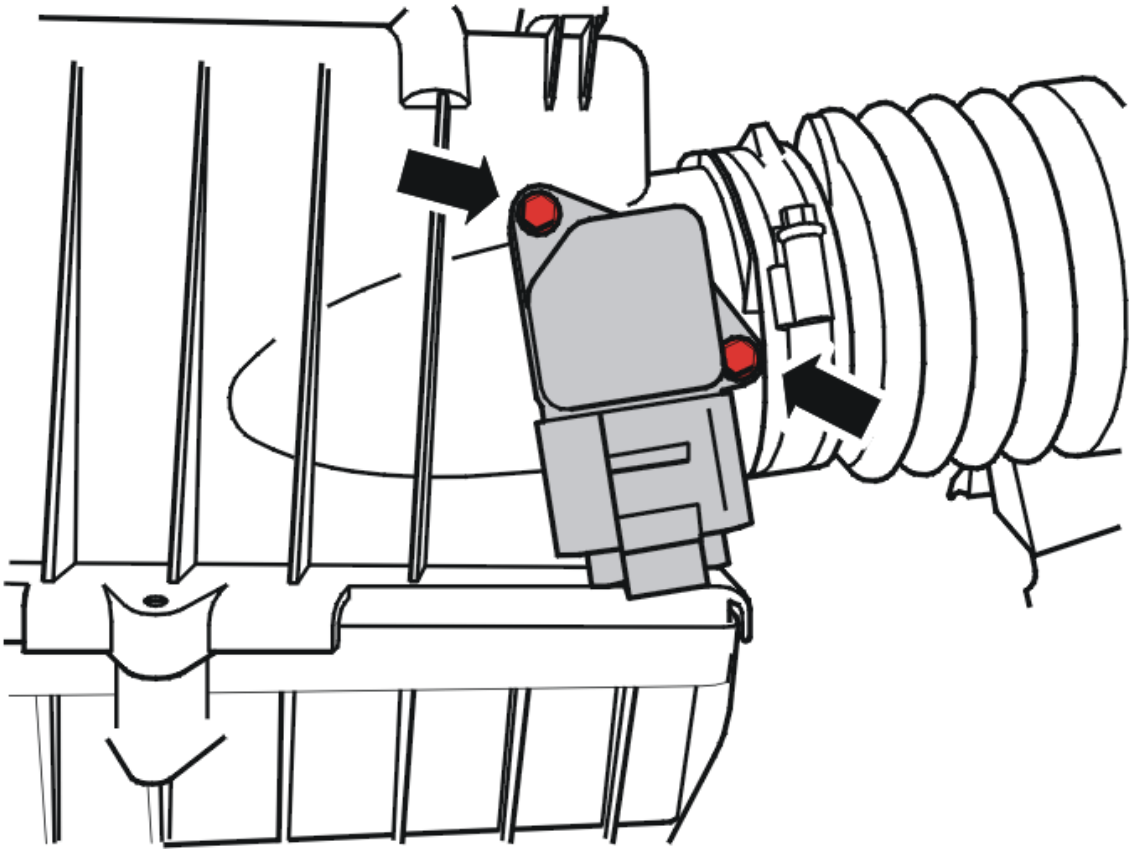

Fig. 6: Identifying Mass Air Flow Sensor
Courtesy of VOLVO CARS CORPORATION

Install:

- the mass air flow sensor
- the 2 screws; tighten
- the connector to the mass air flow sensor
- the cover over the air cleaner module.

FUEL FILTER

REPLACING THE FUEL FILTER

REMOVAL

DRAINING THE FUEL SYSTEM

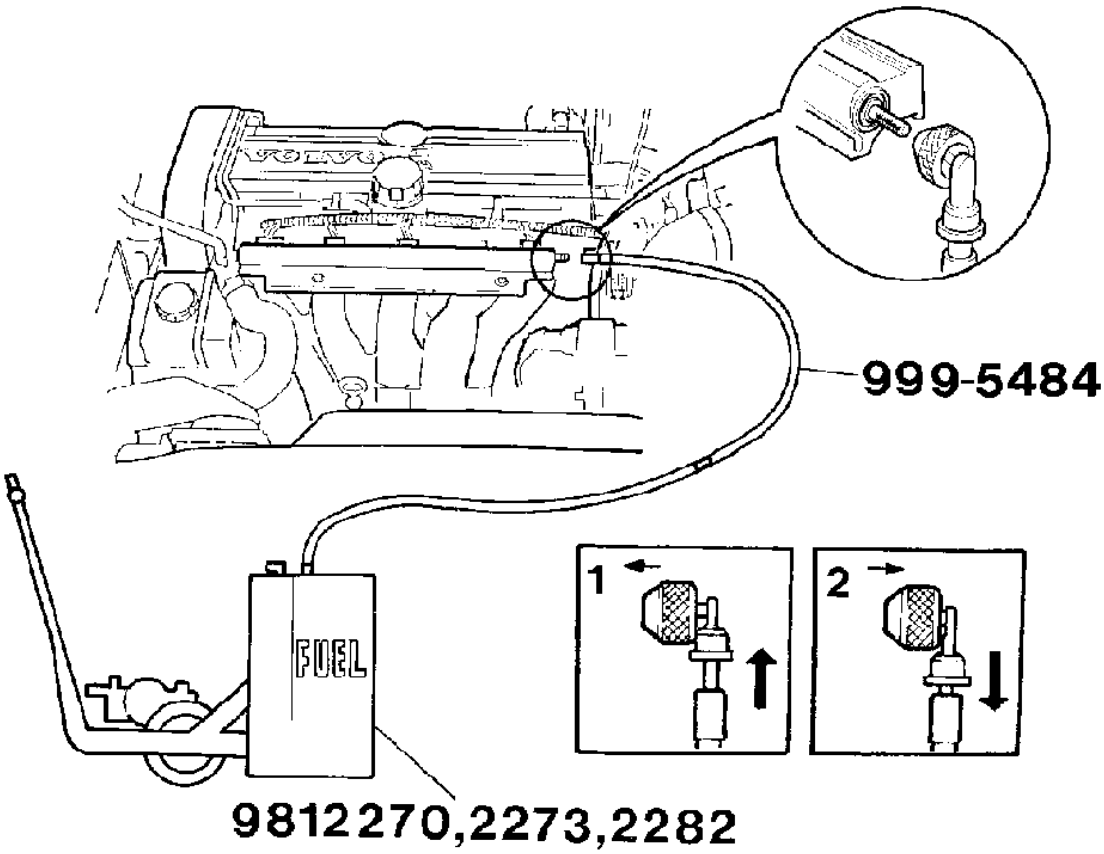

Fig. 7: Adapter Connected To Fuel Draining Unit
Courtesy of VOLVO CARS CORPORATION

- Depressurize the fuel system acc. to **FUEL SYSTEM PRESSURE RELEASE** .

REMOVING THE FUEL FILTER

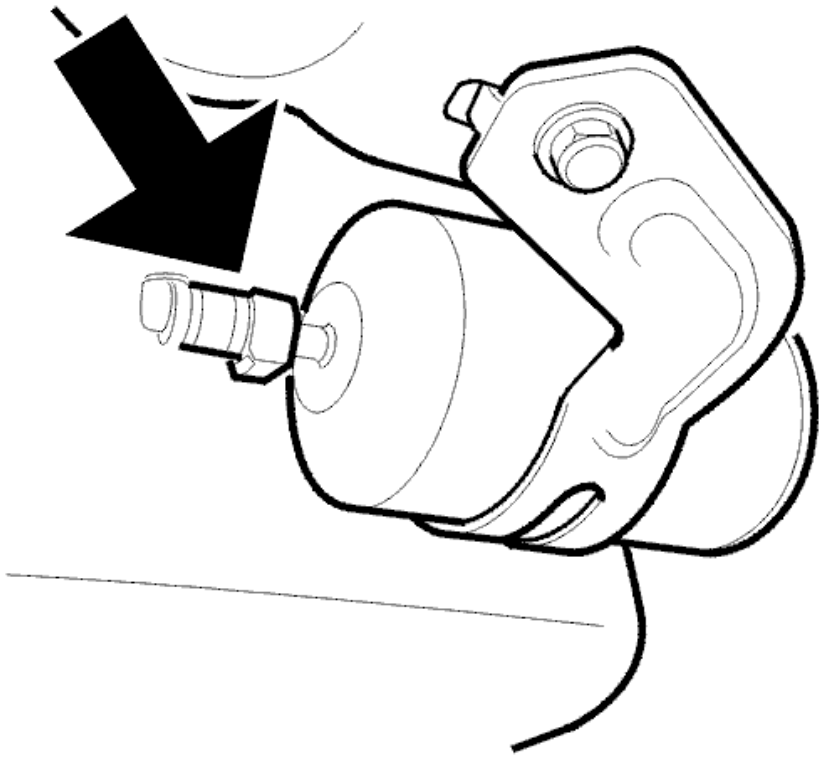

Fig. 8: Fuel Filter Retaining Bolt and Quick-Release Connector
Courtesy of VOLVO CARS CORPORATION

- Remove the screw securing the clamp around the filter
- Disconnect the quick-release connectors from the fuel filter
- Replace the filter.

INSTALLATION

INSTALLING THE FUEL FILTER

In reverse order.

Tighten the screw. Tighten to **25 Nm** .

FUEL LEVEL SENSOR, FUEL TANK, RIGHT-HAND/FUEL TANK, REPLACING

Special tools:

see **9995720**

NOTE: As the illustrations in this service information are used for different model years

and / or models, some variation may occur. However, the essential information in the illustrations is always correct.

NOTE: **To replace the level sensor for the left-hand fuel tank, see:LEVEL SENSOR FUEL TANK LEFT, REPLACING.**

PREPARATION

Drain the fuel tank. See **FUEL TANK, DRAINING** .

REMOVING THE FUEL PUMP (FP) / LEVEL SENSOR

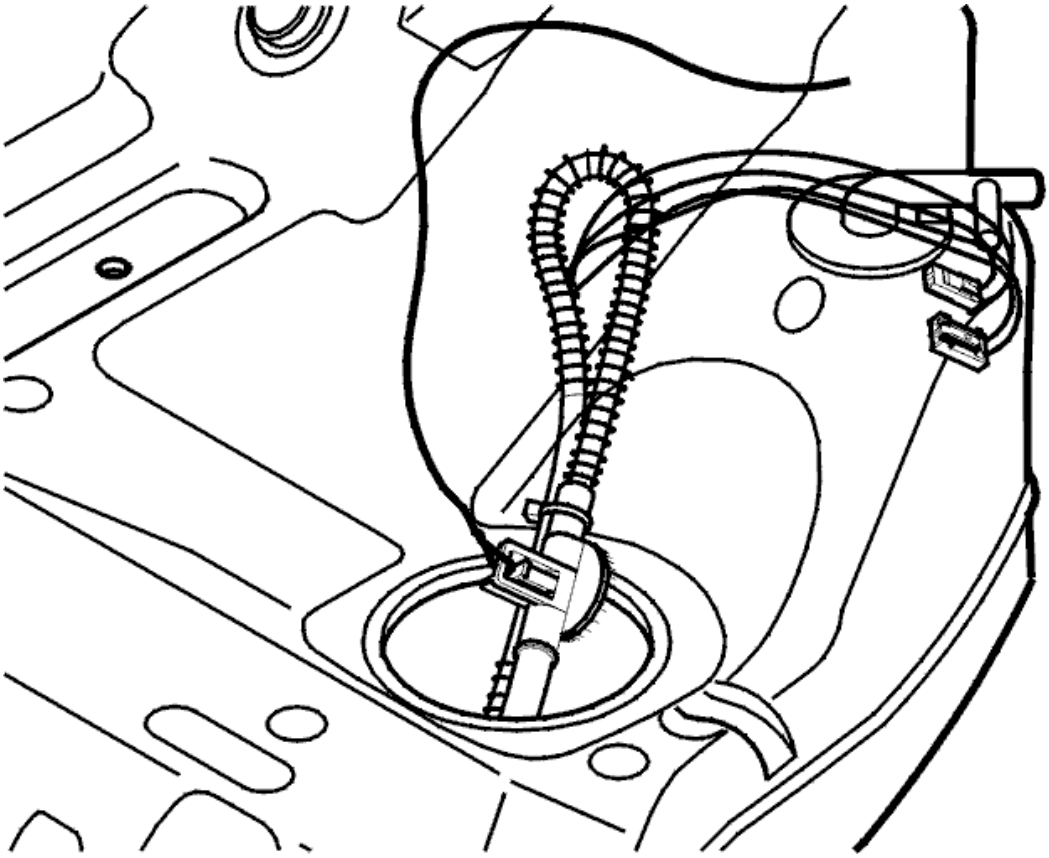

Fig. 9: Identifying Left-Hand Fuel Level Sensor And Connectors
Courtesy of VOLVO CARS CORPORATION

To remove the left-hand level sensor see: **LEVEL SENSOR FUEL TANK LEFT, REPLACING**

Secure a wire in the area of the ejector. The wire must be sufficiently long that it reaches over to the opposite side of the tank with some excess remaining to ensure that it does not slide into the tank. The wire is needed to pull the hoses and wiring back to the left-hand side of the tank after the fuel tank unit has been replaced.

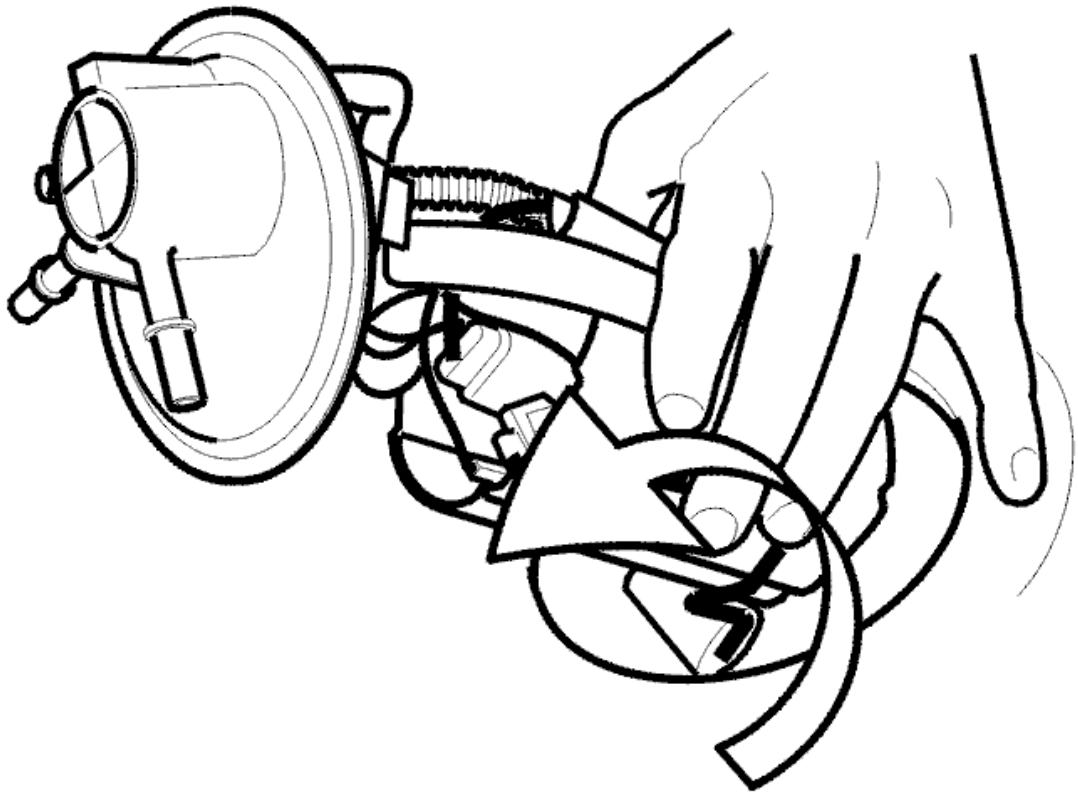

Fig. 10: Removing Fuel Pump Module
Courtesy of VOLVO CARS CORPORATION

Grip around the right-hand fuel pump (FP) / level sensor reservoir. Pinch the float in its lowest position.

NOTE: Take care with the fuel tank.

Carefully and slowly pull up the holder. Carefully work the holder out.

Pull the hoses out from the tank without pulling up the entire wire from the right-hand hole in the tank.

NOTE: It is extremely important that the float arm is not broken or bent.

Remove the wire from the fuel pump (FP) / level sensor ejector.

REMOVING THE LEVEL SENSOR

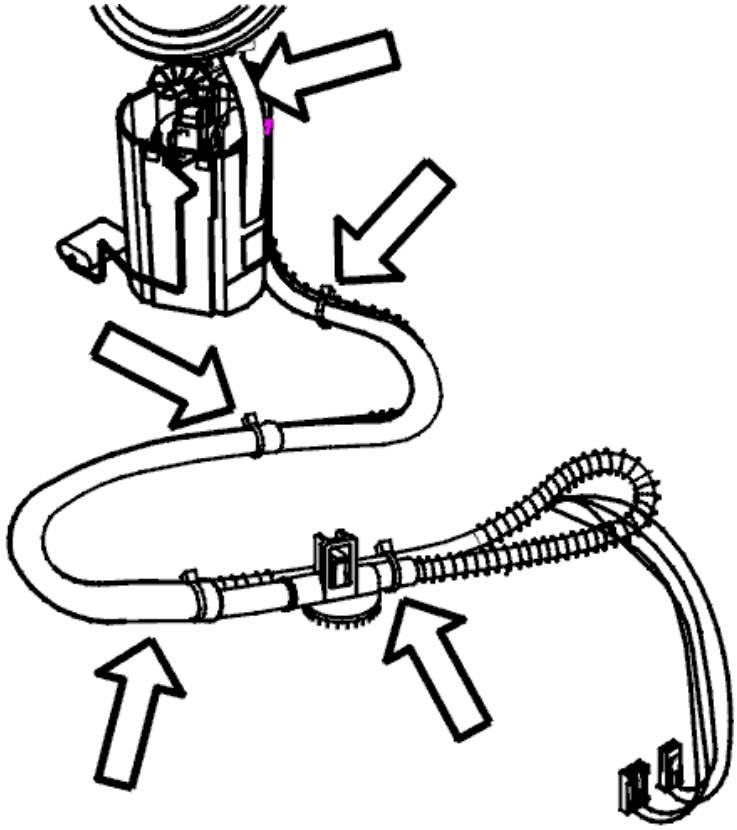

Fig. 11: Identifying Tie Straps Around Protective Sheath, Hoses And Wiring
Courtesy of VOLVO CARS CORPORATION

Remove:

- -the tie straps around the protective sheath, hoses and wiring
- the net protective sheath by carefully threading it off the hoses and wiring
- the tie strap under the protective sheath.

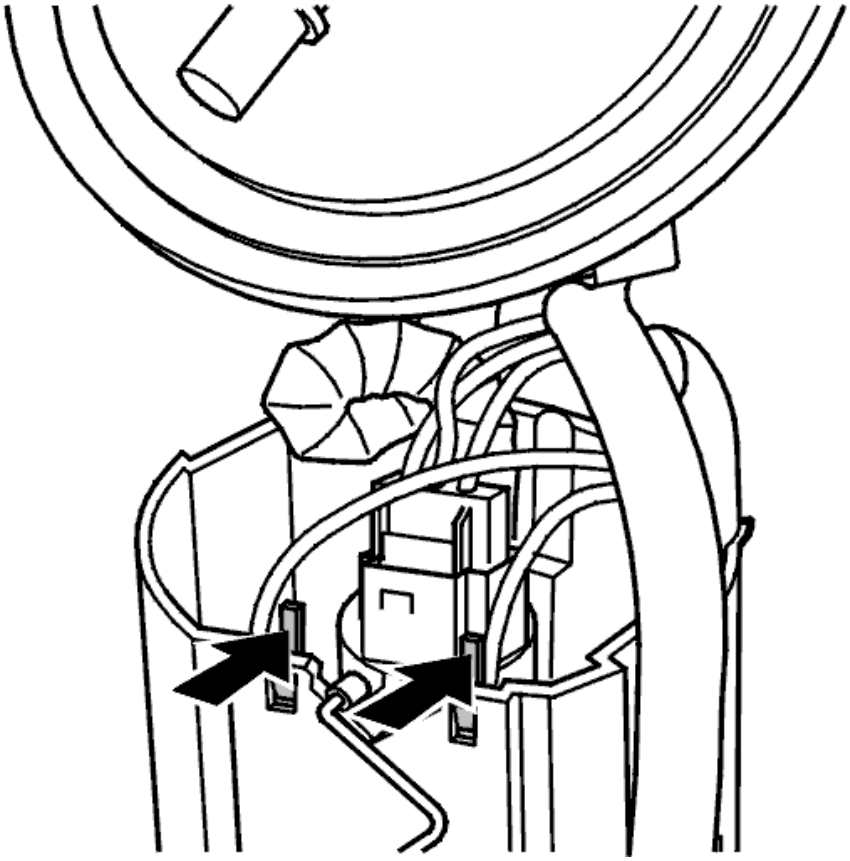

Fig. 12: Identifying Fuel Level Sensor Retaining Clips
Courtesy of VOLVO CARS CORPORATION

Remove:

- the tie strap around the wiring above the pump
- the level sensor by pressing in the two clips and pulling upwards
- the thin pipe from the holder on the outside of the fuel tank unit
- the wiring from the holder in the fuel tank unit.

APPLIES TO VEHICLES WITH PARKING HEATERS

Fig. 13: Fuel Tank Unit Hole Connection
Courtesy of VOLVO CARS CORPORATION

If the vehicle has an engine block heater, drill out the hole connection in the fuel tank unit. Use a O4 mm drill bit. Transfer the dip pipe.

INSTALLING THE RIGHT-HAND LEVEL SENSOR

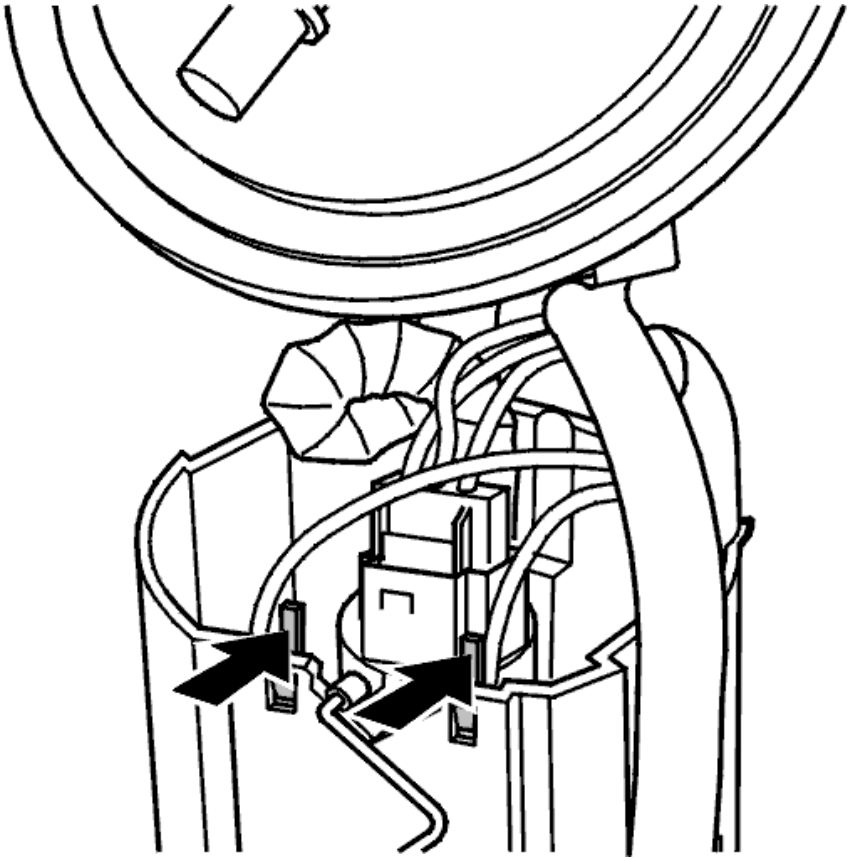

Fig. 14: Identifying Fuel Level Sensor Retaining Clips
Courtesy of VOLVO CARS CORPORATION

Install:

- the new level sensor
- the wiring in the holder
- the thin pipe in the holder on the outside of the fuel tank unit
- the tie strap around the wiring above the pump

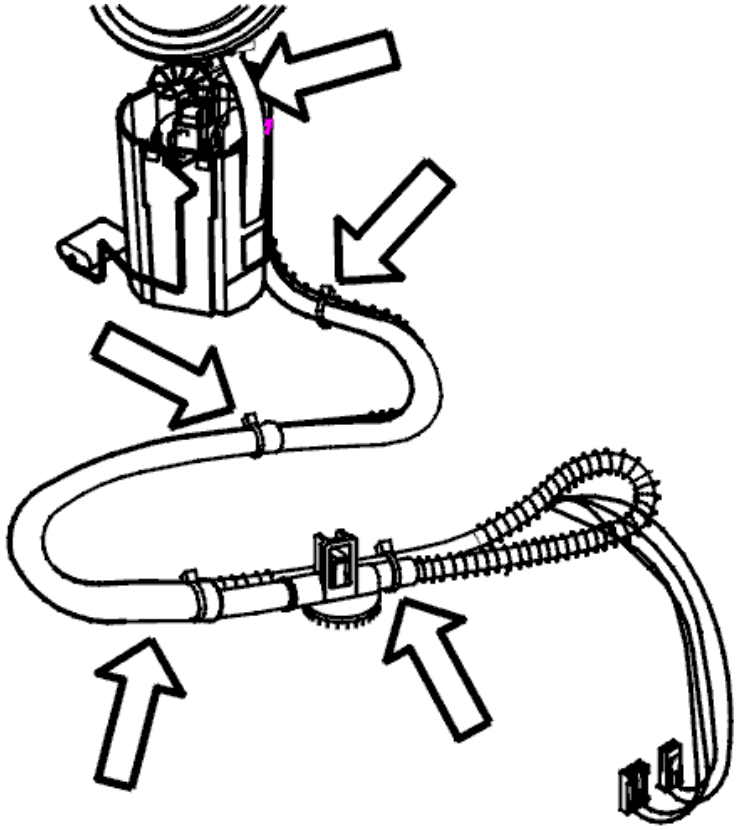

Fig. 15: Identifying Tie Straps Around Protective Sheath, Hoses And Wiring
Courtesy of VOLVO CARS CORPORATION

Install:

- the tie strap under the protective sheath. Secure the tie strap on the smooth central section of the corrugated hose
- the protective sheath
- four tie straps around the protective sheath, hoses and wiring. Secure the tie straps on the four smooth central sections of the corrugated hose.

INSTALLING FUEL PUMP (FP) / LEVEL SENSOR

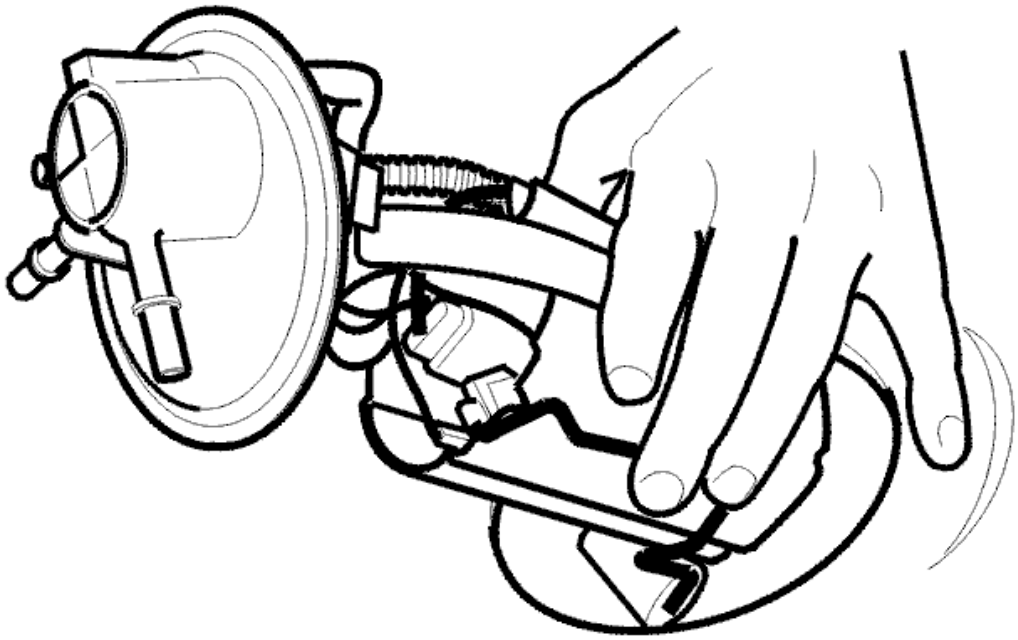

Fig. 16: Gripping Right-Hand Level Sensor In Its Lowest Position
Courtesy of VOLVO CARS CORPORATION

Install the wire on the new ejector for the level sensor and pump.

Install a new O-ring, lubricated with lubricant, P/N 1161580.

Insert the hoses and wiring into the tank via the right-hand tank hole.

Grip the right-hand level sensor and pump holder and pinch it so that the float is held in its lowest position.

Carefully and slowly lower the holder. Carefully work the holder into place.

Pull the wire so that the hoses and wiring end up on the left side of the tank.

LEVEL SENSOR RIGHT-HAND CONTINUED

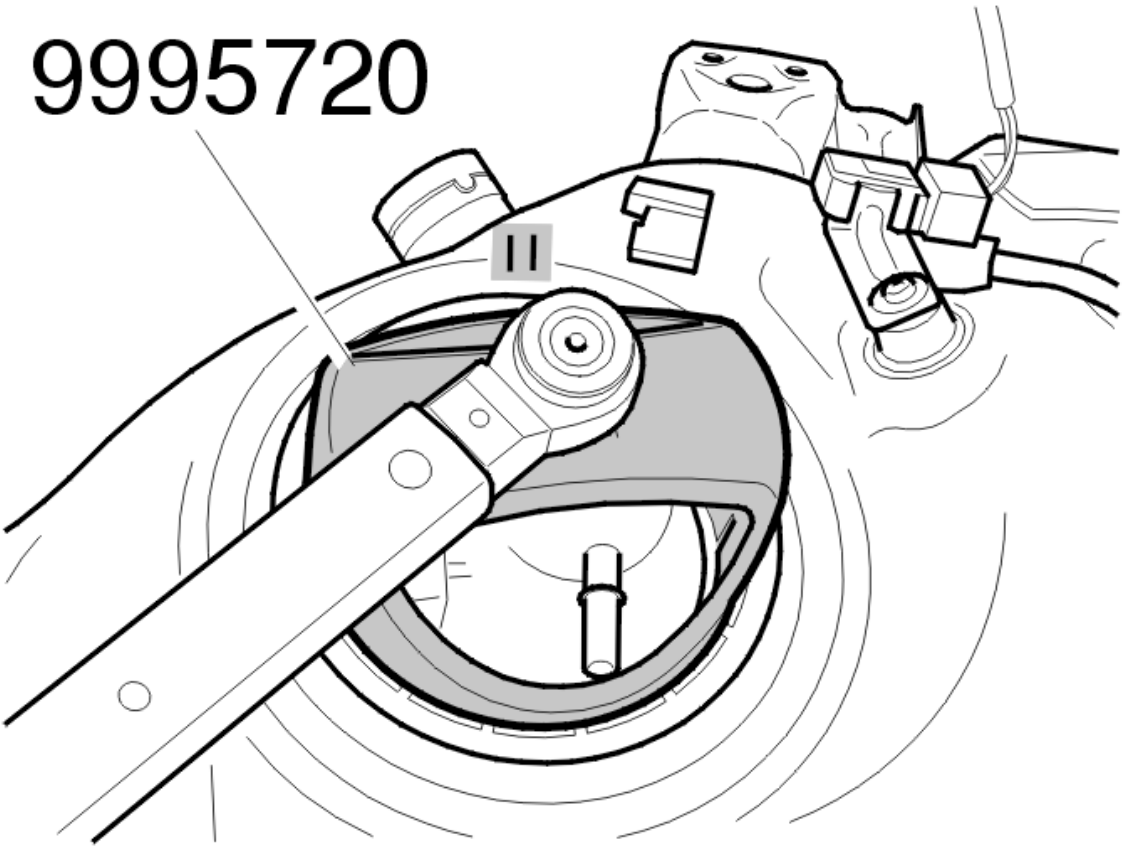

Fig. 17: Installing Fuel Level Sensor Using Special Tool 999 5720
Courtesy of VOLVO CARS CORPORATION

Press the right-hand level sensor down so that the fuel line connections are pointing forwards and to the right.

Check that the O-ring is not trapped.

Tighten the screw to **60 Nm** (Use special tool see **9995720**).

Install the hoses and connectors on the level sensor.

Wipe up any fuel spillage

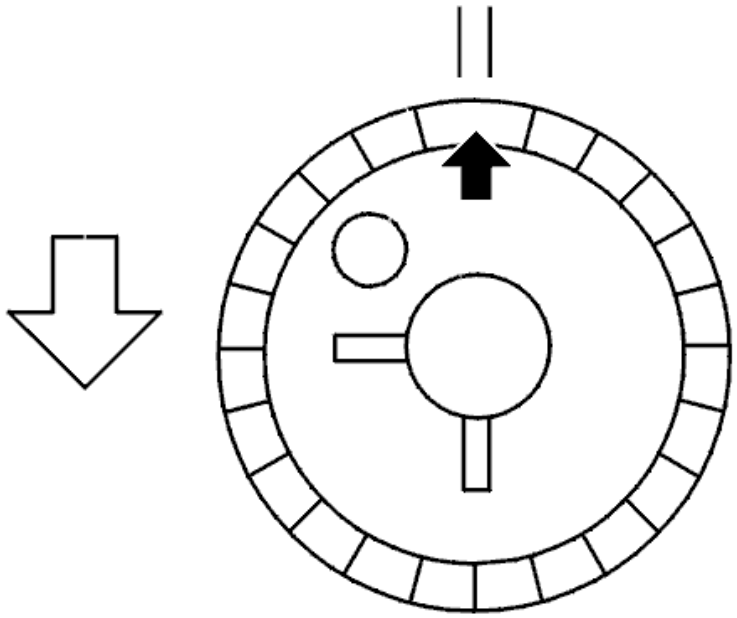

Fig. 18: Checking Arrow On Cover
Courtesy of VOLVO CARS CORPORATION

NOTE: **Check that the arrow on the cover is between the markings on the tank. If the arrow is outside the markings the fuel gauge sensor will give an incorrect value and the float may catch against the inner wall of the tank. If not: Slacken off the screw and adjust the position of the sensor. Tighten as above.**

Install the level sensor left-hand fuel tank, see: **LEVEL SENSOR FUEL TANK LEFT, REPLACING**.

FINISHING

Install on both sides:

- the wiring in the sockets on the rubber seal
- the cover over the level sensors, tighten the nuts to 6 Nm.

Connect the wiring and the connectors.

Fold the carpet down.

Install:

- the center rear seat. See **UPHOLSTERY BACKREST CUSHION CENTER (SECOND ROW), REPLACING** .
- the outer rear seat. See **UPHOLSTERY BACKREST CUSHION OUTER (SECOND ROW)** .

LEVEL SENSOR FUEL TANK LEFT, REPLACING

NOTE: **As the illustrations in this service information are used for different model years and / or models, some variation may occur. However, the essential information in the illustrations is always correct.**

PREPARATORY WORK

DRAINING FUEL TANK

Drain the fuel tank and loosen the left-hand level sensor. See: **FUEL TANK, DRAINING**

REMOVAL

REMOVING THE LEFT-HAND LEVEL SENSOR

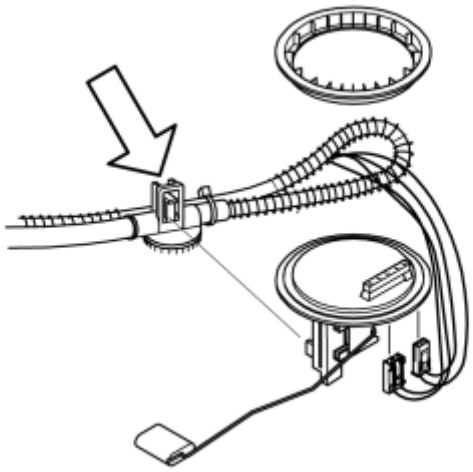

Fig. 19: Identifying Fuel Level Sensor
Courtesy of VOLVO CARS CORPORATION

Remove:

- the ejector
- the connectors.

INSTALLATION

INSTALLING THE LEFT-HAND LEVEL SENSOR

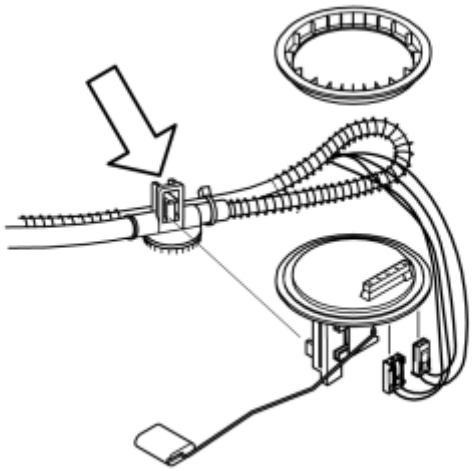

Fig. 20: Identifying Fuel Level Sensor
Courtesy of VOLVO CARS CORPORATION

Install:

- the ejector
- the connectors.

Install the left and right-hand level sensors on the fuel tank. See: **FUEL TANK, DRAINING**

EVAP VALVE, REPLACING

NOTE: **The illustrations in this service information are used for different model years and/or models. Some variation may occur. However, the essential information in the illustrations is always correct.**

REMOVAL

REMOVING UPPER CROSS STAY SCREWS

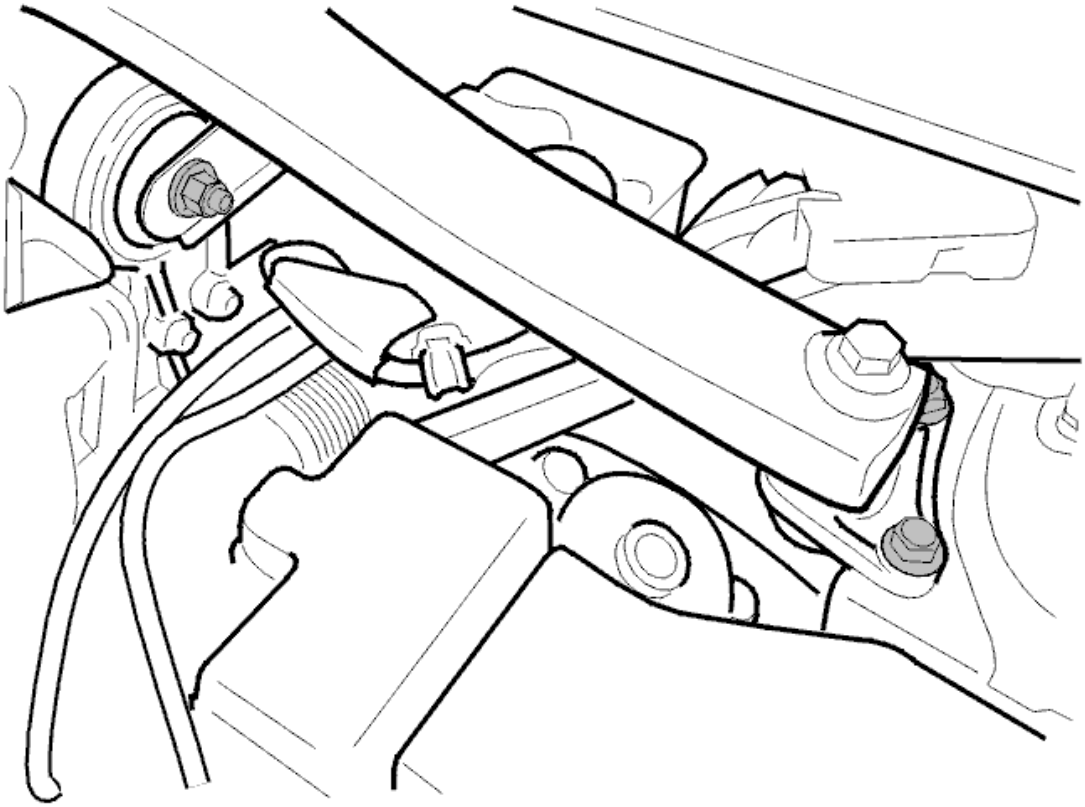

Fig. 21: Identifying Engine Cross Brace
Courtesy of VOLVO CARS CORPORATION

Remove:

- the 2 screws at the suspension turrets on both sides
- the screws of the upper engine mount on the engine
- the upper cross stay.

REMOVE THE UPPER REAR ENGINE COVER

Remove the upper rear engine cover by pulling it straight up.

REMOVING THE UPPER ENGINE MOUNT

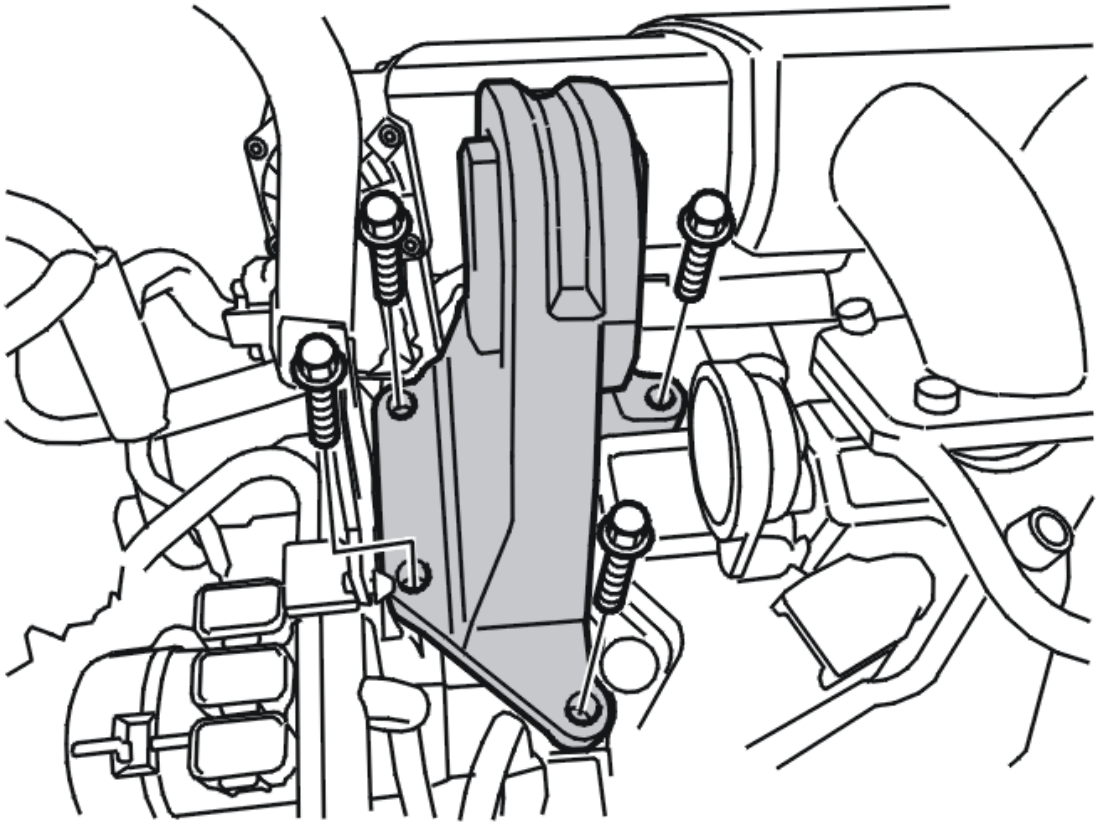

Fig. 22: Viewing Upper Engine Mount
Courtesy of VOLVO CARS CORPORATION

Remove:

- the 4 screws
- the upper engine mount.

REMOVING THE EVAP VALVE

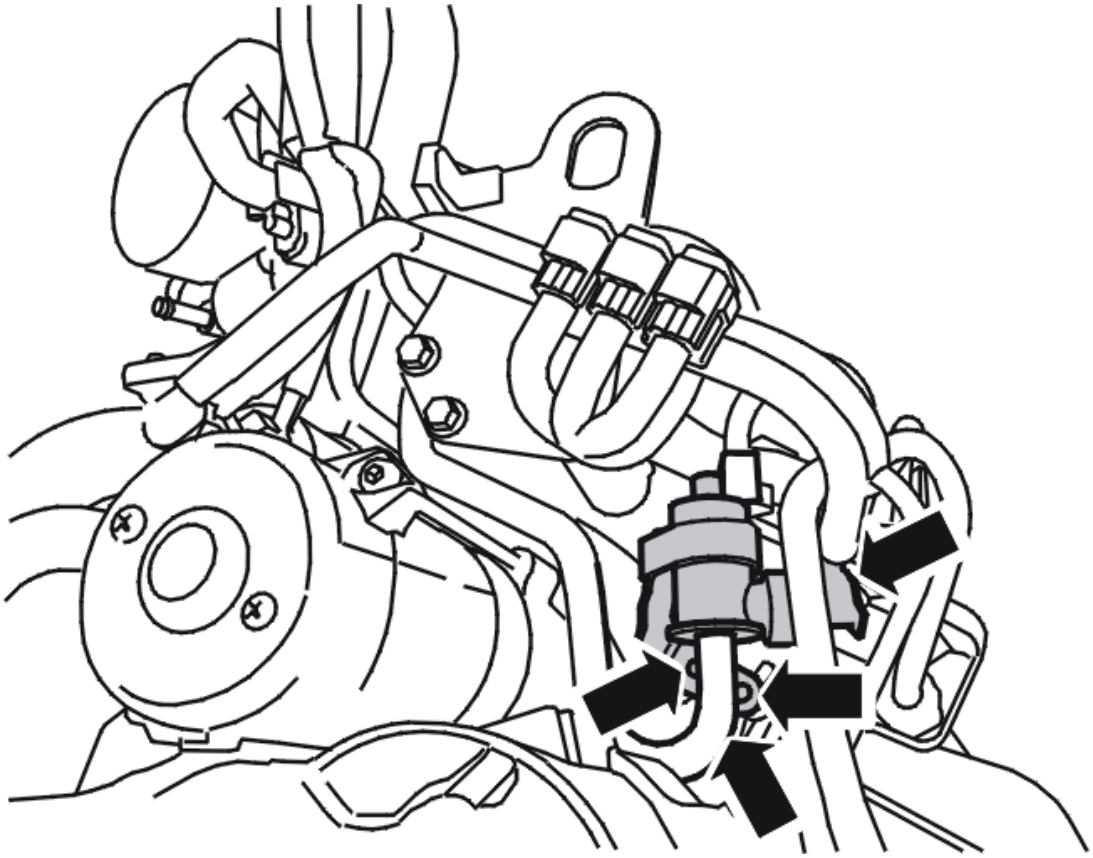

Fig. 23: Locating EVAP Valve
Courtesy of VOLVO CARS CORPORATION

Unplug the EVAP valve connector.

Remove:

- the EVAP valve from the bracket
- the EVAP line from the EVAP valve to the tank by releasing the quick-action lock
- the hose from the intake manifold to the EVAP valve by releasing the hose clip.

INSTALLATION

INSTALLING THE EVAP VALVE

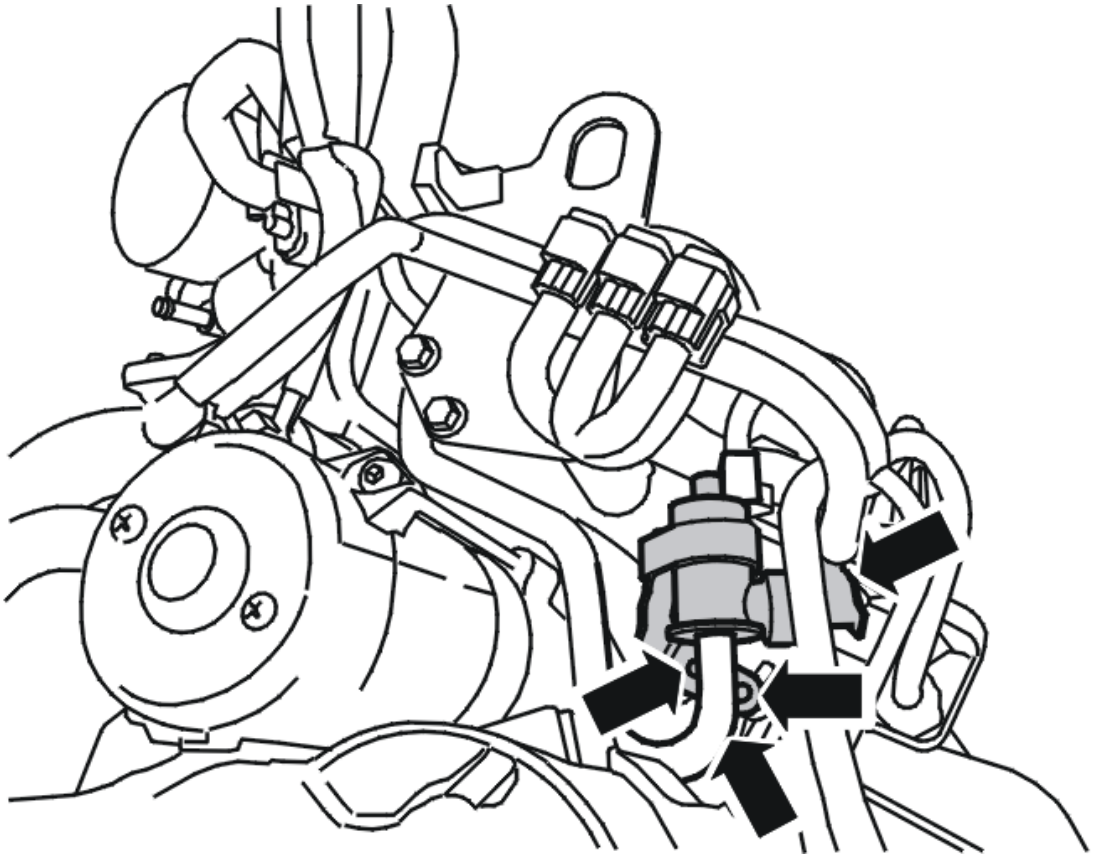

Fig. 24: Locating EVAP Valve
Courtesy of VOLVO CARS CORPORATION

Install:

- the hose from the intake manifold to the EVAP valve; secure with the clamp
- the EVAP line to the tank on the EVAP valve; secure with the quick-action lock
- the EVAP valve on the bracket. Plug in the connector to the EVAP valve.

INSTALLING THE UPPER ENGINE MOUNT

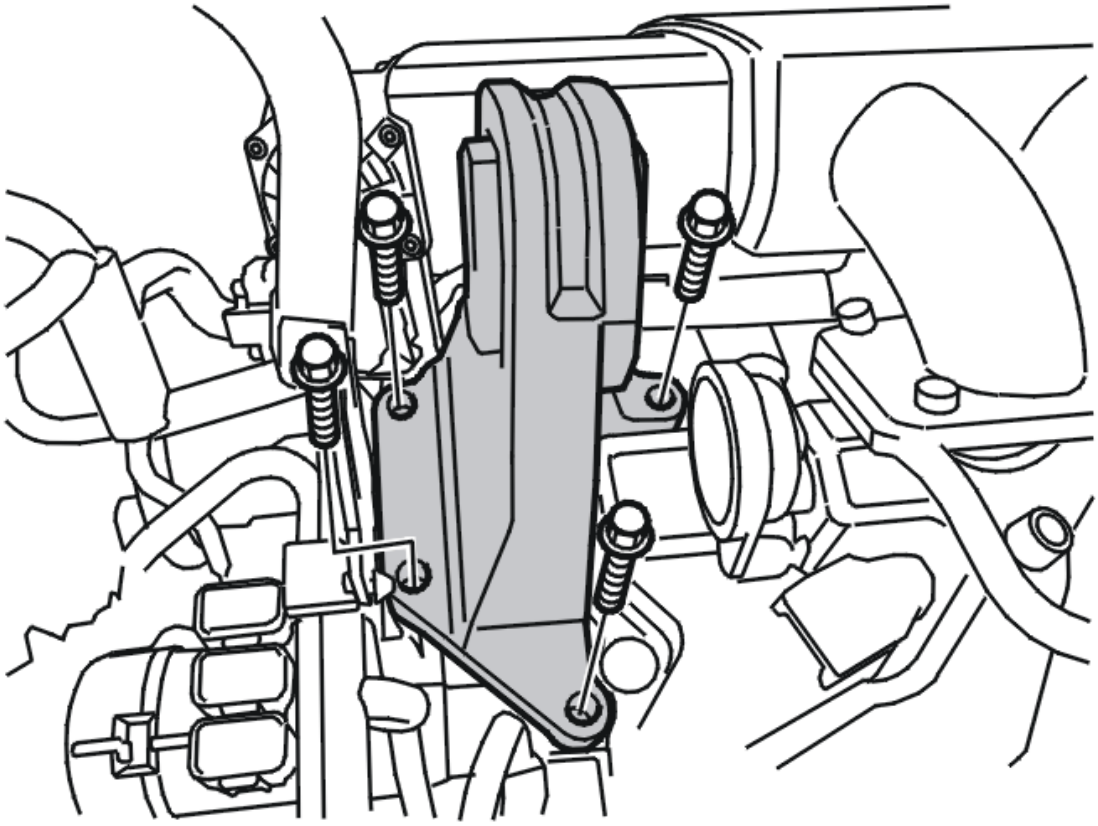

Fig. 25: Viewing Upper Engine Mount
Courtesy of VOLVO CARS CORPORATION

Install:

- the upper engine mount
- the 4 screws; tighten.

INSTALLING THE CROSS STAY

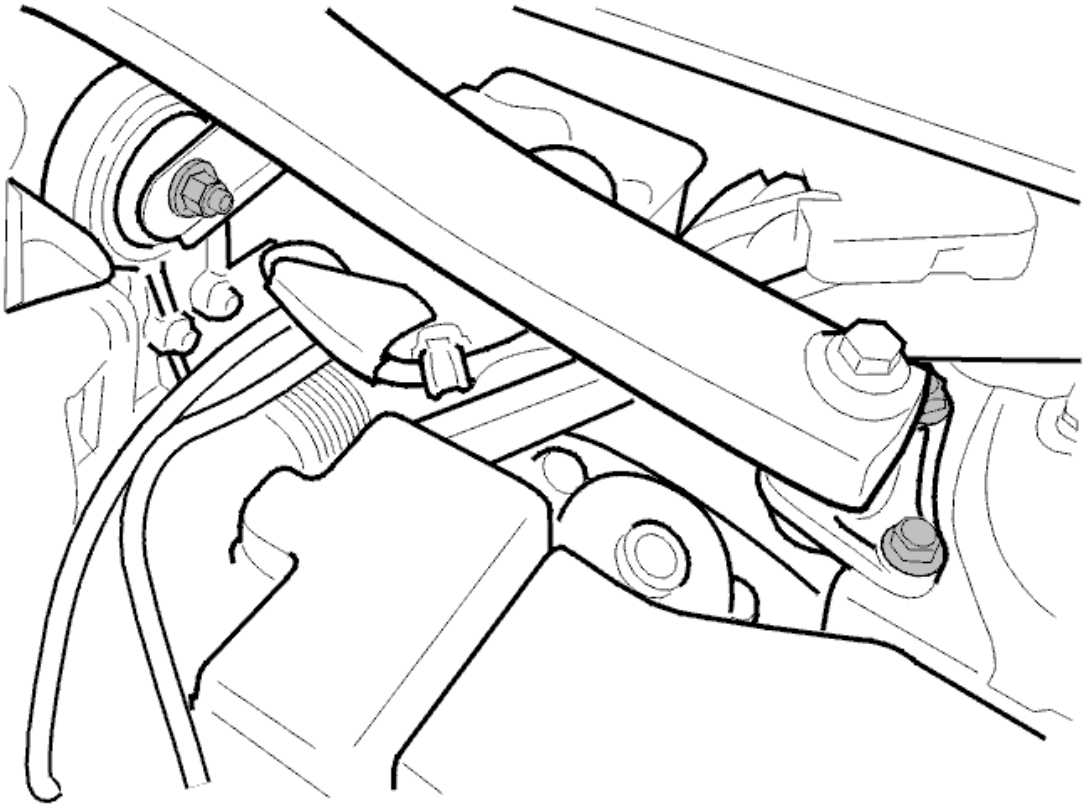

Fig. 26: Identifying Engine Cross Brace
Courtesy of VOLVO CARS CORPORATION

Install:

- the cross stay between the suspension turrets
- the 4 screws in the suspension turrets; tighten
- the screw of the torque rod mounting on the upper engine mount; tighten.

INSTALLING THE UPPER REAR ENGINE COVER

Install the upper rear engine cover.

FUEL TANK FUEL LINES AND EVAPORATIVE SYSTEM (4T65 AWD; 2003-2006)

FUEL TANK, REPLACING

Special tools:

see **9997057**

NOTE: **Since the illustrations in this service information are used for different model years and/or models, some variation may occur. However, the essential information in the illustrations is always correct.**

PREPARATION

Drain the fuel tank. See: **FUEL TANK, DRAINING** .

Block the parking brake pedal in the neutral position. See: **PARKING BRAKE SELF-ADJUSTMENT, RESETTING** .

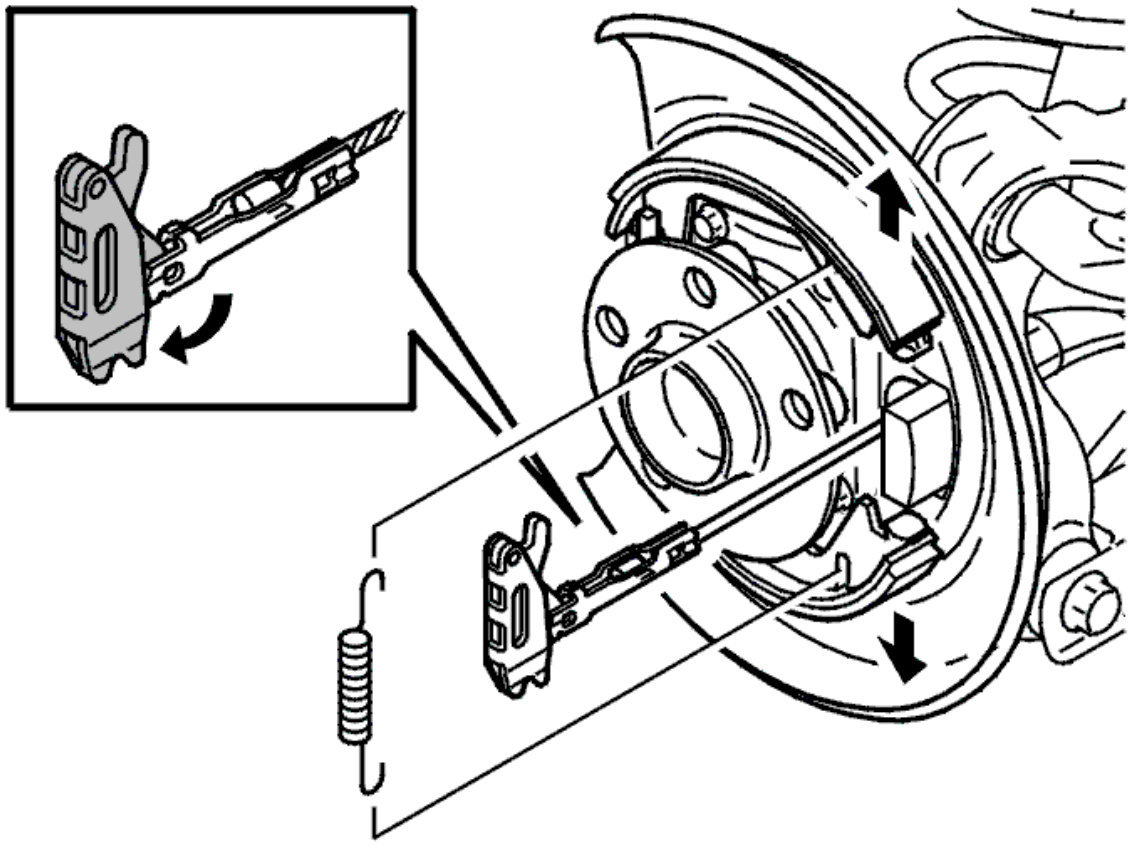

Fig. 27: Identifying Parking Brake Adjuster
Courtesy of VOLVO CARS CORPORATION

Remove the following on both sides:

- the wheel
- the brake caliper. See: **BRAKE CALIPERS REAR, REPLACING**
- the brake discs. See: **BRAKE DISC REAR, REPLACING** .

Remove the tension spring. Remove the expander. Lift the brake shoe slightly. Grip the expander. Pull the expander outwards.

Unhook the expander from the metal bracket.

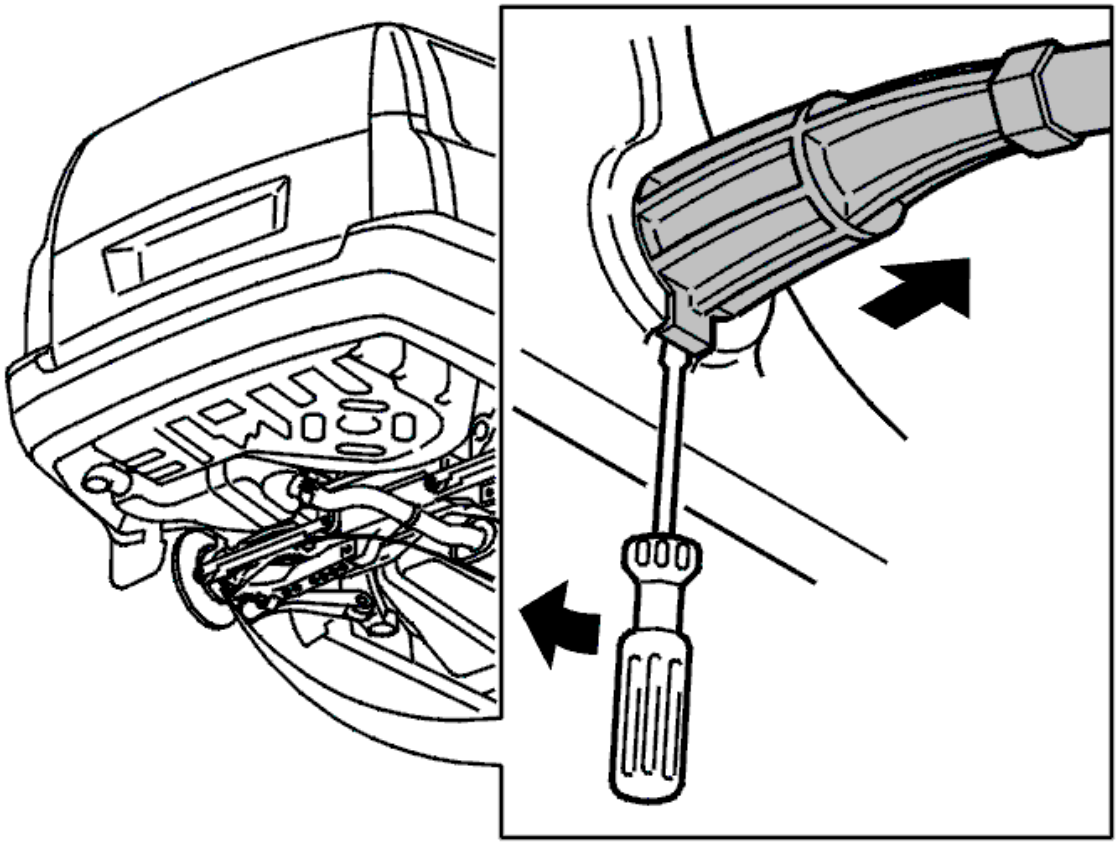

Fig. 28: Applying Screwdriver Between Guide Sleeve Lug And Wheel Arch
Courtesy of VOLVO CARS CORPORATION

Remove the following on both sides:

- the guide sleeve for the cable sleeve. Apply a screwdriver between the guide sleeve lug and wheel arch. Pry apart slightly to remove the sleeve.

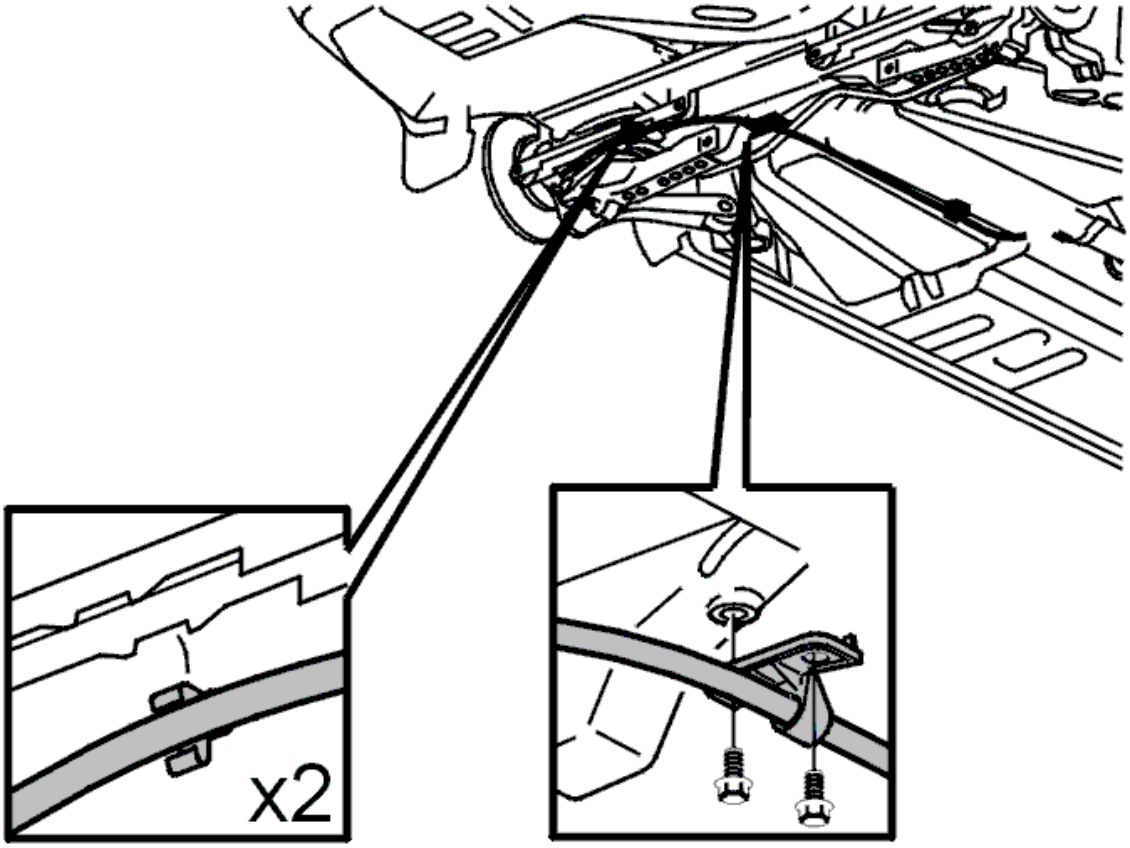

Fig. 29: Handbrake Cable
Courtesy of VOLVO CARS CORPORATION

Remove the parking brake cable from the tie rod and the sub-frame on both sides.

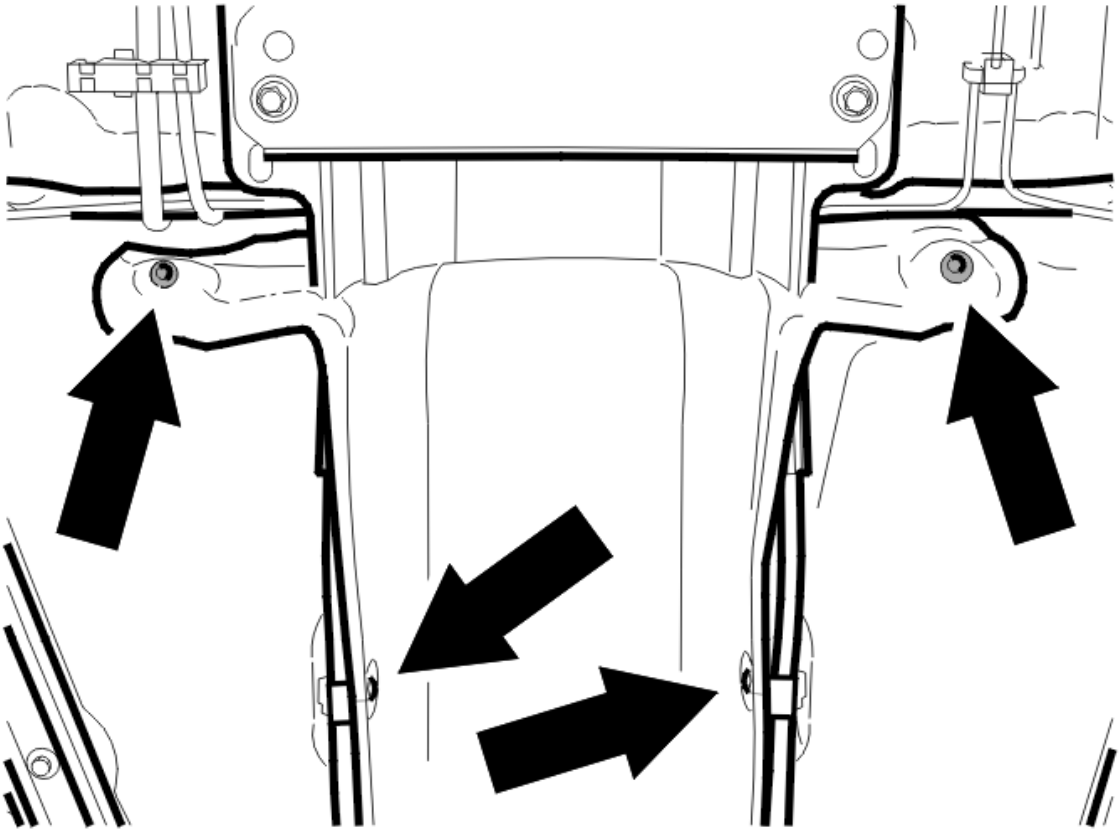

Fig. 30: Locating Mounting Screws For Heat Shield
Courtesy of VOLVO CARS CORPORATION

Remove:

- 2 screws for the cable clips
- 2 screws for the front mounting for the heat deflector plate.

Fold out the cables from the heat deflector plate. Hang the cables up at the front of the car.

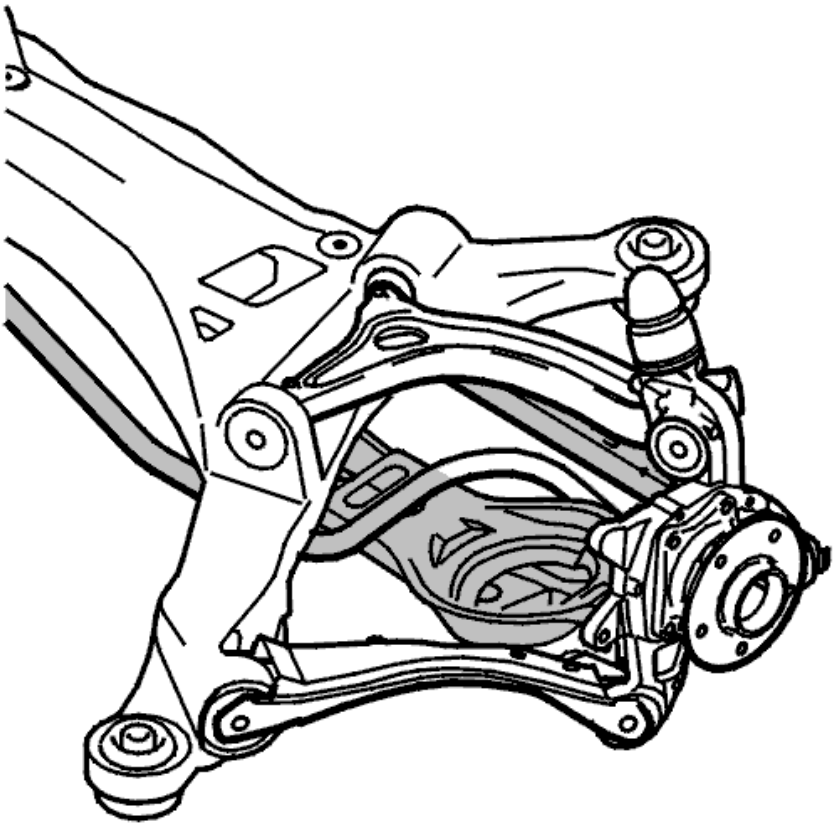

Fig. 31: Wheel Spindle To Upper Control Arm
Courtesy of VOLVO CARS CORPORATION

Remove the exhaust system from the three-way catalytic converter (TWC) and backwards.

NOTE: Suspend catalytic converter to prevent damaging the flex gaiter.

REMOVING THE PROPELLER SHAFT

Mark up the position of the joint on the drive flange on the final drive and at the center bearing. Remove the screws for the joints. Use counterhold see **9997057** .

Remove the rear section of the propeller shaft.

LOWERING THE REAR SUSPENSION

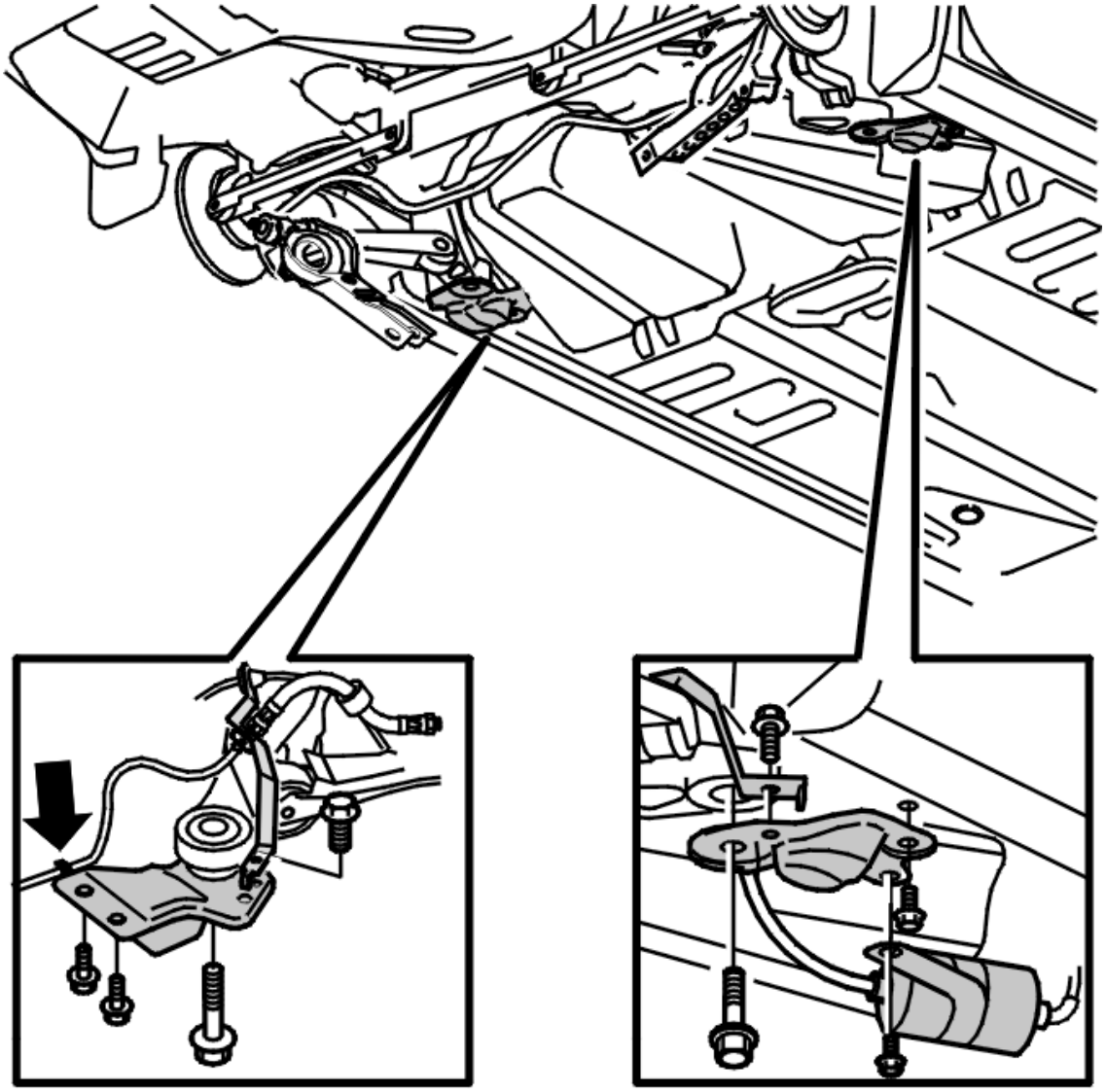

Fig. 32: Identifying Brake Hose Mounting
Courtesy of VOLVO CARS CORPORATION

Place the mobile jack: see **9995972** with plate: see **9995972** under the rear end.

Raise to light contact.

Remove the following on both sides:

- the 2 screws for the mounting bracket
- the mounting screw for the sub frame bushing.

Disconnect the brake pipe on both sides from the plastic clips on the bracket.

Lower the rear suspension carefully.

REMOVING THE FUEL TANK

Install the lifting table under the fuel tank.

Remove:

- the upper quick-release connector plastic pipe on the carbon filter container
- the 4 screws for the mounting for the fuel tank securing strap.

Remove:

- the clamp for the fuel filler pipe
- the clamp for the bleed pipe.

Lower the lifting table to access the plastic pipes on top of the tank.

Remove:

- the plastic pipe
- The ABS cable harness from the clips on both sides of the fuel tank.

Remove the tank.

TRANSFERRING COMPONENTS

REMOVING THE SPLASH GUARD PIPE

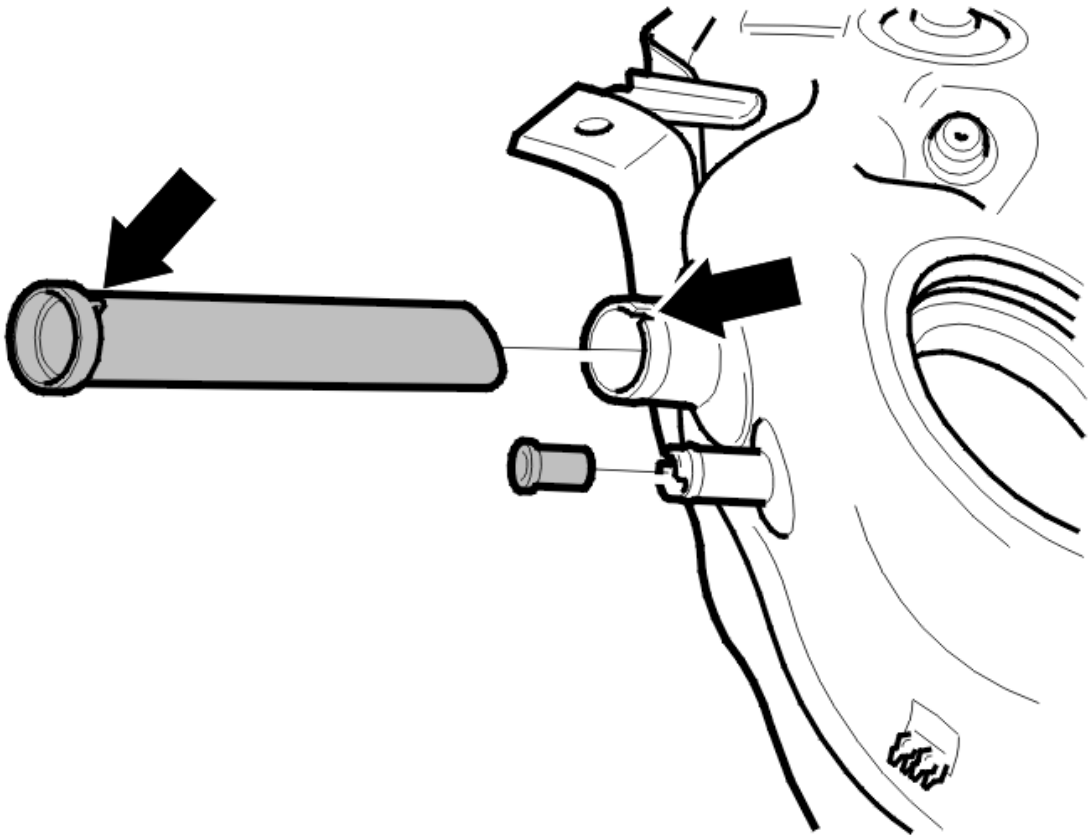

Fig. 33: Locating Splash Guard Pipe
Courtesy of VOLVO CARS CORPORATION

Remove the splash guard pipe and bleed pipe. Pull straight out.

REMOVING THE LEVEL SENSOR

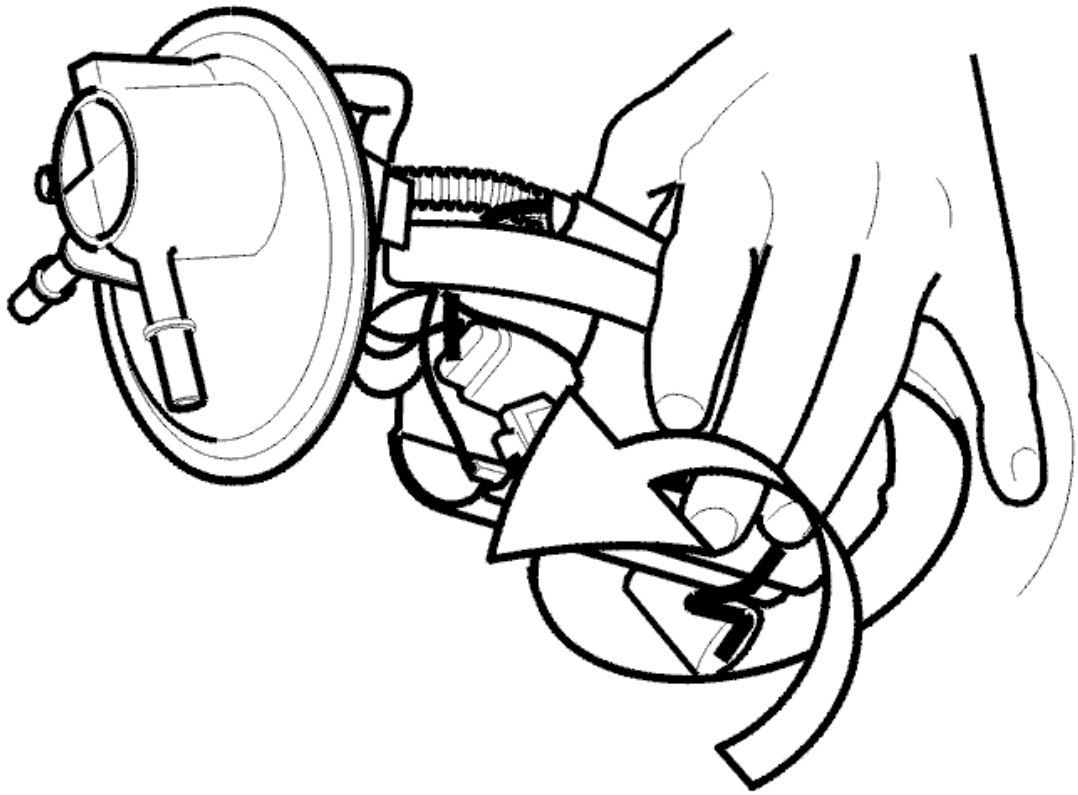

Fig. 34: Removing Fuel Pump Module
Courtesy of VOLVO CARS CORPORATION

Lift the left level sensor.

Remove:

- the connector
- the ejector.

Grip the right-hand level sensor / pump. Pinch the float to hold it in its lowest position.

Carefully and slowly pull up the holder. Carefully work the holder out.

Pull the hoses and the wiring out of the tank.

NOTE: Watch out for fuel splashes.

NOTE: It is extremely important that the float arm is not broken or bent.

REMOVING THE TANK RETAINING STRAP AND HEAT DEFLECTOR PLATE

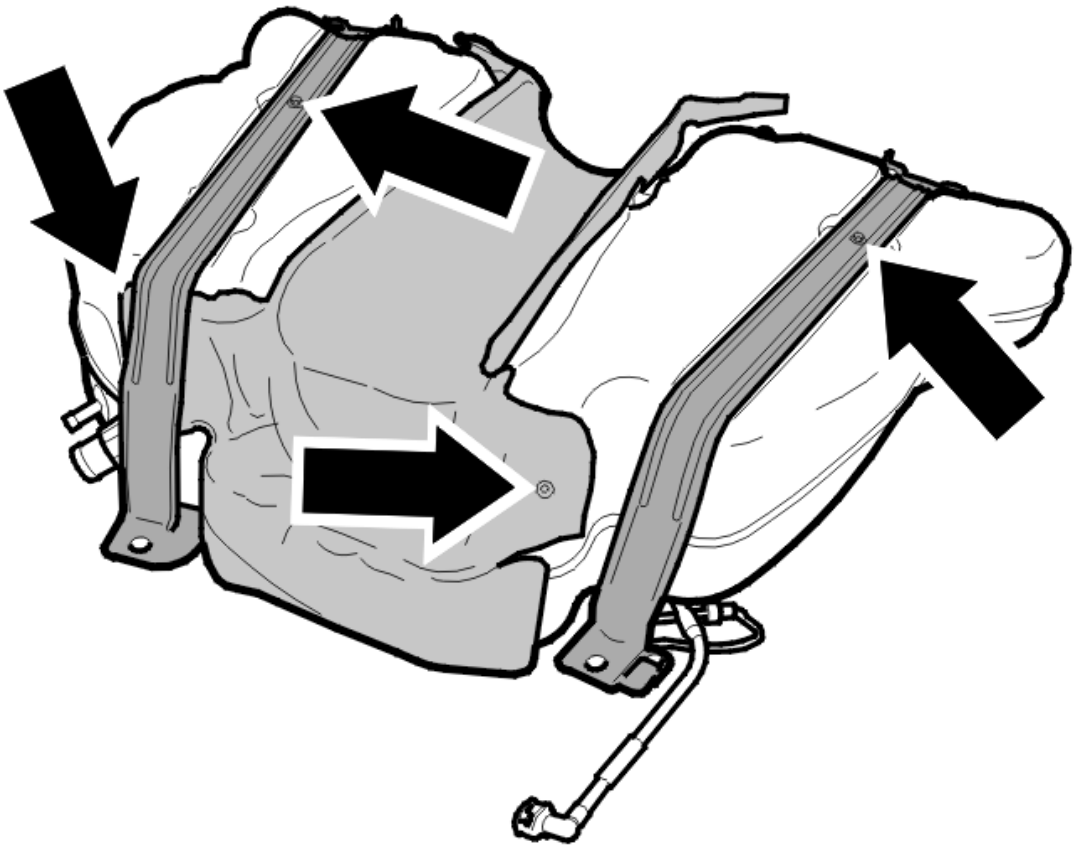

Fig. 35: Identifying Retaining Strap And Heat Deflector
Courtesy of VOLVO CARS CORPORATION

Remove:

- the screws (x 2)
- the tank retaining strap
- the screws (x 2)
- the heat deflector plate.

INSTALLATION

NOTE: **To ensure that there is no exhaust leakage, see: FLANGED JOINT, ASSEMBLING .**

INSTALLING THE TANK RETAINING STRAP AND HEAT DEFLECTOR PLATE

Install:

- the heat deflector plate
- the 2 screws. Tighten to **5 Nm**
- the tank retaining strap

- the 2 screws. (**10 Nm**).

INSTALLING THE LEVEL SENSOR

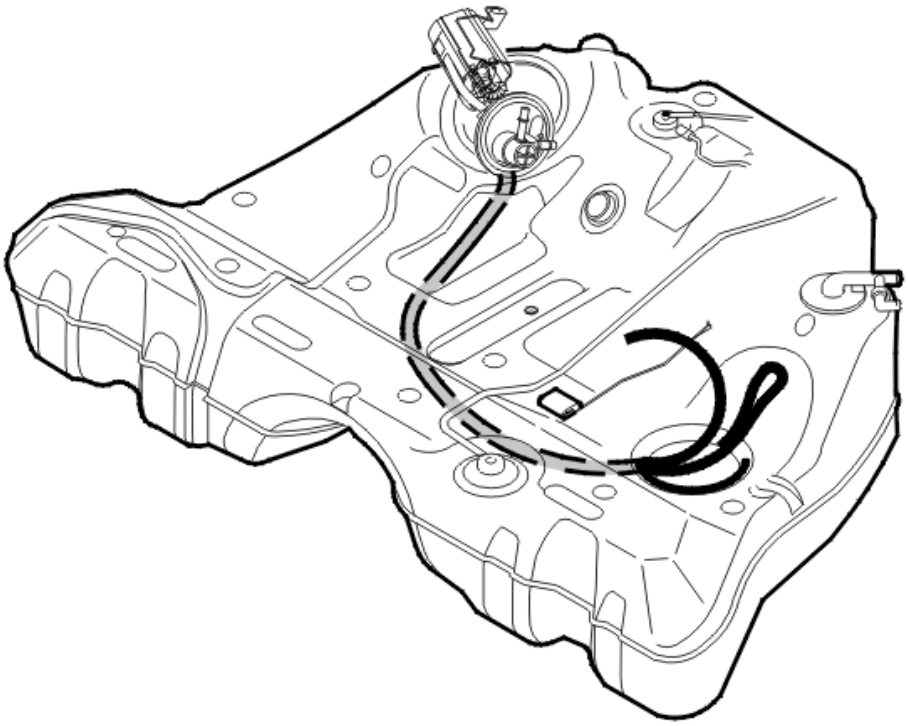

Fig. 36: Fuel Level Sensor
Courtesy of VOLVO CARS CORPORATION

Install the sealing ring.

Route the cable harness / hoses from the right level sensor to the left side of the tank as illustrated.

HINT: Use a welding rod bent into a curve with a hook at one end to pull the cable harness / hoses to the correct position.

NOTE: It is very important for installing the level sensor that the cable harness/hoses are routed in the front part of the fuel tank.

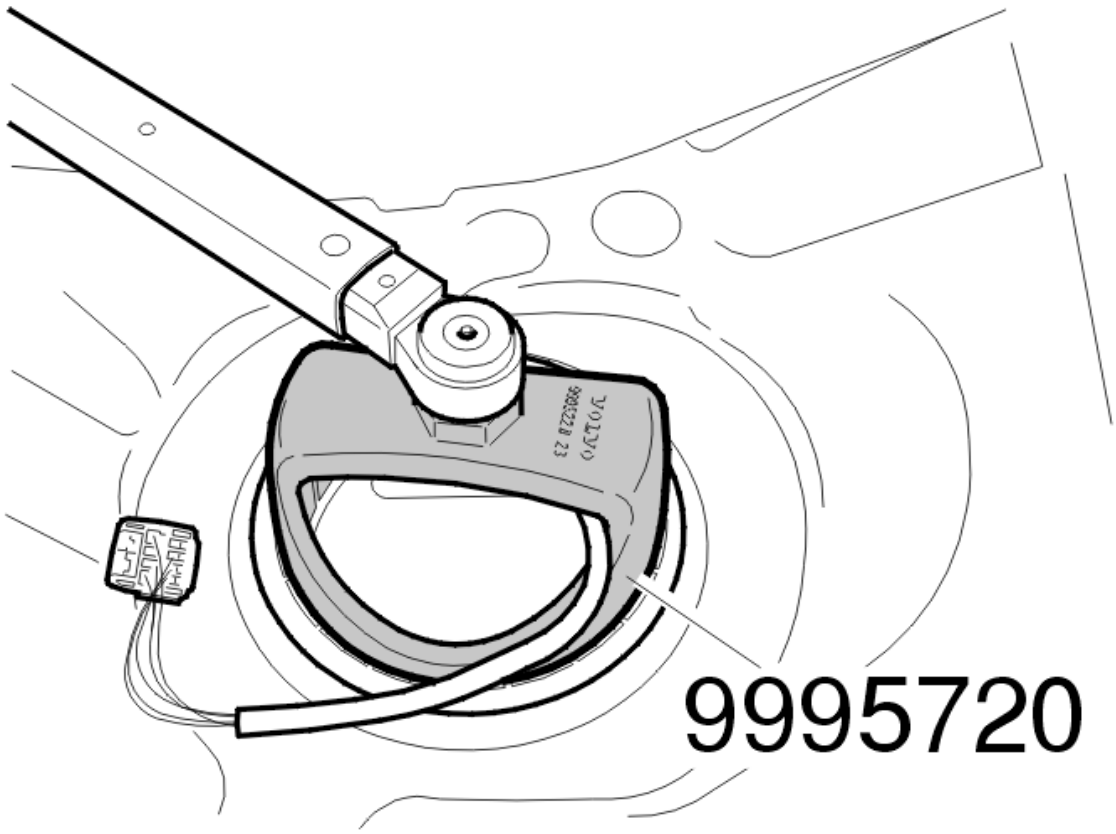

Fig. 37: Tool 999 5720 Installed
Courtesy of VOLVO CARS CORPORATION

Install on the left-hand side:

- sealing cover
- the ejector
- the connectors
- level sensor (**60 Nm**) (Use special tool see **9995720**).

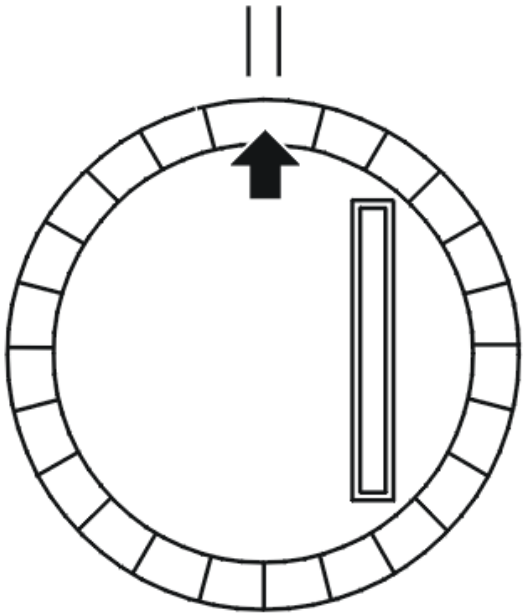

Fig. 38: Checking Arrow On Cover
Courtesy of VOLVO CARS CORPORATION

NOTE: Ensure that the arrow ends up directly opposite the marking on the tank.

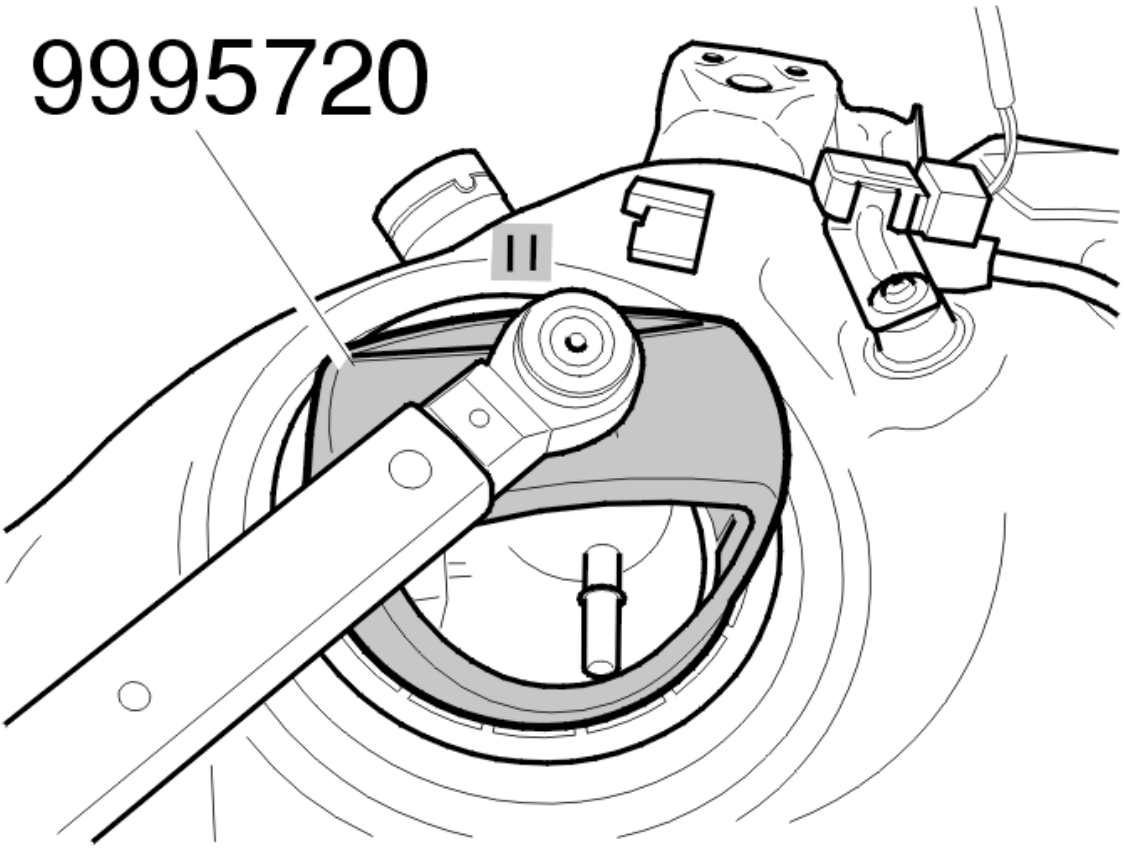

Fig. 39: Installing Fuel Level Sensor Using Special Tool 999 5720
Courtesy of VOLVO CARS CORPORATION

Install on the right-hand side:

- level sensor (**60 Nm**) (Use special tool see **9995720**).

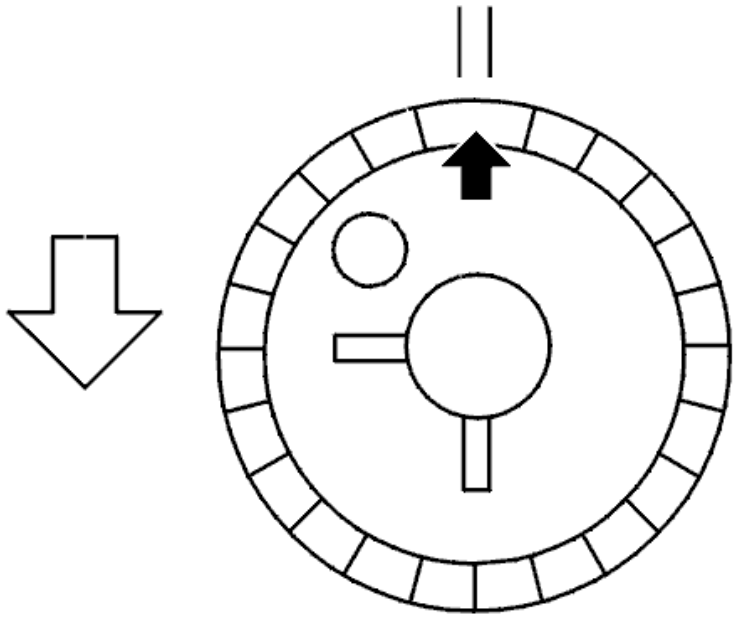

Fig. 40: Checking Arrow On Cover
Courtesy of VOLVO CARS CORPORATION

Ensure that the arrow ends up directly opposite the marking on the tank.

INSTALLING THE SPLASH GUARD PIPE

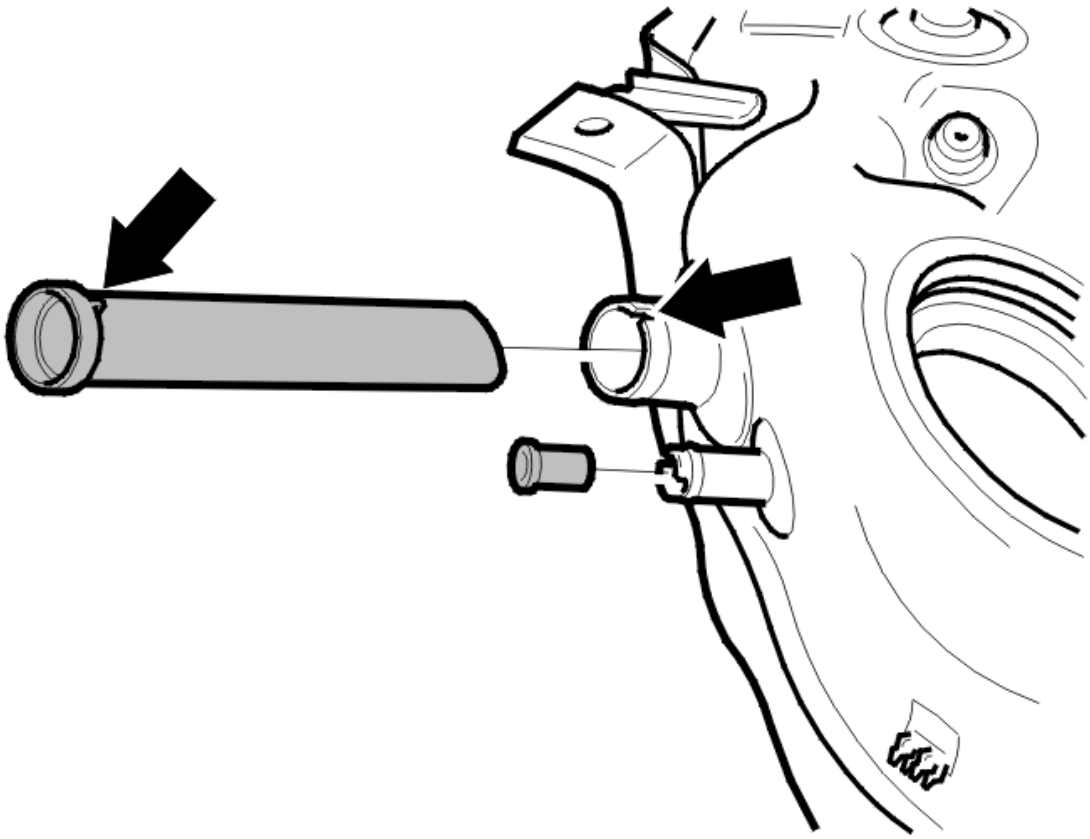

Fig. 41: Locating Splash Guard Pipe
Courtesy of VOLVO CARS CORPORATION

Install the splash guard pipe.

NOTE: Ensure that the locating pin is correctly positioned for the groove in the tank.

INSTALLING THE FUEL TANK

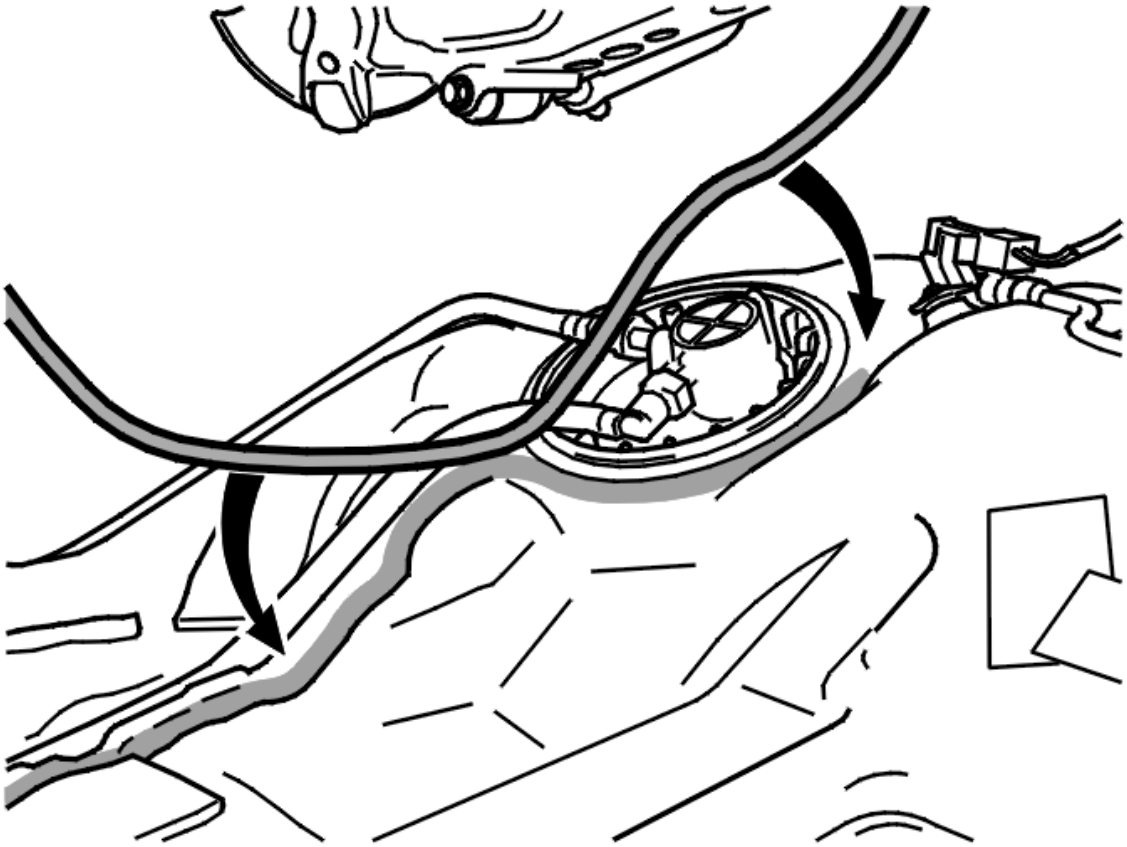

Fig. 42: Installing Pipe In Grooves In The Tank
Courtesy of VOLVO CARS CORPORATION

Place the fuel tank on the lifting table.

Raise the lifting table to install the plastic hoses on the right-hand level sensor and in the grooves in the tank.

Secure the hoses in place using silver tape.

Install the ABS cable harnesses in the clips on both sides of the tank.

Align the fuel filler pipe and the bleed pipe.

Insert the cable harnesses for the level sensor and the fuel tank pressure sensor through the inspection holes in the floor.

Raise the fuel tank to the installation position.

NOTE: Ensure that the filler pipe and breather pipe slide into position while raising the fuel tank.

Install the 4 screws for the mounting for the securing strap. Tighten to **24 Nm** .

Remove the lifting table.

Install:

- the clamp for the fuel filler pipe
- the clamp for the bleed pipe
- the upper plastic pipe in the quick-release connector for the carbon filter container.

INSTALLING THE REAR SUSPENSION

Place the mobile jack see **9995972** with plate see **9995972** under the rear end.

Carefully raise the rear suspension.

NOTE: Ensure that no cable harnesses or brake pipes are trapped while raising.

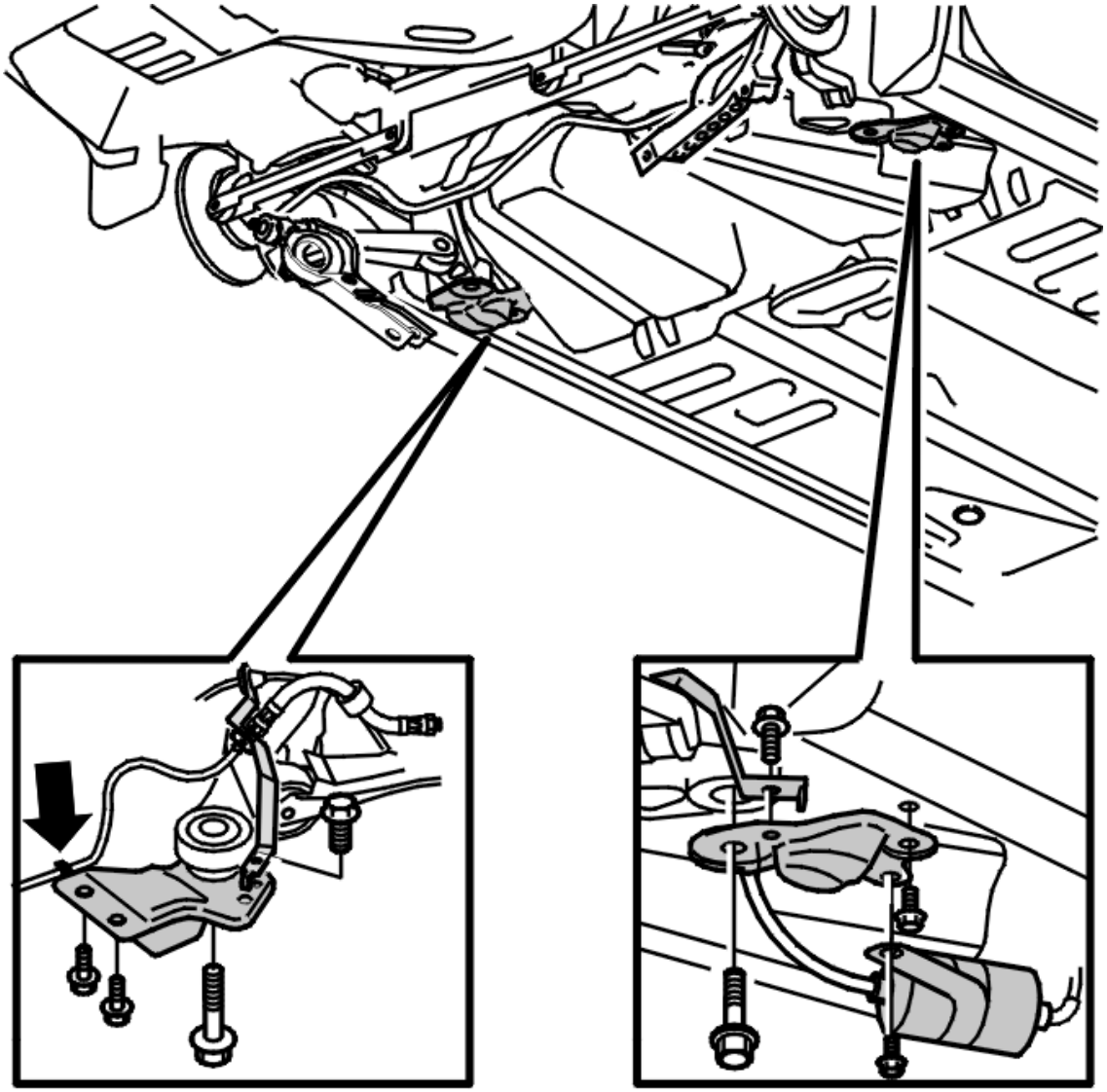

Fig. 43: Identifying Brake Hose Mounting
Courtesy of VOLVO CARS CORPORATION

Install on both sides:

- the 2 screws for the mounting bracket. Tighten to **80 Nm**
- the screw for the sub frame mounting. Tighten to **80 Nm**
- the brake pipe in the plastic clip on the bracket.

INSTALLING THE BRAKES

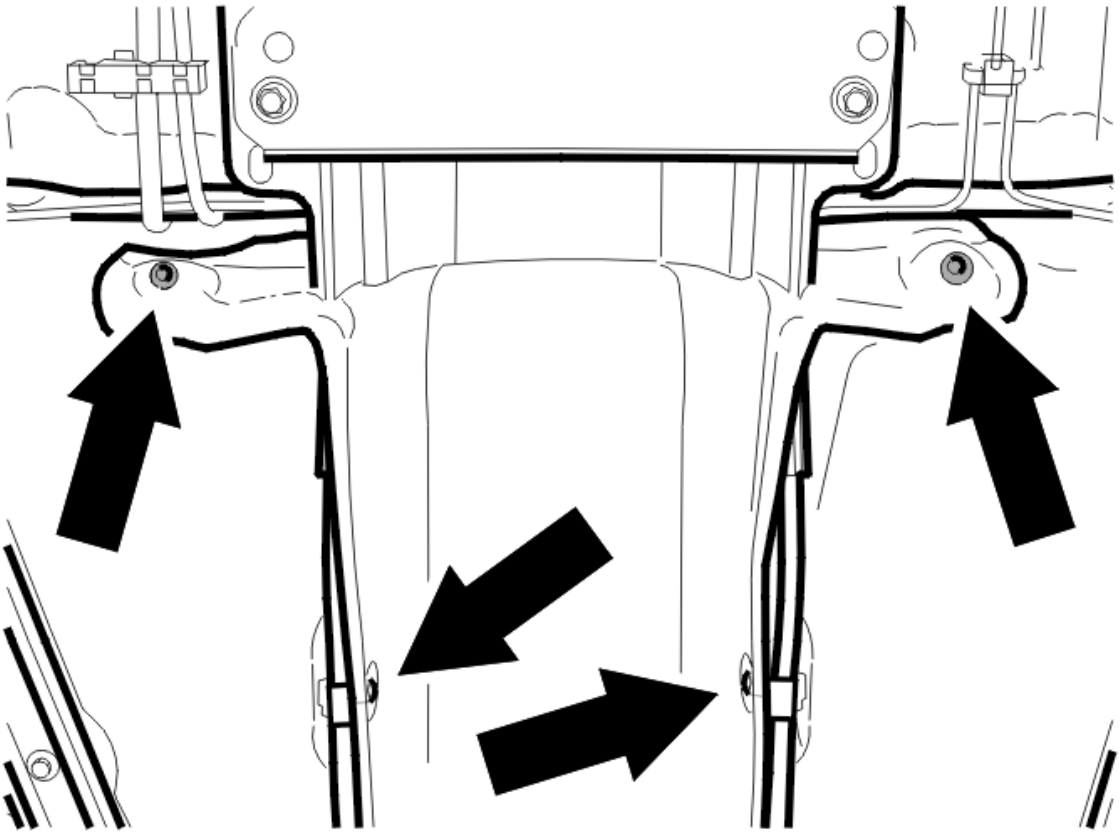

Fig. 44: Locating Mounting Screws For Heat Shield
Courtesy of VOLVO CARS CORPORATION

Install:

- the parking brake cable along the heat shields
- the screws in the center and front mountings for the heat shield.

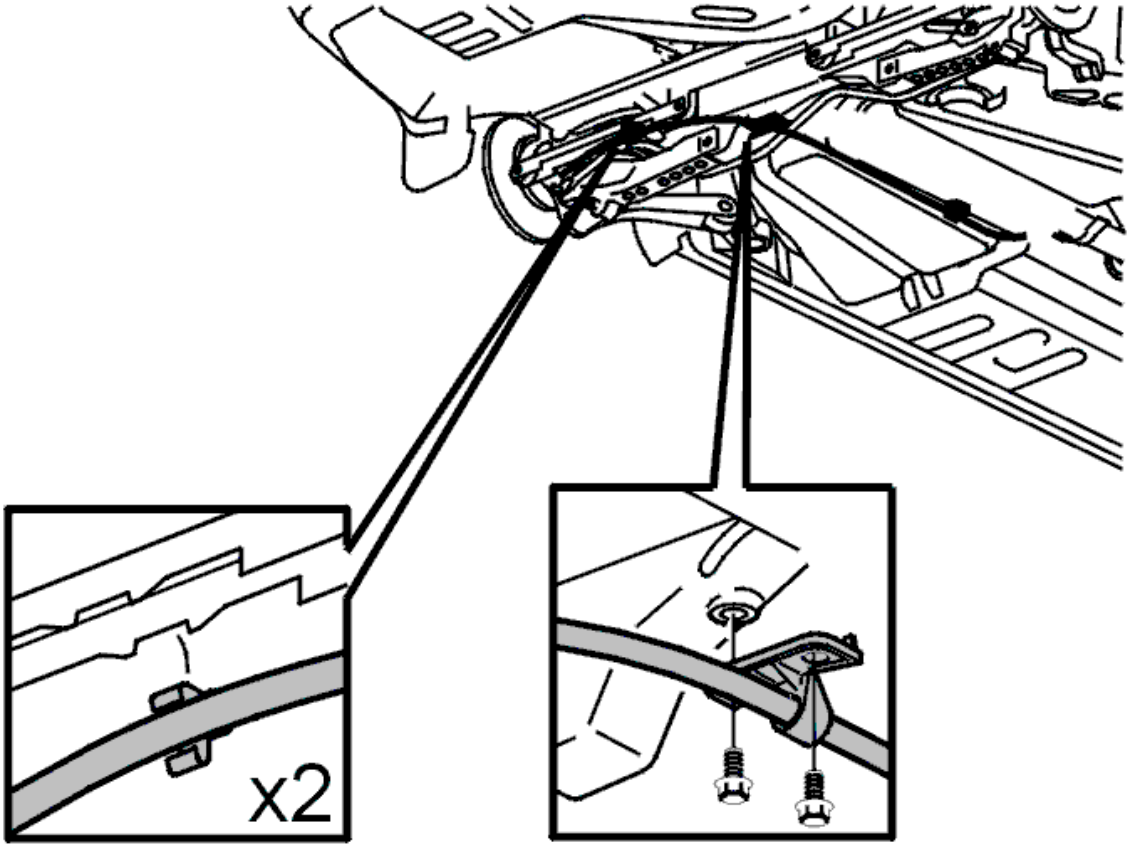

Fig. 45: Handbrake Cable
Courtesy of VOLVO CARS CORPORATION

Install:

- the parking brake cables on the wheel units
- the parking brake cable mountings in the sub-frame. (**25 Nm**)
- the mounting for the parking brake cable on the tie rods.

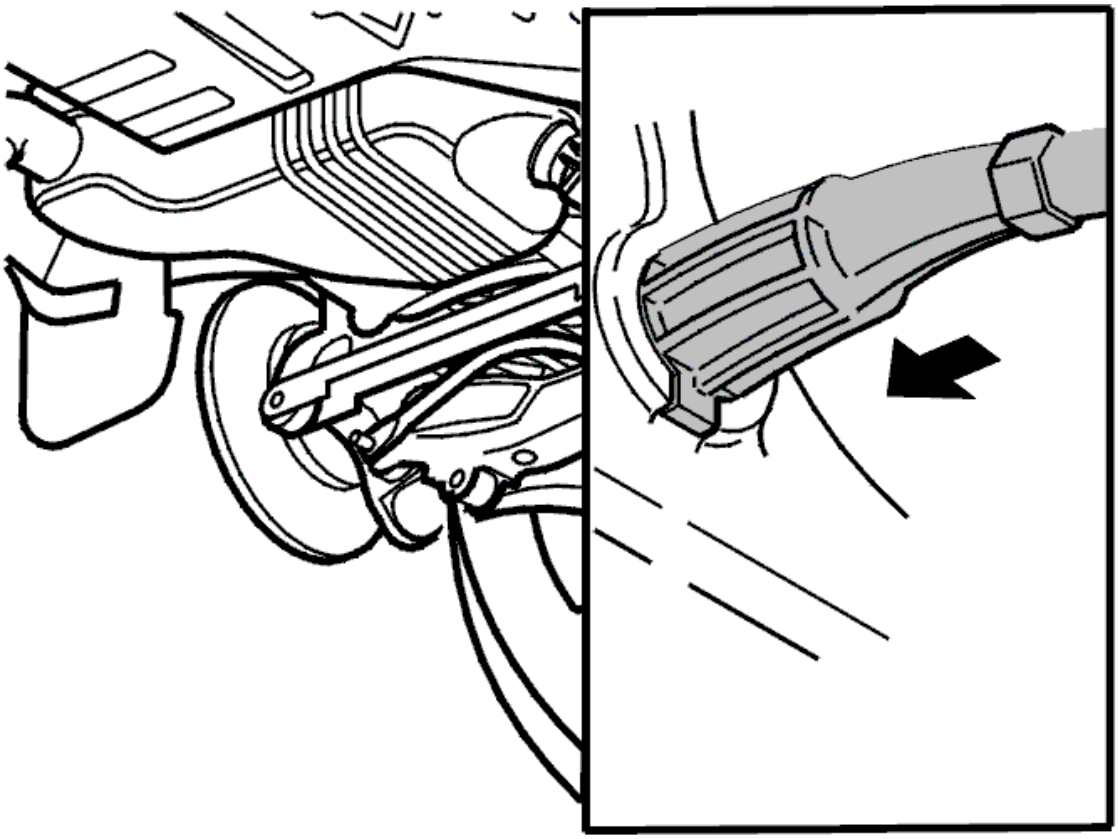

Fig. 46: Pressing Cable Sleeve Guide Sleeve Into Place In Mounting
Courtesy of VOLVO CARS CORPORATION

Press the guide sleeves for the parking brake cables into place on the wheel units.

NOTE: **Lubricate the O-rings on the guide sleeves with lubricant 1161580 or silicon grease.**

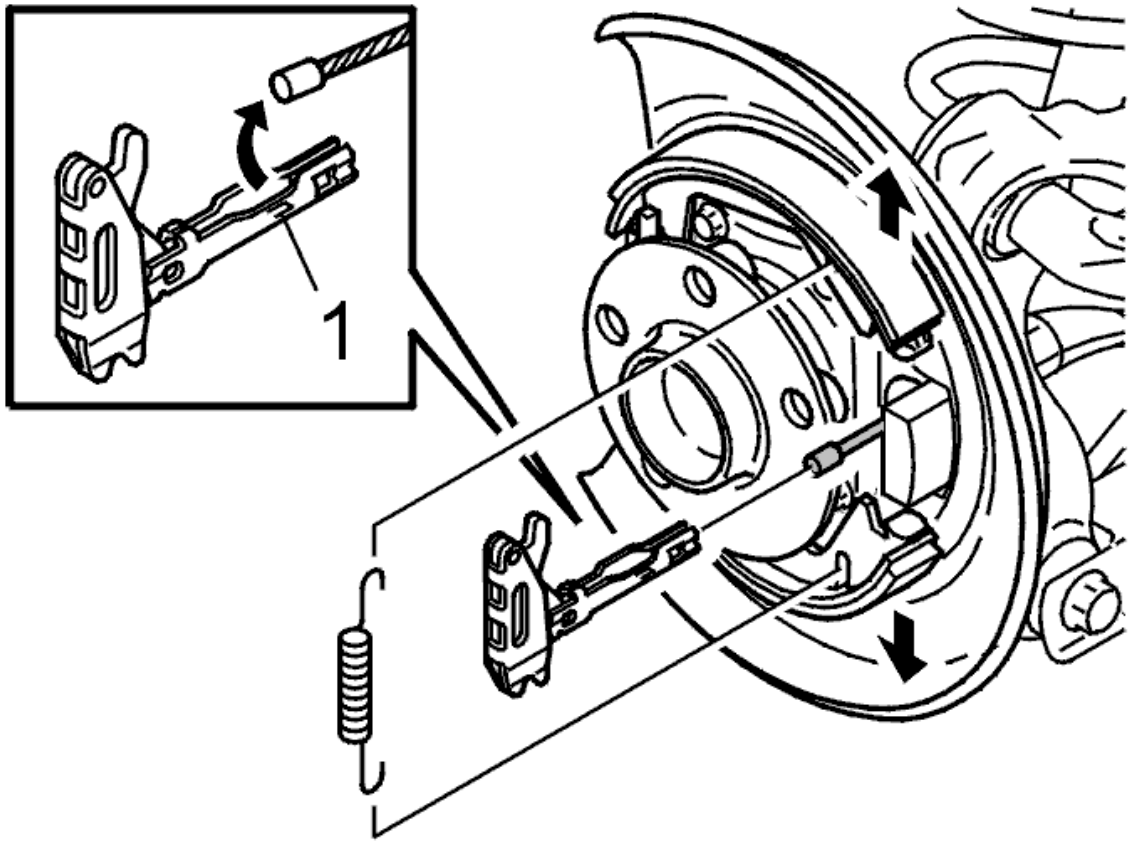

Fig. 47: Identifying Return Spring And Expander
Courtesy of VOLVO CARS CORPORATION

Install:

- the expander on the cable. Press the mounting together to lock the cable in the expander
- the expander between the brake shoes
- the return spring.

Check the function.

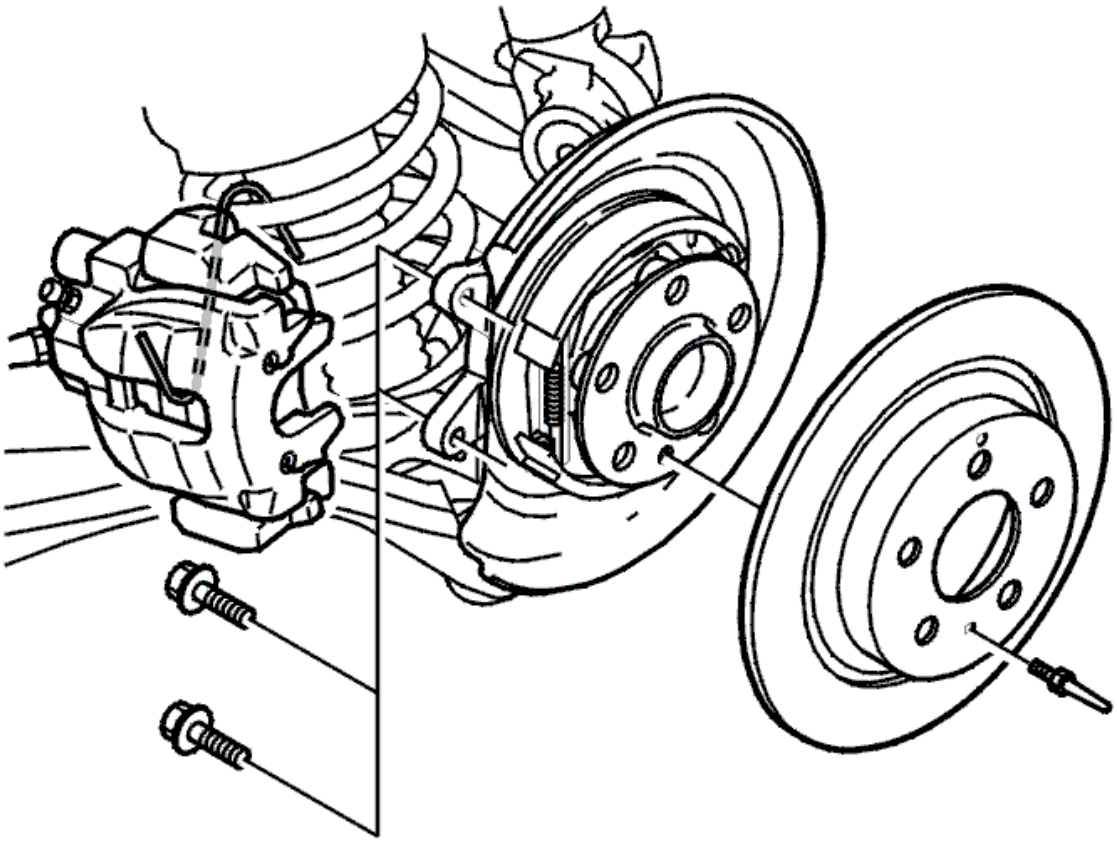

Fig. 48: Brake Disc And Locating Pin
Courtesy of VOLVO CARS CORPORATION

Install:

- the brake disc and the locating pin. Tighten to **10 Nm**
- the brake caliper. Use new screws. Tighten to **60 Nm** .

NOTE: **Activate the parking brake adjuster acc. to PARKING BRAKE SELF-ADJUSTMENT, RESETTING .**

INSTALLING THE PROPELLER SHAFT

Position the propeller shaft as marked previously.

Install new screws for the joints. Use counterhold see **9997057** .

For tightening torques, see **TIGHTENING TORQUE** .

INSTALLING THE EXHAUST SYSTEM

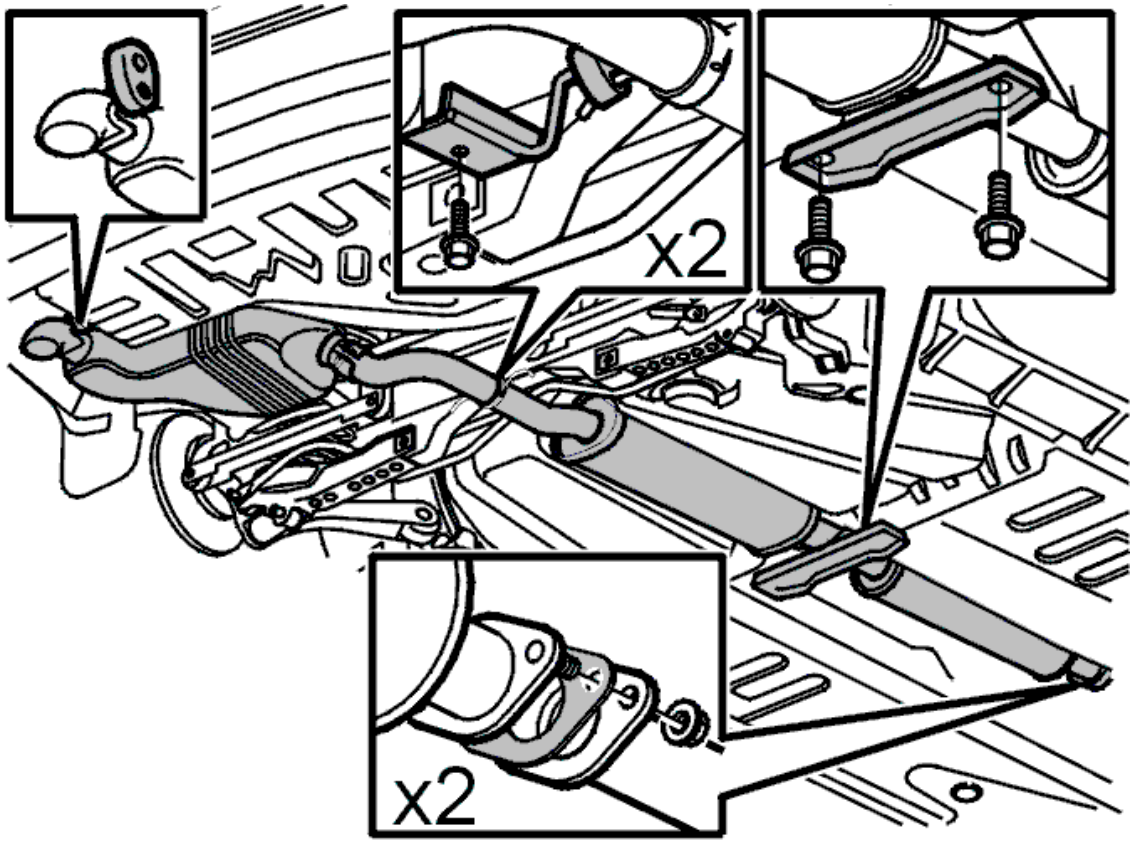

Fig. 49: Exhaust System, Brackets And Fasteners
Courtesy of VOLVO CARS CORPORATION

Install the exhaust system. Use a new flange gasket. Tighten the screws. Tighten to **25 Nm** .

FINISHING

FINISHING

Install the cover over the level sensor. Tighten the nuts. See **FUEL TANK, DRAINING**

Connect the wiring and the connectors.

Remove the block from under the seat frame

Install on both sides:

- the wiring in the slots on the rubber seal.
- the cover over the level sensors and tighten with 6 Nm
- both polystyrene blocks
- the ventilation pipe.

Fold the carpet down.

Install:

- the center rear seat. See **UPHOLSTERY BACKREST CUSHION CENTER (SECOND ROW), REPLACING**
- the outer rear seat. See **UPHOLSTERY BACKREST CUSHION OUTER (SECOND ROW)** .

FUEL TANK FUEL LINES AND EVAPORATIVE SYSTEM (AW50/51 AWD; 2003-2007)

FUEL TANK, REPLACING

see **FUEL TANK, REPLACING**

FUEL TANK FUEL LINES AND EVAPORATIVE SYSTEM (B5254T2; 2003-2007)

CARBON FILTER CONTAINER, REPLACING

NOTE: **As the illustrations in this service information are used for different model years and / or models, some variation may occur. However, the essential information in the illustrations is always correct.**

PREPARATION

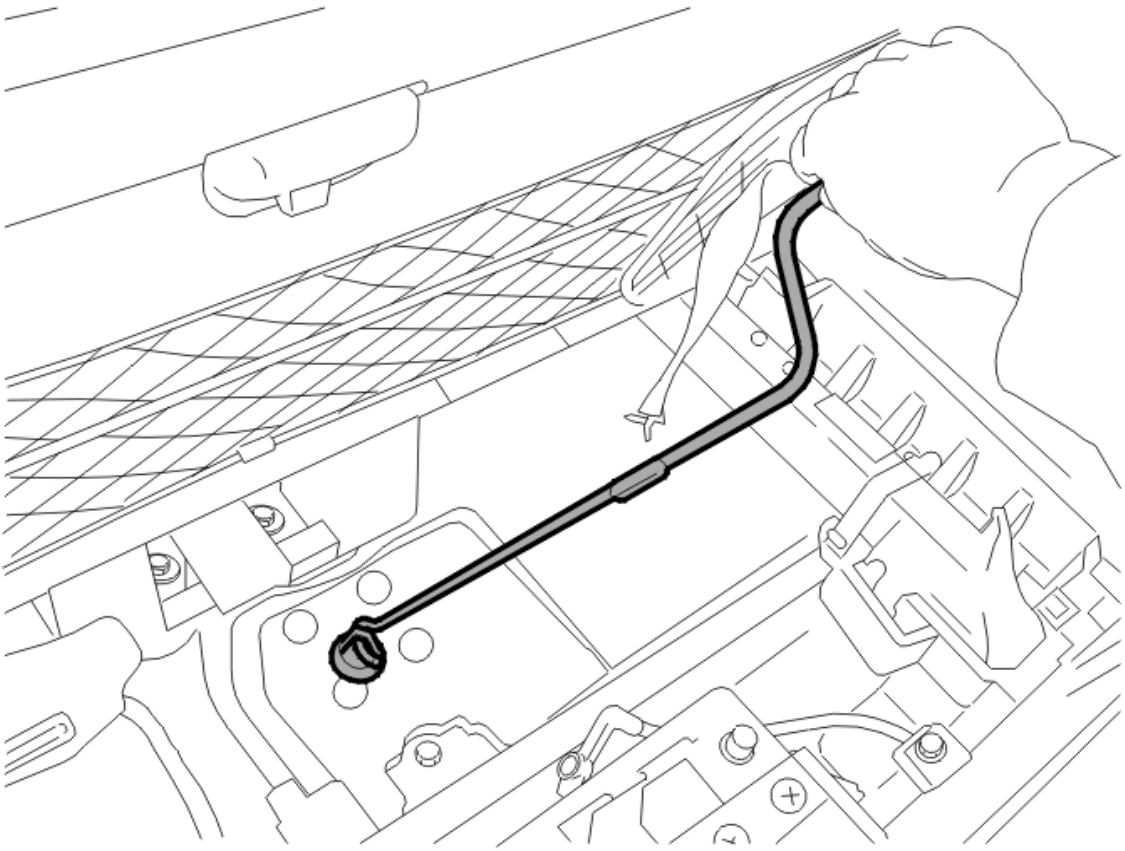

Fig. 50: Attaching Crank To Wind Down Wheel
Courtesy of VOLVO CARS CORPORATION

Open the floor hatch. Remove the storage compartment.

Wind down the spare wheel. Use the crank from the car tool kit.

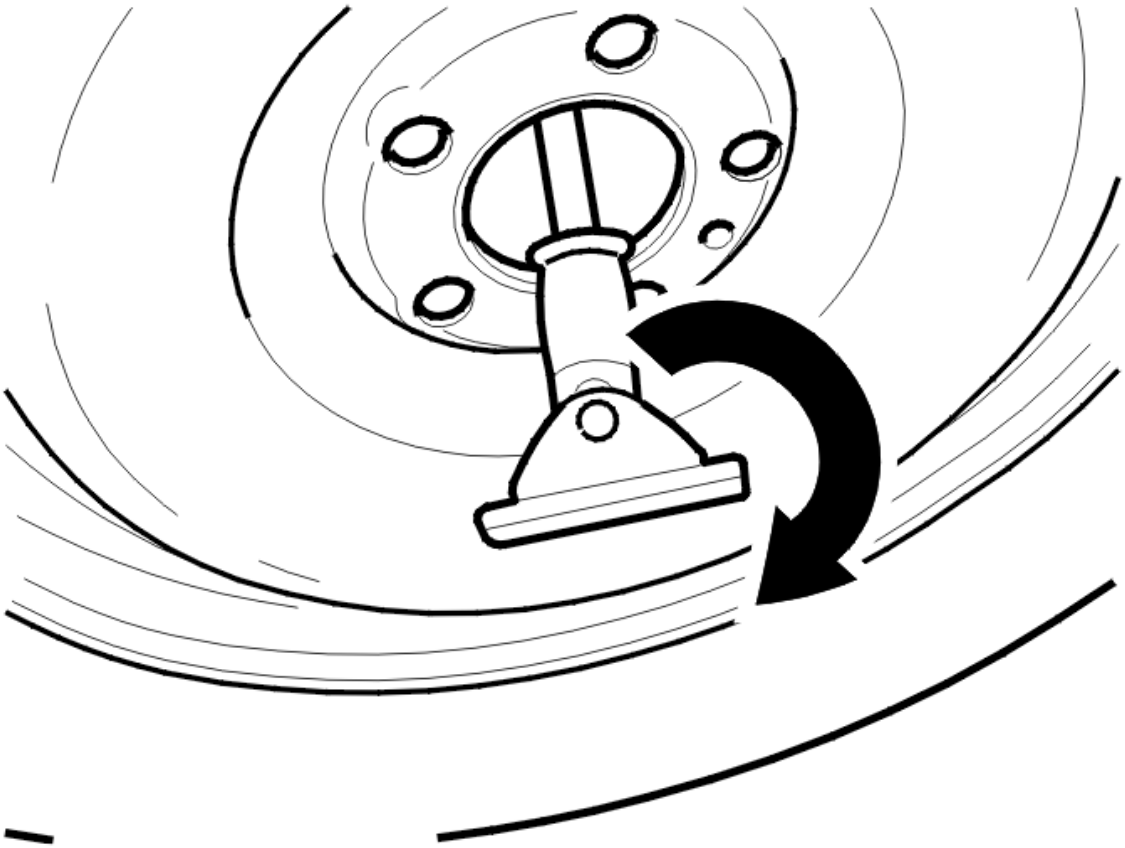

Fig. 51: Identifying Support Plate
Courtesy of VOLVO CARS CORPORATION

Pull out the spare wheel. Release the mechanical cable.

REMOVING THE CARBON FILTER CONTAINER

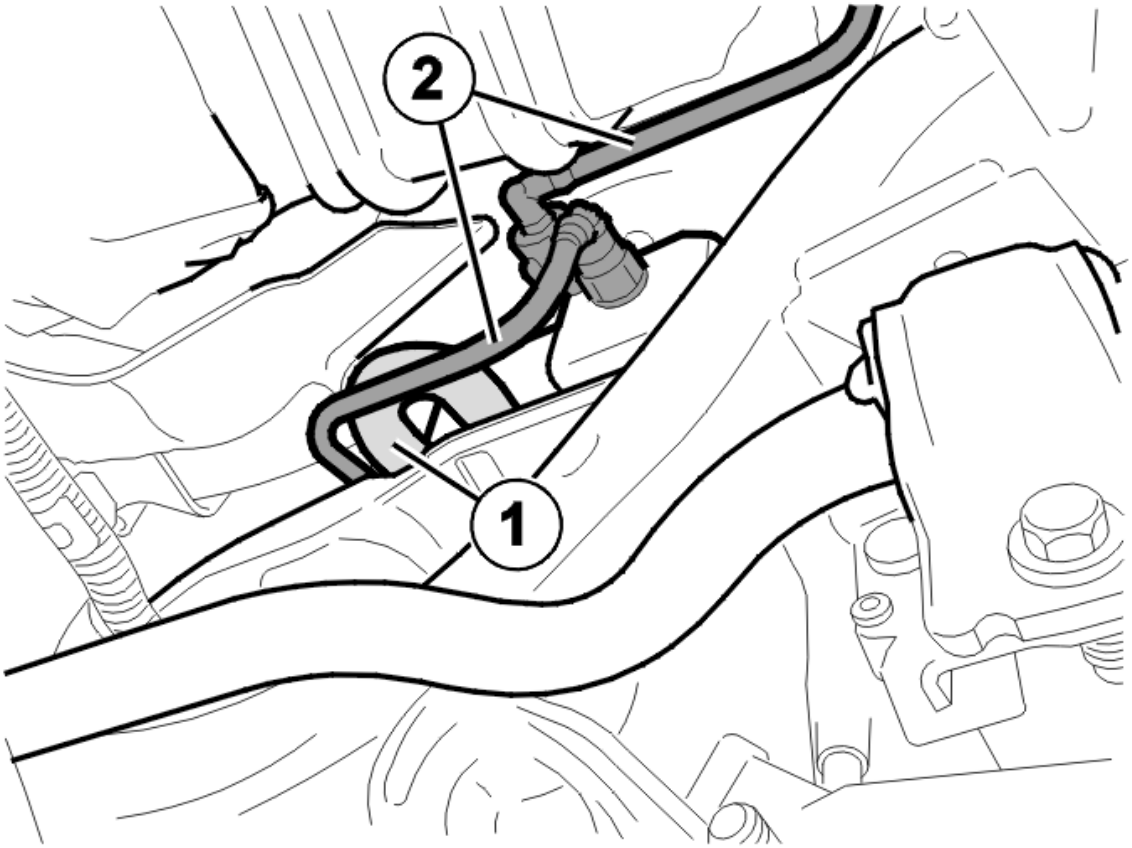

Fig. 52: Identifying Hose and Pipes
Courtesy of VOLVO CARS CORPORATION

Remove:

- the hose (1)
- both pipes and quick-release connectors (2).

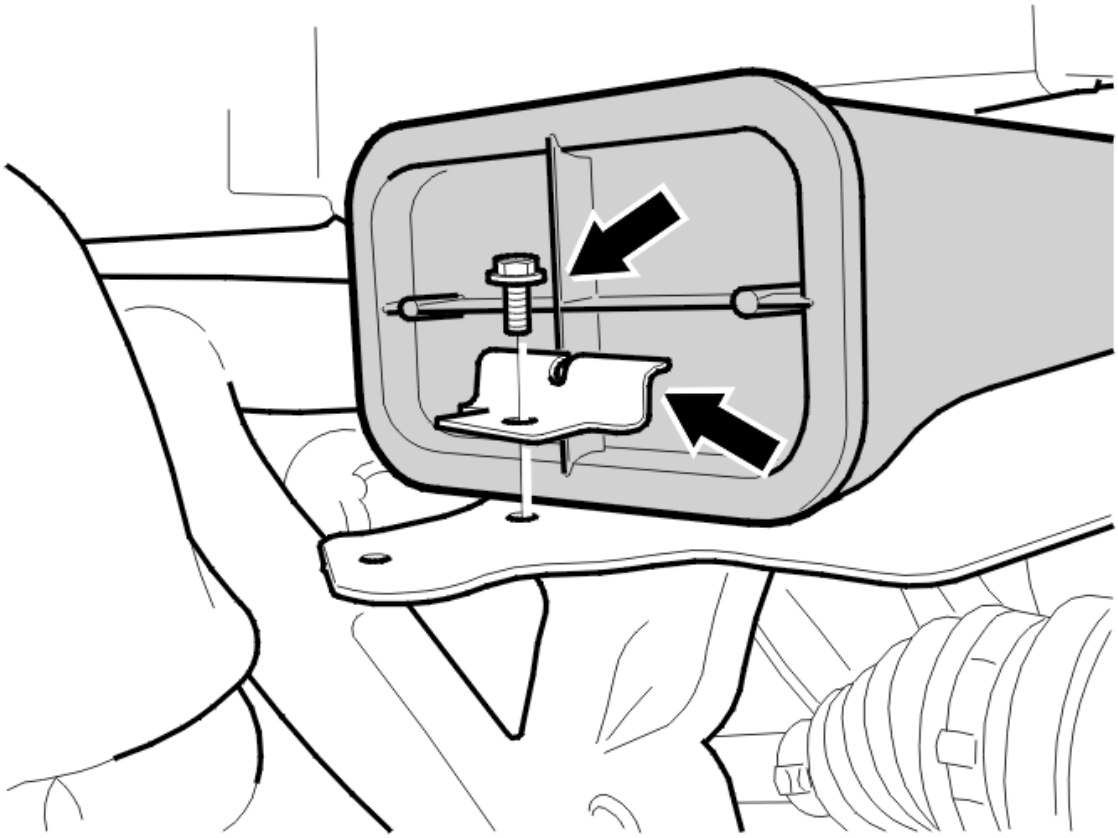

Fig. 53: Identifying Screw and Clamp
Courtesy of VOLVO CARS CORPORATION

Remove:

- the screw
- the clamp
- the carbon filter container.

INSTALLING THE CARBON FILTER CONTAINER

Install:

- the carbon filter container
- the clamp
- the screw. Tighten to 10Nm
- the hose
- the pipes and quick-release connector.

FINISHING

Install the cable in the spare wheel.

Carefully wind up the wheel.

NOTE: Guide the wheel to the correct position whilst raising.

Position the storage compartment and close the floor hatch.

LEAK DIAGNOSTIC PUMP, REPLACING

NOTE: As the illustrations in this service information are used for different model years and / or models, some variation may occur. However, the essential information in the illustrations is always correct.

PREPARATION

Open the floor hatch. Remove the storage compartment.

REMOVING THE SPARE WHEEL

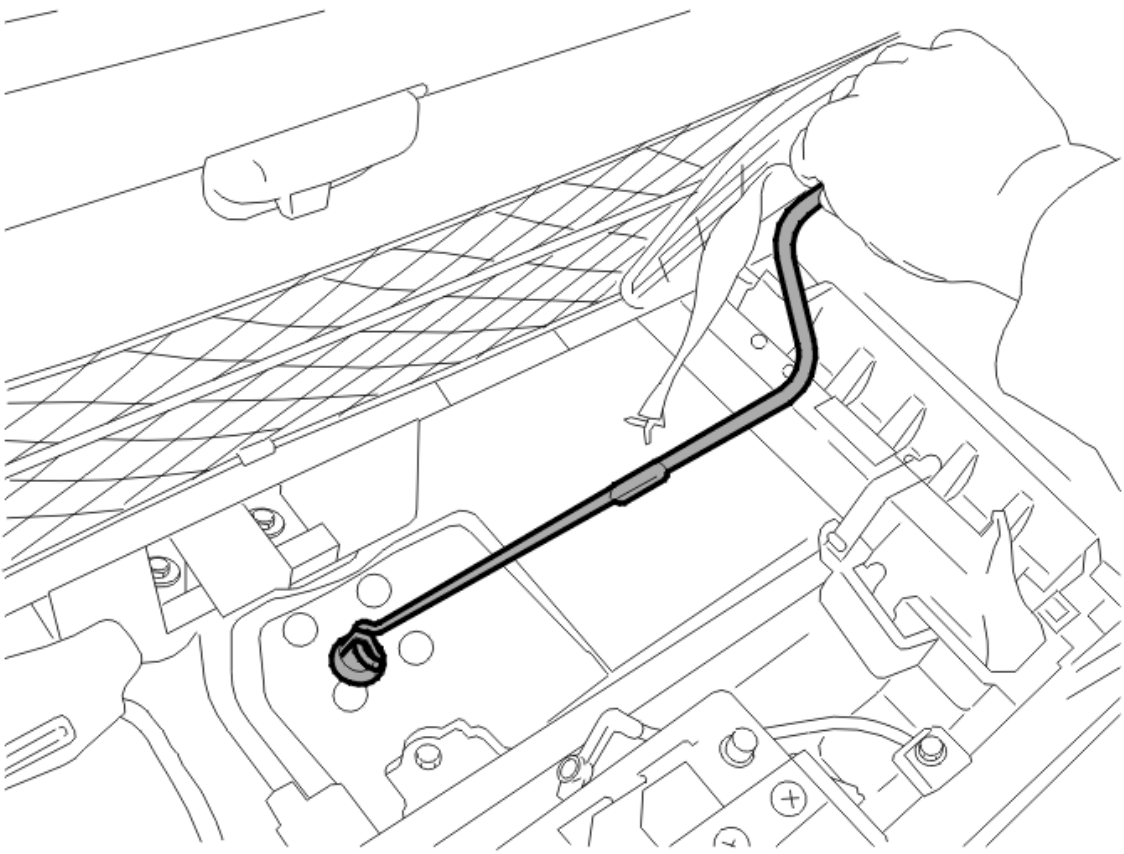

Fig. 54: Attaching Crank To Wind Down Wheel
Courtesy of VOLVO CARS CORPORATION

Attach the crank and wind down the wheel.

HINT: Use the crank from the car tool kit.

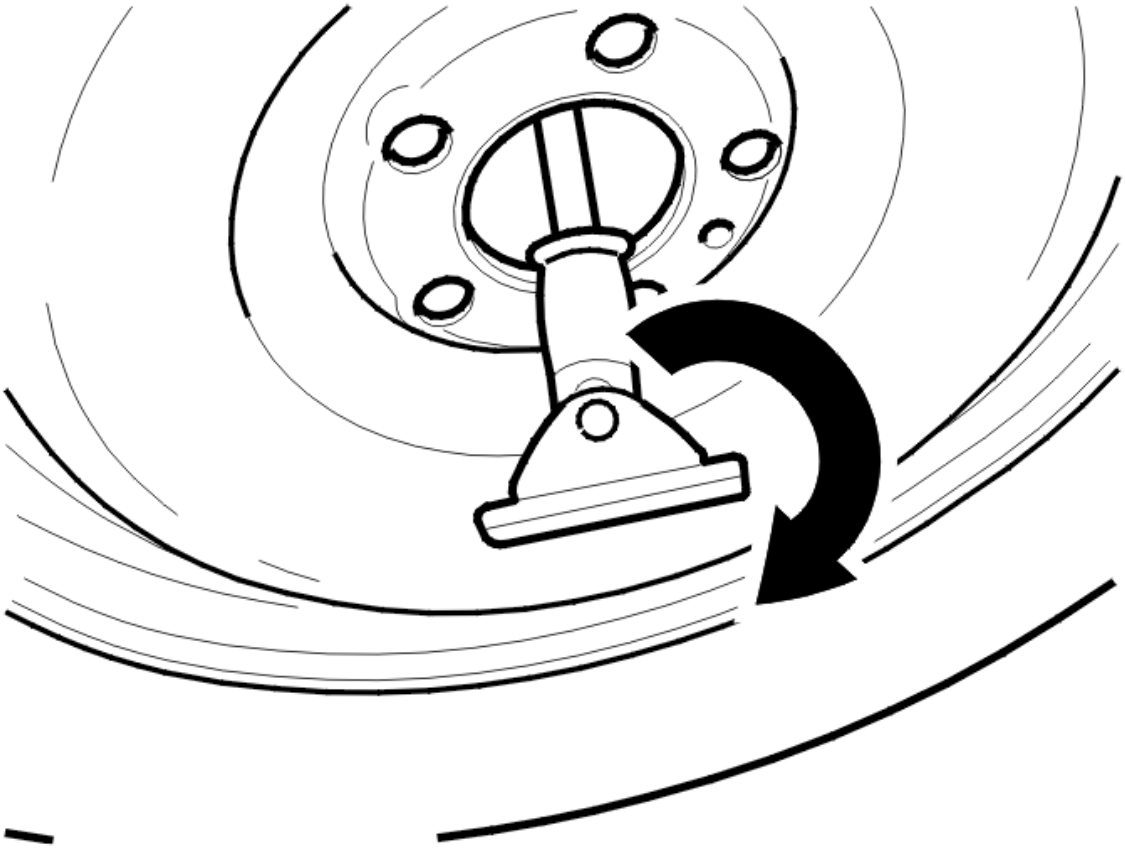

Fig. 55: Identifying Support Plate
Courtesy of VOLVO CARS CORPORATION

Fold in the support plate and pull the wire through the wheel.

Remove the wheel.

REMOVING THE LEAK DIAGNOSTIC PUMP

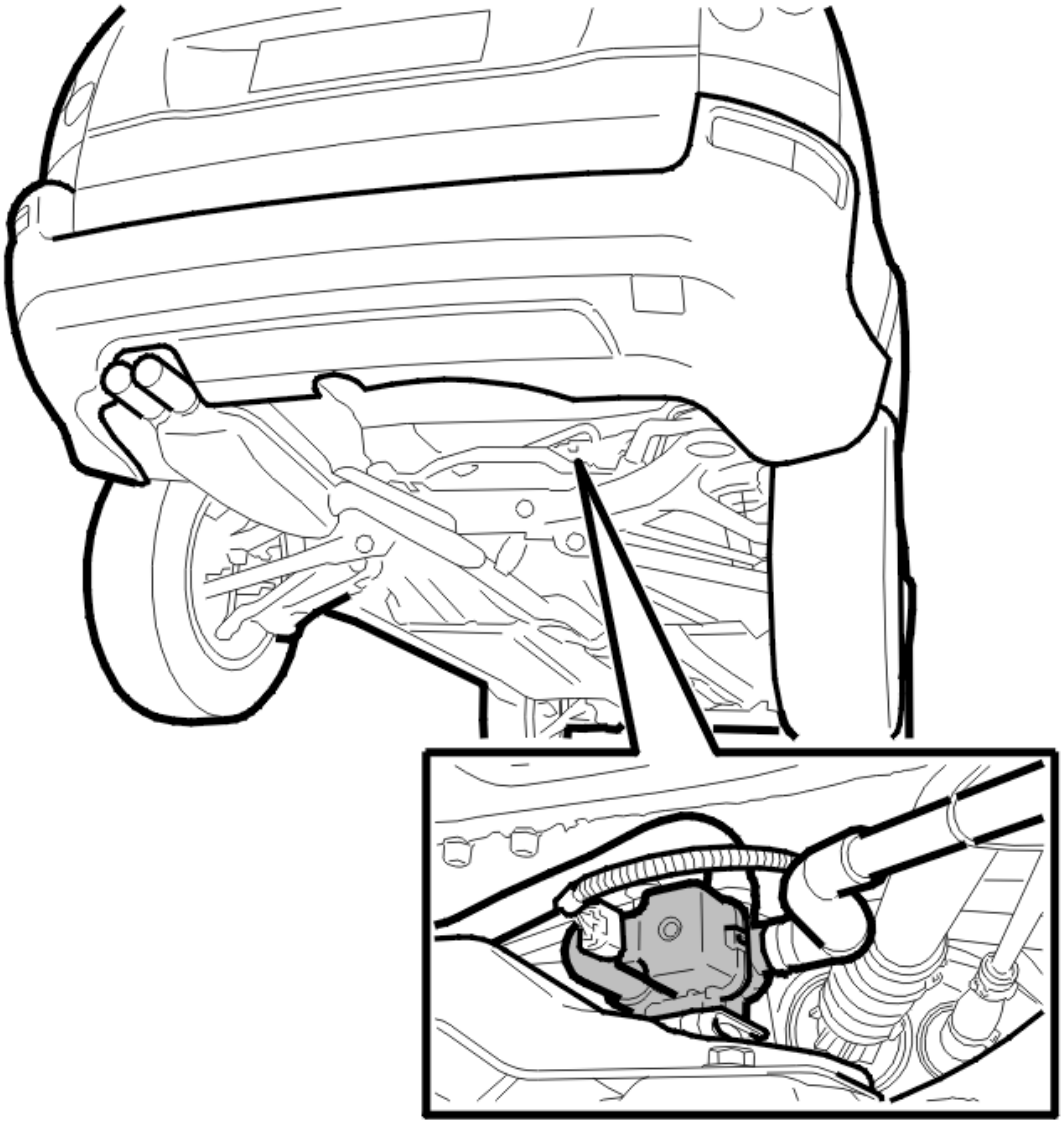

Fig. 56: Identifying Leak Diagnostic Pump, Hoses & Connector
Courtesy of VOLVO CARS CORPORATION

Remove:

- the hoses
- the connector
- the pump. Pull straight back so that the rubber mounting releases from the rear suspension.

INSTALLING THE LEAK DIAGNOSTIC PUMP

Install:

- the pump and rubber mounting
- the hoses. Use new clamps

- the connector.

INSTALLING THE SPARE WHEEL

Insert the wire in the wheel and fold out the support plate.

Carefully wind up the wheel.

NOTE: Guide the wheel whilst raising.

FINISHING

Install the storage compartment and close the floor hatch.

FUEL TANK FUEL LINES AND EVAPORATIVE SYSTEM (B5254T2, AW55-50/51SN; 2003-2007)

FUEL TANK, REPLACING

Special tools:

see **9995720**

NOTE: As the illustrations in this service information are used for different model years and / or models, some variation may occur. However, the essential information in the illustrations is always correct.

REMOVAL

PREPARATORY WORK

Drain the fuel tank. See **FUEL TANK, DRAINING** .

Block the parking brake pedal in the neutral position. See **PARKING BRAKE SELF-ADJUSTMENT, RESETTING** .

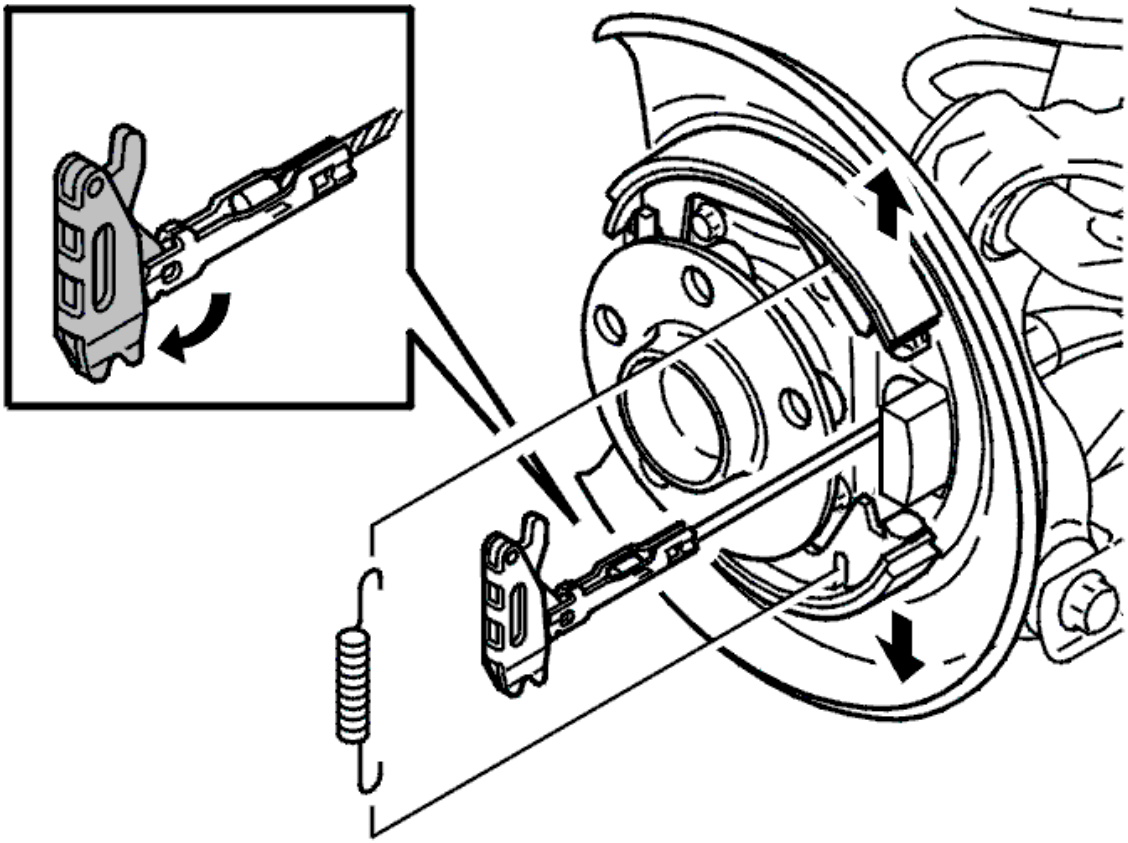

Fig. 57: Identifying Parking Brake Adjuster
Courtesy of VOLVO CARS CORPORATION

Remove the following on both sides:

- the wheel
- the brake caliper. See **BRAKE CALIPERS REAR, REPLACING**
- the brake discs. See **BRAKE DISC REAR, REPLACING** .

Detach the tension spring. Remove the expander. Lift the brake shoe slightly. Grip the expander. Pull the expander outwards.

Unhook the expander from the metal bracket.

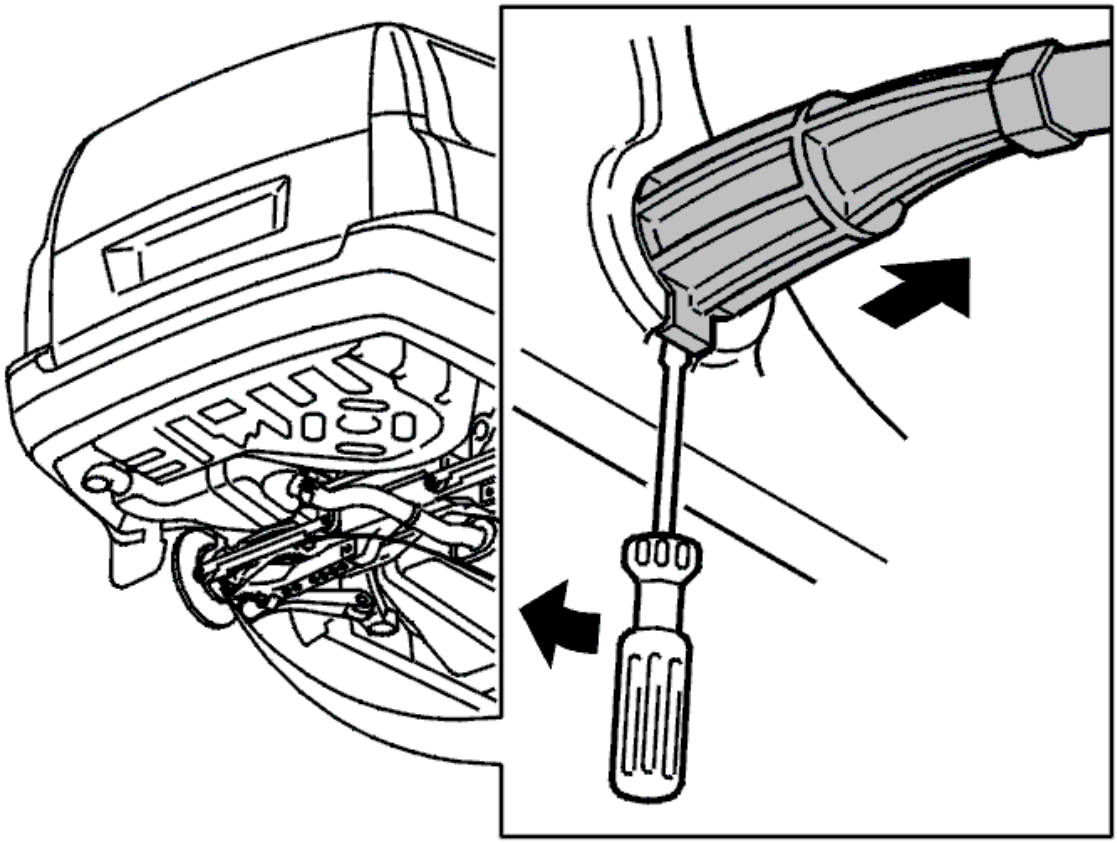

Fig. 58: Applying Screwdriver Between Guide Sleeve Lug And Wheel Arch
Courtesy of VOLVO CARS CORPORATION

Remove the following on both sides:

- the guide sleeve for the cable sleeve. Apply a screwdriver between the guide sleeve lug and wheel arch. Pry apart slightly to remove the sleeve.

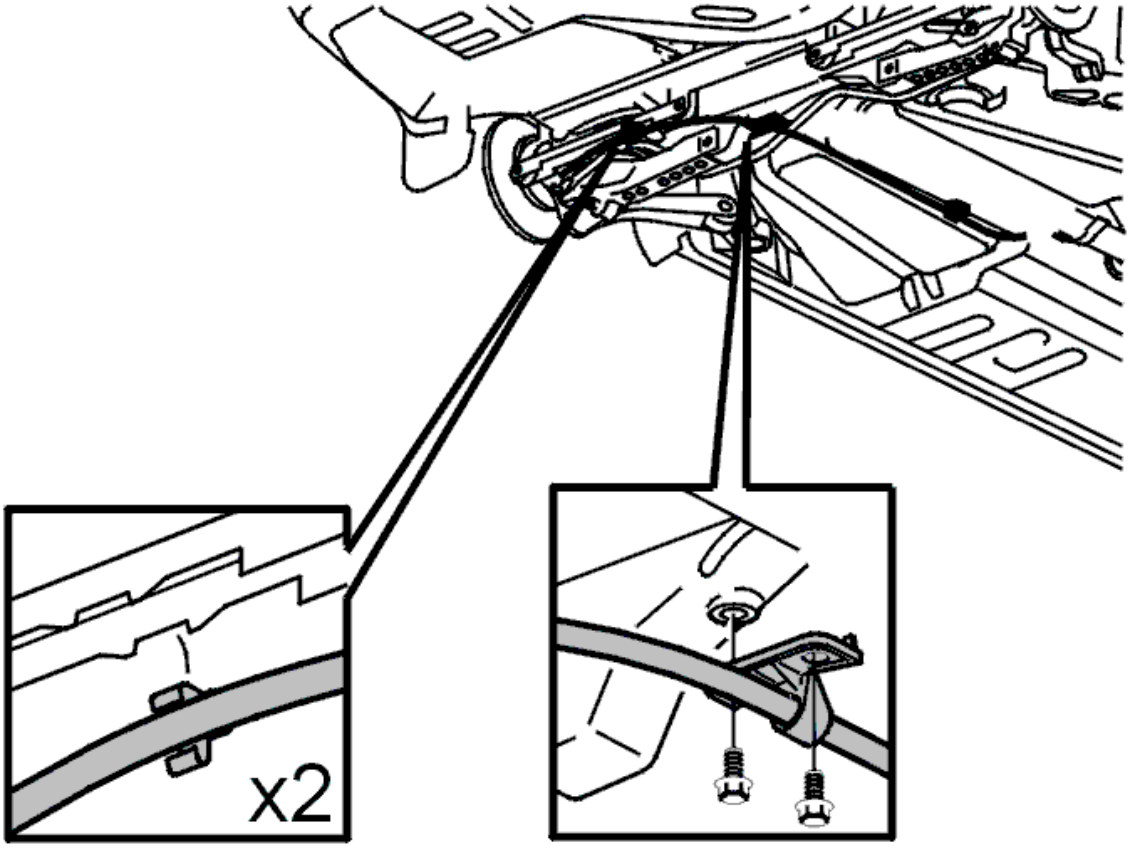

Fig. 59: Handbrake Cable
Courtesy of VOLVO CARS CORPORATION

Remove the parking brake cable from the tie rod and the sub-frame on both sides.

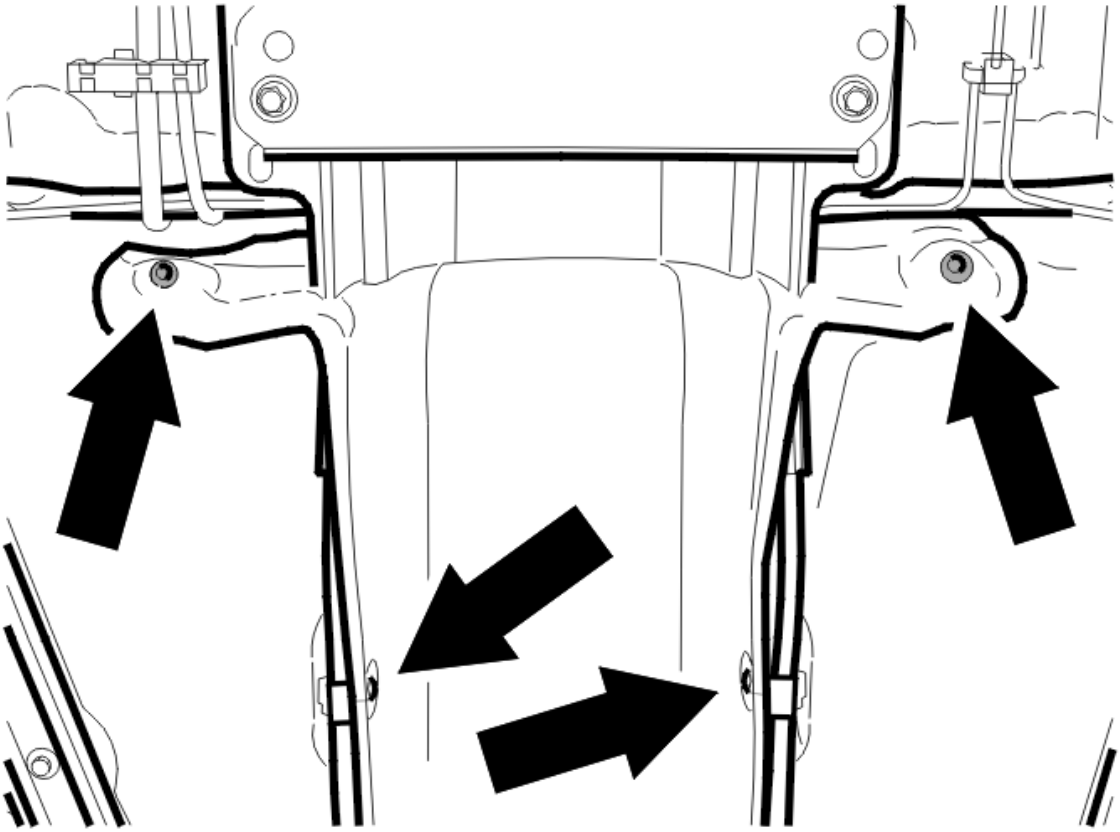

Fig. 60: Locating Mounting Screws For Heat Shield
Courtesy of VOLVO CARS CORPORATION

Remove:

- the 2 screws for the cable clips
- the 2 screws for the front mounting for the heat deflector plate.

Fold out the cables from the heat deflector plate. Hang the cables up at the front of the car.

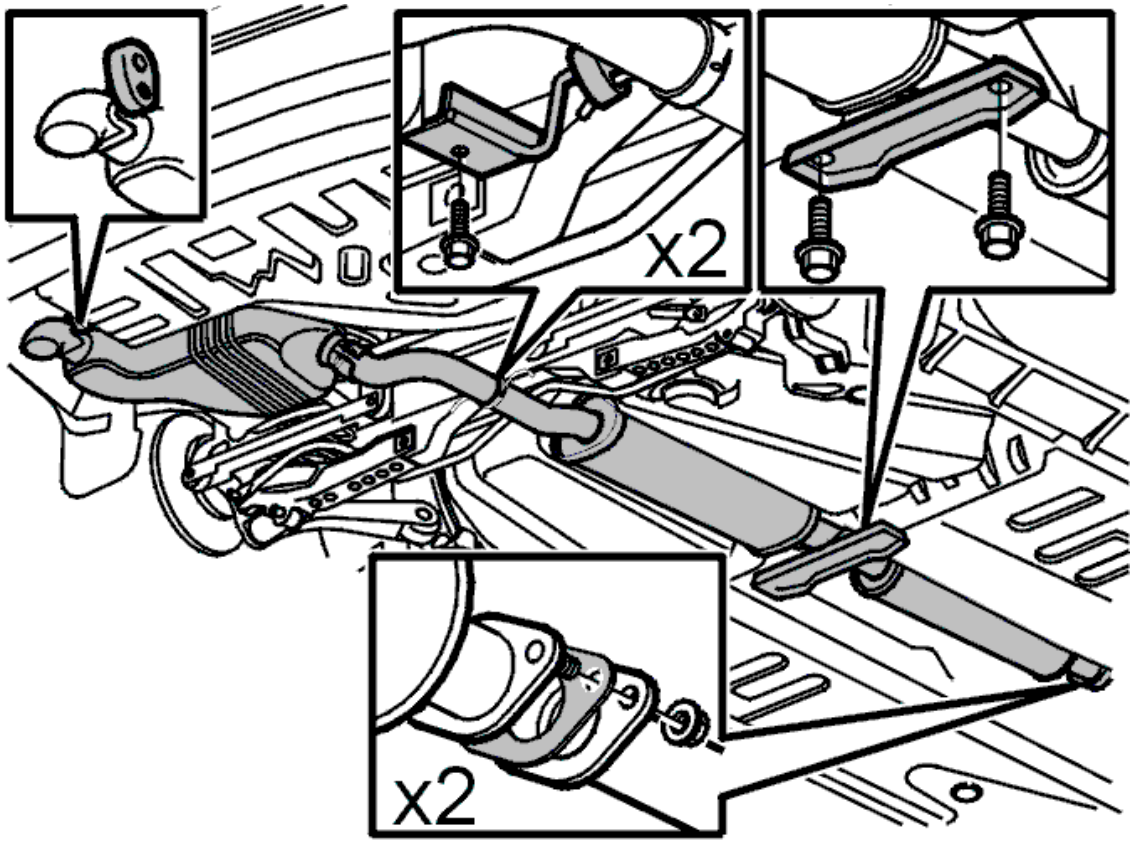

Fig. 61: Exhaust System, Brackets And Fasteners
Courtesy of VOLVO CARS CORPORATION

Remove the exhaust system from the three-way catalytic converter (TWC) and backwards.

NOTE: Hang up the three-way catalytic converter (TWC) to prevent damaging the flex boot.

REMOVING THE FUEL TANK

Install a lifting table under the fuel tank.

Remove:

- the upper quick-release connector plastic pipe on the carbon filter container
- the 4 screws for the mounting for the fuel tank straps in the car.

Remove:

- the hose clamp for the fuel filler pipe
- the hose clamp for the bleed pipe.

Lower the lifting table to access the plastic pipes on top of the tank.

Remove:

- the plastic pipes
- The ABS cable harness from the clips on both sides of the fuel tank.

Remove the fuel tank.

TRANSFERRING COMPONENTS

REMOVING THE SPLASH GUARD PIPE

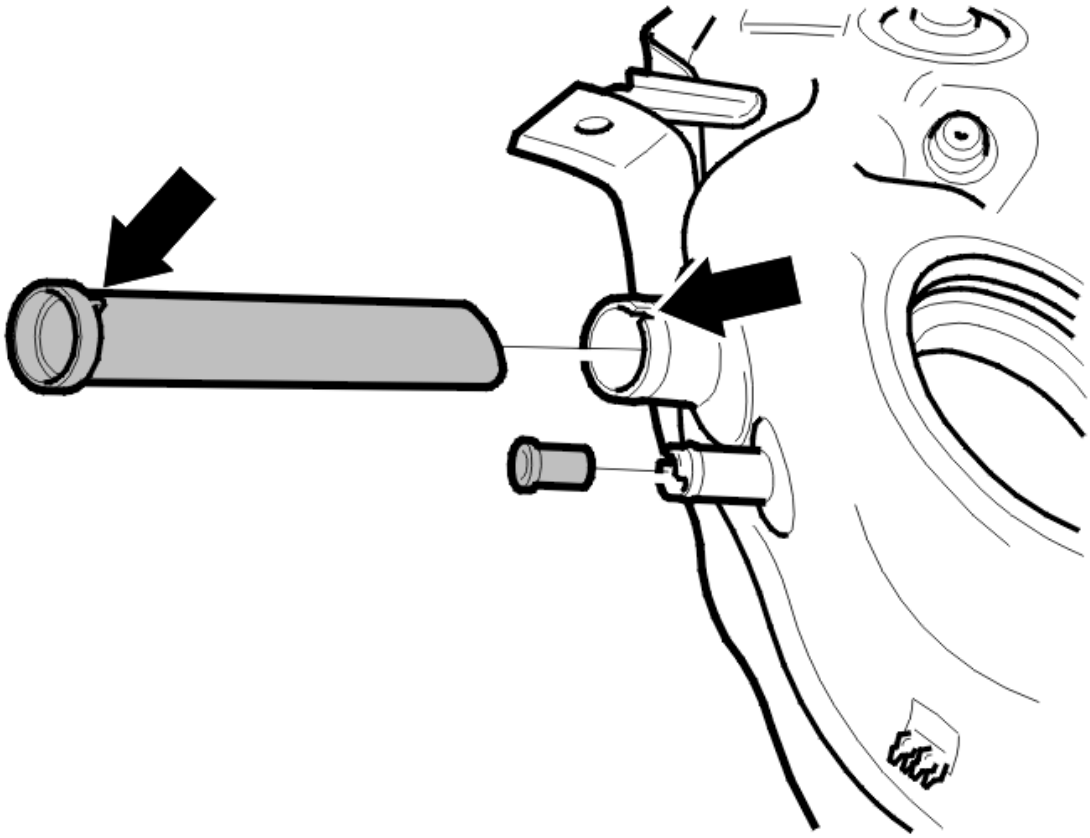

Fig. 62: Locating Splash Guard Pipe
Courtesy of VOLVO CARS CORPORATION

Remove the splash guard pipe and the bleed pipe. Pull straight out.

REMOVING THE LEVEL SENSOR

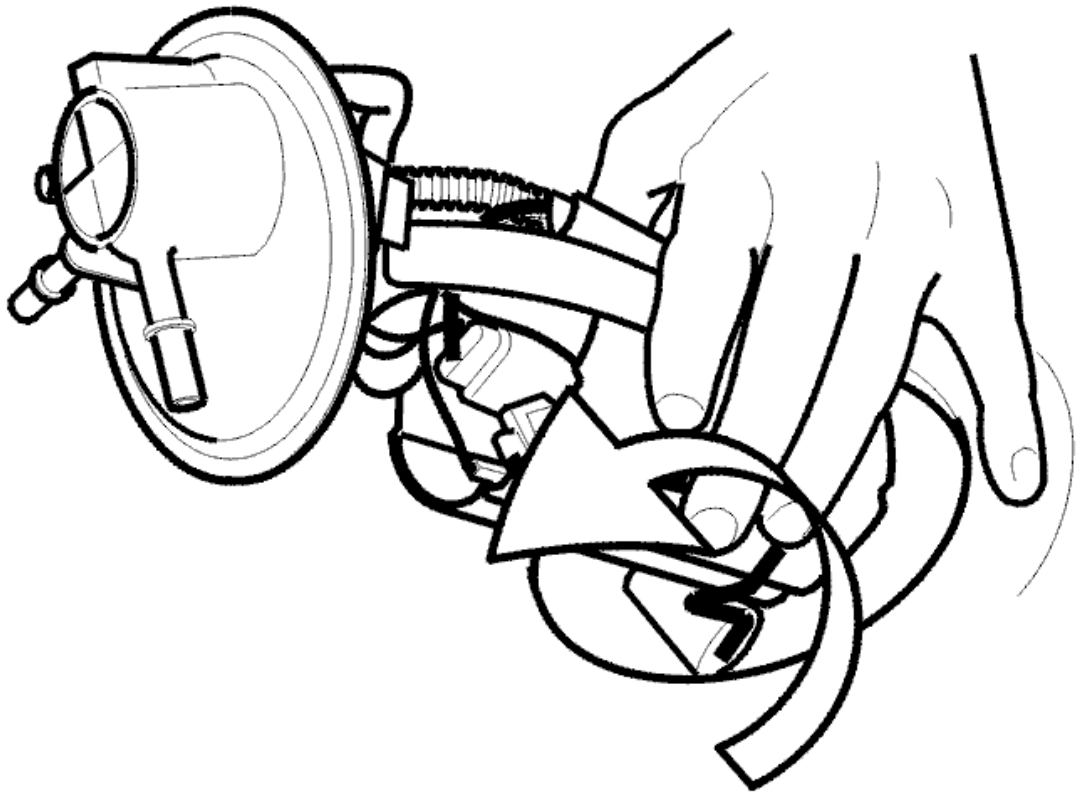

Fig. 63: Removing Fuel Pump Module
Courtesy of VOLVO CARS CORPORATION

Lift the left level sensor.

Remove:

- the connector
- the ejector.

Grip the right-hand level sensor / pump. Pinch the float to hold it in its lowest position.

Carefully and slowly pull up the holder. Carefully work the holder out.

Pull the hoses and the wiring out of the tank.

NOTE: Take care with the fuel tank.

NOTE: It is extremely important that the float arm is not broken or bent.

REMOVING THE TANK RETAINING STRAP AND HEAT DEFLECTOR PLATE

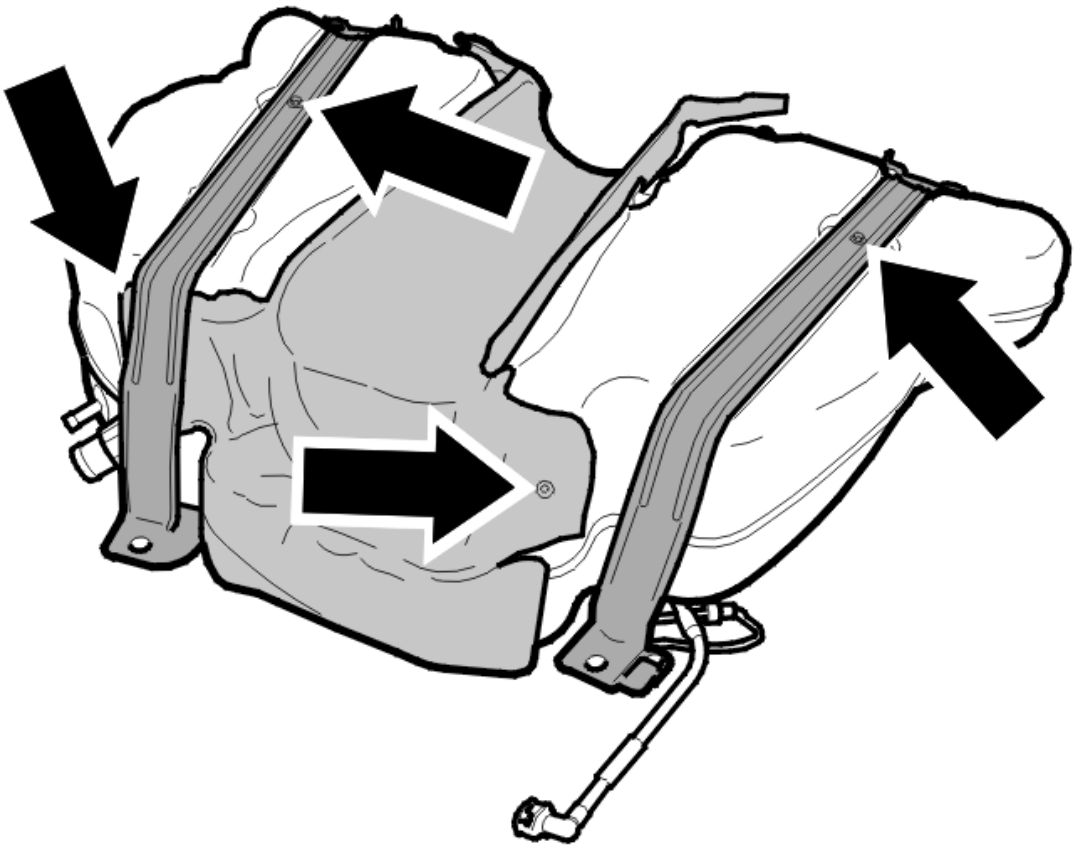

Fig. 64: Identifying Retaining Strap And Heat Deflector
Courtesy of VOLVO CARS CORPORATION

Remove:

- the 2 screws
- the tank retaining strap
- the 2 screws
- the heat deflector plate.

INSTALLING THE TANK RETAINING STRAP AND HEAT DEFLECTOR PLATE

Install:

- the heat deflector plate
- the 2 screws. Tighten to **5 Nm**
- the tank retaining strap
- the 2 screws. Tighten to **10 Nm** .

INSTALLING THE LEVEL SENSOR

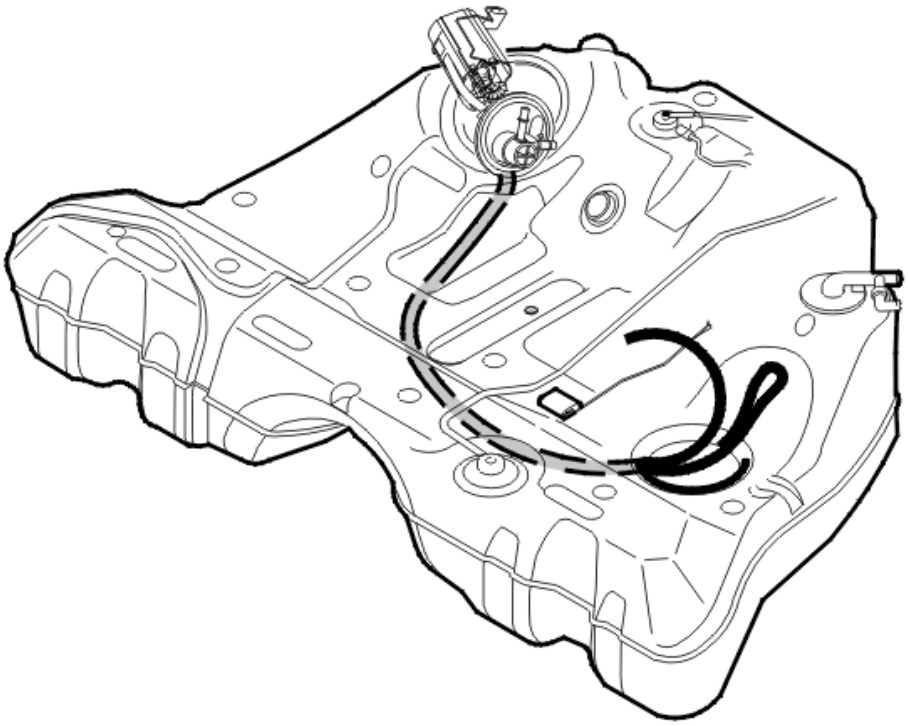

Fig. 65: Fuel Level Sensor
Courtesy of VOLVO CARS CORPORATION

Lubricate the sealing ring using petroleum jelly and install it.

Route the cable harness / hoses from the right level sensor to the left side of the tank as illustrated.

HINT: Use a welding rod bent into a curve with a hook at one end to pull the cable harness / hoses to the correct position.

NOTE: It is very important for installing the level sensor that the cable harness / hoses are routed into the front section of the fuel tank.

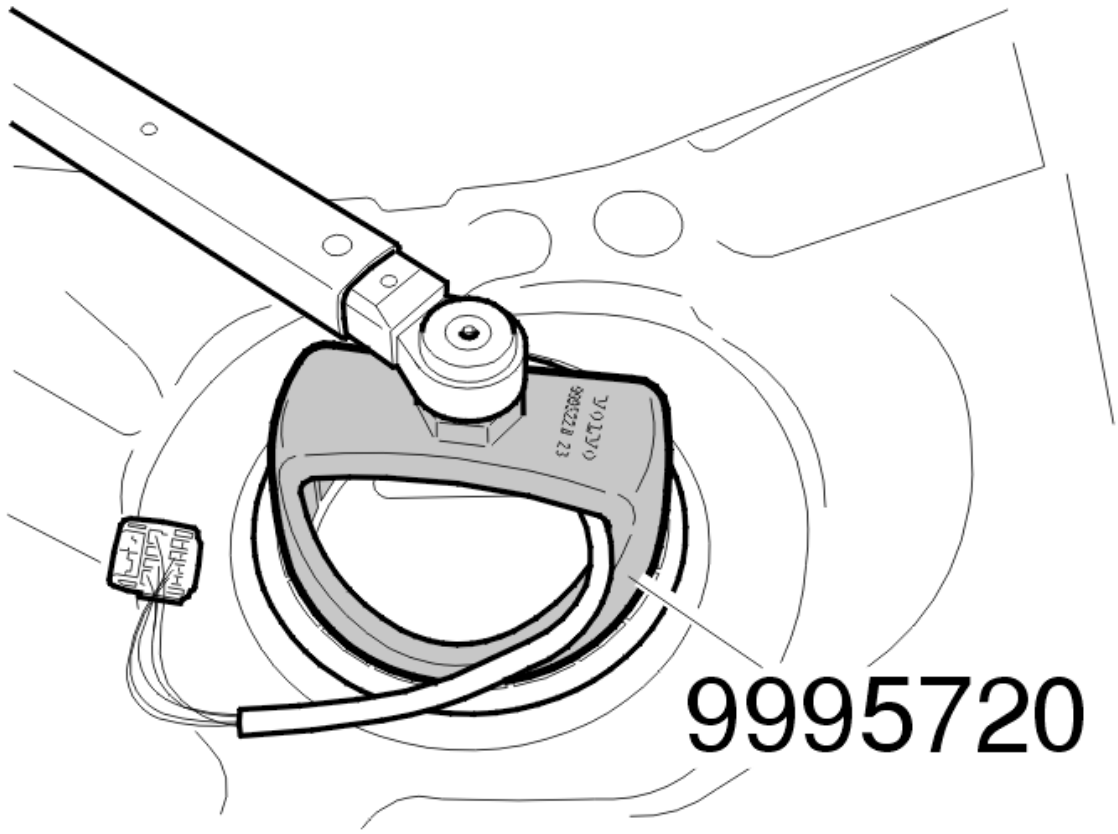

Fig. 66: Tool 999 5720 Installed
Courtesy of VOLVO CARS CORPORATION

Install on the left-hand side:

- the sealing ring, lubricate it first with petroleum jelly
- the ejector
- the connectors
- the level sensor. Use wrench see **9995720** and tighten. See **TIGHTENING TORQUE** .

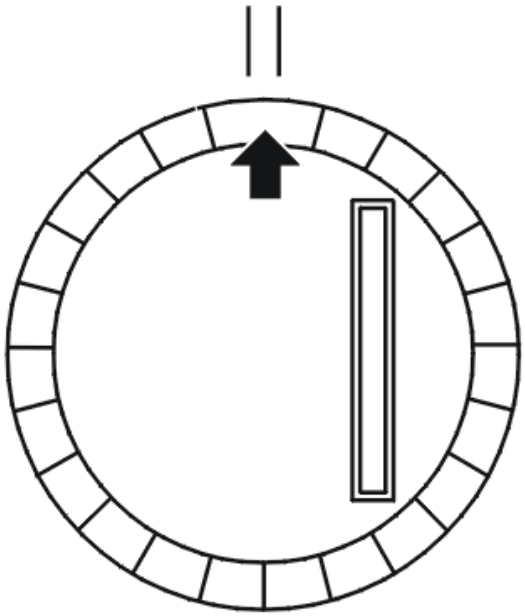

Fig. 67: Checking Arrow On Cover
Courtesy of VOLVO CARS CORPORATION

NOTE: **Ensure that the arrow is opposite the marking on the tank.**

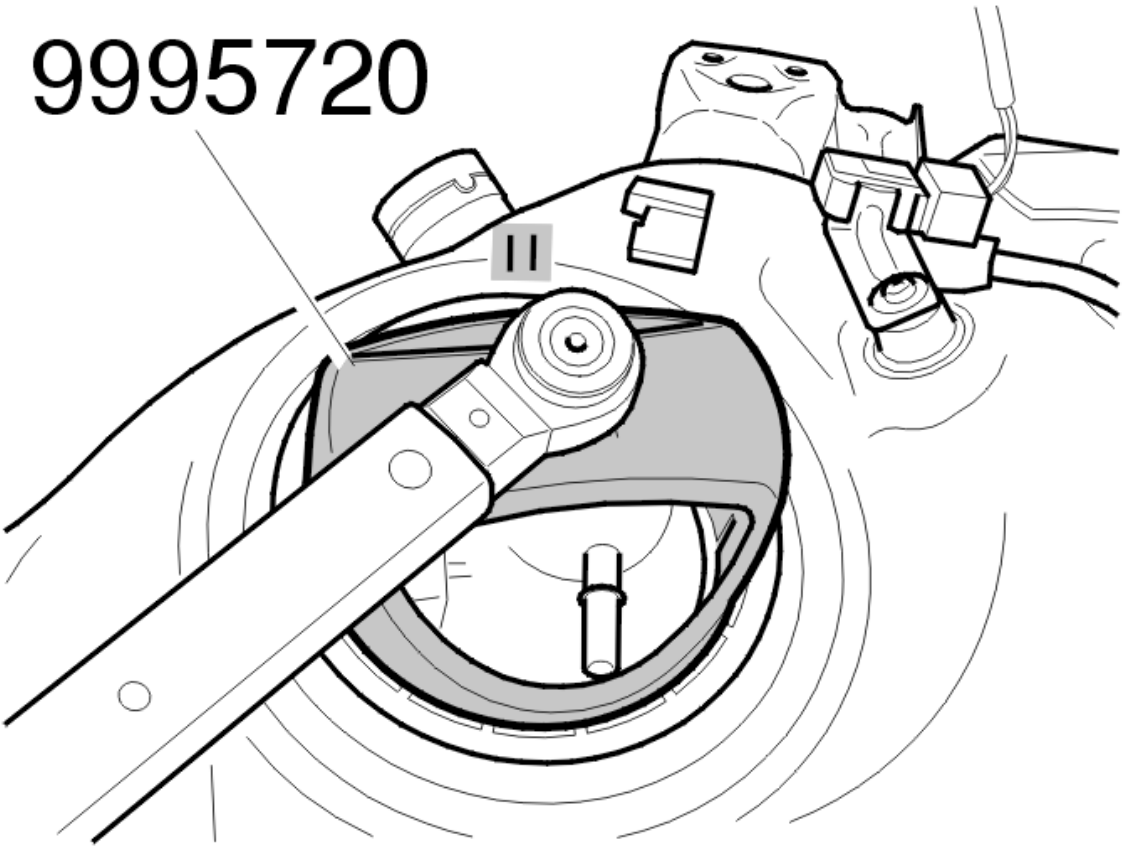

Fig. 68: Installing Fuel Level Sensor Using Special Tool 999 5720
Courtesy of VOLVO CARS CORPORATION

Install on the right-hand side:

- the level sensor. Use wrench see **9995720** and tighten. See **TIGHTENING TORQUE** .

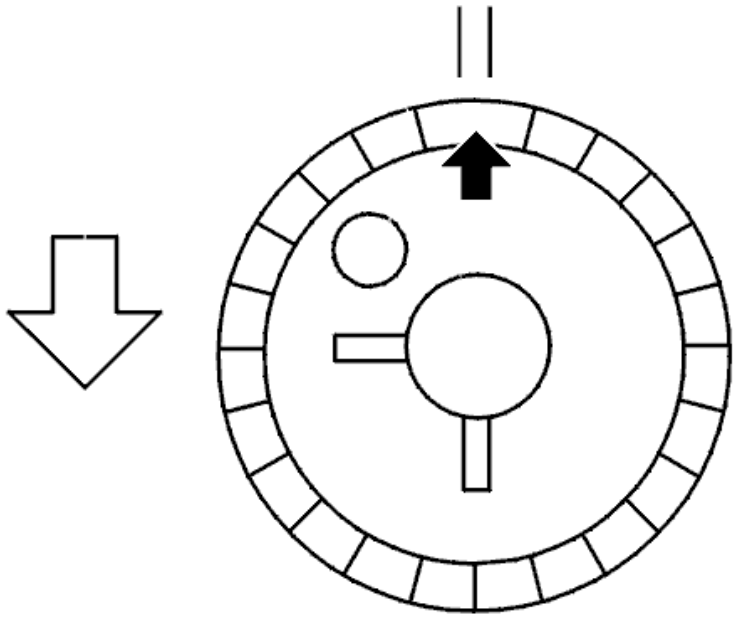

Fig. 69: Checking Arrow On Cover
Courtesy of VOLVO CARS CORPORATION

Ensure that the arrow is opposite the marking on the tank.

INSTALLING THE SPLASH GUARD PIPE

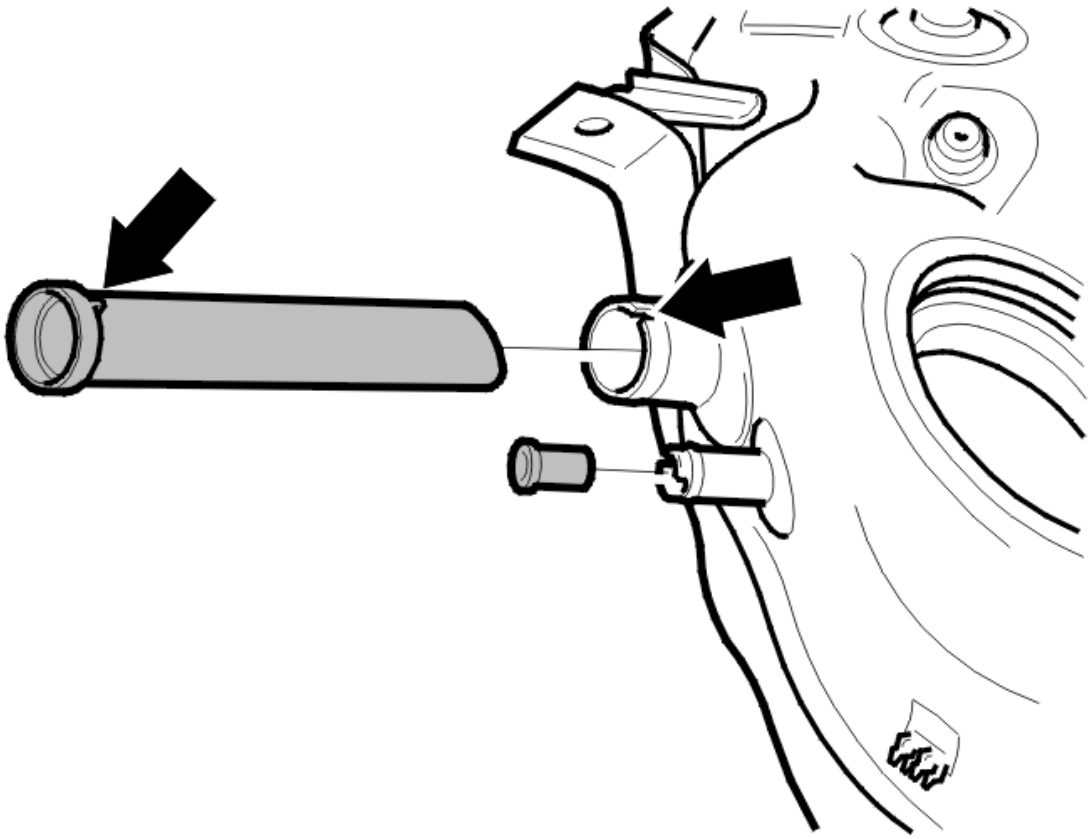

Fig. 70: Locating Splash Guard Pipe
Courtesy of VOLVO CARS CORPORATION

Install the splash guard pipe.

NOTE: Ensure that the locating pin is correctly positioned for the groove in the tank.

INSTALLATION

INSTALLING THE FUEL TANK

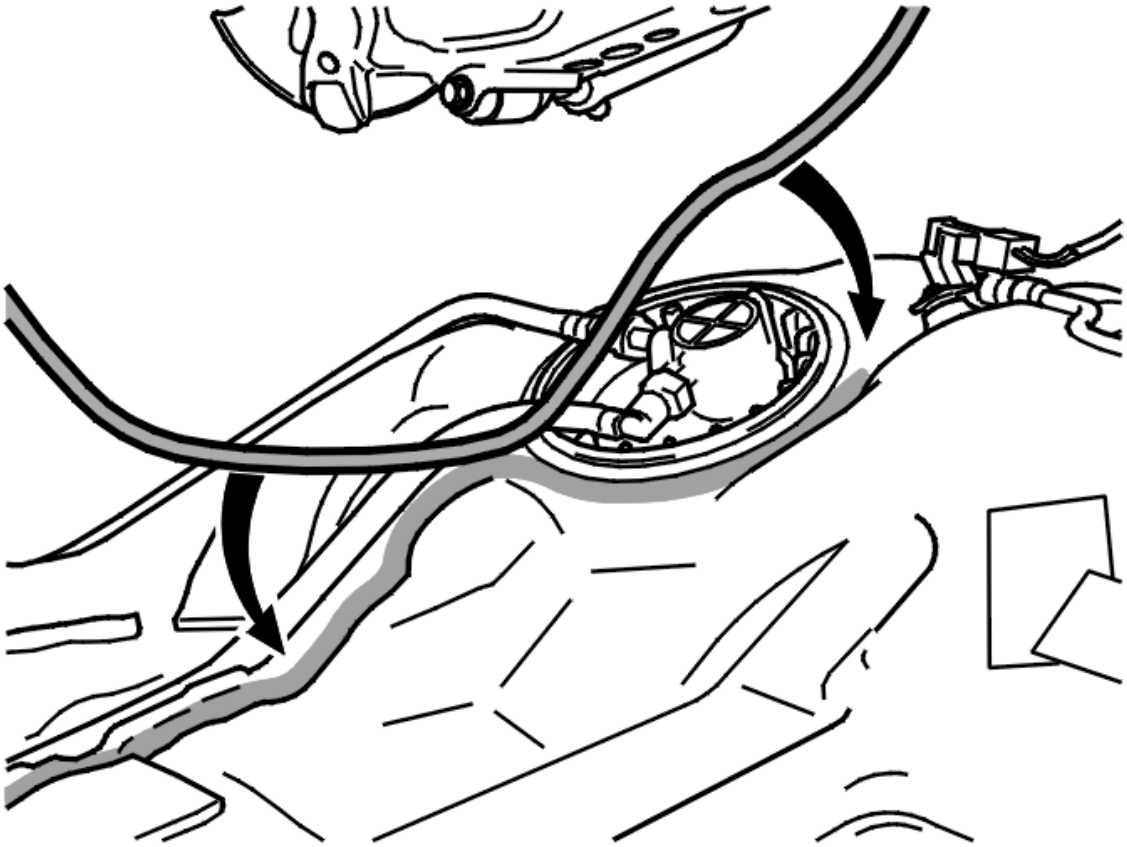

Fig. 71: Installing Pipe In Grooves In The Tank
Courtesy of VOLVO CARS CORPORATION

Place the fuel tank on the lifting table.

Raise the lifting table to install the plastic hoses on the right-hand level sensor and in the grooves in the tank.

Secure the hoses in place using silver tape.

Install the ABS cable harnesses in the clips on both sides of the tank.

Align the fuel filler pipe and the bleed pipe.

Insert the cable harnesses for the level sensor and the fuel tank pressure sensor through the inspection holes in the floor.

Raise the fuel tank to the installation position.

NOTE: Ensure that the fuel filler pipe and bleed pipe slide into position whilst raising the fuel tank.

Install the 4 screws for mounting the fuel tank straps in the vehicle. Tighten to **24 Nm** .

Remove the lifting table.

Install:

- the hose clamp for the fuel filler pipe
- the hose clamp for the bleed pipe
- the upper quick-release connector plastic pipe on the carbon filter container.

INSTALLING THE BRAKES

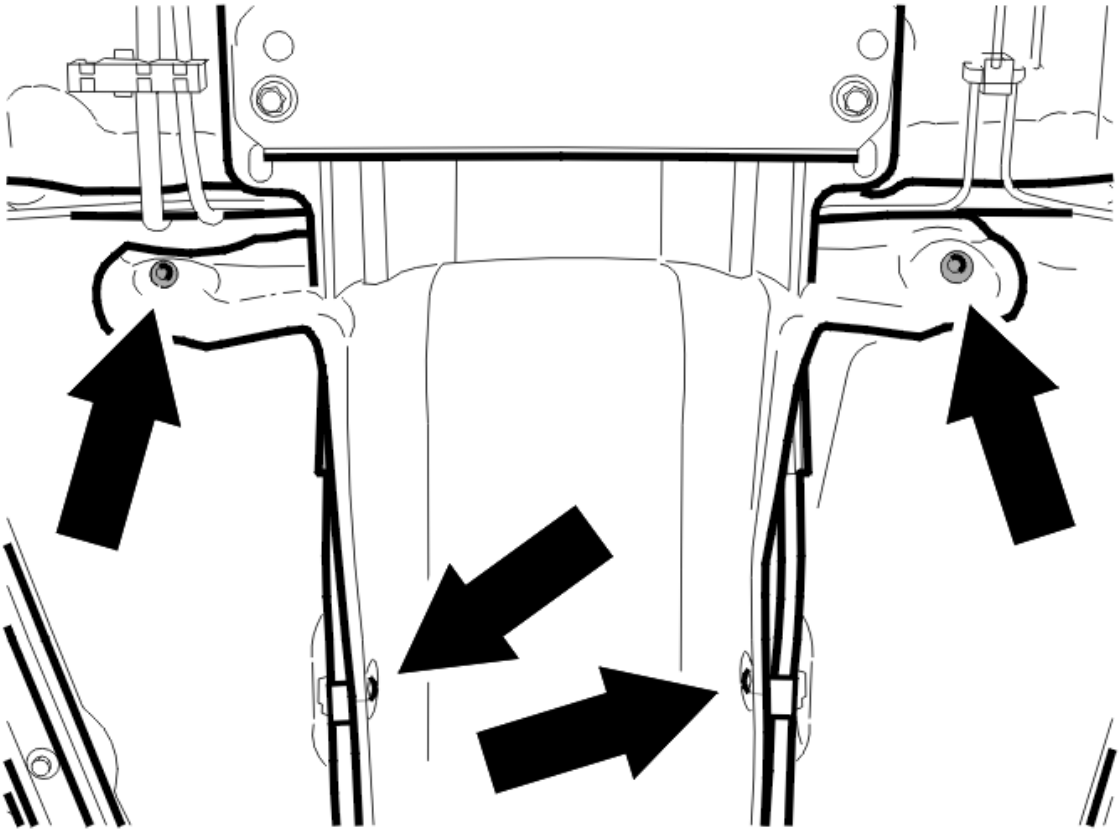

Fig. 72: Locating Mounting Screws For Heat Shield
Courtesy of VOLVO CARS CORPORATION

Install:

- the parking brake cables along the heat shield
- the screws in the center and front mountings for the heat shield.

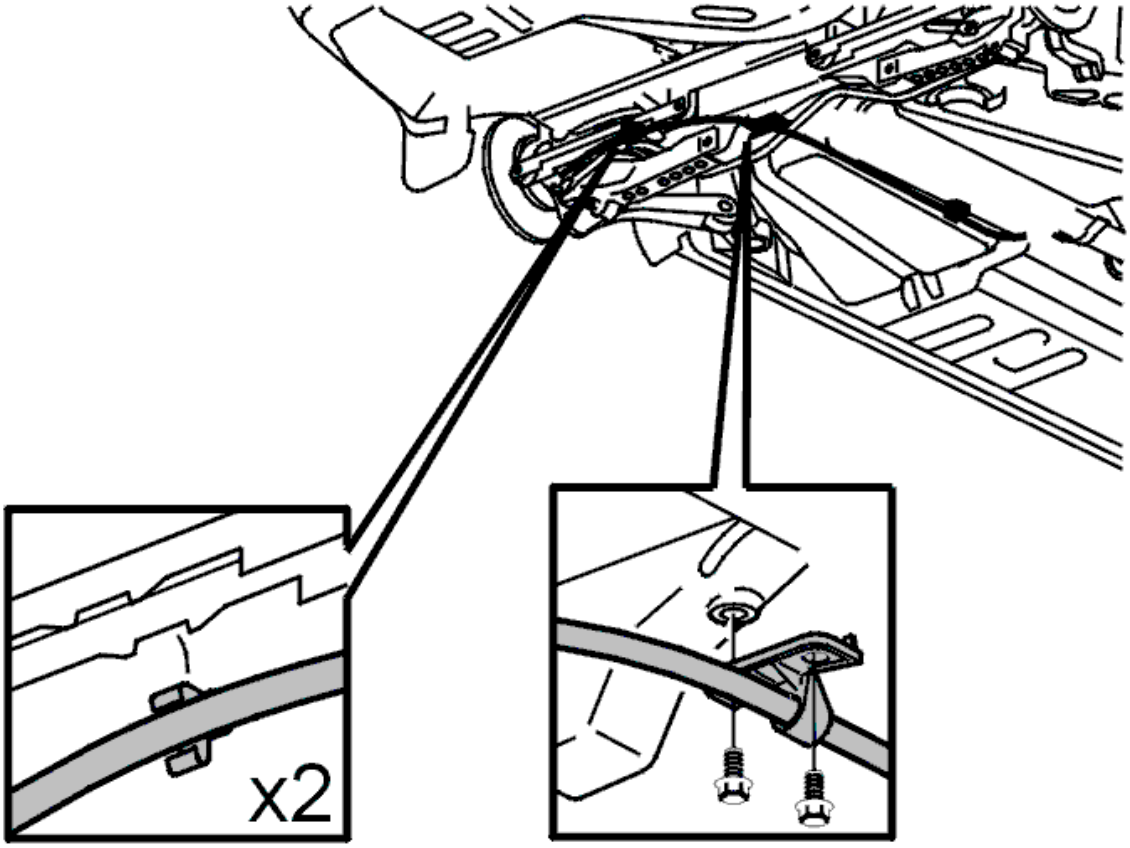

Fig. 73: Handbrake Cable
Courtesy of VOLVO CARS CORPORATION

Install:

- the parking brake cables on the wheel unit
- the mountings for the parking brake cables in the sub-frame. Tighten to **25 Nm**
- the plastic clips for the parking brake cables on the tie rods.

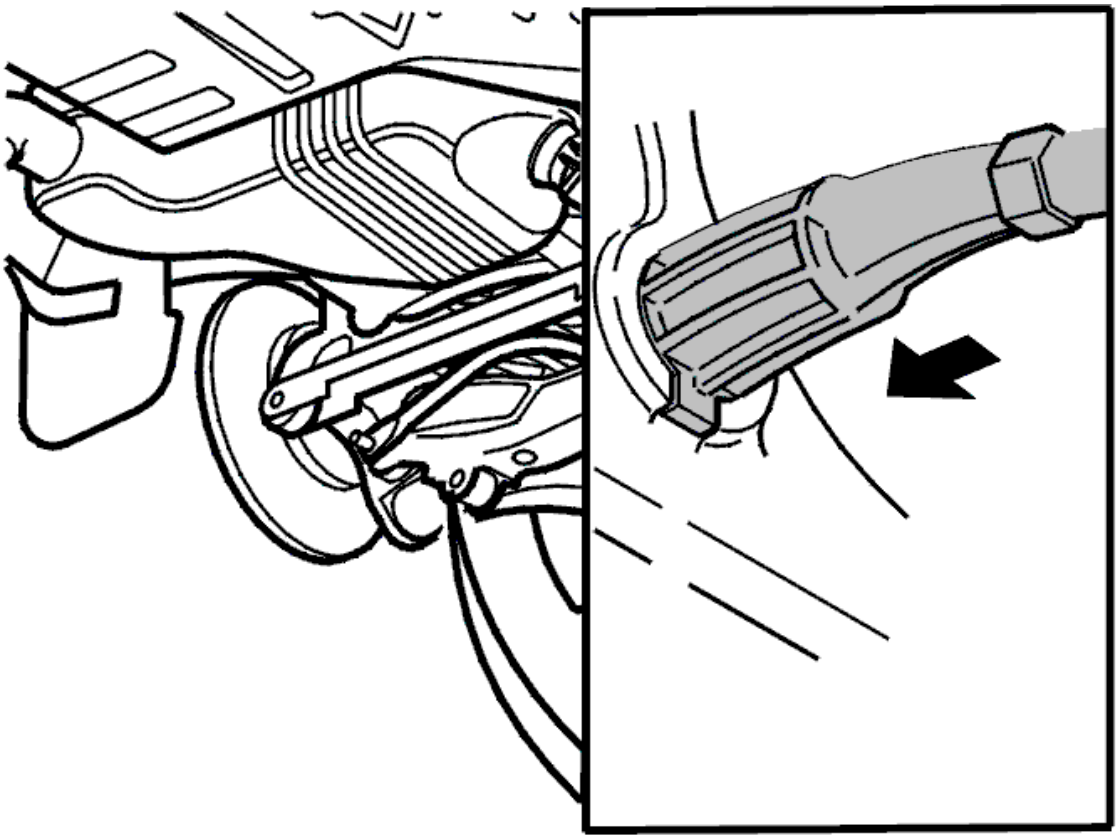

Fig. 74: Pressing Cable Sleeve Guide Sleeve Into Place In Mounting
Courtesy of VOLVO CARS CORPORATION

Press the guide sleeves for the parking brake cables into place on the wheel units.

NOTE: **Lubricate the O-rings on the guide sleeves. Use lubricant 116 1580 or silicon grease.**

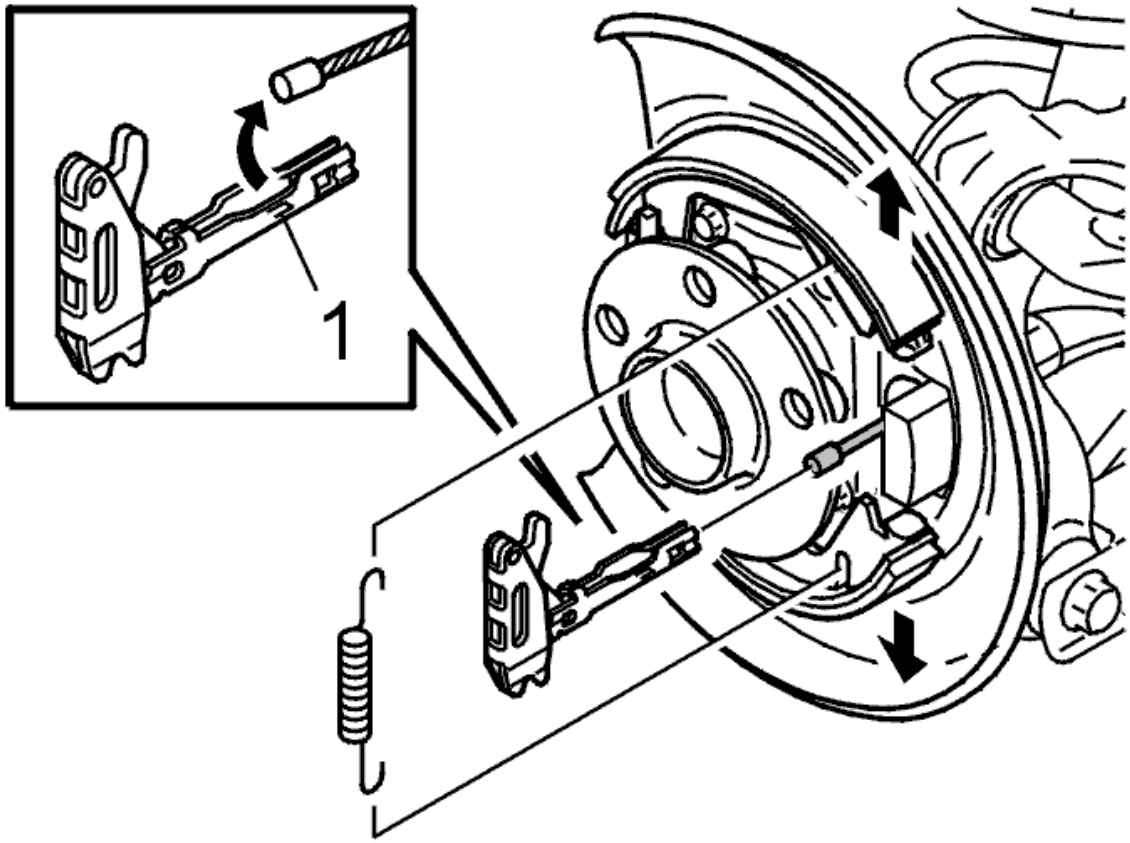

Fig. 75: Identifying Return Spring And Expander
Courtesy of VOLVO CARS CORPORATION

Install:

- the expander on the cable. Press the mounting together to lock the cable in the expander
- the expander between the brake shoes
- the return spring.

Check the function.

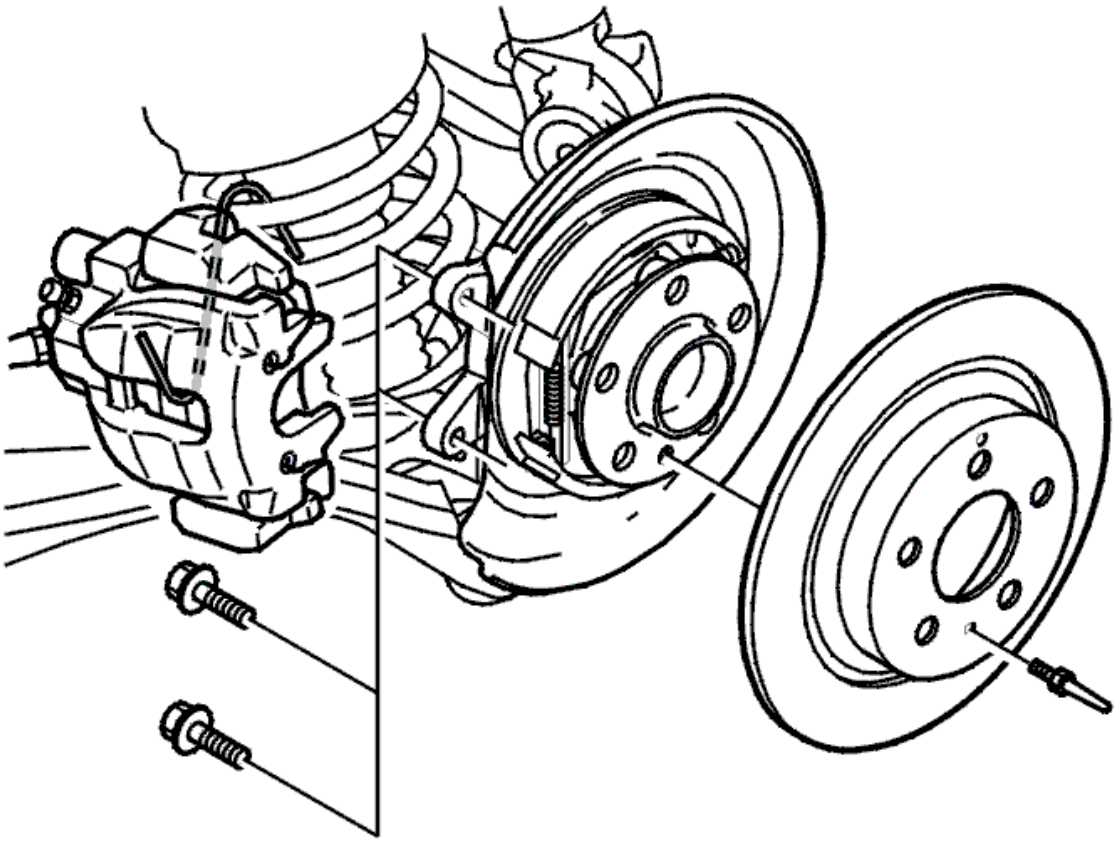

Fig. 76: Brake Disc And Locating Pin
Courtesy of VOLVO CARS CORPORATION

Install:

- the brake disc and the locating pin
- the brake caliper. Use new screws.

Tighten. See **TIGHTENING TORQUE** .

NOTE: **Activate the parking brake adjuster. See PARKING BRAKE SELF-ADJUSTMENT, RESETTING .**

INSTALLING THE EXHAUST SYSTEM

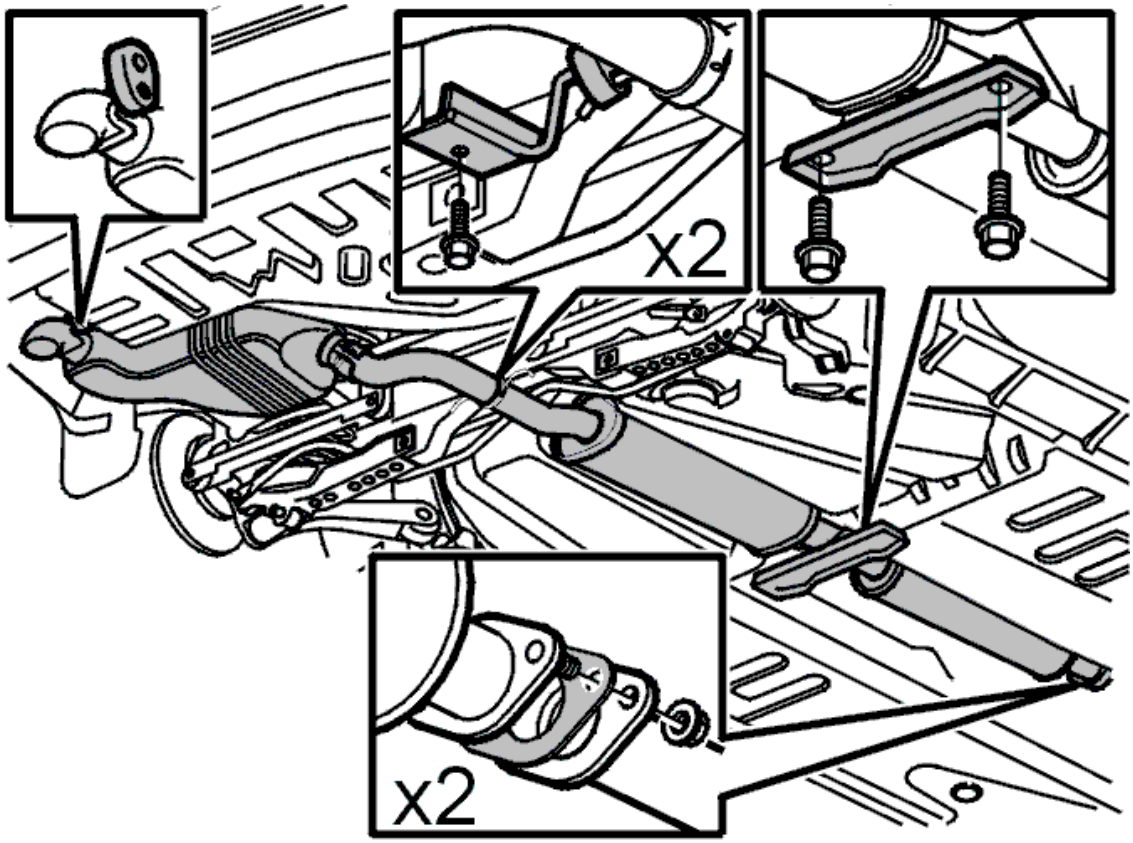

Fig. 77: Exhaust System, Brackets And Fasteners
Courtesy of VOLVO CARS CORPORATION

Install the exhaust system. Use a new flange gasket. Tighten. See **TIGHTENING TORQUE** .

FINISHING

Install the cover over the level sensor. Tighten the nuts.

Connect the wiring and the connectors.

Remove the block from under the seat frame.

Install:

- the 6 screws for the seat frame. Tighten to **50 Nm**
- the 2 screws for the seat frame. Tighten to **24 Nm**
- both polystyrene blocks
- the ventilation pipe.

Fold the carpet down.

Install:

- the center rear seat. See **UPHOLSTERY BACKREST CUSHION CENTER (SECOND ROW), REPLACING**
- the outer rear seat. See **UPHOLSTERY BACKREST CUSHION OUTER (SECOND ROW)** .

FUEL TANK FUEL LINES AND EVAPORATIVE SYSTEM (B6294T; 2003-2006)

CARBON FILTER CONTAINER, REPLACING

see **CARBON FILTER CONTAINER, REPLACING**

LEAK DIAGNOSTIC PUMP, REPLACING

see **LEAK DIAGNOSTIC PUMP, REPLACING**

FUEL TANK FUEL LINES AND EVAPORATIVE SYSTEM (B6324S; 2007-2010)

CARBON FILTER CONTAINER, REPLACING

see **CARBON FILTER CONTAINER, REPLACING**

LEAK DIAGNOSTIC PUMP, REPLACING

see **LEAK DIAGNOSTIC PUMP, REPLACING**

FUEL TANK FUEL LINES AND EVAPORATIVE SYSTEM (B6324S5; 2011-2012)

CARBON FILTER CONTAINER, REPLACING

see **CARBON FILTER CONTAINER, REPLACING**

LEAK DIAGNOSTIC PUMP, REPLACING

see **LEAK DIAGNOSTIC PUMP, REPLACING**

FUEL TANK FUEL LINES AND EVAPORATIVE SYSTEM (B8444S; 2005-2011)

CARBON FILTER CONTAINER, REPLACING

see **CARBON FILTER CONTAINER, REPLACING**

LEAK DIAGNOSTIC PUMP, REPLACING

see **LEAK DIAGNOSTIC PUMP, REPLACING**

FUEL TANK FUEL LINES AND EVAPORATIVE SYSTEM (TF-80SC; 2011-2012)

FUEL TANK, REPLACING

see **FUEL TANK, REPLACING**

FUEL TANK FUEL LINES AND EVAPORATIVE SYSTEM (TF-80SC AWD; 2005-2012)

FUEL TANK, REPLACING

see **FUEL TANK, REPLACING**

INJECTORS AND DELIVERY LINES (B5254T2; 2005-2007)

INJECTOR/PULSE DAMPER, REPLACEMENT

REMOVAL AND INSTALLATION

NOTE: **Since the illustrations in this service information are used for different model years and / or models, some variation may occur. However, the essential information in the illustrations is always correct.**

PREPARATION

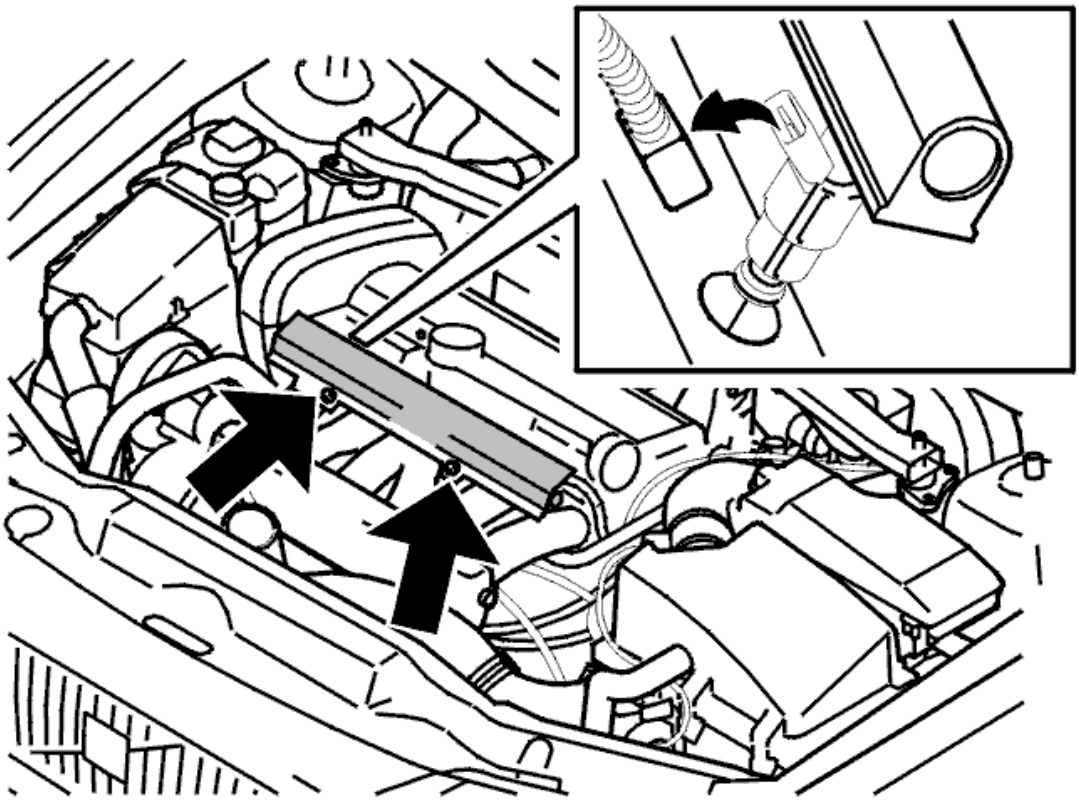

Fig. 78: Identifying Fuel Rail
Courtesy of VOLVO CARS CORPORATION

Depressurize the fuel system acc. to: **FUEL SYSTEM PRESSURE RELEASE** .

Remove the charge air pipe over the engine. Seal the openings.

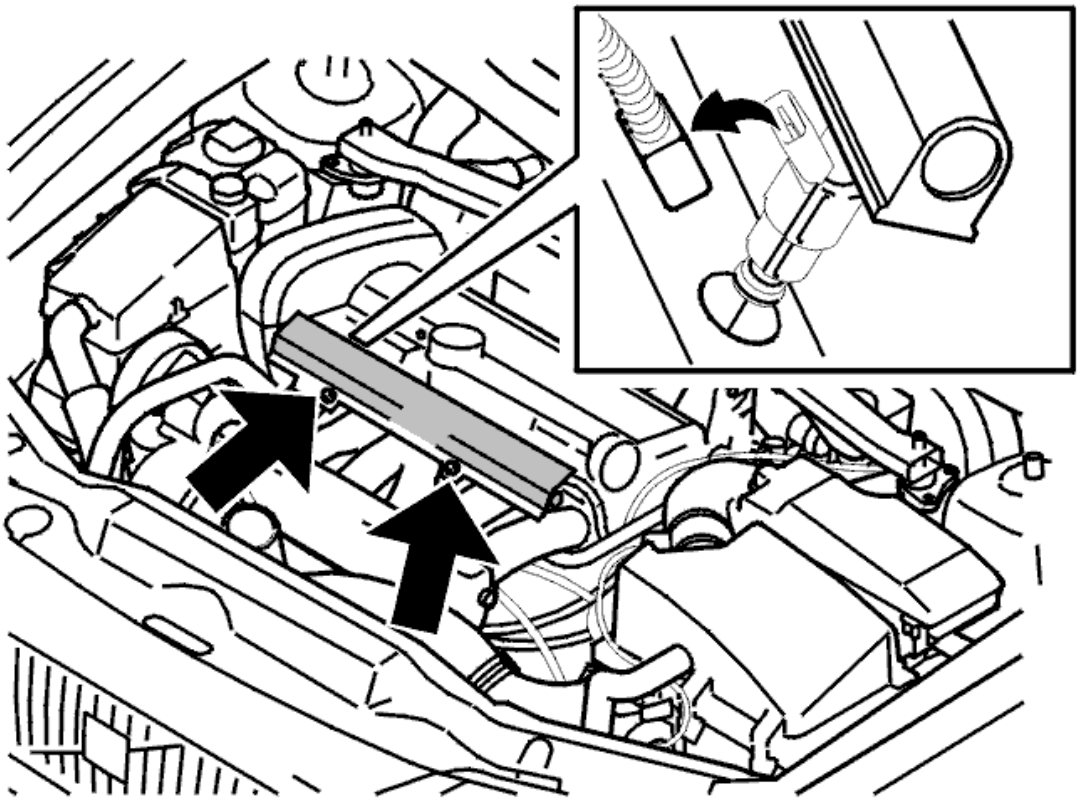

Fig. 79: Identifying Fuel Rail
Courtesy of VOLVO CARS CORPORATION

NOTE: Handle the injectors carefully to avoid damage to the fuel nozzles and fuel needles.

Remove the cover over the fuel rail.

Disconnect the injector connectors. Blow clean around the injectors.

Remove the mounting screws from the fuel rail.

Separate the fuel line quick-release connector. See: **FUEL LINE, LOCK** . Spray universal oil or similar around the injector terminals on the intake manifold.

Disconnect the connector for the fuel pressure sensor in the end of the fuel line. Gently work the fuel rail and injectors loose. Seal the openings.

Remove the tie strap for the fuel pressure sensor wiring.

Gently work the fuel rail and injectors loose. Seal the openings.

REMOVING INJECTORS

Remove:

- the screws holding the mounting rail to the fuel rail
- the mounting rail
- the injector.

INSTALLING INJECTORS

NOTE: For tightening torques, see: TIGHTENING TORQUE

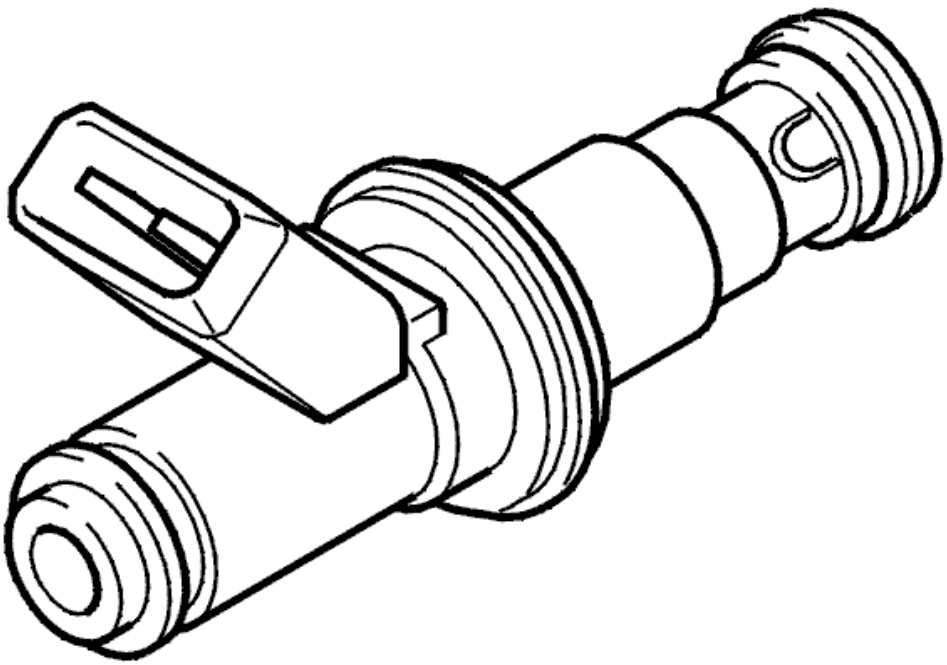

Fig. 80: Identifying Fuel Injector
Courtesy of VOLVO CARS CORPORATION

Lubricate the injector O-ring using a thin layer of petroleum jelly.

Install the new injector.

FINISHING

Position the mounting rail. The injectors may need to be pulled away from the fuel rail a few millimeters to install the rail.

Tighten the mounting rail to the fuel rail. See **TIGHTENING TORQUE** .

Lubricate the injector O-rings with petroleum jelly.

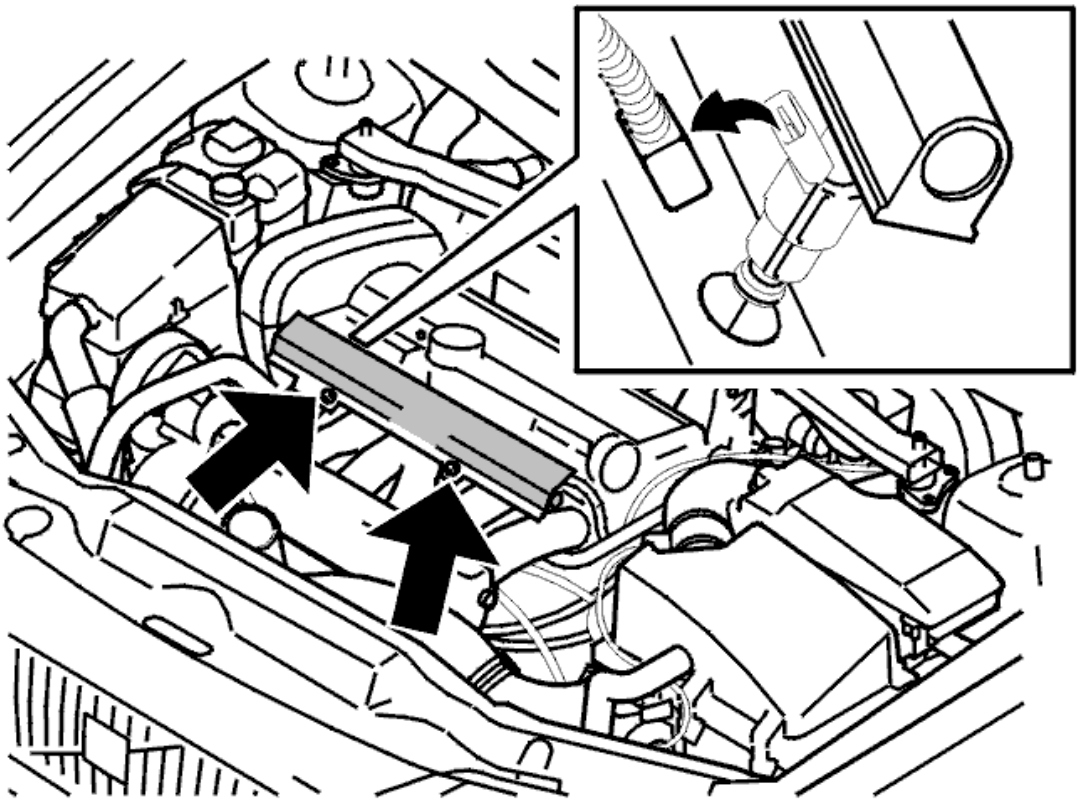

Fig. 81: Identifying Fuel Rail
Courtesy of VOLVO CARS CORPORATION

Depress the fuel rail. Ensure that all injectors sit correctly.

Screw the fuel rail into place. Use new screws and tighten. See **TIGHTENING TORQUE** .

Connect the connectors for the injectors and the fuel pressure sensor.

Install a tie strap for the cable for the fuel pressure sensor.

Press the quick-release connector together until a clicking sound is heard. See **FUEL LINE, LOCK** ..

CAUTION: The fuel pressure pipe must be in place.

Reinstall the cover over the fuel rail.

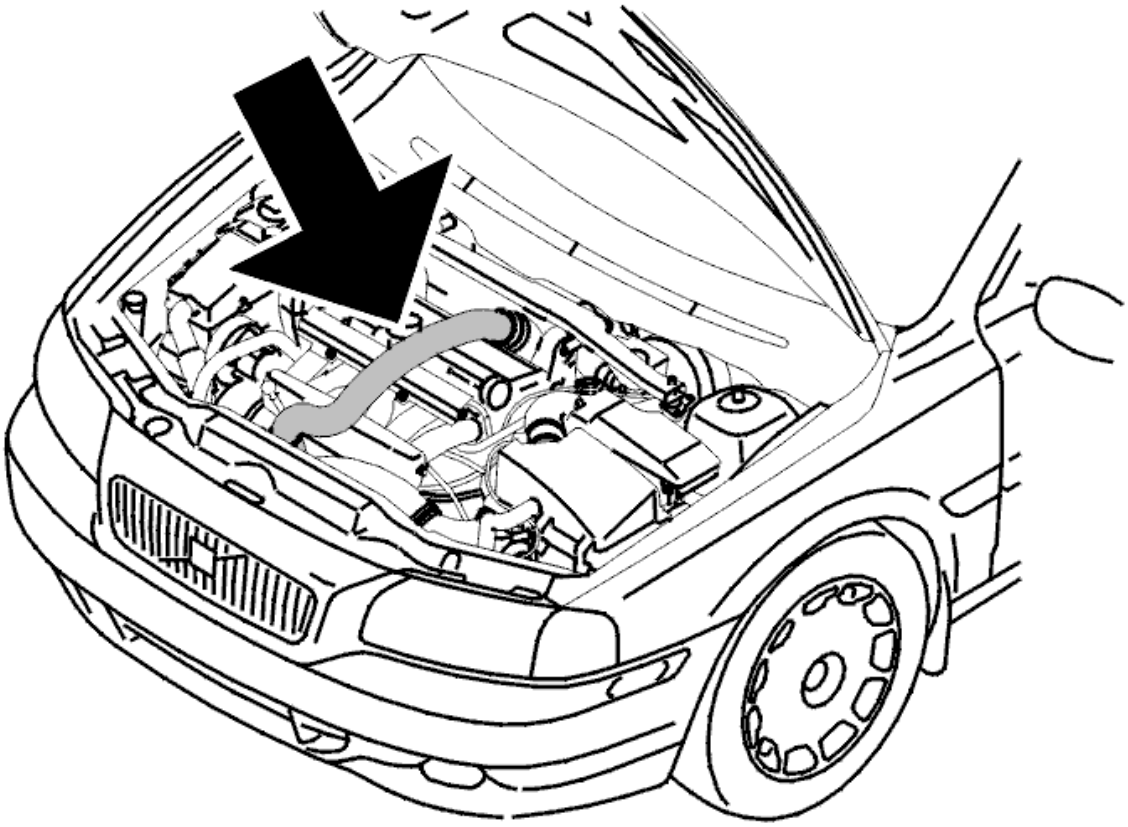

Fig. 82: Charge Air Pipe Over Engine
Courtesy of VOLVO CARS CORPORATION

Remove the seals from the charge air pipe. Reinstall the charge air pipe over the engine.

Start the engine. Check for fuel leakage.

INJECTORS AND DELIVERY LINES (B5254T2; 2003-2004)

INJECTOR/PULSE DAMPER, REPLACEMENT

REMOVAL AND INSTALLATION

NOTE: **Since the illustrations in this service information are used for different model years and / or models, some variation may occur. However, the essential information in the illustrations is always correct.**

PREPARATION

Depressurize the fuel system acc. to:**FUEL SYSTEM PRESSURE RELEASE** .

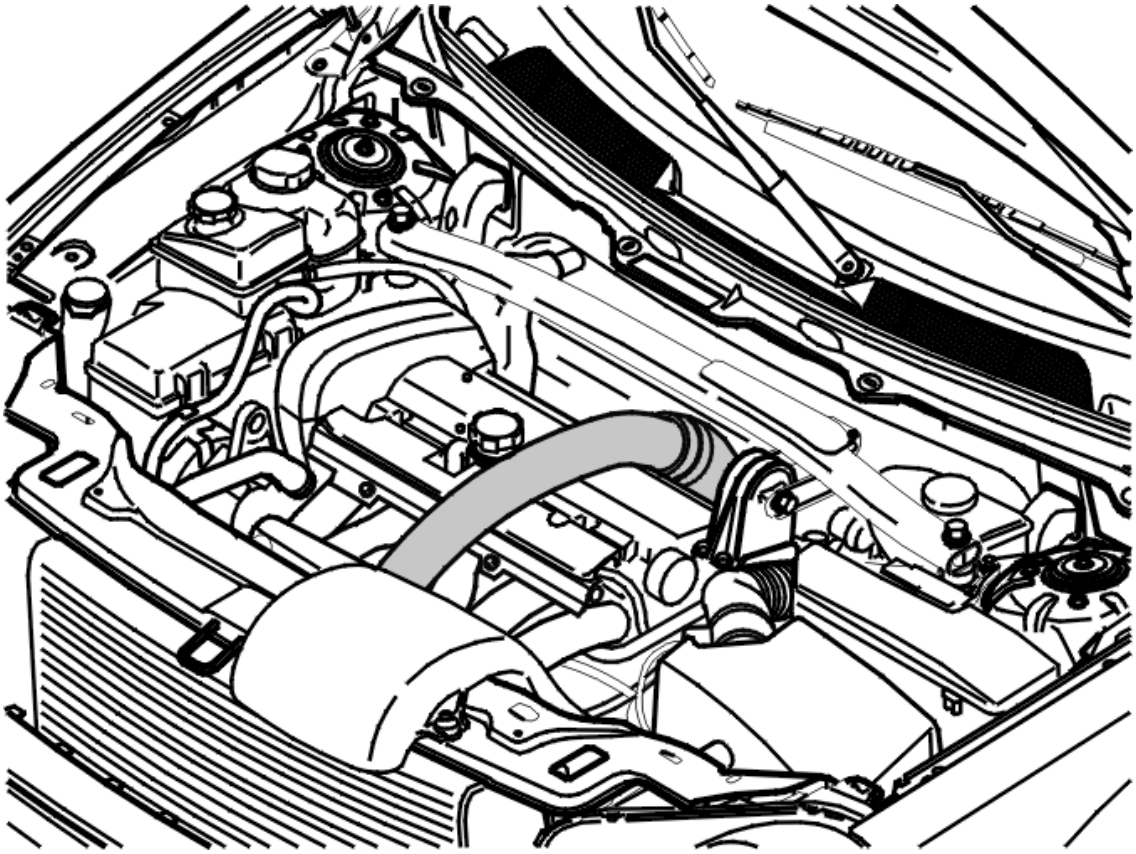

Fig. 83: Charge Air Pipe Over The Engine
Courtesy of VOLVO CARS CORPORATION

Remove the charge air pipe over the engine. Seal the openings.

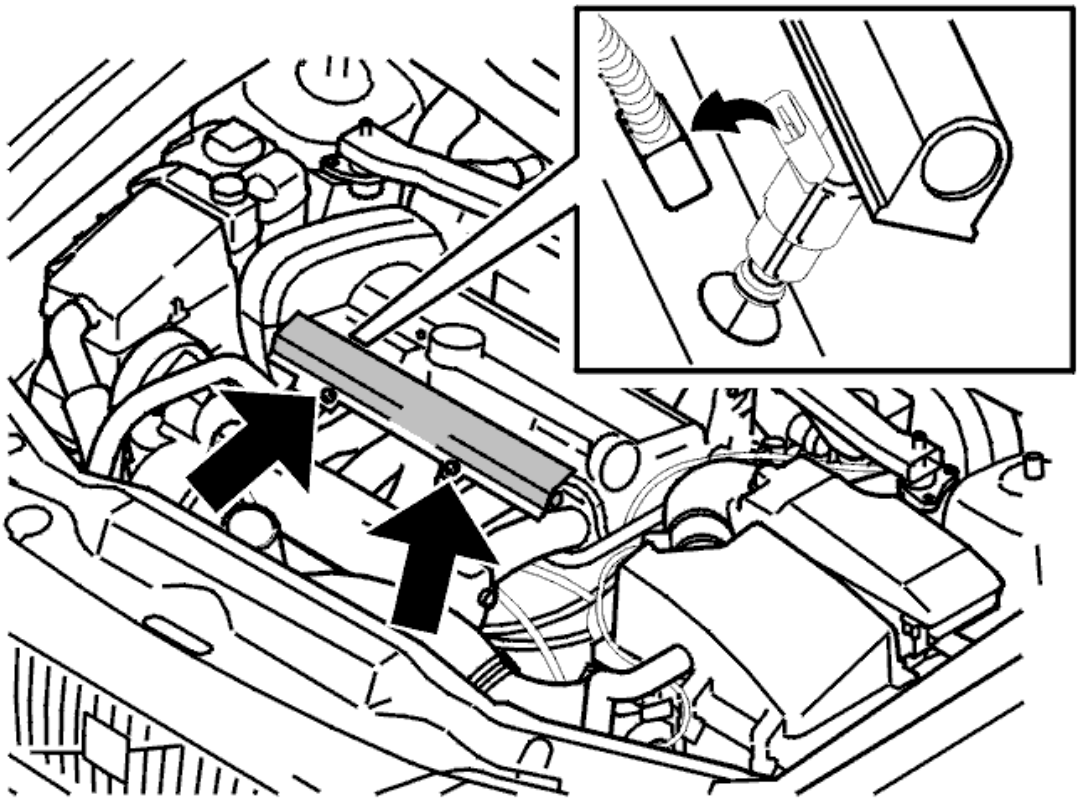

Fig. 84: Identifying Fuel Rail
Courtesy of VOLVO CARS CORPORATION

Remove the cover over the fuel rail.

Disconnect the injector connectors.

Blow clean around the injectors.

Remove the mounting screws from the fuel rail.

Separate the fuel line quick-release connector.

Spray universal oil or similar around the injector terminals on the intake manifold.

Gently work the fuel rail and injectors loose.

NOTE: Handle the injectors carefully to avoid damage to the fuel nozzles and fuel needles.

REMOVING INJECTORS

Remove

- the screws holding the mounting rail to the fuel rail
- the mounting rail
- the injector.

INSTALLING INJECTORS

NOTE: For tightening torques, see: TIGHTENING TORQUE

Lubricate the injector O-ring with a thin layer of petroleum jelly.

Install the new injector.

FINISHING

Position the mounting rail. The injectors may need to be pulled away from the fuel rail a few millimetres to install the rail.

Tighten the mounting rail to the fuel rail.

Lubricate the injector O-rings with petroleum jelly.

Depress the fuel rail. Ensure that all injectors sit correctly.

Screw the fuel rail into place. Use new screws and tighten.

Connect all the connectors for the injectors.

Press the quick-release connector together until a clicking sound is heard.

Reinstall the cover over the fuel rail.

Remove the seals from the charge air pipe. Reinstall the charge air pipe over the engine.

Start the engine. Check for fuel leakage.

INJECTORS AND DELIVERY LINES (B6294T; 2003-2006)

INJECTOR / PULSATION DAMPER, REPLACING

REMOVAL

PREPARATION

NOTE: Since the illustrations in this service information are used for different model years and / or models, some variation may occur. However, the essential information in the illustrations is always correct.

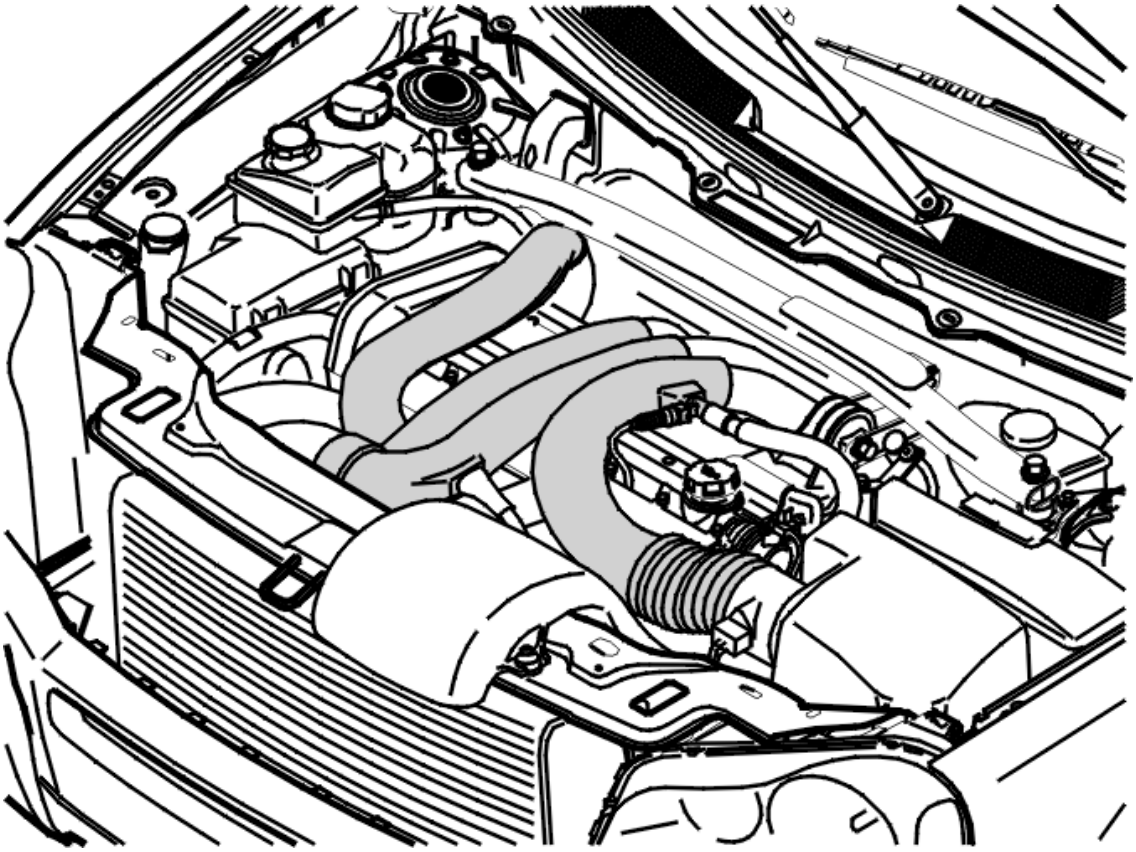

Fig. 85: Identifying Plastic Hoses Between Turbocharger, Charge Air Cooler & Air Cleaner/Turbocharger
Courtesy of VOLVO CARS CORPORATION

- Depressurize the fuel system acc. to: **FUEL SYSTEM PRESSURE RELEASE** .
- Remove the plastic hoses between the turbocharger (TC) and charge air cooler (CAC) and the air cleaner (ACL) and turbocharger (TC). Place them to one side and seal the openings.

REMOVING THE FUEL RAIL

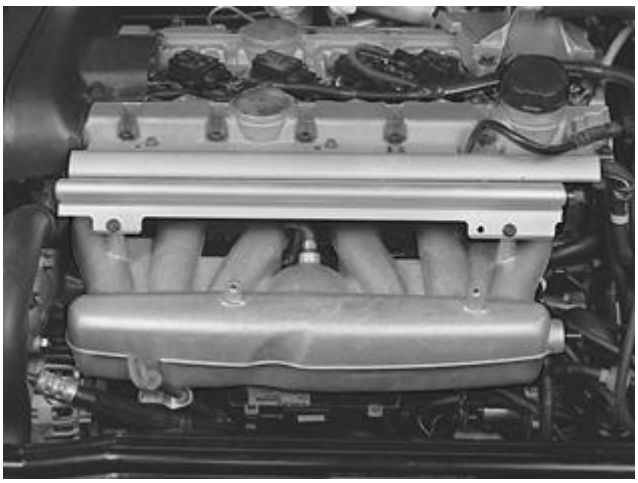

Fig. 86: Identifying Injector Rail Cover
Courtesy of VOLVO CARS CORPORATION

- Remove the protective cover above the nozzles
- Disconnect the connectors from the injectors
- Remove the mounting screws from the fuel rail
- Spray universal oil or similar around the injector terminals on the intake manifold.

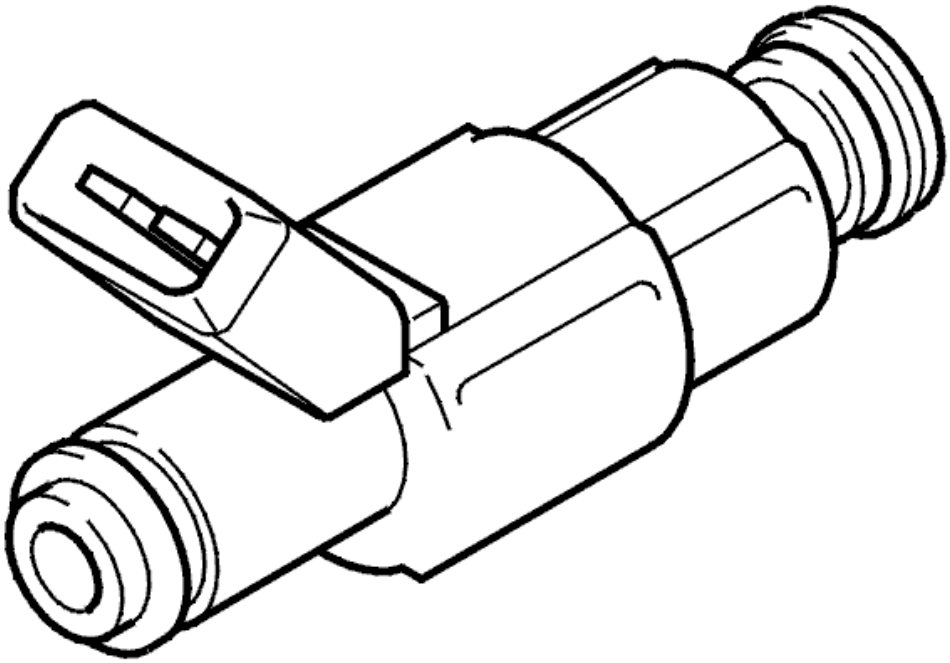

Fig. 87: Identifying Injector Valve
Courtesy of VOLVO CARS CORPORATION

Gently work the fuel rail and injectors loose.

NOTE: Handle the injectors carefully to avoid damage to fuel nozzles and fuel needles.

REMOVING INJECTORS

Remove:

- the screws holding the mounting rail to the fuel rail
- the mounting rail
- the injector.

INSTALLATION

INSTALLING INJECTORS

NOTE: For tightening torques, see TIGHTENING TORQUE .

Lubricate the O-ring for the new injector using petroleum jelly.

Install the injector.

FINISHING

- Position the mounting rail
- The injectors may need to be pulled away from the fuel rail a few millimetres to install the rail
- Tighten the mounting rail to the fuel rail
- Press down the fuel rail.

NOTE: Make sure that all the injectors are installed correctly.

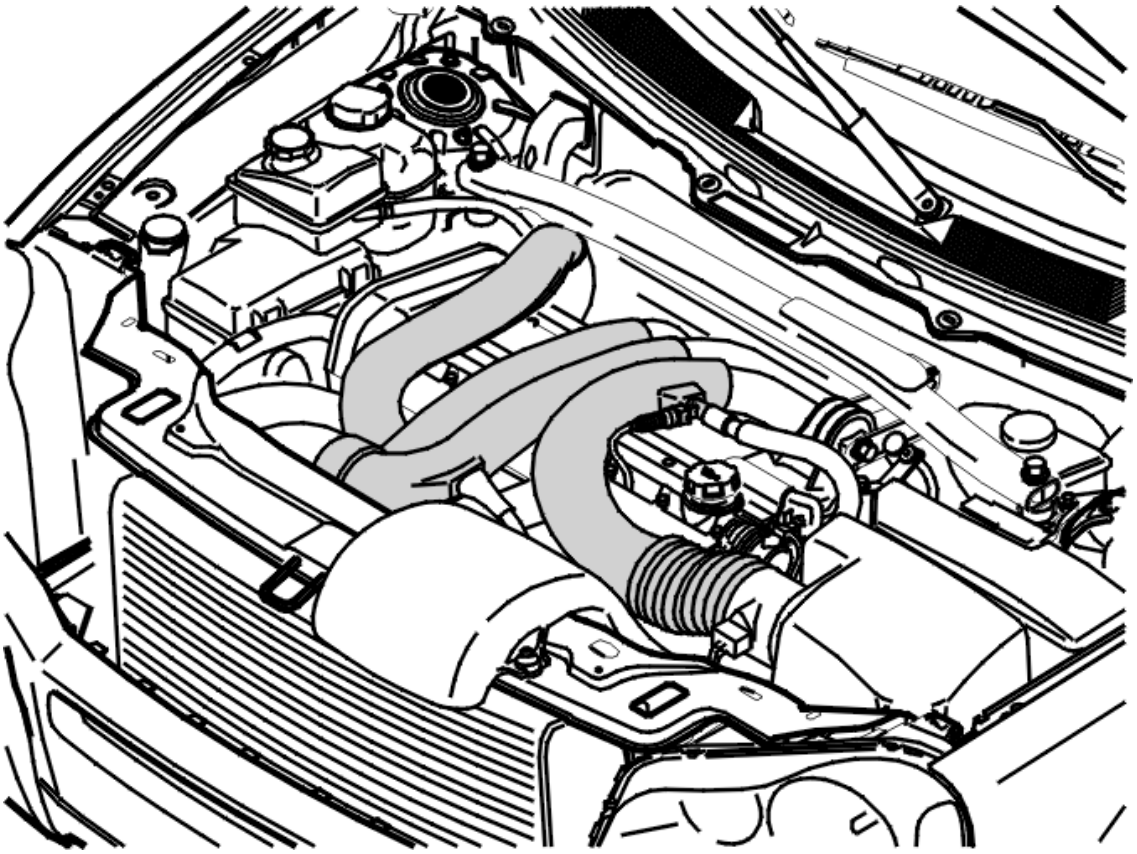

Fig. 88: Identifying Plastic Hoses Between Turbocharger, Charge Air Cooler & Air Cleaner/Turbocharger
Courtesy of VOLVO CARS CORPORATION

- Screw the fuel rail into place. Use new screws. Tighten to **10 Nm** .
- Install all connectors on the injectors
- Press the fuel line quick-release connector together until it clicks
- Install the cover over the nozzles
- Remove the seals. Install the plastic pipes between the turbocharger (TC) and charge air cooler (CAC) and the air cleaner (ACL) and turbocharger (TC).

INJECTORS AND FEED PIPES (B8444S; 2005-2011)

INJECTORS/PULSATION DAMPERS, REPLACING

NOTE: Removal steps in this procedure may contain installation details.

Drain the fuel system. See **FUEL SYSTEM, DRAINING** .

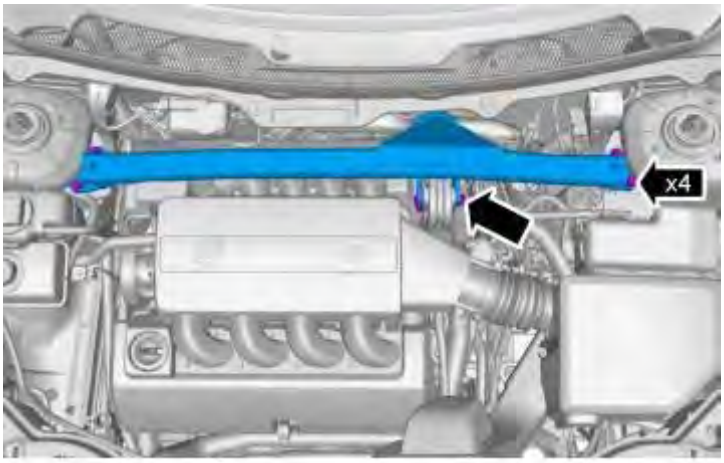

Fig. 89: View of Cross Brace and Bolts
Courtesy of VOLVO CARS CORPORATION

M10. See **TIGHTENING TORQUE**

M12. See **TIGHTENING TORQUE**

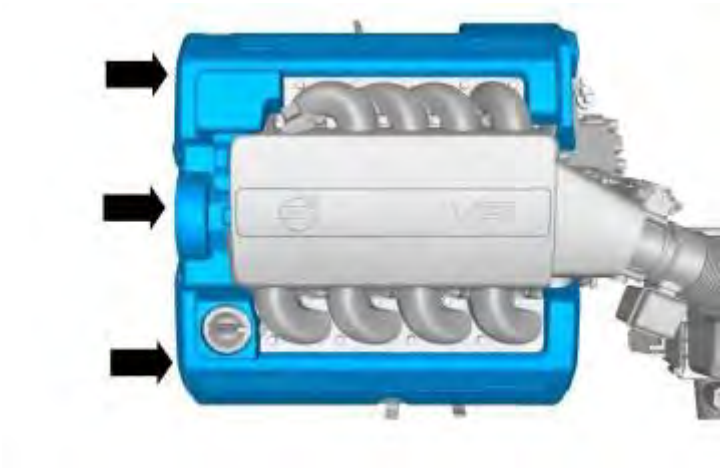

Fig. 90: Identifying EngineCover
Courtesy of VOLVO CARS CORPORATION

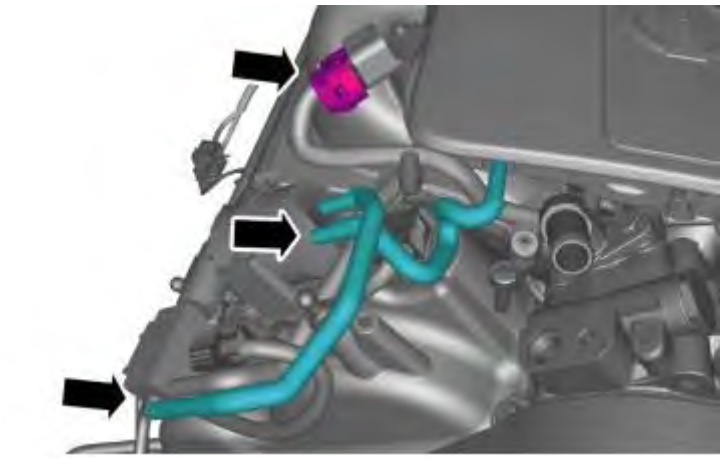

Fig. 91: Identifying Hoses
Courtesy of VOLVO CARS CORPORATION

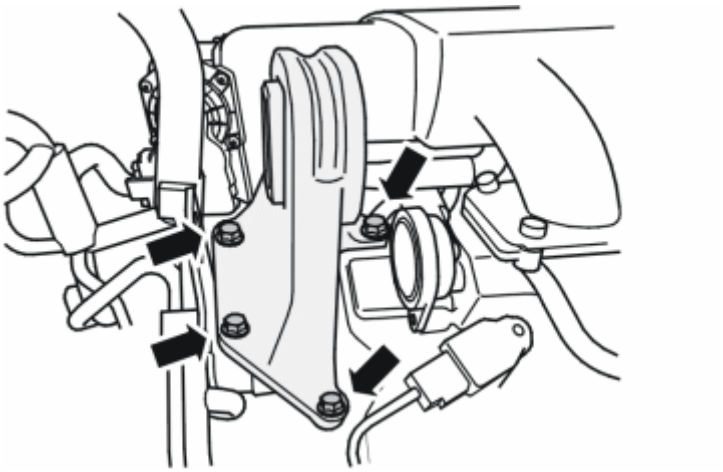

Fig. 92: Identifying Engine Mount Bolts
Courtesy of VOLVO CARS CORPORATION

M10. See **TIGHTENING TORQUE**

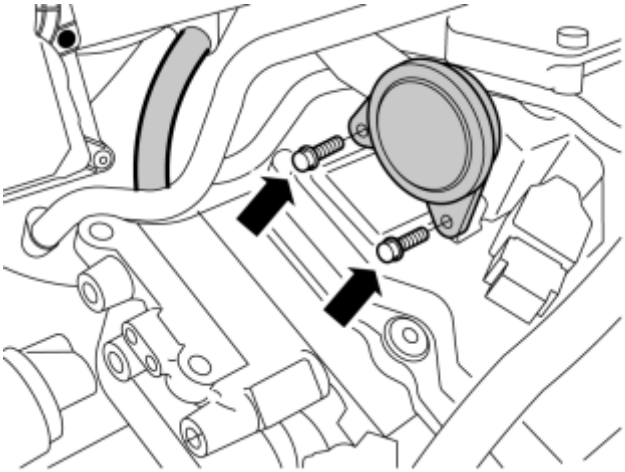

Fig. 93: Viewing End Cap
Courtesy of VOLVO CARS CORPORATION

M6. See **TIGHTENING TORQUE**

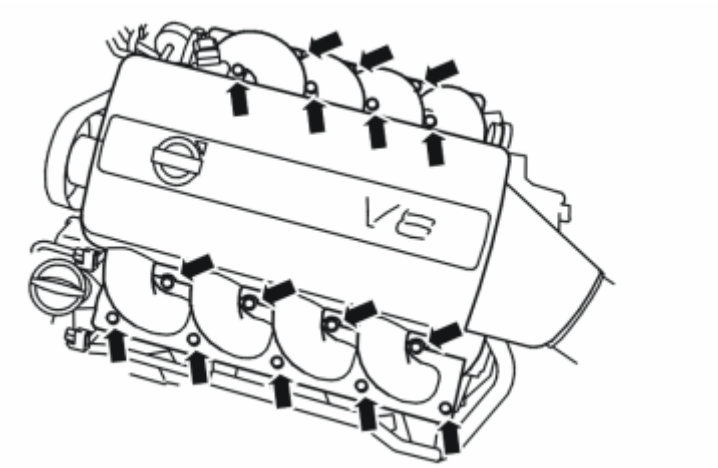

Fig. 94: Identifying Intake Manifold Bolts
Courtesy of VOLVO CARS CORPORATION

The intake manifold, see **TIGHTENING TORQUE**

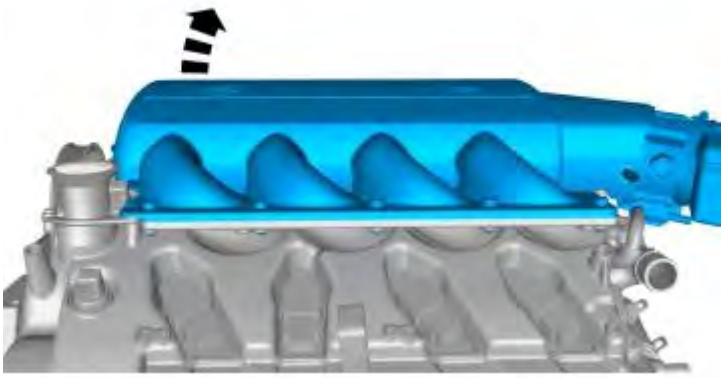

Fig. 95: Removing Upper Intake Manifold
Courtesy of VOLVO CARS CORPORATION

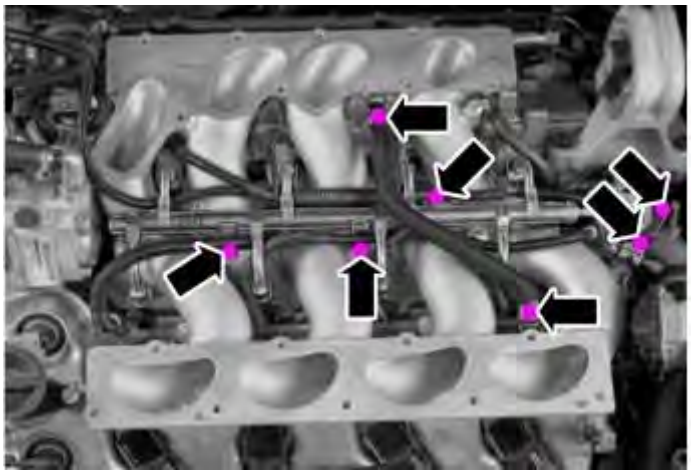

Fig. 96: Viewing Attachments For Fuel Distribution
Courtesy of VOLVO CARS CORPORATION

Remove the following items:

- the crankcase ventilation hose between the cylinder heads by releasing the 2 clamps, M6
- the 3 x M6 screws for the fuel distribution pipe
- the 2 x M6 screws for the fuel pressure sensor

Spray with universal oil or the like around the injection valve connections on the cylinder head.

Lift the fuel rail assembly with injector straight up and lay it aside.

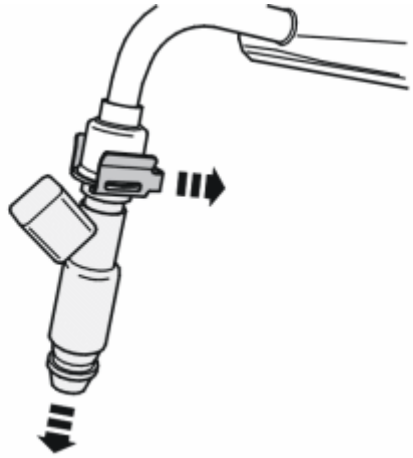

Fig. 97: Identifying Injector Clip
Courtesy of VOLVO CARS CORPORATION

To install, reverse the removal procedure

FUEL TANK FUEL LINES AND EVAPORATIVE SYSTEM (B5254T2; 2003-2007)

CARBON FILTER CONTAINER, REPLACING

see **CARBON FILTER CONTAINER, REPLACING**

LEAK DIAGNOSTIC PUMP, REPLACING

see **LEAK DIAGNOSTIC PUMP, REPLACING**

FUEL TANK FUEL LINES AND EVAPORATIVE SYSTEM (B6294T; 2003-2006)

CARBON FILTER CONTAINER, REPLACING

see **CARBON FILTER CONTAINER, REPLACING**

LEAK DIAGNOSTIC PUMP, REPLACING

see **LEAK DIAGNOSTIC PUMP, REPLACING**

FUEL TANK FUEL LINES AND EVAPORATIVE SYSTEM (B6324S; 2007-2010)

CARBON FILTER CONTAINER, REPLACING

see **CARBON FILTER CONTAINER, REPLACING**

LEAK DIAGNOSTIC PUMP, REPLACING

see **LEAK DIAGNOSTIC PUMP, REPLACING**

FUEL TANK FUEL LINES AND EVAPORATIVE SYSTEM (B6324S, TF-80SC AWD; 2007-2010)

FUEL TANK, REPLACING

see **FUEL TANK, REPLACING**

FUEL TANK FUEL LINES AND EVAPORATIVE SYSTEM (B6324S5; 2011-2012)

CARBON FILTER CONTAINER, REPLACING

see **CARBON FILTER CONTAINER, REPLACING**

LEAK DIAGNOSTIC PUMP, REPLACING

see **LEAK DIAGNOSTIC PUMP, REPLACING**

FUEL TANK FUEL LINES AND EVAPORATIVE SYSTEM (B6324S5, TF-80SC AWD; 2011-2012)

FUEL TANK, REPLACING

see **FUEL TANK, REPLACING**

FUEL TANK FUEL LINES AND EVAPORATIVE SYSTEM (B8444S; 2005-2011)

CARBON FILTER CONTAINER, REPLACING

see **CARBON FILTER CONTAINER, REPLACING**

LEAK DIAGNOSTIC PUMP, REPLACING

see **LEAK DIAGNOSTIC PUMP, REPLACING**

INJECTORS AND DELIVERY LINES (B6324S/5; 2007-2012)

INJECTOR

NOTE: Removal steps in this procedure may contain installation details.

Fig. 98: Identifying Engine Cover
Courtesy of VOLVO CARS CORPORATION

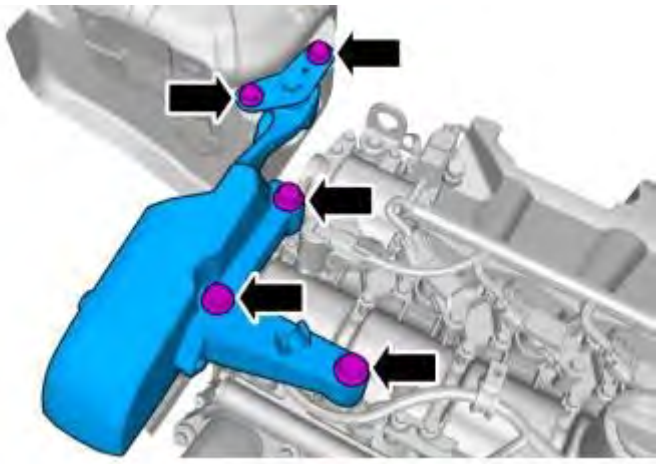

Fig. 99: View of Engine Mounting
Courtesy of VOLVO CARS CORPORATION

M12. See **TIGHTENING TORQUE**

Drain the fuel system. See **FUEL SYSTEM PRESSURE RELEASE** .

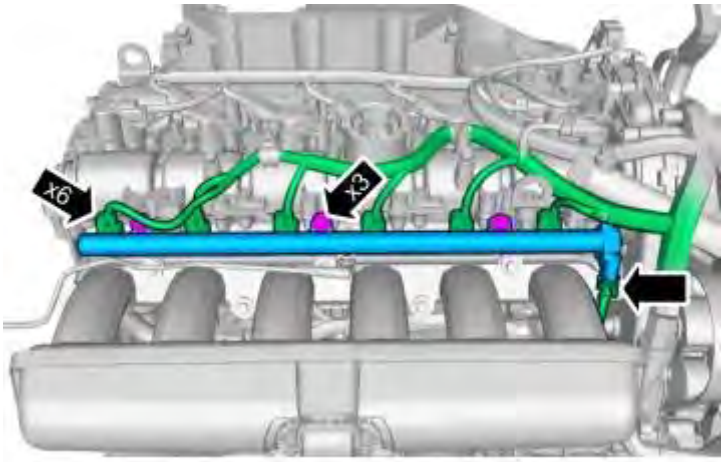

Fig. 100: Identifying Injector Rail and Connectors
Courtesy of VOLVO CARS CORPORATION

M6. See **TIGHTENING TORQUE**

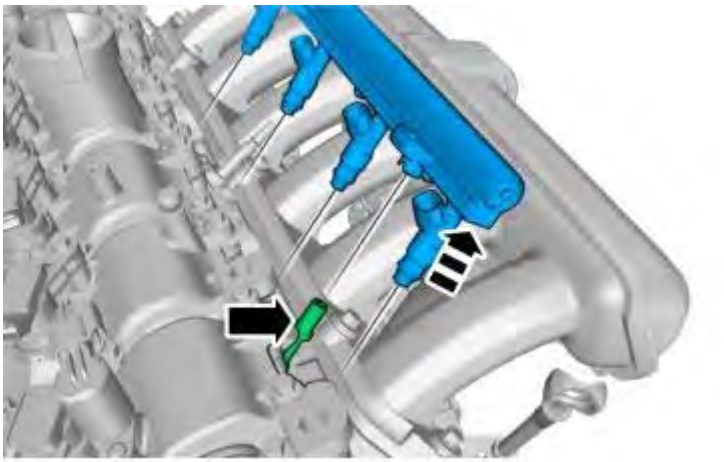

Fig. 101: Removing Injector Rail Assy.
Courtesy of VOLVO CARS CORPORATION

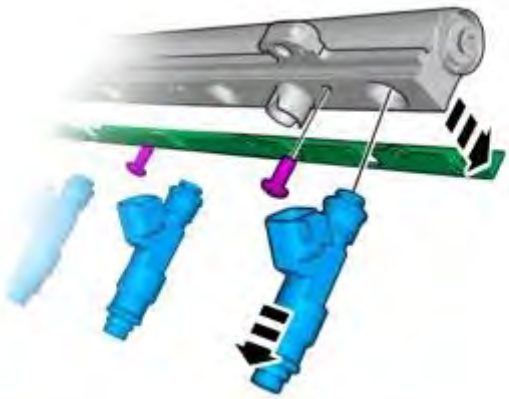

Fig. 102: Removing Injectors
Courtesy of VOLVO CARS CORPORATION

M5. See **TIGHTENING TORQUE**

To install, reverse the removal procedure

CONTROL SYSTEM (B6324S/5; 2007-2012)

MASS AIR FLOW SENSOR (MAF)

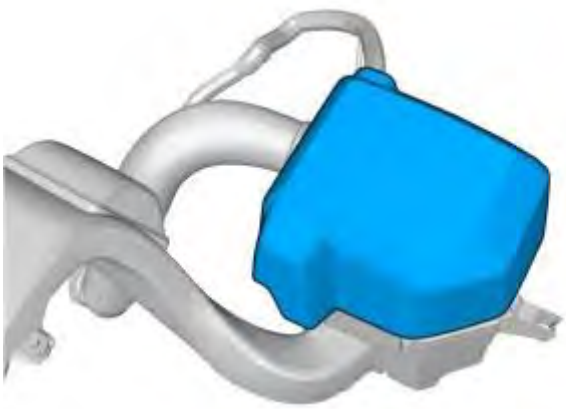

Fig. 103: Identifying Air Filter Housing Cover
Courtesy of VOLVO CARS CORPORATION

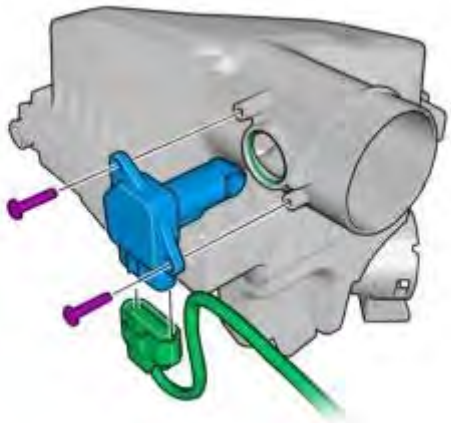

Fig. 104: Identifying Mass Air Flow Sensor (MAF)
Courtesy of VOLVO CARS CORPORATION

FUEL SYSTEM

Electrical system

FUEL SYSTEM

LEVEL SENSOR, FUEL TANK, LEFT, REPLACING

NOTE: **As the illustrations in this service information are used for different model years and / or models, some variation may occur. However, the essential information in the illustrations is always correct.**

PREPARATORY WORK

DRAINING FUEL TANK

Drain the fuel tank and loosen the left-hand level sensor. See: **FUEL TANK, DRAINING**

REMOVAL

REMOVING THE LEFT-HAND LEVEL SENSOR

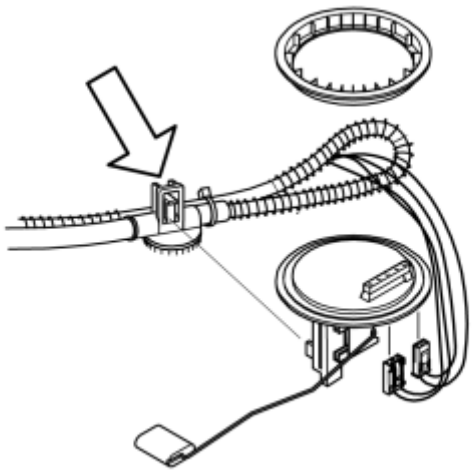

Fig. 1: Identifying Fuel Level Sensor
Courtesy of VOLVO CARS CORPORATION

Remove:

- the ejector
- the connectors.

INSTALLATION

INSTALLING THE LEFT-HAND LEVEL SENSOR

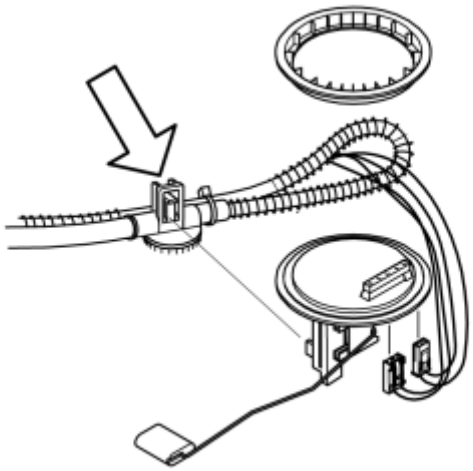

Fig. 2: Identifying Fuel Level Sensor
Courtesy of VOLVO CARS CORPORATION

Install:

- the ejector
- the connectors.

Install the left and right-hand level sensors on the fuel tank. See: **FUEL TANK, DRAINING**

LEVEL SENSOR, FUEL TANK/FUEL PUMP, REPLACING

REMOVAL

NOTE: **As the illustrations in this service information are used for different model years and / or models, some variation may occur. However, the essential information in the illustrations is always correct.**

DRAINING THE FUEL SYSTEM AND FUEL TANK

Drain:

- the fuel system. See **DRAINING THE FUEL SYSTEM** .
- the fuel tank. See **DRAINING THE FUEL TANK**.

REMOVING THE LEFT-HAND LEVEL SENSOR

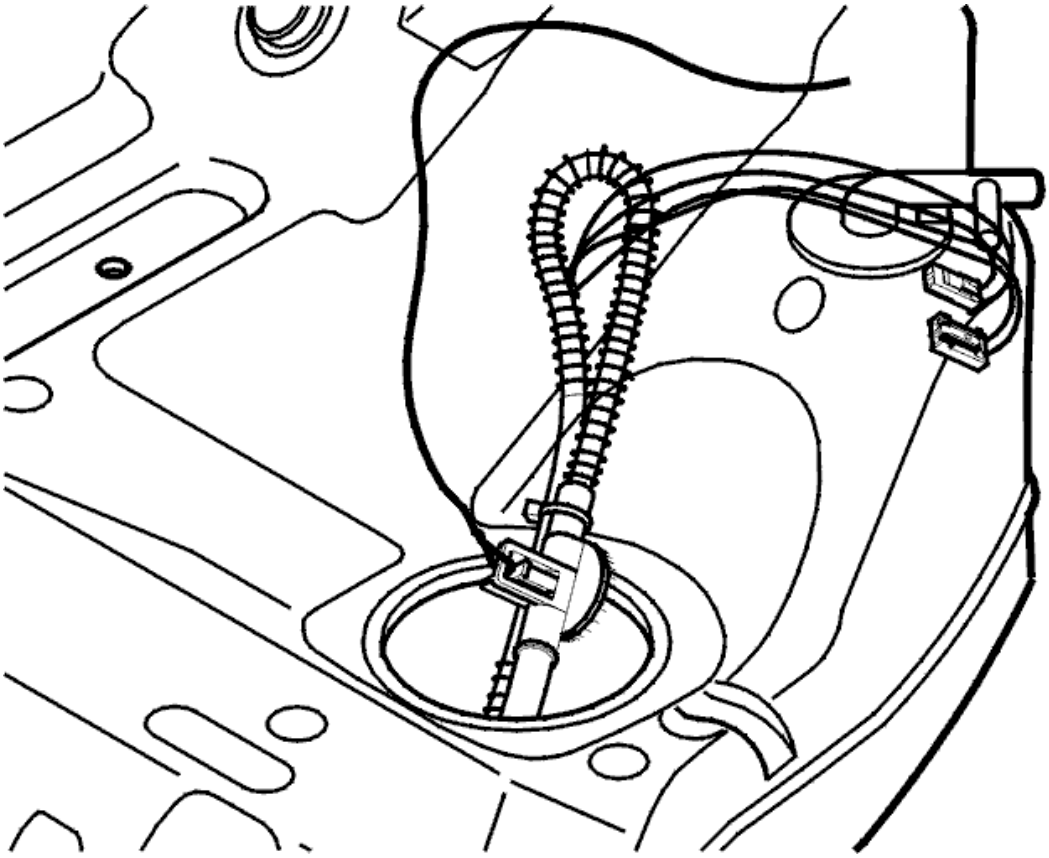

Fig. 3: Identifying Left-Hand Fuel Level Sensor And Connectors
Courtesy of VOLVO CARS CORPORATION

Remove:

- the two connectors from the underneath of the left-hand level sensor
- the left-hand level sensor from the ejector on which it is positioned.

NOTE: **Secure a wire in the area of the ejector.**

The wire must be sufficiently long that it reaches over to the opposite side of the tank with some excess remaining to ensure that it does not slide into the tank. The wire is needed to pull the hoses and wiring back to the left-hand side of the tank after the fuel tank unit has been replaced.

REMOVING THE RIGHT-HAND LEVEL SENSOR / PUMP

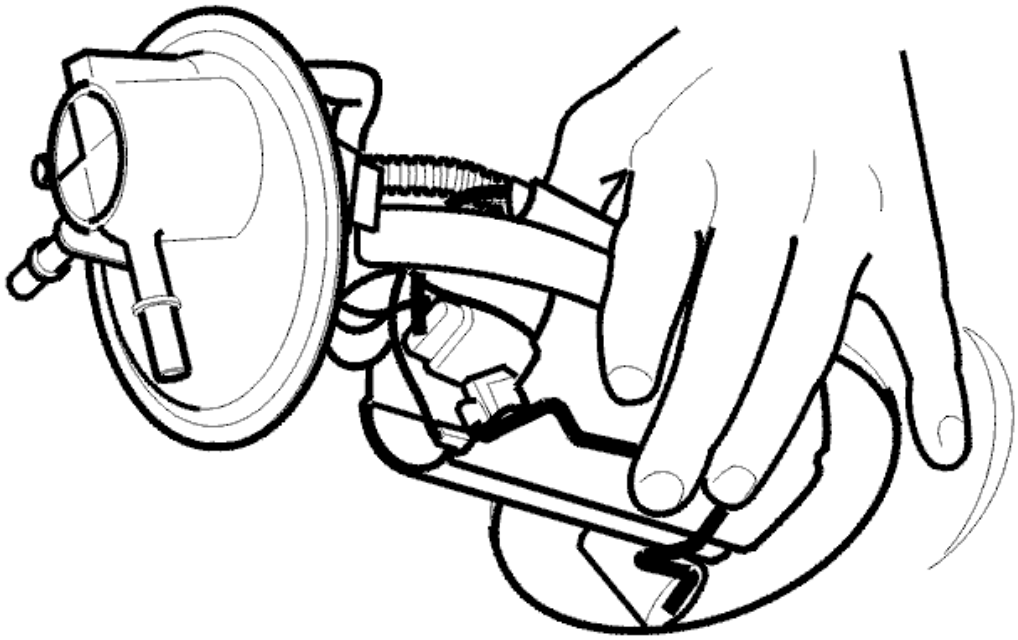

Fig. 4: Gripping Right-Hand Level Sensor And Pumping Holder And Pinching Float So It Is Held In Its Lowest Position
Courtesy of VOLVO CARS CORPORATION

- Grip the right-hand level sensor and pump holder and pinch the float so that it is held in its lowest position.

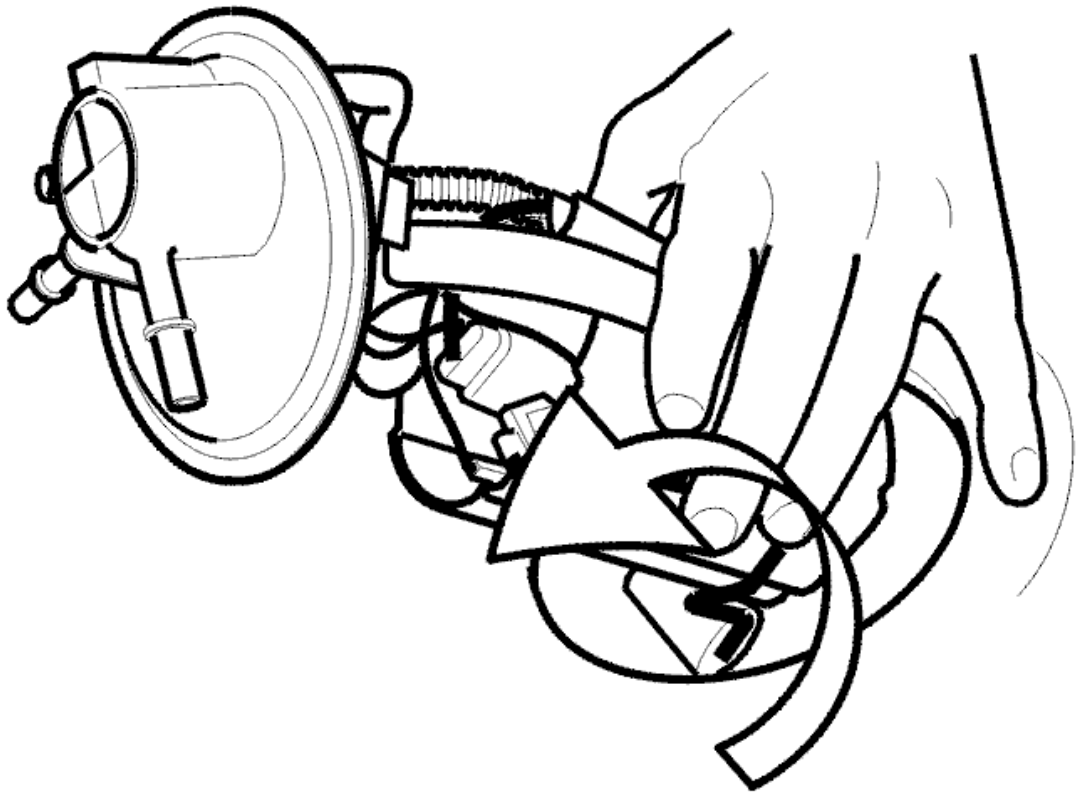

Fig. 5: Identifying Holder Up Pulled And Removed
Courtesy of VOLVO CARS CORPORATION

NOTE: Take care with the fuel tank.

Carefully and slowly pull up the holder. Carefully work the holder out.

Pull the hoses out from the tank without pulling up the entire wire from the right-hand hole in the tank.

NOTE: It is extremely important that the float arm is not broken or bent.

Remove the wire from the old level sensor and pump ejector.

REMOVING THE RIGHT-HAND LEVEL SENSOR

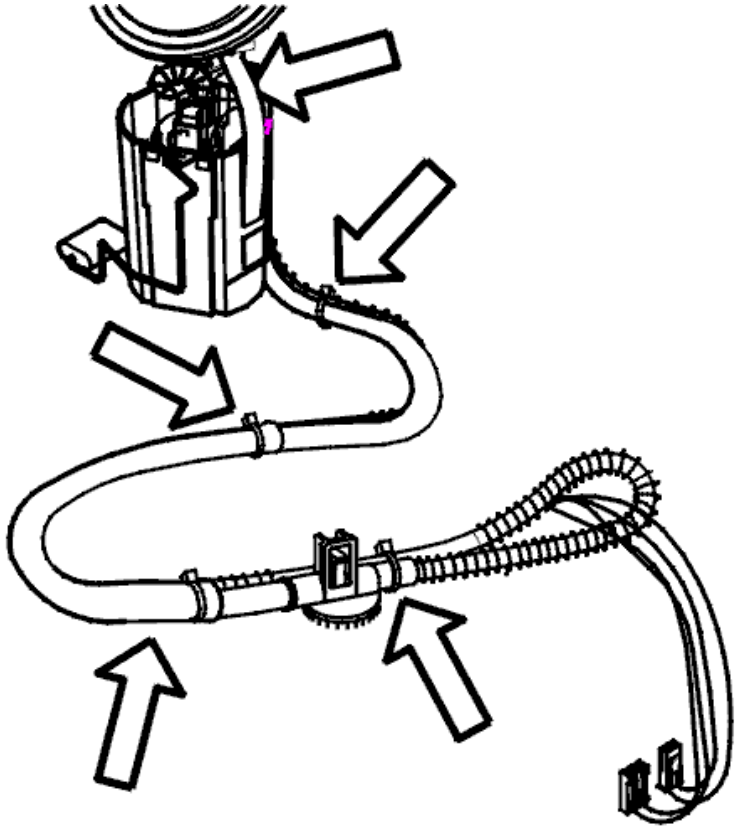

Fig. 6: Identifying Tie Straps Around Protective Sheath, Hoses And Wiring
Courtesy of VOLVO CARS CORPORATION

Remove:

- the tie straps around the protective sheath, hoses and wiring
- the net protective sheath by carefully threading it off the hoses and wiring
- the tie strap under the protective sheath.

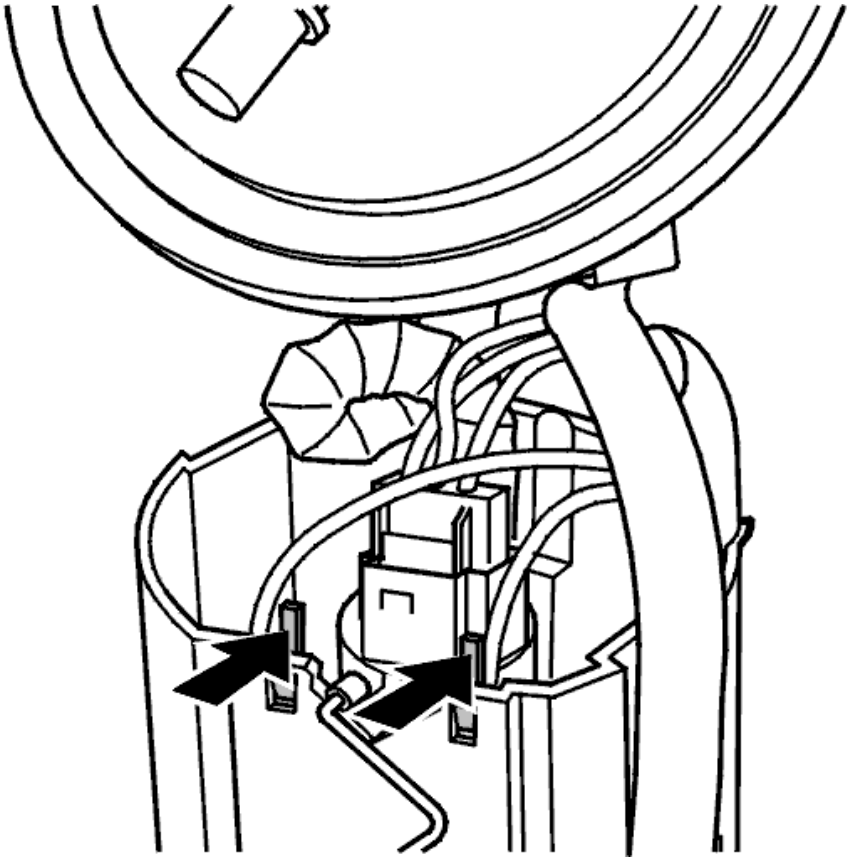

Fig. 7: Identifying Fuel Level Sensor Retaining Clips
Courtesy of VOLVO CARS CORPORATION

Remove:

- the tie strap around the wiring above the pump
- the level sensor by pressing in the two clips and pulling upwards
- the thin pipe from the holder on the outside of the fuel tank unit
- the wiring from the holder in the fuel tank unit.

INSTALLATION

ONLY APPLIES TO VEHICLES WITH PARKING HEATERS

Fig. 8: Fuel Tank Unit Hole Connection
Courtesy of VOLVO CARS CORPORATION

If the vehicle has an engine block heater, drill out the hole connection in the fuel tank unit. Use a O4 mm drill bit. Transfer the dip pipe.

INSTALLING THE RIGHT-HAND LEVEL SENSOR

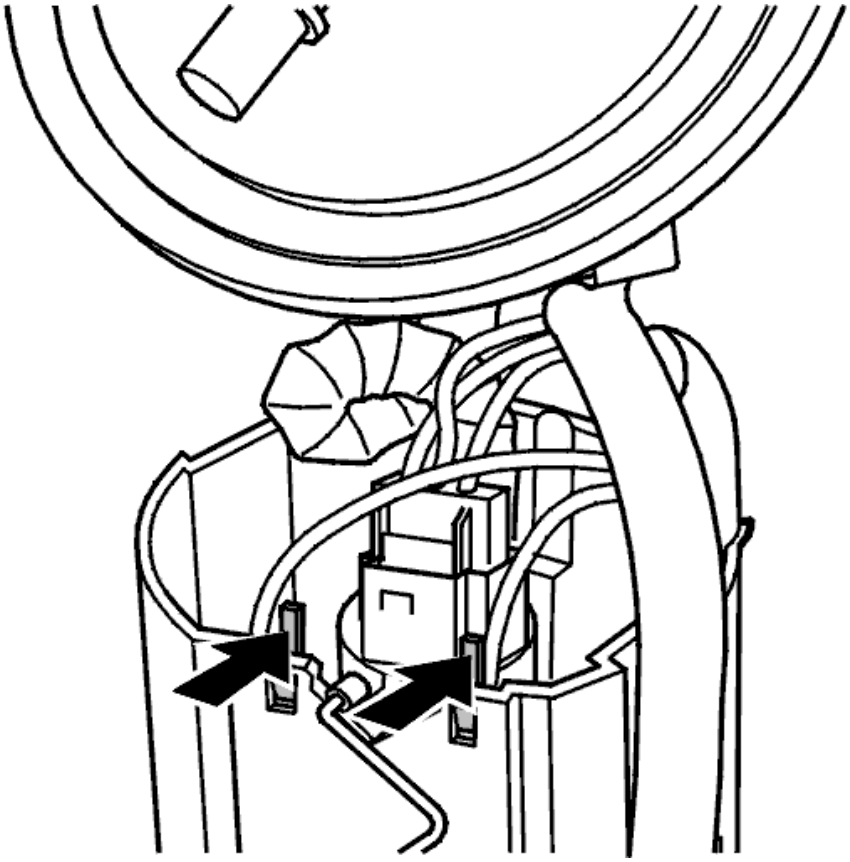

Fig. 9: Identifying Fuel Level Sensor Retaining Clips
Courtesy of VOLVO CARS CORPORATION

Install:

- the new level sensor
- the wiring in the holder
- the thin pipe in the holder on the outside of the fuel tank unit
- the tie strap around the wiring above the pump.

Fig. 10: Fuel Tank Unit Hole Connection
Courtesy of VOLVO CARS CORPORATION

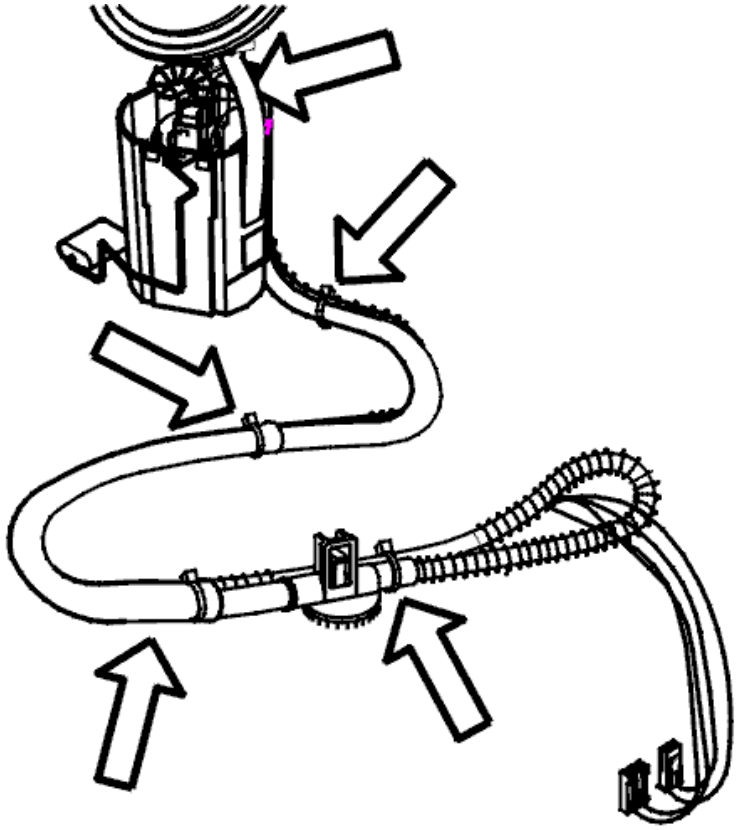

Fig. 11: Identifying Tie Straps Around Protective Sheath, Hoses And Wiring
Courtesy of VOLVO CARS CORPORATION

Install:

- the tie strap under the protective sheath

NOTE: Secure the tie strap on the smooth central section of the corrugated hose.

- the protective sheath
- four tie straps around the protective sheath, hoses and wiring. Secure the tie straps on the four smooth central sections of the corrugated hose.

INSTALLING THE RIGHT-HAND LEVEL SENSOR AND PUMP AND THE LEFT-HAND LEVEL SENSOR IN THE FUEL TANK

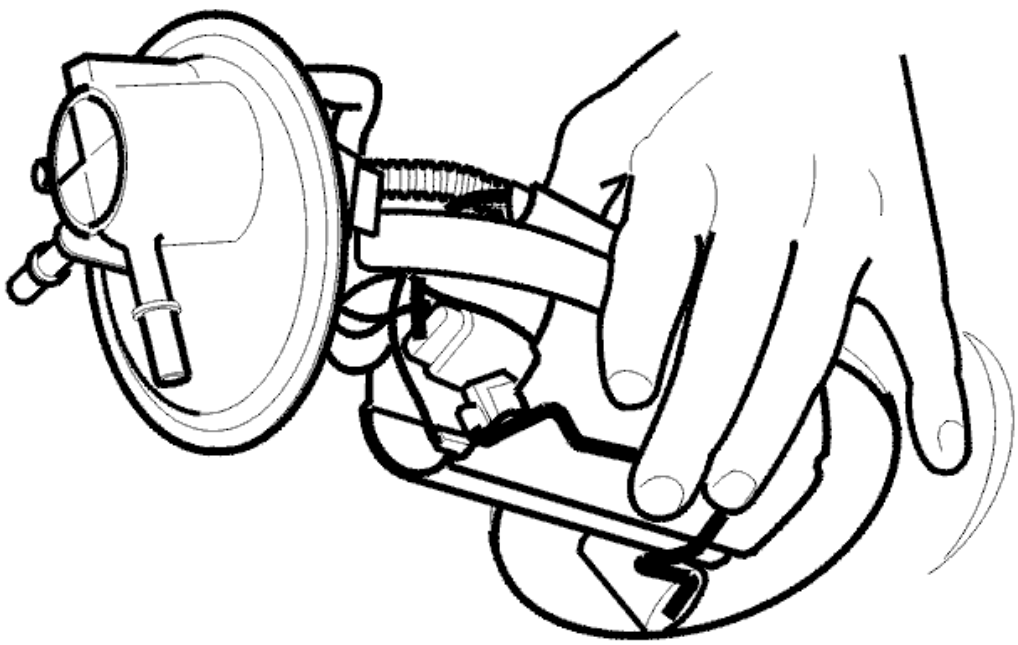

Fig. 12: Gripping Right-Hand Level Sensor And Pumping Holder And Pinching Float So It Is Held In Its Lowest Position
Courtesy of VOLVO CARS CORPORATION

If the fuel tank is replaced, see **CABLE ROUTING WHEN REPLACING THE FUEL TANK**.

- Install the wire on the new ejector for the level sensor and pump

- Insert the hoses and wiring into the tank via the right-hand tank hole
- Grip the right-hand level sensor and pump holder and pinch it so that the float is held in its lowest position
- Carefully and slowly lower the holder. Carefully work the holder into place
- Pull the wire so that the hoses and wiring end up on the left side of the tank
- Install the left-hand level sensor on the ejector
- Install the switches on the underneath of the left-hand level sensor
- Remove the wire from the ejector.

CABLE ROUTING WHEN REPLACING THE FUEL TANK

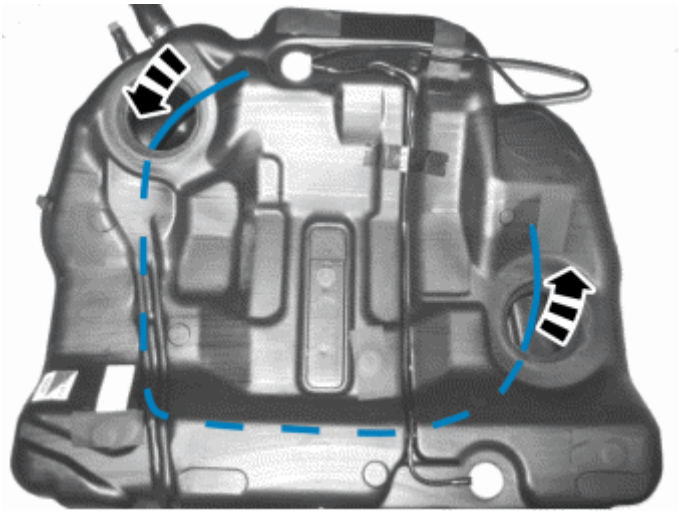

Fig. 13: Fuel Lines And Electrical Wiring Routing In Tank
Courtesy of VOLVO CARS CORPORATION

If replacing the fuel tank, wire cannot be used.

The image shows how to route the fuel lines and electrical wiring in the tank. Use a plastic pipe at least 1.7 m long.

HINT: Use spare part plastic pipe between the carbon filter and EVAP valve.

Insert the hose through the hole for the level sensor on the left-hand side of the vehicle and press it through the tank and take the end of the hose through the hole for the fuel pump.

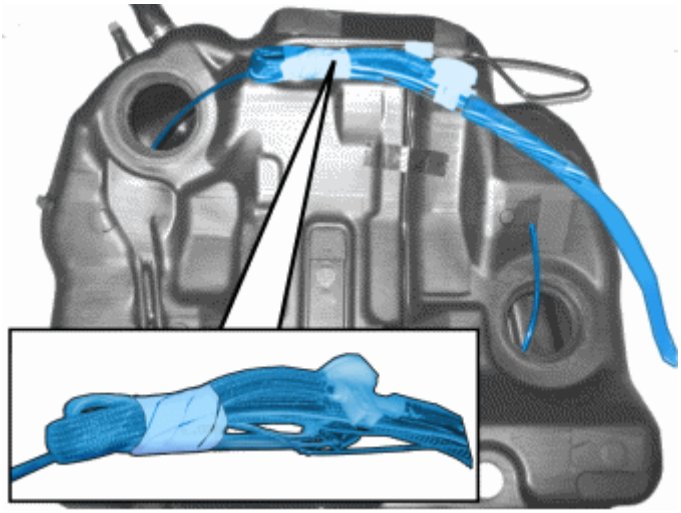

Fig. 14: Fuel Lines/Electrical Wiring Taped To The Plastic Pipe
Courtesy of VOLVO CARS CORPORATION

Tape the fuel pump's fuel lines/electrical wiring to the plastic pipe.

Pull the wiring out of the hole for the level sensor. Remove the plastic pipe and the tape. Check that there is no tape/adhesive residue on the wiring.

Pull the wiring forwards and backwards to check that it has not bent or got trapped.

FINISHING

- Install the sensor, backrest, side cushion and seat cushion.

DRAINING THE FUEL TANK

Special tools	
	T9995720 Key (remove/install nut fuel pump) **Tool number:** T9995720 **Too description:** Key (remove/install nut fuel pump) **Tool boards:**
	T9995721 Adapter (Fuel/Use with 9812270.-2273,-2282) **Tool number:** T9995721 **Tool description:** Adapter (Fuel/Use with 9812270.-2273,-2282) **Tool boards:**
	T9814070 Fuel tank drainer **Tool number:** T9814070 **Tool description:** Fuel tank drainer **Tool boards:**

Special tools:

see **9995720**

see **9995721**

see **9814070**

PREPARATION

Remove the key from the ignition switch.

NOTE: Ensure that nobody can insert the ignition key during work.

WARNING: RISK OF EXPLOSION THE USE OF A FRESH AIR MASK IS RECOMMENDED.

Insert the heavy duty hose 1.3 meters into the fuel filler pipe, measured from the edge of the opening of the filler pipe.

Pump until air comes out.

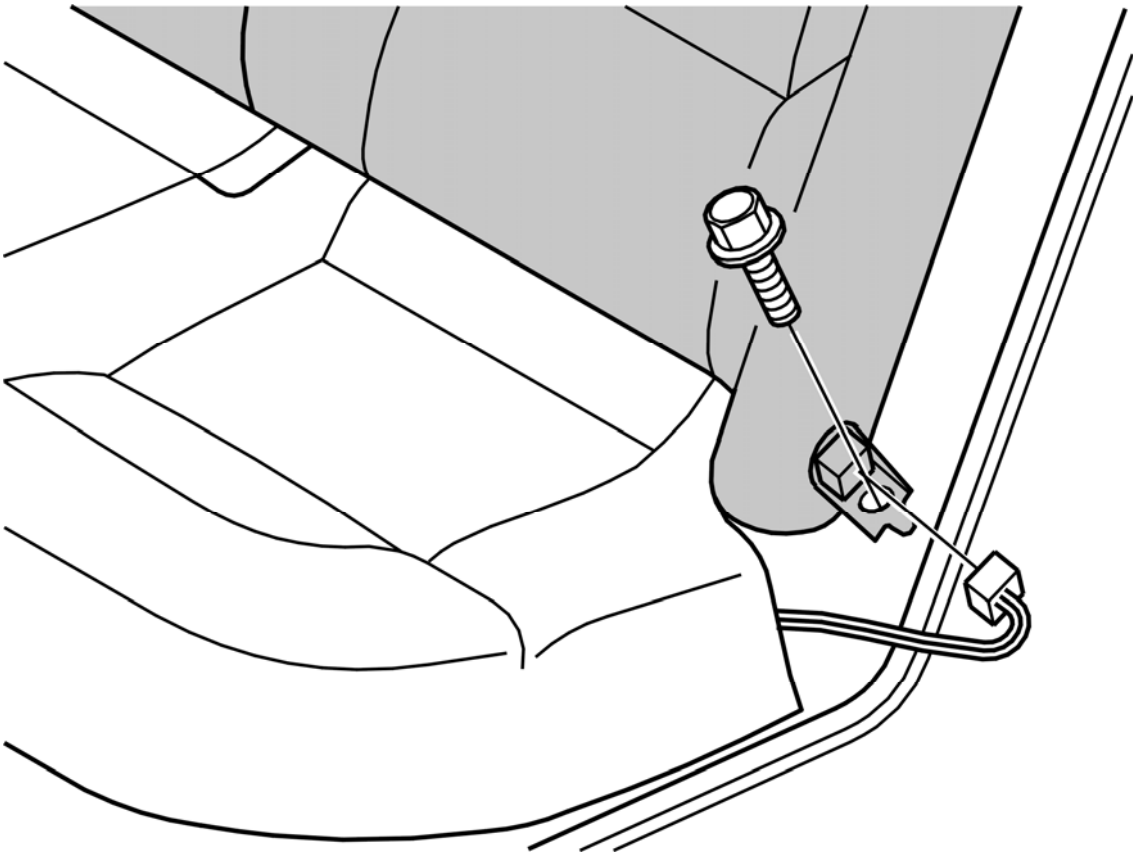

Fig. 15: Identifying Screw And Connector At Seat Hinge
Courtesy of VOLVO CARS CORPORATION

Remove the right side cushion. See **INTERIOR PANELS, SEATS AND UPHOLSTERY - REMOVAL, REPLACEMENT AND INSTALLATION**

Disconnect the connector at the hinge.

Remove:

- the mounting screw for the hinge
- the screw for the seatbelt end mounting.

Release the strap/straps of the folding mechanism for the seat belt buckle. (Hooked into place on the lower edge of the backrest).

Lift out the backrest.

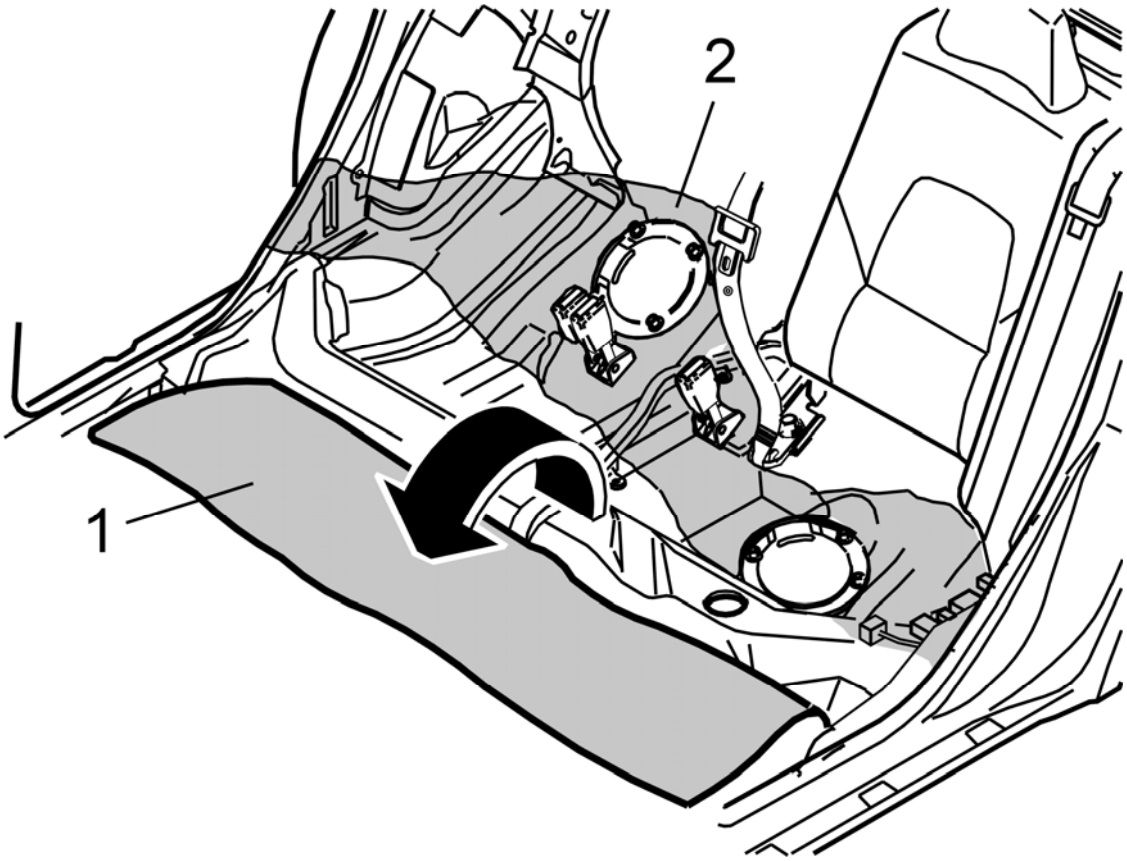

Fig. 16: Identifying Pushing Carpet Aside And Locating Level Sensor/Fuel Pump Cover
Courtesy of VOLVO CARS CORPORATION

Fold the carpet (1) out of the way.

Remove the insulation panel.

Cover the area (2) around the cover and between the doors with absorbent material.

CAUTION: Ensure that there is no risk of dirt getting into the tank.

REMOVING THE FUEL TANK FILLER CAP OVER THE FUEL TANK UNITS

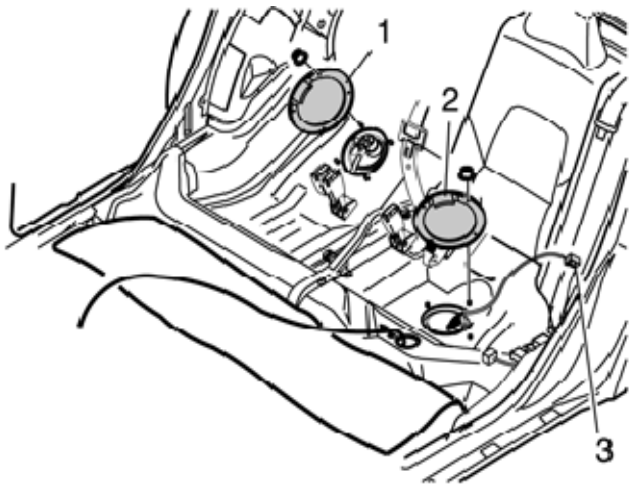

Fig. 17: Identifying Fuel Tank Filler Caps
Courtesy of VOLVO CARS CORPORATION

Remove the covers (1 and 2) over the fuel tank units.

Applies to certain versions

Disconnect the connector from the fuel pump on the right-hand side.

Disconnect the left tank armature's contact (3).

Remove the hoses from the right tank armature.

DRAINING THE FUEL TANK

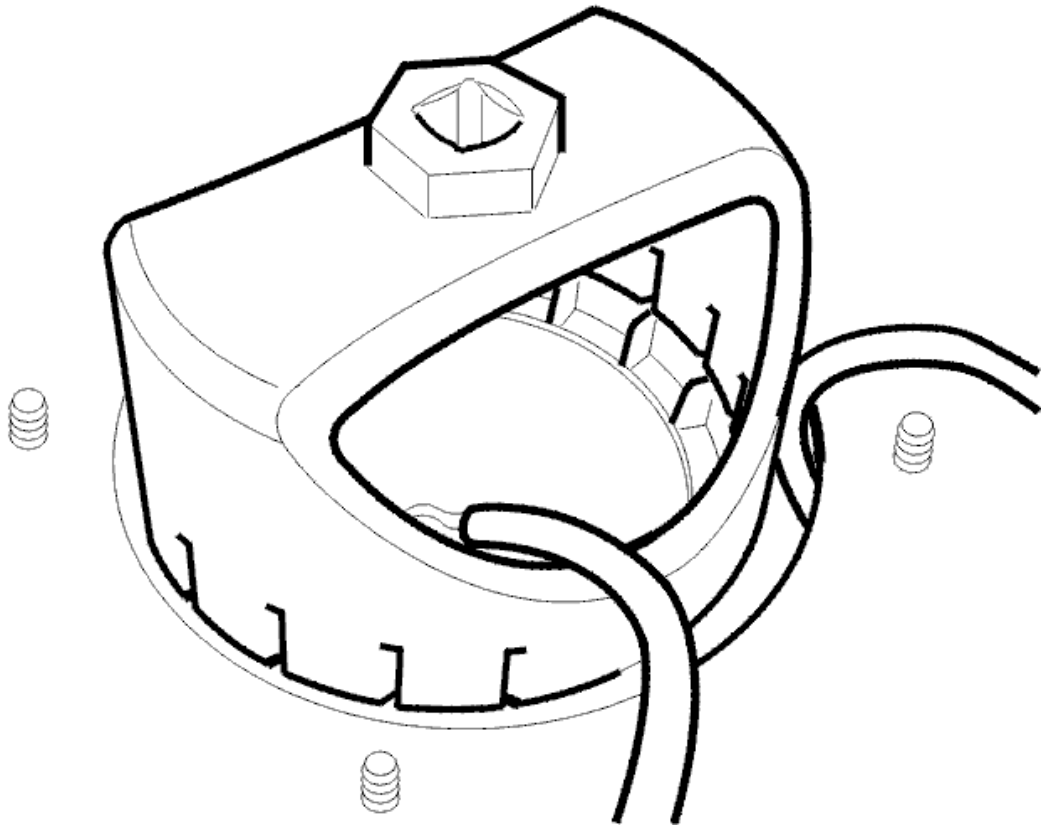

Fig. 18: Heavy Duty Hose And Right Fuel Tank Unit
Courtesy of VOLVO CARS CORPORATION

Special tools: see **9995720** see **9814070**

Clean the area around the fuel tank unit thoroughly.

Open the right fuel tank unit. Insert the heavy duty hose and suck out the remains from the bottom of the right-hand side of the fuel tank.

Connect hose see **9995721** to the heavy duty hose. Suck out the remains from the bottom of the fuel tank unit reservoir.

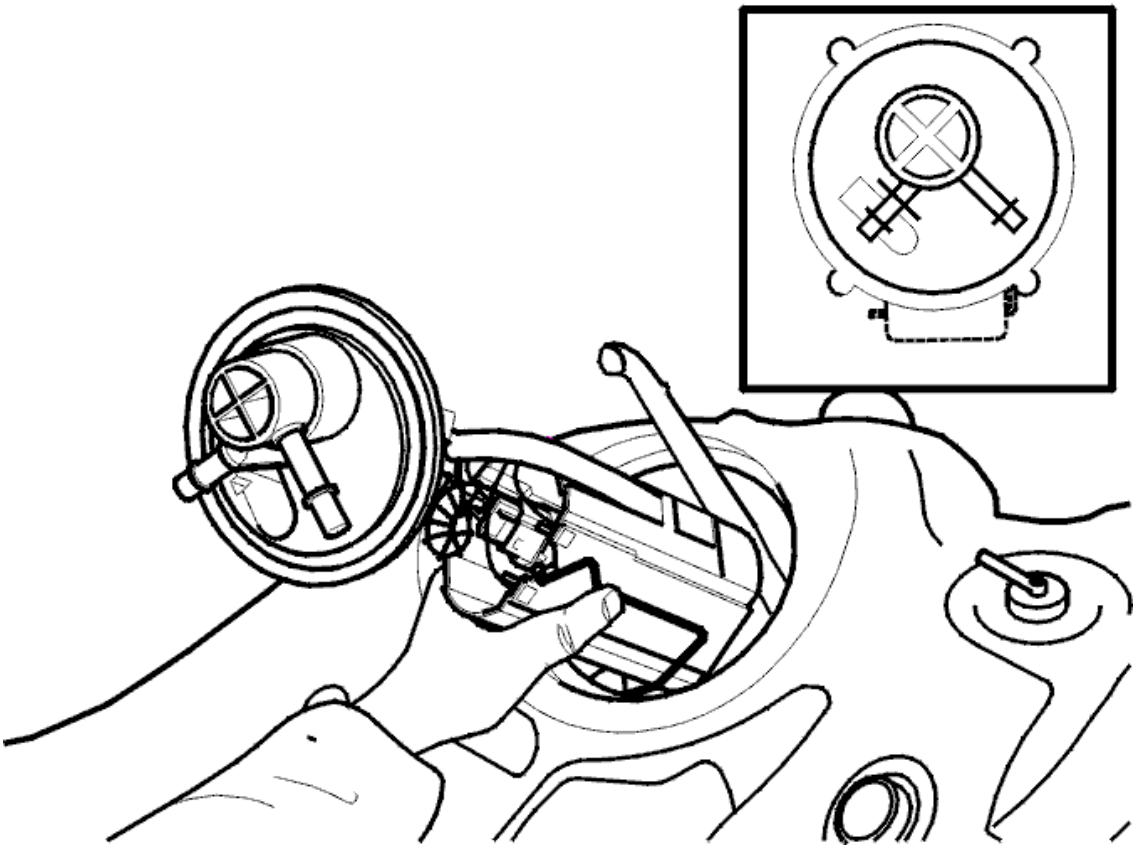

Fig. 19: Identifying Fuel Pump
Courtesy of VOLVO CARS CORPORATION

Carefully remove the overflow pipe from the reservoir.

Remove the thin hose see **9995721** from the heavy duty hose. Connect the thin hose to the overflow pipe. Use a hose clamp.

Pump until a lot of air comes out.

Open the left fuel tank unit. Insert the heavy duty hose and suck out the remains from the bottom of the left-hand side of the fuel tank.

INSTALLATION

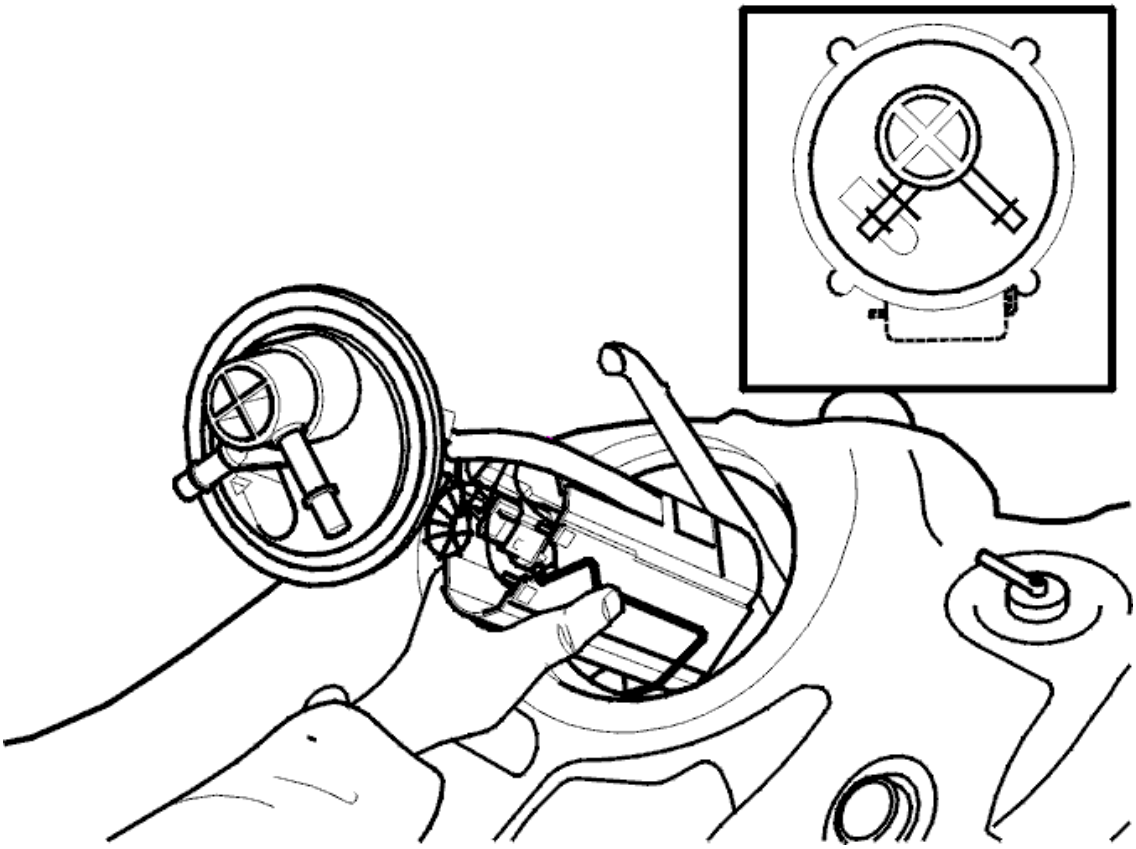

Fig. 20: Identifying Fuel Pump
Courtesy of VOLVO CARS CORPORATION

Right fuel tank unit:

- Place the overflow pipe approximately half a centimeter to the left-hand side
- Grip the right fuel tank unit reservoir. Pinch the fuel tank unit reservoir so that the float is held in its lowest position
- Lower the reservoir carefully while rotating it backwards around the front-rear shaft on the float
- Install the overflow pipe on the reservoir.

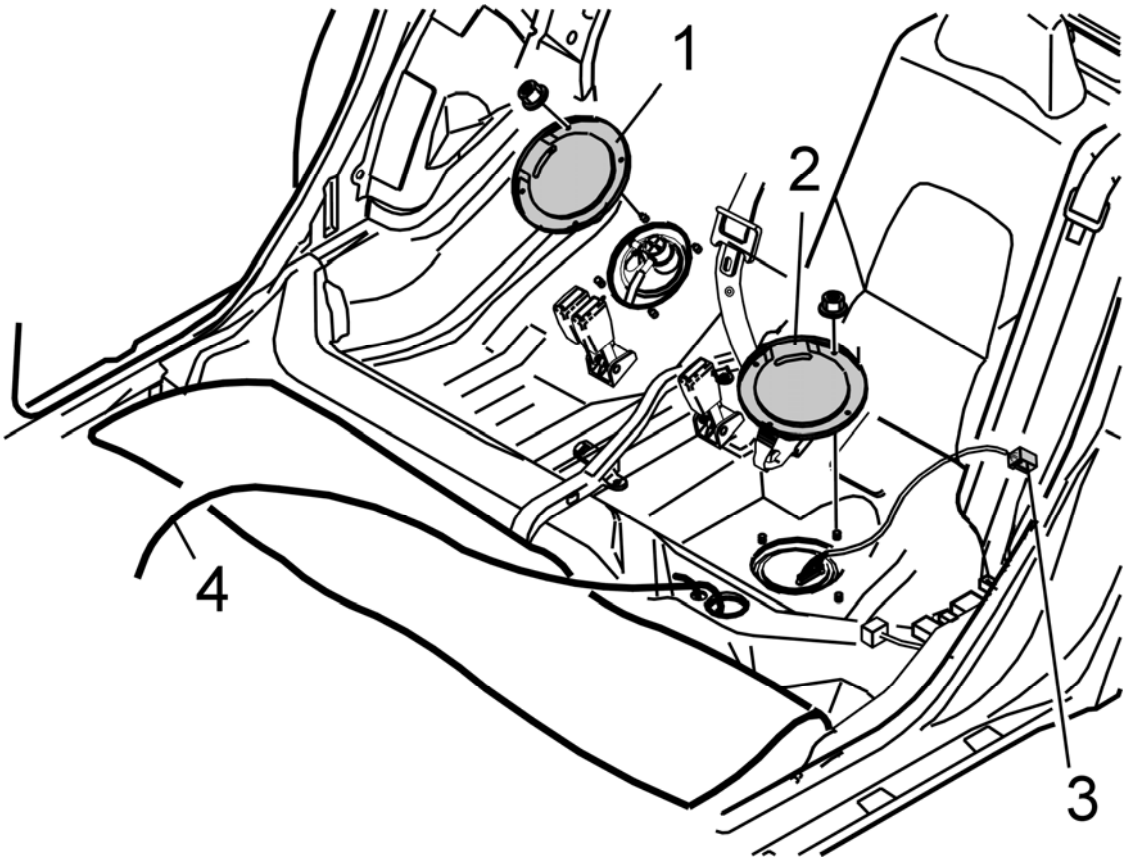

Fig. 21: Fuel Level Sensors Covers, Connectors And Nuts
Courtesy of VOLVO CARS CORPORATION

Left fuel tank unit:

- Install a new O-ring. Lubricate the new O-ring using petroleum jelly
- Press the left fuel tank unit down so that the row of protruding cables runs along the car
- Check that the O-ring is not trapped
- Tighten the screw. Tighten to **60 Nm**
- Wipe up any fuel spillage
- Position the wiring in the cut-out in the rubber ring.

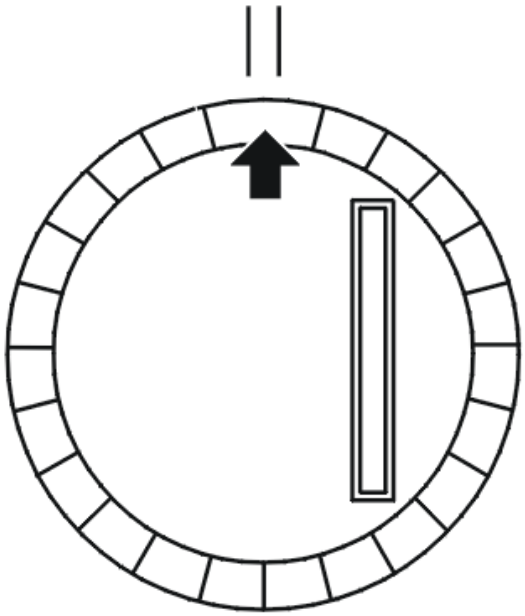

Fig. 22: Checking Arrow On Cover
Courtesy of VOLVO CARS CORPORATION

NOTE: **Check that the arrow on the cover is between the markings on the tank. If the arrow is outside the markings the fuel gauge sensor will give an incorrect value and the float may catch against the inner wall of the tank. If not: Slacken off the screw and adjust the position of the fuel tank unit. Tighten as above.**

Right fuel tank unit, continued:

- Install a new O-ring. Lubricate the new O-ring using petroleum jelly
- Press the right fuel tank unit down so that the fuel line connectors are pointing forwards and to the right
- Check that the O-ring is not trapped
- Tighten the screw. Tighten to **60 Nm**
- Install the hoses on the fuel tank unit
- Wipe up any fuel spillage
- Position the wiring in the cut-out in the rubber ring.

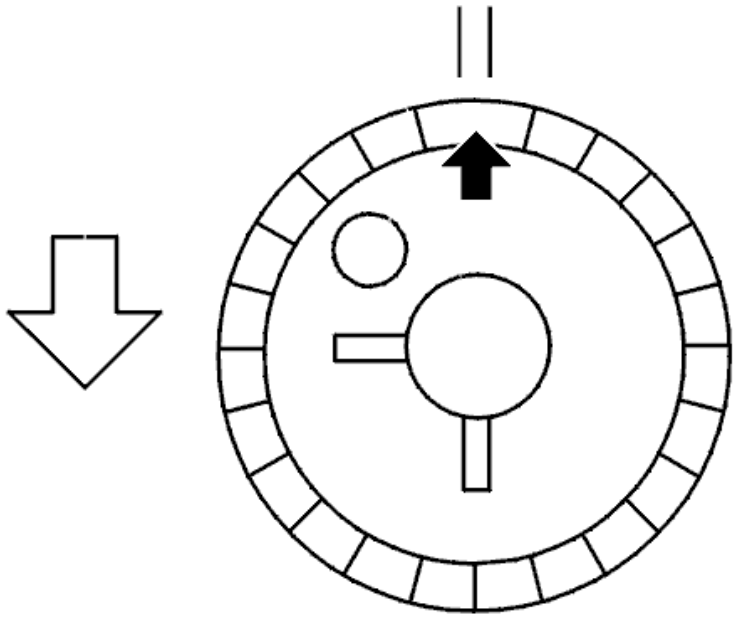

Fig. 23: Checking Arrow On Cover
Courtesy of VOLVO CARS CORPORATION

NOTE: **Check that the arrow on the cover is between the markings on the tank. If the arrow is outside the markings the fuel gauge sensor will give an incorrect value and the float may catch against the inner wall of the tank. If not: Slacken off the screw and adjust the position of the fuel tank unit. Tighten as above.**

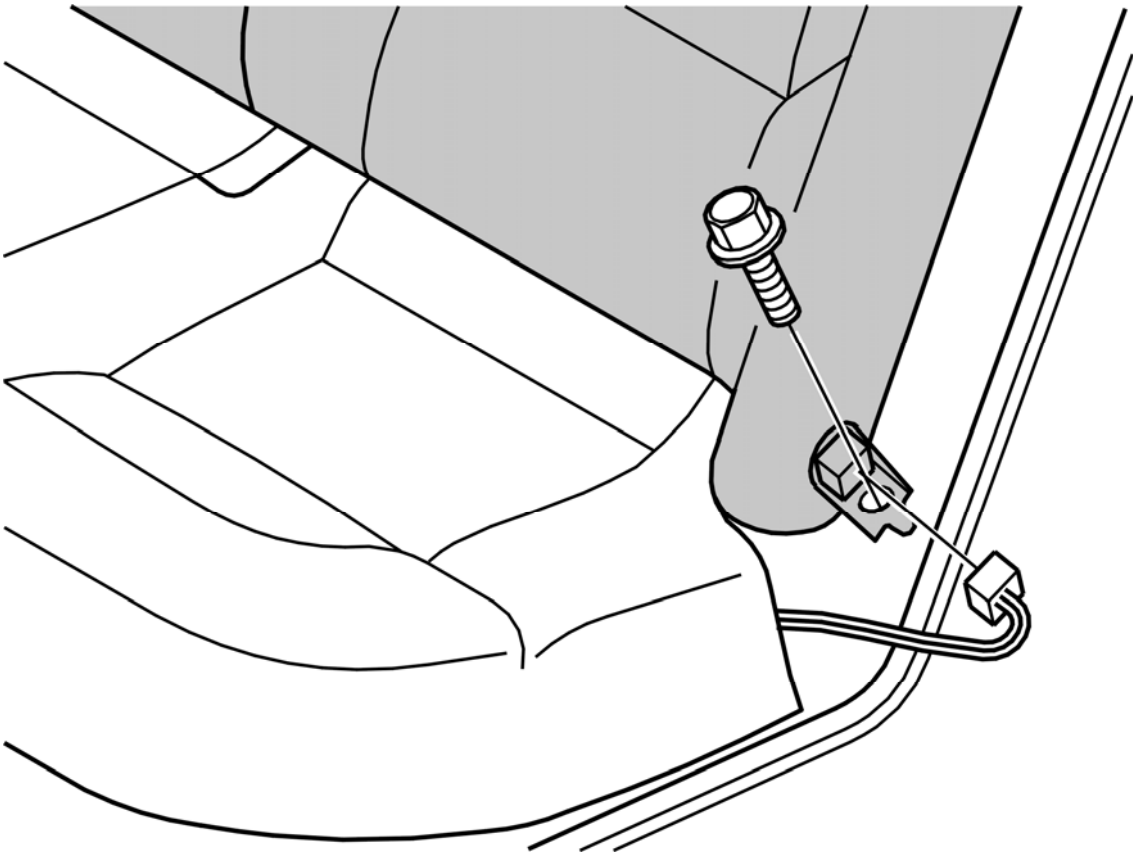

Fig. 24: Identifying Screw And Connector At Seat Hinge
Courtesy of VOLVO CARS CORPORATION

Install the cover over the fuel tank unit. Tighten the nuts.

Connect the wiring and the connectors.

Install:

- backrest
- the mounting screw for the hinge. Tighten to **50 Nm**
- the connector for the hinge
- the seat belt end mounting. Tighten to **48 Nm**
- the side cushion.

FUEL SYSTEM

Power transmission

FUEL SYSTEM

SAFETY REGULATIONS FOR HANDLING FUEL

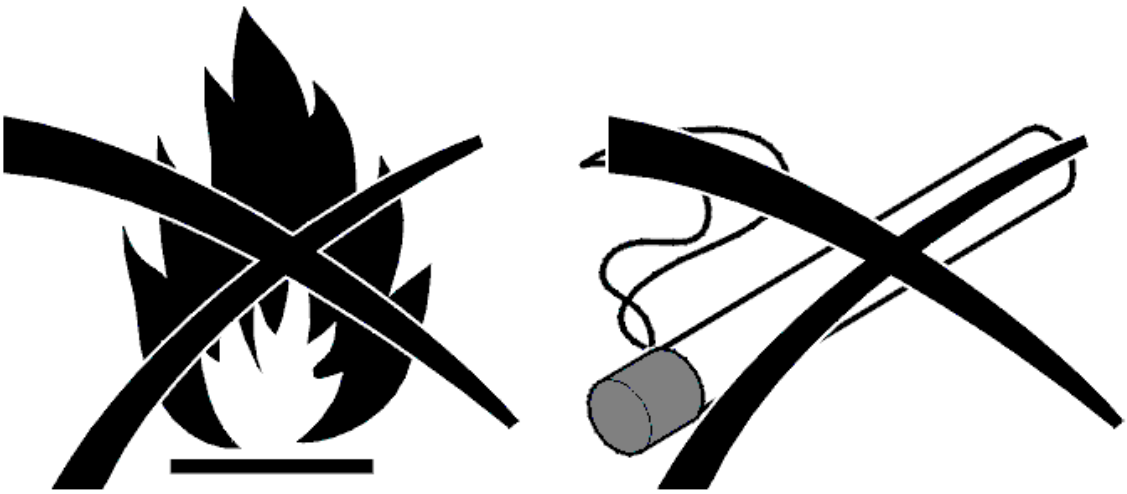

Fig. 1: Caution: No Smoking Or Open Flames
Courtesy of VOLVO CARS CORPORATION

WARNING:

- **Avoid sources of ignition.**
- **Use respiratory protection equipment with an A/brown filter (organic substances) if there is a danger of inhaling gasoline fumes.**
- **Use protective gloves to avoid skin contact with the fuel.**

FUEL SYSTEM

Power transmission

FUEL SYSTEM

FUEL SYSTEM PRESSURE RELEASE

Operation Number(s):

Start the engine.

Remove the fuel pump fuse. Placement may vary between engine types and model year. See the Owner's manual.

The engine will stop after approx. 20 seconds.

Turn over the engine 3-5 seconds.

Switch off the ignition.

Replace the fuse.

ENGINE

Intake And Exhaust System - Cleaning, Inspection and Adjustment

INLET AND EXHAUST MANIFOLD (B8444S; 2005-2011)

AIR LEAKS IN THE INTAKE SYSTEM, CHECKING

Special tools:

see **9995545**

see **9995544**

NOTE: **As the illustrations in this service information are used for different model years and / or models, some variation may occur. However, the essential information in the illustrations is always correct.**

REMOVING THE COVER OVER THE AIR CLEANER (ACL)

Fig. 1: Viewing Under the Hood
Courtesy of VOLVO CARS CORPORATION

Remove the cover over the air cleaner (ACL) by pulling it straight up.

DISCONNECTING THE CONNECTOR

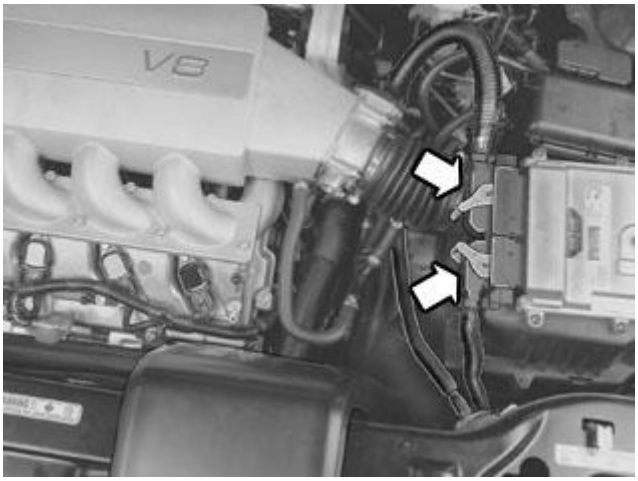

Fig. 2: Identifying connectors (2) from the Engine Control Module (ECM)
Courtesy of VOLVO CARS CORPORATION

Remove:

- the connectors, x 2, from the Engine Control Module (ECM), cut open the tie strap to the cable harness
- the connector from the mass air flow (MAF) sensor.

REMOVING THE AIR CLEANER (ACL)

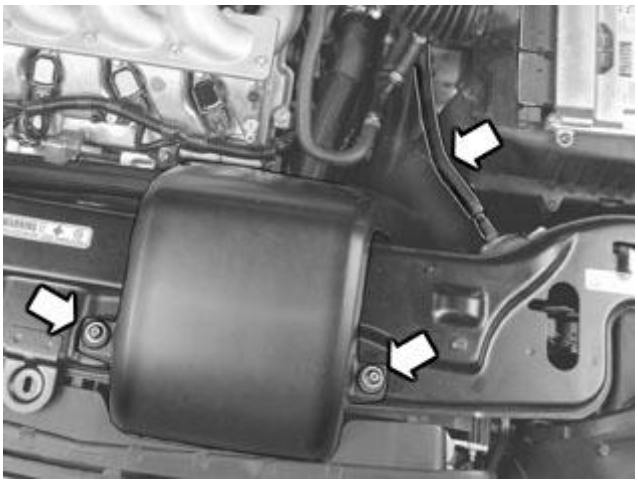

Fig. 3: Identifying 2 Screws and Vacuum Hose
Courtesy of VOLVO CARS CORPORATION

Remove:

- the brake vacuum hose from the vacuum pump
- the screws, x 2, to the fresh air intake hose in the front cover plate
- the fresh air intake hose
- the air cleaner (ACL), by pulling it straight up.

INSTALLATION

INSTALLING THE TEST PRESSURIZING EQUIPMENT

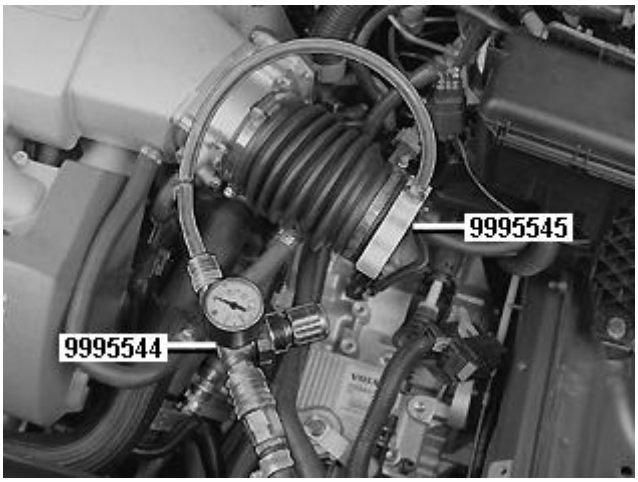

Fig. 4: Installing The Test Pressurizing Equipment
Courtesy of VOLVO CARS CORPORATION

Install tool see **9995545** with pressure regulator see **9995544** on the fresh air intake hose and tighten the hose clamp.

CAUTION: Remove the oil filler cap.

CHECKING THE AIR LEAKAGE

Connect the compressed air hose and adjust the regulator so that a max. pressure of 0.2 bar is obtained.

A weak hissing sound can be heard through the oil filler, this is due to an intake valve being open and the pressure in a cylinder leaking past the piston rings.

Spray soap and water solution if uncertain if leaks exist

Small bubbles are permitted between the throttle body (TB) and the inlet hose if it is plastic. If the inlet hose is rubber then no bubbles are permitted.

Rectify any leakage.

INSTALLING THE AIR CLEANER (ACL)

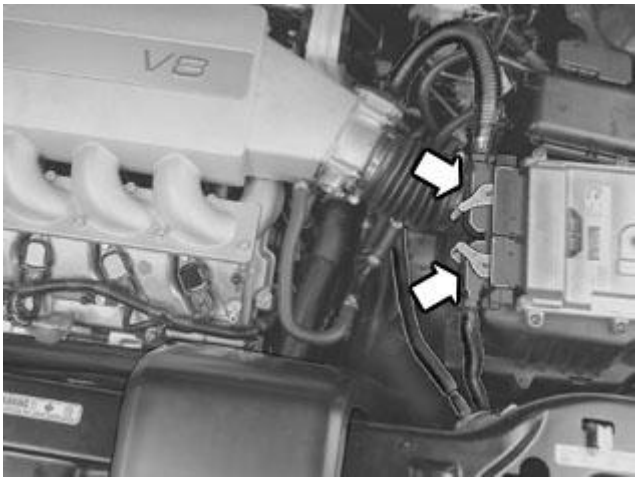

Fig. 5: Identifying connectors (2) from the Engine Control Module (ECM)
Courtesy of VOLVO CARS CORPORATION

Install:

- the air cleaner (ACL), tighten the hose clamp to the mass air flow (MAF) sensor
- the brake vacuum hose on the vacuum pump
- the fresh air intake hose
- the screws, x 2, to the fresh air intake hose in the front cover plate
- the connectors, x 2, for the Engine Control Module (ECM)
- the connector for the mass airflow sensor (MAF)
- the tie strap to the cable harness in the air cleaner (ACL) housing
- the cover over the air cleaner (ACL).

THROTTLE BODY (TB), CLEANING

Materials:	
Designation	**Part number**
Cleaning agent	1161826

NOTE: Removal steps in this procedure may contain installation details.

Remove the throttle body. See **THROTTLE BODY (ELECTRONIC THROTTLE MODULE (ELM)), REPLACING** .

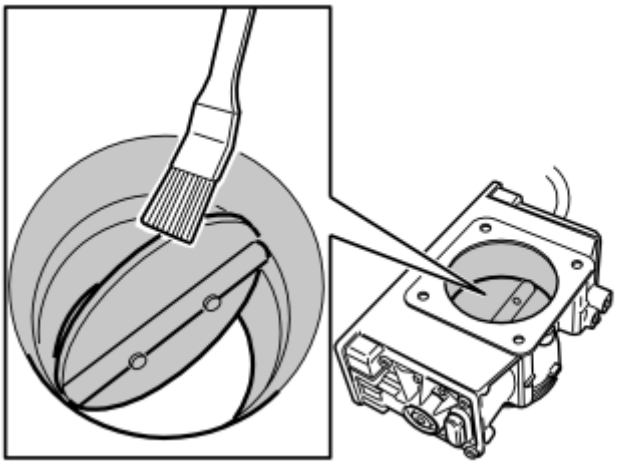

Fig. 6: Cleaning agent, 1161826
Courtesy of VOLVO CARS CORPORATION

Clean the throttle body with a brush. **Use:** Cleaning agent, 1161826

Ensure that all deposits are removed from the marked surfaces.

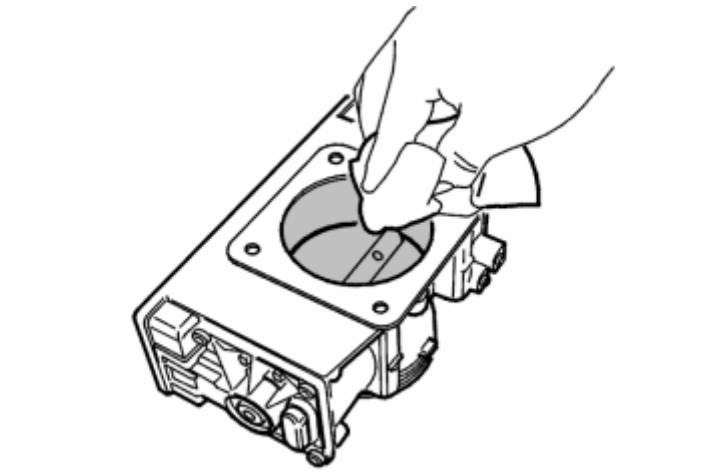

Fig. 7: Wiping Clean Air Duct On Both Sides Of Throttle Disc
Courtesy of VOLVO CARS CORPORATION

Carefully wipe clean the air duct on both sides of the throttle disc. Also wipe clean the edge of the throttle disc.

Install the throttle body. See **THROTTLE BODY (ELECTRONIC THROTTLE MODULE (ELM)), REPLACING**

INTAKE AND EXHAUST MANIFOLD (B5254T2; 2003-2004)

AIR LEAKAGE IN THE INTAKE SYSTEM, CHECKING

Special tools:

see **9995545**

see **9995544**

see **9997080**

NOTE: **As the illustrations in this service information are used for different model years and / or models, some variation may occur. However, the essential information is always correct.**

PREPARATIONS

Check that all hoses are undamaged and are in place with their hose clamps tightened.

ENGAGEMENT

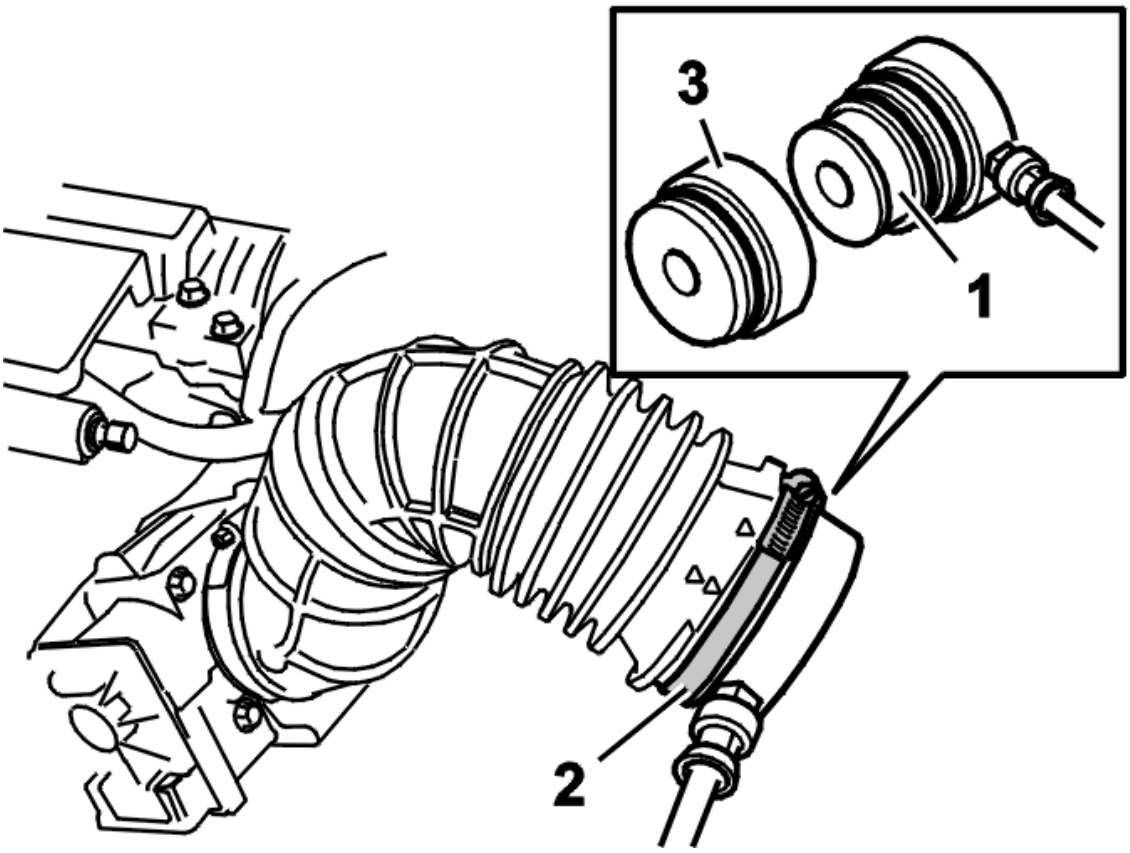

Fig. 8: Fresh Air Hose From Mass Air Flow Sensor
Courtesy of VOLVO CARS CORPORATION

NOTE: **S80 T6 and S60/V70 R use: see 9995545 (1) with see 9997080 (3). Lock see 9997080 on see 9995545 .**

Remove the fresh air hose from the mass air flow (MAF) sensor.

Install tool see **9995545** (1) and pressure regulator see **9995544** on the fresh air intake. Tighten the hose clamp (2).

Remove the oil filler cap.

CHECK

Adjust the regulator to obtain a maximum pressure of **0.3 bar** (0.15 psi). There may be a gentle hissing sound from the oil filler opening. This is due to the opening of an intake valve and the leakage of cylinder pressure past the piston rings.

Check components and connections. See: **CHECKING COMPONENTS**.

If a leak is suspected, spray a soap solution onto the area. Check for air leakage from the canister purge (CP) valve. No leakage is permissible.

CHECKING COMPONENTS

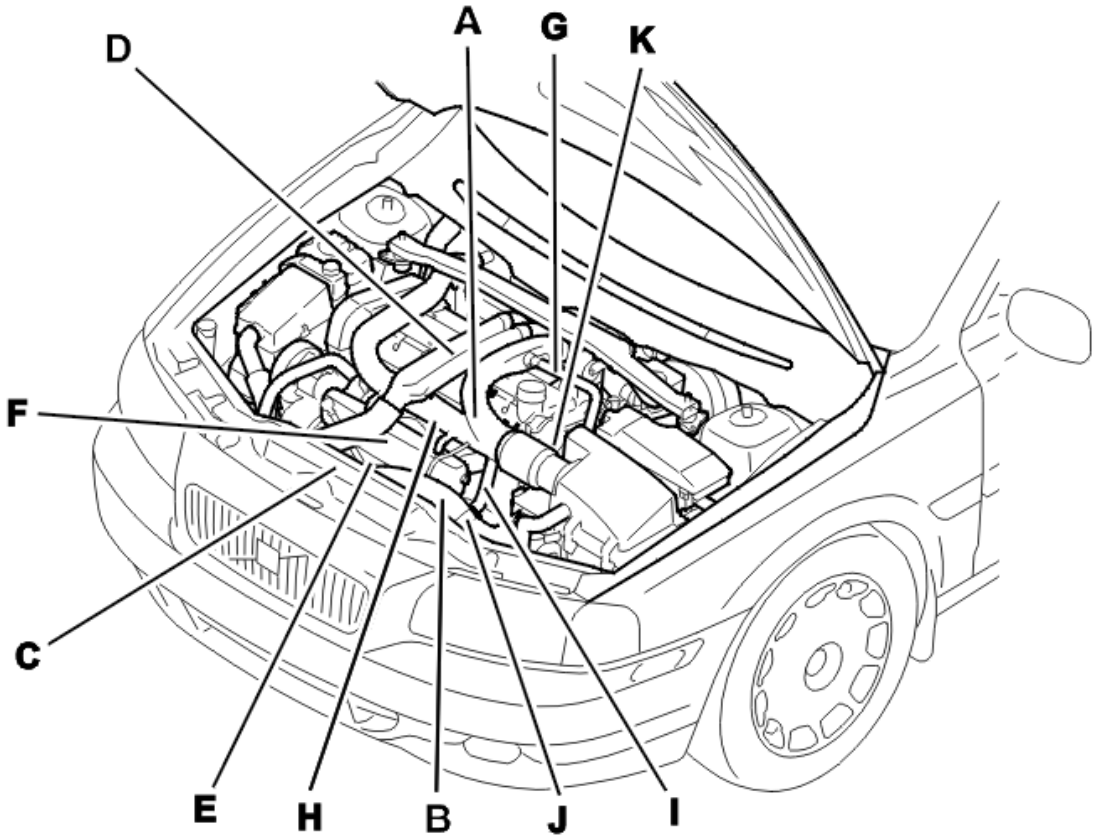

Fig. 9: Engine Components
Courtesy of VOLVO CARS CORPORATION

- A fresh air intake
- B lower charge air pipe

- C charge air cooler (CAC)
- D upper charge air pipe
- E throttle body (TB)
- F intake manifold with vacuum hoses and gaskets
- G crankcase ventilation
- H injectors
- I brake servo hose
- J evaporative emission system (EVAP) valve
- K Turbocharger (TC) control valve.

THROTTLE BODY (TB), CLEANING

NOTE: Removal steps in this procedure may contain installation details.

Remove the throttle body (TB). See **THROTTLE BODY (ELECTRONIC THROTTLE MODULE), REPLACING**

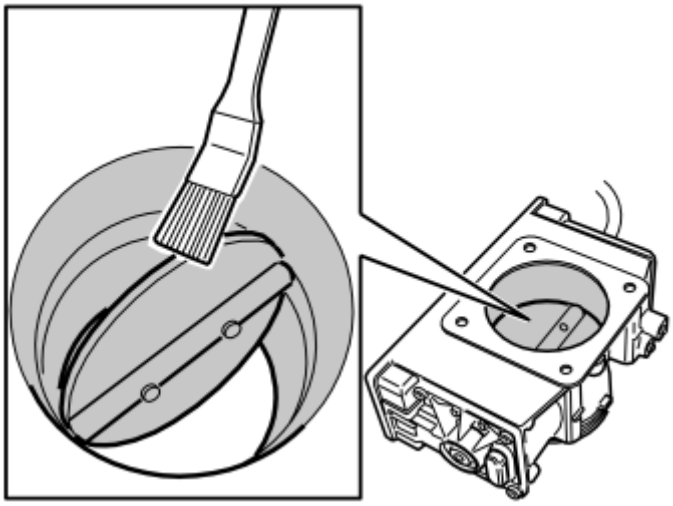

Fig. 10: Cleaning Throttle Body With A Brush
Courtesy of VOLVO CARS CORPORATION

Clean the throttle body with a brush. Use cleaner, part no. **1161826** .

Ensure that all deposits are removed from the marked surfaces.

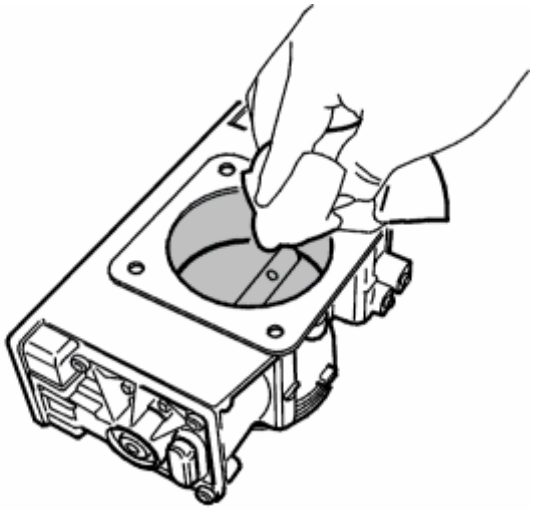

Fig. 11: Wiping Clean Air Duct On Both Sides Of Throttle Disc
Courtesy of VOLVO CARS CORPORATION

Carefully wipe clean the air duct on both sides of the throttle disc. Also wipe clean the edge of the throttle disc.

Install the throttle body (TB). See **THROTTLE BODY (ELECTRONIC THROTTLE MODULE), REPLACING**

INTAKE AND EXHAUST MANIFOLD (B5254T2; 2005-2007)

AIR LEAKAGE IN THE INTAKE SYSTEM, CHECKING

see **AIR LEAKAGE IN THE INTAKE SYSTEM, CHECKING**

THROTTLE BODY (TB), CLEANING

NOTE: Removal steps in this procedure may contain installation details.

Remove the throttle body, see **THROTTLE BODY (ELECTRONIC THROTTLE MODULE (ELM)), REPLACING**

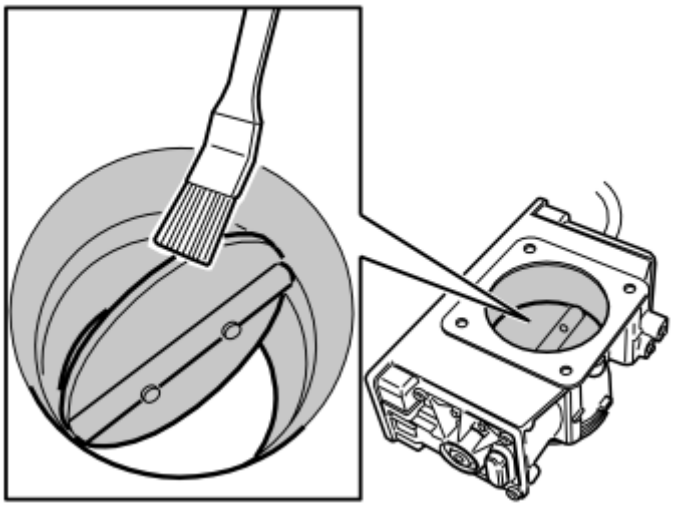

Fig. 12: Cleaning Throttle Body With A Brush
Courtesy of VOLVO CARS CORPORATION

Clean the throttle body with a brush.

Use: Cleaner, 1161826

Ensure that all deposits are removed from the marked surfaces.

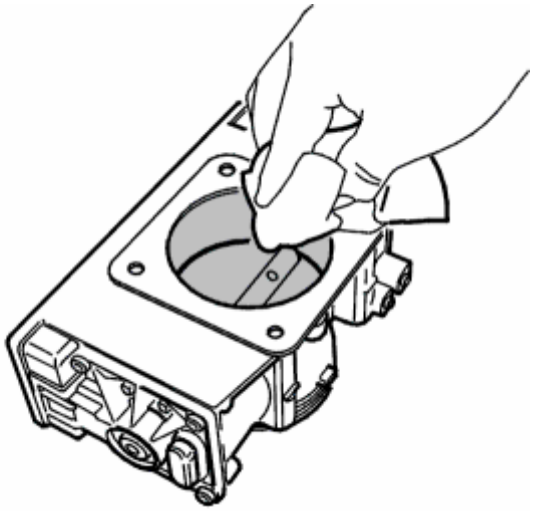

Fig. 13: Wiping Clean Air Duct On Both Sides Of Throttle Disc
Courtesy of VOLVO CARS CORPORATION

Carefully wipe clean the air duct on both sides of the throttle disc. Also wipe clean the edge of the throttle disc.

Install the throttle body, see **THROTTLE BODY (ELECTRONIC THROTTLE MODULE (ELM)), REPLACING**

INTAKE AND EXHAUST MANIFOLDS (B6294T; 2003-2006)

THROTTLE BODY (TB), CLEANING

NOTE: Removal steps in this procedure may contain installation details.

Remove the throttle body. See **THROTTLE BODY (ELECTRONIC THROTTLE MODULE), REPLACING**

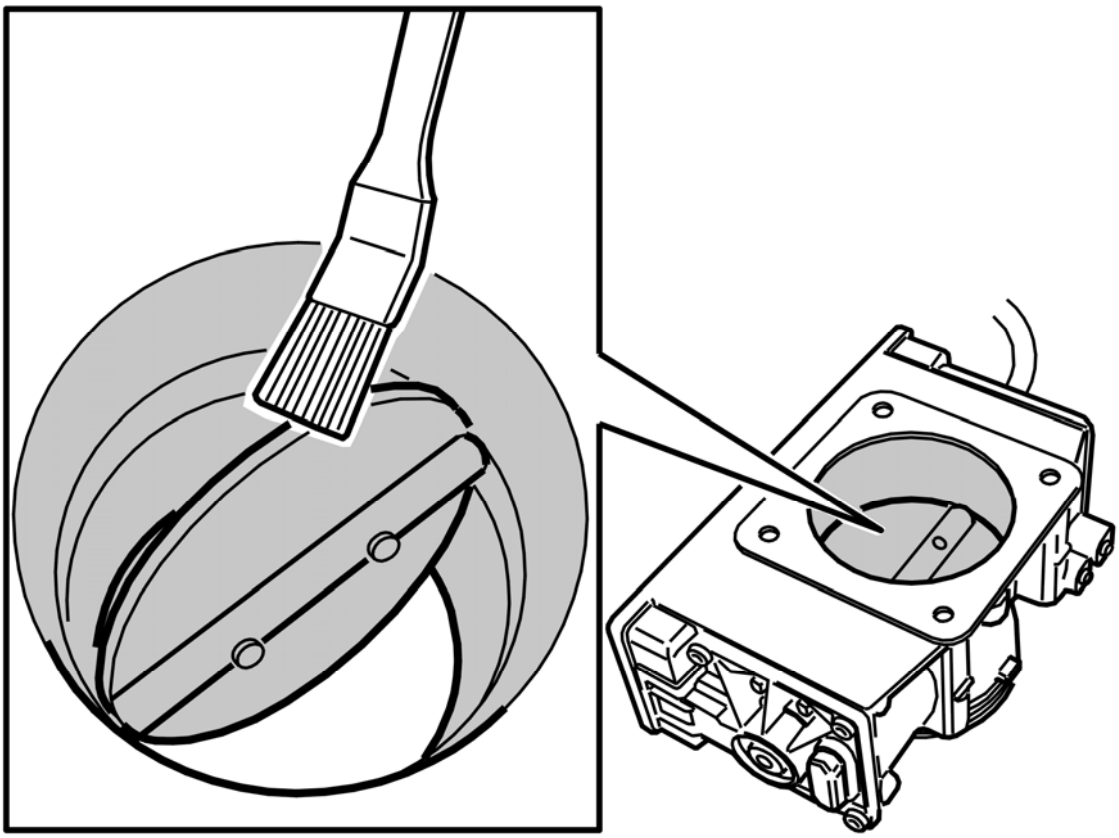

Fig. 14: Cleaning The Throttle Body With A Brush
Courtesy of VOLVO CARS CORPORATION

Clean the throttle body with a brush. Use cleaner, part no. **1161826** .

Ensure that all deposits are removed from the marked surfaces.

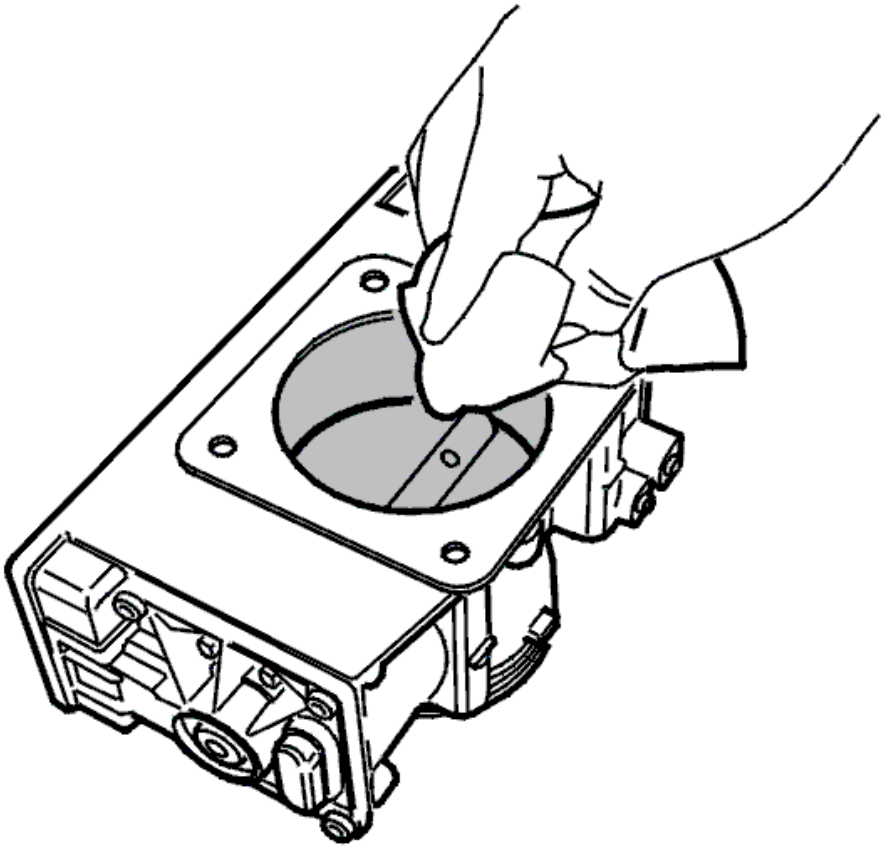

Fig. 15: Carefully Wipe Clean
Courtesy of VOLVO CARS CORPORATION

Carefully wipe clean the air duct on both sides of the throttle disc. Also wipe clean the edge of the throttle disc.

install the throttle body. See **THROTTLE BODY (ELECTRONIC THROTTLE MODULE), REPLACING**

TURBO COMPRESSOR (B5254T2; 2003-2004)

QUICK CHECK, TURBOCHARGER (TC)

STOP ENGINE AND LISTEN TO TURBOCHARGER (TC) AT THE MOMENT OF STOPPING

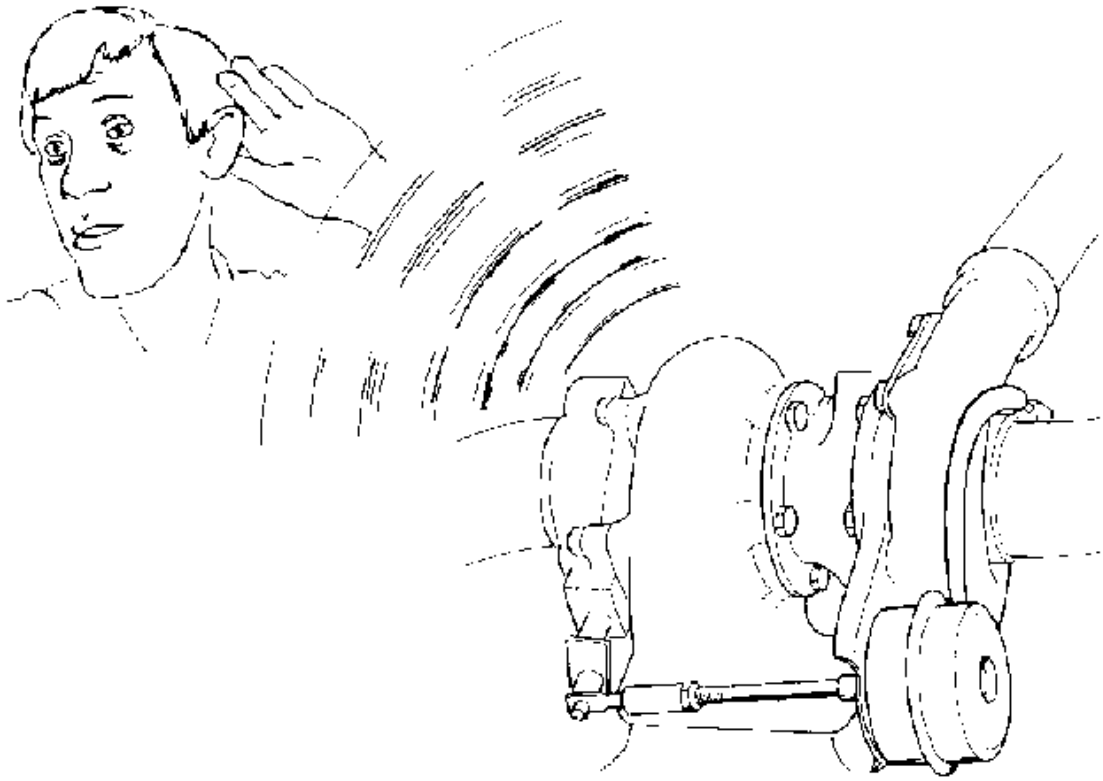

Fig. 16: Listening To Turbocharger At Moment Of Stopping
Courtesy of VOLVO CARS CORPORATION

Normally the rotating turbocharger (TC) components stop moving after the engine.

If this is not the case:

Remove the inlet hose from the compressor housing.

Check afterwards that:

- the compressor wheel spins easily when rotated.
- axial- and radial play feels normal.
- the compressor wheel does not rub in the compressor housing.

REPLACING TURBOCHARGER (TC)

In a number of cases the turbocharger (TC) has been changed unnecessarily. This happened because some play has been felt when checking (the shaft floats on an oil film).

Play should always be checked before replacing, to determine if the bearings are worn.

The turbocharger (TC) should always be replaced complete:

- plug all terminals on the old turbocharger before it is sent away.

WASTEGATE VALVE, ADJUSTING

Special tools:

see **9995544**

see **9995646**

MANOMETER

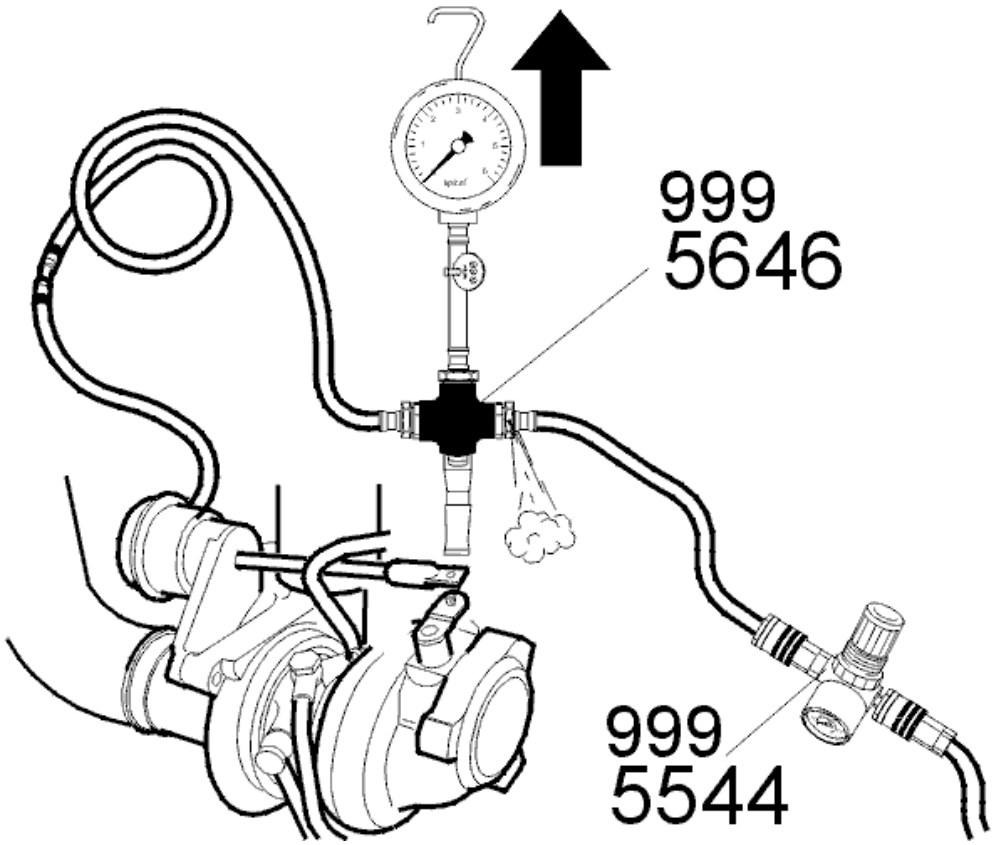

Fig. 17: Identifying Manometer Must Always Hang Vertically From Its Hook When Taking Readings
Courtesy of VOLVO CARS CORPORATION

Use test equipment see **9995646** to measure the adjustment pressure.

The manometer must always hang vertically when taking readings. This is to ensure that the values obtained are correct.

REMOVING THE HEAT DEFLECTOR PLATE

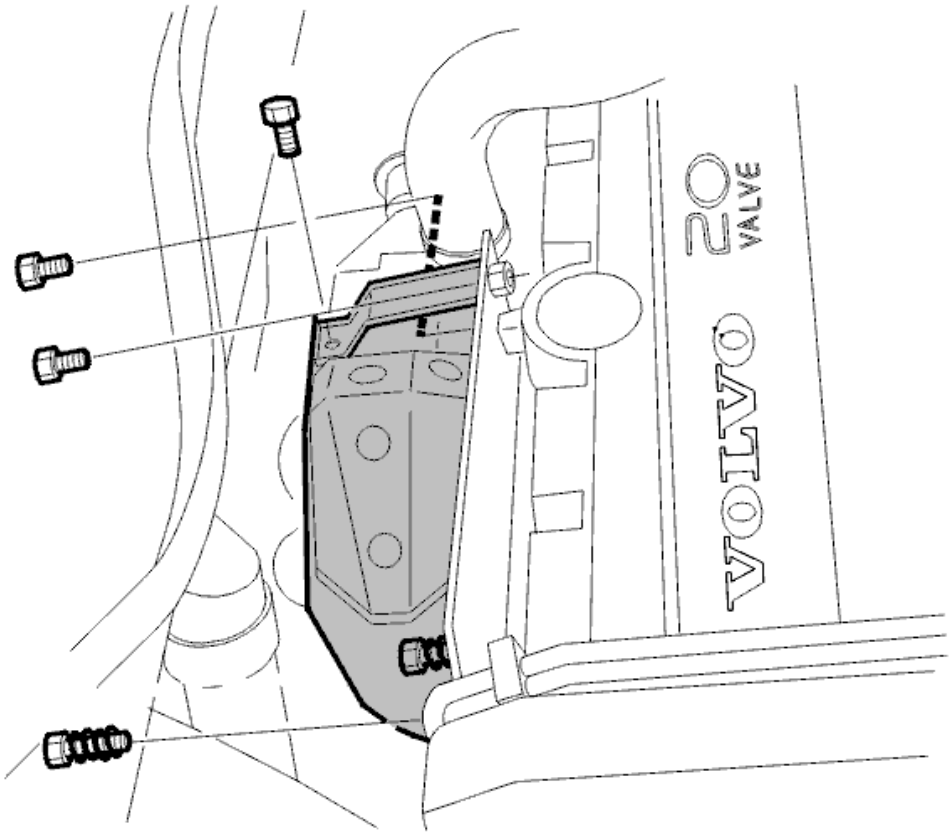

Fig. 18: Heat Deflector Plate
Courtesy of VOLVO CARS CORPORATION

Remove the heat deflector plate over the turbocharger (TC). 4 screws.

REMOVING THE HOSE FOR THE PRESSURE REGULATOR

Remove the hose for the pressure regulator (marked yellow). Disconnect the hose at the turbocharger (TC) control valve.

Remove the fresh air intake hose from the air cleaner (ACL) to access the hose clamp.

Only S70/V70/C70:

The position and version of the turbocharger (TC) control valve have been changed on the S70/V70/C70.

Disconnect the hose running backward on the turbocharger (TC) control valve (marked yellow).

RELEASE THE PUSH ROD

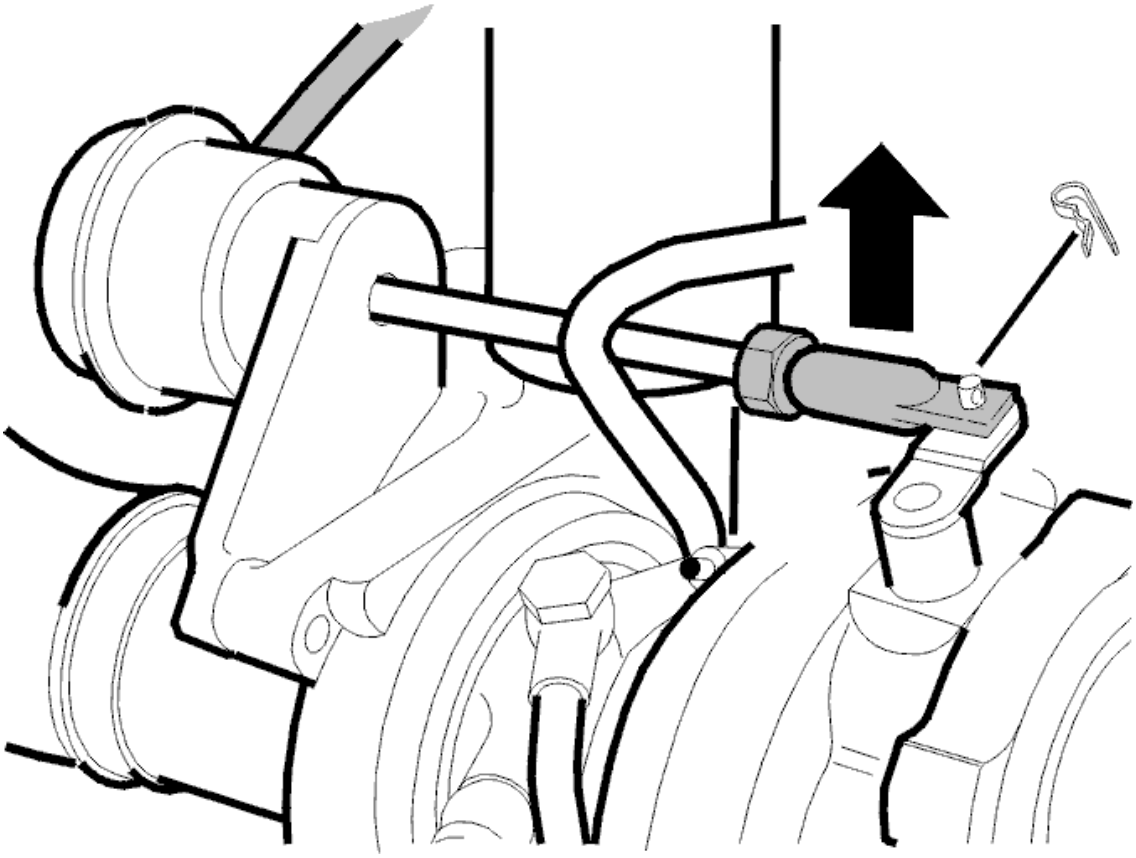

Fig. 19: Identifying Split Pin From Lever And Push Rod
Courtesy of VOLVO CARS CORPORATION

Remove the split pin from the lever.

Release the push rod. Lift the push rod straight up.

CONNECTING TEST EQUIPMENT

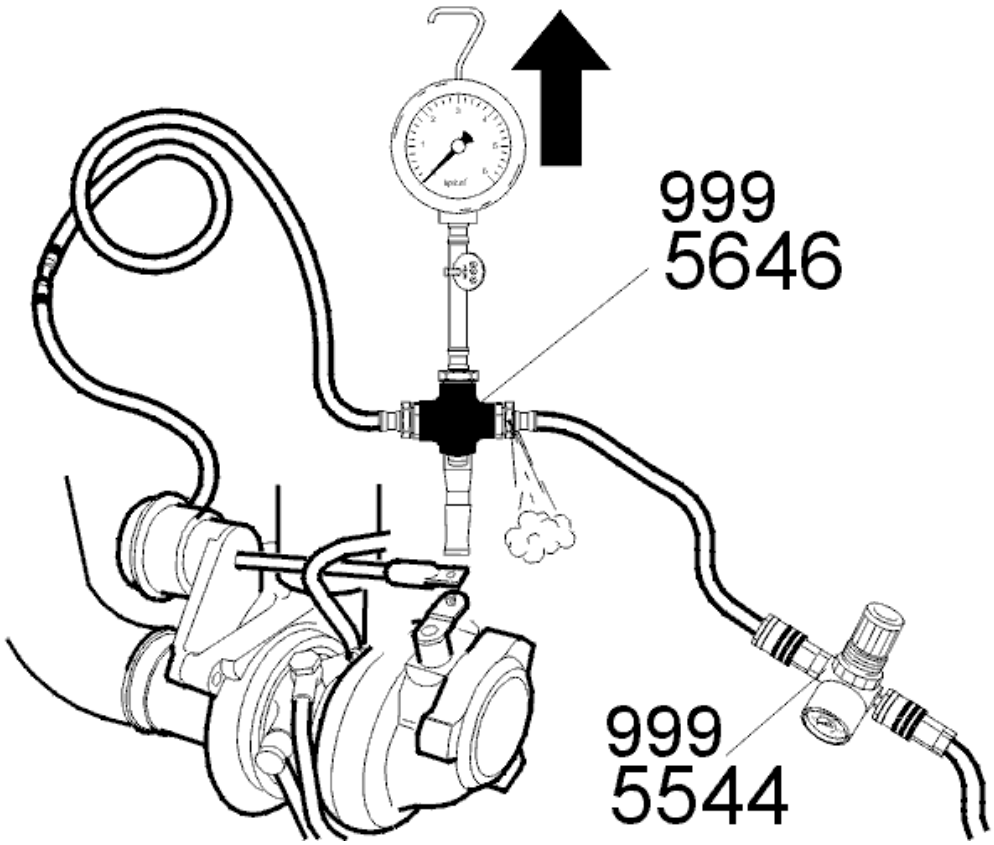

Fig. 20: Identifying Manometer Must Always Hang Vertically From Its Hook When Taking Readings
Courtesy of VOLVO CARS CORPORATION

Connect:

- manometer see **9995646** to the pressure regulator hose
- pressure regulator see **9995544** to the manometer.

NOTE: When taking readings the manometer must always hang vertically from its hook. This is to ensure that the correct values are obtained. Set the 3-way junction connector handle in its middle position.

Screw out the adjustment screw for the pressure regulator completely.

Connect compressed air to the pressure regulator.

Screw in the adjustment screw for the pressure regulator so that the manometer displays the value applicable to the relevant engine. See the table.

3-way junction connector has a vent (drilled hole) where it connects to the pressure regulator. This is to facilitate setting the correct pressure.

Engine	Adjustment pressure

B5204T	12.5 kPa
B5204T2	12.5 kPa
B5204T3	15 kPa
B5204T3, from model year 1999	18 kPa
B5204T4	12.5 kPa
B5204T5	12.5 kPa
B5234T	12.5 kPa
B5234T2	30 kPa
B5234T3	30 kPa
B5234T4	12.5 kPa
B5234T4 R-line, from model year 1998	28 kPa
B5234T5	12.5 kPa
B5234T6	30 kPa
B5234T7	12.5 kPa
B5234T8	30 kPa
B5244T	12.5 kPa
B5244T2	30 kPa
B5244T3	12.5 kPa
B5244T7	12.5 kPa
B5254T	12.5 kPa
B5254T2	12.5 kPa

CHECKING AND ADJUSTING

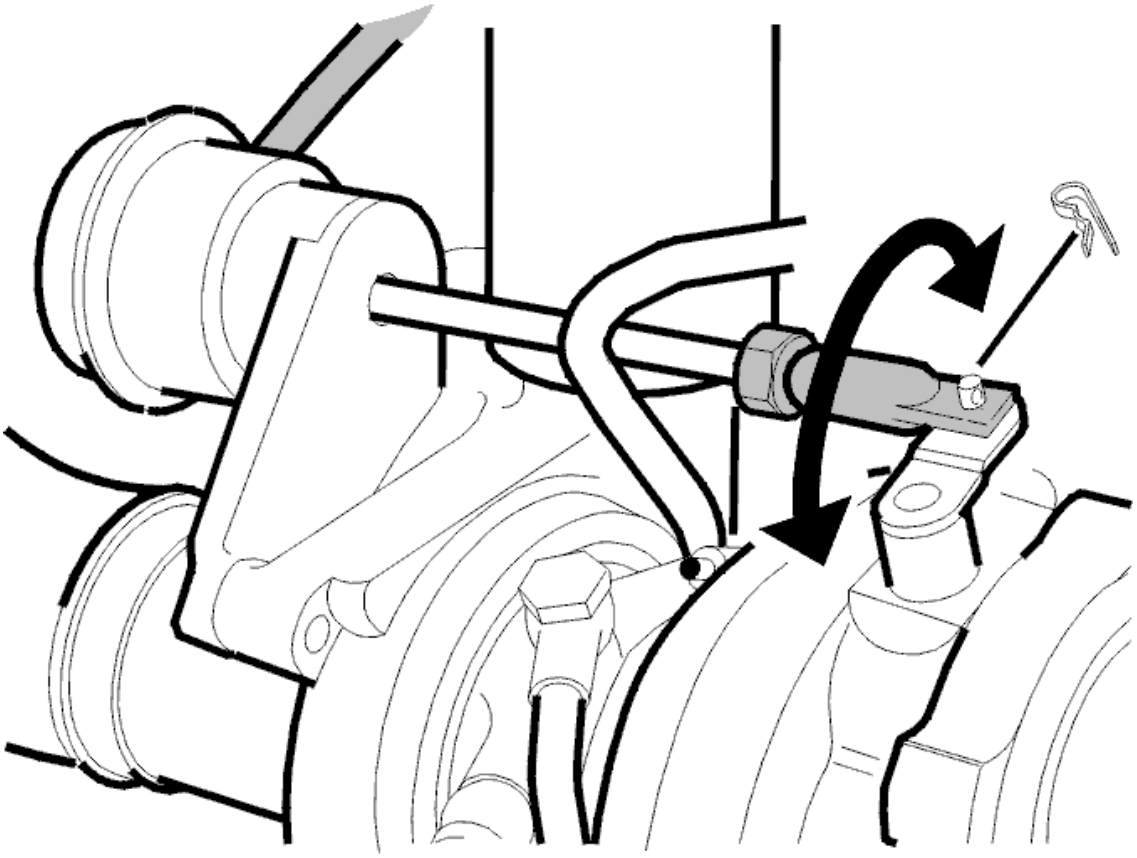

Fig. 21: Identifying Boost Pressure Control Valve Lever And Turbocharger Housing
Courtesy of VOLVO CARS CORPORATION

Push the lever for the boost pressure control (BPC) valve towards the turbocharger (TC) housing.

The boost pressure control (BPC) valve must be closed.

Check that the push rod locates on the lever lug.

If necessary, adjust the push rod until it locates.

NOTE: **The push rod must be mounted on the lever when the lock-nut is adjusted.**

The diaphragm in the pressure regulator will be damaged if the push rod is twisted.

REINSTALL

Install the split pin on the lever.

Tighten the lock-nut on the push rod.

Remove the test equipment.

Connect the hose.

Install the heat shield.

Erase any diagnostic trouble codes (DTCs).

Test drive the car. Accelerate to wide open throttle (WOT) a couple of times.

Then check that no diagnostic trouble codes (DTCs) have been stored.

TURBO COMPRESSOR (B6294T; 2003-2006)

PRESSURE REGULATOR, CHECKING/ADJUSTING

Special tools:

see **9995646**

see **9995544**

CHECKING / SETTING TURBO1 PRESSURE REGULATOR

PREPARATION

To simplify the following text, the terms **turbo1** and **turbo2** are used.

turbo1 is for cylinders 1, 2, 3. turbo2 is for cylinders 4, 5, 6.

NOTE: Always check / set both the pressure regulators.

Fig. 22: Engine And Stabilizer Brace
Courtesy of VOLVO CARS CORPORATION

Remove

- the screw for the engine stabilizer brace mounting on the engine
- the cross stay between the suspension turrets
- the plastic charge air pipe. Place to one side
- the plastic intake pipe. Put it to one side.

Remove the pressure regulator hoses at the T piece

Position the turbo1 pressure regulator hose so that it can be reached from underneath the car later on.

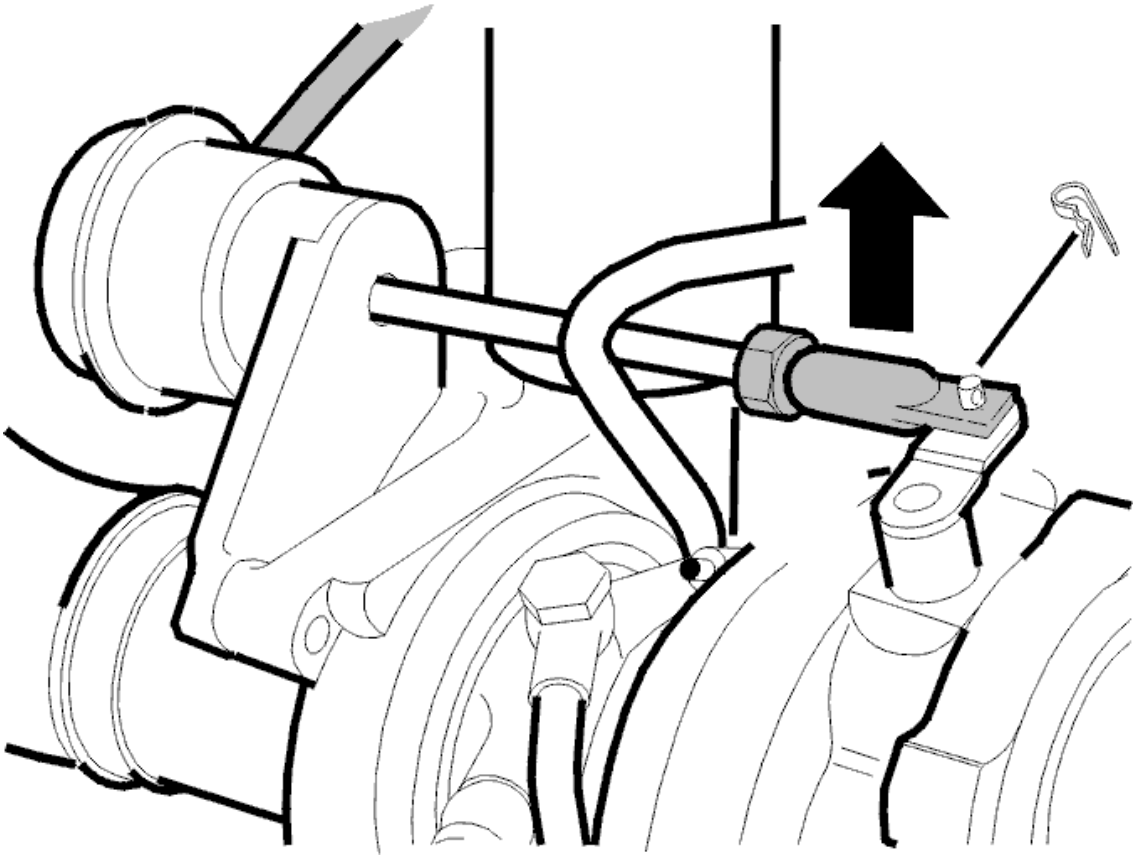

Fig. 23: Identifying Split Pin From Lever And Push Rod
Courtesy of VOLVO CARS CORPORATION

Raise the car.

Remove the lower splash guard.

Pull down the hose from the pressure regulator.

Remove the split pin from the lever.

Lift off the push rod.

CONNECTING TEST EQUIPMENT

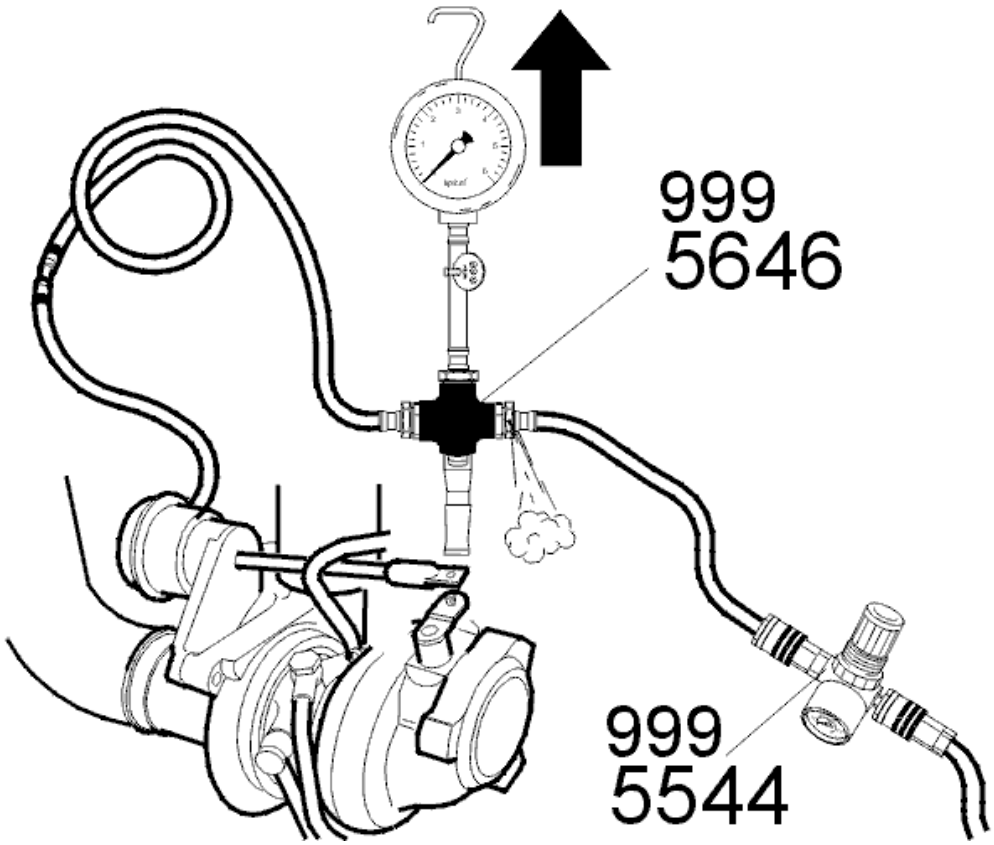

Fig. 24: Identifying Manometer Must Always Hang Vertically From Its Hook When Taking Readings
Courtesy of VOLVO CARS CORPORATION

Connect

- manometer see **9995646** to the pressure regulator hose
- pressure regulator see **9995544** to the manometer.

NOTE: When taking readings the manometer must always hang vertically from its hook. This is to ensure that the correct values are obtained. Set the three-way junction handle to the middle position.

Screw out the adjustment screw for the pressure regulator completely.

Connect compressed air to pressure regulator.

Screw in the adjustment screw for the pressure regulator so that the manometer displays the value applicable to the relevant engine, according to the table below.

The three-way junction connector has a vent (drilled hole) where it connects to the pressure regulator to facilitate setting the correct pressure.

Engine	Adjustment pressure

B6284T	45 kPa

CHECKING AND ADJUSTING PUSH ROD

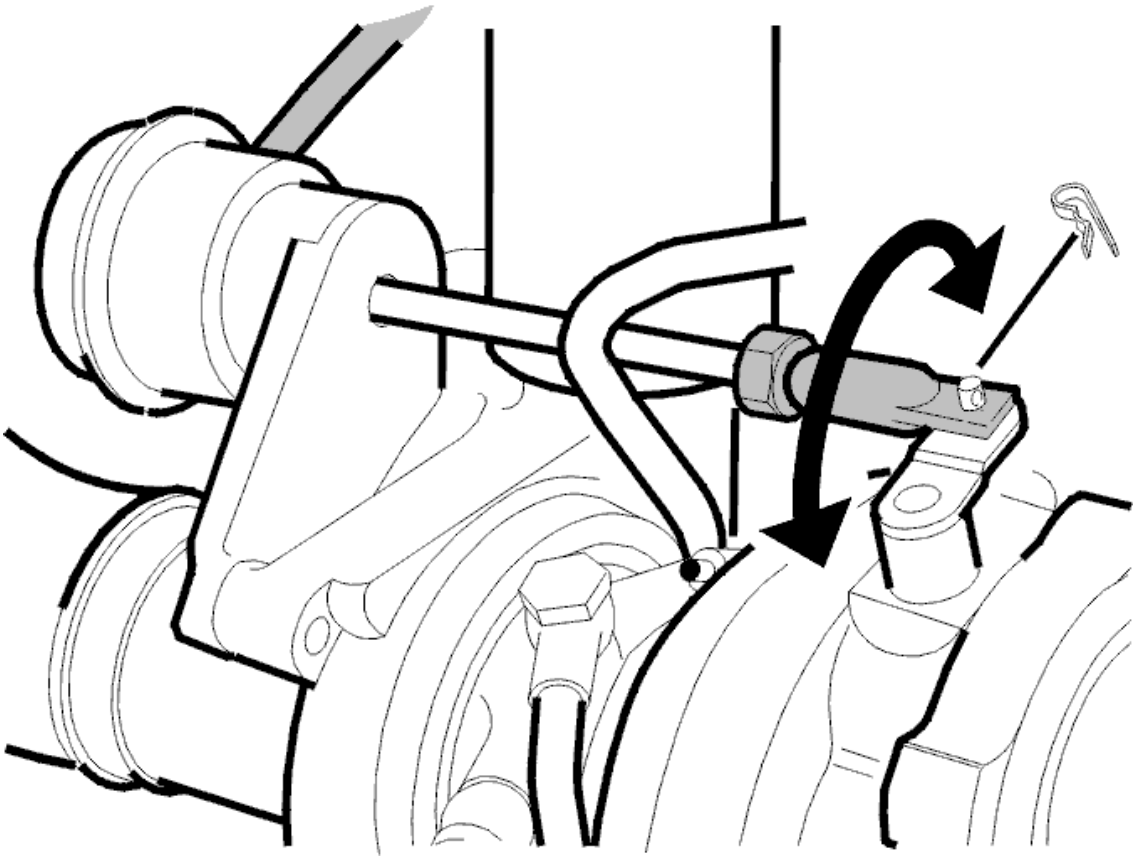

Fig. 25: Identifying Boost Pressure Control Valve Lever And Turbocharger Housing
Courtesy of VOLVO CARS CORPORATION

Push the boost pressure control (BPC) valve lever towards the turbocharger (TC) housing. The boost pressure control (BPC) valve should be closed.

Check that the push rod locates on the lever lug.

If necessary, adjust the push rod until it locates.

NOTE: **The boost pressure control (BPC) valve spindle must be mounted on the lever when the lock-nut is adjusted.**

The diaphragm in the pressure regulator will be damaged if the push rod is twisted.

FINISHING

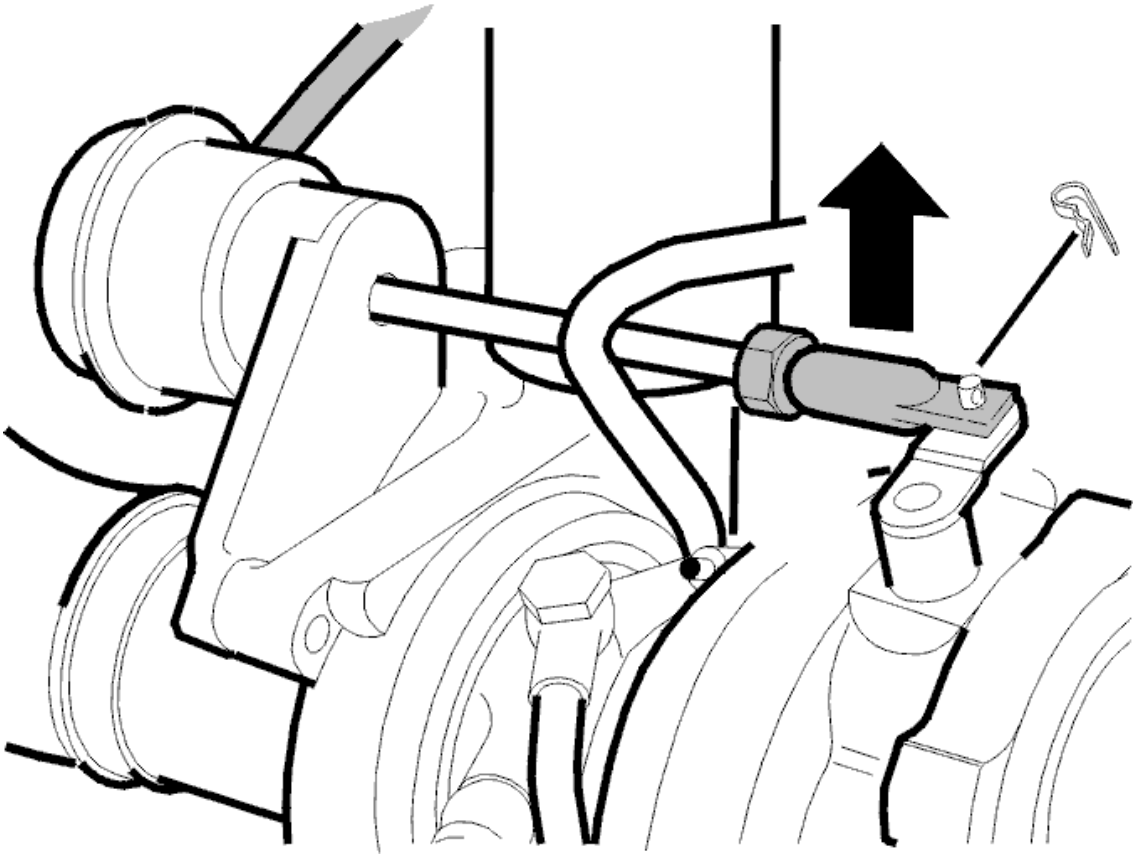

Fig. 26: Identifying Split Pin From Lever And Push Rod
Courtesy of VOLVO CARS CORPORATION

Install the split pin on the lever.

Tighten the locknut on the lever.

Remove the test equipment.

Insert the hose upwards following previous routing.

Install the lower splash guard.

Lower the car.

CHECKING / SETTING TURBO2 PRESSURE REGULATOR

PREPARATION

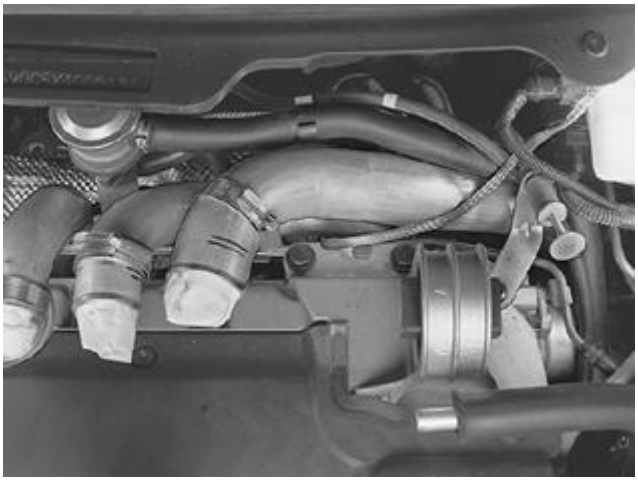

Fig. 27: Charge Air And Intake Pipes
Courtesy of VOLVO CARS CORPORATION

Remove

- the turbocharger (TC) intake pipe
- the charge air pipe from the turbocharger (TC)
- the heat deflector plate over the turbocharger (TC).

CONNECTING TEST EQUIPMENT

- Connect test equipment. See **CONNECTING TEST EQUIPMENT**

CHECKING AND ADJUSTING PUSH ROD

- Check and adjust the push rod. See **CHECKING AND ADJUSTING PUSH ROD**.

FINISHING

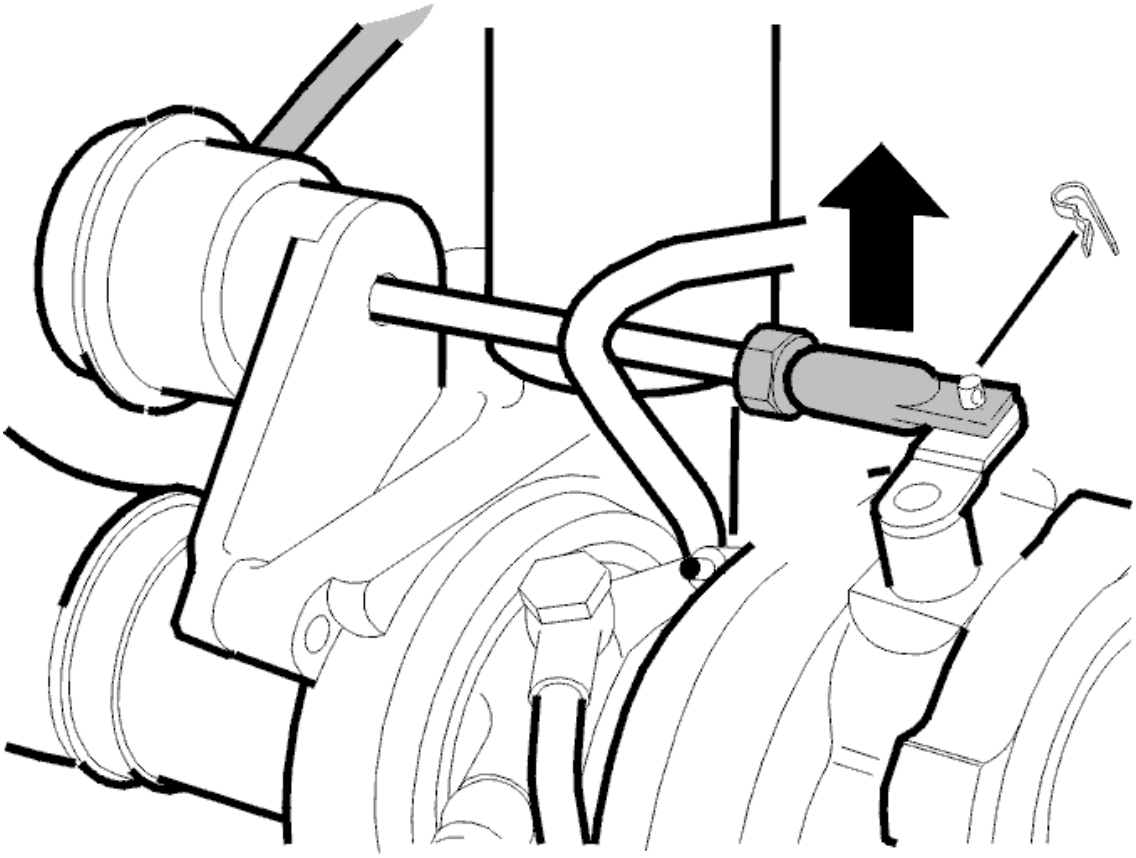

Fig. 28: Identifying Split Pin From Lever And Push Rod
Courtesy of VOLVO CARS CORPORATION

Install the split pin on the lever.

Tighten the locknut on the lever.

Remove the test equipment.

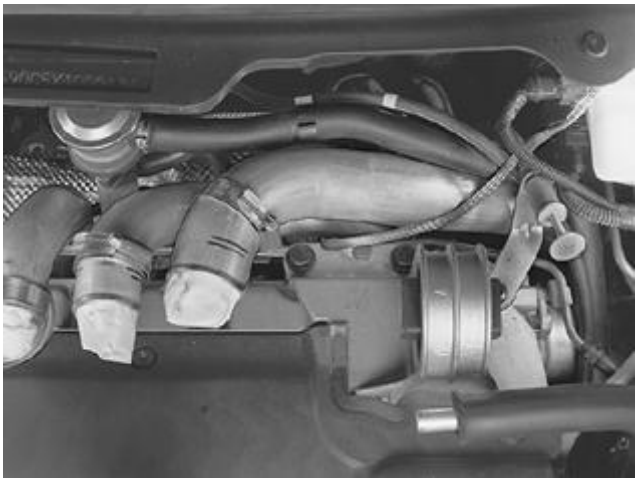

Fig. 29: Charge Air And Intake Pipes

Courtesy of VOLVO CARS CORPORATION

Install

- the heat deflector plate over the turbocharger (TC). Tighten to **25 Nm**
- the charge air and intake pipes to the turbocharger (TC). Align against the plastic pipes and tighten.

Lower the car.

Fig. 30: Engine And Stabilizer Brace
Courtesy of VOLVO CARS CORPORATION

- the engine stabilizer brace between the suspension turrets. Tighten the screws at the suspension turret. Tighten to **50 Nm**
- the screw for the engine stabilizer brace mounting on the engine. Tighten to **80 Nm** .

Press the plastic pipes into place and tighten the clamps.

- the mounting screws for plastic pipes and tighten
- the hoses from the pressure regulators to the T piece.

FUNCTION TEST

- Test drive the engine.

QUICK CHECK, TURBOCHARGER (TC)

see **QUICK CHECK, TURBOCHARGER (TC)**

TURBO KOMPRESSOR (B5254T2; 2005-2007)

QUICK CHECK, TURBOCHARGER (TC)

see **QUICK CHECK, TURBOCHARGER (TC)**

INTAKE AND EXHAUST MANIFOLD (B6324S/5; 2007-2012)

THROTTLE BODY, CLEANING

Materials:	
Designation	**Part number**
Cleaning agent	1161826

NOTE: Removal steps in this procedure may contain installation details.

Remove the throttle body. See **THROTTLE BODY**

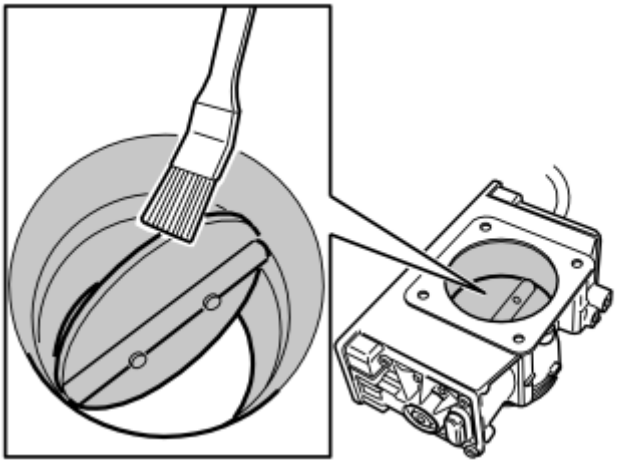

Fig. 31: Cleaning agent, 1161826
Courtesy of VOLVO CARS CORPORATION

Clean throttle body with brush. **Use:** Cleaning agent, 1161826

Make sure that all deposits are removed from marked surfaces.

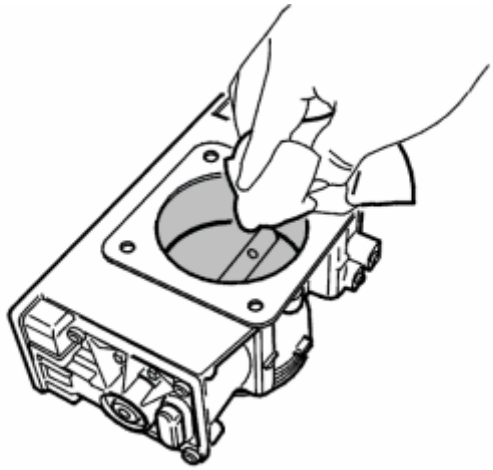

Fig. 32: Wiping Clean Air Duct On Both Sides Of Throttle Disc
Courtesy of VOLVO CARS CORPORATION

Carefully wipe clean the air duct on both sides of the throttle disc. Also wipe clean the edge of the throttle disc.

Install throttle body. See **THROTTLE BODY**

CRANKCASE VENTILATION (B6324S; 2007-2010)

CRANKCASE VENTILATION, CHECK

Special tool	
	T9997226 PRESSURE GAUGE **Tool number:** T9997226 **Tool description:** PRESSURE GAUGE **Tool boards:**

Carry out checks at idle with the engine at operating temperature corresponding to 15 minutes normal driving (100 °C). If the oil quality/type and/or oil filter condition cannot be determined, replace the oil and filter.

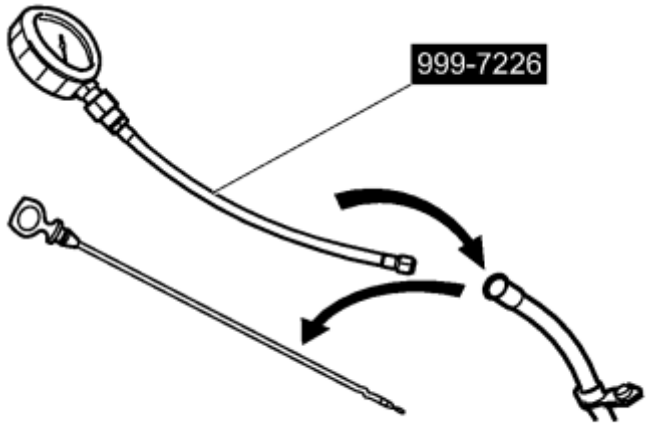

Fig. 33: Identifying Manometer, Dipstick And Tube
Courtesy of VOLVO CARS CORPORATION

Switch of the AC and other electrical equipment.

Reset the manometer using the adjuster screw.

Remove the dip stick.

see **9997226**

Fig. 34: Identifying Manometer Pressure Value
Courtesy of VOLVO CARS CORPORATION

The pressure values are given for sea level. High levels can reduce the reading slightly.

Read off manometer value.

The value for a clean crankcase ventilation is -0.2 kPa or lower.

If the manometer indicates a value from -0.2 up to 0.0 kPa or a positive value, the crankcase ventilation is partially or completely blocked and must be checked further.

CRANKCASE VENTILATION (B6324S5; 2011-2012)

CRANKCASE VENTILATION, CHECK

see **CRANKCASE VENTILATION, CHECK**

CRANKCASE VENTILATION (B8444S; 2005-2011)

CRANKCASE VENTILATION, CLEANING

NOTE: **The illustrations in this service information are used for different model years and/or models. Some variation may occur. However, the essential information in the illustrations is always correct.**

REMOVAL

REMOVING THE UPPER CROSS STAY

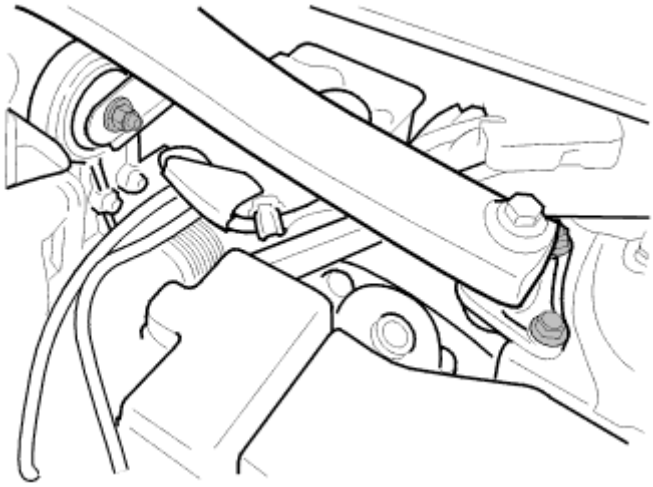

Fig. 35: Removing The Upper Cross Stay
Courtesy of VOLVO CARS CORPORATION

Remove:

- the 4 screws at the suspension turrets
- the screw for the upper engine mount on the engine
- the upper cross stay.

REMOVING THE UPPER ENGINE COVER

Remove the upper rear engine cover by pulling it straight up.

REMOVING NON-RETURN VALVE, CRANKCASE VENTILATION

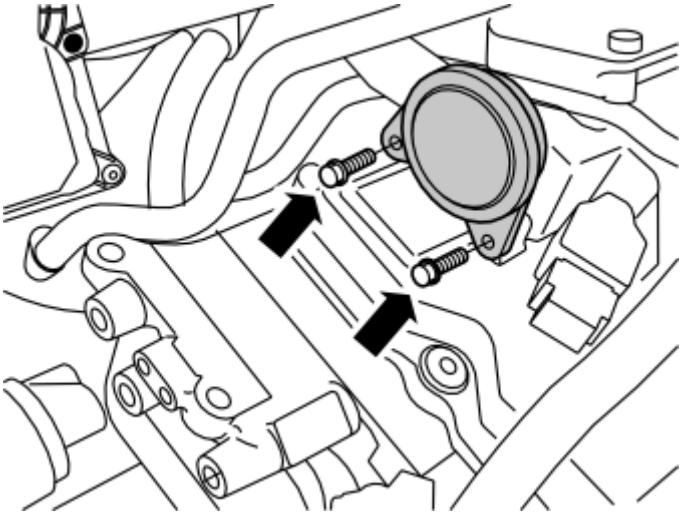

Fig. 36: Identifying Non-Return Valve
Courtesy of VOLVO CARS CORPORATION

Remove:

- the 2 screws on the non-return valve for crankcase ventilation
- the non-return valve.

CLEANING

CLEANING CRANKCASE VENTILATION

Blow clean the valve and the hose.

INSTALLATION

INSTALLING NON-RETURN VALVE, CRANKCASE VENTILATION

Install:

- the non-return valve
- the screws, 2 pcs., for the non-return valve for crankcase ventilation. Tighten.
- the engine casing
- the upper engine stay. Tighten.

ENGINE

Intake And Exhaust System - Installation instructions, accessories

END PIPES (2003-2012)

END PIPES

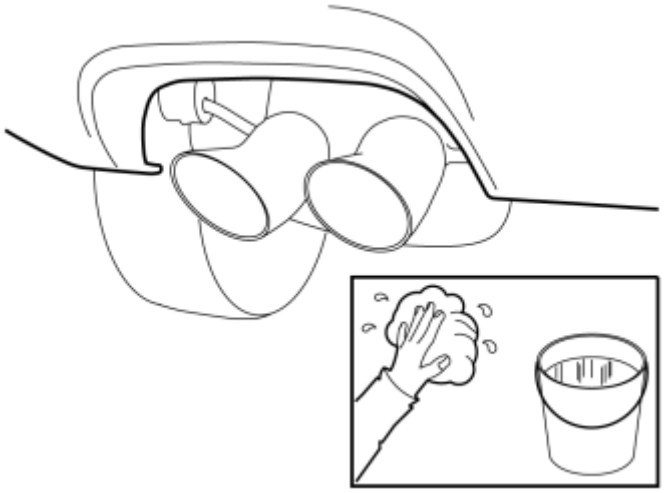

Fig. 1: Cleaning End Pipes.
Courtesy of VOLVO CARS CORPORATION

- Clean the silencer's end pipes.

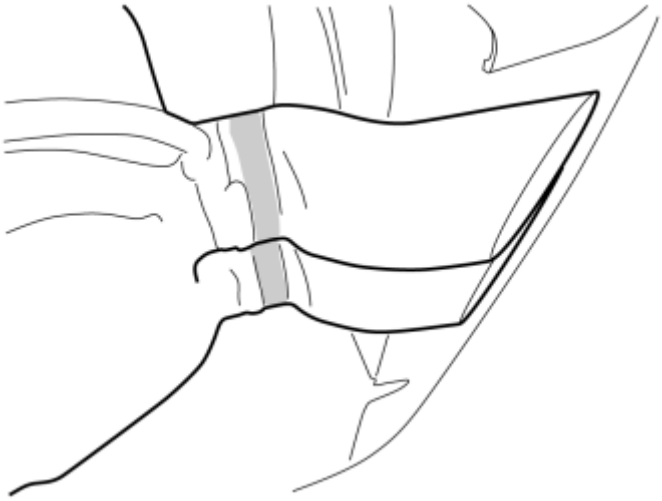

Fig. 2: Verifying No Dirt
Courtesy of VOLVO CARS CORPORATION

- Ensure that the marked areas around the pipes, where the clamp for the end pipes is to be tightened, is clean.

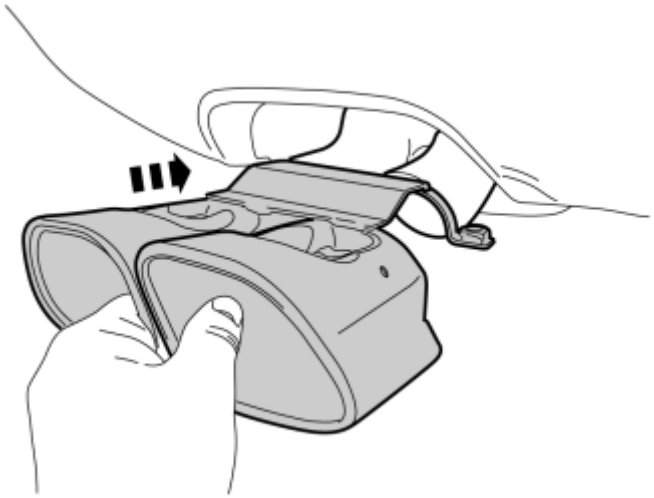

Fig. 3: Installing End Pipe
Courtesy of VOLVO CARS CORPORATION

- Insert the end pipes on the silencer's pipe.

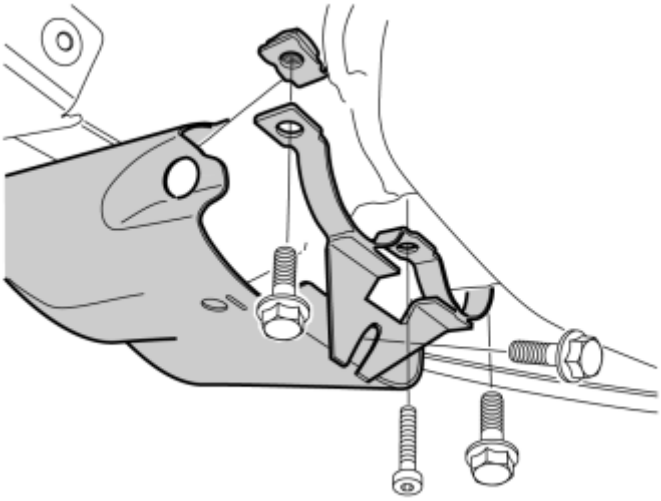

Fig. 4: Tightening the Clamps
Courtesy of VOLVO CARS CORPORATION

- Install the clamp from the kit, take the screws and loosely tighten the end pipes.
- Adjust the clamp so that it is properly secured in the recesses in the silencer pipes.
- Secure the end pipes. Tighten the screws to **24 Nm (18 lbf. ft.)** .

STYLING PACK, SKID PLATE AND EXHAUST SYSTEM (2007-2012)

STYLING PACK, SKID PLATE AND EXHAUST SYSTEM

NOTE: **On cars equipped with a towbar, installation kit, Towbar, installation kit, XC90 R-design containing two exhaust mountings must be obtained.**

Fig. 5: Identifying Ignition Switch Turned To Position 0
Courtesy of VOLVO CARS CORPORATION

- Turn the ignition switch to position 0.

NOTE: **Wait at least three minutes before unplugging the connectors or removing other electrical equipment.**

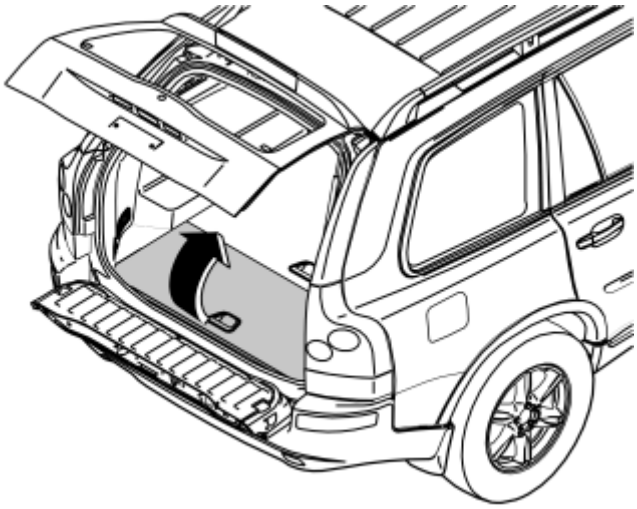

Fig. 6: Exposing the Rear Section
Courtesy of VOLVO CARS CORPORATION

Applies to cars with two rows of seats

- Fold up the middle, rear floor hatch. Unhook the straps.
- Detach the storage box underneath and lift it out.
- Fold back the floor hatch. Pull the floor hatch backwards and lift it out.

Applies to cars with three rows of seats

- Open the middle rear floor hatch.
- Unhook the two cords at the front edge/underneath and lift out.

Applies to all models

- Remove the tool box and equipment at the side of the battery.

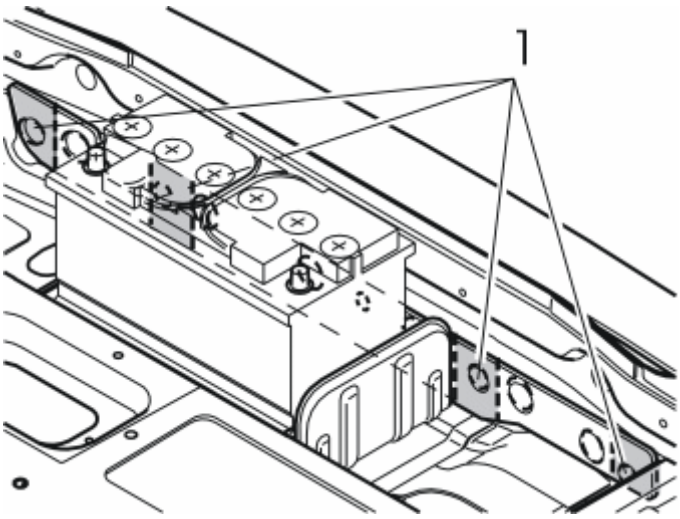

Fig. 7: Identifying The Pre-Punched Pieces
Courtesy of VOLVO CARS CORPORATION

- Remove the pre-punched pieces (1) from the insulation panel in the rear crossmember by cutting them off at the markings.
- Remove the four sleeve nuts holding the bumper in place. They are in the holes under the insulation panel. Lift them out and remove them using a magnet

APPLIES TO CARS WITH REAR PARKING ASSISTANCE

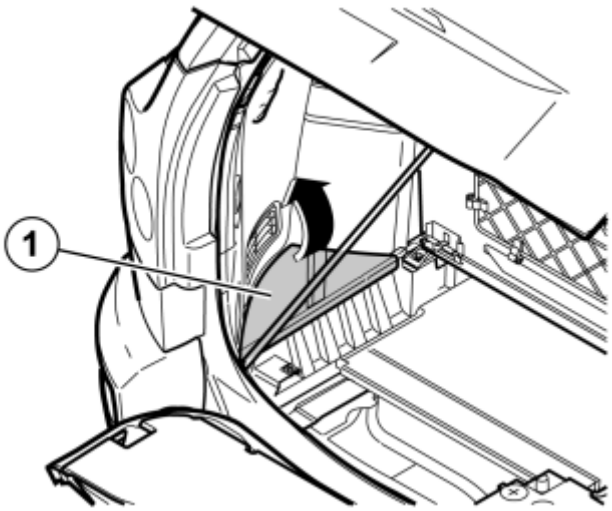

Fig. 8: Removing The Floor Hatch, Left

Courtesy of VOLVO CARS CORPORATION

- Remove the floor hatch (1) on the left-hand side.

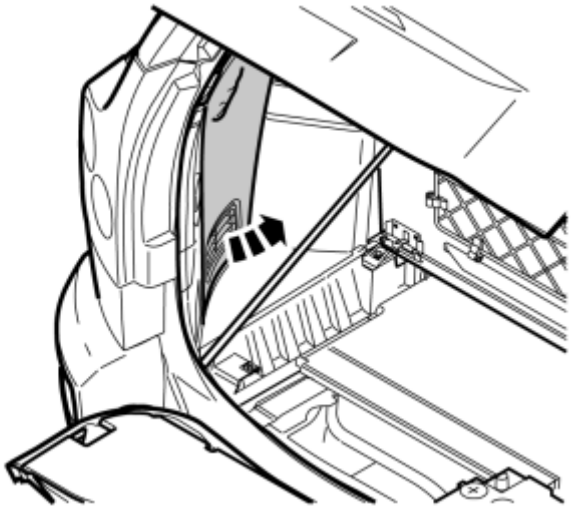

Fig. 9: Removing The Side Panel, Left
Courtesy of VOLVO CARS CORPORATION

- Remove the side panel on the left-hand side.

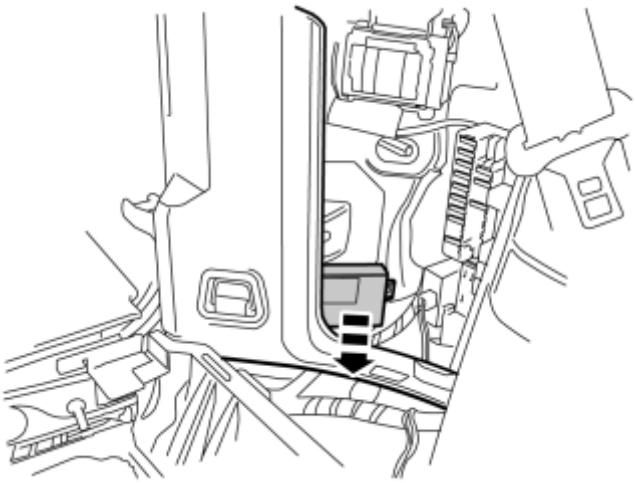

Fig. 10: Removing The Control Module
Courtesy of VOLVO CARS CORPORATION

- Detach the control module, it is secured by Velcro.
- Remove the connector for the cable to the sensors.

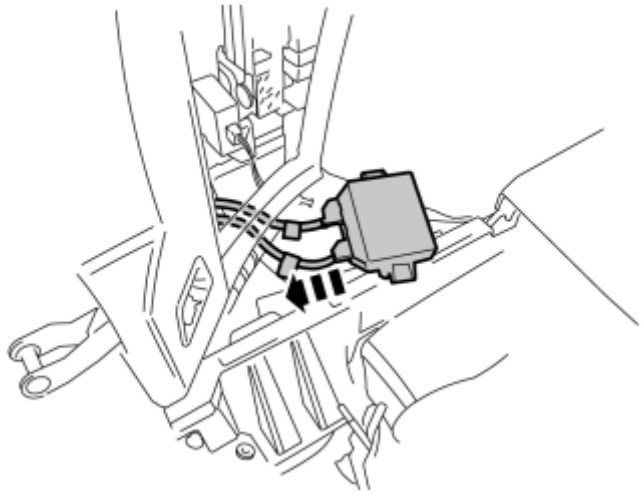

Fig. 11: Relocating the Control Module
Courtesy of VOLVO CARS CORPORATION

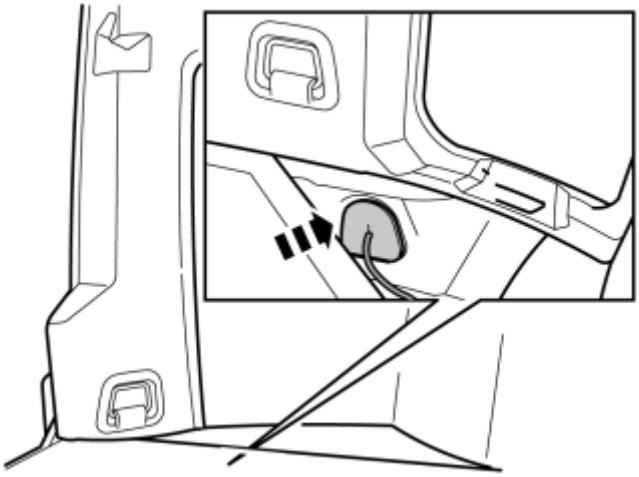

Fig. 12: Identifying Seal With Cable
Courtesy of VOLVO CARS CORPORATION

- Press the foam rubber seal with cable into the hole in the bodywork.

APPLIES TO ALL MODELS

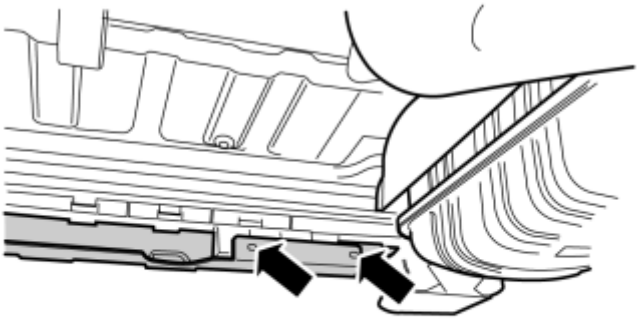

Fig. 13: Locating Clips In The Lower Mounting
Courtesy of VOLVO CARS CORPORATION

- Press in the middle pin on the clip in the lower mounting in the bumper panel and remove.

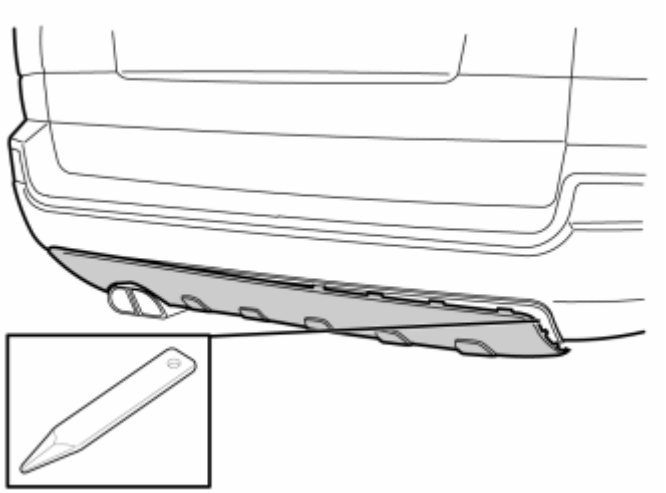

Fig. 14: Prying The Lower Panel
Courtesy of VOLVO CARS CORPORATION

- Carefully pry the lower panel away from the bumper cover using a weatherstrip tool. Start at the lowermost edge. The skid plate is secured by surrounding catches.
- Place to one side. A new panel is in the kit.

APPLIES TO CARS WITH MUDGUARDS

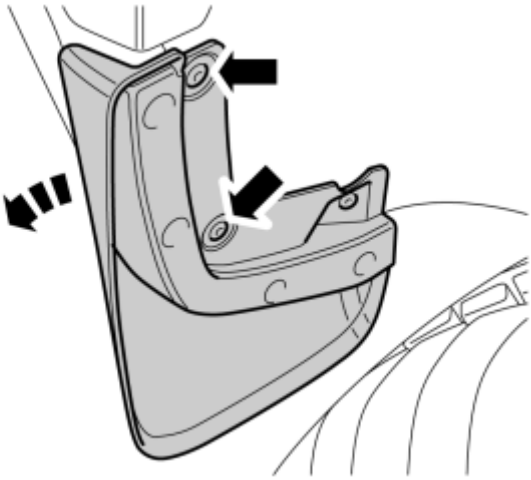

Fig. 15: Drilling Out The Two Rivets
Courtesy of VOLVO CARS CORPORATION

- Drill out the two rivets using a **6 mm (1/4")** drill bit.
- Leave the inner rivet in place.
- Turn the mud guard outwards/downwards.
- Repeat the operation on the other side.

APPLIES TO CARS WITH BODY KIT

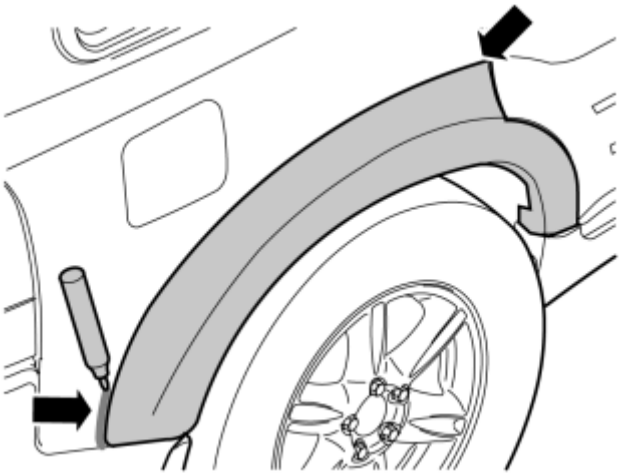

Fig. 16: Using Eraseable Marker
Courtesy of VOLVO CARS CORPORATION

NOTE: Wash and, if necessary, degrease the bumper and rear wings before removing the decor panels.

- Mark the position of the decor panels against the bodywork using a whiteboard pen.

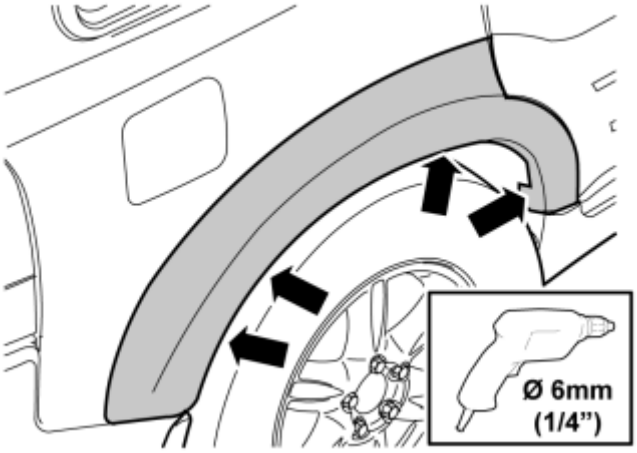

Fig. 17: Locating Rivets
Courtesy of VOLVO CARS CORPORATION

- Drill out the rivets in the rear wheel housings using a **6 mm (1/4")** drill bit.
- Remove any rivet remains from the wheel housings.

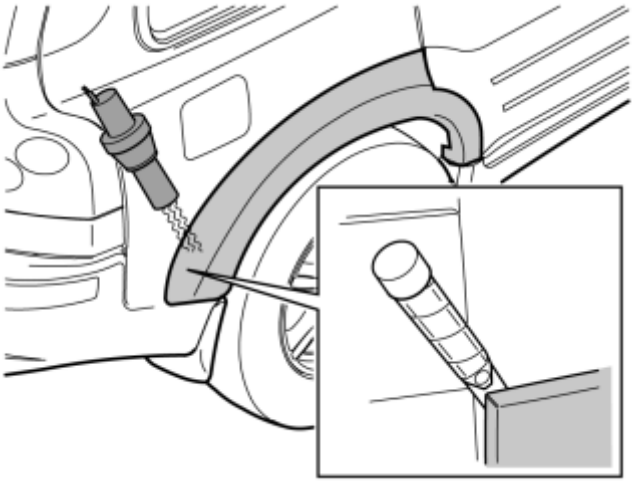

Fig. 18: Using Hot Air Gun To Soften
Courtesy of VOLVO CARS CORPORATION

- Take a plastic weatherstrip and detach the decor panel. Start at the rear corner.

CAUTION: Do not damage painted surfaces.

HINT: If the tape is securely attached, carefully heat the tape using a hot air gun to soften it up.

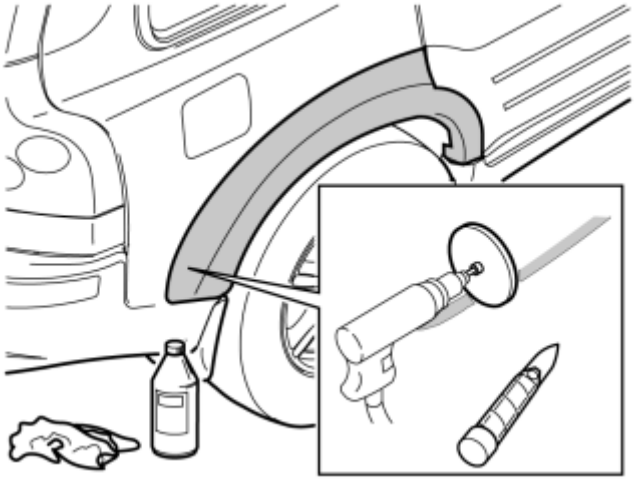

Fig. 19: Using tools 9512942 and 9512949
Courtesy of VOLVO CARS CORPORATION

- Clean the bodywork from adhesive residue. Use tool **9512942** and **9512949** . Then clean using **isopropanol** .

CAUTION: Do not use the tool on painted surfaces that have plastic carriers. On painted surfaces with plastic carriers the adhesive residue must be removed mechanically. Use a plastic weatherstrip and then clean using isopropanol .

PREPARING DECOR PANEL REAR WING

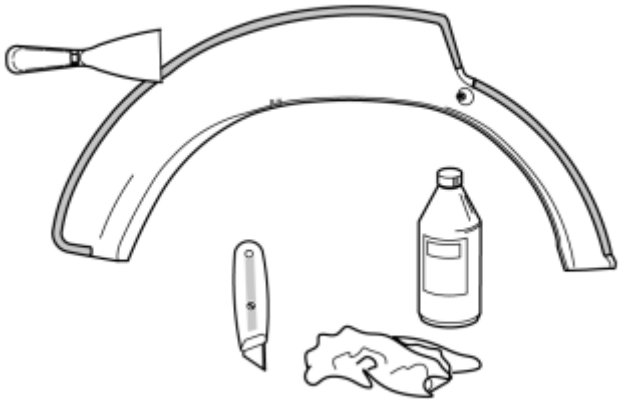

Fig. 20: Cleaning Tape Residue From Decor Panel.
Courtesy of VOLVO CARS CORPORATION

- Clean off any tape residue from the decor panel. Use a knife or putty knife.
- Clean the area for the tape using **isopropanol** and wipe dry.

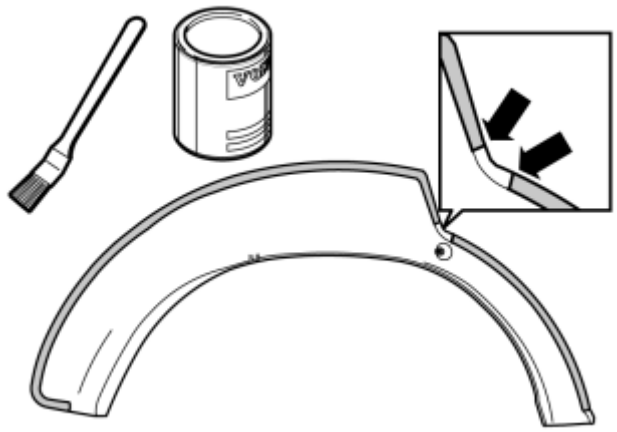

Fig. 21: Applying Paint Primer
Courtesy of VOLVO CARS CORPORATION

- Apply paint primer to the surfaces for the tape on the decor panel.

CAUTION: Apply the tape after, the earliest 15 minutes, and at the latest 3 hours after applying the primer.

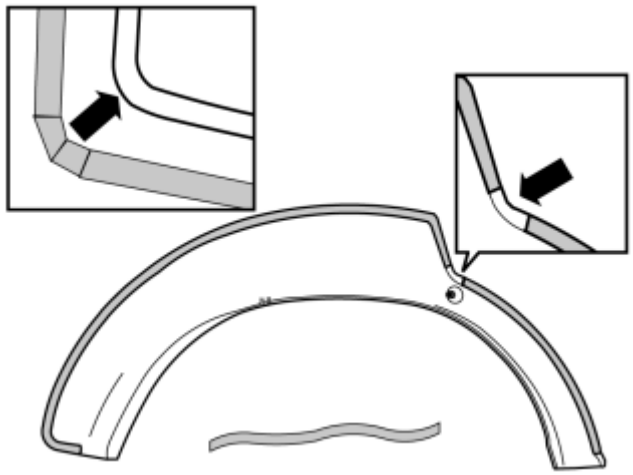

Fig. 22: Attaching The Tape As Illustrated
Courtesy of VOLVO CARS CORPORATION

- Attach the tape to the decor panel as illustrated.

APPLIES TO ALL MODELS

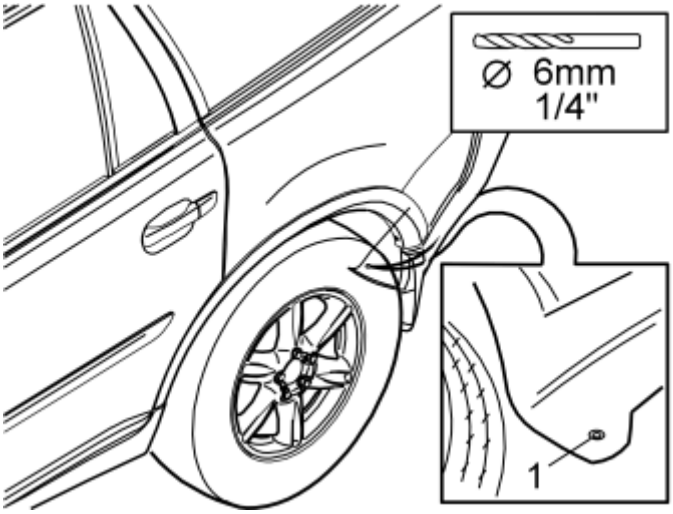

Fig. 23: Drilling Out The Rivets
Courtesy of VOLVO CARS CORPORATION

- Drill out the rivets on the underneath of the front edge using a **6 mm (1/4")** drill bit.
- Repeat the operation on the other side.

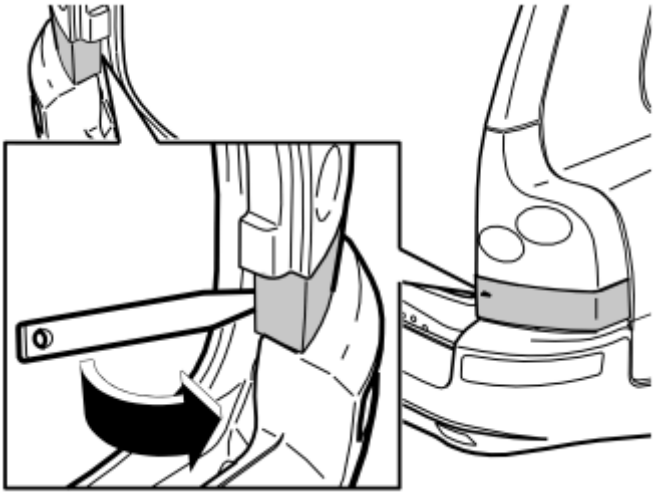

Fig. 24: Removing The Cover Panel
Courtesy of VOLVO CARS CORPORATION

- Remove the cover panel under the tail lamps on the right and left sides by carefully prying them loose using a weatherstrip tool.

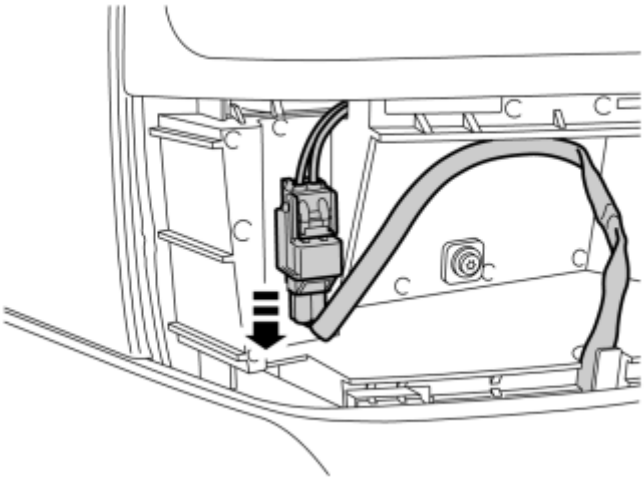

Fig. 25: Identifying Fog Lamp Connector
Courtesy of VOLVO CARS CORPORATION

- Disconnect the connector for the fog lamp on the left-hand side. The upper part of the connector must remain on its holder.

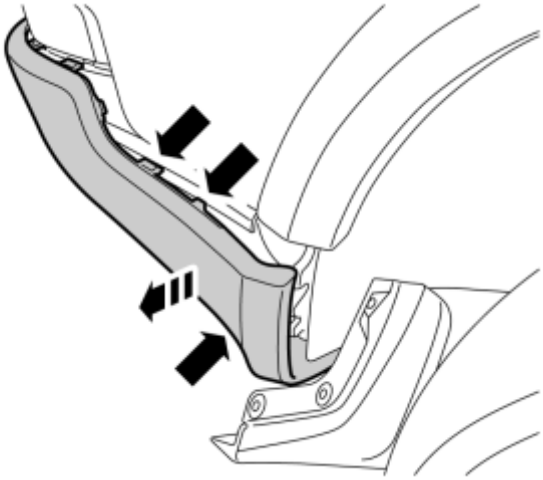

Fig. 26: Removing The Lower Section Of The Bumper Cover
Courtesy of VOLVO CARS CORPORATION

- Pull off the lower section of the bumper cover at the front edge so that the two hooks at the upper edge, and the hooks on the inside, release.
- Grasp the lower edge of the upper section of the bumper cover. Pull straight out so that the three hooks release. The hooks may be hard to release, if so, release using a weatherstrip tool.
- Pull out the ends further until the four hooks, which are horizontally positioned at the upper edge, release.
- Repeat the operation on the other side.

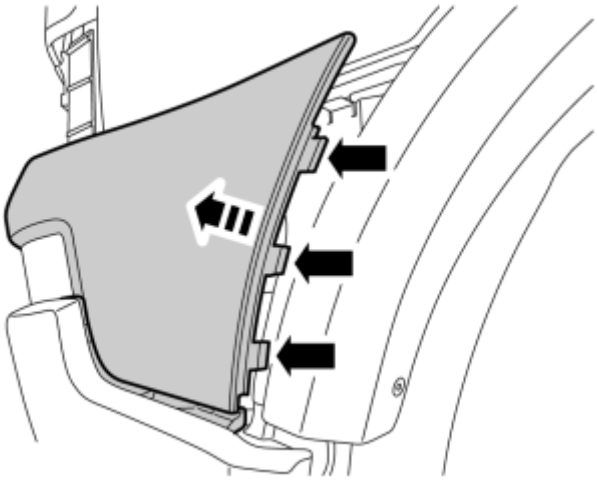

Fig. 27: Identifying Three Hooks
Courtesy of VOLVO CARS CORPORATION

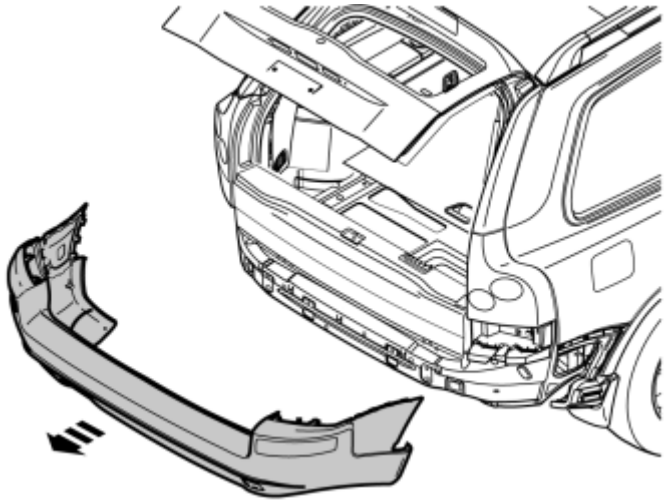

Fig. 28: Removing The Bumper Backwards
Courtesy of VOLVO CARS CORPORATION

- Fold up the lower tailgate.
- Pull the bumper backwards and remove.
- Place the bumper on a suitable surface that will not damage the paint.
- Remove the remaining parts of the removed rivets.

APPLIES TO CARS WITH 8-CYLINDER ENGINE

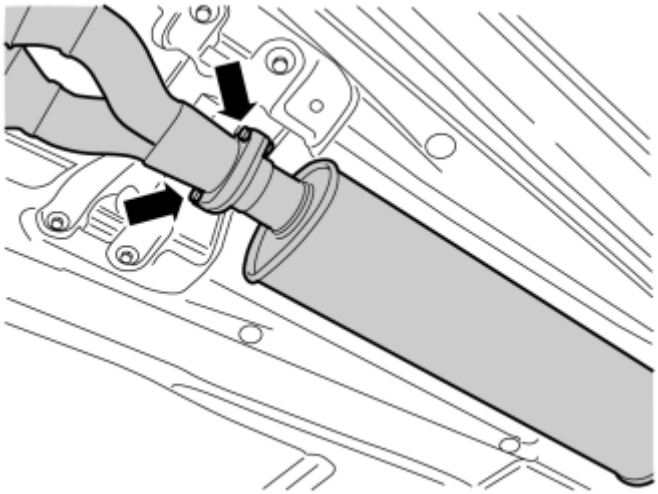

Fig. 29: Identifying Two Nuts at The Joint
Courtesy of VOLVO CARS CORPORATION

- Remove the two nuts in the joint at the silencer.
- Suspend the front section of the exhaust system to prevent damaging it at removal.

NOTE: New clamp nuts and gasket must be used when installing the new exhaust system.

APPLIES TO CARS WITH 6-CYLINDER ENGINE

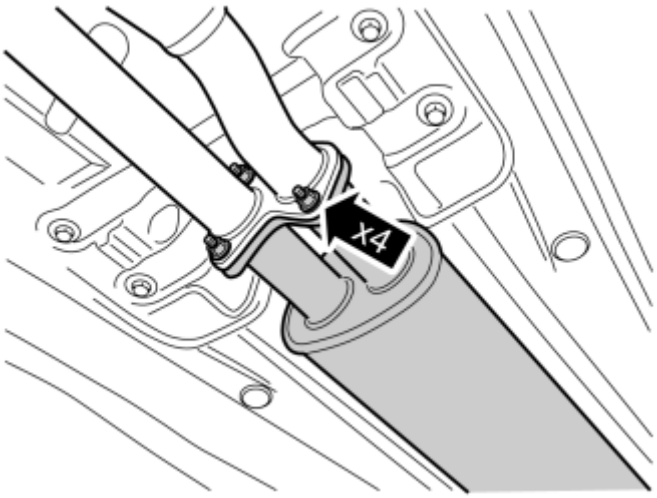

Fig. 30: Tightening Flange Nuts
Courtesy of VOLVO CARS CORPORATION

- Remove the four nuts in the joint at the silencer.
- Suspend the front section of the exhaust system to prevent damaging it at removal.

NOTE: New clamp nuts and gasket must be used when installing the new exhaust

system.

APPLIES TO CARS WITH 8-CYLINDER AND 6-CYLINDER ENGINES

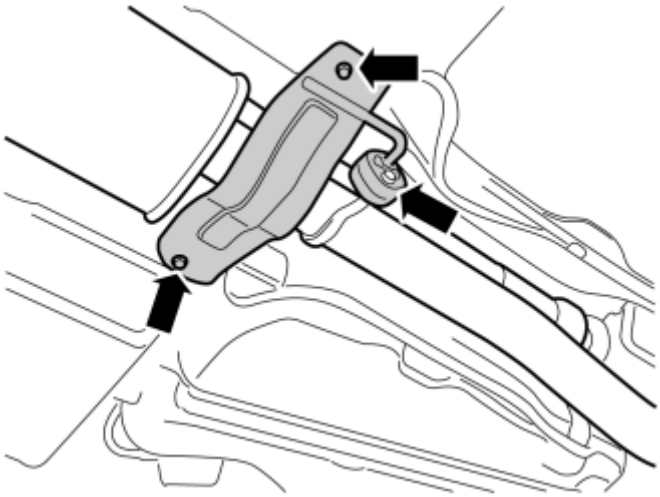

Fig. 31: Removing The Bracket With Rubber Mountings
Courtesy of VOLVO CARS CORPORATION

- Remove the screws in the bracket under the exhaust pipe.
- Remove the bracket with rubber mountings from the exhaust pipe. Use low temperature grease to get the rubber mountings to slide off the mounting hook more easily.

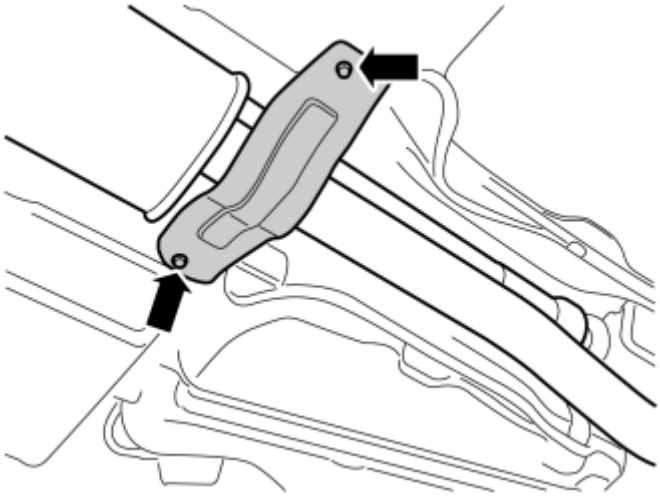

Fig. 32: Removing The Bracket
Courtesy of VOLVO CARS CORPORATION

- Remove the bolts in the bracket underneath the exhaust pipe and remove it.

APPLIES TO ALL MODELS

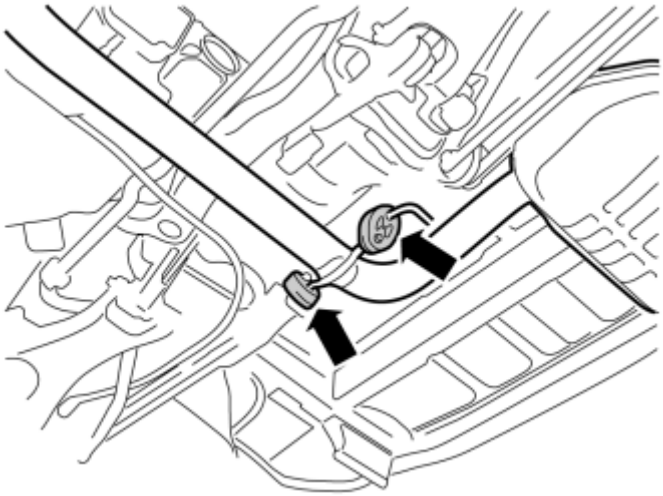

Fig. 33: Remove The Rubber Mountings
Courtesy of VOLVO CARS CORPORATION

- Remove the rubber mountings from the mounting hooks in the bodywork. The rubber mountings will not be reused. New ones are in the kit.

APPLIES TO CARS WITHOUT A TOW HITCH

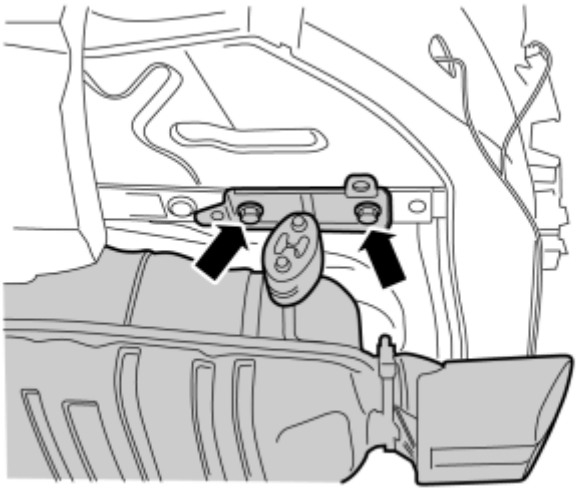

Fig. 34: Removing Screws In The Bracket
Courtesy of VOLVO CARS CORPORATION

NOTE: Two mechanics are needed for this step.

- Remove the screws in the bracket underneath the left side member.
- Pull out the exhaust pipe at the front joint and place to one side.
- The rubber mounting with bracket will not be reused. New ones are in the kits. The screws will be reused.
- Place the exhaust system to one side. New system in the kit.
- Remove the gasket at the front joint and discard it. New nuts and new gasket will be used at installation.

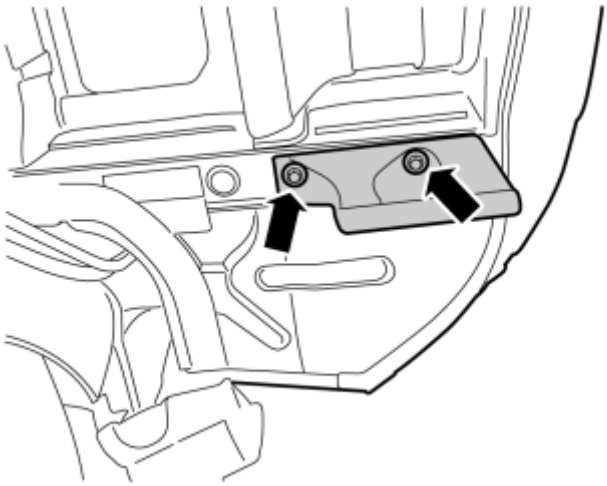

Fig. 35: Removing Towing Eyelet
Courtesy of VOLVO CARS CORPORATION

- Remove the two screws in the bracket for the towing eyelet. The screws will be reused. Place the towing eyelet to one side. New one found in the kit.

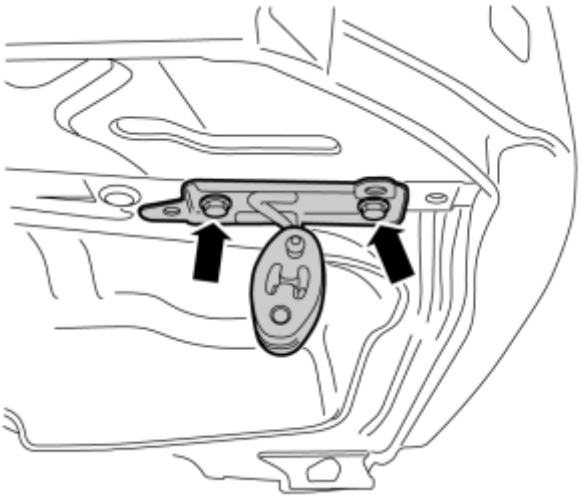

Fig. 36: Installing Mounting Bracket and Rubber
Courtesy of VOLVO CARS CORPORATION

- Take the left-hand mounting bracket from **mounting kit exhaust system for cars without tow hitch** and rubber mounting **part no. 9186408** from **installation kit exhaust system 8, 6 or 5 cyl** and install the rubber mounting on it.
- Install the unit under the side member and install existing screws. Do not tighten hard yet.

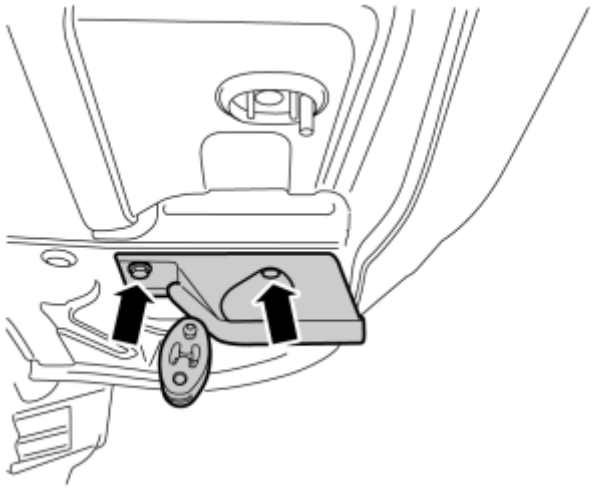

Fig. 37: Install The New Towing Eyelet
Courtesy of VOLVO CARS CORPORATION

- Take the new towing eyelet from **installation kit exhaust system for cars without tow hitch** and rubber mounting **part no. 9186408** from **installation kit exhaust system 8, 6 or 5 cyl** and install the rubber mounting again on it.
- Install the unit under the side member and install existing screws. Do not tighten hard yet.

APPLIES TO CARS WITH A TOW HITCH

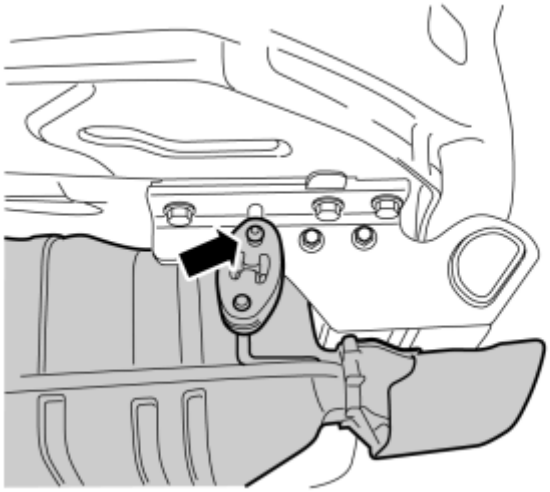

Fig. 38: Identifying Rubber Mounting
Courtesy of VOLVO CARS CORPORATION

NOTE: Two mechanics are needed for this step.

- Unhook the silencer's rubber mounting from the hook on the tow bar's side panel.
- Pull out the exhaust pipe at the front joint and place to one side.
- The rubber mounting will not be reused. New mounting in the kit.

- Place the exhaust system to one side. New system in the kit.
- Remove the gasket at the front joint and discard it. New nuts and gasket will be used.

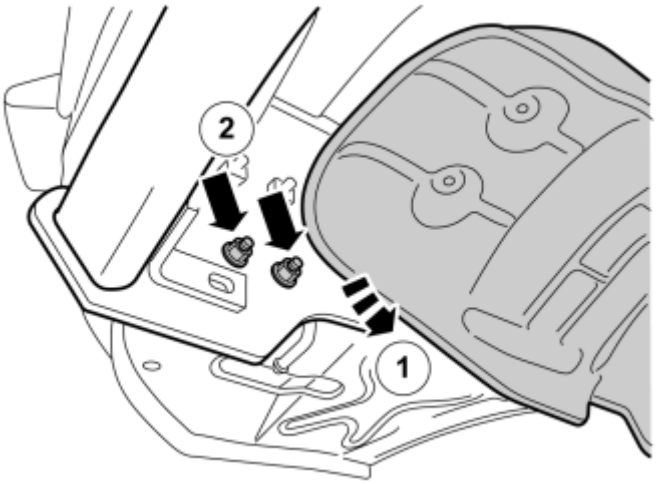

Fig. 39: Accessing The Lower Nuts
Courtesy of VOLVO CARS CORPORATION

- Fold the silencer heat shield to one side to access the lower nuts for the tow bar's reinforcement plate.
- Remove the nuts and discard them. Turn the screws and reinstall.
- Repeat the operation on the other side.

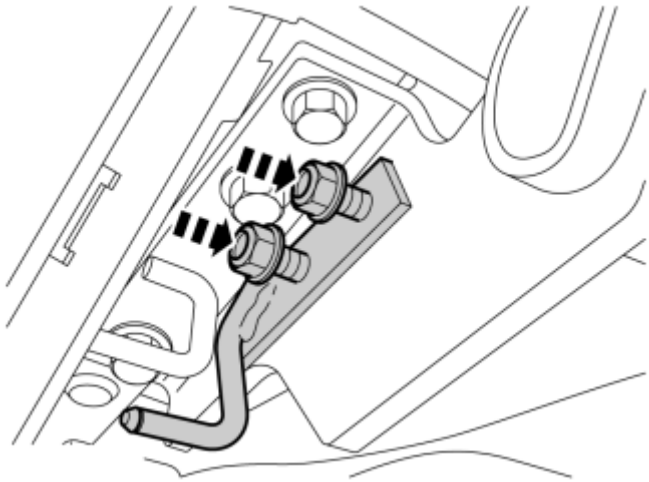

Fig. 40: Installing The Hook On The Screws.
Courtesy of VOLVO CARS CORPORATION

- Take the mounting hooks from the kit **Towbar, installation kit, XC90 R-design** and install the hook on the screws. Take new nuts, install them and tighten to **50 Nm (37 lbf. ft.)** .
- Repeat the operation on the other side.

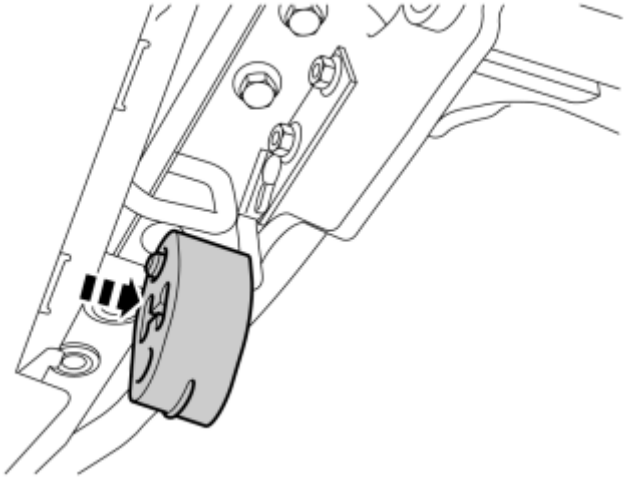

Fig. 41: Installing New Rubber Mountings
Courtesy of VOLVO CARS CORPORATION

- Install new rubber mounting **part no. 9186408** from **installation kit exhaust system 8, 6 or 5 cyl** on the hook.
- Repeat the operation on the other side.

APPLIES TO CARS WITH PARKING ASSISTANCE

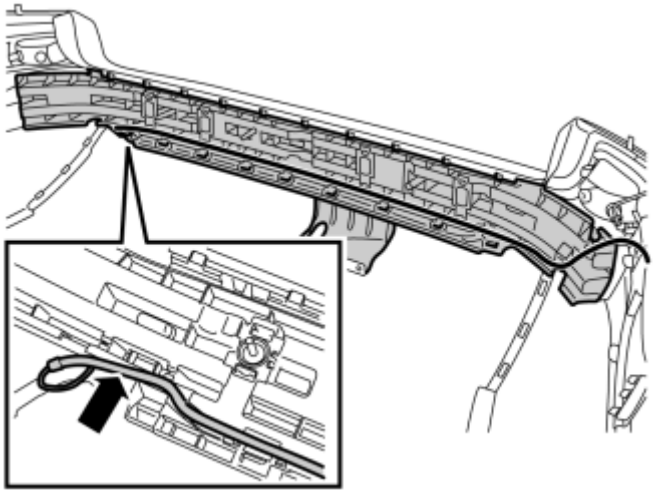

Fig. 42: Disconnecting Harness To The Sensors
Courtesy of VOLVO CARS CORPORATION

- Disconnect the cable harness to the sensors from the rear section of the bumper.

APPLIES TO ALL MODELS

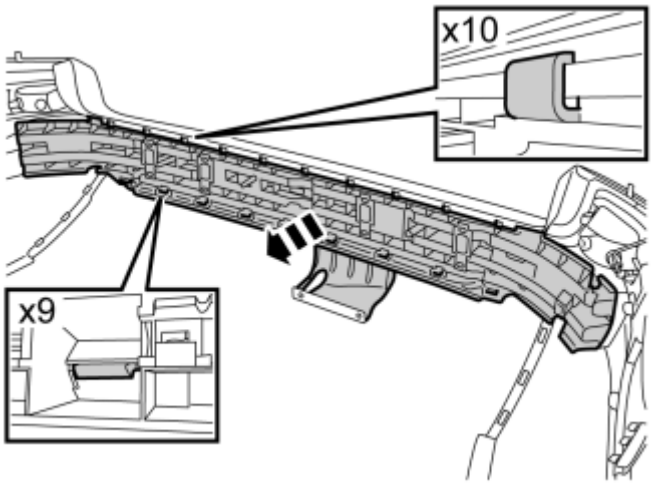

Fig. 43: Unhooking The Ten Catches
Courtesy of VOLVO CARS CORPORATION

- Unhook the ten catches at the upper edge of the bumper.
- Release the nine hooks in the middle of the bumper, at the same time as separating the rear section and outer section of the bumper.
- Remove the rear section from the bumper cover.

APPLIES TO CARS WITH A TOW HITCH

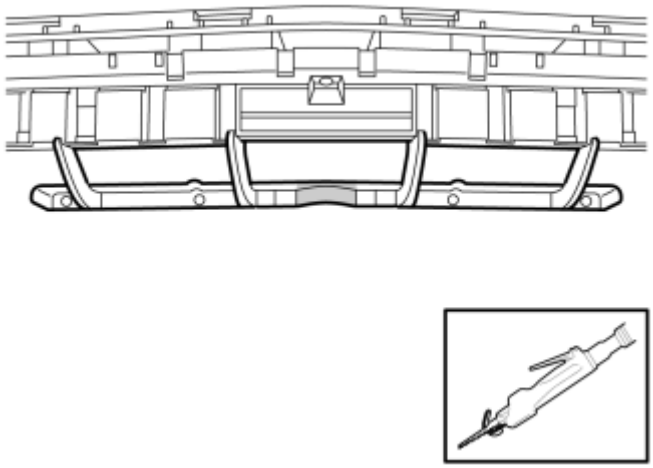

Fig. 44: Identifying Shaded Areas
Courtesy of VOLVO CARS CORPORATION

- Take a new holder for the bumper from the kit and saw out according to the marking. Remove the shaded area.
- Smooth off the sawn edges with a fine toothed file.

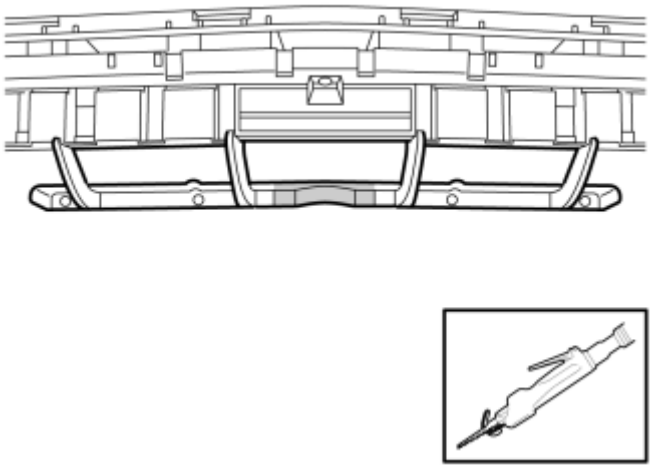

Fig. 45: Identifying Shaded Areas
Courtesy of VOLVO CARS CORPORATION

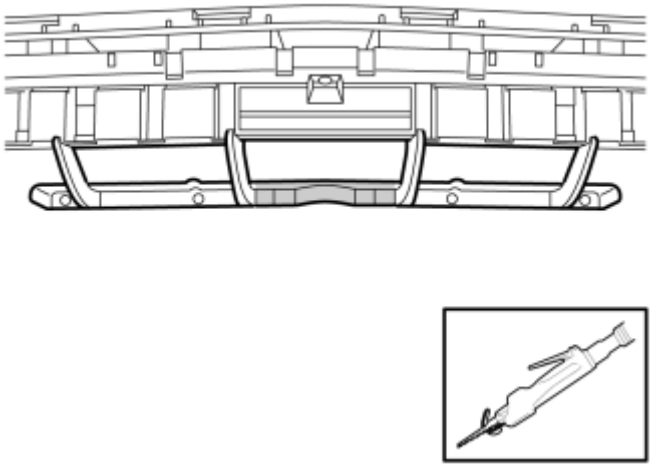

Fig. 46: Identifying Shaded Areas
Courtesy of VOLVO CARS CORPORATION

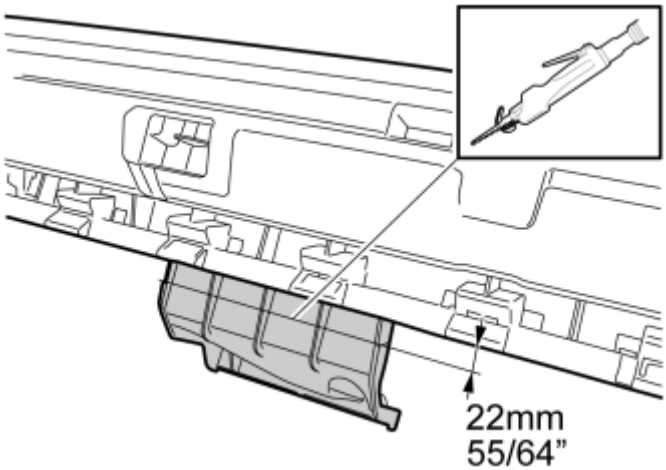

Fig. 47: Measuring The Dimension As Illustrated.
Courtesy of VOLVO CARS CORPORATION

- Take the bumper's rear section and measure the dimension as illustrated. Carefully saw off the holder on the rear section. It will not be reused.
- Smooth off the edges using a file.

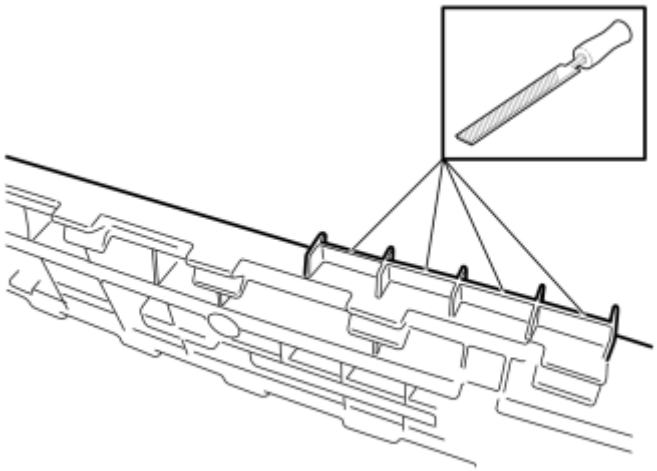

Fig. 48: Smoothing Off The Edges
Courtesy of VOLVO CARS CORPORATION

- Smooth off the edges on the inside where the new holder is to be placed against.

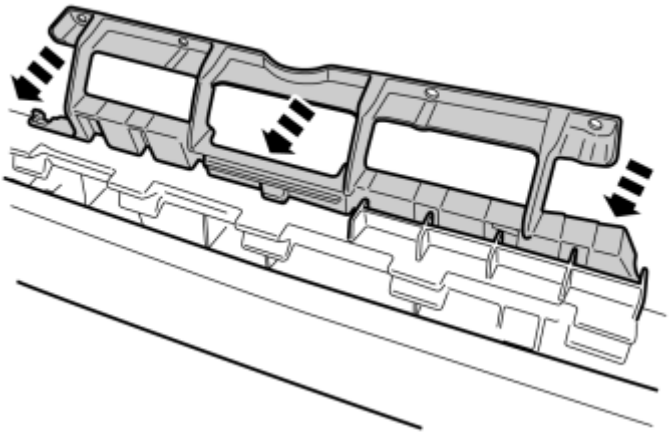

Fig. 49: Securing The Rear Section
Courtesy of VOLVO CARS CORPORATION

- Take the holder from the kit and secure the rear section from the inside.

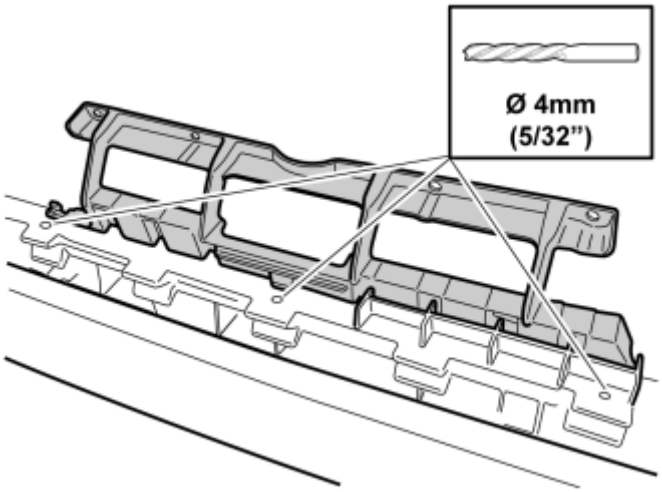

Fig. 50: Matching, Marking and Drilling Holes
Courtesy of VOLVO CARS CORPORATION

- Take measurements for the drilling of the three holes for the attachment of the holder.
- Secure the holder to the rear section properly and drill out the three holes through the rear section and holder.
- Remove any shavings.

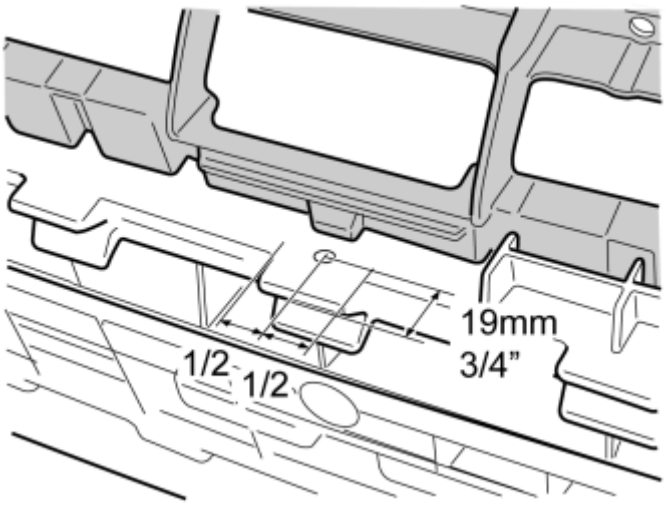

Fig. 51: Locating Holes
Courtesy of VOLVO CARS CORPORATION

- Image shows dimension drawing of the location of the holes.
- Same hole position in all locations.

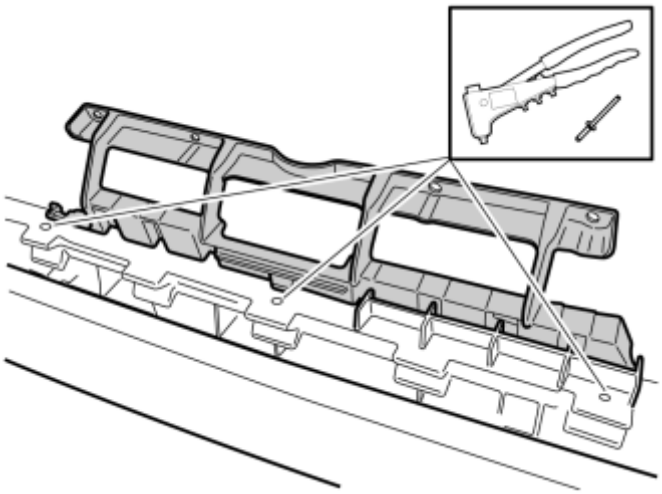

Fig. 52: Riveting The Rear Section
Courtesy of VOLVO CARS CORPORATION

- Take rivets from the kit and rivet the rear section into place.

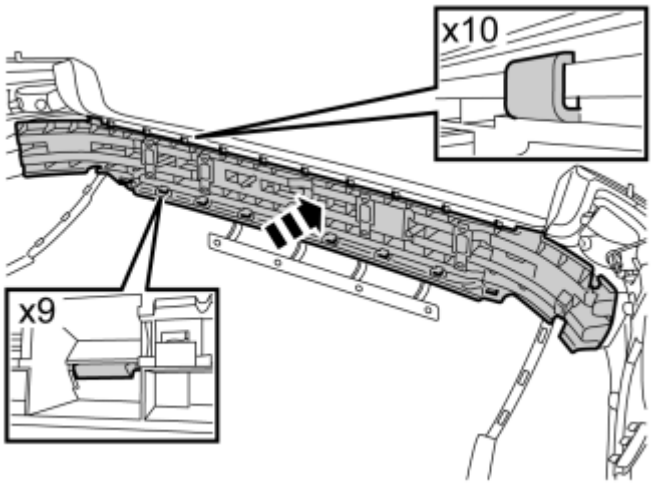

Fig. 53: Securing The Rear Section
Courtesy of VOLVO CARS CORPORATION

- Secure the rear section in the bumper cover. Make sure that all catches engage.

Applies to cars with parking assistance

- Ensure that the wiring for the sensors is correctly positioned.

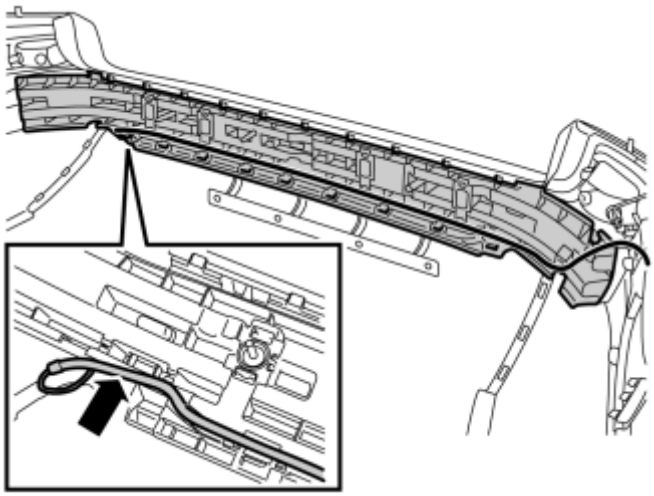

Fig. 54: Securing Harness For The Sensors
Courtesy of VOLVO CARS CORPORATION

Applies to cars with parking assistance

- Secure the cable harness for the sensors in the rear section.

APPLIES TO ALL MODELS

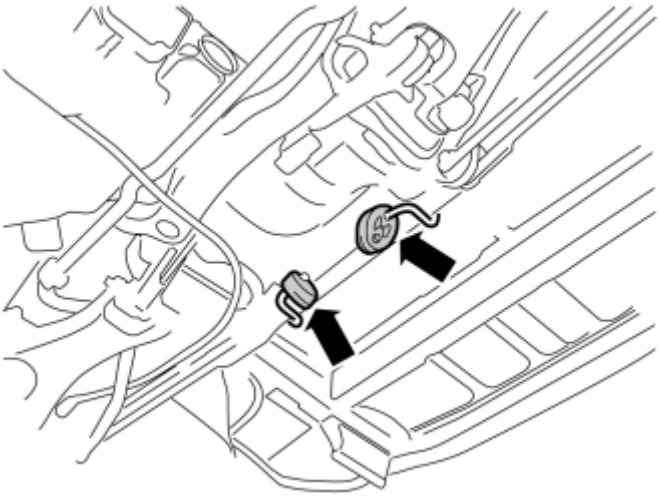

Fig. 55: Installing The Two Rubber Mountings
Courtesy of VOLVO CARS CORPORATION

- Take the two rubber mountings **part no. 9179238** from **kit exhaust system 8 or 6 cyl** , or **part no. 9492157** from **exhaust system 5 cyl** .
- Install them in the suspension hooks in the bodywork.

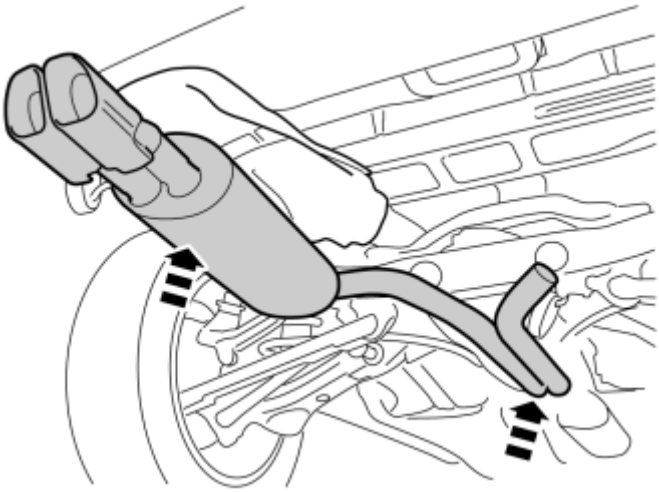

Fig. 56: Installing The New Exhaust System
Courtesy of VOLVO CARS CORPORATION

NOTE: **Two mechanics are needed for this step.**

Ensure that the mating surfaces in the joint between the various parts in the exhaust system are clean.

All clamp nuts and gaskets must be replaced with new ones.

- Take the long part of the new exhaust system and install.

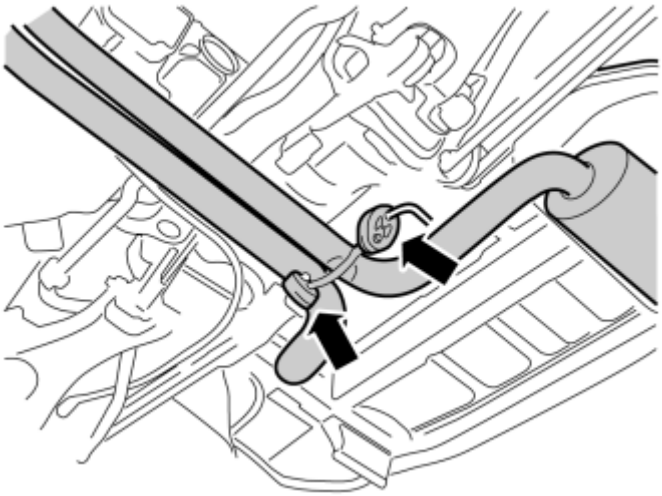

Fig. 57: Hooking The Rubber Mounts
Courtesy of VOLVO CARS CORPORATION

- Hook the rubber mounting onto the exhaust system brackets.

APPLIES TO CARS WITH 8-CYLINDER ENGINE

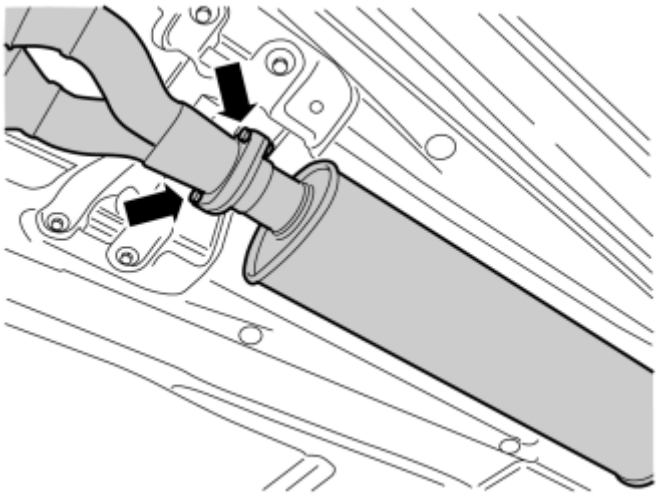

Fig. 58: Identifying Two Nuts at The Joint
Courtesy of VOLVO CARS CORPORATION

- Tighten the nuts to **25 Nm (18.5 lbf. ft)** .

APPLIES TO CARS WITH 6-CYLINDER ENGINE

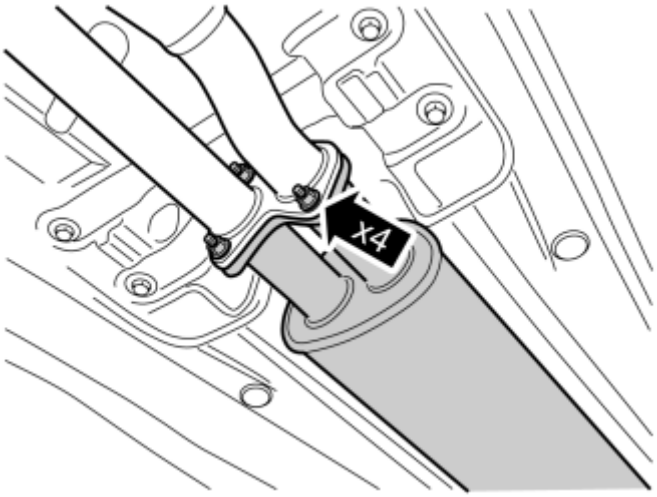

Fig. 59: Tightening Flange Nuts
Courtesy of VOLVO CARS CORPORATION

- Tighten the nuts to **25 Nm (18.5 lbf. ft)** .

APPLIES TO CARS WITH 6 AND 8 CYLINDER ENGINES

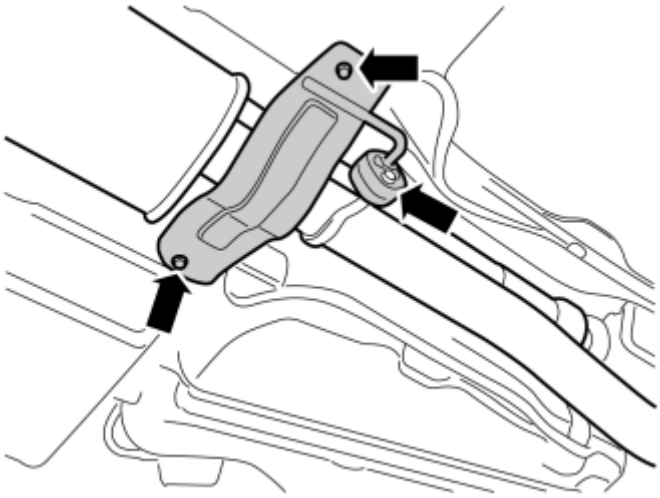

Fig. 60: Removing The Bracket With Rubber Mountings
Courtesy of VOLVO CARS CORPORATION

- Torque tighten the screws to **25 Nm (18.5 lbf. ft.)** .

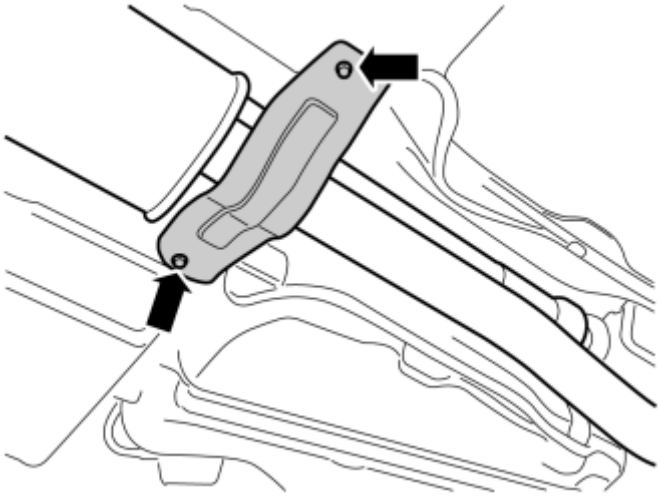

Fig. 61: Removing The Bracket
Courtesy of VOLVO CARS CORPORATION

- Torque tighten the screws to **25 Nm (18.5 lbf. ft.)** .

APPLIES TO ALL MODELS

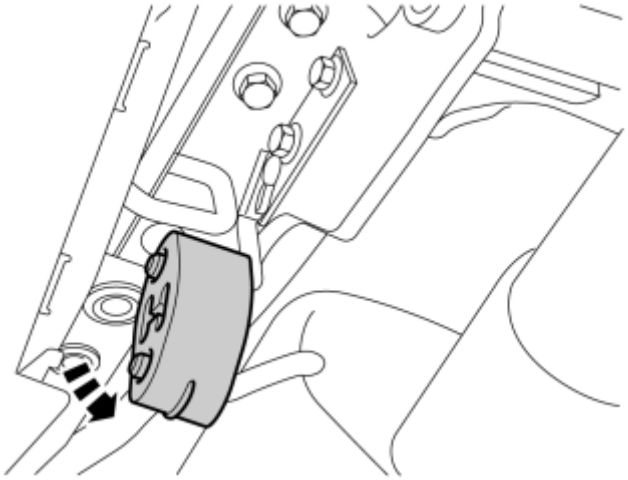

Fig. 62: Identifying Rubber Mounting
Courtesy of VOLVO CARS CORPORATION

- Hook the rubber mounting on for the left silencer.

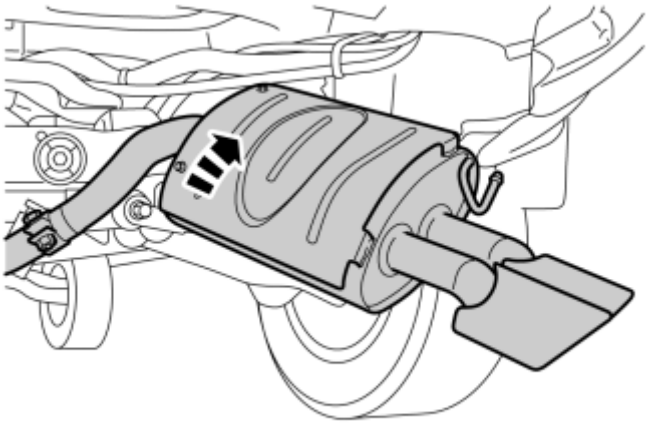

Fig. 63: Installing The Remaining Silencer
Courtesy of VOLVO CARS CORPORATION

- Take the remaining silencer from the kit and install it on the previously installed exhaust system.
- Hook the previously installed rubber mounting onto the silencer's hook.
- Do not tighten the joint in the silencer yet.

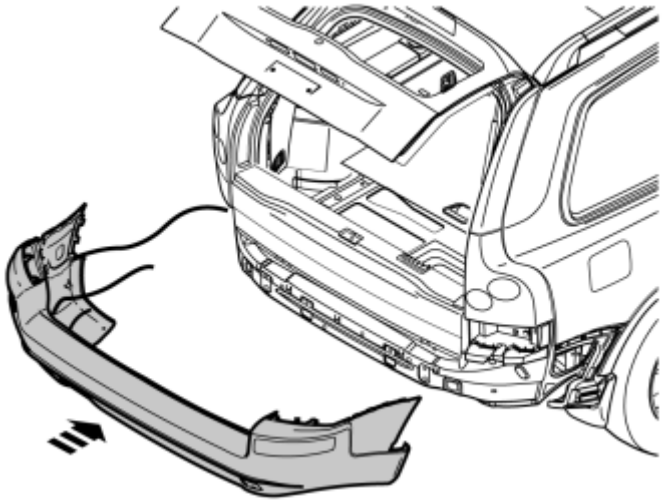

Fig. 64: Reinstalling The Bumper Cover
Courtesy of VOLVO CARS CORPORATION

- Reinstall the bumper cover.
- Connect the connector under the rear lamp.

Applies to cars with parking assistance

- Position the connector for the sensors on the lug on the rear section.

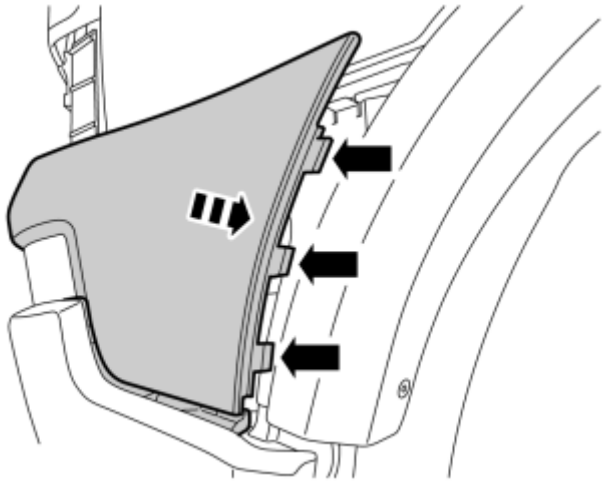

Fig. 65: Reinstalling The Bumper Cover
Courtesy of VOLVO CARS CORPORATION

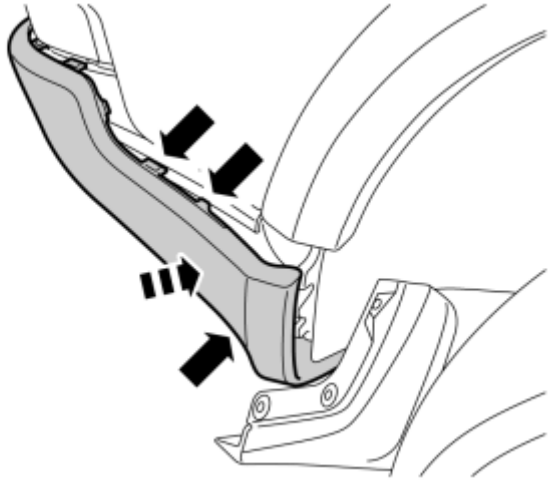

Fig. 66: Reinstalling The Bumper Cover
Courtesy of VOLVO CARS CORPORATION

APPLIES TO CARS WITH MUDGUARDS

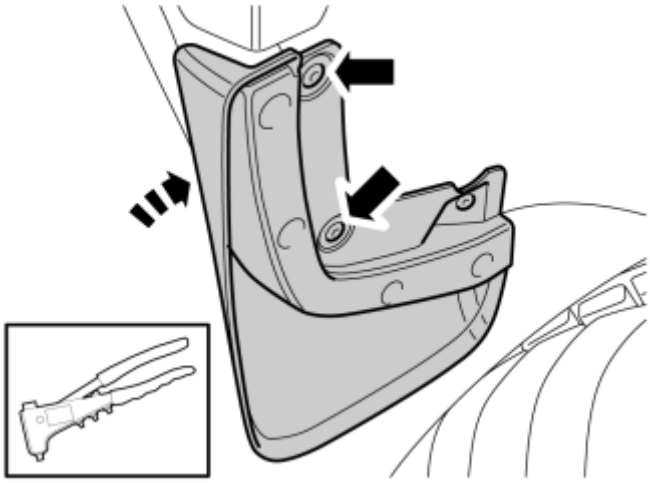

Fig. 67: Installing Rivets
Courtesy of VOLVO CARS CORPORATION

APPLIES TO ALL MODELS

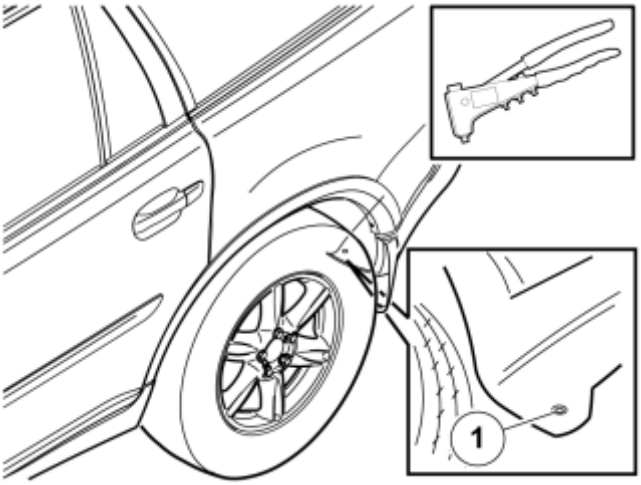

Fig. 68: Installing Rivets
Courtesy of VOLVO CARS CORPORATION

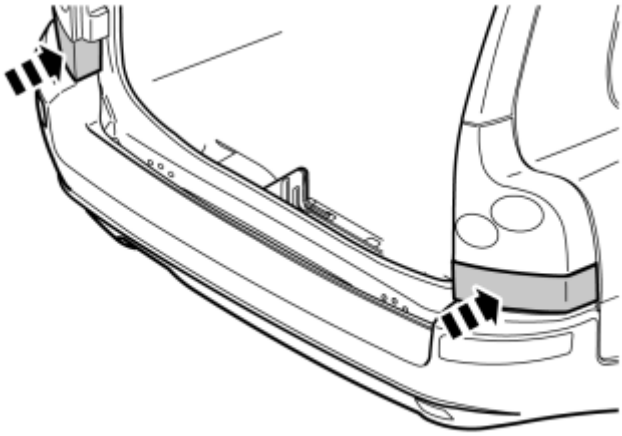

Fig. 69: Reinstalling Covers
Courtesy of VOLVO CARS CORPORATION

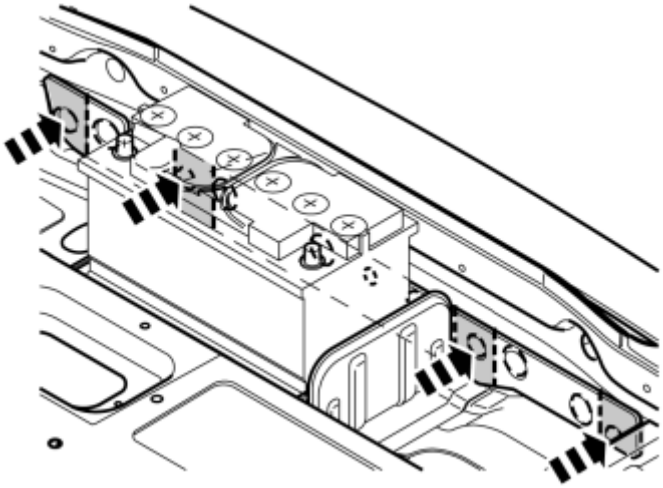

Fig. 70: Installing The Four Nuts
Courtesy of VOLVO CARS CORPORATION

- Install the four nuts that hold the bumper to the bodywork. Tighten to **24 Nm (18 lbf. ft.)** .
- Reinstall the four pieces of insulation.

APPLIES TO CARS WITH PARKING ASSISTANCE

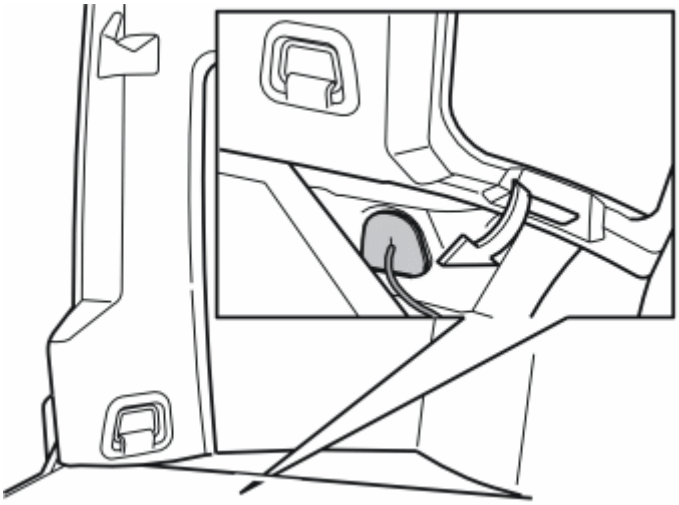

Fig. 71: Securing the Cable Seal
Courtesy of VOLVO CARS CORPORATION

- Route the connector for the cable to the sensors.
- Secure the foam rubber seal.

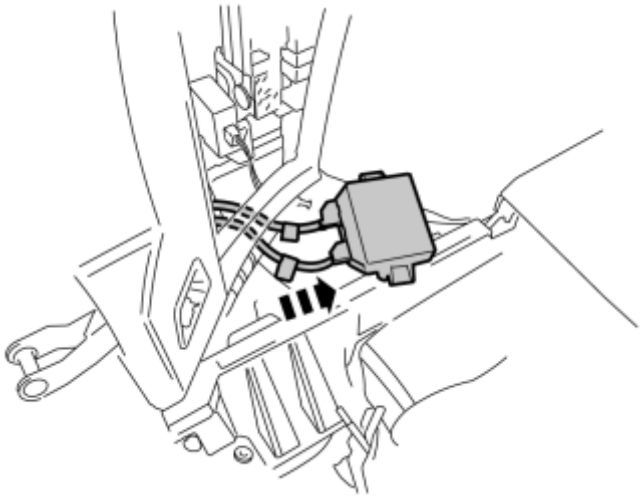

Fig. 72: Reinstalling Control Module
Courtesy of VOLVO CARS CORPORATION

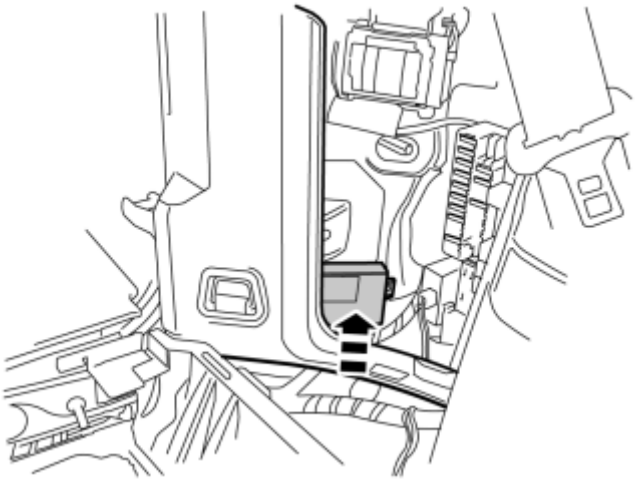

Fig. 73: Reinstalling Control Module
Courtesy of VOLVO CARS CORPORATION

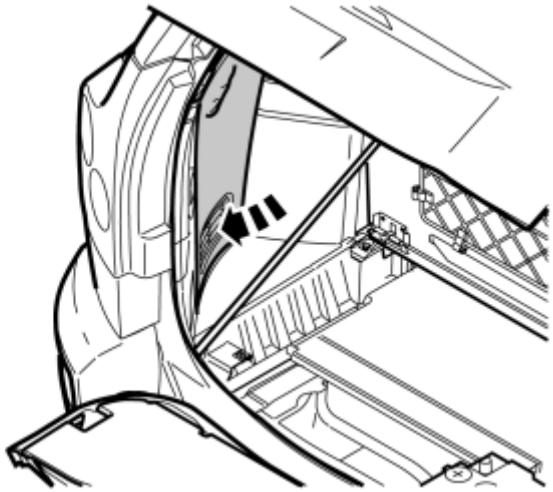

Fig. 74: Refitting Side Panel
Courtesy of VOLVO CARS CORPORATION

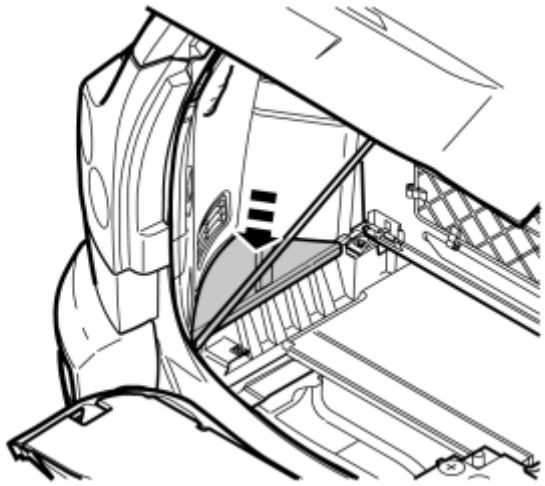

Fig. 75: Refitting Floor Panel, Left
Courtesy of VOLVO CARS CORPORATION

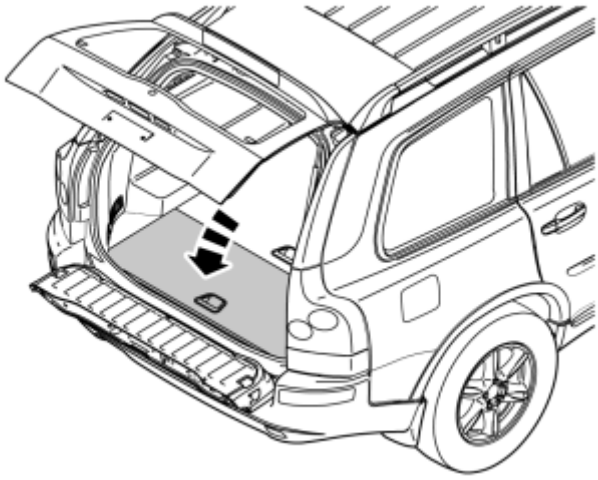

Fig. 76: Refitting Floor Panel
Courtesy of VOLVO CARS CORPORATION

APPLIES TO CARS WITH A TOW HITCH

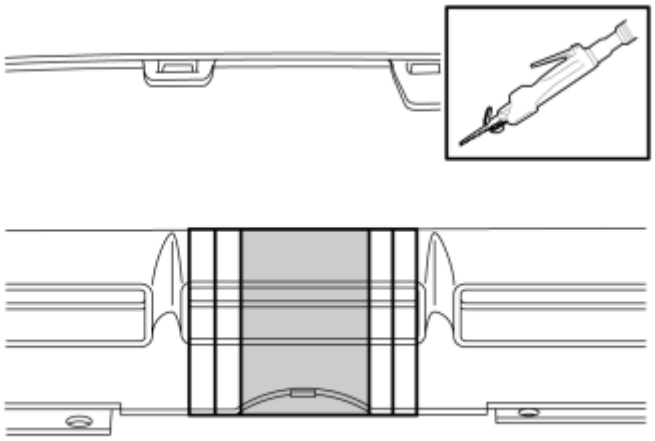

Fig. 77: Identifying The Shaded Area
Courtesy of VOLVO CARS CORPORATION

- Take the skid plate from the kit and saw out according to the markings. Remove the shaded area.

NOTE: Do not damage the paintwork of the bumper cover.

- Smooth off the sawn edges with a fine toothed file.

  Detachable towbar
  Fixed towbar
  Hitch towbar

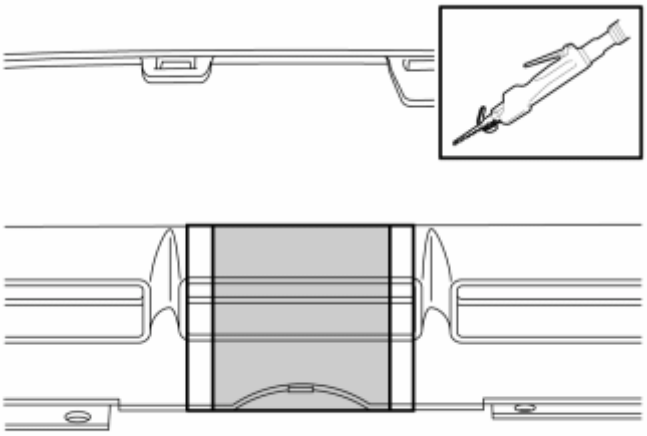

Fig. 78: Identifying The Shaded Area
Courtesy of VOLVO CARS CORPORATION

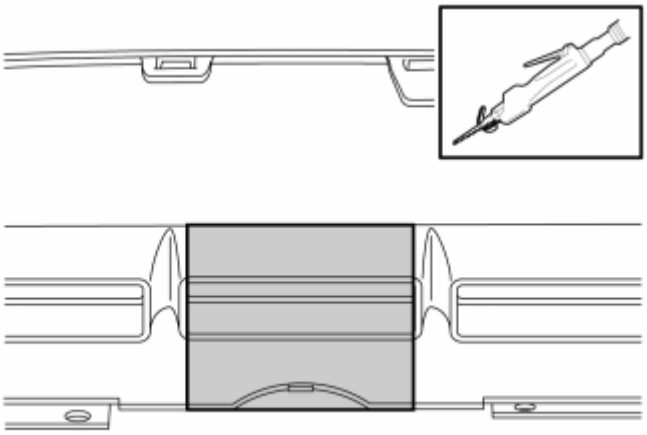

Fig. 79: Identifying The Shaded Area
Courtesy of VOLVO CARS CORPORATION

APPLIES TO ALL MODELS

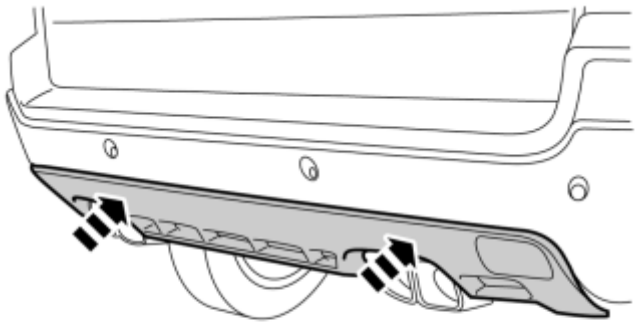

Fig. 80: Securing The Skid Plate
Courtesy of VOLVO CARS CORPORATION

- Secure the skid plate in the bumper cover. Make sure that all catches engage.
- Take four clips from the kit. Fold up the rear edge on the skid plate around the holder and install with the clips.

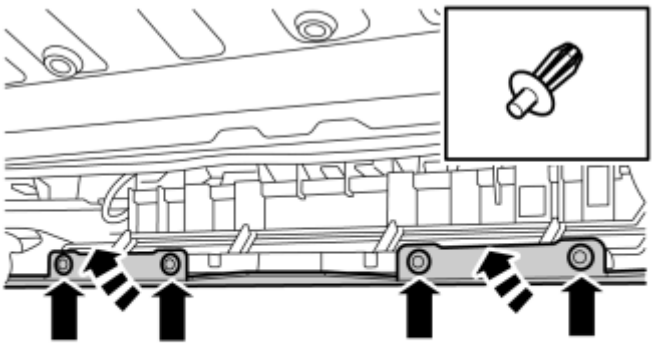

Fig. 81: Identifying Clips
Courtesy of VOLVO CARS CORPORATION

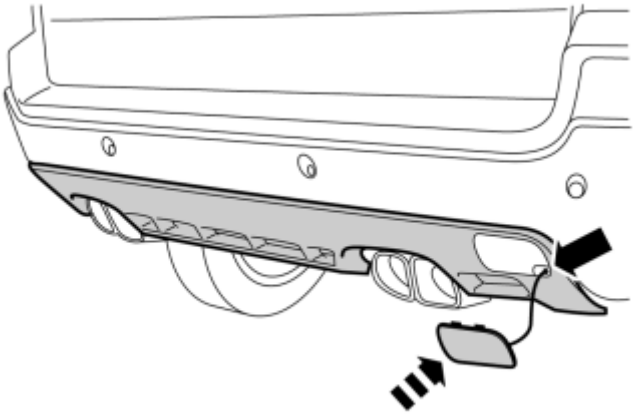

Fig. 82: Securing The Cover In The Skid Plate
Courtesy of VOLVO CARS CORPORATION

- Secure the cord for the cover to the towing eyelet mounting in the lower right-hand corner of the hole in the skid plate. Secure the cover in the skid plate.

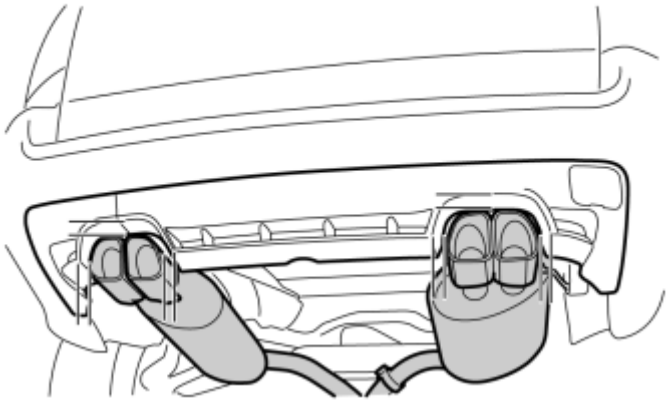

Fig. 83: Centering In The Cut-Outs
Courtesy of VOLVO CARS CORPORATION

- Align the silencer's end pipes in the cut-out in the skid plate so that they are centered in the cut-out on both sides.

Applies to cars without a tow hitch

- Tighten the screws in the brackets for the mountings for the rear silencers. Torque tighten to **80 Nm (59 lbf. ft.)** .

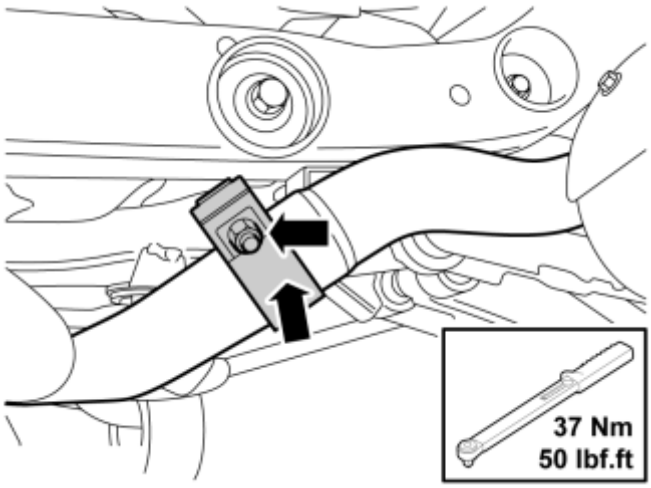

Fig. 84: Tightening The Joint For Right Silencer
Courtesy of VOLVO CARS CORPORATION

- Tighten the nut at the joint for the right-hand silencer. Torque tighten to **37 Nm (50 lbf. ft.)** .

ENGINE

Intake And Exhaust System - Removal, replacement and installation

AIR CLEANER AND THROTTLE BODY (B6324S/5; 2007-2012)

AIR CLEANER HOUSING

NOTE: Removal steps in this procedure may contain installation details.

Disconnect the battery. See **BATTERY, DISCONNECTING** .

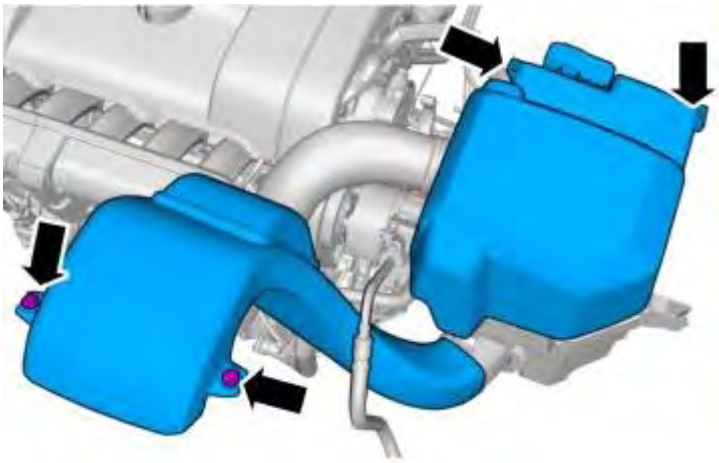

Fig. 1: Identifying Air Intake
Courtesy of VOLVO CARS CORPORATION

M6. See **TIGHTENING TORQUE**

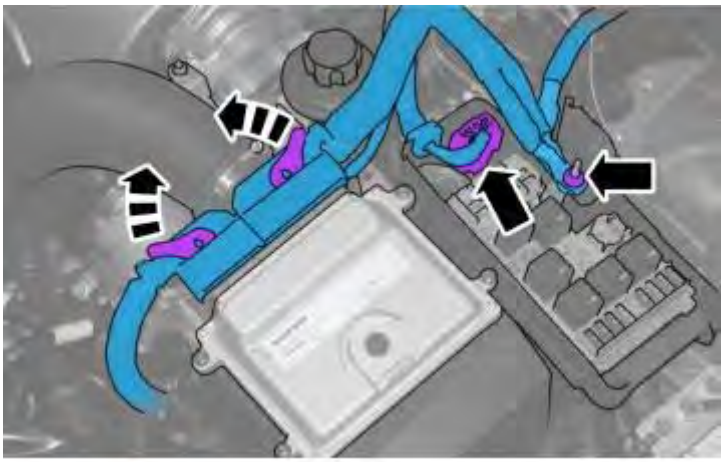

Fig. 2: Identifying Battery Leads
Courtesy of VOLVO CARS CORPORATION

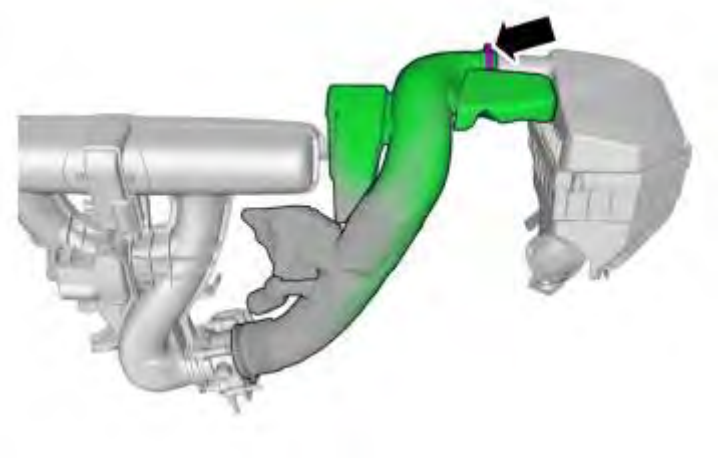

Fig. 3: Locating Air Tube Clamps
Courtesy of VOLVO CARS CORPORATION

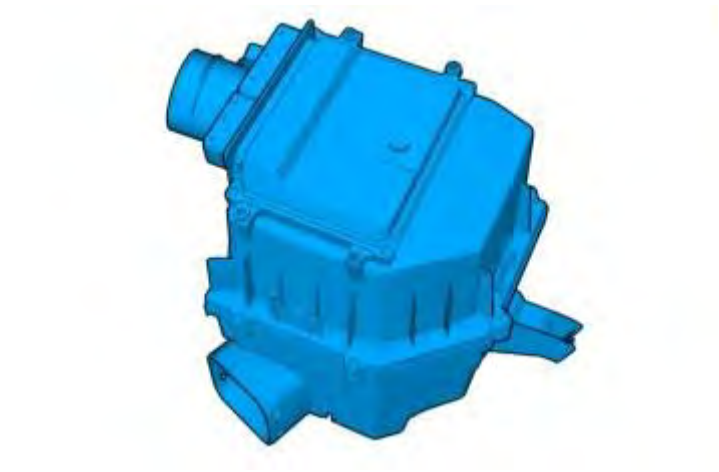

Fig. 4: Identifying Air Filter Housing
Courtesy of VOLVO CARS CORPORATION

To install, reverse the removal procedure

CATALYTIC CONVERTERS AND EMISSIONS EQUIPMENT (B5254T2; 2003-2007)

HEATED OXYGEN SENSOR (HO2S), REPLACING

Special tools:

see **9995543**

REMOVAL AND INSTALLATION (FRONT)

NOTE: As the illustrations in this service information are used for different model years

and / or models, some variation may occur. However, the essential information in the illustrations is always correct.

REMOVING THE FRONT HEATED OXYGEN SENSOR (HO2S)

Remove the heated oxygen sensor (HO2S) wiring from the clips and clamps.

Separate the wiring.

Raise the car

Remove:

- the lower engine cover
- the heated oxygen sensor (HO2S). Use tool see **9995543** .

INSTALLING THE FRONT HEATED OXYGEN SENSOR (HO2S)

For tightening torques, see: **TIGHTENING TORQUE**

Install:

- the front heated oxygen sensor (HO2S). Tighten to **45 Nm** . Use tool see **9995543**
- the lower engine cover. Lower the car
- the wiring for the heated oxygen sensor (HO2S) using clips and clamps. Connect the wiring.

REMOVAL AND INSTALLATION (REAR)

REMOVING THE REAR HEATED OXYGEN SENSOR (HO2S)

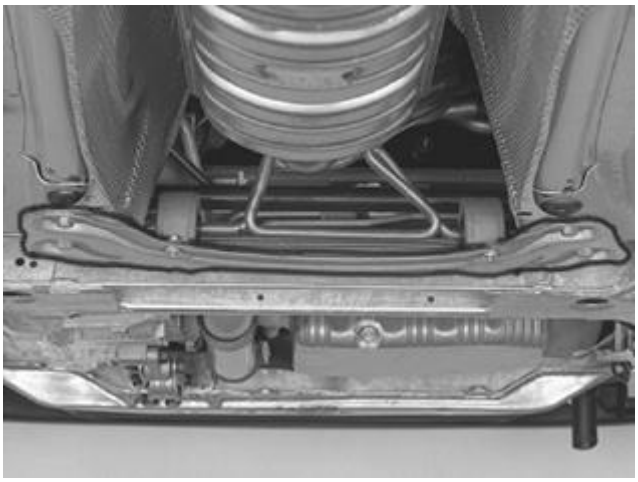

Fig. 5: Identifying SIPS Member
Courtesy of VOLVO CARS CORPORATION

Raise the car.

Remove:

- the lower engine cover
- the front SIPS member. Unhook the brake pipe from the clips
- unhook the three-way catalytic converter (TWC) from the rubber mountings
- the nuts between the three-way catalytic converter (TWC) and exhaust system. Unhooks the three-way catalytic converter (TWC)
- the wiring for the heated oxygen sensor (HO2S) from the clips and clamps. Disconnect the wiring
- the rear probe. Use tool see **9995543** .

INSTALLING THE REAR PROBE

NOTE: For tightening torques, see TIGHTENING TORQUE .

Install:

- the rear heated oxygen sensor (HO2S). Tighten to **45 Nm** . Use tool see **9995543**
- the wiring for the heated oxygen sensor (HO2S) in clips and clamps. Connect the wiring
- a new gasket and new nuts at the join between the three-way catalytic converter (TWC) and the exhaust system. Tighten to **24 Nm**
- the rubber mounting for the three-way catalytic converter (TWC)
- the front SIPS member. Press the brake pipe into place in the member
- the lower engine cover.

Erase Diagnostic Trouble Codes (DTCs).

Reset trim.

THREE-WAY CATALYTIC CONVERTER (TWC), REPLACING

Special tools:

see **9995543**

NOTE: As the illustrations in this service information are used for different model years and / or models, some variation may occur. However, the essential information in the illustrations is always correct.

REMOVING THE THREE-WAY CATALYTIC CONVERTER (TWC)

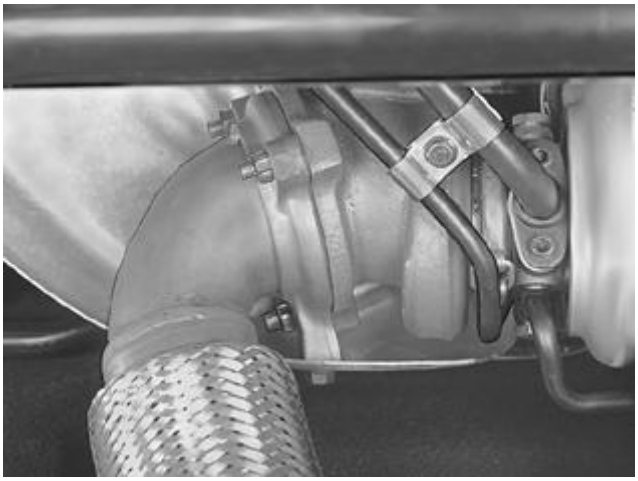

Fig. 6: Front Exhaust Pipe And Turbocharger
Courtesy of VOLVO CARS CORPORATION

Remove:

- the wiring for the front heated oxygen sensor (HO2S) from the clips and clamps. Separate the wiring. Raise the car
- the lower engine cover
- the front SIPS member. Unhook the brake pipe from the clips
- the lower screw in the heat deflector plate on the turbocharger (TC)
- the nuts for the flange between the turbocharger (TC) and the three-way catalytic converter (TWC).

HINT: Use rust solvent or similar.

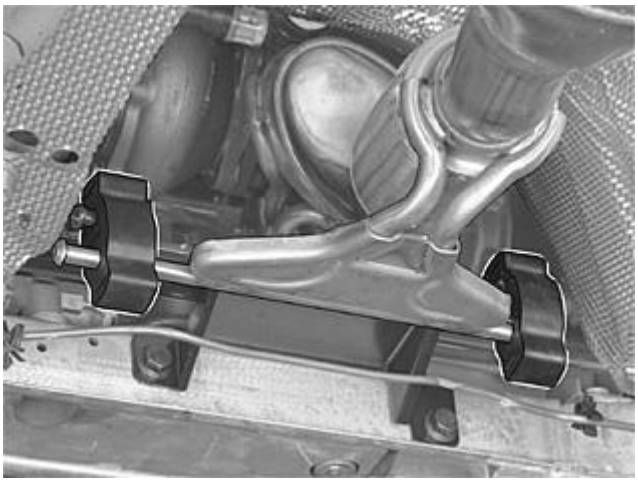

Fig. 7: Identifying Rubber Mounting For The Three-Way Catalytic Converter
Courtesy of VOLVO CARS CORPORATION

Remove:

- the rubber mounting for the three-way catalytic converter (TWC)

- the nuts for the flange between the three-way catalytic converter (TWC) and exhaust system
- the wiring for the rear heated oxygen sensor (HO2S) from the clips and clamps. Separate the wiring
- the three-way catalytic converter (TWC).

TRANSFERRING COMPONENTS

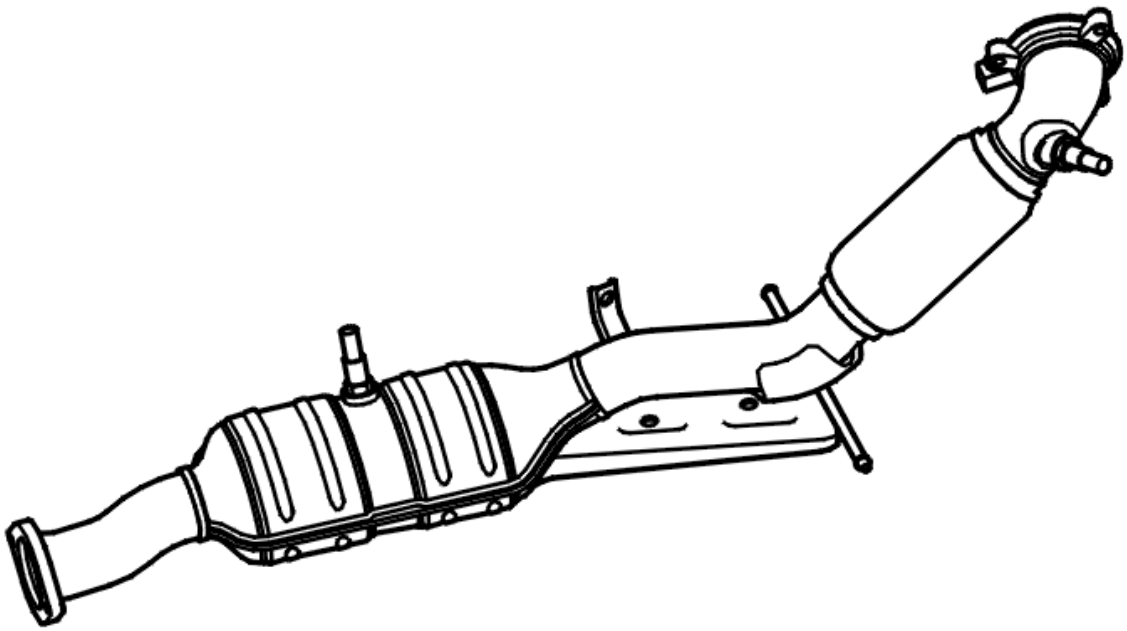

Fig. 8: Identifying Three-Way Catalytic Converter And Heated Oxygen Sensors
Courtesy of VOLVO CARS CORPORATION

- Transfer the rear and front heated oxygen sensors (HO2S). Use tool see **9995543** .

CAUTION: Do not mix up the heated oxygen sensors (HO2S).

- Tighten.

INSTALLING THE THREE-WAY CATALYTIC CONVERTER (TWC)

NOTE: For tightening, see TIGHTENING TORQUE .

NOTE: To ensure that there is no exhaust leakage, see: FLANGED JOINT, ASSEMBLING .

Lubricate the studs on the turbocharger (TC). Use paste, P/N: 1161408. Avoid skin contact with the paste.

Install:

- the three-way catalytic converter (TWC). Use new nuts and gaskets. Tighten. See **SUMMARY OF SPECIFIC COMPONENTS AND TIGHTENING TORQUES**
- the wiring for the rear heated oxygen sensors (HO2S) using the clips and the clamps. Connect the wiring
- the rubber mounting for the three-way catalytic converter (TWC)
- the lower screw in the heat deflector plate above the turbocharger (TC)
- the SIPS (side impact protection system) member. Secure the brake pipe to the member
- the lower engine cover.

Lower the car.

Install the wiring for the front heated oxygen sensor (HO2S) using clips and clamps. Connect the wiring.

FINAL CHECK

Start the engine. Check for exhaust leakage.

CATALYTIC CONVERTERS AND EMISSIONS EQUIPMENT (B6324S; 2007-2010)

CATALYTIC CONVERTER

Special tools	
	T9995543 SOCKET NV-22 (LAMDASOND) **Tool number:** T9995543 **Tool description:** SOCKET NV-22 (LAMDASOND) **Tool boards:**

NOTE: Removal steps in this procedure may contain installation details.

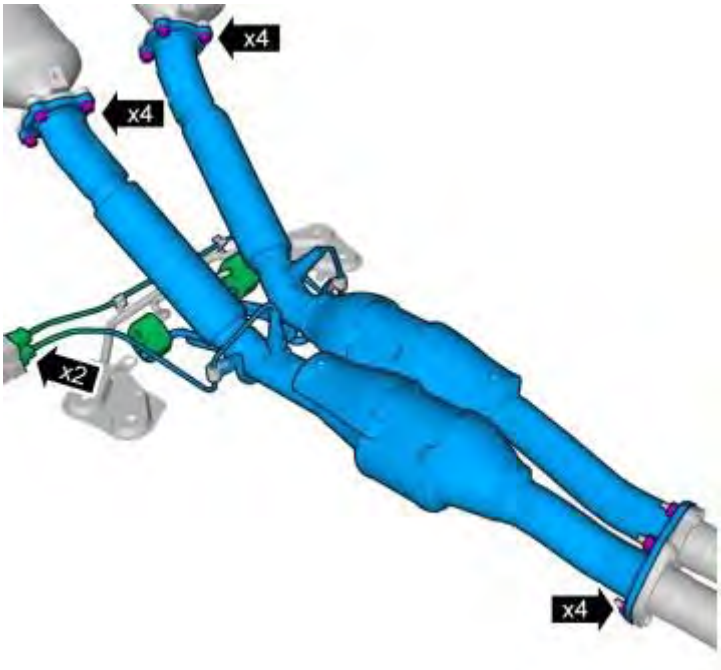

Fig. 9: Identifying Catalytic Converters and Mounting
Courtesy of VOLVO CARS CORPORATION

M8. See **TIGHTENING TORQUE**

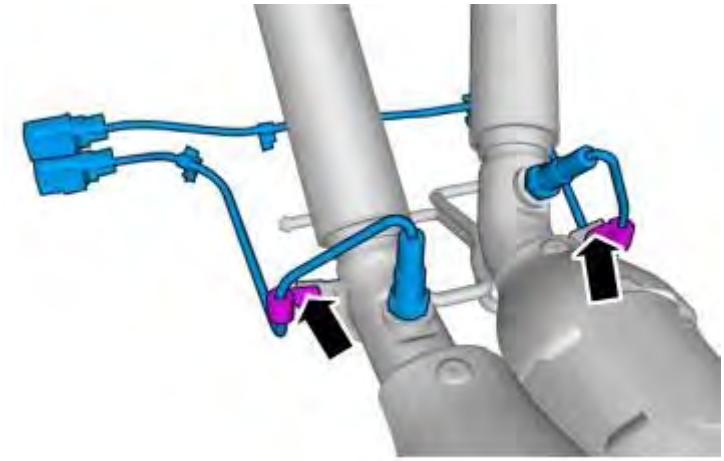

Fig. 10: Identifying Wire Clips
Courtesy of VOLVO CARS CORPORATION

see **9995543**

Heated oxygen sensor. See **TIGHTENING TORQUE**

To install, reverse the removal procedure

OXYGEN SENSOR (CATALYST MONITOR SENSOR)

Special tools	
	T9995543 SOCKET NV-22 (HEATED OXYGEN SENSOR) **Tool number:** T9995543 **Tool description:** SOCKET NV-22 (HEATED OXYGEN SENSOR) **Tool boards:**

NOTE: Removal steps in this procedure may contain installation details.

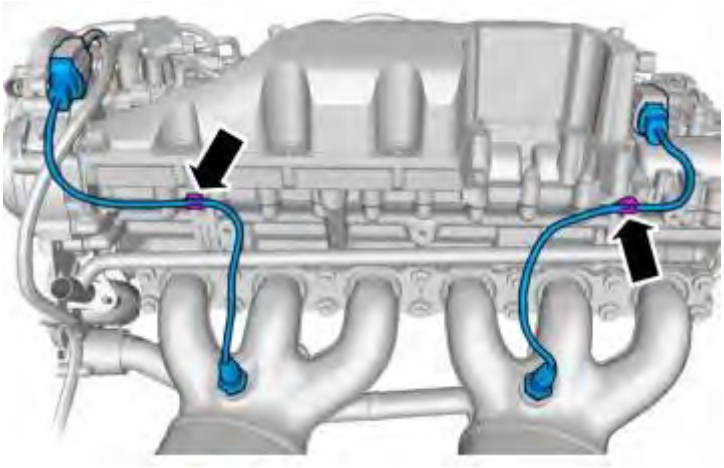

Fig. 11: Identifying Wire Clips
Courtesy of VOLVO CARS CORPORATION

see **9995543**

Heated oxygen sensor. See **TIGHTENING TORQUE**

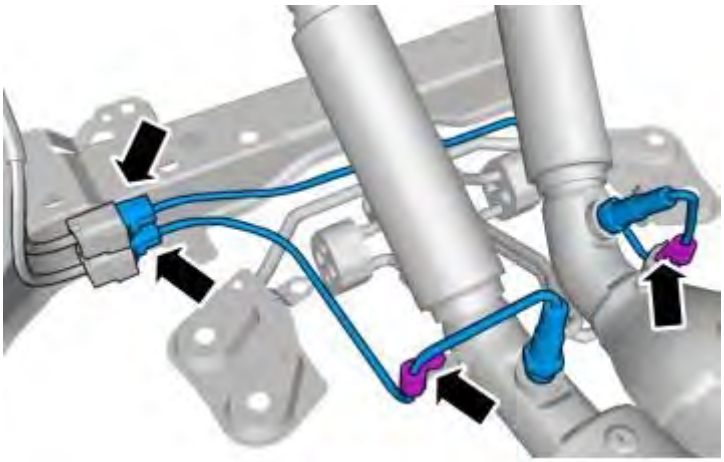

Fig. 12: Removing Heated Oxygen Sensors
Courtesy of VOLVO CARS CORPORATION

see **9995543**

Heated oxygen sensor. See **TIGHTENING TORQUE**

To install, reverse the removal procedure

CATALYTIC CONVERTERS AND EMISSIONS EQUIPMENT (B6324S5; 2011-2012)

CATALYTIC CONVERTER

see **CATALYTIC CONVERTER**

OXYGEN SENSOR (CATALYST MONITOR SENSOR)

see **OXYGEN SENSOR (CATALYST MONITOR SENSOR)**

CATALYTIC CONVERTERS AND EMISSIONS EQUIPMENT (B6294T; 2003-2006)

HEATED OXYGEN SENSOR (HO2S), REPLACING

FRONT HEATED OXYGEN SENSORS (HO2S), REPLACING

NOTE: For tightening torques, see TIGHTENING TORQUE .

REMOVING FRONT HEATED OXYGEN SENSORS (HO2S)

NOTE: As the illustrations in this service information are used for different model years and / or models, some variation may occur. However, the essential information in the illustrations is always correct.

Remove the splashguard under the engine.

Disconnect the connectors for the heated oxygen sensors (HO2S). Disconnect the wiring.

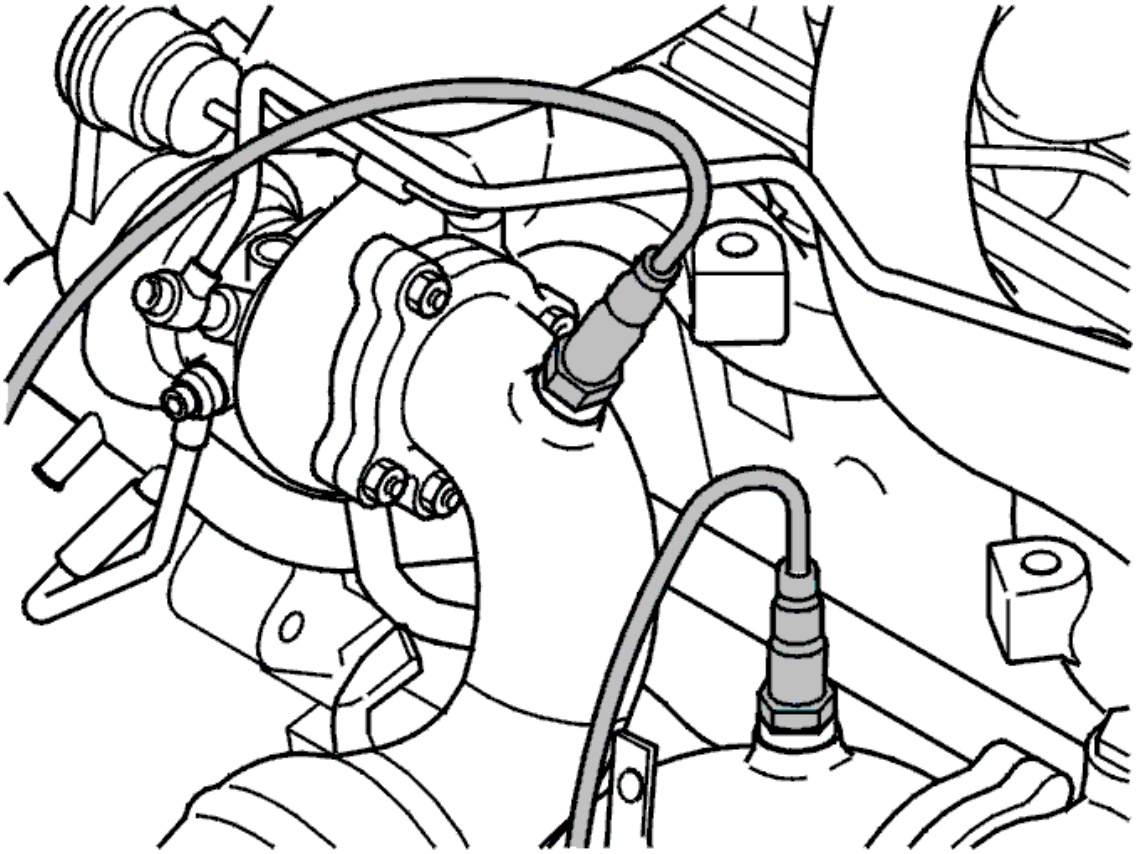

Fig. 13: Identifying Heated Oxygen Sensors
Courtesy of VOLVO CARS CORPORATION

Remove:

- the wiring for the heated oxygen sensors (HO2S) from the clamps
- the heated oxygen sensors (HO2S). Use tool see **9995543** .

CAUTION: Note the position of the probes.

INSTALLING FRONT HEATED OXYGEN SENSORS (HO2S)

CAUTION: Note the position of the probes.

Install:

- the heated oxygen sensors (HO2S). Lubricate the threads using paste 116 1408. Tighten to **45 Nm** . Use tool see **9995543**
- the connectors
- the lower engine cover.

FINISHING

Install the wiring for the heated oxygen sensors (HO2S) using clips and clamps.

Test drive the engine.

Check for leakage.

REAR HEATED OXYGEN SENSOR (HO2S), REPLACING

REMOVING THE REAR HEATED OXYGEN SENSOR (HO2S)

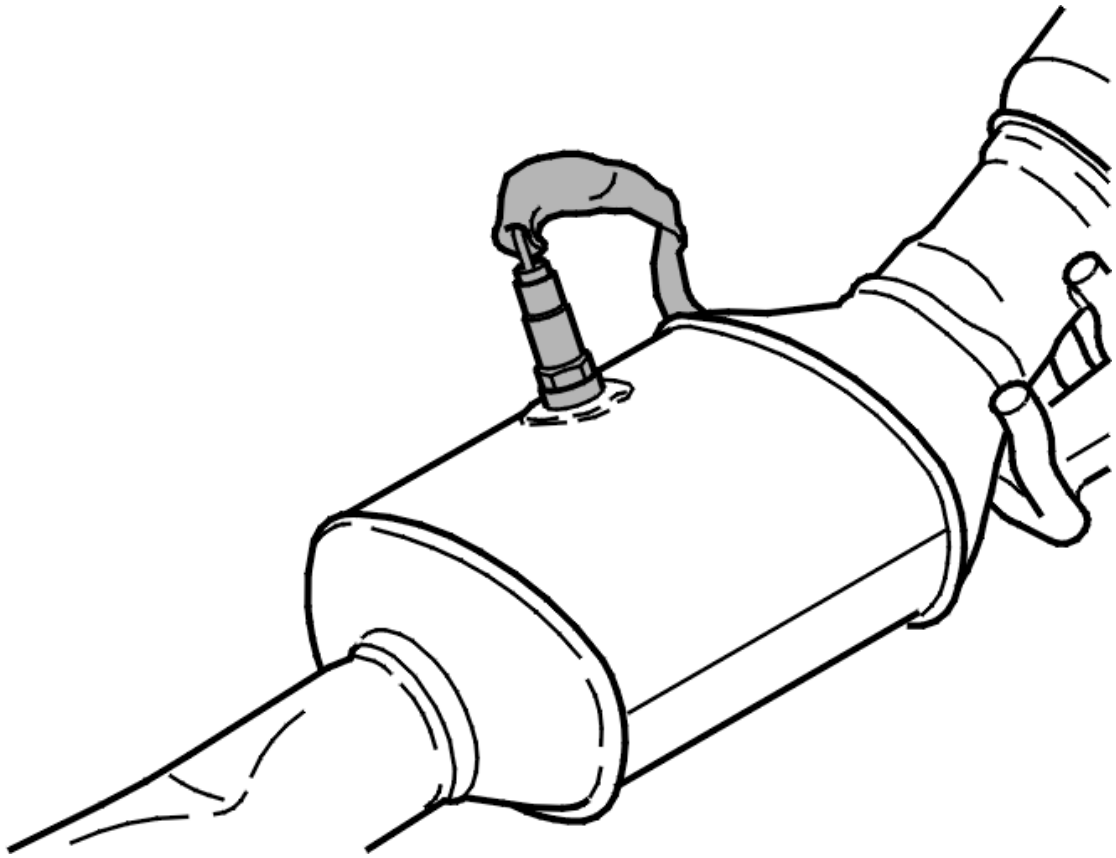

Fig. 14: Identifying Rear Heated Oxygen Sensor
Courtesy of VOLVO CARS CORPORATION

- Remove the splashguard under the engine.
- Disconnect the connectors for the heated oxygen sensors (HO2S)
- Remove the clamps from the wiring for the heated oxygen sensor (HO2S)
- Remove the heated oxygen sensor (HO2S). Use tool see **9995543** .

INSTALLING THE REAR HEATED OXYGEN SENSOR (HO2S)

Install:

- the heated oxygen sensor (HO2S). Lubricate the studs using paste **116 1408** . Tighten to 45 Nm. Use tool 999 5543
- the clamps for the heated oxygen sensor (HO2S) wiring
- the connector
- the lower engine cover.

Test drive the engine.

Check for leakage.

Erase Diagnostic Trouble Codes (DTCs).

Reset trim.

THREE-WAY CATALYTIC CONVERTER (TWC), REPLACING

Special tools:

see **9995543**

see **9995972**

see **9512050**

see **9997057**

REMOVAL

NOTE: **As the illustrations in this service information are used for different model years and / or models, some variation may occur. However, the essential information in the illustrations is always correct.**

REMOVING THE LOWER STEERING SHAFT JOINT

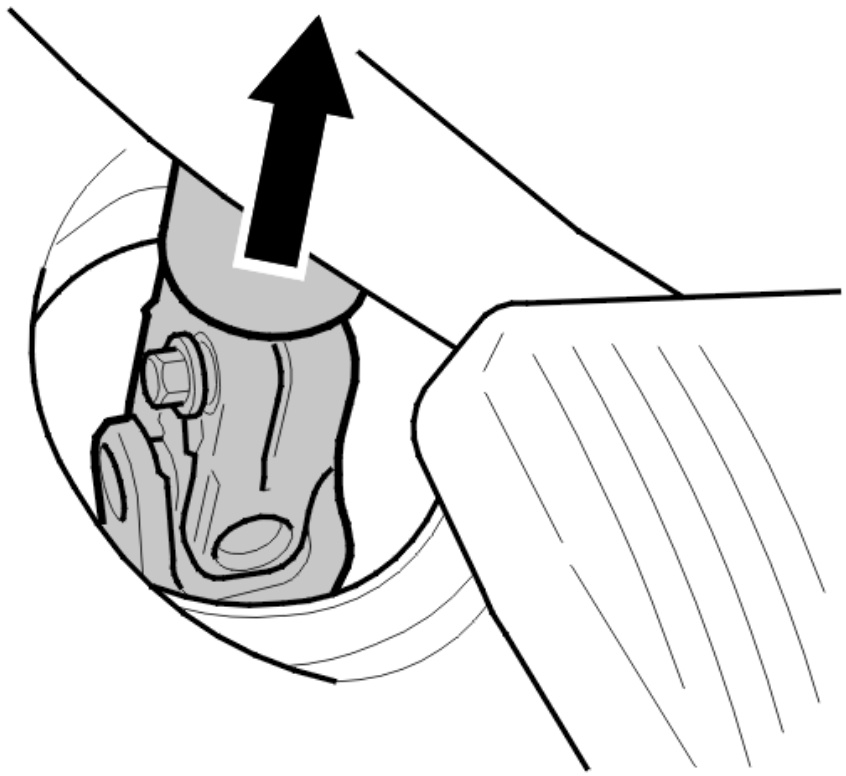

Fig. 15: Identifying Lower Steering Shaft Joint
Courtesy of VOLVO CARS CORPORATION

- Set the front wheels so that they are straight
- Fold back the floor carpet
- Bend up the outer section of the steering shaft boot
- Remove the retaining clip around the boot
- Pull the boot up
- Turn the steering wheel to gain the best possible access to the steering shaft nut
- Remove the ignition key. Activate the steering wheel lock.

CAUTION: Do not move the steering wheel. The contact reel in the SRS (supplemental restraint system) could be damaged.

Remove:

- the screw securing the mounting for the steering shaft in the joint
- the joint from the steering shaft by pressing the shaft upwards.

REMOVING PROTECTIVE PLATE

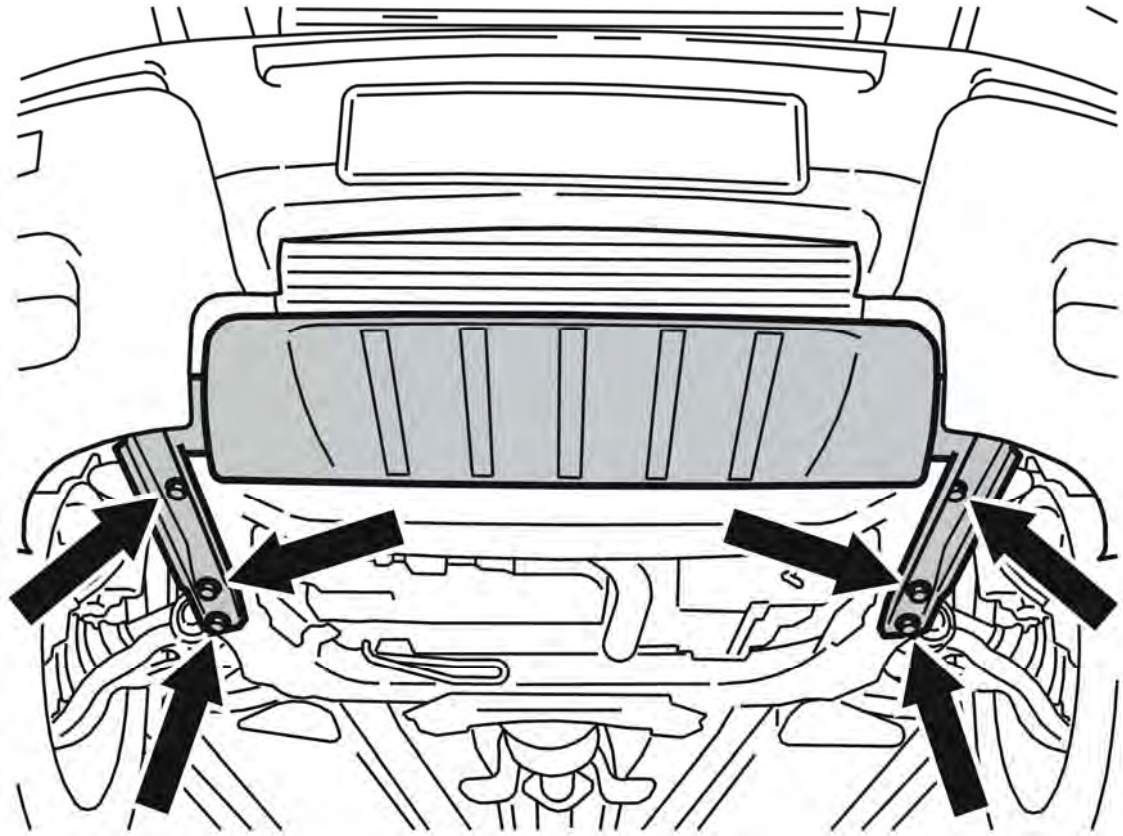

Fig. 16: Splash Guard. Protective Plate And Screws
Courtesy of VOLVO CARS CORPORATION

- Remove the 6 screws
- Lift up and slide the plate forward
- Remove the splash guard.

NOTE: **There is a guide sleeve on the upper mounting for the plate. This must be lifted slightly so that the panel can be slid forward.**

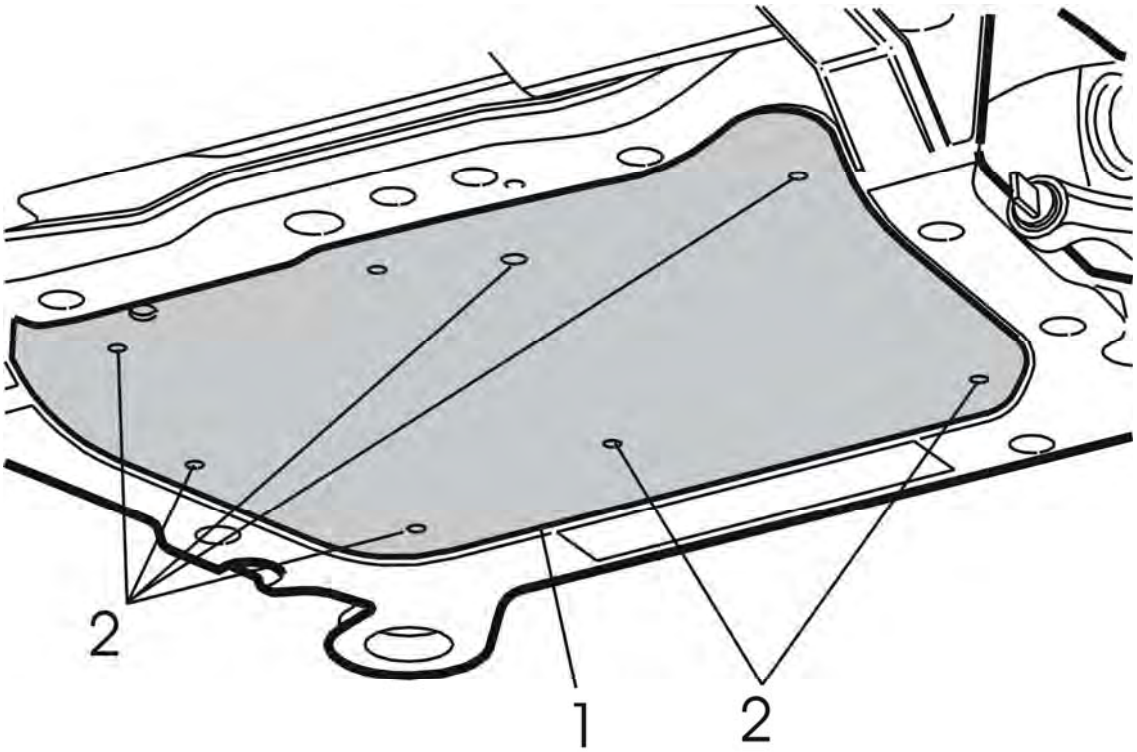

Fig. 17: Splash Guard Under Engine
Courtesy of VOLVO CARS CORPORATION

Remove:

- the splash guard under the engine
- the front wheel
- link rod, anti-roll bar and spring strut.

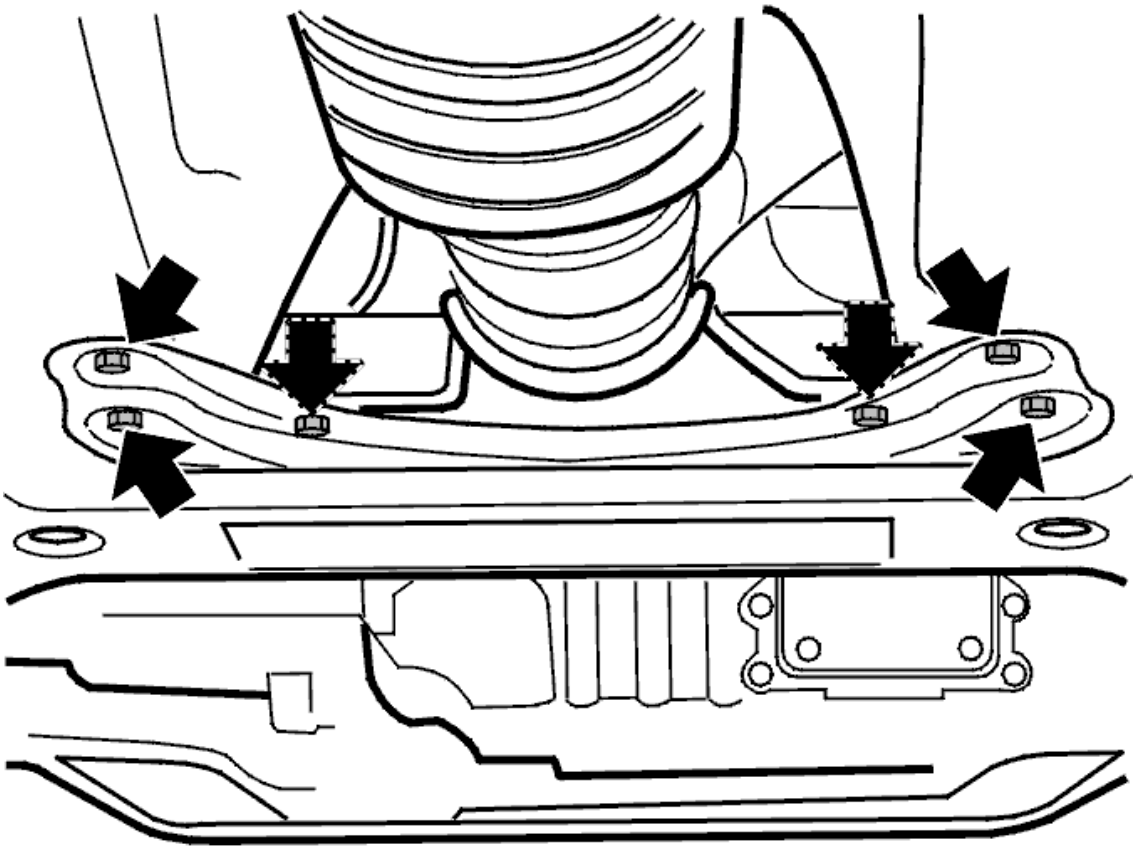

Fig. 18: Exhaust Pipe Bracket Screws
Courtesy of VOLVO CARS CORPORATION

Remove:

- the brake pipe from the clips on the front SIPS member
- the front SIPS member
- the center SIPS (side impact protection system) member and pilot bearing
- the nut between the flange, the three-way catalytic converter (TWC) and exhaust system
- the wiring for the rear heated oxygen sensor (HO2S) from the sub-frame. Separate the wiring.

MARKING UP AND REMOVING THE PROPELLER SHAFT AND CARRIER

Mark the propeller shaft CV joint in relation to the bevel gear flange.

Remove the screws from the propeller shaft. Use counterhold see **9997057** .

Move the propeller shaft to one side.

REMOVING THE NUTS FOR THE BEVEL GEAR FLANGE

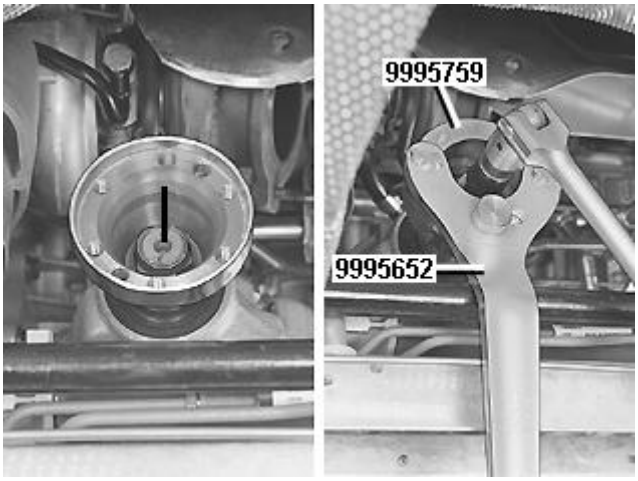

Fig. 19: Removing/Installing Bevel Gear Flange Nuts
Courtesy of VOLVO CARS CORPORATION

Mark the position of the flange and nut in relation to the pinion shaft end.

Remove the nut. Use counterhold see **9995652** with adapter see **9995759** .

REMOVING THE FLANGE

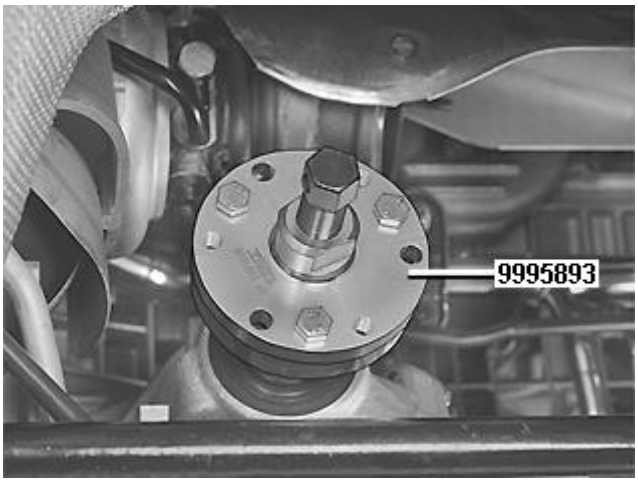

Fig. 20: Removing/Installing Flange Using Puller 999 5893
Courtesy of VOLVO CARS CORPORATION

Remove the flange. Use puller see **9995893** .

Check the seal face on the flange. Replace the flange if it is damaged.

REMOVING HEATED OXYGEN SENSORS (HO2S)

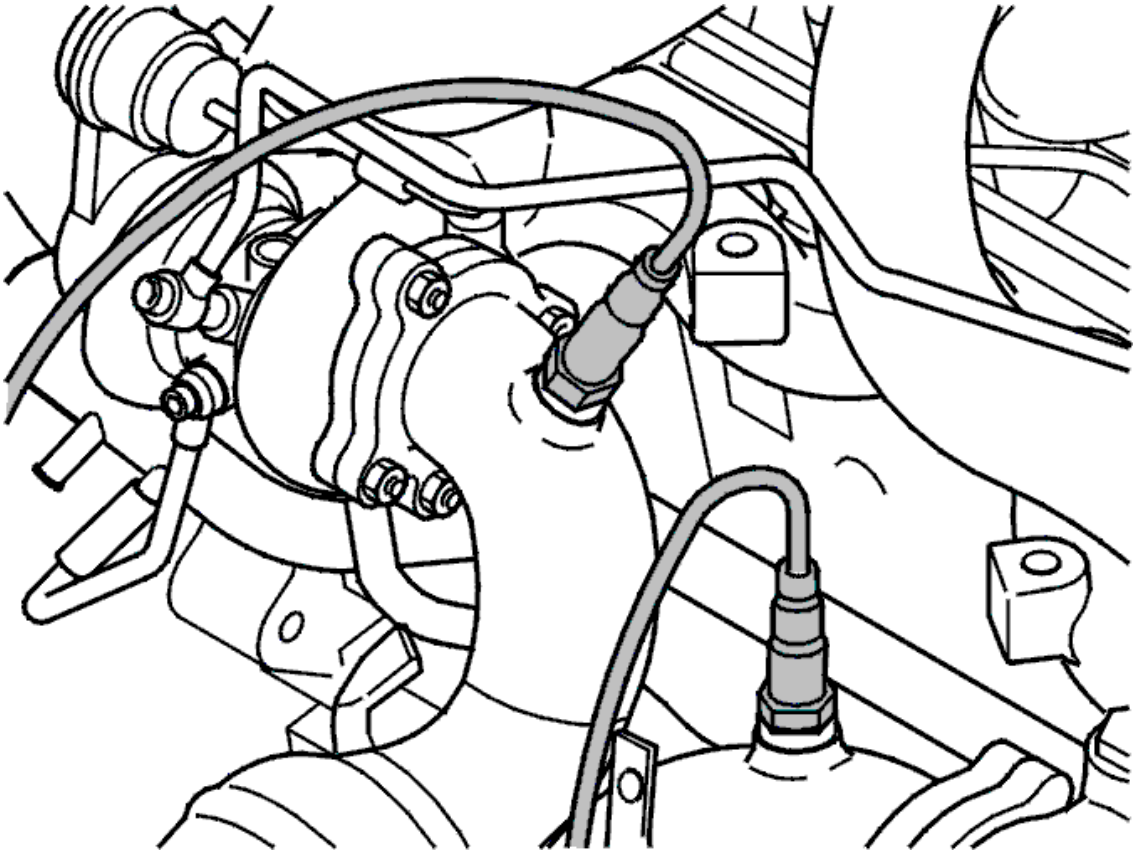

Fig. 21: Identifying Heated Oxygen Sensors
Courtesy of VOLVO CARS CORPORATION

Remove:

- the engine stabilizer brace between the spring strut stays
- the charge air pipe for the turbocharger (TC) for cylinders 1-3
- the connectors for the front heated oxygen sensors (HO2S). Separate the wiring
- the wiring for the front heated oxygen sensors (HO2S) from the mountings and clips
- The front heated oxygen sensors from the catalytic converter. Use tool see **9995543** .

CAUTION: Note the location of the heated oxygen sensors (HO2S)

- the heat deflector plates
- the 6 nuts for the flange between the turbocharger (TC) and three-way catalytic converter (TWC).

HINT: Use rust solvent on the studs.

Unhook the three-way catalytic converter (TWC) from the turbocharger (TC).

REMOVING THE CHARGE AIR PIPE

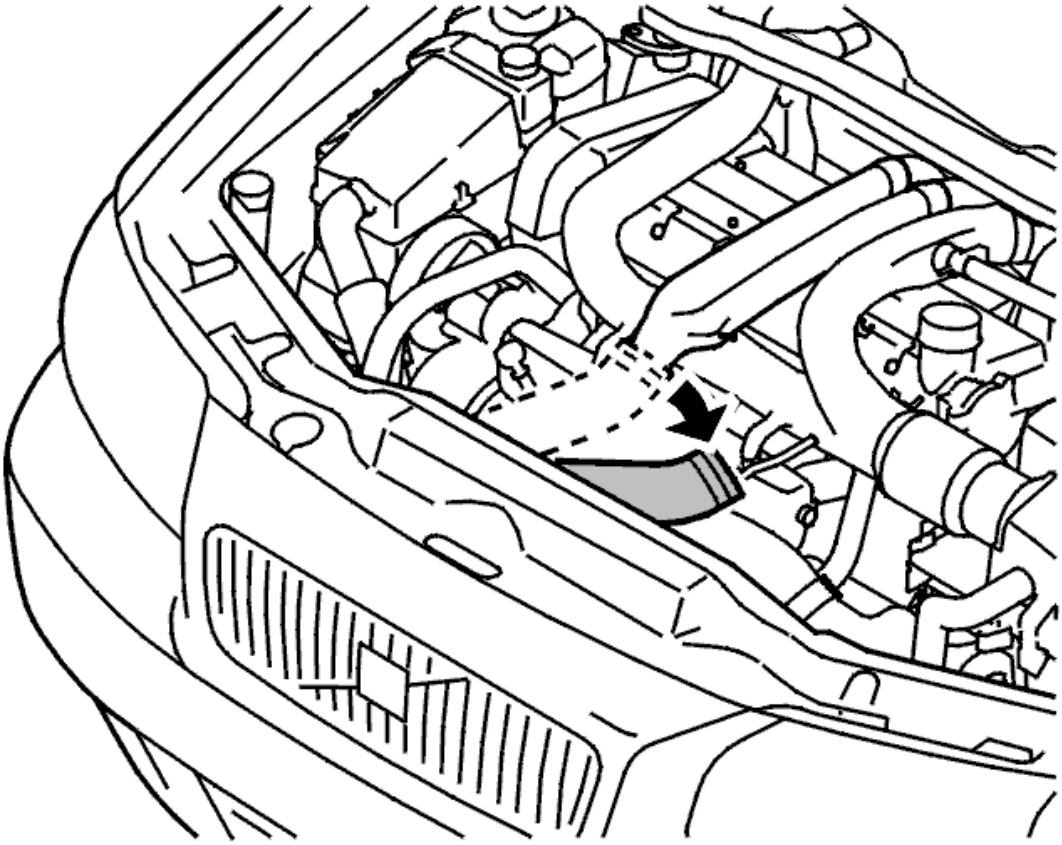

Fig. 22: Charge Air Pipe On Intake Between Throttle Module And Charge Air Cooler
Courtesy of VOLVO CARS CORPORATION

Remove:

- the charge air pipe on the intake between the throttle module and the charge air cooler.

  HINT: If necessary use a hot air gun to loosen the pipe

- undo the hose clamp on the charge air pipe at the fuel rail. Separate the hose and pipe.

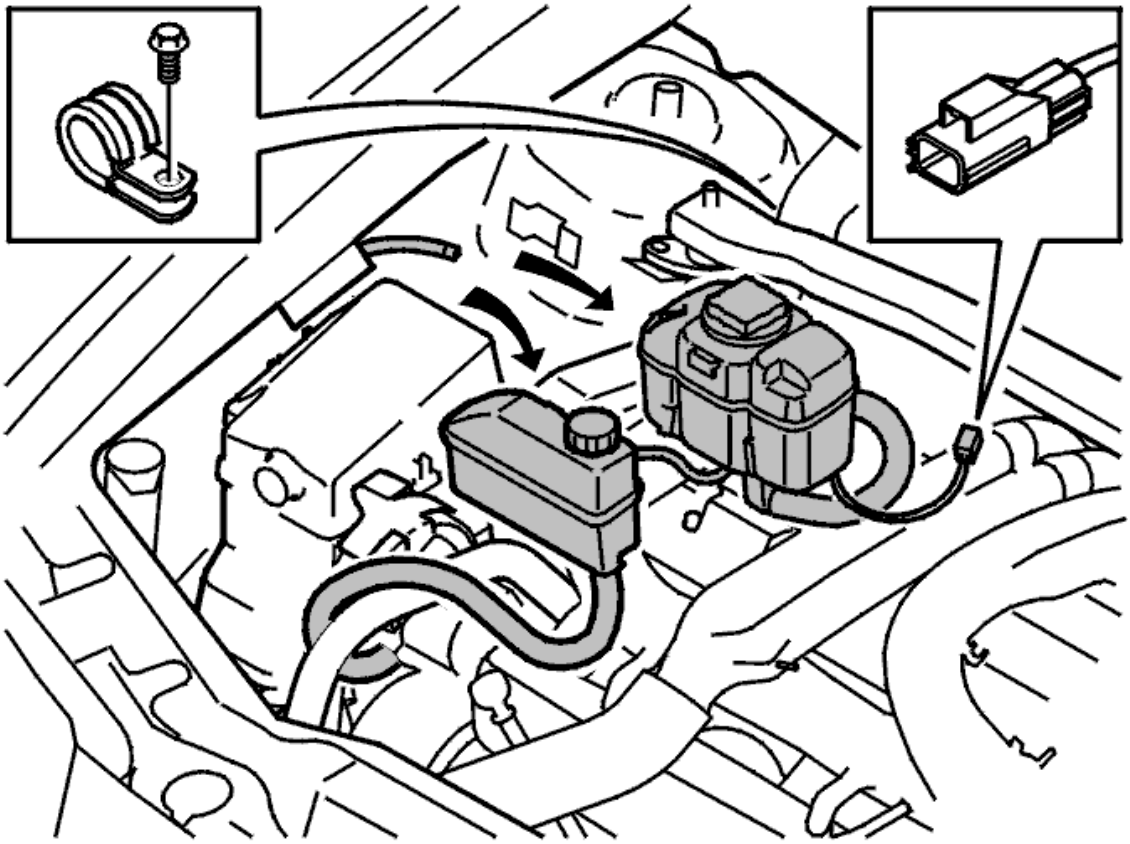

Fig. 23: Identifying Servo Oil Reservoir And Expansion Tank
Courtesy of VOLVO CARS CORPORATION

Place the servo reservoir and the expansion tank on the engine.

NOTE: **Ensure that no oil leaks out of the reservoir through the ventilation holes in the cover.**

LOWERING THE ENGINE AND TRANSMISSION UNIT

Fig. 24: Engine Lifted Using Lifting Table
Courtesy of VOLVO CARS CORPORATION

CAUTION: Ensure that the lifting table is properly centered under the engine.

Position a lifting table under the sub-frame. Secure the table against the sub-frame

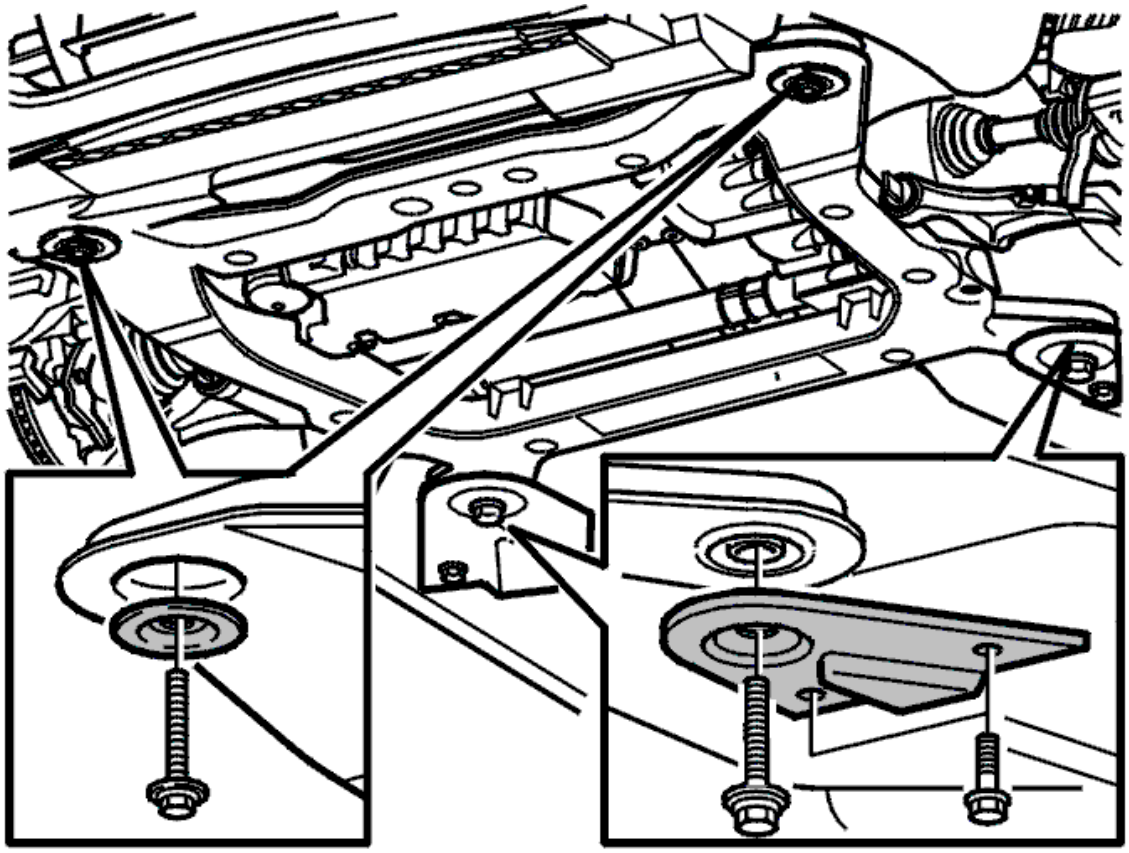

Fig. 25: Identifying Bolts, Washers And Brackets In Sub-Frame
Courtesy of VOLVO CARS CORPORATION

Remove:

- the screws at the rear of the brackets for the sub-frame
- the screws for the sub-frame. Lower the engine and transmission approximately **10 cm** so that the drive shafts describe a horizontal line between the hub and transmission
- the three-way catalytic converter (TWC). If necessary, carefully lower the engine slightly at the rear to lower the three-way catalytic converter (TWC).

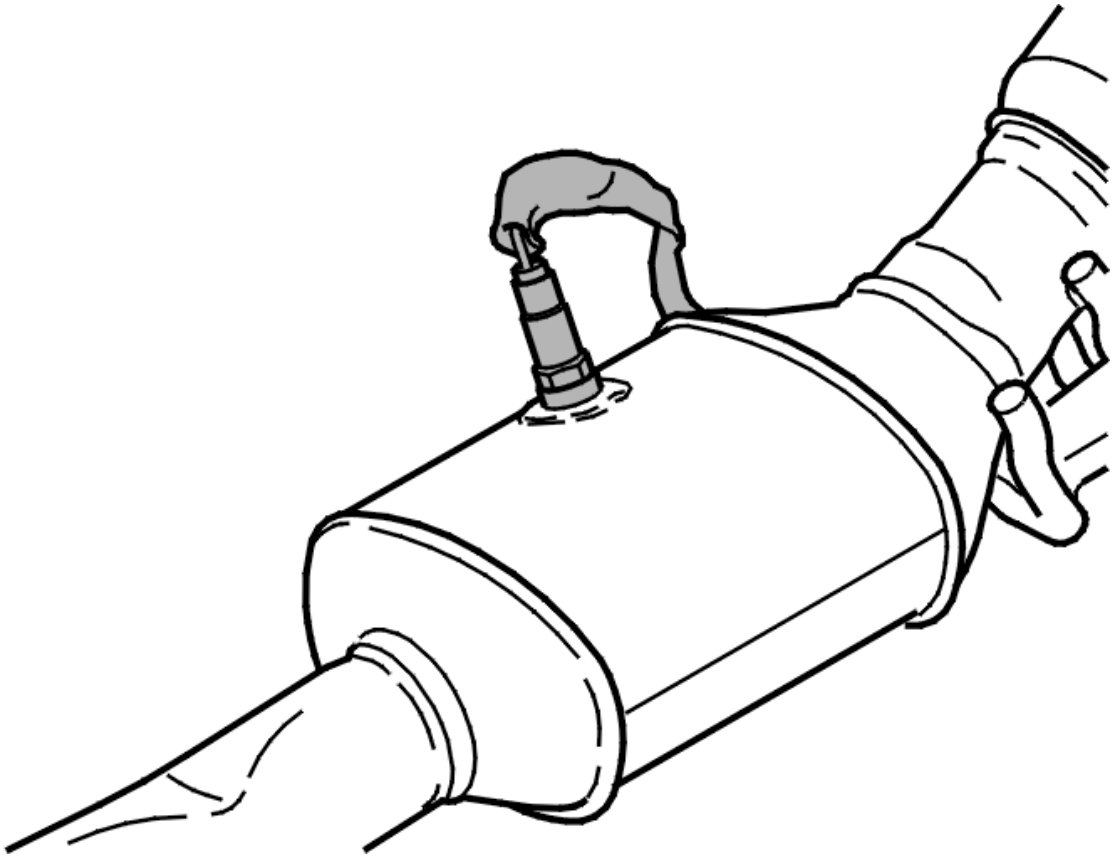

Fig. 26: Identifying Rear Heated Oxygen Sensor
Courtesy of VOLVO CARS CORPORATION

Transfer the rear heated oxygen sensor (HO2S).

Use tool see **9995543** .

Tighten to **45 Nm** .

INSTALLATION

NOTE: For tightening torques, see: TIGHTENING TORQUE .

NOTE: To ensure that there is no exhaust leakage, see: FLANGED JOINT, ASSEMBLING .

INSTALLING COMPONENTS

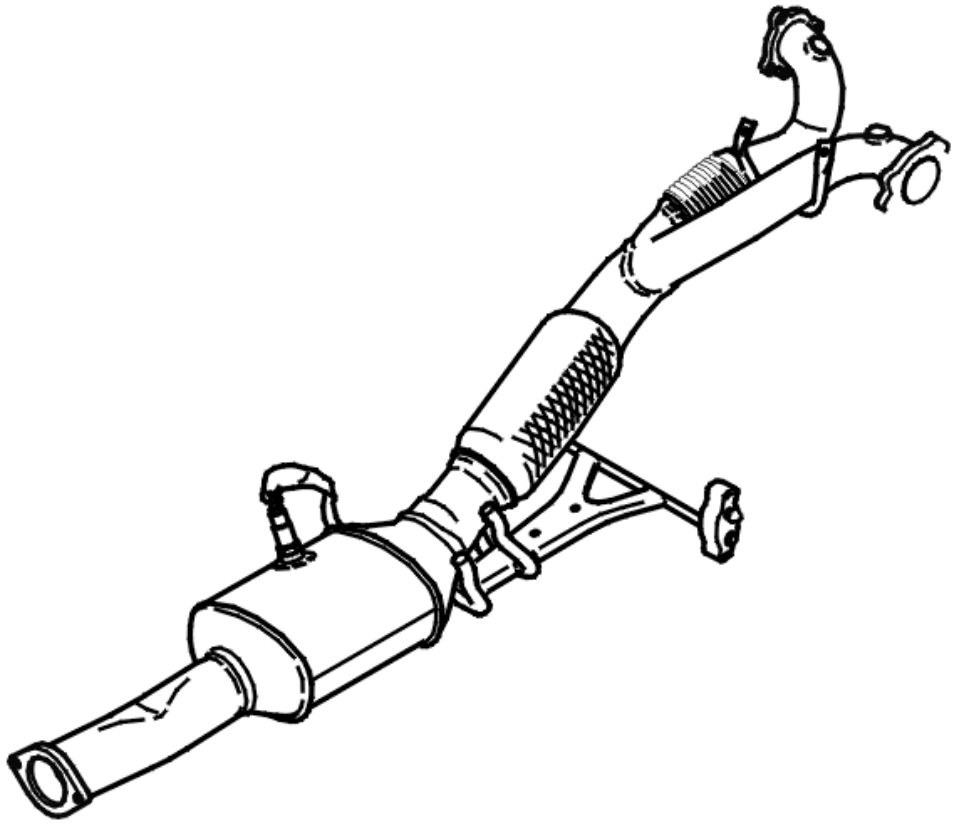

Fig. 27: Three-Way Catalytic Converter And Exhaust System
Courtesy of VOLVO CARS CORPORATION

WARNING: **Avoid skin contact with the copper paste.**

- Lubricate the studs on the turbocharger (TC). Use copper paste **116 1408** .
- Lift the three-way catalytic converter (TWC) up into position
- Install the three-way catalytic converter (TWC) against the exhaust system. Use a **new gasket** . Install **new nuts** but do not tighten.
- Lift the sub-frame until it is against the frame members
- Install **new screws** in the sub-frame. Lubricate the screw threads. Install the washers in the front edge and support plates at the rear edge of the sub-frame
- First tighten the screws on the left side of the subframe. See **SUMMARY OF TIGHTENING TORQUES FOR SPECIFIC COMPONENTS** . Use bevel protractor see **9512050** . Then tighten the screws on the right-hand side of the subframe to the same value.
- Tighten the brackets. Tighten to **50 Nm** .
- Remove the lifting table.

Install:

- the servo reservoir
- the expansion tank
- the charge air pipe between the throttle module and charge air cooler
- the hose on the charge air pipe at the top of the engine.

INSTALLING THE THREE-WAY CATALYTIC CONVERTER (TWC)

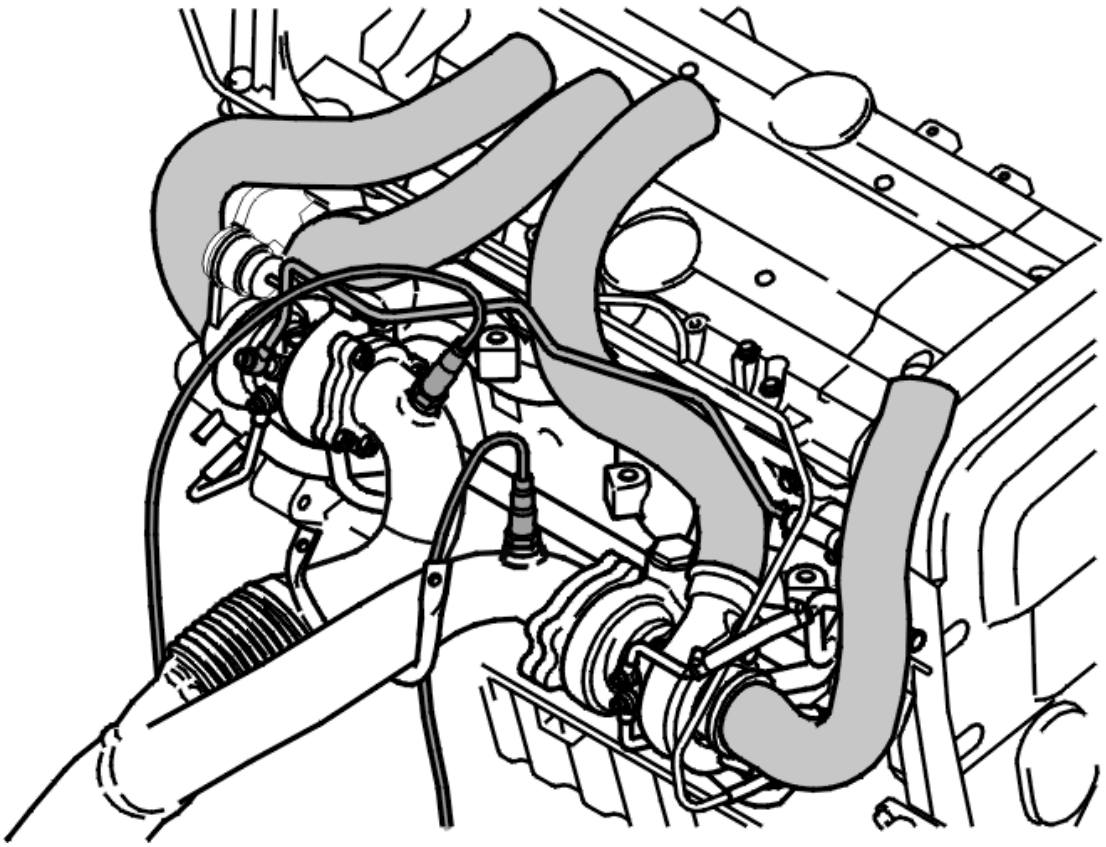

Fig. 28: Three-Way Catalytic Converter And Turbocharger
Courtesy of VOLVO CARS CORPORATION

Pull up and align the three-way catalytic converter (TWC) against the turbocharger (TC).

Tighten the three-way catalytic converter (TWC) to the turbocharger (TC). Use **new nuts** . Torque tighten. See **SUMMARY OF TIGHTENING TORQUES FOR SPECIFIC COMPONENTS** .

Install:

- the upper heated oxygen sensors (HO2S) according to the marks made after removal. Lubricate the threads using copper paste **116 1408** . Tighten to **45 Nm** .
- lower the wiring down for the heated oxygen sensors (HO2S). Secure the wiring in the clips and clamps. Connect the wiring
- the heat deflector plates

- the charge air pipe for the turbocharger (TC) for cylinders 1-3
- the engine stabilizer brace between the spring strut turrets.

INSTALLING THE FLANGE ON THE PINION

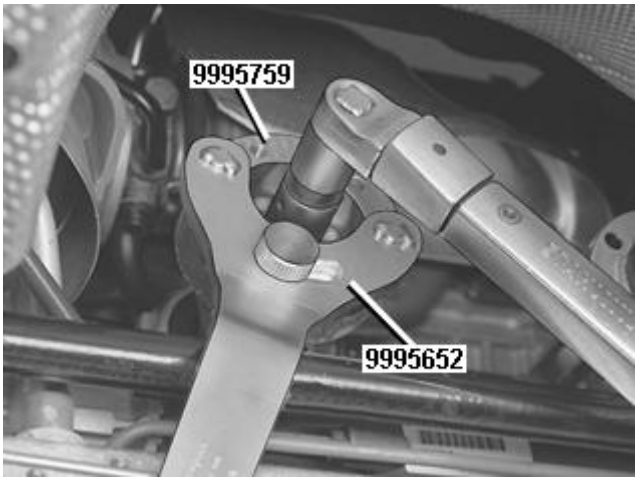

Fig. 29: Installing Flange On Pinion
Courtesy of VOLVO CARS CORPORATION

Install the carrier using the marks made earlier. If necessary, use tool see **9995504** .

INSTALLING A NEW NUT IN THE CARRIER

Install a new lubricated nut.

NOTE: There must be no axial play.

Tighten to **180-200 Nm** . Use counterhold see **9995652** with adapter see **9995759** .

NOTE: 200 Nm must not be exceeded

The forces on the pinion bearing may become too great, causing it to seize.

INSTALLING THE PROPELLER SHAFT

Check that the mating surfaces on the propeller shaft CV joint and flange are clean.

Align the propeller shaft CV joint against the flange.

Install the screws loosely in the support for the center bearing and the propeller shaft.

INSTALLING THE PROPELLER SHAFT USING THE MARKS MADE EARLIER

Use new screws. First tighten the screws crosswise. Tighten to **8 Nm** . Then tighten to **30 Nm** .

Use counterhold see **9997057** .

Tighten the screws for the support for the center bearing.

Tighten the screws for the propeller shaft center bearing

INSTALLING COMPONENTS

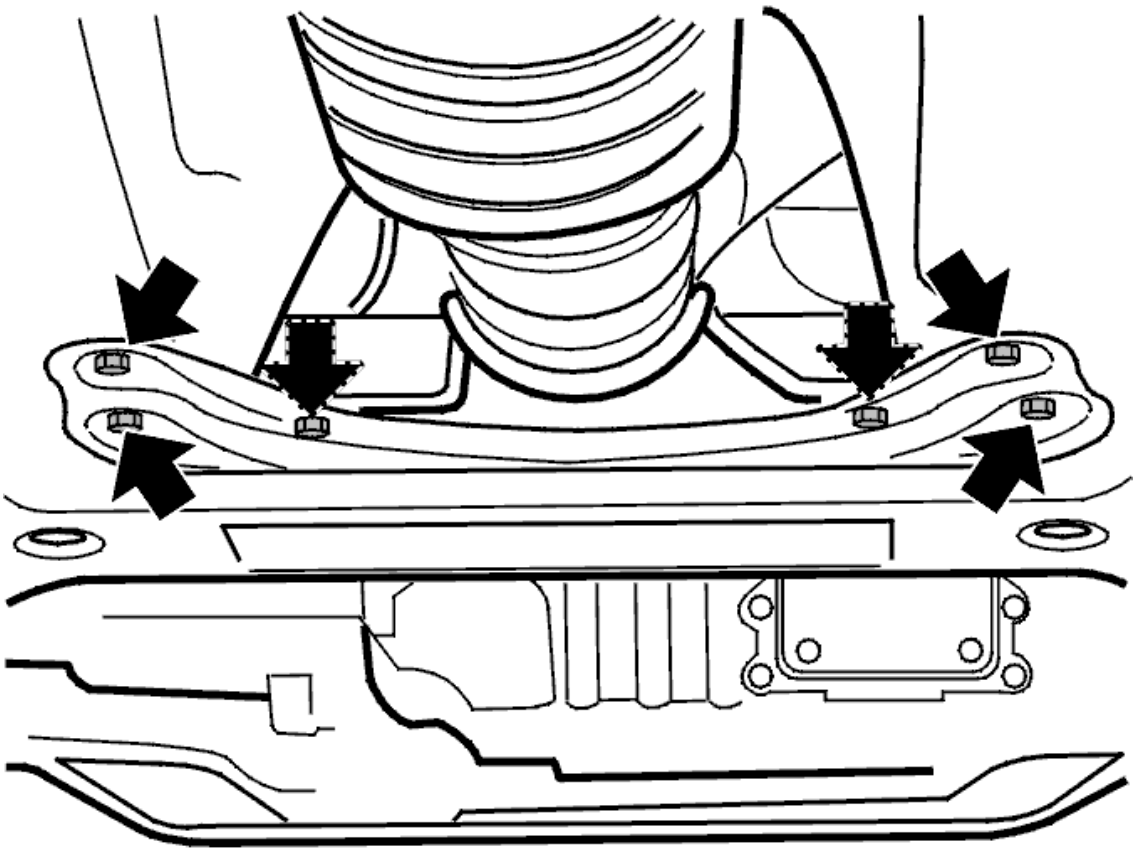

Fig. 30: Exhaust Pipe Bracket Screws
Courtesy of VOLVO CARS CORPORATION

- Install the front SIPS member. Press the brake pipe into place in the member
- Hook the rubber mounting for the three-way catalytic converter (TWC) in the bracket on the sub-frame
- Connect the connector for the rear heated oxygen sensors (HO2S). Clamp the wiring. Tighten the screwed joint between the three-way catalytic converter (TWC) and the exhaust system. See **SUMMARY OF TIGHTENING TORQUES FOR SPECIFIC COMPONENTS** .

FINISHING

Install:

- the anti-roll bar links. Use **new** lock nuts
- the splash guard under the engine

- the front protective cover on the sub-frame
- the front wheels. See **INSTALLING WHEELS**

INSTALLING STEERING SHAFT JOINT

Install:

- the steering shaft joint on the steering gear and steering shaft
- **new screw**
- the steering shaft boot and snap ring. Fold back the carpet.

Check for leakage.

CATALYTIC CONVERTER AND EMISSION EQUIPMENT (B8444S; 2005-2011)

HEATED OXYGEN SENSOR (HO2S), REPLACING

REPLACEMENT OF HEATED OXYGEN SENSORS, CYLINDER 2, 4, 6 AND 8 (BANK 2)

Special tools:

see **9995543**

NOTE: The illustrations in this service information are used for different model years and/or models. Some variation may occur. However, the essential information in the illustrations is always correct.

REMOVAL

REMOVING THE LOWER ENGINE COVER

Raise the vehicle: See **JACKING POINTS, BODY** .

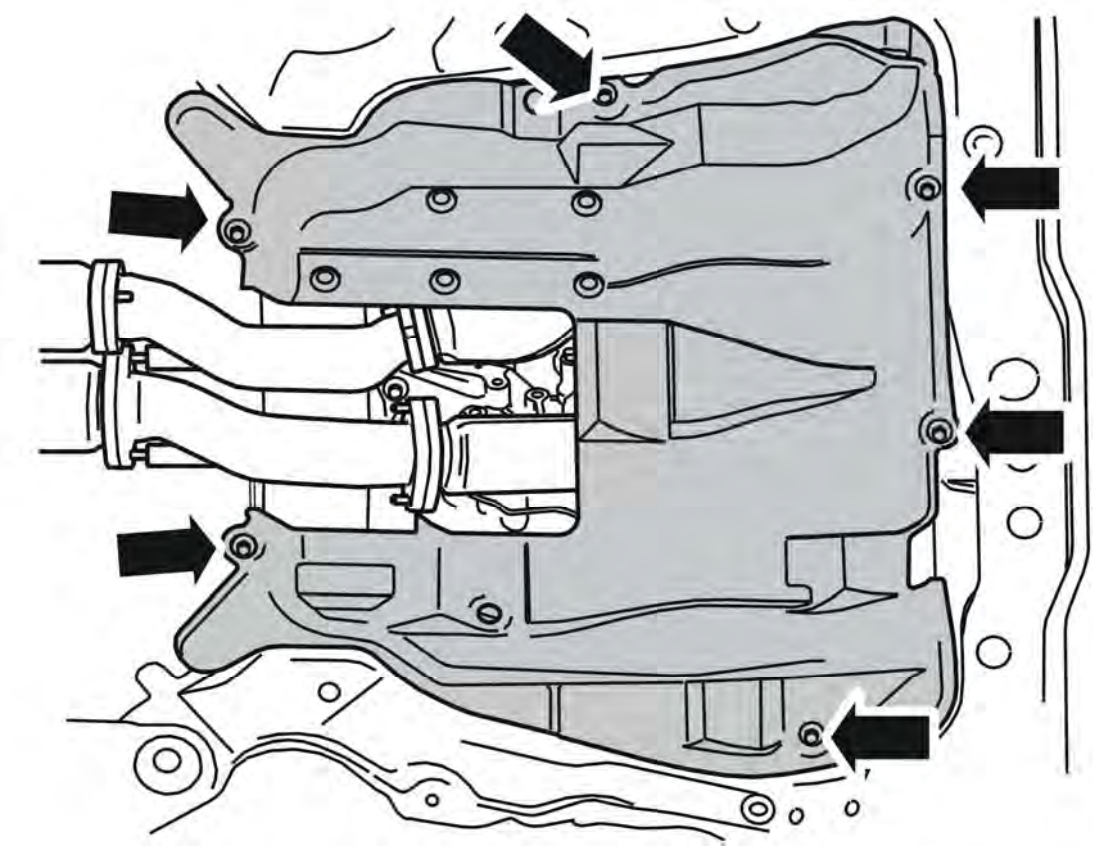

Fig. 31: Removing Lower Engine Cover
Courtesy of VOLVO CARS CORPORATION

Remove:

- the 6 screws
- the lower engine cover.

REMOVING THE REAR HEATED OXYGEN SENSOR

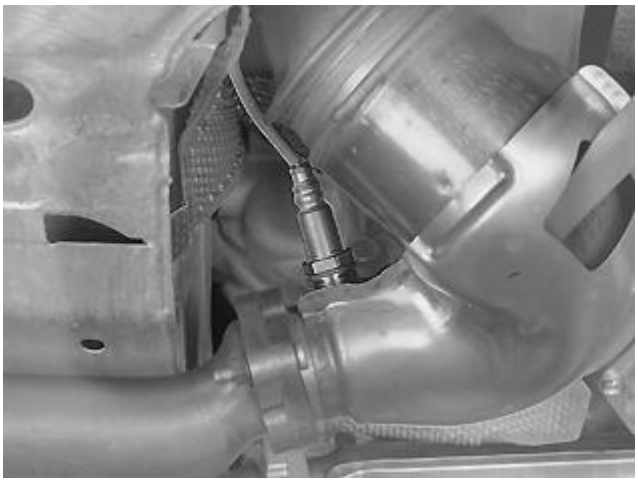

Fig. 32: Identifying Rear Heated Oxygen Sensor
Courtesy of VOLVO CARS CORPORATION

Unplug the connector of the rear heated oxygen sensor. Remove the oxygen sensor using see **9995543** .

REMOVING INTERMEDIATE PIPES

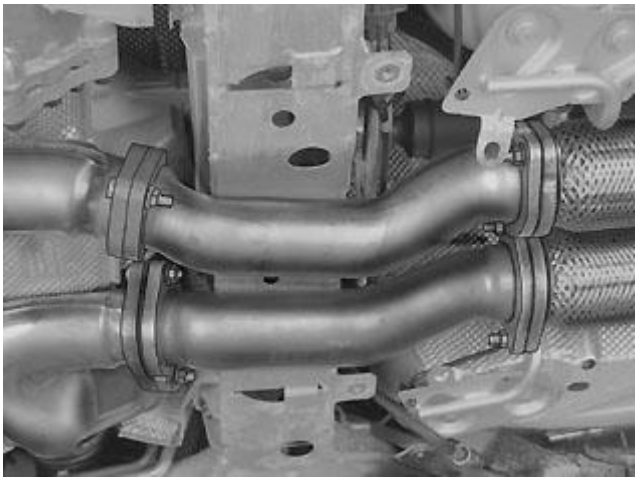

Fig. 33: Locating Intermediate Pipes
Courtesy of VOLVO CARS CORPORATION

Remove:

- the 8 nuts
- the 2 intermediate pipes. Scrap the 4 gaskets.

UNPLUGGING THE CONNECTOR OF THE FRONT HEATED OXYGEN SENSOR

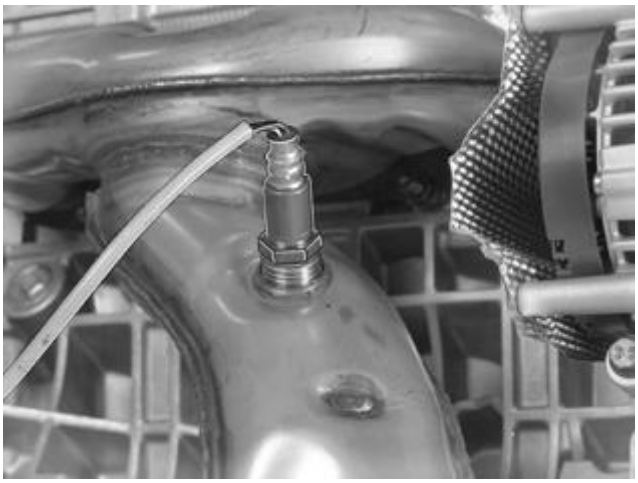

Fig. 34: Identifying Front Heated Oxygen Sensor
Courtesy of VOLVO CARS CORPORATION

Remove the front heated oxygen sensor using tool see **9995543** .

INSTALLATION

NOTE: **To ensure that there is no exhaust leakage, see: FLANGED JOINT, ASSEMBLING .**

INSTALLING THE FRONT HEATED OXYGEN SENSOR

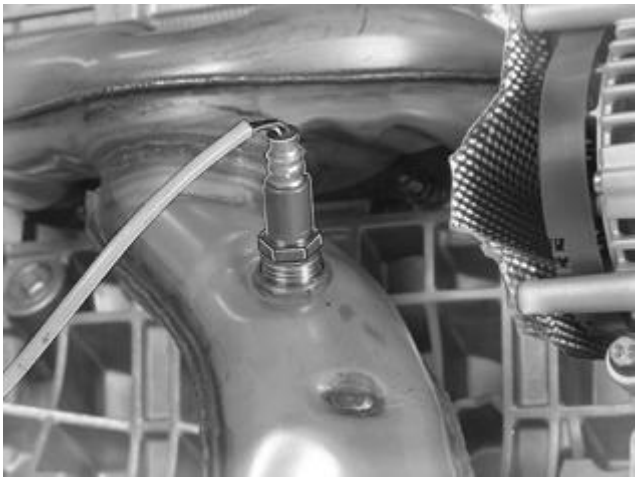

Fig. 35: Identifying Front Heated Oxygen Sensor
Courtesy of VOLVO CARS CORPORATION

Install the front heated oxygen sensor using see **9995543** . Tighten as specified: **SUMMARY OF TIGHTENING TORQUES FOR SPECIFIC COMPONENTS** . Plug in the connector of the front heated oxygen sensor. Position the connector in the retainer.

INSTALLING INTERMEDIATE PIPES

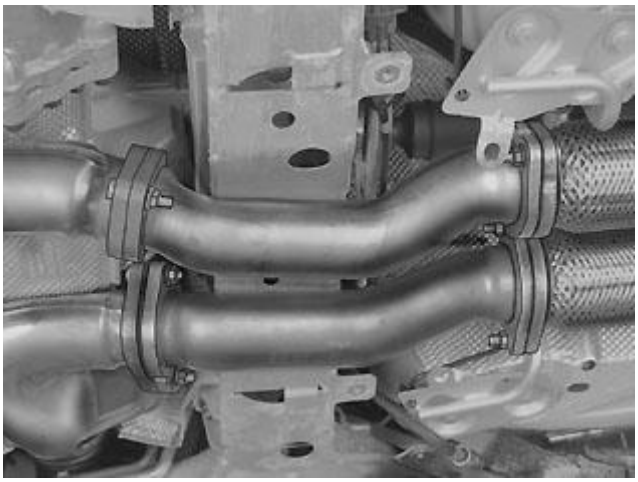

Fig. 36: Locating Intermediate Pipes
Courtesy of VOLVO CARS CORPORATION

Install:

- **new** 4 gaskets
- the 2 intermediate pipes
- the 8 nuts; tighten.

INSTALLING THE REAR HEATED OXYGEN SENSOR

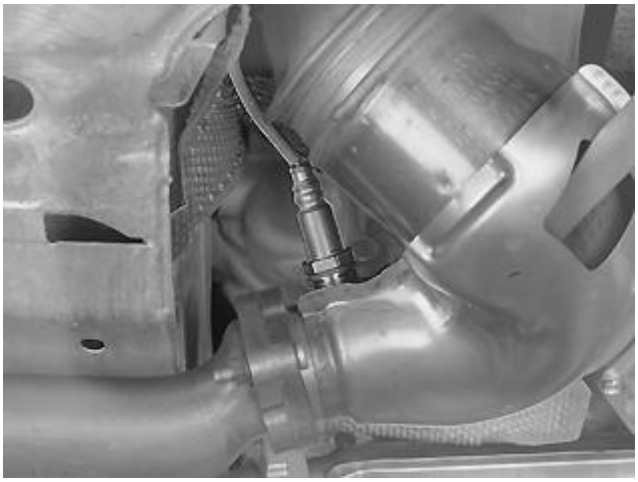

Fig. 37: Identifying Rear Heated Oxygen Sensor
Courtesy of VOLVO CARS CORPORATION

Install the rear heated oxygen sensor using see **9995543** . Tighten as specified: **SUMMARY OF TIGHTENING TORQUES FOR SPECIFIC COMPONENTS** . Plug in the connector of the rear heated oxygen sensor. Position the connector in the retainer.

INSTALLING THE LOWER ENGINE COVER

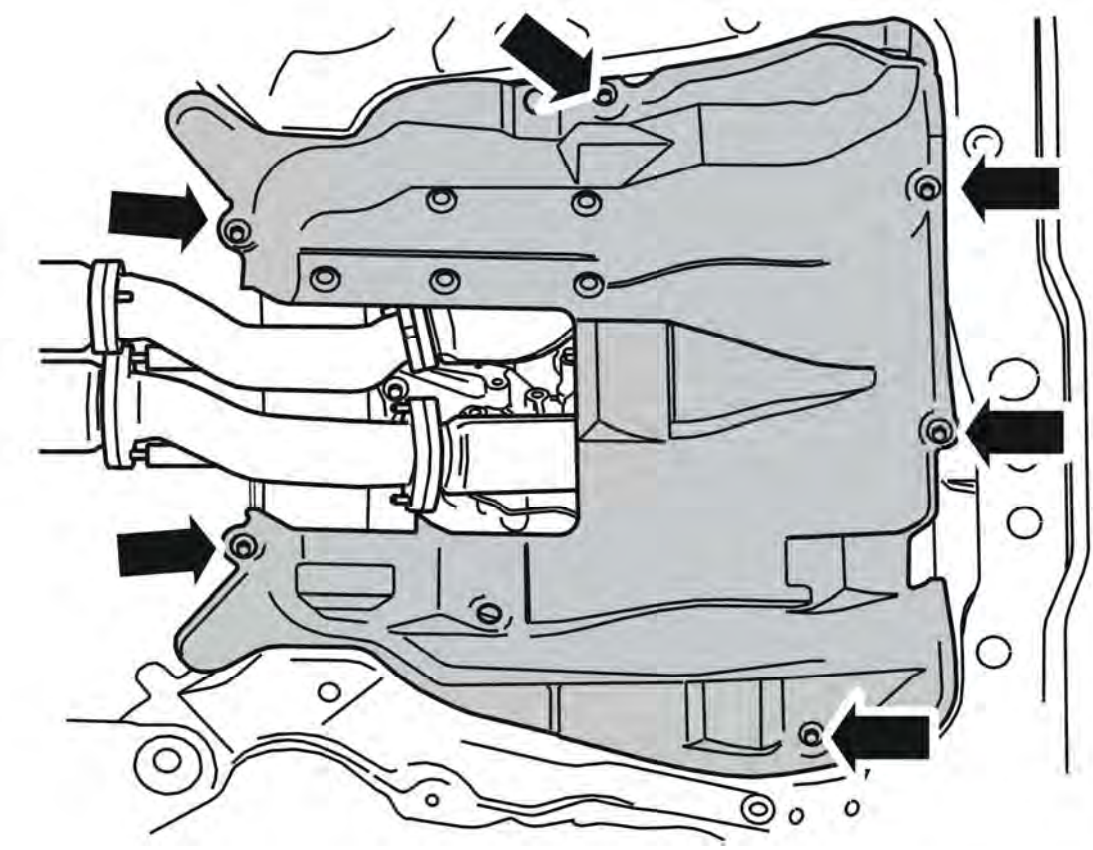

Fig. 38: Removing Lower Engine Cover
Courtesy of VOLVO CARS CORPORATION

Install:

- the lower engine cover
- the 6 screws; tighten.

REPLACEMENT OF HEATED OXYGEN SENSORS, CYLINDER 1, 3, 5 AND 7 (BANK 1)

REMOVAL

REMOVING PROTECTIVE PLATE

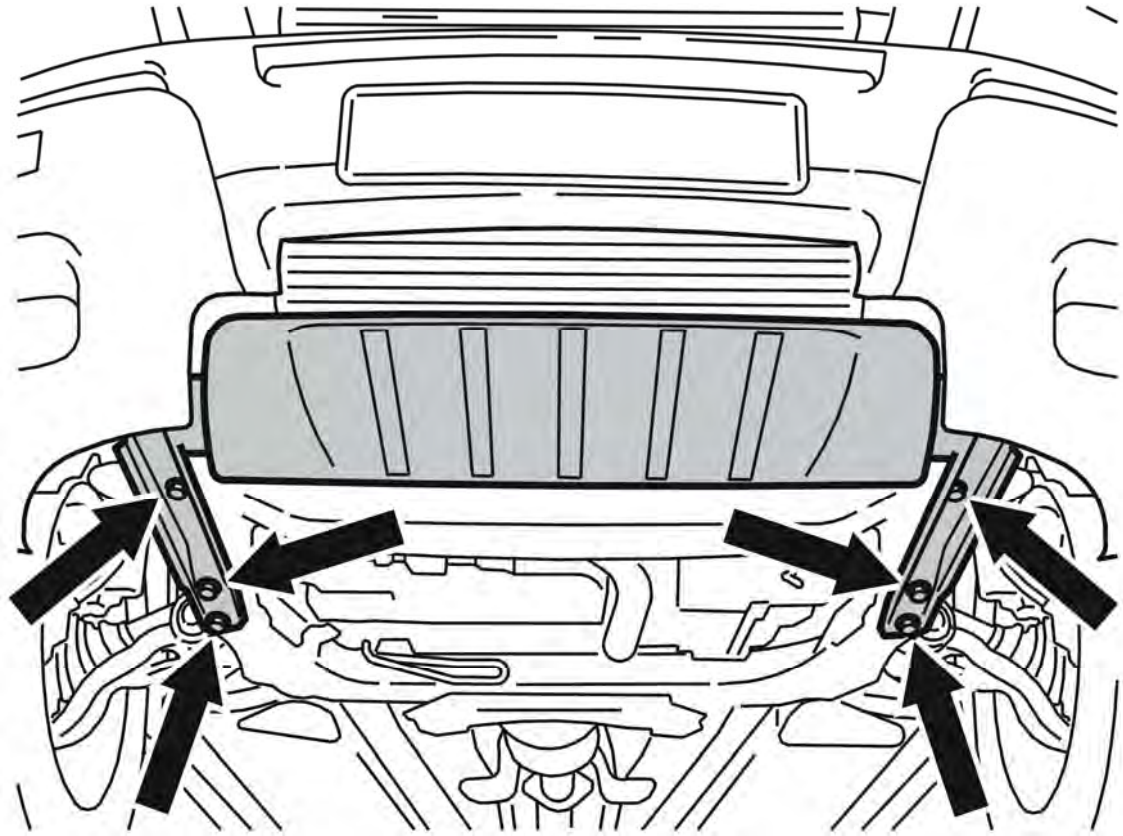

Fig. 39: Splash Guard. Protective Plate And Screws
Courtesy of VOLVO CARS CORPORATION

NOTE: There is a guide sleeve on the upper mounting for the plate. This must be lifted slightly so that the panel can be slid forward.

Remove the 6 screws. Lift and slide the protective plate forward. Remove the protective plate.

REMOVING THE LOWER ENGINE COVER

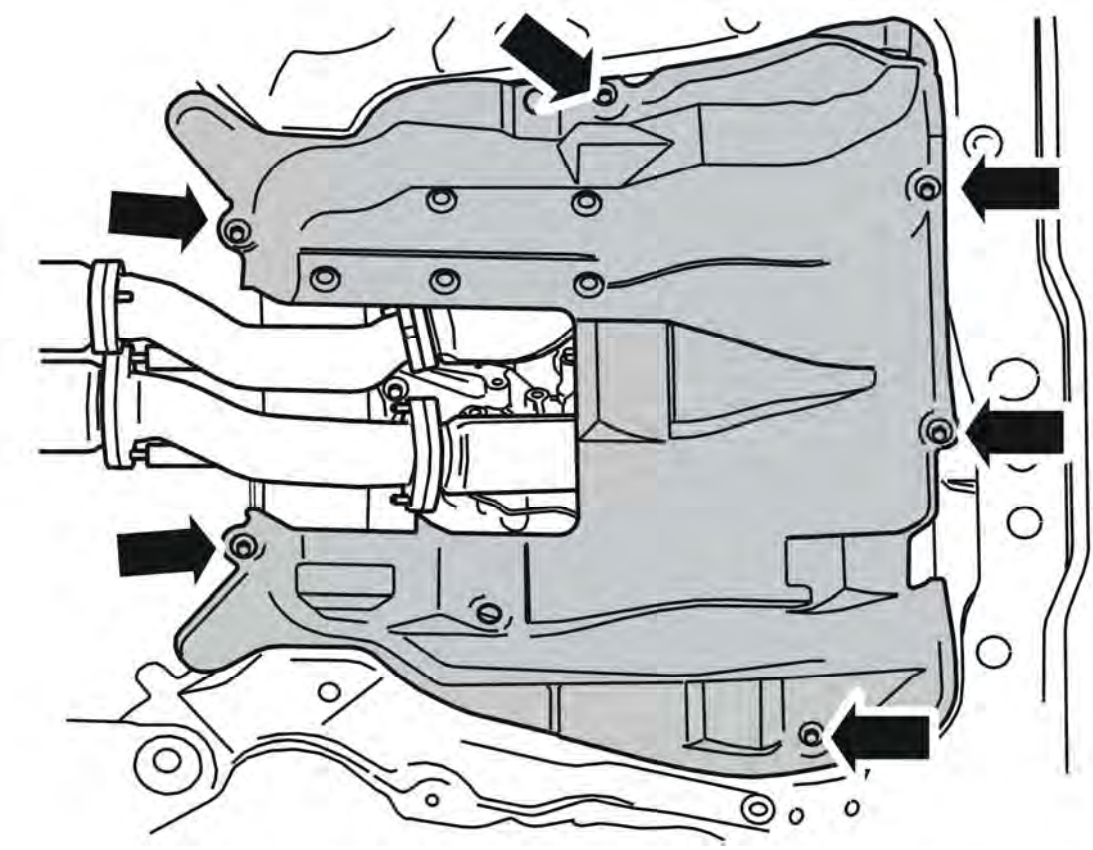

Fig. 40: Removing Lower Engine Cover
Courtesy of VOLVO CARS CORPORATION

Remove:

- the 6 screws
- the lower engine cover.

REMOVING THE FRONT HEATED OXYGEN SENSOR

Fig. 41: Identifying Front Heated Oxygen Sensor
Courtesy of VOLVO CARS CORPORATION

Unplug the connector of the front heated oxygen sensor from above. Remove the front heated oxygen sensor using see **9995543**

REMOVING THE REAR HEATED OXYGEN SENSOR

Fig. 42: Identifying Rear Heated Oxygen Sensor
Courtesy of VOLVO CARS CORPORATION

Unplug the connector of the front heated oxygen sensor from above. Remove the oxygen sensor using see **9995543** .

INSTALLATION

NOTE: To ensure that there is no exhaust leakage, see: FLANGED JOINT, ASSEMBLING .

INSTALLING THE FRONT HEATED OXYGEN SENSOR

Fig. 43: Identifying Front Heated Oxygen Sensor
Courtesy of VOLVO CARS CORPORATION

Install the front heated oxygen sensor using see **9995543** . Tighten as specified: **SUMMARY OF TIGHTENING TORQUES FOR SPECIFIC COMPONENTS** . Plug in the connector of the front heated oxygen sensor. Position the connector in the retainer.

INSTALLING THE REAR HEATED OXYGEN SENSOR

Fig. 44: Identifying Rear Heated Oxygen Sensor
Courtesy of VOLVO CARS CORPORATION

Install the rear heated oxygen sensor using tool see **9995543** . Tighten as specified: **SUMMARY OF TIGHTENING TORQUES FOR SPECIFIC COMPONENTS** . Plug in the connector of the rear heated oxygen sensor. Position the connector in the retainer.

INSTALLING THE LOWER ENGINE COVER

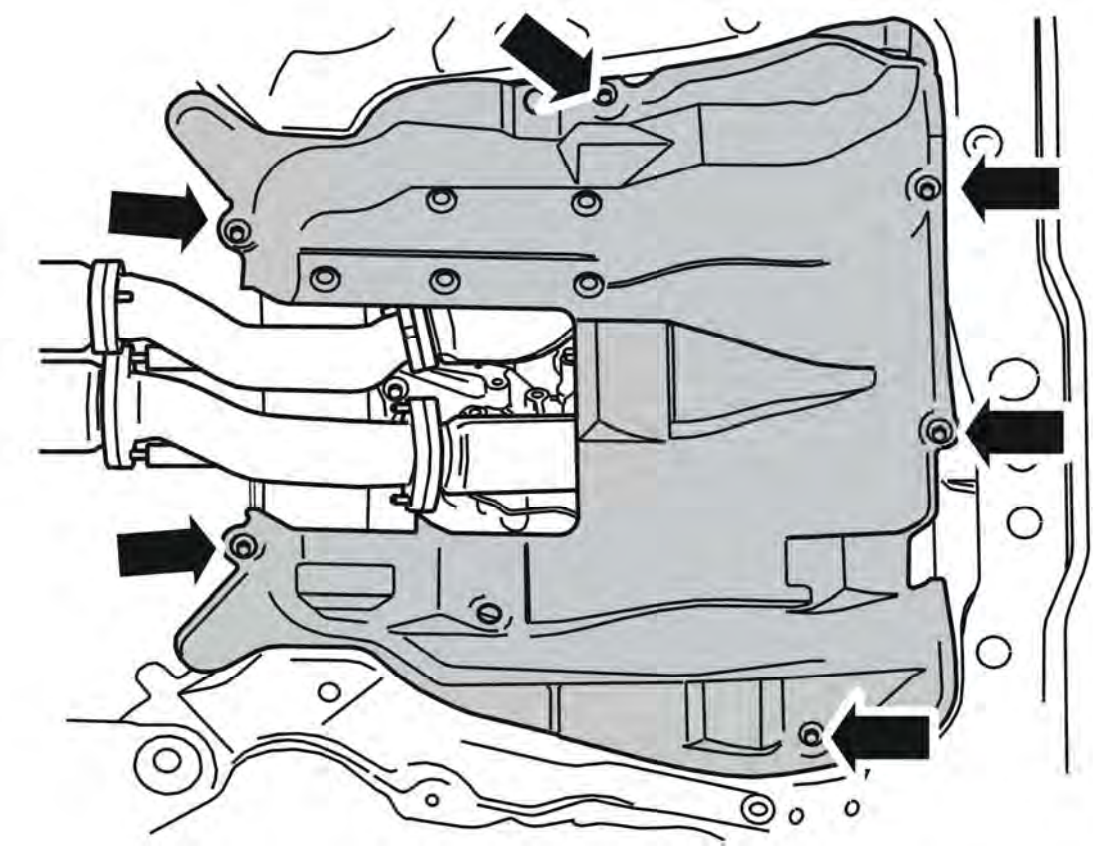

Fig. 45: Removing Lower Engine Cover
Courtesy of VOLVO CARS CORPORATION

Install:

- the lower engine cover
- the 6 screws; tighten.

INSTALLING THE PROTECTIVE PLATE

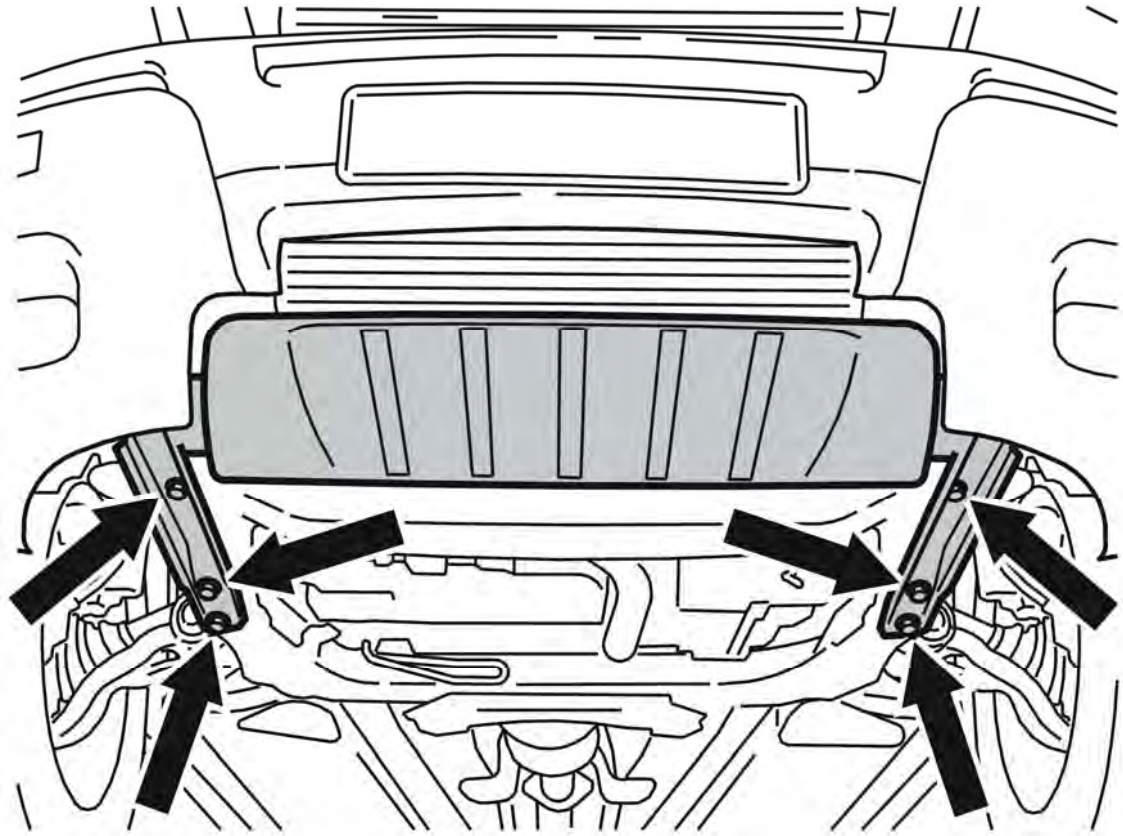

Fig. 46: Splash Guard. Protective Plate And Screws
Courtesy of VOLVO CARS CORPORATION

Install:

- the protective plate
- the 6 screws; tighten.

Erase Diagnostic Trouble Codes (DTCs).

Reset trim.

THREE-WAY CATALYTIC CONVERTER (TWC), REPLACING

NOTE: **The illustrations in this service information are used for different model years and/or models. Some variation may occur. However, the essential information in the illustrations is always correct.**

REMOVAL

REMOVING THE THREE-WAY CATALYTIC CONVERTER (TWC)

Raise the vehicle as described in, see **JACKING POINTS, BODY** .

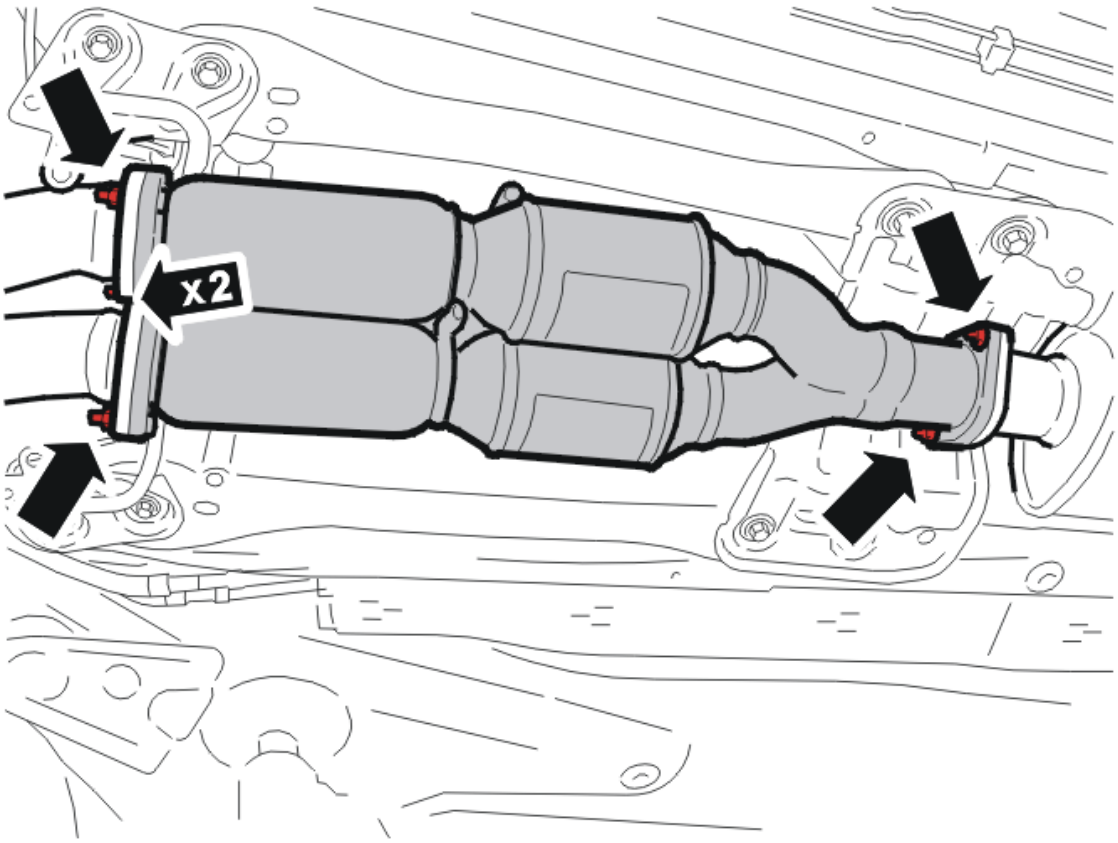

Fig. 47: Identifying Catalytic Converter Flange Bolts
Courtesy of VOLVO CARS CORPORATION

Remove:

- the 4 M8 nuts at the joint between the catalytic converter and the intermediate pipe. Scrap the gaskets.
- the nuts at the joint between the catalytic converter and the exhaust system. Scrap the gasket. Release the catalytic converter from the rubber mountings. Lower the catalytic converter.

INSTALLATION

NOTE: **For tightening torques, see: TIGHTENING TORQUE .**

NOTE: **To ensure that there is no exhaust leakage, see: FLANGED JOINT, ASSEMBLING .**

INSTALLING THE CATALYTIC CONVERTER

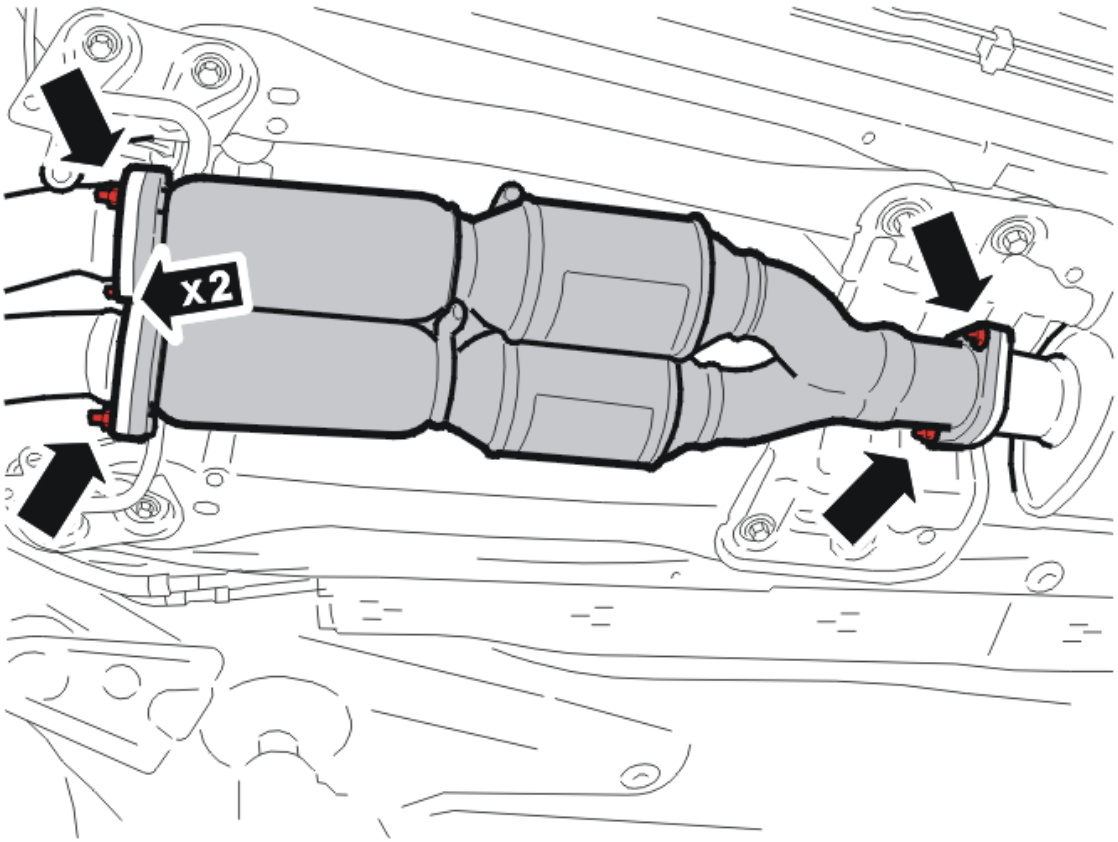

Fig. 48: Identifying Catalytic Converter Flange Bolts
Courtesy of VOLVO CARS CORPORATION

Install:

- the new gaskets
- the catalytic converter. Suspend the catalytic converter in the rubber mountings
- the 6 M8 nuts; tighten. Lower the vehicle.

FINISHING

Start the engine and check for leaks.

INLET AND EXHAUST SYSTEM (B5254T2, AW50/51 AWD; 2005-2007)

EXHAUST MANIFOLD / GASKET, REPLACING

Replacing the exhaust manifold and gasket according to **TURBOCHARGER, REPLACING**.

INTAKE PIPE/GASKET, REPLACEMENT

REMOVAL

NOTE: **Since the illustrations in this service information are used for different model years and / or models, some variation may occur. However, the essential information is always correct.**

REMOVING THE INTAKE MANIFOLD AND GASKET

Disconnect the battery negative lead. First read, see **BATTERY, DISCONNECTING** .

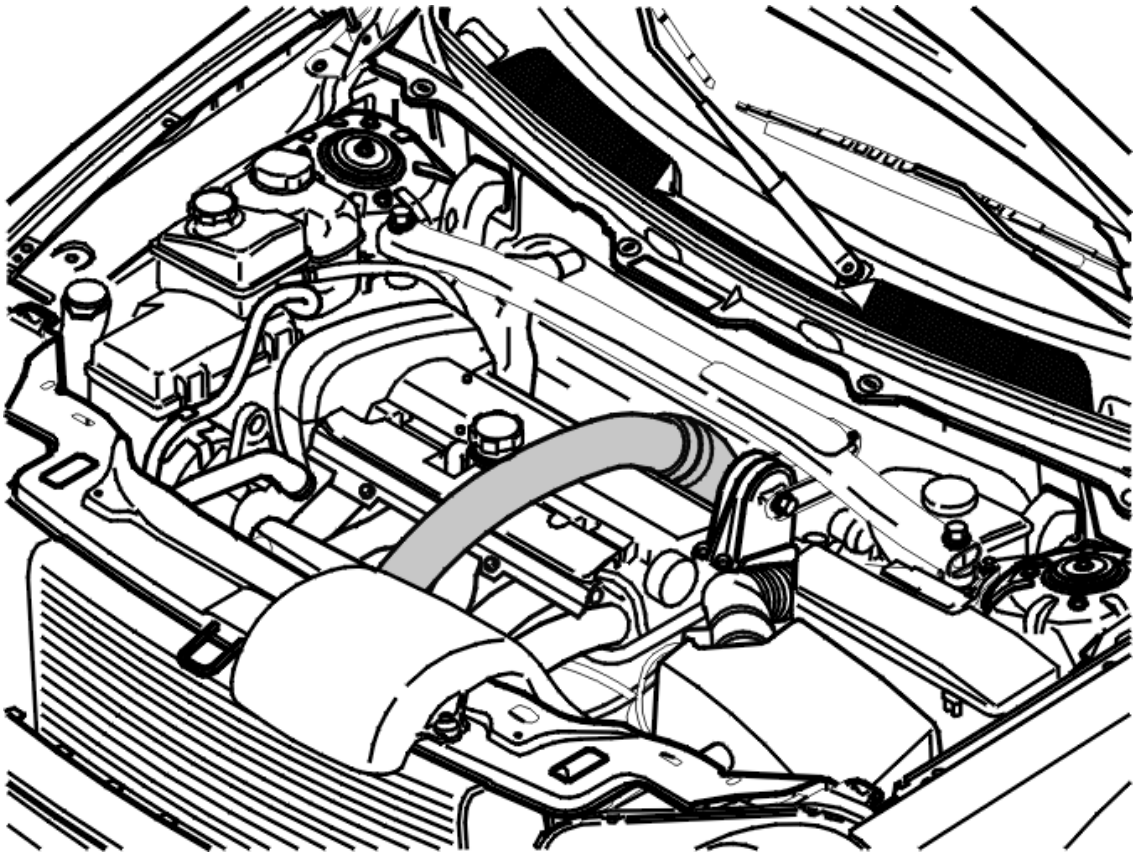

Fig. 49: Charge Air Pipe Over The Engine
Courtesy of VOLVO CARS CORPORATION

Depressurize the fuel system acc. to:**FUEL SYSTEM PRESSURE RELEASE** .

Remove:

- the charge air pipe over the engine
- the cover plate over the connectors from the injectors
- the fuel rail mounting screws. Spray universal oil or similar around the injector nozzle at the terminal on the intake manifold. Gently work the fuel rail and injector nozzles loose. Separate the fuel line quick-release connector. See: **FUEL LINE, LOCK** .

- Separate the throttle body (TB) connector
- Remove the plastic charge air pipe between the throttle body (TB) and the charge air cooler (CAC)

- Seal the openings. Mark up and remove the vacuum hoses from the intake manifold.

Remove:

- the oil filler cap
- the cover over the ignition coils
- the hose from the flame trap to the cam cover at the terminal in the cam cover.

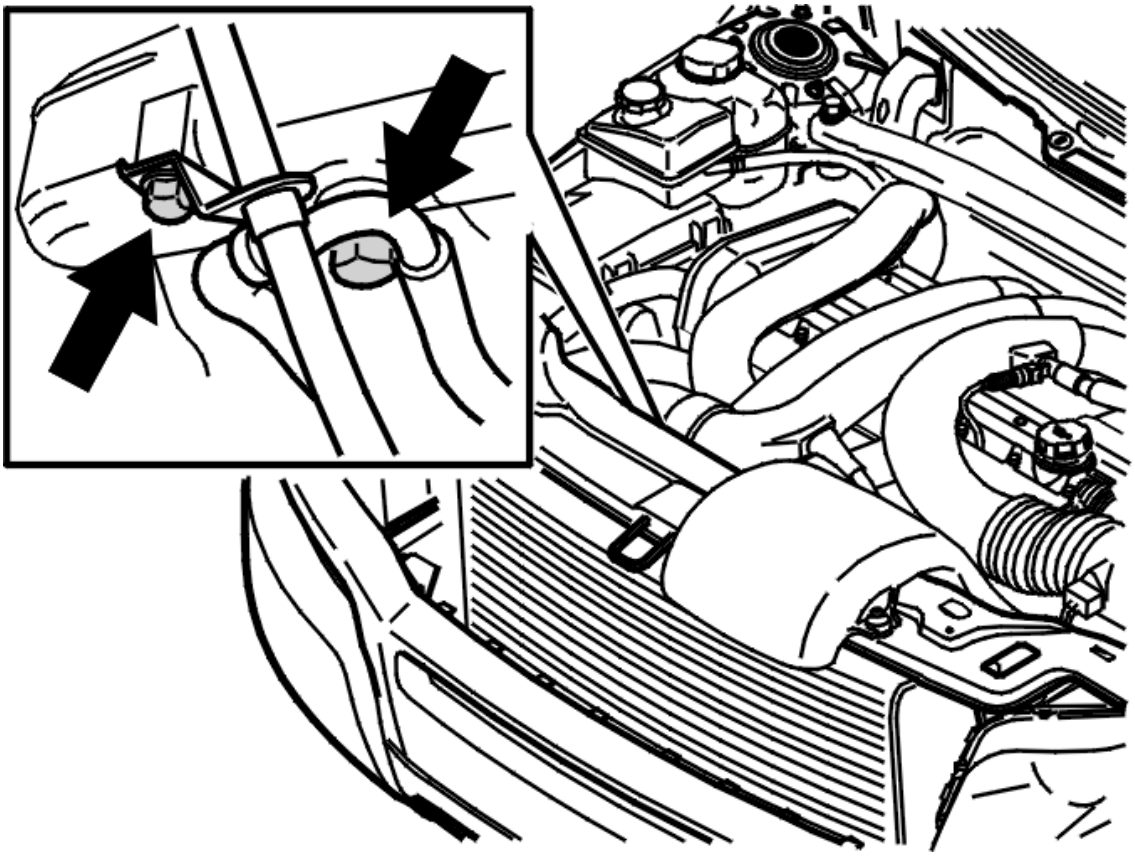

Fig. 50: Identifying Intake Manifold And Screws
Courtesy of VOLVO CARS CORPORATION

- Disconnect the dip stick pipe
- Slacken off the lower screws for the intake manifold a few turns
- Remove the mounting screws in the upper row and the outer screws in the lower row
- Remove the intake manifold by lifting it **approximately 20 mm**
- Remove the nipple for the water heated crankcase ventilation.

Allow the crankcase ventilation hose to run through the intake manifold without disconnecting it from the flame trap.

TRANSFERRING COMPONENTS WHEN REPLACING THE INTAKE MANIFOLD

Transfer the electronic throttle module.

Use a **new gasket** .

Tighten.

INSTALLATION

INSTALLING THE INTAKE MANIFOLD AND GASKET

NOTE: For tightening torques, see TIGHTENING TORQUE .

NOTE: Make sure that the gasket faces are clean.

Fig. 51: Identifying Intake Manifold
Courtesy of VOLVO CARS CORPORATION

Install:

- a **new gasket** held in position by the lower screws for the intake manifold. **Do not forget the clamp for the fuel line at the screw in the lower row.**
- the nipple for the water heated crankcase ventilation
- the intake manifold. Do not forget the crankcase ventilation hose. The hose must be inserted up through the gap between the second and third ducts
- the 3 upper screws. Torque tighten all the screws starting from the center.

FINISHING

Install

- the fuel rail. Press together the quick-release connector. Use **new screws** , see also: **FUEL LINE, LOCK**
- injector connectors

- the protective cover over the fuel rail
- the vacuum hoses according to the earlier markings
- the plastic charge air pipe between the throttle body (TB) and the charge air cooler (CAC)
- the connectors to the throttle body (TB)
- the dip stick in the intake manifold.

FINAL CHECK

Test drive the car. Check the following:

- that there is no fuel leakage
- that the engine operates normally.

Check that everything is in position. Clean the engine compartment.

THROTTLE BODY (ELECTRONIC THROTTLE MODULE (ETM)), REPLACING

NOTE: The illustrations in this service information are used for different model years and/or models. Some variation may occur. However, the essential information in the illustrations is always correct.

REMOVAL

PREPARATION

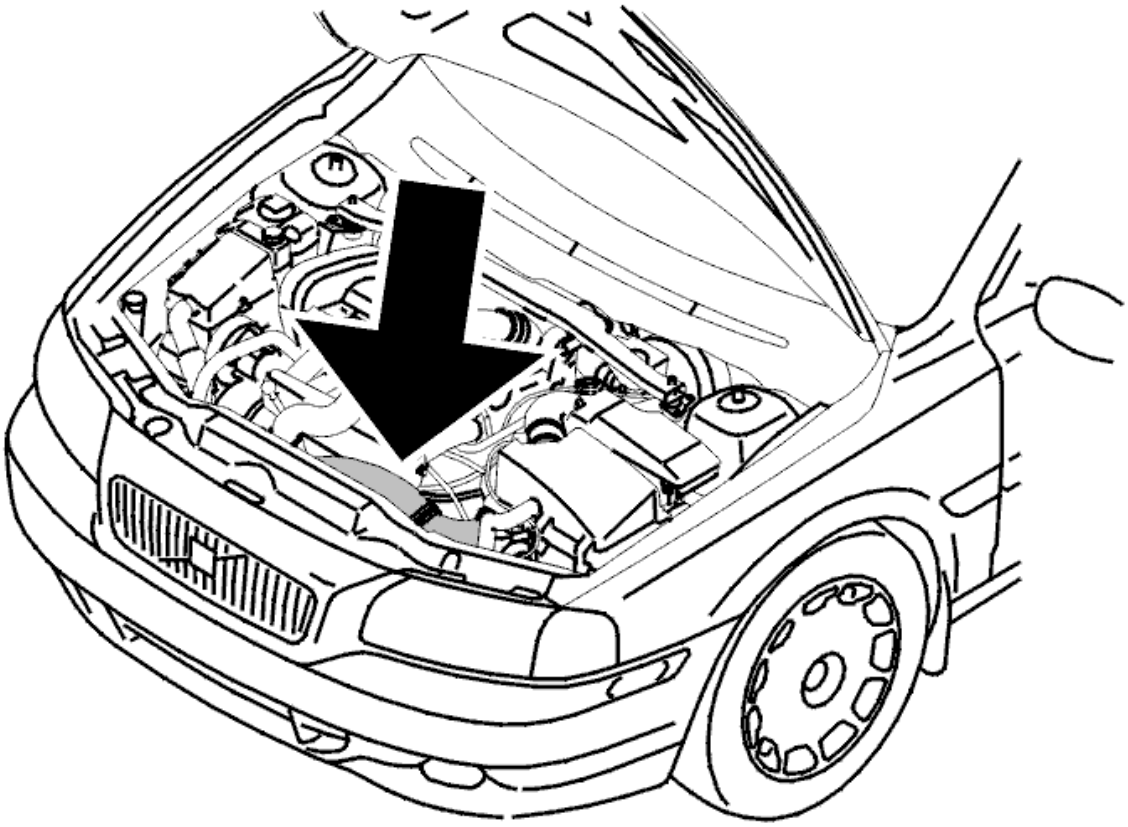

Fig. 52: Identifying Air Intake Between Front Cover Plate And Air Cleaner Housing
Courtesy of VOLVO CARS CORPORATION

Remove:

- the air intake between the front cover plate and the air cleaner (ACL) housing
- the charge air pipe between the charge air cooler (CAC) and the electronic throttle module (ETM).

REMOVING THE ELECTRONIC THROTTLE MODULE (ETM)

Fig. 53: Identifying Electronic Throttle Control Module And Throttle Body
Courtesy of VOLVO CARS CORPORATION

Disconnect the connector for the electronic throttle module.

Remove the 4 x screws for the electronic throttle module (ETM). Lift out the electronic throttle module (ETM). Discard the gasket.

INSTALLATION

NOTE: For tightening torques, see: TIGHTENING TORQUE .

REPLACING THE ELECTRONIC THROTTLE MODULE (ETM)

Fig. 54: Identifying Electronic Throttle Control Module And Throttle Body
Courtesy of VOLVO CARS CORPORATION

CAUTION: Ensure that the surfaces between the throttle body (TB) and the intake manifold are clean.

Install a new electronic throttle module (ETM). Use a new gasket. Tighten the 4 screws.

INSTALLING COMPONENTS

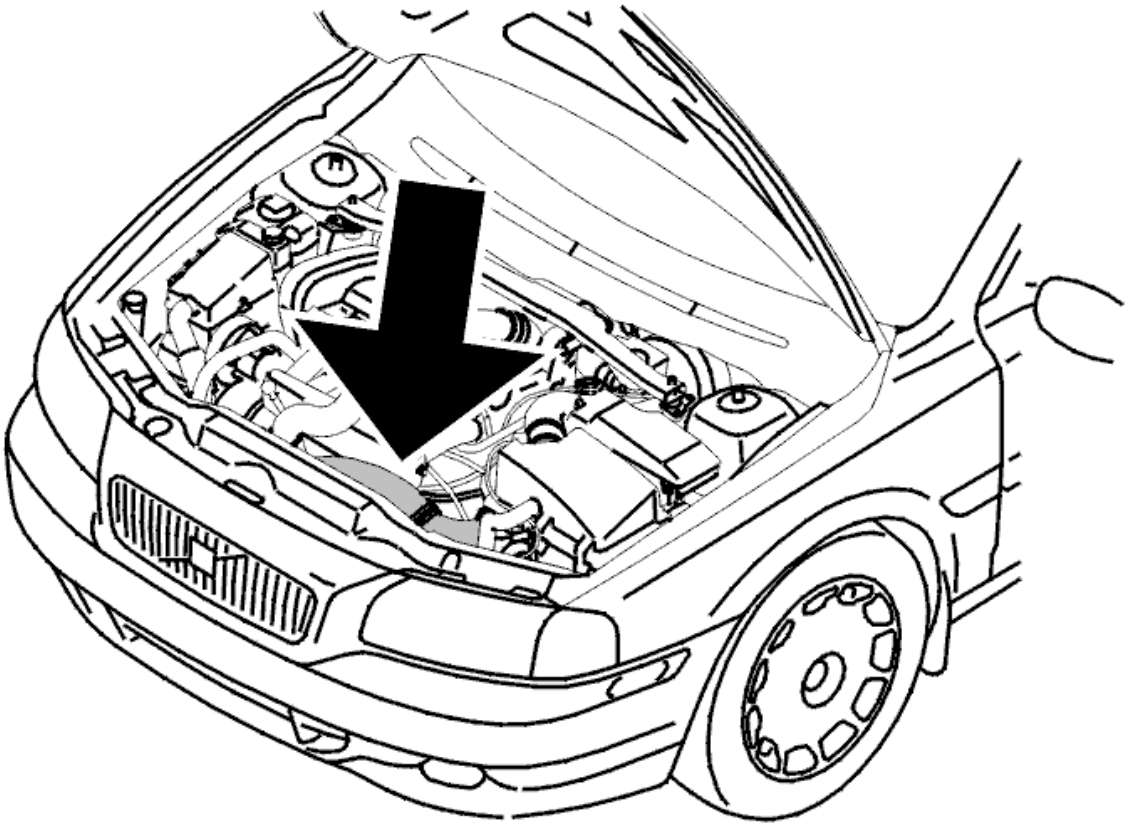

Fig. 55: Identifying Air Intake Between Front Cover Plate And Air Cleaner Housing
Courtesy of VOLVO CARS CORPORATION

Install the charge air pipe between the electronic throttle module (ETM) and the charge air cooler (CAC).

NOTE: Heat the pipe at the connections to facilitate installation.

Install the intake pipe between the front cover plate and the air cleaner (ACL) housing.

FINISHING

After replacing the electronic throttle module (ETM), the electronic throttle module (ETM) must be adapted using the vehicle communication input: "Adaptation of the electronic throttle unit"

Start the engine and check the function.

INLET AND EXHAUST SYSTEM (B5254T2, AW55-50/51SN; 2005-2007)

INTAKE PIPE/GASKET, REPLACEMENT

see **INTAKE PIPE/GASKET, REPLACEMENT**

REPLACING THE EXHAUST MANIFOLD AND GASKET

Replacing the exhaust manifold and gasket. See **TURBOCHARGER (TC)**.

THROTTLE BODY (ELECTRONIC THROTTLE MODULE (ETM)), REPLACING

see **THROTTLE BODY (ELECTRONIC THROTTLE MODULE (ETM)), REPLACING**

INTAKE AND EXHAUST MANIFOLD (B5254T2; 2003-2004)

EXHAUST MANIFOLD / GASKET, REPLACING

see **EXHAUST MANIFOLD / GASKET, REPLACING**

INTAKE PIPE/GASKET, REPLACEMENT

see **INTAKE PIPE/GASKET, REPLACEMENT**

THROTTLE BODY (ELECTRONIC THROTTLE MODULE), REPLACING

REMOVAL AND INSTALLATION

NOTE: **As the illustrations in this service information are used for different model years and / or models, some variation may occur. However, the essential information in the illustrations is always correct.**

REMOVING THE THROTTLE BODY (TB)

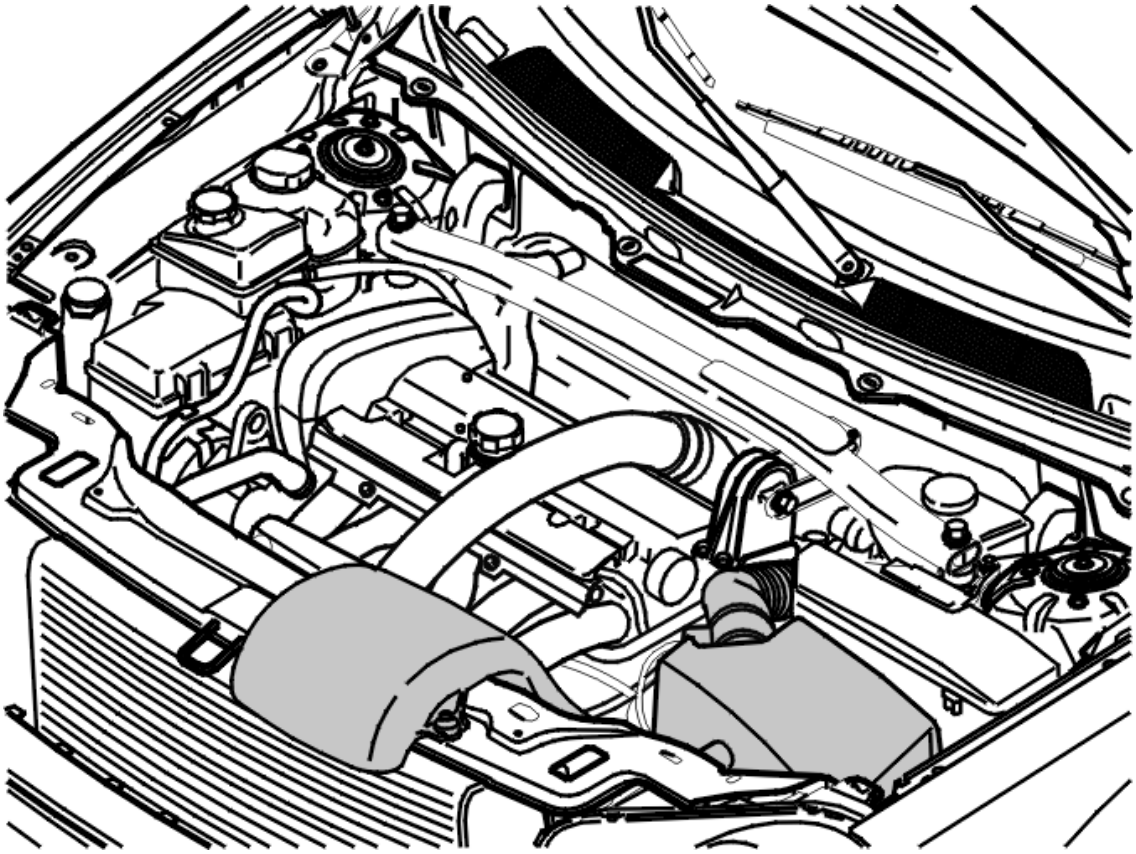

Fig. 56: Air Intake Between Front Cover Plate And Air Cleaner Housing
Courtesy of VOLVO CARS CORPORATION

Remove:

- the battery negative lead. See **BATTERY, DISCONNECTING**
- the air intake between the front cover plate and the air cleaner (ACL) housing
- the charge air pipe between the throttle body (TB) and the charge air cooler (CAC).

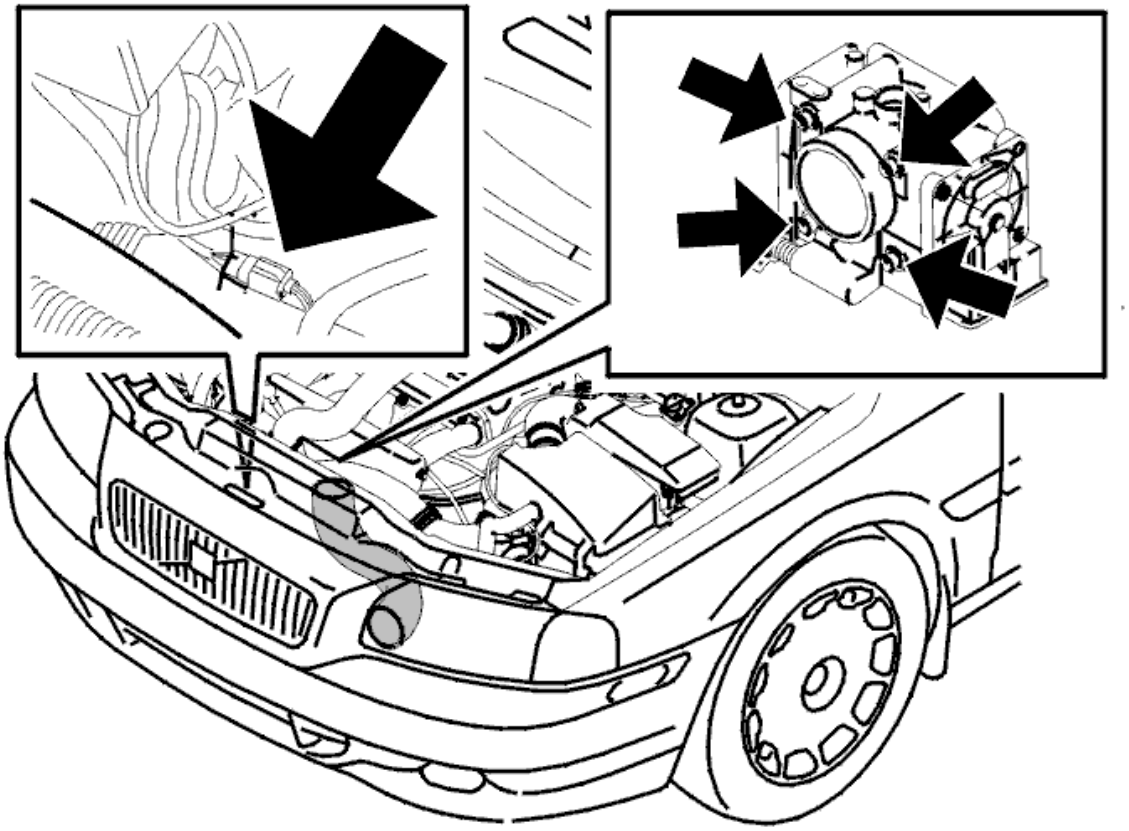

Fig. 57: Identifying Throttle Body, Hose And Screws
Courtesy of VOLVO CARS CORPORATION

Disconnect the throttle body (TB) connector.

Remove the 4 screws for the throttle body (TB).

Remove the throttle body (TB) and the gasket. Clean the mating surfaces thoroughly.

INSTALLING THE THROTTLE BODY (TB)

Install:

- the throttle body (TB). Use a **new gasket** . Tighten. Connect the throttle body (TB) connector
- the pipe between the throttle body (TB) and the charge air cooler (CAC)
- the intake manifold between the front cover plate and the air cleaner (ACL) housing
- the battery negative lead. See **BATTERY, DISCONNECTING** .

NOTE: **After replacing the throttle unit, the throttle unit must be adapted using the vehicle communication input: "Adaptation of the electronic throttle unit".**

Remedy as necessary.

INTAKE AND EXHAUST MANIFOLD (B6324S; 2007-2010)

DISTRIBUTION DAMPER INTAKE MANIFOLD

NOTE: Removal steps in this procedure may contain installation details.

Remove the intake manifold. See **INDUCTION PIPE**.

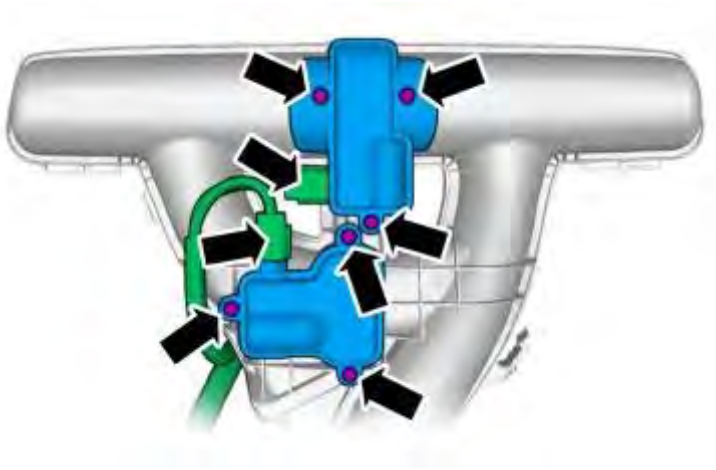

Fig. 58: Identifying Distribution Damper
Courtesy of VOLVO CARS CORPORATION

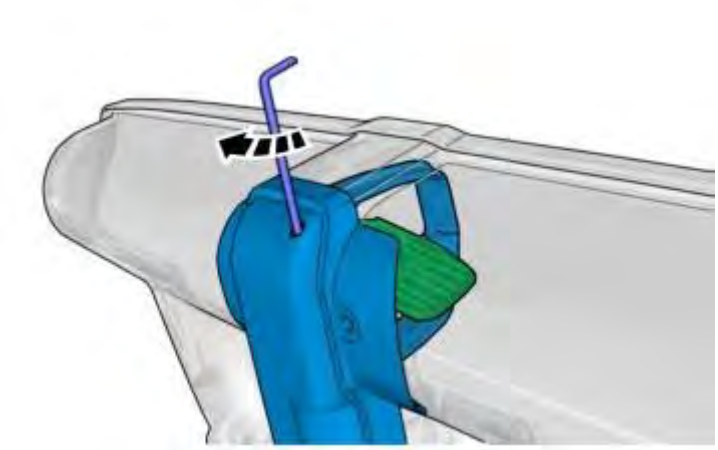

Fig. 59: Turning Clockwise To Close The Damper
Courtesy of VOLVO CARS CORPORATION

If the damper has jammed in the open position it must be screwed back as illustrated.

Make a hole at the mark and screw clockwise to close the damper.

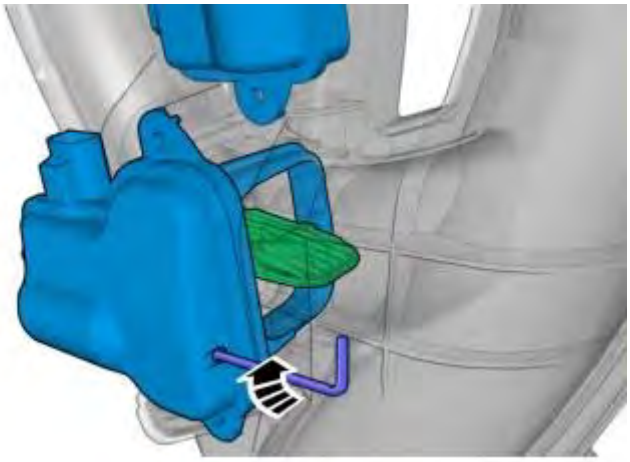

Fig. 60: Turning Clockwise To Close The Damper
Courtesy of VOLVO CARS CORPORATION

To install, reverse the removal procedure

EXHAUST MANIFOLD

Fig. 61: Removing Engine Cover
Courtesy of VOLVO CARS CORPORATION

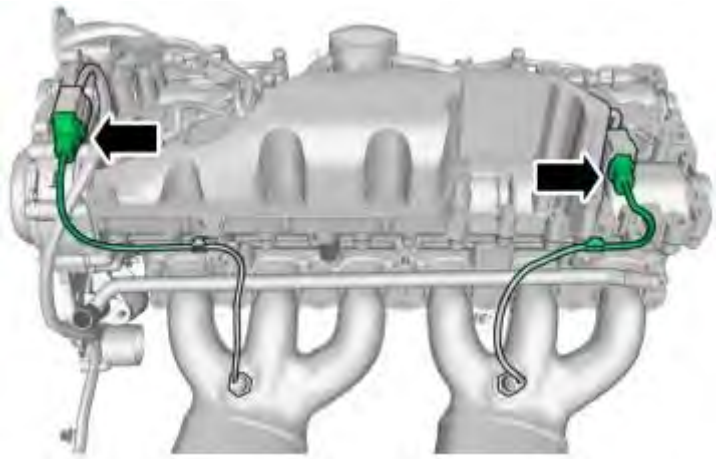

Fig. 62: Identifying Heated Oxygen Sensor Connectors
Courtesy of VOLVO CARS CORPORATION

Remove the catalytic converter. See **CATALYTIC CONVERTER**

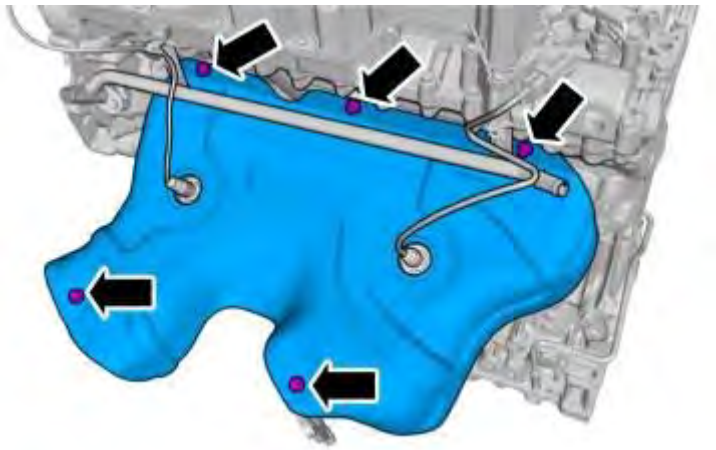

Fig. 63: Locating Heat Shield Bolts
Courtesy of VOLVO CARS CORPORATION

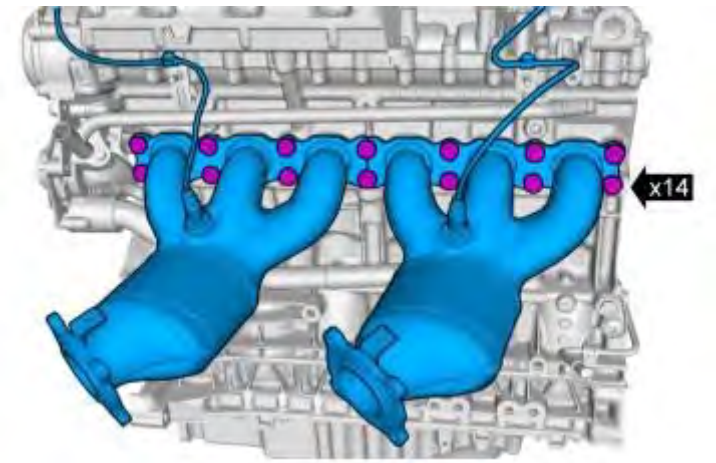

Fig. 64: Locating 14 Exhaust Manifold Bolts
Courtesy of VOLVO CARS CORPORATION

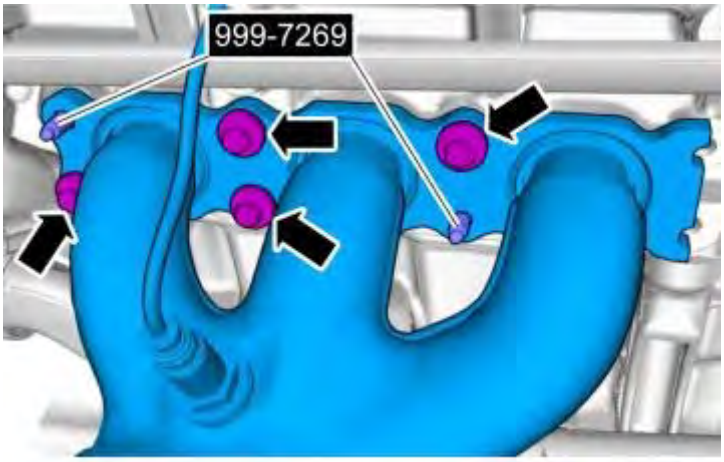

Fig. 65: Guide Pins (9997269) Installed
Courtesy of VOLVO CARS CORPORATION

see **9997269**

M8. See **TIGHTENING TORQUE**

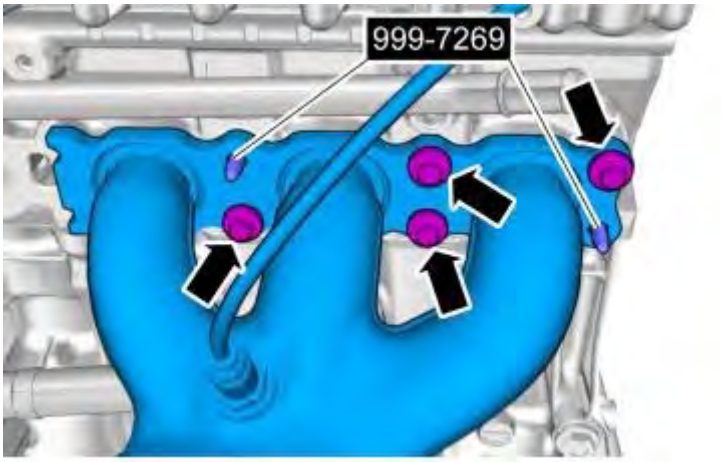

Fig. 66: Guide Pins (9997269) Installed
Courtesy of VOLVO CARS CORPORATION

see **9997269**

M8. See **TIGHTENING TORQUE**

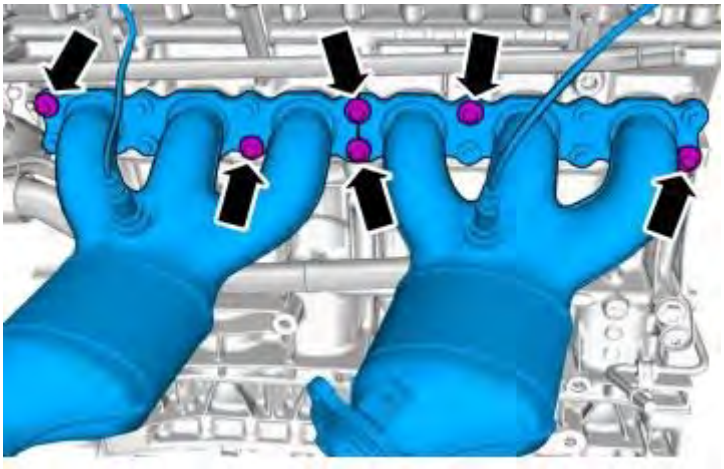

Fig. 67: Installing Bolts
Courtesy of VOLVO CARS CORPORATION

M8. See **TIGHTENING TORQUE**

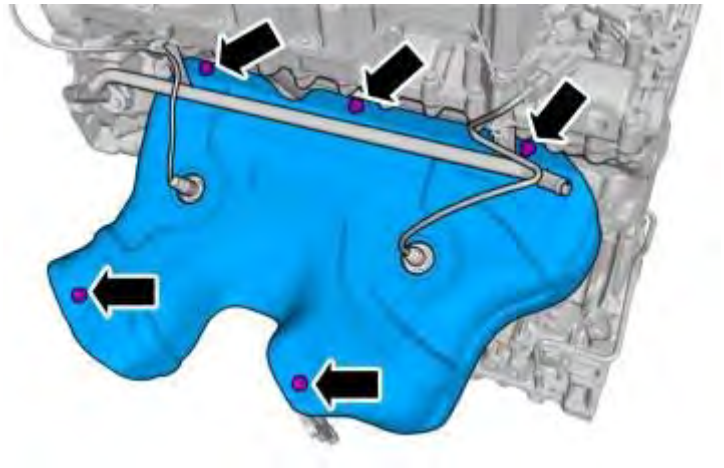

Fig. 68: Locating Heat Shield Bolts
Courtesy of VOLVO CARS CORPORATION

M8. See **TIGHTENING TORQUE**

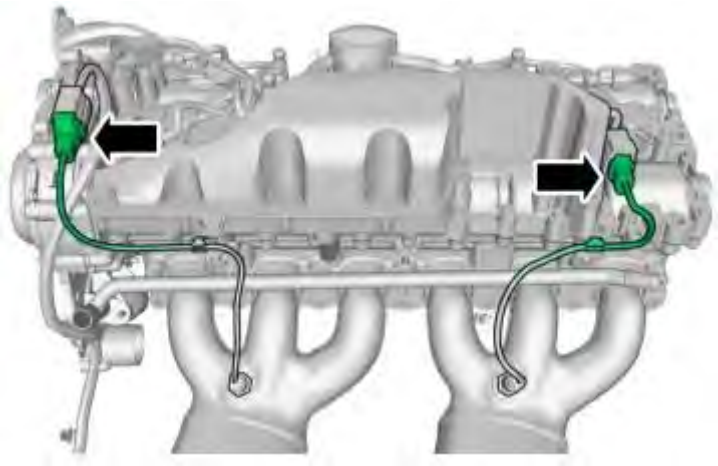

Fig. 69: Identifying Heated Oxygen Sensor Connectors
Courtesy of VOLVO CARS CORPORATION

Fig. 70: Removing Engine Cover
Courtesy of VOLVO CARS CORPORATION

INDUCTION PIPE

NOTE: Removal steps in this procedure may contain installation details.

Fig. 71: Removing Engine Cover
Courtesy of VOLVO CARS CORPORATION

Fig. 72: Locating Engine Undercover And Clips
Courtesy of VOLVO CARS CORPORATION

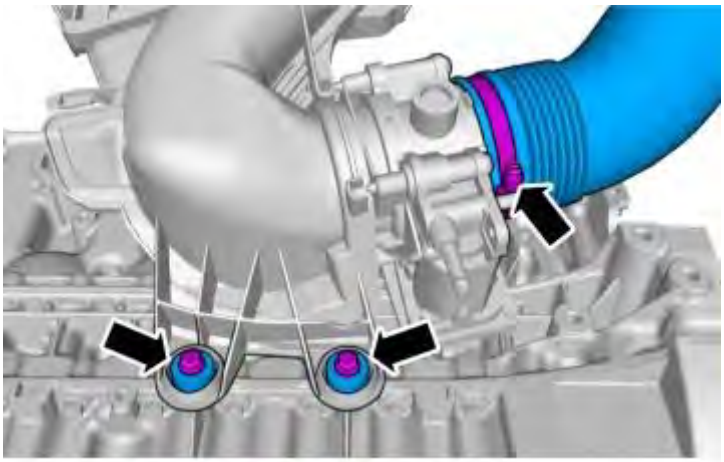

Fig. 73: Removing Throttle Housing Bolts
Courtesy of VOLVO CARS CORPORATION

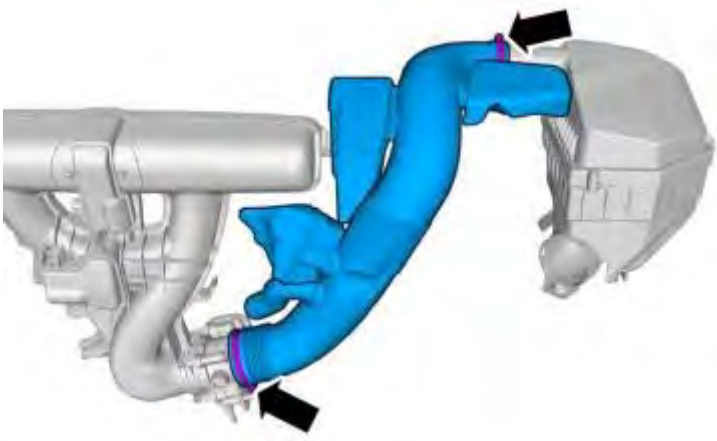

Fig. 74: Identifying Air Tube Clamps
Courtesy of VOLVO CARS CORPORATION

M6. See **TIGHTENING TORQUE**

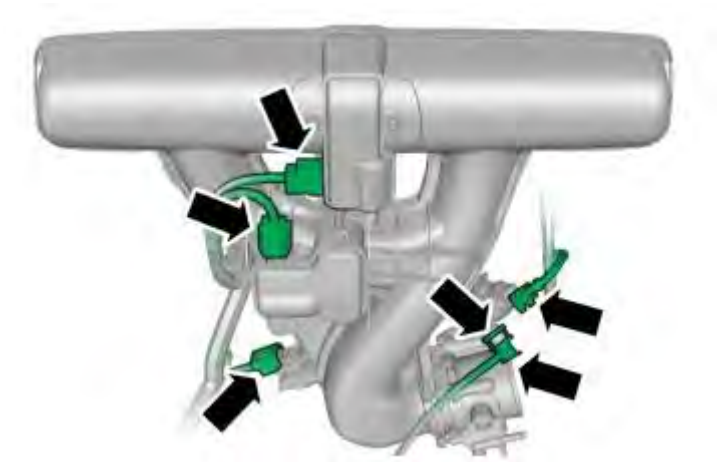

Fig. 75: Removing Connectors
Courtesy of VOLVO CARS CORPORATION

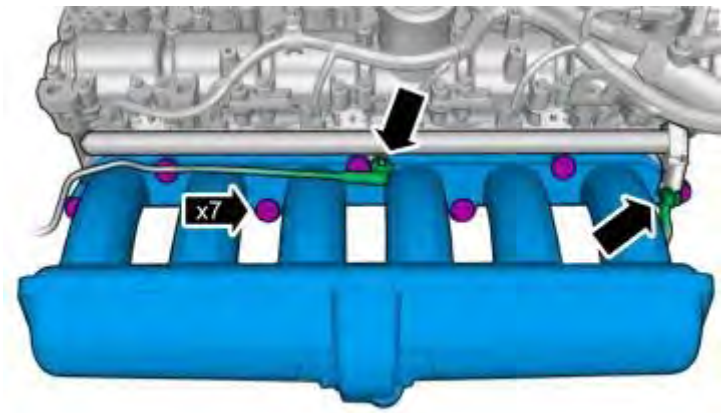

Fig. 76: Identifying Fasteners
Courtesy of VOLVO CARS CORPORATION

M7. See **TIGHTENING TORQUE**

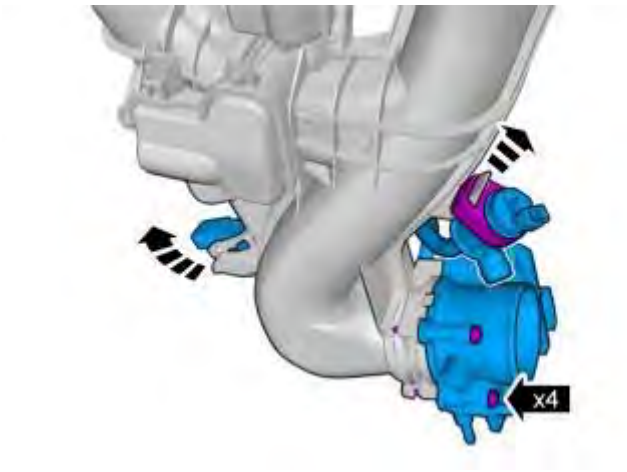

Fig. 77: Removing Throttle Body
Courtesy of VOLVO CARS CORPORATION

To install, reverse the removal procedure

THROTTLE BODY

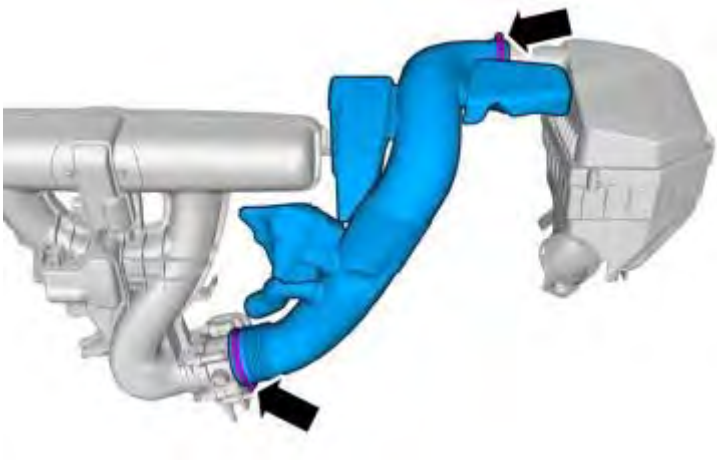

Fig. 78: Identifying Air Tube Clamps
Courtesy of VOLVO CARS CORPORATION

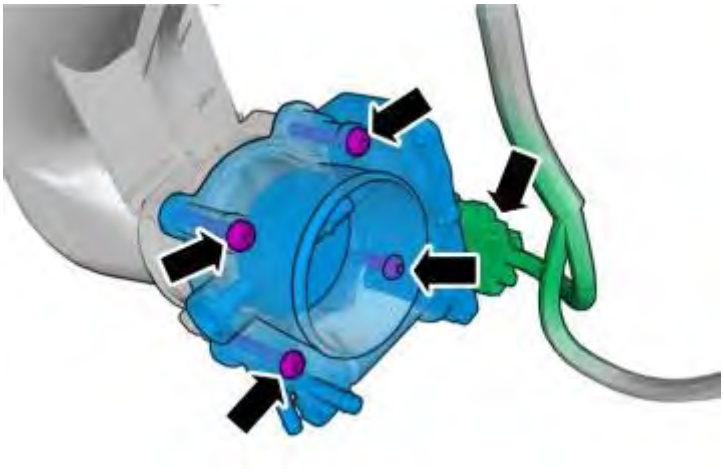

Fig. 79: Locating Throttle Body Screws
Courtesy of VOLVO CARS CORPORATION

INTAKE AND EXHAUST MANIFOLD (B6324S5; 2011-2012)

DISTRIBUTION DAMPER INTAKE MANIFOLD

see **DISTRIBUTION DAMPER INTAKE MANIFOLD**

EXHAUST MANIFOLD

see **EXHAUST MANIFOLD**

INDUCTION PIPE

see **INDUCTION PIPE**

THROTTLE BODY

see **THROTTLE BODY**

INTAKE AND EXHAUST MANIFOLD (B6294T; 2003-2006)

EXHAUST MANIFOLD / GASKET, REPLACING

For the exhaust manifold and gasket, see **TURBOCHARGER (TC), REPLACING**.

INTAKE MANIFOLD / GASKET, REPLACING

REMOVAL

NOTE: **Since the illustrations in this service information are used for different model years and / or models, some variation may occur. However, the essential**

information in the illustrations is always correct.

PREPARATION

Fig. 80: Engine And Stabilizer Brace
Courtesy of VOLVO CARS CORPORATION

Remove

- the battery negative lead.

  First read: See **BATTERY, DISCONNECTING** .

- plastic charge air pipe and hose to charge air cooler (CAC)
- the intake pipe between the air cleaner (ACL) and the turbocharger (TC).

Remove the intake pipe for the air cleaner (ACL) housing from the connection above radiator. Twist the pipe up.

Depressurize the fuel system. See **FUEL SYSTEM PRESSURE RELEASE** .

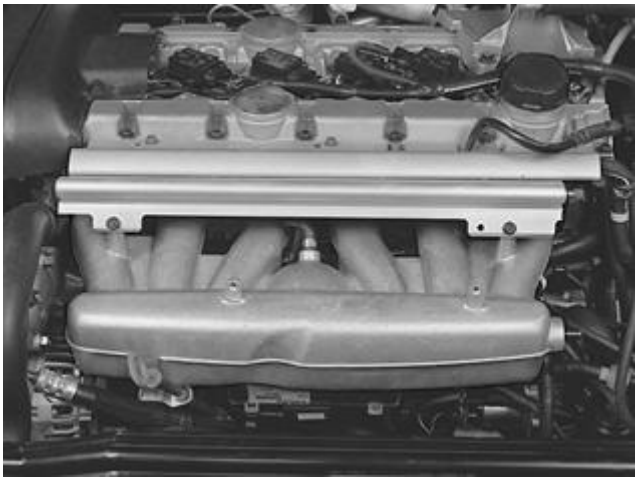

Fig. 81: Identifying Injector Connectors Cover
Courtesy of VOLVO CARS CORPORATION

Remove

- the protective cover over the injector connectors
- injector connectors
- the fuel rail mounting screws.

NOTE: Handle the injectors carefully to avoid damaging the fuel nozzles and fuel needles.

Spray universal oil or similar around the injector terminals on the intake manifold.

Gently work the fuel rail and injectors loose.

Detach the fuel line from the nozzle pipe by pressing the quick-release connector.

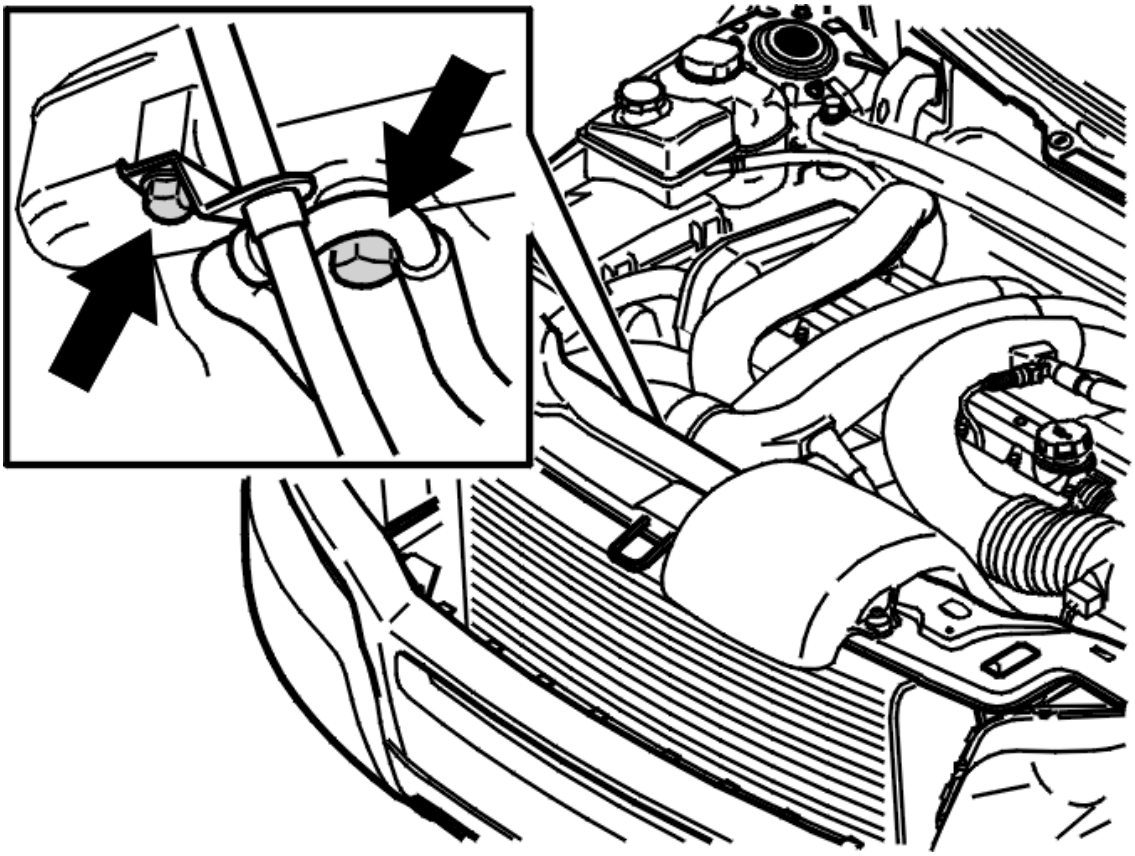

Fig. 82: Identifying Intake Manifold And Screws
Courtesy of VOLVO CARS CORPORATION

Remove

- the dip stick pipe mounting at the intake manifold
- the nipple for the crankcase ventilation under the intake
- disconnect the throttle body (TB) connector. Remove the plastic charge air pipe from the throttle body (TB).

REMOVING THE INTAKE MANIFOLD AND GASKET

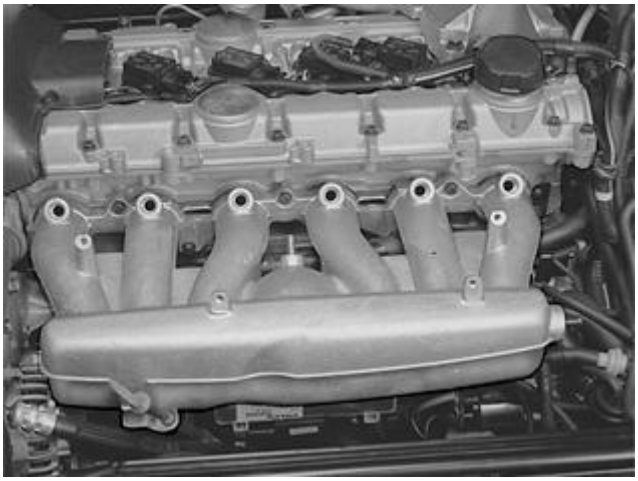

Fig. 83: Identifying Intake Manifold
Courtesy of VOLVO CARS CORPORATION

Remove the upper screws.

Remove the outer screws from the lower row.

Slacken off the remaining screws.

Lift up and remove the intake manifold.

Remove the remaining screws and gasket.

INSTALLATION

NOTE: For tightening torques, see TIGHTENING TORQUE .

TRANSFERRING COMPONENTS WHEN REPLACING INTAKE MANIFOLD

Transfer the throttle body using a **new gasket** . Tighten to **10 Nm** .

INSTALLING INTAKE MANIFOLD / GASKET

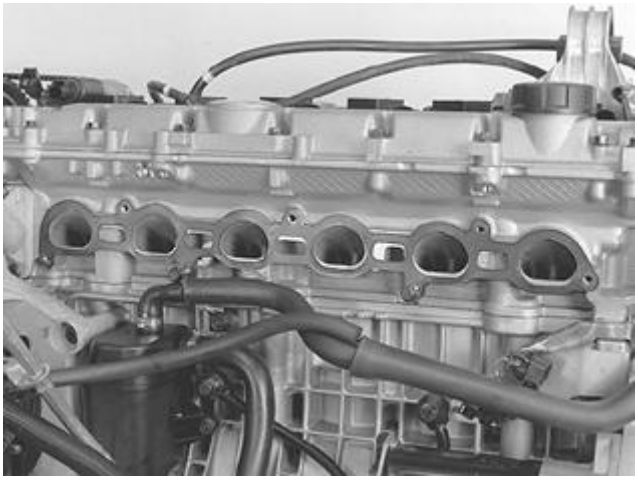

Fig. 84: Gasket
Courtesy of VOLVO CARS CORPORATION

Make sure that the gasket faces are clean.

Install a **new gasket** with the two centremost screws in the lower row.

Lower the intake over the 2 screws.

Install the remaining screws.

Tighten all the screws with **20 Nm** .

FINISHING

Connect the throttle body (TB) connector.

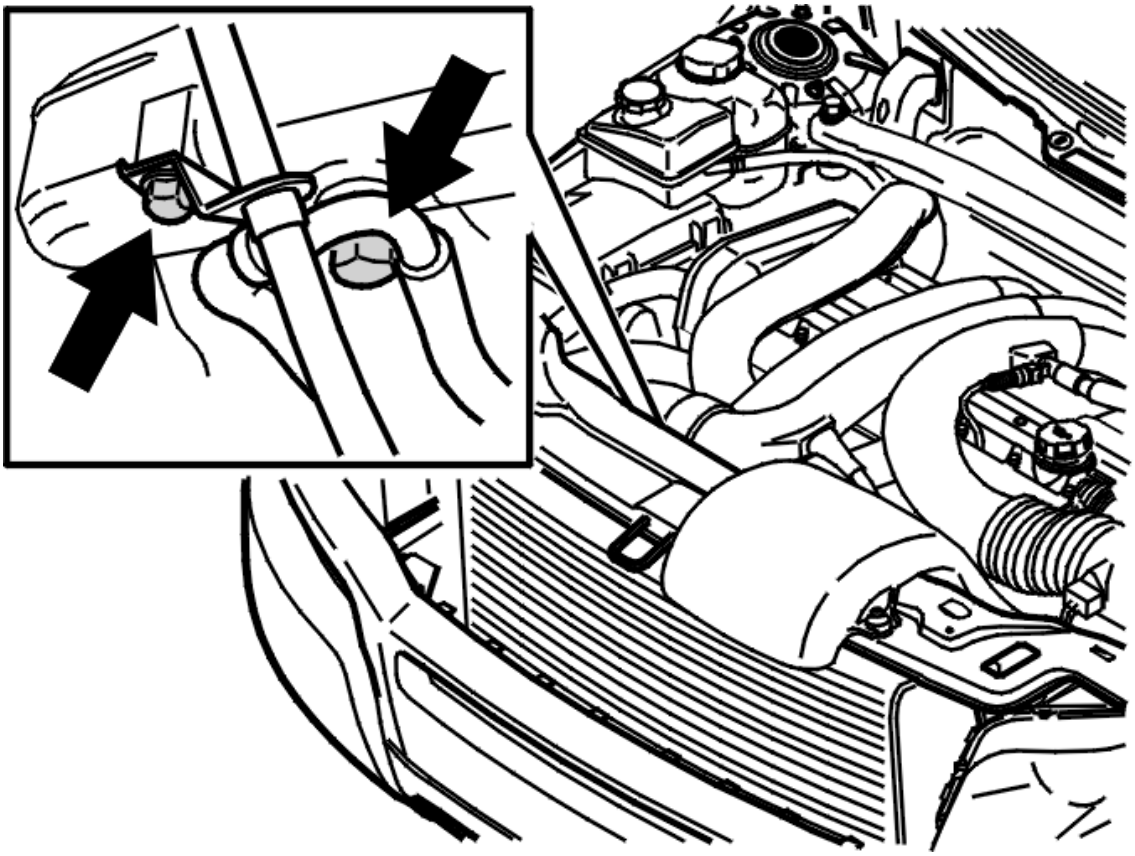

Fig. 85: Identifying Intake Manifold And Screws
Courtesy of VOLVO CARS CORPORATION

Install

- the vacuum hoses according to the earlier markings
- the nipple for the crankcase ventilation under the intake manifold
- the dip stick mounting screw to the intake manifold. Tighten to **25 Nm**
- the plastic charge air pipe between the throttle body (TB) and the charge air cooler (CAC).

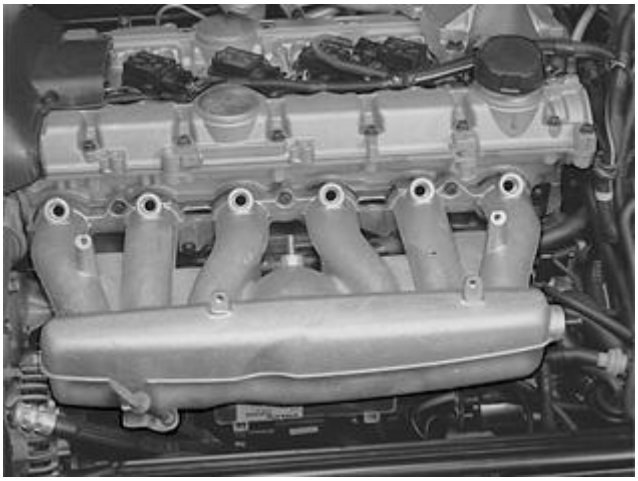

Fig. 86: Identifying Intake Manifold
Courtesy of VOLVO CARS CORPORATION

Lubricate the injector rings with petroleum jelly.

Hold the fuel rail. Press together the fuel line quick-connector until you hear a "click".

Press down the fuel rail. Check that all injectors are correctly positioned.

Tighten the fuel rail to **10 Nm** using **new screws** .

Connect all the connectors to the injectors.

Install the protective cover over the connectors to the nozzles.

Fig. 87: Engine And Stabilizer Brace
Courtesy of VOLVO CARS CORPORATION

Install:

- intake manifold between air cleaner (ACL) and turbocharger (TC)
- plastic charge air pipe and hose to charge air cooler (CAC)
- the air cleaner (ACL) intake pipe
- the negative battery lead. First read, see **BATTERY, DISCONNECTING** .

Test drive the engine.

THROTTLE BODY (ELECTRONIC THROTTLE MODULE), REPLACING

REMOVAL

NOTE: **As the illustrations in this service information are used for different model years and / or models, some variation may occur. However, the essential information**

in the illustrations is always correct.

PREPARATION

Remove the cable from the battery negative terminal. First read, see **BATTERY, DISCONNECTING** .

REMOVING THE CHARGE AIR COOLER (CAC)

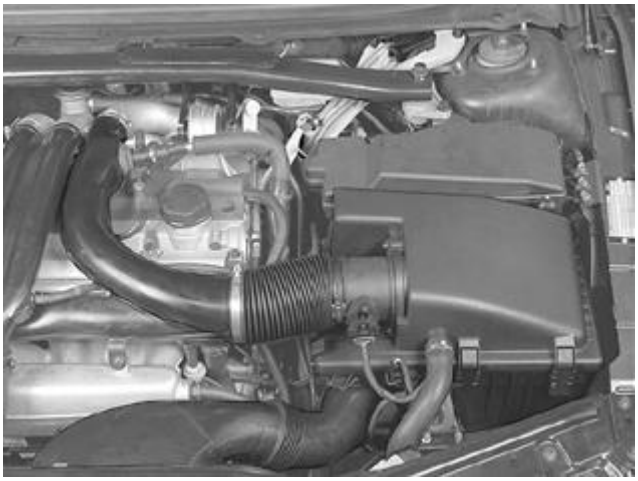

Fig. 88: Air Cleaner Housing Assembly
Courtesy of VOLVO CARS CORPORATION

Remove the intake manifold between the front cover plate and air cleaner (ACL) housing.

Disconnect the hose between the turbocharger (TC) and the charge air cooler (CAC) at its upper end. Push it to one side.

Remove the pipe between the throttle and the charge air cooler.

REMOVING THE THROTTLE BODY (TB)

Disconnect the throttle body (TB) connector.

Remove the mounting screws from the throttle body (TB). Lift up the throttle body (TB).

INSTALLATION

INSTALLING THE THROTTLE BODY (TB)

NOTE: For tightening torques, see TIGHTENING TORQUE .

- Clean the mating surfaces thoroughly
- Install the throttle body (TB). Use a new gasket. Tighten to **10 Nm**
- Connect the throttle body (TB) connector.

FINISHING

Fig. 89: Engine And Stabilizer Brace
Courtesy of VOLVO CARS CORPORATION

Install:

- the pipe between the charge air cooler (CAC) and the throttle
- the hose between the charge air cooler (CAC) and the turbocharger (TC)
- the intake manifold between the front cover plate and the air cleaner (ACL) housing.

Reconnect the battery negative lead. First read, see **BATTERY, DISCONNECTING** .

CAUTION: After replacing the throttle unit, the throttle unit must be adapted using the vehicle communication input: "Adaptation of the electronic throttle unit". Remedy as necessary.

VACUUM NIPPLE CRANKCASE VENTILATION, REPLACING

REMOVAL

REMOVING THE INTAKE MANIFOLD

Remove the intake manifold. See: **INTAKE MANIFOLD / GASKET, REPLACING**.

REMOVING THE VACUUM NIPPLE

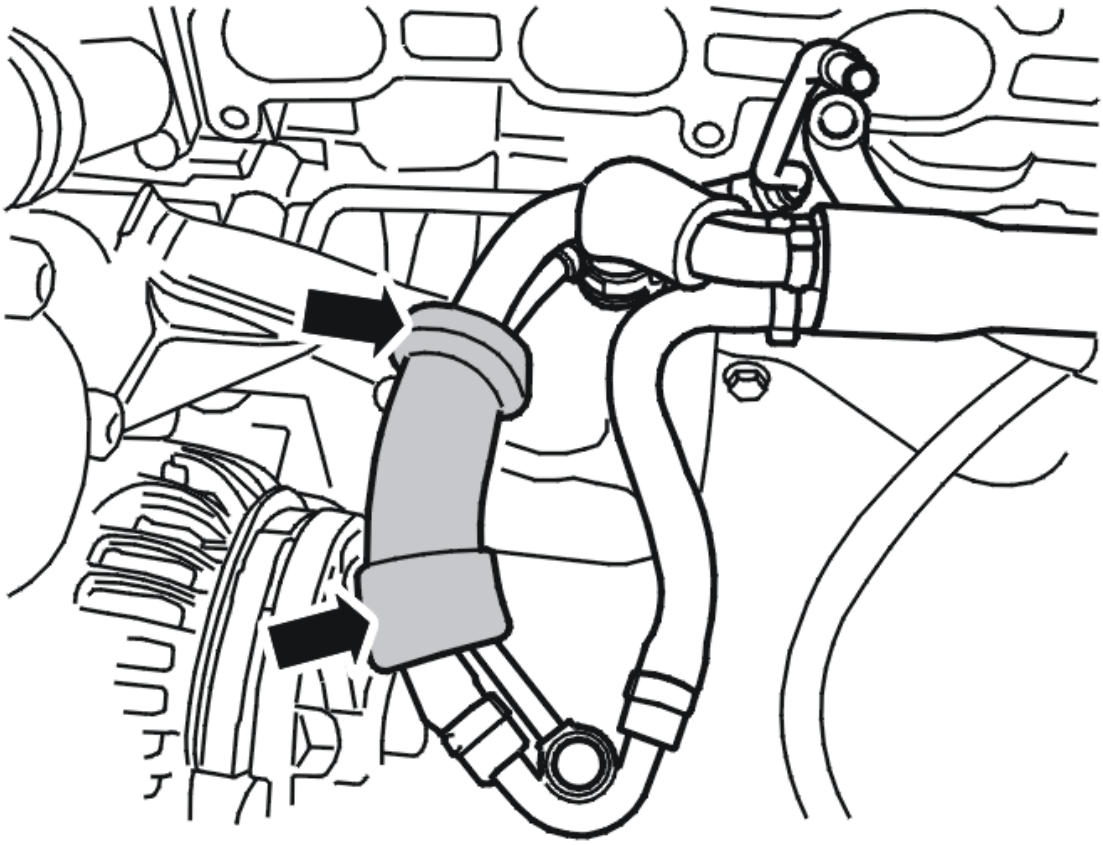

Fig. 90: Identifying Insulation
Courtesy of VOLVO CARS CORPORATION

Wet the outside of the insulation using soap solution. Fold in both ends of the insulation.

REMOVING THE VACUUM NIPPLE, CONTINUED

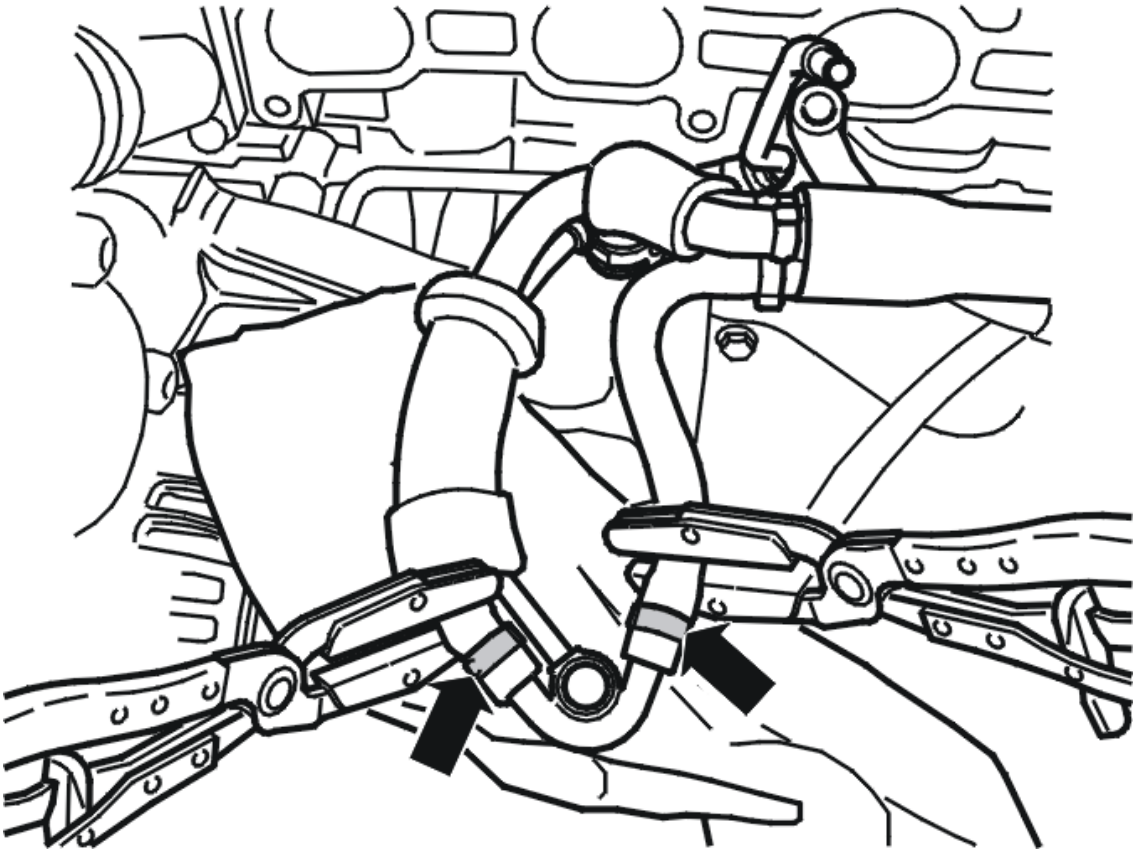

Fig. 91: Hose Clips Installed On Engine Coolant Hoses
Courtesy of VOLVO CARS CORPORATION

Place paper under the vacuum nipple to absorb any coolant leakage. Install hose clips on the engine coolant hoses.

Remove the hose clamps on the engine coolant hoses. Disconnect the engine coolant hoses from the nipple.

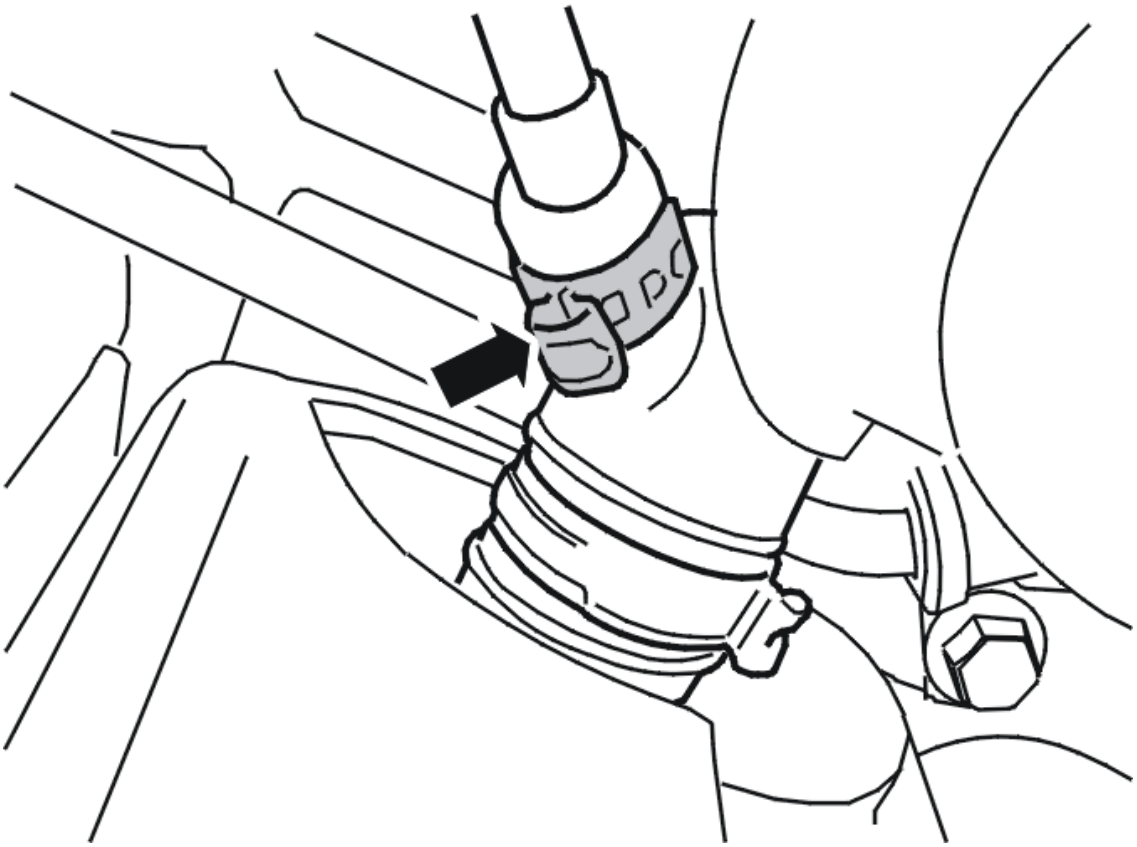

Fig. 92: Locating Hose Clamp
Courtesy of VOLVO CARS CORPORATION

Remove the hose clamp from the plastic hose nipple on the oil trap. Pull the plastic hose out from the insulation.

NOTE: **If the white plastic nipple comes off and remains in the rubber hose it must be removed. See the following step.**

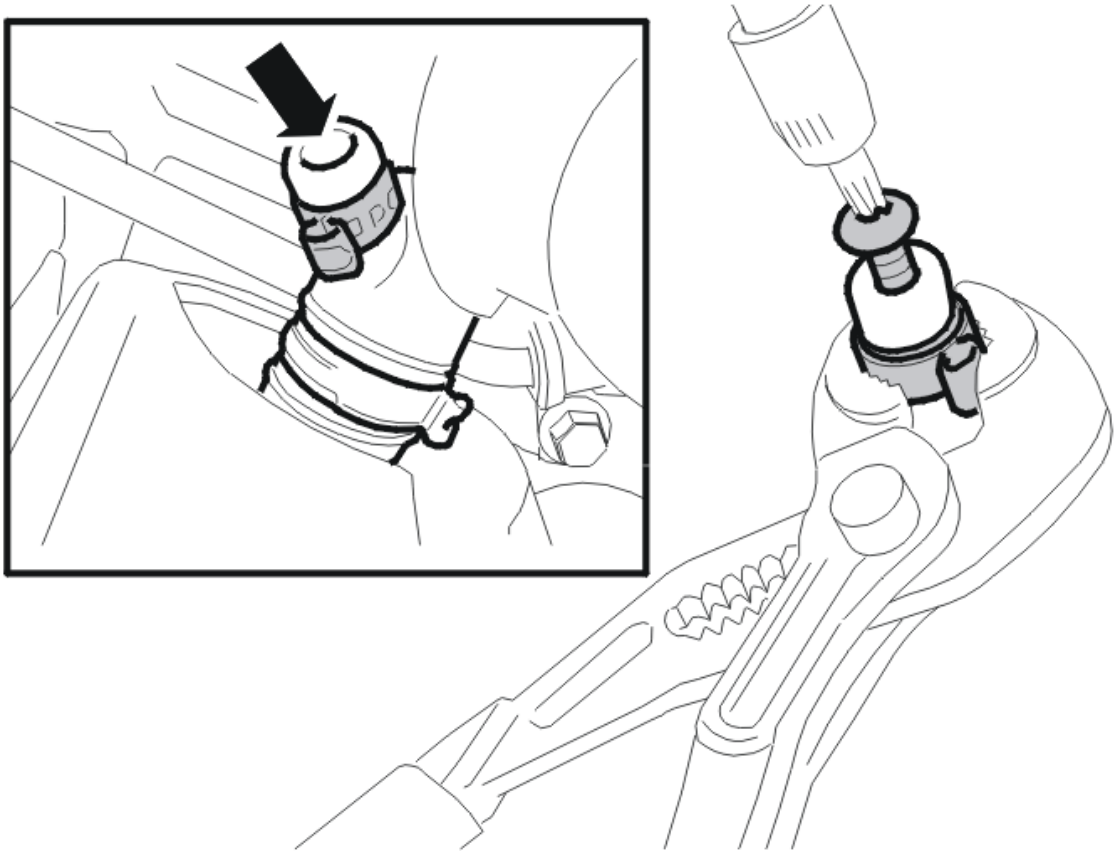

Fig. 93: Screwing Screw Into Nipple
Courtesy of VOLVO CARS CORPORATION

If the nipple breaks, it must be removed. It must not be pressed into the hose.

HINT: Secure the hose above the clamp. Use pliers.

Carefully screw a self-tapping screw into the nipple. The inner diameter of the nipple is **2.7 mm** . Remove the clamp. Pull out the broken nipple.

INSTALLATION

INSTALLING THE VACUUM NIPPLE

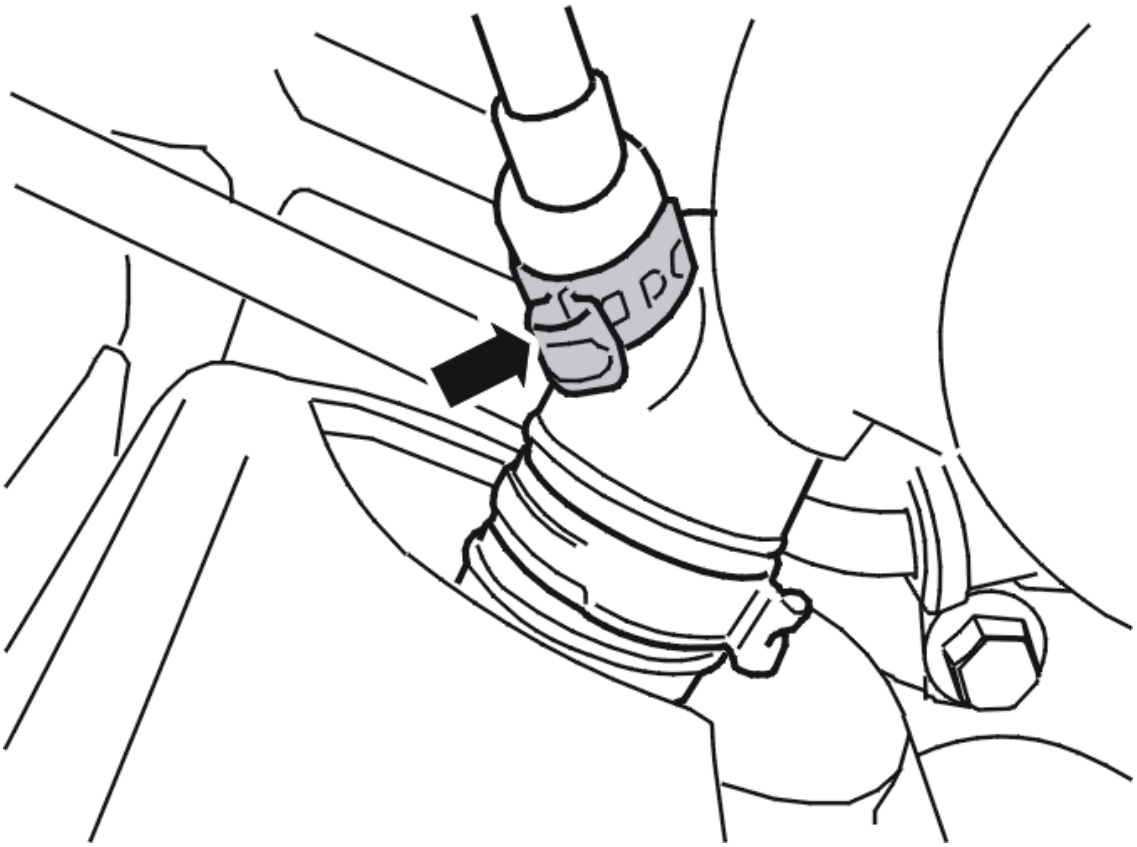

Fig. 94: Locating Hose Clamp
Courtesy of VOLVO CARS CORPORATION

Wet the plastic hose on the new nipple. Use a soap solution. Press the hose through the insulation following the previous routing. Install the hose and nipple on the oil trap. Use a new clamp.

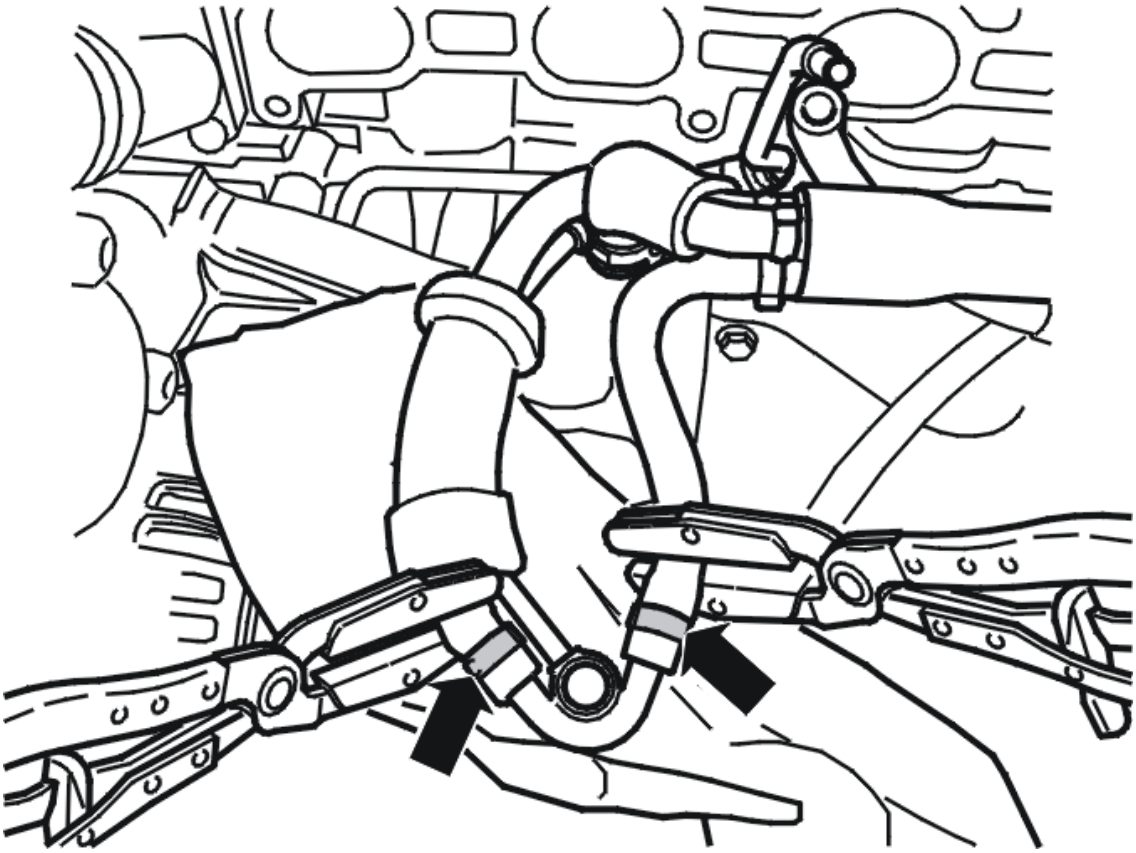

Fig. 95: Hose Clips Installed On Engine Coolant Hoses
Courtesy of VOLVO CARS CORPORATION

Install the engine coolant hoses on the vacuum nipple. Use new clamps. Remove the hose clips.

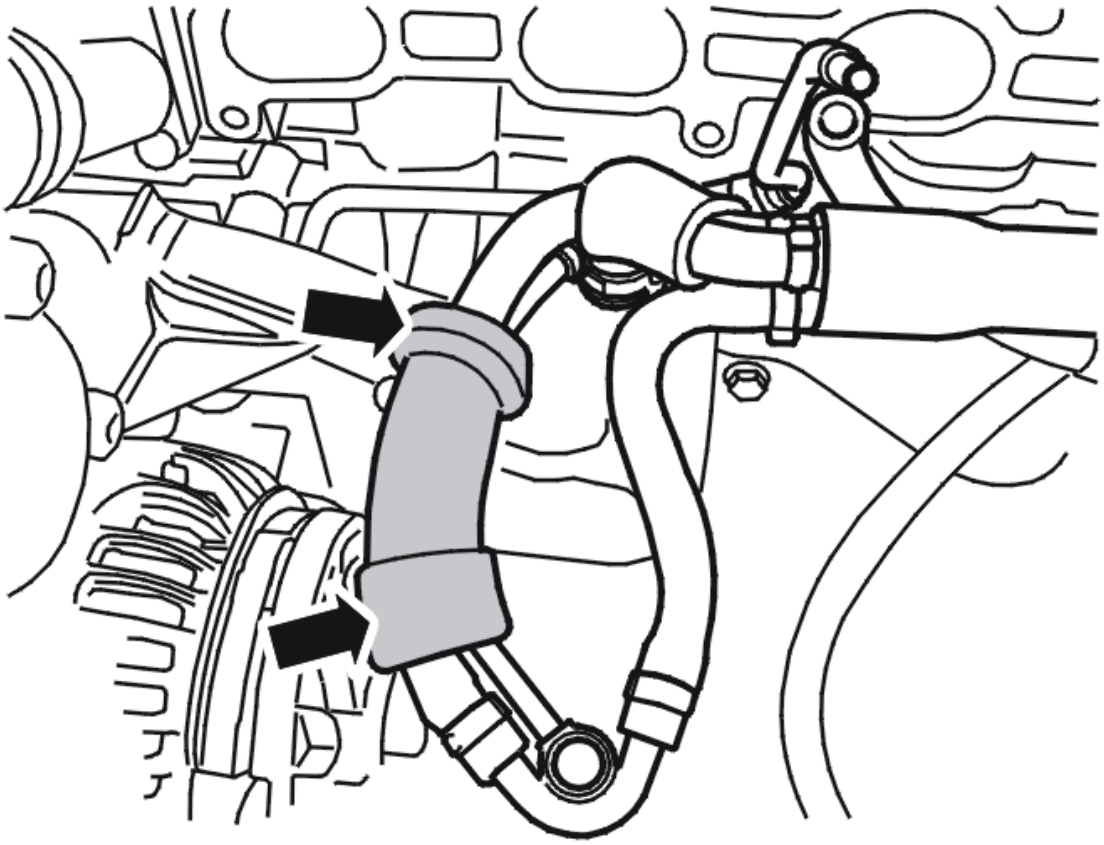

Fig. 96: Identifying Insulation
Courtesy of VOLVO CARS CORPORATION

Fold the insulation back into place. If the insulation breaks, apply tape over the crack.

INSTALLING THE INTAKE MANIFOLD

Install the intake manifold. See: **INTAKE MANIFOLD / GASKET, REPLACING**.

INLET AND EXHAUST MANIFOLD (B8444S; 2005-2011)

DISTRIBUTION DAMPER INTAKE PIPE, REPLACING

NOTE: The illustrations in this service information are used for different model years and/or models. Some variation may occur. However, the essential information in the illustrations is always correct.

PREPARATORY WORK

REMOVING THE INTAKE MANIFOLD

Remove the intake manifold. See **INTAKE MANIFOLD/GASKET, REPLACING**.

REMOVAL

REMOVING THE DISTRIBUTION DAMPER

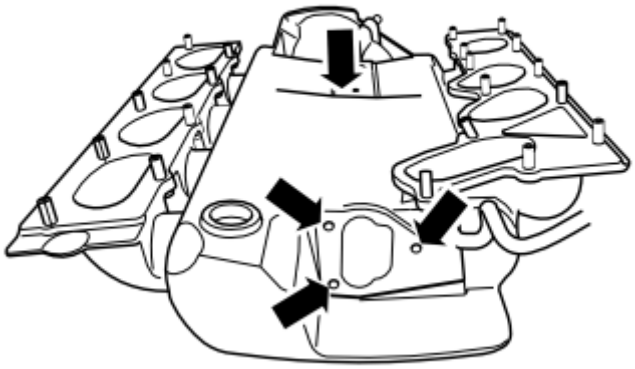

Fig. 97: View of Distribution Damper
Courtesy of VOLVO CARS CORPORATION

Remove:

- the 4 x M6 screws
- the distribution damper, discard the gaskets.

INSTALLATION

NOTE: For tightening torques, see TIGHTENING TORQUE

INSTALLING THE DISTRIBUTION DAMPER

Install:

- the distribution damper, use **new** gaskets
- the 4 x M6 screws. Tighten.

FINISHING

INSTALLING THE INTAKE MANIFOLD

Install the intake manifold. See **INTAKE MANIFOLD/GASKET, REPLACING**

CHECKING THE FUNCTION

Start the engine and check the function.

EXHAUST MANIFOLD/GASKET, CYLINDER 1, 3, 5 AND 7 (BANK 1), REPLACING

NOTE: **The illustrations in this service information are used for different model years and/or models. Some variation may occur. However, the essential information in the illustrations is always correct.**

REMOVAL

REMOVING THE FRONT SUB-FRAME

Remove the front sub-frame. See: **SUB-FRAME FRONT, REPLACING (2005, 2006)** or **SUB-FRAME FRONT, REPLACING (2007, 2008)** .

REMOVING THE ENGINE COOLING FAN

Remove the electric cooling fan. See **ENGINE COOLING FAN (FC), REPLACING** .

REMOVING THE FRONT ENGINE PAD

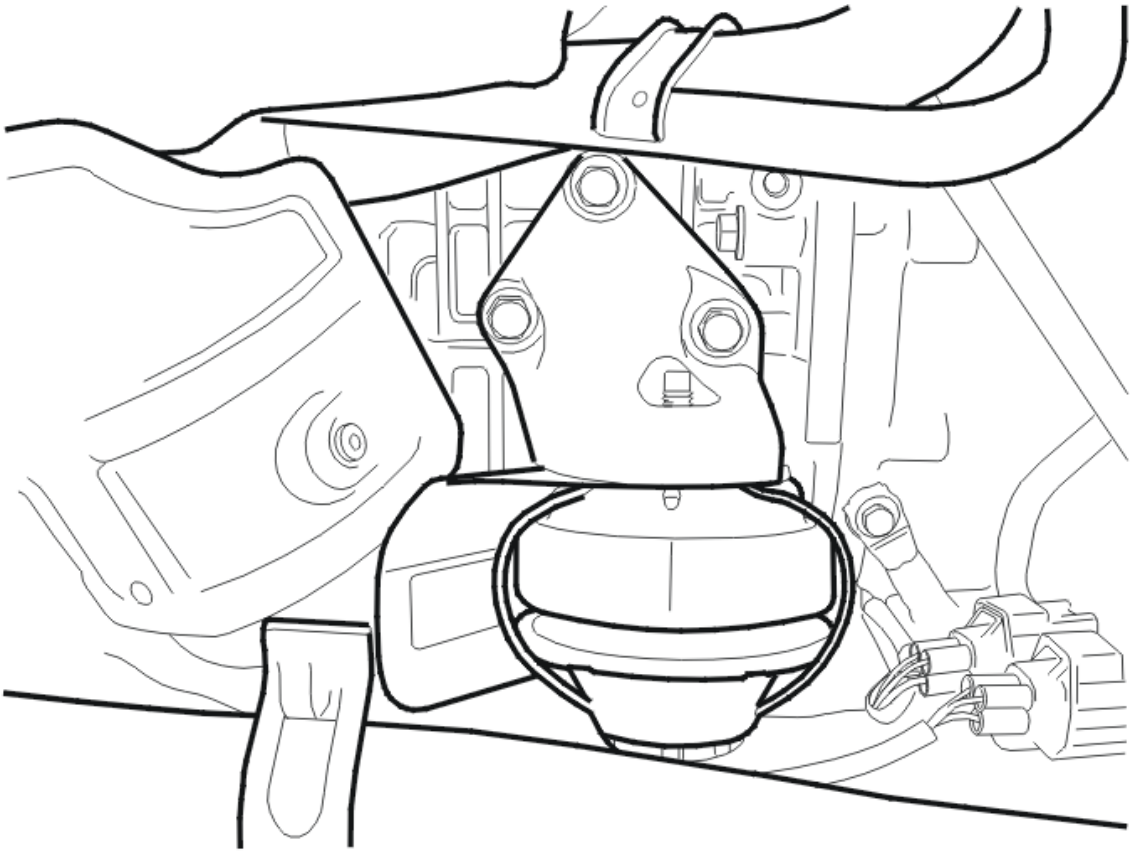

Fig. 98: Locating Front Engine Pad (Mount)
Courtesy of VOLVO CARS CORPORATION

Remove:

- the 3 M10 screws of the engine pad bracket in the engine block
- the engine pad with protective plate

- the connectors from the heated oxygen sensors and detach the lead from the clips and clamps.

REMOVAL OF EXHAUST MANIFOLD, CYLINDER 1, 3, 5 AND 7 (BANK 1)

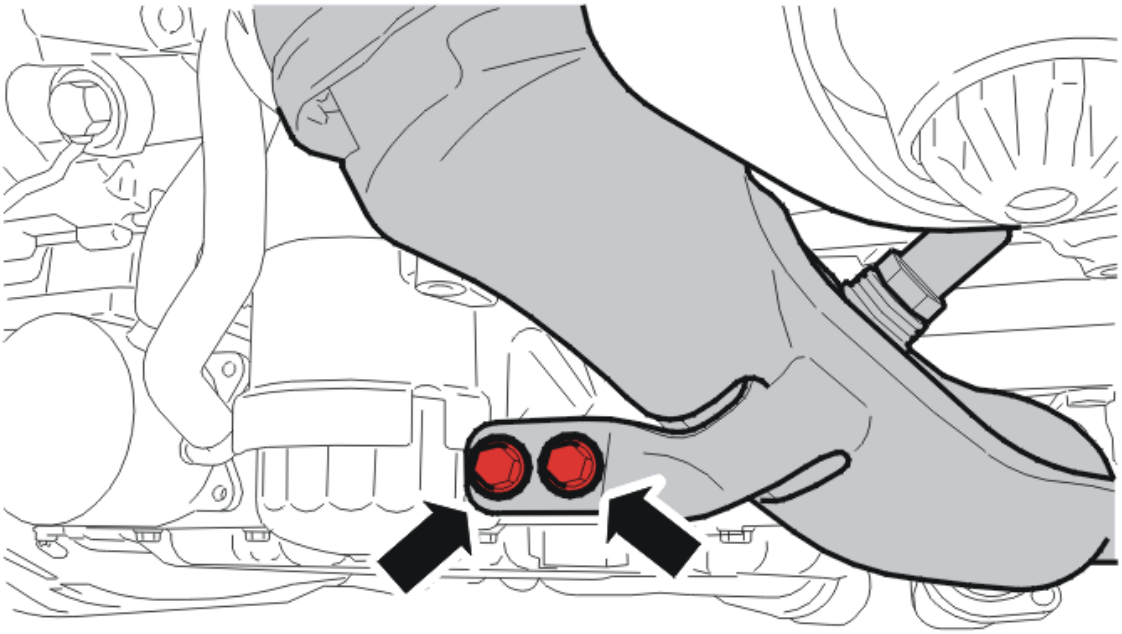

Fig. 99: Locating Support Bracket Screws
Courtesy of VOLVO CARS CORPORATION

Remove the 2 M6 screws of the support bracket for the exhaust manifold in the oil sump.

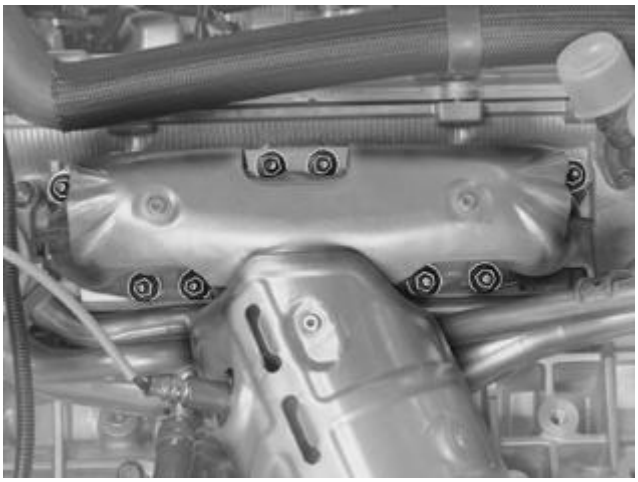

Fig. 100: Locating Exhaust Manifold Flange Nuts

Courtesy of VOLVO CARS CORPORATION

Remove 8 M8 nuts at the exhaust manifold flange toward the cylinder head.

Lower the exhaust manifold.

Remove the exhaust manifold gasket. Scrap the gasket.

When replacing the exhaust manifold, transfer the heated oxygen sensors. Use see **9995543** . Tighten as specified: **SUMMARY OF TIGHTENING TORQUES FOR SPECIFIC COMPONENTS** .

INSTALLATION

NOTE: For tightening torques, see: TIGHTENING TORQUE .

NOTE: To ensure that there is no exhaust leakage, see: FLANGED JOINT, ASSEMBLING .

INSTALLATION OF EXHAUST MANIFOLD, CYLINDER 1, 3, 5 AND 7 (BANK 1)

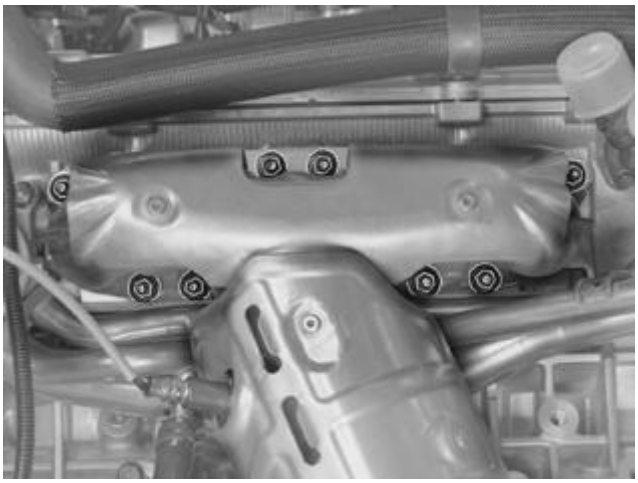

Fig. 101: Locating Exhaust Manifold Flange Nuts
Courtesy of VOLVO CARS CORPORATION

Install:

- a new gasket
- the exhaust manifold
- the 8 nuts. Tighten as specified: **TIGHTENING TORQUE** .

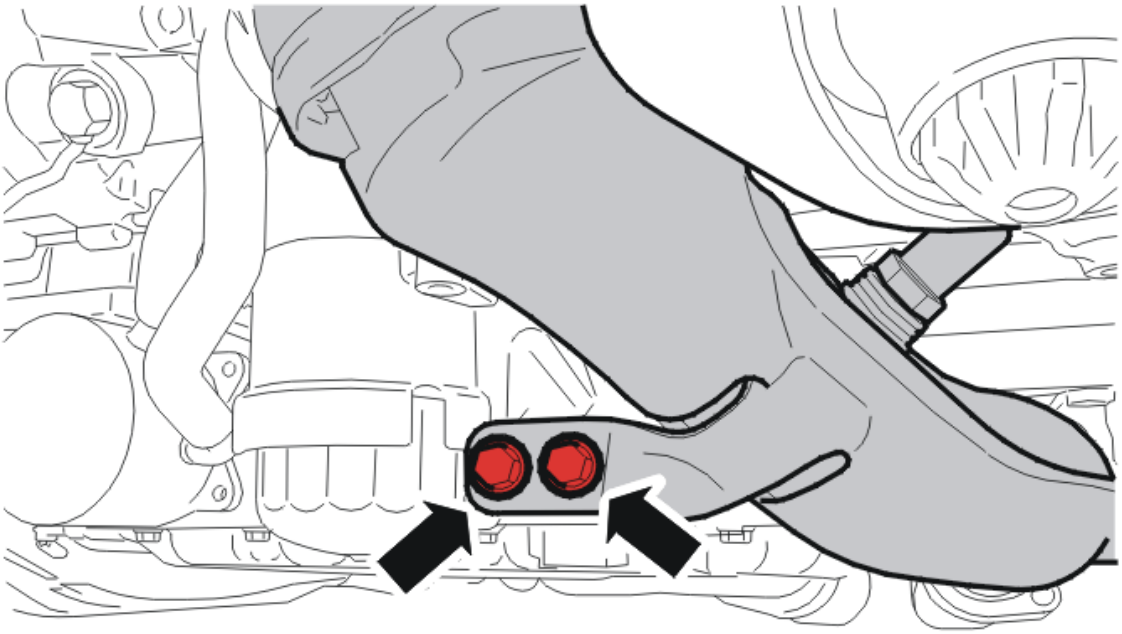

Fig. 102: Locating Support Bracket Screws
Courtesy of VOLVO CARS CORPORATION

Install:

- the 2 M6 screws of the support bracket for the exhaust manifold in the oil sump; tighten
- the connectors to the heated oxygen sensors and the lead in the clips and clamps.

INSTALLING THE FRONT ENGINE PAD

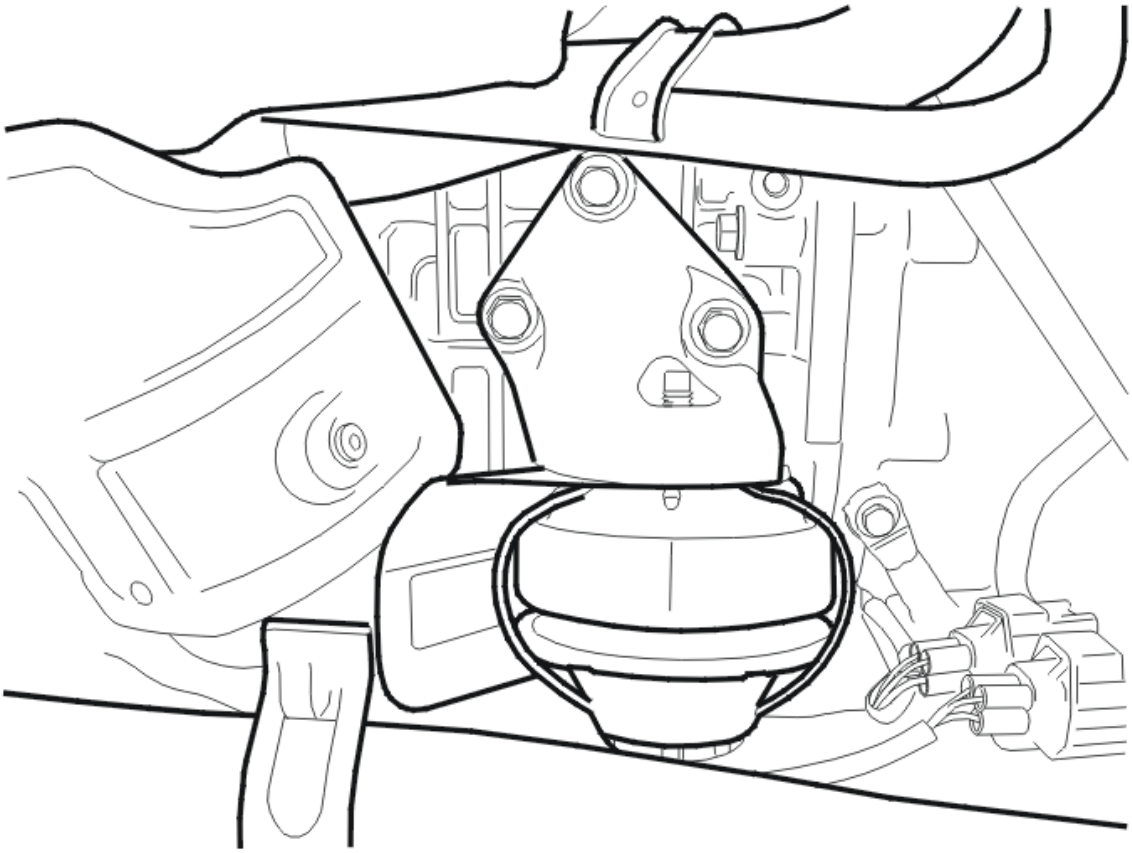

Fig. 103: Locating Front Engine Pad (Mount)
Courtesy of VOLVO CARS CORPORATION

Install:

- the engine pad with protective plate.
- the 3 M10 screws of the engine pad bracket in the engine block; tighten.

INSTALLING THE ENGINE COOLING FAN

Install the electric cooling fan. See: **ENGINE COOLING FAN (FC), REPLACING** .

INSTALLING THE FRONT SUB-FRAME

Install the front sub-frame. See: **SUB-FRAME FRONT, REPLACING (2005, 2006)** or **SUB-FRAME FRONT, REPLACING (2007, 2008)** .

CHECK

Start the engine and check for leaks and proper function.

EXHAUST MANIFOLD/GASKET, CYLINDER 2, 4, 6 AND 8 (BANK 2), REPLACING

NOTE: The illustrations in this service information are used for different model years

and/or models. Some variation may occur. However, the essential information in the illustrations is always correct.

REMOVAL

REMOVING THE FRONT SUB-FRAME

Remove the front sub-frame. See: **SUB-FRAME FRONT, REPLACING (2005, 2006)** or **SUB-FRAME FRONT, REPLACING (2007, 2008)** .

REMOVING THE DRIVE SHAFT, RIGHT

Remove the right drive shaft. See **DRIVE SHAFT, RIGHT, REPLACING** .

REMOVAL OF EXHAUST MANIFOLD, CYLINDER 2, 4, 6 AND 8 (BANK 2)

Fig. 104: Identifying Support Bracket Bolts
Courtesy of VOLVO CARS CORPORATION

Remove:

- the 2 M6 screws of the support bracket for the exhaust manifold in the oil sump
- the connectors from the heated oxygen sensors and detach the lead from the clips and clamps.

Fig. 105: Locating Exhaust Manifold Flange Nuts
Courtesy of VOLVO CARS CORPORATION

Remove 8 M8 nuts at the exhaust manifold flange toward the cylinder head.

Lower the exhaust manifold.

Remove the exhaust manifold gasket. Scrap the gasket.

When replacing the exhaust manifold, transfer the heated oxygen sensors. Use see **9995543** . Tighten as specified: **SUMMARY OF TIGHTENING TORQUES FOR SPECIFIC COMPONENTS** .

INSTALLATION

NOTE: **For tightening torques, see: TIGHTENING TORQUE .**

NOTE: **To ensure that there is no exhaust leakage, see: FLANGED JOINT, ASSEMBLING .**

INSTALLATION OF EXHAUST MANIFOLD, CYLINDER 2, 4, 6 AND 8 (BANK 2)

Fig. 106: Locating Exhaust Manifold Flange Nuts
Courtesy of VOLVO CARS CORPORATION

Install:

- a new gasket
- the exhaust manifold
- the 8 nuts. Tighten as specified: **TIGHTENING TORQUE** .

Fig. 107: Identifying Support Bracket Bolts
Courtesy of VOLVO CARS CORPORATION

Install:

- the 2 M6 screws of the support bracket for the exhaust manifold in the oil sump; tighten
- the connectors to the heated oxygen sensors and the lead in the clips and clamps.

INSTALLING THE RIGHT DRIVE SHAFT

Install the right drive shaft. See **DRIVE SHAFT RIGHT, REPLACING** .

INSTALLING THE FRONT SUB-FRAME

Install the front sub-frame. See: **SUB-FRAME FRONT, REPLACING (2007, 2008)** or **SUB-FRAME FRONT, REPLACING (2005, 2006)** .

CHECK

Start the engine and check for leaks and proper function.

INTAKE MANIFOLD/GASKET, REPLACING

Special tools:

see **9512957**

see **9512953**

NOTE: **The illustrations in this service information are used for different model years and/or models. Some variation may occur. However, the essential information in the illustrations is always correct.**

NOTE: **This work requires that the vehicle be raised. See JACKING POINTS, BODY .**

REMOVAL

REMOVING THE UPPER CROSS STAY

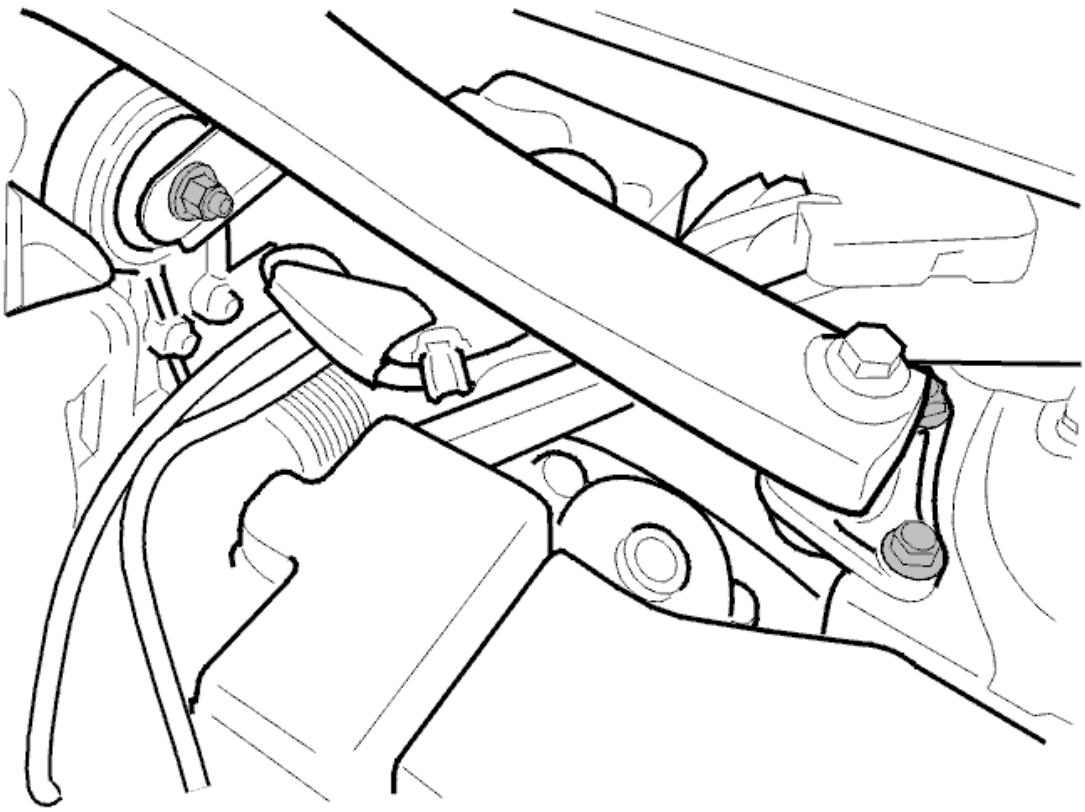

Fig. 108: Engine Stabilizer Brace
Courtesy of VOLVO CARS CORPORATION

Remove:

- the 4 screws at the suspension turrets
- the screws of the upper engine mount on the engine
- the upper cross stay.

REMOVING THE AIR CLEANER COVER

Remove the air cleaner cover by pulling it straight up.

REMOVING CONNECTORS

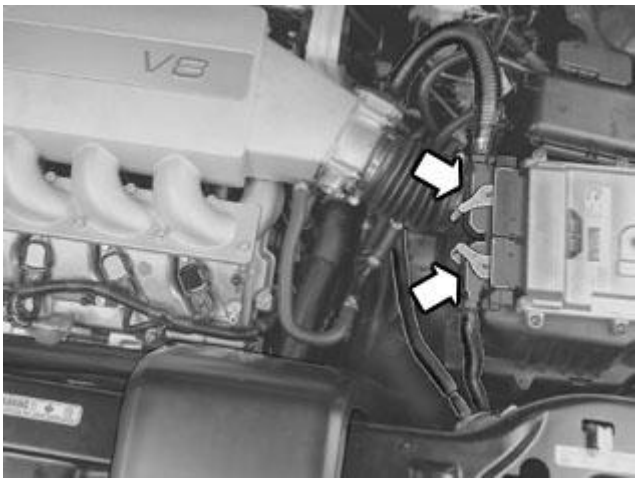

Fig. 109: Installing The Air Cleaner
Courtesy of VOLVO CARS CORPORATION

Remove:

- the 2 connectors from the engine control module (ECM); clip the band clamp to the cable harness
- the connector from the mass air flow sensor

REMOVING THE AIR CLEANER (ACL)

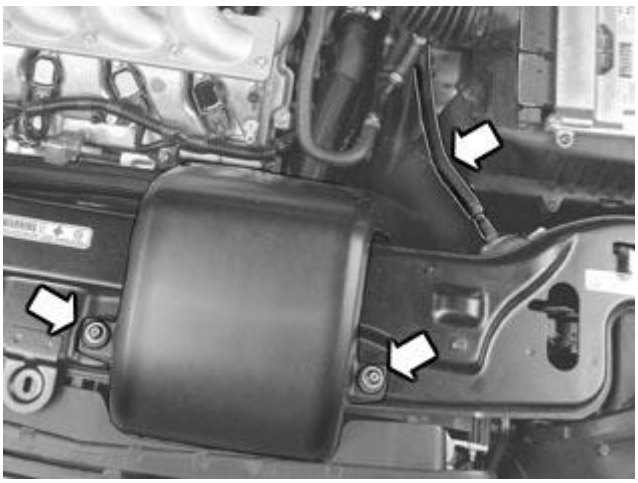

Fig. 110: Identifying 2 Screws, Fresh Air Hose
Courtesy of VOLVO CARS CORPORATION

Remove:

- the brake vacuum hose from the vacuum pump
- the 2 screws of the fresh air hose in the front plate
- the fresh air hose
- the air cleaner by pulling it straight up.

REMOVING THE UPPER ENGINE COVERS

Remove the upper engine covers by pulling them straight up.

REMOVING THE COVER OVER THE SERVO PUMP

Remove:

- the 2 screws on the cover over the servo pump
- the cover.

REMOVING COMPONENTS

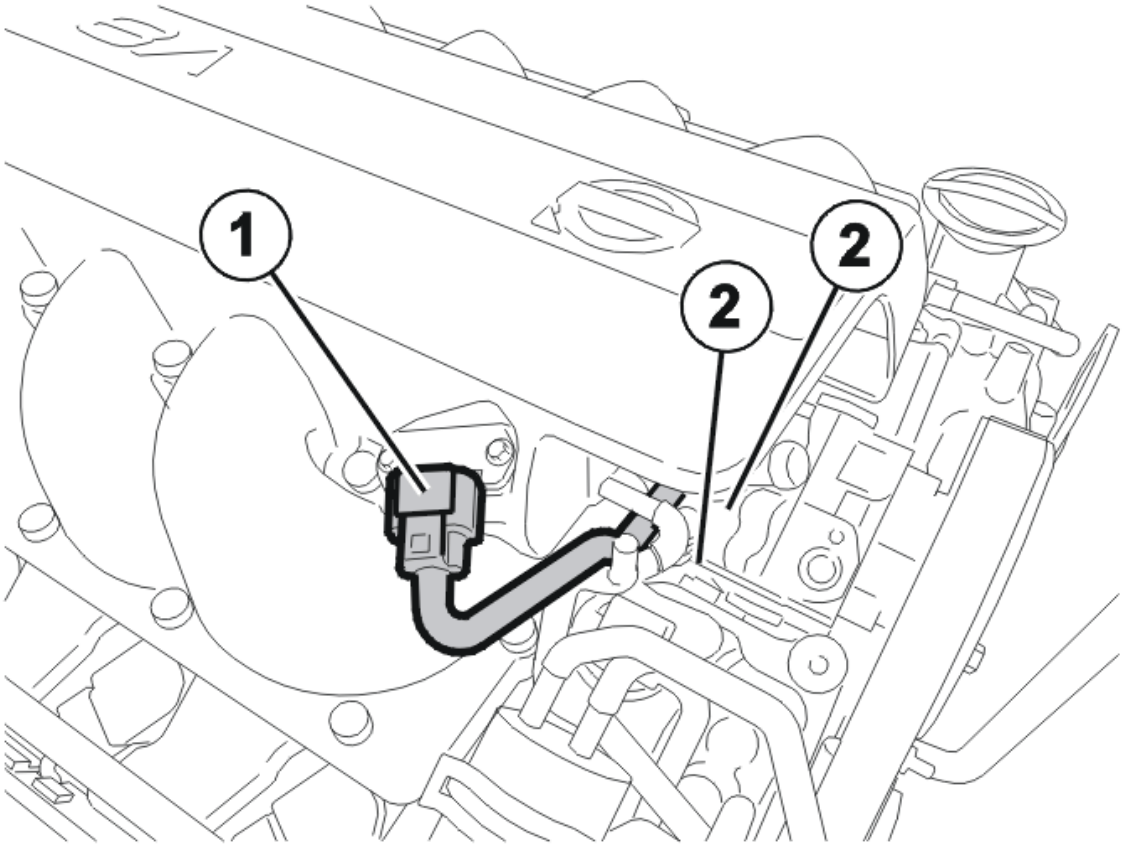

Fig. 111: Identifying Connector and Vacuum Hoses
Courtesy of VOLVO CARS CORPORATION

Detach the connector of the pressure and temperature sensor (1).

Remove the 2 vacuum hoses of the check valve of the distribution damper (2).

REMOVING PROTECTIVE PLATE

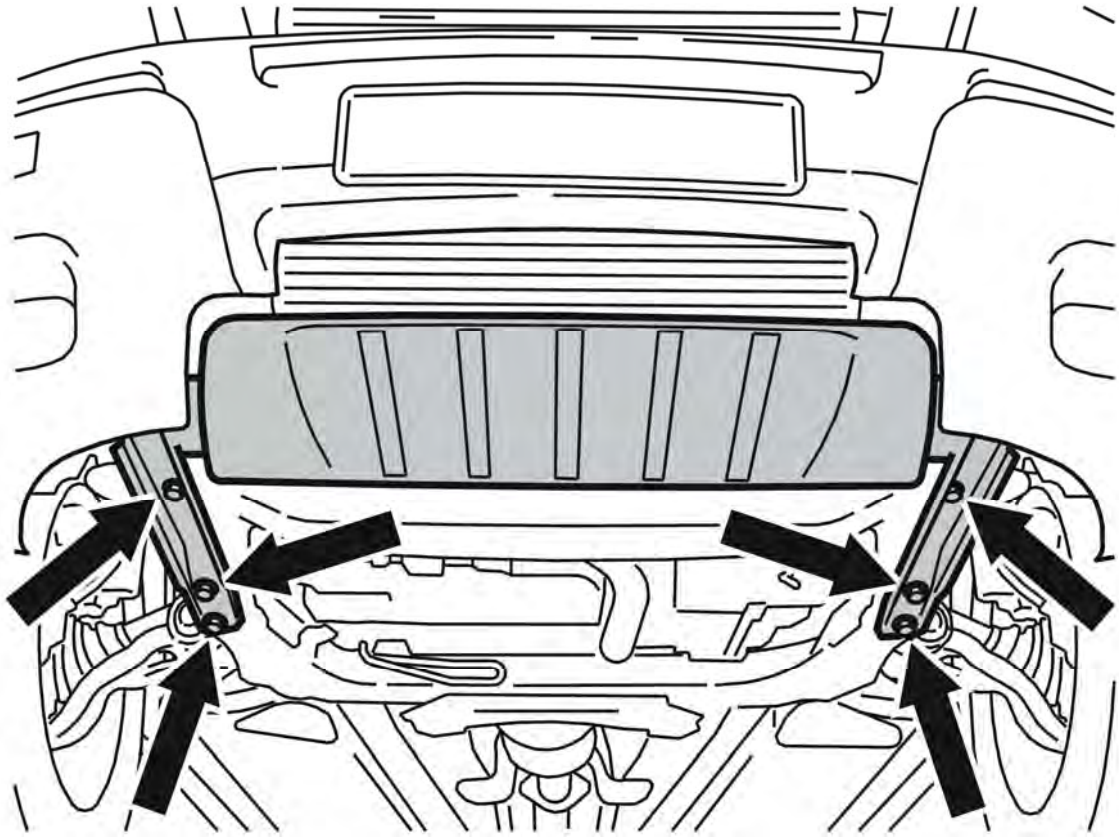

Fig. 112: Splash Guard. Protective Plate And Screws
Courtesy of VOLVO CARS CORPORATION

NOTE: There is a guide sleeve on the upper mounting for the plate. This must be lifted slightly so that the panel can be slid forward.

Remove the 6 screws.

Lift and slide the protective plate forward.

Remove the protective plate.

DRAINING COOLANT

Open the cock on the lower left edge of the radiator.

Drain the coolant into a clean receptacle.

Close the cock.

INSTALLING THE PROTECTIVE PLATE

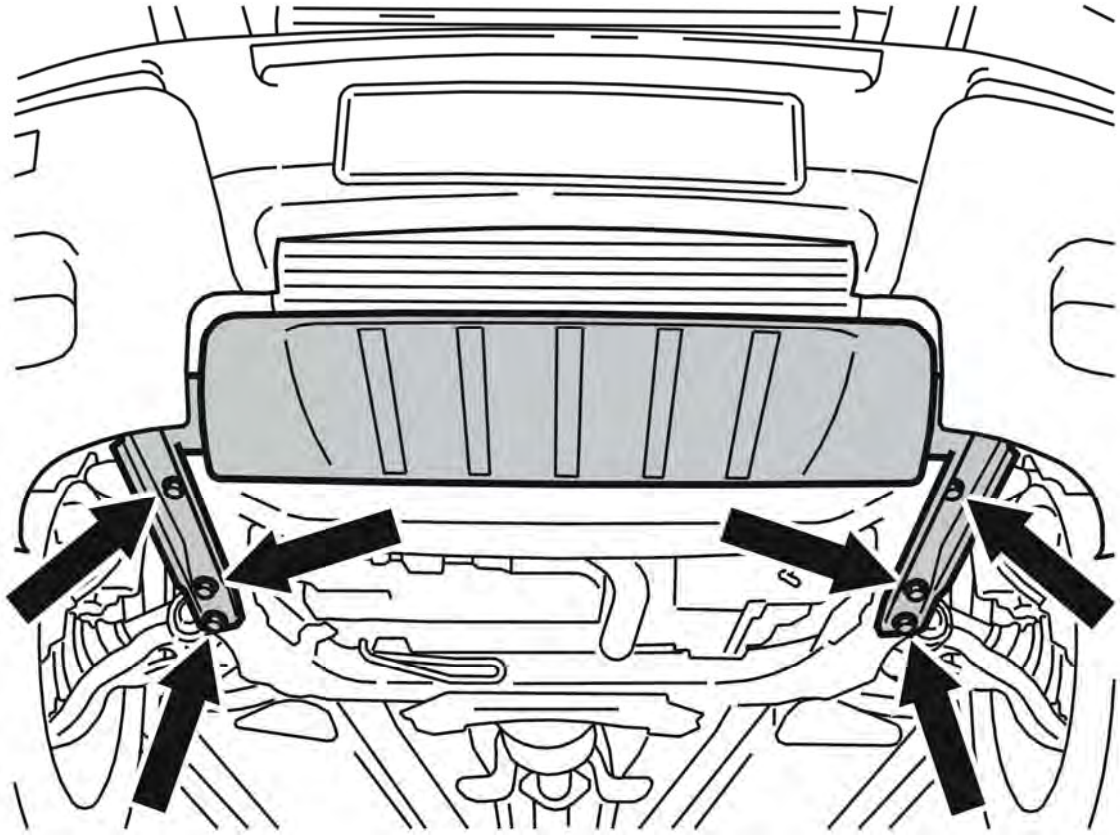

Fig. 113: Splash Guard. Protective Plate And Screws
Courtesy of VOLVO CARS CORPORATION

Install:

- the protective plate
- the 6 screws; tighten.

Lower the vehicle.

REMOVING THE UPPER ENGINE MOUNT

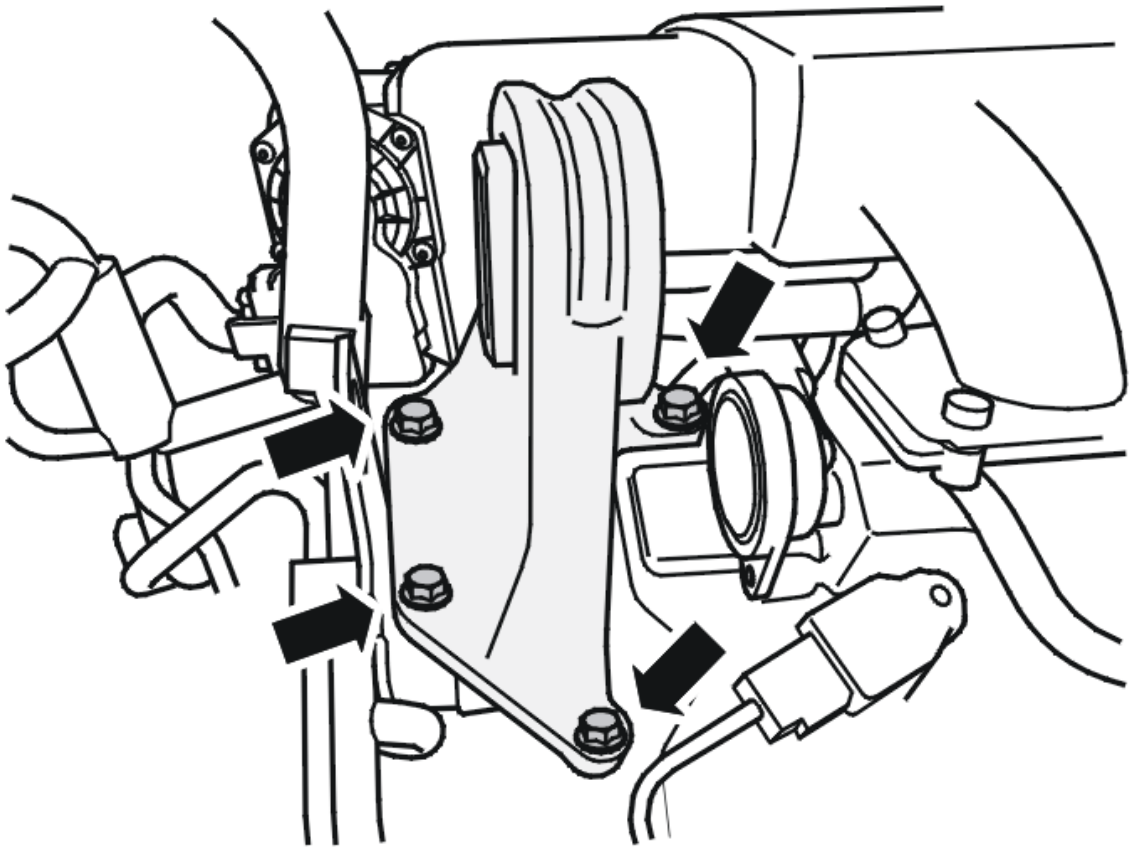

Fig. 114: Locating Upper Engine Mount
Courtesy of VOLVO CARS CORPORATION

Remove:

- the 4 screws
- the upper engine mount.

REMOVING THE INTAKE MANIFOLD

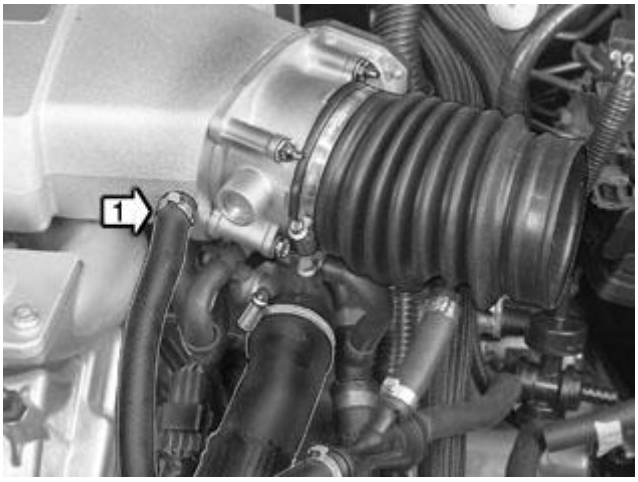

Fig. 115: Identifying Brake Vacuum Hose
Courtesy of VOLVO CARS CORPORATION

Remove:

- the brake vacuum hose (1) from the intake manifold by releasing the clamp
- the intake hose between the air cleaner and throttle body by releasing the 2 clamps
- the 2 nuts on the throttle body
- the 2 screws on the throttle body.

Bend aside the throttle body.

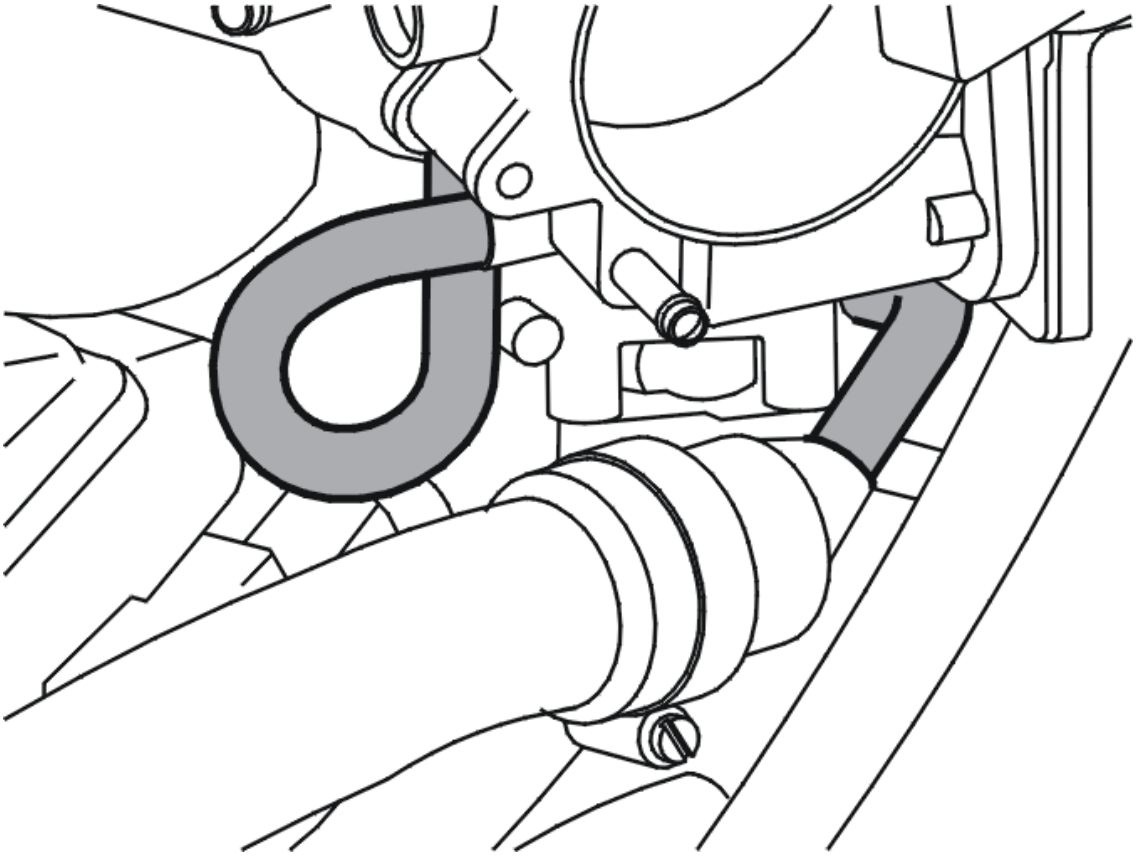

Fig. 116: Locating 2 Coolant Hoses
Courtesy of VOLVO CARS CORPORATION

Detach the 2 coolant hoses - one from the throttle body and one from the coolant distribution pipe.

REMOVING THE INTAKE MANIFOLD, CONTINUED

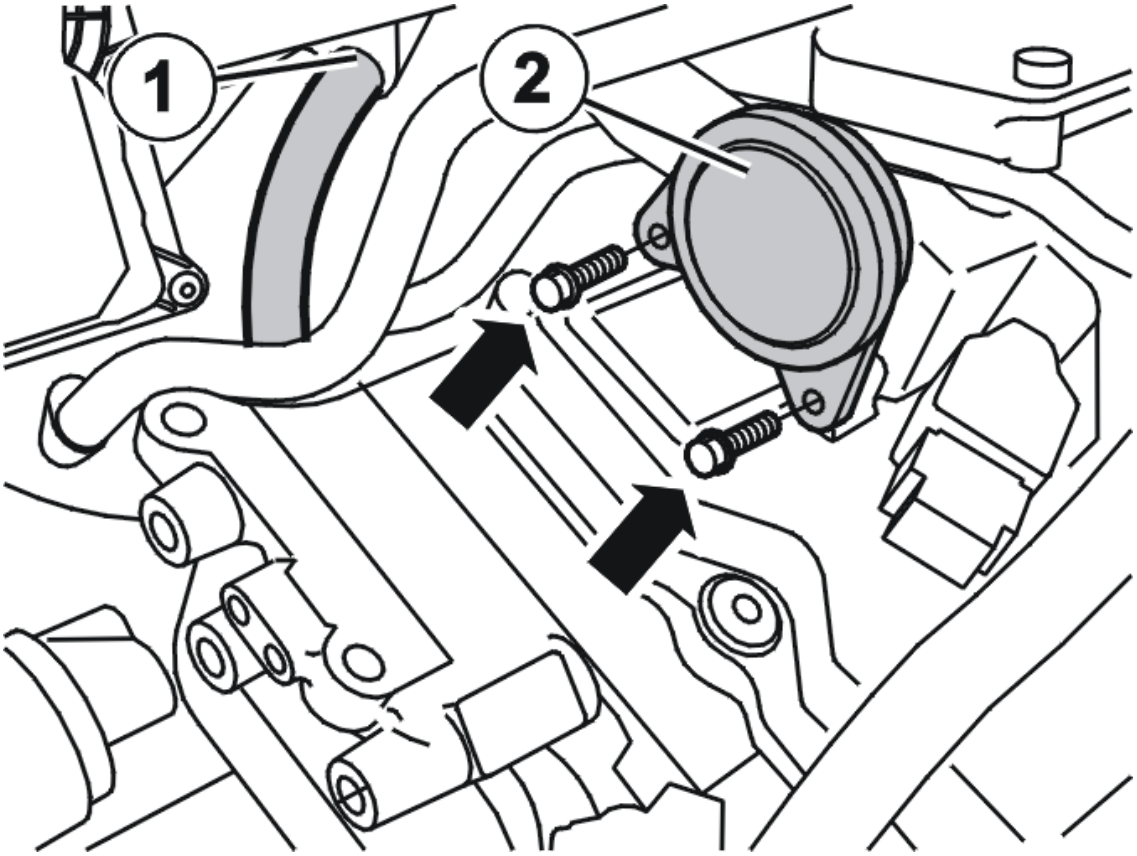

Fig. 117: Identifying Hoses and Non-Return Valve
Courtesy of VOLVO CARS CORPORATION

Remove:

- the hose clip on the vacuum hose (1)
- the vacuum hose (1)
- the 2 M6 screws on the non-return valve (2) for crankcase ventilation
- the non-return valve for crankcase ventilation (2).

REMOVING THE UPPER INTAKE MANIFOLD

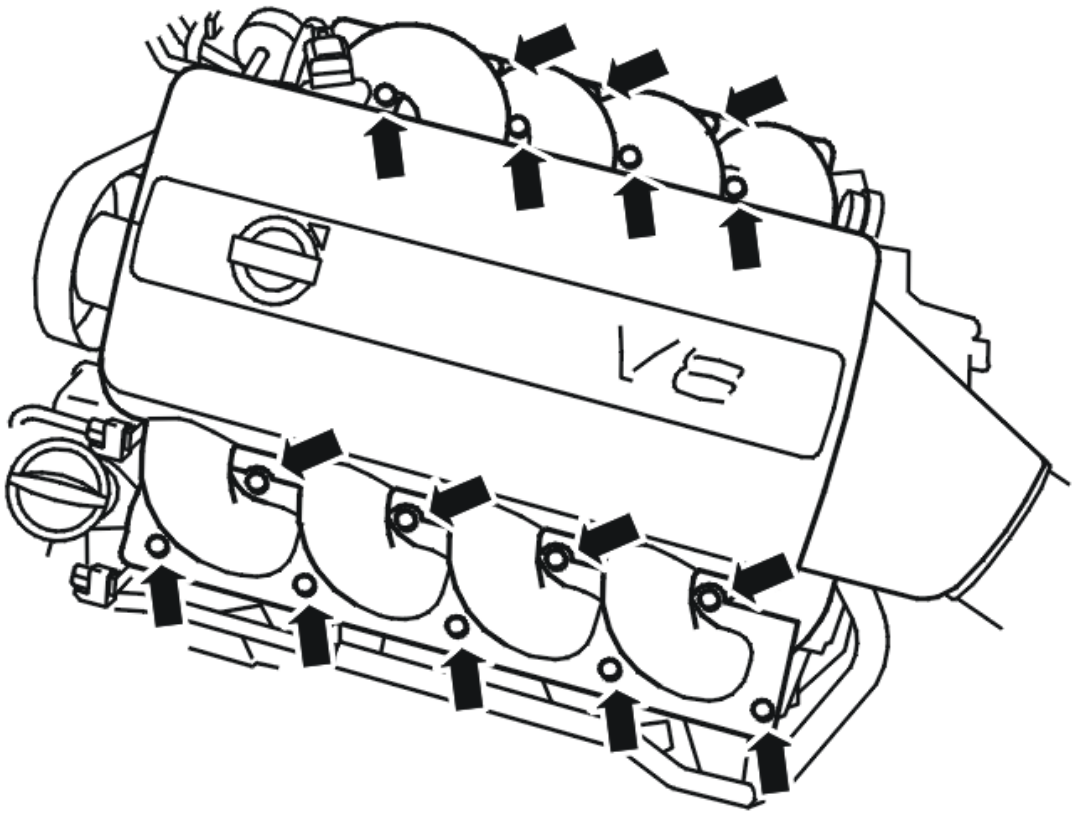

Fig. 118: Removing The Upper Intake Manifold
Courtesy of VOLVO CARS CORPORATION

Remove:

- the 21 screws of the upper intake manifold
- the upper intake manifold. Scrap the gaskets.

DRAINING THE FUEL SYSTEM

Drain the fuel system. See: **FUEL SYSTEM, DRAINING** .

REMOVING THE FUEL RAIL

Fig. 119: Viewing The Fuel Rail
Courtesy of VOLVO CARS CORPORATION

Remove:

- the crankcase ventilation hose between the cylinder heads by releasing the 2 clamps
- the 3 screws from the fuel rail
- the 2 screws on the fuel pressure sensor.

Lift the fuel rail assembly with injector straight up and bend it aside.

REMOVING THE LOWER INTAKE MANIFOLD

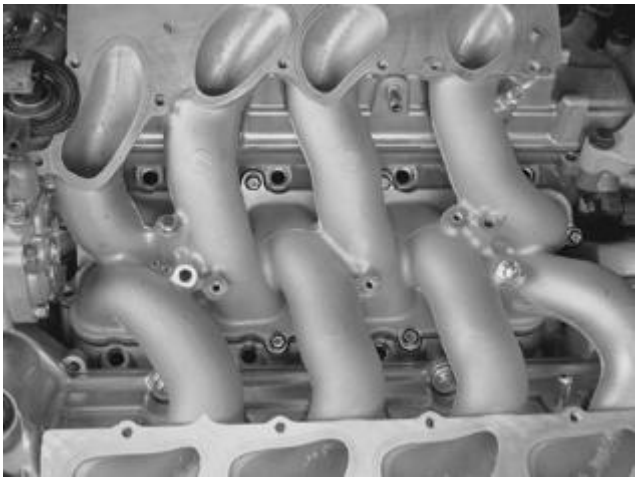

Fig. 120: Removing The Lower Intake Manifold
Courtesy of VOLVO CARS CORPORATION

Remove:

- the 12 screws
- the lower intake manifold. Scrap the gaskets.

INSTALLATION

NOTE: For tightening torques, see: TIGHTENING TORQUE .

CLEANING

Clean the gasket surfaces.

INSTALLING THE LOWER INTAKE MANIFOLD

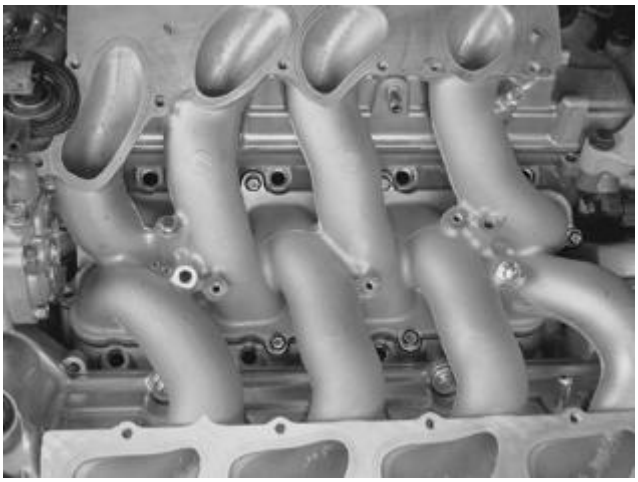

Fig. 121: Removing The Lower Intake Manifold
Courtesy of VOLVO CARS CORPORATION

Install:

- new gaskets
- the lower intake manifold. Tighten the 12 screws. See **TIGHTENING TORQUE** .

INSTALLING THE FUEL RAIL

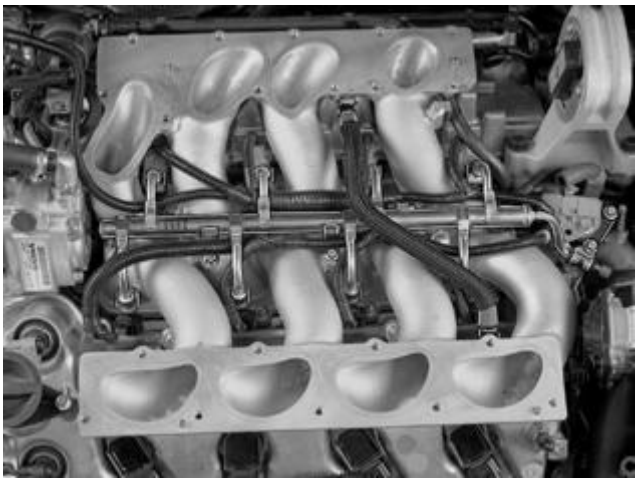

Fig. 122: Viewing The Fuel Rail

Courtesy of VOLVO CARS CORPORATION

HINT: Lubricate the O-rings on the injectors with Vaseline or the like.

Install:

- the fuel rail assembly with injector
- the 3 screws of the fuel rail; tighten
- the 2 screws on the fuel pressure sensor
- the crankcase ventilation hose and 2 clamps

Connect the fuel supply line and secure the line in the clamp.

CAUTION: Make sure there is an audible click during connection.

INSTALLING THE UPPER INTAKE MANIFOLD

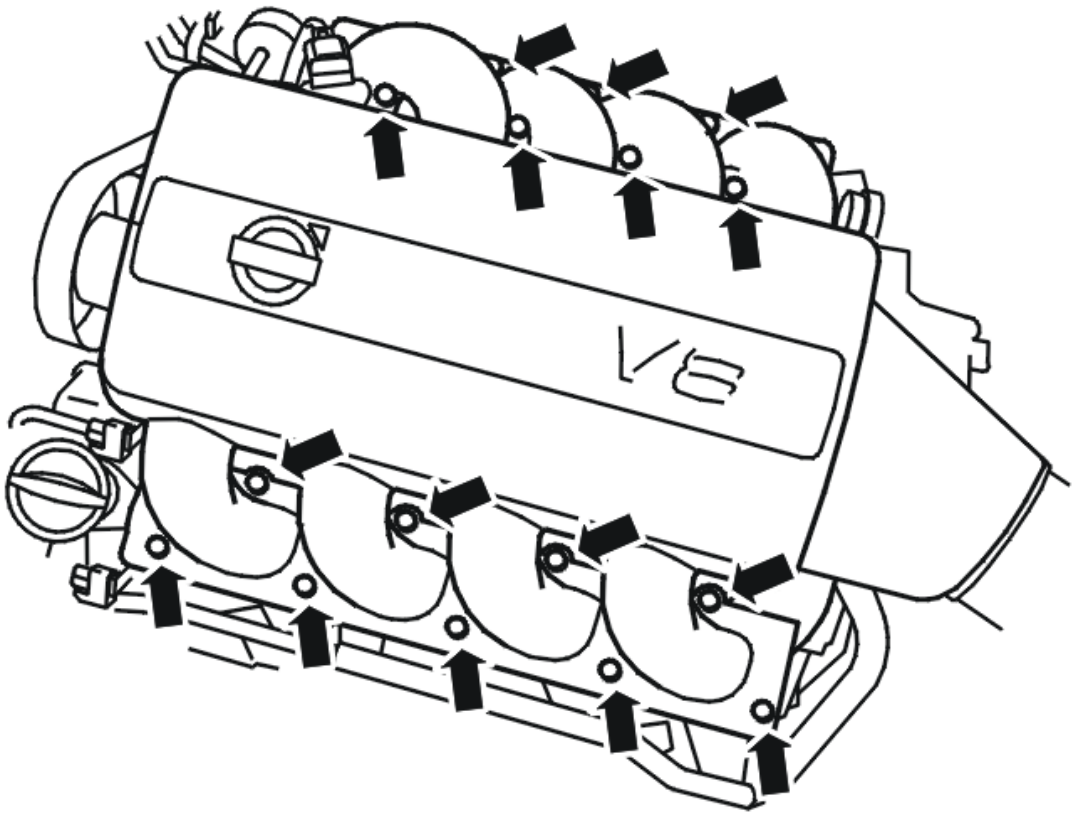

Fig. 123: Removing The Upper Intake Manifold
Courtesy of VOLVO CARS CORPORATION

Install:

- new gaskets
- the upper intake manifold; tighten the 21 screws. See **TIGHTENING TORQUE** .

INSTALLING HOSES TO THE INTAKE MANIFOLD

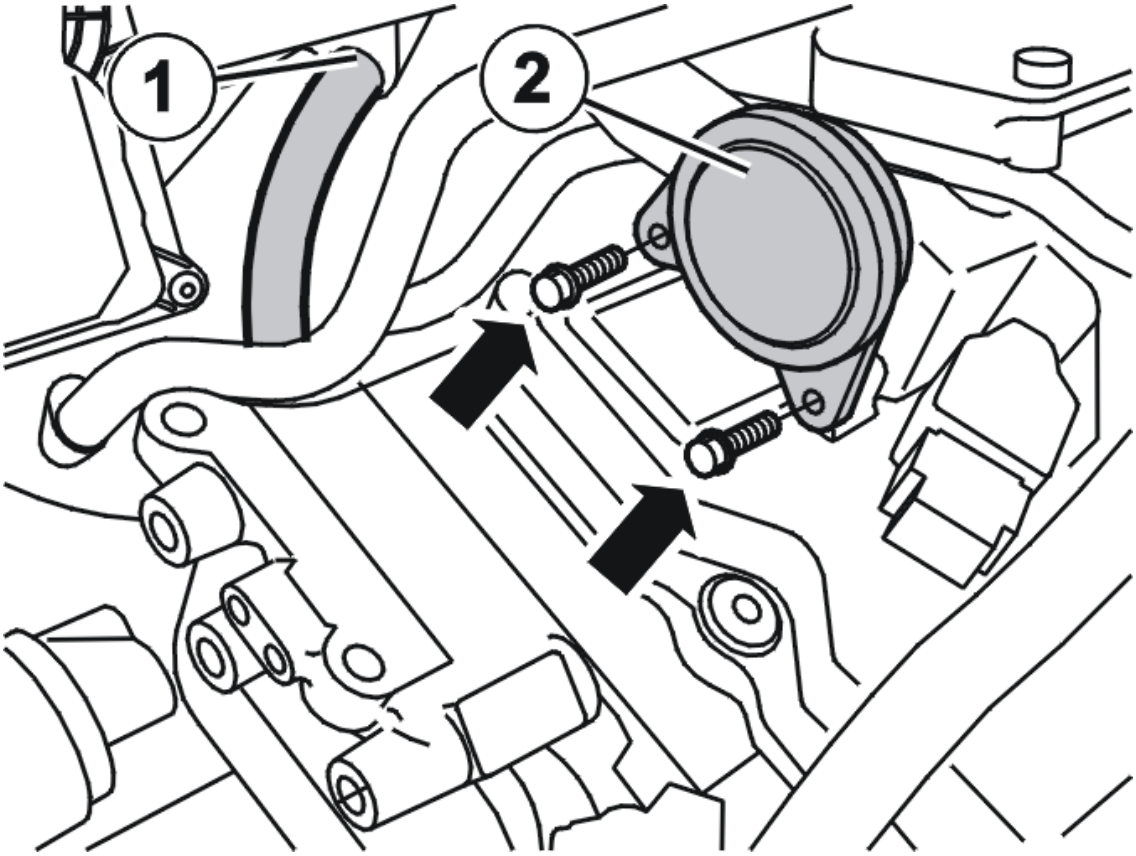

Fig. 124: Identifying Hoses and Non-Return Valve
Courtesy of VOLVO CARS CORPORATION

Install:

- the vacuum hose (1)
- the hose clip on the vacuum hose
- the non-return valve for crankcase ventilation (2)
- the 2 screws of the non-return valve. Tighten.

INSTALLING COMPONENTS

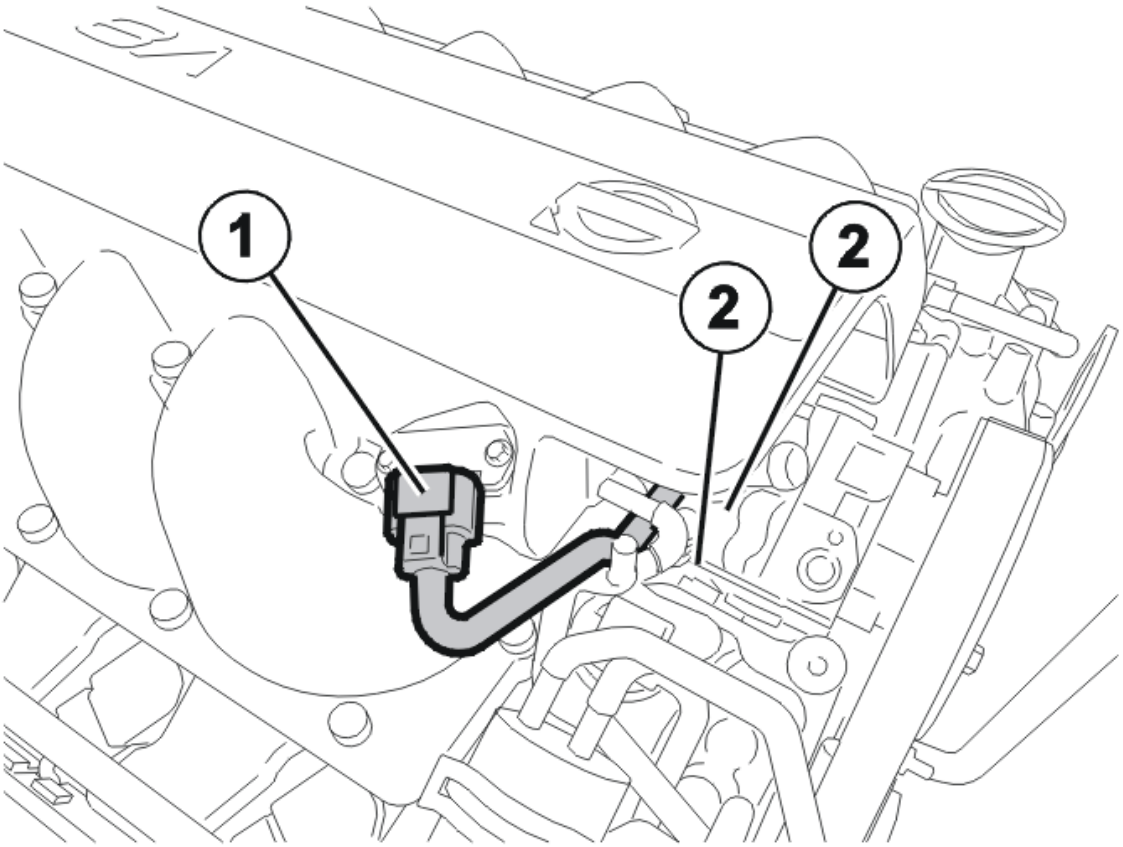

Fig. 125: Identifying Connector and Vacuum Hoses
Courtesy of VOLVO CARS CORPORATION

Install:

- the connector to the pressure and temperature sensor (1)
- the 2 vacuum hoses of the check valve of the distribution damper (2)

INSTALLING THE UPPER ENGINE MOUNT

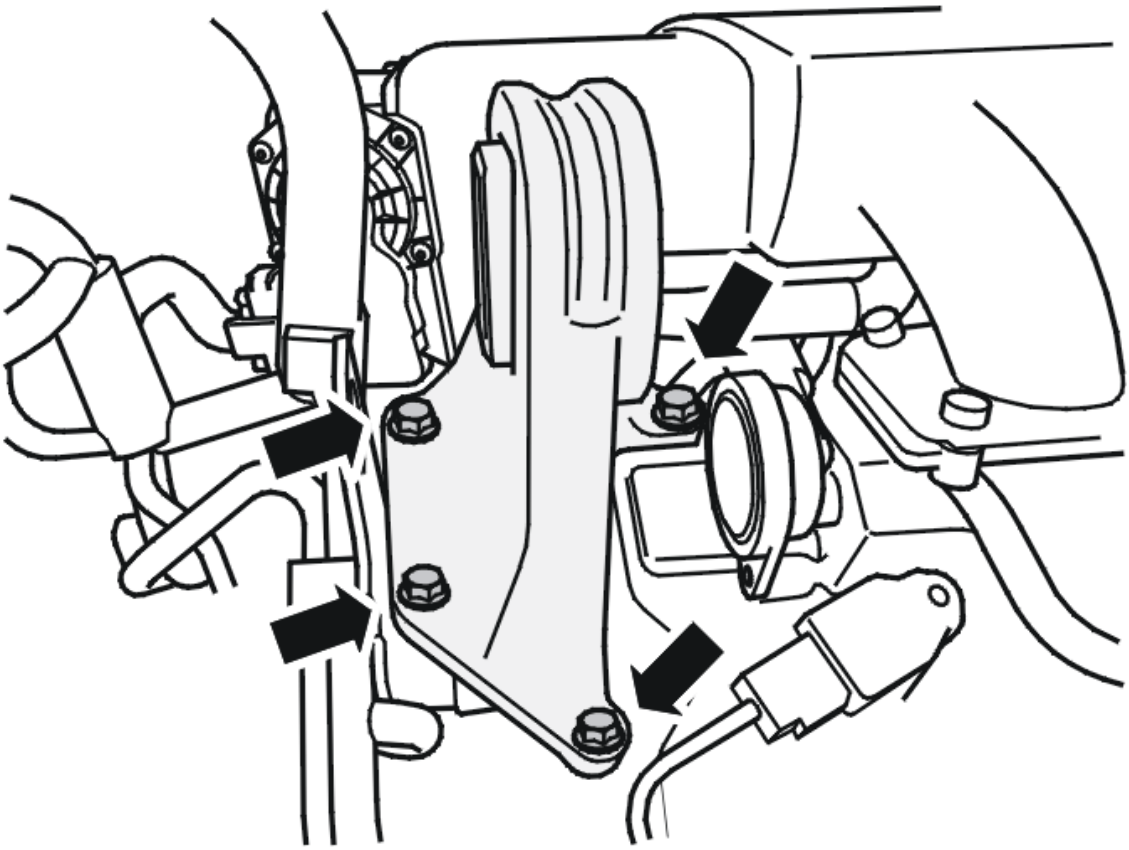

Fig. 126: Locating Upper Engine Mount
Courtesy of VOLVO CARS CORPORATION

Install the upper engine mount. Tighten the 4 M10 screws.

INSTALLING THE COVER OVER THE SERVO PUMP

Install:

- the cover over the servo pump
- the 2 screws; tighten.

INSTALLING THE UPPER ENGINE COVERS

Position the engine covers and press them into the retainers.

INSTALLING THE UPPER CROSS STAY

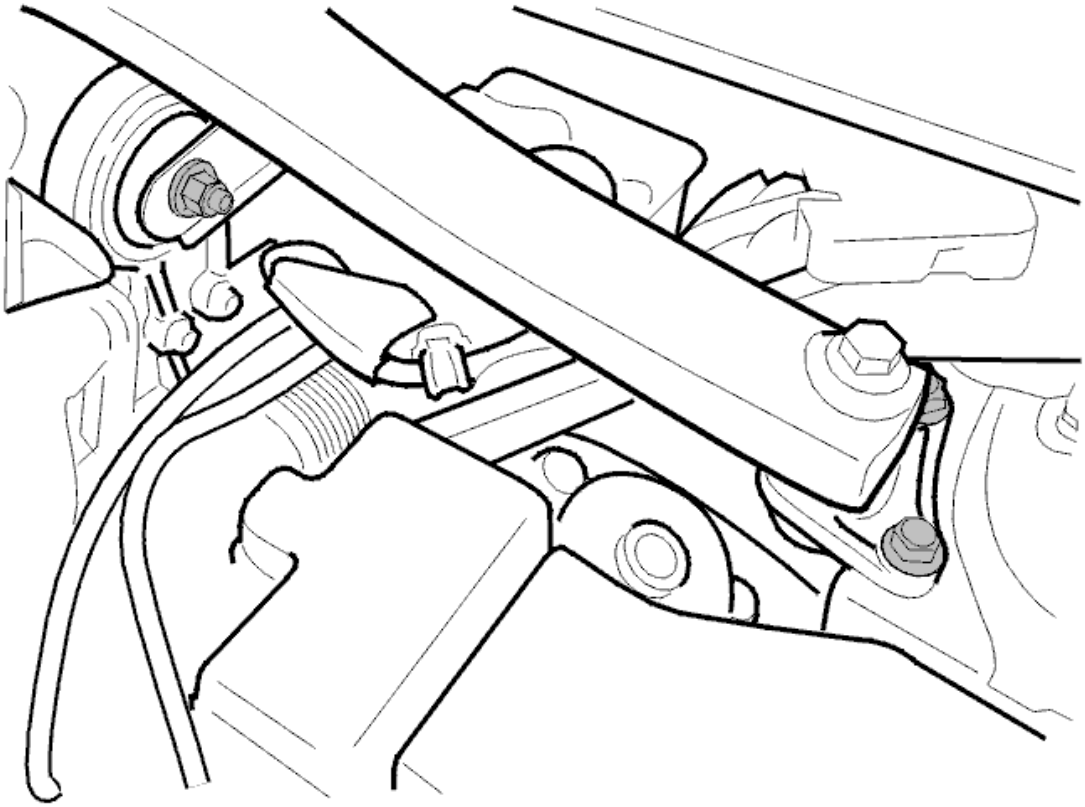

Fig. 127: Engine Stabilizer Brace
Courtesy of VOLVO CARS CORPORATION

Install:

- the upper cross stay between the suspension turrets
- the 4 screws in the suspension turrets; tighten
- the screw of the cross stay mount on the engine; tighten.

INSTALLING THE AIR CLEANER (ACL)

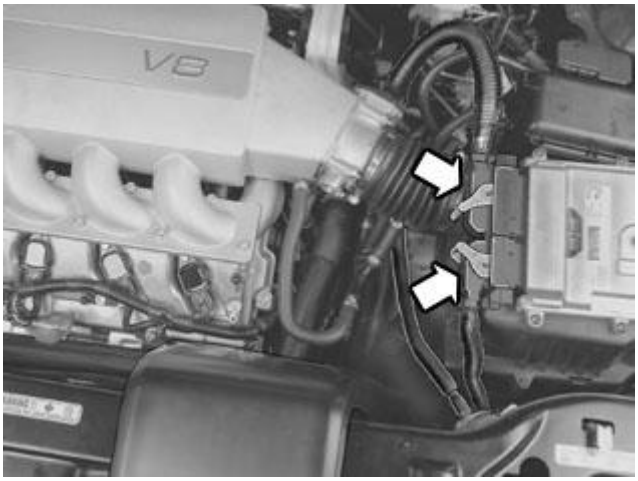

Fig. 128: Installing The Air Cleaner
Courtesy of VOLVO CARS CORPORATION

Install:

- the air cleaner; tighten the hose clip on the mass air flow sensor
- the brake vacuum hose on the brake pump
- the fresh air hose
- the 2 screws of the fresh air hose in the front plate
- the 2 connectors to the engine control module (ECM)
- the connector to the mass air flow sensor
- the band clamp on the cable harness in the air cleaner housing
- the cover over the air cleaner.

CHECK

CAUTION: Make sure the outlet hose of filling equipment is not blocked as this could damage the cooling system.

Fill with coolant using filling equipment see **9512957** and cover see **9512953** .

Start the engine and allow it to warm to normal operating temperature. Check for leaks and proper function. Fill up fluids as necessary.

THROTTLE BODY (ELECTRONIC THROTTLE MODULE (ETM)), REPLACING

NOTE: The illustrations in this service information are used for different model years and/or models. Some variation may occur. However, the essential information in the illustrations is always correct.

REMOVAL

REMOVING THE INTAKE HOSE

Remove the 2 hose clips.

Bend aside the intake hose.

REMOVING THE THROTTLE BODY

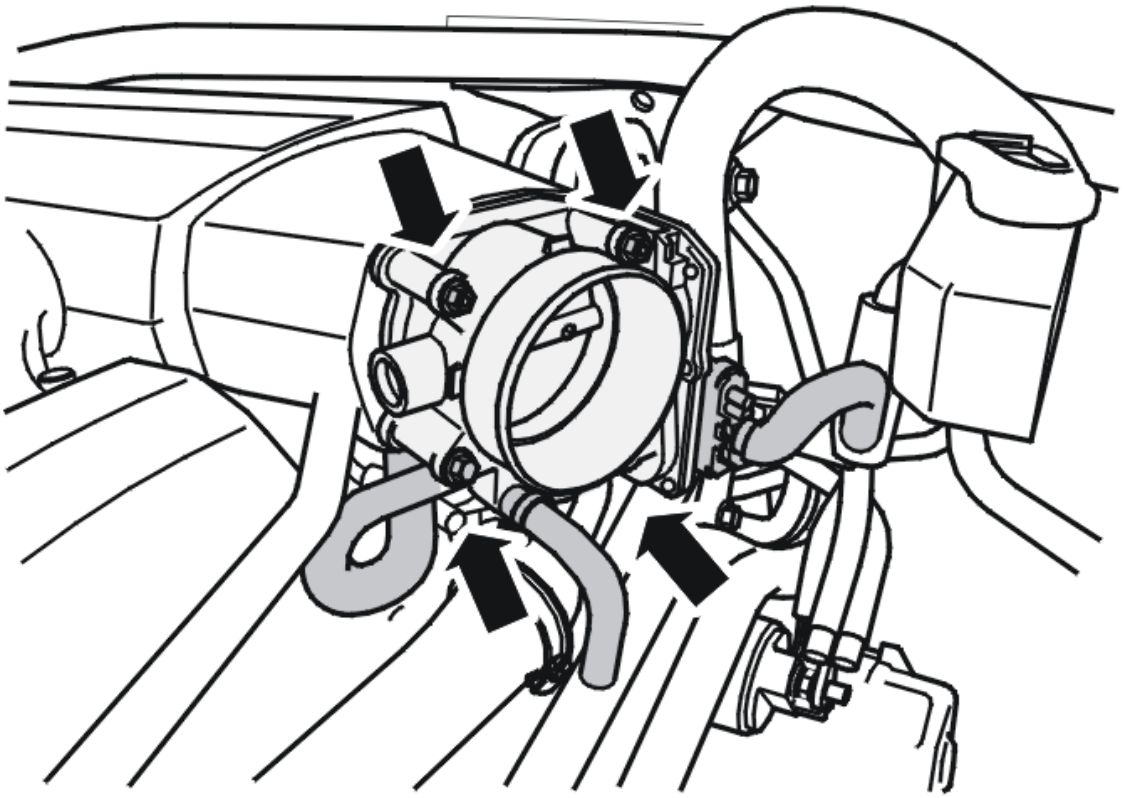

Fig. 129: Identifying The Throttle Body
Courtesy of VOLVO CARS CORPORATION

NOTE: Seal the 2 coolant hoses using hose pinch-off pliers.

Remove:

- the connector from the electronic throttle module (ETM)
- the 2 coolant hoses by releasing the hose clips
- the 2 nuts
- the 2 screws
- the throttle body.

Scrap the gasket.

INSTALLATION

NOTE: For tightening torques, see: TIGHTENING TORQUE .

INSTALLING THE THROTTLE BODY

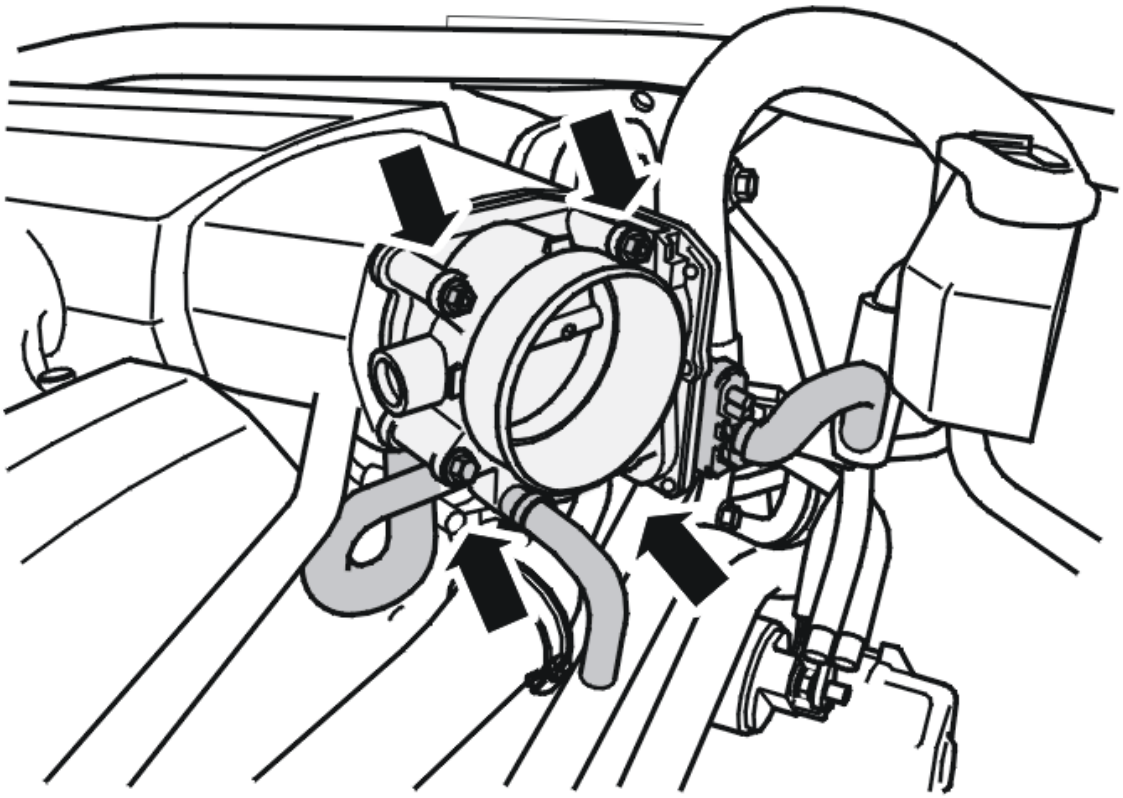

Fig. 130: Identifying The Throttle Body
Courtesy of VOLVO CARS CORPORATION

Install:

- a new gasket
- the throttle body
- the 2 nuts; tighten
- the 2 screws; tighten
- the 2 coolant hoses; tighten the hose clips.

Remove the hose clips.

Attach the connector to the electronic throttle module (ETM).

INSTALLING THE INTAKE HOSE

Install the intake hose. Tighten the 2 hose clips.

MUFFLER AND EXHAUST LINE (2003-2007)

FRONT MUFFLER REPLACEMENT

NOTE: **The illustrations in this service information are used for different model years and/or models. Some variation may occur. However, the essential information in the illustrations is always correct.**

REMOVAL

REMOVING THE MUFFLER

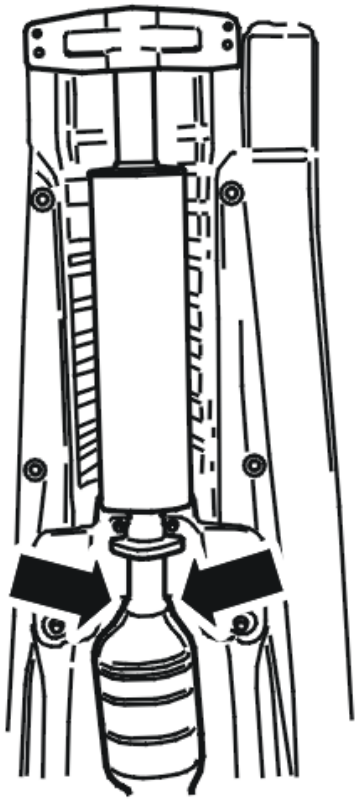

Fig. 131: Identifying Muffler
Courtesy of VOLVO CARS CORPORATION

Applies upon first replacement only:

NOTE: **Suspend the front part of the exhaust pipe so that the catalytic converter is not loaded.**

Cut the exhaust pipe between the front and rear muffler as described in, see **REAR MUFFLER,**

REPLACING.

Applies upon second (or higher) replacement:

NOTE: Suspend the front part of the exhaust pipe so that the catalytic converter is not loaded.

Remove:

- the clamp with nuts between the front and rear muffler
- the 2 nuts of the flange gasket
- the muffler.

INSTALLATION

INSTALLING THE MUFFLER

NOTE: For tightening torques, see TIGHTENING TORQUE .

NOTE: To ensure that there is no exhaust leakage, see FLANGED JOINT, ASSEMBLING .

Install:

- a new gasket
- the muffler
- the 2 nuts to the flange gasket M8
- the clamp with M10 nuts, 2

REAR MUFFLER, REPLACING

NOTE: The illustrations in this service information are used for different model years and/or models. Some variation may occur. However, the essential information in the illustrations is always correct.

REMOVAL

REMOVING THE REAR MUFFLER

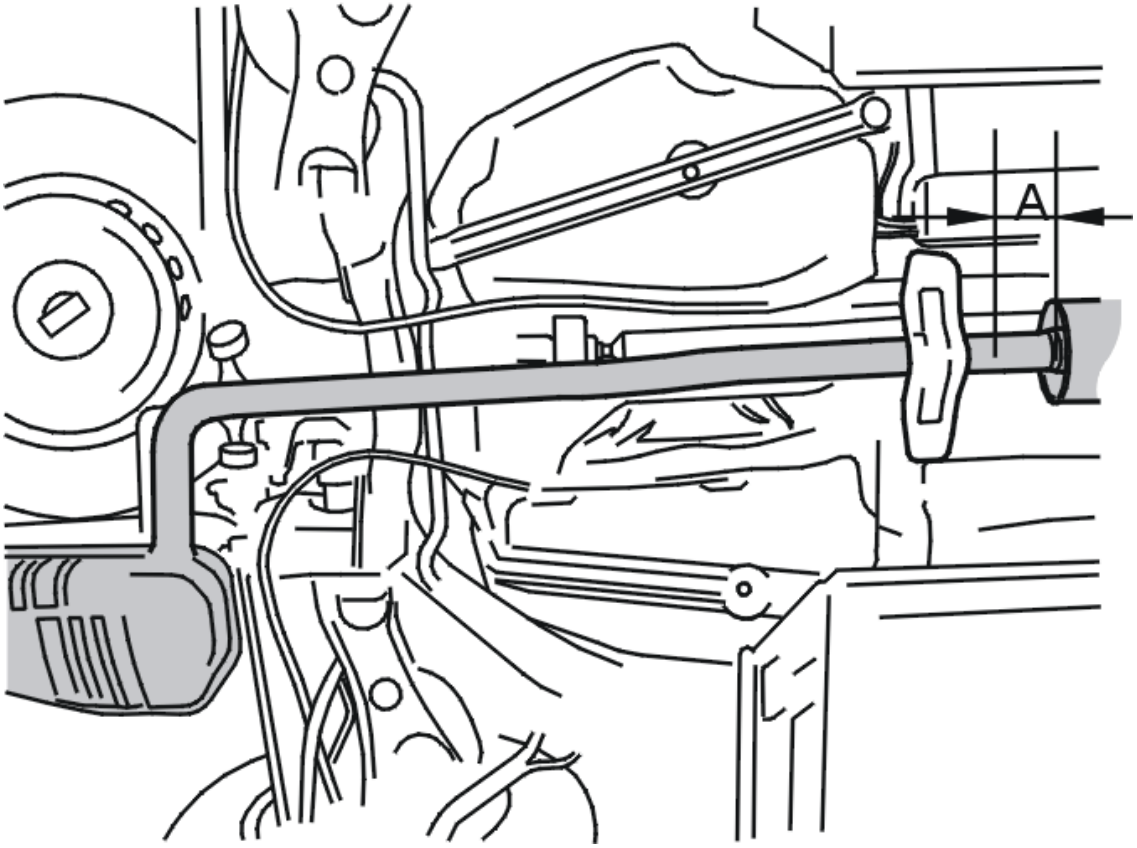

Fig. 132: Locating Point A
Courtesy of VOLVO CARS CORPORATION

Applies upon first replacement only:

NOTE: **Suspend the front part of the exhaust pipe so that the catalytic converter is not loaded**

Measure **78 mm** from the rear end of the front muffler. See A. Mark and cut the pipe using pipe cutter **115 8590** .

Remove:

- the 3 rubber mountings
- the muffler.

Applies upon second (or higher) replacement:

NOTE: **Suspend the front part of the exhaust pipe so that the catalytic converter is not loaded.**

Remove:

- the clamp with nuts between the front and rear muffler
- the 3 rubber mountings
- the muffler.

INSTALLATION

INSTALLING THE REAR MUFFLER

NOTE: **To ensure that there is no exhaust leakage, see FLANGED JOINT, ASSEMBLING .**

Install:

- new muffler
- the 3 rubber mountings
- the clamp with M10 nuts, 2

SILENCER AND EXHAUST SYSTEM (B8444S; 2005-2011, B6324S/5; 2007-2012)

SILENCER, FRONT, REPLACEMENT

NOTE: **The illustrations in this service information are used for different model years and/or models. Some variation may occur. However, the essential information in the illustrations is always correct.**

REMOVING THE MUFFLER

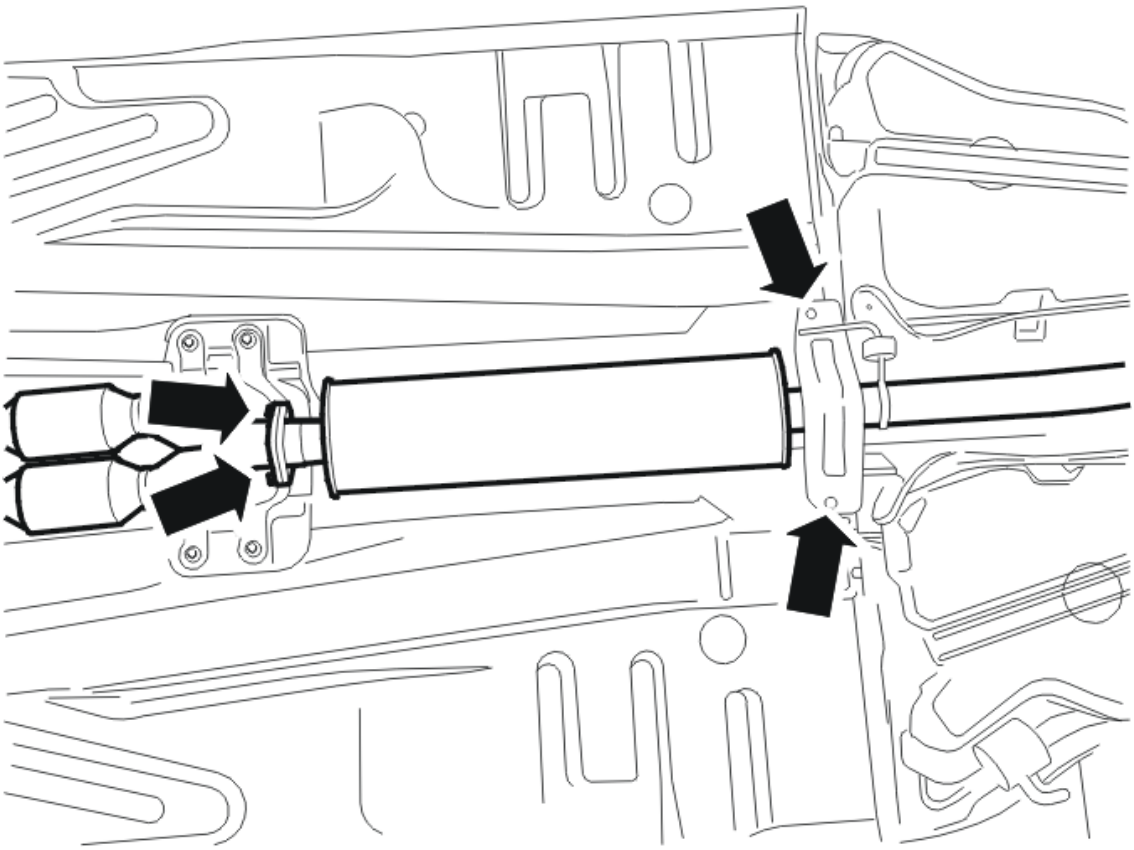

Fig. 133: Identifying Flange and Bracket
Courtesy of VOLVO CARS CORPORATION

NOTE: **If there is no joint between the front and rear silencer then both parts must be replaced.**

CAUTION: Suspend the front section of the exhaust pipe so that the catalytic converter is not loaded.

Applies only to first-time replacement .

Remove:

- the nuts to the flange gasket, x2
- the bolts to the bracket, x2
- the bracket to the rubber mounting
- the rubber mountings, x4
- the silencer, front and rear in one piece
- the flange gasket.

CAUTION: Suspend the front section of the exhaust pipe so that the catalytic

converter is not loaded.

Applies to second-time or later replacements .

Remove:

- the nut to the clamp between the front and rear silencer
- the 2 x nuts for the flange gasket
- the 2 x screws for the bracket
- the bracket with the rubber mounting
- the silencer.

INSTALLING THE SILENCER

NOTE: **For tightening torques, see: TIGHTENING TORQUE .**

NOTE: **To ensure that there is no exhaust leakage, see: FLANGED JOINT, ASSEMBLING .**

Applies only to first-time replacement .

Install:

- a new gasket
- the front silencer
- the 2 x M8 nuts for the flange gasket
- the bracket to the rubber mounting
- the 2 x M8 screws for the bracket
- the rear muffler
- the rubber mountings, x4
- the M10 nut for the clamp between the front and rear mufflers.

Applies to later replacements .

Install:

- a new gasket
- the front muffler
- the 2 x M8 nuts for the flange gasket
- the bracket to the rubber mounting
- the 2 x M8 screws for the bracket
- the rubber mounting

- the M10 nut for the clamp between the front and rear mufflers.

SILENCER, REAR, REPLACEMENT

NOTE: The illustrations in this service information are used for different model years and/or models. Some variation may occur. However, the essential information in the illustrations is always correct.

REMOVAL

REMOVING THE REAR SILENCER

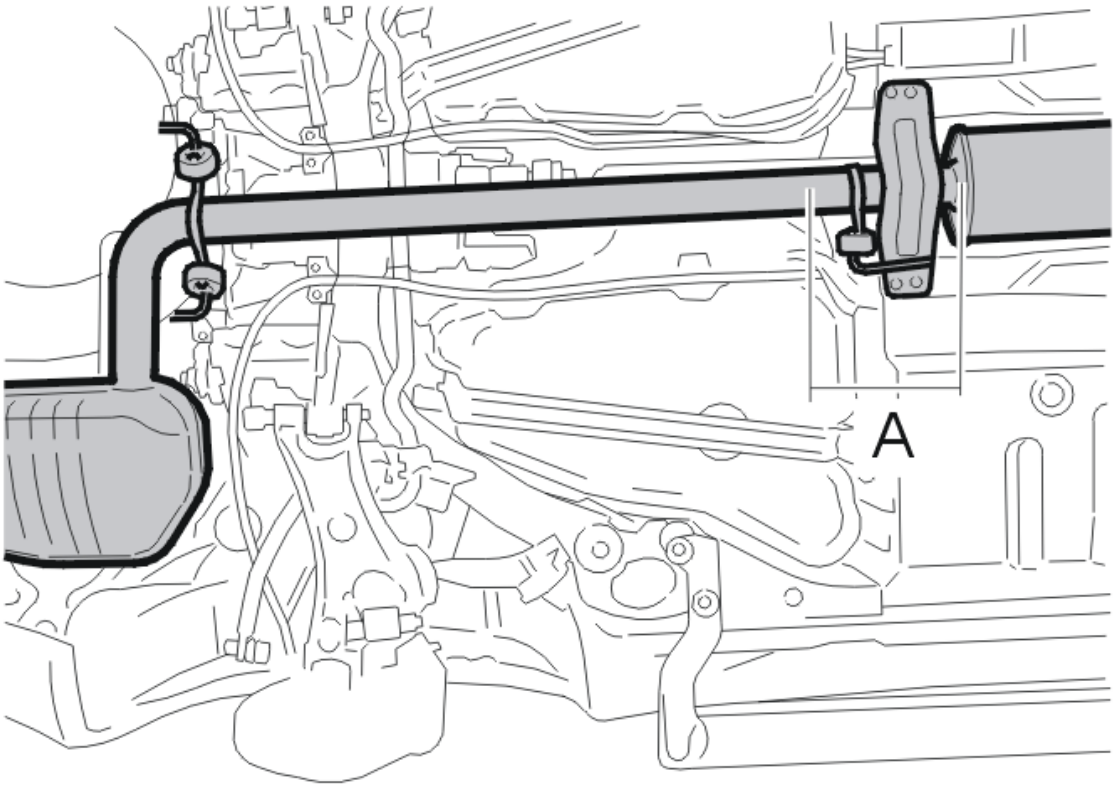

Fig. 134: Locating Point A
Courtesy of VOLVO CARS CORPORATION

Measure **235 mm** from the front silencer's rear end face in accordance with step A in the illustration.

Mark and cut the pipe, use pipe cutter see **1158590** .

Remove:

- the rubber mountings, x3
- the silencer.

APPLIES TO SECOND-TIME OR LATER REPLACEMENTS.

Remove:

- the nut to the clamp between the front and rear silencer
- the rubber mountings, x3
- the silencer.

INSTALLATION

NOTE: To ensure that there is no exhaust leakage, see: FLANGED JOINT, ASSEMBLING .

INSTALLING THE REAR SILENCER

Install:

- a new silencer
- the rubber mountings, x3
- the nut, M10, to the clamp between the front and rear silencer.

TURBOCHARGER (B5254T2; 2005-2007)

REPLACING THE TURBOCHARGER (TC) CONTROL VALVE

REMOVING THE TURBOCHARGER (TC) CONTROL VALVE

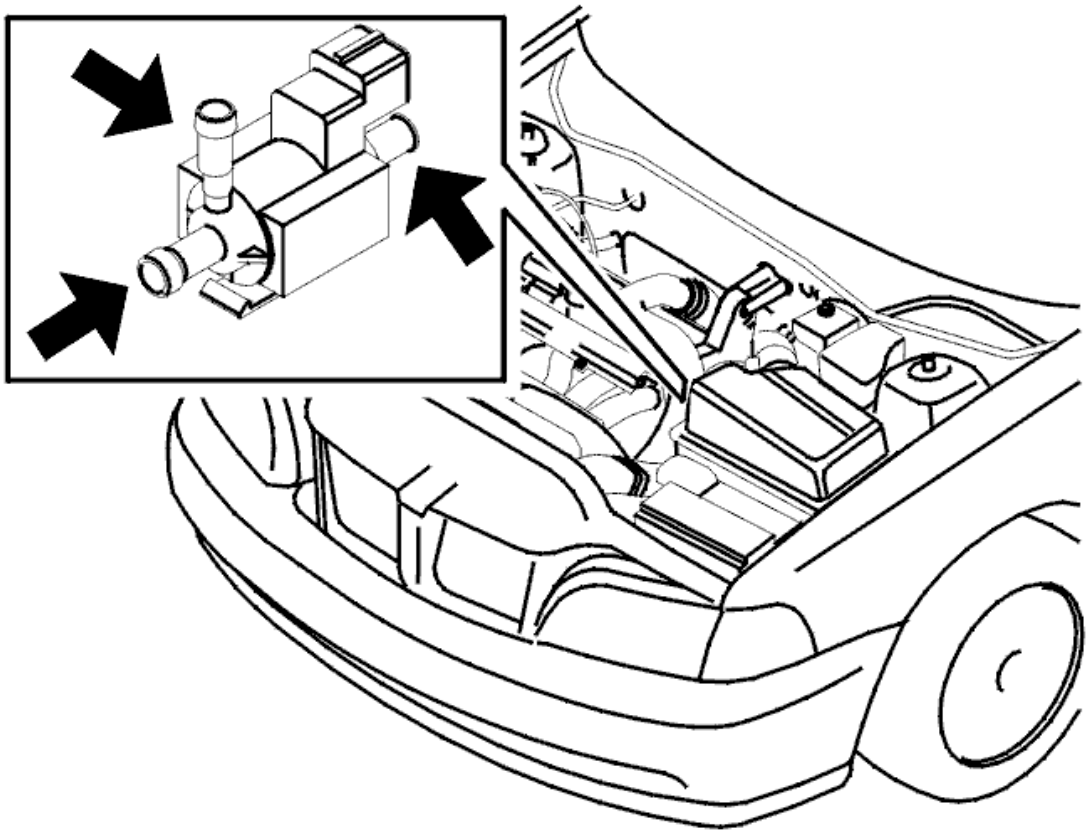

Fig. 135: Identifying Turbocharger Control Valve
Courtesy of VOLVO CARS CORPORATION

Lift the valve away from the air cleaner (ACL) cover.

Remove the connector from the valve.

Mark up and pull off the hoses.

INSTALLING THE TURBOCHARGER (TC) CONTROL VALVE

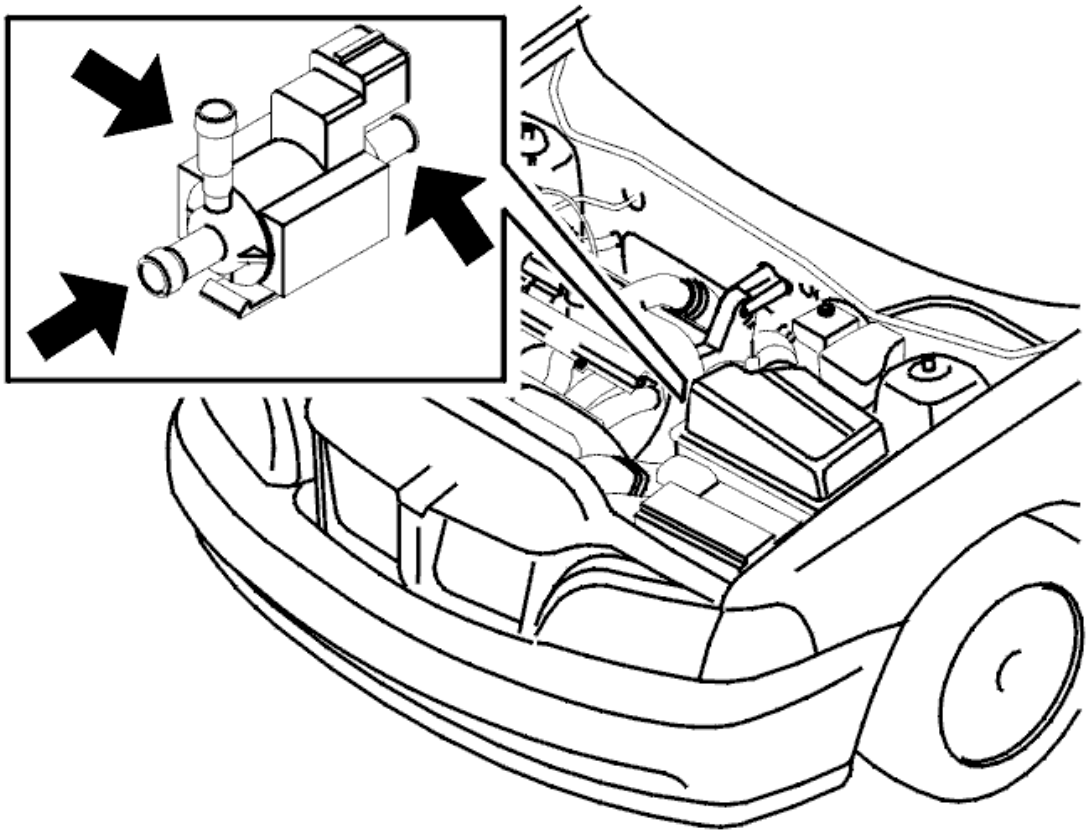

Fig. 136: Identifying Turbocharger Control Valve
Courtesy of VOLVO CARS CORPORATION

Install

- the hoses according to the marking on the control valve
- the connector on the valve
- the valve on the air cleaner (ACL) cover.

TURBOCHARGER (TC), REPLACING

Special tools:

see **9995562**

see **9997076**

see **9997057**

see **9512953**

see **9512957**

NOTE: **The illustrations in this service information are used for different model years and/or models. Some variation may occur. However, the essential information in the illustrations is always correct.**

PREPARATORY WORK

REMOVING COMPONENTS

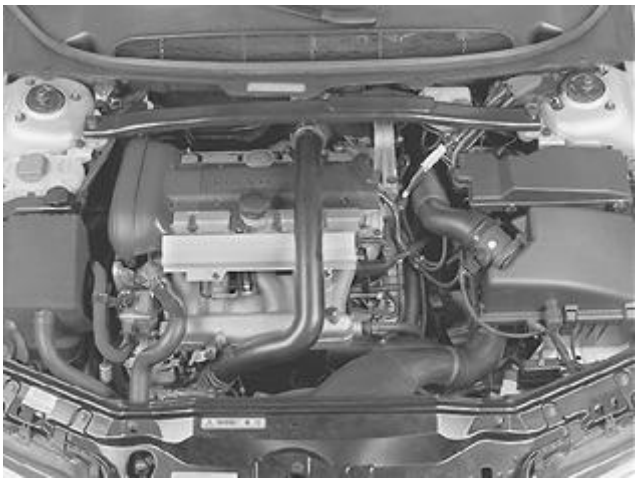

Fig. 137: Engine Compartment Components
Courtesy of VOLVO CARS CORPORATION

Remove:

- the cross stay between the suspension turrets
- the charge air hose and the charge air pipe above the engine. Remove the hose clamps for the turbocharger (TC) intake pipe at the turbocharger (TC). Pull off the pipe from the connector. Place the pipe to one side.

Raise the vehicle. See: **JACKING POINTS, BODY** .

DRAINING COOLANT

Fig. 138: Coolant Drain Plug
Courtesy of VOLVO CARS CORPORATION

Remove the splash guard under the engine. Open the engine nipple. Drain the coolant into a container. Close the nipple. Lower the vehicle.

REMOVAL

REMOVING COMPONENTS FROM THE TURBOCHARGER (TC)

Mark up the vacuum hose for the pressure regulator on the turbocharger (TC).

Remove:

- the vacuum hose from the pressure regulator on the turbocharger (TC)
- the cable for the heated oxygen sensors (HO2S) from the clips and clamps
- the upper heat deflector plate from the turbocharger (TC)
- the pipe screw for the oil pressure pipe in the turbocharger (TC). Discard the gaskets
- the pipe screws for the upper coolant pipe from the turbocharger (TC). Discard the gaskets.

DISCONNECTING THE FRONT SUSPENSION COMPONENTS

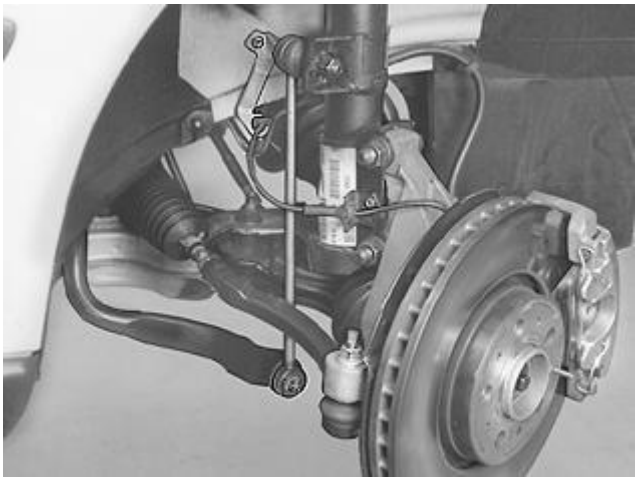

Fig. 139: Front Suspension Components
Courtesy of VOLVO CARS CORPORATION

Remove:

- the right-hand front wheel
- the screw for the drive shaft / wheel hub.

DISCONNECTING THE FRONT SUSPENSION COMPONENTS, CONTINUED

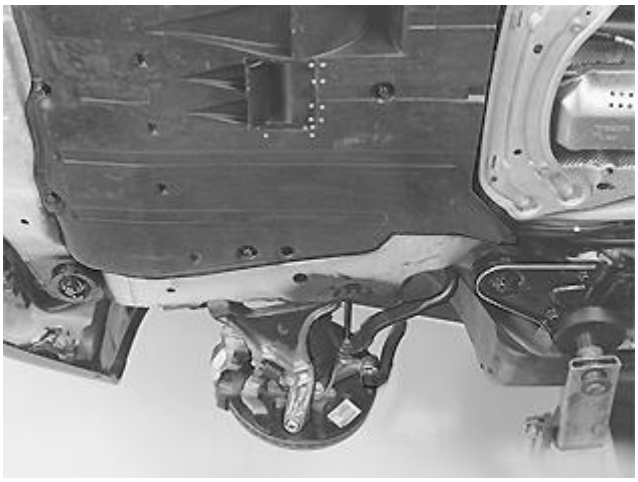

Fig. 140: Front End Components
Courtesy of VOLVO CARS CORPORATION

NOTE: Clean the exposed threads outside the nut. Spray using rust solvent before removing the nut.

Remove the nut for the ball joint and control arm. Counterhold the ball joint pinion so that the boot does not twist. Use a Torx wrench.

REMOVING THE DRIVE SHAFT FROM THE WHEEL HUB

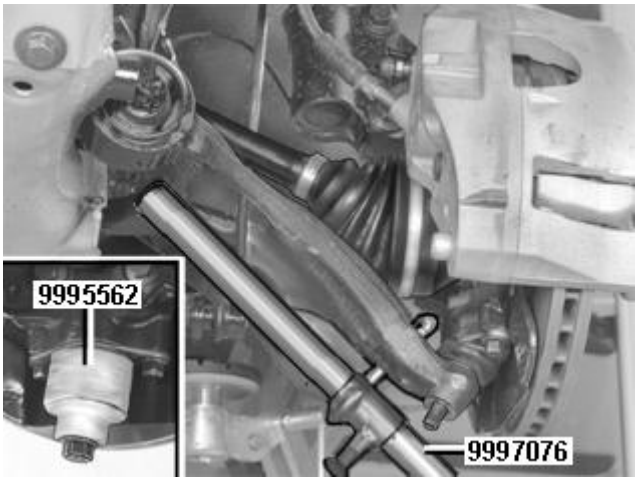

Fig. 141: Identifying Wheel Knuckle, Special Tools 999 7076 And 999 5562
Courtesy of VOLVO CARS CORPORATION

Fold down the control arm. Use lever see **9997076** to move the wheel spindle to the side. At the same time, install protective sleeve see **9995562** on the ball joint pinion. Hold the sleeve in place using the nut for the ball joint.

REMOVING THE DRIVE SHAFT

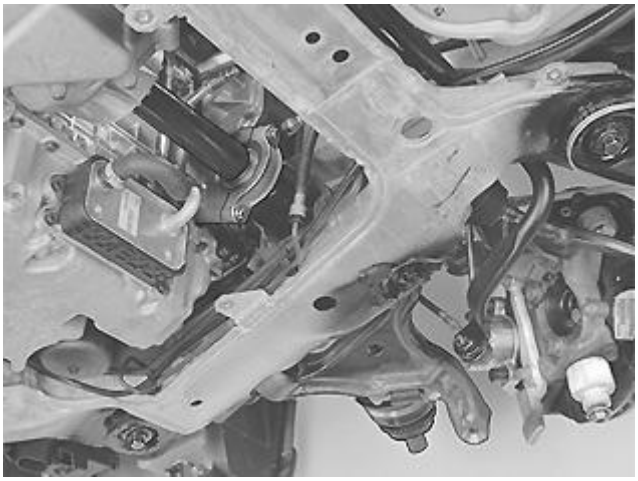

Fig. 142: Drive Shaft
Courtesy of VOLVO CARS CORPORATION

CAUTION: Do not pull the outer part of the shaft. Doing so could damage the axial stops in the joints.

Press out the wheel spindle. Detach the drive shaft from the hub. Do not damage the drive shaft boot. Use a tensioner band to pull the spring strut backwards. Remove the screws from the bearing cap for the drive shaft. Pull the drive shaft straight out.

REMOVING THE PROPELLER SHAFT

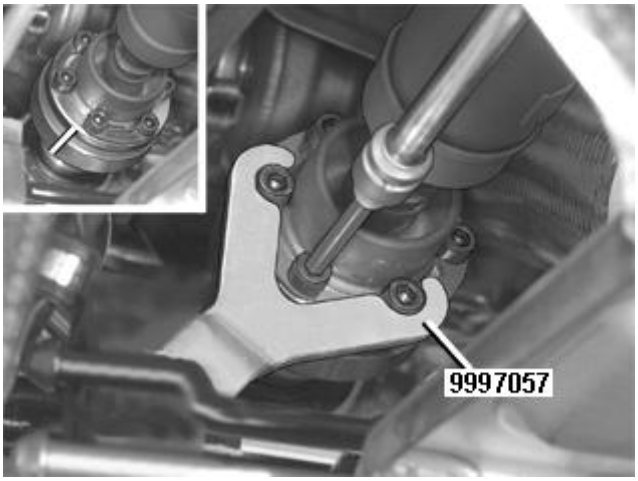

Fig. 143: Identifying Matchmark On Propeller Shaft CV Joint And Special Tool 999 7057
Courtesy of VOLVO CARS CORPORATION

For AWD vehicles carry out the following work:

Remove the front member from the car body.

Remove the brake pipe from the mountings in the member. Mark the propeller shaft CV joint in relation to the bevel gear flange.

Remove the screws from the propeller shaft. Use: see **9997057** . Press the drive shaft joints together as much as possible. Remove the shaft from the bevel gear. Leave the end of the shaft resting against the anti-roll bar.

REMOVING BEVEL GEAR

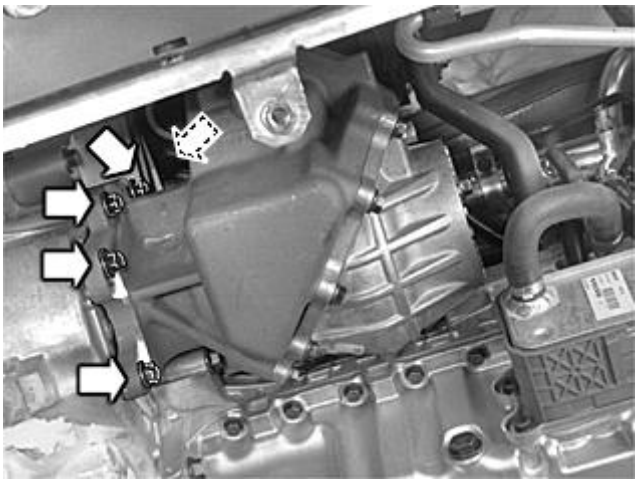

Fig. 144: Angle Gear Screws
Courtesy of VOLVO CARS CORPORATION

Remove the 5 x screws for the bevel gear. Pull the bevel gear straight out. Then turn it during removal.

REMOVING THE THREE-WAY CATALYTIC CONVERTER (TWC)

Remove the three-way catalytic converter (TWC). See: **THREE-WAY CATALYTIC CONVERTER (TWC), REPLACING**.

REMOVING THE SUPPORT BRACKET

Fig. 145: Identifying Support Bracket And Screws
Courtesy of VOLVO CARS CORPORATION

Remove:

- the 3 x screws
- the bracket.

REMOVING COMPONENTS FROM THE TURBOCHARGER (TC)

Fig. 146: Identifying Turbocharger, Oil Pressure Pipe And The Oil Return Line
Courtesy of VOLVO CARS CORPORATION

Remove:

- the clamp between the turbocharger (TC) oil pressure line and the oil return line

- the screws where the oil return line connects to the turbocharger (TC). Pull the pipe from the cylinder block.

NOTE: Check that the rubber sealing ring comes away with the pipe. Seal the opening in the cylinder block.

Remove:

- the pipe screws for the lower coolant pipe from the turbocharger (TC). Discard the gaskets
- the pipe screw for the oil pressure pipe in the engine block. Discard the gaskets.

NOTE: Collect any oil spilled under the pipe screws in the cylinder block.

Remove the oil pressure pipe.

REMOVING THE TURBOCHARGER (TC) AND EXHAUST MANIFOLD

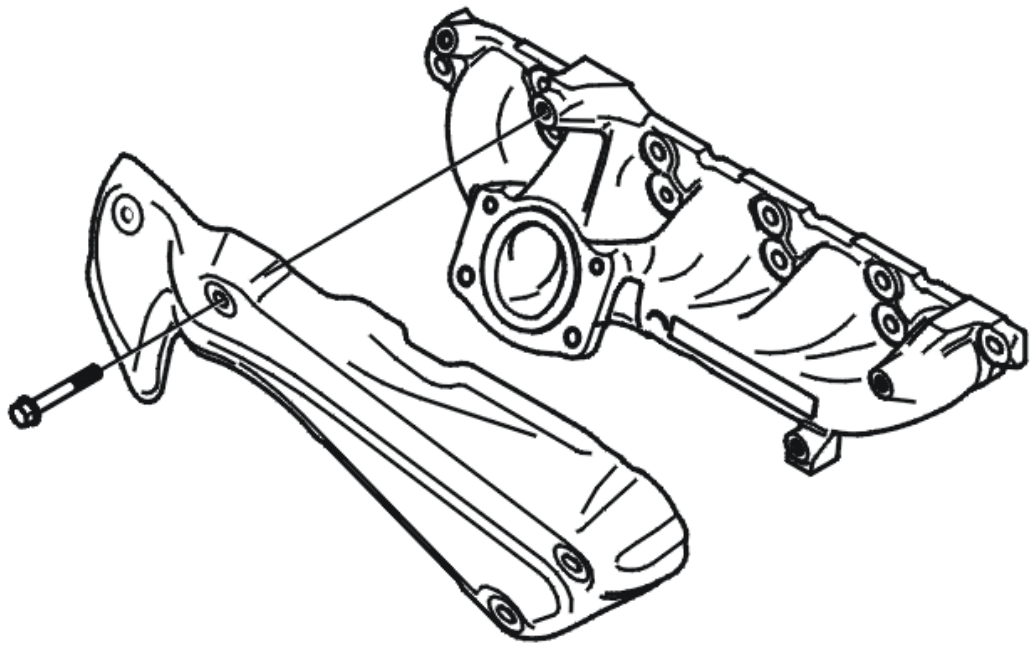

Fig. 147: Identifying Inner Heat Shield And Manifold
Courtesy of VOLVO CARS CORPORATION

HINT: Use rust solvent or similar on the studs.

Remove:

- the inner heat deflector plate from the manifold
- the nuts and washers holding the manifold to the cylinder head
- the manifold
- the old gasket residue. Clean the gasket faces. Check that all the studs are tightened.

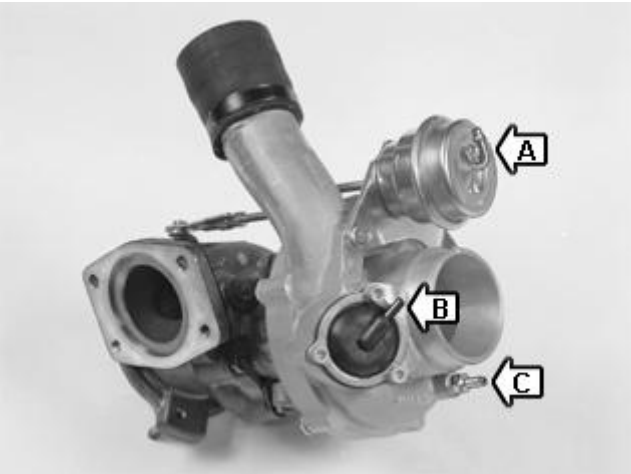

Fig. 148: Identifying Turbocharger And Pipe Fittings
Courtesy of VOLVO CARS CORPORATION

Lower the turbocharger (TC) and exhaust manifold as one complete unit.

NOTE: Mark up the hoses on the turbocharger (TC) in a suitable way.

INSTALLATION

NOTE: For tightening torques, see: TIGHTENING TORQUE .

NOTE: To ensure that there is no exhaust leakage, see: FLANGED JOINT, ASSEMBLING .

ASSEMBLING THE TURBOCHARGER (TC)

Install:

- a new gasket between the turbocharger (TC) and exhaust manifold
- the turbocharger (TC) to the exhaust manifold
- new screws and tighten.

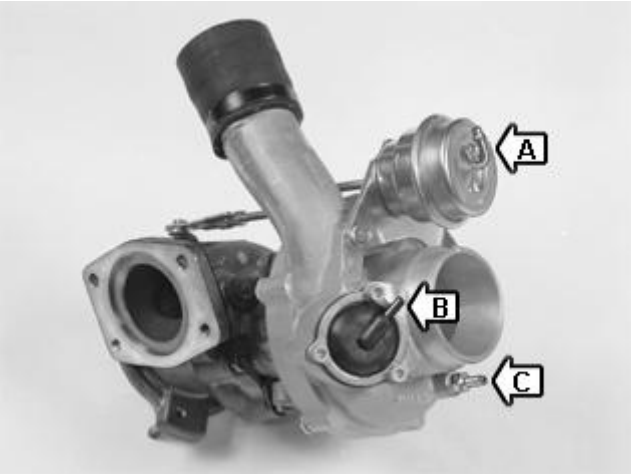

Fig. 149: Identifying Turbocharger And Pipe Fittings
Courtesy of VOLVO CARS CORPORATION

NOTE: Install the hoses on the turbocharger (TC) according to the marking.

Raise the turbocharger (TC) and exhaust manifold as one complete unit.

INSTALLING THE TURBOCHARGER AND EXHAUST MANIFOLD

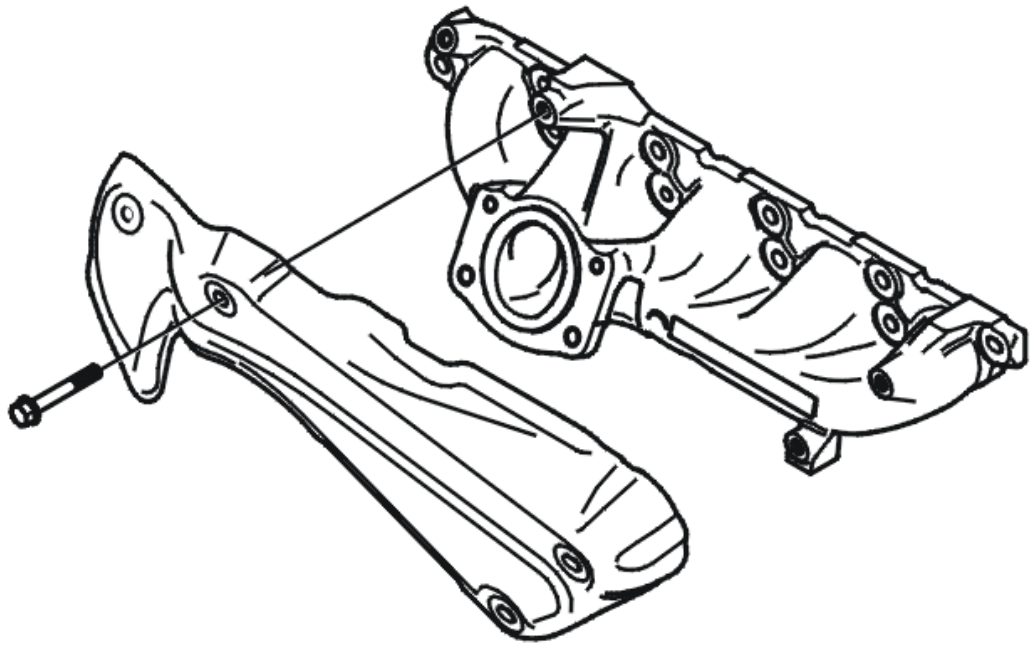

Fig. 150: Identifying Inner Heat Shield And Manifold

Courtesy of VOLVO CARS CORPORATION

Install:

- new gaskets
- the turbocharger (TC) and the exhaust manifold. Use new nuts at the manifold. Tighten
- the inner heat deflector plate.

INSTALLING COMPONENTS ON THE TURBOCHARGER (TC)

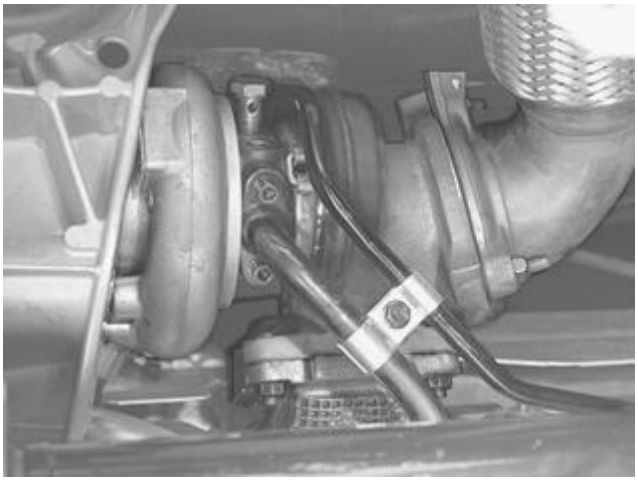

Fig. 151: Identifying Turbocharger, Oil Pressure Pipe And The Oil Return Line
Courtesy of VOLVO CARS CORPORATION

Install:

- the oil pressure pipe in the cylinder block with the pipe screw. Use new gaskets. Do not tighten
- the oil return line in the cylinder block with a new sealing ring
- the 2 x screws for the oil return line in the turbocharger (TC). Use a new gasket. Tighten
- the lower and upper coolant pipe and pipe screws. Tighten. See: **SUMMARY OF SPECIFIC COMPONENTS AND TIGHTENING TORQUES**
- the clamp between the oil pressure pipe and the return pipe. Tighten.

INSTALLING THE BRACKET

Fig. 152: Identifying Support Bracket And Screws
Courtesy of VOLVO CARS CORPORATION

Install:

- the bracket
- the 3 screws. Tighten. See: **SUMMARY OF SPECIFIC COMPONENTS AND TIGHTENING TORQUES** .

INSTALLING THE BEVEL GEAR

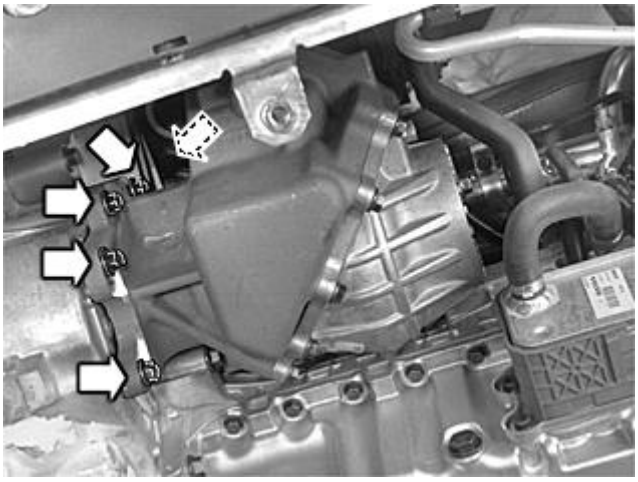

Fig. 153: Angle Gear Screws
Courtesy of VOLVO CARS CORPORATION

For AWD vehicles carry out the following work:

Before installing the bevel gear, lubricate the spline joint between the transmission and the bevel gear. Use grease. See: **SPLINES GREASING** .

Ensure that the mating surfaces on the transmission and bevel gear are clean. Install the bevel gear. Lightly tighten the M10 screws alternately. Tighten.

INSTALLING THE PROPELLER SHAFT

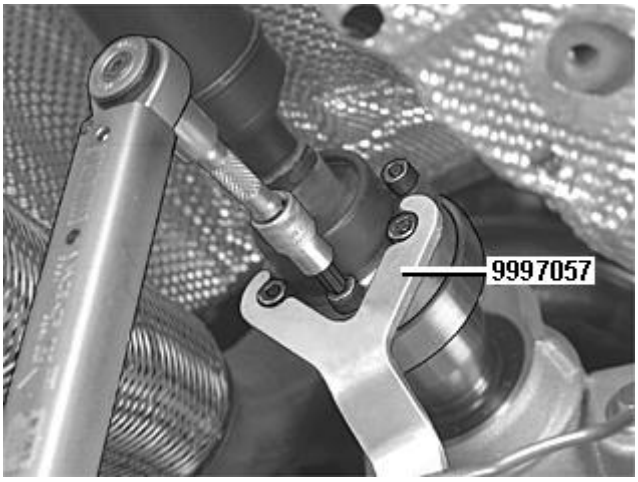

Fig. 154: Identifying Front Propeller Shaft And Special Tool 999 7057
Courtesy of VOLVO CARS CORPORATION

Check that the mating surfaces of the propeller shaft and flange are clean. Install the propeller shaft using the marking made earlier. Use new screws. Tighten the screws. See: **SUMMARY OF SPECIFIC COMPONENTS AND TIGHTENING TORQUES** .

INSTALLING THE THREE-WAY CATALYTIC CONVERTER (TWC)

Install the three-way catalytic converter (TWC). See: **THREE-WAY CATALYTIC CONVERTER (TWC), REPLACING**.

INSTALLING THE DRIVE SHAFT AND BEARING CAP ON THE PILOT BEARING FOR THE SHAFT

Fig. 155: Coolant Drain Plug
Courtesy of VOLVO CARS CORPORATION

Lubricate the mating surface at the end of the drive shaft. Use wheel bearing grease P/N 1161 241-3 (80 g). Install the drive shaft on the transmission and the mounting for the pilot bearing with the bearing cap and the 2

M8 screws. Tighten.

INSTALLING THE DRIVE SHAFT

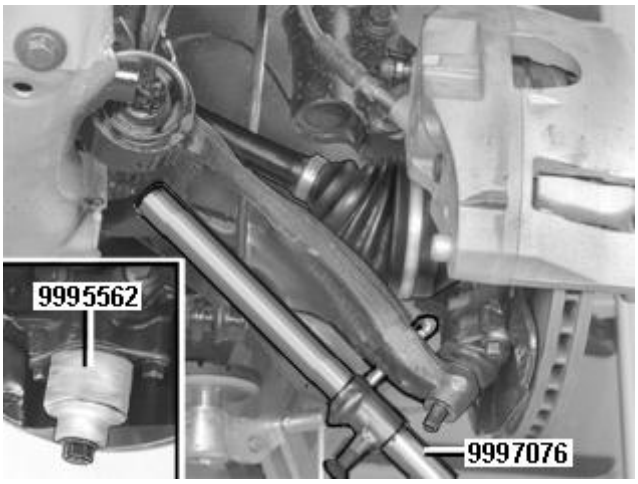

Fig. 156: Identifying Wheel Knuckle, Special Tools 999 7076 And 999 5562
Courtesy of VOLVO CARS CORPORATION

CAUTION: Check that the seal on the end of the drive shaft is correctly positioned. See: SEAL CV JOINT HOUSING, REPLACING .

Press out the spring strut. Align the drive shaft in the hub. Remove protective sleeve. Use: see **9995562** . Locate the control arm on the ball joint pinion. Use: see **9997076** .

Install:

- the nut for the ball joint and control arm. Tighten. See: **SUMMARY OF TIGHTENING TORQUES FOR SPECIFIC COMPONENTS** . Counterhold so that the ball joint boot does not rotate. Use a Torx wrench
- the drive shaft center screw. Use a new screw. Tighten. See: **SUMMARY OF TIGHTENING TORQUES FOR SPECIFIC COMPONENTS** . Use a screwdriver as a counterhold on the brake disc.

INSTALLING THE COMPONENTS ENGINE COMPARTMENT

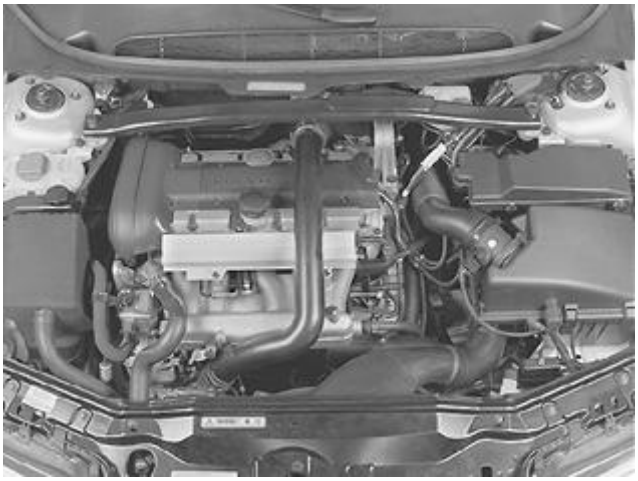

Fig. 157: Engine Compartment Components
Courtesy of VOLVO CARS CORPORATION

Install:

- the pipe screw together with new gaskets on the oil pressure pipe in the turbocharger (TC). Tighten
- the upper heat deflector plate. Tighten the screws
- the charge air pipe over the engine
- the cross stay between the suspension turrets
- the tie strap for the servo cable in the cross stay. Raise the vehicle. See: **JACKING POINTS, BODY** .

FINISHING

ROUTING THE JOINT

Tighten the pipe screws for the oil pressure pipe in the cylinder block. See: **SUMMARY OF SPECIFIC COMPONENTS AND TIGHTENING TORQUES** .

INSTALLING COMPONENTS

Install:

- the lower engine cover
- the right-hand front wheel. See: **INSTALLING WHEELS** .

CHECK

Fill with coolant. Use the filling equipment: see **9512957** and cover see **9512953** .

Start the engine and run the engine to normal operating temperature.

Check the function. Check for leaks. To up the coolant to max if necessary.

TURBOCHARGER (B5254T2, AW50/51 AWD; 2003-2004)

TURBOCHARGER, REPLACING

Special tools:

see **9997076**

see **9995562**

see **9997057**

see **9512953**

see **9512957**

NOTE: **The illustrations in this service information are used for different model years and/or models. Some variation may occur. However, the essential information in the illustrations is always correct.**

PREPARATORY WORK

REMOVING COMPONENTS

Fig. 158: Engine Compartment Components
Courtesy of VOLVO CARS CORPORATION

Remove:

- the battery negative lead. See: **BATTERY, DISCONNECTING**
- the cross stay between the suspension turrets
- the charge air hose and charge air pipe above the engine. Detach the hose clamp for the turbo's intake pipe at the turbo. Pull the pipe off the connection and move to one side. Mark up the vacuum line for the turbo

control valve.
- the vacuum line for the turbo control valve.
- the cable for the catalyst monitor sensor from the clips and the clamps
- the heat shield from the turbo.

DRAINING COOLANT

Fig. 159: Coolant Drain Plug
Courtesy of VOLVO CARS CORPORATION

Raise the vehicle. See: **JACKING POINTS, BODY** .

Remove the engine undershield from under the engine. Open the nipple on the engine. Drain the coolant into a drain pan. Close the nipple.

Remove:

- the pipe screws for the upper coolant pipe on the turbo and move the coolant pipe to one side
- the screws, 2 x, for the oil delivery pipe on the turbo and disconnect the oil delivery pipe and discard the gasket
- the upper screws, 2 pcs, between the turbo and the exhaust pipe
- the catalyst monitor sensors from the exhaust pipe.

REMOVAL OF CATALYTIC CONVERTER

Remove the catalytic converter. See: **THREE-WAY CATALYTIC CONVERTER (TWC), REPLACING**.

REMOVAL

DISCONNECTING THE FRONT SUSPENSION COMPONENTS

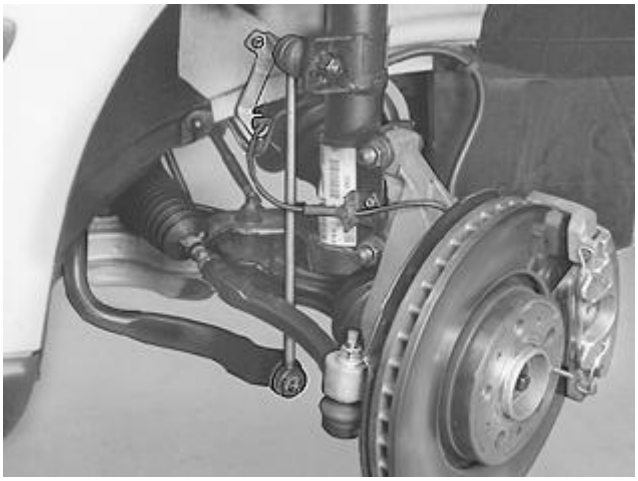

Fig. 160: Front Suspension Components
Courtesy of VOLVO CARS CORPORATION

NOTE: **Check that the parking brake is not applied or that the gear selector is in gear or position P.**

Remove:

- the right-hand front wheel
- the center screw for the driveshaft.

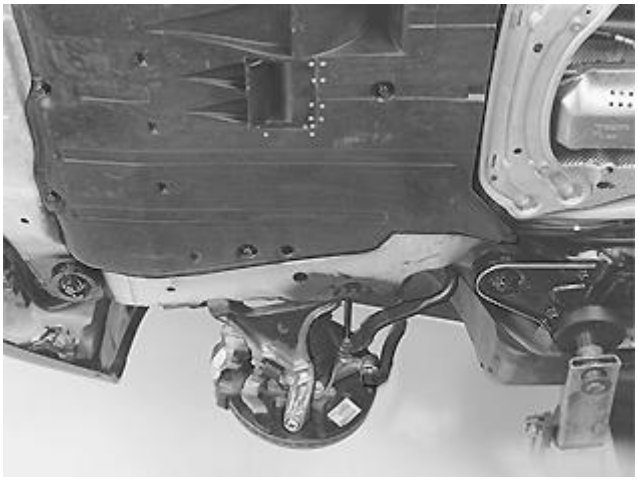

Fig. 161: Front End Components
Courtesy of VOLVO CARS CORPORATION

NOTE: **Clean the exposed threads outside the nut. Spray using rust solvent before removing the nut.**

Remove:

- the nut for the ball joint and control arm. Counterhold the ball joint pinion with a Torx wrench so that the

boot does not twist

REMOVING THE DRIVE SHAFT

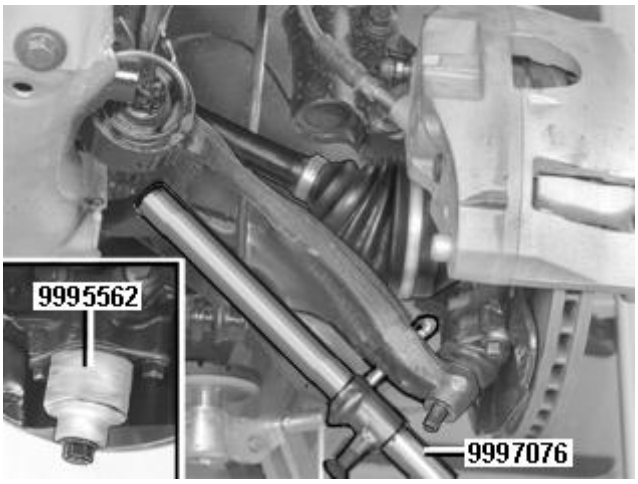

Fig. 162: Identifying Wheel Knuckle, Special Tools 999 7076 And 999 5562
Courtesy of VOLVO CARS CORPORATION

Pull down the control arm. Use: see **9997076** and move the wheel knuckle to the side, and install the protective sleeve: see **9995562** on the ball joint pin at the same time. Keep it in position using the ball joint nut.

REMOVING THE DRIVE SHAFT

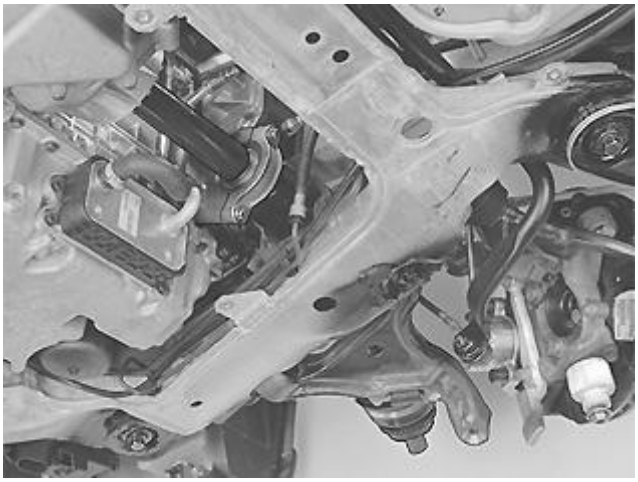

Fig. 163: Drive Shaft
Courtesy of VOLVO CARS CORPORATION

Press out the wheel knuckle and detach the driveshaft from the hub. Take care not to damage the driveshaft boot. Use a tensioner band and pull the strut and spring assembly backwards. Remove the screws for the bearing cap for the driveshaft.

CAUTION: Do not pull the outer part of the shaft. Doing so could damage the axial stops in the joints.

Pull the driveshaft straight out.

REMOVING THE PROPELLER SHAFT

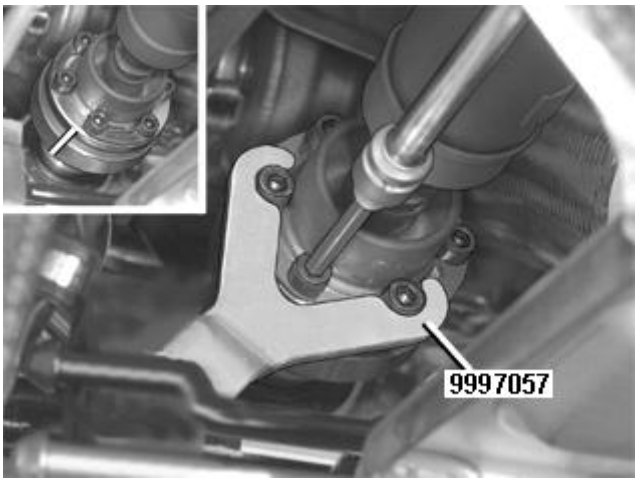

Fig. 164: Identifying Matchmark On Propeller Shaft CV Joint And Special Tool 999 7057
Courtesy of VOLVO CARS CORPORATION

Mark the propeller shaft CV joint in relation to the bevel gear flange.

Remove the screws for the propeller shaft. Use: see **9997057** . Press the shaft's joints together as much as possible. Disconnect the shaft from the bevel gear. Allow the shaft end to rest against the stabilizer bar.

REMOVING BEVEL GEAR

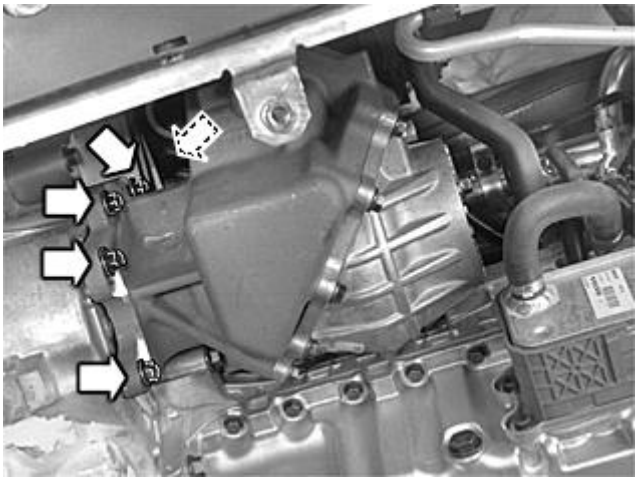

Fig. 165: Angle Gear Screws
Courtesy of VOLVO CARS CORPORATION

NOTE: To prevent oil leakage, position the bevel gear with the bleed hole upward.

Remove the screws, 5 pcs, for the bevel gear. Pull the bevel gear straight out. Then turn it during removal.

REMOVING COMPONENTS

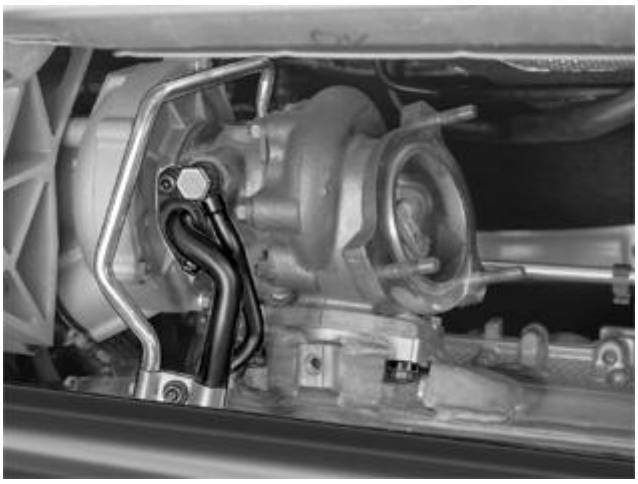

Fig. 166: Identifying Turbocharger Oil Delivery Pipe And The Oil Return Pipe
Courtesy of VOLVO CARS CORPORATION

Remove:

- the clamp between the turbocharger oil delivery pipe and the oil return pipe.
- the screws at the oil return pipe connection to the turbo. Pull the pipe from the cylinder block. Discard the gasket.

NOTE: Check that the rubber sealing ring comes away with the pipe. Seal the opening in the cylinder block.

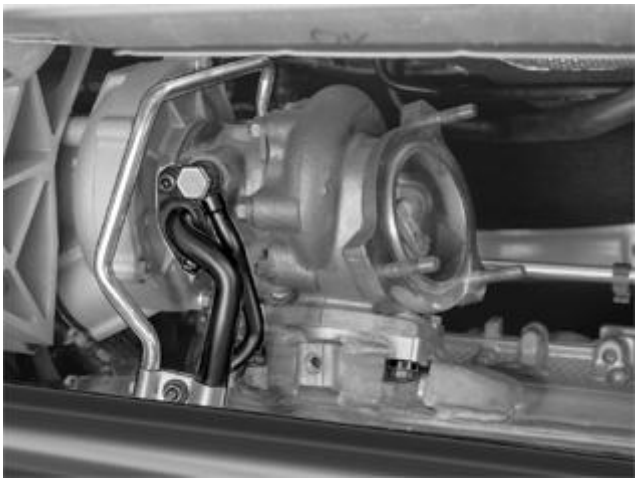

Fig. 167: Identifying Turbocharger Oil Delivery Pipe And The Oil Return Pipe
Courtesy of VOLVO CARS CORPORATION

Remove:

- the pipe screws at the connections for the coolant pipes to the turbo
- the pipe screws for the oil delivery pipe in the cylinder block
- the lower nuts, 2 pcs, for the turbocharger on the exhaust manifold side.

  HINT: Use rust solvent or similar

- the upper nuts at the turbocharger connection to the manifold.

REMOVING THE TURBOCHARGER (TC)

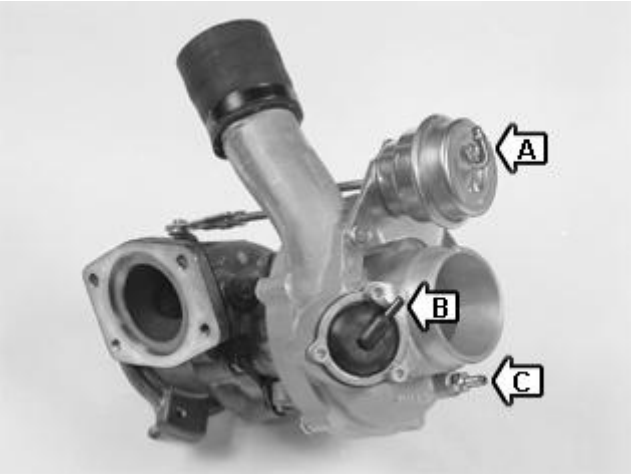

Fig. 168: Identifying Turbocharger And Pipe Fittings
Courtesy of VOLVO CARS CORPORATION

Lift off the turbo and place it on the steering gear. Mark up and remove the turbo control hoses. Lower the turbocharger. Discard the old gasket.

REMOVING MANIFOLD AND GASKET

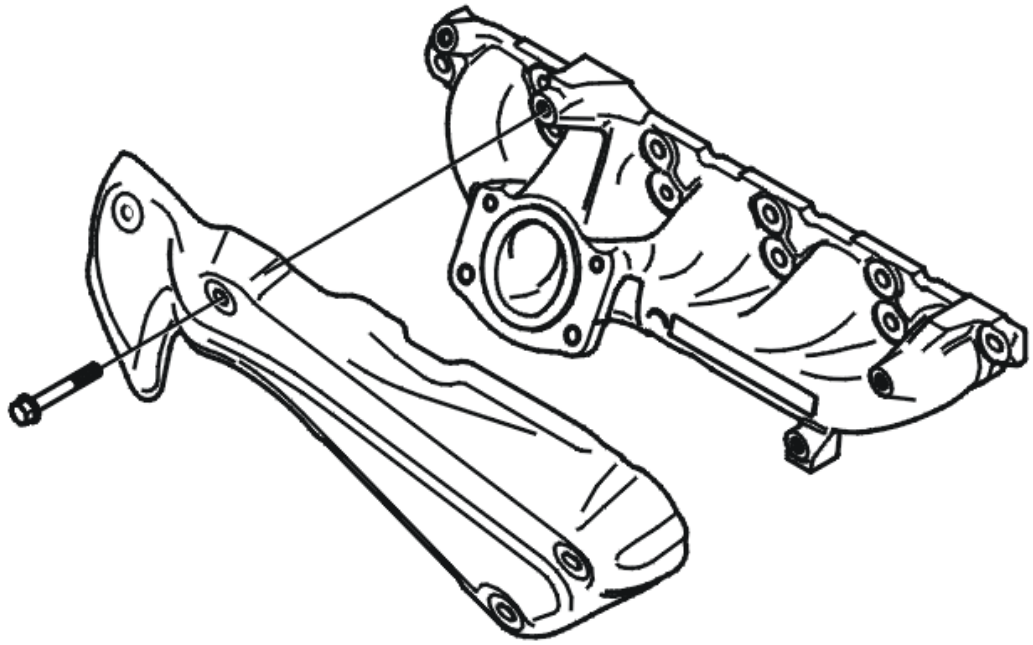

Fig. 169: Identifying Inner Heat Shield And Manifold
Courtesy of VOLVO CARS CORPORATION

Remove:

- the inner heat shield from the manifold
- the nuts and washers holding the manifold against the cylinder head
- the manifold
- old gasket residue. Clean the gasket surfaces and check that all pin studs are tightened.

INSTALLATION

NOTE: **For tightening torques, see: TIGHTENING TORQUE .**

NOTE: **To ensure that there is no exhaust leakage, see: FLANGED JOINT, ASSEMBLING .**

INSTALLING THE MANIFOLD/GASKET

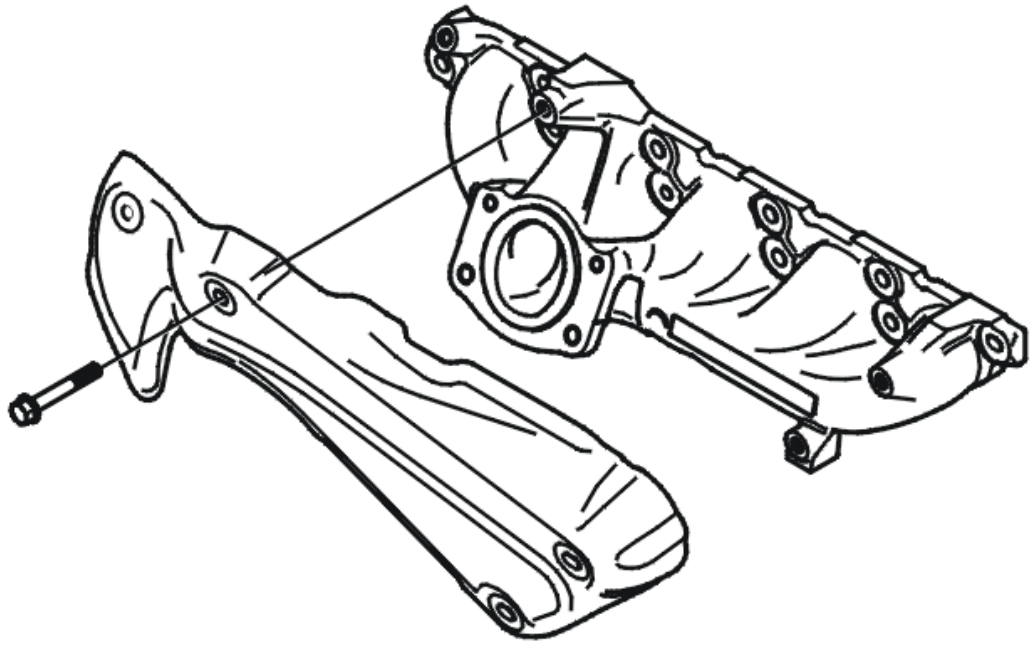

Fig. 170: Identifying Inner Heat Shield And Manifold
Courtesy of VOLVO CARS CORPORATION

Install:

- new gaskets
- the manifold. Use new nuts at the manifold. Tighten.
- the inner heat shield.

FITTING OF TURBO UNIT

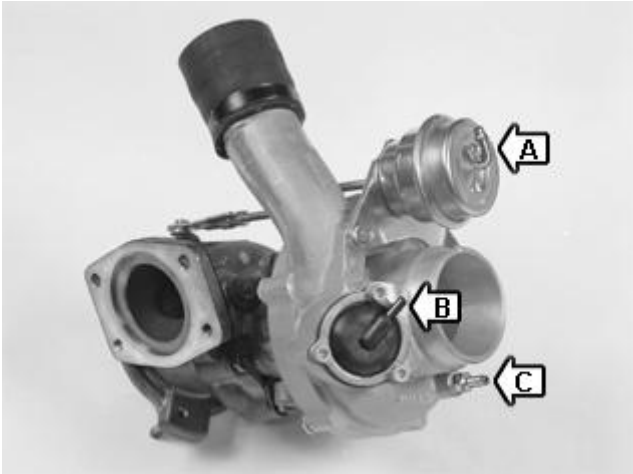

Fig. 171: Identifying Turbocharger And Pipe Fittings
Courtesy of VOLVO CARS CORPORATION

Install:

- the turbo control hoses according to the earlier markings
- the turbo to the manifold with a new gasket
- the upper nuts at the turbo's connection to the manifold. Tighten
- the inlet hose to the inlet manifold on the turbo and tighten the hose clamp
- the screws, 2 pcs, to the oil delivery pipe. Use a new gasket. Tighten.
- the pipe screws for the upper coolant pipe. Tighten.

Raise the vehicle. See: **JACKING POINTS, BODY** .

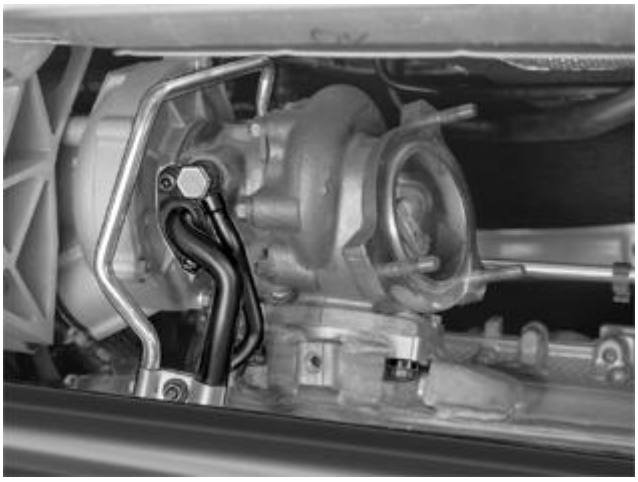

Fig. 172: Identifying Turbocharger Oil Delivery Pipe And The Oil Return Pipe
Courtesy of VOLVO CARS CORPORATION

Install:

- the lower screws, 2 pcs, between the turbocharger and manifold. Tighten
- the oil return pipe in the cylinder block with new sealing ring
- the screws, 2 pcs, to the oil return pipe in the turbocharger as well as new gasket. Tighten.
- the pipe screws for the lower coolant pipe. Use new copper washers. Tighten
- the pipe screws for the lower oil delivery pipe in the engine block. Use new copper washers. Tighten
- the clamp between the turbocharger oil delivery pipe and the oil return pipe. Tighten.

INSTALLING THE BEVEL GEAR

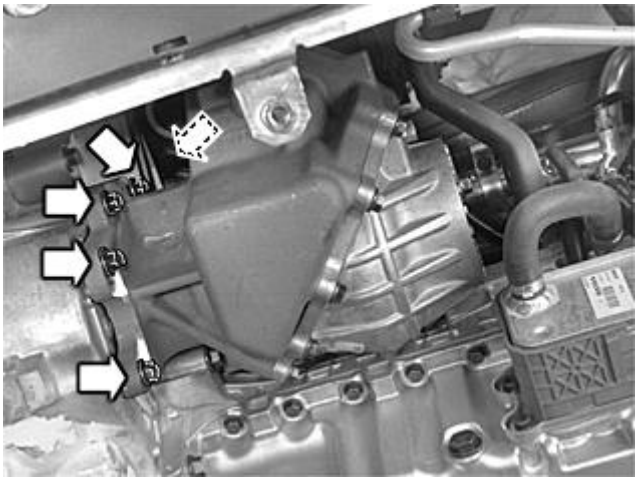

Fig. 173: Angle Gear Screws
Courtesy of VOLVO CARS CORPORATION

Before installing the bevel gear, lubricate the spline joint between the transaxle and the bevel gear using grease. See: **SPLINES GREASING** .

Check that the mating surfaces on the transaxle and bevel gear are clean. Install the bevel gear. Tighten the screws, M10, crosswise to light contact. Tighten.

INSTALLING THE PROPELLER SHAFT

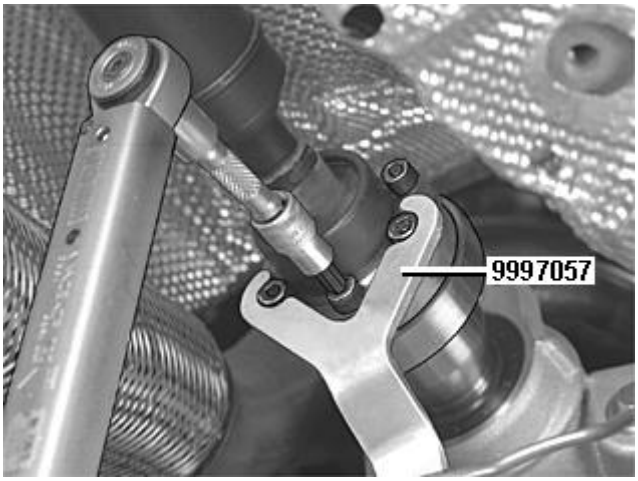

Fig. 174: Identifying Front Propeller Shaft And Special Tool 999 7057
Courtesy of VOLVO CARS CORPORATION

Check that the mating surfaces on the propeller shaft and flange are clean. Install the propeller shaft according to the previous marking. Use new screws. Tighten.

FITTING OF CATALYTIC CONVERTER

Install the catalytic converter. See **THREE-WAY CATALYTIC CONVERTER (TWC), REPLACING**.

INSTALLING THE DRIVE SHAFT AND BEARING CAP ON THE PILOT BEARING FOR THE SHAFT

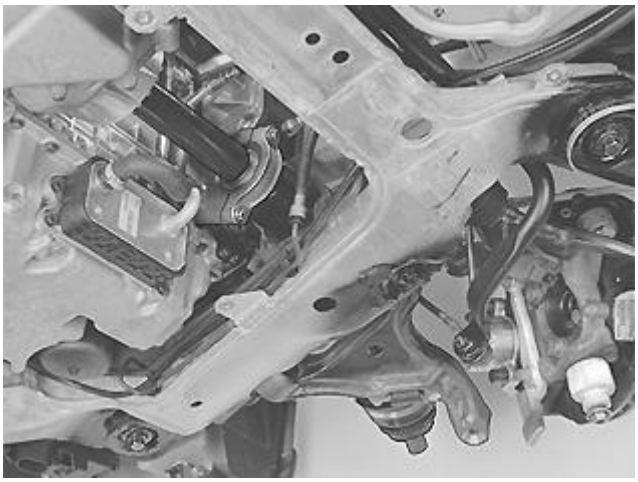

Fig. 175: Drive Shaft
Courtesy of VOLVO CARS CORPORATION

Tighten the screws.

INSTALLING THE DRIVE SHAFT

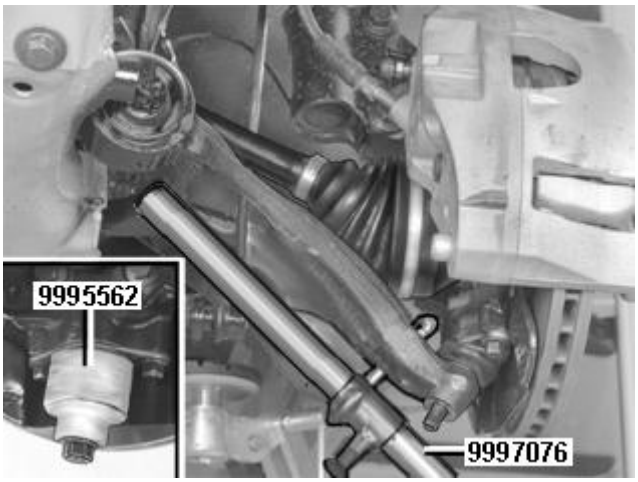

Fig. 176: Identifying Wheel Knuckle, Special Tools 999 7076 And 999 5562
Courtesy of VOLVO CARS CORPORATION

NOTE: **Check that the seal on the end of the driveshaft is correctly positioned. See: SEAL CV JOINT HOUSING, REPLACING .**

Press out the strut and spring assembly.

Align the drive shaft in the hub.

Remove the protective socket, see **9995562** .

Align the control arm with the ball joint stud. Use: see **9997076** .

Install:

- the nut for the ball joint and control arm. Tighten. See **TIGHTENING TORQUE** . Counterhold using a Torx wrench to prevent the ball joint boot from turning.
- the center screw for the driveshaft. Use a new screw. Tighten. See **TIGHTENING TORQUE** . Use a screwdriver as a counterhold in the brake disc.

INSTALLING WHEELS

Install the wheel acc. to: **INSTALLING WHEELS**

INSTALLING COMPONENTS

Fig. 177: Engine Compartment Components
Courtesy of VOLVO CARS CORPORATION

Install:

- the screws for the heat shield above the turbo and screws for the oil delivery pipe. Tighten
- the pipe screws for the upper coolant pipe. Tighten
- the upper charge air pipe. Tighten the screws and clamps
- the cross stay between the suspension turrets. Tighten the screws, 5 pcs.

- the battery negative lead. See: **BATTERY, DISCONNECTING**

FINISHING

CHECKS

Top up with coolant. Use filling equipment: see **9512957** and cover: see **9512953** .

Check the oil level in the engine and transaxle. Start the engine and run it until it reaches normal operating temperature.

Check for leakage.

Top up fluids if so required.

TURBOCHARGER (B5254T2, AW55-50/51SN; 2003-2004)

TURBOCHARGER (TC)

NOTE: As the illustrations in this service information are used for different model years and / or models, some variation may occur. However, the essential information is always correct.

REMOVING THE TURBOCHARGER (TC)

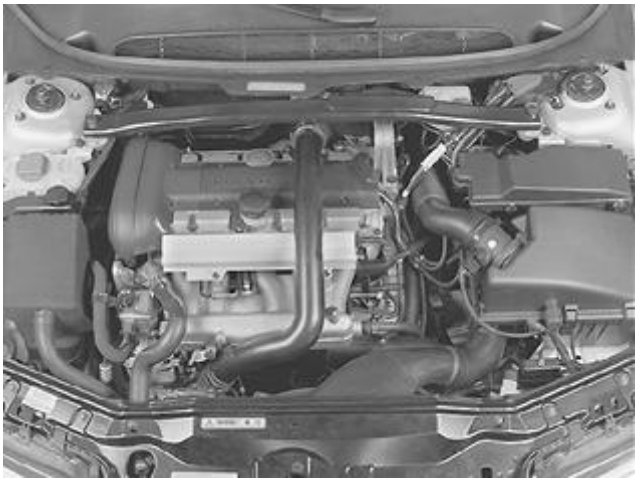

Fig. 178: Engine Compartment Components
Courtesy of VOLVO CARS CORPORATION

Remove

- the cross stay between the suspension turrets
- the heat deflector plate over the turbocharger (TC)
- the charge air hose and the charge air pipe above the engine.

Remove the hose clamps for the turbocharger (TC) intake manifold at the air cleaner (ACL) and the turbocharger (TC). Pull off the pipe from the connections. Put the pipe to one side.

Install lock grip pliers on the rubber hose to the coolant inlet pipe for the turbocharger (TC).

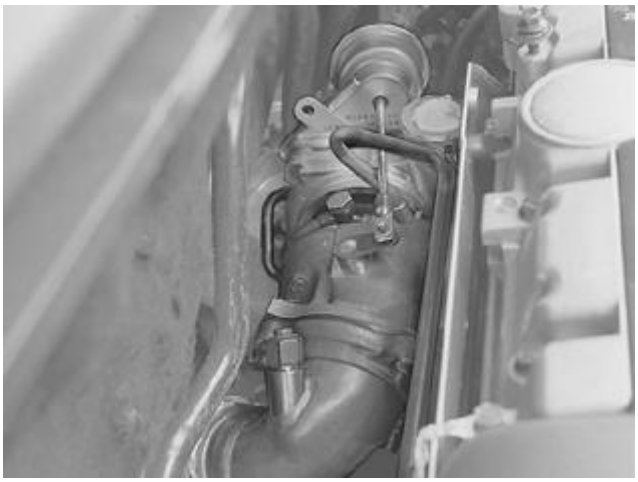

Fig. 179: Identifying Turbocharger Pipes
Courtesy of VOLVO CARS CORPORATION

Remove

- the pipe screws where the coolant pipes are connected to the turbocharger (TC).

  Bend the outlet pipe upwards. Tie it into place

- the pipe screw where the oil pressure pipe connects to the turbocharger (TC)
- the upper nuts where the front exhaust pipe is connected to the turbocharger (TC)
- the upper nuts where the turbocharger (TC) is connected to the manifold.

Fig. 180: Identifying Turbocharger, Oil Pressure Pipe And The Oil Return Line
Courtesy of VOLVO CARS CORPORATION

Raise the car and remove

- the splash guard under the engine
- the clamp between the turbocharger (TC) oil pressure pipe and the oil return line
- the pipe screw where the oil pressure pipe connects to the cylinder block. Lift out the pipe
- the screws where the oil return line connects to the turbocharger (TC). Pull the pipe from the cylinder block. Check that the rubber sealing ring comes away with the pipe. Seal the opening in the cylinder block
- the lower nut where the front exhaust pipe is connected to the turbocharger (TC)
- the lower nuts where the turbocharger (TC) is connected to the manifold.

Fig. 181: Identifying Turbocharger Removal
Courtesy of VOLVO CARS CORPORATION

Lower the car

Remove the exhaust pipe from the turbocharger (TC). Hold the pipe to one side and tie it into place.

Lift off the turbocharger (TC). Mark up and remove the turbocharger (TC) hoses.

Place the turbocharger (TC) above the drive shaft and steering gear.

Raise the car.

Remove the turbocharger (TC).

REPLACING THE MANIFOLD AND GASKET

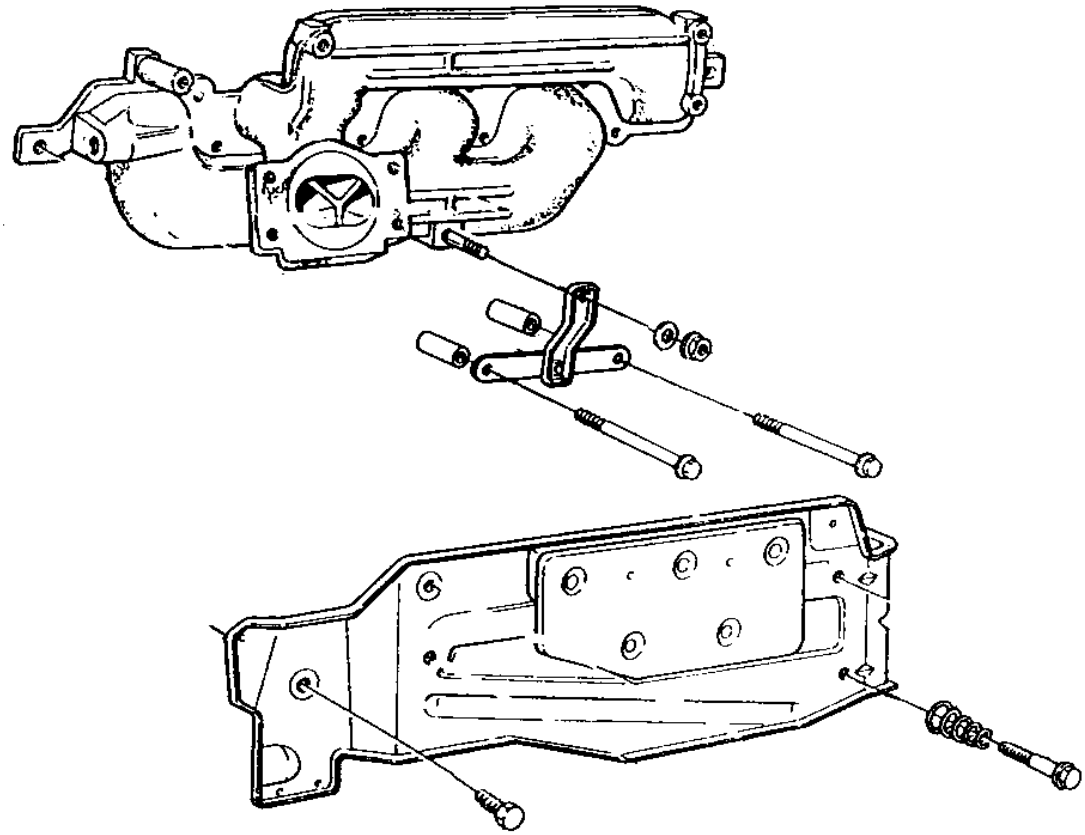

Fig. 182: Identifying Manifold Deflector Plate And Fasteners
Courtesy of VOLVO CARS CORPORATION

Remove

- heat deflector plate over the manifold
- the screws between the support bracket and the cylinder block
- the nuts and washers holding the manifold to the cylinder head.

Clean the gasket faces. Check that all studs are tightened.

Install **new gaskets**

Install the manifold. Use **new** nuts. Tighten to **25 Nm** .

CHECKING THE PRESSURE REGULATOR

When replacing the turbocharger, check the setting of the pressure regulator. See **WASTEGATE VALVE, ADJUSTING** .

INSTALLING THE TURBOCHARGER (TC)

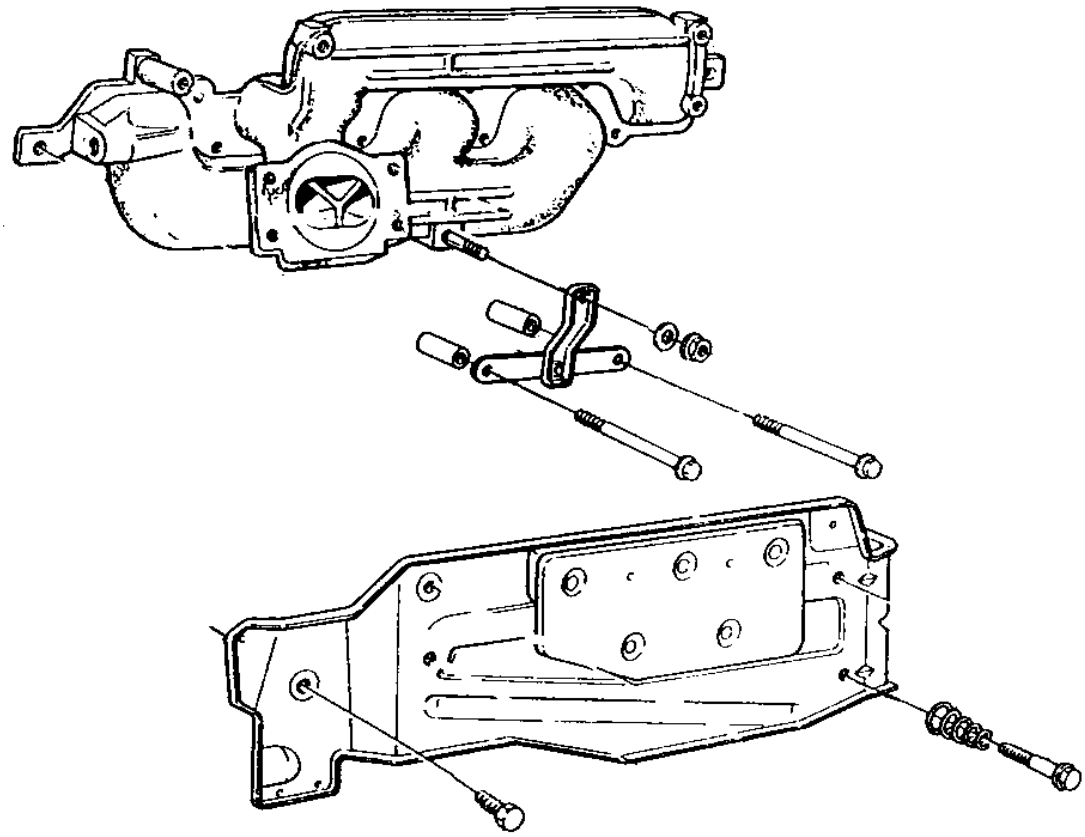

Fig. 183: Identifying Manifold Deflector Plate And Fasteners
Courtesy of VOLVO CARS CORPORATION

Install

- the screws between the support bracket and the cylinder block
- heat deflector plate over the manifold

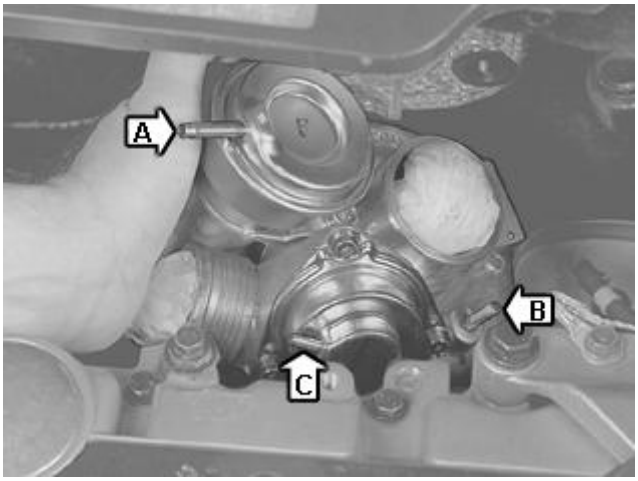

Fig. 184: Identifying Turbocharger Pipe Connectors
Courtesy of VOLVO CARS CORPORATION

Raise the car

Position the turbocharger (TC) on the drive shaft and steering gear.

Lower the car

Lift up the turbocharger (TC). Install the turbocharger (TC) hoses using the marking made earlier.

Install

- the turbocharger (TC) on the manifold
- the upper nuts where the turbocharger (TC) is connected to the manifold. **Do not tighten yet.**
- the upper nuts where the front exhaust pipe is connected to the turbocharger (TC). **Do not tighten yet.**

  Raise the car.

- the lower nuts where the turbocharger (TC) is connected to the manifold. Tighten to **25 Nm**
- the lower nut where the front exhaust pipe is connected to the turbocharger (TC). Tighten to **30 Nm**
- the oil pressure pipe to the connection at the cylinder block. Use a pipe screw and **new seal washers** .

Fig. 185: Identifying Turbocharger Pipes
Courtesy of VOLVO CARS CORPORATION

Lower the car. Install

- the pipe screw for the oil pressure pipe to the connection at the turbocharger (TC). Use **new seal washers** . Tighten to **26 Nm** .

  Tighten the upper nuts where the turbocharger (TC) is connected to the manifold. Tighten to **25 Nm** . Tighten the nuts where the front exhaust pipe connects to the turbocharger (TC). Tighten to **30 Nm**

- the pipe screws for the coolant pipes. Use **new seal washers** . Tighten to **26 Nm**
- the intake pipe between the air cleaner (ACL) and the turbocharger (TC).

  Remove the lock grip pliers.

Fig. 186: Identifying Turbocharger, Oil Pressure Pipe And The Oil Return Line
Courtesy of VOLVO CARS CORPORATION

Raise the car. Install

- the oil return line. Use a **new gasket** and a **new rubber sealing ring** .

  Remove the seal from the hole in the cylinder block.

  Tighten the screw for the oil return line where it connects to the cylinder block. Tighten to **38 Nm**

- the clamp between the turbocharger (TC) oil pressure pipe and the oil return line
- the splash guard under the engine

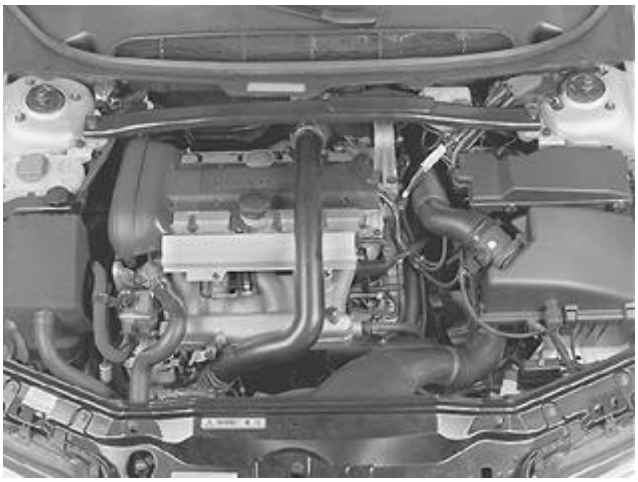

Fig. 187: Engine Compartment Components
Courtesy of VOLVO CARS CORPORATION

Lower the car. Install

- the charge air hose and the charge air pipe above the engine
- the heat deflector plate over the turbocharger (TC)
- the cross member. Tighten the screws at the suspension turret to **50 Nm** and the screw for the engine bracket to **80 Nm** .

Carry out a function test

Check the oil and coolant levels.

TURBOCHARGER (TC) (B6294T, 2003-2006)

TURBOCHARGER (TC), REPLACING

Special tools:

see **9995543**

see **9512957**

see **9512953**

NOTE: **The illustrations in this service information are used for different model years and/or models. Some variation may occur. However, the essential information in the illustrations is always correct.**

REMOVAL

PREPARATION

The turbocharger (TC) for cylinders 1, 2 and 3 is designated turbo 1. The turbo for cylinders 4, 5 and 6 is designated turbocharger (TC) 2.

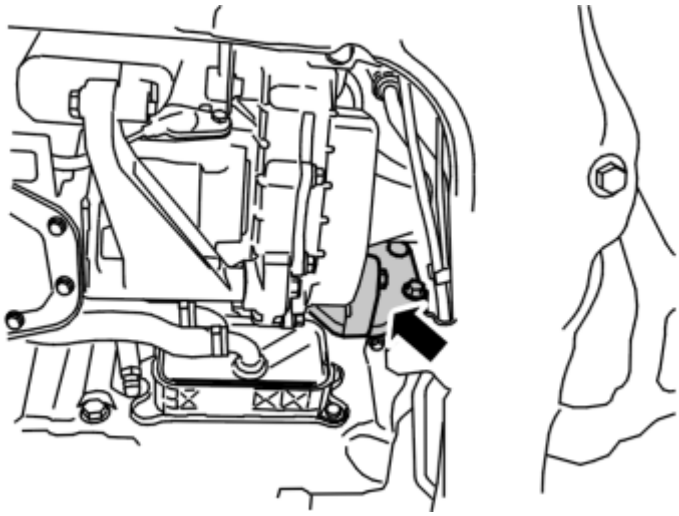

Fig. 188: Locating Splash Guard
Courtesy of VOLVO CARS CORPORATION

Remove:

- the splash guard under the engine
- the right front wheel
- the splash guard at the right-hand side of the driveshaft
- the screw for the fuel line in the oil pan
- the support bracket for the bevel gear in the cylinder block
- the pipe screw for the turbocharger oil pressure pipe by the cylinder block.

HINT: Clear up any oil spill.

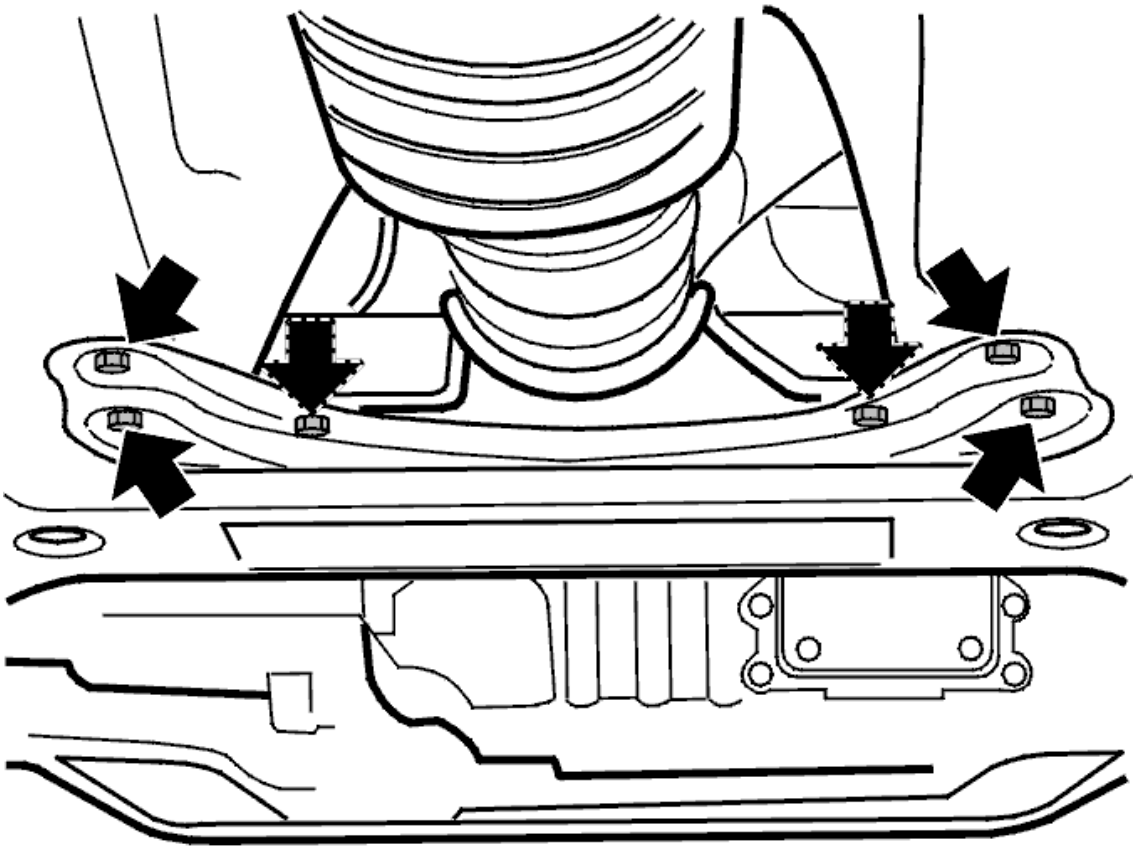

Fig. 189: Exhaust Pipe Bracket Screws
Courtesy of VOLVO CARS CORPORATION

Remove:

- the connectors for the front heated oxygen sensors (HO2S). Remove the wiring from the clips and clamps
- the brake pipe from the clips on the front SIPS member
- the front SIPS member
- the three-way catalytic converter (TWC) from the rubber mountings.

Fig. 190: Draining Coolant
Courtesy of VOLVO CARS CORPORATION

Connect a hose to the engine coolant drain cock.

Drain the coolant into a clean container. Close the cock.

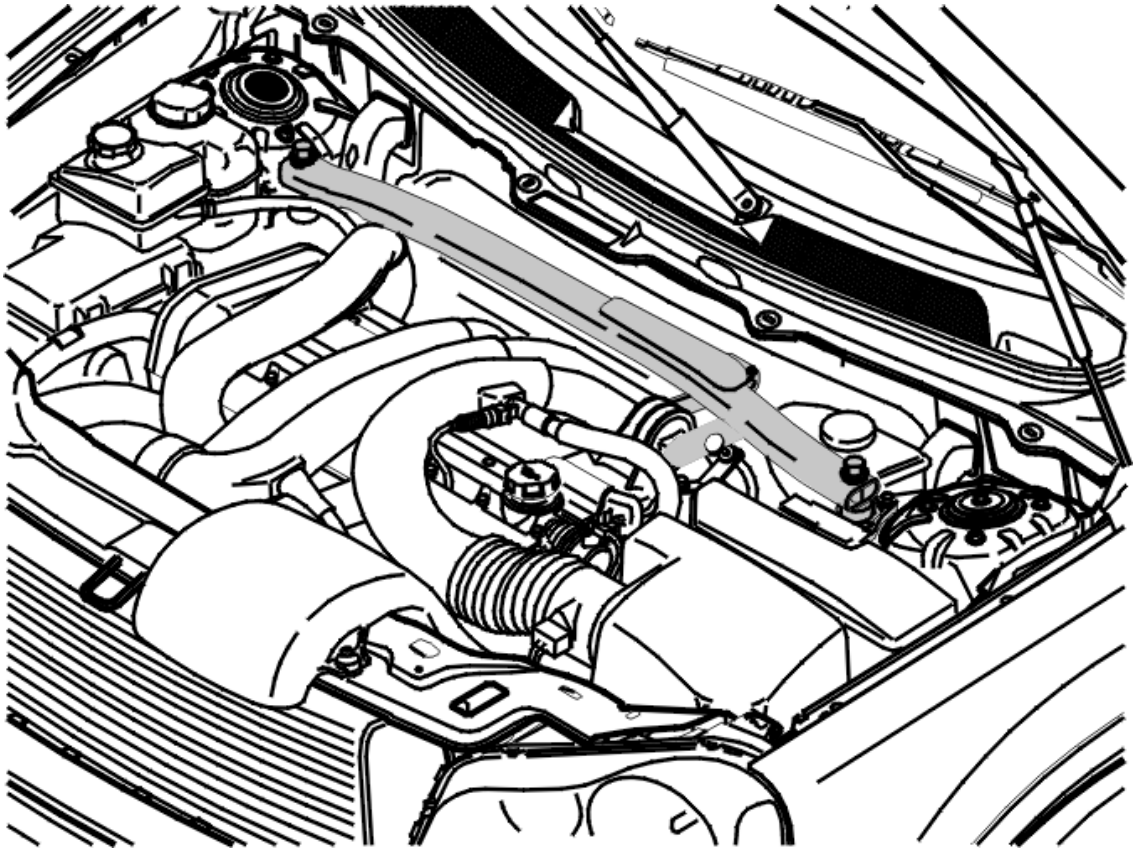

Fig. 191: Identifying Engine Stabilizer Brace Mounting
Courtesy of VOLVO CARS CORPORATION

Remove:

- the screw for the engine stabilizer brace mounting on the engine
- the engine stabilizer brace between the suspension turrets
- the plastic charge air pipe. Place to one side
- the plastic intake pipe. Put it to one side.

REMOVING COMPONENTS FROM TURBO 1

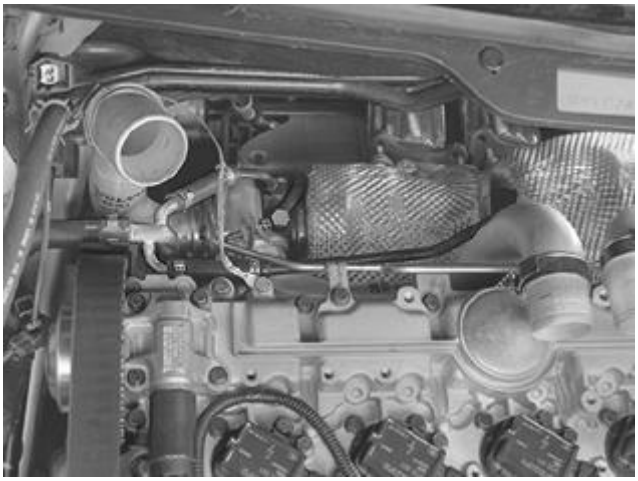

Fig. 192: Identifying Intake And Charge Air Pipes
Courtesy of VOLVO CARS CORPORATION

Remove from turbo 1:

- the intake and charge air pipes. Seal the openings
- the heated oxygen sensor (HO2S). Use tool: see **9995543**

CAUTION: Note the location of the heated oxygen sensor (HO2S)

- the heat deflector plate
- the 3 x nuts for the three-way catalytic converter (TWC)

HINT: use rust solvent

- the pipe screw for the oil pressure pipe
- the oil pressure pipe
- the pipe screws for the coolant pipe. Move the upper coolant pipe and hose to one side

NOTE: Position a container underneath for the coolant.

- the clamp for the pressure regulator control pipe.

REMOVING COMPONENTS FROM TURBO 2

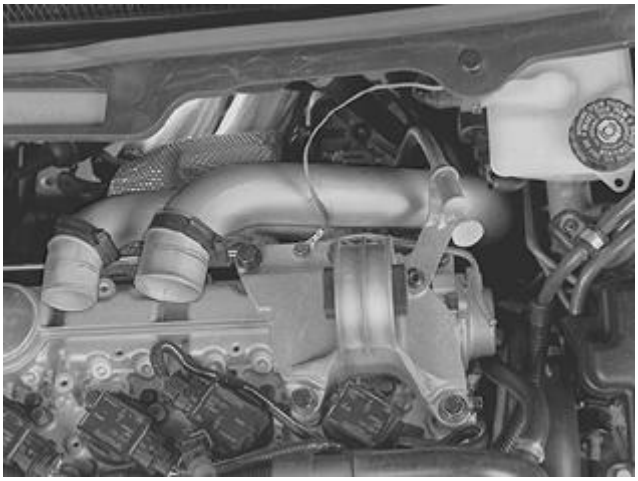

Fig. 193: Installing Torque Rod Bracket, Upper Screw Securing Automatic Transmission Dipstick Pipe To Engine & Ground Leads
Courtesy of VOLVO CARS CORPORATION

Remove from turbo 2:

- the heated oxygen sensor (HO2S). Use: see **9995543**
- the heat deflector plate
- the 3 x nuts for the three-way catalytic converter (TWC).

Move the pipe for the three-way catalytic converter (TWC) to one side.

- the upper screw for the automatic transmission dip stick pipe
- the intake and charge air pipes. Seal the openings
- the hose from the pressure regulator
- the clamps between the coolant pump intake pipe and the turbocharger (TC) oil pressure pipe.

REMOVING COMPONENTS

Fig. 194: Identifying Oil Pressure Pipe

Courtesy of VOLVO CARS CORPORATION

Raise the vehicle. See: **JACKING POINTS, BODY** .

Remove:

- the oil pressure pipe for turbo 1
- the hose from the pressure regulator.

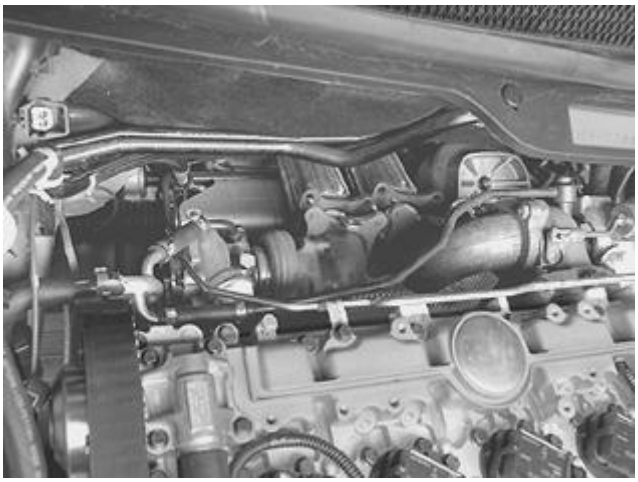

Fig. 195: Identifying Upper Coolant Pipe
Courtesy of VOLVO CARS CORPORATION

Lower the vehicle.

Remove:

- the pipe screws for the coolant pipe at turbo 2. Place the lower pipe to one side
- move the upper coolant pipe and hose from turbo 2 to one side
- the air control pipe for the pressure regulators, 2 x screws
- the nuts and washers for the manifold mounting at cylinders 1, 2 and 3.

  HINT: Use rust solvent or similar

Remove from turbo 2:

- the screws for the oil return line
- the pipe screws for the oil pressure pipe
- the nuts and washers at the manifold mounting for the cylinder head, cylinders 4, 5 and 6. Carefully lift off and turn the turbocharger (TC) and manifold so that the oil pressure pipe releases.

NOTE: **do not deform the oil pressure pipe. Raise and remove the turbocharger (TC) and manifold.**

Lift and remove the turbocharger/manifold 2.

Remove the pipe for the three-way catalytic converter (TWC).

Lift and remove the turbocharger/manifold 1.

INSTALLATION

NOTE: **For tightening torques, see: TIGHTENING TORQUE .**

NOTE: **To ensure that there is no exhaust leakage, see: FLANGED JOINT, ASSEMBLING .**

CLEANING

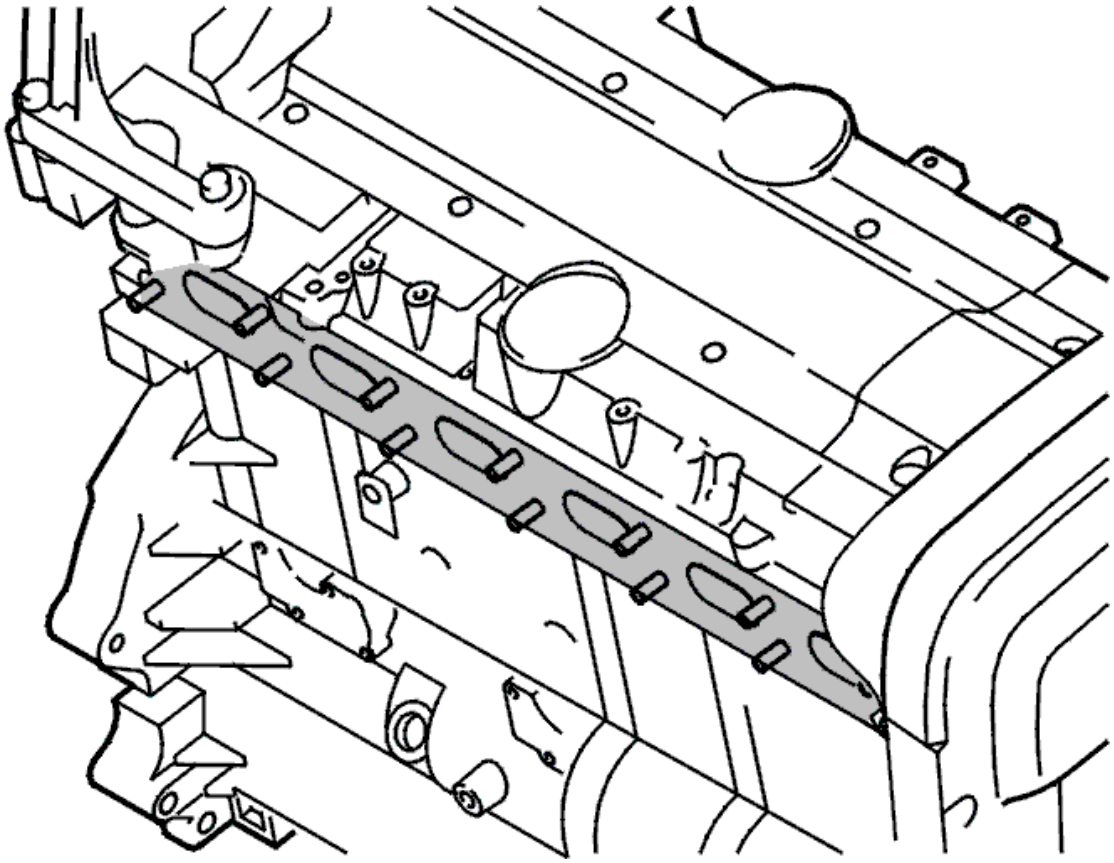

Fig. 196: Identifying Gasket
Courtesy of VOLVO CARS CORPORATION

- Remove the old gaskets
- Clean the gasket faces thoroughly
- Use a razor blade or a gasket scraper
- Ensure that all the studs are tightened in the cylinder head. Tighten to **20 Nm** .

INSTALLING THE MANIFOLD AND TURBO 2

- Install **new gaskets**
- Lubricate the studs at the exhaust ports and at the flange on the turbocharger (TC) flange to the three-way catalytic converter (TWC) using paste P/N 116 1408
- Lower and install the exhaust manifold and turbocharger (TC).

Install:

- the washers and new nuts that hold the manifold onto the cylinder head. Tighten
- the pipe for pressure regulator control
- the upper coolant pipe and hose for turbo 2. Use new washers. Tighten
- the upper coolant pipe and hose for turbo 1. Use new washers. Tighten.

INSTALLING THE MANIFOLD AND TURBO 2

- Install new gaskets.
- Lubricate the studs at the exhaust ports and at the flange on the turbocharger (TC) flange to the three-way catalytic converter (TWC) using paste P/N 116 1408.
- Lower and install the exhaust manifold and turbocharger (TC).

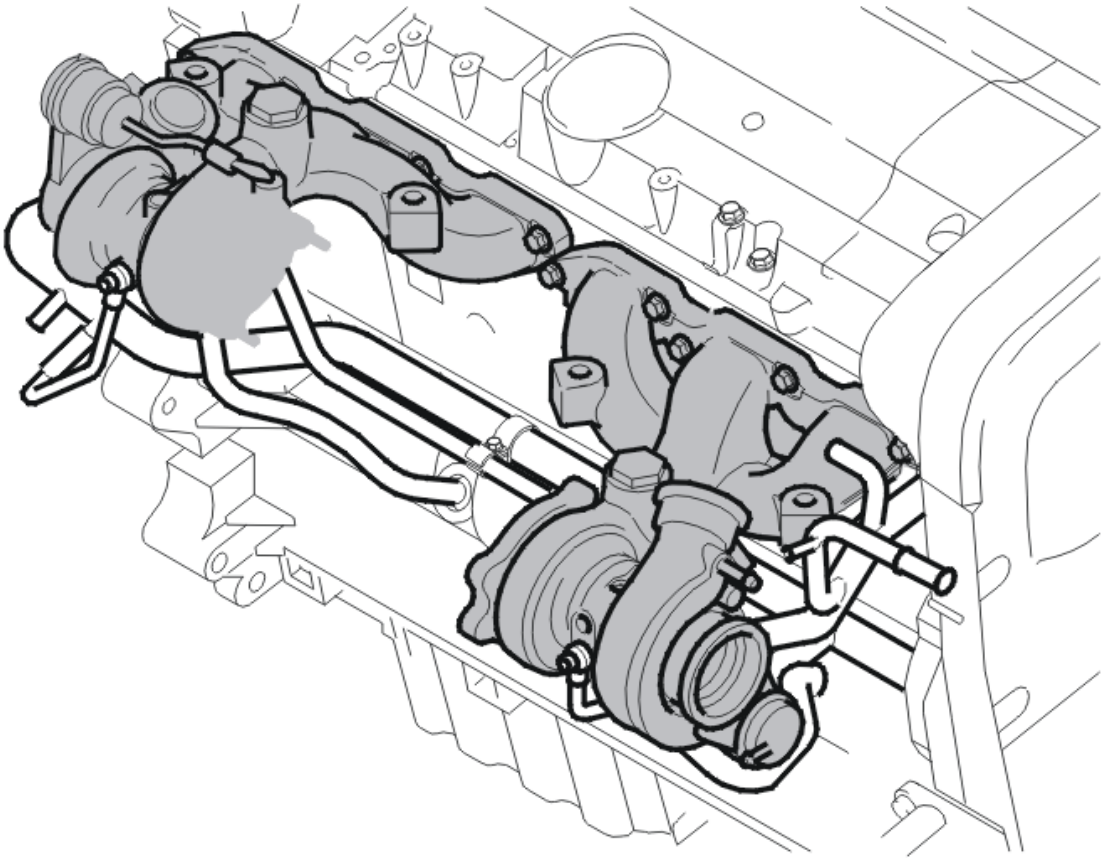

Fig. 197: Removing/Installing Turbocharger (TC)

Courtesy of VOLVO CARS CORPORATION

Install:

- the washers and new nuts that hold the manifold onto the cylinder head. Tighten
- the pipe screws holding the oil pressure pipe to the turbo.

Use new washers. Do not tighten.

- the screws for the oil return line. Tighten
- lower coolant pipe. Use **new** gaskets.

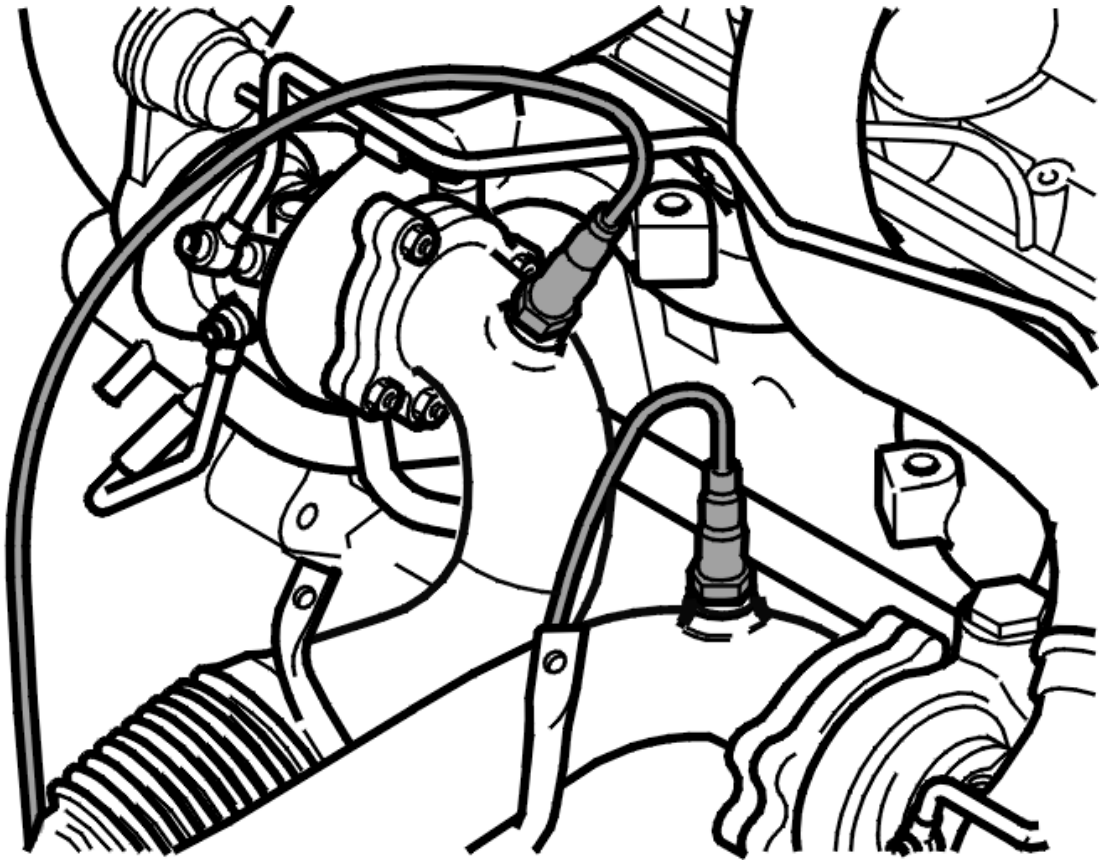

Fig. 198: View Of Components At Turbo
Courtesy of VOLVO CARS CORPORATION

Install the three-way catalytic converter (TWC) on the turbocharger (TC). Use **new nuts** . Lubricate the studs using copper paste 116 1408.

INSTALLING COMPONENTS AT TURBO 1

Fig. 199: Identifying Oil Pressure Pipe
Courtesy of VOLVO CARS CORPORATION

Raise the vehicle. See: **JACKING POINTS, BODY** .

Install:

- the oil return line. Use a **new gasket**
- the hose for the pressure regulator
- the oil pressure pipe
- the pipe screw for the connection between the oil pressure pipes and the cylinder block. Use **new seal washers** . Do not tighten.

INSTALLING COMPONENTS AT TURBO 2

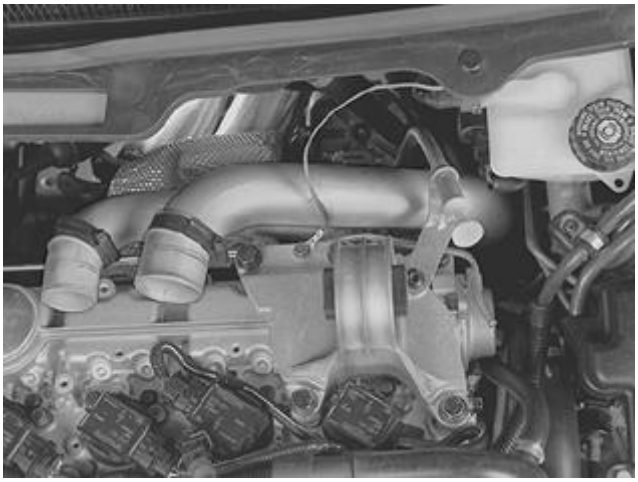

Fig. 200: Installing Torque Rod Bracket, Upper Screw Securing Automatic Transmission Dipstick Pipe To Engine & Ground Leads
Courtesy of VOLVO CARS CORPORATION

Lower the vehicle. Torque tighten the pipe screws for the oil pressure pipe.

Install:

- the charge air pipe. Align and tighten the clamp
- the intake manifold. Align and tighten the clamp.

NOTE: Remove the previously installed seals

- the upper screw securing the automatic transmission dip stick pipe to the engine. Tighten the lower screw
- the heat deflector plate above the turbocharger (TC)
- the heated oxygen sensor (HO2S). Use tool: see **9995543**
- the clamps between the coolant pump intake pipe and the turbocharger (TC) oil pressure pipe.

INSTALLING COMPONENTS AT TURBO 1

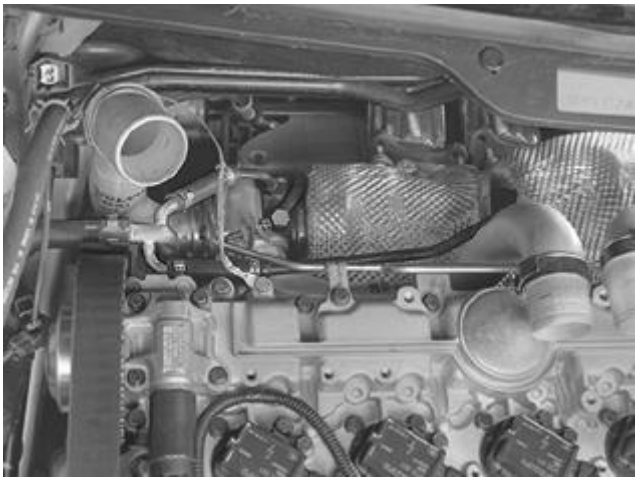

Fig. 201: Identifying Intake And Charge Air Pipes
Courtesy of VOLVO CARS CORPORATION

Install:

- the pipe screw for the oil pressure pipe. Use **new seal washers** . Tighten
- the heat deflector plate above the turbocharger (TC)
- the heated oxygen sensor (HO2S).**Note position** .

CAUTION: Ensure that the probes are in the same position to prevent diagnostic trouble codes (DTCs) being stored.

- the charge air pipe. Align and tighten the clamp
- the intake manifold. Install but do not tighten the clamp

NOTE: Remove the previously installed seals.

INSTALLING COMPONENTS

- Tighten the pipe screw for the oil pressure pipe at the connection in the cylinder block
- Install the support bracket for the bevel gear. First screw **4 M10** screws in to the cylinder block to contact. Then torque tighten **2 M10** screws in the bevel gear. Then torque tighten the **M10** screws in the cylinder block.

Install:

- the screw for the fuel line in the oil pan
- the splash guard at the drive shaft
- hook the three-way catalytic converter (TWC) into the rubber mounting
- the front SIPS member. Press the brake pipe into place. Connect the cable harness for the heated oxygen sensors (HO2S). Secure the cable harness as before.
- the right front wheel. See **INSTALLING WHEELS** .

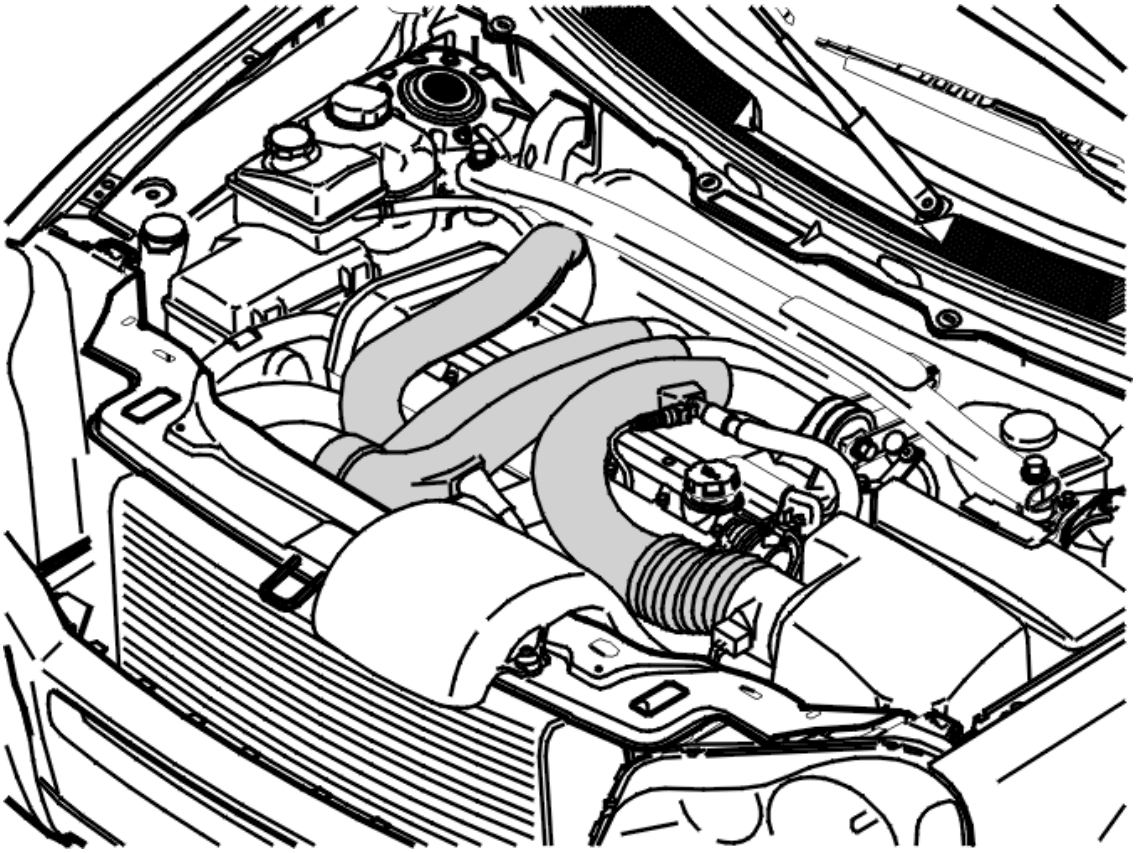

Fig. 202: Identifying Plastic Hoses Between Turbocharger, Charge Air Cooler & Air Cleaner/Turbocharger
Courtesy of VOLVO CARS CORPORATION

Install:

- the plastic intake pipe

- the plastic charge air pipe
- the vacuum hoses for the purge valve and turbocharger control valve
- the engine stabilizer brace. Torque tighten.

FINISHING

Fill the cooling system.

Use: see **9512957** , and see **9512953** to fill the system without the risk of air pockets.

Install the lower engine cover.

TURBOCHARGER OIL RETURN PIPES

REPLACE GASKETS, TURBOCHARGER OIL RETURN PIPES

Remove the turbocharger to expose the oil return pipes. See

see **REMOVAL**.

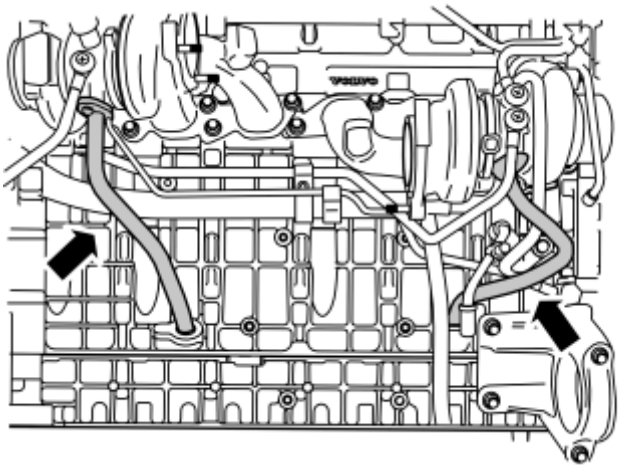

Fig. 203: Oil Return Pipes
Courtesy of VOLVO CARS CORPORATION

Detach the oil return pipes from the engine block. Check that the sealing rings stay with the pipes. Seal the opening in the engine block.

Replace old gaskets. Lubricate the engine block sealing rings with a little oil. Reattach the oil pipes to the engine block.

Reinstall the turbocharger as described in. See **INSTALLATION**.

ENGINE

Intake And Exhaust System - Symptom Verification

EXHAUST SYSTEM/EMITS SMOKE/WHITE SMOKE (2006-2012)

SYMPTOM AND FUNCTION DESCRIPTION

NOTE: The symptom should always be verified together with the customer.

The following tips may be of help to decide if the symptom is due to a product feature or if continued troubleshooting is needed.

HINT: White "condensation smoke" may appear when driving with a cold engine.

EXHAUST SYSTEM/RUST/CORROSION (2006-2012)

SYMPTOM AND FUNCTION DESCRIPTION

NOTE: The symptom should always be verified together with the customer.

The following tips may be of help to decide if the symptom is due to a product feature or if continued troubleshooting is needed.

HINT: Surface rust/corrosion on the exhaust pipe is OK.

ENGINE

Lubricating And Oil System - Cleaning, Inspection and Adjustment

OIL CONSUMPTION TEST (2003-2012)

GENERAL INFORMATION

Some oil consumption is normal when an engine is running. The oil consumption varies depending on different factors:

- The condition of the engine (how well the engine is maintained)
- Blocked or damaged air filter
- Driving conditions - large loads, or excessive idling
- Oil grade and viscosity
- Cylinder capacity - in general a larger motor consumes a greater amount of oil than a smaller engine
- Engine power - a stronger engine consumes more oil than a smaller powered engine
- Oil level - too high a level (above the maximum mark on the dip stick) results in increased oil consumption.

Normal oil consumption

Running-in period

The oil consumption can be as much as 1 liter per 1, 000 km during a running-in period of approx. 5, 000 km if the engine is new or replaced (replacement of piston ring).

Driving between 5, 000 and 150, 000 km

Normal driving: up to 0.25 liters per 1, 000 km is considered normal oil consumption.

Driving at high speed/with heavy trailer: up to 0.40 liters per 1, 000 km is considered normal oil consumption.

Mountain/alpine driving: up to 0.50 liters per 1, 000 km is considered normal oil consumption.

The above stated values for oil consumption can be used as guidelines if there is a suspicion that oil consumption is unusually/abnormally high.

NOTE: The oil consumption can be as much as the following at 150, 000 km. The oil consumption can be approx. 0.35 - 0.55 liters per 1, 000 km under all conditions.

To determine the exact oil consumption a test drive of at least 1, 000 km must be performed under controlled conditions. The oil must be weighed before and after the test drive. This way the exact oil consumption can be calculated.

Abnormally high oil consumption

If the customer points out that the car consumes an abnormal amount of oil, the checks below must be carried out before carrying out corrective action.

- Ask the customer what their driving conditions are. See **GENERAL CAUSES OF HIGH OIL CONSUMPTION**)
- Check for oil leaks
- Check that the crankcase ventilation is not blocked
- Check that the correct dip stick is in the engine. Check that the dip stick is pushed down as far as possible
- The car must be parked on level ground when measuring the oil. The engine should be driven at normal operating temperature on the road (not idling) for 30 minutes. The engine must then be left for 15 minutes before noting the oil level.

GENERAL CAUSES OF HIGH OIL CONSUMPTION

Overfilling

If the oil has been filled above the recommended maximum level, oil is forced up against the cylinder walls and is ejected through the crankcase ventilation. The oil level must not be filled above the maximum mark on the dip stick.

Oil grade

Using a non Volvo recommended oil grade can cause increased oil consumption. The oil contains a larger amount of volatile molecules if the oil is too thin. Thin oil has difficulty in maintaining a comprehensive oil film on the cylinder walls at higher temperatures. This results in increased engine wear and increased oil consumption

Hard driving

Long and continuous driving at high engine speed (RPM) causes high engine temperature. The oil thins and consumption increases. Hard cornering at high engine speed (RPM) causes the oil to be forced against the side of the cylinder block and against the cylinder walls, resulting in increased oil consumption.

Mountain driving

Numerous and long periods of regular engine braking also causes high engine temperature. More oil is sucked into the cylinders due to an increased negative pressure in the intake pipe.

Idling

Driving the car in urban traffic conditions, where the engine may be running for long periods but only covering short distances, does not necessarily increase oil consumption but the ratio of oil consumption to distance travelled may be misleading.

Climate

In hot climates, the engine is required to work harder at a higher temperature. This increases oil consumption.

MECHANICAL CAUSES OF HIGH OIL CONSUMPTION

Leaks

Worn crankshaft and crankshaft seal, external leakage, for example leaking gaskets.

Crankcase ventilation

Overpressure in the crank case caused by blocked crankcase ventilation.

Pistons and piston rings

Worn piston ring groove. Worn, scratched, broken or damaged piston rings. Blocked scraper rings. Incorrectly installed piston rings.

Cylinder walls

Worn or scratched cylinder walls.

Valves

Worn valve guides or valve stem. Worn, damaged or missing valve stem seals.

Cylinder head

Internal leakage between the oil ducts and leakage to the combustion chamber.

MEASURING THE OIL CONSUMPTION

General

There are two methods of determining the oil consumption. The oil is measured using a dip stick in the first method, before and after driving a test distance of 2000 km. This gives a sufficient first indication of the oil consumption. The second method consists of weighing the oil in the sump after driving 1000 km.

To reach as a correct result as possible, with both methods, the car must be driven to normal operating temperature (not idling) for 30 minutes before noting the oil level or draining the oil. Change the oil and replace the oil filter to ensure that a Volvo approved oil is used in the engine during the test period. Also replace the air cleaner (ACL) before measuring. The car must be standing on a flat surface and in the same position when measuring or weighing before and after the driven test distance.

Measuring using the dip stick

Replace the oil, oil filter and air cleaner. The oil must be Volvo approved.

Drive the car to operating temperature for 20-30 minutes (not idling). This is so that the oil reaches normal operating temperature.

Switch off the engine. Leave the engine switched off for 15 minutes.

Check the oil level. Top up with oil if necessary. Fill to the maximum mark on the dip stick.

Run the engine for 5 minutes so that the existing oil and the additional oil mix.

Switch off the engine for 15 minutes. Note the oil level on the dip stick. Note the odometer setting and vehicle data on the included form, see **FORM FOR MEASURING OIL CONSUMPTION**.

Drive the car 2000 km, or until the oil level has dropped to the minimum mark on the dip stick.

Drive the car to operating temperature for 20-30 minutes (not idling). This is so that the oil reaches normal operating temperature.

Switch off the engine. Leave the engine switched off for 15 minutes.

Measure the oil level on the dip stick using a sliding gauge. Note the result.

Complete the information on the form.

Weighing

Drive the car to operating temperature for 20-30 minutes (not idling). This is so that the oil reaches operating temperature.

Drain the oil from the oil trough for 15 minutes. A large amount of oil is collected in the cylinder head when the car is running. This factor, together with the design of the splash guard in the oil pan, means that it takes a long time for the oil to drain out of the engine. The oil must **not** be reused.

WARNING: **Take care when draining the oil. Use protective goggles and protective gloves. Hot oil can cause personal injury**

Replace the oil filter and air cleaner.

Fill with the specified amount of Volvo approved engine oil.

Drive the car to operating temperature for 20-30 minutes (not idling). This is so that the oil reaches normal operating temperature and the oil filter fills.

Carefully weigh an empty clean container (± 1 gram).

Drain the oil from the oil trough into the container for 15 minutes.

WARNING: Take care when draining the oil. Use protective goggles and protective gloves. Hot oil can cause personal injury

Carefully weigh the container + oil.

Fill the engine with the weighed oil. Ensure that as much oil as possible leaves the container.

Weigh the empty container. The container may weigh more than it did the first time due to the remaining oil film. The difference in weight is taken from the weighed oil weight.

Note the oil weight odometer setting and vehicle data on the included form, see **FORM FOR MEASURING OIL CONSUMPTION**.

Drive the car 1000 km, or until the oil level has dropped to the minimum mark on the dip stick.

Ensure that the engine is at normal operating temperature. Drive to normal operating temperature if necessary for 20-30 minutes (not idling).

Carefully weigh an empty clean container (± 1 gram).

Drain the oil from the oil trough into the container for 15 minutes.

WARNING: Take care when draining the oil. Use protective goggles and protective gloves. Hot oil can cause personal injury

Carefully weigh the oil + container. Deduct the weight of the container.

Complete the information on the form

If abnormal oil consumption is discovered when measuring, the engine needs to be remedied as follows.

CORRECTIVE ACTION FOR HIGH OIL CONSUMPTION

Conditions

A new and improved type of piston ring was introduced for naturally aspirated engines from model year 1999 inclusive and for turbocharged engines from model year 2000 inclusive. From model year 2000 inclusive the same piston rings are used on both naturally aspirated engines and turbocharged engines.

A car with an engine with the new piston rings can be expected to use 0.05-0.15 litres of oil every 1000 km.

A car with an engine with the earlier piston rings can be expected to use 0.10-0.20 litres of oil every 1000 km.

If the engine consumes more than 0.4 litres of oil every 1000 km, the following checks must be carried out to

check whether the oil consumption problem is in the cylinder head, crankcase ventilation or piston ring and sleeve surface.

Check

Remove the intake manifold.

Inspect to, see if there is an oil film or drops of oil in the cylinder head intake passage and/or oil on the valve stem and top of the valve crown.

Conclusions

If there is not an abnormally large amount of oil in the intake passage and valves and the oil consumption gradually, from being acceptable, begins to quickly increase, or consumption is between 0.30-0.80 litres per 1000 km, the problem is in the piston, piston ring or cylinder sleeve surface.

Faults in valve stem seals for example, or internal leakage in the cylinder head cannot be completely ruled out.

If the oil consumption has always been high, or there are traces of oil in the intake passage and valves, or the oil consumption is above 0.80 litres every 1000 km, the problem is probably in the cylinder head.

The cause could be leaking valve stem seals, internal leakage in the cylinder head or a fault in the crankcase ventilation (other than a blockage).

Corrective actions

If the problem seems to be in the crankcase ventilation, this must be thoroughly checked and remedied if necessary, before reconditioning or replacing the cylinder head.

If the problem seems to be with the piston, piston ring or cylinder sleeve surface, the engine should be reconditioned or if necessary, replaced.

RECONDITIONING

Replacing piston rings

A corrective action is to replace the two lower piston rings (scraper ring and oil ring).

If the upper piston ring (compression ring) is undamaged it must not be replaced. Increased oil consumption may result if the compression ring is replaced.

CAUTION: Check that the upper piston ring (compression ring) faces the right way (see below)

It is important that the uppermost and centre rings are installed the correct way up.

The lower ring can be installed any way up.

Distribute the piston ring openings as follows.

Early version

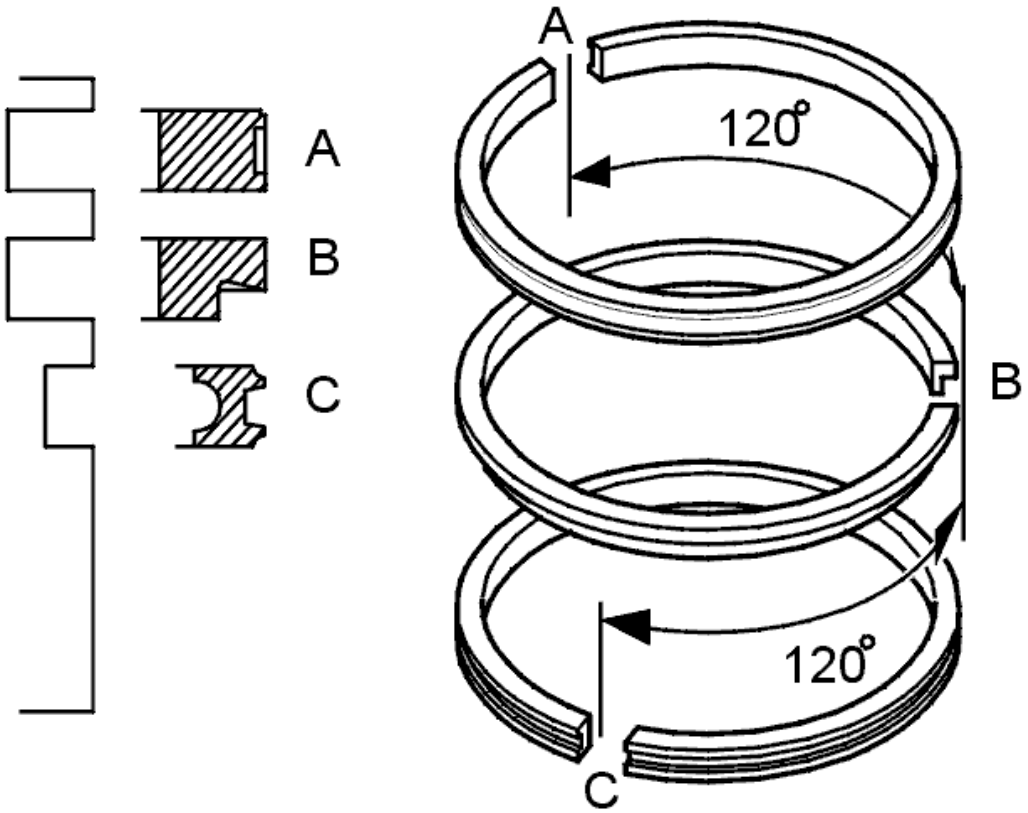

Fig. 1: Compression Rings
Courtesy of VOLVO CARS CORPORATION

A. Compression ring

This is marked with text or with a circle. The marking must be facing upwards. It may be difficult to read the text, a magnifying glass may be required.

B. Scraper ring

The cut out must be turned downwards. The text must be on the top of the ring.

C. Oil ring

Earlier versions of the oil ring are not marked and can be installed any side up.

Later versions of the oil ring are divided into 3 sections. These slotted rings can be installed with either side facing up.

CAUTION: New versions of the piston ring assembly cannot be combined with earlier versions of the piston

Late version

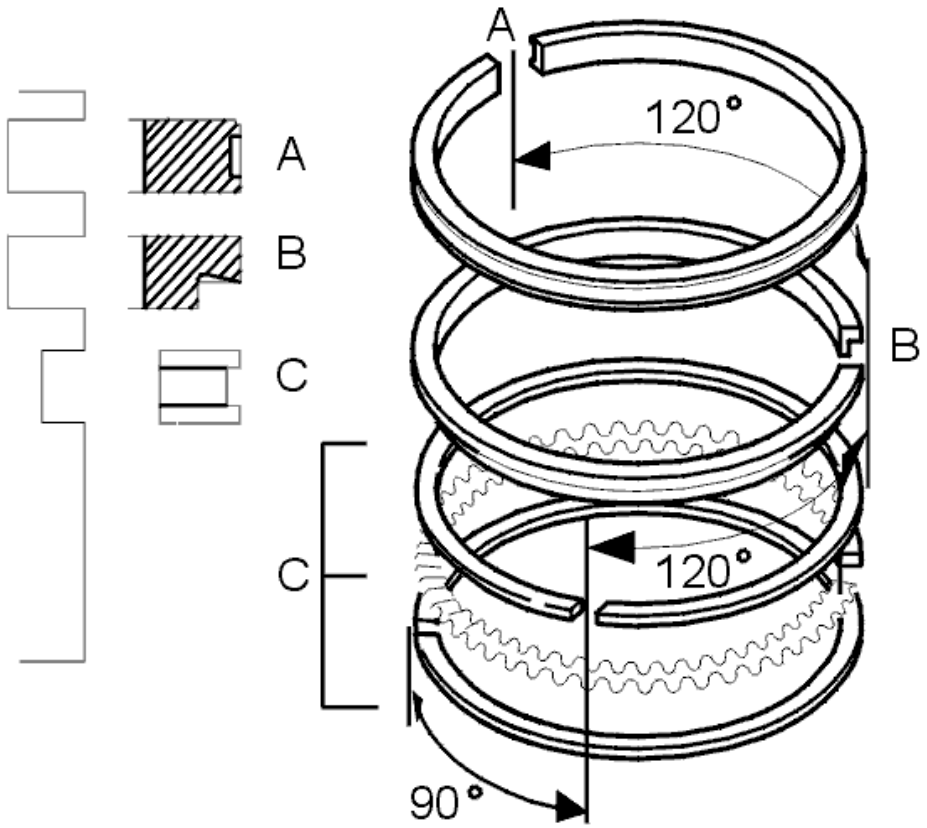

Fig. 2: Compression Rings -- Late Version
Courtesy of VOLVO CARS CORPORATION

CONCLUSIONS FOR CORRECTIVE ACTION

Replacing piston rings

As a first corrective action the piston rings should be replaced. Normally only the scraper ring and the oil ring must be replaced. The compression ring should only be replaced if absolutely necessary.

Replacing valve stem seals

If traces of oil are found on the valve crowns, in the ducts or on the valve stems, the valve stem seals should be replaced.

Thoroughly check the cylinder head. Check for internal leakage.

Replacing the cylinder head

If traces of oil (described above) are found and faults are found on the cylinder head, internal leakage for example, the cylinder head must be replaced.

Replacing the cylinder block and pistons

If damage is found in the cylinder block (worn cylinder bore, deep scratches etc.) the cylinder block, pistons and piston rings must be replaced.

Replacing the engine

The engine must be replaced if the problem cannot be remedied using the above corrective actions.

FORM FOR MEASURING OIL CONSUMPTION

Chassis type:
Chassis number:
Engine number:
Date of arrival:
Odometer reading (km):
Checks carried out by:

1. Mileage	
Odometer reading, before check	(km)
Odometer reading, after check	(km)
Mileage driven "A"	(km)

2. Weighing	
Weight of oil before test drive	(gram)
Weight of oil after test drive	(gram)
Consumed oil weight	(gram)
Volume of consumed oil "B", (870 gram = 1 litre)	(litres)

Volume of consumed oil per 1000 km	
Volume of consumed oil "B" divided by the test drive distance "A" multiplied by 1000 = consumed amount (B / A x 1000 = consumed amount)	(litres/1000km)

OIL PUMP AND LINE (B5254T2; 2003-2007)

CHECKING OIL PRESSURE

Special tools:

see **9995270**

TIGHTENING TORQUES

For tightening torques not in the text, see

B52x4x see **TIGHTENING TORQUE**

B6xx4x see **TIGHTENING TORQUE**

CHECKING THE OIL PRESSURE SENSOR

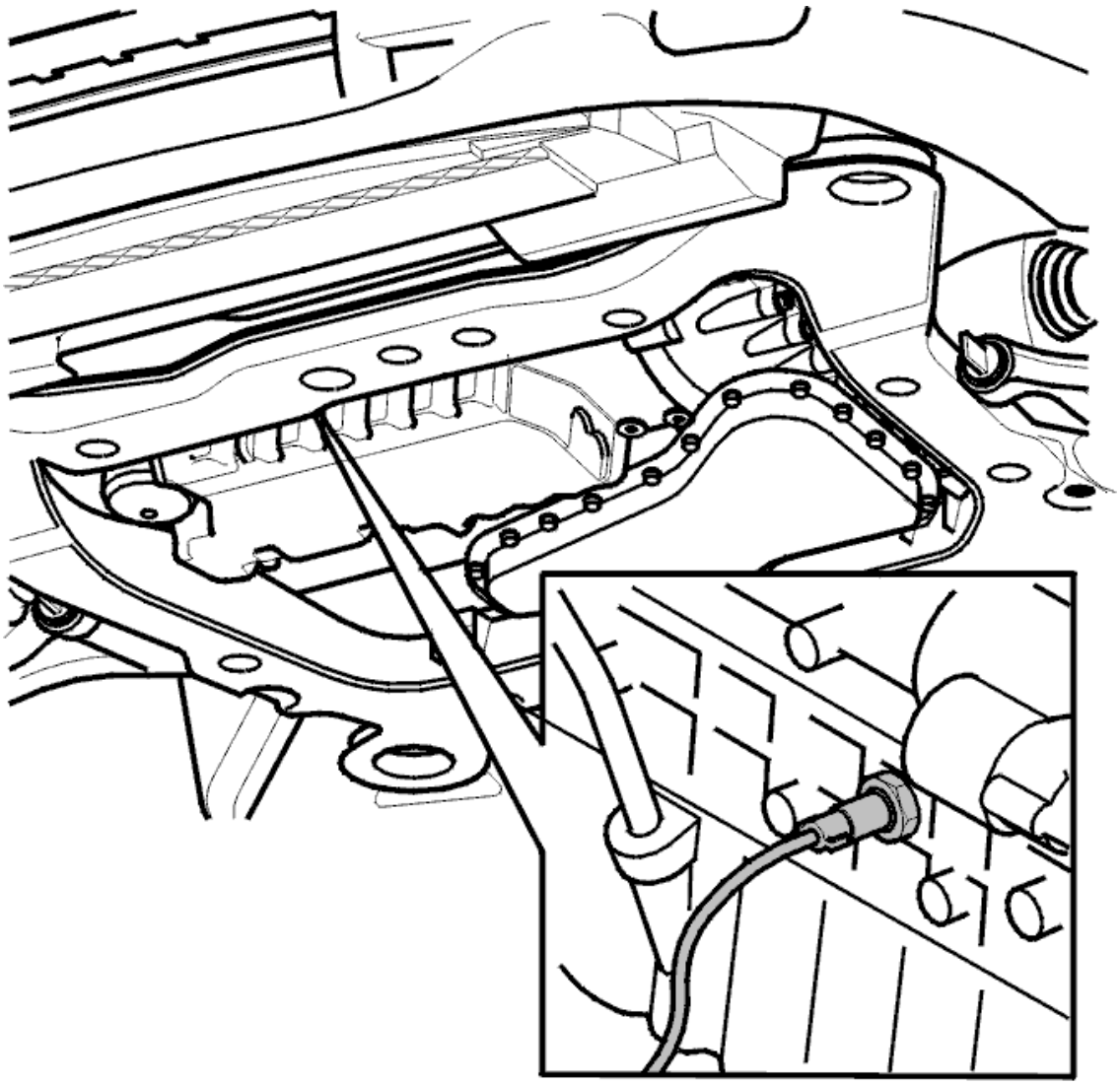

Fig. 3: Locating Oil Pressure Sensor
Courtesy of VOLVO CARS CORPORATION

NOTE: **When checking the oil level and oil pressure, the engine should be at normal operating temperature which corresponds to 15 minutes normal driving (100°C /**

212°F). If the oil quality and type or oil filter condition cannot be determined, replace the oil and filter.

Remove

- the air baffle on both sides
- the center air baffle under the engine.

Check

- the cable and connectors
- type and function. Try a new sensor
- any cable faults between sensor and warning lamp.

NOTE: Use a new gasket when the new sensor is installed.

CHECKING THE OIL PRESSURE

Use instrument kit see **9995270** . Connect to the oil pressure sensor duct on the cylinder block. Start the engine and read off oil pressure at different engine speeds (RPM).

OIL PRESSURE B52X4X

13.3 r/s (800 rpm)	min 0.10 MPa
66.7 r/s (4000 rpm)	min 0.35 MPa
Maximum oil pressure (relief valve opens)	0.48 MPa

OIL PRESSURE B6XX4X

12.5 r/s (750 rpm)	min 0.10 MPa
66.7 r/s (4000 rpm)	min 0.35 MPa
Maximum oil pressure (relief valve opens)	0.65 MPa

OIL PUMP AND LINE (B6294T; 2003-2006)

CHECKING OIL PRESSURE

see **CHECKING OIL PRESSURE**

OIL PUMP AND LINE (B8444S; 2005-2011)

OIL PRESSURE, CHECKING

Special tools:

see **9997207**

see **9995270**

NOTE: **The illustrations in this service information are used for different model years and/or models. Some variation may occur. However, the essential information in the illustrations is always correct.**

REMOVAL

REMOVING PROTECTIVE PLATE

Raise the vehicle. See **JACKING POINTS, BODY** .

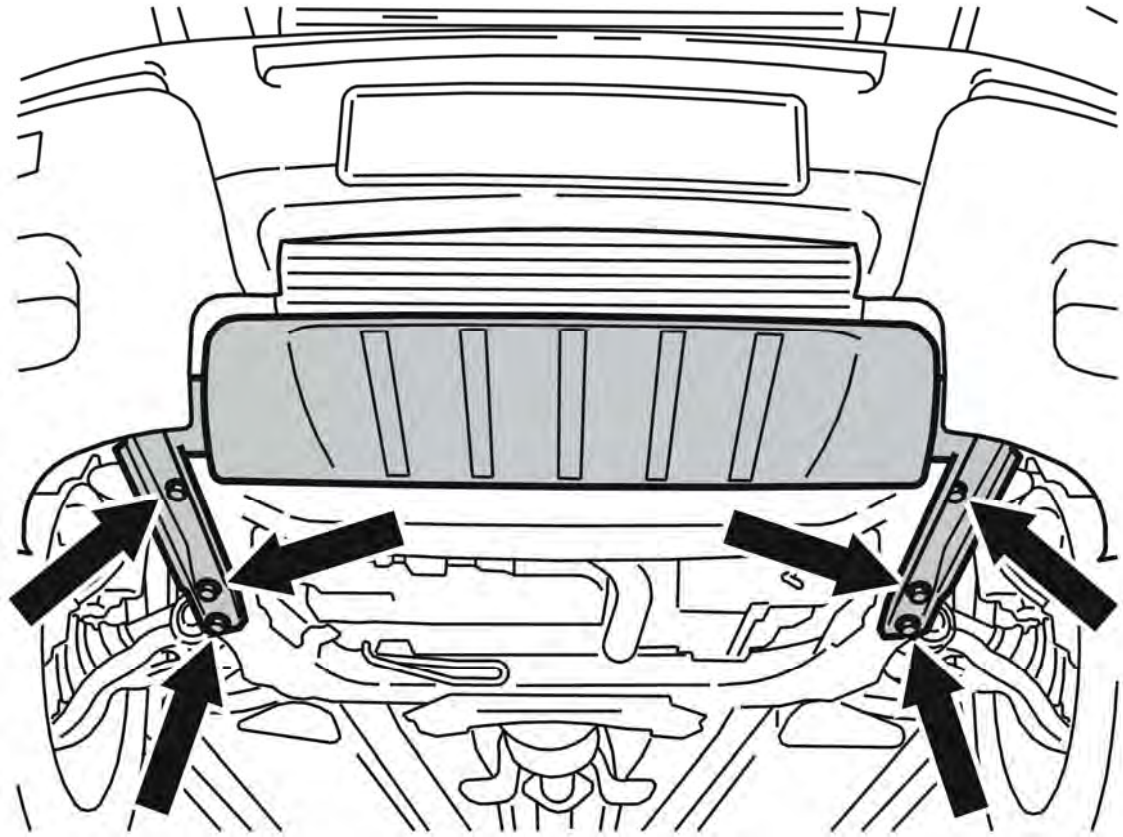

Fig. 4: Splash Guard. Protective Plate And Screws
Courtesy of VOLVO CARS CORPORATION

Remove the 6 screws.

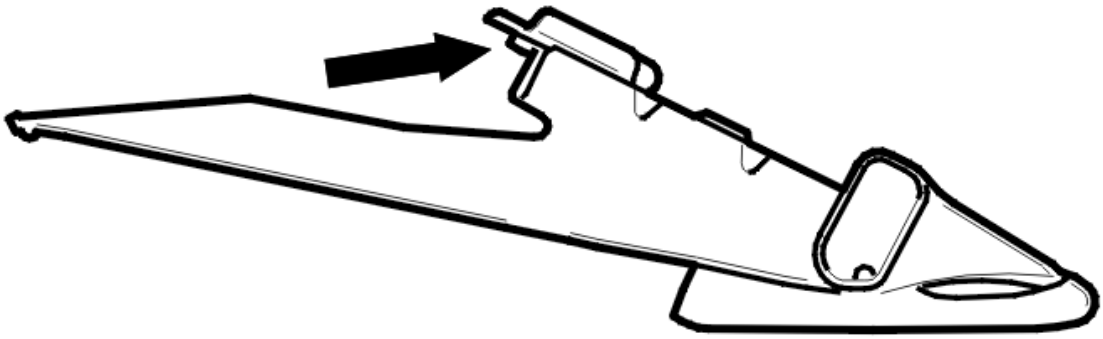

Fig. 5: Identifying Protective Plate
Courtesy of VOLVO CARS CORPORATION

NOTE: **There is a guide sleeve on the upper mounting for the plate. This must be lifted slightly so that the panel can be slid forward.**

Lift and slide the protective plate forward. Remove the protective plate.

REMOVING THE SPLASH GUARD UNDER THE ENGINE

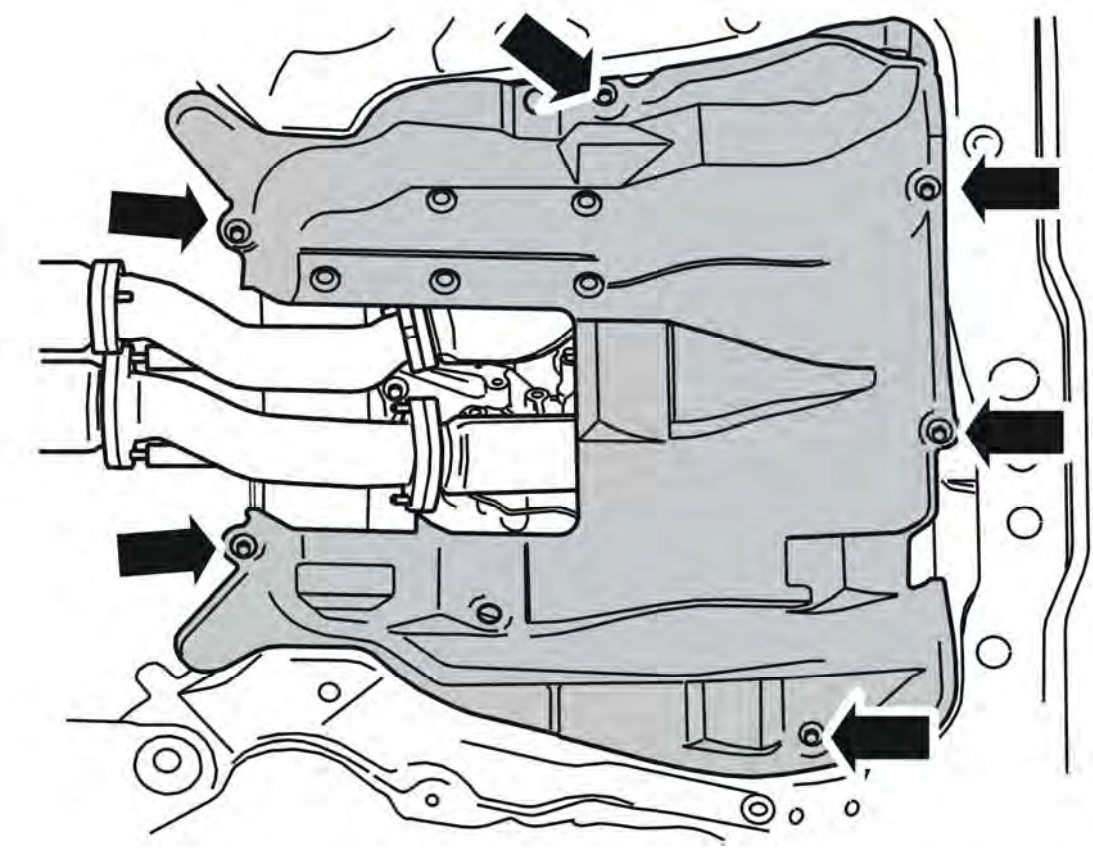

Fig. 6: Identifying Engine Splash Guard
Courtesy of VOLVO CARS CORPORATION

Remove:

- the 6 screws
- the splash guard under the engine

CHECKING THE OIL PRESSURE

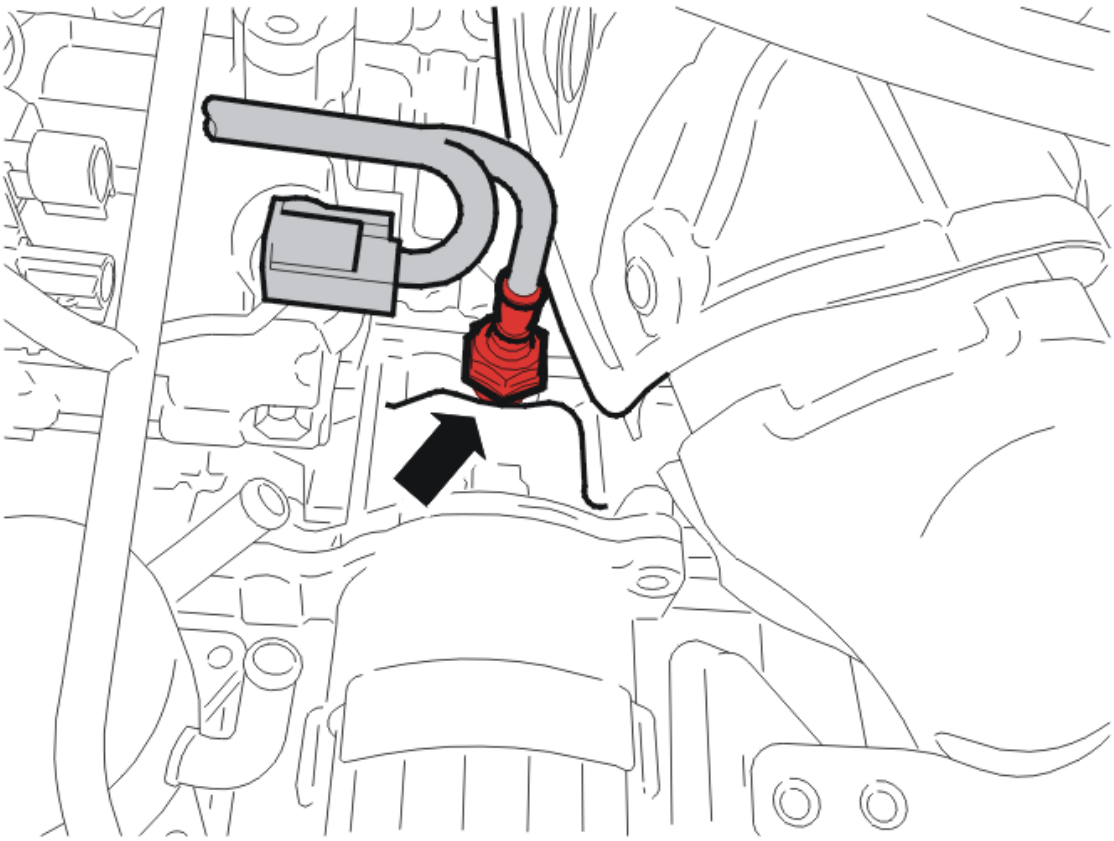

Fig. 7: Using Special Tools (9995270 and 9997207)
Courtesy of VOLVO CARS CORPORATION

Unplug the connector from the sensor.

Remove the oil pressure sensor from the engine block using see **9995270** with the hose and adapter see **9997207** .

HINT: Catch any oil spills with paper or the like.

Connect to the oil pressure sensor duct on the engine block. Lower the vehicle and raise the manometer to the engine compartment. Start the engine and read the oil pressure at various engine speeds.

CHECKING THE OIL PRESSURE SENSOR

NOTE: **When checking oil level and pressure, the engine should be warmed up to a degree corresponding to 15 minutes of normal operation (100 °C/212 °F).**

If the grade/type of the oil and/or condition of the oil filter cannot be determined, change the oil and filter.

READING OIL PRESSURE

Measure oil pressure at the specified engine speed.

MEASURE OIL PRESSURE AT:

650 rpm = approx. 1.4 bar
1000 rpm = approx. 2.4 bar
2000 rpm = approx. 4.1 bar

Remove manometer see **9995270** with hose and adapter see **9997207**

INSTALLATION

NOTE: For tightening torques, 8, see TIGHTENING TORQUE .

INSTALLING THE OIL PRESSURE SENSOR

Install the oil pressure sensor. Apply **Loctite 962** to the sensor and tighten as specified: **SUMMARY OF TIGHTENING TORQUES FOR SPECIFIC COMPONENTS** .

Plug in the connector to the oil pressure sensor. Start the engine and check for leaks and proper function.

INSTALLING SPLASH GUARD UNDER THE ENGINE

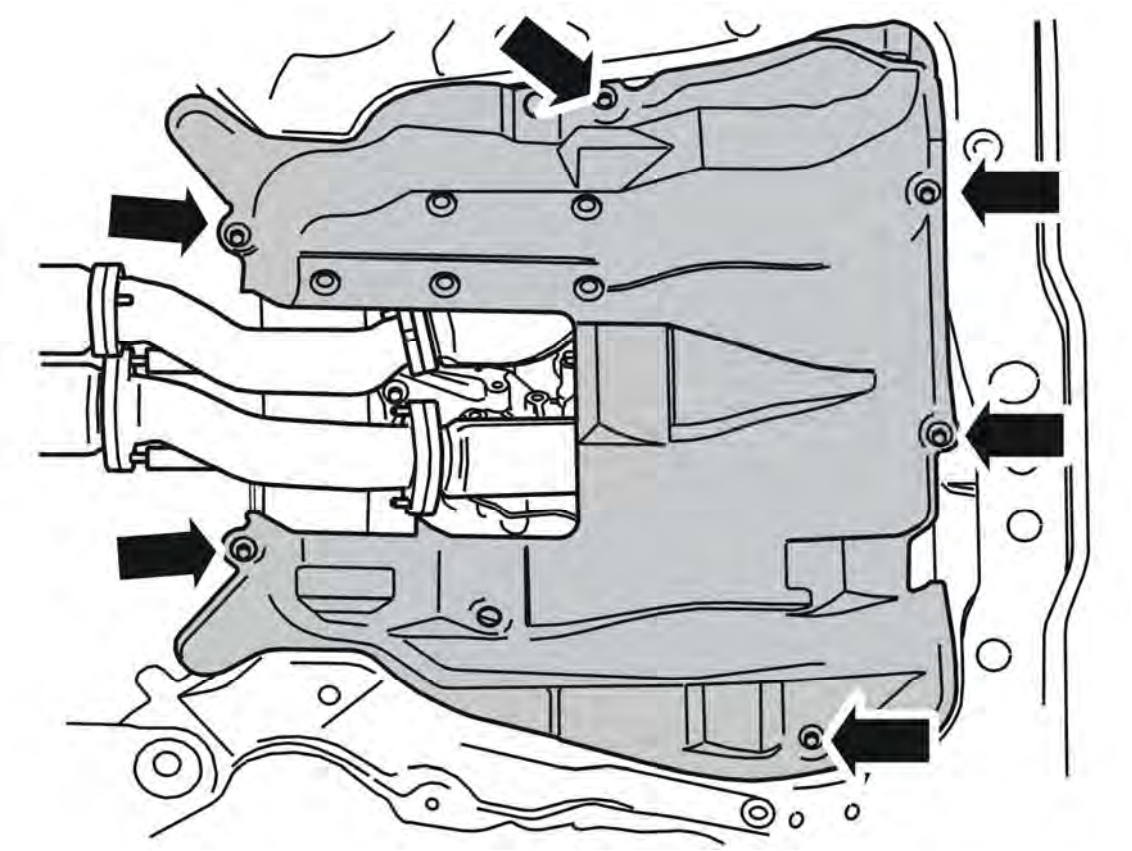

Fig. 8: Identifying Engine Splash Guard
Courtesy of VOLVO CARS CORPORATION

Install:

- the splash guard under the engine
- the 6 M8 screws; tighten.

INSTALLING THE PROTECTIVE PLATE

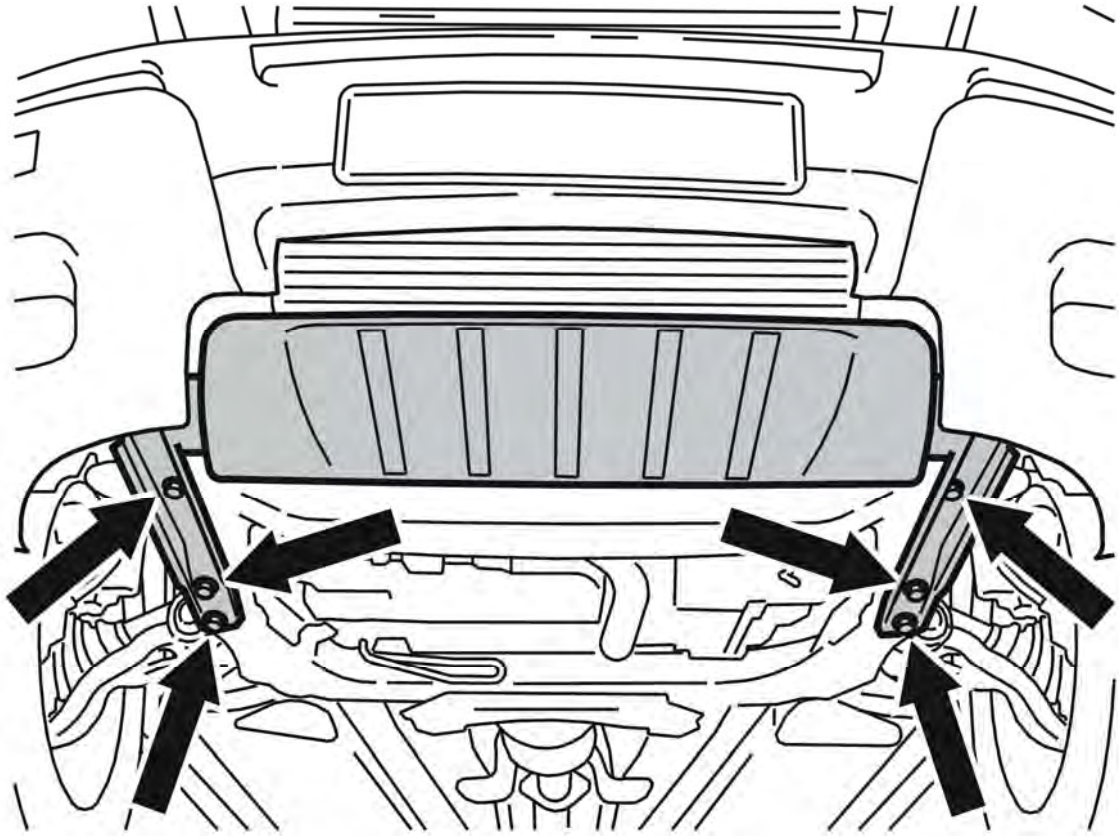

Fig. 9: Splash Guard. Protective Plate And Screws
Courtesy of VOLVO CARS CORPORATION

Install:

- the protective plate
- the 6 screws; tighten.

OIL PUMP AND LINE (B6324S; 2007-2010)

OIL PRESSURE TEST

When checking the oil level and oil pressure, the engine must be at operating temperature corresponding to 15 minutes normal driving (100 °C). If the oil quality/type and/or oil filter condition cannot be determined, replace the oil and filter.

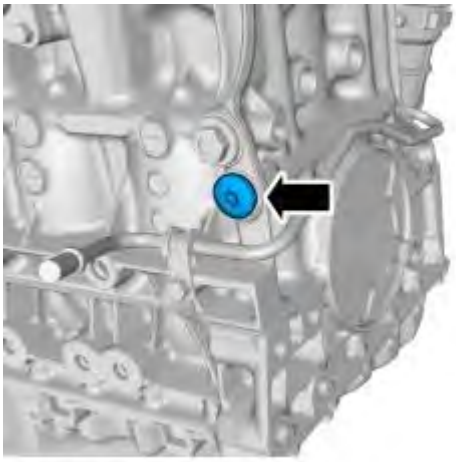

Fig. 10: Locating Test Port
Courtesy of VOLVO CARS CORPORATION

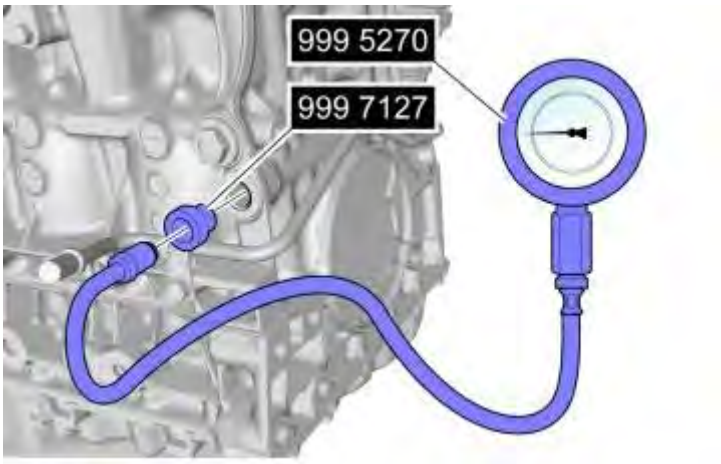

Fig. 11: Using Special Tools (9995270 and 9997127)
Courtesy of VOLVO CARS CORPORATION

Attach the following items:

- see **9995270**
- see **9997127**

Check the oil pressure. See **ENGINE**

OIL PUMP AND LINE (B6324S5; 2011-2012)

OIL PRESSURE TEST

see **OIL PRESSURE TEST**

ENGINE

Lubricating And Oil System - Removal, replacement and installation

OIL COOLER (B5254T2; 2003-2007)

OIL COOLER, REPLACING

NOTE: **As the illustrations in this service information are used for different model years and / or models, some variation may occur. However, the essential information is always correct.**

OIL COOLER, REMOVING:

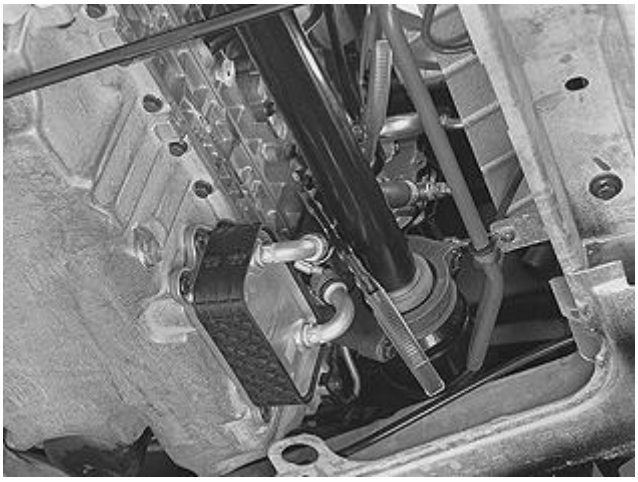

Fig. 1: Identifying Oil Cooler
Courtesy of VOLVO CARS CORPORATION

Raise the car.

Remove:

- the lower splash guard.

Clamp both the oil cooler coolant hoses together with lock grip pliers.

Remove:

- the coolant hoses from the oil cooler
- the oil cooler mounting screws.

NOTE: **Collect the oil that drains from the oil cooler and any coolant.**

Lift down the oil cooler.

OIL COOLER, INSTALLING:

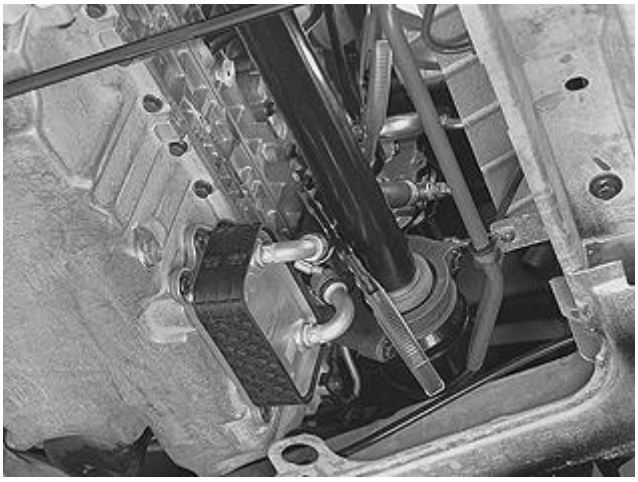

Fig. 2: Identifying Oil Cooler
Courtesy of VOLVO CARS CORPORATION

Use new seals.

The seals must be greased prior to installation.

Install:

- the oil cooler.

  Screw the 4 oil cooler screws into place.

  Tighten to: **17 Nm**

- the coolant hoses.

Remove the lock grip pliers.

Screw the splash guard into place.

CHECK

Check:

- the engine oil level
- the coolant level.

Check for leakage:

- start the engine and run to operating temperature
- then check that there is no leakage.

Check if the oil or coolant needs topping up.

OIL COOLER (B6294T; 2003-2006)

REPLACING THE OIL COOLER

NOTE: **As the illustrations in the information are used for different model years and / or models, certain variations may occur. However, the essential information in the illustrations is always correct.**

REMOVING THE OIL COOLER:

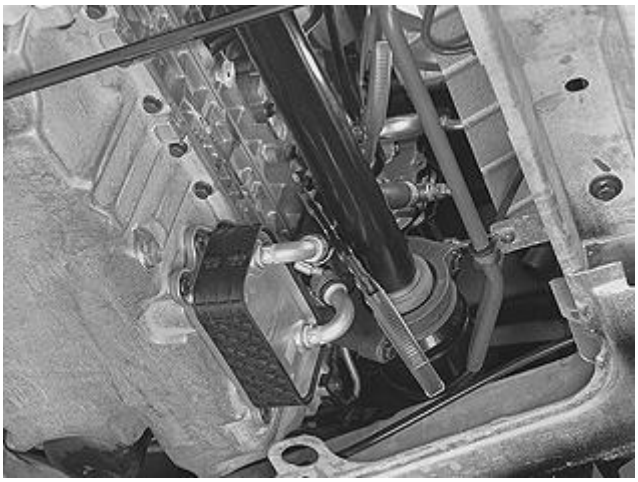

Fig. 3: Identifying Oil Cooler
Courtesy of VOLVO CARS CORPORATION

Raise the car.

Clamp both the oil cooler coolant hoses together with lock grip pliers.

Remove:

- the coolant hoses from the oil cooler.
- the oil cooler mounting screws.

Lift down the oil cooler.

INSTALLING THE OIL COOLER:

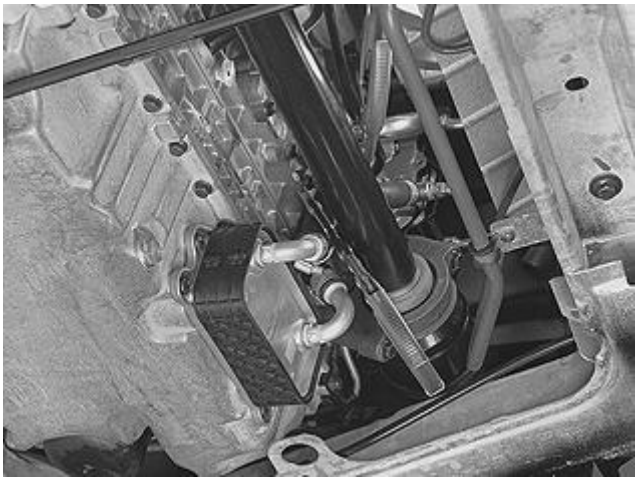

Fig. 4: Identifying Oil Cooler
Courtesy of VOLVO CARS CORPORATION

Use new seals.

The seals must be greased prior to installation.

Install:

- the oil cooler.

  Screw the 4 oil cooler screws into place.

  Tightening torque: **17 Nm (12 lb. ft)** .

- the coolant hoses.

Remove the lock grip pliers.

CHECK

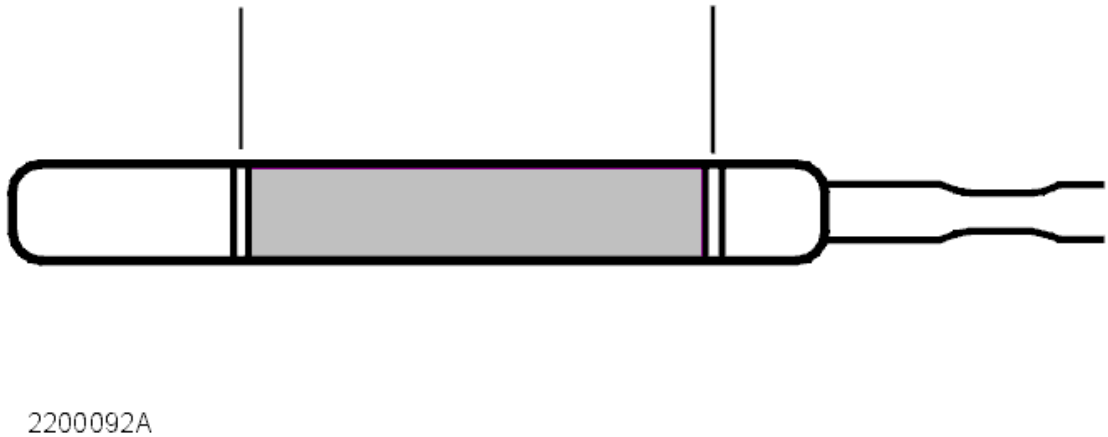

Fig. 5: Identifying Oil Level
Courtesy of VOLVO CARS CORPORATION

Check:

- the engine oil level.
- the coolant level.

Check for leakage

Start the engine and run it to operating temperature.

Then check that there is no leakage.

Check if the oil or coolant needs topping up.

OIL COOLER (B6324S; 2007-2010)

OIL COOLER, ENGINE

NOTE: Removal steps in this procedure may contain installation details.

Remove the intake manifold. See **INDUCTION PIPE**

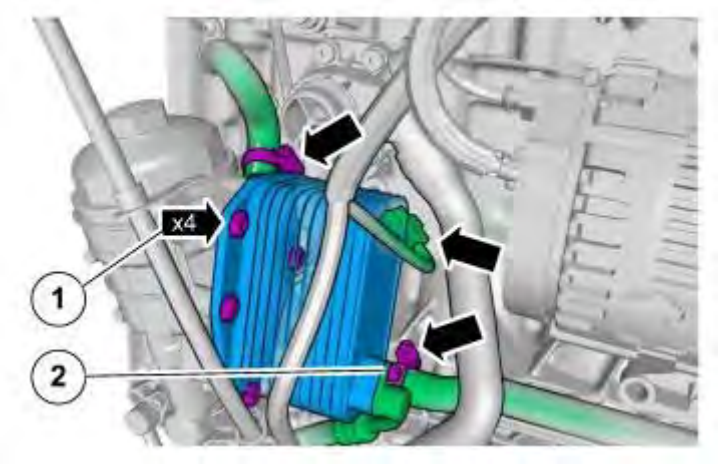

Fig. 6: Identifying Oil Cooler
Courtesy of VOLVO CARS CORPORATION

M6. See **TIGHTENING TORQUE**

M7. See **TIGHTENING TORQUE**

To install, reverse the removal procedure

OIL COOLER (B6324S5; 2011-2012)

OIL COOLER, ENGINE

see **OIL COOLER, ENGINE**

OIL COOLER (B8444S; 2005-2011)

OIL COOLER, REPLACING

Special tools:

see **9512957**

see **9512955**

NOTE: **The illustrations in this service information are used for different model years and/or models. Some variation may occur. However, the essential information in the illustrations is always correct.**

PREPARATORY WORK

Remove the expansion tank cap.

Lift the vehicle, see **JACKING POINTS, BODY** .

Remove the right front wheel.

REMOVAL

REMOVING PROTECTIVE PLATE

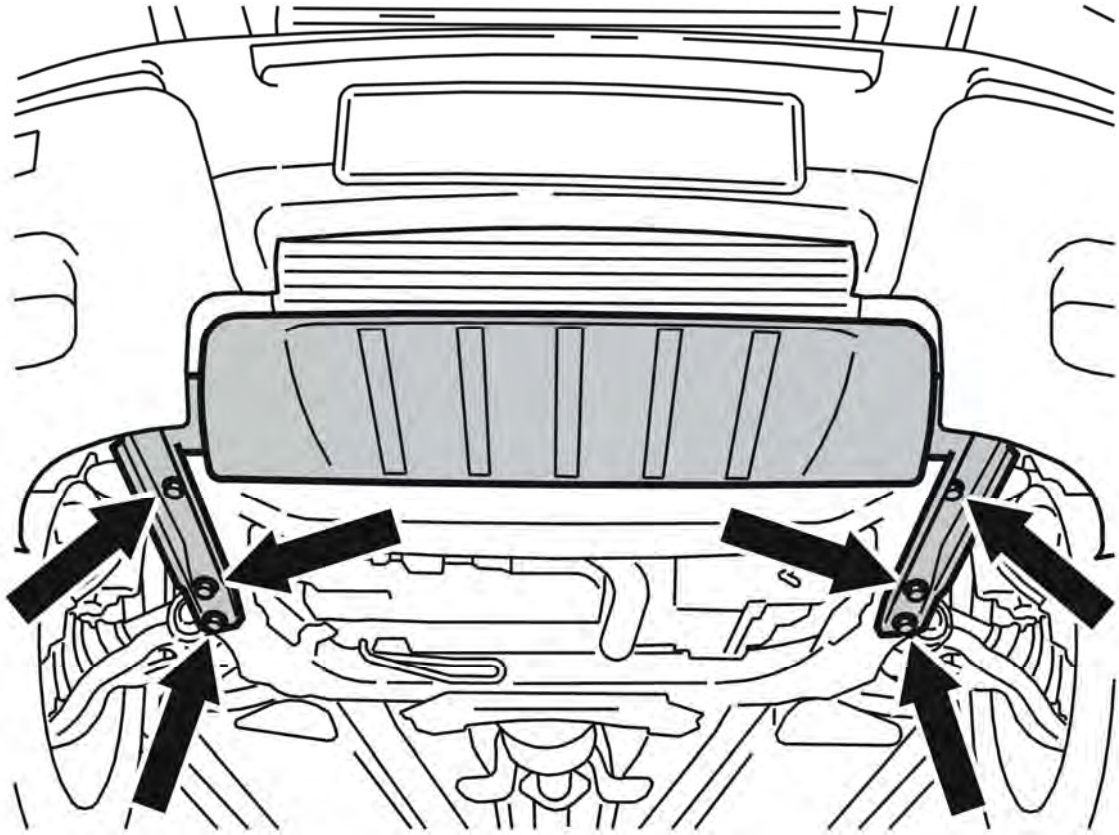

Fig. 7: Splash Guard. Protective Plate And Screws
Courtesy of VOLVO CARS CORPORATION

NOTE: There is a guide sleeve on the upper mounting for the plate. This must be lifted slightly so that the panel can be slid forward.

Remove the 6 screws.

REMOVING THE LOWER ENGINE COVER

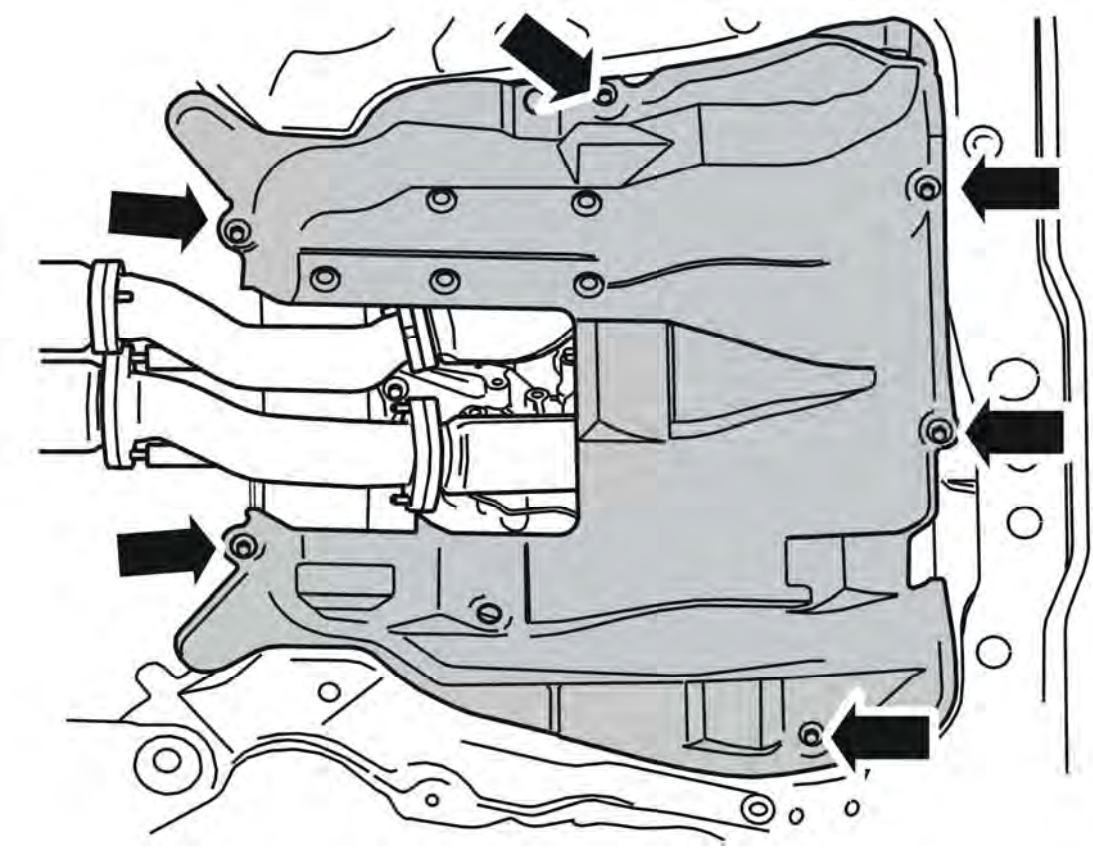

Fig. 8: Removing The Lower Engine Cover
Courtesy of VOLVO CARS CORPORATION

Remove the 6 screws.

DRAINING COOLANT

Open the cock on the lower left edge of the radiator.

Drain the coolant into a clean receptacle.

Close the cock.

REMOVING THE OIL COOLER

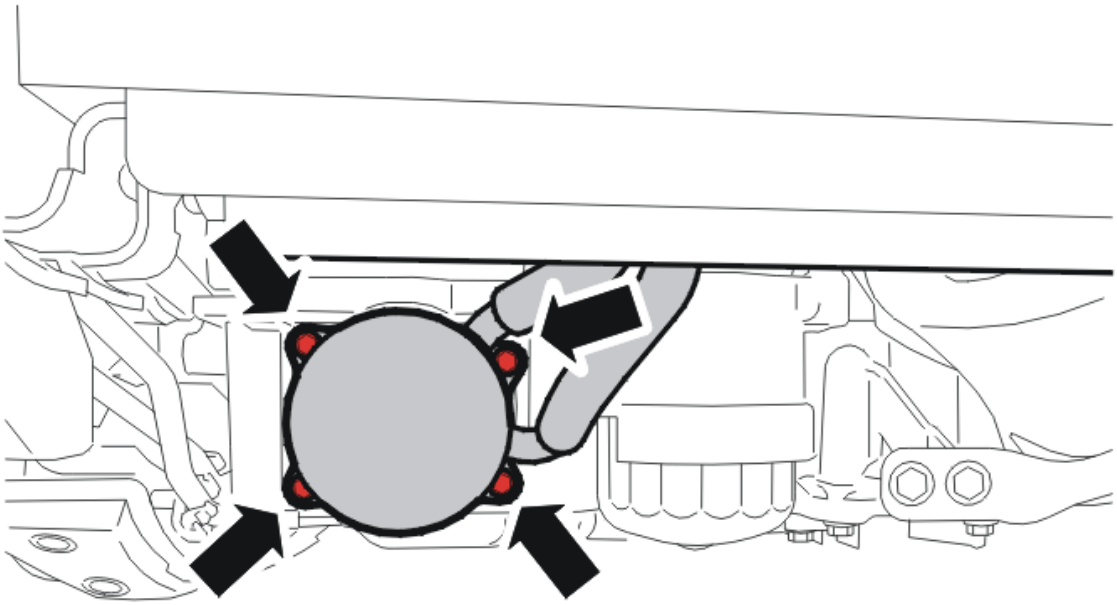

Fig. 9: Identifying The Oil Cooler and 4 Screws
Courtesy of VOLVO CARS CORPORATION

Position a container under the oil cooler.

Remove:

- the oil level sensor cable, by removing the clamp's screw
- the 4 screws

Pull the oil cooler down slightly and clean the oil pan mating surfaces facing the oil cooler. Cover the holes in the oil pan using tape or similar.

Remove:

- 2 clamps
- the oil cooler. Scrap the O-ring.

INSTALLATION

NOTE: For tightening torques, see: TIGHTENING TORQUE .

INSTALLING THE OIL COOLER

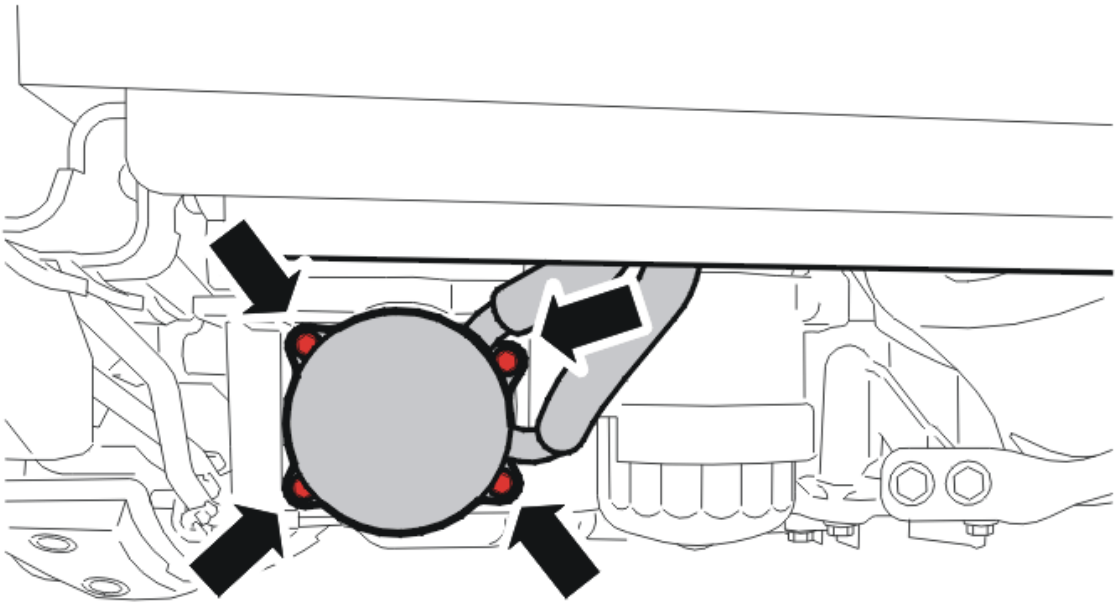

Fig. 10: Identifying The Oil Cooler and 4 Screws
Courtesy of VOLVO CARS CORPORATION

Install:

- **new** O-ring
- the oil cooler
- the 2 hoses; secure them with the clamps
- the 4 screws. Tighten. See: **SUMMARY OF TIGHTENING TORQUES FOR SPECIFIC COMPONENTS**
- the screw for the oil level sensor cable. Tighten. See: **SUMMARY OF TIGHTENING TORQUES FOR SPECIFIC COMPONENTS** .

FILLING COOLANT

CAUTION: Use the filling equipment. When filling manually, air pockets remain in the system.

CAUTION: Make sure the outlet hose of filling equipment is not blocked as this could damage the cooling system.

Fill with coolant. Use filling equipment: see **9512957** and cover: see **9512955** . Follow the equipment's instructions.

Start the engine and allow it to warm to normal operating temperature.

Check its function, and check for any leaks.

INSTALLING THE LOWER ENGINE COVER

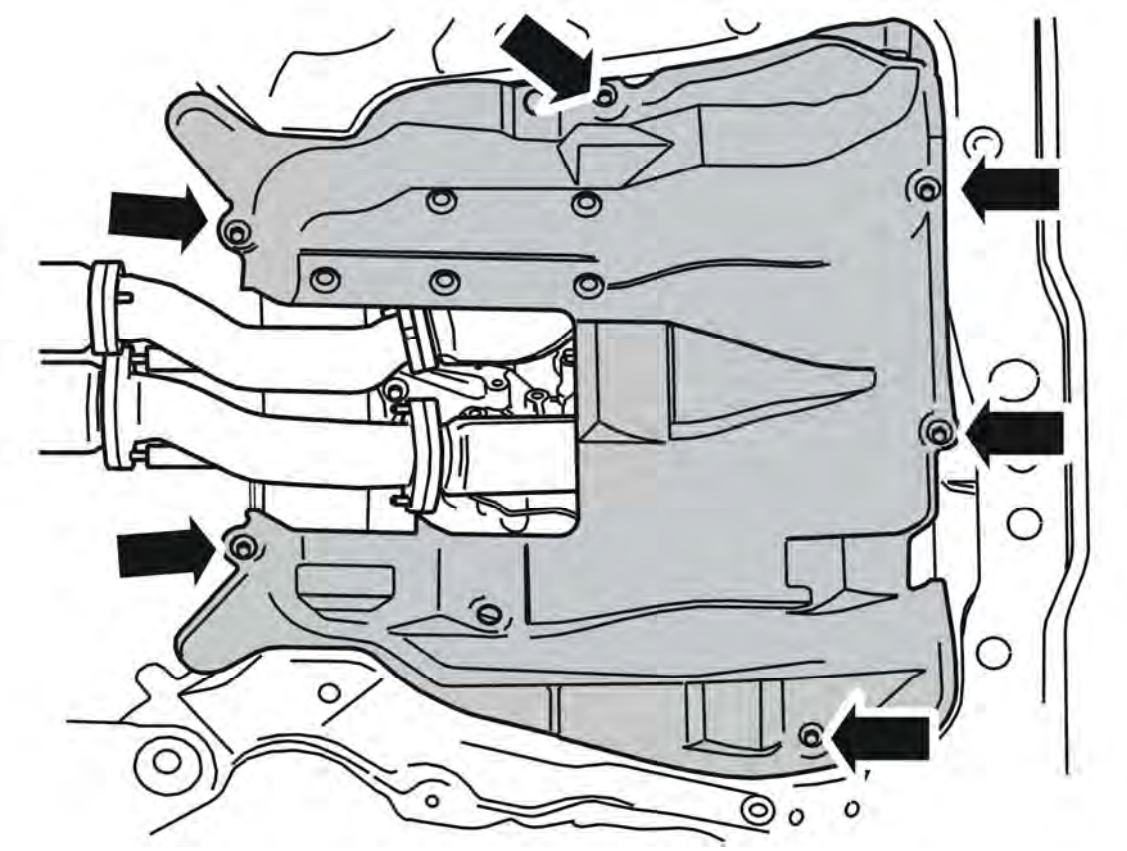

Fig. 11: Removing The Lower Engine Cover
Courtesy of VOLVO CARS CORPORATION

Install:

- the lower engine cover
- the 6 M8 screws; tighten.

INSTALLING THE PROTECTIVE PLATE

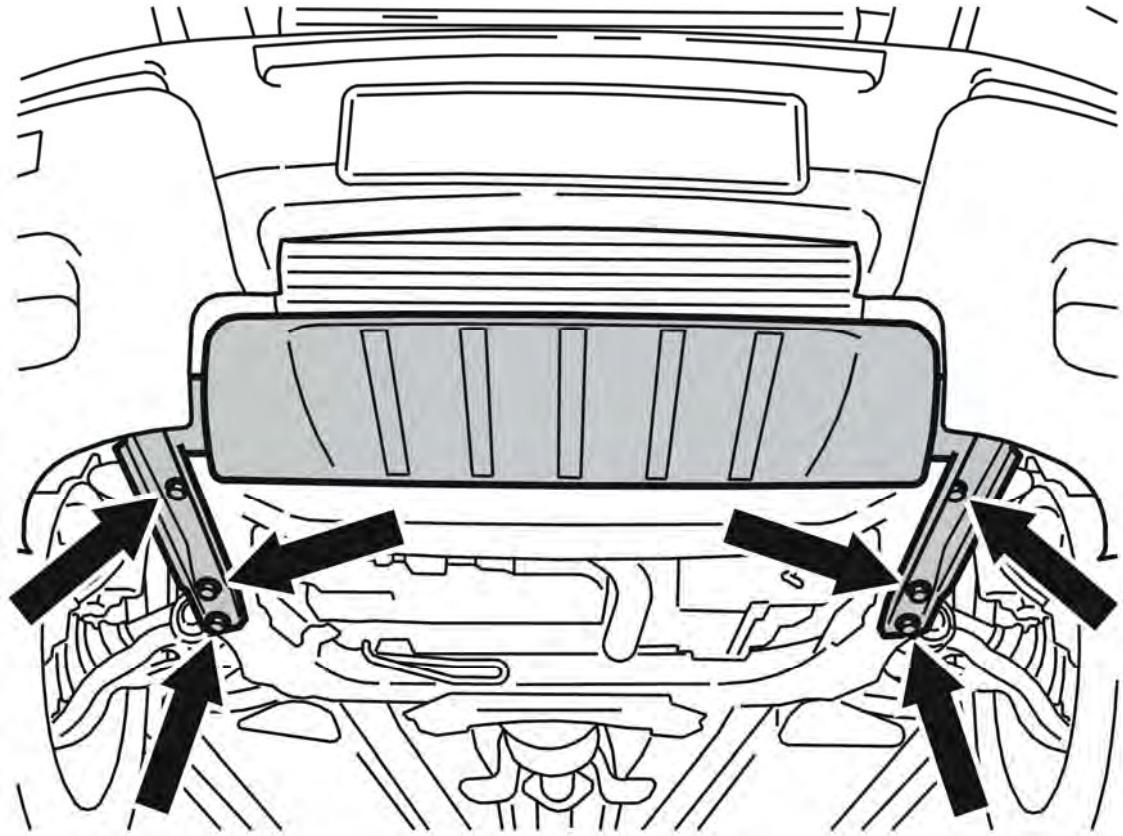

Fig. 12: Splash Guard. Protective Plate And Screws
Courtesy of VOLVO CARS CORPORATION

Install:

- the protective plate
- the 6 M10 screws; tighten.

FINISHING

Check the oil and coolant levels. Top up if necessary.

OIL FILTER (B5254T2; 2003-2007)

OIL/OIL FILTER, REPLACING

Special tools:

see **9995679**

NOTE: **The illustrations in this service information are used for different model years and/or models. Some variation may occur. However, the essential information in the illustrations is always correct.**

REPLACING THE OIL AND OIL FILTER

DRAINING THE OIL

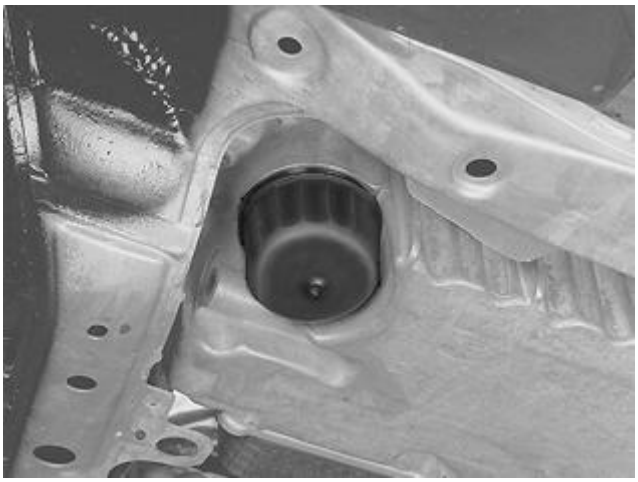

Fig. 13: Identifying Oil Filter
Courtesy of VOLVO CARS CORPORATION

WARNING: **Hot oil can scald.**

Avoid skin contact with engine oil, particularly if the engine oil is dirty.

Immediately wash hands and any skin that has been in contact with oil. Use a suitable cleaning agent and warm water.

Wear protective gloves when working with engine oil.

Raise the vehicle. See: **JACKING POINTS, BODY** and position an oil container.

HINT: The engine should be at operating temperature for the oil to drain more easily.

Remove:

- the lower splash guard. Position the container under the engine oil pan
- the oil pan plug. Discard the gasket. Drain the engine oil.

REMOVING THE OIL FILTER

Fig. 14: Identifying Oil Filter Installation
Courtesy of VOLVO CARS CORPORATION

Position the container under the oil filter.

Remove the oil filter housing. Use tool: see **9995679** .

Reinstall the oil plug again. Tighten. See **SUMMARY OF SPECIFIC COMPONENTS AND TIGHTENING TORQUES** . Always use a new sealing washer.

REPLACE THE OIL FILTER INSERT

Fig. 15: Identifying Oil Filter Replacement Components
Courtesy of VOLVO CARS CORPORATION

Remove:

- the filter insert from the housing
- the O-ring that seals between the housing and the oil trough.

Allow the filter insert to drain and then discard it in an approved place.

INSTALLING THE OIL FILTER

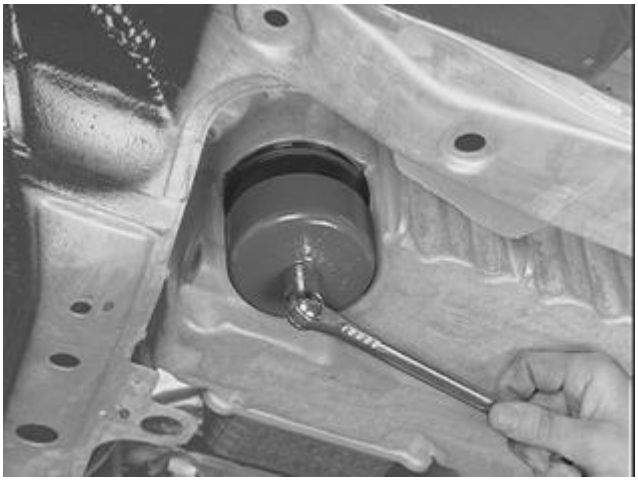

Fig. 16: Identifying Oil Filter Installation
Courtesy of VOLVO CARS CORPORATION

CAUTION: Clean the housing.

Install:

- a new filter insert
- a new O-ring. Lubricate the O-ring
- the oil filter housing. Tighten to **SUMMARY OF SPECIFIC COMPONENTS AND TIGHTENING TORQUES** .

Install the lower cover.

FILLING WITH ENGINE OIL

Lower the vehicle and fill with oil. See **LUBRICANTS, ENGINE**

Check:

Start the engine and check for oil leakage.

Stop the engine and give the oil time to run down into the oil pan.

Then check the oil level. Top up if necessary but do not overfill. Wipe the engine compartment clean. Ensure that the steering wheel and the gear selector lever are clean.

OIL FILTER (B6294T; 2003-2006)

OIL/OIL FILTER, REPLACING

Special tools:

see **9995679**

NOTE: **The illustrations in this service information are used for different model years and/or models. Some variation may occur. However, the essential information in the illustrations is always correct.**

REPLACING THE OIL AND OIL FILTER

DRAINING THE OIL

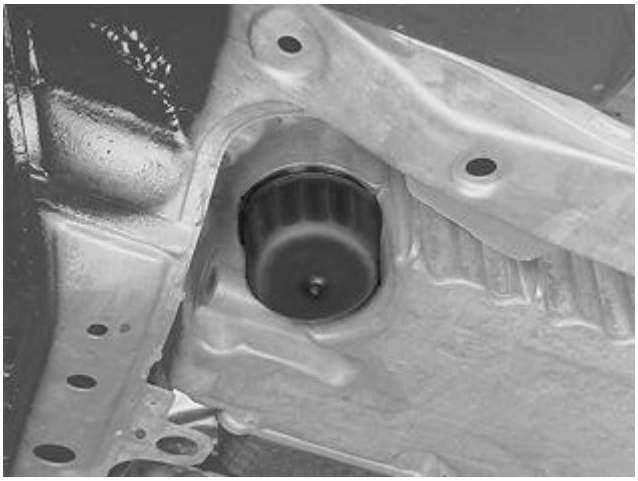

Fig. 17: Identifying Oil Filter
Courtesy of VOLVO CARS CORPORATION

WARNING: **Hot oil can scald.**

Avoid skin contact with engine oil, particularly if the engine oil is dirty.

Immediately wash hands and any skin that has been in contact with oil. Use a suitable cleaning agent and warm water.

Wear protective gloves when working with engine oil.

Raise the vehicle. See: **JACKING POINTS, BODY** and position an oil container.

HINT: The engine should be at operating temperature for the oil to drain more easily.

Remove:

- the lower splash guard. Position the container under the engine oil pan
- the oil pan plug. Discard the gasket. Drain the engine oil.

REMOVING THE OIL FILTER

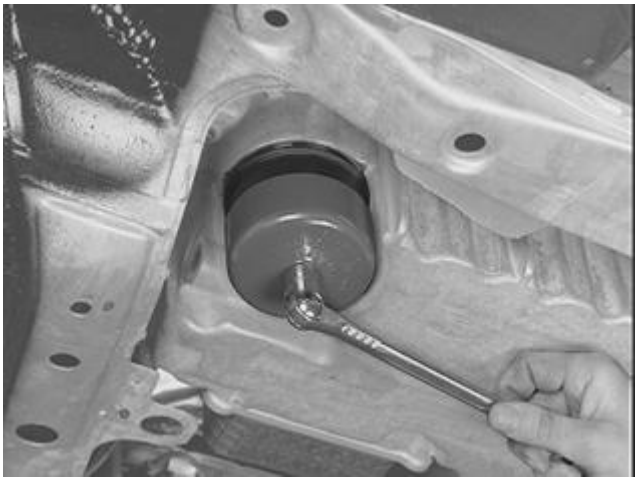

Fig. 18: Identifying Oil Filter Installation
Courtesy of VOLVO CARS CORPORATION

Position the container under the oil filter.

Remove the oil filter housing. Use tool: see **9995679** .

Reinstall the oil plug again. Tighten. See **SUMMARY OF SPECIFIC COMPONENTS AND TIGHTENING TORQUES** . Always use a new sealing washer.

REPLACE THE OIL FILTER INSERT

Fig. 19: Identifying Oil Filter Replacement Components
Courtesy of VOLVO CARS CORPORATION

Remove:

- the filter insert from the housing
- the O-ring that seals between the housing and the oil trough.

Allow the filter insert to drain and then discard it in an approved place.

INSTALLING THE OIL FILTER

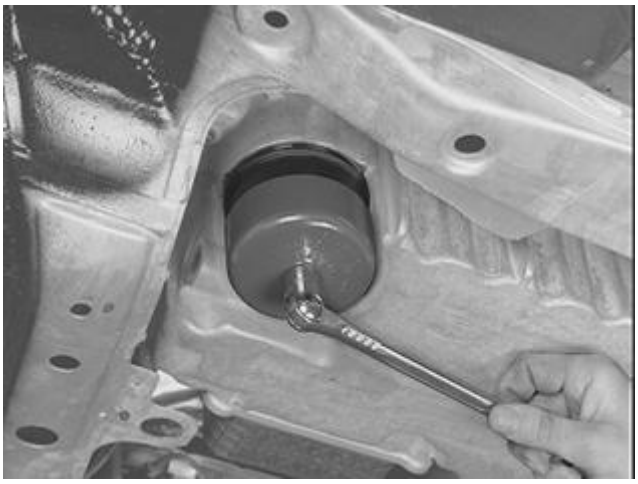

Fig. 20: Identifying Oil Filter Installation
Courtesy of VOLVO CARS CORPORATION

CAUTION: Clean the housing.

Install:

- a new filter insert
- a new O-ring. Lubricate the O-ring
- the oil filter housing. Tighten to **SUMMARY OF TIGHTENING TORQUES FOR SPECIFIC COMPONENTS** .

Install the lower cover.

FILLING WITH ENGINE OIL

Top up oil. See: **LUBRICANTS, ENGINE** .

Check:

Start the engine and check for oil leakage.

Stop the engine and give the oil time to run down into the oil pan.

Then check the oil level. Top up if necessary but do not overfill. Wipe the engine compartment clean. Ensure that the steering wheel and the gear selector lever are clean.

OIL FILTER (B6324S; 2007-2010)

OIL FILTER

WARNING: Hot fluids.

NOTE: Removal steps in this procedure may contain installation details.

The oil filter cover must be loosened before all the oil can be drained.

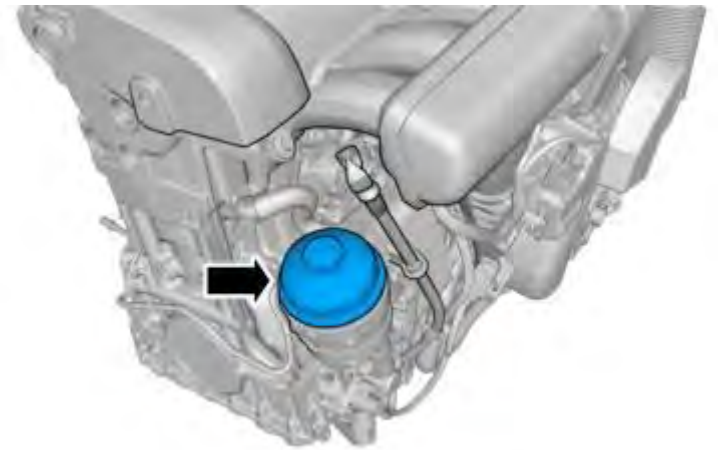

Fig. 21: Identifying Oil Filter Cover
Courtesy of VOLVO CARS CORPORATION

Oil filter casing. See **SUMMARY OF TIGHTENING TORQUES FOR SPECIFIC COMPONENTS**

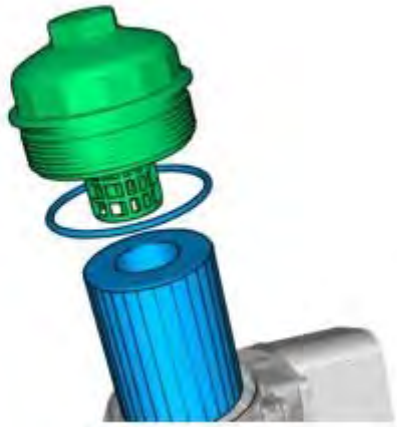

Fig. 22: Identifying Oil Filter and O-Ring Seal
Courtesy of VOLVO CARS CORPORATION

Raise the vehicle. See **JACKING POINTS, BODY** .

Fig. 23: Locating Engine Undercover And Clips
Courtesy of VOLVO CARS CORPORATION

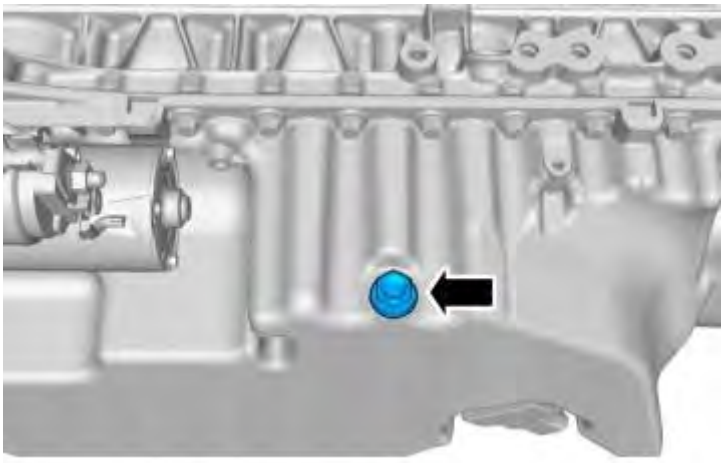

Fig. 24: Locating Oil Drain Bolt
Courtesy of VOLVO CARS CORPORATION

WARNING: **Be prepared to collect escaping fluid.**

the oil plug. See **SUMMARY OF TIGHTENING TORQUES FOR SPECIFIC COMPONENTS**

To install, reverse the removal procedure.

Fig. 25: Locating Oil Filler Cap and Dip Stick
Courtesy of VOLVO CARS CORPORATION

Fill with oil. See **LUBRICANTS, ENGINE**

Start the engine and check the oil level and check for any leaks. Top up as necessary, but do not overfill.

OIL FILTER (B6324S5; 2011-2012)

OIL FILTER

see **OIL FILTER**

OIL FILTER (B8444S; 2005-2011)

OIL/OIL FILTER, REPLACING

Special tools:

see **9995679**

NOTE: **The illustrations in this service information are used for different model years and/or models. Some variation may occur. However, the essential information in the illustrations is always correct.**

WARNING: **Hot oil can scald.**

Avoid skin contact with engine oil, especially if it is dirty. Always wipe spilled oil from your hands and wash exposed skin as soon as possible with suitable cleaner and warm water. Protective gloves should be worn when working with engine oil.

REMOVAL

DRAINING ENGINE OIL

Fig. 26: View of Coolant Reservoir
Courtesy of VOLVO CARS CORPORATION

Remove the oil filler cap.

Lift the vehicle, see **JACKING POINTS, BODY** .

HINT: The engine should be at operating temperature for the oil to drain more easily.

REMOVING THE LOWER ENGINE COVER

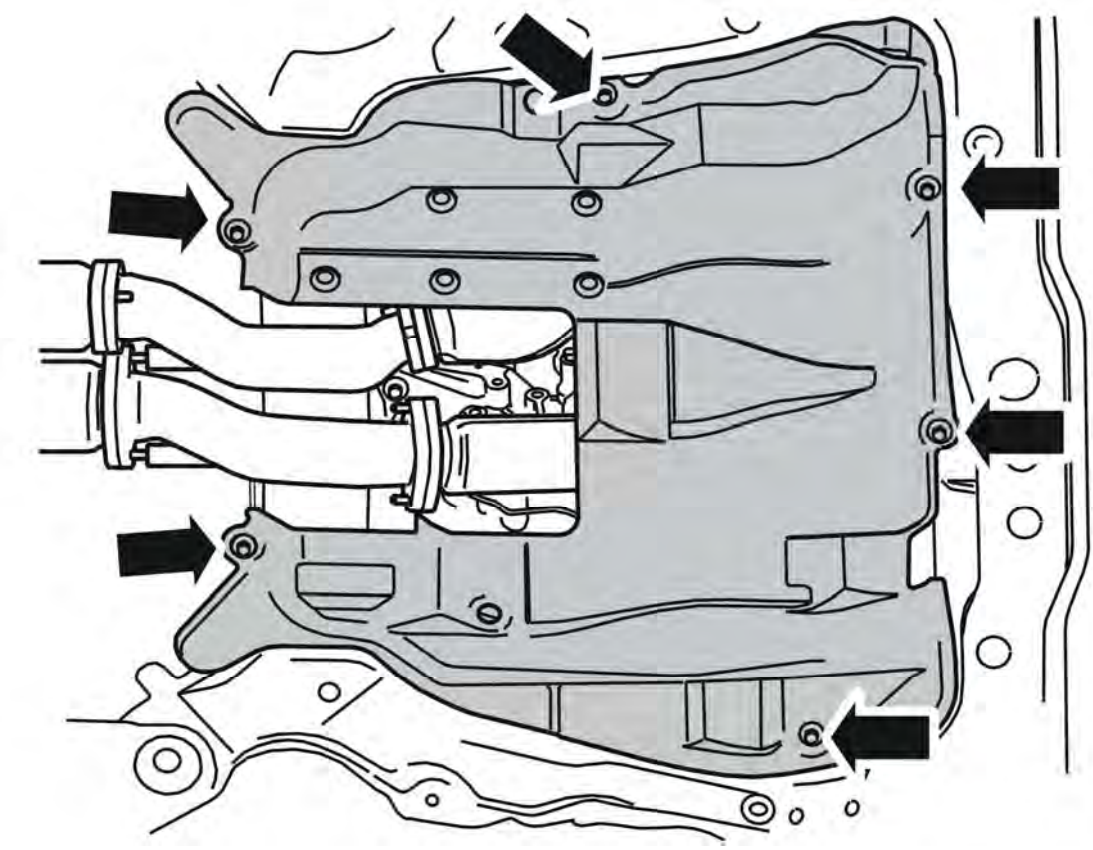

Fig. 27: Removing The Lower Engine Cover
Courtesy of VOLVO CARS CORPORATION

Remove:

- the 6 screws
- the lower engine cover.

DRAINING ENGINE OIL, CONTINUED

Fig. 28: Identifying Oil Drain Bolt
Courtesy of VOLVO CARS CORPORATION

Place a receptacle under the engine's oil sump at the oil plug.

Remove the oil plug. Scrap the gasket.

REMOVING THE OIL FILTER

Fig. 29: Identifying Oil Filter Housing
Courtesy of VOLVO CARS CORPORATION

Position the container under the oil filter.

Remove the oil filter housing. Use oil filter wrench: see **9995679** .

Refit the oil plug. Tighten as specified: **TIGHTENING TORQUE** . Use a new sealing washer.

REMOVING THE OIL FILTER INSERT

Fig. 30: Identifying Oil Filter Replacement Components

Courtesy of VOLVO CARS CORPORATION

Remove:

- the filter insert from the housing
- the O-ring that seals between the housing and the oil trough.

Allow the filter insert to drain and then discard it in an approved place.

INSTALLATION

NOTE: For tightening torques, see: TIGHTENING TORQUE .

INSTALLING THE OIL FILTER

CAUTION: Clean the housing.

Install:

- new filter insert
- new O-ring; oil in the O-ring
- the oil filter housing. Tighten to **TIGHTENING TORQUE** .

INSTALLING THE LOWER ENGINE COVER

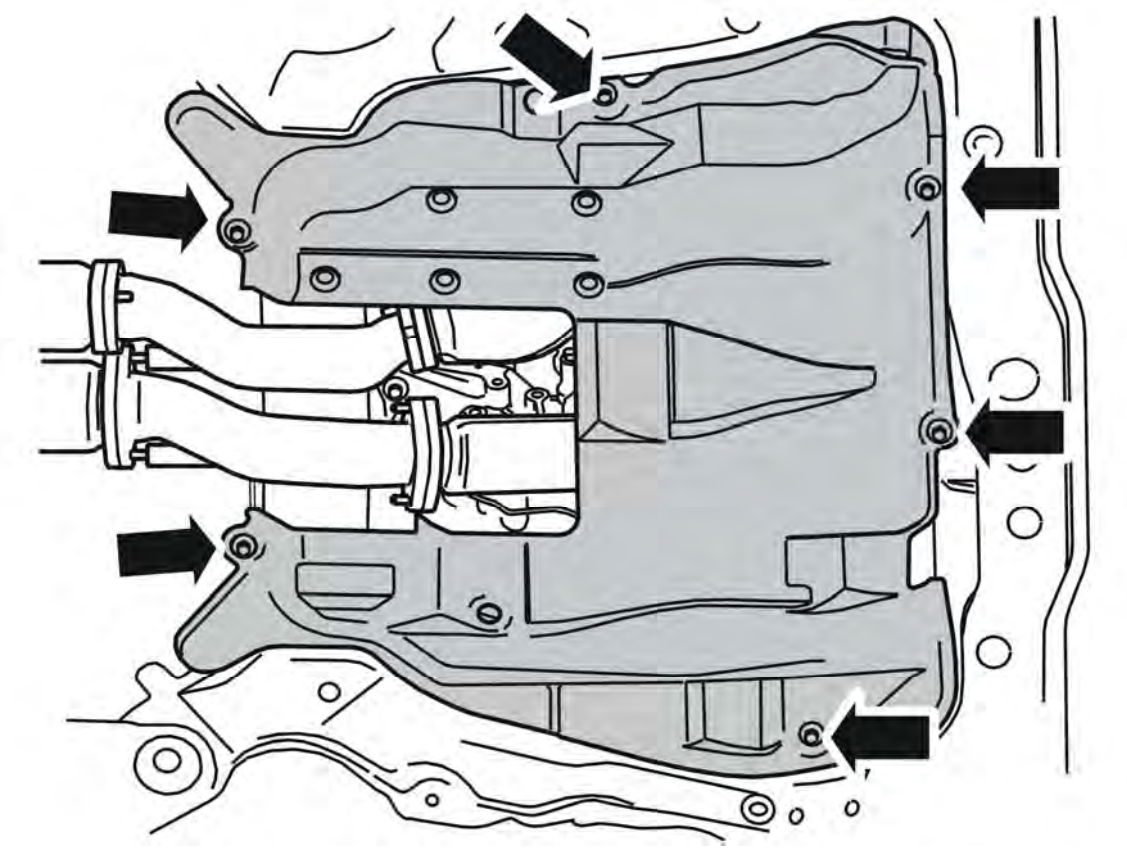

Fig. 31: Removing The Lower Engine Cover
Courtesy of VOLVO CARS CORPORATION

Install:

- the lower engine cover
- the 6 screws; tighten.

Lower the vehicle.

FILLING WITH ENGINE OIL

Top up oil. See: **LUBRICANTS, ENGINE** .

FINAL CHECK

Start the engine and check for leaks.

Stop the engine and give the oil time to run down in the oil sump.

Then check the oil level. Top up if required. Do not overfill.

Wipe the engine compartment clean. Make sure that the steering wheel and gear lever are clean.

OIL PUMP AND LINE (B5254T2; 2003-2007)

PISTON COOLING VALVES, REPLACING

AFFECTED ENGINES: B52XXXX

REMOVING THE TIMING BELT AND MECHANICAL TIMING BELT TENSIONER

Remove the timing belt, see **TIMING BELT, REPLACING** .

Remove the timing belt tensioner. Remove the idler pulley. Remove the screw securing the inner timing cover to the cylinder head.

Raise the car.

Remove the vibration damper.

REMOVING COMPONENTS

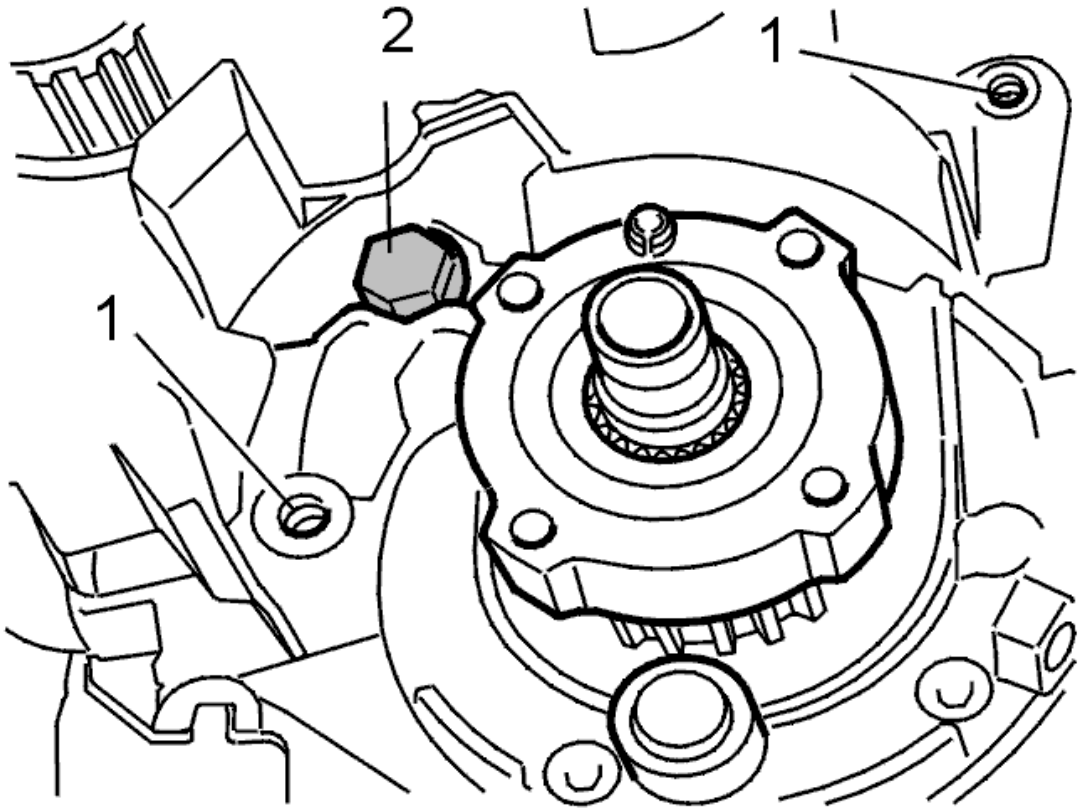

Fig. 32: Identifying Piston Cooling Valve And Inner Timing Cover Screws
Courtesy of VOLVO CARS CORPORATION

Remove:

- the two screws (1) securing the inner timing cover to the cylinder block
- the lower belt guard at the oil pump housing.

Press the inner timing cover off the flange around the coolant pump. Start at the lower edge of the pump.

Hold the cover out of the way. Remove the piston cooling valve (2) and the seal washer.

INSTALLING COMPONENTS

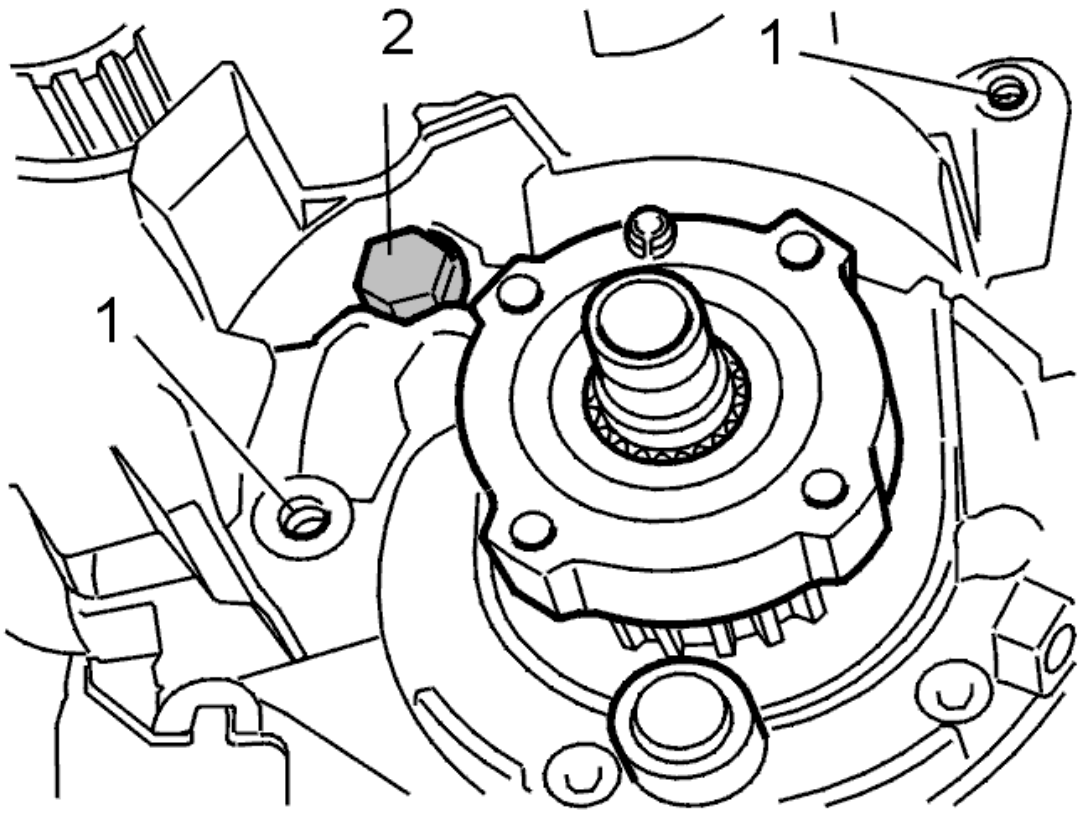

Fig. 33: Identifying Piston Cooling Valve And Inner Timing Cover Screws
Courtesy of VOLVO CARS CORPORATION

Install:

- a new piston cooling valve (2) with a new seal washer. Tighten to **35 Nm**
- the inner timing cover. First press the cover into place over the flange at the top of the coolant pump. Then press the remaining section of the cover into place over the flange around the pump. Check that the cover is correctly positioned
- the two screws (1) securing the inner timing cover to the cylinder block
- the lower belt guard.

INSTALLING THE TIMING BELT

Install:

- the screw securing the inner timing cover to the cylinder head
- the idler pulley. Tighten to **25 Nm**
- the timing belt tensioner. Screw in the center screw by hand. Ensure that the fork on the tensioner centers above the cylinder block rib. Check that the Allen hole on the eccentric is at "10 O'CLOCK".

Continue with, see **TIMING BELT, REPLACING** from section installing the timing belt.

AFFECTED ENGINES: B62XXXX

NOTE: As the illustrations in this service information are used for different model years and / or models, some variation may occur. However, the essential information in the illustrations is always correct.

PREPARATION

Fig. 34: Engine Compartment Components
Courtesy of VOLVO CARS CORPORATION

CAUTION: Remove the ignition key.

Remove

- the screw holding the engine stabilizer brace to the bracket on the engine
- the screws holding the engine stabilizer brace to the suspension turrets
- the engine stabilizer brace.

Applies only to B6xx4T engines:

Remove the plastic pipes between the turbocharger (TC) and charge air cooler (CAC) and between the air

cleaner (ACL) and turbocharger (TC). Put them to one side.

Remove the clamp from the intake manifold for the turbocharger (TC) for cylinders 1, 2 and 3. Turn the upper section of the pipe towards the firewall.

Fig. 35: Expansion Tank
Courtesy of VOLVO CARS CORPORATION

Relieve the load from the belt tensioner. Remove the auxiliaries belt.

Remove the upper timing belt cover.

Remove the front timing belt cover.

Lift up the servo reservoir and place it on top of the engine.

NOTE: Ensure that the oil does not leak from the ventilation hole in the filler cap.

Seal the hose between the expansion tank and the radiator. Disconnect the hose at the tank.

Lift up the expansion tank and place it on top of engine.

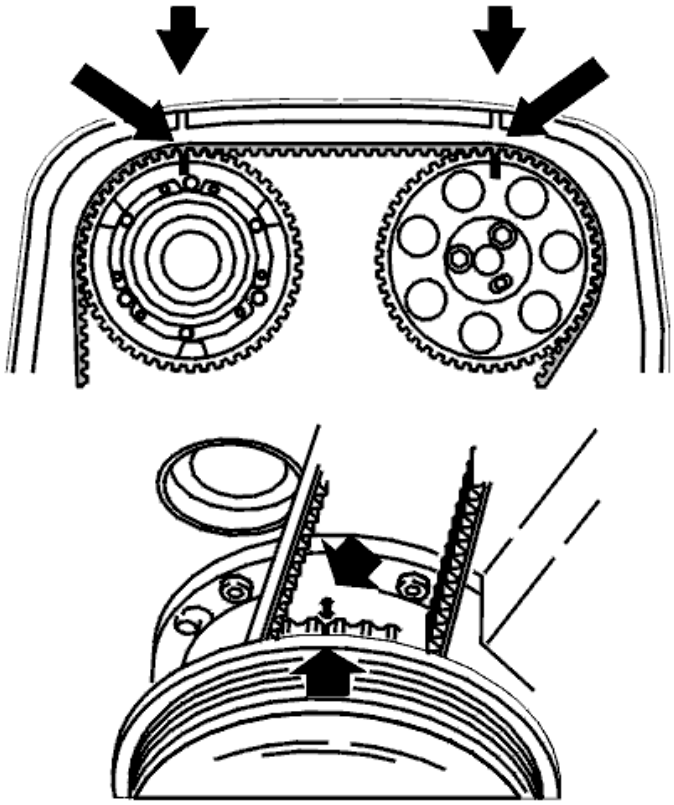

Fig. 36: Crankshaft And Camshafts Markings
Courtesy of VOLVO CARS CORPORATION

Raise the car.

Remove

- the right front wheel
- the plastic nuts on the cover in the fender liner.

Install the upper timing belt cover.

Turn the crankshaft clockwise until the markings on the crankshaft and camshaft pulleys correspond.

Turn the crankshaft a further 1/4 turn clockwise.

Then turn back counter-clockwise until the markings correspond.

Remove the upper timing belt cover.

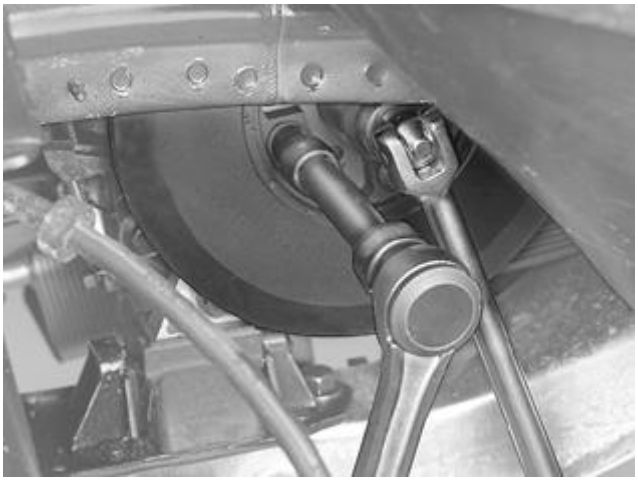

Fig. 37: Identifying Vibration Damper Screws, Counterhold And Crankshaft Central Nut
Courtesy of VOLVO CARS CORPORATION

Remove the 4 vibration damper screws. Counterhold the crankshaft central nut.

Remove

- the vibration damper
- the auxiliaries belt
- the belt cover behind the crankshaft pulley for the auxiliaries belt.

Spray universal oil or similar around the rubber sleeve on the underside of the oil pump.

Remove the rubber sleeve.

REMOVING THE TIMING BELT

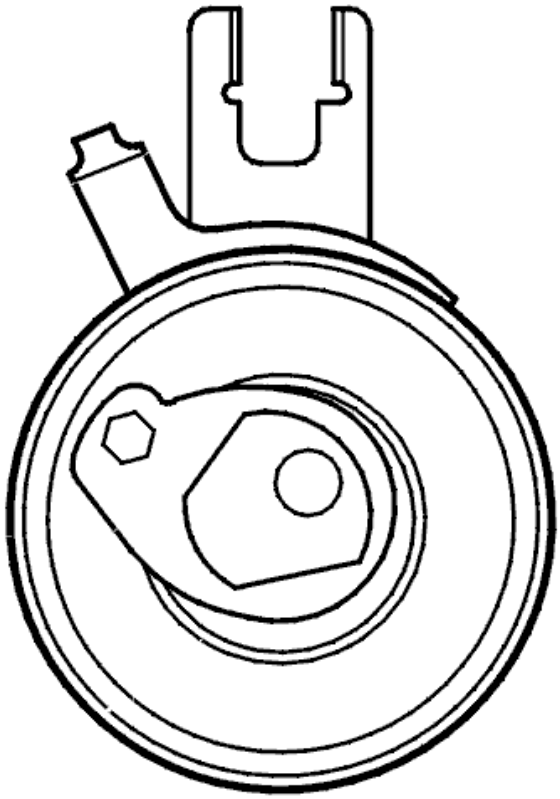

Fig. 38: Belt Tensioner
Courtesy of VOLVO CARS CORPORATION

Slacken off the belt tensioner

Slacken off the center screw for the belt tensioner slightly.

Hold the center screw still. Turn the tensioner eccentric **counter-clockwise** using a 6 mm Allen key. Turn to 10 o'clock.

Unhook and remove the timing belt.

CAUTION: Do not turn the camshafts or the crankshaft when the timing belt has been removed.

REMOVING THE TIMING BELT TENSIONER AND IDLER PULLEY

Remove the timing belt tensioner. Remove the idler pulley. Remove the screw securing the inner timing cover to the cylinder head.

Raise the car.

REMOVING AND INSTALLING COMPONENTS

REMOVING COMPONENTS

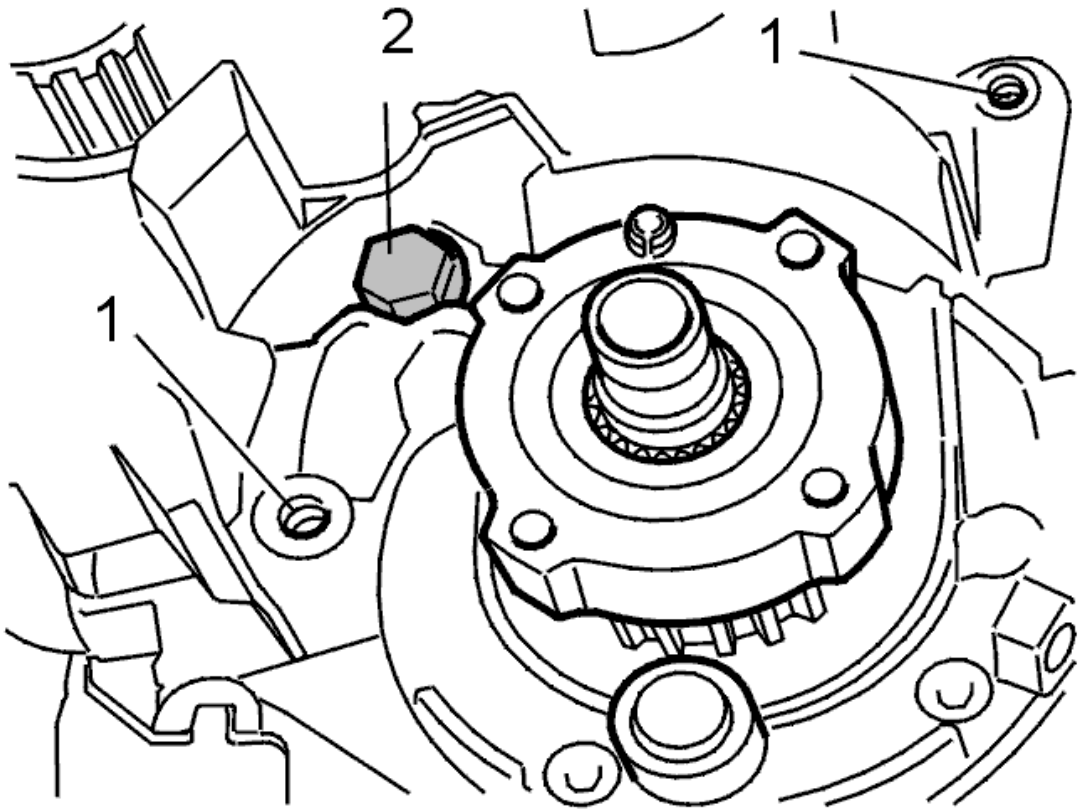

Fig. 39: Identifying Piston Cooling Valve And Inner Timing Cover Screws
Courtesy of VOLVO CARS CORPORATION

Remove:

- the two screws (1) securing the inner timing cover to the cylinder block
- the lower belt guard at the oil pump housing.

Press the inner timing cover off the flange around the coolant pump. Start at the lower edge of the pump.

Hold the cover out of the way. Remove the piston cooling valve (2) and the seal washer.

INSTALLING COMPONENTS

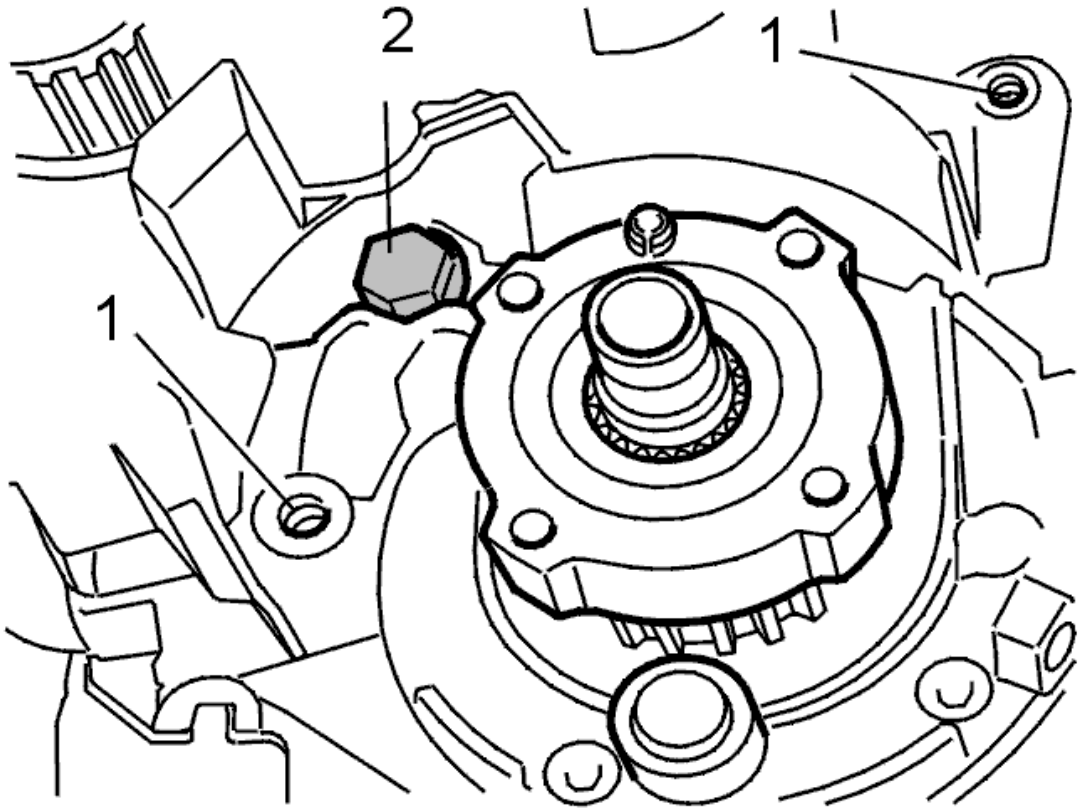

Fig. 40: Identifying Piston Cooling Valve And Inner Timing Cover Screws
Courtesy of VOLVO CARS CORPORATION

Install:

- a new piston cooling valve (2) with a new seal washer. Tighten to **35 Nm**
- the inner timing cover. First press the cover into place over the flange at the top of the coolant pump. Then press the remaining section of the cover into place over the flange around the pump. Check that the cover is correctly positioned
- the two screws (1) securing the inner timing cover to the cylinder block
- the lower belt guard.

INSTALL THE TIMING BELT TENSIONER

Install:

- the screw securing the inner timing cover to the cylinder head
- the idler pulley. Tighten to **25 Nm**
- the timing belt tensioner. Screw in the center screw by hand. Ensure that the fork on the tensioner centers above the cylinder block rib. Check that the Allen hole on the eccentric is at "10 O'CLOCK".

INSTALLING THE TIMING BELT

INSTALLING THE TIMING BELT

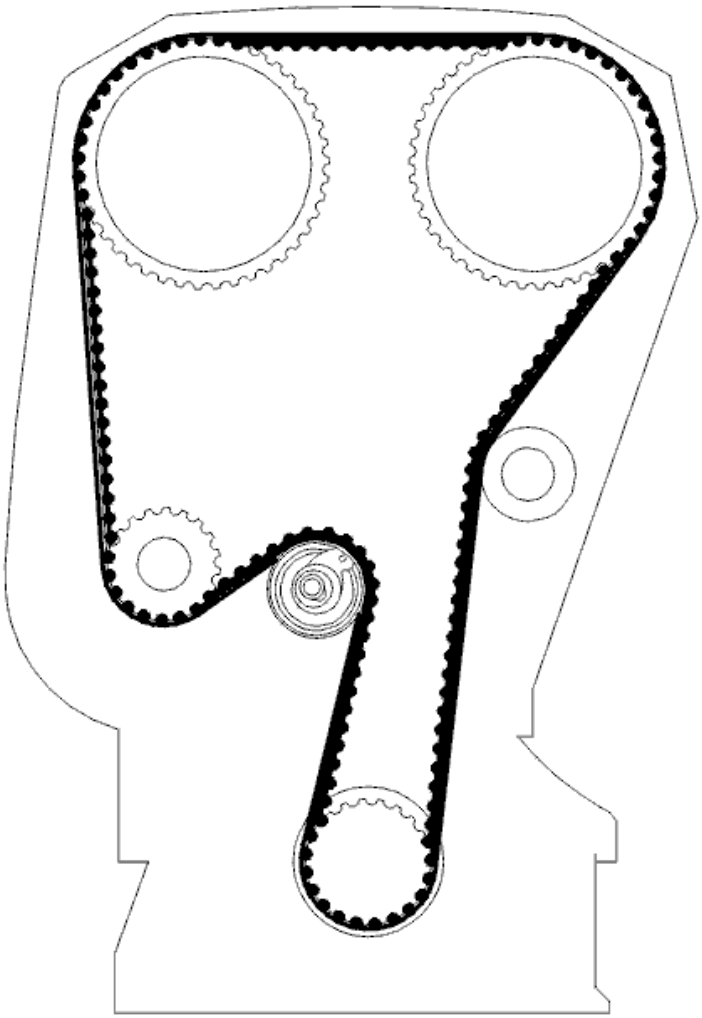

Fig. 41: Identifying Timing Belt Routing
Courtesy of VOLVO CARS CORPORATION

Install the belt in the following order:

- crankshaft
- the idler pulley
- intake cam
- exhaust cam
- water pump
- tension pulley.

NOTE: **The variable valve timing unit on B6304S engines does not have a return spring. The unit is easily dislodged when reinstalling the timing belt.**

TENSIONING THE TIMING BELT

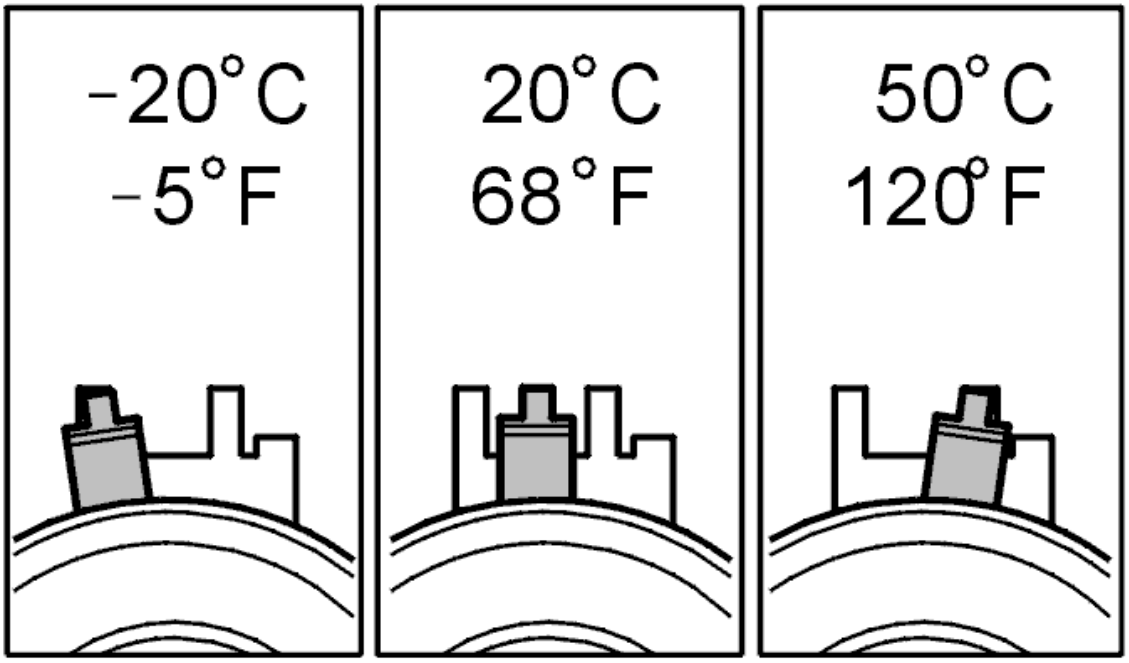

Fig. 42: Identifying Needle Position At Varying Temperatures
Courtesy of VOLVO CARS CORPORATION

This adjustment is carried out on a cold engine. A suitable temperature is approximately 20 ° C / 68 ° F.

At higher temperatures (with the engine at operating temperature or a high outside temperature for example) the indicator is further to the right.

The illustration shows the position of the indicator when aligning the timing belt tensioner at different temperatures.

Carefully turn the crankshaft clockwise until the timing belt is tensioned. The belt must be in tension between the intake camshaft pulley, the idler pulley and the crankshaft.

Hold the belt tensioner center screw secure. Turn the belt tensioner eccentric **clockwise** until the tensioner indicator passes the marked position.

Then turn the eccentric back so that the indicator reaches the marked position in the center of the window.

Hold the eccentric secure. Tighten the center screw to **25 Nm.**

Check that the indicator is in the correct position.

CHECK

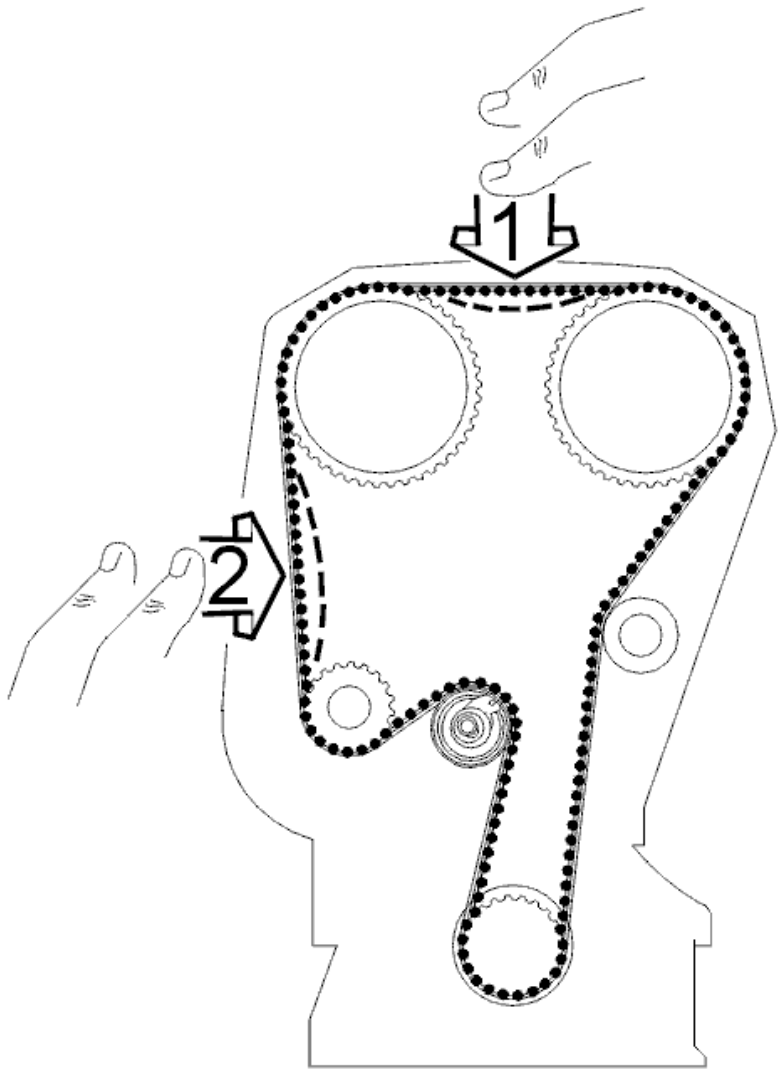

Fig. 43: Checking Timing Belt Tension
Courtesy of VOLVO CARS CORPORATION

Press the belt to check that the indicator on the tensioner moves easily.

Install the upper timing belt cover.

Turn the crankshaft 2 turns. Check that the markings on the crankshaft and camshaft pulley correspond.

Check that the indicator on the belt tensioner is within the marked area.

FINISHING

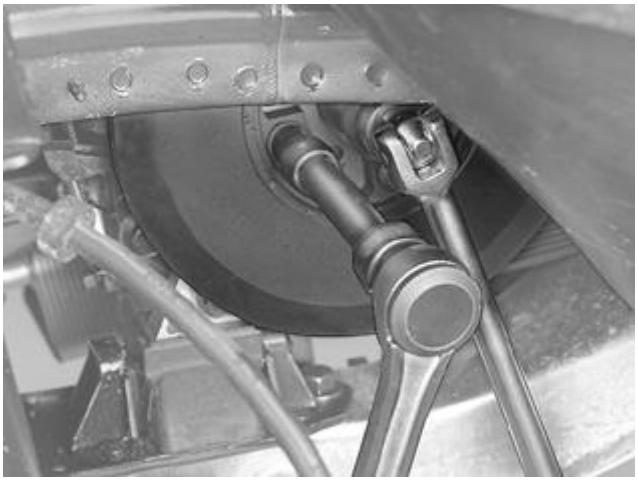

Fig. 44: Identifying Vibration Damper Screws, Counterhold And Crankshaft Central Nut
Courtesy of VOLVO CARS CORPORATION

Install the auxiliaries belt around the pulley on the crankshaft.

Install

- the rubber sleeve on the underside of the oil pump
- the vibration damper. Use **new screws** . Tighten to **35 Nm** . Angle-tighten **50°** . Use the crankshaft center nut as a counterhold
- the plastic nuts for the cover in the right-hand fender liner
- the right front wheel. See **WHEELS** .

Fig. 45: Expansion Tank And Servo Reservoir
Courtesy of VOLVO CARS CORPORATION

Lower the car.

Install

- the front timing belt cover.

Tension the auxiliaries belt.

Install

- the expansion tank
- the hose between the expansion tank and the radiator. Remove the lock grip pliers
- the servo reservoir
- the upper timing belt cover.

Applies only to B6xx4T engines:

Twist the intake pipe for the turbocharger for cylinders 1, 2 and 3 into position. Tighten the clamp.

Install the plastic hoses between the turbocharger (TC) and the charge air cooler and between the air cleaner (ACL) and the turbocharger (TC).

Tighten the hose clamps.

Fig. 46: Engine And Stabilizer Brace
Courtesy of VOLVO CARS CORPORATION

Install

- the engine stabilizer brace. Tighten to **50 Nm**
- the screw holding the engine stabilizer brace to the bracket on the engine. Tighten to **80 Nm** .

FINAL CHECK

Check and top up if required

- coolant level
- the servo fluid level.

Test drive the engine.

OIL PUMP / CRANKSHAFT SEAL, FRONT, REPLACING

Special tools:

see **9995433**

see **9986187**

see **9995919**

see **9995455**

see **9512050**

NOTE: Since the illustrations in this service information are used for different model years and/or models, some variation may occur. However, the essential information is always correct.

NOTE: If the oil pressure is low or if there is possibly a fault with the oil pump, measure the oil pressure

REMOVE ENGINE COMPONENTS

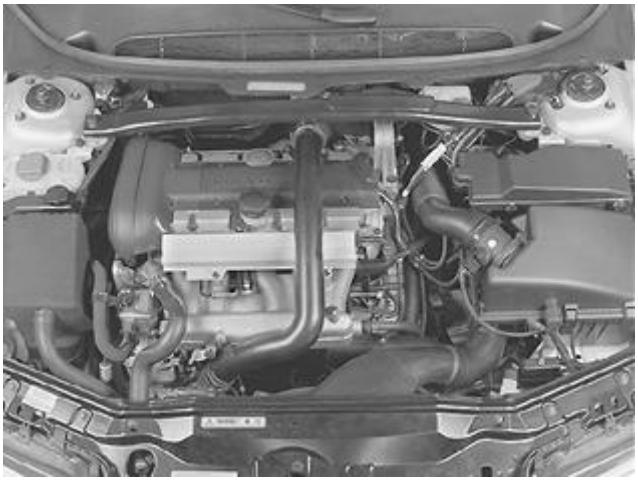

Fig. 47: Engine Compartment Components
Courtesy of VOLVO CARS CORPORATION

CAUTION: Remove the ignition key.

Remove

- the cross stay between the suspension turrets
- the upper timing belt cover
- the servo reservoir and expansion tank. Lift up and place on top of the engine.

WARNING: **Make sure that no power steering fluid is spilled. Extremely flammable.**

- the auxiliaries belt
- the front timing belt cover.

POSITION THE ENGINE ACCORDING TO THE MARKING

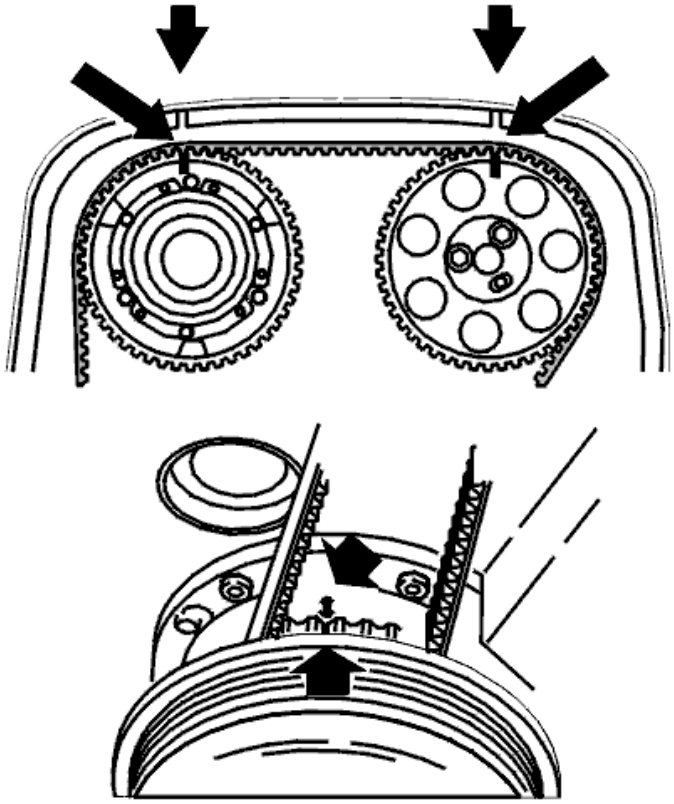

Fig. 48: Crankshaft And Camshafts Markings
Courtesy of VOLVO CARS CORPORATION

Raise the car

- Remove the right front wheel

- Install the upper timing belt cover
- Turn the crankshaft clockwise until the markings on the crankshaft and camshaft pulley correspond
- Turn a further 1/4 turn clockwise and then back counter-clockwise until the markings correspond
- Remove the upper camshaft cover.

REMOVE THE TIMING BELT

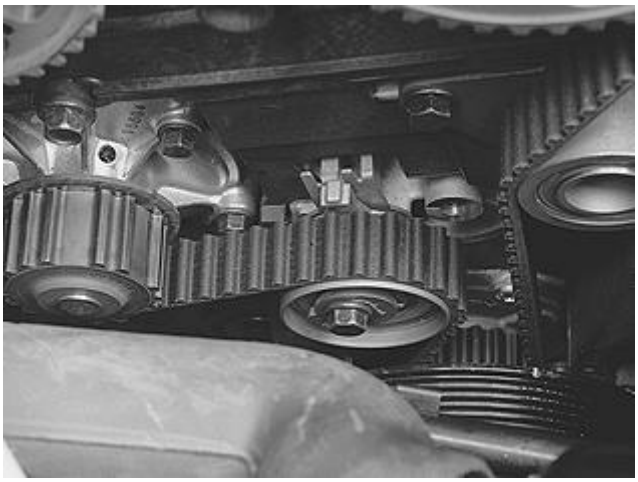

Fig. 49: Belt Between Intake Camshaft Pulley, Idler Pulley And Crankshaft
Courtesy of VOLVO CARS CORPORATION

- Slacken off the centre screw for the belt tensioner slightly
- Hold the centre screw still. Turn the tensioner eccentric clockwise to 10 o'clock using a 6 mm Allen key.
- Remove the timing belt.

REMOVE THE VIBRATION DAMPER

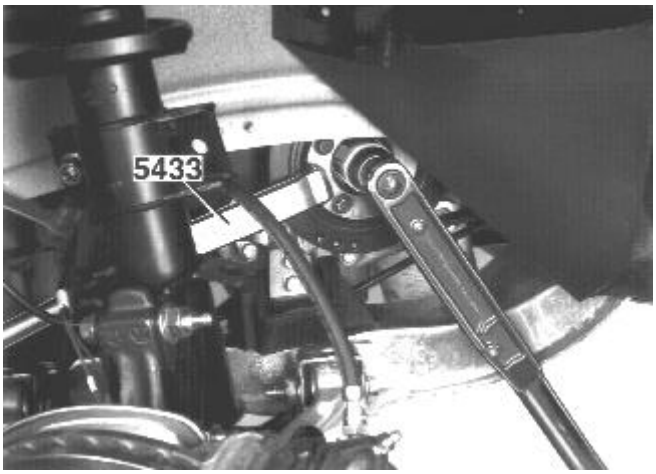

Fig. 50: Identifying Vibration Damper & Counterhold 9995433
Courtesy of VOLVO CARS CORPORATION

- Install counterhold see **9995433** .

- Counterhold and remove the crankshaft centre nut
- Work the vibration damper loose and remove by hand
- Remove the camshaft belt.

REMOVE THE CRANKSHAFT TIMING GEAR PULLEY

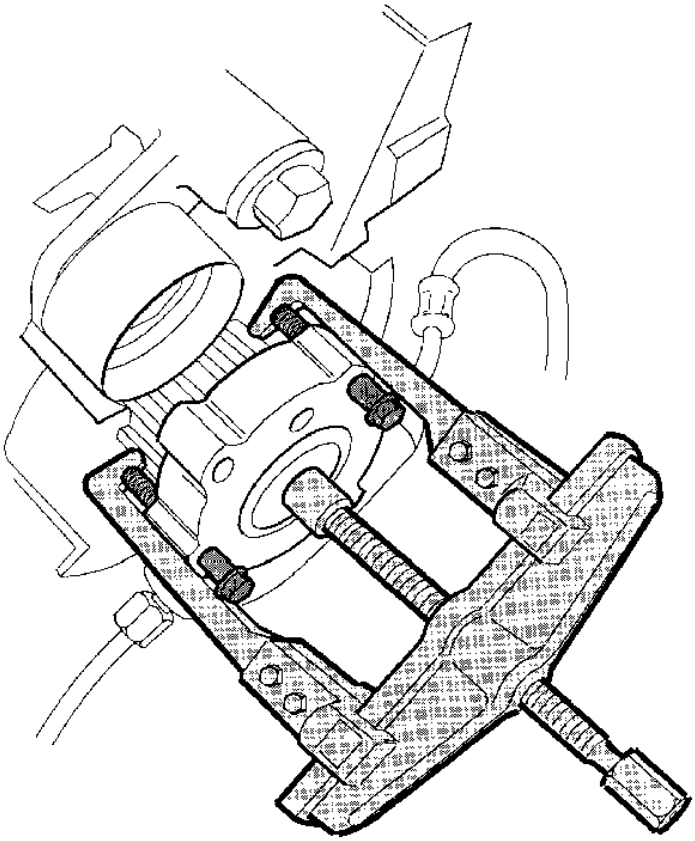

Fig. 51: Identifying Crankshaft Belt Pulley Removal
Courtesy of VOLVO CARS CORPORATION

- Use a universal puller see **9986187** and two of the vibration damper's screws.
- Tighten both the screws by hand to stop in the pulley.
- Install the puller so that the claws engage in the screws, not in the camshaft pulley.

NOTE: Make sure that the tool claws do not damage the gear's teeth.

WHEN ONLY REPLACING THE FRONT CRANKSHAFT SEAL

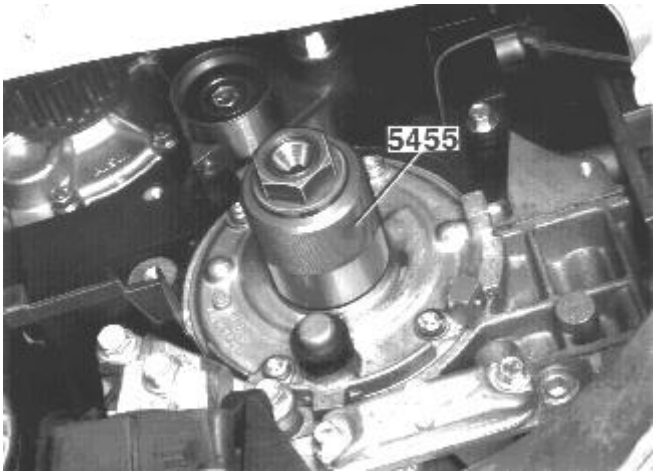

Fig. 52: Identifying Seal Installation Using Tool 9995455
Courtesy of VOLVO CARS CORPORATION

- Remove the old seal using a screwdriver or: see **9995919** .
- Clean the mating surface
- Grease and install a new seal.

  Use tool see **9995455** .

- Press in the seal using a drift and the crankshaft centre nut. As illustrated.

NOTE: **Make sure that the crankshaft does not rotate when pressing in the crankshaft seal.**

REMOVE THE OIL PUMP

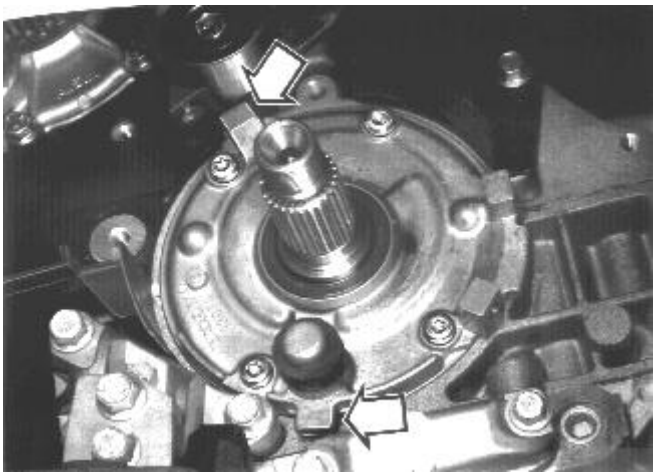

Fig. 53: Identifying Oil Pump Stop Lugs
Courtesy of VOLVO CARS CORPORATION

- Remove the four oil pump screws

- Remove the oil pump.

  Use a screwdriver and pry **carefully** at the stop lugs.

- Clean the gasket face and the mating surfaces.

INSTALL THE OIL PUMP

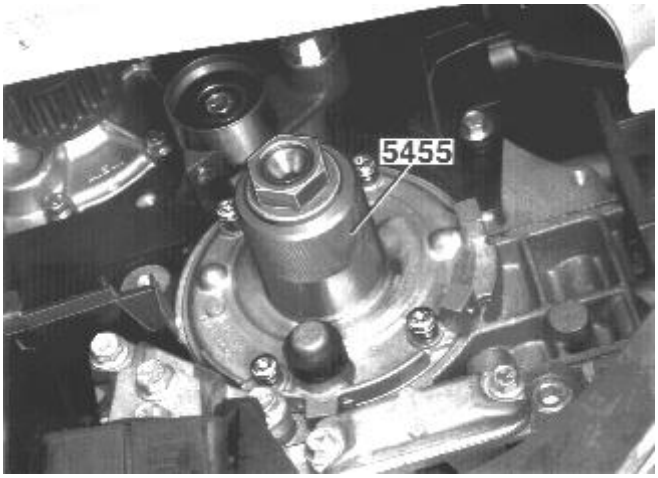

Fig. 54: Identifying Oil Pump And Special Tool 999 5455
Courtesy of VOLVO CARS CORPORATION

Install new oil pump

- Install a new gasket
- Carefully insert the oil pump over the end of the crankshaft.

NOTE: Make sure that the seal ring in the oil pump is not damaged during installation

- Install 4 new screws as guides
- Pull in the oil pump with drift see **9995455** and the crankshaft centre nut.

NOTE: Make sure that the crankshaft does not rotate when pulling in the pump.

- Tighten the screws crosswise. Tighten to **10 Nm**
- Install the crankshaft timing gear pulley.

  Carefully tap alternately around the pulley until end position is reached.

NOTE: The timing gear pulley only fits in one position on the crankshaft's splines.

INSTALL THE VIBRATION DAMPER

Fig. 55: Identifying Vibration Damper & Counterhold 9995433
Courtesy of VOLVO CARS CORPORATION

Install the vibration damper.

Tighten the centre nut to **180 Nm** .

Use counterhold see **9995433** .

Remove the counterhold. Tighten the screws. Tighten to **25 Nm** .

Angle-tighten **30°** . Use bevel protractor see **9512050** .

INSTALL THE TIMING BELT

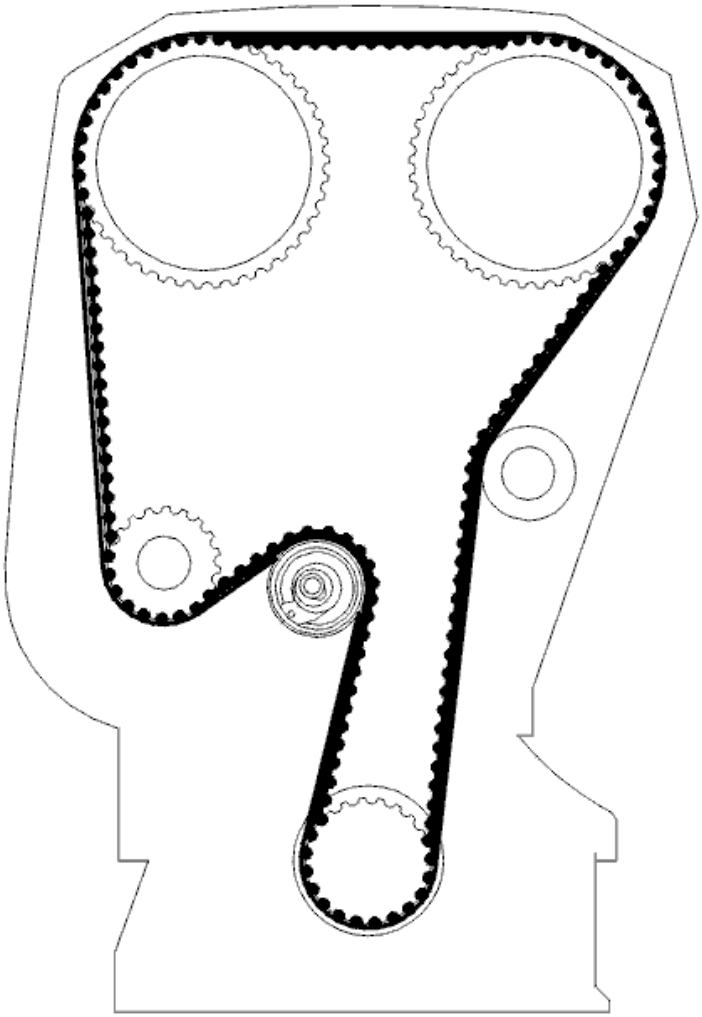

Fig. 56: Camshaft Belt Routing
Courtesy of VOLVO CARS CORPORATION

Install the upper timing belt cover.

Check that the markings on the crankshaft and camshaft timing gear pulley correspond.

Install the belt in the following order:

- crankshaft
- the idler pulley
- intake camshaft
- exhaust camshaft
- water pump
- belt tensioner.

TIGHTEN THE TIMING BELT

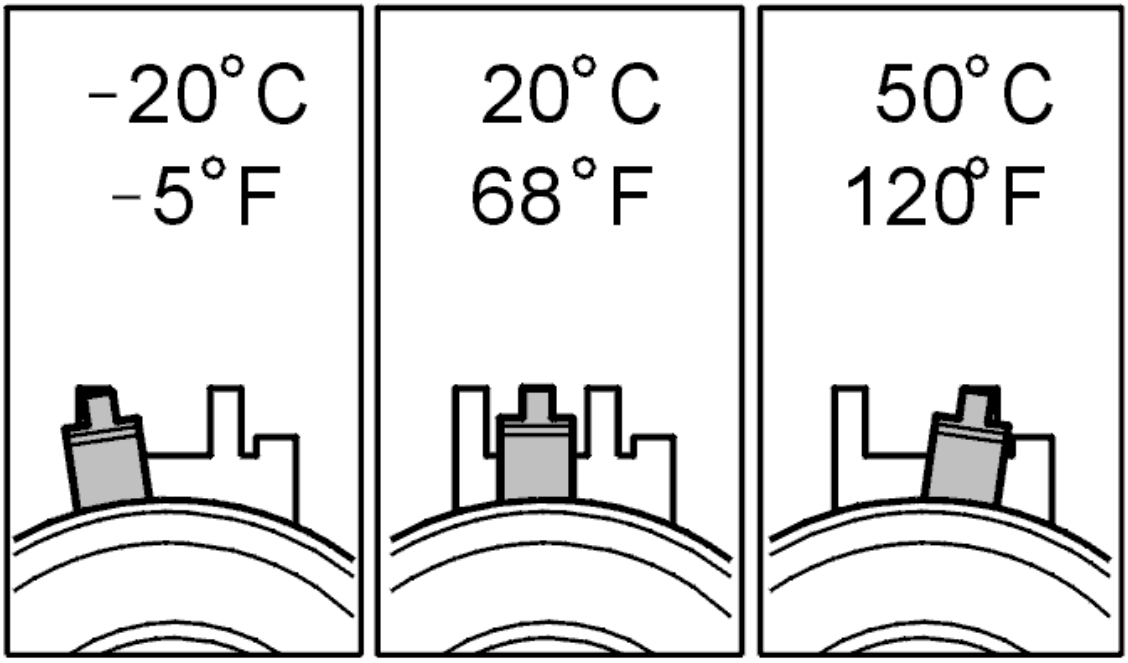

Fig. 57: Identifying Needle Position At Varying Temperatures
Courtesy of VOLVO CARS CORPORATION

This adjustment is carried out on a cold engine. A suitable temperature is approximately 20°C/68°F.

At a higher temperature, for example with a warm engine or a higher ambient temperature, the needle is further to the right.

The illustration shows the position of the indicator when aligning the timing belt tensioner at different temperatures.

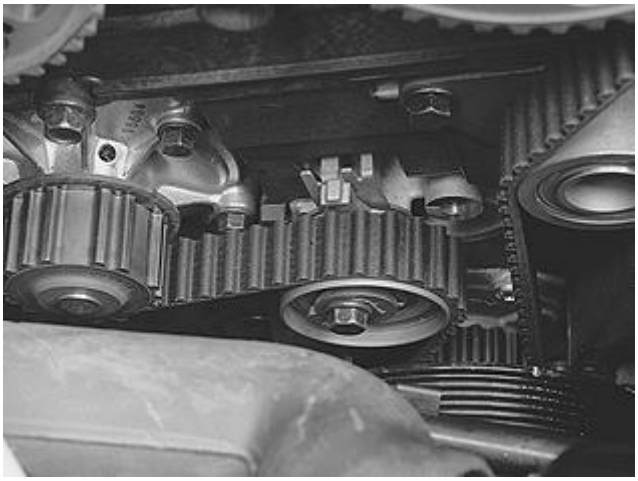

Fig. 58: Belt Between Intake Camshaft Pulley, Idler Pulley And Crankshaft
Courtesy of VOLVO CARS CORPORATION

Carefully turn the crankshaft clockwise until the timing belt is in the tensioned position (tensioned between the intake cam, idler pulley and crankshaft).

Hold the belt tensioner centre screw secure. Turn the belt tensioner eccentric counter-clockwise until the tensioner indicator passes the marked position. Turn the eccentric back until the indicator reaches the marked position in the centre of the window.

Hold the eccentric secure and tighten the centre screw. Tighten to **20 Nm** . Ensure that the indicator is in the correct position.

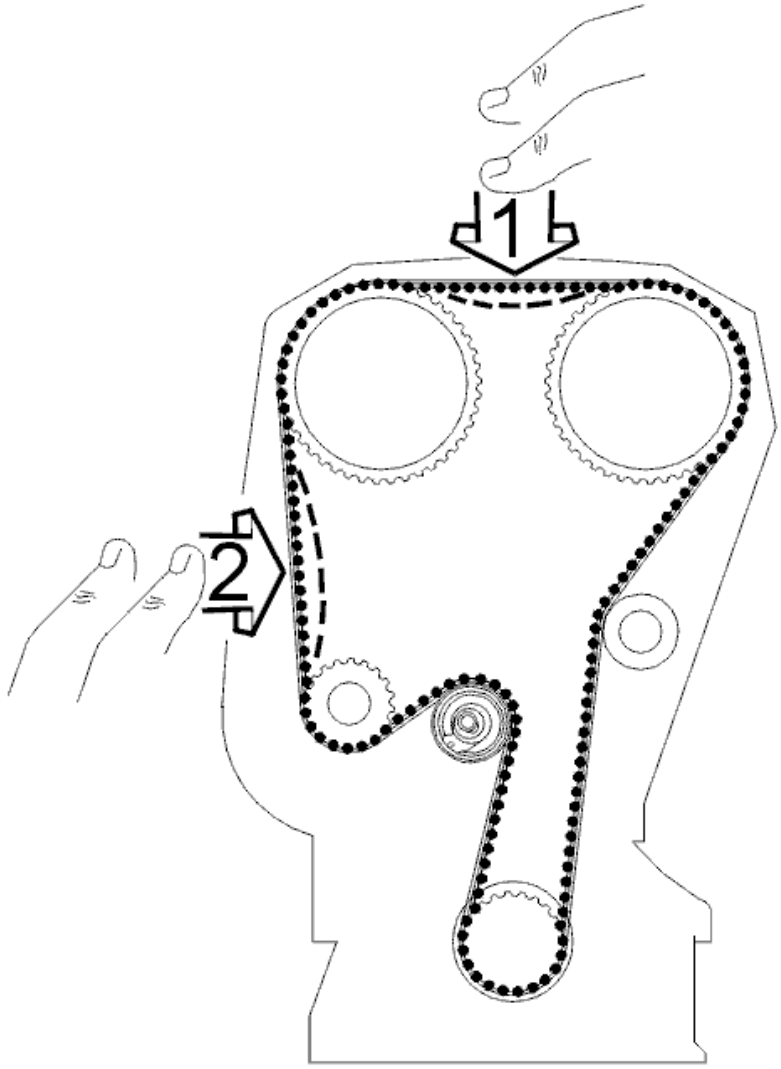

Fig. 59: Pressing Belt To Check That Indicator On Tensioner Moves Easily
Courtesy of VOLVO CARS CORPORATION

Press the belt to, see that the indicator on the tensioner moves easily.

Position the upper camshaft cover.

Turn the crankshaft two turns. Check that the markings on the crankshaft and camshaft pulley correspond.

Check that the indicator on the belt tensioner is within the marked position.

Install

- the nuts for the cover in the wing liner
- the wheel. See **WHEELS** .

FINISHING

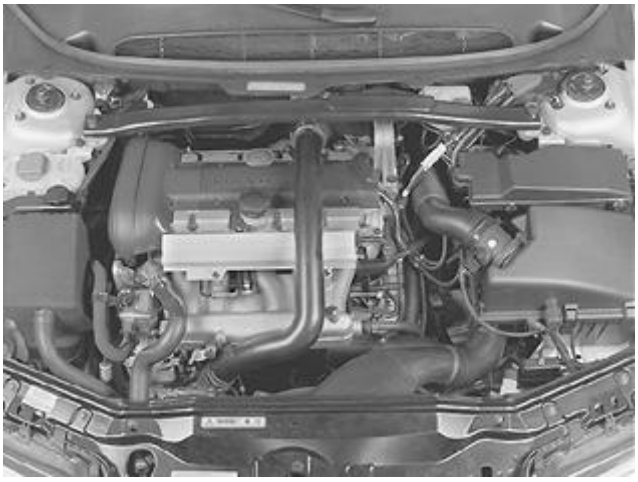

Fig. 60: Engine Compartment Components
Courtesy of VOLVO CARS CORPORATION

Install:

- front timing belt cover.

  Tighten to **12 Nm.** .

- the upper timing belt cover
- the auxiliaries belt
- the expansion tank and servo reservoir.

  NOTE: Make sure that the hoses are positioned correctly.

- the cross member. Tighten the screws at the suspension turret to **50 Nm** and the screw for the engine bracket to **80 Nm** .

CARRY OUT A FUNCTION TEST

- Check the oil level and top up if required.
- Start the engine.
- Check that there is no oil leakage.

  Stop the engine and give the oil time to run down into the oil trough.

  Then check the oil level.

  Top up if necessary.

  Wipe the engine compartment clean.

Make sure that the steering wheel and gear lever are clean.

OIL PUMP AND LINE (B6294T; 2003-2006)

PISTON COOLING VALVES, REPLACING

see **PISTON COOLING VALVES, REPLACING**

OIL PUMP, REPLACING

Special tools:

see **9995304**

see **9995919**

see **9995455**

see **9995433**

REMOVAL

NOTE: **As the illustrations in this service information are used for different model years and / or models, some variation may occur. However, the essential information in the illustrations is always correct.**

PREPARATION

Remove the timing belt. See **REMOVAL** .

Check the tensioner and idler pulleys. See **CHECKING THE TENSIONER PULLEY AND IDLER PULLEY** .

Fig. 61: Pulling Away Timing Gear Pulley Using Puller 999 5304

Courtesy of VOLVO CARS CORPORATION

Carefully pull crankshaft timing gear pulley free. Use puller see **9995304** .

REMOVING OIL PUMP

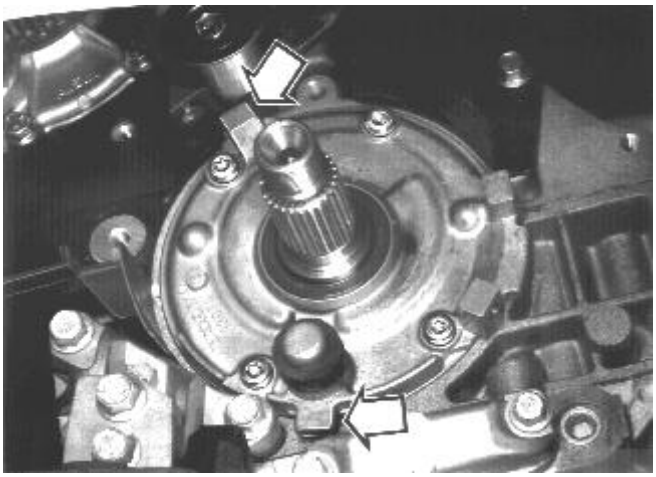

Fig. 62: Identifying Oil Pump Stop Lugs
Courtesy of VOLVO CARS CORPORATION

Remove the four oil pump screws.

Carefully pry upward diagonally between the stop lugs and the cylinder block.

Lift out the oil pump.

INSTALLATION

NOTE: For tightening torques, see TIGHTENING TORQUE .

INSTALLING THE OIL PUMP

Fig. 63: Identifying Oil Pump And Special Tool 999 5455
Courtesy of VOLVO CARS CORPORATION

Install a **new gasket** .

Carefully insert the oil pump over the end of the crankshaft.

NOTE: The sealing ring in the oil pump is very easy to damage if not installed correctly.

Install four **new screws** as a guide.

Pull in the oil pump with drift see **9995455** and the crankshaft center nut.

Tighten the oil pump screw. Tighten to **10 Nm** .

Install the timing gear pulley. Carefully tap alternately around the timing gear pulley until reaching its end position.

NOTE: The timing gear pulley can only be in one position on the crankshaft end splines.

FINISHING

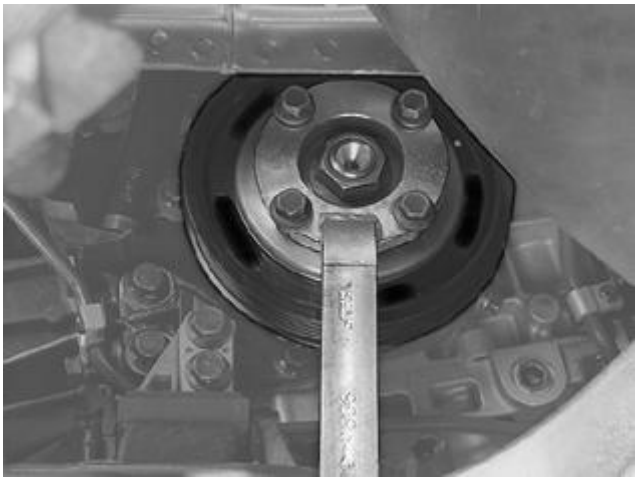

Fig. 64: Installing Pulley For Auxiliaries Belt
Courtesy of VOLVO CARS CORPORATION

Install a **new timing belt** . See **INSTALLATION** .

Install the pulley for the auxiliaries belt. Locate the steering gear on the locating pin in the timing gear pulley.

Install the auxiliaries belt.

Install counterhold see **9995433** .

Tighten crankshaft center nut. See **SUMMARY OF TIGHTENING TORQUES FOR SPECIFIC COMPONENTS** .

Install the vibration damper. See **SUMMARY OF TIGHTENING TORQUES FOR SPECIFIC COMPONENTS** . Use the crankshaft center nut as a counterhold.

FINAL CHECK

Check the engine oil level. Top up if necessary.

Test drive the engine.

OIL PUMP AND LINE (B6324S; 2007-2010)

OIL PUMP

Special tools	
	T9997313 EXTRACTOR **Tool number:** T9997313 **Tool description:** EXTRACTOR **Tool boards:**
	T9813134 DIAL INDICATOR **Tool number:** T9813134 **Tool description:** DIAL INDICATOR **Tool boards:**
	T9999696 MAGNETIC BASE **Tool number:** T9999696 **Tool description:** MAGNETIC BASE **Tool boards:**
	T9995971 PLATE (FOR MAGNETIC BASE) **Tool number:** T9995971 **Tool description:** PLATE (FOR MAGNETIC BASE) **Tool boards:**

NOTE: Removal steps in this procedure may contain installation details.

Remove the oil pan. See **OIL PAN** .

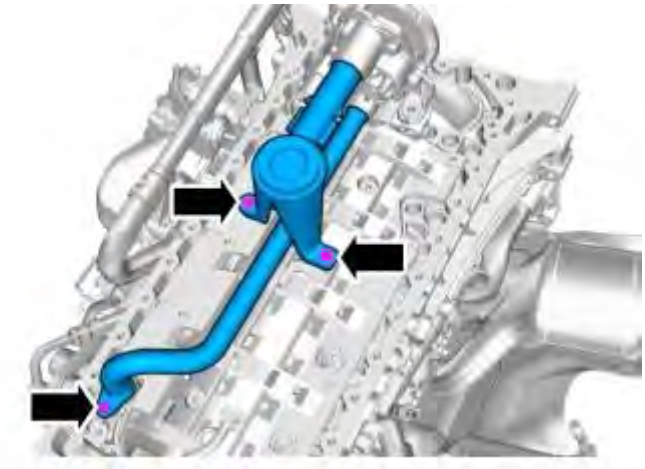

Fig. 65: View With Oil Pan Removed
Courtesy of VOLVO CARS CORPORATION

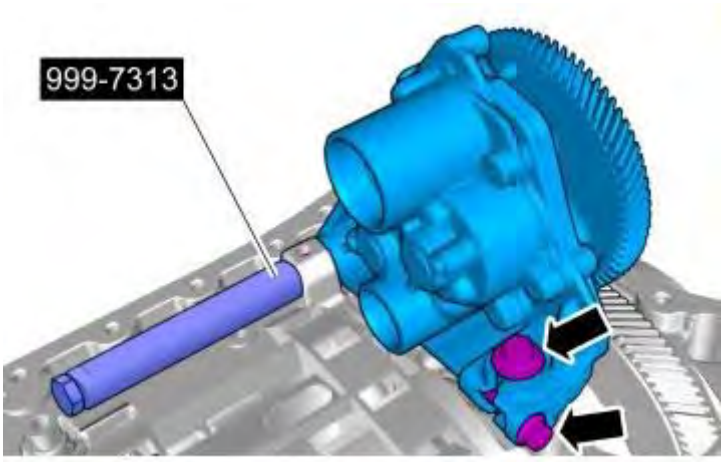

Fig. 66: Identifying Pulling Tool 9997313
Courtesy of VOLVO CARS CORPORATION

see **9997313**

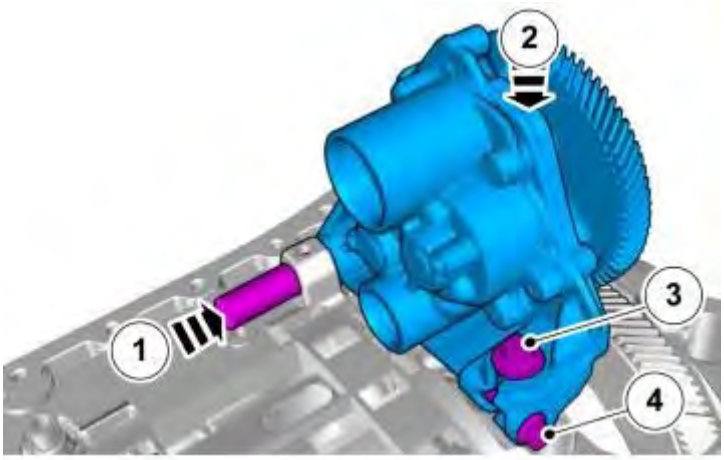

Fig. 67: Identifying Oil Pump Mounting
Courtesy of VOLVO CARS CORPORATION

Using Fig. 67 as a guide, install the following items: 1-4 .

NOTE: Only tighten the bolt (3) finger tight at this stage.

NOTE: Only tighten the bolt (4) finger tight at this stage.

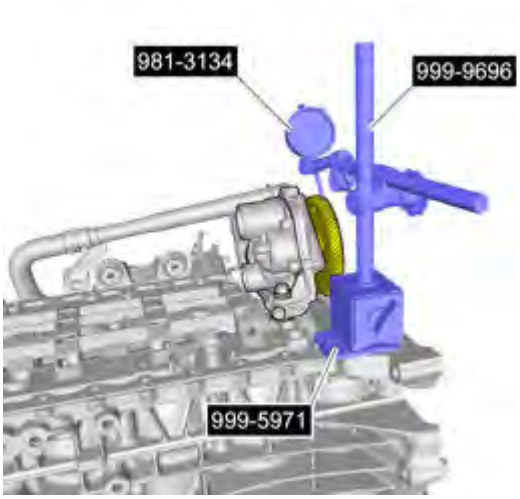

Fig. 68: Identifying Dial Indictor with Magnetic Base
Courtesy of VOLVO CARS CORPORATION

see **9813134** see **9999696** see **9995971**

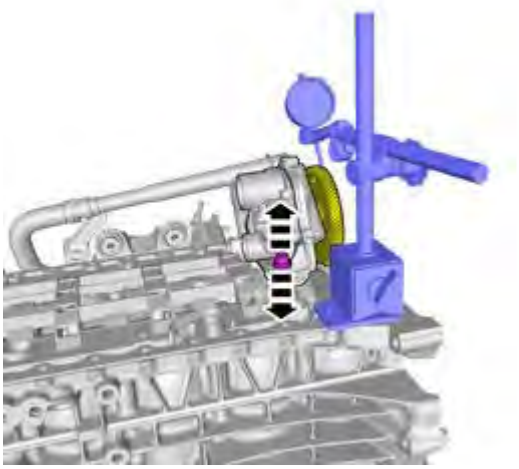

Fig. 69: Installation/Adjustment of Oil Pump
Courtesy of VOLVO CARS CORPORATION

See information about specifications, see **ENGINE**

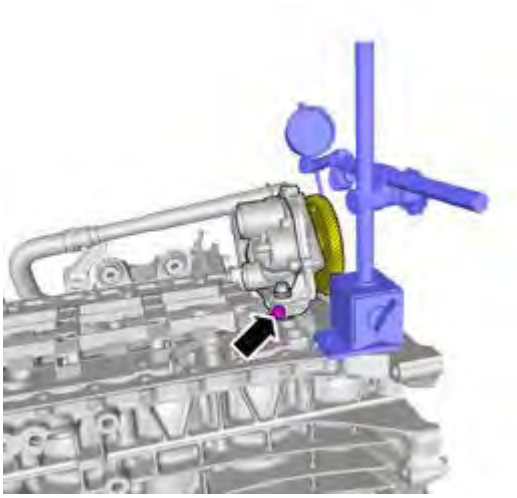

Fig. 70: Torque Bolt to Specification
Courtesy of VOLVO CARS CORPORATION

M6. See **TIGHTENING TORQUE**

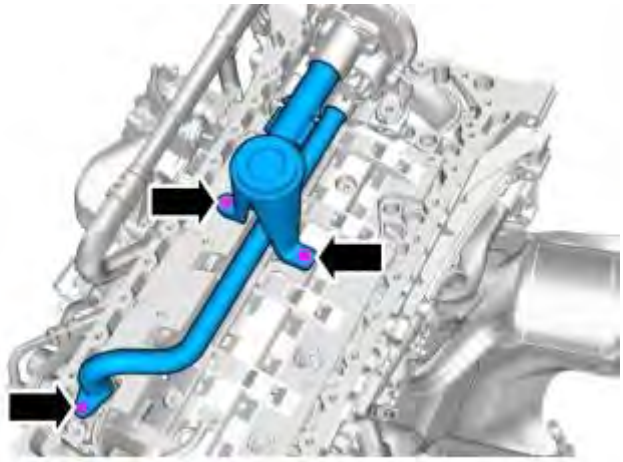

Fig. 71: View With Oil Pan Removed
Courtesy of VOLVO CARS CORPORATION

M7. See **TIGHTENING TORQUE**

Install the oil pan. See **OIL PAN** .

VALVE, PISTON COOLING

NOTE: Removal steps in this procedure may contain installation details.

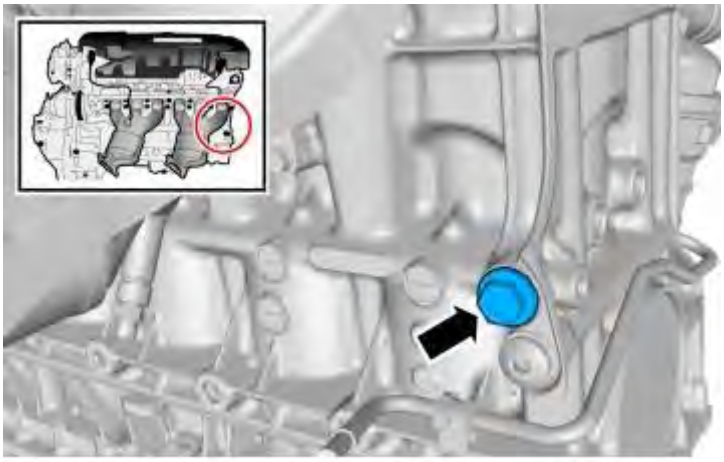

Fig. 72: Locating Piston Cooling Valve
Courtesy of VOLVO CARS CORPORATION

Piston cooling valve. See **SUMMARY OF TIGHTENING TORQUES FOR SPECIFIC COMPONENTS**

To install, reverse the removal procedure

OIL PUMP AND LINE (B6324S5; 2011-2012)

OIL PUMP

see **OIL PUMP**

VALVE, PISTON COOLING

see **VALVE, PISTON COOLING**

OIL PUMP AND LINE (B8444S; 2005-2011)

OIL PUMP, REPLACING

NOTE: **As the illustrations in this service information are used for different model years and / or models, some variation may occur. However, the essential information in the illustrations is always correct.**

PREPARATORY WORK

Remove:

- the timing chain. See **CAMSHAFT CHAIN, REPLACING** .

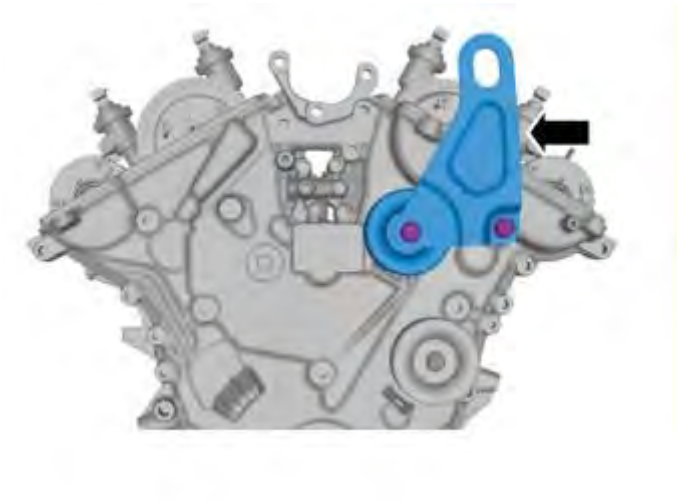

Fig. 73: View Of Engine Bracket
Courtesy of VOLVO CARS CORPORATION

Install the front engine bracket.

Remove the sump as shown: **OIL PAN, REPLACING** .

REMOVAL

REMOVING THE OIL PUMP

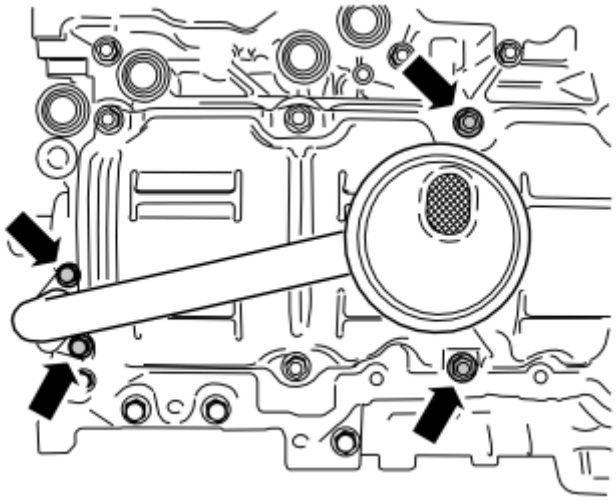

Fig. 74: Identifying Oil Sump
Courtesy of VOLVO CARS CORPORATION

Remove the oil delivery pipe, 2 x M6 and 2 x M8. Discard the gasket.

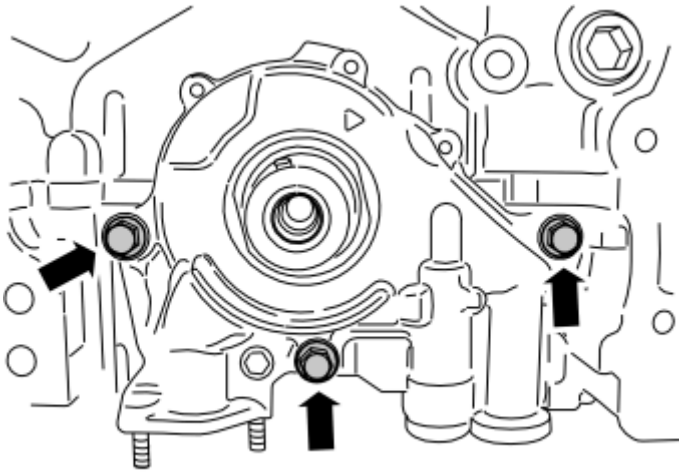

Fig. 75: Removing The Oil Pump
Courtesy of VOLVO CARS CORPORATION

Remove:

- the 3 x M7 screws
- the oil pump, discard the o-ring and the gasket for the oil delivery pipe.

INSTALLATION

NOTE: for tightening torques, see: GENERAL TIGHTENING TORQUE

INSTALLING OIL PUMP

Install:

- **new** O-ring
- the oil pump. Tighten. See: **SUMMARY OF TIGHTENING TORQUES FOR SPECIFIC COMPONENTS**
- the oil delivery pipe, 2 x M6 and 2 x M8, use **new** gasket, tighten
- the oil sump, see: **OIL PAN, REPLACING**
- the timing chain .

GENERAL INFORMATION

Standard parts, service and maintenance material

AUXILIARIES BELT / BELT TENSIONER, REPLACING

NOTE: **The illustrations in this service information are used for different model years and / or models. Some variation may occur. However, the essential information in the illustrations is always correct.**

REMOVAL

REMOVING THE AUXILIARIES BELT

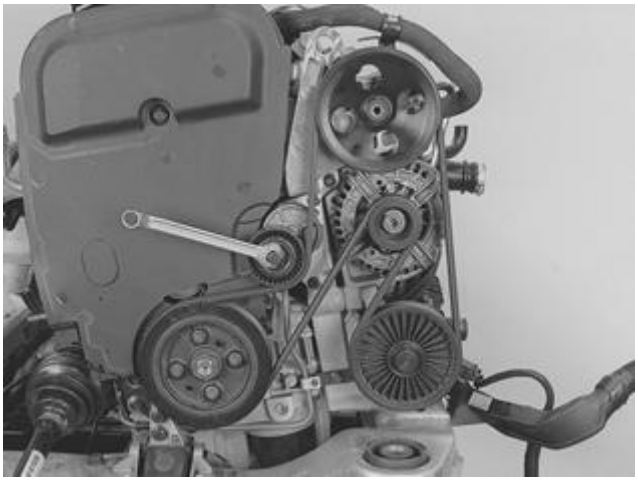

Fig. 1: Identifying Auxiliaries Belt And Pulleys

Remove:

- the plastic cover on the belt tensioner using a small screwdriver. Use a wrench and turn clockwise as far as possible to relieve the load on the belt
- the belt.

REPLACING THE BELT TENSIONER

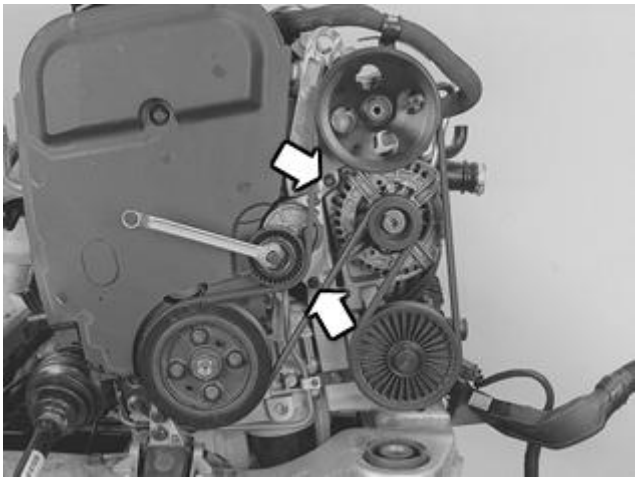

Fig. 2: Belt Tensioner Mounting Screws

Remove:

- both mounting screws from the auxiliaries belt bracket for the belt tensioner
- the belt tensioner. Install the new belt tensioner. Tighten.

INSTALLATION

NOTE: For tightening torques, see TIGHTENING TORQUE .

INSTALLING THE AUXILIARIES BELT

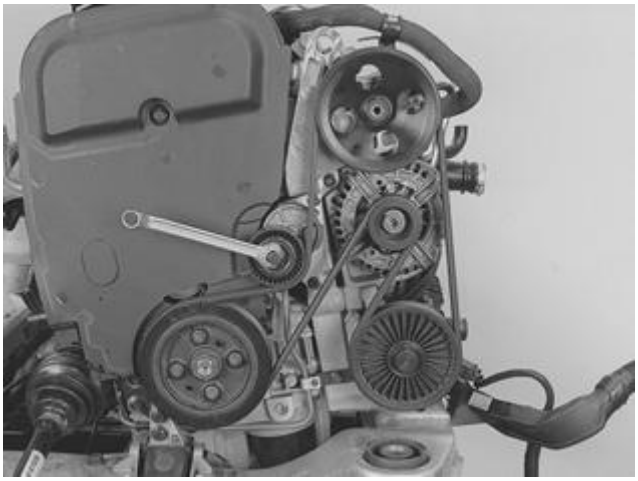

Fig. 3: Identifying Auxiliaries Belt And Pulleys

CAUTION: Ensure that the belt is correctly seated in all the grooves on each pulley.

Use a wrench and turn the belt tensioner clockwise as far as possible.

Install the belt as illustrated.

Install the plastic cover on the belt tensioner.

CHECKING WORK

Start the engine.

Check the rotation of the belt and the function of the belt tensioner.

ENGINE

Starting System - Design and Function

STARTER MOTOR (2003-2012)

DESIGN

see **DESIGN**

FUNCTION

see **FUNCTION**

SYSTEM OVERVIEW

see **SYSTEM OVERVIEW**

ENGINE

Starting System - Removal, replacement and installation

START OPERATION (2003-2012)

STARTER SWITCH, REPLACING

REMOVAL

START SWITCH

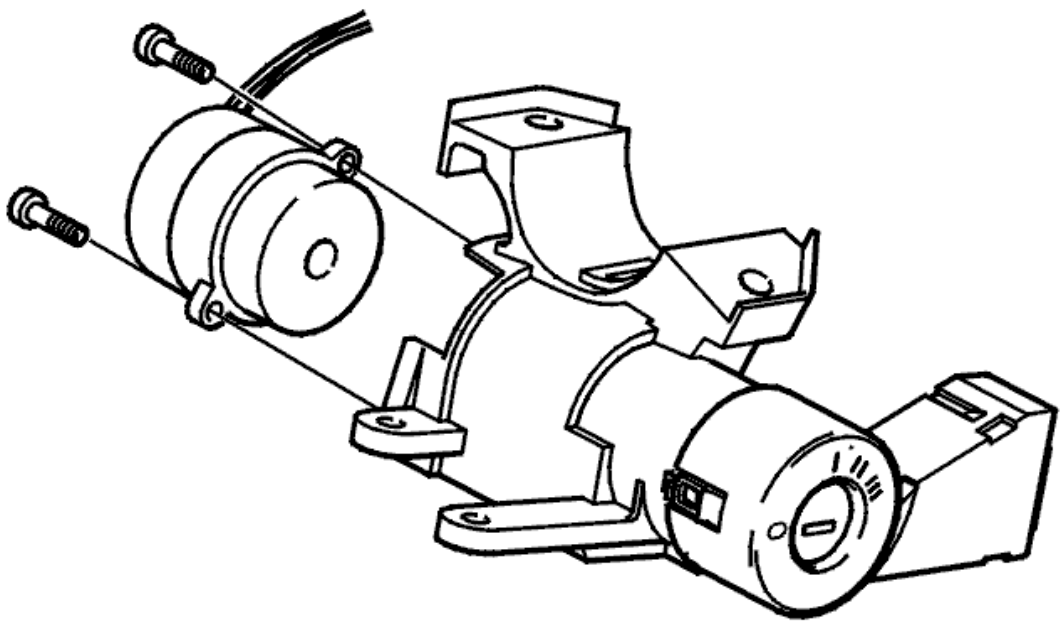

Fig. 1: Identifying Start Switch
Courtesy of VOLVO CARS CORPORATION

- Remove the steering column covers
- Disconnect the connector
- Remove the 2 screws
- Remove the starter switch.

INSTALLATION

START SWITCH

- In reverse order
- Install the steering column covers.

STARTER MOTOR (B6294T; 2003-2006)

STARTER MOTOR, REPLACING

REMOVAL

NOTE: **As the illustrations in this service information are used for different model years and / or models, some variation may occur. However, the essential information in the illustrations is always correct.**

REMOVING THE STARTER MOTOR

Disconnect the battery negative lead. First read, see **BATTERY, DISCONNECTING** .

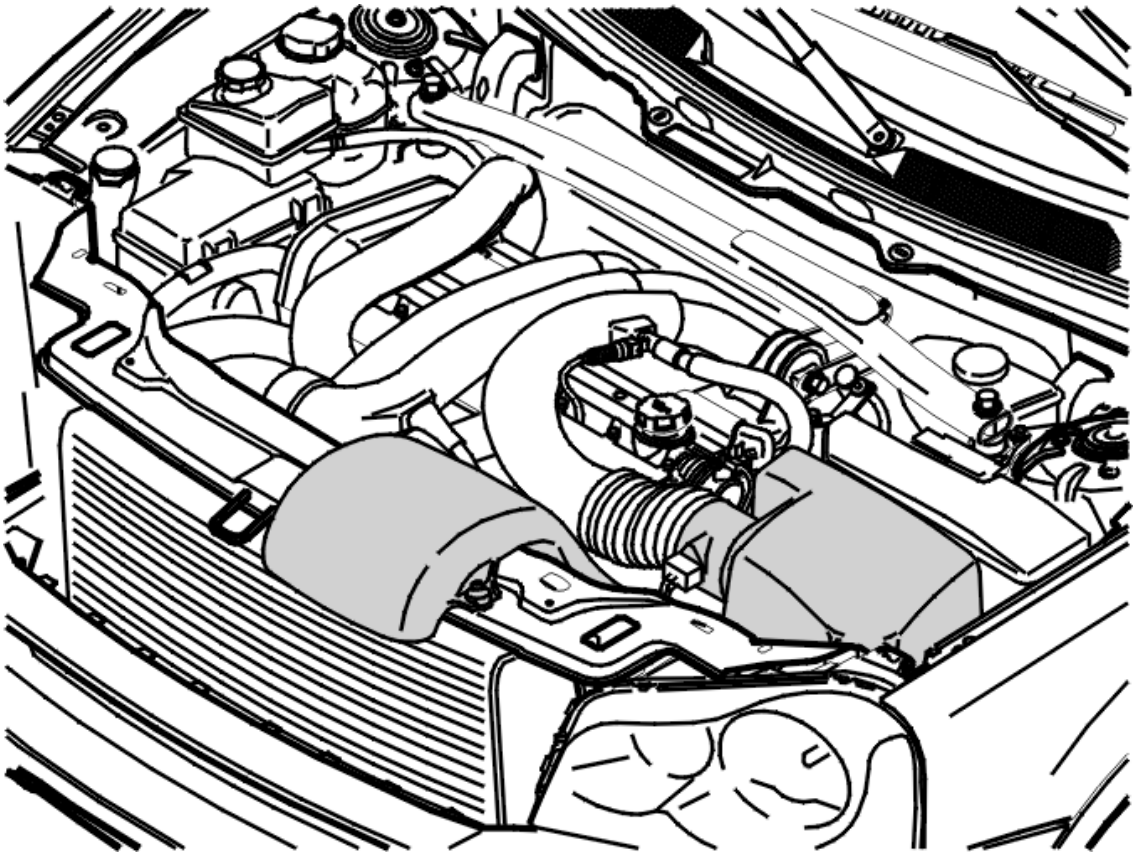

Fig. 2: View Of Air Intake Components
Courtesy of VOLVO CARS CORPORATION

Remove:

- the intake pipe between the front cover plate and the air cleaner (ACL)

- the connector from the mass air flow (MAF) sensor
- the turbocharger control valve from the air cleaner (ACL) housing
- the brake vacuum hose from the air cleaner (ACL)
- the hose clamp between the fresh air intakes
- mass air flow (MAF) sensor
- the air cleaner (ACL) by pulling it straight up.

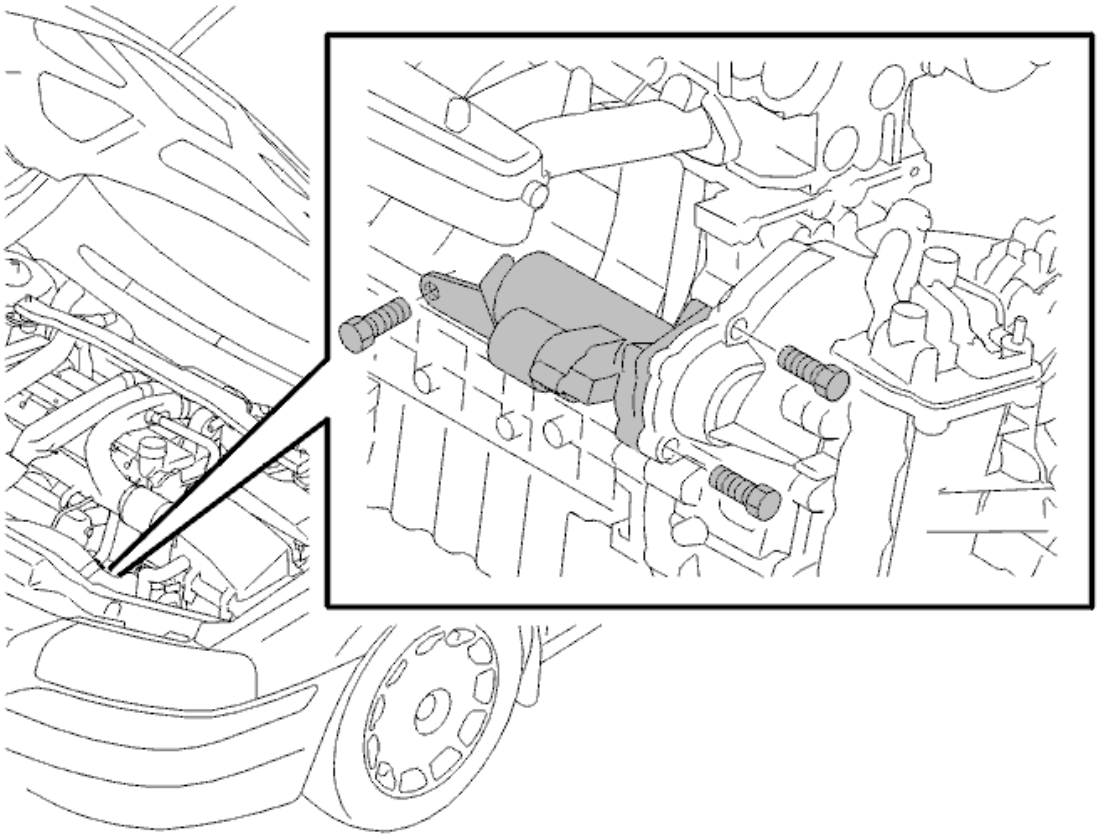

Fig. 3: Identifying Starter Motor And Screws
Courtesy of VOLVO CARS CORPORATION

Remove:

- the hose clamp on the charge air pipe on the throttle body (TB). Pull the pipe off the throttle body (TB)
- M8 screw for the bracket in the cylinder block
- x 2. M8 nuts in the bracket for the wiring and the engine coolant hose
- the blade terminal connector on the solenoid
- the nut for the positive lead
- x 2. the M10 screws for the mounting for the starter motor
- the starter motor.

REMOVING THE SOLENOID

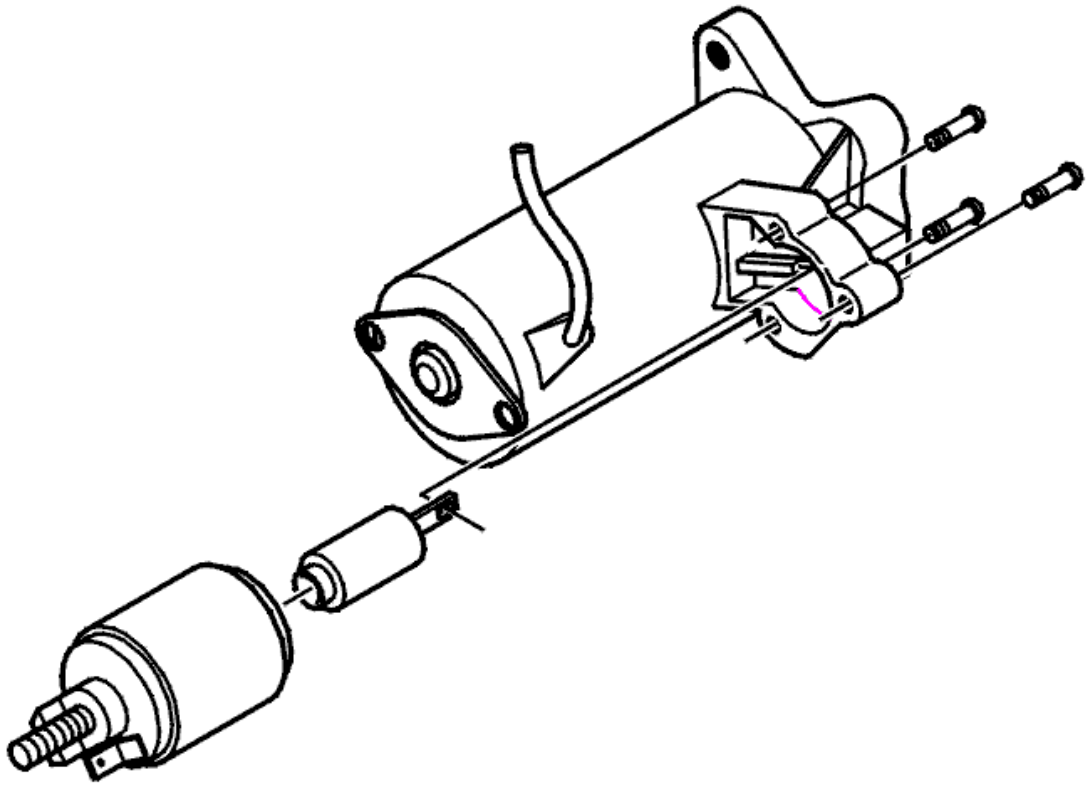

Fig. 4: Identifying Solenoid And Screws
Courtesy of VOLVO CARS CORPORATION

- Slacken off the nut. Remove the cable
- Remove the 3 screws
- Lift the solenoid. Unhook the solenoid and the spring and hook.

INSTALLATION

NOTE: For tightening torques, see TIGHTENING TORQUE .

INSTALLING THE SOLENOID

Transfer the support bracket to the new starter motor. Install the nuts loosely, they will be tightened later.

Install:

- the solenoid
- the screws
- the cable.

INSTALLING THE STARTER MOTOR

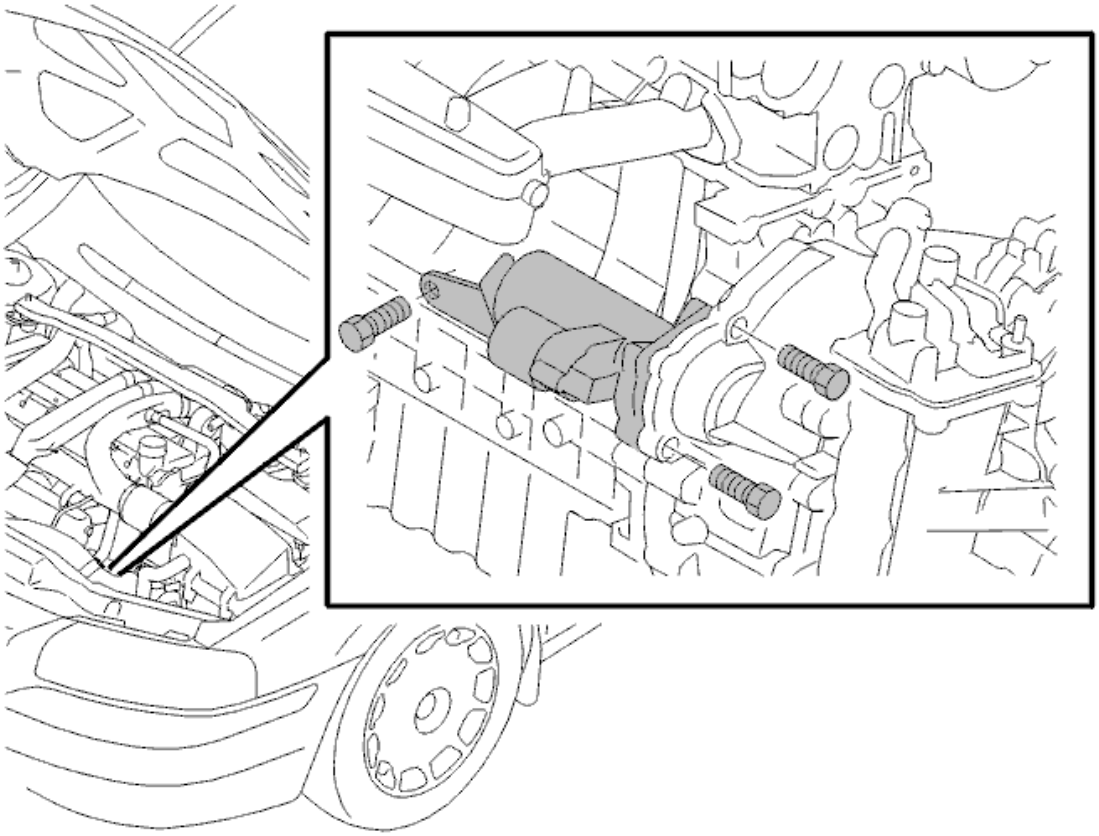

Fig. 5: Identifying Starter Motor And Screws
Courtesy of VOLVO CARS CORPORATION

Install:

- the starter motor
- x 2. the M10 screws in the transmission cover
- x 1. M8 screw for the support bracket on the engine block. Tighten x2. The M6 nuts for the bracket on the starter motor
- the bracket for the wiring. Use 2 M8 nuts.

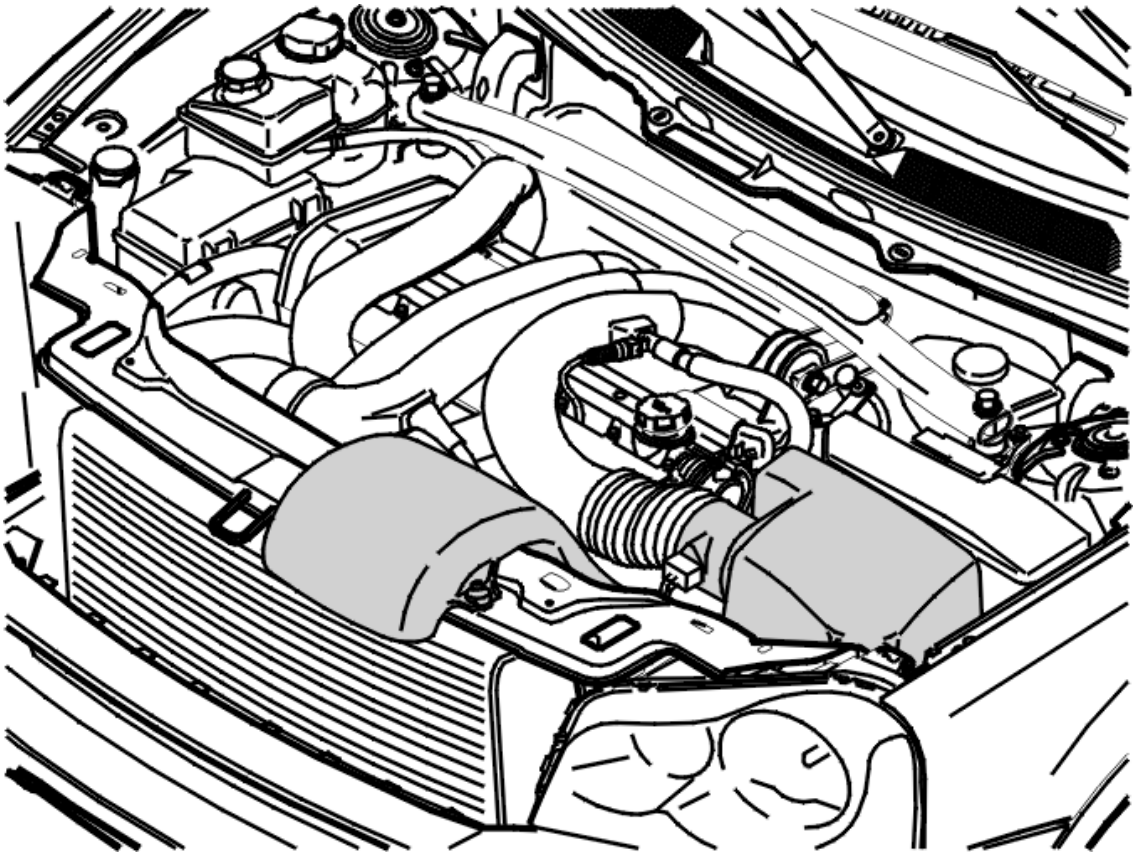

Fig. 6: View Of Air Intake Components
Courtesy of VOLVO CARS CORPORATION

Install:

- the battery positive lead
- the blade terminal connector on the solenoid
- the charge air pipe on the throttle body (TB)
- the air cleaner (ACL)
- the fresh air intake
- the turbocharger control valve
- the brake vacuum hose
- the mass air flow (MAF) sensor connector.

STARTER MOTOR (B8444S; 2005-2011)

STARTER MOTOR, REPLACING

Special tools:

see **9512957**

see **9512955**

NOTE: **The illustrations in this service information are used for different model years and/or models. Some variation may occur. However, the essential information in the illustrations is always correct.**

NOTE: **Lift the vehicle. See JACKING POINTS, BODY .**

REMOVING THE UPPER CROSS STAY

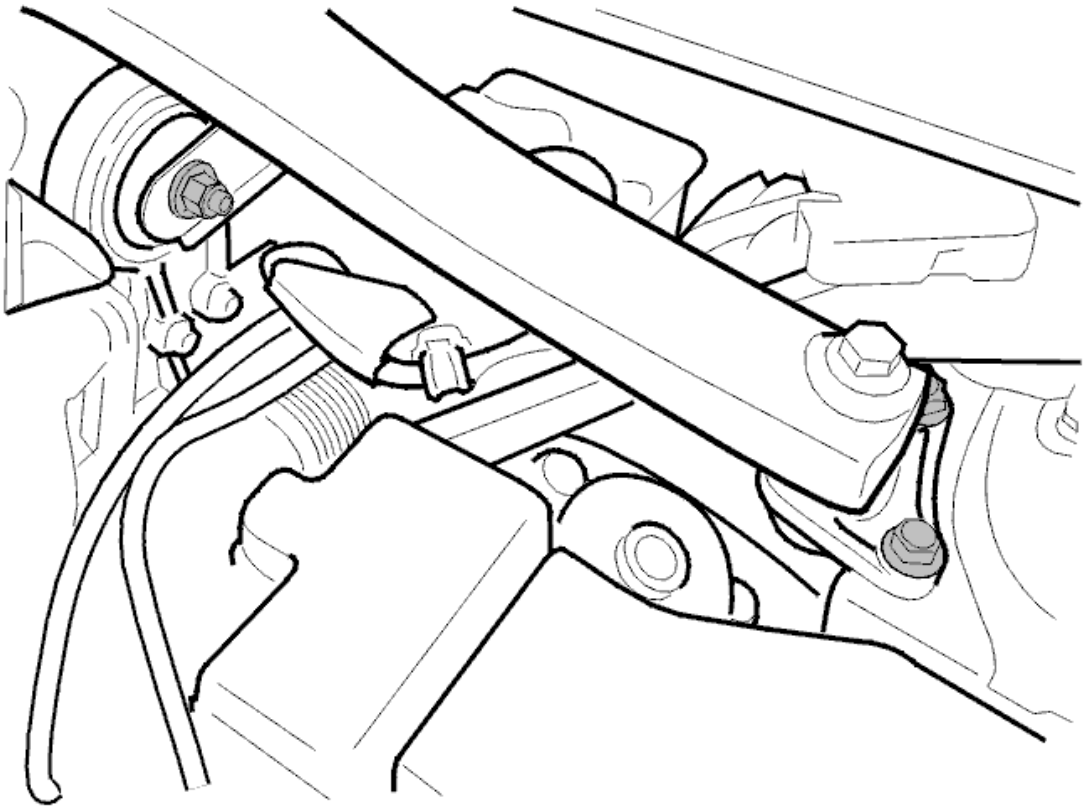

Fig. 7: Engine Stabilizer Brace
Courtesy of VOLVO CARS CORPORATION

Remove:

- the 4 screws at the suspension turrets
- the screws of the upper engine mount on the engine
- the upper cross stay.

REMOVING COMPONENTS

Remove:

- the battery negative cable. See: **BATTERY, DISCONNECTING** .
- the expansion tank cap.

Raise the vehicle.

REMOVING THE PROTECTIVE PLATE (SKID PLATE)

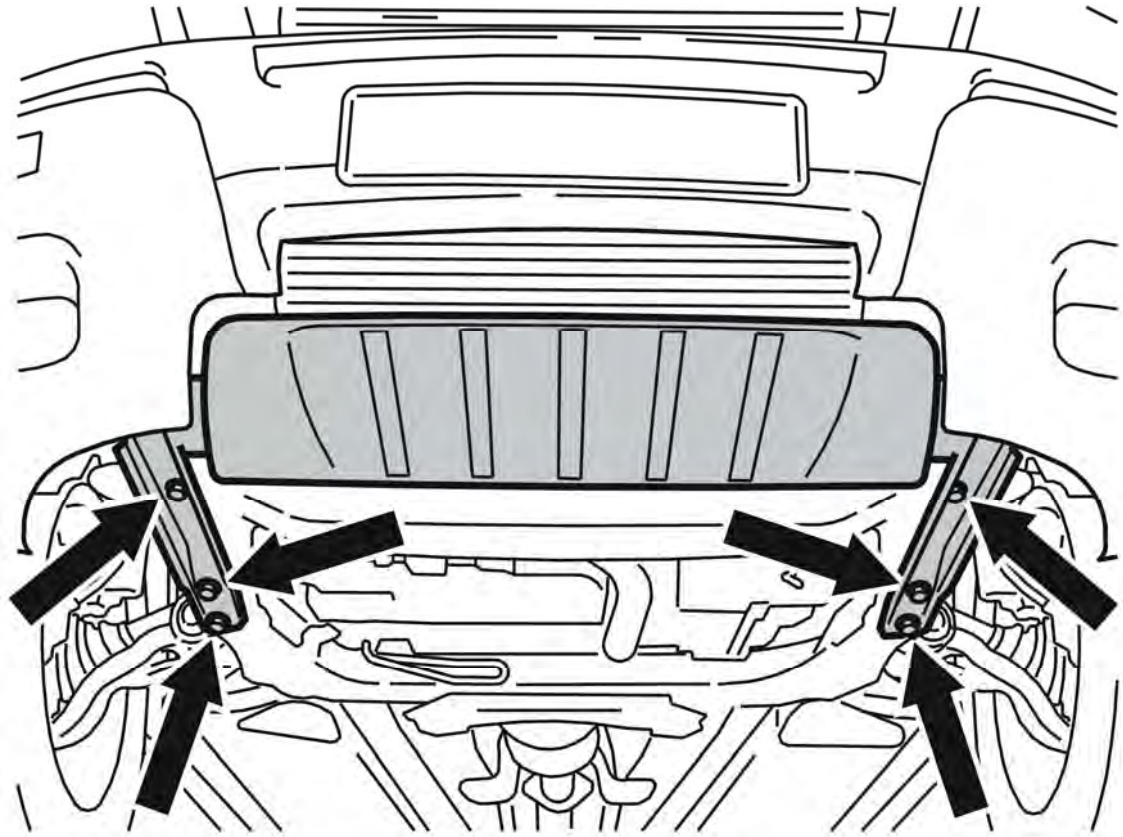

Fig. 8: Splash Guard. Protective Plate And Screws
Courtesy of VOLVO CARS CORPORATION

NOTE: There is a guide sleeve on the upper mounting for the plate. This must be lifted slightly so that the panel can be slid forward.

Remove the 6 screws.

Lift and slide the protective plate forward.

Remove the protective plate.

DRAINING COOLANT

Open the cock on the lower left edge of the radiator.

Drain the coolant into a clean receptacle.

Close the cock.

INSTALLING THE PROTECTIVE PLATE

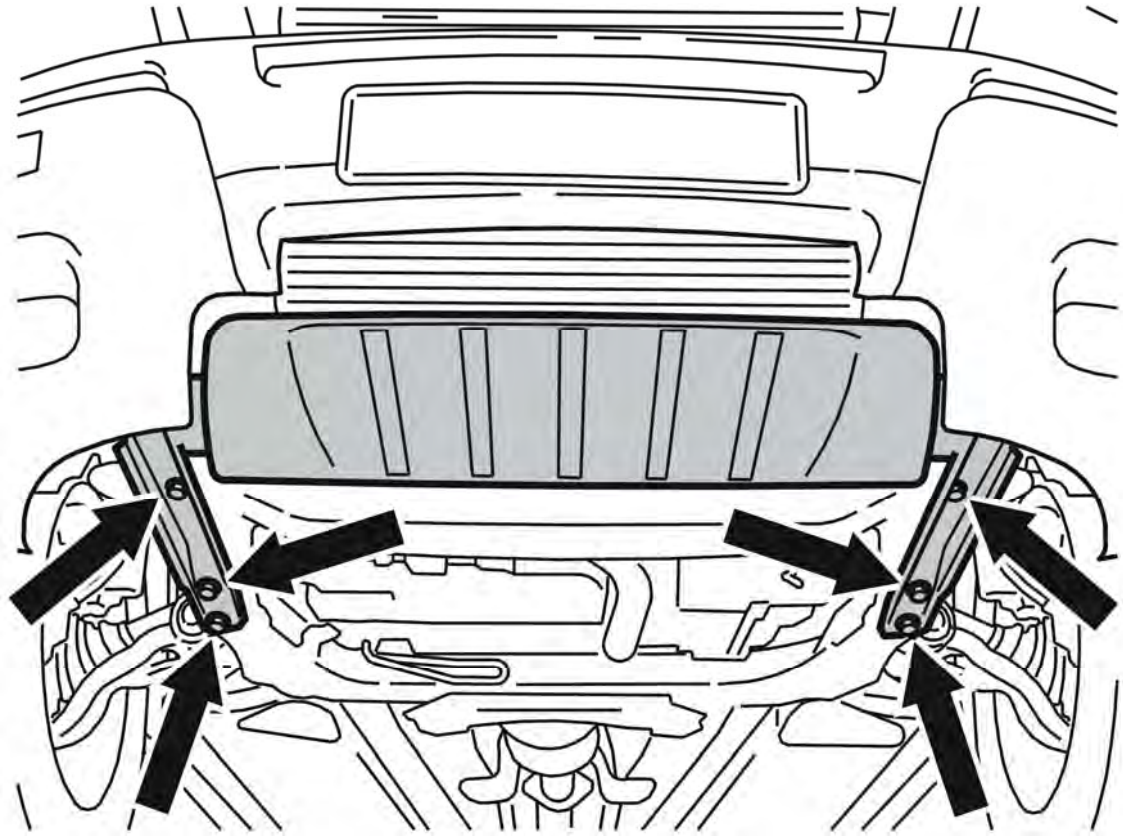

Fig. 9: Splash Guard. Protective Plate And Screws
Courtesy of VOLVO CARS CORPORATION

Install:

- the protective plate
- the 6 screws; tighten.

Lower the vehicle.

REMOVING THE AIR CLEANER COVER

Remove the air cleaner cover by pulling it straight up.

REMOVING CONNECTORS

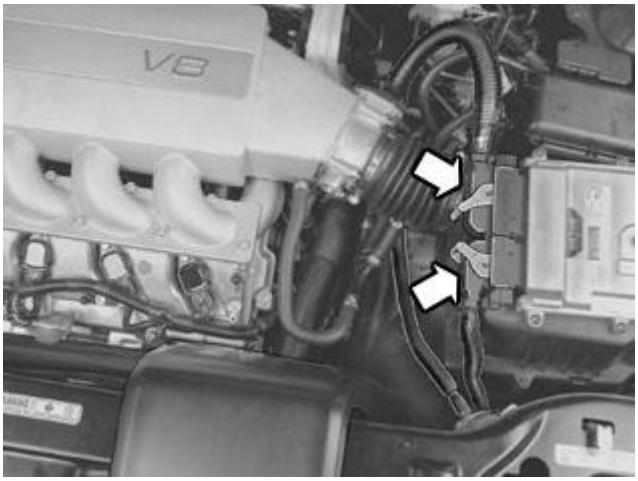

Fig. 10: Viewing Connectors
Courtesy of VOLVO CARS CORPORATION

Remove:

- the 2 connectors from the engine control module (ECM); clip the band clamp to the cable harness
- the connector from the mass air flow sensor.

REMOVING THE AIR CLEANER (ACL)

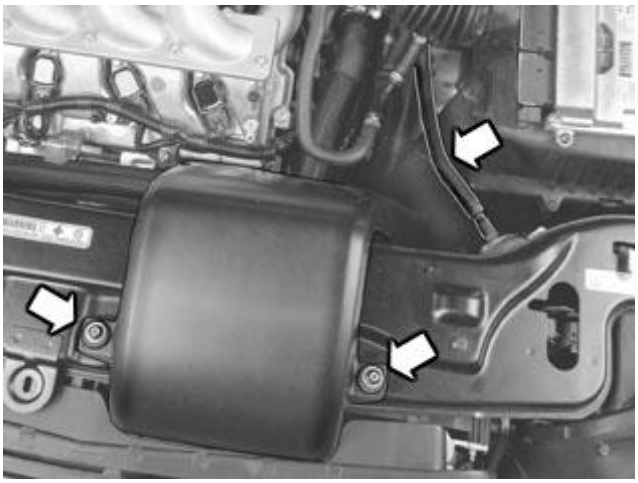

Fig. 11: Identifying 2 Screws, Fresh Air Duct
Courtesy of VOLVO CARS CORPORATION

Remove:

- the 2 screws of the fresh air hose in the front plate
- the fresh air hose
- the hose clips of the intake manifold between the mass air flow sensor and the electronic throttle module (ETM)
- the air cleaner by pulling it straight up.

REMOVING THE VACUUM HOSES

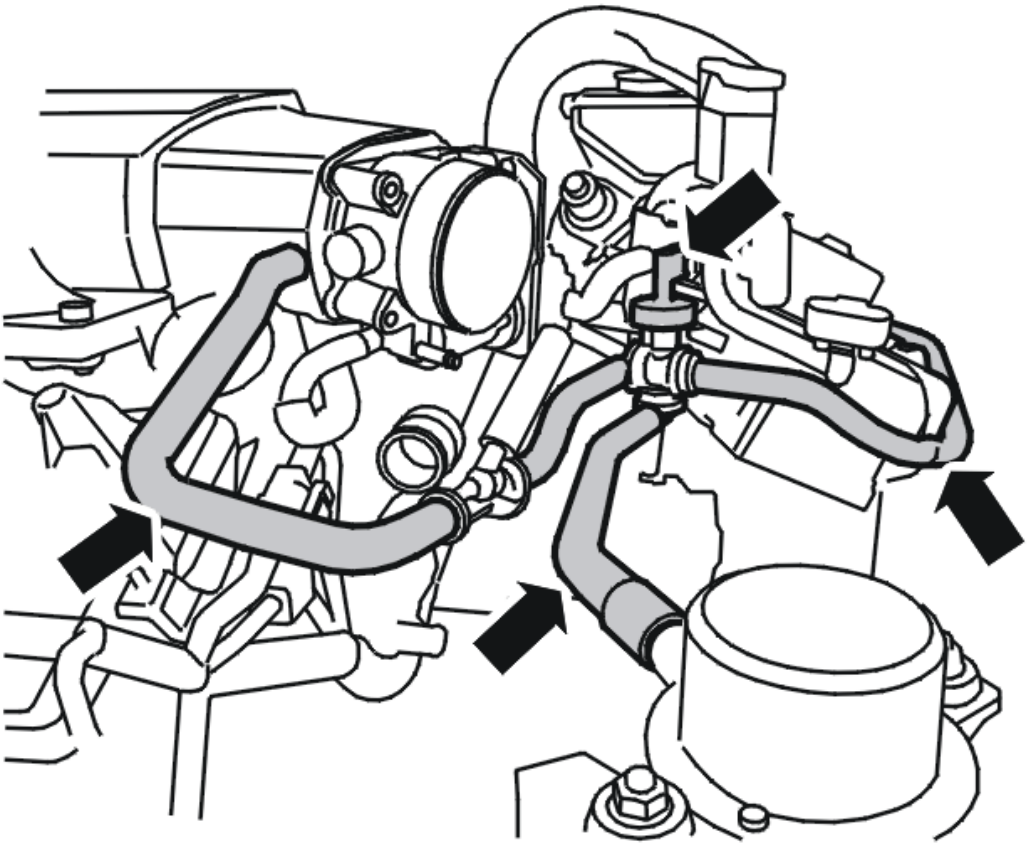

Fig. 12: Removing The Vacuum Hoses
Courtesy of VOLVO CARS CORPORATION

Remove:

- the connector to the brake vacuum valve
- the vacuum hose from the vacuum pump by pressing in the quick-action lock
- the vacuum hose from the brake vacuum valve
- the vacuum hose from the intake manifold
- the brake vacuum from the retainer.

REMOVING THE RADIATOR HOSES

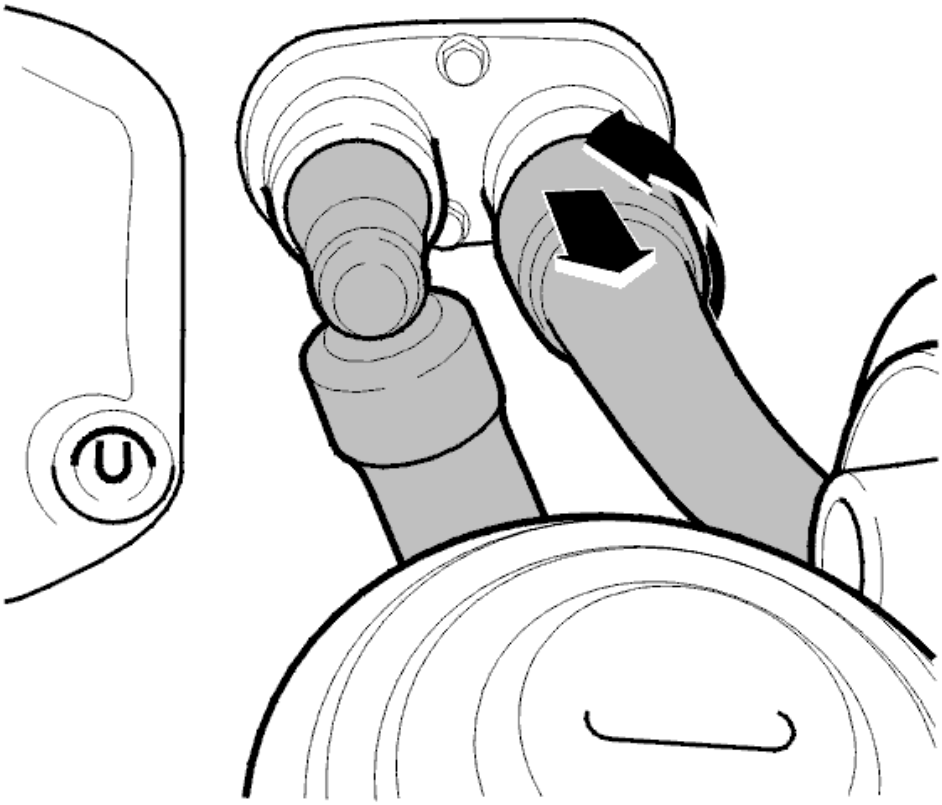

Fig. 13: Identifying Front Section Of Terminal And Hose
Courtesy of VOLVO CARS CORPORATION

Detach the radiator hoses at the quick-release coupling toward the firewall.

Detach the coolant hose from the throttle body by undoing the clamp.

Bend aside the coolant hoses.

REMOVING THE LINES

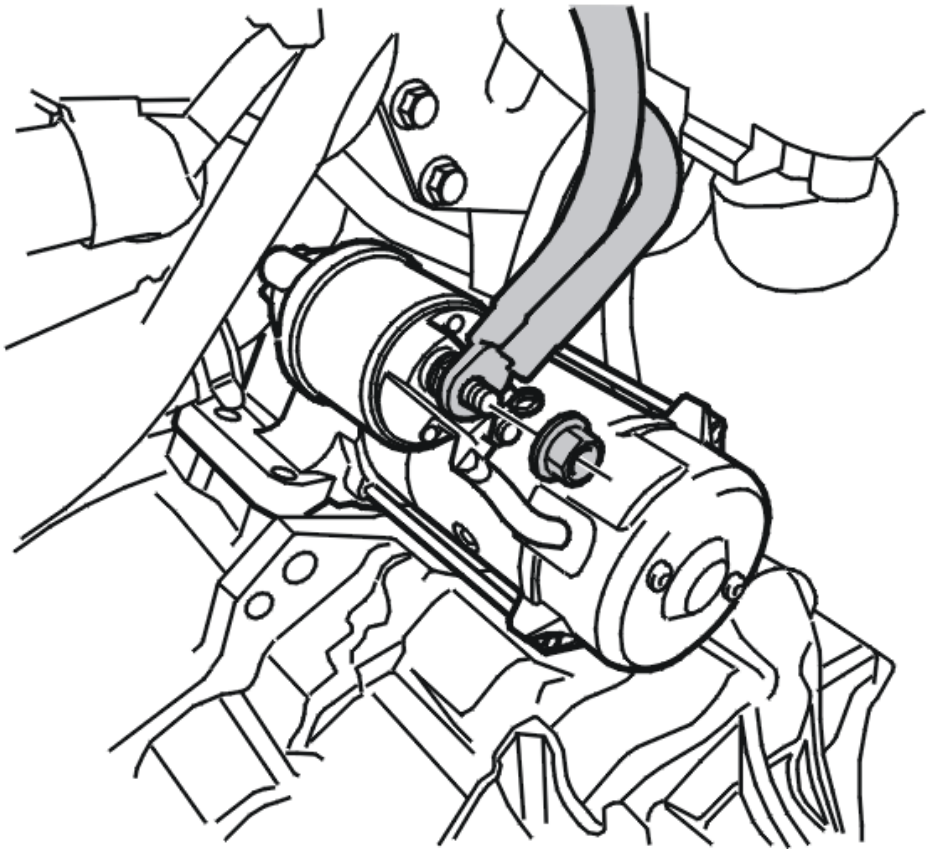

Fig. 14: View Of Starter Motor Leads
Courtesy of VOLVO CARS CORPORATION

Remove:

- the connector to the electronic throttle module (ETM) and the electrical distribution center
- the protective cap from the starter motor solenoid
- the nut of the positive leads on the starter motor solenoid
- the positive leads
- the control current lead from the starter motor solenoid.

REMOVING THE UPPER ENGINE MOUNT

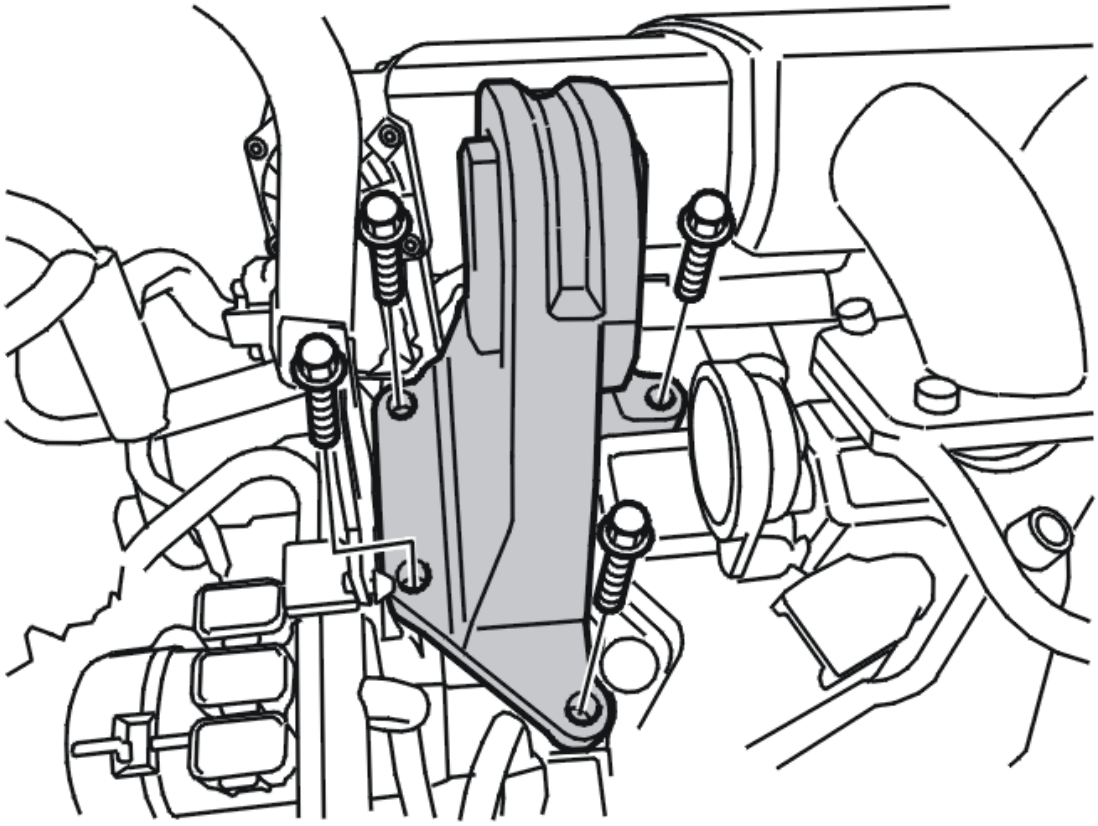

Fig. 15: Identifying Upper Engine Mount
Courtesy of VOLVO CARS CORPORATION

Remove:

- the 4 screws
- the upper engine mount.

REMOVING THE EVAP VALVE BRACKET

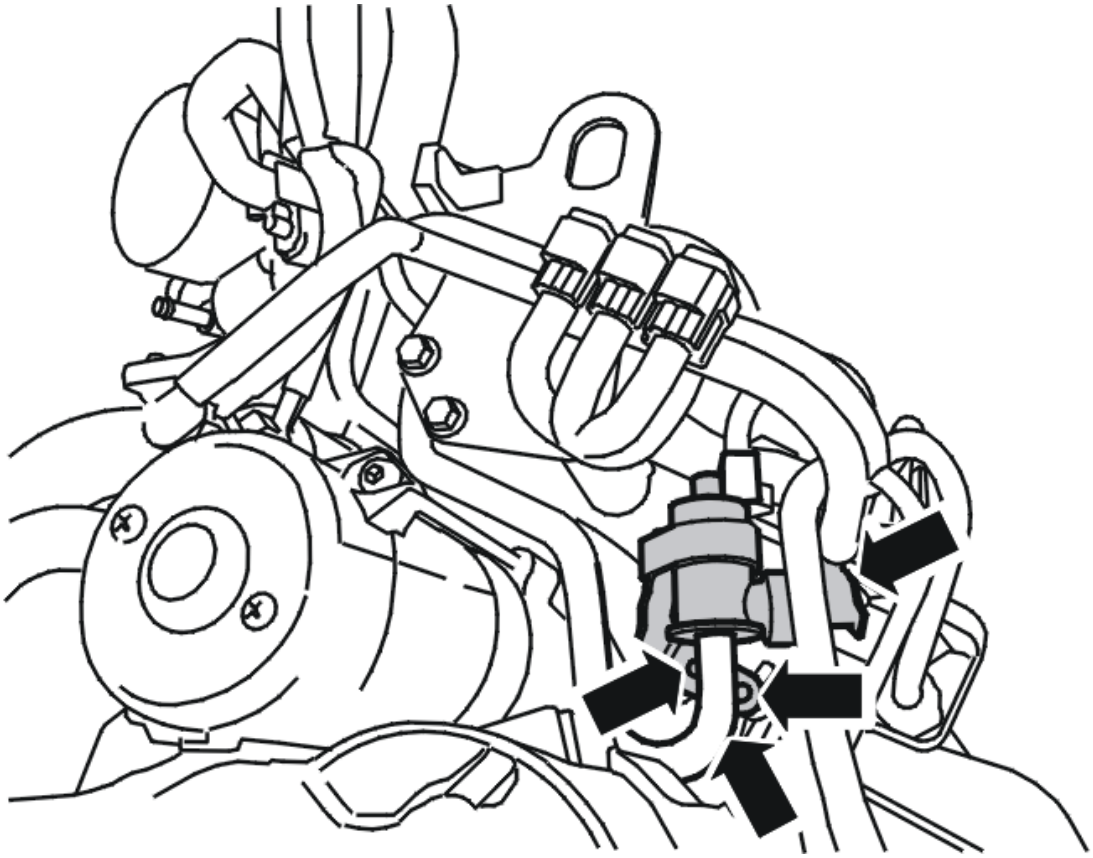

Fig. 16: Locating Evap Valve Bracket
Courtesy of VOLVO CARS CORPORATION

Remove:

- the EVAP valve from the bracket
- the line from the EVAP valve to the tank by releasing the quick-action lock
- the hose from the intake manifold to the EVAP valve by releasing the hose clip
- the 2 screws of the EVAP valve bracket
- the EVAP valve bracket.

REMOVING THE LIFTING EYE

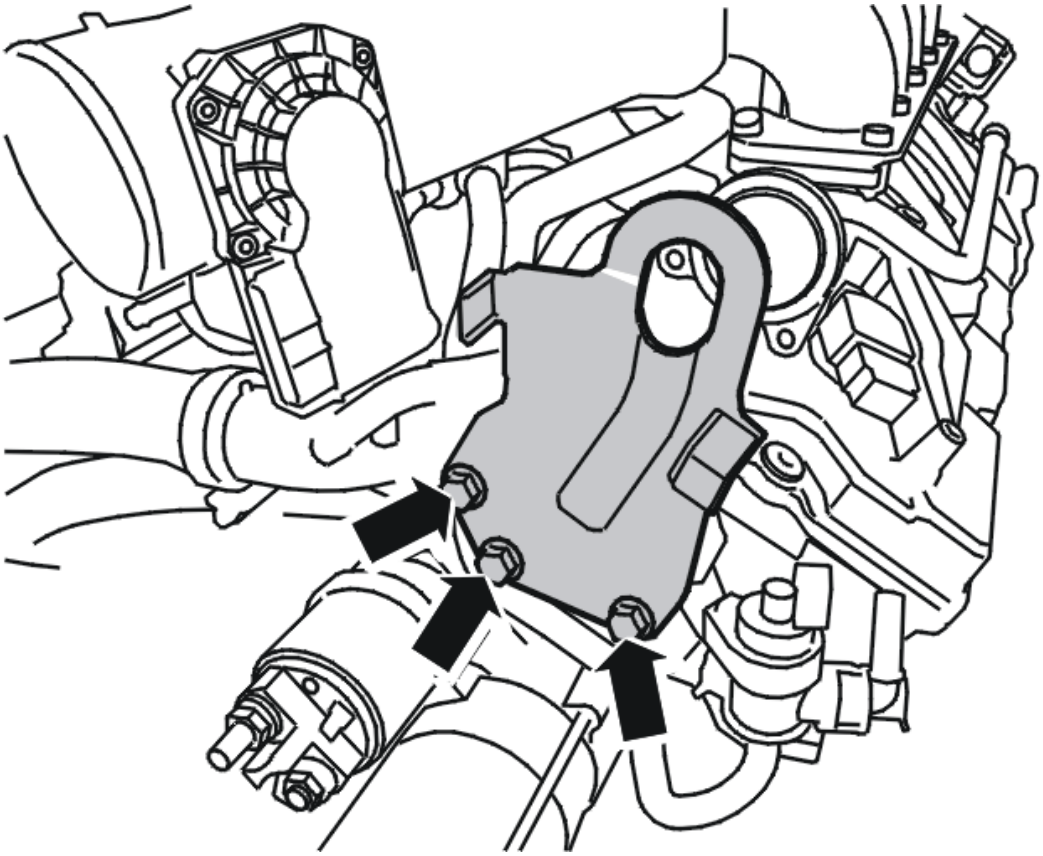

Fig. 17: Removing The Lifting Eye
Courtesy of VOLVO CARS CORPORATION

Remove:

- the 3 screws of the lifting eye
- the lifting eye.

REMOVING THE COOLANT HOSE CLAMP

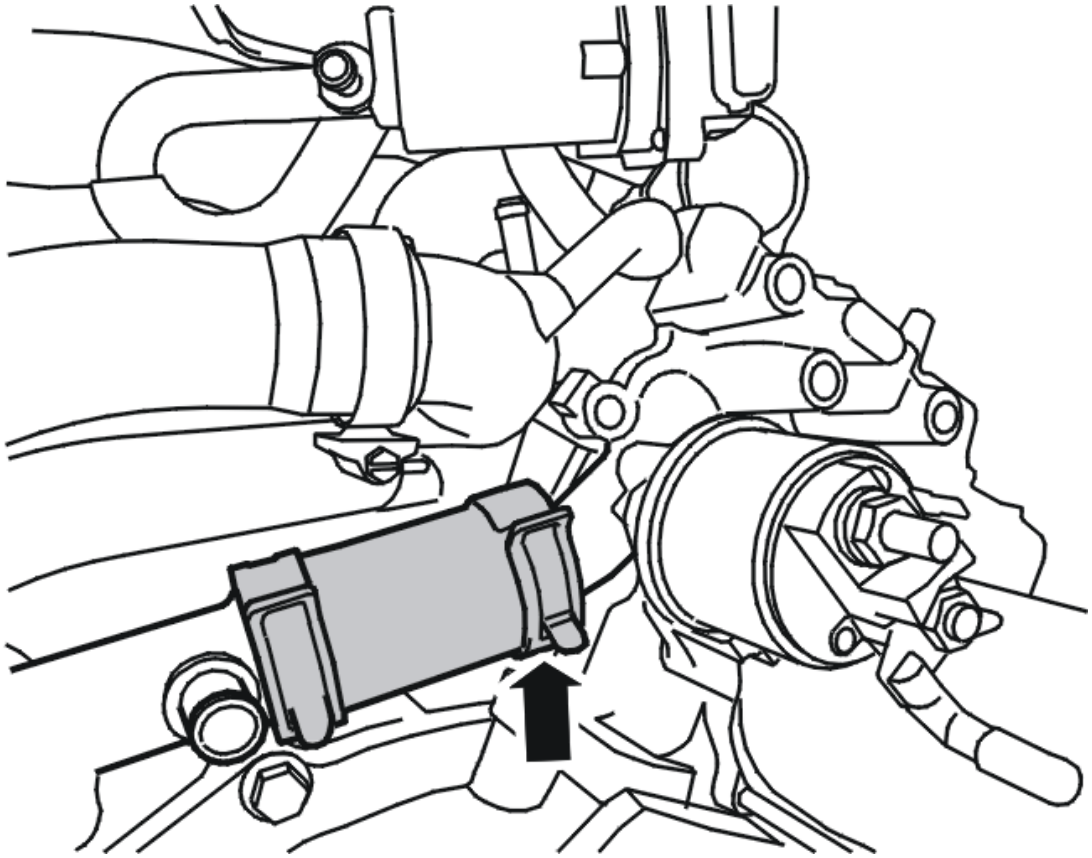

Fig. 18: Identifying Coolant Hose Clamp
Courtesy of VOLVO CARS CORPORATION

Open the hose clip and move it to the side.

REMOVING THE COOLANT CONNECTION PIPE

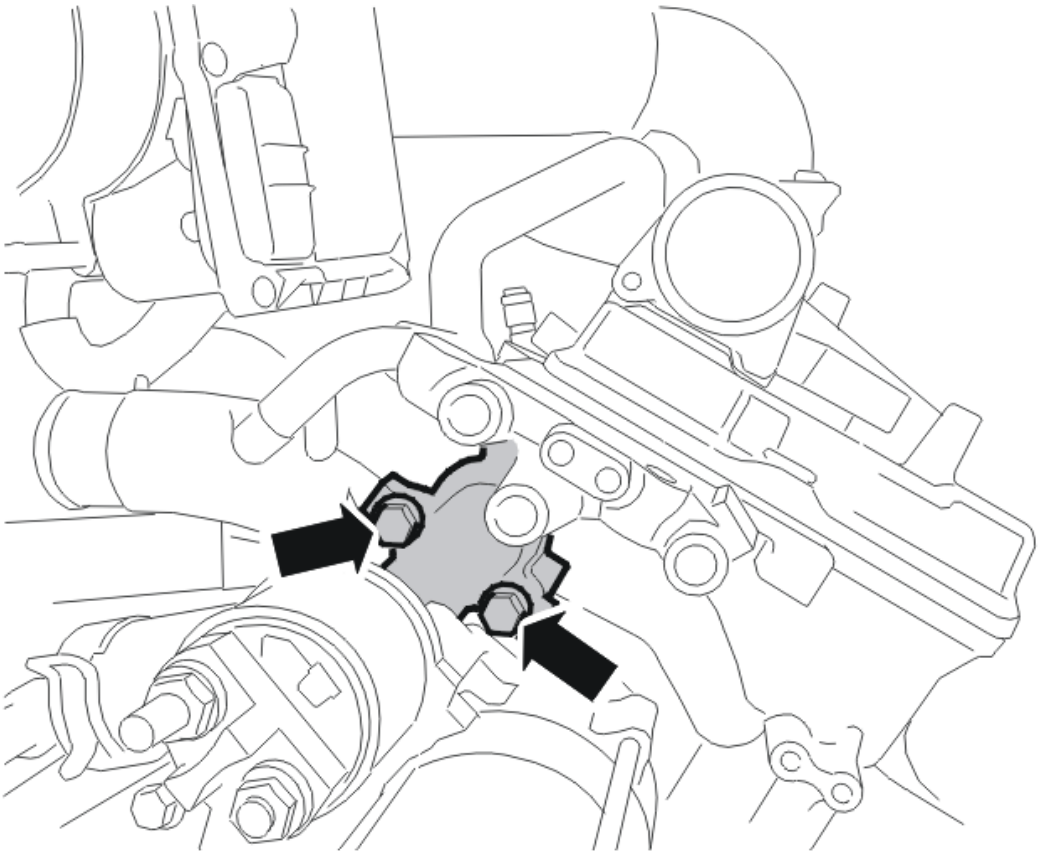

Fig. 19: Identifying 2 Screws, Coolant Connection Pipe
Courtesy of VOLVO CARS CORPORATION

Remove:

- the 2 screws
- the connection pipe. Scrap the gasket.

REMOVING THE STARTER MOTOR

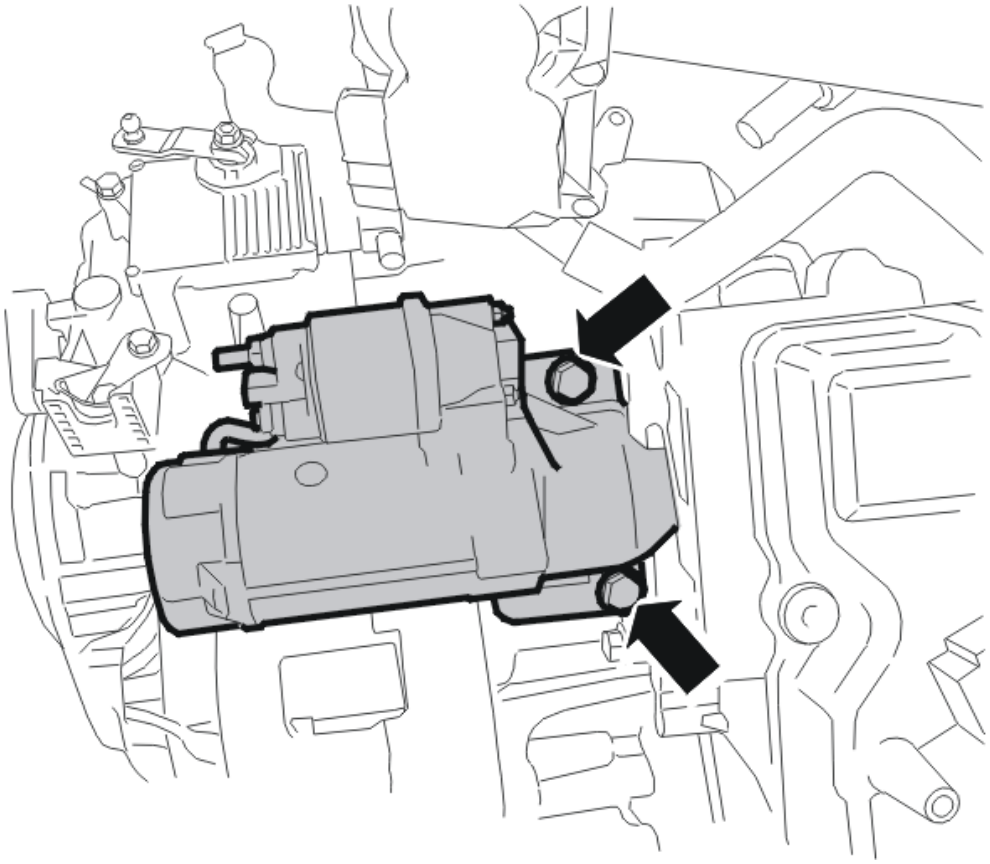

Fig. 20: Identifying Starter Motor Bolts
Courtesy of VOLVO CARS CORPORATION

Remove:

- the 2 screws
- the starter motor.

INSTALLATION

NOTE: For tightening torques, see: TIGHTENING TORQUE .

INSTALLING THE STARTER MOTOR

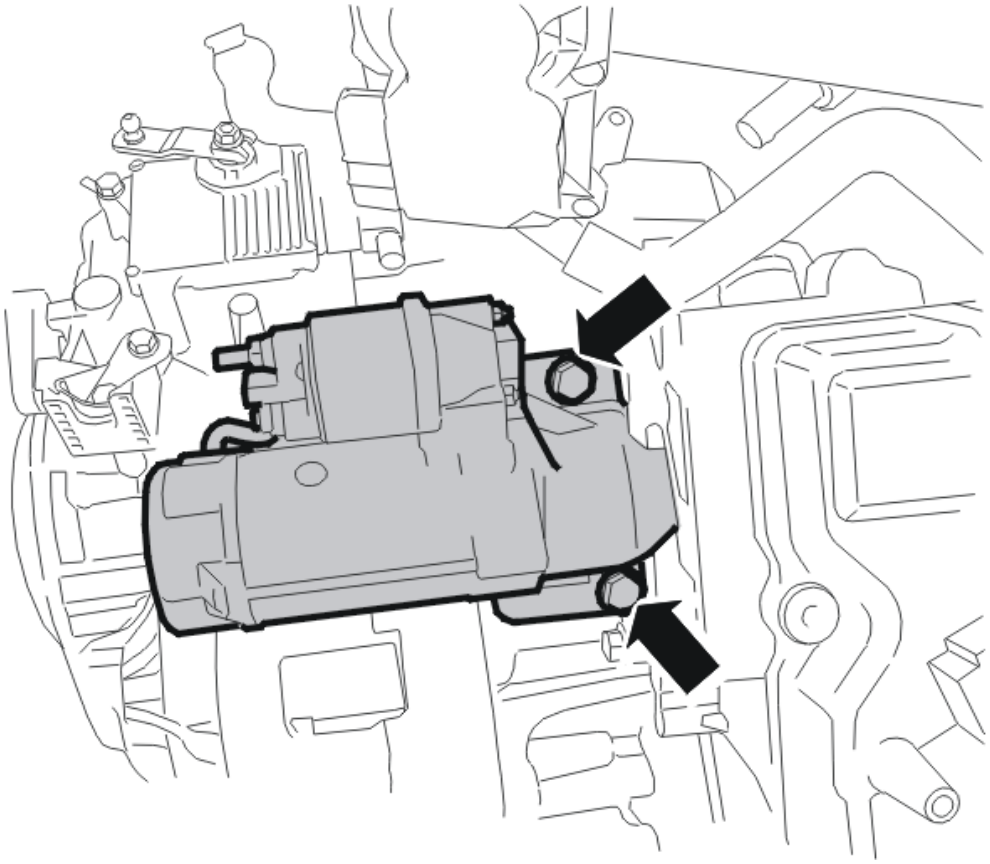

Fig. 21: Identifying Starter Motor Bolts
Courtesy of VOLVO CARS CORPORATION

Install:

- the starter motor.
- the 2 screws; tighten.

INSTALLING THE COOLANT CONNECTION PIPE

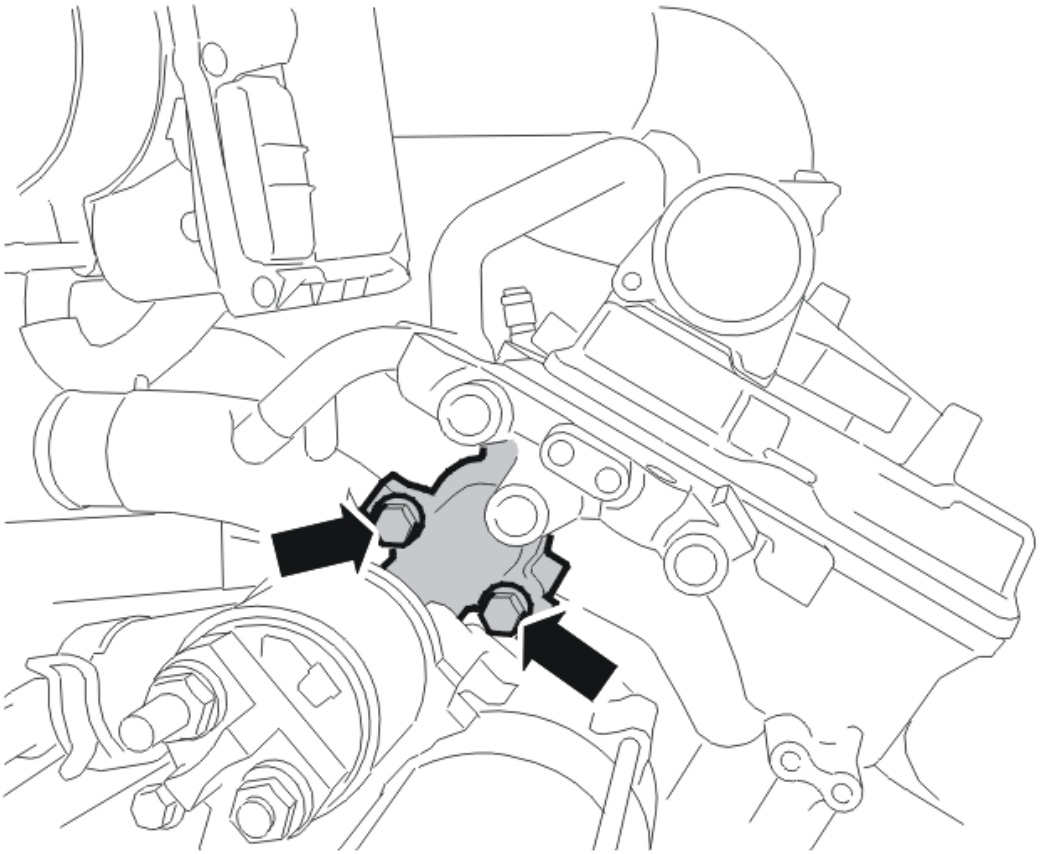

Fig. 22: Identifying 2 Screws, Coolant Connection Pipe
Courtesy of VOLVO CARS CORPORATION

Install:

- a new gasket
- the connection pipe on the coolant hose
- the 2 screws; tighten.

INSTALLING THE CLAMP ON THE COOLANT HOSE

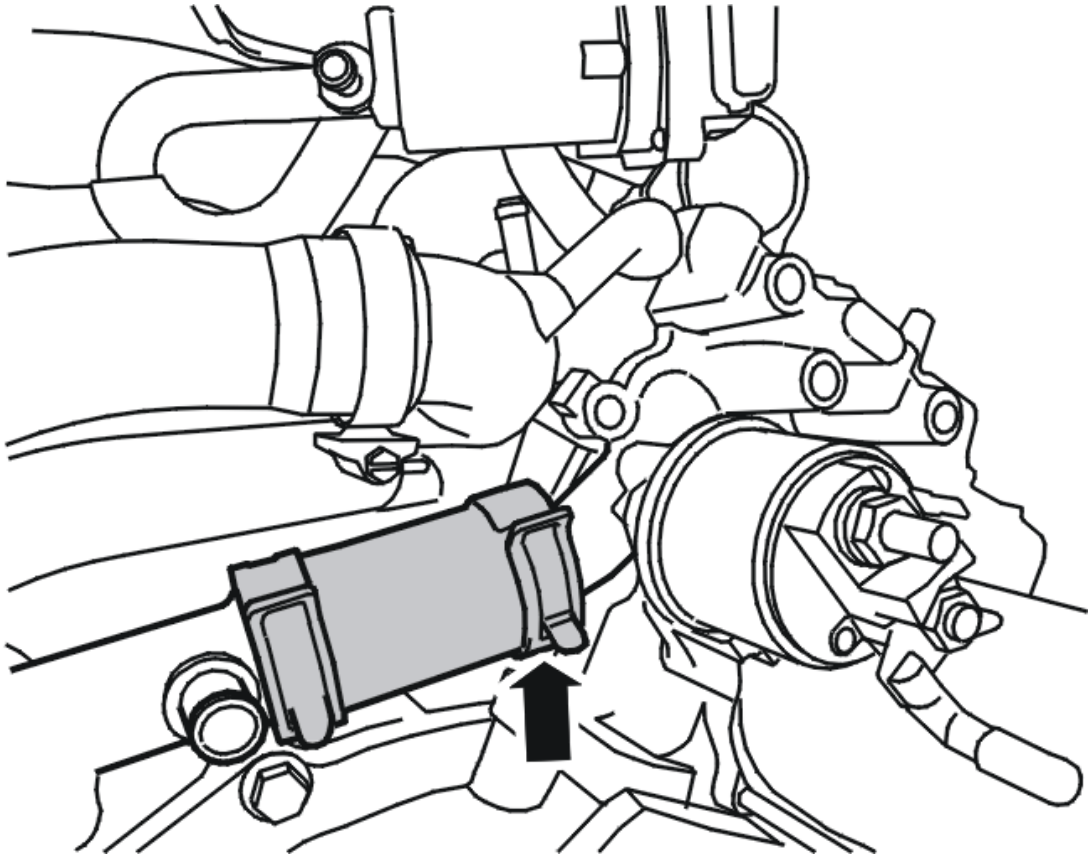

Fig. 23: Identifying Coolant Hose Clamp
Courtesy of VOLVO CARS CORPORATION

Fit the clamp in its original position.

INSTALLING THE LIFTING EYE

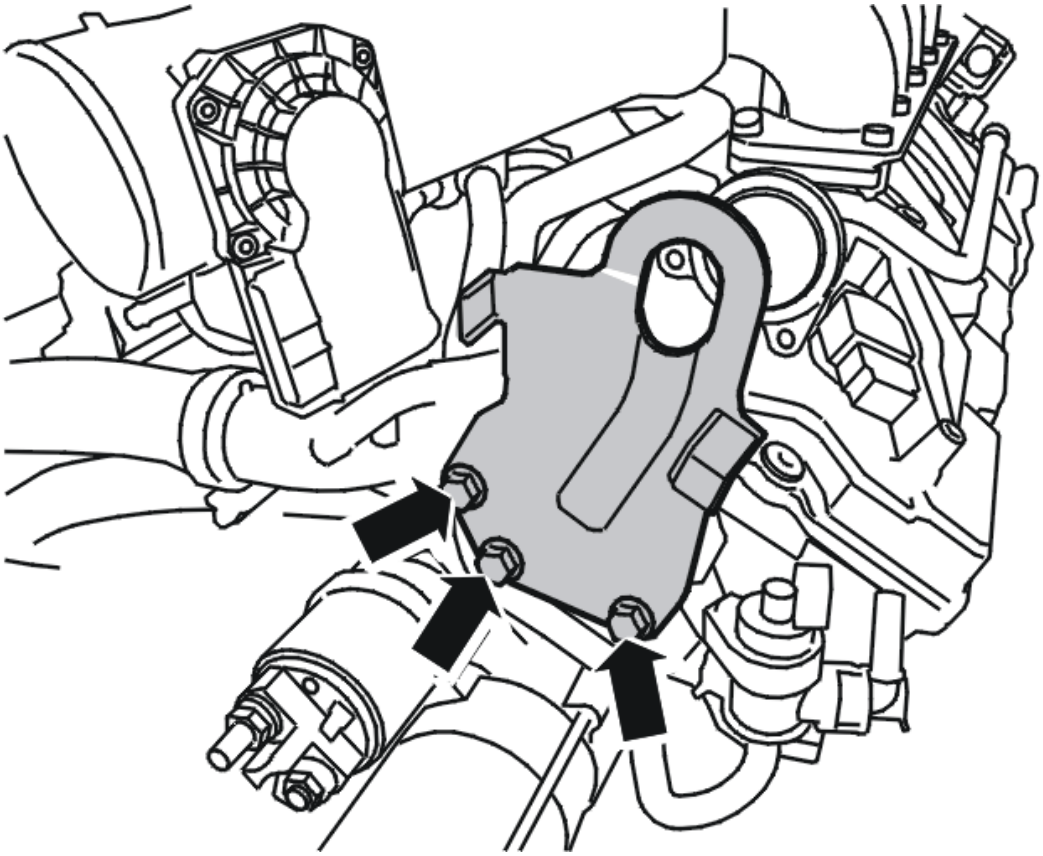

Fig. 24: Removing The Lifting Eye
Courtesy of VOLVO CARS CORPORATION

Install:

- the lifting eye at the connection pipe
- the 3 screws; tighten
- the cable stem in the clip.

INSTALLING THE EVAP VALVE BRACKET

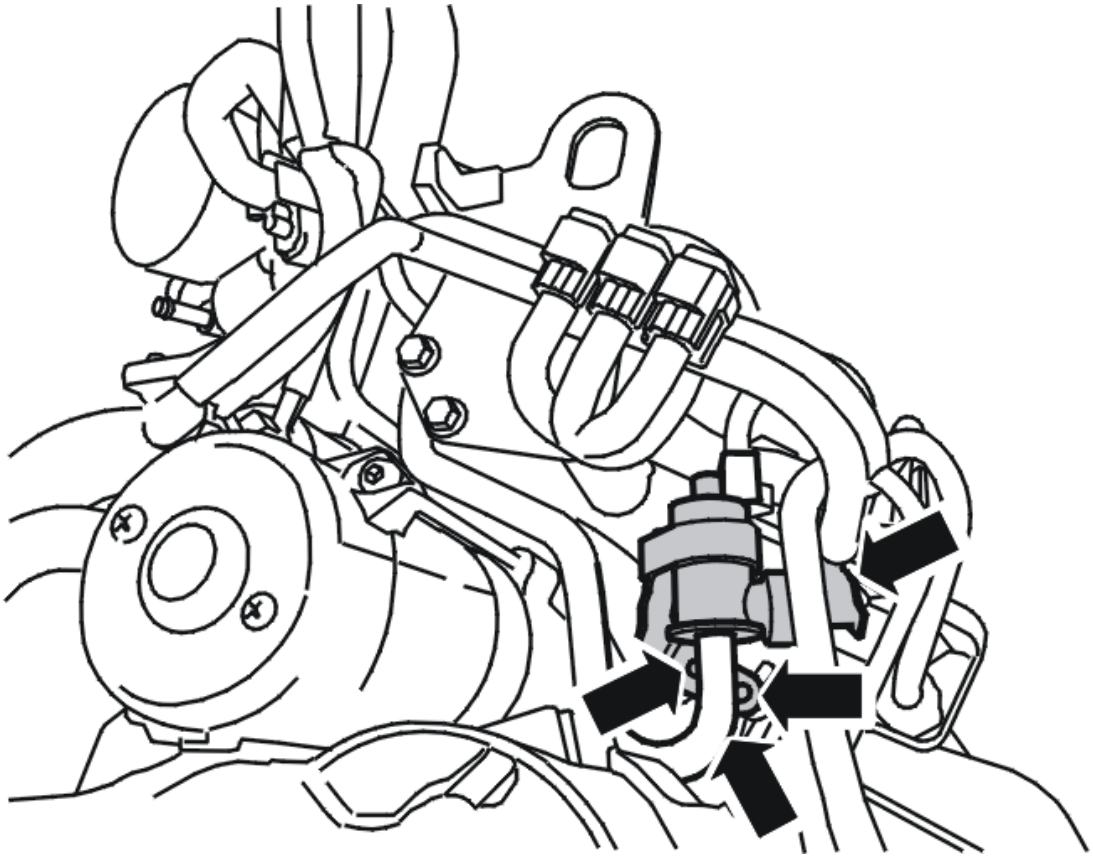

Fig. 25: Locating Evap Valve Bracket
Courtesy of VOLVO CARS CORPORATION

Install:

- the EVAP valve bracket
- the 2 screws of the bracket; tighten
- the hose from the intake manifold to the EVAP valve; secure with the clamp
- the line to the tank on the EVAP valve; secure with the quick-action lock
- the EVAP valve on the bracket.

INSTALLING THE UPPER ENGINE MOUNT

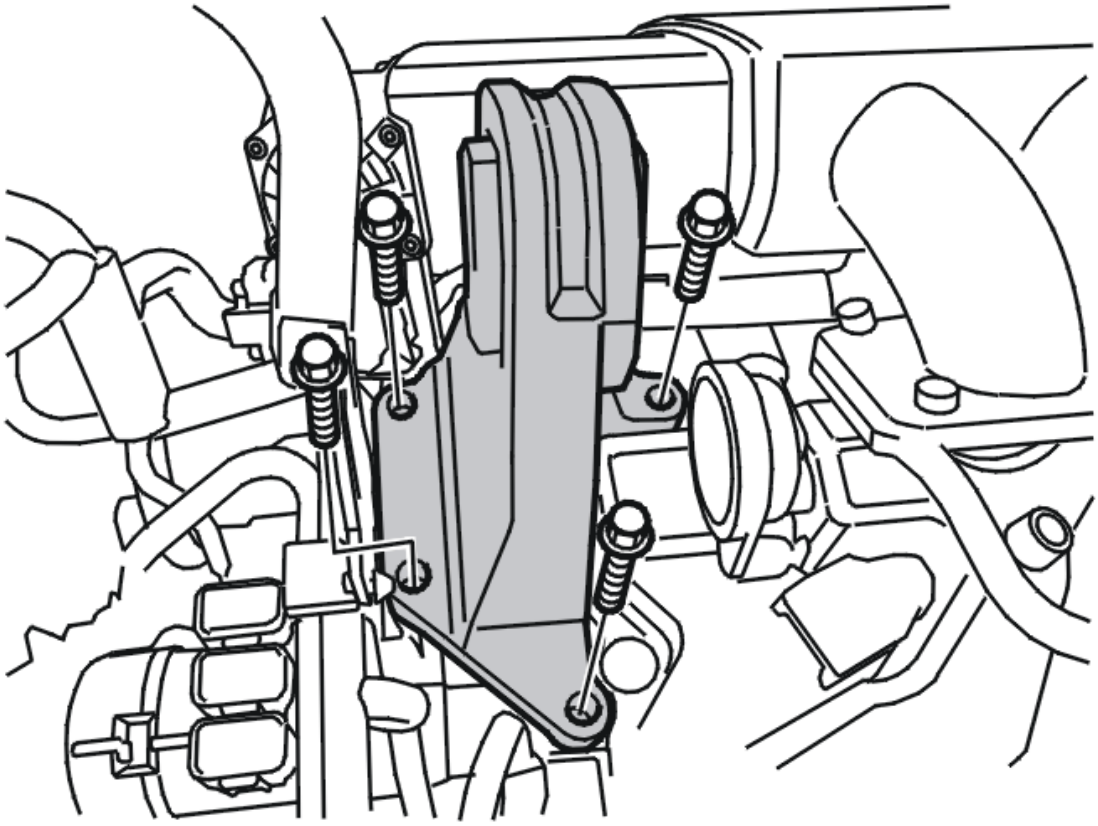

Fig. 26: Identifying Upper Engine Mount
Courtesy of VOLVO CARS CORPORATION

Install:

- the upper engine mount.
- the 4 screws; tighten.

INSTALLING THE LEADS

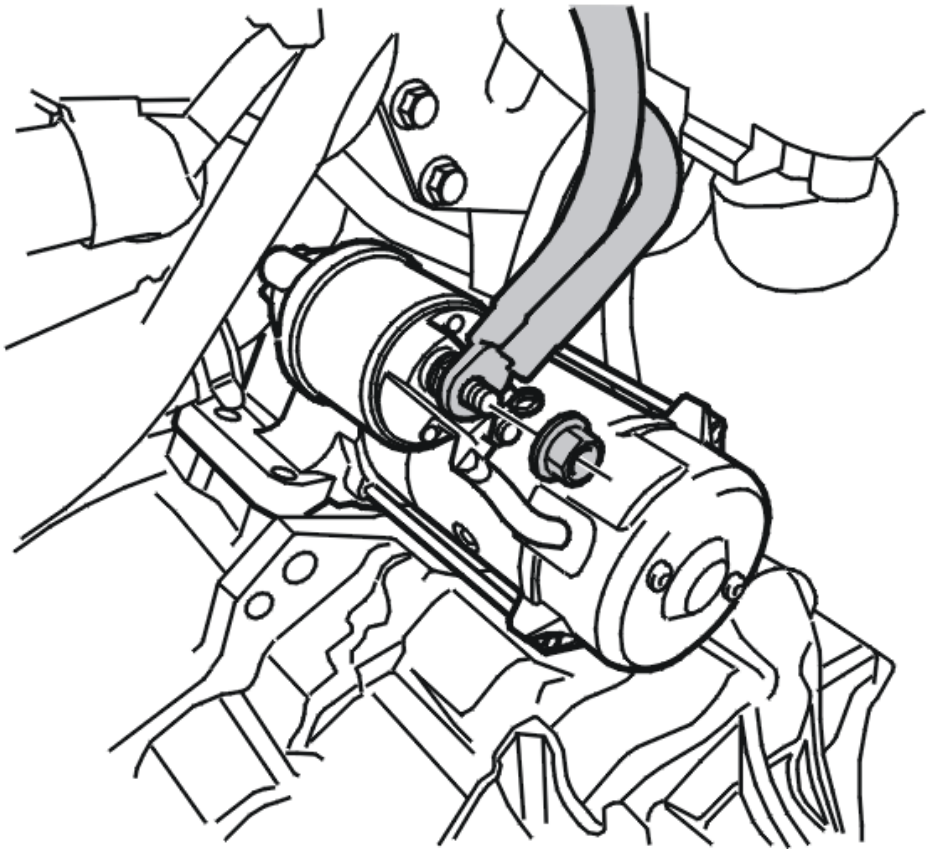

Fig. 27: View Of Starter Motor Leads
Courtesy of VOLVO CARS CORPORATION

Install:

- the connector to the electronic throttle module (ETM) and the electrical distribution center
- the positive leads, x 2, on the solenoid. Tighten in accordance with: **SUMMARY OF TIGHTENING TORQUES FOR SPECIFIC COMPONENTS**
- the nut; tighten
- the protective cover on the nut
- the control current lead on the solenoid.

INSTALLING THE COOLANT HOSES

Install:

- the 2 coolant hoses on the connections at the firewall; secure with the quick-action lock
- the coolant hose on the throttle body; secure with the clamp.

INSTALLING THE AIR CLEANER (ACL)

Install:

- the air cleaner on the left frame member
- the intake hose on the throttle body; secure with the clamp
- the connector to the mass air flow sensor.

INSTALLING VACUUM HOSES

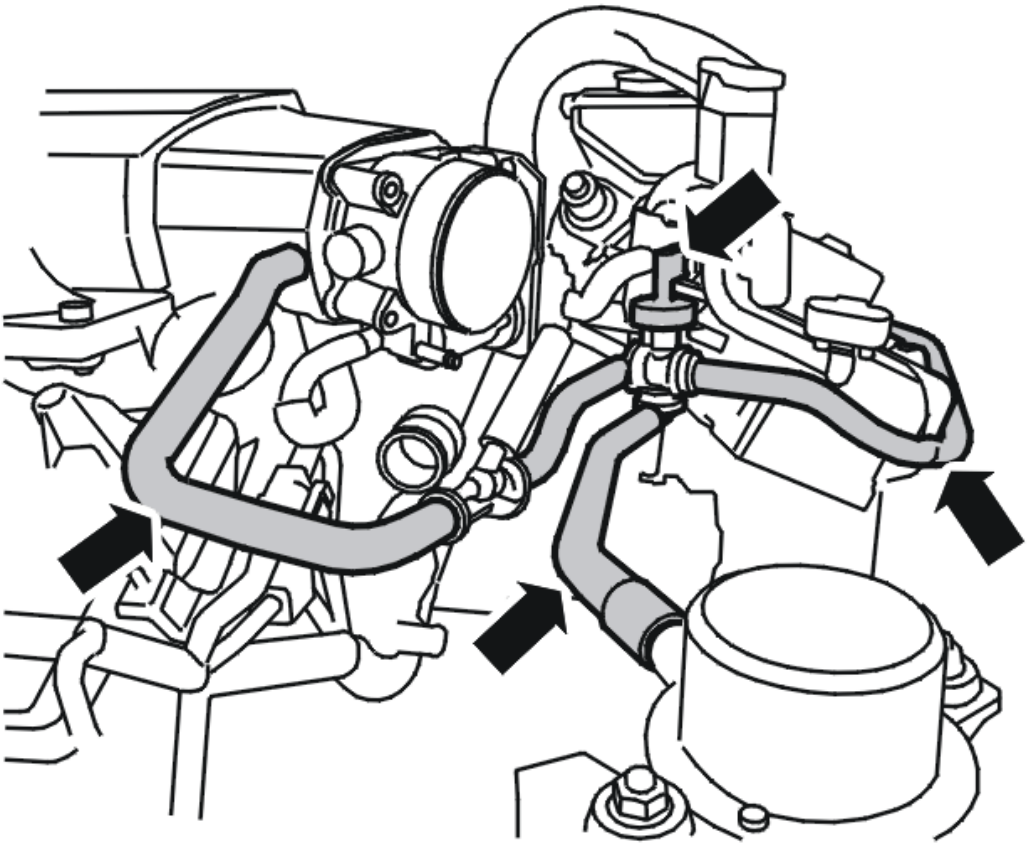

Fig. 28: Removing The Vacuum Hoses
Courtesy of VOLVO CARS CORPORATION

Install:

- the vacuum hose to the vacuum pump; secure with the quick-action lock
- the vacuum hose on the brake vacuum valve
- the vacuum hose on the intake manifold; secure with the clamp
- the brake vacuum valve in the retainer
- the connector to the brake vacuum valve.

INSTALLING THE FRESH AIR INTAKE MANIFOLD

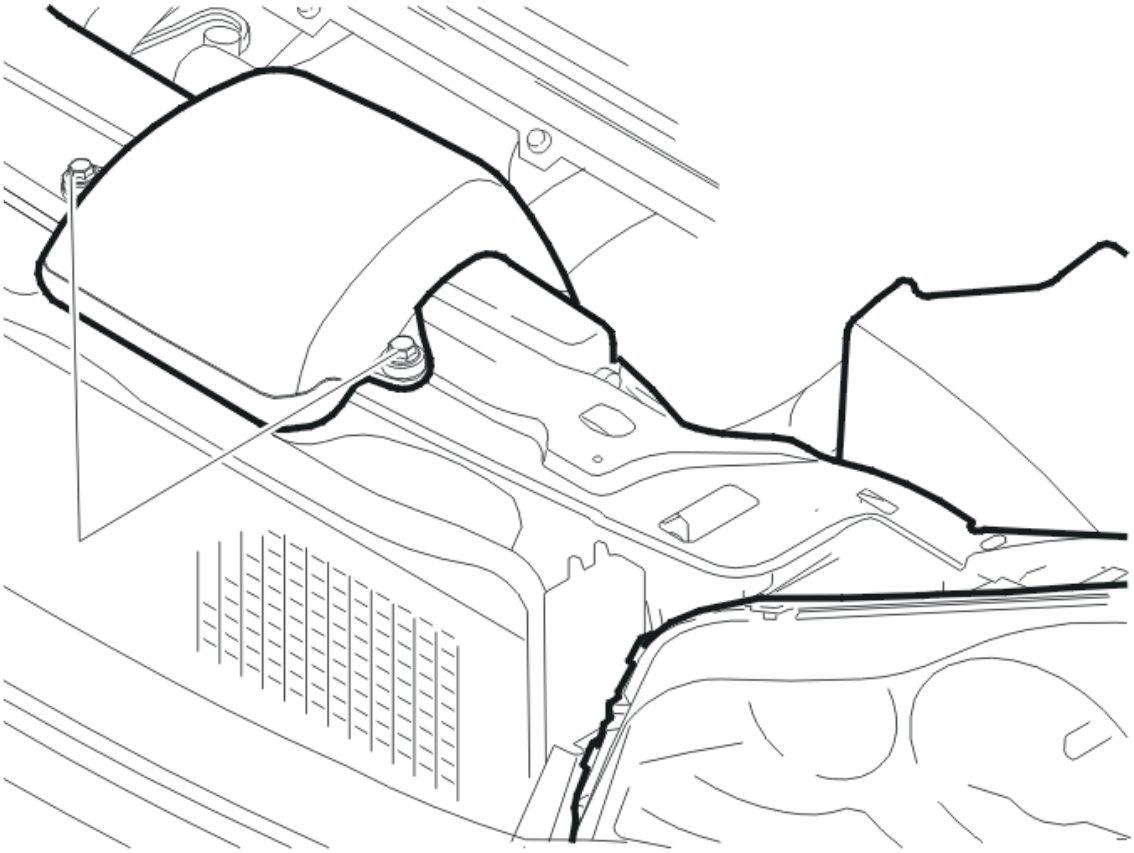

Fig. 29: Installing The Fresh Air Duct
Courtesy of VOLVO CARS CORPORATION

Install:

- the intake manifold
- the 2 screws.

INSTALLING THE ENGINE CONTROL MODULE (ECM) CONNECTORS

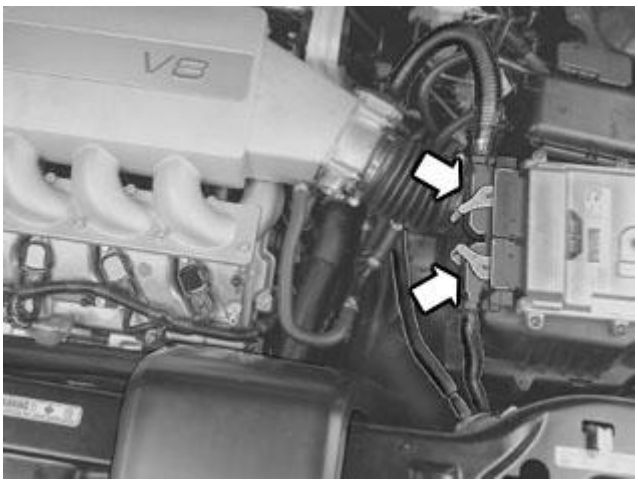

Fig. 30: Viewing Connectors
Courtesy of VOLVO CARS CORPORATION

Install:

- the connectors to the engine control module (ECM); secure with quick-action lock
- the cover over the air cleaner.

INSTALLING THE UPPER CROSS STAY

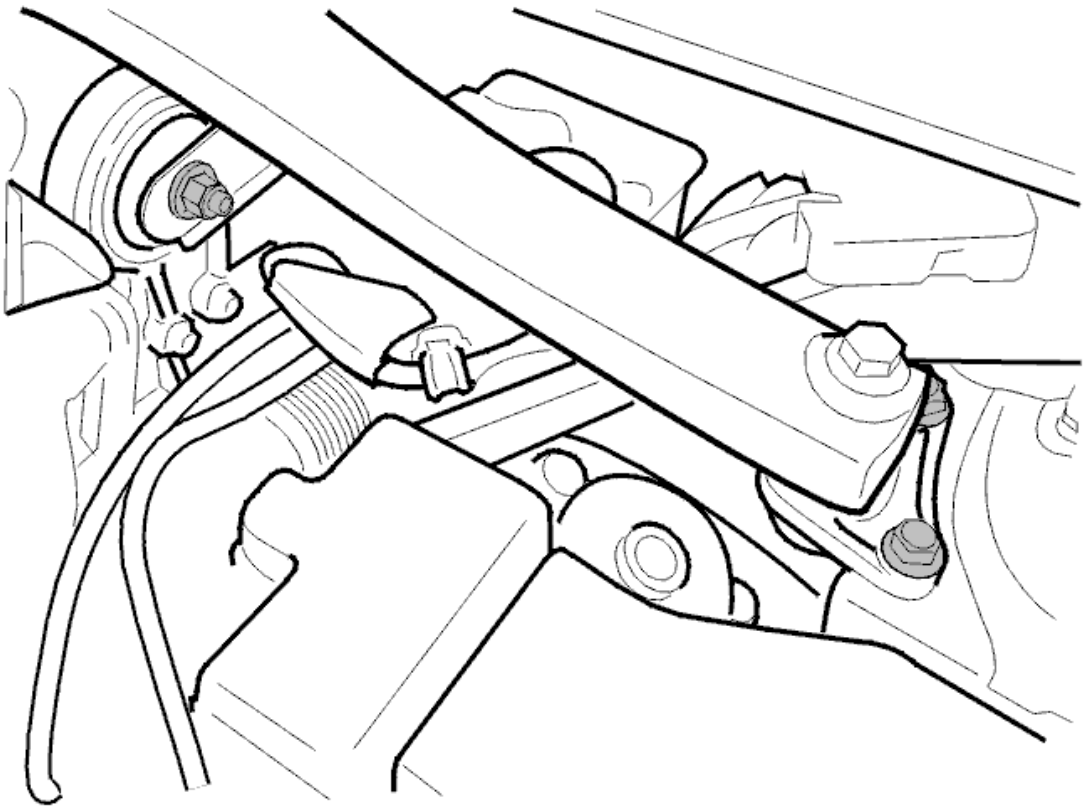

Fig. 31: Engine Stabilizer Brace
Courtesy of VOLVO CARS CORPORATION

Install:

- the cross stay between the suspension turrets
- the 4 screws in the suspension turrets; tighten
- the screw of the cross stay mount on the upper engine mount; tighten.

CHECK

CAUTION: Make sure the outlet hose of filling equipment is not blocked as this could damage the cooling system.

Fill with coolant using filling equipment: see **9512957** and cover: see **9512955** .

Start the engine and allow it to warm to normal operating temperature. Check for leaks and proper function. Fill up fluid as necessary.

STARTER MOTOR (B5254T2; 2003-2006)

STARTER MOTOR, REPLACING

REMOVAL

STARTER MOTOR

- Disconnect the battery negative lead. See **BATTERY, DISCONNECTING** .

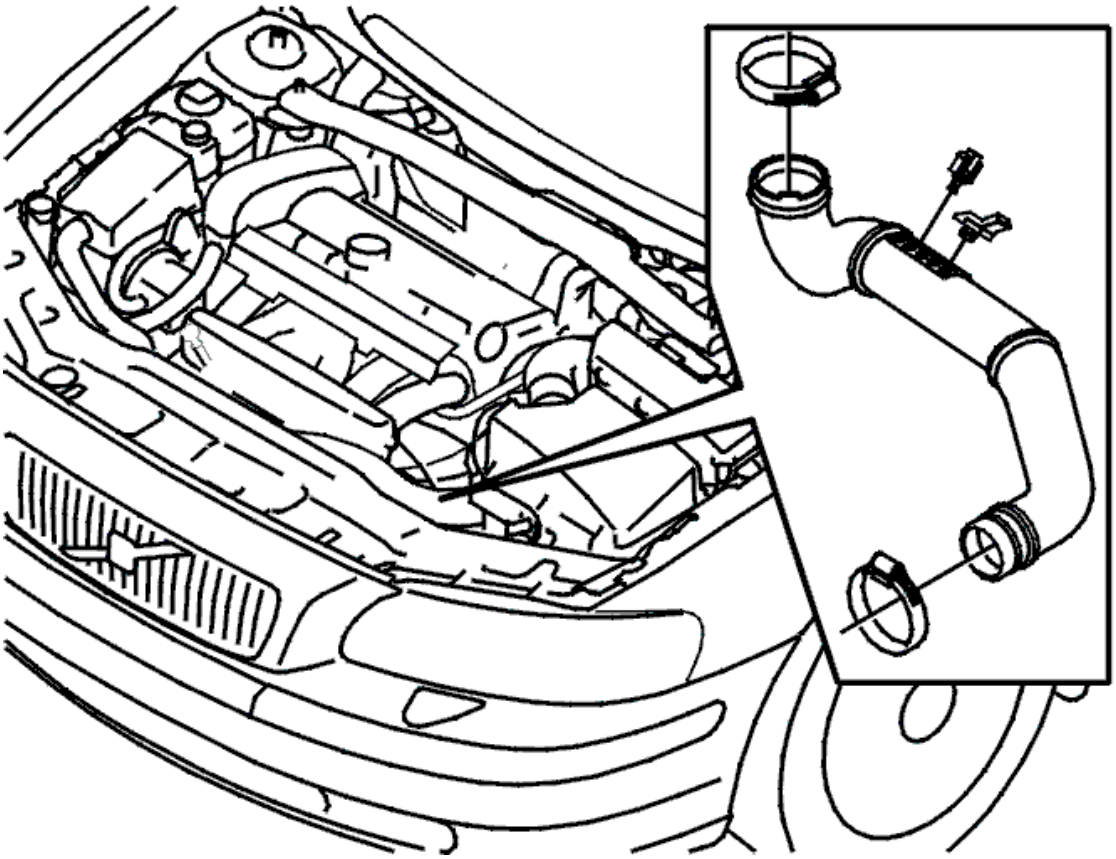

Fig. 32: Identifying Hose Between Charge Air Cooler And Electronic Throttle Module
Courtesy of VOLVO CARS CORPORATION

- Remove the intake manifold between the front cover plate and the air cleaner(ACL) housing.
- Applies to turbocharged engines: Remove the hose between the charge air cooler (CAC) and the electronic throttle module.

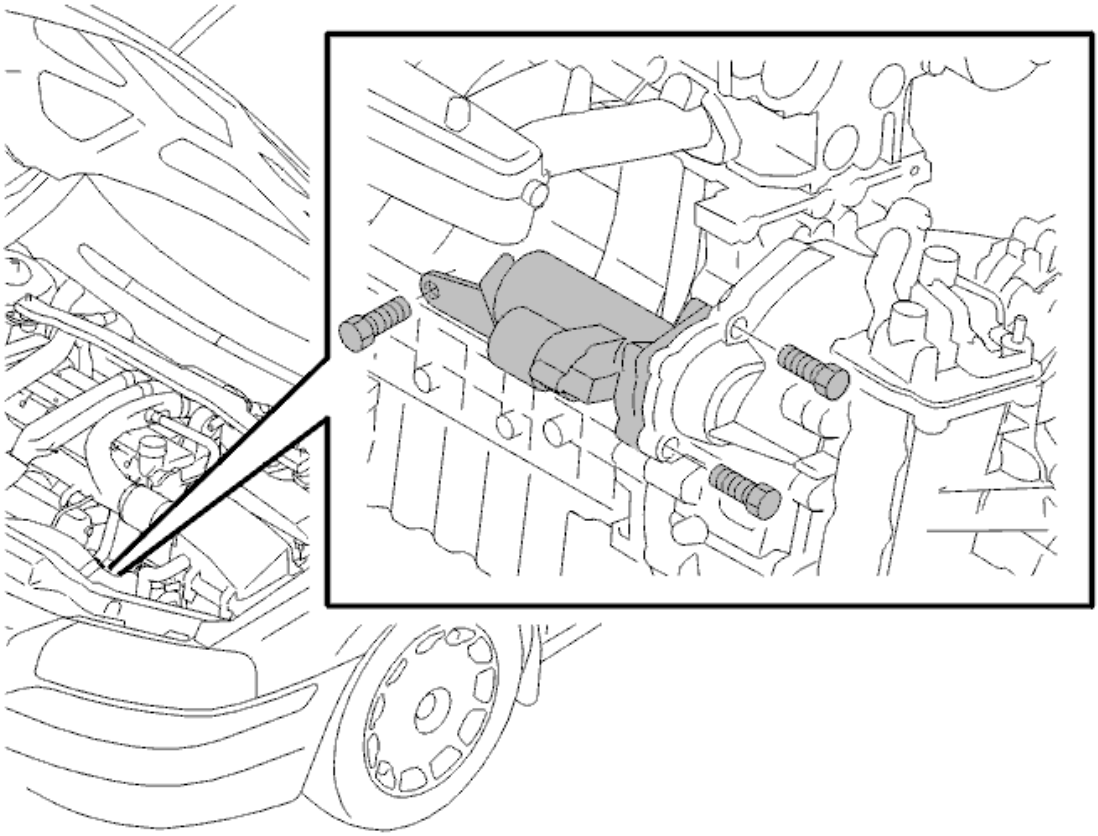

Fig. 33: Identifying Starter Motor And Screws
Courtesy of VOLVO CARS CORPORATION

- Disconnect the connector and the positive battery lead from the starter motor
- Remove the 2 M10 screws securing the starter motor to the gearbox
- Remove the starter motor.

REMOVING THE SOLENOID

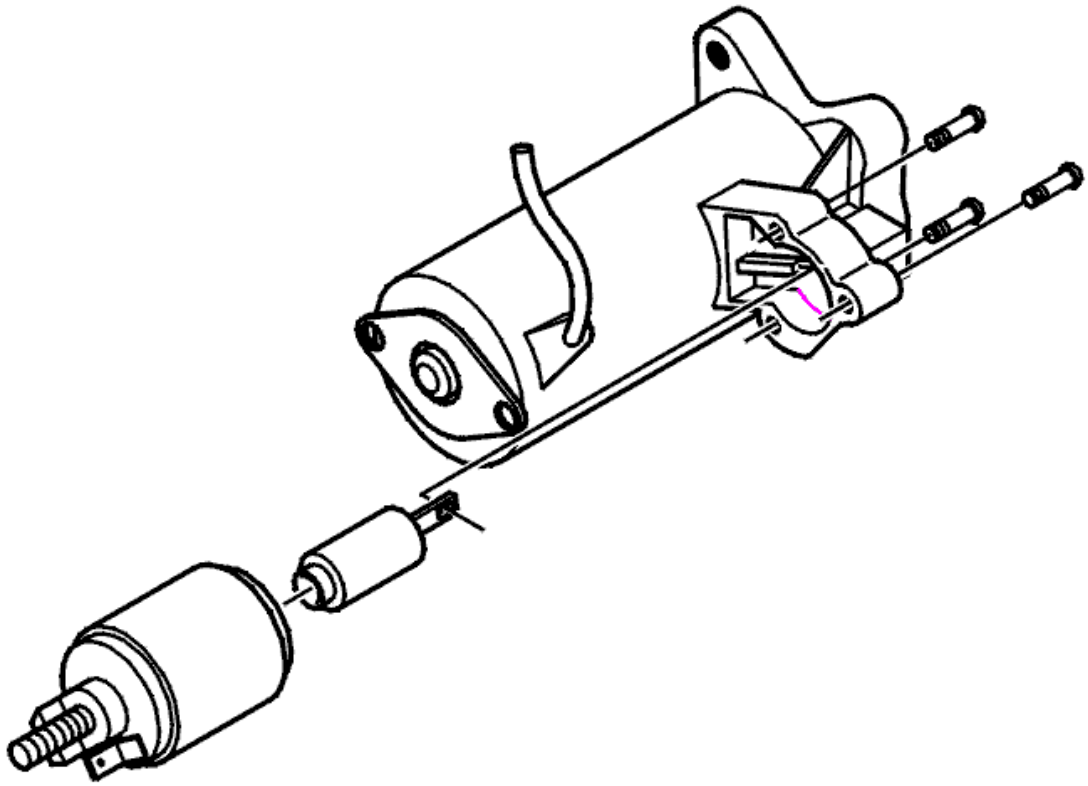

Fig. 34: Identifying Solenoid And Screws
Courtesy of VOLVO CARS CORPORATION

- Slacken off the nut. Remove the cable
- Remove the solenoid screws
- Lift the solenoid. Unhook the solenoid and the spring and hook.

INSTALLATION

INSTALLING THE SOLENOID

Remove:

- the solenoid
- the screws
- the cable.

INSTALLING THE STARTER MOTOR

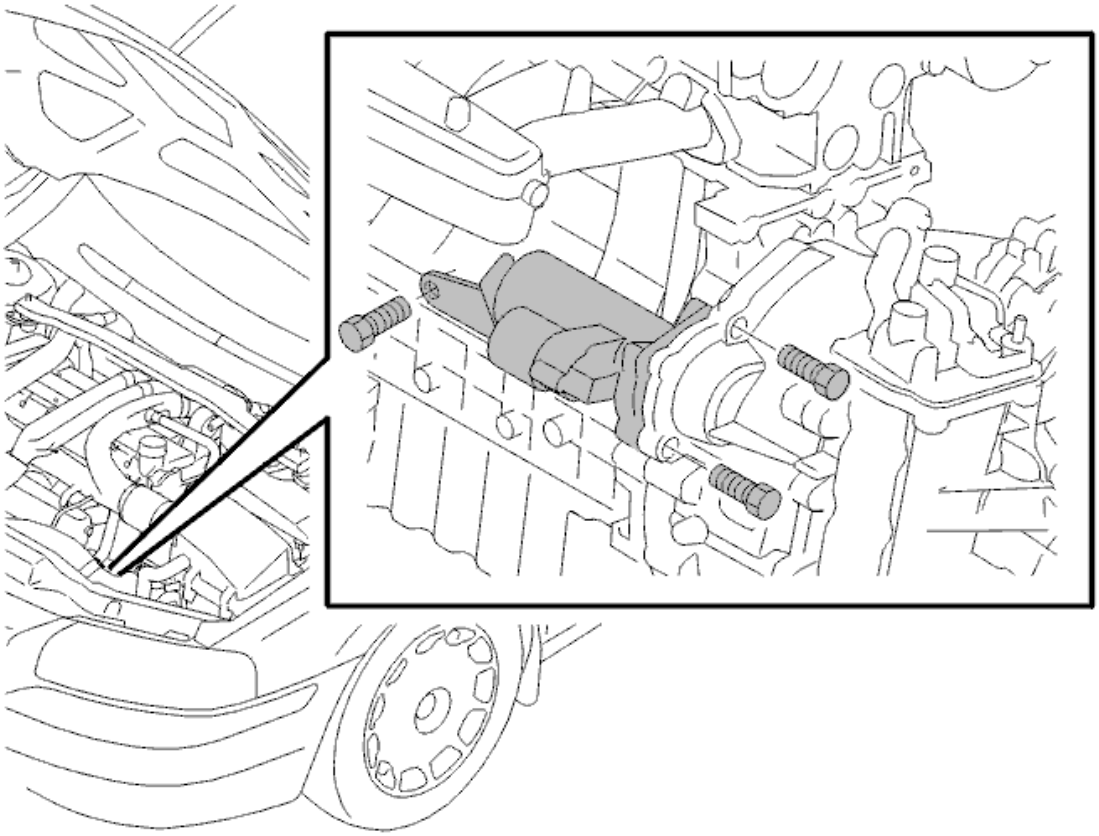

Fig. 35: Identifying Starter Motor And Screws
Courtesy of VOLVO CARS CORPORATION

Install:

- the starter motor. Tighten to
- x2. M10 in the gearbox
- the battery positive lead and the nut
- the flat pin contactor.

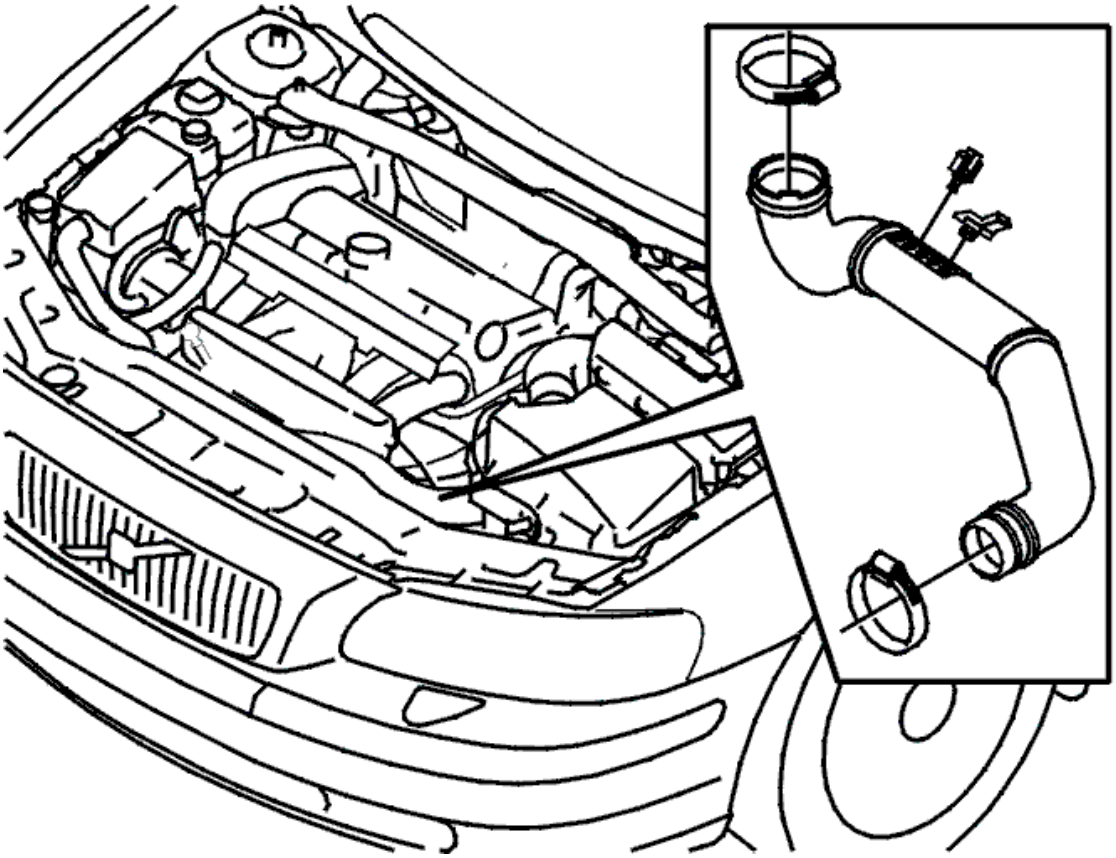

Fig. 36: Identifying Hose Between Charge Air Cooler And Electronic Throttle Module
Courtesy of VOLVO CARS CORPORATION

Only turbocharged (TC) engines: Install the hose between the charge air cooler (CAC) and the electronic throttle module (ETM).

Install:

- the fresh air intake hose
- the battery negative lead. See **BATTERY, DISCONNECTING** .

STARTER MOTOR (B5254T2; 2007)

STARTER MOTOR, REPLACING

REMOVAL

- Disconnect the battery negative lead, see **BATTERY, DISCONNECTING**

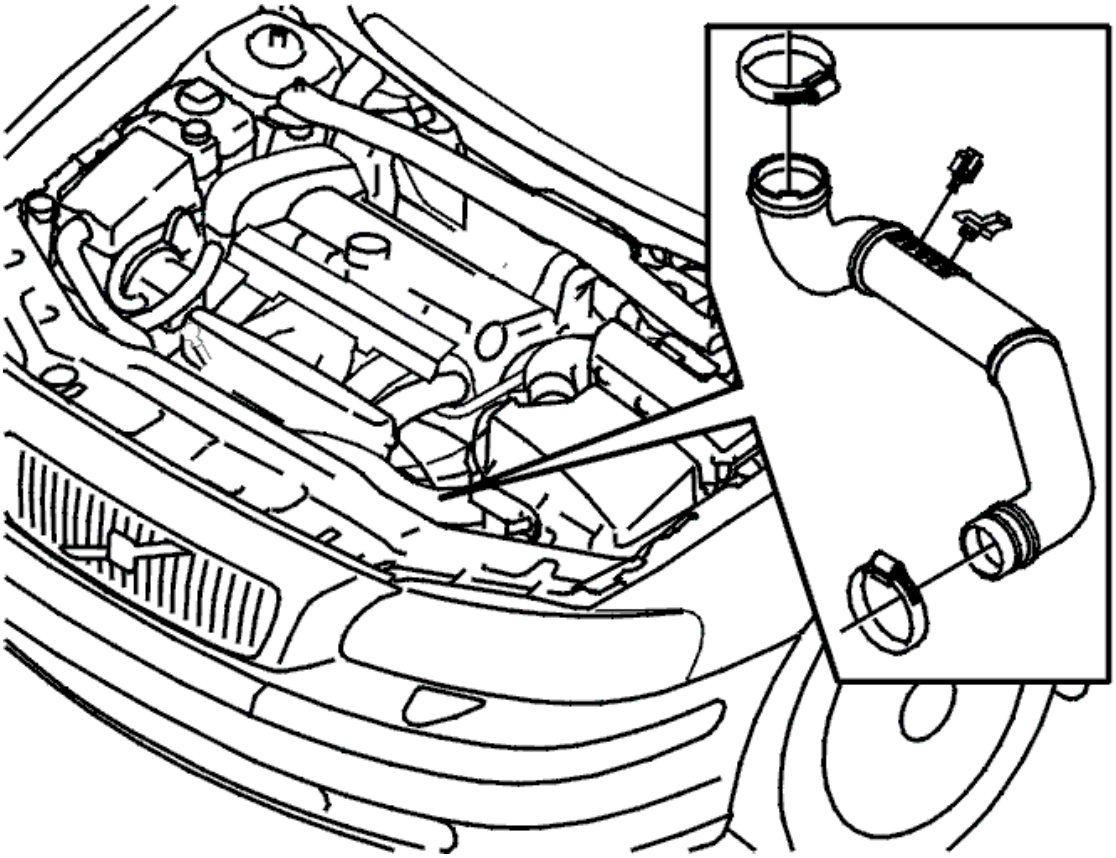

Fig. 37: Identifying Hose Between Charge Air Cooler And Electronic Throttle Module
Courtesy of VOLVO CARS CORPORATION

Remove:

- air intake between the front cover plate and the air cleaner (ACL) housing
- hose between the charge air cooler (CAC) and the electronic throttle module (ETM)

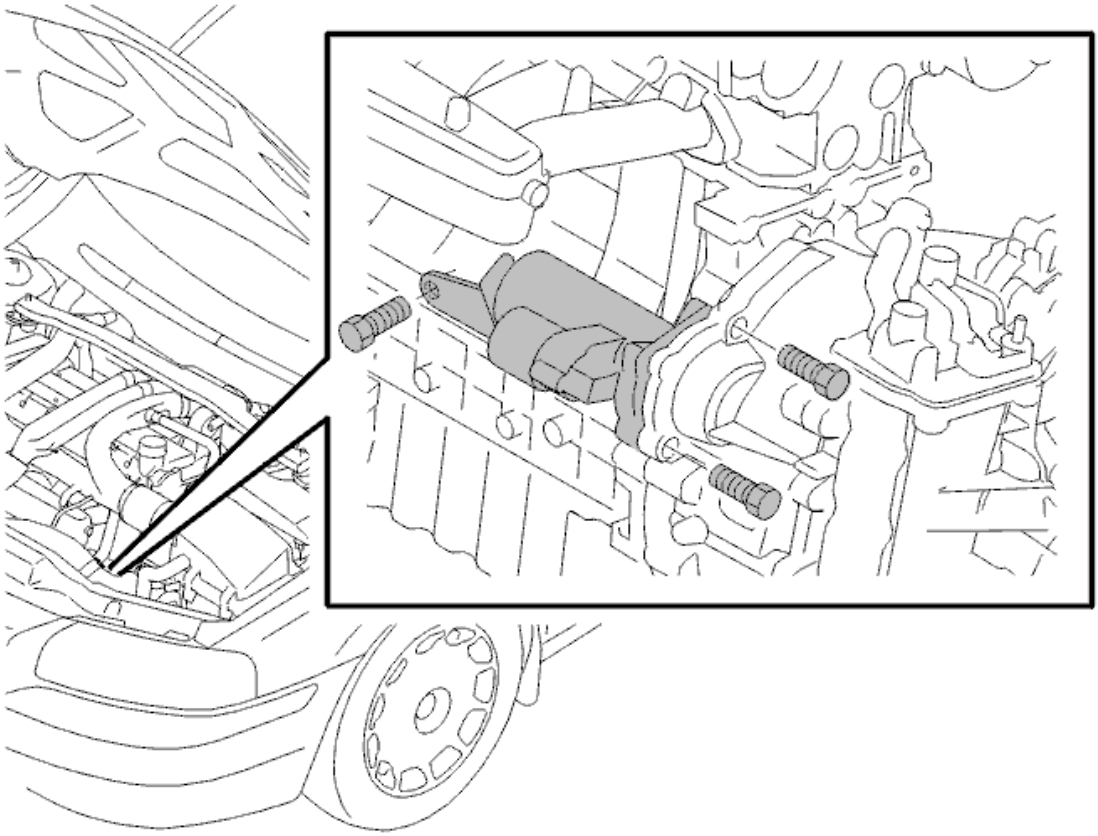

Fig. 38: Identifying Starter Motor And Screws
Courtesy of VOLVO CARS CORPORATION

Unplug the connector and the battery positive lead from the starter motor.

Remove:

- the 2 M10 screws securing the starter motor to the gearbox
- starter motor

INSTALLATION

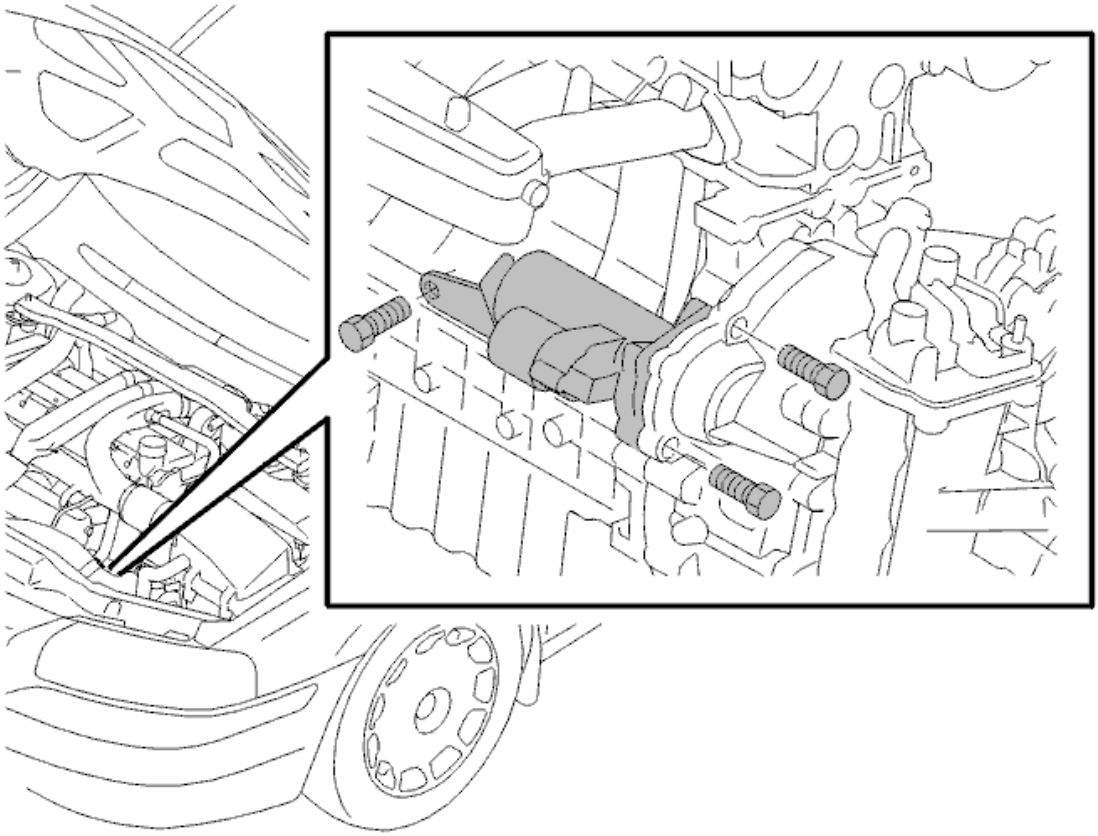

Fig. 39: Identifying Starter Motor And Screws
Courtesy of VOLVO CARS CORPORATION

Install:

- **Torque:** M10

  50 Nm

- **Torque:** Battery positive cable to starter solenoid

  11 Nm

- **Torque:** Start impulse lead

  8, 5 Nm

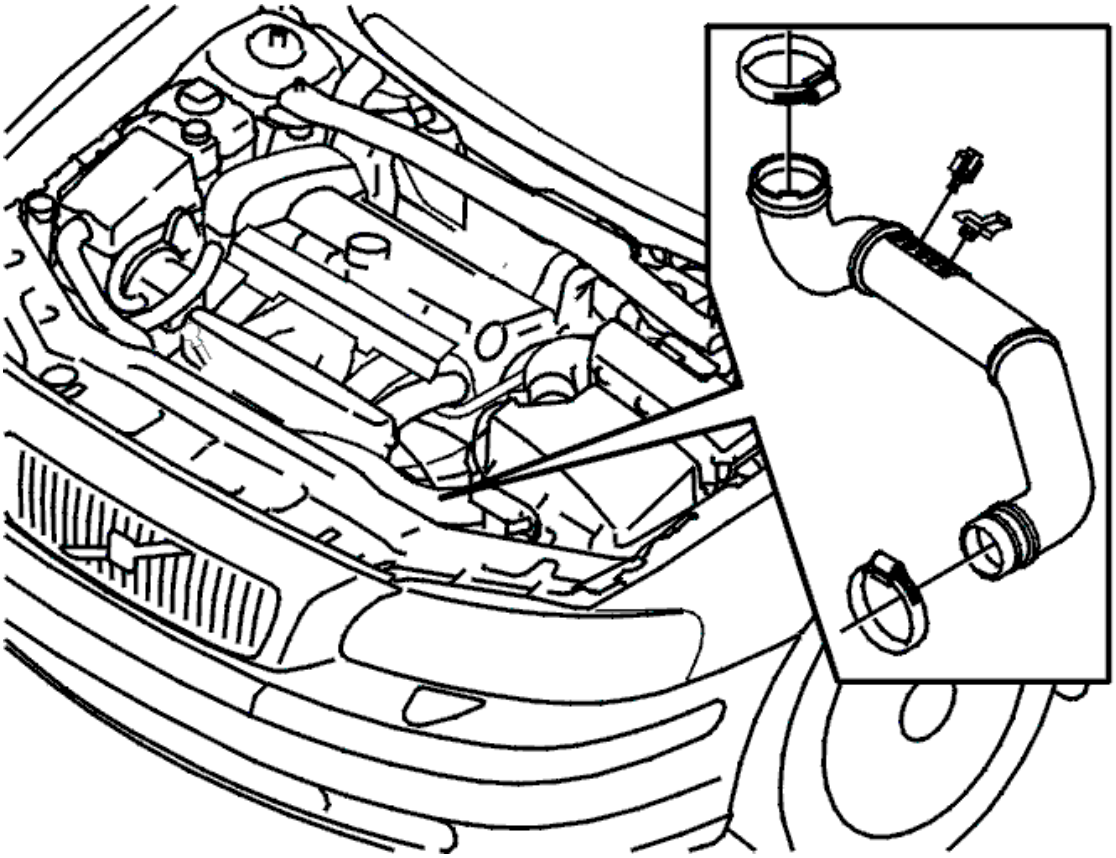

Fig. 40: Identifying Hose Between Charge Air Cooler And Electronic Throttle Module
Courtesy of VOLVO CARS CORPORATION

Install the hose between the charge air cooler (CAC) and the electronic throttle module (ETM).

Install:

- the fresh air intake hose
- the battery negative lead. See **BATTERY, DISCONNECTING** .

STARTER MOTOR (B6324S; 2007-2010)

STARTER MOTOR

NOTE: Removal steps in this procedure may contain installation details.

Disconnect the battery lead. See **BATTERY, DISCONNECTING** .

Fig. 41: Locating Engine Undercover And Clips
Courtesy of VOLVO CARS CORPORATION

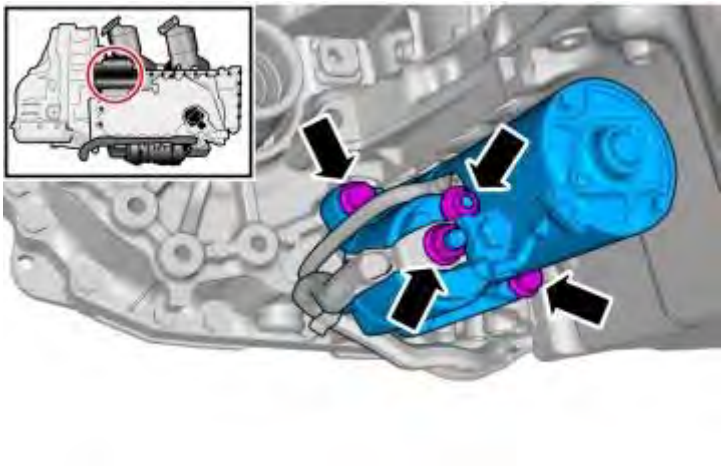

Fig. 42: Identifying Starter Motor
Courtesy of VOLVO CARS CORPORATION

M10. See **TIGHTENING TORQUE**

Positive battery cable to starter solenoid. See **TIGHTENING TORQUE**

Start impulse cable. See **TIGHTENING TORQUE**

To install, reverse the removal procedure

STARTER MOTOR (B6324S5; 2011-2012)

STARTER MOTOR

see **STARTER MOTOR**

EXHAUST

Suspension and steering

EXHAUST

EXHAUST SYSTEM, REPLACING

NOTE: **As the illustrations in this service information are used for different model years and / or models, some variation may occur. However, the essential information in the illustrations is always correct.**

REMOVING THE EXHAUST SYSTEM

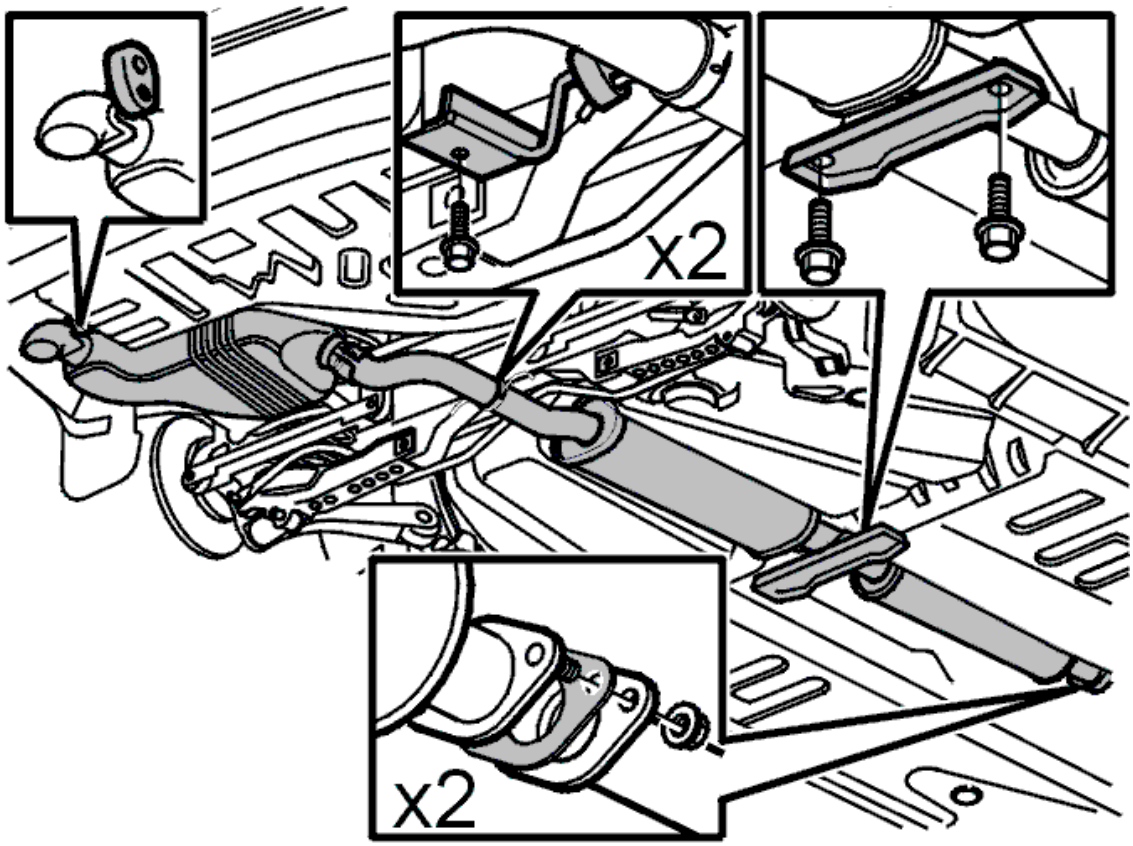

Fig. 1: Exhaust System, Brackets And Fasteners
Courtesy of VOLVO CARS CORPORATION

- Raise the car
- Remove the old exhaust pipe. Begin from the front.

INSTALLING THE EXHAUST SYSTEM

NOTE: **To ensure that there is no exhaust leakage, see: FLANGED JOINT,**

ASSEMBLING .

NOTE: The new exhaust system is supplied in two sections.

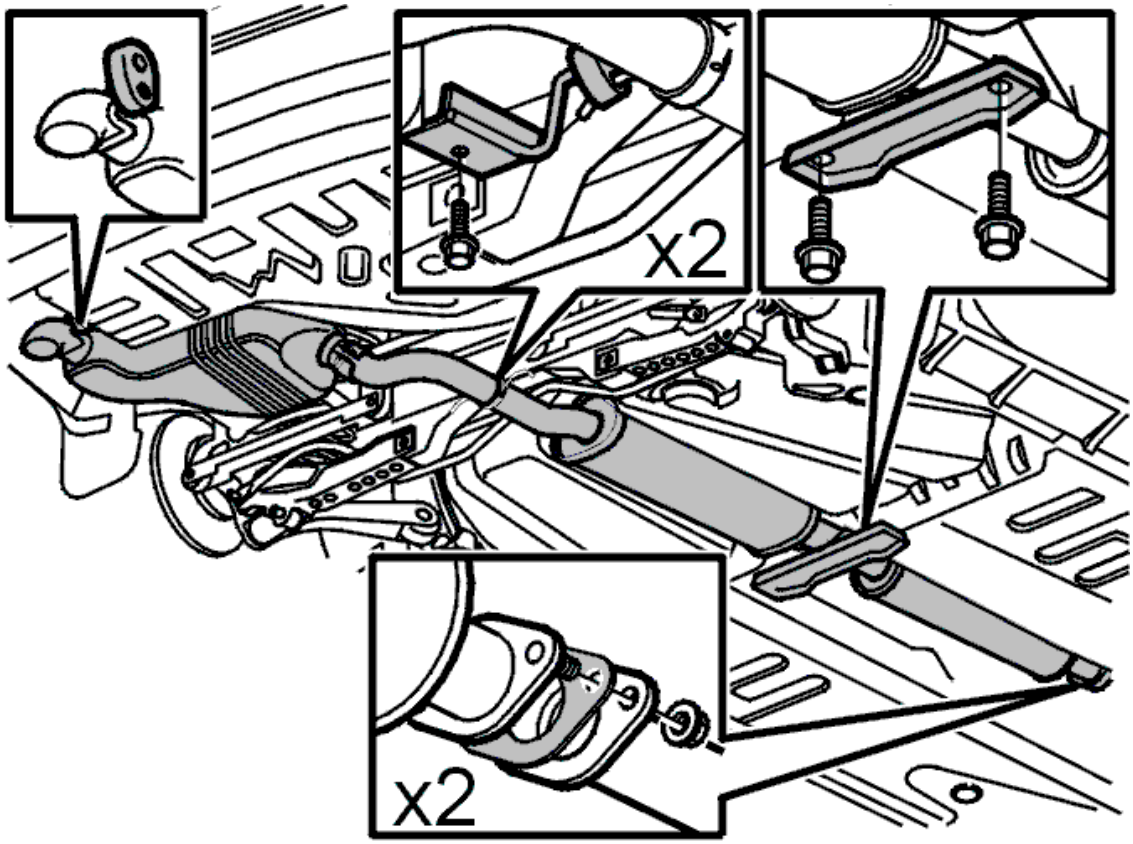

Fig. 2: Exhaust System, Brackets And Fasteners
Courtesy of VOLVO CARS CORPORATION

Install:

- the front section of the exhaust system. Use a new flange gasket. Do not tighten
- the rear section with the pipe clamp
- the mountings for the exhaust system.

Adjust the position of the exhaust system and tighten:

- the screws and the nuts for the flange gasket
- the pipe clamp.

2008 ENGINE PERFORMANCE

Emission Applications - Volvo XC90

EMISSION APPLICATIONS

XC90

Engine & Fuel System	(1) Emission Control Systems & Devices
2008	
3.2L (193") 6-Cyl. SFI	**PCV, EVAP, TWC, FR, SPK, (2) HO2S, CEC, MIL,** EVAP-CPCV, EVAP-LDP, EVAP-VC
4.4L (269") V8 SFI	**PCV, EVAP, TWC, FR, SPK, (2) HO2S, CEC, MIL,** EVAP-CPCV, EVAP-LDP, EVAP-VC

(1) For quick reference, major emission control systems and devices are listed in bold type; components and other related devices are listed in light type.

(2) Equipped with 4.

ABBREVIATIONS

CEC

Computerized Engine Controls

EVAP

Fuel Evaporative System

EVAP-CPCV

EVAP Canister Purge Control Valve

EVAP-LDP

EVAP Leak Diagnostic Pump

EVAP-VC

EVAP Vapor Canister

FR

Fill Pipe Restrictor

HO2S

Heated Oxygen Sensor

MIL

Malfunction Indicator Light

PCV

Positive Crankcase Ventilation

SPK

Spark Controls

SPK-CC

Spark Computer Controlled

TWC

Three-Way Catalytic Converter

ENGINE PERFORMANCE

Firing Order & Cylinder Identification - Volvo - All Models

FIRING ORDER & CYLINDER IDENTIFICATION

NOTE: **This information is intended as a quick reference for firing order and cylinder identification only. The information provided covers many vehicles and may include some information that does not apply to the vehicle you have currently selected.**

4 CYLINDER ENGINE

Engine Configuation	Firing Order	Cylinder Identification
In-Line 4	1-3-4-2	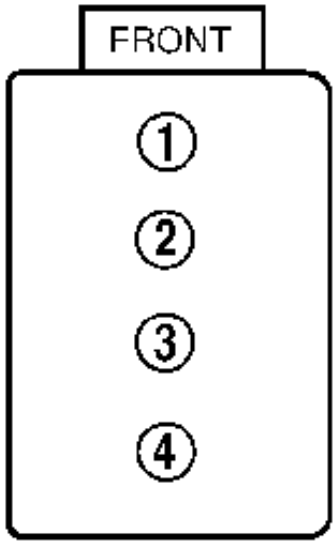

5 CYLINDER ENGINE

Engine Configuation	Firing Order	Cylinder Identification
In-Line 5	1-2-4-5-3	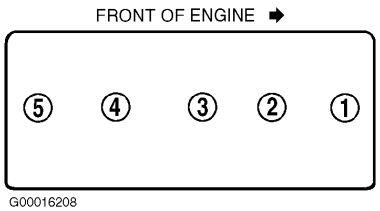

6 CYLINDER ENGINE

Engine Configuation	Firing Order	Cylinder Identification
In-Line 6	1-5-3-6-2-4	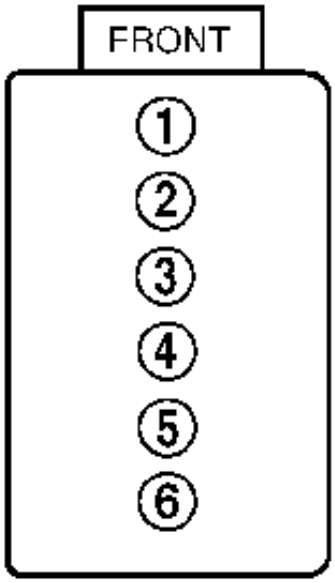 G00016201

V8 ENGINE

Engine Configuation	Firing Order	Cylinder Identification
V8	1-8-4-3-6-5-7-2	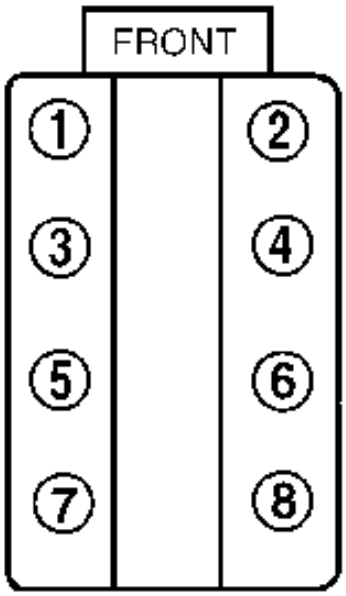 G00016205

ENGINE PERFORMANCE

General - Design and Function

ENGINE (B6324S; 2007-2010)

DESIGN AND FUNCTION

see **DESIGN AND FUNCTION**

OVERVIEW

see **OVERVIEW**

ENGINE (B6324S5; 2011-2012)

DESIGN AND FUNCTION

see **DESIGN AND FUNCTION**

OVERVIEW

see **OVERVIEW**

ENGINE (B8444S; 2005-2011)

DESIGN

see **DESIGN**

FUNCTION

see **FUNCTION**

OVERVIEW

see **OVERVIEW**

ENGINE OVERVIEW (2003)

ENGINE GENERAL

B5244S6 AND B5244S, USA

General

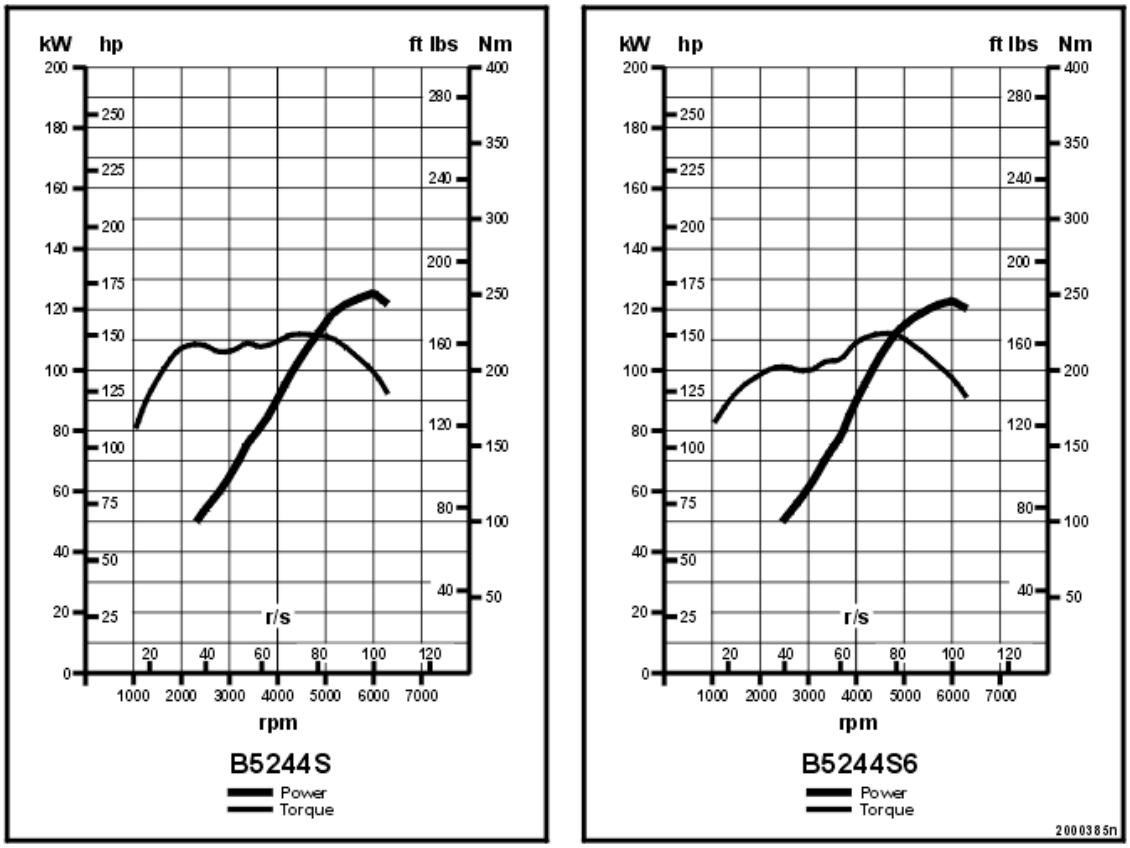

Fig. 1: Identifying B5244S And B5244S6 Power/Torque Chart
Courtesy of VOLVO CARS CORPORATION

B5244S6, SULEV+ (Super Ultra Low Emission Vehicle), California

- The B5244S6 is based on the B5244S
- Corresponds to emissions regulations PZEV (Partial Zero Emission Vehicle). This car must satisfy statutory warranty, exhaust and EVAP regulations
- Introduced only in the S60 and V70
- Due to emissions requirement, only available in California
- Maximum torque 225 Nm. Maximum power 123 kW
- DENSO engine management system
- New ETA (Electronic Throttle Actuator)
- Start is based on the Wide Range concept
- Only available with automatic transmission AW 55-50SN
- The final drive ration is 2.65:1 to ensure good response.

B5244S

- Only available in the 125 kW version
- DENSO engine management system

- New ETA (Electronic Throttle Actuator)
- Start is based on the Wide Range concept
- Available with both manual and automatic transmissions
- Final drive 2.44:1.

B5244S6, news

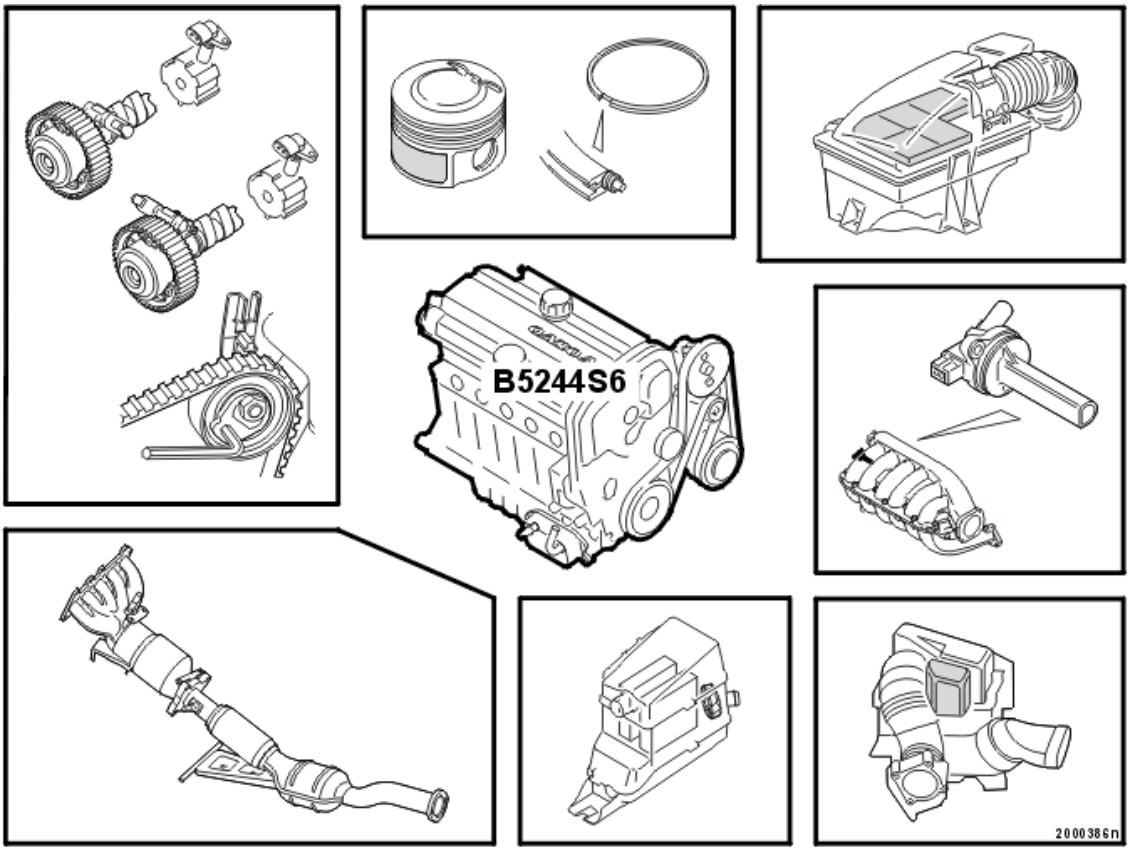

Fig. 2: Identifying B5244S6 Engine Components
Courtesy of VOLVO CARS CORPORATION

Cylinder head

Cylinder head with CVVT (Continuous Variable Valve Timing) for both the intake and exhaust camshafts.

Change over angle CVVT:

- intake = 60 crankshaft degrees
- exhaust = 30 crankshaft degrees.

Wide Range. When cold starting in positions P, N (automatic transmissions) or neutral (manual transmissions), the engine speed may initially reach approx.2000 rpm before dropping immediately to approx.1650 rpm for 15 - 20 seconds. The engine then runs at a low ignition setting and lean lambda. The engine speed (RPM) then drops

to idle speed approx.750 rpm. This is to reduce the emissions during the warm-up phase.

The camshaft toothed belt is reinforced to increase service life. The belt tensioner has a new gasket to ensure an optimal seal.

Pistons

Graphite coated pistons.

The pistons have a two piece oil control ring. The design of a stainless steel ring with nitrated steel spring ensures good service life. The thickness of the oil control ring is 2 mm.

Evaporative emission canister (EVAP canister) in the air cleaner (ACL) housing

An EVAP canister is integrated in the air cleaner (ACL) housing.

There is no service interval for the EVAP canister. If the canister is damaged and needs to be replaced, the entire cover must be replaced.

The canister absorbs the hydro-carbons which return through the air cleaner when the engine is switched off. When the engine is started, the absorbed hydro-carbons enter into the air flow and are combusted.

Crankcase ventilation

The connection nipple for the crankcase ventilation at the intake manifold has been modified to provide more even distribution of the crankcase vapors between the cylinders. A positive temperature coefficient (PTC) element prevents freezing.

The flame trap has a labyrinth which efficiently separates oil from the crankcase vapors before they are returned to the intake manifold.

Resonator

There is a resonator on the hose between the mass air flow (MAF) sensor and the ETA (Electronic Throttle Actuator). This is to satisfy European legal requirements for vehicle sound levels. By modifying the unfavorable frequencies which occur at high engine speeds, the sound levels of the intake and exhaust systems are reduced.

When the pulses affect the measurement function of the mass air flow (MAF) sensor, software in the engine control module (ECM) compensates for this. Because the pulses have been reduced, the software has also been modified from previous engine control modules (ECM).

If the resonator is removed, the signals from the mass air flow (MAF) sensor will be incorrectly interpreted by the engine control module (ECM).

Electrical cooling fan for the control module box

The fan starts when the temperature in the control module box reaches approx. +70 °C and stops at approx. +65 °C. The temperature sensor in the engine control module (ECM) is used as a reference.

Three-way catalytic converter (TWC)

The manifold with the catalytic converter, CCC (Closed Coupled Catalyst), has double ceramic monoliths.

The Under Floor Catalyst (UCF) has a ceramic monolith.

B5244S, ULEV (Ultra Low Emission Vehicle)

Differences from B5244S6:

- CVVT (Continuous Variable Valve Timing) only for the intake camshaft. Change over angle CVVT intake = 60 crankshaft degrees
- Emissions regulations apply for 100 000 miles/10 years
- The pistons have three piece oil control rings, 2.5 mm thick
- A new manifold gives improved torque at low engine speeds
- No EVAP canister in the air cleaner (ACL) housing
- Only an under floor catalyst with two ceramic monoliths and integrated muffler.

B5244S6, fuel injection system

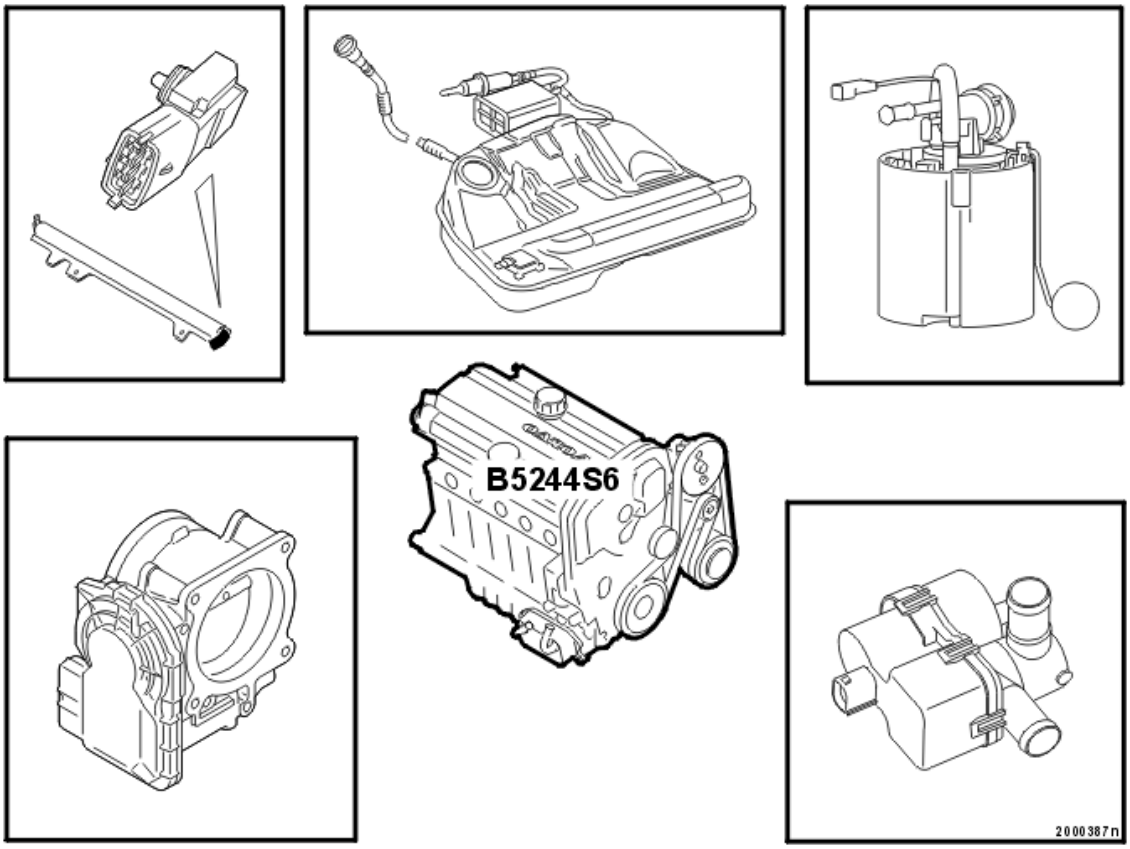

Fig. 3: Identifying B5244S6 Fuel Injection System
Courtesy of VOLVO CARS CORPORATION

Combined fuel pressure / fuel temperature sensor

Fuel temperature sensor

A negative temperature coefficient (NTC) sensors transmits a voltage signal (corresponding to a certain temperature) to the engine control module (ECM). The signal is used to compensate for changes in fuel temperature. The injection period is regulated to provide compensation.

Example: If the engine is restarted after a short stop, the temperature of the fuel in the fuel rail will have increased. The engine control module (ECM) uses the signal from the sensor to compensate for the increased temperature by extending the injection period. (The volumetric energy content of hot fuel is lower than cold fuel).

Fuel pressure sensor

For information about this function, see "Control of the fuel pump".

Fuel injection system miscellaneous

- Fuel tank constructed from stainless steel
- Fuel pump (FP) which is activated as required
- Leak diagnostic based on the overpressure principle
- DENSO fuel control system
- New DENSO ETA (Electronic Throttle Actuator).

FUEL SUPPLY SYSTEM B5244S6 AND B5244S, USA

Fuel tank

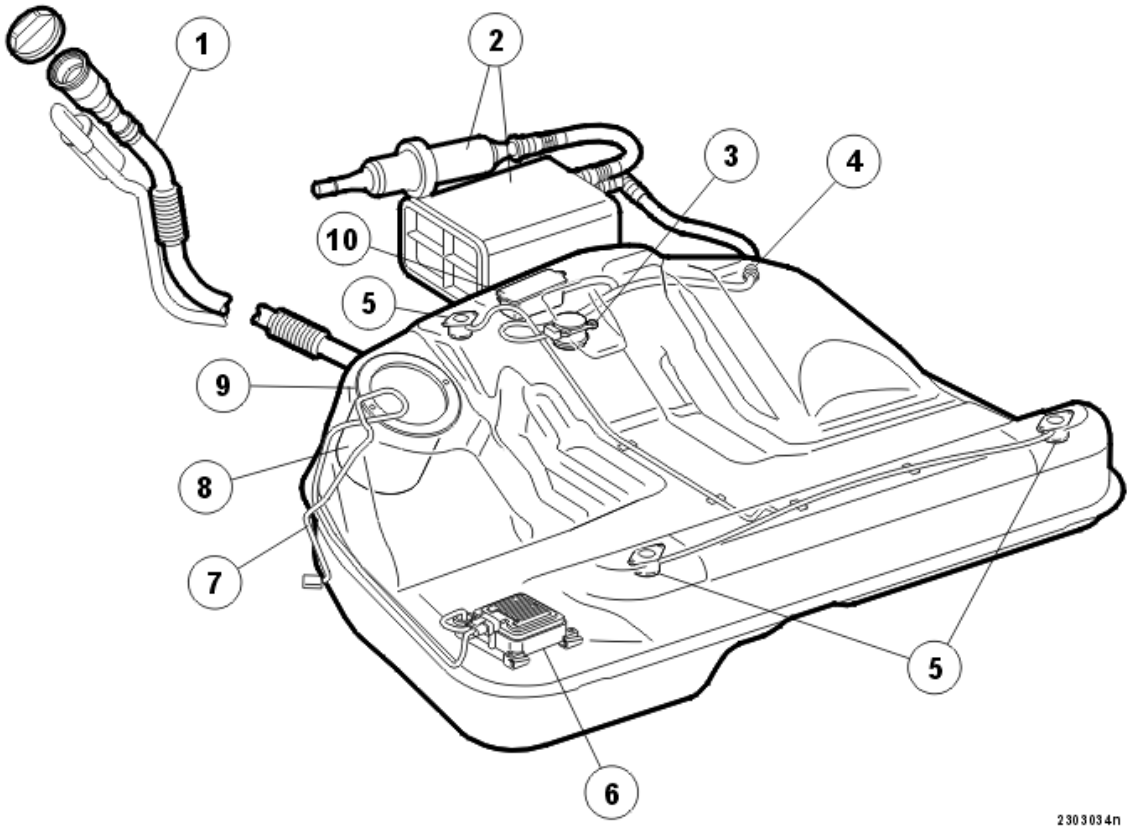

Fig. 4: Identifying Fuel Tank Components
Courtesy of VOLVO CARS CORPORATION

1. Fuel filler pipe
2. EVAP canisters
3. FLVV (Float Limit Vent Valve)
4. Outlet to canisters
5. Roll over valves
6. Control module for the fuel pump (FP) (Pump Electronic Module)
7. Wiring
8. Fuel pump
9. Service hatch
10. Water separator, LSD (Liquid Separation Device).

- In order to satisfy statutory requirements in California, the fuel tank is made of stainless steel. The release of hydro-carbons is reduced because steel is less permeable than plastic
- Volume 70 liters
- The fuel filler pipe, which is manufactured from stainless steel, is welded to the fuel tank. The small diameter of the pipe limits the flow of air into the fuel tank when refueling. The air supply effects the degree to which the canisters full up and therefore emissions
- Fuel tank filler cap with more efficient valves

- The geometric shape of the fuel tank enables three roll-over valves to be used
- The service hatch is made of plastic. The hatch is secured using a stainless steel nut
- The B5244S6 engine has an evaporative emission (EVAP) system with two canisters. There is a water separator upstream of the canisters. The EVAP canister closest to the fuel tank has three chambers filled with active carbon. There is another canister, HCS (Hydro Carbon Scrubber), connected in series. Based on a honeycomb coated with active carbon
- B5244S has only one canister (does not have HCS).

Fuel pump

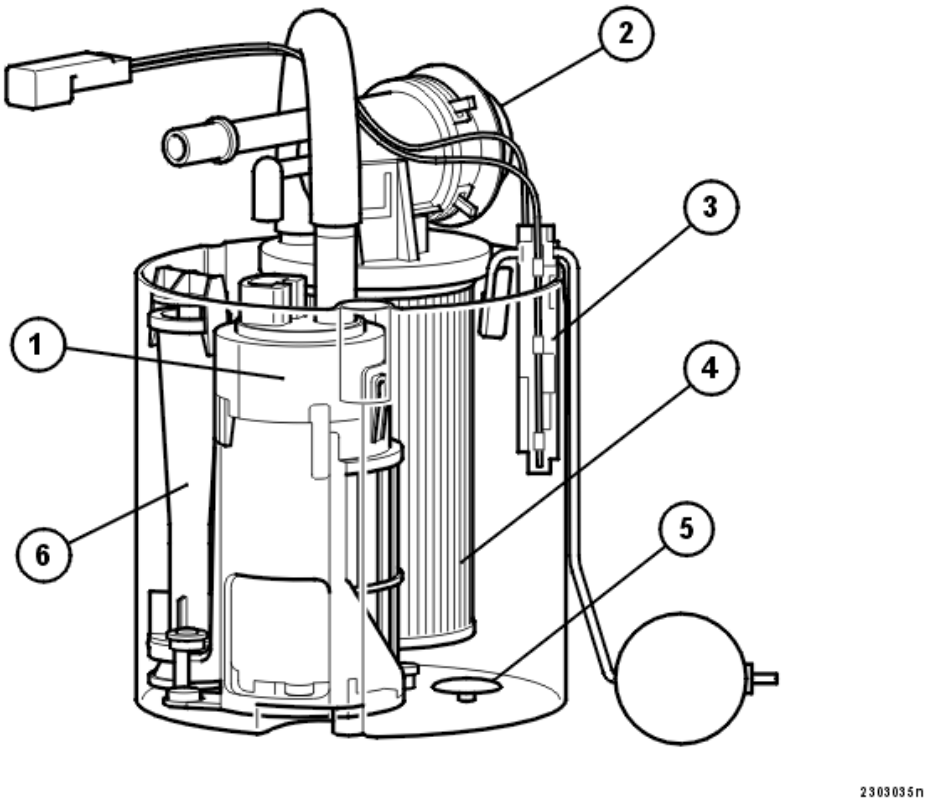

Fig. 5: Identifying Fuel Pump Components
Courtesy of VOLVO CARS CORPORATION

1. Pump with an integrated PRV safety valve (Pressure Relief Valve)
2. PVV (Pressure Ventilation Valve)
3. Fuel level sensor
4. Fuel filter
5. Non-return valve
6. Ejector pump.

A fuel pump (FP) with a flow which is adjusted to suit the requirements. By controlling the power consumption

of the pump based on the fuel requirement of the engine, the following is achieved:

- long service life (all components in the system must last 150 000 miles/15 years)
- tailored power consumption.

A DC motor drives a pump which works on the turbine principle.

Pump flow is as follows at:

- full load approx. 90 liters per hour at 400 kPa (corresponding to 380 kPa at the fuel rail)
- idle speed approx. 1.2 to 2.0 liters per hour.

The power consumption varies from approx. 8 A at full capacity to approx. 2 A at idle speed.

Valves

PVV (Pressure Ventilation Valve)

The valve compensates for surges in pressure that occur when, for example, fuel injection ceases during engine braking. Allowing fuel to continually pass through the valve ensures rapid pressure compensation. Any excess fuel flows into the pump housing.

The pressure is limited to 400 kPa (corresponds to 380 kPa at the fuel rail).

When the engine is switched off, the valve maintains a residual pressure in the fuel injection system to prevent condensation.

Non-return valve

Releases fuel into the pump housing when the fuel tank is refilled having been almost empty. The valve is closed if the car tilts so that fuel remains in the pump housing.

PRV (Pressure Relief Valve)

Safety valve integrated in the fuel pump (FP). The valve opens between 550 kPa - 850 kPa.

Ejector

Continuously fills the pump housing with fuel. approx. 10-15 liters per hour always flows from the fuel pump (FP) through the ejector and back to the pump housing.

Fuel filter

The fuel filter is in the pump housing. Cannot be replaced.

Fuel pump control

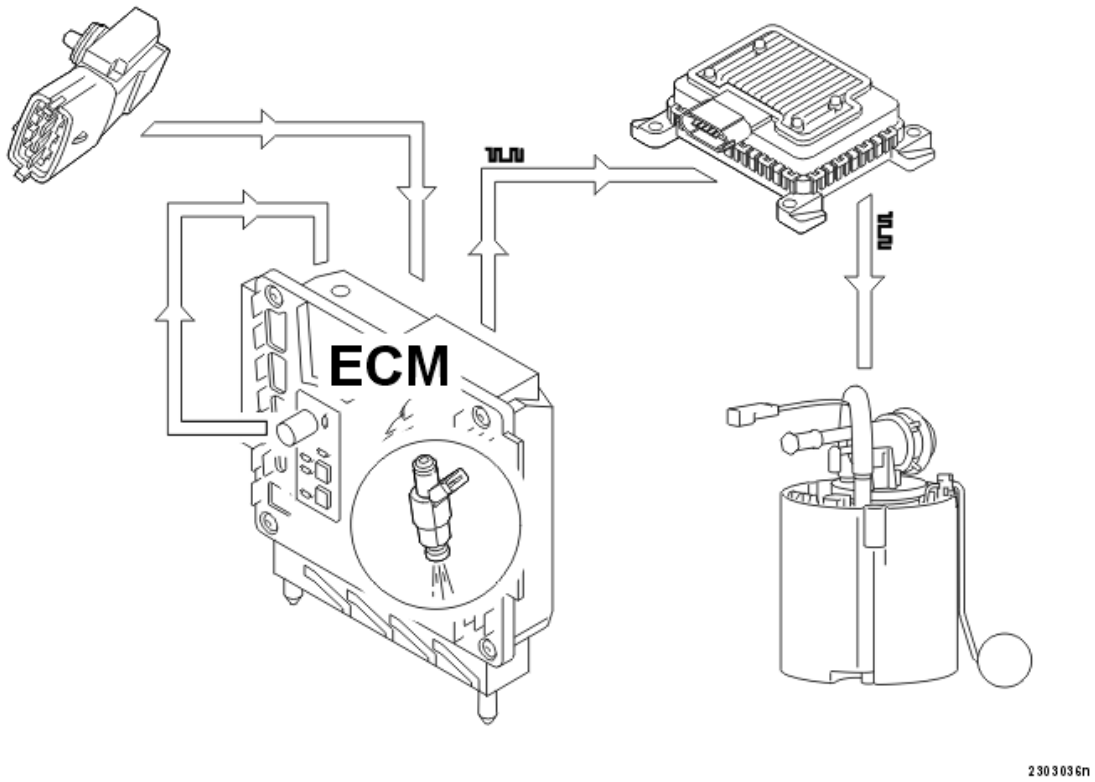

Fig. 6: Identifying Fuel Pressure Regulation
Courtesy of VOLVO CARS CORPORATION

The following components are included in the system which controls the fuel pump:

- Engine control module (ECM) with built-in atmospheric pressure sensor
- Fuel pressure sensor
- Control module for the fuel pump (FP) (Pump Electronic Module).

Function

A piezo-electric fuel pressure sensor transmits a voltage signal to the engine control module (ECM) about the actual pressure in the fuel rail.

The engine control module (ECM) compares the signal with the signal from the atmospheric pressure sensor in the engine control module (ECM). The fuel pressure is regulated so that the pressure in the fuel rail is always 380 kPa above the atmospheric pressure (i. e. the difference in pressure is 380 kPa).

Depending on factors such as engine speed and load, the engine control module (ECM) transmits a calculated pulse width modulated (PWM) signal to the control module for the fuel pump (FP). The control module for the fuel pump sends the signal on to the fuel pump at a higher frequency.

The PWM signal corresponds to a certain feed voltage to the pump. This in turn corresponds to a certain pump

flow rate. By adapting the supply voltage, the load of the pump matches the fuel requirement.

If the engine is running at higher engine speeds (RPM) and under high load, the speed of the pump is higher (greater flow) than at small loads and low engine speed (RPM).

If the pressure briefly rises to 400 kPa, during acceleration for example, the fuel flow is compensated by reducing the injection period. For longer periods of time, such as a couple of seconds, the fuel pressure is lowered via the fuel pump to compensate.

A diagnostic trouble code (DTC) is stored If the pressure sensor detects that the pressure remains at the same value for a long time. The emissions warning lamp lights if the same fault persists or returns.

A diagnostic trouble code (DTC) is stored in the fuel pressure system if there is no signal from the pressure sensor or if it is implausible. The fuel pump (FP) is controlled using a PWM signal. The signal is calculated from the fuel flow - based on the injection periods and the desired pressure.

EMISSIONS CLASSIFICATIONS

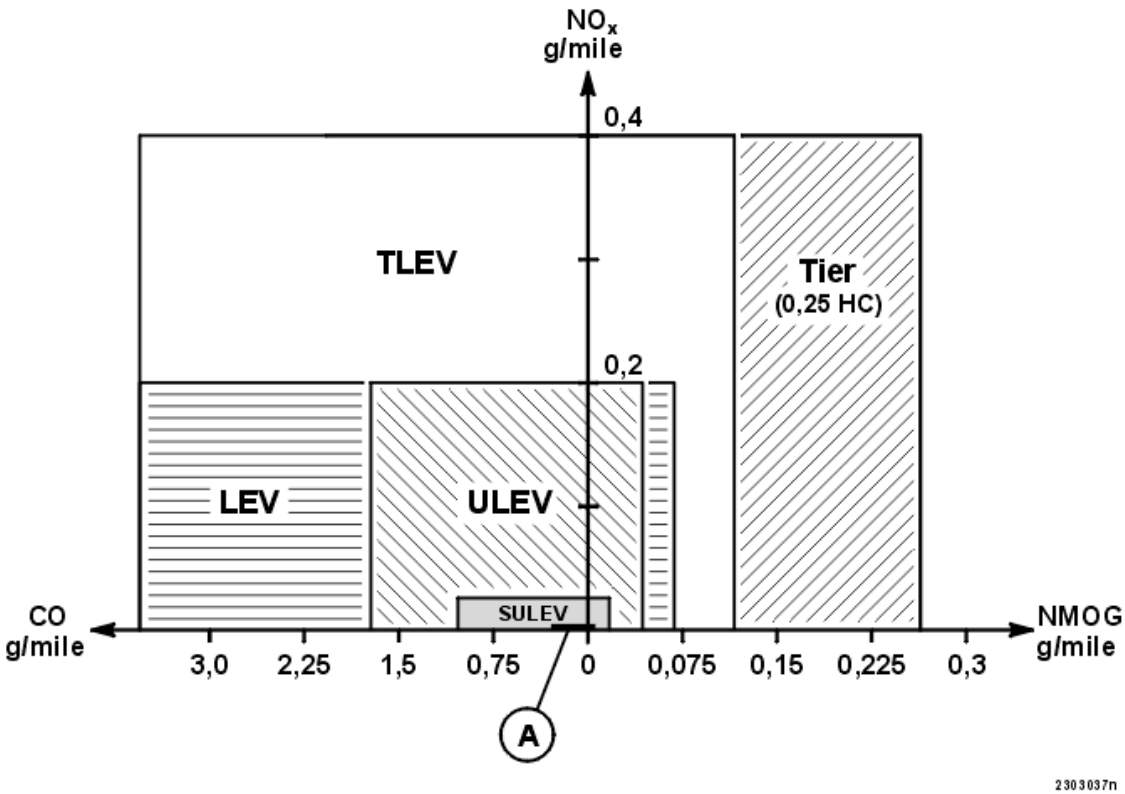

Fig. 7: Identifying Emission Classifications Chart
Courtesy of VOLVO CARS CORPORATION

The illustration shows the relationship between the different emissions classifications.

- Tier 1 (the applicable obligatory requirements, both federal and in California)

- TLEV (Transitional Low Emission Vehicle)
- LEV (Low Emission Vehicle)
- ULEV (Ultra Low Emission Vehicle)
- LEV II (Low Emission Vehicle, stage 2)
- ULEV II (Ultra Low Emission Vehicle, stage 2)
- SULEV (Super Ultra Low Emission Vehicle)
- NOx g/mile (nitrous oxides)
- CO g/mile (carbon monoxide)
- NMOG g/mile (Non-Methane Organic Gases). These are the basis of smog. In principle NMOG are hydro-carbons
- "A" symbolizes the optimal target of the car when it leaves the factory.

B5254T2

General

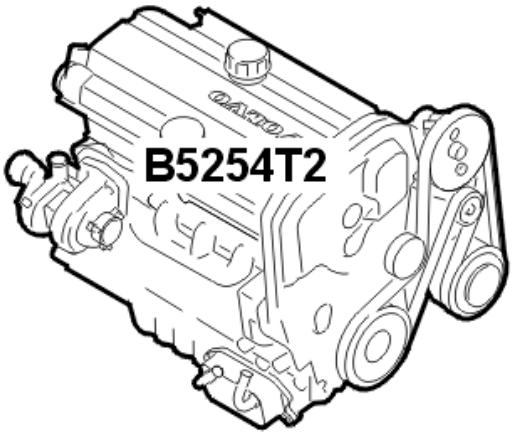

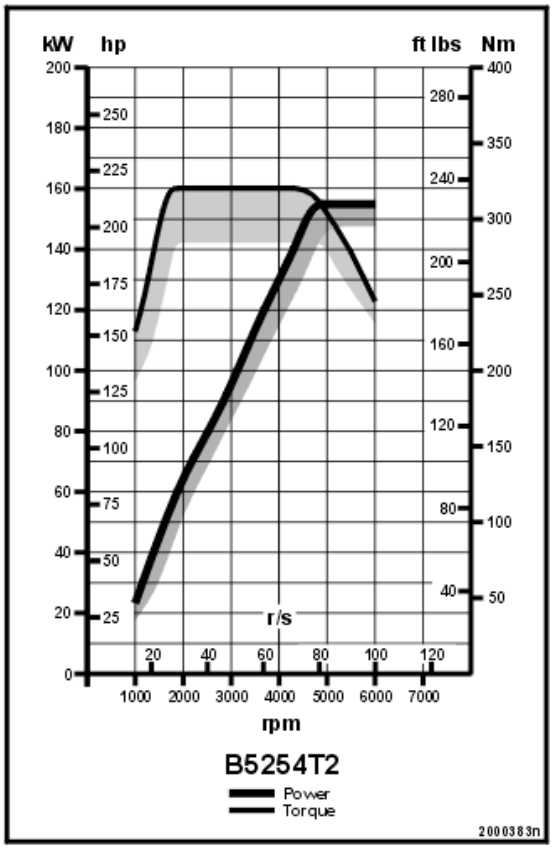

Fig. 8: Identifying B5254T2 Power/Torque Chart
Courtesy of VOLVO CARS CORPORATION

- Based on the B5244T3
- There have been a number of changes to the engine, resulting in improved performance and lower

emissions

- A modified length of stroke results in a cylinder capacity of 2521 cm^3 .
- Meets the emissions requirements for EURO 2005 (EURO 4) and ULEV II
- The maximum torque of 320 Nm is reached at 1500 rpm
- Maximum power is 154 kW (210 hk) at 4800 rpm
- Engine management system Bosch ME 7.01
- The start sequence is based on the Wide Range concept.

General, continued

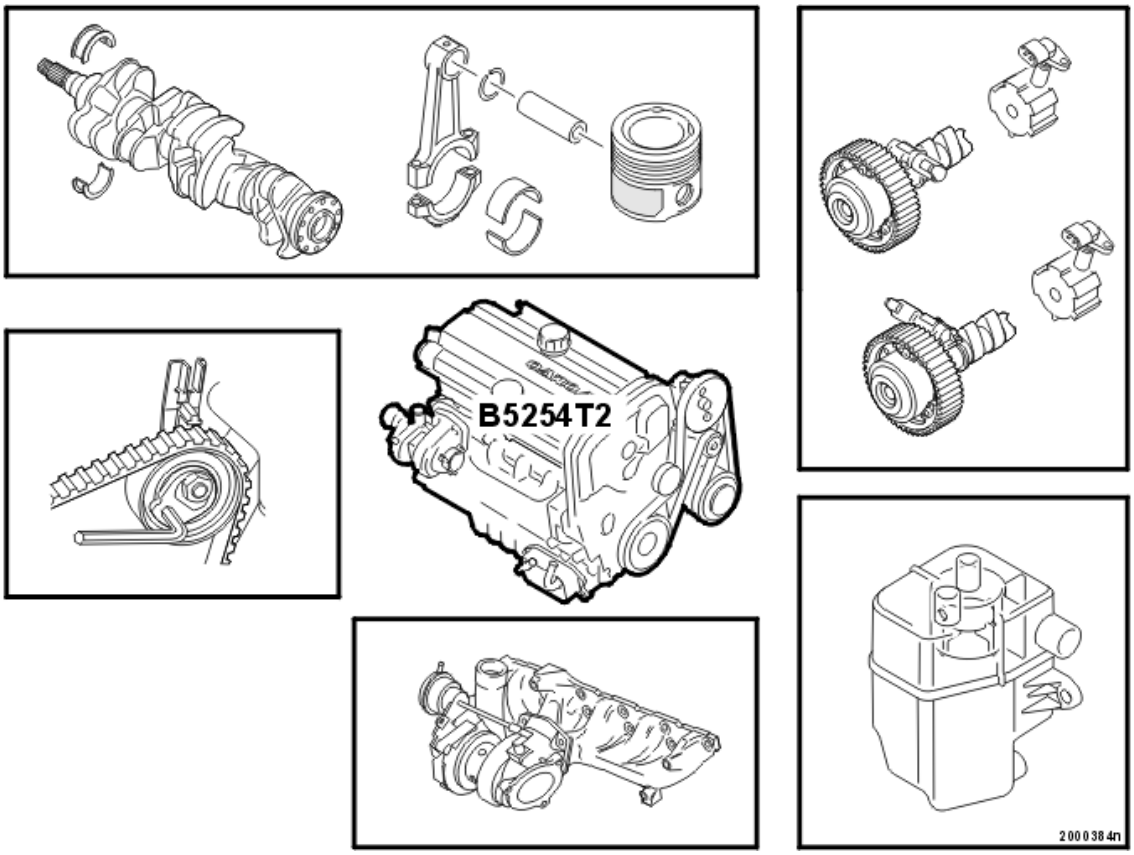

Fig. 9: Identifying B5254T2 Engine Components
Courtesy of VOLVO CARS CORPORATION

Crankshaft, crankshaft bearing

Stroke of 93.2 mm. Forged. Weight: 21559 grams. Connecting rod pins: O 50.00 mm. Main bearing journals: O 65.00 mm.

Both the upper and lower crankshaft bearings are aluminum. The upper bearing has a lubrication hole.

Connecting rods, connecting rod bearing

Forged connecting rods with split covers. Length center to center = 145 mm. Weight = 634 grams.

Both the upper and lower bearings are aluminum.

Pistons

Graphite coated pistons.

Diameter/length gudgeon pin = 21 mm/60 mm.

Cylinder head, camshafts

Cylinder head with CVVT (Continuous Variable Valve Timing) for both the intake and exhaust camshaft.

Change over angle CVVT:

- intake = 50 crankshaft degrees
- exhaust = 30 crankshaft degrees.

Other

Flame trap with labyrinth.

Modified manifold providing improved gas flow and more exhaust energy to the turbine in the turbocharger (TC). Gives a quicker turbocharger response.

The camshaft toothed belt is reinforced to increase service life. The belt tensioner has a new gasket to ensure an optimal seal.

ENGINES, GENERAL MODIFICATIONS

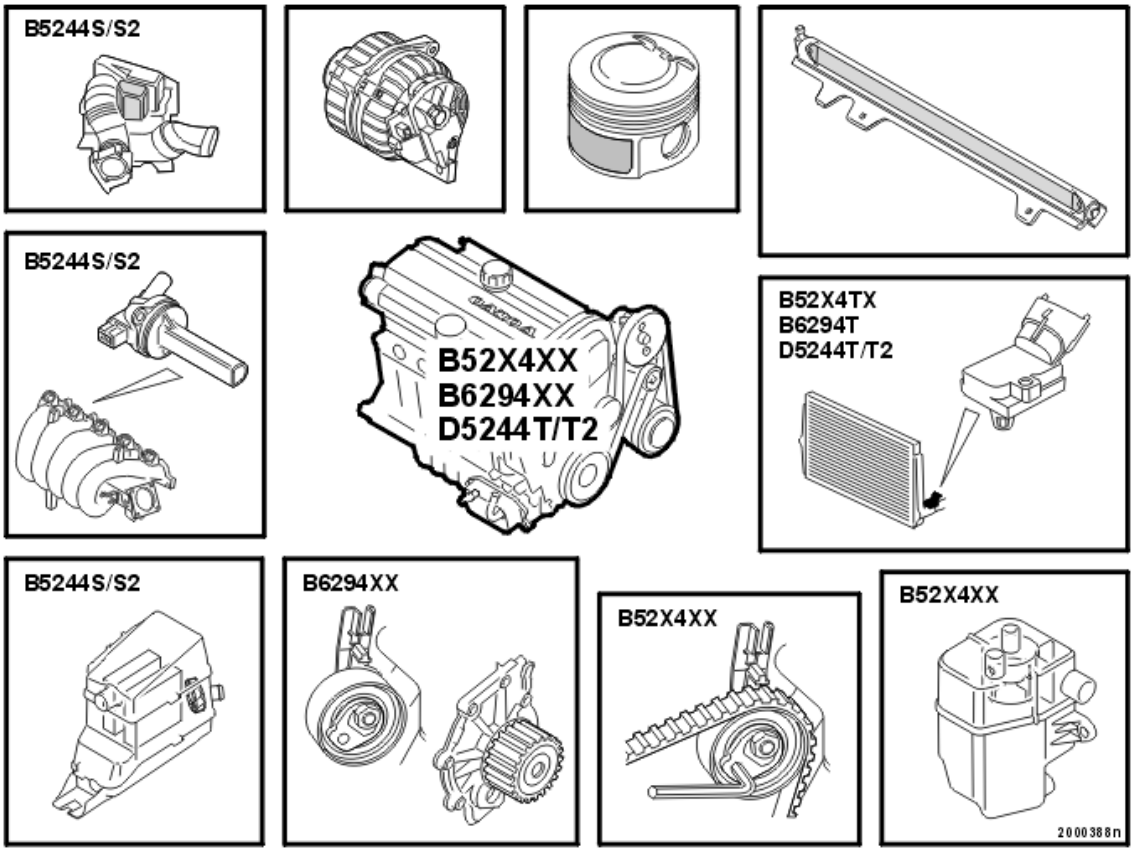

Fig. 10: Identifying General Engine Modifications
Courtesy of VOLVO CARS CORPORATION

5 and 6 cylinder diesel and gasoline engines

Generator

The first ramp up of the charge current (after start) is always completed, irrespective of the engine speed (rpm). This increases the engine load successively, preventing sudden loads. Otherwise the ramp up characteristic of the charge current is maintained.

Previously the ramp up was interrupted and full charge current was permitted when the generator speed exceeded approx. 3400 rpm, even during the first ramp up.

Function:

- The charge current is 0 A until the generator speed has reached approx. 1450 rpm. The charge regulator continues to maintain the charge current at 0 A for a few further seconds
- Ramp up then begins. For a number of seconds the charge current increases linearly from 0 % to 100 % of the maximum power handling capacity. If the requirement is less than the power handling capacity, it takes less than 6 seconnds to reach the controlled condition.

General:

- All 5 cylinder engines have generators with freewheels
- 6 cylinder engines have fixed pulleys
- All 5 and 6 cylinder engines have 140 A generators.

Unique to the XC90:

- The 5 cylinder engines (diesel and gasoline) with rear air conditioning have 160 A generators
- The 6 cylinder engines have 160 A generators.

5 and 6 cylinder gasoline engines

Pistons

All engines (except B5204TX, B5234TX and B5244TX) have pistons with the mantles coated with graphite. This reduces noise and lowers the friction between the piston and the cylinder, particularly when cold starting and under large loads at low engine speeds. Also improves resistance to scoring.

Pulsation damper fuel rail

The engines have a pulsation damper, ATD (Air Tube Damper), in the fuel rail. The pulsation damper is filled with air and helium. Helium is used during manufacture to check for leaks.

Combined temperature/pressure sensor for intake air (turbocharged engines only)

The temperature/pressure sensor, T-MAP (Temperature/Manifold Absolute Pressure), is on the outlet side of the charge air cooler (CAC).

The sensors work according to the previous principles.

There are new resistance values for the temperature sensor.

5 cylinder naturally aspirated and turbocharged engines

The flame trap has a labyrinth which efficiently separates oil from the crankcase vapors before they are returned to the intake manifold. Does not apply to Bi-Fuel cars.

The camshaft toothed belt is reinforced to increase service life. The belt tensioner has a new gasket to ensure an optimal seal.

B6294T and B6294S2

The diameter of the gear drive on the coolant pump has been reduced. The number of teeth has been reduced from 21 to 17. The pump operates at a higher speed, improving the flow and therefore engine cooling.

New tension pulley for the camshaft. The increased diameter compensates for the smaller gear drive for the coolant pump. The timing belt is unchanged.

B5244S/S2

- CVVT (Continuous Variable Valve Timing) only for the intake camshaft. Change over angle CVVT intake = 60 crankshaft degrees
- A new manifold gives improved torque at low engine speeds
- Only an under floor catalyst with two ceramic monoliths and integrated muffler
- New ETA (Electronic Throttle Actuator)
- Start is based on the Wide Range concept
- Electrical cooling fan for the control module box. The fan starts when the temperature reaches approx. +70 °C and stops at approx. +65 °C. The temperature sensor in the engine control module (ECM) is used as a reference
- The connection nipple for the crankcase ventilation at the intake manifold has been modified to provide more even distribution of the crankcase vapors between the cylinders. A positive temperature coefficient (PTC) element prevents freezing.

Resonator

There is a resonator on the hose between the mass air flow (MAF) sensor and the ETA (Electronic Throttle Actuator). This is to satisfy European legal requirements for vehicle sound levels. By modifying the unfavorable frequencies which occur at high engine speeds, the sound levels of the intake and exhaust systems are reduced.

When the pulses affect the measurement function of the mass air flow (MAF) sensor, software in the engine control module (ECM) compensates for this. Because the pulses have been reduced, the software has also been modified from previous engine control modules (ECM).

If the resonator is removed, the signals from the mass air flow (MAF) sensor will be incorrectly interpreted by the engine control module (ECM).

B5204T4, B5234T7, B5244T9

General

- Engine management system Bosch 7.01
- Bosch ETA (Electronic Throttle Actuator)
- The location of the evaporative emission system (EVAP) valve has been moved to the engine
- CVVT only for the exhaust camshaft
- Leak diagnostic based on the overpressure principle. Applies only to USA.

D5244T/T2

XC90

- The fuel pressure sensor and safety valve have changed place on the fuel rail for increased safety in the event of a collision

- Unique software due to EGR calibration, weight and to ensure a more rapid response during "take off".

All D5244T/T2

- The manifold absolute pressure (MAP) sensor on the intake manifold has been withdrawn and replaced by a combined T-MAP sensor. Only the MAP sensor is used. The signal characteristic is unchanged
- Adapted oil drain pipe for the turbocharger (TC)
- Modified intake manifold for the coolant pump.

UNIQUE TO THE XC90 WITH B6294T ENGINE

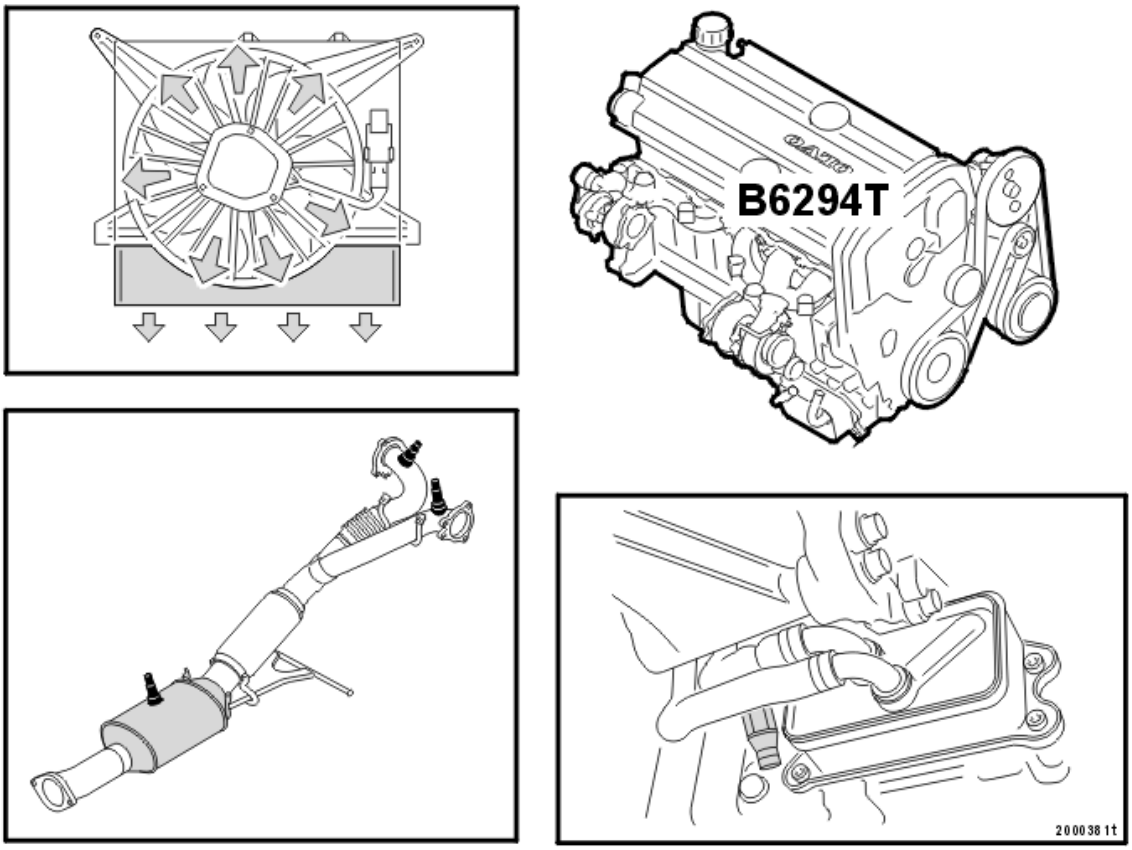

Fig. 11: Identifying Unique Components To B6294T Engine
Courtesy of VOLVO CARS CORPORATION

- The routing of the pipes for the oil cooler has been changed to suit the unique bevel gear
- The drain nipple for the coolant have been moved to the supply hose for the oil cooler
- Has only a rear catalytic converter containing two ceramic monoliths
- Three heated oxygen sensors (HO2S). Two front and a common rear
- Engine cooling fan (FC) without brushes, controlled in 6 set stages. The advantages are: high capacity with good cooling characteristics, long service life and high efficiency
- When a hot engine is switched off, the fan run-on is a maximum of 6 minutes. Ramp down takes places in steps from stage 6 to 0.

ETA (ELECTRONIC THROTTLE ACTUATOR), DENSO

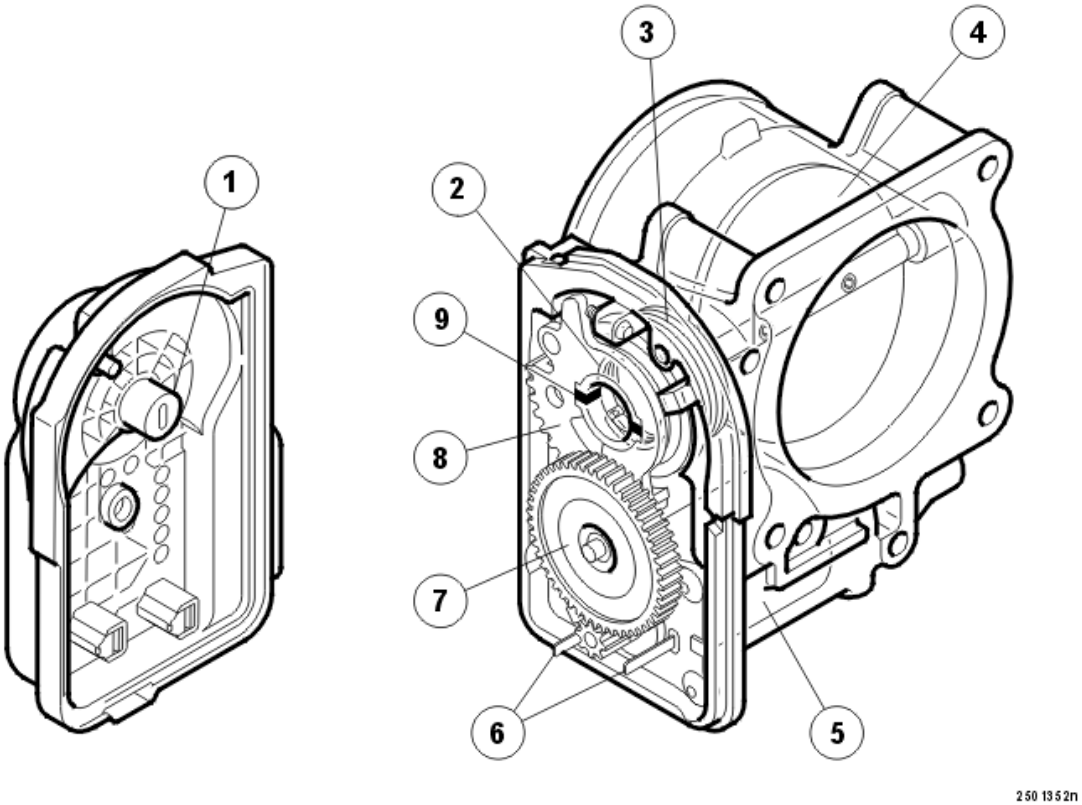

Fig. 12: Identifying Electronic Throttle Actuator Components
Courtesy of VOLVO CARS CORPORATION

1. Hall sensor
2. Spring
3. Spring
4. Throttle
5. DC motor
6. Terminal pins
7. Gear wheel
8. Gear sector
9. Permanent magnets.

Function

The engine control module (ECM) uses a PWM signal to control the position of the DC motor and with it the position of the throttle.

By changing the polarity of the power supply, the DC motor can be run in both directions.

Two permanent magnets in the gear sector on the throttle spindle are used to check the position of the throttle.

- The permanent magnets affect the two Hall sensors in the cover
- When the throttle spindle is turned, the position and strength of the magnetic field changes, which affects the Hall sensors
- Internal circuits convert the hall signals to two voltage signals which are transmitted to the engine control module (ECM).

The two signals are offset internally.

- The voltage of the main signal is 0.6 V when the throttle is shut. The voltage increases by 40 mV per degree that the throttle is opened. The voltage is approx. 4 V at wide open throttle (WOT)
- The voltage of the redundant signal is 1.48 V when the throttle is shut. The voltage increases by 32 mV per degree that the throttle is opened. The voltage is approx. 4.2 V at wide open throttle (WOT).

In order for the engine control module (ECM) to determine whether the voltage signals are plausible, the actual values are compared with stored desired values. A diagnostic trouble code (DTC) is stored if the values are outside certain tolerances. In certain situations, depending on the nature of the fault, this may mean that the power supply to the DC motor is broken. If this happens, the throttle, through the use of springs, is moved to a position which makes the car drivable (with limited driveability).

Function, continued

- The conditions for running the adaptation are that the ignition key is turned from position I to position II and when the engine is turned off. The adaptation is stopped when the car is cranked (i. e. the ignition key is turned to position III)
- During adaptation, the throttle switches from the Limp Home mode to the mechanically closed position. The engine control module (ECM) updates the values if these deviate from the stored values
- The ETA (Electronic Throttle Actuator) has a return spring and a Limp Home spring. The springs are always checked after the engine is switched off
- The DC motor first closes the throttle. The Limp Home spring then resets the throttle to the Limp Home position. The throttle is then opened a few degrees, whereupon the return spring closes the throttle to the Limp Home position. A diagnostic trouble code (DTC) is stored if the throttle does not reach the Limp Home position within a certain time
- Diagnostic trouble codes (DTCs) related to the ETA (Electronic Throttle Actuator) are stored in the engine control module (ECM)
- During adaptation and spring control there is noise as the throttle moves to different positions
- The connector terminal pins are gold plated. A damaged terminal pin surface can interfere with the function
- The terminating resistor for the CAN network has been moved to the engine control module (ECM).

Diagnostics

- The diagnostics for the ETA (Electronic Throttle Actuator) have changed in comparison with the previous ETM (Electronic Throttle Module), Magneti-Marelli. The engine control module (ECM) continuously

reads off the engine torque. If the torque exceeds the expected value, for example if the throttle opening angle is too great, an error flag is stored and the system is reconfigured. This means that the torque is limited using other control mechanisms than the normal, for example fuel shut-off. The cruise control will be disengaged if it is in use

- The following happens, depending on the character of the fault. If the fault persists for a longer period a diagnostic trouble code (DTC) is stored. If the function returns to normal, the error flag goes out and the reconfiguration stops. No diagnostic trouble code (DTC) is stored if the error flag has only been stored for a short time
- In comparison to previous diagnostics, the tolerances before the diagnostic trouble code (DTC) is stored have increased, while the tolerance for the error flag have been reduced. The actual diagnostic trouble code (DTC) is first stored after the error flag has been in the fault area for a certain amount of time
- A new function has been introduced in VIDA for fault-tracing
- The new fault-tracing functions are based on there being a tool which reads out ranking values for relevant diagnostic trouble codes (DTCs)
- A ranking code for a diagnostic trouble code (DTC) indicates how closes the system is to storing a diagnostic trouble code (DTC)
- A high ranking value can result in reconfiguration, even though no diagnostic trouble code (DTC) is stored. The customer may have noticed a specific abnormality without a diagnostic trouble code (DTC) being stored. The cause of this can be identified by reading off the ranking values
- The tool can be used to read off two ranking value positions: "worst" and "latest". "worst" is the highest ranking value since the diagnostic trouble code (DTC) was erased. "latest" is the ranking value of the diagnostic trouble code (DTC) at the time it is read.

CRANKCASE VENTILATION, B6294T

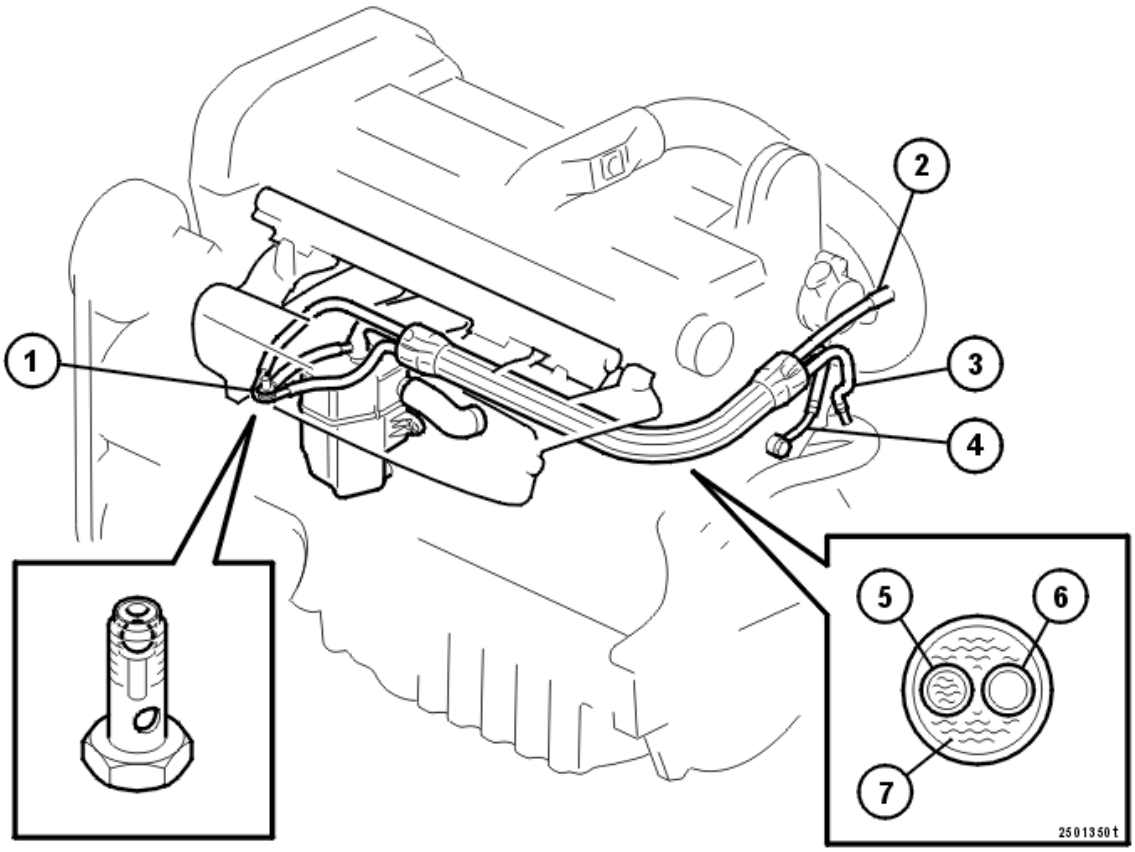

Fig. 13: Identifying Crankcase Ventilation Components
Courtesy of VOLVO CARS CORPORATION

1. Intake manifold connection
2. Turbocharger (TC) intake, connection
3. Connection, coolant pump intake pipe
4. Coolant outlet from the cylinder head
5. Coolant return
6. Crankcase gases to the intake for the turbocharger (TC)
7. Coolant from the cylinder head.

Evacuation

The evacuation system for the crankcase ventilation has been modified to ensure stable pressure in the crankcase. The crankcase gases are routed from the flame trap to, depending on the pressure conditions, the intake manifold (1) or the intake for the turbocharger (TC) (2).

When the pressure at the intake manifold is lower than at the intake for the turbocharger (TC), the gases flow to the intake manifold. When the pressure at the intake for the turbocharger (TC) is lower than in the intake manifold, the gases flow to the intake for the turbocharger (TC).

A non-return valve in the banjo screw for the crankcase ventilation connection (1) prevents the crankcase gases

from returning to the intake for the turbocharger (TC) when the pressure is high. This ensures that the gases are correctly evacuated and that the pressure in the crankcase is stable.

Heating

Coolant is used to heat the crankcase gases to prevent freezing.

The coolant flows from a duct in the cylinder head (4) to a common pipe which fills with coolant (7). The coolant then flows to the crankcase ventilation connection to the intake manifold (1). The coolant returns through a separate pipe (5) to the inlet (3) for the coolant pump.

The crankcase gases which flow to the turbocharger (TC), are warmed in a separate pipe (6) in the common pipe (7).

The location of the components and connections corresponds to the system required for diagnostics and service by authorities such as CARB (California Air Resources Board).

The flame trap is insulated using PUR foam. The flame trap has a labyrinth which efficiently separates oil from the crankcase vapors.

ENGINE PERFORMANCE

Ignition And Control Systems - Cleaning, Inspection and Adjustment

CHECKING FUEL AND RESIDUAL PRESSURES (B5254T2; 2003-2007)

CHECKING FUEL AND RESIDUAL PRESSURES

NOTE: **For vehicles with demand activated fuel pumps (FP), see VIDA vehicle communication quick test of fuel pump (test performed with VIDA Volvo scan tool only).**

MEASURING THE LINE PRESSURE

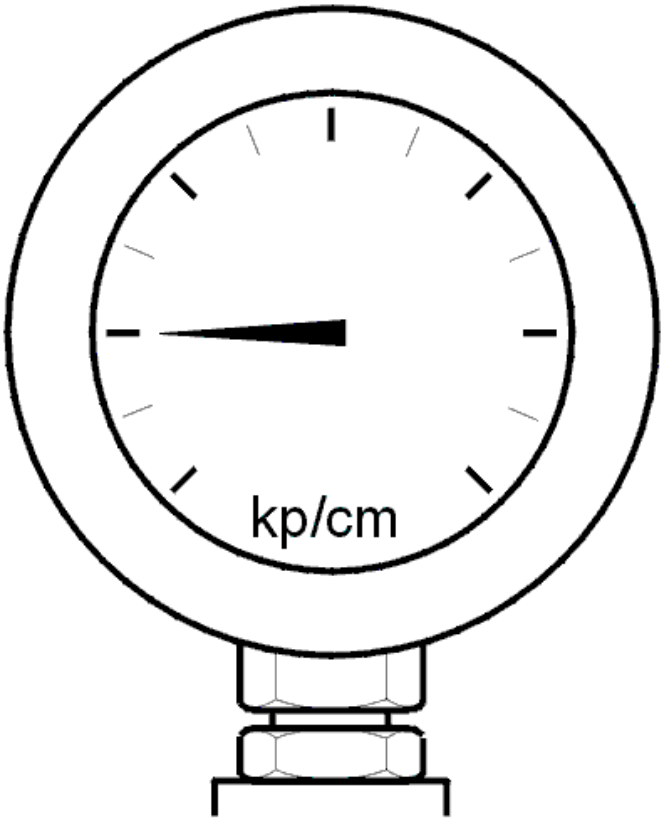

Fig. 1: Identifying Pressure Gauge
Courtesy of VOLVO CARS CORPORATION

- Connect the pressure gauge according to **CONNECTING FUEL PRESSURE GAUGE**
- Remove the soundproofing panel
- Remove the fuel pump (FP) relay (CMI 12 in the passenger compartment)
- Connect a cable to the relay base as illustrated.

Read off the line pressure from the pressure gauge. The line pressure must be 375-395 kPa.

Check the residual pressure if the fuel pressure is OK.

Remedy as necessary.

Other information:

- For the location of and to replace the fuel pump (FP) relay, For -2004, see **CENTRAL ELECTRONIC MODULE (CEM), REPLACING** or for 2005-, see **CENTRAL ELECTRONIC MODULE (CEM), REPLACING**
- For the location of and to replace the fuel pump (FP), see **LEVEL SENSOR, FUEL TANK/FUEL PUMP, REPLACEMENT**
- For the location of and to replace the fuel filter, see **REPLACING THE FUEL FILTER**
- To disconnect the pressure gauge, see **DISCONNECTING FUEL PRESSURE GAUGE**

CHECKING THE RESIDUAL PRESSURE

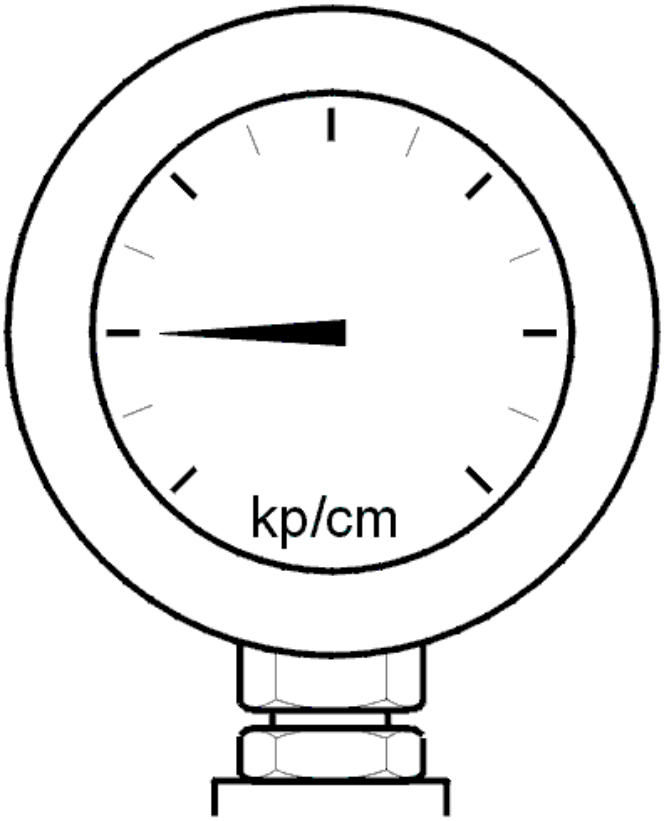

Fig. 2: Identifying Pressure Gauge
Courtesy of VOLVO CARS CORPORATION

- Switch off the ignition
- Disconnect the cable between the terminals on the relay base

- Reinstall the fuel pump (FP) relay.

The line pressure must not fall below 200 kPa within 20 minutes of the fuel pump (FP) being shut-off.

Remedy as necessary.

Other information:

- For the location of and to replace the injector on 5-cylinder engines, see **INJECTOR/PULSE DAMPER, REPLACEMENT**. For 6-cylinder engines, see **INJECTOR/PULSE DAMPER, REPLACEMENT**
- For the location of and to replace the fuel pump (FP) relay, For -2004, see **CENTRAL ELECTRONIC MODULE (CEM), REPLACING** or for 2005-, see **CENTRAL ELECTRONIC MODULE (CEM), REPLACING**
- For the location of and to replace the fuel pump (FP), see **RIGHT SIDE FUEL PUMP WITH LEVEL SENSOR**
- To disconnect the pressure gauge, see **DISCONNECTING FUEL PRESSURE GAUGE** .

INJECTOR/PULSE DAMPER, REPLACEMENT

PREPARATION

Empty the fuel injection system according to **FUEL SYSTEM PRESSURE RELEASE**.

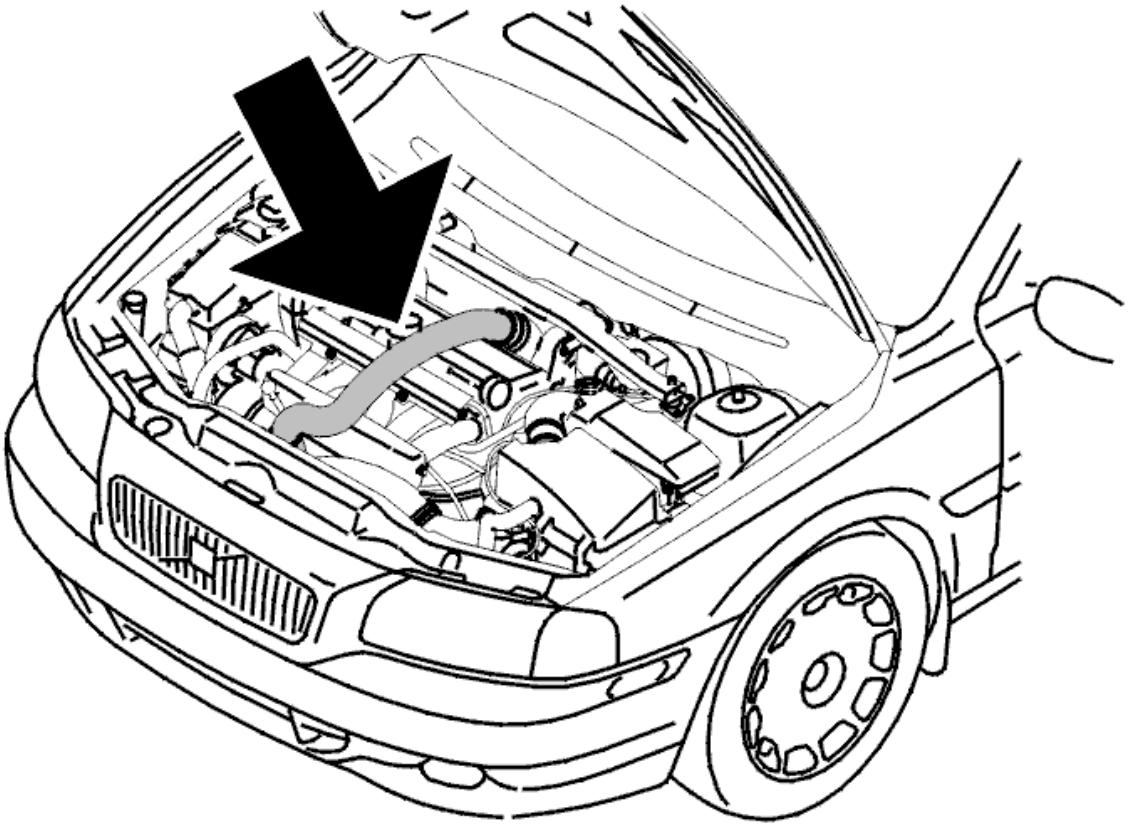

Fig. 3: Identifying Charge Air Pipe
Courtesy of VOLVO CARS CORPORATION

Remove the charge air pipe over the engine. Seal the openings

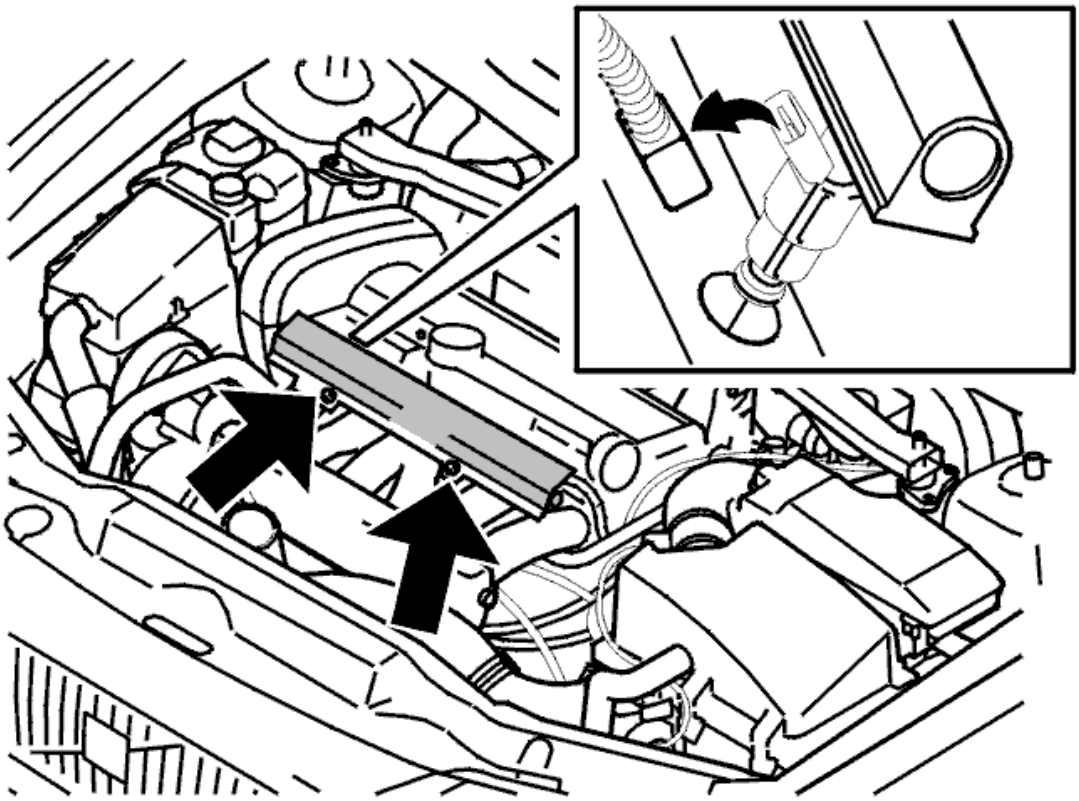

Fig. 4: Identifying Fuel Rail, Injector, And Connector
Courtesy of VOLVO CARS CORPORATION

Remove the cover over the fuel rail.

Disconnect the injector connectors.

Blow clean around the injectors.

Remove the mounting screws from the fuel rail.

Open the fuel line's quick-release connector using tool see **9512666** .

Spray universal oil or similar around the injector terminals on the intake manifold.

Gently work the fuel rail and injectors loose.

NOTE: **Handle the injector valves carefully to avoid damaging the injector valves' nozzles with needles.**

REMOVING INJECTORS

Remove

- the screws holding the mounting rail to the fuel rail
- the mounting rail
- the injector.

REMOVING THE PULSATION DAMPER

Remove

- the screws holding the mounting rail to the fuel rail
- the mounting rail
- the pulsation damper.

INSTALLING INJECTORS

Lubricate the injector O-ring with a thin layer of petroleum jelly.

Install the new injector.

INSTALLING THE PULSATION DAMPER

Lubricate the new pulsation damper O-ring with a thin layer of petroleum jelly.

Install the new pulsation damper.

FINISHING

Position the mounting rail. The injectors may need to be pulled away from the fuel rail a few millimeters to install the rail.

Tighten the mounting rail to the fuel rail. Tighten to **6 Nm** .

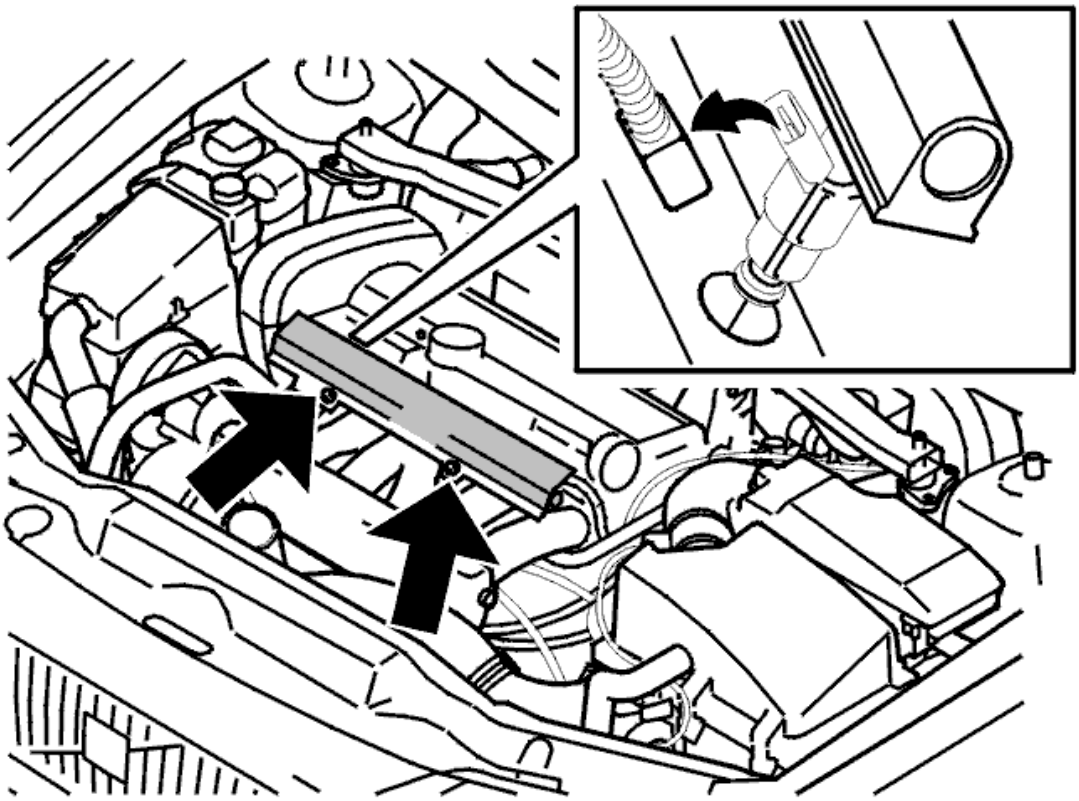

Fig. 5: Identifying Fuel Rail, Injector, And Connector
Courtesy of VOLVO CARS CORPORATION

Lubricate the injector O-rings with petroleum jelly.

Depress the fuel rail. Ensure that all injectors sit correctly.

Screw the fuel rail into place. Use new screws. Tighten to **10 Nm** .

Connect all the connectors for the injectors.

Press the quick-release connector together until a clicking sound is heard.

Reinstall the cover over the fuel rail.

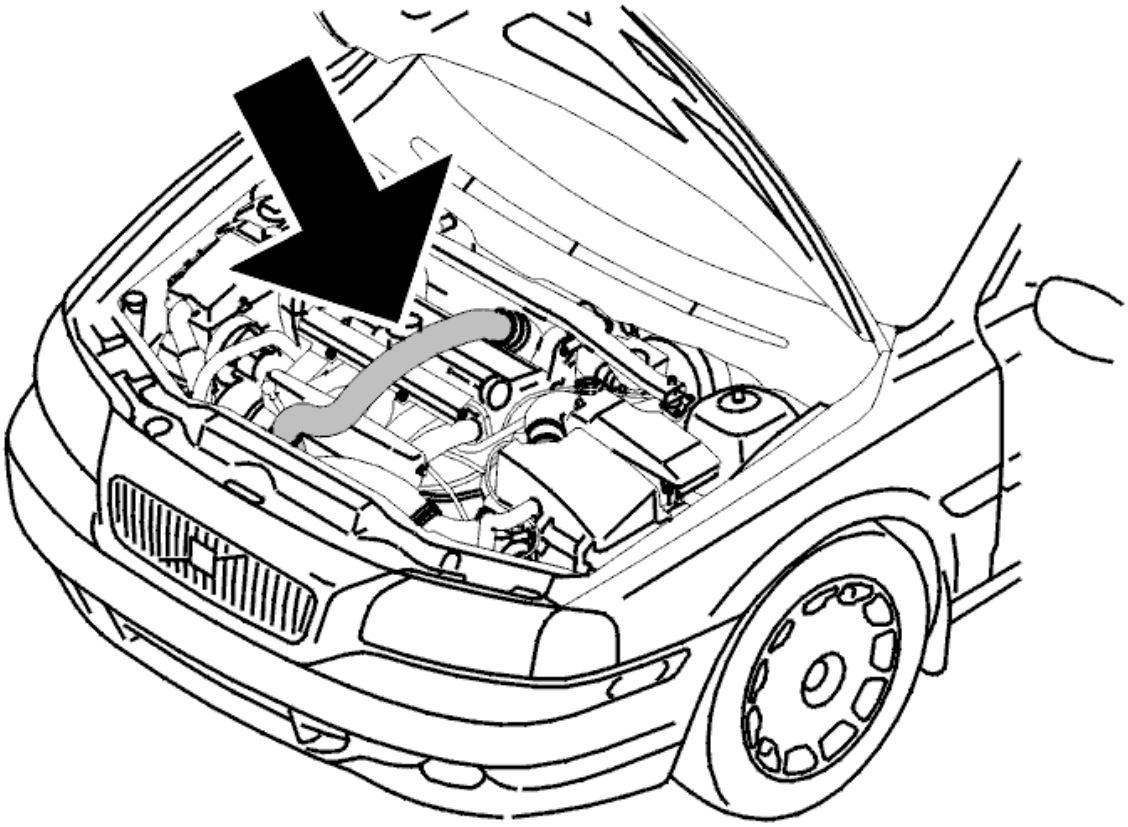

Fig. 6: Identifying Charge Air Pipe
Courtesy of VOLVO CARS CORPORATION

Remove the seals from the charge air pipe. Reinstall the charge air pipe over the engine.

Start the engine. Check for fuel leakage.

FUEL SYSTEM PRESSURE RELEASE

Operation Number(s):

Start the engine.

Remove the fuel pump fuse. Placement may vary between engine types and model year. See the Owner's manual or wiring diagram.

The engine will stop after approx. 20 seconds.

Turn over the engine 3-5 seconds.

Switch off the ignition.

Replace the fuse.

INJECTOR/PULSE DAMPER, REPLACEMENT

PREPARATION

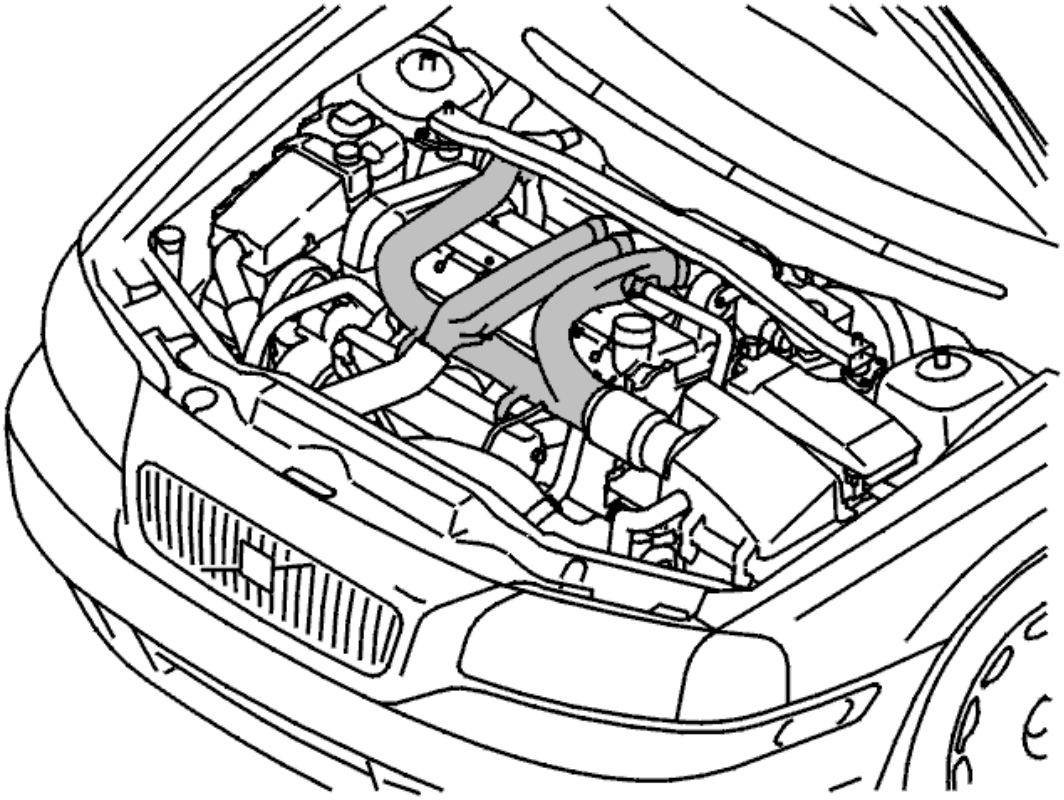

Fig. 7: Identifying Plastic Hoses Between Turbocharger, Charge Air Cooler And Air Cleaner/Turbocharger
Courtesy of VOLVO CARS CORPORATION

Drain the fuel injection system. See **FUEL SYSTEM PRESSURE RELEASE**.

Remove the plastic hoses between the turbocharger (TC) / charge air cooler (CAC) and the air cleaner (ACL) / turbocharger (TC). Place them to one side and seal the openings. **Applies only to B6xx4T** .

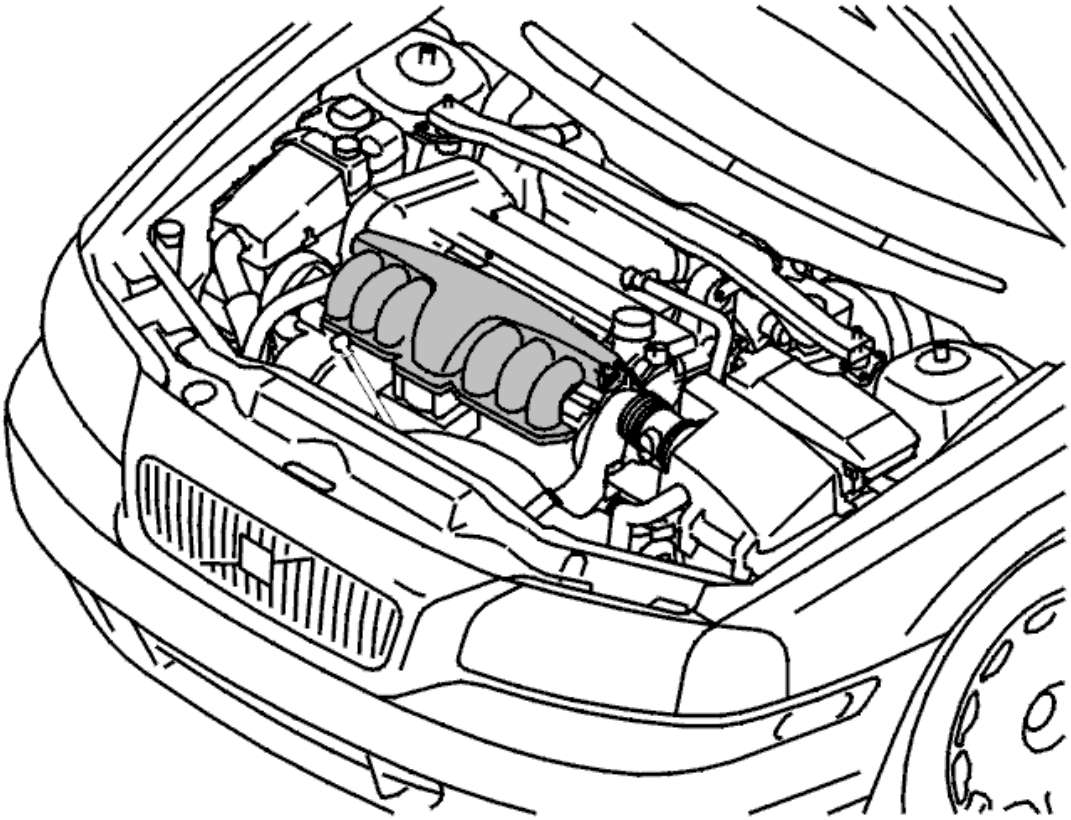

Fig. 8: Identifying Upper Section Of The Intake Manifold
Courtesy of VOLVO CARS CORPORATION

Remove the upper section of the intake manifold. Cover the hole using tool see **9995723** . **Only applies B6xx4S engines** .

Remove the fuel rail.

Disconnect the connectors from the injectors.

Remove the mounting screws from the fuel rail.

Separate the fuel line's quick-release connector, see also: **FUEL LINE, LOCK** . Use tool see **9512666** .

Spray universal oil or similar around the injector terminals on the intake manifold.

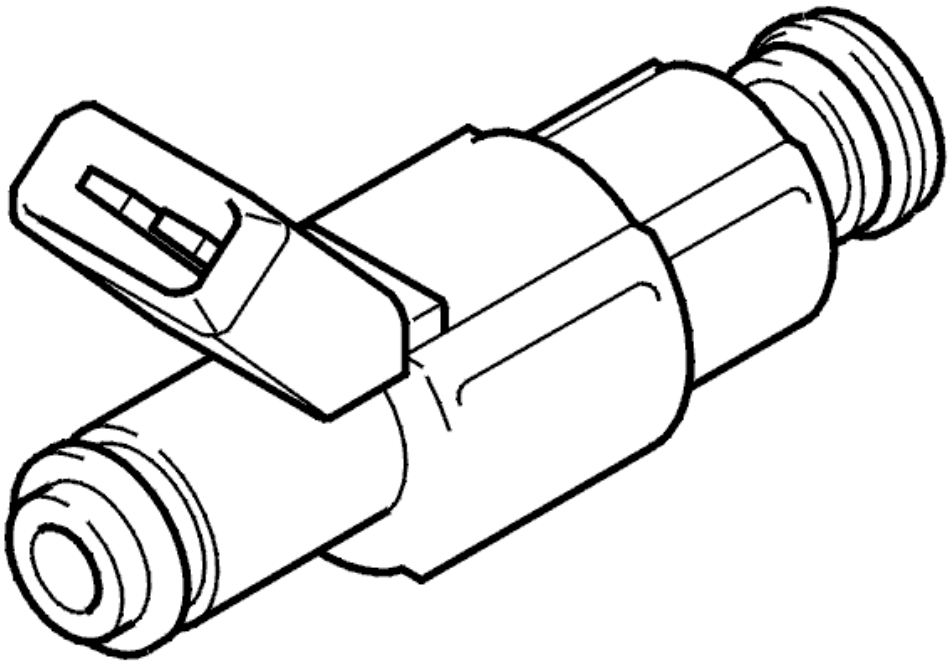

Fig. 9: Identifying Fuel Injector
Courtesy of VOLVO CARS CORPORATION

Gently work the fuel rail and injectors loose.

NOTE: **Handle the injector valves carefully to avoid damaging the injector valves' nozzles with needles.**

REMOVING INJECTORS

Remove

- the screws holding the mounting rail to the fuel rail
- the mounting rail
- the injector.

REMOVING THE PULSATION DAMPER

Remove

- the screws holding the mounting rail to the fuel rail
- the mounting rail

- the pulsation damper.

INSTALLING INJECTORS

Lubricate the O-ring for the new injector using petroleum jelly.

Install the injector.

INSTALLING THE PULSATION DAMPER

Lubricate the O-ring for the new pulsation damper using petroleum jelly.

Install the pulsation damper.

FINISHING

Position the mounting rail. The injectors may need to be pulled away from the fuel rail a few millimeters to install the rail.

Tighten the mounting rail to the fuel rail.

Press down the fuel rail. Check that all injectors are correctly positioned.

Screw the fuel rail into place. Use new screws. Tighten to **10 Nm** .

Install all connectors on the injectors.

Press the quick-release connector together until a clicking sound is heard. See **FUEL LINE, LOCK** .

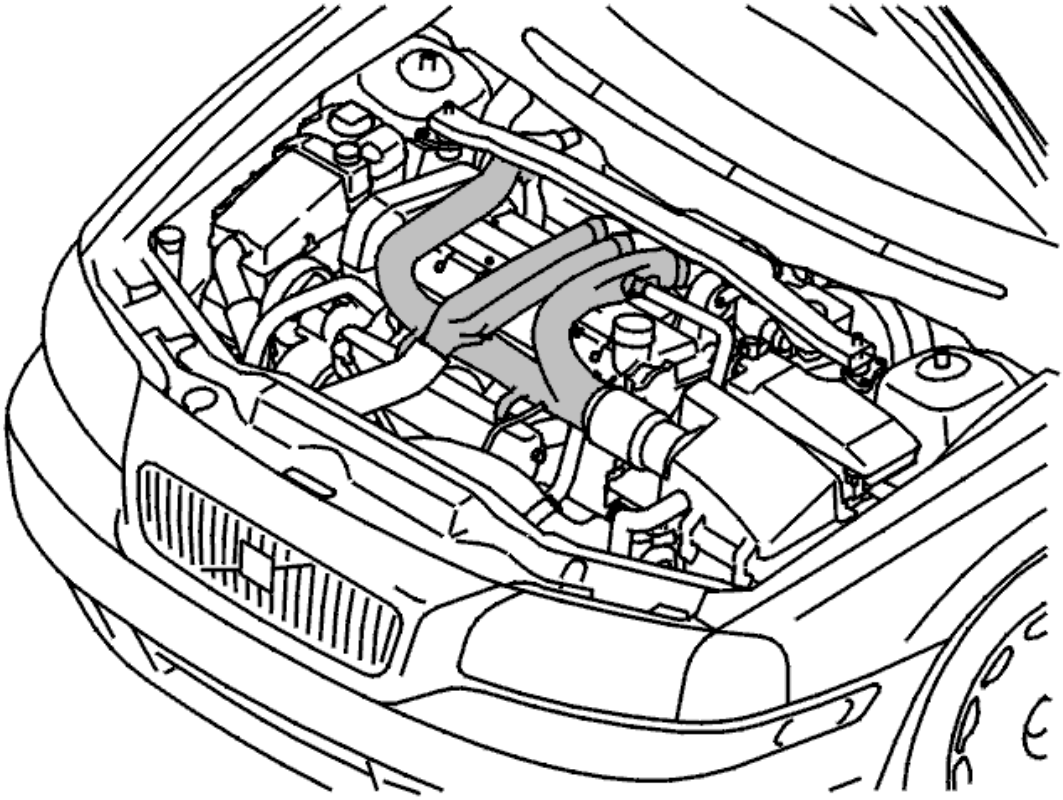

Fig. 10: Identifying Plastic Hoses Between Turbocharger, Charge Air Cooler And Air Cleaner/Turbocharger
Courtesy of VOLVO CARS CORPORATION

Applies only to B6xx4T . Remove the seals. Install the plastic pipes between the turbocharger (TC) / charge air cooler (CAC) and the air cleaner (ACL) / turbocharger (TC).

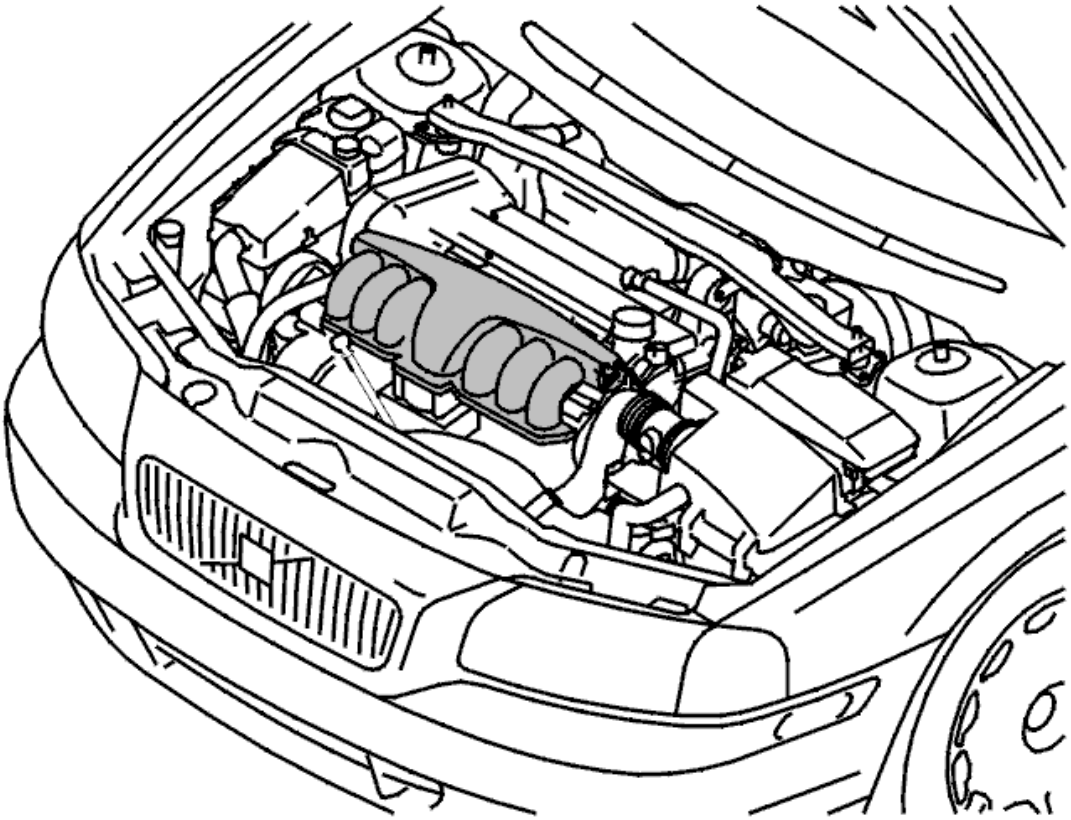

Fig. 11: Identifying Upper Section Of The Intake Manifold
Courtesy of VOLVO CARS CORPORATION

Applies only to B6xx4S engines . Remove tool 999 5723. Clean the gasket faces and install a **new gasket** . Install the upper section of the intake manifold. Tighten to **17 Nm** . Start from the center and tighten alternately.

ENGINE PERFORMANCE

Ignition And Control Systems - Component location

COMPONENT LOCATION, ENGINE CONTROL MODULE (ECM) (B6324S; 2007-2010)

LOCATION OF COMPONENTS

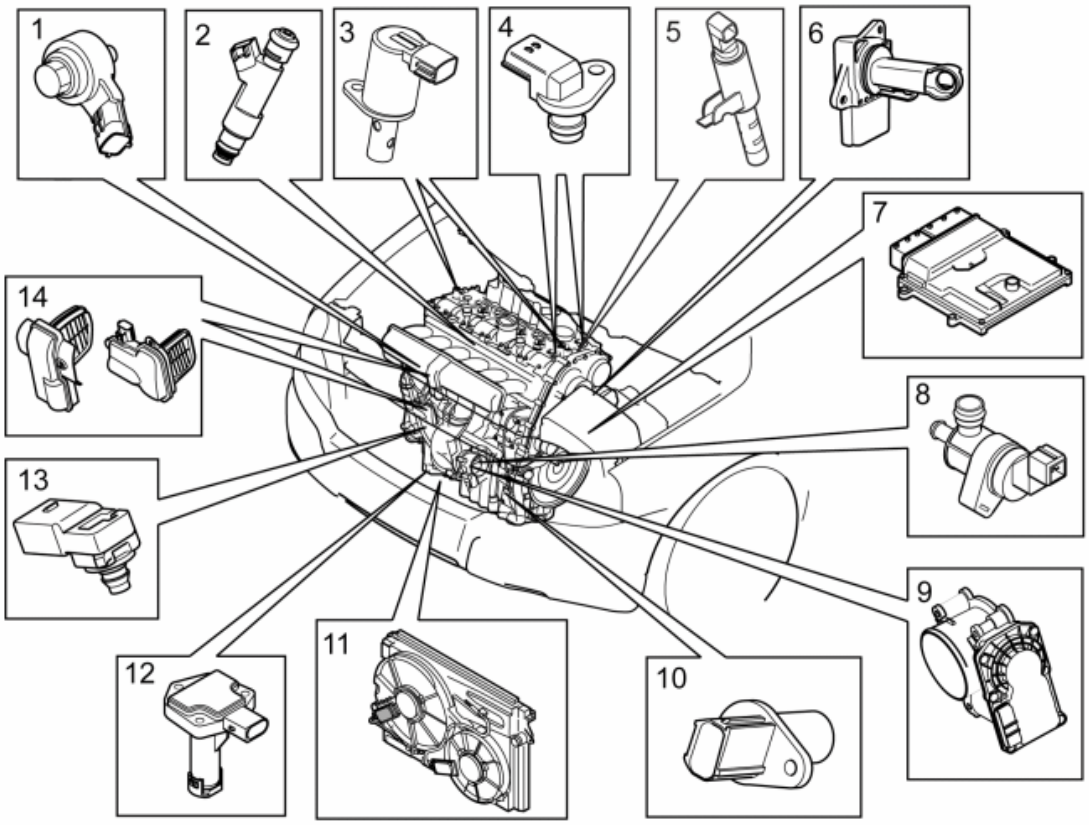

Fig. 1: Locating Engine Compartment Components
Courtesy of VOLVO CARS CORPORATION

Location of components

1. Knock sensor, x 2
2. Injectors x 6
3. Cam profile valve, x 2
4. Camshaft position (CMP) sensor, x 2
5. Reset valve camshaft (CVVT).
6. Mass air flow (MAF) sensor/Intake Air Temperature (IAT) Sensor.
7. Engine control module (ECM)

8. Evaporative emission system (EVAP) valve.
9. Throttle unit.
10. Engine speed (RPM) sensor.
11. Engine cooling fan (FC)
12. Oil level sensor
13. Intake pressure sensor.
14. Actuator, variable intake, x2.

COMPONENT LOCATION, ENGINE CONTROL MODULE (ECM) (B6324S5; 2011-2012)

LOCATION OF COMPONENTS

see **LOCATION OF COMPONENTS**

COMPONENT LOCATION, ENGINE CONTROL MODULE (ECM) (B8444S; 2005-2011)

LOCATION OF COMPONENTS, ENGINE COMPARTMENT

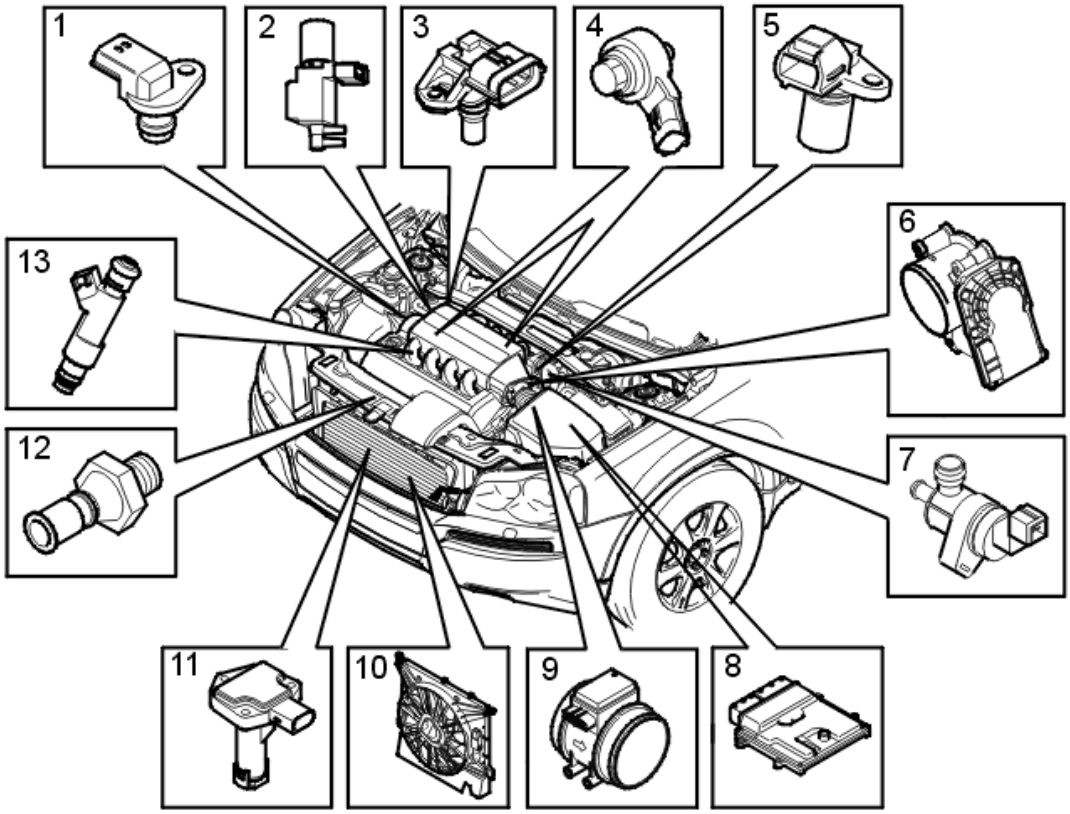

Fig. 2: Locating Engine Compartment Components

Courtesy of VOLVO CARS CORPORATION

Location of components

1. Camshaft sensors, 4 pcs.
2. Variable inlet, solenoid valve (TST)
3. Air pressure sensor inlet
4. Knock sensor (KS)
5. Engine speed (RPM) sensor
6. Throttle unit
7. EVAP-valve
8. Engine control module (ECM)
9. Mass airflow sensor/air temperature sensor
10. Engine cooling fan (FC)
11. Oil level sensor
12. Oil pressure monitor
13. Injector

LOCATION OF COMPONENTS (B5254T2; 2005-2007)

LOCATION OF COMPONENTS, ENGINE COMPARTMENT

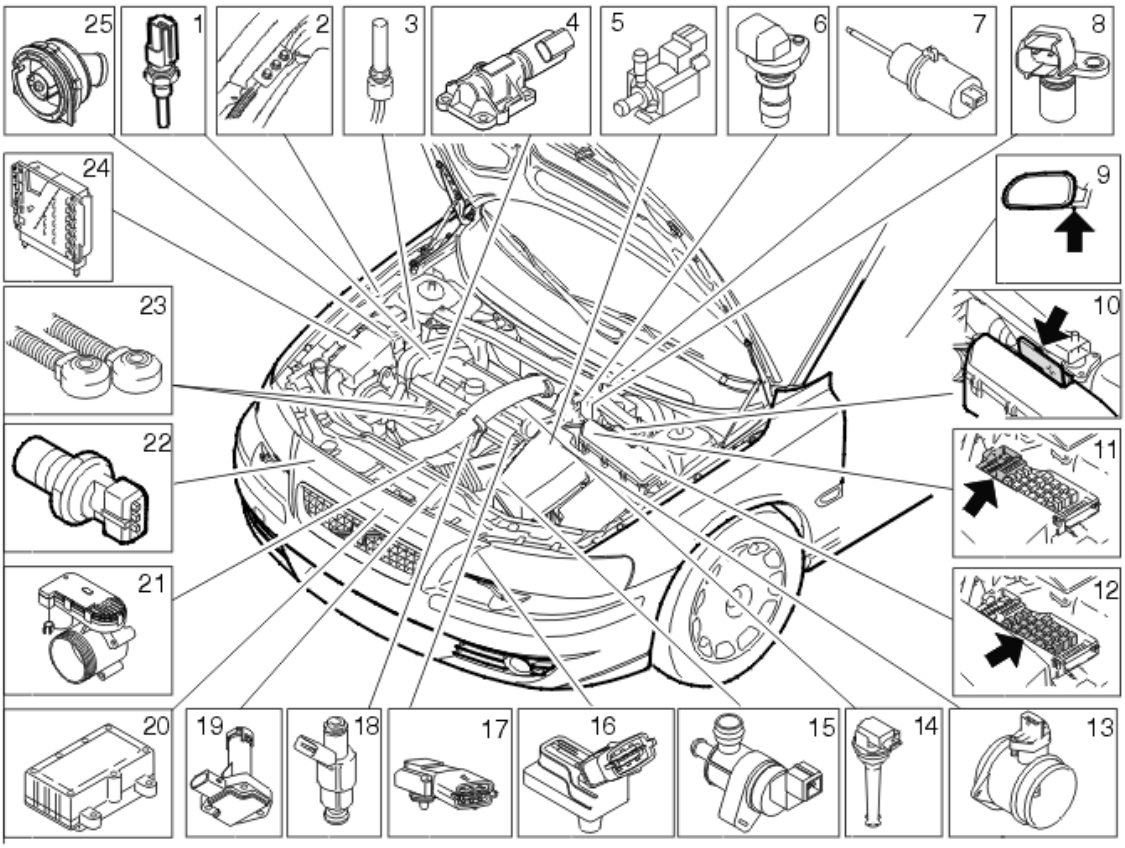

Fig. 3: Locating Engine Compartment Components
Courtesy of VOLVO CARS CORPORATION

Not all the following components are necessarily in the car. The components vary between engine types.

	Component	Remarks
1	Engine coolant temperature (ECT) sensor	
2	Ground terminal	
3	Coolant level sensor	
4	Reset valve, camshaft	Exhaust and intake camshafts.
5	Turbocharger (TC) control valve	Only turbocharged (TC) engines
6	Camshaft sensor	Exhaust and intake camshafts.
7	Brake pedal sensor	
8	Engine speed (RPM) sensor	
9	Outer temperature sensor	
10	Power supply terminal	
11	Fusebox	
12	Relay box	
13	Mass air flow (MAF) sensor	
14	Ignition coil	

15	Canister purge (CP) valve	
16	Boost pressure sensor	The intake air temperature (IAT) sensor is integrated in the boost pressure sensor
17	Fuel pressure sensor	The fuel temperature sensor is integrated in the fuel pressure sensor
18	Injector	
19	Oil level sensor	Located in the oil trough
20	Engine cooling fan (FC) control module	
21	Throttle unit	Also includes the throttle position (TP) sensor
22	A/C pressure sensor	
23	Knock sensor (KS)	
24	Engine control unit	
25	Engine cooling fan (FC) control modules	

LOCATION OF COMPONENTS (B5254T2; B6294T; 2003-2004)

LOCATION OF COMPONENTS, ENGINE COMPARTMENT

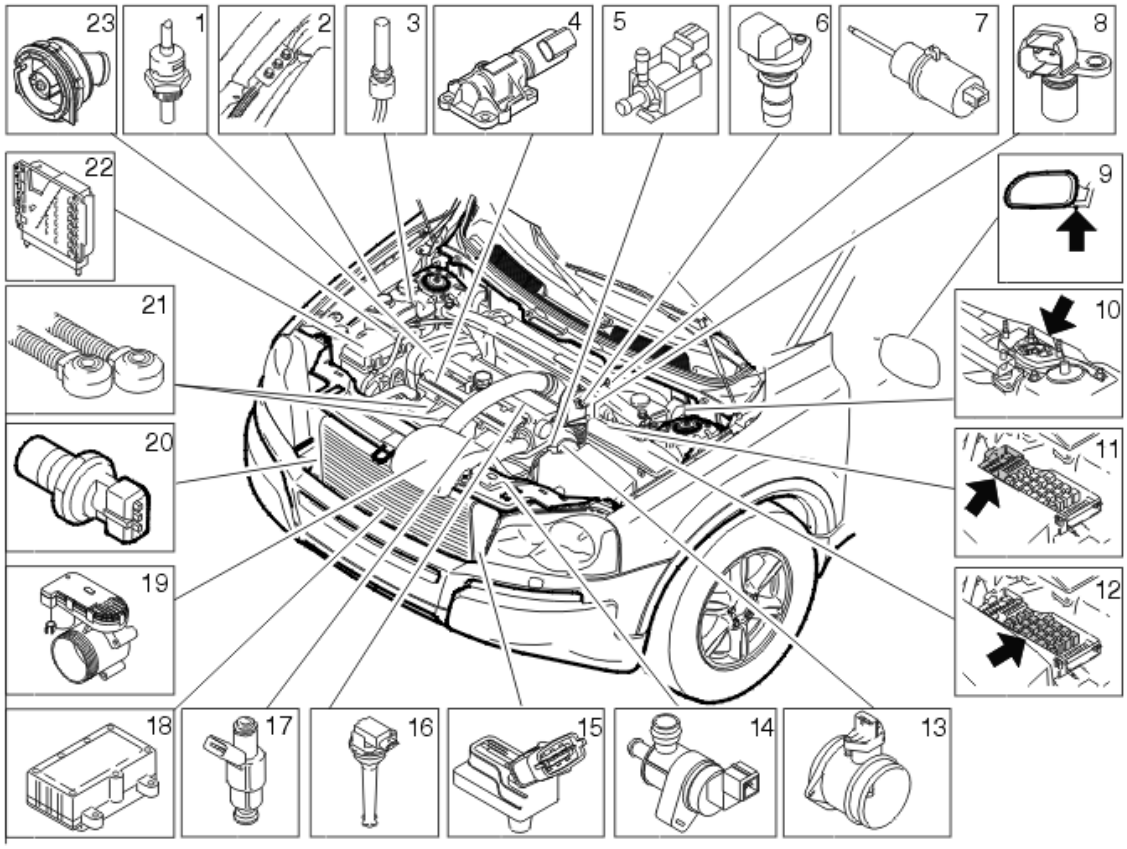

Fig. 4: Locating Engine Compartment Components
Courtesy of VOLVO CARS CORPORATION

Not all the following components are necessarily in the car. The components vary between engine types.

Component		Remarks
1	Engine coolant temperature (ECT) sensor	The appearance varies depending on whether it is the 5 or 6 cylinder engine
2	Ground terminal	
3	Coolant level sensor	
4	Camshaft reset valve	Exhaust and intake camshafts.
5	Turbocharger (TC) control valve	Only turbocharged (TC) engines
6	Camshaft sensor	Exhaust and intake camshafts.
7	Brake pedal sensor	
8	Engine speed (RPM) sensor	
9	Outer temperature sensor	
10	Power supply terminal	
11	Fusebox	
12	Relay box	
13	Mass air flow (MAF) sensor	
14	Canister purge (CP) valve	
15	Boost pressure sensor	Only turbocharged (TC) engines. Intake air temperature (IAT) sensor, integrated in the boost pressure sensor
16	Ignition coil	
17	Injector	
18	Engine cooling fan (FC) control module	
19	Throttle unit	Also includes the throttle position (TP) sensor
20	A/C pressure sensor	
21	Knock sensor (KS)	
22	Engine control unit	
23	Cooling fan for control modules	

LOCATION OF COMPONENTS (B6294T; 2005-2006)

LOCATION OF COMPONENTS, ENGINE COMPARTMENT

see **LOCATION OF COMPONENTS, ENGINE COMPARTMENT**

ENGINE PERFORMANCE

Ignition And Control Systems - Design and Function

BOSCH ME7.01 ENGINE MANAGEMENT SYSTEM (B5254T2; 2003-2007)

DESIGN

see **DESIGN**

DIAGNOSTIC FUNCTIONS

see **DIAGNOSTIC FUNCTIONS**

DOWNLOADING SOFTWARE AND REPLACING THE CONTROL MODULE

see **DOWNLOADING SOFTWARE AND REPLACING THE CONTROL MODULE**

FUNCTION

see **FUNCTION**

SYSTEM OVERVIEW

see **SYSTEM OVERVIEW**

BOSCH ME7.01 ENGINE MANAGEMENT SYSTEM (B6294T; 2003-2006)

DESIGN

see **DESIGN**

DIAGNOSTIC FUNCTIONS

see **DIAGNOSTIC FUNCTIONS**

DOWNLOADING SOFTWARE AND REPLACING THE CONTROL MODULE

see **DOWNLOADING SOFTWARE AND REPLACING THE CONTROL MODULE**

FUNCTION

see **FUNCTION**

SYSTEM OVERVIEW

see **SYSTEM OVERVIEW**

ENGINE CONTROL MODULE (ECM) (B6324S; 2007-2010)

DESIGN

see **DESIGN**

DIAGNOSTIC FUNCTIONS

see **DIAGNOSTIC FUNCTIONS**

DOWNLOADING SOFTWARE AND REPLACING THE CONTROL MODULE

see **DOWNLOADING SOFTWARE AND REPLACING THE CONTROL MODULE**

FUNCTION

see **FUNCTION**

SYSTEM OVERVIEW

see **SYSTEM OVERVIEW**

ENGINE CONTROL MODULE (ECM) (B6324S5; 2011-2012)

DESIGN

see **DESIGN**

DIAGNOSTIC FUNCTIONS

see **DIAGNOSTIC FUNCTIONS**

DOWNLOADING SOFTWARE AND REPLACING THE CONTROL MODULE

see **DOWNLOADING SOFTWARE AND REPLACING THE CONTROL MODULE**

FUNCTION

see **FUNCTION**

SYSTEM OVERVIEW

see **SYSTEM OVERVIEW**

ENGINE CONTROL MODULE (ECM) (B8444S; 2005-2011)

DESIGN

see **DESIGN**

DIAGNOSTIC FUNCTIONS

see **DIAGNOSTIC FUNCTIONS**

DOWNLOADING SOFTWARE AND REPLACING THE CONTROL MODULE

see **DOWNLOADING SOFTWARE AND REPLACING THE CONTROL MODULE**

FUNCTION

see **FUNCTION**

SYSTEM OVERVIEW

see **SYSTEM OVERVIEW**

ENGINE PERFORMANCE

Ignition And Control Systems - Diagnostic Trouble Codes and Associated Procedures

ECM-1000: CONTROL MODULE. SIGNAL TOO HIGH/SIGNAL TOO LOW. INTERMITTENT FAULT (B5254T2; B6294T; 2003-2004)

DIAGNOSTIC TROUBLE CODE (DTC) INFORMATION

Condition

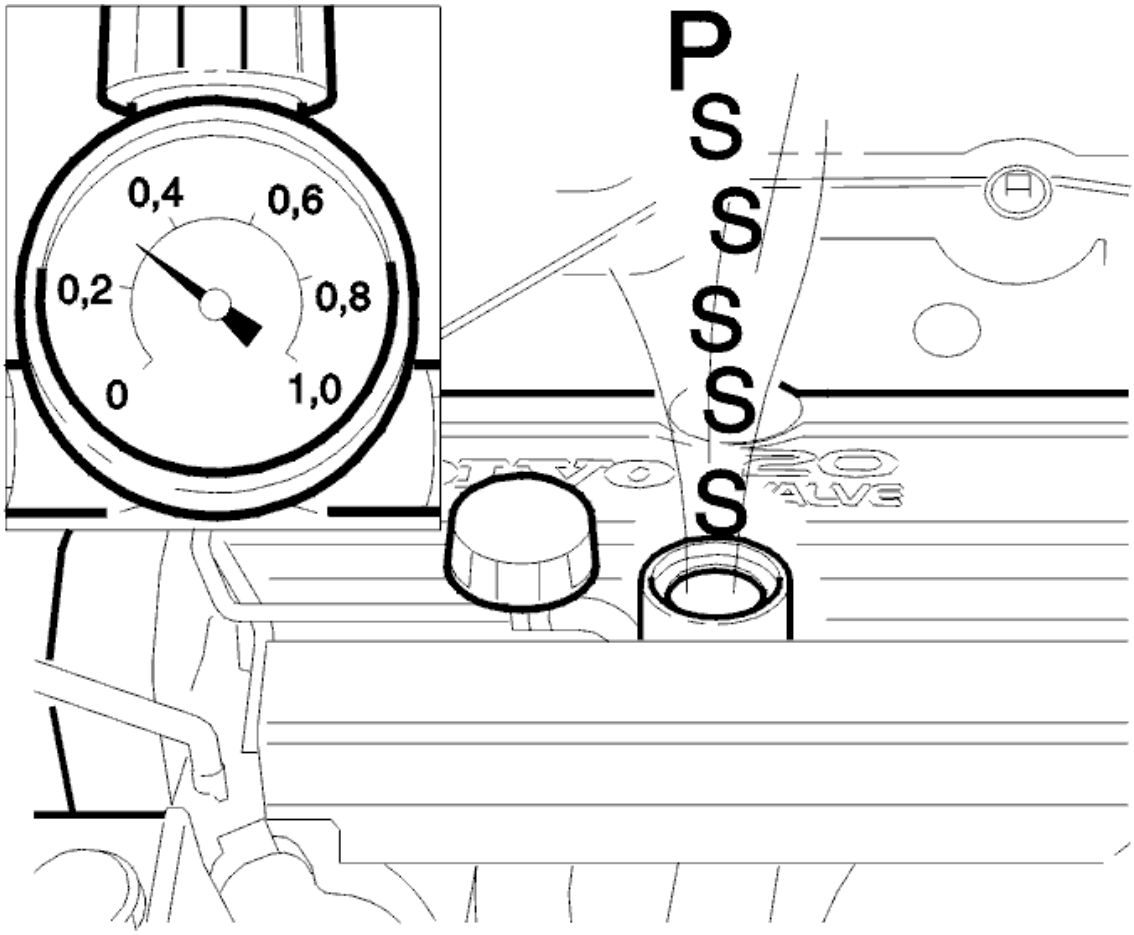

Fig. 1: Engine Control Module
Courtesy of VOLVO CARS CORPORATION

If the control module registers that a signal from the internal atmospheric pressure sensor is faulty, the control module interprets this as a fault and ECM-1000 is stored after 20 seconds.

Substitute Value

The control module assumes 1013 hPa air pressure corresponding to sea level.

Possible Source

Signal too high:

- defective control module

Signal too low:

- defective control module

Fault symptom[s]

- Malfunction indicator lamp (MIL) lit.

SIGNAL TOO HIGH/SIGNAL TOO LOW. INTERMITTENT FAULT

INFORMATION

FAULT-TRACING INFORMATION

If the fault is intermittent, do not verify fault-tracing if the fault does not recur.

It is possible to view the information again, or leave fault-tracing for this diagnostic trouble code (DTC).

ECM-1000: CONTROL MODULE. SIGNAL TOO HIGH/SIGNAL TOO LOW. PERMANENT FAULT (B5254T2; B6294T; 2003-2004)

DIAGNOSTIC TROUBLE CODE (DTC) INFORMATION

see **DIAGNOSTIC TROUBLE CODE (DTC) INFORMATION**

SIGNAL TOO HIGH/SIGNAL TOO LOW. PERMANENT FAULT

REPLACING COMPONENT

Fig. 2: Identifying Ignition OFF
Courtesy of VOLVO CARS CORPORATION

- Ignition off.

  The control module has registered an internal fault. Try a new control module according to **ENGINE CONTROL MODULE (ECM), REPLACING** .

  NOTE: When replacing a control module the new software must be programmed into the control module.

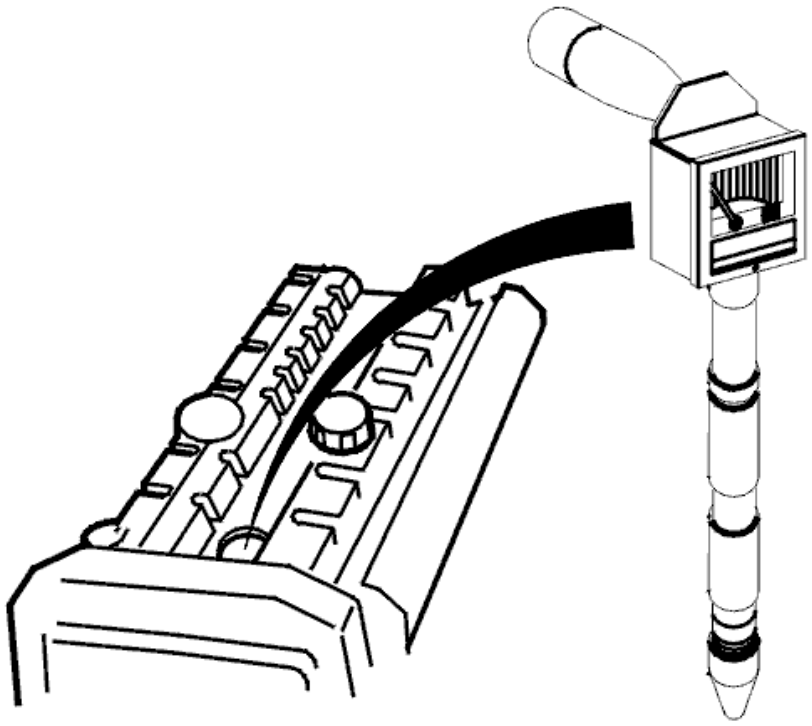

Fig. 3: Engine Control Module
Courtesy of VOLVO CARS CORPORATION

- **Continue**

  Refer to **INFORMATION**

INFORMATION

FAULT-TRACING INFORMATION

In case of this defect, troubleshooting is not followed by verification.

The information can be displayed again or the fault-tracing for this fault can be interrupted.

ECM-1100: OUTSIDE TEMPERATURE SENSOR. FAULTY SIGNAL (B5254T2; B6294T; 2003-2004)

DIAGNOSTIC TROUBLE CODE (DTC) INFORMATION ECM-1100

Condition

Diagnostic trouble code (DTC) ECM-1100 (signal too high or too low) is stored if the signal from the outside

temperature sensor is outside of its normal range. The fault is diagnosed by the control module when the ignition is on or the engine is running.

Diagnostic trouble code (DTC) ECM-1100 (faulty signal) is stored if the signal from the outside temperature sensor is within its normal range but deviates from the calculated temperature. The fault is diagnosed by the control module when the engine is running, approximately 2 minutes after the engine is started.

Substitute Value

The values from the engine intake air temperature (IAT) sensor.

Possible Source

Signal too high:

- Short-circuit to ground in the signal cable
- Faulty outside temperature sensor.

Signal too low:

- Open-circuit in the signal cable
- Short-circuit to supply voltage in the signal cable
- Faulty outside temperature sensor
- Contact resistance in the terminals.

Faulty signal:

- Contact resistance in the terminals
- Faulty outside temperature sensor.

Fault symptom[s]

- Malfunction indicator lamp (MIL) lit.

FAULTY SIGNAL

CHECKING COMPONENTS AND CONNECTORS

Check the connector for the outside temperature sensor. Check for contact resistance and oxidation.

The sensor may be defective if the above fault tracing and corrective action does not remedy the fault.

Remedy as necessary.

Other information

- For outside temperature sensor **- 2006** see **OUTSIDE TEMPERATURE SENSOR DOOR MIRROR, REPLACING**
- For outside temperature sensor **2007 -** see **OUTSIDE TEMPERATURE SENSOR**
- see **CHECKING WIRING AND TERMINALS** .

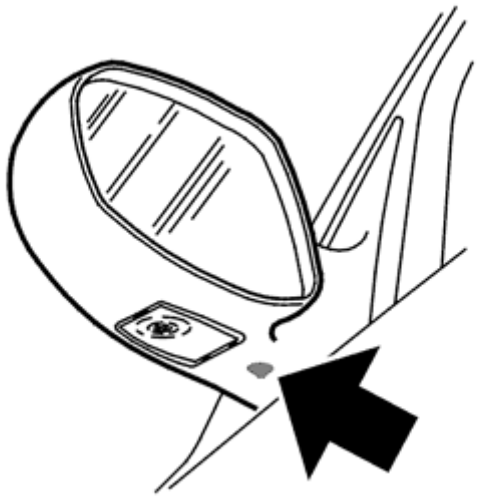

Fig. 4: Identifying Outside Temperature Sensor Door Mirror
Courtesy of VOLVO CARS CORPORATION

- **Continue**

  Refer to **VERIFICATION**

VERIFICATION

VERIFICATION

HINT: After carrying out the repair, check that the fault has been remedied.

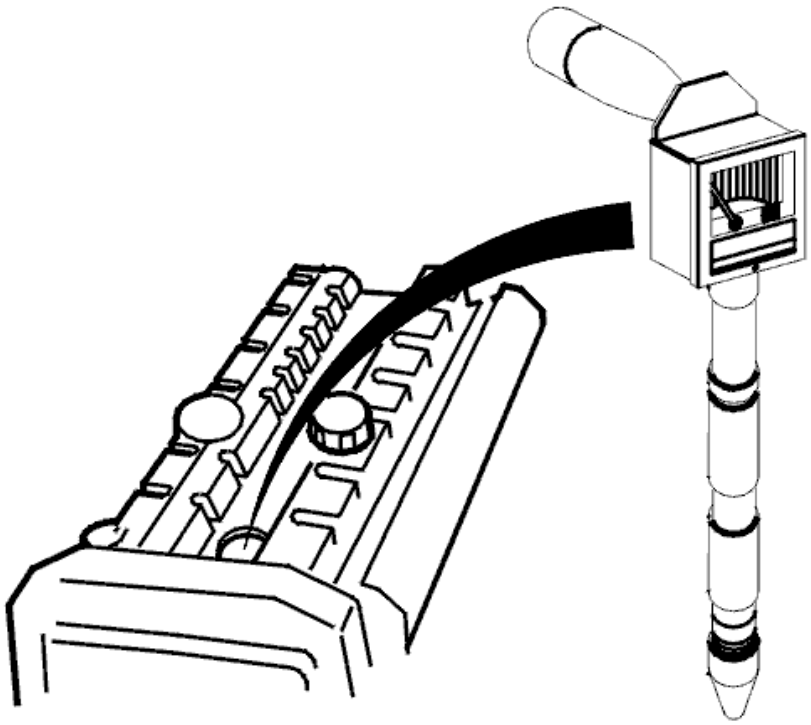

Fig. 5: Identifying Ignition ON
Courtesy of VOLVO CARS CORPORATION

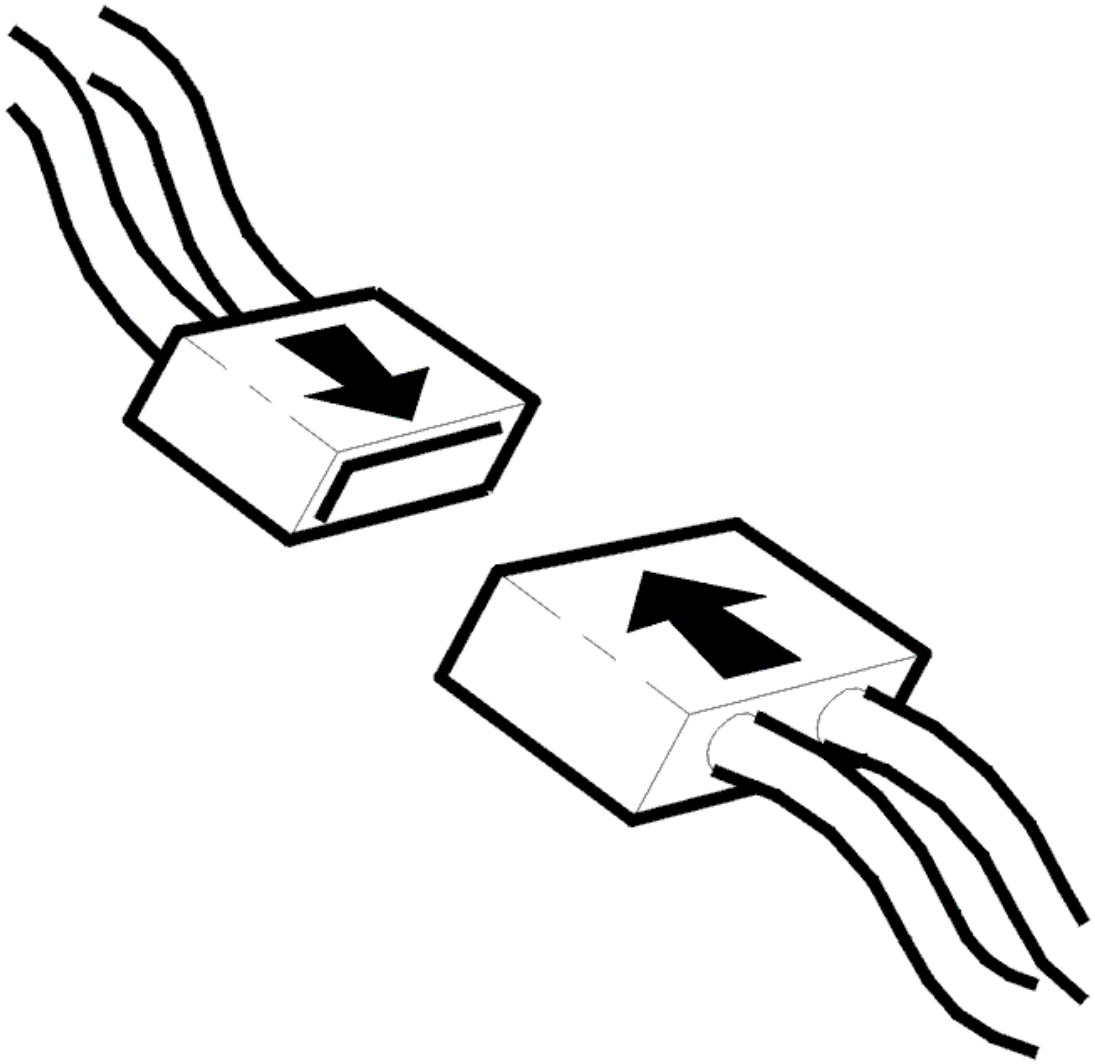

Fig. 6: Connecting Connector
Courtesy of VOLVO CARS CORPORATION

- Ignition off.
- Reconnect connectors, reinstall components.
- Ignition on.
- Read off outside temperature.

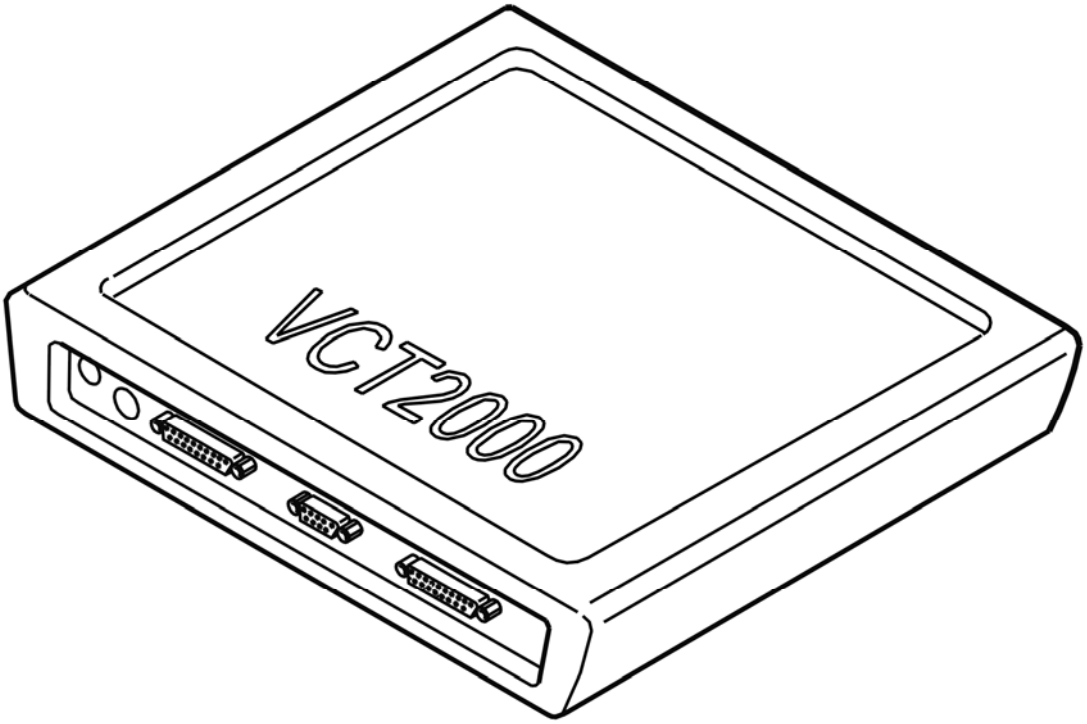

Fig. 7: Identifying VCT2000 Diagnostic Tool Symbol In VIDA
Courtesy of VOLVO CARS CORPORATION

Is the temperature within its permitted range?

- **YES**

  VERIFIED: Troubleshooting has been completed.

- **NO**

  Refer to **INFORMATION**

INFORMATION

FAULT-TRACING INFORMATION

The fault should have been detected and remedied. As this is not the case fault-tracing has failed.

Exit fault-tracing for this diagnostic trouble code (DTC) or make another attempt.

ECM-1100: OUTSIDE TEMPERATURE SENSOR. SIGNAL TOO HIGH (B5254T2; B6294T; 2003-2004)

DIAGNOSTIC TROUBLE CODE (DTC) INFORMATION ECM-1100

see **DIAGNOSTIC TROUBLE CODE (DTC) INFORMATION ECM-1100**

SIGNAL TOO HIGH

CHECKING COMPONENTS AND WIRING

Check the resistance of the outside temperature sensor.

Check the signal cable between control module terminal #B29 (#B39) and outside temperature sensor terminal #2. Check for a short-circuit to ground.

HINT: With the ignition on and the outside temperature sensor connector disconnected, the voltage between #2 and the ground terminal must be approximately 5V.

Remedy as necessary.

Other information:

- To connect the breakout box / access the control module, see **CONNECTING THE BREAKOUT BOX**
- For outside temperature sensor **- 2006** see **OUTSIDE TEMPERATURE SENSOR DOOR MIRROR, REPLACING**
- For outside temperature sensor **2007 -** see **OUTSIDE TEMPERATURE SENSOR**
- For resistance values, see **COMPONENT SPECIFICATIONS**
- For 5 cylinder turbocharged engines -2004, see **SIGNAL DESCRIPTION**
- For 5 cylinder turbocharged engines 2005-, see **SIGNAL SPECIFICATION** .
- For 6 cylinder engines -2004, see **SIGNAL SPECIFICATION**
- For 6 cylinder engines 2005-, see **SIGNAL SPECIFICATION** .

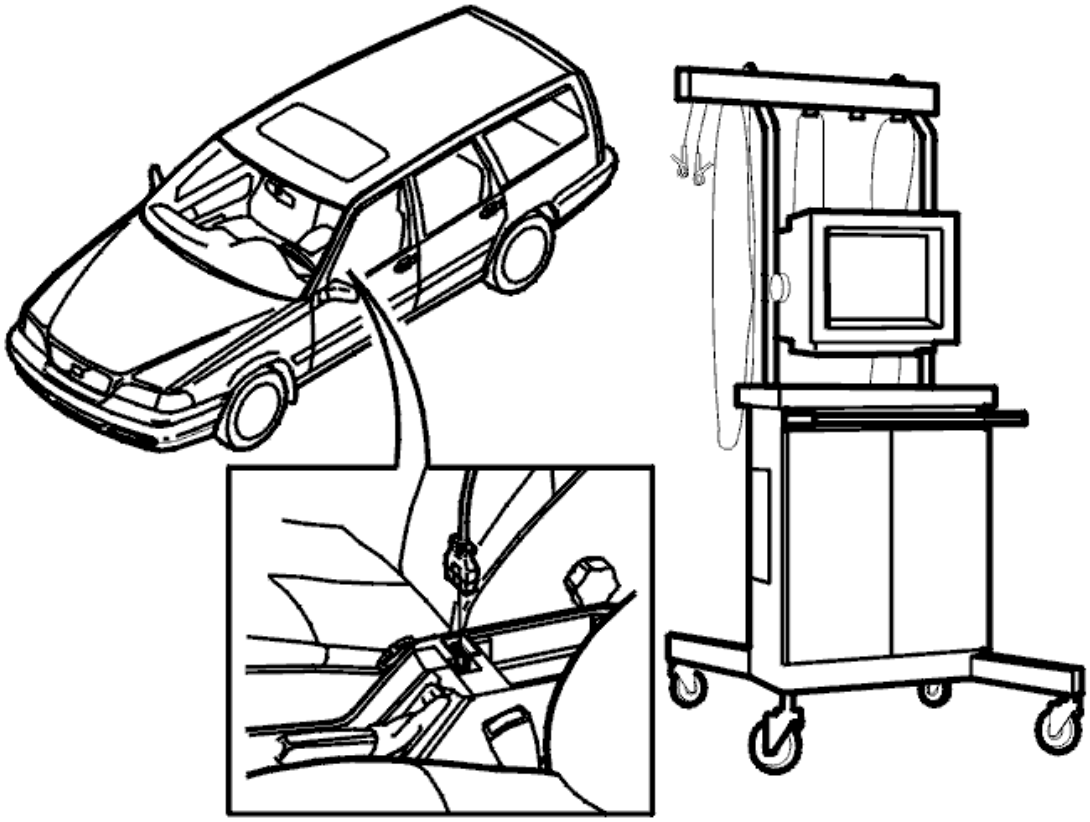

Fig. 8: Identifying Connector Terminals
Courtesy of VOLVO CARS CORPORATION

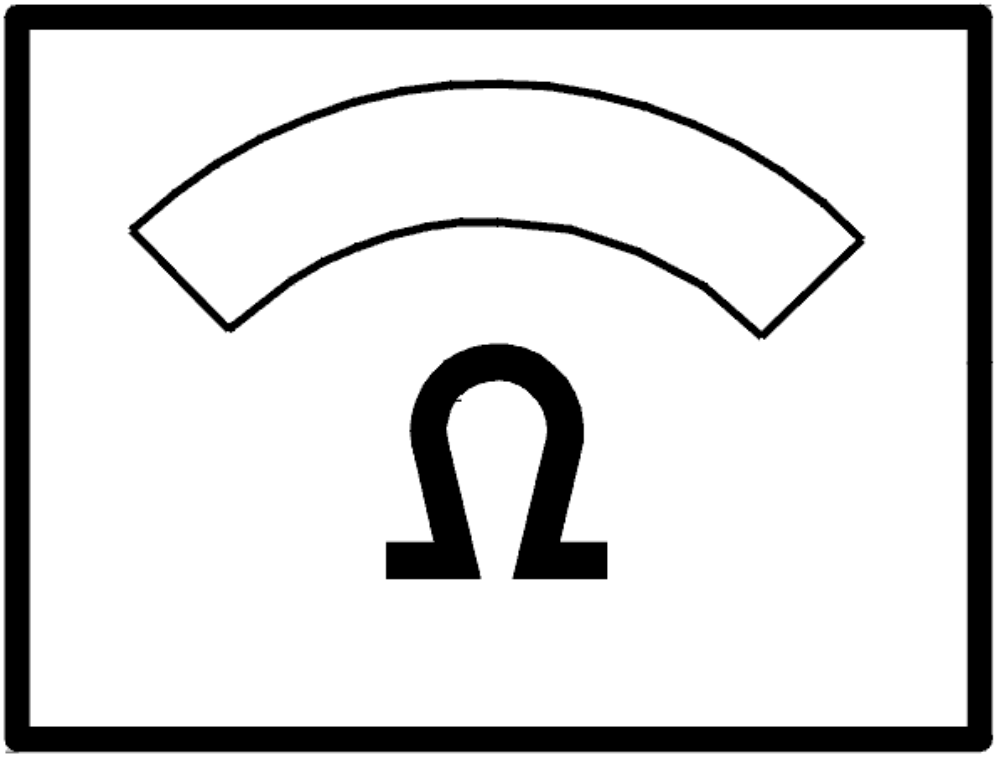

Fig. 9: Identifying Ohm Meter
Courtesy of VOLVO CARS CORPORATION

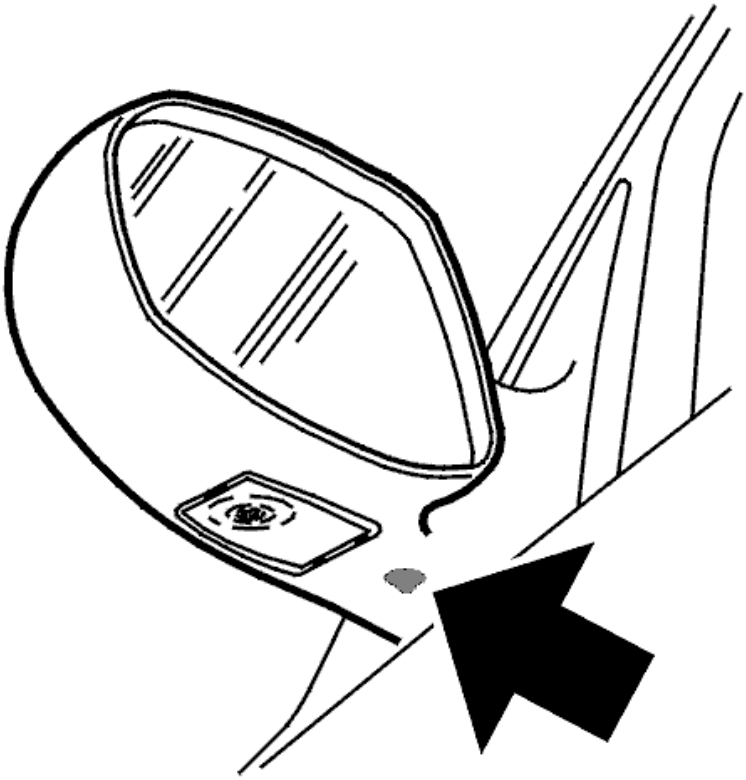

Fig. 10: Identifying Outside Temperature Sensor
Courtesy of VOLVO CARS CORPORATION

- **Continue**

  Refer to **VERIFICATION**

VERIFICATION

VERIFICATION

HINT: After carrying out the repair, check that the fault has been remedied.

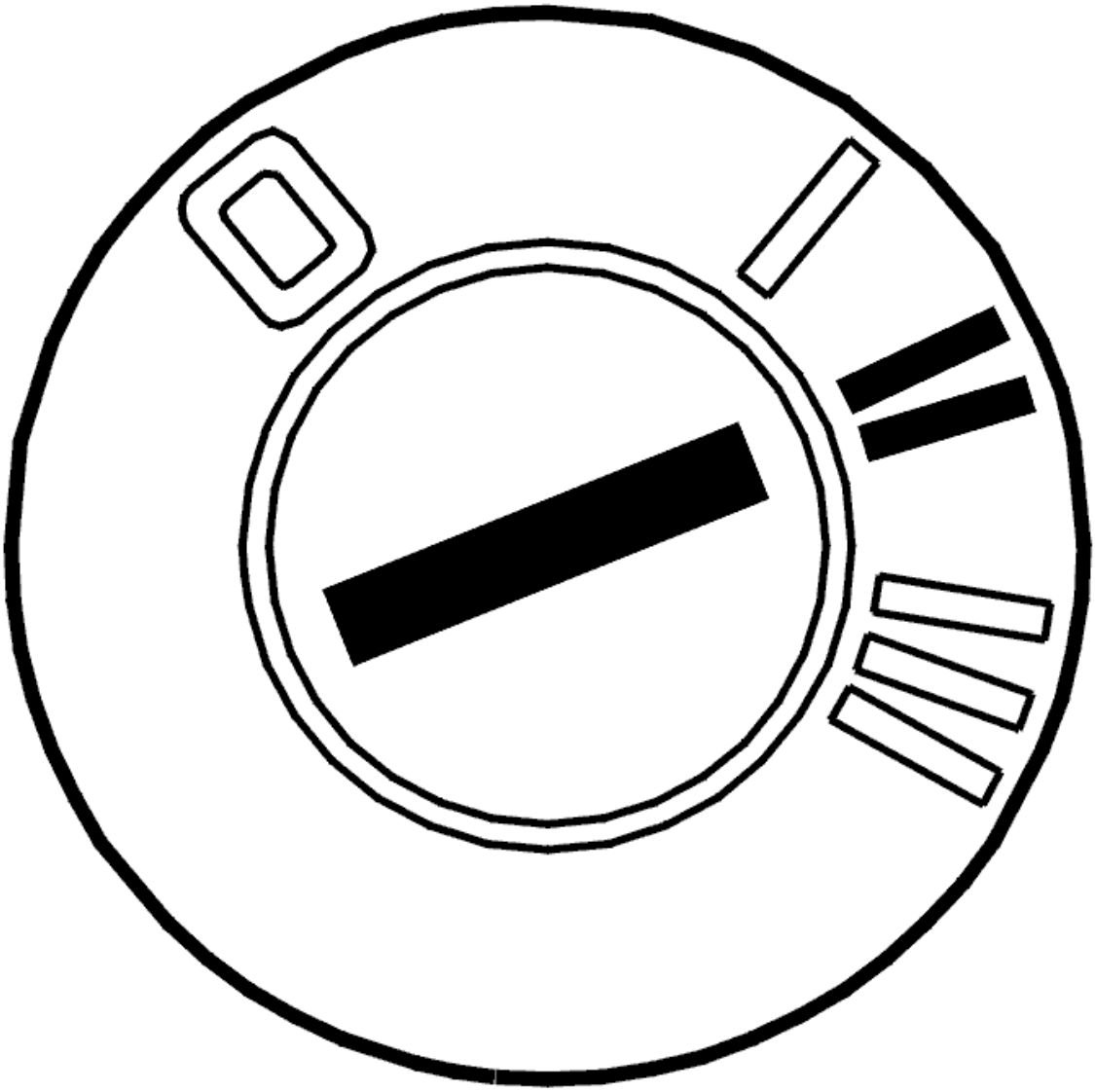

Fig. 11: Identifying Ignition ON
Courtesy of VOLVO CARS CORPORATION

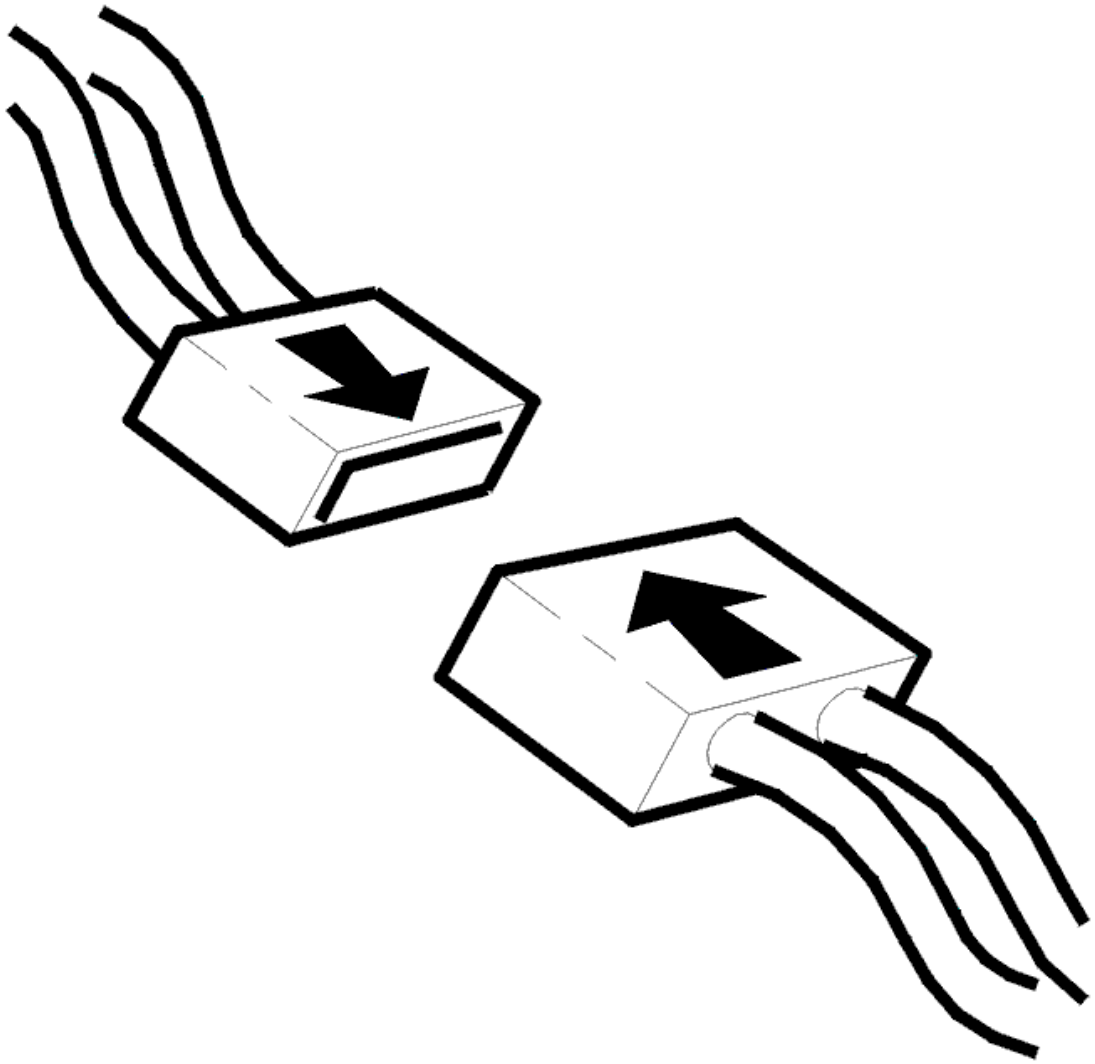

Fig. 12: Connecting Connector
Courtesy of VOLVO CARS CORPORATION

- Ignition off.
- Reconnect connectors, reinstall components.
- Ignition on.
- Read off outside temperature.

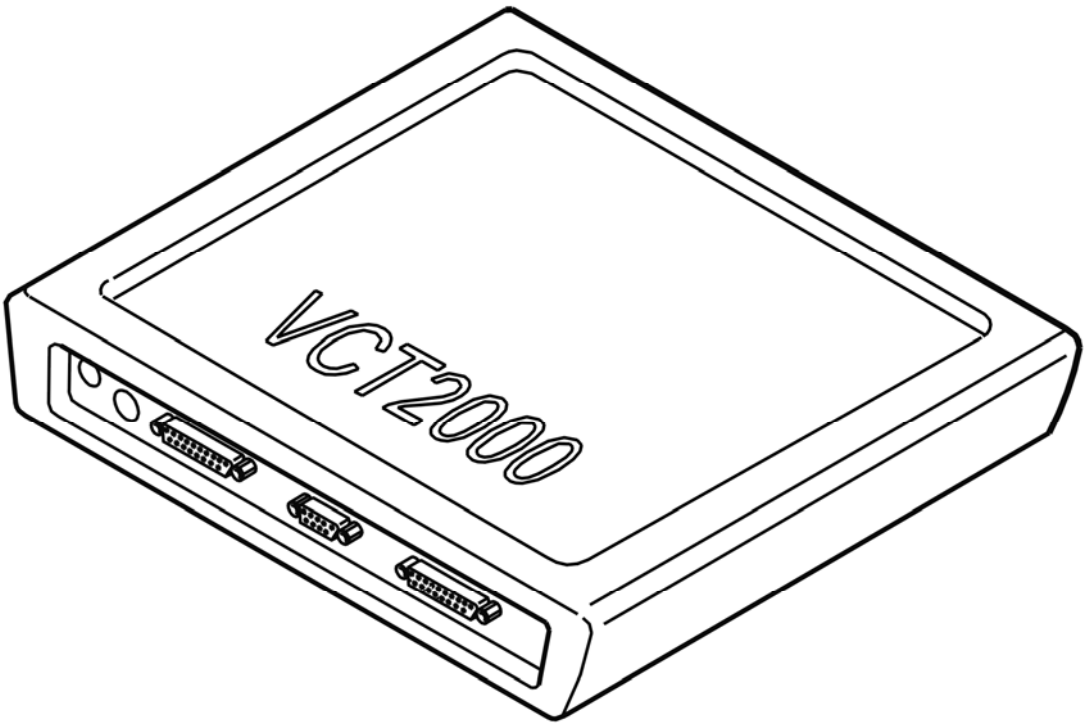

Fig. 13: Identifying VCT2000 Diagnostic Tool Symbol In VIDA
Courtesy of VOLVO CARS CORPORATION

Is the temperature within its permitted range?

- **YES**

  VERIFIED: Troubleshooting has been completed.

- **NO**

  Refer to **INFORMATION**

INFORMATION

FAULT-TRACING INFORMATION

The fault should have been detected and remedied. As this is not the case fault-tracing has failed.

Exit fault-tracing for this diagnostic trouble code (DTC) or make another attempt.

ECM-1100: OUTSIDE TEMPERATURE SENSOR. SIGNAL TOO LOW (B5254T2; B6294T; 2003-2004)

DIAGNOSTIC TROUBLE CODE (DTC) INFORMATION ECM-1100

see **DIAGNOSTIC TROUBLE CODE (DTC) INFORMATION ECM-1100**

SIGNAL TOO LOW

CHECKING THE CONNECTOR

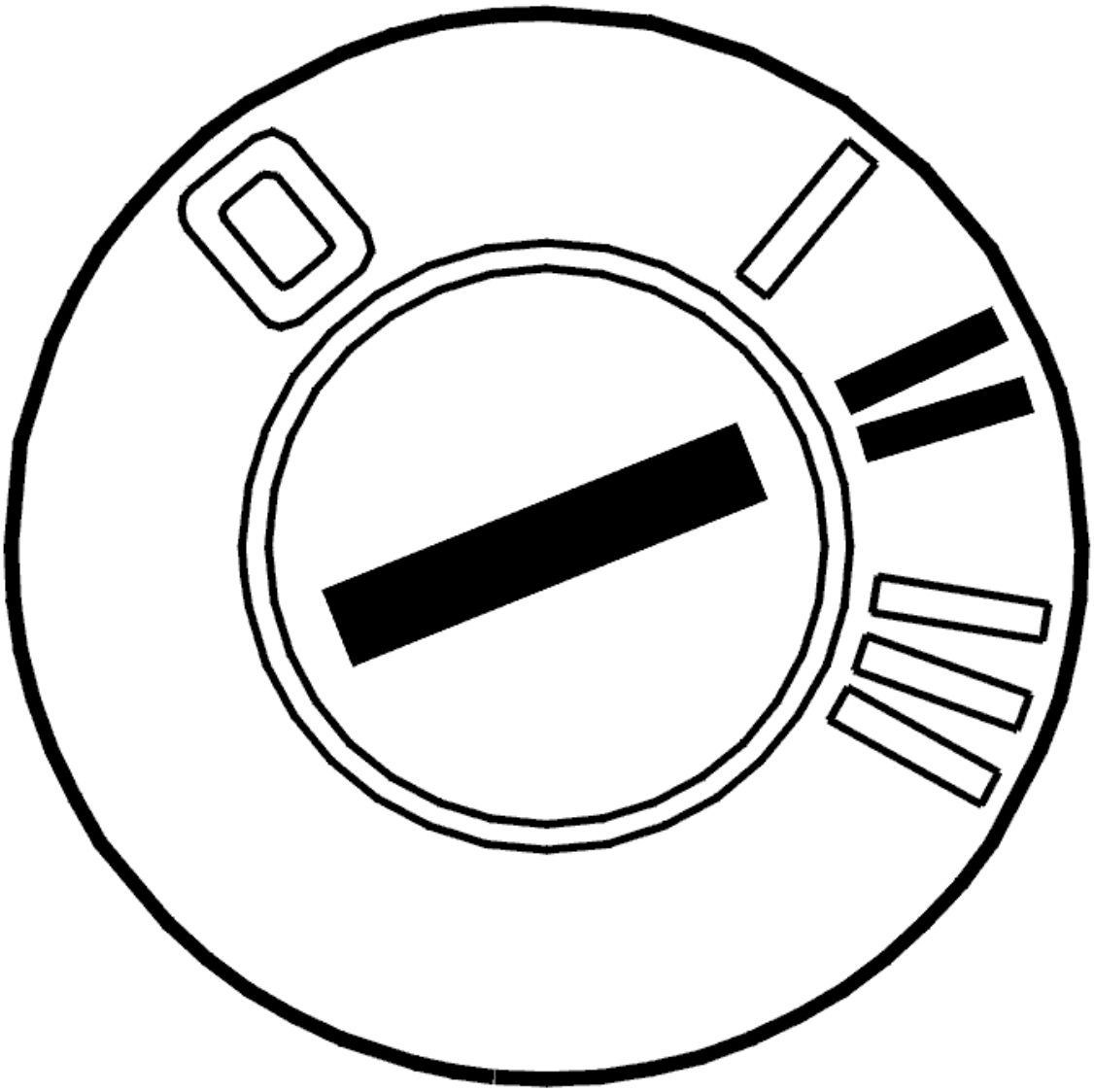

Fig. 14: Identifying Ignition ON
Courtesy of VOLVO CARS CORPORATION

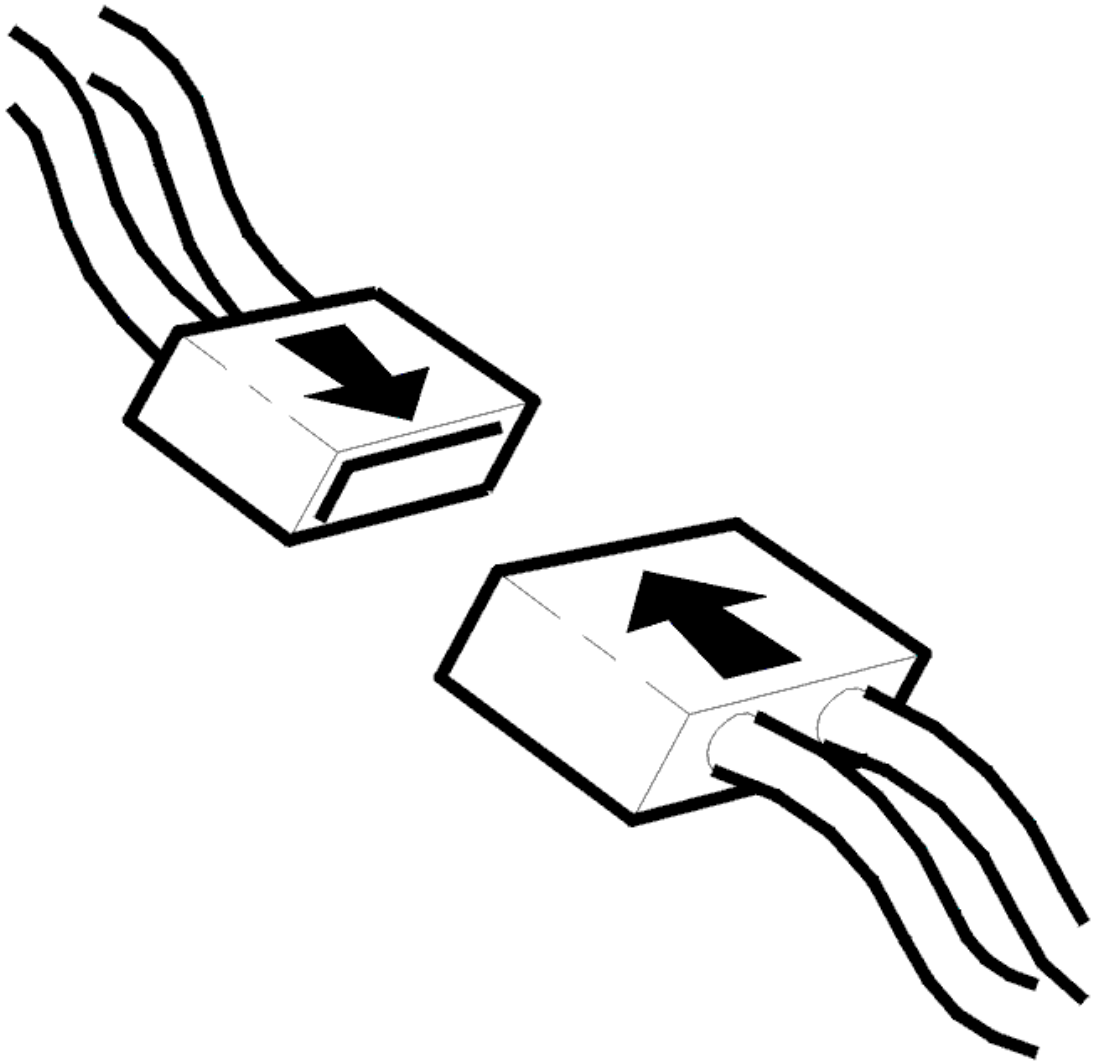

Fig. 15: Connecting Connector
Courtesy of VOLVO CARS CORPORATION

- Ignition off
- Check the wiring and connectors. Check for contact resistance and oxidation
- Reinstall the components, reconnect the connectors etc.
- Ignition on
- Read off the outside temperature.

  If the temperature is now within its permitted range, the fault was caused by loose connections in the connector.

  Other information

  - For outside temperature sensor **- 2006** see **OUTSIDE TEMPERATURE SENSOR DOOR**

MIRROR, REPLACING

- For outside temperature sensor **2007 -** see **OUTSIDE TEMPERATURE SENSOR**

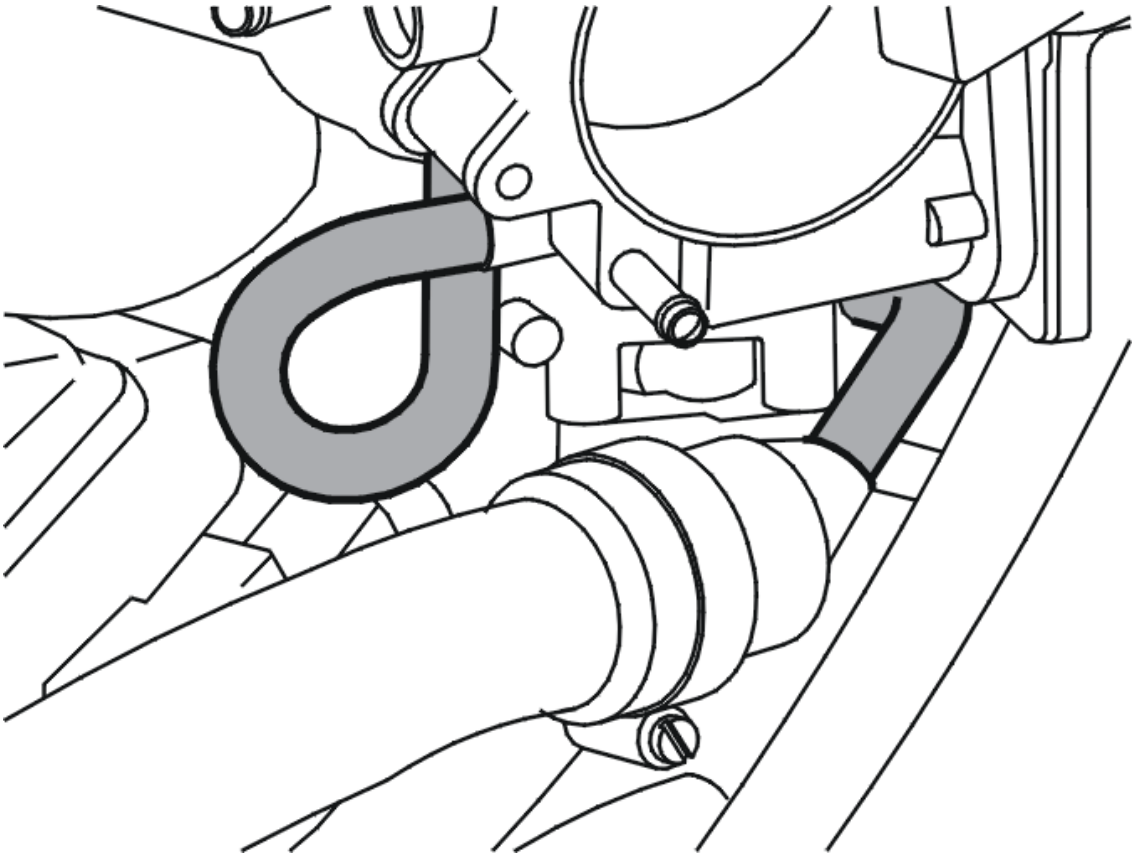

Fig. 16: Identifying Connector Terminals
Courtesy of VOLVO CARS CORPORATION

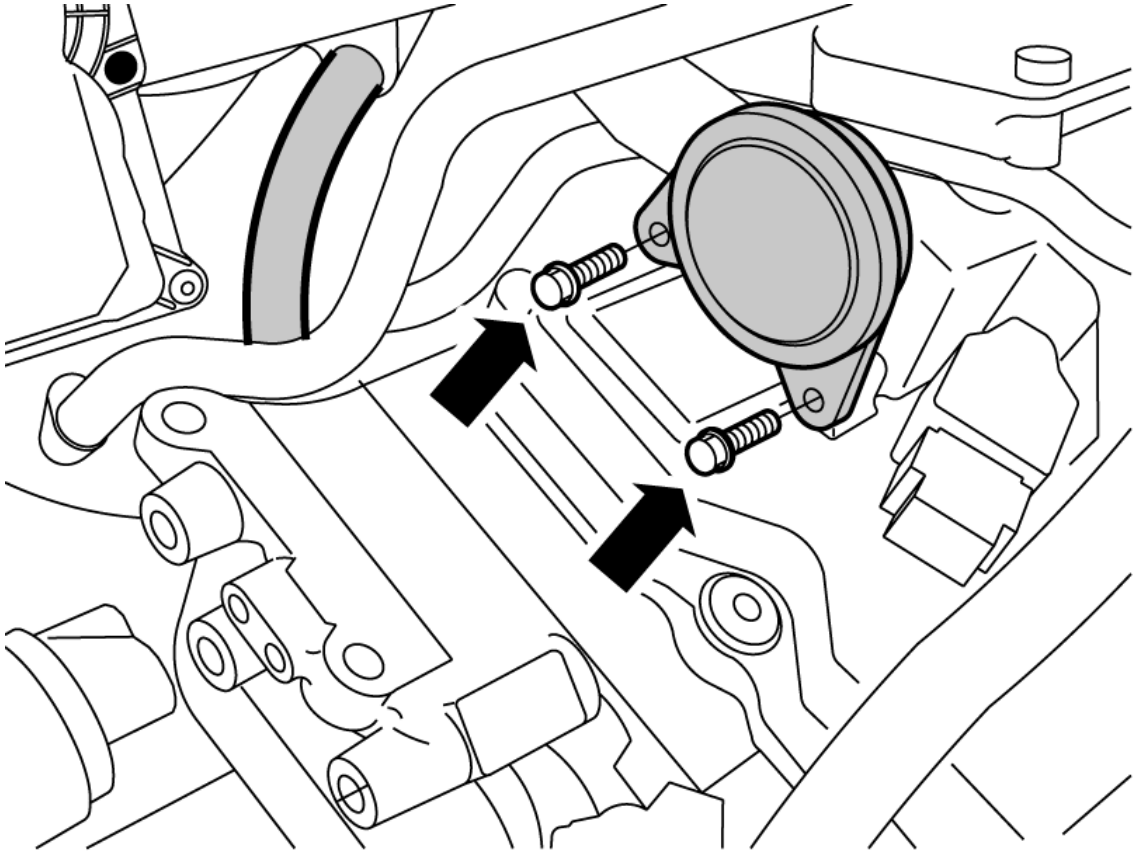

Fig. 17: Identifying VCT2000 Diagnostic Tool Symbol In VIDA
Courtesy of VOLVO CARS CORPORATION

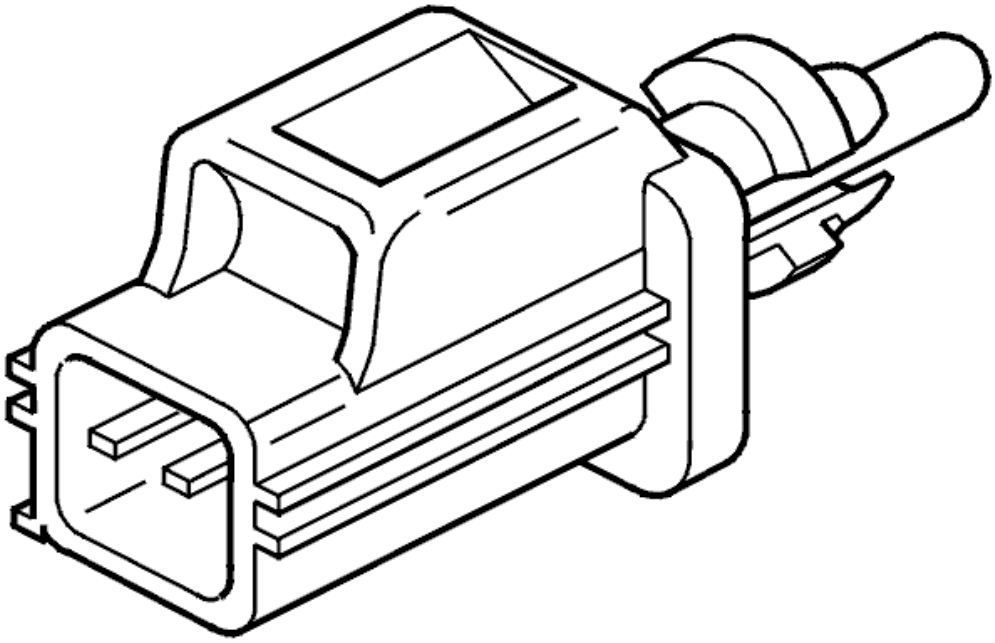

Fig. 18: Identifying Outside Temperature Sensor
Courtesy of VOLVO CARS CORPORATION

Is the temperature within its permitted range?

- **YES**

  OKAY: Troubleshooting has been completed.

- **NO**

  Refer to **CHECKING COMPONENTS AND WIRING**

CHECKING COMPONENTS AND WIRING

Check the resistance of the outside temperature sensor.

NOTE: **The outside temperature sensor may be defective if there was a short-circuit to supply voltage in the signal cable. Check this before replacing the sensor.**

Check the signal cable between control module terminal #B29 (#B39) and outside temperature sensor terminal #2. Check for a short-circuit to supply voltage. Check for an open-circuit.

HINT: With the ignition on and the outside temperature sensor connector disconnected, the voltage between #2 and ground must be approximately 5 V.

Check the ground lead between control module terminal #B4 (#B14) and outside temperature sensor terminal #3. Check for an open-circuit.

Remedy as necessary.

Other information

- To connect the breakout box / access the control module, see **CONNECTING THE BREAKOUT BOX**
- For outside temperature sensor **- 2006** see **OUTSIDE TEMPERATURE SENSOR DOOR MIRROR, REPLACING**
- For outside temperature sensor **2007 -** see **OUTSIDE TEMPERATURE SENSOR**
- For resistance values, see **COMPONENT SPECIFICATIONS**
- For 5 cylinder turbocharged engines -2004, see **SIGNAL DESCRIPTION**
- For 5 cylinder turbocharged engines 2005-, see **SIGNAL SPECIFICATION** .
- For 6 cylinder engines -2004, see **SIGNAL SPECIFICATION**
- For 6 cylinder engines 2005-, see **SIGNAL SPECIFICATION** .

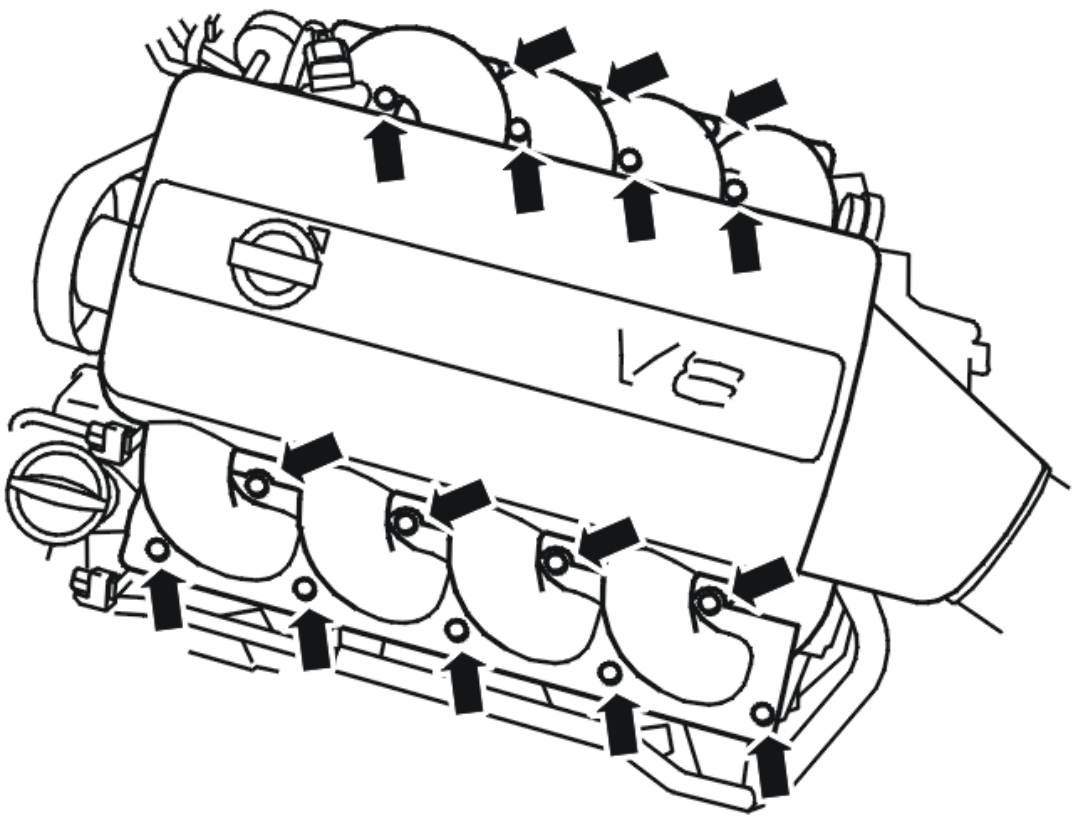

Fig. 19: Identifying Connector Terminals
Courtesy of VOLVO CARS CORPORATION

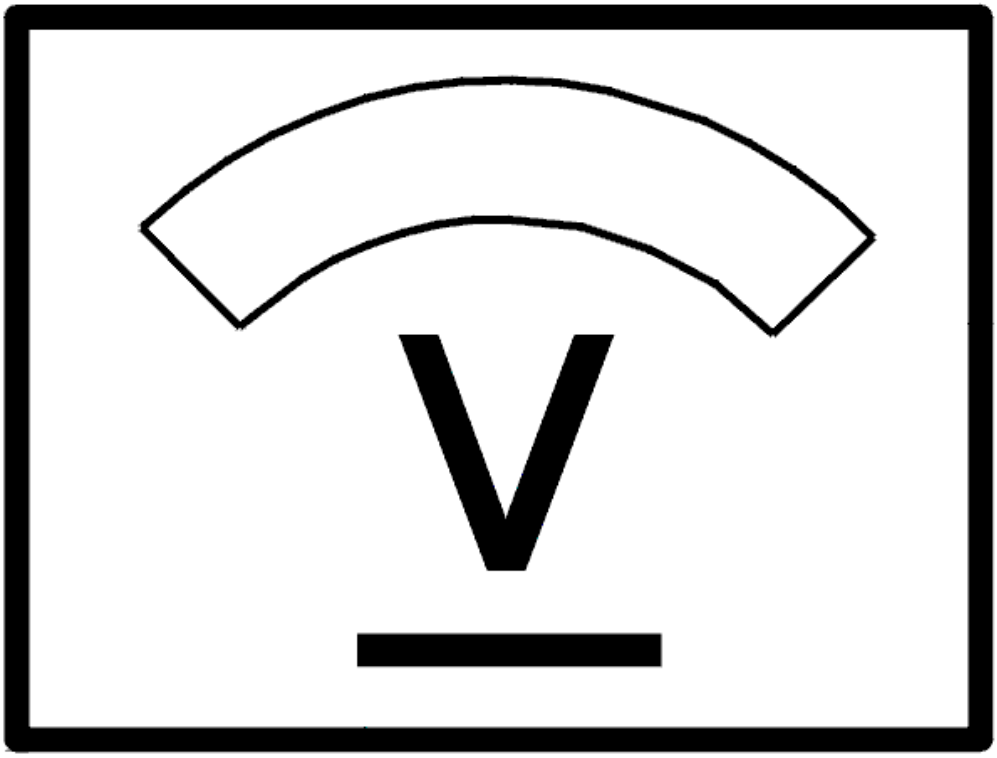

Fig. 20: Identifying Voltage Display
Courtesy of VOLVO CARS CORPORATION

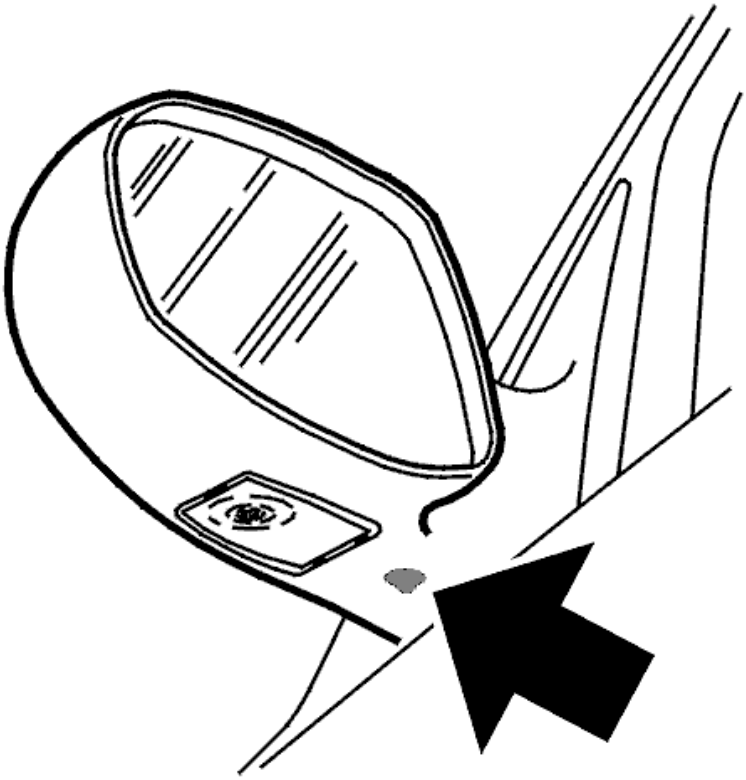

Fig. 21: Identifying Outside Temperature Sensor
Courtesy of VOLVO CARS CORPORATION

- **Continue**

  Refer to **VERIFICATION**

VERIFICATION

VERIFICATION

HINT: After carrying out the repair, check that the fault has been remedied.

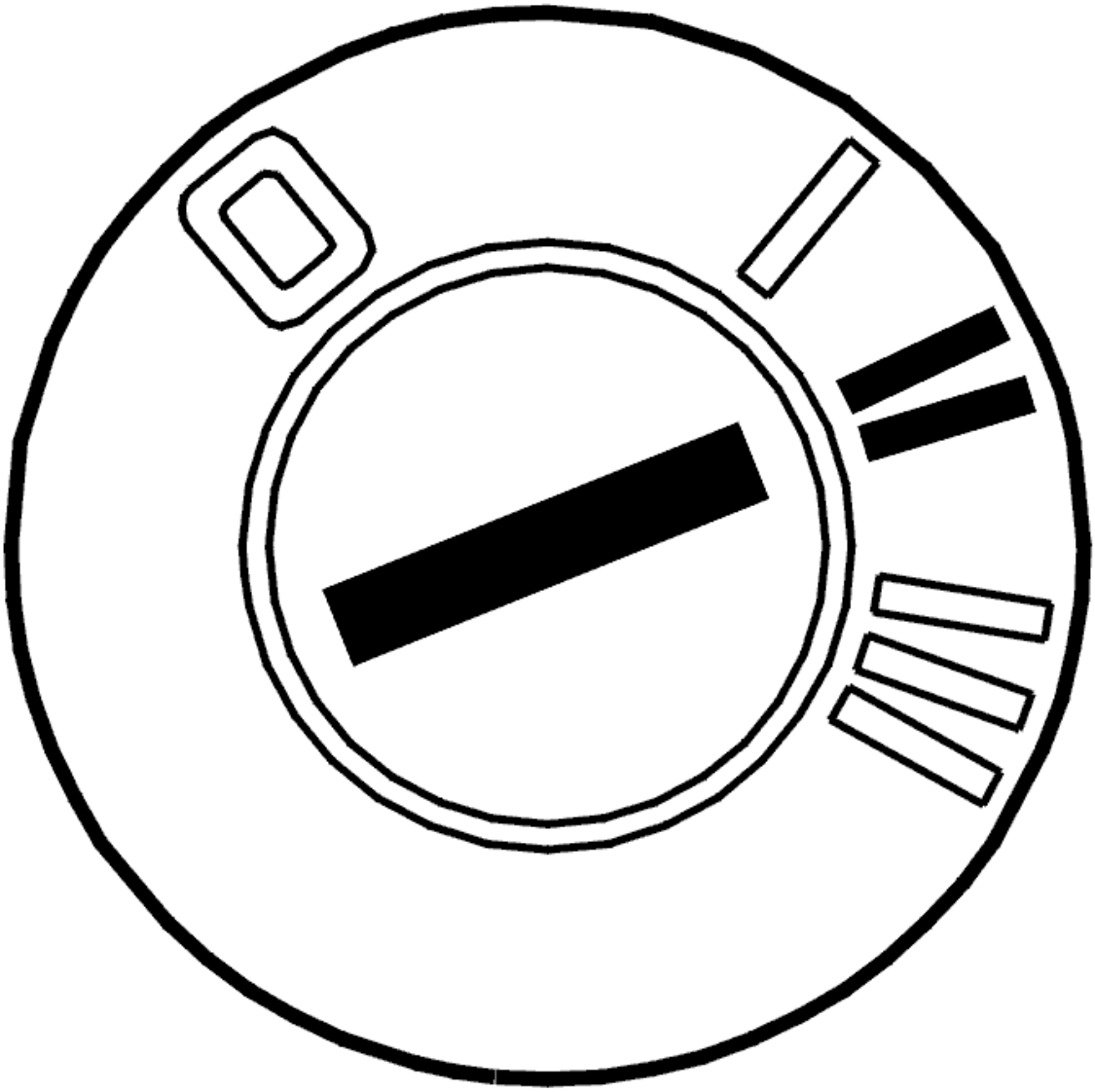

Fig. 22: Identifying Ignition ON
Courtesy of VOLVO CARS CORPORATION

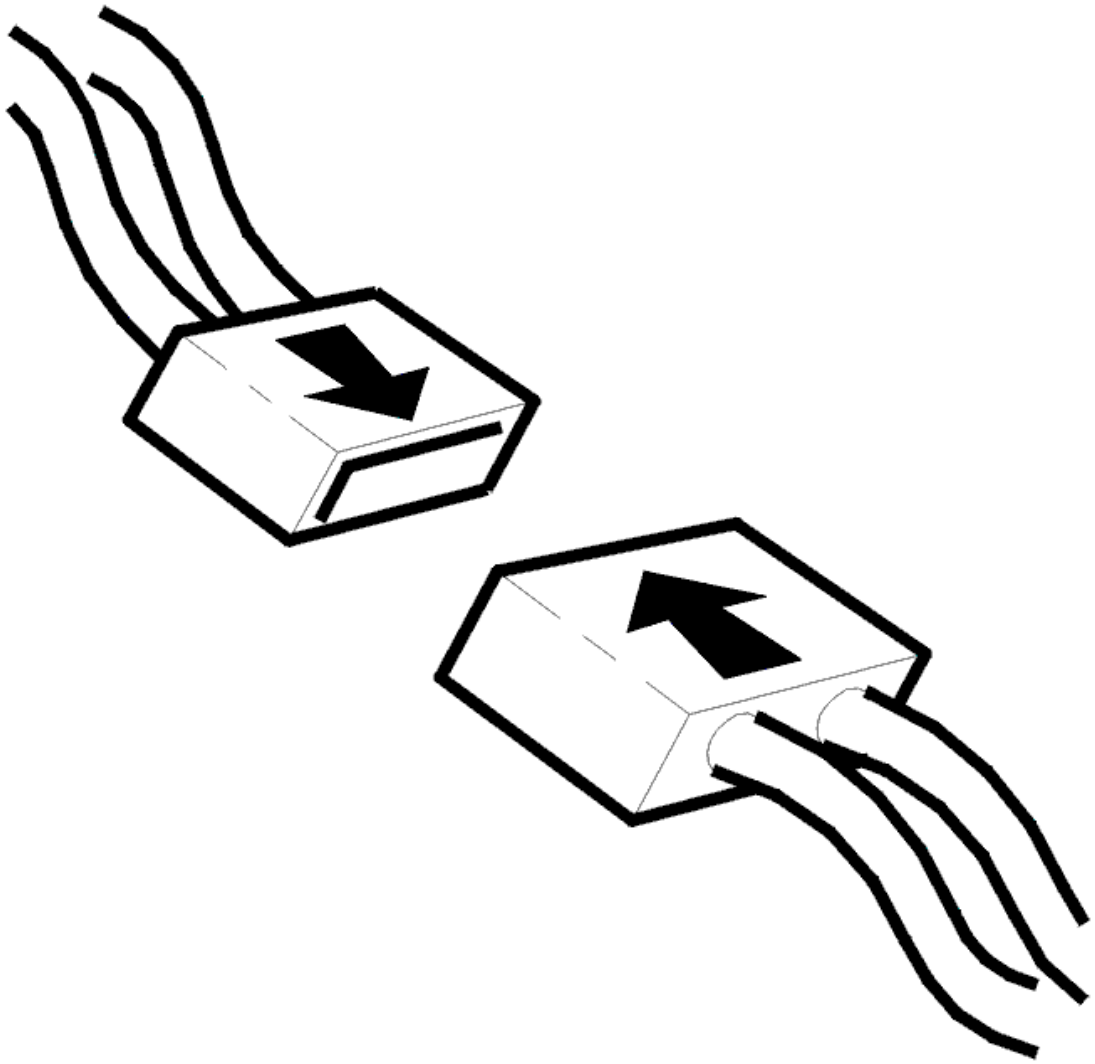

Fig. 23: Connecting Connector
Courtesy of VOLVO CARS CORPORATION

- Ignition off.
- Reconnect connectors, reinstall components.
- Ignition on.
- Read off outside temperature.

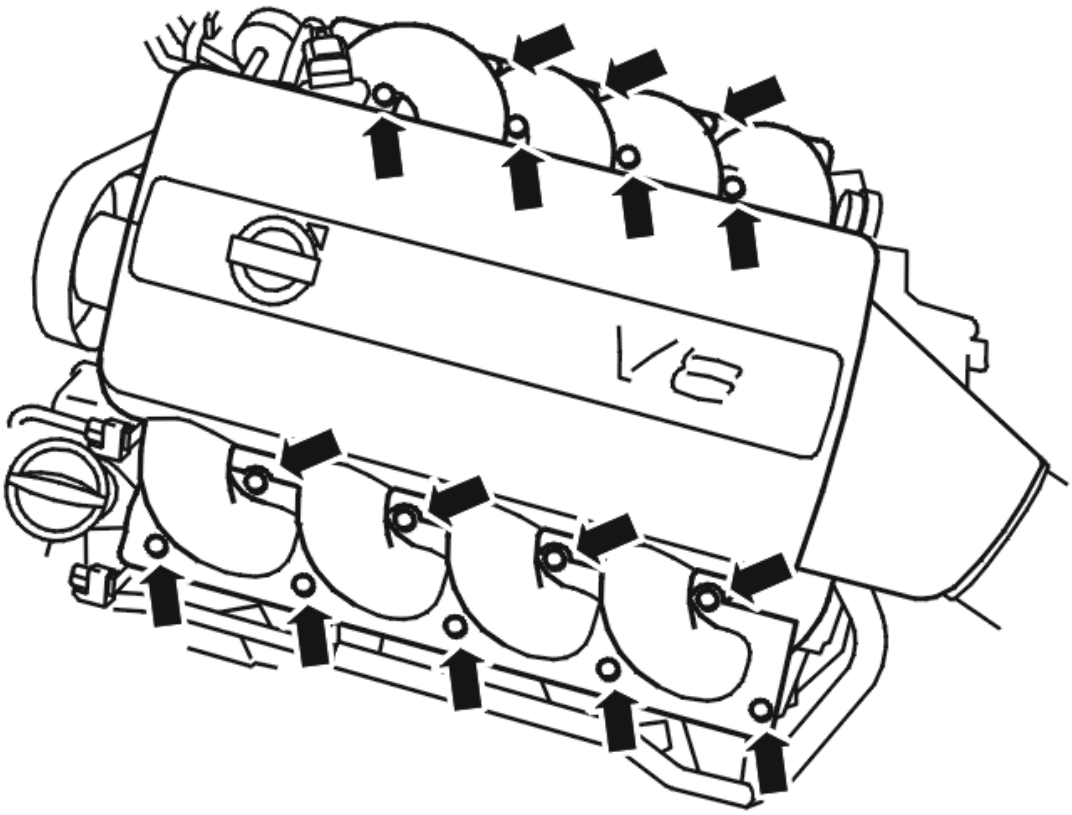

Fig. 24: Identifying VCT2000 Diagnostic Tool Symbol In VIDA
Courtesy of VOLVO CARS CORPORATION

Is the temperature within its permitted range?

- **YES**

  VERIFIED: Troubleshooting has been completed.

- **NO**

  Refer to **INFORMATION**

INFORMATION

FAULT-TRACING INFORMATION

The fault should have been detected and remedied. As this is not the case fault-tracing has failed.

Exit fault-tracing for this diagnostic trouble code (DTC) or make another attempt.

ECM-112C: ATMOSPHERIC PRESSURE SENSOR. SIGNAL TOO HIGH (B5254T2; 2005-2007)

DIAGNOSTIC TROUBLE CODE (DTC) INFORMATION ECM-112C

Condition

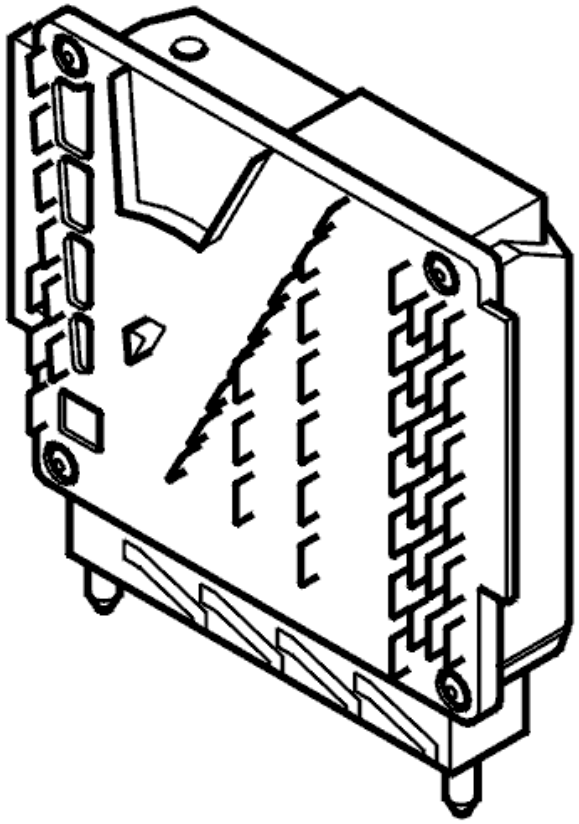

Fig. 25: Engine Control Module
Courtesy of VOLVO CARS CORPORATION

The engine control module (ECM) checks the signal from the internal atmospheric pressure sensor.

The diagnostic trouble code (DTC) is stored if the signal from the internal atmospheric pressure sensor is higher than a certain value for a certain amount of time. The diagnostic trouble code (DTC) can be diagnosed when the engine is running.

Substitute Value

- 1013 hPa (atmospheric pressure corresponding to sea level).

Possible Source

- Damaged engine control module (ECM).

Fault symptom[s]

- Malfunction indicator lamp (MIL) lit.

INTERNAL FAULT

REPLACING THE COMPONENT

The engine control module (ECM) has registered an internal fault.

If the fault is intermittent, it has been registered previously but is no longer present. Intermittent faults can be caused by interference at start up of the engine control module (ECM) or may be a different type of fault which occurs on different occasions. The fault is evaluated depending on how it occurs. Replace the engine control module (ECM) if the fault recurs.

Replace the engine control module (ECM) in the event of a permanent fault.

see **ENGINE CONTROL MODULE (ECM), REPLACING**

Remedy as necessary.

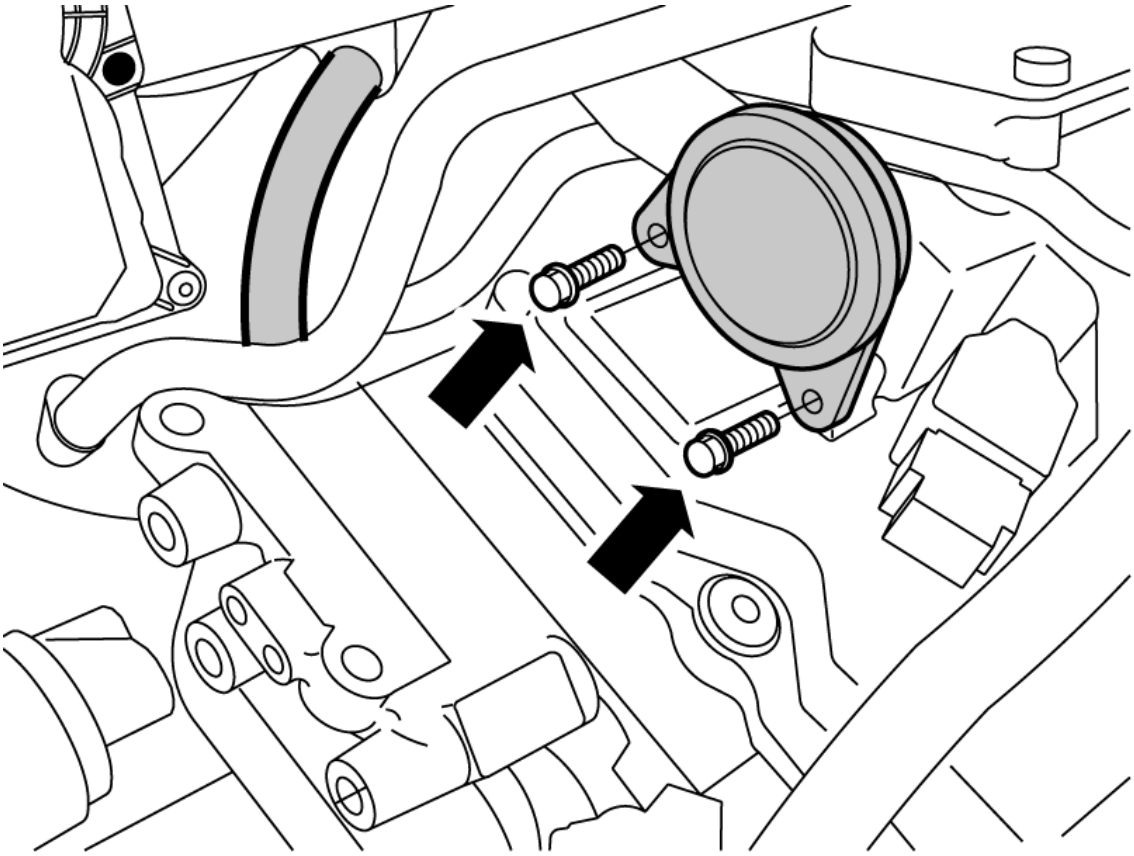

Fig. 26: Engine Control Module
Courtesy of VOLVO CARS CORPORATION

- **Continue**

  Refer to **INFORMATION**

INFORMATION

FAULT-TRACING INFORMATION

In case of this defect, troubleshooting is not followed by verification.

The information can be displayed again or the fault-tracing for this fault can be interrupted.

ECM-112C: ATMOSPHERIC PRESSURE SENSOR. SIGNAL TOO HIGH (B6294T; 2005-2006)

DIAGNOSTIC TROUBLE CODE (DTC) INFORMATION ECM-112C

see **DIAGNOSTIC TROUBLE CODE (DTC) INFORMATION ECM-112C**

INTERNAL FAULT

see **INTERNAL FAULT**

ECM-112D: ATMOSPHERIC PRESSURE SENSOR. SIGNAL TOO LOW (B5254T2; 2005-2007)

DIAGNOSTIC TROUBLE CODE (DTC) INFORMATION ECM-112D

Condition

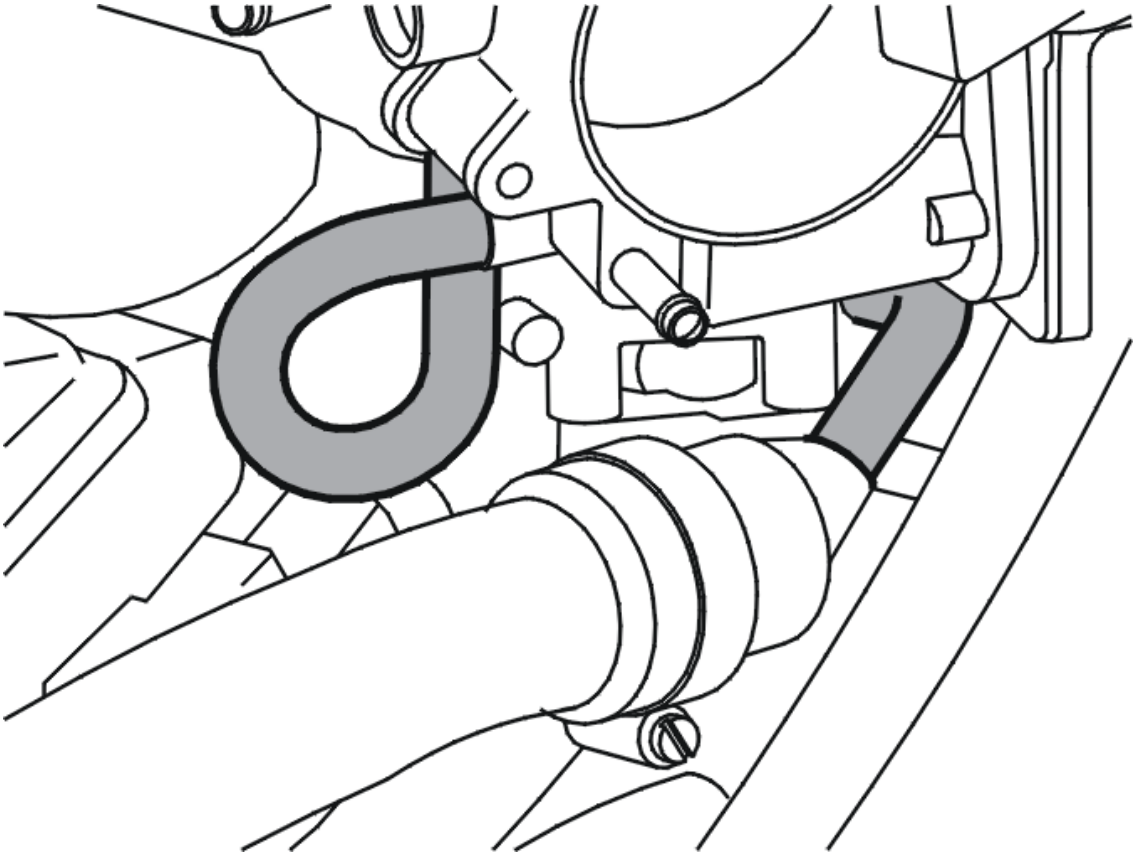

Fig. 27: Engine Control Module
Courtesy of VOLVO CARS CORPORATION

The engine control module (ECM) checks the signal from the internal atmospheric pressure sensor.

The diagnostic trouble code (DTC) is stored if the signal from the internal atmospheric pressure sensor is lower than a certain value for a certain amount of time. The diagnostic trouble code (DTC) can be diagnosed when the engine is running.

Substitute Value

- 1013 hPa (atmospheric pressure corresponding to sea level).

Possible Source

- Damaged engine control module (ECM).

Fault symptom[s]

- Malfunction indicator lamp (MIL) lit.

INTERNAL FAULT

see **INTERNAL FAULT**

ECM-112D: ATMOSPHERIC PRESSURE SENSOR. SIGNAL TOO LOW (B6294T; 2005-2006)

DIAGNOSTIC TROUBLE CODE (DTC) INFORMATION ECM-112D

see **DIAGNOSTIC TROUBLE CODE (DTC) INFORMATION ECM-112D**

INTERNAL FAULT

see **INTERNAL FAULT**

ECM-1130: ATMOSPHERIC PRESSURE SENSOR. FAULTY SIGNAL (B5254T2; 2005-2007)

DIAGNOSTIC TROUBLE CODE (DTC) INFORMATION ECM-1130

Condition

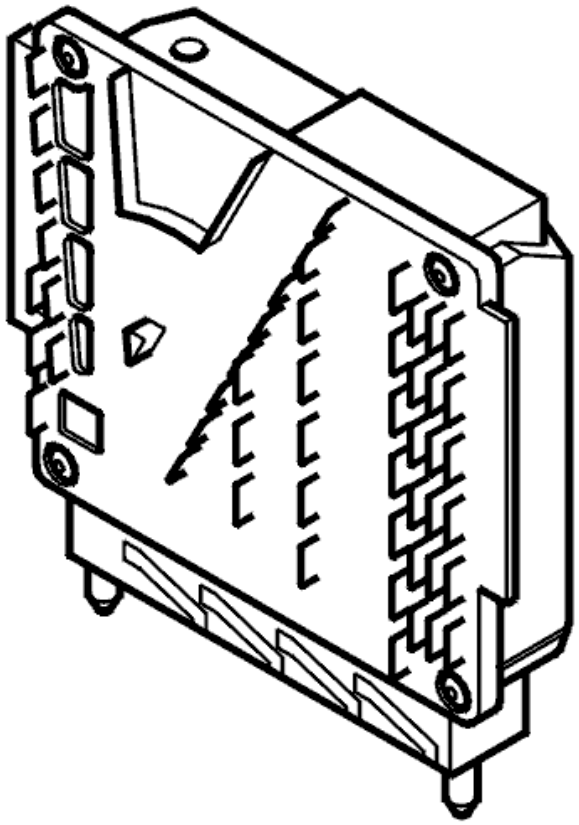

Fig. 28: Engine Control Module
Courtesy of VOLVO CARS CORPORATION

The engine control module (ECM) checks the signal from the internal atmospheric pressure sensor.

The diagnostic trouble code (DTC) is stored if the engine control module (ECM) detects a faulty signal from the internal atmospheric pressure sensor.

The diagnostic trouble code (DTC) can be diagnosed when the ignition has been on for at least 20 seconds.

Substitute Value

- 1013 hPa (atmospheric pressure corresponding to sea level).

Possible Source

- Damaged engine control module (ECM).

Fault symptom[s]

- Malfunction indicator lamp (MIL) lit.

INTERNAL FAULT

see **INTERNAL FAULT**

ECM-1130: ATMOSPHERIC PRESSURE SENSOR. FAULTY SIGNAL (B6294T; 2005-2006)

DIAGNOSTIC TROUBLE CODE (DTC) INFORMATION ECM-1130

see **DIAGNOSTIC TROUBLE CODE (DTC) INFORMATION ECM-1130**

INTERNAL FAULT

see **INTERNAL FAULT**

ECM-113B: ATMOSPHERIC PRESSURE SENSOR. SIGNAL MISSING (B5254T2; 2005-2007)

DIAGNOSTIC TROUBLE CODE (DTC) INFORMATION ECM-113B

Condition

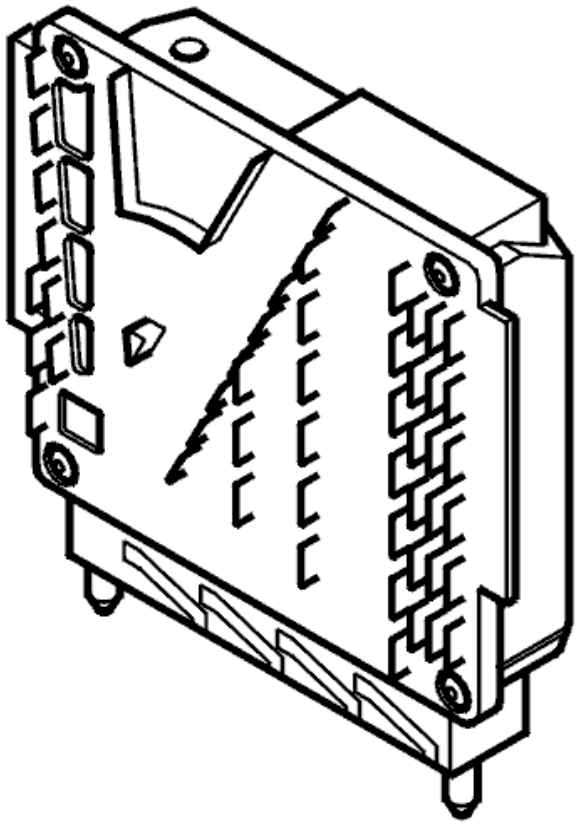

Fig. 29: Engine Control Module
Courtesy of VOLVO CARS CORPORATION

The engine control module (ECM) checks the signal from the internal atmospheric pressure sensor.

The diagnostic trouble code (DTC) is stored if the engine control module (ECM) detects a faulty signal from the internal atmospheric pressure sensor.

The diagnostic trouble code (DTC) can be diagnosed when the ignition has been on for at least 20 seconds.

Substitute Value

- 1013 hPa (atmospheric pressure corresponding to sea level).

Possible Source

- Damaged engine control module (ECM).

Fault symptom[s]

- Malfunction indicator lamp (MIL) lit.

INTERNAL FAULT

see **INTERNAL FAULT**

ECM-113B: ATMOSPHERIC PRESSURE SENSOR. SIGNAL MISSING (B6294T; 2005-2006)

DIAGNOSTIC TROUBLE CODE (DTC) INFORMATION ECM-113B

see **DIAGNOSTIC TROUBLE CODE (DTC) INFORMATION ECM-113B**

INTERNAL FAULT

see **INTERNAL FAULT**

ECM-113C: ATMOSPHERIC PRESSURE SENSOR. SIGNAL TOO HIGH (B5254T2; 2005-2007)

DIAGNOSTIC TROUBLE CODE (DTC) INFORMATION ECM-113C

Condition

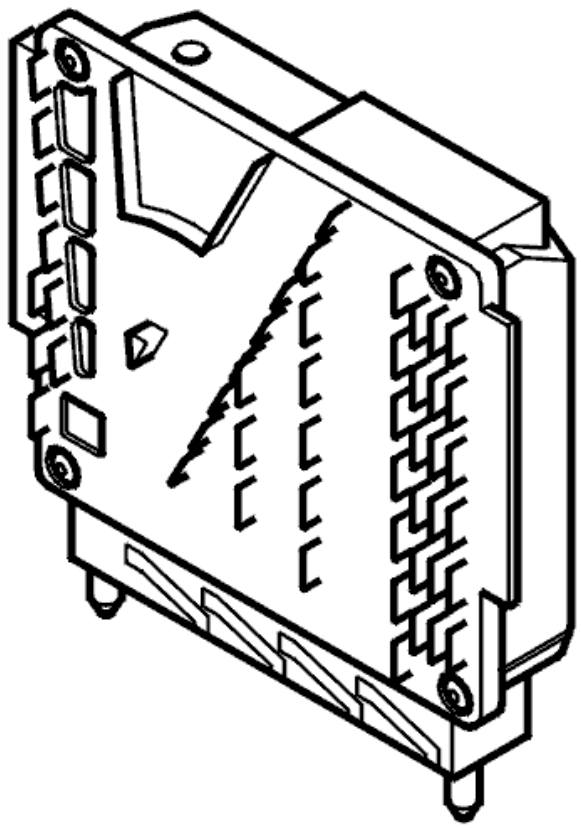

Fig. 30: Engine Control Module
Courtesy of VOLVO CARS CORPORATION

The engine control module (ECM) checks the signal from the internal atmospheric pressure sensor.

The diagnostic trouble code (DTC) is stored if the engine control module (ECM) detects a faulty signal from the internal atmospheric pressure sensor.

The diagnostic trouble code (DTC) can be diagnosed when the ignition has been on for at least 20 seconds.

Substitute Value

- 1013 hPa (atmospheric pressure corresponding to sea level).

Possible Source

- Damaged engine control module (ECM).

Fault symptom[s]

- Malfunction indicator lamp (MIL) lit.

INTERNAL FAULT

see **INTERNAL FAULT**

ECM-113C: ATMOSPHERIC PRESSURE SENSOR. SIGNAL TOO HIGH (B6294T; 2005-2006)

DIAGNOSTIC TROUBLE CODE (DTC) INFORMATION ECM-113C

see **DIAGNOSTIC TROUBLE CODE (DTC) INFORMATION ECM-113C**

INTERNAL FAULT

see **INTERNAL FAULT**

ECM-113D: ATMOSPHERIC PRESSURE SENSOR. SIGNAL TOO LOW (B5254T2; 2005-2007)

DIAGNOSTIC TROUBLE CODE (DTC) INFORMATION ECM-113D

Condition

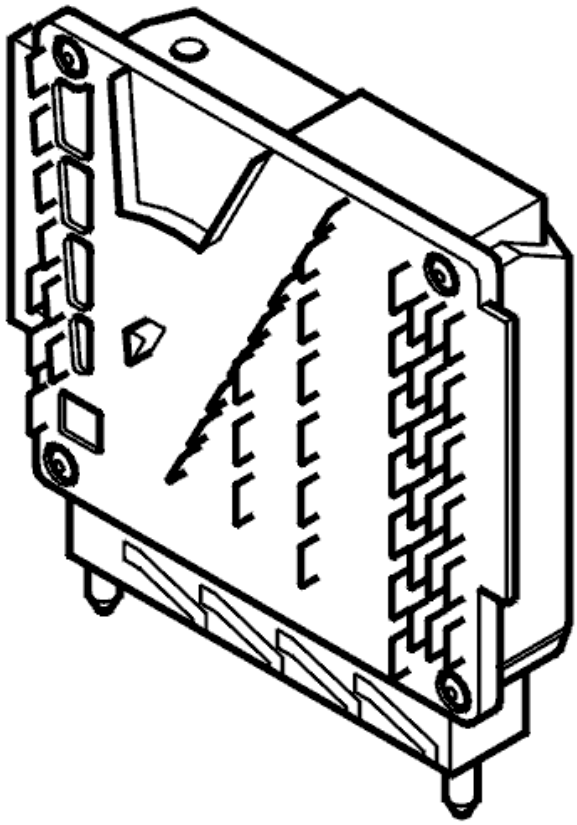

Fig. 31: Engine Control Module
Courtesy of VOLVO CARS CORPORATION

The engine control module (ECM) checks the signal from the internal atmospheric pressure sensor.

The diagnostic trouble code (DTC) is stored if the engine control module (ECM) detects a faulty signal from the internal atmospheric pressure sensor.

The diagnostic trouble code (DTC) can be diagnosed when the ignition has been on for at least 20 seconds.

Substitute Value

- 1013 hPa (atmospheric pressure corresponding to sea level).

Possible Source

- Damaged engine control module (ECM).

Fault symptom[s]

- Malfunction indicator lamp (MIL) lit.

INTERNAL FAULT

see **INTERNAL FAULT**

ECM-113D: ATMOSPHERIC PRESSURE SENSOR. SIGNAL TOO LOW (B6294T; 2005-2006)

DIAGNOSTIC TROUBLE CODE (DTC) INFORMATION ECM-113D

see **DIAGNOSTIC TROUBLE CODE (DTC) INFORMATION ECM-113D**

INTERNAL FAULT

see **INTERNAL FAULT**

ECM-1200: INTAKE AIR TEMPERATURE (IAT) SENSOR. SIGNAL TOO HIGH (B5254T2; B6294T; 2003-2004)

DIAGNOSTIC TROUBLE CODE (DTC) INFORMATION ECM-1200

Condition

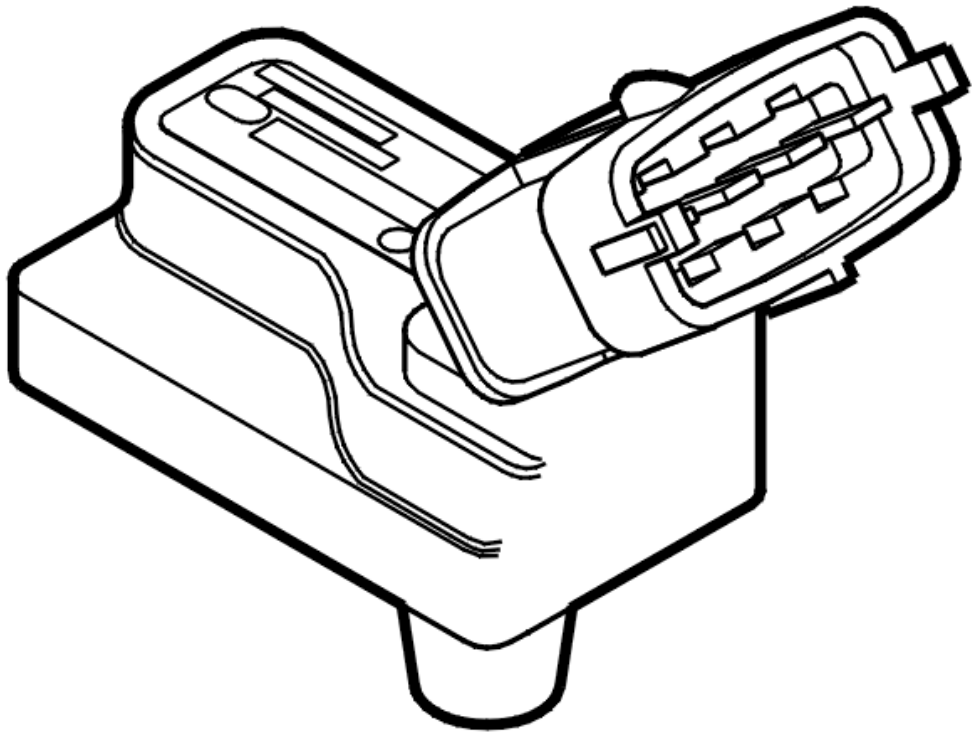

Fig. 32: Identifying Boost Pressure Sensor
Courtesy of VOLVO CARS CORPORATION

Diagnostic trouble code (DTC) ECM-1200 is stored if the engine has been running for 3 minutes and been idling for at least 60 seconds and the control module receives a signal from the intake air temperature sensor (integrated in the mass air flow (MAF) sensor) corresponding to a temperature lower than -29 °C or higher than +129 °C The diagnostic trouble code (DTC) is also stored if the signal is not plausible for the intake air temperature sensor for a certain period of time.

Substitute Value

+20 °C.

Three-way catalytic converter (TWC) preheating and idle air trim diagnostics are disabled.

Possible Source

Signal too high:

- Short-circuit to ground in the signal cable
- Defective intake air temperature (IAT) sensor.

Signal too low:

- Contact resistance or oxidation in the terminals
- Open-circuit in the signal cable
- Open-circuit in the signal ground cable
- Short-circuit to supply voltage in the signal cable
- Defective intake air temperature (IAT) sensor.

Faulty signal:

- Contact resistance or oxidation in the terminals
- Defective intake air temperature (IAT) sensor.

Fault symptom[s]

- Malfunction indicator lamp (MIL) lit
- Poor performance.

SIGNAL TOO HIGH

CHECKING THE WIRING AND COMPONENT

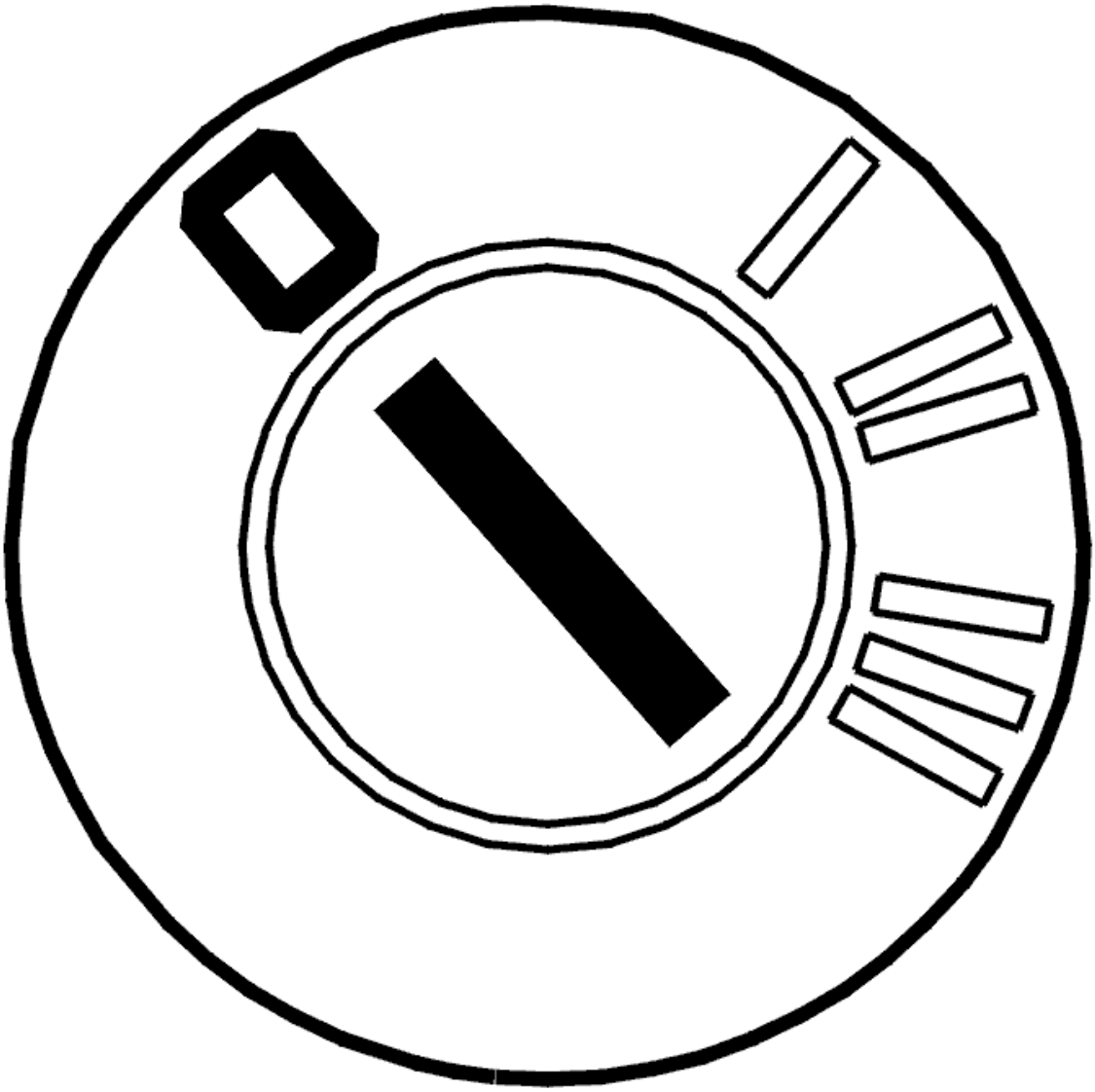

Fig. 33: Identifying Ignition OFF
Courtesy of VOLVO CARS CORPORATION

- Ignition off.

  Check the intake air temperature (IAT) sensor resistance between terminals #1 and #2 on the boost pressure sensor.

  NOTE: The intake air temperature (IAT) sensor is integrated in the boost pressure sensor.

  Check the signal cable between engine control module (ECM) terminal #A5 (#A5) and boost pressure sensor terminal #2 for short circuit to ground.

  HINT: With the ignition on and the boost pressure sensor connector unplugged, the voltage between terminal #2 and the grounding terminal should be 5 V, measured at the connector. Read

off air temperature using the VCT2000 (or appropriate scan tool).

If no errors are found and the fault is permanent, replace the intake air temperature (IAT) sensor.

Remedy as necessary.

Other information:

- see **CONNECTING THE BREAKOUT BOX**
- For 5 cylinder turbocharged engines -2004, see **SIGNAL DESCRIPTION**
- For 5 cylinder turbocharged engines 2005-, see **SIGNAL SPECIFICATION** .
- For 6 cylinder engines -2004, see **SIGNAL SPECIFICATION**
- For 6 cylinder engines 2005-, see **SIGNAL SPECIFICATION** .
- For B5xx4T, see **TEMPERATURE AND PRESSURE SENSORS, REPLACING**
- For B6xx4T, see **TEMPERATURE AND PRESSURE SENSORS, REPLACING**
- For information on resistance values: **COMPONENT SPECIFICATIONS**
- see **CHECKING WIRING AND TERMINALS**

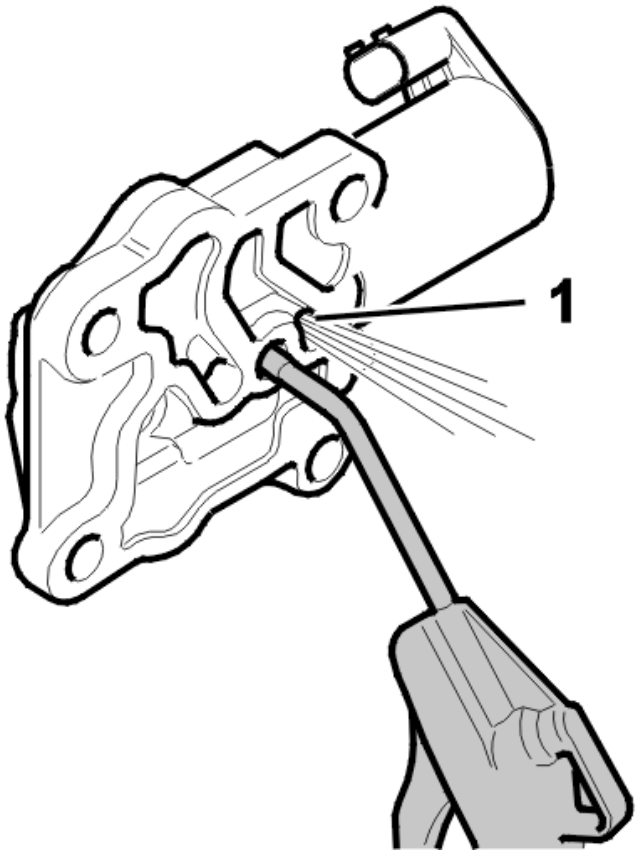

Fig. 34: Identifying 4-Bit Connector
Courtesy of VOLVO CARS CORPORATION

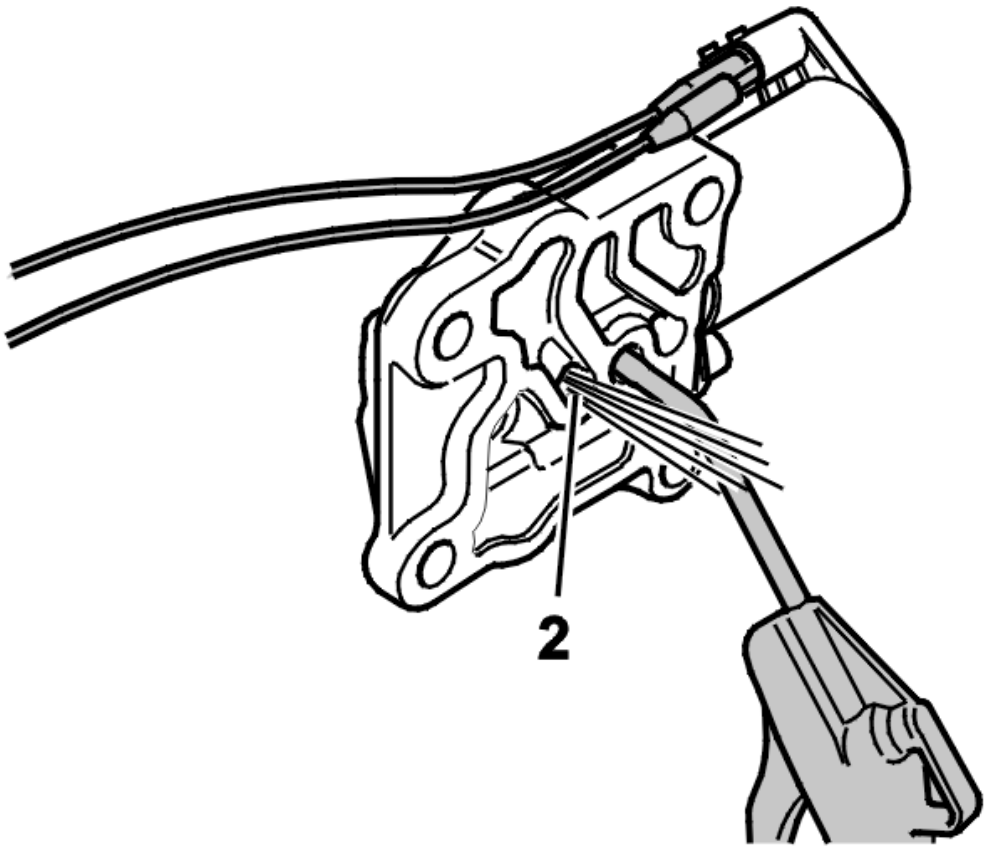

Fig. 35: Identifying VCT2000 Diagnostic Tool Symbol In VIDA
Courtesy of VOLVO CARS CORPORATION

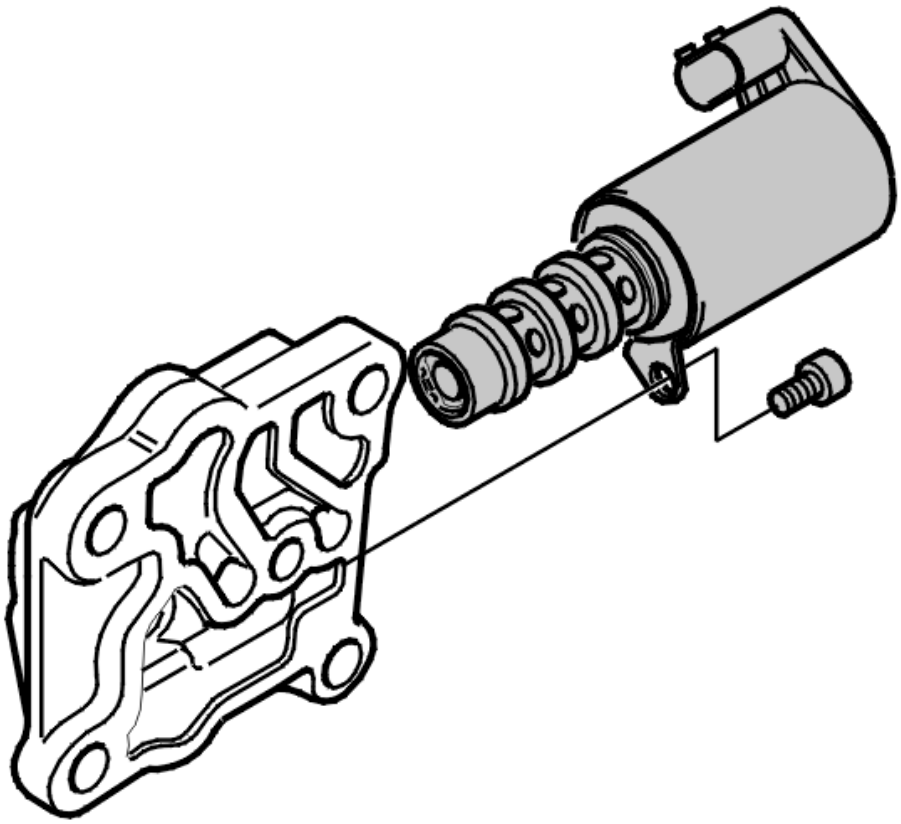

Fig. 36: Identifying Boost Pressure Sensor
Courtesy of VOLVO CARS CORPORATION

- **Continue**

  Refer to **VERIFICATION**

VERIFICATION

VERIFICATION

HINT: After carrying out the repair, check that the fault has been remedied.

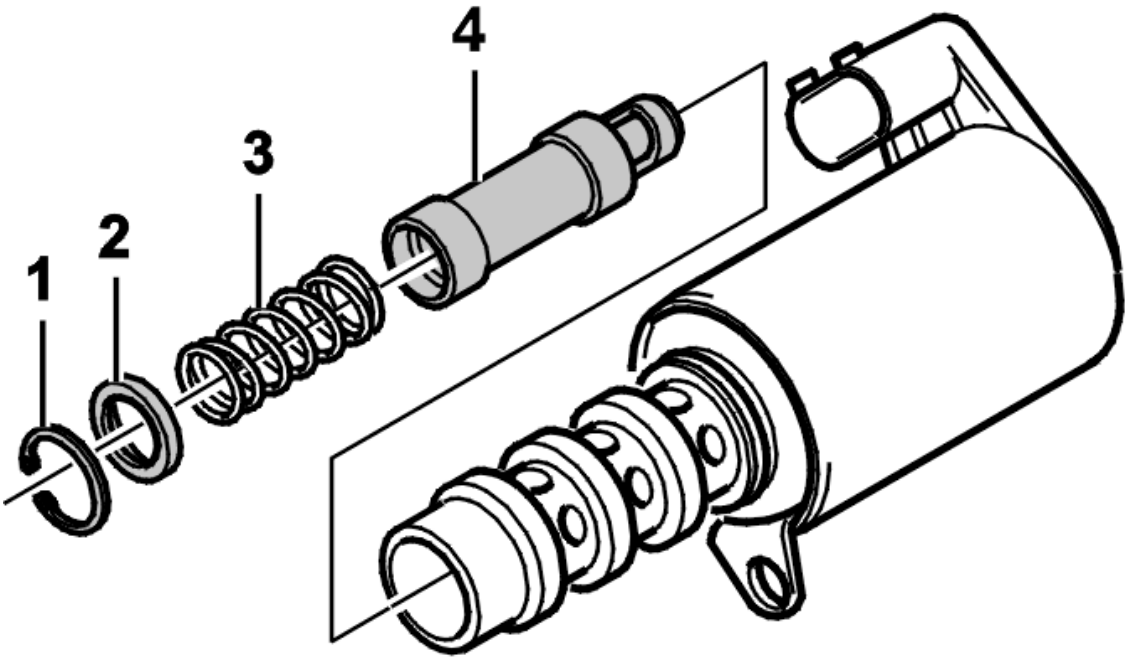

Fig. 37: Identifying Ignition ON
Courtesy of VOLVO CARS CORPORATION

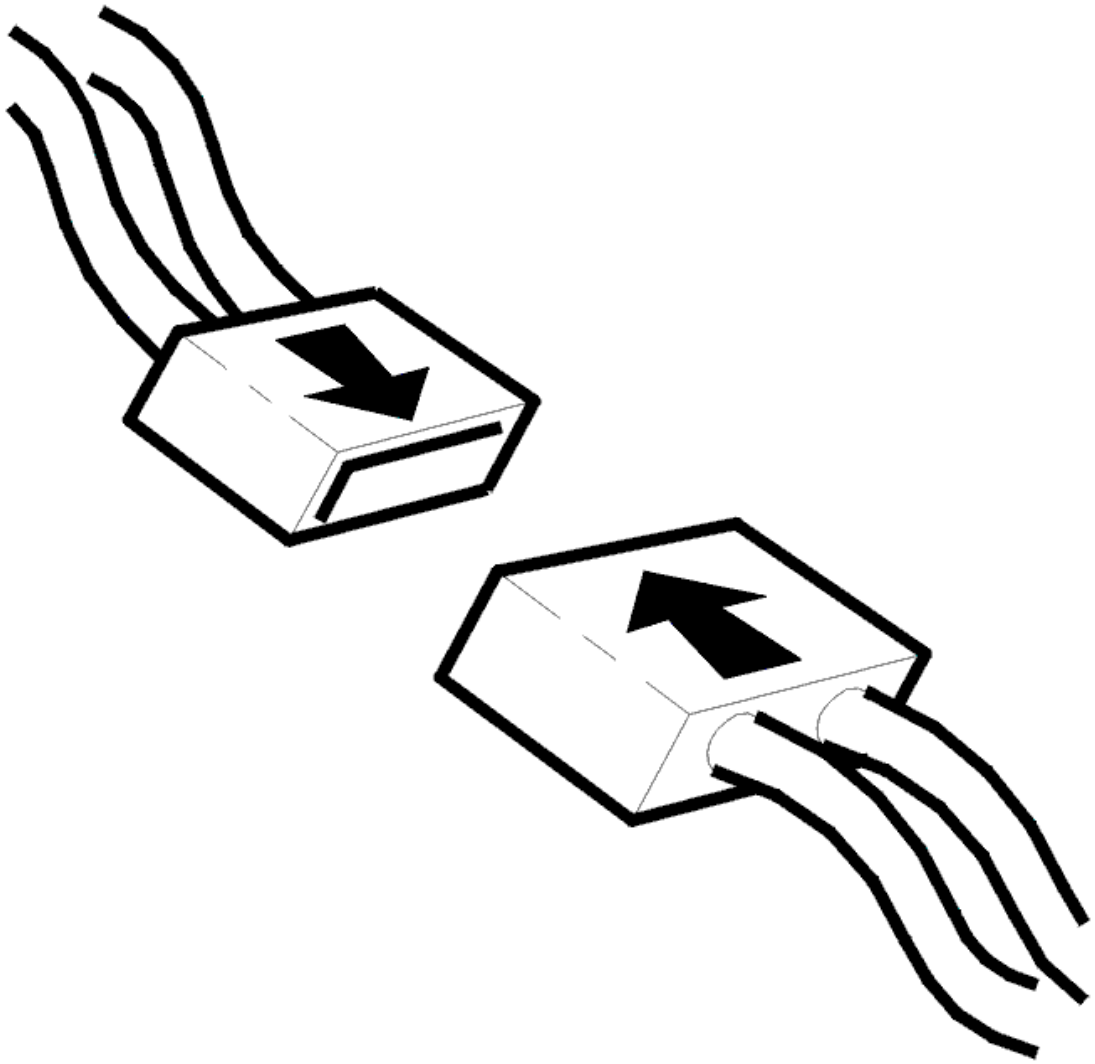

Fig. 38: Connecting Connector
Courtesy of VOLVO CARS CORPORATION

- Ignition off
- Reconnect the connectors, reinstall components etc.
- Ignition on
- Read off the intake air temperature (IAT).

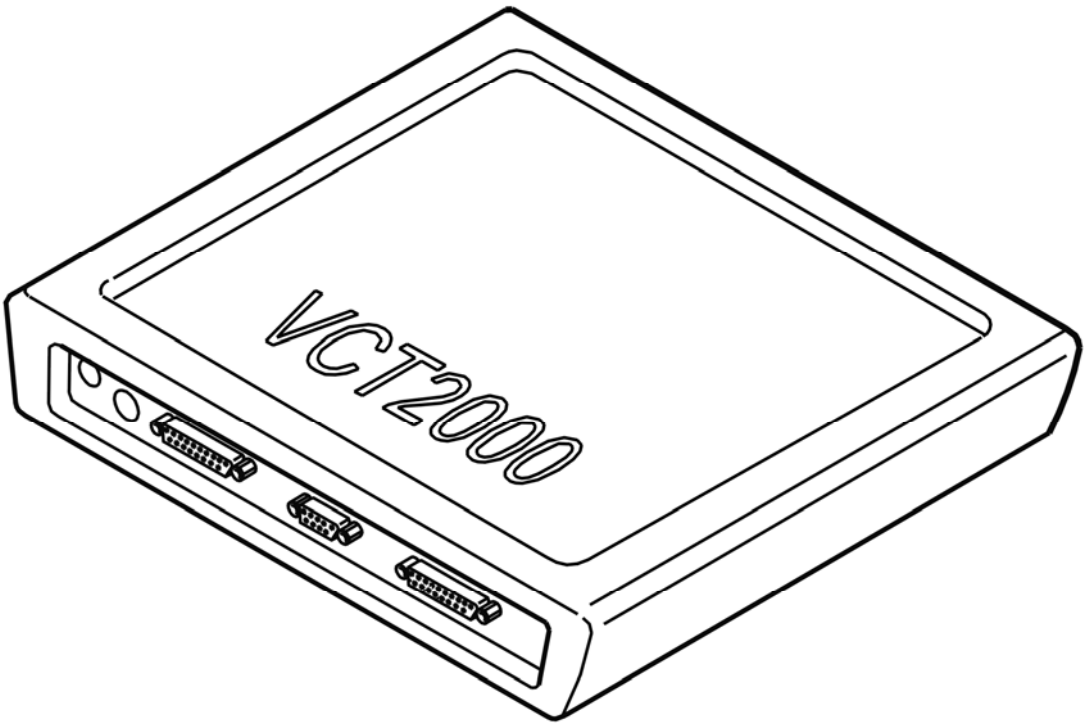

Fig. 39: Identifying VCT2000 Diagnostic Tool Symbol In VIDA
Courtesy of VOLVO CARS CORPORATION

Is the temperature within its permitted range?

- **YES**

  VERIFIED: Troubleshooting has been completed.

- **NO**

  Refer to **INFORMATION**

INFORMATION

FAULT-TRACING INFORMATION

The fault should have been detected and remedied. As this is not the case fault-tracing has failed.

Exit fault-tracing for this diagnostic trouble code (DTC) or make another attempt.

ECM-1200: INTAKE AIR TEMPERATURE (IAT) SENSOR. SIGNAL TOO LOW (B5254T2; B6294T; 2003-2004)

DIAGNOSTIC TROUBLE CODE (DTC) INFORMATION ECM-1200

see **DIAGNOSTIC TROUBLE CODE (DTC) INFORMATION ECM-1200**

SIGNAL TOO LOW

CHECKING THE CONNECTOR

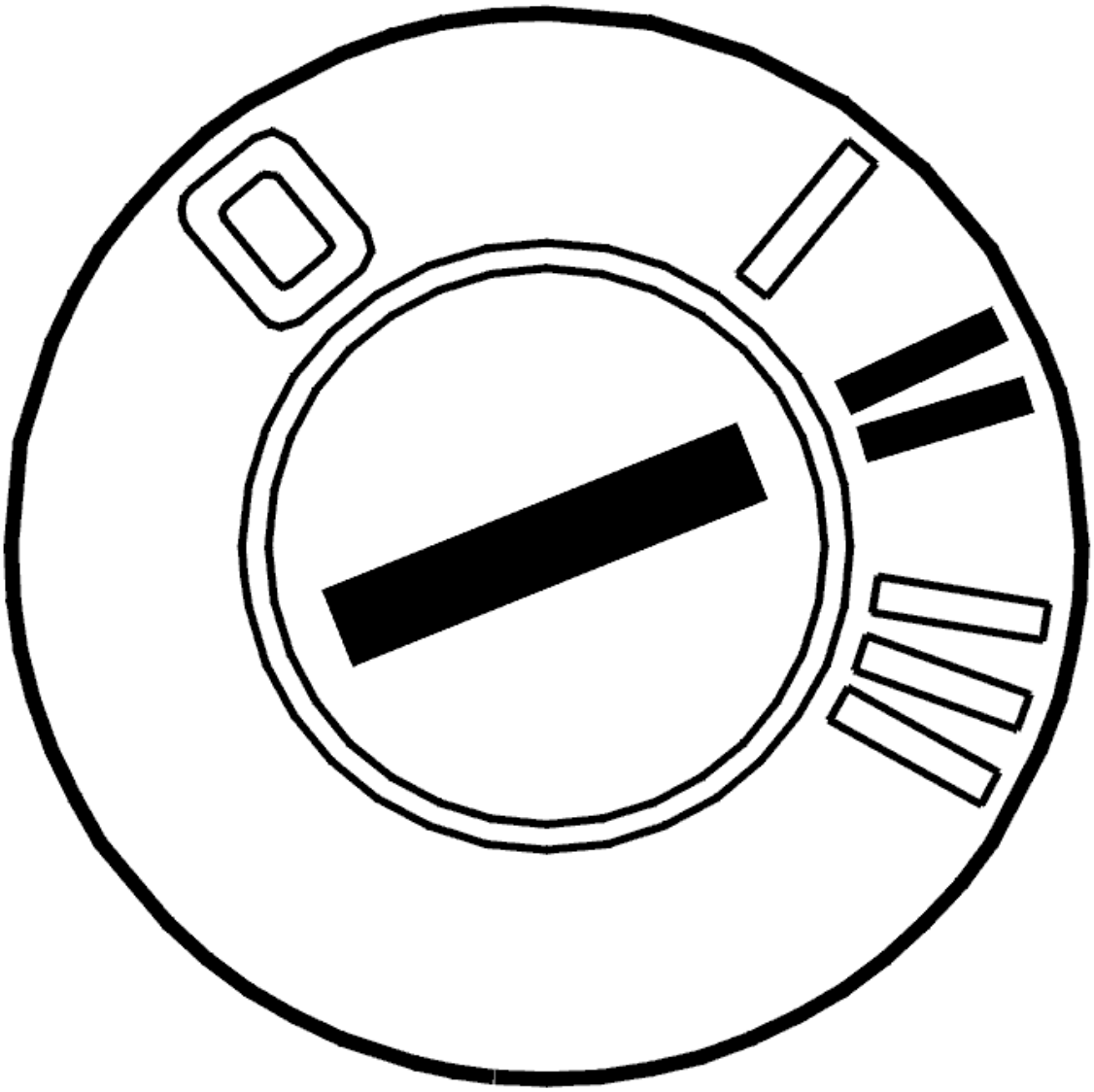

Fig. 40: Identifying Ignition ON
Courtesy of VOLVO CARS CORPORATION

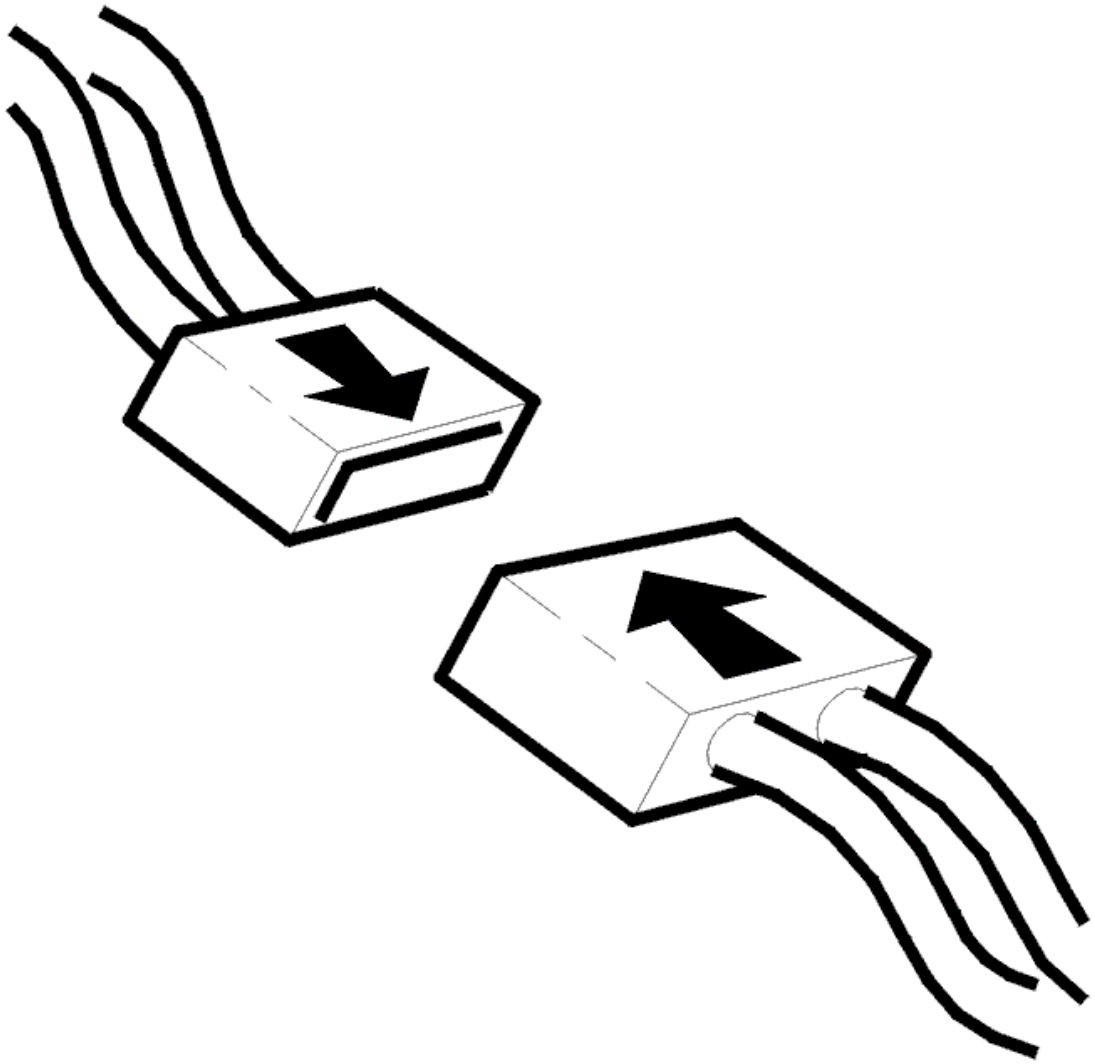

Fig. 41: Connecting Connector
Courtesy of VOLVO CARS CORPORATION

- Ignition off
- Check the boost pressure sensor connector. Check for contact resistance and oxidation.

NOTE: The intake air temperature (IAT) sensor is integrated in the boost pressure sensor

- Reinstall the components, reconnect the connectors etc.
- Ignition on
- Read off the intake air temperature (IAT).

Check that the intake air temperature (IAT) is within its permitted range. If the intake air temperature (IAT) is now within its permitted range, the fault was caused by loose connections in the connector.

Other information:

- For B5xx4T, see **TEMPERATURE AND PRESSURE SENSORS, REPLACING**
- For B6xx4T, see **TEMPERATURE AND PRESSURE SENSORS, REPLACING**

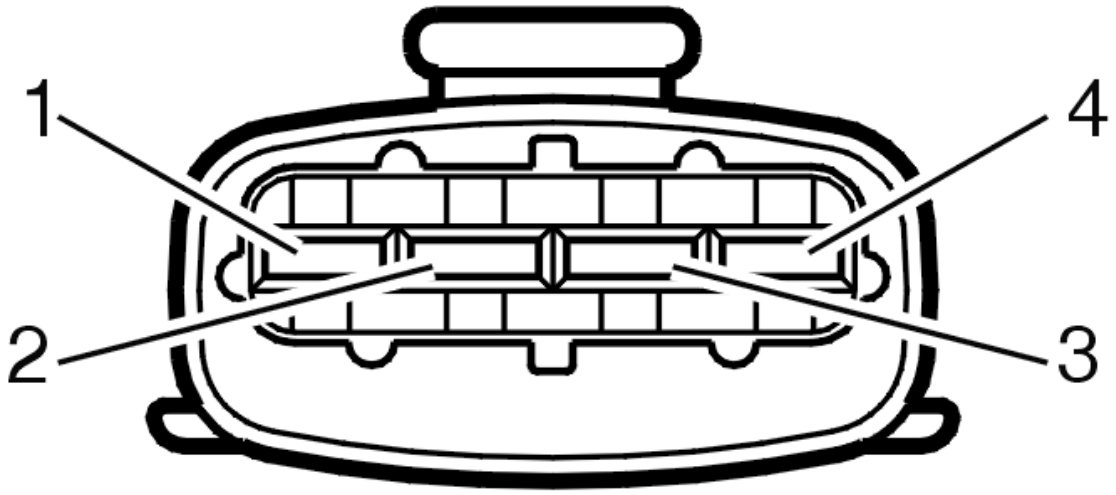

Fig. 42: Identifying 4-Bit Connector
Courtesy of VOLVO CARS CORPORATION

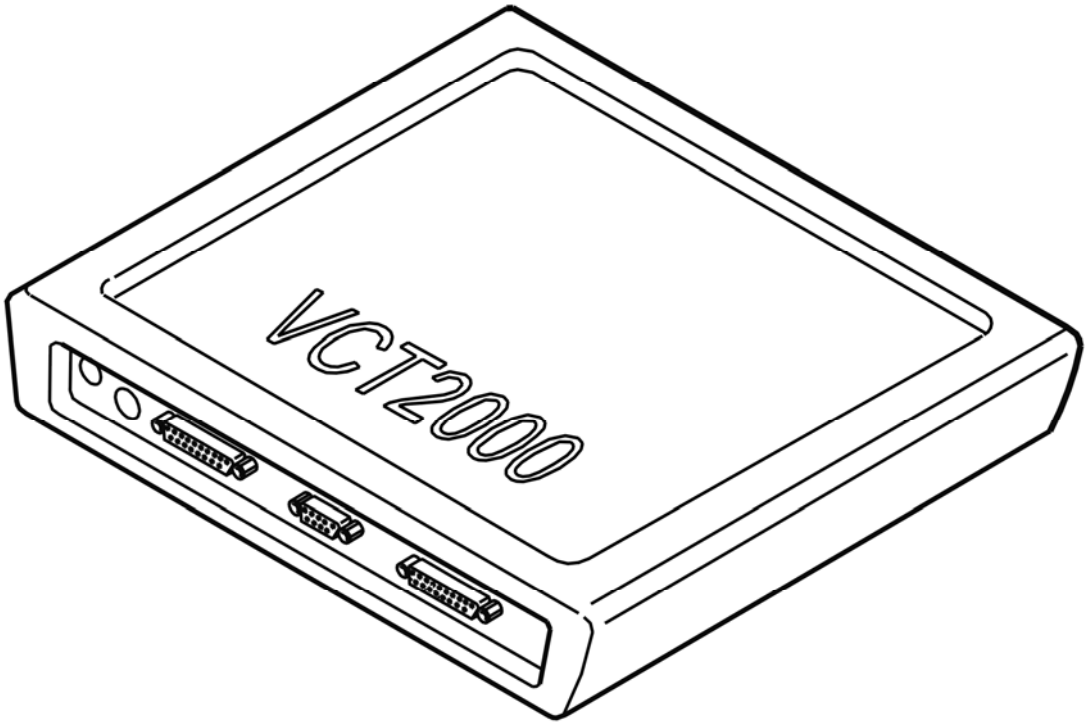

Fig. 43: Identifying VCT2000 Diagnostic Tool Symbol In VIDA

Courtesy of VOLVO CARS CORPORATION

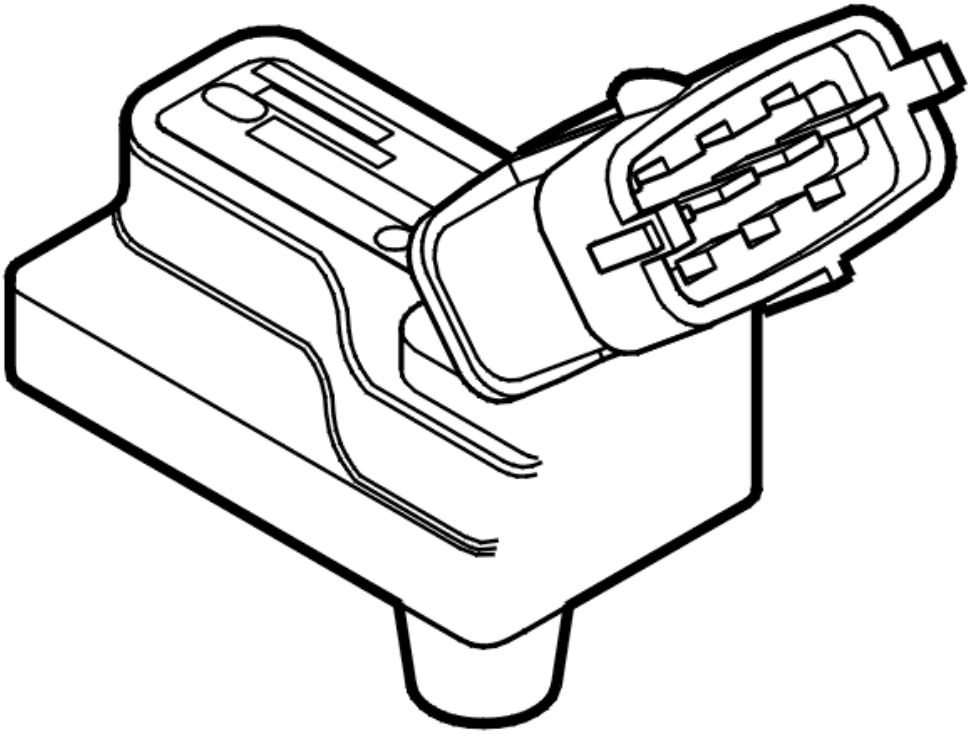

Fig. 44: Identifying Boost Pressure Sensor
Courtesy of VOLVO CARS CORPORATION

Is the temperature within its permitted range?

- **YES**

  OKAY: Troubleshooting has been completed.

- **NO**

  Refer to **CHECKING THE WIRING AND COMPONENT**

CHECKING THE WIRING AND COMPONENT

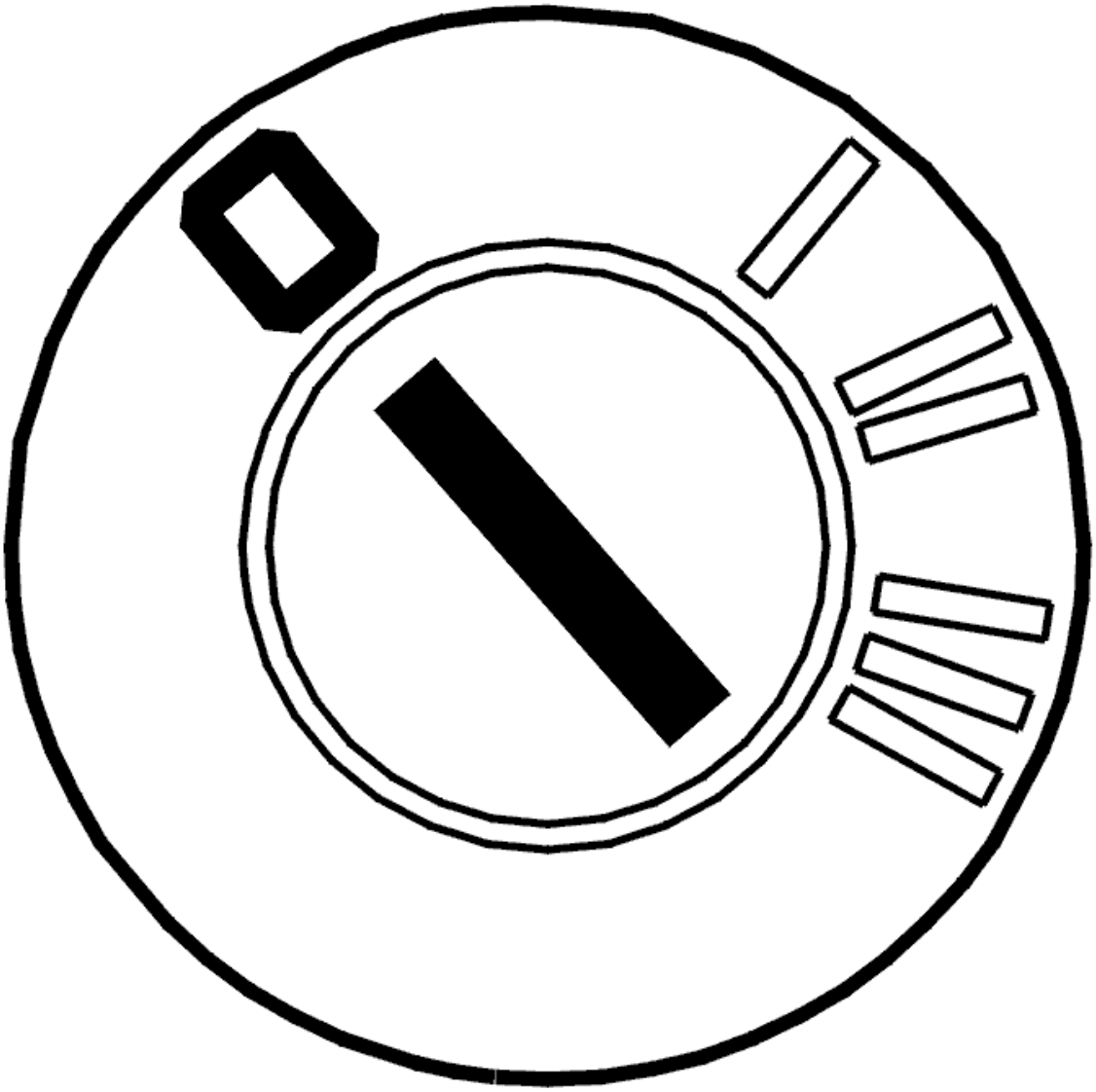

Fig. 45: Identifying Ignition OFF
Courtesy of VOLVO CARS CORPORATION

- Ignition off.

  Check the intake air temperature (IAT) sensor resistance between terminals #1 and #2 on the boost pressure sensor.

  NOTE: The intake air temperature (IAT) sensor may be defective if there gas been a short-circuit to supply voltage in the signal cable. Check this before replacing the sensor.

  Check the signal cable between control module terminal #A5 (#A5) and boost pressure sensor terminal #2. Check for a short-circuit to supply voltage. Check for an open-circuit.

  HINT: With the ignition on and the boost pressure sensor connector disconnected, the voltage

between terminal #2 and ground must be approximately 5 V.

Check the ground lead between control module terminal #A60 (#A60) and boost pressure sensor terminal #1. Check for an open-circuit.

If no errors are found and the fault is permanent, replace the intake air temperature (IAT) sensor.

Remedy as necessary.

Other information:

- To connect the breakout box / access the control module, see **CONNECTING THE BREAKOUT BOX**
- For B5xx4T, see **TEMPERATURE AND PRESSURE SENSORS, REPLACING**
- For B6xx4T, see **TEMPERATURE AND PRESSURE SENSORS, REPLACING**
- For resistance values, see **COMPONENT SPECIFICATIONS**
- For 5 cylinder turbocharged engines -2004, see **SIGNAL DESCRIPTION**
- For 5 cylinder turbocharged engines 2005-, see **SIGNAL SPECIFICATION** .
- For 6 cylinder engines -2004, see **SIGNAL SPECIFICATION**
- For 6 cylinder engines 2005-, see **SIGNAL SPECIFICATION** .
- see **CHECKING WIRING AND TERMINALS** .

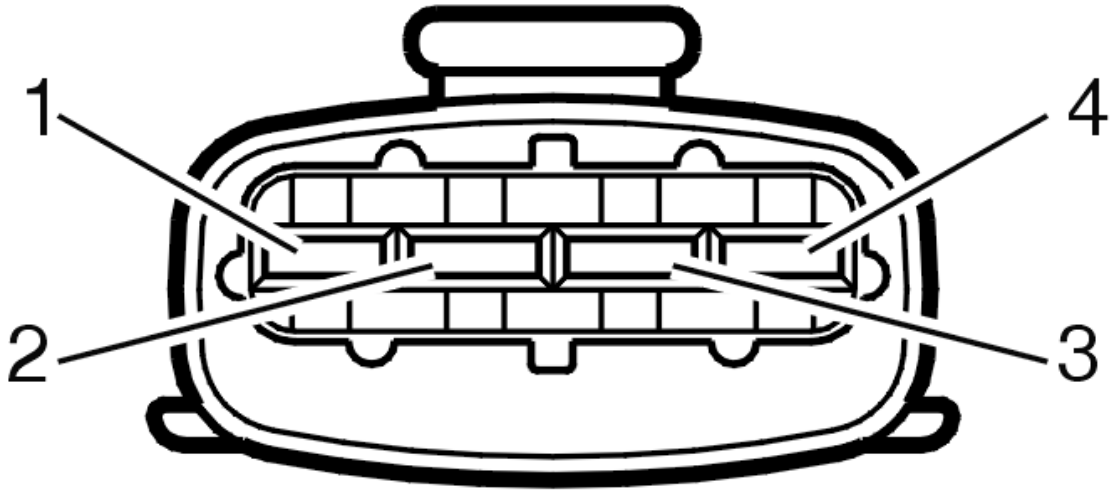

Fig. 46: Identifying 4-Bit Connector
Courtesy of VOLVO CARS CORPORATION

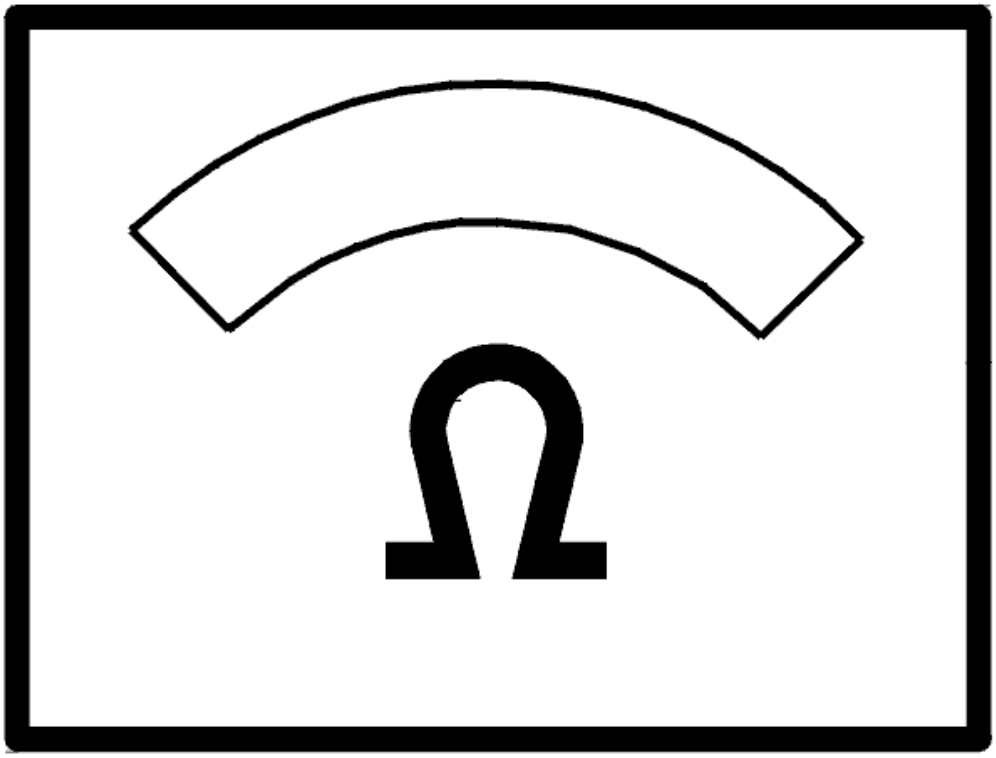

Fig. 47: Identifying Ohm Meter
Courtesy of VOLVO CARS CORPORATION

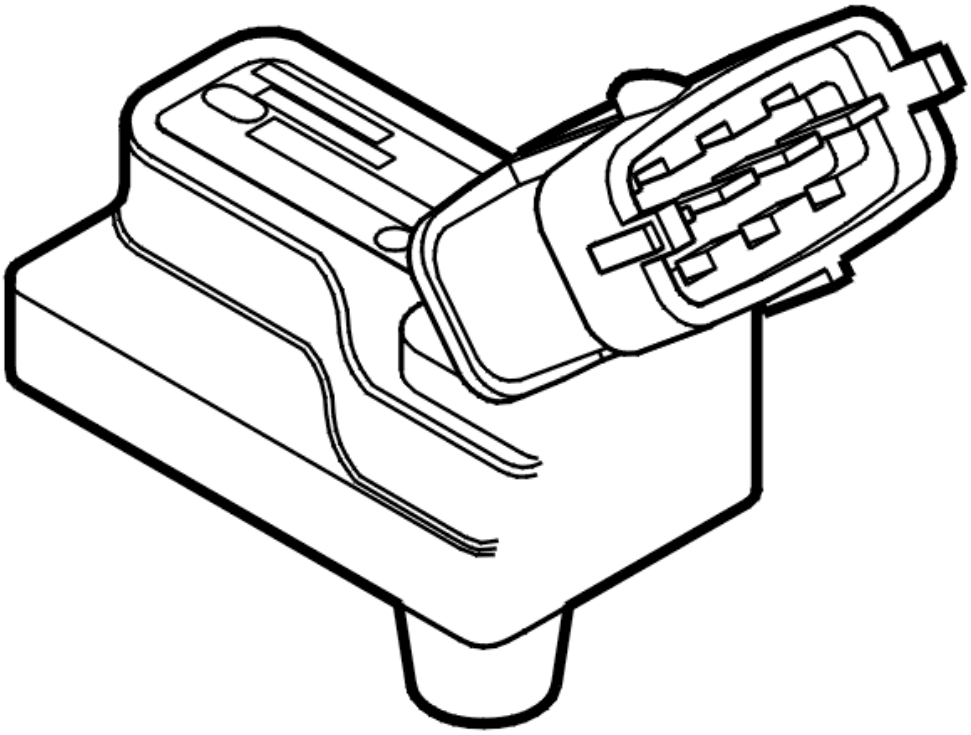

Fig. 48: Identifying Boost Pressure Sensor
Courtesy of VOLVO CARS CORPORATION

- **Continue**

  Refer to **VERIFICATION**

VERIFICATION

VERIFICATION

HINT: After carrying out the repair, check that the fault has been remedied.

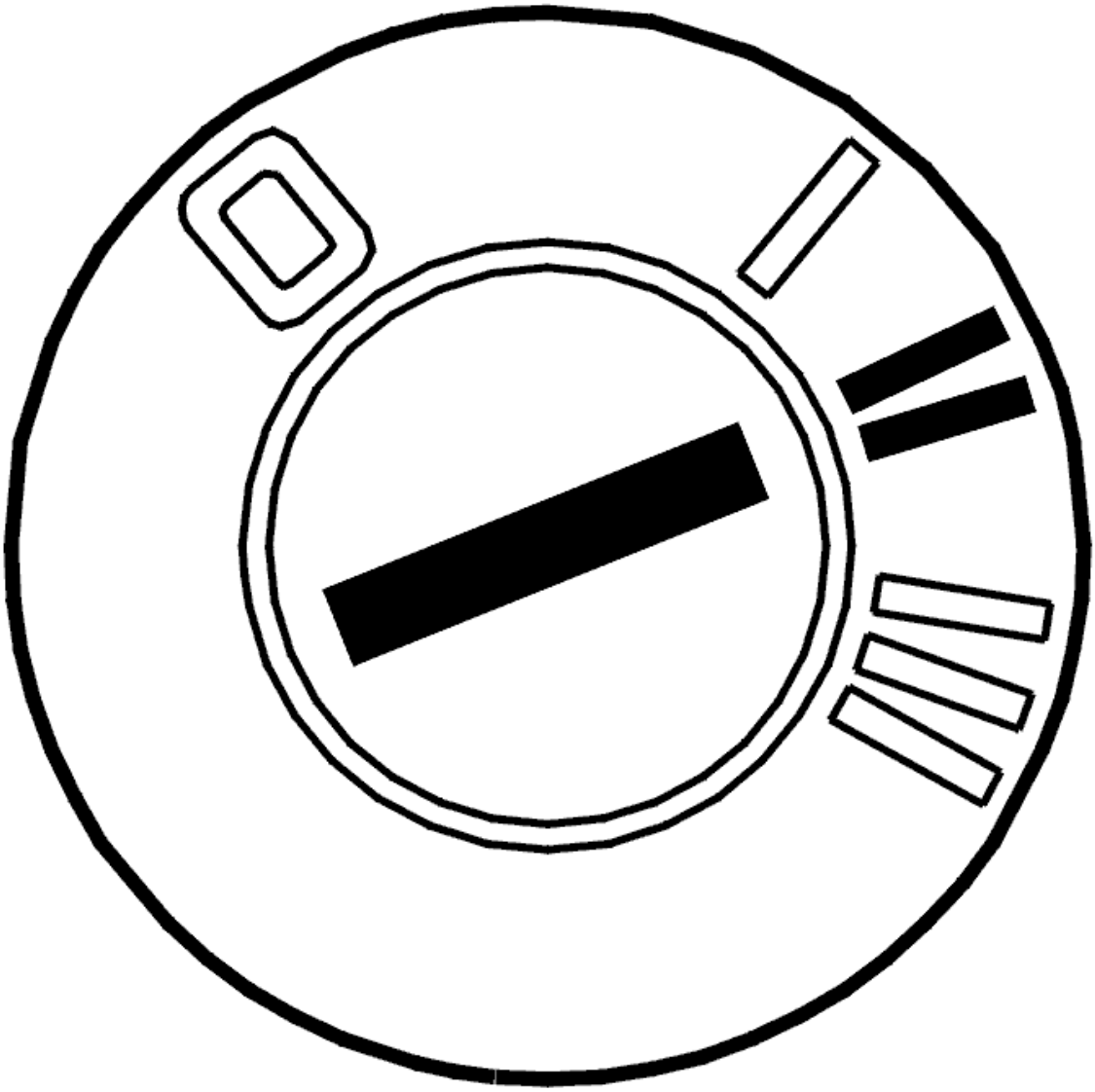

Fig. 49: Identifying Ignition ON
Courtesy of VOLVO CARS CORPORATION

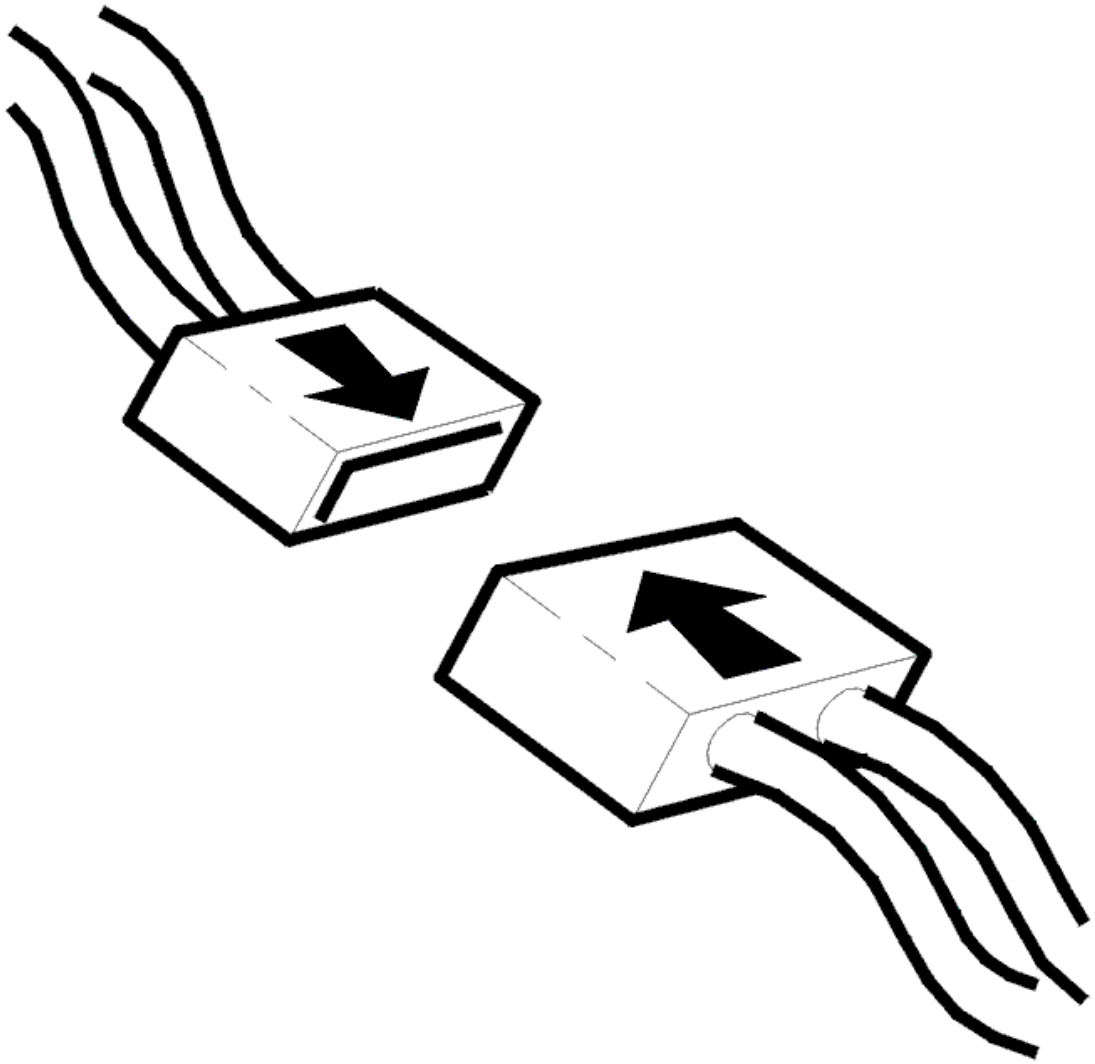

Fig. 50: Connecting Connector
Courtesy of VOLVO CARS CORPORATION

- Ignition off
- Reconnect the connectors, reinstall components etc.
- Ignition on
- Read off the intake air temperature (IAT).

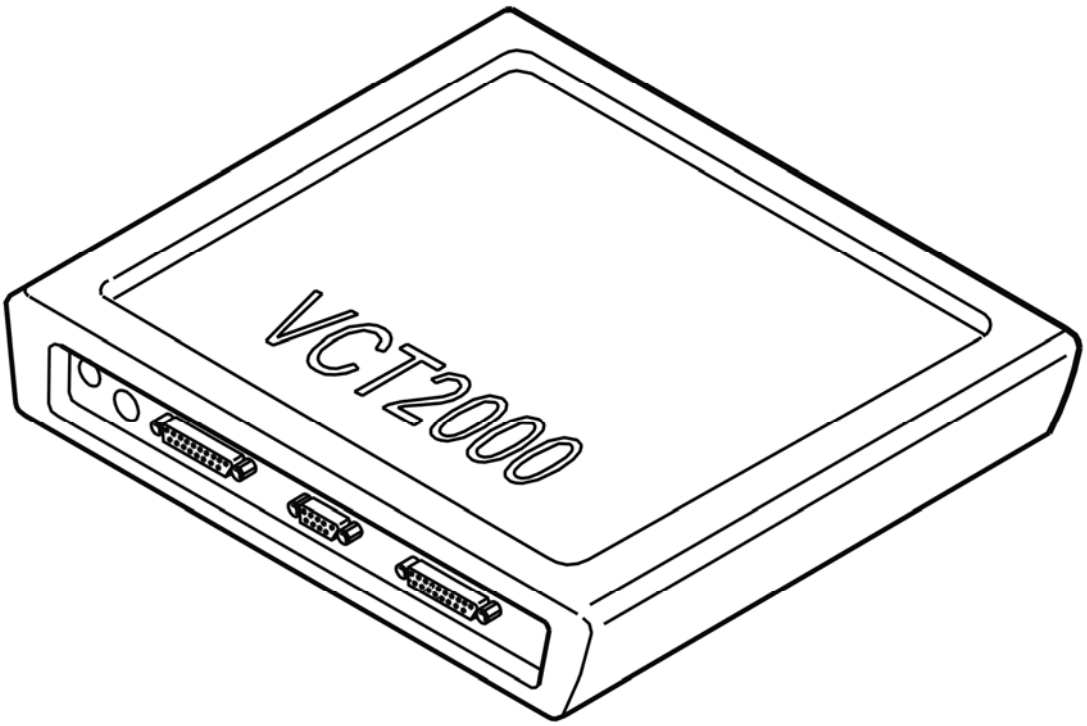

Fig. 51: Identifying VCT2000 Diagnostic Tool Symbol In VIDA
Courtesy of VOLVO CARS CORPORATION

Is the temperature within its permitted range?

- **YES**

  VERIFIED: Troubleshooting has been completed.

- **NO**

  Refer to **INFORMATION**

INFORMATION

FAULT-TRACING INFORMATION

The fault should have been detected and remedied. As this is not the case fault-tracing has failed.

Exit fault-tracing for this diagnostic trouble code (DTC) or make another attempt.

ECM-1200: INTAKE AIR TEMPERATURE (IAT). FAULTY SIGNAL (B5254T2; B6294T; 2003-2004)

DIAGNOSTIC TROUBLE CODE (DTC) INFORMATION ECM-1200

see **DIAGNOSTIC TROUBLE CODE (DTC) INFORMATION ECM-1200**

FAULTY SIGNAL

CHECKING COMPONENTS AND CONNECTORS

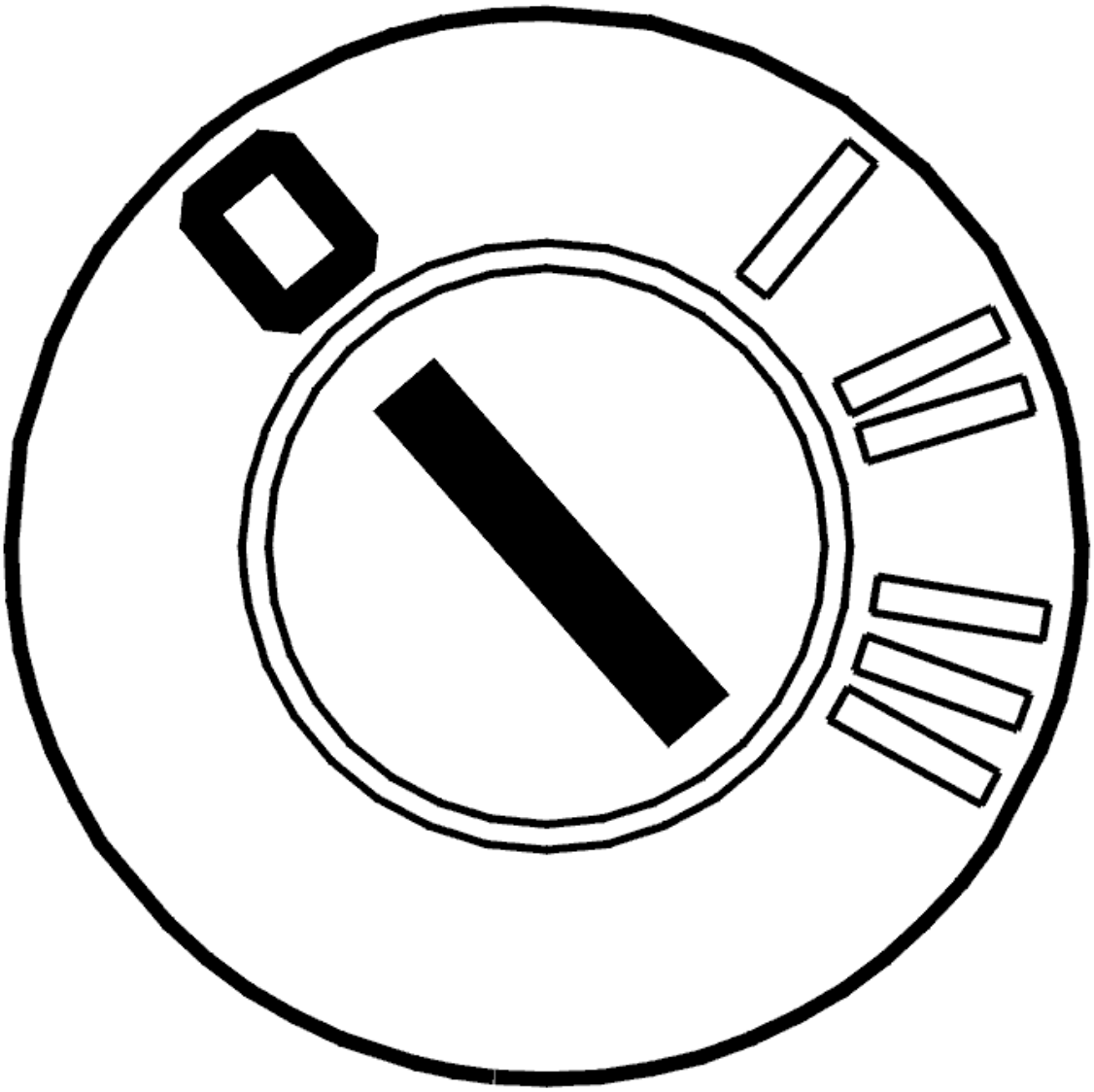

Fig. 52: Identifying Ignition OFF
Courtesy of VOLVO CARS CORPORATION

- Ignition off
- Check the boost pressure sensor connector and terminal. Check for contact resistance and oxidation.

NOTE: The intake air temperature (IAT) sensor is integrated in the boost pressure

sensor.

If no errors are found and the fault is permanent, replace the intake air temperature (IAT) sensor.

Remedy as necessary.

Other information:

- see **CHECKING WIRING AND TERMINALS**
- For resistance values, see **COMPONENT SPECIFICATIONS**
- For B5xx4T, see **TEMPERATURE AND PRESSURE SENSORS, REPLACING**
- For B6xx4T, see **TEMPERATURE AND PRESSURE SENSORS, REPLACING**

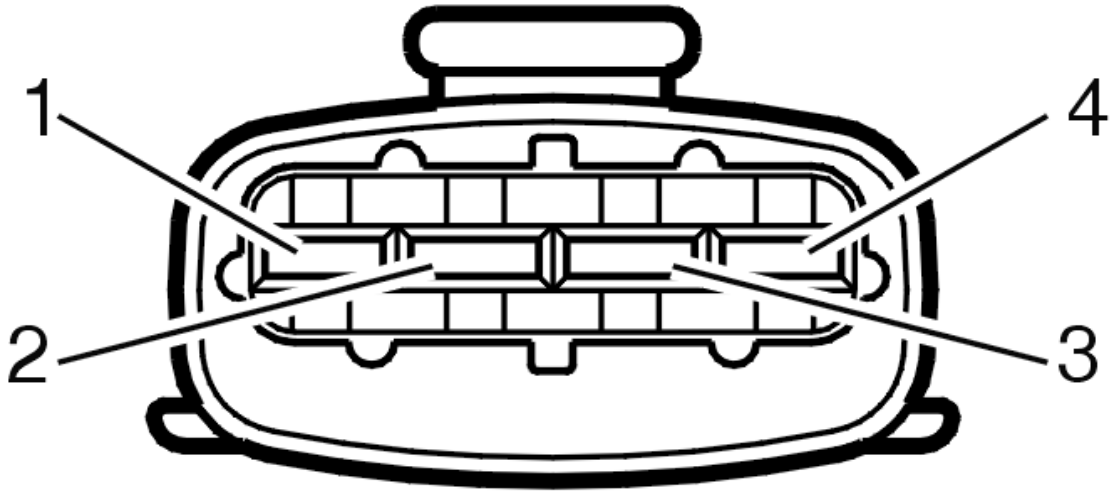

Fig. 53: Identifying 4-Bit Connector
Courtesy of VOLVO CARS CORPORATION

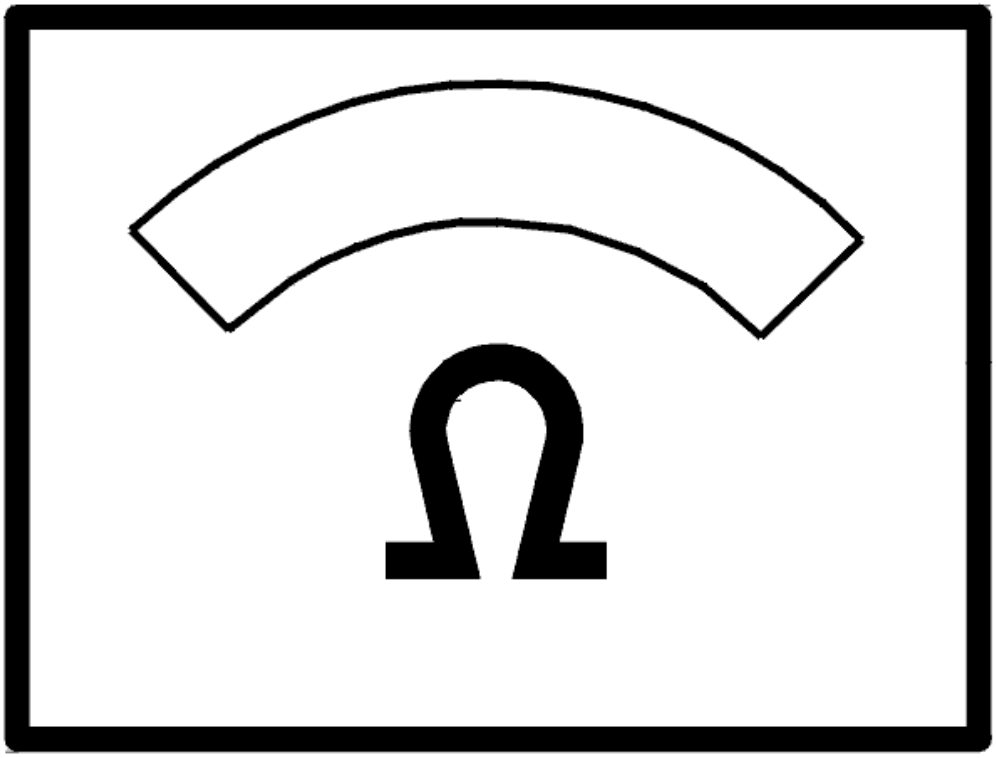

Fig. 54: Identifying Ohm Meter
Courtesy of VOLVO CARS CORPORATION

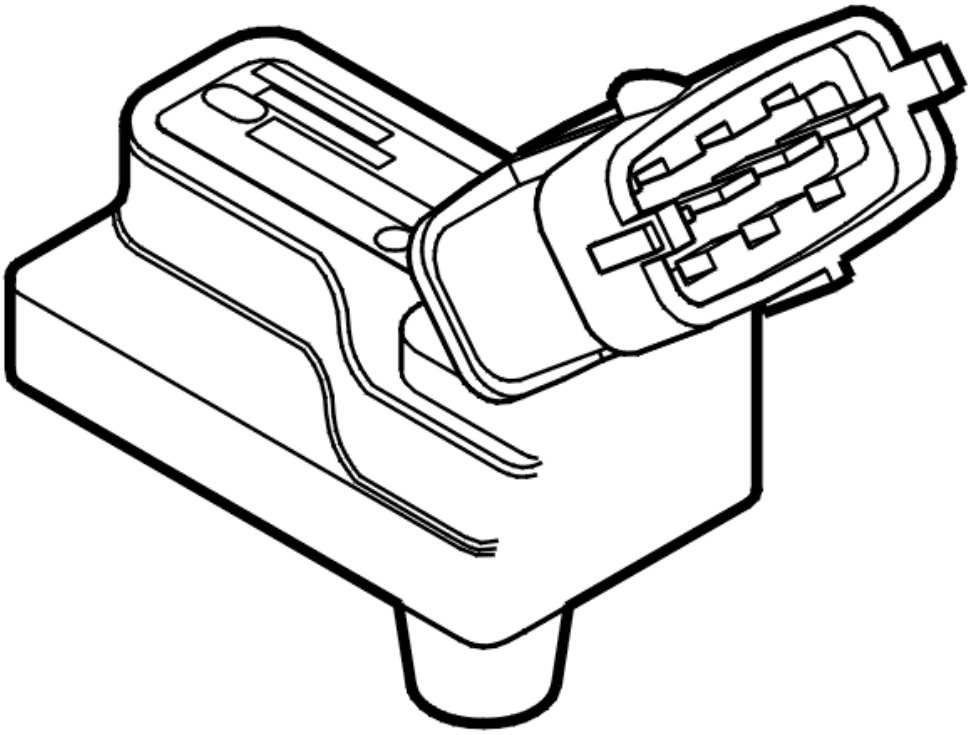

Fig. 55: Identifying Boost Pressure Sensor
Courtesy of VOLVO CARS CORPORATION

- **Continue**

  Refer to **VERIFICATION**

VERIFICATION

VERIFICATION

HINT: After carrying out the repair, check that the fault has been remedied.

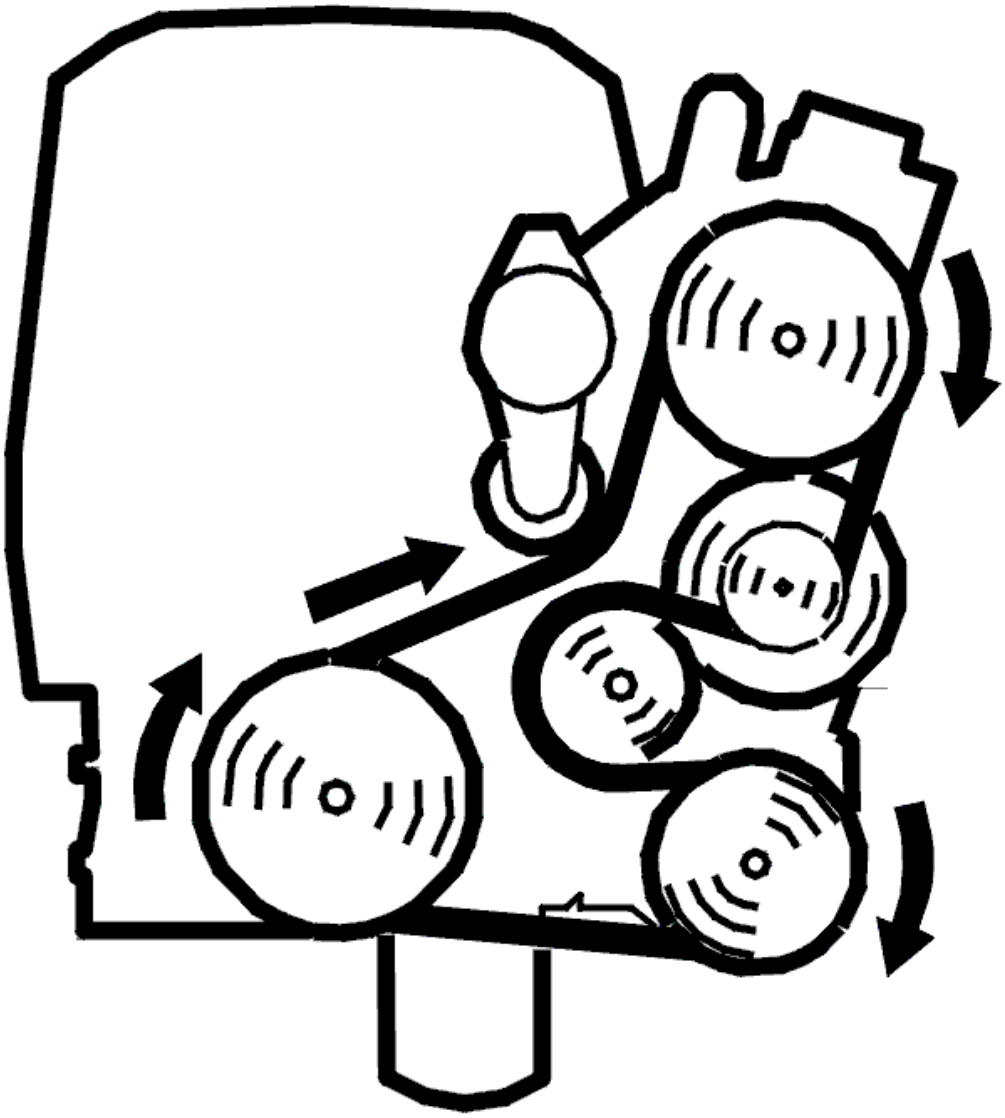

Fig. 56: Belt Routing / Engine Idling - Volvo
Courtesy of VOLVO CARS CORPORATION

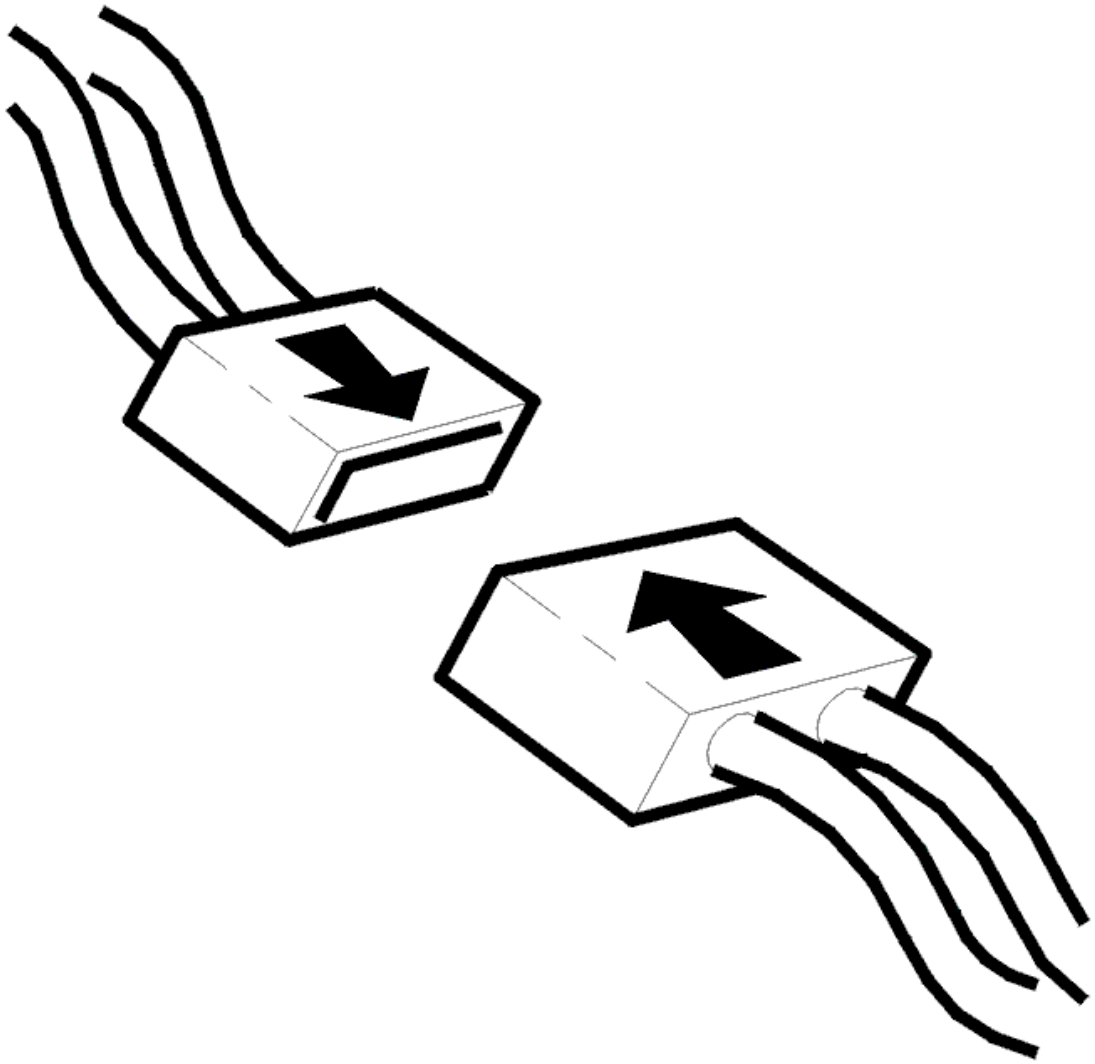

Fig. 57: Connecting Connector
Courtesy of VOLVO CARS CORPORATION

- Ignition off
- Reconnect the connectors, reinstall components etc.
- Start the engine. Allow the engine to idle for 5 minutes
- Read off diagnostic trouble codes (DTCs).

The fault has been remedied if status of the diagnostic trouble code (DTC) is intermittent.

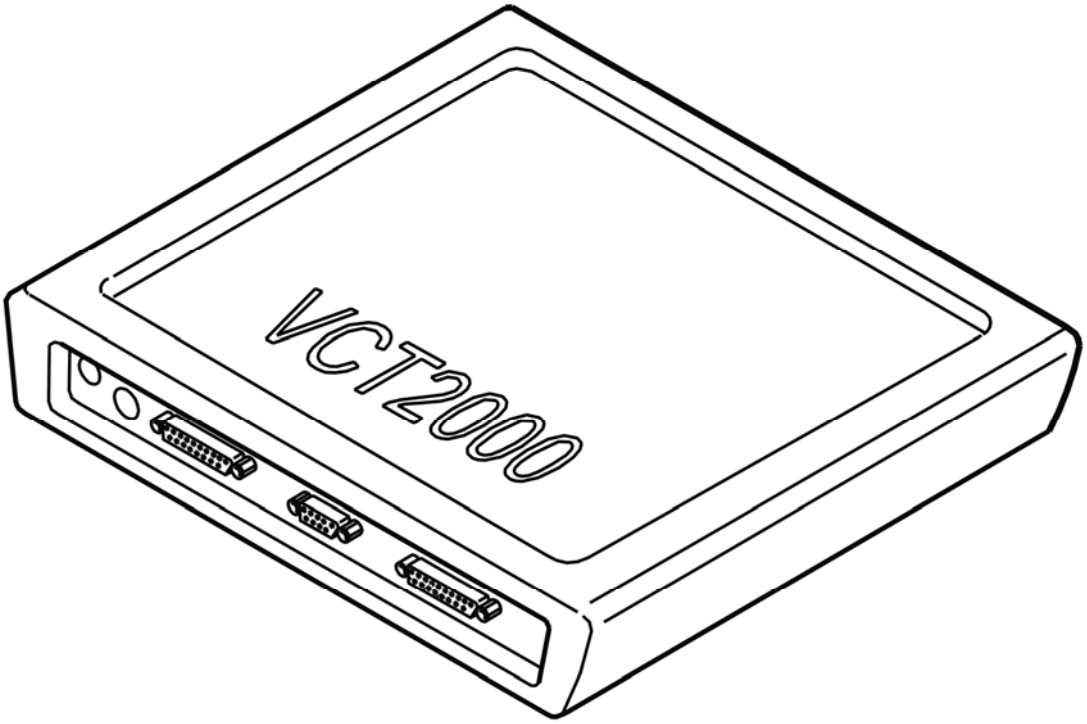

Fig. 58: Identifying VCT2000 Diagnostic Tool Symbol In VIDA
Courtesy of VOLVO CARS CORPORATION

Is the status of the diagnostic trouble code (DTC) intermittent?

- **YES**

  VERIFIED: Troubleshooting has been completed.

- **NO**

  Refer to **INFORMATION**

INFORMATION

FAULT-TRACING INFORMATION

The fault should have been detected and remedied. As this is not the case fault-tracing has failed.

Exit fault-tracing for this diagnostic trouble code (DTC) or make another attempt.

ECM-120C: MASS AIR FLOW. SIGNAL TOO HIGH (B5254T2; 2005-2007)

DIAGNOSTIC TROUBLE CODE (DTC) INFORMATION ECM-120C

Condition

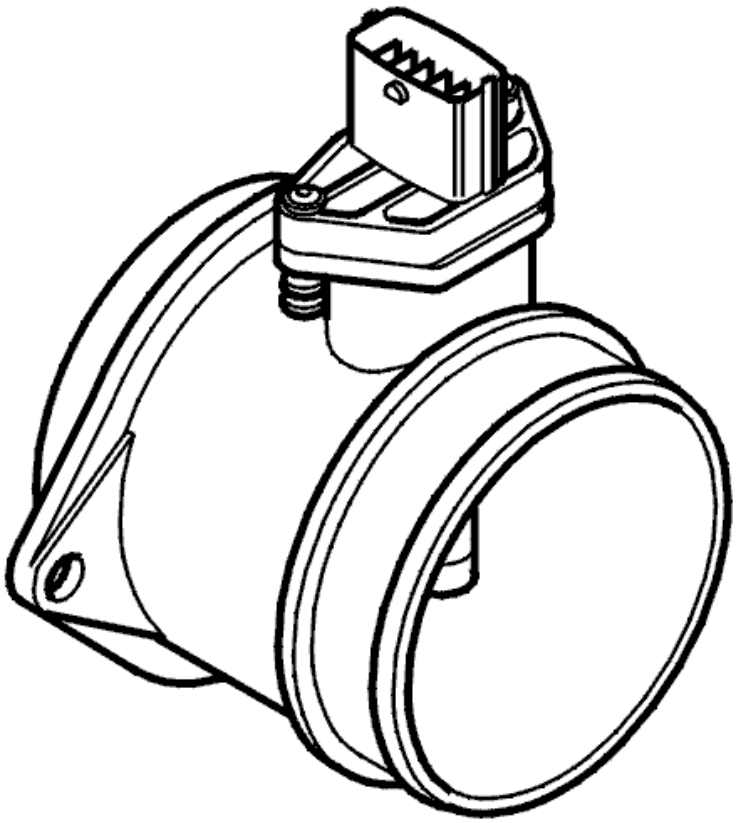

Fig. 59: Identifying Mass Air Flow (MAF) Sensor
Courtesy of VOLVO CARS CORPORATION

The engine control module (ECM) calculates the expected mass air flow. The calculation is based on a number of different parameters. The calculated value for mass air flow is divided (/) by the measured value from the mass air flow (MAF) sensor (= correction value, mass air flow).

The diagnostic trouble code (DTC) is stored if the correction value deviates from 1 (higher than 1) i. e. the calculated air mass is higher than the measured air mass.

The diagnostic trouble code (DTC) can be diagnosed when the engine is running.

Substitute Value

- None.

Possible Source

- Air leakage in the intake system
- Contaminated throttle body (TB).
- Blocked intake system

- Damaged mass air flow (MAF) sensor.

Fault symptom[s]

- Malfunction indicator lamp (MIL) lit.
- Uneven idle

FLOW TOO LOW OR TOO HIGH

CHECKING THE INTAKE SYSTEM

Check the mass air flow (MAF) sensor connector. Check for contact resistance and oxidation.

Check the intake system for leakage. In particular, check the hoses and hose connectors between the mass air flow (MAF) sensor and the throttle unit. Check for leakage and damage.

Check the inside of the throttle body (TB). Check for contamination. When the throttle body (TB) is contaminated, the air flow to the engine is impaired and diagnostic trouble code (DTCs) or fault symptoms can occur.

Clean the throttle body (TB) if needed.

If no fault is found, try a new mass air flow (MAF) sensor.

Remedy as necessary.

Other information

- see **AIR LEAKAGE IN THE INTAKE SYSTEM, CHECKING**
- see **THROTTLE BODY (TB), CLEANING**
- see **MASS AIR FLOW (MAF) SENSOR, REPLACING**
- see **CHECKING WIRING AND TERMINALS**

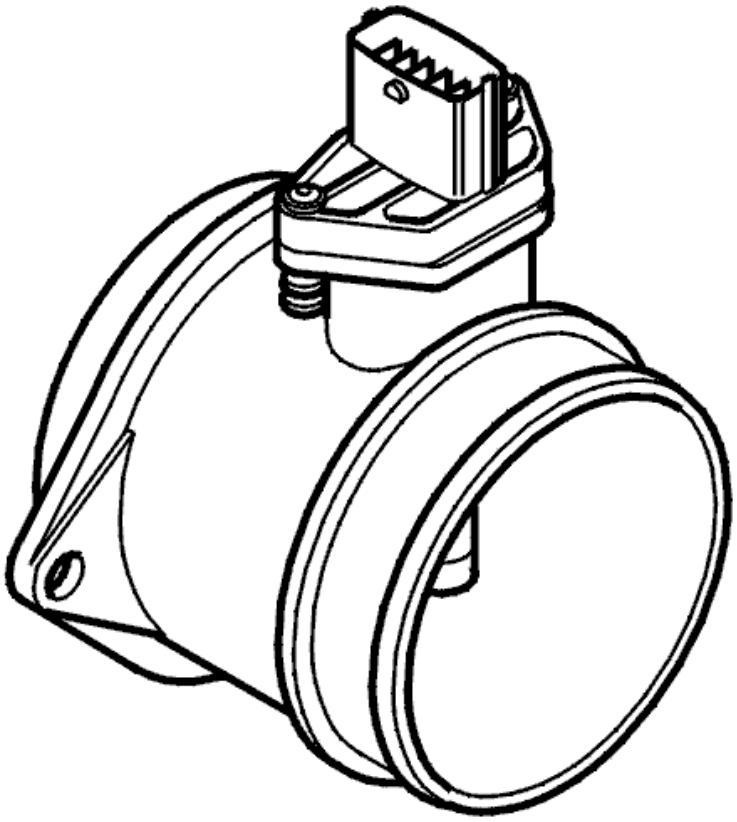

Fig. 60: Identifying Mass Air Flow (MAF) Sensor
Courtesy of VOLVO CARS CORPORATION

- **Continue**

  Refer to **VERIFICATION**

VERIFICATION

VERIFICATION

HINT: After carrying out the repair, check that the fault has been remedied.

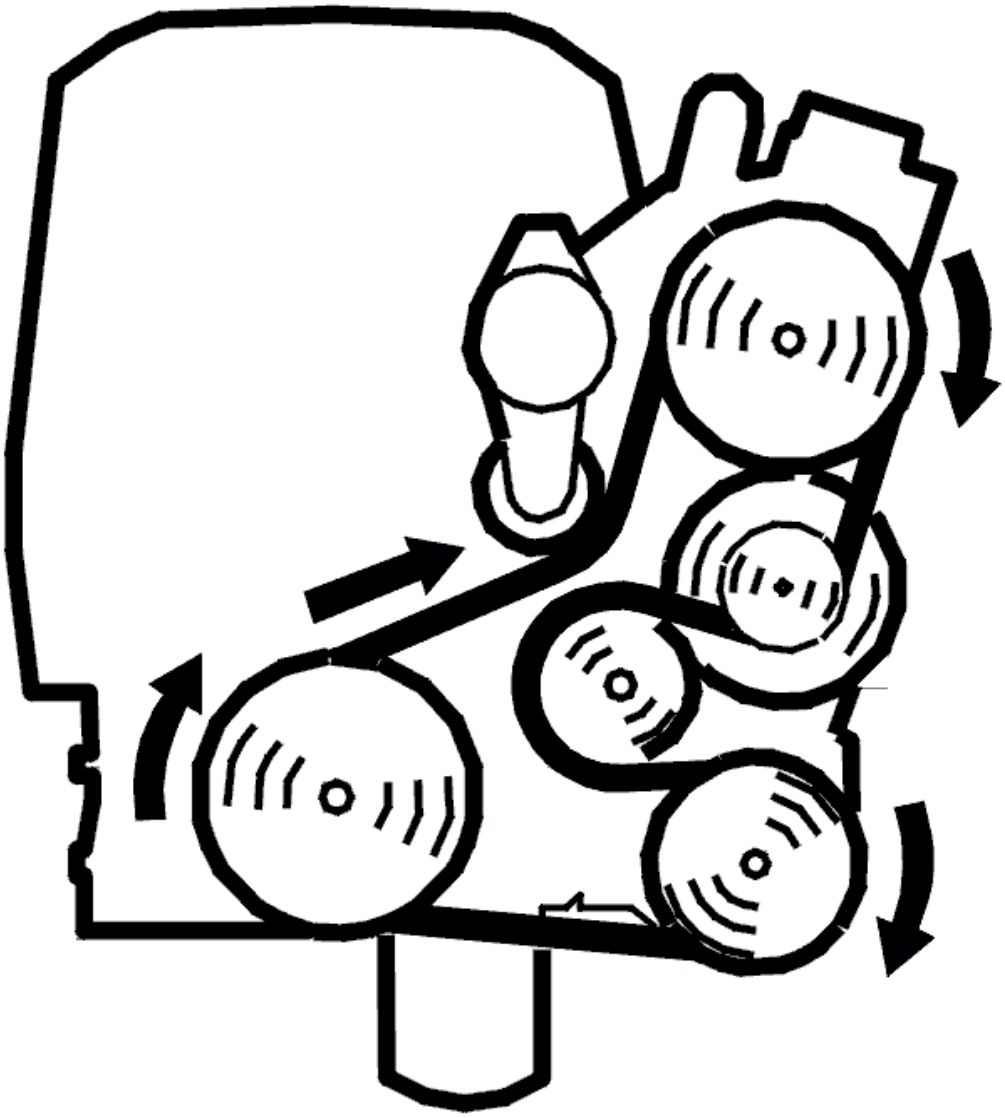

Fig. 61: Belt Routing / Engine Idling - Volvo
Courtesy of VOLVO CARS CORPORATION

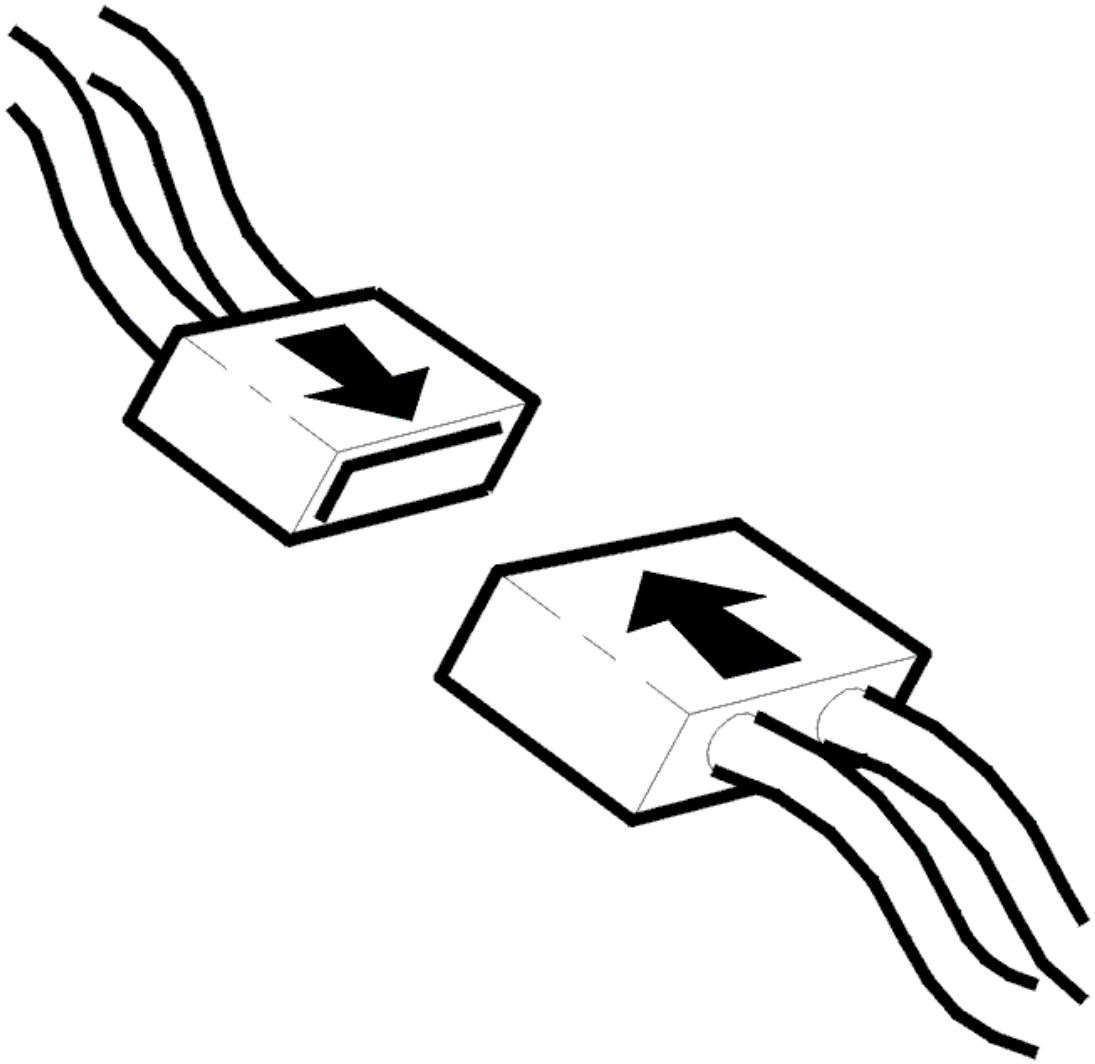

Fig. 62: Connecting Connector
Courtesy of VOLVO CARS CORPORATION

- Ignition off.
- Reinstall the connectors, components etc.
- Ignition on.
- Read off and make a note of the adaptation value.
- Start the engine. Increase the engine speed (RPM) a couple of times.
- Read off the adaptation value and check that the adaptation value approaches 1.

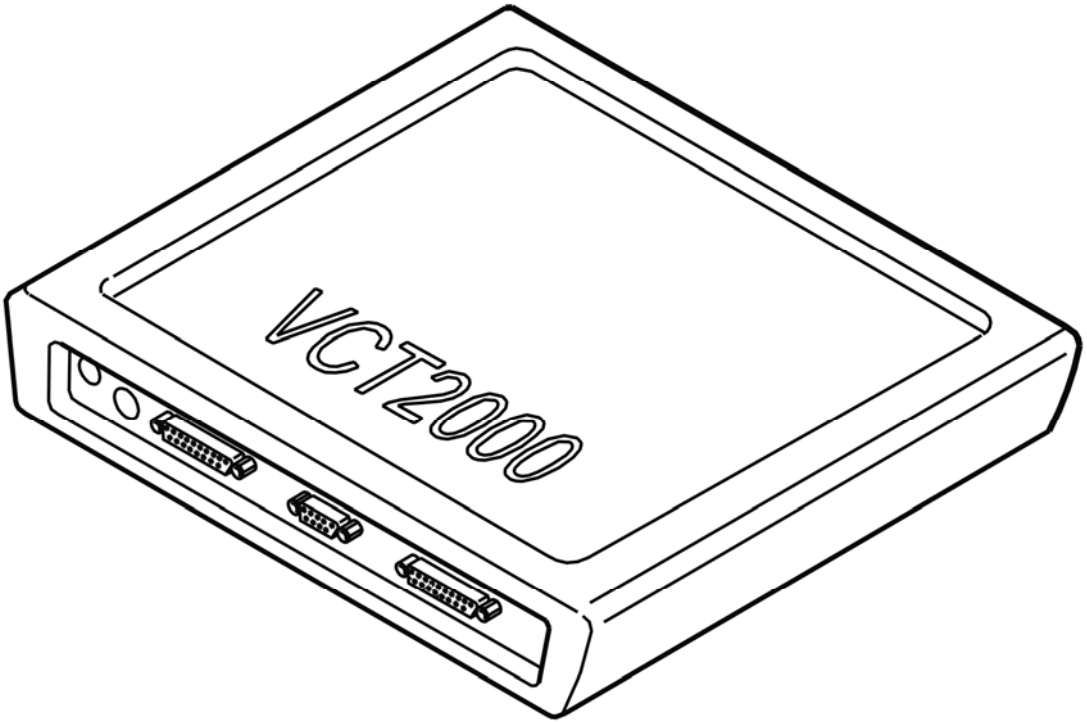

Fig. 63: Identifying VCT2000 Diagnostic Tool Symbol In VIDA
Courtesy of VOLVO CARS CORPORATION

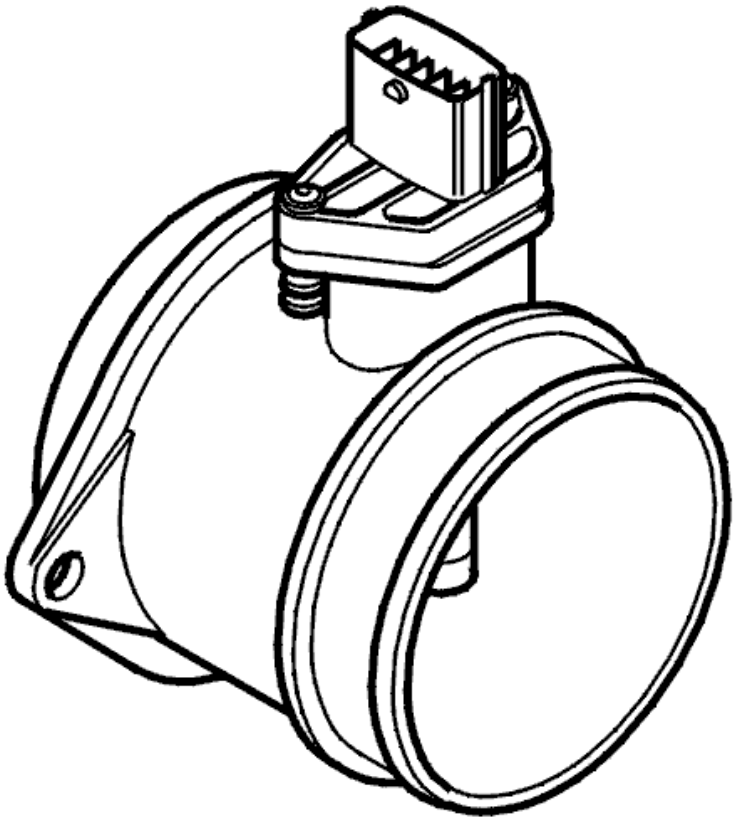

Fig. 64: Identifying Mass Air Flow (MAF) Sensor
Courtesy of VOLVO CARS CORPORATION

Does the adaptation value approach 1?

- **YES**

  VERIFIED: Troubleshooting has been completed.

- **NO**

  Refer to **INFORMATION**

INFORMATION

FAULT-TRACING INFORMATION

The fault should have been detected and remedied. As this is not the case fault-tracing has failed.

Exit fault-tracing for this diagnostic trouble code (DTC) or make another attempt.

ECM-120C: MASS AIR FLOW. SIGNAL TOO HIGH (B6294T; 2005-2006)

DIAGNOSTIC TROUBLE CODE (DTC) INFORMATION ECM-120C

see **DIAGNOSTIC TROUBLE CODE (DTC) INFORMATION ECM-120C**

FLOW TOO LOW OR TOO HIGH

CHECKING THE INTAKE SYSTEM

Check the mass air flow (MAF) sensor connector. Check for contact resistance and oxidation.

Check the intake system for leakage. In particular, check the hoses and hose connectors between the mass air flow (MAF) sensor and the throttle unit. Check for leakage and damage.

Check the inside of the throttle body (TB). Check for contamination. When the throttle body (TB) is contaminated, the air flow to the engine is impaired and diagnostic trouble code (DTCs) or fault symptoms can occur.

Clean the throttle body (TB) if needed.

If no fault is found, try a new mass air flow (MAF) sensor.

Remedy as necessary.

Other information

- see **AIR LEAKAGE IN THE INTAKE SYSTEM, CHECKING**
- see **THROTTLE BODY (TB), CLEANING**
- see **MASS AIR FLOW (MAF) SENSOR, REPLACING**
- see **CHECKING WIRING AND TERMINALS**

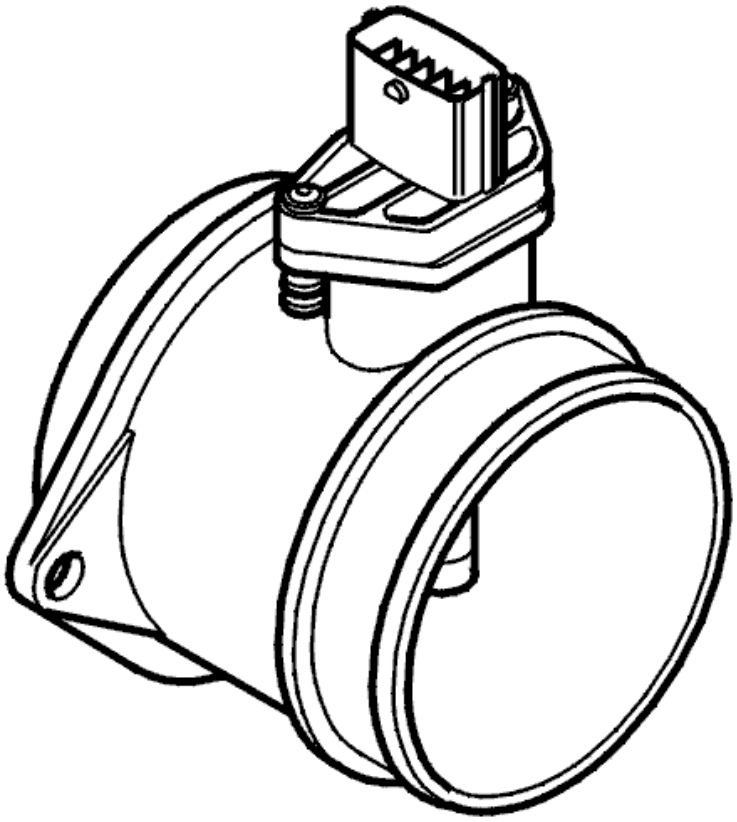

Fig. 65: Identifying Mass Air Flow (MAF) Sensor
Courtesy of VOLVO CARS CORPORATION

- **Continue**

  Refer to **VERIFICATION**

VERIFICATION

VERIFICATION

HINT: After carrying out the repair, check that the fault has been remedied.

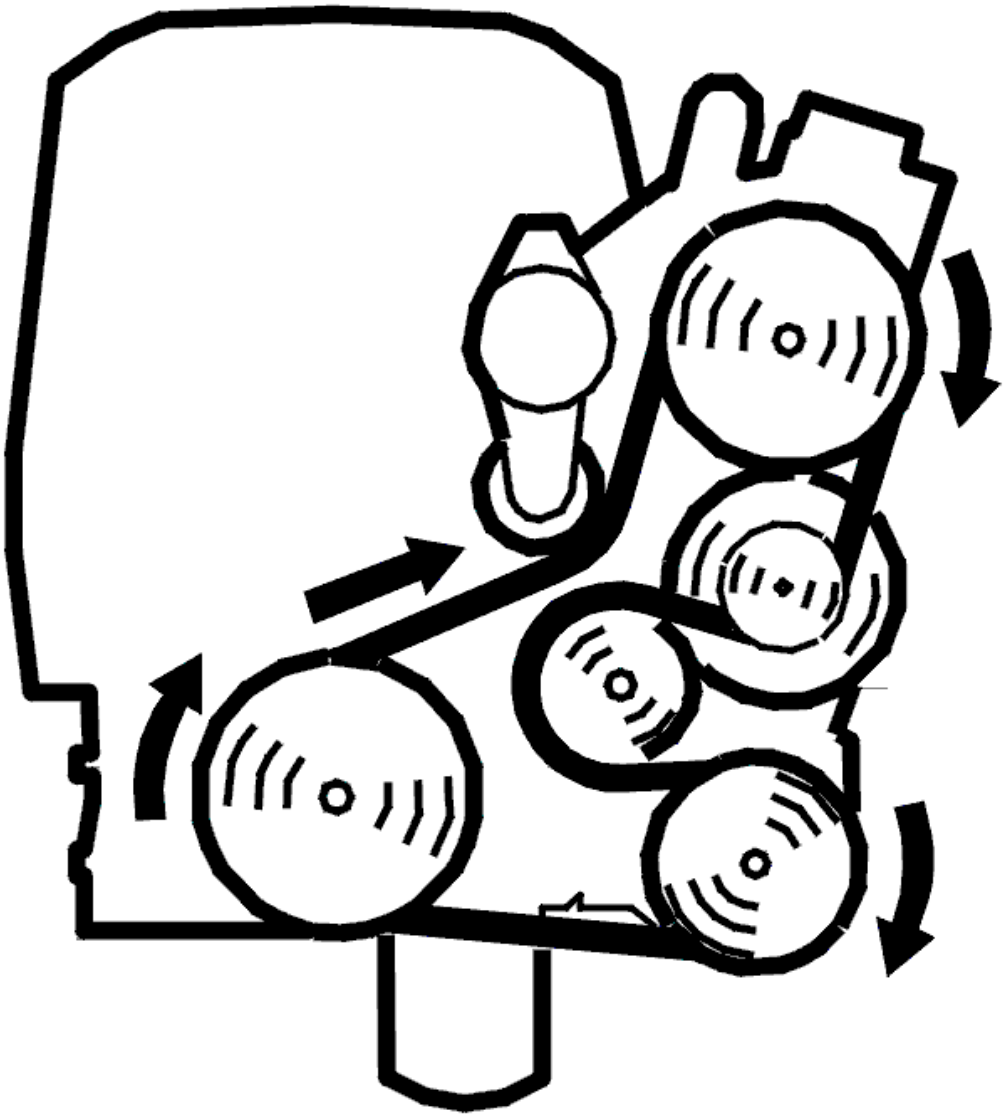

Fig. 66: Belt Routing / Engine Idling - Volvo
Courtesy of VOLVO CARS CORPORATION

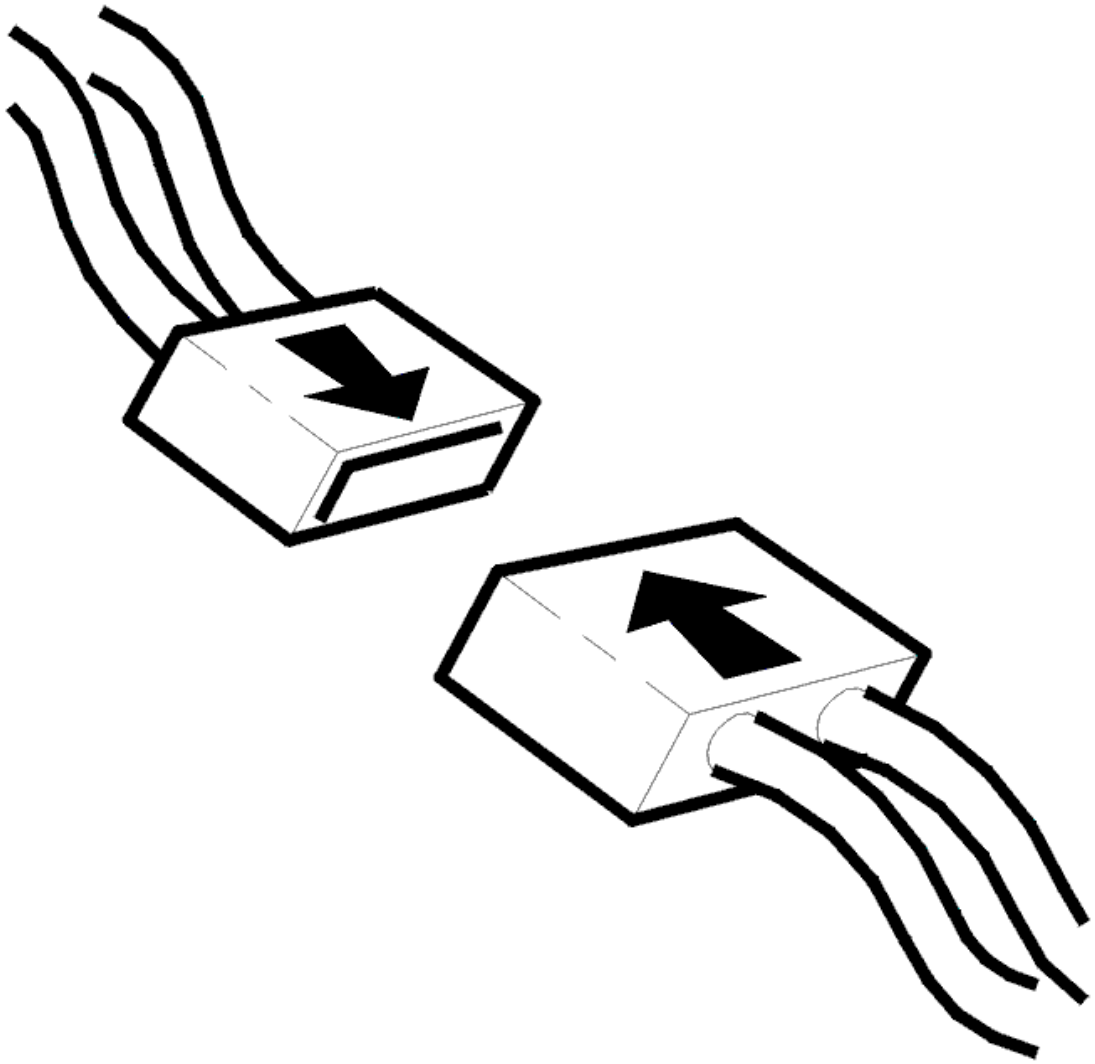

Fig. 67: Connecting Connector
Courtesy of VOLVO CARS CORPORATION

- Ignition off.
- Reinstall the connectors, components etc.
- Ignition on.
- Read off and make a note of the adaptation value.
- Start the engine. Increase the engine speed (RPM) a couple of times.
- Read off the adaptation value and check that the adaptation value approaches 1.

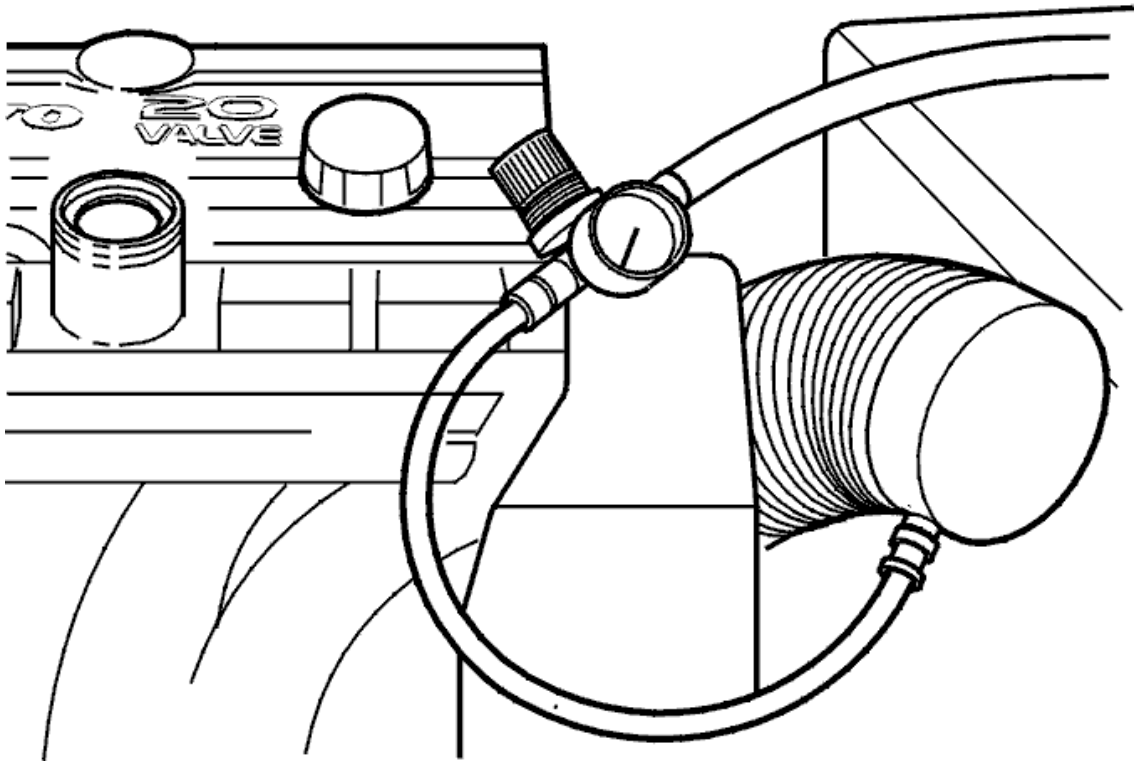

Fig. 68: Identifying VCT2000 Diagnostic Tool Symbol In VIDA
Courtesy of VOLVO CARS CORPORATION

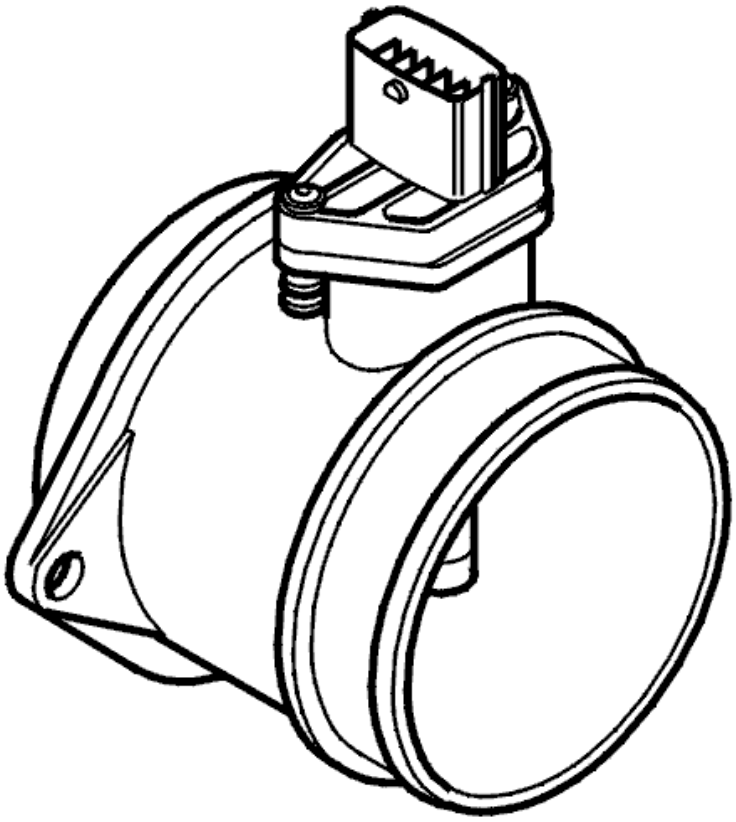

Fig. 69: Identifying Mass Air Flow (MAF) Sensor
Courtesy of VOLVO CARS CORPORATION

Does the adaptation value approach 1?

- **YES**

  VERIFIED: Troubleshooting has been completed.

- **NO**

  Refer to **INFORMATION**

INFORMATION

FAULT-TRACING INFORMATION

The fault should have been detected and remedied. As this is not the case fault-tracing has failed.

Exit fault-tracing for this diagnostic trouble code (DTC) or make another attempt.

ECM-120D: MASS AIR FLOW. SIGNAL TOO LOW (B5254T2; 2005-2007)

DIAGNOSTIC TROUBLE CODE (DTC) INFORMATION ECM-120D

Condition

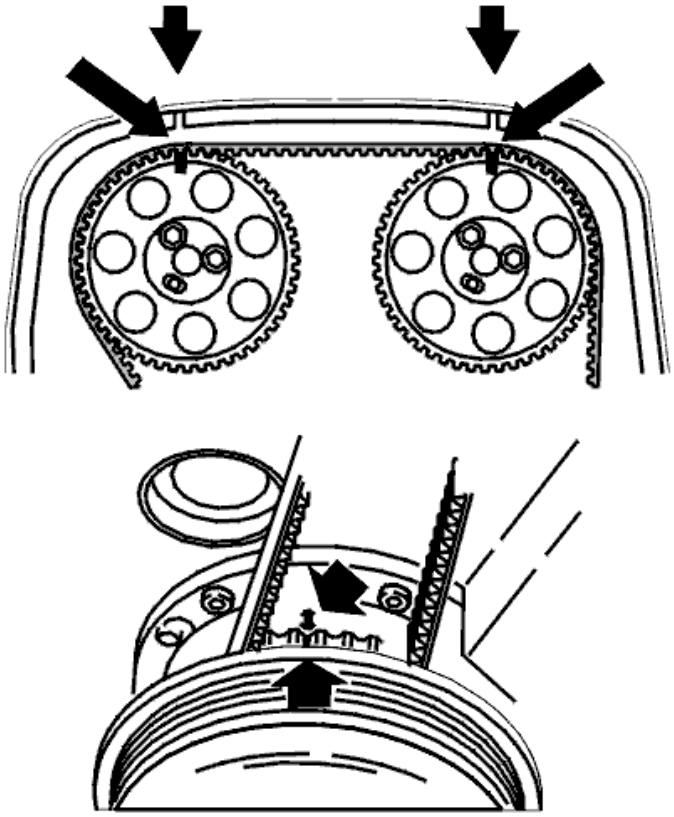

Fig. 70: Identifying Mass Air Flow (MAF) Sensor
Courtesy of VOLVO CARS CORPORATION

The engine control module (ECM) calculates the expected mass air flow. The calculation is based on a number of different parameters. The calculated value for mass air flow is divided (/) by the measured value from the mass air flow (MAF) sensor (= correction value, mass air flow).

The diagnostic trouble code (DTC) is stored if the correction value deviates from 1 (lower than 1) i. e. the calculated air mass is lower than the measured air mass.

The diagnostic trouble code (DTC) can be diagnosed when the engine is running.

Substitute Value

- None.

Possible Source

- Air leakage in the intake system.
- Contaminated throttle body (TB).
- Blocked intake system

- Damaged mass air flow (MAF) sensor.

Fault symptom[s]

- Malfunction indicator lamp (MIL) lit.
- Uneven idle

SIGNAL TOO LOW

CHECKING THE INTAKE SYSTEM

Check the mass air flow (MAF) sensor connector. Check for contact resistance and oxidation.

Check the induction system for air leaks. In particular, check the hoses and hose connectors between the mass air flow (MAF) sensor and the throttle unit. Check for leakage and damage.

Check the inside of the throttle body (TB). Check for contamination. When the throttle body (TB) is contaminated, the air flow to the engine is impaired and diagnostic trouble code (DTCs) or fault symptoms can occur. Clean the throttle body (TB) if needed.

Remedy as necessary.

Other information

- see **AIR LEAKAGE IN THE INTAKE SYSTEM, CHECKING**
- see **THROTTLE BODY (TB), CLEANING**
- see **MASS AIR FLOW (MAF) SENSOR, REPLACING**
- see **CHECKING WIRING AND TERMINALS**

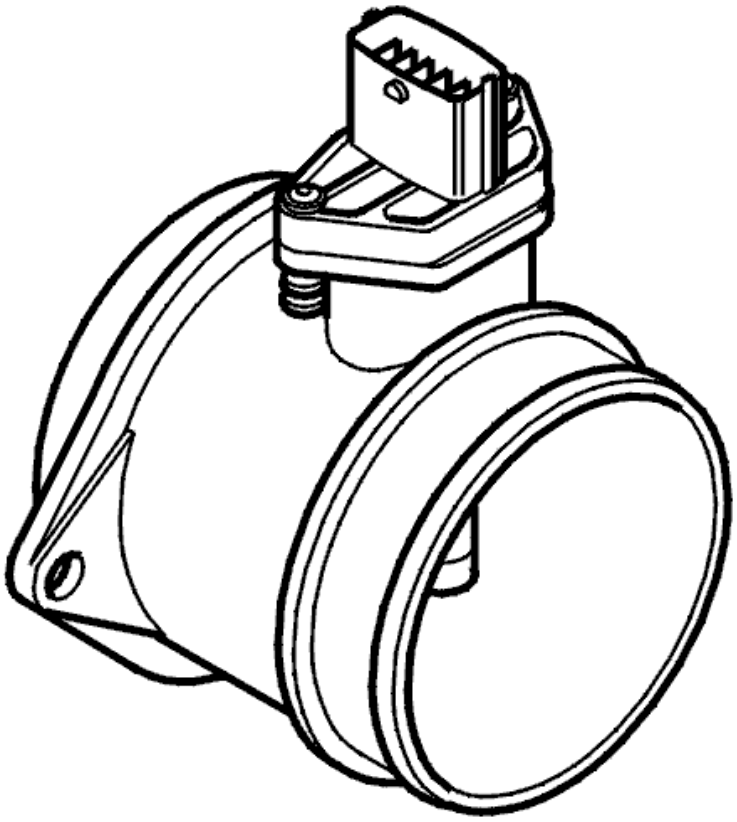

Fig. 71: Identifying Mass Air Flow (MAF) Sensor
Courtesy of VOLVO CARS CORPORATION

- **Continue**

  Refer to **VERIFICATION**

VERIFICATION

VERIFICATION

HINT: After carrying out the repair, check that the fault has been remedied.

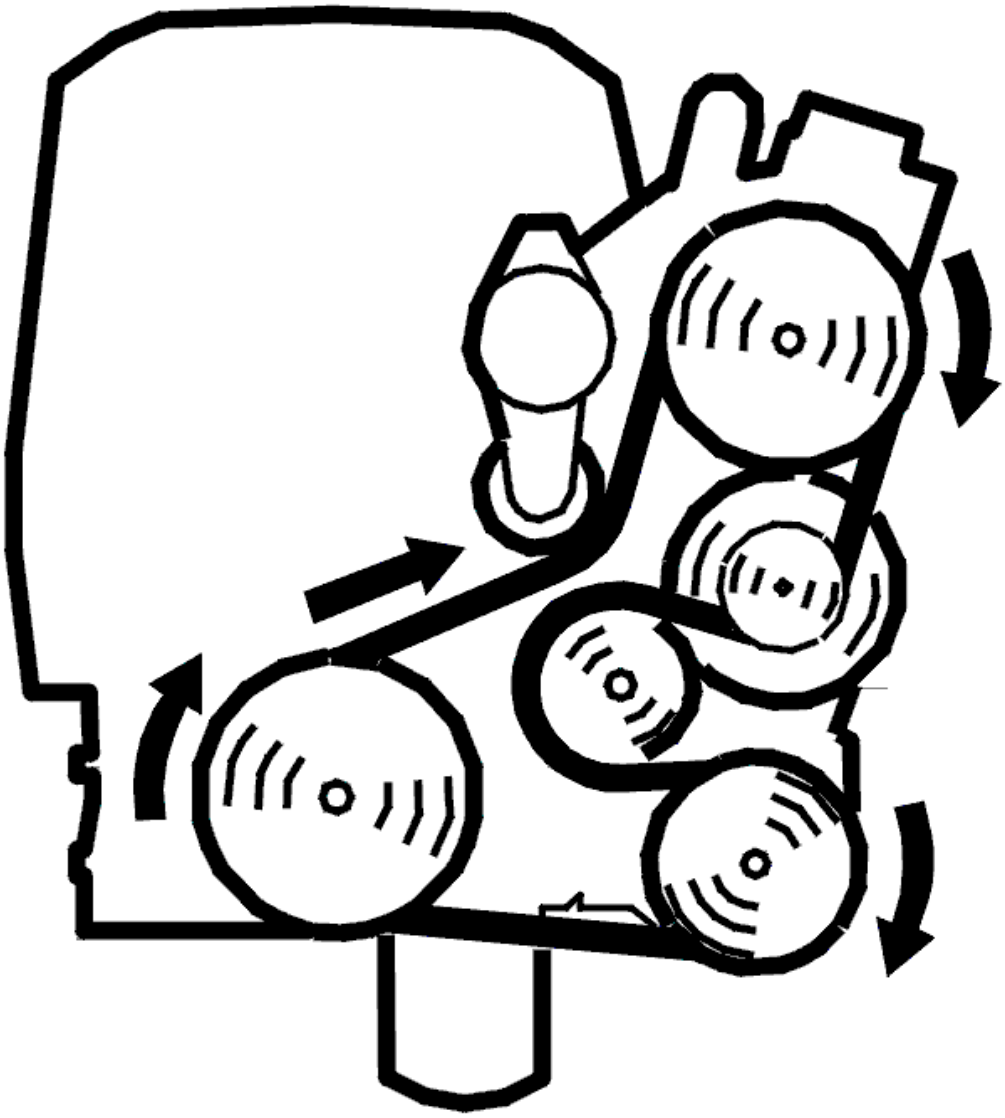

Fig. 72: Belt Routing / Engine Idling - Volvo
Courtesy of VOLVO CARS CORPORATION

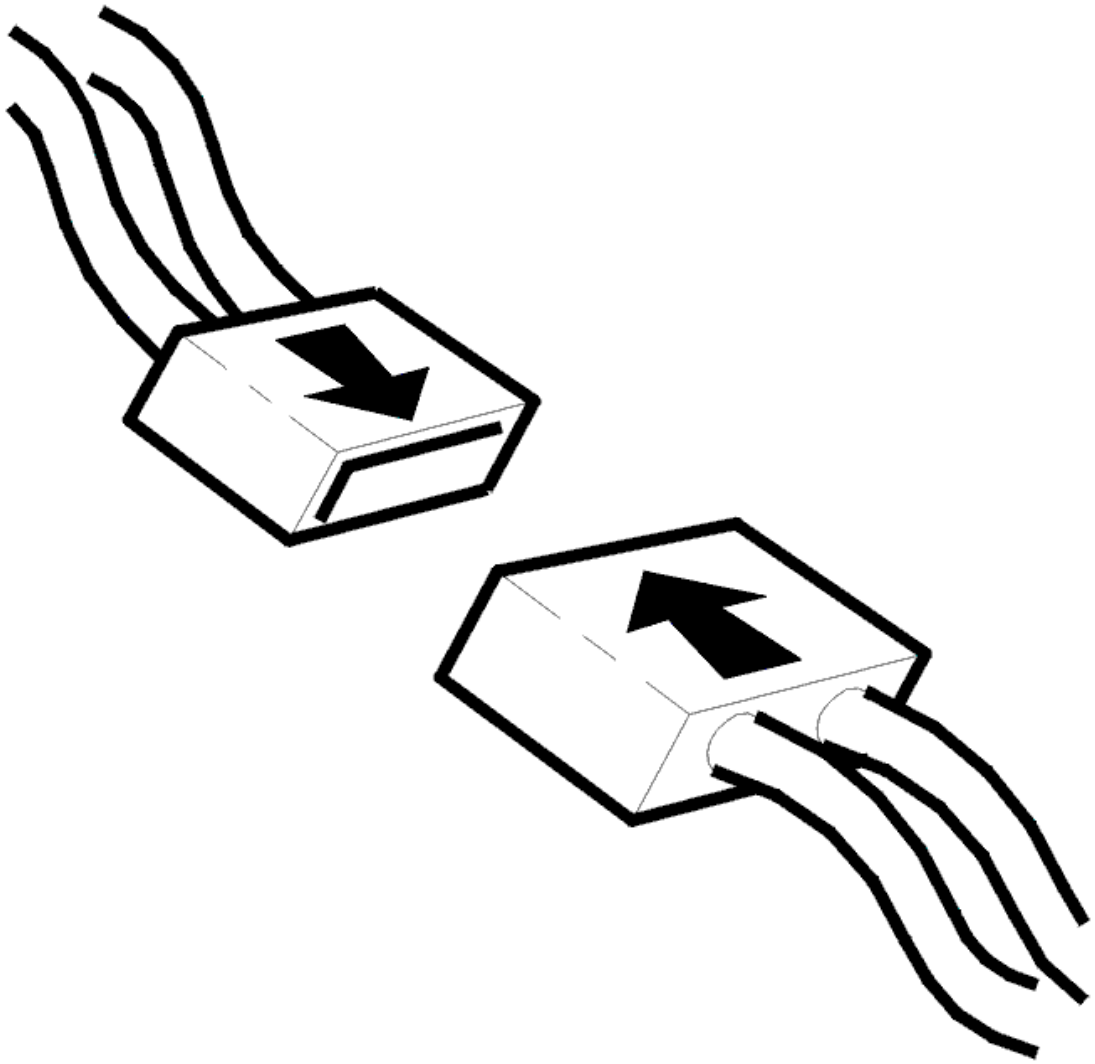

Fig. 73: Connecting Connector
Courtesy of VOLVO CARS CORPORATION

- Ignition off.
- Reinstall the connectors, components etc.
- Ignition on.
- Read off and make a note of the adaptation value.
- Start the engine. Increase the engine speed (RPM) a couple of times.
- Read off the adaptation value and check that the adaptation value approaches 1.

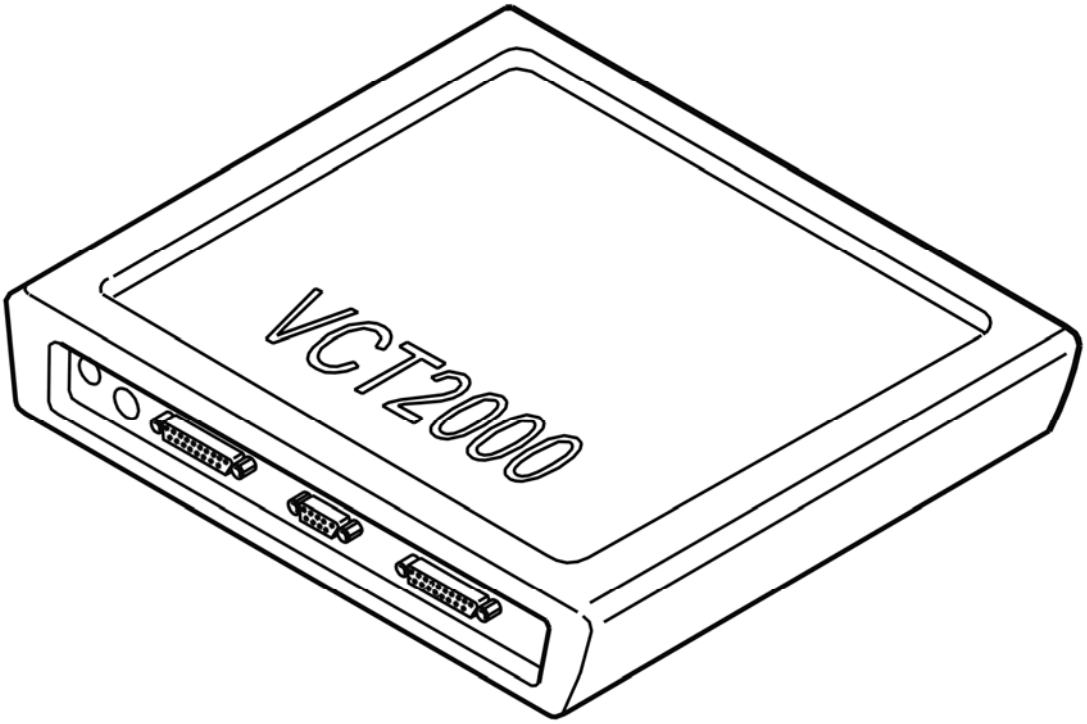

Fig. 74: Identifying VCT2000 Diagnostic Tool Symbol In VIDA
Courtesy of VOLVO CARS CORPORATION

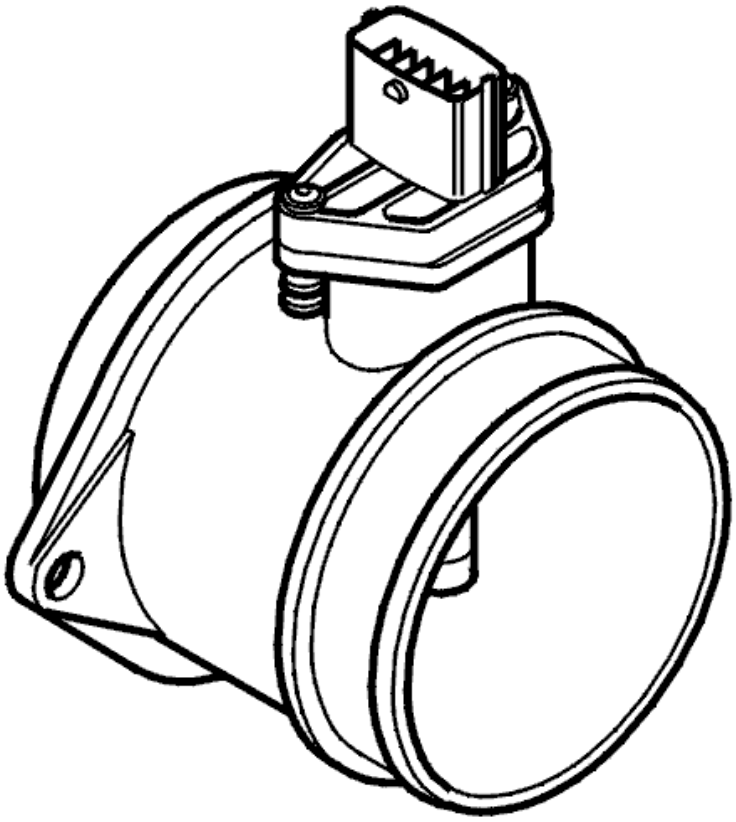

Fig. 75: Identifying Mass Air Flow (MAF) Sensor
Courtesy of VOLVO CARS CORPORATION

Does the adaptation value approach 1?

- **YES**

  VERIFIED: Troubleshooting has been completed.

- **NO**

  Refer to **INFORMATION**

INFORMATION

FAULT-TRACING INFORMATION

The fault should have been detected and remedied. As this is not the case fault-tracing has failed.

Exit fault-tracing for this diagnostic trouble code (DTC) or make another attempt.

ECM-120D: MASS AIR FLOW. SIGNAL TOO LOW (B6294T; 2005-2006)

DIAGNOSTIC TROUBLE CODE (DTC) INFORMATION ECM-120D

see **DIAGNOSTIC TROUBLE CODE (DTC) INFORMATION ECM-120D**

SIGNAL TOO LOW

CHECKING THE INTAKE SYSTEM

Check the mass air flow (MAF) sensor connector. Check for contact resistance and oxidation.

Check the induction system for air leaks. In particular, check the hoses and hose connectors between the mass air flow (MAF) sensor and the throttle unit. Check for leakage and damage.

Check the inside of the throttle body (TB). Check for contamination. When the throttle body (TB) is contaminated, the air flow to the engine is impaired and diagnostic trouble code (DTCs) or fault symptoms can occur. Clean the throttle body (TB) if needed.

Remedy as necessary.

Other information

- see **AIR LEAKAGE IN THE INTAKE SYSTEM, CHECKING**
- see **THROTTLE BODY (TB), CLEANING**
- see **MASS AIR FLOW (MAF) SENSOR, REPLACING**
- see **CHECKING WIRING AND TERMINALS**

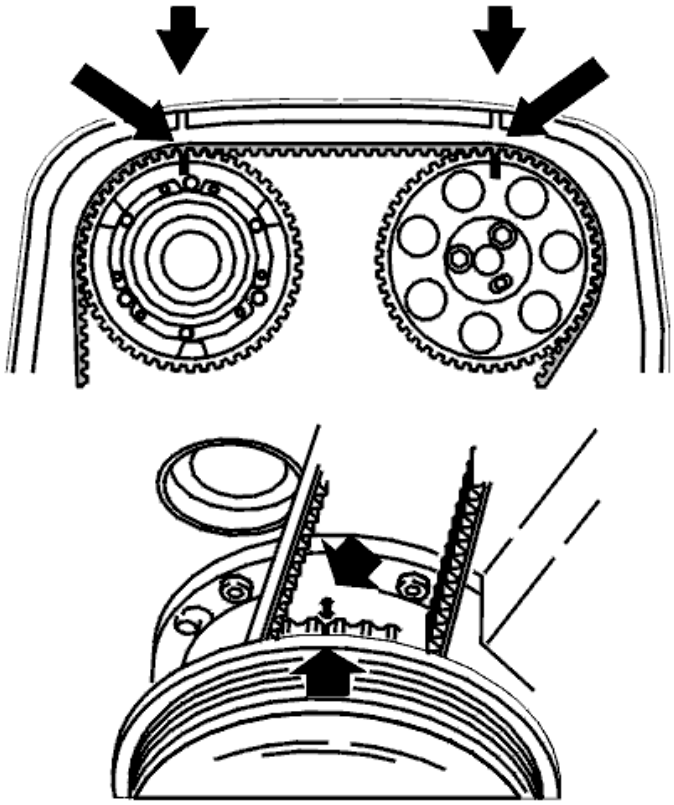

Fig. 76: Identifying Mass Air Flow (MAF) Sensor
Courtesy of VOLVO CARS CORPORATION

- **Continue**

  Refer to **VERIFICATION**

VERIFICATION

VERIFICATION

HINT: After carrying out the repair, check that the fault has been remedied.

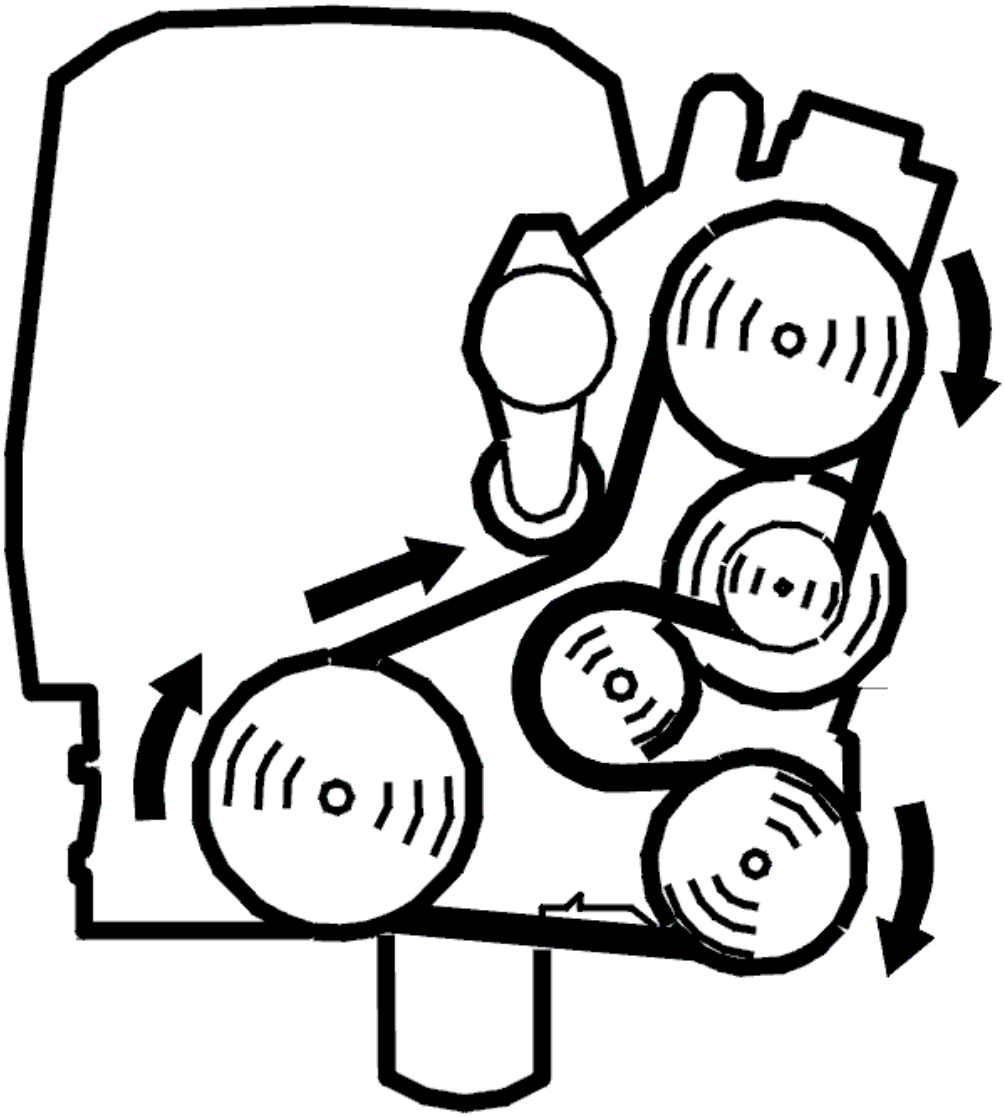

Fig. 77: Belt Routing / Engine Idling - Volvo
Courtesy of VOLVO CARS CORPORATION

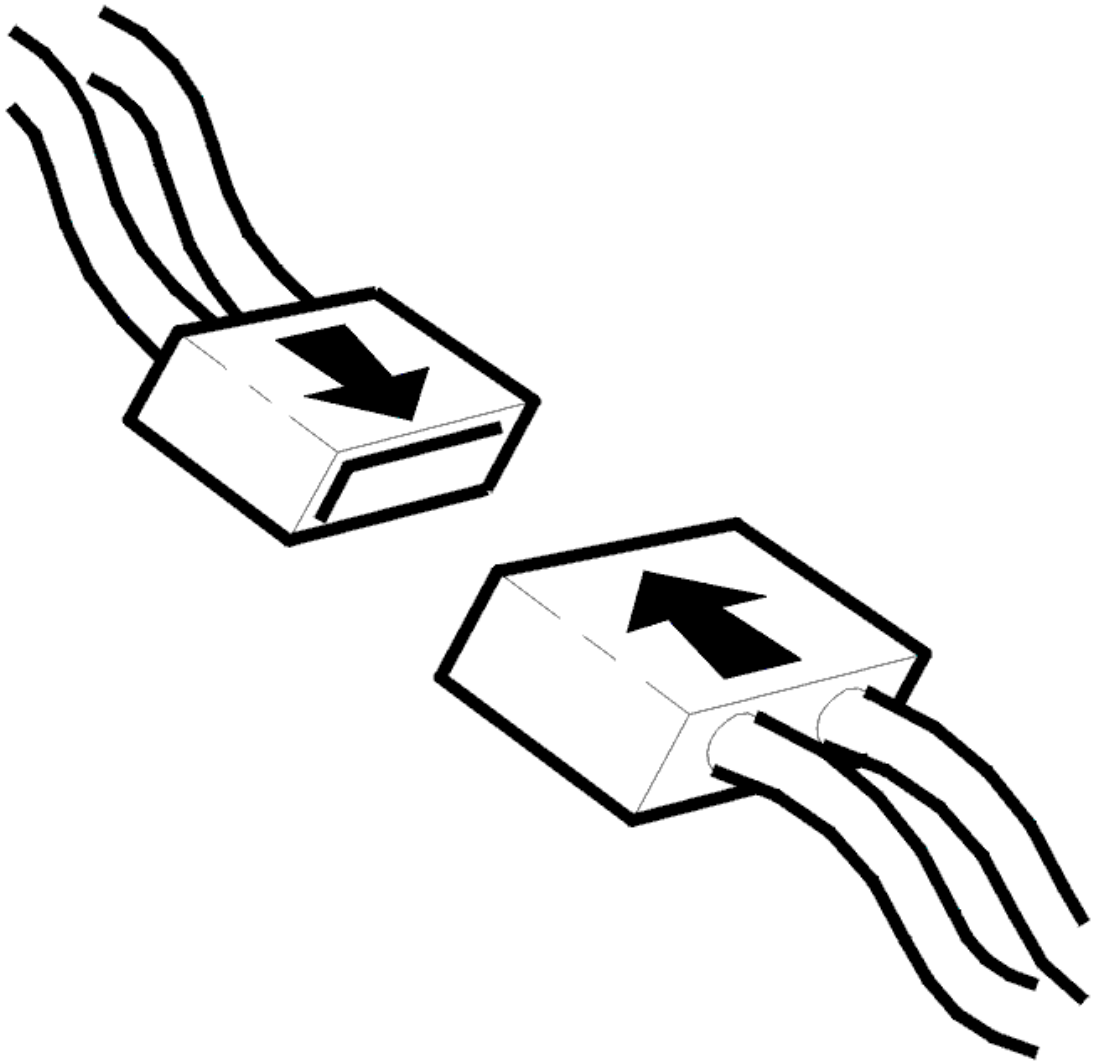

Fig. 78: Connecting Connector
Courtesy of VOLVO CARS CORPORATION

- Ignition off.
- Reinstall the connectors, components etc.
- Ignition on.
- Read off and make a note of the adaptation value.
- Start the engine. Increase the engine speed (RPM) a couple of times.
- Read off the adaptation value and check that the adaptation value approaches 1.

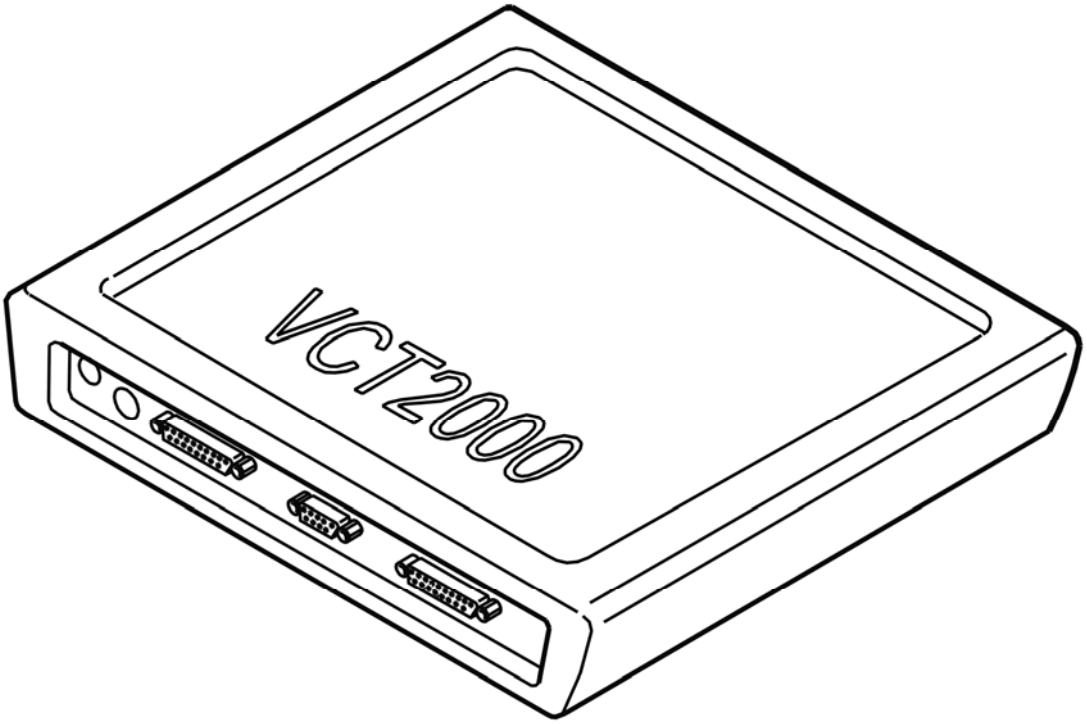

Fig. 79: Identifying VCT2000 Diagnostic Tool Symbol In VIDA
Courtesy of VOLVO CARS CORPORATION

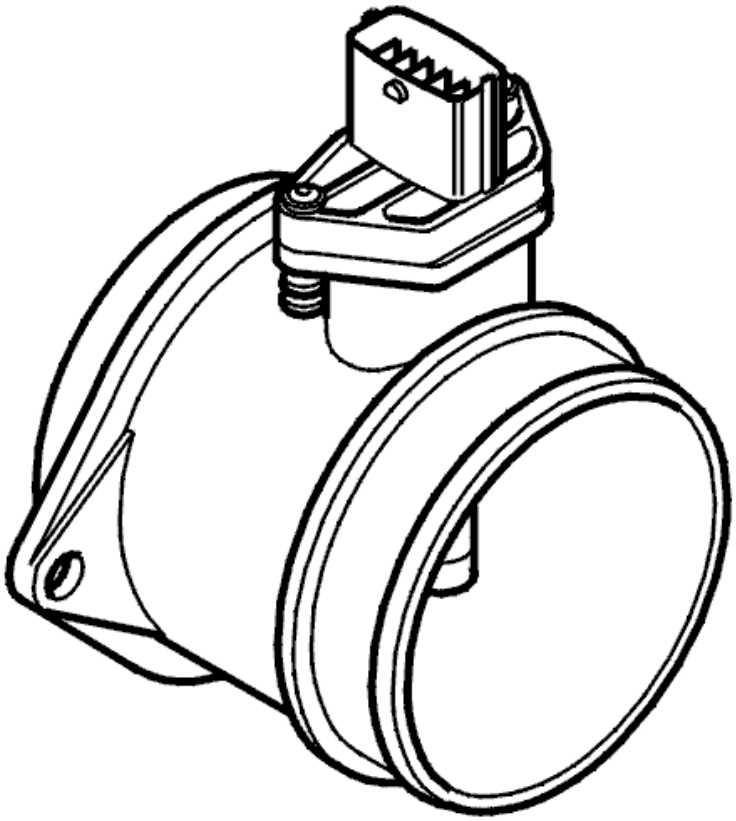

Fig. 80: Identifying Mass Air Flow (MAF) Sensor
Courtesy of VOLVO CARS CORPORATION

Does the adaptation value approach 1?

- **YES**

  VERIFIED: Troubleshooting has been completed.

- **NO**

  Refer to **INFORMATION**

INFORMATION

FAULT-TRACING INFORMATION

The fault should have been detected and remedied. As this is not the case fault-tracing has failed.

Exit fault-tracing for this diagnostic trouble code (DTC) or make another attempt.

ECM-1210: MASS AIR FLOW (MAF) SENSOR. FLOW TOO HIGH (B5254T2; 2005-2007)

DIAGNOSTIC TROUBLE CODE (DTC) INFORMATION ECM-1210

Condition

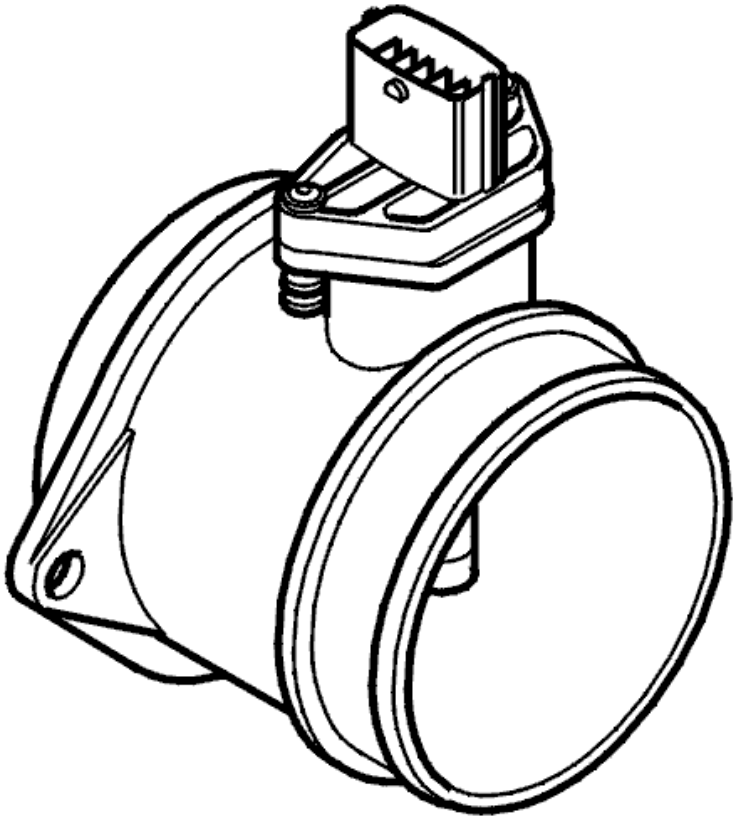

Fig. 81: Identifying Mass Air Flow (MAF) Sensor
Courtesy of VOLVO CARS CORPORATION

The engine control module (ECM) calculates the expected mass air flow. The calculation is based on a number of different parameters. The calculated value for mass air flow is then compared with the measured value from the mass air flow (MAF) sensor.

The diagnostic trouble code (DTC) is stored if the engine control module (ECM) detects that the correction factor for the air mass (measured air mass/desired air mass value) is too high, while the long-term fuel trim is above or below a set value.

The diagnostic trouble code (DTC) can be diagnosed when the engine is running.

Substitute Value

- Calculated boost pressure
- Calculated air mass
- Rear heated oxygen sensor (HO2S) control shut off
- Misfire diagnostic shut off.

Possible Source

- Contact resistance or oxidation in the mass air flow (MAF) connectors
- Air leakage in the intake system
- Blocked intake system
- Damaged mass air flow (MAF) sensor.

Fault symptom[s]

- Malfunction indicator lamp (MIL) lit.

FLOW TOO LOW OR TOO HIGH

see **FLOW TOO LOW OR TOO HIGH**

ECM-1210: MASS AIR FLOW (MAF) SENSOR. FLOW TOO HIGH (B6294T; 2005-2006)

DIAGNOSTIC TROUBLE CODE (DTC) INFORMATION ECM-1210

see **DIAGNOSTIC TROUBLE CODE (DTC) INFORMATION ECM-1210**

FLOW TOO LOW OR TOO HIGH

see **FLOW TOO LOW OR TOO HIGH**

ECM-121B: MASS AIR FLOW (MAF) SENSOR. FLOW TOO LOW (B5254T2; 2005-2007)

DIAGNOSTIC TROUBLE CODE (DTC) INFORMATION ECM-121B

Condition

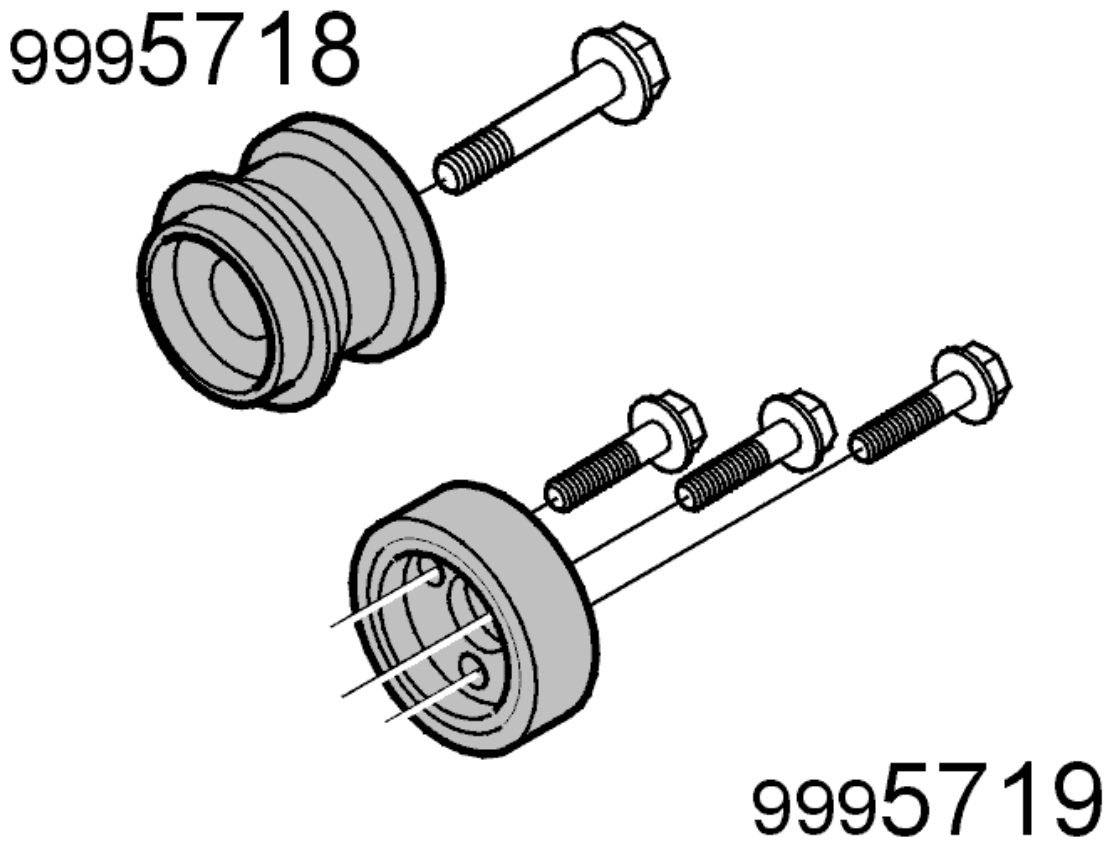

Fig. 82: Identifying Mass Air Flow (MAF) Sensor
Courtesy of VOLVO CARS CORPORATION

The engine control module (ECM) calculates the expected mass air flow. The calculation is based on a number of different parameters. The calculated value for mass air flow is then compared with the measured value from the mass air flow (MAF) sensor.

The diagnostic trouble code (DTC) is stored if the engine control module (ECM) detects that the correction factor for the air mass (measured air mass/desired air mass value) is too low, while the long-term fuel trim is above or below a set value.

The diagnostic trouble code (DTC) can be diagnosed when the engine is running.

Substitute Value

- Calculated boost pressure
- Calculated air mass
- Rear heated oxygen sensor (HO2S) control shut off
- Misfire diagnostic shut off.

Possible Source

- Contact resistance or oxidation in the mass air flow (MAF) connectors

- Air leakage in the intake system
- Blocked intake system
- Damaged mass air flow (MAF) sensor.

Fault symptom[s]

- Malfunction indicator lamp (MIL) lit
- Poor performance.

FLOW TOO LOW OR TOO HIGH

see **FLOW TOO LOW OR TOO HIGH**

ECM-121B: MASS AIR FLOW (MAF) SENSOR. FLOW TOO LOW (B6294T; 2005-2006)

DIAGNOSTIC TROUBLE CODE (DTC) INFORMATION ECM-121B

see **DIAGNOSTIC TROUBLE CODE (DTC) INFORMATION ECM-121B**

FLOW TOO LOW OR TOO HIGH

see **FLOW TOO LOW OR TOO HIGH**

ECM-121C: MASS AIR FLOW (MAF) SENSOR. SIGNAL TOO HIGH (B5254T2; 2005-2007)

DIAGNOSTIC TROUBLE CODE (DTC) INFORMATION ECM-121C

Condition

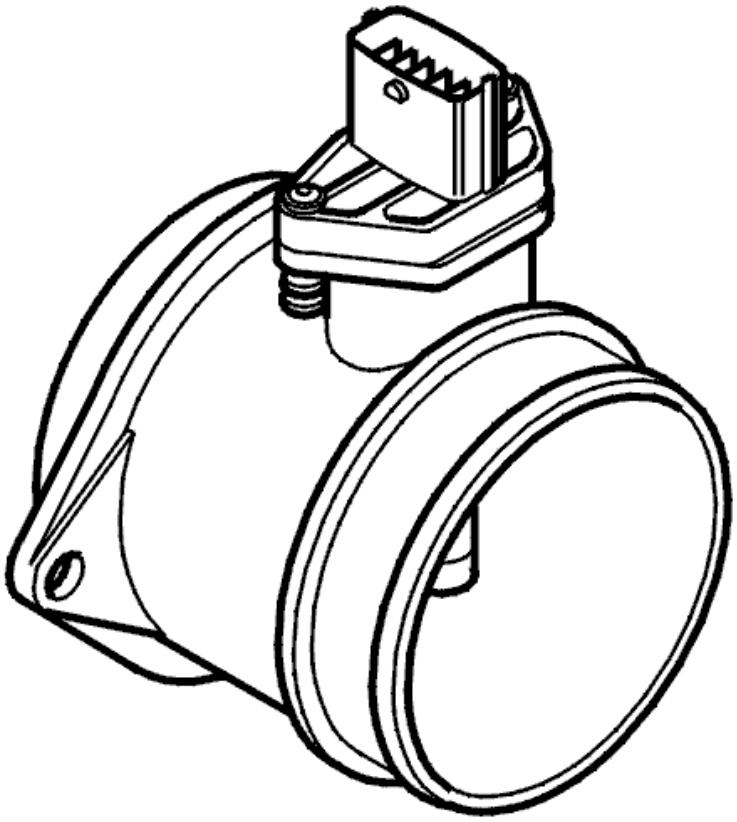

Fig. 83: Identifying Mass Air Flow (MAF) Sensor
Courtesy of VOLVO CARS CORPORATION

The engine control module (ECM) calculates the expected mass air flow. The calculation is based on a number of different parameters. The calculated value for mass air flow is then compared with the measured value from the mass air flow (MAF) sensor.

The diagnostic trouble code (DTC) is stored if the engine control module (ECM) detects that the value for the measured air mass is higher than the calculated value for air mass.

The diagnostic trouble code (DTC) can be diagnosed when the engine is running.

Substitute Value

- Calculated boost pressure
- Calculated air mass
- Rear heated oxygen sensor (HO2S) control shut off
- Misfire diagnostic shut off.

Possible Source

- Short-circuit to supply voltage in the signal cable
- Open-circuit in the ground lead

- Damaged mass air flow (MAF) sensor.

Fault symptom[s]

- Malfunction indicator lamp (MIL) lit
- Poor performance.

SIGNAL TOO HIGH

CHECKING THE WIRING

Check the cable between engine control module (ECM) terminal #A22 (#A22) and mass air flow (MAF) sensor terminal #5. Check for a short-circuit to supply voltage.

Check the ground lead between terminal #A58 (#A58) and mass air flow (MAF) sensor terminal #3. Check for an open-circuit.

With the ignition on and the mass air flow (MAF) sensor connector disconnected, the voltage at mass air flow (MAF) terminal #2 must be approximately U_{bat} , at mass air flow (MAF) terminal #3 it must be ground and at terminal #5 approximately 1 V.

Remedy as necessary

Other information:

- see **SHORT-CIRCUIT TO SUPPLY VOLTAGE. PERMANENT FAULTS**
- see **CONNECTING THE BREAKOUT BOX**
- see **MASS AIR FLOW (MAF) SENSOR, REPLACING**
- For 5 cylinder turbocharged engines -2004, see **SIGNAL DESCRIPTION**
- For 5 cylinder turbocharged engines 2005-, see **SIGNAL SPECIFICATION** .
- For 6 cylinder engines -2004, see **SIGNAL SPECIFICATION**
- For 6 cylinder engines 2005-, see **SIGNAL SPECIFICATION** .

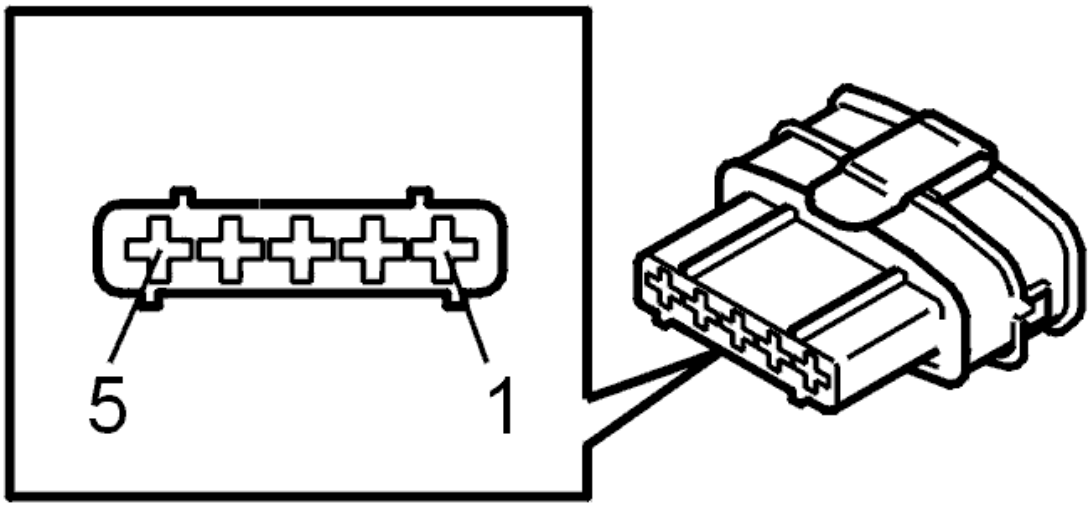

Fig. 84: Identifying Connector
Courtesy of VOLVO CARS CORPORATION

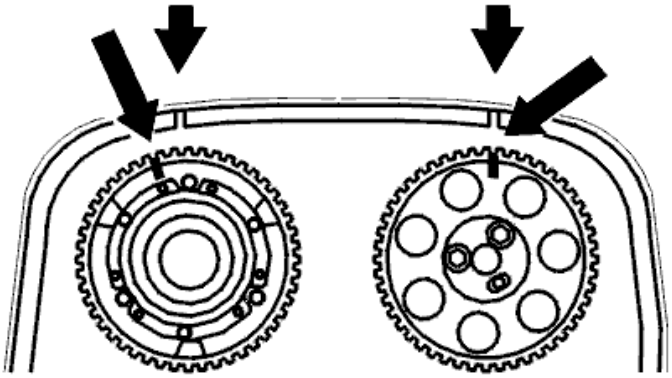

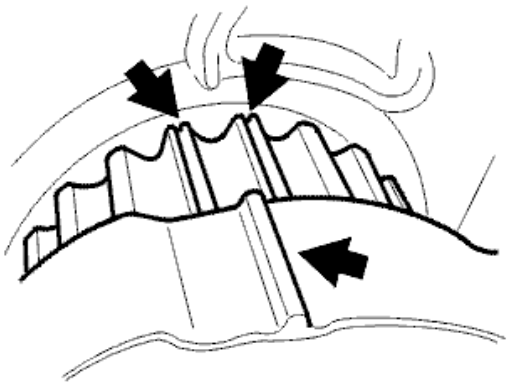

Fig. 85: Identifying Mass Air Flow (MAF) Sensor
Courtesy of VOLVO CARS CORPORATION

- **Continue**

  Refer to **VERIFICATION**

VERIFICATION

VERIFICATION

HINT: After carrying out the repair, check that the fault has been remedied.

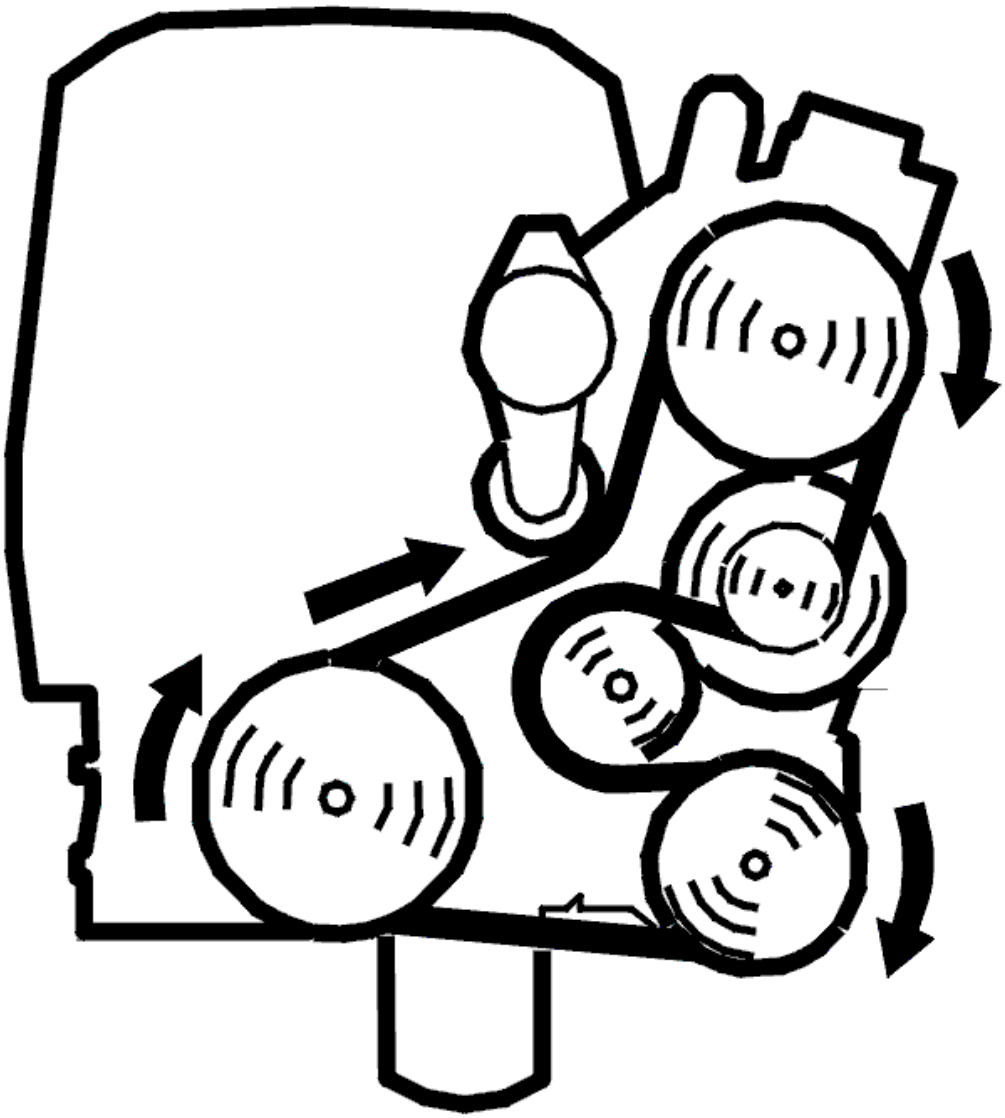

Fig. 86: Belt Routing / Engine Idling - Volvo
Courtesy of VOLVO CARS CORPORATION

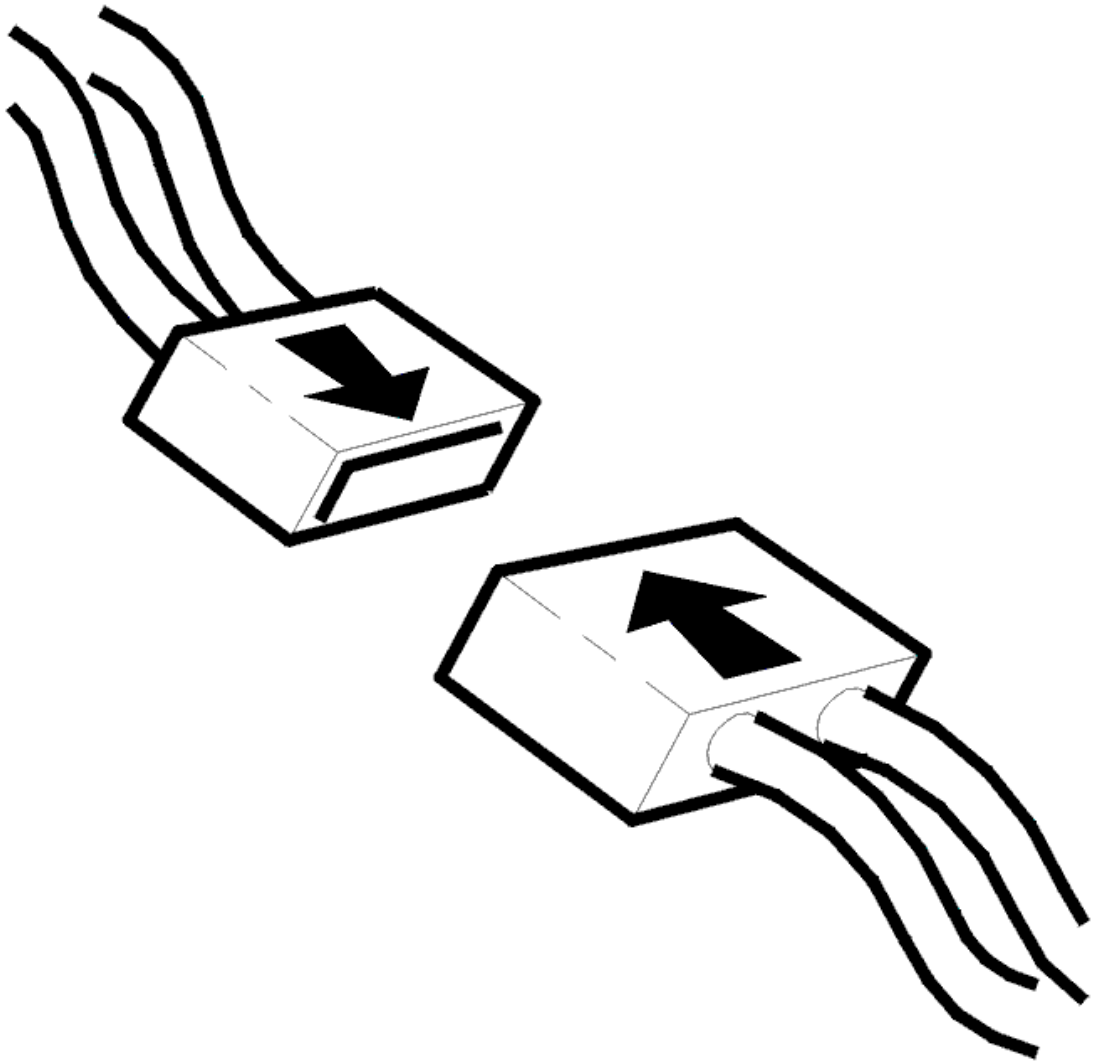

Fig. 87: Connecting Connector
Courtesy of VOLVO CARS CORPORATION

- Ignition off
- Reinstall the connectors, components etc.
- Ignition on
- Check that the air flow is correct. The value must be approximately 0 kg/h with the engine switched off
- Start the engine. Read off the air flow. The value may vary by between 12-20 kg/h at idle speed, depending on the engine load and temperature. The value may be in excess of 20 kg/h if the engine is cold
- Increase the engine speed (RPM) and check that the air flow increases with increased engine speed.

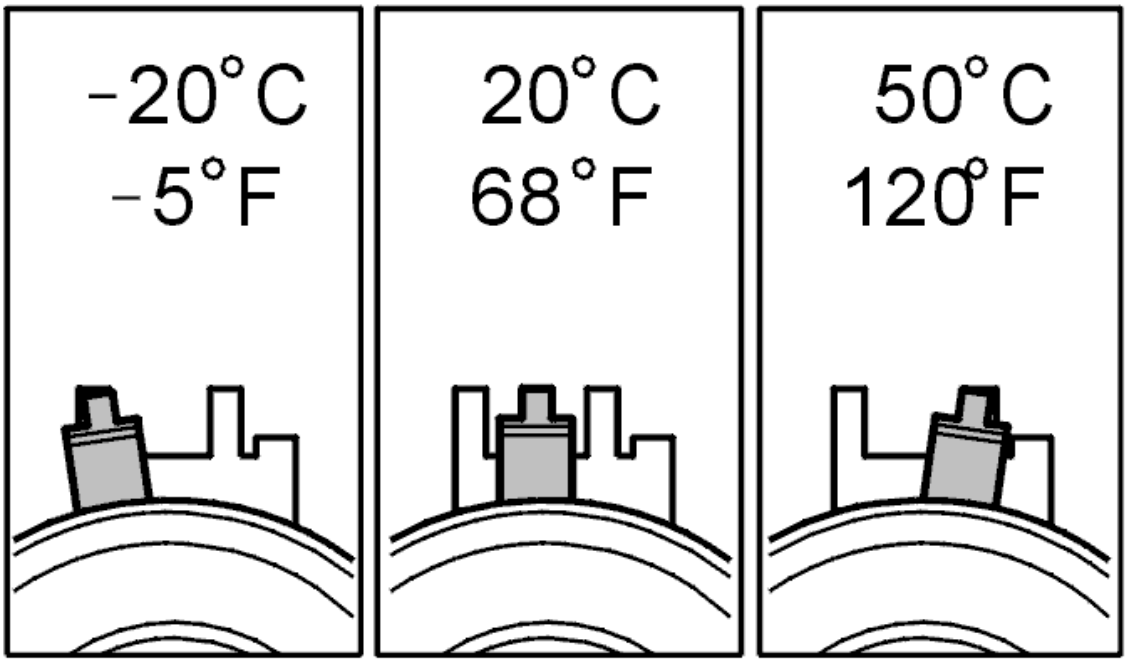

Fig. 88: Identifying VCT2000 Diagnostic Tool Symbol In VIDA
Courtesy of VOLVO CARS CORPORATION

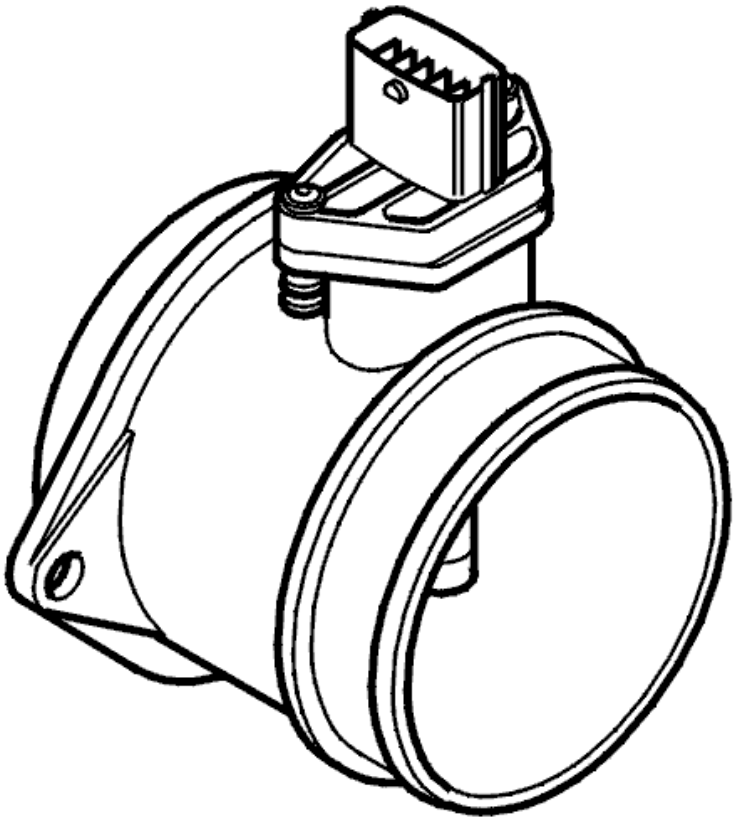

Fig. 89: Identifying Mass Air Flow (MAF) Sensor
Courtesy of VOLVO CARS CORPORATION

Are the values correct?

- **YES**

  VERIFIED: Troubleshooting has been completed.

- **NO**

  Refer to **INFORMATION**

INFORMATION

FAULT-TRACING INFORMATION

The fault should have been detected and remedied. As this is not the case fault-tracing has failed.

Exit fault-tracing for this diagnostic trouble code (DTC) or make another attempt.

ECM-121C: MASS AIR FLOW (MAF) SENSOR. SIGNAL TOO HIGH (B6294T; 2005-2006)

DIAGNOSTIC TROUBLE CODE (DTC) INFORMATION ECM-121C

see **DIAGNOSTIC TROUBLE CODE (DTC) INFORMATION ECM-121C**

SIGNAL TOO HIGH

see **SIGNAL TOO HIGH**

ECM-121D: MASS AIR FLOW (MAF) SENSOR. SIGNAL TOO LOW (B5254T2; 2005-2007)

DIAGNOSTIC TROUBLE CODE (DTC) INFORMATION ECM-121D

Condition

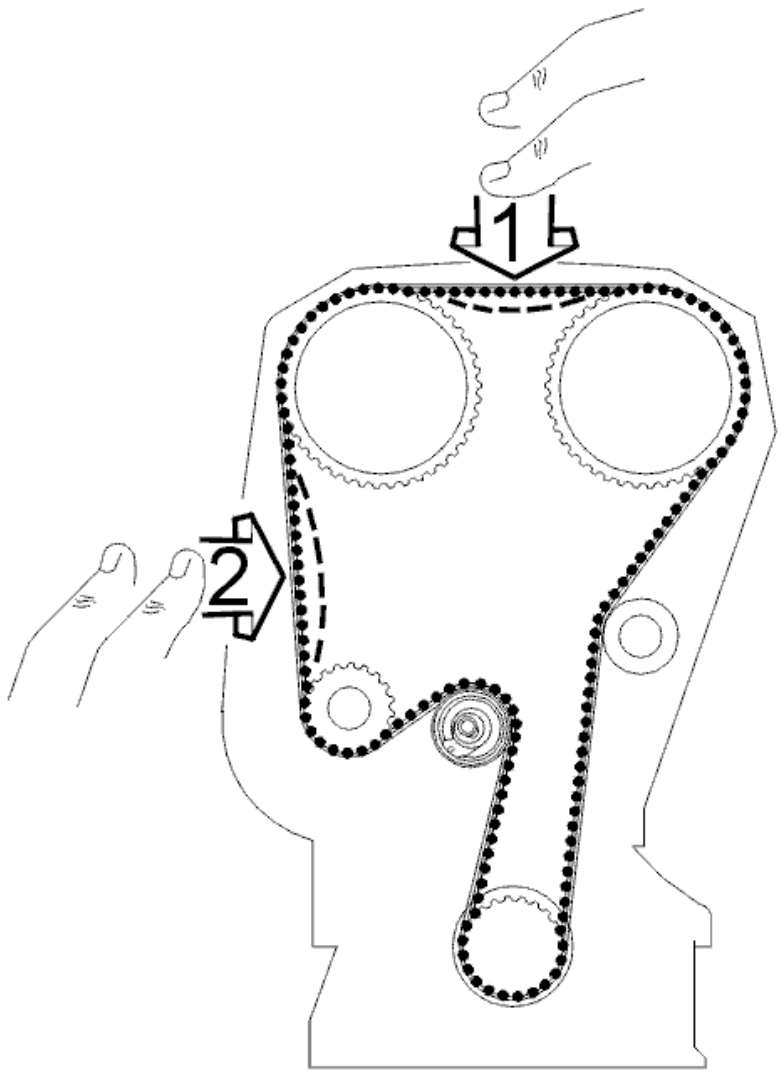

Fig. 90: Identifying Mass Air Flow (MAF) Sensor
Courtesy of VOLVO CARS CORPORATION

The engine control module (ECM) calculates the expected mass air flow. The calculation is based on a number of different parameters. The calculated value for mass air flow is then compared with the measured value from the mass air flow (MAF) sensor.

The diagnostic trouble code (DTC) is stored if the engine control module (ECM) detects that the value for the measured air mass is lower than the calculated value for air mass.

The diagnostic trouble code (DTC) can be diagnosed when the engine is running.

Substitute Value

- Calculated boost pressure
- Calculated air mass
- Rear heated oxygen sensor (HO2S) control shut off
- Misfire diagnostic shut off.

Possible Source

- Air leakage in the intake system
- Contact resistance in the mass air flow (MAF) sensor connectors
- Short-circuit to ground in the signal cable
- Open-circuit in the signal cable
- Open-circuit in the power supply
- Damaged mass air flow (MAF) sensor.

Fault symptom[s]

- Malfunction indicator lamp (MIL) lit
- Poor performance.

SIGNAL TOO LOW

CHECKING COMPONENTS AND WIRING

Check the mass air flow (MAF) sensor connector. Check for contact resistance and oxidation.

Check for air leakage in the intake system and for damage to hoses etc.

Check the power supply cable between system relay terminal #5 and mass air flow (MAF) sensor terminal #2. Check for an open-circuit.

Check the signal cable between engine control module (ECM) terminal #A22 (#A22) and mass air flow (MAF)

sensor terminal #5. Check for an open-circuit. Check for a short-circuit to ground.

Check the power supply cable between engine control module (ECM) terminal #A39 (#A39) and mass air flow (MAF) sensor terminal #4. Check for an open-circuit.

HINT: With the ignition on and the mass air flow (MAF) sensor connector connected the voltage at mass air flow (MAF) sensor terminal #2 must be approximately U_{bat}.

Remedy as necessary.

Other information

- see **CONNECTING THE BREAKOUT BOX**
- see **CHECK FOR AIR LEAKS IN THE INTAKE SYSTEM**
- see **MASS AIR FLOW (MAF) SENSOR, REPLACING**
- For 5 cylinder turbocharged engines -2004, see **SIGNAL DESCRIPTION**
- For 5 cylinder turbocharged engines 2005-, see **SIGNAL SPECIFICATION** .
- For 6 cylinder engines -2004, see **SIGNAL SPECIFICATION**
- For 6 cylinder engines 2005-, see **SIGNAL SPECIFICATION** .
- see **CHECKING WIRING AND TERMINALS**

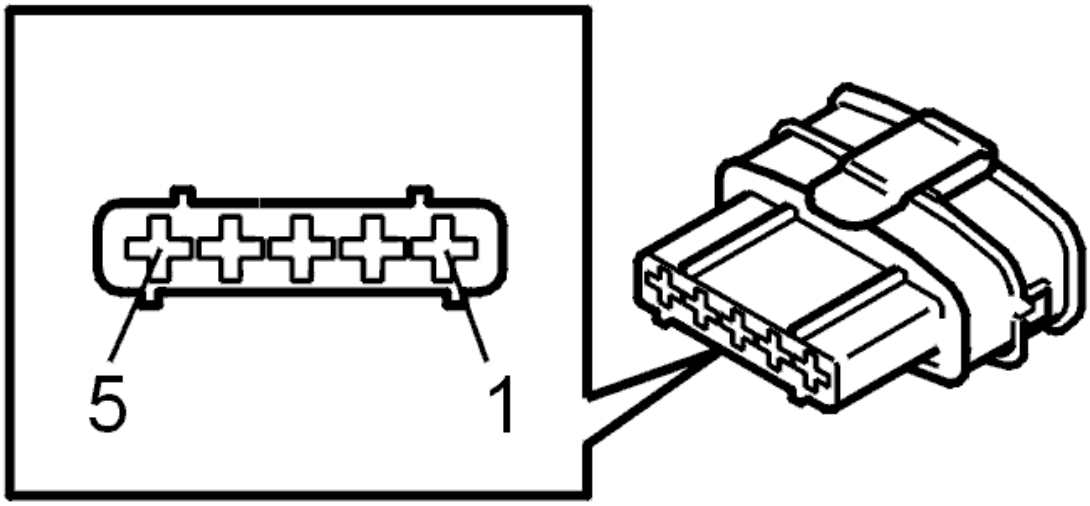

Fig. 91: Identifying Connector
Courtesy of VOLVO CARS CORPORATION

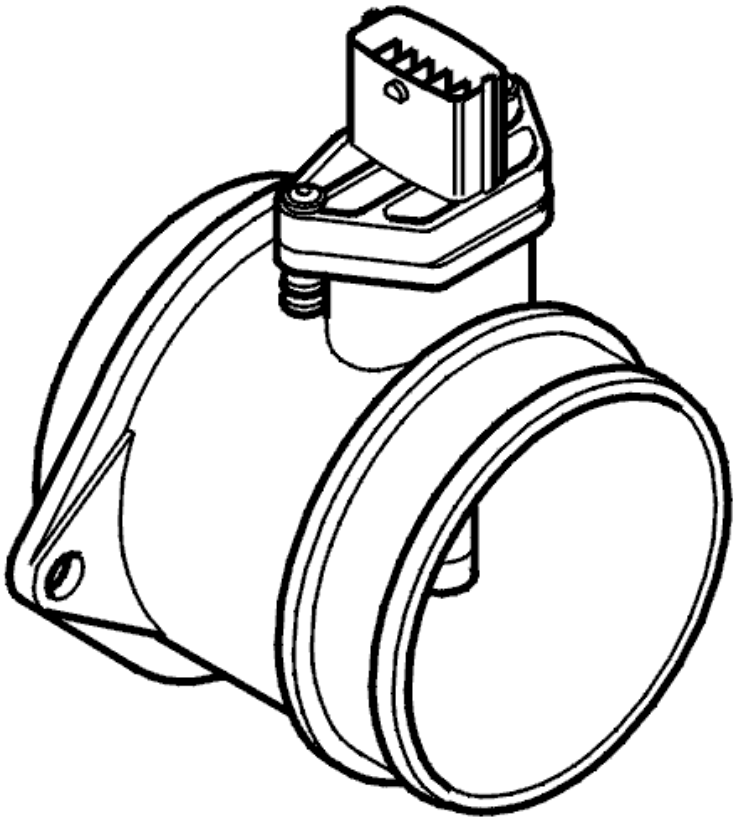

Fig. 92: Identifying Mass Air Flow (MAF) Sensor
Courtesy of VOLVO CARS CORPORATION

- **Continue**

  Refer to **VERIFICATION**

VERIFICATION

VERIFICATION

HINT: After carrying out the repair, check that the fault has been remedied.

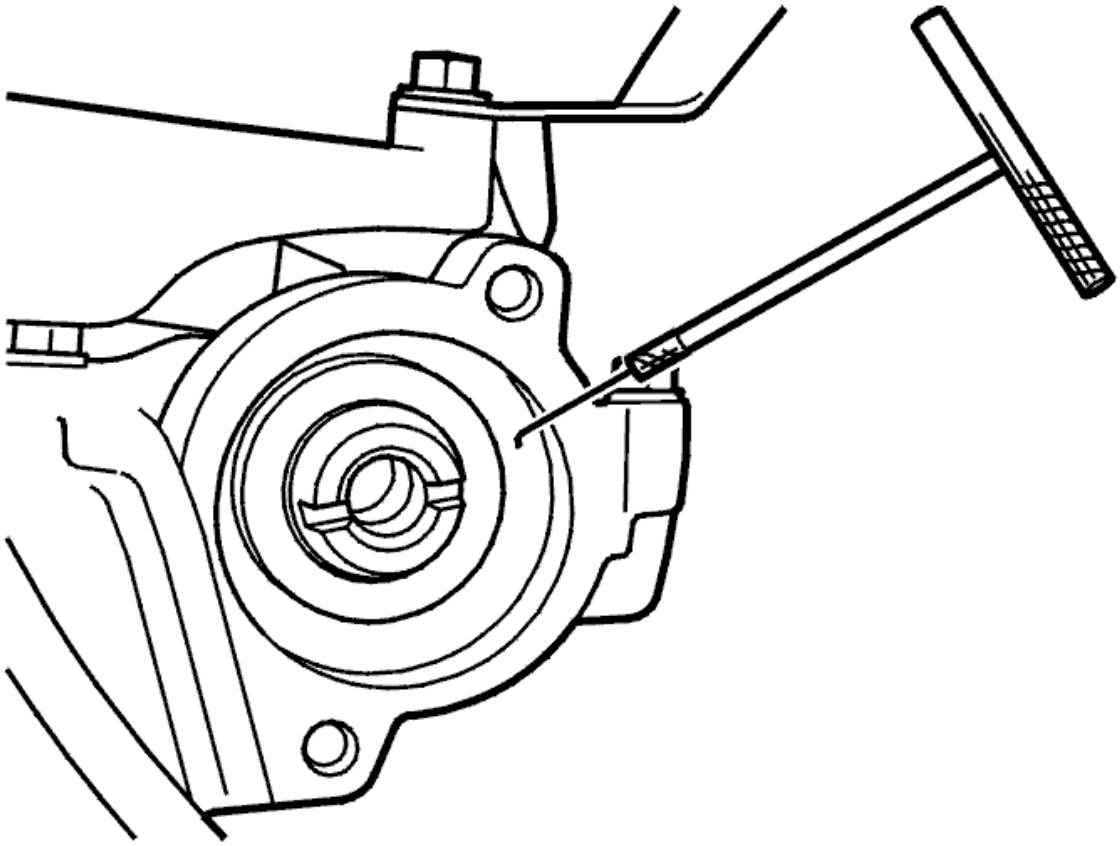

Fig. 93: Belt Routing / Engine Idling - Volvo
Courtesy of VOLVO CARS CORPORATION

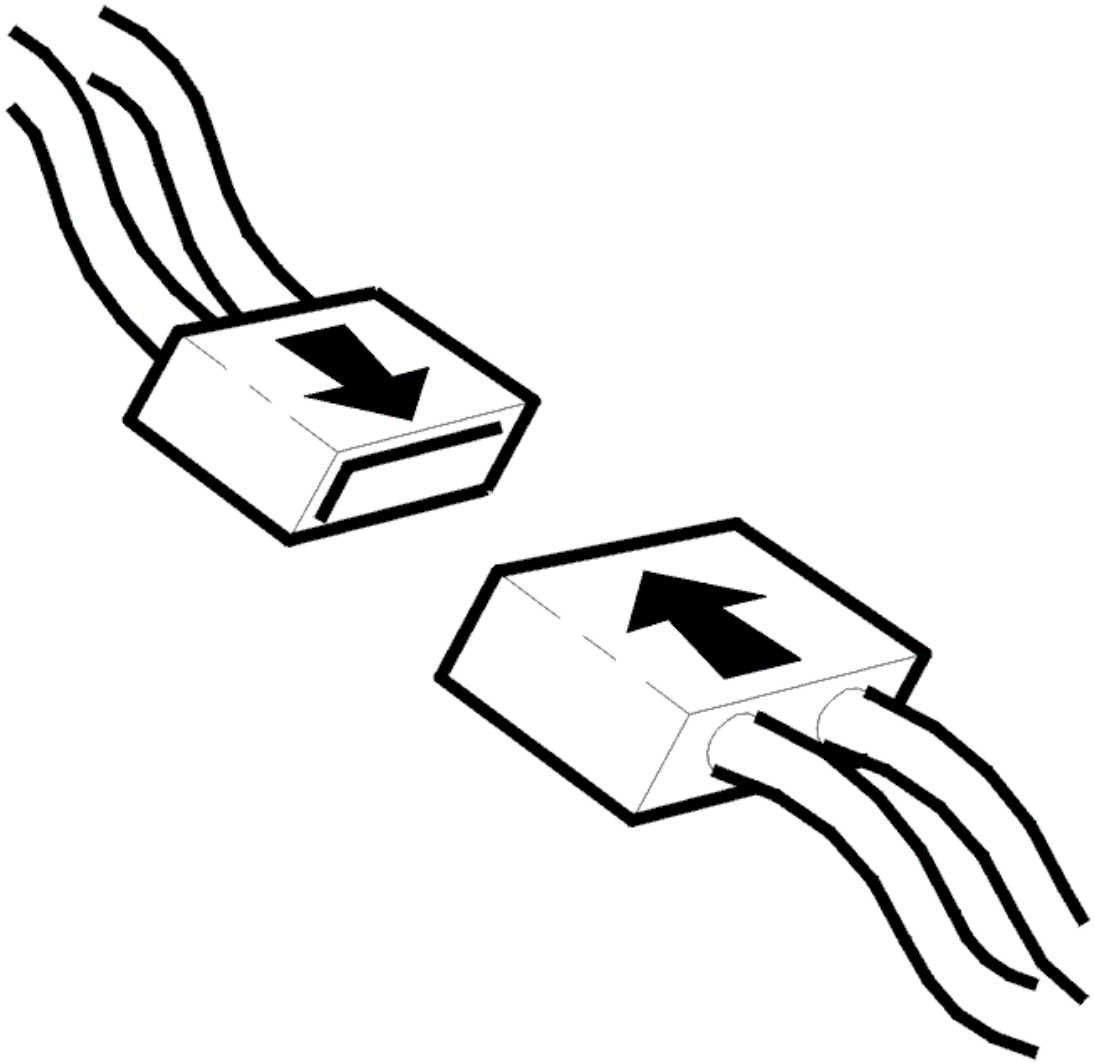

Fig. 94: Connecting Connector
Courtesy of VOLVO CARS CORPORATION

- Ignition off
- Reinstall the connectors, components etc.
- Ignition on
- Check that the air flow is correct. The value must be approximately 0 kg/h with the engine switched off
- Start the engine. Read off the air flow. The value may vary by between 12-20 kg/h at idle speed, depending on the engine load and temperature. The value may be in excess of 20 kg/h if the engine is cold
- Increase the engine speed (RPM) and check that the air flow increases with increased engine speed.

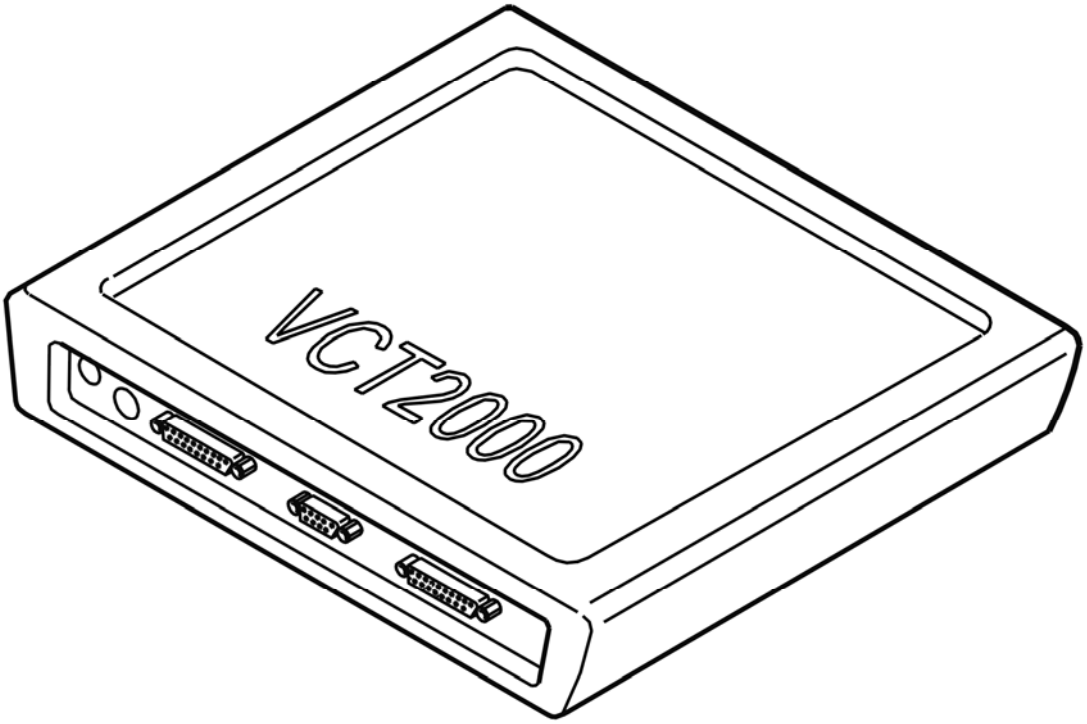

Fig. 95: Identifying VCT2000 Diagnostic Tool Symbol In VIDA
Courtesy of VOLVO CARS CORPORATION

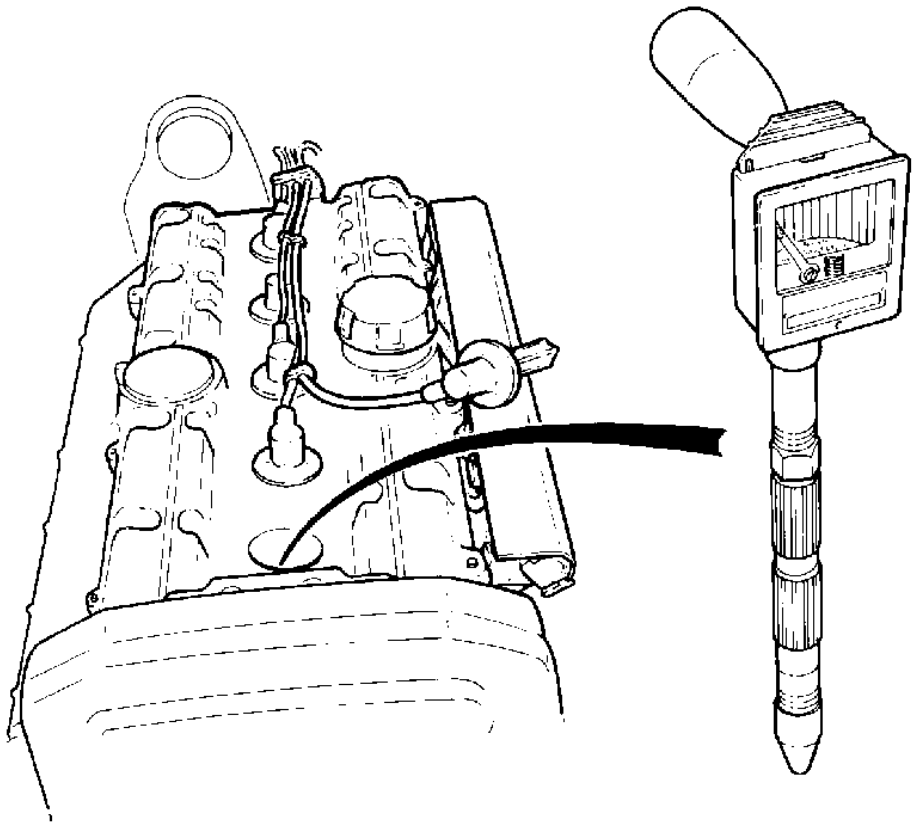

Fig. 96: Identifying Mass Air Flow (MAF) Sensor
Courtesy of VOLVO CARS CORPORATION

Are the values correct?

- **YES**

  VERIFIED: Troubleshooting has been completed.

- **NO**

  Refer to **INFORMATION**

INFORMATION

FAULT-TRACING INFORMATION

The fault should have been detected and remedied. As this is not the case fault-tracing has failed.

Exit fault-tracing for this diagnostic trouble code (DTC) or make another attempt.

ECM-121D: MASS AIR FLOW (MAF) SENSOR. SIGNAL TOO LOW (B6294T; 2005-2006)

DIAGNOSTIC TROUBLE CODE (DTC) INFORMATION ECM-121D

see **DIAGNOSTIC TROUBLE CODE (DTC) INFORMATION ECM-121D**

SIGNAL TOO LOW

see **SIGNAL TOO LOW**

ECM-125C: BOOST PRESSURE SENSOR. SIGNAL TOO HIGH (B5254T2; 2005-2007)

DIAGNOSTIC TROUBLE CODE (DTC) INFORMATION ECM-125C

Condition

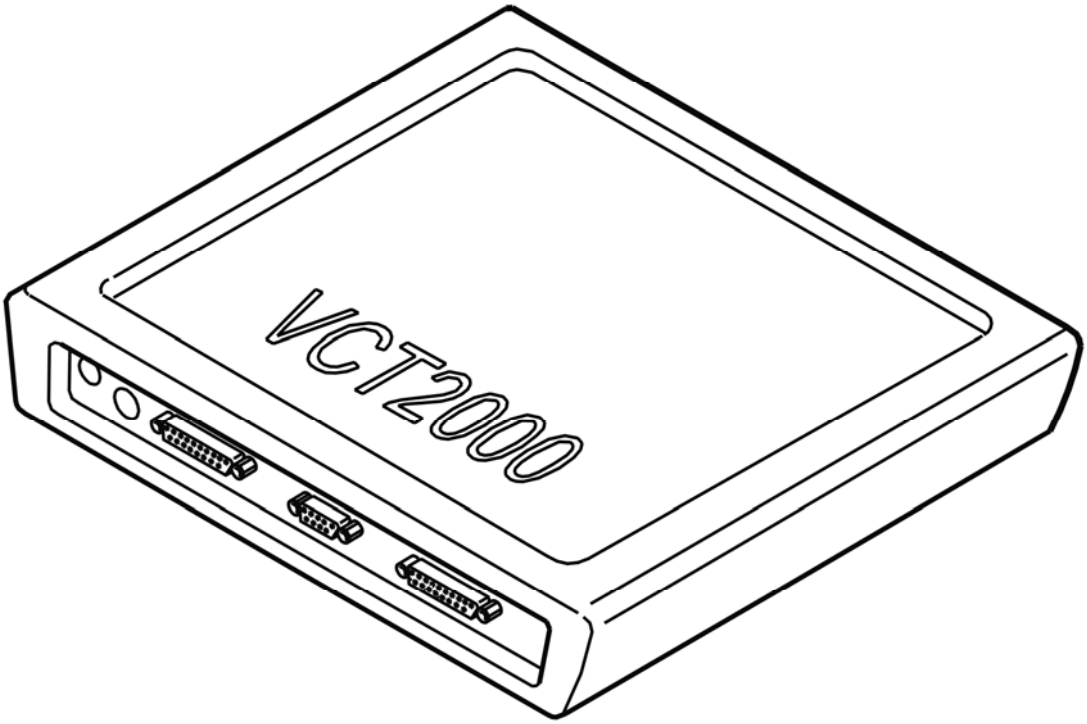

Fig. 97: Identifying Boost Pressure Sensor
Courtesy of VOLVO CARS CORPORATION

The engine control module (ECM) checks the signal from the boost pressure sensor.

The diagnostic trouble code (DTC) is stored if the signal from the boost pressure sensor is higher than a certain value for a certain amount of time. The diagnostic trouble code (DTC) can be diagnosed at ignition on and with the engine running.

Substitute Value

- Limited boost pressure.

Possible Source

- Contact resistance or oxidation in the terminals
- Short-circuit to supply voltage in the signal cable
- Open-circuit in the signal cable
- Open-circuit in the signal ground cable
- Damaged boost pressure sensor.

Fault symptom[s]

- Malfunction indicator lamp (MIL) lit
- Poor performance.

SIGNAL TOO HIGH

CHECKING COMPONENTS AND WIRING

- Check the boost pressure sensor connector. Check for contact resistance and oxidation.

  Check the signal cable between engine control module (ECM) terminal #A23 (#A23) and boost pressure sensor terminal #4. Check for a short-circuit to supply voltage. Check for an open-circuit.

  Check the ground lead between control module terminal #A60 (#A60) and boost pressure sensor terminal #1. Check for an open-circuit.

  Remedy as necessary.

  Other information:

  - see **CONNECTING THE BREAKOUT BOX**
  - For 5 cylinder turbocharged engines -2004, see **SIGNAL DESCRIPTION**
  - For 5 cylinder turbocharged engines 2005-, see **SIGNAL SPECIFICATION** .
  - For 6 cylinder engines -2004, see **SIGNAL SPECIFICATION**
  - For 6 cylinder engines 2005-, see **SIGNAL SPECIFICATION** .
  - For B5xx4T, see **TEMPERATURE AND PRESSURE SENSORS, REPLACING**
  - For B6xx4T, see **TEMPERATURE AND PRESSURE SENSORS, REPLACING**
  - see **CHECKING WIRING AND TERMINALS**

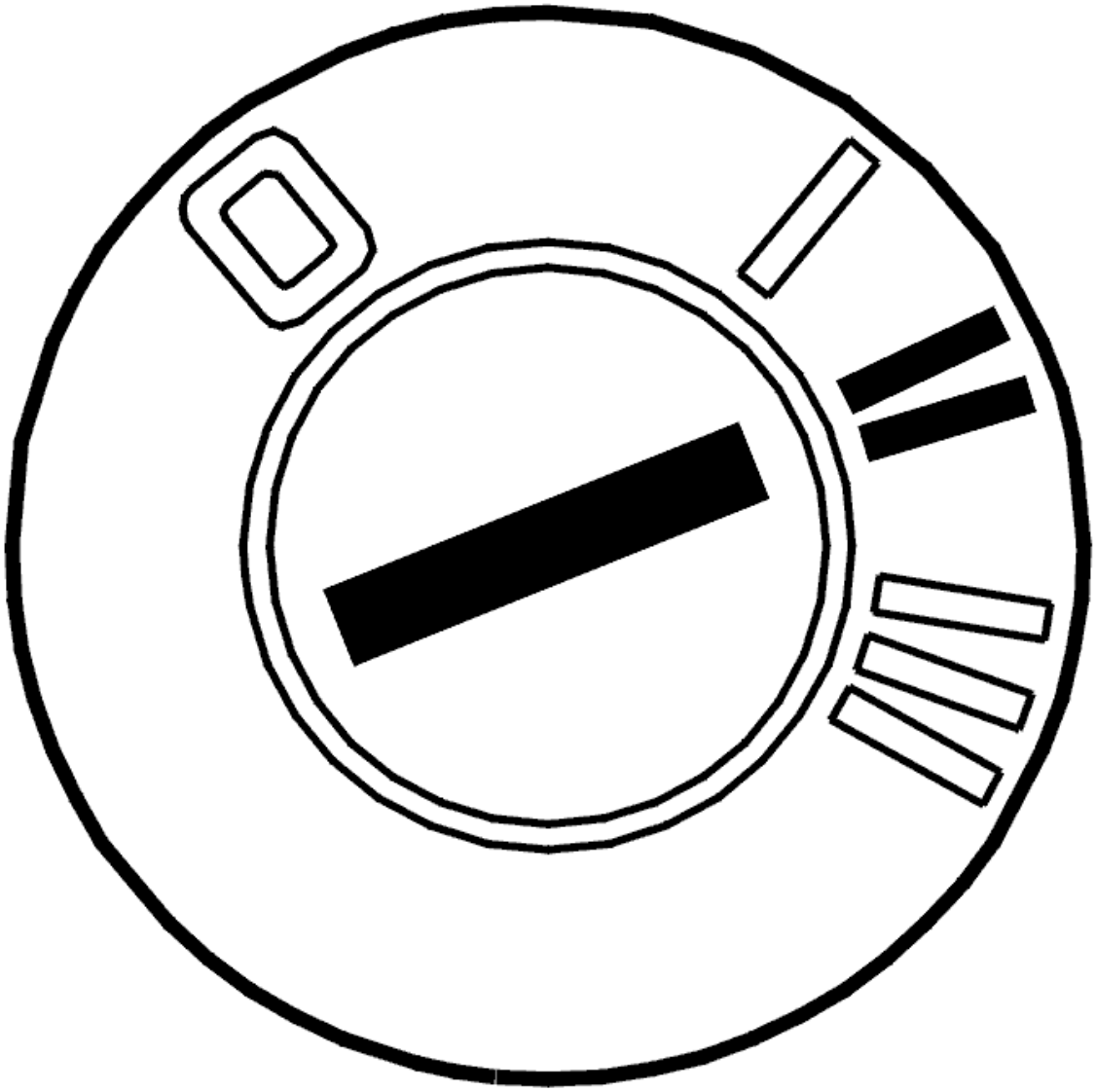

Fig. 98: Identifying 4-Bit Connector
Courtesy of VOLVO CARS CORPORATION

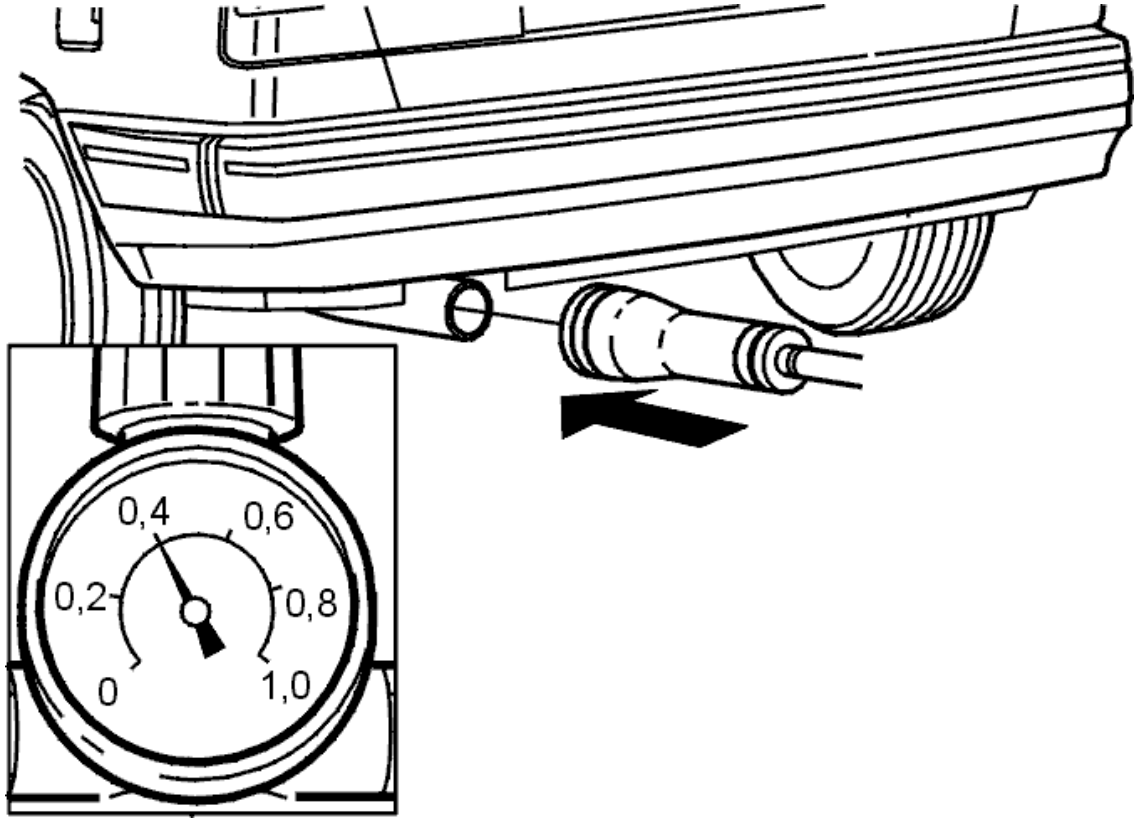

Fig. 99: Identifying VCT2000 Diagnostic Tool Symbol In VIDA
Courtesy of VOLVO CARS CORPORATION

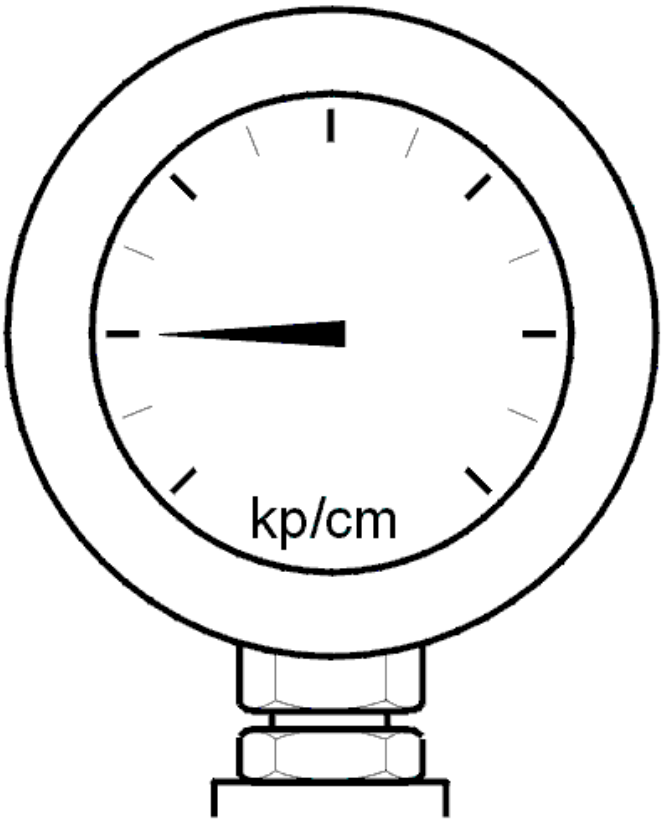

Fig. 100: Identifying Boost Pressure Sensor
Courtesy of VOLVO CARS CORPORATION

- **Continue**

  Refer to **VERIFICATION**

VERIFICATION

VERIFICATION

HINT: After carrying out the repair, check that the fault has been remedied.

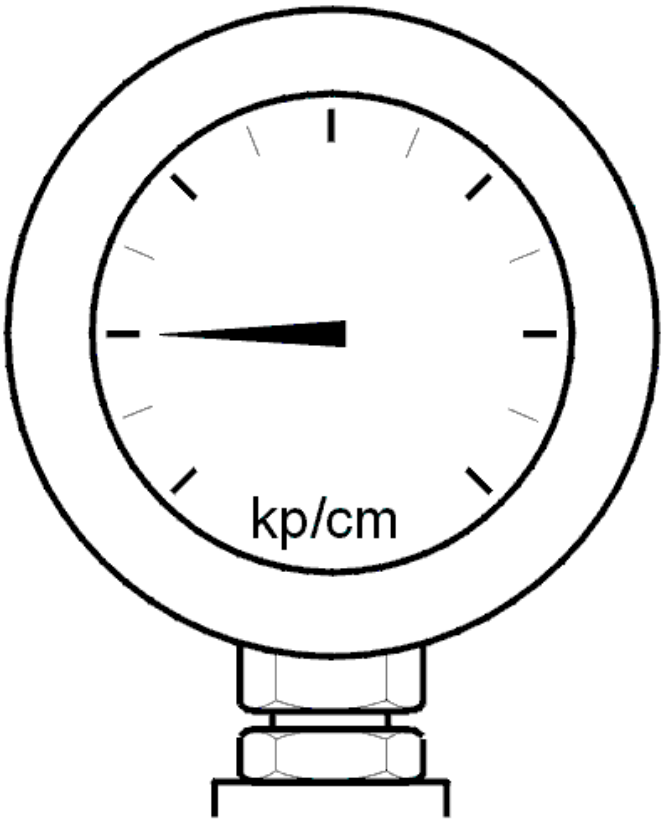

Fig. 101: Identifying Ignition ON
Courtesy of VOLVO CARS CORPORATION

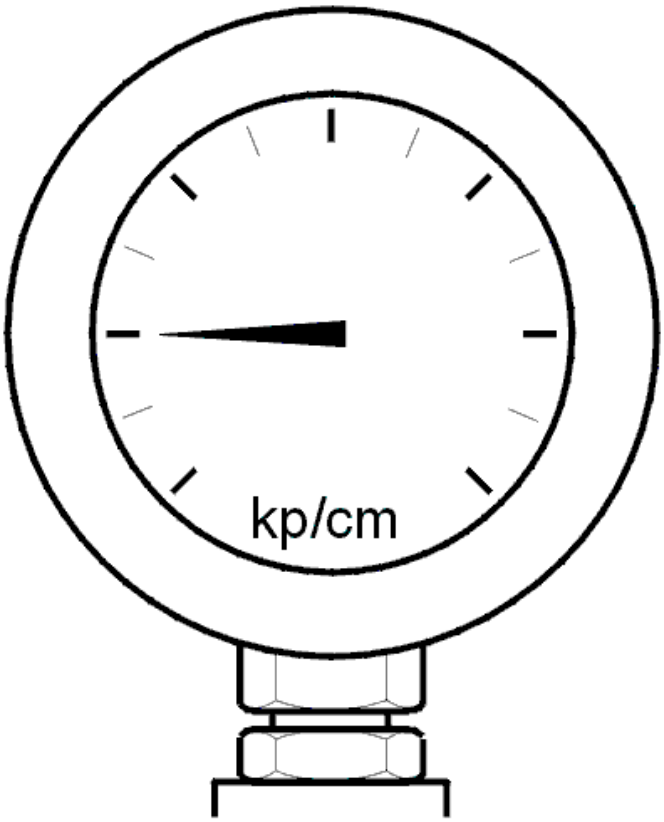

Fig. 102: Connecting Connector
Courtesy of VOLVO CARS CORPORATION

- Ignition off
- Reinstall the connectors, components etc.
- Ignition on
- Read off the boost pressure sensor pressure and atmospheric pressure sensor pressure
- The difference between the pressure sensors should not be greater than 140 hPa.

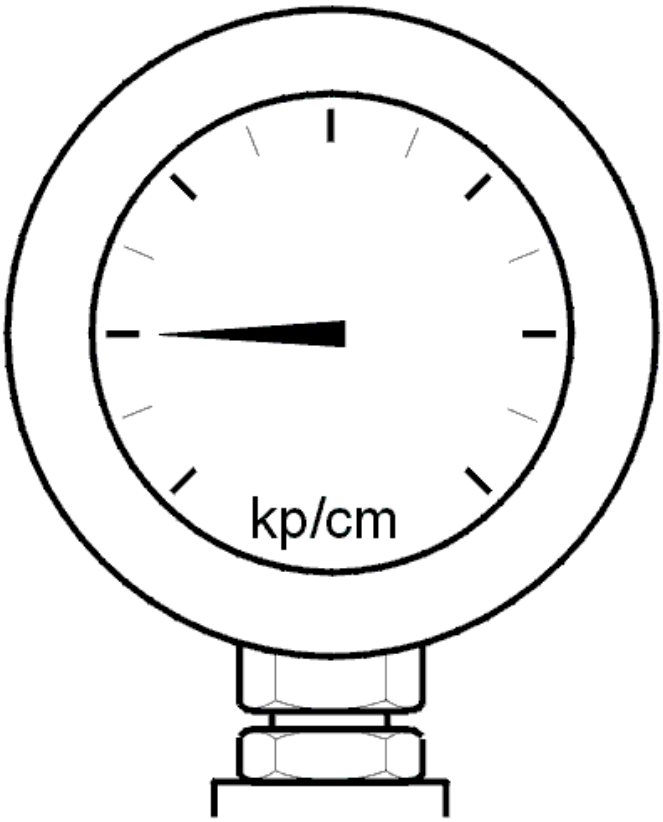

Fig. 103: Identifying VCT2000 Diagnostic Tool Symbol In VIDA
Courtesy of VOLVO CARS CORPORATION

Is the difference between the pressure sensors less than 140 hPa?

- **YES**

  VERIFIED: Troubleshooting has been completed.

- **NO**

  Refer to **INFORMATION**

INFORMATION

FAULT-TRACING INFORMATION

The fault should have been detected and remedied. As this is not the case fault-tracing has failed.

Exit fault-tracing for this diagnostic trouble code (DTC) or make another attempt.

ECM-125C: BOOST PRESSURE SENSOR. SIGNAL TOO HIGH (B6294T; 2005-2006)

DIAGNOSTIC TROUBLE CODE (DTC) INFORMATION ECM-125C

see **DIAGNOSTIC TROUBLE CODE (DTC) INFORMATION ECM-125C**

SIGNAL TOO HIGH

see **SIGNAL TOO HIGH**

ECM-125D: BOOST PRESSURE SENSOR. SIGNAL TOO LOW (B5254T2; 2005-2007)

DIAGNOSTIC TROUBLE CODE (DTC) INFORMATION ECM-125D

Condition

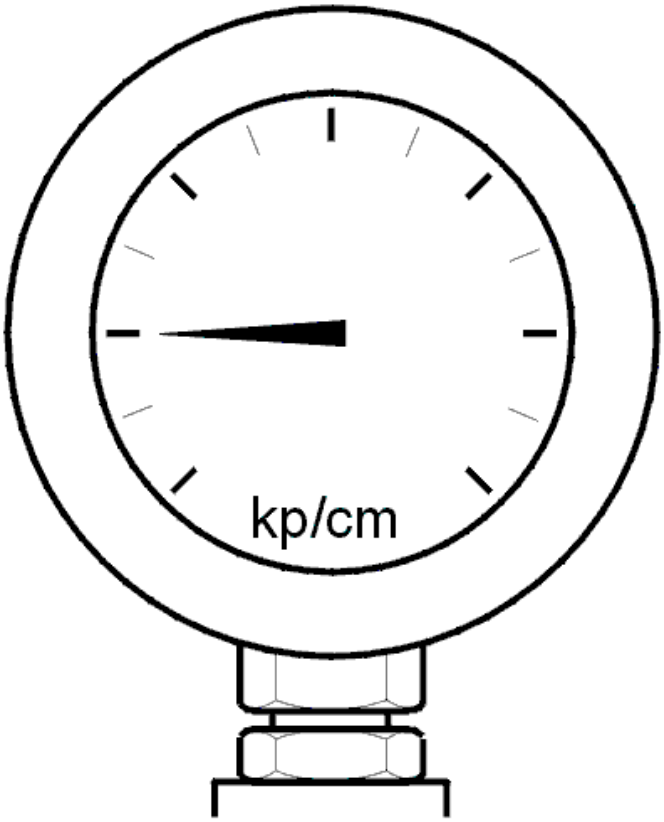

Fig. 104: Identifying Boost Pressure Sensor
Courtesy of VOLVO CARS CORPORATION

The engine control module (ECM) checks the signal from the boost pressure sensor.

The diagnostic trouble code (DTC) is stored if the signal from the boost pressure sensor is lower than a certain value for a certain amount of time. The diagnostic trouble code (DTC) can be diagnosed at ignition on and with the engine running.

Substitute Value

- Limited boost pressure.

Possible Source

- Contact resistance or oxidation in the terminals
- Short-circuit to ground in the signal cable
- Damaged boost pressure sensor.

Fault symptom[s]

- Malfunction indicator lamp (MIL) lit
- Poor performance.

SIGNAL TOO LOW / SIGNAL TOO HIGH

CHECKING COMPONENTS AND WIRING

- Check the boost pressure sensor connector. Check for contact resistance and oxidation.

  Check the signal cable between engine control module (ECM) terminal #A23 (#A23) and boost pressure sensor terminal #4. Check for a short-circuit to ground.

  Remedy as necessary.

  Other information:

  - see **CONNECTING THE BREAKOUT BOX**
  - For 5 cylinder turbocharged engines -2004, see **SIGNAL DESCRIPTION**
  - For 5 cylinder turbocharged engines 2005-, see **SIGNAL SPECIFICATION** .
  - For 6 cylinder engines -2004, see **SIGNAL SPECIFICATION**
  - For 6 cylinder engines 2005-, see **SIGNAL SPECIFICATION** .
  - For B5xx4T, see **TEMPERATURE AND PRESSURE SENSORS, REPLACING**
  - For B6xx4T, see **TEMPERATURE AND PRESSURE SENSORS, REPLACING**
  - see **CHECKING WIRING AND TERMINALS**

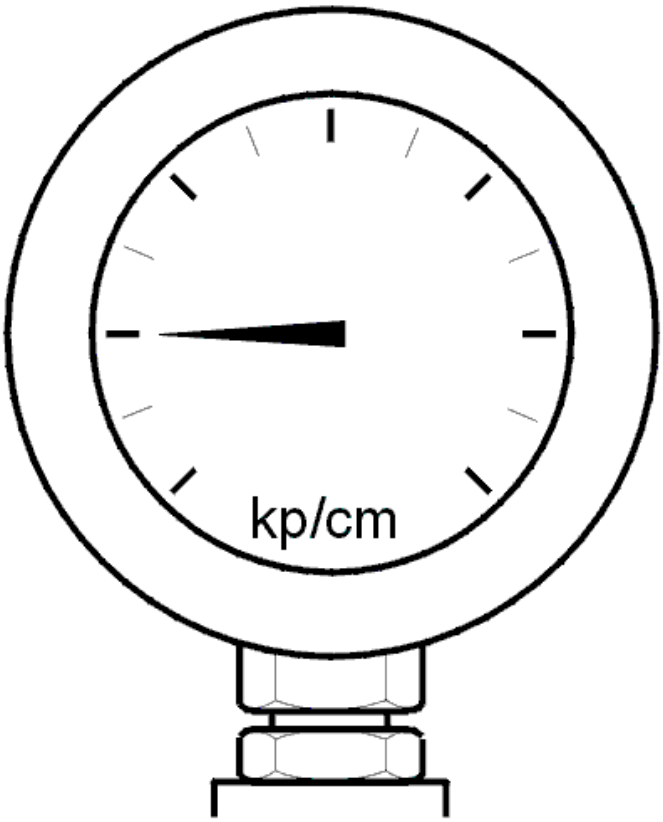

Fig. 105: Identifying 4-Bit Connector
Courtesy of VOLVO CARS CORPORATION

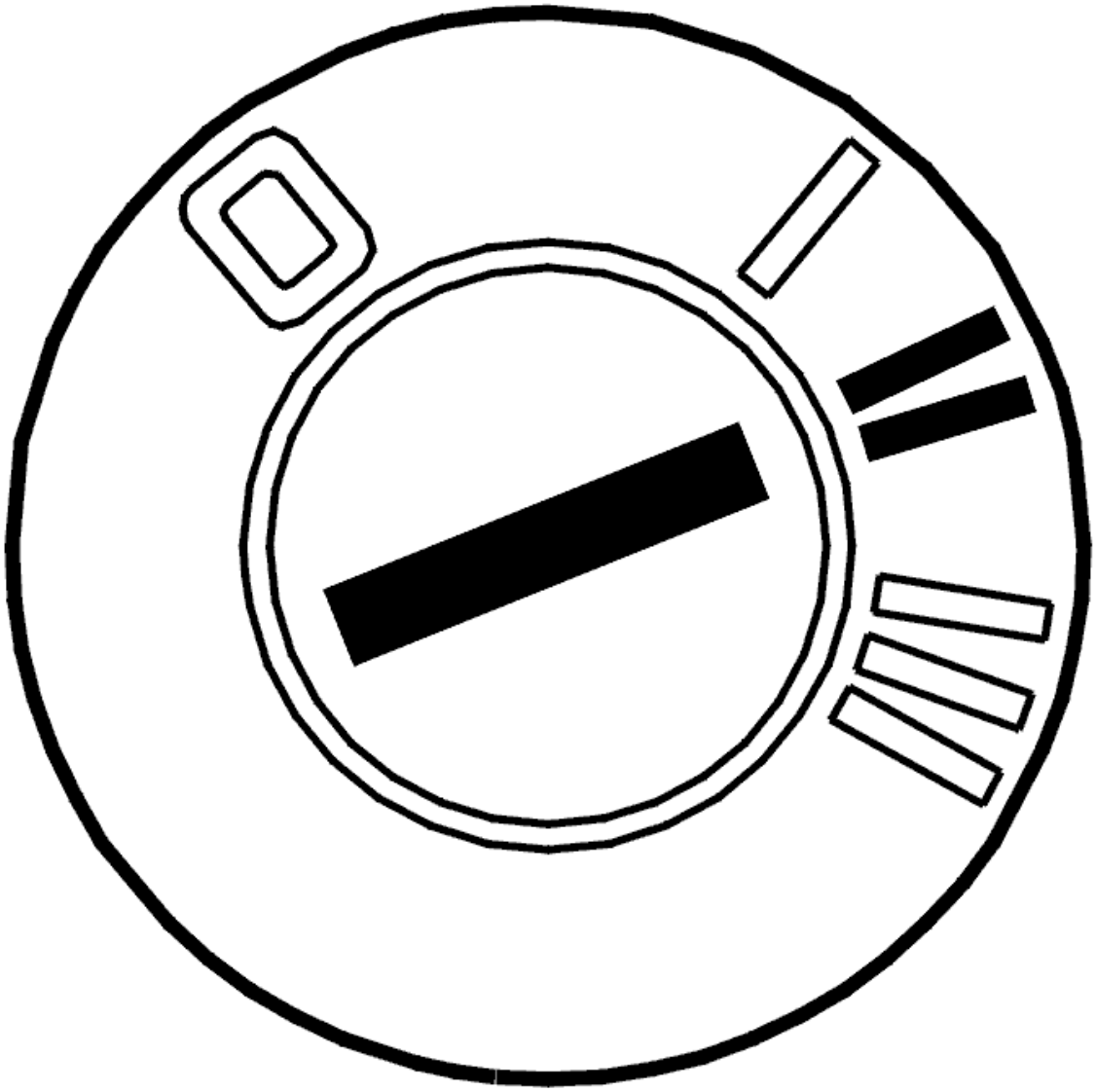

Fig. 106: Identifying VCT2000 Diagnostic Tool Symbol In VIDA
Courtesy of VOLVO CARS CORPORATION

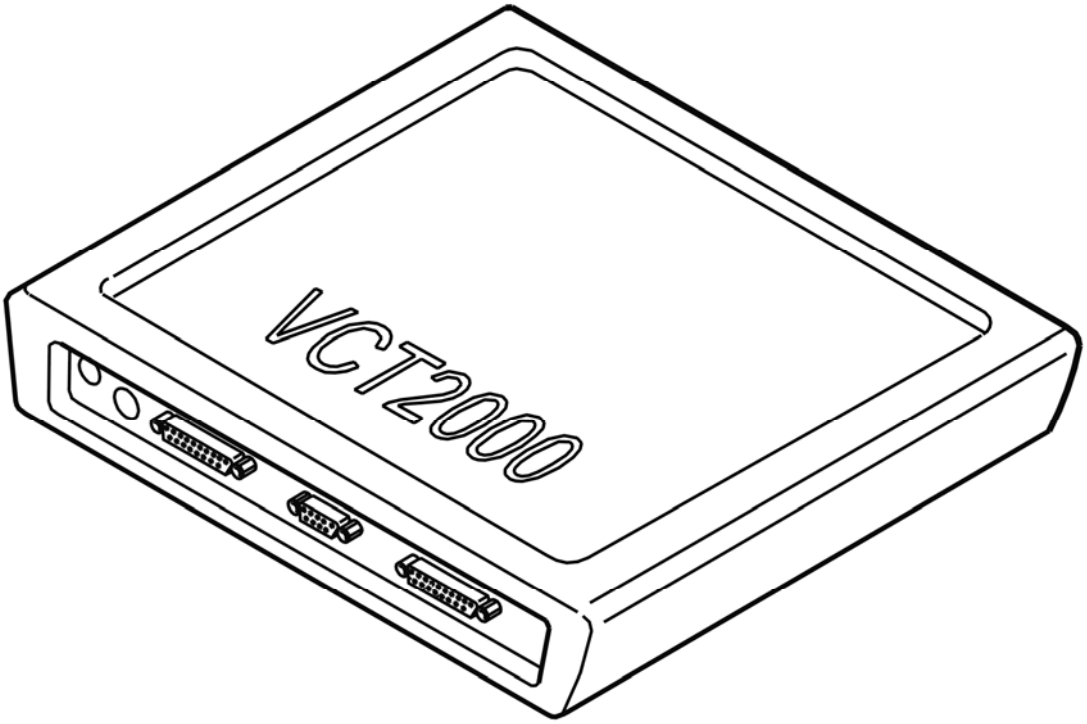

Fig. 107: Identifying Boost Pressure Sensor
Courtesy of VOLVO CARS CORPORATION

- **Continue**

  Refer to **VERIFICATION**

VERIFICATION

VERIFICATION

HINT: After carrying out the repair, check that the fault has been remedied.

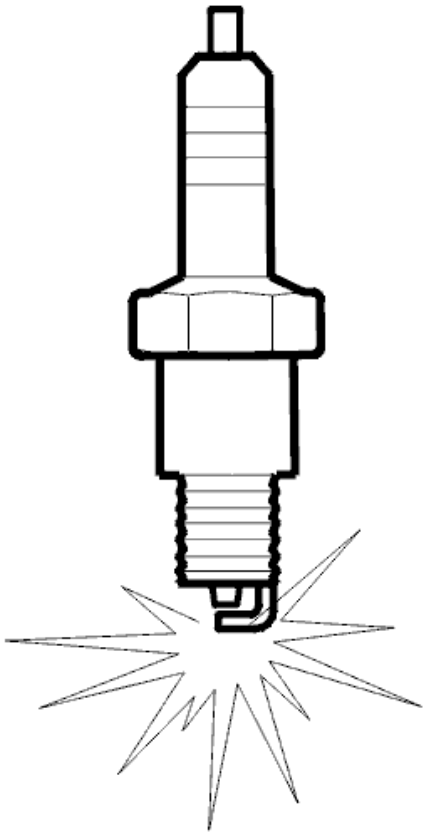

Fig. 108: Identifying Ignition ON
Courtesy of VOLVO CARS CORPORATION

Fig. 109: Connecting Connector
Courtesy of VOLVO CARS CORPORATION

- Ignition off
- Reinstall the connectors, components etc.
- Ignition on
- Read off the boost pressure sensor pressure and atmospheric pressure sensor pressure
- The difference between the pressure sensors should not be greater than 140 hPa.

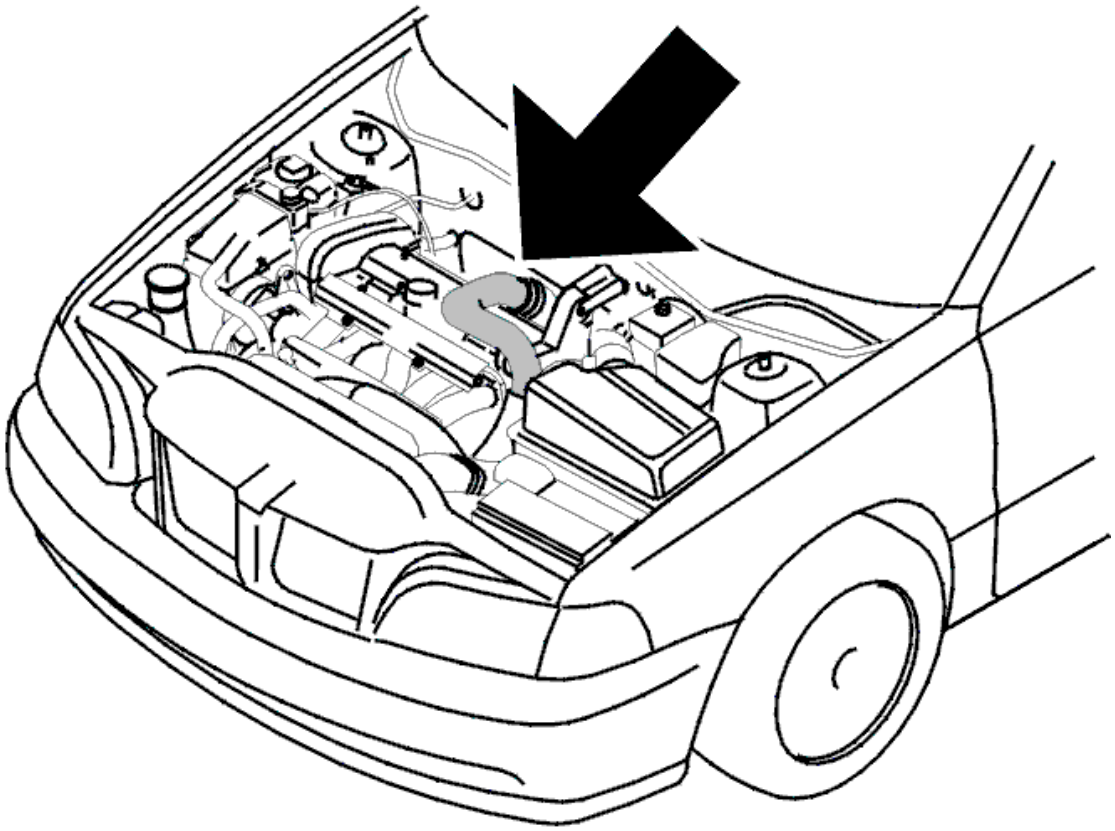

Fig. 110: Identifying VCT2000 Diagnostic Tool Symbol In VIDA
Courtesy of VOLVO CARS CORPORATION

Is the difference between the pressure sensors less than 140 hPa?

- **YES**

  VERIFIED: Troubleshooting has been completed.

- **NO**

  Refer to **INFORMATION**

INFORMATION

FAULT-TRACING INFORMATION

The fault should have been detected and remedied. As this is not the case fault-tracing has failed.

Exit fault-tracing for this diagnostic trouble code (DTC) or make another attempt.

ECM-125D: BOOST PRESSURE SENSOR. SIGNAL TOO LOW (B6294T; 2005-2006)

DIAGNOSTIC TROUBLE CODE (DTC) INFORMATION ECM-125D

see **DIAGNOSTIC TROUBLE CODE (DTC) INFORMATION ECM-125D**

SIGNAL TOO LOW / SIGNAL TOO HIGH

see **SIGNAL TOO LOW / SIGNAL TOO HIGH**

ECM-1260: BOOST PRESSURE SENSOR. FAULTY SIGNAL (B5254T2; 2005-2007)

DIAGNOSTIC TROUBLE CODE (DTC) INFORMATION ECM-1260

Condition

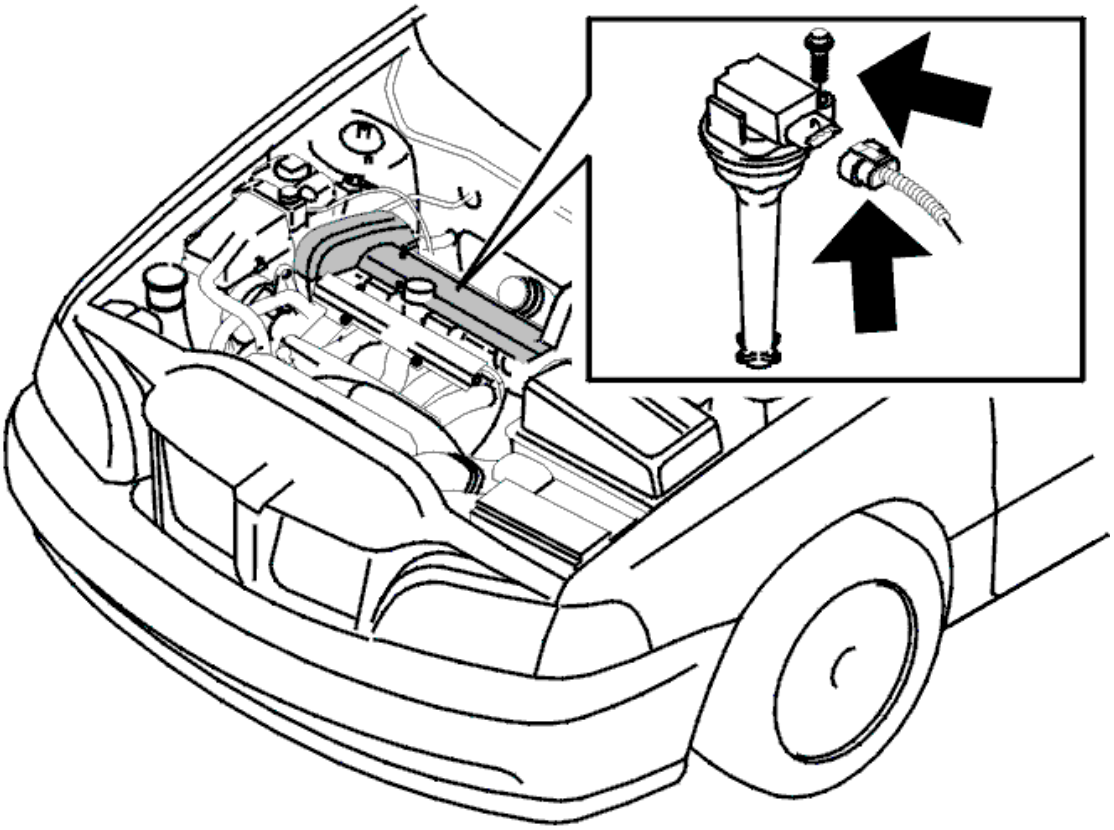

Fig. 111: Identifying Boost Pressure Sensor
Courtesy of VOLVO CARS CORPORATION

The engine control module (ECM) checks the signal from the boost pressure sensor.

The diagnostic trouble code (DTC) is stored if the boost pressure sensor signal is within its normal range is higher than a calculated value from the atmospheric pressure sensor.

The diagnostic trouble code (DTC) is diagnosed by the control module when the engine is running.

Substitute Value

- Limited boost pressure.

Possible Source

- Contact resistance or oxidation in the terminals
- Damaged boost pressure sensor.

Fault symptom[s]

- Malfunction indicator lamp (MIL) lit
- Poor performance.

FAULTY SIGNAL

CHECKING COMPONENTS AND WIRING

- Check the boost pressure sensor connector. Check for contact resistance and oxidation.

  HINT: The diagnostic trouble code (DTC) may be caused by a damaged boost pressure sensor.

  Remedy as necessary.

  Other information:

  - For B5xx4T, see **TEMPERATURE AND PRESSURE SENSORS, REPLACING**
  - For B6xx4T, see **TEMPERATURE AND PRESSURE SENSORS, REPLACING**
  - see **CHECKING WIRING AND TERMINALS**

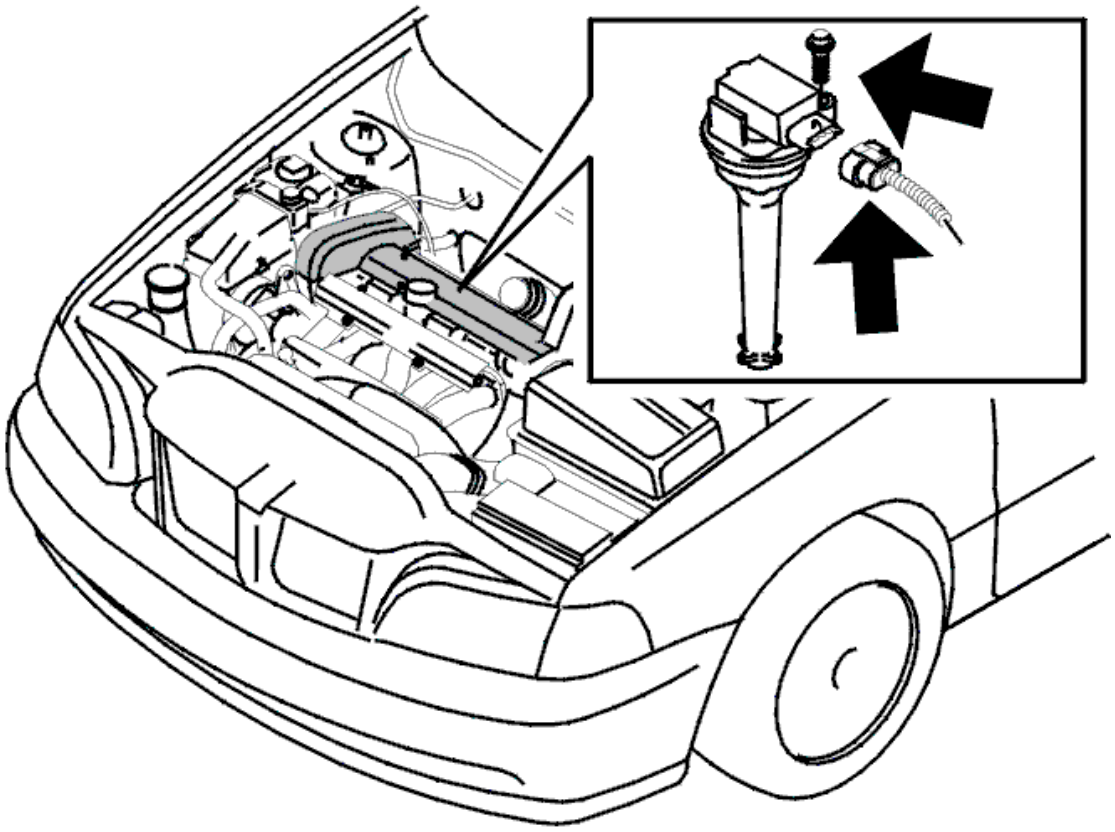

Fig. 112: Identifying 4-Bit Connector
Courtesy of VOLVO CARS CORPORATION

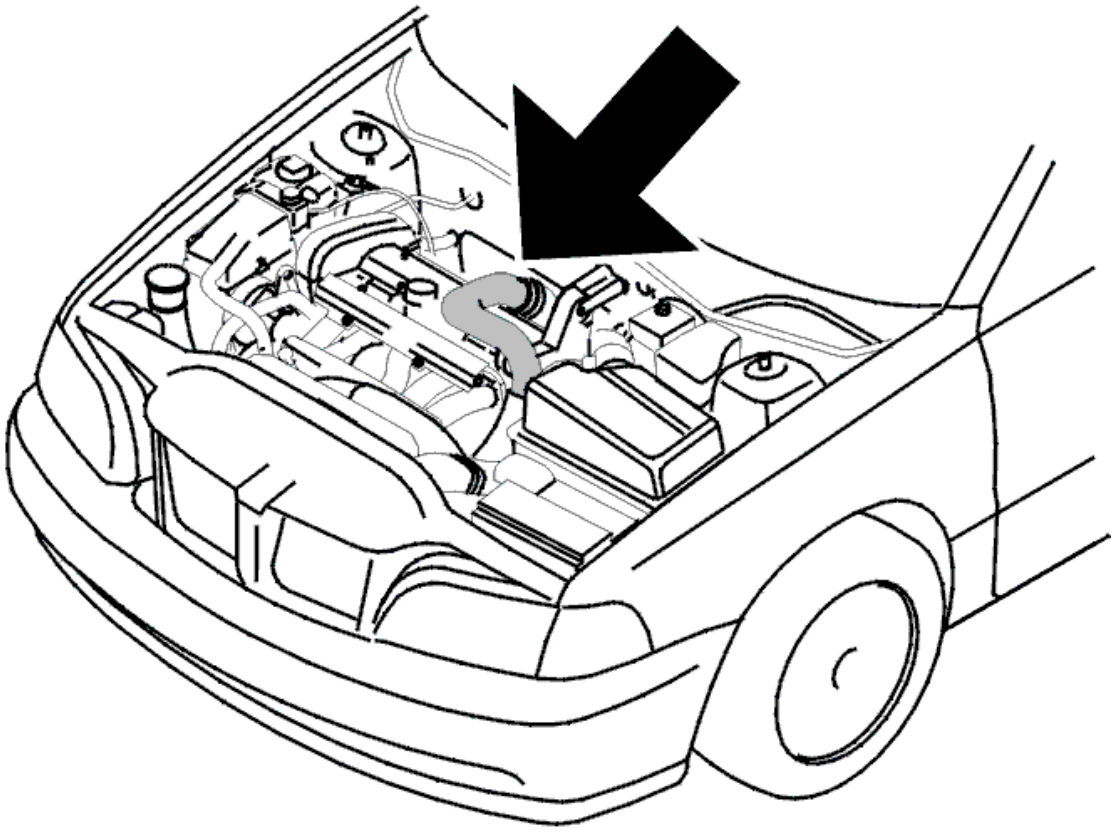

Fig. 113: Identifying VCT2000 Diagnostic Tool Symbol In VIDA
Courtesy of VOLVO CARS CORPORATION

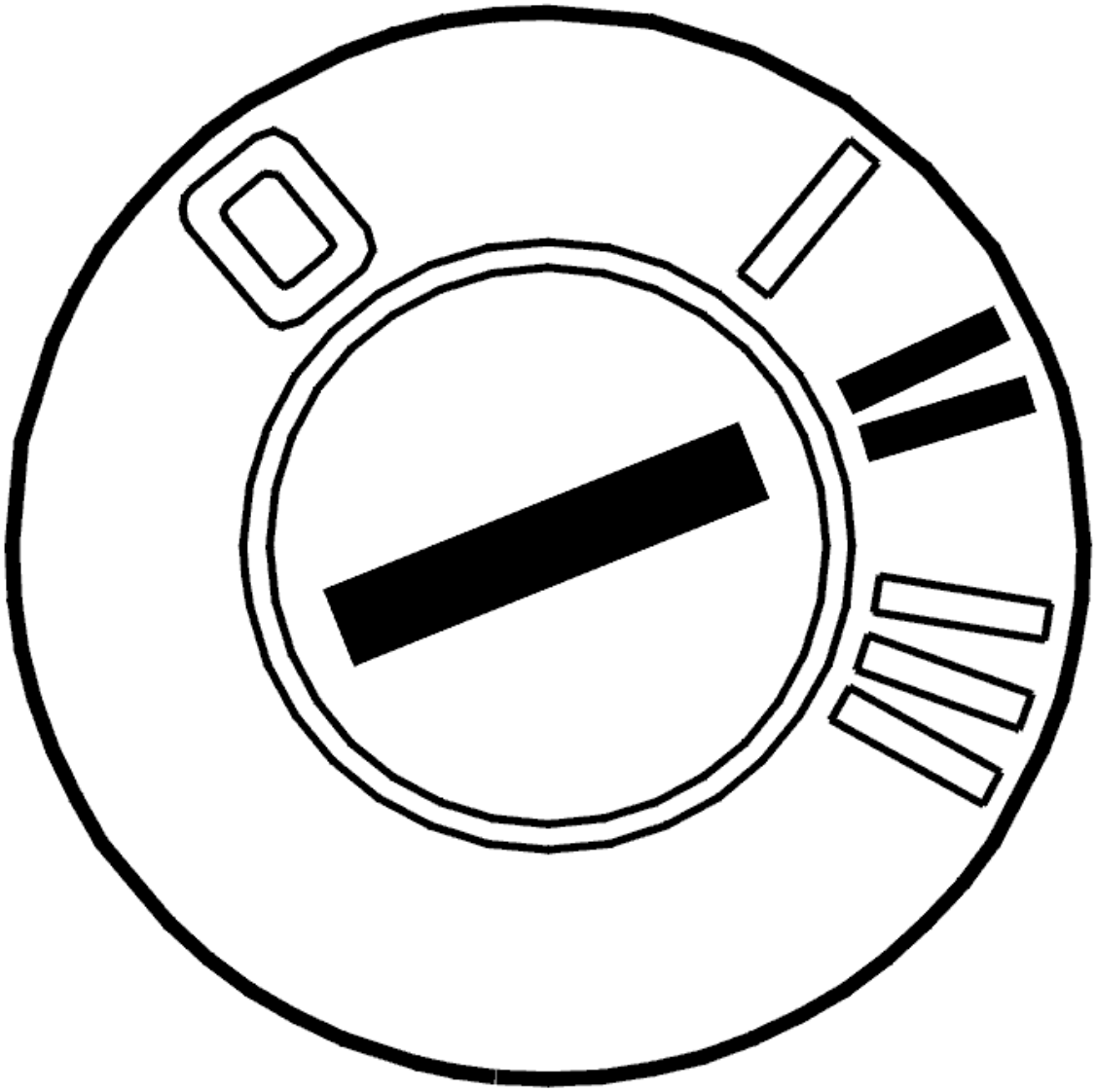

Fig. 114: Identifying Boost Pressure Sensor
Courtesy of VOLVO CARS CORPORATION

- **Continue**

  Refer to **VERIFICATION**

VERIFICATION

VERIFICATION

HINT: After carrying out the repair, check that the fault has been remedied.

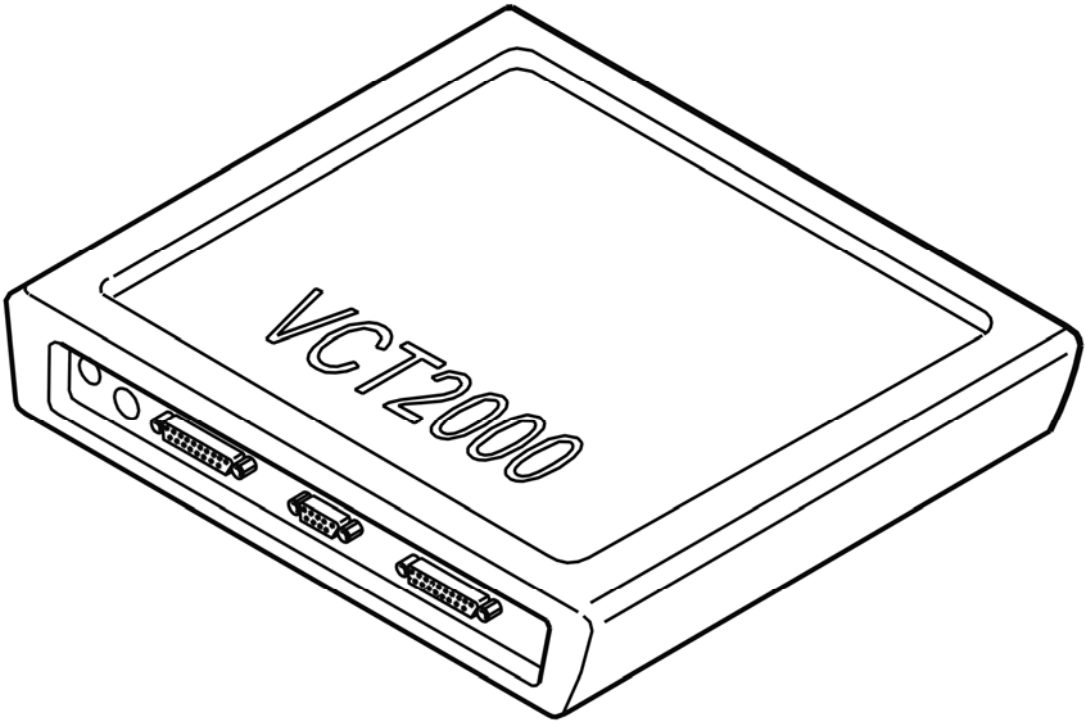

Fig. 115: Identifying Ignition ON
Courtesy of VOLVO CARS CORPORATION

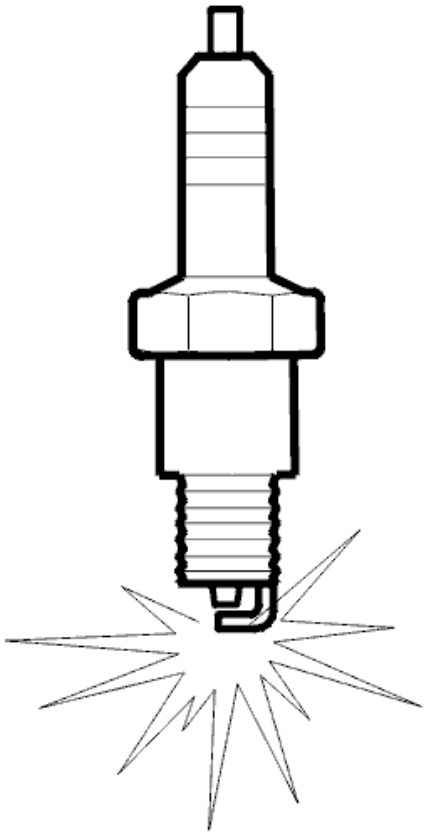

Fig. 116: Connecting Connector
Courtesy of VOLVO CARS CORPORATION

- Ignition off
- Reinstall the connectors, components etc.
- Ignition on
- Read off the boost pressure sensor pressure and atmospheric pressure sensor pressure
- The difference between the pressure sensors should not be greater than 140 hPa.

Fig. 117: Identifying VCT2000 Diagnostic Tool Symbol In VIDA
Courtesy of VOLVO CARS CORPORATION

Is the difference between the pressure sensors less than 140 hPa?

- **YES**

  VERIFIED: Troubleshooting has been completed.

- **NO**

  Refer to **INFORMATION**

INFORMATION

FAULT-TRACING INFORMATION

The fault should have been detected and remedied. As this is not the case fault-tracing has failed.

Exit fault-tracing for this diagnostic trouble code (DTC) or make another attempt.

ECM-1260: BOOST PRESSURE SENSOR. FAULTY SIGNAL (B6294T; 2005-2006)

DIAGNOSTIC TROUBLE CODE (DTC) INFORMATION ECM-1260

see **DIAGNOSTIC TROUBLE CODE (DTC) INFORMATION ECM-1260**

FAULTY SIGNAL

see **FAULTY SIGNAL**

ECM-126B: BOOST PRESSURE SENSOR. SIGNAL MISSING (B5254T2; 2005-2007)

DIAGNOSTIC TROUBLE CODE (DTC) INFORMATION ECM-126B

Condition

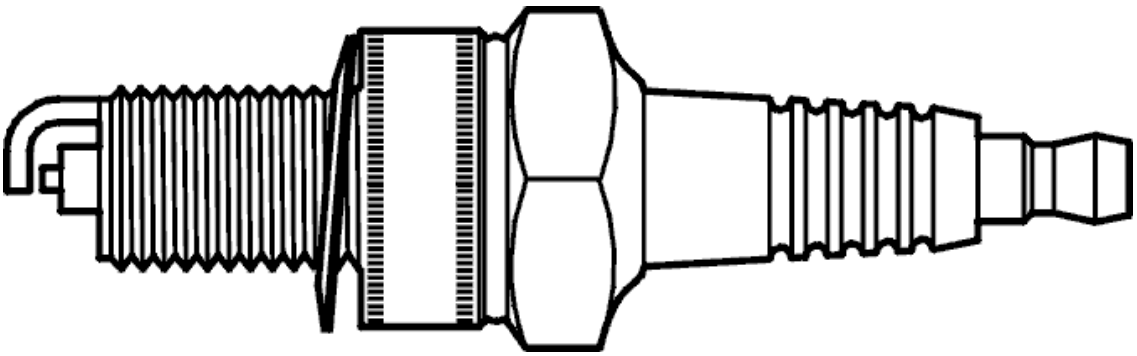

Fig. 118: Identifying Boost Pressure Sensor
Courtesy of VOLVO CARS CORPORATION

The engine control module (ECM) checks the signal from the boost pressure sensor.

The diagnostic trouble code (DTC) is stored if the boost pressure sensor signal is within its normal range but the signal is lower than a calculated value from the atmospheric pressure sensor.

The diagnostic trouble code (DTC) can be diagnosed at ignition on and with the engine running.

Substitute Value

- Limited boost pressure.

Possible Source

- Contact resistance or oxidation in the terminals
- Loose boost pressure sensor
- Damaged boost pressure sensor.

Fault symptom[s]

- Malfunction indicator lamp (MIL) lit
- Poor performance.

SIGNAL MISSING

CHECKING COMPONENTS AND WIRING

- Check the boost pressure sensor connector. Check for contact resistance and oxidation.

  Check that the boost pressure sensor is correctly installed and that there is no air leakage.

  HINT: The diagnostic trouble code (DTC) may be caused by a damaged boost pressure sensor.

  Remedy as necessary.

  Other information:

  - For B5xx4T, see **TEMPERATURE AND PRESSURE SENSORS, REPLACING**
  - For B6xx4T, see **TEMPERATURE AND PRESSURE SENSORS, REPLACING**
  - see **CHECKING WIRING AND TERMINALS**

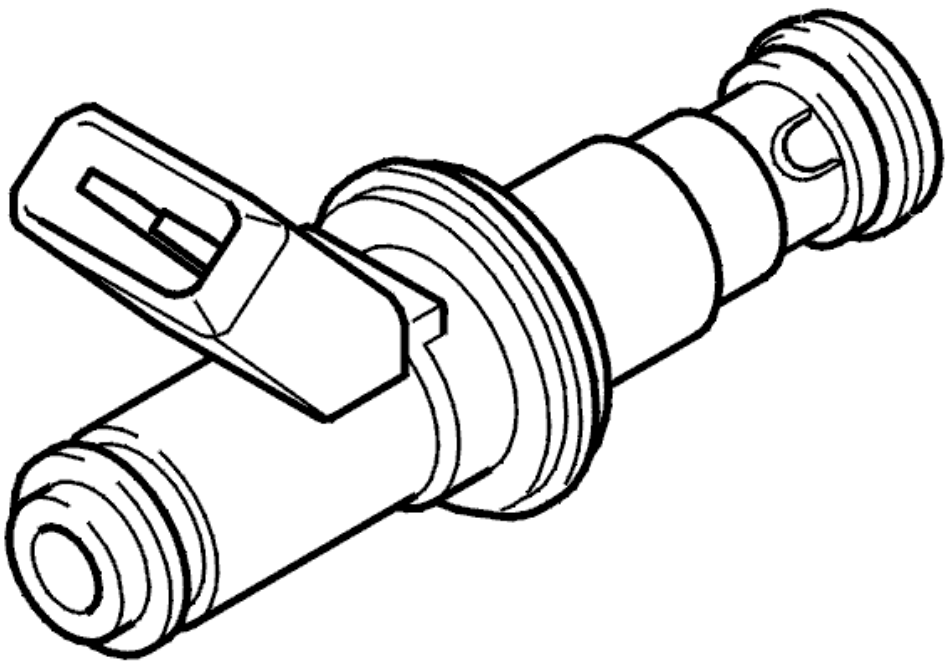

Fig. 119: Identifying 4-Bit Connector
Courtesy of VOLVO CARS CORPORATION

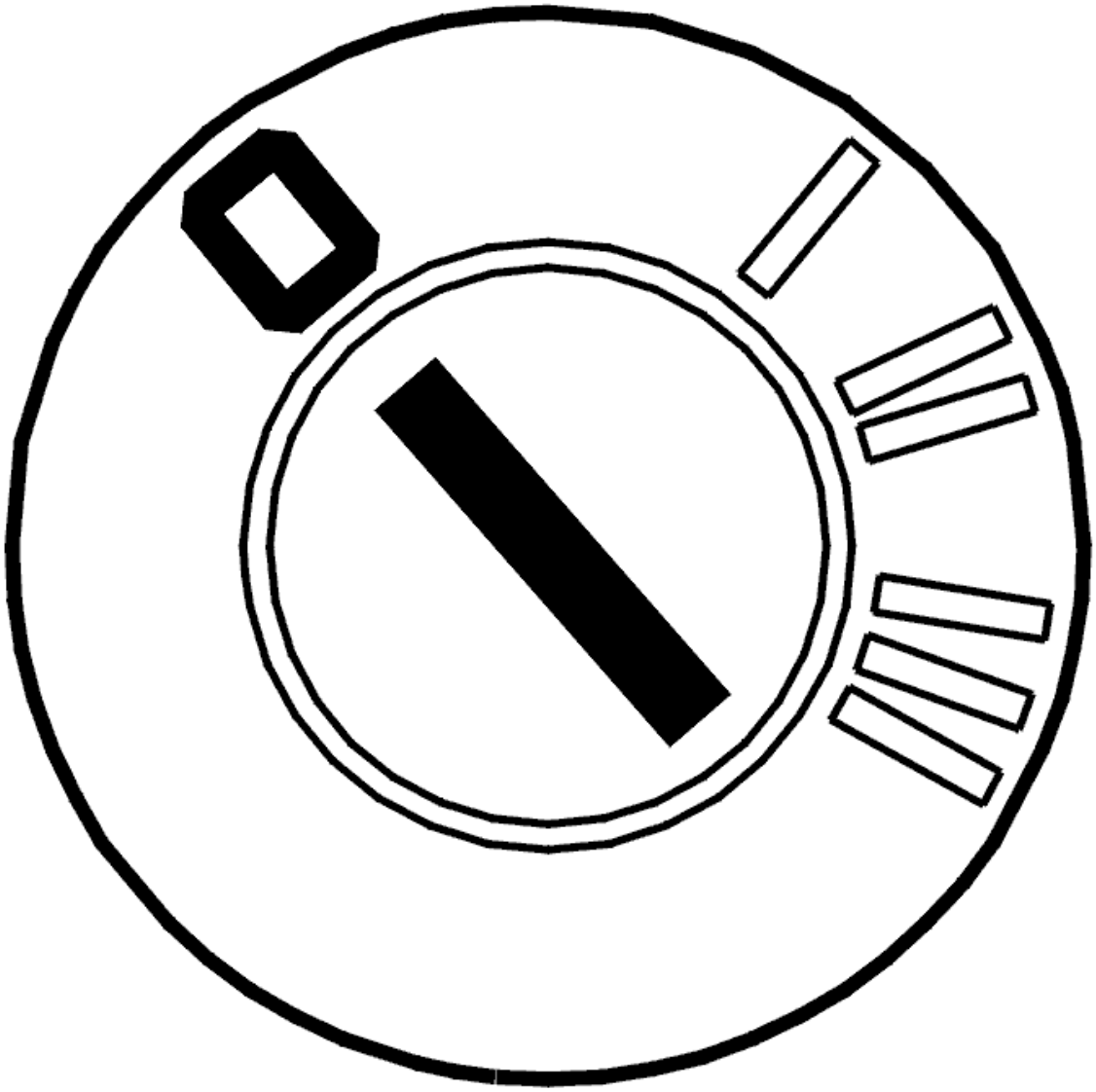

Fig. 120: Identifying VCT2000 Diagnostic Tool Symbol In VIDA
Courtesy of VOLVO CARS CORPORATION

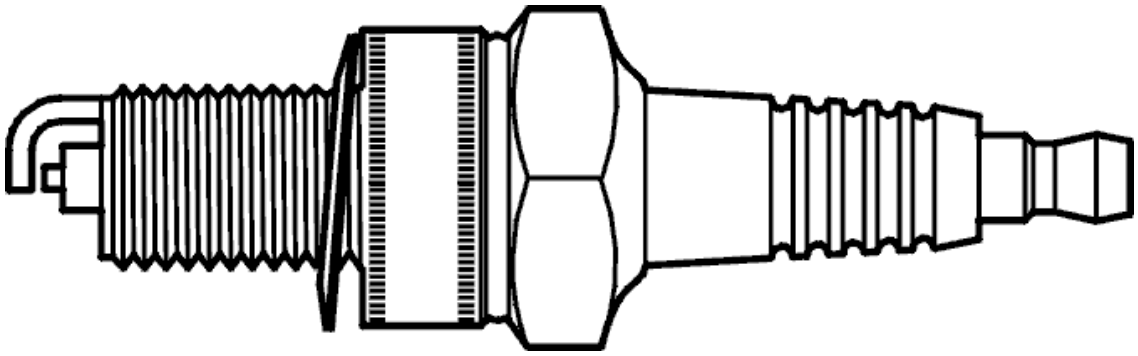

Fig. 121: Identifying Boost Pressure Sensor
Courtesy of VOLVO CARS CORPORATION

- **Continue**

  Refer to **VERIFICATION**

VERIFICATION

VERIFICATION

HINT: After carrying out the repair, check that the fault has been remedied.

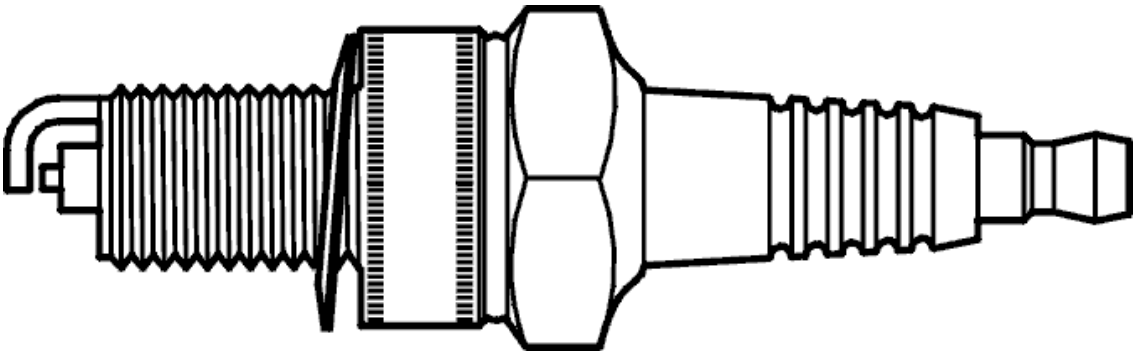

Fig. 122: Identifying Ignition ON
Courtesy of VOLVO CARS CORPORATION

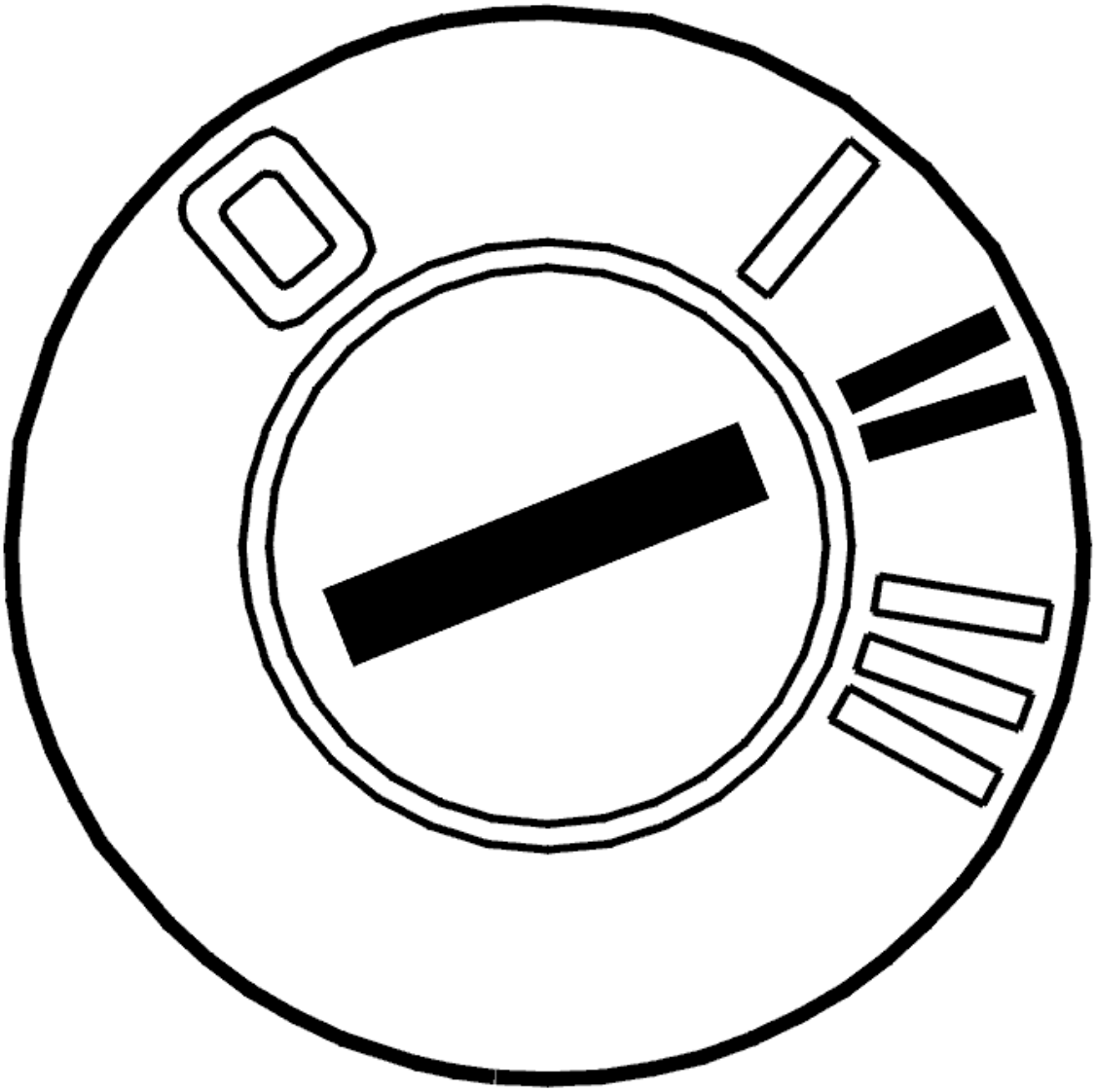

Fig. 123: Connecting Connector
Courtesy of VOLVO CARS CORPORATION

- Ignition off
- Reinstall the connectors, components etc.
- Ignition on
- Read off the boost pressure sensor pressure and atmospheric pressure sensor pressure
- The difference between the pressure sensors should not be greater than 140 hPa.

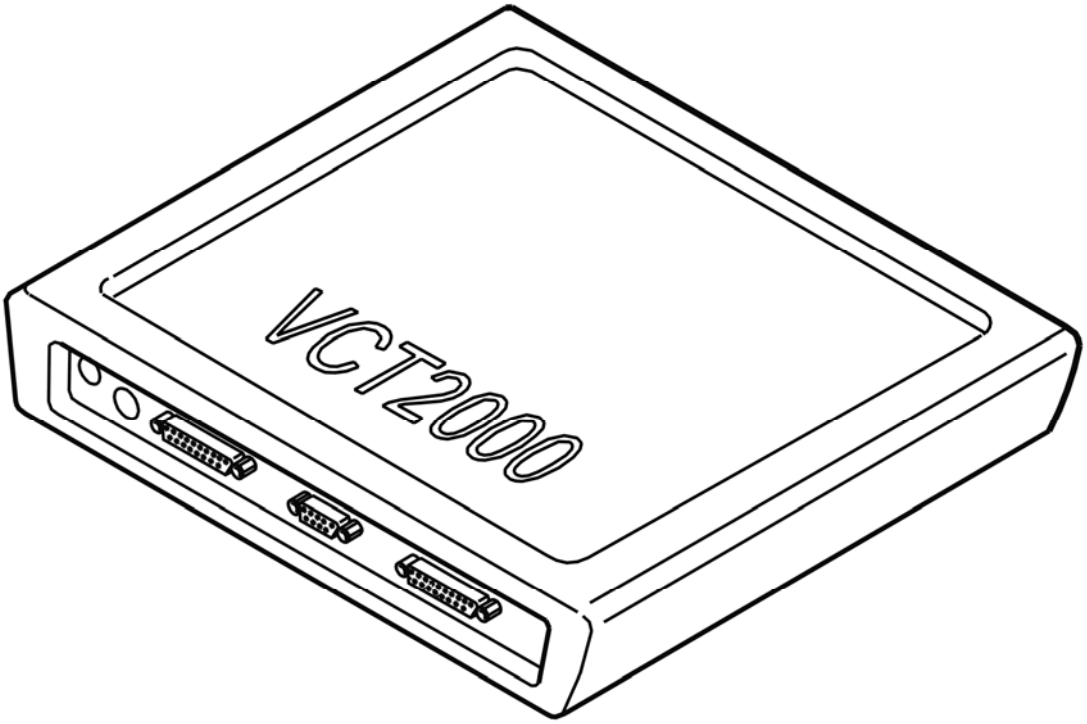

Fig. 124: Identifying VCT2000 Diagnostic Tool Symbol In VIDA
Courtesy of VOLVO CARS CORPORATION

Is the difference between the pressure sensors less than 140 hPa?

- **YES**

  VERIFIED: Troubleshooting has been completed.

- **NO**

  Refer to **INFORMATION**

INFORMATION

FAULT-TRACING INFORMATION

The fault should have been detected and remedied. As this is not the case fault-tracing has failed.

Exit fault-tracing for this diagnostic trouble code (DTC) or make another attempt.

ECM-126B: BOOST PRESSURE SENSOR. SIGNAL MISSING (B6294T; 2005-2006)

DIAGNOSTIC TROUBLE CODE (DTC) INFORMATION ECM-126B

see **DIAGNOSTIC TROUBLE CODE (DTC) INFORMATION ECM-126B**

SIGNAL MISSING

see **SIGNAL MISSING**

ECM-126C: BOOST PRESSURE SENSOR. SIGNAL TOO HIGH (B5254T2; 2005-2007)

DIAGNOSTIC TROUBLE CODE (DTC) INFORMATION ECM-126C

Condition

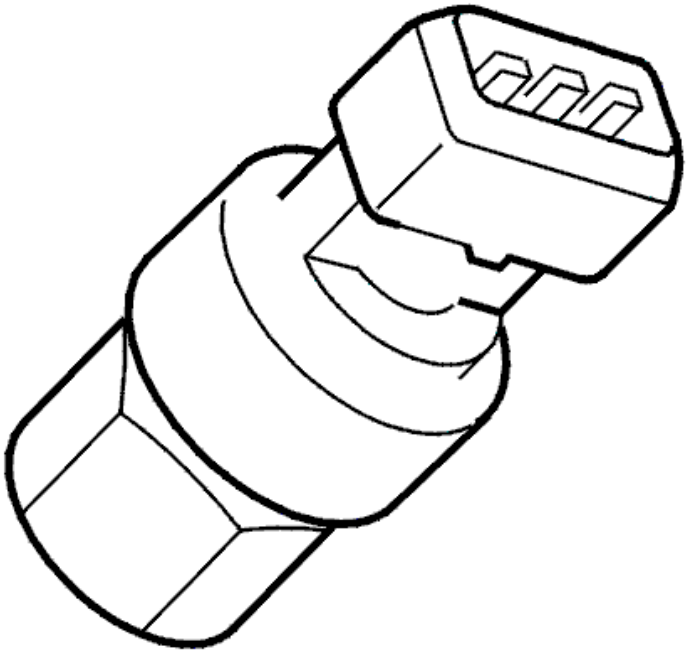

Fig. 125: Identifying Boost Pressure Sensor
Courtesy of VOLVO CARS CORPORATION

The engine control module (ECM) checks the signal from the boost pressure sensor.

The diagnostic trouble code (DTC) is stored if the signal from the boost pressure sensor is higher than a certain value for a certain amount of time. The diagnostic trouble code (DTC) can be diagnosed at ignition on and with the engine running.

Substitute Value

- Limited boost pressure.

Possible Source

- Contact resistance or oxidation in the terminals
- Short-circuit to supply voltage in the signal cable
- Open-circuit in the signal cable
- Open-circuit on signal ground cable
- Damaged boost pressure sensor.

Fault symptom[s]

- Malfunction indicator lamp (MIL) lit
- Poor performance.

SIGNAL TOO HIGH

see **SIGNAL TOO HIGH**

ECM-126C: BOOST PRESSURE SENSOR. SIGNAL TOO HIGH (B6294T; 2005-2006)

DIAGNOSTIC TROUBLE CODE (DTC) INFORMATION ECM-126C

see **DIAGNOSTIC TROUBLE CODE (DTC) INFORMATION ECM-126C**

SIGNAL TOO HIGH

see **SIGNAL TOO HIGH**

ECM-126D: BOOST PRESSURE SENSOR. SIGNAL TOO LOW (B5254T2; 2005-2007)

DIAGNOSTIC TROUBLE CODE (DTC) INFORMATION ECM-126D

Condition

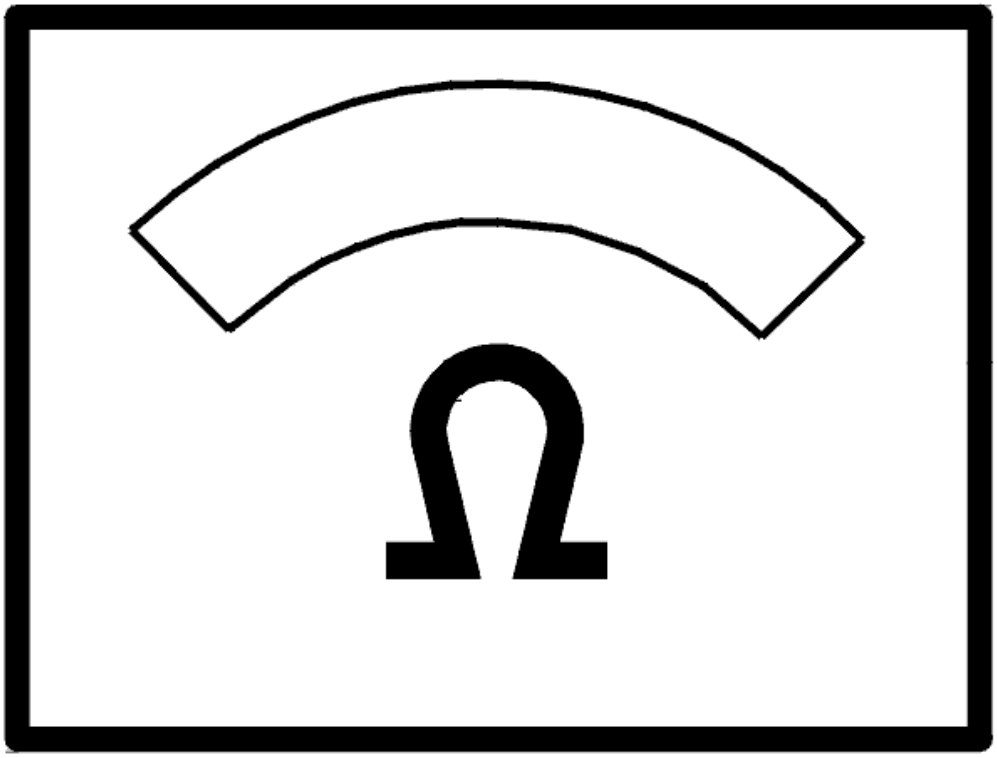

Fig. 126: Identifying Boost Pressure Sensor
Courtesy of VOLVO CARS CORPORATION

The engine control module (ECM) checks the signal from the boost pressure sensor.

The diagnostic trouble code (DTC) is stored if the signal from the boost pressure sensor is lower than a certain value for a certain amount of time. The diagnostic trouble code (DTC) can be diagnosed at ignition on and with the engine running.

Substitute Value

- Limited boost pressure.

Possible Source

- Contact resistance or oxidation in the terminals

- Short-circuit to ground in the signal cable
- Damaged boost pressure sensor.

Fault symptom[s]

- Malfunction indicator lamp (MIL) lit
- Poor performance.

SIGNAL TOO LOW / SIGNAL TOO HIGH

see **SIGNAL TOO LOW / SIGNAL TOO HIGH**

ECM-126D: BOOST PRESSURE SENSOR. SIGNAL TOO LOW (B6294T; 2005-2006)

DIAGNOSTIC TROUBLE CODE (DTC) INFORMATION ECM-126D

see **DIAGNOSTIC TROUBLE CODE (DTC) INFORMATION ECM-126D**

SIGNAL TOO LOW / SIGNAL TOO HIGH

see **SIGNAL TOO LOW / SIGNAL TOO HIGH**

ECM-1300: MASS AIR FLOW (MAF) SENSOR. FLOW TOO HIGH. INTERMITTENT FAULT (B5254T2; B6294T; 2003-2004)

DIAGNOSTIC TROUBLE CODE (DTC) INFORMATION ECM-1300

Condition

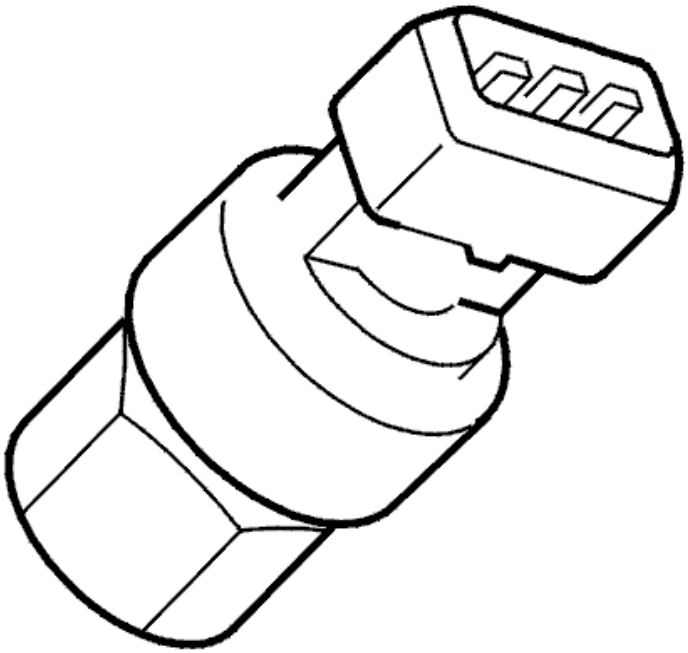

Fig. 127: Identifying Mass Air Flow (MAF) Sensor
Courtesy of VOLVO CARS CORPORATION

If the signal from the mass air flow sensor deviates in relation to the calculated air mass, the diagnostic trouble code is generated in the engine control module (ECM). Calculated air mass is based on throttle position and engine speed.

Substitute Value

- initial boost pressure
- rear heated oxygen sensor (HO2S) control shut off
- misfire diagnosis shut off

Possible Source

Flow too high:

- short-circuit to supply voltage in the signal cable
- open-circuit in the ground lead
- defective sensor

Flow too low:

- air leakage
- contact resistance
- Contaminated throttle body (TB).
- short-circuit to ground in the signal cable
- open-circuit in signal cable
- open-circuit in power supply cable
- defective sensor

Fault symptom[s]

- poor performance
- Uneven idle

FLOW TOO HIGH. INTERMITTENT FAULT

CHECKING CABLES AND CONNECTORS

Check signal cable between engine control module (ECM) #A22 (#A22) and mass air flow (MAF) sensor #5 for an intermittent short-circuit to supply voltage according to **SHORT-CIRCUIT TO SUPPLY VOLTAGE, INTERMITTENT FAULTS** .

Check power supply cable between engine control module (ECM) #A58 (#A58) and mass air flow (MAF) sensor #3 for an intermittent open-circuit according to **OPEN-CIRCUIT, INTERMITTENT FAULTS**

Other information

- Connecting the breakout box/accessing the control module, see **CONNECTING THE BREAKOUT BOX** .
- To access/replace the Mass Air Flow (MAF) sensor, see **MASS AIR FLOW (MAF) SENSOR, REPLACING** .
- With the ignition on and mass air flow (MAF) sensor connector connected the voltage at mass air flow (MAF) sensor #2 should be approximately U_{bat} , mass air flow (MAF) sensor #3 should be ground and mass air flow (MAF) sensor #5 should be approximately 1 volt.
- For 5 cylinder turbocharged engines -2004, see **SIGNAL DESCRIPTION**
- For 5 cylinder turbocharged engines 2005-, see **SIGNAL SPECIFICATION** .
- For 6 cylinder engines -2004, see **SIGNAL SPECIFICATION**
- For 6 cylinder engines 2005-, see **SIGNAL SPECIFICATION** .

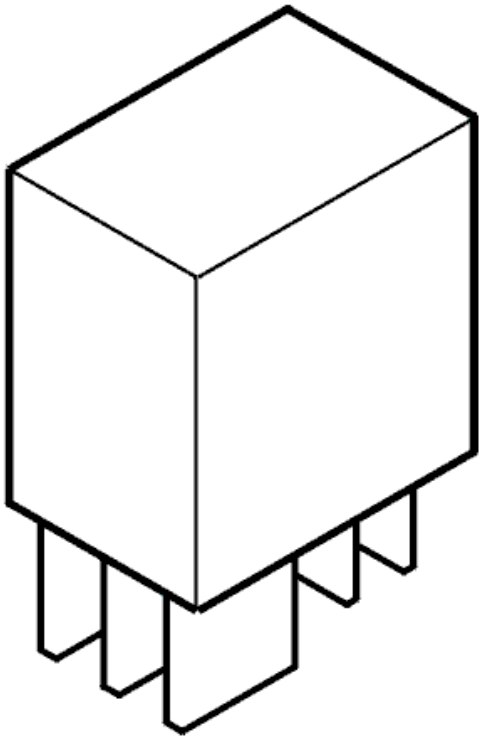

Fig. 128: Identifying Connector
Courtesy of VOLVO CARS CORPORATION

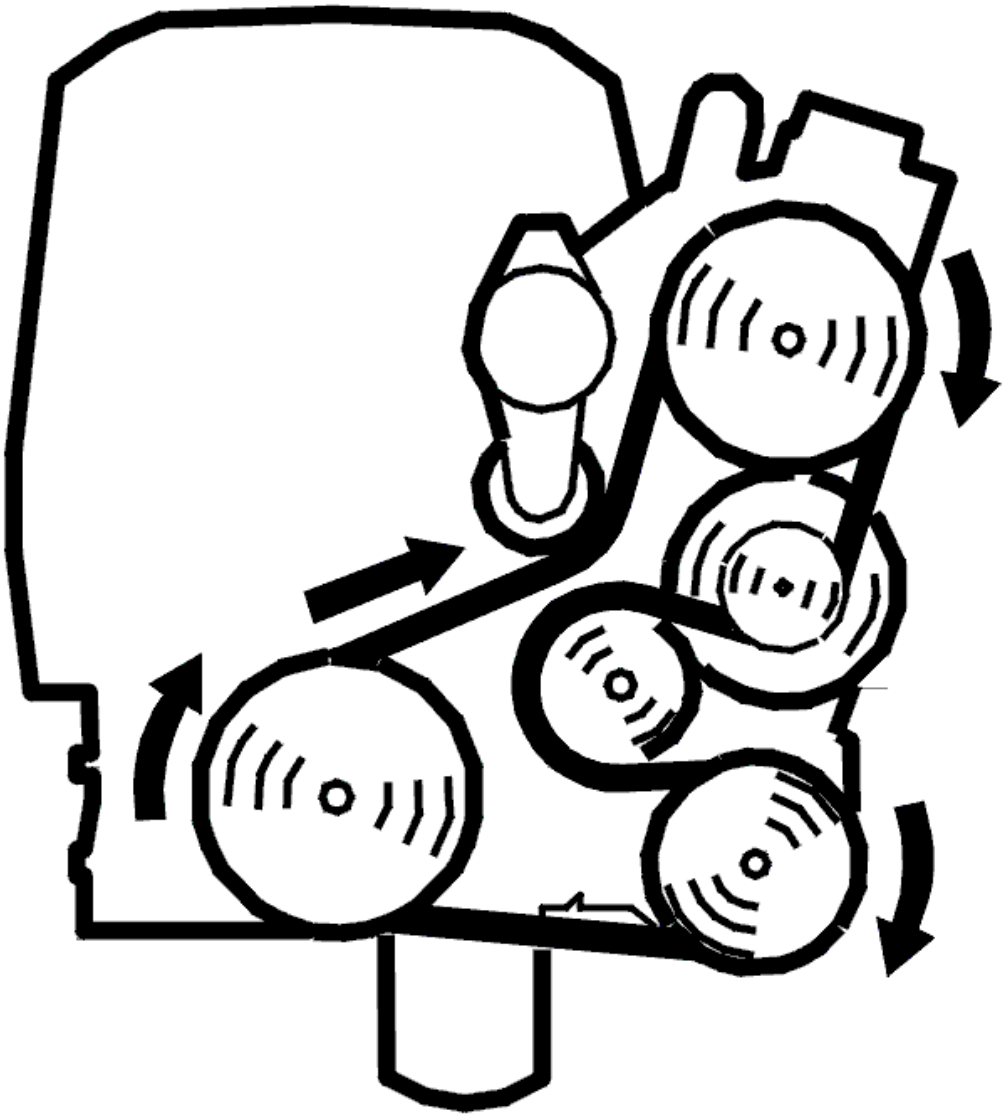

Fig. 129: Identifying Ohm Meter
Courtesy of VOLVO CARS CORPORATION

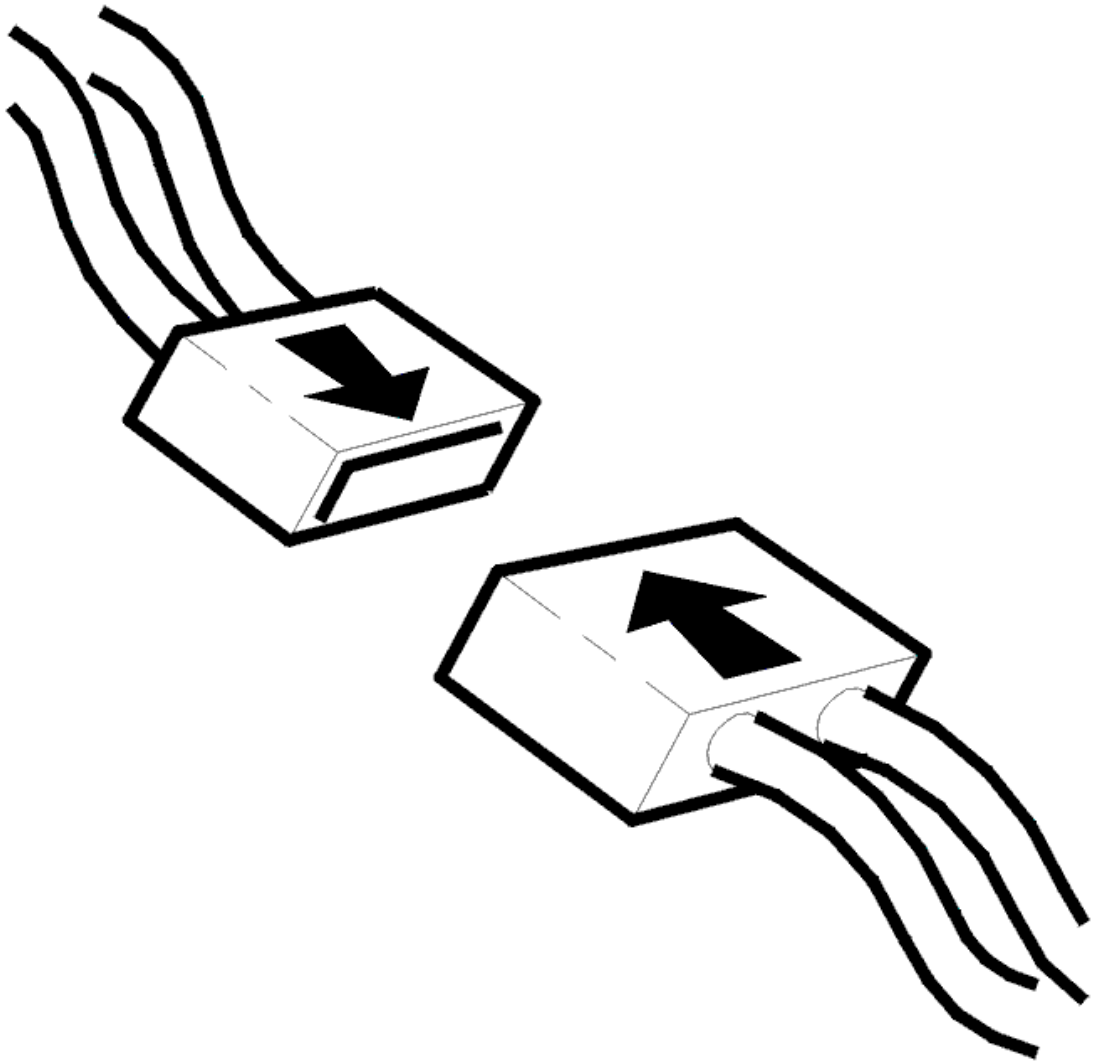

Fig. 130: Identifying Mass Air Flow (MAF) Sensor
Courtesy of VOLVO CARS CORPORATION

- **Continue**

  Refer to **INFORMATION**

INFORMATION

FAULT-TRACING INFORMATION

If the fault is intermittent, do not verify fault-tracing if the fault does not recur.

It is possible to view the information again, or leave fault-tracing for this diagnostic trouble code (DTC).

ECM-1300: MASS AIR FLOW (MAF) SENSOR. FLOW TOO HIGH.

PERMANENT FAULT (B5254T2; B6294T; 2003-2004)

DIAGNOSTIC TROUBLE CODE (DTC) INFORMATION ECM-1300

see **DIAGNOSTIC TROUBLE CODE (DTC) INFORMATION ECM-1300**

FLOW TOO HIGH. PERMANENT FAULT

CHECKING CABLES

Check the cable between engine control module (ECM) #A22 (#A22) and mass air flow (MAF) sensor #5 for a short-circuit to supply voltage according to **SHORT-CIRCUIT TO SUPPLY VOLTAGE. PERMANENT FAULTS** .

Check the ground lead between #A58 (#A58) and mass air flow (MAF) sensor #3 for an open-circuit according to **OPEN-CIRCUIT, PERMANENT FAULTS**

Remedy as necessary

Other information:

- Connecting the breakout box/accessing the control module, see **CONNECTING THE BREAKOUT BOX** .
- To access/replace the Mass Air Flow (MAF) sensor, see **MASS AIR FLOW (MAF) SENSOR, REPLACING** .
- With the ignition on and the mass air flow (MAF) sensor connector connected the voltage at mass air flow (MAF) sensor #2 should be approximately U_{batt} , mass air flow (MAF) sensor #3 should be ground and mass air flow (MAF) sensor #5 should be approximately 1 V.
- For 5 cylinder turbocharged engines -2004, see **SIGNAL DESCRIPTION**
- For 5 cylinder turbocharged engines 2005-, see **SIGNAL SPECIFICATION** .
- For 6 cylinder engines -2004, see **SIGNAL SPECIFICATION**
- For 6 cylinder engines 2005-, see **SIGNAL SPECIFICATION** .

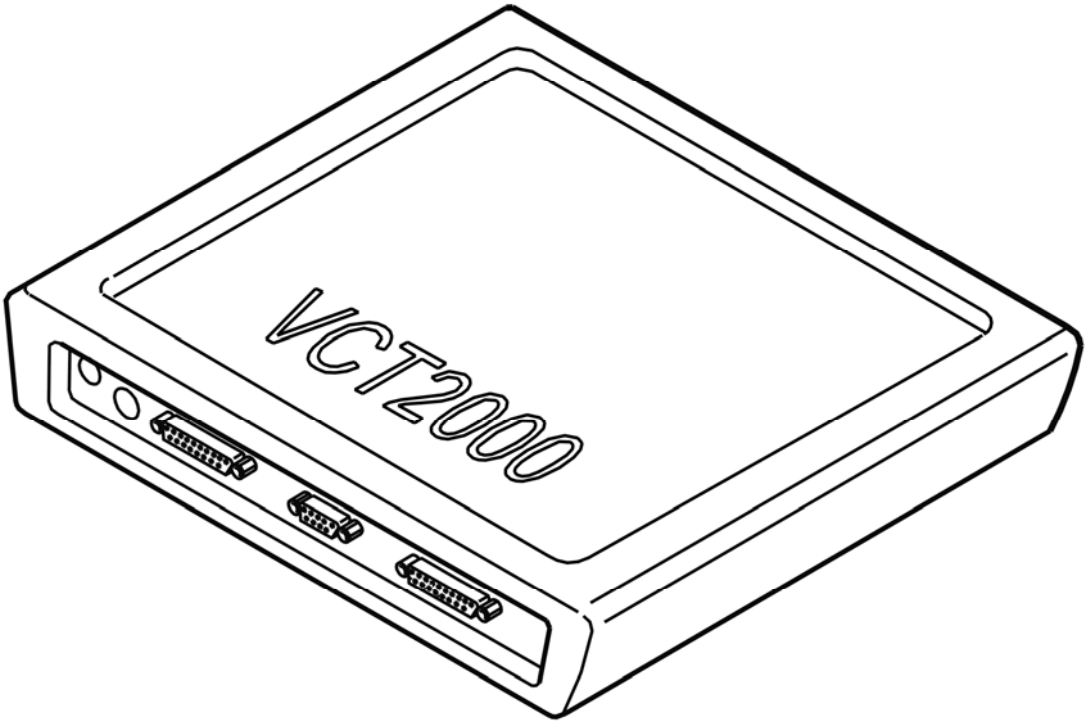

Fig. 131: Identifying Connector
Courtesy of VOLVO CARS CORPORATION

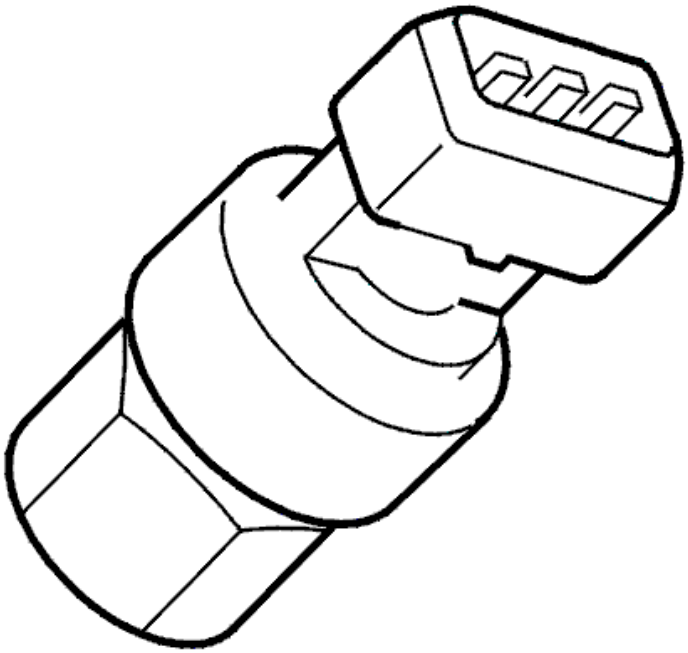

Fig. 132: Identifying Ohm Meter
Courtesy of VOLVO CARS CORPORATION

Fig. 133: Identifying Mass Air Flow (MAF) Sensor
Courtesy of VOLVO CARS CORPORATION

- **Continue**

  Refer to **VERIFICATION**

VERIFICATION

VERIFICATION

HINT: After carrying out the repair, check that the fault has been remedied.

Fig. 134: Belt Routing / Engine Idling - Volvo
Courtesy of VOLVO CARS CORPORATION

Fig. 135: Connecting Connector
Courtesy of VOLVO CARS CORPORATION

- Ignition off
- Reinstall the connectors, components etc.
- Ignition on
- Check that the air flow is correct. The value must be approximately 0 kg/h with the engine switched off
- Start the engine. Read off the air flow. The value may vary by between 12-20 kg/h at idle speed, depending on the engine load and temperature. The value may be in excess of 20 kg/h if the engine is cold
- Increase the engine speed (RPM) and check that the air flow increases with increased engine speed.

Fig. 136: Identifying VCT2000 Diagnostic Tool Symbol In VIDA
Courtesy of VOLVO CARS CORPORATION

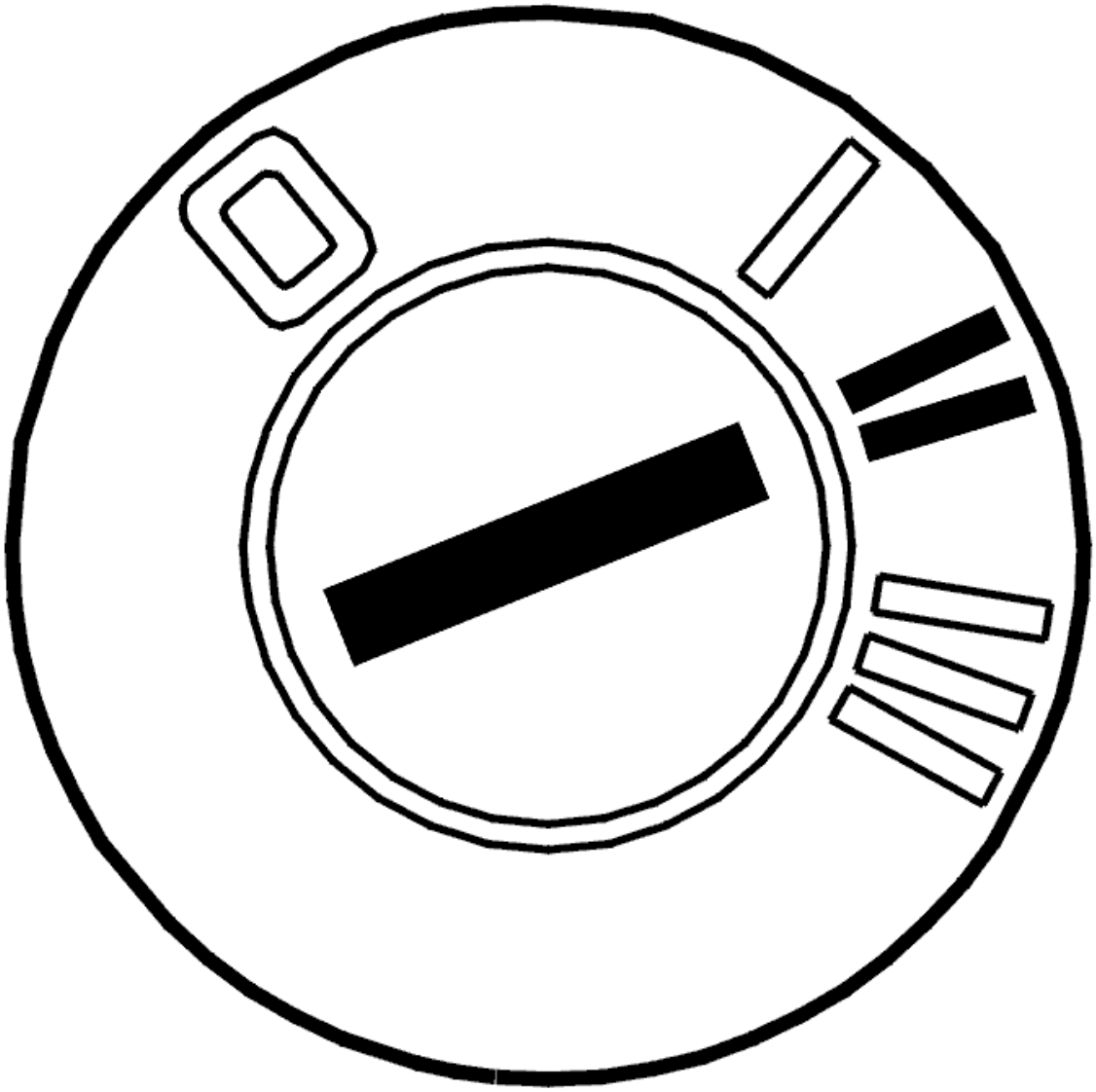

Fig. 137: Identifying Mass Air Flow (MAF) Sensor
Courtesy of VOLVO CARS CORPORATION

Are the values correct?

- **YES**

  VERIFIED: Troubleshooting has been completed.

- **NO**

  Refer to **INFORMATION**

INFORMATION

FAULT-TRACING INFORMATION

The fault should have been detected and remedied. As this is not the case fault-tracing has failed.

Exit fault-tracing for this diagnostic trouble code (DTC) or make another attempt.

ECM-1300: MASS AIR FLOW (MAF) SENSOR. FLOW TOO LOW. INTERMITTENT FAULT (B5254T2; B6294T; 2003-2004)

DIAGNOSTIC TROUBLE CODE (DTC) INFORMATION ECM-1300

see **DIAGNOSTIC TROUBLE CODE (DTC) INFORMATION ECM-1300**

FLOW TOO LOW

CHECKING COMPONENTS AND WIRING

Check the mass air flow (MAF) sensor connector. Check for contact resistance and oxidation.

Check for air leakage in the intake system and for damage to hoses etc.

Check the inside of the throttle body (TB). Check for contamination. When the throttle body (TB) is contaminated, the air flow to the engine is impaired and diagnostic trouble code (DTCs) or fault symptoms can occur.

Clean the throttle body (TB) if needed.

Check the power supply cable between system relay terminal #5 and mass air flow (MAF) sensor terminal #2. Check for an open-circuit.

Check the signal cable between engine control module (ECM) terminal #A22 (#A22) and mass air flow (MAF) sensor terminal #5. Check for a short-circuit to ground.

Check the power supply cable between engine control module (ECM) terminal #A39 (#A39) and mass air flow (MAF) sensor terminal #4. Check for an open-circuit.

HINT: With the ignition on and the mass air flow (MAF) sensor connector connected the voltage at mass air flow (MAF) sensor terminal #2 must be approximately U_{bat}.

Remedy as necessary.

Other information

- To connect the breakout box and access the control module, see **CONNECTING THE BREAKOUT BOX**
- see **CHECKING FOR AIR LEAKAGE IN THE INTAKE SYSTEM**
- For B5xx4T, see **THROTTLE BODY (TB), CLEANING** .
- For B6xx4x, see **THROTTLE BODY (TB), CLEANING** .

- see **MASS AIR FLOW (MAF) SENSOR, REPLACING**
- For 5 cylinder turbocharged engines -2004, see **SIGNAL DESCRIPTION**
- For 5 cylinder turbocharged engines 2005-, see **SIGNAL SPECIFICATION** .
- For 6 cylinder engines -2004, see **SIGNAL SPECIFICATION**
- For 6 cylinder engines 2005-, see **SIGNAL SPECIFICATION** .
- see **CHECKING WIRING AND TERMINALS**

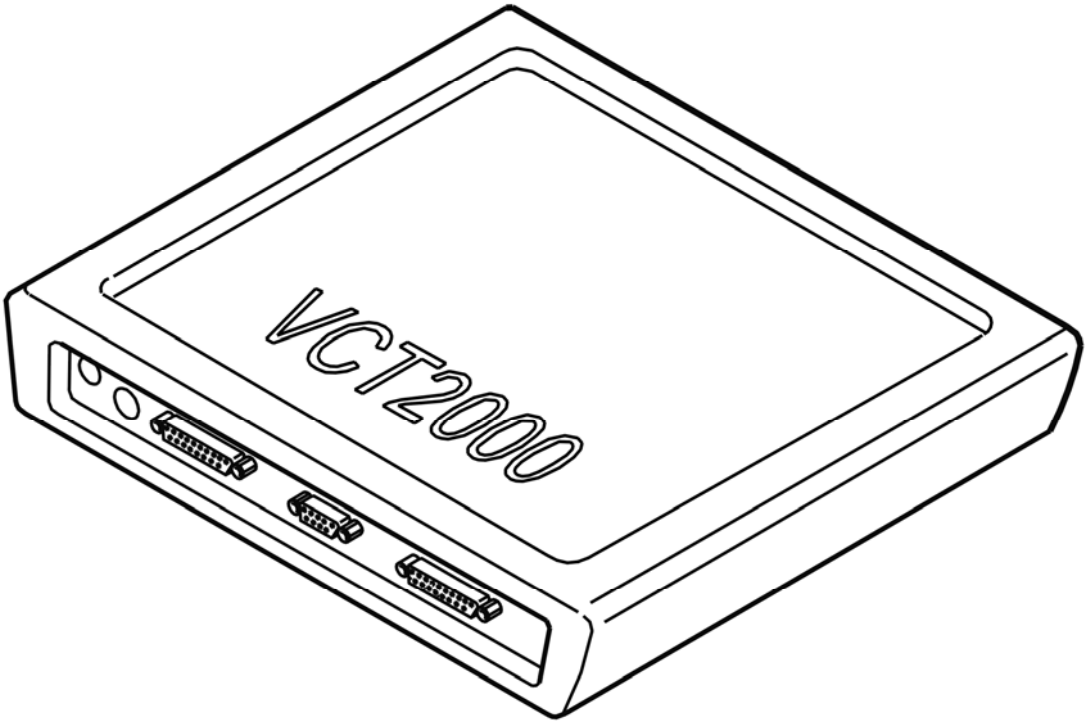

Fig. 138: Identifying Connector
Courtesy of VOLVO CARS CORPORATION

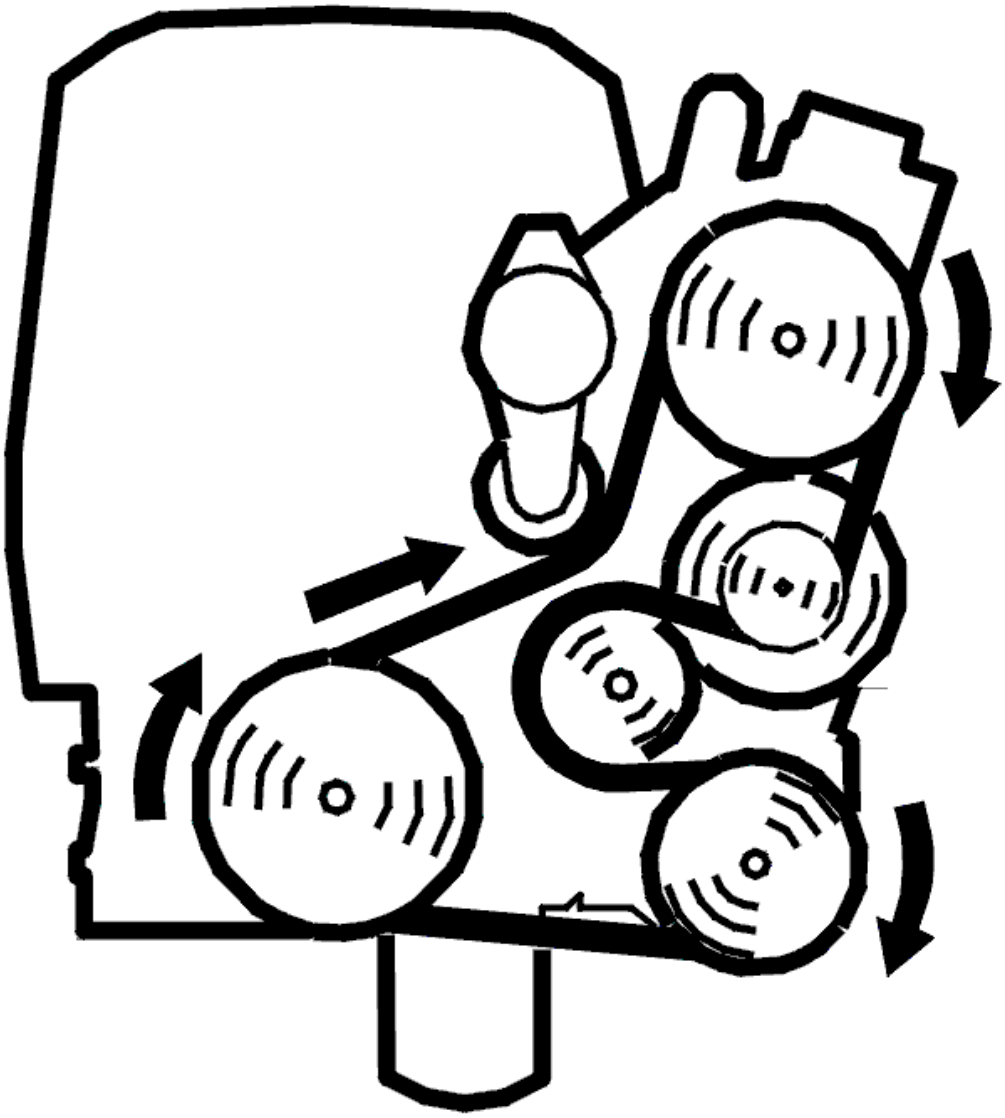

Fig. 139: Identifying Ohm Meter
Courtesy of VOLVO CARS CORPORATION

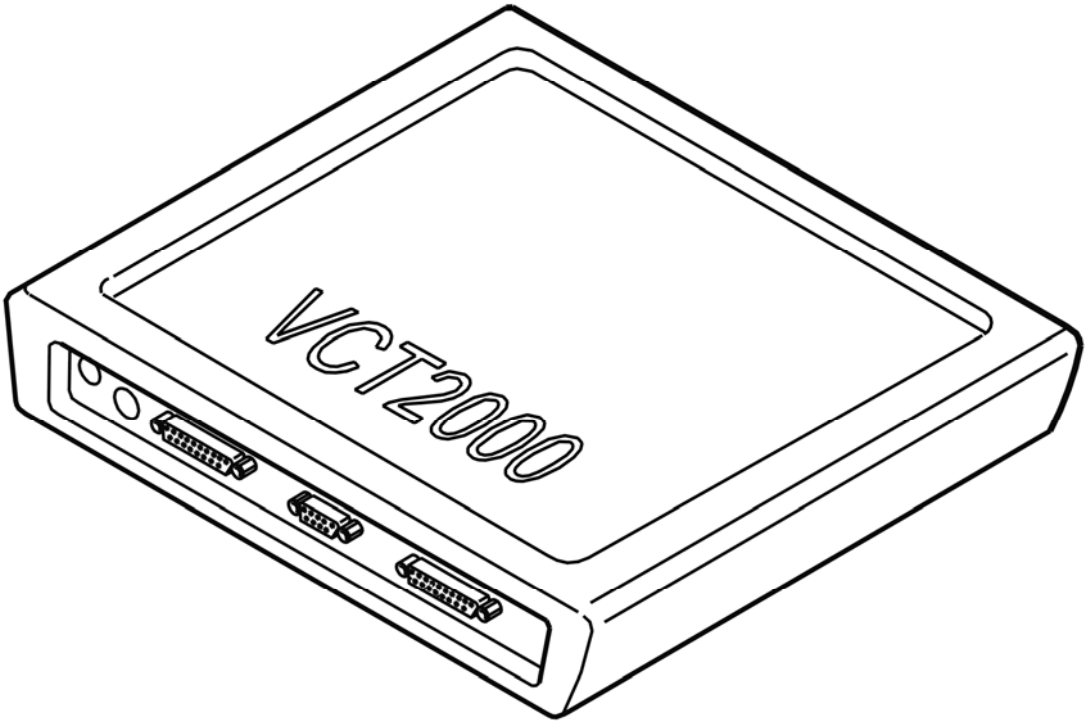

Fig. 140: Identifying Mass Air Flow (MAF) Sensor
Courtesy of VOLVO CARS CORPORATION

- **Continue**

  Refer to **VERIFICATION**

VERIFICATION

VERIFICATION

HINT: After carrying out the repair, check that the fault has been remedied.

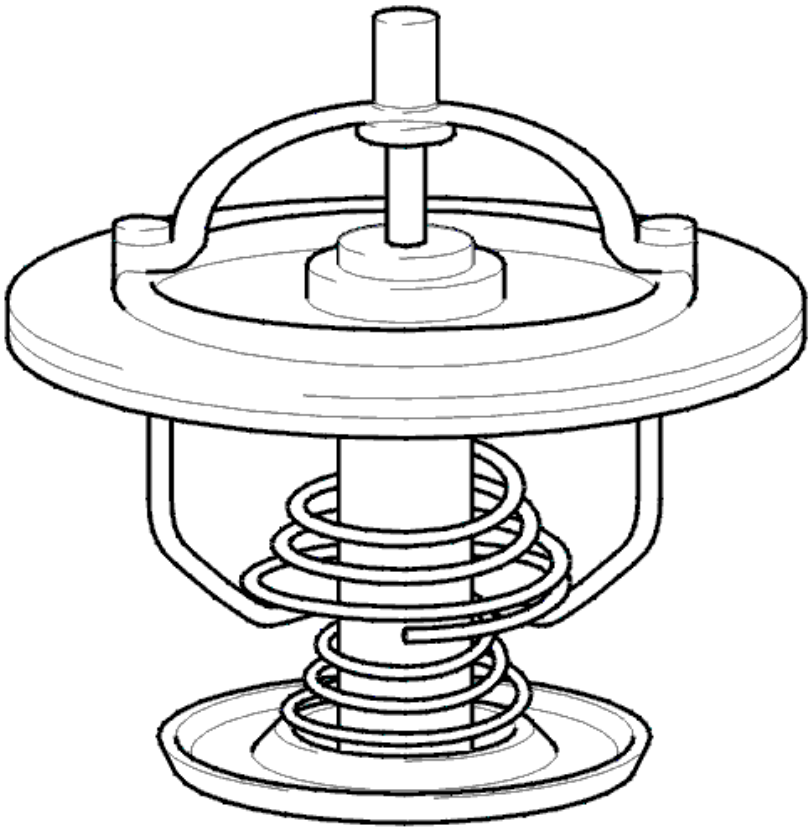

Fig. 141: Belt Routing / Engine Idling - Volvo
Courtesy of VOLVO CARS CORPORATION

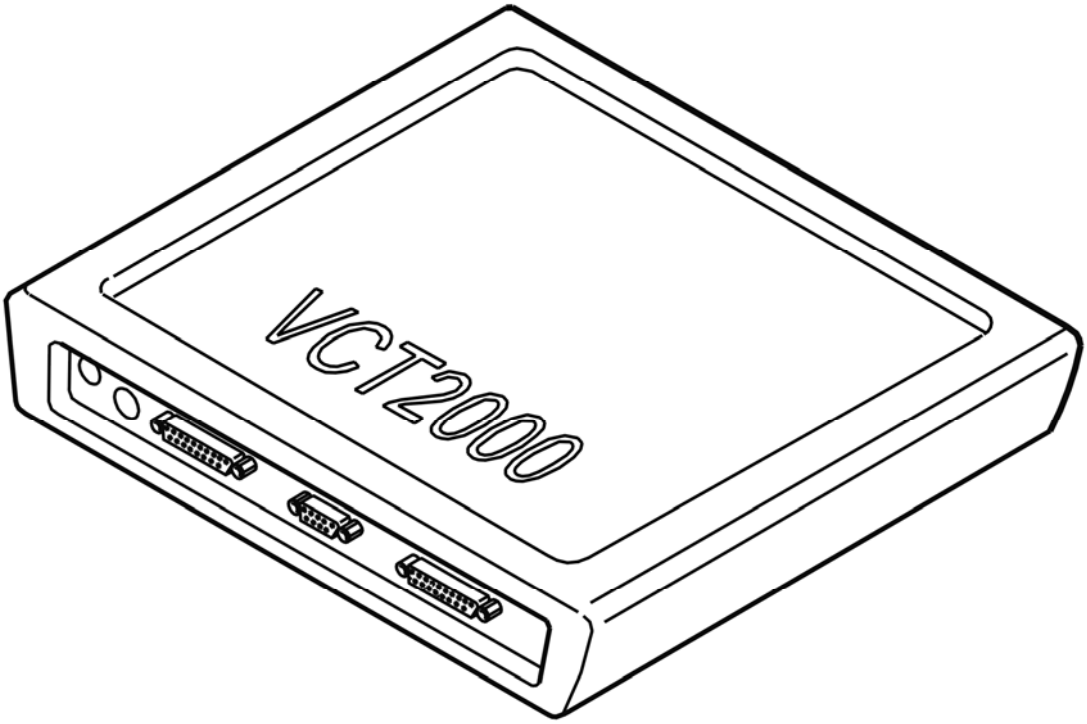

Fig. 142: Connecting Connector
Courtesy of VOLVO CARS CORPORATION

- Ignition off
- Reinstall the connectors, components etc.
- Ignition on
- Check that the air flow is correct. The value must be approximately 0 kg/h with the engine switched off
- Start the engine. Read off the air flow. The value may vary by between 12-20 kg/h at idle speed, depending on the engine load and temperature. The value may be in excess of 20 kg/h if the engine is cold
- Increase the engine speed (RPM) and check that the air flow increases with increased engine speed.

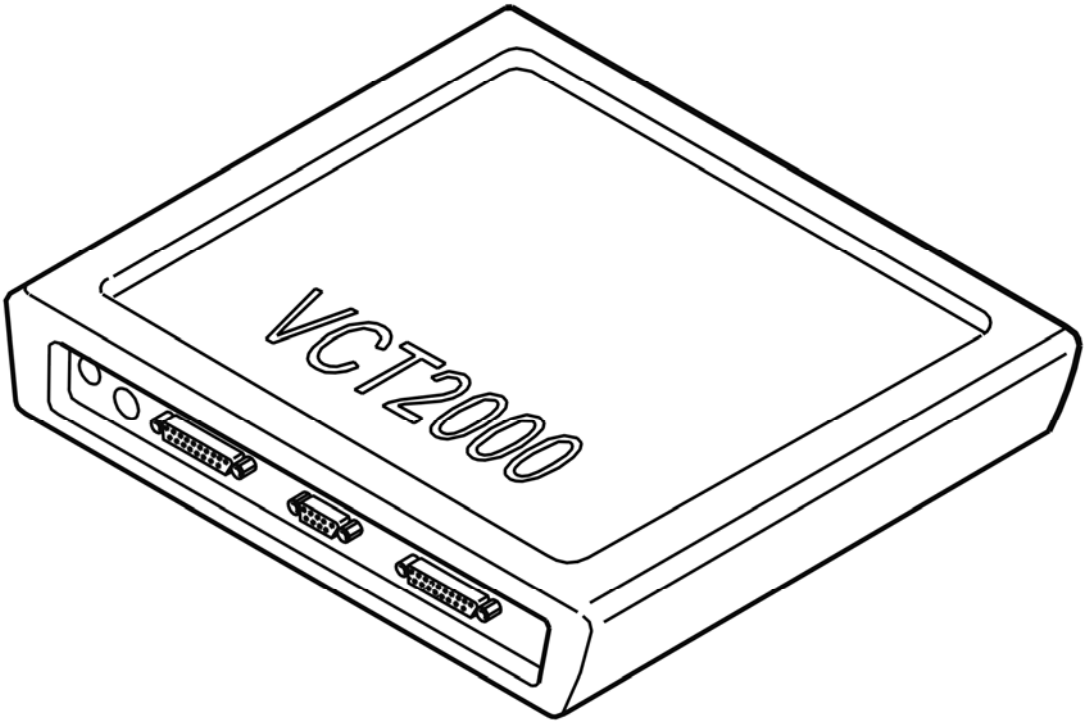

Fig. 143: Identifying VCT2000 Diagnostic Tool Symbol In VIDA
Courtesy of VOLVO CARS CORPORATION

Fig. 144: Identifying Mass Air Flow (MAF) Sensor
Courtesy of VOLVO CARS CORPORATION

Are the values correct?

- **YES**

  VERIFIED: Troubleshooting has been completed.

- **NO**

  Refer to **INFORMATION**

INFORMATION

FAULT-TRACING INFORMATION

The fault should have been detected and remedied. As this is not the case fault-tracing has failed.

Exit fault-tracing for this diagnostic trouble code (DTC) or make another attempt.

ECM-130A: INTAKE AIR LEAKAGE. FAULTY SIGNAL (B5254T2; B6294T; 2003-2004)

DIAGNOSTIC TROUBLE CODE (DTC) INFORMATION ECM-130A

Condition

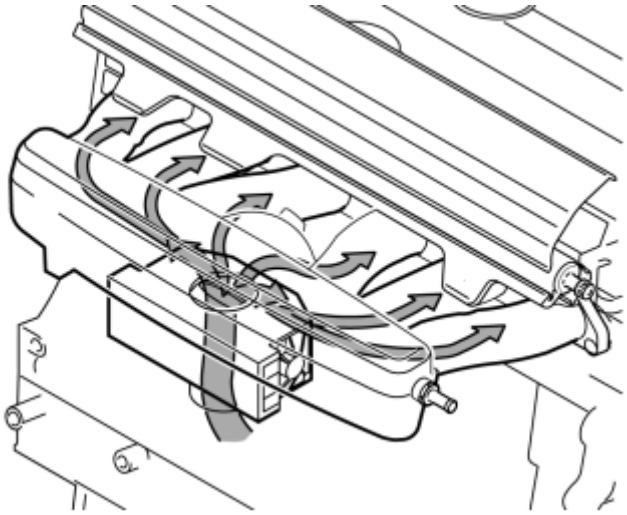

Fig. 145: Identifying Air Flow
Courtesy of VOLVO CARS CORPORATION

Engine control module (ECM) calculates the air mass in to the engine using, among other, information about the throttle position, engine RPM, EVAP-flow, air temperature, atmospheric pressure and pressure in the intake manifold. Then the calculated value is corrected so that it matches with the measured air mass from the mass air flow sensor. If Engine control module (ECM) registers that a too high correction of the calculated value is necessary, then diagnostic trouble code ECM-130A, Faulty flow, is stored.

For upgraded software, released during year 2006 or later, certain adjustments have been made. A greater correction of the calculated air mass will be allowed, which means that the system will be more tolerant to greater deviations in the air mass. Therefore this diagnostic trouble code is no longer necessary and has been removed.

see **IDENTIFYING UPGRADED SOFTWARE ECM/ETM**

For more information about the electronic throttle system and related components such as the electronic throttle module, accelerator pedal position sensor, brake light switch, clutch pedal position sensor, and brake pedal position sensor: see **DESIGN** and **FUNCTION**.

Substitute Value

- None.

Possible Source

Faulty signal

- Air leakage in the intake system
- Contaminated throttle disc
- Blocked crankcase ventilation or positive crankcase ventilation (PCV) nipple.
- Damaged mass air flow sensor.
- This diagnostic trouble code is generated in combination with other trouble codes. Information on the possible root cause is described.

  see **INFORMATION ABOUT COMBINED DIAGNOSTIC TROUBLE CODES (DTCS)**

Fault symptom[s]

- Poor performance.

DESIGN

IGNITION SWITCH

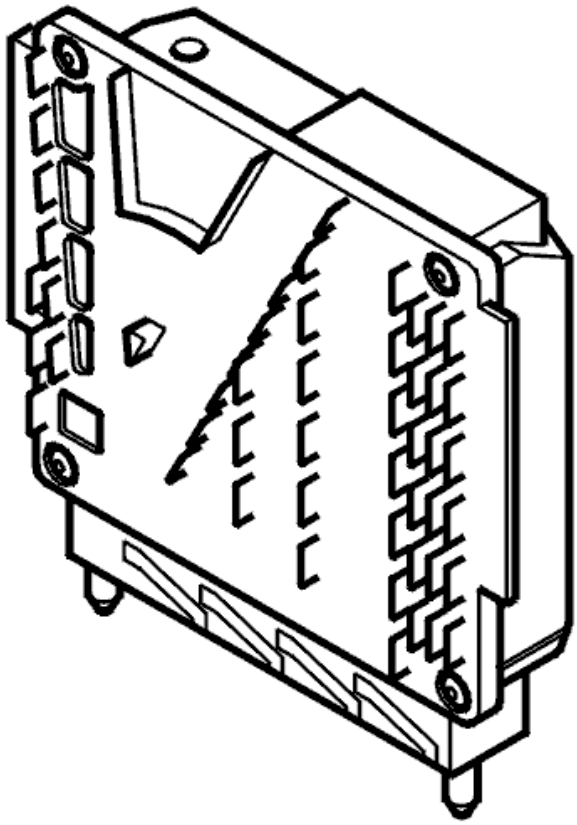

Fig. 146: Identifying Central Electronic Module (CEM) Connector Terminals
Courtesy of VOLVO CARS CORPORATION

The Engine Control Module (ECM) uses the signal from the ignition switch to detect when the ignition key has been turned to position II or III. When the key is in the ignition position (position II) or starting position (position III) a high signal (U_{bat}) is transmitted from the ignition switch to the engine control module (ECM).

The engine management system prepares for start-up (for example, temporarily activates the fuel pump (FP) relay). When the flywheel in the engine rotates, the engine speed (RPM) sensor signal is used to keep the fuel pump (FP) relay activated.

The fuse in the fusebox in the passenger compartment supplies current to the ignition switch.

The central electronic module (CEM) can diagnose the ignition switch.

BRAKE LAMP SWITCH

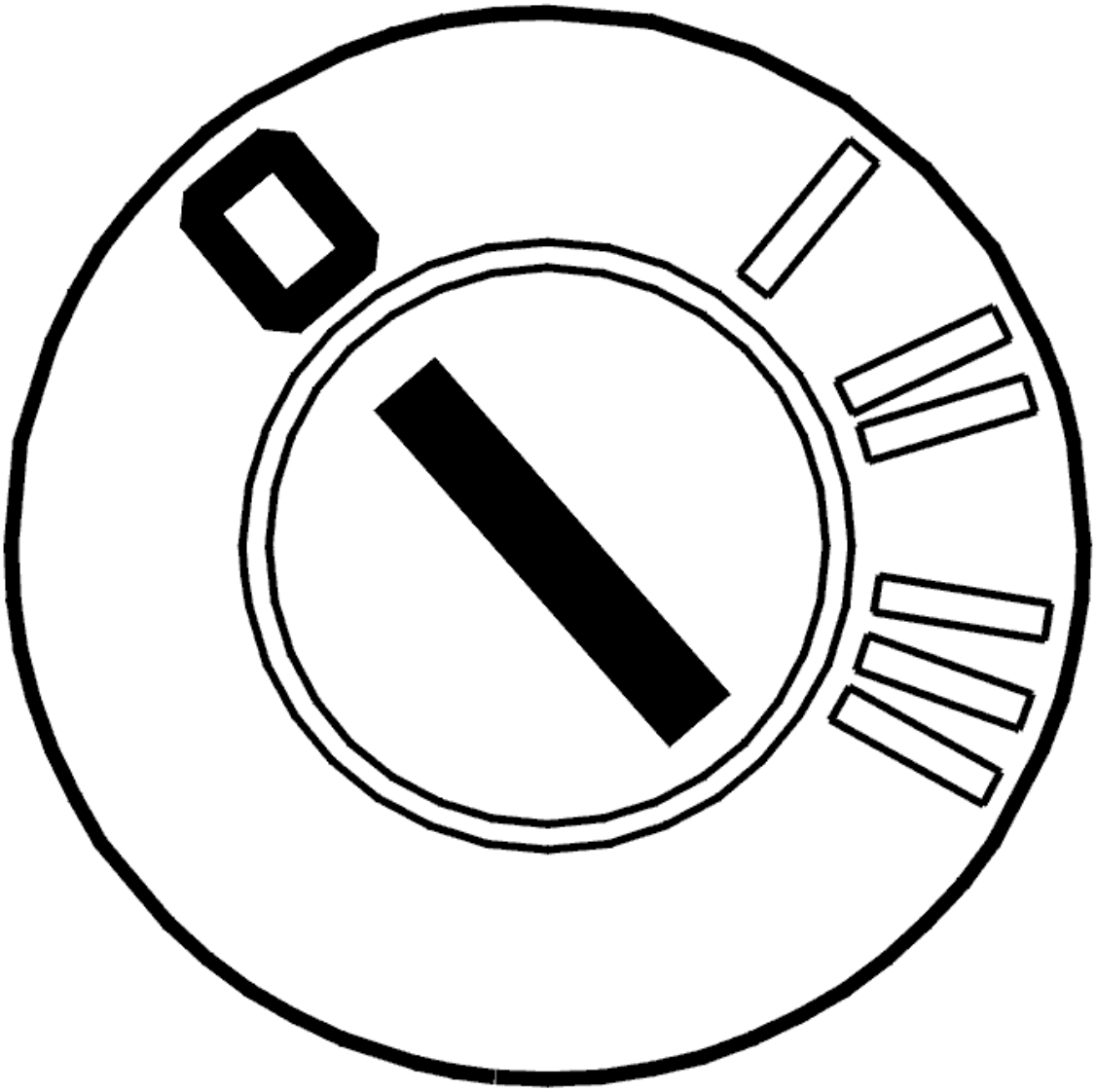

Fig. 147: Identifying Brake Lamp Switch
Courtesy of VOLVO CARS CORPORATION

The stop lamp switch is on the pedal box by the brake pedal. Its task is to supply the Engine control module (ECM) and Electronic throttle module (ETM) with information about the position of the brake pedal, if it is released or depressed.

One pin for the stop lamp switch is connected to battery voltage (terminal 30), the other pin is connected to the Engine control module (ECM) and the Electronic throttle module (ETM). When the brake pedal is in the released position, the stop lamp switch circuit is open, which means that 0 V is sent to the Engine control module (ECM) and the Electronic throttle module (ETM). If the brake pedal is depressed, the stop lamp switch circuit closes and battery voltage is sent instead.

The information from the stop lamp switch is used:

- together with information from the brake pedal position sensor to determine when it is permitted to use

cruise control or not
- to determine whether the information from the brake pedal position sensor is valid or not.
- when the CAN does not work, to be the only information to the Electronic throttle module (ETM) about the position of the brake pedal.

To determine whether the information from the stop lamp switch can be used or not, the Engine control module (ECM) and the Electronic throttle module (ETM) carry out plausibility checks.

For further information about which tests are carried out, see diagnostic trouble code (DTC) information for the relevant diagnostic trouble code (DTC).

BRAKE PEDAL POSITION SWITCH

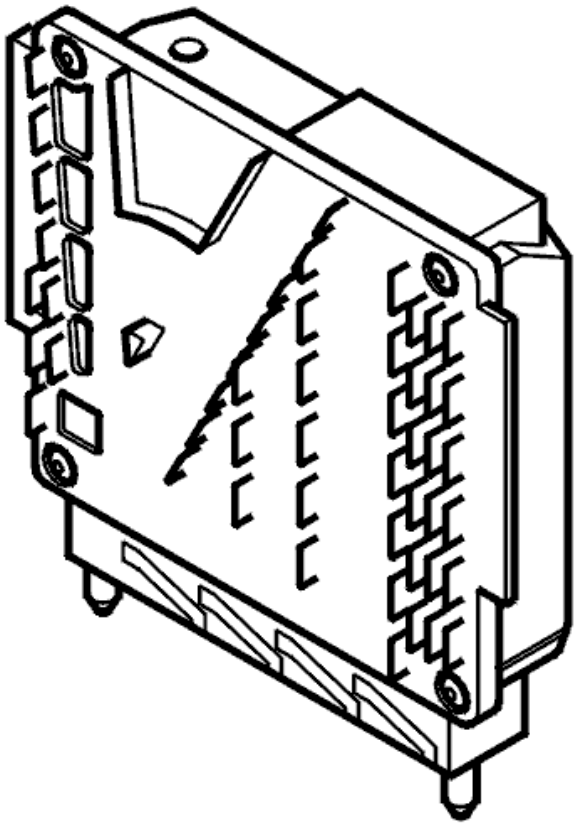

Fig. 148: Identifying Brake Pedal Position Switch
Courtesy of VOLVO CARS CORPORATION

The brake pedal position sensor is mounted on the power brake booster in the engine compartment. Its task is to supply the Engine control module (ECM) with information about the position of the brake pedal.

The brake pedal position sensor is affected by the brake pedal push rod and is a sliding potentiometer. The sensor is supplied with 5 V from the engine control module (ECM) and the signal that varies depending on the position of the brake pedal is sent to the engine control module (ECM).

When the pedal is released the signal is 3 - 4.5 V, the precise value depends on the engine control system in the vehicle. The reason that the signal differs between different engine control systems, despite it being the same sensor, is that the control module's internal circuits differ, which affects the signal level from the sensor. When the pedal is depressed, the voltage from the sensor drops.

From model year 2002 the brake pedal position sensor is directly connected to the brake control module (BCM), information is sent over the CAN to the Engine control module (ECM).

The information from the brake pedal position sensor is used:

- together with information from the stop lamp switch to determine when it is permitted to use cruise control
- to determine whether the information from the stop lamp switch is valid or not.

To determine whether the information from the stop lamp switch can be used or not, the Engine control module (ECM) and the Electronic throttle module (ETM) carry out an electrical check of the circuits and plausibility checks.

For further information about which tests are carried out, see diagnostic trouble code (DTC) information for the relevant diagnostic trouble code (DTC).

ACCELERATOR PEDAL (AP) POSITION SENSOR

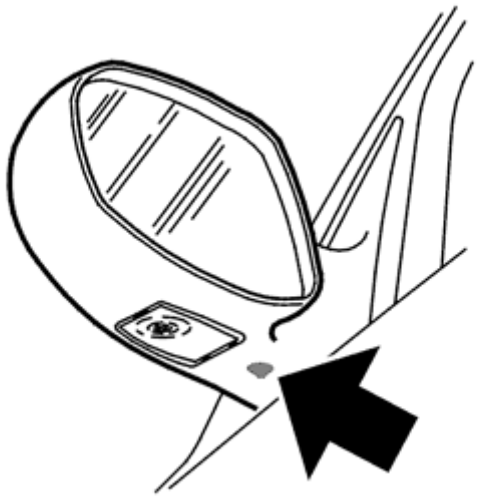

Fig. 149: Identifying Accelerator Pedal (AP) Position Sensor
Courtesy of VOLVO CARS CORPORATION

The accelerator position sensor is mounted by the pedal box in the passenger compartment and makes a mounting for accelerator pedal. Its main task is to supply the Engine control module (ECM) with information about the position of the accelerator pedal.

The accelerator pedal position sensor consists of two internal sensors, where one generates an analog signal and the other a pulse width modulated signal (PWM). The purpose of having two types of sensor is to eliminate the

probability of a fault from both signals from the sensors being incorrect, at the same time as them showing the same pedal position and the control module considers them correct.

The analog sensor supplies the Engine control module (ECM) with a signal that is approximately 0.5 V when the pedal is released and approximately 4.5 V when fully depressed. The sensor receives a voltage supply (5 V) and ground from the Engine control module (ECM).

The pulse width modulated (PWM) sensor supplies both the Engine control module (ECM) and Electronic throttle module (ETM) with a signal that has a fixed frequency of approximately 200 Hz where the pulse ratio varies between 8-88 %, depending on the position of the accelerator pedal.

The sensor receives voltage supply (12 V) via the main relay and is grounded via its own ground terminal. the signal to the Electronic throttle module (ETM) is electrically routed via the Engine control module (ECM), however, without affecting the signal at all.

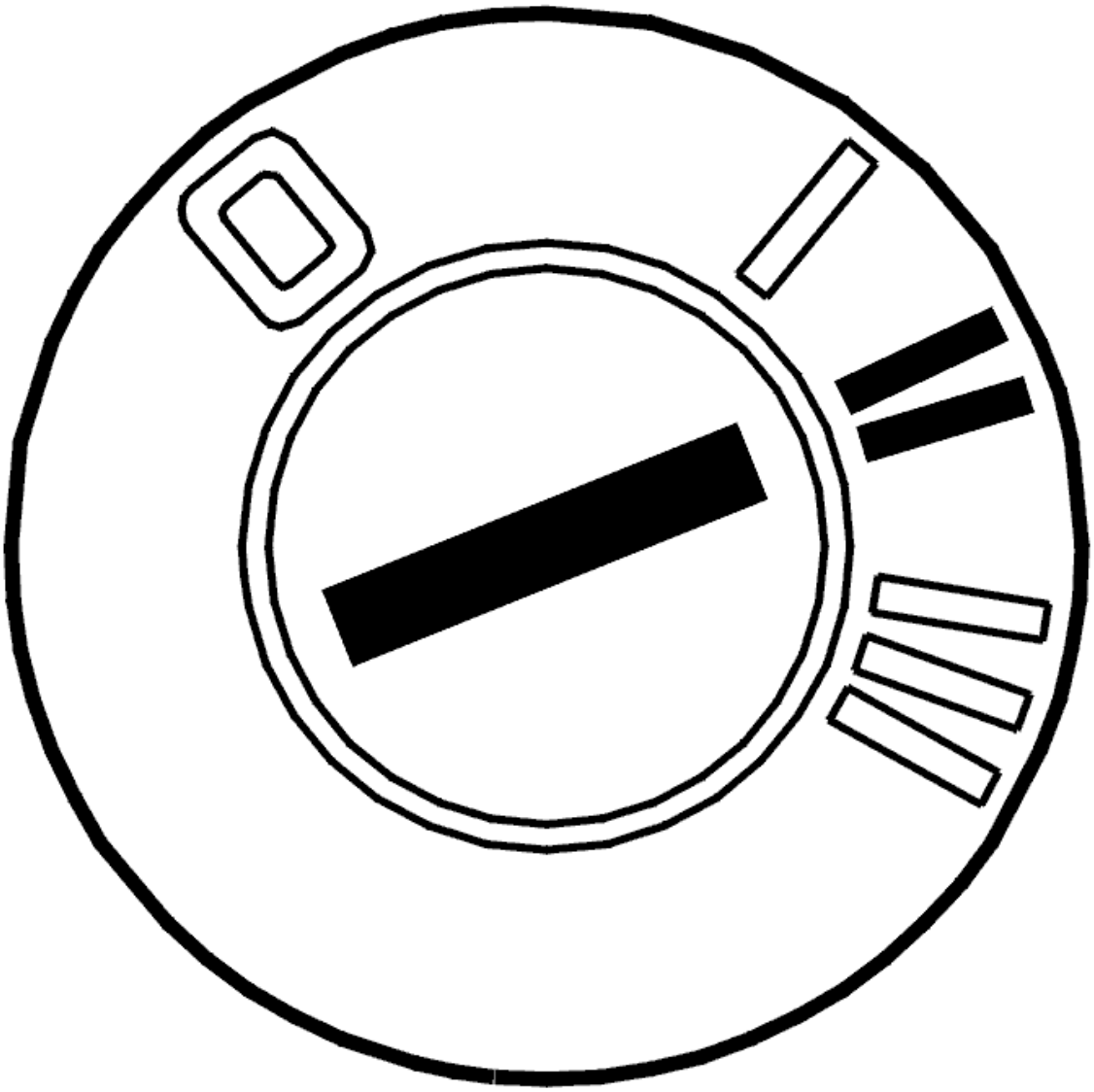

Fig. 150: Identifying Communication Signals Between Accelerator Position Sensor, ECM & ETM

Courtesy of VOLVO CARS CORPORATION

The Engine control module (ECM) first uses the analog signal from the accelerator position sensor to calculate the desired throttle angle. The Engine control module (ECM) then transmits this request about the desired throttle angle via the CAN to the Electronic throttle module (ETM), which then fulfils the desired throttle angle and transmits back the information about the current throttle angle.

The pulse width modulated signal is used to monitor the analog signal. If there is a fault in the analog signal, the system uses the pulse width modulated (PWM) signal instead.

There are also situations when the PWM signal is used to control the throttle angle without a fault being detected on the analog signal. For example, when a fault has occurred in CAN communication between the Engine control module (ECM) and the Electronic throttle module (ETM), the throttle unit then does not receive any desired throttle angles from the Engine control module (ECM) but must then rely on the directly connected PWM signal to control the throttle.

On vehicles equipped with an automatic transmission, the sensor also contains a mechanical kick-down resistor that gives the driver a kick-down feeling when the pedal is depressed approximately 80 % of full pedal stroke. In this pedal position, the Transmission control module (TCM) permits kick-down to be activated. There is no separate switch in this sensor for kick-down.

To determine if the analog and the PWM signal are fault free, the Engine control module (ECM) and Electronic throttle module (ETM) carry out electrical checks and plausibility checks of the signals. If a fault is detected on any of the signals, the system uses the other signal.

For further information about which tests are carried out, see diagnostic trouble code (DTC) information for the relevant diagnostic trouble code (DTC).

CLUTCH PEDAL POSITION SENSOR (MANUAL TRANSMISSIONS ONLY)

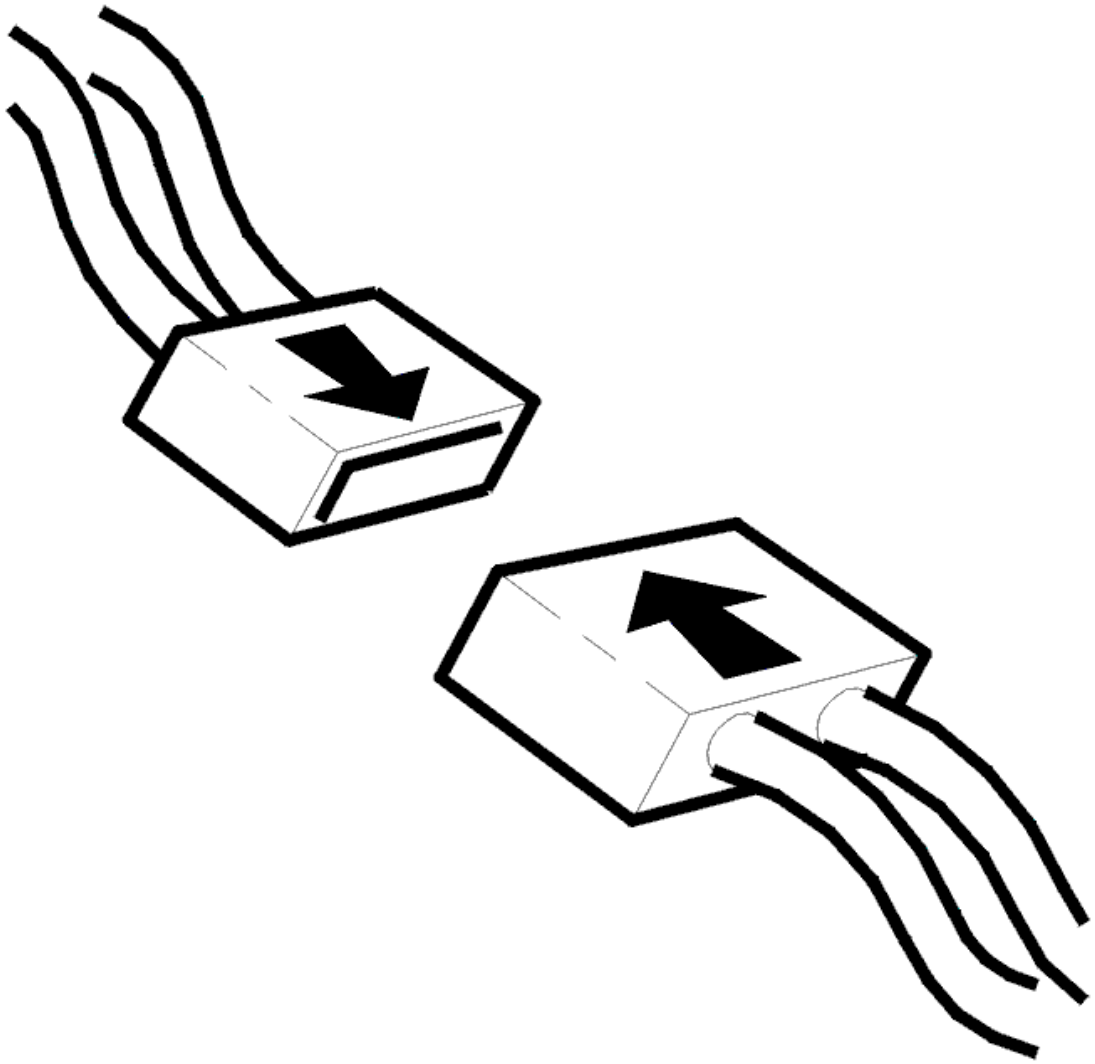

Fig. 151: Identifying Clutch Pedal Position Sensor
Courtesy of VOLVO CARS CORPORATION

The clutch pedal position sensor is mounted between the clutch pedal and the pedal box. Its task is to supply the Engine control module (ECM) with information about the position of the clutch pedal.

The clutch pedal position sensor is a slide potentiometer and is supplied with 5 V from the Engine control module (ECM). The signal that varies depending on the position of the clutch pedal is sent to the Engine control module (ECM). When the pedal is released the signal is 3-4 V, the precise value depends on which engine control system the vehicle has. The reason that the signal differs between different engine control systems, despite it being the same sensor, is that the control module's internal circuits differ, which affects the signal level from the sensor. When the pedal is depressed, the voltage from the sensor drops.

The information from the clutch pedal position is used:

- to determine when it is permitted to use cruise control

- on certain markets to prevent the engine from being started if the pedal is released.

To determine if the information from the clutch pedal sensor can be used or not, the Engine control module (ECM) carries out an electrical check of the circuits and plausibility checks of the signal.

For further information about which tests are carried out, see diagnostic trouble code (DTC) information for the relevant diagnostic trouble code (DTC).

ELECTRONIC THROTTLE UNIT

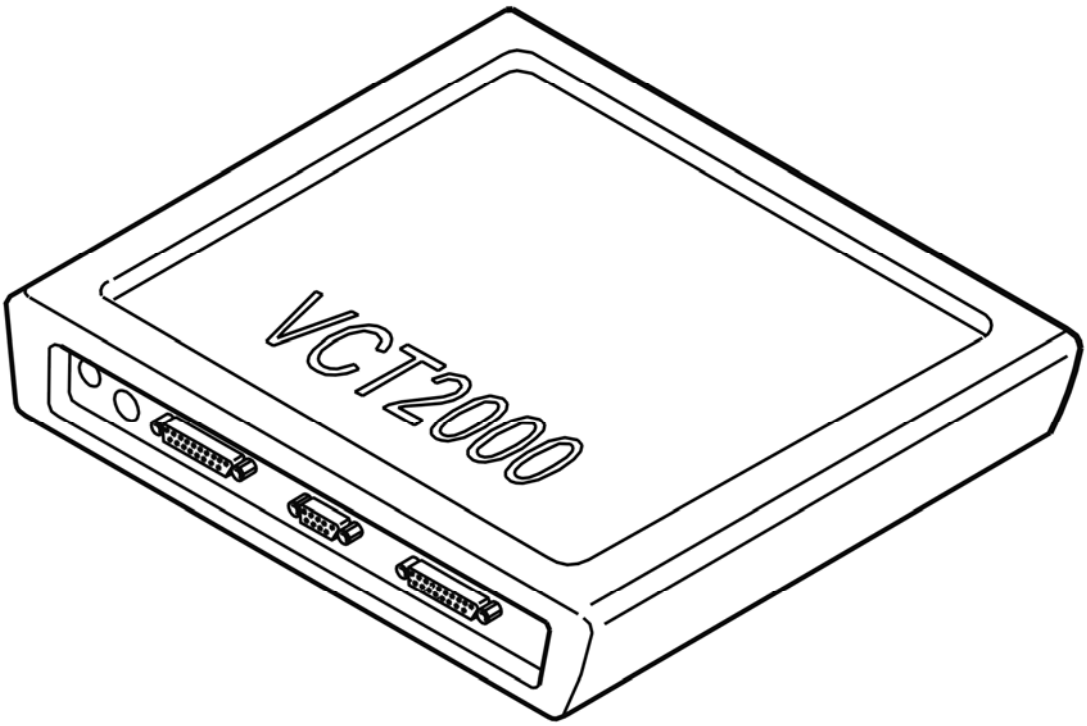

Fig. 152: Identifying Electronic Throttle Unit
Courtesy of VOLVO CARS CORPORATION

The throttle unit is mounted on the engine intake manifold, the location can vary depending on engine type. 5 cylinder turbocharged engines and 6 cylinder engines have the throttle unit mounted under the intake manifold. Others have it mounted on the side of the intake manifold. The throttle unit's primary task is to control the amount of air to the engine from the request from the Engine control module (ECM).

The Electronic throttle module (ETM) is in the throttle unit, which means that it works as its own control module on the high speed side of the CAN.

The connection to the CAN takes up two of the six pins in the throttle unit's connector, the remaining four are taken up by:

- Voltage supply, 12 V via the engine control system's system relay.
- Ground terminals, separated from the engine control system's other ground terminals.
- Information about the brake pedal's position from the brake lamp switch.
- Information about the position of the accelerator pedal from the accelerator pedal unit's PWM sensor.

In order for the Electronic throttle module (ETM) to carry out the main task of controlling the air flow to the engine, the voltage supply, ground and contact with the CAN is sufficient. The other two signals about the position of the brake pedal and the accelerator pedal are used as a safety function in case a problem should occur with CAN communication. This makes it possible to continue driving, but with reduced driveability. The signals are used, among other things, to carry out a plausibility check of the desired throttle angle that comes from the Engine control module (ECM) via CAN.

In addition, the throttle unit consists of a further number of components such as throttle housing, throttle disc, throttle spindle, torque motor, throttle position sensor (potentiometers), spring unit etc.

In one end the throttle unit contains a stepless torque motor that is directly operated on the throttle spindle. The torque motor is supplied with 12 V and controlled by the Electronic throttle module (ETM). In the other end there is the throttle's spring unit and the mechanical stop for the smallest and largest throttle openings.

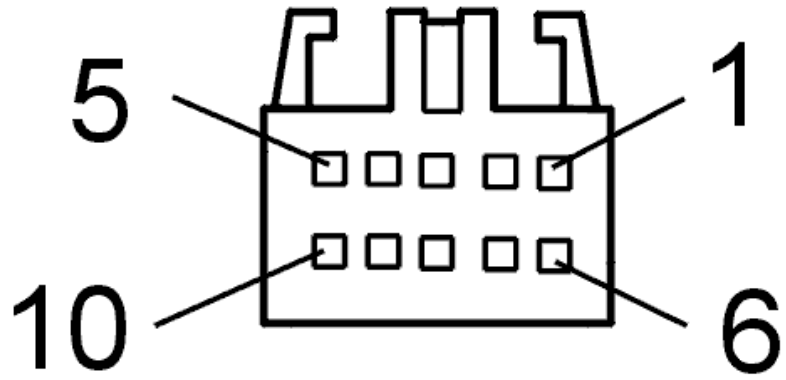

Fig. 153: Identifying Torque Motor & Spring Unit
Courtesy of VOLVO CARS CORPORATION

Outside the torque motor and the spring unit, out on the relevant end there is a throttle position sensor (potentiometer). The two position sensors are mechanically connected to each other via the throttle spindle.

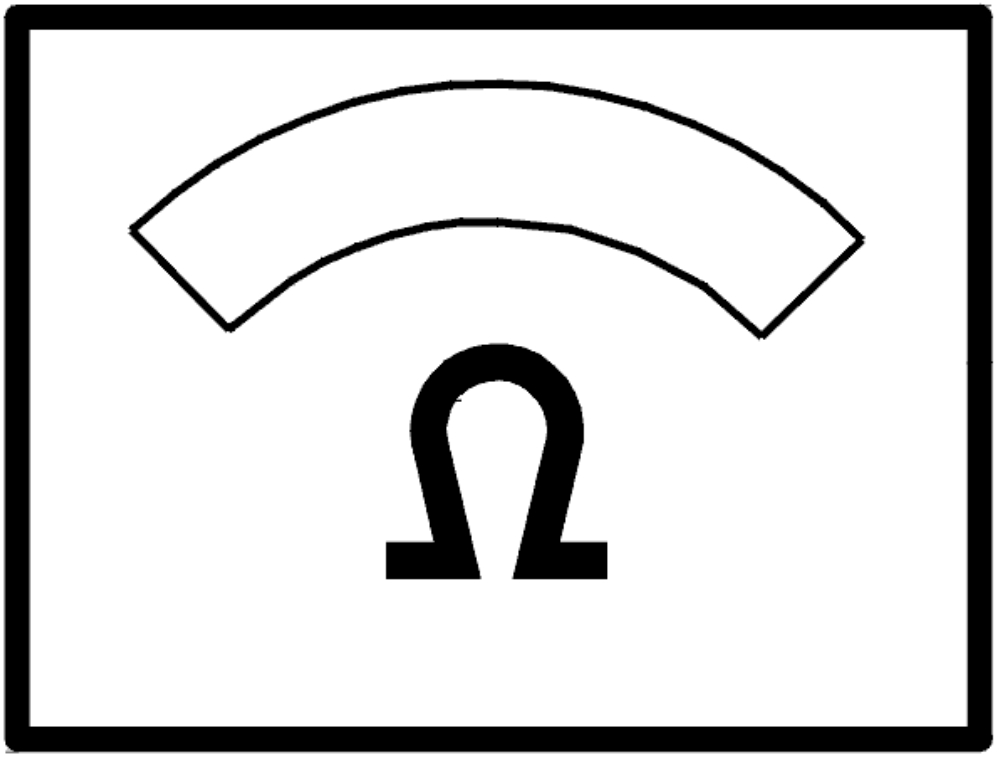

Fig. 154: Identifying Torque Motor Rotational Hub, Contacts & Grooves
Courtesy of VOLVO CARS CORPORATION

1. Rotational hub with contacts.
2. Contacts, x 2
3. Contact track, 2 grooves.

For safety reasons, two position sensors send the same signal about the position of the throttle to the electronic throttle module (ETM).

If the signal from one of the position sensors is missing or faulty, the electronic throttle module (ETM) is still able to calculate the position of the throttle using the signal from the other position sensor. This maintains the driveability of the car.

Depending on the type of fault, the throttle system can reconfigure its own software (limp-home mode) and can

react in different ways.

The throttle is a so called "ball zone throttle" which means that the throttle housing's mating surfaces are "spherical" and provide a better solution per opening angle. This gives more accurate flow control from idling position up to approximately 20 % open throttle. The effect is a smoother start at throttle opening / acceleration.

A number of plausibility checks are carried out by the Engine control module (ECM) to determine whether the throttle unit and Electronic throttle module (ETM) works as intended or not.

For further information about which tests are carried out, see diagnostic trouble code (DTC) information for the relevant diagnostic trouble code (DTC).

ELECTRONICALLY CONTROLLED THROTTLE SYSTEM

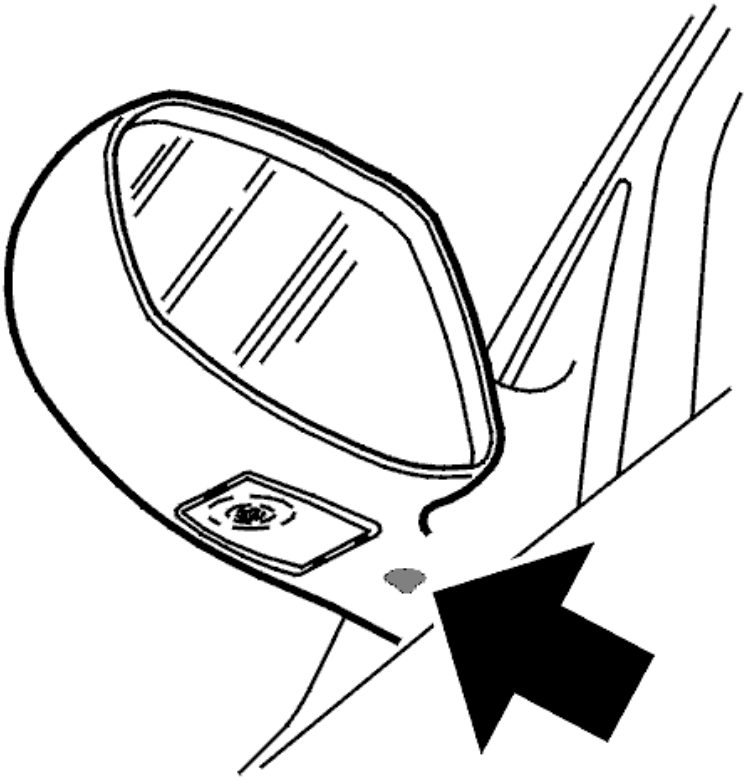

Fig. 155: Electronically Controlled Throttle System Diagram
Courtesy of VOLVO CARS CORPORATION

There are a number of components that are important for the electronic throttle system to work, the most vital parts are the Engine control module (ECM), Electronic throttle module (ETM) and the accelerator pedal position sensor. The system does not have a mechanical link system or mechanical cable.

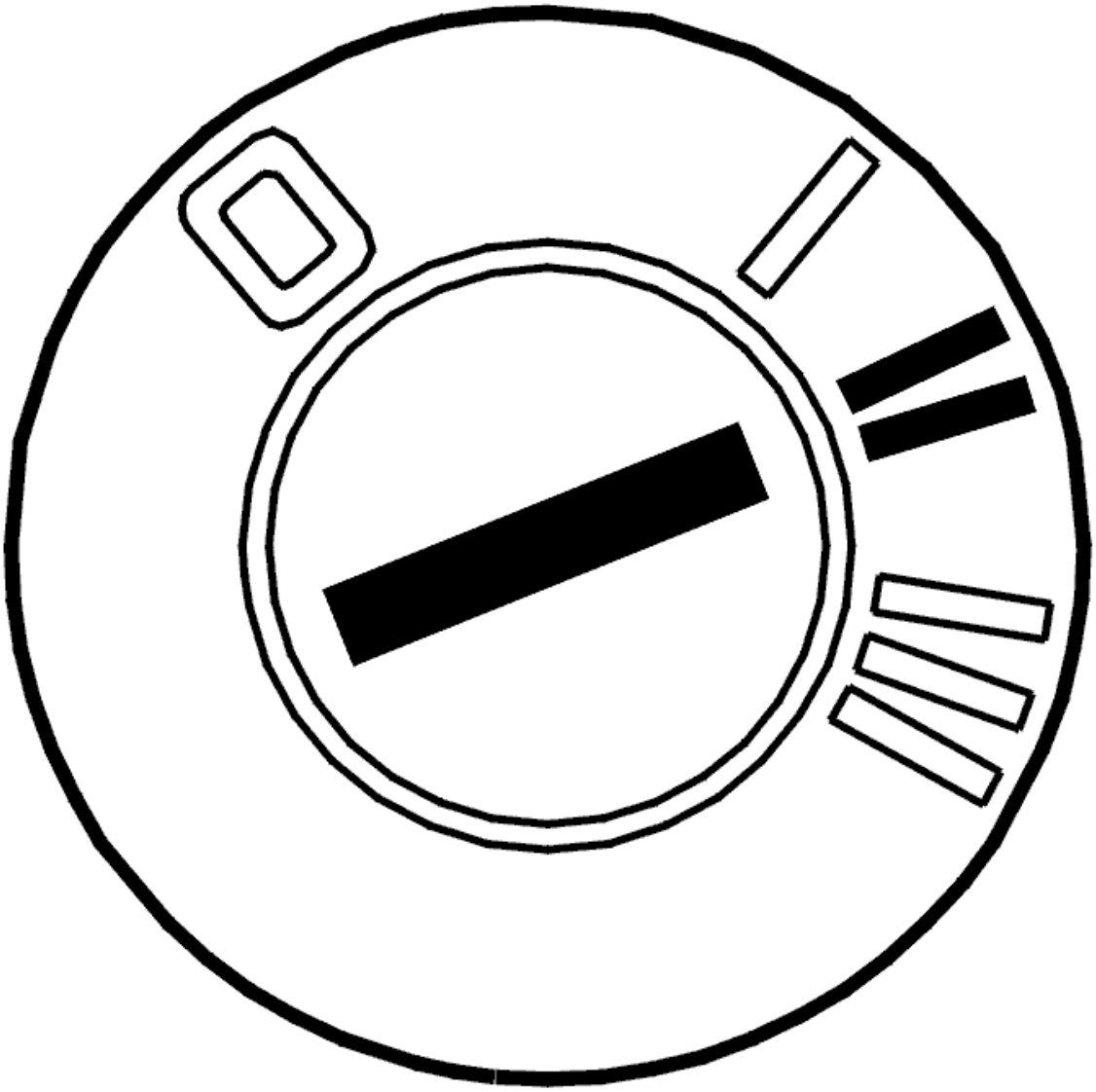

Fig. 156: Identifying Communication Signals Between Accelerator Position Sensor, ECM & ETM
Courtesy of VOLVO CARS CORPORATION

The main task of the throttle unit system is to regulate the amount of air to the engine from the driver's demands. The driver requests a certain toque from the engine by depressing the accelerator pedal. This information is received by the Engine control module (ECM) that, together with the torque request from other functions, calculates a desired throttle angle.

The torque request from other functions means that there are loads that the system compensates for without the driver knowing it, for example, when the AC compressor is to be switched on, the throttle needs to be opened to compensate for the extra load that is placed on the engine. If the system does not do this, the engine speed would drop and the torque out on the drive shaft would be reduced every time the AC compressor was switched on, and increase when switched off.

The Engine control module (ECM) sends the request about the desired throttle angle to the Electronic throttle module (ETM) via CAN. The Electronic throttle module (ETM) fulfils the desired throttle angle and sends the

information about the current throttle position back to the Engine control module (ECM) via CAN.

The Electronic throttle module (ETM), must not, under any circumstances, start to regulate the throttle position from its own request, but must always fulfill the desired throttle angle from the Engine control module (ECM). All signal transfers between the Engine control module (ECM) and Electronic throttle module (ETM) occur via CAN. If there is a problem with CAN communication, the information about the position of the accelerator pedal and the brake pedal is available via direct contact with the relevant sensor. This means that the vehicle can be driven, but with reduced driveability. In this position, the Electronic throttle module (ETM) only controls the throttle position after the accelerator pedal position, the throttle unit does not know whether the engine is running or not.

The Engine control module (ECM) and Electronic throttle module (ETM) carry out checks and plausibility checks continuously. If a fault is detected, the system carries out corrective actions, such as to activate a suitable reconfiguration and store diagnostic trouble codes (DTCs).

For further information about which tests are carried out, see diagnostic trouble code (DTC) information for the relevant diagnostic trouble code (DTC).

Below is general information about diagnostic trouble codes (DTCs) and a more detailed explanation regarding reconfigurations in the throttle system.

General information

When the Electronic throttle module (ETM) detects that the communication to the Engine control module (ECM) is interrupted in any way or broken, faults are stored in the Electronic throttle module (ETM). The information about these faults are sent to the Engine control module (ECM) as soon as communication is restored on the CAN. This means that the Engine control module (ECM) stores the diagnostic trouble codes (DTCs) for these faults as soon as the Electronic throttle module (ETM) delivers the faults. This, in turn, means that it is at this point that the frozen values for the diagnostic trouble codes (DTCs) are saved. For the Electronic throttle module (ETM) this means that the frozen values will be from a point in time after the diagnostic trouble code (DTC) first occurred.

For certain fault-tracing it is recommended that the ignition is switched off and switched on twice *before* erasing the diagnostic trouble codes (DTCs). This depends on the diagnostic trouble codes (DTCs) being generated according to the command from the Electronic throttle module (ETM), but as only the Engine control module (ECM) is erased, the Electronic throttle module (ETM) must be switched off completely (powerless) for its memory to be entirely erased. This must be carried out before the vehicle is test driven, otherwise the fault can be recreated in the Engine control module (ECM).

For the Engine control module (ECM) and Electronic throttle module (ETM) to be completely switched off the following must be carried out:

- Ignition off, then wait 3 minutes for the main relay/system relay to release the voltage supply to the Electronic throttle module (ETM) among other things.
- Then switch the ignition on and off again.
- Wait a further 3 minutes. If the engine cooling fan is running, wait a further 2 minutes after the engine cooling fan has stopped, to ensure that the Electronic throttle module (ETM) is switched off correctly.

Reconfigurations

A CAN or the throttle related fault can result in both the Engine control module (ECM) and the Electronic throttle module (ETM) switching to the reconfiguration mode (limp home). This mode is maintained for the rest of the operating cycle in which the fault occurred and in all following cycles where the fault is still present.

Depending on the detected type of fault, the control modules can assume different levels of reconfiguration. Reconfiguration covers everything from preventing cruise control being used due to a temporary break in communication with the cruise control switch, to the Electronic throttle module (ETM) using a fixed throttle angle and the Engine control module (ECM) controlling the engine speed with the ignition and fuel injection.

In the last named reconfiguration, the engine's idle speed may seem uneven because the Engine control module (ECM) for controlling the speed, closes the fuel supply to the cylinders individually. This reconfiguration (engine's behavior) must not be confused with an actual problem in driveability, which occurred before the reconfiguration.

For example, a short break in the voltage supply to the Electronic throttle module (ETM) means that the control module is reconfiguring itself. Be aware that the engine's behavior then depends on a fault being detected and that the fault is detected because of this behavior.

NOTE: **Upgraded software for the Engine control module (ECM) and Electronic throttle module (ETM) available during 2006 or later, has other conditions for determining when the reconfiguration must occur. The throttle system with this software is more tolerant of faults, which means that the reconfiguration in some cases occurs at other occasions.**

For information about how to identify the software in the control module, see: **IDENTIFYING UPGRADED SOFTWARE ECM/ETM**

The following reconfigurations (limp home) occur:

- **Fuel shut-off that follows the accelerator pedal position.** The engine's speed is controlled via fuel shut-off by the injector valves switching off one at a time. The engine's speed is determined by the position of the accelerator pedal sensor and the speed is maximized to approximately 5000 RPM. This reconfiguration can make engine idling seem to be uneven because the Engine control module (ECM) for controlling the engine's speed, closes the fuel supply to the cylinders individually. This reconfiguration (engine's behavior) must not be confused with an actual problem in driveability, which occurred before the reconfiguration.
- **Slower throttle opening than the requested throttle opening.** The throttle opens more slowly than normal requested opening because the system is only regulated by the pulse width modulated signals from the accelerator pedal position sensor. The driver may notice that the engine responds slightly slower than at normal acceleration.
- **Throttle closure when braking.** The accelerator pedal position is ignored when the brake pedal is depressed.
- **The throttle follows the accelerator pedal position.** The throttle and accelerator pedal are used as if they were mechanically connected to each other. This reconfiguration is always determined by fuel-shut off as above.

- **Throttle closed.** The Electronic throttle module (ETM) switches off the throttle motor's control, which means that the throttle is not affected and therefore returns to the mechanical stop position. This means approximately 20 % throttle opening. This reconfiguration is always determined by fuel shut-off as above.
- **Cruise control off.** The cruise control is off during the operating cycle when the fault was detected. The function is available at next start-up if the fault is no longer present.

AIR-CONDITIONING: (A/C) COMPRESSOR

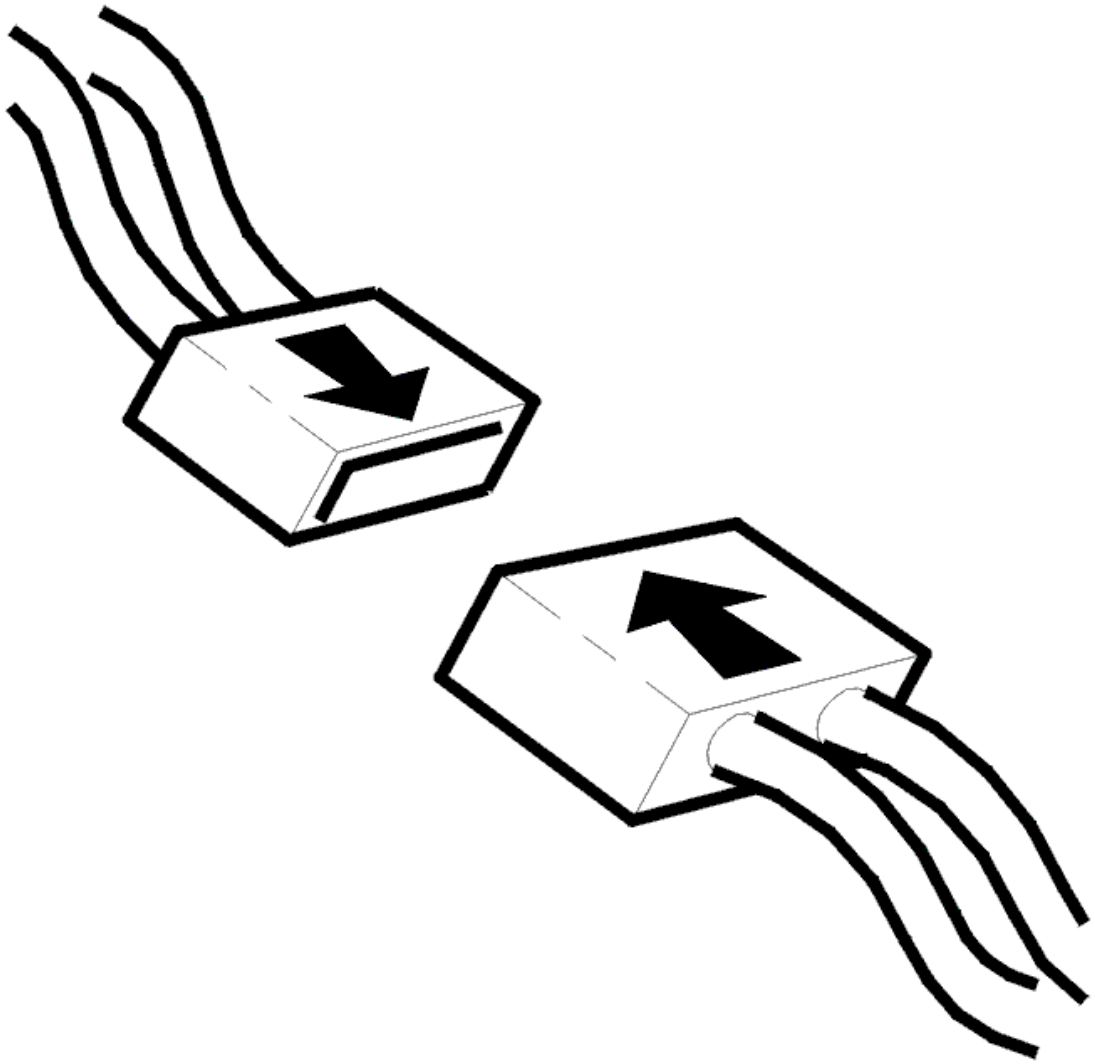

Fig. 157: Identifying A/C Pressure Sensor
Courtesy of VOLVO CARS CORPORATION

The air conditioning (A/C) pressure sensor detects the pressure in the high-pressure side of the air conditioning (A/C) system. This is so the engine control module (ECM) can control:

- start-up of the engine cooling fan (FC) step 2

- start-up of the engine cooling fan (FC) step 3
- stopping the compressor if the pressure in the air conditioning (A/C) is too high
- constant idle speed compensation for the air conditioning (A/C) compressor load.

The sensor is linear. It is grounded in the control module and supplied with a 5 Volt current from the control module. A linear signal (between 0-5 V depending on the pressure in the air conditioning (A/C)) is transmitted to the control module. Low pressure produces low voltage, high pressure produces high voltage.

The engine control module (ECM) can diagnose the air conditioning (A/C) pressure sensor. The sensor value can be read off using VIDA (Volvo scan tool).

The air conditioning (A/C) pressure sensor is positioned on the high pressure delivery line for the air conditioning (A/C) system.

HEATED OXYGEN SENSORS (HO2S)

Front heated oxygen sensor (HO2S)

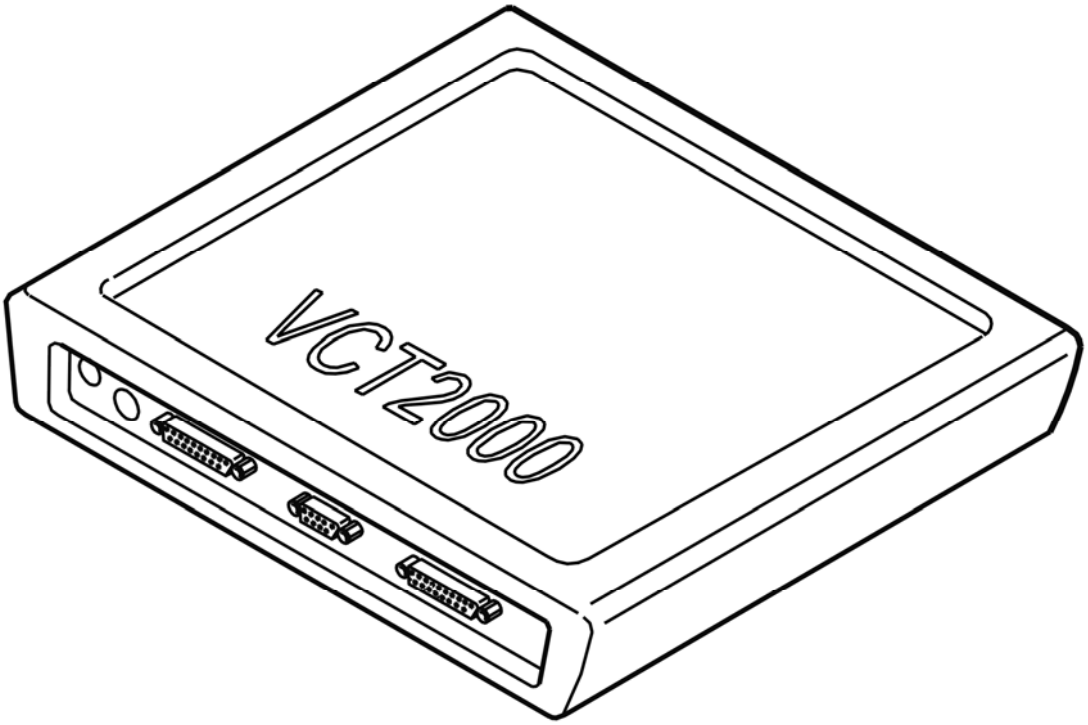

Fig. 158: Front Heated Oxygen Sensor
Courtesy of VOLVO CARS CORPORATION

The front heated oxygen sensor (HO2S) is used to provide the engine control module (ECM) with information about the remaining oxygen content of the exhaust gases in front of the three-way catalytic converter (TWC).

This information is used by the engine control module (ECM) so that it can continually check the combustion so that lambda=1. lambda=1 is the ideal fuel-air ratio, with 14.7 kg air/1 kg fuel.

The heated oxygen sensor uses current control and its signal characteristic is linear. With a linear signal characteristic, the amplitude of the signal curve is low when changing the oxygen content in the exhaust gases. The probe consists of a preheating element (see "Pre-heating heated oxygen sensors") and the actual lambda sensor. The lambda sensor is an oxygen sensitive ceramic body consisting of zirconium oxide. The control module supplies power to the ceramic body, which reacts to the oxygen content of the exhaust gases. This in turn affects the signal to the Engine Control Module (ECM). In order to determine the oxygen content in the exhaust pipe, the heated oxygen sensor needs reference air from the surrounding air. This reference air reaches the heated oxygen sensor via the cable harness.

CAUTION: The cable harness for the heated oxygen sensors (HO2S) must not be trapped or damaged in any way. The connectors for the heated oxygen sensors (HO2S) must not be greased under any circumstances. The oil in the grease would disrupt the reference air and the function of the heated oxygen sensors (HO2S).

The engine control module (ECM) can diagnose the heated oxygen sensor. For further information, see **HEATED OXYGEN SENSOR (HO2S) DIAGNOSTIC** . VIDA (Volvo scan tool) can be used to read off the calculated lambda value from the heated oxygen sensor.

Rear heated oxygen sensor (HO2S)

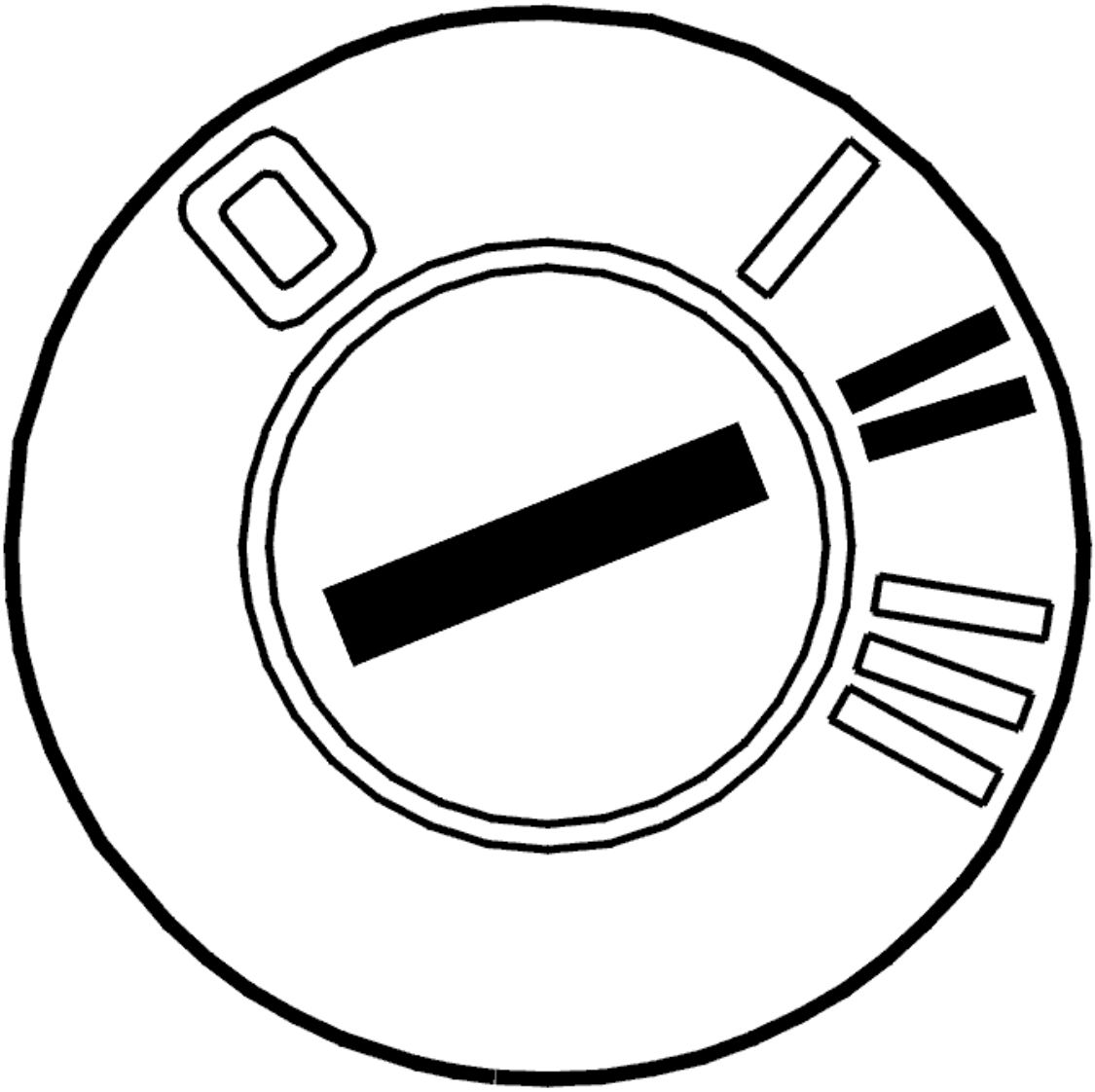

Fig. 159: Identifying Rear Heated Oxygen Sensor
Courtesy of VOLVO CARS CORPORATION

The rear heated oxygen sensor is used to provide the Engine Control Module (ECM) with information about the remaining oxygen content of the exhaust gases behind the three-way catalytic converter (TWC). This information is used by the Engine Control Module (ECM) to check the function of the three-way catalytic converter (TWC). This check is carried out when the conditions for the catalytic converter diagnostics have been met. The rear heated oxygen sensor has no direct effect on regulation of the fuel/air mixture. However the Engine Control Module (ECM) uses the signal to optimize the signal from the front heated oxygen sensor. For further information, see **CATALYTIC CONVERTER DIAGNOSTIC** .

The heated oxygen sensor (HO2S) uses voltage control. The signal characteristic is binary. With a binary signal characteristic, the amplitude of the signal curve changes considerably when changing the oxygen content in the exhaust gases. Otherwise its components and function are the same as the front heated oxygen sensor (HO2S).

CAUTION: The cable harness for the heated oxygen sensors (HO2S) must not be

trapped or damaged in any way. The connectors for the heated oxygen sensors (HO2S) must not be greased under any circumstances. The oil in the grease would disrupt the reference air and the function of the heated oxygen sensors (HO2S).

The engine control module (ECM) can diagnose the rear heated oxygen sensor. The signal can be read using VIDA (Volvo scan tool).

Preheating of the heated oxygen sensors (HO2S)

The heated oxygen sensor (HO2S) only functions above a certain temperature, approximately 300 °C. The normal operating temperature is between 300-900 °C. The heated oxygen sensors (HO2S) are electrically pre-heated so that operating temperature is rapidly reached. This also ensures that the heated oxygen sensors (HO2S) maintain a normal operating temperature and to prevent condensation which could damage the heated oxygen sensor (HO2S).

The heater element in the probe consists of a positive temperature coefficient (PTC) resistor. The system relay supplies the heater element with voltage. The element is grounded in the engine control module (ECM). When the control module grounds the connection a current flows through the PTC resistor. When the heated oxygen sensor (HO2S) is cold, the resistance in the PTC resistor is low and a large current will flow through the circuit. The current from the Engine Control Module (ECM) is pulsed at first to prevent condensation damage to the heated oxygen sensor (HO2S). Depending on the temperature, allowances are made for factors such as the dew point. As the temperature in the PTC resistor rises, the resistance rises, the current falls and switches in stages to a constant current. The pre-heating time for the front heated oxygen sensor (HO2S) is short, approximately 20 seconds. The rear short-term fuel trim takes longer to warm up. This is to prevent damage to the probe. The pre-heating time for the front heated oxygen sensor (HO2S) is short, approximately 20 seconds.

Probe preheating begins as soon as the engine is started. The heater element heats the heated oxygen sensors (HO2S) to approximately 350 °C. The probes maintain this as a minimum temperature.

The engine control module (ECM) can diagnose the heater element.

ENGINE COOLANT TEMPERATURE (ECT) SENSOR

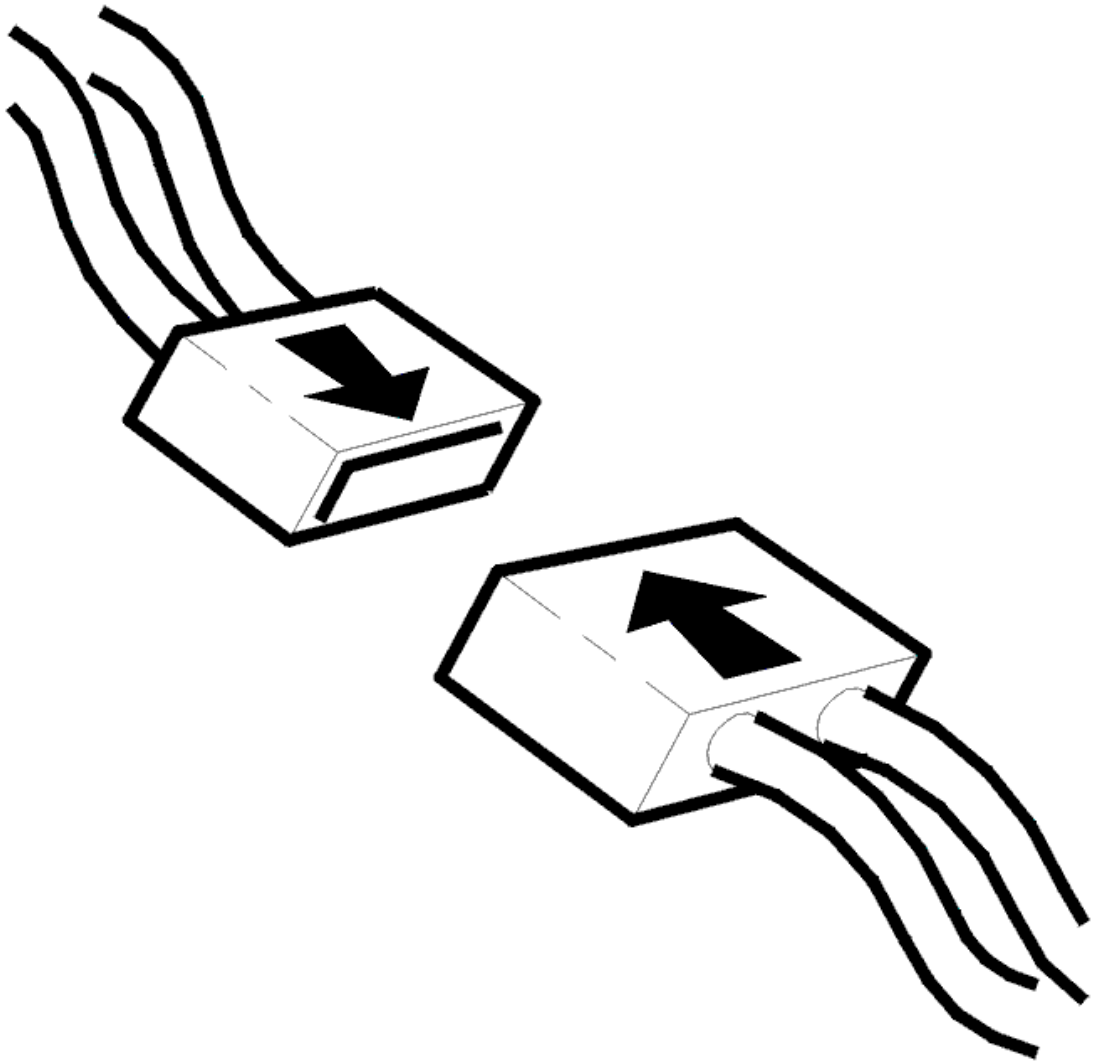

Fig. 160: Identifying Engine Coolant Temperature Sensor
Courtesy of VOLVO CARS CORPORATION

The engine coolant temperature (ECT) sensor checks the temperature of the engine coolant. The temperature of the engine coolant is required so that the engine control module (ECM) can regulate:

- the injection period
- the idle speed
- the engine cooling fan (FC)
- the ignition advance
- engagement and disengagement of the A/C compressor
- diagnostic functions.

The sensor is a negative temperature coefficient (NTC) type which is supplied with power from the control module (signal) and is grounded in the control module.

The resistance in the sensor changes according to the temperature of the engine coolant. This provides the control module with a signal of between 0.1-4.9 V. The lower the temperature the higher the voltage (high resistance). A high temperature results in low voltage (low resistance).

The engine coolant temperature (ECT) sensor is located beside the thermostat.

The engine control module (ECM) can diagnose the engine coolant temperature sensor. The sensor value can be read off using VIDA (Volvo scan tool).

ENGINE COOLING FAN (FC) / ENGINE COOLING FAN (FC) CONTROL MODULE

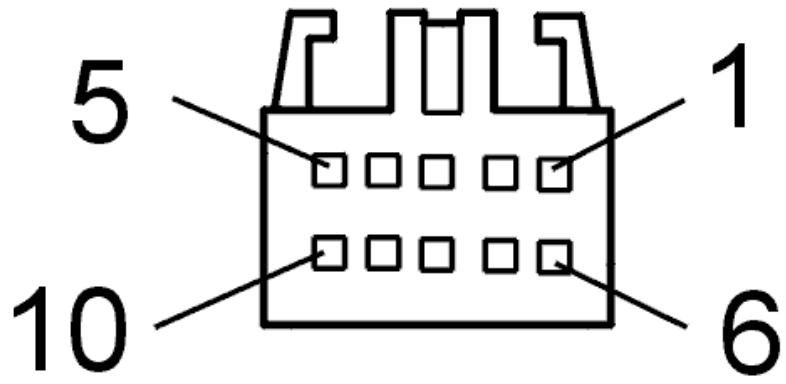

Fig. 161: Identifying Electronic Control Module
Courtesy of VOLVO CARS CORPORATION

The engine cooling fan (FC) has two functions. One is to cool the engine compartment, the other is to cool the condenser when the air conditioning (A/C) compressor is working.

The engine control module (ECM) transmits a pulse width modulated (PWM) signal to the engine cooling fan (FC) control module. The control module then activates the fan at one of three different speeds. The speed of the engine cooling fan (FC) is determined by the engine control module (ECM), depending on the coolant temperature (based on the signal from the engine coolant temperature (ECT) sensor) and the vehicle speed.

When the vehicle is stationary, the engine cooling fan (FC) is activated as follows:

- the first stage is activated at approximately 105 °C and shut of at approximately 100 °C

- the second stage is activated at approximately 110 °C and shut of at approximately 105 °C
- the third stage is activated at approximately 115 °C and shut of at approximately 110 °C.

NOTE: **The engine cooling fan may have a post-run of up to approx. 6 minutes after the engine has been turned off. The time for the fan's post-run depends on engine temperature, temperature in the engine compartment and pressure level in the AC-system.**

WARNING: **Be careful since the engine cooling fan may have a post-run after the engine has been turned off.**

The engine cooling fan (FC) and its control module are behind the radiator.

The engine control module (ECM) can diagnose the engine cooling fan. The fan can be activated using VIDA (Volvo scan tool).

MASS AIR FLOW (MAF) SENSOR

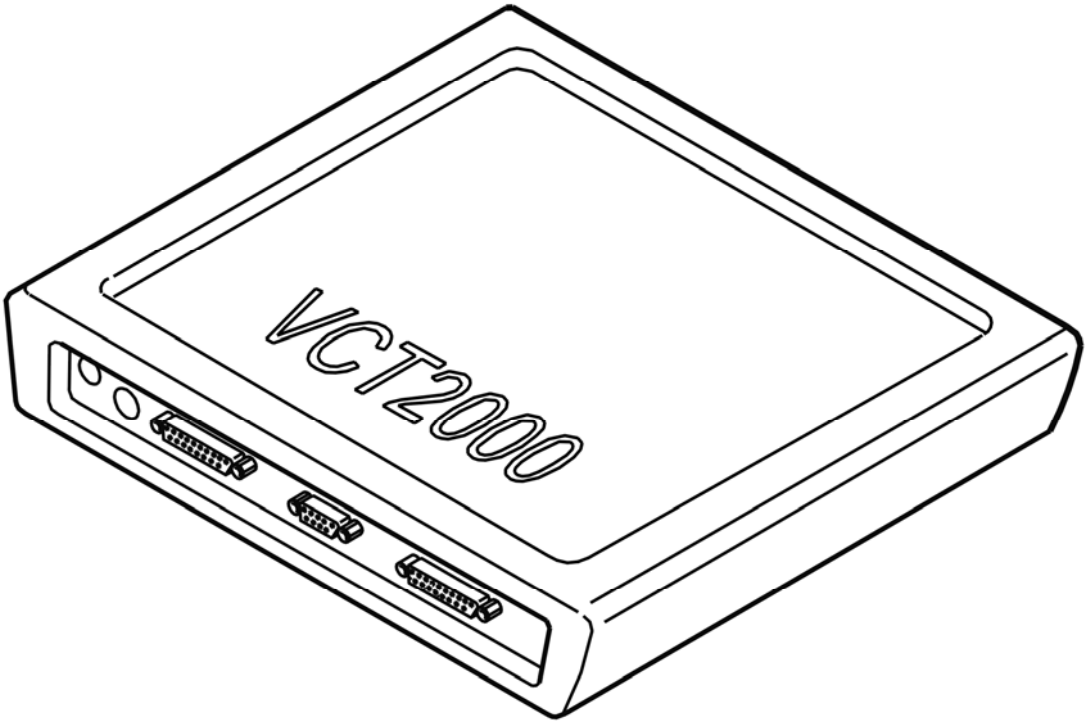

Fig. 162: Identifying Intake Air Temperature (IAT) Sensor
Courtesy of VOLVO CARS CORPORATION

The mass air flow (MAF) sensor gauges the air mass sucked into the engine. It continuously transmits signals to

the engine control module (ECM) about the mass of the intake air. This data is used by the engine control module (ECM) to calculate:

- the injection period
- the ignition timing
- the engine load.

The gearbox control module (TCM) also uses this data for its gear shift calculations. This data is transmitted to the gearbox control module (TCM) from the engine control module (ECM) via the high speed side of the Controller area network (CAN).

The mass air flow (MAF) sensor is a hot wire type. Unlike other hot wire types, the mass air flow sensor in the Denso system uses a hot wire which has a ceramic casing. This eliminates the need for a clean burn function.

The mass air flow (MAF) sensor is supplied with battery voltage by the system relay and is grounded in the engine control module (ECM). The signal from the sensor is analogue and varies between 0.5 - 4.5 V depending on the air mass. Low air flow (low mass) results in low voltage, high air flow (high mass) gives high voltage.

The mass air flow (MAF) sensor is positioned between the air cleaner (ACL) housing and the intake manifold.

The mass air flow (MAF) sensor also contains an intake air temperature (IAT) sensor.

The engine control module (ECM) can diagnose the mass air flow (MAF) sensor. The signal can be read using VIDA (Volvo scan tool).

OUTSIDE TEMPERATURE SENSOR

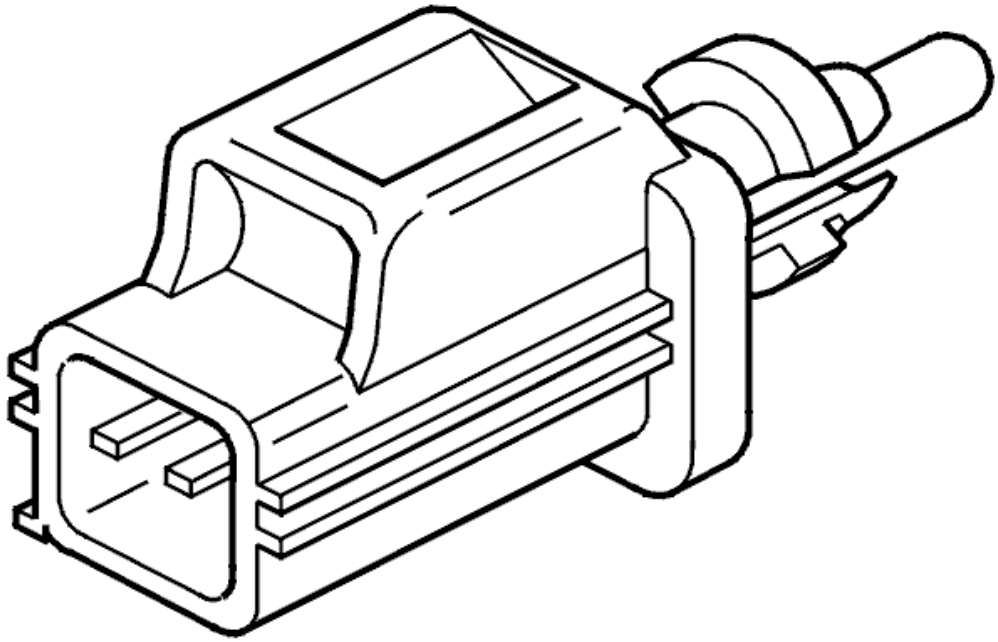

Fig. 163: Identifying Outside Temperature Sensor
Courtesy of VOLVO CARS CORPORATION

The outside temperature sensor detects the temperature in the surrounding air. The signal is used by the engine control module (ECM) as a substitute value in the event of a fault in certain components or functions and to control certain diagnostic functions.

The sensor is a negative temperature coefficient (NTC) type which is supplied with power from the control module (signal) and is grounded in the control module.

The resistance in the sensor, which provides a signal between 0.1-4.7 V, changes depending on the outside temperature. Low temperatures produce high voltage (high resistance), high temperatures produce low voltage (low resistance).

The outside temperature sensor is positioned in the left door mirror.

The engine control module (ECM) can diagnose the outside temperature sensor. The sensor value can be read off using VIDA (Volvo scan tool).

ENGINE SPEED (RPM) SENSOR

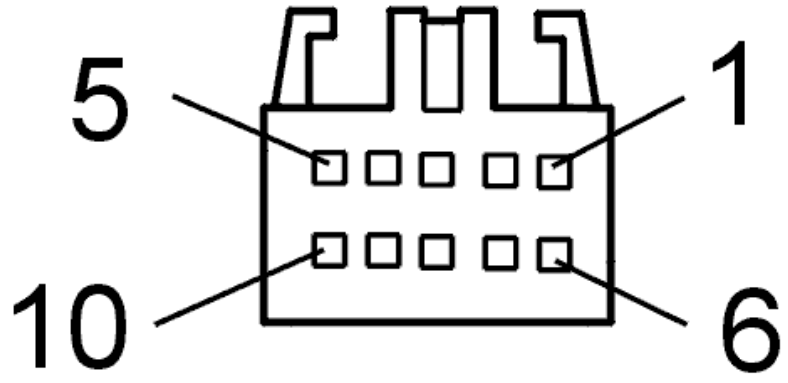

Fig. 164: Identifying Engine Speed Sensor
Courtesy of VOLVO CARS CORPORATION

The engine speed (RPM) sensor provides the Engine Control Module (ECM) with information about the speed and position of the crankshaft. The Engine Control Module (ECM) is able to use the signal from the engine speed (RPM) sensor to determine when a piston is approaching top dead center (TDC). However it is unable to use the signal from the engine speed (RPM) sensor to determine whether the piston is in the combustion stroke or whether the exhaust valve is open (exhaust stroke). The signal from the camshaft position (CMP) sensor is also required to determine the operating cycle of the engine.

The signal from the engine speed (RPM) sensor is also used to check the engine for misfires (misfire diagnostics).

Cars with manual transmissions have a series of holes drilled in the periphery of the flywheel. Cars with automatic transmissions have a steel ring with punched holes. This steel ring is welded to the edge of the carrier plate. In both cases, there is 6° between each hole. This arrangement creates a hole for each tooth. There are 360° in one revolution. 6° between each hole means that there are 60 holes. However one hole is not drilled/punched, to create a reference position (tooth) for the crankshaft. This reference position is 72° before the top dead center (TDC) of cylinder 1 on a 5 cylinder engine.

The engine speed (RPM) sensor is at the rear of the engine above the flywheel.

The sensor is inductive with a permanent magnet. An alternating current is induced in the sensor when the flywheel/carrier plate passes the engine speed (RPM) sensor. The generated voltage and frequency increases with the engine speed (RPM).

The signal varies between 0.1 - 100 V (AC) depending on the engine speed (RPM).

The Engine Control Module (ECM) is able to determine the engine speed (RPM) by counting the number of holes per time unit. When the reference tooth passes the engine speed (RPM) sensor, the voltage and frequency drop momentarily to zero, even though the engine is still running. This allows the Engine Control Module (ECM) to determine the position of the crankshaft.

If the signal from the engine speed (RPM) sensor is incorrect or missing, the control module will use the signals from the camshaft position (CMP) sensor, on the condition that the position of the camshaft has been adapted and the car can be driven if there is no signal.

The engine control module (ECM) can diagnose the engine speed (RPM) sensor. The sensor value (engine speed (RPM)) can be read off using VIDA (Volvo scan tool).

CAMSHAFT POSITION (CMP) SENSOR

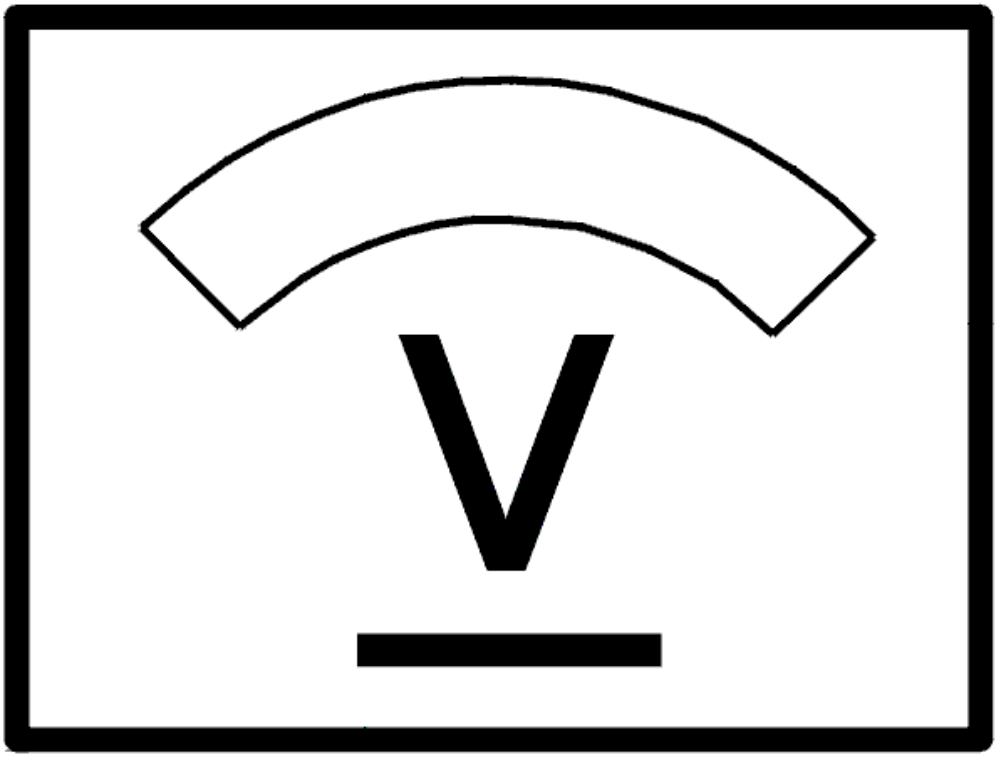

Fig. 165: Identifying Camshaft Position Sensor
Courtesy of VOLVO CARS CORPORATION

The Engine Control Module (ECM) uses the signals from the camshaft position (CMP) sensor and the engine speed (RPM) sensor to establish the operating cycle of the engine. This enables the engine control module (ECM) to:

- start the engine more quickly
- control the correct ignition coil and injector
- function as a substitute for the engine speed (RPM) sensor
- check the camshaft continuous variable valve timing (CVVT).

The pulse wheel on the camshaft has five teeth with different gaps which correspond to a specific cylinder.

For further information, also, see **KNOCK SENSOR (KS)** and **CAMSHAFT CONTROL (CVVT)**.

The sensor, which is a magnetic resistor with a permanent magnet, is grounded in the control module and supplied with current from the control module. When one of the teeth on the camshaft pulse wheel passes the camshaft position (CMP) sensor, a signal is transmitted to the control module from the camshaft position (CMP) sensor. The signal varies between 0-1 V and is low when a flank passes the camshaft position (CMP) sensor.

The camshaft position (CMP) sensor is positioned at the rear of the engine on the camshaft with continuous variable valve timing (CVVT).

The engine control module (ECM) can diagnose the camshaft position (CMP) sensor.

KNOCK SENSOR (KS)

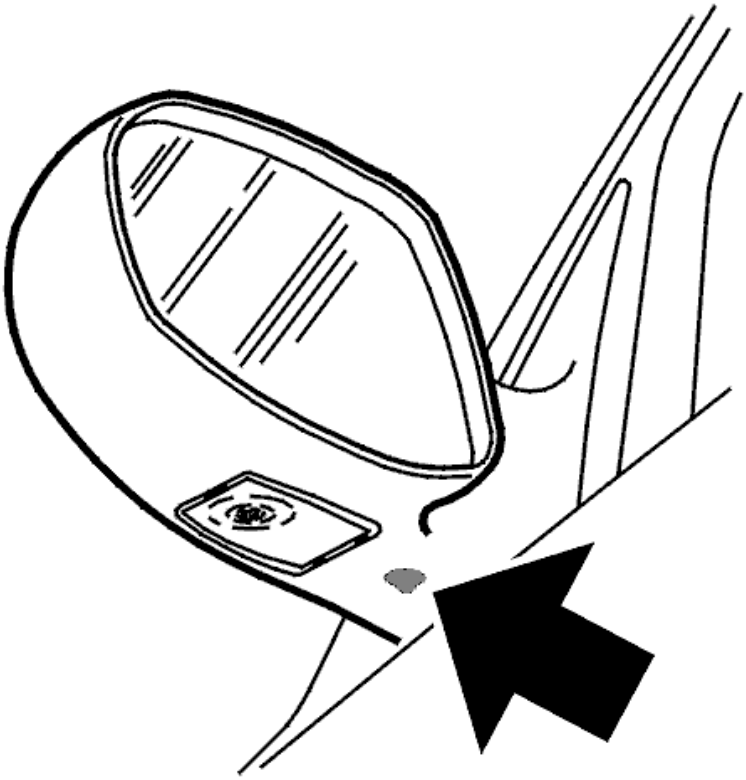

Fig. 166: Identifying Knock Sensor
Courtesy of VOLVO CARS CORPORATION

Cars of model year 1999-2000 have a knock sensor. Cars from model year 2001 are equipped with two knock sensors (KS).

The function of the knock sensor (KS) is to monitor combustion knocking from the engine. Knocking may damage the engine and reduces the efficiency of engine combustion.

If the engine control module (ECM) registers knocking from any of the cylinders, the ignition will be retarded for that cylinder at the next combustion stage. If repeated ignition retardation does not prevent knocking, the injection period will be increased. This has a cooling effect.

The sensor is made up of a piezo electrical crystal. If there is engine knock, vibrations (sound waves) spread through the cylinder block to the knock sensor (KS). The resultant mechanical stress in the piezo electrical material in the knock sensors generates a voltage. This signal is transmitted to the Engine Control Module (ECM). The signal corresponds to the frequency and amplitude of the sound waves. This allows the Engine Control Module (ECM) to determine if the engine is knocking. The camshaft position (CMP) sensor and engine speed (RPM) sensor are used to determine the operating cycle of the engine (which cylinder is igniting) and thereby which cylinder is knocking.

The knock sensors (KS) are positioned on the cylinder block below the intake manifold.

The engine control module (ECM) can diagnose the knock sensors (KS).

ENGINE COOLANT LEVEL SENSOR

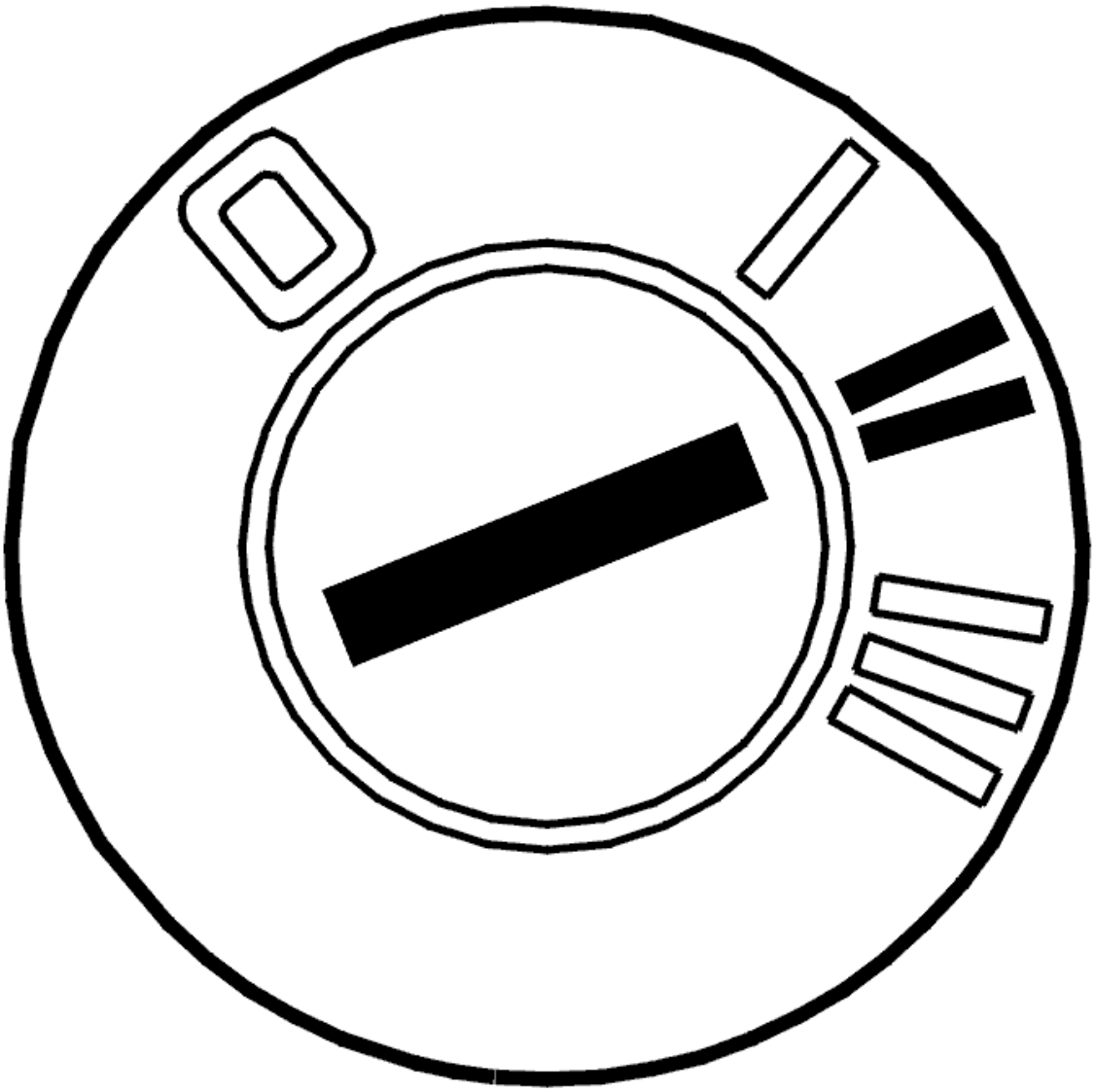

Fig. 167: Identifying Engine Coolant Level Sensor
Courtesy of VOLVO CARS CORPORATION

The function of the engine coolant level sensor is to alert the driver if the engine coolant level in the expansion tank is too low.

The sensor is a magnetic reed switch, which is enclosed in a pipe on the bottom of the expansion tank. Around the pipe, on the inside of the expansion tank is a float. This float contains a magnet. When the engine coolant level is above minimum, the float is too high in the tank to affect the switch. However if the engine coolant level falls below the minimum level, the magnetic field acts on the switch.

The sensor is supplied with voltage (signal) from the Engine Control Module (ECM) and grounded in chassis. When the engine coolant level in the expansion tank is over a certain level the circuit closes, which produces a low signal. When the engine coolant level is below a certain level the circuit is opened by the engine coolant

level sensor, which produces a high signal. When the engine control module (ECM) detects a high signal the information about low engine coolant level is transmitted via the Controller area network (CAN) to the driver information module (DIM), which warns the driver.

NOTE: There are no functions controlled by the engine which are directly connected to the low coolant level warning lamp. The Engine Control Module (ECM) only transfers the signal which is used by the Driver Information Module (DIM).

The engine control module (ECM) cannot diagnose the engine coolant level sensor.

MAIN RELAY (SYSTEM RELAY)

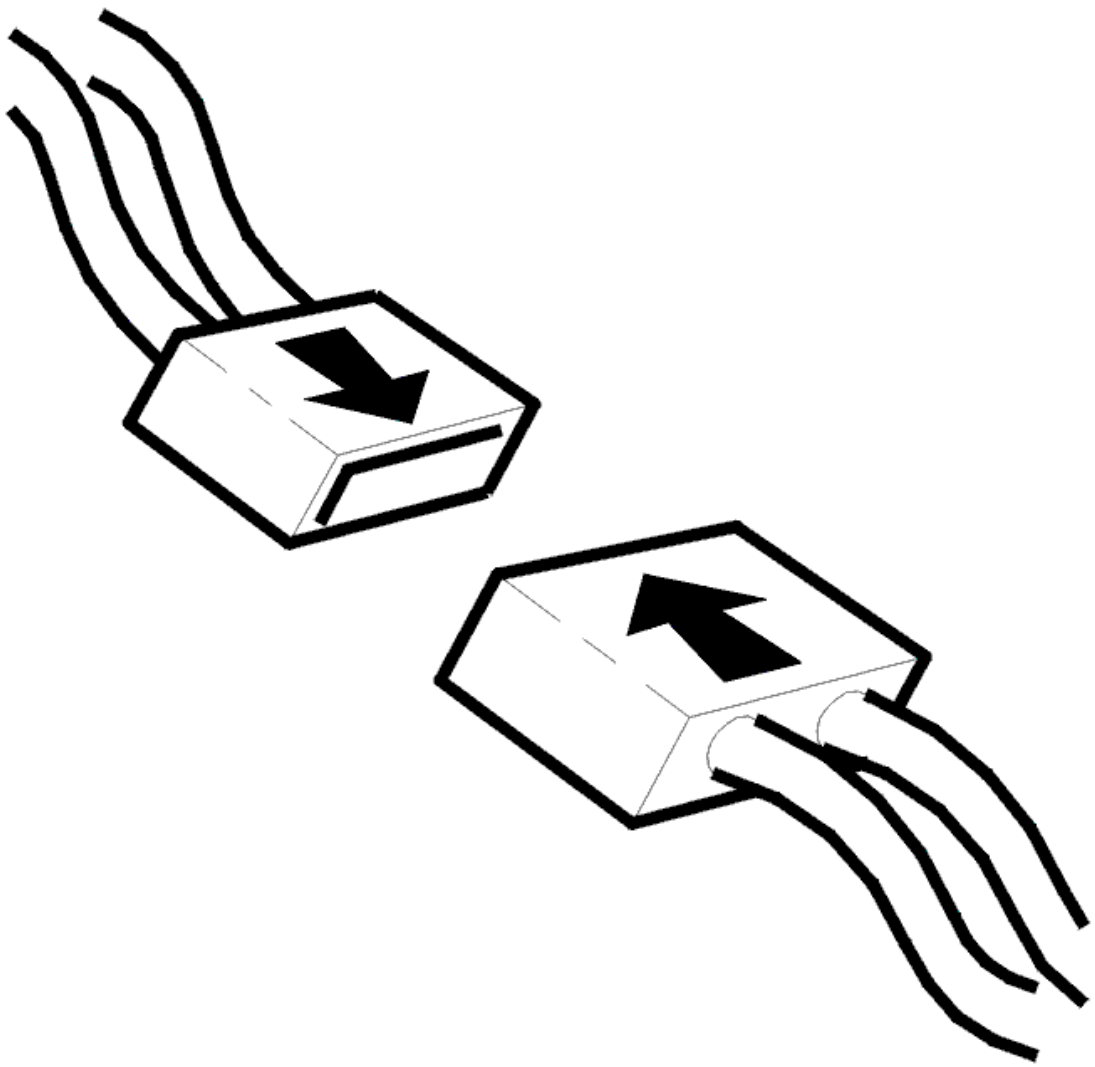

Fig. 168: Identifying Main Relay
Courtesy of VOLVO CARS CORPORATION

The function of the main relay (system relay) is to supply certain components with voltage.

The relay is mechanical and has a closing function. In the rest position the circuit in the relay is open.

The main relay terminals (#30 and #86) are supplied with voltage by the battery. When the ignition key has been turned and the engine control module (ECM) is powered, the terminal (#85) on the main relay is grounded by the engine control module (ECM).

When the terminal (#85) is grounded, the relay is activated and a number of components are powered via the relay terminal (#87).

The engine control module (ECM) can diagnose the main relay.

The main relay is in the relay/fusebox in the engine compartment.

AIR-CONDITIONING: (A/C) RELAY

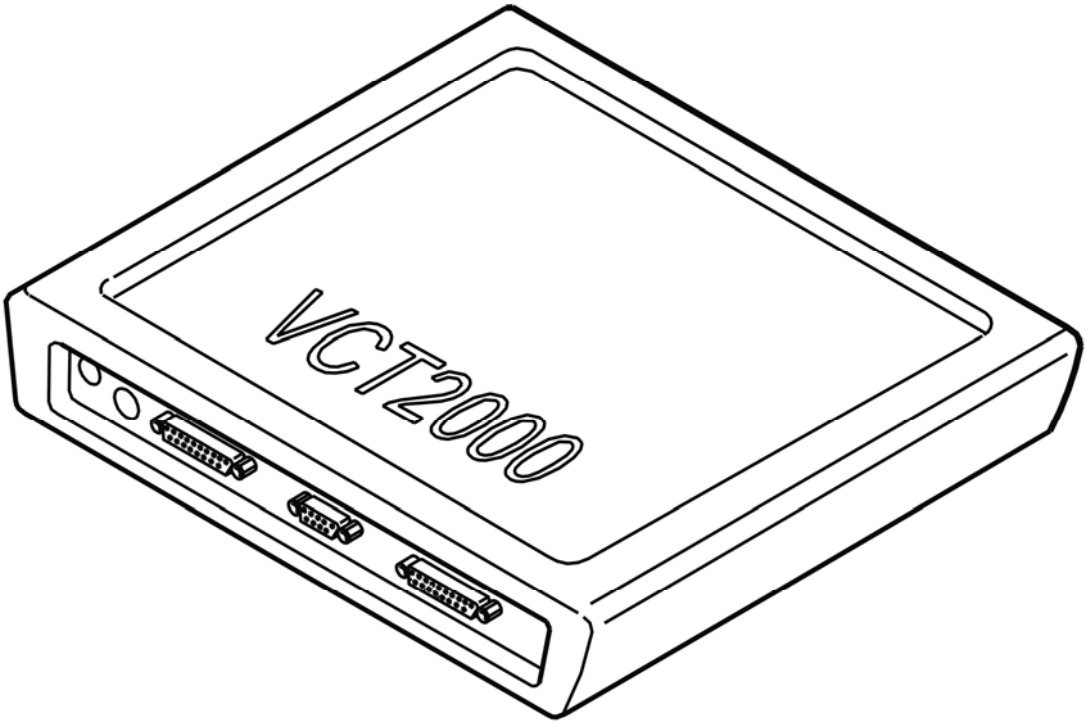

Fig. 169: Identifying A/C Relay
Courtesy of VOLVO CARS CORPORATION

The air conditioning (A/C) relay controls the A/C compressor. When the climate control module (CCM) requests A/C control, a signal is transmitted to the engine control module (ECM) via the controller area network (CAN) to activate the relay. The engine control module (ECM) temporarily deactivates the relay in the event of:

- full load acceleration
- too high engine coolant temperature.

The relay is mechanical. It has a closing / breaking function and is supplied with power from the system relay.

In the rest position the circuit in the relay is open.

The system relay supplies the coil and the relay with power. The relay activates when the coil is grounded in the engine control module (ECM), the circuit closes and the A/C compressor is supplied with power via the relay voltage output.

The relay coil is grounded (signal) when the engine control module (ECM) receives a signal via the Controller area network (CAN) from the climate control module (CCM) to activate the relay and start the compressor.

FUEL PUMP (FP) RELAY

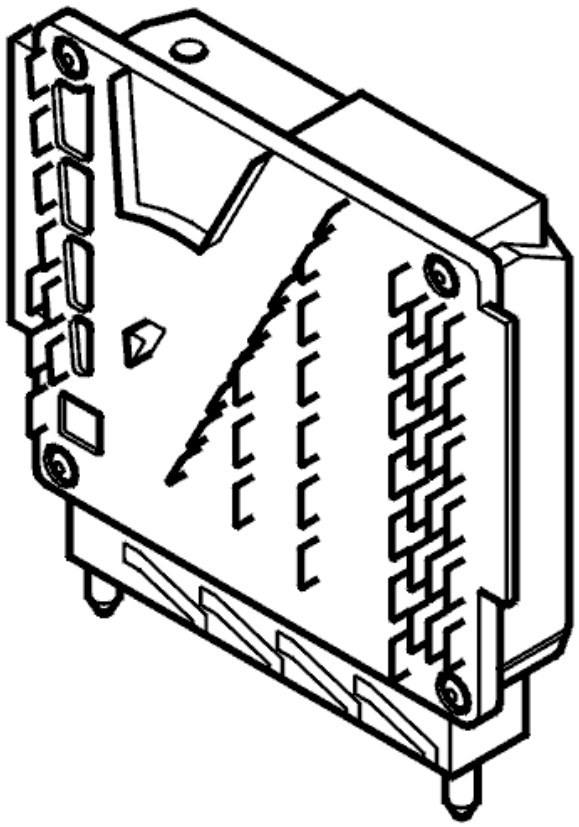

Fig. 170: Identifying A/C Relay
Courtesy of VOLVO CARS CORPORATION

The fuel pump (FP) relay supplies the fuel pump with power. The relay also cuts the power to the pump when the ignition is switched off or if the engine stops. The central electronic module (CEM) also cuts the power to the relay if the supplemental restraint module (SRS) transmits a message indicating that an airbag has deployed.

The central electronic module (CEM) activates and deactivates the relay when requested by the engine control module (ECM) (via the Controller area network (CAN)).

When the ignition is switched on, the engine control module (ECM) sends a signal to the central electronic

module (CEM) via the controller area network (CAN) to run the fuel pump (FP) for one seconds. This is so that the pressure increases in the fuel system, shortening the start time.

When the flywheel in the engine rotates (generating a signal from the engine speed (RPM) sensor), the engine control module (ECM) will transmit a request to the central electronic module (ECM) via the Controller area network to start the fuel pump (FP). In the event of the engine stopping, the Engine Control Module (ECM) cancels the "activated fuel pump" signal. The central electronic module (CEM) then switches off the fuel pump (FP).

There is a directly connected cable between the engine control module (ECM) and the central electronic module (CEM). In the event of a fault in the Control area network (CAN), this cable is used by the "activated fuel pump" signal.

AIR-DISTRIBUTION: VALVE

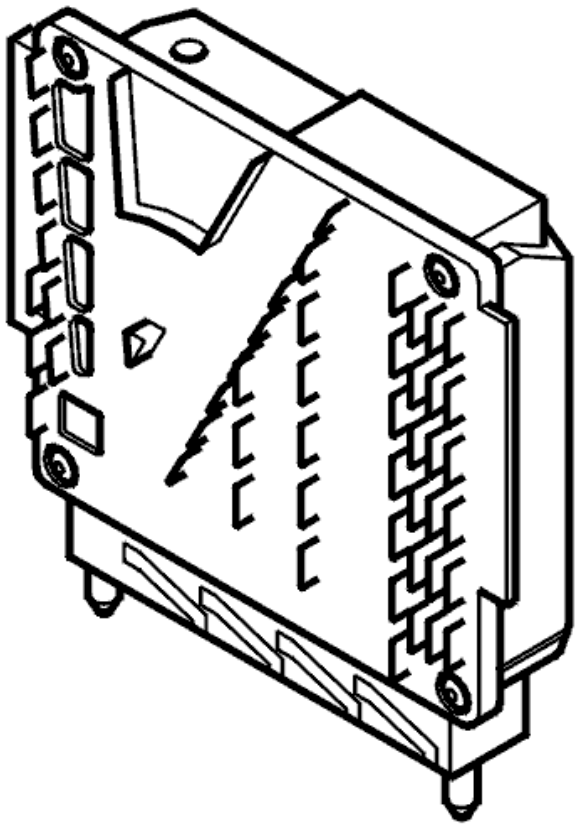

Fig. 171: Identifying Air Distribution Valve
Courtesy of VOLVO CARS CORPORATION

Cars from model year 1999-2000 have an air distribution valve. The air distribution valve supplies the injectors with air. This results in better volumetric efficiency, more effective combustion and therefore cleaner exhaust emissions. The valve is also used for idle air trim but is also slightly open at higher engine speeds.

The valve is directly mounted on the inlet hose for the electronic throttle module (ETM). The valve is connected to a hose which supplies air to the air-shrouded injectors via a distribution pipe.

The valve has its own ignition driver stage and solenoid and is supplied with 12V. The valve is controlled steplessly by the Engine Control Module (ECM) using a variable pulse ratio (duty-cycle) which opens or closes a shutter in the valve.

The valve works primarily during cold starts and when idling, to minimize the release of carbon dioxide and hydro-carbons whilst maintaining performance and driveability. This is partly because the size of fuel drops is smaller with fuel mixed with air and does not adhere as easily to the walls of the intake manifold when they are cold and damp. This also reduces fuel consumption when cold starting and cuts the warm up time for both the engine and the three-way catalytic converter (TWC).

The total calculated volume of air to be released into the combustion chamber is distributed between both the Electronic Throttle Module (ETM) and the air distribution valve. The input signals to the Engine Control Module (ECM) which affect the operation of the air distribution valve are: the position of the throttle, engine speed (RPM)/position sensor, engine coolant temperature (ECT) sensor, ambient air pressure and ambient air temperature.

The air distribution valve can be diagnosed by the Engine control module (ECM) and can be activated using VIDA (Volvo scan tool).

INJECTORS

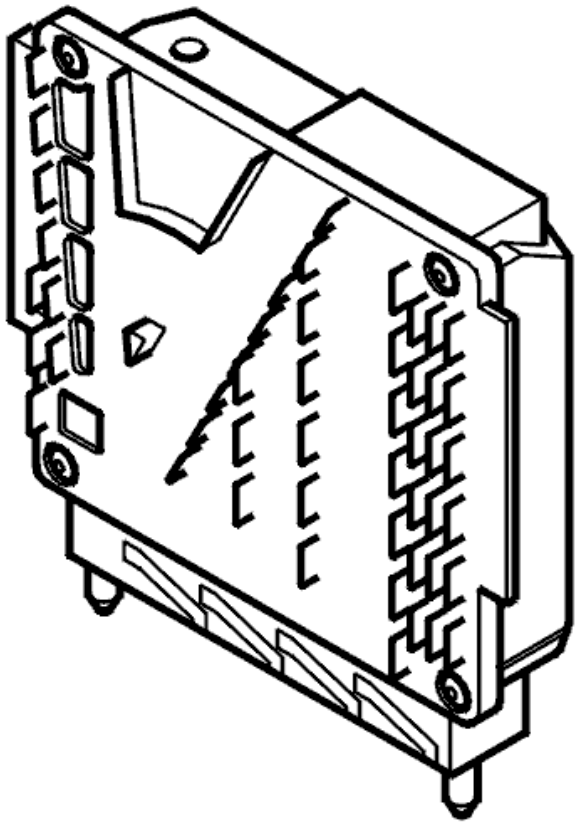

Fig. 172: Identifying Injector
Courtesy of VOLVO CARS CORPORATION

The function of the injectors is to spray fuel into the cylinders in the correct spray patterns. This happens sequentially.

The injectors are in the intake manifold.

It is essential that the injectors are correctly installed with no air leakage around them. Fuel leakage from the top of an injector when it is not activated may lead to starting and driving problems.

The engine control module (ECM) controls the injectors using a pulse width modulation (PWM) signal.

The engine control module (ECM) can diagnose the injectors. The injectors can be activated using VIDA (Volvo scan tool).

Air-shrouded injectors

Cars from model year 1999-2000 have air-shrouded injectors.

The injectors are in the air distribution pipe which is in the intake manifold.

The lower section of the injectors has 2 openings in the side where air can enter.

When the needle in the injector starts to rise, the openings are exposed. This allows air to flow in to the center of the valve at high speed, and the fuel and air are finely distributed and mixed.

When the needle rises further, the injector nozzle opens and the air/fuel mixture is released into the combustion chamber.

EVAPORATIVE EMISSION SYSTEM (EVAP) VALVE

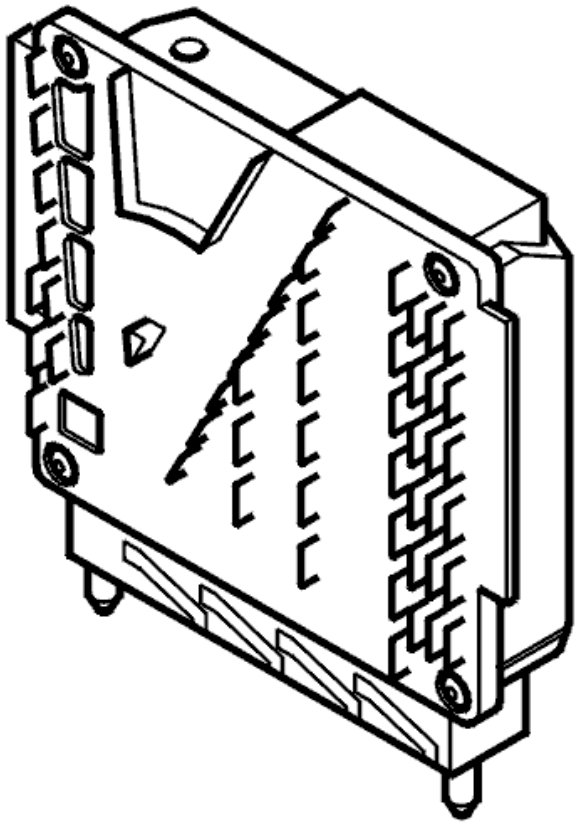

Fig. 173: Identifying Canister Purge (CP) Valve
Courtesy of VOLVO CARS CORPORATION

The evaporative emission system (EVAP) valve is used to open/close the connection between the EVAP canister and the intake manifold. The valve controls the flow of hydro-carbons (fuel vapor) from the EVAP canister to the engine intake manifold using the vacuum in the intake manifold. This ensures that hydro-carbons stored in the EVAP canister are used in the engine combustion process.

The valve is an electro-magnetic valve which is powered from the system relay. When the valve needs to be opened, it is grounded internally in the engine control module (ECM). The evaporative emission system (EVAP) valve is closed when in the standby position (open-circuit).

When the control module requests that the EVAP canister should be emptied (the hydrocarbons stored in the canister should be released into the engine), the control module deploys the evaporative emission system (EVAP) valve by grounding it. The valve is grounded using a pulse width modulation (PWM) signal, allowing the control module to govern the extent to which the valve opens and adapting the emptying of the canister according to how full it is, engine speed (RPM) and load etc.

The engine control module (ECM) can diagnose the evaporative emission system (EVAP) valve. The valve can be activated using VIDA (Volvo scan tool).

The evaporative emission system (EVAP) valve is close to the intake manifold.

CAMSHAFT RESET VALVE (CONTINUOUS VARIABLE VALVE TIMING (CVVT))

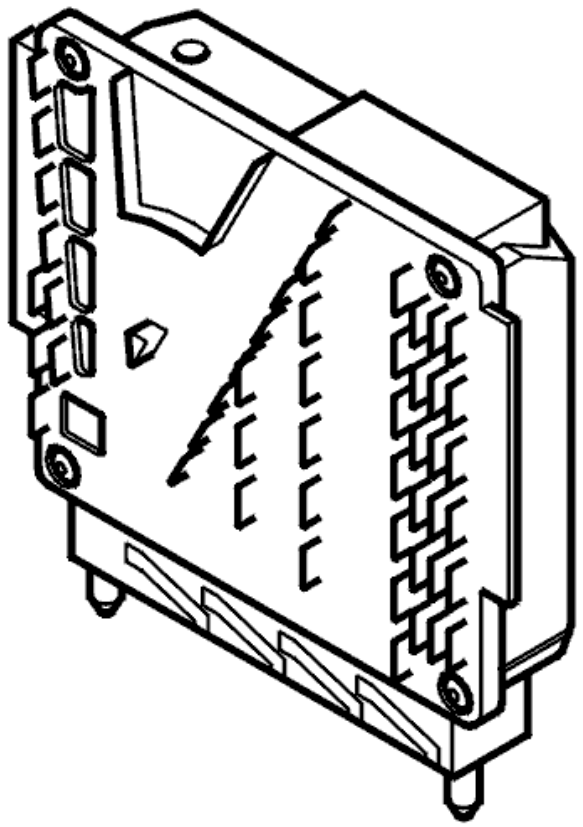

Fig. 174: Identifying Camshaft Reset Valve
Courtesy of VOLVO CARS CORPORATION

The camshaft reset valve controls the oil flow to the continuous variable valve timing (CVVT) unit.

The valve consists of an electro-magnetic valve with a spring-loaded piston. There are slits in the piston which channel the engine lubricating oil to different channels in the continuous variable valve timing (CVVT) unit by moving the piston in the reset valve. The continuous variable valve timing (CVVT) unit turns the camshaft (the cam timing changes). The direction in which the camshaft turns depends on the chamber in the CVVT unit which is supplied with oil (pressure).

Also, see **CAMSHAFT CONTROL (CVVT)**.

The system relay supplies the reset valve with voltage. The valve is grounded (control stage) in the engine control module (ECM). When the valve is grounded using a pulse width modulation (PWM) signal, the oil flow in the valve can be controlled to the different chambers in the continuous variable valve timing (CVVT) unit at variable rates. This allow the angle of the camshaft to be changed precisely and smoothly.

The engine control module (ECM) can diagnose the camshaft reset valve. The value of the reset valve can be read using VIDA (Volvo scan tool).

Only cars of model year 2000 and later have continuous variable valve timing (CVVT).

The valve is on the cylinder head above the camshaft with camshaft control.

IGNITION COILS

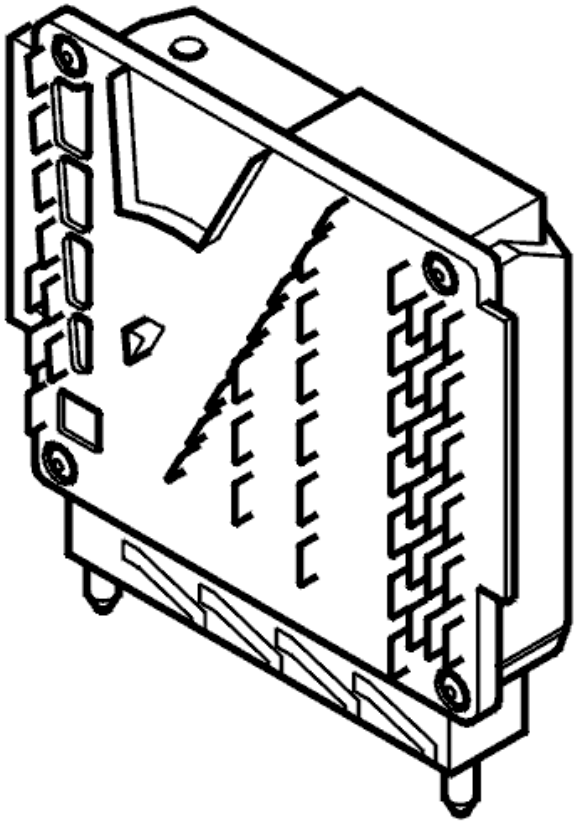

Fig. 175: Identifying Ignition Coil
Courtesy of VOLVO CARS CORPORATION

The ignition coils ignite the fuel / air mixture on command from the engine control module (ECM). The signal is re-transmitted so that the control module knows that it worked.

Each ignition coil has its own integrated power stage.

The ignition coils are in the sparkplug wells above each spark plug.

The ignition windings can be diagnosed by the Engine control module (ECM) and can be activated using VIDA (Volvo scan tool).

EMISSIONS WARNING LAMP

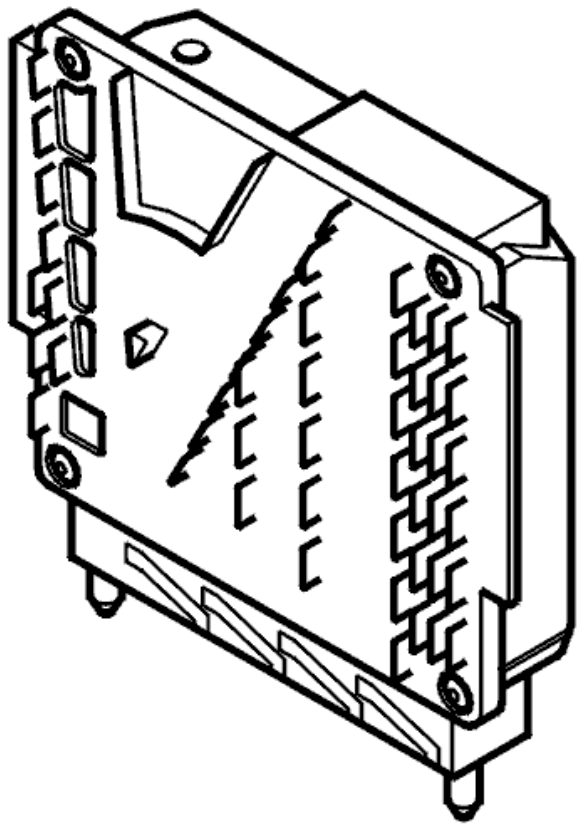

Fig. 176: Emissions Warning Lamp
Courtesy of VOLVO CARS CORPORATION

The emissions warning lamp in the Driver Information Module (DIM) has a warning symbol. This warning symbol varies depending on the market and model year. The warning symbols are:

- "Engine symbol" (not USA, model year 2001-)
- "CHECK ENGINE" (MIL - Malfunction Indicator Lamp, USA only).
- "Lambda symbol" (not USA, model year 1999-2000).

The warning symbol lights when the ignition key is turned to position II and goes out when the engine is started if the engine management system does not detect any faults.

The warning lamp is directly connected to the engine control module (ECM).

The warning lamp will light if there is a fault in one of the monitored parameters in the engine management system. The warning lamp will also light in response to a request transmitted via the Control area network (CAN) if there is a fault in one of the following systems which affects emissions:

- gearbox control module (TCM)
- brake control module (BCM)
- electronic throttle module (ETM).

MANIFOLD ABSOLUTE PRESSURE (MAP) SENSOR

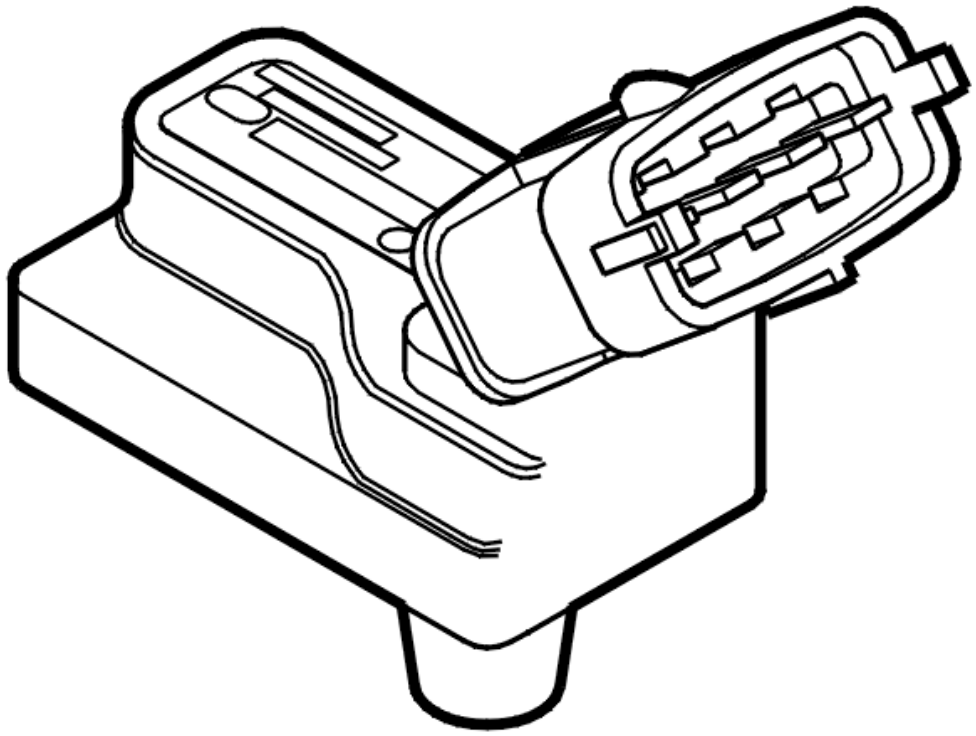

Fig. 177: Identifying MAP Sensor
Courtesy of VOLVO CARS CORPORATION

The manifold absolute pressure (MAP) sensor detects quick pressure changes in the intake manifold after the throttle. The signal from the sensor is used by the engine control module (ECM) as an addition to the mass air flow (MAF) sensor to calculate the injection period.

The semi-conductor sensor is grounded in the control module and is supplied with power from the control module.

The resistance in the sensor changes depending on the pressure in the intake manifold, giving a signal of 0.5 - 4.5 V. Low pressure results in low voltage, high pressure in high voltage.

The engine control module (ECM) can diagnose the manifold absolute pressure sensor. The sensor signal can be read using VIDA (Volvo scan tool).

The manifold absolute pressure (MAP) sensor is on top of the radiator and is connected to the intake manifold by a hose.

FUEL TANK PRESSURE SENSOR (CERTAIN MARKETS ONLY)

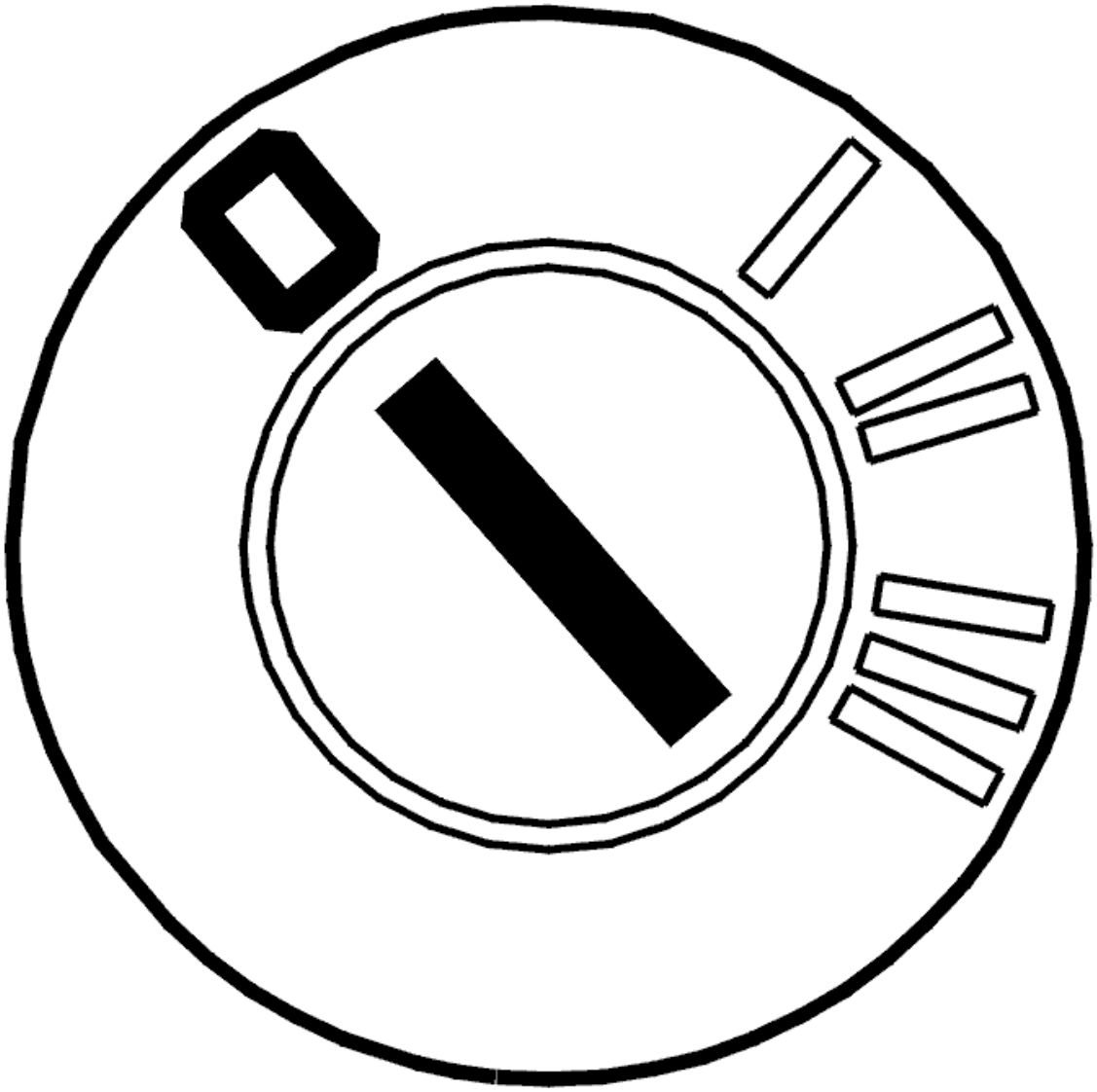

Fig. 178: Fuel Tank Pressure Sensor
Courtesy of VOLVO CARS CORPORATION

The fuel tank pressure sensor detects the pressure in the fuel tank. The signal from the sensor is used by the engine control module (ECM) during diagnostics to check for leakage in the fuel tank system.

The sensor, which is a piezo resistor, is grounded in the control module and supplied with power from the control module.

The resistance in the sensor changes depending on the pressure in the fuel tank, giving a signal of 0.5 - 4.5 V. Low pressure results in low voltage, high pressure in high voltage.

The tank pressure sensor can be diagnosed by the Engine control module (ECM), and the sensor's signal can be read using VIDA (Volvo scan tool).

The fuel tank pressure sensor is positioned on top of the fuel tank on cars with leakage diagnostics for the

evaporative emission (EVAP) system.

EVAP CANISTER SHUT-OFF VALVE (CERTAIN MARKETS ONLY)

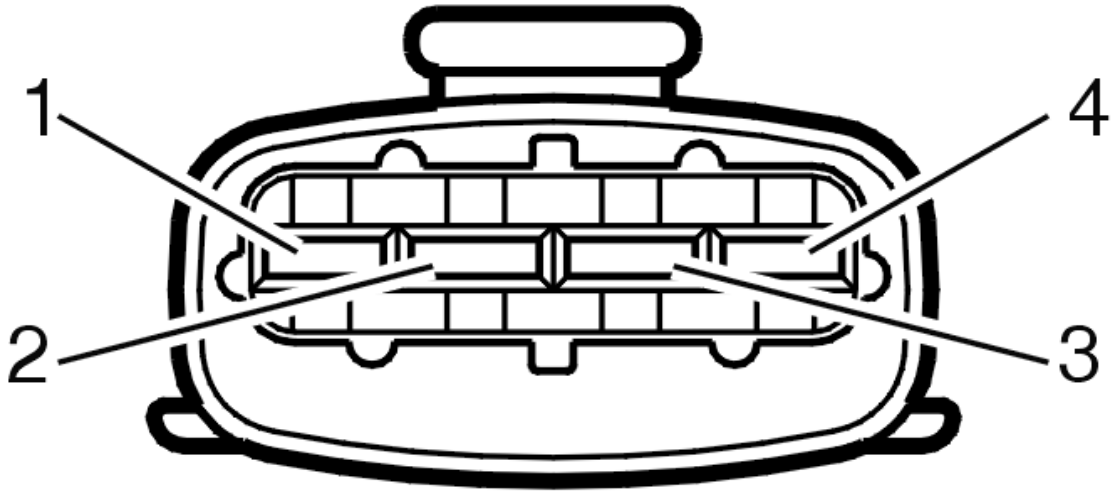

Fig. 179: Identifying EVAP Canister Shut-Off Valve
Courtesy of VOLVO CARS CORPORATION

The EVAP canister shut-off valve is used to close the connection between the EVAP canister/fuel tank system and fresh air (atmospheric pressure) when leak diagnostics are carried out on the cars with the evaporative emission (EVAP) system.

The valve is an electro-magnetic valve which is powered from the system relay. When the valve needs to be closed, it is grounded internally in the engine control module (ECM). The valve is open when in the rest position (open-circuit).

The valve can be diagnosed by the engine control module (ECM) and can be activated using VIDA (Volvo scan tool).

The valve is next to the EVAP canister on cars with leak diagnostics for the evaporative emission (EVAP) system.

IDENTIFYING UPGRADED SOFTWARE ECM/ETM

Upgraded software for the engine control module (ECM) and electronic throttle module (ETM), available during 2006 or later, can be identified. The updated software has a **diagnostic number/software number** . The diagnostic number/software number can be read using VIDA (Volvo scan tool).

CAUTION: For turbocharged and 6-cylinder normally aspirated engines the software of the engine control module (ECM) can be identified using the software number or diagnostic number , depending on the version of the software involved.

The differences between the **first version** , which is identified by the software number, and the **second**

version , which is identified by the diagnostic number, include the following:

- Improved driveability after engine control module (ECM) reset. The start values for some system adaptations are adjusted to facilitate handling of aged/worn systems/components after diagnostic trouble code deletion or when the control module has been without power.
- Increased hardiness to certain combinations of aging/wear in the system. The work areas for some adaptations are adjusted to better match the aging of certain components.
- Supplements as to which faults are to generate a message to the driver.
- Improved serviceability (diagnostic trouble code generation) for some intermittent faults that generate driveability problems.

The diagnostic number (also known as diagnostic version in VIDA (Volvo scan tool)) and the software number can be read out via VIDA (Volvo scan tool). The electronic throttle module (ETM) is identified solely by the diagnostic number.

If the diagnostic number/software number is within the following series, it is the **latest** software downloaded:

- **5-cyl non-turbo engines** ,: Engine control module (ECM) diagnostic number 30785129 - 30785132 or 30785667 and electronic throttle module (ETM) 30785387.
- **Turbocharged and 6-cylinder normally aspirated engines** :

  First version, engine control module (ECM) **software number** 30785203 - 30785240 and electronic throttle module (ETM) diagnostic number 30785388.

  Second version, engine control module (ECM) **diagnostic number** 30785372 - 30785378 and electronic throttle module (ETM) diagnostic number 30785388.

FUNCTION

CAMSHAFT CONTROL (CVVT)

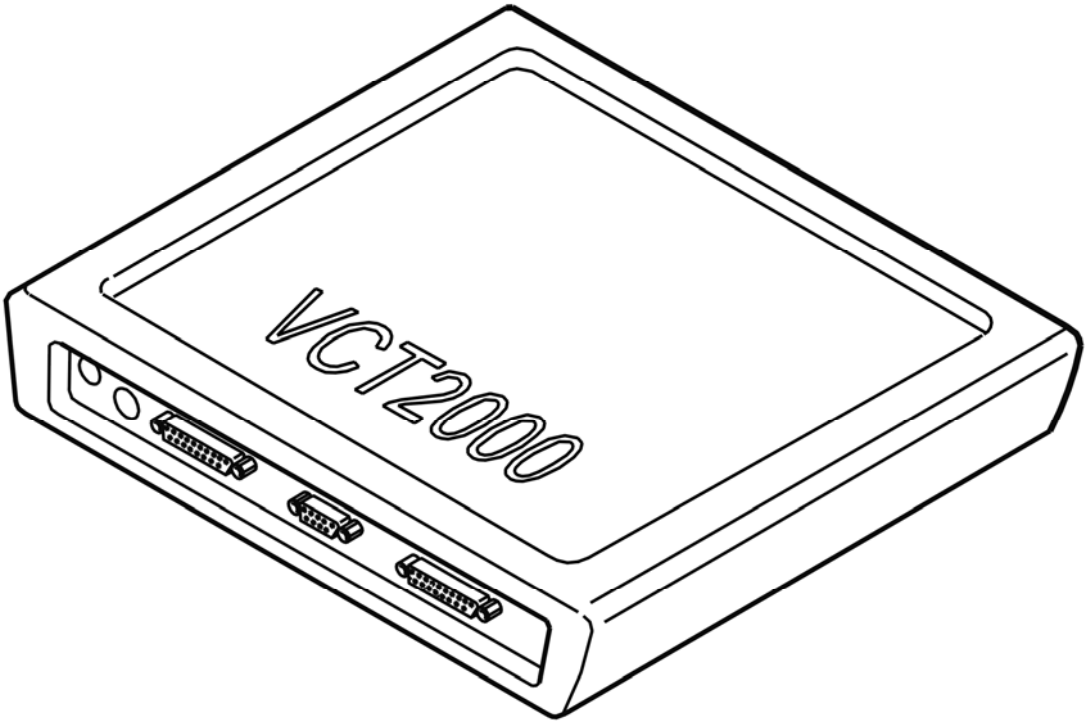

Fig. 180: CVVT Function
Courtesy of VOLVO CARS CORPORATION

The engine control module (ECM) controls the camshaft reset valve (CVVT) steplessly. The pressure of the engine oil is used to regulate the CVVT unit.

The CVVT is installed on the intake camshaft on all B5244 engines.

There are 30 camshaft degrees (60 crankshaft degrees) between the limit positions.

The variable camshaft is hydraulically controlled by the engine oil. The camshaft turns when the camshaft reset valve (CVVT) releases lubricating oil into the front **(A)** or rear chamber **(B)** of the CVVT unit. The chambers are separated by a piston which is secured in the camshaft. The piston is secured in the cover of the CVVT unit by splines so that it moves easily. When the oil acts on the piston, the piston twists. The pulse wheel for the timing belt is on the outer cover of the CVVT unit.

Regulation is precise and rapid.

The camshaft reset valve (CVVT) has extremely fine ducts. This allows for precise regulation. However as a result the reset valve is sensitive to contaminants.

The main role of the variable camshaft is to reduce exhaust emissions, especially during cold starting. Idle quality is also improved.

Before the engine starts, there is an internal check consisting of the following stages:

1. When the ignition is switched on, there is an electrical check of the signal cable, the power supply cable and the solenoid. This check checks for a short-circuit to supply voltage or ground and open-circuits
2. The camshaft is checked to ensure that it is in the correct position in relation to the flywheel, with the camshaft in its 0 position (mechanical resting position). This can be done by comparing the signals from the camshaft position (CMP) sensor and the engine speed (RPM) sensor. If there is too much deviation between these, the camshaft reset valve (CVVT) is not activated and a diagnostic trouble code (DTC) is stored
3. During greater control of the variable camshaft, the amount of time taken to deploy the camshaft to the desired value is measured. This time is used partly to assess how long it takes to change the angle of the camshaft and partly to disengage the variable camshaft if the time exceeds a certain maximum limit. The camshaft uses the engine oil and the oil pressure to turn itself. The rotation time varies, depending on factors such as engine speed (RPM), oil pressure and the viscosity of the oil (which depends open the temperature and quality of the oil)
4. The signal from the camshaft position (CMP) sensor is compared with the signal from the engine speed (RPM) sensor when the engine is turned over to ensure that it is correct. The check stops when the engine has started. If the check returns faulty values, a diagnostic trouble code (DTC) is stored and there is no camshaft control (CVVT).

Control

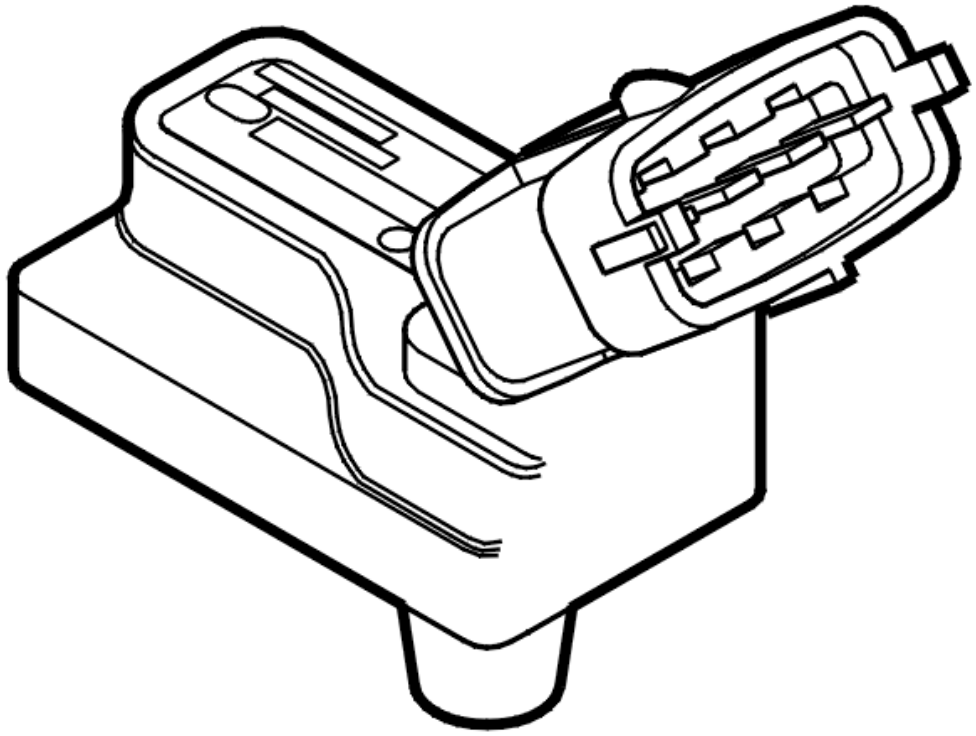

Fig. 181: CVVT Control

Courtesy of VOLVO CARS CORPORATION

Control takes place as follows when deploying the camshaft:

1. Oil is forced from the engine lubricating system to the intake port on the reset valve
2. The engine control module (ECM) grounds the valve, the position of the piston in the valve changes and the oil is guided to the continuous variable valve timing (CVVT) unit chamber (A1) via the duct (A2) in the camshaft
3. The continuous variable valve timing (CVVT) unit hub is pressed backwards by the oil pressure. The continuous variable valve timing (CVVT) unit then rotates the hub and the carriers are joined by twisted splines
4. The oil flows to the engine sump via the outer ducts on the hub and the reset valve's return hose.

Control takes place as follows when returning the camshaft:

1. Oil is forced from the engine lubricating system to the intake port on the reset valve
2. The engine control module (ECM) breaks the ground connection for the valve. The piston in the valve is then pressed back by a spring. The oil flows to the continuous variable valve timing (CVVT) unit chamber (B1) via a duct (B2) in the camshaft
3. The hub of the continuous variable valve timing (CVVT) unit is forced forward by the oil pressure that is created. The continuous variable valve timing (CVVT) unit will rotate back to the non-deployed position
4. The oil flows to the engine oil sump via the center duct on the hub and the reset valve's return duct.

The above takes place very quickly. The engine control module (ECM) controls the deployment and return of the reset valve continually at high frequency. This results in rapid and exact control.

There are diagnostics for this function.

KNOCK CONTROL

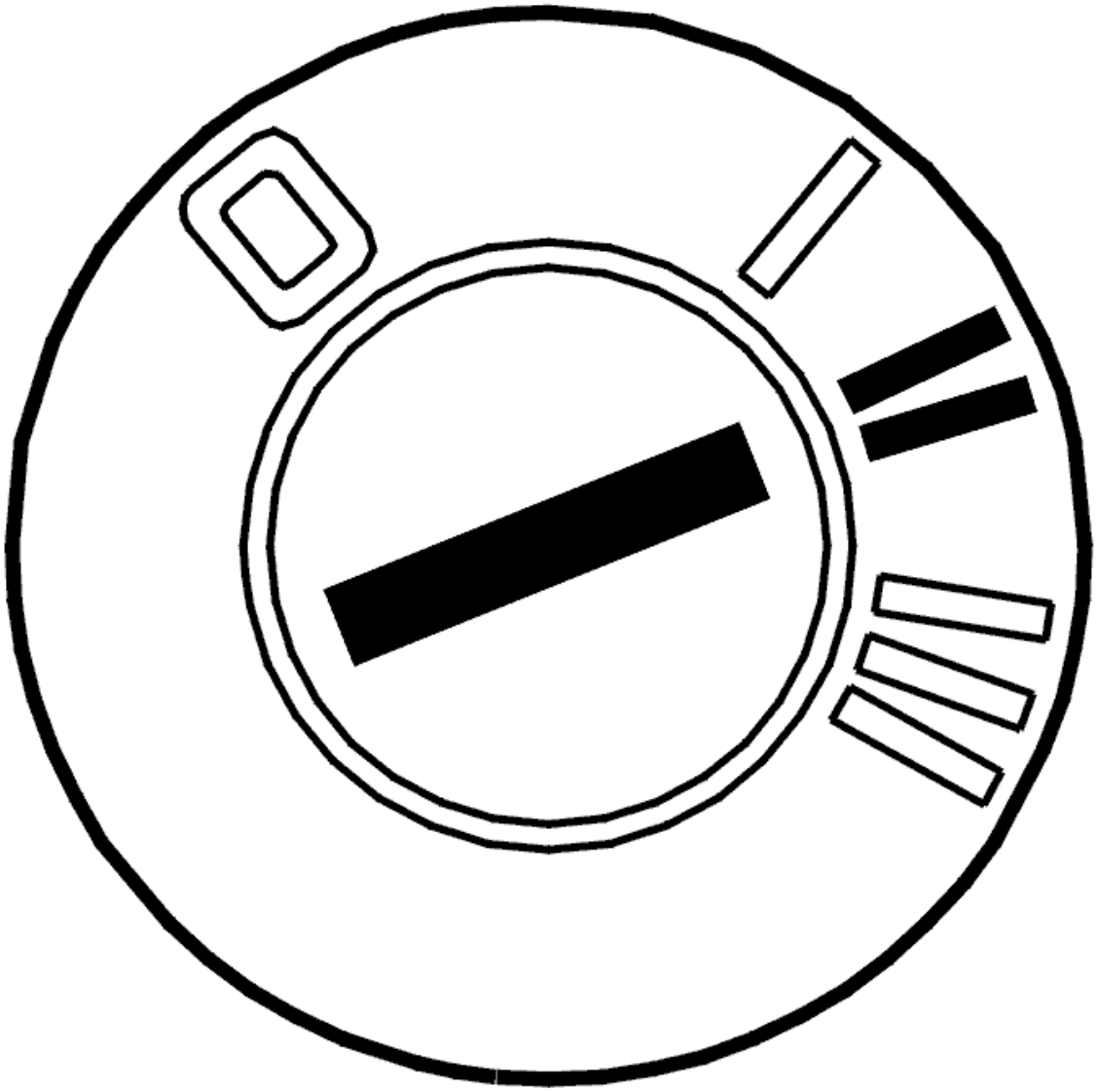

Fig. 182: Identifying Knock Control
Courtesy of VOLVO CARS CORPORATION

Knock occurs in the combustion chamber when the fuel and air mixture self ignites. This can occur either before or after the spark plug has produced an ignition spark. In both cases the gas in two or more places ignites in the combustion chamber.

This results in an extremely fast combustion process with flames from several directions. When these flames collide, the pressure in the cylinder increases rapidly and there is a mechanical knocking sound.

If any of the cylinders knock there is a specific type of vibration in the cylinder block. These vibrations are transferred to the knock sensors (KS) which are screwed into place in the cylinder block. The resultant mechanical stress in the piezo electrical material in the knock sensors generates a voltage. The engine control module (ECM) can then determine which cylinder is knocking with the help of the camshaft position (CMP) sensor and the engine speed (RPM) sensor.

The knock sensors (KS) also interpret a proportion of normal engine sound. The control module is able to recognize the vibrations which correspond to knocking by filtering, amplifying and using software to evaluate the signal.

If the knock sensors (KS) detect knocking in the engine above a certain threshold value, the ignition timing is first retarded and then the fuel / air mixture is enriched to eliminate knocking.

IGNITION CONTROL

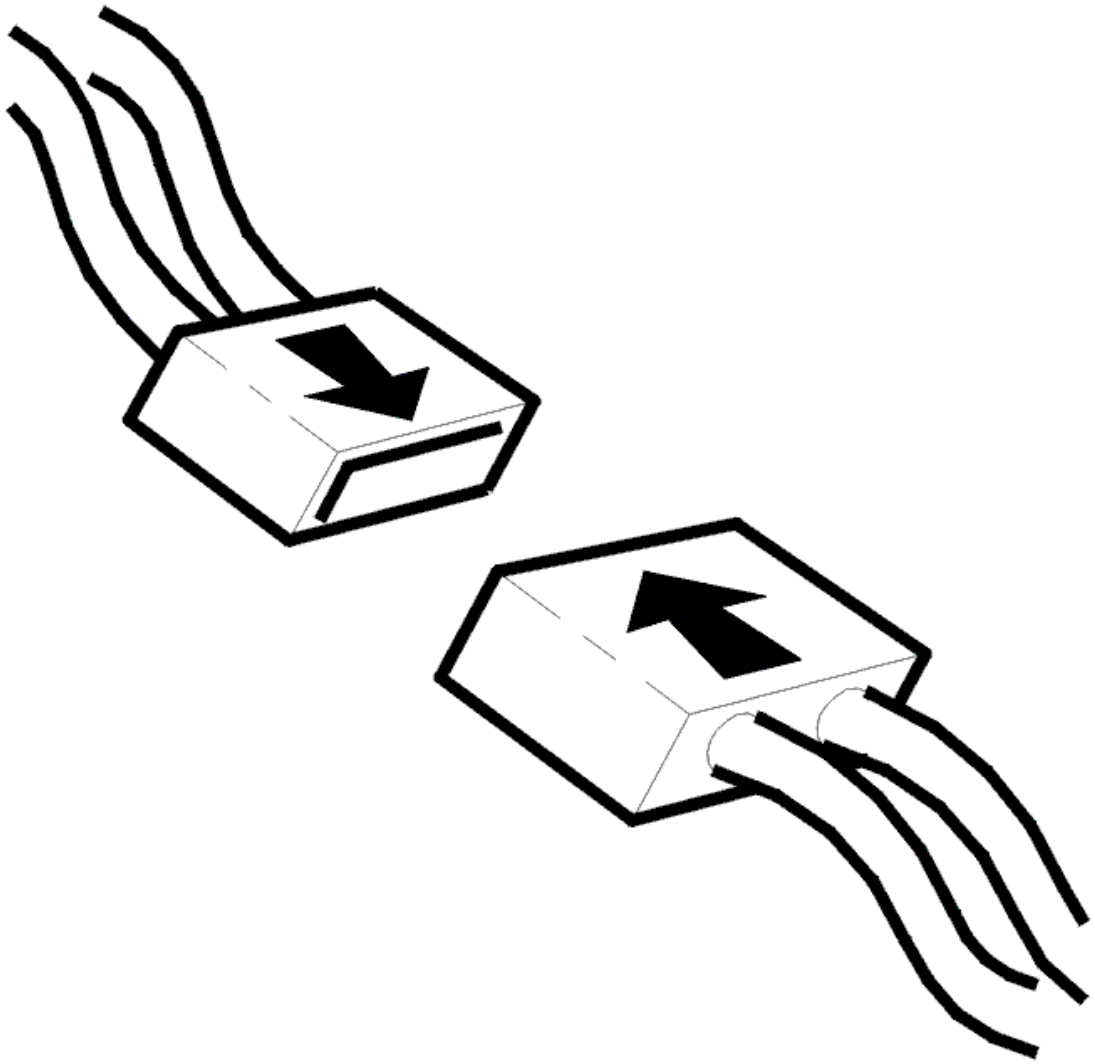

Fig. 183: Identifying Engine Control Module (ECM) Communication System
Courtesy of VOLVO CARS CORPORATION

The following components are used for ignition control:

- engine speed sensor (7/25)
- camshaft position (CMP) sensor (7/172)

- mass air flow (MAF) sensor (7/17)
- engine coolant temperature (ECT) sensor (7/16)
- electronic throttle module (ETM) (4/50)
- knock sensor (KS) (7/23-7/24)
- transmission control module (TCM) (4/28)
- spark plugs with ignition coils (20/3-20/8)
- brake control module (BCM)/anti-lock brake system module (ABS), (4/16).

The engine control module (ECM) calculates the optimum ignition advance based on the software and information from the sensors. The engine control module (ECM) cuts the current to the ignition coil mounted on the cylinder to be ignited and produces a spark.

During the starting phase the engine control module (ECM) produces a fixed ignition setting. When the engine starts and the car is driven the engine control module (ECM) calculates the optimum ignition setting according to the engine speed (RPM), load, temperature etc.

The engine control module (ECM) analyses the signal from the knock sensors (KS) when the engine reaches operating temperature. If any of the cylinders knock, the ignition is retarded for that specific cylinder until the knocking ceases.

The ignition then advanced to the normal position or until the knock recurs.

Before the gearbox control module (TCM) changes gear, it sometimes transmits a torque limiting request to the engine control module (ECM). The engine control module (ECM) then retards the ignition momentarily to reduce the torque, resulting in smoother gear changes and reducing the load on the gearbox. There are different ignition retardation levels depending on the signals from the gearbox control module (TCM). The return signal from the engine control module (ECM) to the gearbox control module (TCM) confirms that the signal reached the engine control module (ECM). The brake control module (BCM)/ABS control module transmits information to the engine control module (ECM) about deviations in the drive line. The signal is used to stop the diagnosis.

For further information, also, see **MISFIRE DIAGNOSTIC** .

The engine misfires if the fuel does not ignite correctly. See **MISFIRE DIAGNOSTIC** .

CRUISE CONTROL

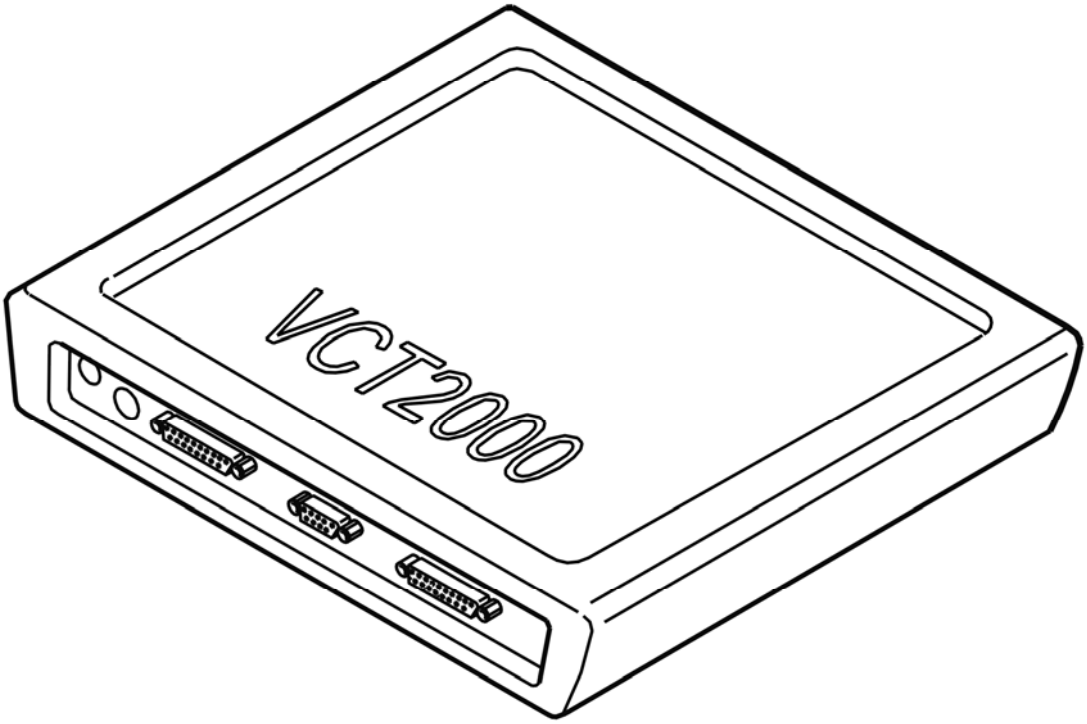

Fig. 184: Identifying Cruise Control Communication System & Components
Courtesy of VOLVO CARS CORPORATION

The cruise control function is an example of distributed functionality.

The following components are used when driving using cruise control:

- engine control module (ECM).
- electronic throttle module (ETM)
- brake control module (BCM) / anti-lock brake system module (ABS)
- accelerator pedal (AP) position sensor
- clutch pedal sensor
- brake pedal sensor
- control unit cruise control
- steering wheel module (SWM)
- central electronic module (CEM)
- gearbox control module (TCM)
- driver information module (DIM).

To activate cruise control the function must be switched on using the "CRUISE" button. A lamp lights up in the Driver Information Module (DIM).

The driver activates the function by pressing the SET+ or SET- button. A message is then transmitted via the low speed side of the Controller area network (CAN) to the central electronic module (CEM) which then transmits the message on via the high speed side of the Controller area network (CAN) to the engine control module (ECM). The engine control module (ECM) uses the vehicle speed signal from the brake control module (BCM)/ABS control module to control the throttle angle so that a constant speed is maintained. The gearbox control module (TCM) also receives a message indicating that cruise control is active via the Controller area network (CAN), so that the gearbox follows certain shifting patterns when the cruise control is active.

If the accelerator pedal (AP) is depressed the speed increases as normal and then resumes to the stored value when the driver releases the accelerator pedal (AP) again.

The engine control module (ECM) continually stores the speed. If the cruise control is disengaged, if for example the driver presses the brake pedal, the previous stored speed can be used by pressing the "RESUME" button.

Cruise control cannot be activated at speeds below 35 km/h.

Cruise control is disengaged:

- when the driver presses the clutch pedal or brake pedal
- when the driver presses the "CRUISE" button on the steering wheel
- when the driver depresses the "0" button on the steering wheel
- if "P" or "N" positions are transmitted on the Controller area network (CAN) (applies to automatic transmissions)
- if the speed deviates too much from the set value
- when certain diagnostic trouble codes (DTCs) are stored which do not allow continued activation (For further information, see diagnostic trouble code (DTC) information).

AIR-FLOW: ADAPTATION (ONLY TURBO AND 6 CYLINDER NON TURBO ENGINES)

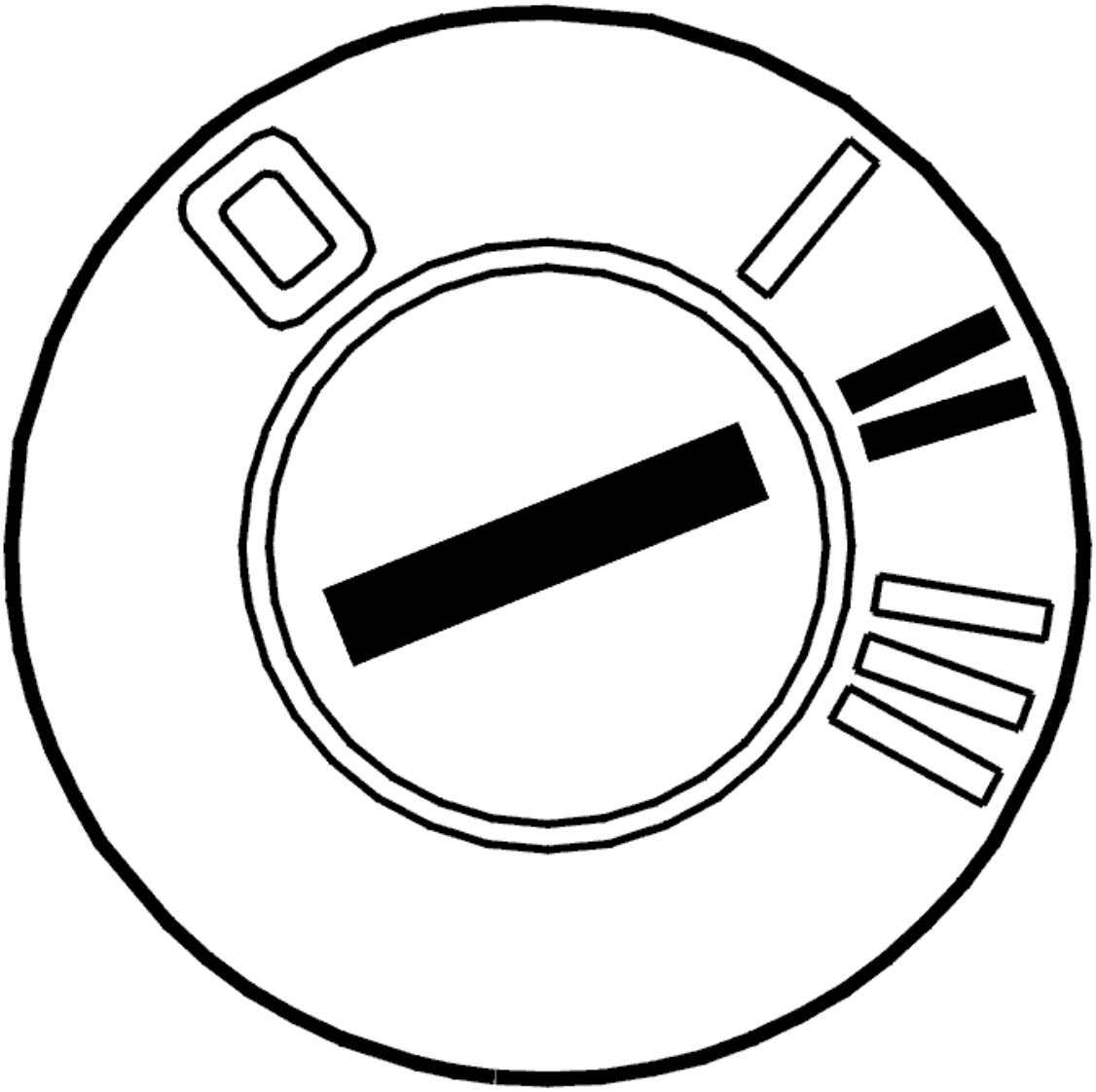

Fig. 185: Identifying Air Flow Adaptation
Courtesy of VOLVO CARS CORPORATION

NOTE: This service information pertains to the air flow adaptation over the throttle unit, not to be confused with the control module's fuel adaptation (lambda adaptation).

There is a correction factor in the Engine control module (ECM) for adjusting the leakage flow over the throttle unit. Leakage flow means the air that does not go through the throttle unit, but goes via the crankcase ventilation, power brake booster and EVAP system. For the control module to be able to learn the adjustments needed in the different air flow areas, there are two adaptation areas. One for idling and one for part load. These values are saved when the engine is switched off.

These values can be read off using the "Air mass, correction value" and "Leakage flow over throttle unit" parameters.

AIR-LEAKAGE: FLOW VIA THROTTLE UNIT

HINT: The following measurement for diagnostic trouble code (DTC) ECM-130A can be carried out to determine the fault cause.

Air flow adaptation idling

The parameter for air flow adaptation idling is one of the parameters for determining the leakage flow over the throttle unit where the mass air flow (MAF) sensor flow determines the reference value. The adaptation value is the value that must be added or subtracted from the control module calculated air flow. The calculated air flow added or subtracted from the adaptation value should be the same as the mass air flow (MAF) sensor's flow.

The adaptation value is not used as a part of a diagnostic function and will not, in the event of a large value, result in a diagnostic trouble code (DTC). The value can be used to evaluate the air flow over the throttle unit. The adaptation value is displayed in kg/h and the normal values are 5-10 kg/h.

The engine does not only obtain air via the throttle unit, but also from the crankcase ventilation, the EVAP system and power brake booster for example. The total of this air supply should give us our normal adaptation value of 5-10 kg/h, which does not pass through the throttle unit and therefore the mass air flow (MAF) sensor.

If this air supply is removed or slightly restricted, e. g. if the crankcase ventilation becomes blocked, the adaptation value drops to less than 5 kg/h. Dirt in the throttle unit can have the same effect and generally depends on the crankcase ventilation being blocked. The crankcase ventilation should, in such cases, be checked first. If there is an air leak in the intake manifold the value would increase to above 10 kg/h.

Air flow adaptation part load

This is the part of air flow adaptation that makes it possible to compensate for the tolerance interval between different engines and for aging components. The normal value without adaptation is 1. A value below 1, e. g. 0.95 indicates that more air passes through the mass air flow (MAF) sensor than calculated. An indication of a blocked crankcase ventilation is a low adaptation value around 0.85 or less.

A value greater than 1 can indicate an air leak inside the intake manifold where, for example, a loose or defective vacuum line can give a value of 1.15 or greater.

Diagnostic trouble code (DTC) ECM-130A is stored if the value for the air flow adaptation at part load and the correction factor are extremely large. Unfortunately, the correction factor cannot be displayed in VIDA (Volvo scan tool), but if this DTC has been generated, the correction factor can be assumed to be extremely large. These adaptations should not only be used for fault-tracing, but considered to be an indication of which method should be used next time.

The fuel adaptations (lambda adaptations) should be checked first to analyze for an air leak. Thereafter check for smaller leaks than normal, for idling, less than 5 kg/h and/or for part load less than 1 kg/h. If the leakage flow is smaller, the crankcase ventilation may be blocked.

If the leakage flow is greater than normal, for idling greater than 10 kg/h and/or for part load greater than 1 kg/h, there might be an air leak in the connections to the engine after the throttle unit.

FAULTY SIGNAL

CHECKING THE INTAKE SYSTEM

Check that the hoses and hose connectors between the mass air flow (MAF) sensor and the throttle unit are not leaking or defective.

Check that the boost pressure sensor is correctly mounted. Check for air leakage around the component.

HINT: This diagnostic trouble code can be caused by a damaged mass air flow sensor.

Remedy as necessary.

Other information

- see **CHECK FOR AIR LEAKS IN THE INTAKE SYSTEM**
- For B5xx4T, see **THROTTLE BODY (TB), CLEANING** .
- For B6xx4x, see **THROTTLE BODY (TB), CLEANING** .
- see **MASS AIR FLOW (MAF) SENSOR, REPLACING**

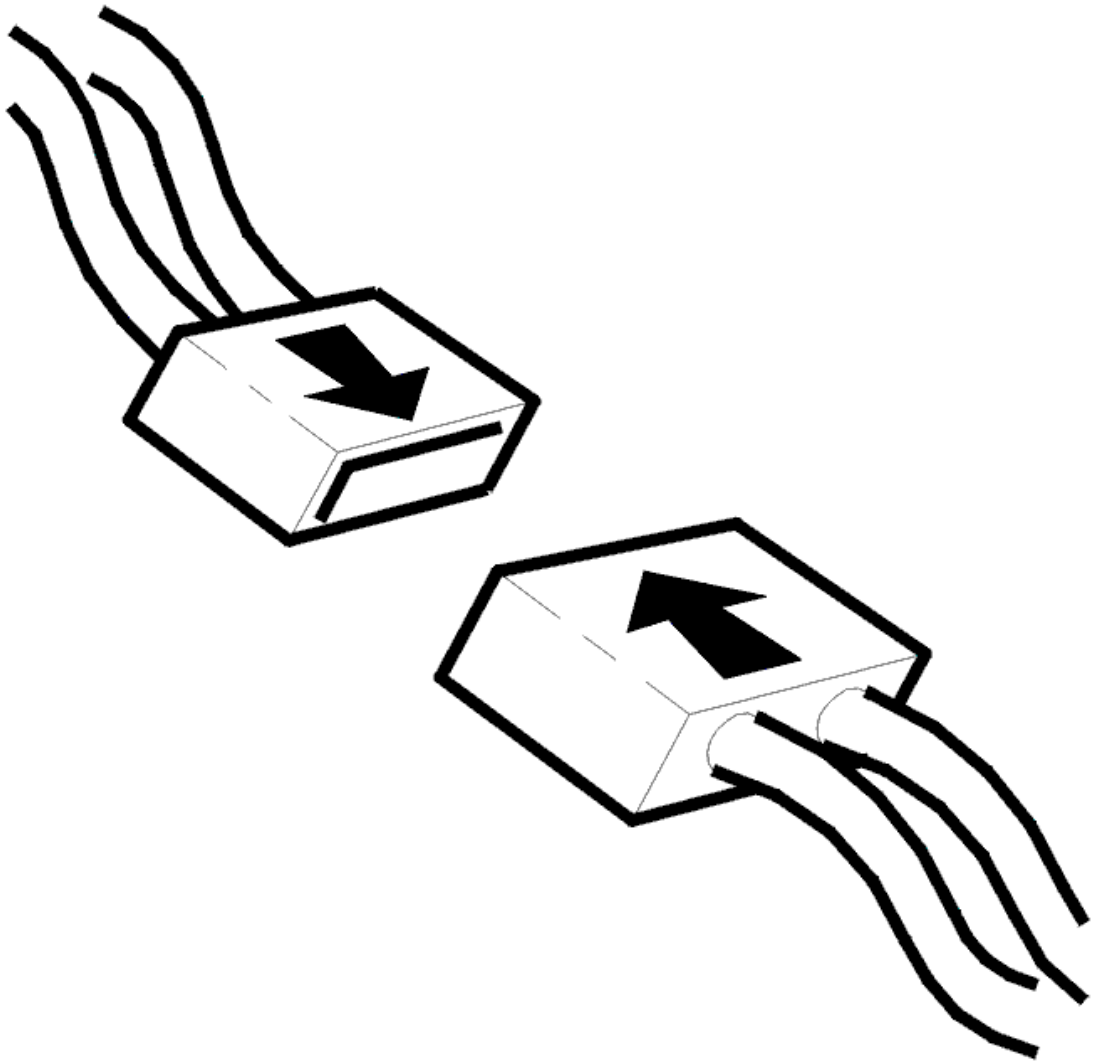

Fig. 186: Identifying Mass Air Flow (MAF) Sensor
Courtesy of VOLVO CARS CORPORATION

- **Continue**

  Refer to **VERIFICATION**

VERIFICATION

VERIFICATION

HINT: After carrying out the repair, check that the fault has been remedied.

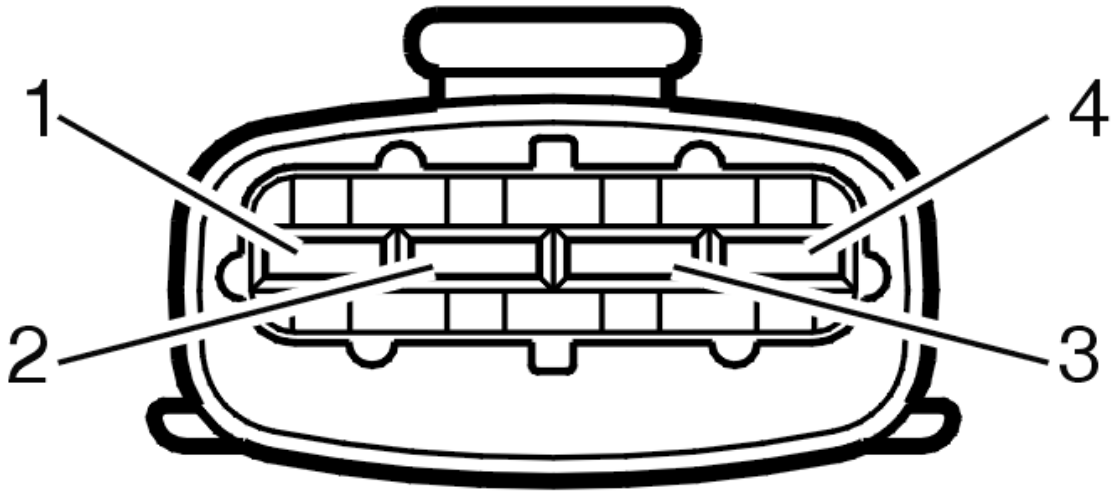

Fig. 187: Belt Routing / Engine Idling - Volvo
Courtesy of VOLVO CARS CORPORATION

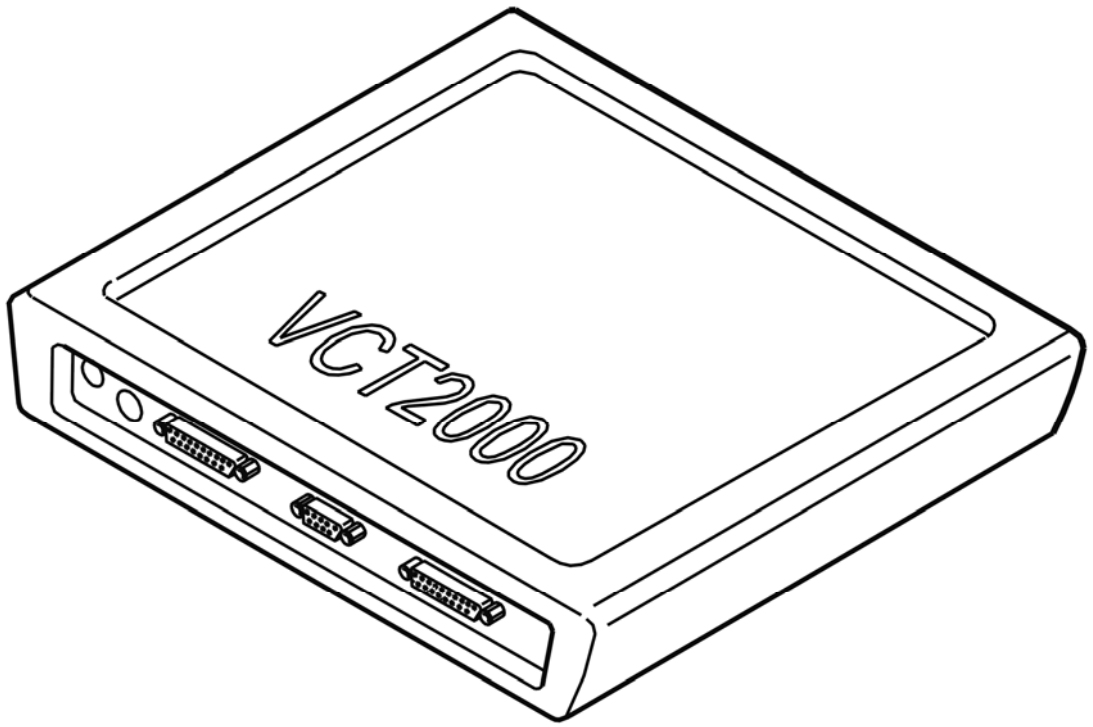

Fig. 188: Connecting Connector
Courtesy of VOLVO CARS CORPORATION

- Ignition off.
- Reinstall the connectors, components etc.
- Ignition on.

- Read off and make a note of the adaptation value.
- Start the engine. Increase the engine speed (RPM) a couple of times.
- Read off the adaptation value and check that the adaptation value approaches 1.

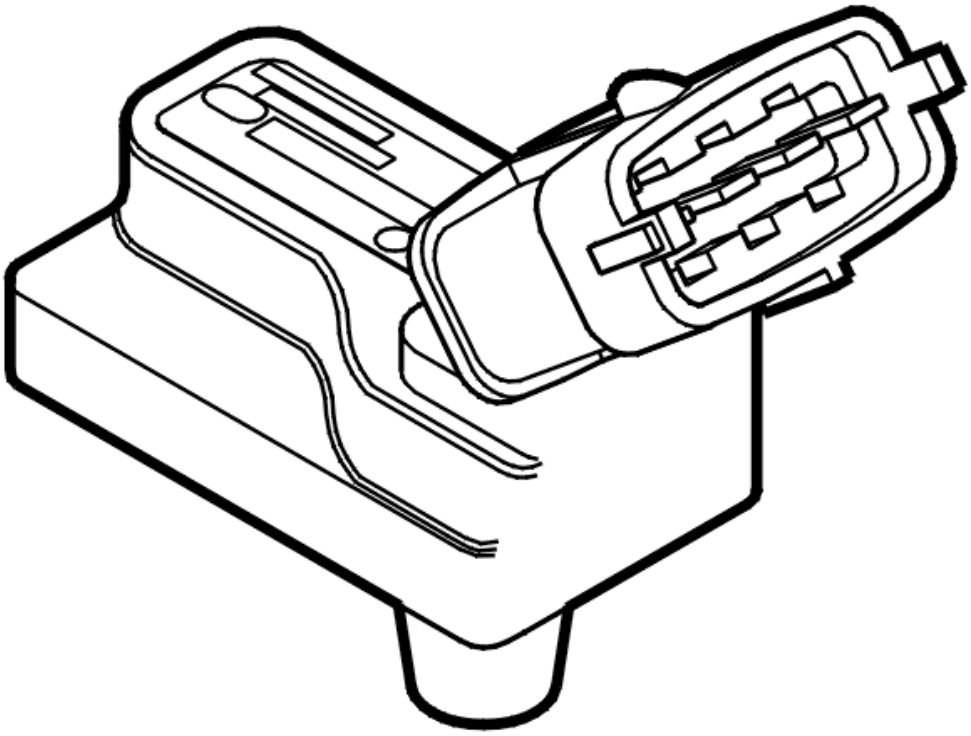

Fig. 189: Identifying VCT2000 Diagnostic Tool Symbol In VIDA
Courtesy of VOLVO CARS CORPORATION

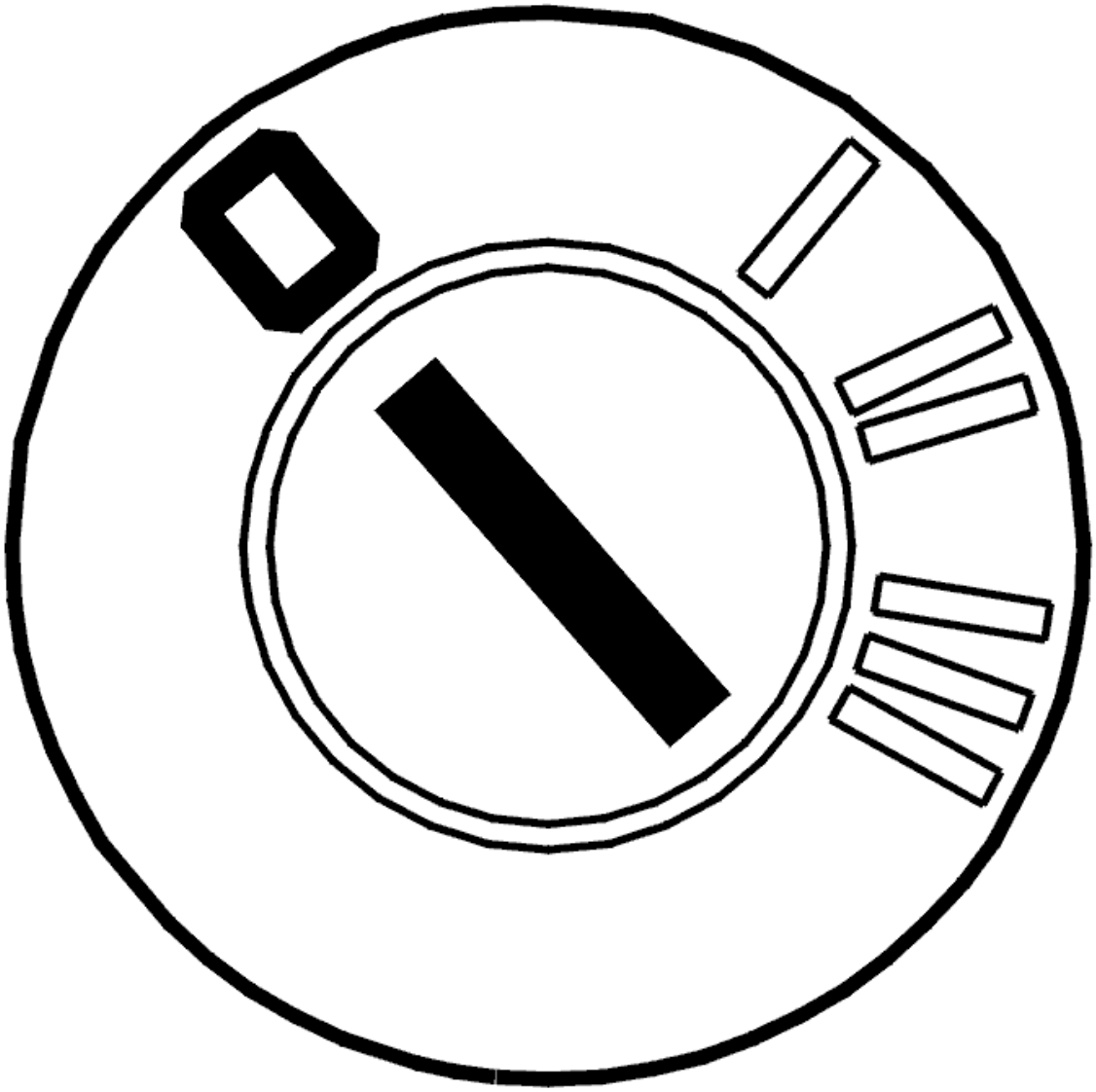

Fig. 190: Identifying Mass Air Flow (MAF) Sensor
Courtesy of VOLVO CARS CORPORATION

Does the adaptation value approach 1?

- **YES**

  VERIFIED: Troubleshooting has been completed.

- **NO**

  Refer to **INFORMATION**

INFORMATION

FAULT-TRACING INFORMATION

The fault should have been detected and remedied. As this is not the case fault-tracing has failed.

Exit fault-tracing for this diagnostic trouble code (DTC) or make another attempt.

ECM-131C: INTAKE AIR TEMPERATURE (IAT) SENSOR. SIGNAL TOO HIGH (B5254T2; 2005-2007)

DIAGNOSTIC TROUBLE CODE (DTC) INFORMATION ECM-131C

Condition

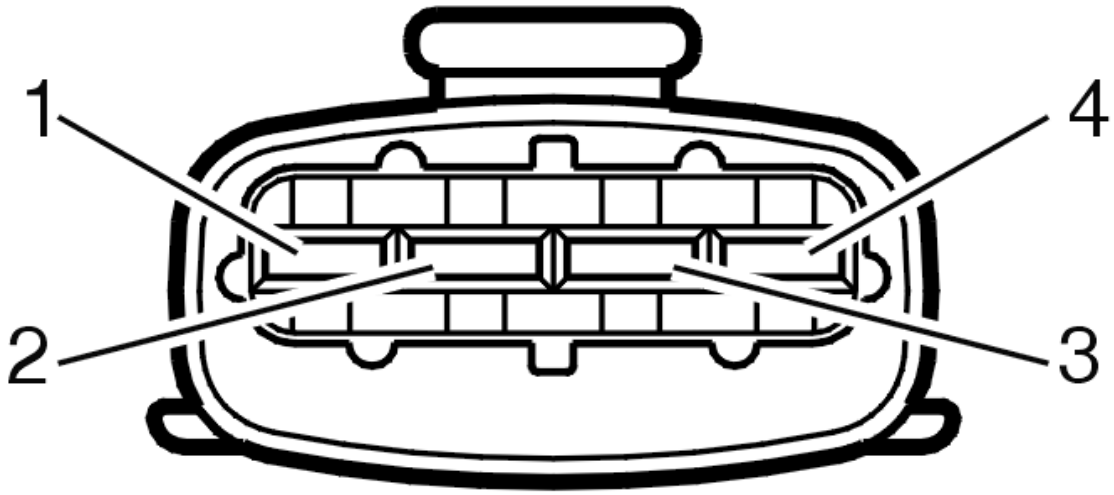

Fig. 191: Identifying Boost Pressure Sensor
Courtesy of VOLVO CARS CORPORATION

The engine control module (ECM) checks the signal for the intake air temperature.

The diagnostic trouble code (DTC) is stored if the engine control module (ECM) detects that the signal for the intake air temperature corresponds to a temperature that is higher than a certain value.

The diagnostic trouble code (DTC) can be diagnosed when the engine is running.

Substitute Value

- Predefined value for intake air temperature
- Three-way catalytic converter (TWC) preheating and idle air trim diagnostics are disabled.

Possible Source

- Short-circuit to ground in the signal cable
- Damaged intake air temperature (IAT) sensor.

Fault symptom[s]

- Malfunction indicator lamp (MIL) lit
- Poor performance.

SIGNAL TOO HIGH

see **SIGNAL TOO HIGH**

ECM-131C: INTAKE AIR TEMPERATURE (IAT) SENSOR. SIGNAL TOO HIGH (B6294T; 2005-2006)

DIAGNOSTIC TROUBLE CODE (DTC) INFORMATION ECM-131C

see **DIAGNOSTIC TROUBLE CODE (DTC) INFORMATION ECM-131C**

SIGNAL TOO HIGH

see **SIGNAL TOO HIGH**

ECM-131D: INTAKE AIR TEMPERATURE (IAT) SENSOR. SIGNAL TOO LOW (B5254T2; 2005-2007)

DIAGNOSTIC TROUBLE CODE (DTC) INFORMATION ECM-131D

Condition

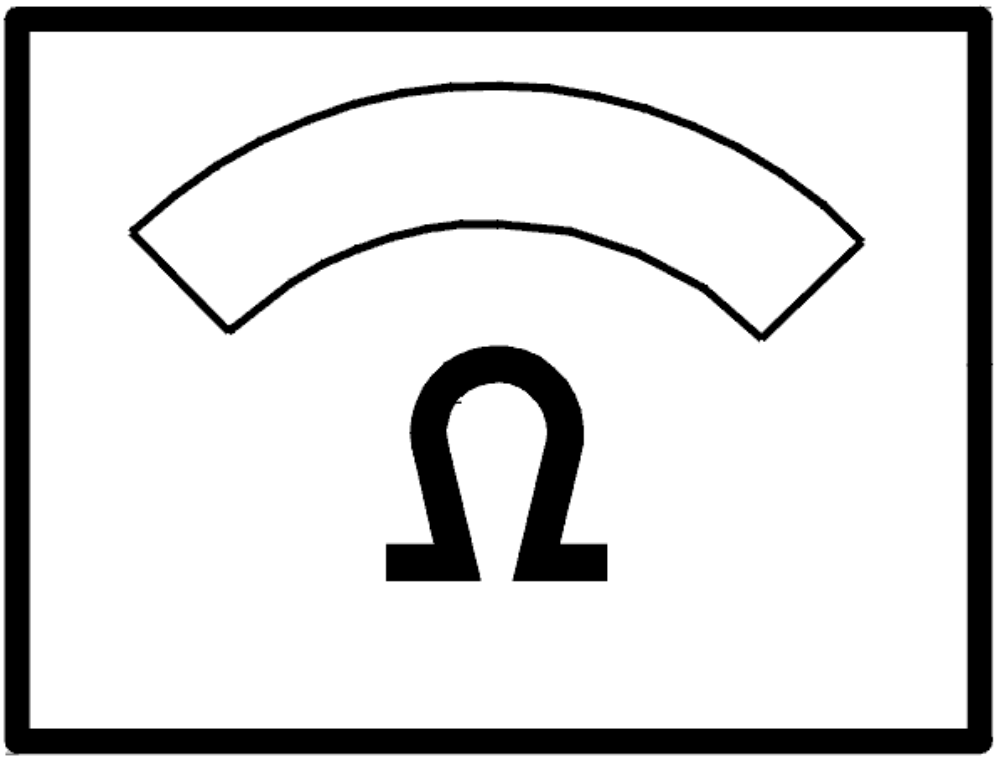

Fig. 192: Identifying Boost Pressure Sensor
Courtesy of VOLVO CARS CORPORATION

The engine control module (ECM) checks the signal for the intake air temperature.

The diagnostic trouble code (DTC) is stored if the engine control module (ECM) detects that the signal for the intake air temperature corresponds to a temperature that is lower than a certain value.

The diagnostic trouble code (DTC) can be diagnosed when the engine is running.

Substitute Value

- Predefined value for intake air temperature
- Three-way catalytic converter (TWC) preheating and idle air trim diagnostics are disabled.

Possible Source

- Contact resistance in the terminals
- Open-circuit in the signal cable
- Short-circuit to supply voltage in the signal cable
- Damaged intake air temperature (IAT) sensor.

Fault symptom[s]

- Malfunction indicator lamp (MIL) lit
- Poor performance.

SIGNAL TOO LOW

see **SIGNAL TOO LOW**

ECM-131D: INTAKE AIR TEMPERATURE (IAT) SENSOR. SIGNAL TOO LOW (B6294T; 2005-2006)

DIAGNOSTIC TROUBLE CODE (DTC) INFORMATION ECM-131D

see **DIAGNOSTIC TROUBLE CODE (DTC) INFORMATION ECM-131D**

SIGNAL TOO LOW

see **SIGNAL TOO LOW**

ECM-1320: INTAKE AIR TEMPERATURE (IAT) SENSOR. FAULTY SIGNAL (B5254T2; 2005-2007)

DIAGNOSTIC TROUBLE CODE (DTC) INFORMATION ECM-1320

Condition

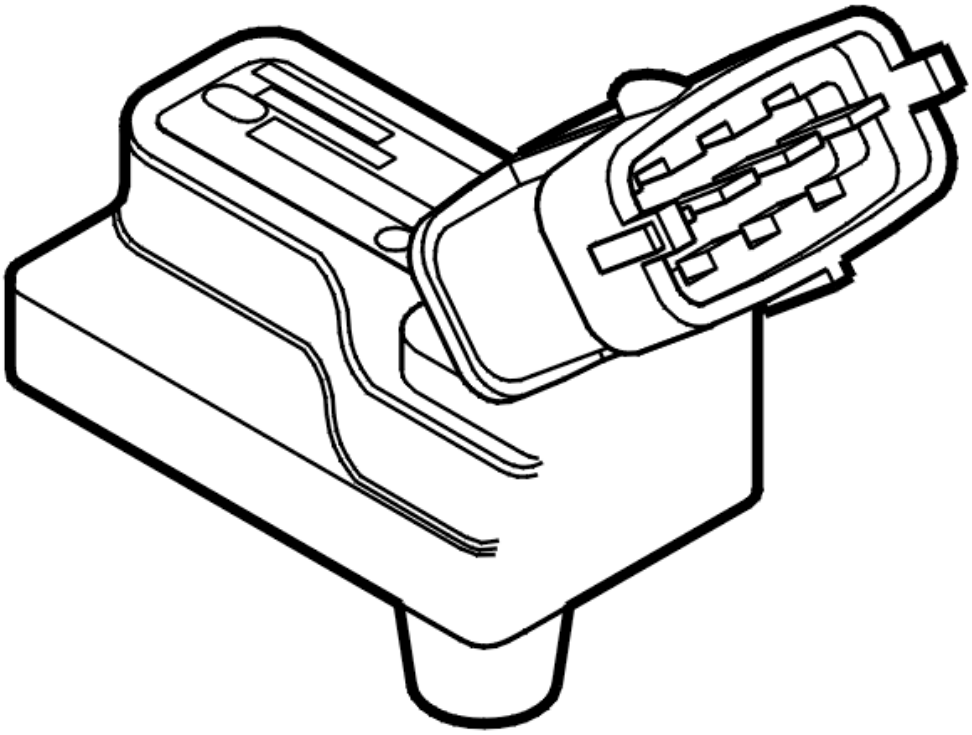

Fig. 193: Identifying Boost Pressure Sensor
Courtesy of VOLVO CARS CORPORATION

The engine control module (ECM) checks the signal for the intake air temperature.

The diagnostic trouble code (DTC) is stored if the engine control module (ECM) detects that the signal does not follow a certain characteristic over a period of time.

The diagnostic trouble code (DTC) can be diagnosed under specific driving conditions.

Substitute Value

- Predefined value for intake air temperature
- Three-way catalytic converter (TWC) preheating and idle air trim diagnostics are disabled.

Possible Source

- Contact resistance or oxidation in the intake air temperature (IAT) sensor terminals
- Damaged intake air temperature (IAT) sensor.

Fault symptom[s]

- Malfunction indicator lamp (MIL) lit

- Poor performance.

FAULTY SIGNAL

see **FAULTY SIGNAL**

ECM-1320: INTAKE AIR TEMPERATURE (IAT) SENSOR. FAULTY SIGNAL (B6294T; 2005-2006)

DIAGNOSTIC TROUBLE CODE (DTC) INFORMATION ECM-1320

see **DIAGNOSTIC TROUBLE CODE (DTC) INFORMATION ECM-1320**

FAULTY SIGNAL

see **FAULTY SIGNAL**

ECM-132C: INTAKE AIR TEMPERATURE (IAT) SENSOR. SIGNAL TOO HIGH (B5254T2; 2005-2007)

DIAGNOSTIC TROUBLE CODE (DTC) INFORMATION ECM-132C

Condition

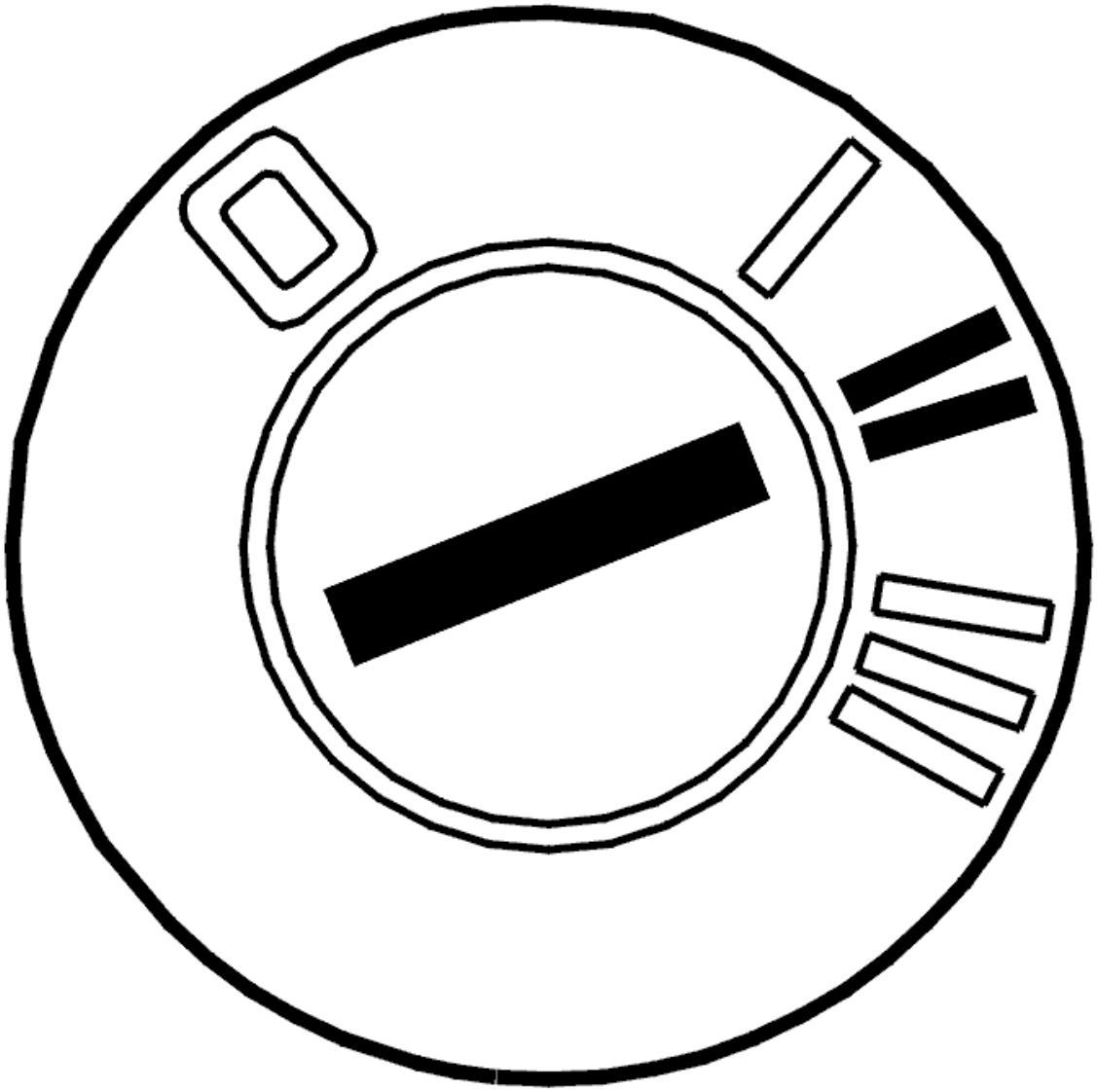

Fig. 194: Identifying Boost Pressure Sensor
Courtesy of VOLVO CARS CORPORATION

The engine control module (ECM) checks the signal for the intake air temperature.

The diagnostic trouble code (DTC) is stored if the engine control module (ECM) detects that the signal from the intake air temperature (IAT) sensor is higher than a calculated desired value.

The diagnostic trouble code (DTC) can be diagnosed under specific driving conditions.

Substitute Value

- Predefined value for intake air temperature
- Three-way catalytic converter (TWC) preheating and idle air trim diagnostics are disabled.

Possible Source

- Contact resistance or oxidation in the intake air temperature (IAT) sensor terminals
- Damaged intake air temperature (IAT) sensor.

Fault symptom[s]

- Malfunction indicator lamp (MIL) lit
- Poor performance.

SIGNAL TOO HIGH / SIGNAL TOO LOW

CHECKING COMPONENTS AND CONNECTORS

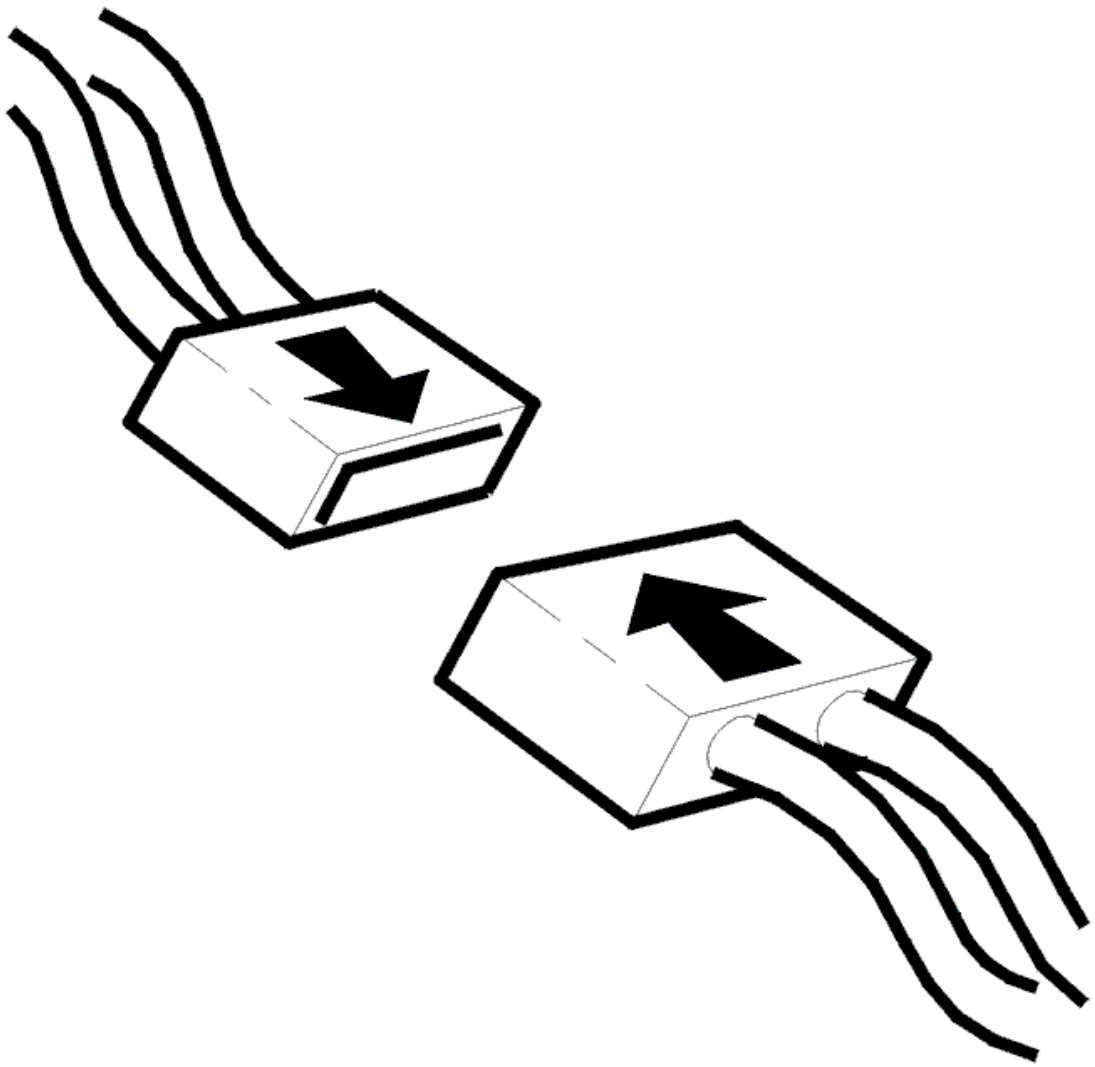

Fig. 195: Identifying Ignition OFF
Courtesy of VOLVO CARS CORPORATION

- Ignition off
- Check the boost pressure sensor connector and terminal. Check for contact resistance and oxidation.

NOTE: The intake air temperature (IAT) sensor is integrated in the boost pressure sensor.

If no errors are found and the fault is permanent, replace the intake air temperature (IAT) sensor.

Remedy as necessary.

Other information:

- see **CHECKING WIRING AND TERMINALS**
- For resistance values: **COMPONENT SPECIFICATIONS**
- For B5xx4T, see **TEMPERATURE AND PRESSURE SENSORS, REPLACING**
- For B6xx4T, see **TEMPERATURE AND PRESSURE SENSORS, REPLACING**

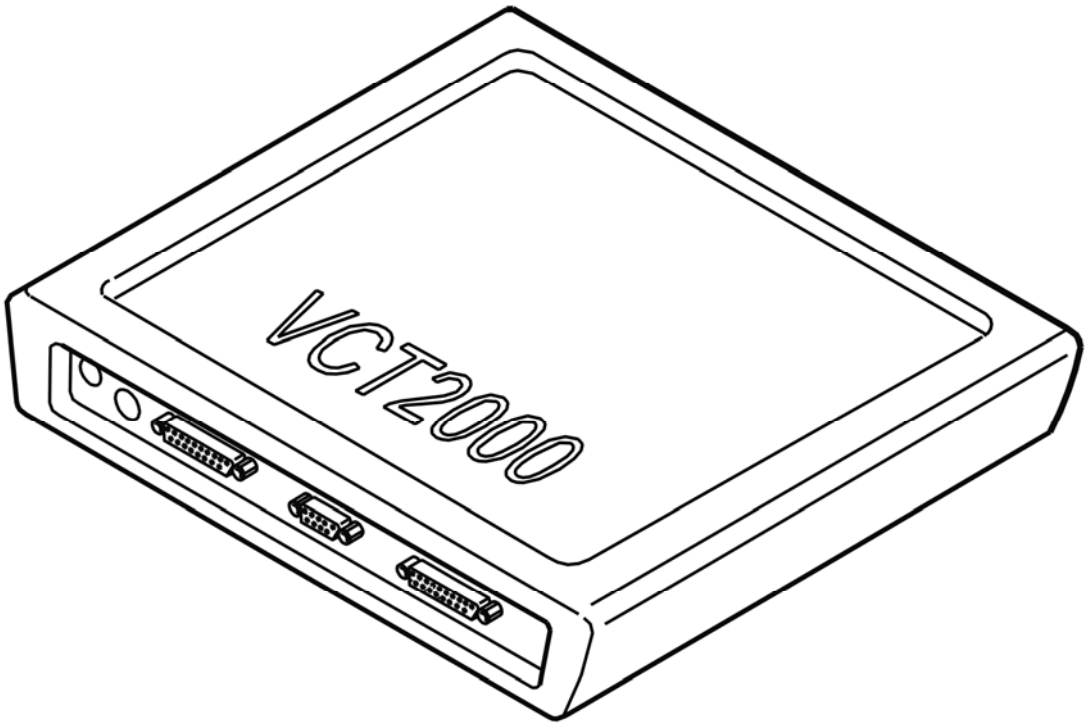

Fig. 196: Identifying 4-Bit Connector
Courtesy of VOLVO CARS CORPORATION

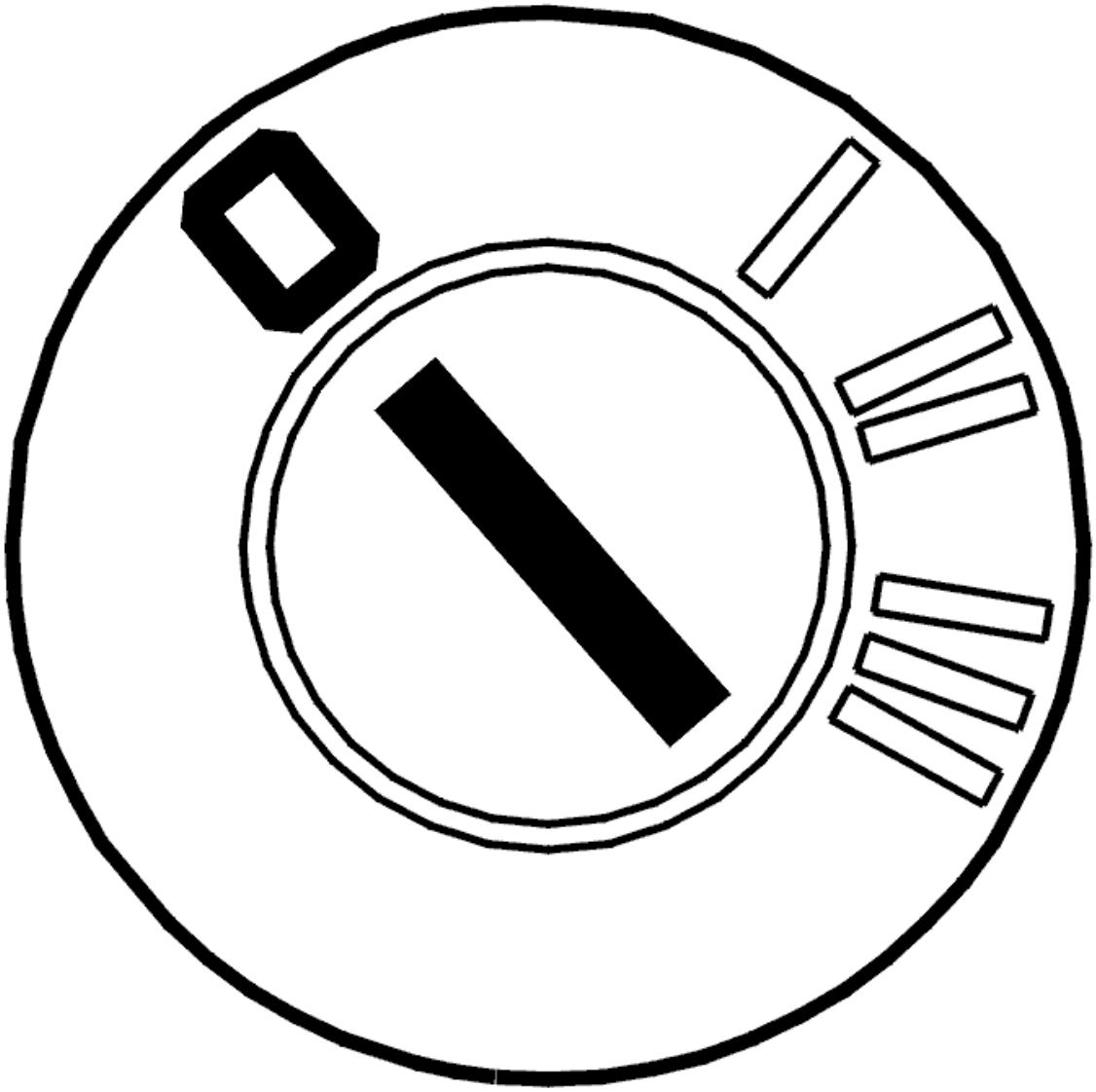

Fig. 197: Identifying Boost Pressure Sensor
Courtesy of VOLVO CARS CORPORATION

- **Continue**

  Refer to **VERIFICATION**

VERIFICATION

VERIFICATION

HINT: After carrying out the repair, check that the fault has been remedied.

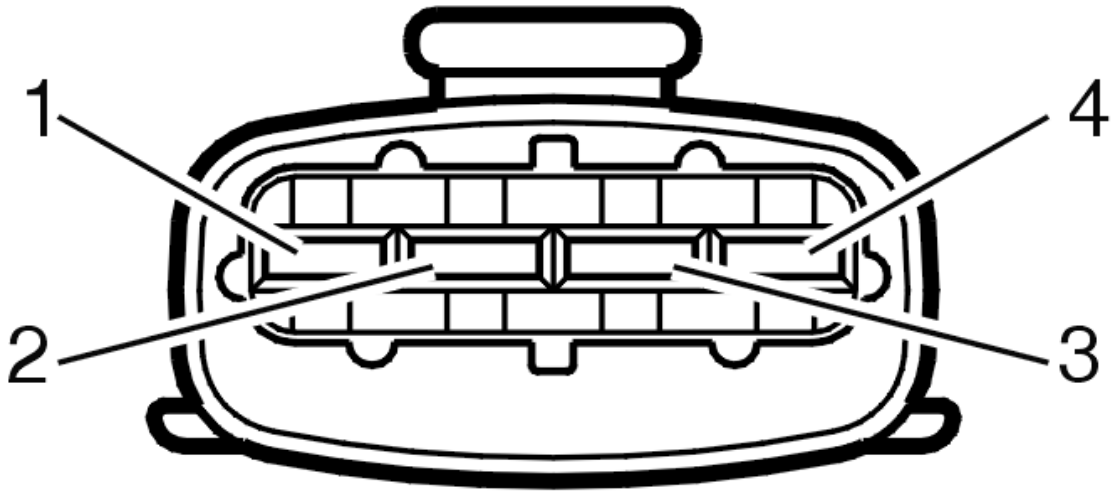

Fig. 198: Belt Routing / Engine Idling - Volvo
Courtesy of VOLVO CARS CORPORATION

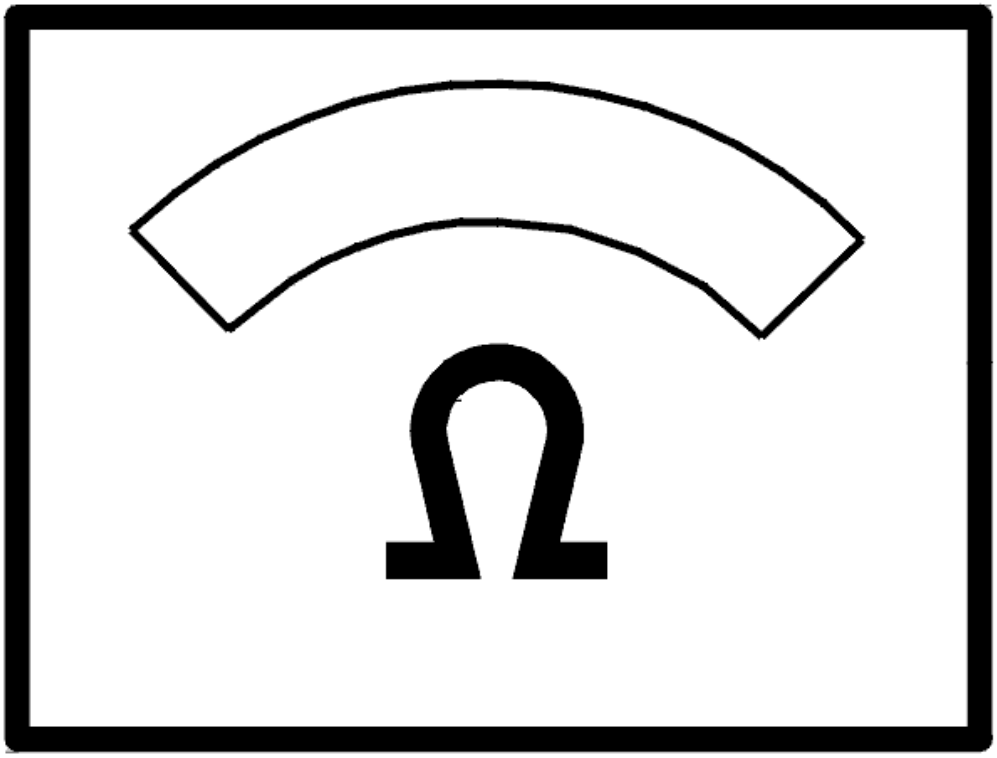

Fig. 199: Connecting Connector
Courtesy of VOLVO CARS CORPORATION

- Ignition off
- Reconnect the connectors, reinstall components etc.
- Start the engine. Allow the engine to idle for 5 minutes
- Read off diagnostic trouble codes (DTCs).

The fault has been remedied if status of the diagnostic trouble code (DTC) is intermittent.

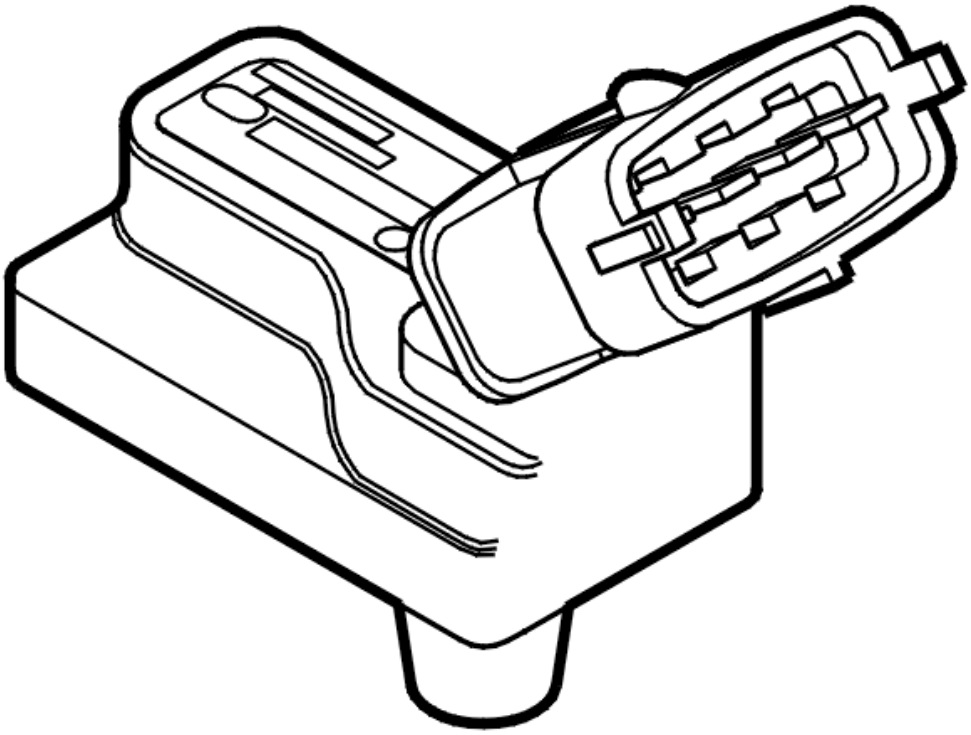

Fig. 200: Identifying VCT2000 Diagnostic Tool Symbol In VIDA
Courtesy of VOLVO CARS CORPORATION

Is the status of the diagnostic trouble code (DTC) intermittent?

- **YES**

  VERIFIED: Troubleshooting has been completed.

- **NO**

  Refer to **INFORMATION**

INFORMATION

FAULT-TRACING INFORMATION

The fault should have been detected and remedied. As this is not the case fault-tracing has failed.

Exit fault-tracing for this diagnostic trouble code (DTC) or make another attempt.

ECM-132C: INTAKE AIR TEMPERATURE (IAT) SENSOR. SIGNAL TOO HIGH (B6294T; 2005-2006)

DIAGNOSTIC TROUBLE CODE (DTC) INFORMATION ECM-132C

see **DIAGNOSTIC TROUBLE CODE (DTC) INFORMATION ECM-132C**

SIGNAL TOO HIGH / SIGNAL TOO LOW

see **SIGNAL TOO HIGH / SIGNAL TOO LOW**

ECM-132D: INTAKE AIR TEMPERATURE (IAT) SENSOR. SIGNAL TOO LOW (B5254T2; 2005-2007)

DIAGNOSTIC TROUBLE CODE (DTC) INFORMATION ECM-132D

Condition

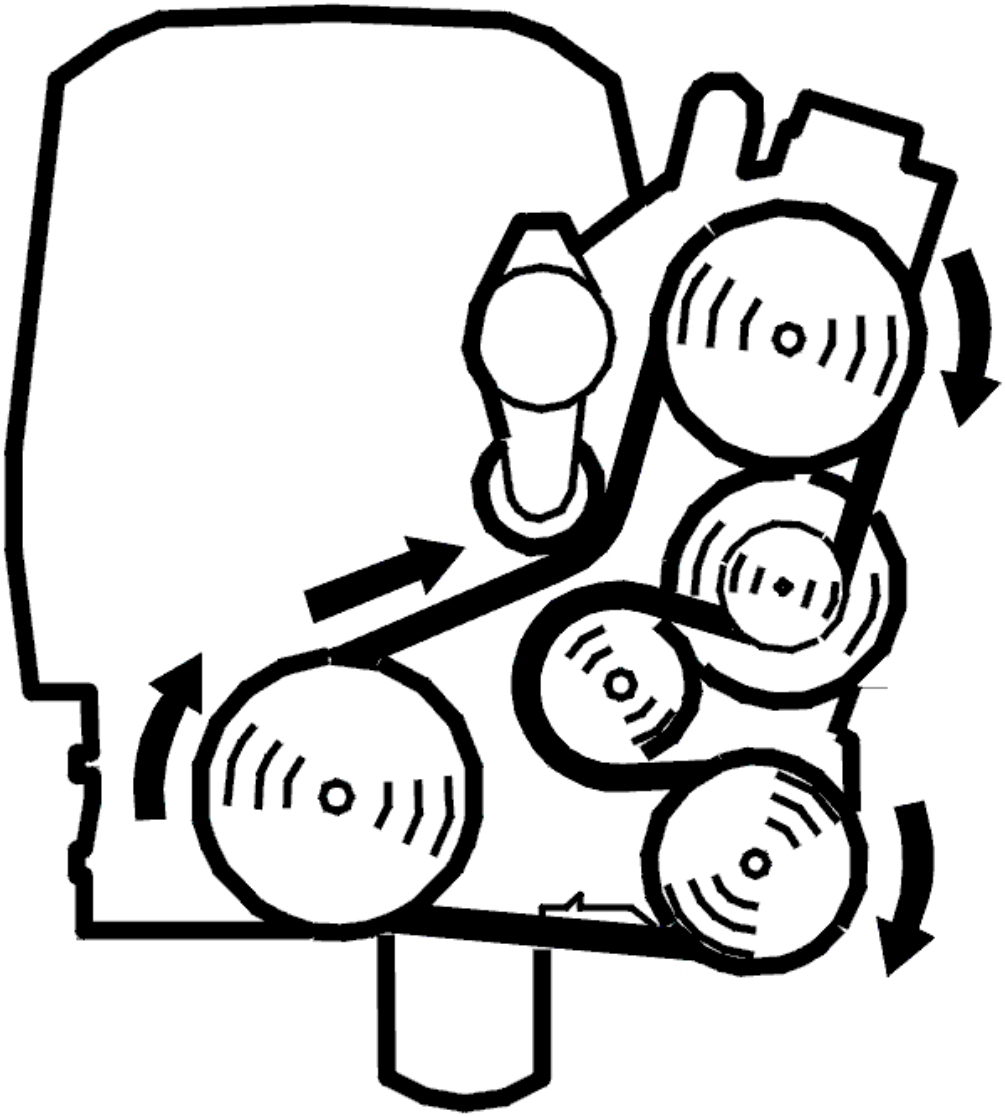

Fig. 201: Identifying Boost Pressure Sensor
Courtesy of VOLVO CARS CORPORATION

The engine control module (ECM) checks the signal for the intake air temperature.

The diagnostic trouble code (DTC) is stored if the engine control module (ECM) detects that the difference between the signals from the intake air temperature (IAT) sensor and the engine coolant temperature (ECT) sensor is more than 50 °C after the engine has been off for a certain amount of time.

The diagnostic trouble code (DTC) can be diagnosed when the engine is running.

Substitute Value

- Predefined value for intake air temperature
- Three-way catalytic converter (TWC) preheating and idle air trim diagnostics are disabled.

Possible Source

- Contact resistance or oxidation in the intake air temperature (IAT) sensor terminals
- Damaged intake air temperature (IAT) sensor.

Fault symptom[s]

- Malfunction indicator lamp (MIL) lit
- Poor performance.

SIGNAL TOO HIGH / SIGNAL TOO LOW

see **SIGNAL TOO HIGH / SIGNAL TOO LOW**

ECM-132D: INTAKE AIR TEMPERATURE (IAT) SENSOR. SIGNAL TOO LOW (B6294T; 2005-2006)

DIAGNOSTIC TROUBLE CODE (DTC) INFORMATION ECM-132D

see **DIAGNOSTIC TROUBLE CODE (DTC) INFORMATION ECM-132D**

SIGNAL TOO HIGH / SIGNAL TOO LOW

see **SIGNAL TOO HIGH / SIGNAL TOO LOW**

ECM-133C: INTAKE AIR TEMPERATURE (IAT) SENSOR INLET. SIGNAL TOO HIGH (B5254T2; 2006-2007)

DIAGNOSTIC TROUBLE CODE (DTC) INFORMATION ECM-133C

Condition

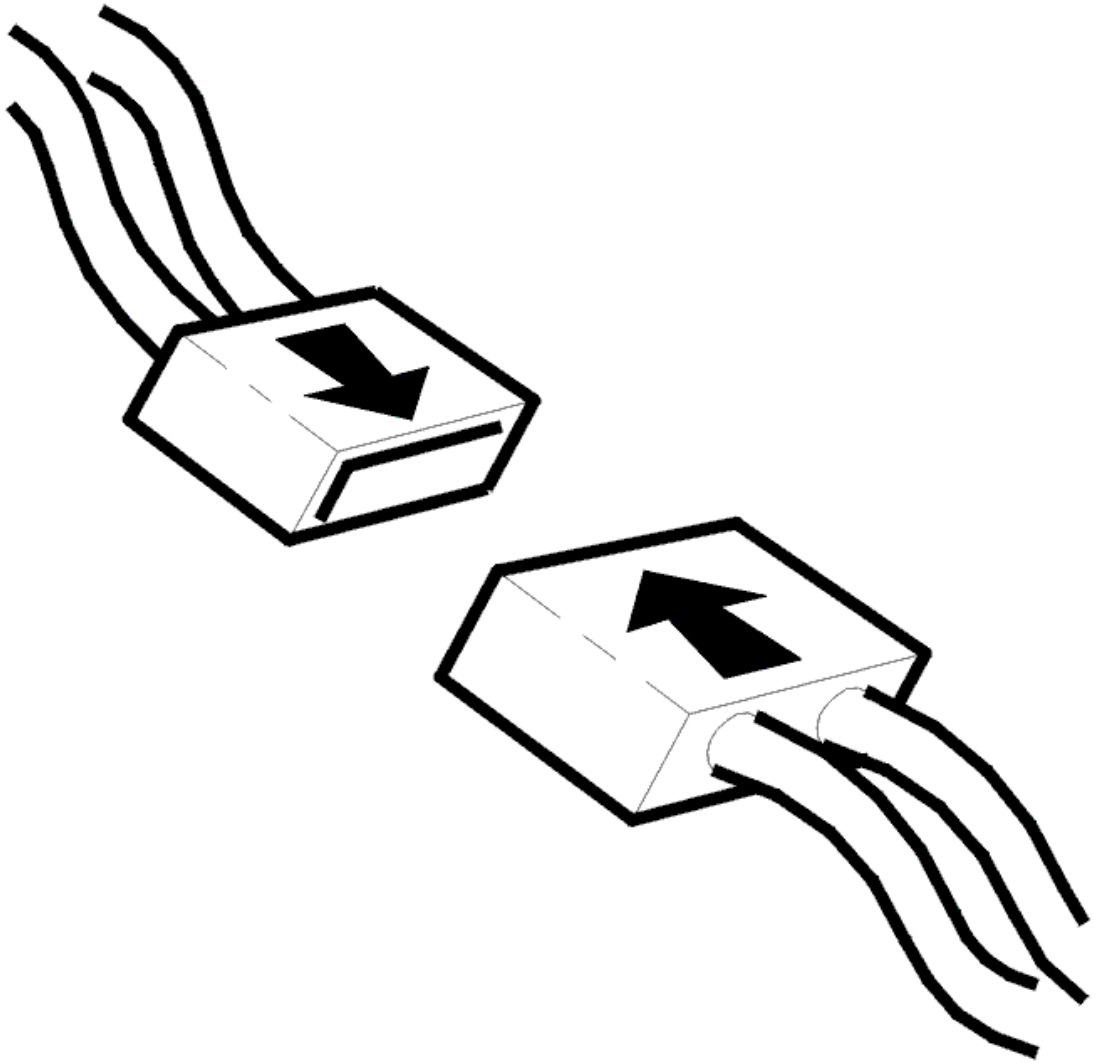

Fig. 202: Identifying Intake Air Temperature (IAT) Sensor
Courtesy of VOLVO CARS CORPORATION

Engine Control Module (ECM) checks the signal for inlet temperature at start. This is done by the control module saving the values from inlet, fuel and engine temperature sensors at the moment of start. Then the control module compares the values. If the signal from the air temperature sensor matches a temperature that exceeds a certain limit in relation to the other, the control module interprets this as a malfunction and the diagnostic trouble code (DTC) is generated.

The diagnostic trouble code (DTC) can be diagnosed after approx. 10 minutes with the engine running.

Substitute Value

- Value from the outdoor temperature sensor is used.

Possible Source

- Damaged intake air temperature (IAT) sensor.
- Contact resistance or oxidation in the intake air temperature (IAT) sensor terminals.

Fault symptom[s]

- Malfunction indicator light (MIL), on
- Engine is difficult to start

FAULT-TRACING

CHECKING THE STATUS

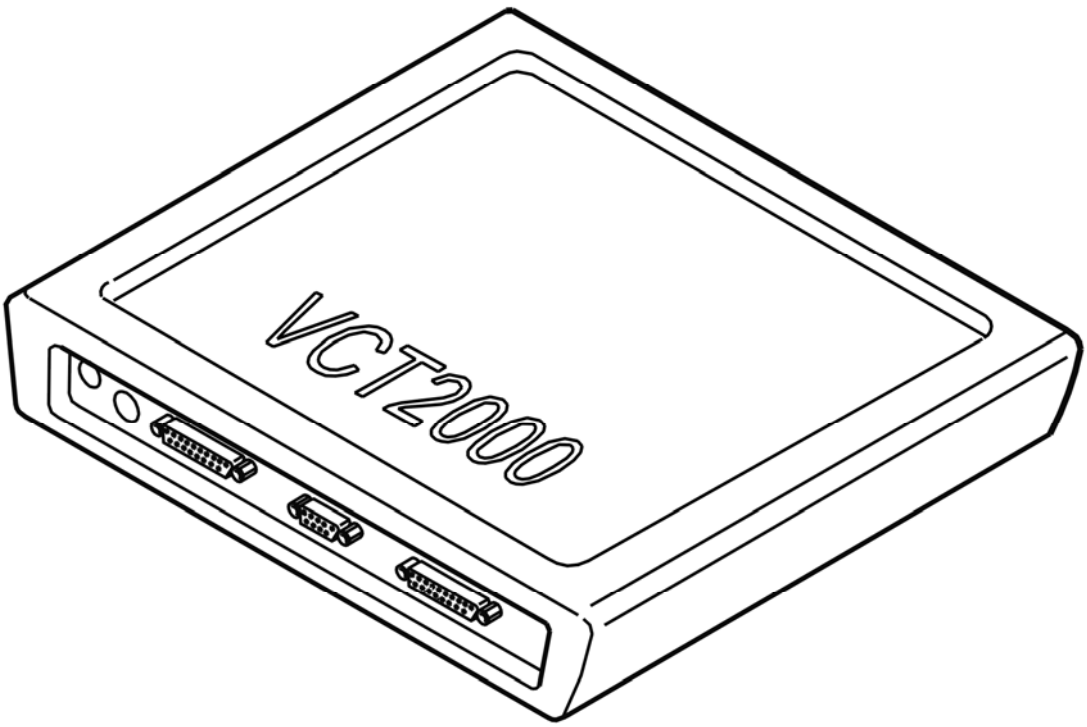

Fig. 203: Belt Routing / Engine Idling - Volvo
Courtesy of VOLVO CARS CORPORATION

Check whether the fault is permanent or intermittent by reading the signals from the fuel, outside and engine temperature sensors.

NOTE: **In order for the correct values to be shown, reading of the temperatures must take place at the moment of start.**

- Start the engine.

Check that the intake temperature is reasonable. The temperature must correspond to the ambient temperature.

The fault is permanent if the signal is incorrect. The fault is intermittent if the signal is correct.

HINT: Remove the air temperature sensor, but let the connector remain connected. Let the hood remain open, the sensor should then indicate the same temperature as the outdoor temperature.

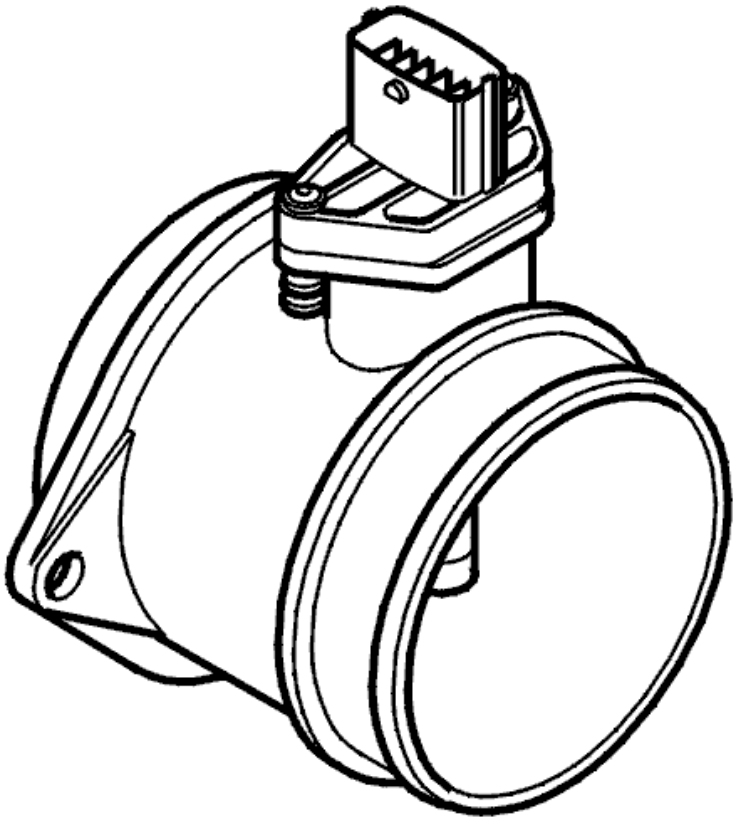

Fig. 204: Identifying VCT2000 Diagnostic Tool Symbol In VIDA
Courtesy of VOLVO CARS CORPORATION

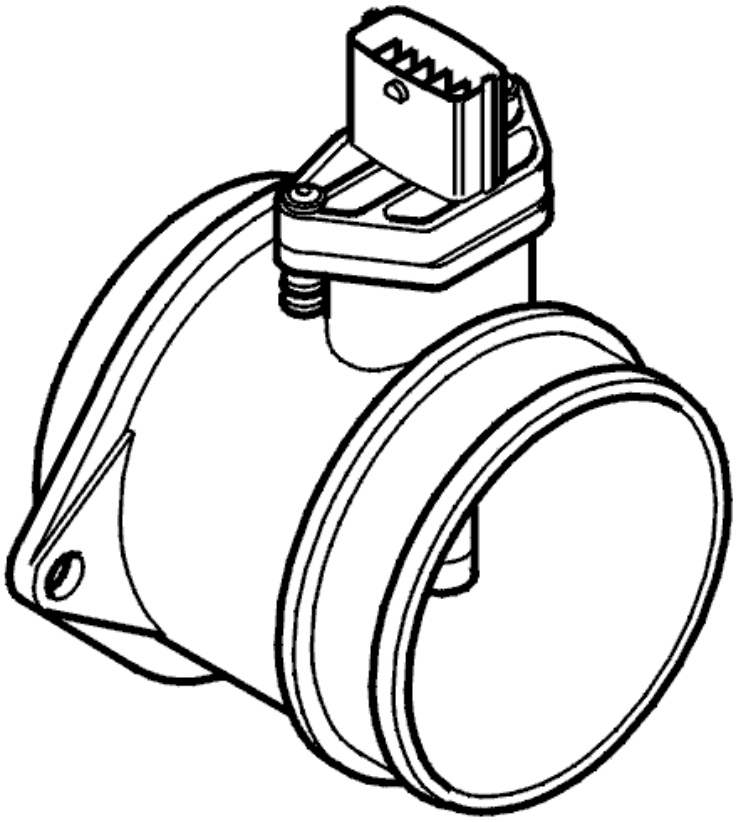

Fig. 205: Identifying Intake Air Temperature (IAT) Sensor
Courtesy of VOLVO CARS CORPORATION

- **Continue**

  Refer to **CHECKING THE COMPONENT AND WIRING**

CHECKING THE COMPONENT AND WIRING

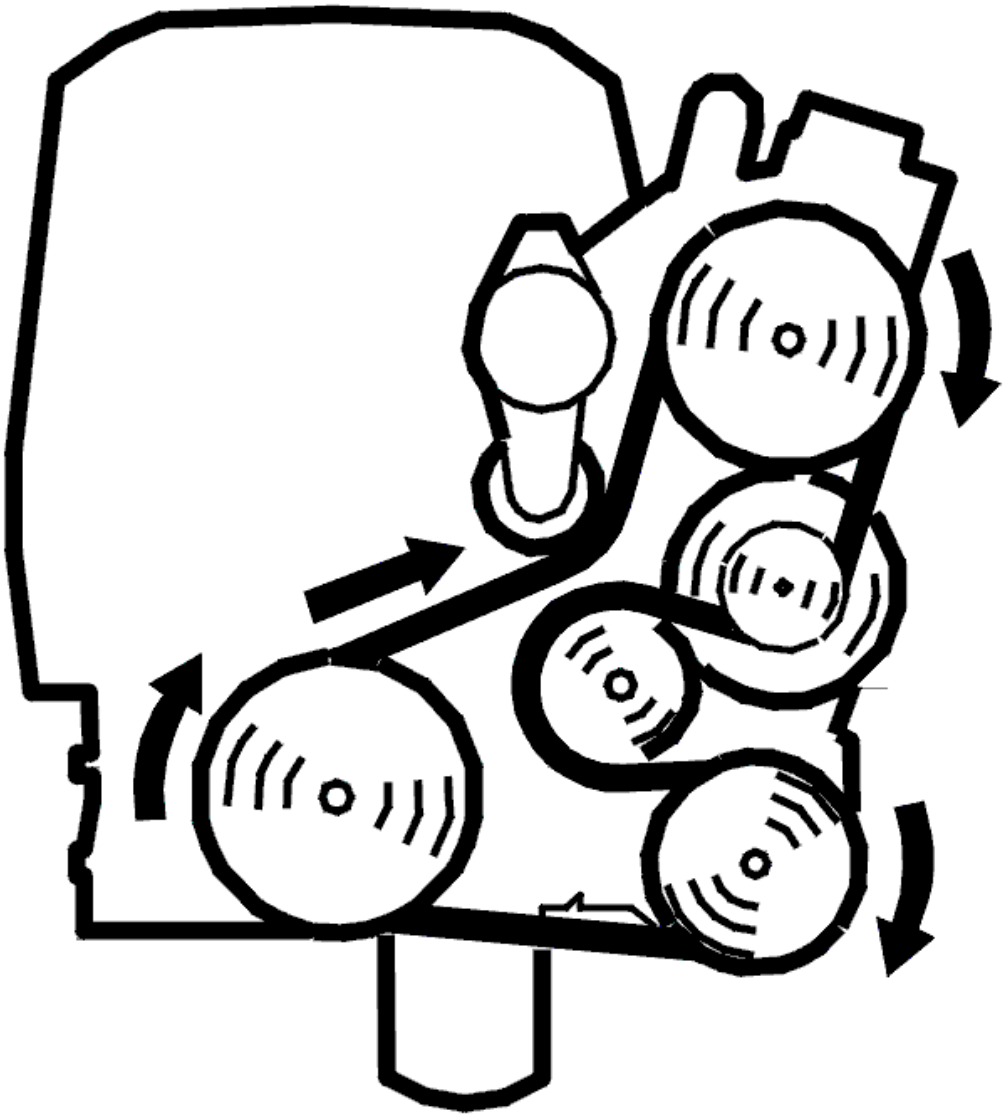

Fig. 206: Identifying Ignition In Off Position
Courtesy of VOLVO CARS CORPORATION

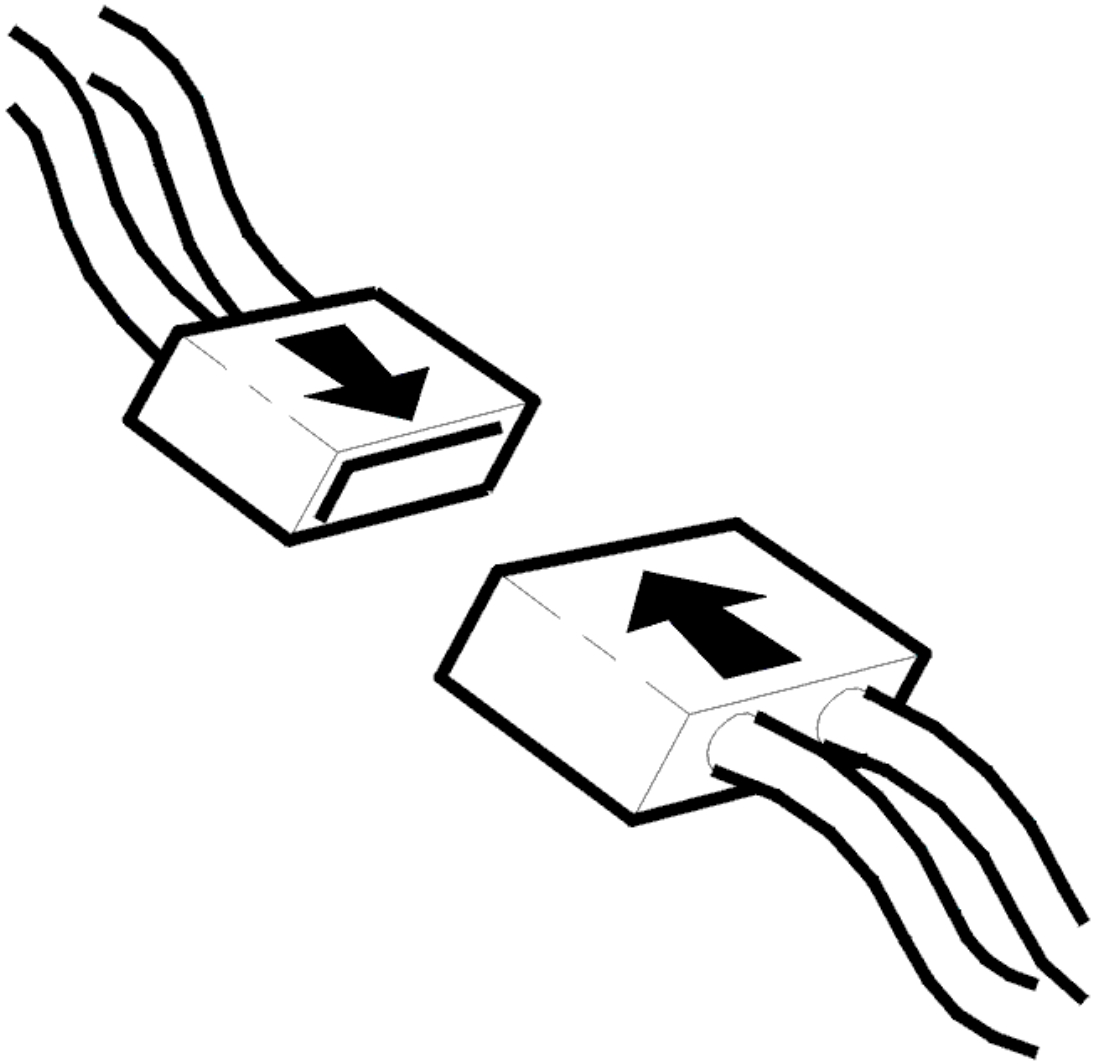

Fig. 207: Identifying Connectors
Courtesy of VOLVO CARS CORPORATION

- Ignition off.
- Unplug the air temperature sensor connectors.
- Check the connectors. Check for loose connections. Check for contact resistance. Check for oxidation.

  Check the resistance of the sensor between #1 and #2 (to the sensor).

  Remedy as necessary.

  Other information

  - see **CONNECTING THE BREAKOUT BOX**
  - For 5 cylinder turbocharged engines -2004, see **SIGNAL DESCRIPTION**

- For 5 cylinder turbocharged engines 2005-, see **SIGNAL SPECIFICATION** .
- see **COMPONENT SPECIFICATIONS**
- For B5xx4T, see **TEMPERATURE AND PRESSURE SENSORS, REPLACING**
- For B6xx4T, see **TEMPERATURE AND PRESSURE SENSORS, REPLACING**
- see **CHECKING WIRING AND TERMINALS**

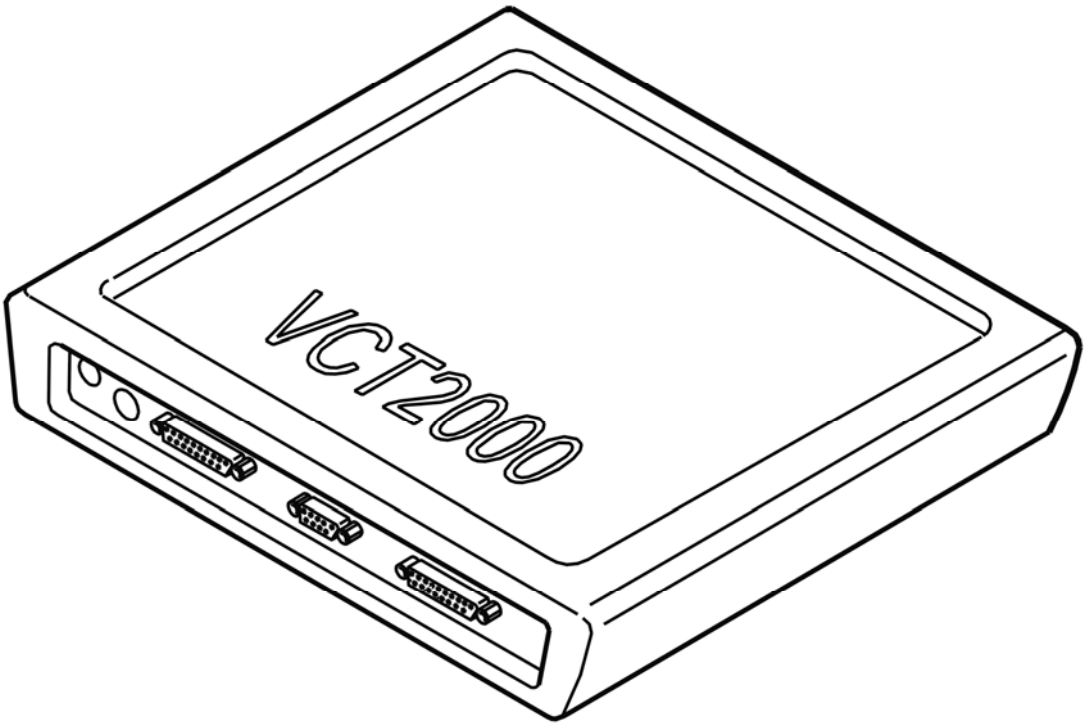

Fig. 208: Identifying 4-Bit Connector
Courtesy of VOLVO CARS CORPORATION

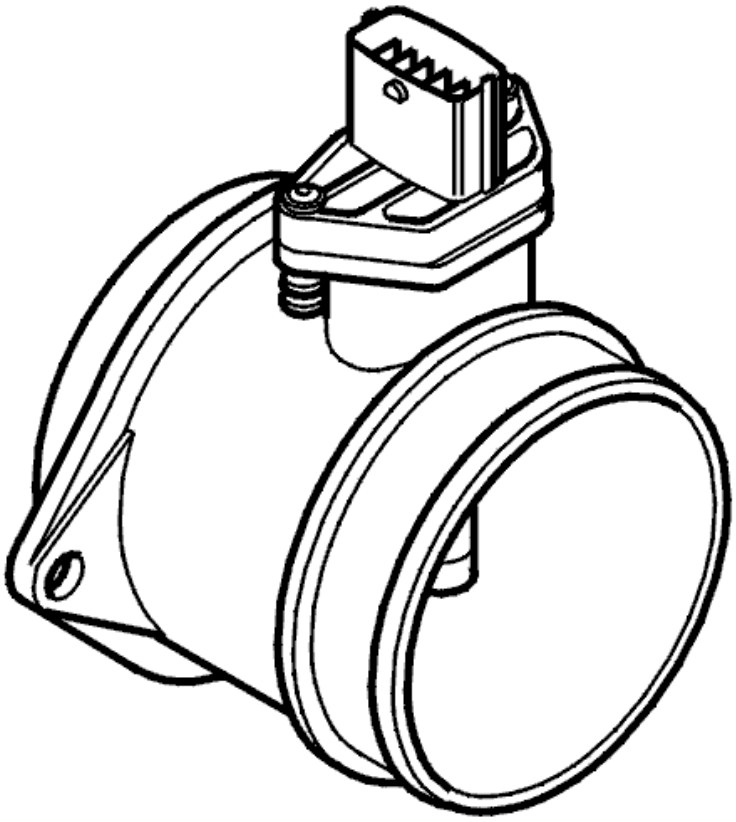

Fig. 209: Identifying VCT2000 Diagnostic Tool Symbol In VIDA
Courtesy of VOLVO CARS CORPORATION

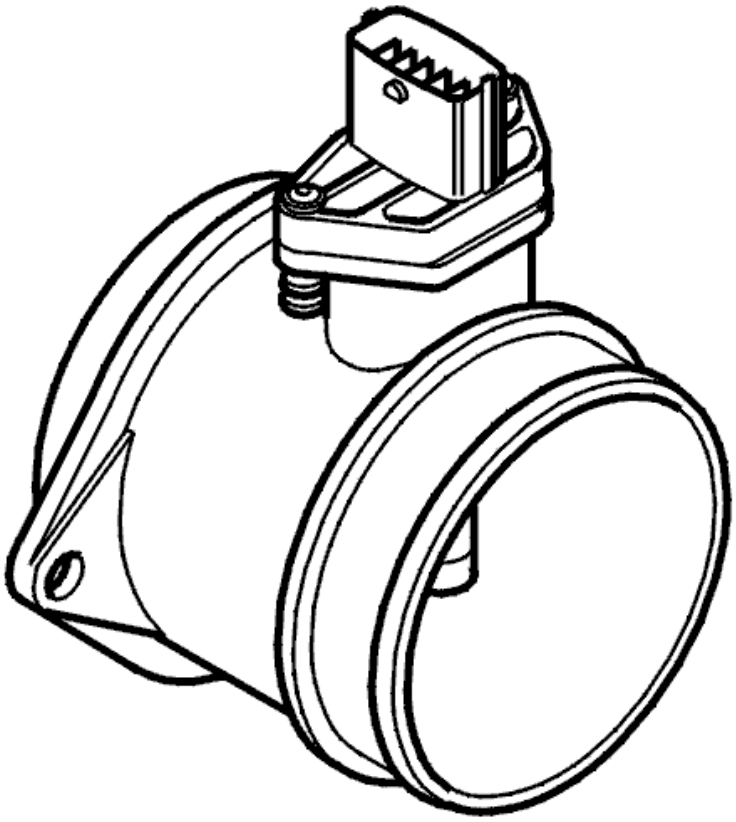

Fig. 210: Identifying Intake Air Temperature (IAT) Sensor
Courtesy of VOLVO CARS CORPORATION

- **Continue**

  Refer to **VERIFICATION**

VERIFICATION

VERIFICATION

HINT: After carrying out the repair, check that the fault has been remedied.

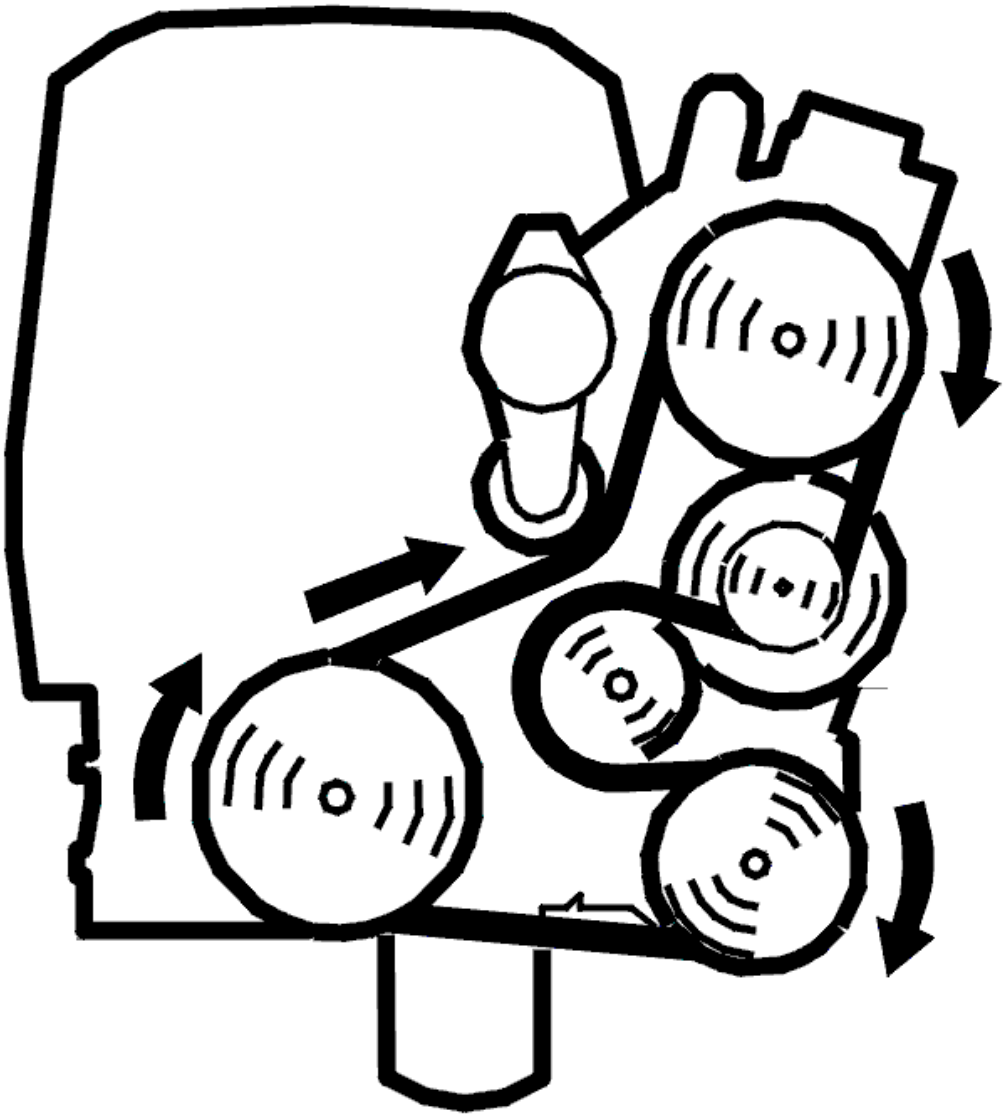

Fig. 211: Identifying Ignition ON
Courtesy of VOLVO CARS CORPORATION

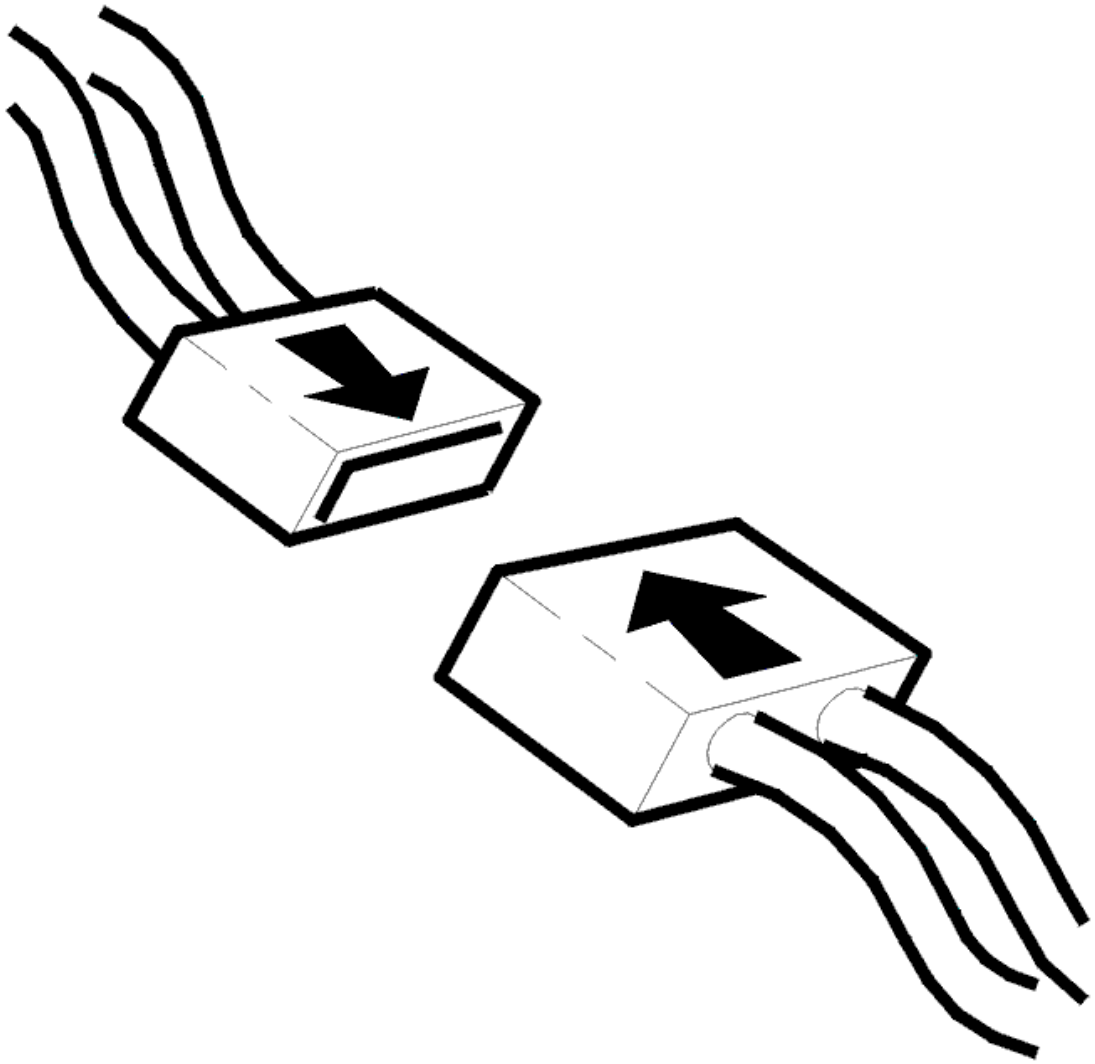

Fig. 212: Connecting Connector
Courtesy of VOLVO CARS CORPORATION

- Ignition off
- Reconnect the connectors, reinstall components etc.
- Ignition on.

  Read off the air temperature sensor signal. Check that the signal is plausible, compare with the external temperature.

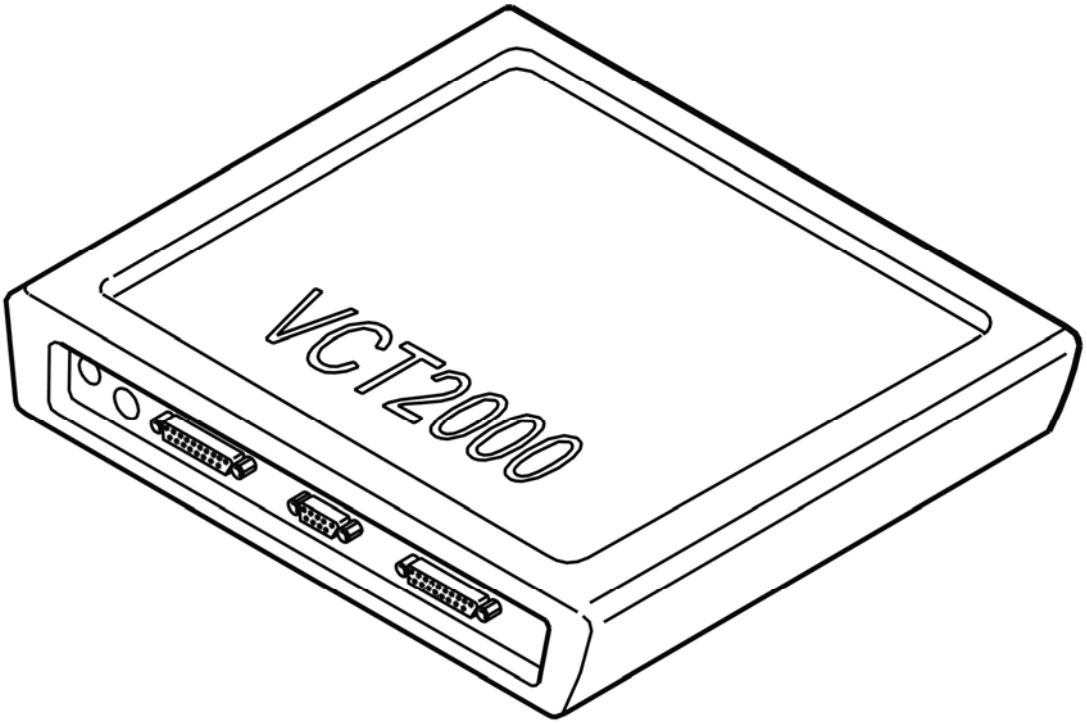

Fig. 213: Identifying VCT2000 Diagnostic Tool Symbol In VIDA
Courtesy of VOLVO CARS CORPORATION

Is the value OK?

- **YES**

  VERIFIED: Troubleshooting has been completed.

- **NO**

  Refer to **INFORMATION**

INFORMATION

FAULT-TRACING INFORMATION

The fault should have been detected and remedied. As this is not the case fault-tracing has failed.

Exit fault-tracing for this diagnostic trouble code (DTC) or make another attempt.

ECM-133D: INTAKE AIR TEMPERATURE (IAT) SENSOR INLET. SIGNAL TOO LOW (B5254T2; 2006-2007)

DIAGNOSTIC TROUBLE CODE (DTC) INFORMATION ECM-133D

Condition

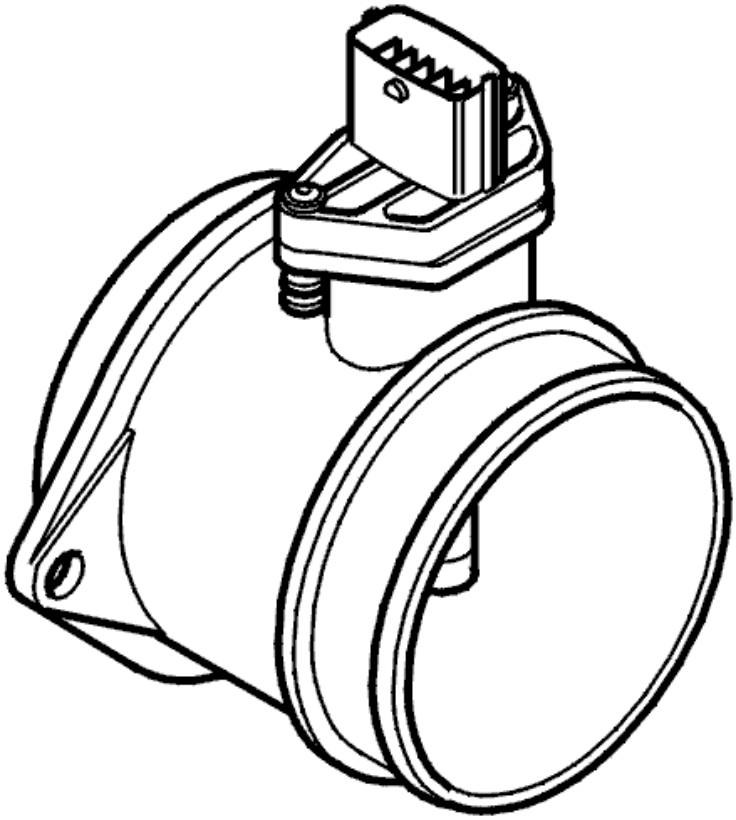

Fig. 214: Identifying Intake Air Temperature (IAT) Sensor
Courtesy of VOLVO CARS CORPORATION

Engine Control Module (ECM) checks the signal for inlet temperature at start. This is done by the control module saving the values from inlet, fuel and engine temperature sensors at the moment of start. Then the control module compares the values. If the signal from the air temperature sensor matches a temperature that is below a certain limit in relation to the other, the control module interprets this as a malfunction and the diagnostic trouble code (DTC) is generated.

The diagnostic trouble code (DTC) can be diagnosed after approx. 10 minutes with the engine running.

Substitute Value

- Value from the outdoor temperature sensor is used.

Possible Source

- Damaged intake air temperature (IAT) sensor.
- Contact resistance or oxidation in the intake air temperature (IAT) sensor terminals.

Fault symptom[s]

- Malfunction indicator light (MIL), on
- Engine is difficult to start

FAULT-TRACING

see **FAULT-TRACING**

ECM-140C: OUTSIDE TEMPERATURE SENSOR. SIGNAL TOO HIGH (B5254T2; 2005-2007)

DIAGNOSTIC TROUBLE CODE (DTC) INFORMATION ECM-140C

Condition

The diagnostic trouble code (DTC) is stored if there is a short-circuit to ground in the outside temperature sensor.

The diagnostic trouble code (DTC) can be diagnosed when the ignition is switched on.

Substitute Value

- The value is taken from the intake air temperature (IAT) sensor.

Possible Source

- Contact resistance in the terminals
- Short-circuit to ground in the signal cable
- Damaged outside temperature sensor.

Fault symptom[s]

- Malfunction indicator lamp (MIL) lit.

SIGNAL TOO HIGH

see **SIGNAL TOO HIGH**

ECM-140C: OUTSIDE TEMPERATURE SENSOR. SIGNAL TOO HIGH (B6294T; 2005-2006)

DIAGNOSTIC TROUBLE CODE (DTC) INFORMATION ECM-140C

see **DIAGNOSTIC TROUBLE CODE (DTC) INFORMATION ECM-140C**

SIGNAL TOO HIGH

see **SIGNAL TOO HIGH**

ECM-140D: OUTSIDE TEMPERATURE SENSOR. SIGNAL TOO LOW (B5254T2; 2005-2007)

DIAGNOSTIC TROUBLE CODE (DTC) INFORMATION ECM-140D

Condition

The diagnostic trouble code (DTC) is stored if there is a short-circuit to supply voltage in the outside temperature sensor.

The diagnostic trouble code (DTC) can be diagnosed when the ignition is switched on.

Substitute Value

- The value is taken from the intake air temperature (IAT) sensor.

Possible Source

- Contact resistance in the terminals
- Short-circuit to supply voltage in the signal cable
- Open-circuit in the signal cable
- Damaged outside temperature sensor.

Fault symptom[s]

- Malfunction indicator lamp (MIL) lit.

SIGNAL TOO LOW

see **SIGNAL TOO LOW**

ECM-140D: OUTSIDE TEMPERATURE SENSOR. SIGNAL TOO LOW (B6294T; 2005-2006)

DIAGNOSTIC TROUBLE CODE (DTC) INFORMATION ECM-140D

see **DIAGNOSTIC TROUBLE CODE (DTC) INFORMATION ECM-140D**

SIGNAL TOO LOW

see **SIGNAL TOO LOW**

ECM-1410: OUTSIDE TEMPERATURE SENSOR. FAULTY SIGNAL (B5254T2; 2005-2007)

DIAGNOSTIC TROUBLE CODE (DTC) INFORMATION ECM-1410

Condition

The diagnostic trouble code (DTC) is stored if the outside temperature sensor signal is higher than the calculated signal.

The diagnostic trouble code (DTC) can be diagnosed after 5 minutes driving at an engine speed above 1700 RPM and a speed above 50 km/h.

Substitute Value

- The value from the engine intake air temperature (IAT) sensor.

Possible Source

- Contact resistance in the terminals
- Damaged outside temperature sensor
- Damaged intake air temperature (IAT) sensor.

Fault symptom[s]

- Malfunction indicator lamp (MIL) lit.

FAULTY SIGNAL OR SIGNAL MISSING

CHECKING COMPONENTS AND WIRING

HINT: If a diagnostic trouble code (DTC) for the intake air temperature (IAT) sensor is also stored, this code must be fault-traced first.

Check the connector for the outside temperature sensor. Check for contact resistance and oxidation.

Check the resistance of the outside temperature sensor.

HINT: With the ignition on and the outside temperature sensor connector disconnected, the voltage between terminal #2 and ground must be approximately 5 V.

Remedy as necessary.

Other information:

- see **CONNECTING THE BREAKOUT BOX**

- For 5 cylinder turbocharged engines -2004, see **SIGNAL DESCRIPTION**
- For 5 cylinder turbocharged engines 2005-, see **SIGNAL SPECIFICATION** .
- For 6 cylinder engines -2004, see **SIGNAL SPECIFICATION**
- For 6 cylinder engines 2005-, see **SIGNAL SPECIFICATION** .
- see **COMPONENT SPECIFICATIONS**
- For outside temperature sensor **- 2006** see **OUTSIDE TEMPERATURE SENSOR DOOR MIRROR, REPLACING**
- For outside temperature sensor **2007** - see **OUTSIDE TEMPERATURE SENSOR**

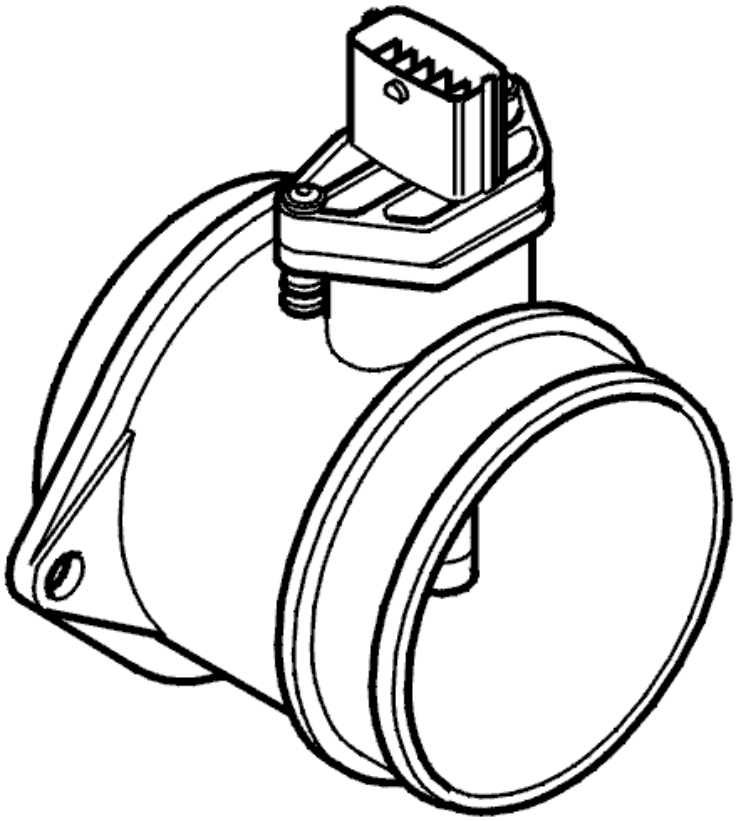

Fig. 215: Identifying Connector Terminals
Courtesy of VOLVO CARS CORPORATION

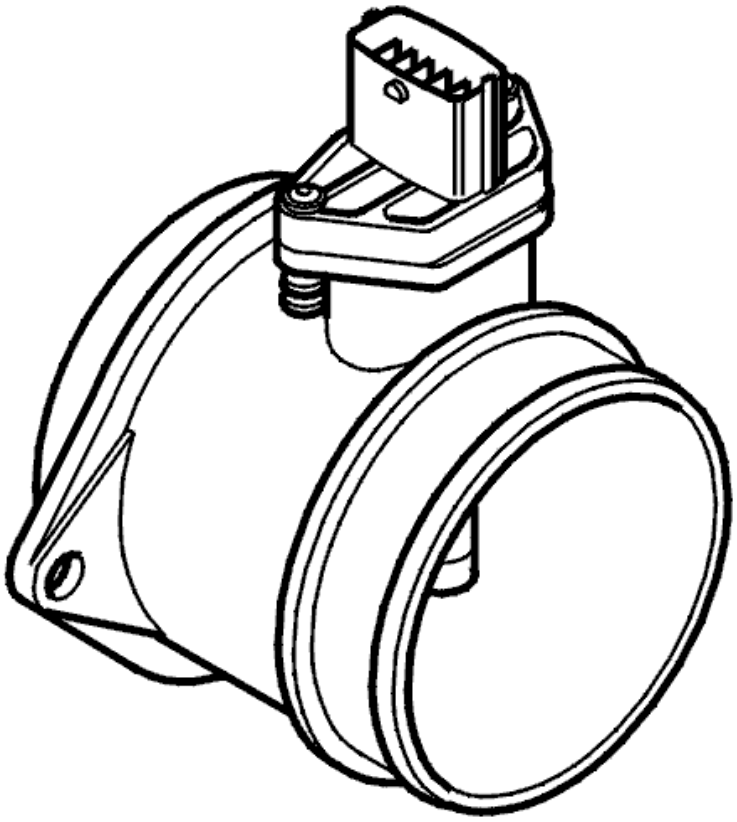

Fig. 216: Identifying VCT2000 Diagnostic Tool Symbol In VIDA
Courtesy of VOLVO CARS CORPORATION

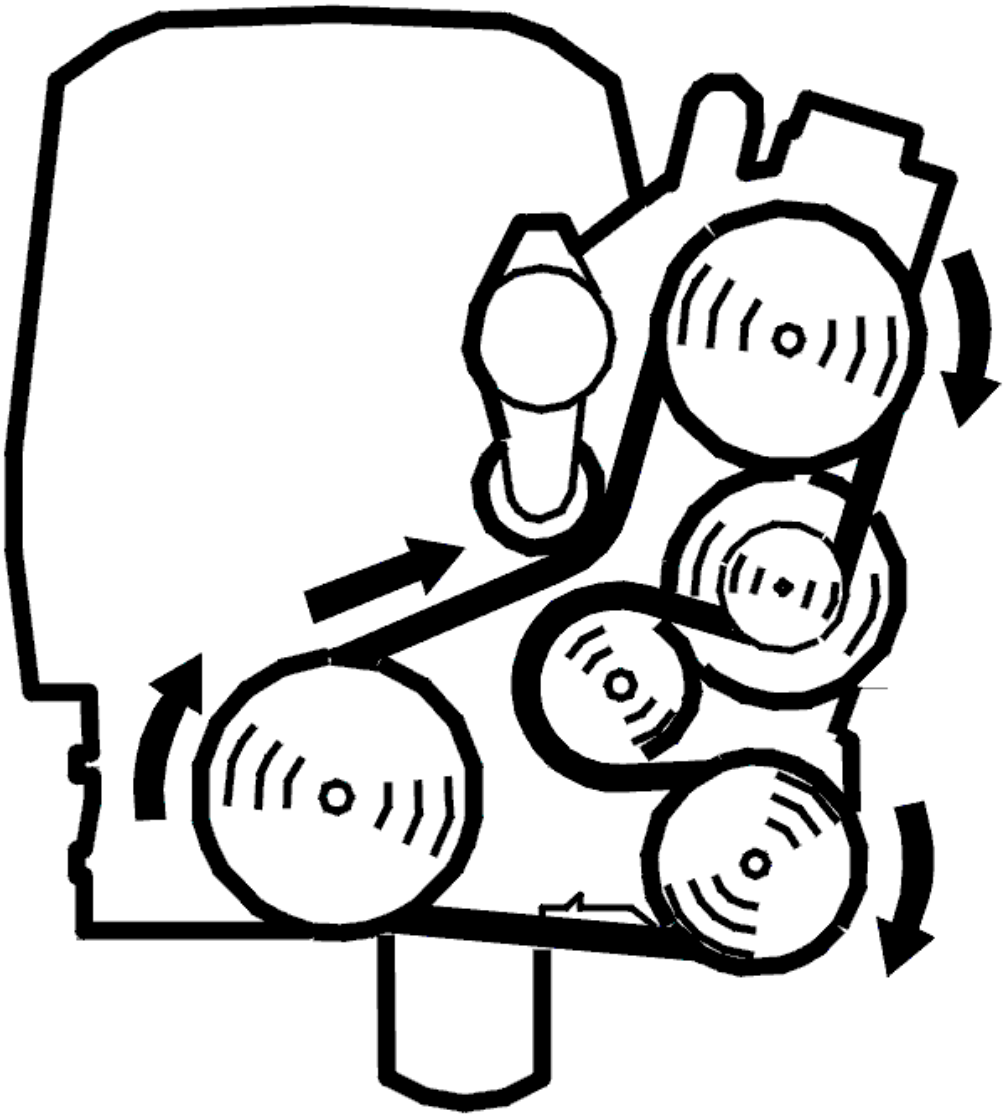

Fig. 217: Identifying Outside Temperature Sensor
Courtesy of VOLVO CARS CORPORATION

- **Continue**

  Refer to **VERIFICATION**

VERIFICATION

VERIFICATION

HINT: After carrying out the repair, check that the fault has been remedied.

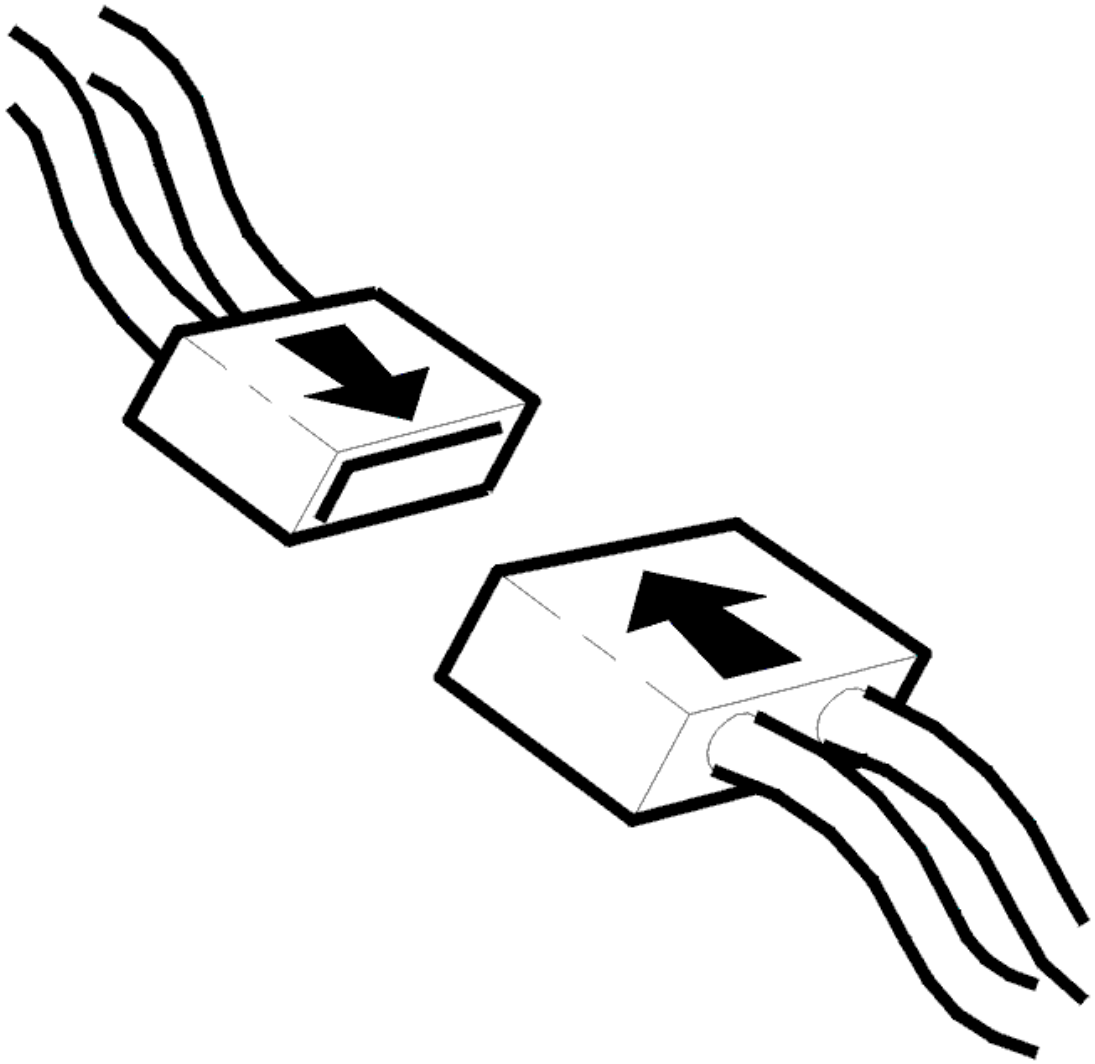

Fig. 218: Identifying Ignition ON
Courtesy of VOLVO CARS CORPORATION

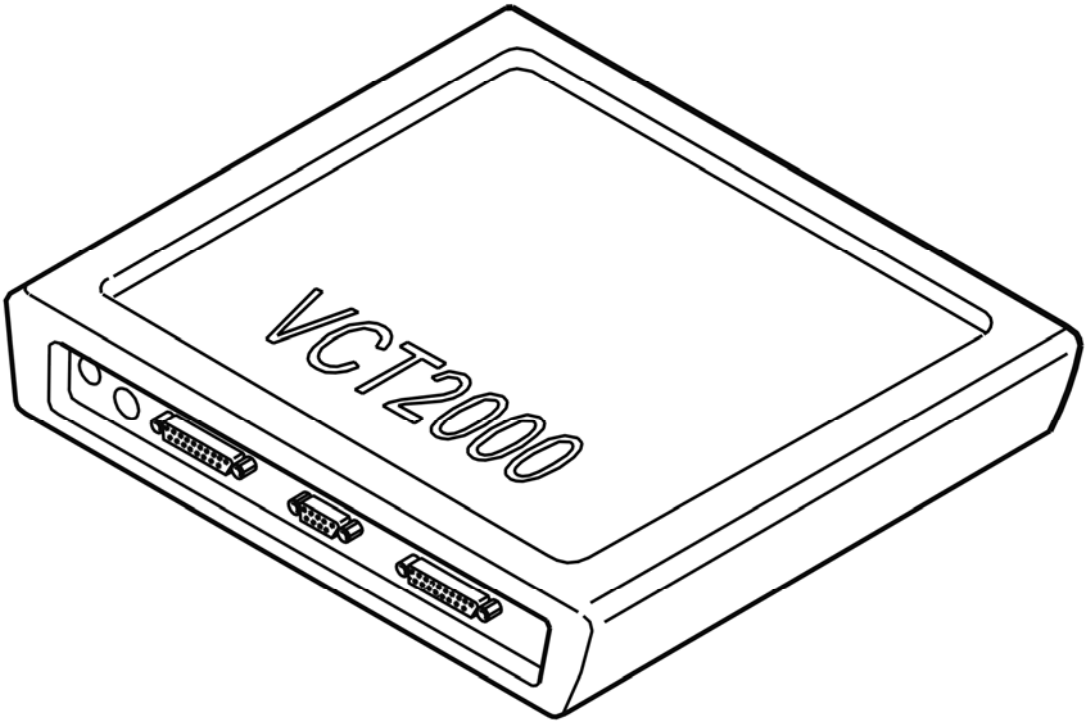

Fig. 219: Connecting Connector
Courtesy of VOLVO CARS CORPORATION

- Ignition off.
- Reconnect connectors, reinstall components.
- Ignition on.
- Read off outside temperature.

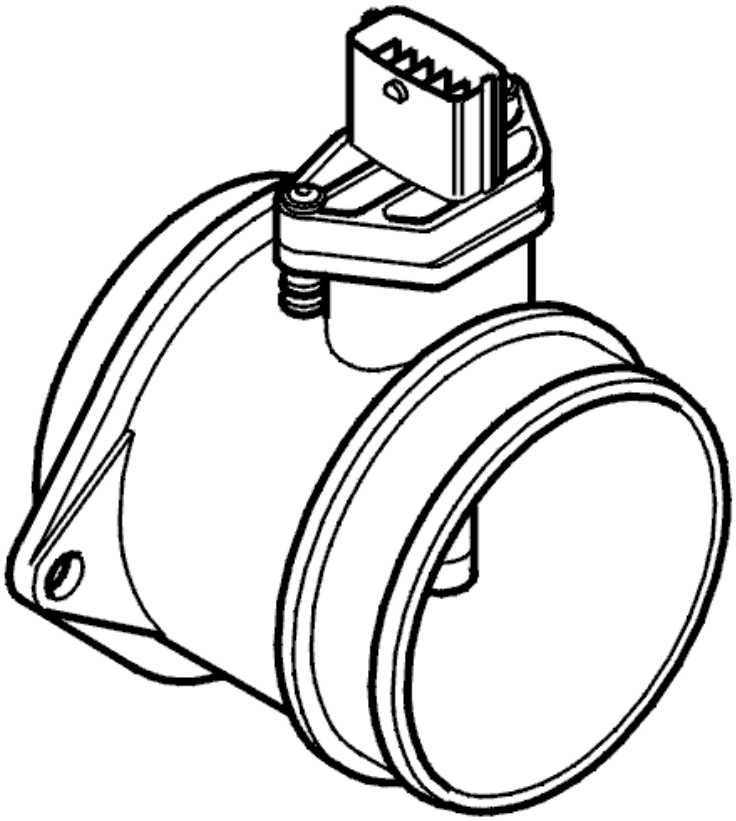

Fig. 220: Identifying VCT2000 Diagnostic Tool Symbol In VIDA
Courtesy of VOLVO CARS CORPORATION

Is the temperature within its permitted range?

- **YES**

  VERIFIED: Troubleshooting has been completed.

- **NO**

  Refer to **INFORMATION**

INFORMATION

FAULT-TRACING INFORMATION

The fault should have been detected and remedied. As this is not the case fault-tracing has failed.

Exit fault-tracing for this diagnostic trouble code (DTC) or make another attempt.

ECM-1410: OUTSIDE TEMPERATURE SENSOR. FAULTY SIGNAL (B6294T; 2005-2006)

DIAGNOSTIC TROUBLE CODE (DTC) INFORMATION ECM-1410

see **DIAGNOSTIC TROUBLE CODE (DTC) INFORMATION ECM-1410**

FAULTY SIGNAL OR SIGNAL MISSING

see **FAULTY SIGNAL OR SIGNAL MISSING**

ECM-141B: OUTSIDE TEMPERATURE SENSOR. SIGNAL MISSING (B5254T2; 2005-2007)

DIAGNOSTIC TROUBLE CODE (DTC) INFORMATION ECM-141B

Condition

The diagnostic trouble code (DTC) is stored if the outside temperature sensor signal is lower than the calculated signal.

The diagnostic trouble code (DTC) can be diagnosed after 5 minutes driving at an engine speed above 1700 RPM and a speed above 50 km/h.

Substitute Value

- The values from the engine intake air temperature (IAT) sensor.

Possible Source

- Contact resistance in the terminals
- Damaged outside temperature sensor
- Damaged intake air temperature (IAT) sensor.

Fault symptom[s]

- Malfunction indicator lamp (MIL) lit.

FAULTY SIGNAL OR SIGNAL MISSING

see **FAULTY SIGNAL OR SIGNAL MISSING**

ECM-141B: OUTSIDE TEMPERATURE SENSOR. SIGNAL MISSING (B6294T; 2005-2006)

DIAGNOSTIC TROUBLE CODE (DTC) INFORMATION ECM-141B

see **DIAGNOSTIC TROUBLE CODE (DTC) INFORMATION ECM-141B**

FAULTY SIGNAL OR SIGNAL MISSING

see **FAULTY SIGNAL OR SIGNAL MISSING**

ECM-142C: OUTSIDE TEMPERATURE SENSOR. SIGNAL TOO HIGH (B5254T2; 2006-2007)

DIAGNOSTIC TROUBLE CODE (DTC) INFORMATION ECM-142C

Condition

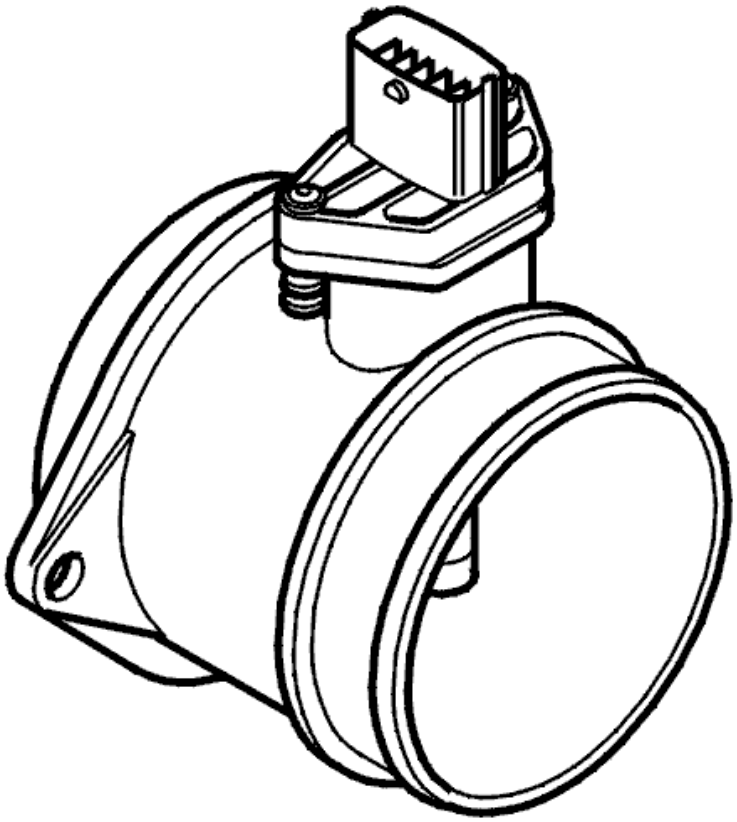

Fig. 221: Identifying Outside Temperature Sensor
Courtesy of VOLVO CARS CORPORATION

The central electronic module (CEM) transmits the signal from the outside temperature sensor via CAN to the engine control module (ECM).

The diagnostic trouble code (DTC) is stored in the engine control module (ECM) if the signal from the engine control module (ECM) is determined to be above its normal range. The fault is diagnosed at ignition on or with the engine running.

Substitute Value

Value from the engine intake air temperature (IAT) sensor in the intake manifold is used.

Possible Source

- Damaged outside temperature sensor
- Short-circuit to ground in the signal cable.

Fault symptom[s]

- Starting/Engine hard to start/cranks slowly/Unsure when/at all times
- Gauges/Ambient temperature gauge not accurate/does not work

FAULT-TRACING INFORMATION

INFORMATION

No fault-tracing has been developed for this diagnostic trouble code (DTC). The diagnostic trouble code (DTC) for this fault is first stored in the Central electronic module (CEM), then in the Engine control module (ECM). This diagnostic trouble code (DTC) can not be erased before the diagnostic trouble codes (DTC) in the central electronic module (CEM) has been remedied and erased.

Therefore, first read off diagnostic trouble codes in Central electronic module (CEM), perform troubleshooting and perform actions as needed. This diagnostic trouble code (DTC) can then be erased.

For further information on this diagnostic trouble code, see Diagnostic trouble code (DTC) information.

ECM-142D: AMBIENT TEMPERATURE SENSOR. SIGNAL TOO LOW (B5254T2; 2006-2007)

DIAGNOSTIC TROUBLE CODE (DTC) INFORMATION ECM-142D

Condition

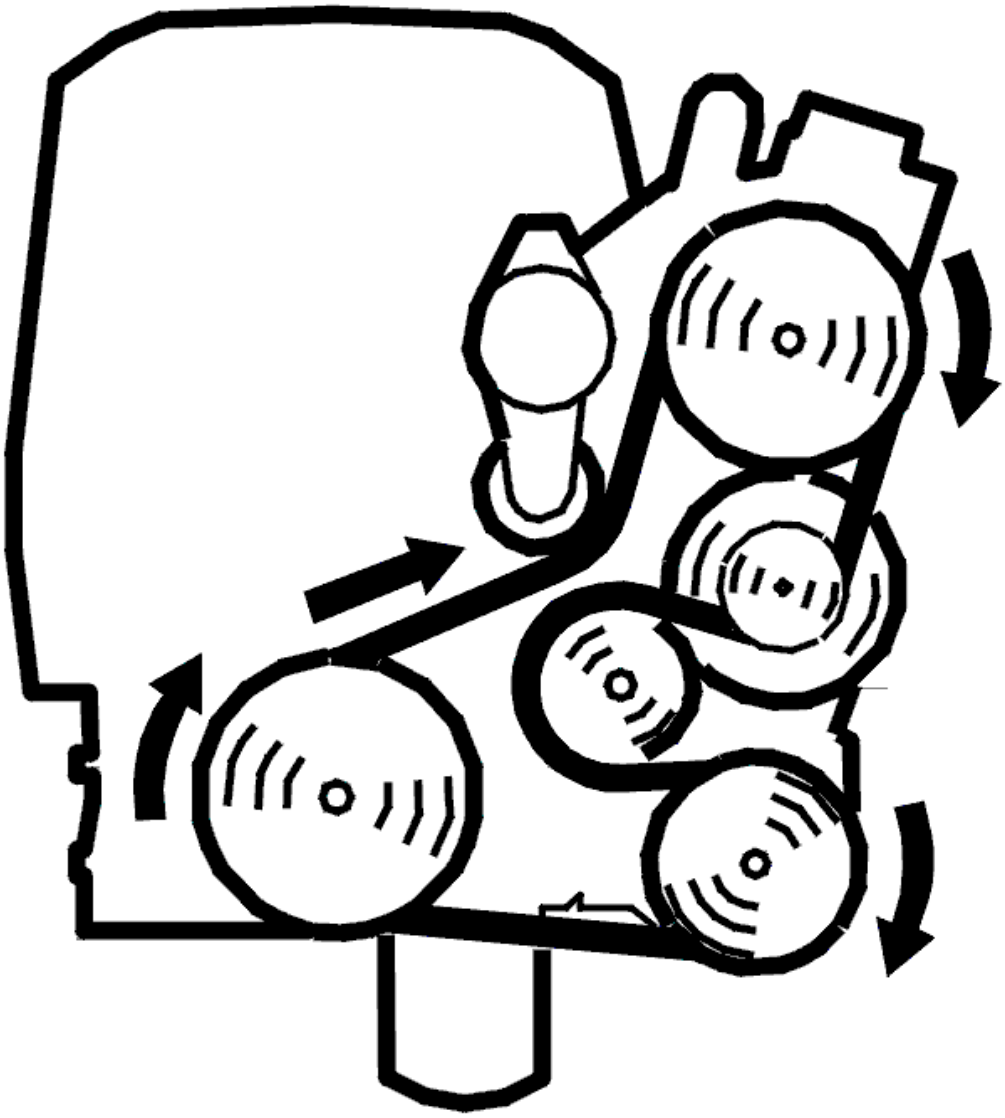

Fig. 222: Identifying Outside Temperature Sensor
Courtesy of VOLVO CARS CORPORATION

The central electronic module (CEM) transmits the signal from the outside temperature sensor via CAN to the engine control module (ECM).

The diagnostic trouble code (DTC) is stored in the engine control module (ECM) if the signal from the engine control module (ECM) is determined to be below its normal range. The fault is diagnosed at ignition on or with the engine running.

Substitute Value

Value from the engine intake air temperature (IAT) sensor in the intake manifold is used.

Possible Source

- Damaged outside temperature sensor
- Short-circuit to supply voltage in the signal cable
- Open-circuit in the signal cable.

Fault symptom[s]

- Starting/Engine hard to start/cranks slowly/Unsure when/at all times
- Gauges/Ambient temperature gauge not accurate/does not work

FAULT-TRACING INFORMATION

see **FAULT-TRACING INFORMATION**

ECM-143C: OUTSIDE TEMPERATURE SENSOR. SIGNAL TOO HIGH (B5254T2; 2006-2007)

DIAGNOSTIC TROUBLE CODE (DTC) INFORMATION ECM-143C

Condition

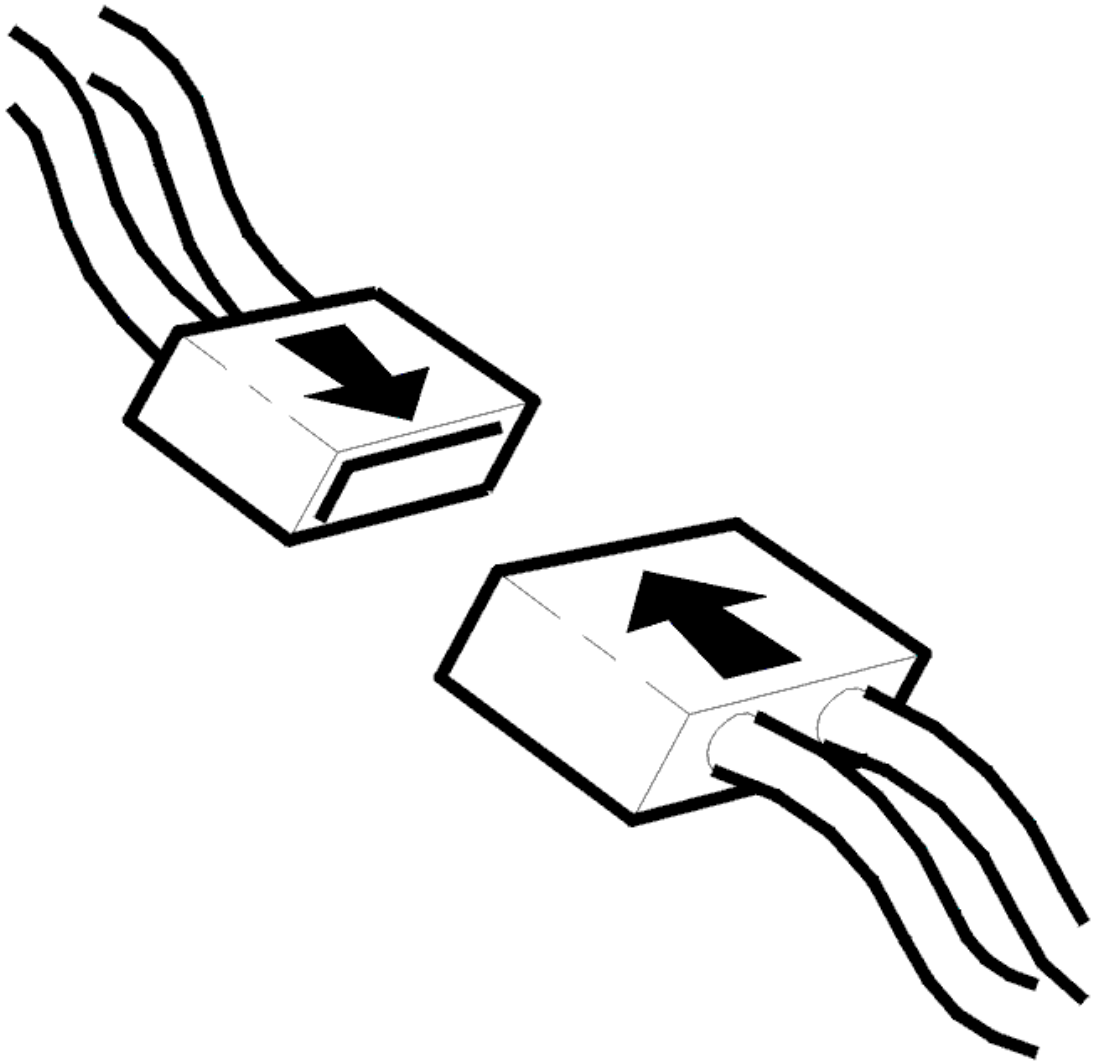

Fig. 223: Identifying Outside Temperature Sensor
Courtesy of VOLVO CARS CORPORATION

Engine Control Module (ECM) checks the signal for outdoor temperature at start. This is done by the control module saving the values from outdoor, inlet and engine temperature sensors at the moment of start. Then the control module compares the values. If the signal from the outdoor temperature sensor corresponds to a temperature that is higher than a certain limit in relation to the others, the control module interprets this as a malfunction and the diagnostic trouble code is generated.

The diagnostic trouble code (DTC) can be diagnosed after approx. 10 minutes with the engine running.

Substitute Value

- Outdoor temperature is calculated according to a model.

Possible Source

- Damaged outside temperature sensor.
- Contact resistance or oxidation in the terminals.

Fault symptom[s]

- Displays too low ambient temperature
- Displays too high outside temperature

FAULT-TRACING INFORMATION

INFORMATION

There is no fault-tracing for this diagnostic fault code (DTC).

For further information on this diagnostic trouble code, see Diagnostic trouble code (DTC) information.

ECM-143D: OUTSIDE TEMPERATURE SENSOR. SIGNAL TOO LOW (B5254T2; 2006-2007)

DIAGNOSTIC TROUBLE CODE (DTC) INFORMATION ECM-143D

Condition

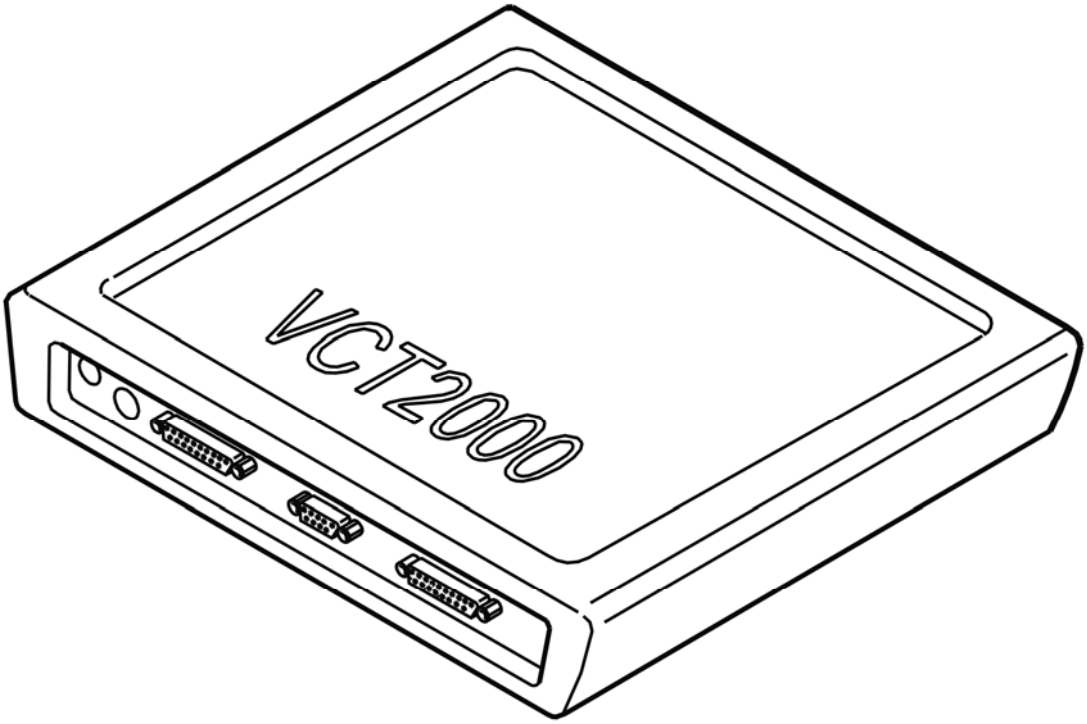

Fig. 224: Identifying Outside Temperature Sensor
Courtesy of VOLVO CARS CORPORATION

Engine Control Module (ECM) checks the signal for outdoor temperature at start. This is done by the control module saving the values from outdoor, inlet and engine temperature sensors at the moment of start. Then the control module compares the values. If the signal from the outdoor temperature sensor corresponds to a temperature that is lower than a certain limit in relation to the others, the control module interprets this as a malfunction and the diagnostic trouble code is generated.

The diagnostic trouble code (DTC) can be diagnosed after approx. 10 minutes with the engine running.

Substitute Value

- Outdoor temperature is calculated according to a model.

Possible Source

- Damaged outside temperature sensor.
- Contact resistance or oxidation in the terminals.

Fault symptom[s]

- Displays too low ambient temperature
- Displays too high outside temperature

FAULT-TRACING INFORMATION

see **FAULT-TRACING INFORMATION**

ECM-1600: BOOST PRESSURE SENSOR. FAULTY SIGNAL (B5254T2; B6294T; 2003-2004)

DIAGNOSTIC TROUBLE CODE (DTC) INFORMATION ECM-1600

Condition

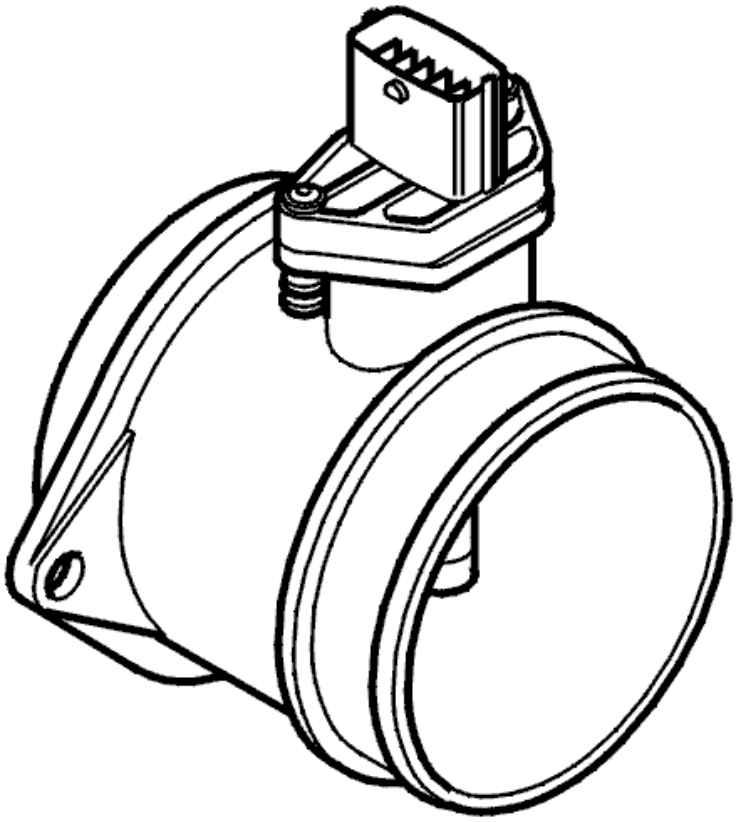

Fig. 225: Identifying Boost Pressure Sensor
Courtesy of VOLVO CARS CORPORATION

Diagnostic trouble code (DTC) ECM-1600 (signal too high or too low) is stored if the signal from the boost pressure sensor is outside its normal range. The fault is diagnosed by the control module when the ignition is on / the engine is running. Diagnostic trouble code (DTC) ECM-1600 (faulty signal) is stored if the signal from the boost pressure sensor is within its normal range but deviates from the calculated boost pressure. The fault is diagnosed by the control module when the engine is running.

Substitute Value

Limited boost pressure (if the signal is too high).

Possible Source

Signal too high:

- Contact resistance or oxidation in the terminals
- Short-circuit to supply voltage in the signal cable
- Open-circuit in the signal cable
- Open-circuit on signal ground cable
- Defective boost pressure sensor.

Signal too low:

- Short-circuit to ground in the signal cable
- Defective boost pressure sensor.

Faulty signal:

- Loose boost pressure sensor
- Contact resistance or oxidation in the terminals
- Defective boost pressure sensor.

Fault symptom[s]

- Malfunction indicator lamp (MIL) lit
- Poor performance.

FAULTY SIGNAL

CHECKING COMPONENTS AND CONNECTORS

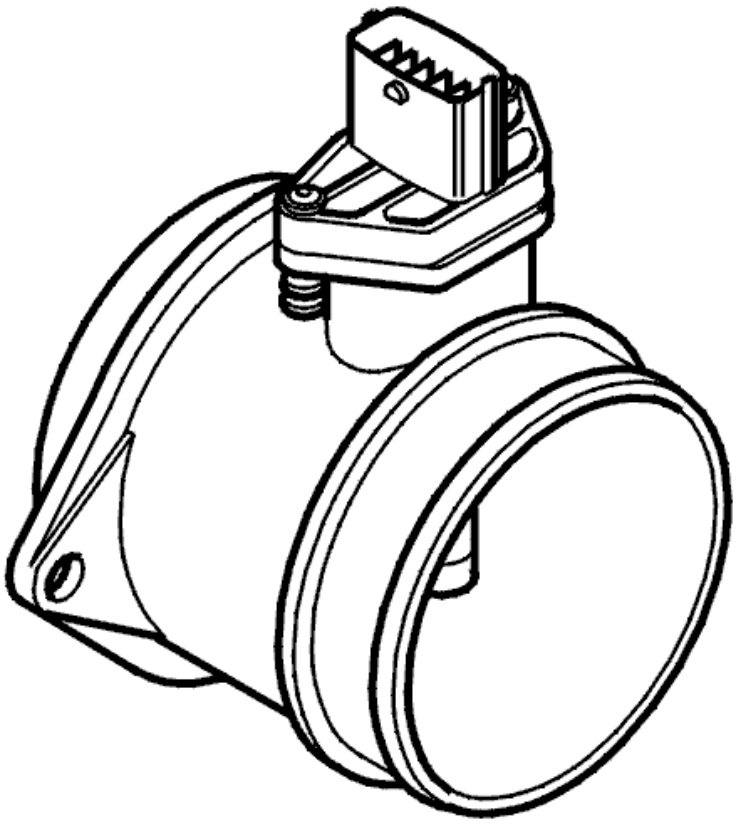

Fig. 226: Identifying Ignition OFF
Courtesy of VOLVO CARS CORPORATION

- Ignition off.

  Check the boost pressure sensor connector. Check for contact resistance and oxidation.

  Check that the boost pressure sensor is correctly installed and has not come loose.

  HINT: The fault may be due to a defective boost pressure sensor. The boost pressure sensor may be defective if the above fault tracing and corrective action does not remedy the fault.

  Remedy as necessary.

  Other information:

  - For B5xx4T, see **TEMPERATURE AND PRESSURE SENSORS, REPLACING**
  - For B6xx4T, see **TEMPERATURE AND PRESSURE SENSORS, REPLACING**
  - see **CHECKING WIRING AND TERMINALS** .

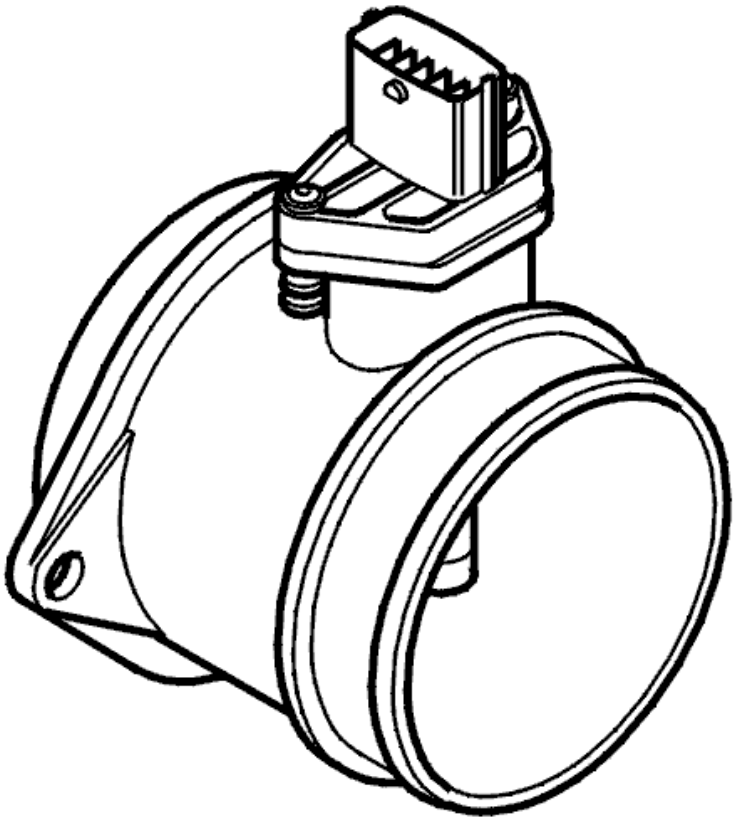

Fig. 227: Identifying 4-Bit Connector
Courtesy of VOLVO CARS CORPORATION

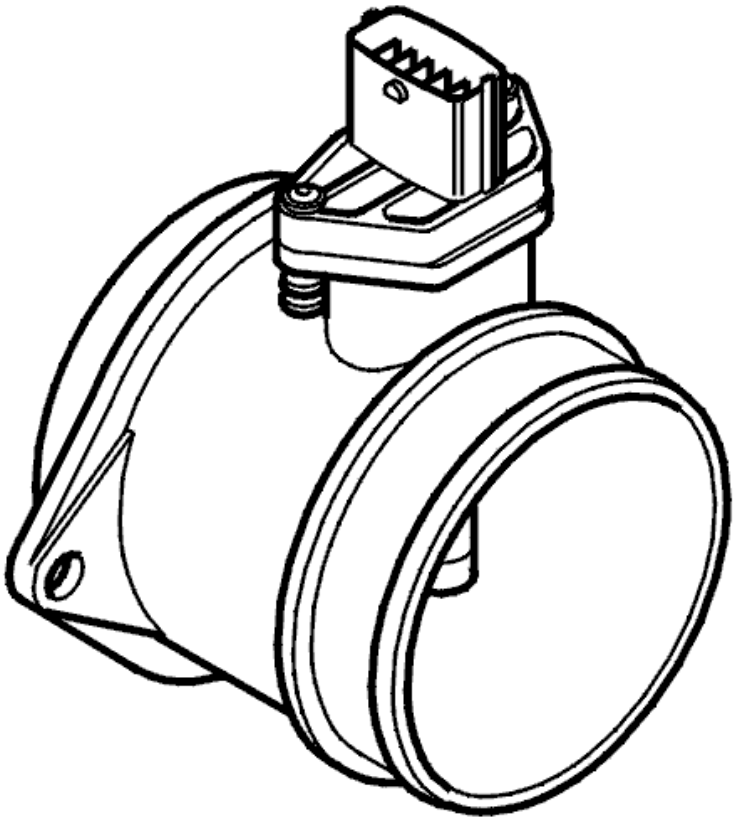

Fig. 228: Identifying Ohm Meter
Courtesy of VOLVO CARS CORPORATION

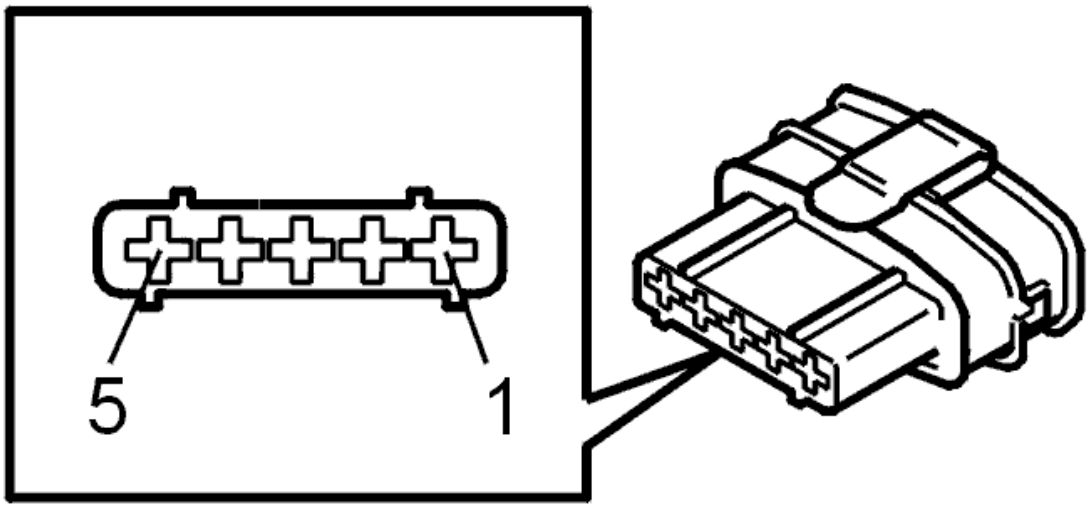

Fig. 229: Identifying Boost Pressure Sensor
Courtesy of VOLVO CARS CORPORATION

- **Continue**

Refer to **VERIFICATION**

VERIFICATION

VERIFICATION

HINT: After carrying out the repair, check that the fault has been remedied.

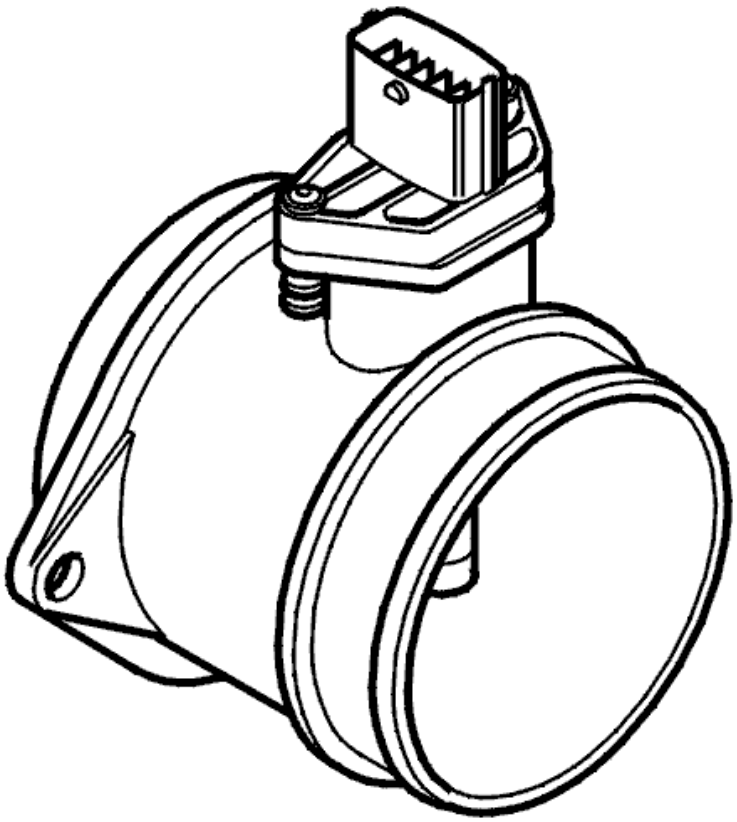

Fig. 230: Belt Routing / Engine Idling - Volvo
Courtesy of VOLVO CARS CORPORATION

- Reinstall the connectors, components etc.
- Test drive the car to reach different boost pressures
- Read off the diagnostic status and the fault status for diagnostic trouble code (DTC) ECM-1600.

NOTE: **Do not switch off the engine before VCT2000 (or appropriate scan tool) has been connected and the status of the fault has been read off.**

Check that the fault status is "NO FAULT FOUND" when the diagnostic status is COMPLETED. If the fault status is "FAULT FOUND" when the diagnostic status is COMPLETED there is a fault.

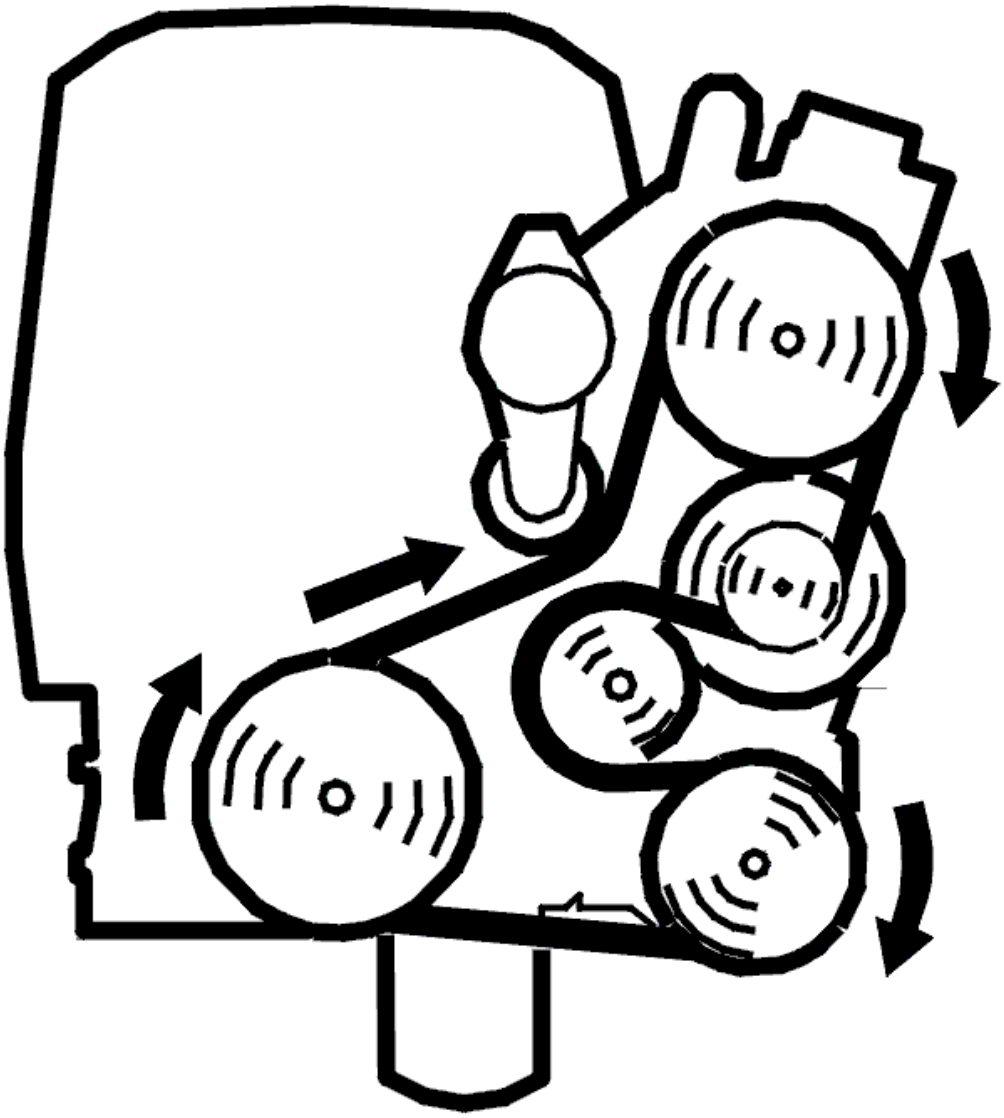

Fig. 231: Identifying VCT2000 Diagnostic Tool Symbol In VIDA
Courtesy of VOLVO CARS CORPORATION

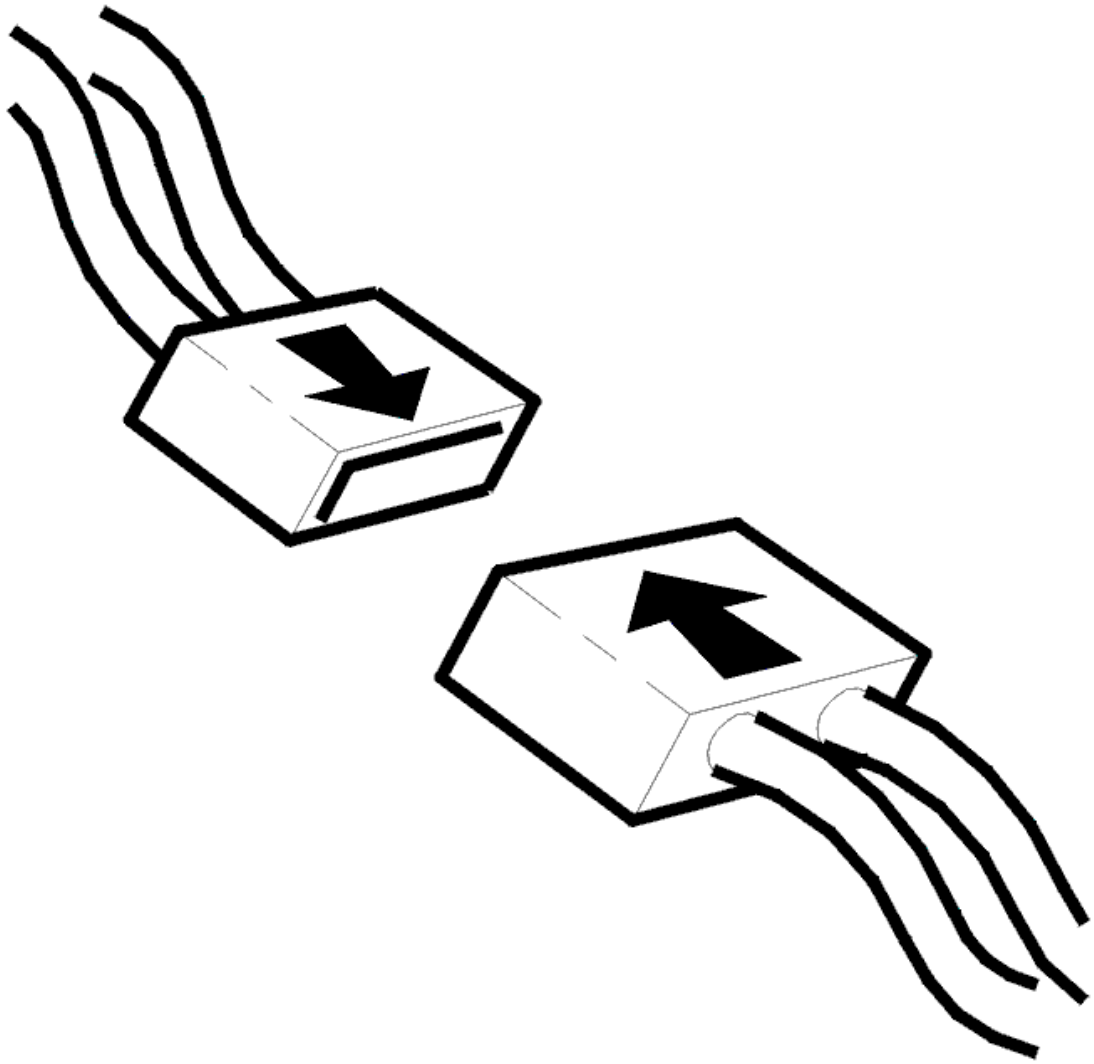

Fig. 232: Identifying Test Drive
Courtesy of VOLVO CARS CORPORATION

Is the fault status "NO FAULT FOUND"?

- **YES**

  VERIFIED: Troubleshooting has been completed.

- **NO**

  Refer to **INFORMATION**

INFORMATION

FAULT-TRACING INFORMATION

The fault should have been detected and remedied. As this is not the case fault-tracing has failed.

Exit fault-tracing for this diagnostic trouble code (DTC) or make another attempt.

ECM-1600: BOOST PRESSURE SENSOR. SIGNAL TOO HIGH (B5254T2; B6294T; 2003-2004)

DIAGNOSTIC TROUBLE CODE (DTC) INFORMATION ECM-1600

see **DIAGNOSTIC TROUBLE CODE (DTC) INFORMATION ECM-1600**

SIGNAL TOO HIGH

CHECKING THE CONNECTOR

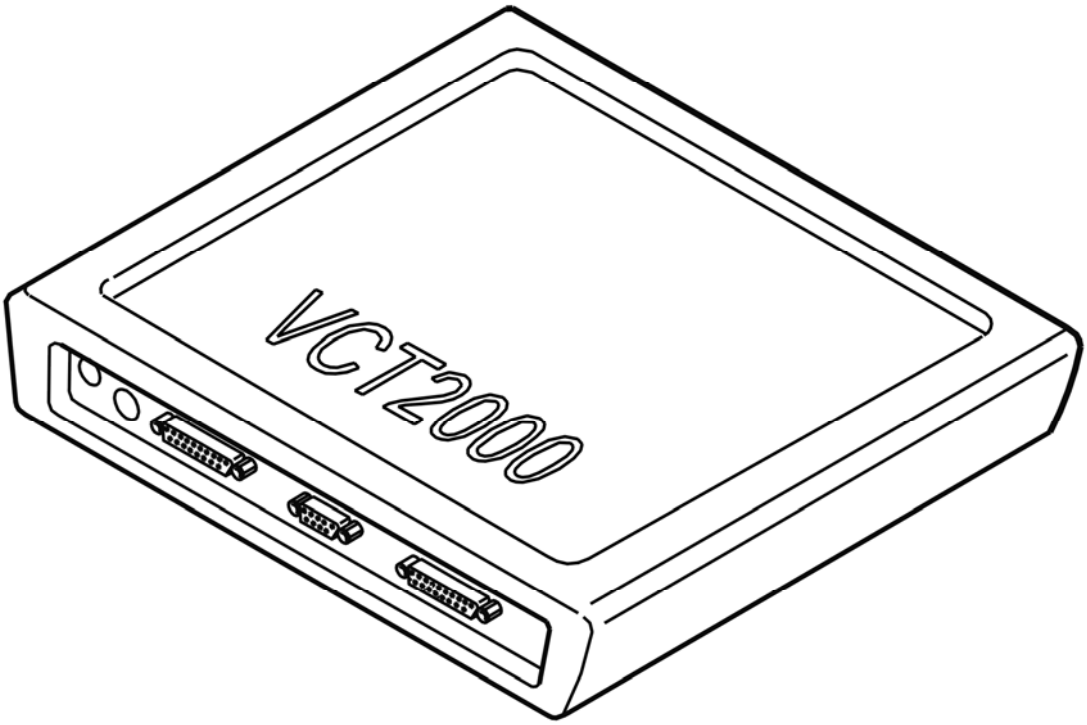

Fig. 233: Identifying Ignition ON
Courtesy of VOLVO CARS CORPORATION

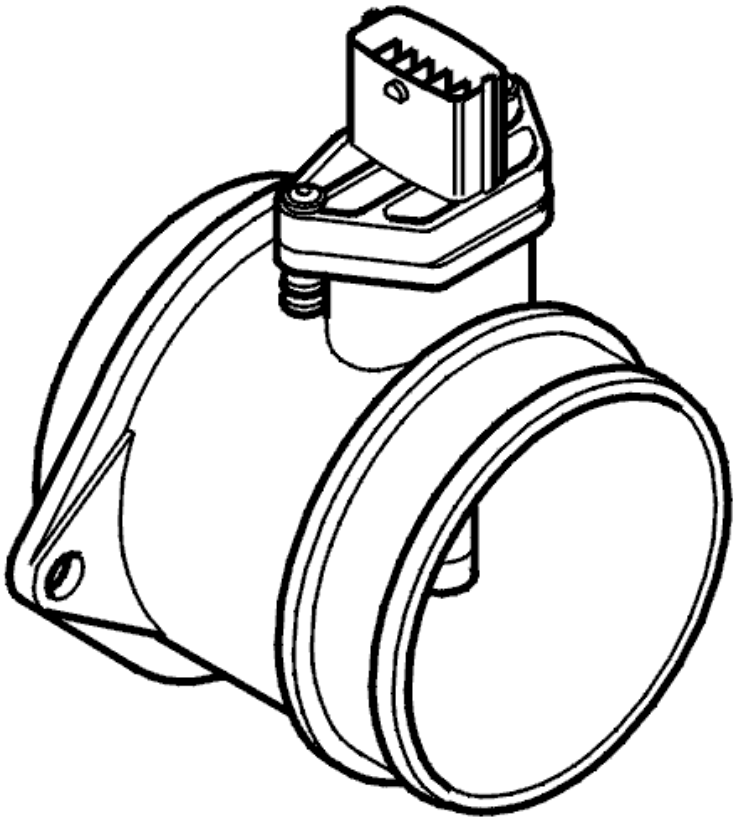

Fig. 234: Connecting Connector
Courtesy of VOLVO CARS CORPORATION

- Ignition off
- Check the boost pressure sensor connector. Check for contact resistance and oxidation
- Reinstall the components, reconnect the connectors etc.
- Ignition on
- Read off the boost pressure sensor signal.

  Check that the signal is within its permitted range. With the engine switched off, the voltage should be approximately 1.9 V.

  If the signal is now OK, the fault was caused by poor contact in the connector.

  Other information:

  - For B5xx4T, see **TEMPERATURE AND PRESSURE SENSORS, REPLACING**
  - For B6xx4T, see **TEMPERATURE AND PRESSURE SENSORS, REPLACING**
  - see **CHECKING WIRING AND TERMINALS** .

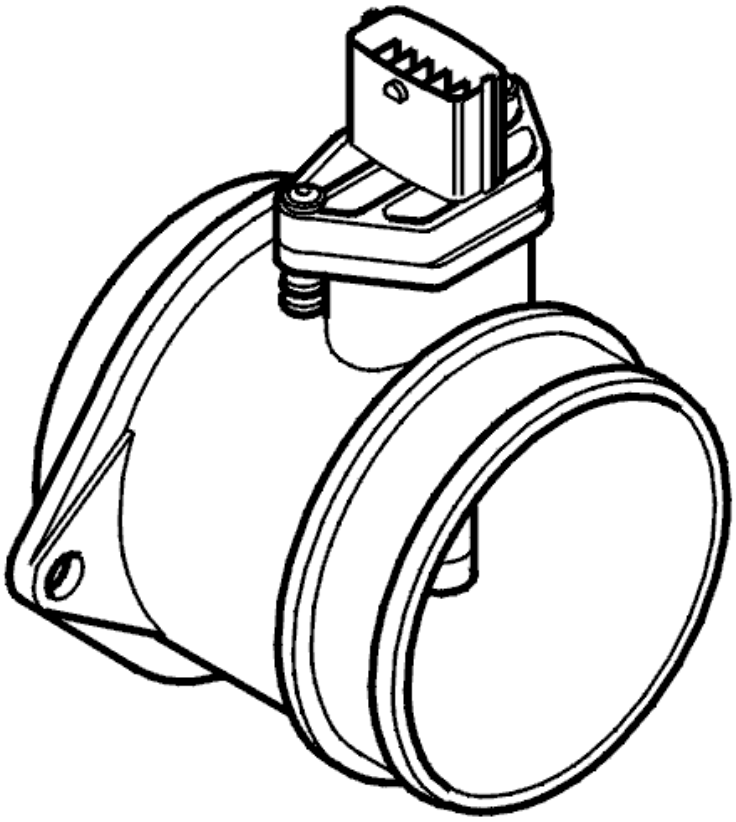

Fig. 235: Identifying 4-Bit Connector
Courtesy of VOLVO CARS CORPORATION

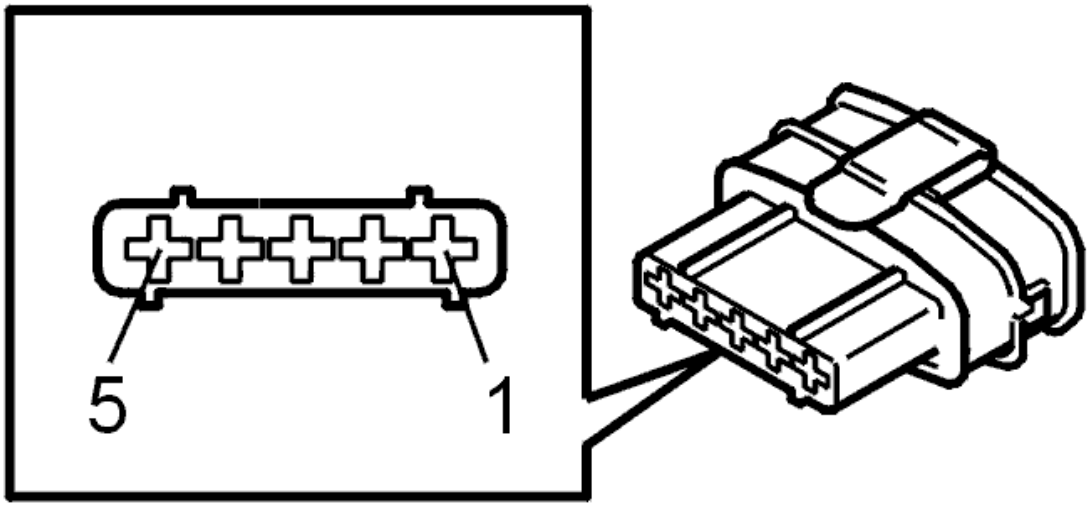

Fig. 236: Identifying VCT2000 Diagnostic Tool Symbol In VIDA
Courtesy of VOLVO CARS CORPORATION

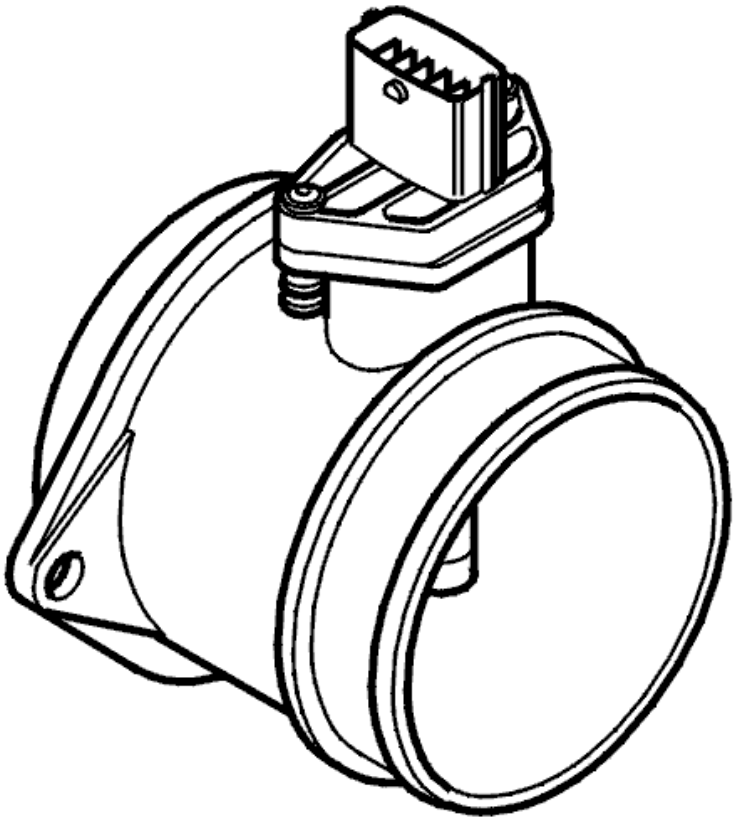

Fig. 237: Identifying Boost Pressure Sensor
Courtesy of VOLVO CARS CORPORATION

Is the signal OK?

- **YES**

  OKAY: Troubleshooting has been completed.

- **NO**

  Refer to **CHECKING COMPONENTS AND WIRING**

CHECKING COMPONENTS AND WIRING

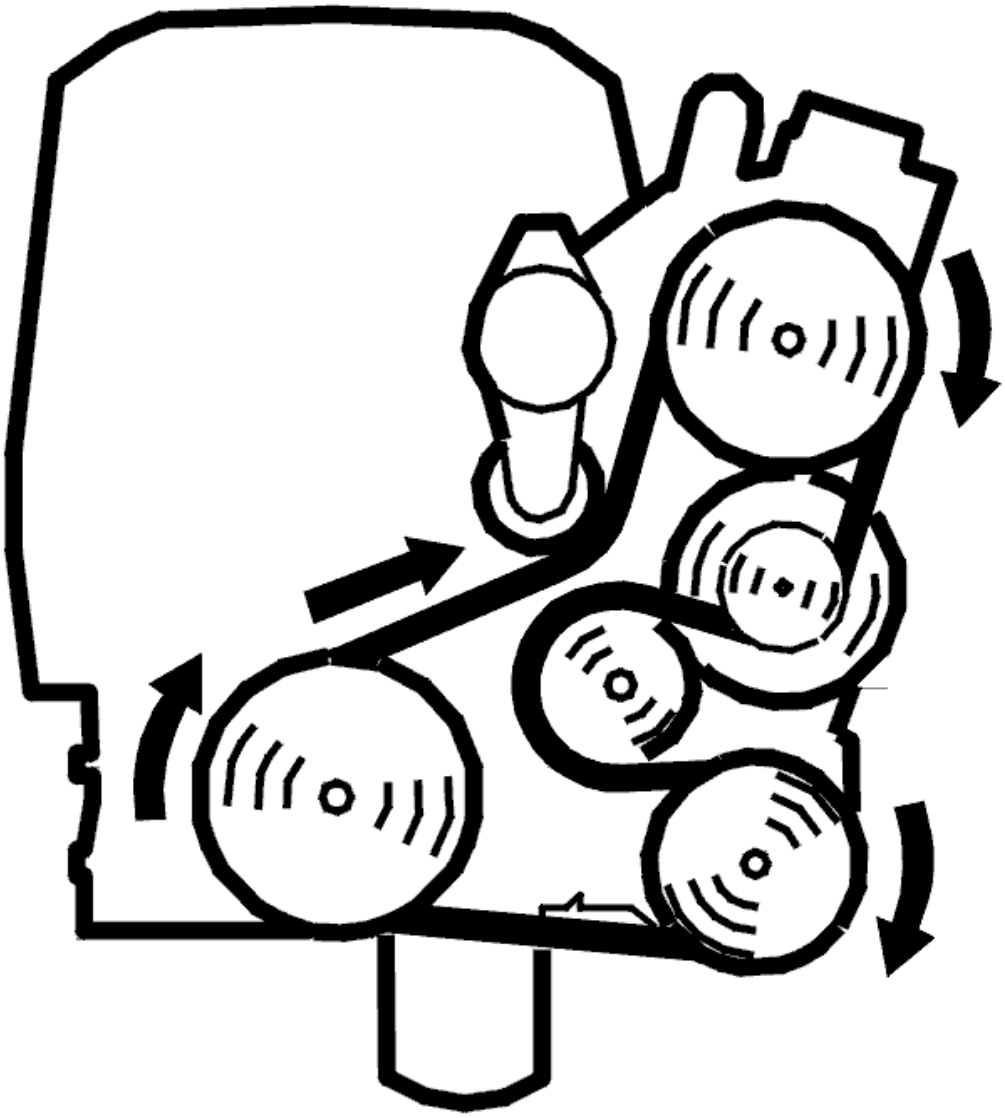

Fig. 238: Identifying Ignition OFF
Courtesy of VOLVO CARS CORPORATION

- Ignition off.

  Check the signal cable between control module terminal #A23 (#A23) and boost pressure sensor terminal #4. Check for a short-circuit to supply voltage. Check for an open-circuit.

  HINT: With the ignition on and the boost pressure sensor connector disconnected, the voltage between terminal #4 and ground terminal should be approximately 5 V.

  Check the ground lead between control module terminal #A60 (#A60) and boost pressure sensor terminal #1. Check for an open-circuit.

  If no errors are found and the fault is permanent, replace the boost pressure sensor.

Remedy as necessary.

Other information:

- To connect the breakout box / access the control module, see **CONNECTING THE BREAKOUT BOX**
- For B5xx4T, see **TEMPERATURE AND PRESSURE SENSORS, REPLACING**
- For B6xx4T, see **TEMPERATURE AND PRESSURE SENSORS, REPLACING**
- For 5 cylinder turbocharged engines -2004, see **SIGNAL DESCRIPTION**
- For 5 cylinder turbocharged engines 2005-, see **SIGNAL SPECIFICATION** .
- For 6 cylinder engines -2004, see **SIGNAL SPECIFICATION**
- For 6 cylinder engines 2005-, see **SIGNAL SPECIFICATION** .
- see **CHECKING WIRING AND TERMINALS** .

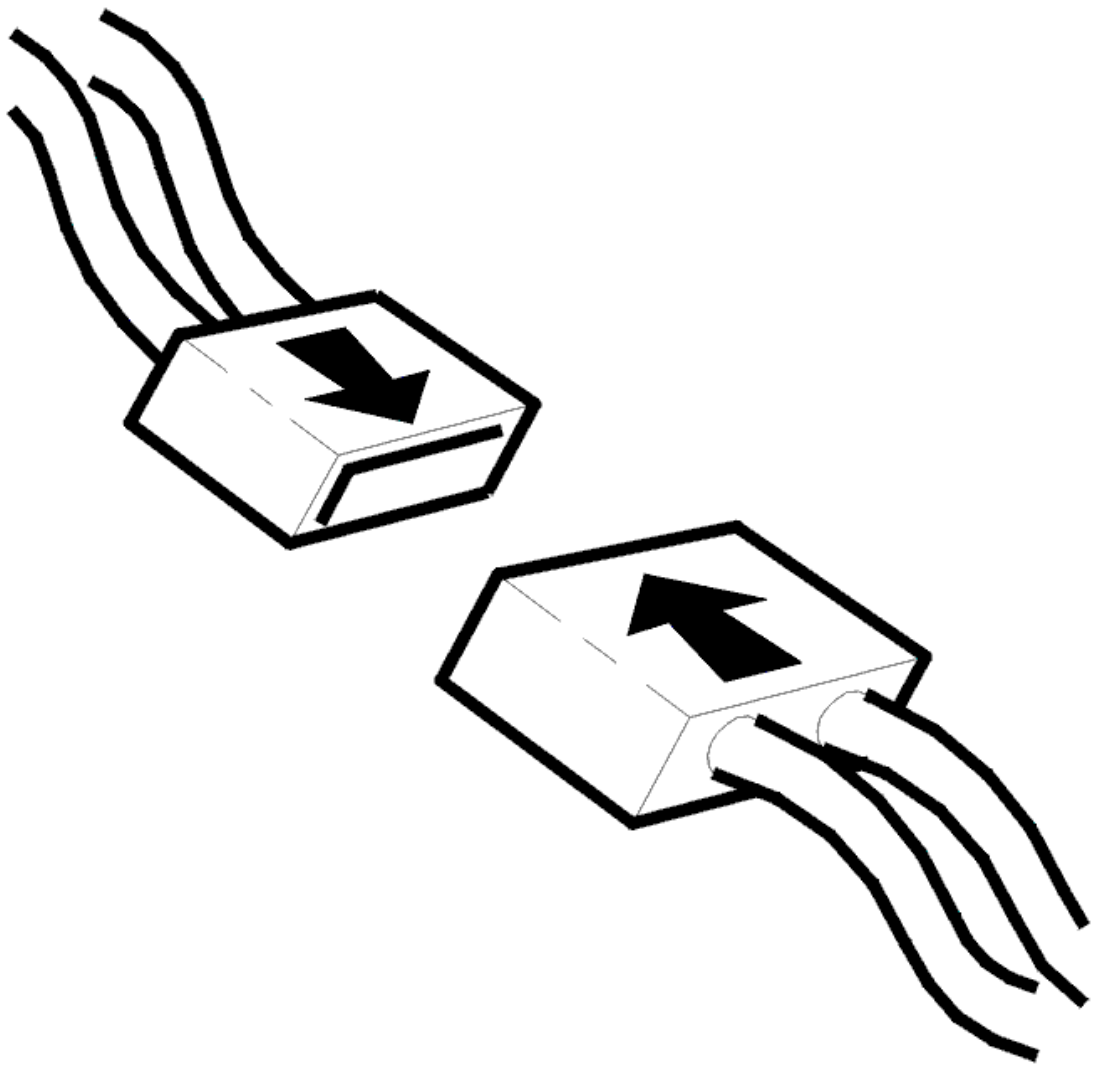

Fig. 239: Identifying 4-Bit Connector
Courtesy of VOLVO CARS CORPORATION

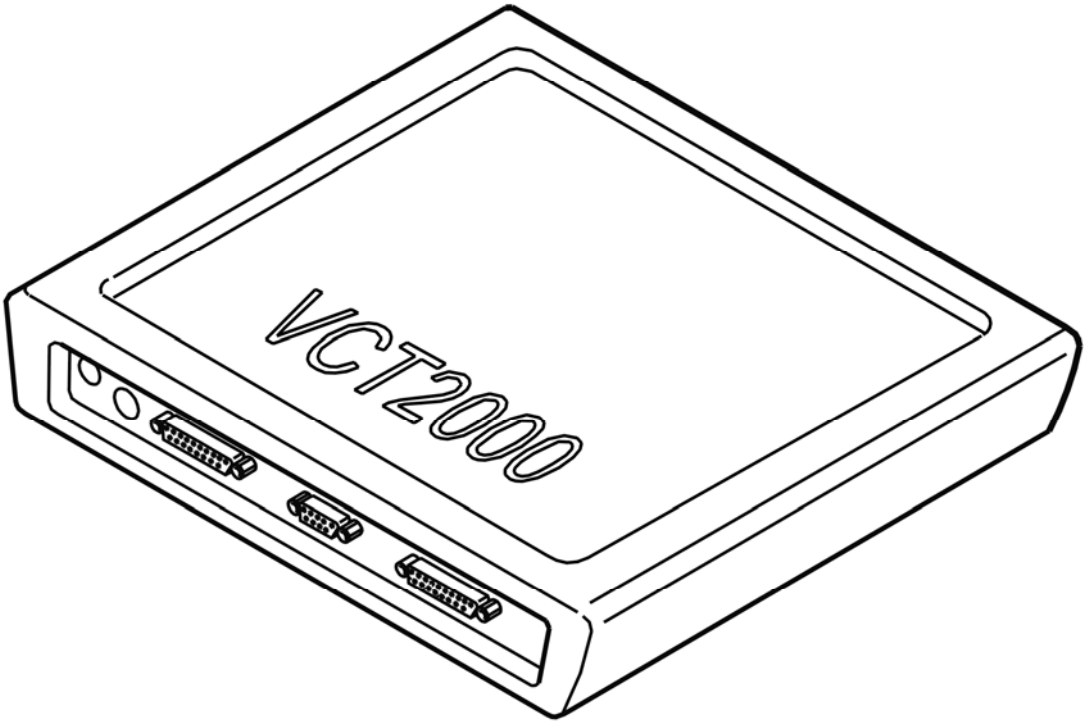

Fig. 240: Identifying Ohm Meter
Courtesy of VOLVO CARS CORPORATION

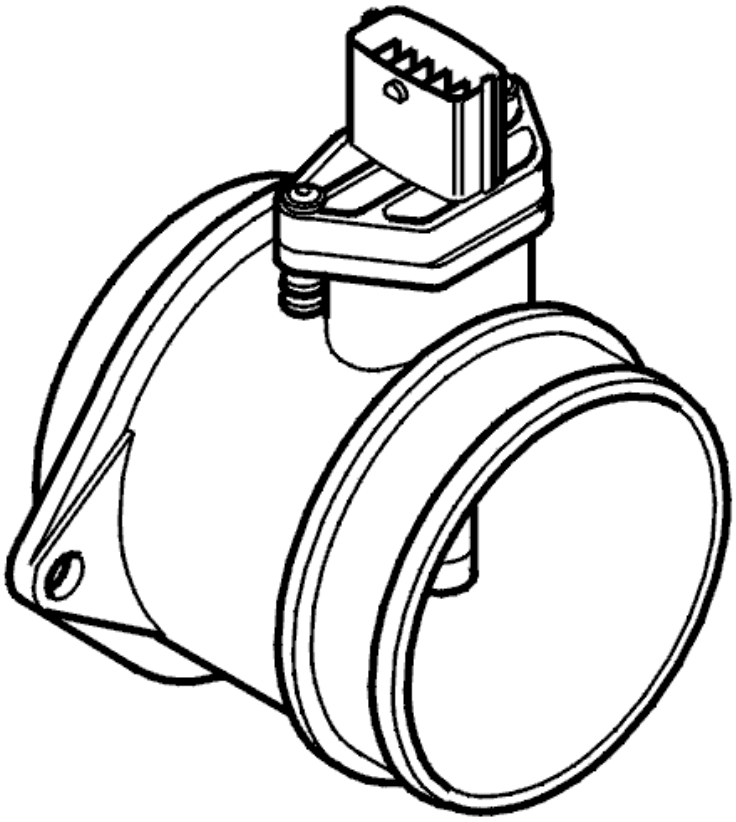

Fig. 241: Identifying Boost Pressure Sensor
Courtesy of VOLVO CARS CORPORATION

- **Continue**

  Refer to **VERIFICATION**

VERIFICATION

VERIFICATION

HINT: After carrying out the repair, check that the fault has been remedied.

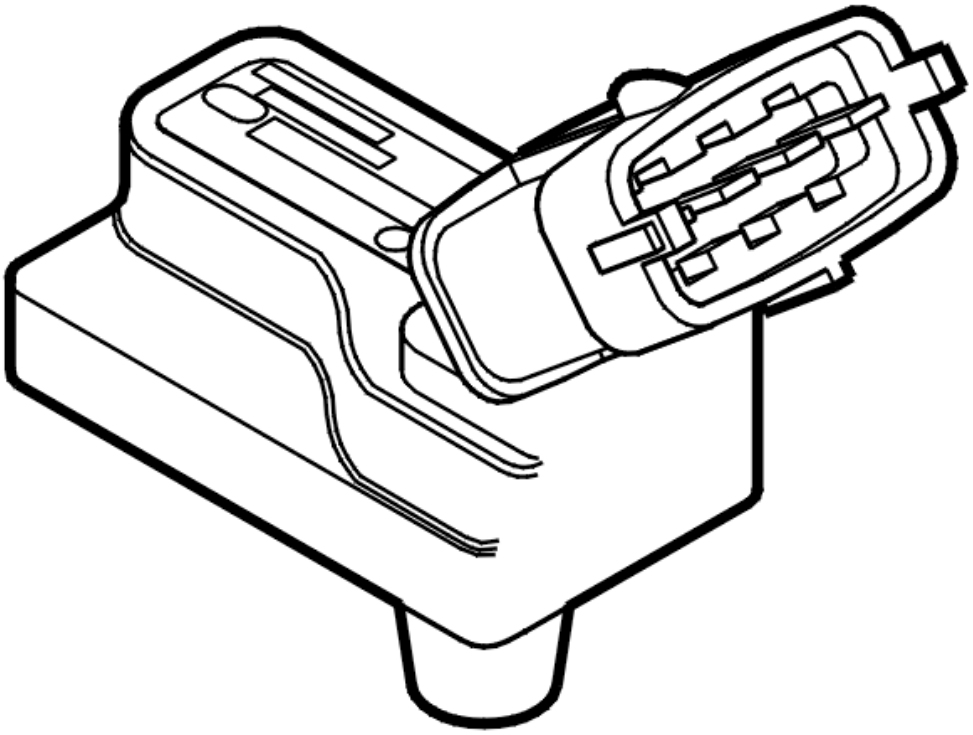

Fig. 242: Identifying Ignition ON
Courtesy of VOLVO CARS CORPORATION

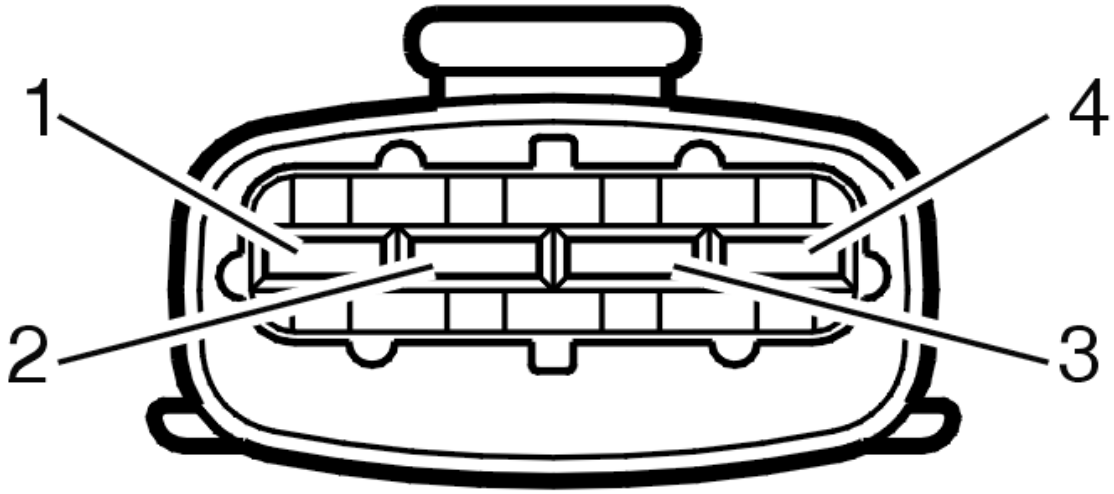

Fig. 243: Connecting Connector
Courtesy of VOLVO CARS CORPORATION

- Ignition off
- Reinstall the connectors, components etc.
- Ignition on

- Read off the boost pressure sensor signal.

  With the ignition on the voltage should be approximately 1.9 V.

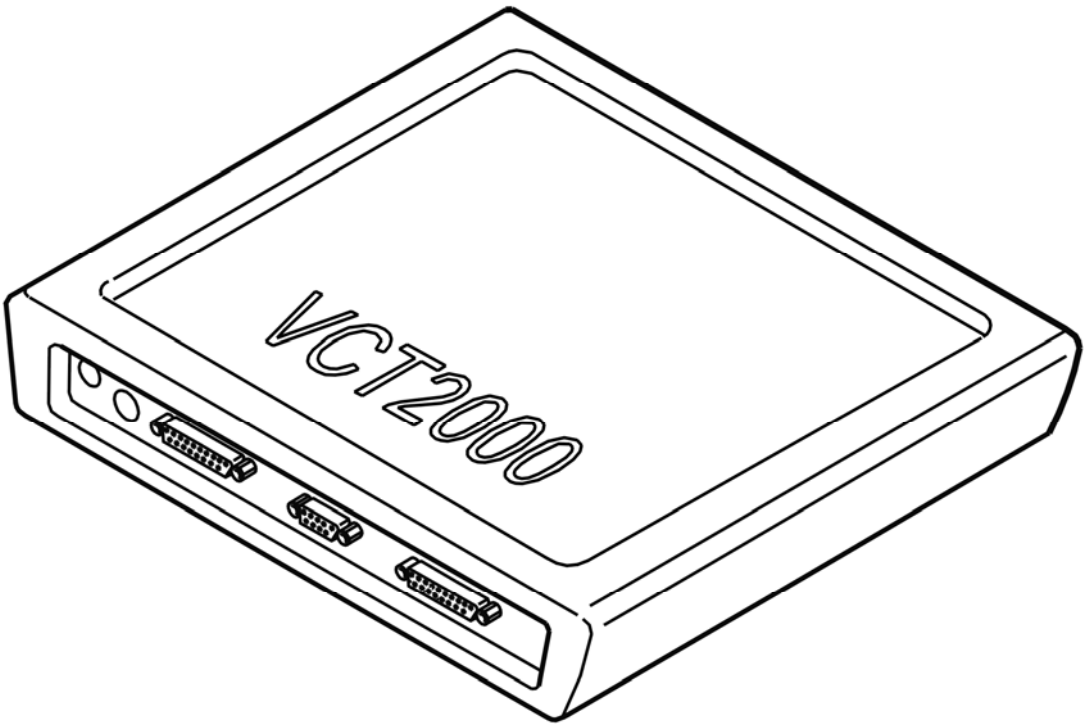

Fig. 244: Identifying VCT2000 Diagnostic Tool Symbol In VIDA
Courtesy of VOLVO CARS CORPORATION

Is the signal OK?

- **YES**

  VERIFIED: Troubleshooting has been completed.

- **NO**

  Refer to **INFORMATION**

INFORMATION

FAULT-TRACING INFORMATION

The fault should have been detected and remedied. As this is not the case fault-tracing has failed.

Exit fault-tracing for this diagnostic trouble code (DTC) or make another attempt.

ECM-1600: BOOST PRESSURE SENSOR. SIGNAL TOO LOW (B5254T2; B6294T; 2003-2004)

DIAGNOSTIC TROUBLE CODE (DTC) INFORMATION ECM-1600

see **DIAGNOSTIC TROUBLE CODE (DTC) INFORMATION ECM-1600**

SIGNAL TOO LOW

CHECKING COMPONENTS AND WIRING

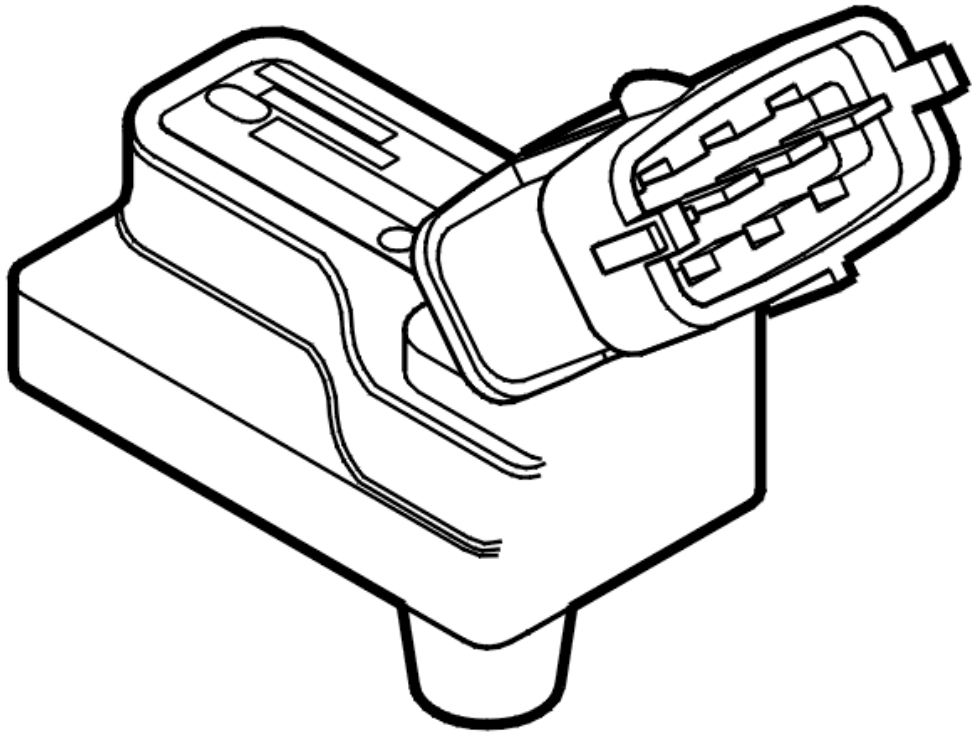

Fig. 245: Identifying Ignition OFF
Courtesy of VOLVO CARS CORPORATION

- Ignition off.

  Check the signal cable between control module terminal #A23 (#A23) and boost pressure sensor terminal #4. Check for a short-circuit to ground.

  HINT: With the ignition on and the boost pressure sensor connector disconnected, the voltage between terminal #4 and the ground terminal should be approximately 5 V.

  If no errors are found and the fault is permanent, replace the boost pressure sensor.

Remedy as necessary.

Other information:

- To connect the breakout box / access the control module, see **CONNECTING THE BREAKOUT BOX**
- For B5xx4T, see **TEMPERATURE AND PRESSURE SENSORS, REPLACING**
- For B6xx4T, see **TEMPERATURE AND PRESSURE SENSORS, REPLACING**
- For 5 cylinder turbocharged engines -2004, see **SIGNAL DESCRIPTION**
- For 5 cylinder turbocharged engines 2005-, see **SIGNAL SPECIFICATION** .
- For 6 cylinder engines -2004, see **SIGNAL SPECIFICATION**
- For 6 cylinder engines 2005-, see **SIGNAL SPECIFICATION** .
- see **CHECKING WIRING AND TERMINALS** .

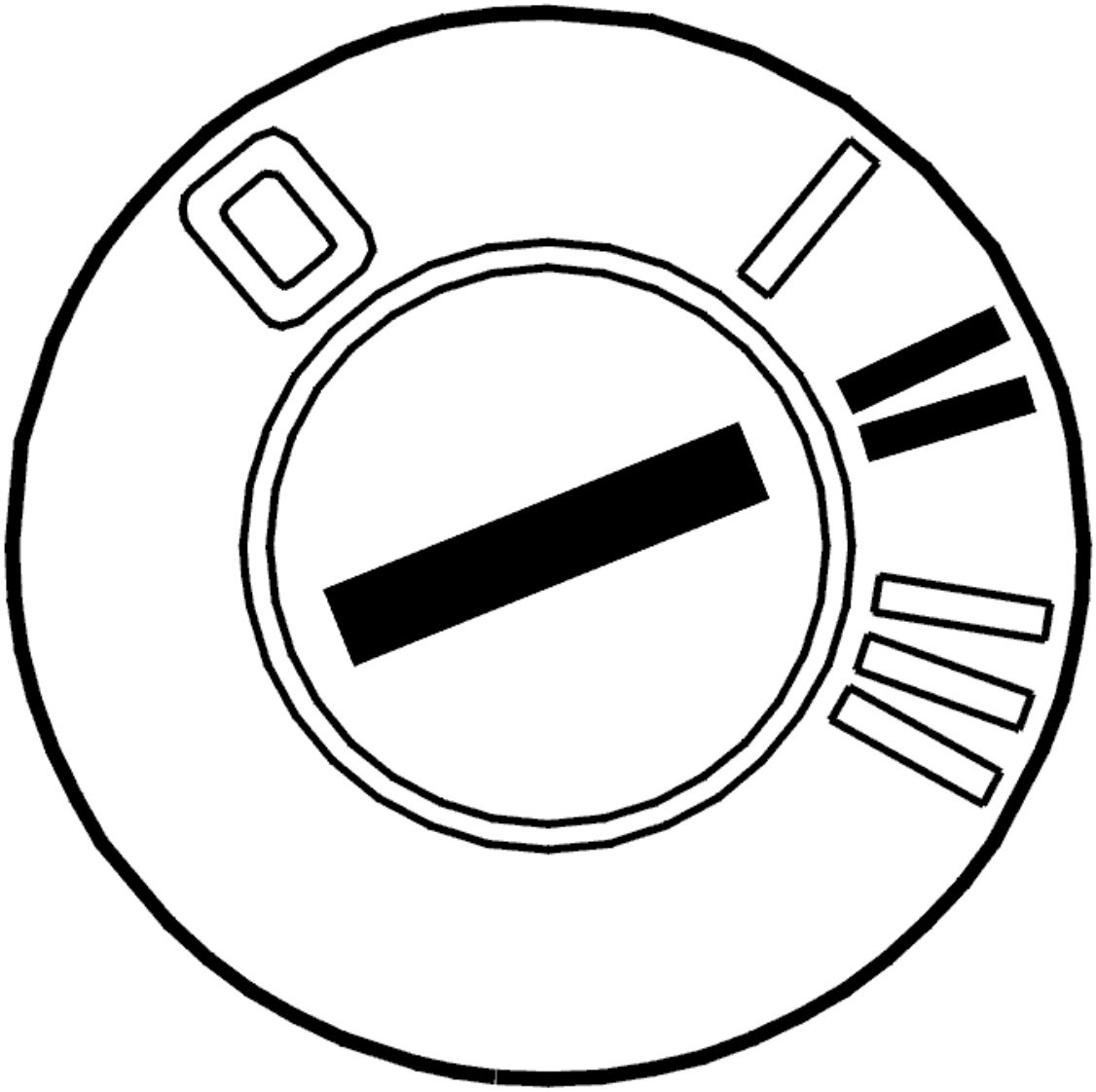

Fig. 246: Identifying 4-Bit Connector
Courtesy of VOLVO CARS CORPORATION

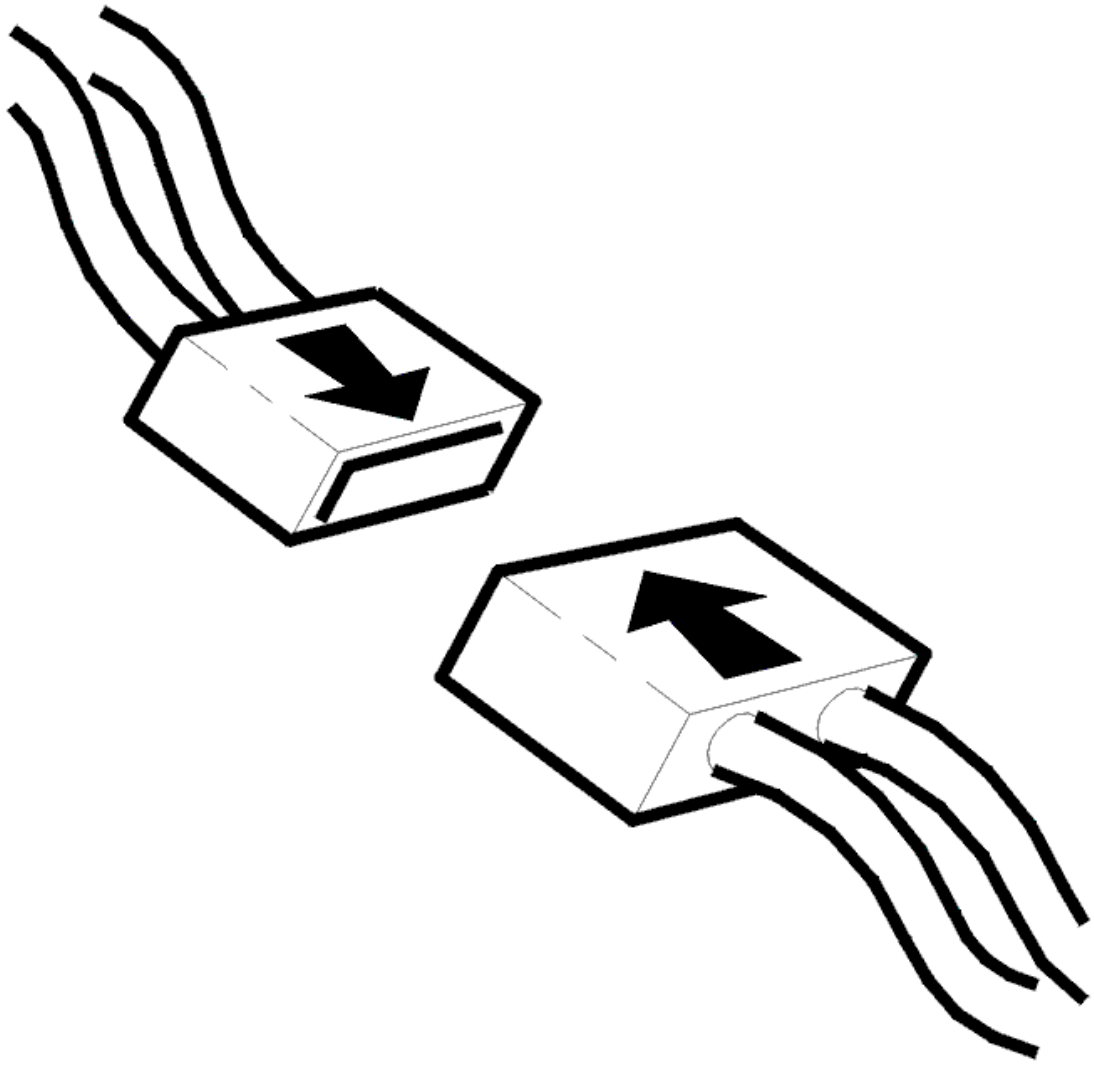

Fig. 247: Identifying Ohm Meter
Courtesy of VOLVO CARS CORPORATION

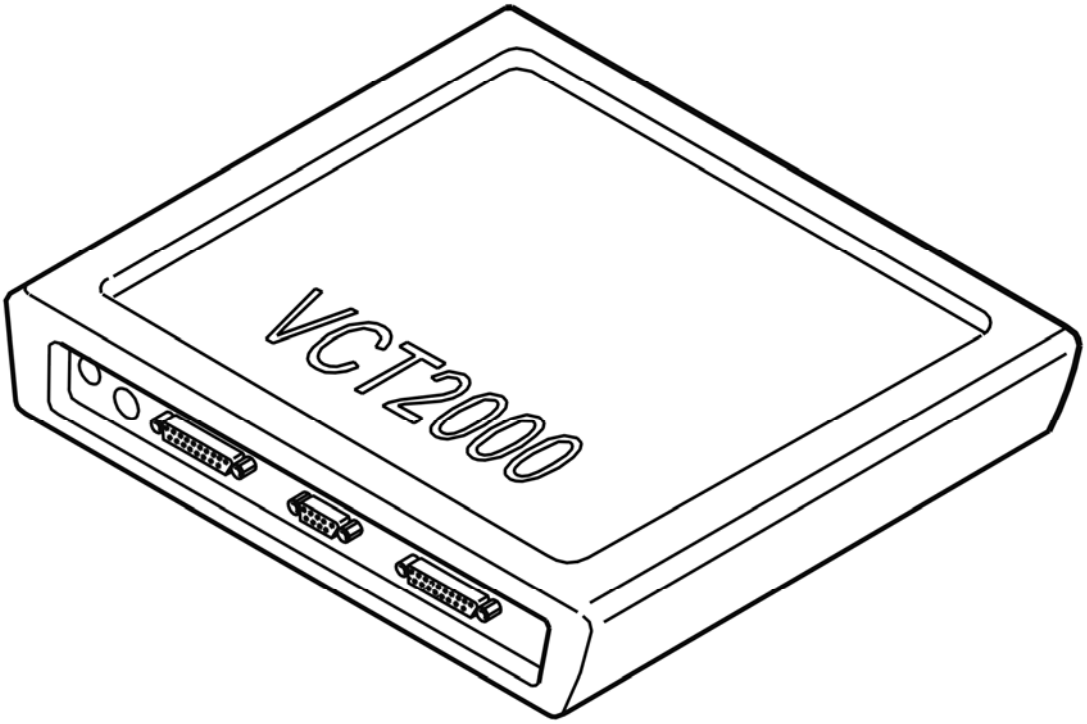

Fig. 248: Identifying Boost Pressure Sensor
Courtesy of VOLVO CARS CORPORATION

- **Continue**

  Refer to **VERIFICATION**

VERIFICATION

VERIFICATION

HINT: After carrying out the repair, check that the fault has been remedied.

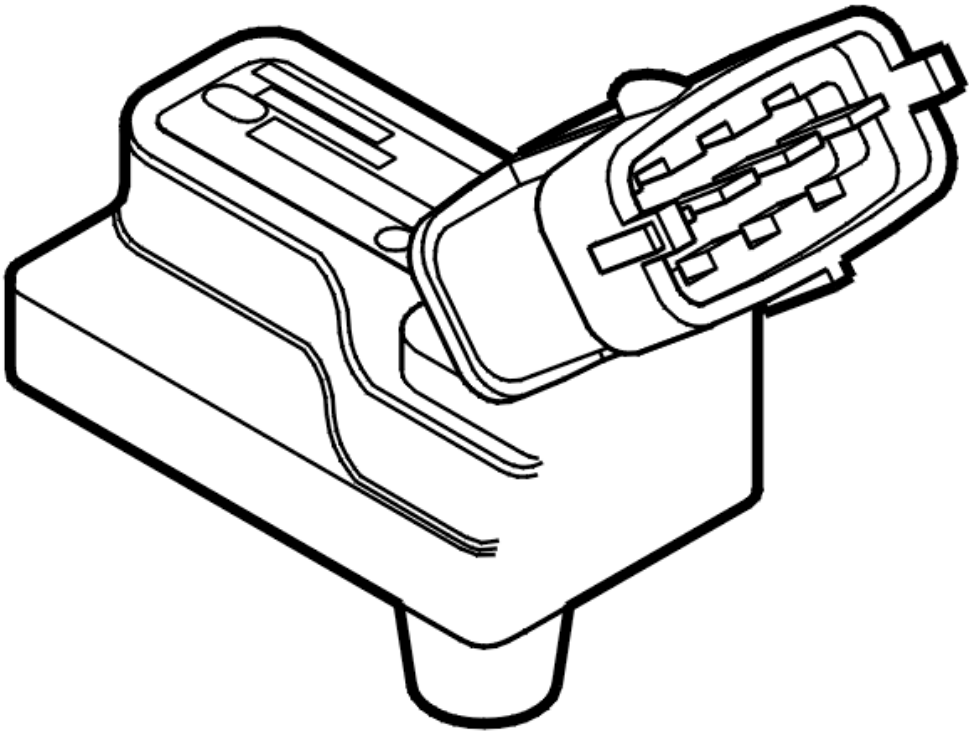

Fig. 249: Identifying Ignition ON
Courtesy of VOLVO CARS CORPORATION

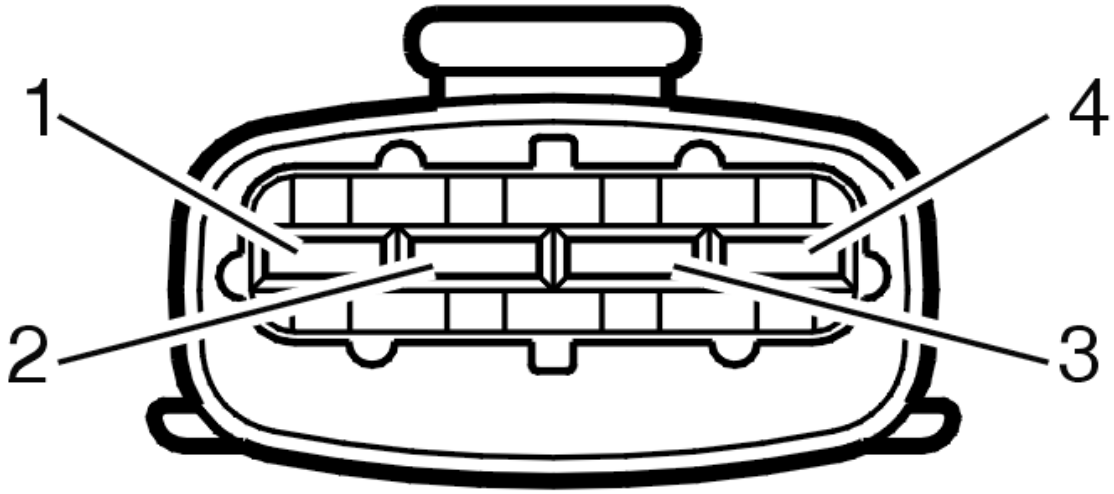

Fig. 250: Connecting Connector
Courtesy of VOLVO CARS CORPORATION

- Ignition off
- Reinstall the connectors, components etc.
- Ignition on

- Read off the boost pressure sensor signal.

  With the ignition on the voltage should be approximately 1.9 V.

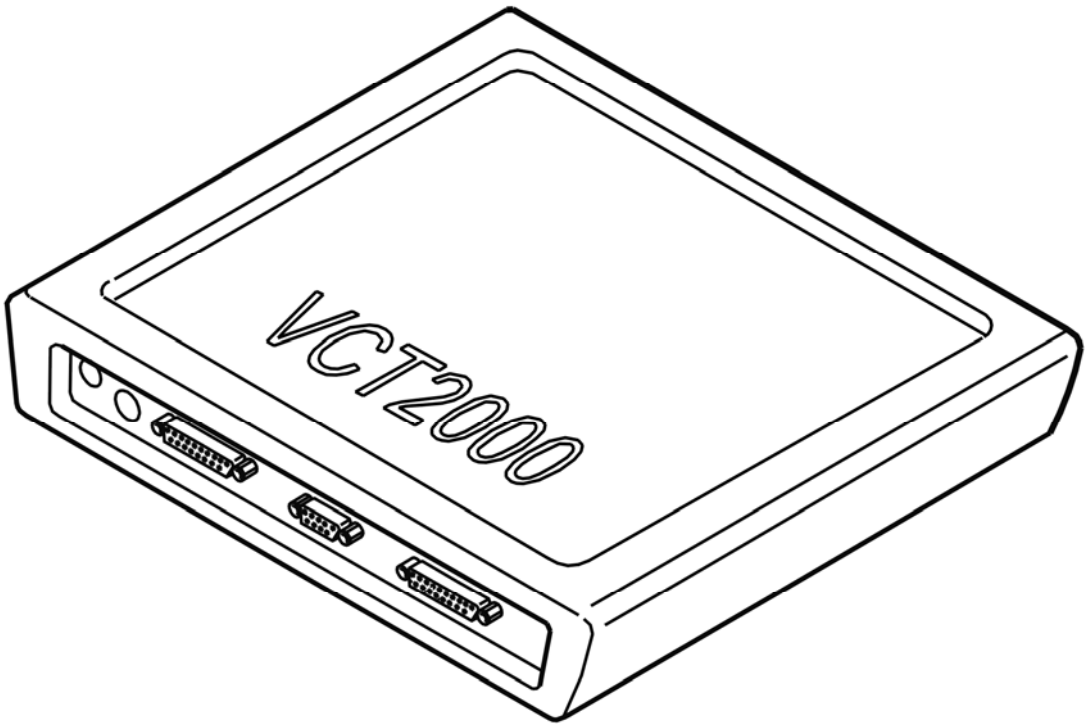

Fig. 251: Identifying VCT2000 Diagnostic Tool Symbol In VIDA
Courtesy of VOLVO CARS CORPORATION

Is the signal OK?

- **YES**

  VERIFIED: Troubleshooting has been completed.

- **NO**

  Refer to **INFORMATION**

INFORMATION

FAULT-TRACING INFORMATION

The fault should have been detected and remedied. As this is not the case fault-tracing has failed.

Exit fault-tracing for this diagnostic trouble code (DTC) or make another attempt.

ECM-170F: ATMOSPHERIC PRESSURE SENSOR / BOOST PRESSURE SENSOR RANGE CHECK. FAULTY SIGNAL (B5254T2; B6294T; 2003-2004)

DIAGNOSTIC TROUBLE CODE (DTC) INFORMATION

Condition

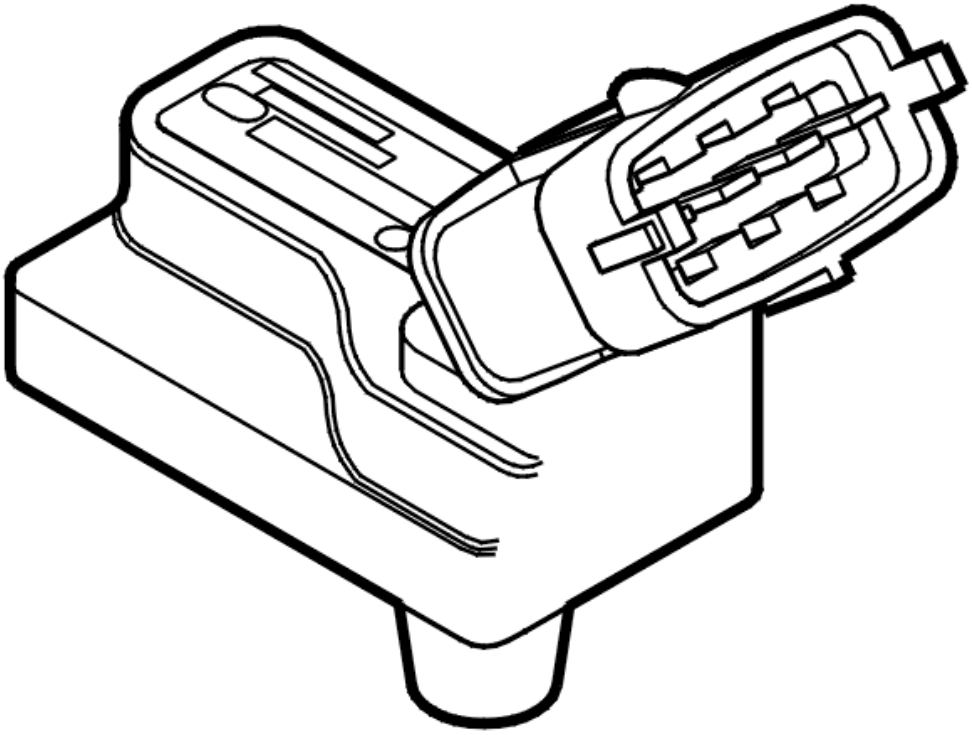

Fig. 252: Identifying Ignition In Off Position
Courtesy of VOLVO CARS CORPORATION

Diagnostic trouble code (DTC) ECM-170F is stored if the boost pressure sensor's registered pressure deviates from the atmospheric pressure sensor's registered pressure. This comparison is made at engine start (at approximately 500 RPM) before the turbocharger (TC) has built up a boost pressure.

Substitute Value

Possible Source

Faulty signal

- contact resistance in terminals
- defective boost pressure sensor
- defective atmospheric pressure sensor

Fault symptom[s]

- none

FAULTY SIGNAL

CHECKING THE CONNECTOR

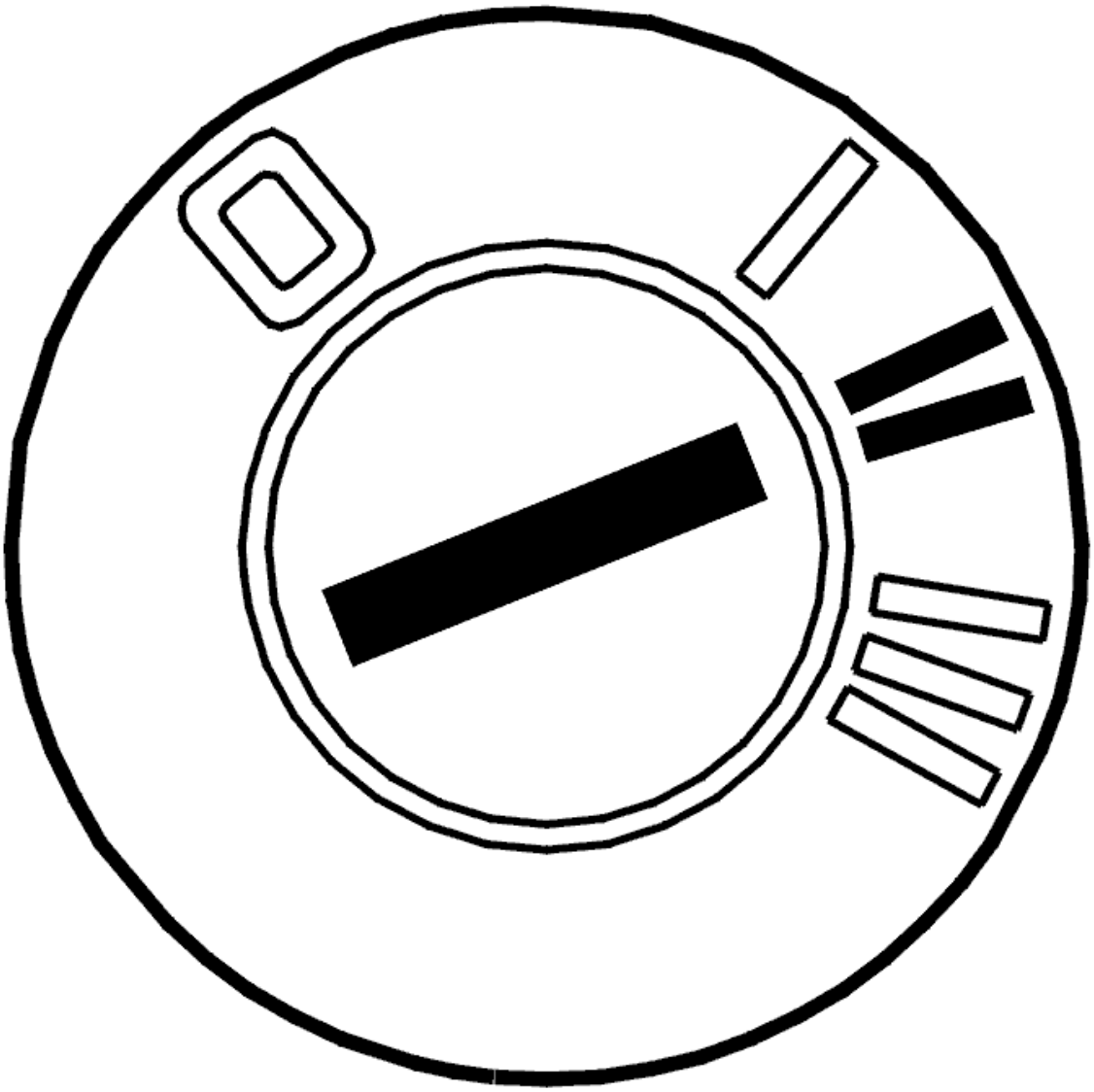

Fig. 253: Identifying Ignition ON
Courtesy of VOLVO CARS CORPORATION

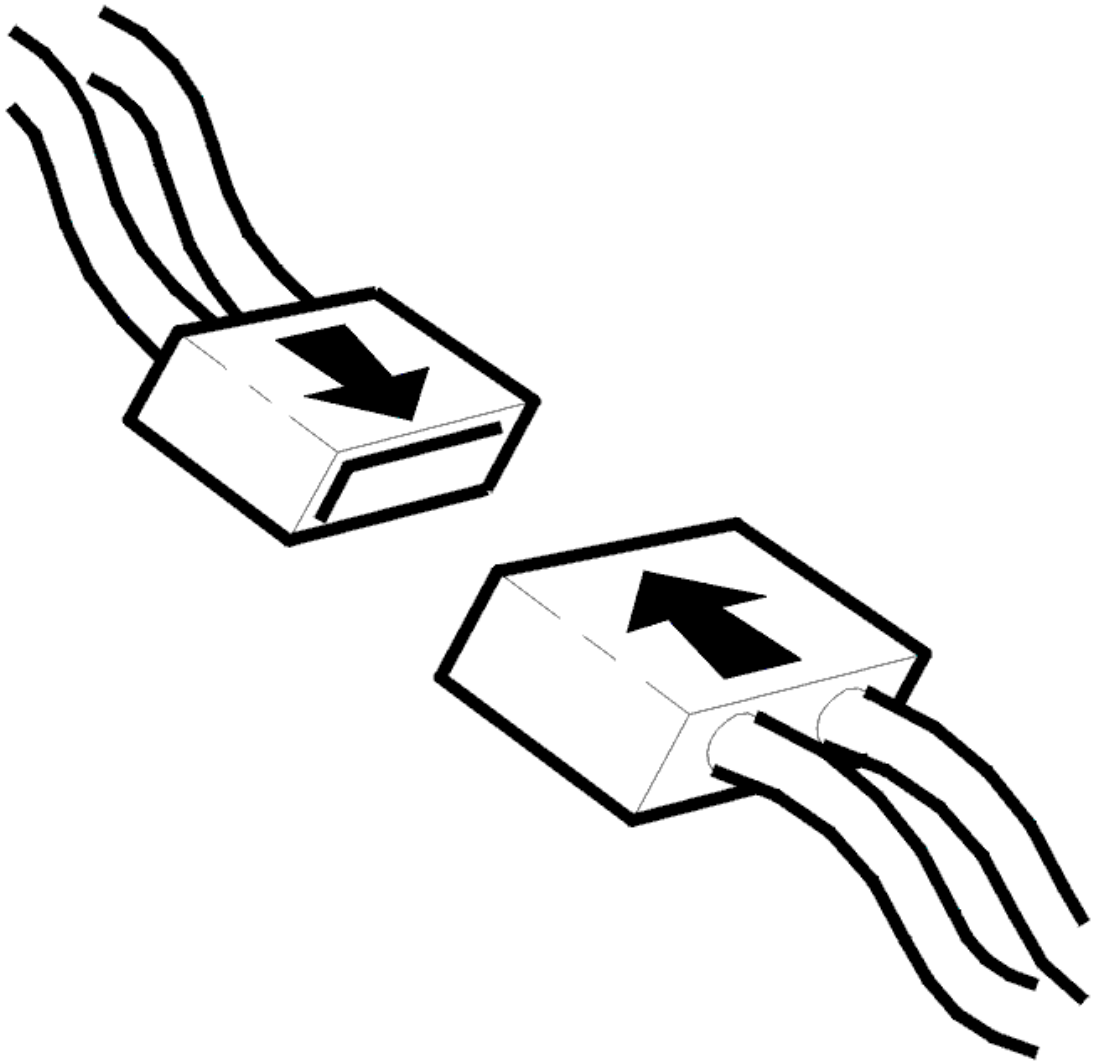

Fig. 254: Connecting Connector
Courtesy of VOLVO CARS CORPORATION

- Ignition off
- Check the boost pressure sensor connector. Check for contact resistance and oxidation
- Reinstall the components, reconnect the connectors etc.
- Ignition on.

Read off the boost pressure and the atmospheric pressure.

The difference in pressure must not be greater than 140 hPa.

If the difference is less than 140 hPa, the cause of the fault was loose connections in the connector.

Other information:

- For B5xx4T, see **TEMPERATURE AND PRESSURE SENSORS, REPLACING**
- For B6xx4T, see **TEMPERATURE AND PRESSURE SENSORS, REPLACING**

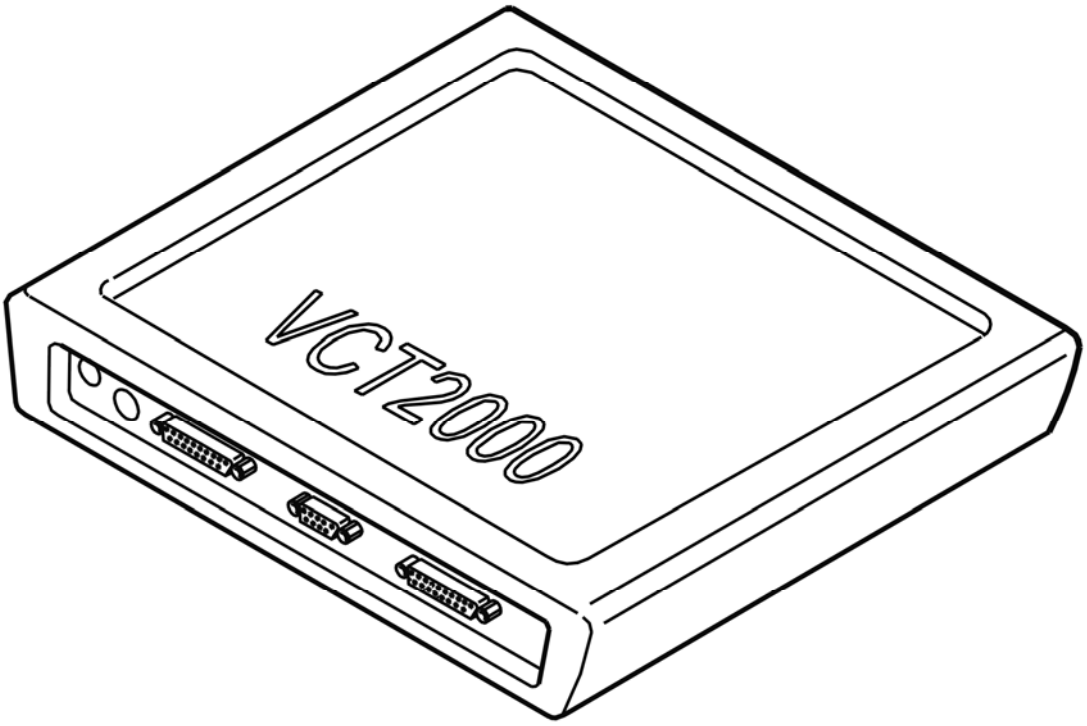

Fig. 255: Identifying 4-Bit Connector
Courtesy of VOLVO CARS CORPORATION

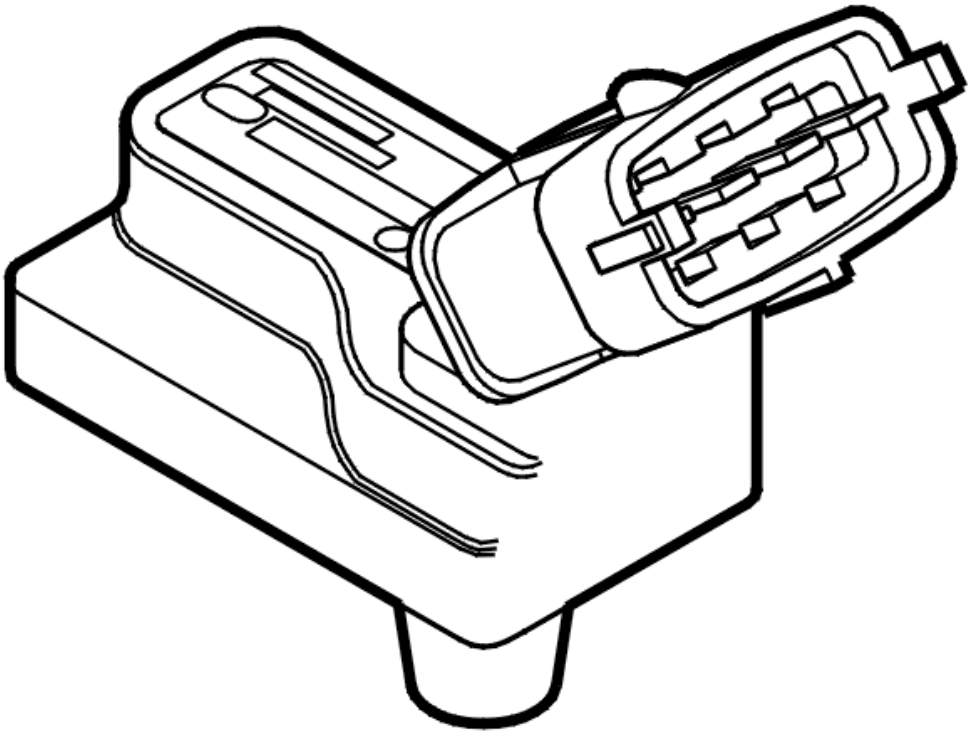

Fig. 256: Identifying VCT2000 Diagnostic Tool Symbol In VIDA
Courtesy of VOLVO CARS CORPORATION

Is the difference between the pressures less than 140 hPa?

- **YES**

  OKAY: Troubleshooting has been completed.

- **NO**

  Refer to **REPLACING THE COMPONENT**

REPLACING THE COMPONENT

If the difference between the pressures is greater than 140 hPa, try replacing the boost pressure sensor.

HINT: Normal atmospheric pressure is 1013 hPa. Check which of the sensors appears to display the incorrect reading.

If the fault is not in the boost pressure sensor, replace the engine control module (ECM).

NOTE: The atmospheric pressure sensor is built into the engine control module (ECM)

and therefore cannot be replaced as a separate item.

CAUTION: New engine control module (ECM)s (ECM) are supplied without software. The engine control module (ECM) must be programmed before it will function after replacement.

Remedy as necessary.

Other information:

- Normal atmospheric pressure is 1013 hPa
- For B5xx4T, see **TEMPERATURE AND PRESSURE SENSORS, REPLACING**
- For B6xx4T, see **TEMPERATURE AND PRESSURE SENSORS, REPLACING**
- To access or replace the engine control module (ECM), see **ENGINE CONTROL MODULE (ECM), REPLACING**
- For 5 cylinder turbocharged engines -2004, see **SIGNAL DESCRIPTION**
- For 5 cylinder turbocharged engines 2005-, see **SIGNAL SPECIFICATION** .
- For 6 cylinder engines -2004, see **SIGNAL SPECIFICATION**
- For 6 cylinder engines 2005-, see **SIGNAL SPECIFICATION** .

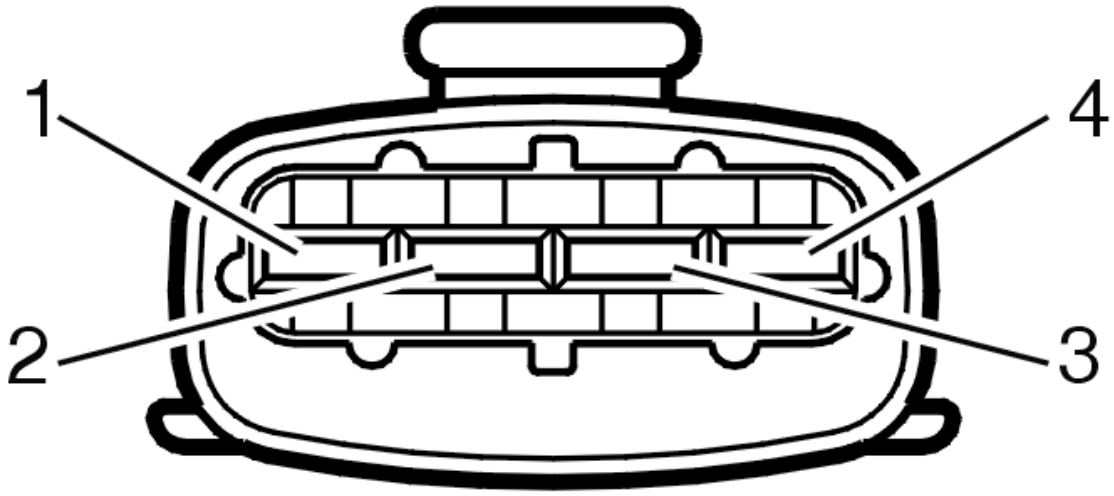

Fig. 257: Identifying 4-Bit Connector
Courtesy of VOLVO CARS CORPORATION

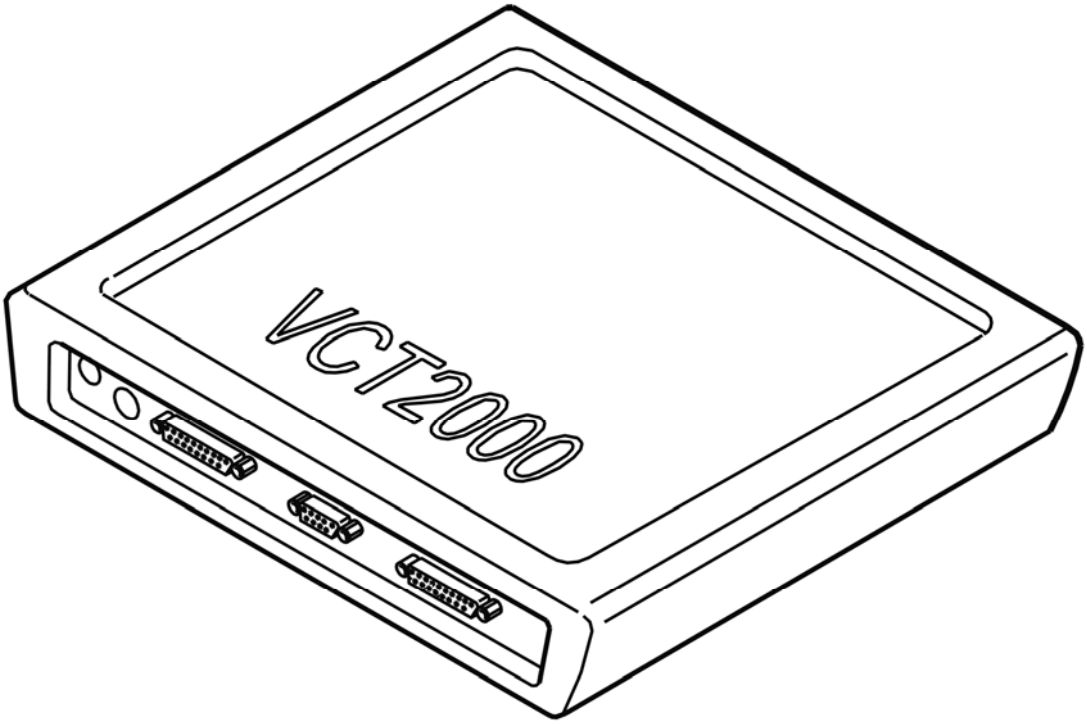

Fig. 258: Identifying Ohm Meter
Courtesy of VOLVO CARS CORPORATION

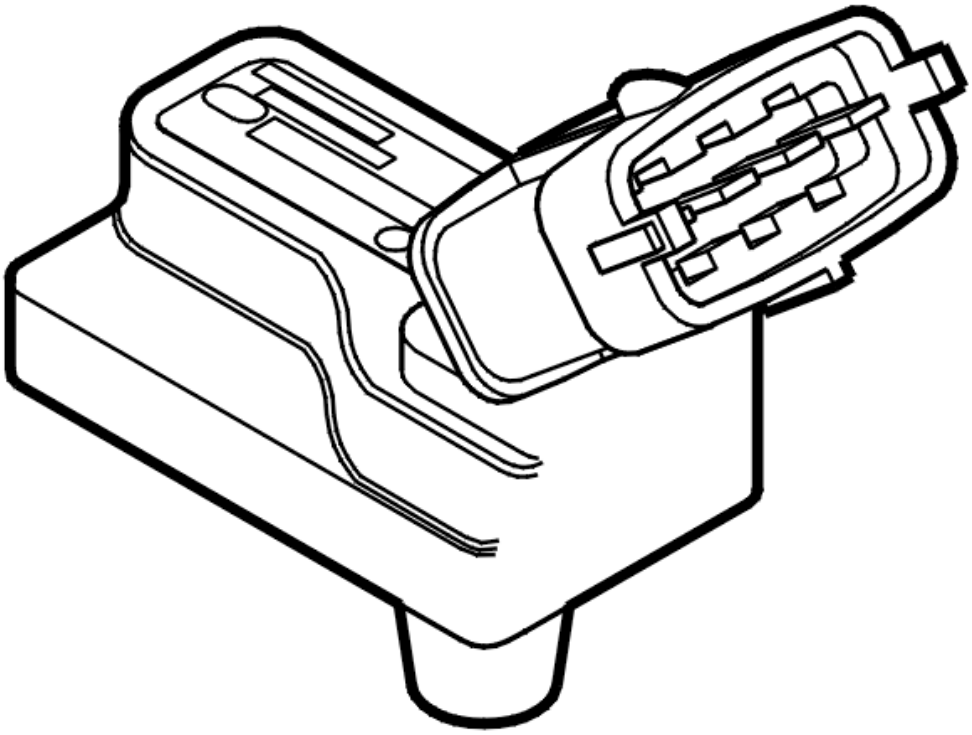

Fig. 259: Identifying Boost Pressure Sensor
Courtesy of VOLVO CARS CORPORATION

- **Continue**

  Refer to **VERIFICATION**

VERIFICATION

VERIFICATION

HINT: After carrying out the repair, check that the fault has been remedied.

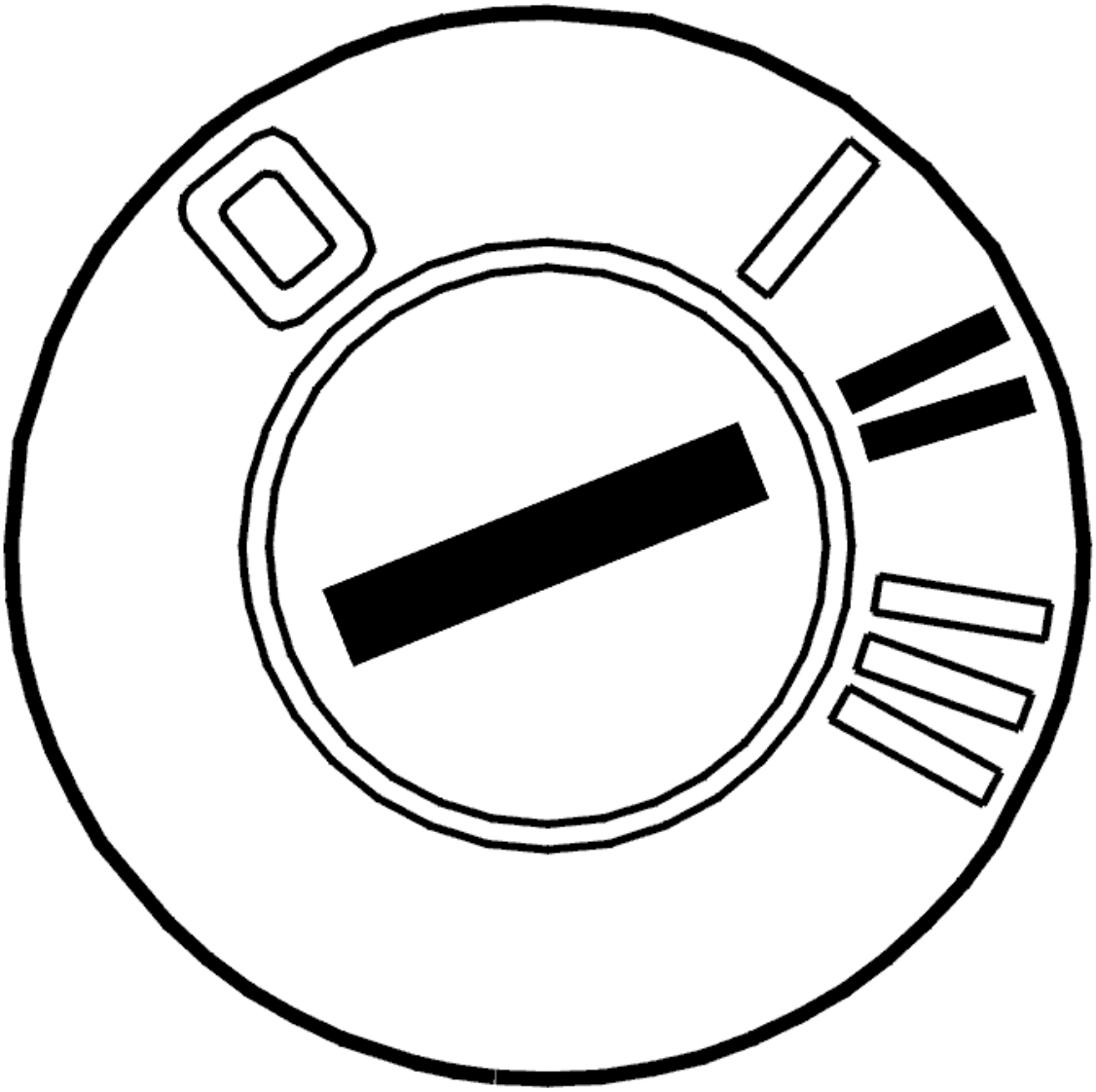

Fig. 260: Identifying Ignition ON
Courtesy of VOLVO CARS CORPORATION

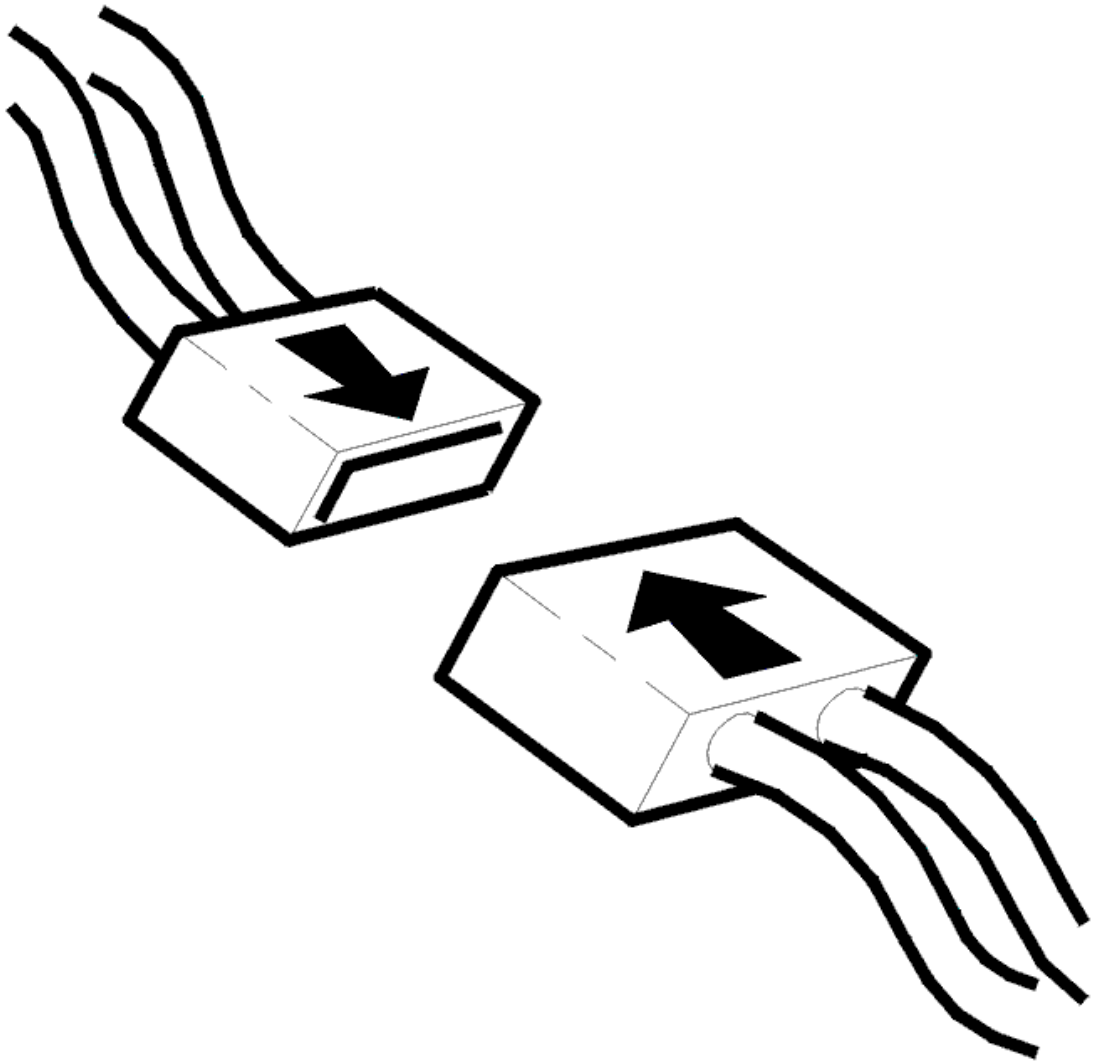

Fig. 261: Connecting Connector
Courtesy of VOLVO CARS CORPORATION

- Ignition off
- Reinstall the connectors, components etc.
- Ignition on
- Read off the boost pressure sensor pressure and atmospheric pressure sensor pressure
- The difference between the pressure sensors should not be greater than 140 hPa.

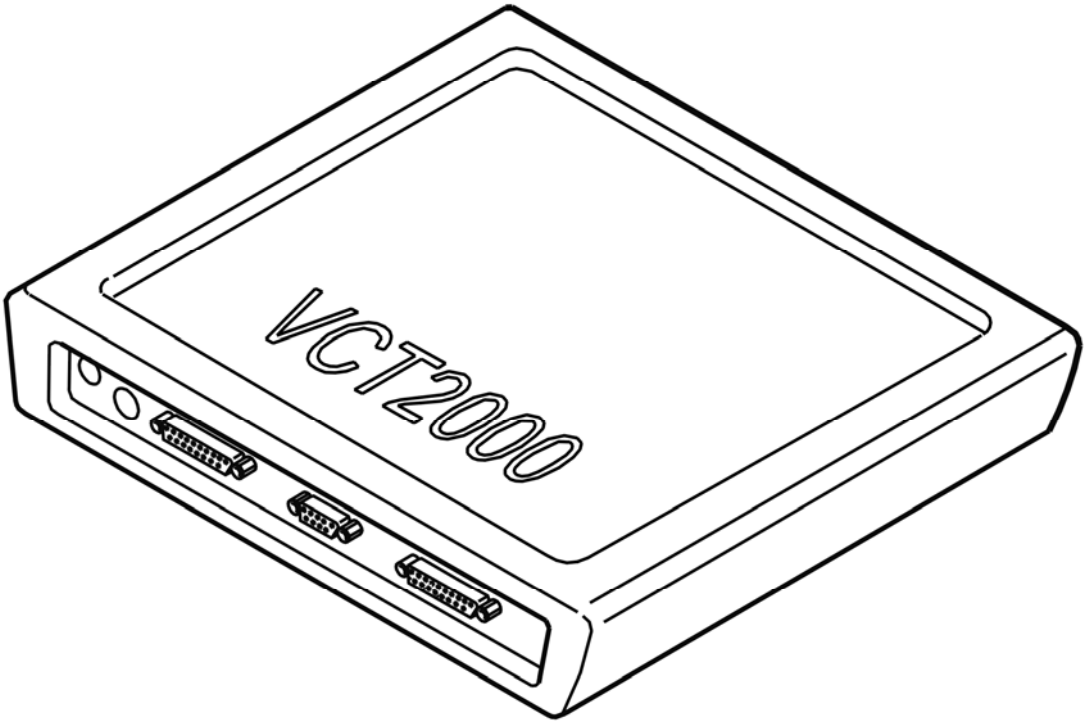

Fig. 262: Identifying VCT2000 Diagnostic Tool Symbol In VIDA
Courtesy of VOLVO CARS CORPORATION

Is the difference between the pressure sensors less than 140 hPa?

- **YES**

  VERIFIED: Troubleshooting has been completed.

- **NO**

  Refer to **INFORMATION**

INFORMATION

FAULT-TRACING INFORMATION

The fault should have been detected and remedied. As this is not the case fault-tracing has failed.

Exit fault-tracing for this diagnostic trouble code (DTC) or make another attempt.

ECM-2000: ENGINE COOLANT TEMPERATURE (ECT) SENSOR. FAULTY SIGNAL (B5254T2; 2003-2004)

DIAGNOSTIC TROUBLE CODE (DTC) INFORMATION ECM-2000

Condition

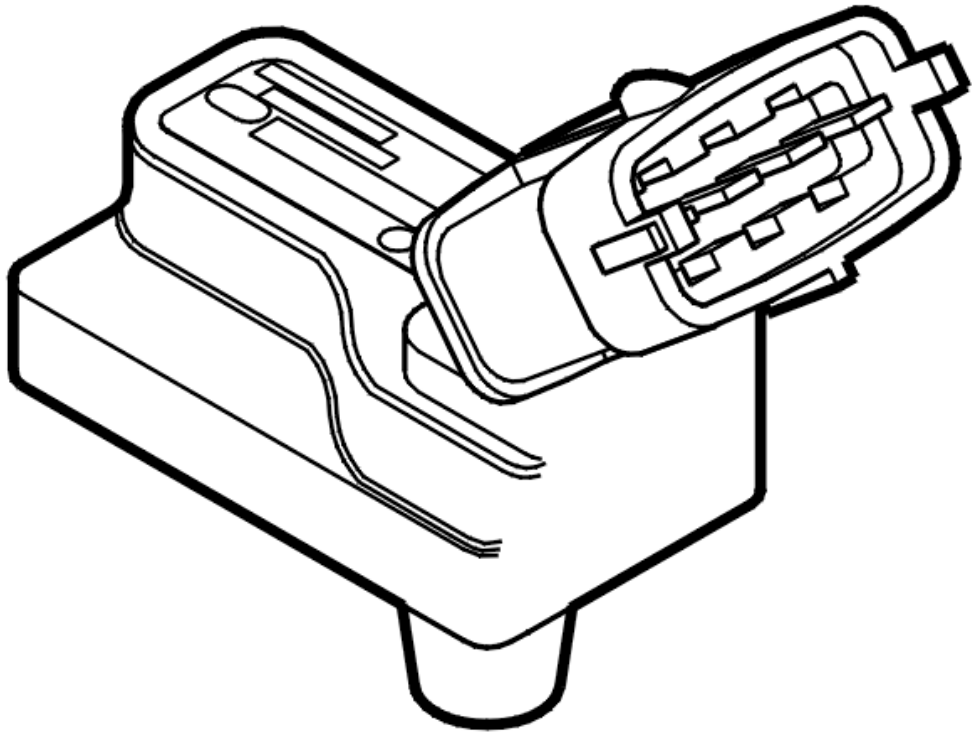

Fig. 263: Identifying 2-Bit Connector Side View
Courtesy of VOLVO CARS CORPORATION

Diagnostic trouble code (DTC) ECM-2000 is stored If the control module receives a signal from the engine temperature sensor corresponding to a temperature lower than -47 °C or higher than +143 °C. As soon as the engine is started the temperature is calculated theoretically. Diagnostic trouble code (DTC) ECM-2000 is stored (faulty signal) if the calculated temperature exceeds the engine coolant temperature (ECT) sensor signal.

Substitute Value

- The engine coolant temperature (ECT) is calculated based on a model. Three-way catalytic converter (TWC) heating and fuel trim at start (starting trim), idle diagnostic and misfire diagnostic are disabled
- The engine cooling fan (FC) runs at low-speed.

Possible Source

Signal too high:

- Short-circuit to ground in the signal cable

- Defective temperature sensor.

Signal too low:

- Contact resistance and oxidation in the terminals
- Open-circuit in the signal cable
- Open-circuit in the signal ground cable
- Short-circuit to supply voltage in the signal cable
- Defective temperature sensor.

Faulty signal:

- Defective temperature sensor
- Faulty engine coolant thermostat.

Fault symptom[s]

- Malfunction indicator lamp (MIL) lit
- Engine difficult to start.

FAULTY SIGNAL

CHECKING THE WIRING

WARNING: **Before fault-tracing can begin, the engine cooling fan (FC) connector must be disconnected to prevent the engine cooling fan (FC) engaging. Diagnostic trouble code (DTC) ECM-6110 Engine cooling fan (FC) control module may be stored. After fault-tracing the connector must be reconnected.**

NOTE: **This diagnostic trouble code (DTC) is stored if the engine coolant temperature (ECT) sensor freezes. This may happen if the coolant level is low or there is too little glycol in the coolant. Check the engine coolant level and its freezing point. Remedy as necessary.**

HINT: The diagnostic trouble code (DTC) can be caused by a thermostat that doesn't open.

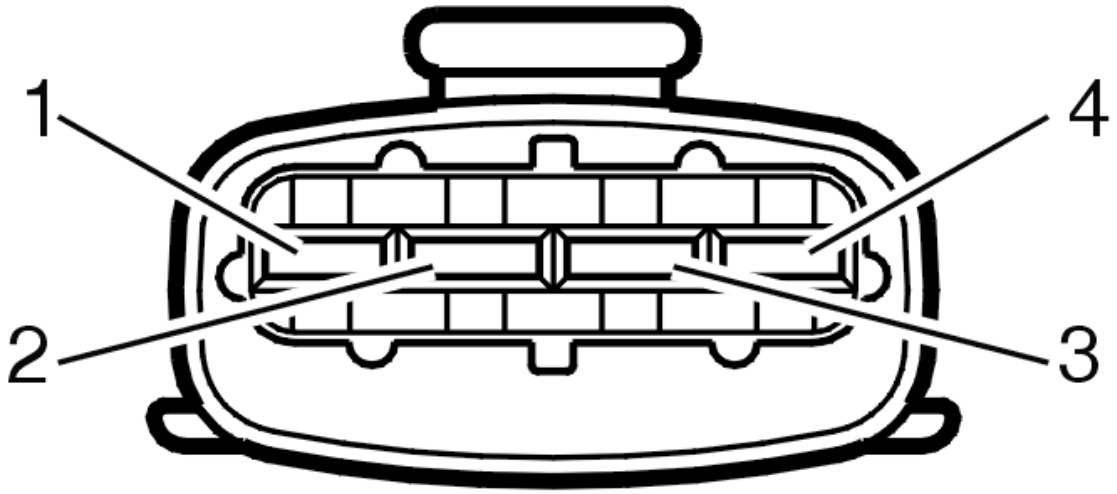

Fig. 264: Identifying Ignition OFF
Courtesy of VOLVO CARS CORPORATION

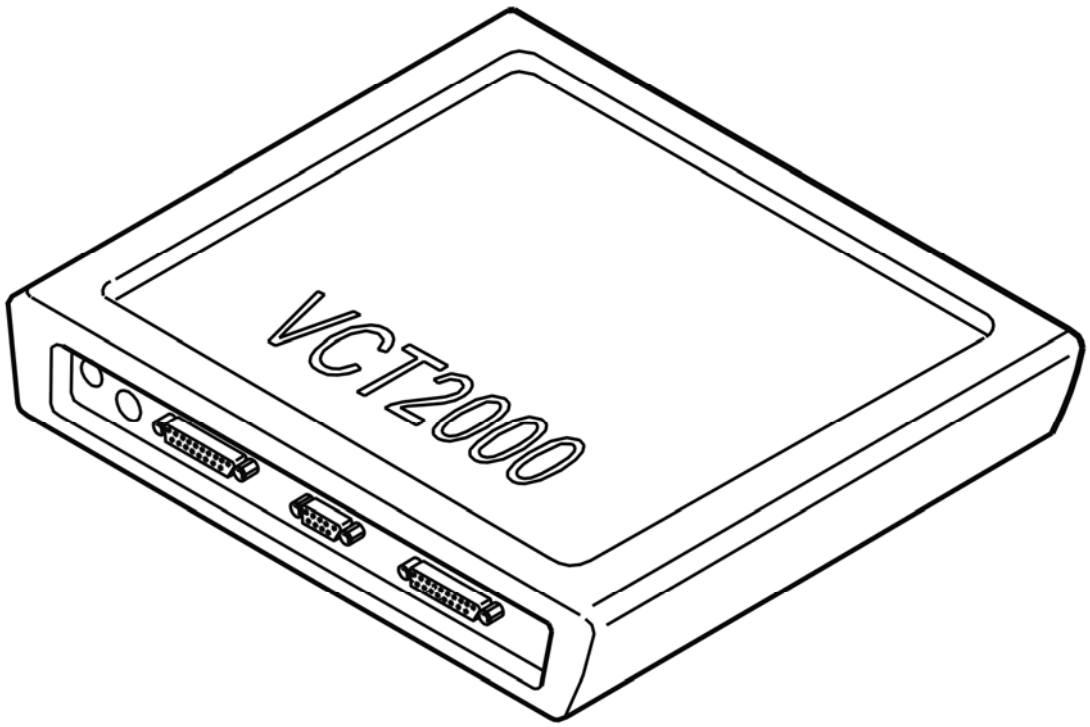

Fig. 265: Connecting Connector
Courtesy of VOLVO CARS CORPORATION

- Ignition off
- Check the ground lead between control module terminal #A60 (#A60) and engine coolant temperature (ECT) sensor terminal #2. Check for an open-circuit

- Reinstall the components, reconnect the connectors etc.

Other information

- see **CHECKING WIRING AND TERMINALS**
- To connect the breakout box / access the control module, see **CONNECTING THE BREAKOUT BOX**
- For B5xx4T, see **REPLACING THE THERMOSTAT AND/OR ENGINE COOLANT TEMPERATURE SENSOR**
- For B6xx4T, see **ENGINE COOLANT TEMPERATURE (ECT) SENSOR, REPLACING** .
- For resistance values, see **COMPONENT SPECIFICATIONS**
- For 5 cylinder turbocharged engines -2004, see **SIGNAL DESCRIPTION**
- For 5 cylinder turbocharged engines 2005-, see **SIGNAL SPECIFICATION** .

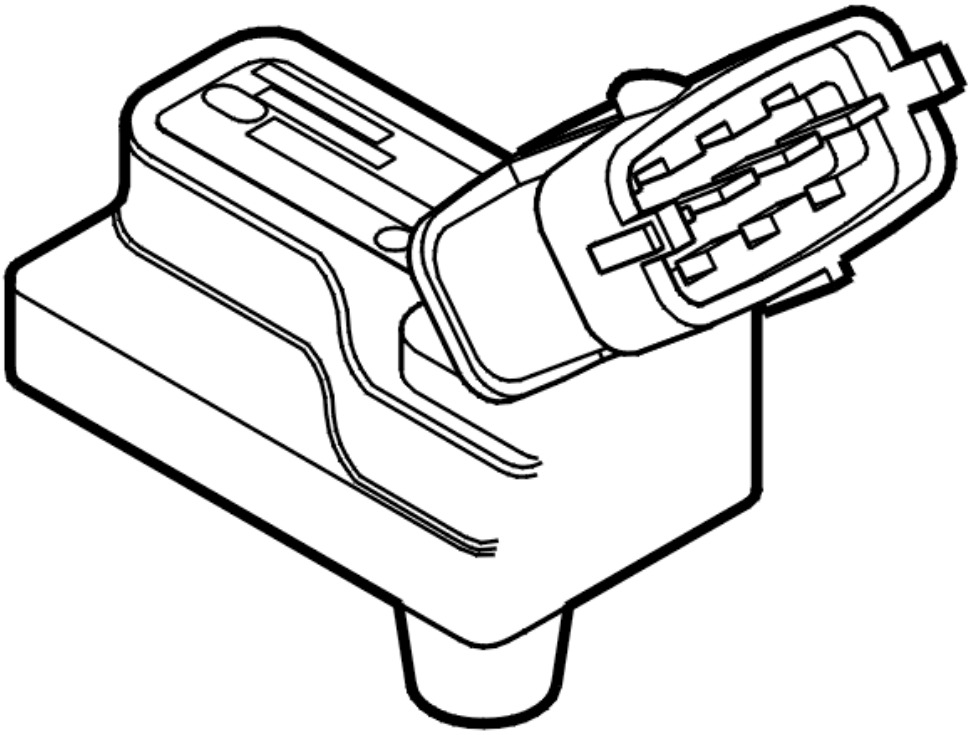

Fig. 266: Identifying 2-Bit Connector
Courtesy of VOLVO CARS CORPORATION

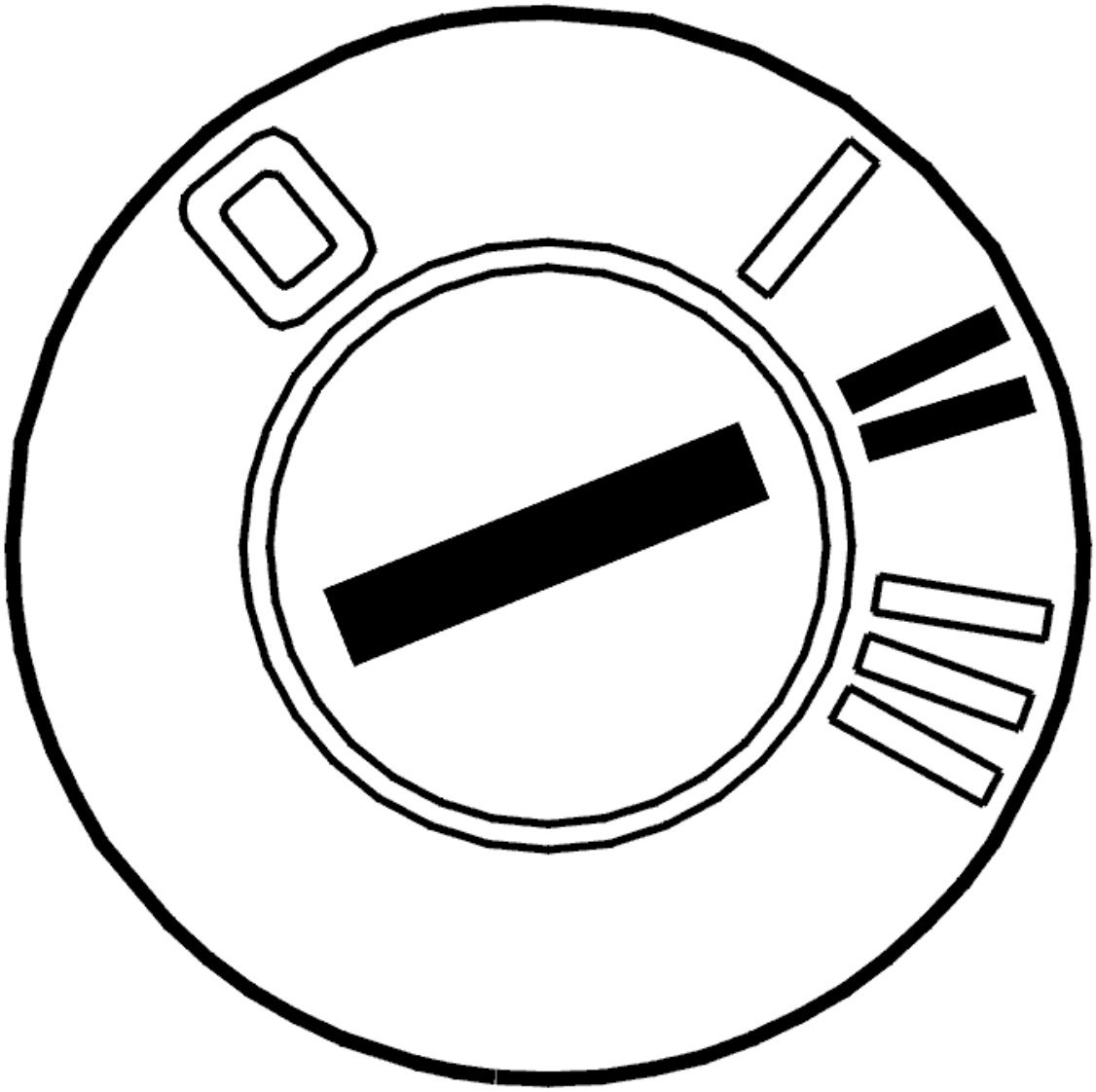

Fig. 267: Identifying Ohm Meter
Courtesy of VOLVO CARS CORPORATION

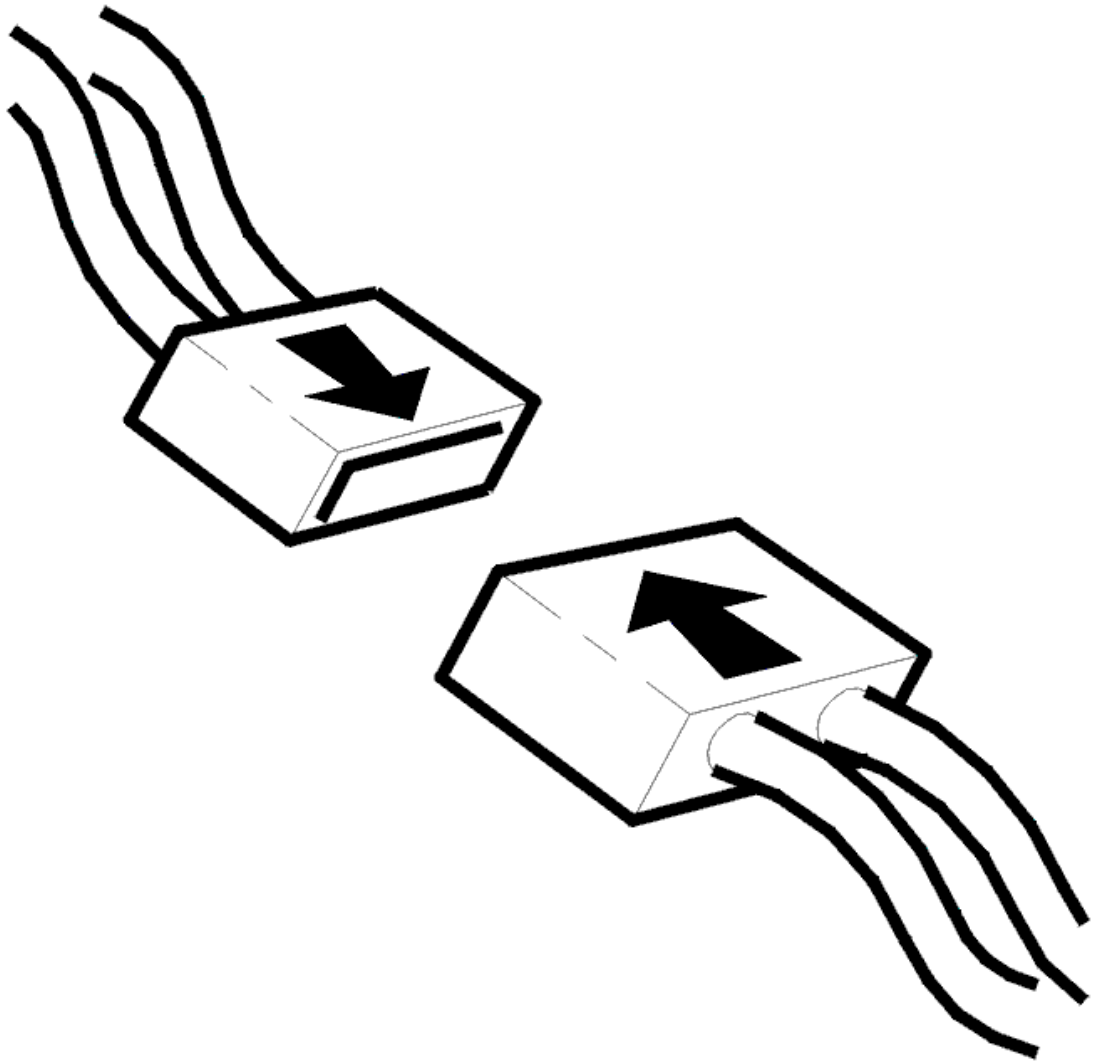

Fig. 268: Identifying 2-Bit Connector Side View
Courtesy of VOLVO CARS CORPORATION

Were any faults found in the cable?

- **YES**

  Refer to **VERIFICATION**

- **NO**

  Refer to **CHECKING THE ENGINE COOLANT TEMPERATURE (ECT)**

CHECKING THE ENGINE COOLANT TEMPERATURE (ECT)

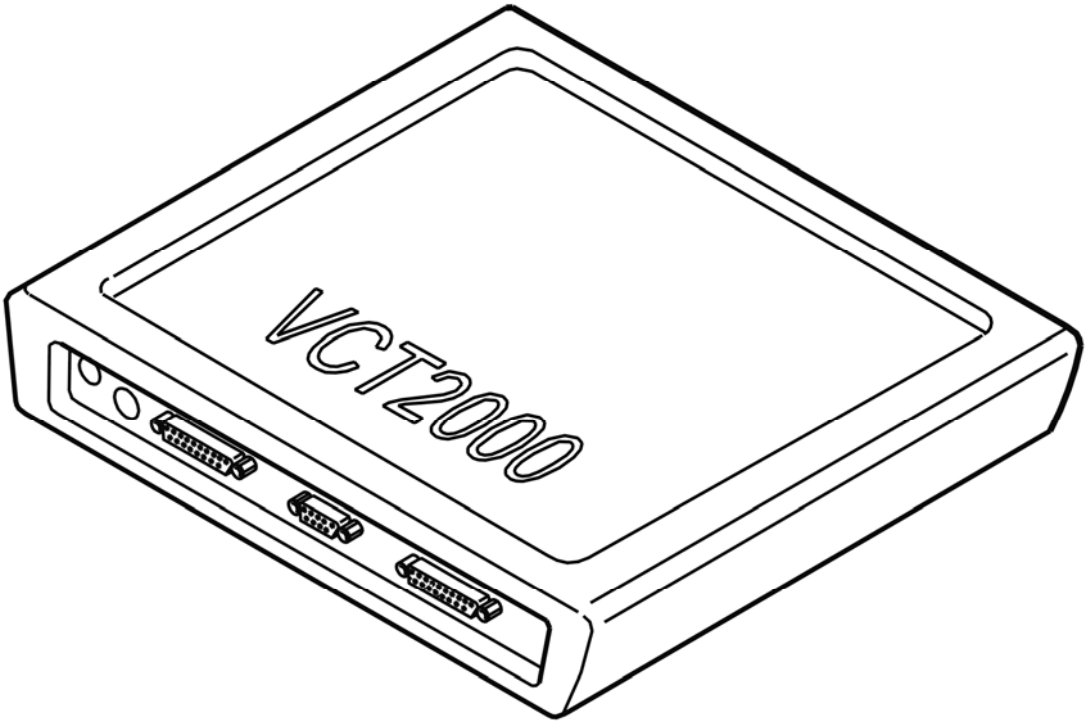

Fig. 269: Belt Routing / Engine Idling - Volvo
Courtesy of VOLVO CARS CORPORATION

- Fault-tracing must begin with the engine cold (+20 °C) so that the engine coolant temperature (ECT) sensor can be tested over as wide a temperature range as possible
- Switch off the climate control system
- Start the engine.

  Read off the engine coolant temperature (ECT).

  Check that the engine coolant temperature (ECT) is within its permitted range and corresponds with the engine warming up.

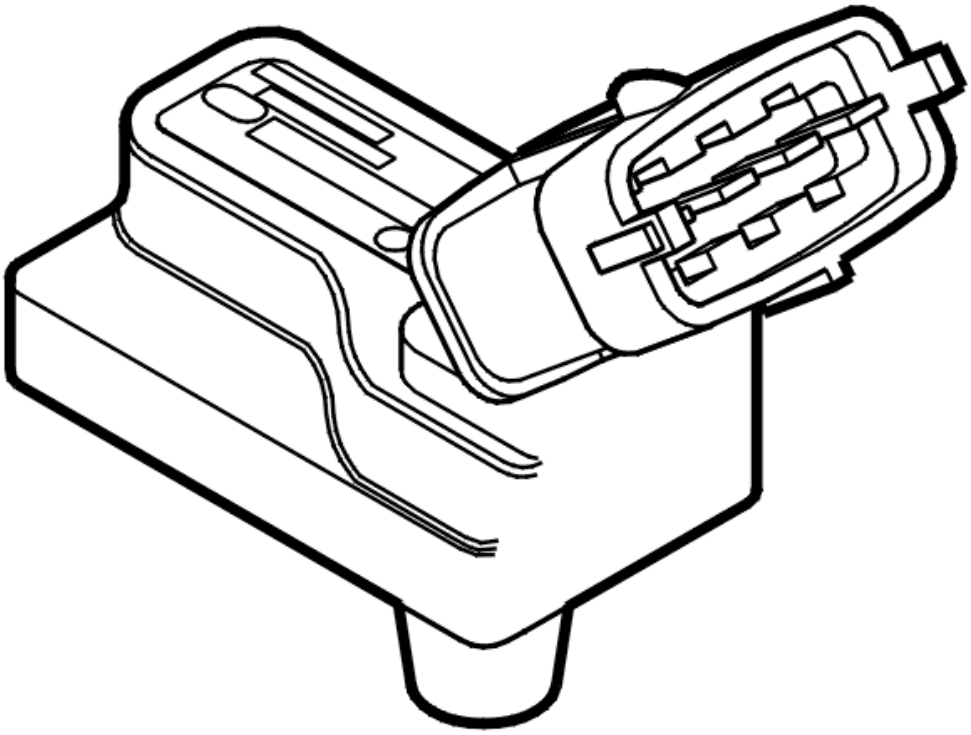

Fig. 270: Identifying VCT2000 Diagnostic Tool Symbol In VIDA
Courtesy of VOLVO CARS CORPORATION

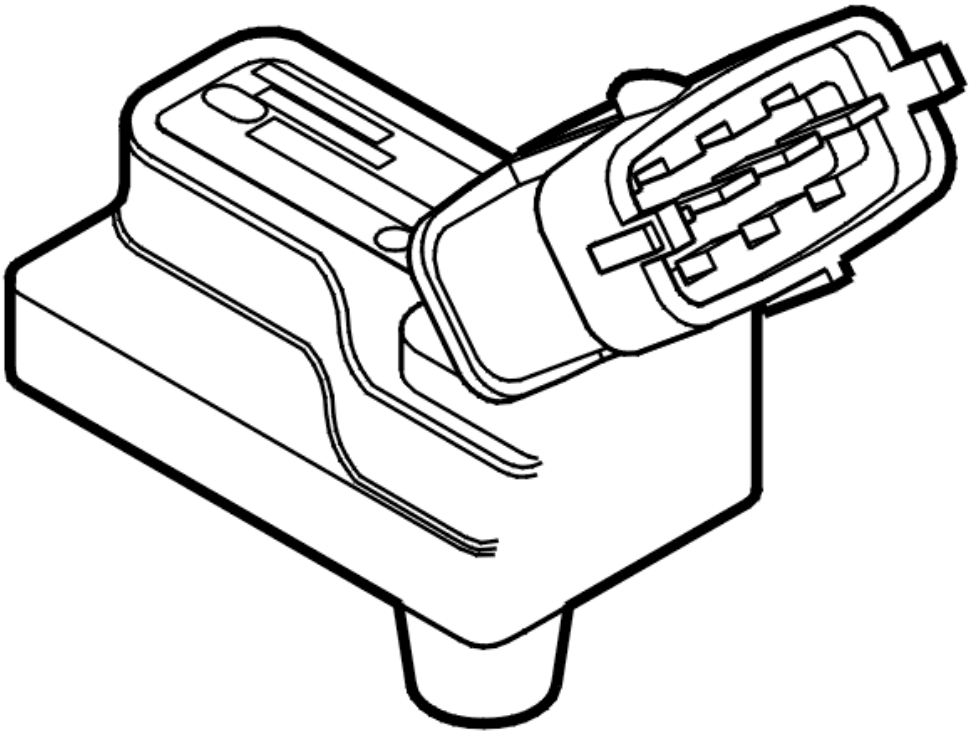

Fig. 271: Identifying 2-Bit Connector Side View
Courtesy of VOLVO CARS CORPORATION

Is the temperature reasonable?

- **YES**

  Refer to **CHECKING THE THERMOSTAT**

- **NO**

  Refer to **REPLACING THE COMPONENT**

CHECKING THE THERMOSTAT

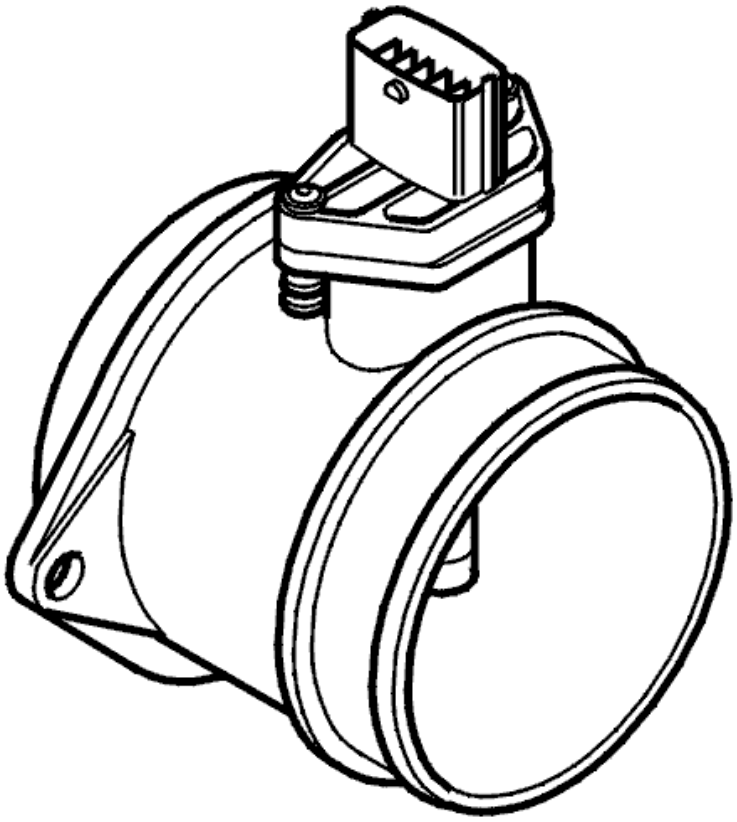

Fig. 272: Belt Routing / Engine Idling - Volvo
Courtesy of VOLVO CARS CORPORATION

- Start the engine. Run the engine until the engine coolant temperature (ECT) reaches approximately 100 ° C
- Activate the engine cooling fan (FC) with the engine running
- Wait approximately 90 seconds and then shut-off the engine cooling fan (FC).

  Read off the engine coolant temperature (ECT). If the temperature is 85 °C or lower when the fan stops, the thermostat is defective.

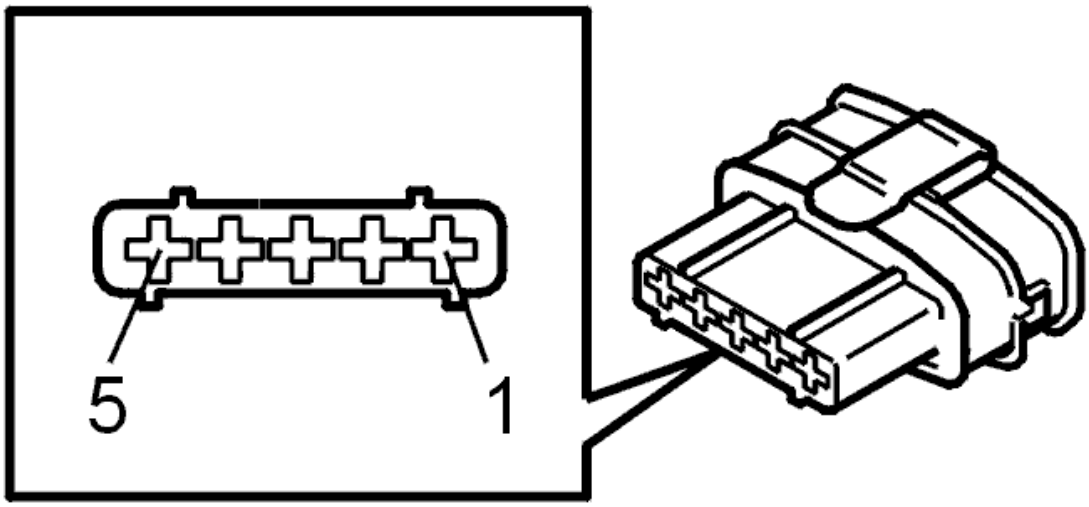

Fig. 273: Identifying VCT2000 Diagnostic Tool Symbol In VIDA
Courtesy of VOLVO CARS CORPORATION

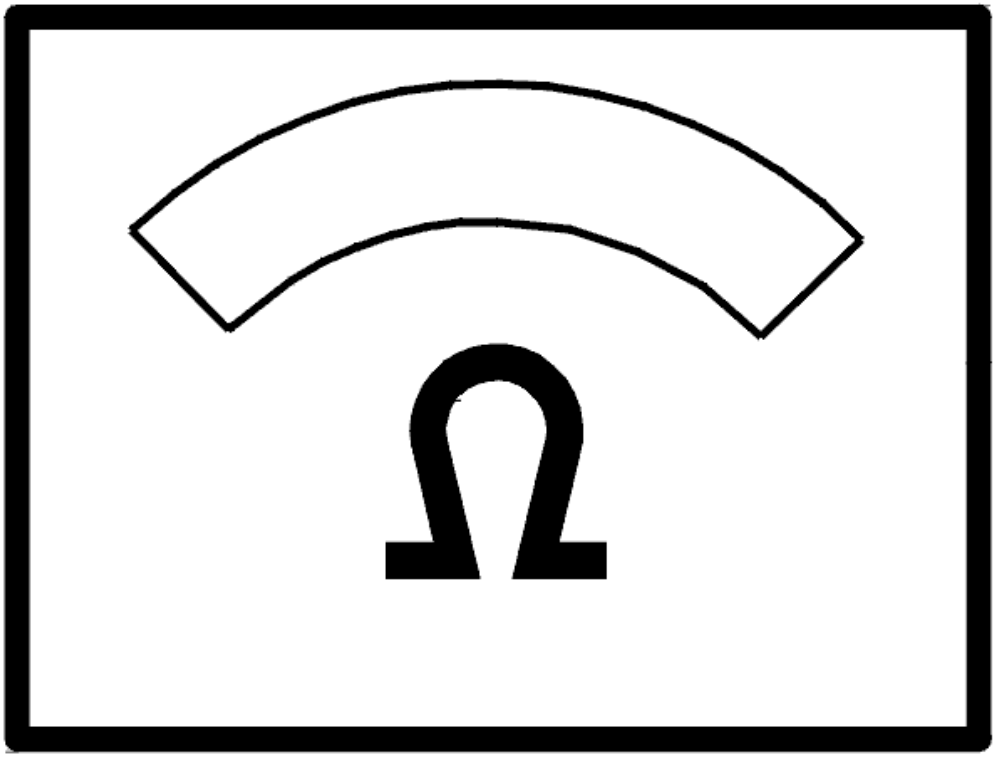

Fig. 274: Identifying 2-Bit Connector Side View
Courtesy of VOLVO CARS CORPORATION

Is the temperature lower than 86 °C?

- **YES**

  Refer to **REPLACING THE COMPONENT**

- **NO**

  FAULT TRACING FAILED: The fault should have been detected and remedied. As this is not the case fault-tracing has failed. Exit fault-tracing for this diagnostic trouble code (DTC) or make another attempt.

REPLACING THE COMPONENT

Try a new thermostat. See **THERMOSTAT, REPLACING**.

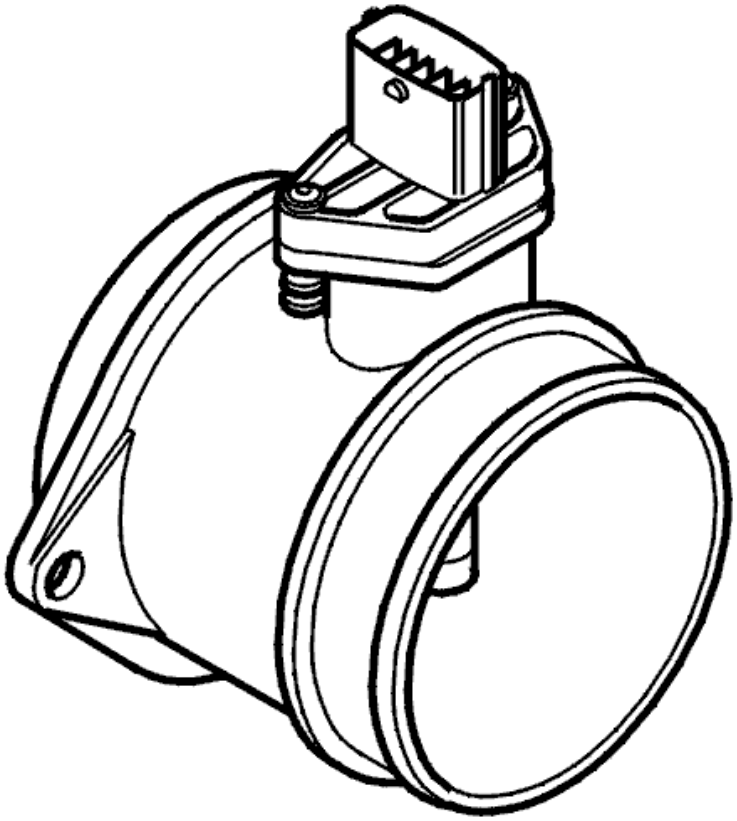

Fig. 275: Checking Thermostat
Courtesy of VOLVO CARS CORPORATION

REPLACING THE COMPONENT

Try a new engine coolant temperature (ECT) sensor.

- For B5xx4T, see **REPLACING THE THERMOSTAT AND/OR ENGINE COOLANT TEMPERATURE SENSOR**
- For B6xx4T, see **ENGINE COOLANT TEMPERATURE (ECT) SENSOR, REPLACING** .

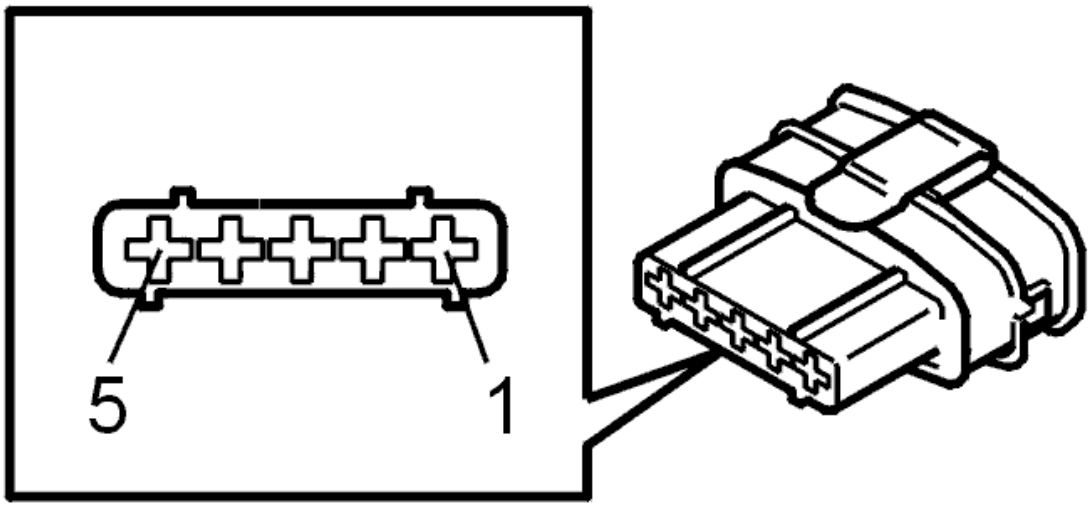

Fig. 276: Identifying 2-Bit Connector Side View
Courtesy of VOLVO CARS CORPORATION

- **Continue**

  Refer to **VERIFICATION**

VERIFICATION

VERIFICATION

HINT: After carrying out the repair, check that the fault has been remedied.

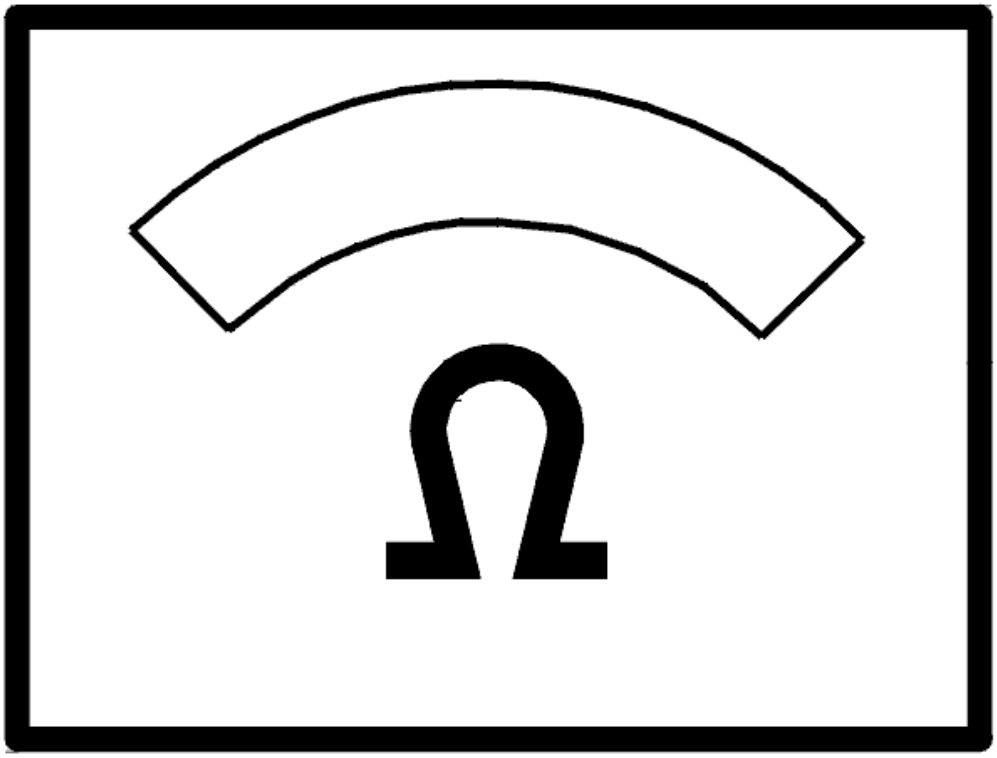

Fig. 277: Belt Routing / Engine Idling - Volvo
Courtesy of VOLVO CARS CORPORATION

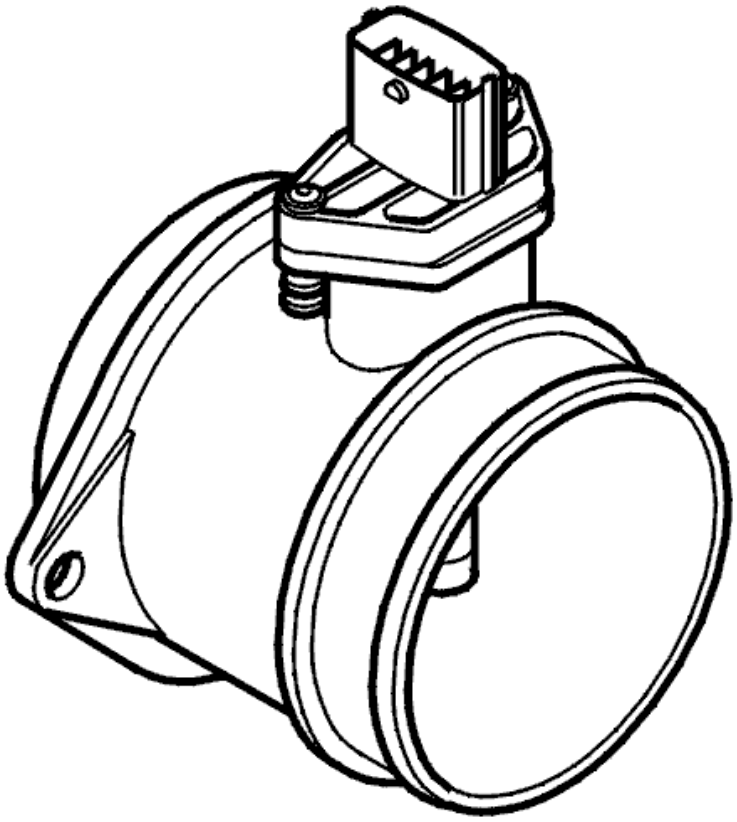

Fig. 278: Connecting Connector
Courtesy of VOLVO CARS CORPORATION

- Fault-tracing must begin with the engine cold (+20 °C) so that the engine coolant temperature (ECT) sensor can be tested over as wide a temperature range as possible
- Ignition off
- Reconnect connectors, reinstall components etc.
- Start the engine
- Read off the engine coolant temperature.

  Check that the engine coolant temperature (ECT) is within its permitted range and corresponds with the engine warming up.

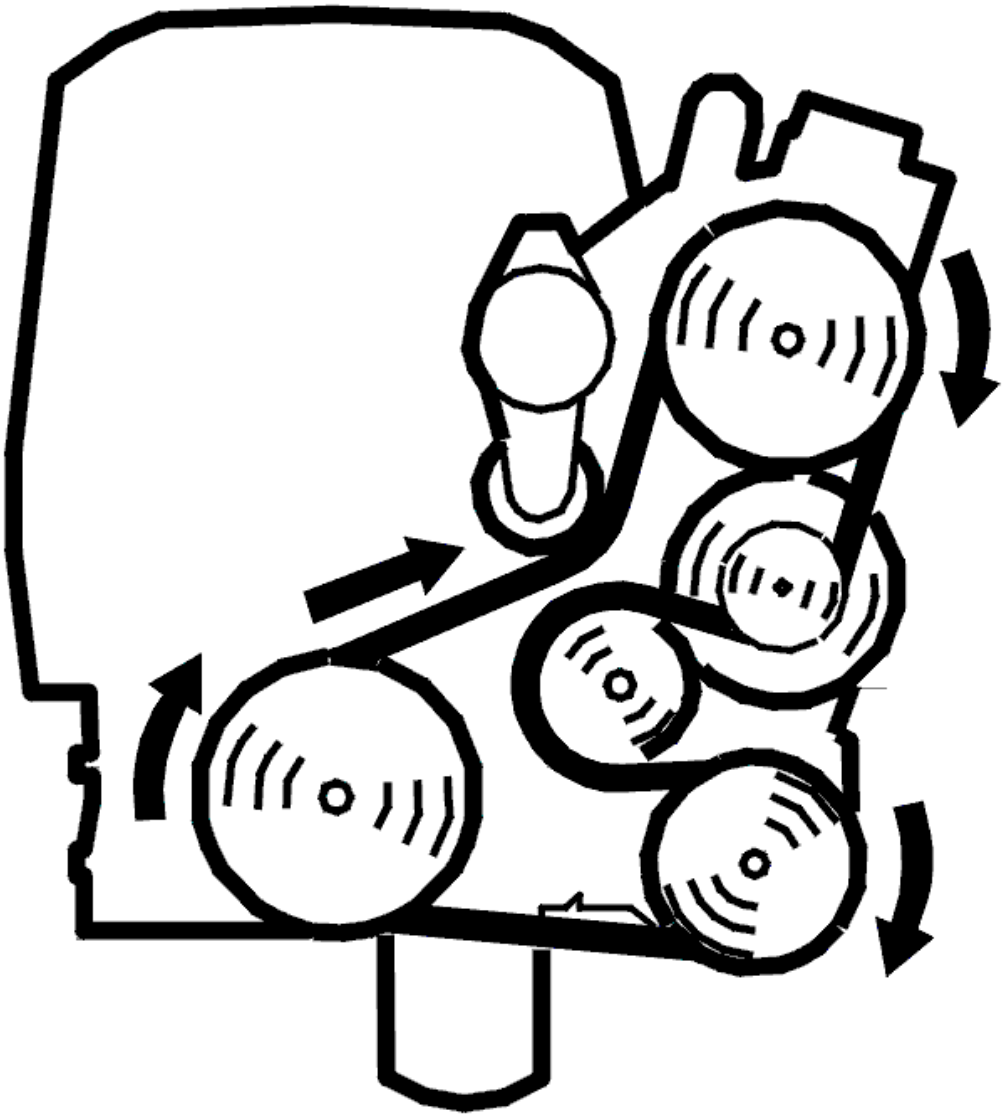

Fig. 279: Identifying VCT2000 Diagnostic Tool Symbol In VIDA
Courtesy of VOLVO CARS CORPORATION

Is the temperature within its permitted range?

- **YES**

  VERIFIED: Troubleshooting has been completed.

- **NO**

  Refer to **INFORMATION**

INFORMATION

FAULT-TRACING INFORMATION

The fault should have been detected and remedied. As this is not the case fault-tracing has failed.

Exit fault-tracing for this diagnostic trouble code (DTC) or make another attempt.

ECM-2000: ENGINE COOLANT TEMPERATURE (ECT) SENSOR. FAULTY SIGNAL. INTERMITTENT FAULT (B6294T; 2003-2004)

DIAGNOSTIC TROUBLE CODE (DTC) INFORMATION

Condition

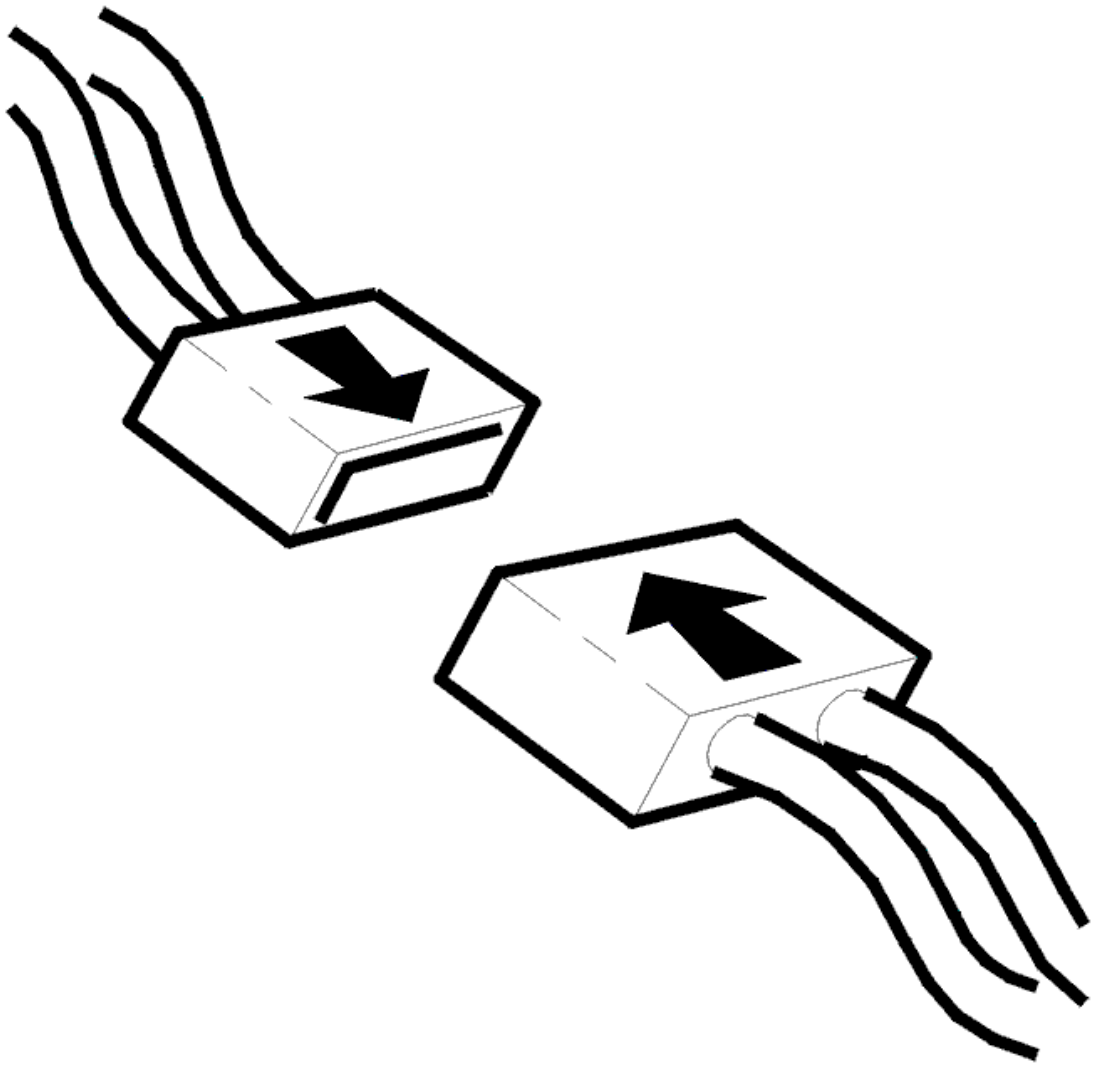

Fig. 280: Identifying Engine Coolant Temperature Sensor
Courtesy of VOLVO CARS CORPORATION

If the control module receives a signal from the engine temperature sensor corresponding to a temperature lower

than -47°C (-52.6°F) or higher than +143°C (289.4°F) the control module interprets it as a fault and ECM-2000 is stored. As soon as the engine is started the temperature is calculated theoretically. If the calculated temperature exceeds the engine coolant temperature (ECT) sensor signal, the control module interprets as a fault and ECM-2000 is stored.

Substitute Value

- engine coolant temperature (ECT) is calculated using a model. Three-way catalytic converter (TWC) heating and fuel trim at start (starting trim), idle diagnostic and misfire diagnostic is disabled.
- engine cooling fan (FC) runs at low-speed

Possible Source

Signal too high:

- short-circuit to ground in the signal cable
- defective temperature sensor

Signal too low:

- open-circuit in the signal cable
- short-circuit to supply voltage in the signal cable
- defective temperature sensor
- contact resistance in terminals

Faulty signal:

- defective temperature sensor
- faulty engine coolant thermostat

Fault symptom[s]

- Malfunction indicator lamp (MIL) lit.

FAULTY SIGNAL. INTERMITTENT FAULT

CHECKING WIRING AND CONNECTORS

WARNING: **Before fault-tracing can begin, the engine cooling fan (FC) connector must be disconnected to prevent the engine cooling fan (FC) engaging. Diagnostic trouble code (DTC) ECM-6110 Engine cooling fan (FC) control module may be stored. After fault-tracing the connector must be reconnected.**

NOTE: This diagnostic trouble code (DTC) is stored if the engine coolant temperature

(ECT) sensor freezes. This may happen if the coolant level is low or there is too little glycol in the coolant. Check the engine coolant level and its freezing point. Remedy as necessary.

Check the connector on the engine coolant temperature (ECT) sensor. Check for contact resistance and oxidation. Check for loose connections.

Check the ground lead between control module terminal #A60 (#A60) and engine coolant temperature (ECT) sensor terminal #2. Check for an intermittent open-circuit.

HINT: The fault may have been caused by air pockets in the cooling system.

Other information

- To connect the breakout box / access the control module, see **CONNECTING THE BREAKOUT BOX**
- For B5xx4T, see **REPLACING THE THERMOSTAT AND/OR ENGINE COOLANT TEMPERATURE SENSOR**
- For B6xx4T, see **ENGINE COOLANT TEMPERATURE (ECT) SENSOR, REPLACING** .
- For resistance values, see **COMPONENT SPECIFICATIONS**
- For 6 cylinder engines -2004, see **SIGNAL SPECIFICATION**
- For 6 cylinder engines 2005-, see **SIGNAL SPECIFICATION** .
- see **CHECKING WIRING AND TERMINALS** .

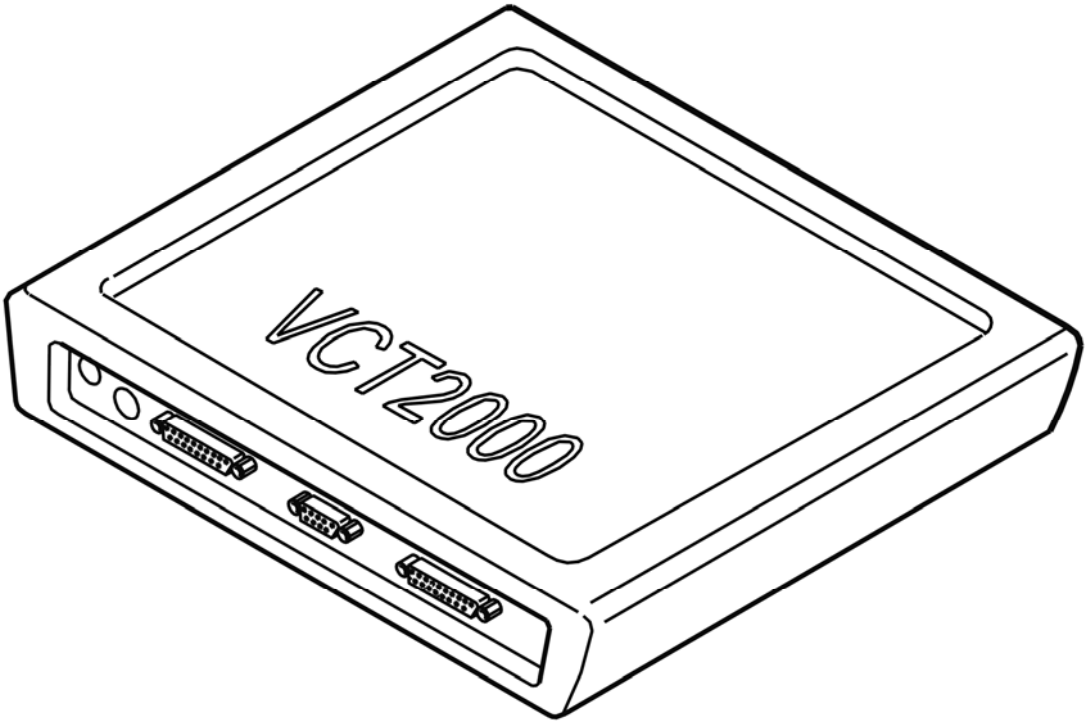

Fig. 281: Identifying Camshaft Reset Valve Connector Terminals
Courtesy of VOLVO CARS CORPORATION

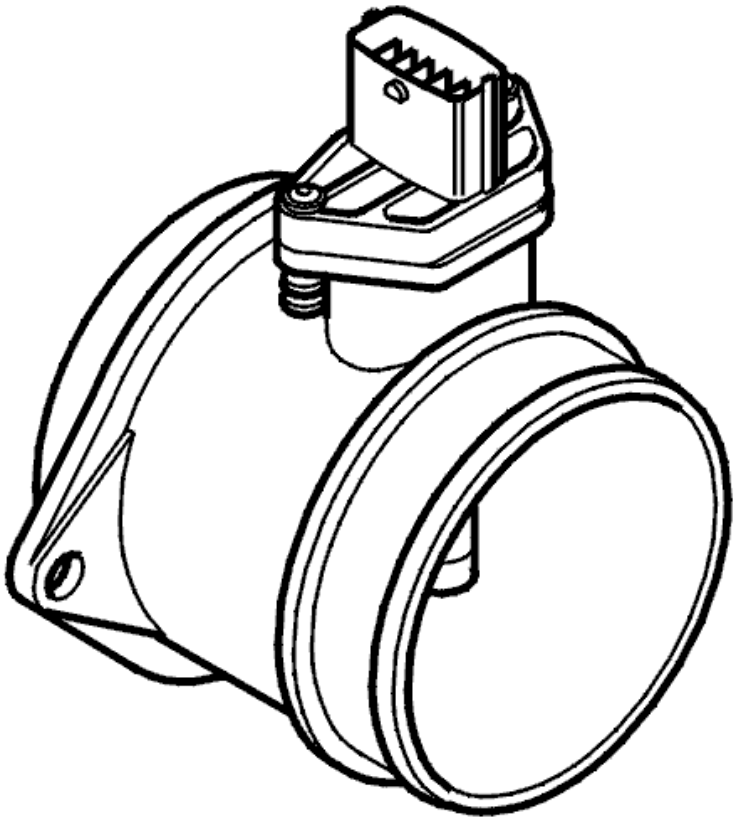

Fig. 282: Identifying Ohm Meter
Courtesy of VOLVO CARS CORPORATION

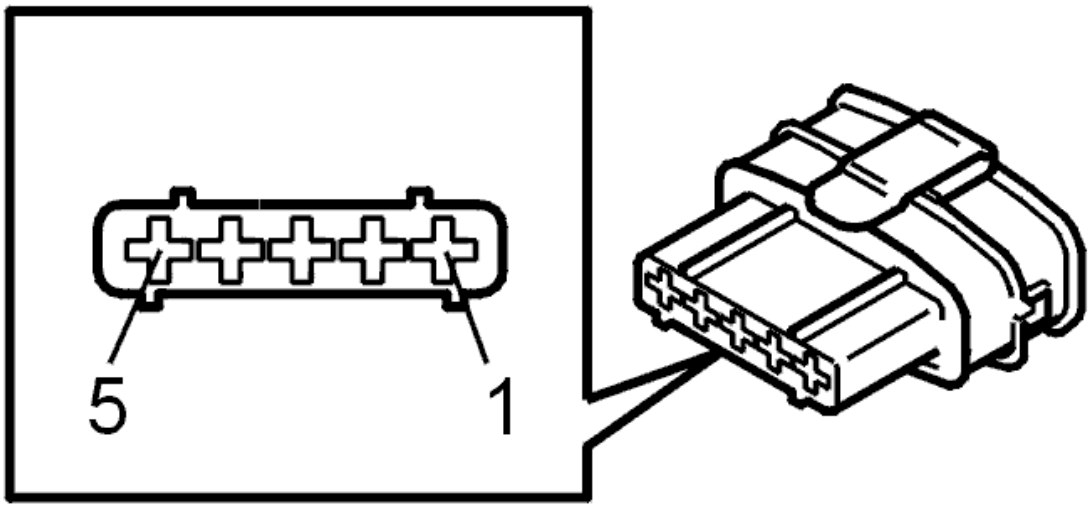

Fig. 283: Identifying Engine Coolant Temperature Sensor
Courtesy of VOLVO CARS CORPORATION

- **Continue**

  Refer to **INFORMATION**

INFORMATION

FAULT-TRACING INFORMATION

If the fault is intermittent, do not verify fault-tracing if the fault does not recur.

It is possible to view the information again, or leave fault-tracing for this diagnostic trouble code (DTC).

ECM-2000: ENGINE COOLANT TEMPERATURE (ECT) SENSOR. FAULTY SIGNAL. PERMANENT FAULT (B6294T; 2003-2004)

DIAGNOSTIC TROUBLE CODE (DTC) INFORMATION

see **DIAGNOSTIC TROUBLE CODE (DTC) INFORMATION**

FAULTY SIGNAL. PERMANENT FAULT

CHECKING THE WIRING

WARNING: **Before fault-tracing can begin, the engine cooling fan (FC) connector must be disconnected to prevent the engine cooling fan (FC) engaging. Diagnostic trouble code (DTC) ECM-6120 Engine cooling fan (FC) control module may be stored. After fault-tracing the connector must be reconnected.**

NOTE: **This diagnostic trouble code (DTC) is stored if the engine coolant temperature (ECT) sensor freezes. This may happen if the coolant level is low or there is too little glycol in the coolant. Check the engine coolant level and its freezing point. Remedy as necessary.**

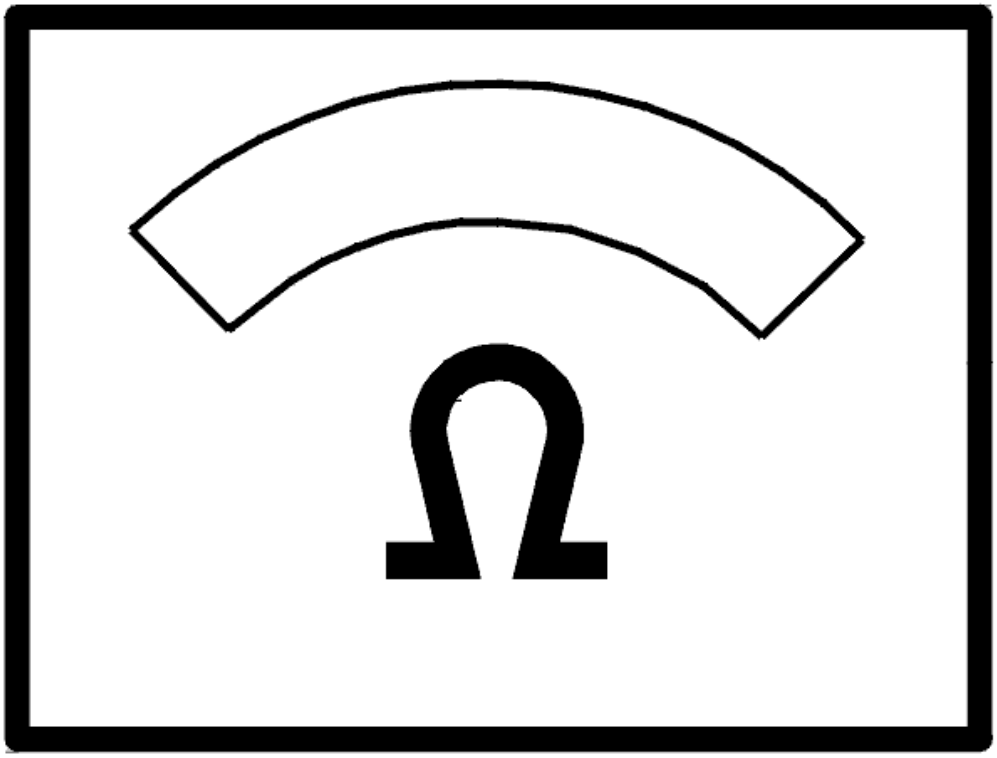

Fig. 284: Identifying Ignition ON
Courtesy of VOLVO CARS CORPORATION

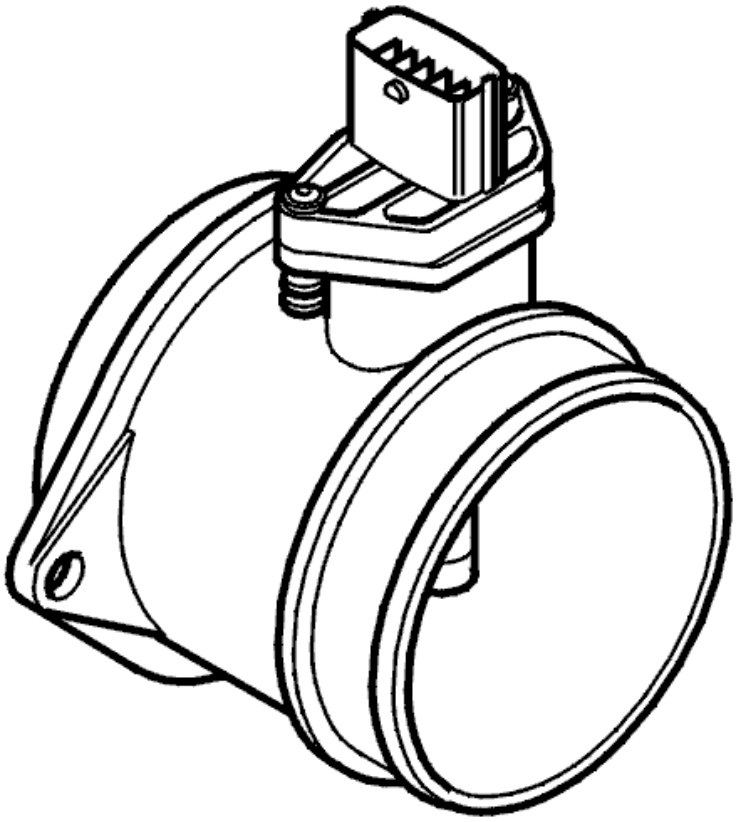

Fig. 285: Connecting Connector
Courtesy of VOLVO CARS CORPORATION

- Ignition off
- Check the ground lead between control module terminal #A60 (#A60) and engine coolant temperature (ECT) sensor terminal #2. Check for an open-circuit
- Reinstall the components, reconnect the connectors etc.

Other information

- To connect the breakout box / access the control module, see **CONNECTING THE BREAKOUT BOX**
- For B5xx4T, see **REPLACING THE THERMOSTAT AND/OR ENGINE COOLANT TEMPERATURE SENSOR**
- For B6xx4T, see **ENGINE COOLANT TEMPERATURE (ECT) SENSOR, REPLACING** .
- For resistance values, see **COMPONENT SPECIFICATIONS**
- For 6 cylinder engines -2004, see **SIGNAL SPECIFICATION**
- For 6 cylinder engines 2005-, see **SIGNAL SPECIFICATION** .
- see **CHECKING WIRING AND TERMINALS** .

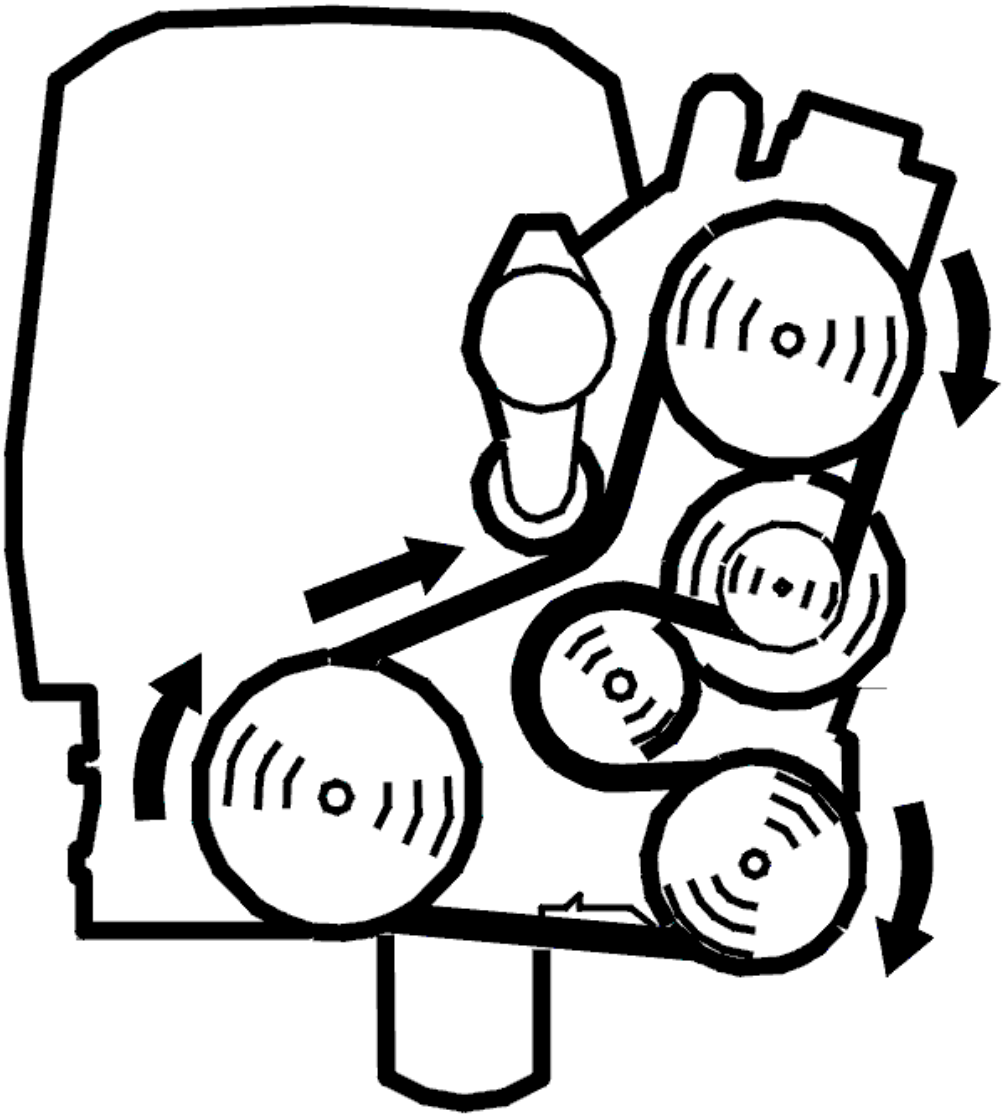

Fig. 286: Identifying Camshaft Reset Valve Connector Terminals
Courtesy of VOLVO CARS CORPORATION

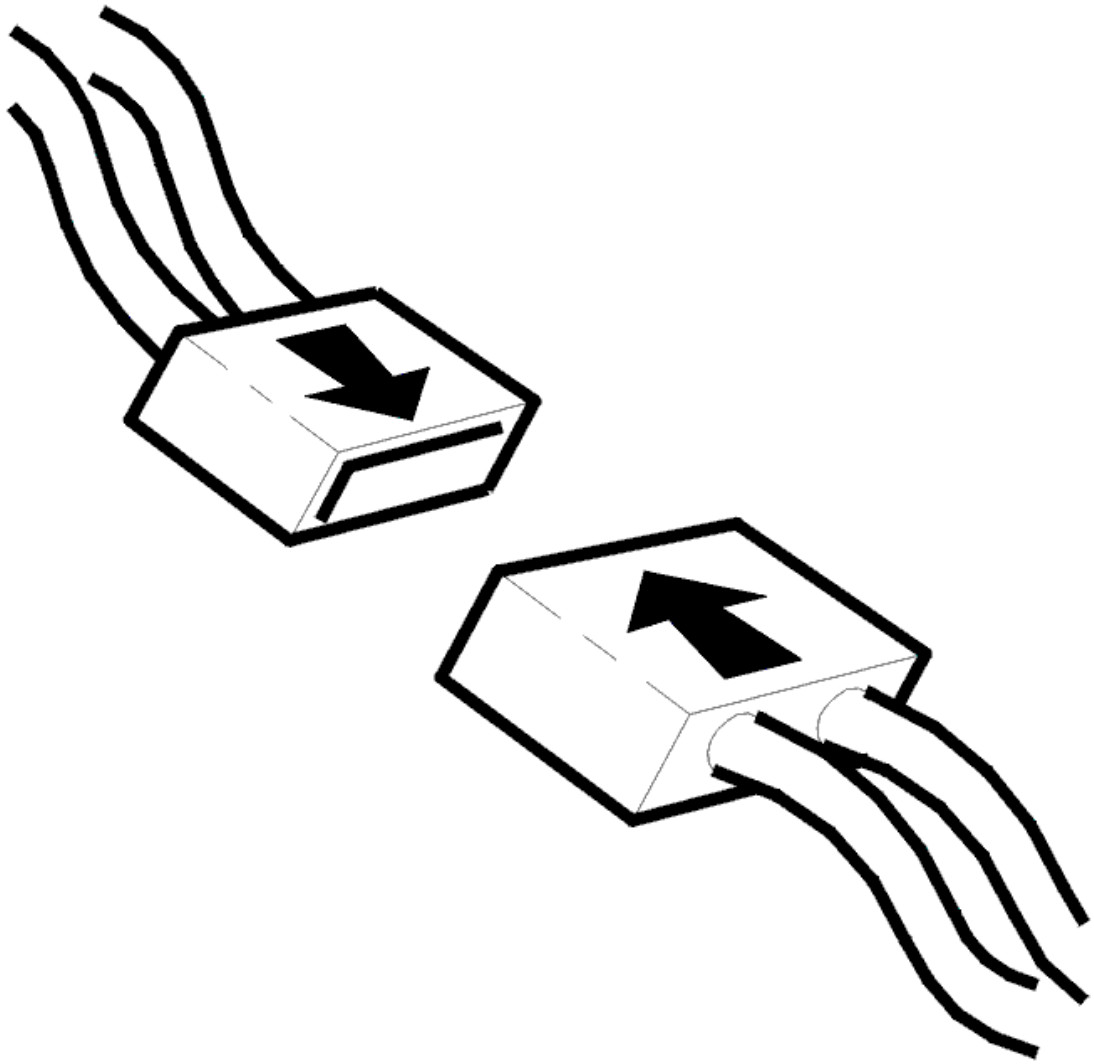

Fig. 287: Identifying Ohm Meter
Courtesy of VOLVO CARS CORPORATION

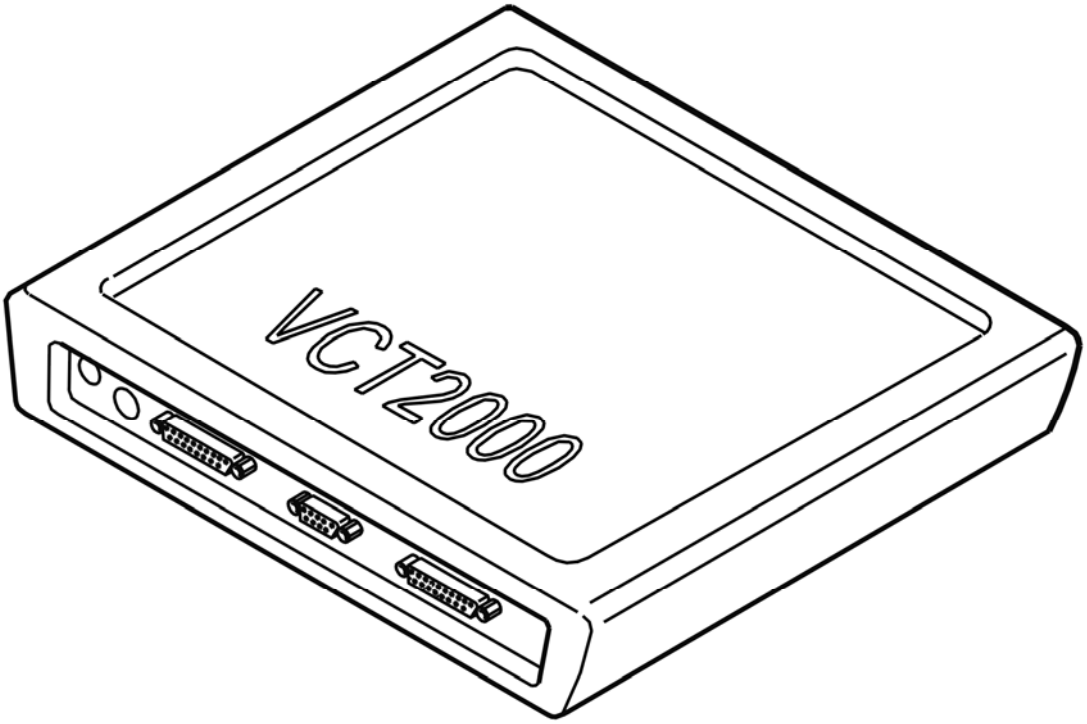

Fig. 288: Identifying Engine Coolant Temperature Sensor
Courtesy of VOLVO CARS CORPORATION

Were any faults found in the ground cable?

- **YES**

  Refer to **VERIFICATION**

- **NO**

  Refer to **CHECKING THE ENGINE COOLANT TEMPERATURE (ECT)**

CHECKING THE ENGINE COOLANT TEMPERATURE (ECT)

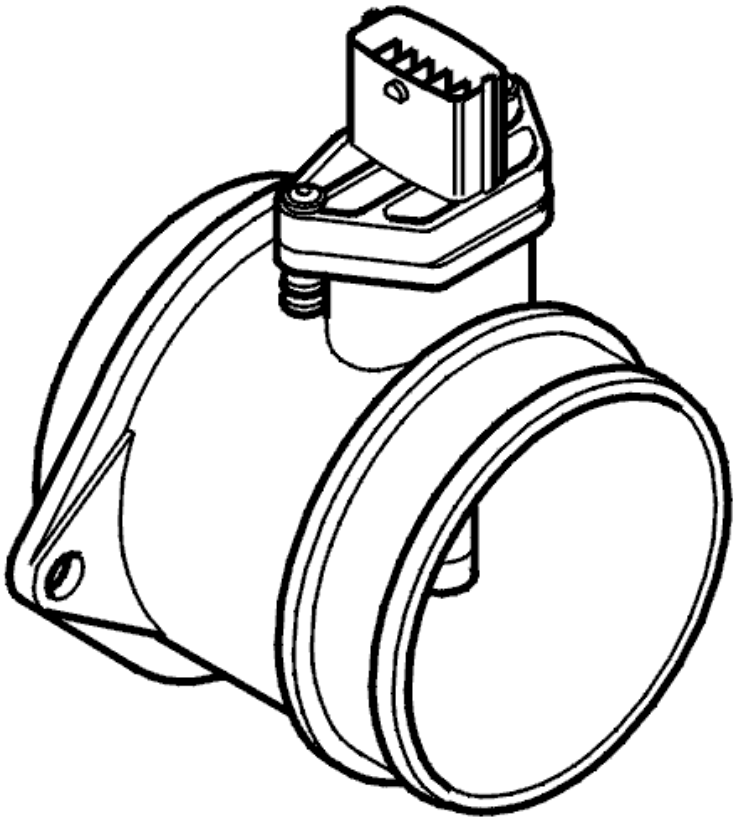

Fig. 289: Belt Routing / Engine Idling - Volvo
Courtesy of VOLVO CARS CORPORATION

- Fault-tracing must begin with the engine cold (+20 °C) so that the engine coolant temperature (ECT) sensor can be tested over as wide a temperature range as possible
- Switch off the climate control unit
- Start the engine.

  Read off the engine coolant temperature (ECT).

  Check that the engine coolant temperature (ECT) is within its permitted range and corresponds with the engine warming up.

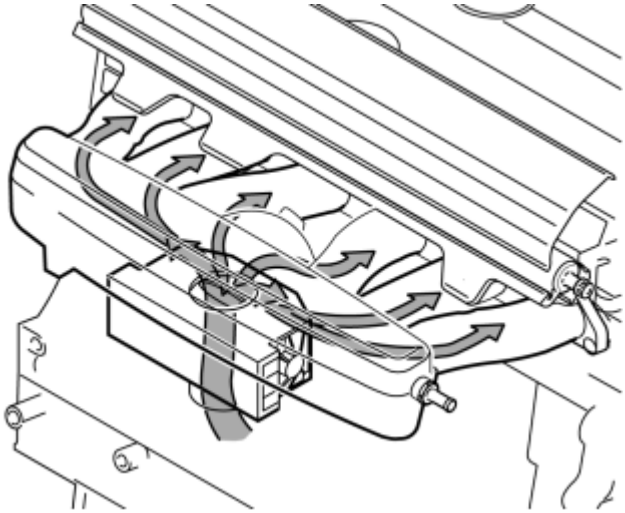

Fig. 290: Identifying VCT2000 Diagnostic Tool Symbol In VIDA
Courtesy of VOLVO CARS CORPORATION

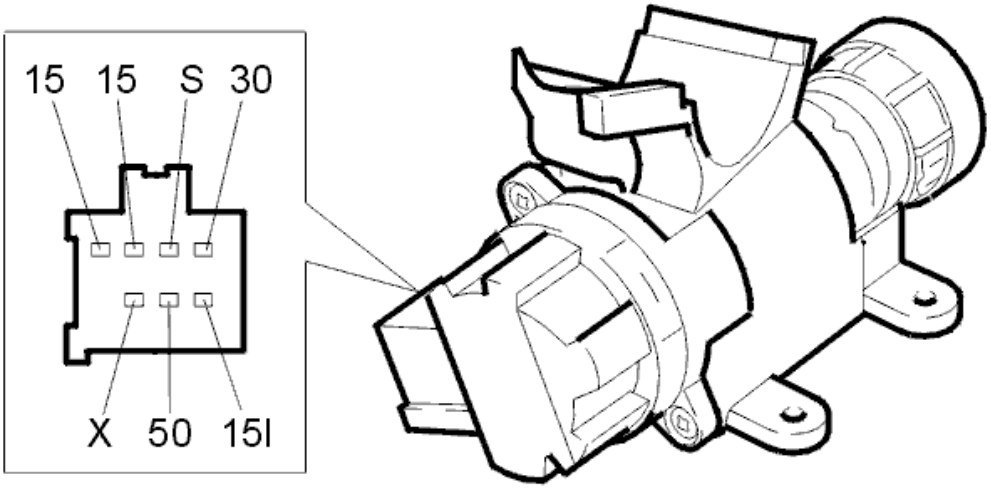

Fig. 291: Identifying Engine Coolant Level Sensor
Courtesy of VOLVO CARS CORPORATION

Is the temperature within its permitted range?

- **YES**

Refer to **CHECKING THE THERMOSTAT**

- **NO**

  Refer to **REPLACING THE COMPONENT**

CHECKING THE THERMOSTAT

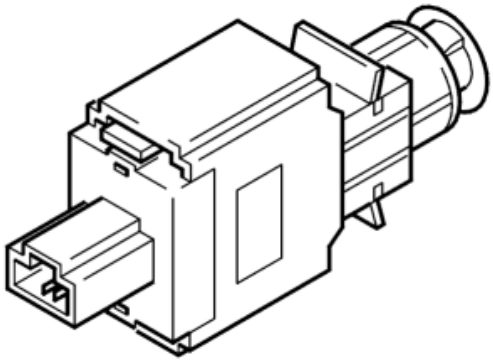

Fig. 292: Belt Routing / Engine Idling - Volvo
Courtesy of VOLVO CARS CORPORATION

- Start the engine. Run the engine until the engine coolant temperature (ECT) reaches approximately 100°C
- Activate the engine cooling fan (FC) with the engine running
- Wait approximately 90 seconds and then shut-off the engine cooling fan (FC).

  Read off the engine coolant temperature (ECT). If it is 85°C or lower when the fan stops, the thermostat is defective.

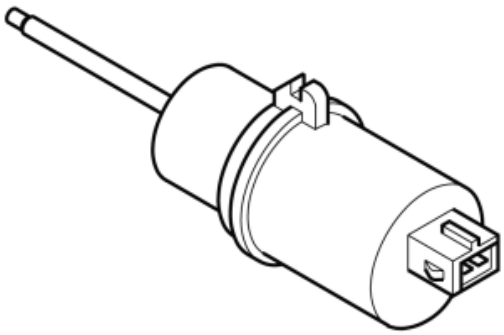

Fig. 293: Identifying VCT2000 Diagnostic Tool Symbol In VIDA
Courtesy of VOLVO CARS CORPORATION

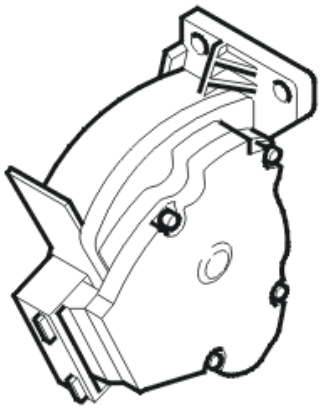

Fig. 294: Identifying Engine Coolant Temperature Sensor
Courtesy of VOLVO CARS CORPORATION

Is the temperature lower than 86°C?

- **YES**

  Refer to **REPLACING THE COMPONENT**

- **NO**

  FAULT TRACING FAILED: The fault should have been detected and remedied. As this is not the case fault-tracing has failed. Exit fault-tracing for this diagnostic trouble code (DTC) or make another attempt.

REPLACING THE COMPONENT

Try a new thermostat. See **THERMOSTAT, REPLACING**.

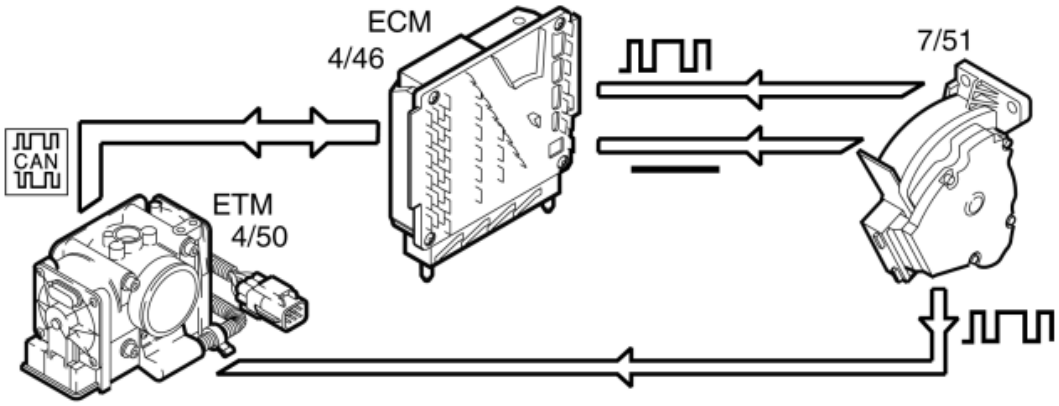

Fig. 295: Checking Thermostat
Courtesy of VOLVO CARS CORPORATION

REPLACING THE COMPONENT

Try a new engine coolant temperature (ECT) sensor.

- For B5xx4T, see **REPLACING THE THERMOSTAT AND/OR ENGINE COOLANT TEMPERATURE SENSOR**
- For B6xx4T, see **ENGINE COOLANT TEMPERATURE (ECT) SENSOR, REPLACING** .

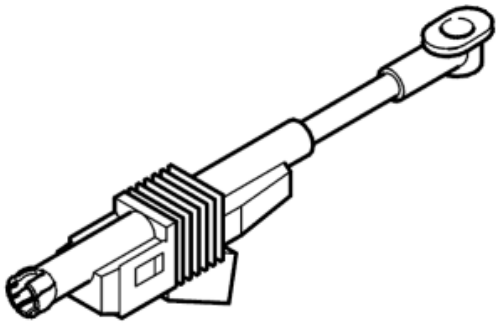

Fig. 296: Identifying Engine Coolant Temperature Sensor
Courtesy of VOLVO CARS CORPORATION

- **Continue**

  Refer to **VERIFICATION**

VERIFICATION

VERIFICATION

HINT: After carrying out the repair, check that the fault has been remedied.

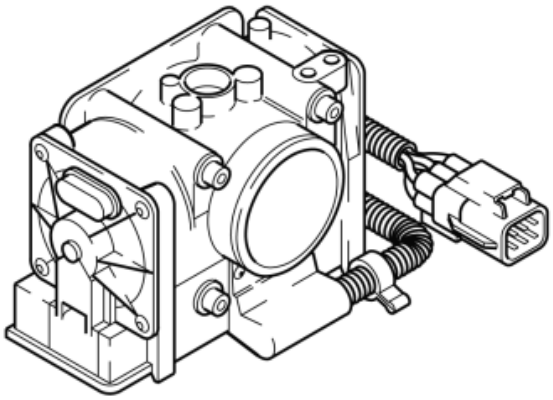

Fig. 297: Belt Routing / Engine Idling - Volvo
Courtesy of VOLVO CARS CORPORATION

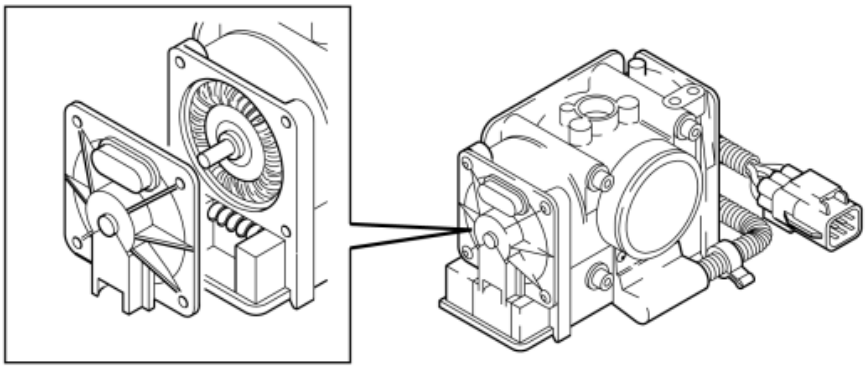

Fig. 298: Connecting Connector
Courtesy of VOLVO CARS CORPORATION

- Fault-tracing must begin with the engine cold (+20 °C) so that the engine coolant temperature (ECT) sensor can be tested over as wide a temperature range as possible
- Ignition off
- Reconnect connectors, reinstall components etc.
- Start the engine
- Read off the engine coolant temperature.

  Check that the engine coolant temperature (ECT) is within its permitted range and corresponds with the engine warming up.

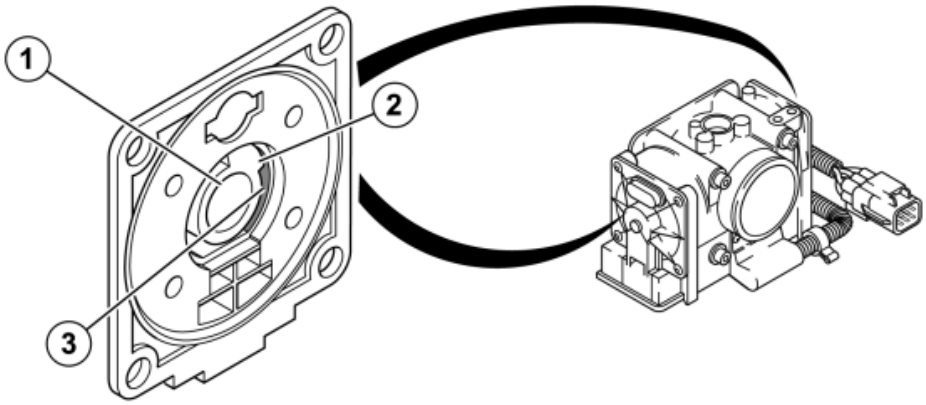

Fig. 299: Identifying VCT2000 Diagnostic Tool Symbol In VIDA
Courtesy of VOLVO CARS CORPORATION

Is the temperature within its permitted range?

- **YES**

  VERIFIED: Troubleshooting has been completed.

- **NO**

  Refer to **INFORMATION**

INFORMATION

FAULT-TRACING INFORMATION

The fault should have been detected and remedied. As this is not the case fault-tracing has failed.

Exit fault-tracing for this diagnostic trouble code (DTC) or make another attempt.

THERMOSTAT, REPLACING

REMOVING THE THERMOSTAT

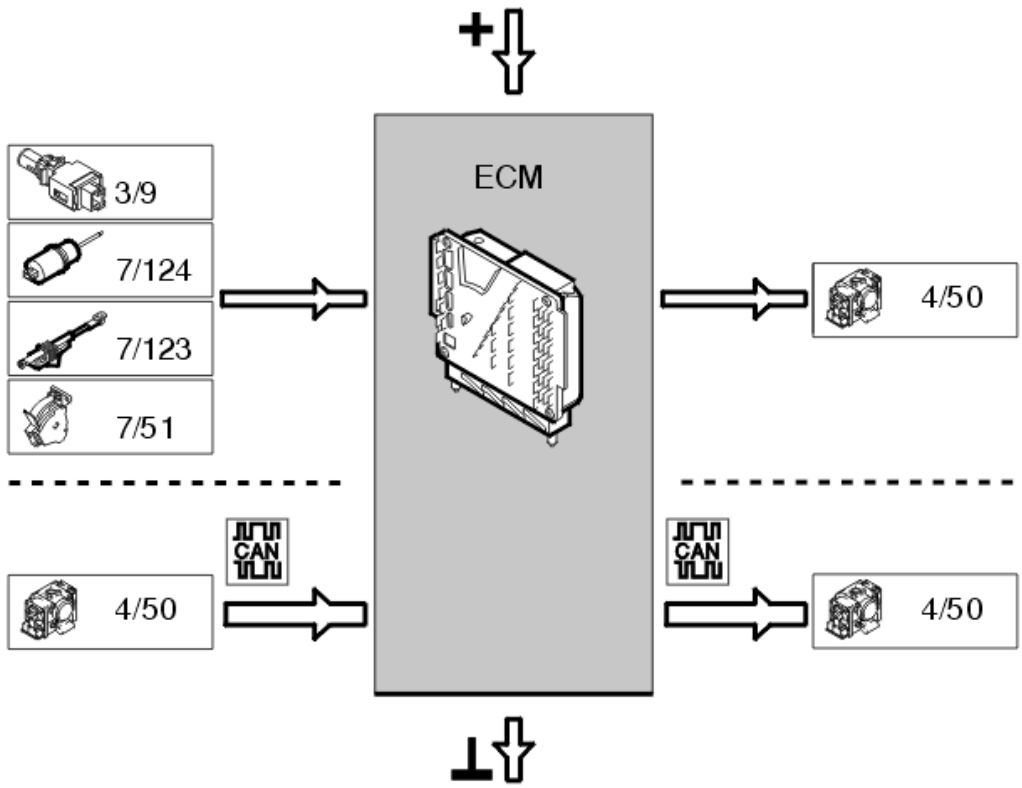

Fig. 300: Identifying Expansion Tank
Courtesy of VOLVO CARS CORPORATION

Remove

- the clamp holding the return hose for the power steering
- the screw holding the engine stabilizer brace to the bracket on the engine

- the screws holding the engine stabilizer brace to the suspension turrets
- the engine stabilizer brace
- the expansion tank cap.

Raise the car. Remove the lower splashguard.

Position a container under the engine drain cock. Drain the coolant.

Close the cock.

Install the lower splash guard.

Lower the car.

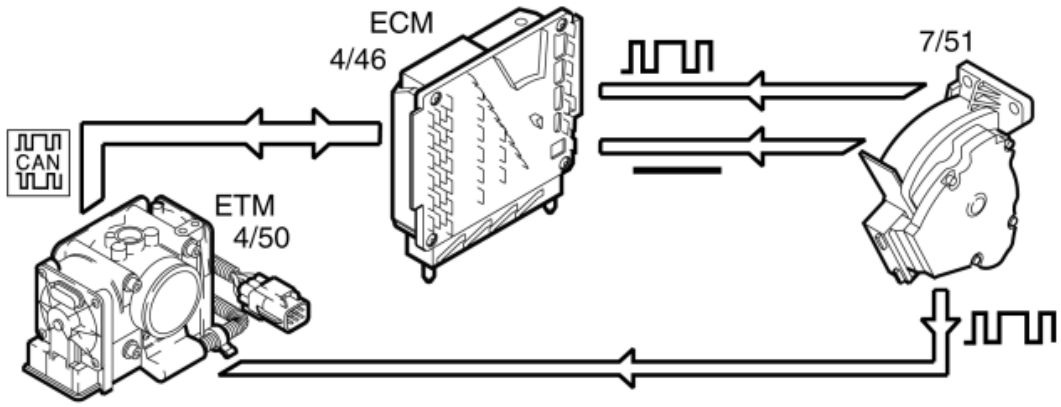

Fig. 301: Identifying Plastic Hoses Between Turbocharger, Charge Air Cooler & Air Cleaner/Turbocharger
Courtesy of VOLVO CARS CORPORATION

- the plastic hoses between the turbocharger (TC) / charge air cooler and the air cleaner (ACL) / turbocharger (TC). **Applies only to B6xx4T engines** .

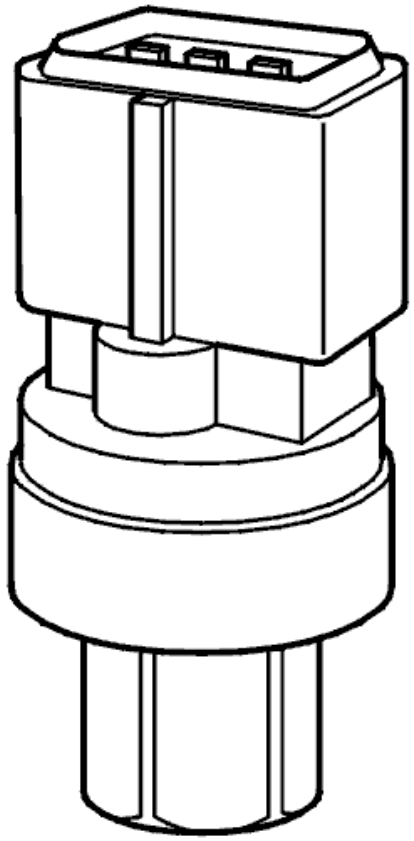

Fig. 302: Front Timing Belt Cover
Courtesy of VOLVO CARS CORPORATION

Lift up the servo reservoir and place it on top of the engine.

WARNING: Seal the cover for the servo reservoir. Check that no oil leaks out.

Servo oil is highly inflammable.

NOTE: Ensure that the timing belt cover has cleared the nipple on the thermostat housing before the cover is pulled up.

Remove:

- the screw for the front timing belt cover. **Applies only to B6xx4T** Cars with chassis number **203779-** see **TIMING COVER FRONT, REPLACING** .
- the timing belt cover. Use a weatherstrip tool.

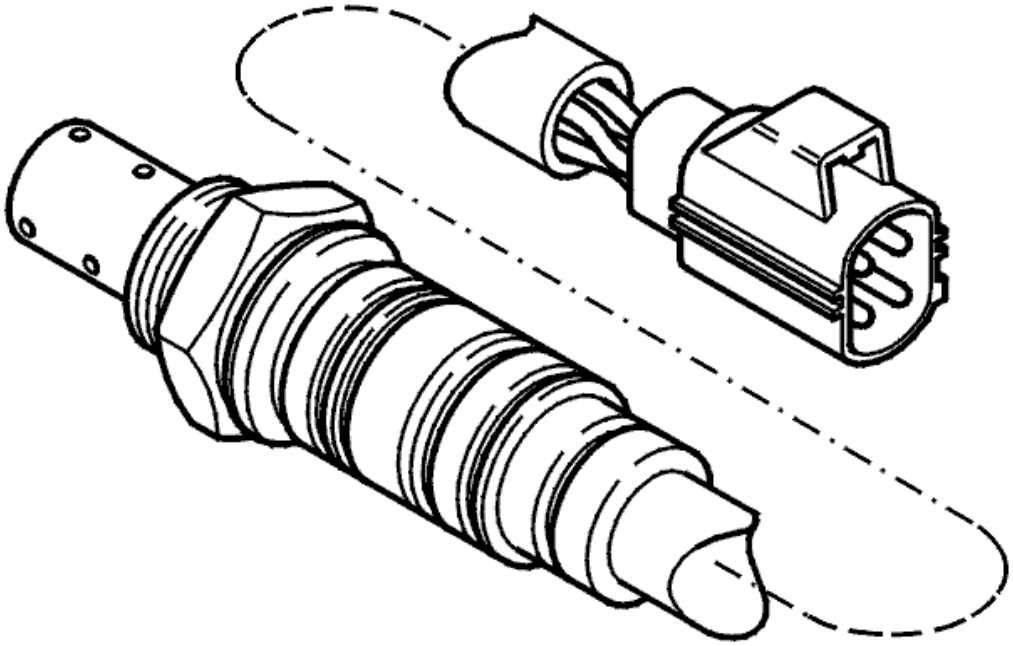

Fig. 303: Identifying Thermostat Housing & Cable Duct
Courtesy of VOLVO CARS CORPORATION

- the thermostat housing cover
- the thermostat.

INSTALLING THE THERMOSTAT

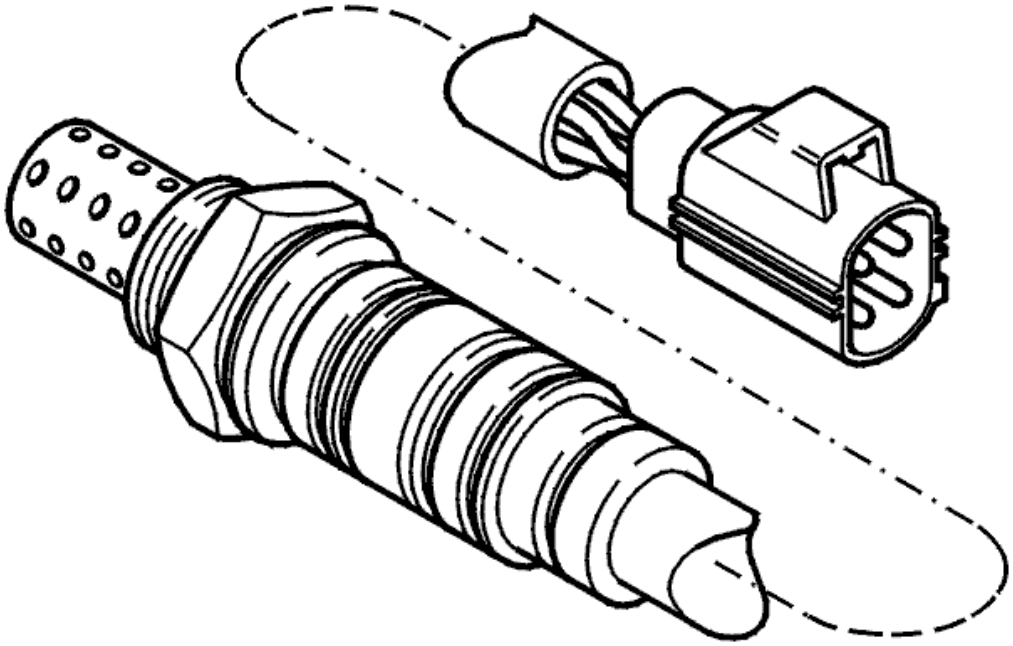

Fig. 304: Front Timing Belt Cover
Courtesy of VOLVO CARS CORPORATION

NOTE: **Clean all mating surfaces. Ensure that no dirt enters the fluid ducts.**

NOTE: **Ensure that the timing belt cover is in position before the cover is pressed in against the rear timing belt cover to prevent damage to the nipple on the thermostat housing.**

Install

- the new thermostat
- the cover of the thermostat housing with a **new gasket** . Tighten to **17 Nm**
- the front timing belt cover. The mudguard over the right drive shaft boot may come loose. If this happens, secure it from underneath
- the screw for the front timing belt cover. Tighten to **12 Nm** . **Applies only to B6xx4T** Cars with chassis number **203779-** see **INSTALLING THE FRONT TIMING COVER** .

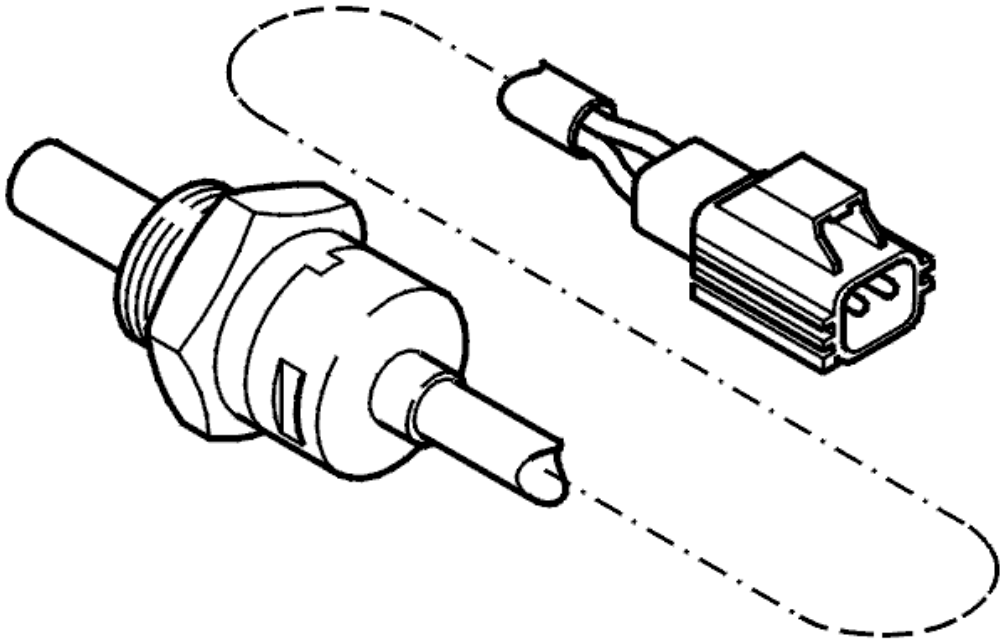

Fig. 305: Identifying Plastic Hoses Between Turbocharger, Charge Air Cooler & Air Cleaner/Turbocharger
Courtesy of VOLVO CARS CORPORATION

- the plastic hoses between the turbocharger (TC) / charge air cooler and the air cleaner (ACL) / turbocharger (TC). **Applies only to B6xx4T engines** .

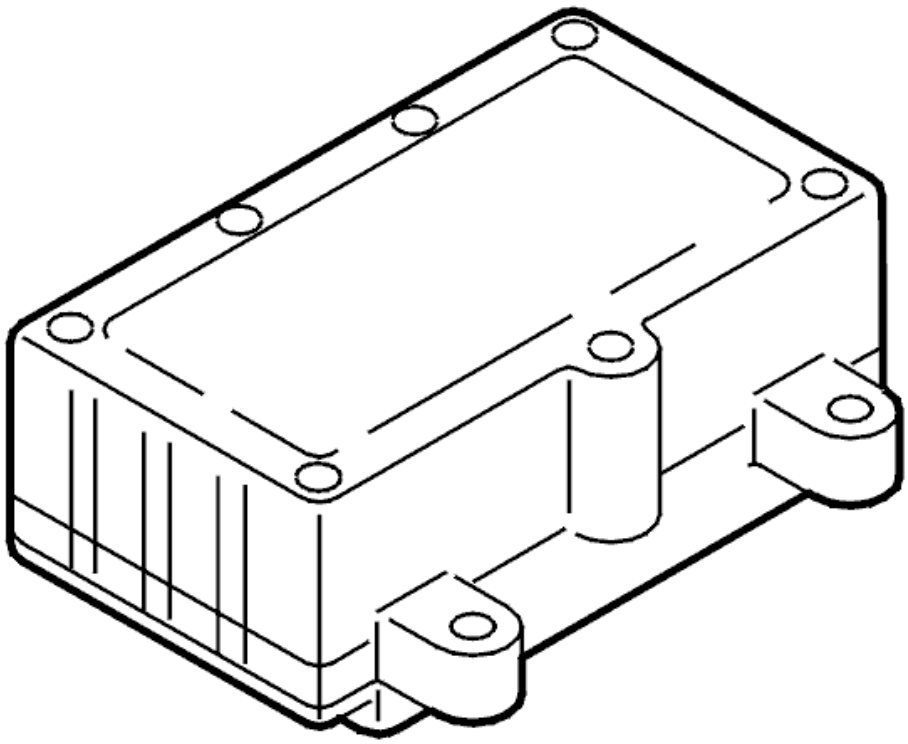

Fig. 306: Identifying Expansion Tank
Courtesy of VOLVO CARS CORPORATION

- the servo reservoir. Check that the hoses are correctly positioned
- the engine stabilizer brace
- the screws holding the engine stabilizer brace to the suspension turrets. Tighten to **50 Nm**
- the screw holding the engine stabilizer brace to the bracket on the engine. Tighten to **80 Nm**
- the clamp holding the return hose for the power steering.

Carry out a function test

Fill with coolant.

Install the cap on the expansion tank.

Test drive the engine until the thermostat has opened.

Top up the coolant if necessary.

ECM-2000: ENGINE COOLANT TEMPERATURE (ECT) SENSOR. SIGNAL TOO HIGH (B5254T2; 2003-2004)

DIAGNOSTIC TROUBLE CODE (DTC) INFORMATION ECM-2000

see **DIAGNOSTIC TROUBLE CODE (DTC) INFORMATION ECM-2000**

SIGNAL TOO HIGH

CHECKING THE WIRING AND COMPONENT

WARNING: Before fault-tracing can begin, the engine cooling fan (FC) connector must be disconnected to prevent the engine cooling fan (FC) engaging. Diagnostic trouble code (DTC) ECM-6110 Engine cooling fan (FC) low-speed signal may be stored. After fault-tracing the connector must be reconnected.

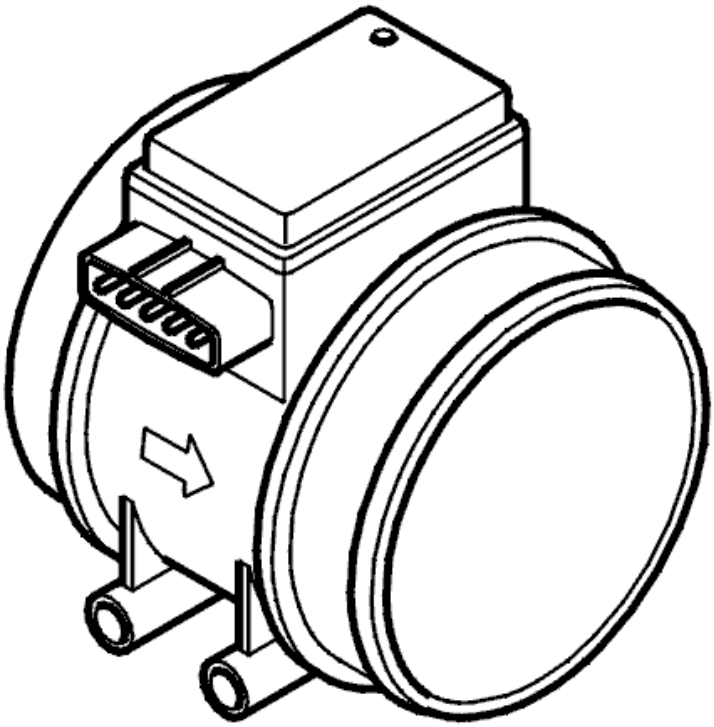

Fig. 307: Identifying Ignition OFF
Courtesy of VOLVO CARS CORPORATION

- Ignition off.

  Check the resistance of the engine coolant temperature (ECT) sensor between terminals #1 and #2 (component side).

  Check the signal cable between control module terminal #A4 (#A4) and engine coolant temperature

(ECT) sensor terminal #1. Check for a short-circuit to ground.

If no faults are found and the fault is permanent, replace the engine coolant temperature (ECT) sensor.

Remedy as necessary.

Other information:

- To connect the breakout box / access the control module, see **CONNECTING THE BREAKOUT BOX**
- For B5xx4T, see **REPLACING THE THERMOSTAT AND/OR ENGINE COOLANT TEMPERATURE SENSOR**
- For B6xx4T, see **ENGINE COOLANT TEMPERATURE (ECT) SENSOR, REPLACING** .
- For resistance values, see **COMPONENT SPECIFICATIONS**
- For 5 cylinder turbocharged engines -2004, see **SIGNAL DESCRIPTION**
- For 5 cylinder turbocharged engines 2005-, see **SIGNAL SPECIFICATION** .
- see **CHECKING WIRING AND TERMINALS** .

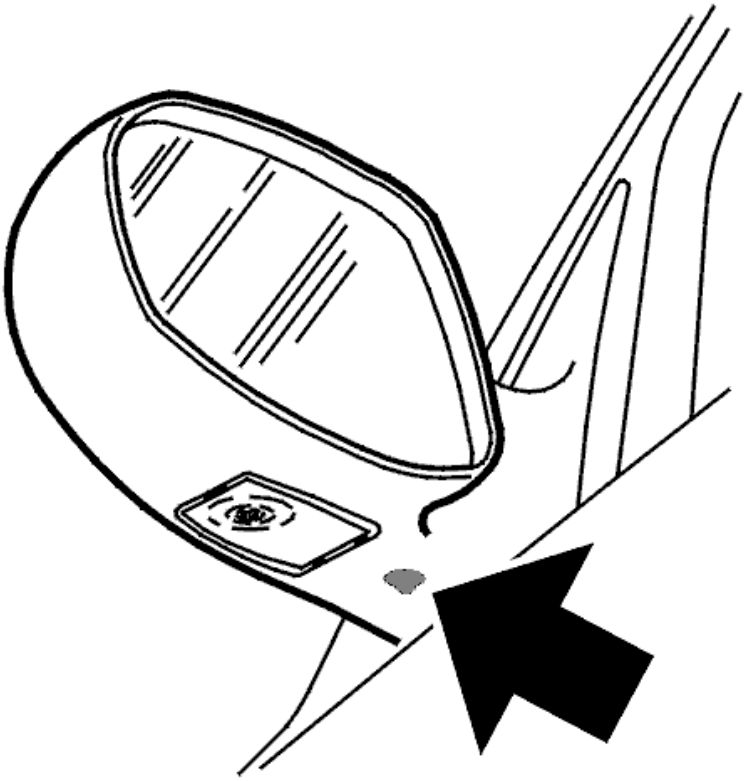

Fig. 308: Identifying 2-Bit Connector
Courtesy of VOLVO CARS CORPORATION

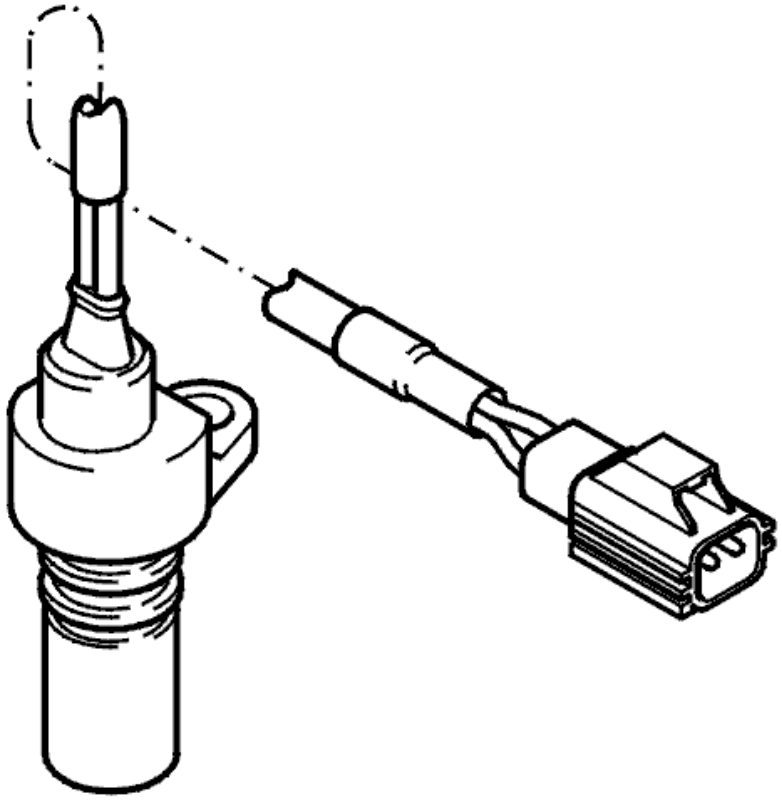

Fig. 309: Identifying Ohm Meter
Courtesy of VOLVO CARS CORPORATION

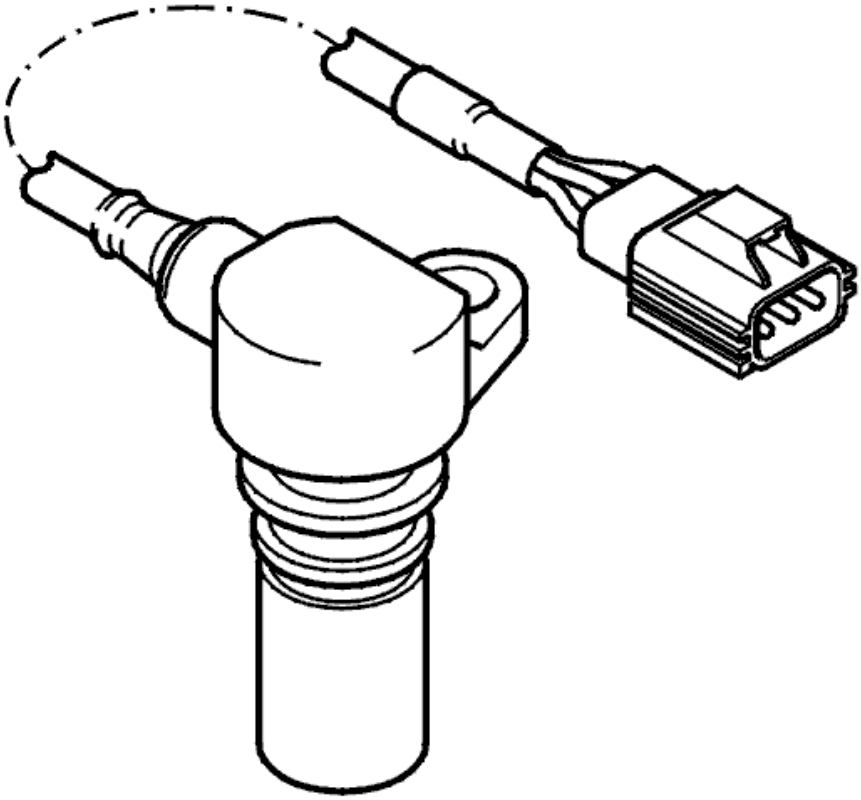

Fig. 310: Identifying 2-Bit Connector Side View
Courtesy of VOLVO CARS CORPORATION

- **Continue**

  Refer to **VERIFICATION**

VERIFICATION

VERIFICATION

HINT: After carrying out the repair, check that the fault has been remedied.

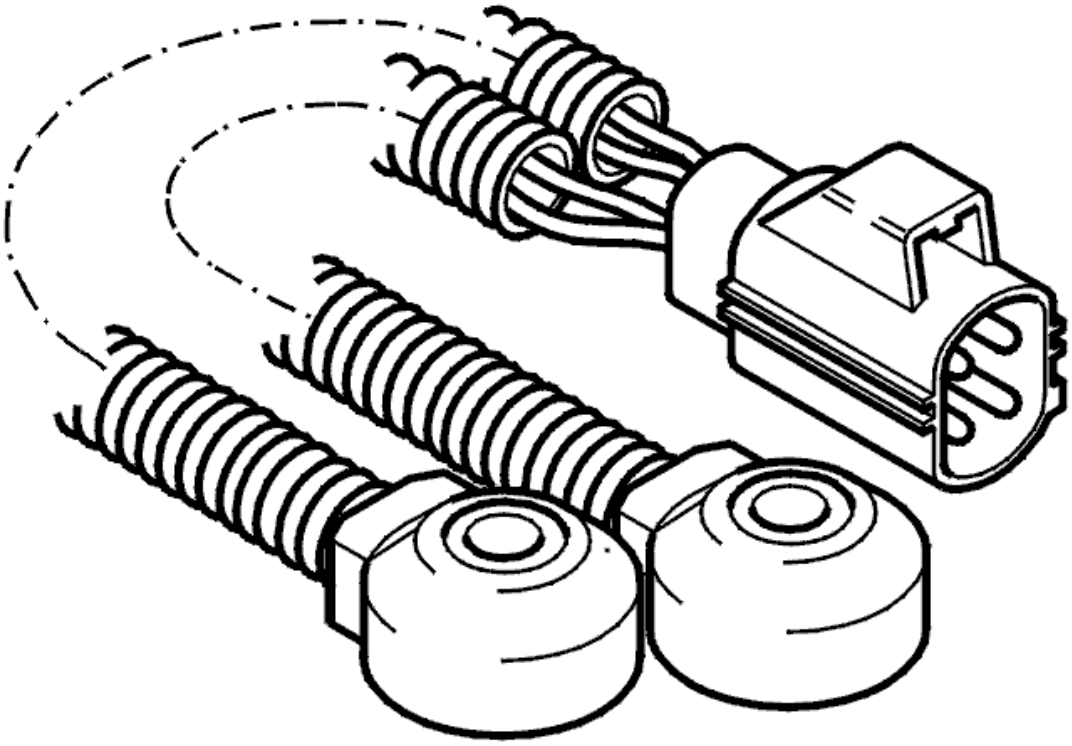

Fig. 311: Identifying Ignition ON
Courtesy of VOLVO CARS CORPORATION

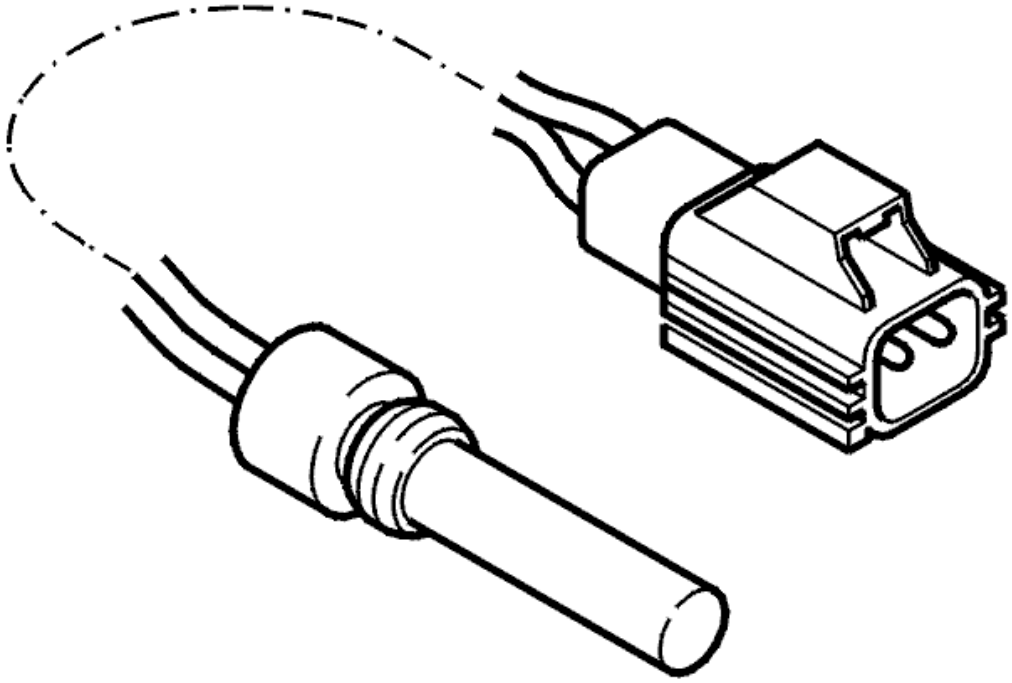

Fig. 312: Connecting Connector
Courtesy of VOLVO CARS CORPORATION

- Ignition off
- Reconnect connectors, reinstall components etc.
- Ignition on
- Read off the engine coolant temperature (ECT) sensor.

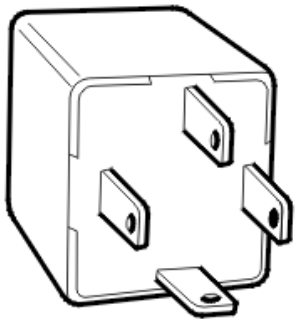

Fig. 313: Identifying VCT2000 Diagnostic Tool Symbol In VIDA
Courtesy of VOLVO CARS CORPORATION

Is the temperature within its permitted range?

- **YES**

  VERIFIED: Troubleshooting has been completed.

- **NO**

  Refer to **INFORMATION**

INFORMATION

FAULT-TRACING INFORMATION

The fault should have been detected and remedied. As this is not the case fault-tracing has failed.

Exit fault-tracing for this diagnostic trouble code (DTC) or make another attempt.

ECM-2000: ENGINE COOLANT TEMPERATURE (ECT) SENSOR. SIGNAL TOO HIGH. INTERMITTENT FAULT (B6294T; 2003-2004)

DIAGNOSTIC TROUBLE CODE (DTC) INFORMATION

see **DIAGNOSTIC TROUBLE CODE (DTC) INFORMATION**

SIGNAL TOO HIGH. INTERMITTENT FAULT

CHECKING WIRING AND CONNECTORS

WARNING: **Before fault-tracing can begin, the engine cooling fan (FC) connector must be disconnected to prevent the engine cooling fan (FC) engaging. Diagnostic trouble code (DTC) ECM-6120 Engine cooling fan (FC) control module may be stored. After fault-tracing the connector must be reconnected.**

Check the signal cable between control module terminal #A4 (#A4) and engine coolant temperature (ECT) sensor terminal #1. Check for an intermittent short-circuit to ground.

Other information

- To connect the breakout box / access the control module, see **CONNECTING THE BREAKOUT BOX**
- For B5xx4T, see **REPLACING THE THERMOSTAT AND/OR ENGINE COOLANT TEMPERATURE SENSOR**
- For B6xx4T, see **ENGINE COOLANT TEMPERATURE (ECT) SENSOR, REPLACING** .
- For resistance values, see **COMPONENT SPECIFICATIONS**
- For 6 cylinder engines -2004, see **SIGNAL SPECIFICATION**

- For 6 cylinder engines 2005-, see **SIGNAL SPECIFICATION** .
- see **CHECKING WIRING AND TERMINALS** .

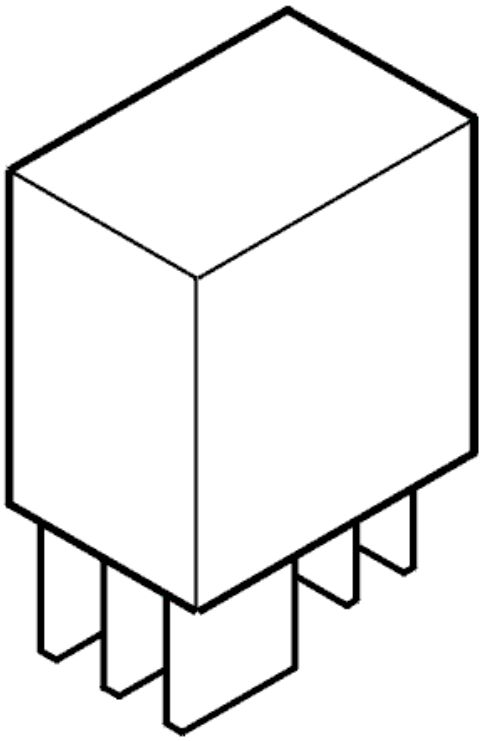

Fig. 314: Identifying Camshaft Reset Valve Connector Terminals
Courtesy of VOLVO CARS CORPORATION

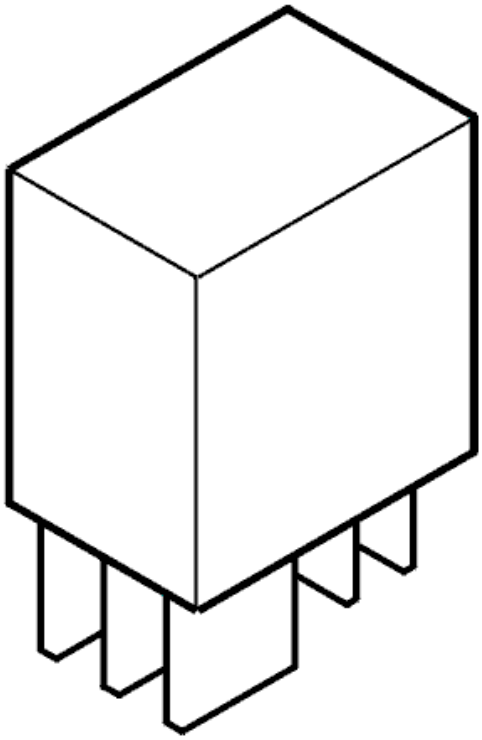

Fig. 315: Identifying Ohm Meter
Courtesy of VOLVO CARS CORPORATION

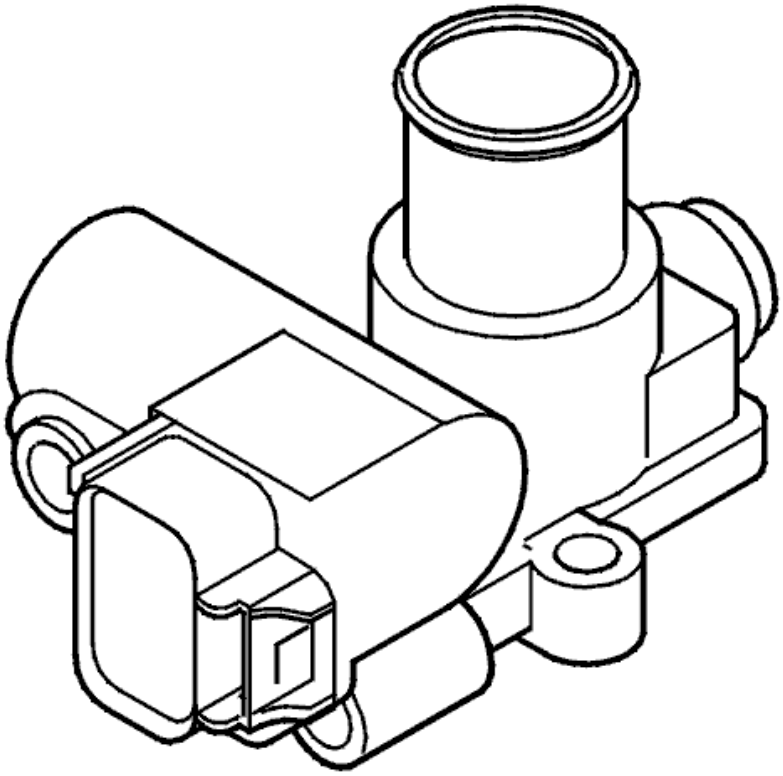

Fig. 316: Identifying Engine Coolant Temperature Sensor
Courtesy of VOLVO CARS CORPORATION

- **Continue**

  Refer to **INFORMATION**

INFORMATION

FAULT-TRACING INFORMATION

If the fault is intermittent, do not verify fault-tracing if the fault does not recur.

It is possible to view the information again, or leave fault-tracing for this diagnostic trouble code (DTC).

ECM-2000: ENGINE COOLANT TEMPERATURE (ECT) SENSOR. SIGNAL TOO HIGH. PERMANENT FAULT (B6294T; 2003-2004)

DIAGNOSTIC TROUBLE CODE (DTC) INFORMATION

see **DIAGNOSTIC TROUBLE CODE (DTC) INFORMATION**

SIGNAL TOO HIGH. PERMANENT FAULT

CHECKING THE WIRING AND COMPONENT

> WARNING: **Before fault-tracing can begin, the engine cooling fan (FC) connector must be disconnected to prevent the engine cooling fan (FC) engaging. Diagnostic trouble code (DTC) ECM-6120 Engine cooling fan (FC) control module may be stored. After fault-tracing the connector must be reconnected.**

Check the resistance of the engine coolant temperature (ECT) sensor.

Check the signal cable between control module terminal #A4 (#A4) and engine coolant temperature (ECT) sensor terminal #1. Check for a short-circuit to ground.

Remedy as necessary.

Other information

- To connect the breakout box / access the control module, see **CONNECTING THE BREAKOUT BOX**
- For B5xx4T, see **REPLACING THE THERMOSTAT AND/OR ENGINE COOLANT TEMPERATURE SENSOR**
- For B6xx4T, see **ENGINE COOLANT TEMPERATURE (ECT) SENSOR, REPLACING** .
- For resistance values, see **COMPONENT SPECIFICATIONS**
- For 6 cylinder engines -2004, see **SIGNAL SPECIFICATION**
- For 6 cylinder engines 2005-, see **SIGNAL SPECIFICATION** .
- see **CHECKING WIRING AND TERMINALS** .

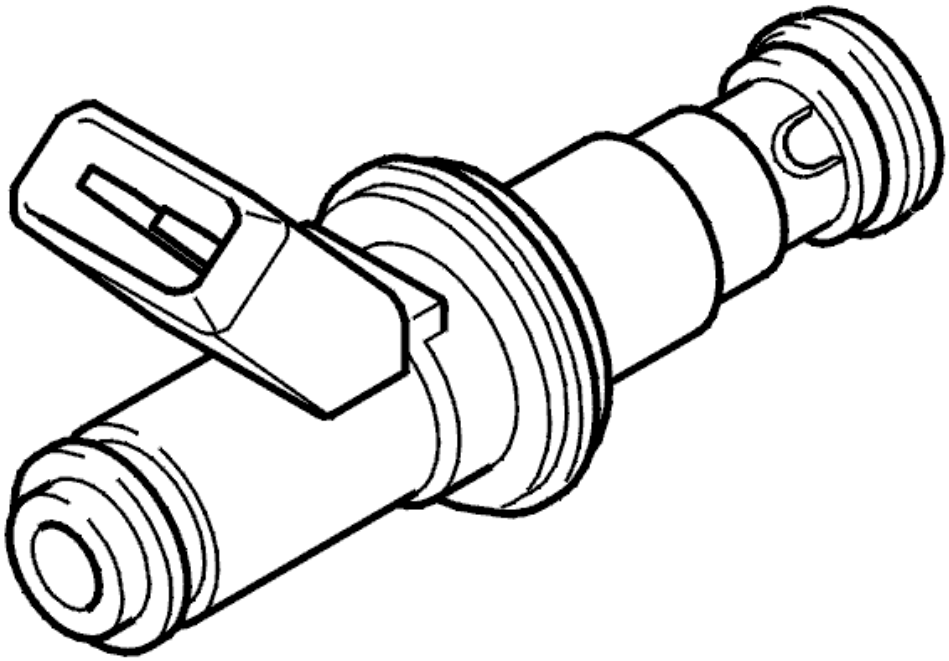

Fig. 317: Identifying Camshaft Reset Valve Connector Terminals
Courtesy of VOLVO CARS CORPORATION

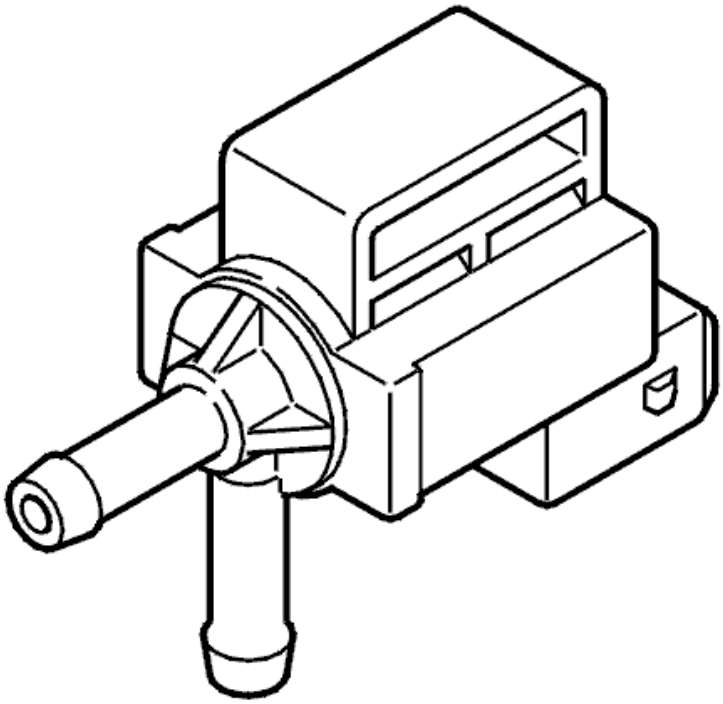

Fig. 318: Identifying Ohm Meter
Courtesy of VOLVO CARS CORPORATION

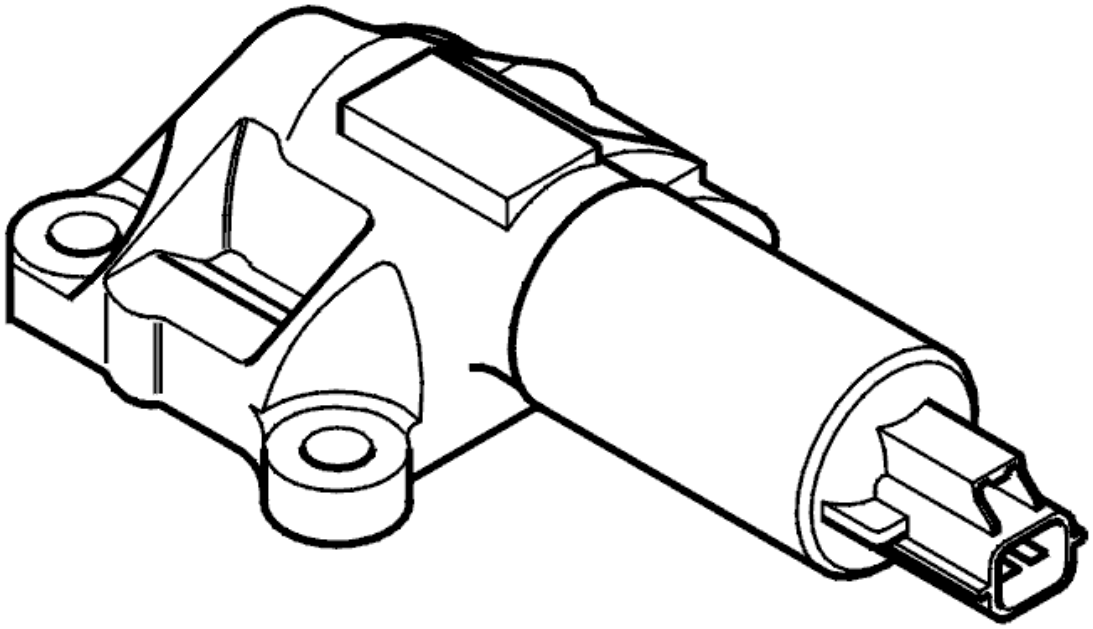

Fig. 319: Identifying Engine Coolant Temperature Sensor
Courtesy of VOLVO CARS CORPORATION

- **Continue**

  Refer to **VERIFICATION**

VERIFICATION

VERIFICATION

HINT: After carrying out the repair, check that the fault has been remedied.

Fig. 320: Identifying Ignition ON
Courtesy of VOLVO CARS CORPORATION

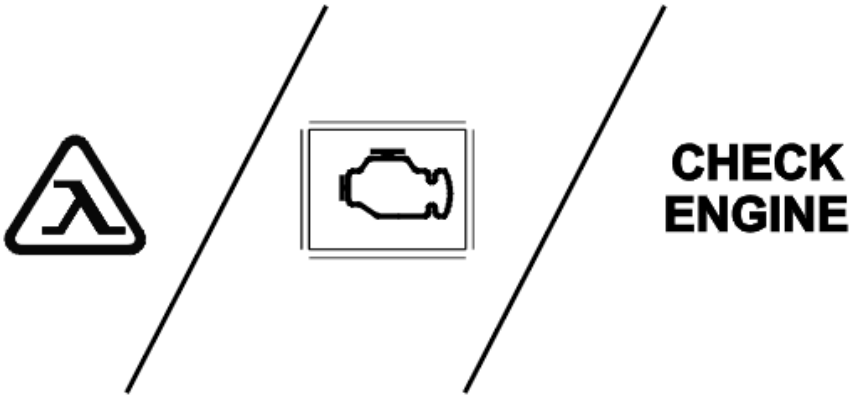

Fig. 321: Connecting Connector
Courtesy of VOLVO CARS CORPORATION

- Ignition off
- Reconnect the connectors, reinstall components etc.
- Ignition on
- Read off the engine coolant temperature (ECT) sensor.

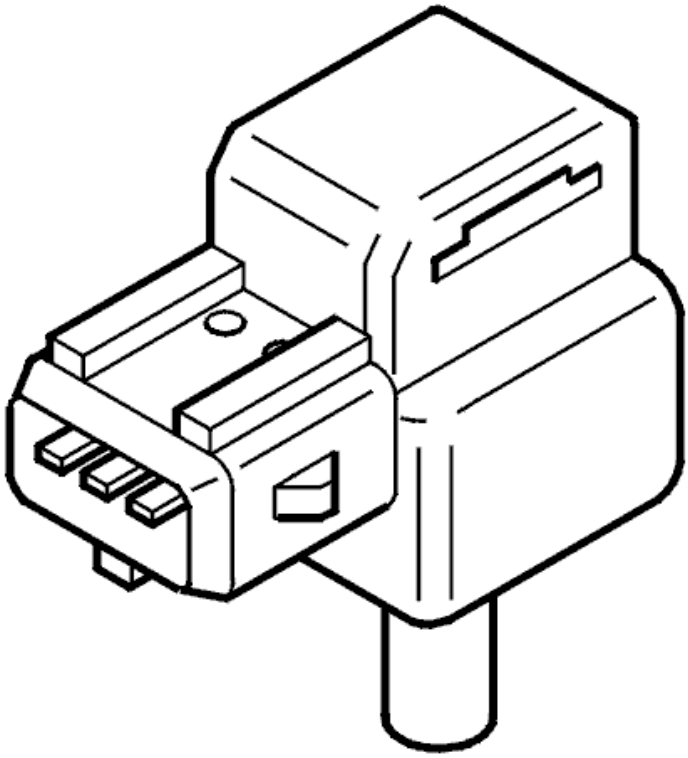

Fig. 322: Identifying VCT2000 Diagnostic Tool Symbol In VIDA
Courtesy of VOLVO CARS CORPORATION

Is the temperature within its permitted range?

- **YES**

  VERIFIED: Troubleshooting has been completed.

- **NO**

  Refer to **INFORMATION**

INFORMATION

FAULT-TRACING INFORMATION

The fault should have been detected and remedied. As this is not the case fault-tracing has failed.

Exit fault-tracing for this diagnostic trouble code (DTC) or make another attempt.

ECM-2000: ENGINE COOLANT TEMPERATURE (ECT) SENSOR. SIGNAL TOO LOW (B5254T2; 2003-2004)

DIAGNOSTIC TROUBLE CODE (DTC) INFORMATION ECM-2000

see **DIAGNOSTIC TROUBLE CODE (DTC) INFORMATION ECM-2000**

SIGNAL TOO LOW

CHECKING THE CONNECTOR

WARNING: Before fault-tracing can begin, the engine cooling fan (FC) connector must be disconnected to prevent the engine cooling fan (FC) engaging. Diagnostic trouble code (DTC) ECM-6110 Engine cooling fan (FC) low-speed signal may be stored. After fault-tracing the connector must be reconnected.

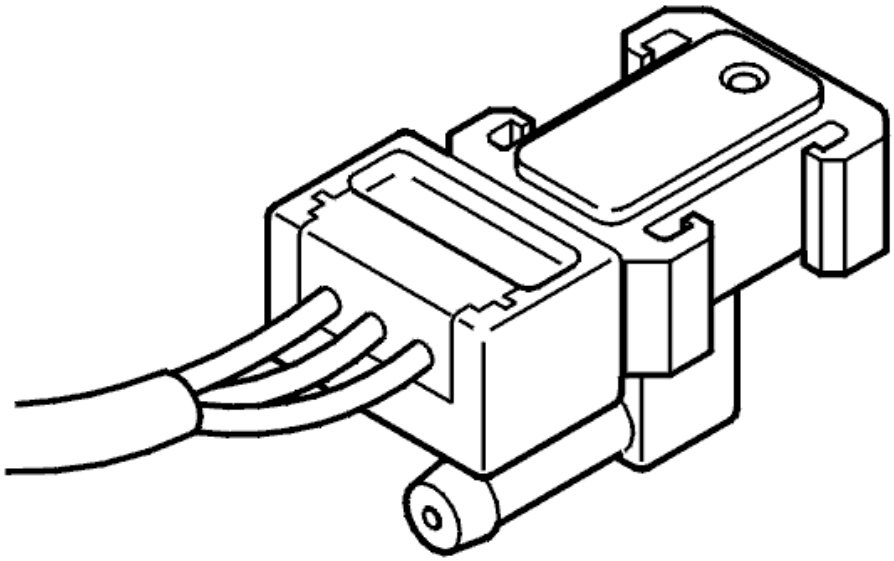

Fig. 323: Identifying Ignition ON
Courtesy of VOLVO CARS CORPORATION

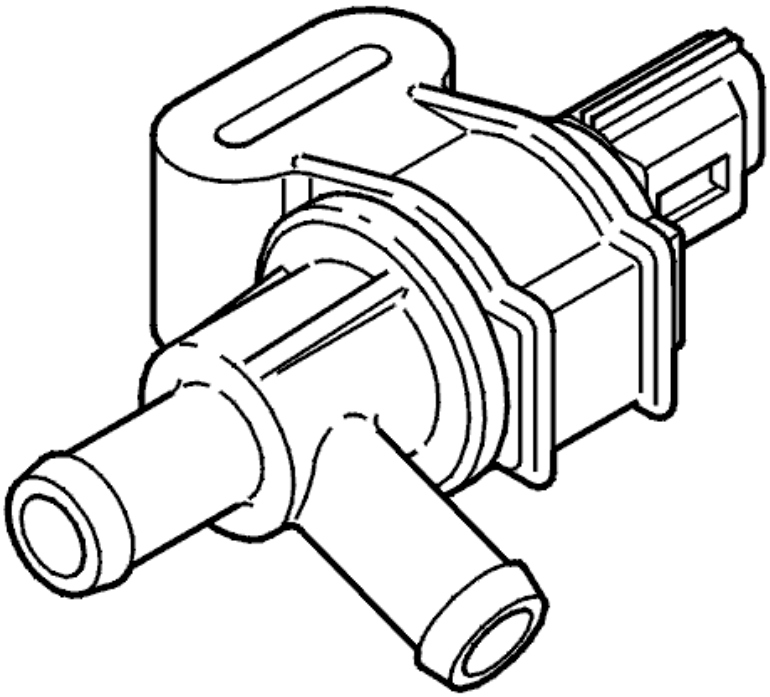

Fig. 324: Connecting Connector
Courtesy of VOLVO CARS CORPORATION

- Ignition off
- Check the connector on the engine coolant temperature (ECT) sensor. Check for contact resistance and oxidation
- Reinstall the components, reconnect the connectors etc.
- Ignition on
- Read off the engine coolant temperature (ECT) sensor.

  If the temperature is now within its permitted range, the fault was caused by loose connections in the connector.

  Other information

  - see **CHECKING WIRING AND TERMINALS**
  - For B5xx4T, see **REPLACING THE THERMOSTAT AND/OR ENGINE COOLANT TEMPERATURE SENSOR**
  - For B6xx4T, see **ENGINE COOLANT TEMPERATURE (ECT) SENSOR, REPLACING** .

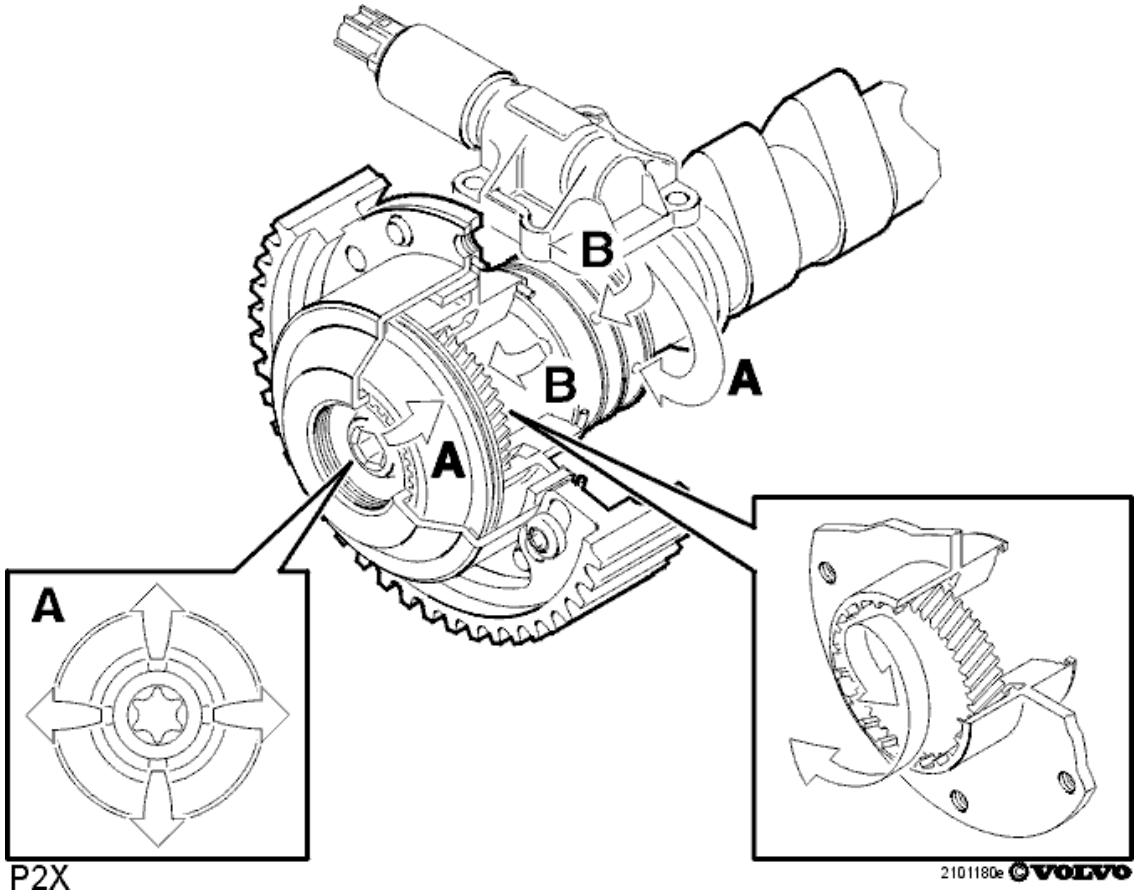

Fig. 325: Identifying 2-Bit Connector
Courtesy of VOLVO CARS CORPORATION

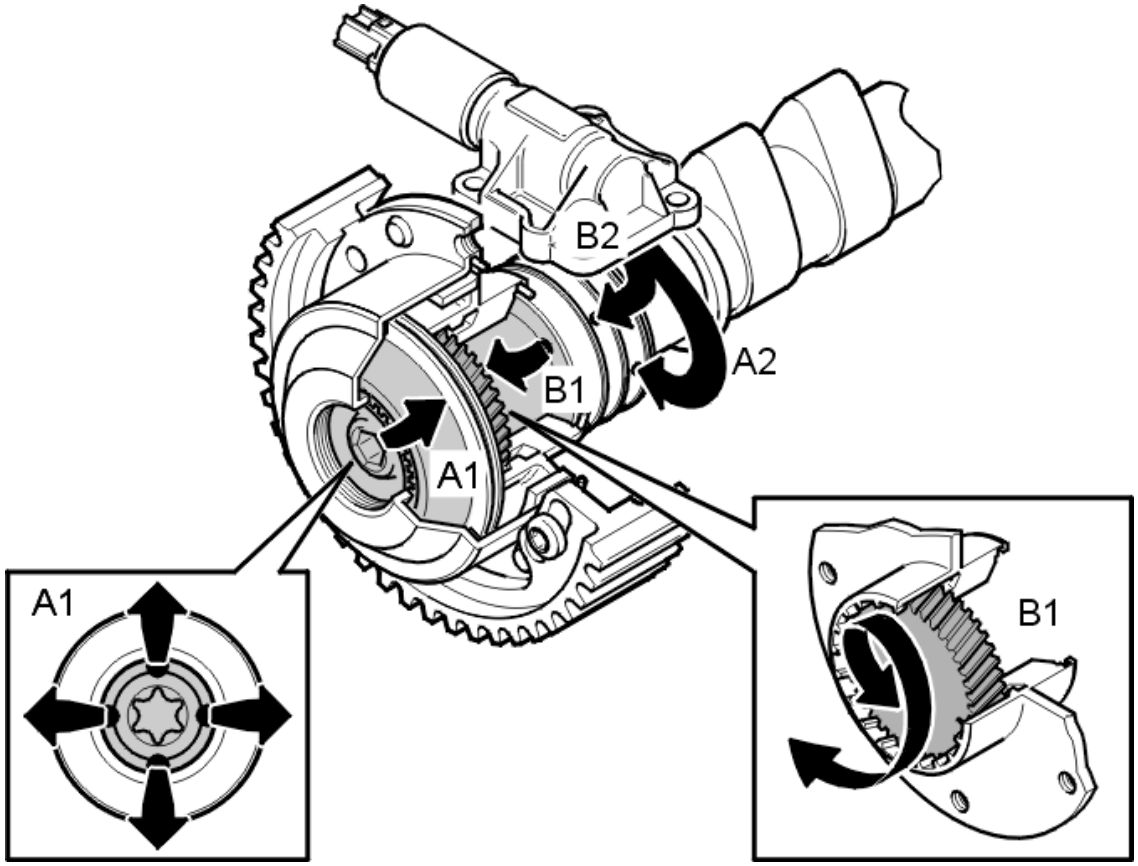

Fig. 326: Identifying VCT2000 Diagnostic Tool Symbol In VIDA
Courtesy of VOLVO CARS CORPORATION

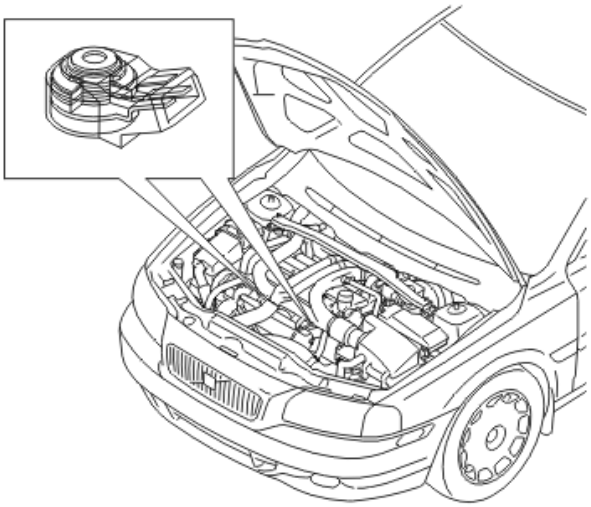

Fig. 327: Identifying 2-Bit Connector Side View
Courtesy of VOLVO CARS CORPORATION

Is the temperature within its permitted range?

- **YES**

  OKAY: Troubleshooting has been completed.

- **NO**

  Refer to **CHECKING THE WIRING AND COMPONENT**

CHECKING THE WIRING AND COMPONENT

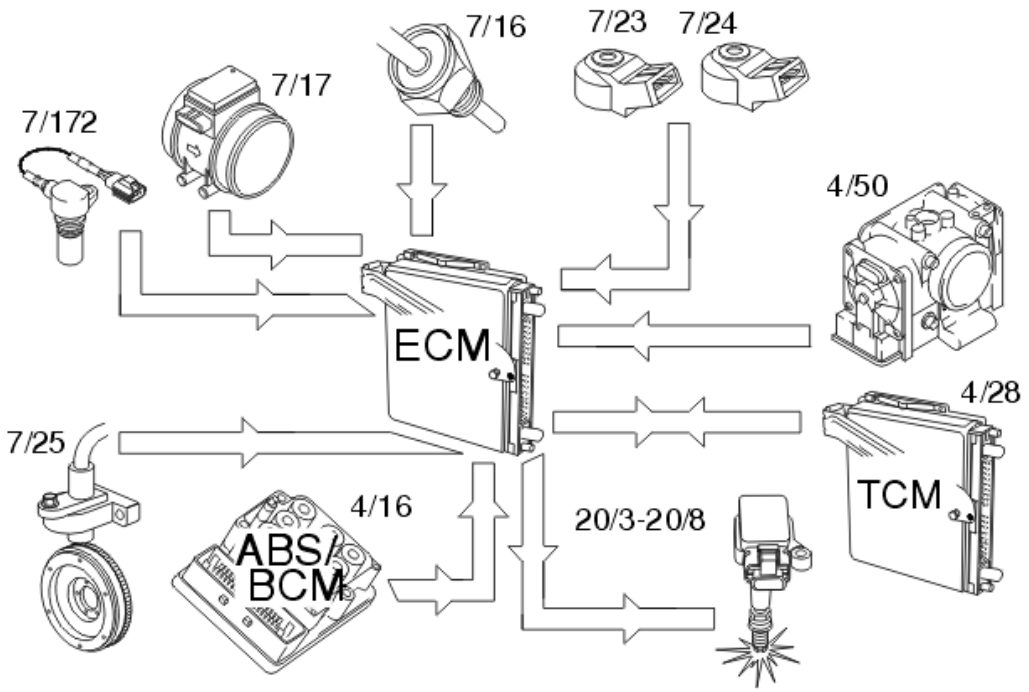

Fig. 328: Identifying Ignition OFF
Courtesy of VOLVO CARS CORPORATION

- Ignition off.

  Check the resistance of the engine coolant temperature (ECT) sensor between terminals #1 and #2 (component side).

  NOTE: The engine coolant temperature (ECT) sensor may be defective as a result of the signal cable having been short-circuited to supply voltage. Check this before replacing the sensor.

  Check the signal cable between control module terminal #A4 (#A4) and engine coolant temperature (ECT) sensor terminal #1. Check for an open-circuit. Check for a short-circuit to supply voltage.

  HINT: With the ignition on and engine coolant temperature (ECT) sensor connector disconnected the voltage between terminal #1 and ground terminal should be approximately 5 V.

Check the ground lead between control module terminal #A60 (#A60) and engine coolant temperature (ECT) sensor terminal #2. Check for an open-circuit.

If no faults are found and the fault is permanent, replace the engine coolant temperature (ECT) sensor.

Remedy as necessary.

Other information

- To connect the breakout box / access the control module, see **CONNECTING THE BREAKOUT BOX**
- For B5xx4T, see **REPLACING THE THERMOSTAT AND/OR ENGINE COOLANT TEMPERATURE SENSOR**
- For B6xx4T, see **ENGINE COOLANT TEMPERATURE (ECT) SENSOR, REPLACING** .
- For resistance values, see **COMPONENT SPECIFICATIONS**
- For 5 cylinder turbocharged engines -2004, see **SIGNAL DESCRIPTION**
- For 5 cylinder turbocharged engines 2005-, see **SIGNAL SPECIFICATION** .
- see **CHECKING WIRING AND TERMINALS** .

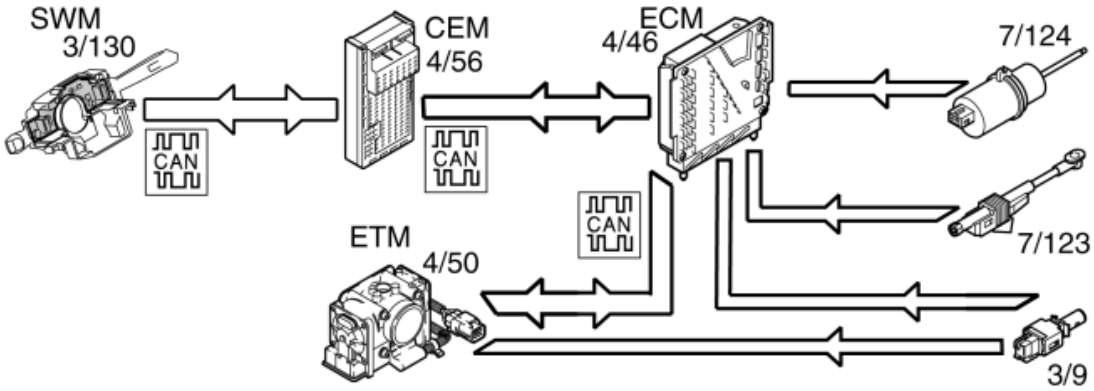

Fig. 329: Identifying 2-Bit Connector
Courtesy of VOLVO CARS CORPORATION

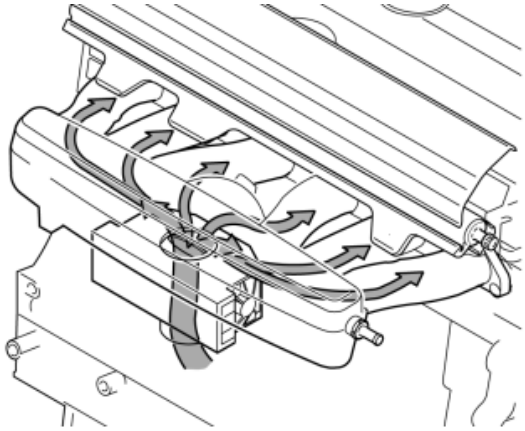

Fig. 330: Identifying Ohm Meter
Courtesy of VOLVO CARS CORPORATION

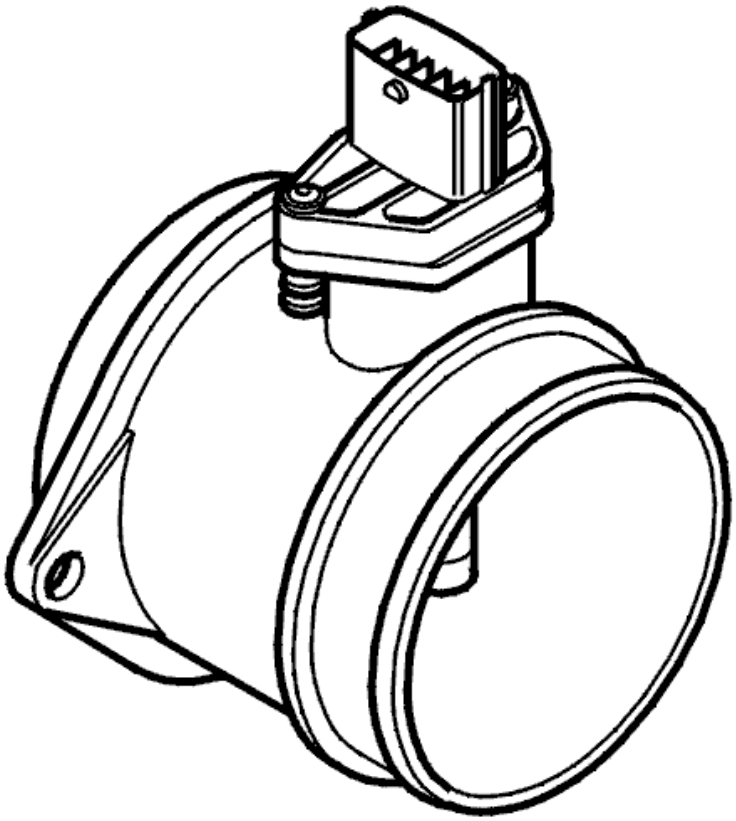

Fig. 331: Identifying 2-Bit Connector Side View
Courtesy of VOLVO CARS CORPORATION

- **Continue**

Refer to **VERIFICATION**

VERIFICATION

VERIFICATION

HINT: After carrying out the repair, check that the fault has been remedied.

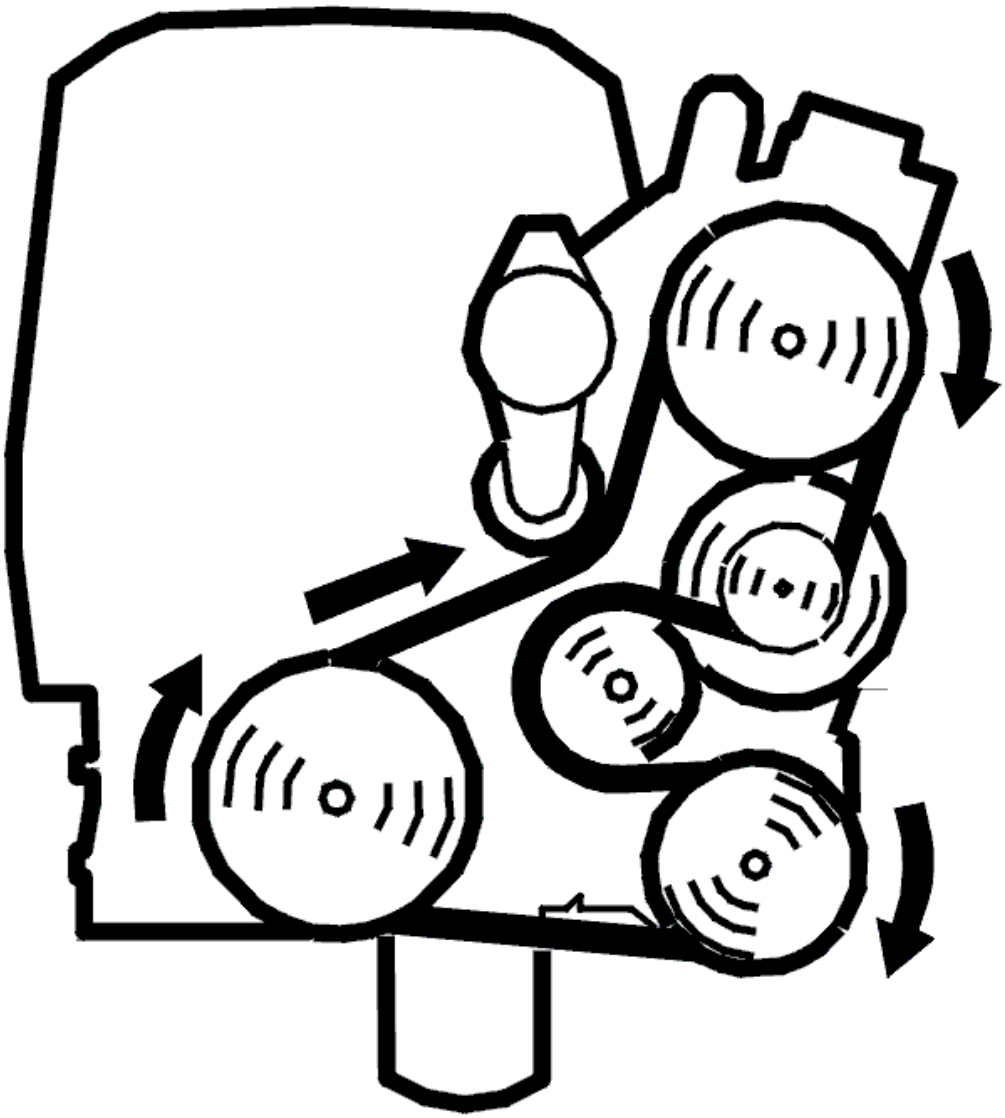

Fig. 332: Identifying Ignition ON
Courtesy of VOLVO CARS CORPORATION

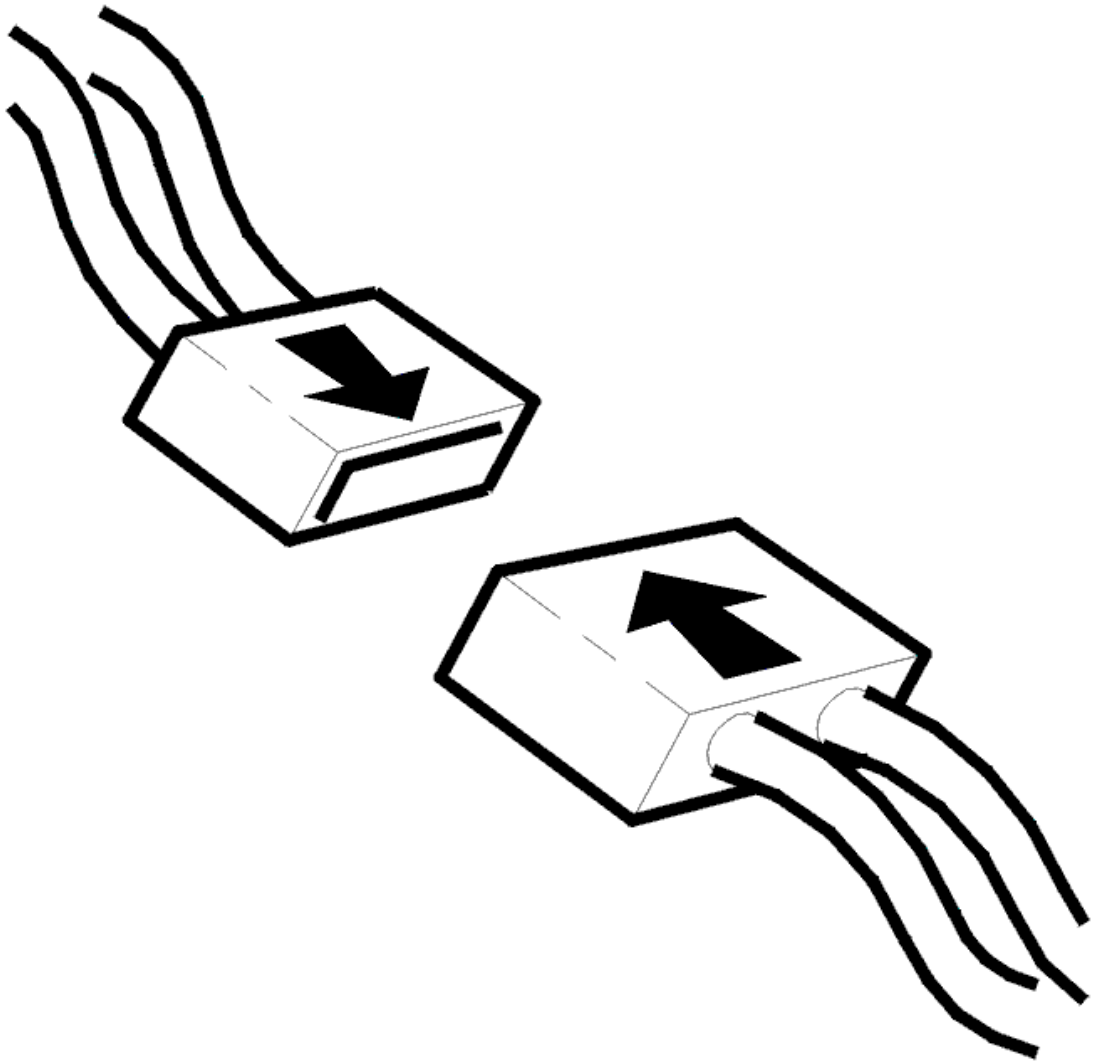

Fig. 333: Connecting Connector
Courtesy of VOLVO CARS CORPORATION

- Ignition off
- Reconnect connectors, reinstall components etc.
- Ignition on
- Read off the engine coolant temperature (ECT) sensor.

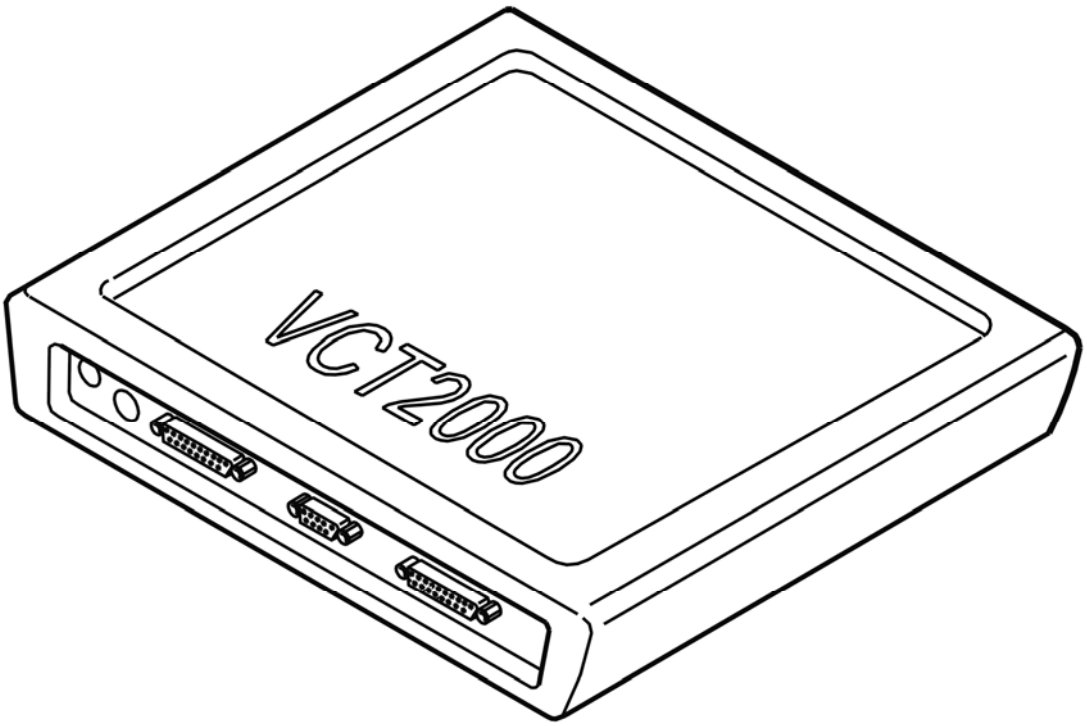

Fig. 334: Identifying VCT2000 Diagnostic Tool Symbol In VIDA
Courtesy of VOLVO CARS CORPORATION

Is the temperature within its permitted range?

- **YES**

  VERIFIED: Troubleshooting has been completed.

- **NO**

  Refer to **INFORMATION**

INFORMATION

FAULT-TRACING INFORMATION

The fault should have been detected and remedied. As this is not the case fault-tracing has failed.

Exit fault-tracing for this diagnostic trouble code (DTC) or make another attempt.

ECM-2000: ENGINE COOLANT TEMPERATURE (ECT) SENSOR. SIGNAL TOO LOW. INTERMITTENT FAULT (B6294T; 2003-2004)

DIAGNOSTIC TROUBLE CODE (DTC) INFORMATION

see **DIAGNOSTIC TROUBLE CODE (DTC) INFORMATION**

SIGNAL TOO LOW. INTERMITTENT FAULT

CHECKING WIRING AND CONNECTORS

WARNING: Before fault-tracing can begin, the engine cooling fan (FC) connector must be disconnected to prevent the engine cooling fan (FC) engaging. Diagnostic trouble code (DTC) ECM-6120 Engine cooling fan (FC) control module may be stored. After fault-tracing the connector must be reconnected.

Check the signal cable between control module terminal #A4 (#A4) and engine coolant temperature (ECT) sensor terminal #1. Check for an intermittent open-circuit. Check for an intermittent short-circuit to supply voltage.

HINT: With the ignition on and engine coolant temperature (ECT) sensor connector disconnected the voltage between terminal #1 and ground terminal should be approximately 5 V.

Check the ground lead between control module terminal #A60 (#A60) and engine coolant temperature (ECT) sensor terminal #2. Check for an intermittent open-circuit.

Other information

- To connect the breakout box / access the control module, see **CONNECTING THE BREAKOUT BOX**
- For B5xx4T, see **REPLACING THE THERMOSTAT AND/OR ENGINE COOLANT TEMPERATURE SENSOR**
- For B6xx4T, see **ENGINE COOLANT TEMPERATURE (ECT) SENSOR, REPLACING** .
- For the resistance values, see **COMPONENT SPECIFICATIONS**
- For 6 cylinder engines -2004, see **SIGNAL SPECIFICATION**
- For 6 cylinder engines 2005-, see **SIGNAL SPECIFICATION** .
- see **CHECKING WIRING AND TERMINALS** .

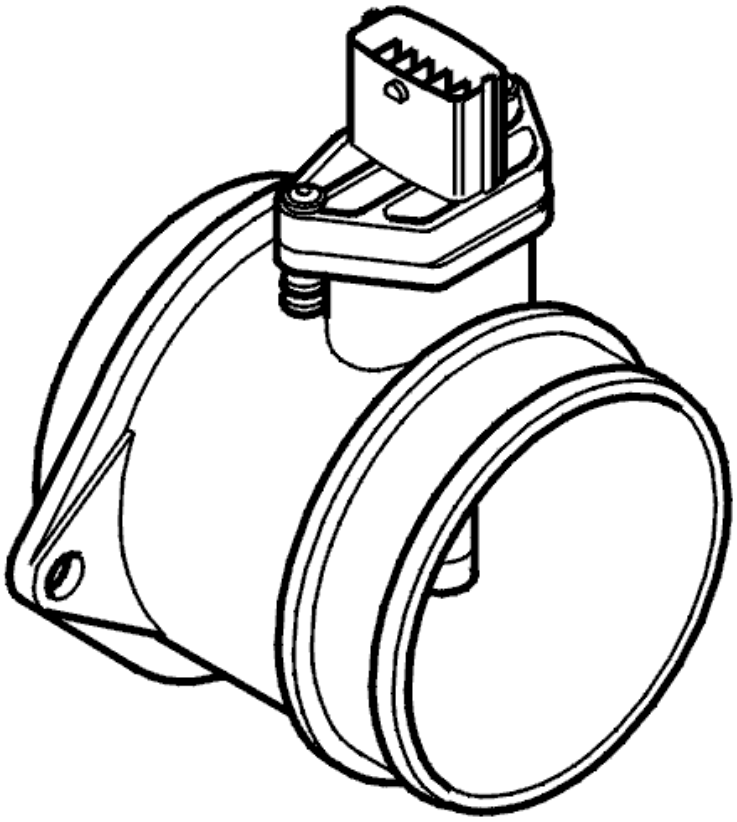

Fig. 335: Identifying Camshaft Reset Valve Connector Terminals
Courtesy of VOLVO CARS CORPORATION

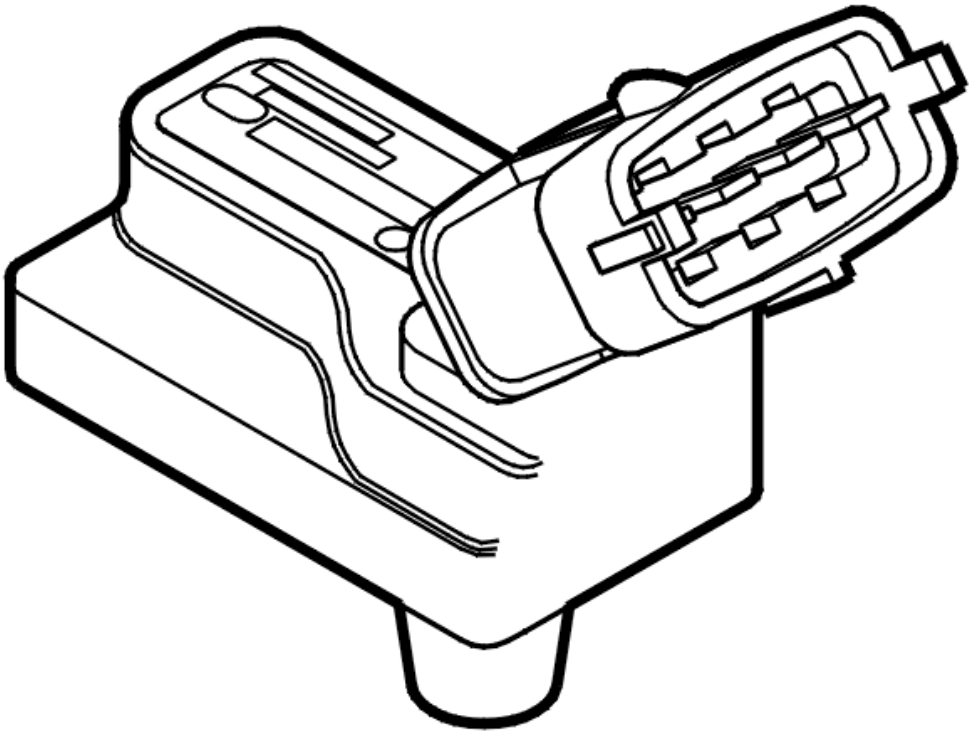

Fig. 336: Identifying Ohm Meter
Courtesy of VOLVO CARS CORPORATION

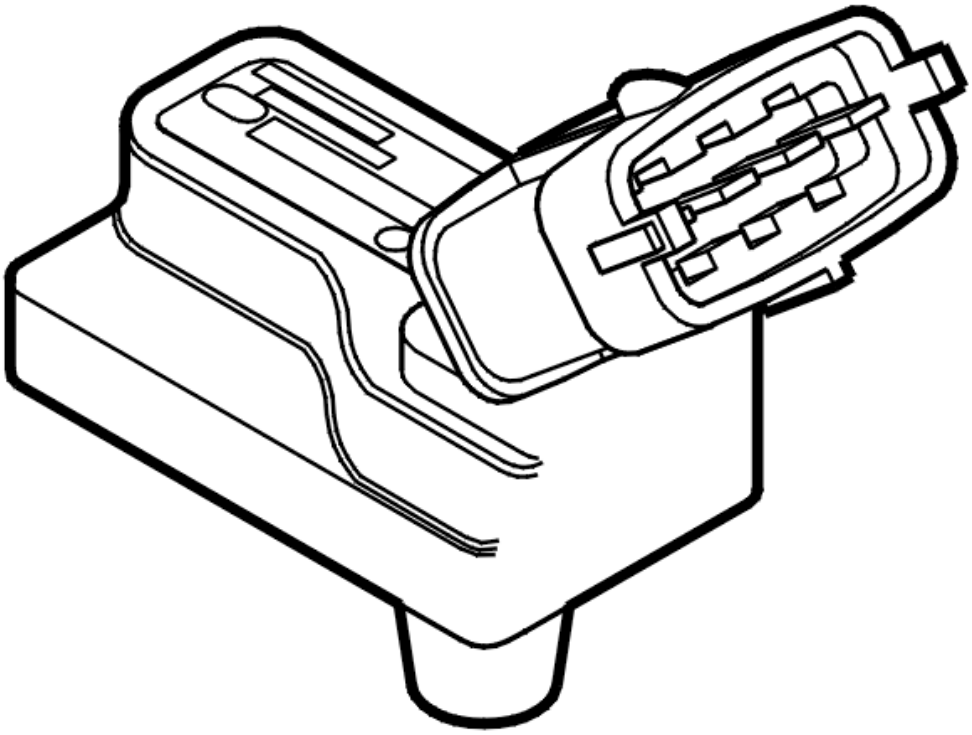

Fig. 337: Identifying Engine Coolant Temperature Sensor
Courtesy of VOLVO CARS CORPORATION

- **Continue**

  Refer to **INFORMATION**

INFORMATION

FAULT-TRACING INFORMATION

If the fault is intermittent, do not verify fault-tracing if the fault does not recur.

It is possible to view the information again, or leave fault-tracing for this diagnostic trouble code (DTC).

ECM-2000: ENGINE COOLANT TEMPERATURE (ECT) SENSOR. SIGNAL TOO LOW. PERMANENT FAULT (B6294T; 2003-2004)

DIAGNOSTIC TROUBLE CODE (DTC) INFORMATION

see **DIAGNOSTIC TROUBLE CODE (DTC) INFORMATION**

SIGNAL TOO LOW. PERMANENT FAULT

CHECKING THE CONNECTOR

WARNING: Before fault-tracing can begin, the engine cooling fan (FC) connector must be disconnected to prevent the engine cooling fan (FC) engaging. Diagnostic trouble code (DTC) ECM-6110 Engine cooling fan (FC) control module may be stored. After fault-tracing the connector must be reconnected.

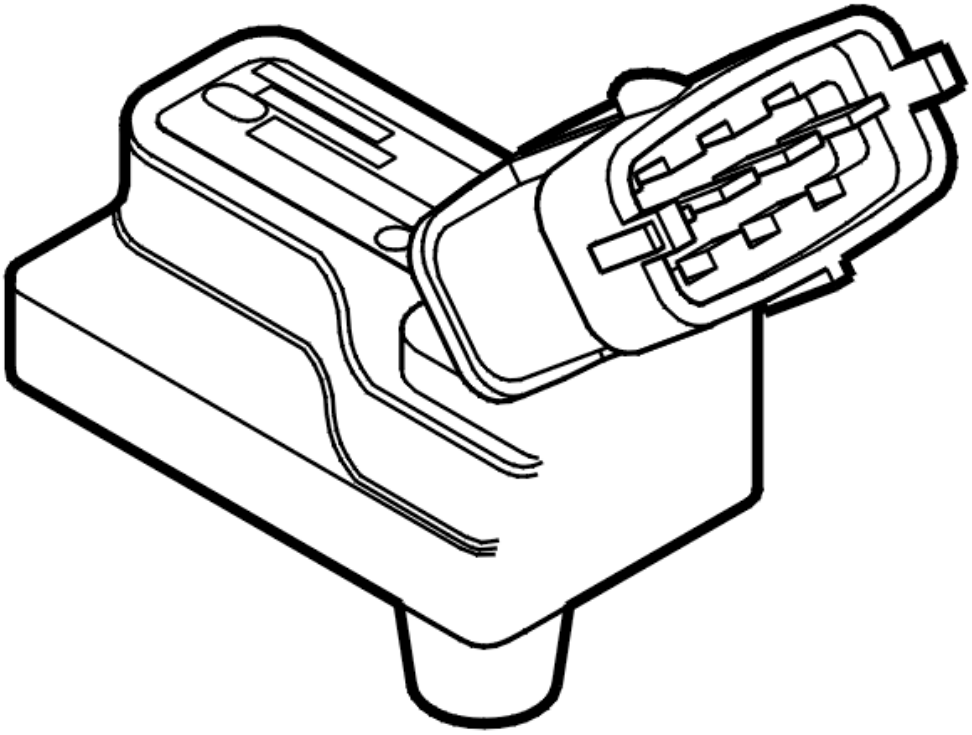

Fig. 338: Identifying Ignition ON
Courtesy of VOLVO CARS CORPORATION

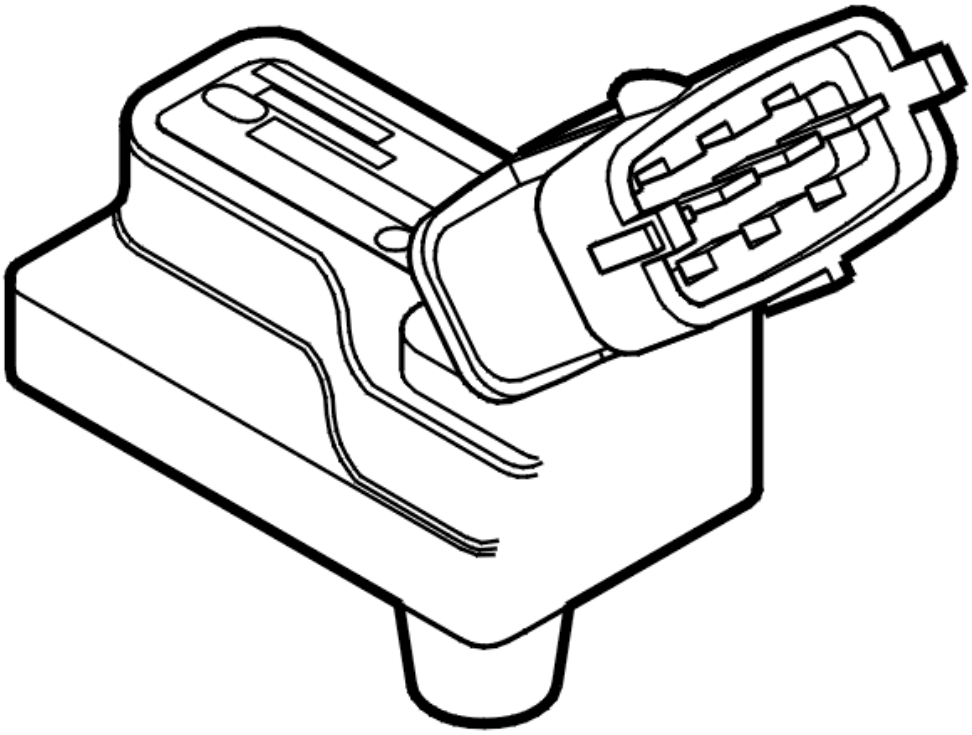

Fig. 339: Connecting Connector
Courtesy of VOLVO CARS CORPORATION

- Ignition off
- Check the engine coolant temperature (ECT) sensor connector. Check for contact resistance and oxidation
- Reinstall the components, reconnect the connectors etc.
- Ignition on
- Read off the engine coolant temperature (ECT) sensor.

  If the temperature is now within its permitted range, the fault was caused by loose connections in the connector.

  Other information

  - For B5xx4T, see **REPLACING THE THERMOSTAT AND/OR ENGINE COOLANT TEMPERATURE SENSOR**
  - For B6xx4T, see **ENGINE COOLANT TEMPERATURE (ECT) SENSOR, REPLACING** .
  - see **CHECKING WIRING AND TERMINALS** .

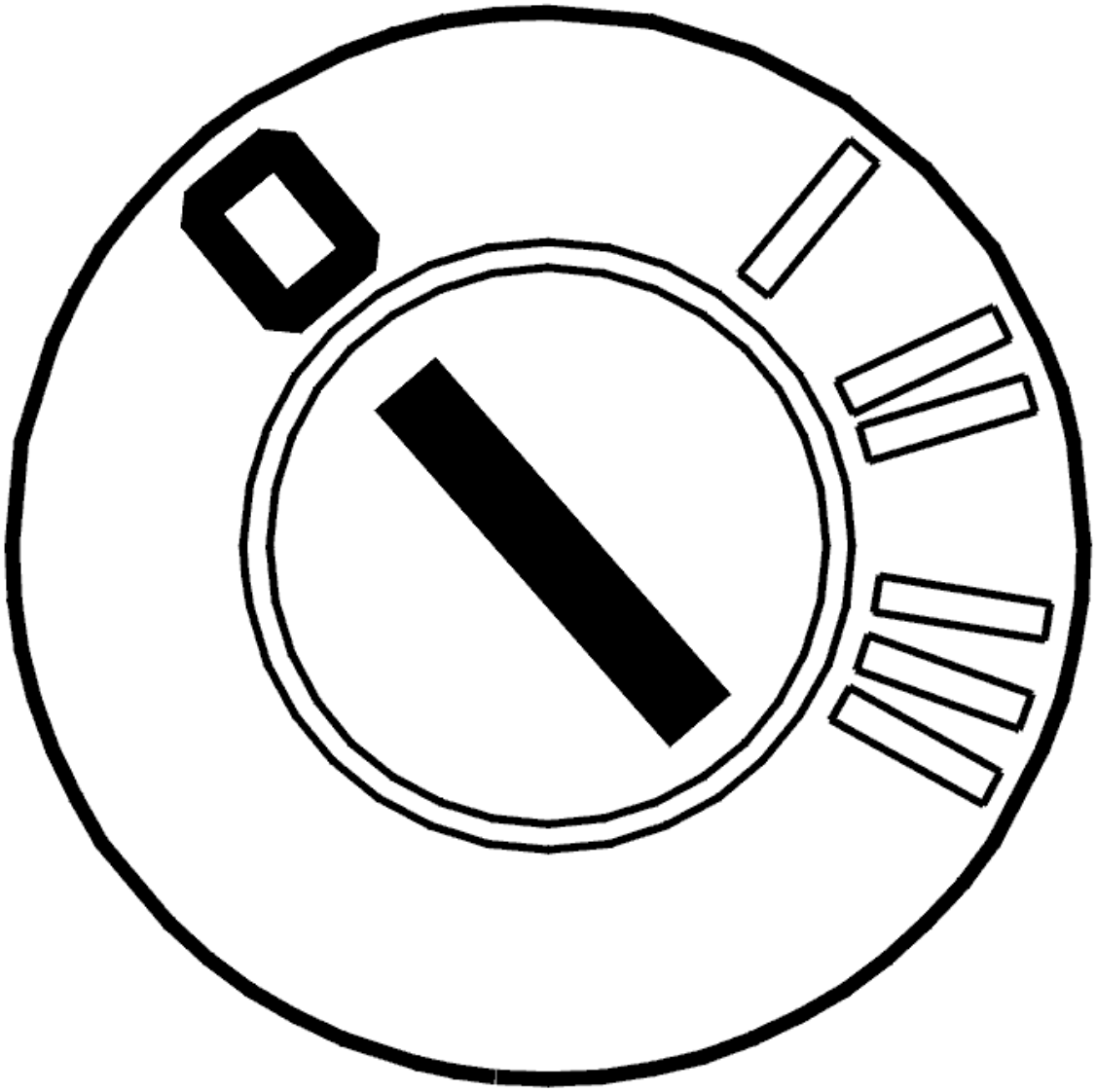

Fig. 340: Identifying Camshaft Reset Valve Connector Terminals
Courtesy of VOLVO CARS CORPORATION

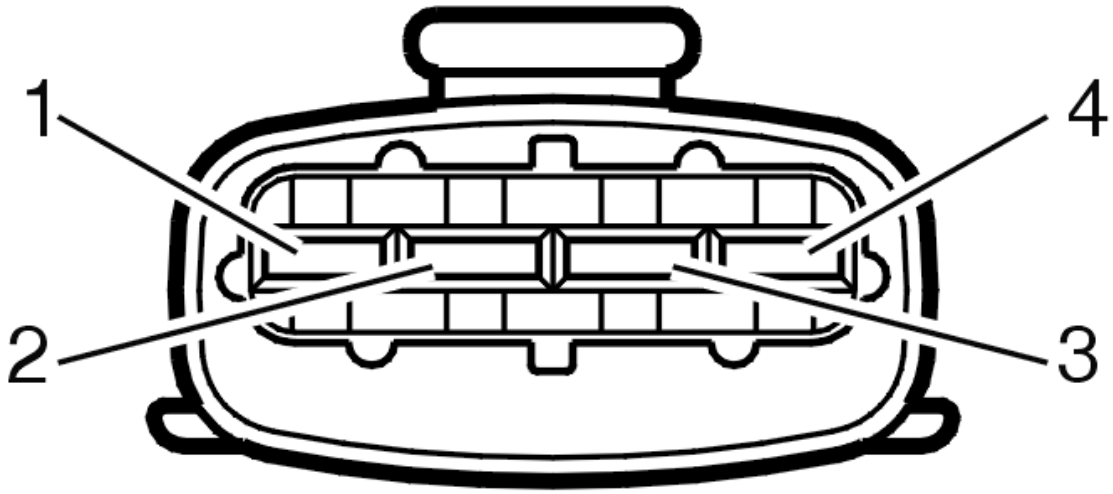

Fig. 341: Identifying VCT2000 Diagnostic Tool Symbol In VIDA
Courtesy of VOLVO CARS CORPORATION

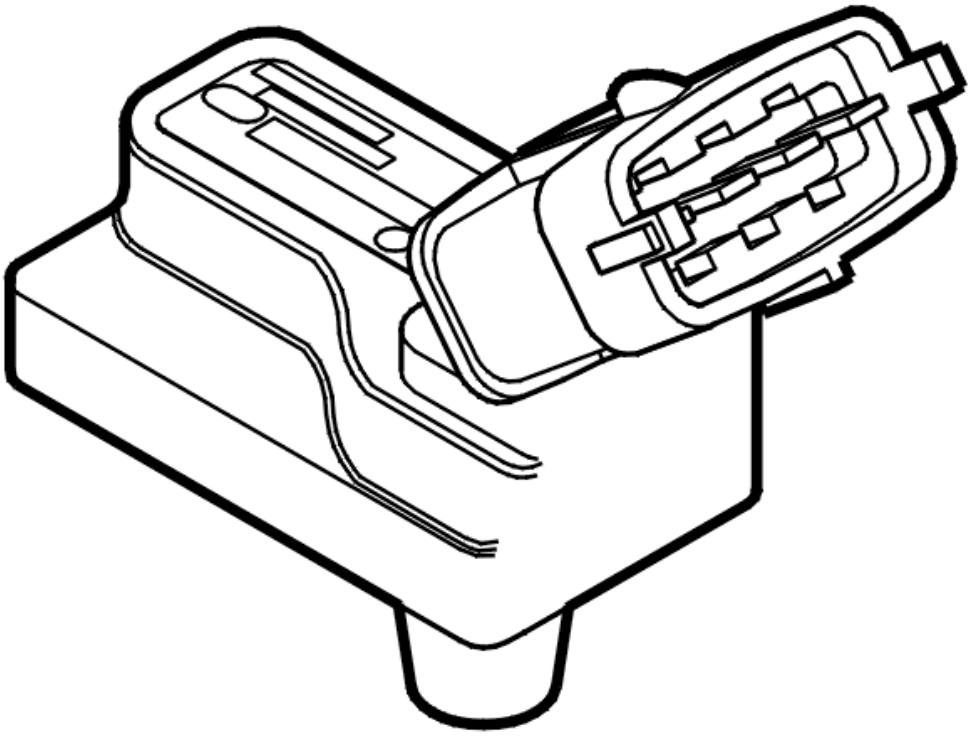

Fig. 342: Identifying Engine Coolant Temperature Sensor
Courtesy of VOLVO CARS CORPORATION

Is the temperature within its permitted range?

- **YES**

OKAY: Troubleshooting has been completed.

- **NO**

  Refer to **CHECKING THE WIRING AND COMPONENT**

CHECKING THE WIRING AND COMPONENT

Check the resistance of the engine coolant temperature (ECT) sensor.

NOTE: The engine coolant temperature (ECT) sensor may be defective as a result of the signal cable having been short-circuited to supply voltage. Check this before replacing the sensor.

Check the signal cable between control module terminal #A4 (#A4) and engine coolant temperature (ECT) sensor terminal #1. Check for an open-circuit. Check for a short-circuit to supply voltage.

HINT: With the ignition on and engine coolant temperature (ECT) sensor connector disconnected the voltage between terminal #1 and ground terminal must be approximately 5 V.

Check the ground lead between control module terminal #A60 (#A60) and engine coolant temperature (ECT) sensor terminal #2. Check for an open-circuit.

Remedy as necessary.

Other information

- To connect the breakout box / access the control module, see **CONNECTING THE BREAKOUT BOX**
- For B5xx4T, see **REPLACING THE THERMOSTAT AND/OR ENGINE COOLANT TEMPERATURE SENSOR**
- For B6xx4T, see **ENGINE COOLANT TEMPERATURE (ECT) SENSOR, REPLACING** .
- For resistance values, see **COMPONENT SPECIFICATIONS**
- For 6 cylinder engines -2004, see **SIGNAL SPECIFICATION**
- For 6 cylinder engines 2005-, see **SIGNAL SPECIFICATION** .
- see **CHECKING WIRING AND TERMINALS** .

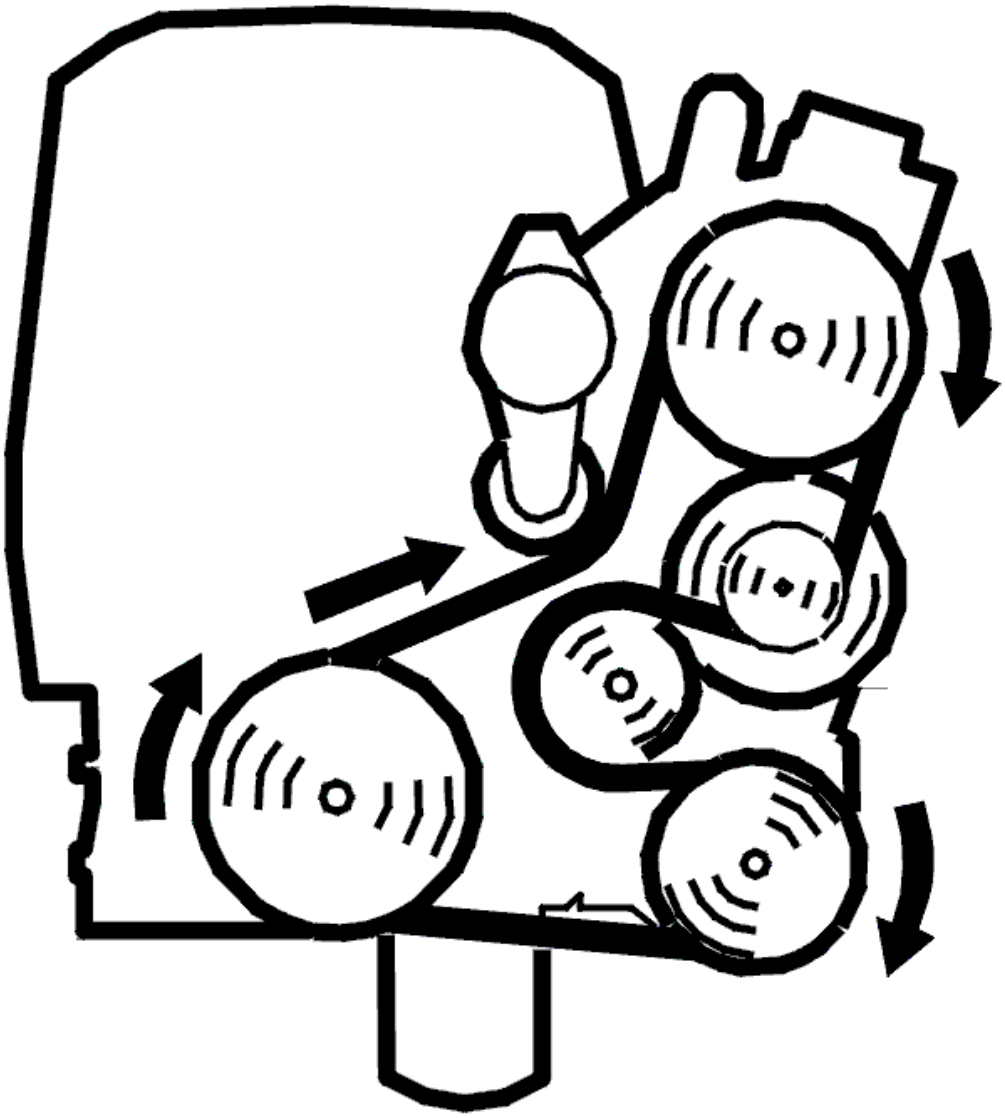

Fig. 343: Identifying Camshaft Reset Valve Connector Terminals
Courtesy of VOLVO CARS CORPORATION

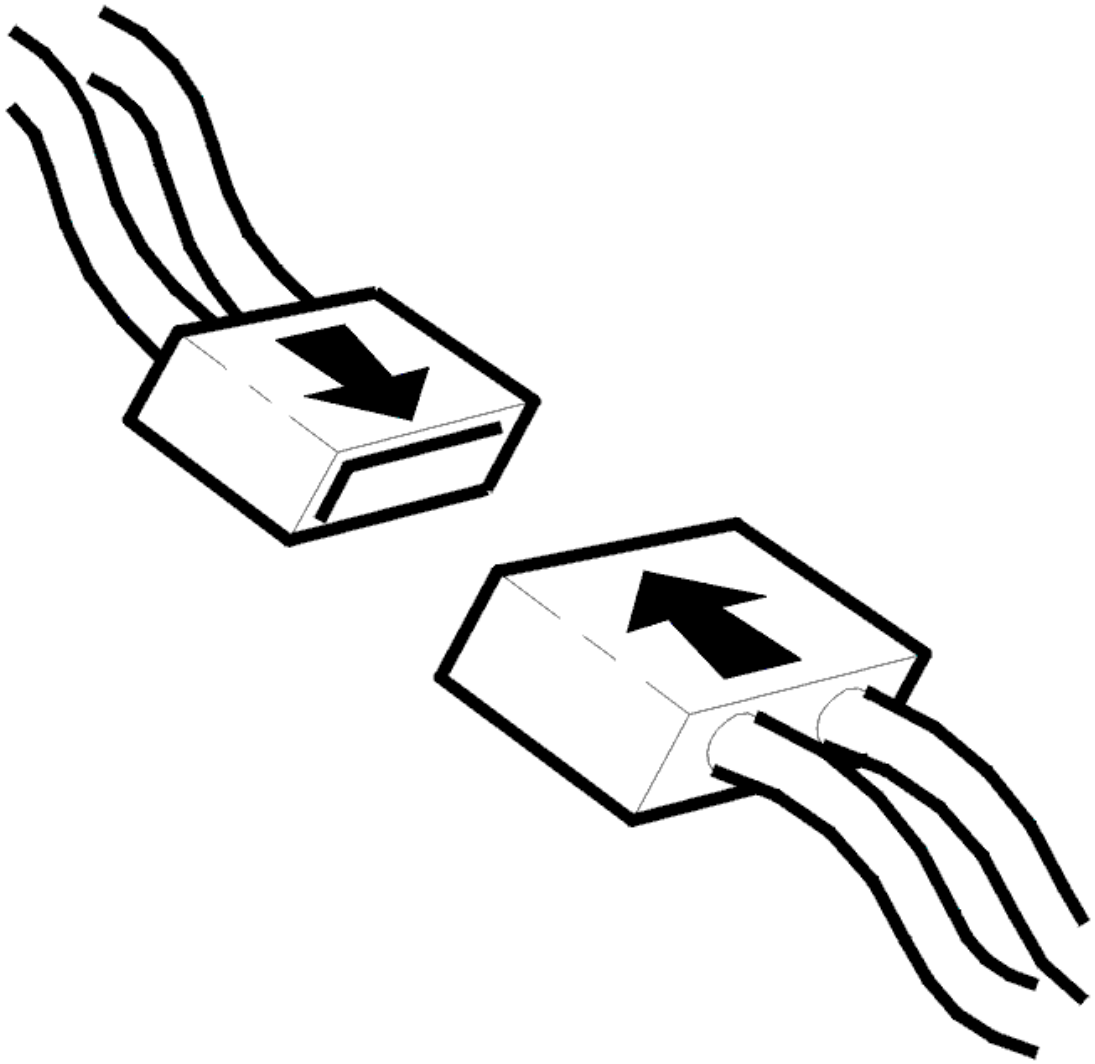

Fig. 344: Identifying Ohm Meter
Courtesy of VOLVO CARS CORPORATION

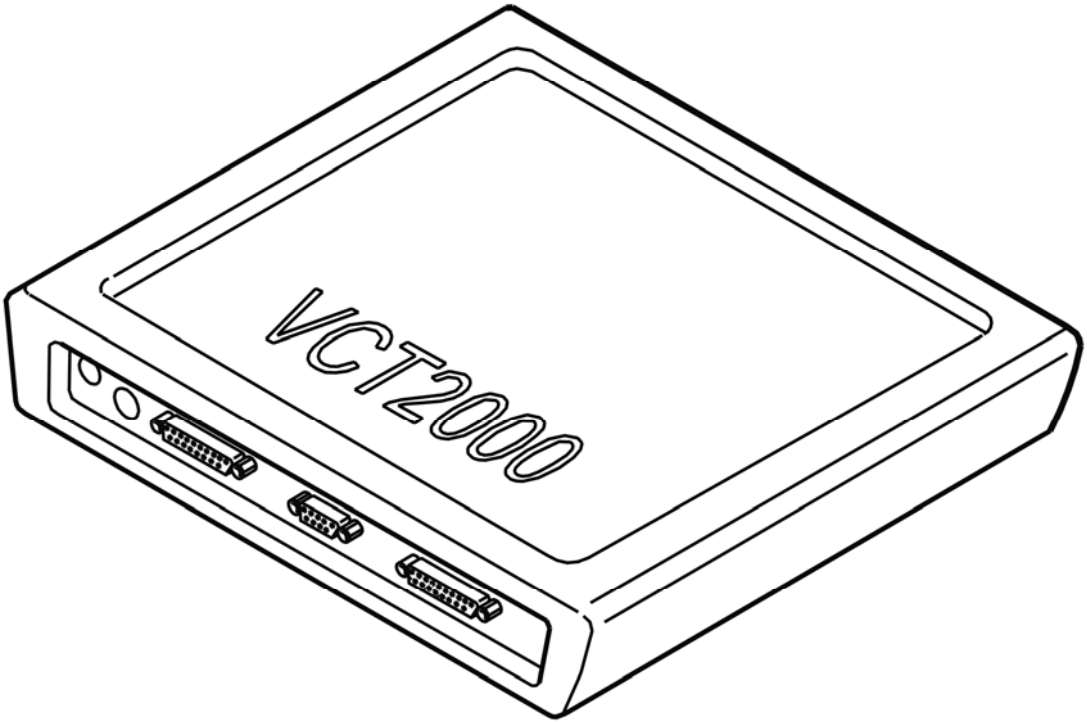

Fig. 345: Identifying Engine Coolant Temperature Sensor
Courtesy of VOLVO CARS CORPORATION

- **Continue**

  Refer to **VERIFICATION**

VERIFICATION

VERIFICATION

HINT: After carrying out the repair, check that the fault has been remedied.

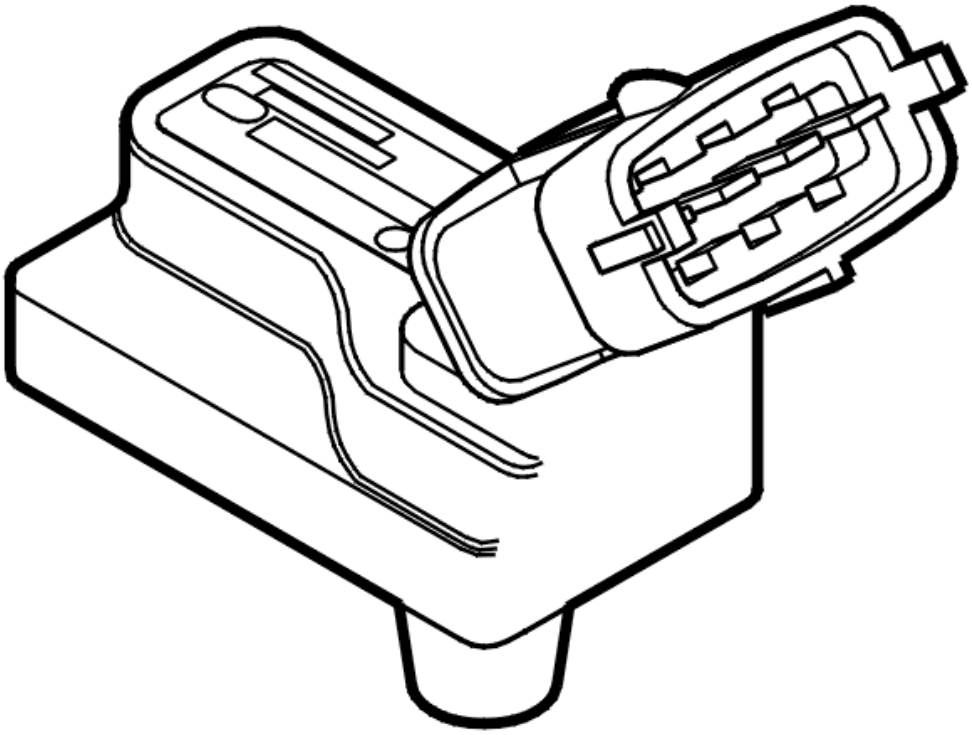

Fig. 346: Identifying Ignition ON
Courtesy of VOLVO CARS CORPORATION

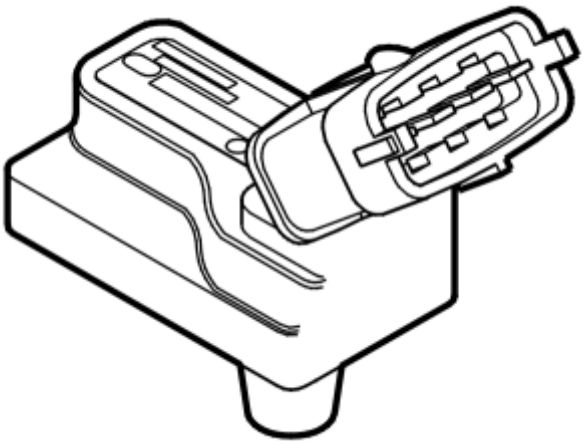

Fig. 347: Connecting Connector
Courtesy of VOLVO CARS CORPORATION

- Ignition off
- Reconnect the connectors, reinstall components etc.
- Ignition on

- Read off the engine coolant temperature (ECT) sensor.

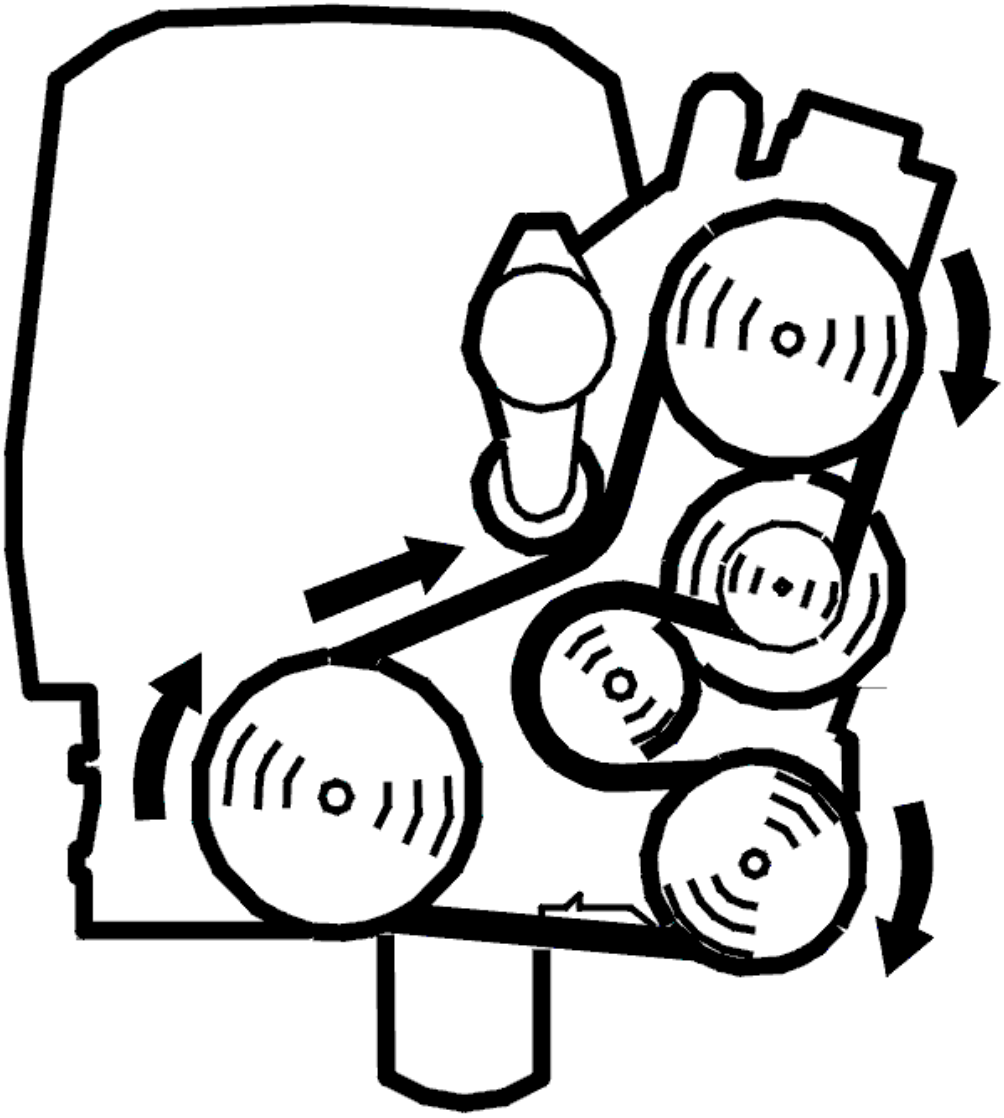

Fig. 348: Identifying VCT2000 Diagnostic Tool Symbol In VIDA
Courtesy of VOLVO CARS CORPORATION

Is the temperature within its permitted range?

- **YES**

  VERIFIED: Troubleshooting has been completed.

- **NO**

  Refer to **INFORMATION**

INFORMATION

FAULT-TRACING INFORMATION

The fault should have been detected and remedied. As this is not the case fault-tracing has failed.

Exit fault-tracing for this diagnostic trouble code (DTC) or make another attempt.

ECM-200B: INJECTOR CYL 1. SIGNAL MISSING (B5254T2; 2005-2007)

DIAGNOSTIC TROUBLE CODE (DTC) INFORMATION

Condition

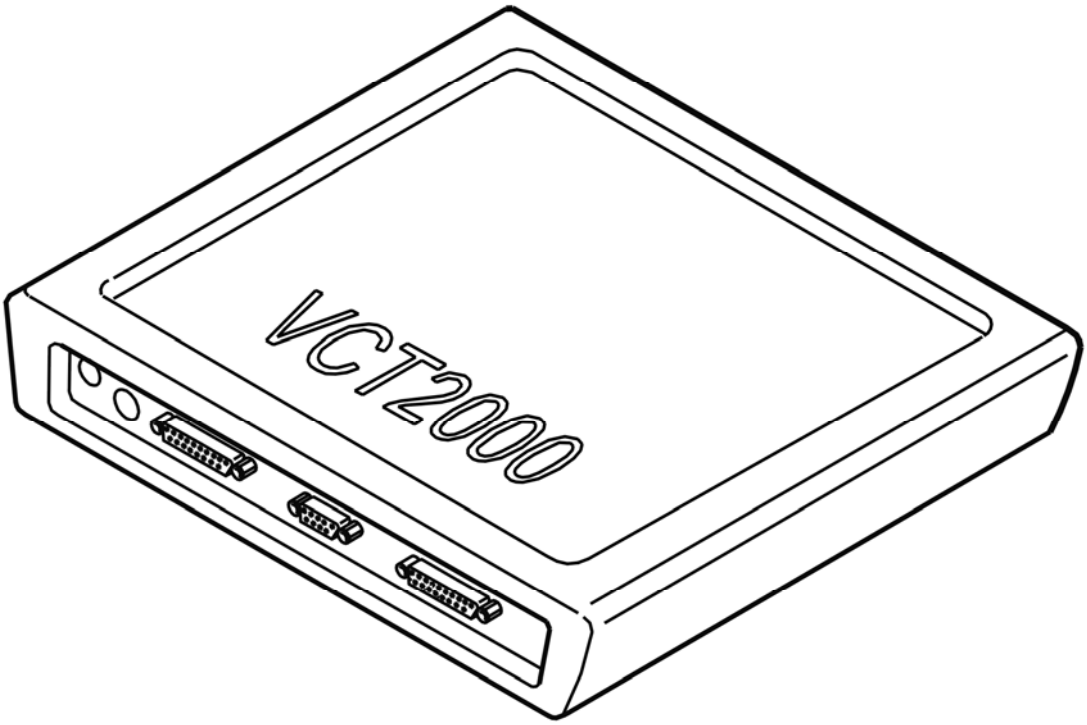

Fig. 349: Identifying Injector
Courtesy of VOLVO CARS CORPORATION

The engine control module (ECM) checks the circuit for the injectors.

The diagnostic trouble code (DTC) is stored if the engine control module (ECM) detects that the signal for one of the injector circuits is missing.

The diagnostic trouble code (DTC) indicates which injector is being referred to.

- ECM-200B: injector 1

- ECM-201B: injector 2
- ECM-202B: injector 3
- ECM-203B: injector 4
- ECM-204B: injector 5.

The diagnostic trouble code (DTC) can be diagnosed when the engine is running.

Substitute Value

- None.

Possible Source

- Contact resistance in the terminals
- Open-circuit in the signal cable
- Open-circuit in the power supply to the injector
- Damaged injector.

Fault symptom[s]

- Malfunction indicator lamp (MIL) lit
- The engine is not firing on all cylinders.

SIGNAL MISSING

CHECKING COMPONENTS AND WIRING

Check the cable that relates to the diagnostic trouble code (DTC). Check for an open-circuit.

Check between:

- Engine control module (ECM) terminal #A16 (#A16) and injector terminal #2 (ECM-200B, injector 1)
- Engine control module (ECM) terminal #A34 (#A34) and injector terminal #2 (ECM-201B, injector 2)
- Engine control module (ECM) terminal #A15 (#A15) and injector terminal #2 (ECM-202B, injector 3)
- Engine control module (ECM) terminal #A33 (#A33) and injector terminal #2 (ECM-203B, injector 4)
- Engine control module (ECM) terminal #A14 (#A14) and injector terminal #2 (ECM-204B, injector 5).

Remedy as necessary.

Other information

- see **CONNECTING THE BREAKOUT BOX**
- For 5 cylinder turbocharged engines -2004, see **SIGNAL DESCRIPTION**
- For 5 cylinder turbocharged engines 2005-, see **SIGNAL SPECIFICATION** .

- For B5xx4T, see **INJECTOR/PULSE DAMPER, REPLACEMENT**
- For B6xx4T, see **INJECTOR / PULSATION DAMPER, REPLACING** .
- see **CHECKING WIRING AND TERMINALS**

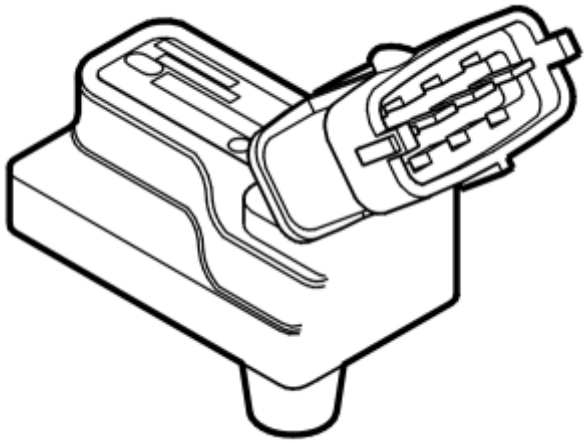

Fig. 350: Identifying 2-Bit Connector
Courtesy of VOLVO CARS CORPORATION

Fig. 351: Identifying Injector
Courtesy of VOLVO CARS CORPORATION

- **Continue**

  Refer to **VERIFICATION**

VERIFICATION

VERIFICATION

HINT: After carrying out the repair, check that the fault has been remedied.

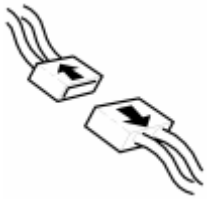

Fig. 352: Identifying Ignition ON

Courtesy of VOLVO CARS CORPORATION

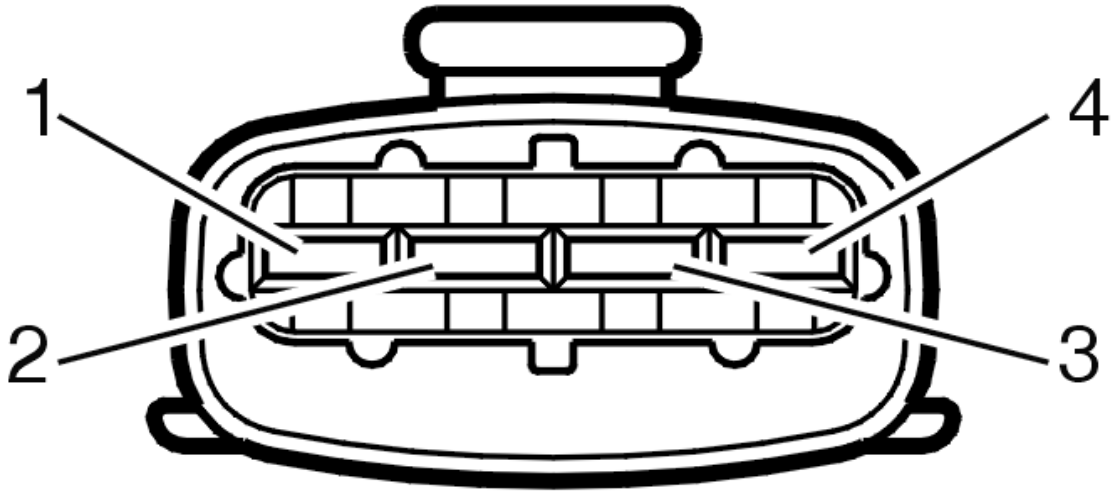

Fig. 353: Connecting Connector
Courtesy of VOLVO CARS CORPORATION

- Ignition off
- Reconnect connectors, reinstall components etc.
- Ignition on
- Activate the relevant injector.

  A "click" should be heard when the injector is activated.

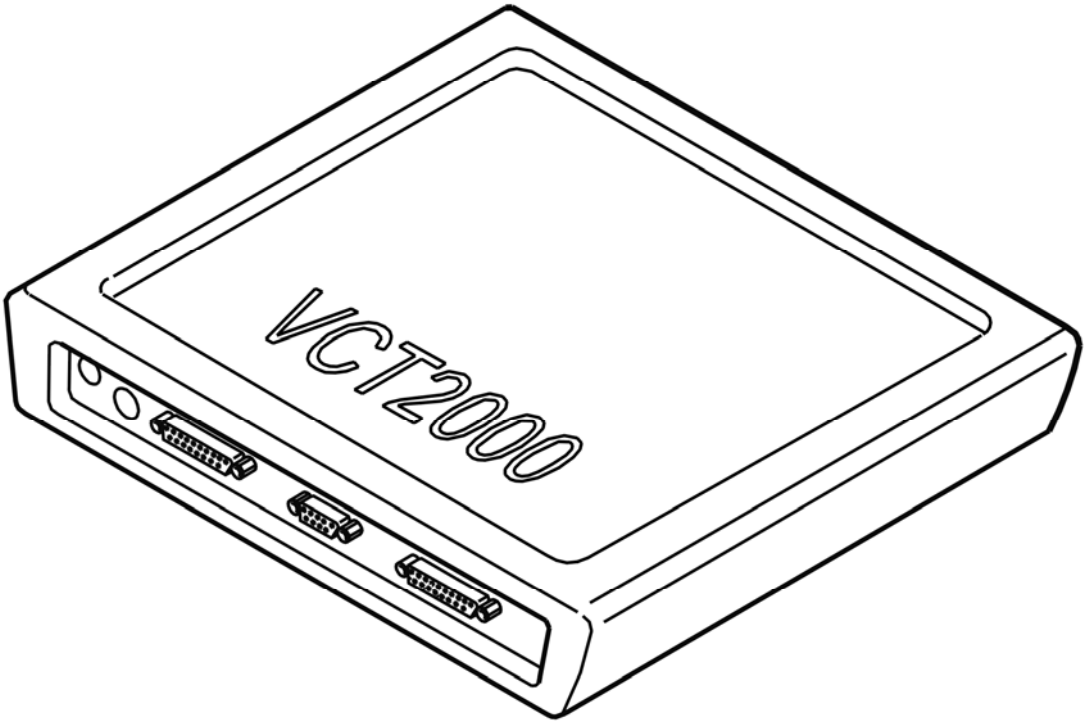

Fig. 354: Identifying VCT2000 Diagnostic Tool Symbol In VIDA
Courtesy of VOLVO CARS CORPORATION

Is the injector working?

- **YES**

  VERIFIED: Troubleshooting has been completed.

- **NO**

  Refer to **INFORMATION**

INFORMATION

FAULT-TRACING INFORMATION

The fault should have been detected and remedied. As this is not the case fault-tracing has failed.

Exit fault-tracing for this diagnostic trouble code (DTC) or make another attempt.

ECM-200C: INJECTOR CYL 1. SIGNAL TOO HIGH (B5254T2; 2005-2007)

DIAGNOSTIC TROUBLE CODE (DTC) INFORMATION

Condition

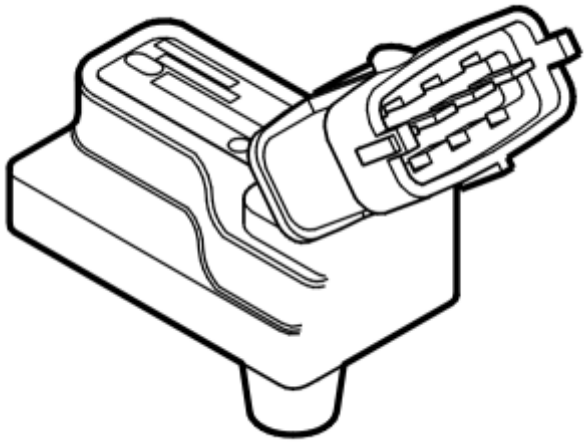

Fig. 355: Identifying Injector
Courtesy of VOLVO CARS CORPORATION

The engine control module (ECM) checks the circuit for the injectors.

The diagnostic trouble code (DTC) is stored if the engine control module (ECM) detects that the signal for one of the injector circuits is too high.

The diagnostic trouble code (DTC) indicates which injector is being referred to.

- ECM-200C: injector 1
- ECM-201C: injector 2
- ECM-202C: injector 3
- ECM-203C: injector 4
- ECM-204C: injector 5.

The diagnostic trouble code (DTC) can be diagnosed at ignition on and with the engine running.

Substitute Value

- None.

Possible Source

- Short-circuit to supply voltage in the signal cable
- Damaged injector.

Fault symptom[s]

- Malfunction indicator lamp (MIL) lit

- The engine is not firing on all cylinders.

SIGNAL TOO HIGH

CHECKING COMPONENTS AND WIRING

Check the cable that relates to the diagnostic trouble code (DTC). Check for a short-circuit to supply voltage.

Check between:

- Engine control module (ECM) terminal #A16 (#A16) and injector terminal #2 (ECM-200C, injector 1)
- Engine control module (ECM) terminal #A34 (#A34) and injector terminal #2 (ECM-201C, injector 2)
- Engine control module (ECM) terminal #A15 (#A15) and injector terminal #2 (ECM-202C, injector 3)
- Engine control module (ECM) terminal #A33 (#A33) and injector terminal #2 (ECM-203C, injector 4)
- Engine control module (ECM) terminal #A14 (#A14) and injector terminal #2 (ECM-204C, injector 5).

Remedy as necessary.

Other information

- see **CONNECTING THE BREAKOUT BOX**
- For 5 cylinder turbocharged engines -2004, see **SIGNAL DESCRIPTION**
- For 5 cylinder turbocharged engines 2005-, see **SIGNAL SPECIFICATION** .
- For B5xx4T, see **INJECTOR/PULSE DAMPER, REPLACEMENT**
- For B6xx4T, see **INJECTOR / PULSATION DAMPER, REPLACING** .
- see **CHECKING WIRING AND TERMINALS**

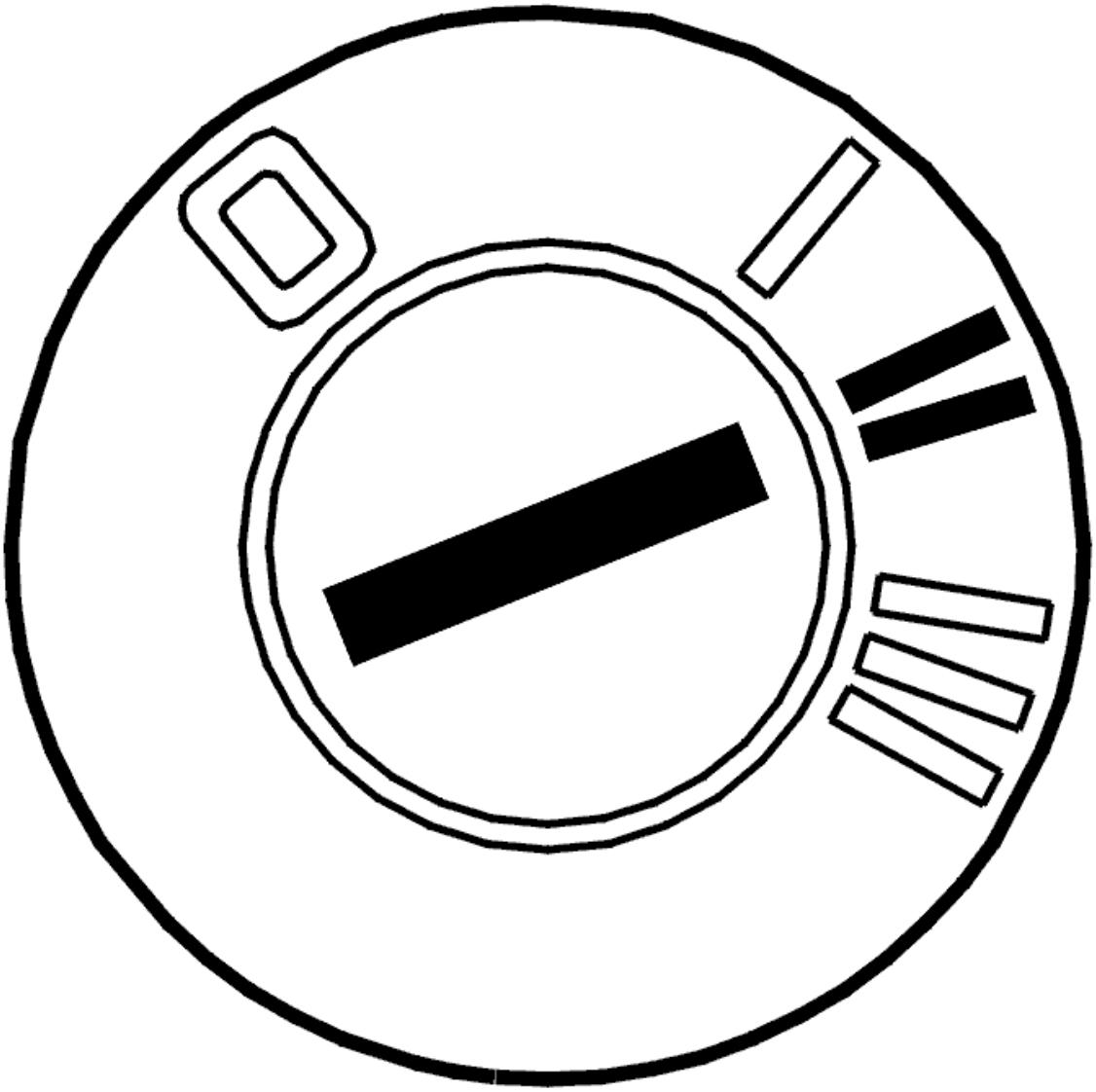

Fig. 356: Identifying 2-Bit Connector
Courtesy of VOLVO CARS CORPORATION

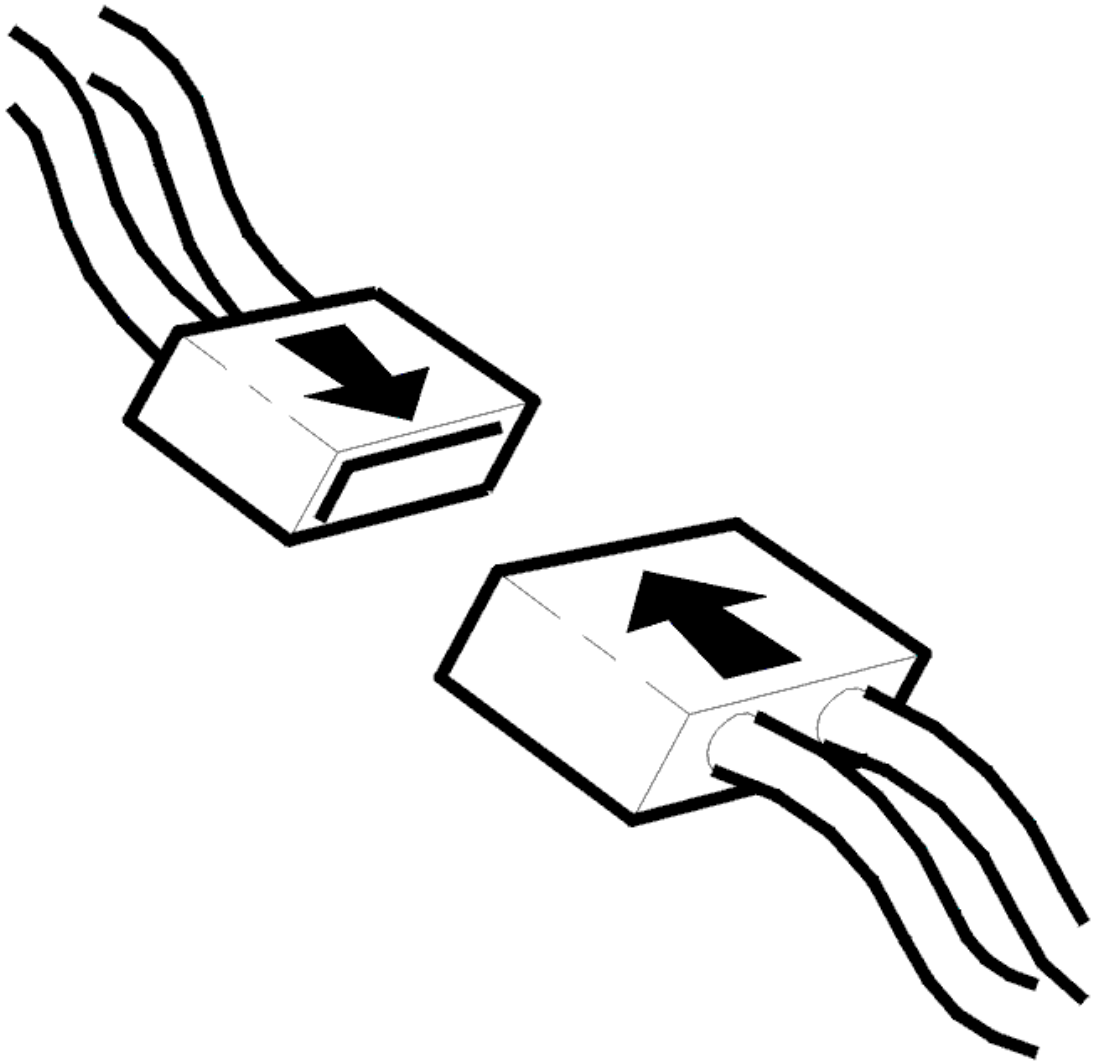

Fig. 357: Identifying Injector
Courtesy of VOLVO CARS CORPORATION

- **Continue**

  Refer to **VERIFICATION**

VERIFICATION

VERIFICATION

HINT: After carrying out the repair, check that the fault has been remedied.

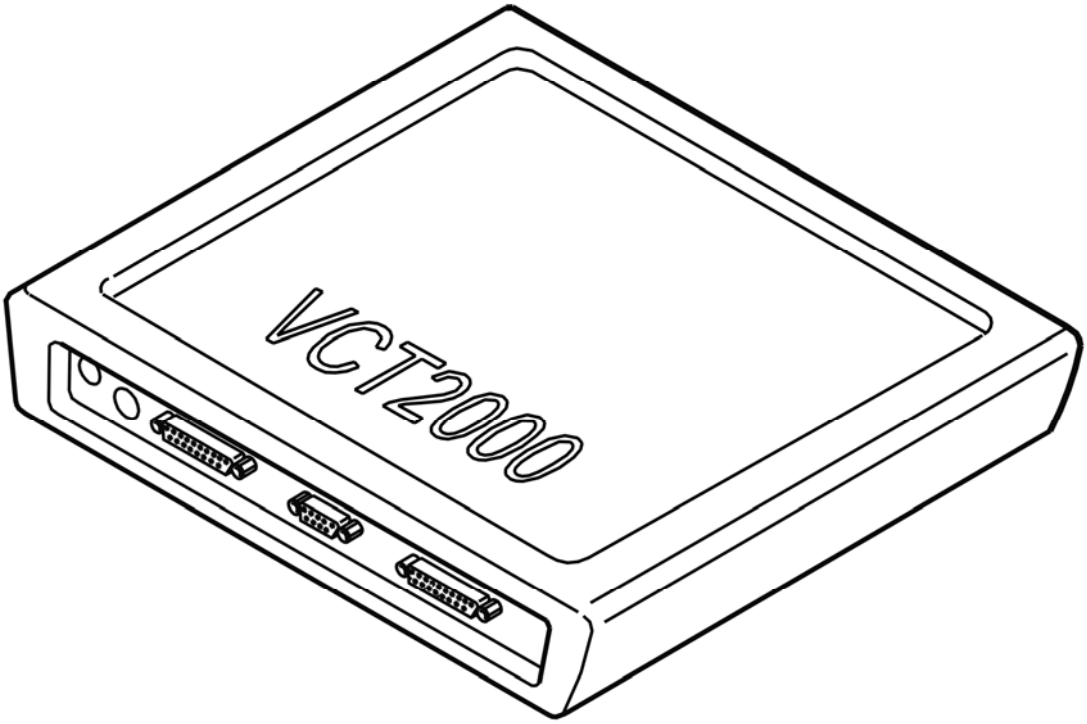

Fig. 358: Identifying Ignition ON
Courtesy of VOLVO CARS CORPORATION

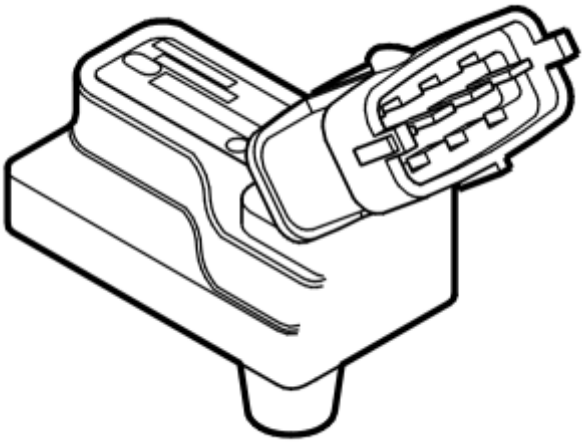

Fig. 359: Connecting Connector
Courtesy of VOLVO CARS CORPORATION

- Ignition off
- Reconnect connectors, reinstall components etc.
- Ignition on

- Activate the relevant injector.

  A "click" should be heard when the injector is activated.

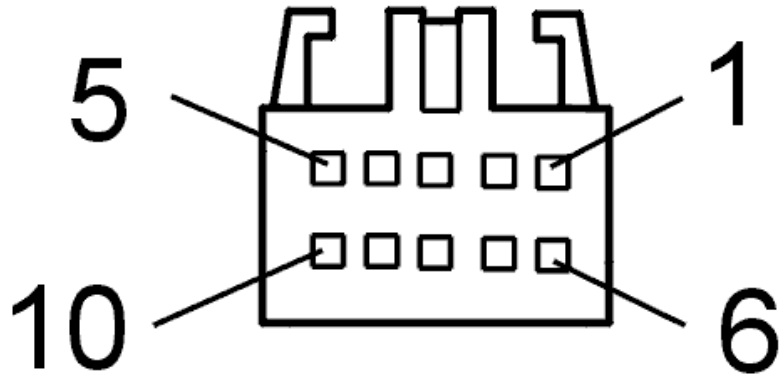

Fig. 360: Identifying VCT2000 Diagnostic Tool Symbol In VIDA
Courtesy of VOLVO CARS CORPORATION

Is the injector working?

- **YES**

  VERIFIED: Troubleshooting has been completed.

- **NO**

  Refer to **INFORMATION**

INFORMATION

FAULT-TRACING INFORMATION

The fault should have been detected and remedied. As this is not the case fault-tracing has failed.

Exit fault-tracing for this diagnostic trouble code (DTC) or make another attempt.

ECM-200D: INJECTOR CYL 1. SIGNAL TOO LOW (B5254T2; 2005-2007)

DIAGNOSTIC TROUBLE CODE (DTC) INFORMATION

Condition

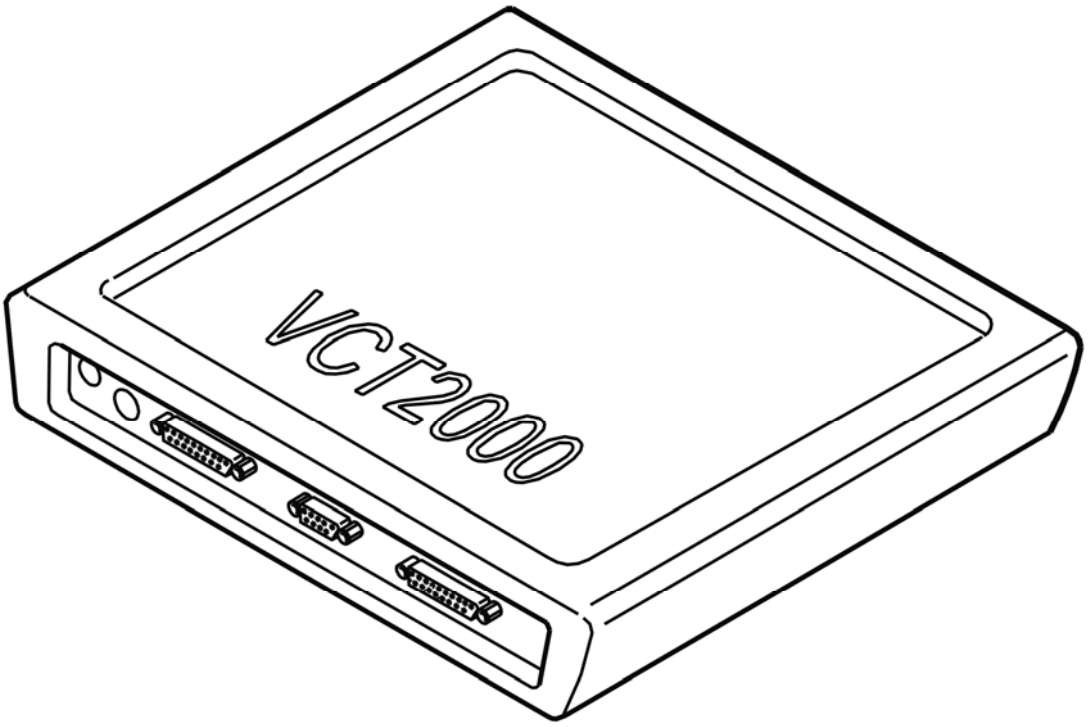

Fig. 361: Identifying Injector
Courtesy of VOLVO CARS CORPORATION

The engine control module (ECM) checks the circuit for the injectors.

The diagnostic trouble code (DTC) is stored if the engine control module (ECM) detects that the signal for one of the injector circuits is too low.

The diagnostic trouble code (DTC) indicates which injector is being referred to.

- ECM-200D: injector 1
- ECM-201D: injector 2
- ECM-202D: injector 3
- ECM-203D: injector 4
- ECM-204D: injector 5.

The diagnostic trouble code (DTC) can be diagnosed at ignition on and with the engine running.

Substitute Value

- None.

Possible Source

- Short-circuit to ground in the signal cable
- Damaged injector.

Fault symptom[s]

- Malfunction indicator lamp (MIL) lit
- The engine is not firing on all cylinders.

SIGNAL TOO LOW

CHECKING COMPONENTS AND WIRING

Check the cable that relates to the diagnostic trouble code (DTC). Check for a short-circuit to ground.

Check between:

- Engine control module (ECM) terminal #A16 (#A16) and injector terminal #2 (ECM-200D, injector 1)
- Engine control module (ECM) terminal #A34 (#A34) and injector terminal #2 (ECM-201D, injector 2)
- Engine control module (ECM) terminal #A15 (#A15) and injector terminal #2 (ECM-202D, injector 3)
- Engine control module (ECM) terminal #A33 (#A33) and injector terminal #2 (ECM-203D, injector 4)
- Engine control module (ECM) terminal #A14 (#A14) and injector terminal #2 (ECM-204D, injector 5).

Remedy as necessary.

Other information

- see **CONNECTING THE BREAKOUT BOX**
- For 5 cylinder turbocharged engines -2004, see **SIGNAL DESCRIPTION**
- For 5 cylinder turbocharged engines 2005-, see **SIGNAL SPECIFICATION** .
- For B5xx4T, see **INJECTOR/PULSE DAMPER, REPLACEMENT**
- For B6xx4T, see **INJECTOR / PULSATION DAMPER, REPLACING** .
- see **CHECKING WIRING AND TERMINALS**

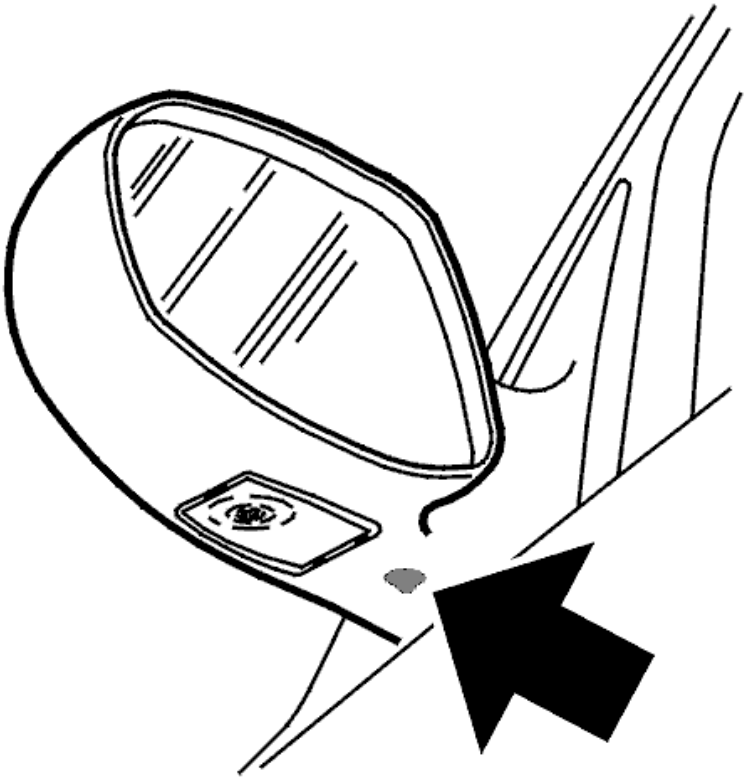

Fig. 362: Identifying 2-Bit Connector
Courtesy of VOLVO CARS CORPORATION

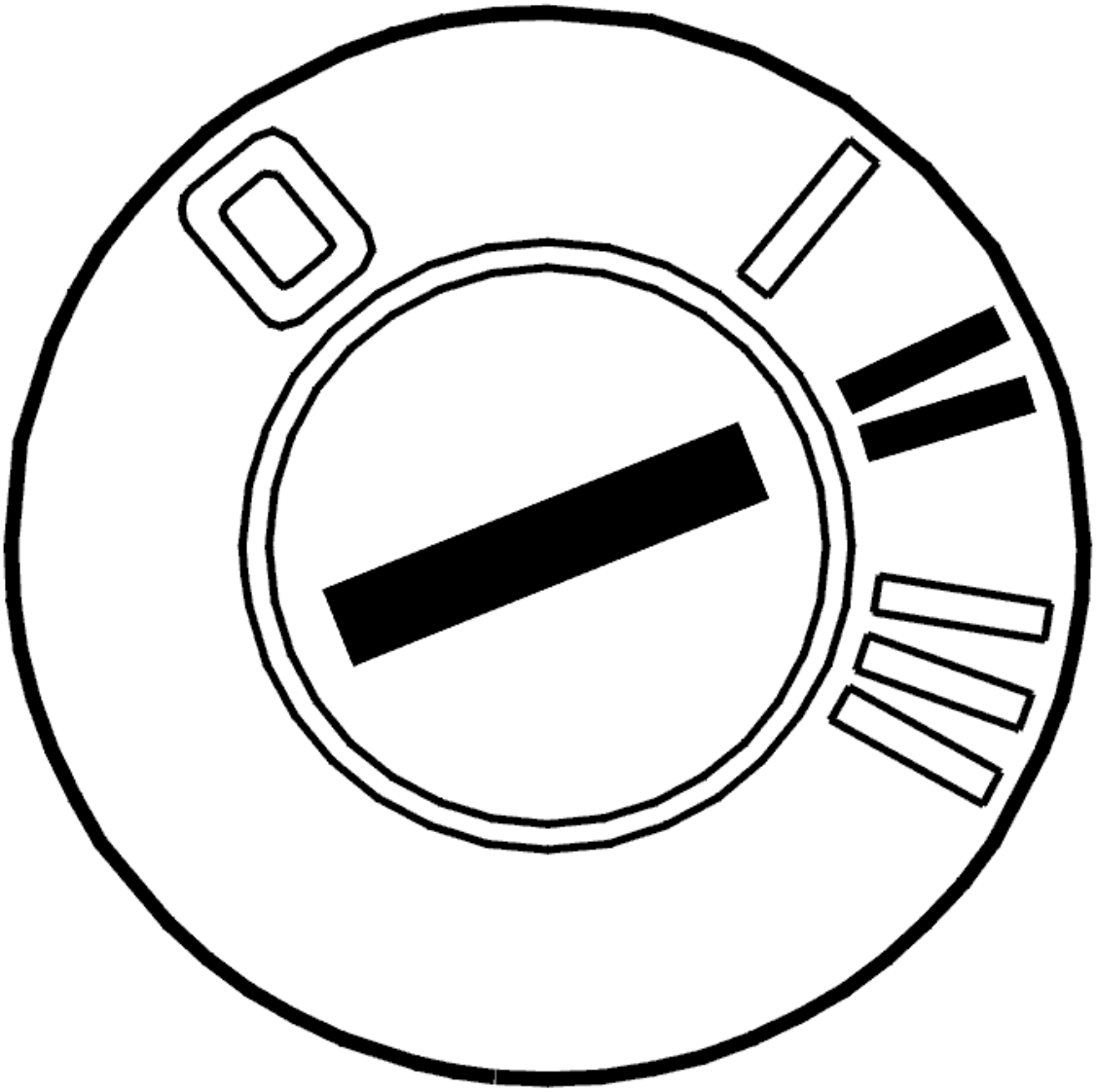

Fig. 363: Identifying Injector
Courtesy of VOLVO CARS CORPORATION

- **Continue**

  Refer to **VERIFICATION**

VERIFICATION

VERIFICATION

HINT: After carrying out the repair, check that the fault has been remedied.

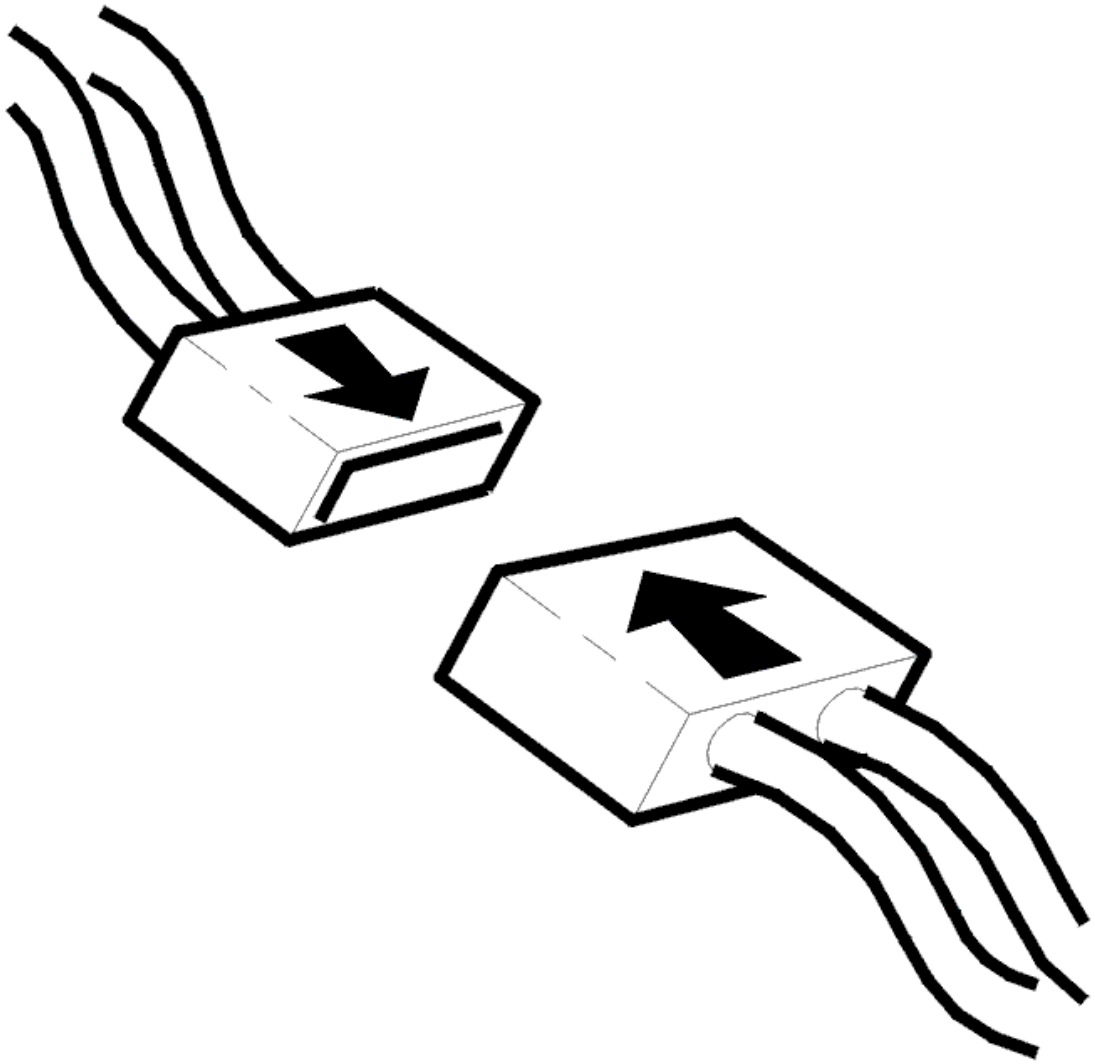

Fig. 364: Identifying Ignition ON
Courtesy of VOLVO CARS CORPORATION

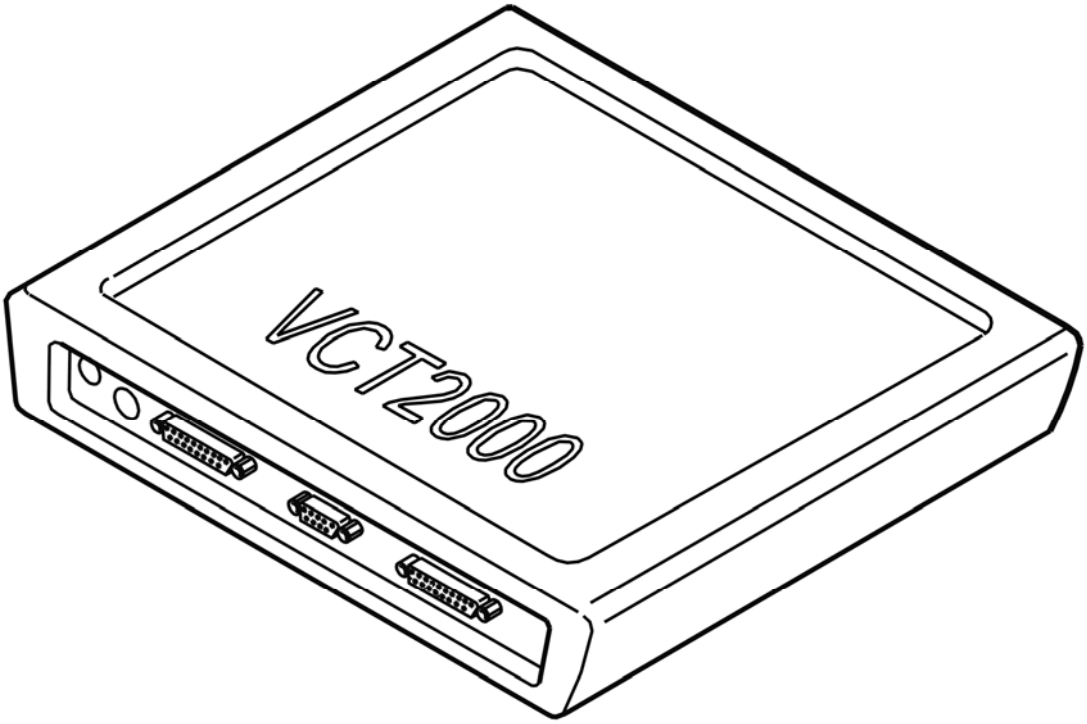

Fig. 365: Connecting Connector
Courtesy of VOLVO CARS CORPORATION

- Ignition off
- Reconnect connectors, reinstall components etc.
- Ignition on
- Activate the relevant injector.

  A "click" should be heard when the injector is activated.

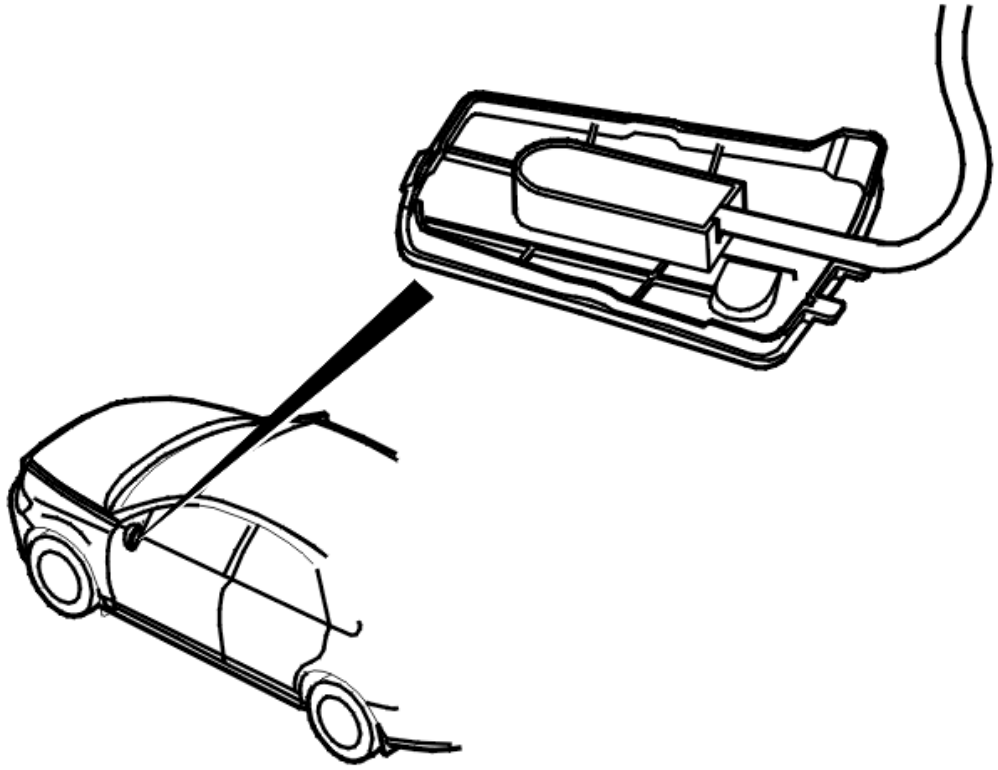

Fig. 366: Identifying VCT2000 Diagnostic Tool Symbol In VIDA
Courtesy of VOLVO CARS CORPORATION

Is the injector working?

- **YES**

  VERIFIED: Troubleshooting has been completed.

- **NO**

  Refer to **INFORMATION**

INFORMATION

FAULT-TRACING INFORMATION

The fault should have been detected and remedied. As this is not the case fault-tracing has failed.

Exit fault-tracing for this diagnostic trouble code (DTC) or make another attempt.

ECM-201A: THERMOSTAT. FAULTY SIGNAL (B5254T2; B6294T; 2003-2004)

DIAGNOSTIC TROUBLE CODE (DTC) INFORMATION ECM-201A

Condition

During the engine warm up phase the way the engine temperature should increase is calculated. Factors such as engine load and the start temperature are taken into account. This test takes place during the engine warm-up phase (under "normal operation") and continues until the engine temperature has reached 84 °C. For the test to start, the starting temperature of the engine must be below 35 °C, the outside temperature must be between -7 and +35 °C and at least 15 minutes must have passed since the engine was last run.

The diagnostic trouble code (DTC) is stored if the calculated increase in temperature does not correspond to the actual increase (measured by the engine coolant temperature (ECT) sensor).

HINT: This diagnostic trouble code (DTC) can also be caused by faults that store diagnostic trouble codes (DTCs) for outside temperature sensors.

Substitute Value

- None.

Possible Source

- Damaged engine coolant temperature (ECT) sensor
- Damaged thermostat.

Fault symptom[s]

- Malfunction indicator lamp (MIL) lit.

FAULTY SIGNAL

REPLACING THE THERMOSTAT

NOTE: **This diagnostic trouble code (DTC) is stored if the engine coolant temperature (ECT) sensor freezes. This may happen if the coolant level is low or there is too little glycol in the coolant. Check the engine coolant level and its freezing point. Remedy as necessary.**

The engine control module (ECM) has registered that the actual temperature increase has deviated from the calculated temperature increase. This deviation is due to a defective thermostat.

Try replacing the thermostat.

- For B5xx4T, see **REPLACING THE THERMOSTAT AND/OR ENGINE COOLANT TEMPERATURE SENSOR**
- For B6xx4T, see **ENGINE COOLANT TEMPERATURE (ECT) SENSOR, REPLACING** .

- **Continue**

Refer to **INFORMATION**

INFORMATION

FAULT-TRACING INFORMATION

In case of this defect, troubleshooting is not followed by verification.

The information can be displayed again or the fault-tracing for this fault can be interrupted.

ECM-210C: LONG-TERM FUEL TRIM, BANK 1. SIGNAL TOO HIGH (B5254T2; 2005-2007)

DIAGNOSTIC TROUBLE CODE (DTC) INFORMATION ECM-210C

Condition

The engine control module (ECM) receives information from the heated oxygen sensor (HO2S) (bank 1) about the fuel / air mixture when idling and at both the upper and lower part-load range. If the fuel / air mixture deviates from lambda=1, the short-term fuel trim will compensate for this by adjusting the injection time so that lambda=1 is achieved. When the short-term fuel trim makes an adjustment, the integrator median must be adjusted by the long-term trim. The diagnostic trouble code (DTC) is stored when the long-term trim must be adjusted to almost maximum in the upper part load area.

Substitute Value

- None.

Possible Source

- Intake air leakage
- Air leakage in the exhaust system
- Low fuel pressure
- Damaged heated oxygen sensor (HO2S) (bank 1).

Fault symptom[s]

- None.

SIGNAL TOO HIGH

CHECKING THE FUEL INJECTION SYSTEM

Check the intake system for air leakage.

HINT: Air leakage in the intake system can occur through the evaporative emission system (EVAP)

valve, the secondary air solenoid valve or the power brake booster.

Check the fuel pressure.

Test drive the car for approximately 10 minutes.

Check the mass air flow (MAF) sensor. Read off its correction factor. The value must be between 0.8 and 1.2.

NOTE: There must not be any air leakage when this test is carried out.

Remedy as necessary.

Other information

- see **CHECK FOR AIR LEAKS IN THE INTAKE SYSTEM**
- see **CHECKING FUEL AND RESIDUAL PRESSURES**
- see **MASS AIR FLOW (MAF) SENSOR, REPLACING**

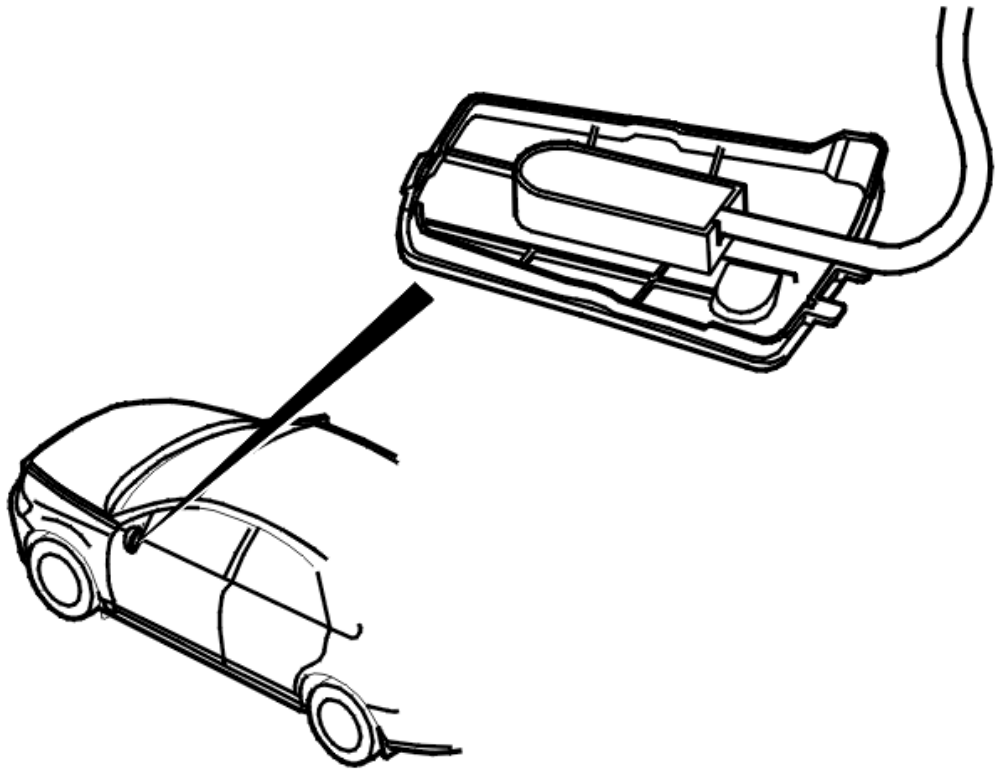

Fig. 367: Identifying VCT2000 Diagnostic Tool Symbol In VIDA
Courtesy of VOLVO CARS CORPORATION

- **Continue**

Refer to **VERIFICATION**

VERIFICATION

VERIFICATION

HINT: After carrying out the repair, check that the fault has been remedied.

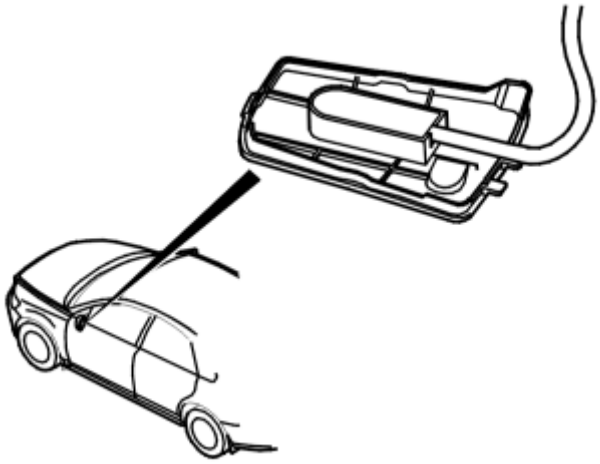

Fig. 368: Belt Routing / Engine Idling - Volvo
Courtesy of VOLVO CARS CORPORATION

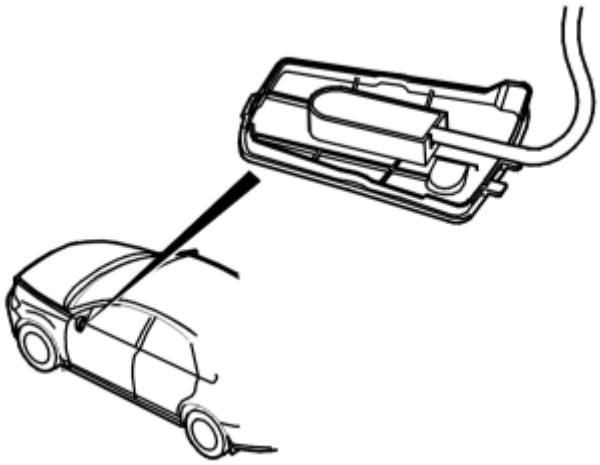

Fig. 369: Connecting Connector
Courtesy of VOLVO CARS CORPORATION

- Ignition off
- Reconnect the connectors, reinstall components etc.
- Test drive the vehicle on the road. Run a TRIP schedule so that the engine control module (ECM) compares the diagnostics. To run a TRIP schedule, see: **VERIFYING REPAIRS**

- Connect VCT2000 (or appropriate scan tool) to the data link connector (DLC) without switching off the engine.

  NOTE: If the engine is switched off, the stored fault status will be erased and the test drive will have to be repeated.

  Read off the diagnostic status and fault status for the diagnostic trouble code (DTC) by selecting the relevant diagnostic trouble code (DTC) from the list.

  Check the fault status for the diagnostic trouble code (DTC) when the diagnostic is "Complete". If the function is correct, the fault status must be "No fault found" when the diagnostic is complete.

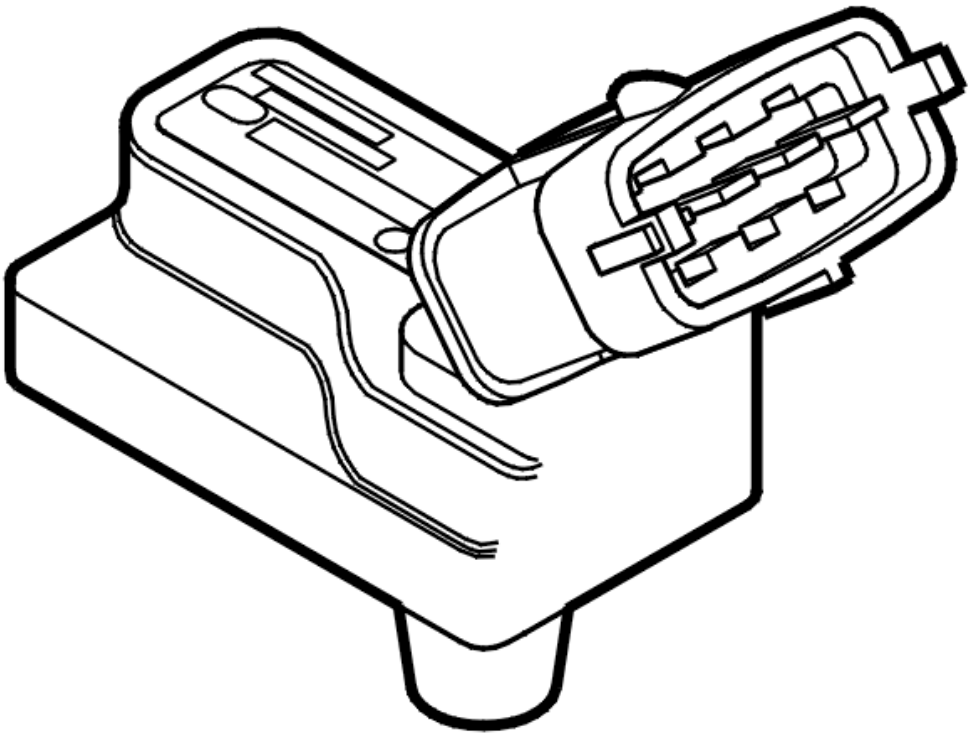

Fig. 370: Identifying VCT2000 Diagnostic Tool Symbol In VIDA
Courtesy of VOLVO CARS CORPORATION

Is the function OK?

- **YES**

  VERIFIED: Troubleshooting has been completed.

- **NO**

Refer to **INFORMATION**

INFORMATION

FAULT-TRACING INFORMATION

The fault should have been detected and remedied. As this is not the case fault-tracing has failed.

Exit fault-tracing for this diagnostic trouble code (DTC) or make another attempt.

ECM-210C: LONG-TERM FUEL TRIM, BANK 1. SIGNAL TOO HIGH (B6294T; 2005-2006)

DIAGNOSTIC TROUBLE CODE (DTC) INFORMATION ECM-210C

see **DIAGNOSTIC TROUBLE CODE (DTC) INFORMATION ECM-210C**

SIGNAL TOO HIGH

see **SIGNAL TOO HIGH**

ECM-210D: LONG-TERM FUEL TRIM, BANK 1. SIGNAL TOO LOW (B5254T2; 2005-2007)

DIAGNOSTIC TROUBLE CODE (DTC) INFORMATION ECM-210D

Condition

The engine control module (ECM) receives information from the heated oxygen sensor (HO2S) (bank 1) about the fuel / air mixture when idling and at both the upper and lower part-load range. If the fuel / air mixture deviates from lambda=1, the short-term fuel trim will compensate for this by adjusting the injection time so that lambda=1 is achieved. When the short-term fuel trim makes an adjustment, the integrator median must be adjusted by the long-term trim. The diagnostic trouble code (DTC) is stored when the long-term trim must be adjusted to almost maximum in the upper part load area.

Substitute Value

- None.

Possible Source

- Intake air leakage
- High fuel pressure
- Leaking injectors
- Damaged mass air flow (MAF) sensor

- Contaminated engine oil
- Oil level too high
- Damaged heated oxygen sensor (HO2S) (bank 1).

Fault symptom[s]

- None.

SIGNAL TOO LOW

CHECKING THE FUEL INJECTION SYSTEM

Check the intake system for air leakage.

HINT: Air leakage in the intake system can occur through the evaporative emission system (EVAP) valve, the secondary air solenoid valve or the power brake booster.

Check the exhaust system for leakage.

Check the fuel pressure and residual pressure.

Check that the oil level is within the minimum and maximum markings.

Check the viscosity of the engine oil by reading off the short-term fuel trim with the engine running. Plug the crankcase ventilation and read off the short-term fuel trim again. The value must be more or less unchanged.

Remedy as necessary.

Other information:

- see **CHECK FOR AIR LEAKS IN THE INTAKE SYSTEM**
- see **CHECKING FOR AIR LEAKAGE IN THE EXHAUST SYSTEM**
- see **CHECKING FUEL AND RESIDUAL PRESSURES**

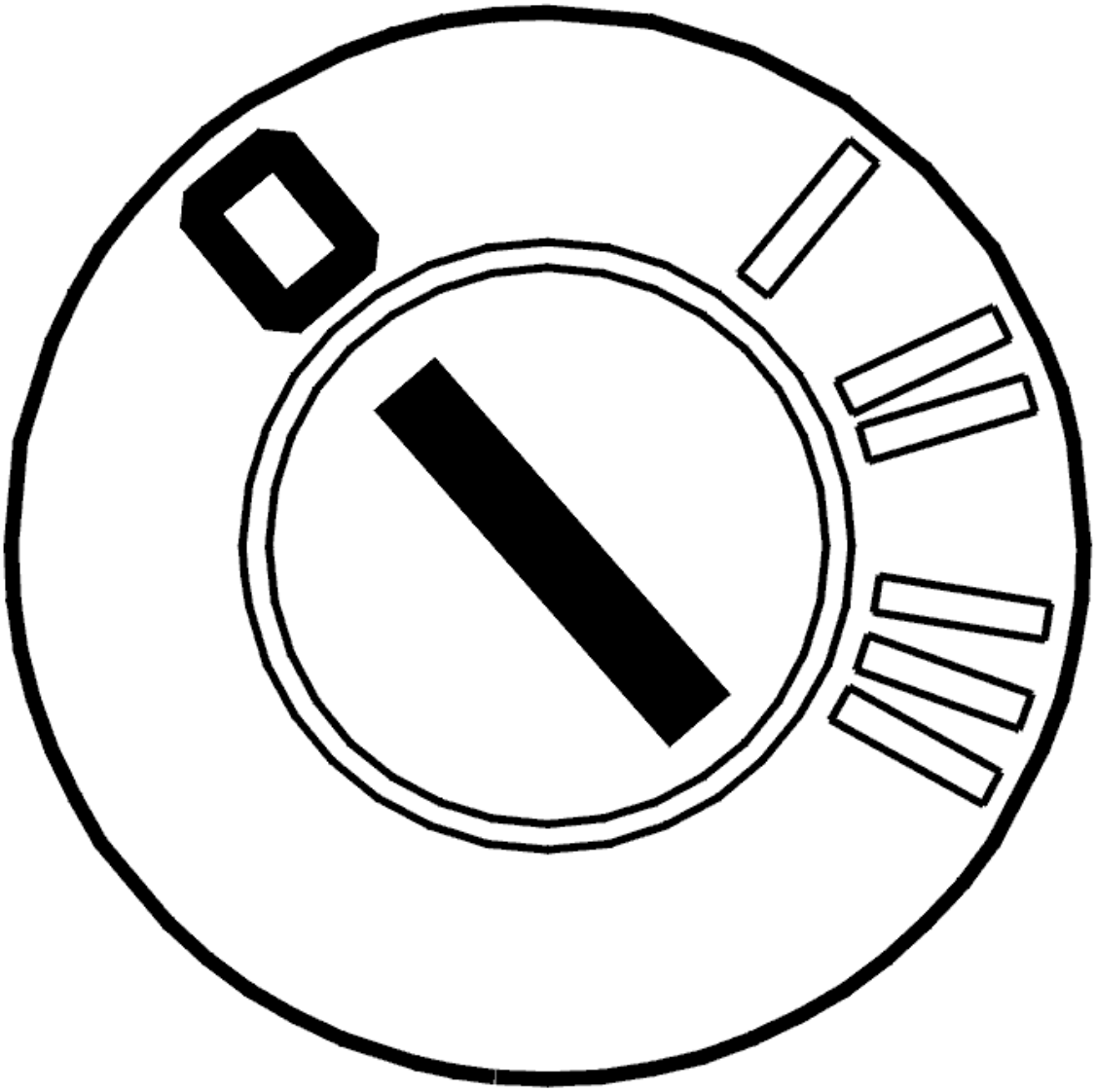

Fig. 371: Identifying VCT2000 Diagnostic Tool Symbol In VIDA
Courtesy of VOLVO CARS CORPORATION

Was a fault detected?

- **YES**

  Refer to **VERIFICATION**

- **NO**

  Refer to **CHECKING THE MASS AIR FLOW (MAF) SENSOR**

CHECKING THE MASS AIR FLOW (MAF) SENSOR

Test drive the car for approximately 10 minutes.

Read off the correction factor of the mass air flow (MAF) sensor. The value must be between 0.8 and 1.2.

NOTE: There must not be any air leakage when this test is carried out.

Remedy as necessary.

Other information

- see **MASS AIR FLOW (MAF) SENSOR, REPLACING** .

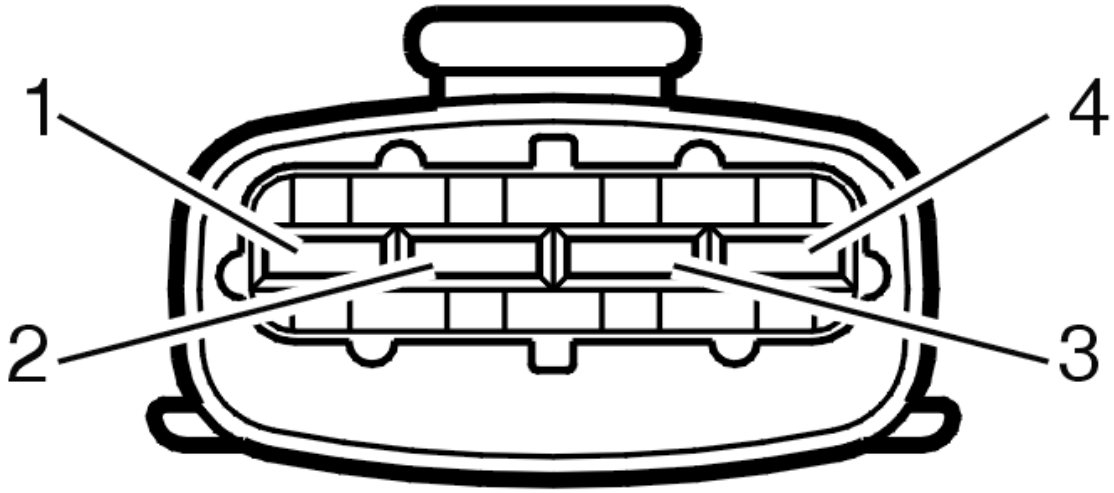

Fig. 372: Identifying VCT2000 Diagnostic Tool Symbol In VIDA
Courtesy of VOLVO CARS CORPORATION

- **Continue**

  Refer to **VERIFICATION**

VERIFICATION

VERIFICATION

HINT: After carrying out the repair, check that the fault has been remedied.

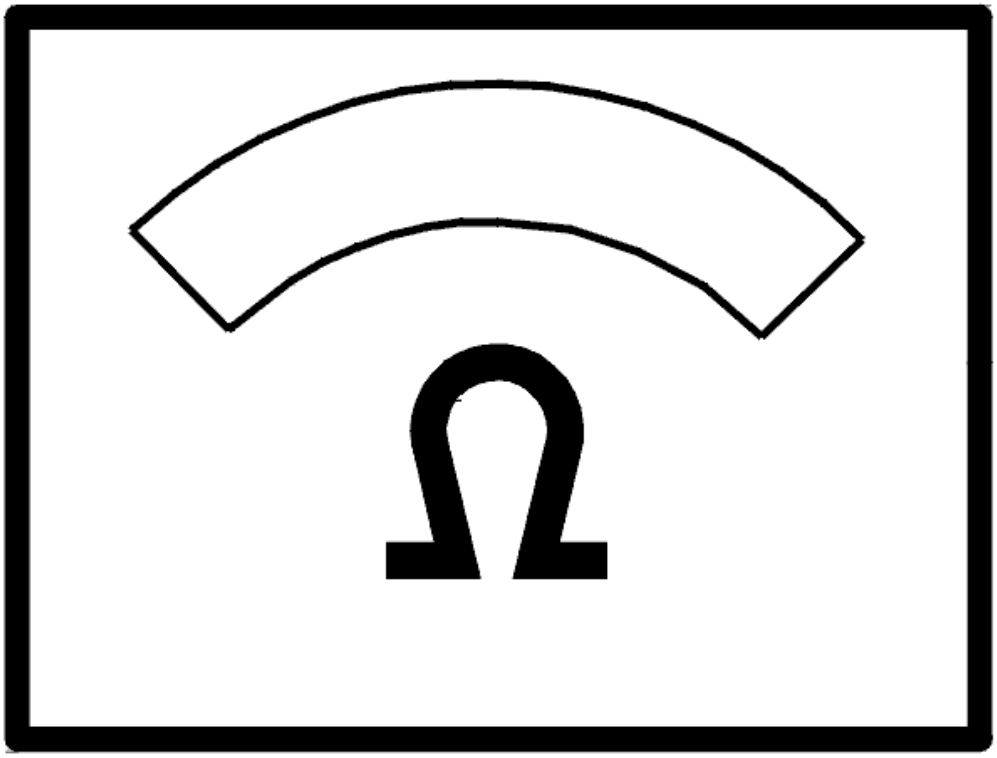

Fig. 373: Belt Routing / Engine Idling - Volvo
Courtesy of VOLVO CARS CORPORATION

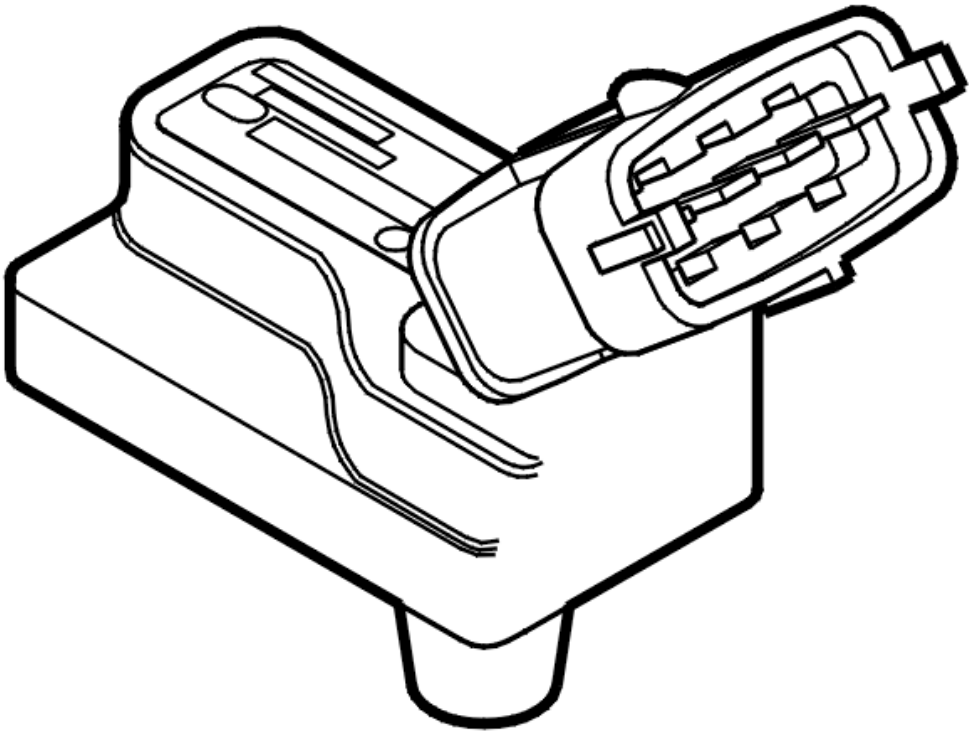

Fig. 374: Connecting Connector
Courtesy of VOLVO CARS CORPORATION

- Ignition off
- Reconnect the connectors, reinstall components etc.
- Test drive the vehicle on the road. Run a TRIP schedule so that the engine control module (ECM) compares the diagnostics. To run a TRIP schedule, see: **VERIFYING REPAIRS**
- Connect VCT2000 (or appropriate scan tool) to the data link connector (DLC) without switching off the engine.

NOTE: **If the engine is switched off, the stored fault status will be erased and the test drive will have to be repeated.**

Read off the diagnostic status and fault status for the diagnostic trouble code (DTC) by selecting the relevant diagnostic trouble code (DTC) from the list.

Check the fault status for the diagnostic trouble code (DTC) when the diagnostic is "Complete". If the function is correct, the fault status must be "No fault found" when the diagnostic is complete.

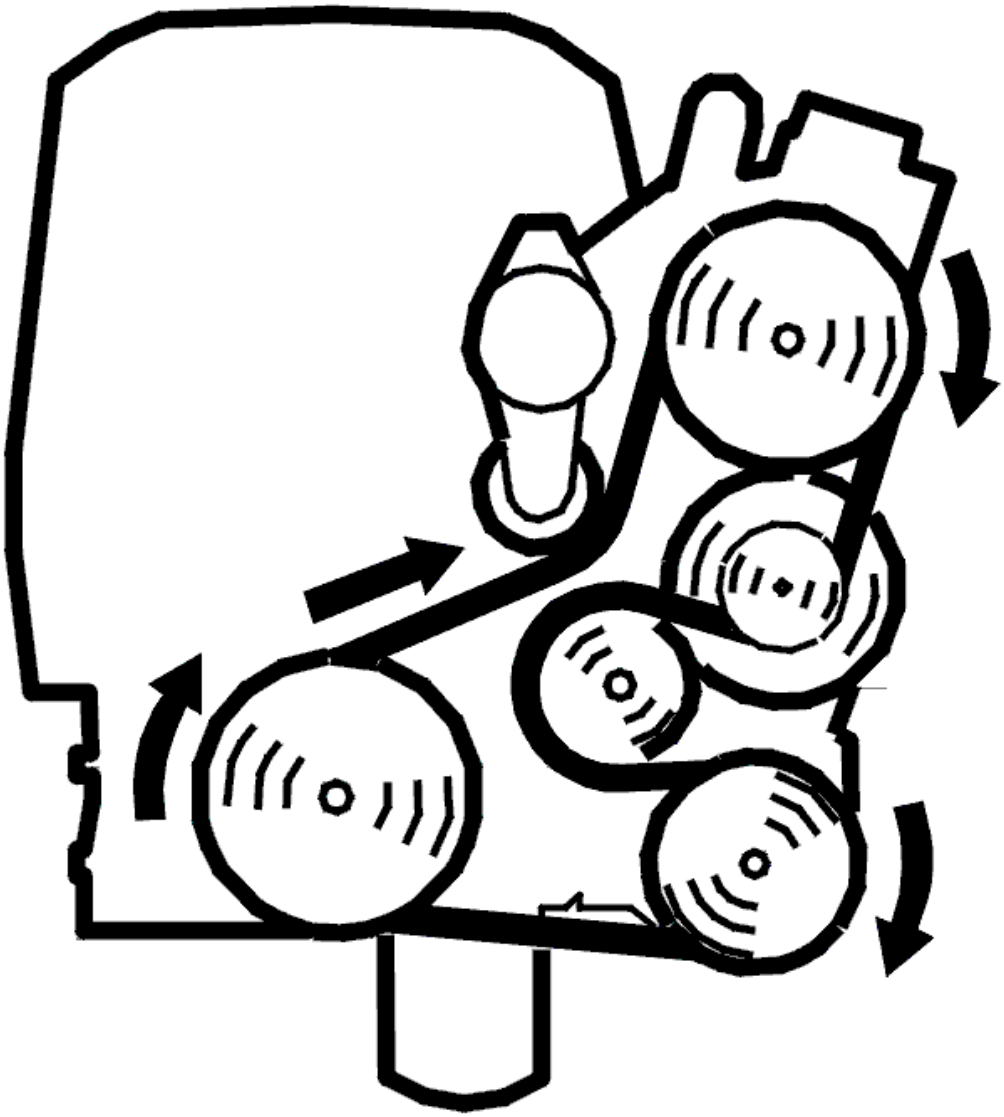

Fig. 375: Identifying VCT2000 Diagnostic Tool Symbol In VIDA
Courtesy of VOLVO CARS CORPORATION

Is the function OK?

- **YES**

  VERIFIED: Troubleshooting has been completed.

- **NO**

  Refer to **INFORMATION**

INFORMATION

FAULT-TRACING INFORMATION

The fault should have been detected and remedied. As this is not the case fault-tracing has failed.

Exit fault-tracing for this diagnostic trouble code (DTC) or make another attempt.

ECM-210D: LONG-TERM FUEL TRIM, BANK 1. SIGNAL TOO LOW (B6294T; 2005-2006)

DIAGNOSTIC TROUBLE CODE (DTC) INFORMATION ECM-210D

see **DIAGNOSTIC TROUBLE CODE (DTC) INFORMATION ECM-210D**

SIGNAL TOO LOW

see **SIGNAL TOO LOW**

ECM-211C: LONG-TERM FUEL TRIM, BANK 2. SIGNAL TOO HIGH (B6294T; 2005-2006)

DIAGNOSTIC TROUBLE CODE (DTC) INFORMATION ECM-211C

Condition

The engine control module (ECM) receives information from the heated oxygen sensor (HO2S) (bank 2) about the fuel / air mixture when idling and at both the upper and lower part-load range. If the fuel / air mixture deviates from lambda=1, the short-term fuel trim will compensate for this by adjusting the injection time so that lambda=1 is achieved. When the short-term fuel trim makes an adjustment, the integrator median must be adjusted by the long-term trim. The diagnostic trouble code (DTC) is stored when the long-term trim must be adjusted to almost maximum in the upper part load area.

Substitute Value

- None.

Possible Source

- Intake air leakage
- Air leakage in the exhaust system
- Low fuel pressure
- Damaged heated oxygen sensor (HO2S) (bank 2).

Fault symptom[s]

- None.

SIGNAL TOO HIGH

CHECKING THE FUEL INJECTION SYSTEM

Check the intake system for air leakage.

HINT: Air leakage in the intake system can occur through the evaporative emission system (EVAP) valve, the secondary air solenoid valve or the power brake booster.

Check the fuel pressure.

Test drive the car for approximately 10 minutes.

Check the mass air flow (MAF) sensor. Read off its correction factor. The value must be between 0.8 and 1.2.

NOTE: There must not be any air leakage when this test is carried out.

Remedy as necessary.

Other information

- see **CHECK FOR AIR LEAKS IN THE INTAKE SYSTEM**
- see **CHECKING FUEL AND RESIDUAL PRESSURES**
- see **MASS AIR FLOW (MAF) SENSOR, REPLACING** .

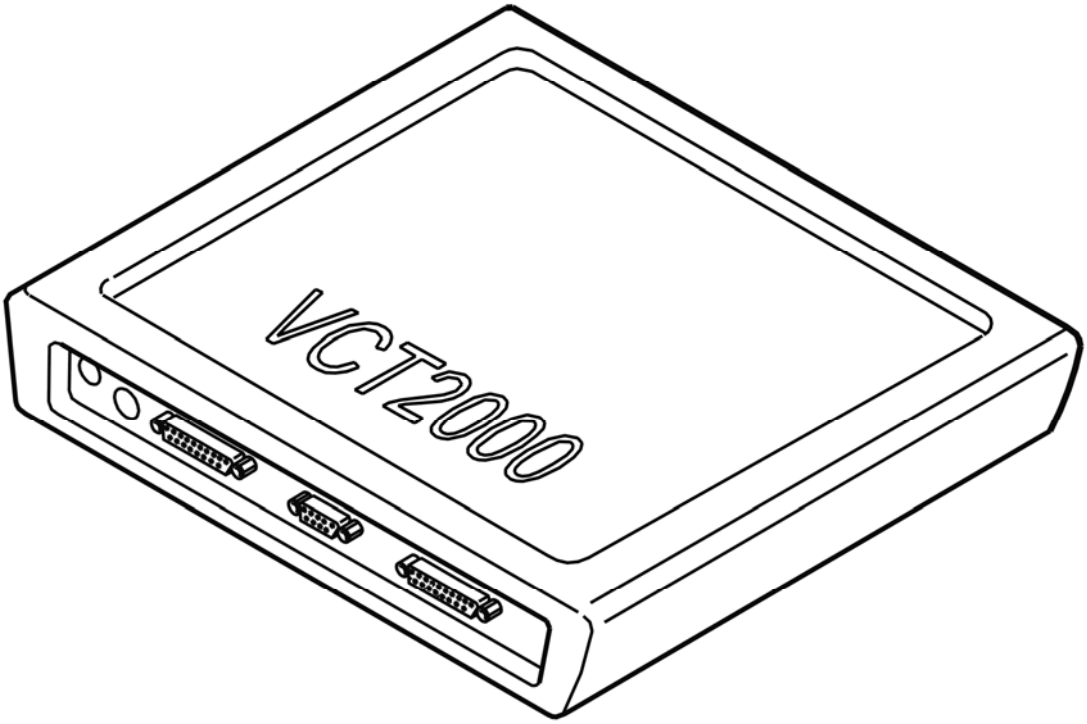

Fig. 376: Identifying VCT2000 Diagnostic Tool Symbol In VIDA
Courtesy of VOLVO CARS CORPORATION

- **Continue**

  Refer to **VERIFICATION**

VERIFICATION

VERIFICATION

HINT: After carrying out the repair, check that the fault has been remedied.

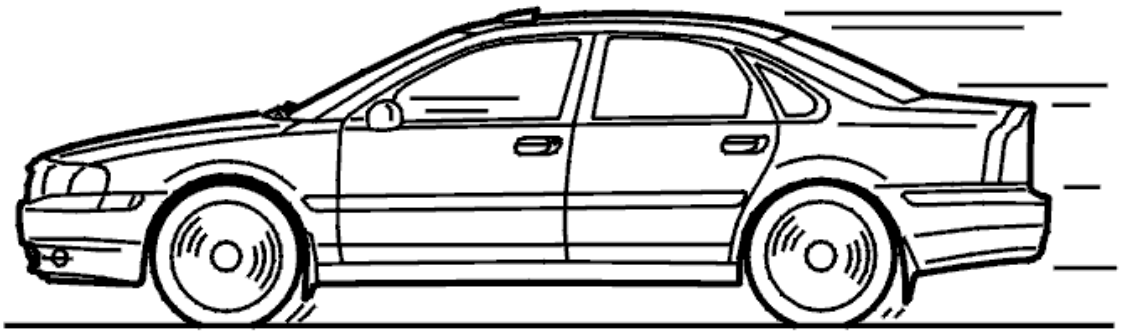

Fig. 377: Belt Routing / Engine Idling - Volvo
Courtesy of VOLVO CARS CORPORATION

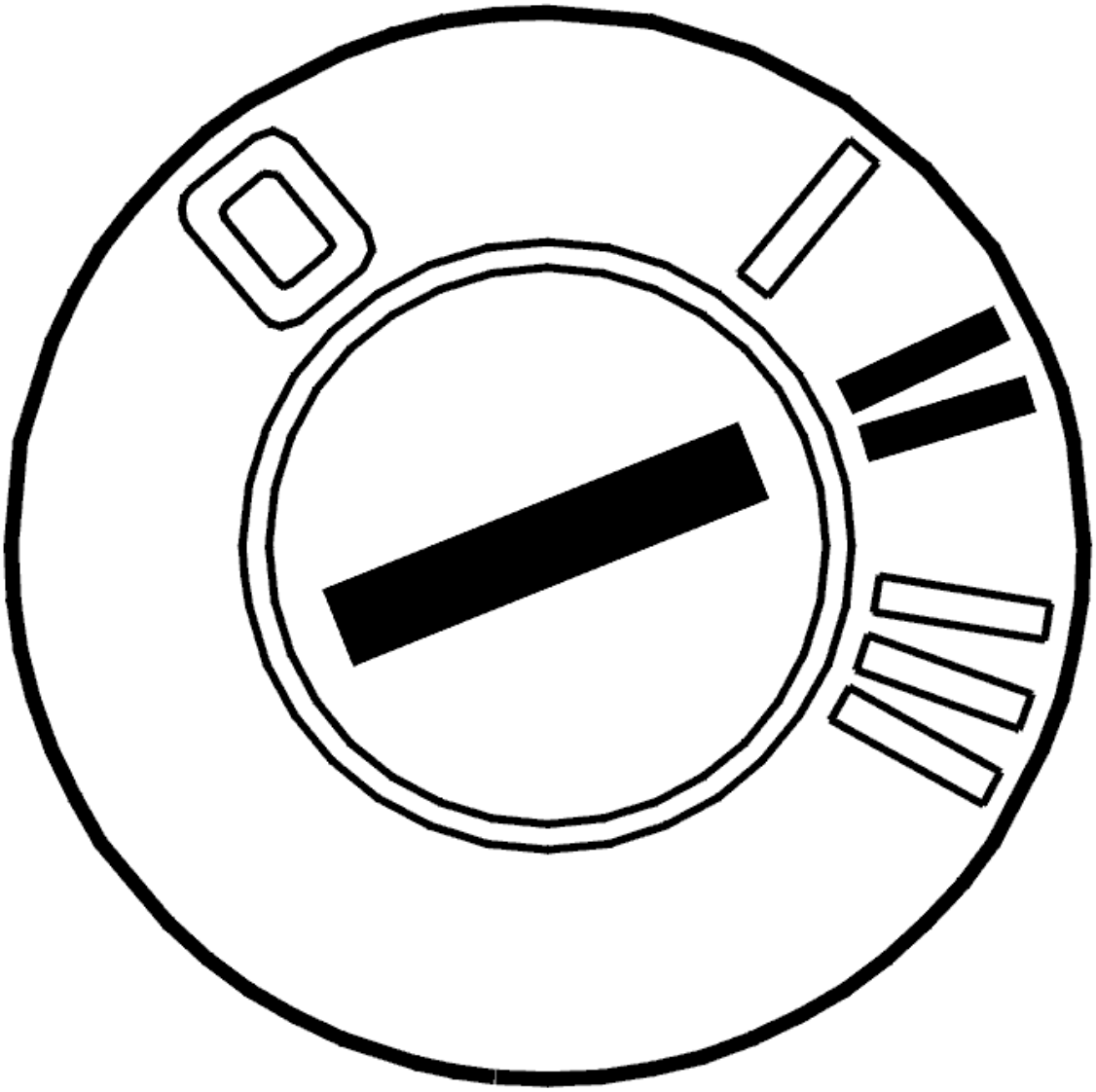

Fig. 378: Connecting Connector
Courtesy of VOLVO CARS CORPORATION

- Ignition off
- Reconnect the connectors, reinstall components etc.
- Test drive the vehicle on the road. Run a TRIP schedule so that the engine control module (ECM) compares the diagnostics. To run a TRIP schedule, see: **VERIFYING REPAIRS**
- Connect VCT2000 (or appropriate scan tool) to the data link connector (DLC) without switching off the engine.

NOTE: **If the engine is switched off, the stored fault status will be erased and the test drive will have to be repeated.**

Read off the diagnostic status and fault status for the diagnostic trouble code (DTC) by selecting the relevant diagnostic trouble code (DTC) from the list.

Check the fault status for the diagnostic trouble code (DTC) when the diagnostic is "Complete". If the function is correct, the fault status must be "No fault found" when the diagnostic is complete.

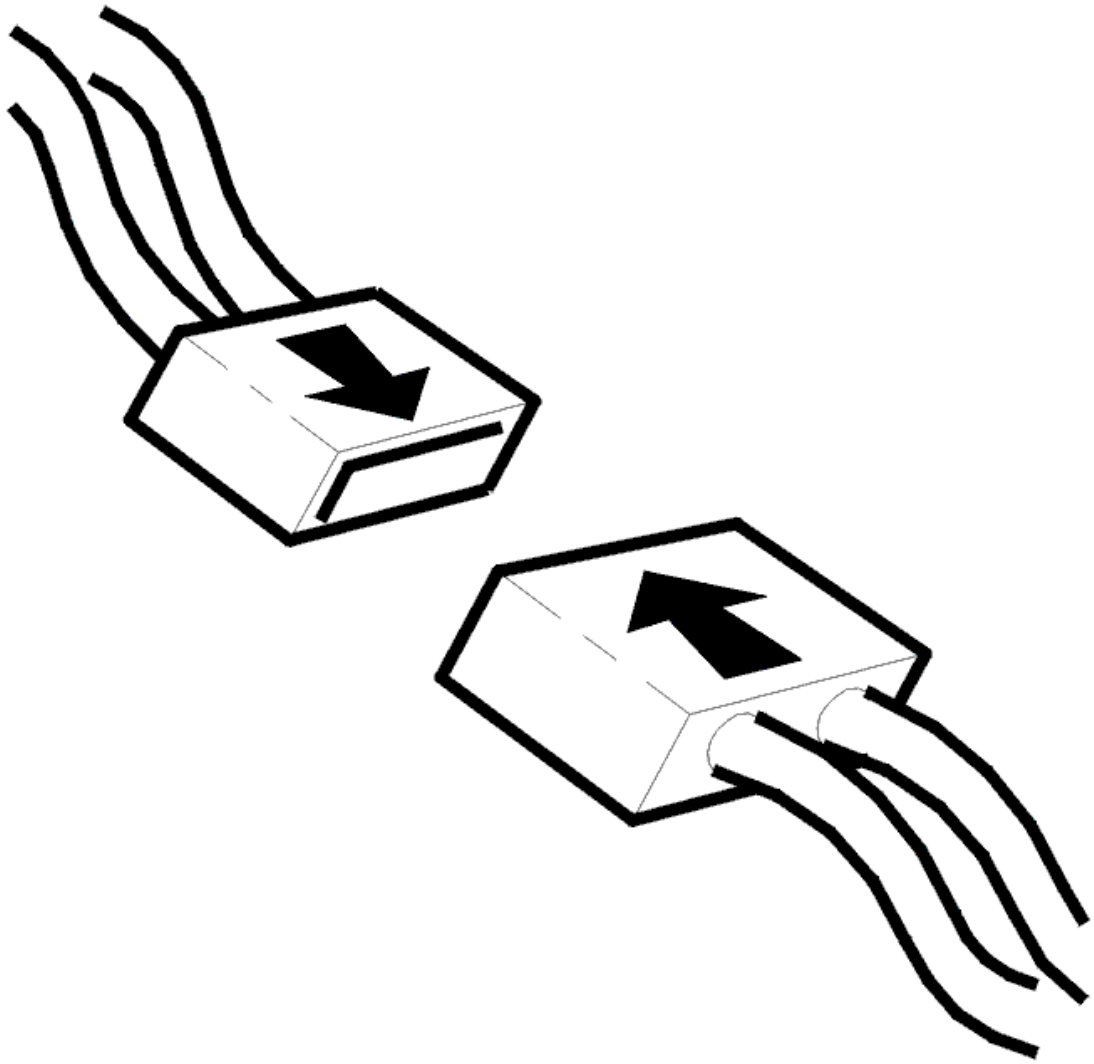

Fig. 379: Identifying VCT2000 Diagnostic Tool Symbol In VIDA
Courtesy of VOLVO CARS CORPORATION

Is the function OK?

- **YES**

  VERIFIED: Troubleshooting has been completed.

- **NO**

  Refer to **INFORMATION**

INFORMATION

FAULT-TRACING INFORMATION

The fault should have been detected and remedied. As this is not the case fault-tracing has failed.

Exit fault-tracing for this diagnostic trouble code (DTC) or make another attempt.

ECM-211D: LONG-TERM FUEL TRIM, BANK 2. SIGNAL TOO LOW (B6294T; 2005-2006)

DIAGNOSTIC TROUBLE CODE (DTC) INFORMATION ECM-211D

Condition

The engine control module (ECM) receives information from the heated oxygen sensor (HO2S) (bank 2) about the fuel / air mixture when idling and at both the upper and lower part-load range. If the fuel / air mixture deviates from lambda=1, the short-term fuel trim will compensate for this by adjusting the injection time so that lambda=1 is achieved. When the short-term fuel trim makes an adjustment, the integrator median must be adjusted by the long-term trim. The diagnostic trouble code (DTC) is stored when the long-term trim must be adjusted to almost maximum in the upper part load area.

Substitute Value

- None.

Possible Source

- Intake air leakage
- High fuel pressure
- Leaking injectors
- Damaged mass air flow (MAF) sensor
- Contaminated engine oil
- Oil level too high
- Damaged heated oxygen sensor (HO2S) (bank 2).

Fault symptom[s]

- None.

SIGNAL TOO LOW

CHECKING THE FUEL INJECTION SYSTEM

Check the intake system for air leakage.

HINT: Air leakage in the intake system can occur through the evaporative emission system (EVAP) valve, the secondary air solenoid valve or the power brake booster.

Check the exhaust system for leakage.

Check the fuel pressure and residual pressure.

Check that the oil level is within the minimum and maximum markings.

Check the viscosity of the engine oil by reading off the short-term fuel trim with the engine running. Plug the crankcase ventilation and read off the short-term fuel trim again. The value must be more or less unchanged.

Remedy as necessary.

Other information:

- see **CHECK FOR AIR LEAKS IN THE INTAKE SYSTEM**
- see **CHECKING FOR AIR LEAKAGE IN THE EXHAUST SYSTEM**
- see **CHECKING FUEL AND RESIDUAL PRESSURES**

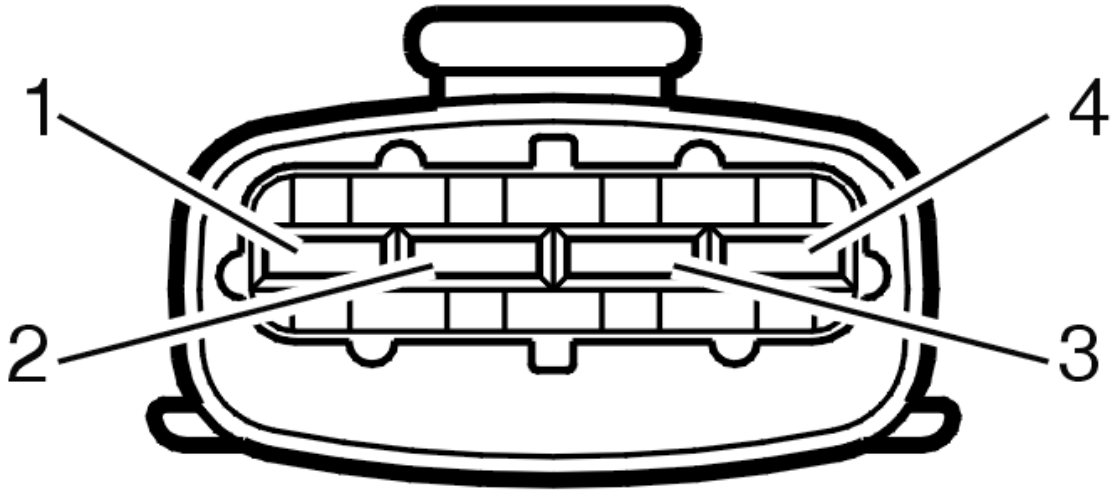

Fig. 380: Identifying VCT2000 Diagnostic Tool Symbol In VIDA
Courtesy of VOLVO CARS CORPORATION

Was a fault detected?

- **YES**

  Refer to **VERIFICATION**

- **NO**

  Refer to **CHECKING THE MASS AIR FLOW (MAF) SENSOR**

CHECKING THE MASS AIR FLOW (MAF) SENSOR

Test drive the car for approximately 10 minutes.

Read off the correction factor of the mass air flow (MAF) sensor. The value must be between 0.8 and 1.2.

NOTE: There must not be any air leakage when this test is carried out.

Remedy as necessary.

Other information

- see **MASS AIR FLOW (MAF) SENSOR, REPLACING** .

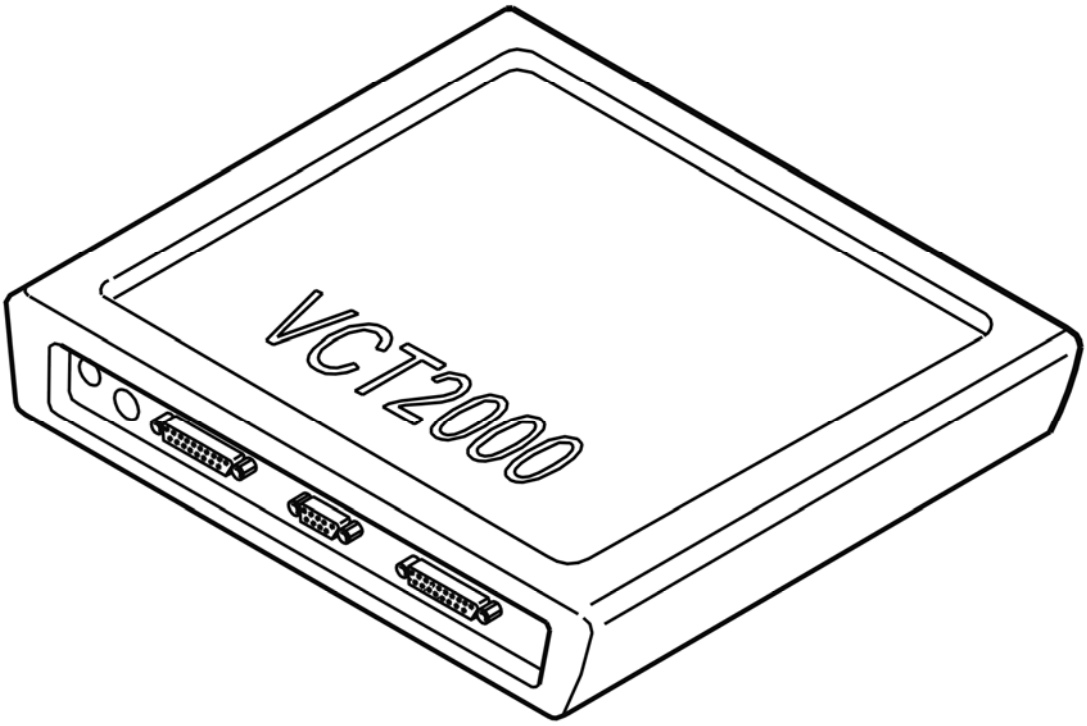

Fig. 381: Identifying VCT2000 Diagnostic Tool Symbol In VIDA
Courtesy of VOLVO CARS CORPORATION

- **Continue**

  Refer to **VERIFICATION**

VERIFICATION

VERIFICATION

HINT: After carrying out the repair, check that the fault has been remedied.

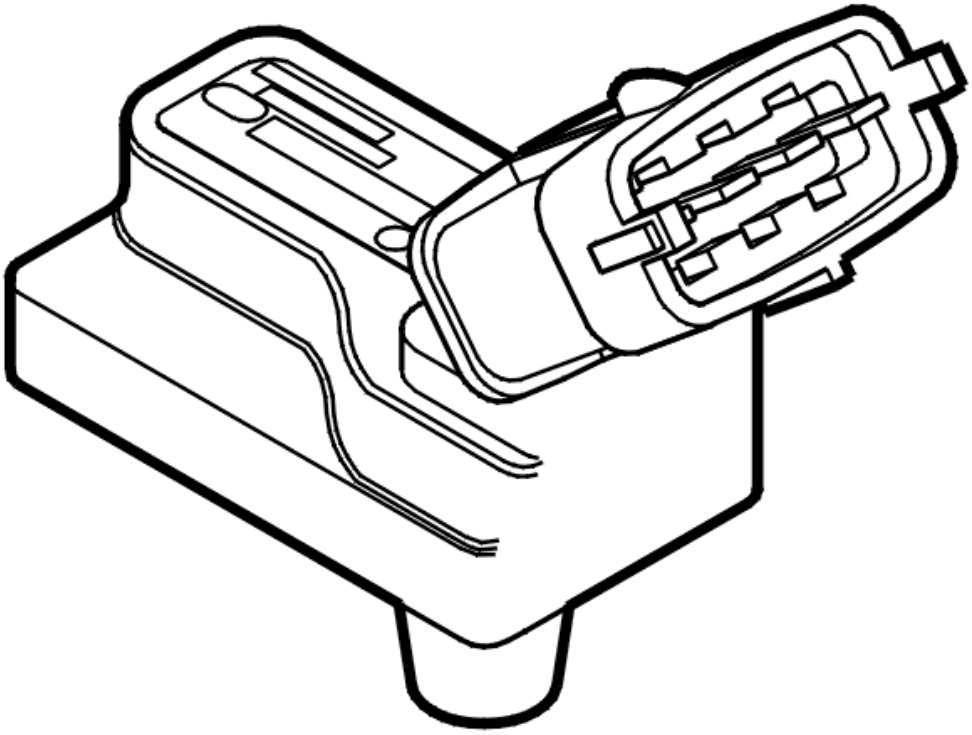

Fig. 382: Belt Routing / Engine Idling - Volvo
Courtesy of VOLVO CARS CORPORATION

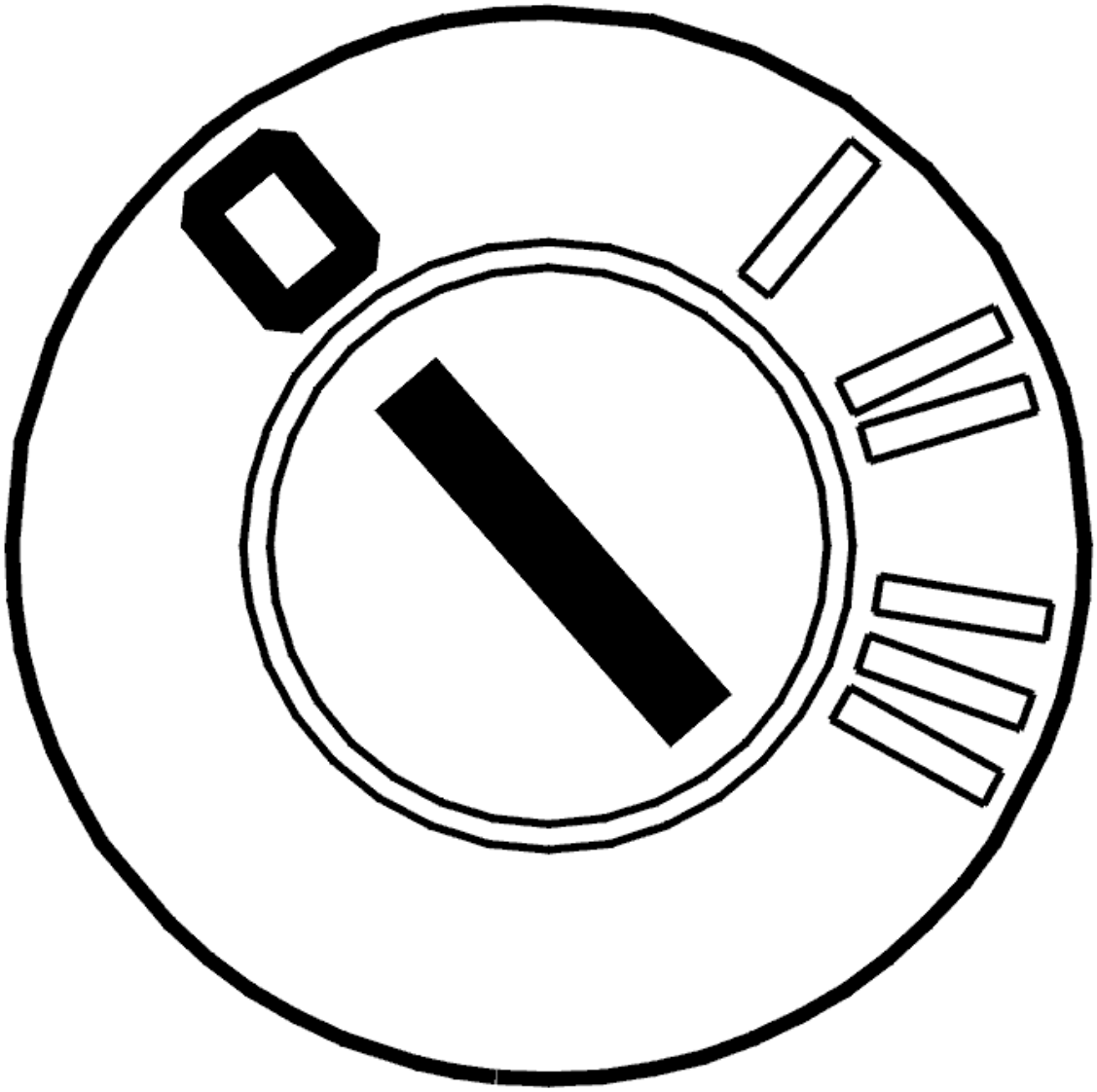

Fig. 383: Connecting Connector
Courtesy of VOLVO CARS CORPORATION

- Ignition off
- Reconnect the connectors, reinstall components etc.
- Test drive the vehicle on the road. Run a TRIP schedule so that the engine control module (ECM) compares the diagnostics. To run a TRIP schedule, see: **VERIFYING REPAIRS**
- Connect VCT2000 (or appropriate scan tool) to the data link connector (DLC) without switching off the engine.

NOTE: **If the engine is switched off, the stored fault status will be erased and the test drive will have to be repeated.**

Read off the diagnostic status and fault status for the diagnostic trouble code (DTC) by selecting the relevant diagnostic trouble code (DTC) from the list.

Check the fault status for the diagnostic trouble code (DTC) when the diagnostic is "Complete". If the function is correct, the fault status must be "No fault found" when the diagnostic is complete.

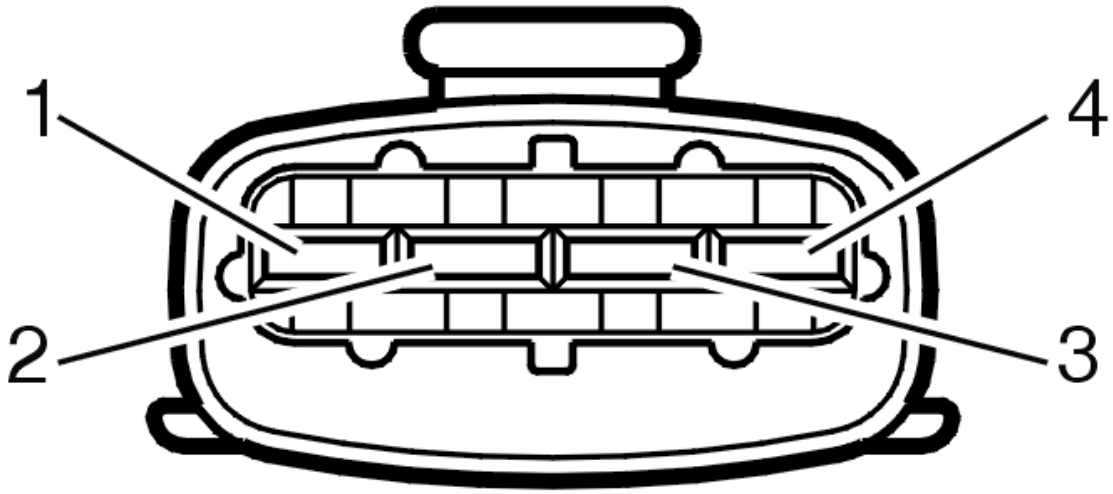

Fig. 384: Identifying VCT2000 Diagnostic Tool Symbol In VIDA
Courtesy of VOLVO CARS CORPORATION

Is the function OK?

- **YES**

  VERIFIED: Troubleshooting has been completed.

- **NO**

  Refer to **INFORMATION**

INFORMATION

FAULT-TRACING INFORMATION

The fault should have been detected and remedied. As this is not the case fault-tracing has failed.

Exit fault-tracing for this diagnostic trouble code (DTC) or make another attempt.

ECM-212C: LONG-TERM FUEL TRIM, BANK 1. SIGNAL TOO HIGH (B5254T2; 2005-2007)

DIAGNOSTIC TROUBLE CODE (DTC) INFORMATION ECM-212C

Condition

The engine control module (ECM) receives information from the heated oxygen sensor (HO2S) (bank 1) about

the fuel / air mixture when idling and at both the upper and lower part-load range. If the fuel / air mixture deviates from lambda=1, the short-term fuel trim will compensate for this by adjusting the injection time so that lambda=1 is achieved. When the short-term fuel trim makes an adjustment, the integrator median must be adjusted by the long-term trim. The diagnostic trouble code (DTC) is stored when the long-term trim must be adjusted to almost maximum in the lower part load area.

Substitute Value

- None.

Possible Source

- Intake air leakage
- Air leakage in the exhaust system
- Low fuel pressure
- Damaged heated oxygen sensor (HO2S) (bank 1).

Fault symptom[s]

- None.

SIGNAL TOO HIGH

CHECKING THE FUEL INJECTION SYSTEM

Check the intake system for air leakage.

HINT: Air leakage in the intake system can occur through the evaporative emission system (EVAP) valve, the secondary air solenoid valve or the power brake booster.

Check the fuel pressure.

Test drive the car for approximately 10 minutes.

Read off the correction factor of the mass air flow (MAF) sensor. The value must be between 0.8 and 1.2.

NOTE: There must not be any air leakage when this test is carried out.

Remedy as necessary.

Other information

- see **CHECK FOR AIR LEAKS IN THE INTAKE SYSTEM**
- see **CHECKING FUEL AND RESIDUAL PRESSURES**
- see **MASS AIR FLOW (MAF) SENSOR, REPLACING**

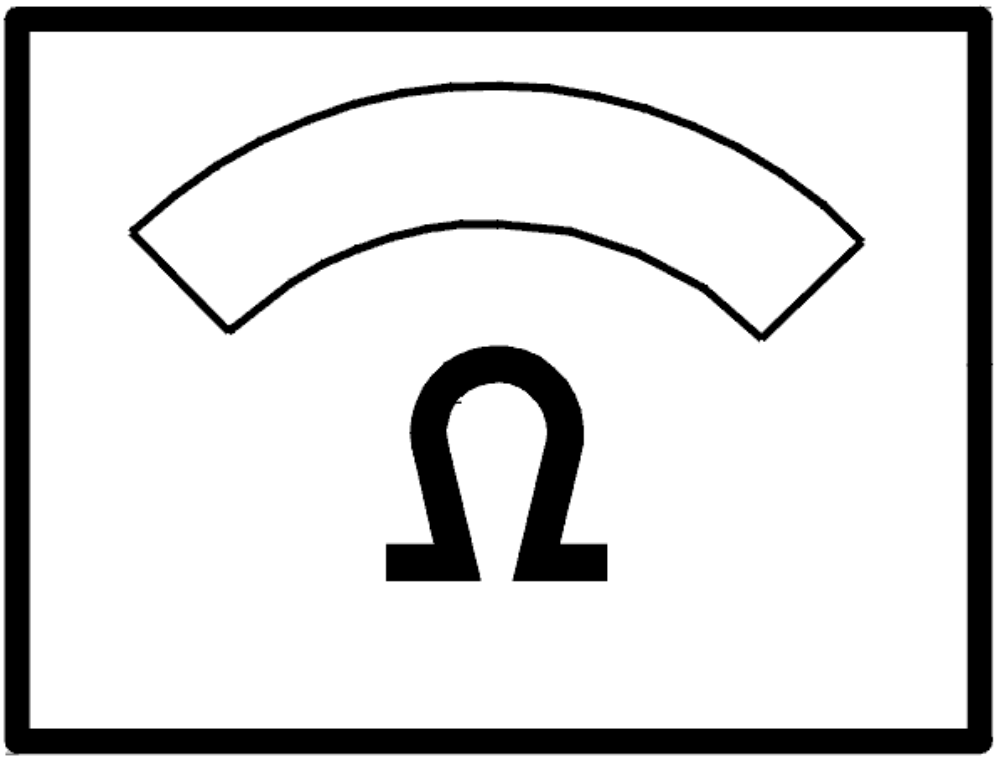

Fig. 385: Identifying VCT2000 Diagnostic Tool Symbol In VIDA
Courtesy of VOLVO CARS CORPORATION

- **Continue**

  Refer to **VERIFICATION**

VERIFICATION

VERIFICATION

HINT: After carrying out the repair, check that the fault has been remedied.

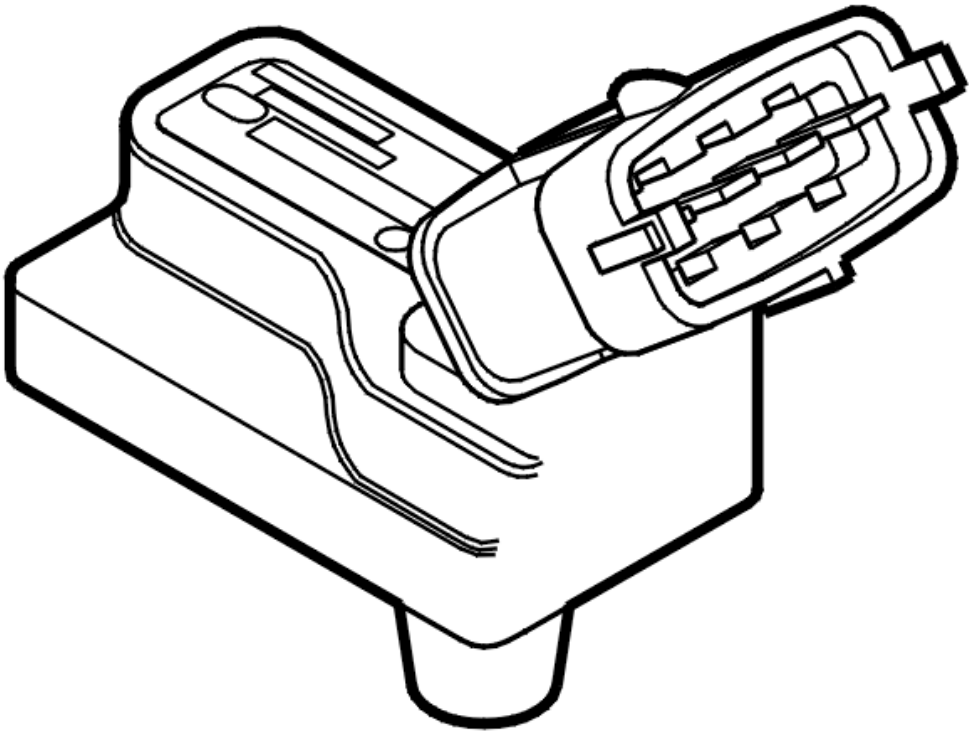

Fig. 386: Belt Routing / Engine Idling - Volvo
Courtesy of VOLVO CARS CORPORATION

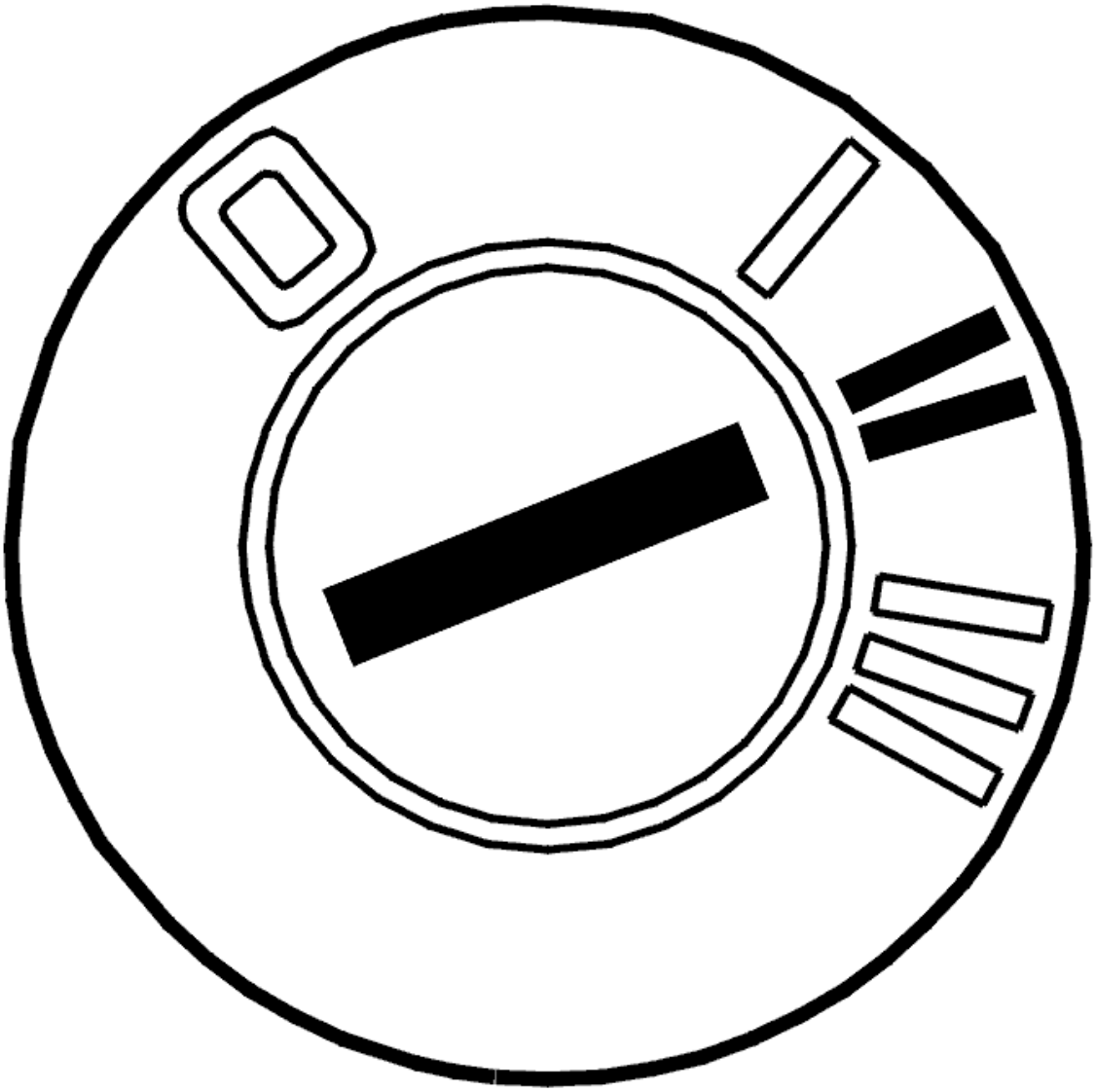

Fig. 387: Connecting Connector
Courtesy of VOLVO CARS CORPORATION

- Ignition off
- Reconnect the connectors, reinstall components etc.
- Test drive the vehicle on the road. Run a TRIP schedule so that the engine control module (ECM) compares the diagnostics. To run a TRIP schedule, see: **VERIFYING REPAIRS**
- Connect VCT2000 (or appropriate scan tool) to the data link connector (DLC) without switching off the engine.

NOTE: **If the engine is switched off, the stored fault status will be erased and the test drive will have to be repeated.**

Read off the diagnostic status and fault status for the diagnostic trouble code (DTC) by selecting the relevant diagnostic trouble code (DTC) from the list.

Check the fault status for the diagnostic trouble code (DTC) when the diagnostic is "Complete". If the function is correct, the fault status must be "No fault found" when the diagnostic is complete.

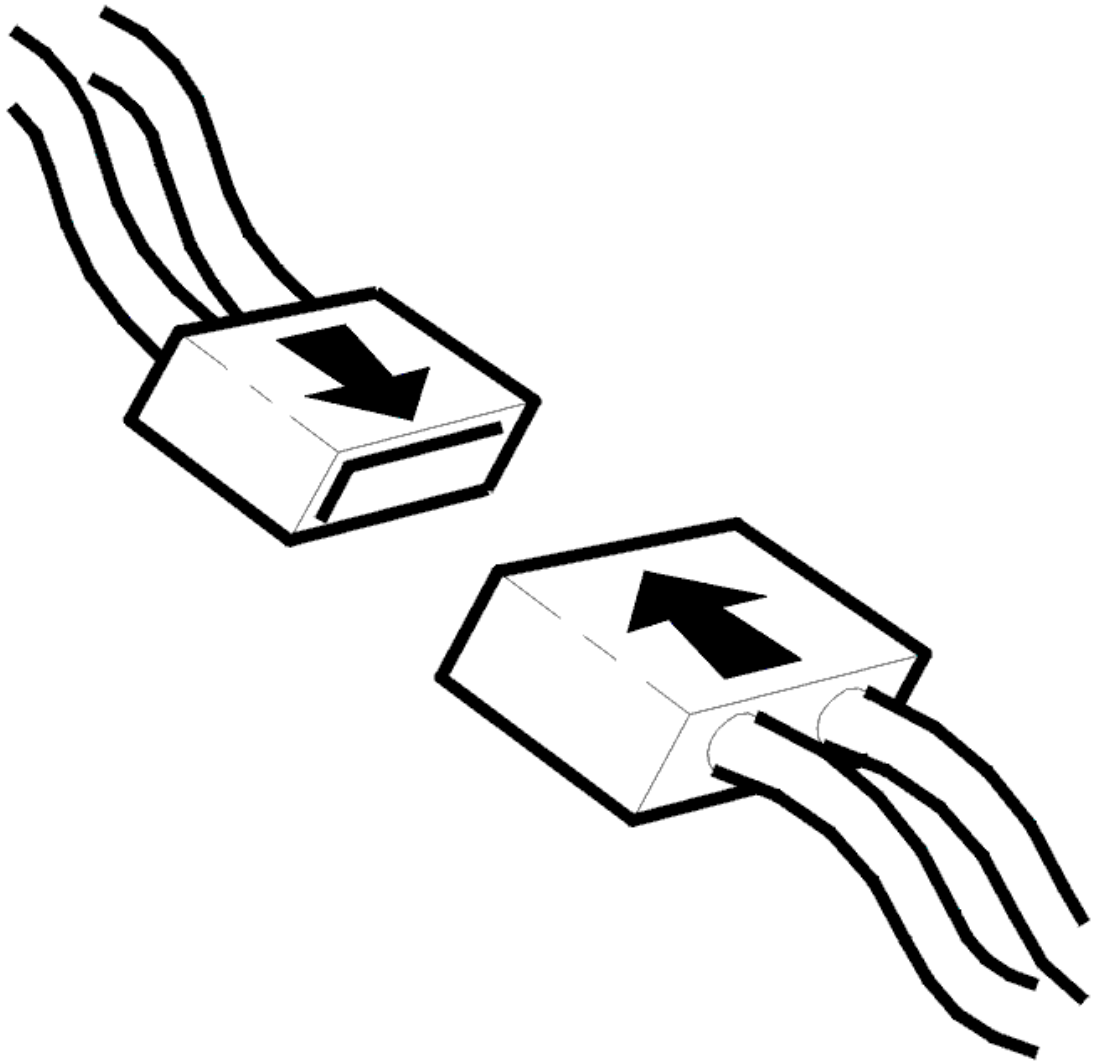

Fig. 388: Identifying VCT2000 Diagnostic Tool Symbol In VIDA
Courtesy of VOLVO CARS CORPORATION

Is the function OK?

- **YES**

  VERIFIED: Troubleshooting has been completed.

- **NO**

  Refer to **INFORMATION**

INFORMATION

FAULT-TRACING INFORMATION

The fault should have been detected and remedied. As this is not the case fault-tracing has failed.

Exit fault-tracing for this diagnostic trouble code (DTC) or make another attempt.

ECM-212C: LONG-TERM FUEL TRIM, BANK 1. SIGNAL TOO HIGH (B6294T; 2005-2006)

DIAGNOSTIC TROUBLE CODE (DTC) INFORMATION ECM-212C

see **DIAGNOSTIC TROUBLE CODE (DTC) INFORMATION ECM-212C**

SIGNAL TOO HIGH

see **SIGNAL TOO HIGH**

ECM-212D: LONG-TERM FUEL TRIM, BANK 1. SIGNAL TOO LOW (B5254T2; 2005-2007)

DIAGNOSTIC TROUBLE CODE (DTC) INFORMATION ECM-212D

Condition

The engine control module (ECM) receives information from the heated oxygen sensor (HO2S) (bank 1) about the fuel / air mixture when idling and at both the upper and lower part-load range. If the fuel / air mixture deviates from lambda=1, the short-term fuel trim will compensate for this by adjusting the injection time so that lambda=1 is achieved. When the short-term fuel trim makes an adjustment, the integrator median must be adjusted by the long-term trim. The diagnostic trouble code (DTC) is stored when the long-term trim must be adjusted to almost maximum in the lower part load area.

Substitute Value

- None.

Possible Source

- Intake air leakage
- High fuel pressure
- Leaking injectors
- Damaged mass air flow (MAF) sensor
- Contaminated engine oil
- Oil level too high

- Damaged heated oxygen sensor (HO2S) (bank 1).

Fault symptom[s]

- Fuel system/Excessive fuel consumption

SIGNAL TOO LOW

CHECKING THE FUEL INJECTION SYSTEM

Check the intake system for air leakage.

HINT: Air leakage in the intake system can occur through the evaporative emission system (EVAP) valve, the secondary air solenoid valve or the power brake booster.

Check the exhaust system for leakage.

Check the fuel pressure and residual pressure.

Check that the oil level is within the minimum and maximum markings.

Check the viscosity of the engine oil by reading off the short-term fuel trim with the engine running. Plug the crankcase ventilation and read off the short-term fuel trim again. The value must be more or less unchanged.

Remedy as necessary.

Other information:

- see **CHECK FOR AIR LEAKS IN THE INTAKE SYSTEM**
- see **CHECKING FOR AIR LEAKAGE IN THE EXHAUST SYSTEM**
- see **CHECKING FUEL AND RESIDUAL PRESSURES**

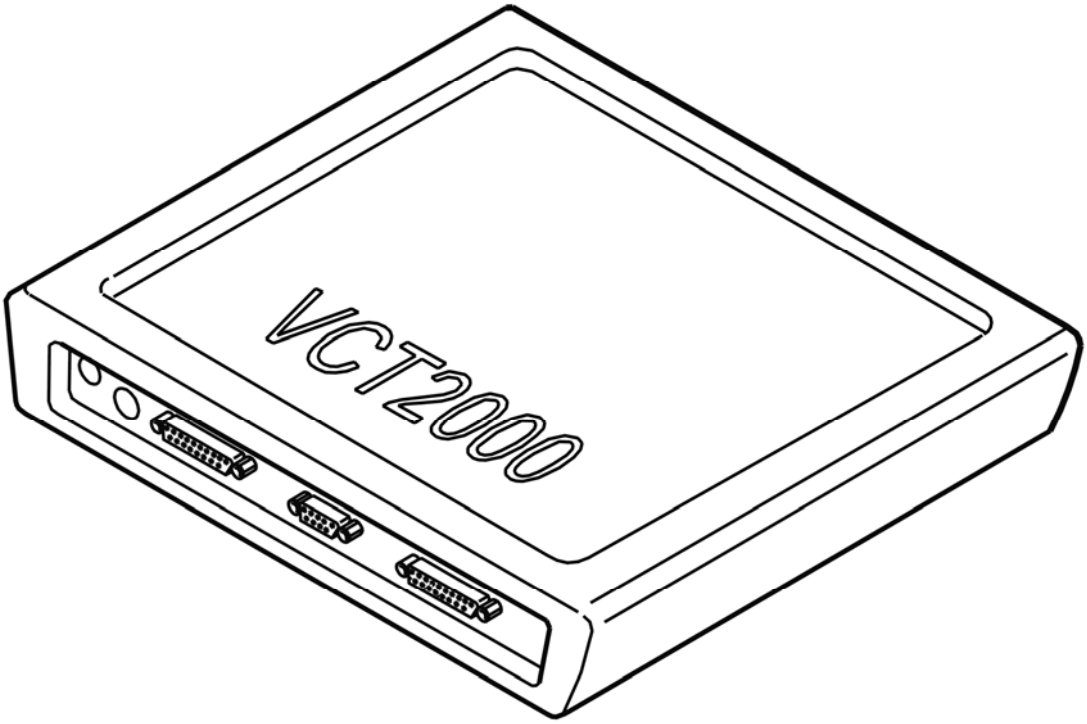

Fig. 389: Identifying VCT2000 Diagnostic Tool Symbol In VIDA
Courtesy of VOLVO CARS CORPORATION

Was a fault detected?

- **YES**

  Refer to **VERIFICATION**

- **NO**

  Refer to **CHECKING THE MASS AIR FLOW (MAF) SENSOR**

CHECKING THE MASS AIR FLOW (MAF) SENSOR

Test drive the car for approximately 10 minutes.

Read off the correction factor of the mass air flow (MAF) sensor. The value must be between 0.8 and 1.2.

NOTE: There must not be any air leakage when this test is carried out.

Remedy as necessary.

Other information

- see **MASS AIR FLOW (MAF) SENSOR, REPLACING** .

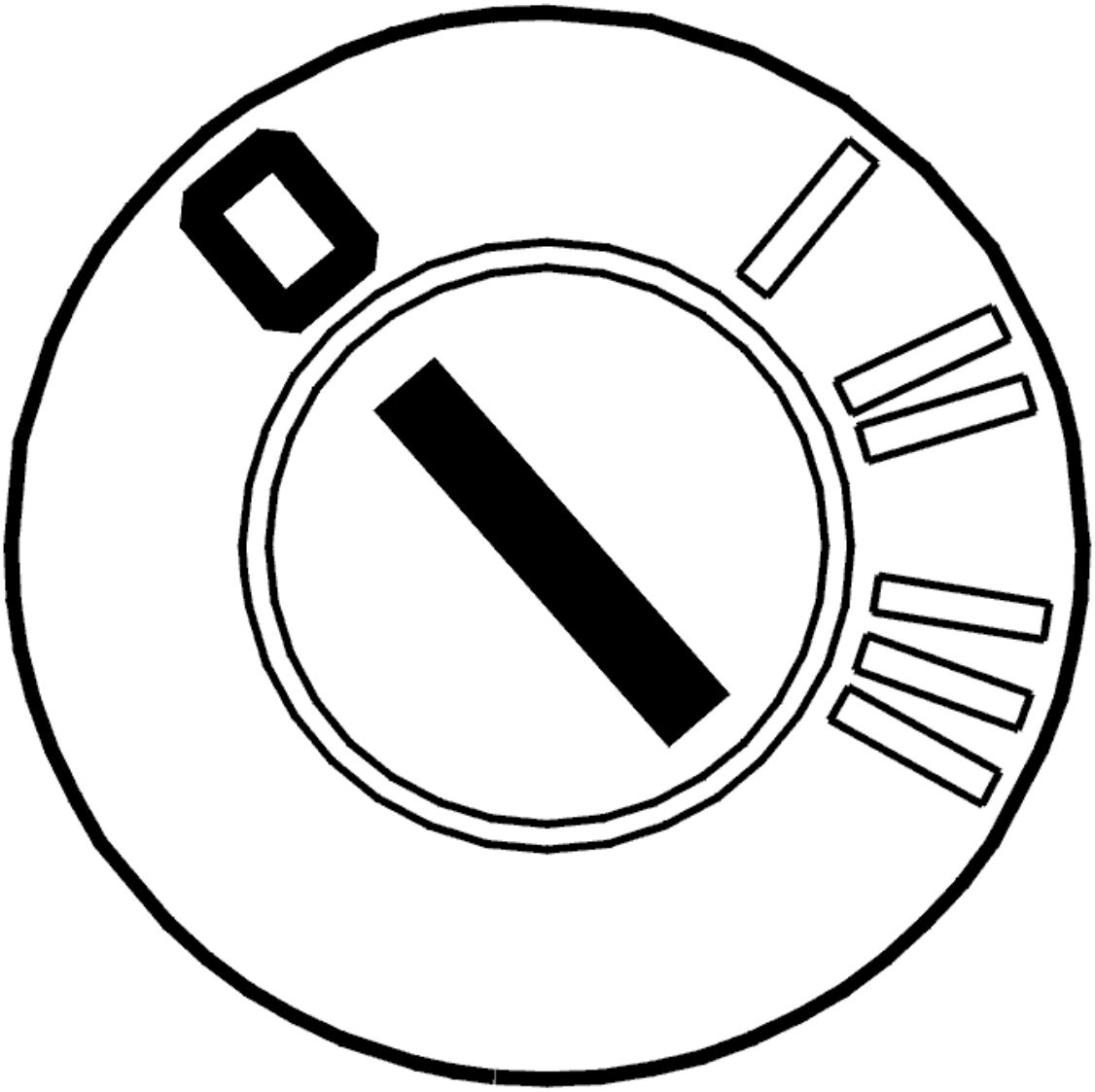

Fig. 390: Identifying VCT2000 Diagnostic Tool Symbol In VIDA
Courtesy of VOLVO CARS CORPORATION

- **Continue**

  Refer to **VERIFICATION**

VERIFICATION

VERIFICATION

HINT: After carrying out the repair, check that the fault has been remedied.

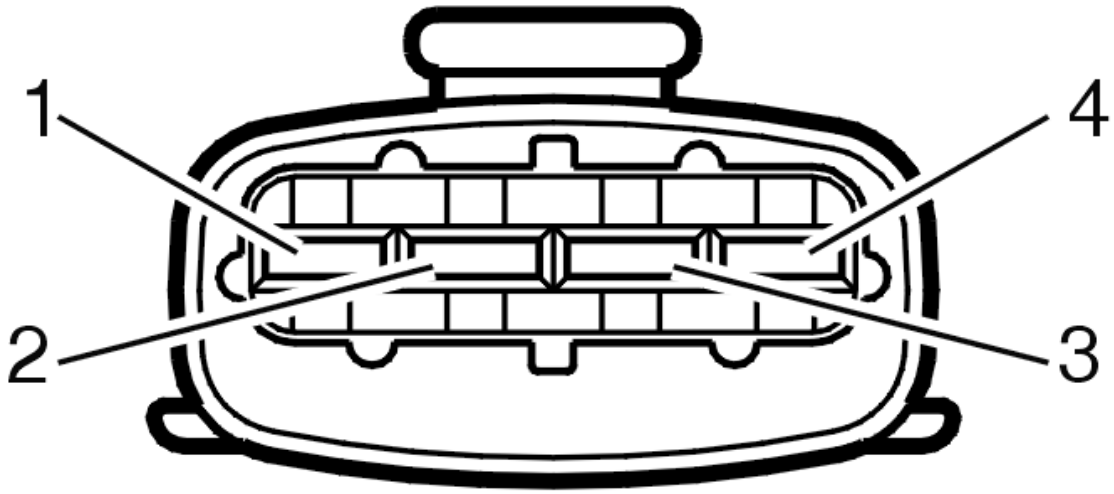

Fig. 391: Belt Routing / Engine Idling - Volvo
Courtesy of VOLVO CARS CORPORATION

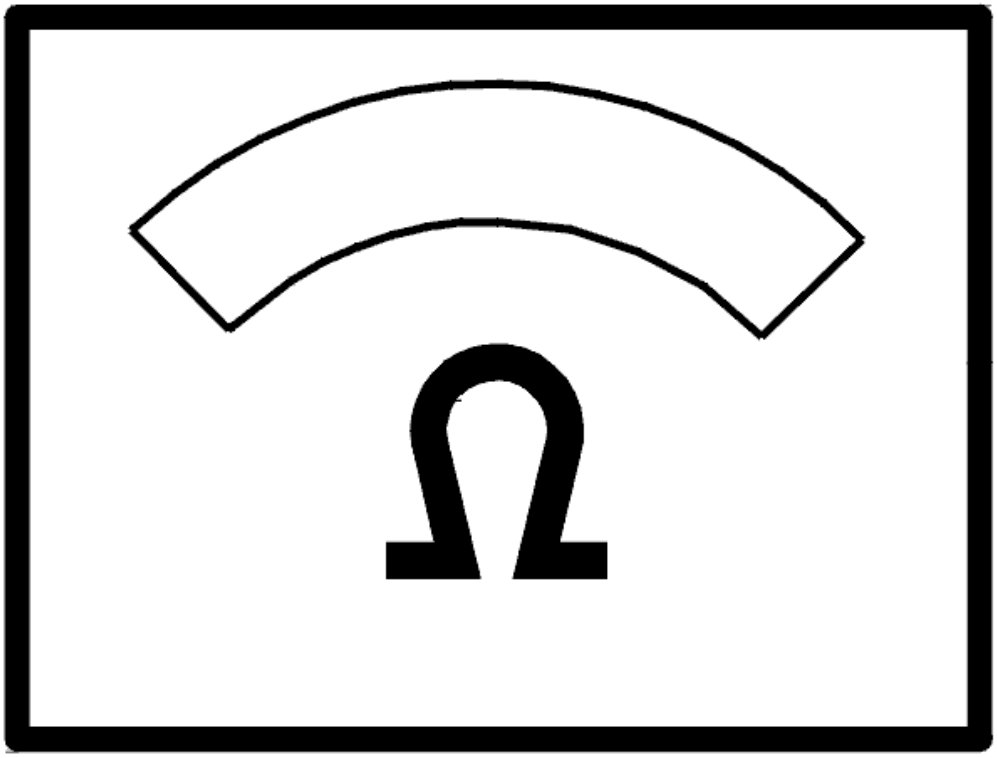

Fig. 392: Connecting Connector
Courtesy of VOLVO CARS CORPORATION

- Ignition off
- Reconnect the connectors, reinstall components etc.
- Test drive the vehicle on the road. Run a TRIP schedule so that the engine control module (ECM) compares the diagnostics. To run a TRIP schedule, see: **VERIFYING REPAIRS**
- Connect VCT2000 (or appropriate scan tool) to the data link connector (DLC) without switching off the engine.

NOTE: **If the engine is switched off, the stored fault status will be erased and the test drive will have to be repeated.**

Read off the diagnostic status and fault status for the diagnostic trouble code (DTC) by selecting the relevant diagnostic trouble code (DTC) from the list.

Check the fault status for the diagnostic trouble code (DTC) when the diagnostic is "Complete". If the function is correct, the fault status must be "No fault found" when the diagnostic is complete.

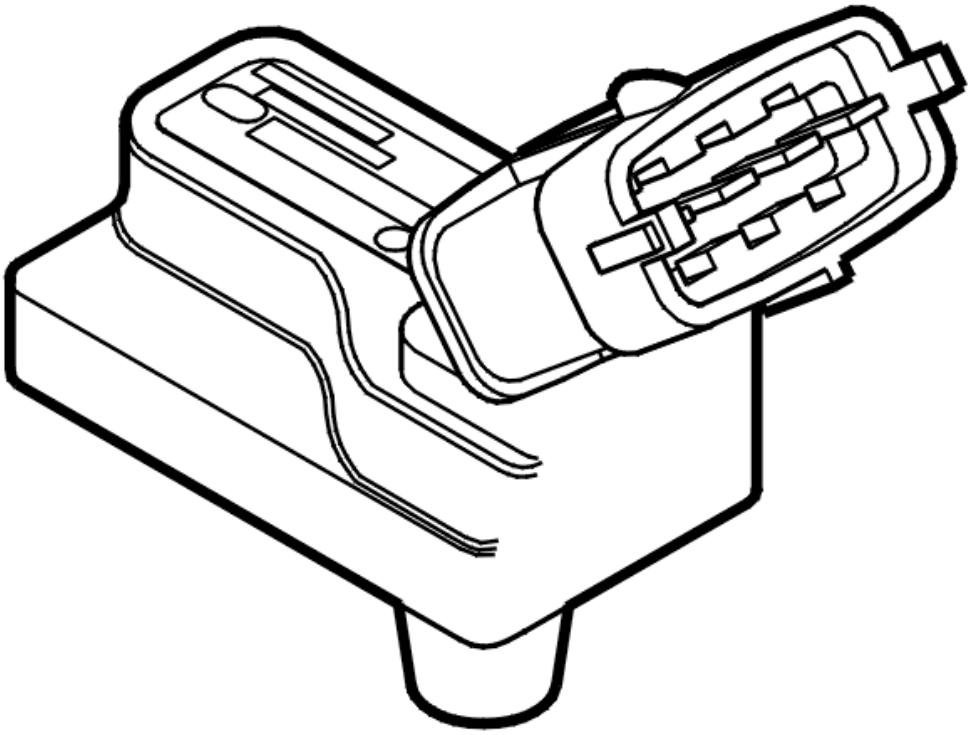

Fig. 393: Identifying VCT2000 Diagnostic Tool Symbol In VIDA
Courtesy of VOLVO CARS CORPORATION

Is the function OK?

- **YES**

  VERIFIED: Troubleshooting has been completed.

- **NO**

  Refer to **INFORMATION**

INFORMATION

FAULT-TRACING INFORMATION

The fault should have been detected and remedied. As this is not the case fault-tracing has failed.

Exit fault-tracing for this diagnostic trouble code (DTC) or make another attempt.

ECM-212D: LONG-TERM FUEL TRIM, BANK 1. SIGNAL TOO LOW (B6294T; 2005-2006)

DIAGNOSTIC TROUBLE CODE (DTC) INFORMATION ECM-212D

see **DIAGNOSTIC TROUBLE CODE (DTC) INFORMATION ECM-212D**

SIGNAL TOO LOW

see **SIGNAL TOO LOW**

ECM-213C: LONG-TERM FUEL TRIM, BANK 2. SIGNAL TOO HIGH (B6294T; 2005-2006)

DIAGNOSTIC TROUBLE CODE (DTC) INFORMATION ECM-213C

Condition

The engine control module (ECM) receives information from the heated oxygen sensor (HO2S) (bank 2) about the fuel / air mixture when idling and at both the upper and lower part-load range. If the fuel / air mixture deviates from lambda=1, the short-term fuel trim will compensate for this by adjusting the injection time so that lambda=1 is achieved. When the short-term fuel trim makes an adjustment, the integrator median must be adjusted by the long-term trim. The diagnostic trouble code (DTC) is stored when the long-term trim must be adjusted to almost maximum in the lower part load area.

Substitute Value

- None.

Possible Source

- Intake air leakage
- Air leakage in the exhaust system
- Low fuel pressure
- Damaged heated oxygen sensor (HO2S) (bank 2).

Fault symptom[s]

- None.

SIGNAL TOO HIGH

see **SIGNAL TOO HIGH**

ECM-213D: LONG-TERM FUEL TRIM, BANK 2. SIGNAL TOO LOW (B6294T;

2005-2006)

DIAGNOSTIC TROUBLE CODE (DTC) INFORMATION ECM-213D

Condition

The engine control module (ECM) receives information from the heated oxygen sensor (HO2S) (bank 2) about the fuel / air mixture when idling and at both the upper and lower part-load range. If the fuel / air mixture deviates from lambda=1, the short-term fuel trim will compensate for this by adjusting the injection time so that lambda=1 is achieved. When the short-term fuel trim makes an adjustment, the integrator median must be adjusted by the long-term trim. The diagnostic trouble code (DTC) is stored when the long-term trim must be adjusted to almost maximum in the lower part load area.

Substitute Value

- None.

Possible Source

- Intake air leakage
- High fuel pressure
- Leaking injectors
- Damaged mass air flow (MAF) sensor
- Contaminated engine oil
- Oil level too high
- Damaged heated oxygen sensor (HO2S) (bank 2).

Fault symptom[s]

- None.

SIGNAL TOO LOW

see **SIGNAL TOO LOW**

ECM-2140: LONG-TERM FUEL TRIM, BANK 1 (B5254T2; 2007)

DIAGNOSTIC TROUBLE CODE (DTC) INFORMATION ECM-2140

Condition

This diagnostic trouble code can only be stored during lambda regulation quick tests. This is a workshop test, for detecting air leaks or low fuel pressure. During the quick test, the Engine control module (ECM) receives information from the heated oxygen sensor about the fuel/air mixture with reset fuel adaptations. If the fuel/air mixture is outside certain parameters, this means that there is a fault that can cause diagnostic trouble codes

related to lambda regulation to be stored during normal operation. I. e. diagnostic trouble codes ECM-21AC, ECM-21AD, ECM-21CC or ECM-21DD.

The diagnostic trouble code (DTC) is stored if the control module detects that:

- Fuel/air mixture (lambda) deviates abnormally from the expected (lambda=1).

The control module's test for the diagnostic trouble code (DTC) starts in the event of:

- Activate quick test

NOTE: The control module can only detect the fault once the test has been started and the diagnostic trouble code (DTC) is stored when the conditions are met.

Substitute Value

- None.

Possible Source

Faulty signal

- Damaged heated oxygen sensor (HO2S).
- Intake air leakage.
- Air leakage in the exhaust system.
- Damaged mass air flow (MAF) sensor.

Fault symptom[s]

- None.

FAULT-TRACING INFORMATION

INFORMATION

This diagnostic trouble code can only be stored during lambda regulation quick tests. The test is normally run as verification after faults have been rectified. If the diagnostic trouble code is stored during the test, this means that faults remain to be remedied that can cause problems with lambda regulation. Continue with/return to manual navigation for fault tracing under the diagnostic trouble code related to lambda regulation.

ECM-214C: LONG-TERM FUEL TRIM, BANK 1 (B5254T2; 2007)

DIAGNOSTIC TROUBLE CODE (DTC) INFORMATION ECM-214C

Condition

This diagnostic trouble code can only be stored during lambda regulation quick tests. This is a workshop test, for detecting air leaks or low fuel pressure. During the quick test, the Engine control module (ECM) receives information from the heated oxygen sensor about the fuel/air mixture with reset fuel adaptations. If the fuel/air mixture is outside certain parameters, this means that there is a fault that can cause diagnostic trouble codes related to lambda regulation to be stored during normal operation. I. e. diagnostic trouble codes ECM-21AC, ECM-21AD, ECM-21CC or ECM-21DD.

The diagnostic trouble code (DTC) is stored if the control module detects that:

- Fuel/air mixture (lambda) deviates abnormally from the expected (lambda=1).

The control module's test for the diagnostic trouble code (DTC) starts in the event of:

- Activate quick test

NOTE: The control module can only detect the fault once the test has been started and the diagnostic trouble code (DTC) is stored when the conditions are met.

Substitute Value

- None.

Possible Source

Signal too high:

- Air leakage in the exhaust system.
- Low fuel pressure.
- Damaged heated oxygen sensor (HO2S).

Fault symptom[s]

- None.

FAULT-TRACING INFORMATION

see **FAULT-TRACING INFORMATION**

ECM-214D: LONG-TERM FUEL TRIM, BANK 1 (B5254T2; 2007)

DIAGNOSTIC TROUBLE CODE (DTC) INFORMATION ECM-214D

Condition

This diagnostic trouble code can only be stored during lambda regulation quick tests. This is a workshop test, for detecting air leaks or low fuel pressure. During the quick test, the Engine control module (ECM) receives

information from the heated oxygen sensor about the fuel/air mixture with reset fuel adaptations. If the fuel/air mixture is outside certain parameters, this means that there is a fault that can cause diagnostic trouble codes related to lambda regulation to be stored during normal operation. I. e. diagnostic trouble codes ECM-21AC, ECM-21AD, ECM-21CC or ECM-21DD.

The diagnostic trouble code (DTC) is stored if the control module detects that:

- Fuel/air mixture (lambda) deviates abnormally from the expected (lambda=1).

The control module's test for the diagnostic trouble code (DTC) starts in the event of:

- Activate quick test

NOTE: The control module can only detect the fault once the test has been started and the diagnostic trouble code (DTC) is stored when the conditions are met.

Substitute Value

- None.

Possible Source

Signal too low

- Air leakage in the intake system.
- Low fuel pressure. High fuel pressure.
- Leaking injectors.
- Damaged mass air flow (MAF) sensor.
- Contaminated engine oil.
- Oil level too high.
- Damaged heated oxygen sensor (HO2S).

Fault symptom[s]

- None.

FAULT-TRACING INFORMATION

see **FAULT-TRACING INFORMATION**

ECM-216C: LONG-TERM FUEL TRIM, BANK 1. SIGNAL TOO HIGH (B5254T2; 2005-2007)

DIAGNOSTIC TROUBLE CODE (DTC) INFORMATION ECM-216C

Condition

The engine control module (ECM) receives information from the heated oxygen sensor (HO2S) (bank 1) about the fuel / air mixture when idling and at both the upper and lower part-load range. If the fuel / air mixture deviates from lambda=1, the short-term fuel trim will compensate for this by adjusting the injection time so that lambda=1 is achieved. When the short-term fuel trim makes an adjustment, the integrator median must be adjusted by the long-term trim. The diagnostic trouble code (DTC) will be stored when the long-term trim must be adjusted almost to maximum in the idle range.

Substitute Value

- None.

Possible Source

- Intake air leakage
- Air leakage in the exhaust system
- Damaged heated oxygen sensor (HO2S) (bank 1).

Fault symptom[s]

- None.

SIGNAL TOO HIGH

CHECKING THE FUEL INJECTION SYSTEM

Check the intake system for air leakage.

HINT: Air leakage in the intake system can occur through the evaporative emission system (EVAP) valve, the secondary air solenoid valve or the power brake booster.

Start the engine. Allow the engine to run at idle speed for 10 minutes.

Check the mass air flow (MAF) sensor. Read off its correction factor. The value must be between 2 and 12.

NOTE: There must not be any air leakage when this test is carried out.

Remedy as necessary.

Other information

- see **CHECK FOR AIR LEAKS IN THE INTAKE SYSTEM**
- see **MASS AIR FLOW (MAF) SENSOR, REPLACING** .

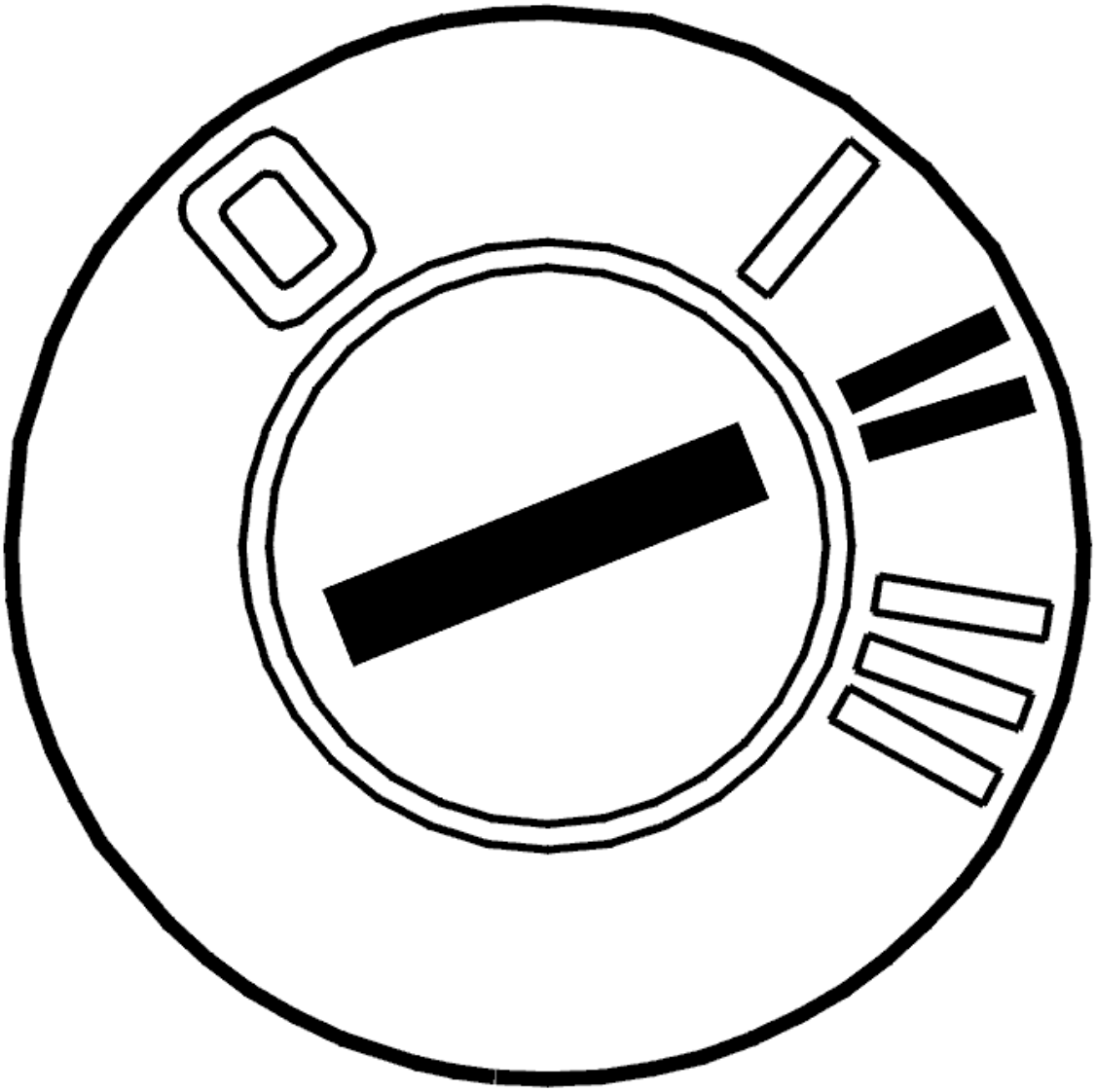

Fig. 394: Identifying VCT2000 Diagnostic Tool Symbol In VIDA
Courtesy of VOLVO CARS CORPORATION

- **Continue**

  Refer to **VERIFICATION**

VERIFICATION

VERIFICATION

HINT: After carrying out the repair, check that the fault has been remedied.

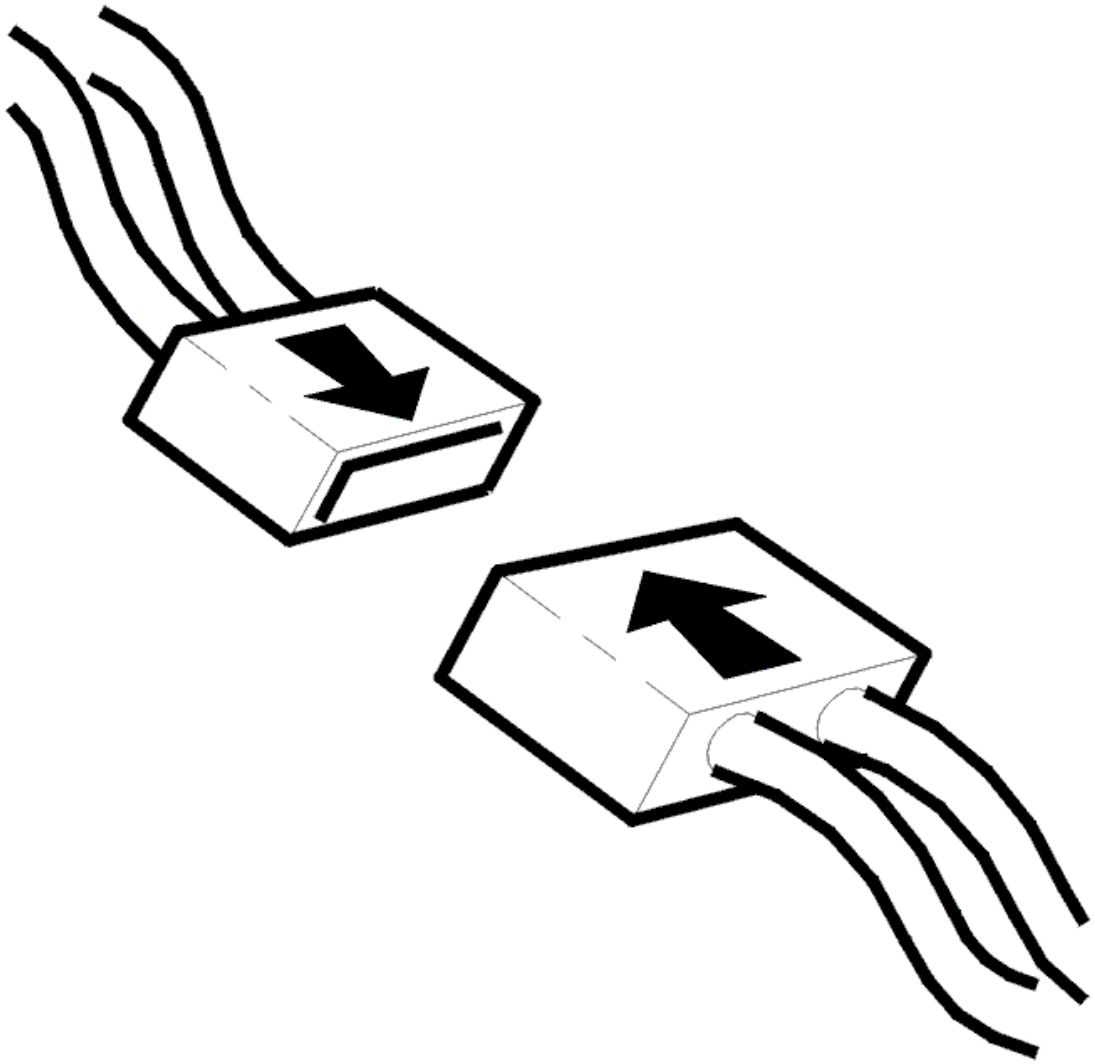

Fig. 395: Belt Routing / Engine Idling - Volvo
Courtesy of VOLVO CARS CORPORATION

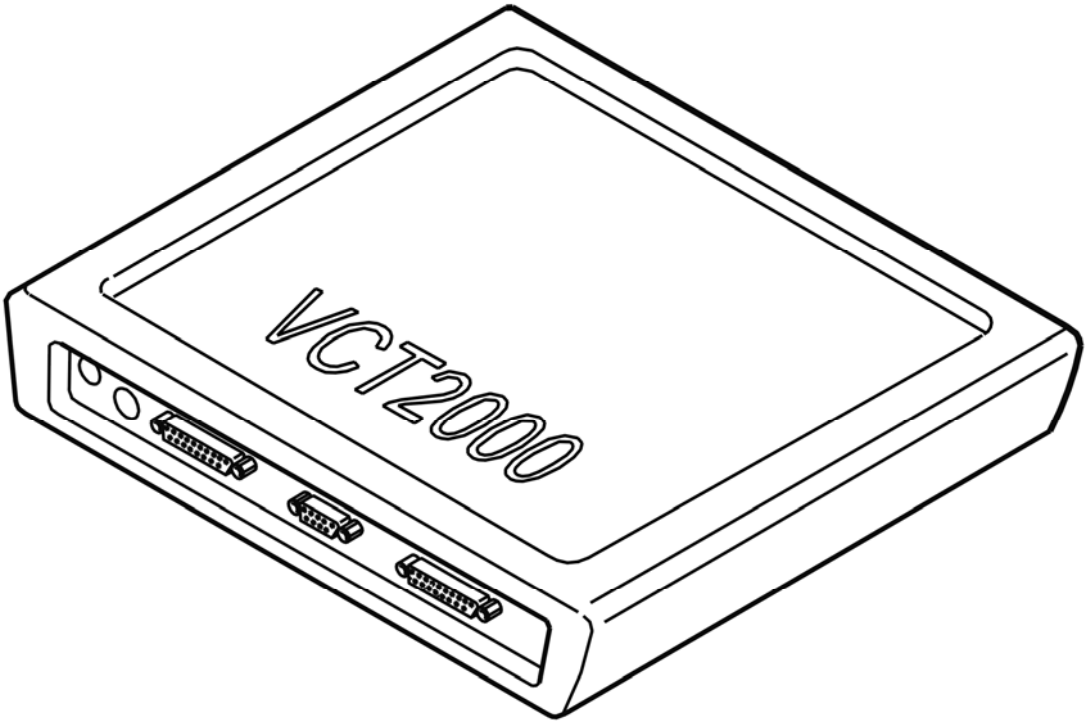

Fig. 396: Connecting Connector
Courtesy of VOLVO CARS CORPORATION

- Ignition off
- Reconnect the connectors, reinstall components etc.
- Test drive the vehicle on the road. Run a TRIP schedule so that the engine control module (ECM) compares the diagnostics. To run a TRIP schedule, see: **VERIFYING REPAIRS**
- Connect VCT2000 (or appropriate scan tool) to the data link connector (DLC) without switching off the engine.

NOTE: **If the engine is switched off, the stored fault status will be erased and the test drive will have to be repeated.**

Read off the diagnostic status and fault status for the diagnostic trouble code (DTC) by selecting the relevant diagnostic trouble code (DTC) from the list.

Check the fault status for the diagnostic trouble code (DTC) when the diagnostic is "Complete". If the function is correct, the fault status must be "No fault found" when the diagnostic is complete.

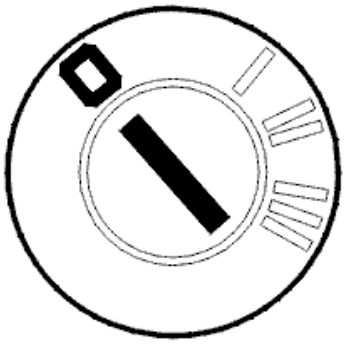

Fig. 397: Identifying VCT2000 Diagnostic Tool Symbol In VIDA
Courtesy of VOLVO CARS CORPORATION

Is the function OK?

- **YES**

  VERIFIED: Troubleshooting has been completed.

- **NO**

  Refer to **INFORMATION**

INFORMATION

FAULT-TRACING INFORMATION

The fault should have been detected and remedied. As this is not the case fault-tracing has failed.

Exit fault-tracing for this diagnostic trouble code (DTC) or make another attempt.

ECM-216C: LONG-TERM FUEL TRIM, BANK 1. SIGNAL TOO HIGH (B6294T; 2005-2006)

DIAGNOSTIC TROUBLE CODE (DTC) INFORMATION ECM-216C

see **DIAGNOSTIC TROUBLE CODE (DTC) INFORMATION ECM-216C**

SIGNAL TOO HIGH

see **SIGNAL TOO HIGH**

ECM-216D: LONG-TERM FUEL TRIM, BANK 1. SIGNAL TOO LOW (B5254T2; 2005-2007)

DIAGNOSTIC TROUBLE CODE (DTC) INFORMATION ECM-216D

Condition

The control module receives information from the heated oxygen sensor (HO2S) (bank 1) about the fuel / air mixture when idling and at both the lower and upper part-load range. If the fuel / air mixture deviates from lambda=1, the short-term fuel trim will compensate for this by adjusting the injection time so that lambda=1 is achieved. When the short-term fuel trim makes an adjustment, the integrator median must be adjusted by the long-term trim. The diagnostic trouble code (DTC) will be stored when the long-term trim must be adjusted almost to maximum in the idle range.

Substitute Value

- None.

Possible Source

- Intake air leakage
- High fuel pressure
- Leaking injectors
- Damaged mass air flow (MAF) sensor
- Contaminated engine oil
- Oil level too high
- Damaged heated oxygen sensor (HO2S) (bank 1).

Fault symptom[s]

- None.

SIGNAL TOO LOW

CHECKING THE FUEL INJECTION SYSTEM

Check the intake system for air leakage.

HINT: Air leakage in the intake system can occur through the evaporative emission system (EVAP) valve, the secondary air solenoid valve or the power brake booster.

Check the exhaust system for leakage.

Check the fuel pressure and residual pressure.

Check that the oil level is within the minimum and maximum markings.

Check the viscosity of the engine oil by reading off the short-term fuel trim with the engine running. Plug the crankcase ventilation and read off the short-term fuel trim again. The value must be more or less unchanged.

Remedy as necessary.

Other information:

- see **CHECK FOR AIR LEAKS IN THE INTAKE SYSTEM**
- see **CHECKING FOR AIR LEAKAGE IN THE EXHAUST SYSTEM**
- see **CHECKING FUEL AND RESIDUAL PRESSURES**

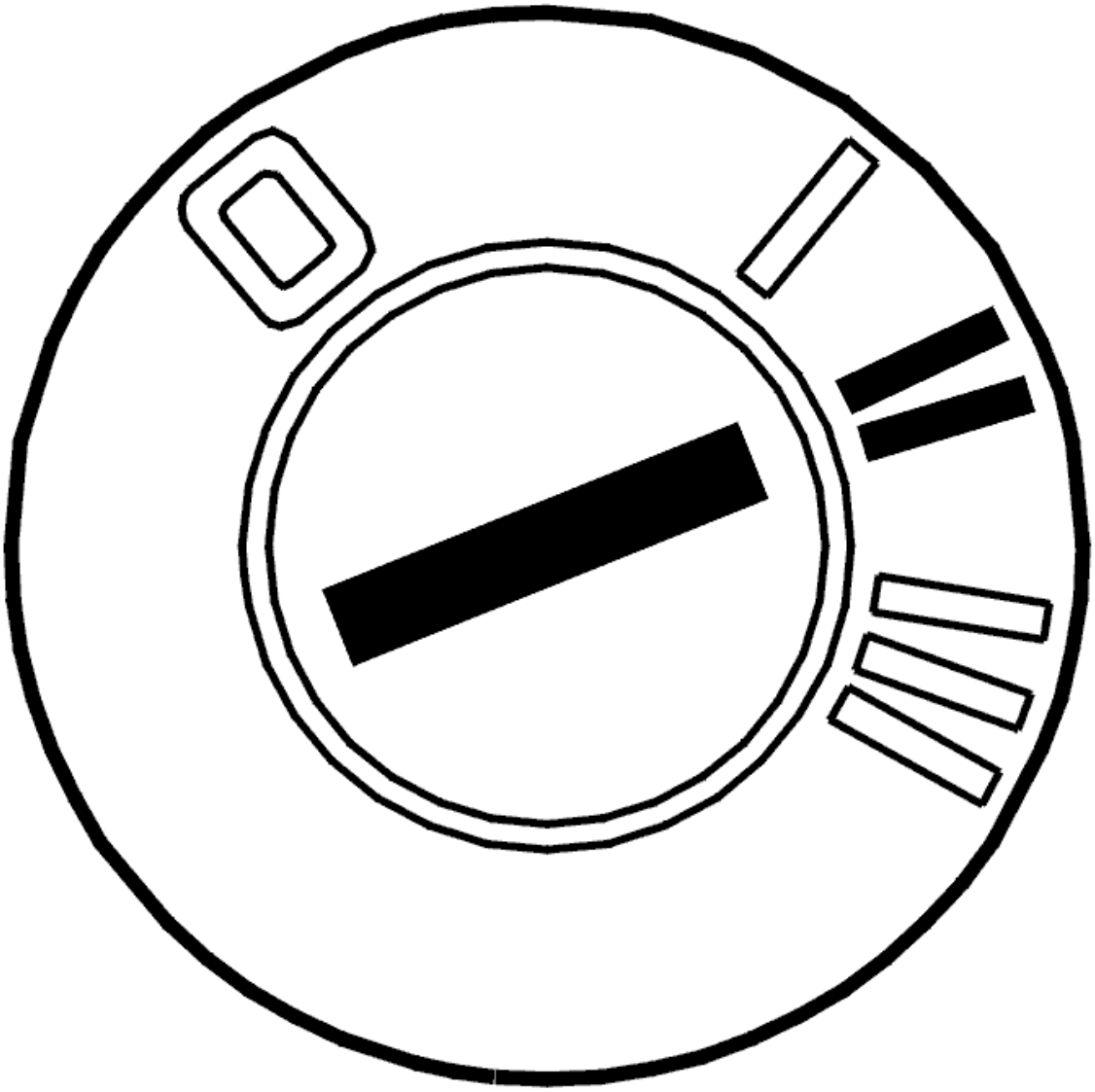

Fig. 398: Identifying VCT2000 Diagnostic Tool Symbol In VIDA
Courtesy of VOLVO CARS CORPORATION

- **Continue**

  Refer to **CHECKING THE MASS AIR FLOW (MAF) SENSOR**

CHECKING THE MASS AIR FLOW (MAF) SENSOR

Read off the correction factor of the mass air flow (MAF) sensor. The value must be between 2 and 12.

NOTE: There must not be any air leakage when this test is carried out.

Remedy as necessary.

Other information

- see **MASS AIR FLOW (MAF) SENSOR, REPLACING** .

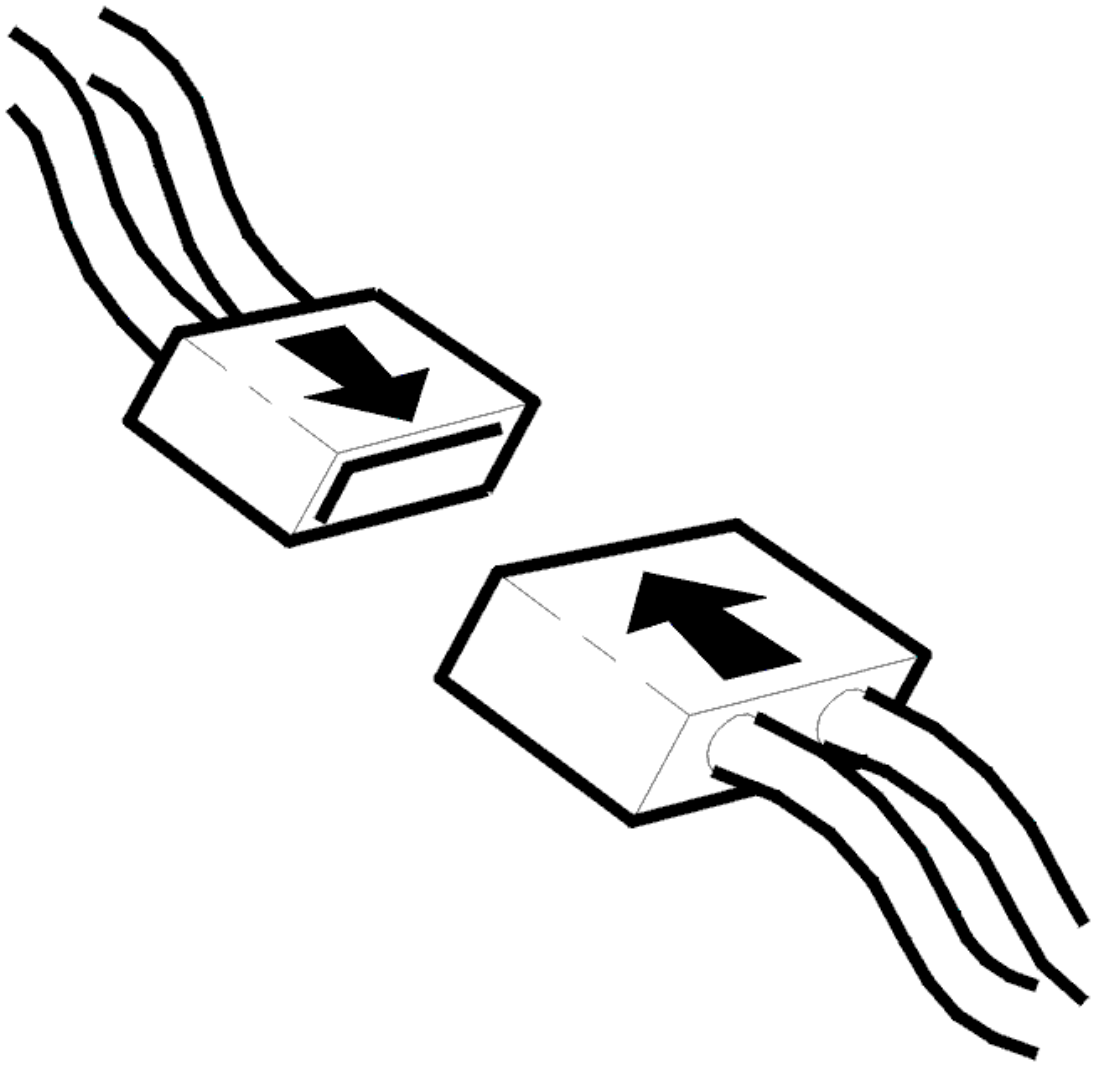

Fig. 399: Identifying VCT2000 Diagnostic Tool Symbol In VIDA
Courtesy of VOLVO CARS CORPORATION

- **Continue**

Refer to **VERIFICATION**

VERIFICATION

VERIFICATION

HINT: After carrying out the repair, check that the fault has been remedied.

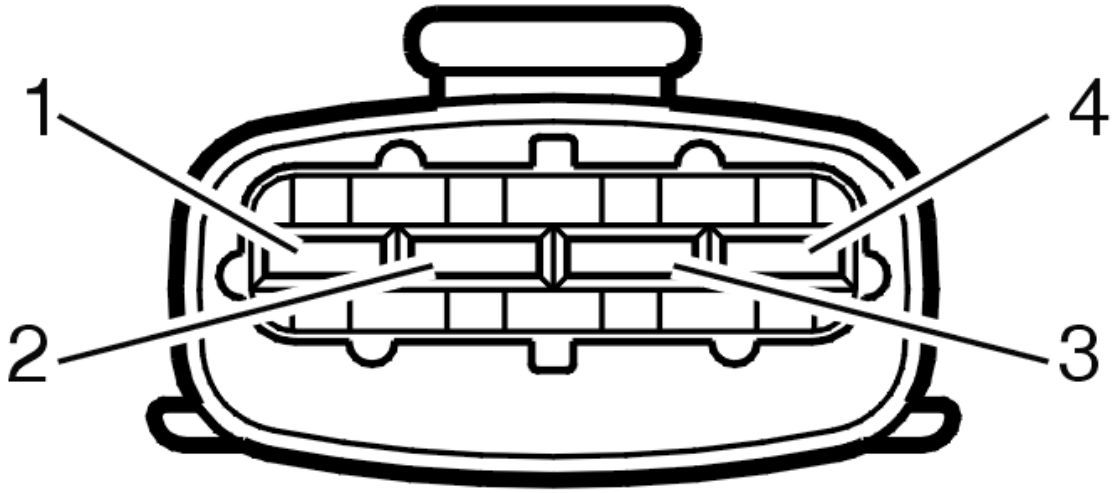

Fig. 400: Belt Routing / Engine Idling - Volvo
Courtesy of VOLVO CARS CORPORATION

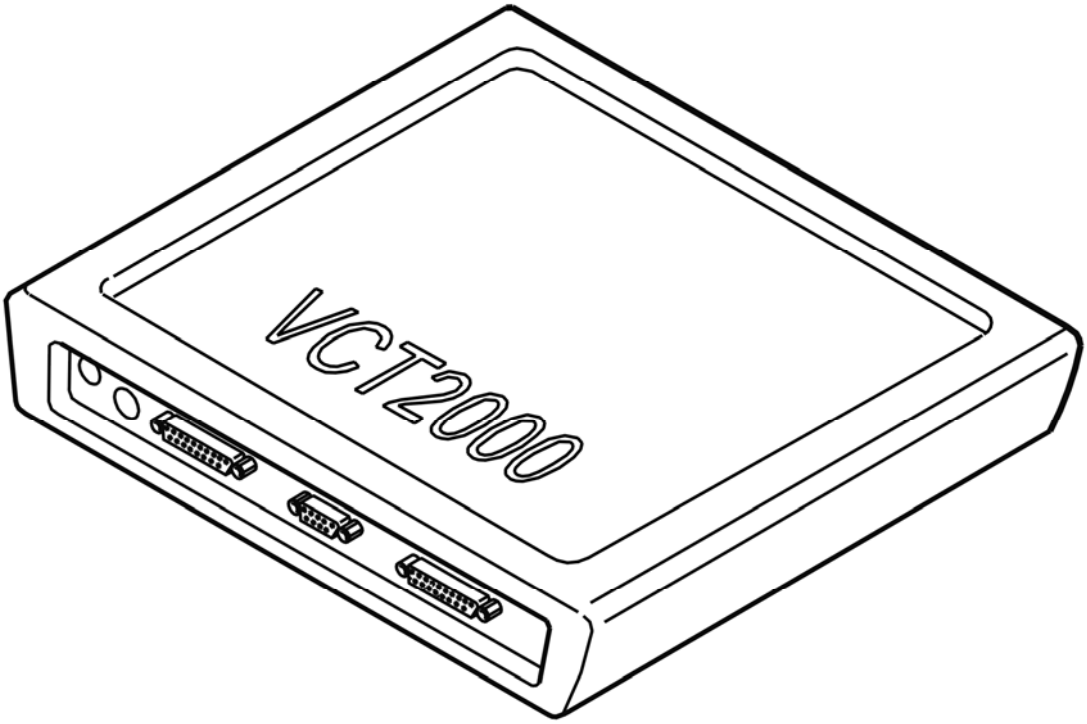

Fig. 401: Connecting Connector
Courtesy of VOLVO CARS CORPORATION

- Ignition off
- Reconnect the connectors, reinstall components etc.
- Test drive the vehicle on the road. Run a TRIP schedule so that the engine control module (ECM) compares the diagnostics. To run a TRIP schedule, see: **VERIFYING REPAIRS**
- Connect VCT2000 (or appropriate scan tool) to the data link connector (DLC) without switching off the engine.

NOTE: **If the engine is switched off, the stored fault status will be erased and the test drive will have to be repeated.**

Read off the diagnostic status and fault status for the diagnostic trouble code (DTC) by selecting the relevant diagnostic trouble code (DTC) from the list.

Check the fault status for the diagnostic trouble code (DTC) when the diagnostic is "Complete". If the function is correct, the fault status must be "No fault found" when the diagnostic is complete.

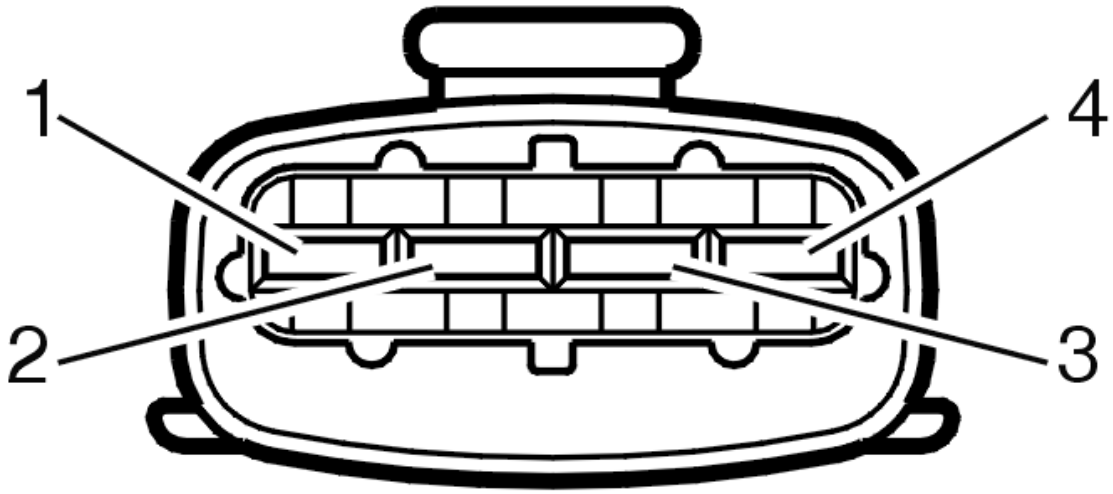

Fig. 402: Identifying VCT2000 Diagnostic Tool Symbol In VIDA
Courtesy of VOLVO CARS CORPORATION

Is the function OK?

- **YES**

  VERIFIED: Troubleshooting has been completed.

- **NO**

  Refer to **INFORMATION**

INFORMATION

FAULT-TRACING INFORMATION

The fault should have been detected and remedied. As this is not the case fault-tracing has failed.

Exit fault-tracing for this diagnostic trouble code (DTC) or make another attempt.

ECM-216D: LONG-TERM FUEL TRIM, BANK 1. SIGNAL TOO LOW (B6294T; 2005-2006)

DIAGNOSTIC TROUBLE CODE (DTC) INFORMATION ECM-216D

see **DIAGNOSTIC TROUBLE CODE (DTC) INFORMATION ECM-216D**

SIGNAL TOO LOW

see **SIGNAL TOO LOW**

ECM-217C: LONG-TERM FUEL TRIM, BANK 2. SIGNAL TOO HIGH (B5254T2; 2005-2007)

DIAGNOSTIC TROUBLE CODE (DTC) INFORMATION ECM-217C

Condition

The control module receives information from the heated oxygen sensor (HO2S) (bank 2) about the fuel / air mixture when idling and at both the lower and upper part-load range. If the fuel / air mixture deviates from lambda=1, the short-term fuel trim will compensate for this by adjusting the injection time so that lambda=1 is achieved. When the short-term fuel trim makes an adjustment, the integrator median must be adjusted by the long-term trim. The diagnostic trouble code (DTC) will be stored when the long-term trim must be adjusted almost to maximum in the idle range.

Substitute Value

- None.

Possible Source

- Intake air leakage
- Air leakage in the exhaust system
- Damaged heated oxygen sensor (HO2S) (bank 2).

Fault symptom[s]

- None.

SIGNAL TOO HIGH

see **SIGNAL TOO HIGH**

ECM-217C: LONG-TERM FUEL TRIM, BANK 2. SIGNAL TOO HIGH (B6294T; 2005-2006)

DIAGNOSTIC TROUBLE CODE (DTC) INFORMATION ECM-217C

see **DIAGNOSTIC TROUBLE CODE (DTC) INFORMATION ECM-217C**

SIGNAL TOO HIGH

see **SIGNAL TOO HIGH**

ECM-217D: LONG-TERM FUEL TRIM, BANK 2. SIGNAL TOO LOW (B6294T; 2005-2006)

DIAGNOSTIC TROUBLE CODE (DTC) INFORMATION ECM-217D

Condition

The control module receives information from the heated oxygen sensor (HO2S) (bank 2) about the fuel / air mixture when idling and at both the lower and upper part-load range. If the fuel / air mixture deviates from lambda=1, the short-term fuel trim will compensate for this by adjusting the injection time so that lambda=1 is achieved. When the short-term fuel trim makes an adjustment, the integrator median must be adjusted by the long-term trim. The diagnostic trouble code (DTC) will be stored when the long-term trim must be adjusted almost to maximum in the idle range.

Substitute Value

- None.

Possible Source

- Intake air leakage
- High fuel pressure
- Leaking injectors
- Damaged mass air flow (MAF) sensor
- Contaminated engine oil
- Oil level too high
- Damaged heated oxygen sensor (HO2S) (bank 2).

Fault symptom[s]

- None.

SIGNAL TOO LOW

see **SIGNAL TOO LOW**

ECM-21E0: LONG-TERM FUEL TRIM, BANK 1. FAULTY SIGNAL (B5254T2; 2005-2007)

DIAGNOSTIC TROUBLE CODE (DTC) INFORMATION

Condition

The engine control module (ECM) stores information about fuel trim in the various adaptation ranges. The diagnostic trouble code (DTC) is stored if the engine control module (ECM) detects that one of the codes for fuel trim (bank 1) is stored in two consecutive operating cycles. The diagnostic trouble code is a collective code for diagnostic trouble codes having to do with the fuel adaptation. The diagnostic trouble code is always stored together with one of the following diagnostic trouble codes:

- **ECM-210C**
- **ECM-210D**
- **ECM-212C**
- **ECM-212D**
- **ECM-216C**
- **ECM-216D**

If any or some of these diagnostic trouble codes above are stored, then troubleshoot these according to each troubleshooting.

Substitute Value

- None.

Possible Source

- Locate the fault cause in the diagnostic trouble codes (DTCs) covering "Long-term fuel trim".

Fault symptom[s]

- Warning lights and chimes/Malfunction Indicator Light ("Check engine" light) indication/no indication

FAULT-TRACING INFORMATION

see **FAULT-TRACING INFORMATION**

ECM-21E0: LONG-TERM FUEL TRIM, BANK 1. FAULTY SIGNAL (B6294T; 2005-2006)

DIAGNOSTIC TROUBLE CODE (DTC) INFORMATION

see **DIAGNOSTIC TROUBLE CODE (DTC) INFORMATION**

FAULT-TRACING INFORMATION

see **FAULT-TRACING INFORMATION**

ECM-21F0: LONG-TERM FUEL TRIM, BANK 2. FAULTY SIGNAL (B6294T; 2005-2006)

DIAGNOSTIC TROUBLE CODE (DTC) INFORMATION

Condition

The engine control module (ECM) stores information about fuel trim in the various adaptation ranges. The

diagnostic trouble code (DTC) is stored if the engine control module (ECM) detects that one of the codes for fuel trim (bank 2) is stored in two consecutive operating cycles. The diagnostic trouble code is a collective code for diagnostic trouble codes having to do with the fuel adaptation. The diagnostic trouble code is always stored together with one of the following diagnostic trouble codes:

- **ECM-211C**
- **ECM-211D**
- **ECM-213C**
- **ECM-213D**
- **ECM-217C**
- **ECM-217D**

If any or some of these diagnostic trouble codes above are stored, then troubleshoot these according to each troubleshooting.

Substitute Value

- None.

Possible Source

- Locate the fault cause in the diagnostic trouble codes (DTCs) covering "Long-term fuel trim".

Fault symptom[s]

- Warning lights and chimes/Malfunction Indicator Light ("Check engine" light) indication/no indication

FAULT-TRACING INFORMATION

see **FAULT-TRACING INFORMATION**

ECM-21FC: LONG-TERM FUEL TRIM, BANK 2. SIGNAL TOO HIGH (B5254T2; 2005-2007)

DIAGNOSTIC TROUBLE CODE (DTC) INFORMATION

see **DIAGNOSTIC TROUBLE CODE (DTC) INFORMATION**

FAULT-TRACING INFORMATION

see **FAULT-TRACING INFORMATION**

ECM-2200: REAR HEATED OXYGEN SENSOR (HO2S), BANK 1, HEATING. FAULTY SIGNAL (B5254T2; 2005-2007)

DIAGNOSTIC TROUBLE CODE (DTC) INFORMATION ECM-2200

Condition

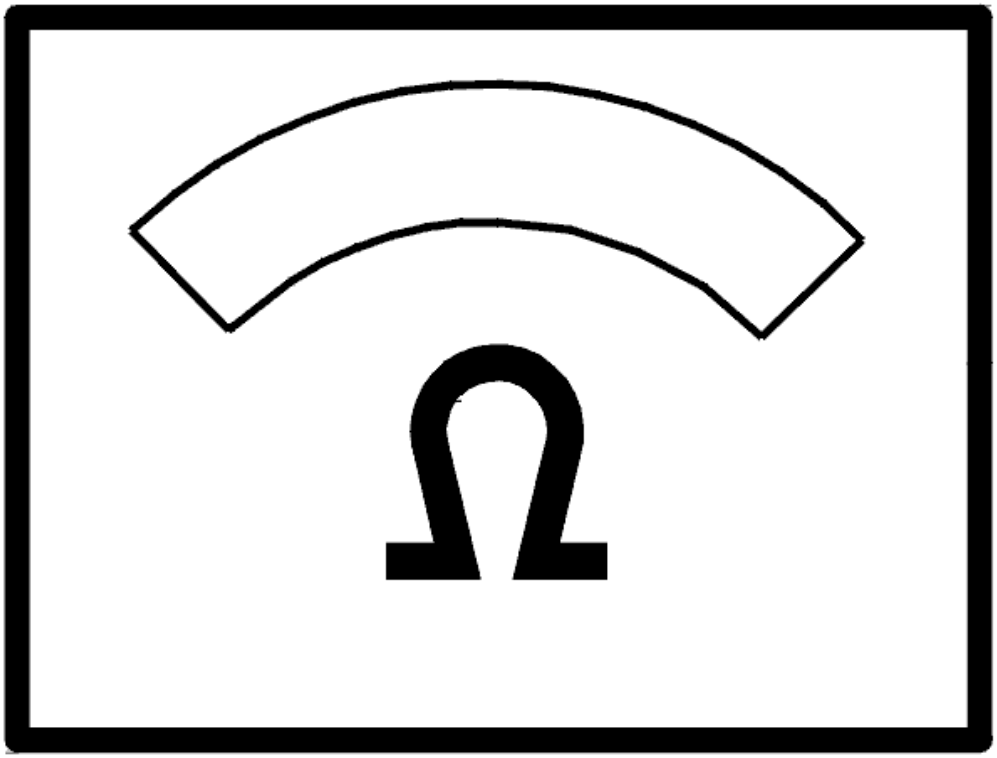

Fig. 403: Identifying Rear Heated Oxygen Sensor
Courtesy of VOLVO CARS CORPORATION

The diagnostic trouble code (DTC) is stored if the engine control module (ECM) registers that the resistance of the rear heated oxygen sensor (HO2S) in the pre-heating circuit is too high for a certain amount of time.

Substitute Value

- None.

Possible Source

- Contact resistance or oxidation in the terminals
- Damaged rear heated oxygen sensor (HO2S).

Fault symptom[s]

- Malfunction indicator lamp (MIL) lit.

FAULTY SIGNAL

CHECKING THE CONNECTOR

Check power cable terminal #1 in the rear heated oxygen sensor (HO2S) connector. Check for contact resistance. Check for oxidation.

Check ground lead terminal #2 in the rear heated oxygen sensor (HO2S) connector. Check for contact resistance. Check for oxidation.

Try a new heated oxygen sensor (HO2S) if the above fault-tracing does not remedy the fault.

Remedy as necessary.

Other information

- see **HEATED OXYGEN SENSOR (HO2S), REPLACING**
- see **CHECKING WIRING AND TERMINALS**

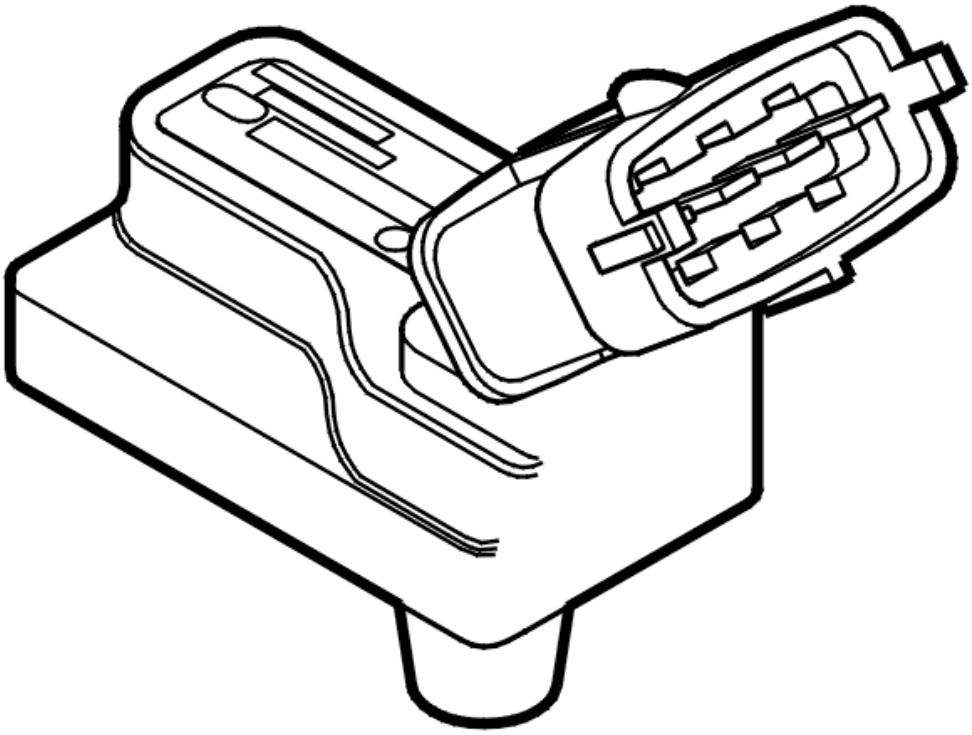

Fig. 404: Identifying Rear Heated Oxygen Sensor
Courtesy of VOLVO CARS CORPORATION

- **Continue**

  Refer to **VERIFICATION**

VERIFICATION

VERIFICATION

HINT: After carrying out the repair, check that the fault has been remedied.

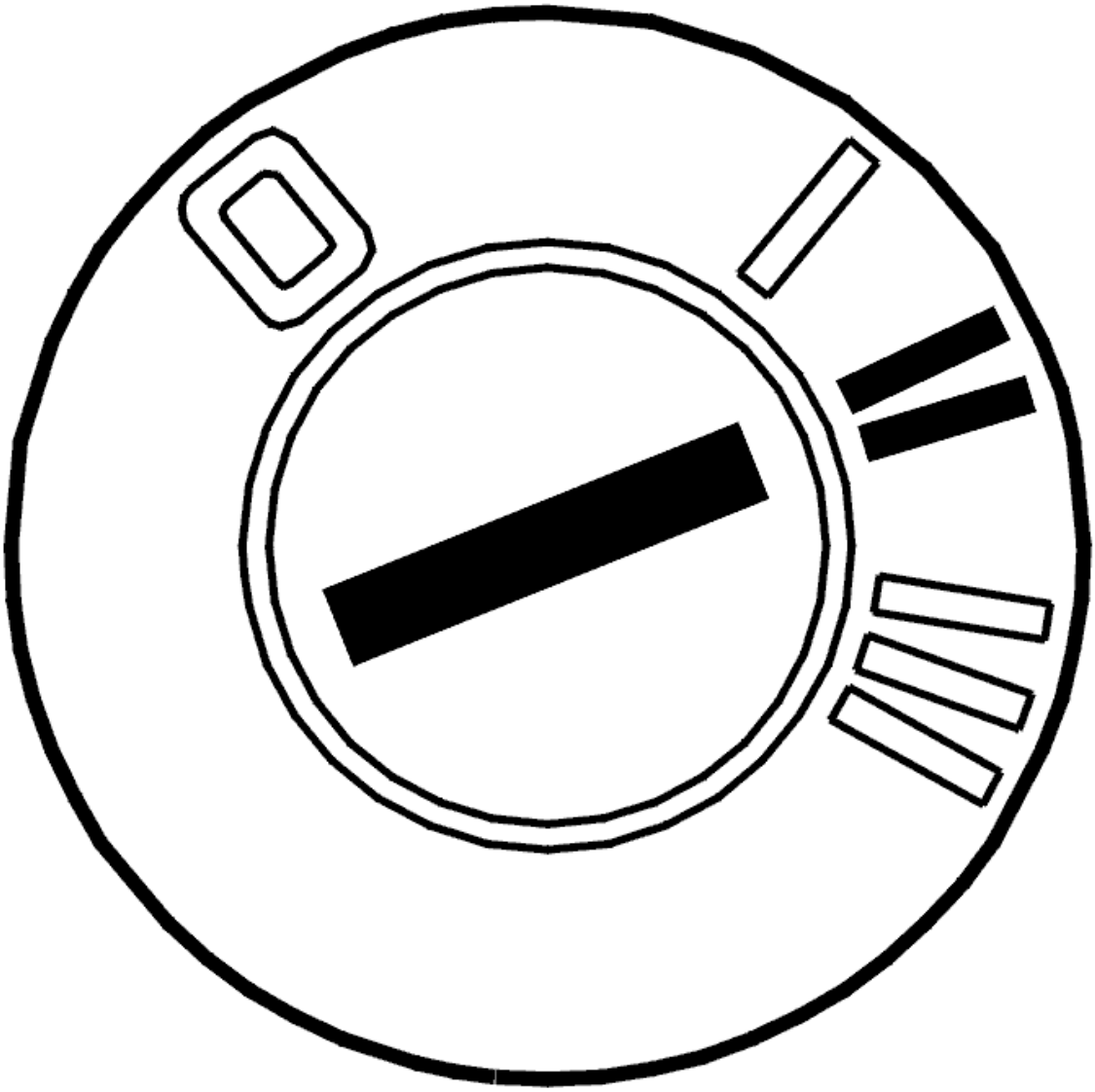

Fig. 405: Belt Routing / Engine Idling - Volvo
Courtesy of VOLVO CARS CORPORATION

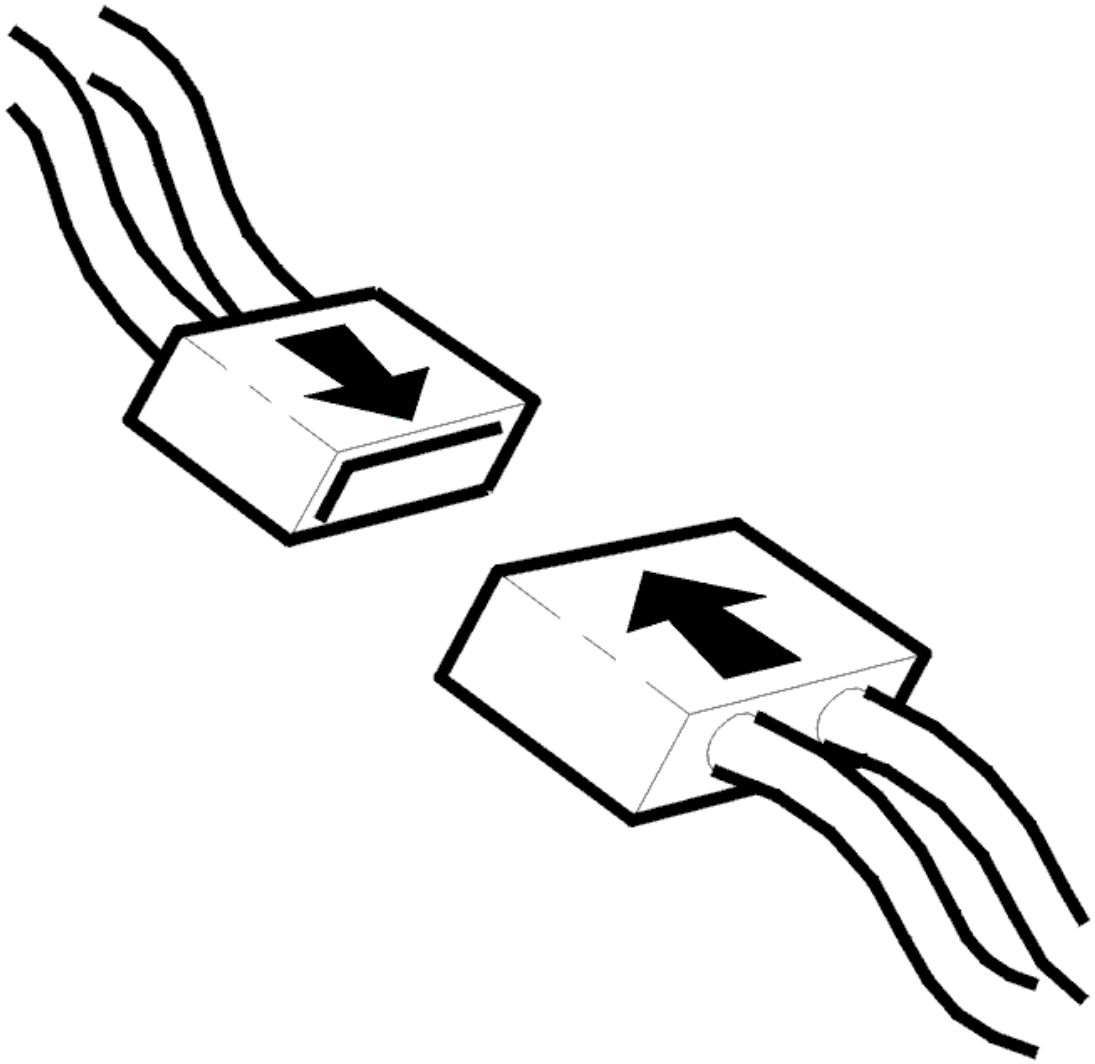

Fig. 406: Connecting Connector
Courtesy of VOLVO CARS CORPORATION

- Ignition off
- Reconnect the connectors, reinstall components etc.
- Start the engine.

  Read off the diagnostic status and fault status for the diagnostic trouble code (DTC) by selecting the relevant diagnostic trouble code (DTC) from the list.

  Increase the engine speed to 2500 RPM until the diagnostic is "Complete".

  Check the fault status for the diagnostic trouble code (DTC) when the diagnostic is "Complete". If the function is correct, the fault status must be "No fault found" when the diagnostic is complete.

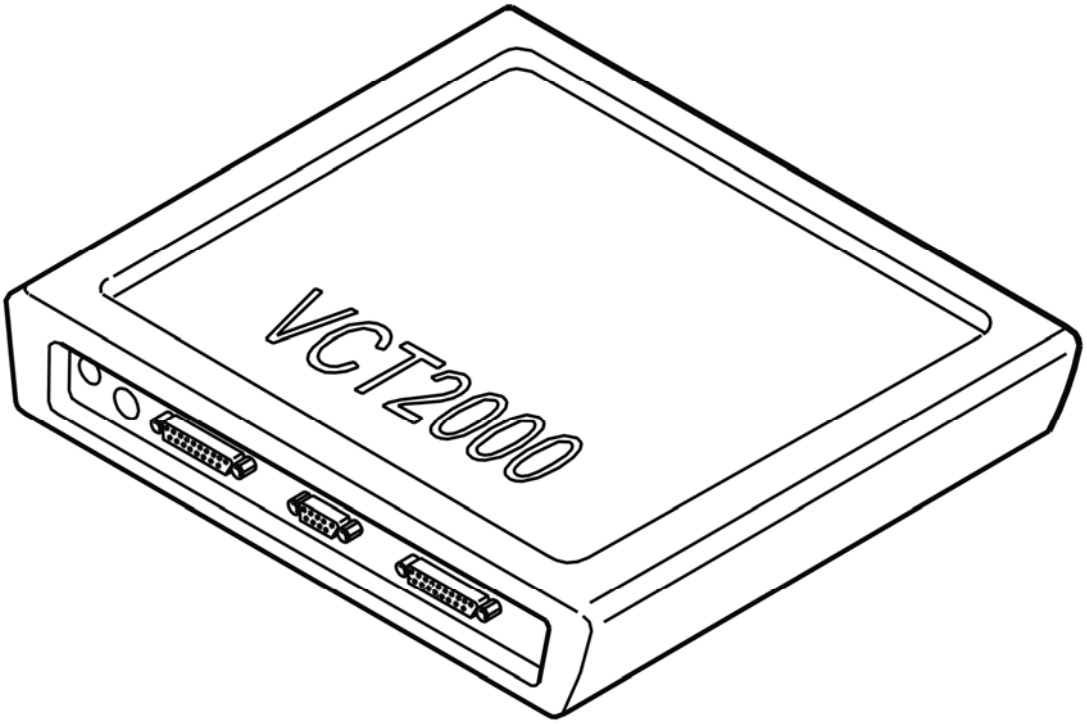

Fig. 407: Identifying VCT2000 Diagnostic Tool Symbol In VIDA
Courtesy of VOLVO CARS CORPORATION

Is the function OK?

- **YES**

  VERIFIED: Troubleshooting has been completed.

- **NO**

  Refer to **INFORMATION**

INFORMATION

FAULT-TRACING INFORMATION

The fault should have been detected and remedied. As this is not the case fault-tracing has failed.

Exit fault-tracing for this diagnostic trouble code (DTC) or make another attempt.

ECM-2200: REAR HEATED OXYGEN SENSOR (HO2S), BANK 1, HEATING. FAULTY SIGNAL (B6294T; 2005-2006)

DIAGNOSTIC TROUBLE CODE (DTC) INFORMATION ECM-2200

see **DIAGNOSTIC TROUBLE CODE (DTC) INFORMATION ECM-2200**

FAULTY SIGNAL

see **FAULTY SIGNAL**

ECM-221B: REAR HEATED OXYGEN SENSOR (HO2S), AGING, BANK 1. SIGNAL MISSING (B5254T2; 2005-2007)

DIAGNOSTIC TROUBLE CODE (DTC) INFORMATION ECM-221B

Condition

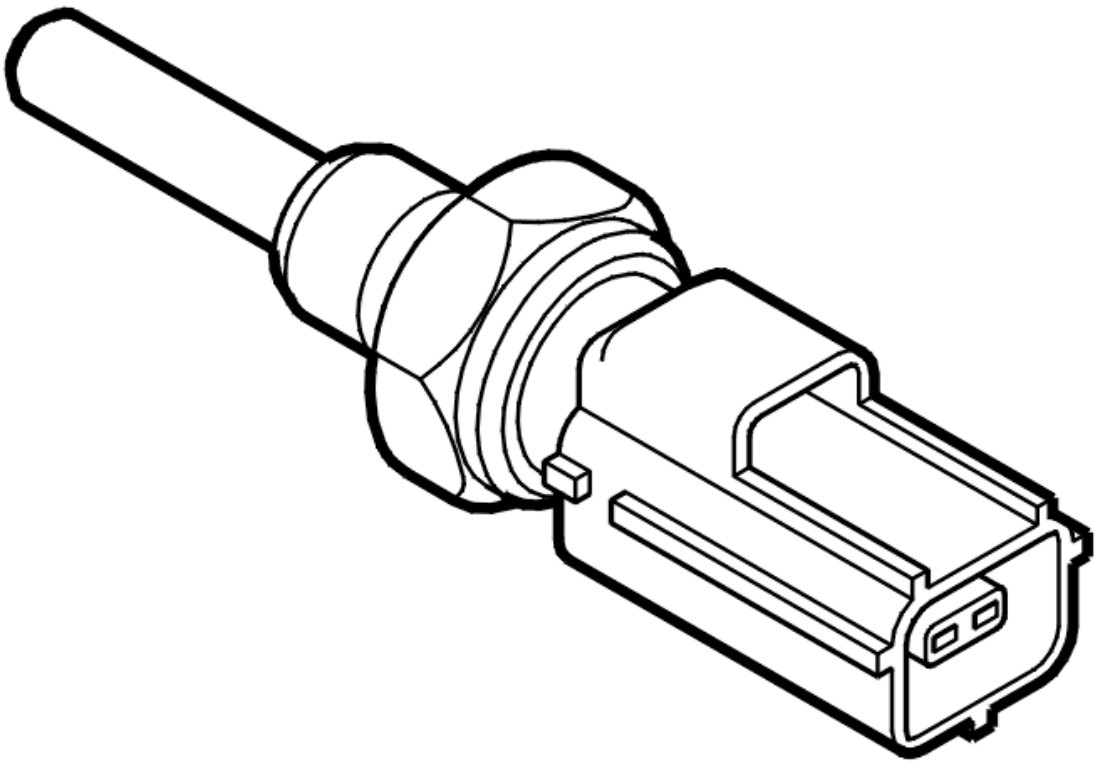

Fig. 408: Identifying Rear Heated Oxygen Sensor
Courtesy of VOLVO CARS CORPORATION

The engine control module (ECM) monitors the operation of the rear heated oxygen sensor (HO2S) by checking its signal.

The diagnostic trouble code (DTC) is stored if the engine control module (ECM) does not register a signal from the rear heated oxygen sensor (HO2S).

Substitute Value

- None.

Possible Source

- Damaged rear heated oxygen sensor (HO2S).

Fault symptom[s]

- Malfunction indicator lamp (MIL) lit.

SIGNAL TOO HIGH/SIGNAL TOO LOW/SIGNAL MISSING

CHECKING THE COMPONENTS AND WIRING

CAUTION: Do not apply rust solvent spray or grease to the heated oxygen sensor (HO2S) connector.

Check the exhaust system for air leakage.

If no fault is discovered, try using a new rear heated oxygen sensor (HO2S), as a damaged rear heated oxygen sensor (HO2S) can cause a diagnostic trouble code (DTC) to be stored.

Remedy as necessary

Other information

- see **CHECKING FOR AIR LEAKAGE IN THE EXHAUST SYSTEM**
- see **HEATED OXYGEN SENSOR (HO2S), REPLACING**
- see **CHECKING WIRING AND TERMINALS**

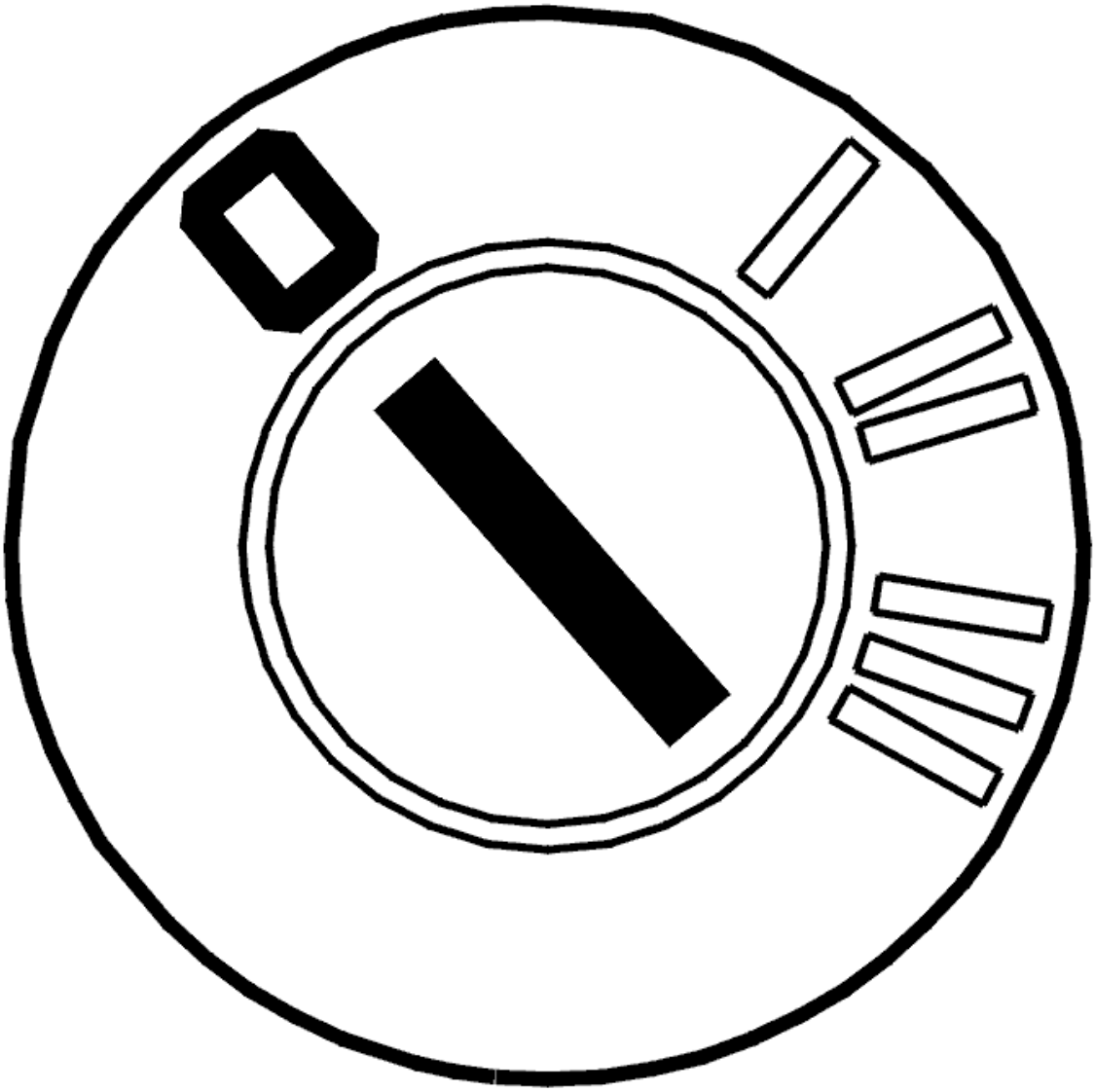

Fig. 409: Identifying VCT2000 Diagnostic Tool Symbol In VIDA
Courtesy of VOLVO CARS CORPORATION

- **Continue**

  Refer to **VERIFICATION**

VERIFICATION

VERIFICATION

HINT: After carrying out the repair, check that the fault has been remedied.

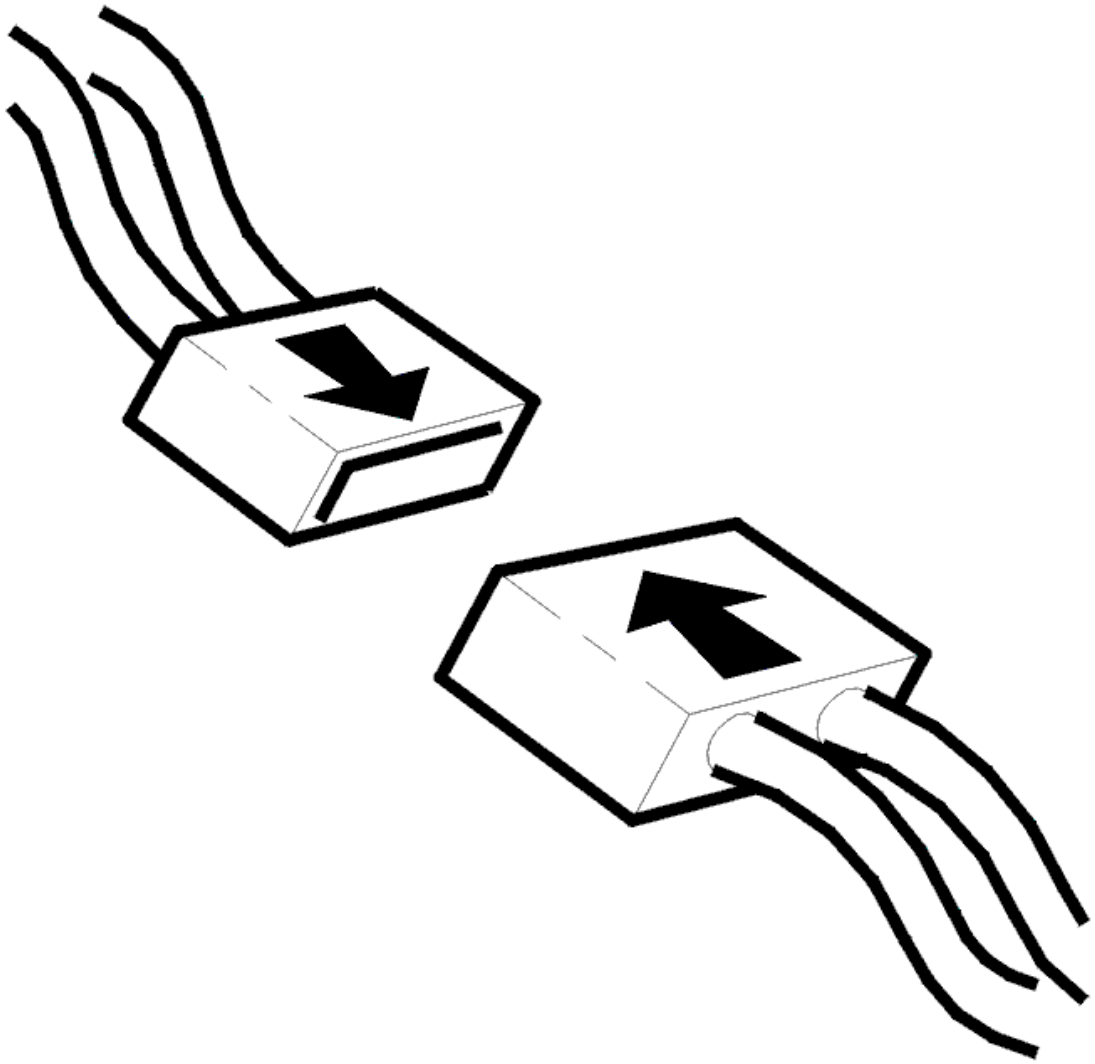

Fig. 410: Belt Routing / Engine Idling - Volvo
Courtesy of VOLVO CARS CORPORATION

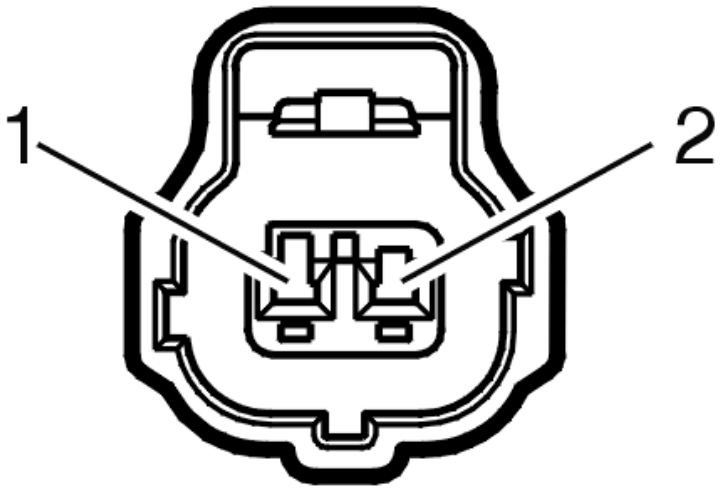

Fig. 411: Connecting Connector
Courtesy of VOLVO CARS CORPORATION

- Ignition off
- Reconnect the connectors, reinstall components etc.
- Start the engine. Allow the engine to idle for at least 1 minute
- Test drive the car at an even speed (approximately 80 km/h for at least 5 minutes)
- Connect VCT2000 (or appropriate scan tool) to the data link connector (DLC) without switching off the engine.

NOTE: **If the engine is switched off, the stored fault status will be erased and the test drive will have to be repeated.**

Read off the diagnostic status and fault status for the diagnostic trouble code (DTC) by selecting the relevant diagnostic trouble code (DTC) from the list.

Check the fault status for the diagnostic trouble code (DTC) when the diagnostic is "Complete". If the function is correct, the fault status must be "No fault found" when the diagnostic is complete.

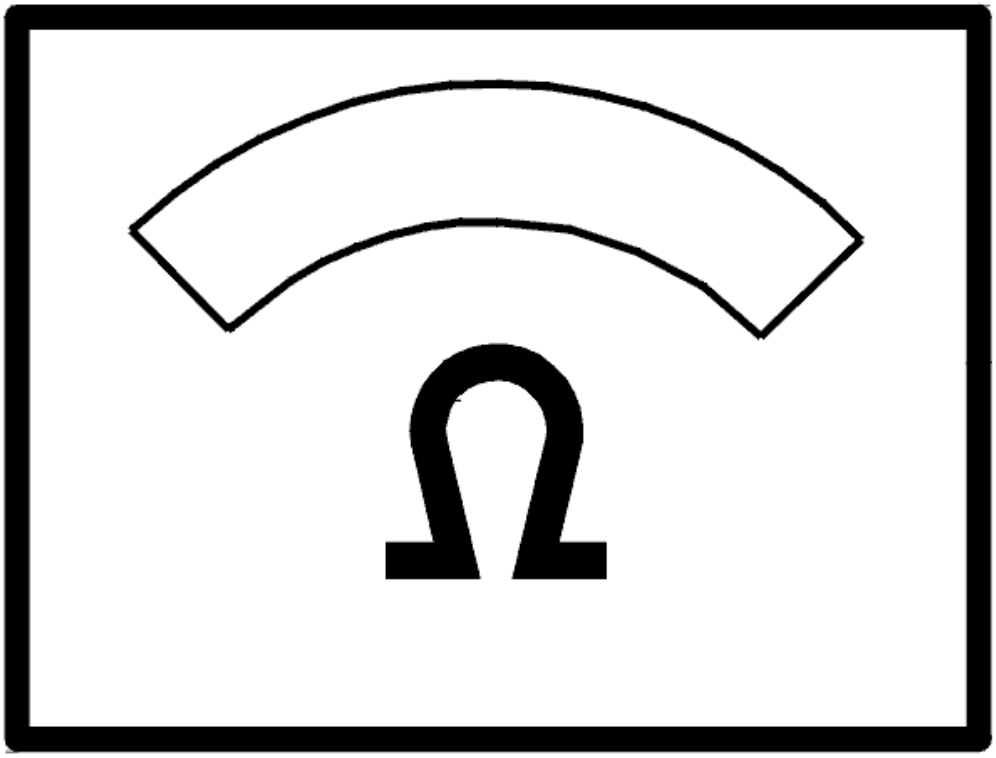

Fig. 412: Identifying VCT2000 Diagnostic Tool Symbol In VIDA
Courtesy of VOLVO CARS CORPORATION

Is the function OK?

- **YES**

  VERIFIED: Troubleshooting has been completed.

- **NO**

  Refer to **INFORMATION**

INFORMATION

FAULT-TRACING INFORMATION

The fault should have been detected and remedied. As this is not the case fault-tracing has failed.

Exit fault-tracing for this diagnostic trouble code (DTC) or make another attempt.

ECM-221B: REAR HEATED OXYGEN SENSOR (HO2S), AGING, BANK 1. SIGNAL MISSING (B6294T; 2005-2006)

DIAGNOSTIC TROUBLE CODE (DTC) INFORMATION ECM-221B

see **DIAGNOSTIC TROUBLE CODE (DTC) INFORMATION ECM-221B**

SIGNAL TOO HIGH/SIGNAL TOO LOW/SIGNAL MISSING

see **SIGNAL TOO HIGH/SIGNAL TOO LOW/SIGNAL MISSING**

ECM-221C: REAR HEATED OXYGEN SENSOR (HO2S) AGING, BANK 1. SIGNAL TOO HIGH (B5254T2; 2005-2007)

DIAGNOSTIC TROUBLE CODE (DTC) INFORMATION ECM-221C

Condition

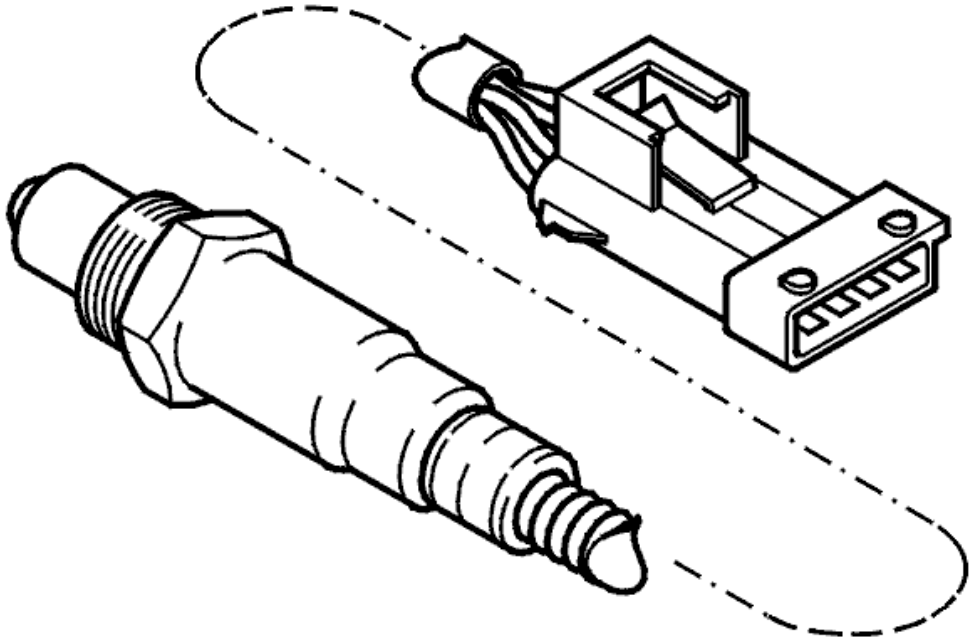

Fig. 1: Identifying Rear Heated Oxygen Sensor
Courtesy of VOLVO CARS CORPORATION

The engine control module (ECM) monitors the operation of the rear heated oxygen sensor (HO2S) by checking its signal. The engine control module (ECM) checks that the probe has registered a rich fuel/air mixture. If this is not the case, the engine control module (ECM) changes the fuel/air mixture. The diagnostic trouble code (DTC) is stored if the rear probe has still not registered a rich fuel / air mixture.

Substitute Value

- None.

Possible Source

- Leakage in the exhaust system
- Damaged rear heated oxygen sensor (HO2S).

Fault symptom[s]

- Malfunction indicator lamp (MIL) lit.

SIGNAL TOO HIGH/SIGNAL TOO LOW/SIGNAL MISSING

see **SIGNAL TOO HIGH/SIGNAL TOO LOW/SIGNAL MISSING**

ECM-221C: REAR HEATED OXYGEN SENSOR (HO2S) AGING, BANK 1. SIGNAL TOO HIGH (B6294T; 2005-2006)

DIAGNOSTIC TROUBLE CODE (DTC) INFORMATION ECM-221C

see **DIAGNOSTIC TROUBLE CODE (DTC) INFORMATION ECM-221C**

SIGNAL TOO HIGH/SIGNAL TOO LOW/SIGNAL MISSING

see **SIGNAL TOO HIGH/SIGNAL TOO LOW/SIGNAL MISSING**

ECM-221D: REAR HEATED OXYGEN SENSOR (HO2S) AGING, BANK 1. SIGNAL TOO LOW (B5254T2; 2005-2007)

DIAGNOSTIC TROUBLE CODE (DTC) INFORMATION ECM-221D

Condition

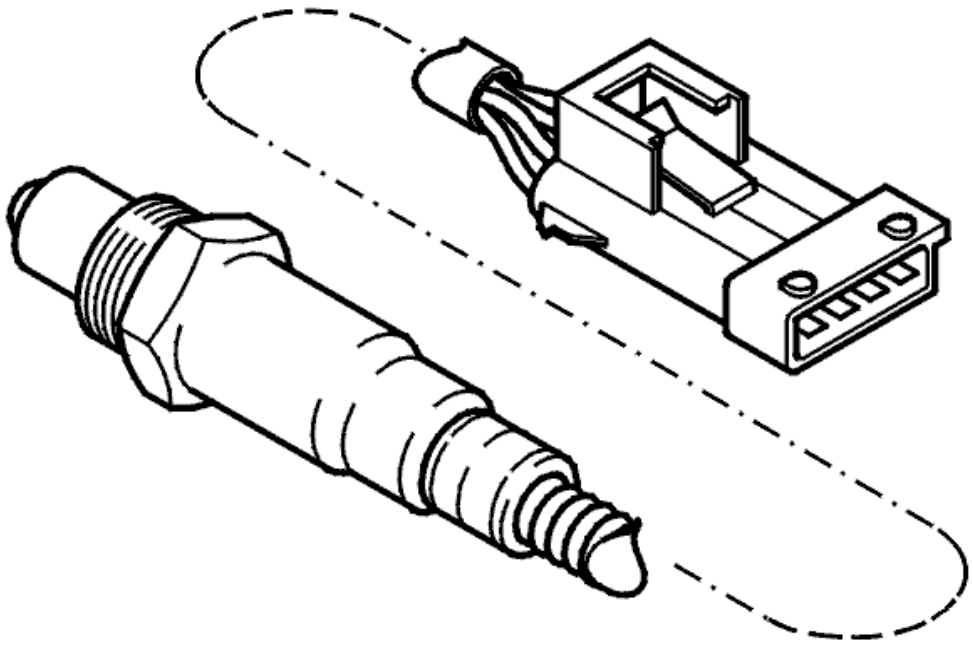

Fig. 2: Identifying Rear Heated Oxygen Sensor
Courtesy of VOLVO CARS CORPORATION

The engine control module (ECM) monitors the operation of the rear heated oxygen sensor (HO2S) by checking its signal. The engine control module (ECM) checks that the probe has registered a lean fuel/air mixture. If this is not the case, the engine control module (ECM) changes the fuel/air mixture. The diagnostic trouble code (DTC) is stored if the rear probe has still not registered a lean fuel / air mixture.

NOTE: **At fuel shut-off, the probe must show a lean fuel/air mixture. The diagnostic trouble code (DTC) is also stored if the switch-over time to a lean fuel/air mixture is too long.**

Substitute Value

- None.

Possible Source

- Leakage in the exhaust system
- Damaged rear heated oxygen sensor (HO2S).

Fault symptom[s]

- Malfunction indicator lamp (MIL) lit.

SIGNAL TOO HIGH/SIGNAL TOO LOW/SIGNAL MISSING

see **SIGNAL TOO HIGH/SIGNAL TOO LOW/SIGNAL MISSING**

ECM-221D: REAR HEATED OXYGEN SENSOR (HO2S) AGING, BANK 1. SIGNAL TOO LOW (B6294T; 2005-2006)

DIAGNOSTIC TROUBLE CODE (DTC) INFORMATION ECM-221D

see **DIAGNOSTIC TROUBLE CODE (DTC) INFORMATION ECM-221D**

SIGNAL TOO HIGH/SIGNAL TOO LOW/SIGNAL MISSING

see **SIGNAL TOO HIGH/SIGNAL TOO LOW/SIGNAL MISSING**

ECM-2220: REAR HEATED OXYGEN SENSOR (HO2S), BANK 1. FAULTY SIGNAL (B5254T2; 2005-2007)

DIAGNOSTIC TROUBLE CODE (DTC) INFORMATION ECM-2220

Condition

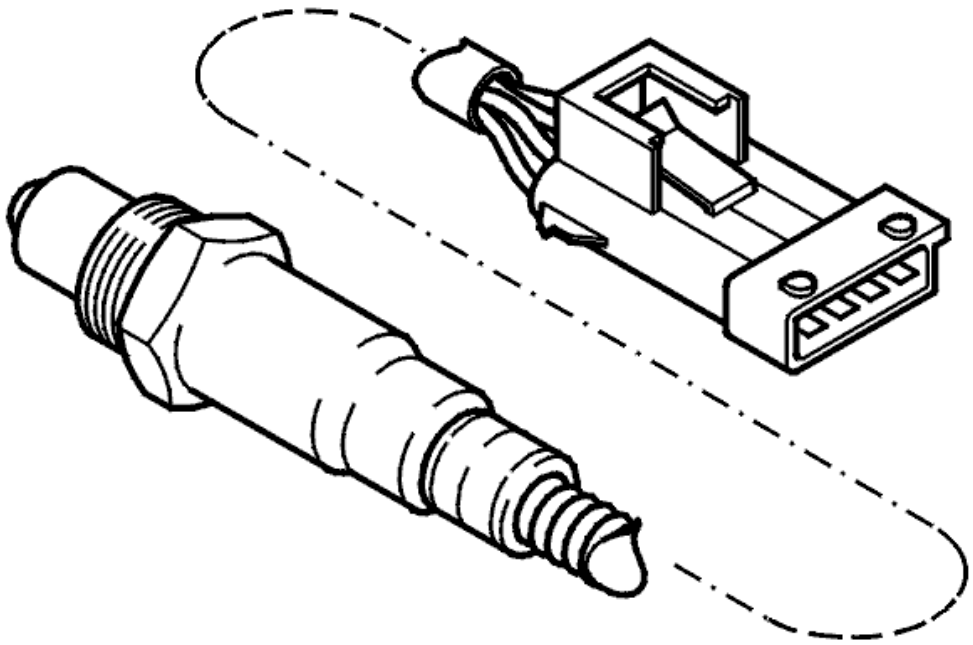

Fig. 3: Identifying Rear Heated Oxygen Sensor
Courtesy of VOLVO CARS CORPORATION

The engine control module (ECM) monitors the operation of the rear heated oxygen sensor (HO2S) by checking its signal. The diagnostic trouble code (DTC) is stored if the engine control module (ECM) registers that the signal deviates from its permitted operational range or if the voltage for the heated oxygen sensor (HO2S) preheating disrupts the heated oxygen sensor (HO2S) signal.

Substitute Value

- Rear heated oxygen sensor (HO2S) control is disabled
- Three-way catalytic converter (TWC) diagnostics are disabled.

Possible Source

- Short-circuit in the signal cable for the pre-heating circuit
- Short-circuit in the ground lead for the preheating circuit
- Damaged rear heated oxygen sensor (HO2S).

Fault symptom[s]

- Malfunction indicator lamp (MIL) lit.

FAULTY SIGNAL

CHECKING THE COMPONENTS AND WIRING

Check the following cables for a short-circuit to each other.

- Engine control module (ECM) terminal #A61 (#B1) and heated oxygen sensor (HO2S) terminal #4
- Engine control module (ECM) terminal #A6 (#A6) and heated oxygen sensor (HO2S) terminal #2
- Heated oxygen sensor (HO2S) terminal #1 and the system relay.

Check the following cables for a short-circuit to each other.

- Engine control module (ECM) terminal #A62 (#B2) and heated oxygen sensor (HO2S) terminal #3
- Engine control module (ECM) terminal #A6 (#A6) and heated oxygen sensor (HO2S) terminal #2
- Heated oxygen sensor (HO2S) terminal #1 and the system relay.

Try a new heated oxygen sensor (HO2S) if the above fault-tracing does not remedy the fault.

Remedy as necessary.

Other information

- see **CONNECTING THE BREAKOUT BOX**
- For 5 cylinder turbocharged engines -2004, see **SIGNAL DESCRIPTION**
- For 5 cylinder turbocharged engines 2005-, see **SIGNAL SPECIFICATION** .
- For 6 cylinder engines -2004, see **SIGNAL SPECIFICATION**
- For 6 cylinder engines 2005-, see **SIGNAL SPECIFICATION** .
- For B5xx4T, see **HEATED OXYGEN SENSOR (HO2S), REPLACING**
- For B6xx4T, see **HEATED OXYGEN SENSOR (HO2S), REPLACING** .
- see **CHECKING WIRING AND TERMINALS**

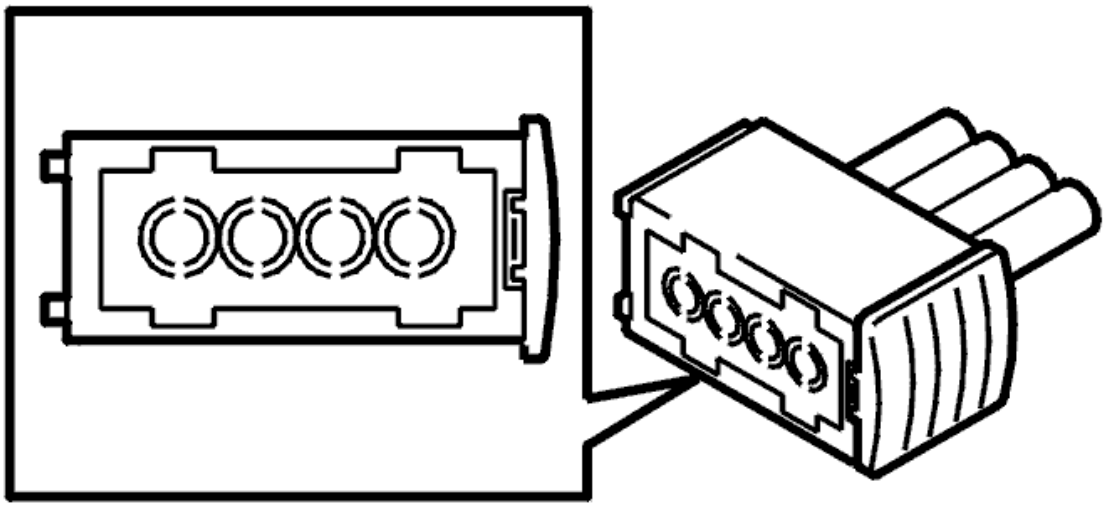

Fig. 4: Identifying Heated Oxygen Sensor
Courtesy of VOLVO CARS CORPORATION

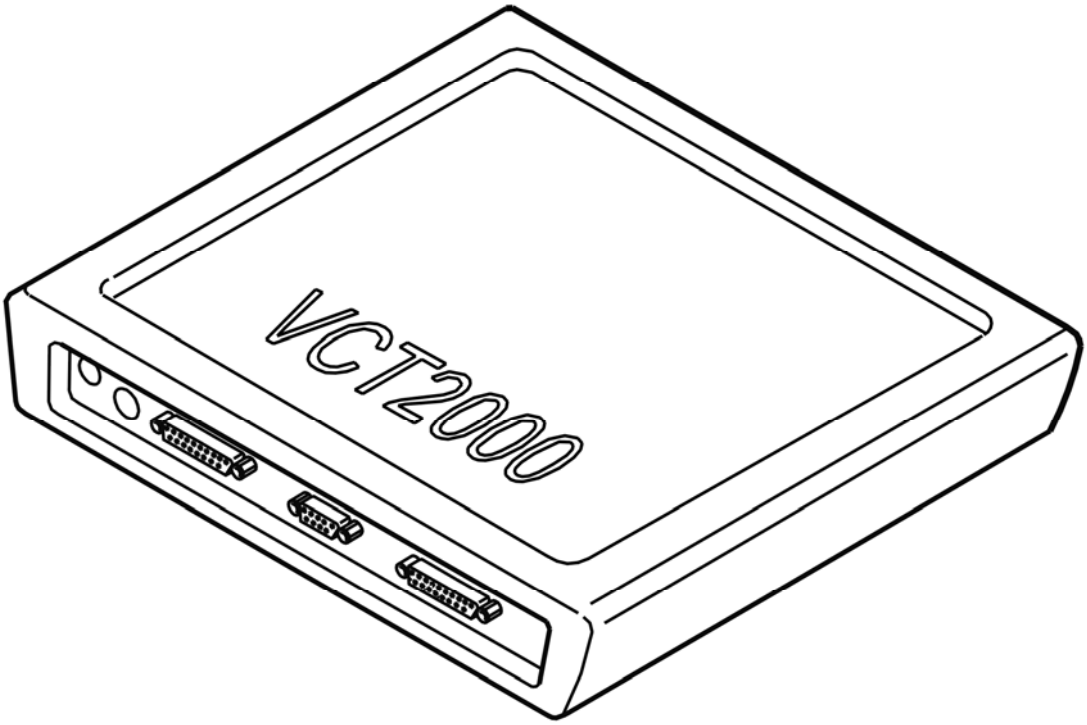

Fig. 5: Identifying VCT2000 Diagnostic Tool Symbol In VIDA
Courtesy of VOLVO CARS CORPORATION

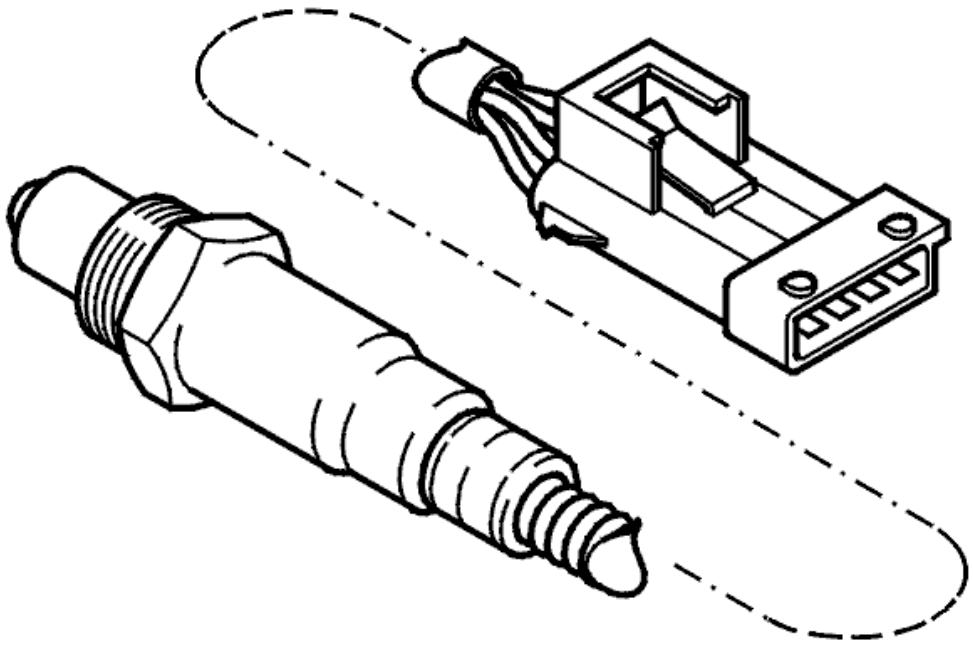

Fig. 6: Identifying Rear Heated Oxygen Sensor
Courtesy of VOLVO CARS CORPORATION

- **Continue**

  Refer to **VERIFICATION**

VERIFICATION

VERIFICATION

HINT: After carrying out the repair, check that the fault has been remedied.

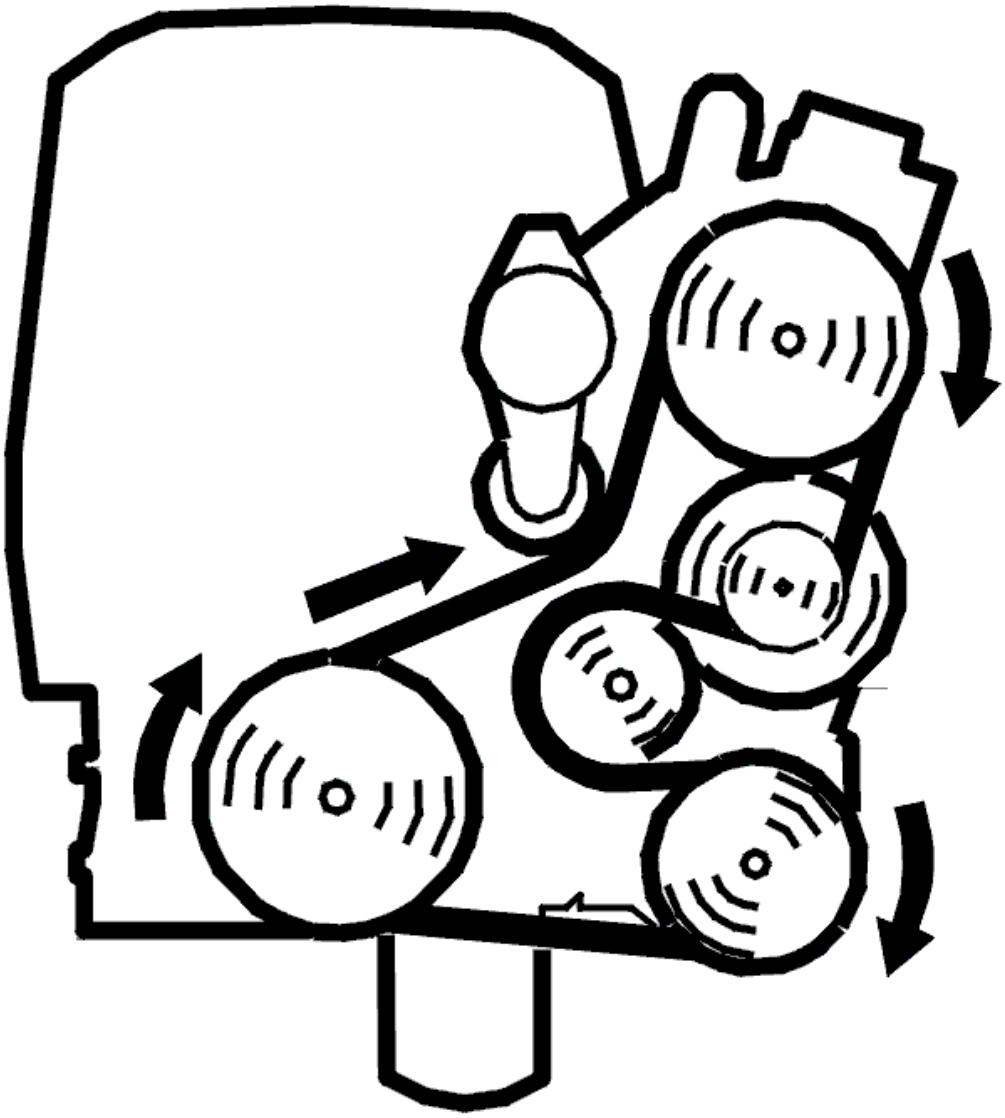

Fig. 7: Belt Routing / Engine Idling - Volvo
Courtesy of VOLVO CARS CORPORATION

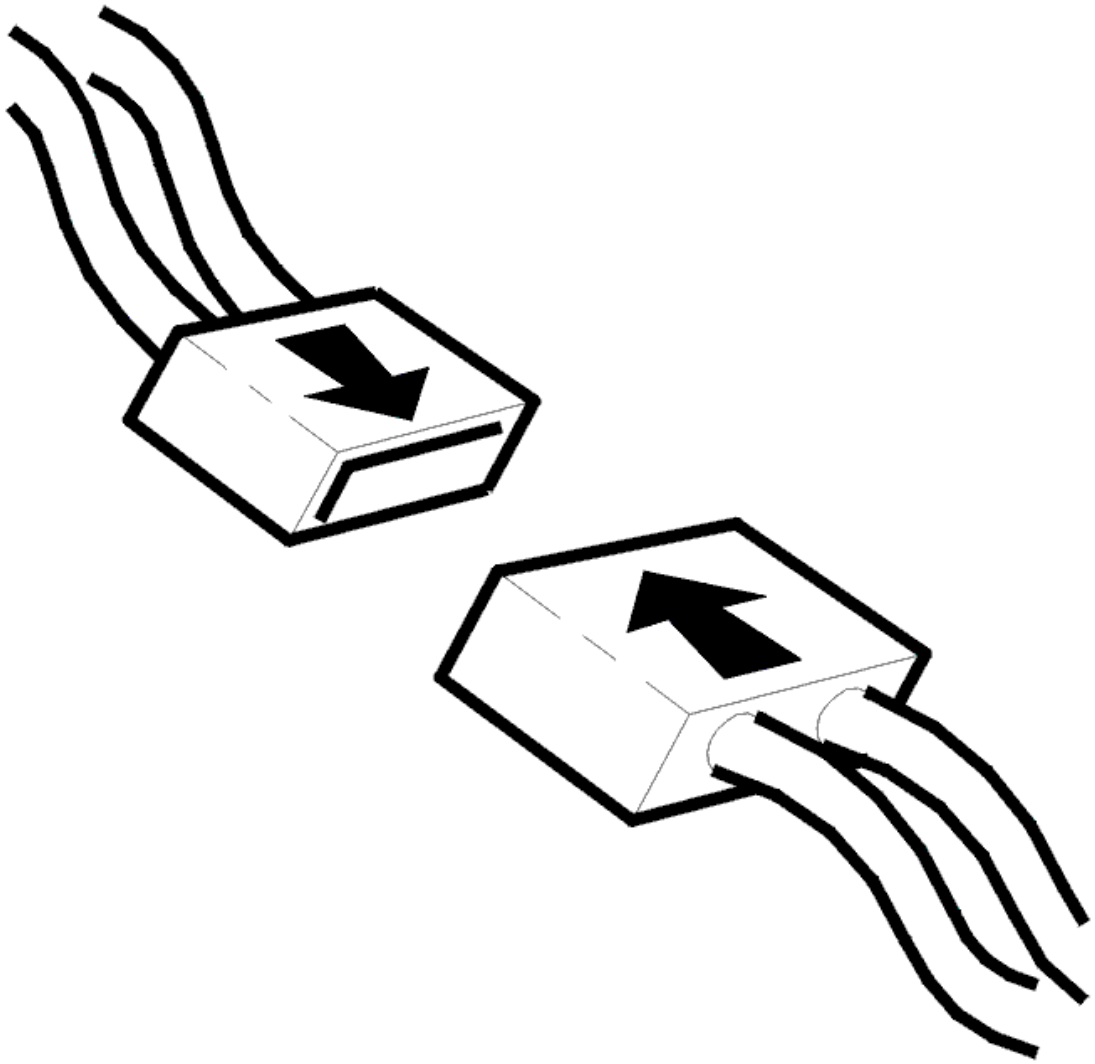

Fig. 8: Connecting Connector
Courtesy of VOLVO CARS CORPORATION

- Ignition off
- Reconnect the connectors, reinstall components etc.
- Start the engine and run it until the engine coolant temperature exceeds 60 °C
- Switch off the engine and allow it to cool (below 40 °C)
- Test drive the car on the road (engine speed (RPM) above 2000 RPM, never idling) for at least 15 minutes
- Connect VCT2000 (or appropriate scan tool) to the data link connector (DLC) without switching off the engine.

NOTE: **If the engine is switched off, the stored fault status will be erased and the test drive will have to be repeated.**

Read off the diagnostic status and fault status for the diagnostic trouble code (DTC) by selecting the relevant diagnostic trouble code (DTC) from the list.

Check the fault status for the diagnostic trouble code (DTC) when the diagnostic is "Complete". If the function is correct, the fault status must be "No fault found" when the diagnostic is complete.

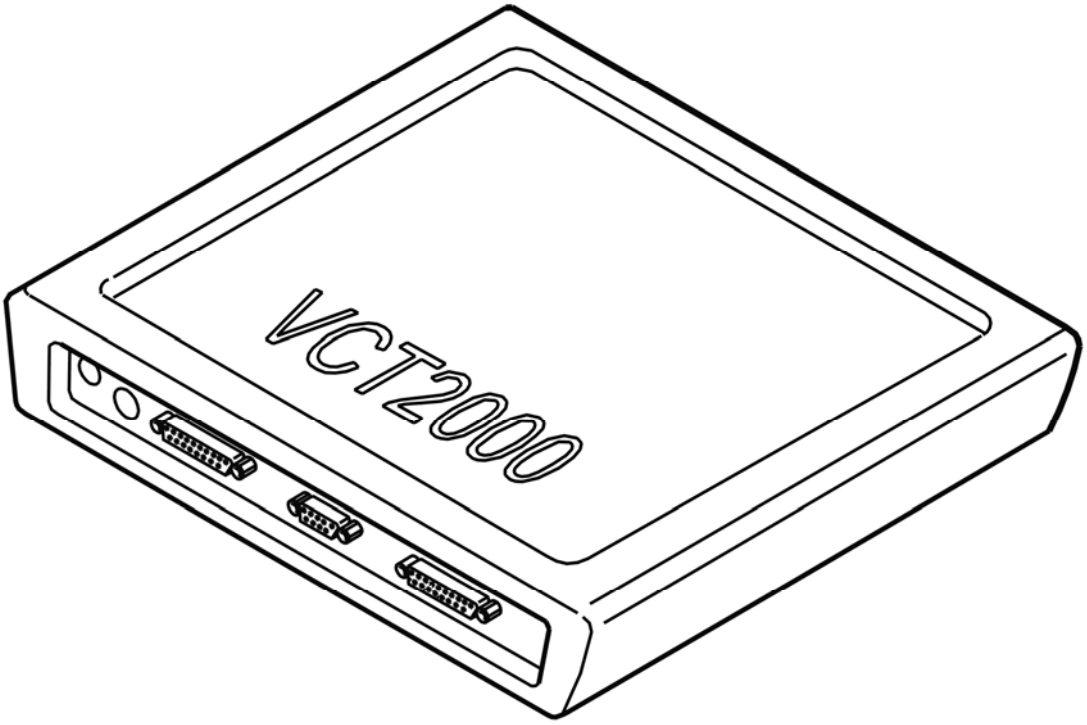

Fig. 9: Identifying VCT2000 Diagnostic Tool Symbol In VIDA
Courtesy of VOLVO CARS CORPORATION

Is the function OK?

- **YES**

  VERIFIED: Troubleshooting has been completed.

- **NO**

  Refer to **INFORMATION**

INFORMATION

FAULT-TRACING INFORMATION

The fault should have been detected and remedied. As this is not the case fault-tracing has failed.

Exit fault-tracing for this diagnostic trouble code (DTC) or make another attempt.

ECM-2220: REAR HEATED OXYGEN SENSOR (HO2S), BANK 1. FAULTY SIGNAL (B6294T; 2005-2006)

DIAGNOSTIC TROUBLE CODE (DTC) INFORMATION ECM-2220

see **DIAGNOSTIC TROUBLE CODE (DTC) INFORMATION ECM-2220**

FAULTY SIGNAL

see **FAULTY SIGNAL**

ECM-222B: REAR HEATED OXYGEN SENSOR (HO2S), BANK 1. SIGNAL MISSING (B5254T2; 2005-2007)

DIAGNOSTIC TROUBLE CODE (DTC) INFORMATION ECM-222B

Condition

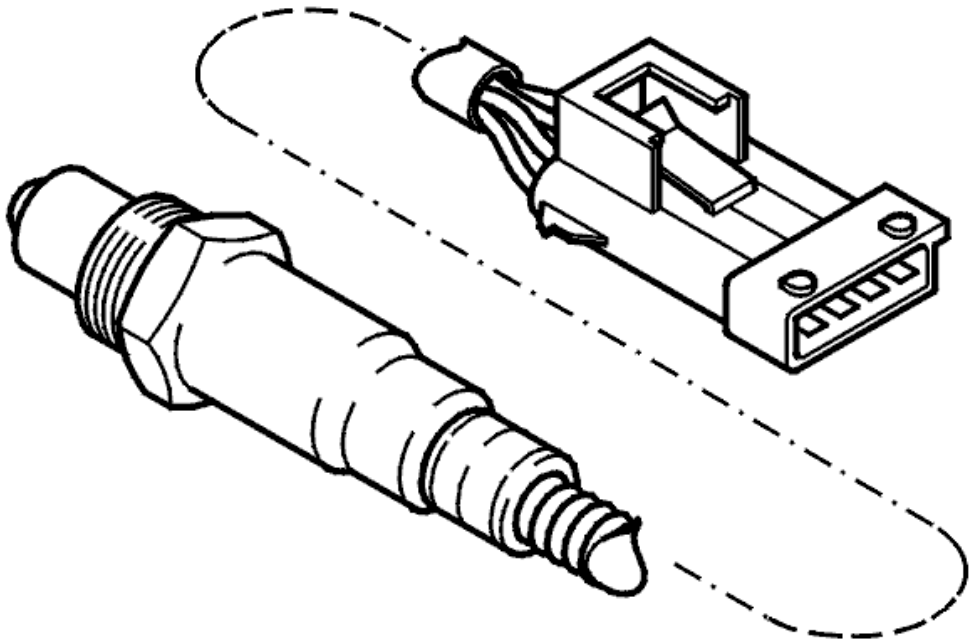

Fig. 10: Identifying Rear Heated Oxygen Sensor
Courtesy of VOLVO CARS CORPORATION

The engine control module (ECM) monitors the operation of the rear heated oxygen sensor (HO2S) by checking its signal. The diagnostic trouble code (DTC) is stored if the engine control module (ECM) registers that the signal deviates from its permitted operational range or if the voltage for the heated oxygen sensor (HO2S) preheating disrupts the heated oxygen sensor (HO2S) signal.

Substitute Value

- Rear heated oxygen sensor (HO2S) control is disabled
- Three-way catalytic converter (TWC) diagnostics are disabled.

Possible Source

- Contact resistance or oxidation in the connectors
- Open-circuit in the signal cable
- Open-circuit in the ground lead
- Damaged rear heated oxygen sensor (HO2S).

Fault symptom[s]

- Malfunction indicator lamp (MIL) lit.

SIGNAL MISSING

CHECKING THE COMPONENTS AND WIRING

Check the rear heated oxygen sensor (HO2S) connector. Check for contact resistance and oxidation.

Check the cable between engine control module (ECM) terminal #A61 (#B1) and heated oxygen sensor (HO2S) terminal #4. Check for an open-circuit.

Check the cable between engine control module (ECM) terminal #A62 (#B2) and heated oxygen sensor (HO2S) terminal #3. Check for an open-circuit.

Try a new heated oxygen sensor (HO2S) if the above fault-tracing does not remedy the fault.

Remedy as necessary.

Other information

- see **CONNECTING THE BREAKOUT BOX**
- For 5 cylinder turbocharged engines -2004, see **SIGNAL DESCRIPTION**
- For 5 cylinder turbocharged engines 2005-, see **SIGNAL SPECIFICATION** .
- For 6 cylinder engines -2004, see **SIGNAL SPECIFICATION**
- For 6 cylinder engines 2005-, see **SIGNAL SPECIFICATION** .
- For B5xx4T, see **HEATED OXYGEN SENSOR (HO2S), REPLACING**

- For B6xx4T, see **HEATED OXYGEN SENSOR (HO2S), REPLACING** .
- see **CHECKING WIRING AND TERMINALS**

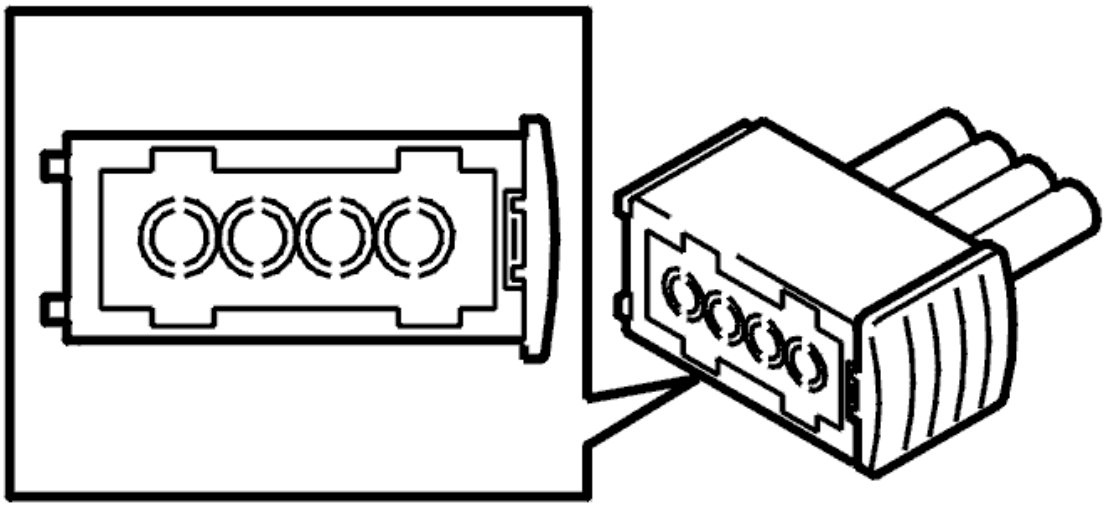

Fig. 11: Identifying Heated Oxygen Sensor
Courtesy of VOLVO CARS CORPORATION

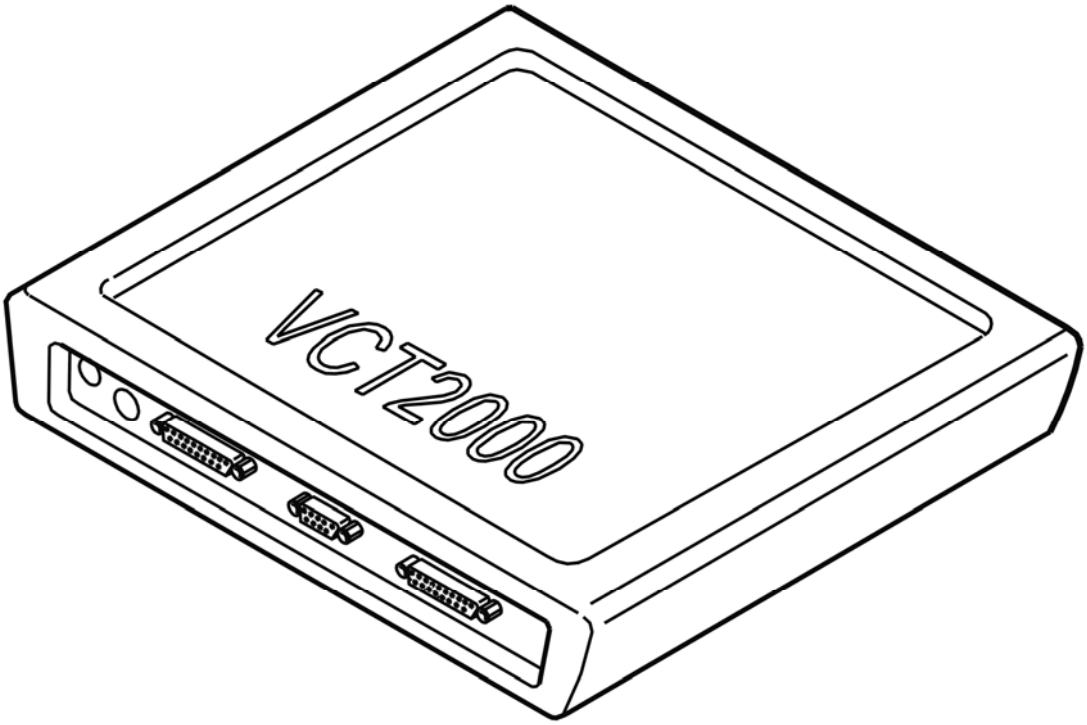

Fig. 12: Identifying VCT2000 Diagnostic Tool Symbol In VIDA
Courtesy of VOLVO CARS CORPORATION

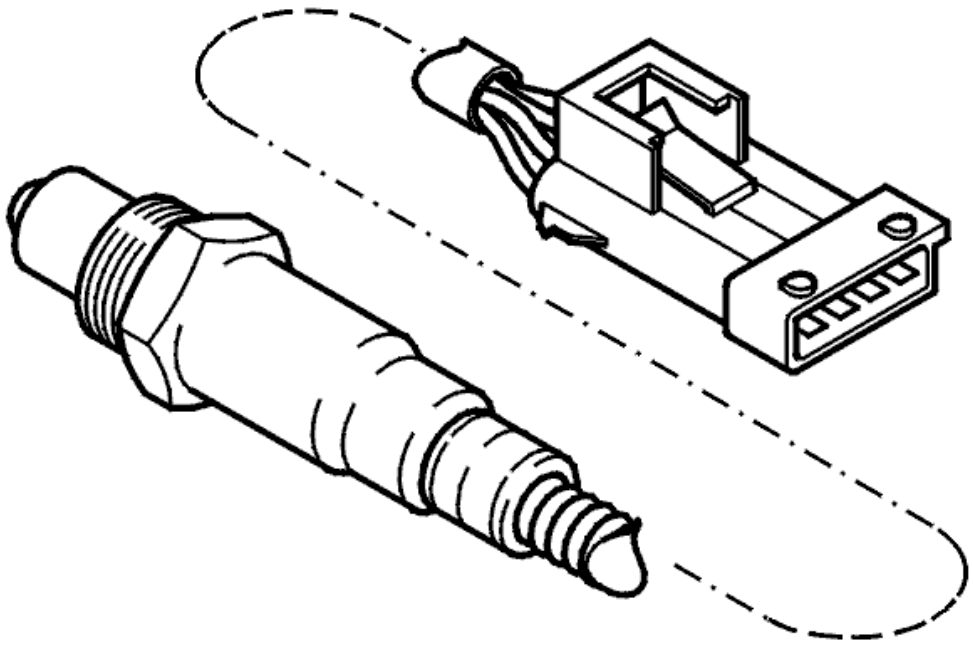

Fig. 13: Identifying Rear Heated Oxygen Sensor
Courtesy of VOLVO CARS CORPORATION

- **Continue**

  Refer to **VERIFICATION**

VERIFICATION

VERIFICATION

HINT: After carrying out the repair, check that the fault has been remedied.

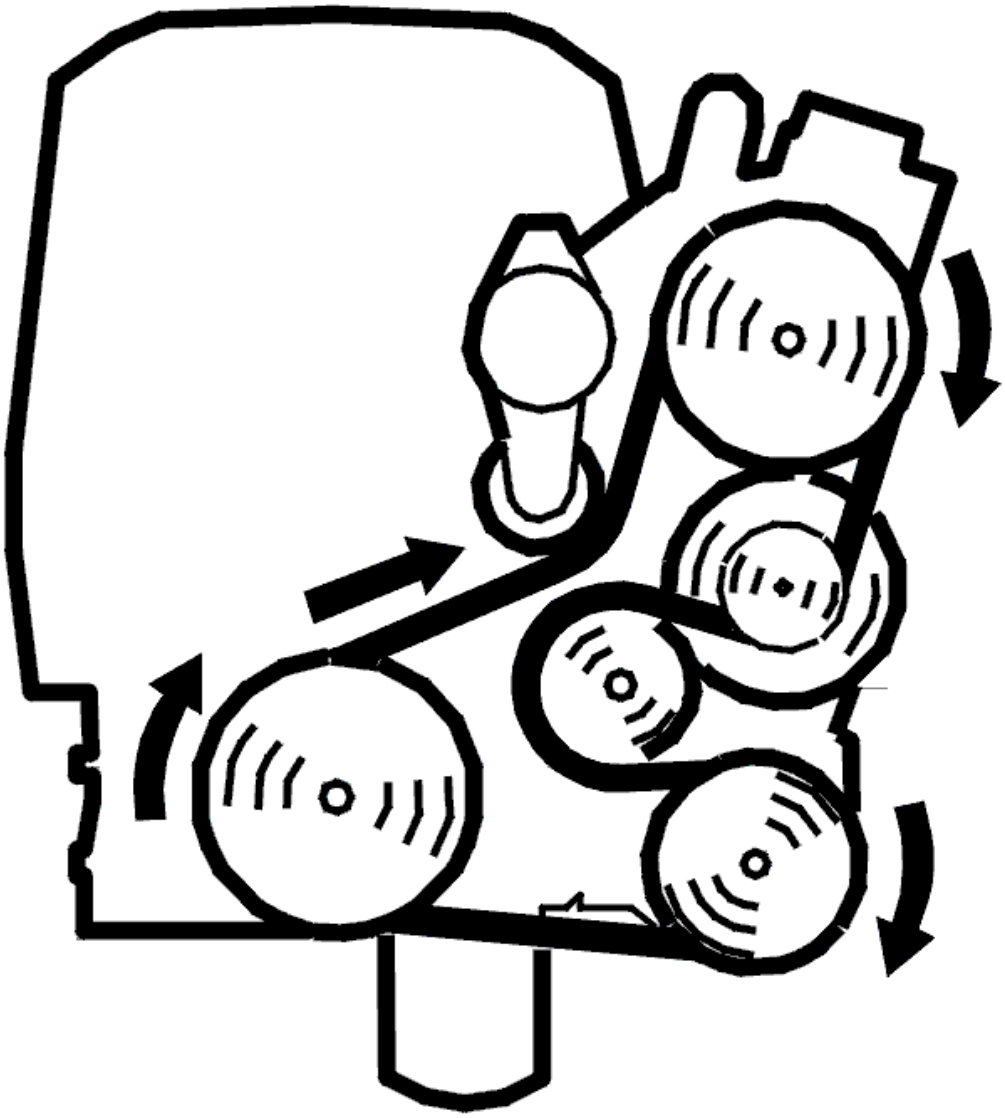

Fig. 14: Belt Routing / Engine Idling - Volvo
Courtesy of VOLVO CARS CORPORATION

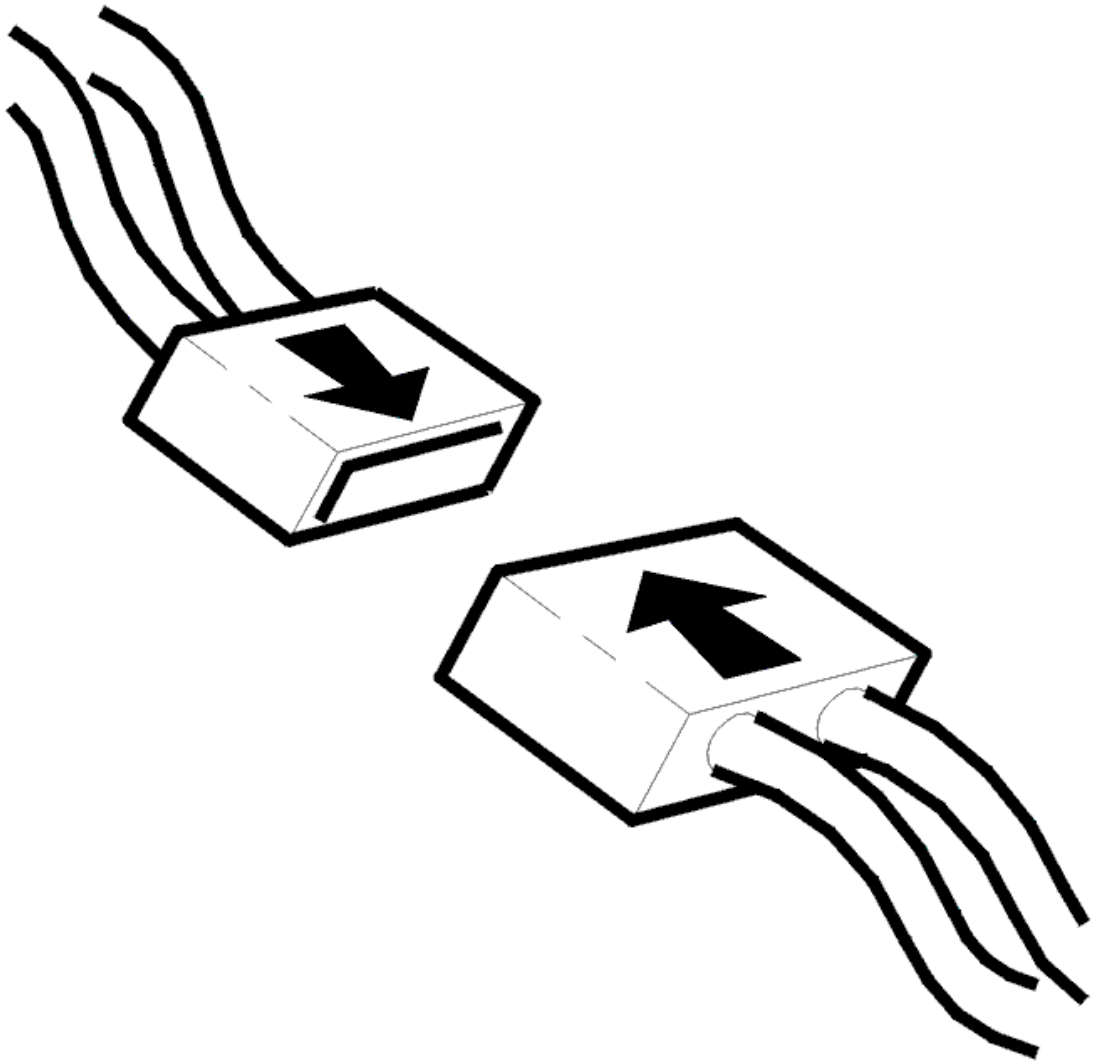

Fig. 15: Connecting Connector
Courtesy of VOLVO CARS CORPORATION

- Ignition off
- Reconnect the connectors, reinstall components etc.
- Start the engine and run it until the engine coolant temperature exceeds 60 °C
- Switch off the engine and allow it to cool (below 40 °C)
- Test drive the car on the road (engine speed (RPM) above 2000 RPM, never idling) for at least 15 minutes
- Connect VCT2000 (or appropriate scan tool) to the data link connector (DLC) without switching off the engine.

NOTE: **If the engine is switched off, the stored fault status will be erased and the test drive will have to be repeated.**

Read off the diagnostic status and fault status for the diagnostic trouble code (DTC) by selecting the relevant diagnostic trouble code (DTC) from the list.

Check the fault status for the diagnostic trouble code (DTC) when the diagnostic is "Complete". If the function is correct, the fault status must be "No fault found" when the diagnostic is complete.

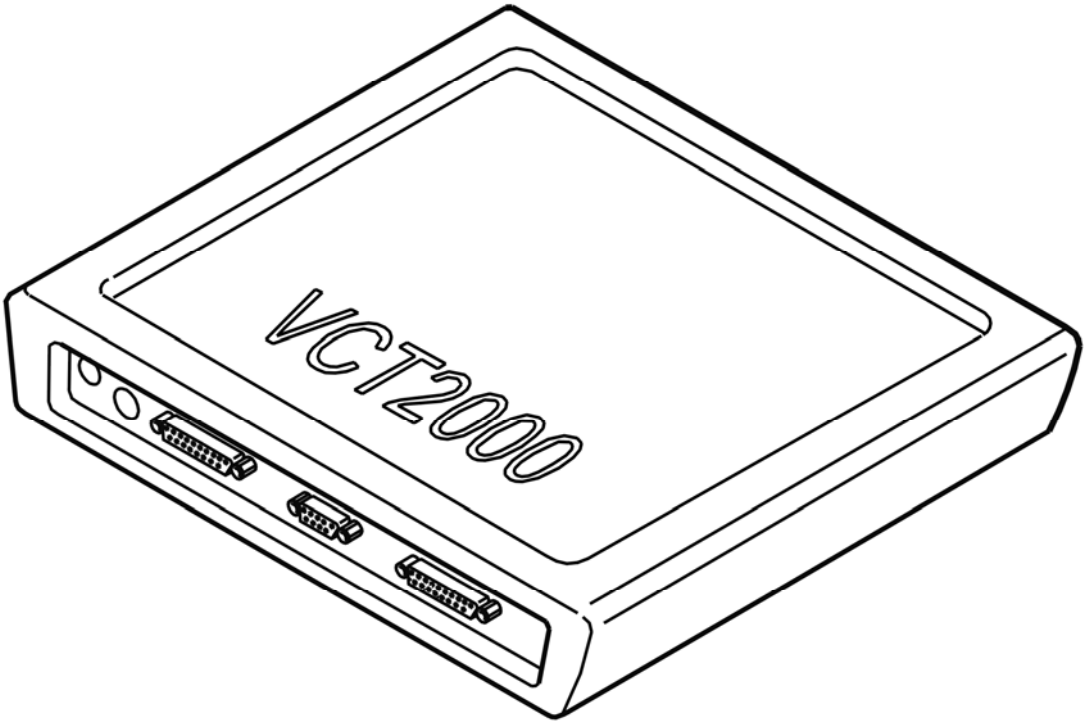

Fig. 16: Identifying VCT2000 Diagnostic Tool Symbol In VIDA
Courtesy of VOLVO CARS CORPORATION

Is the function OK?

- **YES**

  VERIFIED: Troubleshooting has been completed.

- **NO**

  Refer to **INFORMATION**

INFORMATION

FAULT-TRACING INFORMATION

The fault should have been detected and remedied. As this is not the case fault-tracing has failed.

Exit fault-tracing for this diagnostic trouble code (DTC) or make another attempt.

ECM-222B: REAR HEATED OXYGEN SENSOR (HO2S), BANK 1. SIGNAL MISSING (B6294T; 2005-2006)

DIAGNOSTIC TROUBLE CODE (DTC) INFORMATION ECM-222B

see **DIAGNOSTIC TROUBLE CODE (DTC) INFORMATION ECM-222B**

SIGNAL MISSING

see **SIGNAL MISSING**

ECM-222C: REAR HEATED OXYGEN SENSOR (HO2S), BANK 1. SIGNAL TOO HIGH (B5254T2; 2005-2007)

DIAGNOSTIC TROUBLE CODE (DTC) INFORMATION ECM-222C

Condition

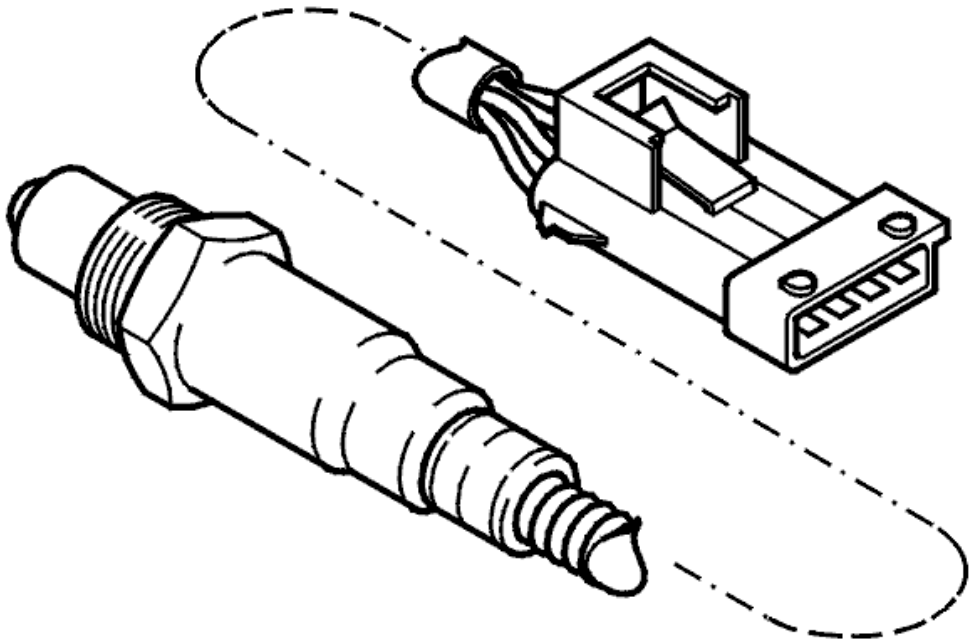

Fig. 17: Identifying Rear Heated Oxygen Sensor
Courtesy of VOLVO CARS CORPORATION

The engine control module (ECM) monitors the operation of the rear heated oxygen sensor (HO2S) by checking its signal. The diagnostic trouble code (DTC) is stored if the engine control module (ECM) registers that the signal deviates from its permitted operational range or if the voltage for the heated oxygen sensor (HO2S) preheating disrupts the heated oxygen sensor (HO2S) signal.

Substitute Value

- Rear heated oxygen sensor (HO2S) control is disabled
- Three-way catalytic converter (TWC) diagnostics are disabled.

Possible Source

- Short-circuit to supply voltage in the signal cable
- Short-circuit to supply voltage in the ground lead
- Damaged rear heated oxygen sensor (HO2S).

Fault symptom[s]

- Malfunction indicator lamp (MIL) lit.

SIGNAL TOO HIGH

CHECKING THE COMPONENTS AND WIRING

Check the cable between engine control module (ECM) terminal #A61 (#B1) and heated oxygen sensor (HO2S) terminal #4. Check for a short-circuit to supply voltage.

Check the cable between engine control module (ECM) terminal #A62 (#B2) and heated oxygen sensor (HO2S) terminal #3. Check for a short-circuit to supply voltage.

Try a new heated oxygen sensor (HO2S) if the above fault-tracing does not remedy the fault.

Remedy as necessary.

Other information

- see **CONNECTING THE BREAKOUT BOX**
- For 5 cylinder turbocharged engines -2004, see **SIGNAL DESCRIPTION**
- For 5 cylinder turbocharged engines 2005-, see **SIGNAL SPECIFICATION** .
- For 6 cylinder engines -2004, see **SIGNAL SPECIFICATION**
- For 6 cylinder engines 2005-, see **SIGNAL SPECIFICATION** .
- For B5xx4T, see **HEATED OXYGEN SENSOR (HO2S), REPLACING**
- For B6xx4T, see **HEATED OXYGEN SENSOR (HO2S), REPLACING** .
- see **CHECKING WIRING AND TERMINALS**

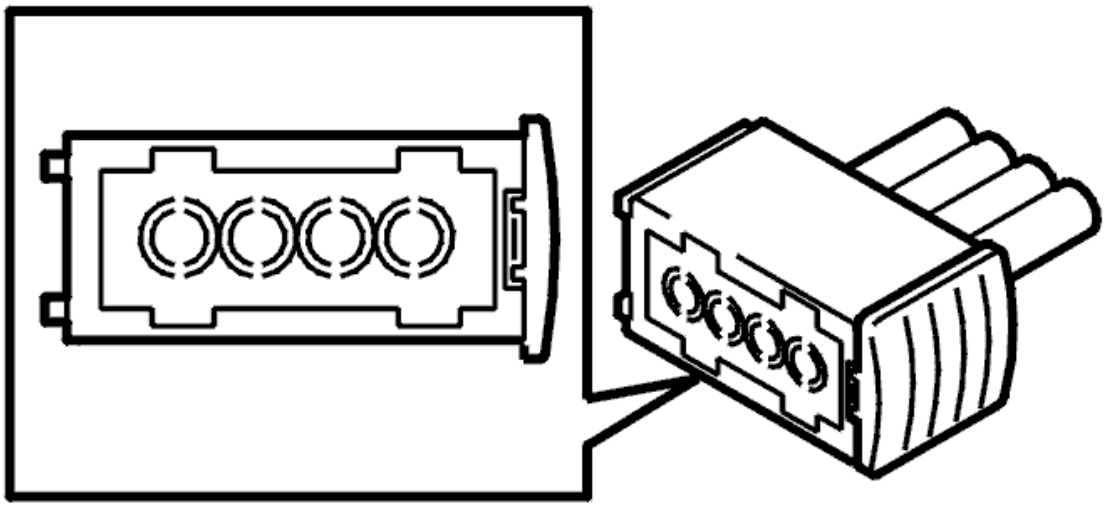

Fig. 18: Identifying Heated Oxygen Sensor
Courtesy of VOLVO CARS CORPORATION

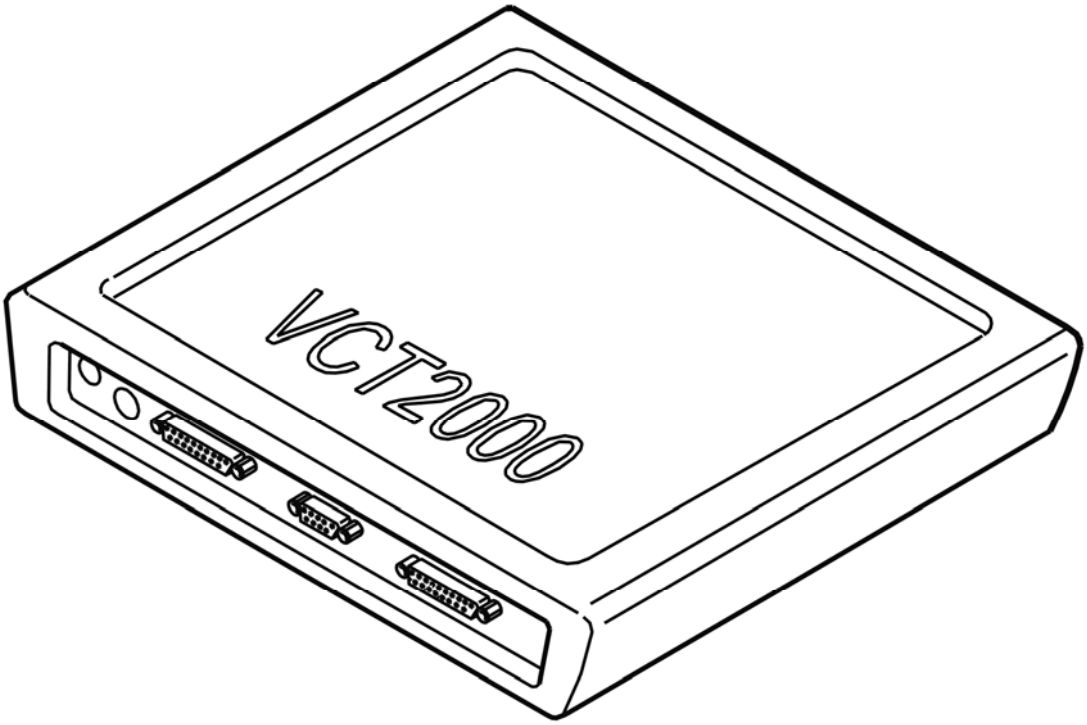

Fig. 19: Identifying VCT2000 Diagnostic Tool Symbol In VIDA
Courtesy of VOLVO CARS CORPORATION

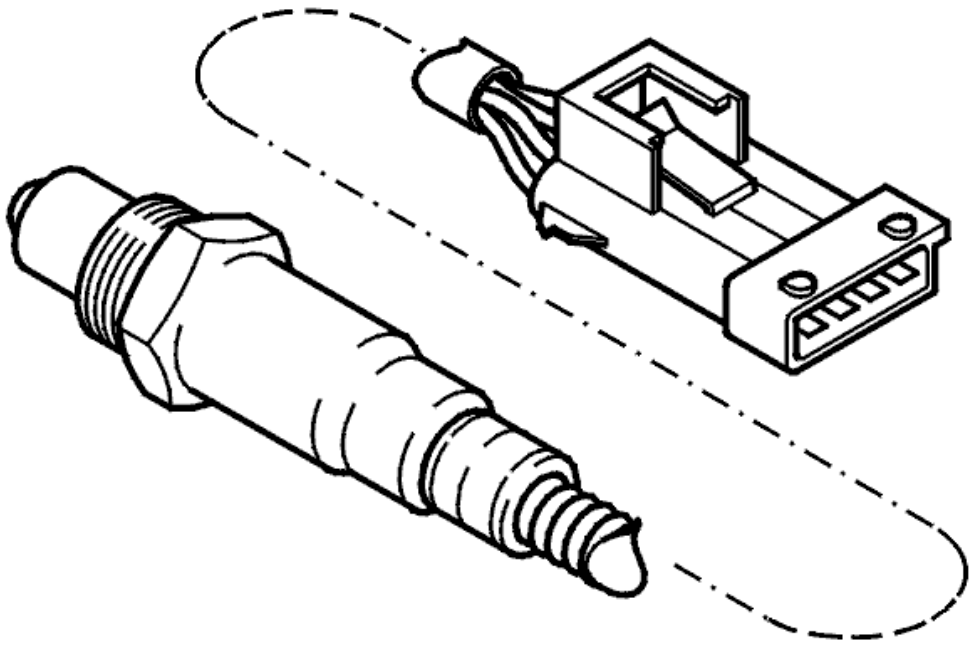

Fig. 20: Identifying Rear Heated Oxygen Sensor
Courtesy of VOLVO CARS CORPORATION

- **Continue**

  Refer to **VERIFICATION**

VERIFICATION

VERIFICATION

HINT: After carrying out the repair, check that the fault has been remedied.

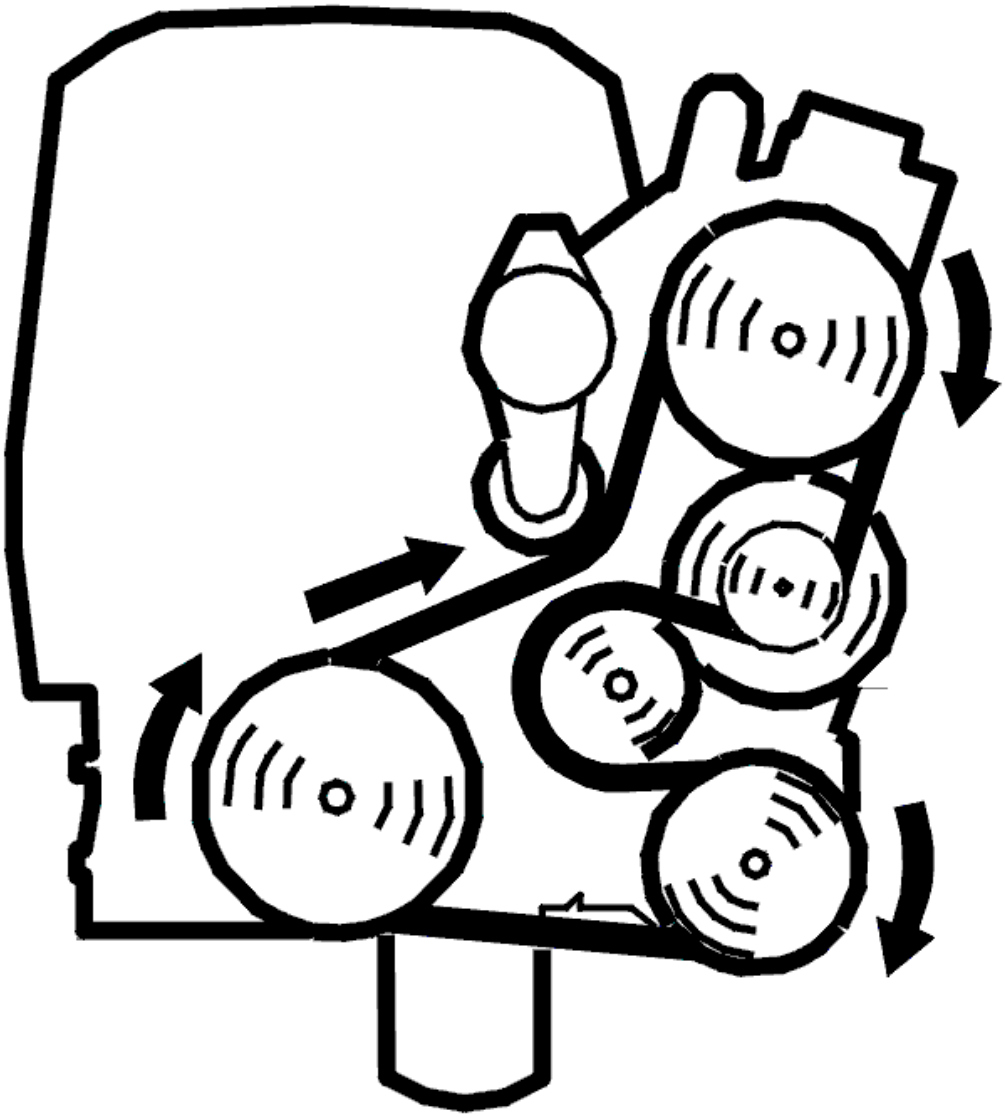

Fig. 21: Belt Routing / Engine Idling - Volvo
Courtesy of VOLVO CARS CORPORATION

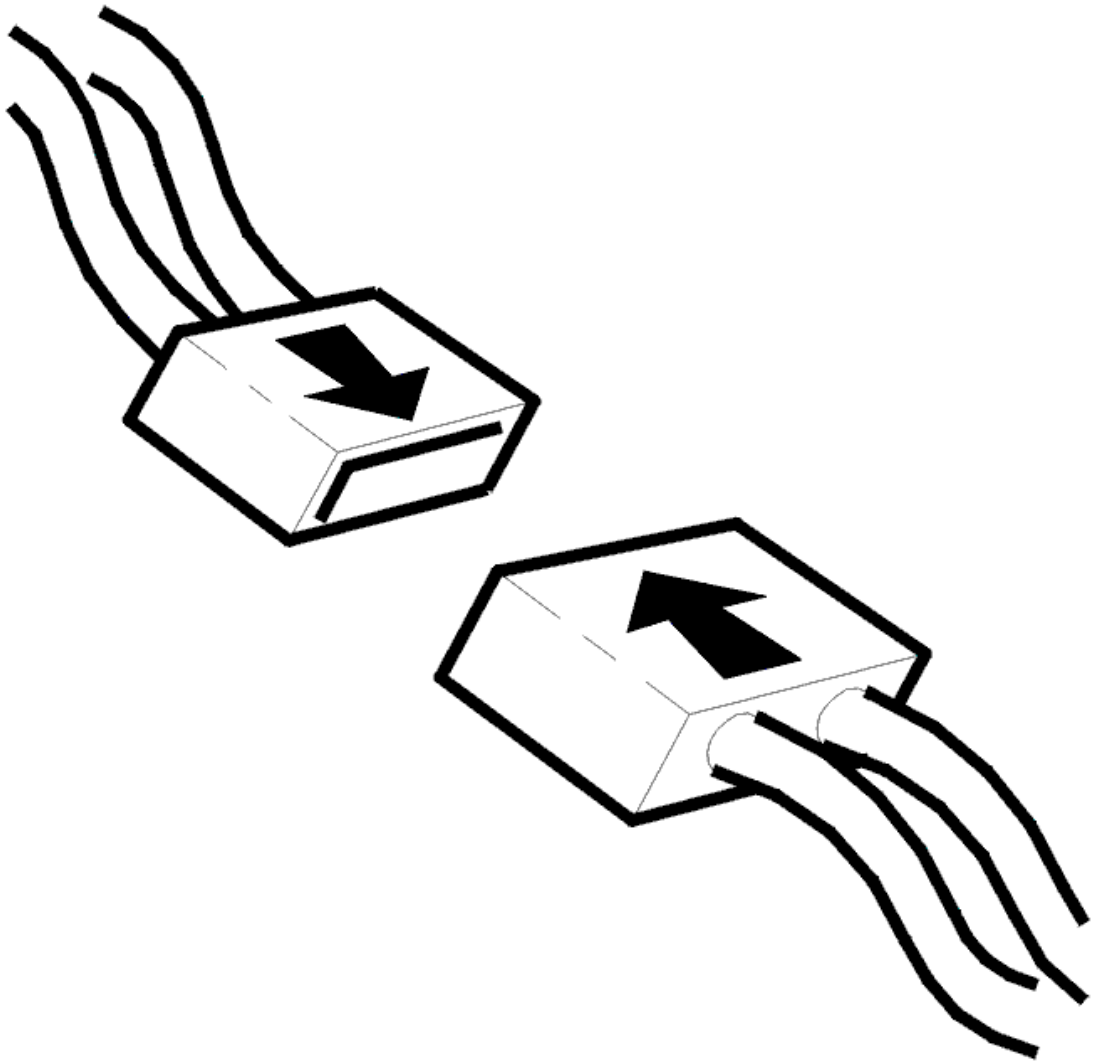

Fig. 22: Connecting Connector
Courtesy of VOLVO CARS CORPORATION

- Ignition off
- Reconnect the connectors, reinstall components etc.
- Start the engine and run it until the engine coolant temperature exceeds 60 °C
- Switch off the engine and allow it to cool (below 40 °C)
- Test drive the car on the road (engine speed (RPM) above 2000 RPM, never idling) for at least 15 minutes
- Connect VCT2000 (or appropriate scan tool) to the data link connector (DLC) without switching off the engine.

NOTE: **If the engine is switched off, the stored fault status will be erased and the test drive will have to be repeated.**

Read off the diagnostic status and fault status for the diagnostic trouble code (DTC) by selecting the relevant diagnostic trouble code (DTC) from the list.

Check the fault status for the diagnostic trouble code (DTC) when the diagnostic is "Complete". If the function is correct, the fault status must be "No fault found" when the diagnostic is complete.

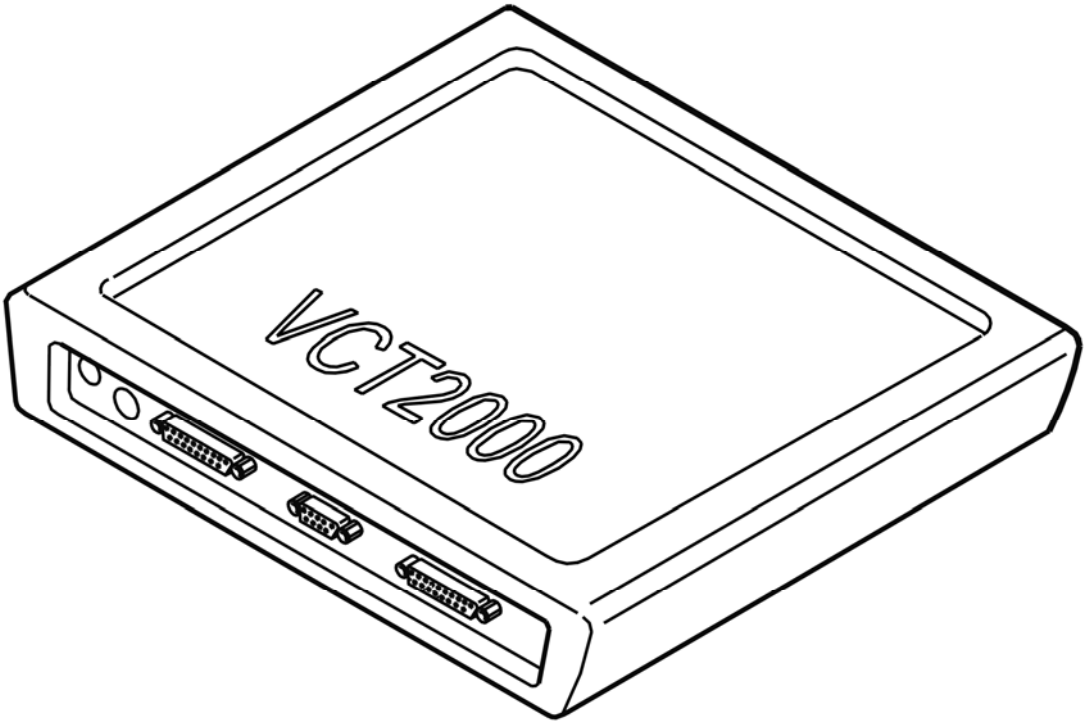

Fig. 23: Identifying VCT2000 Diagnostic Tool Symbol In VIDA
Courtesy of VOLVO CARS CORPORATION

Is the function OK?

- **YES**

  VERIFIED: Troubleshooting has been completed.

- **NO**

  Refer to **INFORMATION**

INFORMATION

FAULT-TRACING INFORMATION

The fault should have been detected and remedied. As this is not the case fault-tracing has failed.

Exit fault-tracing for this diagnostic trouble code (DTC) or make another attempt.

ECM-222C: REAR HEATED OXYGEN SENSOR (HO2S), BANK 1. SIGNAL TOO HIGH (B6294T; 2005-2006)

DIAGNOSTIC TROUBLE CODE (DTC) INFORMATION ECM-222C

see **DIAGNOSTIC TROUBLE CODE (DTC) INFORMATION ECM-222C**

SIGNAL TOO HIGH

see **SIGNAL TOO HIGH**

ECM-222D: REAR HEATED OXYGEN SENSOR (HO2S), BANK 1. SIGNAL TOO LOW (B5254T2; 2005-2007)

DIAGNOSTIC TROUBLE CODE (DTC) INFORMATION ECM-222D

Condition

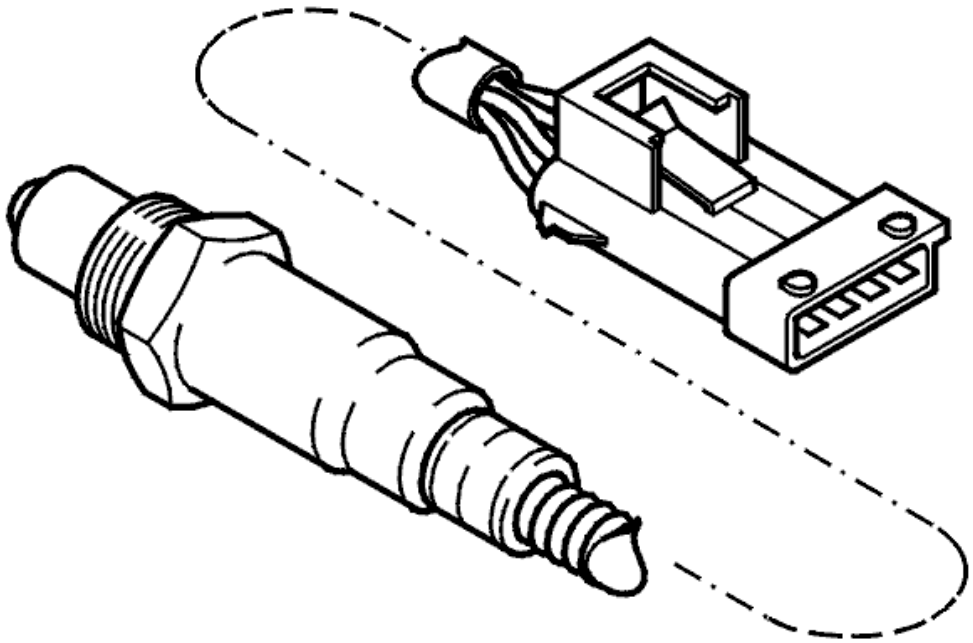

Fig. 24: Identifying Rear Heated Oxygen Sensor
Courtesy of VOLVO CARS CORPORATION

The engine control module (ECM) monitors the operation of the rear heated oxygen sensor (HO2S) by checking its signal. The diagnostic trouble code (DTC) is stored if the engine control module (ECM) registers that the signal deviates from its permitted operational range or if the voltage for the heated oxygen sensor (HO2S) preheating disrupts the heated oxygen sensor (HO2S) signal.

Substitute Value

- Rear heated oxygen sensor (HO2S) control is disabled
- Three-way catalytic converter (TWC) diagnostics are disabled.

Possible Source

- Short-circuit to ground in the signal cable
- Short-circuit to ground in the ground lead
- Damaged rear heated oxygen sensor (HO2S).

Fault symptom[s]

- Malfunction indicator lamp (MIL) lit.

SIGNAL TOO LOW

CHECKING THE COMPONENTS AND WIRING

Check the cable between engine control module (ECM) terminal #A61 (#B1) and heated oxygen sensor (HO2S) terminal #4. Check for a short-circuit to ground.

Check the cable between engine control module (ECM) terminal #A62 (#B2) and heated oxygen sensor (HO2S) terminal #3. Check for a short-circuit to ground.

Try a new heated oxygen sensor (HO2S) if the above fault-tracing does not remedy the fault.

Remedy as necessary.

Other information

- see **CONNECTING THE BREAKOUT BOX**
- For 5 cylinder turbocharged engines -2004, see **SIGNAL DESCRIPTION**
- For 5 cylinder turbocharged engines 2005-, see **SIGNAL SPECIFICATION** .
- For 6 cylinder engines -2004, see **SIGNAL SPECIFICATION**
- For 6 cylinder engines 2005-, see **SIGNAL SPECIFICATION** .
- For B5xx4T, see **HEATED OXYGEN SENSOR (HO2S), REPLACING**
- For B6xx4T, see **HEATED OXYGEN SENSOR (HO2S), REPLACING** .
- see **CHECKING WIRING AND TERMINALS**

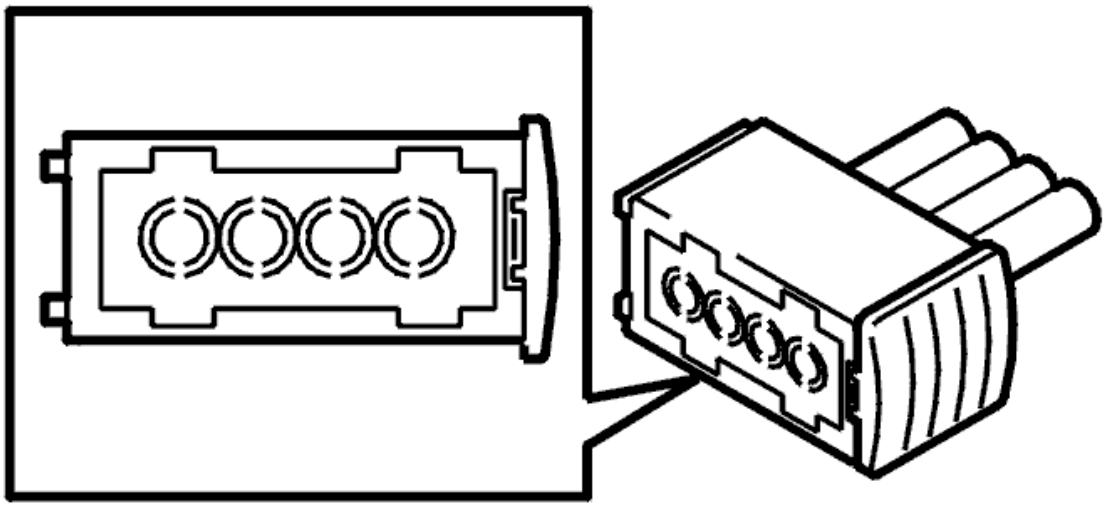

Fig. 25: Identifying Heated Oxygen Sensor
Courtesy of VOLVO CARS CORPORATION

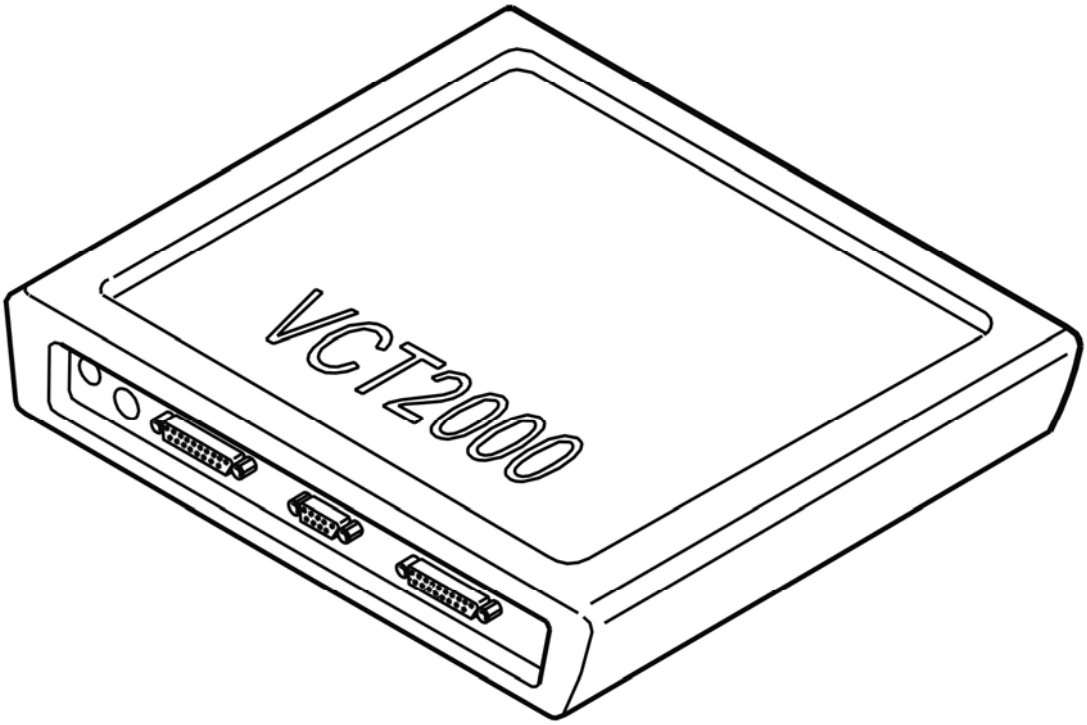

Fig. 26: Identifying VCT2000 Diagnostic Tool Symbol In VIDA
Courtesy of VOLVO CARS CORPORATION

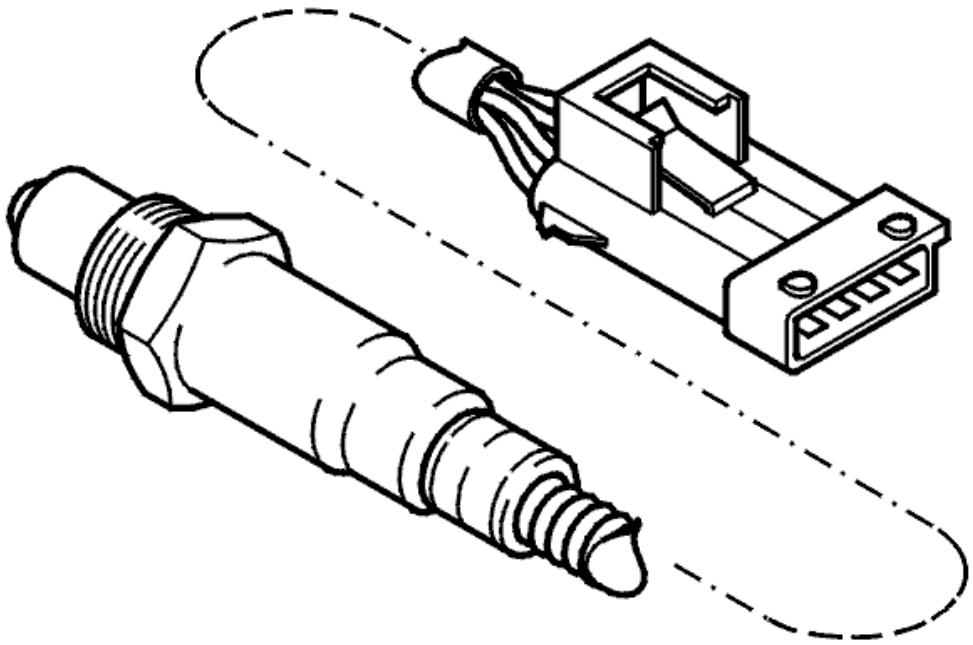

Fig. 27: Identifying Rear Heated Oxygen Sensor
Courtesy of VOLVO CARS CORPORATION

- **Continue**

  Refer to **VERIFICATION**

VERIFICATION

VERIFICATION

HINT: After carrying out the repair, check that the fault has been remedied.

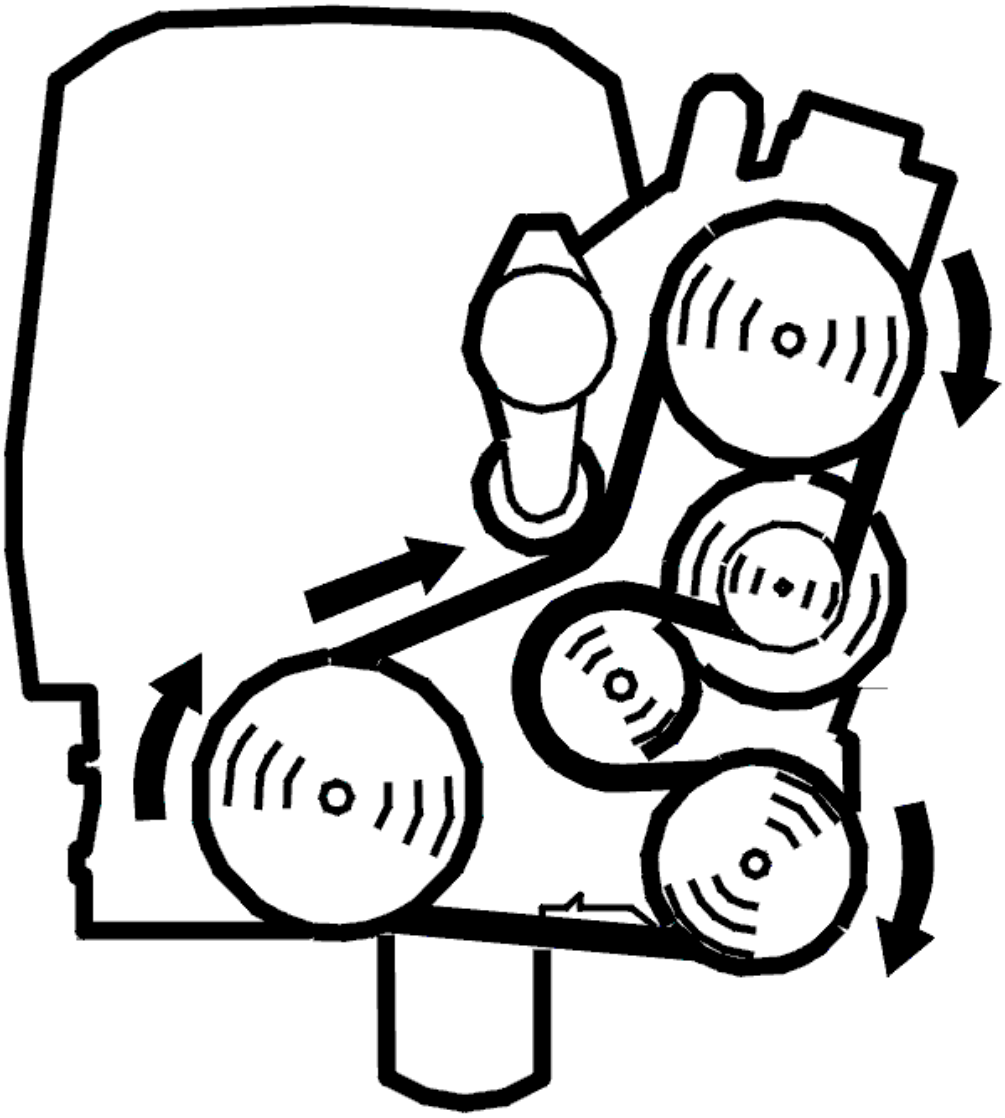

Fig. 28: Belt Routing / Engine Idling - Volvo
Courtesy of VOLVO CARS CORPORATION

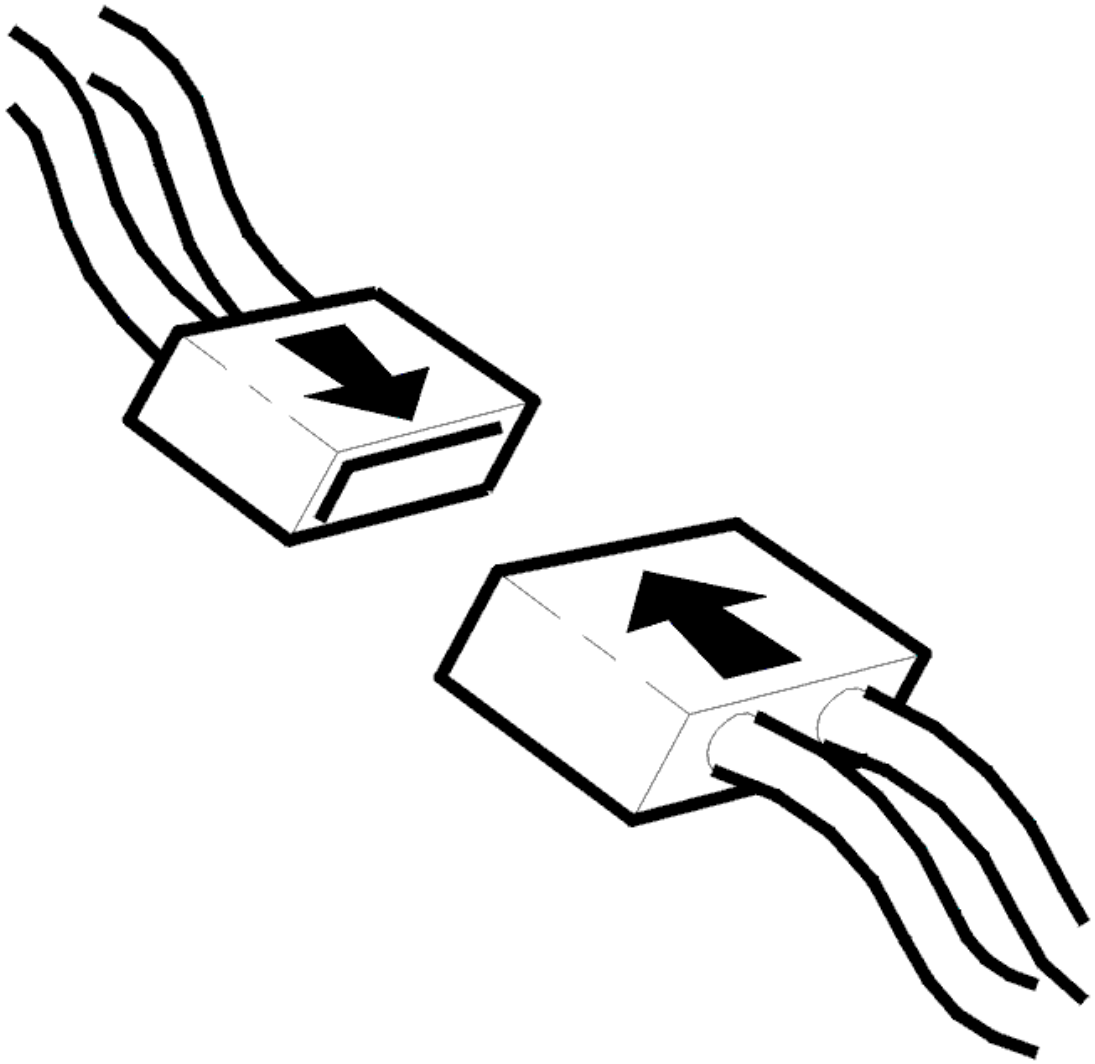

Fig. 29: Connecting Connector
Courtesy of VOLVO CARS CORPORATION

- Ignition off
- Reconnect the connectors, reinstall components etc.
- Start the engine and run it until the engine coolant temperature exceeds 60 °C
- Switch off the engine and allow it to cool (below 40 °C)
- Test drive the car on the road (engine speed (RPM) above 2000 RPM, never idling) for at least 15 minutes
- Connect VCT2000 (or appropriate scan tool) to the data link connector (DLC) without switching off the engine.

NOTE: **If the engine is switched off, the stored fault status will be erased and the test drive will have to be repeated.**

Read off the diagnostic status and fault status for the diagnostic trouble code (DTC) by selecting the relevant diagnostic trouble code (DTC) from the list.

Check the fault status for the diagnostic trouble code (DTC) when the diagnostic is "Complete". If the function is correct, the fault status must be "No fault found" when the diagnostic is complete.

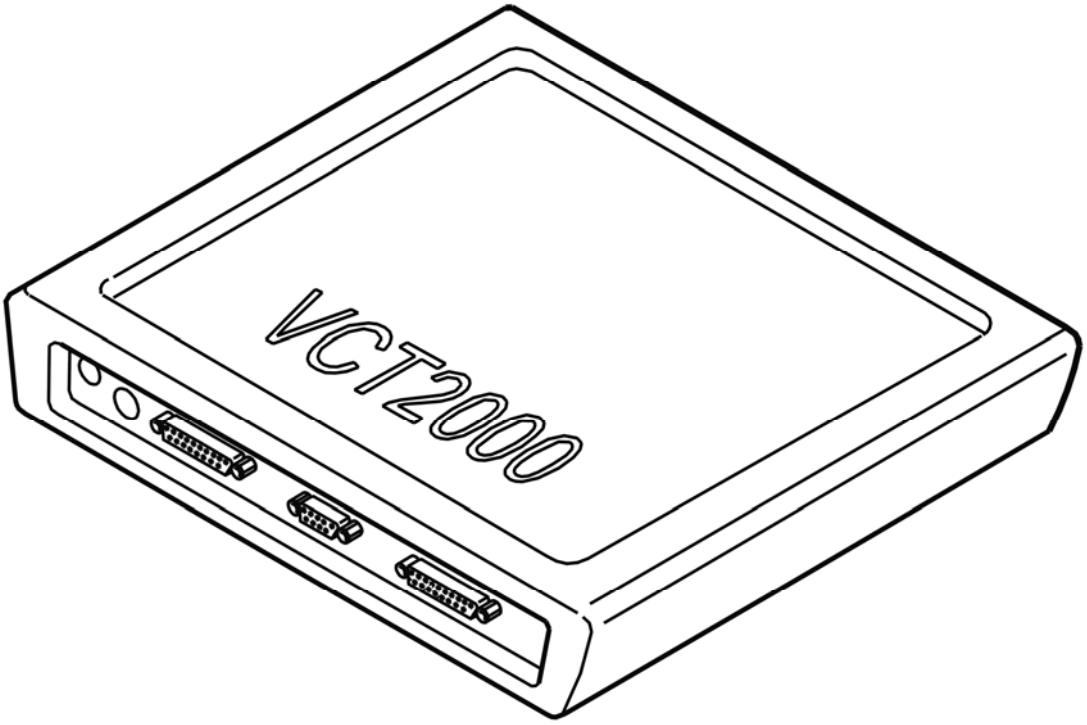

Fig. 30: Identifying VCT2000 Diagnostic Tool Symbol In VIDA
Courtesy of VOLVO CARS CORPORATION

Is the function OK?

- **YES**

  VERIFIED: Troubleshooting has been completed.

- **NO**

  Refer to **INFORMATION**

INFORMATION

FAULT-TRACING INFORMATION

The fault should have been detected and remedied. As this is not the case fault-tracing has failed.

Exit fault-tracing for this diagnostic trouble code (DTC) or make another attempt.

ECM-222D: REAR HEATED OXYGEN SENSOR (HO2S), BANK 1. SIGNAL TOO LOW (B6294T; 2005-2006)

DIAGNOSTIC TROUBLE CODE (DTC) INFORMATION ECM-222D

see **DIAGNOSTIC TROUBLE CODE (DTC) INFORMATION ECM-222D**

SIGNAL TOO LOW

see **SIGNAL TOO LOW**

ECM-223B: REAR HEATED OXYGEN SENSOR (HO2S), BANK 1. SIGNAL MISSING (B5254T2; 2005-2007)

DIAGNOSTIC TROUBLE CODE (DTC) INFORMATION ECM-223B

Condition

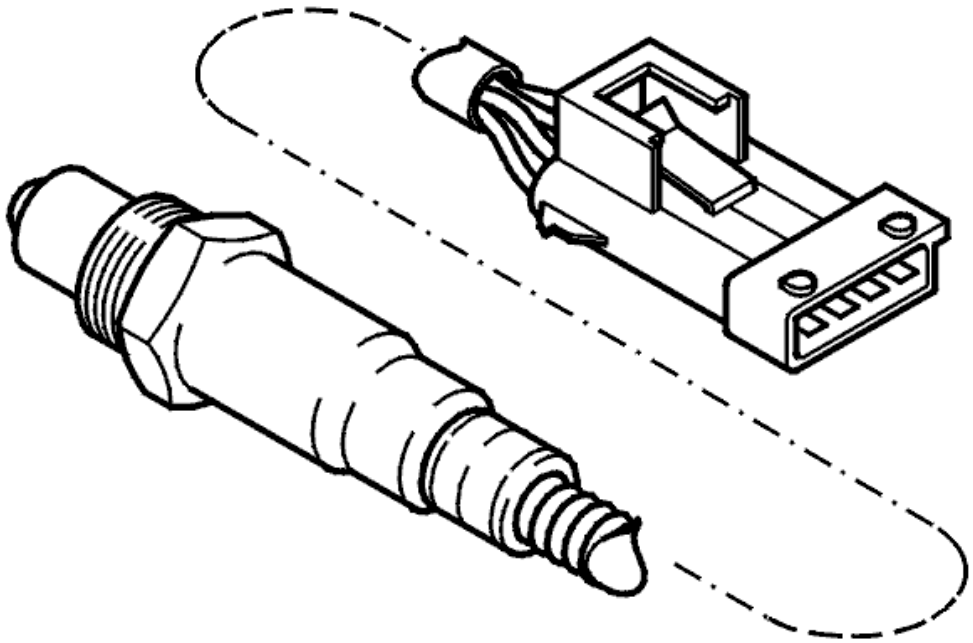

Fig. 31: Identifying Rear Heated Oxygen Sensor
Courtesy of VOLVO CARS CORPORATION

The engine control module (ECM) controls the preheating of the rear heated oxygen sensor (HO2S) by pulsing the current to the positive temperature coefficient (PTC) element in the heated oxygen sensor (HO2S). Pulse lengths are dependent on the temperature of the heated oxygen sensor (H02S).

The diagnostic trouble code (DTC) is stored if the engine control module (ECM) registers that the signal is lower than a certain value when preheating is deactivated.

Substitute Value

- The fuel trim is shut off.

Possible Source

- Contact resistance and oxidation in the terminals
- Open-circuit in the power supply from the system relay
- Damaged heated oxygen sensor (HO2S).

Fault symptom[s]

- Malfunction indicator lamp (MIL) lit.

SIGNAL MISSING

CHECKING THE STATUS

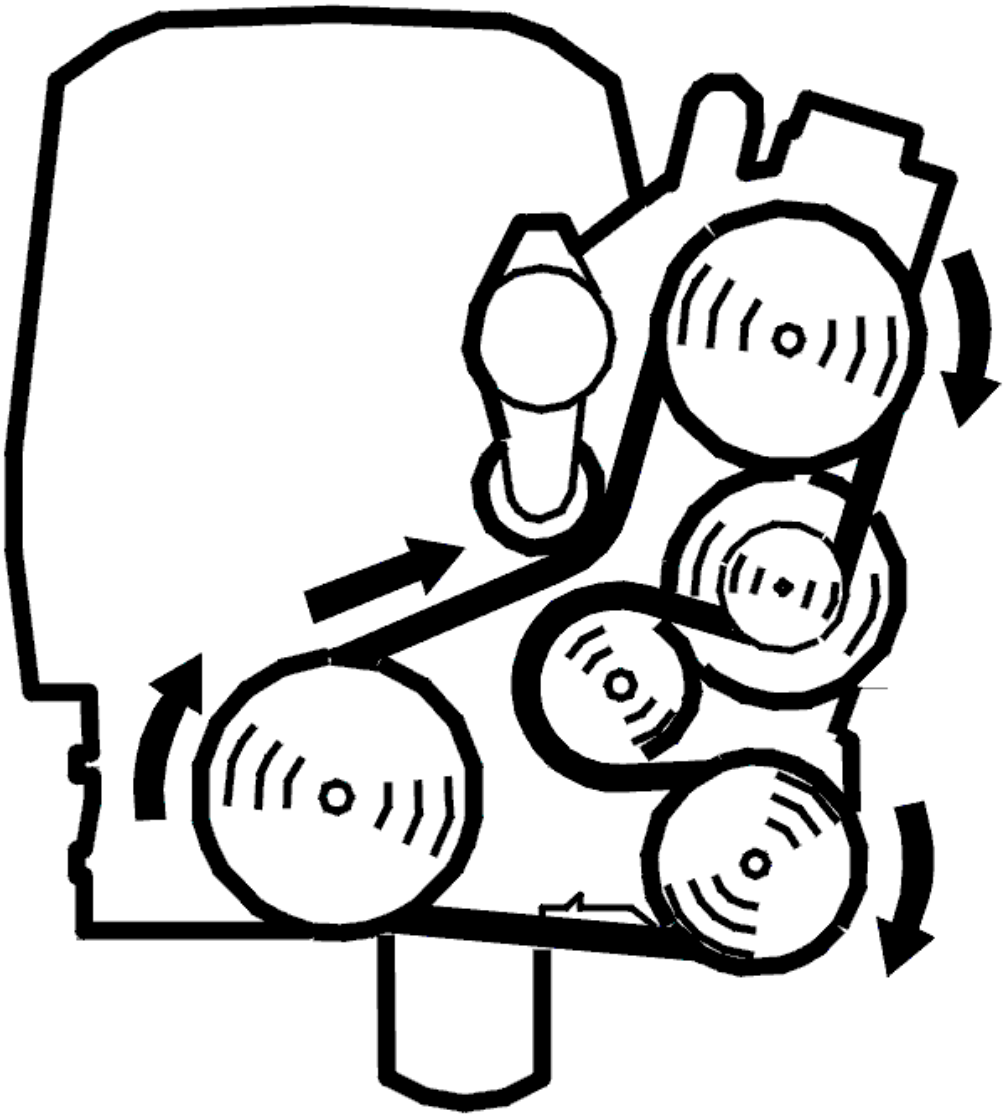

Fig. 32: Belt Routing / Engine Idling - Volvo
Courtesy of VOLVO CARS CORPORATION

- Start the engine.

  Read off the diagnostic status and fault status for the diagnostic trouble code (DTC) by selecting the relevant diagnostic trouble code (DTC) from the list.

  Increase the engine speed to 2500 RPM until the diagnostic is "Complete".

  Check whether the fault is permanent or intermittent. Read off the diagnostic trouble code (DTC) fault status when the diagnostic status is "Completed".

  HINT: In some cases several functions of the component will be diagnosed. The affects the amount of time taken to run the diagnostic.

The fault is permanent if the fault status is "Fault found". If the fault status is "No fault found" the fault is intermittent and not presently active.

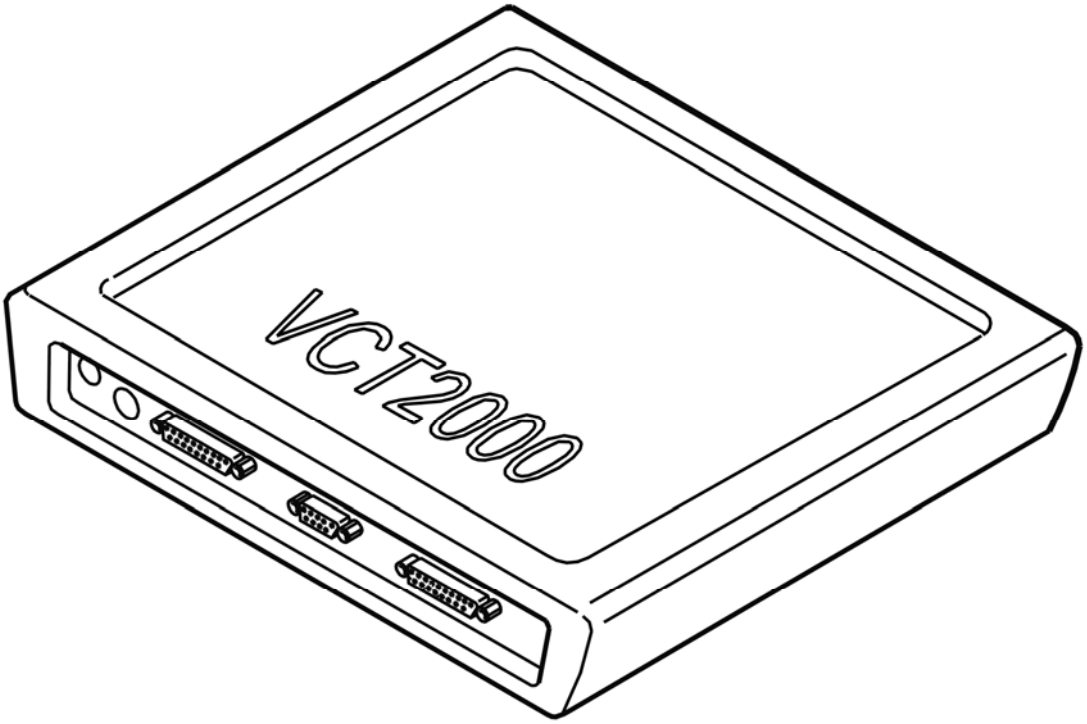

Fig. 33: Identifying VCT2000 Diagnostic Tool Symbol In VIDA
Courtesy of VOLVO CARS CORPORATION

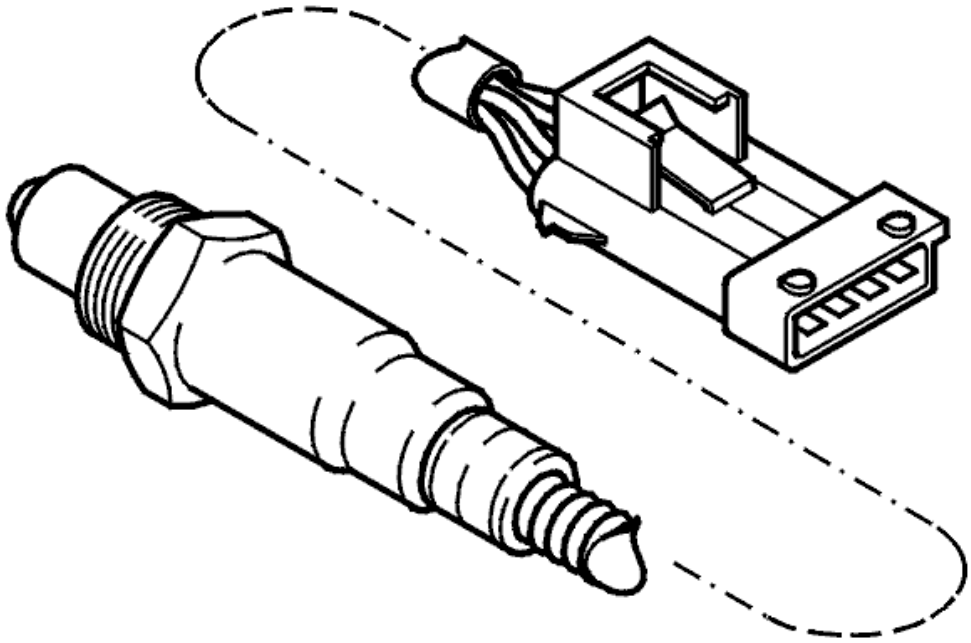

Fig. 34: Identifying Rear Heated Oxygen Sensor
Courtesy of VOLVO CARS CORPORATION

- **Continue**

  Refer to **CHECKING THE COMPONENTS AND WIRING**

CHECKING THE COMPONENTS AND WIRING

Check the resistance of the heated oxygen sensor (HO2S) between terminals #1 and #2.

Check the signal cable between heated oxygen sensor (HO2S) terminal #2 and control module terminal #A6 (#A6).

Check the power supply between system relay terminal #3 and heated oxygen sensor (HO2S) terminal #1. Check for an open-circuit.

Remedy as necessary.

Other information

- see **CONNECTING THE BREAKOUT BOX**
- For 5 cylinder turbocharged engines -2004, see **SIGNAL DESCRIPTION**

- For 5 cylinder turbocharged engines 2005-, see **SIGNAL SPECIFICATION** .
- For 6 cylinder engines -2004, see **SIGNAL SPECIFICATION**
- For 6 cylinder engines 2005-, see **SIGNAL SPECIFICATION** .
- For resistance values: **COMPONENT SPECIFICATIONS**
- For B5xx4T, see **HEATED OXYGEN SENSOR (HO2S), REPLACING**
- For B6xx4T, see **HEATED OXYGEN SENSOR (HO2S), REPLACING** .
- see **CHECKING WIRING AND TERMINALS**

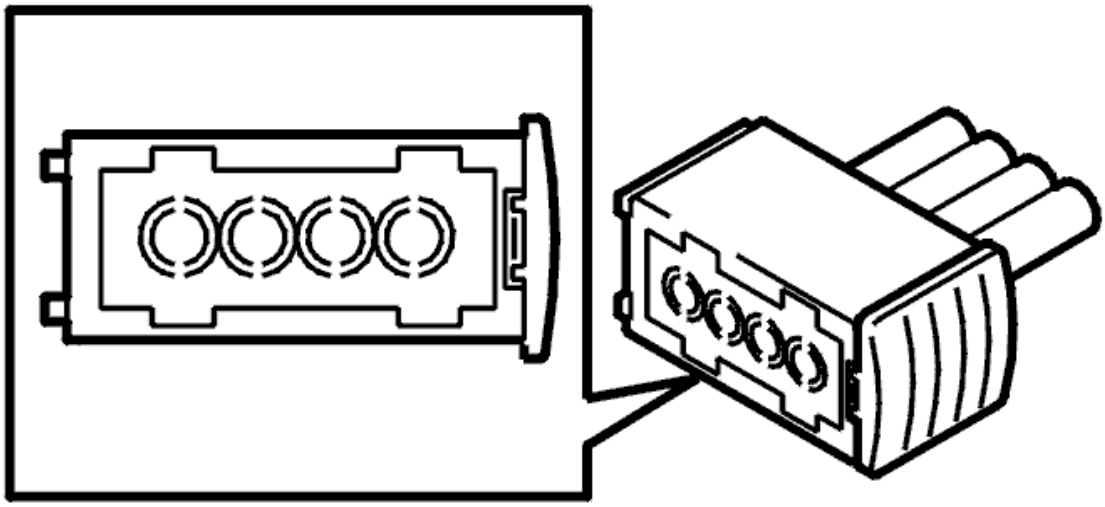

Fig. 35: Identifying Heated Oxygen Sensor
Courtesy of VOLVO CARS CORPORATION

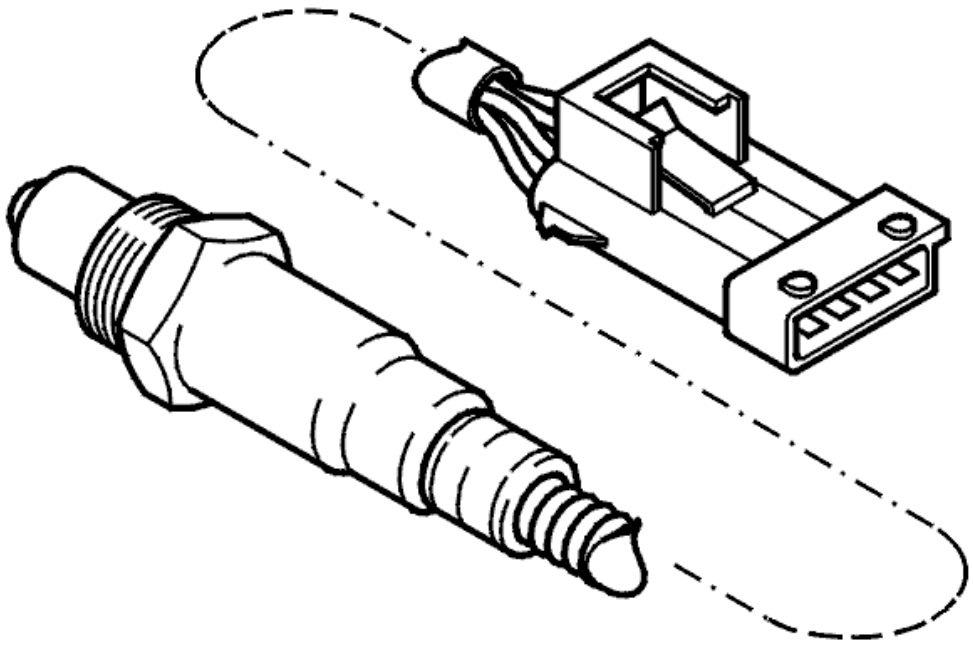

Fig. 36: Identifying Rear Heated Oxygen Sensor
Courtesy of VOLVO CARS CORPORATION

- **Continue**

  Refer to **VERIFICATION**

VERIFICATION

VERIFICATION

HINT: After carrying out the repair, check that the fault has been remedied.

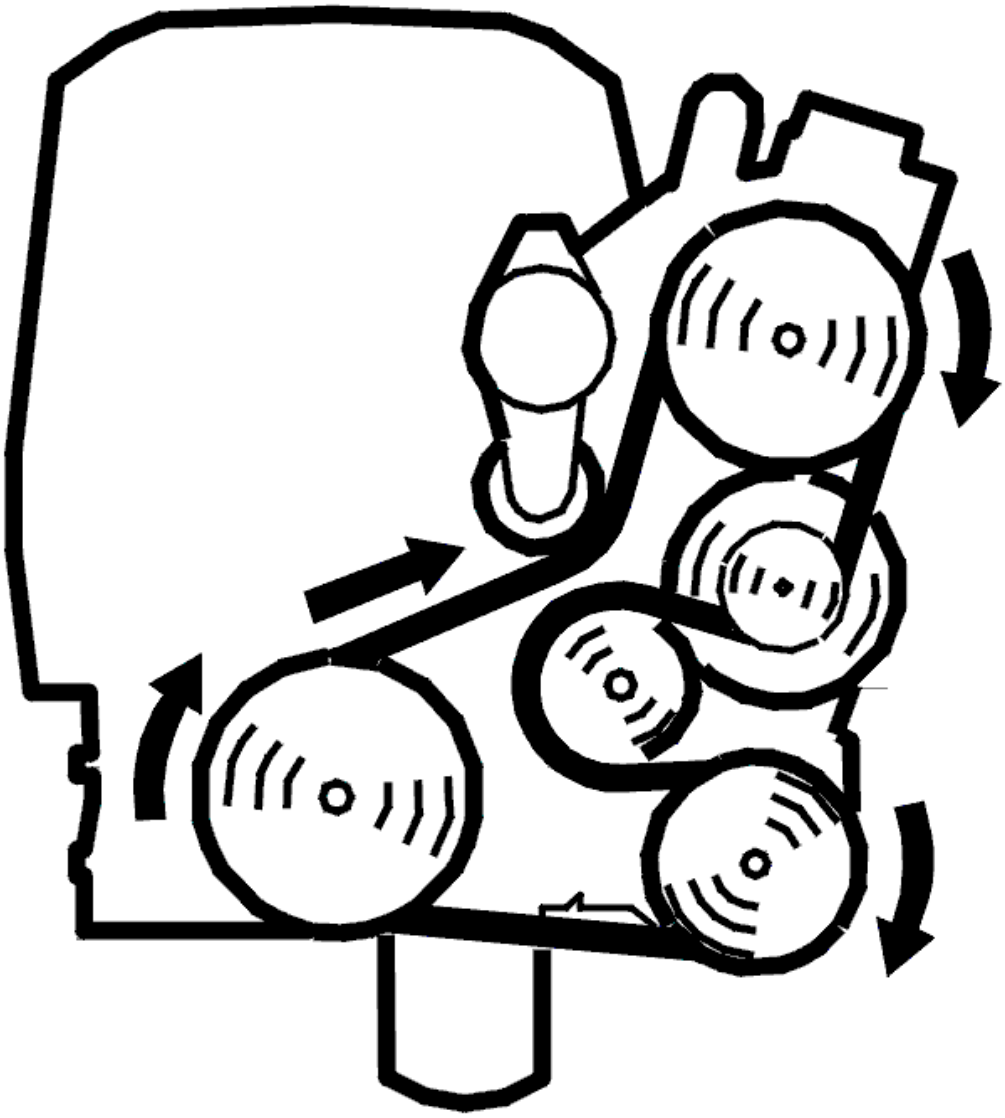

Fig. 37: Belt Routing / Engine Idling - Volvo
Courtesy of VOLVO CARS CORPORATION

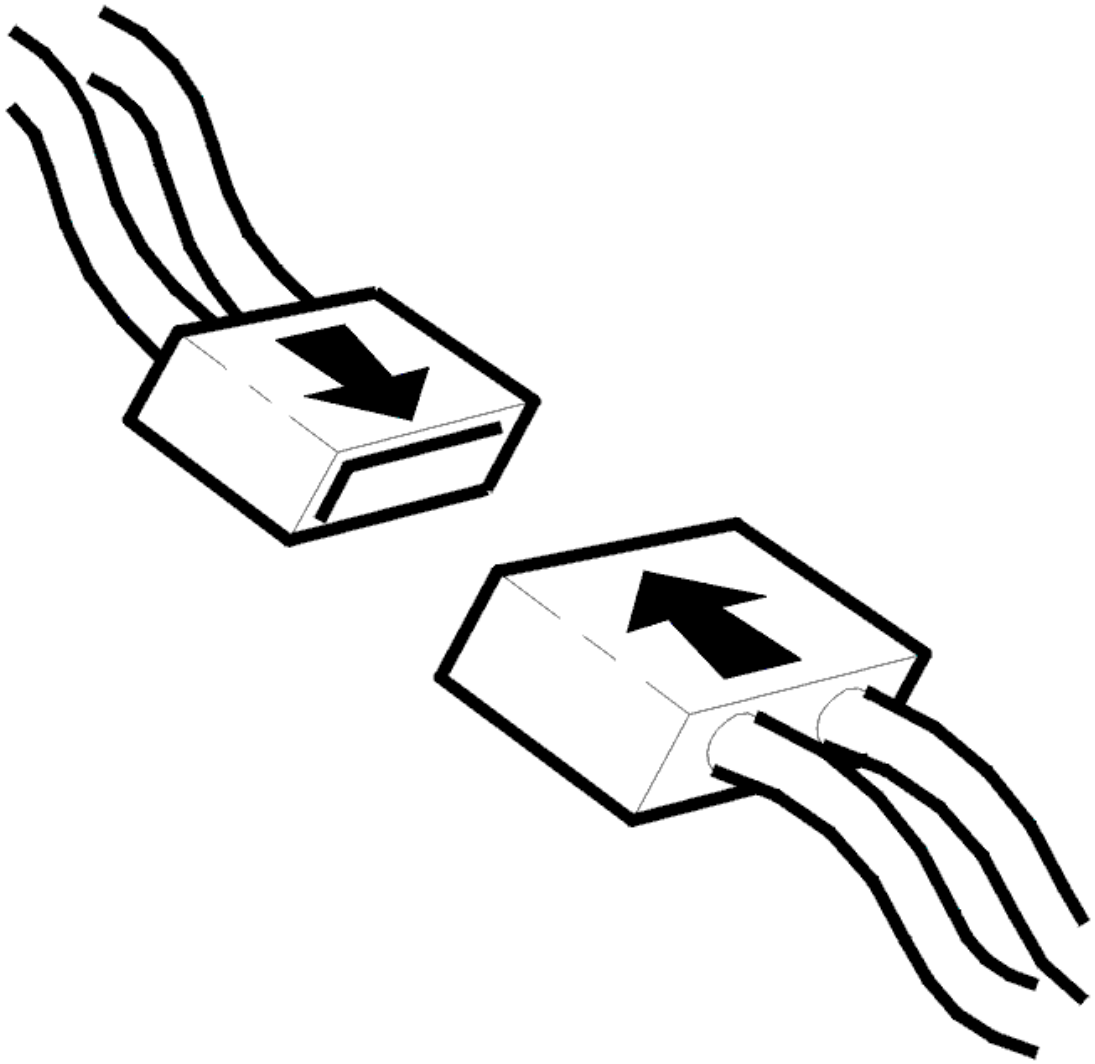

Fig. 38: Connecting Connector
Courtesy of VOLVO CARS CORPORATION

- Ignition off
- Reconnect the connectors, reinstall components etc.
- Start the engine.

  Read off the diagnostic status and fault status for the diagnostic trouble code (DTC) by selecting the relevant diagnostic trouble code (DTC) from the list.

  Increase the engine speed to 2500 RPM until the diagnostic is "Complete".

  Check the fault status for the diagnostic trouble code (DTC) when the diagnostic is "Complete". If the function is correct, the fault status must be "No fault found" when the diagnostic is complete.

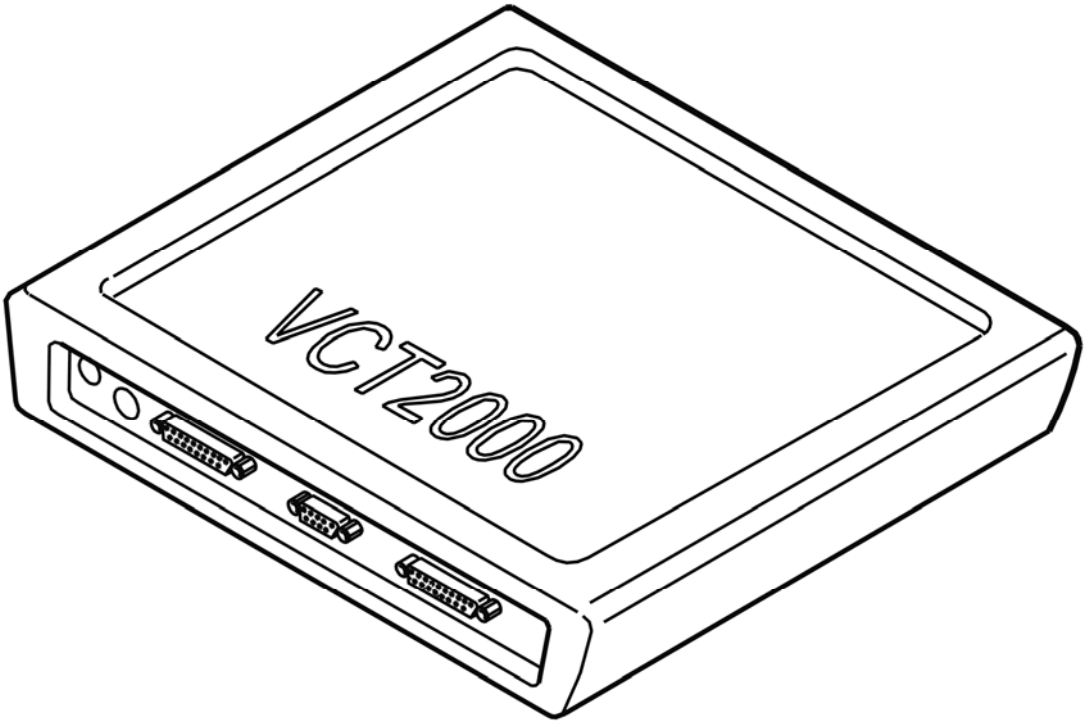

Fig. 39: Identifying VCT2000 Diagnostic Tool Symbol In VIDA
Courtesy of VOLVO CARS CORPORATION

Is the function OK?

- **YES**

  VERIFIED: Troubleshooting has been completed.

- **NO**

  Refer to **INFORMATION**

INFORMATION

FAULT-TRACING INFORMATION

The fault should have been detected and remedied. As this is not the case fault-tracing has failed.

Exit fault-tracing for this diagnostic trouble code (DTC) or make another attempt.

ECM-223B: REAR HEATED OXYGEN SENSOR (HO2S), BANK 1. SIGNAL MISSING (B6294T; 2005-2006)

DIAGNOSTIC TROUBLE CODE (DTC) INFORMATION ECM-223B

see **DIAGNOSTIC TROUBLE CODE (DTC) INFORMATION ECM-223B**

SIGNAL MISSING

see **SIGNAL MISSING**

ECM-223C: REAR HEATED OXYGEN SENSOR (HO2S), BANK 1. SIGNAL TOO HIGH (B5254T2; 2005-2007)

DIAGNOSTIC TROUBLE CODE (DTC) INFORMATION ECM-223C

Condition

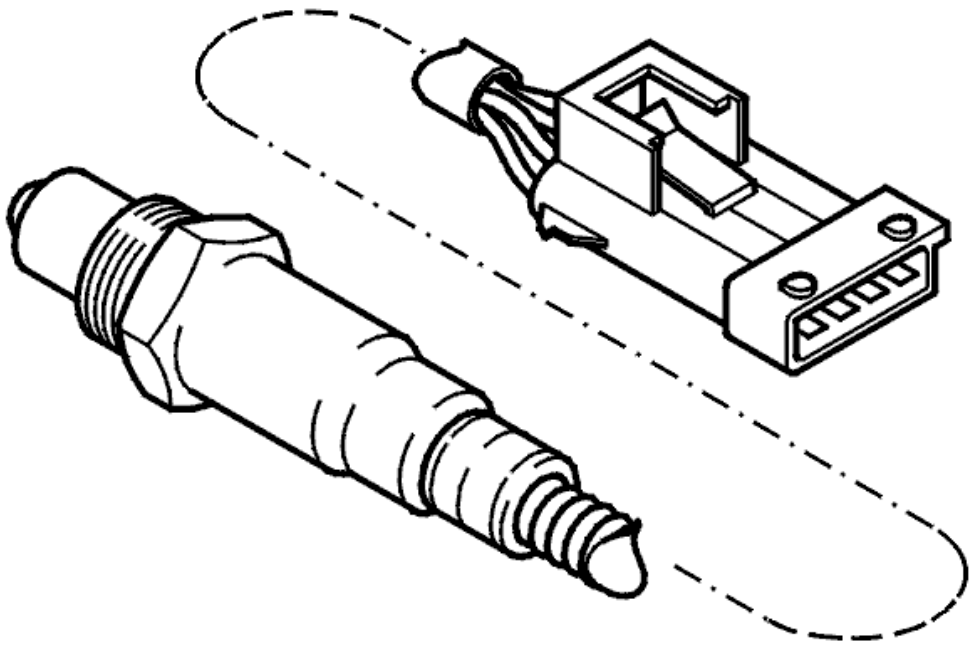

Fig. 40: Identifying Rear Heated Oxygen Sensor
Courtesy of VOLVO CARS CORPORATION

The engine control module (ECM) controls the preheating of the rear heated oxygen sensor (HO2S) by pulsing the current to the positive temperature coefficient (PTC) element in the heated oxygen sensor (HO2S). Pulse lengths are dependent on the temperature of the heated oxygen sensor (H02S).

The diagnostic trouble code (DTC) is stored if the engine control module (ECM) registers that the signal is

higher than a certain value when preheating is active.

Substitute Value

- The fuel trim is shut off.

Possible Source

- Short-circuit to supply voltage in the signal cable
- Damaged heated oxygen sensor (HO2S).

Fault symptom[s]

- Malfunction indicator lamp (MIL) lit.

SIGNAL TOO HIGH

CHECKING THE COMPONENTS AND WIRING

Check the resistance of the heated oxygen sensor (HO2S) between terminals #1 and #2.

Check the signal cable between heated oxygen sensor (HO2S) terminal #2 and control module terminal #A6 (#A6). Check for a short-circuit to supply voltage.

Remedy as necessary.

Other information

- see **CONNECTING THE BREAKOUT BOX**
- For 5 cylinder turbocharged engines -2004, see **SIGNAL DESCRIPTION**
- For 5 cylinder turbocharged engines 2005-, see **SIGNAL SPECIFICATION** .
- For 6 cylinder engines -2004, see **SIGNAL SPECIFICATION**
- For 6 cylinder engines 2005-, see **SIGNAL SPECIFICATION** .
- For resistance values: **COMPONENT SPECIFICATIONS**
- For B5xx4T, see **HEATED OXYGEN SENSOR (HO2S), REPLACING**
- For B6xx4T, see **HEATED OXYGEN SENSOR (HO2S), REPLACING** .
- see **CHECKING WIRING AND TERMINALS**

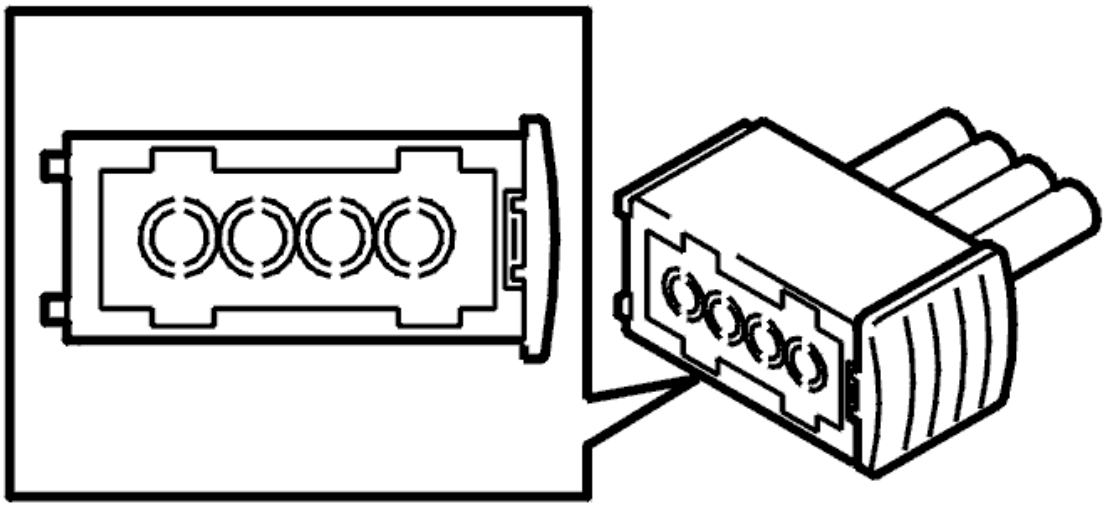

Fig. 41: Identifying Heated Oxygen Sensor
Courtesy of VOLVO CARS CORPORATION

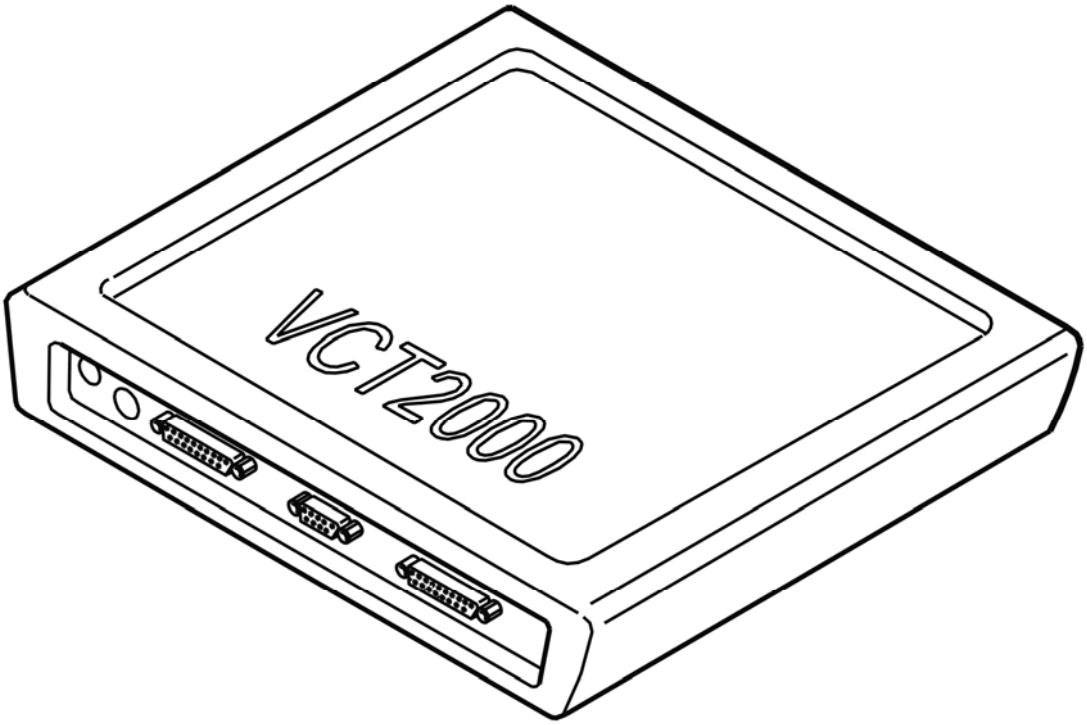

Fig. 42: Identifying VCT2000 Diagnostic Tool Symbol In VIDA
Courtesy of VOLVO CARS CORPORATION

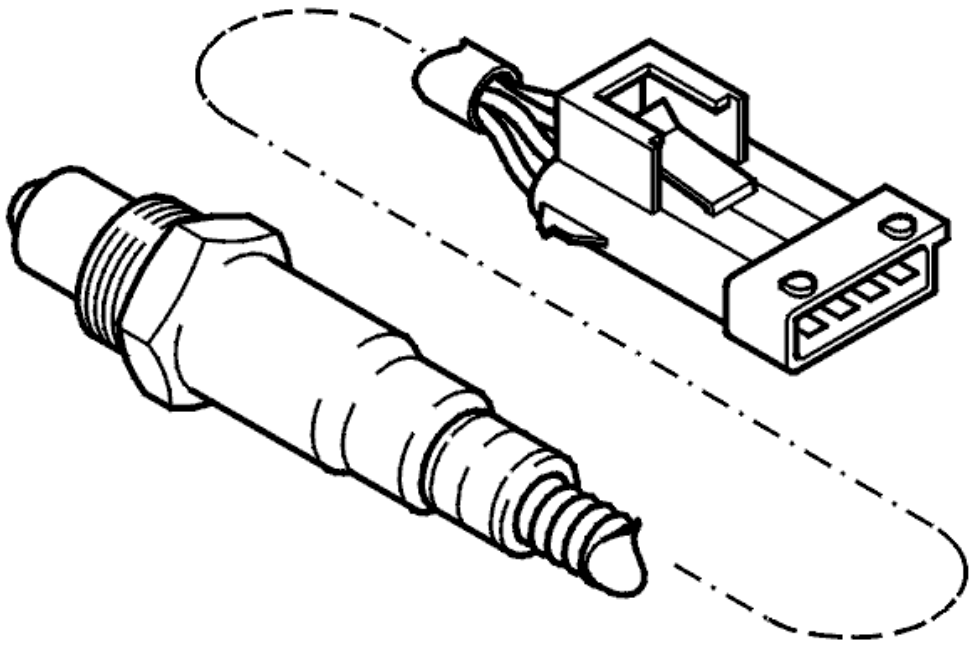

Fig. 43: Identifying Rear Heated Oxygen Sensor
Courtesy of VOLVO CARS CORPORATION

- **Continue**

  Refer to **VERIFICATION**

VERIFICATION

VERIFICATION

HINT: After carrying out the repair, check that the fault has been remedied.

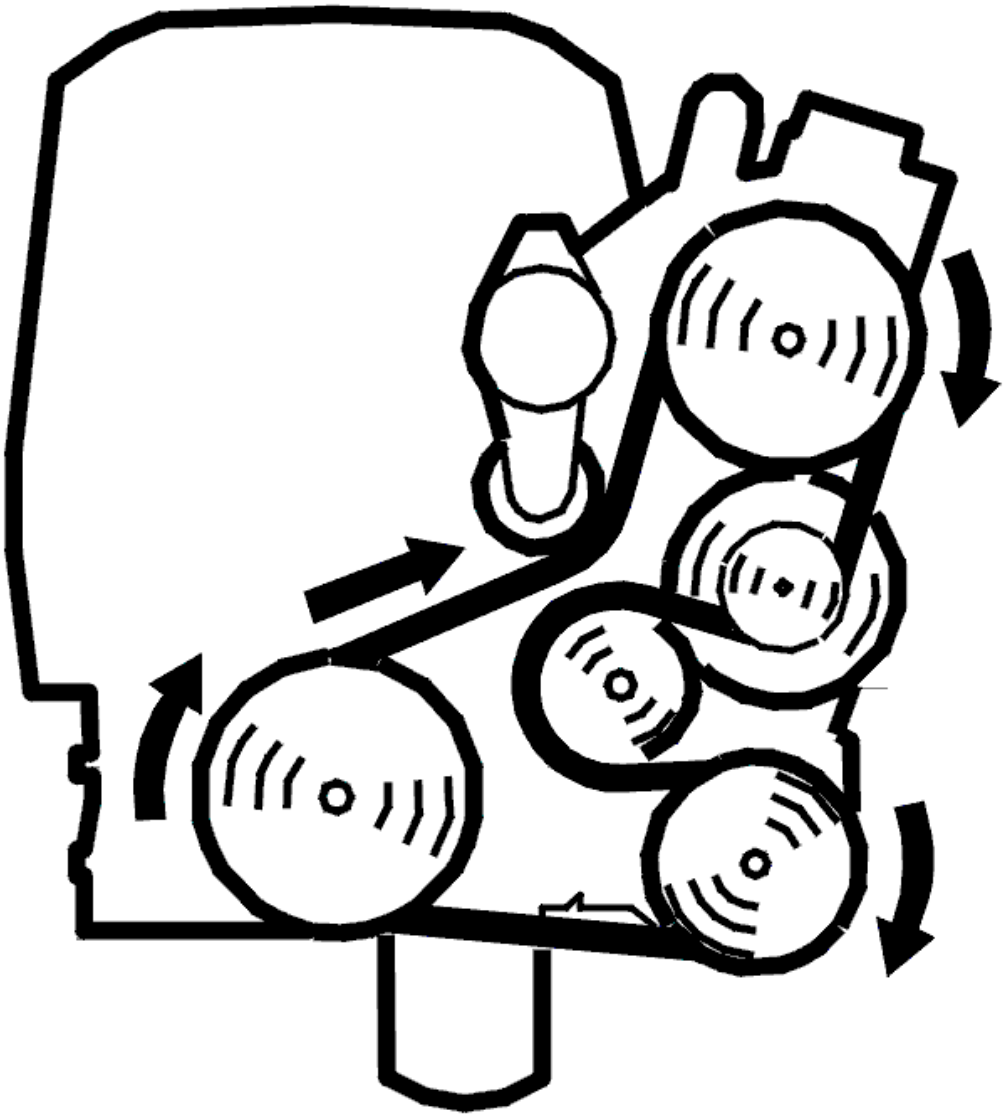

Fig. 44: Belt Routing / Engine Idling - Volvo
Courtesy of VOLVO CARS CORPORATION

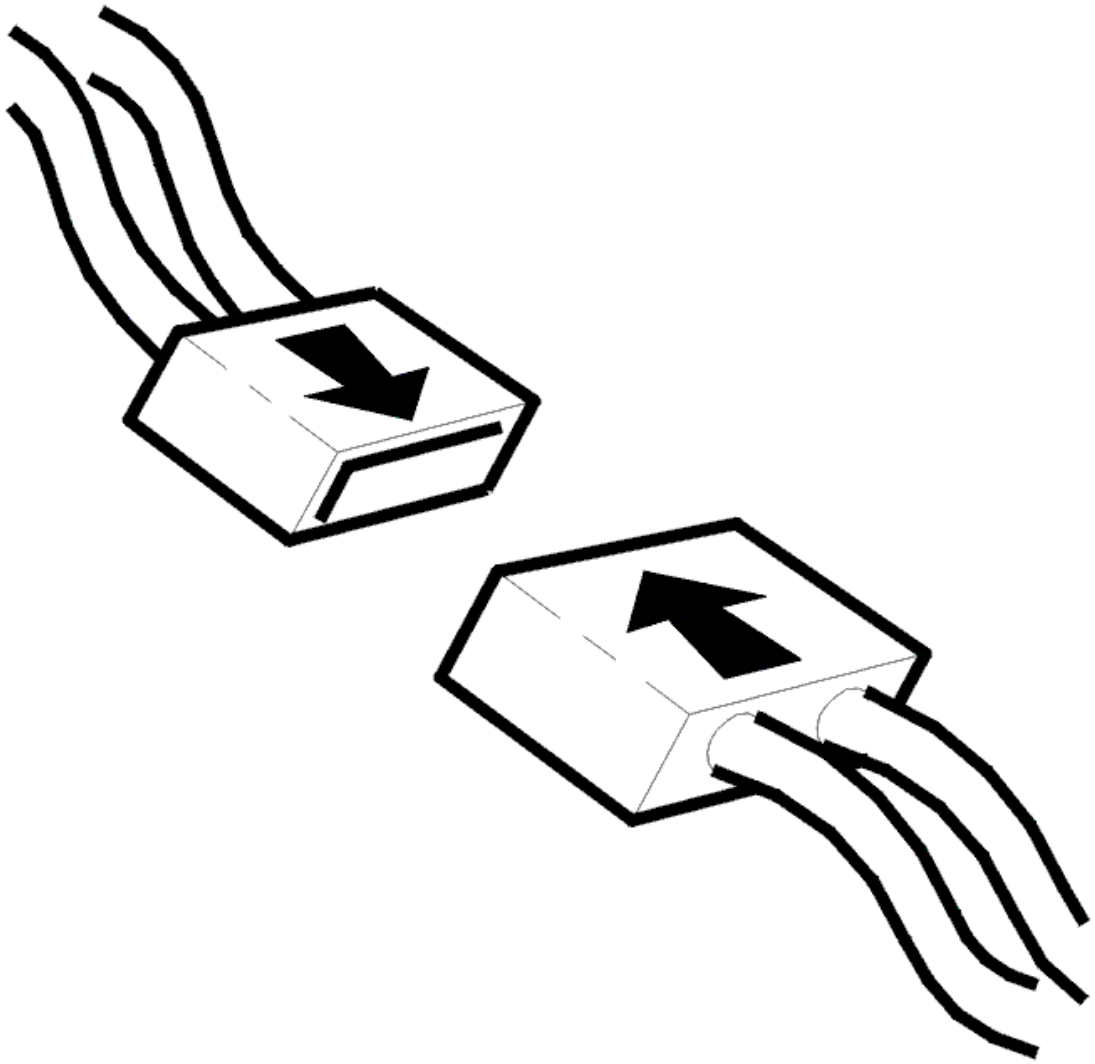

Fig. 45: Connecting Connector
Courtesy of VOLVO CARS CORPORATION

- Ignition off
- Reconnect the connectors, reinstall components etc.
- Start the engine.

  Read off the diagnostic status and fault status for the diagnostic trouble code (DTC) by selecting the relevant diagnostic trouble code (DTC) from the list.

  Increase the engine speed to 2500 RPM until the diagnostic is "Complete".

  Check the fault status for the diagnostic trouble code (DTC) when the diagnostic is "Complete". If the function is correct, the fault status must be "No fault found" when the diagnostic is complete.

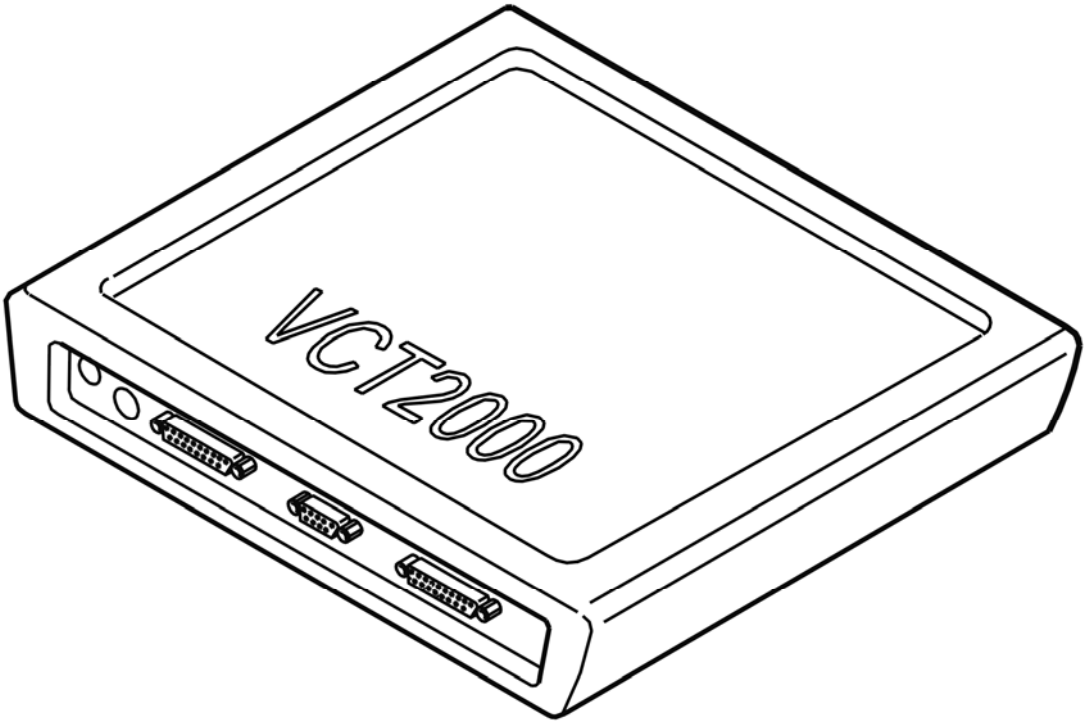

Fig. 46: Identifying VCT2000 Diagnostic Tool Symbol In VIDA
Courtesy of VOLVO CARS CORPORATION

Is the function OK?

- **YES**

  VERIFIED: Troubleshooting has been completed.

- **NO**

  Refer to **INFORMATION**

INFORMATION

FAULT-TRACING INFORMATION

The fault should have been detected and remedied. As this is not the case fault-tracing has failed.

Exit fault-tracing for this diagnostic trouble code (DTC) or make another attempt.

ECM-223C: REAR HEATED OXYGEN SENSOR (HO2S), BANK 1. SIGNAL TOO HIGH (B6294T; 2005-2006)

DIAGNOSTIC TROUBLE CODE (DTC) INFORMATION ECM-223C

see **DIAGNOSTIC TROUBLE CODE (DTC) INFORMATION ECM-223C**

SIGNAL TOO HIGH

see **SIGNAL TOO HIGH**

ECM-223D: REAR HEATED OXYGEN SENSOR (HO2S), BANK 1. SIGNAL TOO LOW (B5254T2; 2005-2007)

DIAGNOSTIC TROUBLE CODE (DTC) INFORMATION ECM-223D

Condition

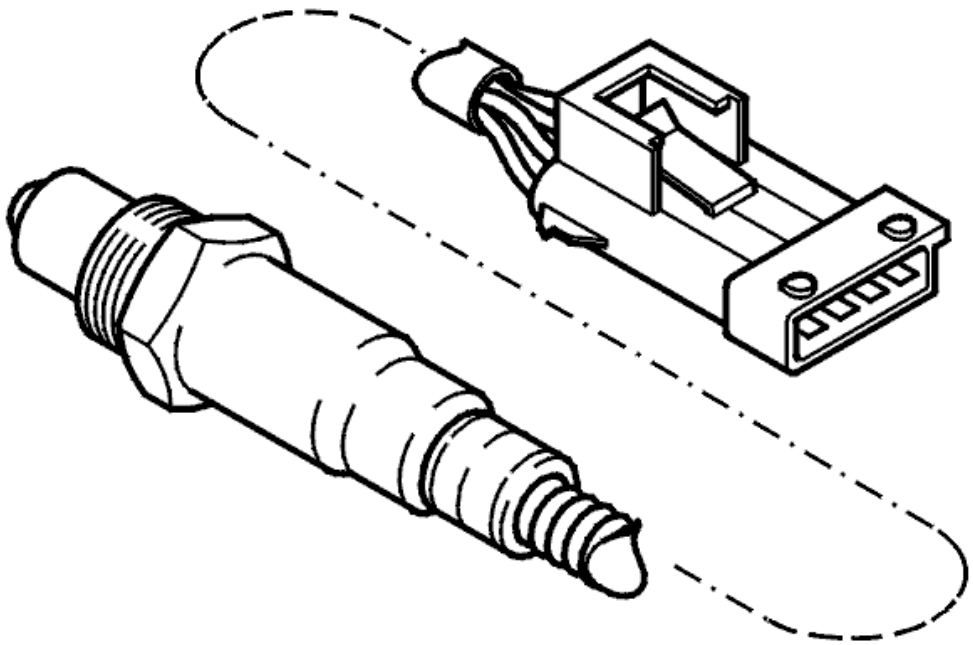

Fig. 47: Identifying Rear Heated Oxygen Sensor
Courtesy of VOLVO CARS CORPORATION

The engine control module (ECM) controls the preheating of the rear heated oxygen sensor (HO2S) by pulsing the current to the positive temperature coefficient (PTC) element in the heated oxygen sensor (HO2S). Pulse lengths are dependent on the temperature of the heated oxygen sensor (H02S).

The diagnostic trouble code (DTC) is stored if the engine control module (ECM) registers that the signal is

lower than a certain value when preheating is deactivated.

Substitute Value

- The fuel trim is shut off.

Possible Source

- Short-circuit to ground in the signal cable
- Damaged heated oxygen sensor (HO2S).

Fault symptom[s]

- Malfunction indicator lamp (MIL) lit.

SIGNAL TOO LOW

CHECKING THE COMPONENTS AND WIRING

Check the resistance of the heated oxygen sensor (HO2S) between terminals #1 and #2.

Check the signal cable between heated oxygen sensor (HO2S) terminal #2 and control module terminal #A6 (#A6). Check for a short-circuit to ground.

Remedy as necessary.

Other information

- see **CONNECTING THE BREAKOUT BOX**
- For 5 cylinder turbocharged engines -2004, see **SIGNAL DESCRIPTION**
- For 5 cylinder turbocharged engines 2005-, see **SIGNAL SPECIFICATION** .
- For 6 cylinder engines -2004, see **SIGNAL SPECIFICATION**
- For 6 cylinder engines 2005-, see **SIGNAL SPECIFICATION** .
- For resistance values: **COMPONENT SPECIFICATIONS**
- For B5xx4T, see **HEATED OXYGEN SENSOR (HO2S), REPLACING**
- For B6xx4T, see **HEATED OXYGEN SENSOR (HO2S), REPLACING** .
- see **CHECKING WIRING AND TERMINALS**

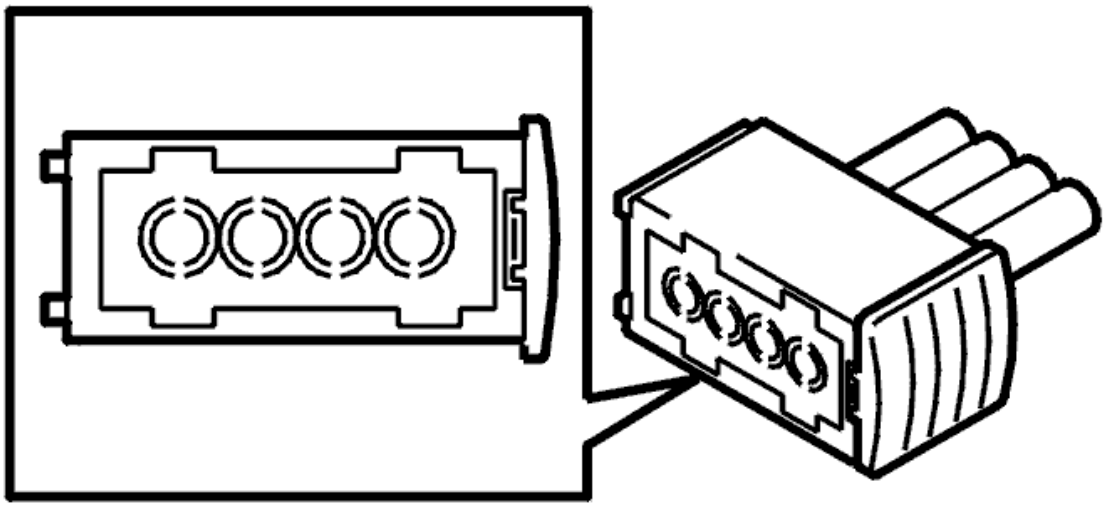

Fig. 48: Identifying Heated Oxygen Sensor
Courtesy of VOLVO CARS CORPORATION

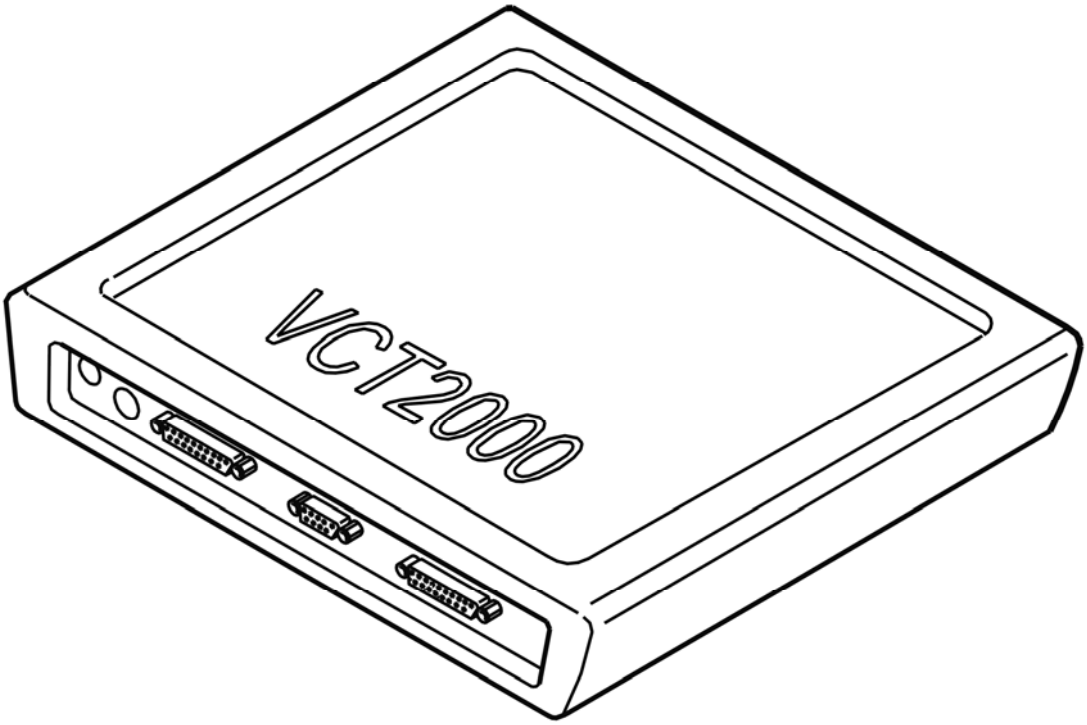

Fig. 49: Identifying VCT2000 Diagnostic Tool Symbol In VIDA
Courtesy of VOLVO CARS CORPORATION

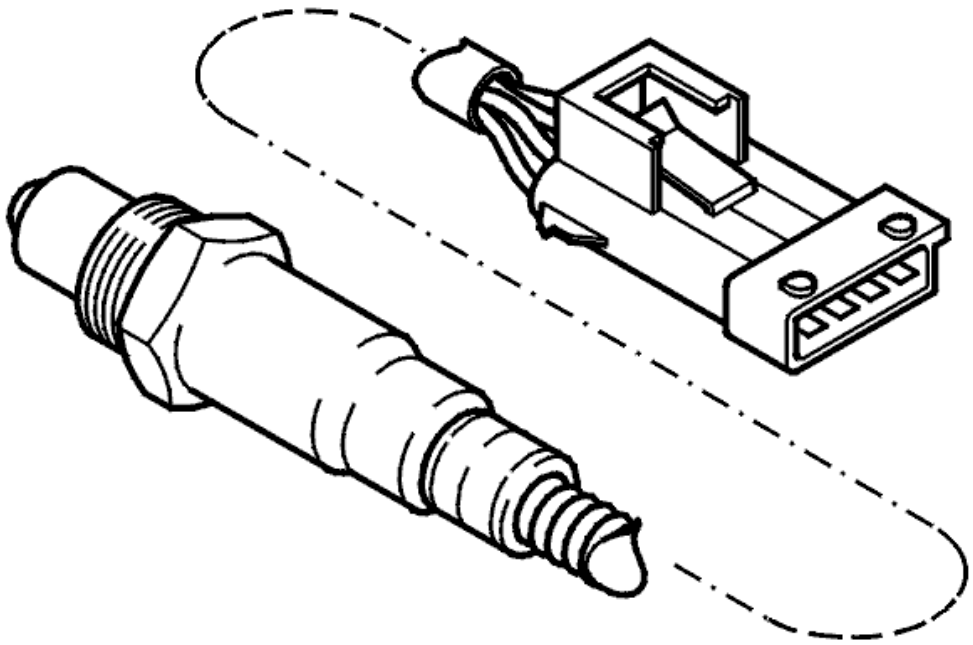

Fig. 50: Identifying Rear Heated Oxygen Sensor
Courtesy of VOLVO CARS CORPORATION

- **Continue**

  Refer to **VERIFICATION**

VERIFICATION

VERIFICATION

HINT: After carrying out the repair, check that the fault has been remedied.

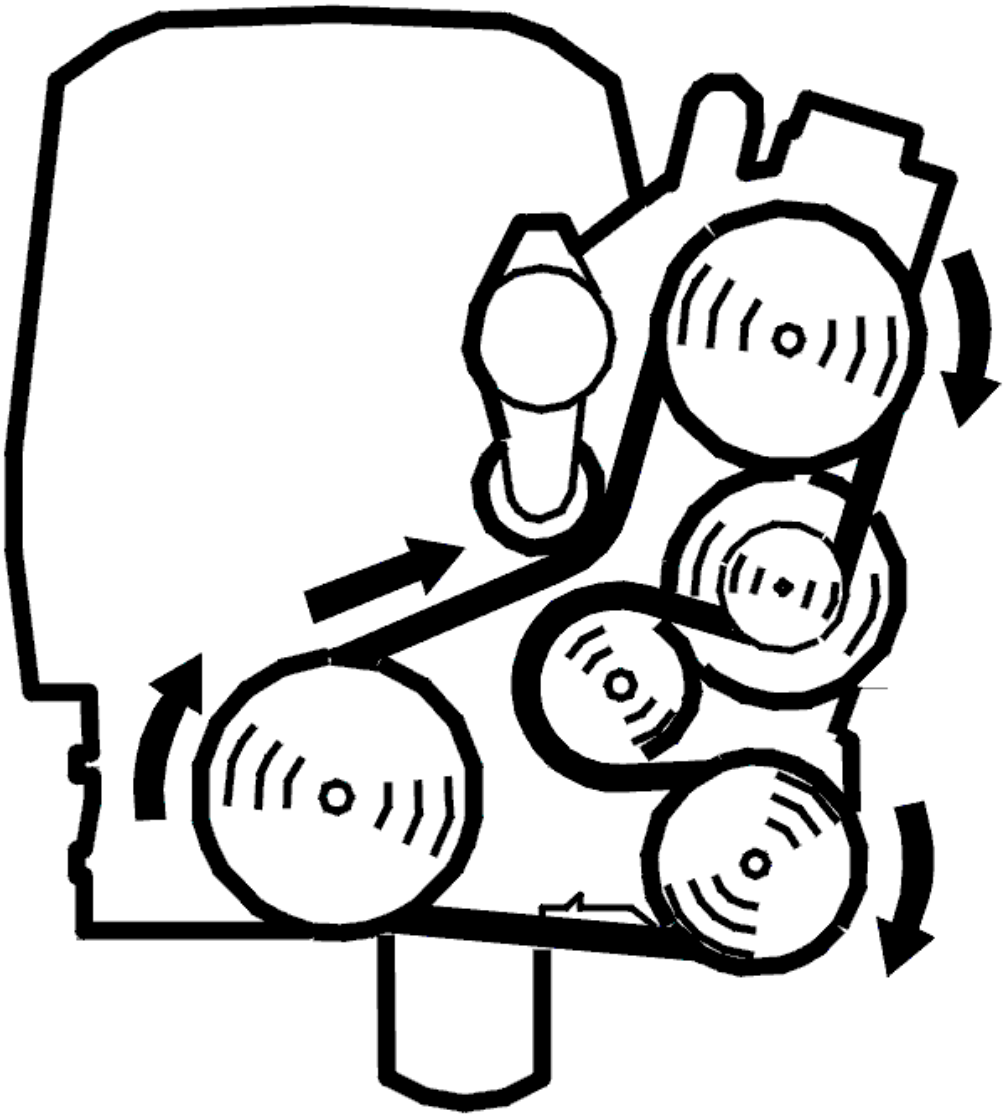

Fig. 51: Belt Routing / Engine Idling - Volvo
Courtesy of VOLVO CARS CORPORATION

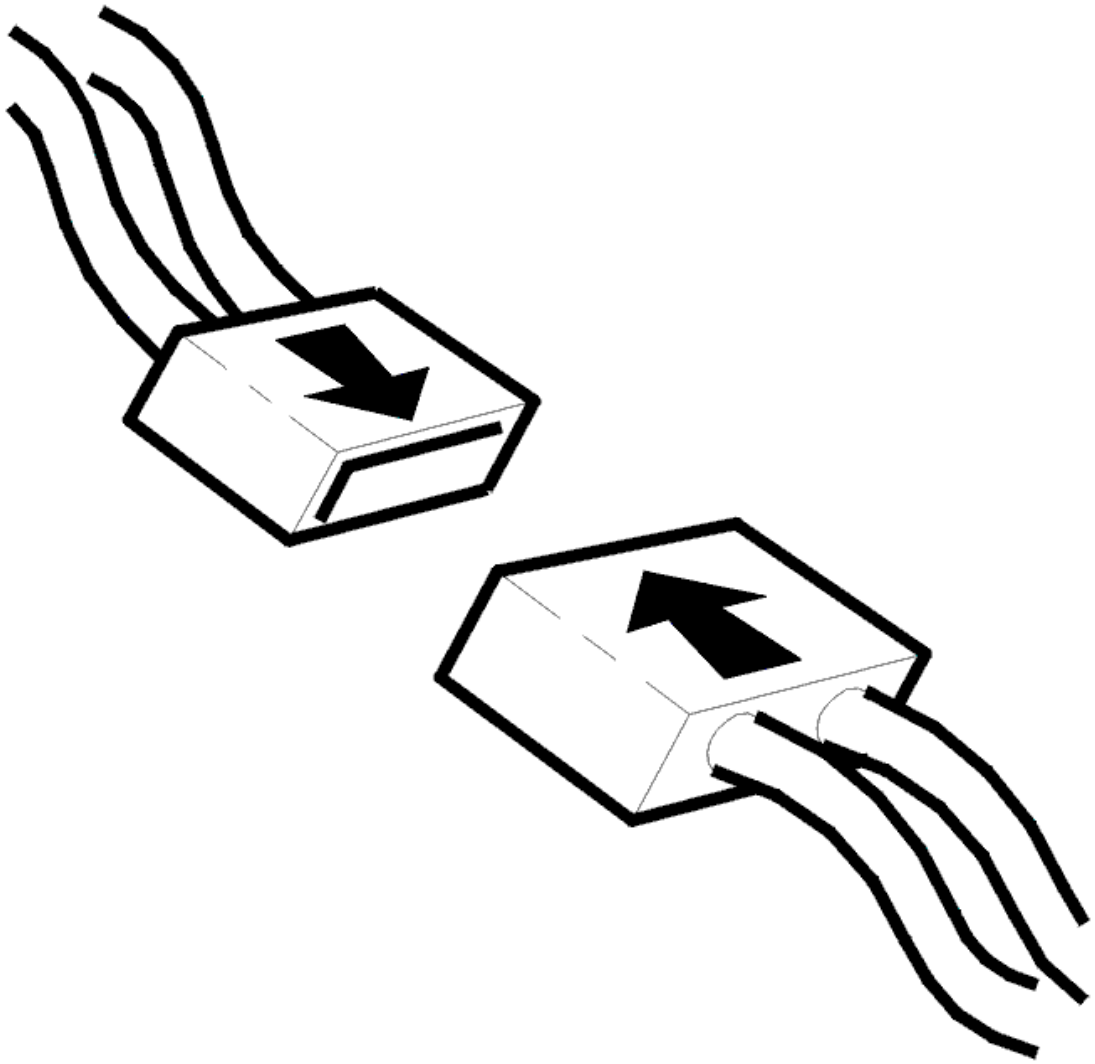

Fig. 52: Connecting Connector
Courtesy of VOLVO CARS CORPORATION

- Ignition off
- Reconnect the connectors, reinstall components etc.
- Start the engine.

  Read off the diagnostic status and fault status for the diagnostic trouble code (DTC) by selecting the relevant diagnostic trouble code (DTC) from the list.

  Increase the engine speed to 2500 RPM until the diagnostic is "Complete".

  Check the fault status for the diagnostic trouble code (DTC) when the diagnostic is "Complete". If the function is correct, the fault status must be "No fault found" when the diagnostic is complete.

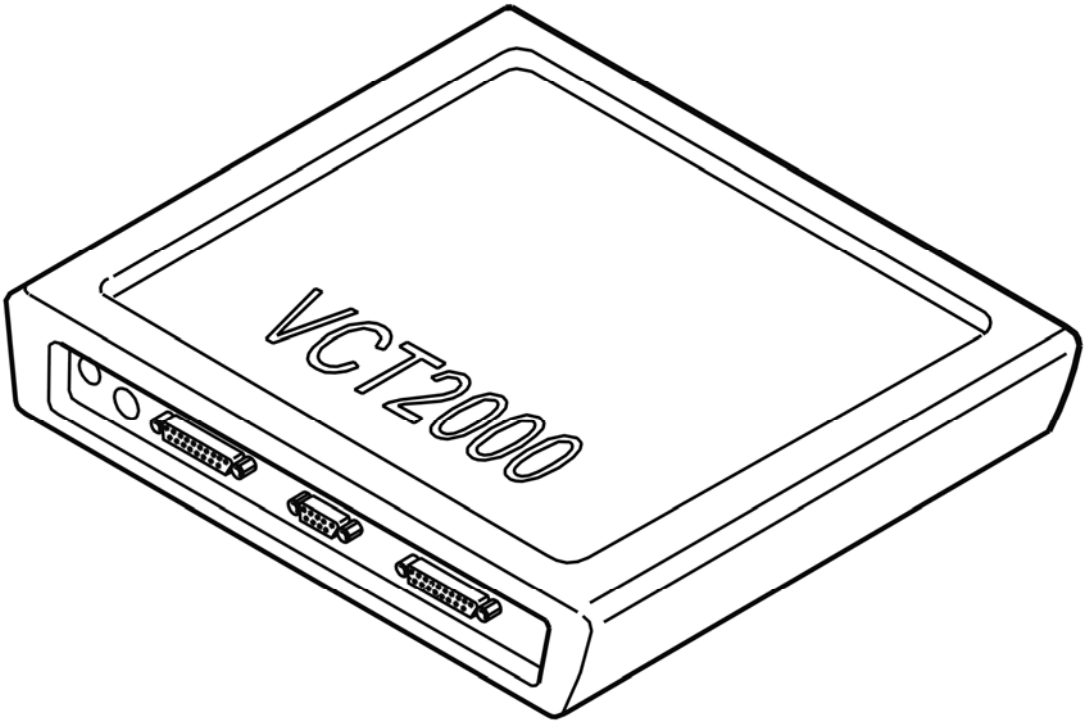

Fig. 53: Identifying VCT2000 Diagnostic Tool Symbol In VIDA
Courtesy of VOLVO CARS CORPORATION

Is the function OK?

- **YES**

  VERIFIED: Troubleshooting has been completed.

- **NO**

  Refer to **INFORMATION**

INFORMATION

FAULT-TRACING INFORMATION

The fault should have been detected and remedied. As this is not the case fault-tracing has failed.

Exit fault-tracing for this diagnostic trouble code (DTC) or make another attempt.

ECM-223D: REAR HEATED OXYGEN SENSOR (HO2S), BANK 1. SIGNAL TOO LOW (B6294T; 2005-2006)

DIAGNOSTIC TROUBLE CODE (DTC) INFORMATION ECM-223D

see **DIAGNOSTIC TROUBLE CODE (DTC) INFORMATION ECM-223D**

SIGNAL TOO LOW

see **SIGNAL TOO LOW**

ECM-2240: REAR HEATED OXYGEN SENSORS (HO2S), SWITCHED. FAULTY SIGNAL (B5254T2; 2005-2007)

DIAGNOSTIC TROUBLE CODE (DTC) INFORMATION ECM-2240

Condition

The diagnostic trouble code (DTC) is stored if the engine control module (ECM) detects that the rear heated oxygen sensors (HO2S) (banks 1 and 2) have been switched.

The diagnostic trouble code (DTC) is diagnosed when the engine has been idling for 10 minutes.

Substitute Value

- The heated oxygen sensor (HO2S) control is disabled
- Three-way catalytic converter (TWC) diagnostics are disabled.

Possible Source

- The rear heated oxygen sensors (HO2S) have been installed in the wrong bank
- Both the rear heated oxygen sensors (HO2S) are damaged.

Fault symptom[s]

- Malfunction indicator lamp (MIL) lit.

FAULTY SIGNAL

CHECKING THE COMPONENTS AND WIRING

Visually check that the rear heated oxygen sensors (HO2S) have not been mounted in the wrong bank on banks 1 and 2.

Read off the voltage of the probe on the rear heated oxygen sensor (HO2S) for bank 1.

Read off the voltage of the probe on the rear heated oxygen sensor (HO2S) for bank 2.

HINT: If the voltage is constantly close to 0 V on one bank and 1 V on the other bank, or vice-versa, the

rear heated oxygen sensors (HO2S) have been switched.

Try new heated oxygen sensors (HO2S) if the above fault-tracing does not remedy the fault.

Remedy as necessary.

Other information

- see **CONNECTING THE BREAKOUT BOX**
- For 5 cylinder turbocharged engines -2004, see **SIGNAL DESCRIPTION**
- For 5 cylinder turbocharged engines 2005-, see **SIGNAL SPECIFICATION** .
- For 6 cylinder engines -2004, see **SIGNAL SPECIFICATION**
- For 6 cylinder engines 2005-, see **SIGNAL SPECIFICATION** .
- For B5xx4T, see **HEATED OXYGEN SENSOR (HO2S), REPLACING**
- For B6xx4T, see **HEATED OXYGEN SENSOR (HO2S), REPLACING** .
- see **CHECKING WIRING AND TERMINALS**

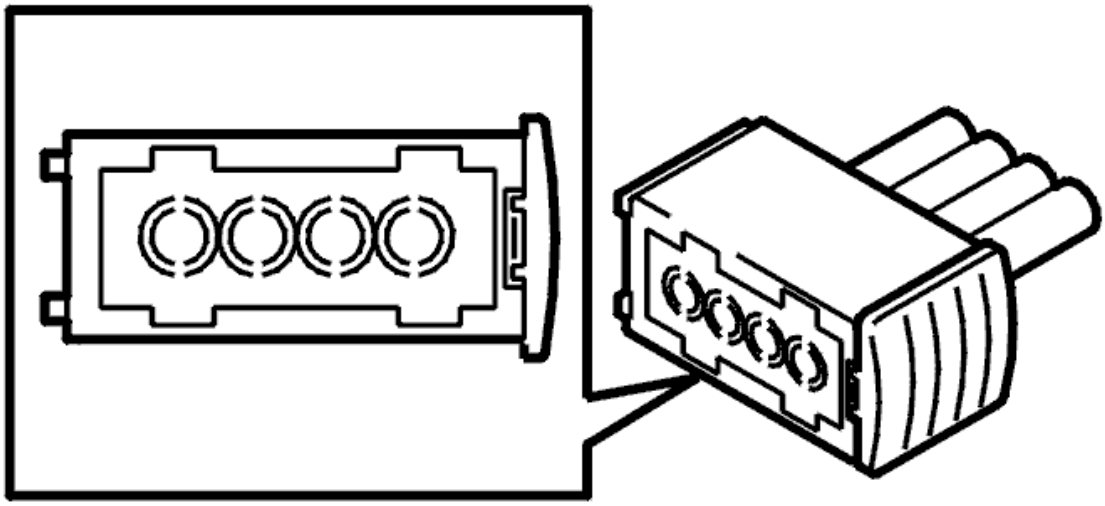

Fig. 54: Identifying Heated Oxygen Sensor
Courtesy of VOLVO CARS CORPORATION

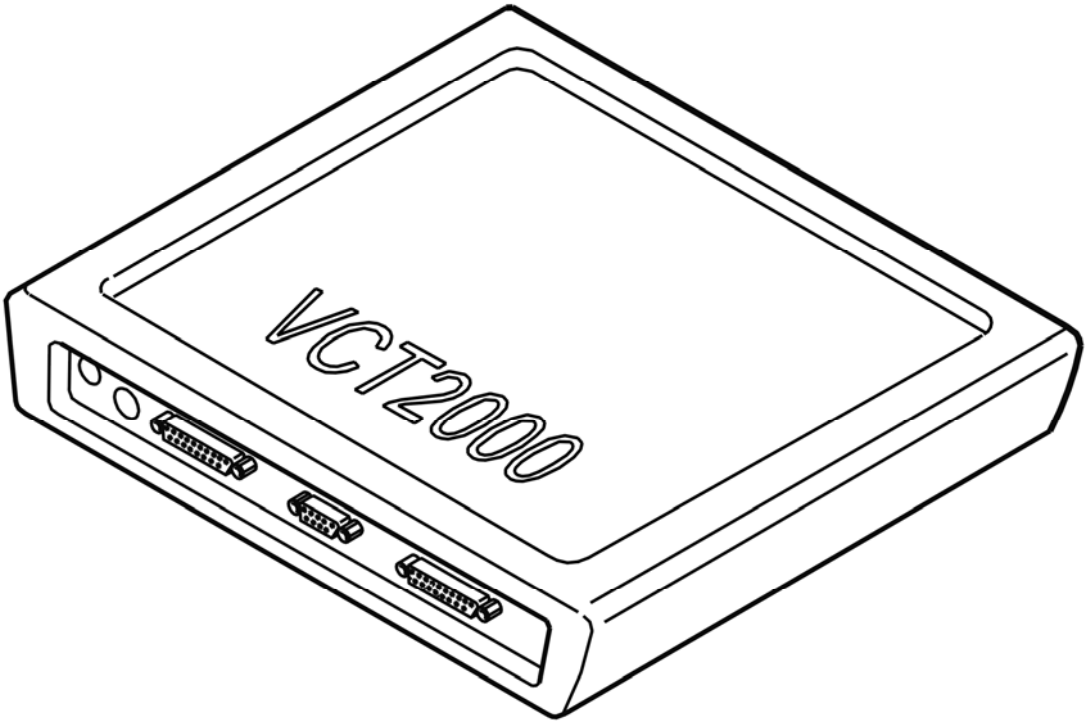

Fig. 55: Identifying VCT2000 Diagnostic Tool Symbol In VIDA
Courtesy of VOLVO CARS CORPORATION

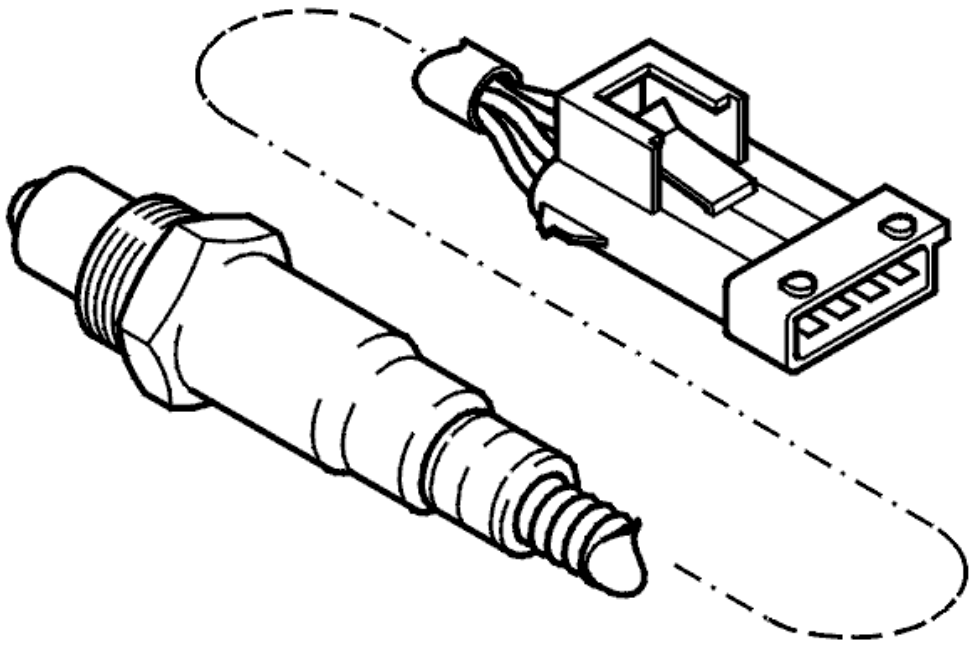

Fig. 56: Identifying Rear Heated Oxygen Sensor
Courtesy of VOLVO CARS CORPORATION

- **Continue**

  Refer to **VERIFICATION**

VERIFICATION

VERIFICATION

HINT: After carrying out the repair, check that the fault has been remedied.

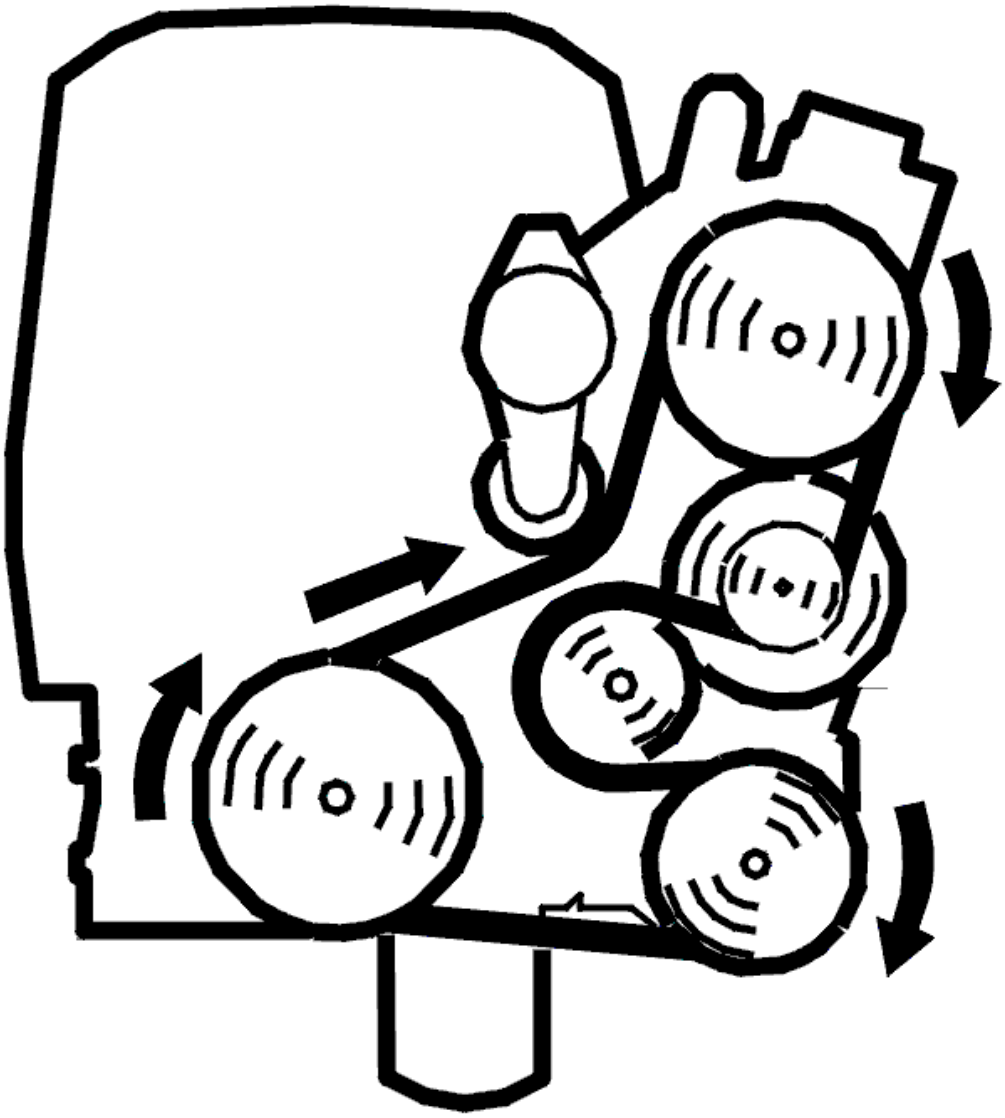

Fig. 57: Belt Routing / Engine Idling - Volvo
Courtesy of VOLVO CARS CORPORATION

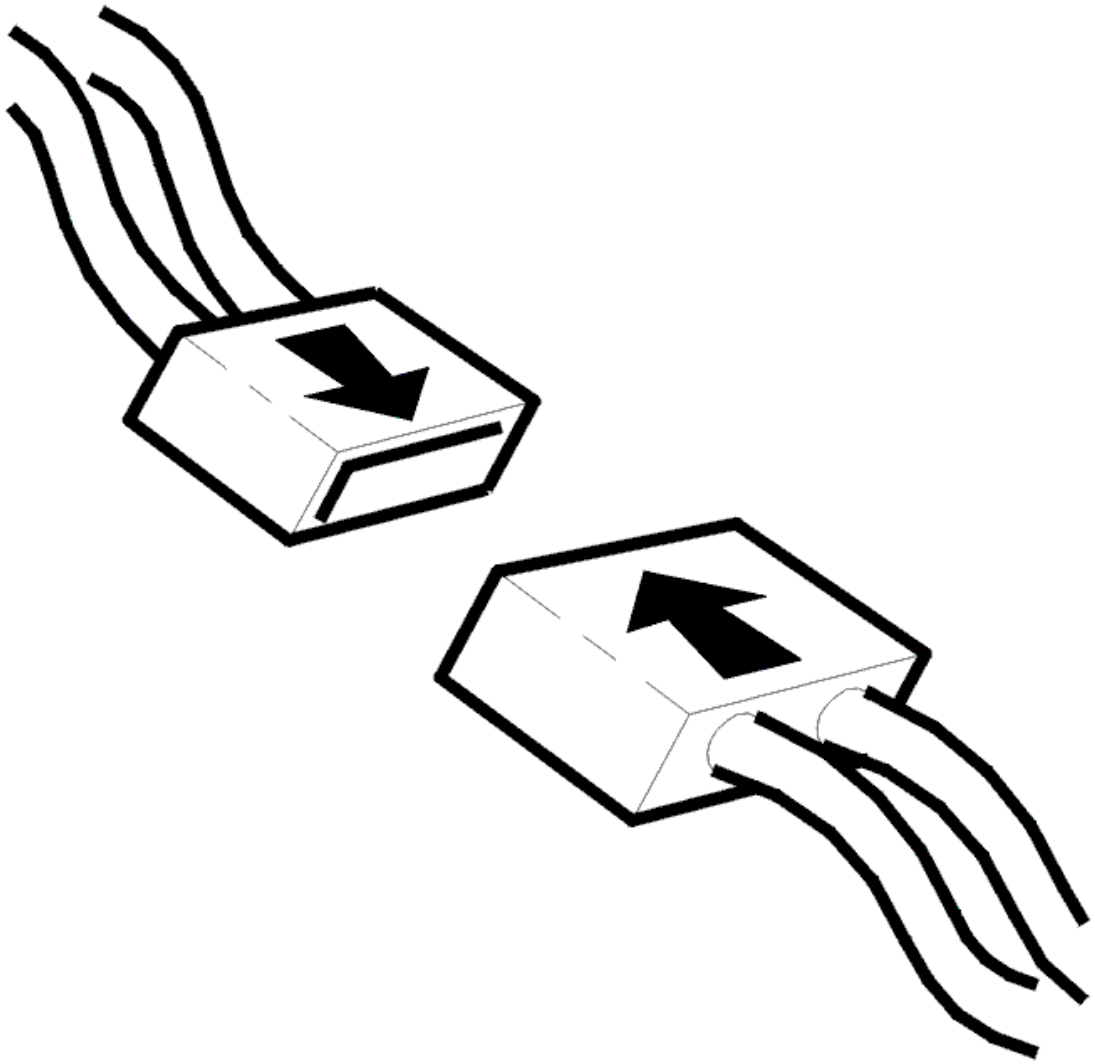

Fig. 58: Connecting Connector
Courtesy of VOLVO CARS CORPORATION

- Ignition off
- Reconnect the connectors, reinstall components etc.
- Start the engine. Allow the engine to run at idle speed for 10 minutes
- Connect VCT2000 (or appropriate scan tool) to the data link connector (DLC) without switching off the engine.

NOTE: **If the engine is switched off, the stored fault status will be erased and the test drive will have to be repeated.**

Read off the diagnostic status and fault status for the diagnostic trouble code (DTC) by selecting the relevant diagnostic trouble code (DTC) from the list.

Check the fault status for the diagnostic trouble code (DTC) when the diagnostic is "Complete". If the function is correct, the fault status must be "No fault found" when the diagnostic is complete.

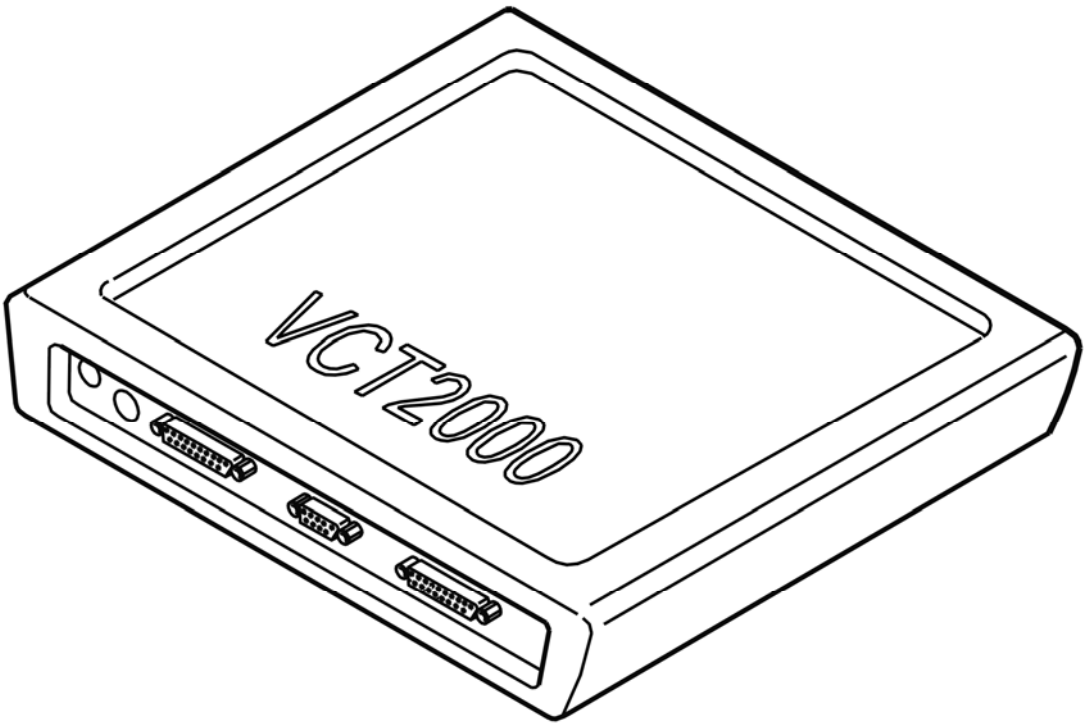

Fig. 59: Identifying VCT2000 Diagnostic Tool Symbol In VIDA
Courtesy of VOLVO CARS CORPORATION

Is the function OK?

- **YES**

  VERIFIED: Troubleshooting has been completed.

- **NO**

  Refer to **INFORMATION**

INFORMATION

FAULT-TRACING INFORMATION

The fault should have been detected and remedied. As this is not the case fault-tracing has failed.

Exit fault-tracing for this diagnostic trouble code (DTC) or make another attempt.

ECM-2240: REAR HEATED OXYGEN SENSORS (HO2S), SWITCHED. FAULTY SIGNAL (B6294T; 2005-2006)

DIAGNOSTIC TROUBLE CODE (DTC) INFORMATION ECM-2240

see **DIAGNOSTIC TROUBLE CODE (DTC) INFORMATION ECM-2240**

FAULTY SIGNAL

see **FAULTY SIGNAL**

ECM-2300: REAR HEATED OXYGEN SENSOR (HO2S), BANK 2, HEATING. FAULTY SIGNAL (B6294T; 2005-2006)

DIAGNOSTIC TROUBLE CODE (DTC) INFORMATION ECM-2300

Condition

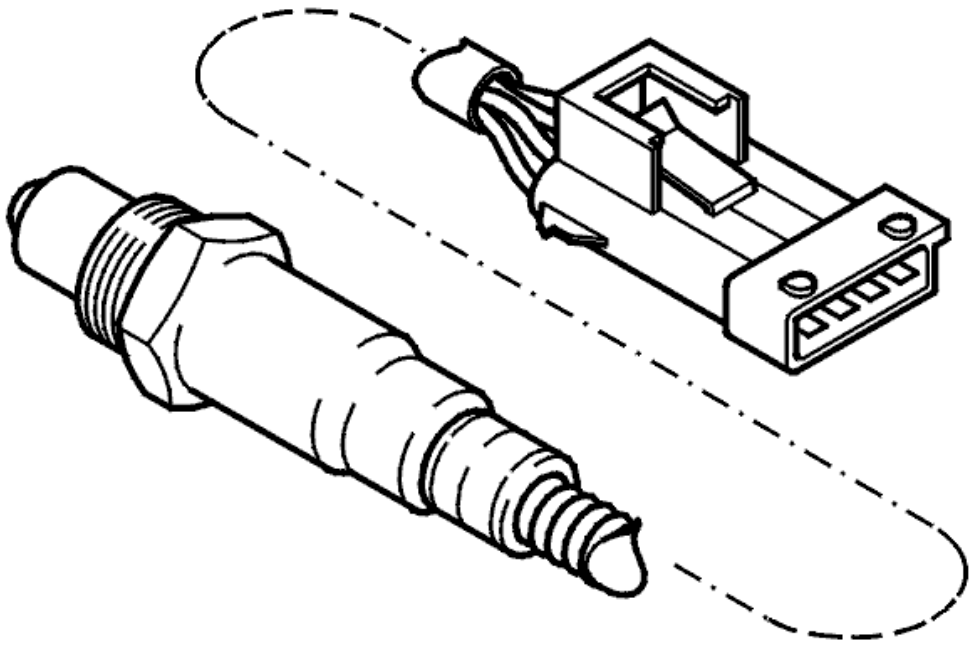

Fig. 60: Identifying Rear Heated Oxygen Sensor
Courtesy of VOLVO CARS CORPORATION

The diagnostic trouble code (DTC) is stored if the engine control module (ECM) registers that the resistance of the rear right heated oxygen sensor (HO2S) in the pre-heating circuit is too high for a certain amount of time.

Substitute Value

None.

Possible Source

- Contact resistance or oxidation in the terminals
- Damaged rear heated oxygen sensor (HO2S).

Fault symptom[s]

- Malfunction indicator lamp (MIL) lit.

FAULTY SIGNAL

CHECKING THE CONNECTOR

Check power cable terminal #1 in the rear heated oxygen sensor (HO2S) connector. Check for contact resistance and oxidation.

Check ground lead terminal #2 in the rear heated oxygen sensor (HO2S) connector. Check for contact resistance and oxidation.

Try a new heated oxygen sensor (HO2S) if the above fault-tracing does not remedy the fault.

Remedy as necessary.

Other information

- For B5xx4T, see **HEATED OXYGEN SENSOR (HO2S), REPLACING**
- For B6xx4T, see **HEATED OXYGEN SENSOR (HO2S), REPLACING** .
- see **CHECKING WIRING AND TERMINALS**

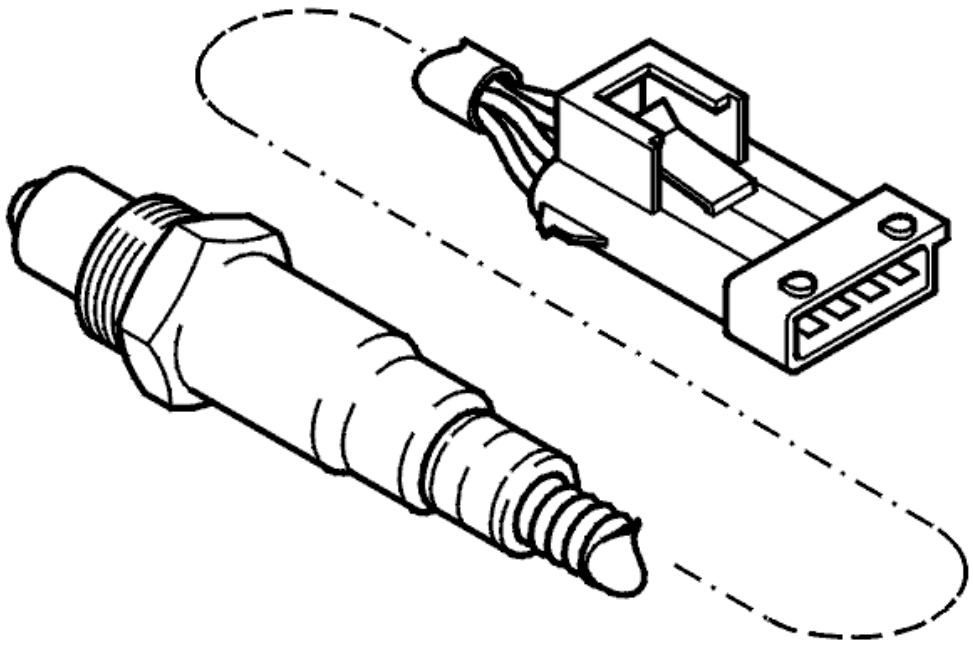

Fig. 61: Identifying Rear Heated Oxygen Sensor
Courtesy of VOLVO CARS CORPORATION

- **Continue**

  Refer to **VERIFICATION**

VERIFICATION

VERIFICATION

HINT: After carrying out the repair, check that the fault has been remedied.

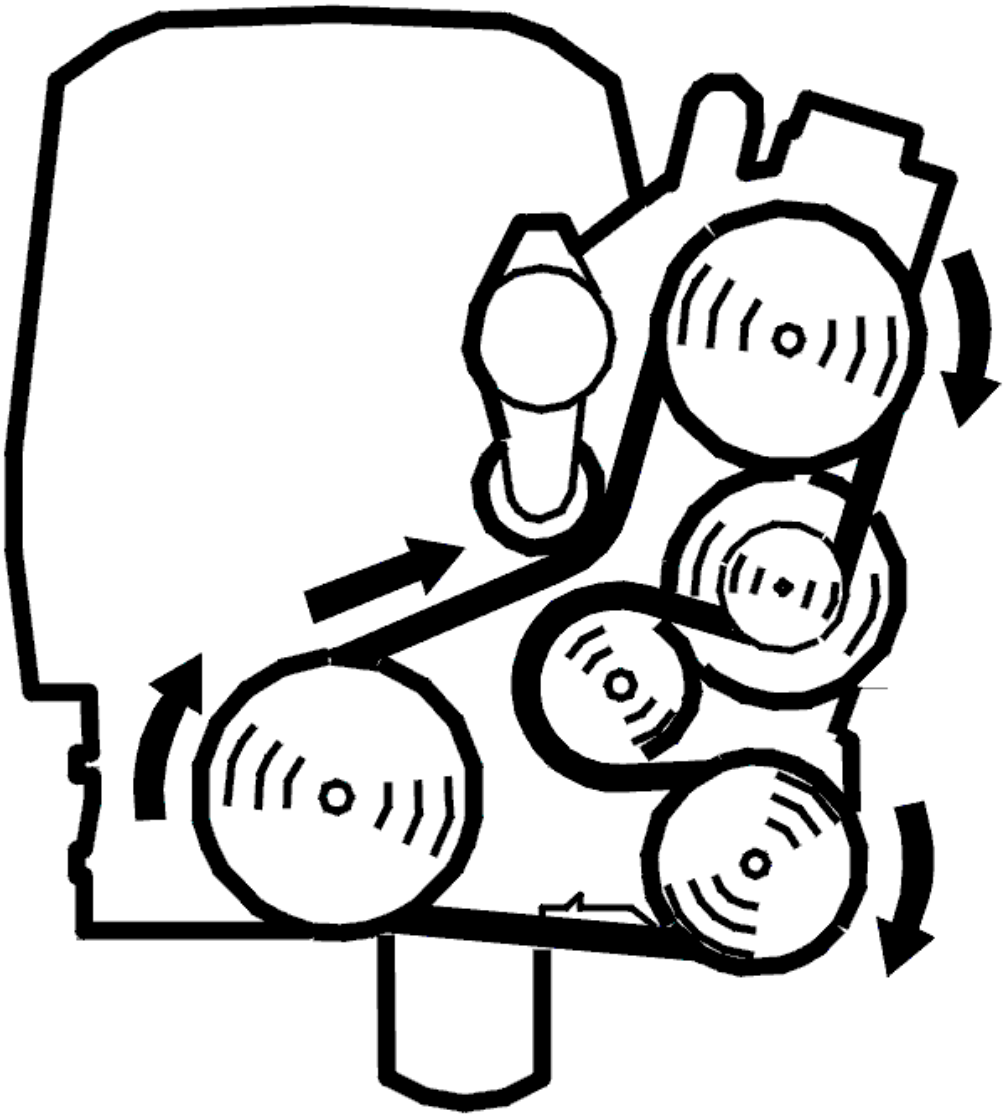

Fig. 62: Belt Routing / Engine Idling - Volvo
Courtesy of VOLVO CARS CORPORATION

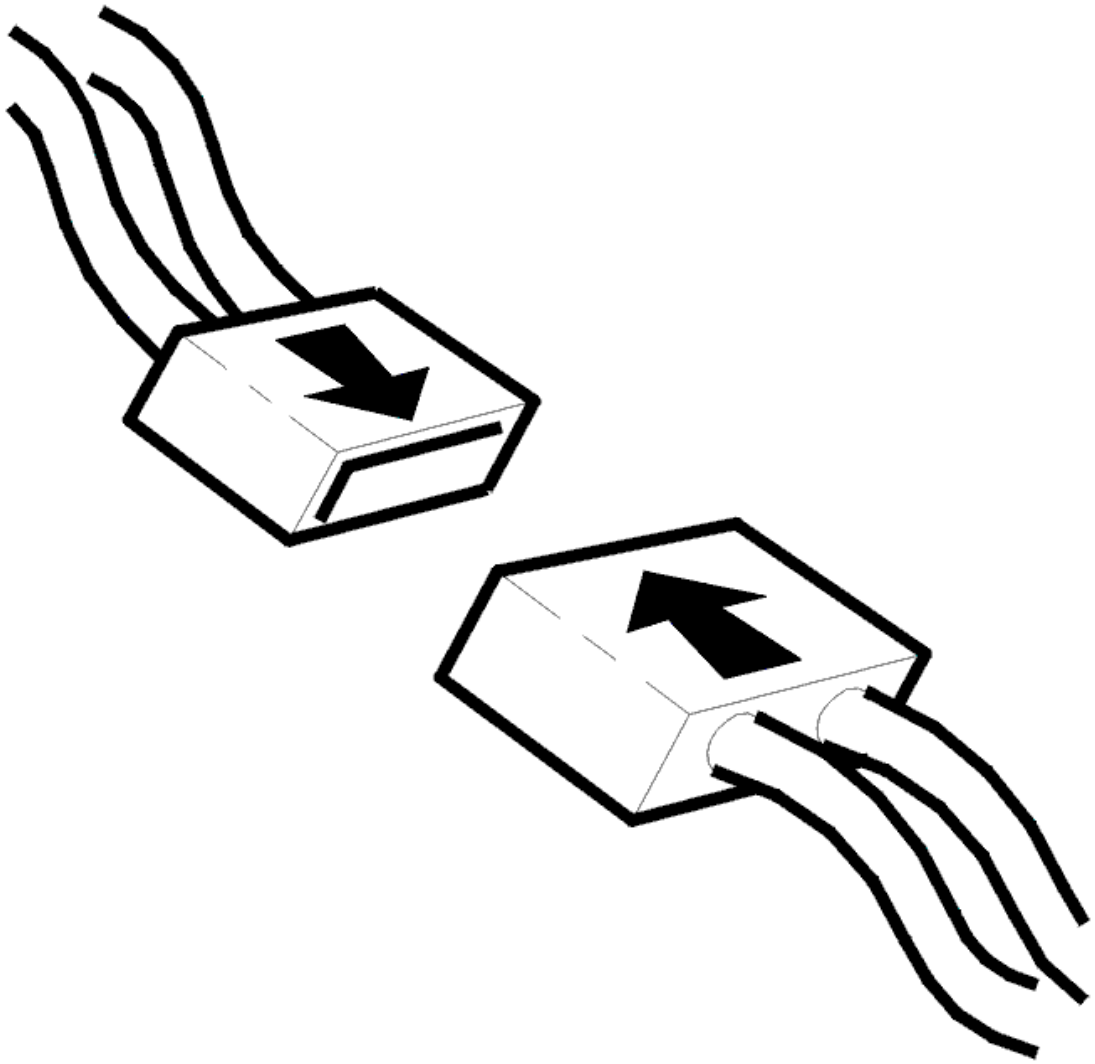

Fig. 63: Connecting Connector
Courtesy of VOLVO CARS CORPORATION

- Ignition off
- Reconnect the connectors, reinstall components etc.
- Start the engine. Allow the engine to run at idle speed for 10 minutes
- Connect VCT2000 (or appropriate scan tool) to the data link connector (DLC) without switching off the engine.

NOTE: **If the engine is switched off, the stored fault status will be erased and the test drive will have to be repeated.**

Read off the diagnostic status and fault status for the diagnostic trouble code (DTC) by selecting the relevant diagnostic trouble code (DTC) from the list.

Check the fault status for the diagnostic trouble code (DTC) when the diagnostic is "Complete". If the function is correct, the fault status must be "No fault found" when the diagnostic is complete.

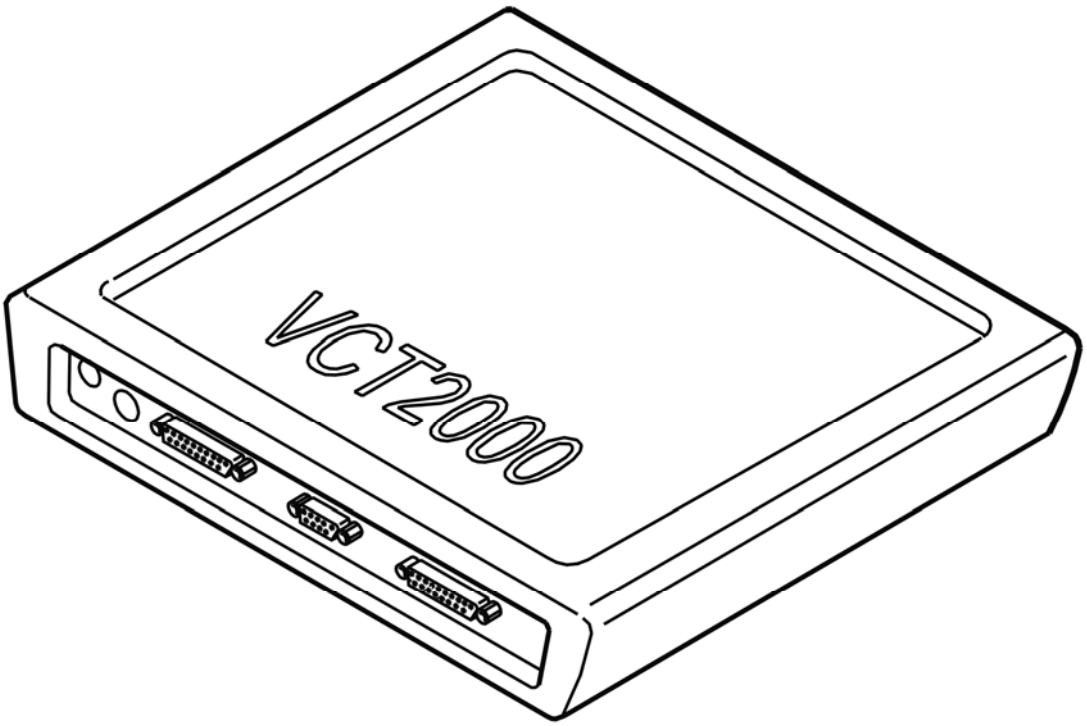

Fig. 64: Identifying VCT2000 Diagnostic Tool Symbol In VIDA
Courtesy of VOLVO CARS CORPORATION

Is the function OK?

- **YES**

  VERIFIED: Troubleshooting has been completed.

- **NO**

  Refer to **INFORMATION**

INFORMATION

FAULT-TRACING INFORMATION

The fault should have been detected and remedied. As this is not the case fault-tracing has failed.

Exit fault-tracing for this diagnostic trouble code (DTC) or make another attempt.

ECM-2310: INJECTOR 1. SIGNAL MISSING. INTERMITTENT FAULT (B5254T2; 2003-2004)

DIAGNOSTIC TROUBLE CODE (DTC) INFORMATION

Condition

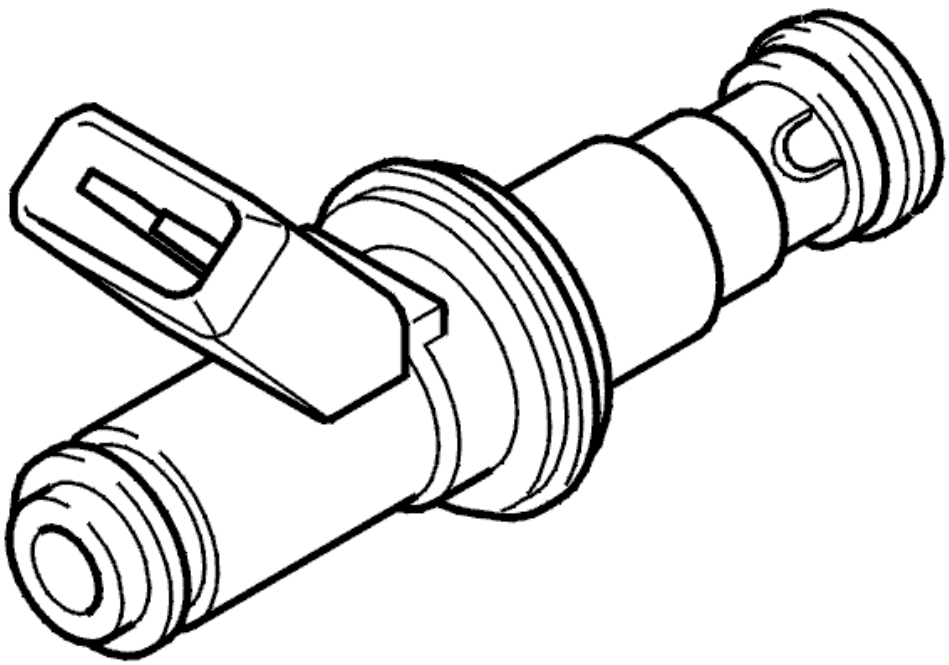

Fig. 65: Identifying Injector
Courtesy of VOLVO CARS CORPORATION

Diagnostic trouble code (DTC) ECM-23X0 is stored if the signal from the injector is too high, too low or missing.

Substitute Value

None

Possible Source

Signal too high:

- short-circuit to supply voltage in the signal cable
- defective injector

Signal too low:

- short-circuit to ground in the signal cable

Signal missing:

- open-circuit in the signal cable
- open-circuit in power supply to injector
- defective injector
- contact resistance in terminals

Fault symptom[s]

- engine not firing on all cylinders
- malfunction indicator lamp (MIL) lit

SIGNAL MISSING. INTERMITTENT FAULT

CHECKING WIRING AND CONNECTORS

Check the injector connector. Check for contact resistance and oxidation. Check for loose connections.

Check the cable between injector terminal 2 and control module:

- terminal #A16 (#A16) (ECM 2310)
- terminal #A34 (#A34) (ECM 2320)
- terminal #A15 (#A15) (ECM 2330)
- terminal #A33(#A33) (ECM 2340)
- terminal #A14 (#A14) (ECM 2350).

Check the power supply between system relay terminal 3 and injector terminal 1. Check for an for an intermittent open-circuit.

Other information

- To connect the breakout box / access the control module, see **CONNECTING THE BREAKOUT BOX**
- For B5xx4T, see **INJECTOR/PULSE DAMPER, REPLACEMENT**
- For B6xx4T, see **INJECTOR / PULSATION DAMPER, REPLACING** .
- For 5 cylinder turbocharged engines -2004, see **SIGNAL DESCRIPTION**
- For 5 cylinder turbocharged engines 2005-, see **SIGNAL SPECIFICATION** .
- see **CHECKING WIRING AND TERMINALS** .

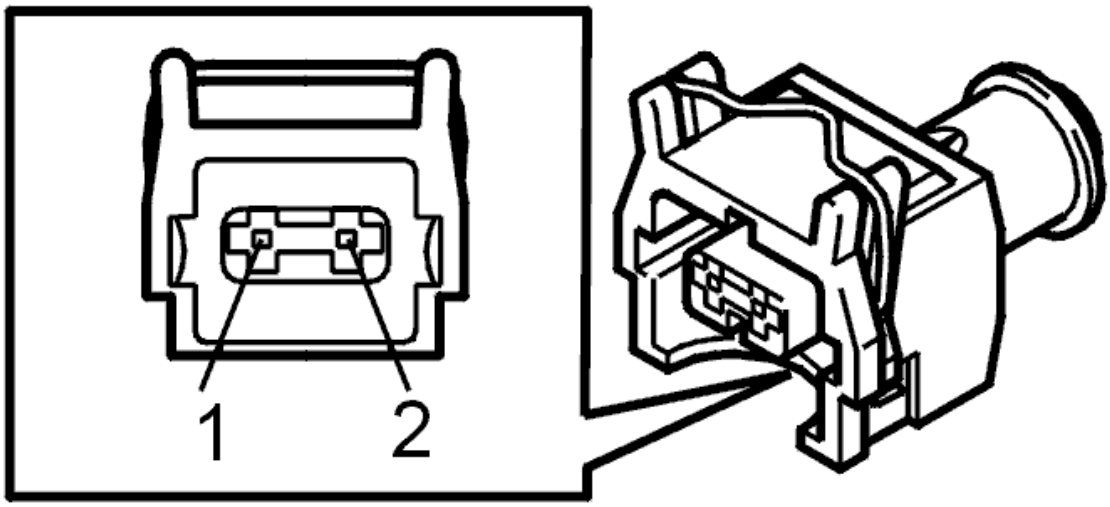

Fig. 66: Identifying 2 Pin Connector
Courtesy of VOLVO CARS CORPORATION

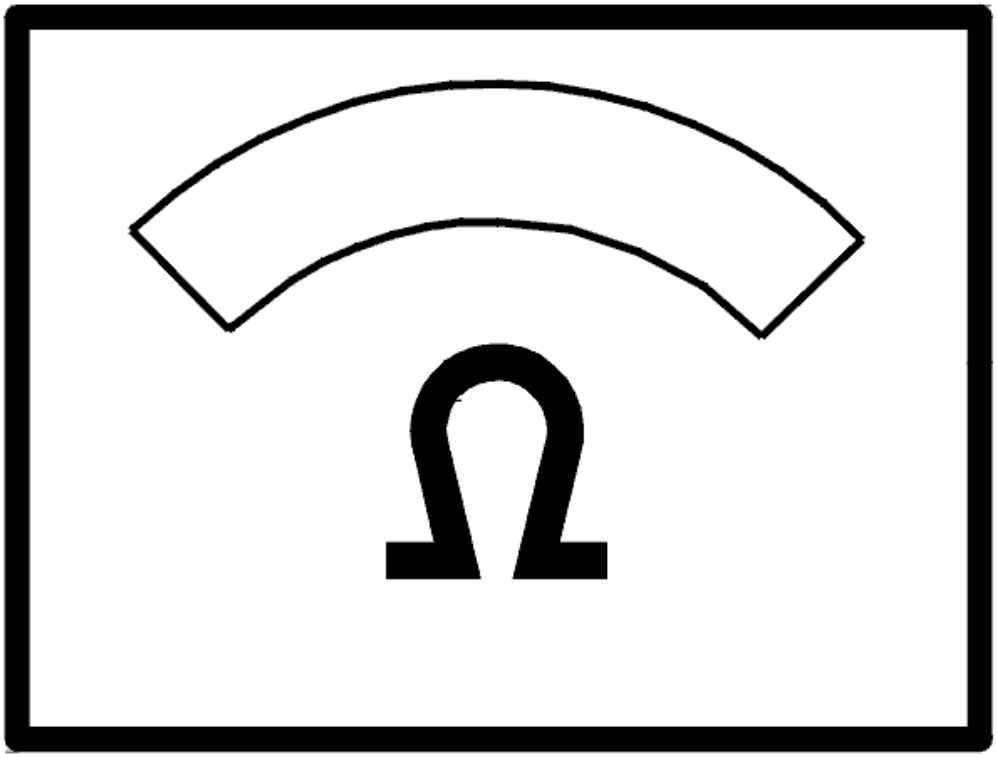

Fig. 67: Identifying Ohm Meter
Courtesy of VOLVO CARS CORPORATION

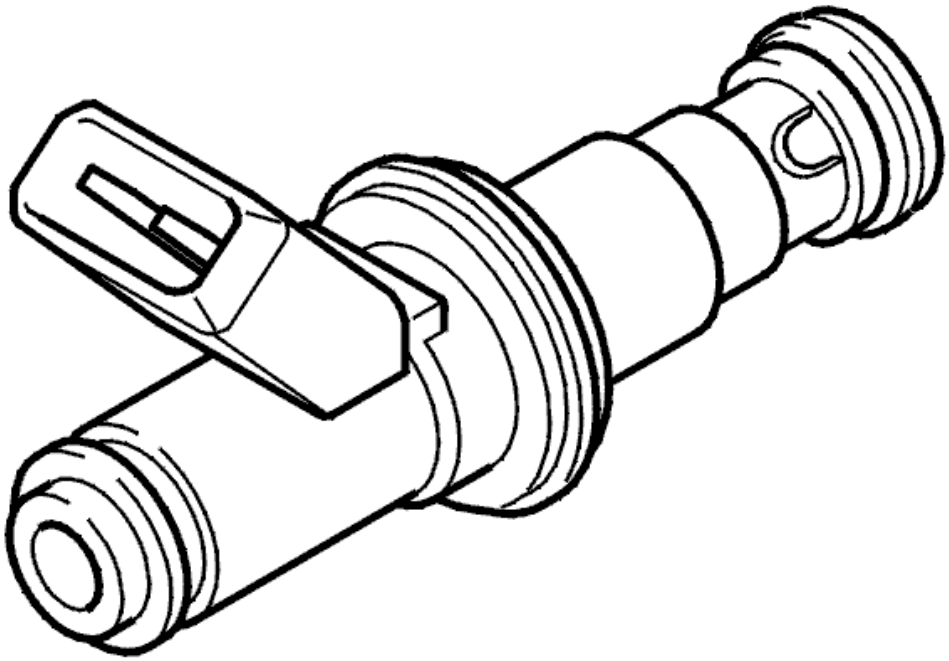

Fig. 68: Identifying Injector
Courtesy of VOLVO CARS CORPORATION

- **Continue**

  Refer to **INFORMATION**

INFORMATION

FAULT-TRACING INFORMATION

If the fault is intermittent, do not verify fault-tracing if the fault does not recur.

It is possible to view the information again, or leave fault-tracing for this diagnostic trouble code (DTC).

ECM-2310: INJECTOR 1. SIGNAL MISSING. INTERMITTENT FAULT (B6294T; 2003-2004)

DIAGNOSTIC TROUBLE CODE (DTC) INFORMATION

see **DIAGNOSTIC TROUBLE CODE (DTC) INFORMATION**

SIGNAL MISSING. INTERMITTENT FAULT

CHECKING WIRING AND CONNECTORS

Check the injector connector. Check for contact resistance and oxidation. Check for loose connections.

Check the cable between injector terminal 2 and control module:

- terminal #A16 (#A16) (ECM 2310)
- terminal #A15 (#A15) (ECM 2320)
- terminal #A33(#A33) (ECM 2330)
- terminal #A32 (#A32) (ECM 2340)
- terminal #A34 (#A34) (ECM 2350)
- terminal #A14 (#A14) (ECM 2360).

Check the power supply between system relay terminal 3 and injector terminal 1. Check for an for an intermittent open-circuit.

Other information

- To access or replace the engine control module (ECM), see **ENGINE CONTROL MODULE (ECM), REPLACING**
- For B5xx4T, see **INJECTOR/PULSE DAMPER, REPLACEMENT**
- For B6xx4T, see **INJECTOR / PULSATION DAMPER, REPLACING** .
- For 6 cylinder engines -2004, see **SIGNAL SPECIFICATION**
- For 6 cylinder engines 2005-, see **SIGNAL SPECIFICATION** .
- see **CHECKING WIRING AND TERMINALS** .

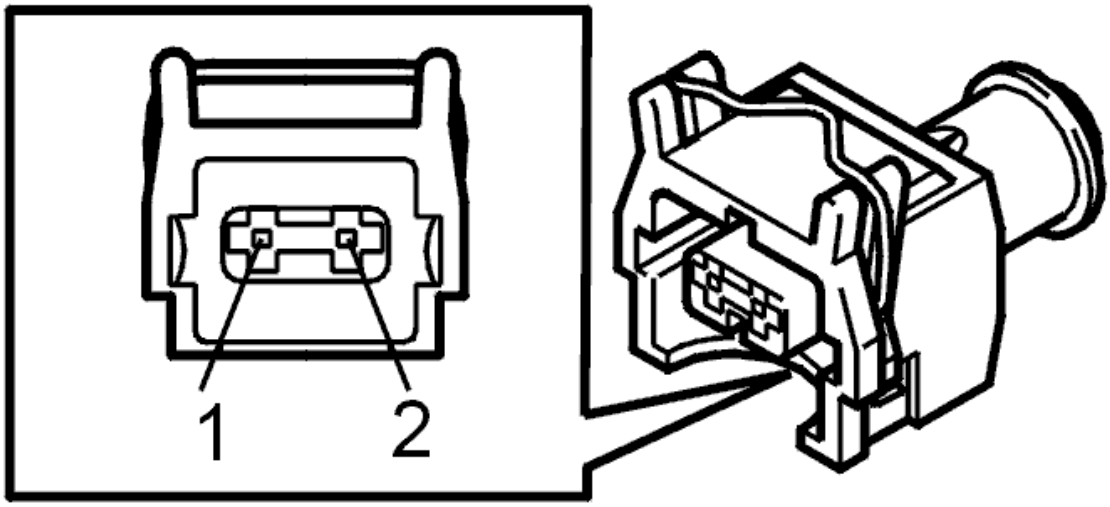

Fig. 69: Identifying 2 Pin Connector
Courtesy of VOLVO CARS CORPORATION

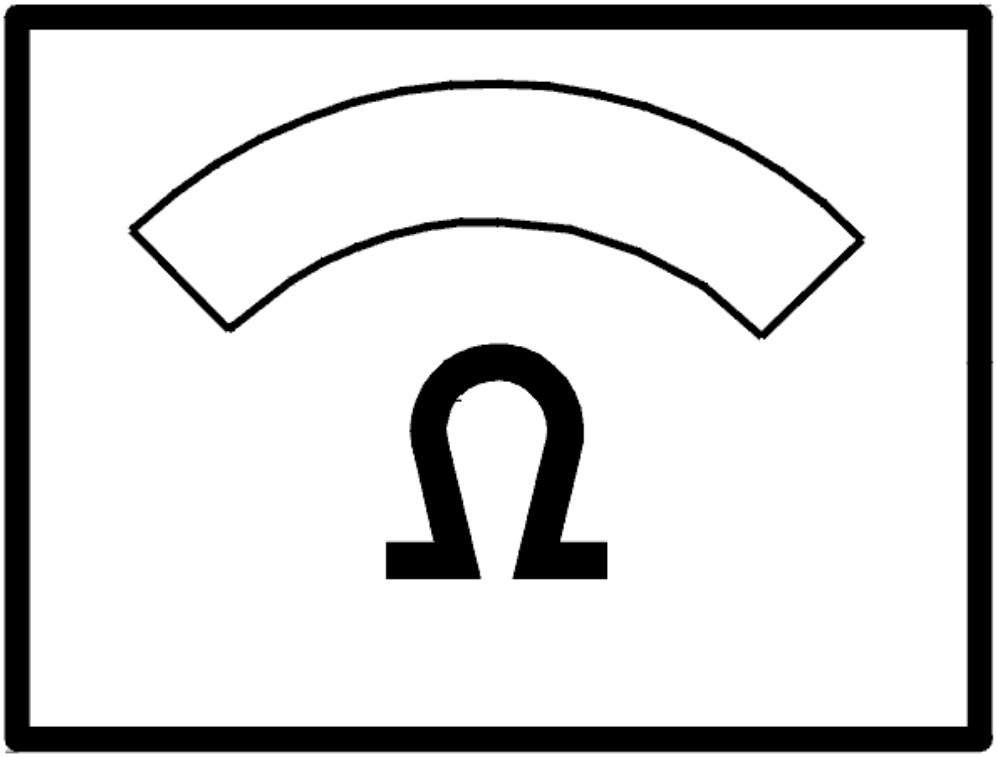

Fig. 70: Identifying Ohm Meter
Courtesy of VOLVO CARS CORPORATION

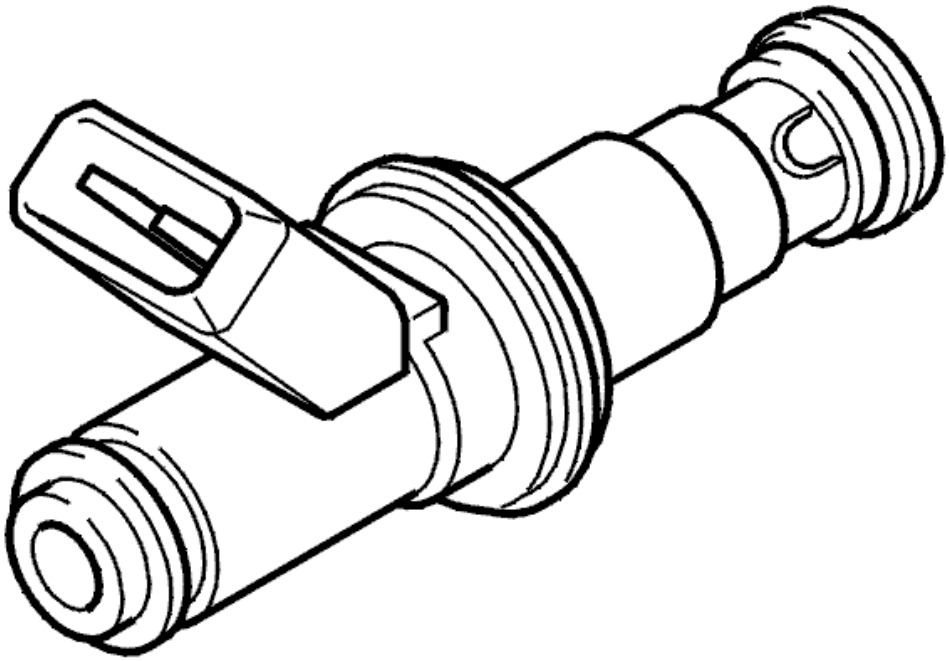

Fig. 71: Identifying Injector
Courtesy of VOLVO CARS CORPORATION

- **Continue**

  Refer to **INFORMATION**

INFORMATION

FAULT-TRACING INFORMATION

If the fault is intermittent, do not verify fault-tracing if the fault does not recur.

It is possible to view the information again, or leave fault-tracing for this diagnostic trouble code (DTC).

ECM-2310: INJECTOR 1. SIGNAL MISSING. PERMANENT FAULT (B5254T2; 2003-2004)

DIAGNOSTIC TROUBLE CODE (DTC) INFORMATION

see **DIAGNOSTIC TROUBLE CODE (DTC) INFORMATION**

SIGNAL MISSING. PERMANENT FAULT

CHECKING THE CONNECTOR

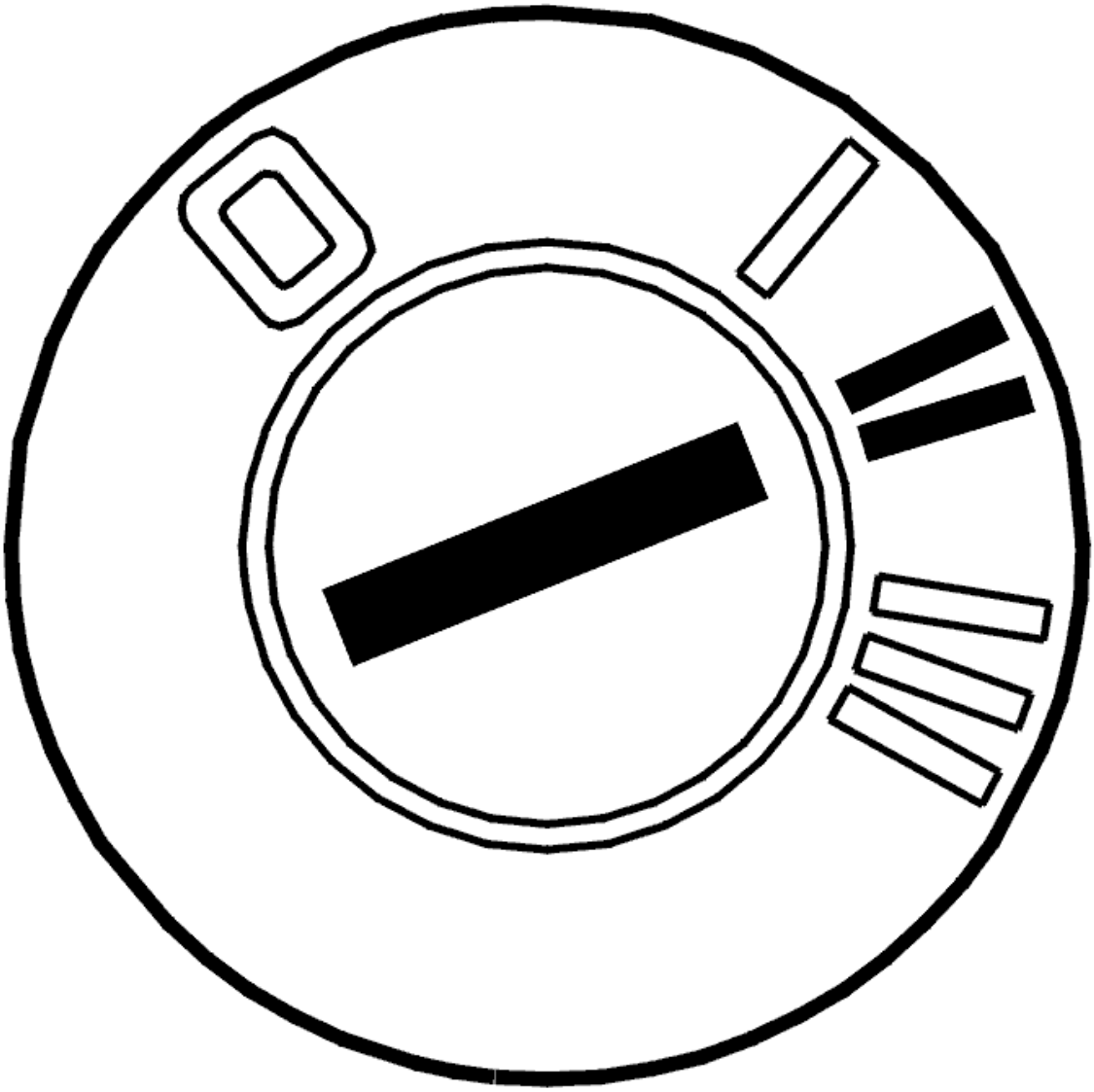

Fig. 72: Identifying Ignition ON
Courtesy of VOLVO CARS CORPORATION

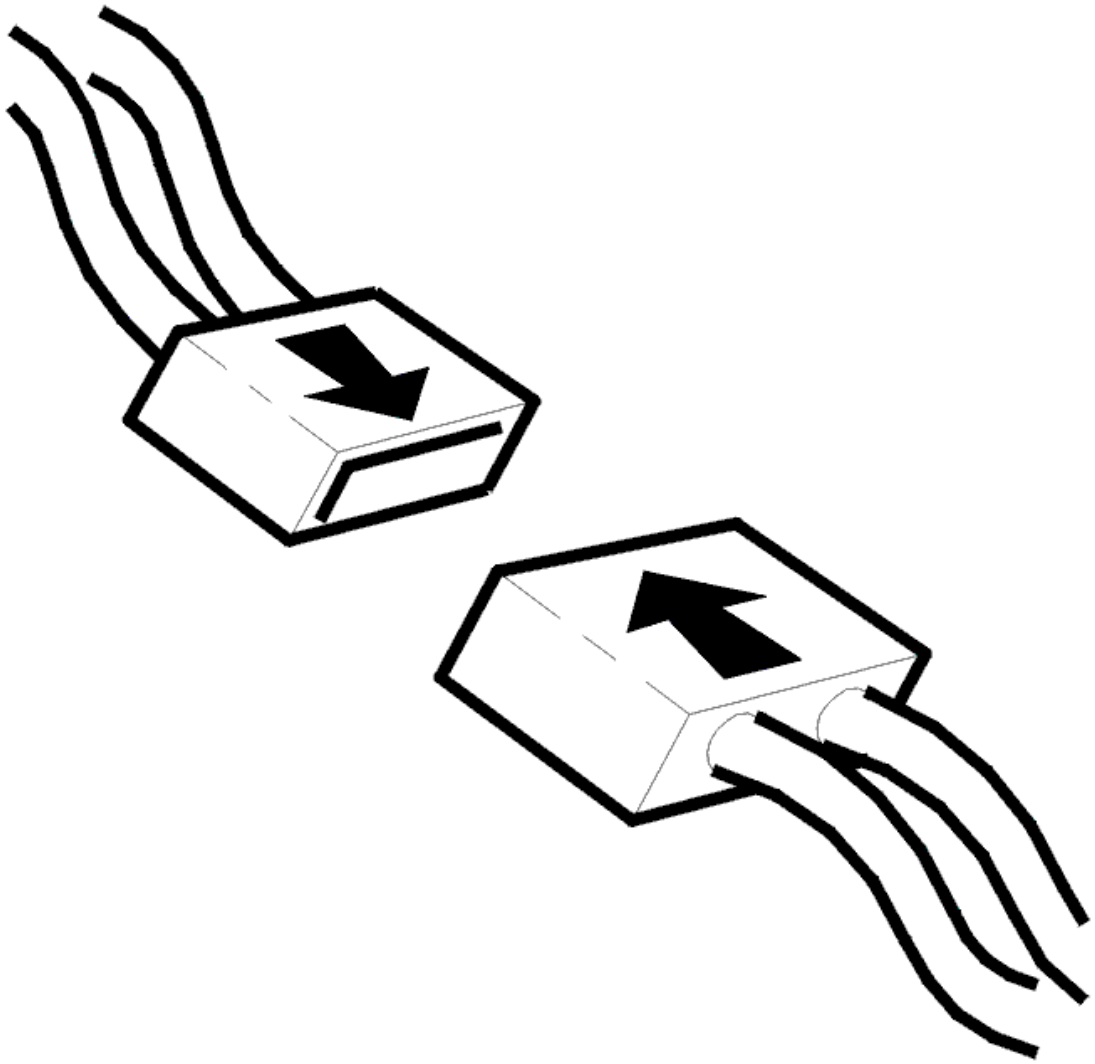

Fig. 73: Connecting Connector
Courtesy of VOLVO CARS CORPORATION

- Ignition off
- Check the injector connector. Check for contact resistance and oxidation
- Reinstall the components, reconnect the connectors etc.
- Ignition on
- Activate the injector.

  A "click" should be heard when the injector is activated.

  If the injector is now OK, the fault was caused by poor contact in the connector.

  Other information

- For B5xx4T, see **INJECTOR/PULSE DAMPER, REPLACEMENT**
- For B6xx4T, see **INJECTOR / PULSATION DAMPER, REPLACING** .
- For 5 cylinder turbocharged engines -2004, see **SIGNAL DESCRIPTION**
- For 5 cylinder turbocharged engines 2005-, see **SIGNAL SPECIFICATION** .
- see **CHECKING WIRING AND TERMINALS** .

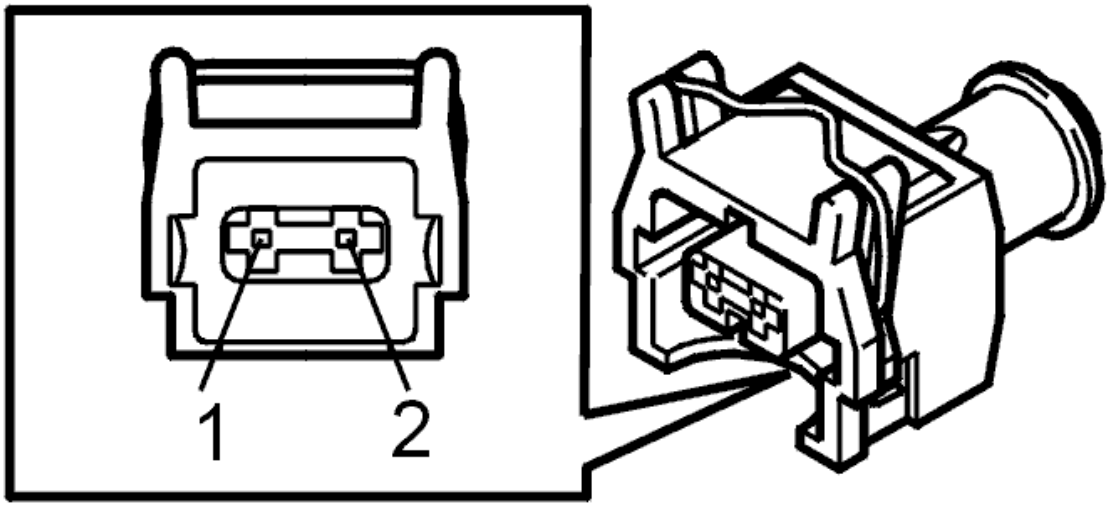

Fig. 74: Identifying 2 Pin Connector
Courtesy of VOLVO CARS CORPORATION

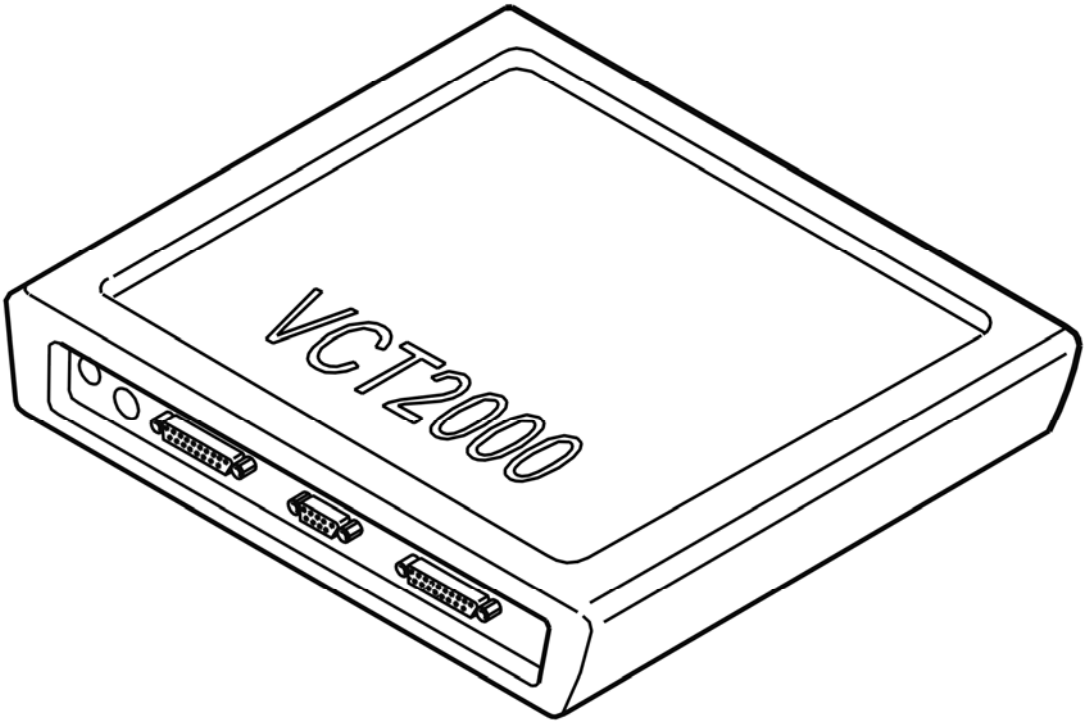

Fig. 75: Identifying VCT2000 Diagnostic Tool Symbol In VIDA
Courtesy of VOLVO CARS CORPORATION

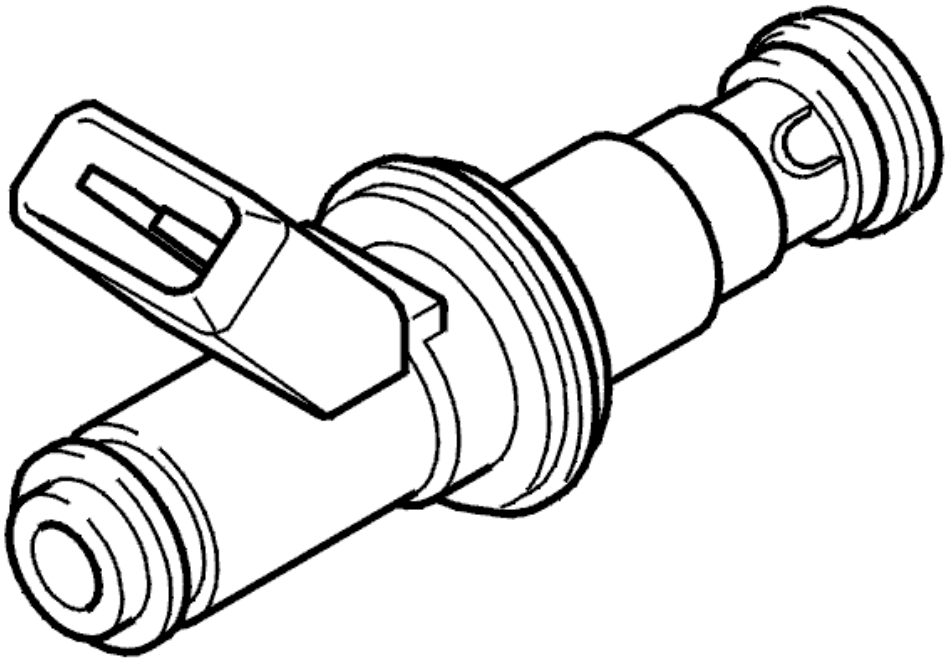

Fig. 76: Identifying Injector
Courtesy of VOLVO CARS CORPORATION

Is the injector working?

- **YES**

  OKAY: Troubleshooting has been completed.

- **NO**

  Refer to **CHECKING COMPONENTS AND WIRING**

CHECKING COMPONENTS AND WIRING

Check the resistance of the injector between terminals 1 and 2.

Check the cable between injector terminal 2 and control module:

- terminal #A16 (#A16) (ECM 2310)
- terminal #A34 (#A34) (ECM 2320)
- terminal #A15 (#A15) (ECM 2330)
- terminal #A33(#A33) (ECM 2340)

- terminal #A14 (#A14) (ECM 2350).

Check the power supply between system relay terminal 3 and injector terminal 1. Check for an open-circuit.

Remedy as necessary.

Other information

- To connect the breakout box / access the control module, see **CONNECTING THE BREAKOUT BOX**
- For B5xx4T, see **INJECTOR/PULSE DAMPER, REPLACEMENT**
- For B6xx4T, see **INJECTOR / PULSATION DAMPER, REPLACING** .
- For resistance values, see **COMPONENT SPECIFICATIONS**
- For 5 cylinder turbocharged engines -2004, see **SIGNAL DESCRIPTION**
- For 5 cylinder turbocharged engines 2005-, see **SIGNAL SPECIFICATION** .

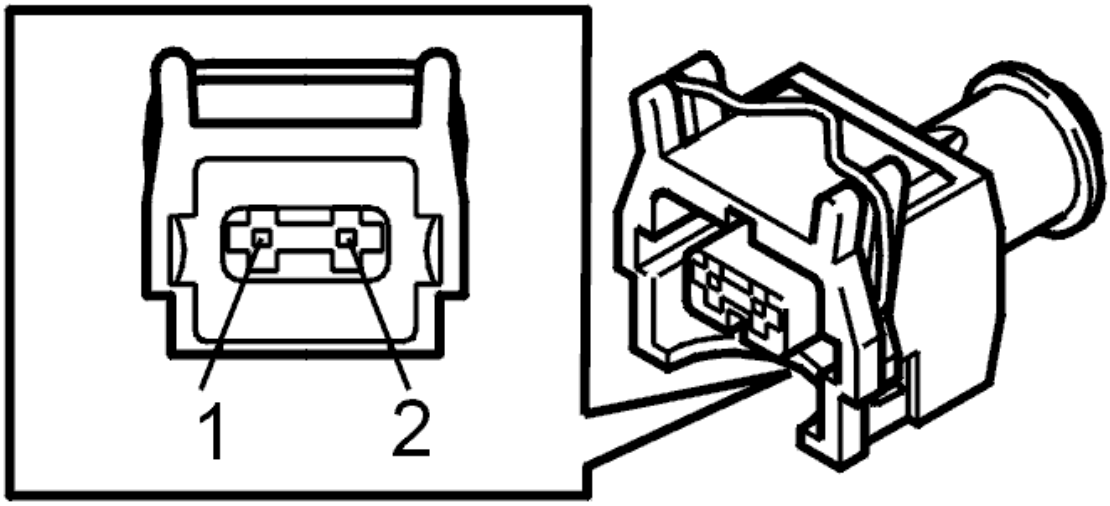

Fig. 77: Identifying 2 Pin Connector
Courtesy of VOLVO CARS CORPORATION

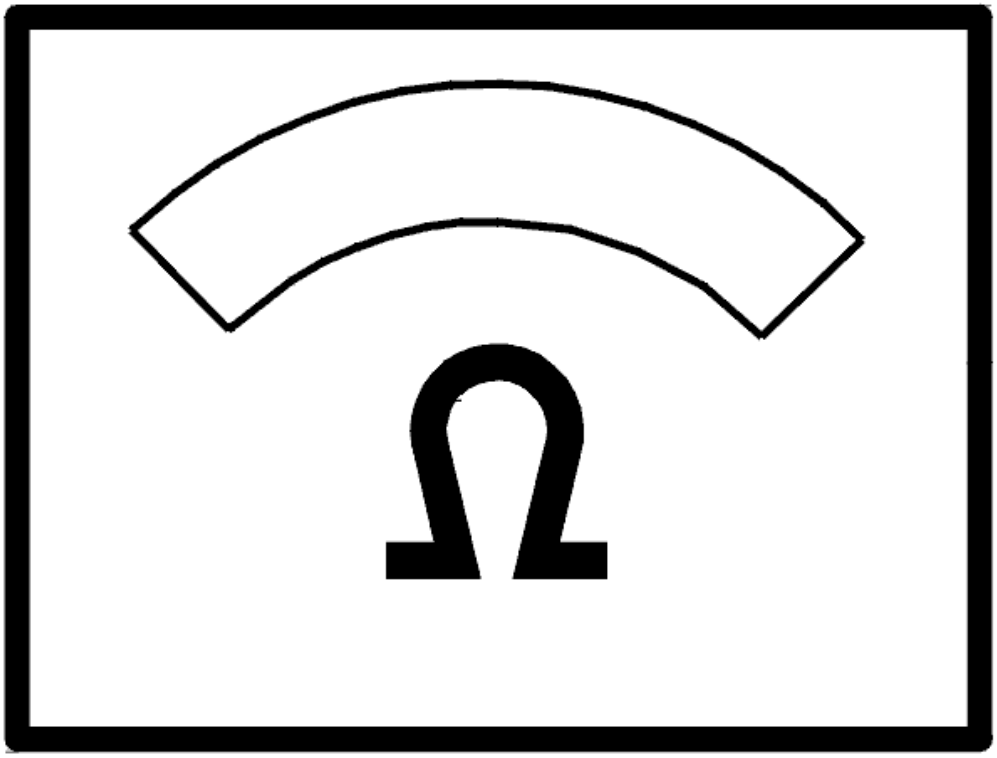

Fig. 78: Identifying Ohm Meter
Courtesy of VOLVO CARS CORPORATION

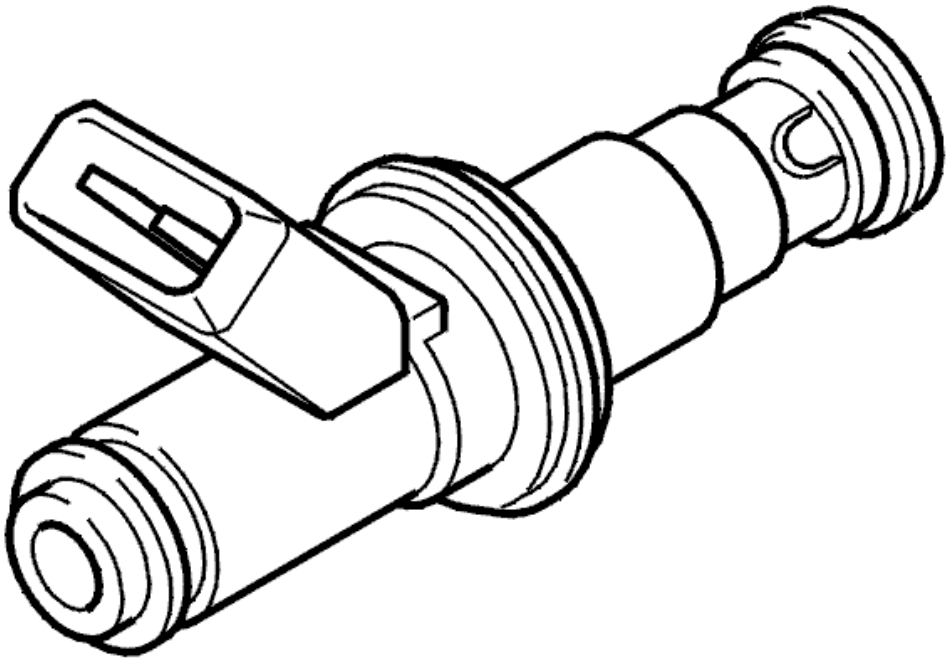

Fig. 79: Identifying Injector
Courtesy of VOLVO CARS CORPORATION

- **Continue**

  Refer to **VERIFICATION**

VERIFICATION

VERIFICATION

HINT: After carrying out the repair, check that the fault has been remedied.

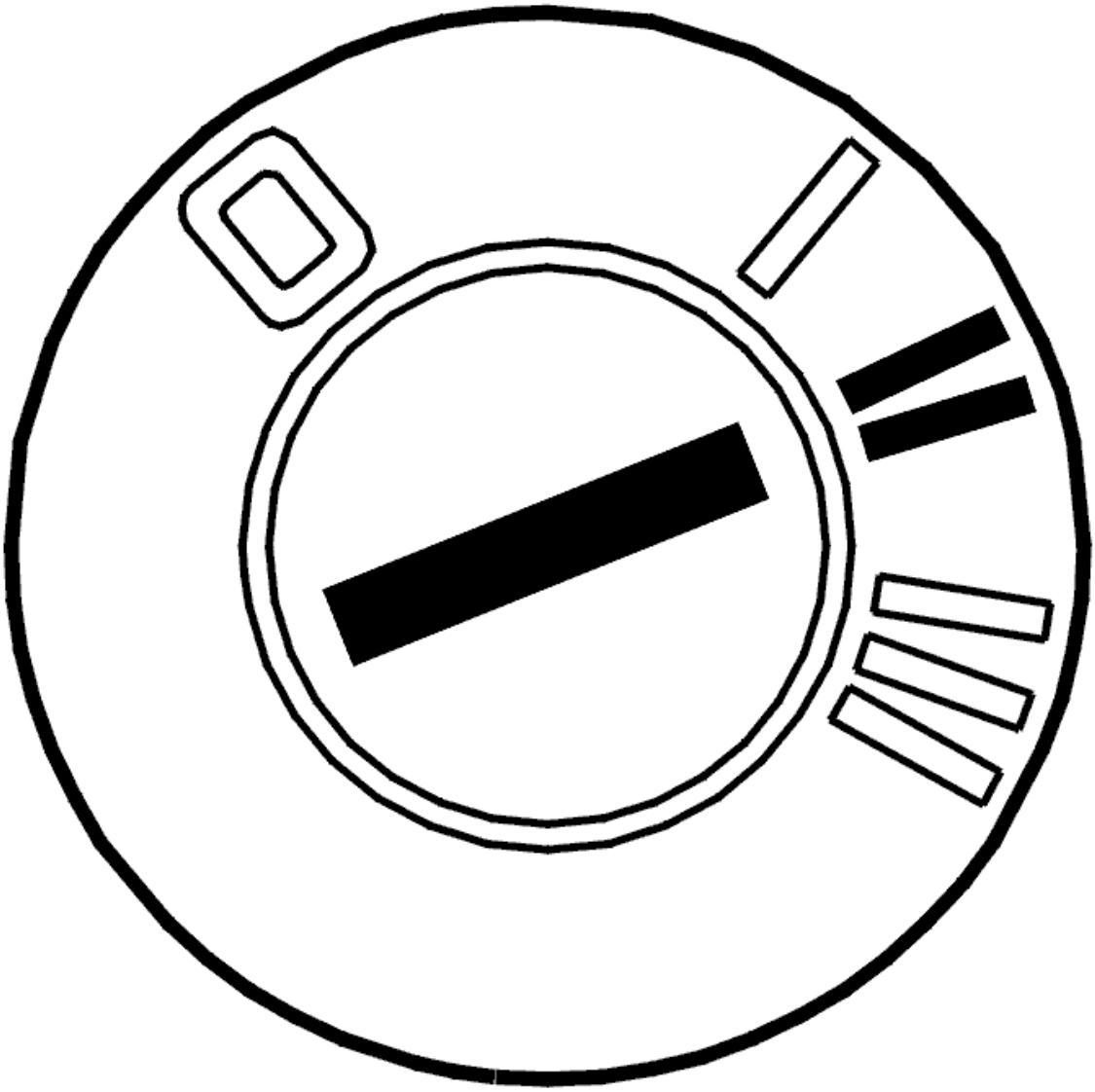

Fig. 80: Identifying Ignition ON
Courtesy of VOLVO CARS CORPORATION

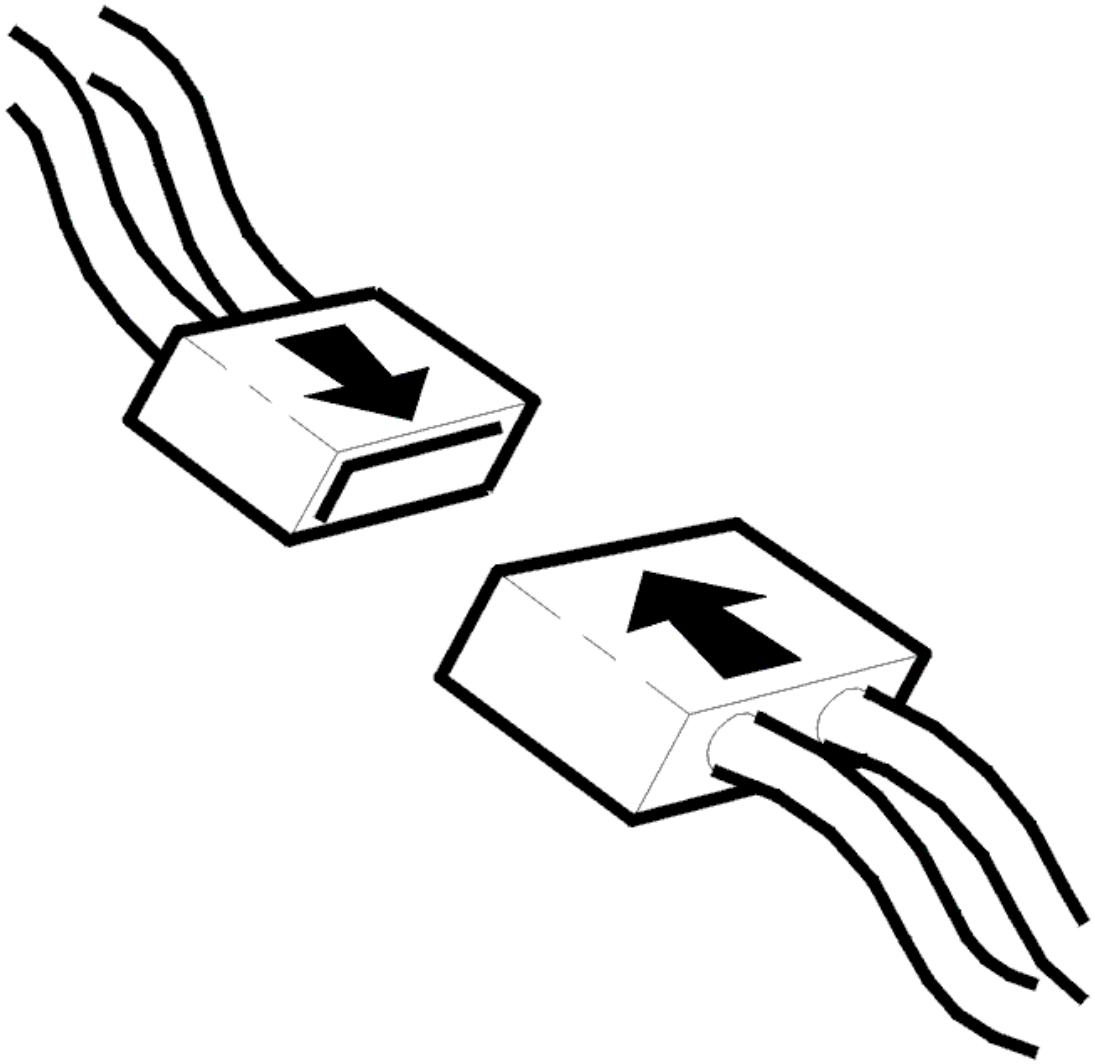

Fig. 81: Connecting Connector
Courtesy of VOLVO CARS CORPORATION

- Ignition off.
- Reconnect connectors, reinstall components etc.
- Ignition on.
- Activate the relevant injector.

  A "click" should be heard when the injector is activated.

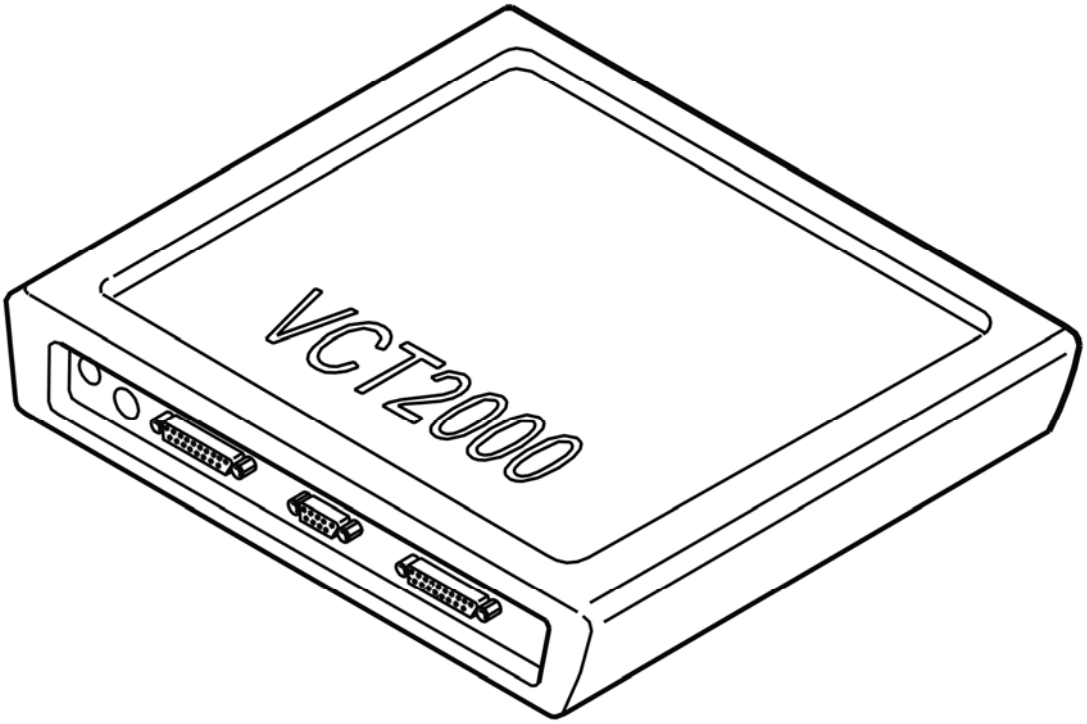

Fig. 82: Identifying VCT2000 Diagnostic Tool Symbol In VIDA
Courtesy of VOLVO CARS CORPORATION

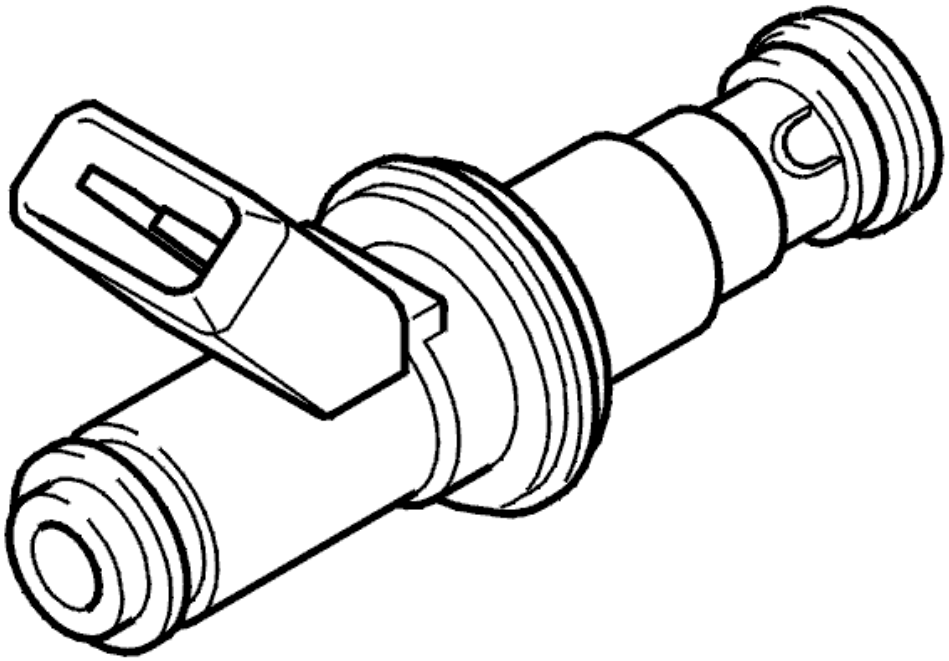

Fig. 83: Identifying Injector
Courtesy of VOLVO CARS CORPORATION

Is the injector working?

- **YES**

  VERIFIED: Troubleshooting has been completed.

- **NO**

  Refer to **INFORMATION**

INFORMATION

FAULT-TRACING INFORMATION

The fault should have been detected and remedied. As this is not the case fault-tracing has failed.

Exit fault-tracing for this diagnostic trouble code (DTC) or make another attempt.

ECM-2310: INJECTOR 1. SIGNAL MISSING. PERMANENT FAULT (B6294T; 2003-2004)

DIAGNOSTIC TROUBLE CODE (DTC) INFORMATION

see **DIAGNOSTIC TROUBLE CODE (DTC) INFORMATION**

SIGNAL MISSING. PERMANENT FAULT

CHECKING THE CONNECTOR

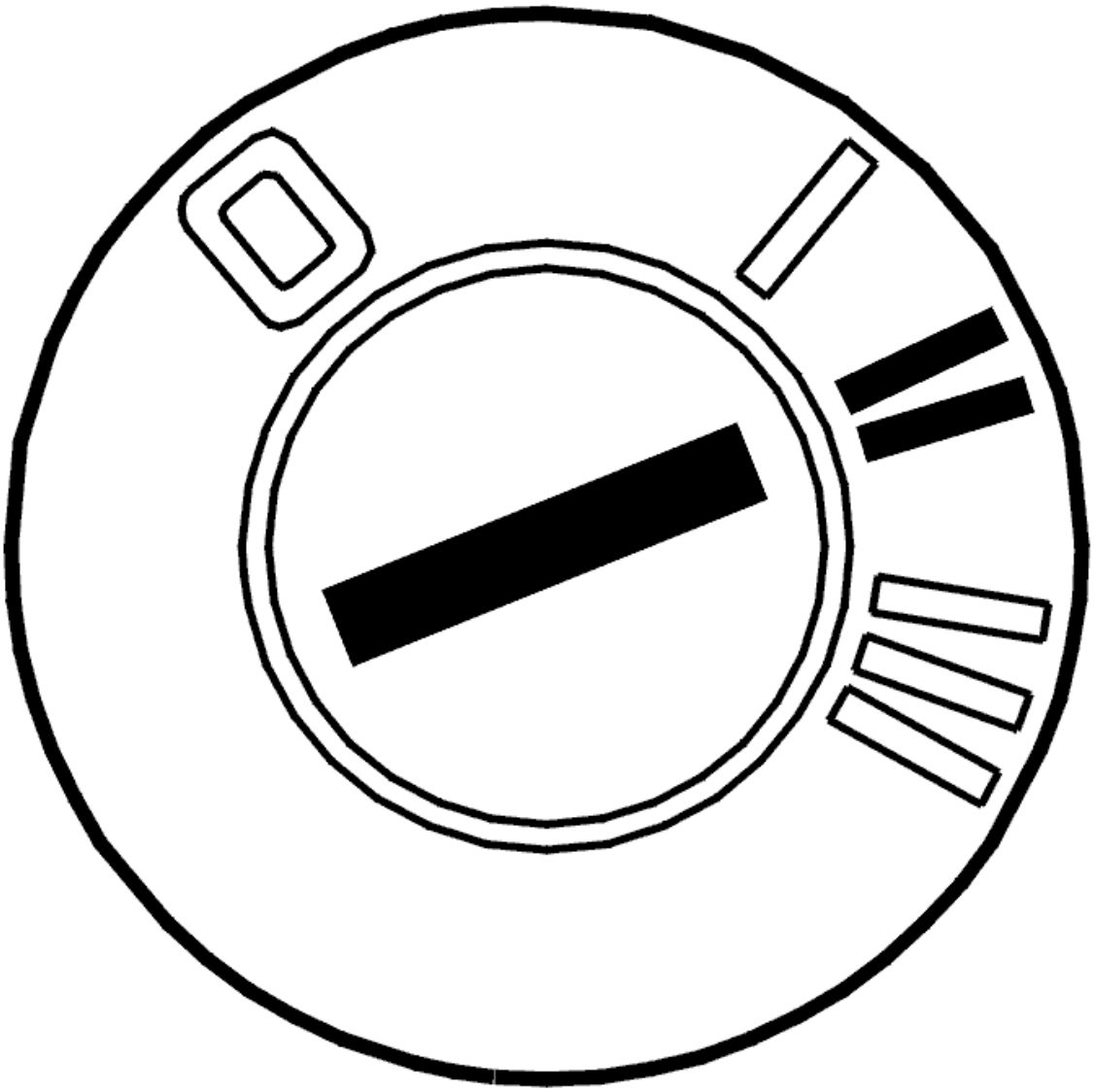

Fig. 84: Identifying Ignition ON
Courtesy of VOLVO CARS CORPORATION

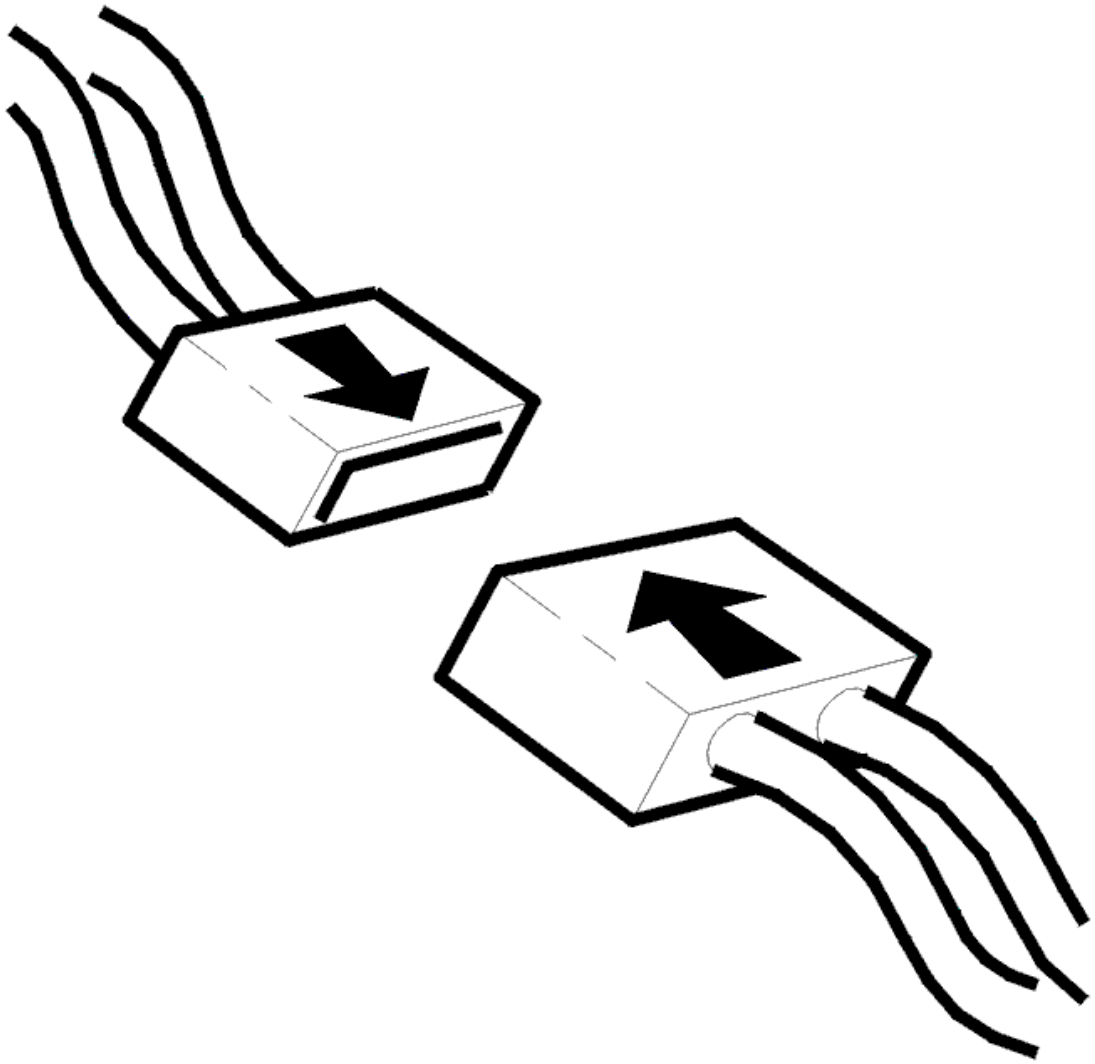

Fig. 85: Connecting Connector
Courtesy of VOLVO CARS CORPORATION

- Ignition off
- Check the injector connector. Check for contact resistance and oxidation
- Reinstall the components, reconnect the connectors etc.
- Ignition on
- Activate the injector.

  A "click" should be heard when the injector is activated.

  If the injector is now OK, the fault was caused by poor contact in the connector.

  Other information

- For B5xx4T, see **INJECTOR/PULSE DAMPER, REPLACEMENT**
- For B6xx4T, see **INJECTOR / PULSATION DAMPER, REPLACING** .
- For 6 cylinder engines -2004, see **SIGNAL SPECIFICATION**
- For 6 cylinder engines 2005-, see **SIGNAL SPECIFICATION** .
- see **CHECKING WIRING AND TERMINALS** .

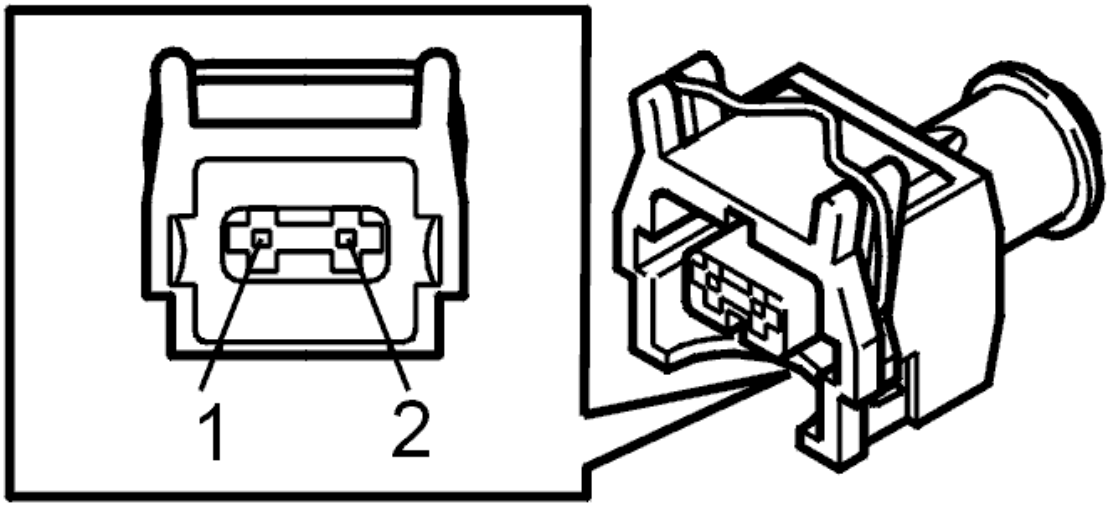

Fig. 86: Identifying 2 Pin Connector
Courtesy of VOLVO CARS CORPORATION

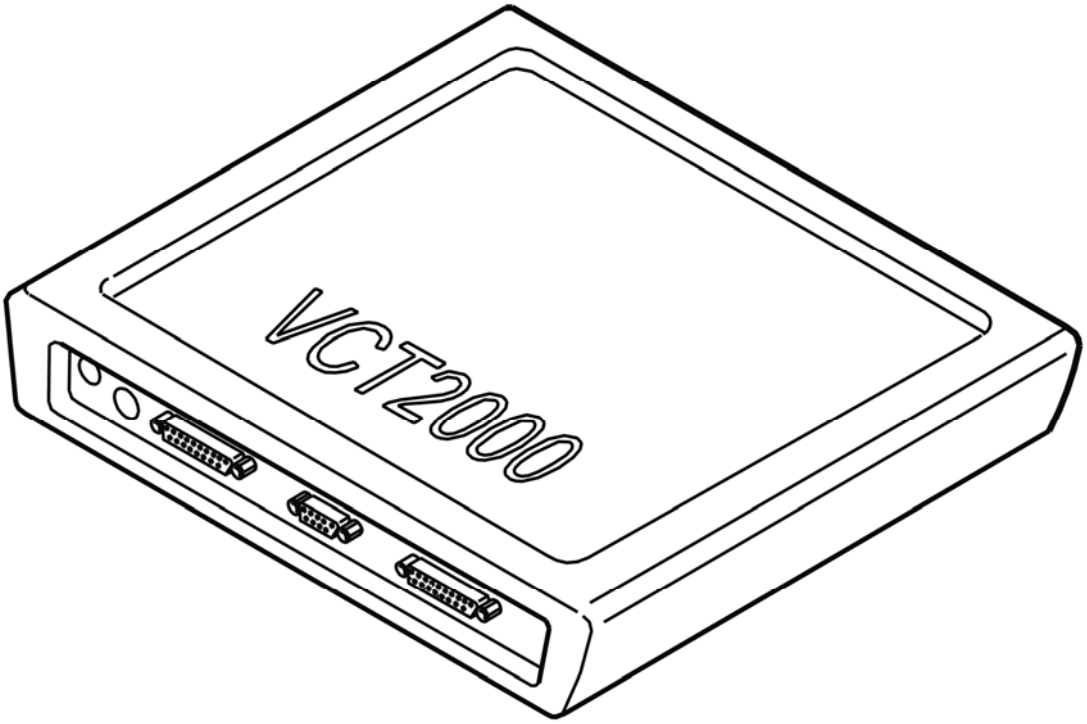

Fig. 87: Identifying VCT2000 Diagnostic Tool Symbol In VIDA
Courtesy of VOLVO CARS CORPORATION

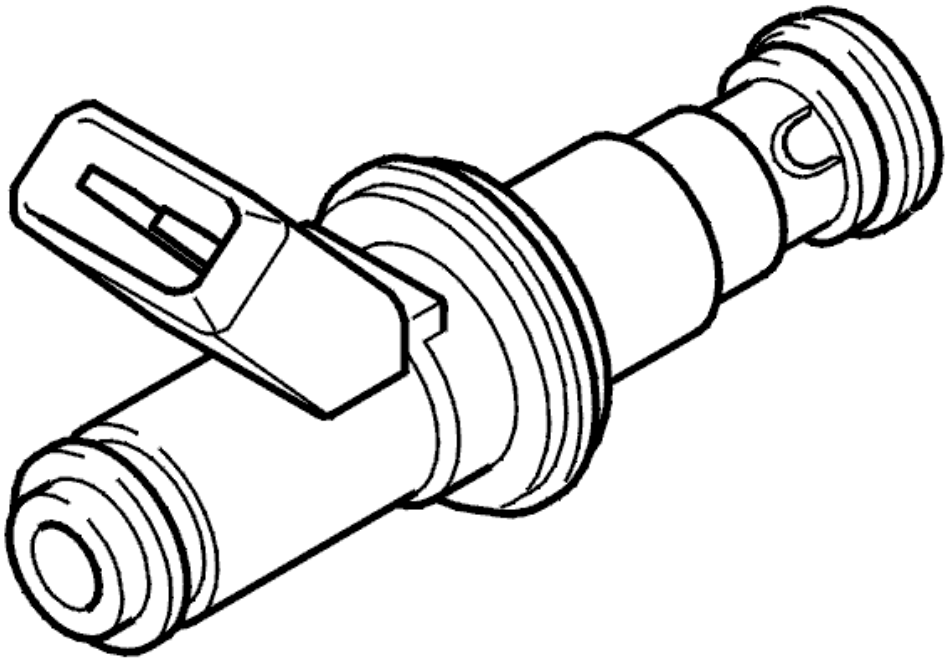

Fig. 88: Identifying Injector
Courtesy of VOLVO CARS CORPORATION

Is the injector working?

- **YES**

  OKAY: Troubleshooting has been completed.

- **NO**

  Refer to **CHECKING COMPONENTS AND WIRING**

CHECKING COMPONENTS AND WIRING

Check the resistance of the injector between terminals 1 and 2.

Check the cable between injector terminal 2 and control module:

- terminal #A16 (#A16) (ECM 2310)
- terminal #A15 (#A15) (ECM 2320)
- terminal #A33(#A33) (ECM 2330)
- terminal #A32 (#A32) (ECM 2340)

- terminal #A34 (#A34) (ECM 2350)
- terminal #A14 (#A14) (ECM 2360).

Check the power supply between system relay terminal 3 and injector terminal 1. Check for an open-circuit.

Remedy as necessary.

Other information

- For B5xx4T, see **INJECTOR/PULSE DAMPER, REPLACEMENT**
- For B6xx4T, see **INJECTOR / PULSATION DAMPER, REPLACING** .
- For resistance values, see **COMPONENT SPECIFICATIONS**
- For 6 cylinder engines -2004, see **SIGNAL SPECIFICATION**
- For 6 cylinder engines 2005-, see **SIGNAL SPECIFICATION** .
- see **CHECKING WIRING AND TERMINALS** .

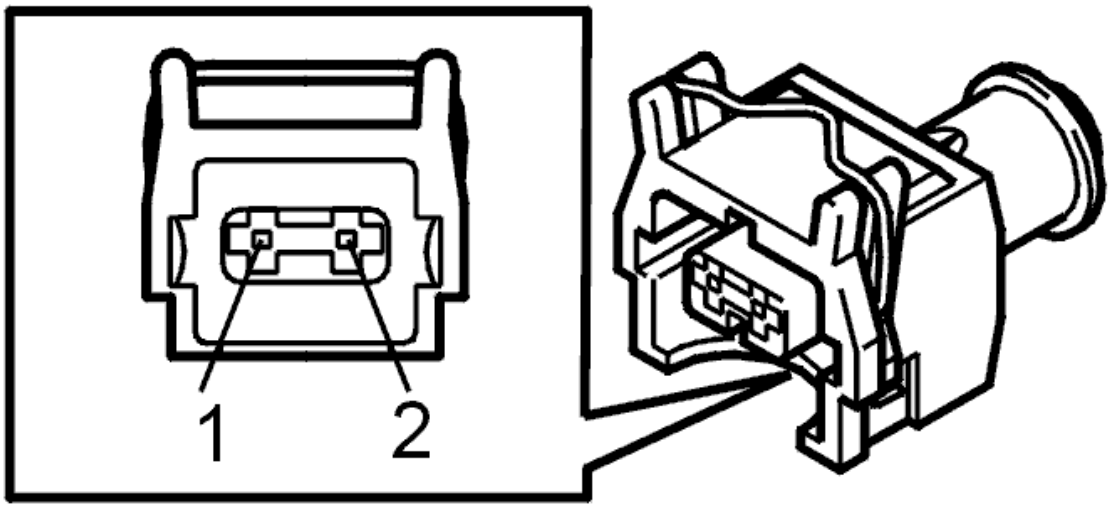

Fig. 89: Identifying 2 Pin Connector
Courtesy of VOLVO CARS CORPORATION

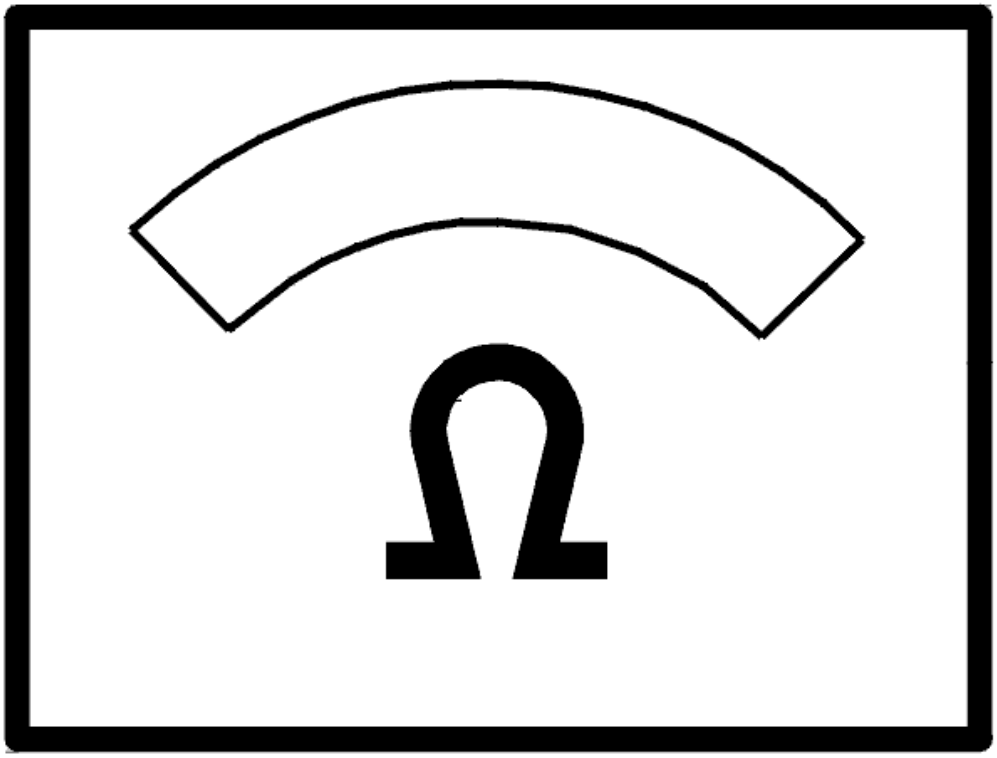

Fig. 90: Identifying Ohm Meter
Courtesy of VOLVO CARS CORPORATION

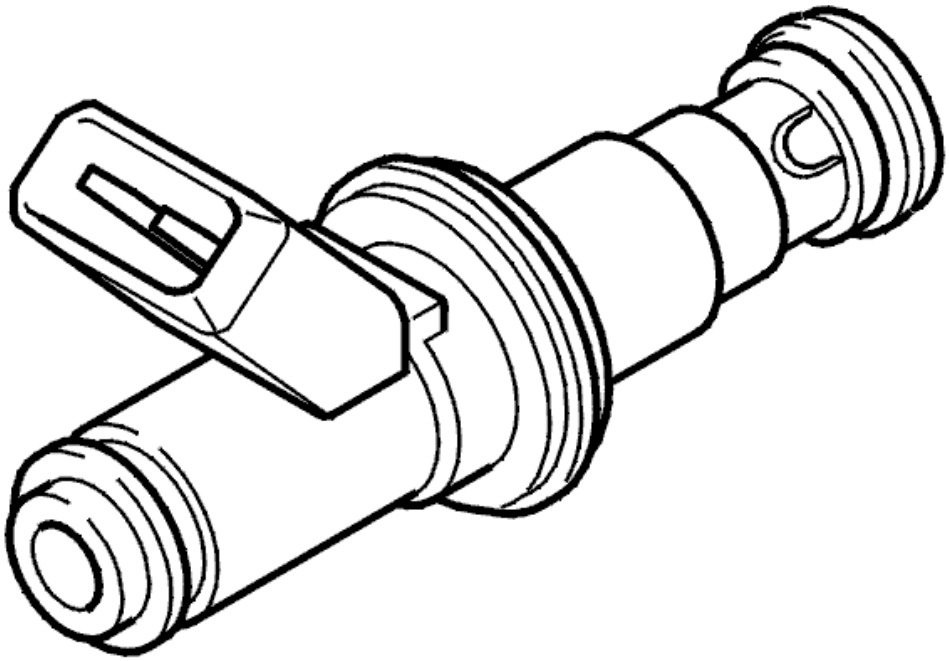

Fig. 91: Identifying Injector
Courtesy of VOLVO CARS CORPORATION

- **Continue**

  Refer to **VERIFICATION**

VERIFICATION

VERIFICATION

HINT: After carrying out the repair, check that the fault has been remedied.

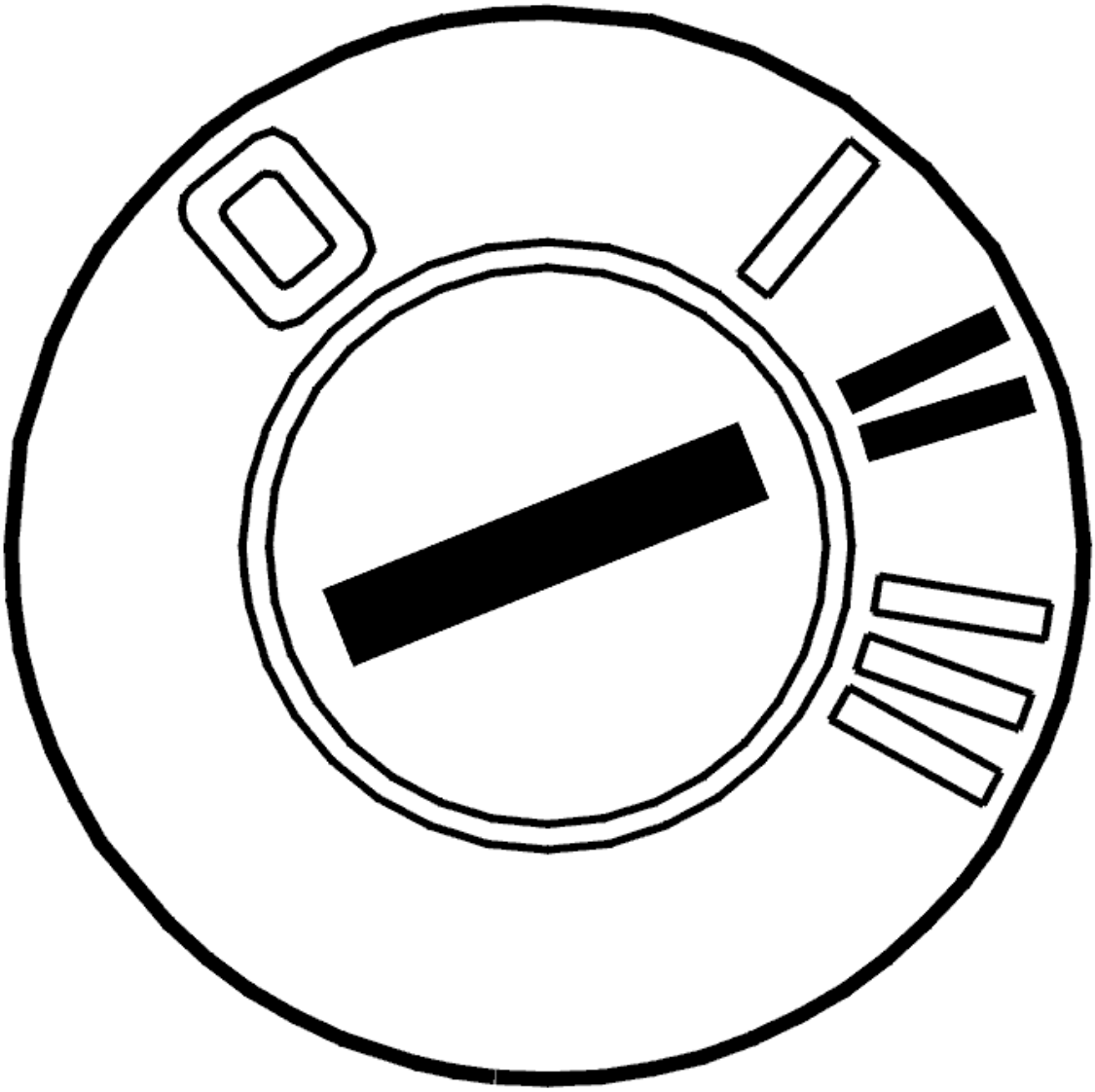

Fig. 92: Identifying Ignition ON
Courtesy of VOLVO CARS CORPORATION

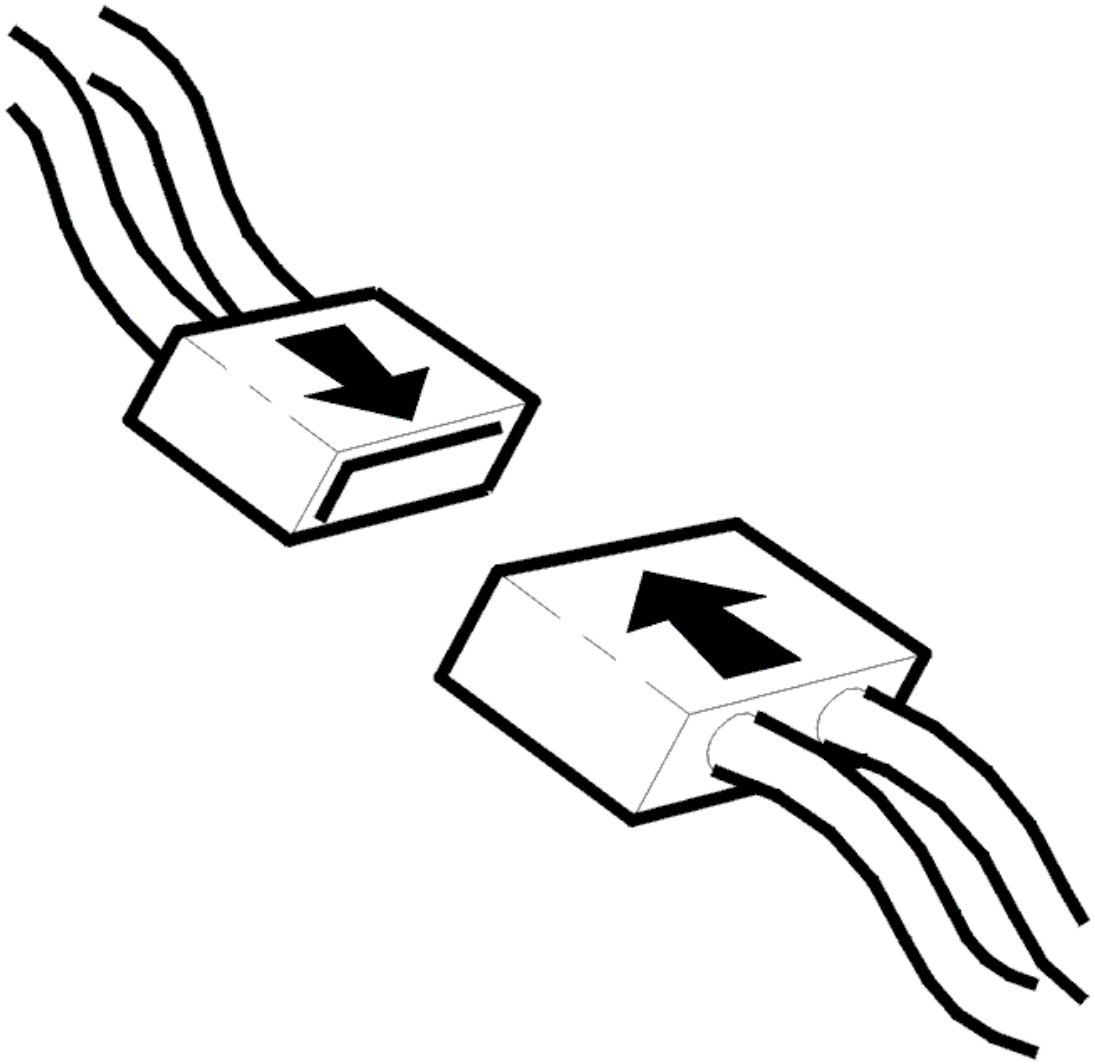

Fig. 93: Connecting Connector
Courtesy of VOLVO CARS CORPORATION

- Ignition off
- Reconnect connectors, reinstall components etc.
- Ignition on
- Activate the relevant injector.

  A "click" should be heard when the injector is activated.

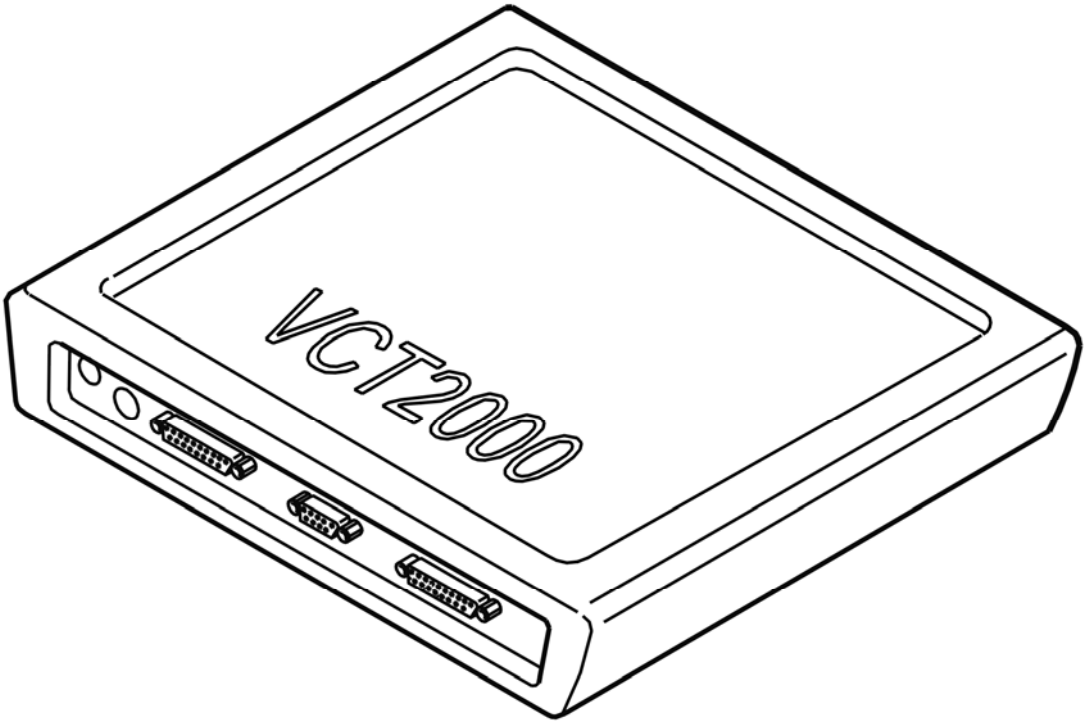

Fig. 94: Identifying VCT2000 Diagnostic Tool Symbol In VIDA
Courtesy of VOLVO CARS CORPORATION

Is the injector working?

- **YES**

  VERIFIED: Troubleshooting has been completed.

- **NO**

  Refer to **INFORMATION**

INFORMATION

FAULT-TRACING INFORMATION

The fault should have been detected and remedied. As this is not the case fault-tracing has failed.

Exit fault-tracing for this diagnostic trouble code (DTC) or make another attempt.

ECM-2310: INJECTOR 1. SIGNAL TO HIGH. INTERMITTENT FAULT (B5254T2; 2003-2004)

DIAGNOSTIC TROUBLE CODE (DTC) INFORMATION

see **DIAGNOSTIC TROUBLE CODE (DTC) INFORMATION**

SIGNAL TOO HIGH. INTERMITTENT FAULT

CHECKING THE WIRING

Check the cable between injector terminal 2 and control module:

- terminal #A16 (#A16) (ECM 2310)
- terminal #A34 (#A34) (ECM 2320)
- terminal #A15 (#A15) (ECM 2330)
- terminal #A33(#A33) (ECM 2340)
- terminal #A14 (#A14) (ECM 2350).

Check for an intermittent short-circuit to supply voltage.

Other information

- To connect the breakout box / access the control module, see **CONNECTING THE BREAKOUT BOX**
- For B5xx4T, see **INJECTOR/PULSE DAMPER, REPLACEMENT**
- For B6xx4T, see **INJECTOR / PULSATION DAMPER, REPLACING** .
- For 5 cylinder turbocharged engines -2004, see **SIGNAL DESCRIPTION**
- For 5 cylinder turbocharged engines 2005-, see **SIGNAL SPECIFICATION** .
- see **CHECKING WIRING AND TERMINALS** .

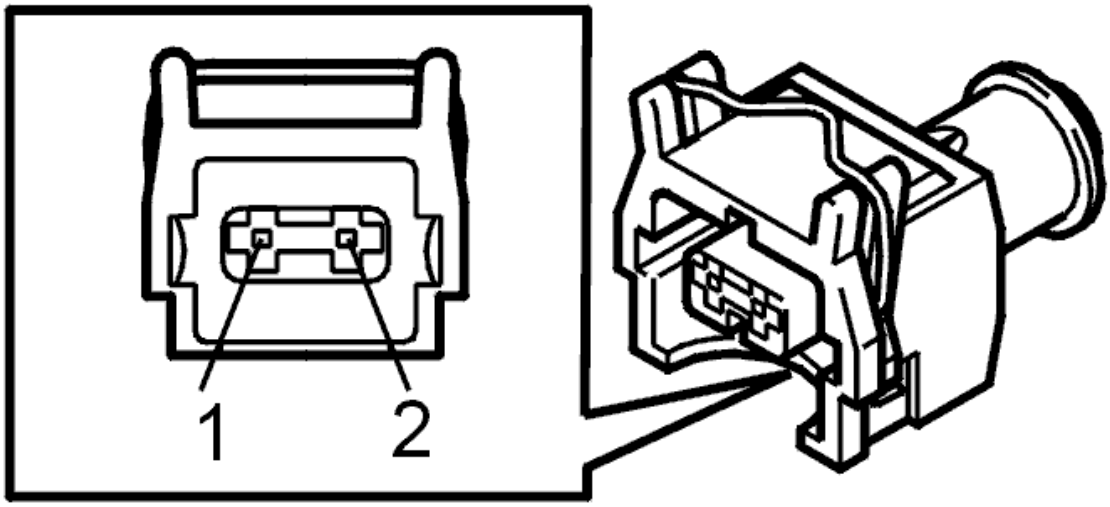

Fig. 95: Identifying 2 Pin Connector
Courtesy of VOLVO CARS CORPORATION

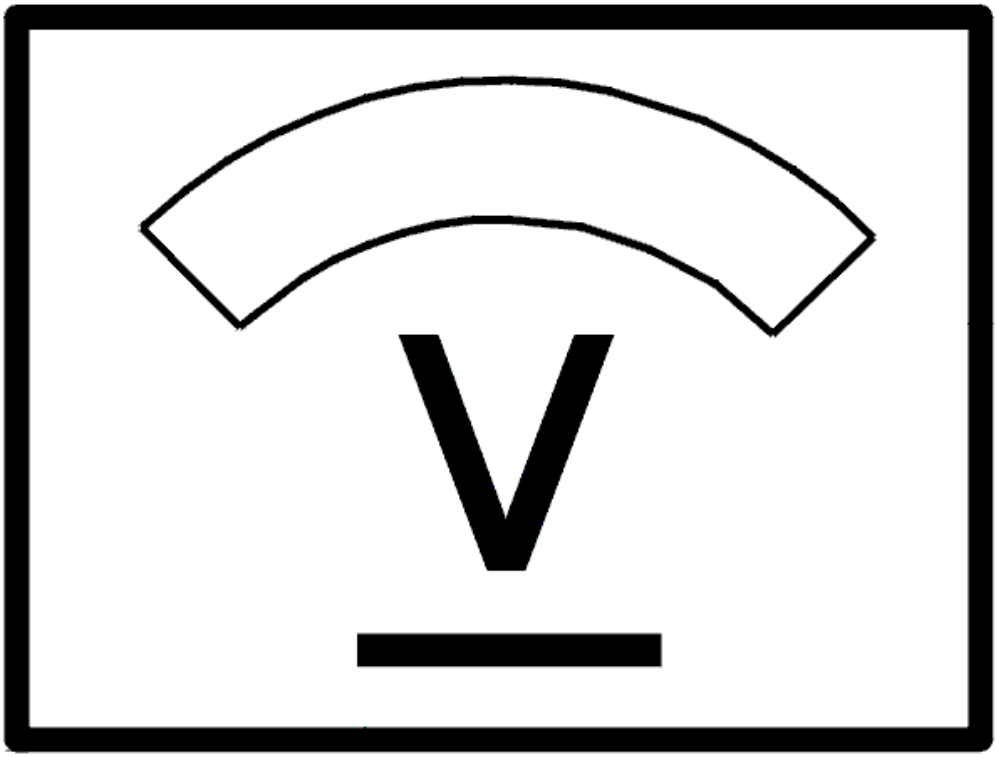

Fig. 96: Identifying Voltage Display
Courtesy of VOLVO CARS CORPORATION

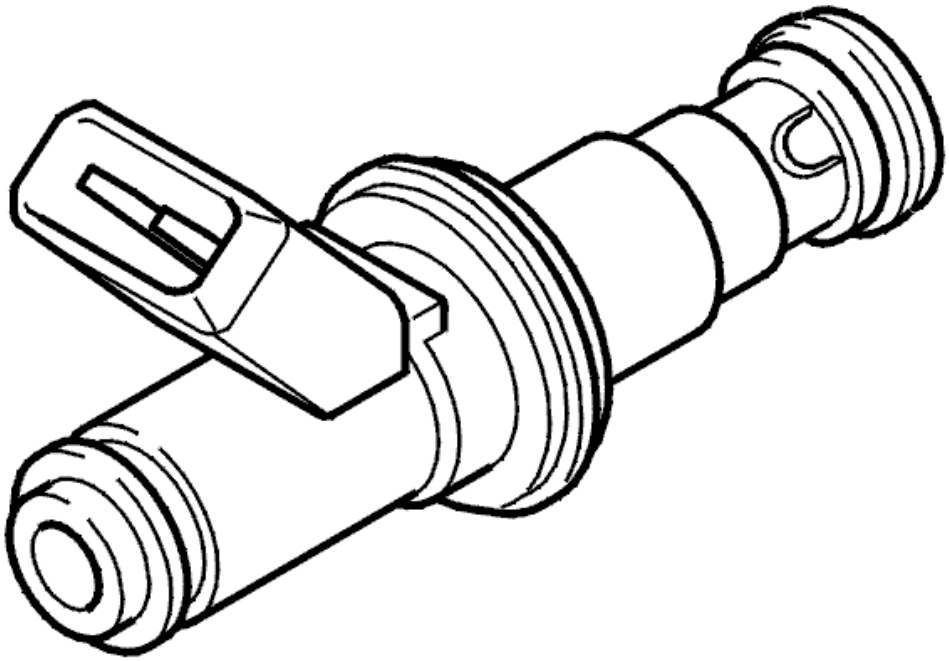

Fig. 97: Identifying Injector
Courtesy of VOLVO CARS CORPORATION

- **Continue**

  Refer to **INFORMATION**

INFORMATION

FAULT-TRACING INFORMATION

If the fault is intermittent, do not verify fault-tracing if the fault does not recur.

It is possible to view the information again, or leave fault-tracing for this diagnostic trouble code (DTC).

ECM-2310: INJECTOR 1. SIGNAL TO HIGH. INTERMITTENT FAULT (B6294T; 2003-2004)

DIAGNOSTIC TROUBLE CODE (DTC) INFORMATION

see **DIAGNOSTIC TROUBLE CODE (DTC) INFORMATION**

SIGNAL TOO HIGH. INTERMITTENT FAULT

CHECKING THE WIRING

Check the cable between injector terminal 2 and control module:

- terminal #A16 (#A16) (ECM 2310)
- terminal #A15 (#A15) (ECM 2320)
- terminal #A33(#A33) (ECM 2330)
- terminal #A32 (#A32) (ECM 2340)
- terminal #A34 (#A34) (ECM 2350)
- terminal #A14 (#A14) (ECM 2360).

Check for an intermittent short-circuit to supply voltage.

Other information

- To connect the breakout box / access the control module, see **CONNECTING THE BREAKOUT BOX**
- For B5xx4T, see **INJECTOR/PULSE DAMPER, REPLACEMENT**
- For B6xx4T, see **INJECTOR / PULSATION DAMPER, REPLACING** .
- For 6 cylinder engines -2004, see **SIGNAL SPECIFICATION**
- For 6 cylinder engines 2005-, see **SIGNAL SPECIFICATION** .
- see **CHECKING WIRING AND TERMINALS** .

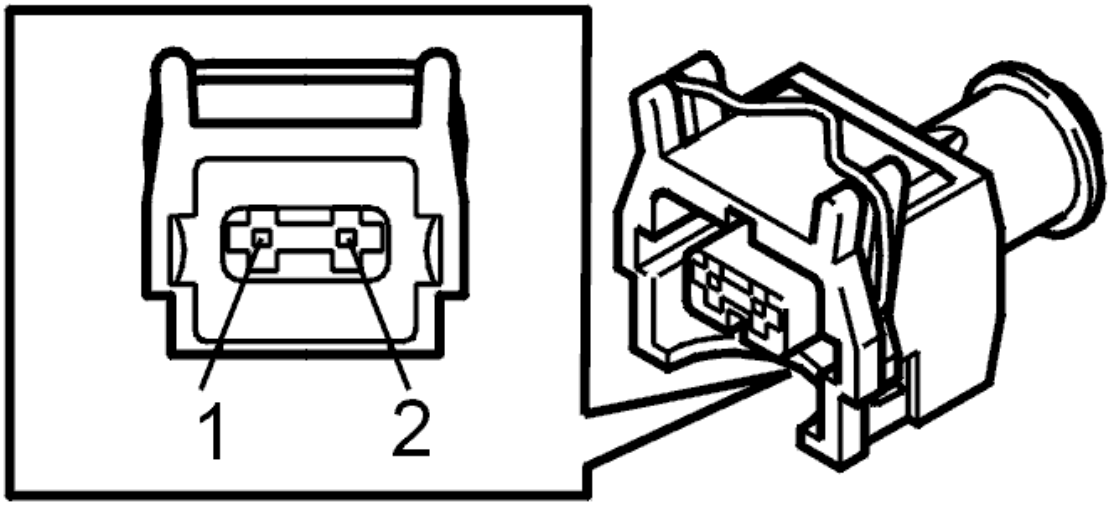

Fig. 98: Identifying 2 Pin Connector
Courtesy of VOLVO CARS CORPORATION

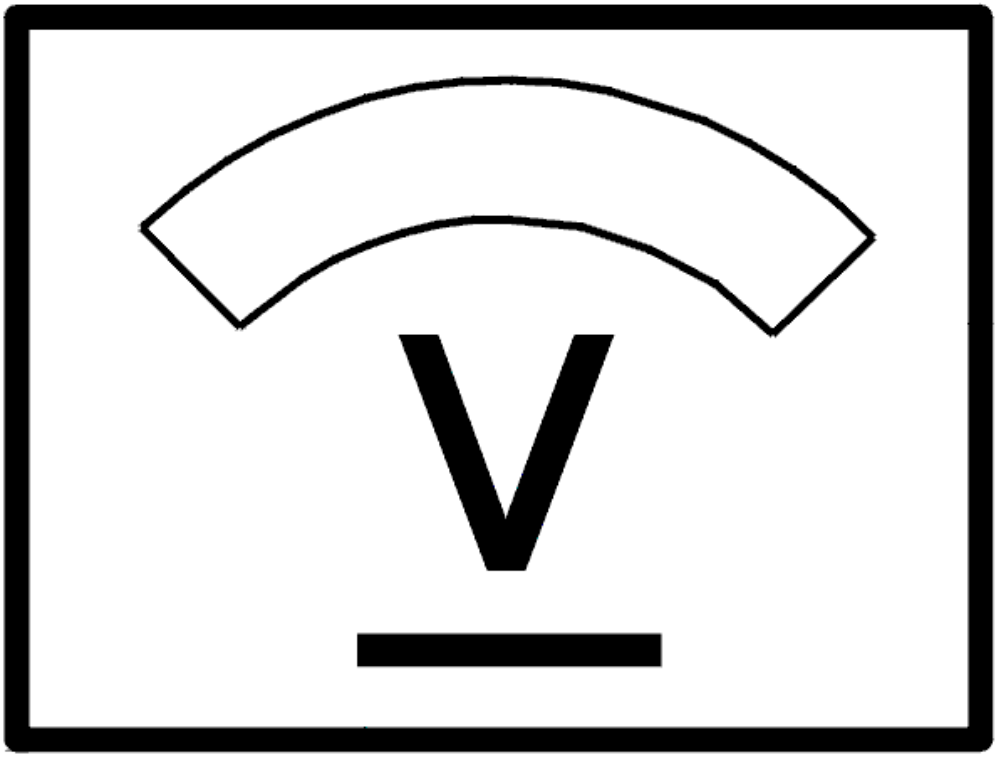

Fig. 99: Identifying Voltage Display
Courtesy of VOLVO CARS CORPORATION

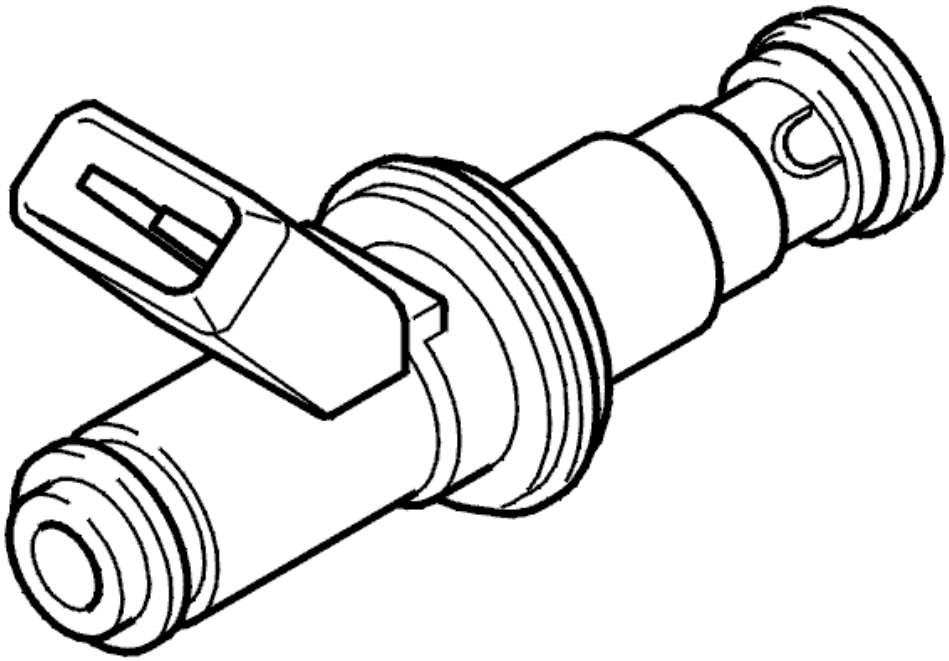

Fig. 100: Identifying Injector
Courtesy of VOLVO CARS CORPORATION

- **Continue**

  Refer to **INFORMATION**

INFORMATION

FAULT-TRACING INFORMATION

If the fault is intermittent, do not verify fault-tracing if the fault does not recur.

It is possible to view the information again, or leave fault-tracing for this diagnostic trouble code (DTC).

ECM-2310: INJECTOR 1. SIGNAL TO HIGH. PERMANENT FAULT (B5254T2; 2003-2004)

DIAGNOSTIC TROUBLE CODE (DTC) INFORMATION

see **DIAGNOSTIC TROUBLE CODE (DTC) INFORMATION**

SIGNAL TOO HIGH. PERMANENT FAULT

CHECKING COMPONENTS AND WIRING

Check the resistance of the injector between terminals 1 and 2.

Check the cable between injector terminal 2 and control module:

- terminal #A16 (#A16) (ECM 2310)
- terminal #A34 (#A34) (ECM 2320)
- terminal #A15 (#A15) (ECM 2330)
- terminal #A33(#A33) (ECM 2340)
- terminal #A14 (#A14) (ECM 2350).

Check for a short-circuit to supply voltage.

HINT: Use a test lamp with at least a 3 W bulb to determine whether the cable is short-circuited to supply voltage.

Remedy as necessary.

Other information

- To connect the breakout box / access the control module, see **CONNECTING THE BREAKOUT BOX**
- For B5xx4T, see **INJECTOR/PULSE DAMPER, REPLACEMENT**
- For B6xx4T, see **INJECTOR / PULSATION DAMPER, REPLACING** .
- For resistance values, see **COMPONENT SPECIFICATIONS**
- For 5 cylinder turbocharged engines -2004, see **SIGNAL DESCRIPTION**
- For 5 cylinder turbocharged engines 2005-, see **SIGNAL SPECIFICATION** .

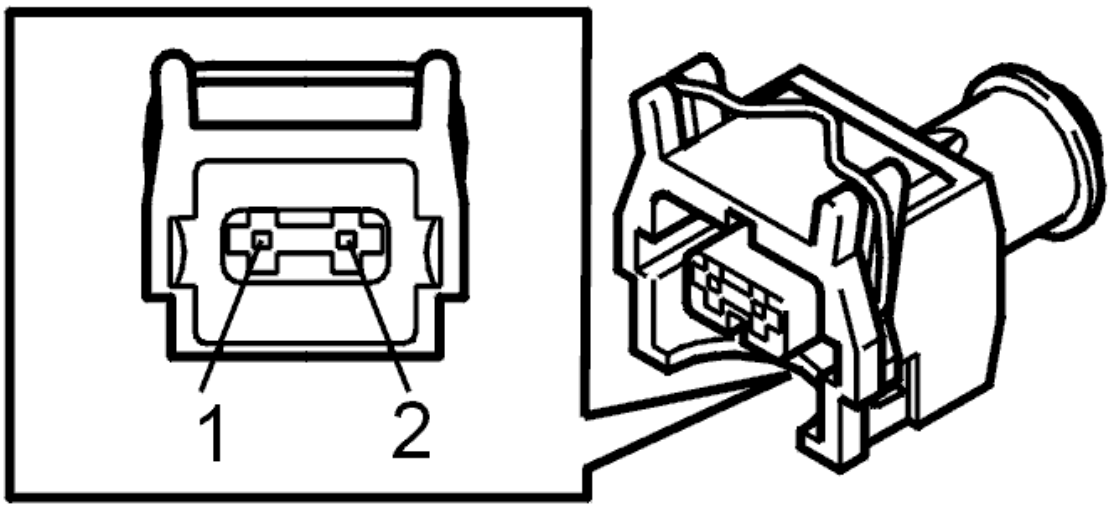

Fig. 101: Identifying 2 Pin Connector
Courtesy of VOLVO CARS CORPORATION

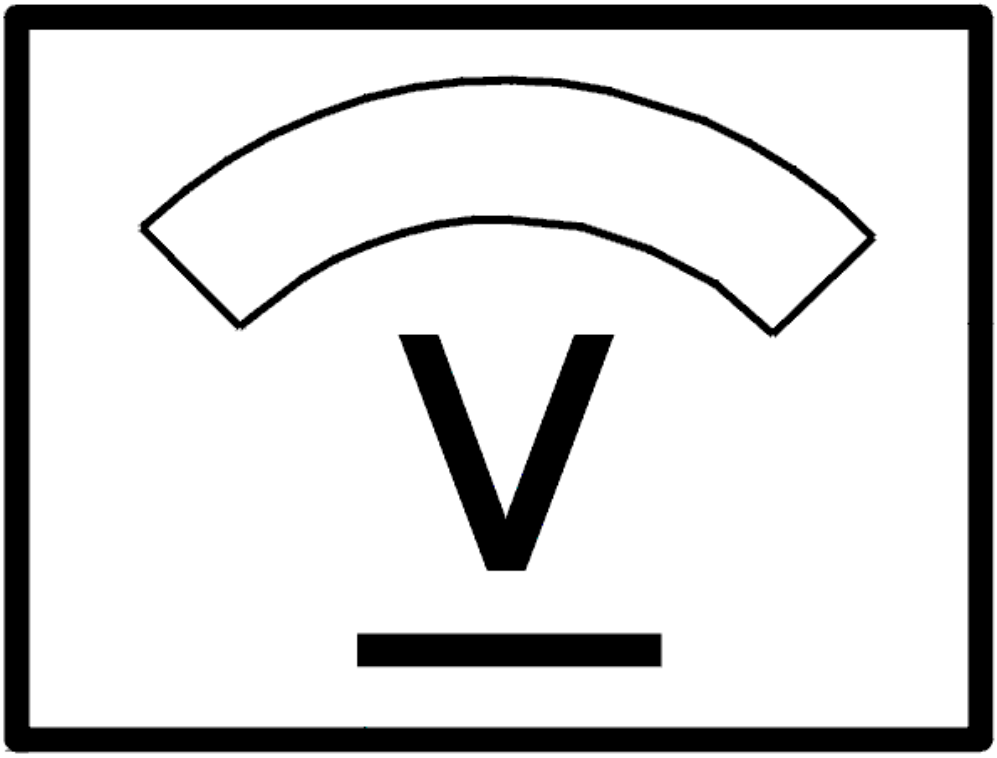

Fig. 102: Identifying Voltage Display
Courtesy of VOLVO CARS CORPORATION

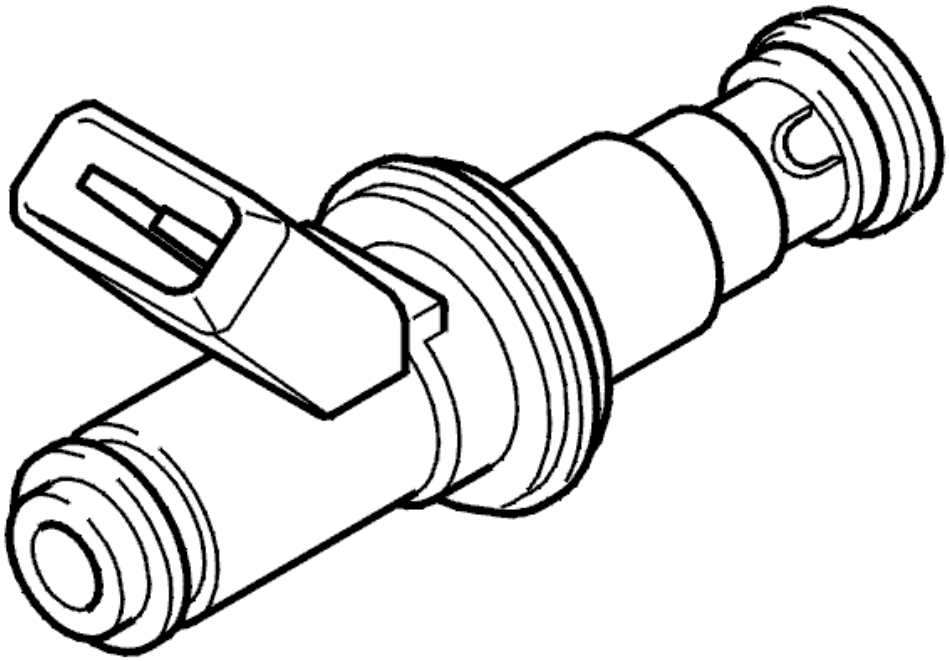

Fig. 103: Identifying Injector
Courtesy of VOLVO CARS CORPORATION

- **Continue**

  Refer to **VERIFICATION**

VERIFICATION

VERIFICATION

HINT: After carrying out the repair, check that the fault has been remedied.

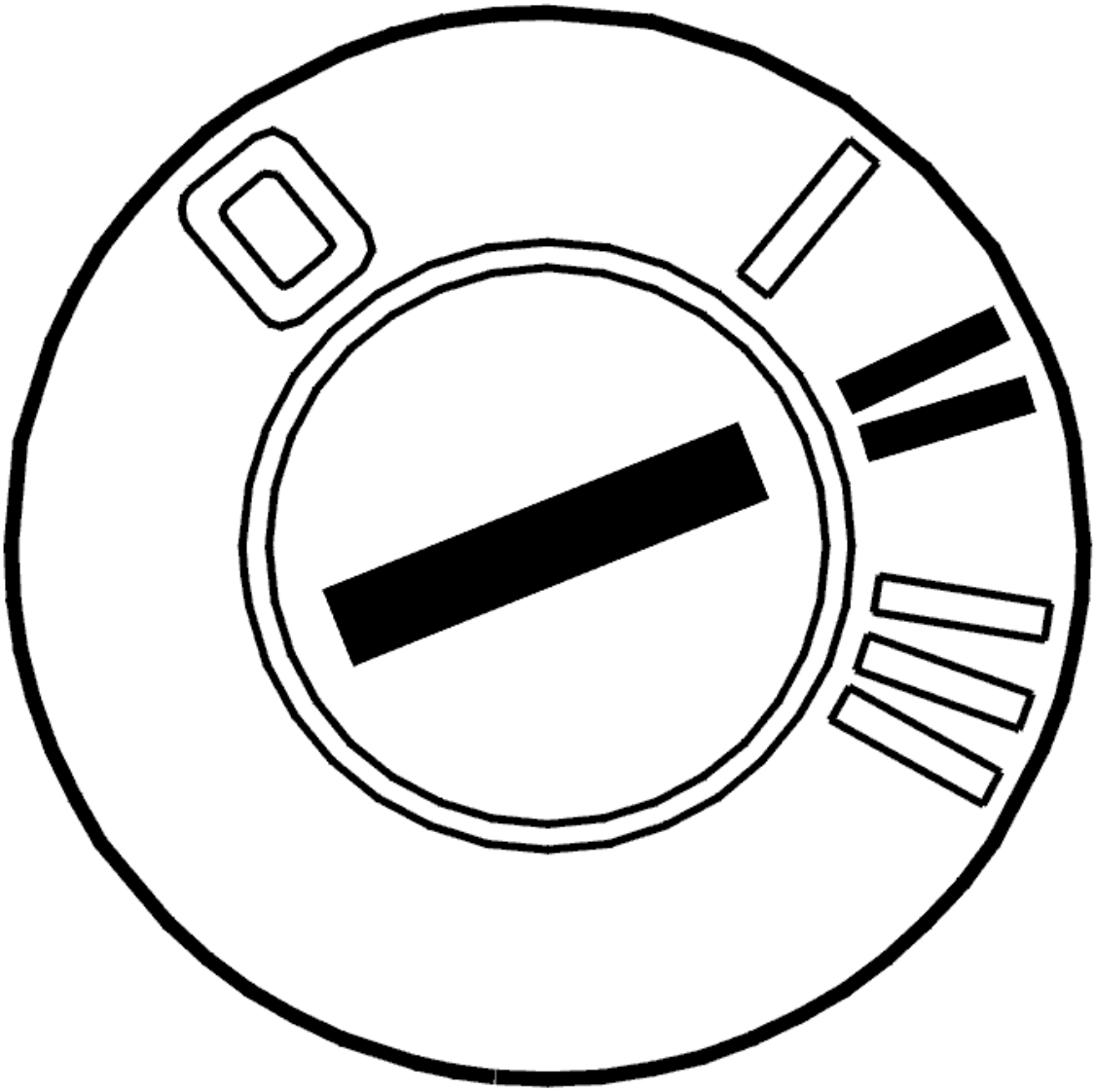

Fig. 104: Identifying Ignition ON
Courtesy of VOLVO CARS CORPORATION

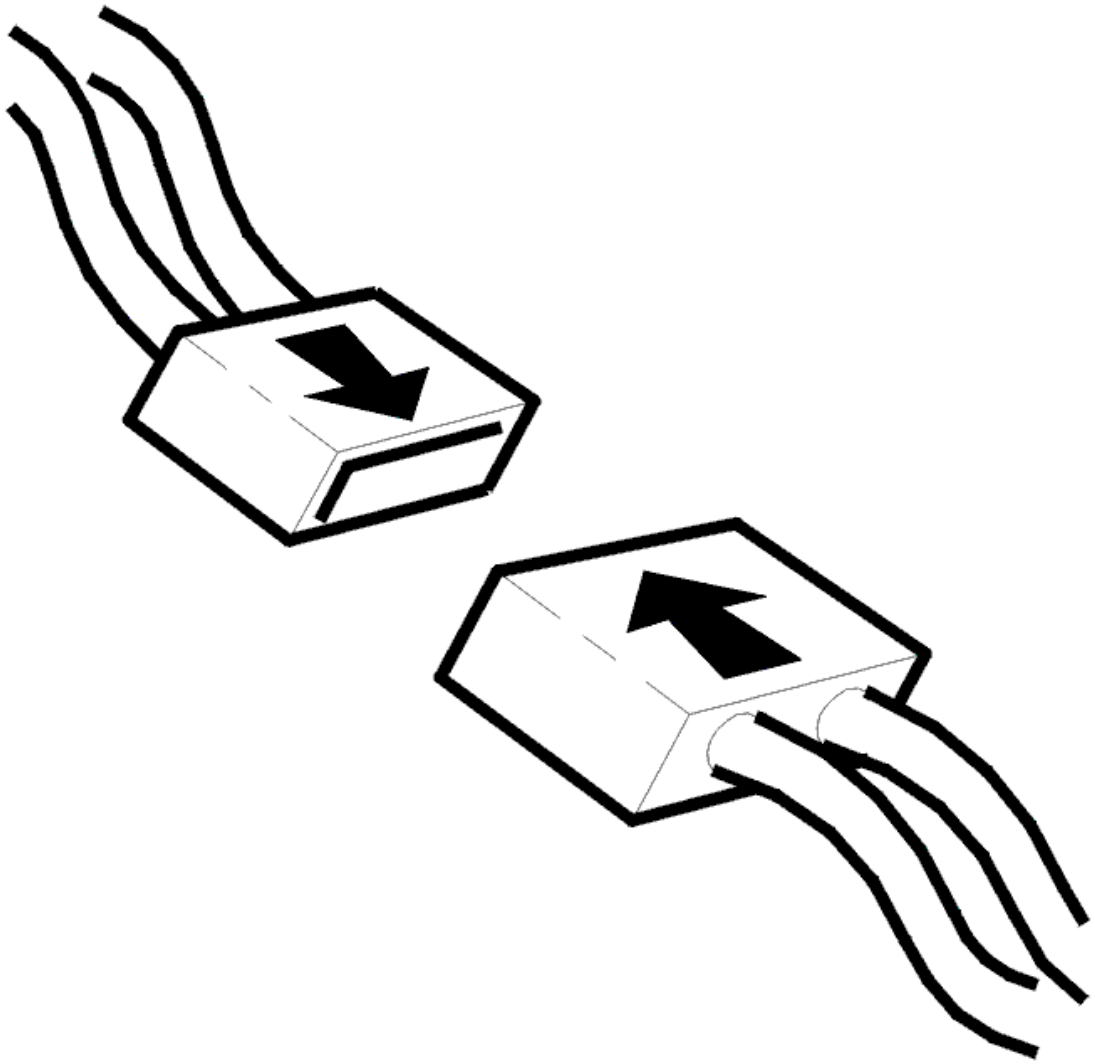

Fig. 105: Connecting Connector
Courtesy of VOLVO CARS CORPORATION

- Ignition off.
- Reconnect connectors, reinstall components etc.
- Ignition on.
- Activate the relevant injector.

  A "click" should be heard when the injector is activated.

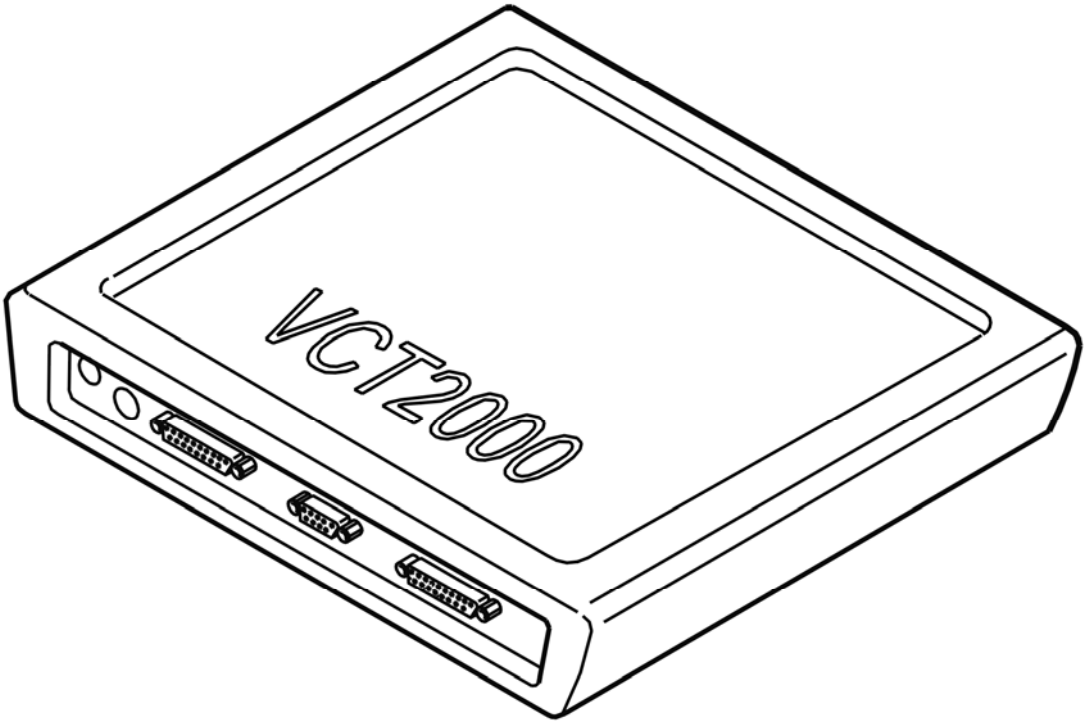

Fig. 106: Identifying VCT2000 Diagnostic Tool Symbol In VIDA
Courtesy of VOLVO CARS CORPORATION

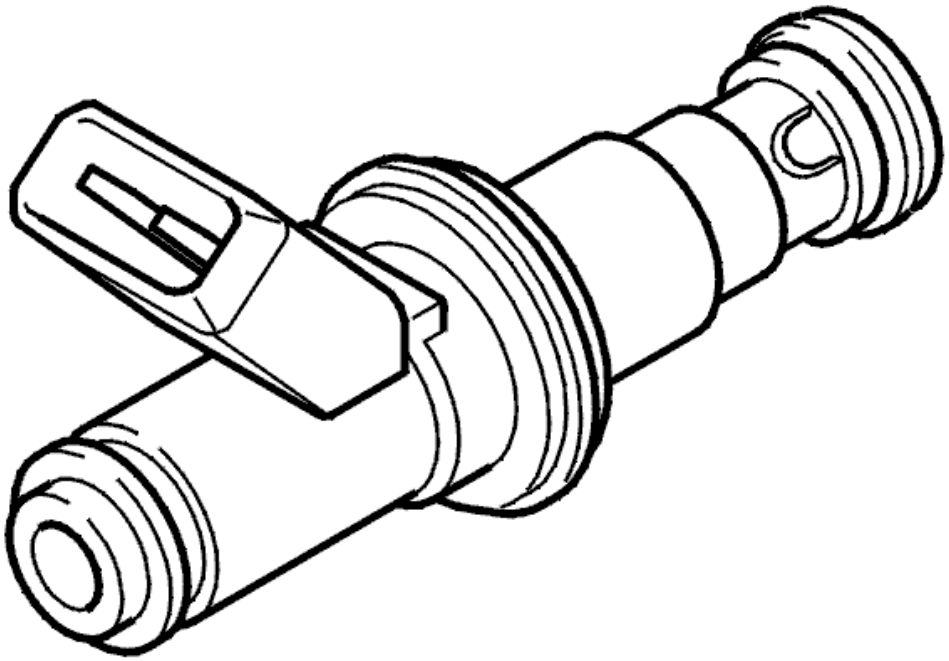

Fig. 107: Identifying Injector
Courtesy of VOLVO CARS CORPORATION

Is the injector working?

- **YES**

  VERIFIED: Troubleshooting has been completed.

- **NO**

  Refer to **INFORMATION**

INFORMATION

FAULT-TRACING INFORMATION

The fault should have been detected and remedied. As this is not the case fault-tracing has failed.

Exit fault-tracing for this diagnostic trouble code (DTC) or make another attempt.

ECM-2310: INJECTOR 1. SIGNAL TO HIGH. PERMANENT FAULT (B6294T; 2003-2004)

DIAGNOSTIC TROUBLE CODE (DTC) INFORMATION

see **DIAGNOSTIC TROUBLE CODE (DTC) INFORMATION**

SIGNAL TOO HIGH. PERMANENT FAULT

CHECKING COMPONENTS AND WIRING

Check the resistance of the injector between terminals 1 and 2.

Check the cable between injector terminal 2 and control module:

- terminal #A16 (#A16) (ECM 2310)
- terminal #A15 (#A15) (ECM 2320)
- terminal #A33(#A33) (ECM 2330)
- terminal #A32 (#A32) (ECM 2340)
- terminal #A34 (#A34) (ECM 2350)
- terminal #A14 (#A14) (ECM 2360).

Check for a short-circuit to supply voltage.

HINT: Use a test lamp with at least a 3 W bulb to determine whether the cable is short-circuited to supply voltage.

Remedy as necessary.

Other information

- To connect the breakout box / access the control module, see **CONNECTING THE BREAKOUT BOX**
- For B5xx4T, see **INJECTOR/PULSE DAMPER, REPLACEMENT**
- For B6xx4T, see **INJECTOR / PULSATION DAMPER, REPLACING** .
- For resistance values, see **COMPONENT SPECIFICATIONS**
- For 6 cylinder engines -2004, see **SIGNAL SPECIFICATION**
- For 6 cylinder engines 2005-, see **SIGNAL SPECIFICATION** .
- see **CHECKING WIRING AND TERMINALS**

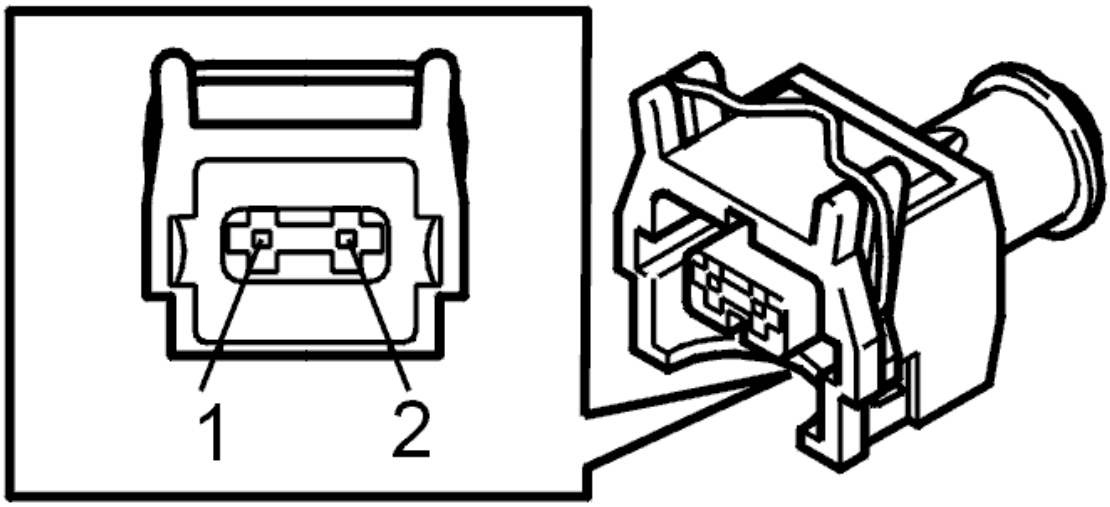

Fig. 108: Identifying 2 Pin Connector
Courtesy of VOLVO CARS CORPORATION

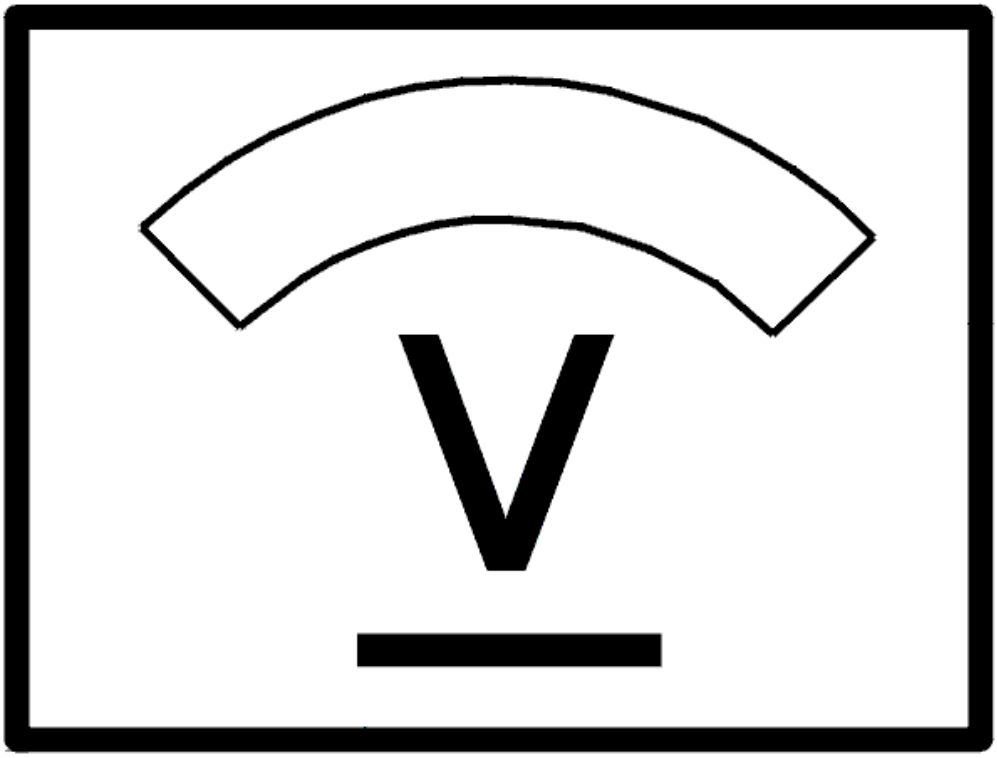

Fig. 109: Identifying Voltage Display
Courtesy of VOLVO CARS CORPORATION

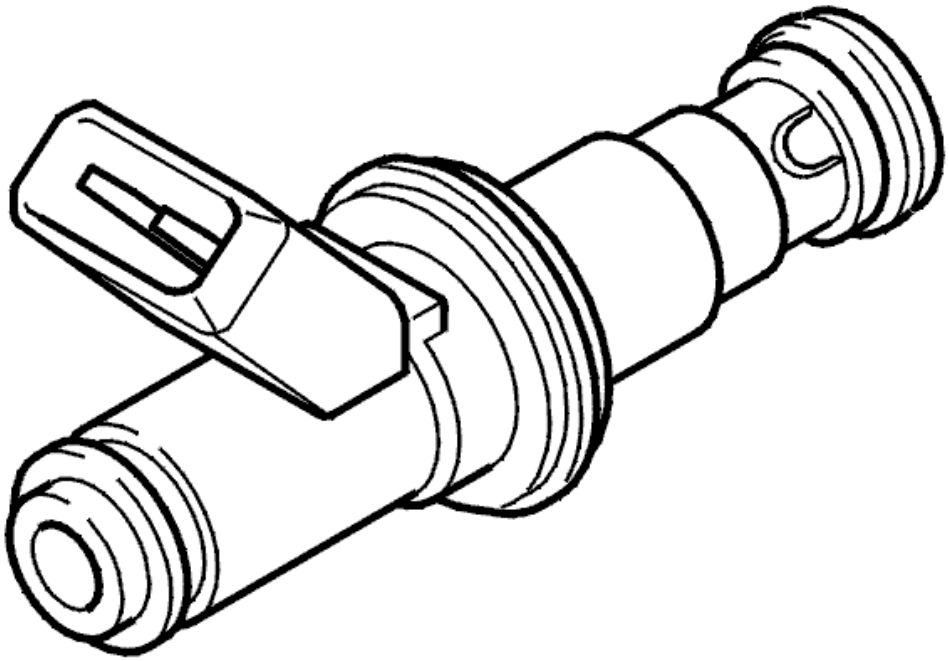

Fig. 110: Identifying Injector
Courtesy of VOLVO CARS CORPORATION

- **Continue**

  Refer to **VERIFICATION**

VERIFICATION

VERIFICATION

HINT: After carrying out the repair, check that the fault has been remedied.

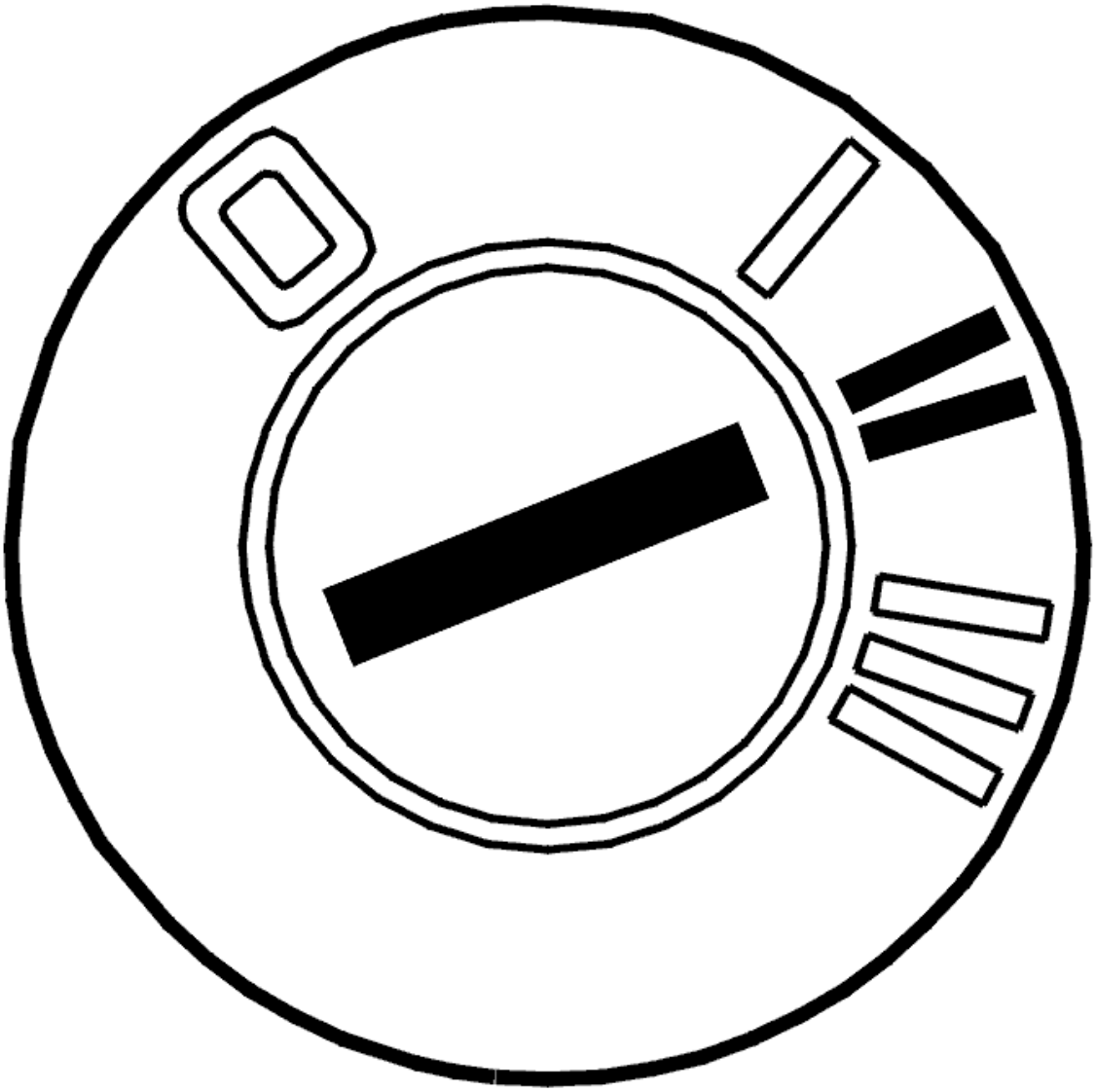

Fig. 111: Identifying Ignition ON
Courtesy of VOLVO CARS CORPORATION

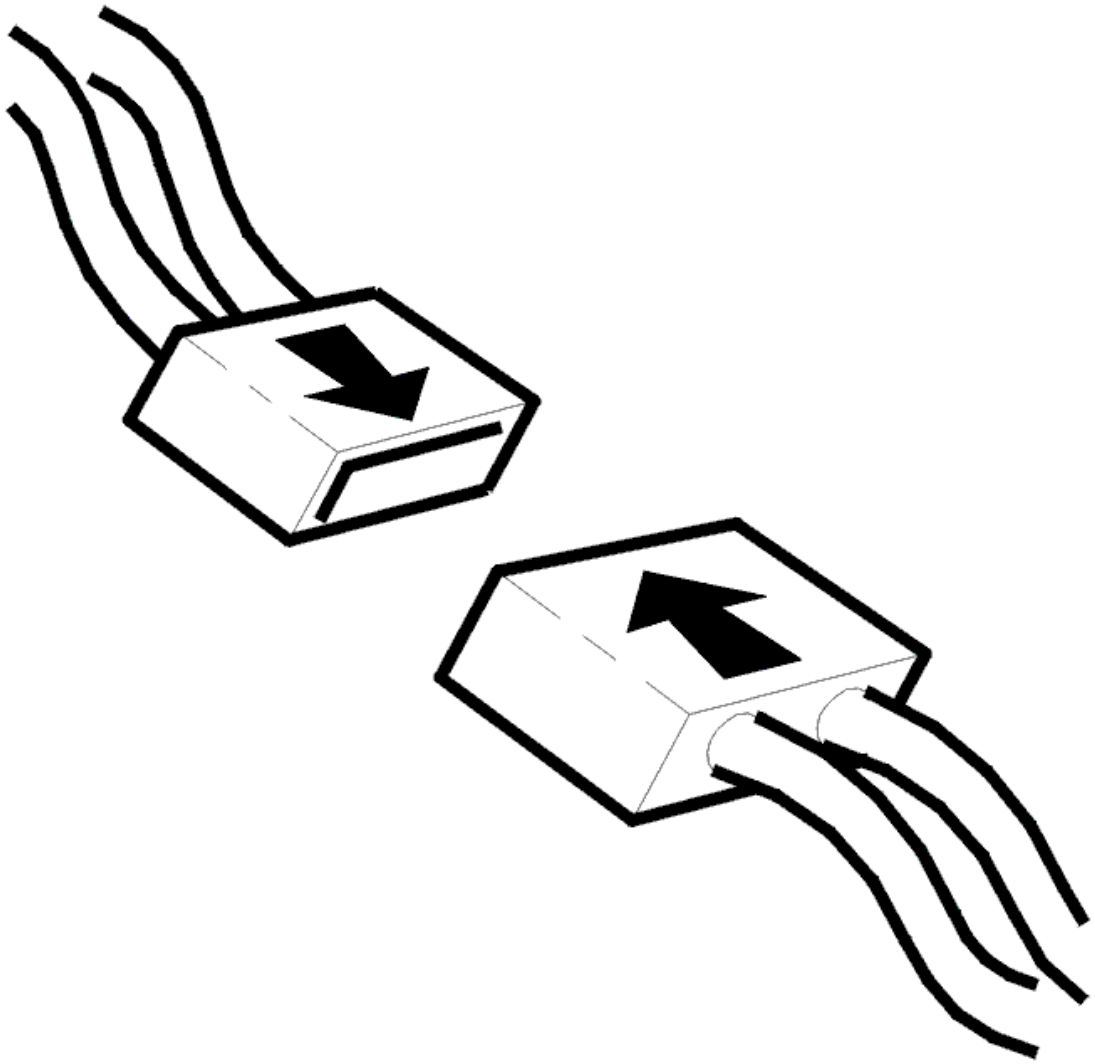

Fig. 112: Connecting Connector
Courtesy of VOLVO CARS CORPORATION

- Ignition off
- Reconnect connectors, reinstall components etc.
- Ignition on
- Activate the relevant injector.

  A "click" should be heard when the injector is activated.

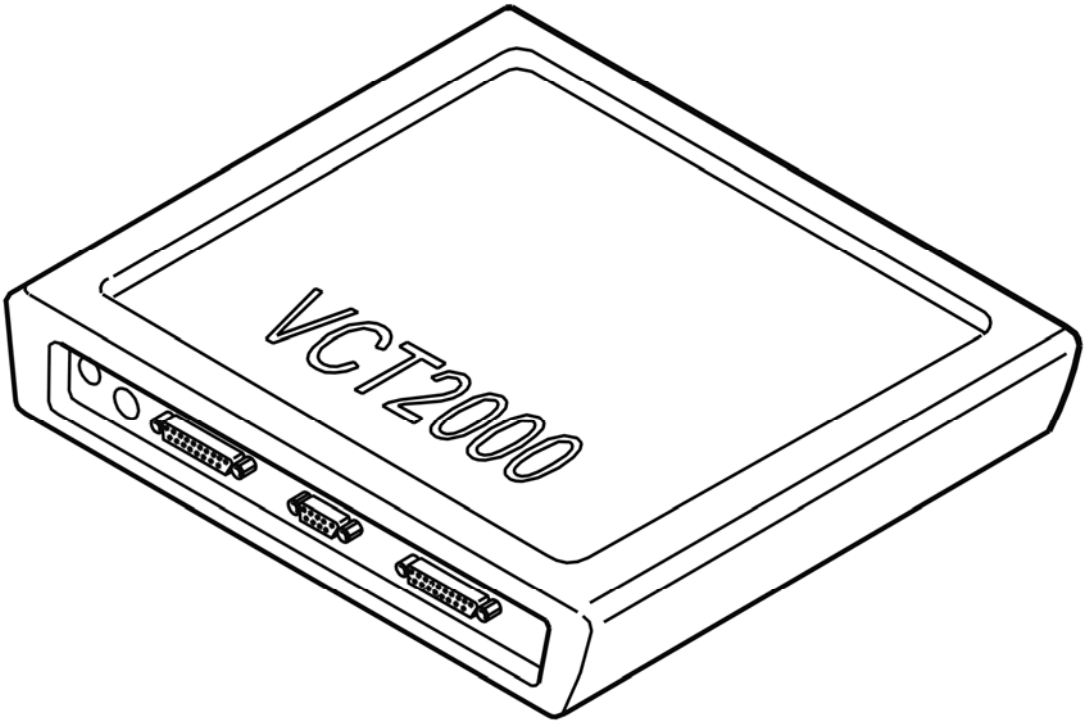

Fig. 113: Identifying VCT2000 Diagnostic Tool Symbol In VIDA
Courtesy of VOLVO CARS CORPORATION

Is the injector working?

- **YES**

  VERIFIED: Troubleshooting has been completed.

- **NO**

  Refer to **INFORMATION**

INFORMATION

FAULT-TRACING INFORMATION

The fault should have been detected and remedied. As this is not the case fault-tracing has failed.

Exit fault-tracing for this diagnostic trouble code (DTC) or make another attempt.

ECM-2310: INJECTOR 1. SIGNAL TO LOW. INTERMITTENT FAULT (B5254T2; 2003-2004)

DIAGNOSTIC TROUBLE CODE (DTC) INFORMATION

see **DIAGNOSTIC TROUBLE CODE (DTC) INFORMATION**

SIGNAL TOO LOW. INTERMITTENT FAULT

CHECKING THE WIRING

Check the cable between injector terminal 2 and control module:

- terminal #A16 (#A16) (ECM 2310)
- terminal #A34 (#A34) (ECM 2320)
- terminal #A15 (#A15) (ECM 2330)
- terminal #A33(#A33) (ECM 2340)
- terminal #A14 (#A14) (ECM 2350).

Check for an intermittent short-circuit to ground.

Other information

- To connect the breakout box / access the control module, see **CONNECTING THE BREAKOUT BOX**
- For B5xx4T, see **INJECTOR/PULSE DAMPER, REPLACEMENT**
- For B6xx4T, see **INJECTOR / PULSATION DAMPER, REPLACING** .
- For 5 cylinder turbocharged engines -2004, see **SIGNAL DESCRIPTION**
- For 5 cylinder turbocharged engines 2005-, see **SIGNAL SPECIFICATION** .
- see **CHECKING WIRING AND TERMINALS** .

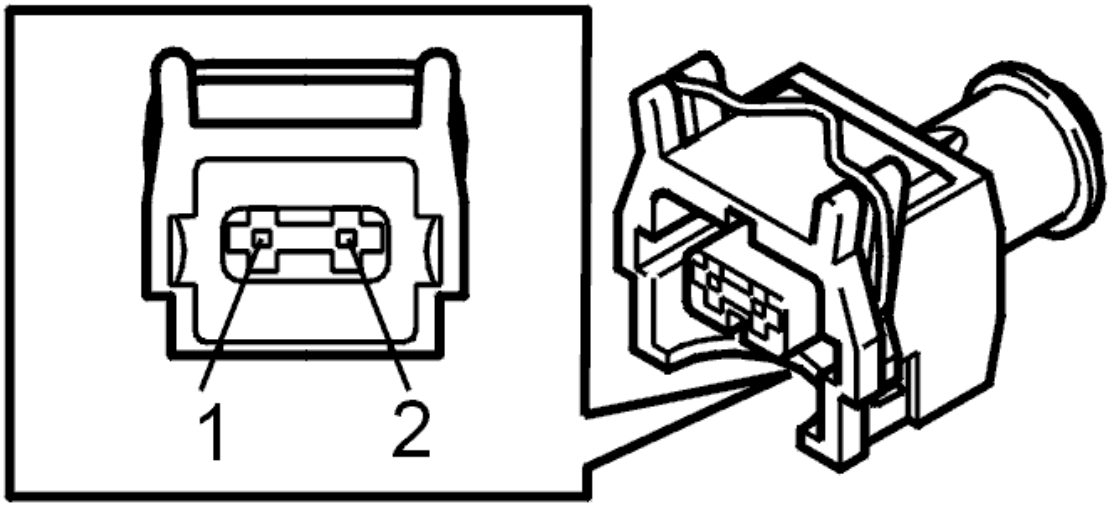

Fig. 114: Identifying 2 Pin Connector
Courtesy of VOLVO CARS CORPORATION

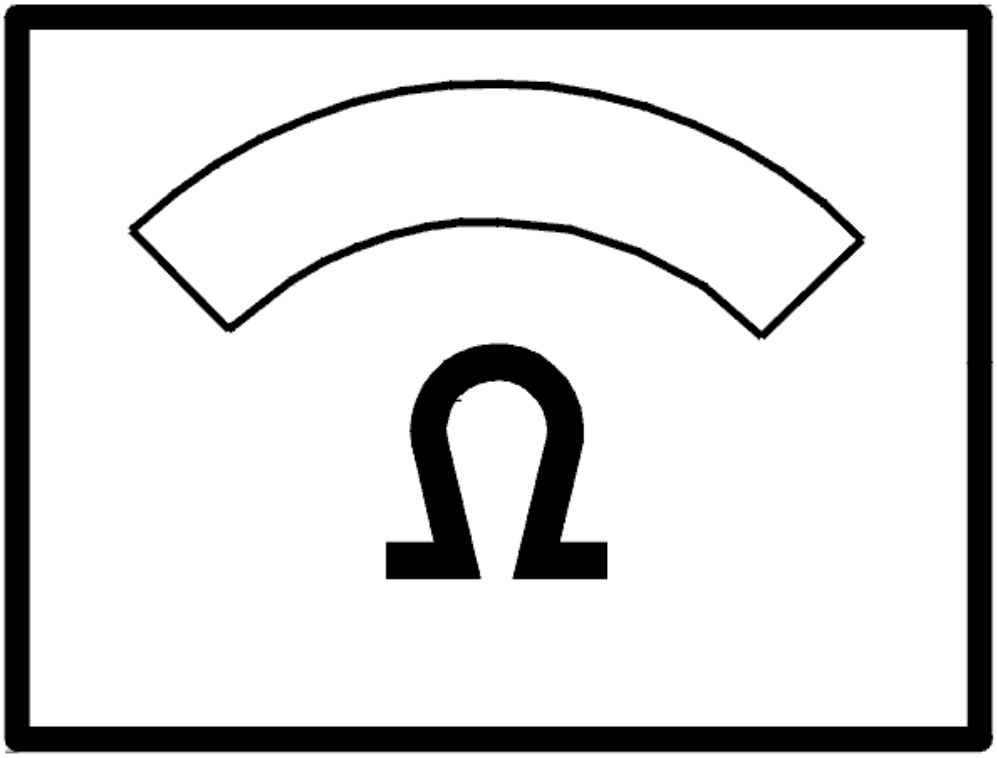

Fig. 115: Identifying Ohm Meter
Courtesy of VOLVO CARS CORPORATION

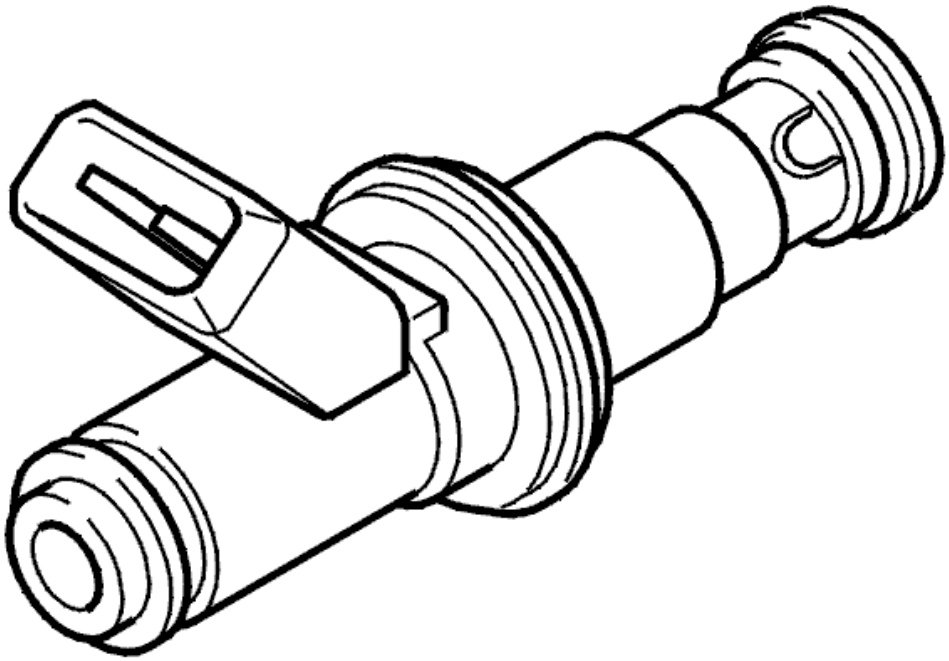

Fig. 116: Identifying Injector
Courtesy of VOLVO CARS CORPORATION

- **Continue**

  Refer to **INFORMATION**

INFORMATION

FAULT-TRACING INFORMATION

If the fault is intermittent, do not verify fault-tracing if the fault does not recur.

It is possible to view the information again, or leave fault-tracing for this diagnostic trouble code (DTC).

ECM-2310: INJECTOR 1. SIGNAL TO LOW. INTERMITTENT FAULT (B6294T; 2003-2004)

DIAGNOSTIC TROUBLE CODE (DTC) INFORMATION

see **DIAGNOSTIC TROUBLE CODE (DTC) INFORMATION**

SIGNAL TOO LOW. INTERMITTENT FAULT

CHECKING THE WIRING

Check the cable between injector terminal 2 and control module:

- terminal #A16 (ECM 2310)
- terminal #A15 (ECM 2320)
- terminal #A33 (ECM 2330)
- terminal #A32 (ECM 2340)
- terminal #A34 (ECM 2350)
- terminal #A14 (ECM 2360).

Check for an intermittent short-circuit to ground.

Other information

- To connect the breakout box / access the control module, see **CONNECTING THE BREAKOUT BOX**
- For B5xx4T, see **INJECTOR/PULSE DAMPER, REPLACEMENT**
- For B6xx4T, see **INJECTOR / PULSATION DAMPER, REPLACING** .
- For 6 cylinder engines -2004, see **SIGNAL SPECIFICATION**
- For 6 cylinder engines 2005-, see **SIGNAL SPECIFICATION** .
- see **CHECKING WIRING AND TERMINALS** .

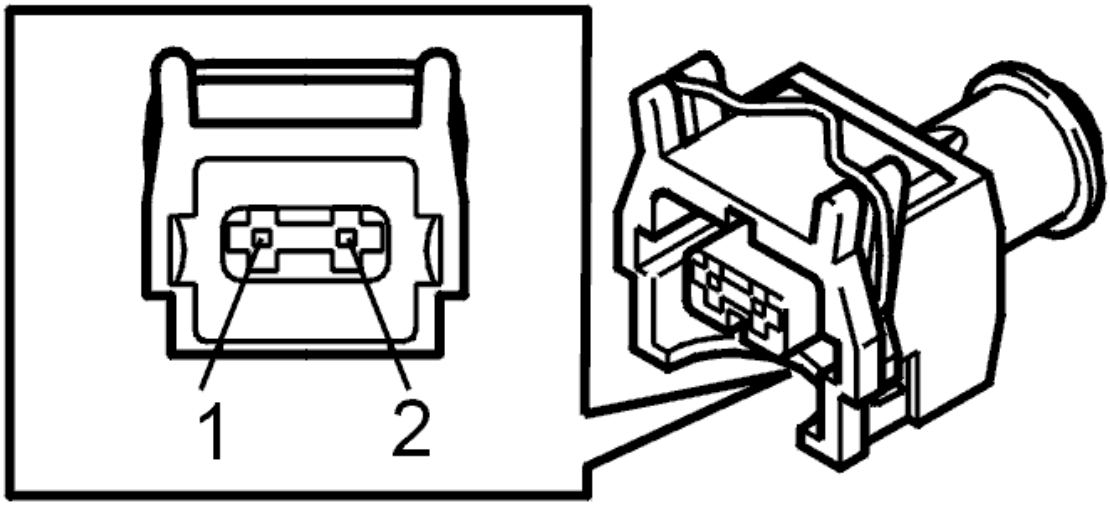

Fig. 117: Identifying 2 Pin Connector
Courtesy of VOLVO CARS CORPORATION

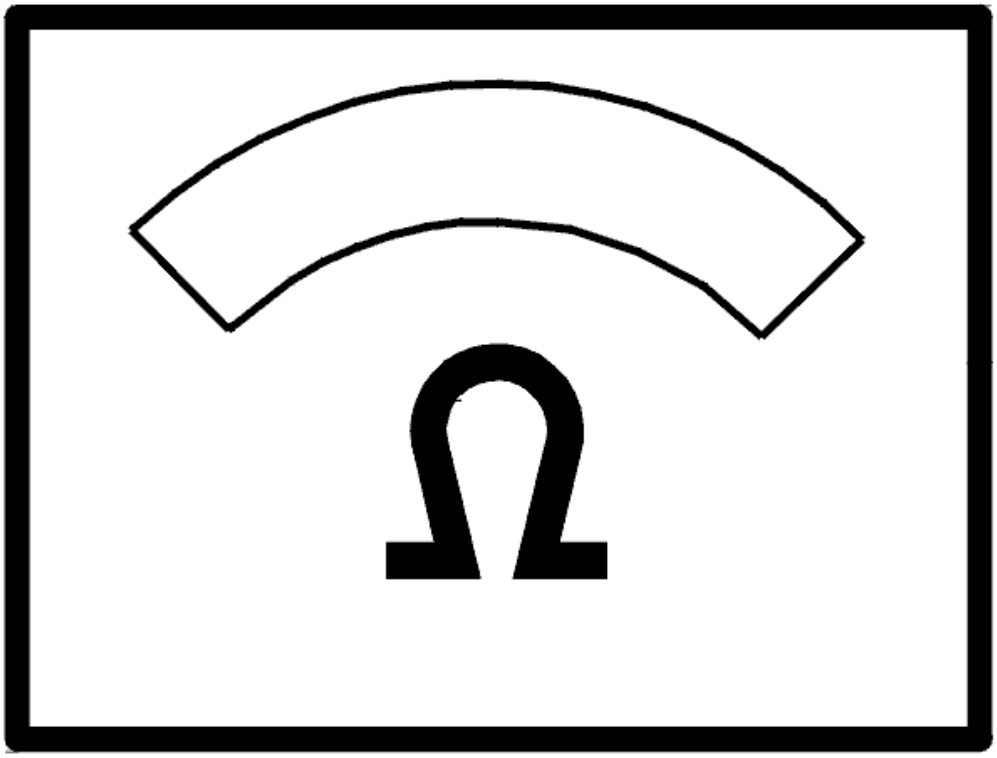

Fig. 118: Identifying Ohm Meter
Courtesy of VOLVO CARS CORPORATION

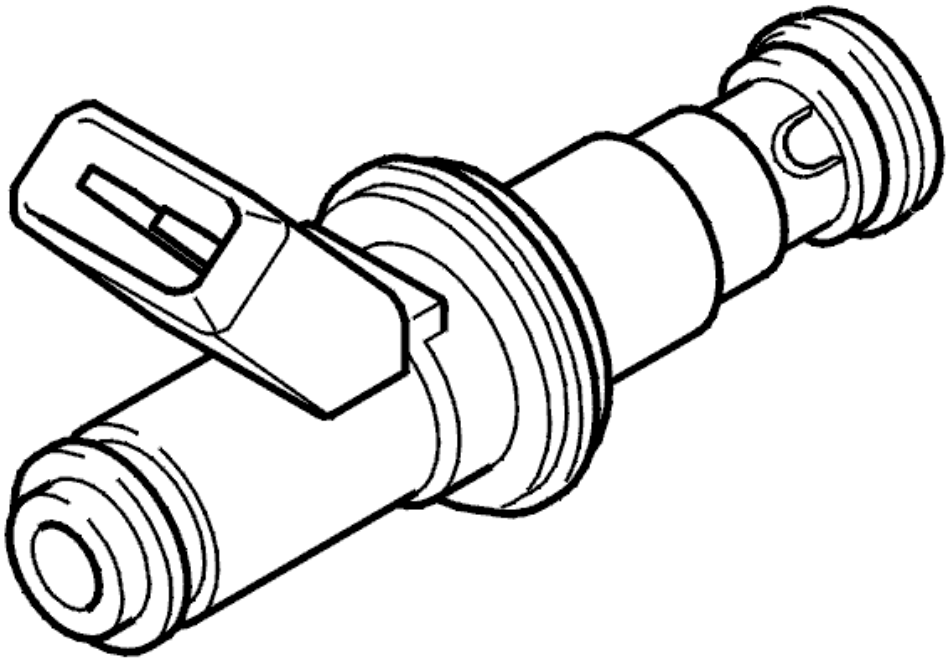

Fig. 119: Identifying Injector
Courtesy of VOLVO CARS CORPORATION

- **Continue**

  Refer to **INFORMATION**

INFORMATION

FAULT-TRACING INFORMATION

If the fault is intermittent, do not verify fault-tracing if the fault does not recur.

It is possible to view the information again, or leave fault-tracing for this diagnostic trouble code (DTC).

ECM-2310: INJECTOR 1. SIGNAL TO LOW. PERMANENT FAULT (B5254T2; 2003-2004)

DIAGNOSTIC TROUBLE CODE (DTC) INFORMATION

see **DIAGNOSTIC TROUBLE CODE (DTC) INFORMATION**

SIGNAL TOO LOW. PERMANENT FAULT

CHECKING COMPONENTS AND WIRING

Check the resistance of the injector between terminals 1 and 2.

Check the cable between injector terminal 2 and control module:

- terminal #A16 (#A16) (ECM 2310)
- terminal #A34 (#A34) (ECM 2320)
- terminal #A15 (#A15) (ECM 2330)
- terminal #A33(#A33) (ECM 2340)
- terminal #A14 (#A14) (ECM 2350).

Check for a short-circuit to ground.

Remedy as necessary.

Other information

- To connect the breakout box / access the control module, see **CONNECTING THE BREAKOUT BOX**
- For B5xx4T, see **INJECTOR/PULSE DAMPER, REPLACEMENT**
- For B6xx4T, see **INJECTOR / PULSATION DAMPER, REPLACING** .
- For resistance values, see **COMPONENT SPECIFICATIONS**
- For 5 cylinder turbocharged engines -2004, see **SIGNAL DESCRIPTION**
- For 5 cylinder turbocharged engines 2005-, see **SIGNAL SPECIFICATION** .
- see **CHECKING WIRING AND TERMINALS** .

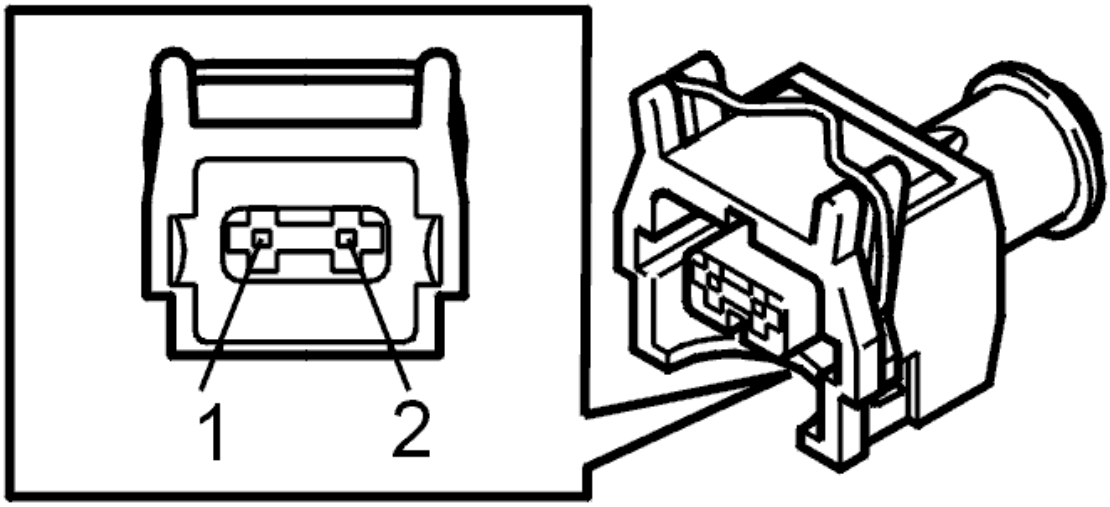

Fig. 120: Identifying 2 Pin Connector
Courtesy of VOLVO CARS CORPORATION

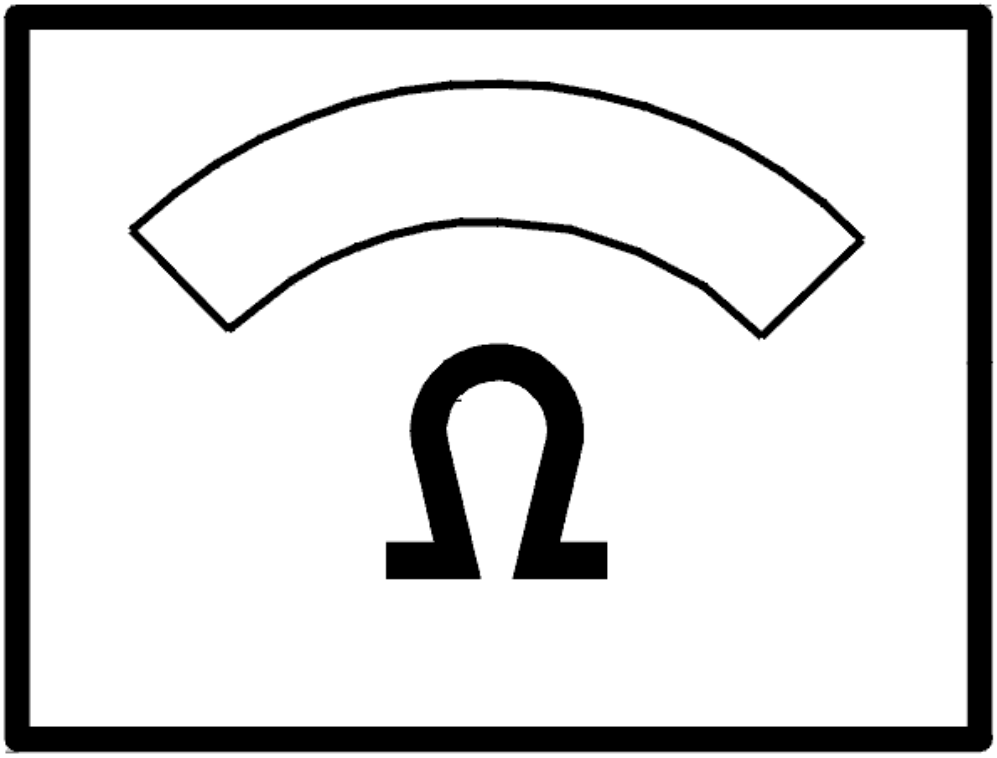

Fig. 121: Identifying Ohm Meter
Courtesy of VOLVO CARS CORPORATION

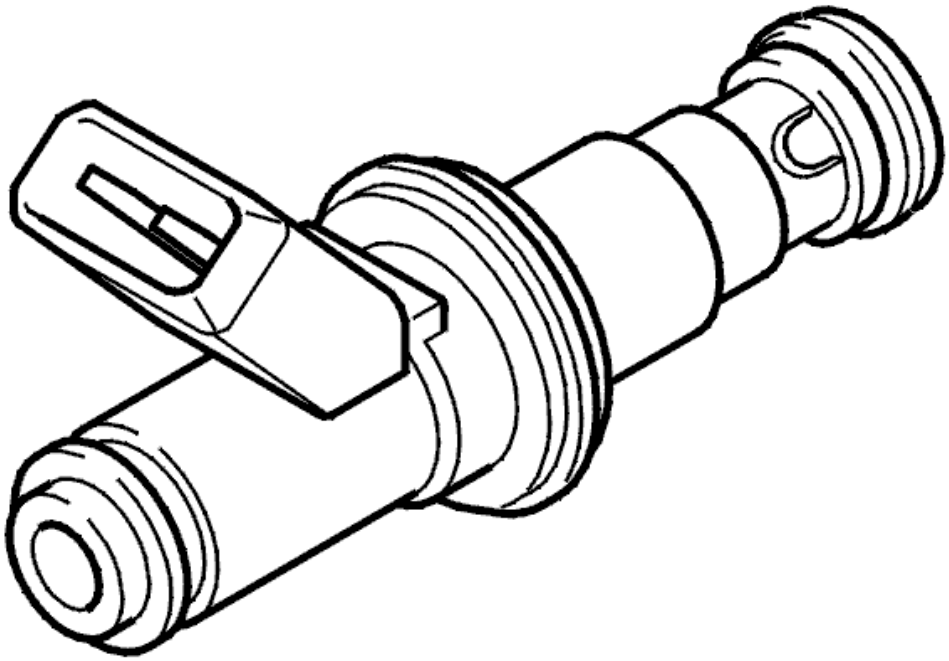

Fig. 122: Identifying Injector
Courtesy of VOLVO CARS CORPORATION

- **Continue**

  Refer to **VERIFICATION**

VERIFICATION

VERIFICATION

HINT: After carrying out the repair, check that the fault has been remedied.

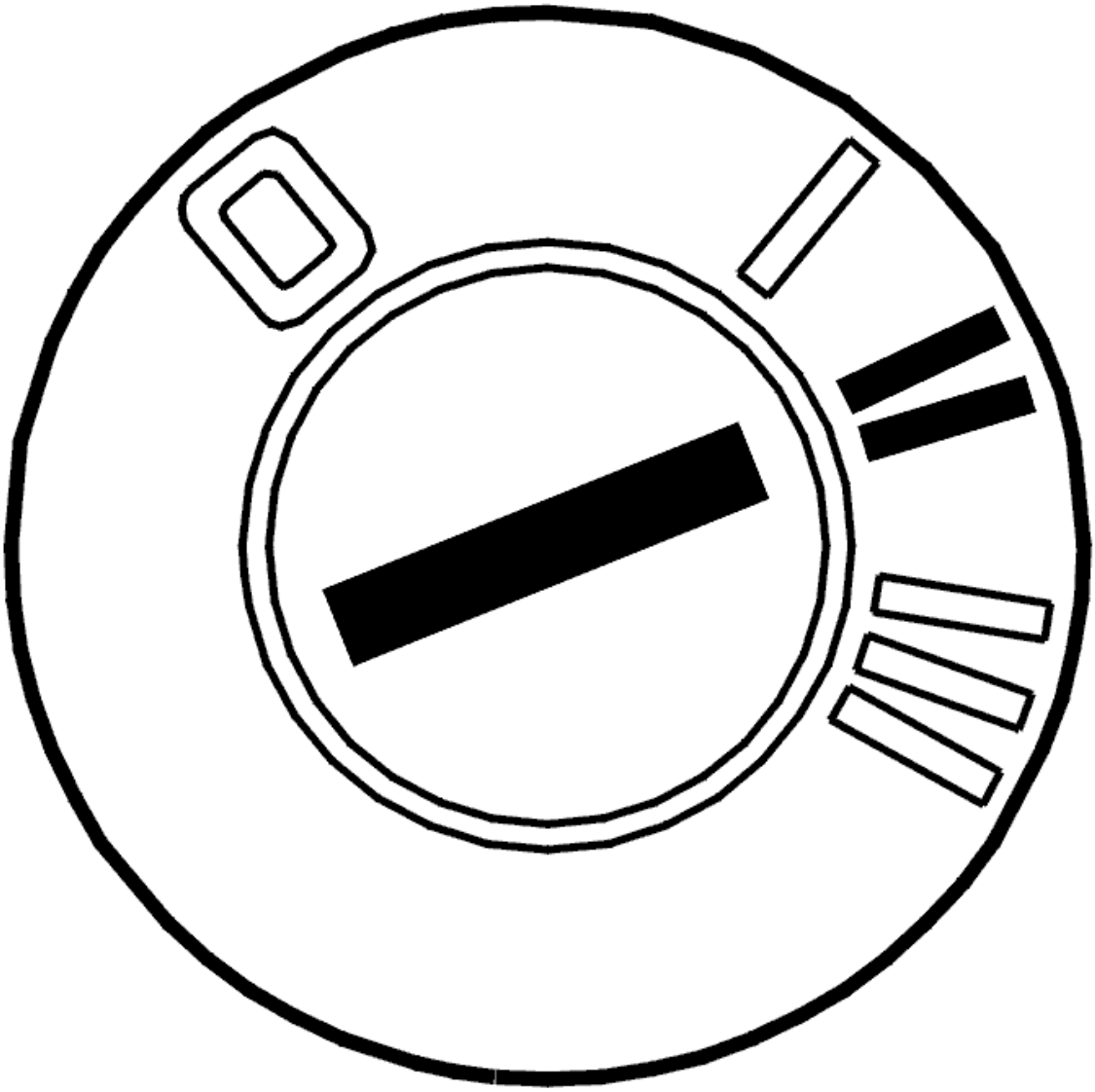

Fig. 123: Identifying Ignition ON
Courtesy of VOLVO CARS CORPORATION

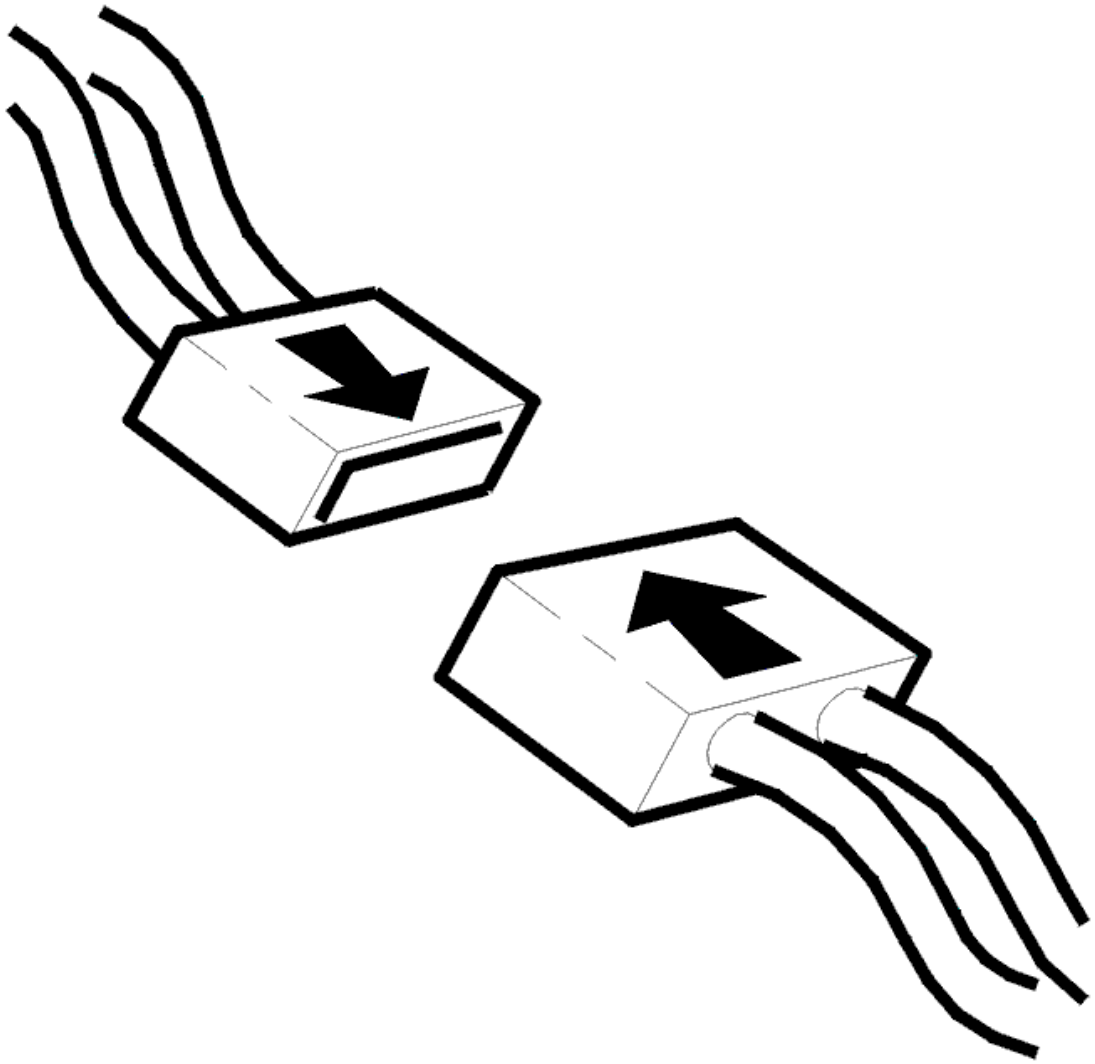

Fig. 124: Connecting Connector
Courtesy of VOLVO CARS CORPORATION

- Ignition off.
- Reconnect connectors, reinstall components etc.
- Ignition on.
- Activate the relevant injector.

  A "click" should be heard when the injector is activated.

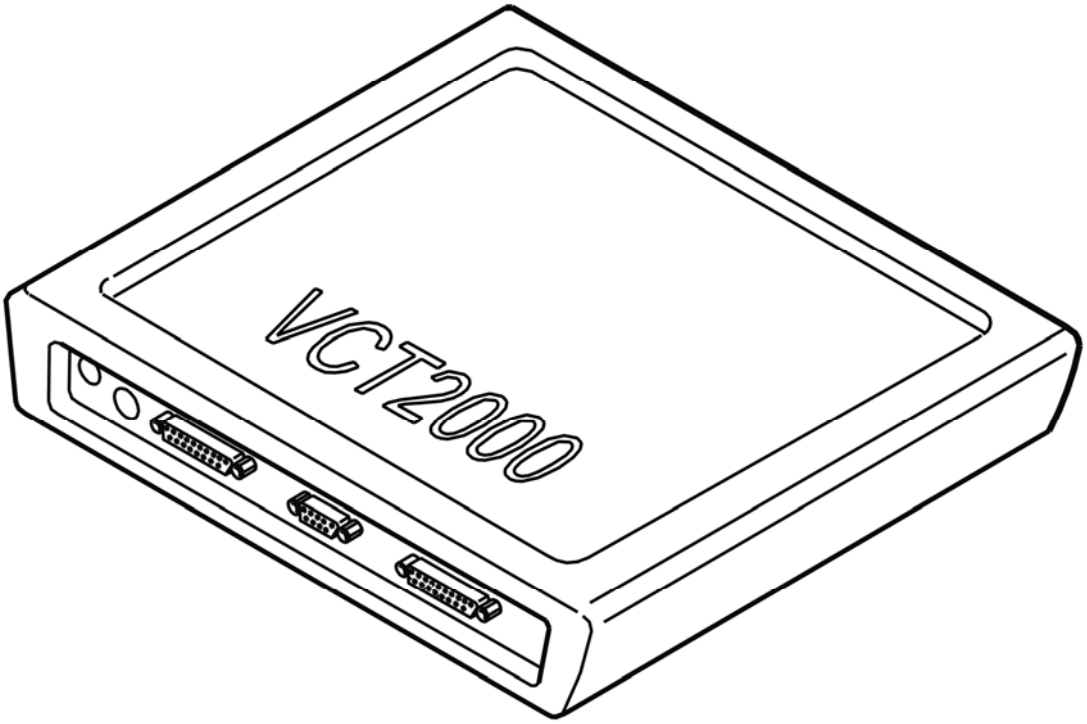

Fig. 125: Identifying VCT2000 Diagnostic Tool Symbol In VIDA
Courtesy of VOLVO CARS CORPORATION

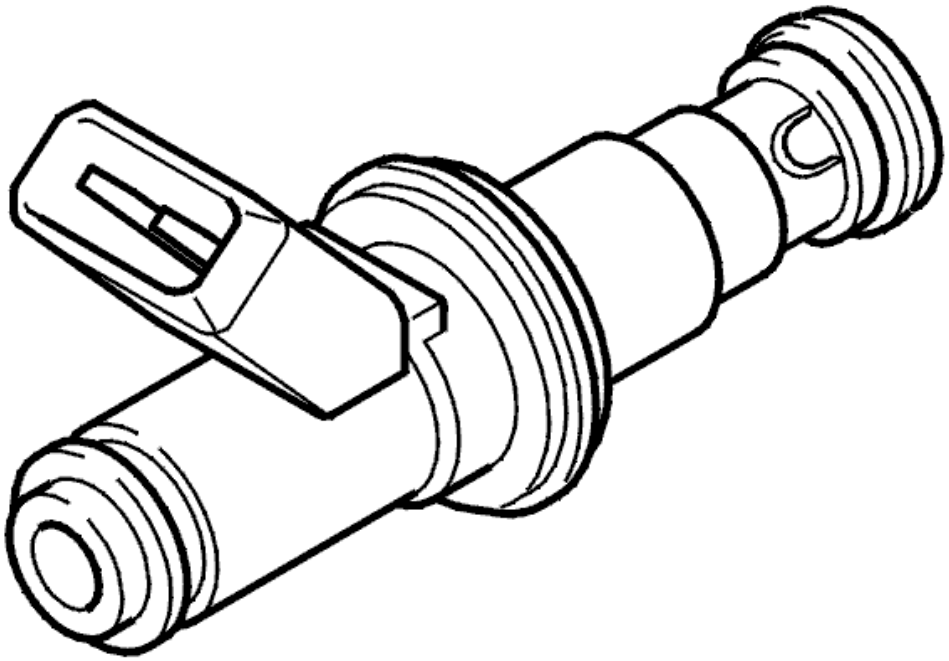

Fig. 126: Identifying Injector
Courtesy of VOLVO CARS CORPORATION

Is the injector working?

- **YES**

  VERIFIED: Troubleshooting has been completed.

- **NO**

  Refer to **INFORMATION**

INFORMATION

FAULT-TRACING INFORMATION

The fault should have been detected and remedied. As this is not the case fault-tracing has failed.

Exit fault-tracing for this diagnostic trouble code (DTC) or make another attempt.

ECM-2310: INJECTOR 1. SIGNAL TO LOW. PERMANENT FAULT (B6294T; 2003-2004)

DIAGNOSTIC TROUBLE CODE (DTC) INFORMATION

see **DIAGNOSTIC TROUBLE CODE (DTC) INFORMATION**

SIGNAL TOO LOW. PERMANENT FAULT

CHECKING COMPONENTS AND WIRING

Check the resistance of the injector between terminals 1 and 2.

Check the cable between injector terminal 2 and control module:

- terminal #A16 (#A16) (ECM 2310)
- terminal #A15 (#A15) (ECM 2320)
- terminal #A33(#A33) (ECM 2330)
- terminal #A32 (#A32) (ECM 2340)
- terminal #A34 (#A34) (ECM 2350)
- terminal #A14 (#A14) (ECM 2360).

Check for a short-circuit to ground.

Remedy as necessary.

Other information

- To connect the breakout box / access the control module, see **CONNECTING THE BREAKOUT BOX**
- For B5xx4T, see **INJECTOR/PULSE DAMPER, REPLACEMENT**
- For B6xx4T, see **INJECTOR / PULSATION DAMPER, REPLACING** .
- For resistance values, see **COMPONENT SPECIFICATIONS**
- For 6 cylinder engines -2004, see **SIGNAL SPECIFICATION**
- For 6 cylinder engines 2005-, see **SIGNAL SPECIFICATION** .

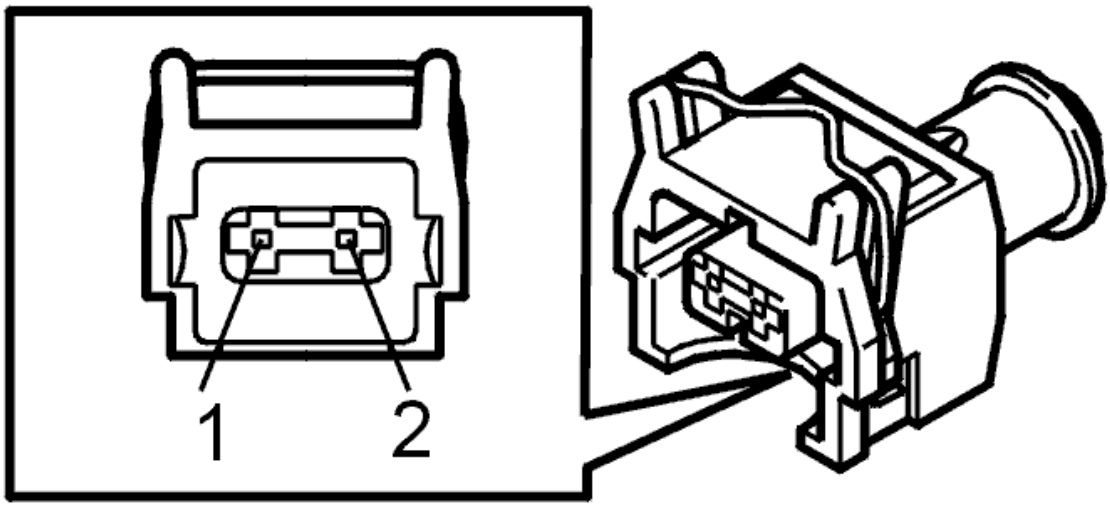

Fig. 127: Identifying 2 Pin Connector
Courtesy of VOLVO CARS CORPORATION

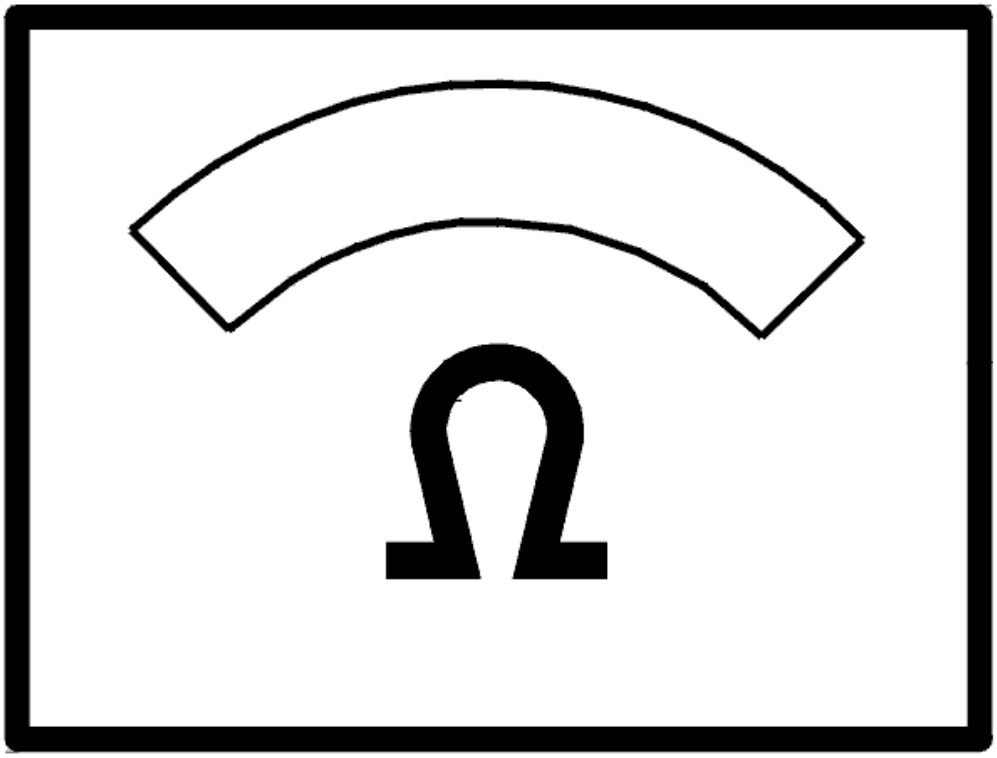

Fig. 128: Identifying Ohm Meter
Courtesy of VOLVO CARS CORPORATION

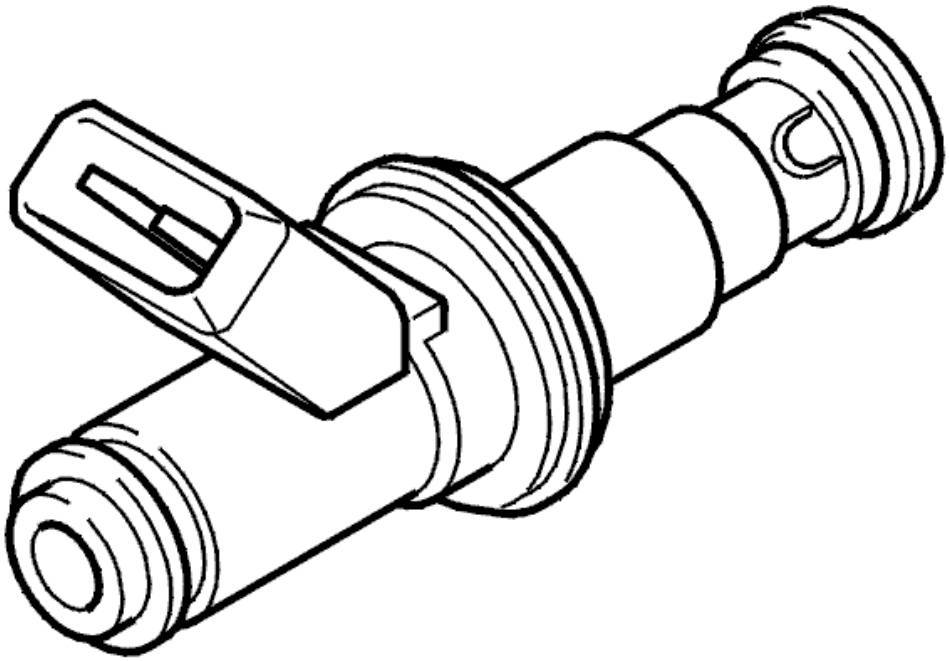

Fig. 129: Identifying Injector
Courtesy of VOLVO CARS CORPORATION

- **Continue**

  Refer to **VERIFICATION**

VERIFICATION

VERIFICATION

HINT: After carrying out the repair, check that the fault has been remedied.

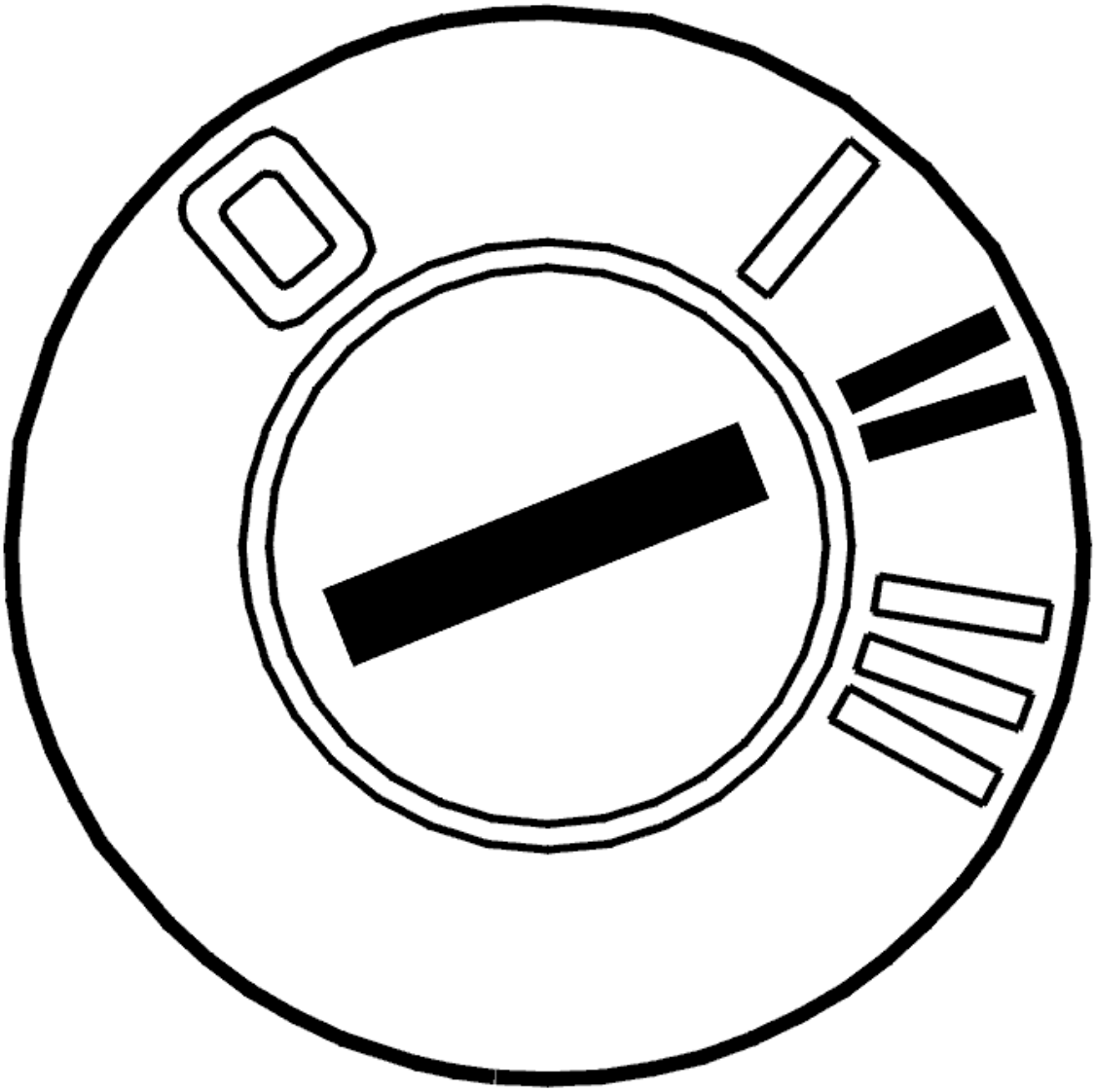

Fig. 130: Identifying Ignition ON
Courtesy of VOLVO CARS CORPORATION

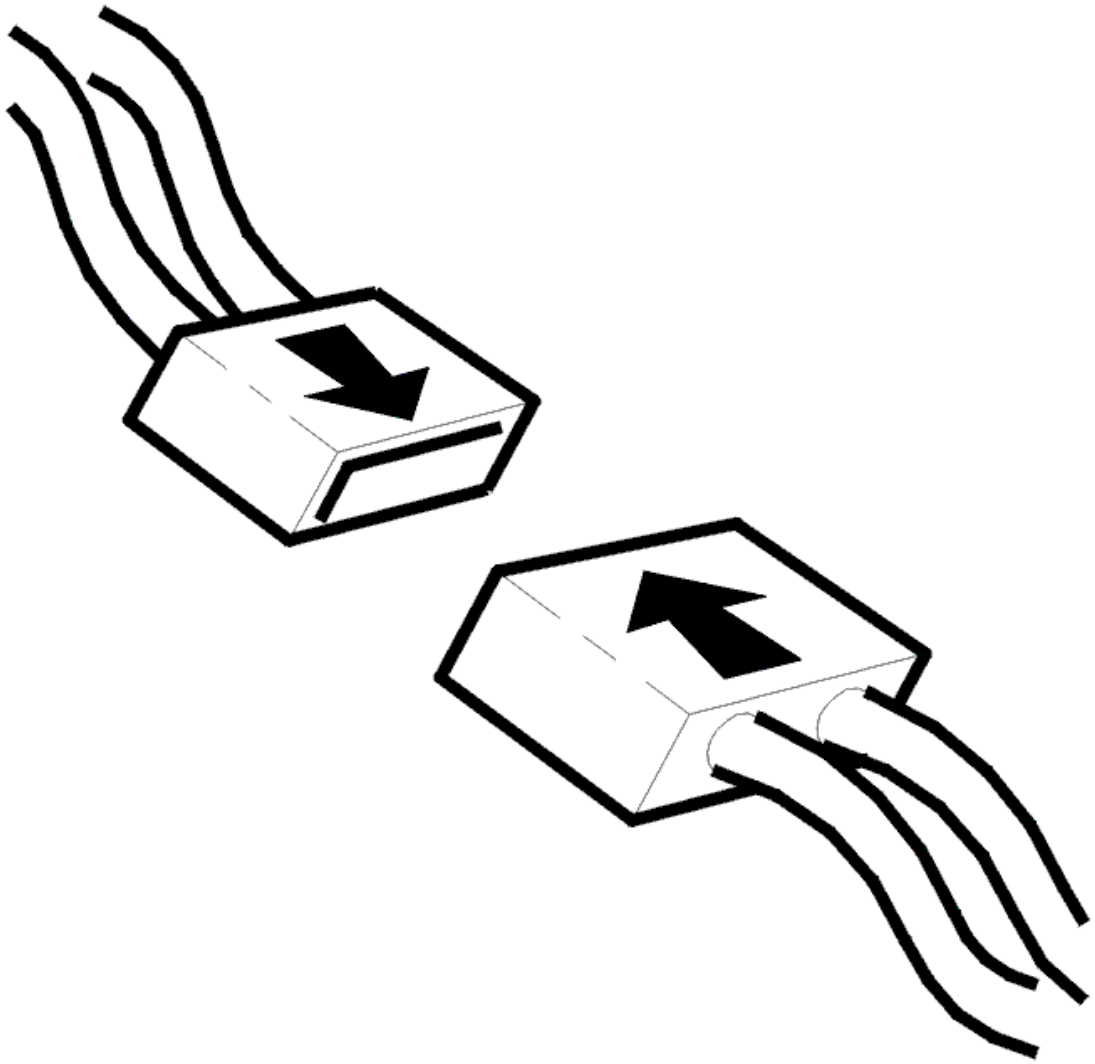

Fig. 131: Connecting Connector
Courtesy of VOLVO CARS CORPORATION

- Ignition off
- Reconnect connectors, reinstall components etc.
- Ignition on
- Activate the relevant injector.

  A "click" should be heard when the injector is activated.

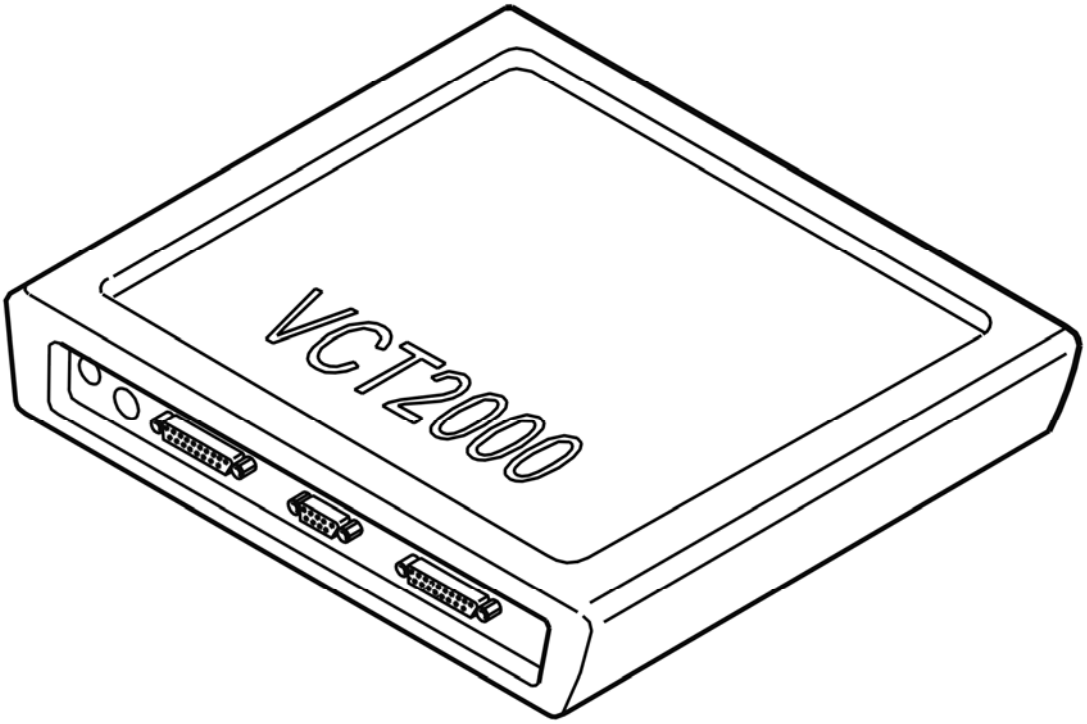

Fig. 132: Identifying VCT2000 Diagnostic Tool Symbol In VIDA
Courtesy of VOLVO CARS CORPORATION

Is the injector working?

- **YES**

  VERIFIED: Troubleshooting has been completed.

- **NO**

  Refer to **INFORMATION**

INFORMATION

FAULT-TRACING INFORMATION

The fault should have been detected and remedied. As this is not the case fault-tracing has failed.

Exit fault-tracing for this diagnostic trouble code (DTC) or make another attempt.

ECM-231B: REAR HEATED OXYGEN SENSOR (HO2S), AGING, BANK 2. SIGNAL MISSING (B6294T; 2005-2006)

DIAGNOSTIC TROUBLE CODE (DTC) INFORMATION ECM-231B

Condition

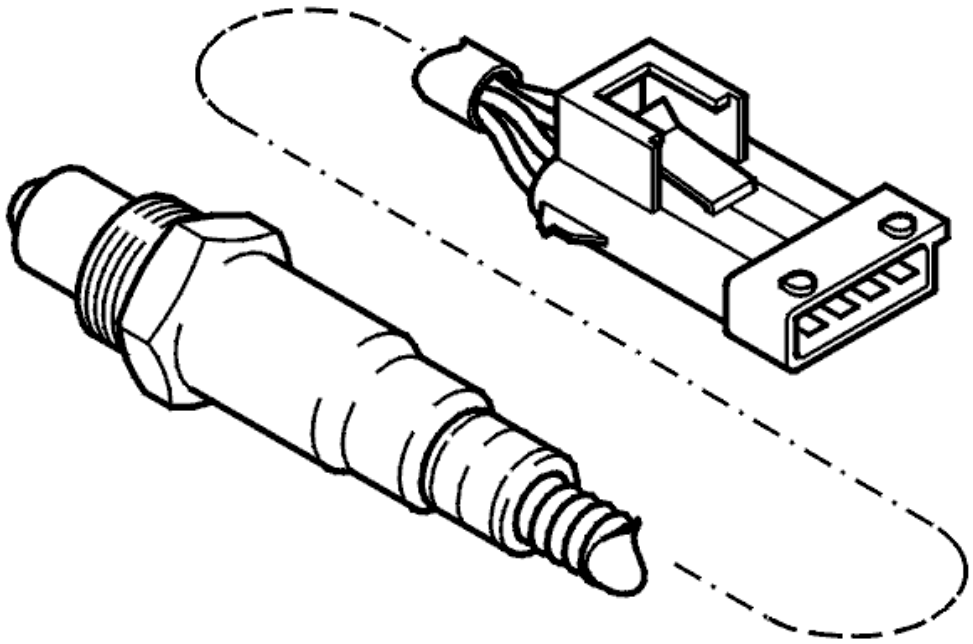

Fig. 133: Identifying Rear Heated Oxygen Sensor
Courtesy of VOLVO CARS CORPORATION

The engine control module (ECM) monitors the function of the rear heated oxygen sensor (HO2S) (bank 2) by checking its signal.

The diagnostic trouble code (DTC) is stored if the engine control module (ECM) does not register a signal from the rear heated oxygen sensor (HO2S).

Substitute Value

- None.

Possible Source

- Damaged rear heated oxygen sensor (HO2S).

Fault symptom[s]

- Malfunction indicator lamp (MIL) lit.

SIGNAL TOO HIGH/SIGNAL TOO LOW/SIGNAL MISSING

CHECKING THE COMPONENTS AND WIRING

CAUTION: Do not apply rust solvent spray or grease to the heated oxygen sensor (HO2S) connector.

Check the exhaust system for air leakage.

If no fault is discovered, try using a new rear heated oxygen sensor (HO2S), as a damaged rear heated oxygen sensor (HO2S) can cause a diagnostic trouble code (DTC) to be stored.

Remedy as necessary

Other information

- see **CHECKING FOR AIR LEAKAGE IN THE EXHAUST SYSTEM**
- For B5xx4T, see **HEATED OXYGEN SENSOR (HO2S), REPLACING**
- For B6xx4T, see **HEATED OXYGEN SENSOR (HO2S), REPLACING** .
- see **CHECKING WIRING AND TERMINALS**

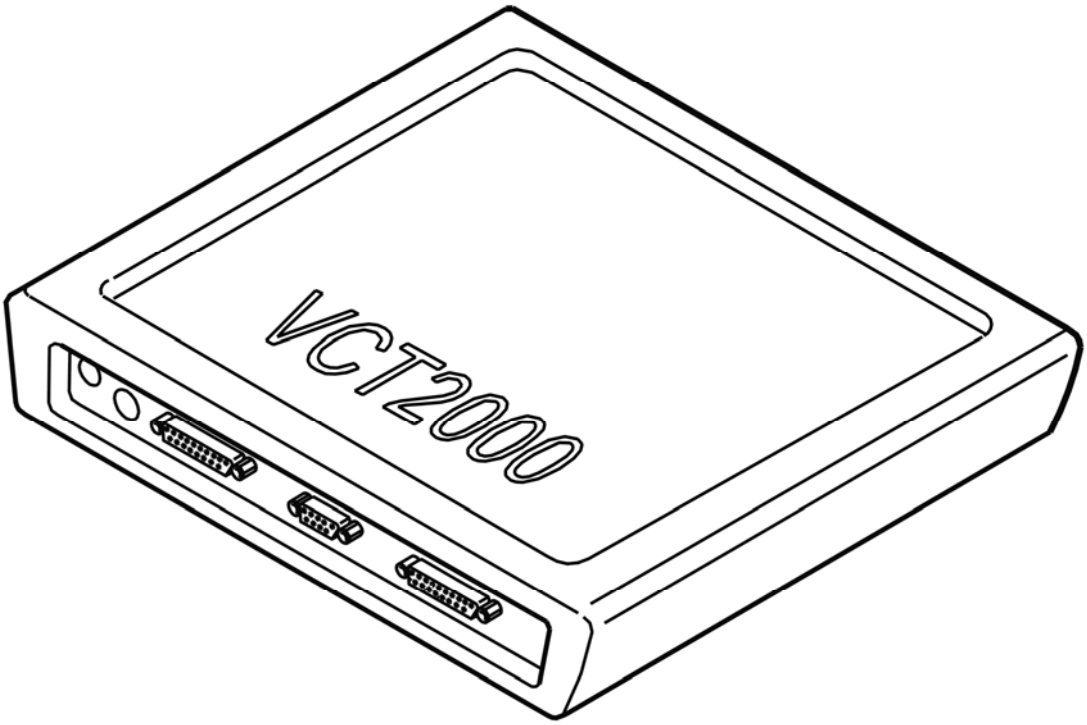

Fig. 134: Identifying VCT2000 Diagnostic Tool Symbol In VIDA

Courtesy of VOLVO CARS CORPORATION

- **Continue**

  Refer to **VERIFICATION**

VERIFICATION

VERIFICATION

HINT: After carrying out the repair, check that the fault has been remedied.

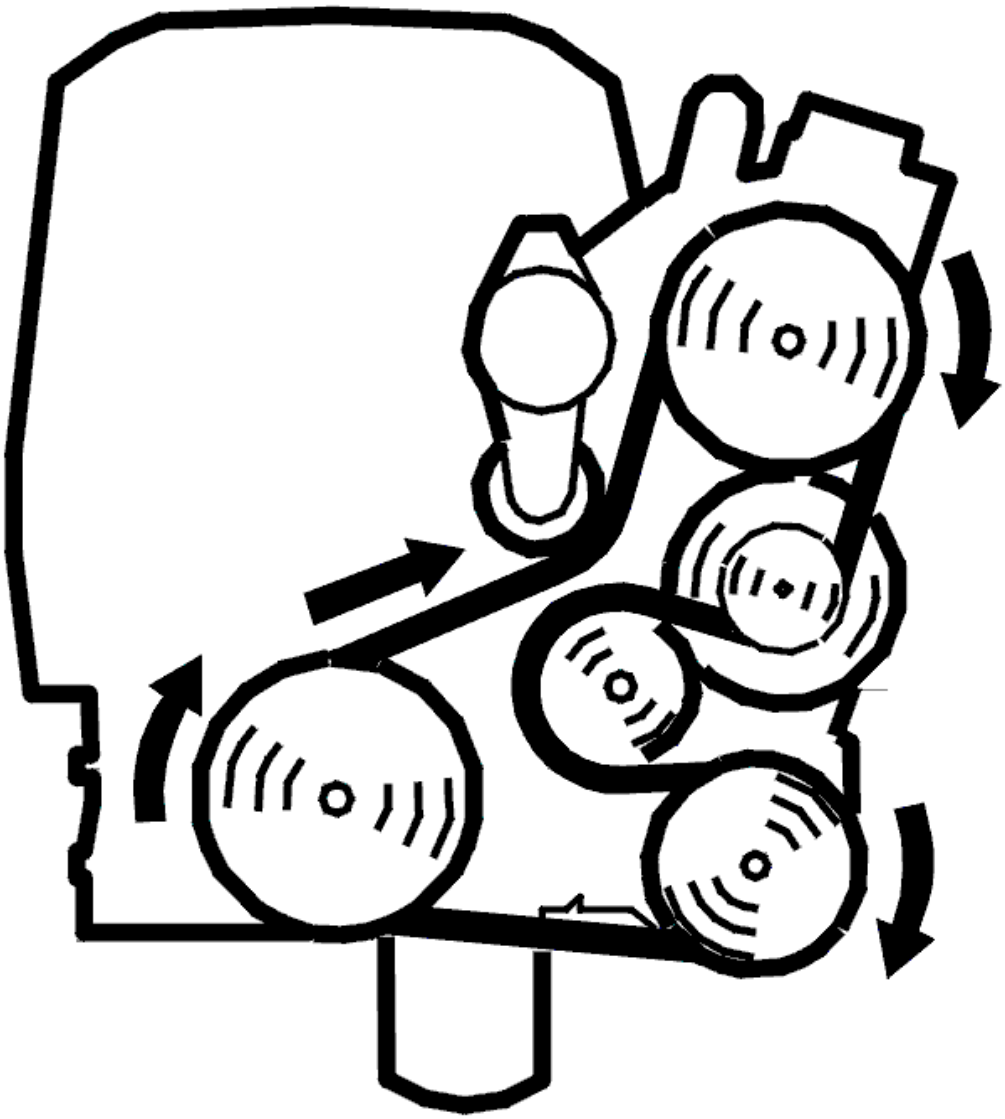

Fig. 135: Belt Routing / Engine Idling - Volvo
Courtesy of VOLVO CARS CORPORATION

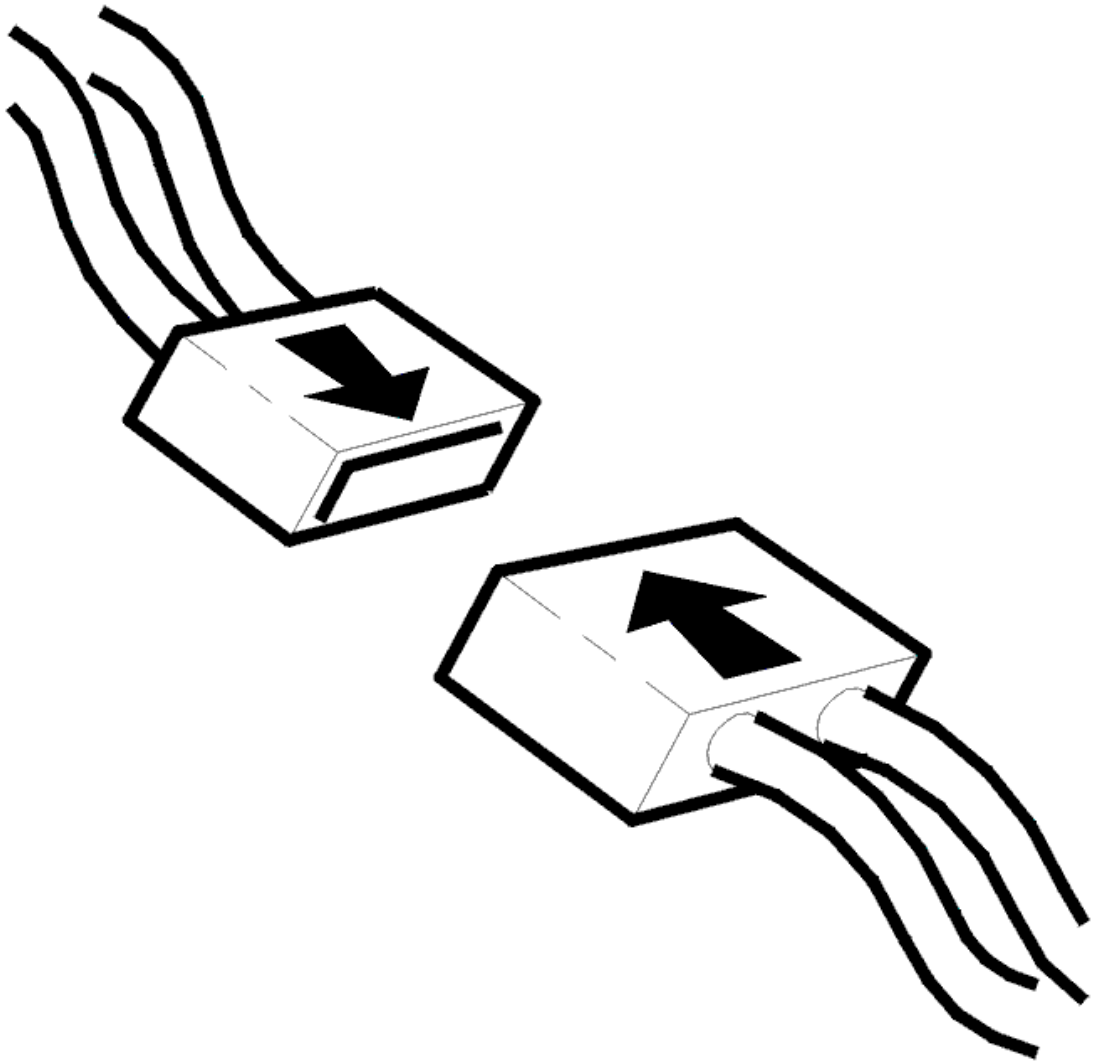

Fig. 136: Connecting Connector
Courtesy of VOLVO CARS CORPORATION

- Ignition off
- Reconnect the connectors, reinstall components etc.
- Start the engine. Allow the engine to idle for at least 1 minute
- Test drive the car at an even speed (approximately 80 km/h for at least 5 minutes)
- Connect VCT2000 (or appropriate scan tool) to the data link connector (DLC) without switching off the engine.

NOTE: **If the engine is switched off, the stored fault status will be erased and the test drive will have to be repeated.**

Read off the diagnostic status and fault status for the diagnostic trouble code (DTC) by selecting the relevant diagnostic trouble code (DTC) from the list.

Check the fault status for the diagnostic trouble code (DTC) when the diagnostic is "Complete". If the function is correct, the fault status must be "No fault found" when the diagnostic is complete.

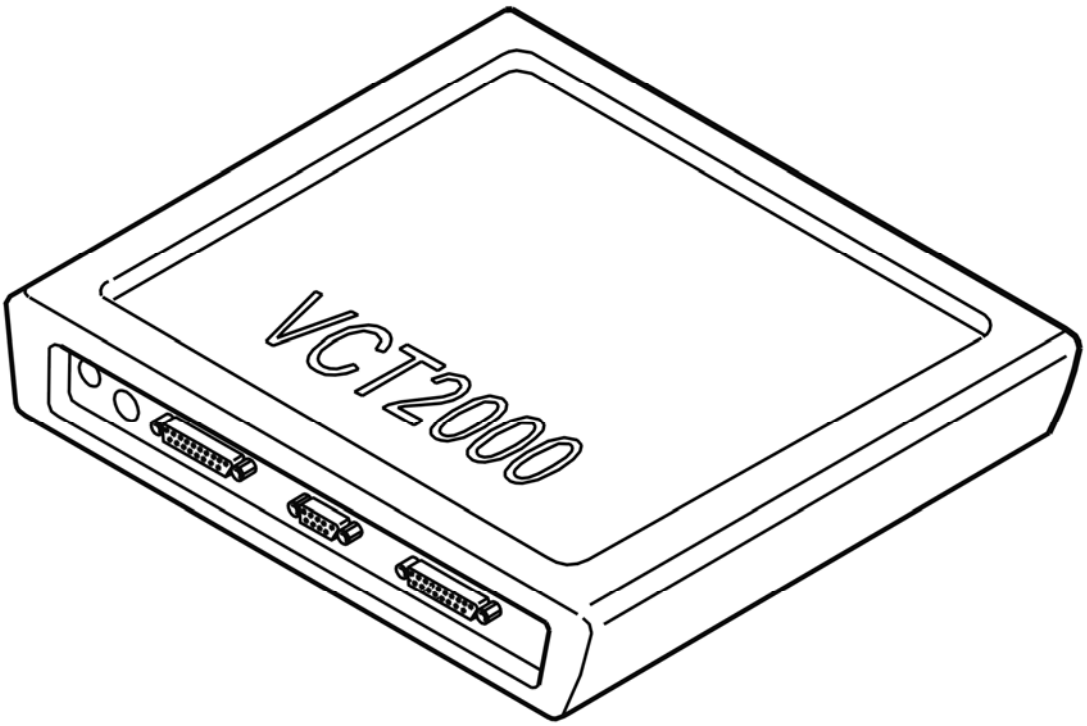

Fig. 137: Identifying VCT2000 Diagnostic Tool Symbol In VIDA
Courtesy of VOLVO CARS CORPORATION

Is the function OK?

- **YES**

  VERIFIED: Troubleshooting has been completed.

- **NO**

  Refer to **INFORMATION**

INFORMATION

FAULT-TRACING INFORMATION

The fault should have been detected and remedied. As this is not the case fault-tracing has failed.

Exit fault-tracing for this diagnostic trouble code (DTC) or make another attempt.

ECM-231C: REAR HEATED OXYGEN SENSOR (HO2S) AGING, BANK 2. SIGNAL TOO HIGH (B6294T; 2005-2006)

DIAGNOSTIC TROUBLE CODE (DTC) INFORMATION ECM-231C

Condition

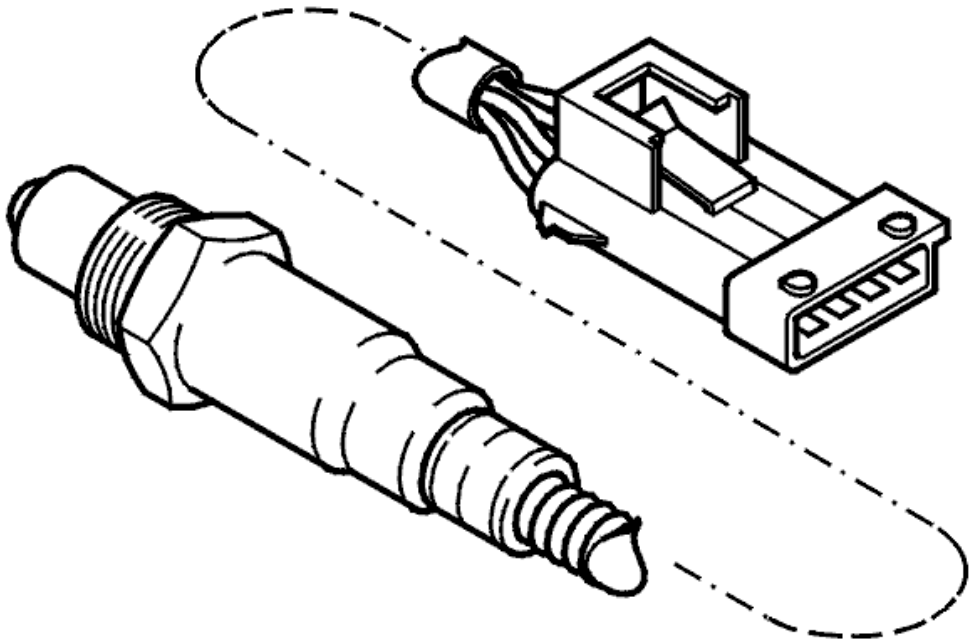

Fig. 138: Identifying Rear Heated Oxygen Sensor
Courtesy of VOLVO CARS CORPORATION

The engine control module (ECM) monitors the function of the rear heated oxygen sensor (HO2S) (bank 2) by checking its signal. The engine control module (ECM) checks that the probe has registered a rich fuel/air mixture. If this is not the case, the engine control module (ECM) changes the fuel/air mixture. The diagnostic trouble code (DTC) is stored if the rear probe has still not registered a rich fuel / air mixture.

Substitute Value

- None.

Possible Source

- Leakage in the exhaust system
- Damaged rear heated oxygen sensor (HO2S).

Fault symptom[s]

- Malfunction indicator lamp (MIL) lit.

SIGNAL TOO HIGH/SIGNAL TOO LOW/SIGNAL MISSING

see **SIGNAL TOO HIGH/SIGNAL TOO LOW/SIGNAL MISSING**

ECM-231D: REAR HEATED OXYGEN SENSOR (HO2S) AGING, BANK 2. SIGNAL TOO LOW (B6294T; 2005-2006)

DIAGNOSTIC TROUBLE CODE (DTC) INFORMATION ECM-231D

Condition

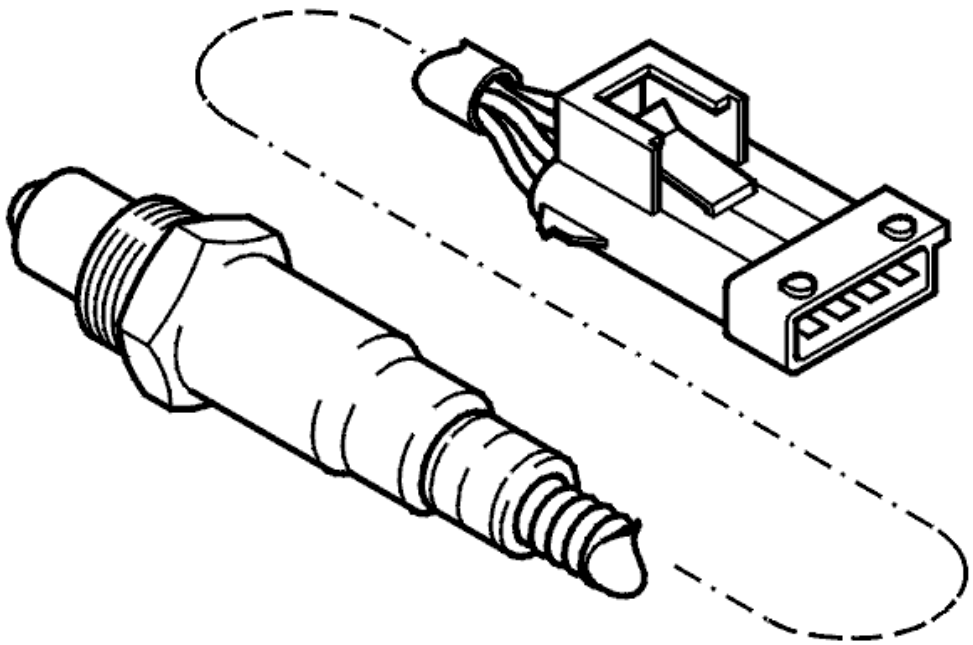

Fig. 139: Identifying Rear Heated Oxygen Sensor
Courtesy of VOLVO CARS CORPORATION

The engine control module (ECM) monitors the function of the rear heated oxygen sensor (HO2S) (bank 2) by checking its signal. The engine control module (ECM) checks that the probe has registered a lean fuel/air mixture. If this is not the case, the engine control module (ECM) changes the fuel/air mixture. The diagnostic trouble code (DTC) is stored if the rear probe has still not registered a lean fuel / air mixture.

NOTE: **At fuel shut-off, the probe must show a lean fuel/air mixture. The diagnostic trouble code (DTC) is also stored if the switch-over time to a lean fuel/air mixture is too long.**

Substitute Value

- None.

Possible Source

- Leakage in the exhaust system
- Damaged rear heated oxygen sensor (HO2S).

Fault symptom[s]

- Malfunction indicator lamp (MIL) lit.

SIGNAL TOO HIGH/SIGNAL TOO LOW/SIGNAL MISSING

see **SIGNAL TOO HIGH/SIGNAL TOO LOW/SIGNAL MISSING**

ECM-2320: REAR HEATED OXYGEN SENSOR (HO2S), BANK 2. FAULTY SIGNAL (B6294T; 2005-2006)

DIAGNOSTIC TROUBLE CODE (DTC) INFORMATION ECM-2320

Condition

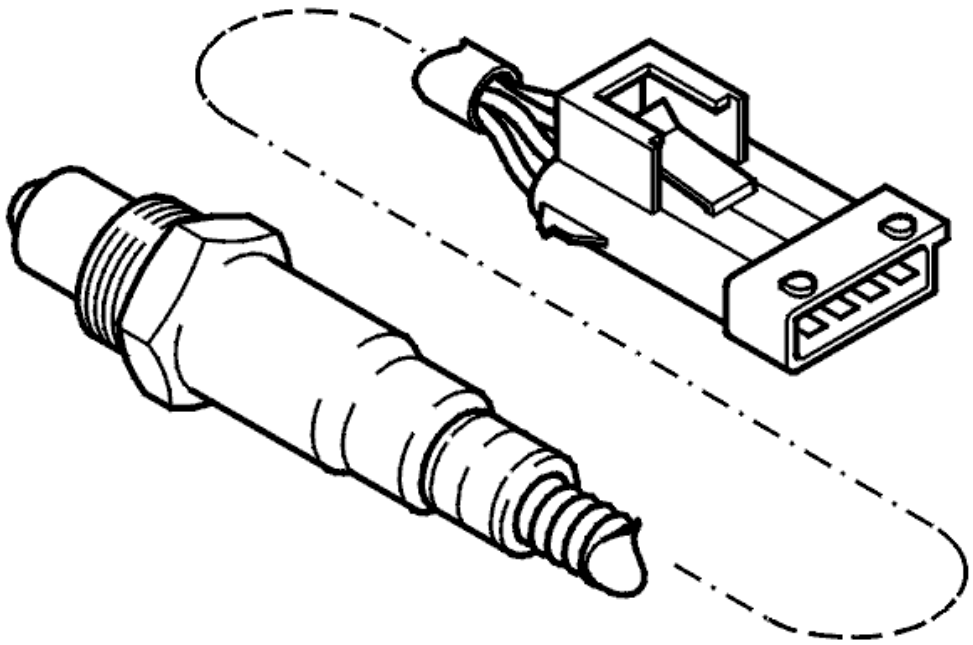

Fig. 140: Identifying Rear Heated Oxygen Sensor
Courtesy of VOLVO CARS CORPORATION

The engine control module (ECM) monitors the function of the rear heated oxygen sensor (HO2S) (bank 2) by checking its signal. The diagnostic trouble code (DTC) is stored if the engine control module (ECM) registers that the signal deviates from its permitted operational range or if the voltage for the heated oxygen sensor (HO2S) preheating disrupts the heated oxygen sensor (HO2S) signal.

Substitute Value

- Rear heated oxygen sensor (HO2S) control is disabled
- Three-way catalytic converter (TWC) diagnostics are disabled.

Possible Source

- Short-circuit in the signal cable for the pre-heating circuit
- Short-circuit in the ground lead for the preheating circuit
- Damaged rear heated oxygen sensor (HO2S).

Fault symptom[s]

- Malfunction indicator lamp (MIL) lit.

FAULTY SIGNAL

CHECKING THE COMPONENTS AND WIRING

Check the following cables for a short-circuit to each other.

- Engine control module (ECM) terminal #A10 (#A10) and heated oxygen sensor (HO2S) terminal #4
- Engine control module (ECM) terminal #A8 (#A8) and heated oxygen sensor (HO2S) terminal #2
- Heated oxygen sensor (HO2S) terminal #1 and the system relay.

Check the following cables for a short-circuit to each other.

- Engine control module (ECM) terminal #A11 (#A11) and heated oxygen sensor (HO2S) terminal #3
- Engine control module (ECM) terminal #A8 (#A8) and heated oxygen sensor (HO2S) terminal #2
- Heated oxygen sensor (HO2S) terminal #1 and the system relay.

Try a new heated oxygen sensor (HO2S) if the above fault-tracing does not remedy the fault.

Remedy as necessary.

Other information

- see **CONNECTING THE BREAKOUT BOX**
- For 5 cylinder turbocharged engines -2004, see **SIGNAL DESCRIPTION**
- For 5 cylinder turbocharged engines 2005-, see **SIGNAL SPECIFICATION** .
- For 6 cylinder engines -2004, see **SIGNAL SPECIFICATION**
- For 6 cylinder engines 2005-, see **SIGNAL SPECIFICATION** .
- For B5xx4T, see **HEATED OXYGEN SENSOR (HO2S), REPLACING**
- For B6xx4T, see **HEATED OXYGEN SENSOR (HO2S), REPLACING** .
- see **CHECKING WIRING AND TERMINALS**

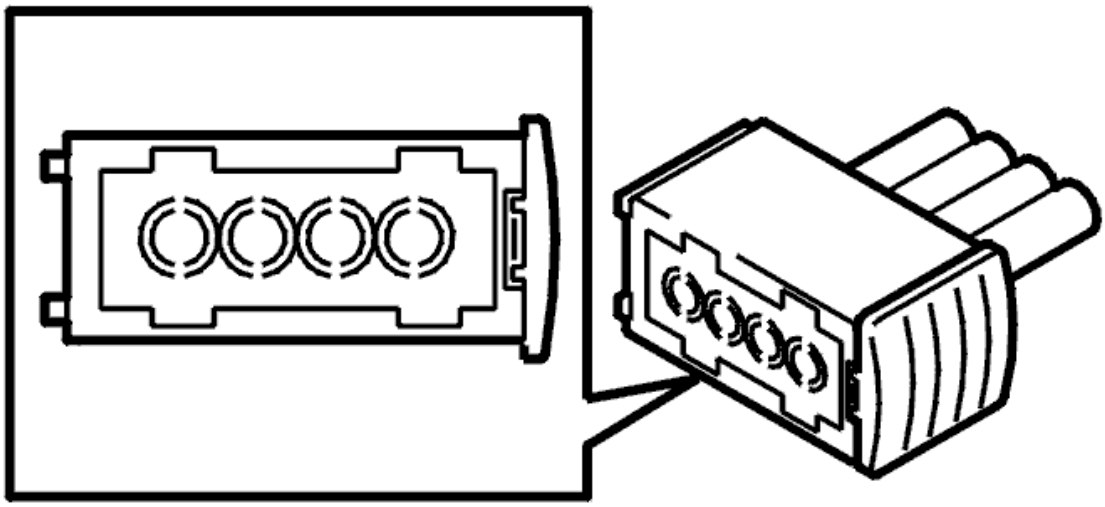

Fig. 141: Identifying Heated Oxygen Sensor
Courtesy of VOLVO CARS CORPORATION

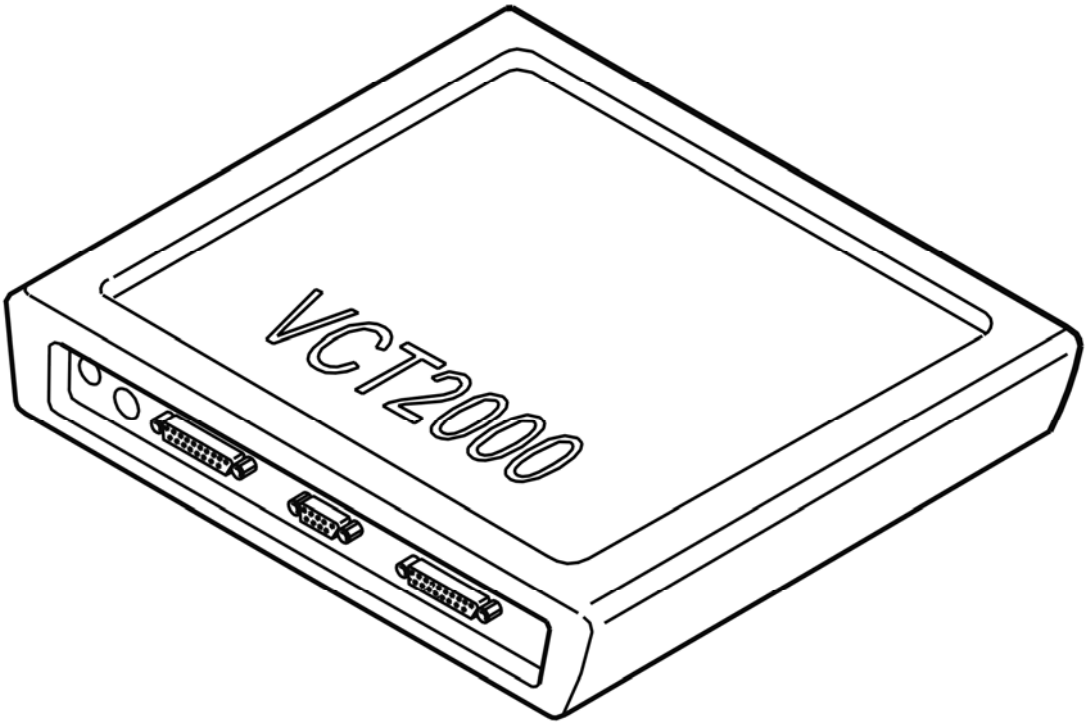

Fig. 142: Identifying VCT2000 Diagnostic Tool Symbol In VIDA
Courtesy of VOLVO CARS CORPORATION

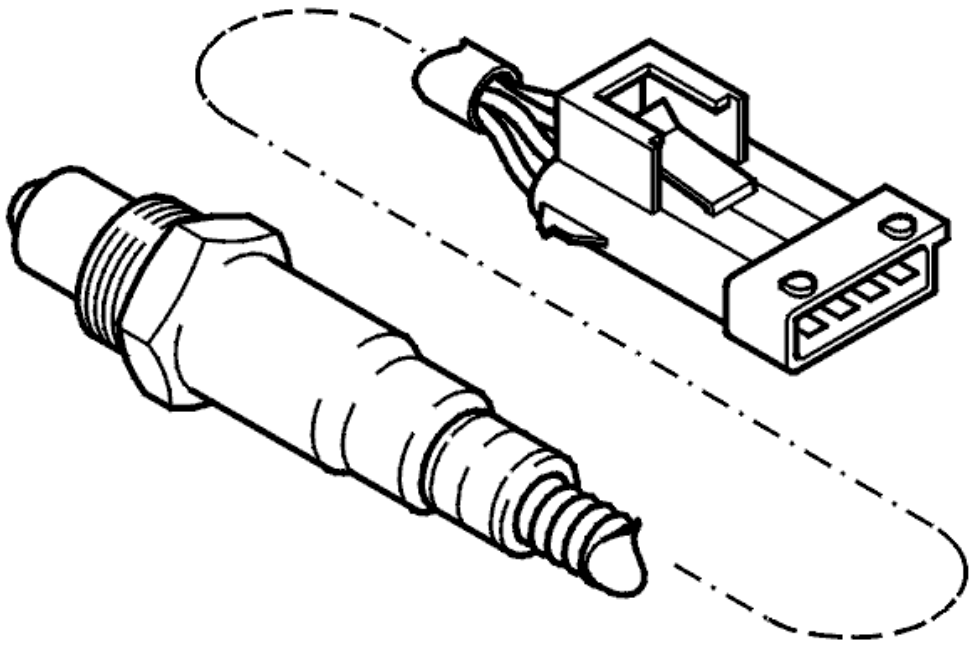

Fig. 143: Identifying Rear Heated Oxygen Sensor
Courtesy of VOLVO CARS CORPORATION

- **Continue**

  Refer to **VERIFICATION**

VERIFICATION

VERIFICATION

HINT: After carrying out the repair, check that the fault has been remedied.

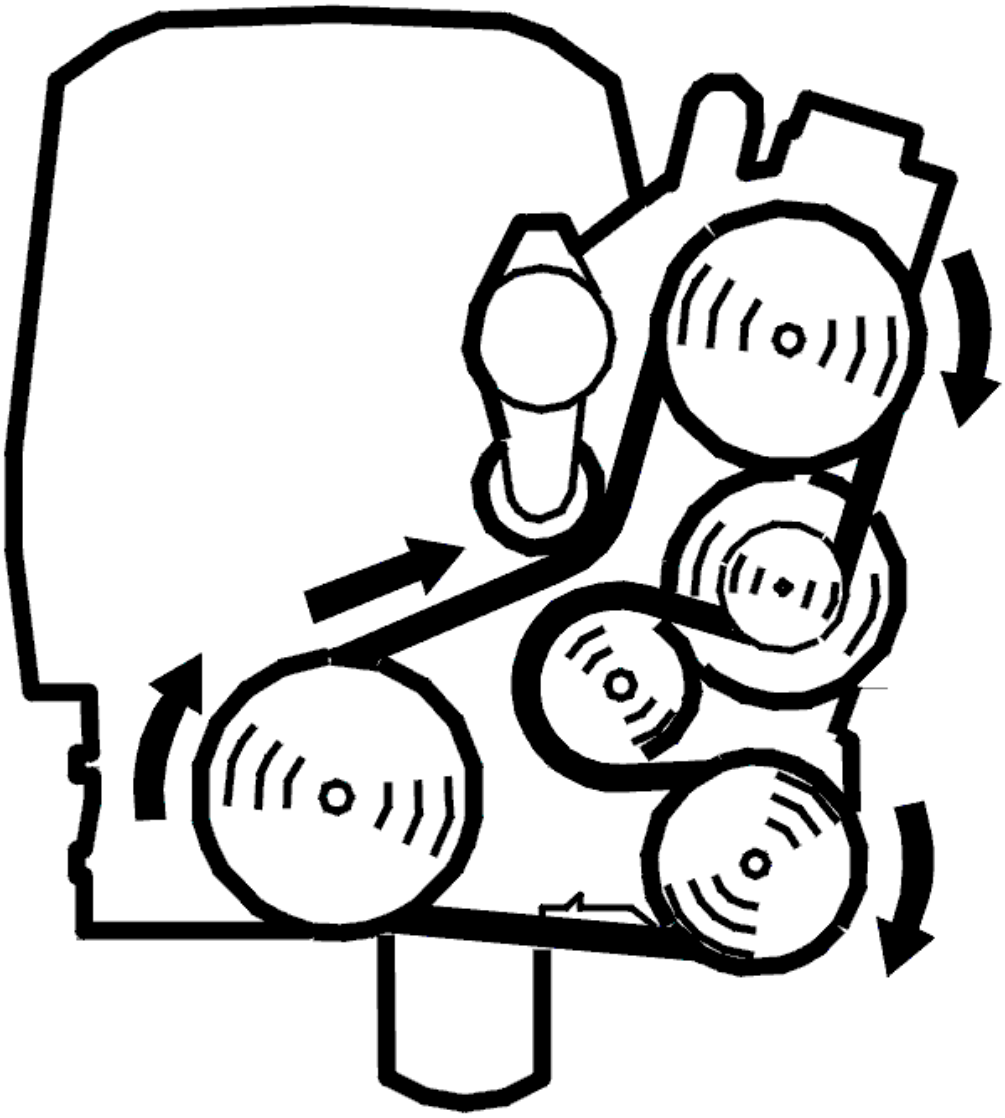

Fig. 144: Belt Routing / Engine Idling - Volvo
Courtesy of VOLVO CARS CORPORATION

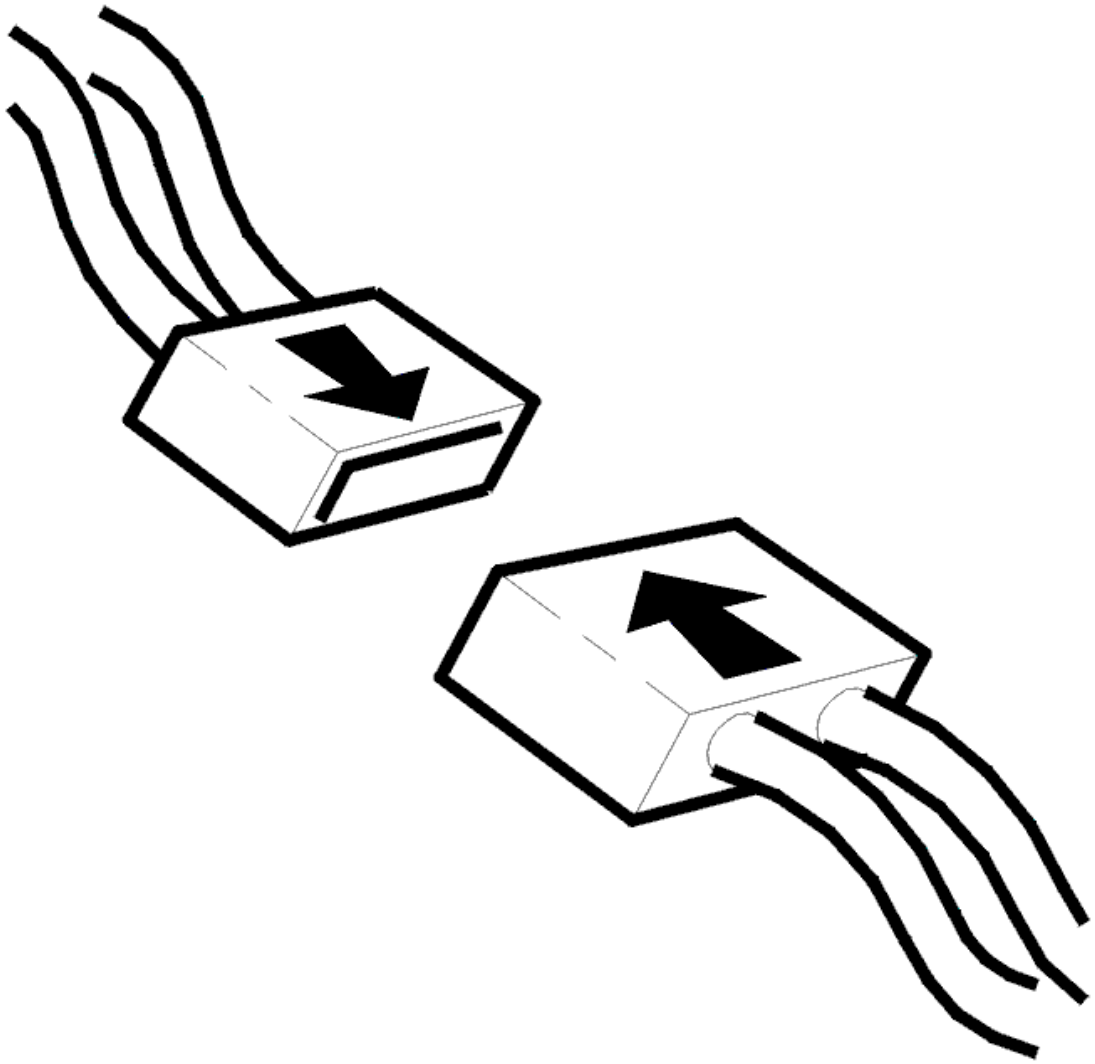

Fig. 145: Connecting Connector
Courtesy of VOLVO CARS CORPORATION

- Ignition off
- Reconnect the connectors, reinstall components etc.
- Start the engine and run it until the engine coolant temperature exceeds 60 °C
- Switch off the engine and allow it to cool (below 40 °C)
- Test drive the car on the road (engine speed (RPM) above 2000 RPM, never idling) for at least 15 minutes
- Connect VCT2000 (or appropriate scan tool) to the data link connector (DLC) without switching off the engine.

NOTE: **If the engine is switched off, the stored fault status will be erased and the test drive will have to be repeated.**

Read off the diagnostic status and fault status for the diagnostic trouble code (DTC) by selecting the relevant diagnostic trouble code (DTC) from the list.

Check the fault status for the diagnostic trouble code (DTC) when the diagnostic is "Complete". If the function is correct, the fault status must be "No fault found" when the diagnostic is complete.

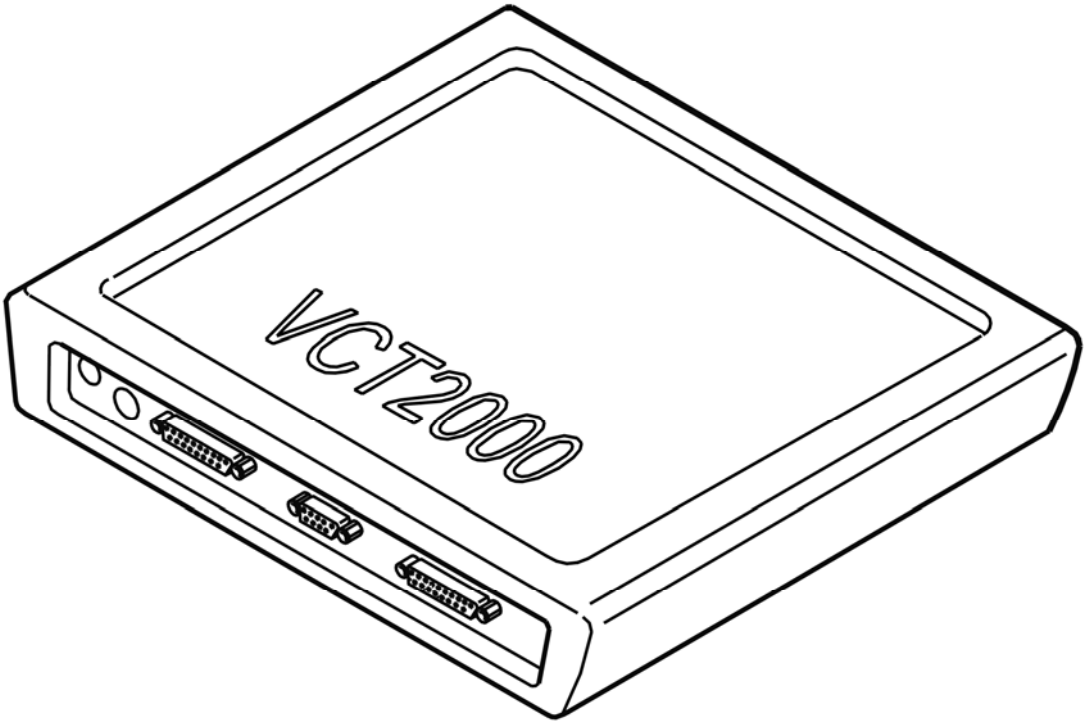

Fig. 146: Identifying VCT2000 Diagnostic Tool Symbol In VIDA
Courtesy of VOLVO CARS CORPORATION

Is the function OK?

- **YES**

  VERIFIED: Troubleshooting has been completed.

- **NO**

  Refer to **INFORMATION**

INFORMATION

FAULT-TRACING INFORMATION

The fault should have been detected and remedied. As this is not the case fault-tracing has failed.

Exit fault-tracing for this diagnostic trouble code (DTC) or make another attempt.

ECM-232B: REAR HEATED OXYGEN SENSOR (HO2S), BANK 2. SIGNAL MISSING (B6294T; 2005-2006)

DIAGNOSTIC TROUBLE CODE (DTC) INFORMATION ECM-232B

Condition

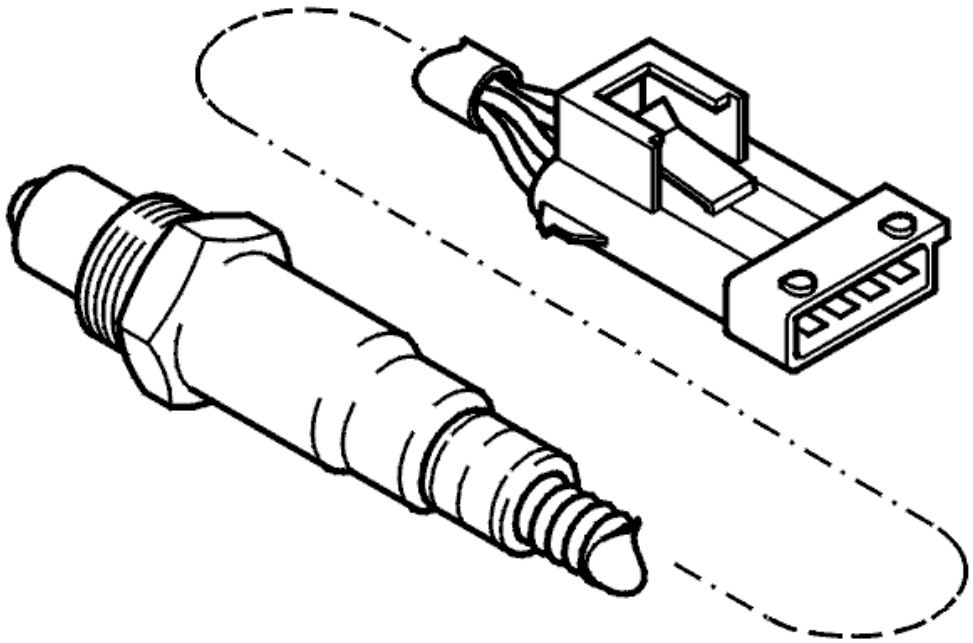

Fig. 147: Identifying Rear Heated Oxygen Sensor
Courtesy of VOLVO CARS CORPORATION

The engine control module (ECM) monitors the function of the rear heated oxygen sensor (HO2S) (bank 2) by checking its signal. The diagnostic trouble code (DTC) is stored if the engine control module (ECM) registers that the signal deviates from its permitted operational range or if the voltage for the heated oxygen sensor (HO2S) preheating disrupts the heated oxygen sensor (HO2S) signal.

Substitute Value

- Rear heated oxygen sensor (HO2S) control is disabled
- Three-way catalytic converter (TWC) diagnostics are disabled.

Possible Source

- Contact resistance or oxidation in the connectors
- Open-circuit in the signal cable
- Open-circuit in the ground lead
- Damaged rear heated oxygen sensor (HO2S).

Fault symptom[s]

- Malfunction indicator lamp (MIL) lit.

SIGNAL MISSING

CHECKING THE COMPONENTS AND WIRING

Check the rear heated oxygen sensor (HO2S) connector. Check for contact resistance and oxidation.

Check the cable between engine control module (ECM) terminal #A10 (#A10) and heated oxygen sensor (HO2S) terminal #4. Check for an open-circuit.

Check the cable between engine control module (ECM) terminal #A11 (#A11) and heated oxygen sensor (HO2S) terminal #3. Check for an open-circuit.

Try a new heated oxygen sensor (HO2S) if the above fault-tracing does not remedy the fault.

Remedy as necessary.

Other information

- see **CONNECTING THE BREAKOUT BOX**
- For 5 cylinder turbocharged engines -2004, see **SIGNAL DESCRIPTION**
- For 5 cylinder turbocharged engines 2005-, see **SIGNAL SPECIFICATION** .
- For 6 cylinder engines -2004, see **SIGNAL SPECIFICATION**
- For 6 cylinder engines 2005-, see **SIGNAL SPECIFICATION** .
- For B5xx4T, see **HEATED OXYGEN SENSOR (HO2S), REPLACING**
- For B6xx4T, see **HEATED OXYGEN SENSOR (HO2S), REPLACING** .
- see **CHECKING WIRING AND TERMINALS**

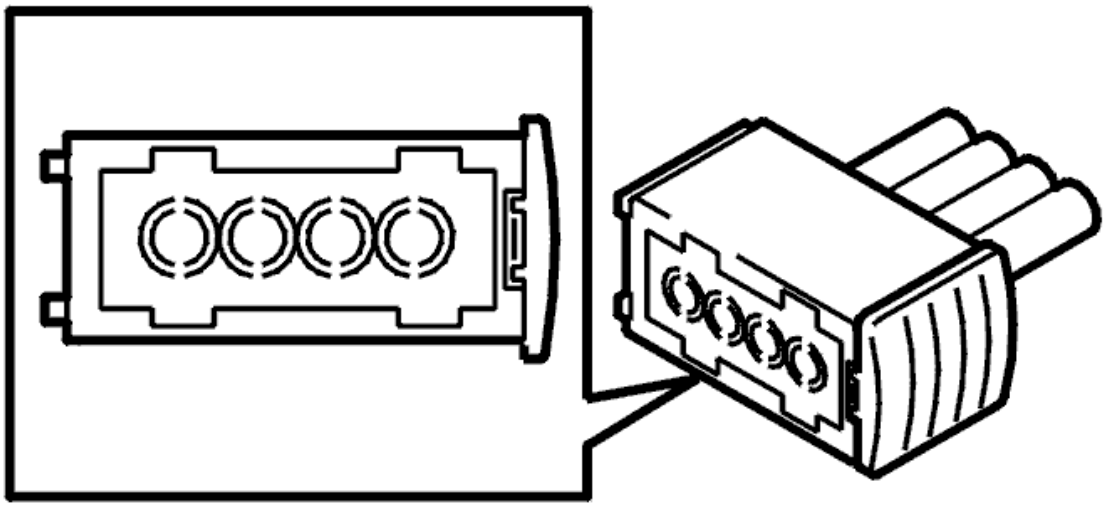

Fig. 148: Identifying Heated Oxygen Sensor
Courtesy of VOLVO CARS CORPORATION

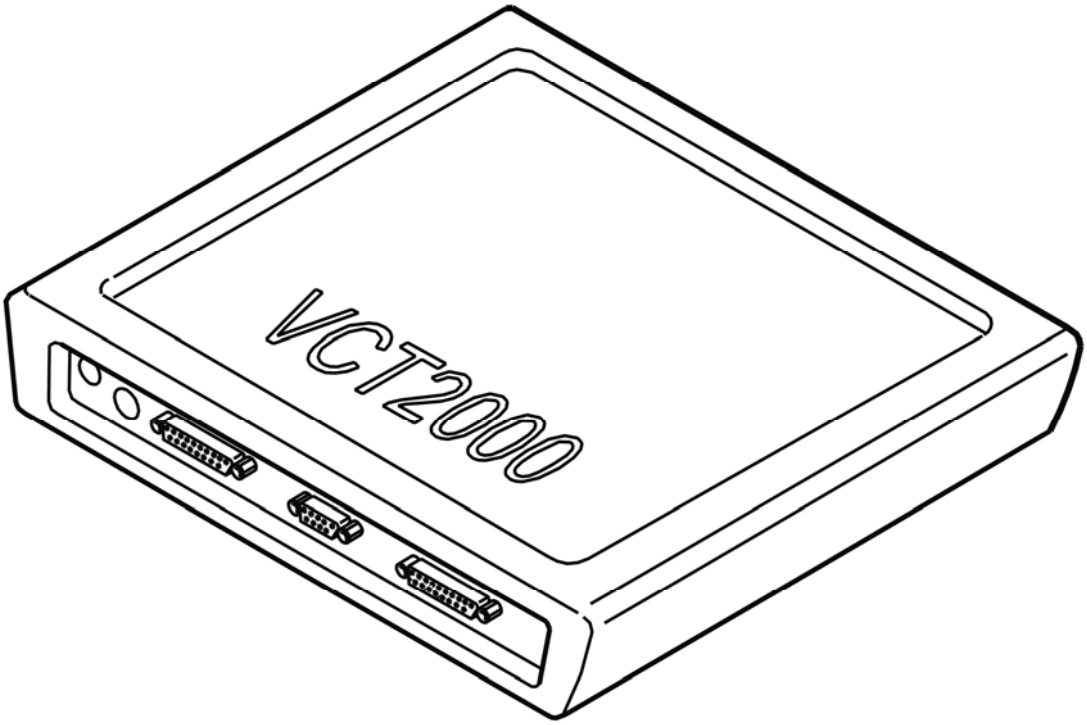

Fig. 149: Identifying VCT2000 Diagnostic Tool Symbol In VIDA
Courtesy of VOLVO CARS CORPORATION

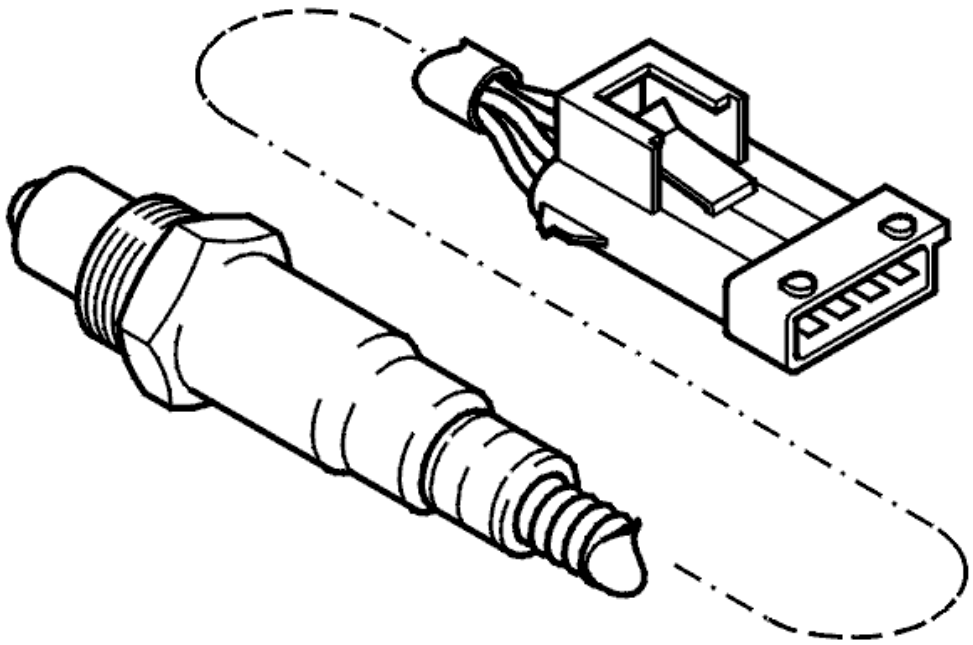

Fig. 150: Identifying Rear Heated Oxygen Sensor
Courtesy of VOLVO CARS CORPORATION

- **Continue**

  Refer to **VERIFICATION**

VERIFICATION

VERIFICATION

HINT: After carrying out the repair, check that the fault has been remedied.

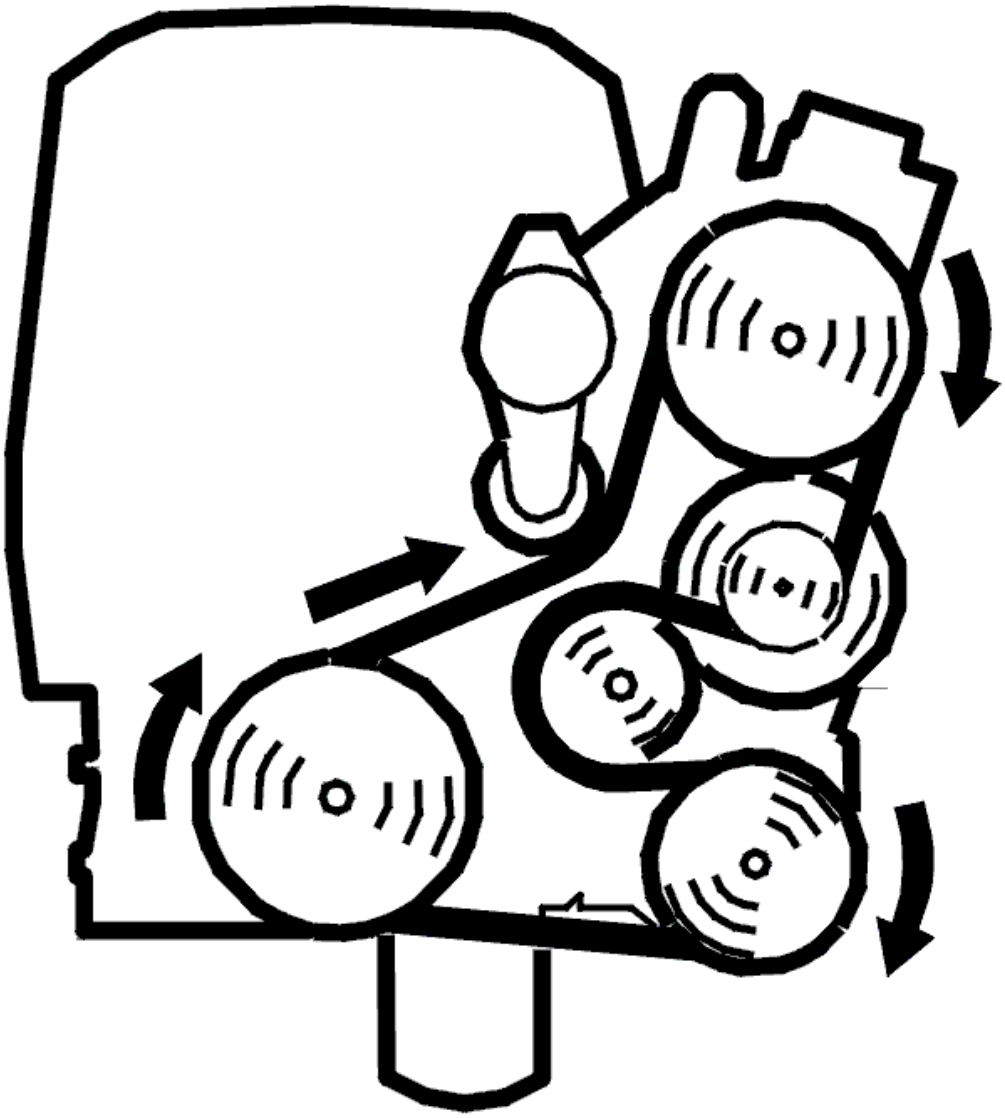

Fig. 151: Belt Routing / Engine Idling - Volvo
Courtesy of VOLVO CARS CORPORATION

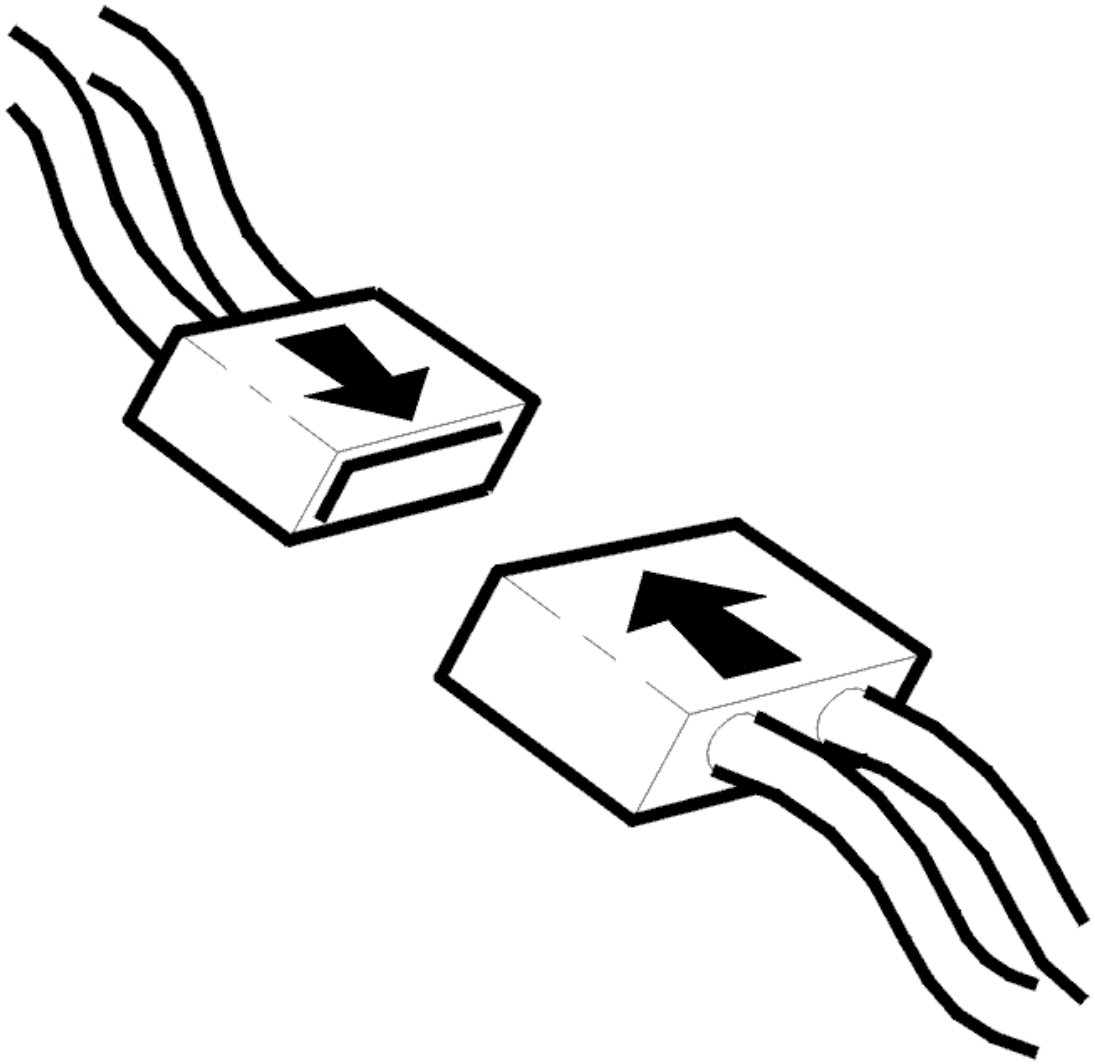

Fig. 152: Connecting Connector
Courtesy of VOLVO CARS CORPORATION

- Ignition off
- Reconnect the connectors, reinstall components etc.
- Start the engine and run it until the engine coolant temperature exceeds 60 °C
- Switch off the engine and allow it to cool (below 40 °C)
- Test drive the car on the road (engine speed (RPM) above 2000 RPM, never idling) for at least 15 minutes
- Connect VCT2000 (or appropriate scan tool) to the data link connector (DLC) without switching off the engine.

NOTE: **If the engine is switched off, the stored fault status will be erased and the test drive will have to be repeated.**

Read off the diagnostic status and fault status for the diagnostic trouble code (DTC) by selecting the relevant diagnostic trouble code (DTC) from the list.

Check the fault status for the diagnostic trouble code (DTC) when the diagnostic is "Complete". If the function is correct, the fault status must be "No fault found" when the diagnostic is complete.

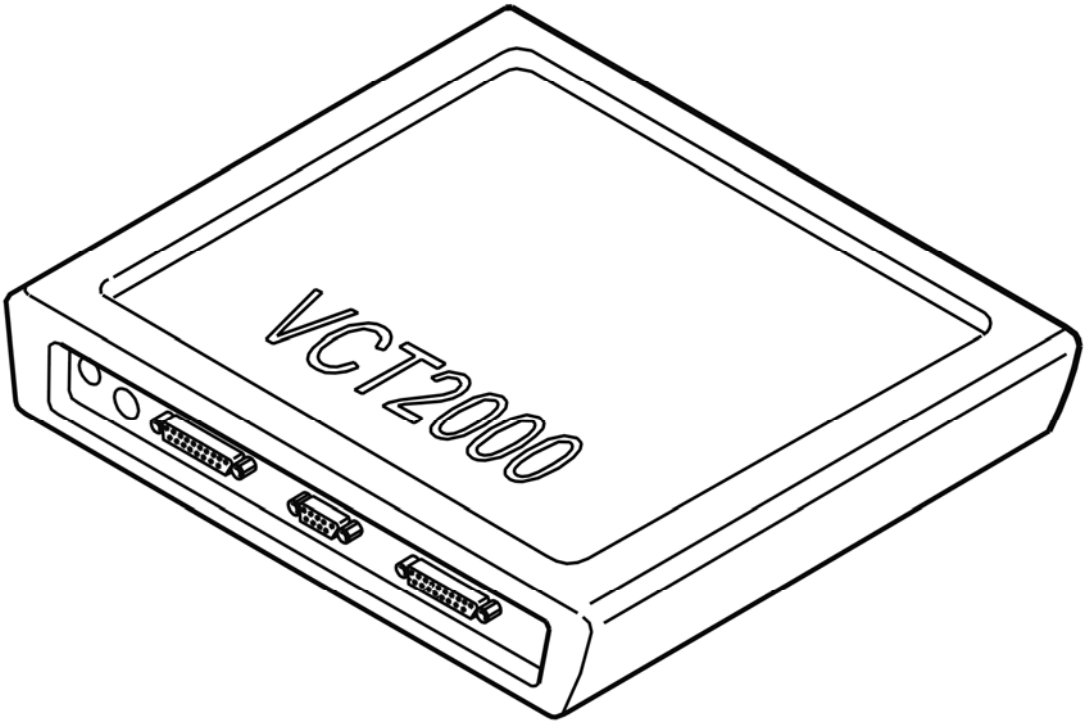

Fig. 153: Identifying VCT2000 Diagnostic Tool Symbol In VIDA
Courtesy of VOLVO CARS CORPORATION

Is the function OK?

- **YES**

  VERIFIED: Troubleshooting has been completed.

- **NO**

  Refer to **INFORMATION**

INFORMATION

FAULT-TRACING INFORMATION

The fault should have been detected and remedied. As this is not the case fault-tracing has failed.

Exit fault-tracing for this diagnostic trouble code (DTC) or make another attempt.

ECM-232C: REAR HEATED OXYGEN SENSOR (HO2S), BANK 2. SIGNAL TOO HIGH (B6294T; 2005-2006)

DIAGNOSTIC TROUBLE CODE (DTC) INFORMATION ECM-232C

Condition

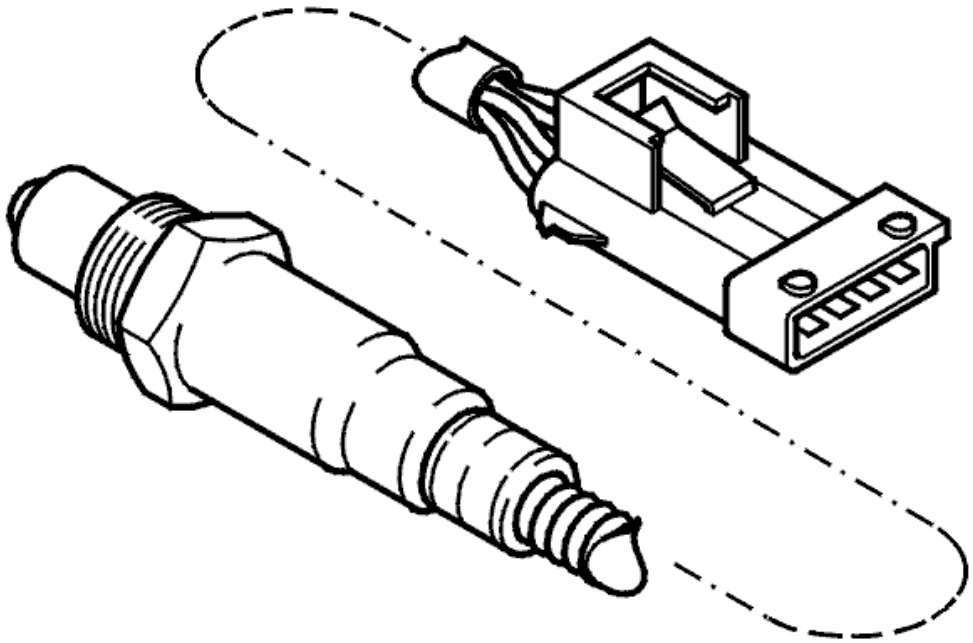

Fig. 154: Identifying Rear Heated Oxygen Sensor
Courtesy of VOLVO CARS CORPORATION

The engine control module (ECM) monitors the function of the rear heated oxygen sensor (HO2S) (bank 2) by checking its signal. The diagnostic trouble code (DTC) is stored if the engine control module (ECM) registers that the signal deviates from its permitted operational range or if the voltage for the heated oxygen sensor (HO2S) preheating disrupts the heated oxygen sensor (HO2S) signal.

Substitute Value

- Rear heated oxygen sensor (HO2S) control is disabled
- Three-way catalytic converter (TWC) diagnostics are disabled.

Possible Source

- Short-circuit to supply voltage in the signal cable
- Short-circuit to supply voltage in the ground lead
- Damaged rear heated oxygen sensor (HO2S).

Fault symptom[s]

- Malfunction indicator lamp (MIL) lit.

SIGNAL TOO HIGH

CHECKING THE COMPONENTS AND WIRING

Check the cable between engine control module (ECM) terminal #A10 (#A10) and heated oxygen sensor (HO2S) terminal #4. Check for a short-circuit to supply voltage.

Check the cable between engine control module (ECM) terminal #A11 (#A11) and heated oxygen sensor (HO2S) terminal #3. Check for a short-circuit to supply voltage.

Try a new heated oxygen sensor (HO2S) if the above fault-tracing does not remedy the fault.

Remedy as necessary.

Other information

- see **CONNECTING THE BREAKOUT BOX**
- For 5 cylinder turbocharged engines -2004, see **SIGNAL DESCRIPTION**
- For 5 cylinder turbocharged engines 2005-, see **SIGNAL SPECIFICATION** .
- For 6 cylinder engines -2004, see **SIGNAL SPECIFICATION**
- For 6 cylinder engines 2005-, see **SIGNAL SPECIFICATION** .
- For B5xx4T, see **HEATED OXYGEN SENSOR (HO2S), REPLACING**
- For B6xx4T, see **HEATED OXYGEN SENSOR (HO2S), REPLACING** .
- see **CHECKING WIRING AND TERMINALS**

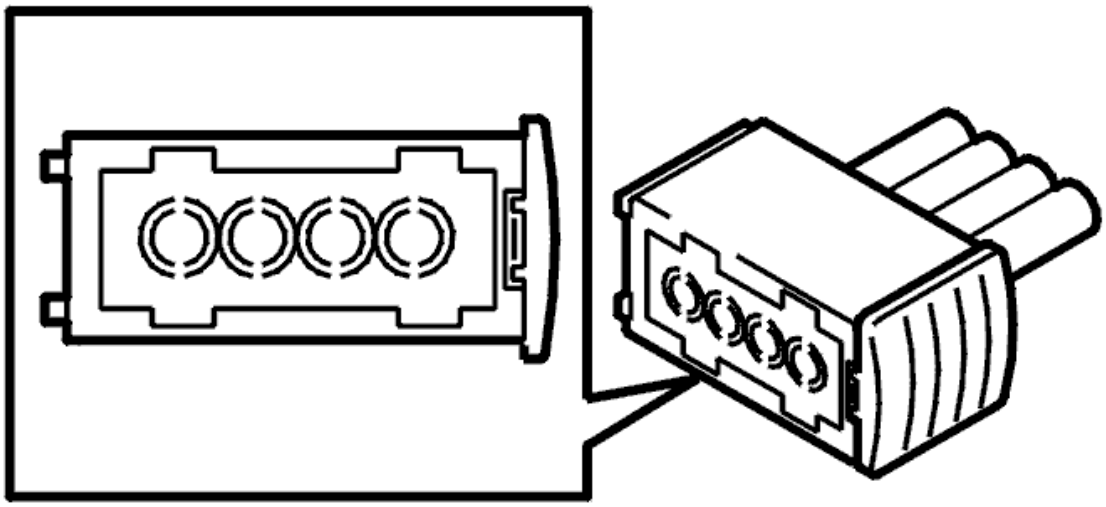

Fig. 155: Identifying Heated Oxygen Sensor
Courtesy of VOLVO CARS CORPORATION

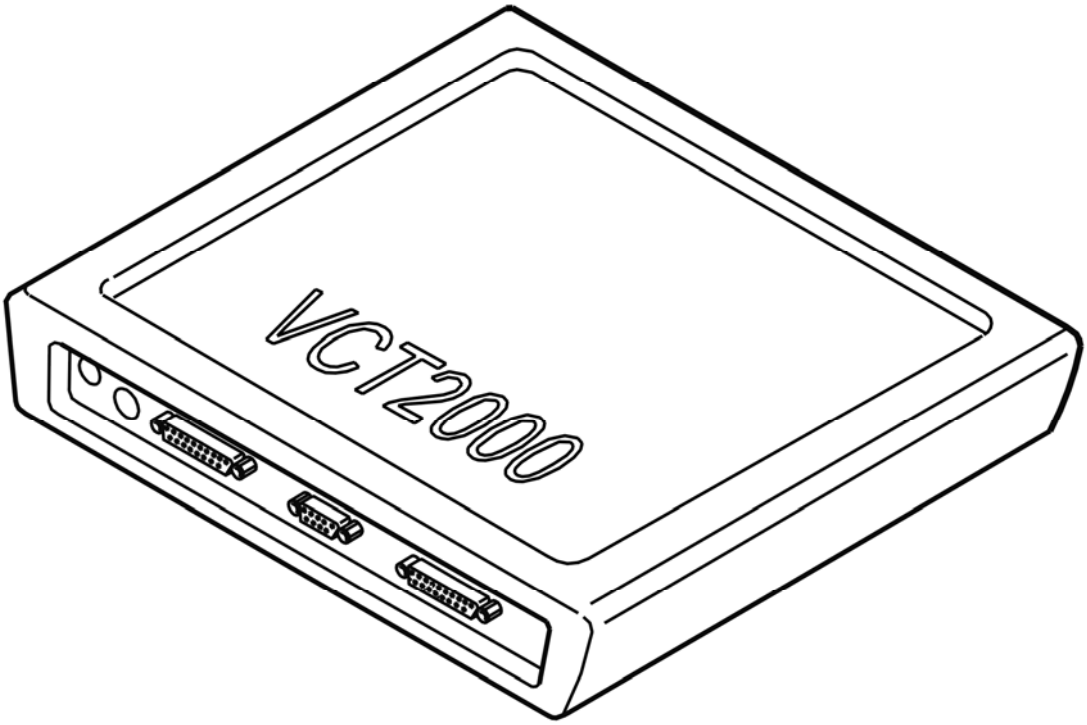

Fig. 156: Identifying VCT2000 Diagnostic Tool Symbol In VIDA
Courtesy of VOLVO CARS CORPORATION

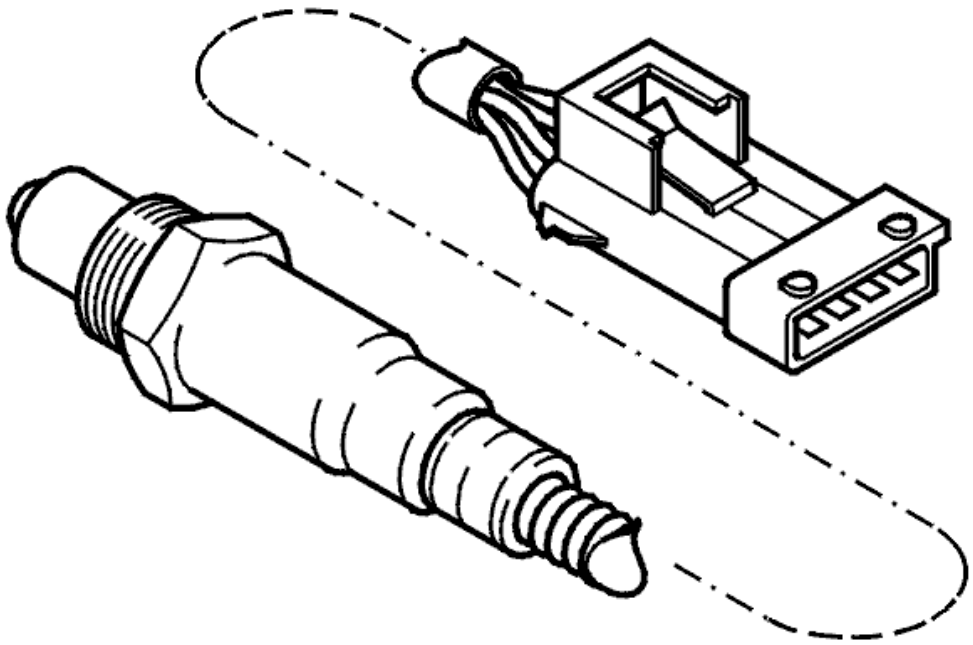

Fig. 157: Identifying Rear Heated Oxygen Sensor
Courtesy of VOLVO CARS CORPORATION

- **Continue**

  Refer to **VERIFICATION**

VERIFICATION

VERIFICATION

HINT: After carrying out the repair, check that the fault has been remedied.

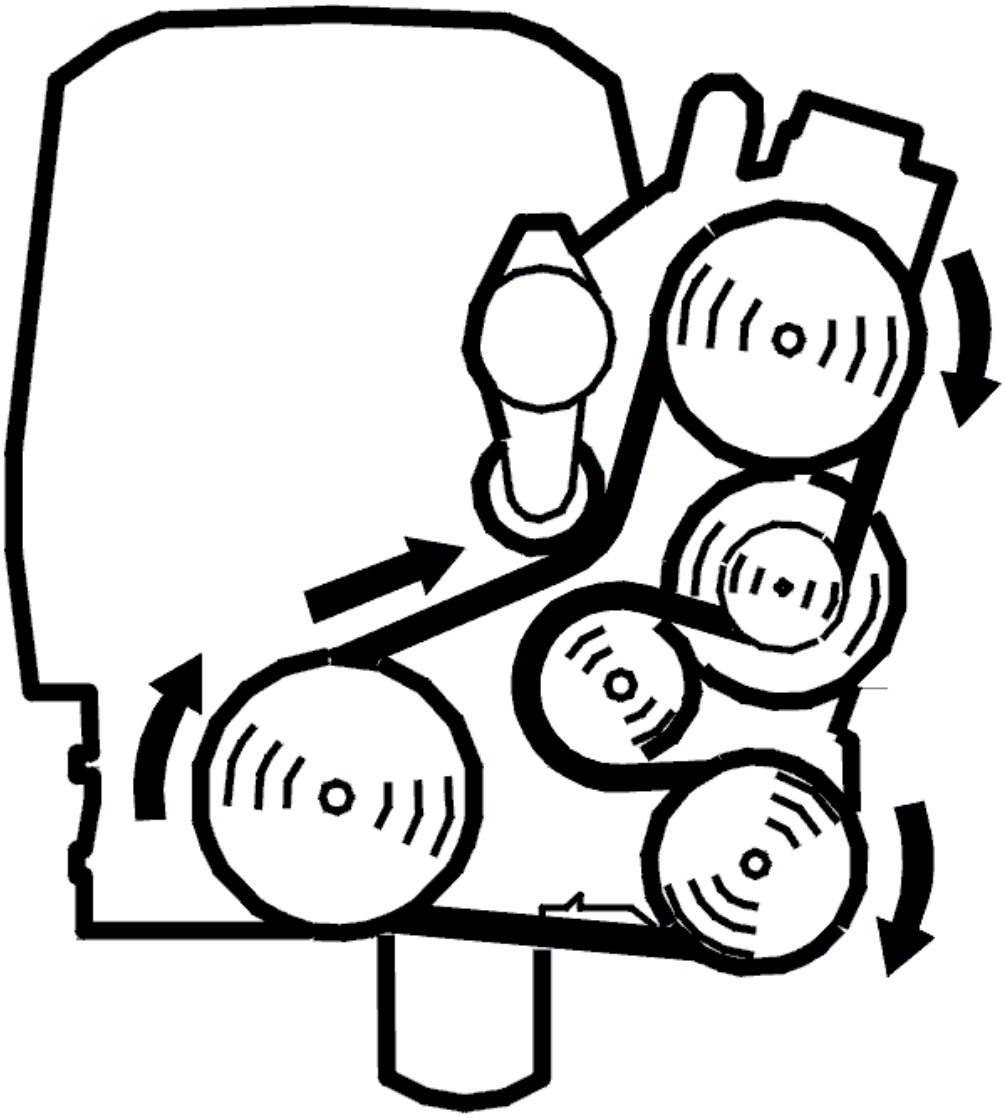

Fig. 158: Belt Routing / Engine Idling - Volvo
Courtesy of VOLVO CARS CORPORATION

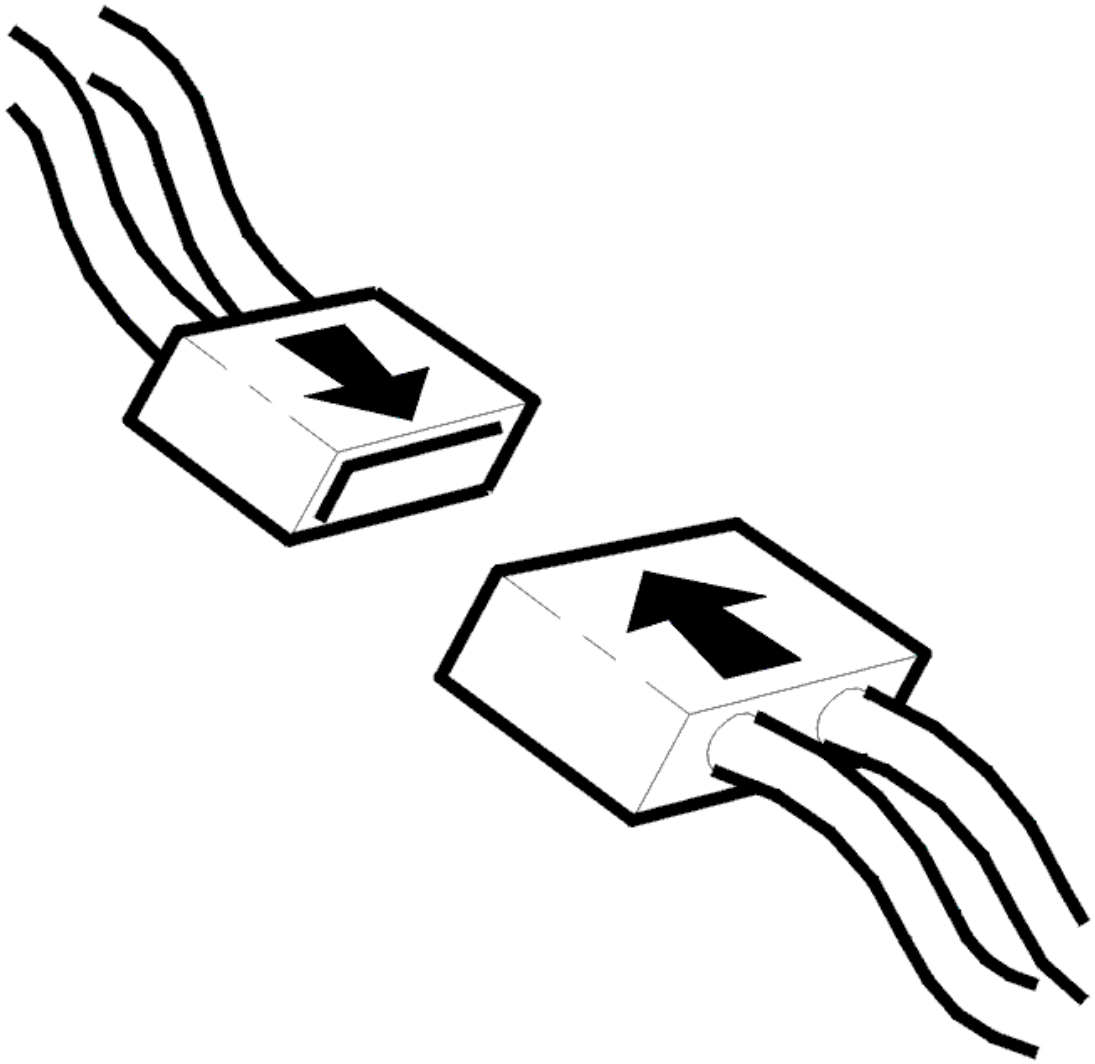

Fig. 159: Connecting Connector
Courtesy of VOLVO CARS CORPORATION

- Ignition off
- Reconnect the connectors, reinstall components etc.
- Start the engine and run it until the engine coolant temperature exceeds 60 °C
- Switch off the engine and allow it to cool (below 40 °C)
- Test drive the car on the road (engine speed (RPM) above 2000 RPM, never idling) for at least 15 minutes
- Connect VCT2000 (or appropriate scan tool) to the data link connector (DLC) without switching off the engine.

NOTE: **If the engine is switched off, the stored fault status will be erased and the test drive will have to be repeated.**

Read off the diagnostic status and fault status for the diagnostic trouble code (DTC) by selecting the relevant diagnostic trouble code (DTC) from the list.

Check the fault status for the diagnostic trouble code (DTC) when the diagnostic is "Complete". If the function is correct, the fault status must be "No fault found" when the diagnostic is complete.

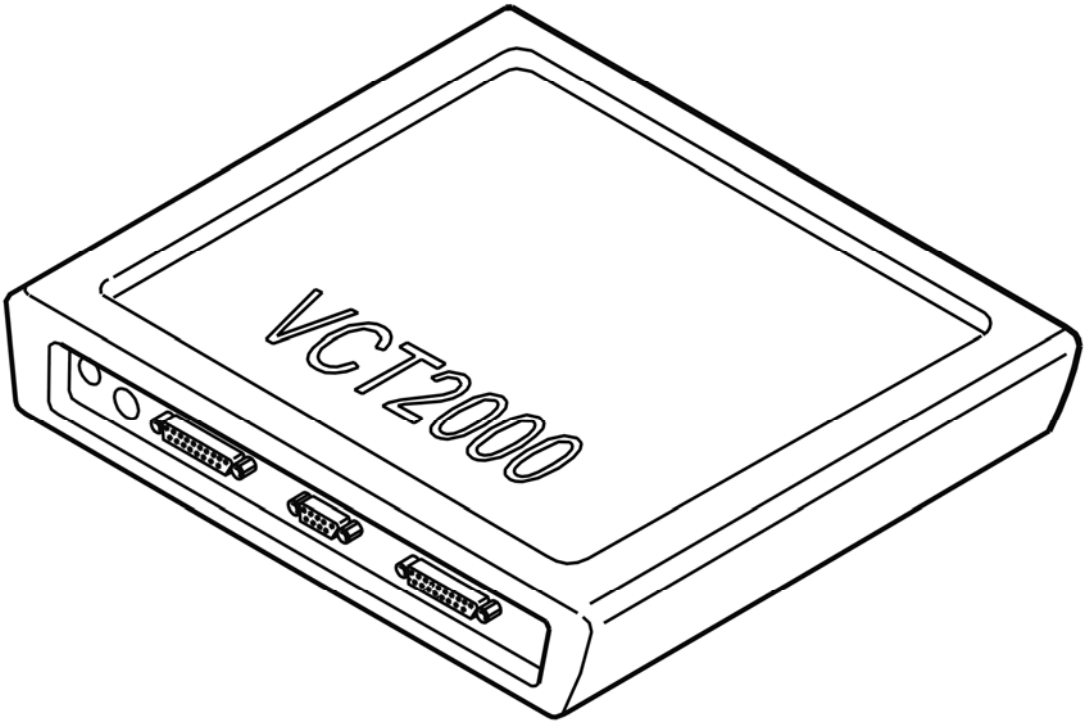

Fig. 160: Identifying VCT2000 Diagnostic Tool Symbol In VIDA
Courtesy of VOLVO CARS CORPORATION

Is the function OK?

- **YES**

  VERIFIED: Troubleshooting has been completed.

- **NO**

  Refer to **INFORMATION**

INFORMATION

FAULT-TRACING INFORMATION

The fault should have been detected and remedied. As this is not the case fault-tracing has failed.

Exit fault-tracing for this diagnostic trouble code (DTC) or make another attempt.

ECM-232D: REAR HEATED OXYGEN SENSOR (HO2S), BANK 2. SIGNAL TOO LOW (B6294T; 2005-2006)

DIAGNOSTIC TROUBLE CODE (DTC) INFORMATION ECM-232D

Condition

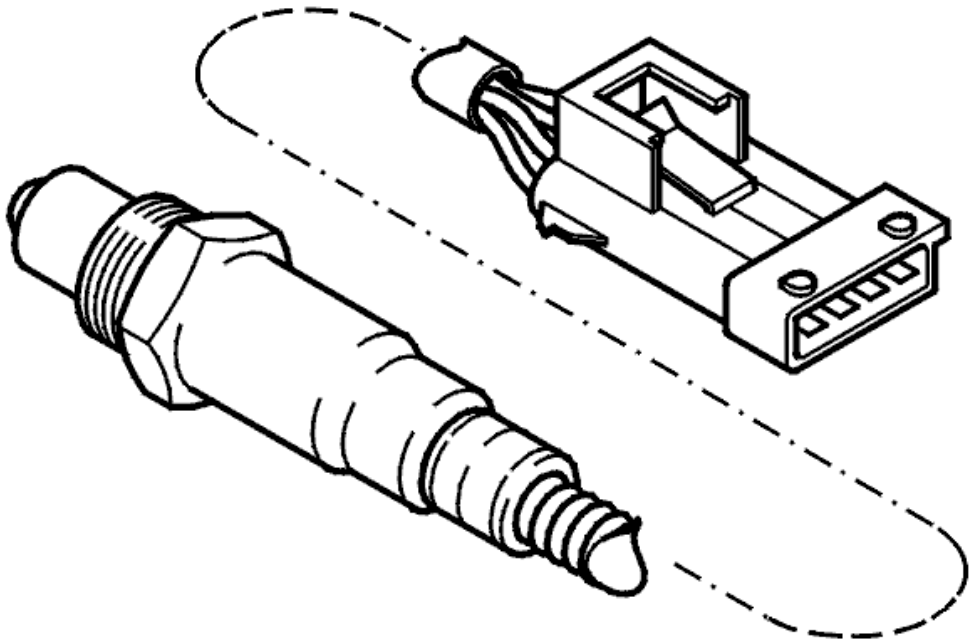

Fig. 161: Identifying Rear Heated Oxygen Sensor
Courtesy of VOLVO CARS CORPORATION

The engine control module (ECM) monitors the function of the rear heated oxygen sensor (HO2S) (bank 2) by checking its signal. The diagnostic trouble code (DTC) is stored if the engine control module (ECM) registers that the signal deviates from its permitted operational range or if the voltage for the heated oxygen sensor (HO2S) preheating disrupts the heated oxygen sensor (HO2S) signal.

Substitute Value

- Rear heated oxygen sensor (HO2S) control is disabled
- Three-way catalytic converter (TWC) diagnostics are disabled.

Possible Source

- Short-circuit to ground in the signal cable
- Short-circuit to ground in the ground lead
- Damaged rear heated oxygen sensor (HO2S).

Fault symptom[s]

- Malfunction indicator lamp (MIL) lit.

SIGNAL TOO LOW

CHECKING THE COMPONENTS AND WIRING

Check the cable between engine control module (ECM) terminal #A10 (#A10) and heated oxygen sensor (HO2S) terminal #4. Check for a short-circuit to ground.

Check the cable between engine control module (ECM) terminal #A11 (#A11) and heated oxygen sensor (HO2S) terminal #3. Check for a short-circuit to ground.

Try a new heated oxygen sensor (HO2S) if the above fault-tracing does not remedy the fault.

Remedy as necessary.

Other information

- see **CONNECTING THE BREAKOUT BOX**
- For 5 cylinder turbocharged engines -2004, see **SIGNAL DESCRIPTION**
- For 5 cylinder turbocharged engines 2005-, see **SIGNAL SPECIFICATION** .
- For 6 cylinder engines -2004, see **SIGNAL SPECIFICATION**
- For 6 cylinder engines 2005-, see **SIGNAL SPECIFICATION** .
- For B5xx4T, see **HEATED OXYGEN SENSOR (HO2S), REPLACING**
- For B6xx4T, see **HEATED OXYGEN SENSOR (HO2S), REPLACING** .
- see **CHECKING WIRING AND TERMINALS**

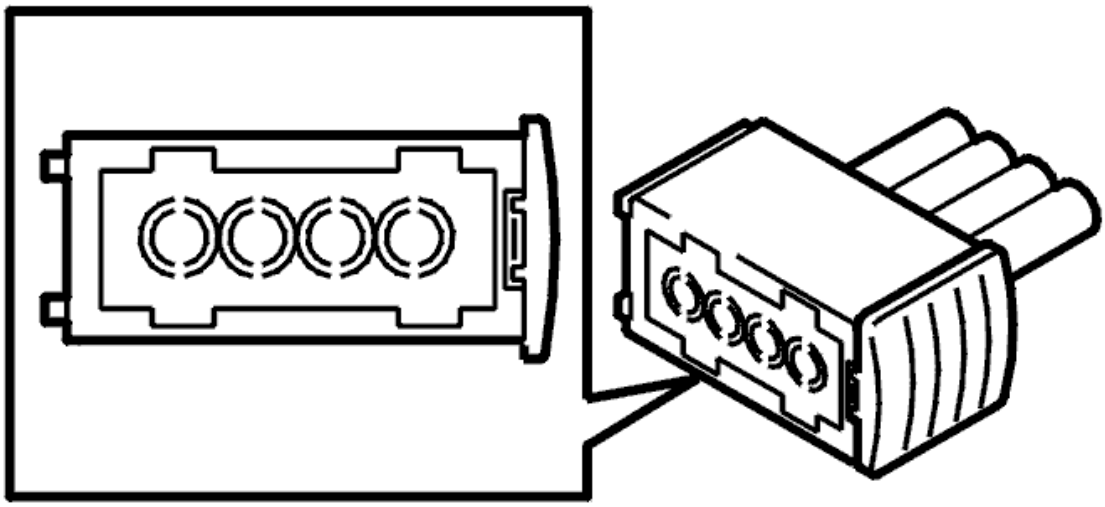

Fig. 162: Identifying Heated Oxygen Sensor
Courtesy of VOLVO CARS CORPORATION

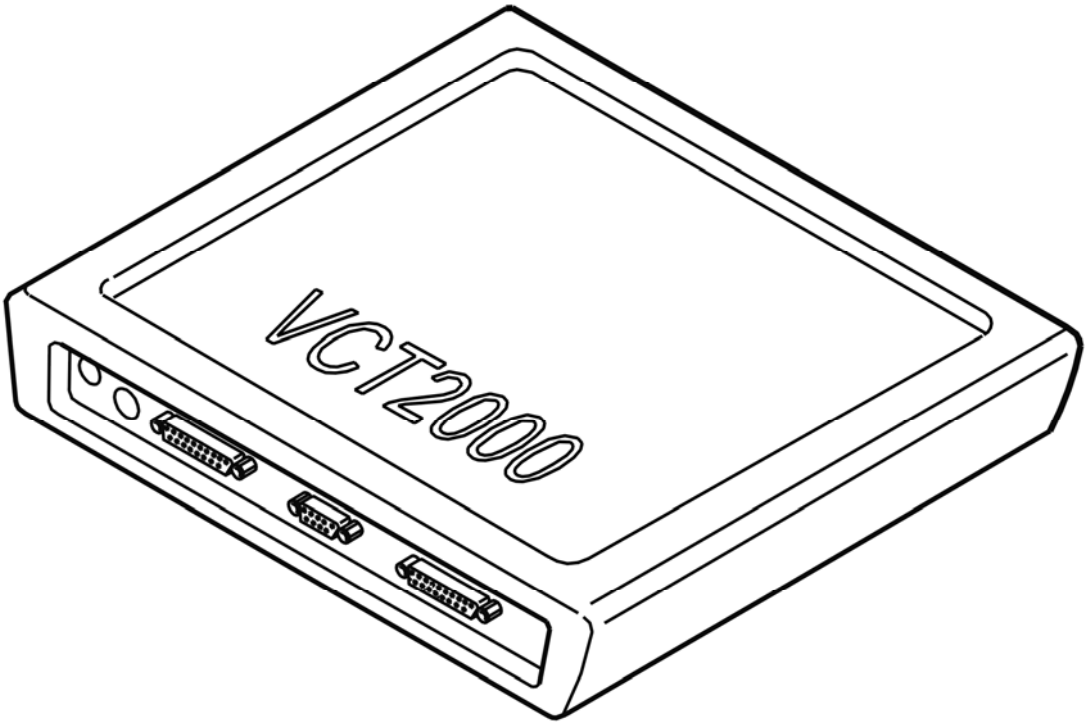

Fig. 163: Identifying VCT2000 Diagnostic Tool Symbol In VIDA
Courtesy of VOLVO CARS CORPORATION

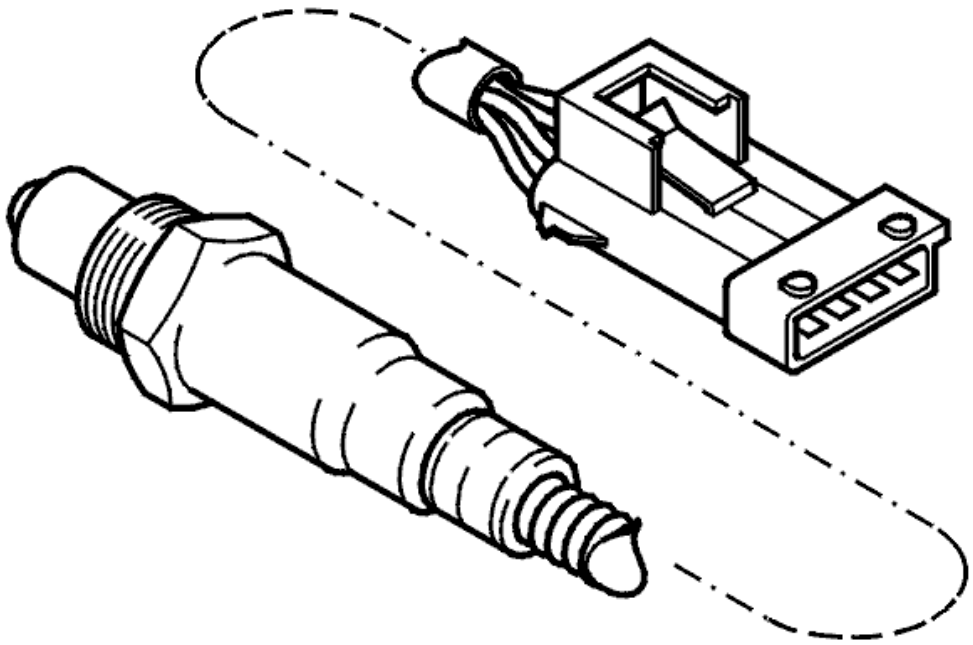

Fig. 164: Identifying Rear Heated Oxygen Sensor
Courtesy of VOLVO CARS CORPORATION

- **Continue**

  Refer to **VERIFICATION**

VERIFICATION

VERIFICATION

HINT: After carrying out the repair, check that the fault has been remedied.

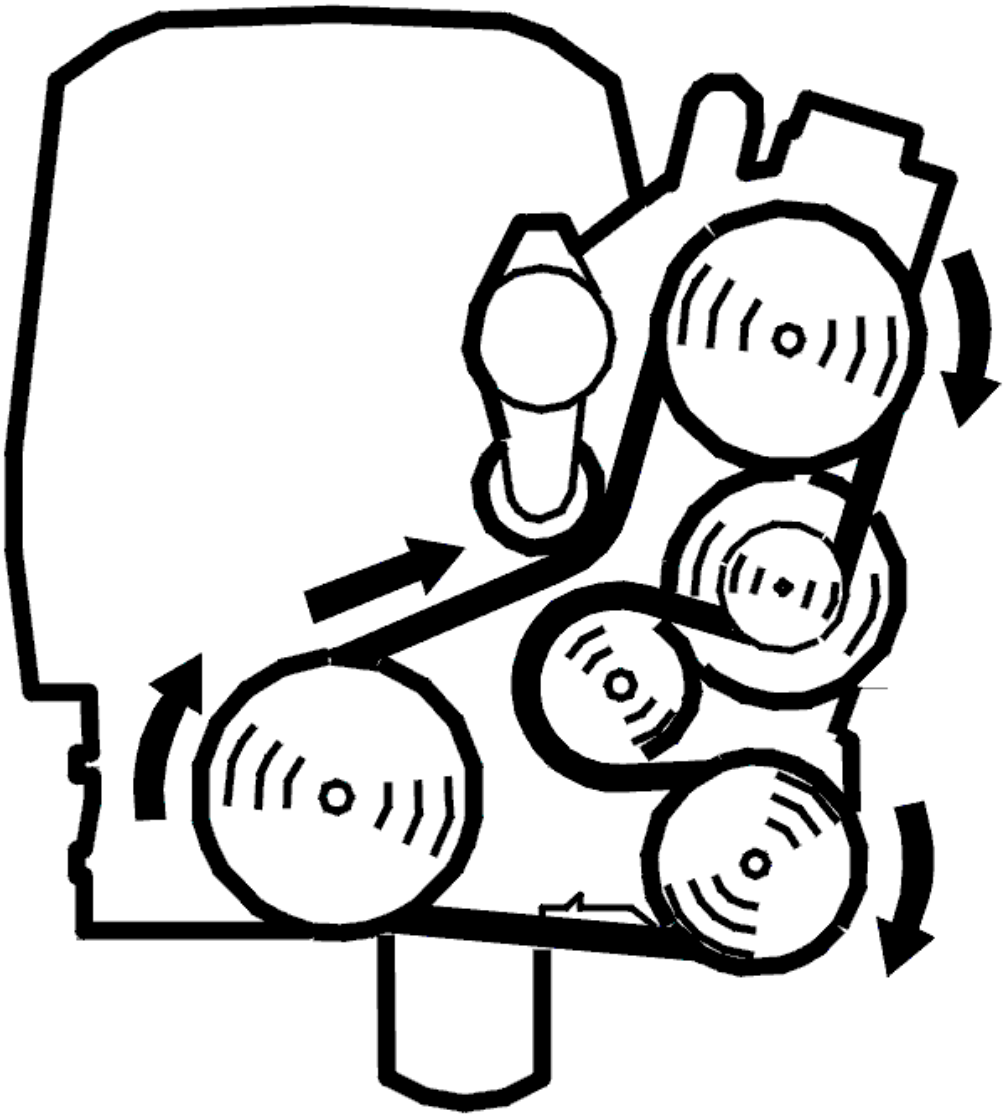

Fig. 165: Belt Routing / Engine Idling - Volvo
Courtesy of VOLVO CARS CORPORATION

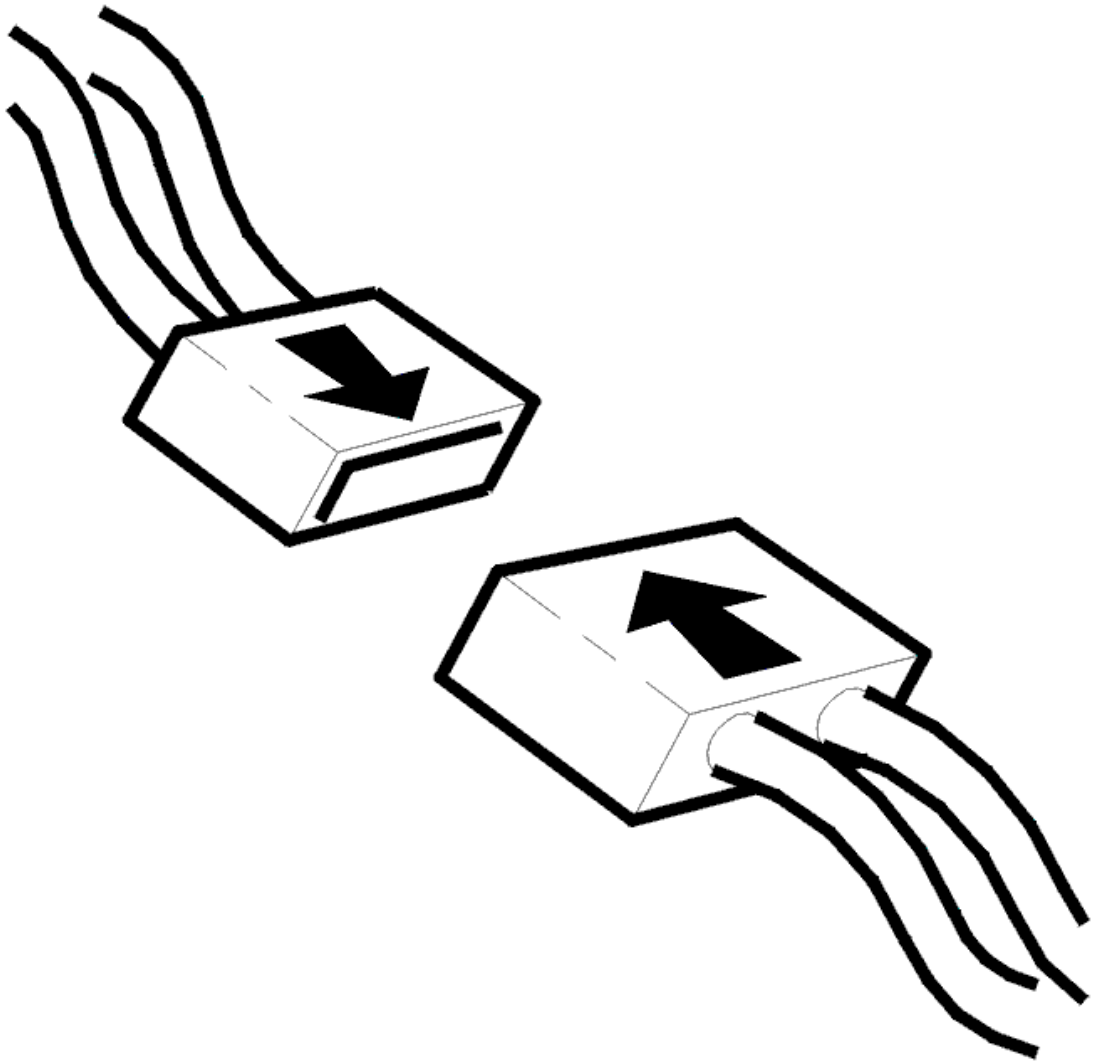

Fig. 166: Connecting Connector
Courtesy of VOLVO CARS CORPORATION

- Ignition off
- Reconnect the connectors, reinstall components etc.
- Start the engine and run it until the engine coolant temperature exceeds 60 °C
- Switch off the engine and allow it to cool (below 40 °C)
- Test drive the car on the road (engine speed (RPM) above 2000 RPM, never idling) for at least 15 minutes
- Connect VCT2000 (or appropriate scan tool) to the data link connector (DLC) without switching off the engine.

NOTE: **If the engine is switched off, the stored fault status will be erased and the test drive will have to be repeated.**

Read off the diagnostic status and fault status for the diagnostic trouble code (DTC) by selecting the relevant diagnostic trouble code (DTC) from the list.

Check the fault status for the diagnostic trouble code (DTC) when the diagnostic is "Complete". If the function is correct, the fault status must be "No fault found" when the diagnostic is complete.

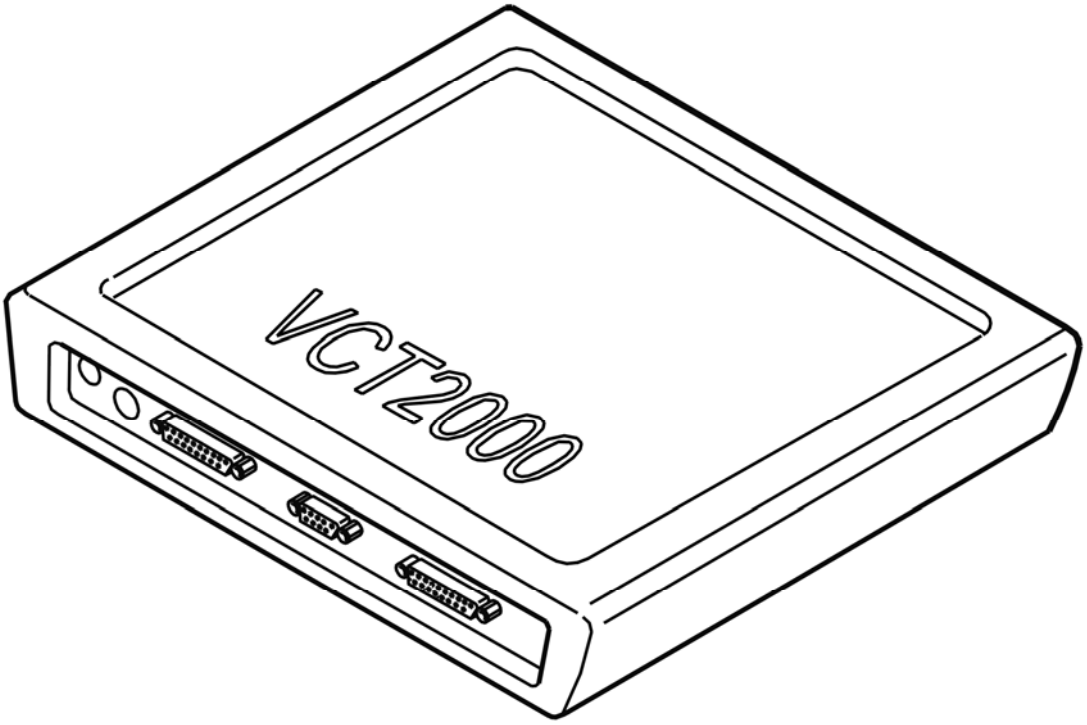

Fig. 167: Identifying VCT2000 Diagnostic Tool Symbol In VIDA
Courtesy of VOLVO CARS CORPORATION

Is the function OK?

- **YES**

  VERIFIED: Troubleshooting has been completed.

- **NO**

  Refer to **INFORMATION**

INFORMATION

FAULT-TRACING INFORMATION

The fault should have been detected and remedied. As this is not the case fault-tracing has failed.

Exit fault-tracing for this diagnostic trouble code (DTC) or make another attempt.

ECM-233B: REAR HEATED OXYGEN SENSOR (HO2S), BANK 2. SIGNAL MISSING (B6294T; 2005-2006)

DIAGNOSTIC TROUBLE CODE (DTC) INFORMATION ECM-233B

Condition

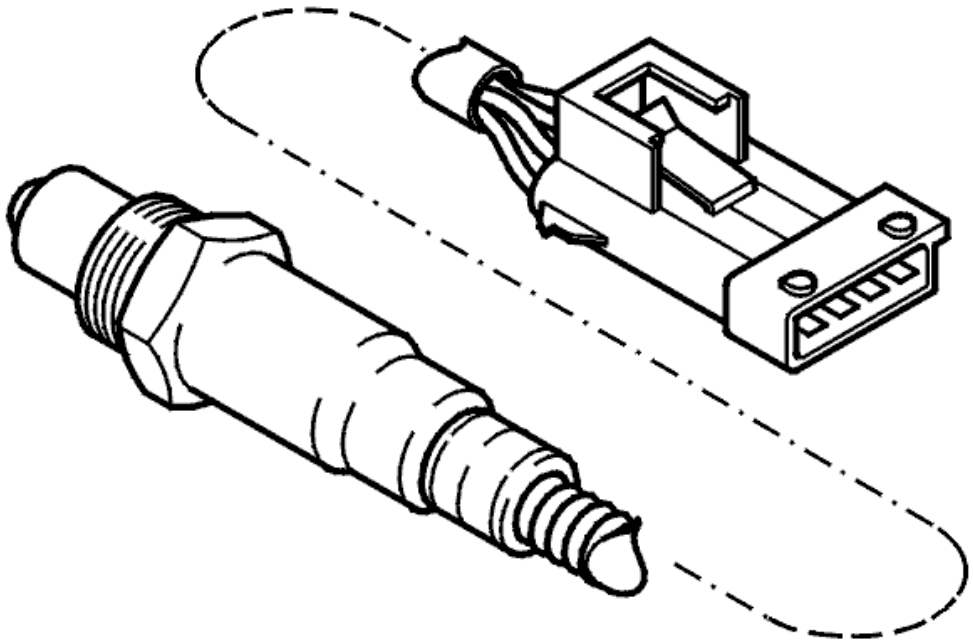

Fig. 168: Identifying Rear Heated Oxygen Sensor
Courtesy of VOLVO CARS CORPORATION

The engine control module (ECM) controls preheating by pulsing the current to the positive temperature coefficient (PTC) element in the heated oxygen sensor (HO2S). Pulse lengths are dependent on the temperature of the heated oxygen sensor (H02S).

The diagnostic trouble code (DTC) is stored if the engine control module (ECM) registers that the signal is lower than a certain value when preheating is deactivated.

Substitute Value

- The fuel trim is shut off.

Possible Source

- Contact resistance and oxidation in the terminals
- Open-circuit in the power supply from the system relay
- Damaged heated oxygen sensor (HO2S).

Fault symptom[s]

- Malfunction indicator lamp (MIL) lit.

SIGNAL MISSING

CHECKING THE STATUS

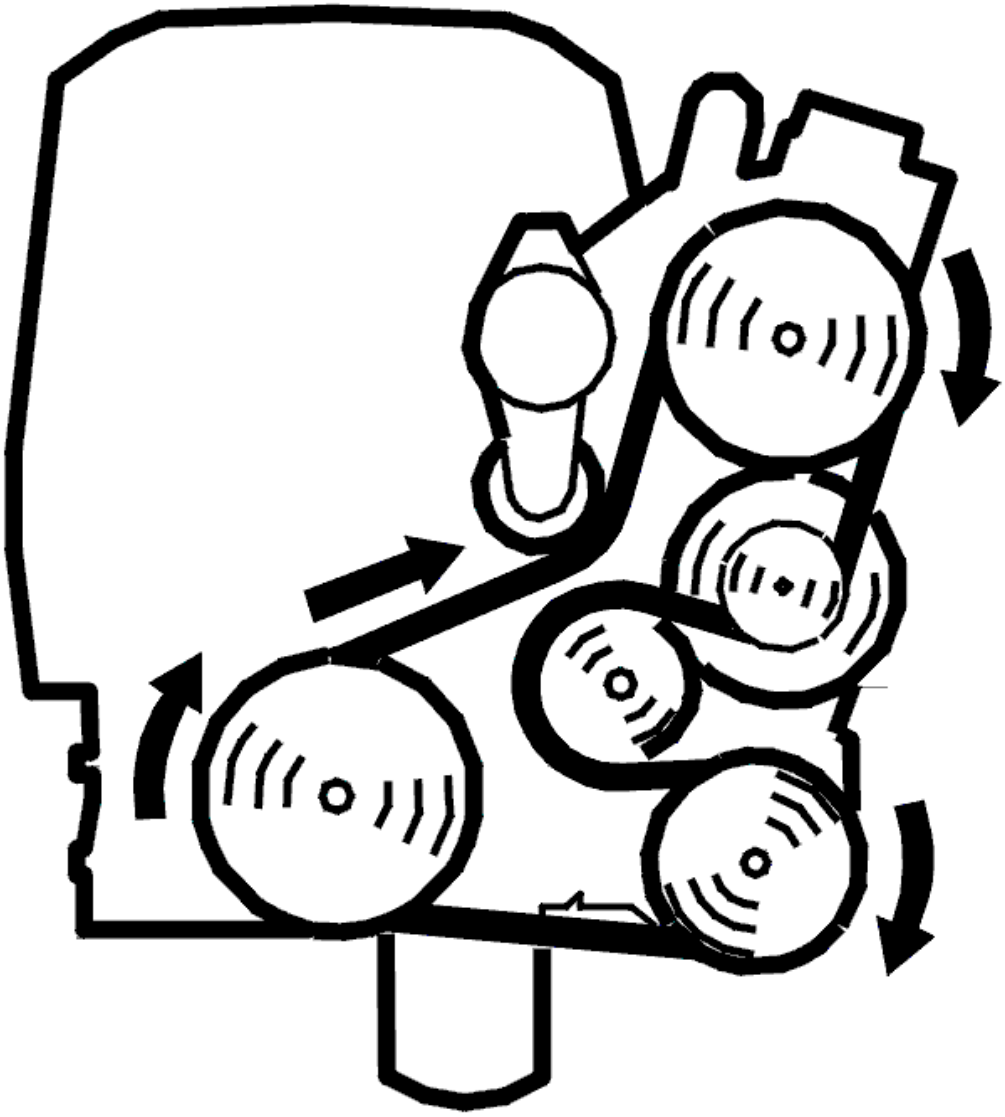

Fig. 169: Belt Routing / Engine Idling - Volvo

Courtesy of VOLVO CARS CORPORATION

- Start the engine.

  Read off the diagnostic status and fault status for the diagnostic trouble code (DTC) by selecting the relevant diagnostic trouble code (DTC) from the list.

  Increase the engine speed to 2500 RPM until the diagnostic is "Complete".

  Check whether the fault is permanent or intermittent. Read off the diagnostic trouble code (DTC) fault status when the diagnostic status is "Completed".

  HINT: In some cases several functions of the component will be diagnosed. The affects the amount of time taken to run the diagnostic.

  The fault is permanent if the fault status is "Fault found". If the fault status is "No fault found" the fault is intermittent and not presently active.

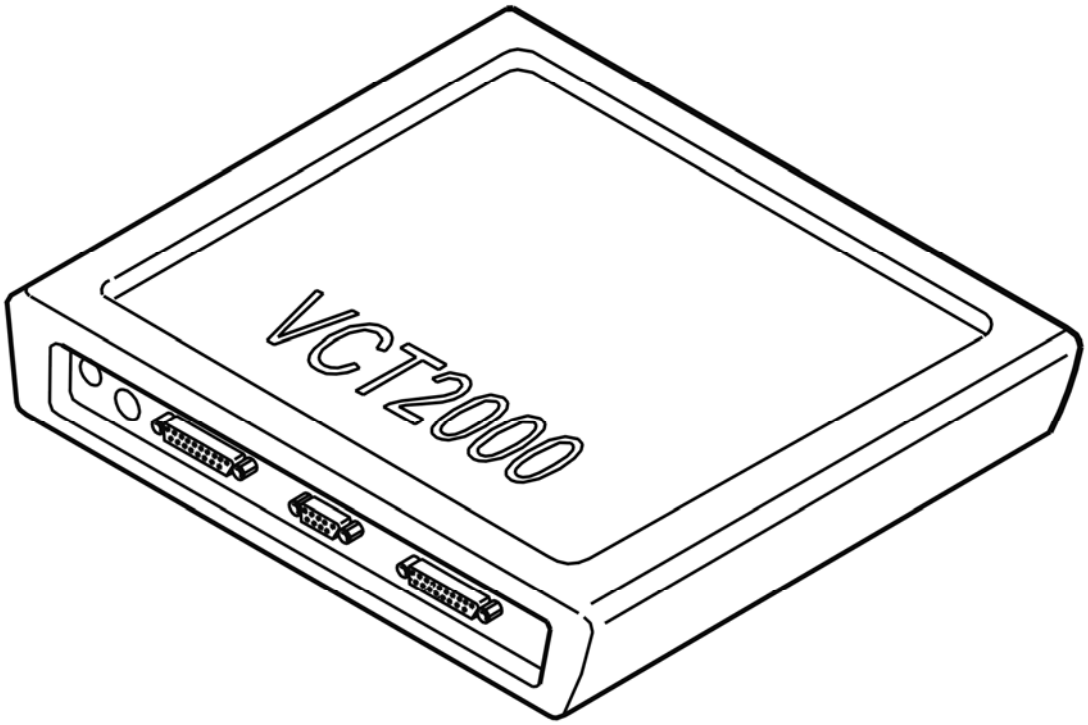

Fig. 170: Identifying VCT2000 Diagnostic Tool Symbol In VIDA
Courtesy of VOLVO CARS CORPORATION

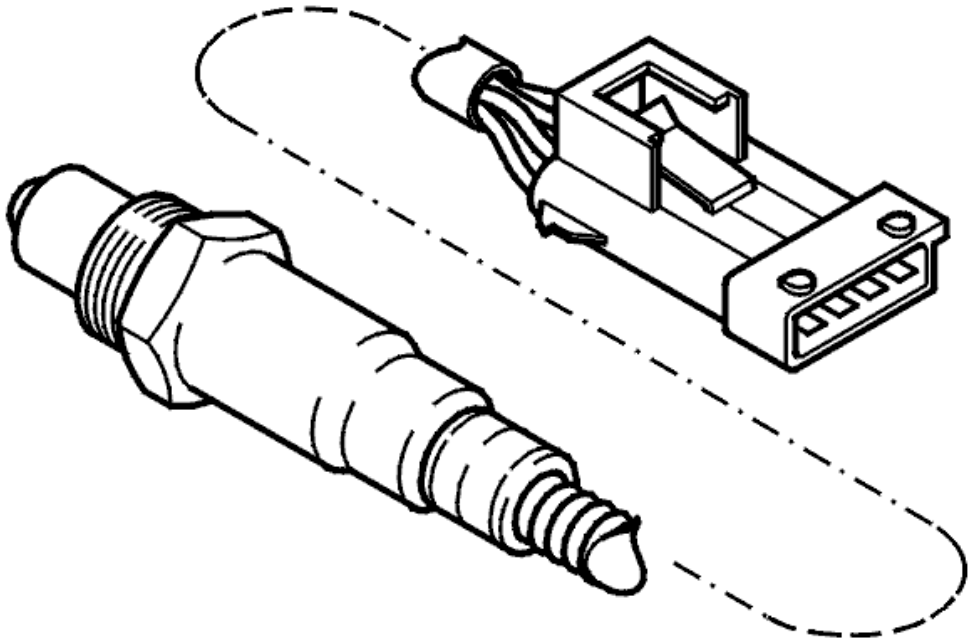

Fig. 171: Identifying Rear Heated Oxygen Sensor (HO2S)
Courtesy of VOLVO CARS CORPORATION

- **Continue**

  Refer to **CHECKING THE COMPONENTS AND WIRING**

CHECKING THE COMPONENTS AND WIRING

Check the resistance of the heated oxygen sensor (HO2S) between terminals #1 and #2.

Check the signal cable between heated oxygen sensor (HO2S) terminal #2 and engine control module (ECM) terminal #A8 (#A8). Check the power supply between system relay terminal #3 and heated oxygen sensor (HO2S) terminal #1. Check for an open-circuit.

Remedy as necessary.

Other information

- see **CONNECTING THE BREAKOUT BOX**
- For 5 cylinder turbocharged engines -2004, see **SIGNAL DESCRIPTION**
- For 5 cylinder turbocharged engines 2005-, see **SIGNAL SPECIFICATION** .
- For 6 cylinder engines -2004, see **SIGNAL SPECIFICATION**

- For 6 cylinder engines 2005-, see **SIGNAL SPECIFICATION** .
- For resistance values, see: **COMPONENT SPECIFICATIONS**
- For B5xx4T, see **HEATED OXYGEN SENSOR (HO2S), REPLACING**
- For B6xx4T, see **HEATED OXYGEN SENSOR (HO2S), REPLACING** .
- see **CHECKING WIRING AND TERMINALS** .

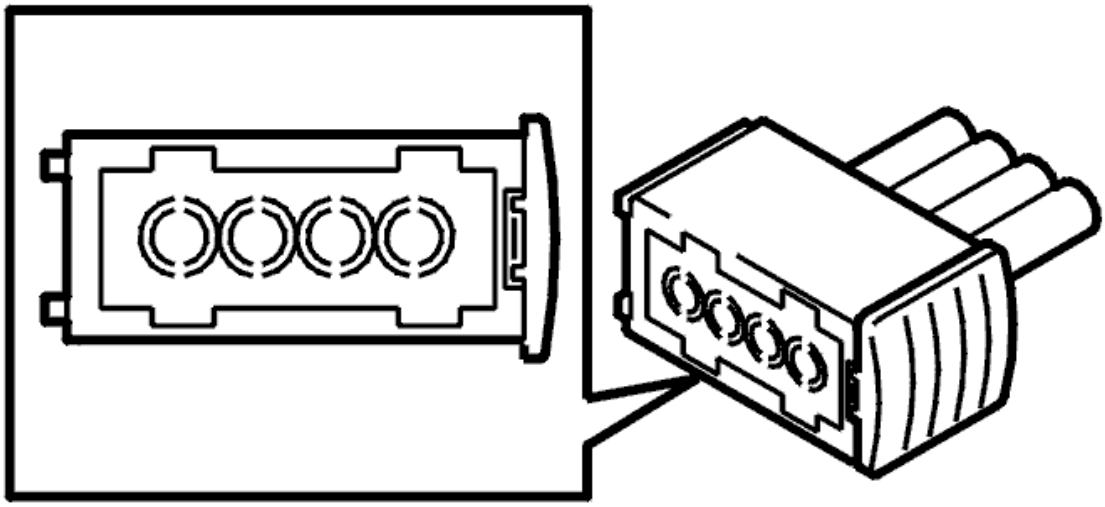

Fig. 172: Identifying Heated Oxygen Sensor
Courtesy of VOLVO CARS CORPORATION

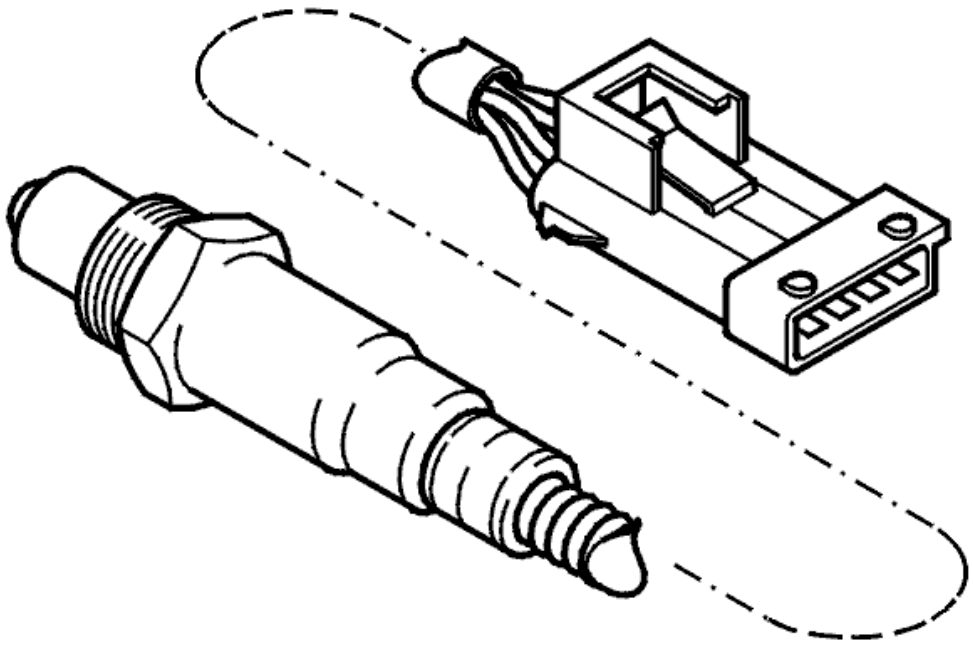

Fig. 173: Identifying Rear Heated Oxygen Sensor
Courtesy of VOLVO CARS CORPORATION

- **Continue**

  Refer to **VERIFICATION**

VERIFICATION

VERIFICATION

HINT: After carrying out the repair, check that the fault has been remedied.

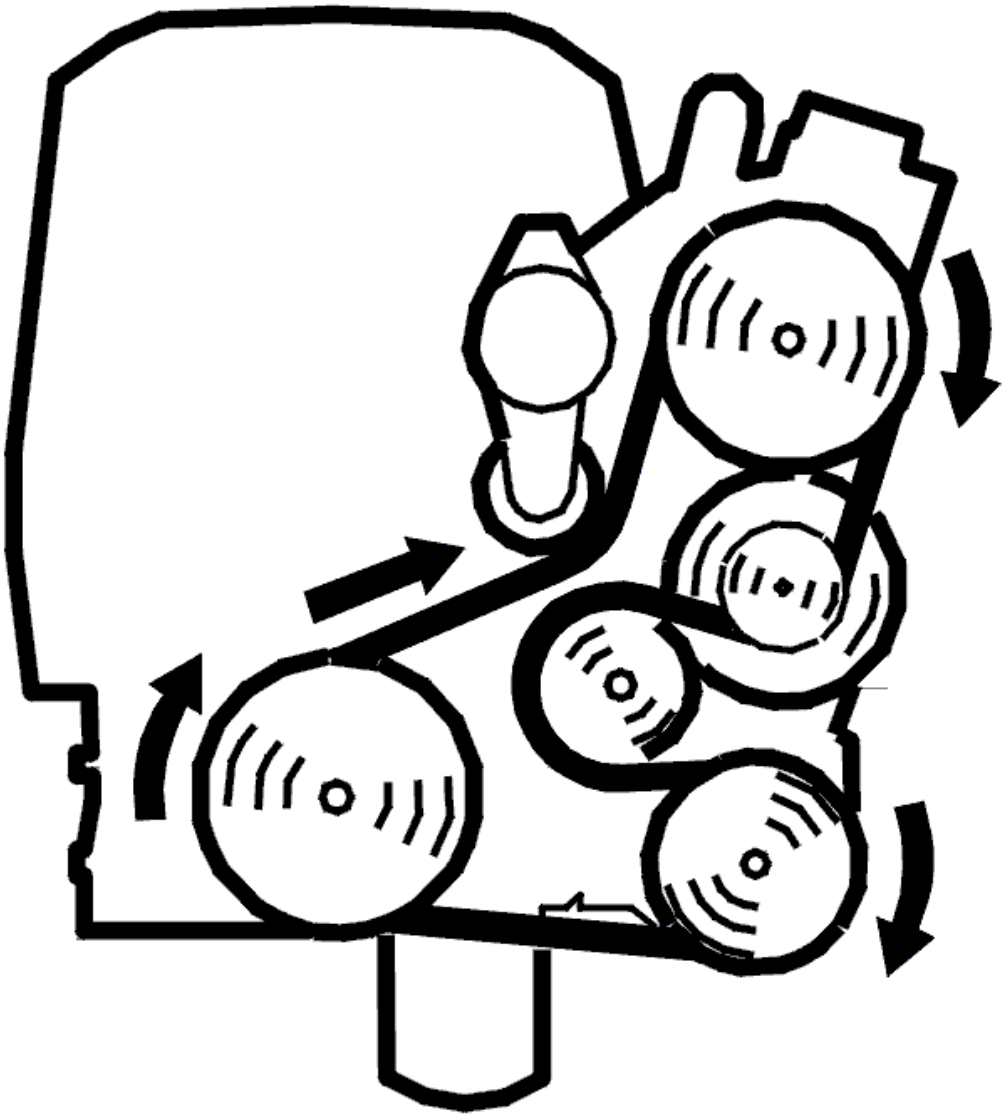

Fig. 174: Belt Routing / Engine Idling - Volvo
Courtesy of VOLVO CARS CORPORATION

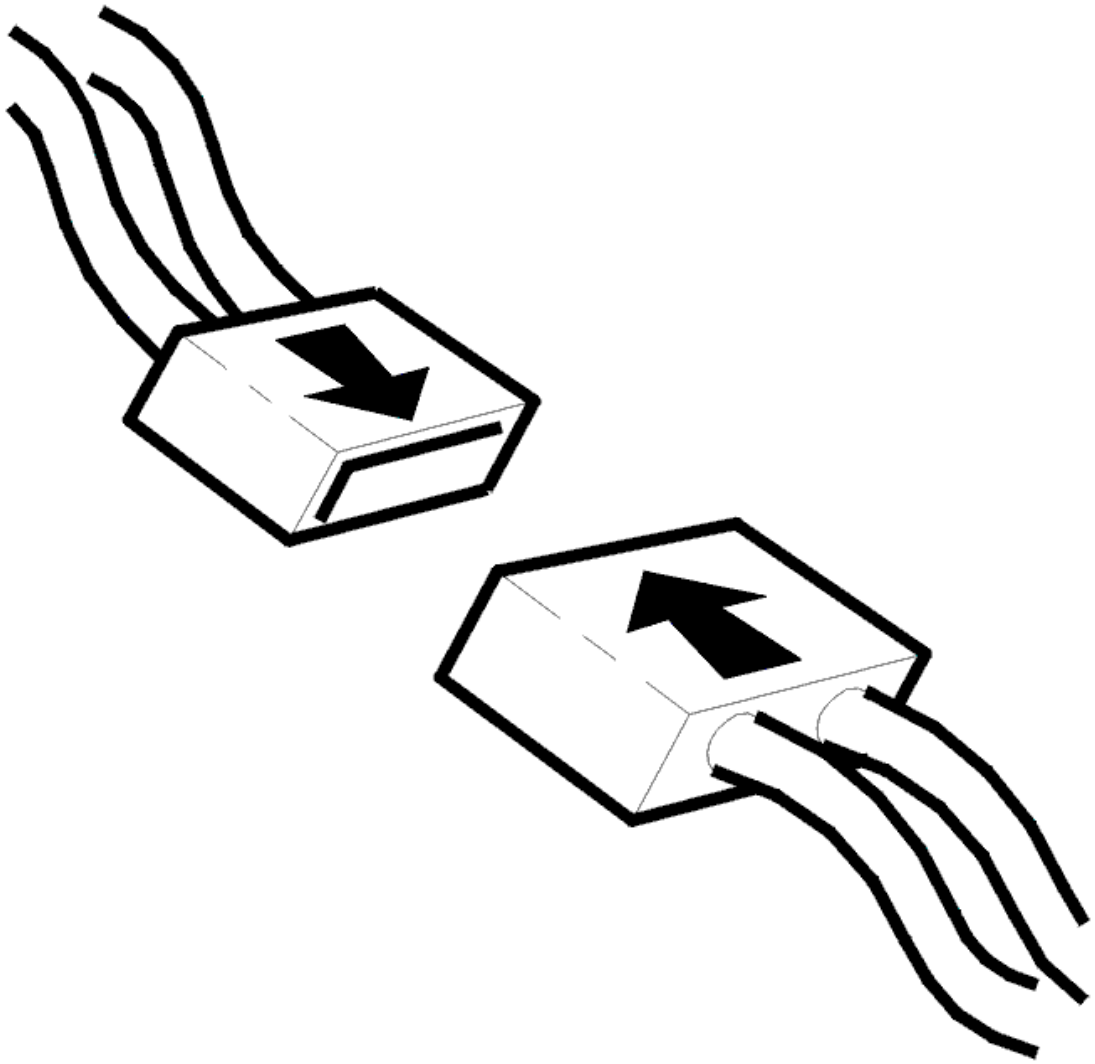

Fig. 175: Connecting Connector
Courtesy of VOLVO CARS CORPORATION

- Ignition off
- Reconnect the connectors, reinstall components etc.
- Start the engine.

  Read off the diagnostic status and fault status for the diagnostic trouble code (DTC) by selecting the relevant diagnostic trouble code (DTC) from the list.

  Increase the engine speed to 2500 RPM until the diagnostic is "Complete".

  Check the fault status for the diagnostic trouble code (DTC) when the diagnostic is "Complete". If the function is correct, the fault status must be "No fault found" when the diagnostic is complete.

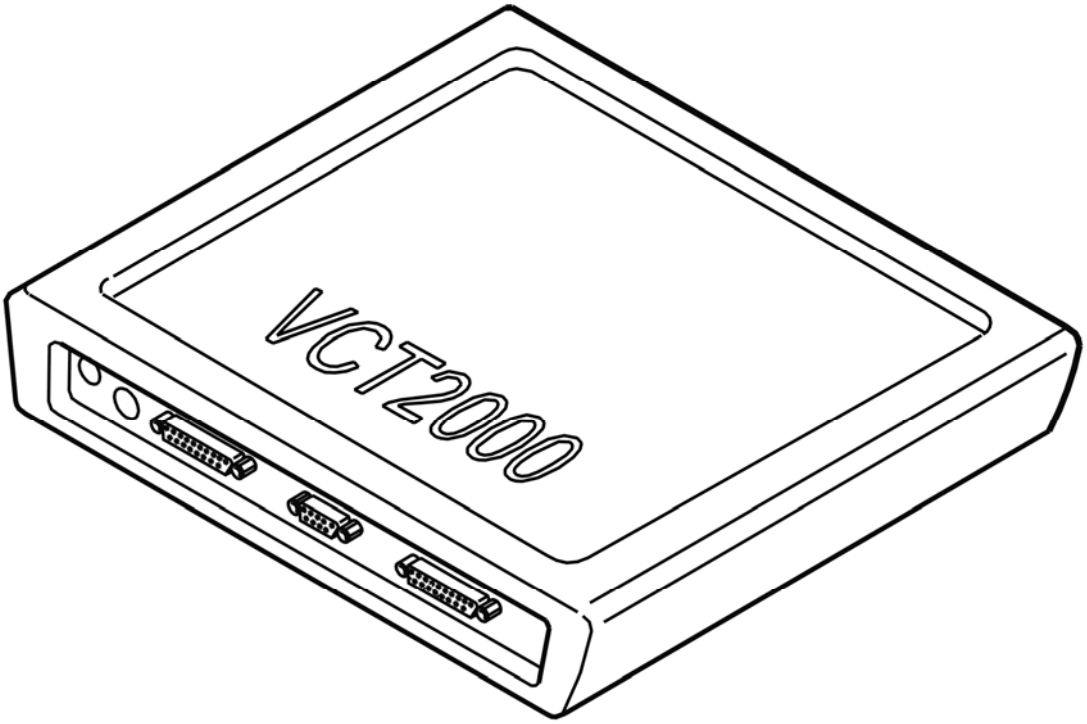

Fig. 176: Identifying VCT2000 Diagnostic Tool Symbol In VIDA
Courtesy of VOLVO CARS CORPORATION

Is the function OK?

- **YES**

  VERIFIED: Troubleshooting has been completed.

- **NO**

  Refer to **INFORMATION**

INFORMATION

FAULT-TRACING INFORMATION

The fault should have been detected and remedied. As this is not the case fault-tracing has failed.

Exit fault-tracing for this diagnostic trouble code (DTC) or make another attempt.

ECM-233C: REAR HEATED OXYGEN SENSOR (HO2S), BANK 2. SIGNAL TOO HIGH (B6294T; 2005-2006)

DIAGNOSTIC TROUBLE CODE (DTC) INFORMATION ECM-233C

Condition

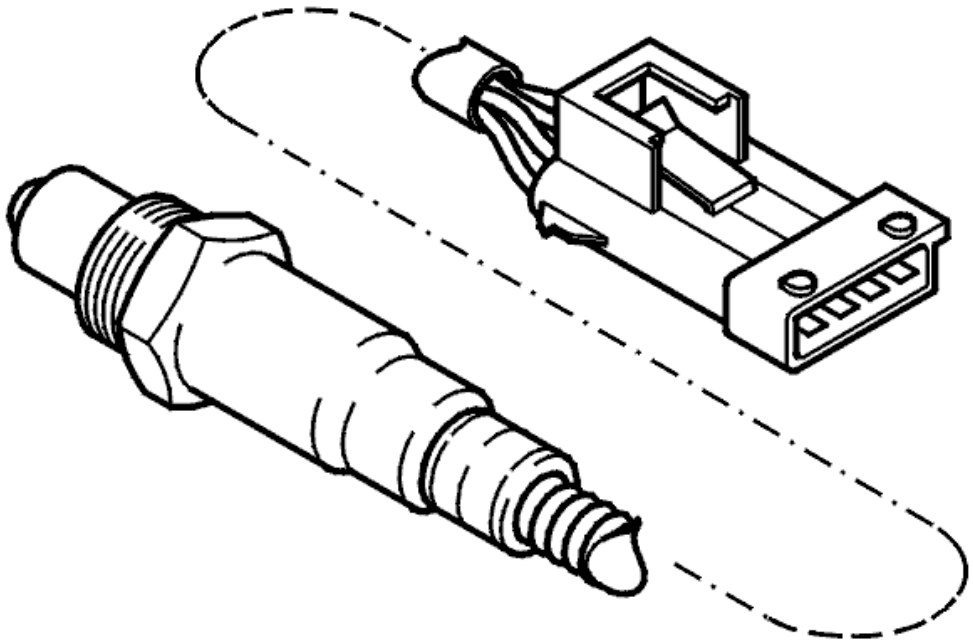

Fig. 177: Identifying Rear Heated Oxygen Sensor
Courtesy of VOLVO CARS CORPORATION

The engine control module (ECM) controls preheating by pulsing the current to the positive temperature coefficient (PTC) element in the heated oxygen sensor (HO2S). Pulse lengths are dependent on the temperature of the heated oxygen sensor (H02S).

The diagnostic trouble code (DTC) is stored if the engine control module (ECM) registers that the signal is higher than a certain value when preheating is active.

Substitute Value

- The fuel trim is shut off.

Possible Source

- Short-circuit to supply voltage in the signal cable
- Damaged heated oxygen sensor (HO2S).

Fault symptom[s]

- Malfunction indicator lamp (MIL) lit.

SIGNAL TOO HIGH

CHECKING THE COMPONENTS AND WIRING

Check the resistance of the heated oxygen sensor (HO2S) between terminals #1 and #2.

Check the signal cable between heated oxygen sensor (HO2S) terminal #2 and engine control module (ECM) terminal #A8 (#A8). Check for a short-circuit to supply voltage.

Remedy as necessary.

Other information:

- see **CONNECTING THE BREAKOUT BOX**
- For 5 cylinder turbocharged engines -2004, see **SIGNAL DESCRIPTION**
- For 5 cylinder turbocharged engines 2005-, see **SIGNAL SPECIFICATION** .
- For 6 cylinder engines -2004, see **SIGNAL SPECIFICATION**
- For 6 cylinder engines 2005-, see **SIGNAL SPECIFICATION** .
- For resistance values: **COMPONENT SPECIFICATIONS**
- For B5xx4T, see **HEATED OXYGEN SENSOR (HO2S), REPLACING**
- For B6xx4T, see **HEATED OXYGEN SENSOR (HO2S), REPLACING** .
- see **CHECKING WIRING AND TERMINALS**

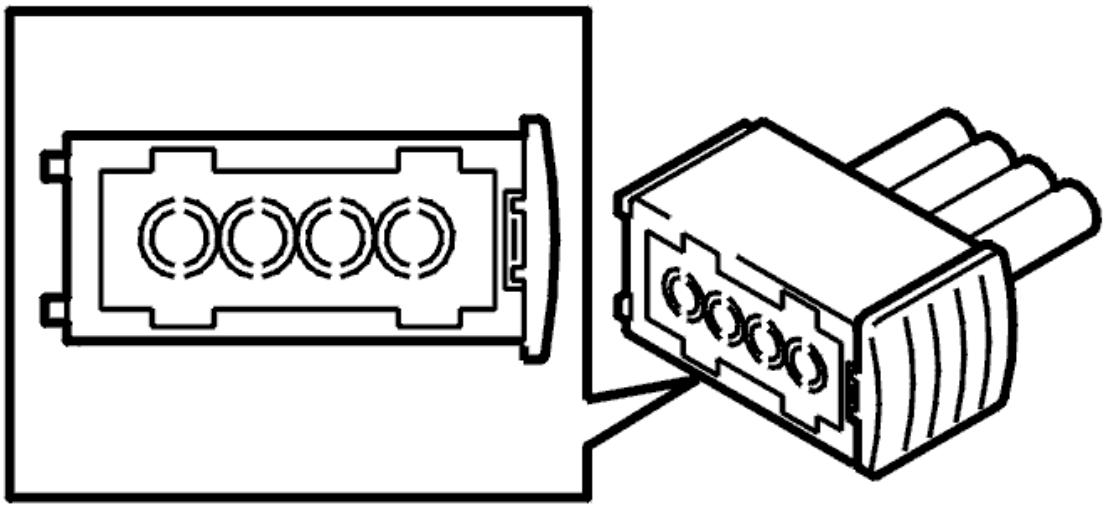

Fig. 178: Identifying Rear Heated Oxygen Sensor (HO2S) Connector
Courtesy of VOLVO CARS CORPORATION

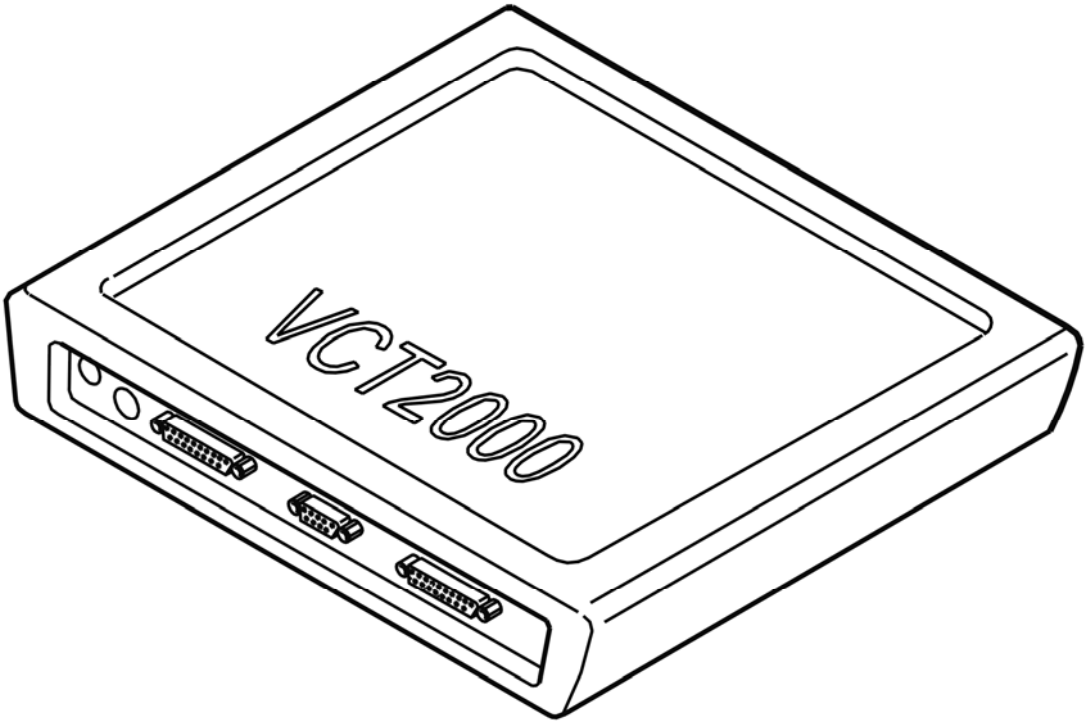

Fig. 179: Identifying VCT2000 Diagnostic Tool Symbol In VIDA
Courtesy of VOLVO CARS CORPORATION

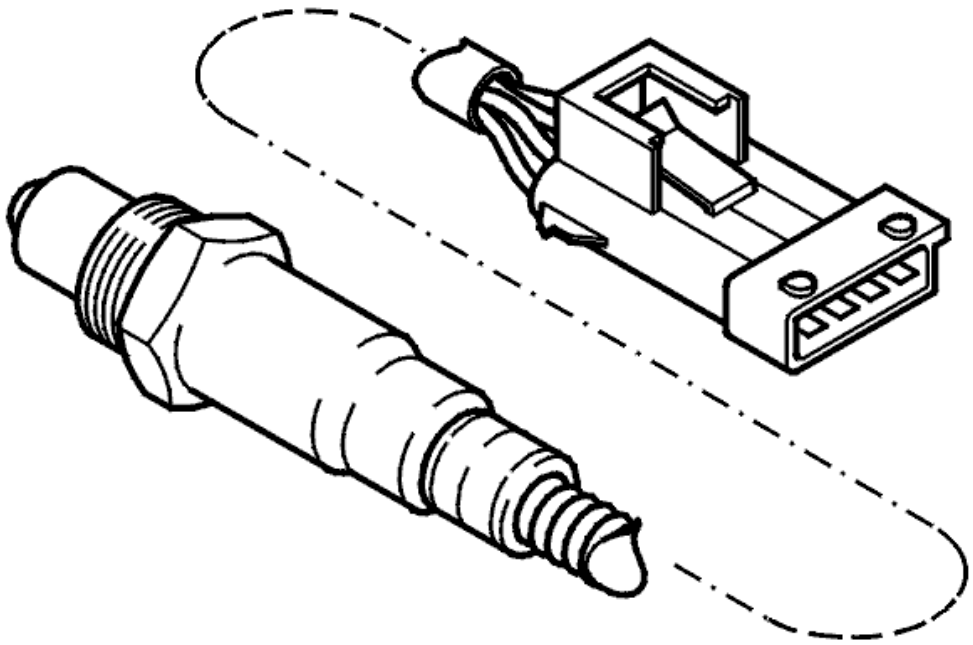

Fig. 180: Identifying Rear Heated Oxygen Sensor (HO2S)
Courtesy of VOLVO CARS CORPORATION

- **Continue**

  Refer to **VERIFICATION**

VERIFICATION

VERIFICATION

HINT: After carrying out the repair, check that the fault has been remedied.

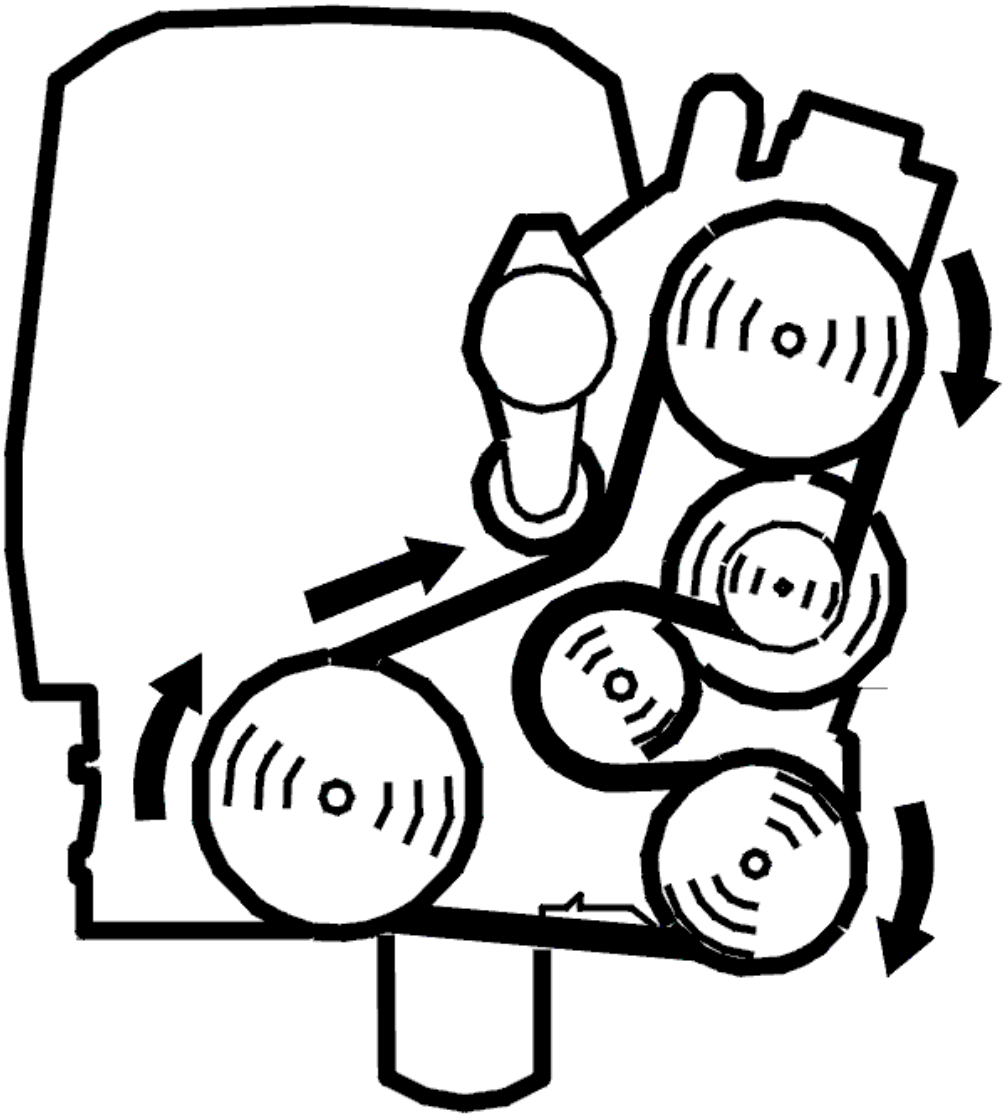

Fig. 181: Belt Routing / Engine Idling - Volvo
Courtesy of VOLVO CARS CORPORATION

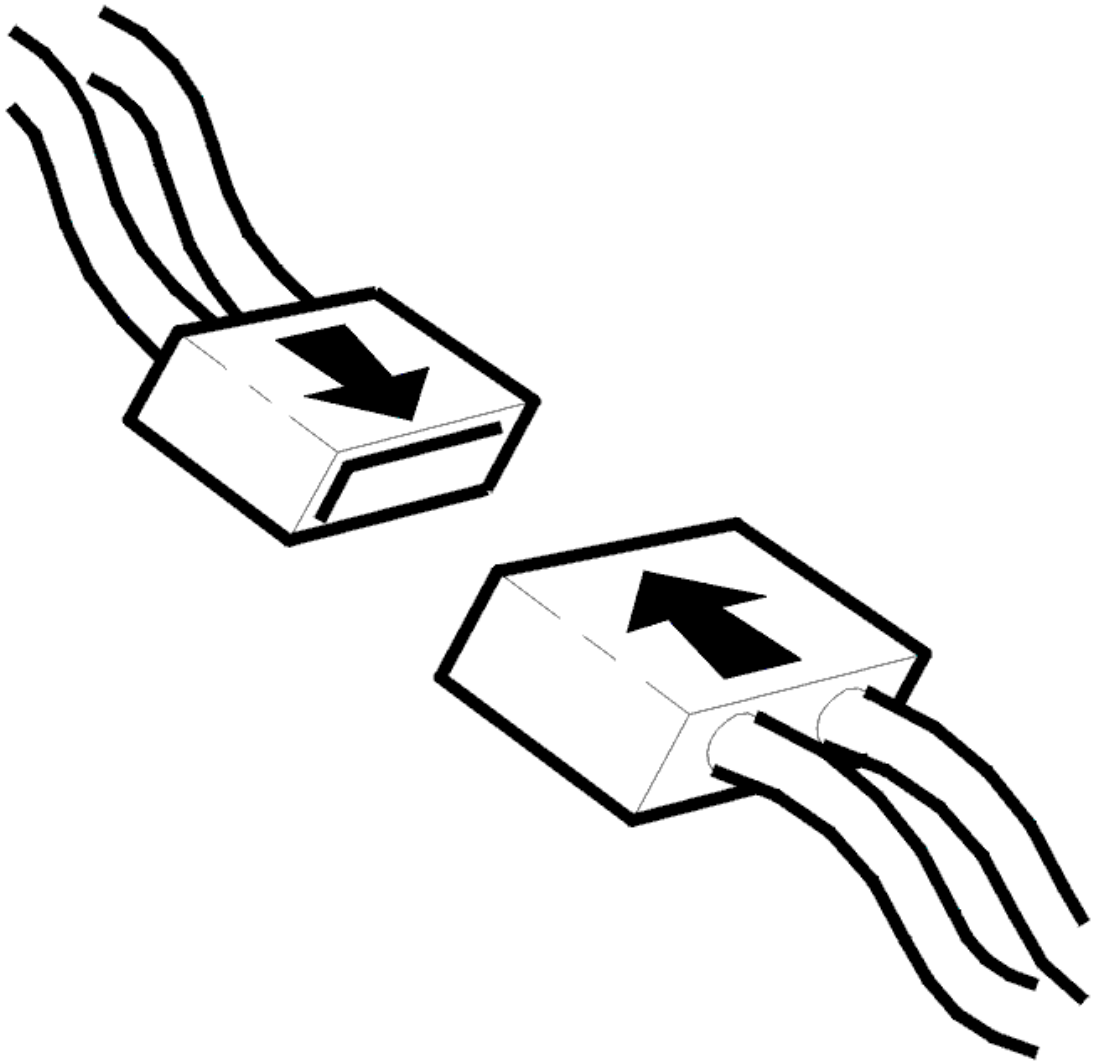

Fig. 182: Connecting Connector
Courtesy of VOLVO CARS CORPORATION

- Ignition off
- Reconnect the connectors, reinstall components etc.
- Start the engine.

  Read off the diagnostic status and fault status for the diagnostic trouble code (DTC) by selecting the relevant diagnostic trouble code (DTC) from the list.

  Increase the engine speed to 2500 RPM until the diagnostic is "Complete".

  Check the fault status for the diagnostic trouble code (DTC) when the diagnostic is "Complete". If the function is correct, the fault status must be "No fault found" when the diagnostic is complete.

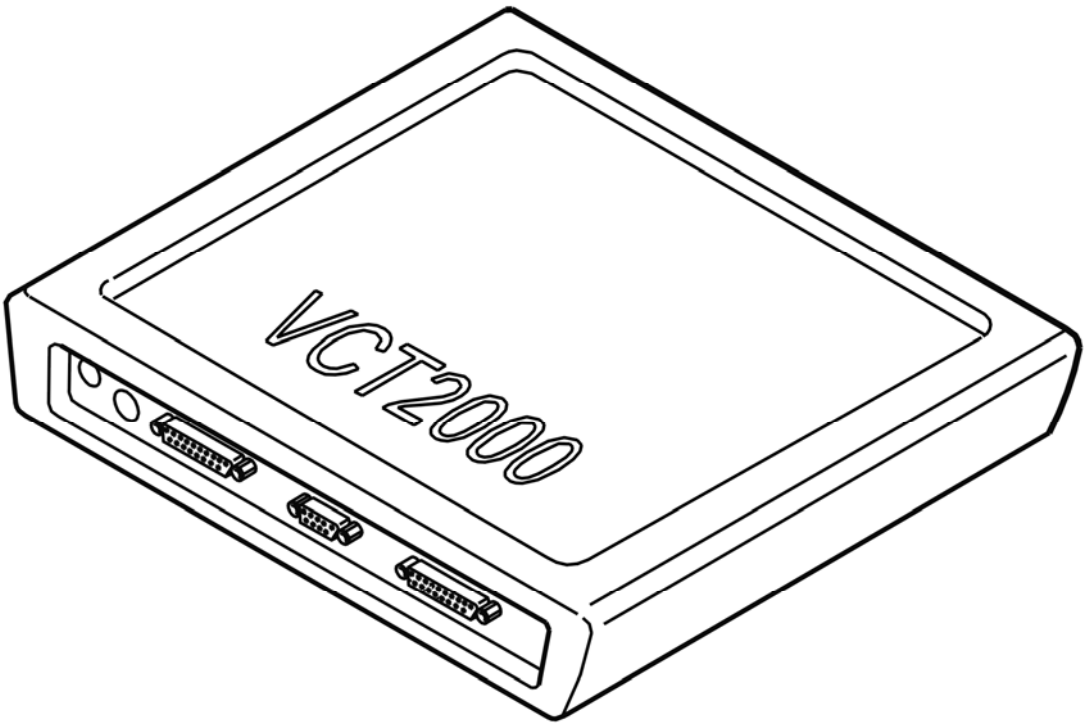

Fig. 183: Identifying VCT2000 Diagnostic Tool Symbol In VIDA
Courtesy of VOLVO CARS CORPORATION

Is the function OK?

- **YES**

  VERIFIED: Troubleshooting has been completed.

- **NO**

  Refer to **INFORMATION**

INFORMATION

FAULT-TRACING INFORMATION

The fault should have been detected and remedied. As this is not the case fault-tracing has failed.

Exit fault-tracing for this diagnostic trouble code (DTC) or make another attempt.

ECM-233D: REAR HEATED OXYGEN SENSOR (HO2S), BANK 2. SIGNAL TOO LOW (B6294T; 2005-2006)

DIAGNOSTIC TROUBLE CODE (DTC) INFORMATION ECM-233D

Condition

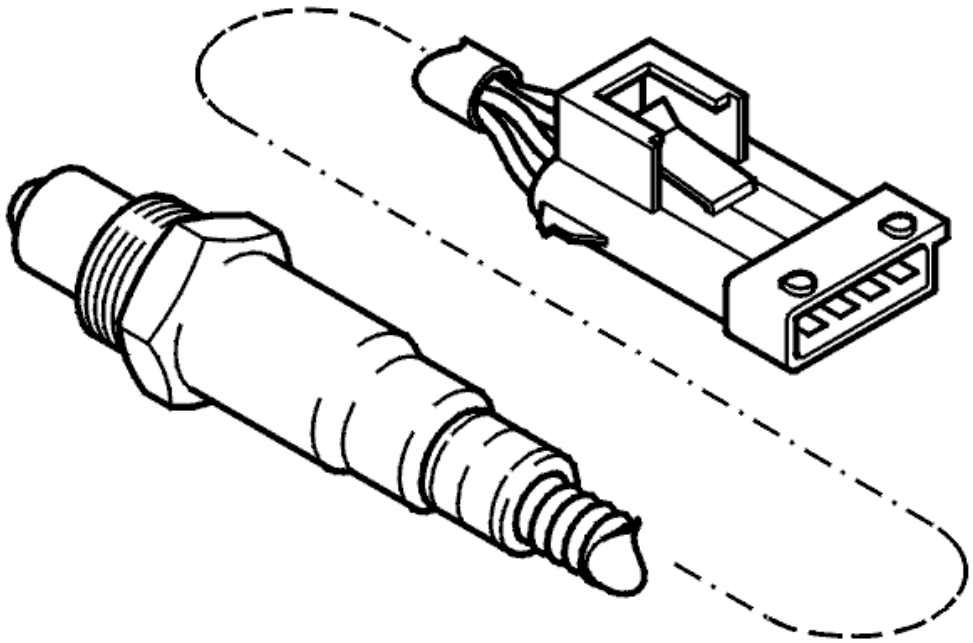

Fig. 184: Identifying Rear Heated Oxygen Sensor
Courtesy of VOLVO CARS CORPORATION

The engine control module (ECM) controls preheating by pulsing the current to the positive temperature coefficient (PTC) element in the heated oxygen sensor (HO2S). Pulse lengths are dependent on the temperature of the heated oxygen sensor (H02S).

The diagnostic trouble code (DTC) is stored if the engine control module (ECM) registers that the signal is lower than a certain value when preheating is deactivated.

Substitute Value

- The fuel trim is shut off.

Possible Source

- Short-circuit to ground in the signal cable
- Damaged heated oxygen sensor (HO2S).

Fault symptom[s]

- Malfunction indicator lamp (MIL) lit.

SIGNAL TOO LOW

CHECKING THE COMPONENTS AND WIRING

Check the resistance of the heated oxygen sensor (HO2S) between terminals #1 and #2.

Check the signal cable between heated oxygen sensor (HO2S) terminal #2 and engine control module (ECM) terminal #A8 (#A8). Check for a short-circuit to ground.

Remedy as necessary.

Other information:

- see **CONNECTING THE BREAKOUT BOX**
- For 5 cylinder turbocharged engines -2004, see **SIGNAL DESCRIPTION**
- For 5 cylinder turbocharged engines 2005-, see **SIGNAL SPECIFICATION** .
- For 6 cylinder engines -2004, see **SIGNAL SPECIFICATION**
- For 6 cylinder engines 2005-, see **SIGNAL SPECIFICATION** .
- For resistance values: **COMPONENT SPECIFICATIONS**
- For B5xx4T, see **HEATED OXYGEN SENSOR (HO2S), REPLACING**
- For B6xx4T, see **HEATED OXYGEN SENSOR (HO2S), REPLACING** .
- see **CHECKING WIRING AND TERMINALS**

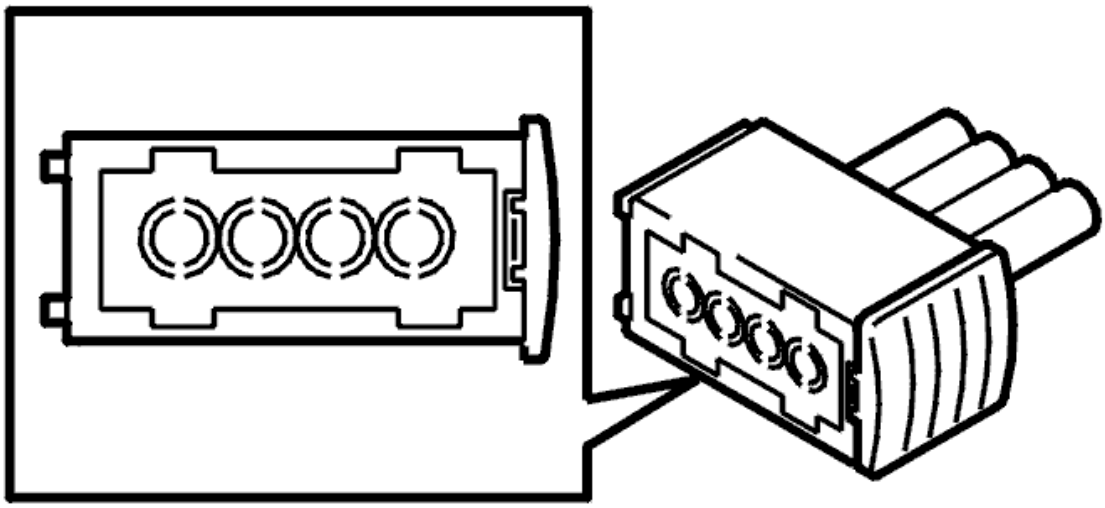

Fig. 185: Identifying Rear Heated Oxygen Sensor (HO2S) Connector
Courtesy of VOLVO CARS CORPORATION

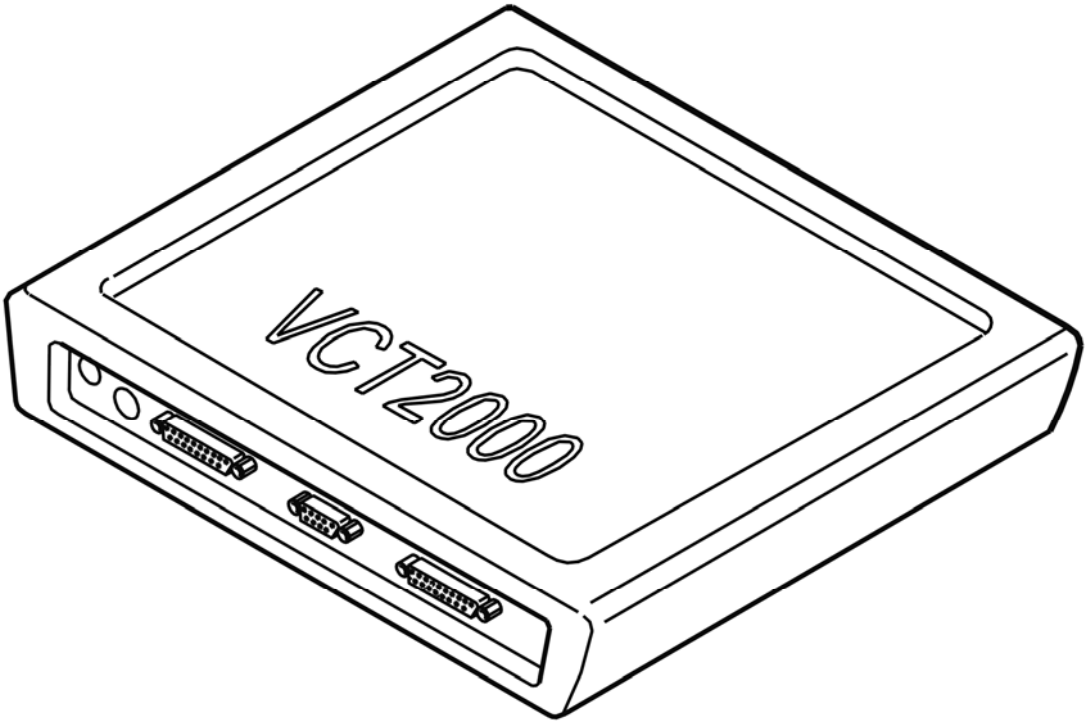

Fig. 186: Identifying VCT2000 Diagnostic Tool Symbol In VIDA
Courtesy of VOLVO CARS CORPORATION

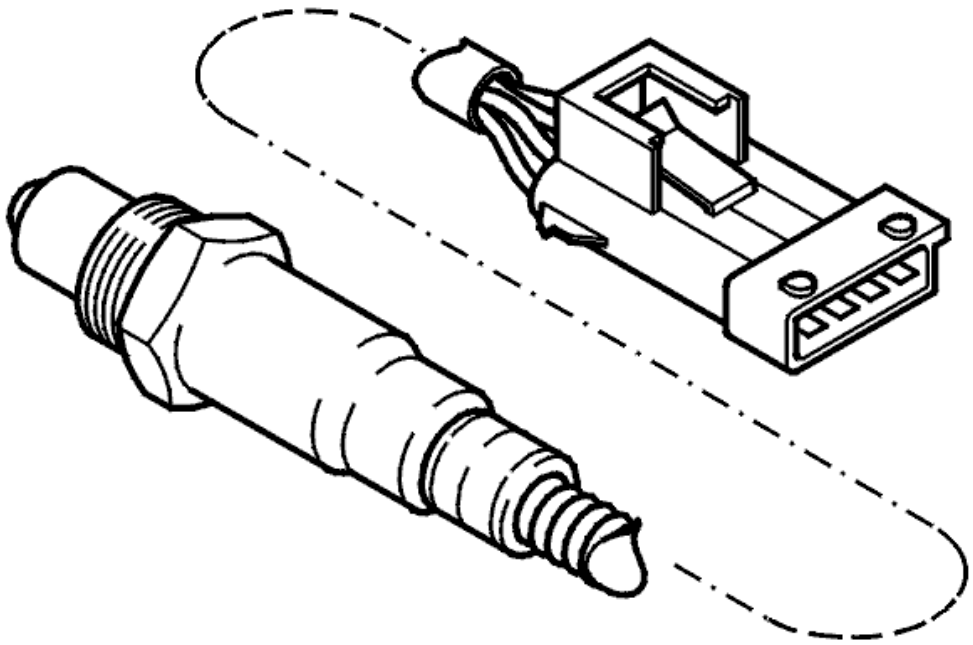

Fig. 187: Identifying Rear Heated Oxygen Sensor (HO2S)
Courtesy of VOLVO CARS CORPORATION

- **Continue**

  Refer to **VERIFICATION**

VERIFICATION

VERIFICATION

HINT: After carrying out the repair, check that the fault has been remedied.

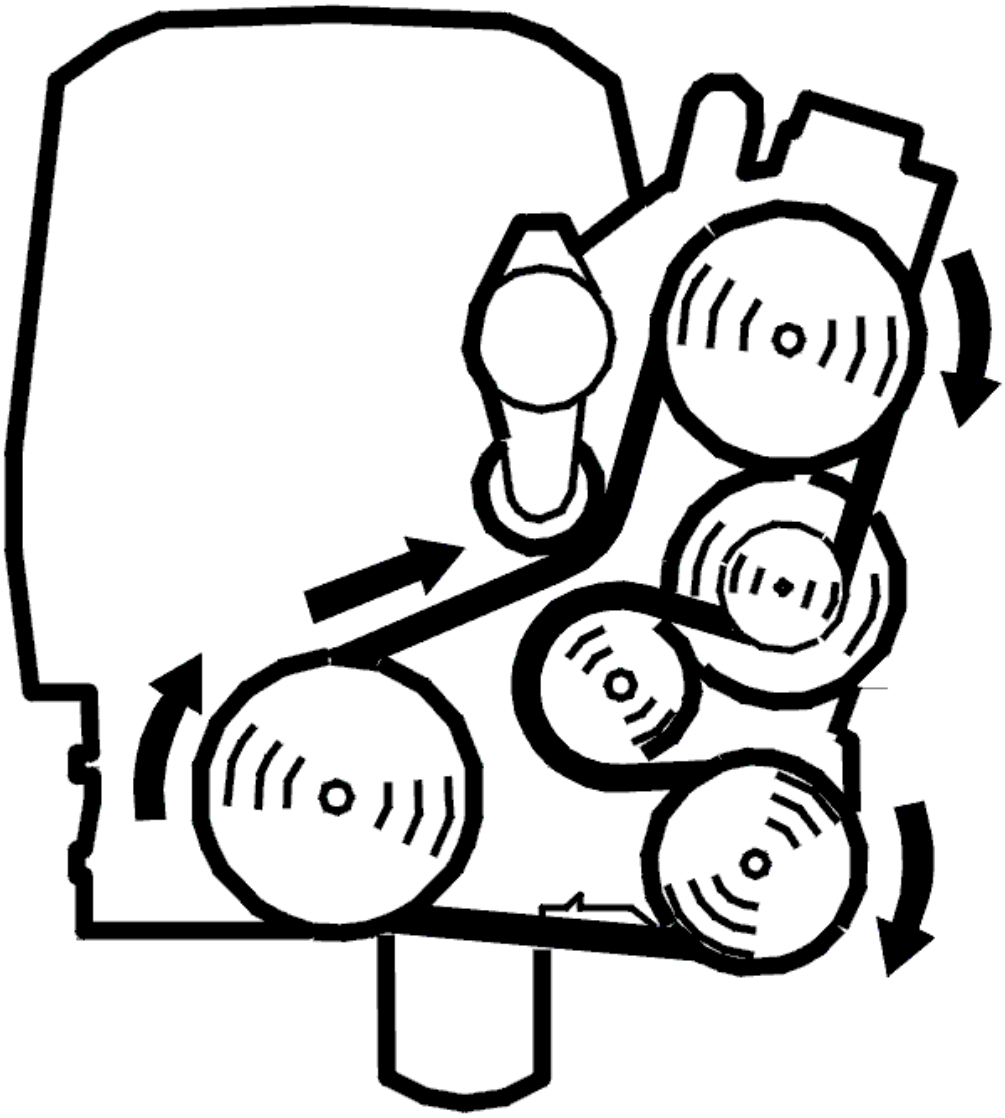

Fig. 188: Belt Routing / Engine Idling - Volvo
Courtesy of VOLVO CARS CORPORATION

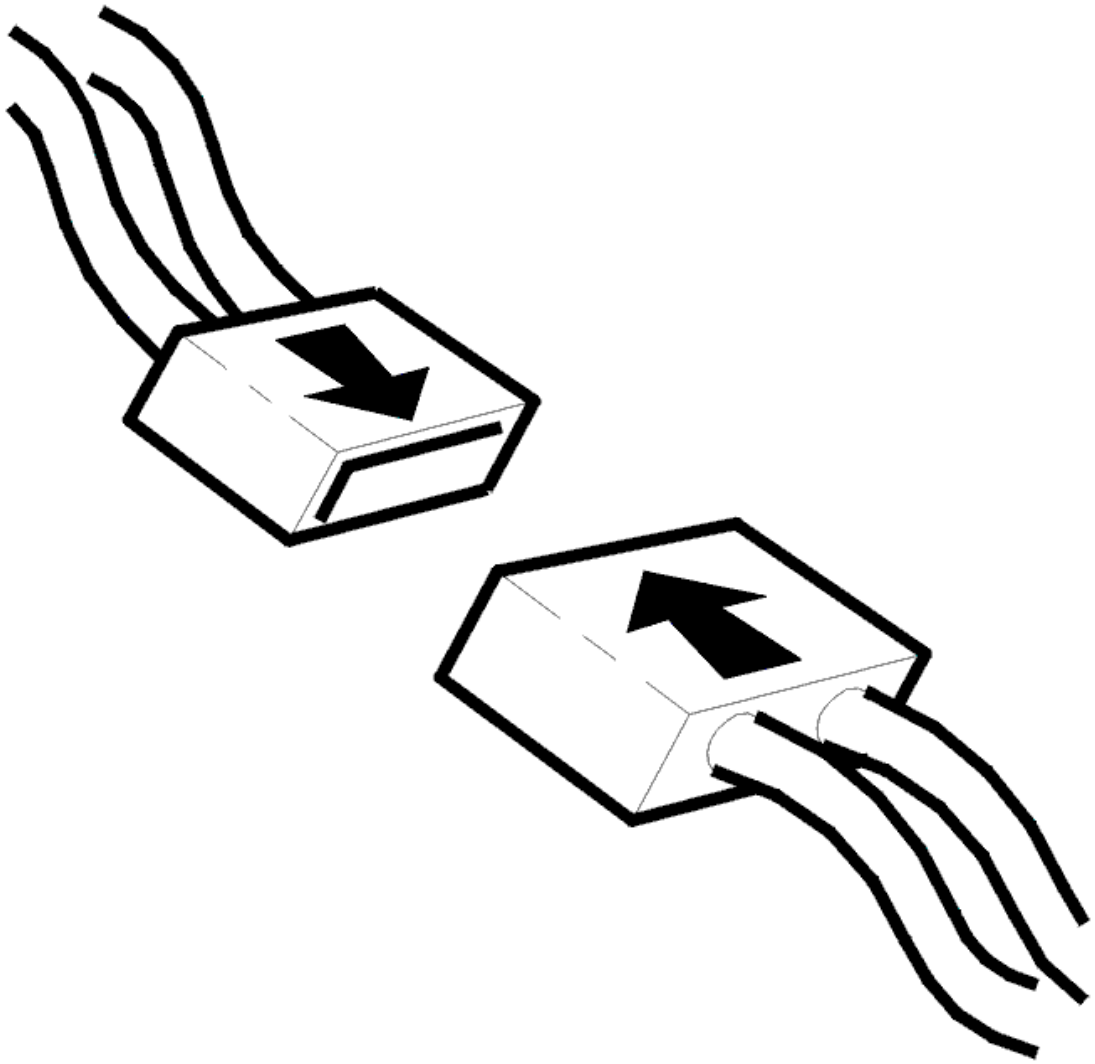

Fig. 189: Connecting Connector
Courtesy of VOLVO CARS CORPORATION

- Ignition off
- Reconnect the connectors, reinstall components etc.
- Start the engine.

  Read off the diagnostic status and fault status for the diagnostic trouble code (DTC) by selecting the relevant diagnostic trouble code (DTC) from the list.

  Increase the engine speed to 2500 RPM until the diagnostic is "Complete".

  Check the fault status for the diagnostic trouble code (DTC) when the diagnostic is "Complete". If the function is correct, the fault status must be "No fault found" when the diagnostic is complete.

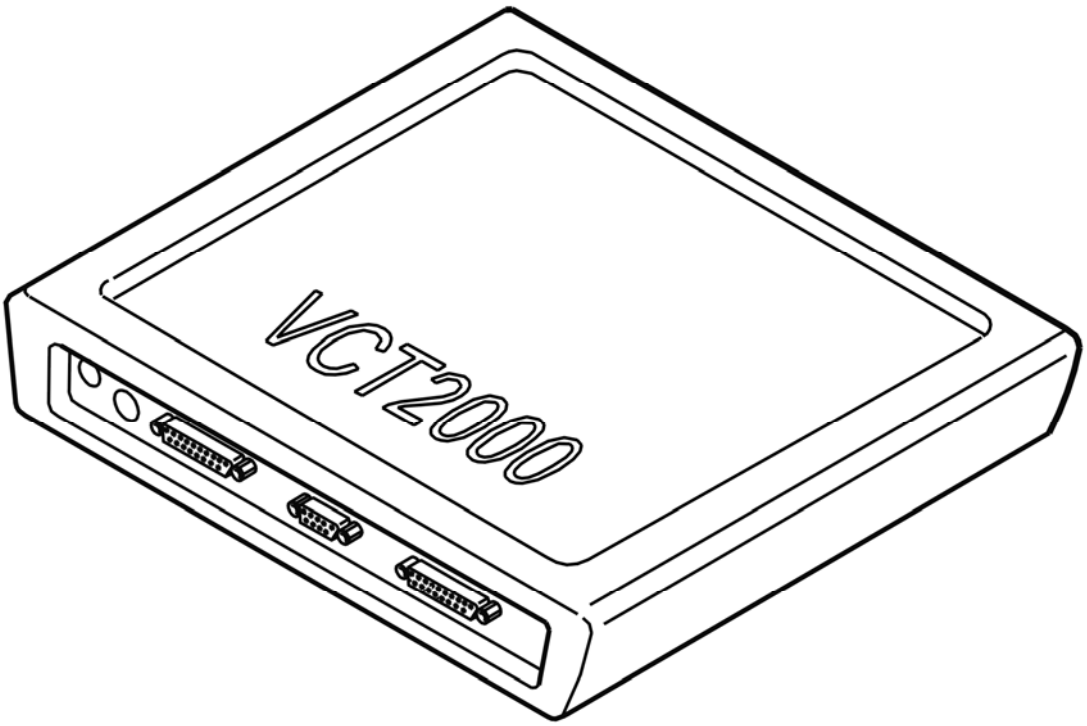

Fig. 190: Identifying VCT2000 Diagnostic Tool Symbol In VIDA
Courtesy of VOLVO CARS CORPORATION

Is the function OK?

- **YES**

  VERIFIED: Troubleshooting has been completed.

- **NO**

  Refer to **INFORMATION**

INFORMATION

FAULT-TRACING INFORMATION

The fault should have been detected and remedied. As this is not the case fault-tracing has failed.

Exit fault-tracing for this diagnostic trouble code (DTC) or make another attempt.

ECM-2400: FRONT HEATED OXYGEN SENSOR (HO2S), BANK 1, HEATING. FAULTY SIGNAL (B5254T2; 2005-2007)

DIAGNOSTIC TROUBLE CODE (DTC) INFORMATION ECM-2400

Condition

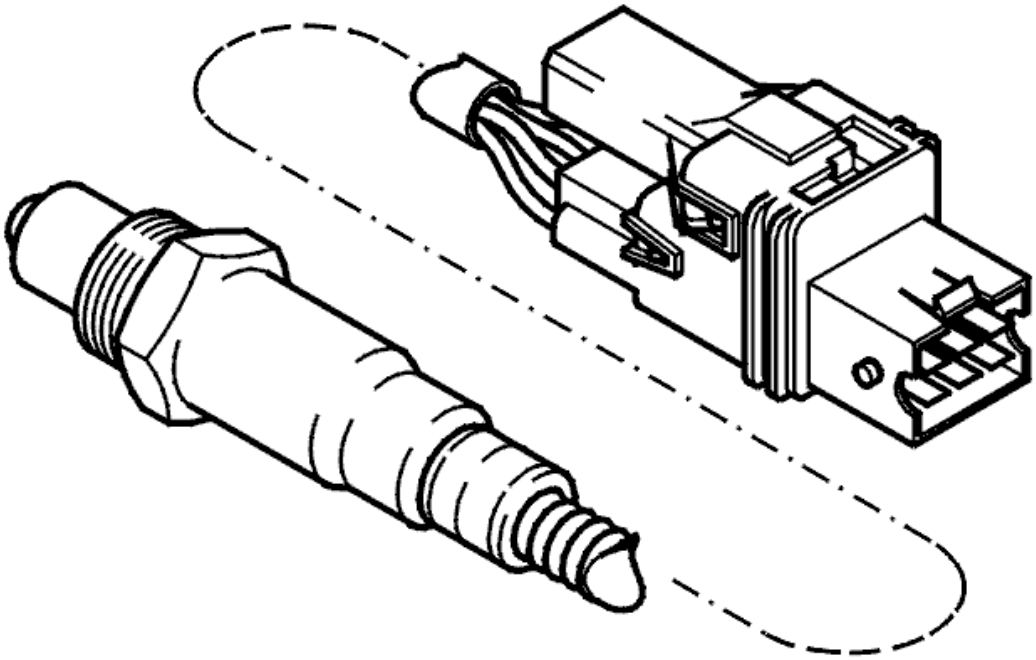

Fig. 191: Front Heated Oxygen Sensor
Courtesy of VOLVO CARS CORPORATION

The diagnostic trouble code (DTC) is stored if the engine control module (ECM) registers that the front heated oxygen sensor (HO2S) (bank 1) has not reached normal operating temperature.

Substitute Value

- None.

Possible Source

- Contact resistance and oxidation in the terminals
- Damaged front heated oxygen sensor (HO2S).

Fault symptom[s]

- Malfunction indicator lamp (MIL) lit.

FAULTY SIGNAL

CHECKING THE CONNECTOR

Check the connector for the rear heated oxygen sensor (HO2S). Check for contact resistance and oxidation. Remedy if necessary.

Try a new heated oxygen sensor (HO2S) if the above fault-tracing does not remedy the fault.

Other information

- For B5xx4T, see **HEATED OXYGEN SENSOR (HO2S), REPLACING**
- For B6xx4T, see **HEATED OXYGEN SENSOR (HO2S), REPLACING** .
- see **CHECKING WIRING AND TERMINALS**

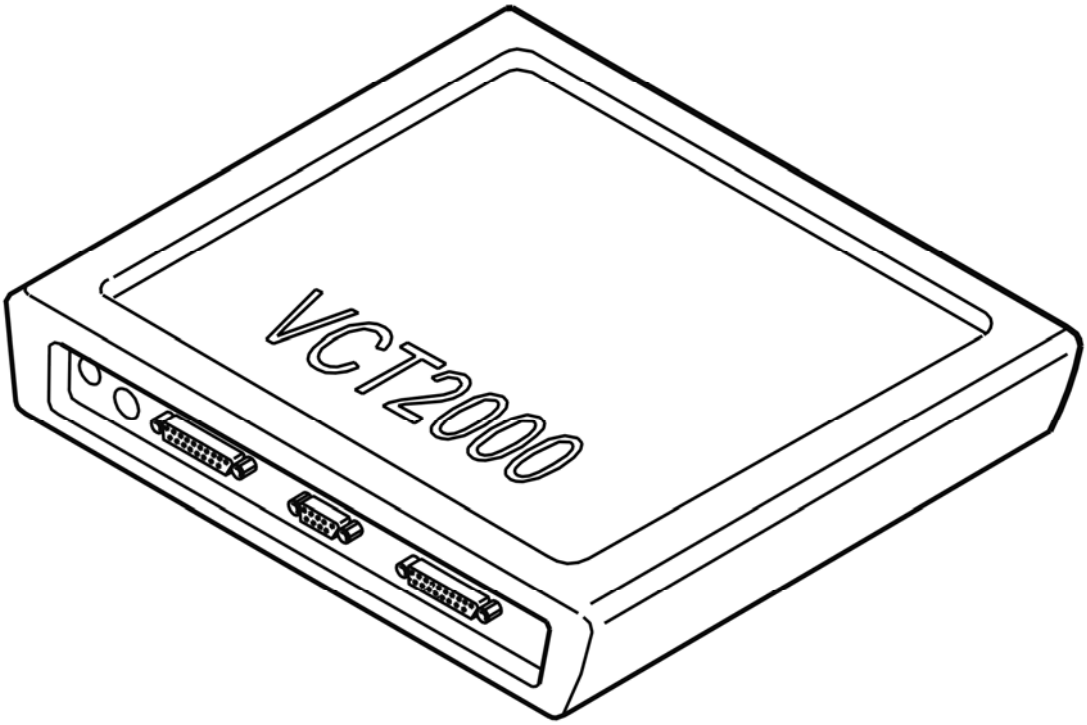

Fig. 192: Identifying VCT2000 Diagnostic Tool Symbol In VIDA
Courtesy of VOLVO CARS CORPORATION

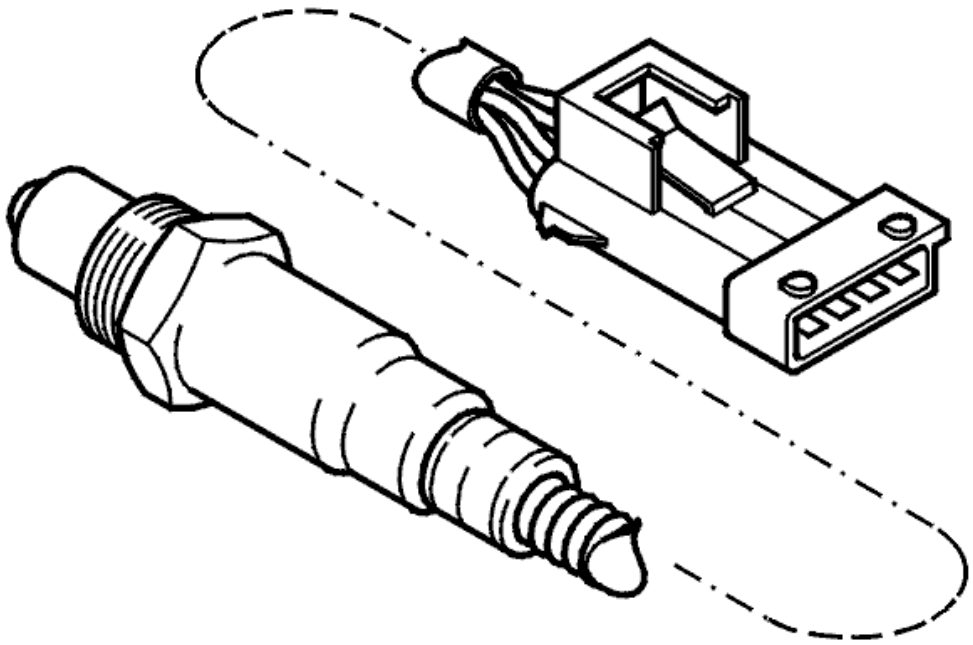

Fig. 193: Identifying Rear Heated Oxygen Sensor
Courtesy of VOLVO CARS CORPORATION

- **Continue**

  Refer to **VERIFICATION**

VERIFICATION

VERIFICATION

HINT: After carrying out the repair, check that the fault has been remedied.

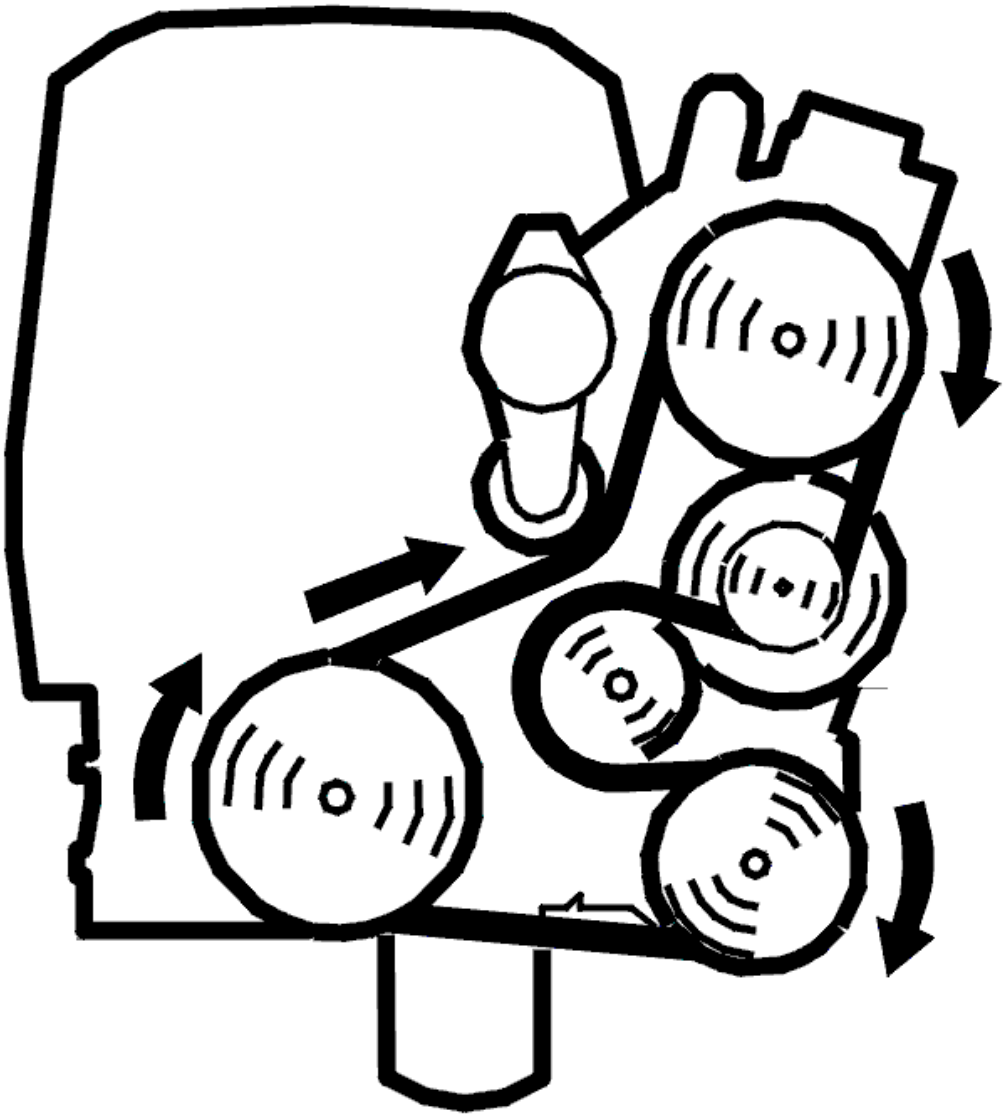

Fig. 194: Belt Routing / Engine Idling - Volvo
Courtesy of VOLVO CARS CORPORATION

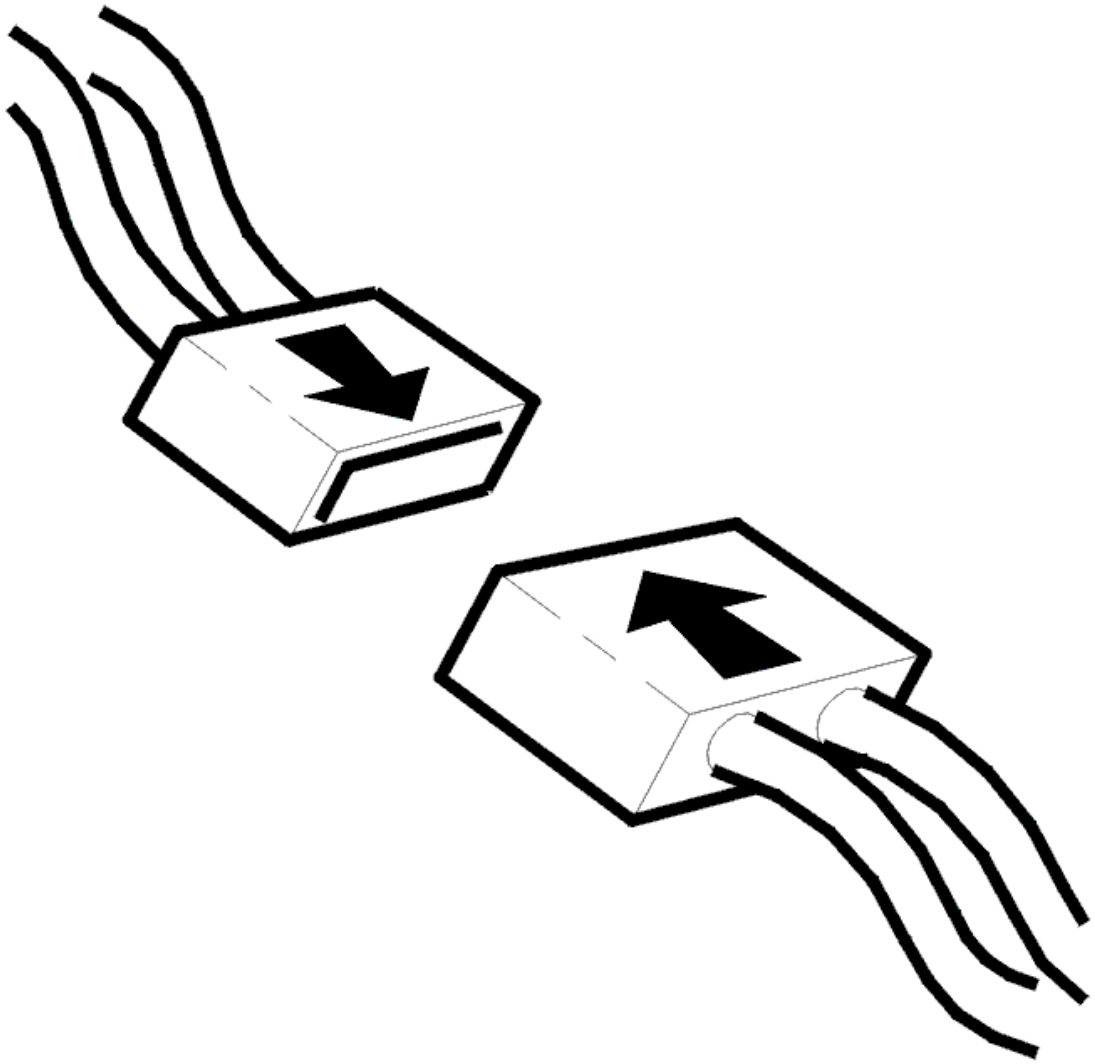

Fig. 195: Connecting Connector
Courtesy of VOLVO CARS CORPORATION

- Ignition off
- Reconnect the connectors, reinstall components etc.
- Start the engine. Allow the engine to idle for at least 1 minute
- Test drive the car at an even speed (approximately 80 km/h for at least 5 minutes)
- Connect VCT2000 (or appropriate scan tool) to the data link connector (DLC) without switching off the engine.

NOTE: **If the engine is switched off, the stored fault status will be erased and the test drive will have to be repeated.**

Read off the diagnostic status and fault status for the diagnostic trouble code (DTC) by selecting the relevant diagnostic trouble code (DTC) from the list.

Check the fault status for the diagnostic trouble code (DTC) when the diagnostic is "Complete". If the function is correct, the fault status must be "No fault found" when the diagnostic is complete.

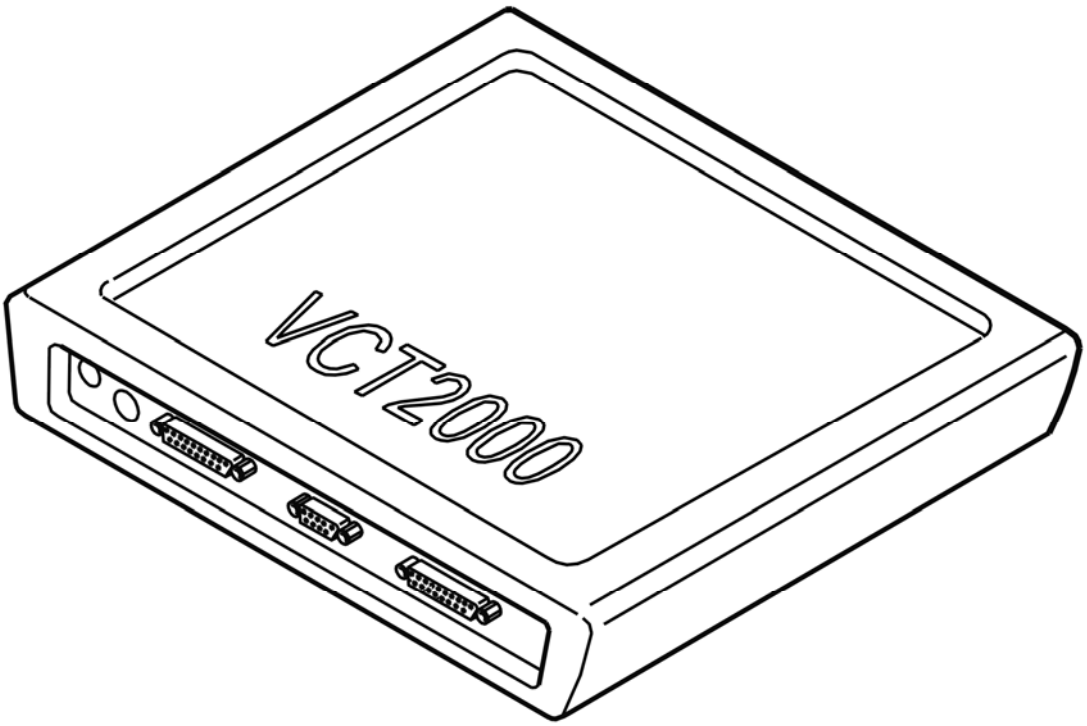

Fig. 196: Identifying VCT2000 Diagnostic Tool Symbol In VIDA
Courtesy of VOLVO CARS CORPORATION

Is the function OK?

- **YES**

  VERIFIED: Troubleshooting has been completed.

- **NO**

  Refer to **INFORMATION**

INFORMATION

FAULT-TRACING INFORMATION

The fault should have been detected and remedied. As this is not the case fault-tracing has failed.

Exit fault-tracing for this diagnostic trouble code (DTC) or make another attempt.

ECM-2400: FRONT HEATED OXYGEN SENSOR (HO2S), BANK 1, HEATING. FAULTY SIGNAL (B6294T; 2005-2006)

DIAGNOSTIC TROUBLE CODE (DTC) INFORMATION ECM-2400

see **DIAGNOSTIC TROUBLE CODE (DTC) INFORMATION ECM-2400**

FAULTY SIGNAL

see **FAULTY SIGNAL**

ECM-2400: FUEL PUMP (FP) RELAY. SIGNAL MISSING. INTERMITTENT FAULT (B5254T2; B6294T; 2003-2004)

DIAGNOSTIC TROUBLE CODE (DTC) INFORMATION

Condition

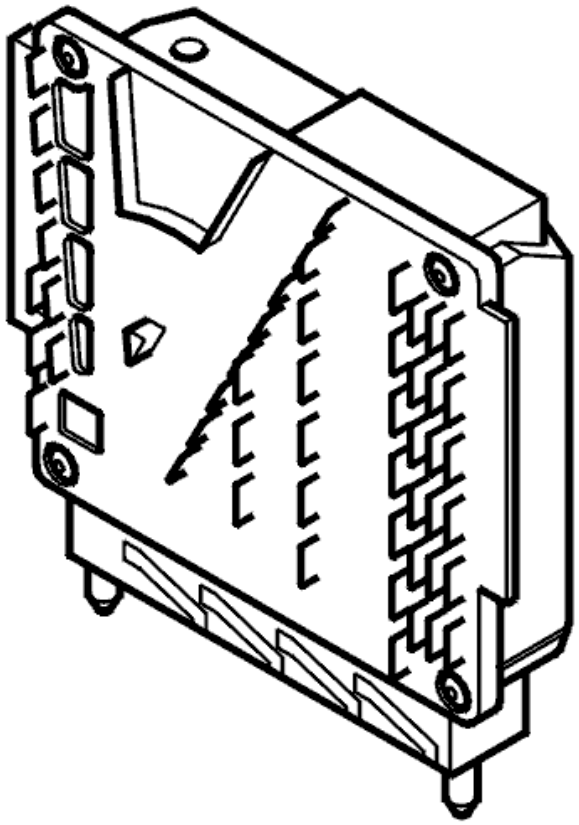

Fig. 197: Engine Control Module
Courtesy of VOLVO CARS CORPORATION

Normally the Control area network (CAN) is used to transfer information about fuel pump control from the engine control module (ECM) to the central electronic module. The signal cable from the engine control module

(ECM) to the Central electronic module is used for a "limp home" function when there is no Controller Area Network function.

Diagnostic trouble code (DTC) ECM-2400 is stored in the engine control module (ECM) if the engine control module (ECM) registers a fault in signal cable to the central electrical unit.

Substitute Value

None.

Possible Source

Signal too high:

- Short-circuit to supply voltage in the signal cable.

Signal too low:

- Short-circuit to ground in the signal cable.

Signal missing:

- Open-circuit in the signal cable.

Fault symptom[s]

- None.

SIGNAL TOO LOW. INTERMITTENT FAULT

CHECKING COMPONENT AND WIRING

Check the cable between engine control module (ECM) #B45 (#B55) and central electronic module #14B (#A34) for an intermittent short-circuit to ground according to **SHORT-CIRCUIT TO GROUND, INTERMITTENT FAULTS** and for an intermittent open-circuit according to **OPEN-CIRCUIT, INTERMITTENT FAULTS** .

Other information

- Connecting the breakout box/accessing the control module, see **CONNECTING THE BREAKOUT BOX** .
- To connect the central electronic module breakout box, see **CONNECTING THE BREAKOUT BOX** .
- For 5 cylinder turbocharged engines -2004, see **SIGNAL DESCRIPTION**
- For 5 cylinder turbocharged engines 2005-, see **SIGNAL SPECIFICATION** .
- For 6 cylinder engines -2004, see **SIGNAL SPECIFICATION**
- For 6 cylinder engines 2005-, see **SIGNAL SPECIFICATION** .

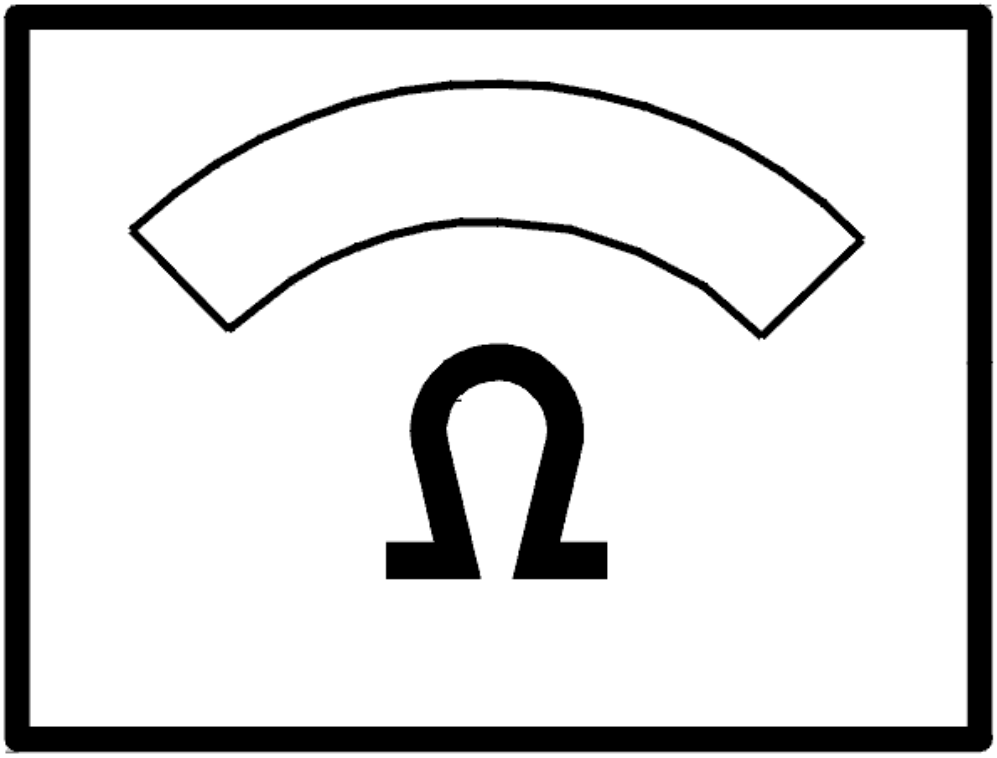

Fig. 198: Identifying Ohm Meter
Courtesy of VOLVO CARS CORPORATION

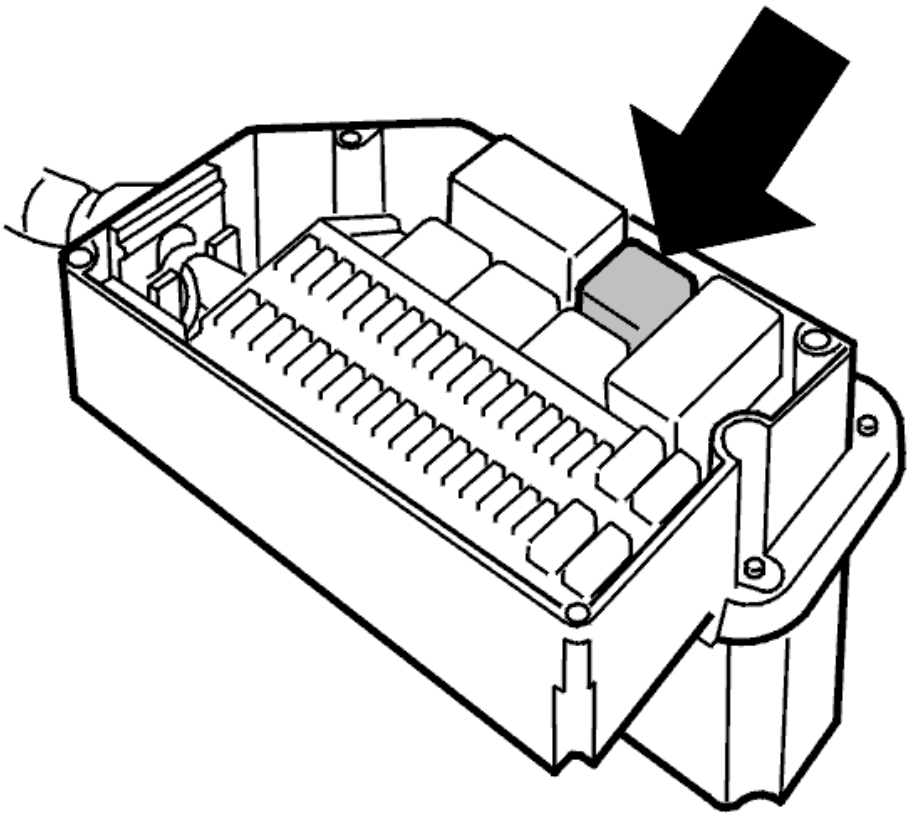

Fig. 199: Identifying Frequency Controlled Mechanical Relay
Courtesy of VOLVO CARS CORPORATION

- **Continue**

  Refer to **INFORMATION**

INFORMATION

FAULT-TRACING INFORMATION

If the fault is intermittent, do not verify fault-tracing if the fault does not recur.

It is possible to view the information again, or leave fault-tracing for this diagnostic trouble code (DTC).

ECM-2400: FUEL PUMP (FP) RELAY. SIGNAL MISSING. PERMANENT FAULT (B5254T2; B6294T; 2003-2004)

DIAGNOSTIC TROUBLE CODE (DTC) INFORMATION

see **DIAGNOSTIC TROUBLE CODE (DTC) INFORMATION**

SIGNAL TOO LOW. PERMANENT FAULT

CHECKING CABLES

Check the cable between engine control module (ECM) #B45 (#B55) and central electronic module #14B (#A34) for a short-circuit to ground according to **SHORT-CIRCUIT TO GROUND, PERMANENT FAULTS** and for open-circuits according to **OPEN-CIRCUIT, PERMANENT FAULTS**

Remedy as necessary

Other information:

- Connecting the breakout box/accessing the control module, see **CONNECTING THE BREAKOUT BOX** .
- To connect the central electronic module breakout box, see **CONNECTING THE BREAKOUT BOX** .
- For 5 cylinder turbocharged engines -2004, see **SIGNAL DESCRIPTION**
- For 5 cylinder turbocharged engines 2005-, see **SIGNAL SPECIFICATION** .
- For 6 cylinder engines -2004, see **SIGNAL SPECIFICATION**
- For 6 cylinder engines 2005-, see **SIGNAL SPECIFICATION** .

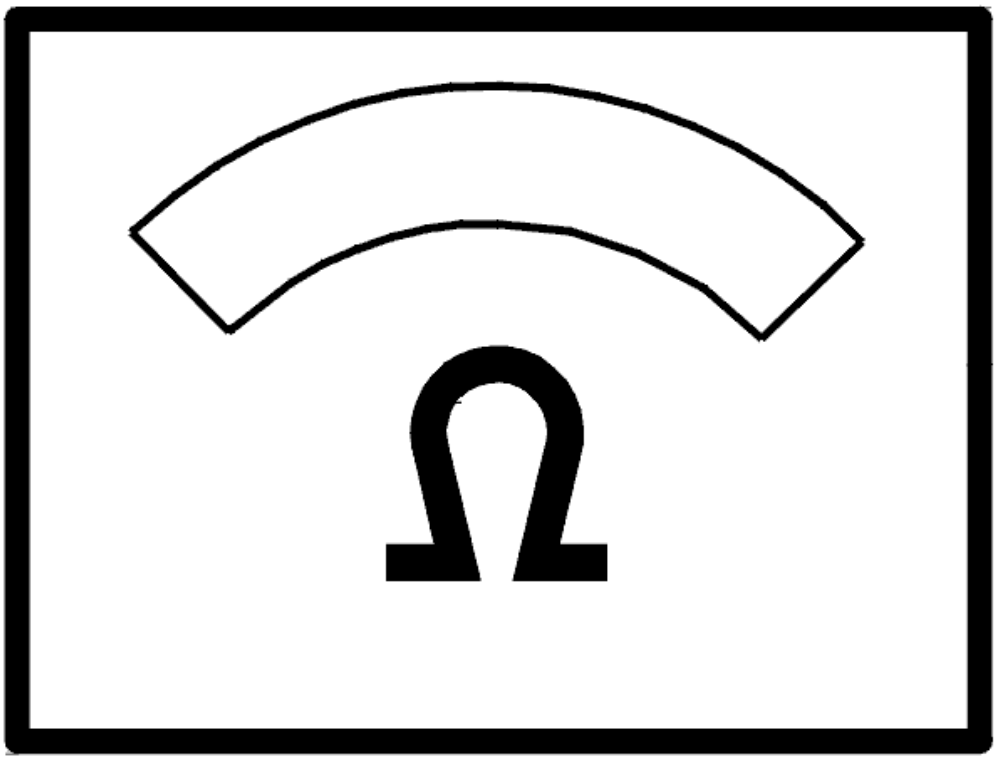

Fig. 200: Identifying Ohm Meter
Courtesy of VOLVO CARS CORPORATION

- **Continue**

  Refer to **VERIFICATION**

VERIFICATION

VERIFICATION

HINT: After carrying out the repair, check that the fault has been remedied.

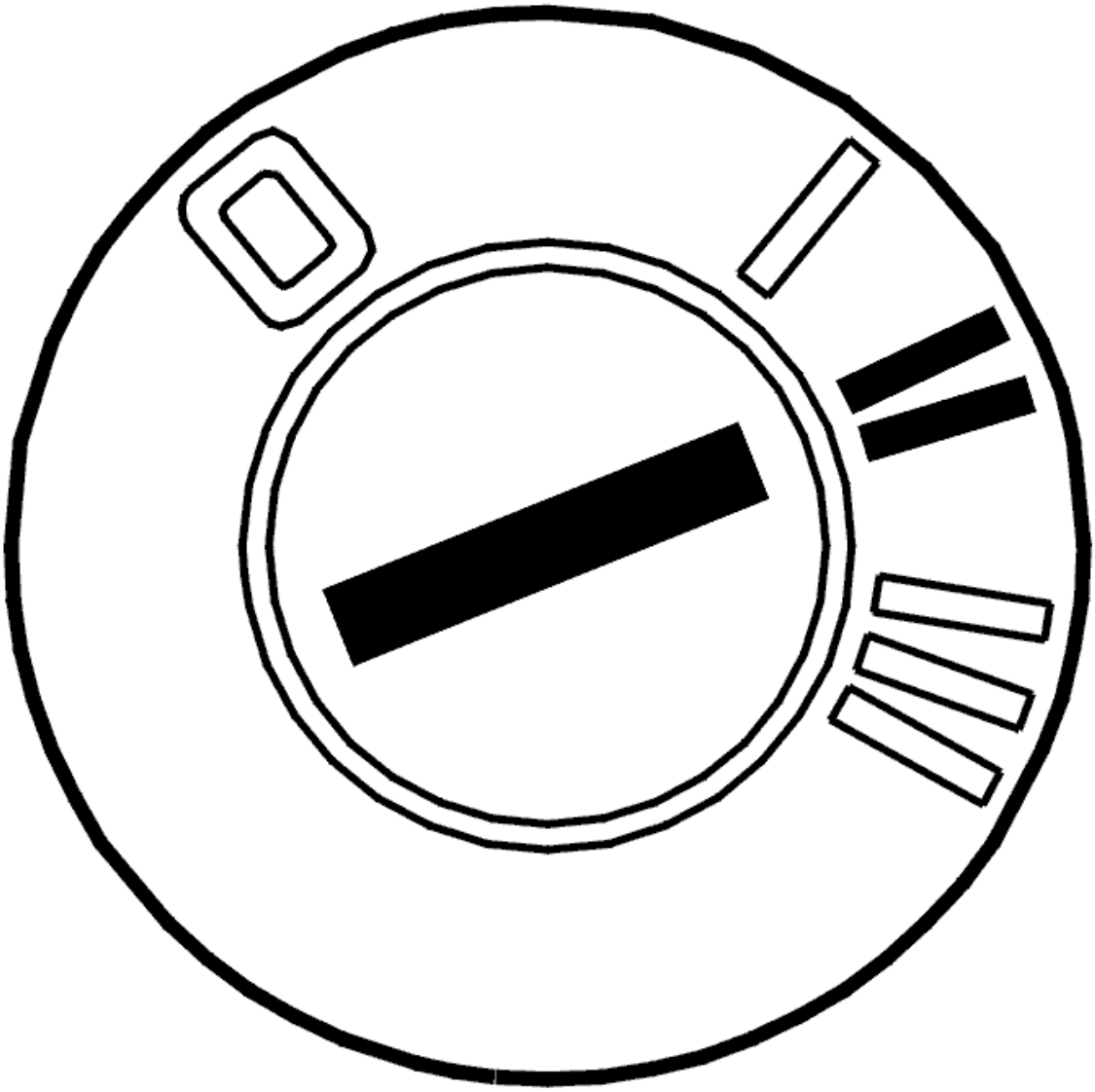

Fig. 201: Identifying Ignition ON
Courtesy of VOLVO CARS CORPORATION

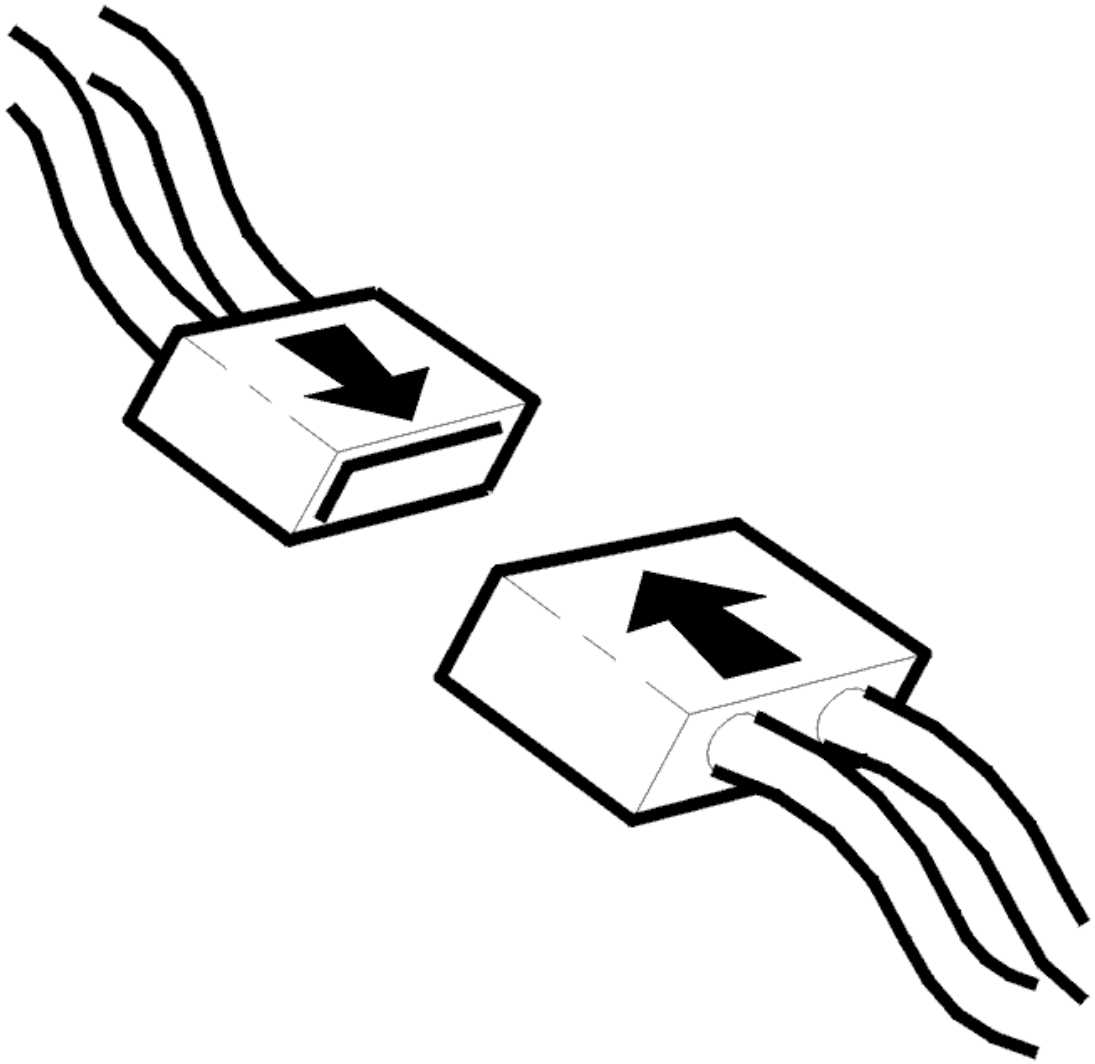

Fig. 202: Connecting Connector
Courtesy of VOLVO CARS CORPORATION

- Ignition off
- Reinstall the connectors, components etc.
- Ignition on.

  Read off the fuel pump input signal for the central electronic module (CEM) from the engine control module (ECM).

  Start the engine and check that the fuel pump (FP) input signal to the central electronic module (CEM) changes status.

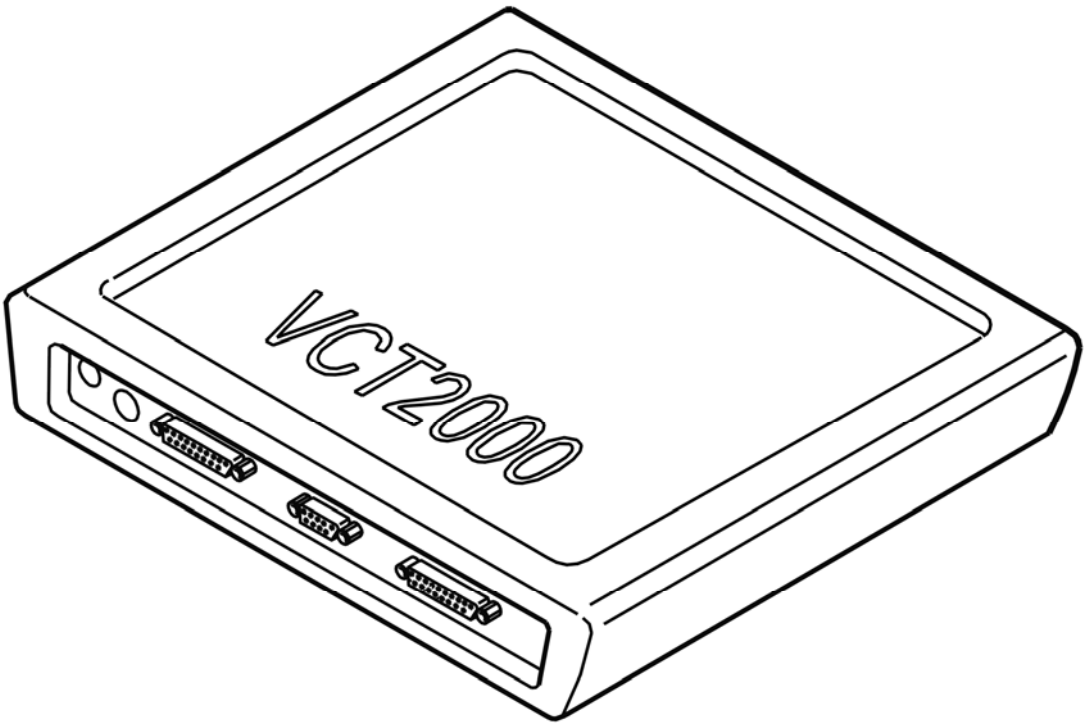

Fig. 203: Identifying VCT2000 Diagnostic Tool Symbol In VIDA
Courtesy of VOLVO CARS CORPORATION

Does the status of the input signal change?

- **YES**

  VERIFIED: Troubleshooting has been completed.

- **NO**

  Refer to **INFORMATION**

INFORMATION

FAULT-TRACING INFORMATION

The fault should have been detected and remedied. As this is not the case fault-tracing has failed.

Exit fault-tracing for this diagnostic trouble code (DTC) or make another attempt.

ECM-2400: FUEL PUMP (FP) RELAY. SIGNAL TOO HIGH. INTERMITTENT FAULT (B5254T2; B6294T; 2003-2004)

DIAGNOSTIC TROUBLE CODE (DTC) INFORMATION

see **DIAGNOSTIC TROUBLE CODE (DTC) INFORMATION**

SIGNAL TOO HIGH. INTERMITTENT FAULT

CHECKING CABLES

Check the cable between engine control module (ECM) #B45 (#B55) and central electronic module #14B (#A34) for an intermittent short-circuit to supply voltage according to **SHORT-CIRCUIT TO SUPPLY VOLTAGE, INTERMITTENT FAULTS** .

Other information

- Connecting the breakout box/accessing the control module, see **CONNECTING THE BREAKOUT BOX** .
- To connect the central electronic module breakout box, see **CONNECTING THE BREAKOUT BOX** .
- For 5 cylinder turbocharged engines -2004, see **SIGNAL DESCRIPTION**
- For 5 cylinder turbocharged engines 2005-, see **SIGNAL SPECIFICATION** .
- For 6 cylinder engines -2004, see **SIGNAL SPECIFICATION**
- For 6 cylinder engines 2005-, see **SIGNAL SPECIFICATION** .

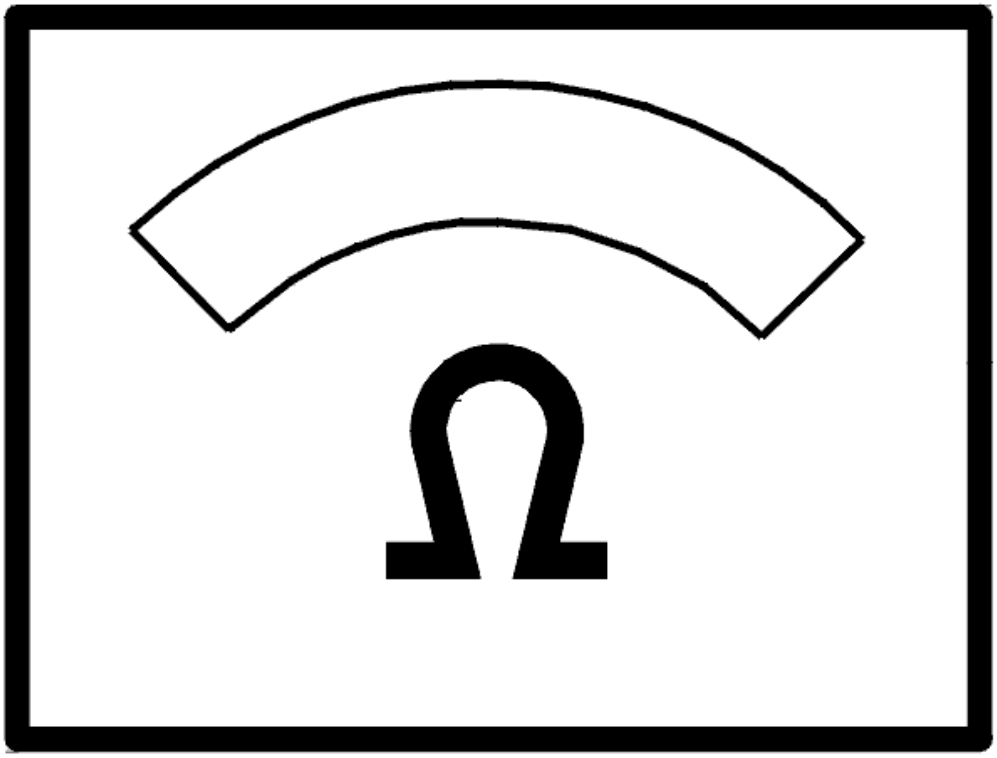

Fig. 204: Identifying Ohm Meter
Courtesy of VOLVO CARS CORPORATION

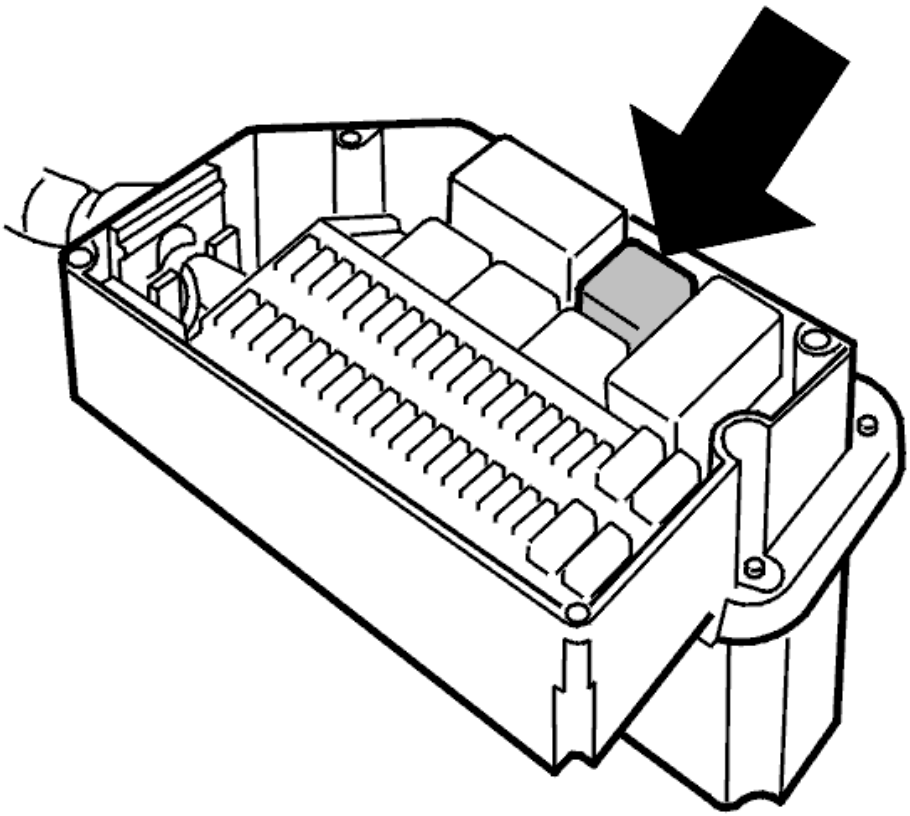

Fig. 205: Identifying Frequency Controlled Mechanical Relay
Courtesy of VOLVO CARS CORPORATION

- **Continue**

  Refer to **INFORMATION**

INFORMATION

FAULT-TRACING INFORMATION

If the fault is intermittent, do not verify fault-tracing if the fault does not recur.

It is possible to view the information again, or leave fault-tracing for this diagnostic trouble code (DTC).

ECM-2400: FUEL PUMP (FP) RELAY. SIGNAL TOO HIGH. PERMANENT FAULT (B5254T2; B6294T; 2003-2004)

DIAGNOSTIC TROUBLE CODE (DTC) INFORMATION

see **DIAGNOSTIC TROUBLE CODE (DTC) INFORMATION**

SIGNAL TOO HIGH. PERMANENT FAULT

CHECKING CABLES

Check the cable between engine control module (ECM) #B45 (#B55) and central electronic module #14B (#A34) for a short-circuit to supply voltage according to **SHORT-CIRCUIT TO SUPPLY VOLTAGE. PERMANENT FAULTS** .

Remedy as necessary

Other information:

- Connecting the breakout box/accessing the control module, see **CONNECTING THE BREAKOUT BOX** .
- To connect the central electronic module breakout box, see **CONNECTING THE BREAKOUT BOX** .
- For 5 cylinder turbocharged engines -2004, see **SIGNAL DESCRIPTION**
- For 5 cylinder turbocharged engines 2005-, see **SIGNAL SPECIFICATION** .
- For 6 cylinder engines -2004, see **SIGNAL SPECIFICATION**
- For 6 cylinder engines 2005-, see **SIGNAL SPECIFICATION** .

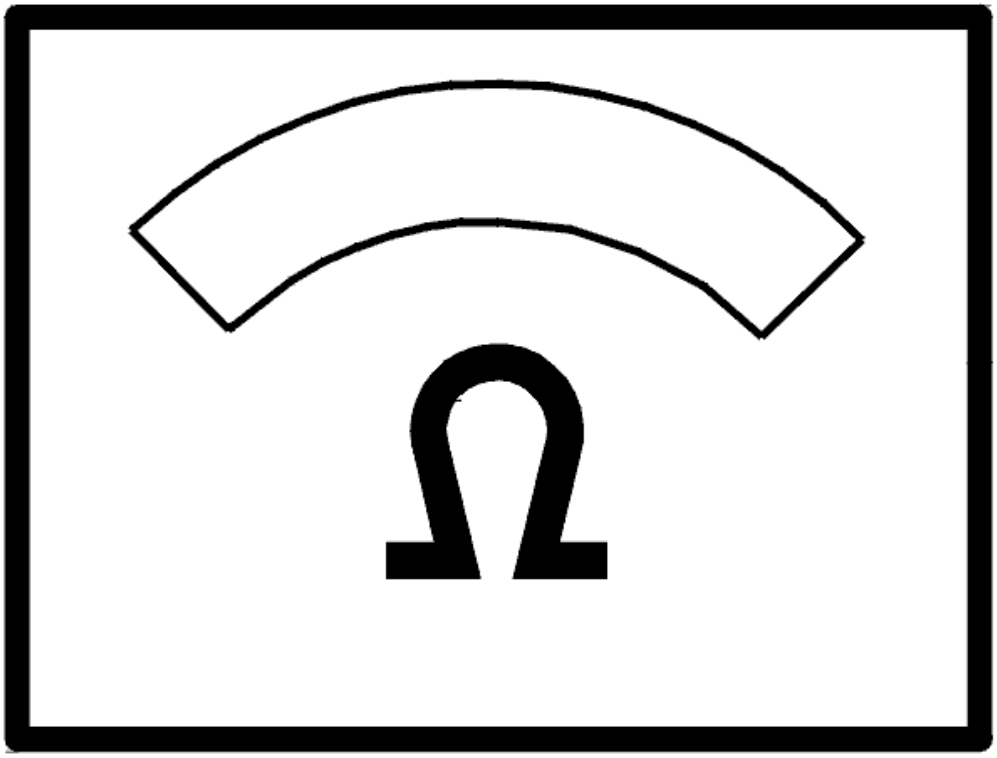

Fig. 206: Identifying Ohm Meter
Courtesy of VOLVO CARS CORPORATION

- **Continue**

  Refer to **VERIFICATION**

VERIFICATION

VERIFICATION

HINT: After carrying out the repair, check that the fault has been remedied.

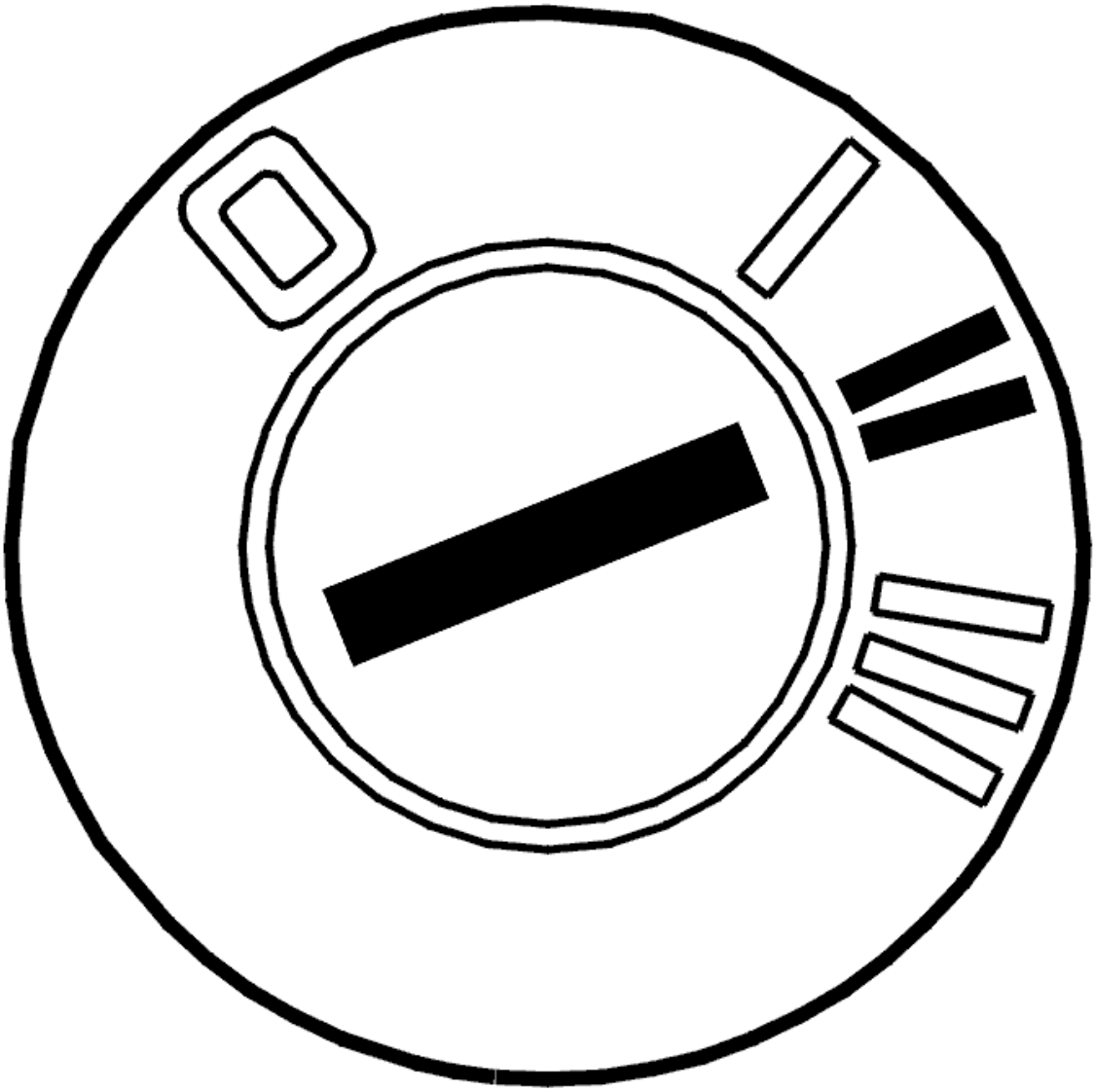

Fig. 207: Identifying Ignition ON
Courtesy of VOLVO CARS CORPORATION

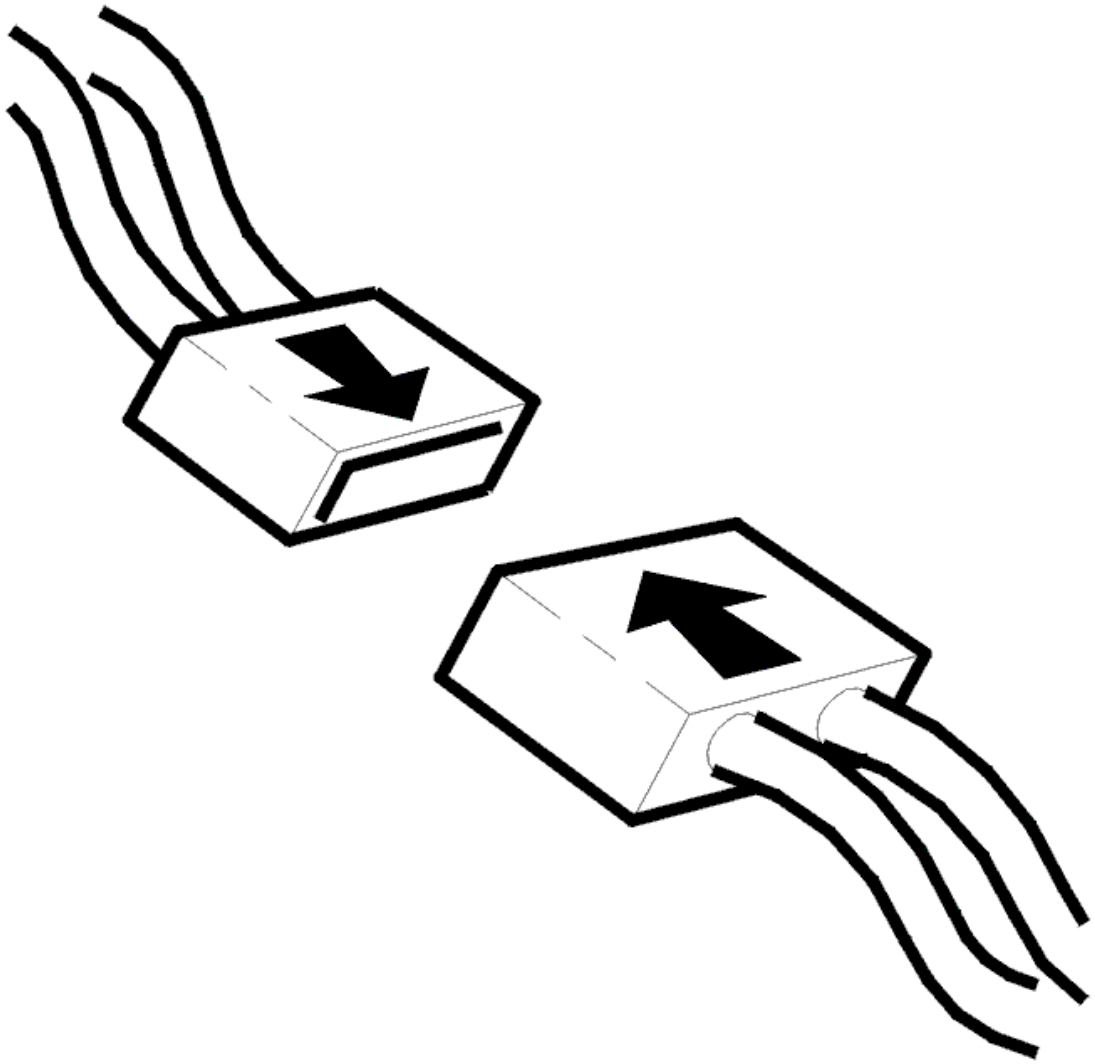

Fig. 208: Connecting Connector
Courtesy of VOLVO CARS CORPORATION

- Ignition off
- Reinstall the connectors, components etc.
- Ignition on.

  Read off the fuel pump input signal for the central electronic module (CEM) from the engine control module (ECM).

  Start the engine and check that the fuel pump (FP) input signal to the central electronic module (CEM) changes status.

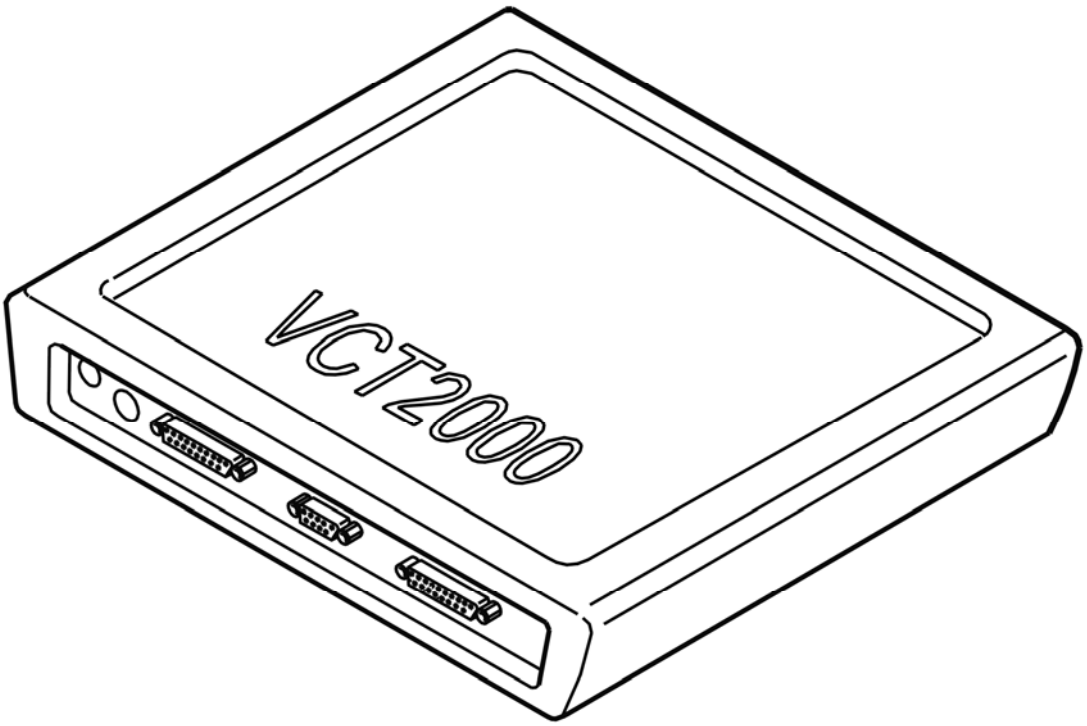

Fig. 209: Identifying VCT2000 Diagnostic Tool Symbol In VIDA
Courtesy of VOLVO CARS CORPORATION

Does the status of the input signal change?

- **YES**

  VERIFIED: Troubleshooting has been completed.

- **NO**

  Refer to **INFORMATION**

INFORMATION

FAULT-TRACING INFORMATION

The fault should have been detected and remedied. As this is not the case fault-tracing has failed.

Exit fault-tracing for this diagnostic trouble code (DTC) or make another attempt.

ECM-240B: FRONT HEATED OXYGEN SENSOR (HO2S), BANK 1, HEATING. SIGNAL MISSING (B5254T2; 2005-2007)

DIAGNOSTIC TROUBLE CODE (DTC) INFORMATION ECM-240B

Condition

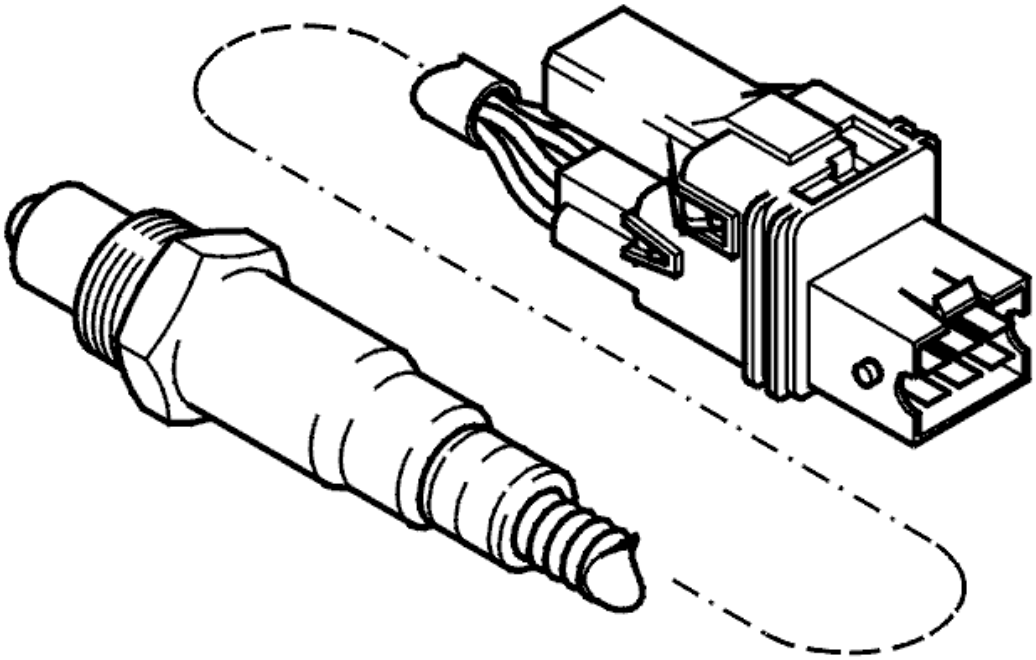

Fig. 210: Front Heated Oxygen Sensor
Courtesy of VOLVO CARS CORPORATION

The diagnostic trouble code (DTC) is stored if the engine control module (ECM) registers that there has been no control of the heater element for the front heated oxygen sensor (HO2S) (bank 1) for a certain amount of time.

Substitute Value

- None.

Possible Source

- Contact resistance and oxidation in the terminals
- Damaged front heated oxygen sensor (HO2S).

Fault symptom[s]

- Malfunction indicator lamp (MIL) lit.

SIGNAL TOO HIGH/SIGNAL TOO LOW/SIGNAL MISSING

CHECKING THE COMPONENTS AND WIRING

CAUTION: Do not apply rust solvent spray or grease to the heated oxygen sensor (HO2S) connector.

Check the heated oxygen sensor (HO2S) pre-heating circuit. Measure the resistance between terminals #3 and #4 in the probe connector.

NOTE: If possible, measure from the rear of the affected connectors in order to minimize any damage and future loose connections.

Try a new heated oxygen sensor (HO2S) if the above fault-tracing does not remedy the fault

Remedy as necessary.

Other information

- see **CONNECTING THE BREAKOUT BOX**
- For 5 cylinder turbocharged engines -2004, see **SIGNAL DESCRIPTION**
- For 5 cylinder turbocharged engines 2005-, see **SIGNAL SPECIFICATION** .
- For 6 cylinder engines -2004, see **SIGNAL SPECIFICATION**
- For 6 cylinder engines 2005-, see **SIGNAL SPECIFICATION** .
- For resistance values: **COMPONENT SPECIFICATIONS**
- For B5xx4T, see **HEATED OXYGEN SENSOR (HO2S), REPLACING**
- For B6xx4T, see **HEATED OXYGEN SENSOR (HO2S), REPLACING** .
- see **CHECKING WIRING AND TERMINALS**

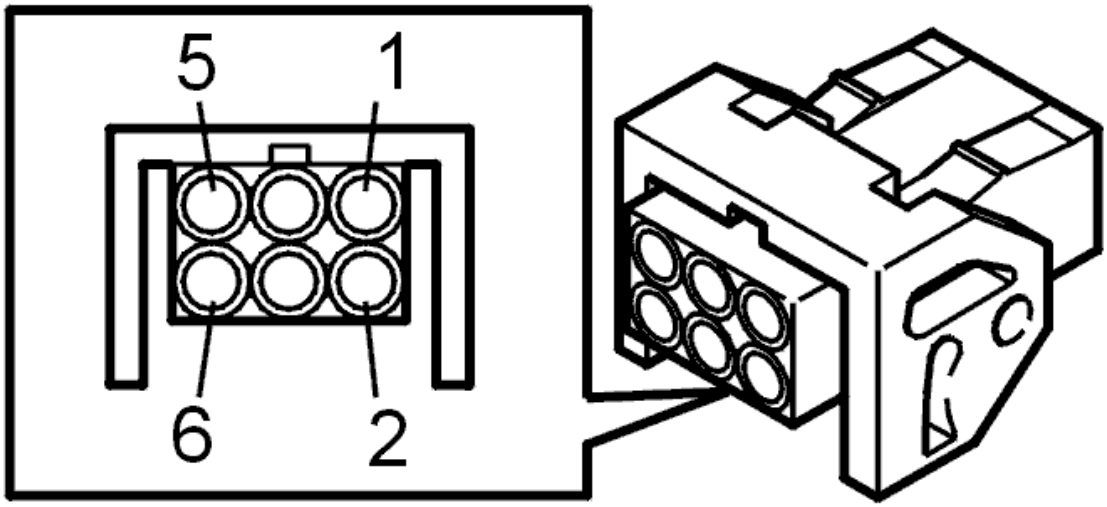

Fig. 211: Identifying Front Heated Oxygen Sensor Connector Terminals

Courtesy of VOLVO CARS CORPORATION

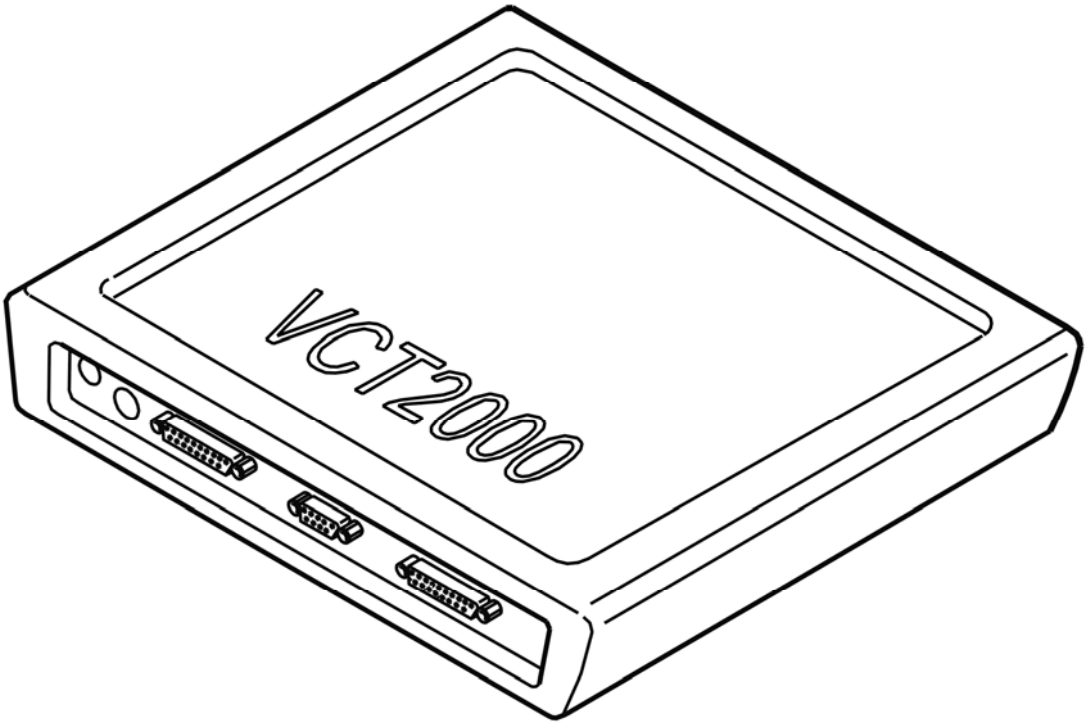

Fig. 212: Identifying VCT2000 Diagnostic Tool Symbol In VIDA
Courtesy of VOLVO CARS CORPORATION

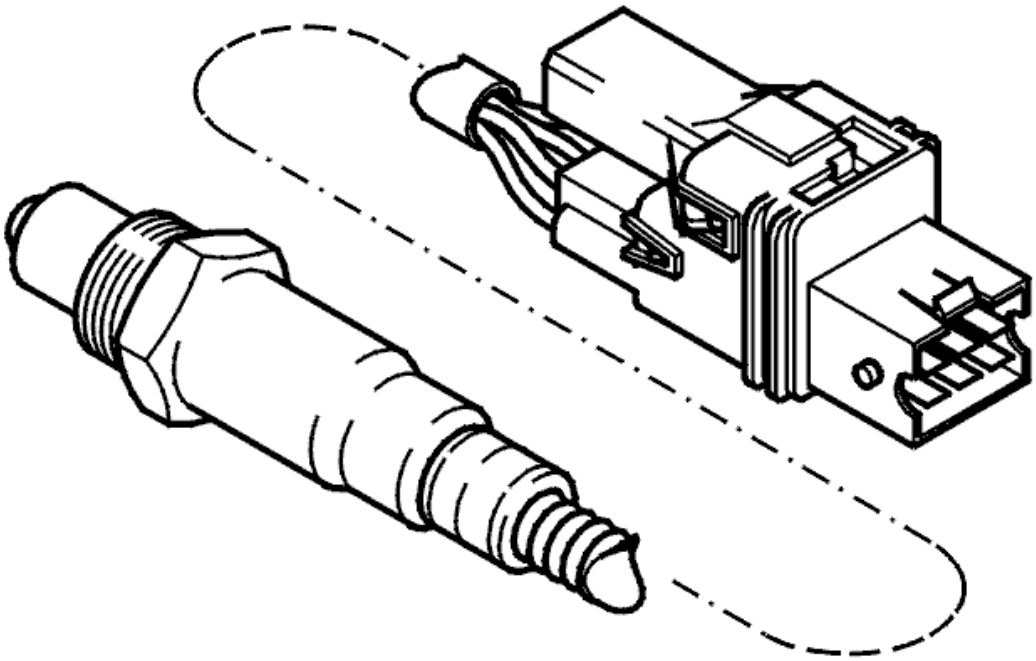

Fig. 213: Front Heated Oxygen Sensor
Courtesy of VOLVO CARS CORPORATION

- **Continue**

  Refer to **VERIFICATION**

VERIFICATION

VERIFICATION

HINT: After carrying out the repair, check that the fault has been remedied.

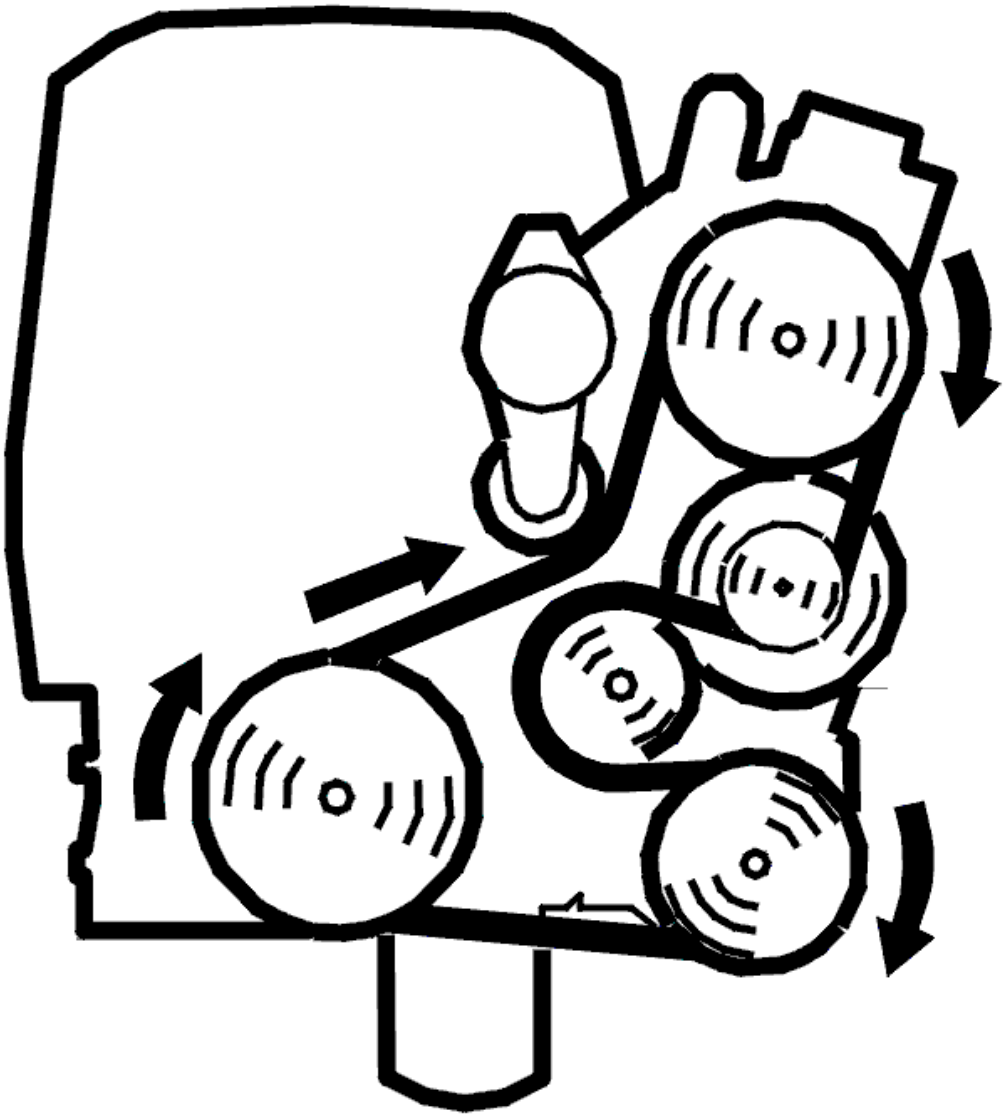

Fig. 214: Belt Routing / Engine Idling - Volvo
Courtesy of VOLVO CARS CORPORATION

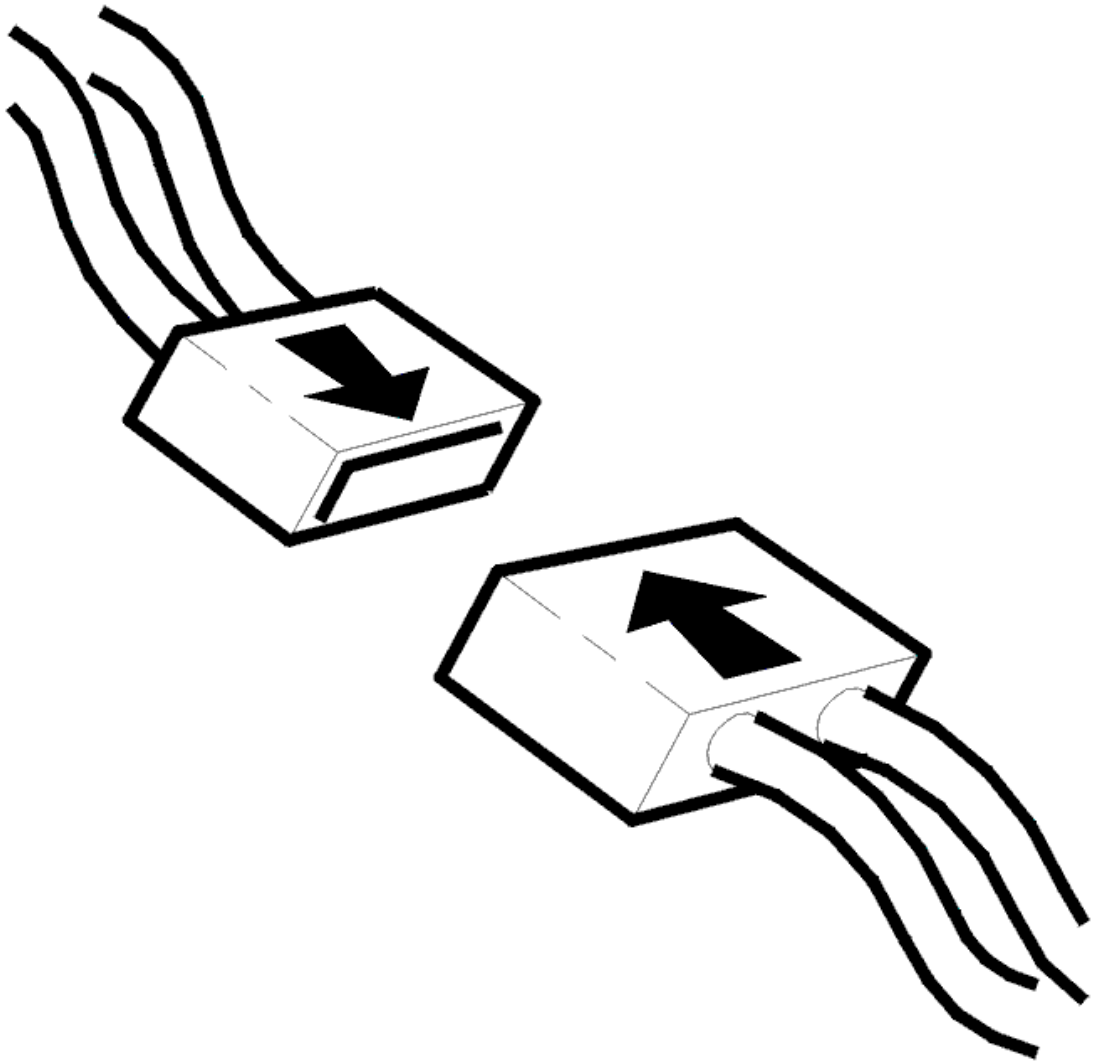

Fig. 215: Connecting Connector
Courtesy of VOLVO CARS CORPORATION

- Ignition off
- Reconnect the connectors, reinstall components etc.
- Start the engine. Allow the engine to idle for at least 1 minute
- Test drive the car at an even speed (approximately 80 km/h for at least 5 minutes)
- Connect VCT2000 (or appropriate scan tool) to the data link connector (DLC) without switching off the engine.

NOTE: **If the engine is switched off, the stored fault status will be erased and the test drive will have to be repeated.**

Read off the diagnostic status and fault status for the diagnostic trouble code (DTC) by selecting the relevant diagnostic trouble code (DTC) from the list.

Check the fault status for the diagnostic trouble code (DTC) when the diagnostic is "Complete". If the function is correct, the fault status must be "No fault found" when the diagnostic is complete.

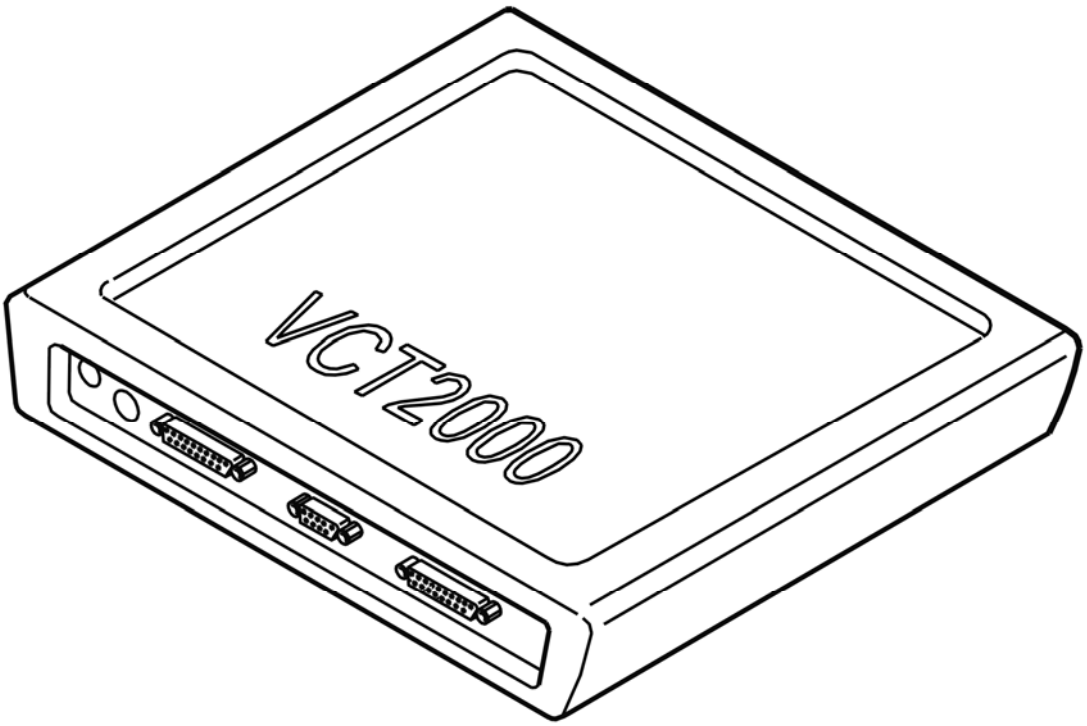

Fig. 216: Identifying VCT2000 Diagnostic Tool Symbol In VIDA
Courtesy of VOLVO CARS CORPORATION

Is the function OK?

- **YES**

  VERIFIED: Troubleshooting has been completed.

- **NO**

  Refer to **INFORMATION**

INFORMATION

FAULT-TRACING INFORMATION

The fault should have been detected and remedied. As this is not the case fault-tracing has failed.

Exit fault-tracing for this diagnostic trouble code (DTC) or make another attempt.

ECM-240B: FRONT HEATED OXYGEN SENSOR (HO2S), BANK 1, HEATING. SIGNAL MISSING (B6294T; 2005-2006)

DIAGNOSTIC TROUBLE CODE (DTC) INFORMATION ECM-240B

see **DIAGNOSTIC TROUBLE CODE (DTC) INFORMATION ECM-240B**

SIGNAL TOO HIGH/SIGNAL TOO LOW/SIGNAL MISSING

see **SIGNAL TOO HIGH/SIGNAL TOO LOW/SIGNAL MISSING**

ECM-240C: FRONT HEATED OXYGEN SENSOR (HO2S), BANK 1, HEATING. SIGNAL TOO HIGH (B5254T2; 2005-2007)

DIAGNOSTIC TROUBLE CODE (DTC) INFORMATION ECM-240C

Condition

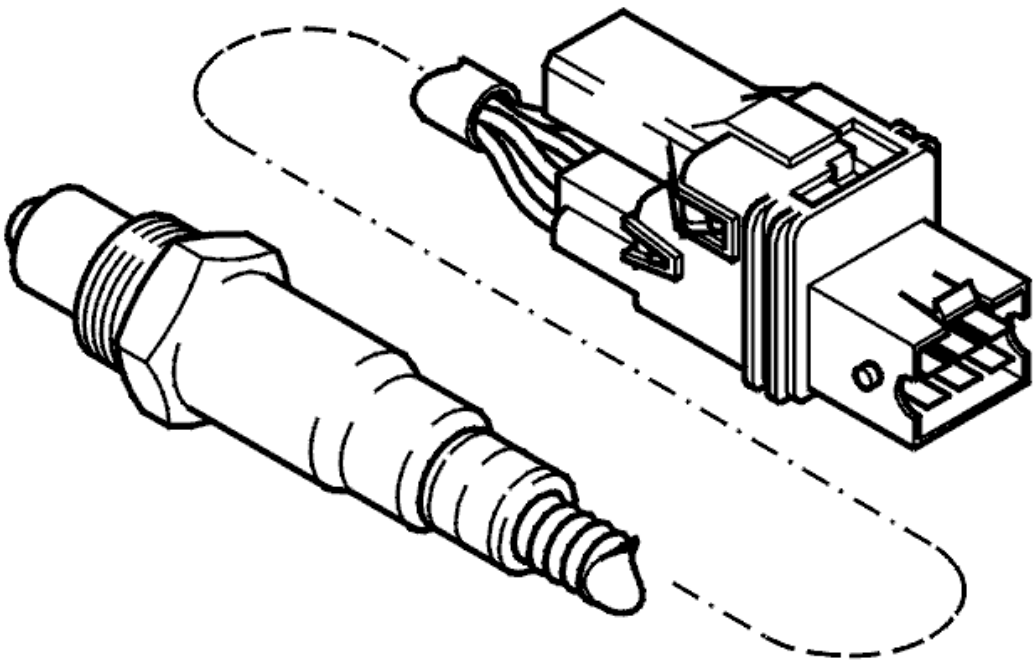

Fig. 217: Front Heated Oxygen Sensor
Courtesy of VOLVO CARS CORPORATION

The diagnostic trouble code (DTC) is stored if the engine control module (ECM) registers that the resistance in the preheating circuit for the front heated oxygen sensor (HO2S) (bank 1) is too high.

Substitute Value

- None.

Possible Source

- Contact resistance and oxidation in the terminals
- Damaged front heated oxygen sensor (HO2S).

Fault symptom[s]

- Malfunction indicator lamp (MIL) lit.

SIGNAL TOO HIGH/SIGNAL TOO LOW/SIGNAL MISSING

see **SIGNAL TOO HIGH/SIGNAL TOO LOW/SIGNAL MISSING**

ECM-240C: FRONT HEATED OXYGEN SENSOR (HO2S), BANK 1, HEATING. SIGNAL TOO HIGH (B6294T; 2005-2006)

DIAGNOSTIC TROUBLE CODE (DTC) INFORMATION ECM-240C

see **DIAGNOSTIC TROUBLE CODE (DTC) INFORMATION ECM-240C**

SIGNAL TOO HIGH/SIGNAL TOO LOW/SIGNAL MISSING

see **SIGNAL TOO HIGH/SIGNAL TOO LOW/SIGNAL MISSING**

ECM-242D: FRONT HEATED OXYGEN SENSOR (HO2S), BANK 1. SLOW REGULATION (B5254T2; 2005-2007)

DIAGNOSTIC TROUBLE CODE (DTC) INFORMATION ECM-242D

Condition

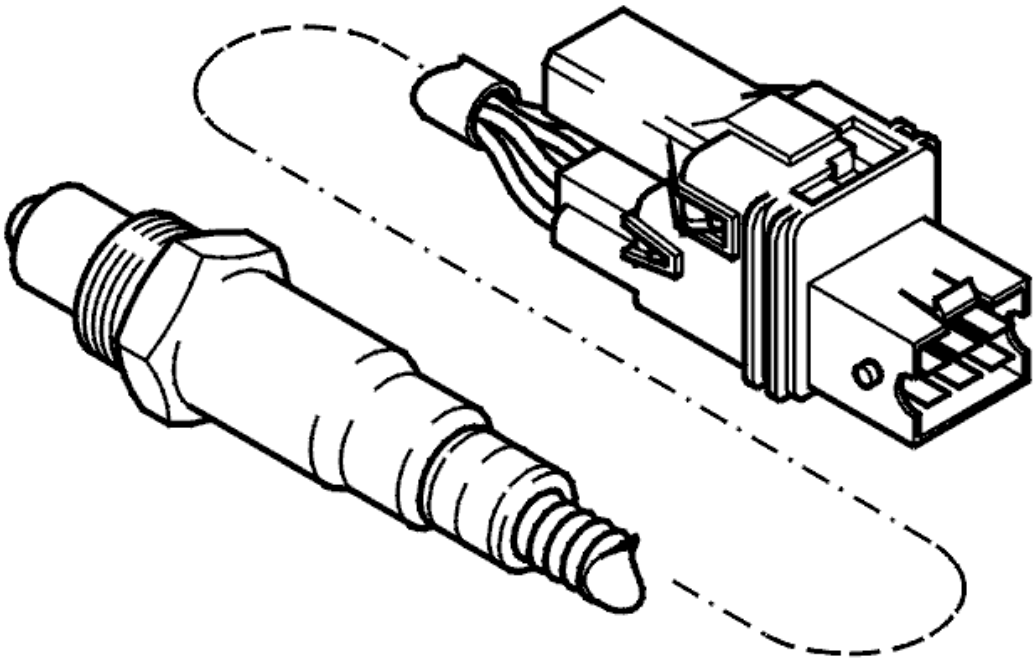

Fig. 218: Front Heated Oxygen Sensor
Courtesy of VOLVO CARS CORPORATION

The engine control module (ECM) monitors the aging of the front heated oxygen sensor (HO2S) by checking its ability to react to changes in the exhaust gases. The diagnostic trouble code (DTC) is stored if the engine control module (ECM) registers that the heated oxygen sensor (HO2S) reacts too slowly to changes in the fuel/air mixture.

Substitute Value

- Three-way catalytic converter (TWC) diagnostics are disabled.

Possible Source

- The cables for the calibration current and the pump current are short-circuited to each other
- Open-circuit in signal cable (-)
- Open-circuit in the cable for calibration current
- Damaged front heated oxygen sensor (HO2S).

Fault symptom[s]

- Malfunction indicator lamp (MIL) lit.

SIGNAL TOO LOW

CHECKING COMPONENTS AND WIRING

CAUTION: Do not apply rust solvent spray or grease to the heated oxygen sensor (HO2S) connector.

- Check the heated oxygen sensor (HO2S) connector. Check for contact resistance and oxidation.

  Check the cable for calibration current between engine control module (ECM) terminal #A28 (#A28) and heated oxygen sensor (HO2S) terminal #2.

  Check the cable for pump current between heated oxygen sensor (HO2S) terminal #6 and engine control module (ECM) terminal #A24 (#A24). Check for a short-circuit to each other.

  Check the cable for an open-circuit.

  Check between:

  - Heated oxygen sensor (HO2S) terminal #5 and engine control module (ECM) terminal #A42 (#A42)
  - Heated oxygen sensor (HO2S) terminal #2 and engine control module (ECM) terminal #A28 (#A28).

  Remedy as necessary.

  Other information

  - see **CONNECTING THE BREAKOUT BOX**
  - For 5 cylinder turbocharged engines -2004, see **SIGNAL DESCRIPTION**
  - For 5 cylinder turbocharged engines 2005-, see **SIGNAL SPECIFICATION** .
  - For 6 cylinder engines -2004, see **SIGNAL SPECIFICATION**
  - For 6 cylinder engines 2005-, see **SIGNAL SPECIFICATION** .
  - For B5xx4T, see **HEATED OXYGEN SENSOR (HO2S), REPLACING**
  - For B6xx4T, see **HEATED OXYGEN SENSOR (HO2S), REPLACING** .
  - see **CHECKING WIRING AND TERMINALS**

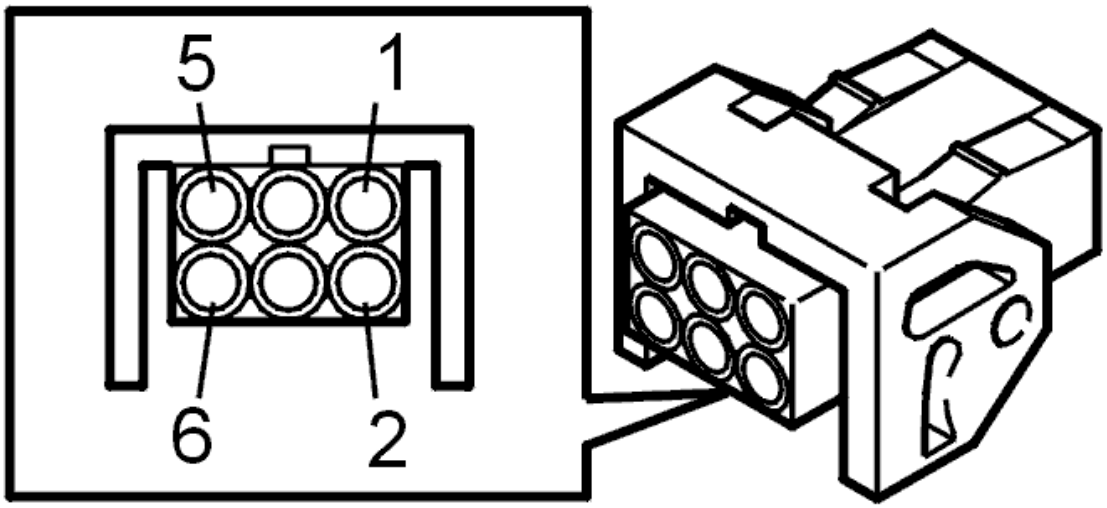

Fig. 219: Identifying Front Heated Oxygen Sensor Connector Terminals
Courtesy of VOLVO CARS CORPORATION

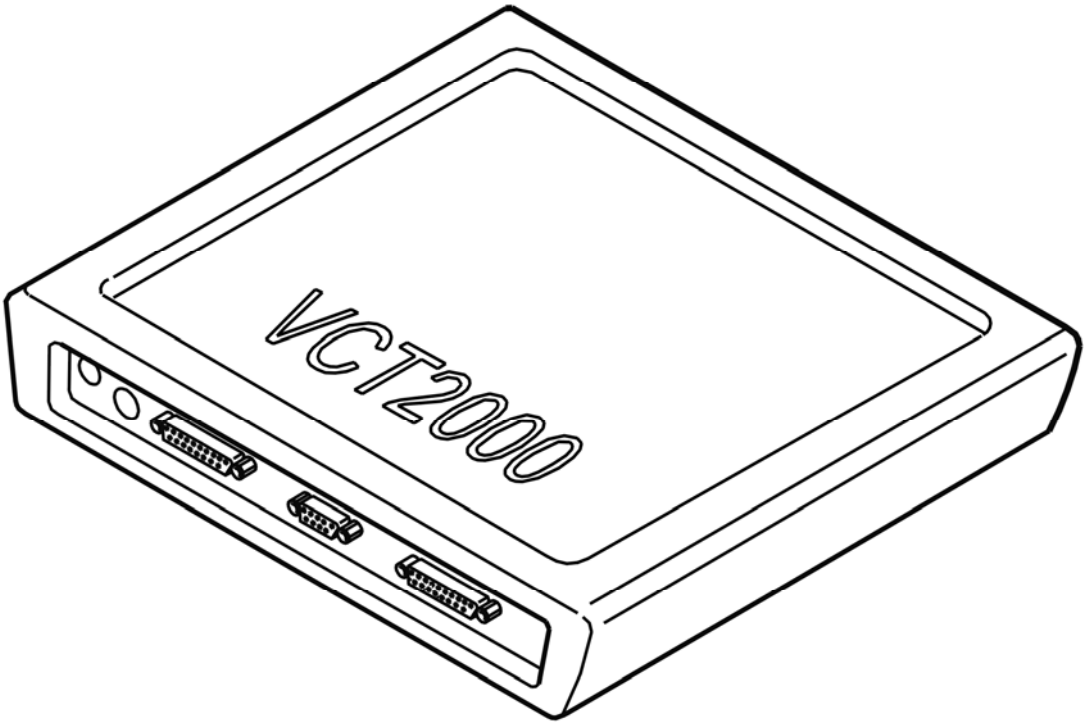

Fig. 220: Identifying VCT2000 Diagnostic Tool Symbol In VIDA
Courtesy of VOLVO CARS CORPORATION

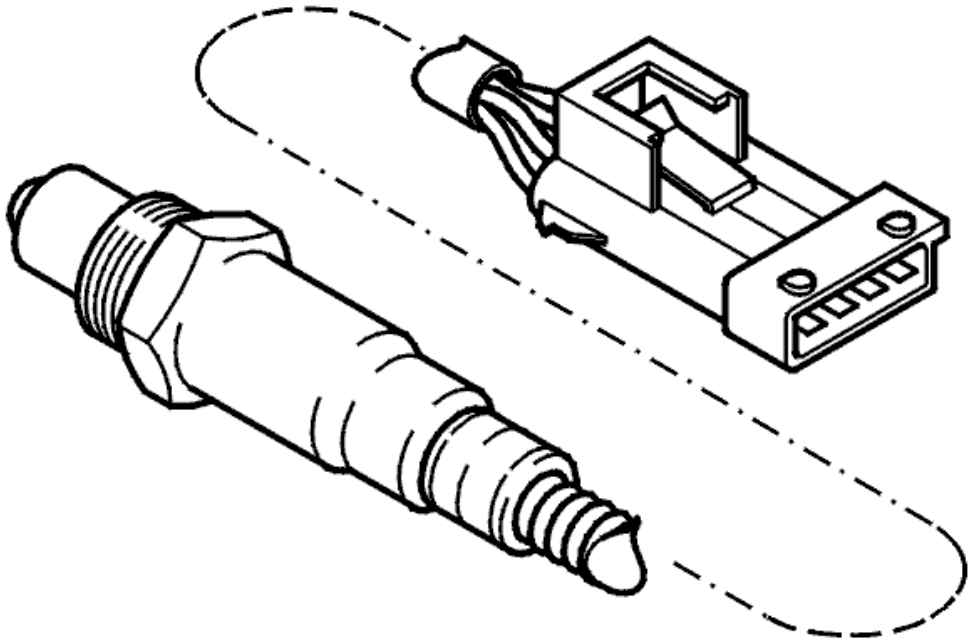

Fig. 221: Identifying Rear Heated Oxygen Sensor
Courtesy of VOLVO CARS CORPORATION

- **Continue**

  Refer to **VERIFICATION**

VERIFICATION

VERIFICATION

HINT: After carrying out the repair, check that the fault has been remedied.

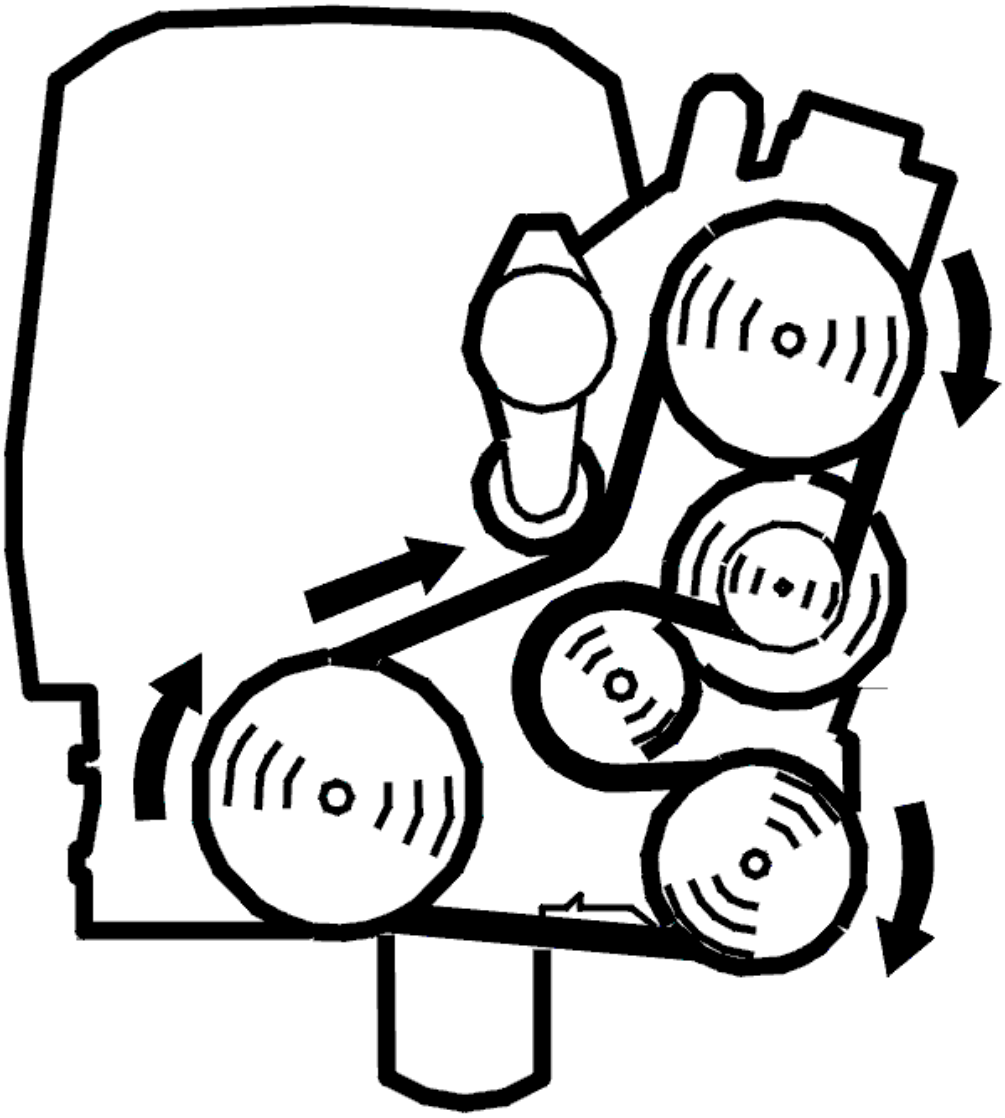

Fig. 222: Belt Routing / Engine Idling - Volvo
Courtesy of VOLVO CARS CORPORATION

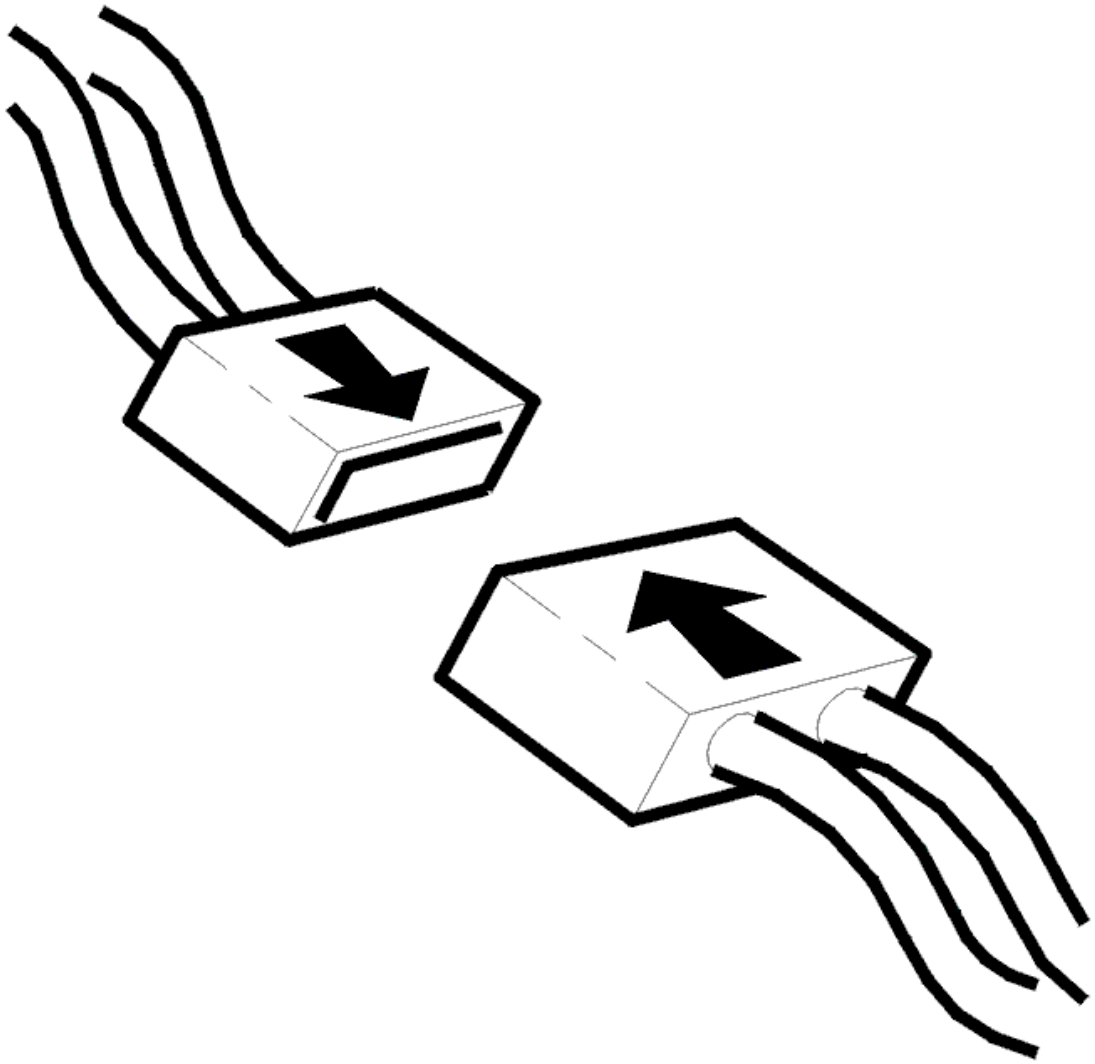

Fig. 223: Connecting Connector
Courtesy of VOLVO CARS CORPORATION

- Ignition off
- Reconnect the connectors, reinstall components etc.
- Test drive the car and perform a TRIP schedule: **VERIFYING REPAIRS**
- Connect VCT2000 (or appropriate scan tool) to the data link connector (DLC) without switching off the engine.

NOTE: **If the engine is switched off, the stored fault status will be erased and the test drive will have to be repeated.**

Read off the dynamic for the front heated oxygen sensor (HO2S).

The value should be higher than 1.0.

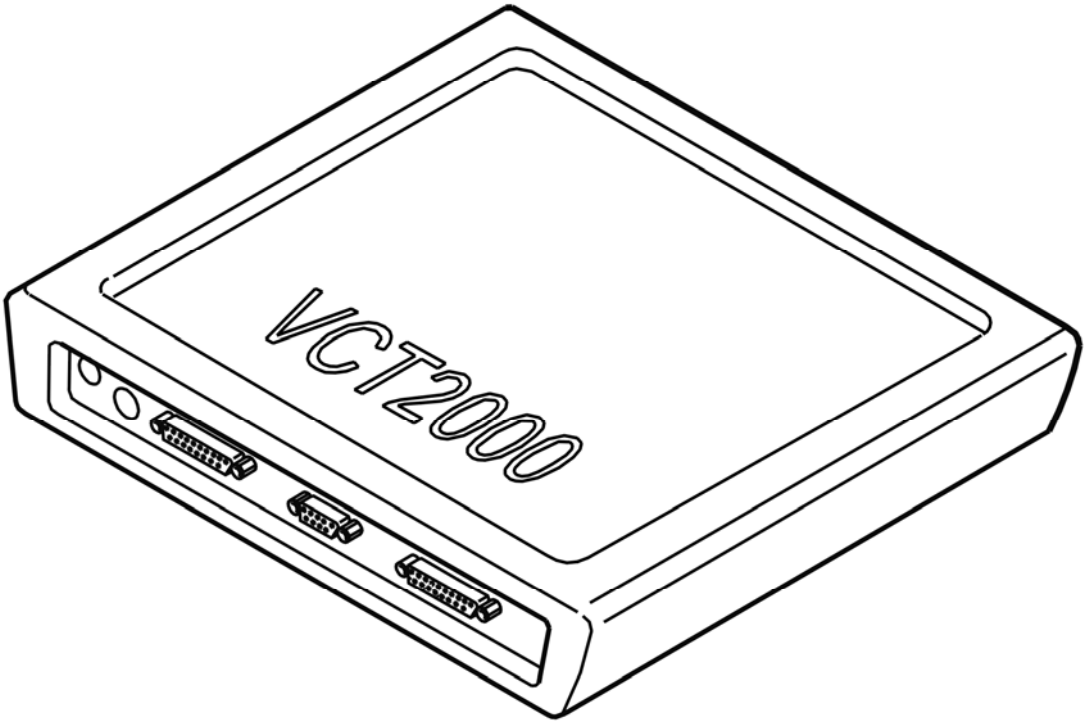

Fig. 224: Identifying VCT2000 Diagnostic Tool Symbol In VIDA
Courtesy of VOLVO CARS CORPORATION

Is the value OK?

- **YES**

  VERIFIED: Troubleshooting has been completed.

- **NO**

  Refer to **INFORMATION**

INFORMATION

FAULT-TRACING INFORMATION

The fault should have been detected and remedied. As this is not the case fault-tracing has failed.

Exit fault-tracing for this diagnostic trouble code (DTC) or make another attempt.

ECM-242D: FRONT HEATED OXYGEN SENSOR (HO2S), BANK 1. SLOW REGULATION (B6294T; 2005-2006)

DIAGNOSTIC TROUBLE CODE (DTC) INFORMATION ECM-242D

see **DIAGNOSTIC TROUBLE CODE (DTC) INFORMATION ECM-242D**

SIGNAL TOO LOW

see **SIGNAL TOO LOW**

ECM-243B: FRONT HEATED OXYGEN SENSOR (HO2S), BANK 1. SIGNAL MISSING (B5254T2; 2005-2007)

DIAGNOSTIC TROUBLE CODE (DTC) INFORMATION ECM-243B

Condition

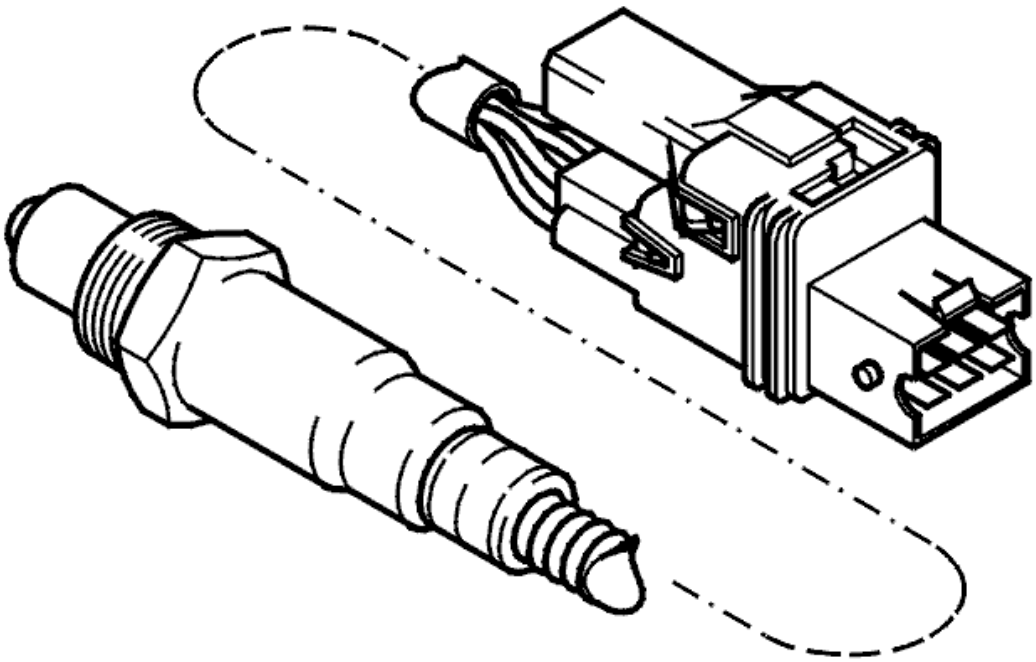

Fig. 225: Front Heated Oxygen Sensor
Courtesy of VOLVO CARS CORPORATION

The engine control module (ECM) monitors the function of the front heated oxygen sensor (HO2S) (bank 1) by checking its signal. The diagnostic trouble code (DTC) is stored if the voltage for the heated oxygen sensor (HO2S) preheating disrupts the heated oxygen sensor (HO2S) signal.

Substitute Value

- The heated oxygen sensor (HO2S) control is disabled
- Three-way catalytic converter (TWC) diagnostics are disabled.

Possible Source

- One of the cables for heated oxygen sensor (HO2S) preheating is short-circuited to the probe's other signal cables
- Damaged front heated oxygen sensor (HO2S).

Fault symptom[s]

- Malfunction indicator lamp (MIL) lit.

SIGNAL MISSING

CHECKING THE COMPONENTS AND WIRING

CAUTION: Do not apply rust solvent spray or grease to the heated oxygen sensor (HO2S) connector.

Check the power cable between the engine control module (ECM) and heated oxygen sensor (HO2S) connector terminal #3. Check for a short-circuit to the other signal cables for the heated oxygen sensor (HO2S).

Check the ground lead between engine control module (ECM) terminals #A18 (#A18) and heated oxygen sensor (HO2S) connector terminal #4. Check for a short-circuit to the other signal cables for the heated oxygen sensor (HO2S).

Try a new heated oxygen sensor (HO2S) if the wiring is OK.

Remedy as necessary.

Other information

- see **CONNECTING THE BREAKOUT BOX**
- For 5 cylinder turbocharged engines -2004, see **SIGNAL DESCRIPTION**
- For 5 cylinder turbocharged engines 2005-, see **SIGNAL SPECIFICATION** .
- For 6 cylinder engines -2004, see **SIGNAL SPECIFICATION**
- For 6 cylinder engines 2005-, see **SIGNAL SPECIFICATION** .
- For B5xx4T, see **HEATED OXYGEN SENSOR (HO2S), REPLACING**
- For B6xx4T, see **HEATED OXYGEN SENSOR (HO2S), REPLACING** .
- see **CHECKING WIRING AND TERMINALS**

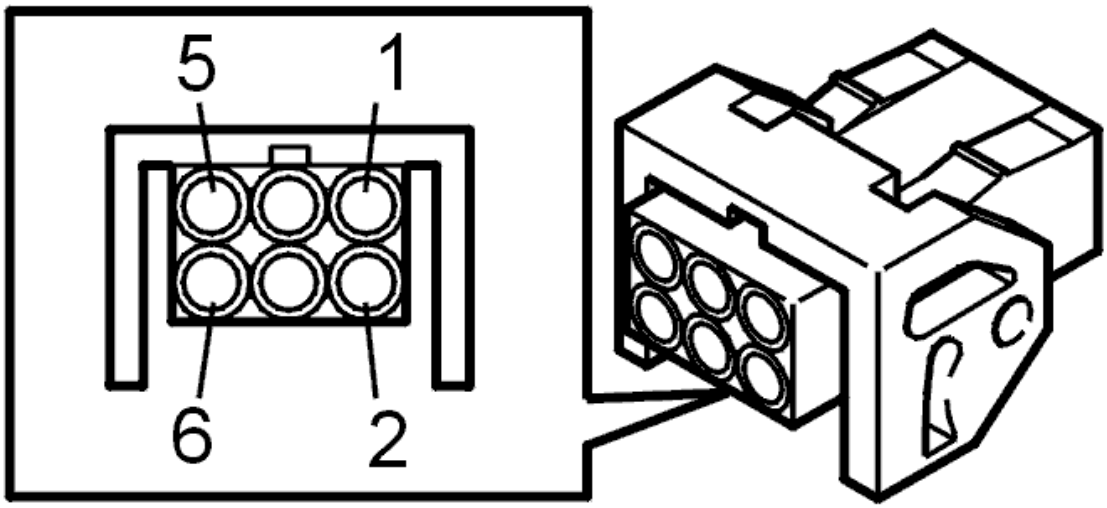

Fig. 226: Identifying Front Heated Oxygen Sensor Connector Terminals
Courtesy of VOLVO CARS CORPORATION

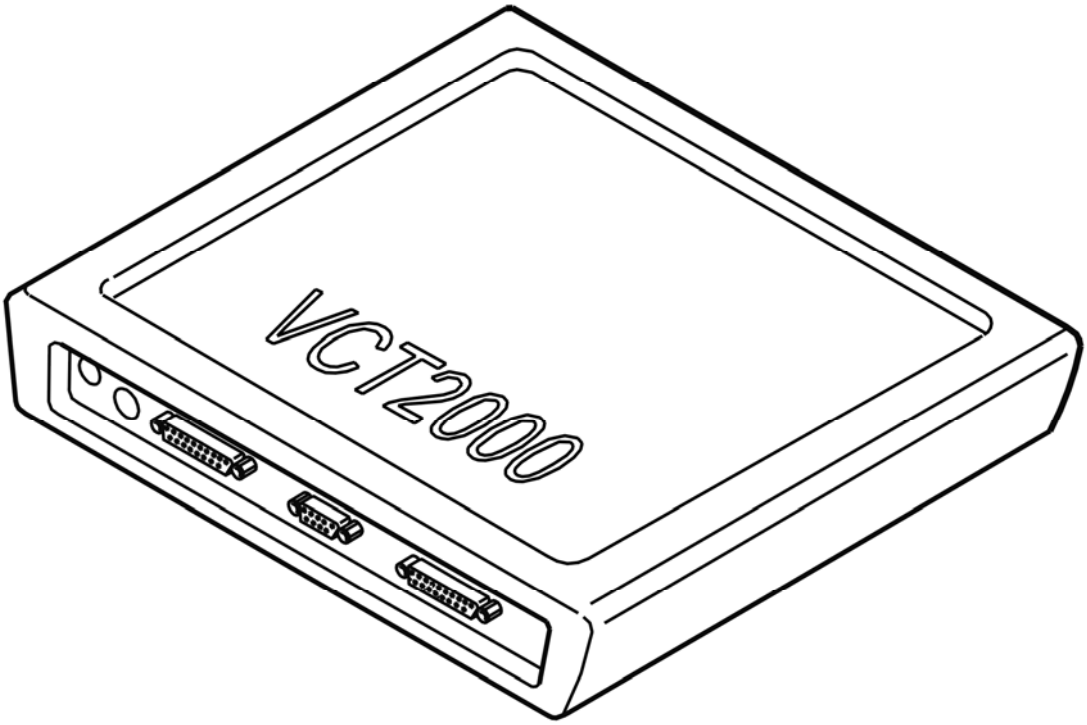

Fig. 227: Identifying VCT2000 Diagnostic Tool Symbol In VIDA
Courtesy of VOLVO CARS CORPORATION

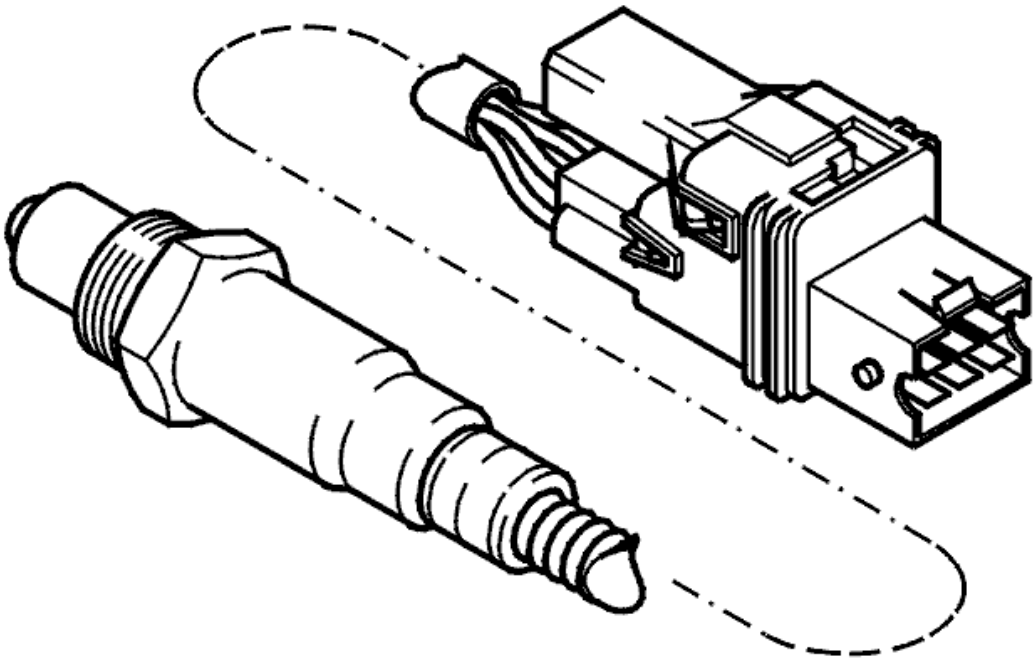

Fig. 228: Front Heated Oxygen Sensor
Courtesy of VOLVO CARS CORPORATION

- **Continue**

  Refer to **VERIFICATION**

VERIFICATION

VERIFICATION

HINT: After carrying out the repair, check that the fault has been remedied.

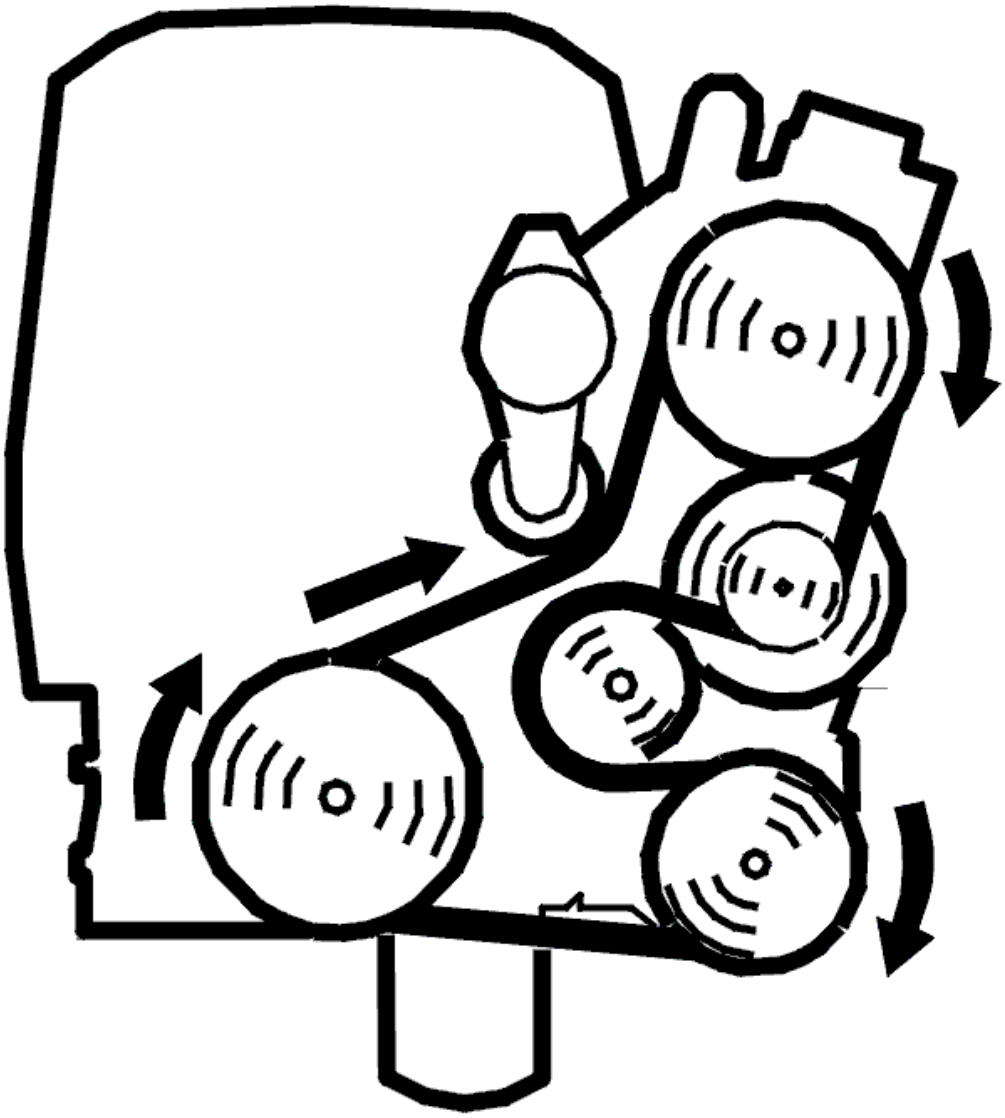

Fig. 229: Belt Routing / Engine Idling - Volvo
Courtesy of VOLVO CARS CORPORATION

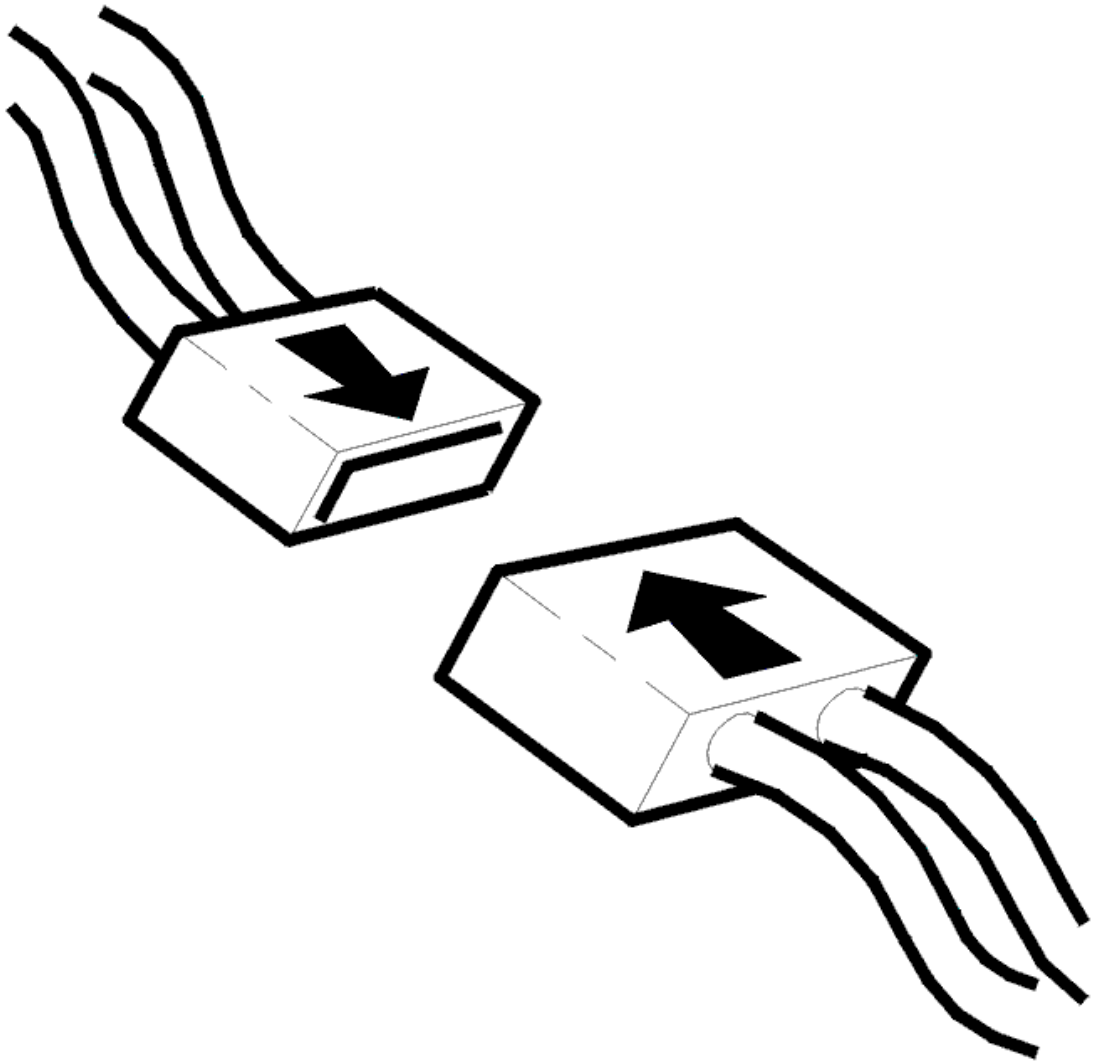

Fig. 230: Connecting Connector
Courtesy of VOLVO CARS CORPORATION

- Ignition off
- Reconnect the connectors, reinstall components etc.
- Allow the engine to cool (to below 40 °C). Then start the engine
- Connect VCT2000 (or appropriate scan tool) to the data link connector (DLC) without switching off the engine.

NOTE: **If the engine is switched off, the stored fault status will be erased and the test drive will have to be repeated.**

Read off the diagnostic status and fault status for the diagnostic trouble code (DTC) by selecting the relevant diagnostic trouble code (DTC) from the list.

Check the fault status for the diagnostic trouble code (DTC) when the diagnostic is "Complete". If the function is correct, the fault status must be "No fault found" when the diagnostic is complete.

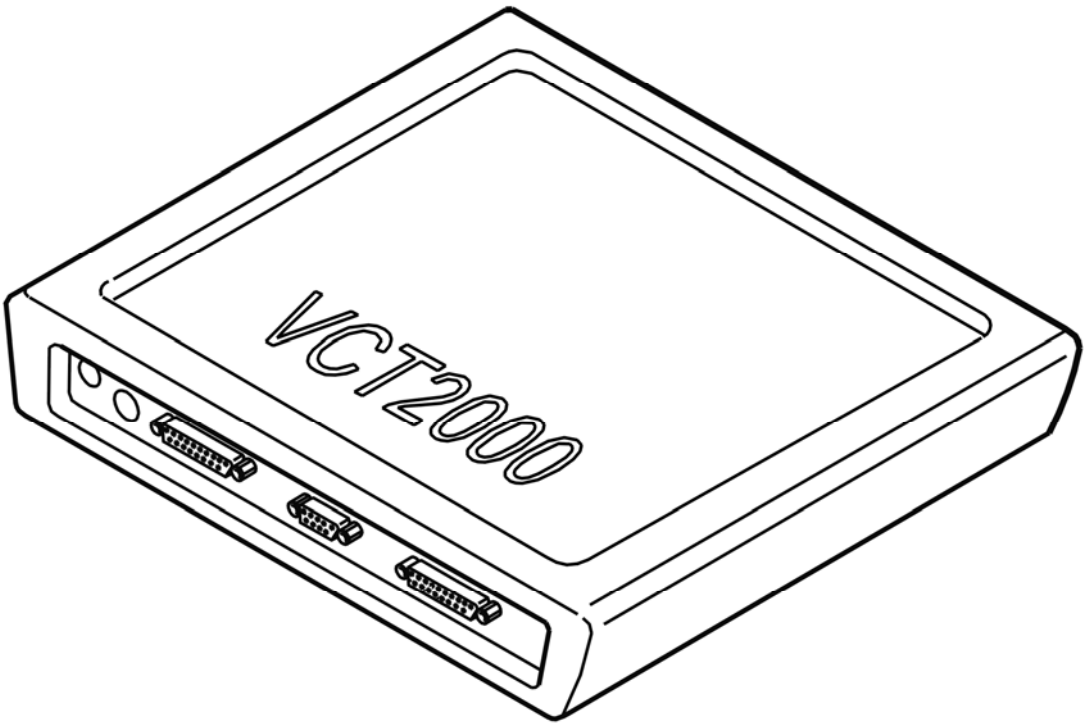

Fig. 231: Identifying VCT2000 Diagnostic Tool Symbol In VIDA
Courtesy of VOLVO CARS CORPORATION

Is the function OK?

- **YES**

  VERIFIED: Troubleshooting has been completed.

- **NO**

  Refer to **INFORMATION**

INFORMATION

FAULT-TRACING INFORMATION

The fault should have been detected and remedied. As this is not the case fault-tracing has failed.

Exit fault-tracing for this diagnostic trouble code (DTC) or make another attempt.

ECM-243B: FRONT HEATED OXYGEN SENSOR (HO2S), BANK 1. SIGNAL MISSING (B6294T; 2005-2006)

DIAGNOSTIC TROUBLE CODE (DTC) INFORMATION ECM-243B

see **DIAGNOSTIC TROUBLE CODE (DTC) INFORMATION ECM-243B**

SIGNAL MISSING

see **SIGNAL MISSING**

ECM-243C: FRONT HEATED OXYGEN SENSOR (HO2S), BANK 1 HEATING. SIGNAL TOO HIGH (B5254T2; 2006-2007)

DIAGNOSTIC TROUBLE CODE (DTC) INFORMATION ECM-243C

Condition

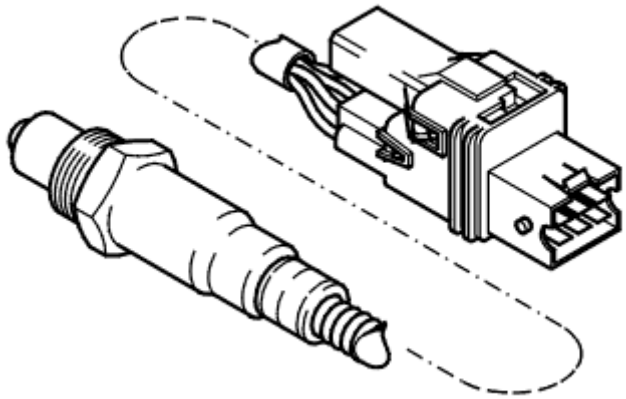

Fig. 232: Identifying Preheating Circuit In Front Lambda Probe
Courtesy of VOLVO CARS CORPORATION

The engine control module (ECM) controls the resistance on the preheating circuit in the front lambda probe. The check is made by the control module measuring the current through the circuit and then converting the current to temperature. The diagnostic trouble code (DTC) is stored and it is interpreted as a fault if the control module detects that the resistance is unreasonably high, which results in a low temperature.

The diagnostic trouble code (DTC) can be diagnosed when driving.

Substitute Value

- None.

Possible Source

- Contact resistance and oxidation in the terminals.
- Damaged front heated oxygen sensor (HO2S).

Fault symptom[s]

- Malfunction indicator light (MIL), on

SIGNAL TOO HIGH/SIGNAL TOO LOW/SIGNAL MISSING

see **SIGNAL TOO HIGH/SIGNAL TOO LOW/SIGNAL MISSING**

ECM-243C: FRONT HEATED OXYGEN SENSOR (HO2S), BANK 1 HEATING. SIGNAL TOO HIGH (B6294T; 2006)

DIAGNOSTIC TROUBLE CODE (DTC) INFORMATION ECM-243C

see **DIAGNOSTIC TROUBLE CODE (DTC) INFORMATION ECM-243C**

SIGNAL TOO HIGH/SIGNAL TOO LOW/SIGNAL MISSING

see **SIGNAL TOO HIGH/SIGNAL TOO LOW/SIGNAL MISSING**

ECM-244B: FRONT HEATED OXYGEN SENSOR (HO2S), BANK 1, HEATING. SIGNAL MISSING (B5254T2; 2005-2007)

DIAGNOSTIC TROUBLE CODE (DTC) INFORMATION ECM-244B

Condition

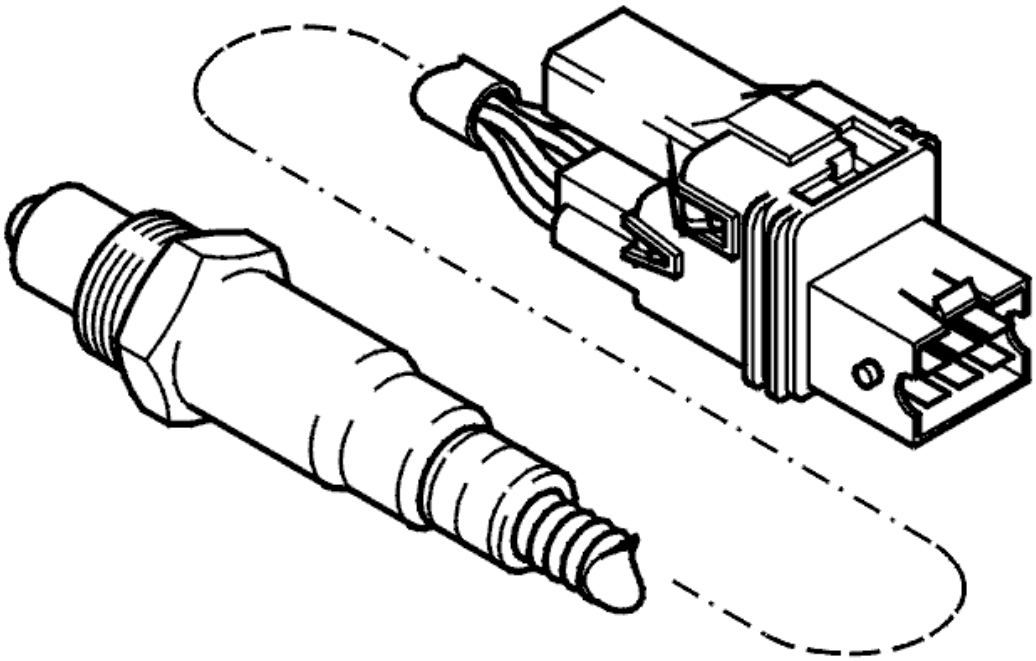

Fig. 233: Front Heated Oxygen Sensor
Courtesy of VOLVO CARS CORPORATION

The engine control module (ECM) controls preheating by pulsing the current to the positive temperature coefficient (PTC) element in the front heated oxygen sensor (HO2S). Pulse lengths are dependent on the temperature of the heated oxygen sensor (H02S).

The diagnostic trouble code (DTC) is stored if the engine control module (ECM) registers that the signal is lower than a certain value when preheating is deactivated.

Substitute Value

- Heated oxygen sensor (HO2S) control is disabled.

Possible Source

- Contact resistance and oxidation in the terminals
- Open-circuit in the power supply from the system relay
- Damaged front heated oxygen sensor (HO2S).

Fault symptom[s]

- Malfunction indicator lamp (MIL) lit.

SIGNAL MISSING

CHECKING THE COMPONENTS AND WIRING

CAUTION: Do not apply rust solvent spray or grease to the heated oxygen sensor (HO2S) connector.

Check the signal cable between heated oxygen sensor (HO2S) #3 and the system relay. Check for contact resistance and oxidation.

Check the power supply between the system relay and heated oxygen sensor (HO2S) terminal #3. Check for an open-circuit.

NOTE: If possible, measure from the rear of the affected connectors in order to minimize any damage and future loose connections.

Try a new heated oxygen sensor (HO2S) if the above fault-tracing does not remedy the fault.

Remedy as necessary.

Other information

- see **CONNECTING THE BREAKOUT BOX**
- For 5 cylinder turbocharged engines -2004, see **SIGNAL DESCRIPTION**
- For 5 cylinder turbocharged engines 2005-, see **SIGNAL SPECIFICATION** .
- For 6 cylinder engines -2004, see **SIGNAL SPECIFICATION**
- For 6 cylinder engines 2005-, see **SIGNAL SPECIFICATION** .
- For B5xx4T, see **HEATED OXYGEN SENSOR (HO2S), REPLACING**
- For B6xx4T, see **HEATED OXYGEN SENSOR (HO2S), REPLACING** .
- see **CHECKING WIRING AND TERMINALS**

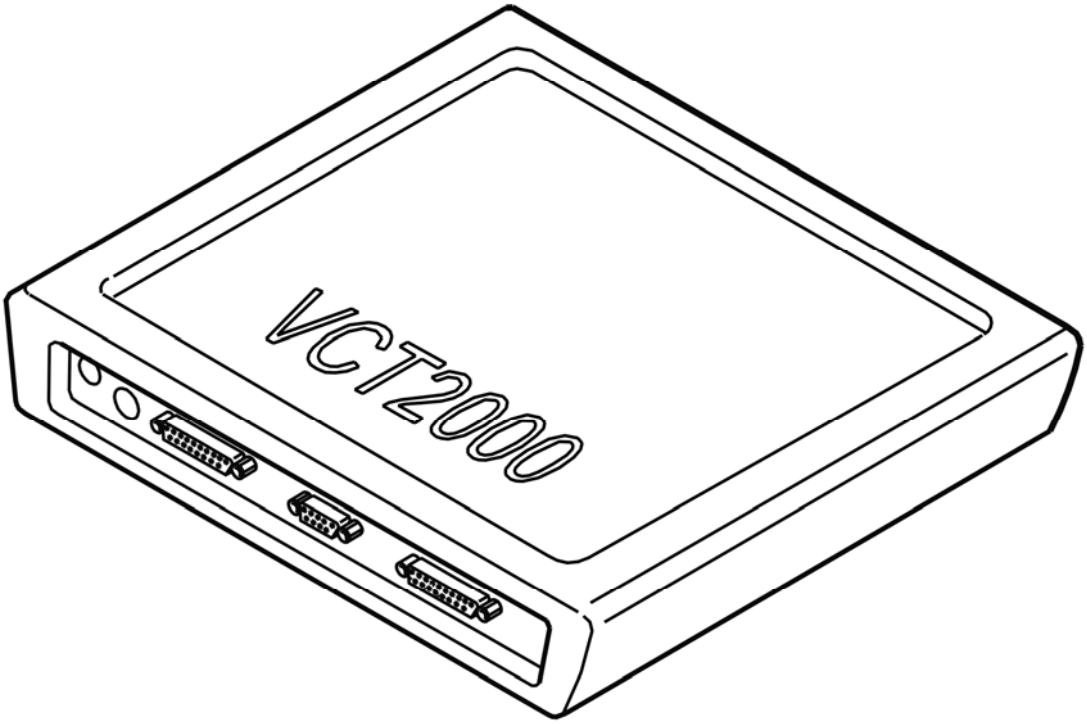

Fig. 234: Identifying VCT2000 Diagnostic Tool Symbol In VIDA
Courtesy of VOLVO CARS CORPORATION

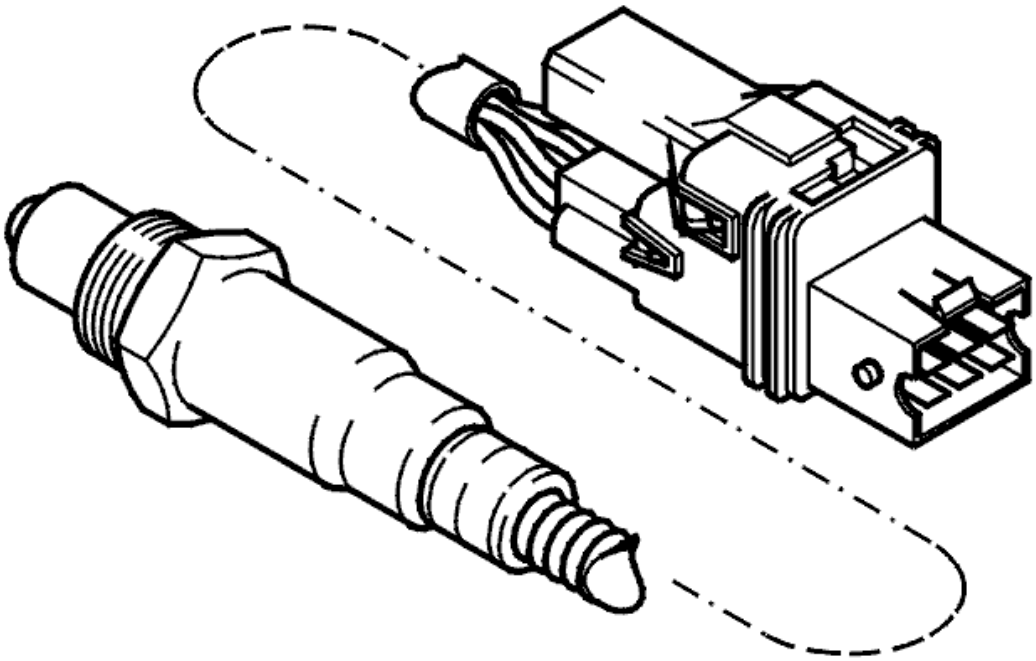

Fig. 235: Front Heated Oxygen Sensor
Courtesy of VOLVO CARS CORPORATION

- **Continue**

  Refer to **VERIFICATION**

VERIFICATION

VERIFICATION

HINT: After carrying out the repair, check that the fault has been remedied.

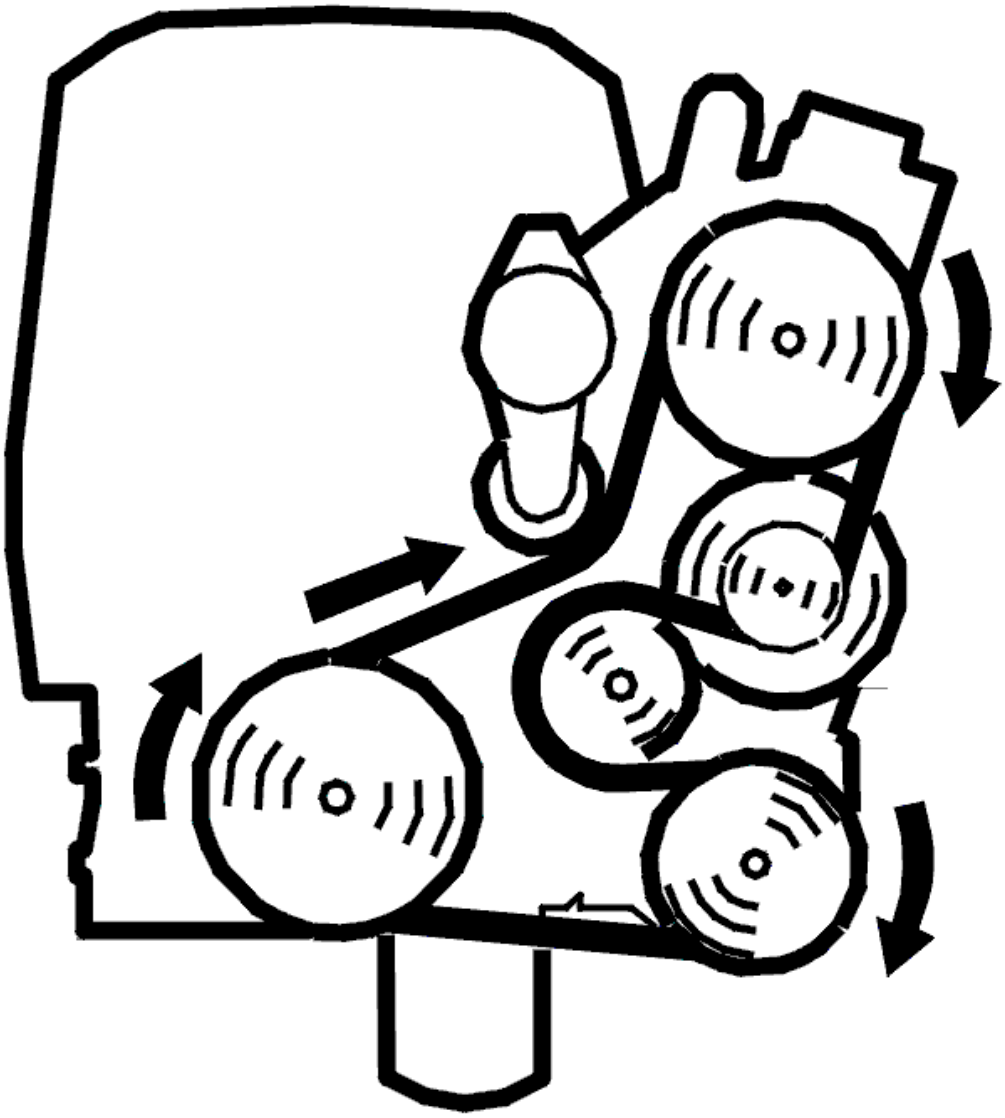

Fig. 236: Belt Routing / Engine Idling - Volvo
Courtesy of VOLVO CARS CORPORATION

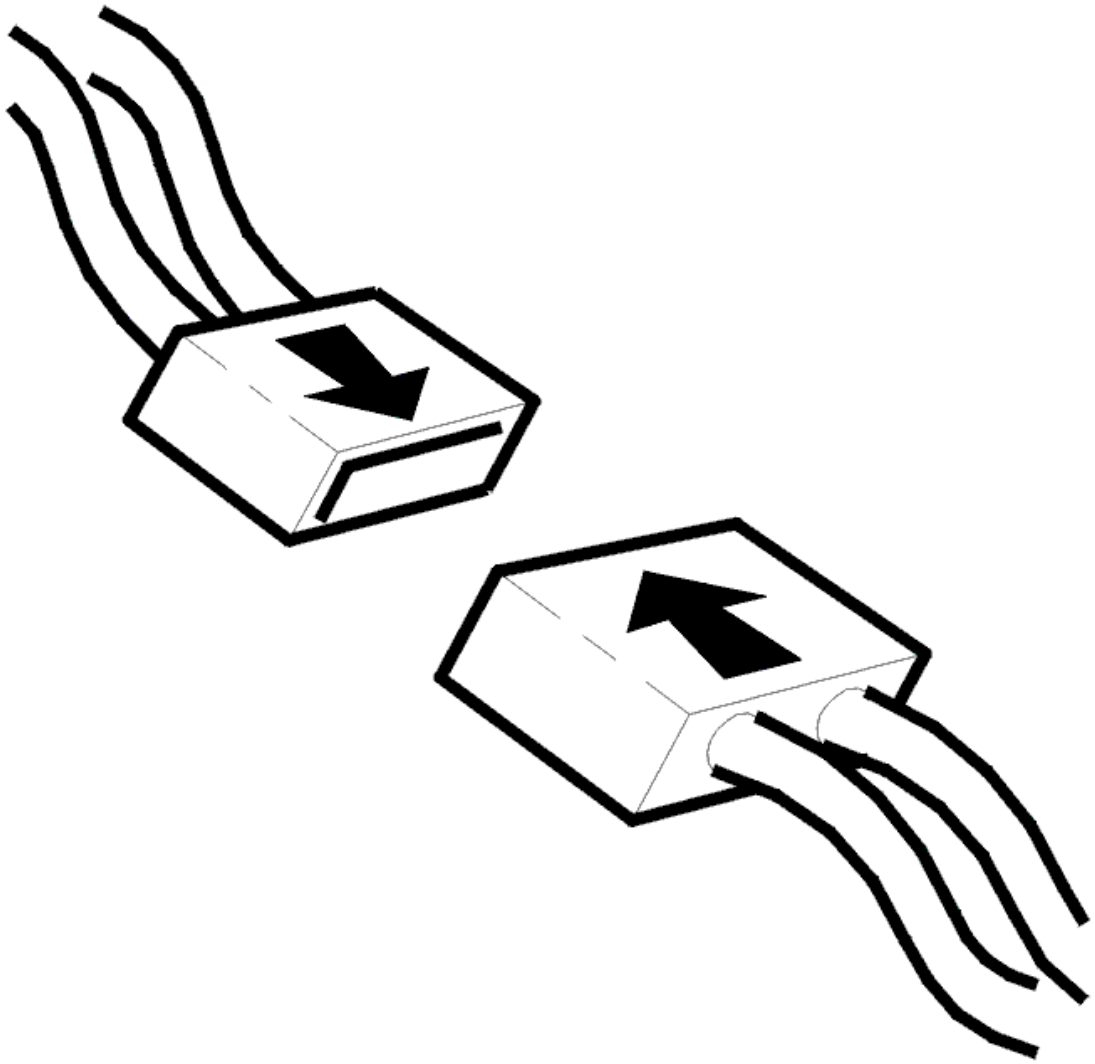

Fig. 237: Connecting Connector
Courtesy of VOLVO CARS CORPORATION

- Ignition off
- Reconnect the connectors, reinstall components etc.
- Test drive the car at an even speed (engine speed (RPM) above 2000 RPM) for at least 5 minutes
- Connect VCT2000 (or appropriate scan tool) to the data link connector (DLC) without switching off the engine.

NOTE: **If the engine is switched off, the stored fault status will be erased and the test drive will have to be repeated.**

Read off the diagnostic status and fault status for the diagnostic trouble code (DTC) by selecting the relevant diagnostic trouble code (DTC) from the list.

Check the fault status for the diagnostic trouble code (DTC) when the diagnostic is "Complete". If the function is correct, the fault status must be "No fault found" when the diagnostic is complete.

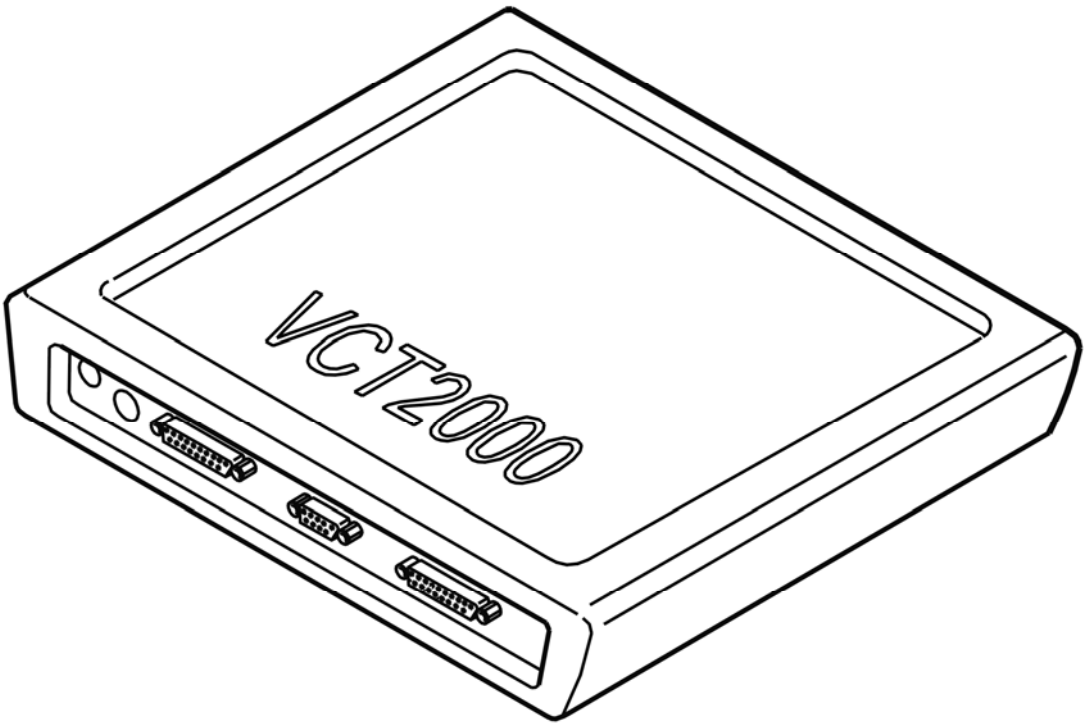

Fig. 238: Identifying VCT2000 Diagnostic Tool Symbol In VIDA
Courtesy of VOLVO CARS CORPORATION

Is the function OK?

- **YES**

  VERIFIED: Troubleshooting has been completed.

- **NO**

  Refer to **INFORMATION**

INFORMATION

FAULT-TRACING INFORMATION

The fault should have been detected and remedied. As this is not the case fault-tracing has failed.

Exit fault-tracing for this diagnostic trouble code (DTC) or make another attempt.

ECM-244B: FRONT HEATED OXYGEN SENSOR (HO2S), BANK 1, HEATING. SIGNAL MISSING (B6294T; 2005-2006)

DIAGNOSTIC TROUBLE CODE (DTC) INFORMATION ECM-244B

see **DIAGNOSTIC TROUBLE CODE (DTC) INFORMATION ECM-244B**

SIGNAL MISSING

see **SIGNAL MISSING**

ECM-244C: FRONT HEATED OXYGEN SENSOR (HO2S), BANK 1, HEATING. SIGNAL TOO HIGH (B5254T2; 2005-2007)

DIAGNOSTIC TROUBLE CODE (DTC) INFORMATION ECM-244C

Condition

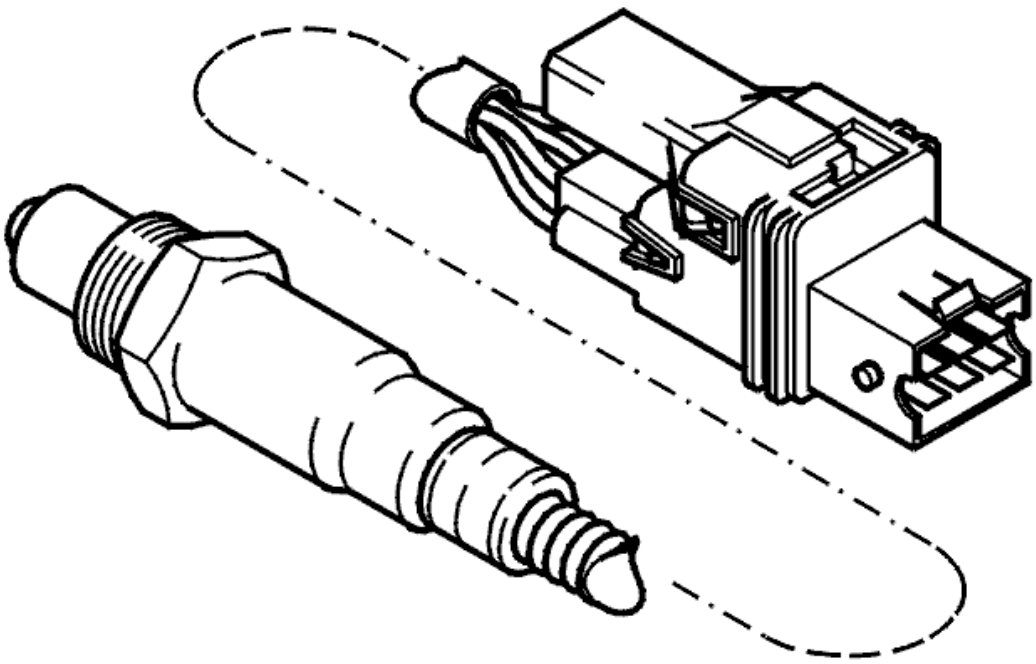

Fig. 239: Front Heated Oxygen Sensor
Courtesy of VOLVO CARS CORPORATION

The engine control module (ECM) controls preheating by pulsing the current to the positive temperature coefficient (PTC) element in the front heated oxygen sensor (HO2S). Pulse lengths are dependent on the

temperature of the heated oxygen sensor (H02S).

The diagnostic trouble code (DTC) is stored if the engine control module (ECM) registers that the signal is higher than a certain value when preheating is active.

Substitute Value

- Heated oxygen sensor (HO2S) control is disabled.

Possible Source

- Short-circuit to supply voltage in the signal cable
- Damaged front heated oxygen sensor (HO2S).

Fault symptom[s]

- Malfunction indicator lamp (MIL) lit.

SIGNAL TOO HIGH

CHECKING THE COMPONENTS AND WIRING

CAUTION: Do not apply rust solvent spray or grease to the heated oxygen sensor (HO2S) connector.

Check the signal cable between heated oxygen sensor (HO2S) #3 and the system relay. Check for a short-circuit to supply voltage.

NOTE: If possible, measure from the rear of the affected connectors in order to minimize any damage and future loose connections.

Try a new heated oxygen sensor (HO2S) if the above fault-tracing does not remedy the fault.

Remedy as necessary.

Other information

- see **CONNECTING THE BREAKOUT BOX**
- For 5 cylinder turbocharged engines -2004, see **SIGNAL DESCRIPTION**
- For 5 cylinder turbocharged engines 2005-, see **SIGNAL SPECIFICATION** .
- For 6 cylinder engines -2004, see **SIGNAL SPECIFICATION**
- For 6 cylinder engines 2005-, see **SIGNAL SPECIFICATION** .
- For B5xx4T, see **HEATED OXYGEN SENSOR (HO2S), REPLACING**
- For B6xx4T, see **HEATED OXYGEN SENSOR (HO2S), REPLACING** .

- see **CHECKING WIRING AND TERMINALS**

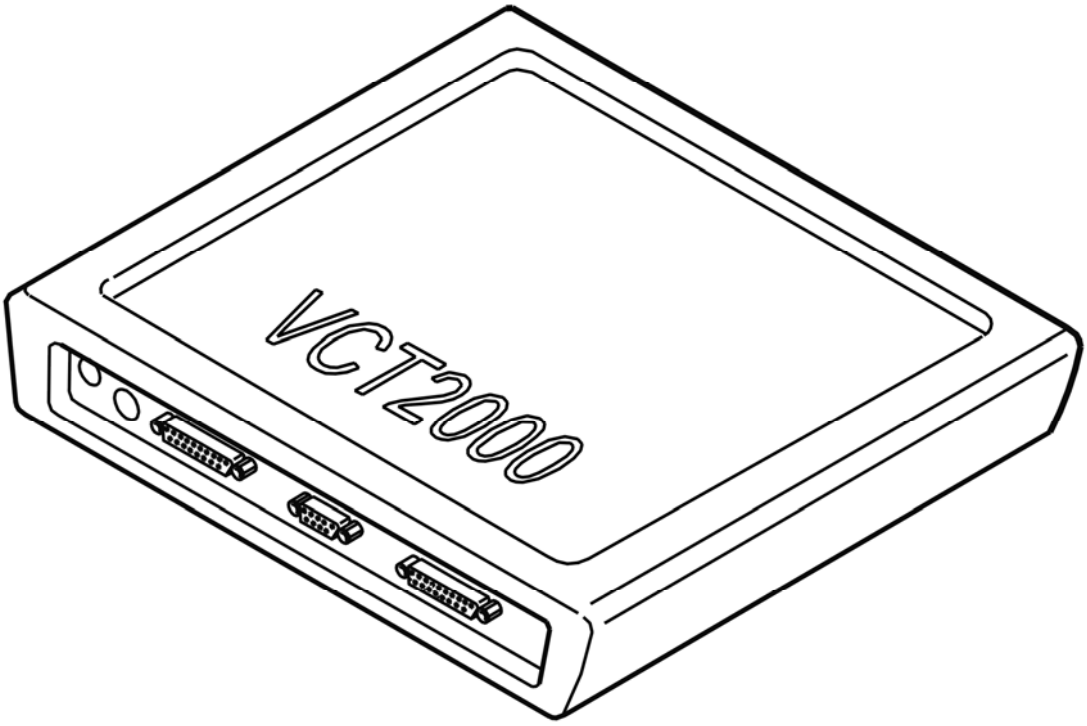

Fig. 240: Identifying VCT2000 Diagnostic Tool Symbol In VIDA
Courtesy of VOLVO CARS CORPORATION

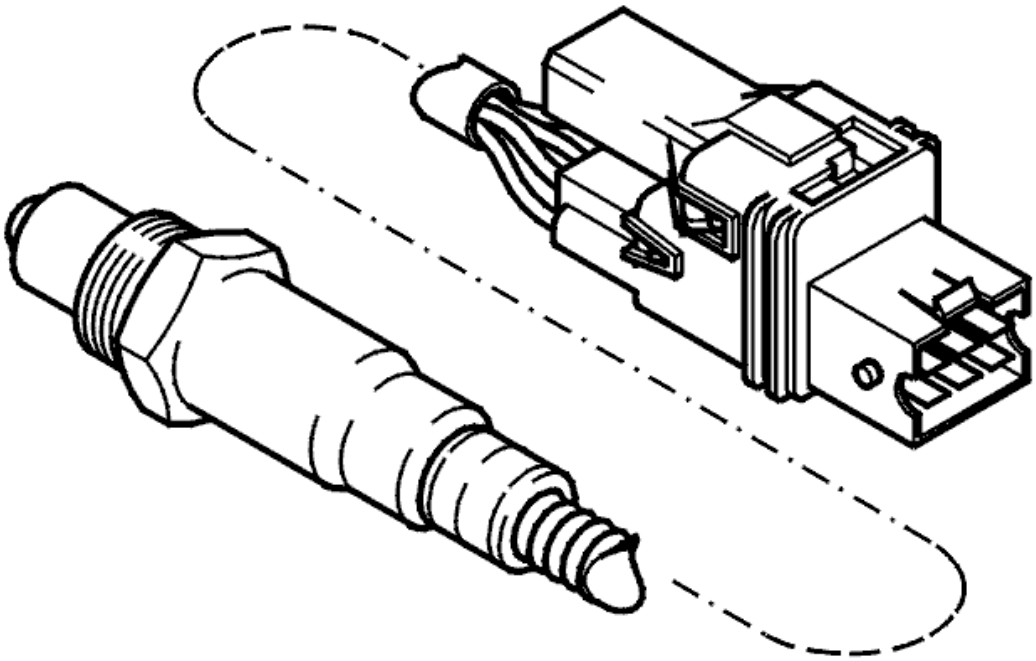

Fig. 241: Front Heated Oxygen Sensor
Courtesy of VOLVO CARS CORPORATION

- **Continue**

  Refer to **VERIFICATION**

VERIFICATION

VERIFICATION

HINT: After carrying out the repair, check that the fault has been remedied.

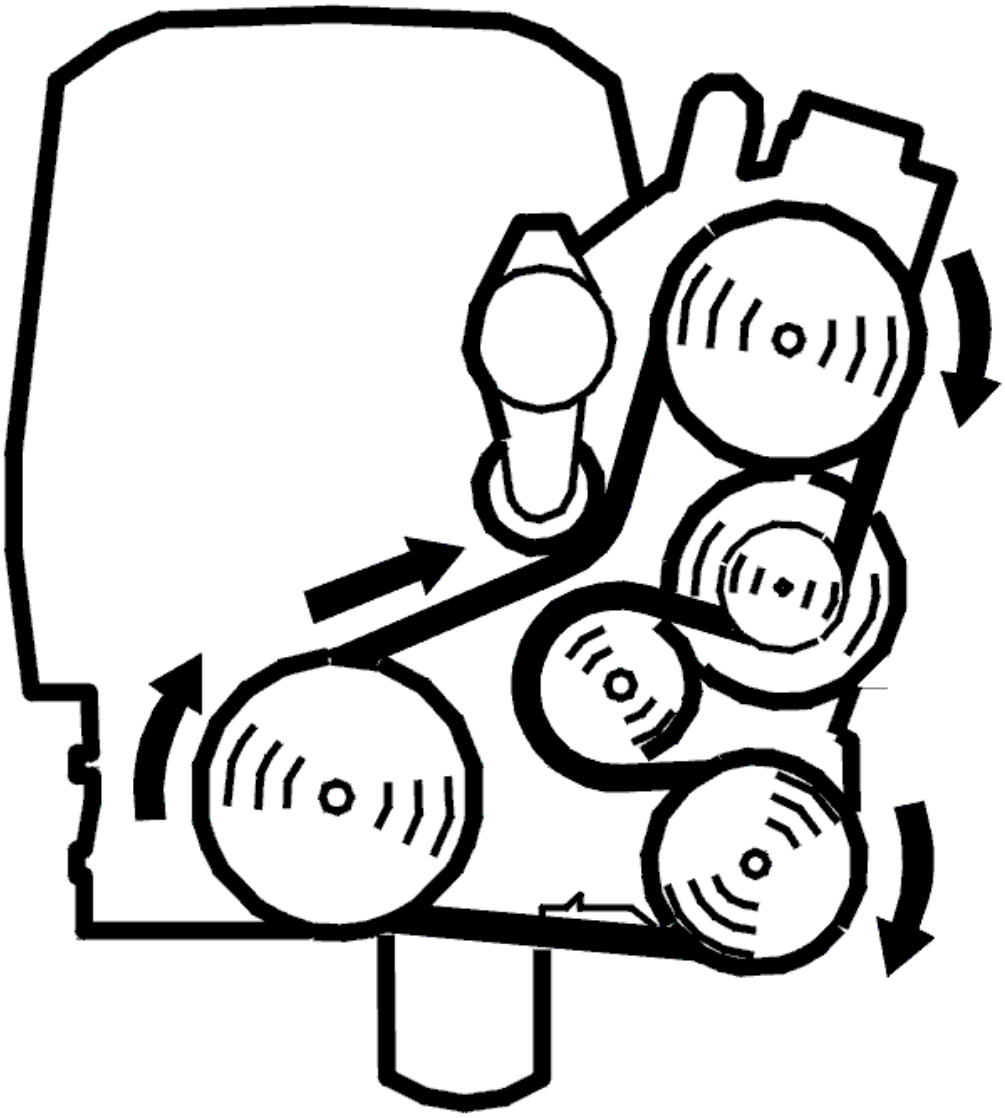

Fig. 242: Belt Routing / Engine Idling - Volvo
Courtesy of VOLVO CARS CORPORATION

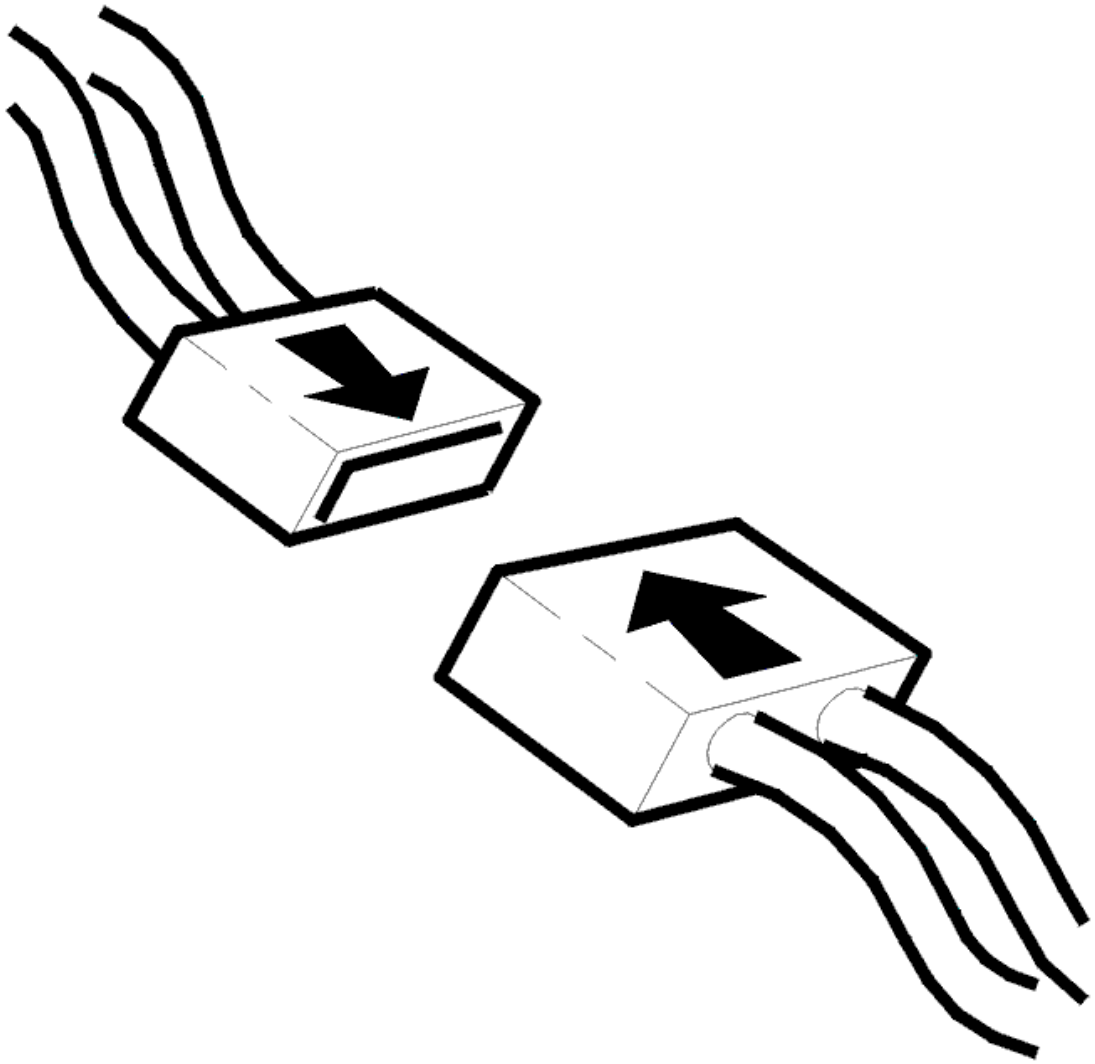

Fig. 243: Connecting Connector
Courtesy of VOLVO CARS CORPORATION

- Ignition off
- Reconnect the connectors, reinstall components etc.
- Test drive the car at an even speed (engine speed (RPM) above 2000 RPM) for at least 5 minutes
- Connect VCT2000 (or appropriate scan tool) to the data link connector (DLC) without switching off the engine.

NOTE: **If the engine is switched off, the stored fault status will be erased and the test drive will have to be repeated.**

Read off the diagnostic status and fault status for the diagnostic trouble code (DTC) by selecting the relevant diagnostic trouble code (DTC) from the list.

Check the fault status for the diagnostic trouble code (DTC) when the diagnostic is "Complete". If the function is correct, the fault status must be "No fault found" when the diagnostic is complete.

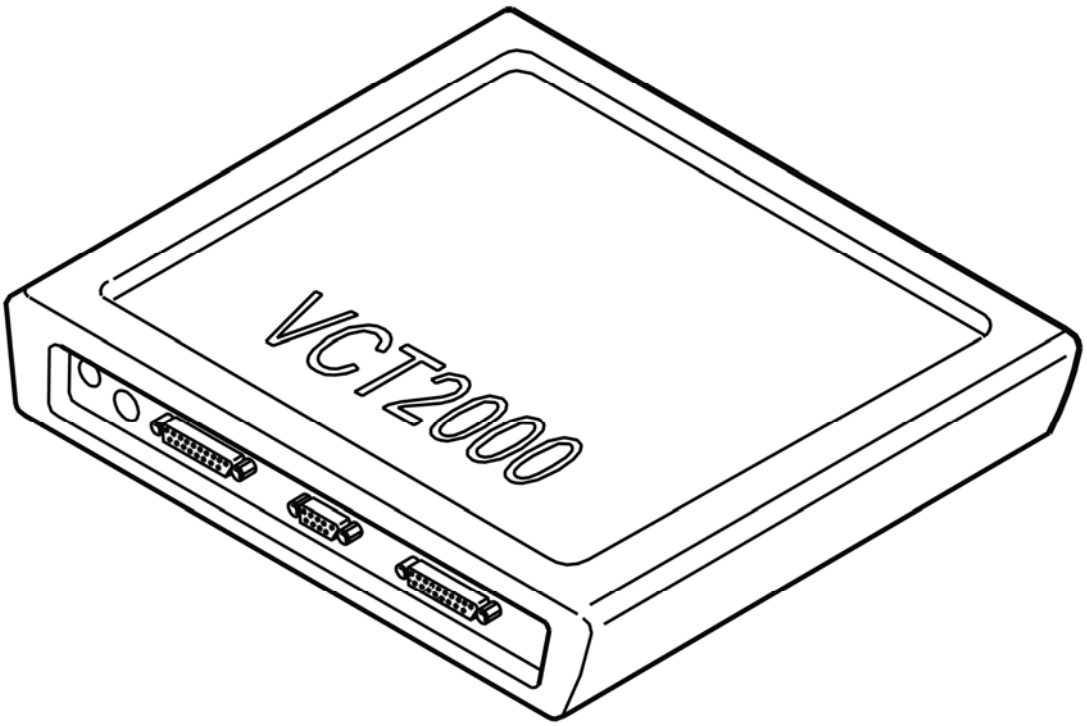

Fig. 244: Identifying VCT2000 Diagnostic Tool Symbol In VIDA
Courtesy of VOLVO CARS CORPORATION

Is the function OK?

- **YES**

  VERIFIED: Troubleshooting has been completed.

- **NO**

  Refer to **INFORMATION**

INFORMATION

FAULT-TRACING INFORMATION

The fault should have been detected and remedied. As this is not the case fault-tracing has failed.

Exit fault-tracing for this diagnostic trouble code (DTC) or make another attempt.

ECM-244C: FRONT HEATED OXYGEN SENSOR (HO2S), BANK 1, HEATING. SIGNAL TOO HIGH (B6294T; 2005-2006)

DIAGNOSTIC TROUBLE CODE (DTC) INFORMATION ECM-244C

see **DIAGNOSTIC TROUBLE CODE (DTC) INFORMATION ECM-244C**

SIGNAL TOO HIGH

see **SIGNAL TOO HIGH**

ECM-244D: FRONT HEATED OXYGEN SENSOR (HO2S), BANK 1, HEATING. SIGNAL TOO LOW (B5254T2; 2005-2007)

DIAGNOSTIC TROUBLE CODE (DTC) INFORMATION ECM-244D

Condition

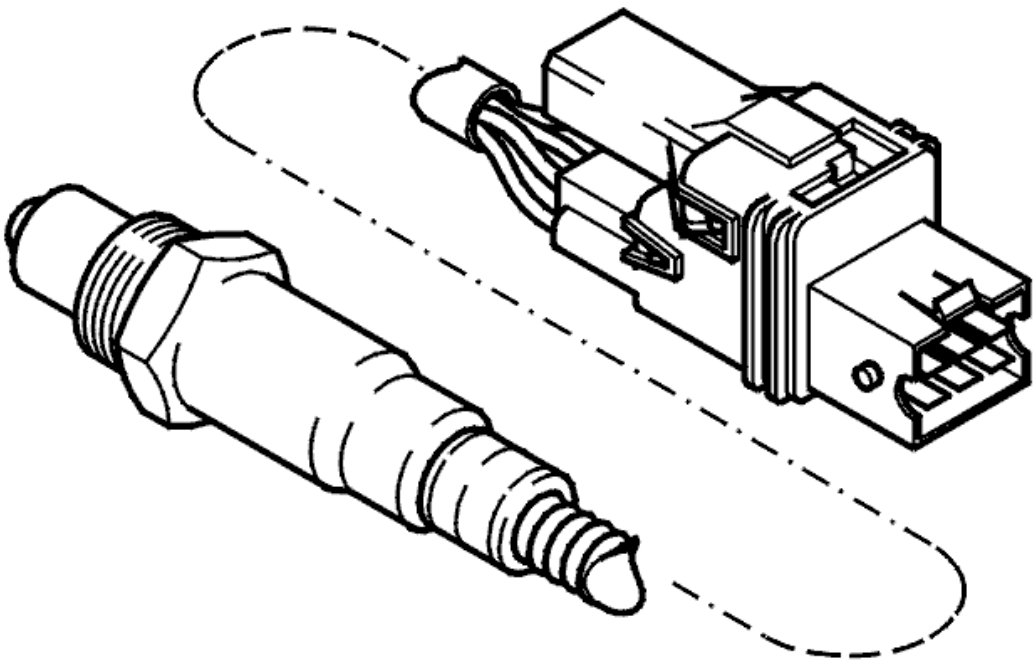

Fig. 245: Front Heated Oxygen Sensor
Courtesy of VOLVO CARS CORPORATION

The engine control module (ECM) controls preheating by pulsing the current to the positive temperature coefficient (PTC) element in the front heated oxygen sensor (HO2S). Pulse lengths are dependent on the

temperature of the heated oxygen sensor (H02S).

The diagnostic trouble code (DTC) is stored if the engine control module (ECM) registers that the signal is lower than a certain value when preheating is deactivated.

Substitute Value

- Heated oxygen sensor (HO2S) control is disabled.

Possible Source

- Short-circuit to ground in the signal cable
- Damaged front heated oxygen sensor (HO2S).

Fault symptom[s]

- Malfunction indicator lamp (MIL) lit.

SIGNAL TOO LOW

CHECKING THE COMPONENTS AND WIRING

CAUTION: Do not apply rust solvent spray or grease to the heated oxygen sensor (HO2S) connector.

Check the signal cable between heated oxygen sensor (HO2S) terminal #3 and the system relay. Check for a short-circuit to ground.

NOTE: If possible, measure from the rear of the affected connectors in order to minimize any damage and future loose connections.

Try a new heated oxygen sensor (HO2S) if the above fault-tracing does not remedy the fault.

Remedy as necessary.

Other information

- see **CONNECTING THE BREAKOUT BOX**
- For 5 cylinder turbocharged engines -2004, see **SIGNAL DESCRIPTION**
- For 5 cylinder turbocharged engines 2005-, see **SIGNAL SPECIFICATION** .
- For 6 cylinder engines -2004, see **SIGNAL SPECIFICATION**
- For 6 cylinder engines 2005-, see **SIGNAL SPECIFICATION** .
- For B5xx4T, see **HEATED OXYGEN SENSOR (HO2S), REPLACING**
- For B6xx4T, see **HEATED OXYGEN SENSOR (HO2S), REPLACING** .

- see **CHECKING WIRING AND TERMINALS**

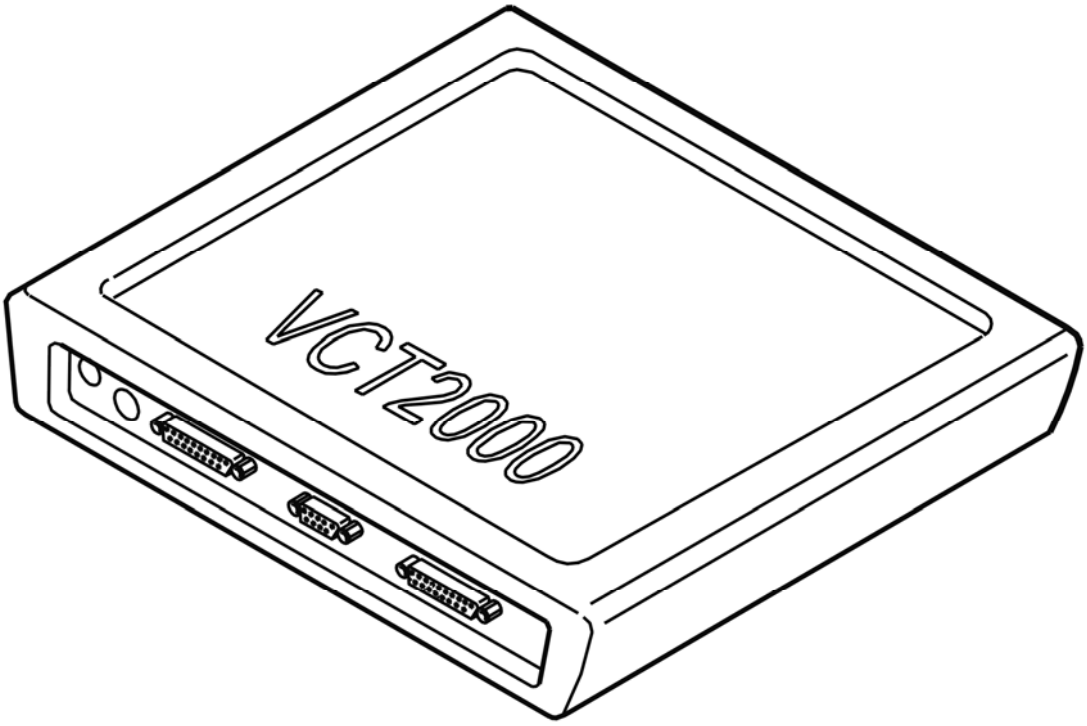

Fig. 246: Identifying VCT2000 Diagnostic Tool Symbol In VIDA
Courtesy of VOLVO CARS CORPORATION

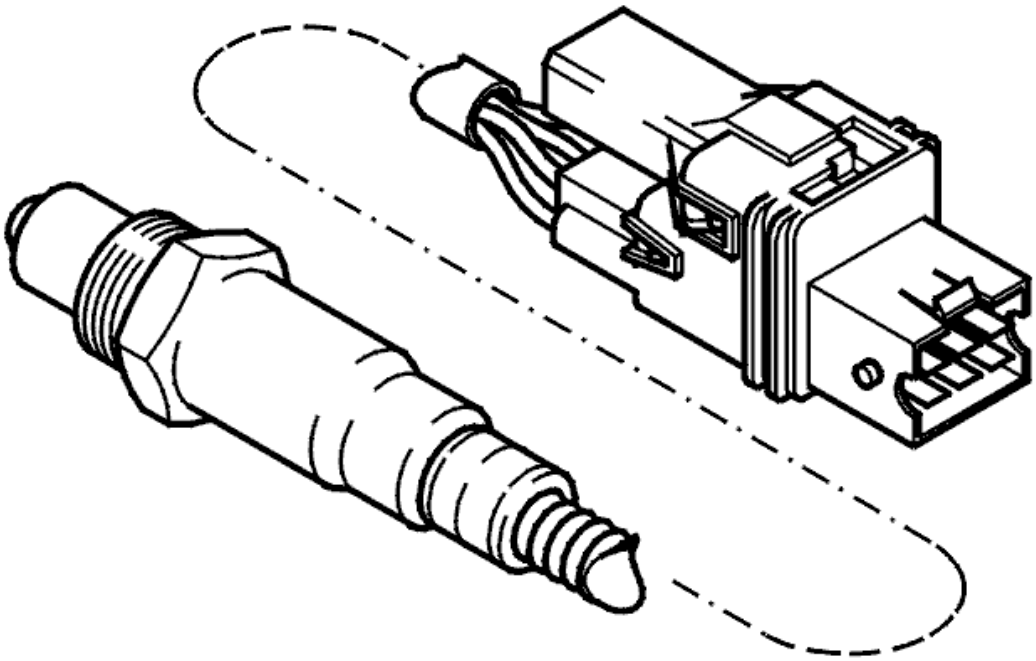

Fig. 247: Front Heated Oxygen Sensor
Courtesy of VOLVO CARS CORPORATION

- **Continue**

  Refer to **VERIFICATION**

VERIFICATION

VERIFICATION

HINT: After carrying out the repair, check that the fault has been remedied.

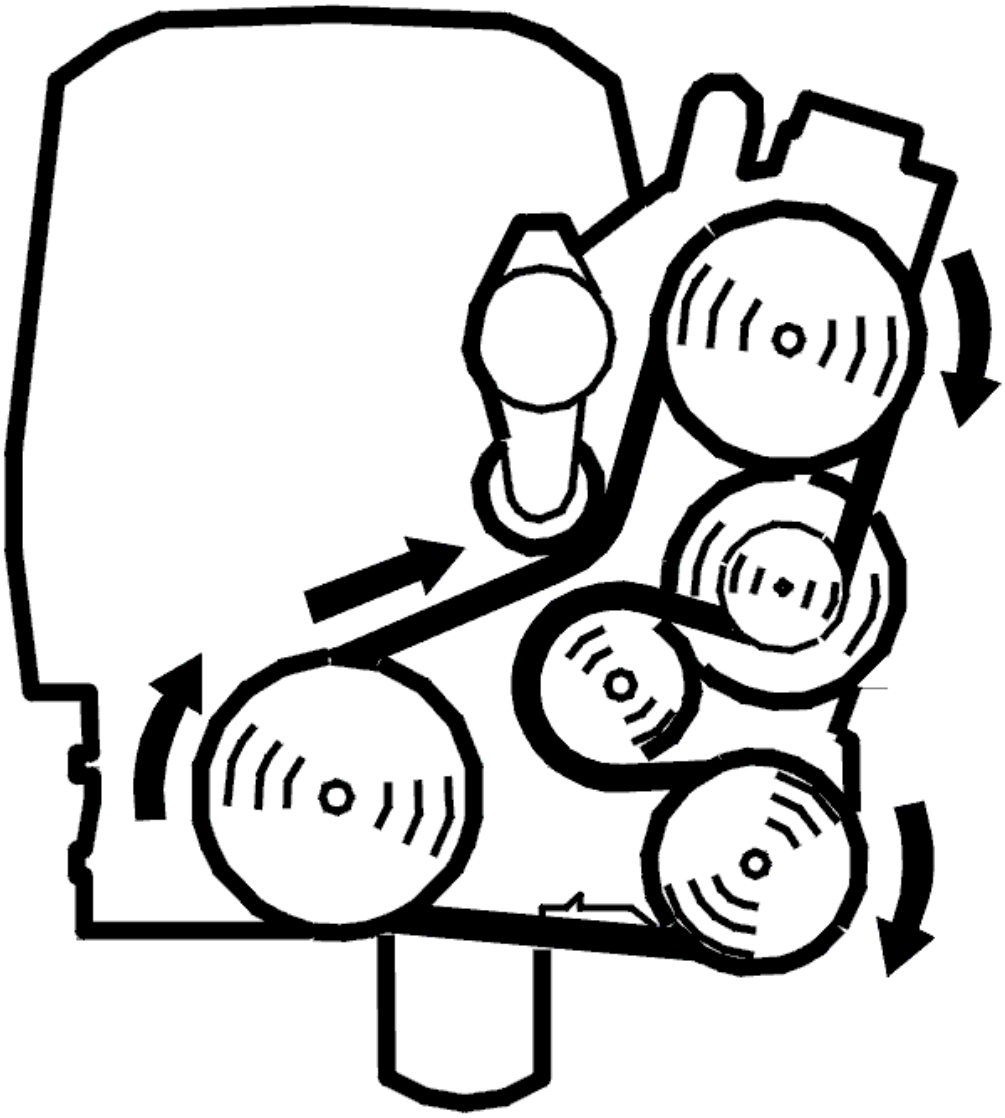

Fig. 248: Belt Routing / Engine Idling - Volvo
Courtesy of VOLVO CARS CORPORATION

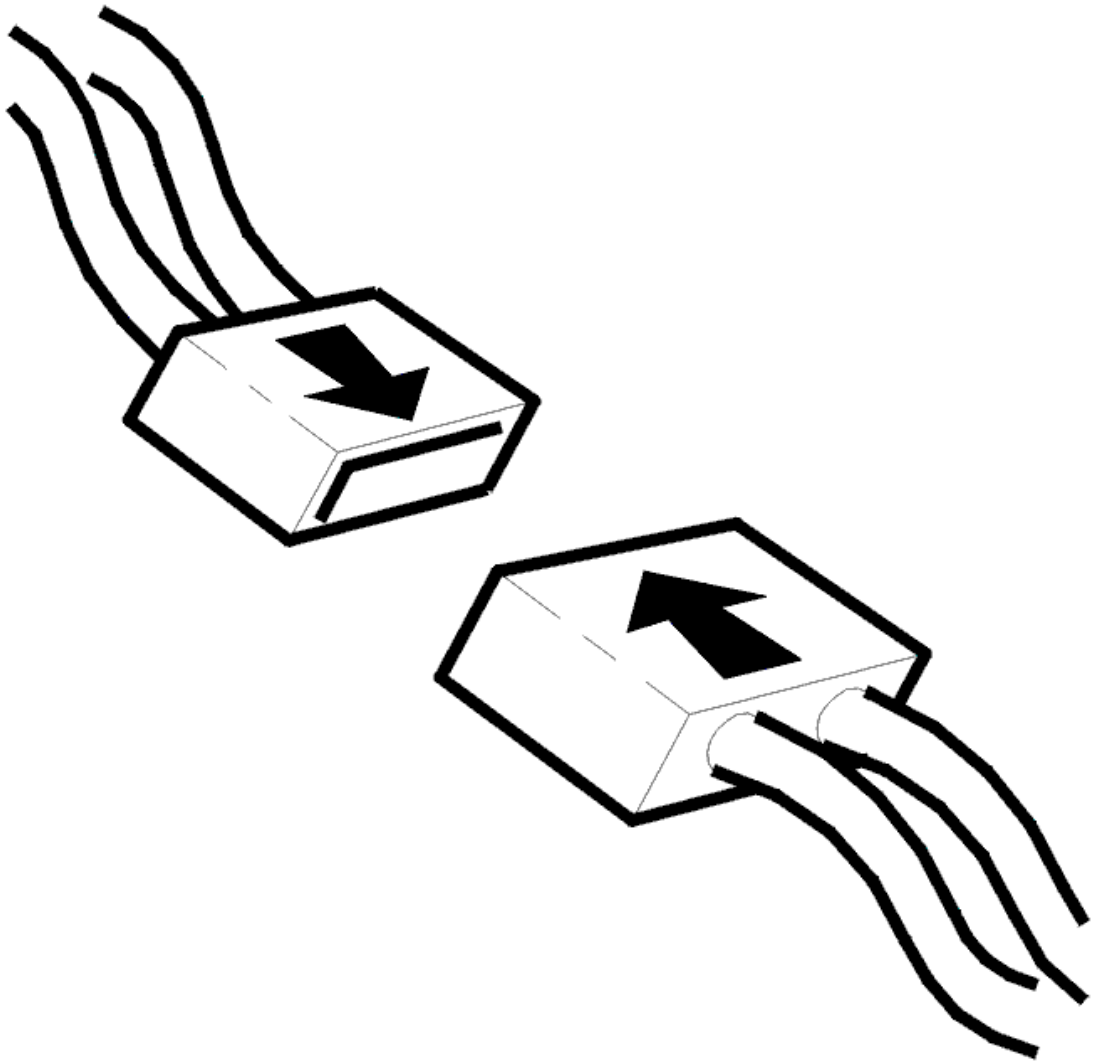

Fig. 249: Connecting Connector
Courtesy of VOLVO CARS CORPORATION

- Ignition off
- Reconnect the connectors, reinstall components etc.
- Test drive the car at an even speed (engine speed (RPM) above 2000 RPM) for at least 5 minutes
- Connect VCT2000 (or appropriate scan tool) to the data link connector (DLC) without switching off the engine.

NOTE: **If the engine is switched off, the stored fault status will be erased and the test drive will have to be repeated.**

Read off the diagnostic status and fault status for the diagnostic trouble code (DTC) by selecting the relevant diagnostic trouble code (DTC) from the list.

Check the fault status for the diagnostic trouble code (DTC) when the diagnostic is "Complete". If the function is correct, the fault status must be "No fault found" when the diagnostic is complete.

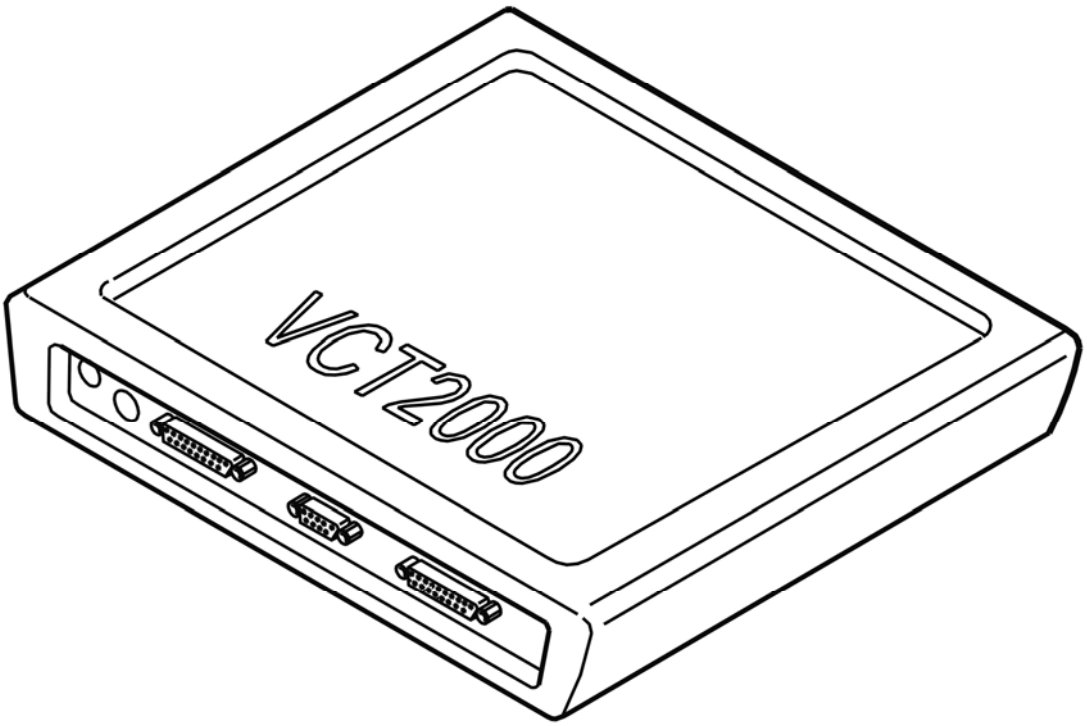

Fig. 250: Identifying VCT2000 Diagnostic Tool Symbol In VIDA
Courtesy of VOLVO CARS CORPORATION

Is the function OK?

- **YES**

  VERIFIED: Troubleshooting has been completed.

- **NO**

  Refer to **INFORMATION**

INFORMATION

FAULT-TRACING INFORMATION

The fault should have been detected and remedied. As this is not the case fault-tracing has failed.

Exit fault-tracing for this diagnostic trouble code (DTC) or make another attempt.

ECM-244D: FRONT HEATED OXYGEN SENSOR (HO2S), BANK 1, HEATING. SIGNAL TOO LOW (B6294T; 2005-2006)

DIAGNOSTIC TROUBLE CODE (DTC) INFORMATION ECM-244D

see **DIAGNOSTIC TROUBLE CODE (DTC) INFORMATION ECM-244D**

SIGNAL TOO LOW

see **SIGNAL TOO LOW**

ECM-2450: FRONT HEATED OXYGEN SENSOR (HO2S), BANK 1. FAULTY SIGNAL (B5254T2; 2005-2007)

DIAGNOSTIC TROUBLE CODE (DTC) INFORMATION ECM-2450

Condition

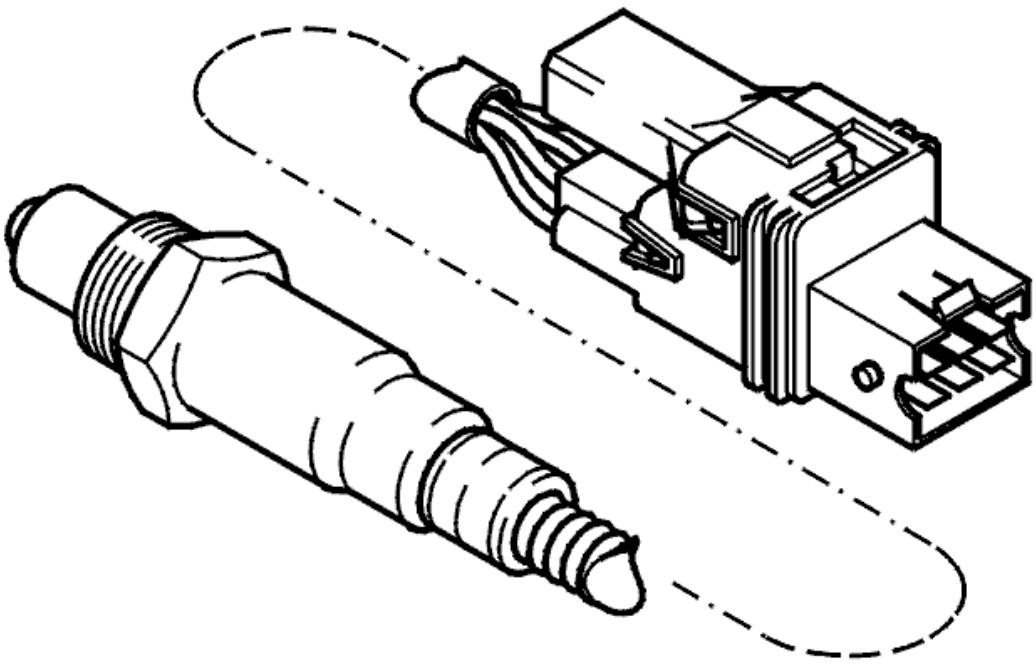

Fig. 251: Front Heated Oxygen Sensor
Courtesy of VOLVO CARS CORPORATION

The diagnostic trouble code (DTC) is stored if the engine control module (ECM) registers an internal fault in the control for the heated oxygen sensors (HO2S).

The diagnostic trouble code (DTC) can be diagnosed when the ignition is switched on.

Substitute Value

- None.

Possible Source

- Damaged engine control module (ECM).

Fault symptom[s]

- Malfunction indicator lamp (MIL) lit.

INTERNAL FAULT

see **INTERNAL FAULT**

ECM-2450: FRONT HEATED OXYGEN SENSOR (HO2S), BANK 1. FAULTY SIGNAL (B6294T; 2005-2006)

DIAGNOSTIC TROUBLE CODE (DTC) INFORMATION ECM-2450

see **DIAGNOSTIC TROUBLE CODE (DTC) INFORMATION ECM-2450**

INTERNAL FAULT

see **INTERNAL FAULT**

ECM-245B: FRONT HEATED OXYGEN SENSOR (HO2S), BANK 1. SIGNAL MISSING (B5254T2; 2005-2007)

DIAGNOSTIC TROUBLE CODE (DTC) INFORMATION ECM-245B

Condition

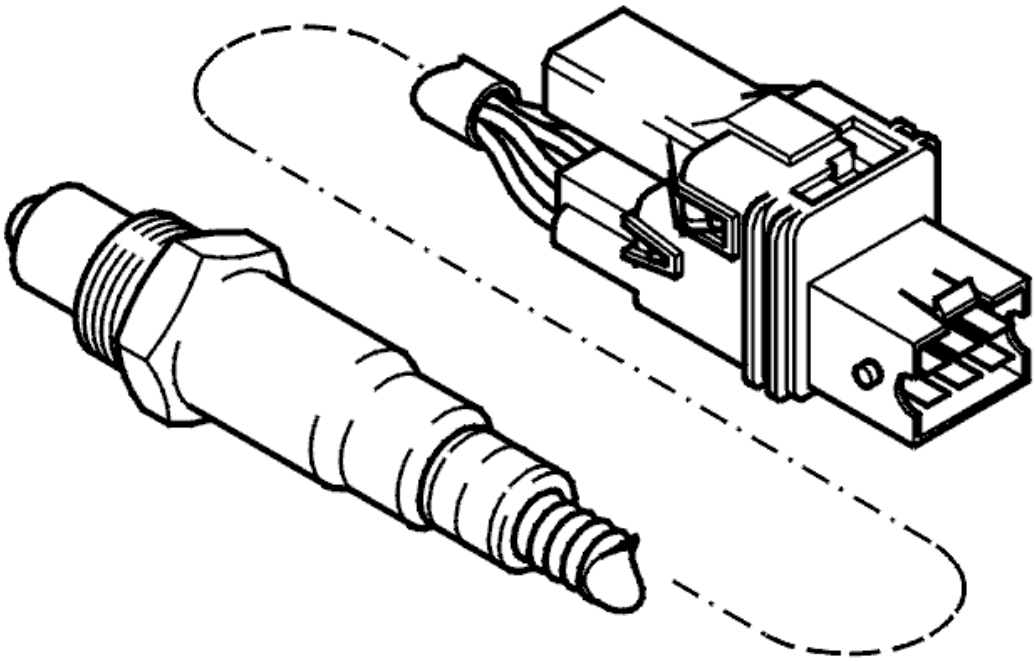

Fig. 252: Front Heated Oxygen Sensor
Courtesy of VOLVO CARS CORPORATION

The diagnostic trouble code (DTC) is stored if the engine control module (ECM) registers an internal fault in the control for the heated oxygen sensors (HO2S).

The diagnostic trouble code (DTC) can be diagnosed when the ignition is switched on.

Substitute Value

- None.

Possible Source

- Damaged engine control module (ECM).

Fault symptom[s]

- Malfunction indicator lamp (MIL) lit.

INTERNAL FAULT

see **INTERNAL FAULT**

ECM-245B: FRONT HEATED OXYGEN SENSOR (HO2S), BANK 1. SIGNAL MISSING (B6294T; 2005-2006)

DIAGNOSTIC TROUBLE CODE (DTC) INFORMATION ECM-245B

see **DIAGNOSTIC TROUBLE CODE (DTC) INFORMATION ECM-245B**

INTERNAL FAULT

see **INTERNAL FAULT**

ECM-245C: FRONT HEATED OXYGEN SENSOR (HO2S), BANK 1. SIGNAL TOO HIGH (B5254T2; 2005-2007)

DIAGNOSTIC TROUBLE CODE (DTC) INFORMATION ECM-245C

Condition

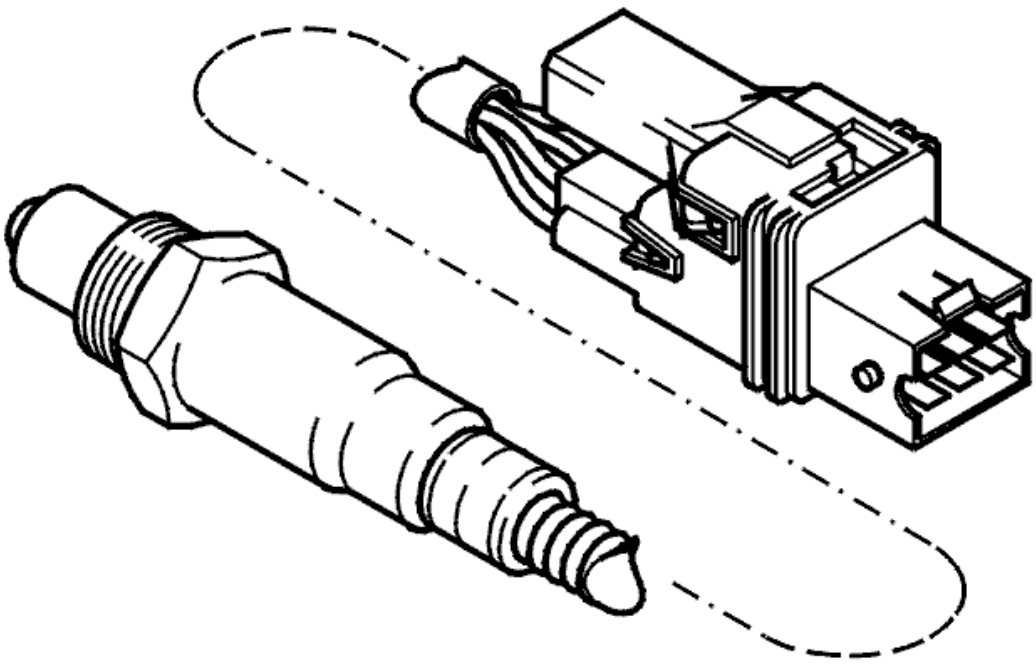

Fig. 253: Front Heated Oxygen Sensor
Courtesy of VOLVO CARS CORPORATION

The diagnostic trouble code (DTC) is stored if the engine control module (ECM) registers an internal fault in the control for the heated oxygen sensors (HO2S).

The diagnostic trouble code (DTC) can be diagnosed when the ignition is switched on.

Substitute Value

- None.

Possible Source

- Damaged engine control module (ECM).

Fault symptom[s]

- Malfunction indicator lamp (MIL) lit.

INTERNAL FAULT

see **INTERNAL FAULT**

ECM-245C: FRONT HEATED OXYGEN SENSOR (HO2S), BANK 1. SIGNAL TOO HIGH (B6294T; 2005-2006)

DIAGNOSTIC TROUBLE CODE (DTC) INFORMATION ECM-245C

see **DIAGNOSTIC TROUBLE CODE (DTC) INFORMATION ECM-245C**

INTERNAL FAULT

see **INTERNAL FAULT**

ECM-245D: FRONT HEATED OXYGEN SENSOR (HO2S), BANK 1. SIGNAL TOO LOW (B5254T2; 2005-2007)

DIAGNOSTIC TROUBLE CODE (DTC) INFORMATION ECM-245D

Condition

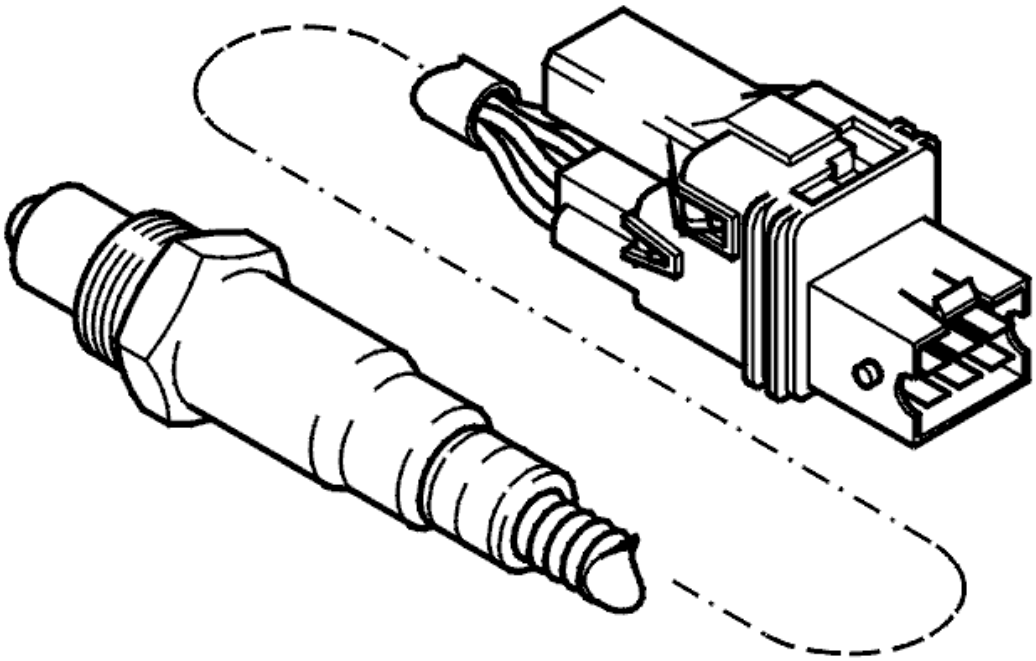

Fig. 254: Front Heated Oxygen Sensor
Courtesy of VOLVO CARS CORPORATION

The diagnostic trouble code (DTC) is stored if the engine control module (ECM) registers an internal fault in the control for the heated oxygen sensors (HO2S).

The diagnostic trouble code (DTC) can be diagnosed when the ignition is switched on.

Substitute Value

- None.

Possible Source

- Damaged engine control module (ECM).

Fault symptom[s]

- Malfunction indicator lamp (MIL) lit.

INTERNAL FAULT

see **INTERNAL FAULT**

ECM-245D: FRONT HEATED OXYGEN SENSOR (HO2S), BANK 1. SIGNAL TOO LOW (B6294T; 2005-2006)

DIAGNOSTIC TROUBLE CODE (DTC) INFORMATION ECM-245D

see **DIAGNOSTIC TROUBLE CODE (DTC) INFORMATION ECM-245D**

INTERNAL FAULT

see **INTERNAL FAULT**

ECM-246B: FRONT HEATED OXYGEN SENSOR (HO2S), BANK 1. SIGNAL MISSING (B5254T2; 2005-2007)

DIAGNOSTIC TROUBLE CODE (DTC) INFORMATION ECM-246B

Condition

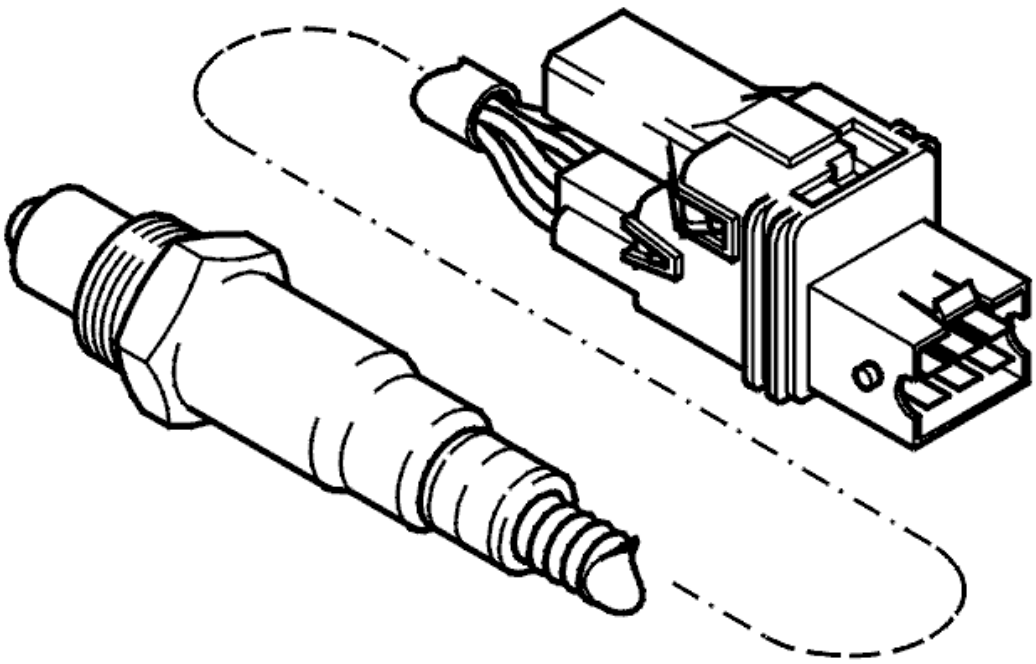

Fig. 255: Front Heated Oxygen Sensor
Courtesy of VOLVO CARS CORPORATION

The diagnostic trouble code (DTC) is stored if the engine control module (ECM) registers that the calibration current has ceased and the front heated oxygen sensor (HO2S) signal (bank 1) is implausibly high at fuel shut-

off.

Substitute Value

- None.

Possible Source

- Contact resistance and oxidation in the terminals
- Open-circuit in the cable for calibration current
- Damaged front heated oxygen sensor (HO2S).

Fault symptom[s]

- Malfunction indicator lamp (MIL) lit.

SIGNAL MISSING

CHECKING THE COMPONENTS AND WIRING

CAUTION: Do not apply rust solvent spray or grease to the heated oxygen sensor (HO2S) connector.

Check the heated oxygen sensor (HO2S) connector. Check for contact resistance and oxidation.

Check the cable between engine control module (ECM) terminal #A28 (#A28) and heated oxygen sensor (HO2S) terminal #2. Check for an open-circuit.

NOTE: If possible, measure from the rear of the affected connectors in order to minimize any damage and future loose connections.

Try a new heated oxygen sensor (HO2S) if the above fault-tracing does not remedy the fault.

Remedy as necessary.

Other information

- see **CONNECTING THE BREAKOUT BOX**
- For 5 cylinder turbocharged engines -2004, see **SIGNAL DESCRIPTION**
- For 5 cylinder turbocharged engines 2005-, see **SIGNAL SPECIFICATION** .
- For 6 cylinder engines -2004, see **SIGNAL SPECIFICATION**
- For 6 cylinder engines 2005-, see **SIGNAL SPECIFICATION** .
- For B5xx4T, see **HEATED OXYGEN SENSOR (HO2S), REPLACING**
- For B6xx4T, see **HEATED OXYGEN SENSOR (HO2S), REPLACING** .

- see **CHECKING WIRING AND TERMINALS**

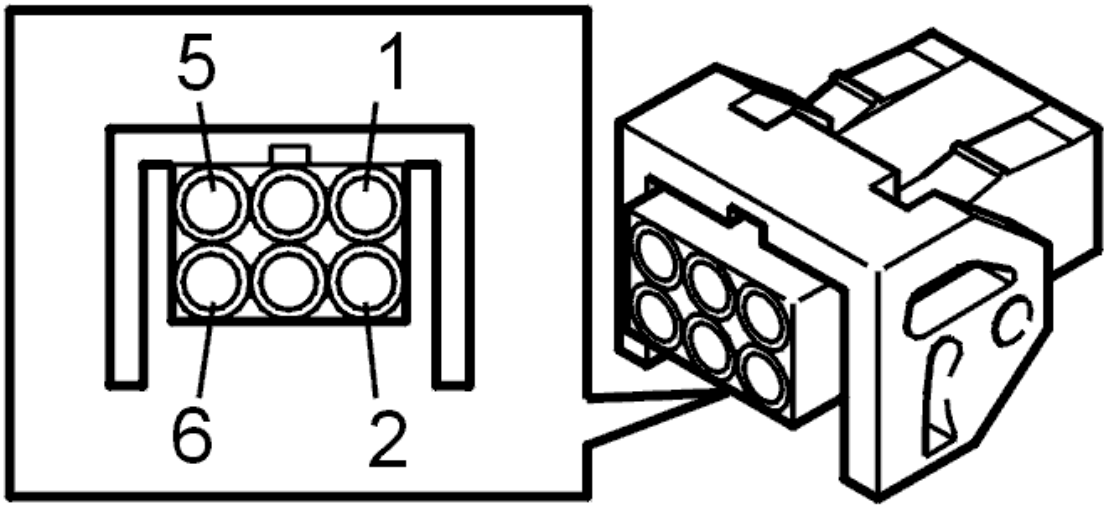

Fig. 256: Identifying Front Heated Oxygen Sensor Connector Terminals
Courtesy of VOLVO CARS CORPORATION

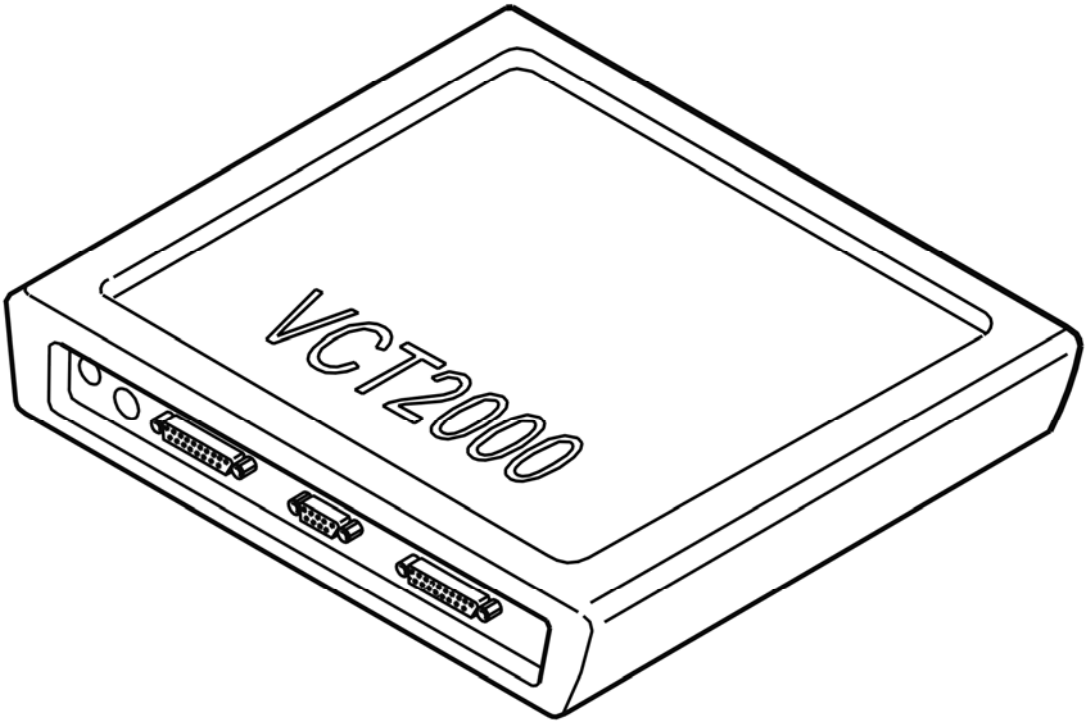

Fig. 257: Identifying VCT2000 Diagnostic Tool Symbol In VIDA
Courtesy of VOLVO CARS CORPORATION

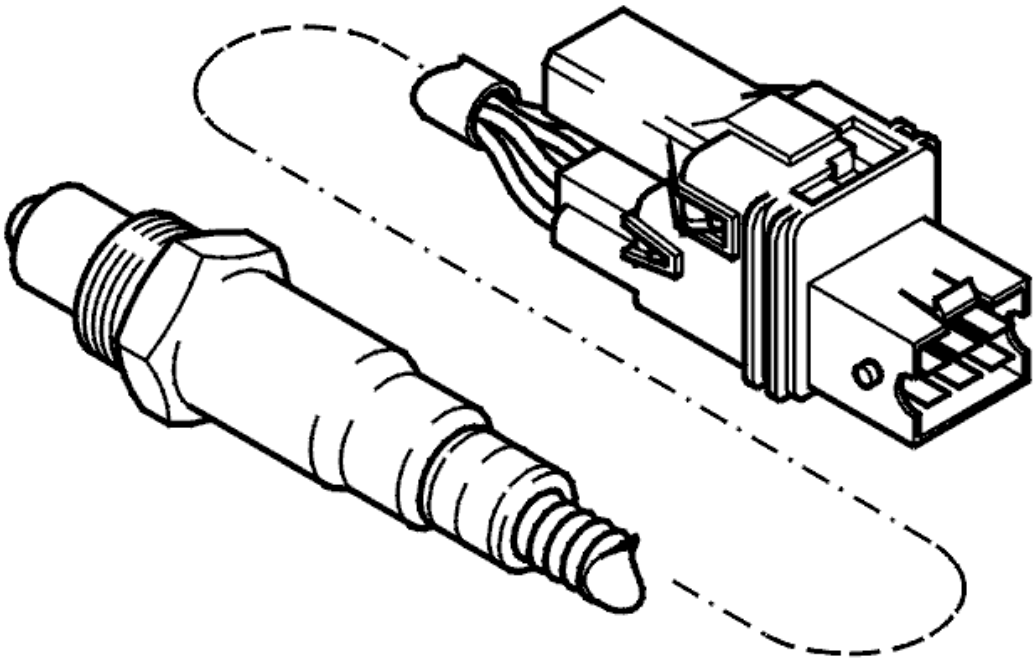

Fig. 258: Front Heated Oxygen Sensor
Courtesy of VOLVO CARS CORPORATION

- **Continue**

  Refer to **VERIFICATION**

VERIFICATION

VERIFICATION

HINT: After carrying out the repair, check that the fault has been remedied.

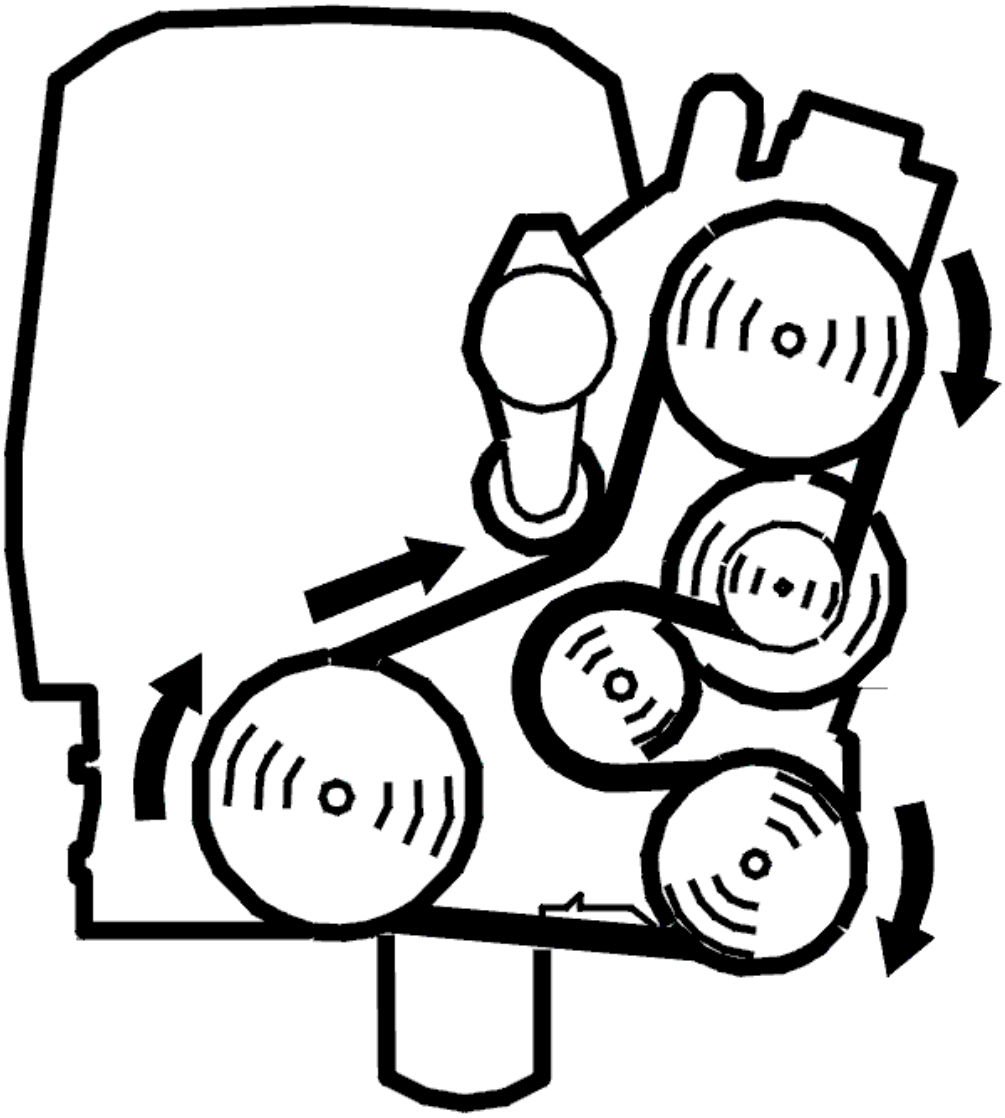

Fig. 259: Belt Routing / Engine Idling - Volvo
Courtesy of VOLVO CARS CORPORATION

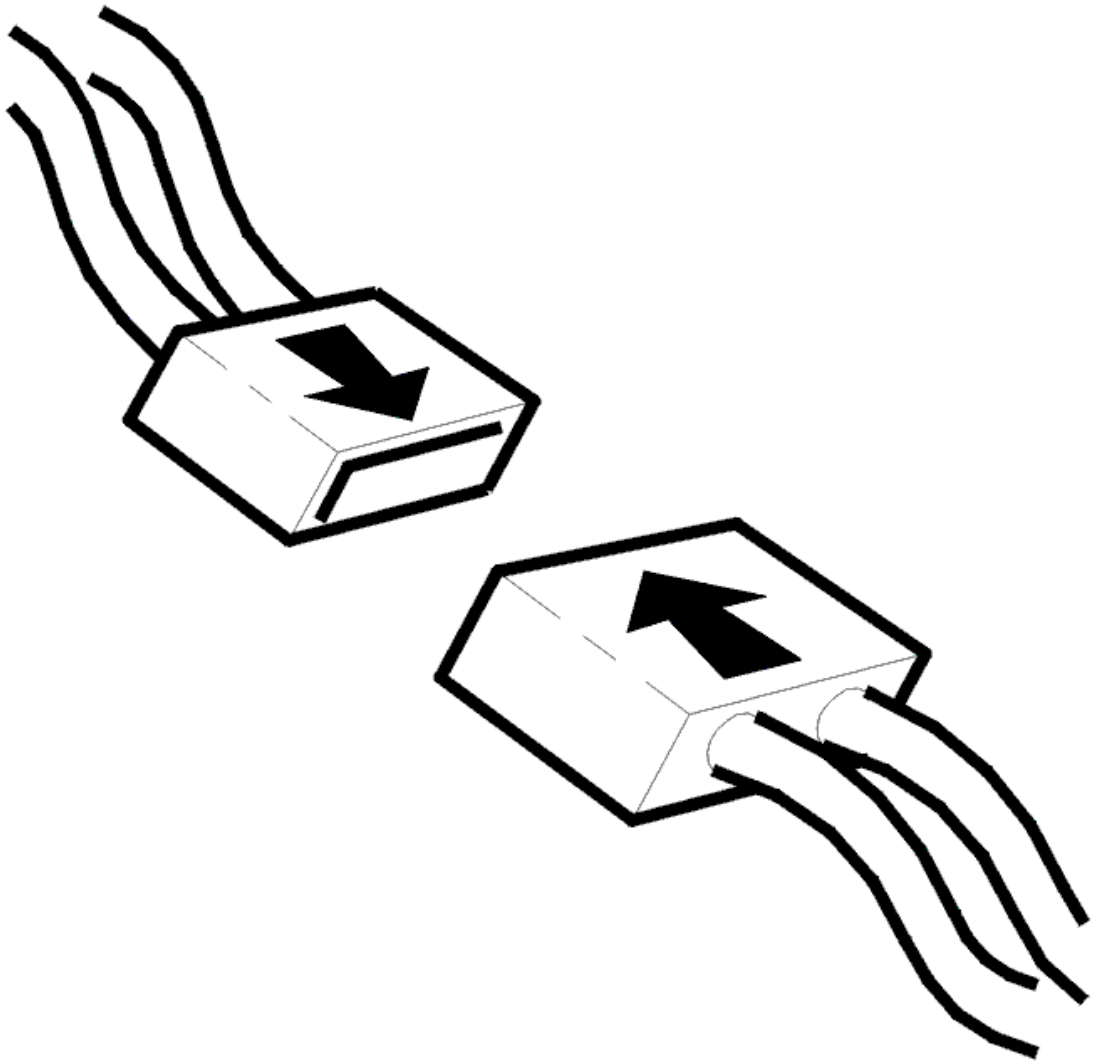

Fig. 260: Connecting Connector
Courtesy of VOLVO CARS CORPORATION

- Ignition off
- Reconnect the connectors, reinstall components etc.
- Test drive the car at an even speed (engine speed (RPM) above 2000 RPM) for at least 5 minutes
- Connect VCT2000 (or appropriate scan tool) to the data link connector (DLC) without switching off the engine.

NOTE: **If the engine is switched off, the stored fault status will be erased and the test drive will have to be repeated.**

Read off the diagnostic status and fault status for the diagnostic trouble code (DTC) by selecting the relevant diagnostic trouble code (DTC) from the list.

Check the fault status for the diagnostic trouble code (DTC) when the diagnostic is "Complete". If the function is correct, the fault status must be "No fault found" when the diagnostic is complete.

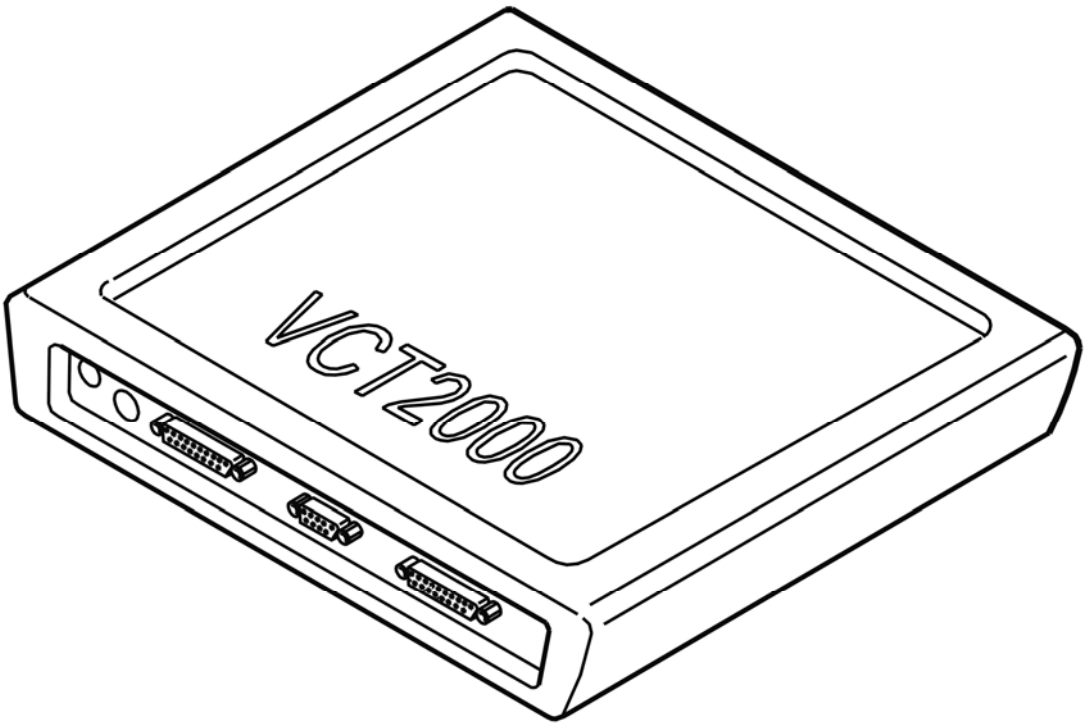

Fig. 261: Identifying VCT2000 Diagnostic Tool Symbol In VIDA
Courtesy of VOLVO CARS CORPORATION

Is the function OK?

- **YES**

  VERIFIED: Troubleshooting has been completed.

- **NO**

  Refer to **INFORMATION**

INFORMATION

FAULT-TRACING INFORMATION

The fault should have been detected and remedied. As this is not the case fault-tracing has failed.

Exit fault-tracing for this diagnostic trouble code (DTC) or make another attempt.

ECM-246B: FRONT HEATED OXYGEN SENSOR (HO2S), BANK 1. SIGNAL MISSING (B6294T; 2005-2006)

DIAGNOSTIC TROUBLE CODE (DTC) INFORMATION ECM-246B

see **DIAGNOSTIC TROUBLE CODE (DTC) INFORMATION ECM-246B**

SIGNAL MISSING

see **SIGNAL MISSING**

ECM-2470: FRONT HEATED OXYGEN SENSOR (HO2S), BANK 1. FAULTY SIGNAL (B5254T2; 2005-2007)

DIAGNOSTIC TROUBLE CODE (DTC) INFORMATION ECM-2470

Condition

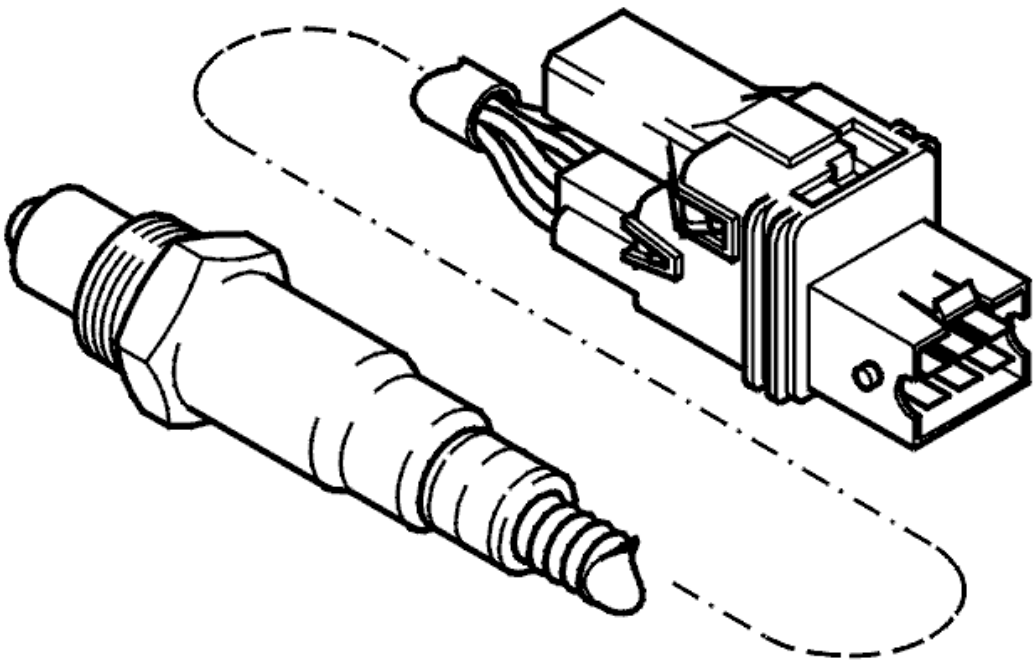

Fig. 262: Front Heated Oxygen Sensor
Courtesy of VOLVO CARS CORPORATION

The diagnostic trouble code (DTC) is stored if the engine control module (ECM) registers that the pump current has ceased and the front heated oxygen sensor (HO2S) signal (bank 1) has been set to a default value.

Substitute Value

- None.

Possible Source

- Contact resistance and oxidation in the terminals
- Open-circuit in the cable for pump current
- Damaged front heated oxygen sensor (HO2S).

Fault symptom[s]

- Malfunction indicator lamp (MIL) lit.

SIGNAL TOO HIGH / SIGNAL MISSING / FAULTY SIGNAL

CHECKING THE COMPONENTS AND WIRING

CAUTION: Do not apply rust solvent spray or grease to the heated oxygen sensor (HO2S) connector.

Check the heated oxygen sensor (HO2S) connector. Check for contact resistance and oxidation.

Check the cable between engine control module (ECM) terminal #A28 (#A28) and heated oxygen sensor (HO2S) terminal #2. Check for an open-circuit.

NOTE: If possible, measure from the rear of the affected connectors in order to minimize any damage and future loose connections.

Try a new heated oxygen sensor (HO2S) if the above fault-tracing does not remedy the fault.

Remedy as necessary.

Other information

- see **CONNECTING THE BREAKOUT BOX**
- For 5 cylinder turbocharged engines -2004, see **SIGNAL DESCRIPTION**
- For 5 cylinder turbocharged engines 2005-, see **SIGNAL SPECIFICATION** .
- For 6 cylinder engines -2004, see **SIGNAL SPECIFICATION**
- For 6 cylinder engines 2005-, see **SIGNAL SPECIFICATION** .
- For B5xx4T, see **HEATED OXYGEN SENSOR (HO2S), REPLACING**
- For B6xx4T, see **HEATED OXYGEN SENSOR (HO2S), REPLACING** .
- see **CHECKING WIRING AND TERMINALS**

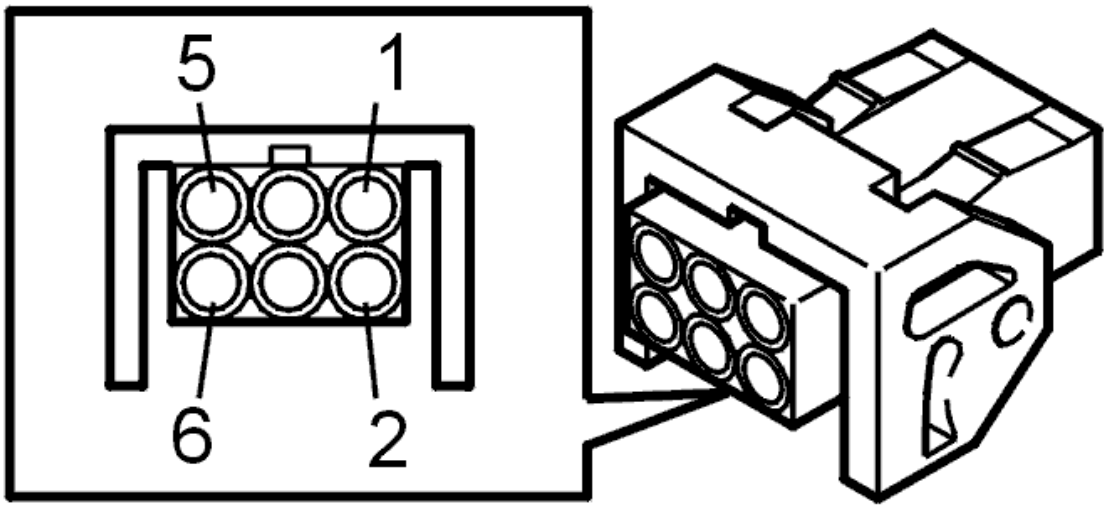

Fig. 263: Identifying Front Heated Oxygen Sensor Connector Terminals
Courtesy of VOLVO CARS CORPORATION

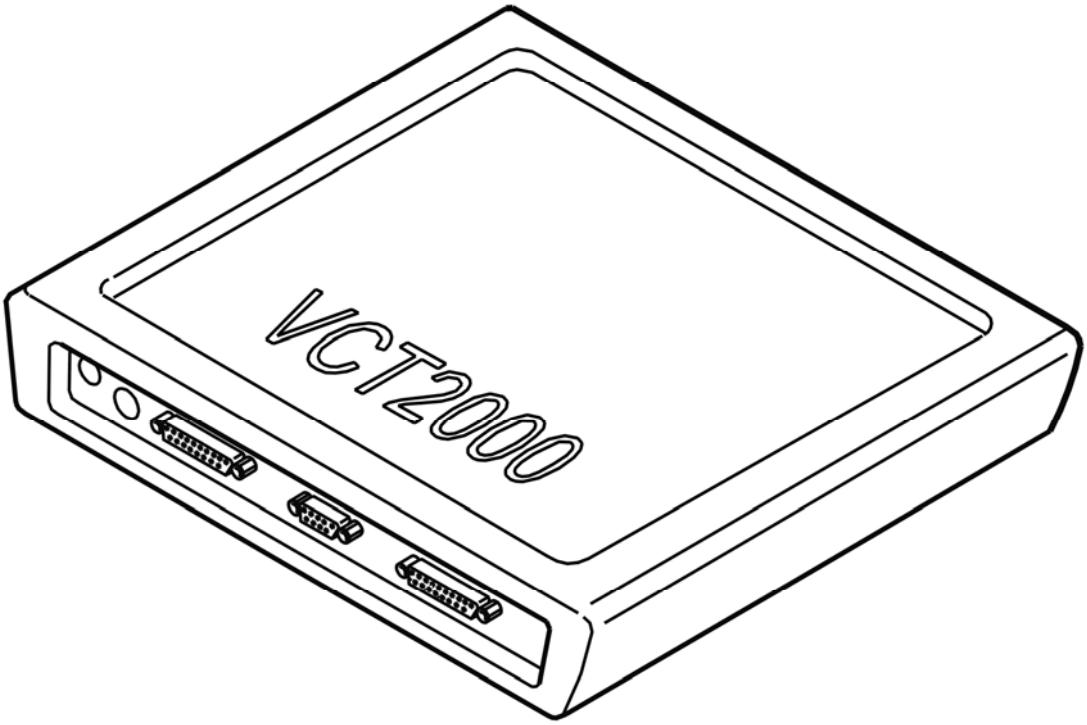

Fig. 264: Identifying VCT2000 Diagnostic Tool Symbol In VIDA
Courtesy of VOLVO CARS CORPORATION

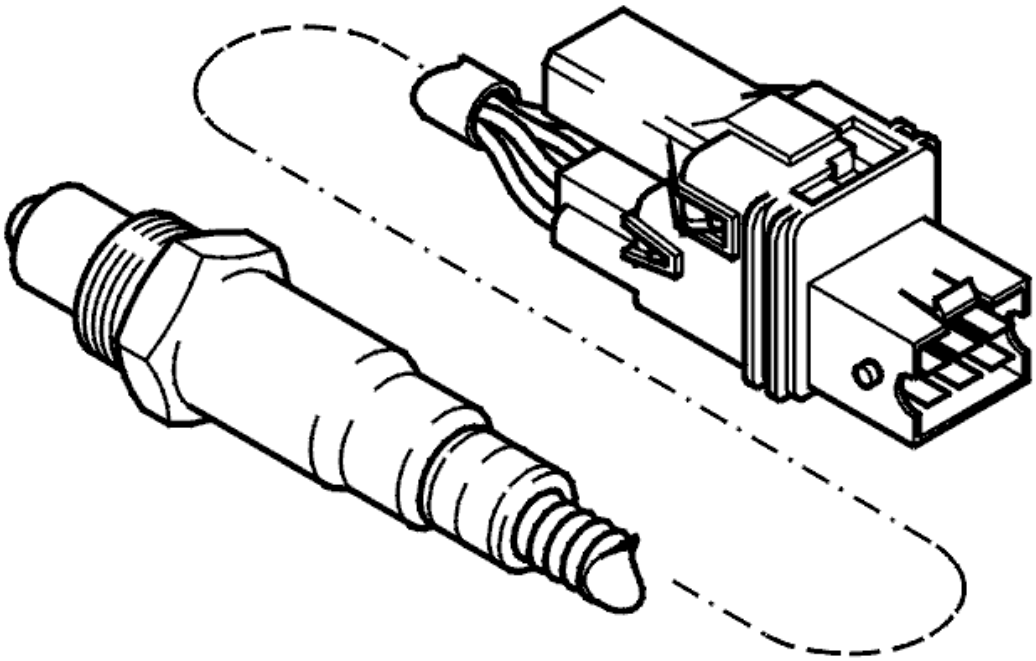

Fig. 265: Front Heated Oxygen Sensor
Courtesy of VOLVO CARS CORPORATION

- **Continue**

  Refer to **VERIFICATION**

VERIFICATION

VERIFICATION

HINT: After carrying out the repair, check that the fault has been remedied.

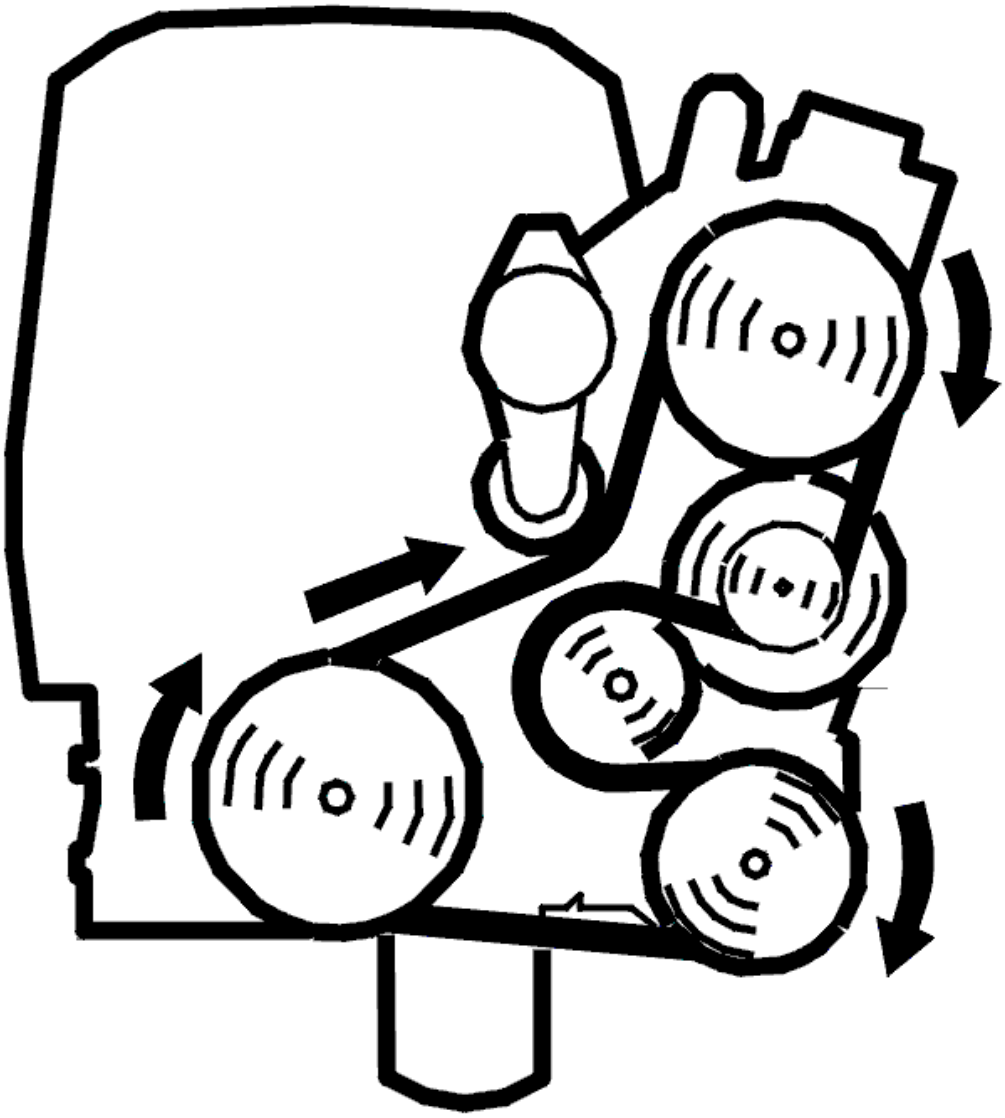

Fig. 266: Belt Routing / Engine Idling - Volvo
Courtesy of VOLVO CARS CORPORATION

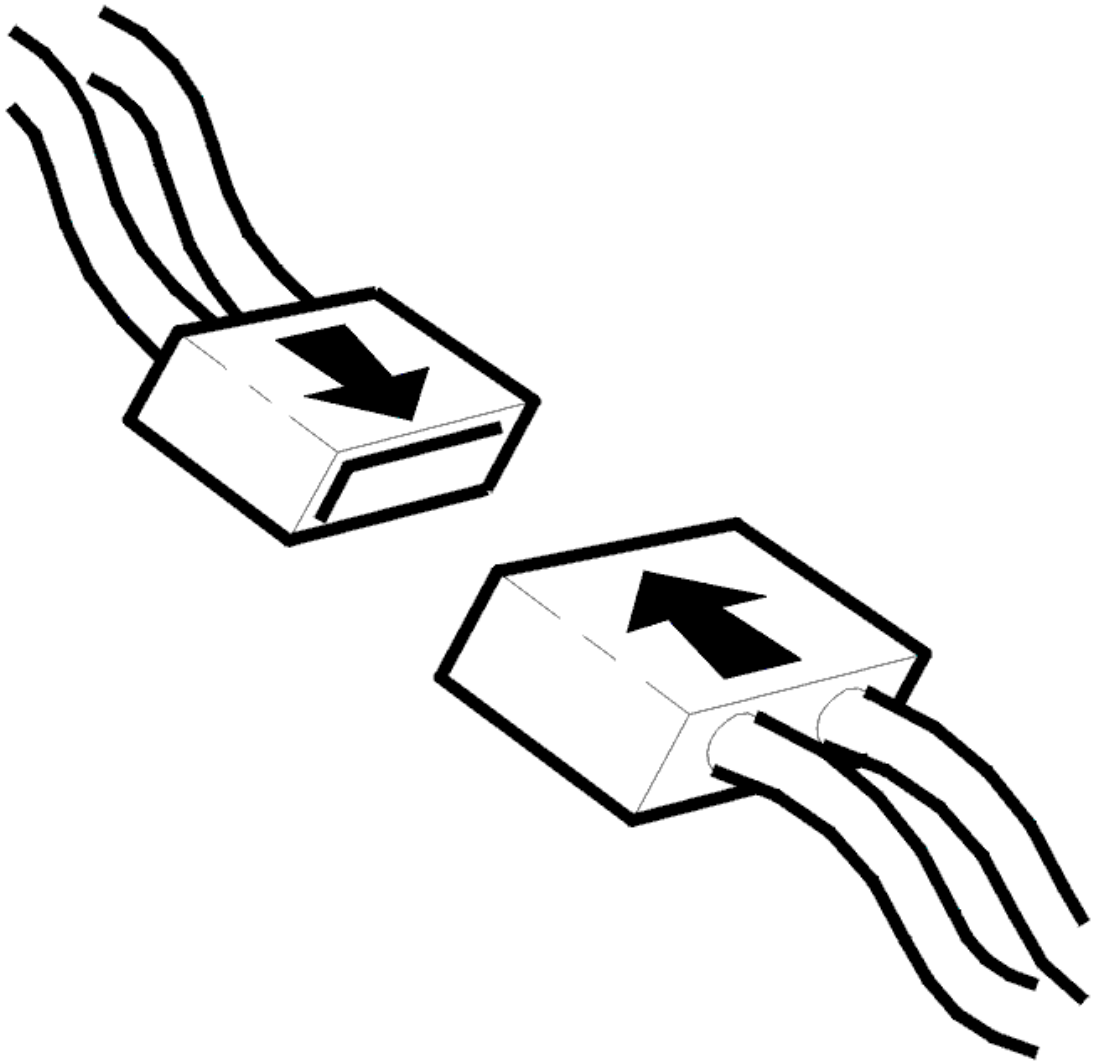

Fig. 267: Connecting Connector
Courtesy of VOLVO CARS CORPORATION

- Ignition off
- Reconnect the connectors, reinstall components etc.
- Test drive the car at an even speed (engine speed (RPM) above 2000 RPM) for at least 5 minutes
- Release the accelerator pedal (AP) quickly at least three times to simulate fuel shut-off
- Connect VCT2000 (or appropriate scan tool) to the data link connector (DLC) without switching off the engine.

NOTE: **If the engine is switched off, the stored fault status will be erased and the test drive will have to be repeated.**

Read off the diagnostic status and fault status for the diagnostic trouble code (DTC) by selecting the relevant diagnostic trouble code (DTC) from the list.

Check the fault status for the diagnostic trouble code (DTC) when the diagnostic is "Complete". If the function is correct, the fault status must be "No fault found" when the diagnostic is complete.

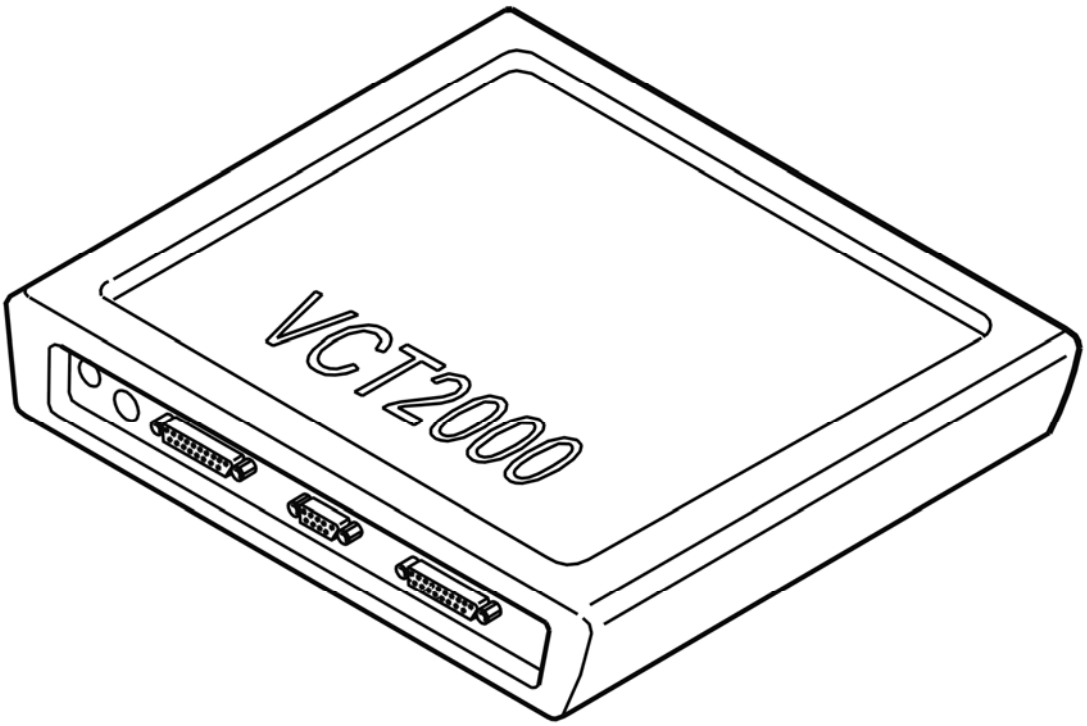

Fig. 268: Identifying VCT2000 Diagnostic Tool Symbol In VIDA
Courtesy of VOLVO CARS CORPORATION

Is the function OK?

- **YES**

  VERIFIED: Troubleshooting has been completed.

- **NO**

  Refer to **INFORMATION**

INFORMATION

FAULT-TRACING INFORMATION

The fault should have been detected and remedied. As this is not the case fault-tracing has failed.

Exit fault-tracing for this diagnostic trouble code (DTC) or make another attempt.

ECM-2470: FRONT HEATED OXYGEN SENSOR (HO2S), BANK 1. FAULTY SIGNAL (B6294T; 2005-2006)

DIAGNOSTIC TROUBLE CODE (DTC) INFORMATION ECM-2470

see **DIAGNOSTIC TROUBLE CODE (DTC) INFORMATION ECM-2470**

SIGNAL TOO HIGH / SIGNAL MISSING / FAULTY SIGNAL

see **SIGNAL TOO HIGH / SIGNAL MISSING / FAULTY SIGNAL**

ECM-247B: FRONT HEATED OXYGEN SENSOR (HO2S), BANK 1. SIGNAL MISSING (B5254T2; 2005-2007)

DIAGNOSTIC TROUBLE CODE (DTC) INFORMATION ECM-247B

Condition

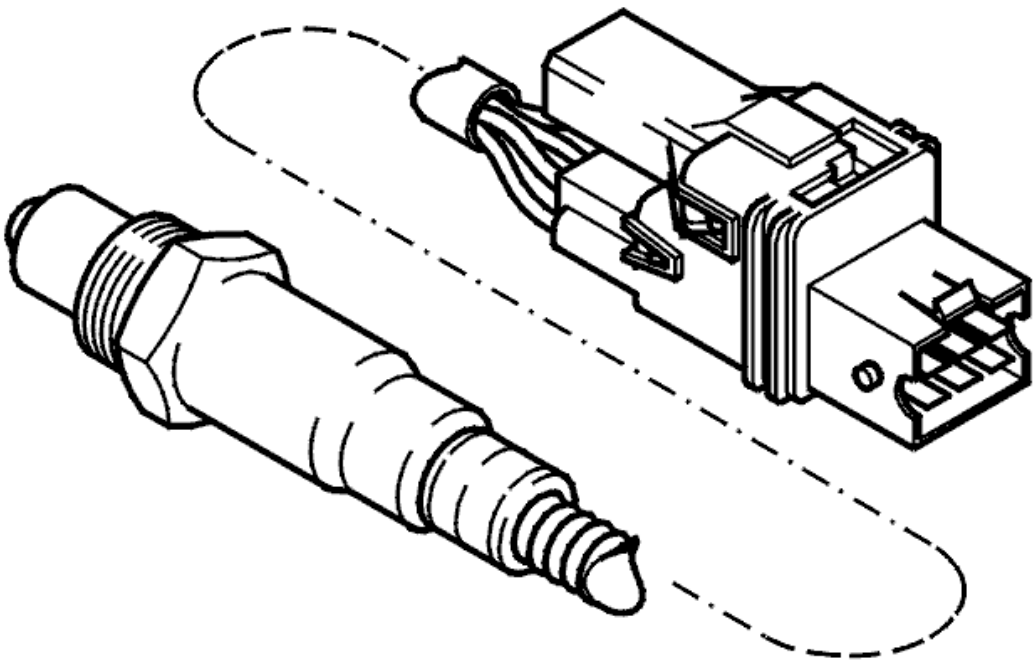

Fig. 269: Front Heated Oxygen Sensor
Courtesy of VOLVO CARS CORPORATION

The diagnostic trouble code (DTC) is stored if the engine control module (ECM) registers that the pump current has ceased and the front heated oxygen sensor (HO2S) signal (bank 1) has been set to a default value.

Substitute Value

- None.

Possible Source

- Contact resistance and oxidation in the terminals
- Open-circuit in the cable for pump current
- Damaged front heated oxygen sensor (HO2S).

Fault symptom[s]

- Malfunction indicator lamp (MIL) lit.

SIGNAL TOO HIGH / SIGNAL MISSING / FAULTY SIGNAL

see **SIGNAL TOO HIGH / SIGNAL MISSING / FAULTY SIGNAL**

ECM-247B: FRONT HEATED OXYGEN SENSOR (HO2S), BANK 1. SIGNAL MISSING (B6294T; 2005-2006)

DIAGNOSTIC TROUBLE CODE (DTC) INFORMATION ECM-247B

see **DIAGNOSTIC TROUBLE CODE (DTC) INFORMATION ECM-247B**

SIGNAL TOO HIGH / SIGNAL MISSING / FAULTY SIGNAL

see **SIGNAL TOO HIGH / SIGNAL MISSING / FAULTY SIGNAL**

ECM-247C: FRONT HEATED OXYGEN SENSOR (HO2S), BANK 1. SIGNAL TOO HIGH (B5254T2; 2005-2007)

DIAGNOSTIC TROUBLE CODE (DTC) INFORMATION ECM-247C

Condition

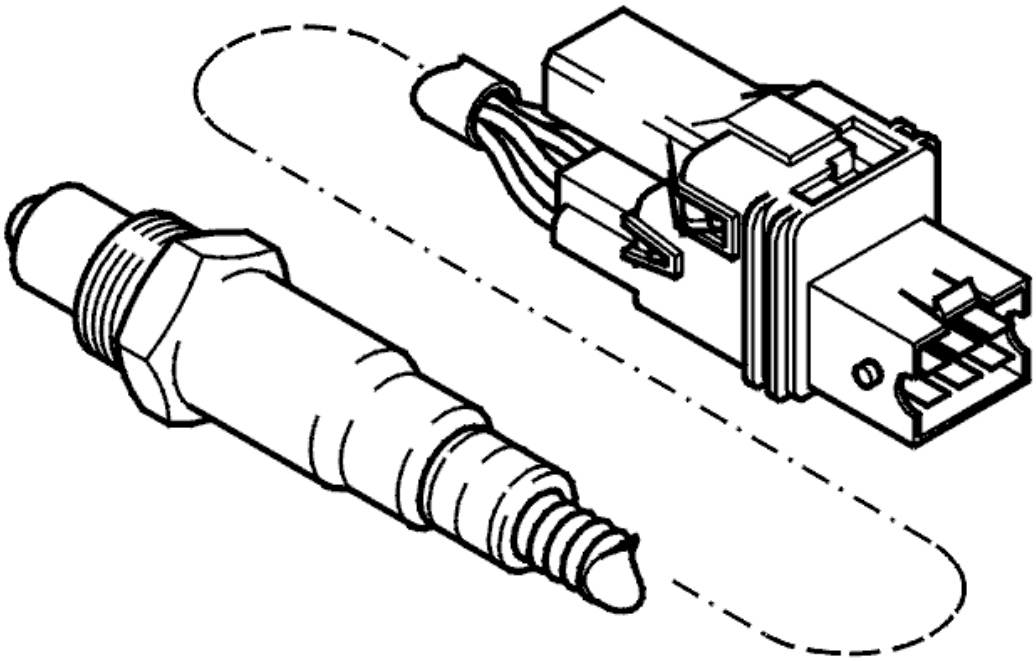

Fig. 270: Front Heated Oxygen Sensor
Courtesy of VOLVO CARS CORPORATION

The diagnostic trouble code (DTC) is stored if the engine control module (ECM) registers that the pump current has ceased and the front heated oxygen sensor (HO2S) signal (bank 1) has been set to a default value.

Substitute Value

- None.

Possible Source

- Contact resistance and oxidation in the terminals
- Open-circuit in the cable for pump current
- Damaged front heated oxygen sensor (HO2S).

Fault symptom[s]

- Malfunction indicator lamp (MIL) lit.

SIGNAL TOO HIGH / SIGNAL MISSING / FAULTY SIGNAL

see **SIGNAL TOO HIGH / SIGNAL MISSING / FAULTY SIGNAL**

ECM-247C: FRONT HEATED OXYGEN SENSOR (HO2S), BANK 1. SIGNAL TOO HIGH (B6294T; 2005-2006)

DIAGNOSTIC TROUBLE CODE (DTC) INFORMATION ECM-247C

see **DIAGNOSTIC TROUBLE CODE (DTC) INFORMATION ECM-247C**

SIGNAL TOO HIGH / SIGNAL MISSING / FAULTY SIGNAL

see **SIGNAL TOO HIGH / SIGNAL MISSING / FAULTY SIGNAL**

ECM-248C: FRONT HEATED OXYGEN SENSOR (HO2S), BANK 1. SIGNAL TOO HIGH (B5254T2; 2005-2007)

DIAGNOSTIC TROUBLE CODE (DTC) INFORMATION ECM-248C

Condition

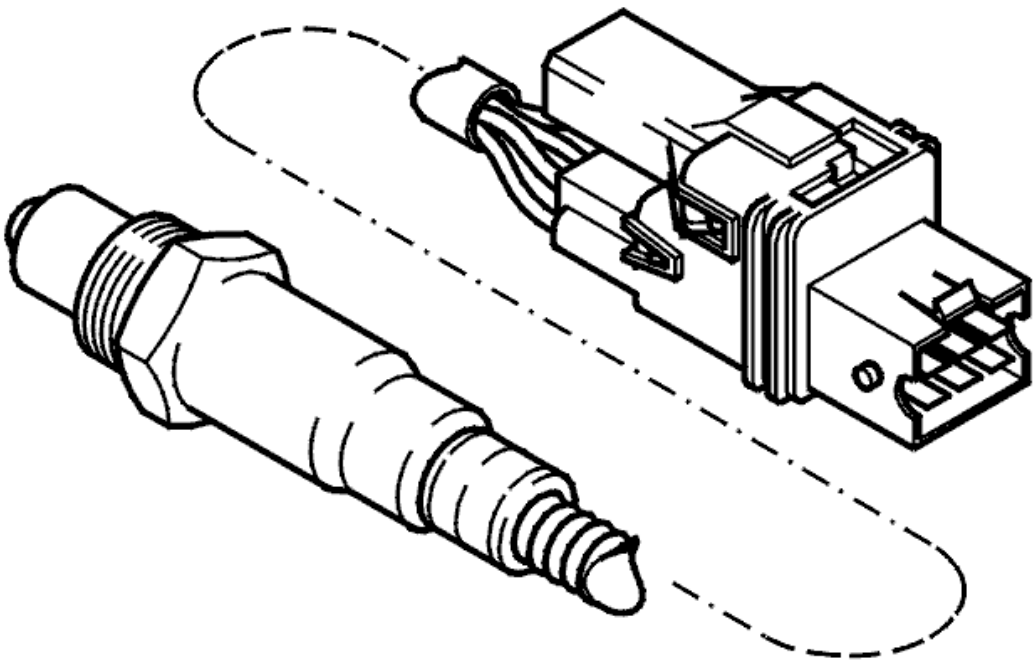

Fig. 271: Front Heated Oxygen Sensor
Courtesy of VOLVO CARS CORPORATION

The diagnostic trouble code (DTC) is stored if the engine control module (ECM) registers that there is a short-circuit to supply voltage in the signal cables for the front heated oxygen sensor (HO2S) (bank 1).

Substitute Value

- None.

Possible Source

- Short-circuit in the signal cables
- Damaged front heated oxygen sensor (HO2S).

Fault symptom[s]

- Malfunction indicator lamp (MIL) lit.

SIGNAL TOO HIGH

CHECKING THE COMPONENTS AND WIRING

CAUTION: Do not apply rust solvent spray or grease to the heated oxygen sensor (HO2S) connector.

Check the cable for a short-circuit to supply voltage.

Check between:

- The system relay and heated oxygen sensor (HO2S) terminal #3
- Engine control module (ECM) terminal #A18 (#A18) and heated oxygen sensor (HO2S) terminal #4.

NOTE: If possible, measure from the rear of the affected connectors in order to minimize any damage and future loose connections.

Try a new heated oxygen sensor (HO2S) if the above fault-tracing does not remedy the fault.

Remedy as necessary.

Other information

- see **CONNECTING THE BREAKOUT BOX**
- For 5 cylinder turbocharged engines -2004, see **SIGNAL DESCRIPTION**
- For 5 cylinder turbocharged engines 2005-, see **SIGNAL SPECIFICATION** .
- For 6 cylinder engines -2004, see **SIGNAL SPECIFICATION**
- For 6 cylinder engines 2005-, see **SIGNAL SPECIFICATION** .
- For B5xx4T, see **HEATED OXYGEN SENSOR (HO2S), REPLACING**
- For B6xx4T, see **HEATED OXYGEN SENSOR (HO2S), REPLACING** .
- see **CHECKING WIRING AND TERMINALS**

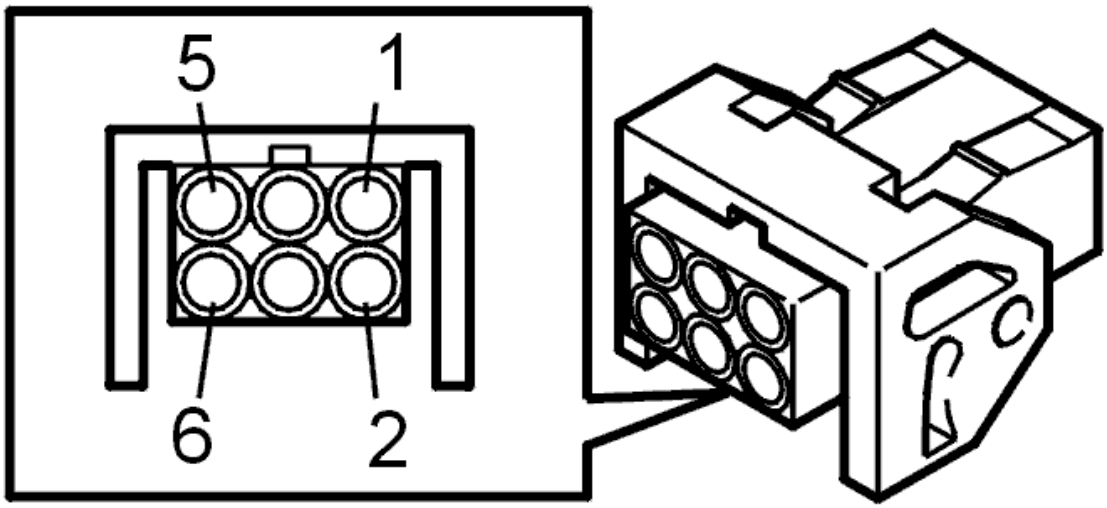

Fig. 272: Identifying Front Heated Oxygen Sensor Connector Terminals
Courtesy of VOLVO CARS CORPORATION

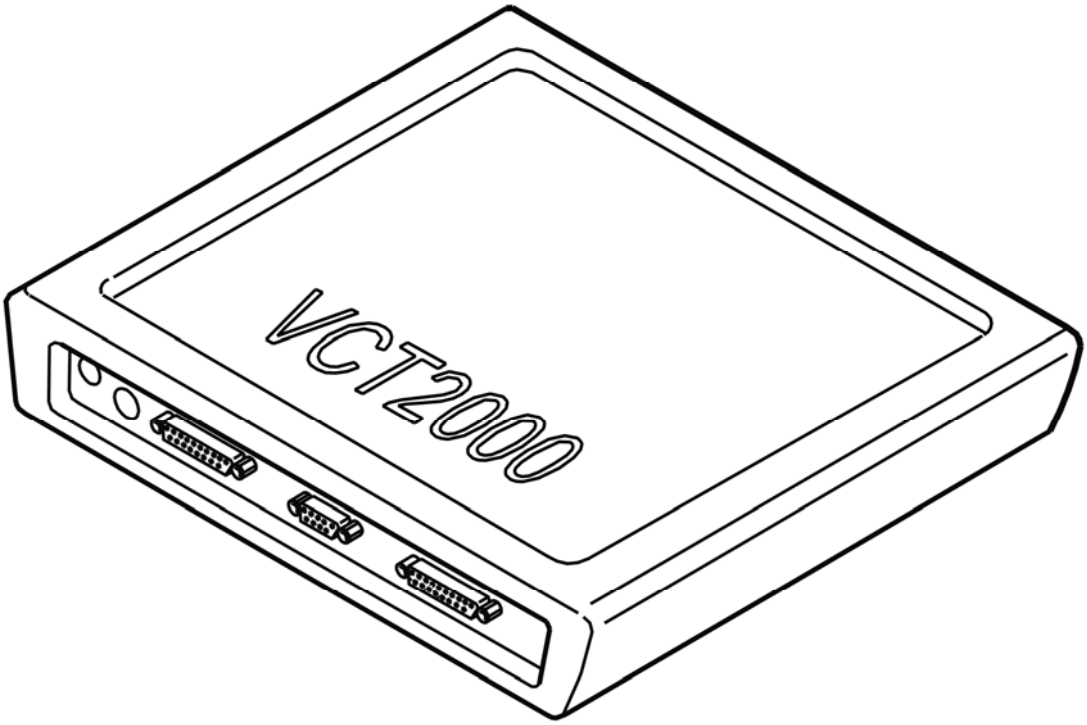

Fig. 273: Identifying VCT2000 Diagnostic Tool Symbol In VIDA
Courtesy of VOLVO CARS CORPORATION

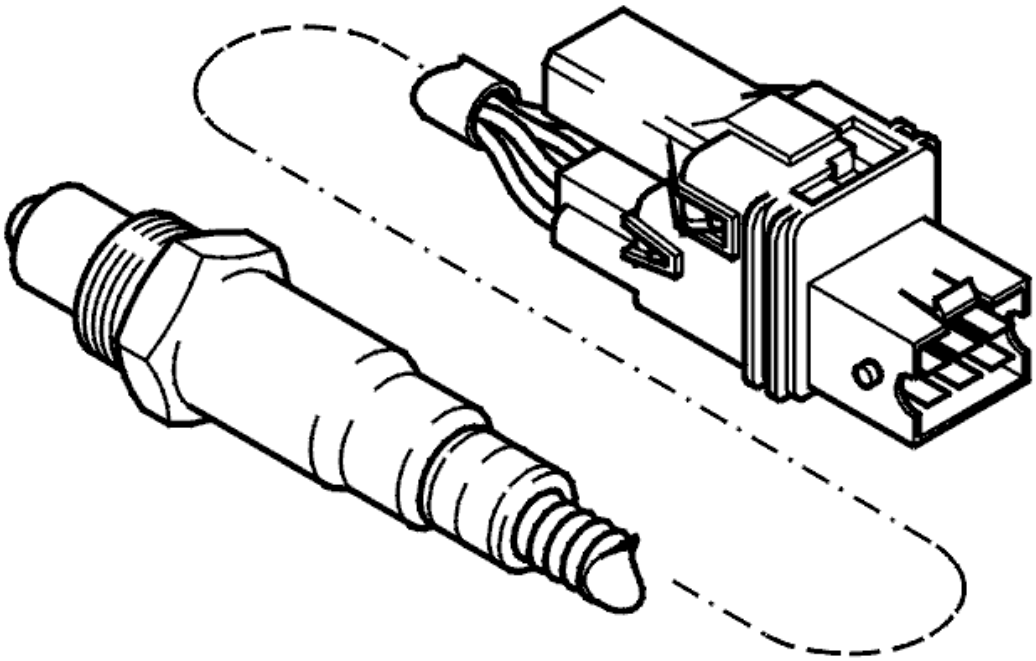

Fig. 274: Front Heated Oxygen Sensor
Courtesy of VOLVO CARS CORPORATION

- **Continue**

  Refer to **VERIFICATION**

VERIFICATION

VERIFICATION

HINT: After carrying out the repair, check that the fault has been remedied.

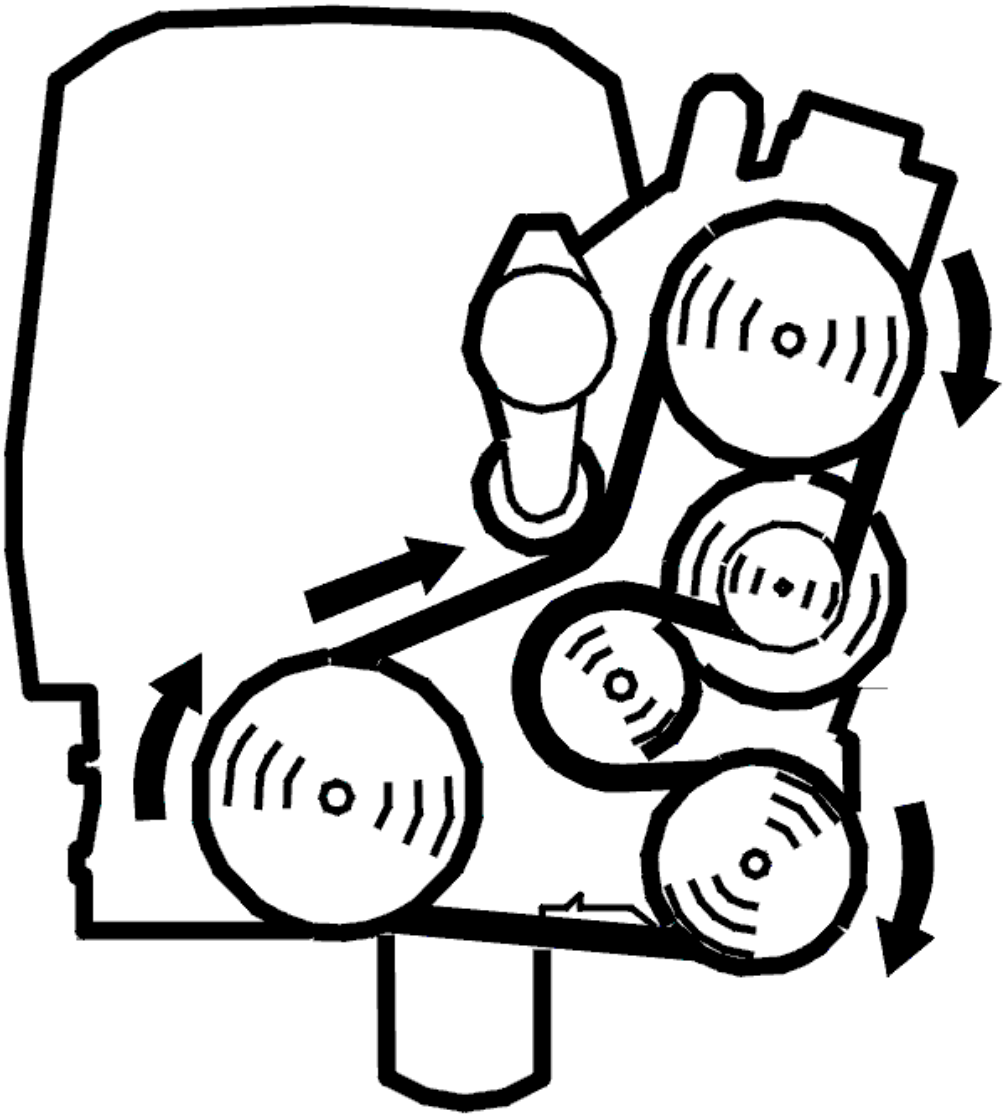

Fig. 275: Belt Routing / Engine Idling - Volvo
Courtesy of VOLVO CARS CORPORATION

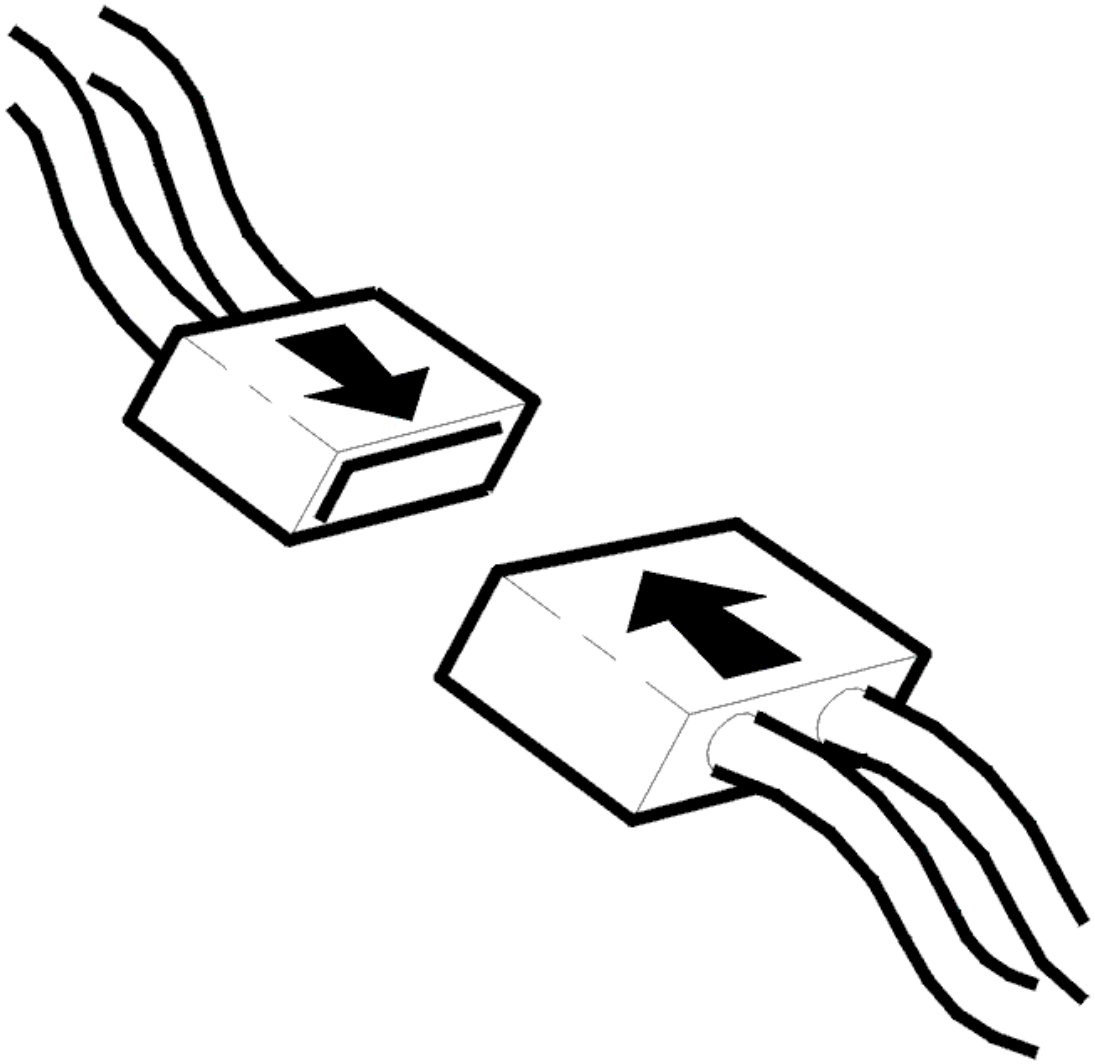

Fig. 276: Connecting Connector
Courtesy of VOLVO CARS CORPORATION

- Ignition off
- Reconnect the connectors, reinstall components etc.
- Test drive the car at an even speed (engine speed (RPM) above 2000 RPM) for at least 5 minutes
- Release the accelerator pedal (AP) quickly at least three times to simulate fuel shut-off
- Connect VCT2000 (or appropriate scan tool) to the data link connector (DLC) without switching off the engine.

NOTE: **If the engine is switched off, the stored fault status will be erased and the test drive will have to be repeated.**

Read off the diagnostic status and fault status for the diagnostic trouble code (DTC) by selecting the relevant diagnostic trouble code (DTC) from the list.

Check the fault status for the diagnostic trouble code (DTC) when the diagnostic is "Complete". If the function is correct, the fault status must be "No fault found" when the diagnostic is complete.

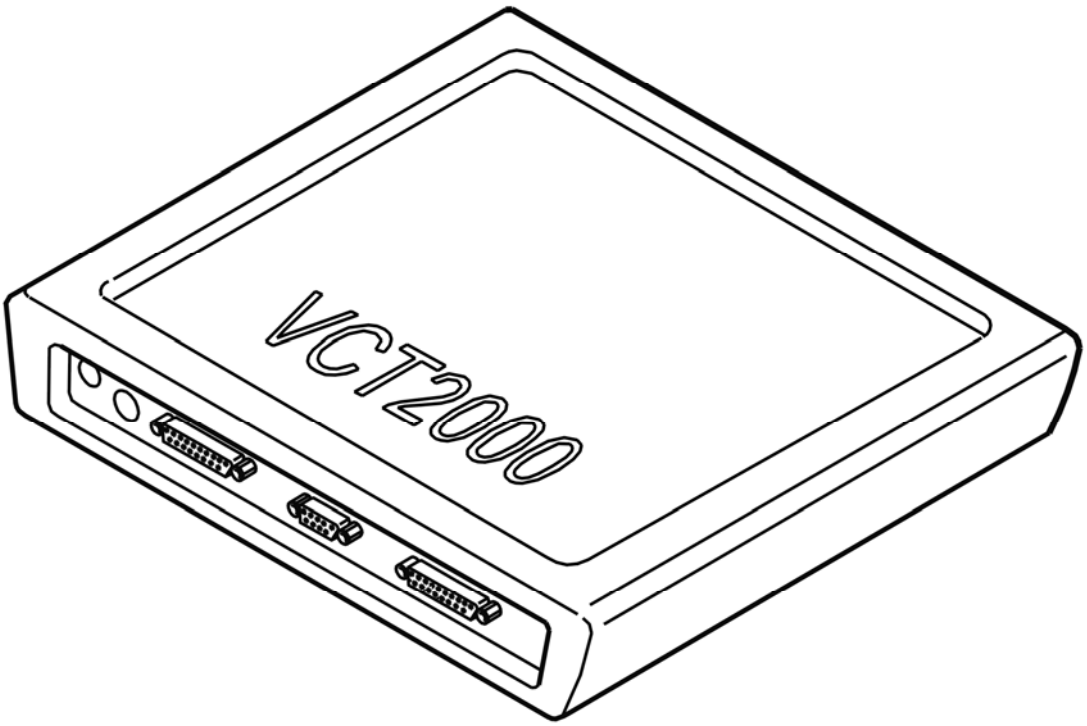

Fig. 277: Identifying VCT2000 Diagnostic Tool Symbol In VIDA
Courtesy of VOLVO CARS CORPORATION

Is the function OK?

- **YES**

  VERIFIED: Troubleshooting has been completed.

- **NO**

  Refer to **INFORMATION**

INFORMATION

FAULT-TRACING INFORMATION

The fault should have been detected and remedied. As this is not the case fault-tracing has failed.

Exit fault-tracing for this diagnostic trouble code (DTC) or make another attempt.

ECM-248C: FRONT HEATED OXYGEN SENSOR (HO2S), BANK 1. SIGNAL TOO HIGH (B6294T; 2005-2006)

DIAGNOSTIC TROUBLE CODE (DTC) INFORMATION ECM-248C

see **DIAGNOSTIC TROUBLE CODE (DTC) INFORMATION ECM-248C**

SIGNAL TOO HIGH

see **SIGNAL TOO HIGH**

ECM-248D: FRONT HEATED OXYGEN SENSOR (HO2S), BANK 1. SIGNAL TOO LOW (B5254T2; 2005-2007)

DIAGNOSTIC TROUBLE CODE (DTC) INFORMATION ECM-248D

Condition

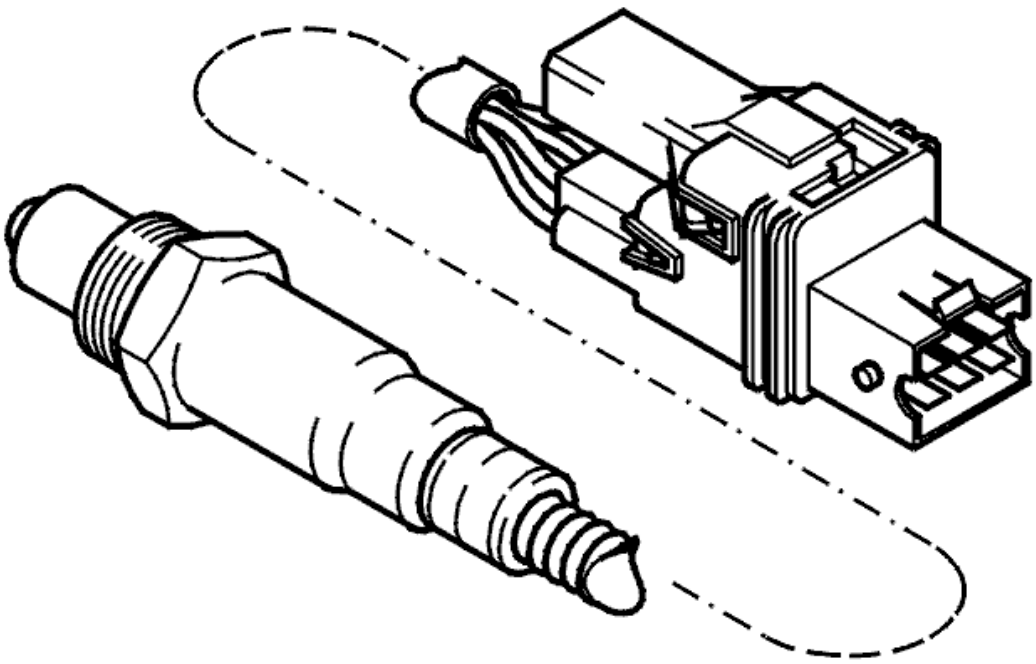

Fig. 278: Front Heated Oxygen Sensor
Courtesy of VOLVO CARS CORPORATION

The diagnostic trouble code (DTC) is stored if the engine control module (ECM) registers that there is a short-circuit to ground in the signal cables for the front heated oxygen sensor (HO2S) (bank 1).

Substitute Value

- None.

Possible Source

- Short-circuit in the signal cables
- Damaged front heated oxygen sensor (HO2S).

Fault symptom[s]

- Malfunction indicator lamp (MIL) lit.

SIGNAL TOO LOW

CHECKING THE COMPONENTS AND WIRING

CAUTION: Do not apply rust solvent spray or grease to the heated oxygen sensor (HO2S) connector.

Check the cable for a short-circuit to ground.

Check between:

- The system relay and heated oxygen sensor (HO2S) terminal #3
- Engine control module (ECM) terminal #A18 (#A18) and heated oxygen sensor (HO2S) terminal #4.

NOTE: If possible, measure from the rear of the affected connectors in order to minimize any damage and future loose connections.

Try a new heated oxygen sensor (HO2S) if the above fault-tracing does not remedy the fault.

Remedy as necessary.

Other information

- see **CONNECTING THE BREAKOUT BOX**
- For 5 cylinder turbocharged engines -2004, see **SIGNAL DESCRIPTION**
- For 5 cylinder turbocharged engines 2005-, see **SIGNAL SPECIFICATION** .
- For 6 cylinder engines -2004, see **SIGNAL SPECIFICATION**
- For 6 cylinder engines 2005-, see **SIGNAL SPECIFICATION** .
- For B5xx4T, see **HEATED OXYGEN SENSOR (HO2S), REPLACING**
- For B6xx4T, see **HEATED OXYGEN SENSOR (HO2S), REPLACING** .
- see **CHECKING WIRING AND TERMINALS**

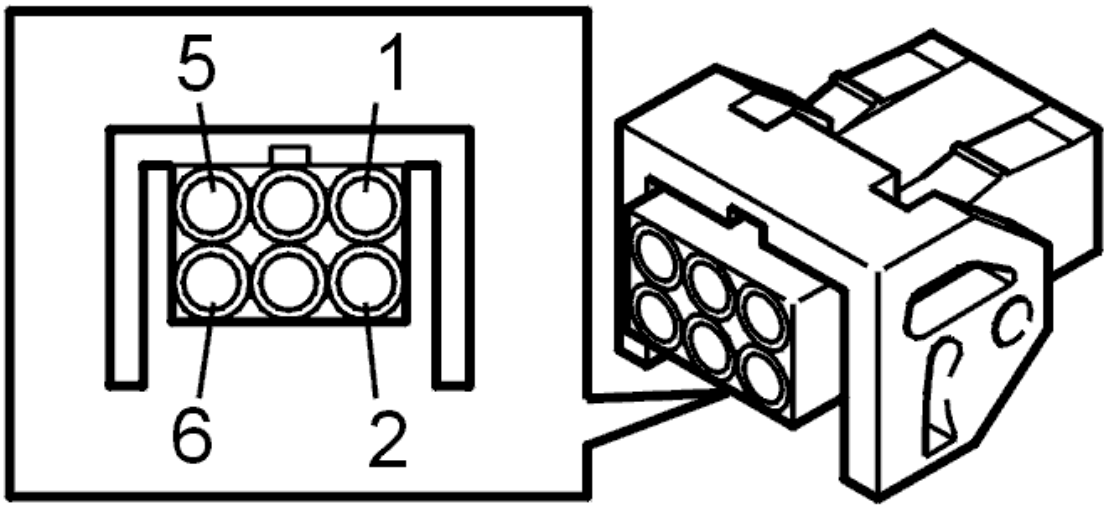

Fig. 279: Identifying Front Heated Oxygen Sensor Connector Terminals
Courtesy of VOLVO CARS CORPORATION

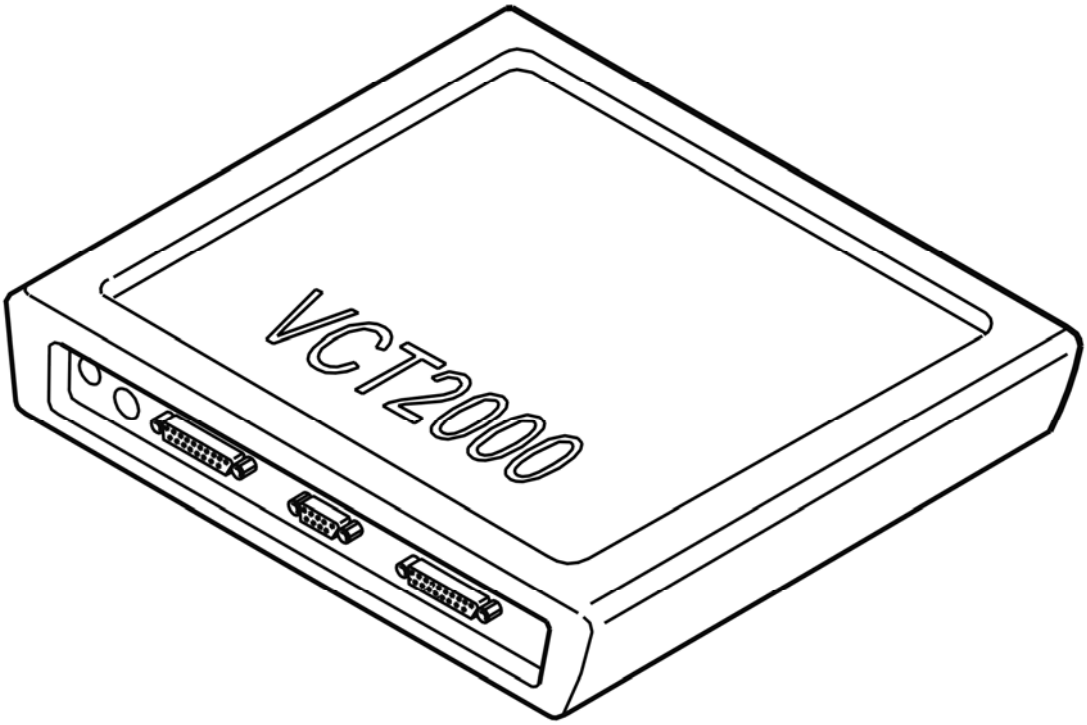

Fig. 280: Identifying VCT2000 Diagnostic Tool Symbol In VIDA
Courtesy of VOLVO CARS CORPORATION

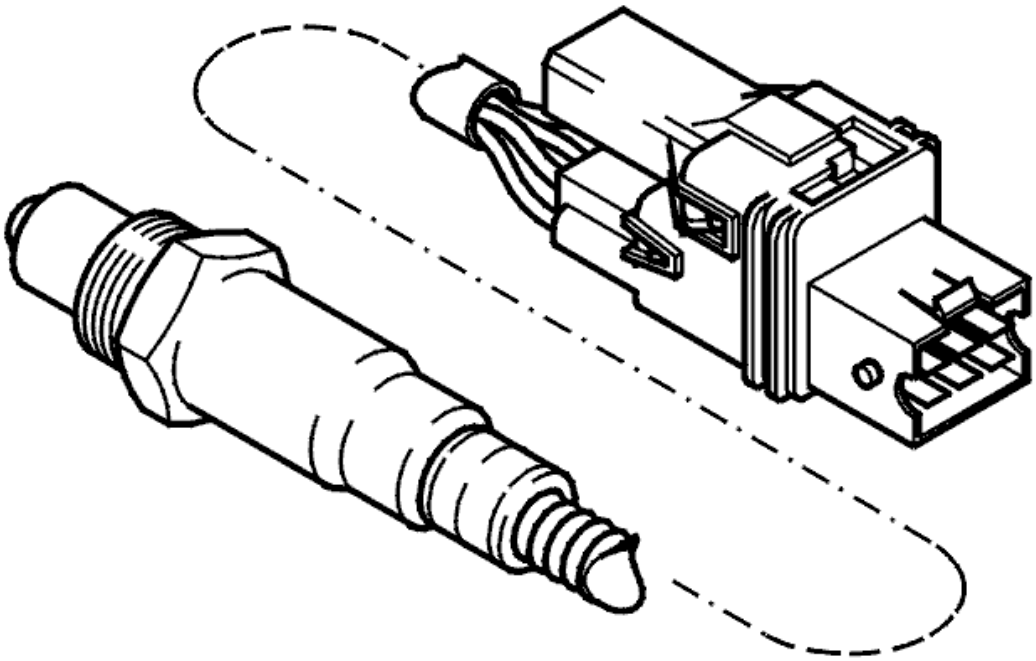

Fig. 281: Front Heated Oxygen Sensor
Courtesy of VOLVO CARS CORPORATION

- **Continue**

  Refer to **VERIFICATION**

VERIFICATION

VERIFICATION

HINT: After carrying out the repair, check that the fault has been remedied.

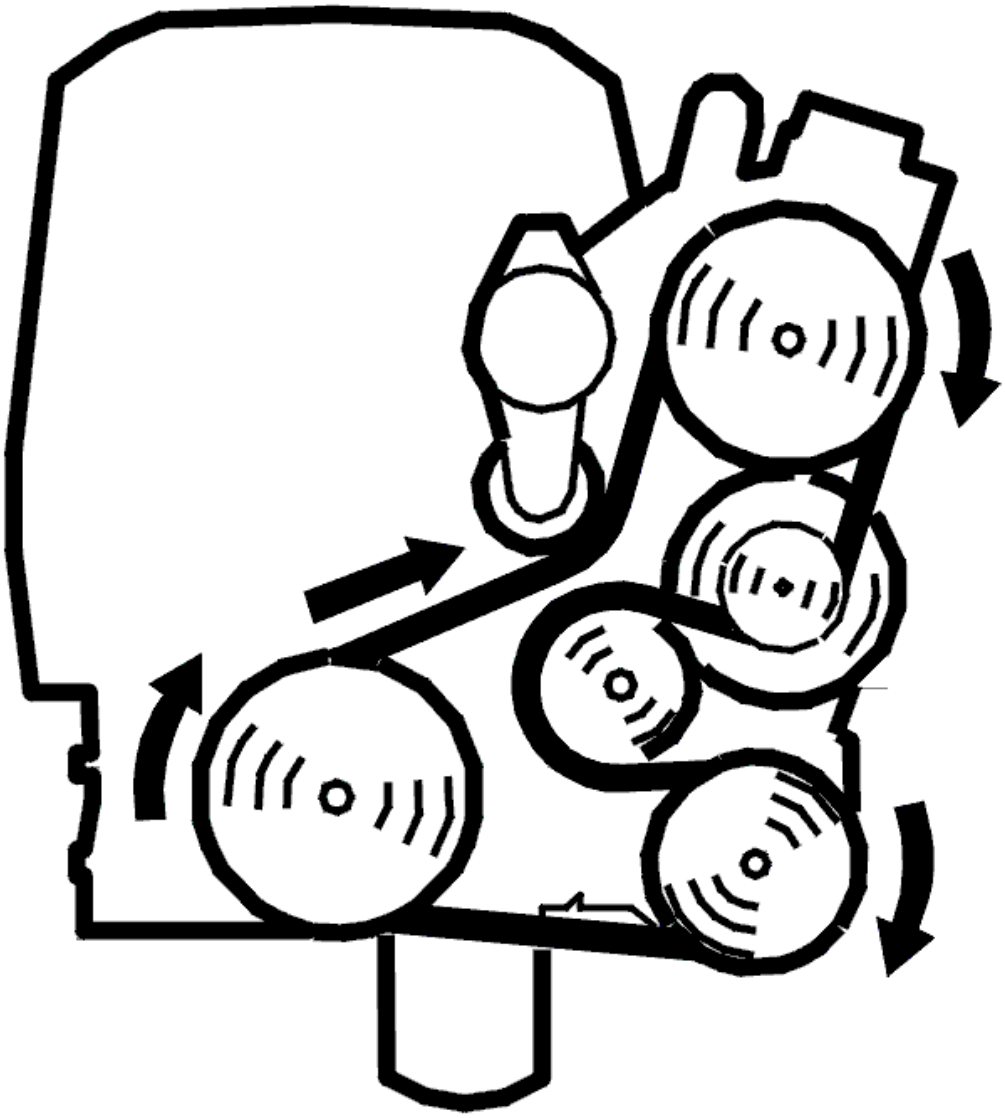

Fig. 282: Belt Routing / Engine Idling - Volvo
Courtesy of VOLVO CARS CORPORATION

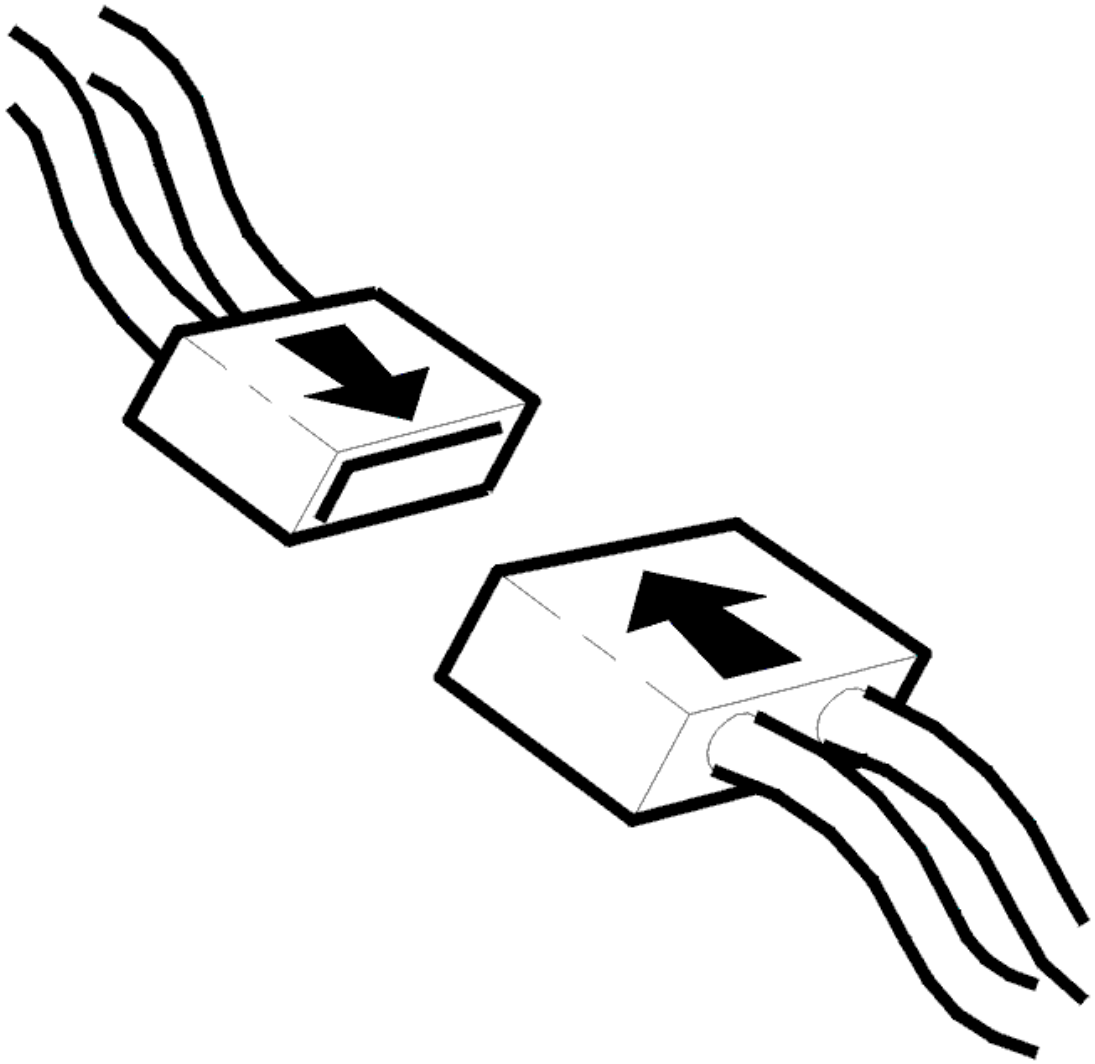

Fig. 283: Connecting Connector
Courtesy of VOLVO CARS CORPORATION

- Ignition off
- Reconnect the connectors, reinstall components etc.
- Test drive the car at an even speed (engine speed (RPM) above 2000 RPM) for at least 5 minutes
- Release the accelerator pedal (AP) quickly at least three times to simulate fuel shut-off
- Connect VCT2000 (or appropriate scan tool) to the data link connector (DLC) without switching off the engine.

NOTE: **If the engine is switched off, the stored fault status will be erased and the test drive will have to be repeated.**

Read off the diagnostic status and fault status for the diagnostic trouble code (DTC) by selecting the relevant diagnostic trouble code (DTC) from the list.

Check the fault status for the diagnostic trouble code (DTC) when the diagnostic is "Complete". If the function is correct, the fault status must be "No fault found" when the diagnostic is complete.

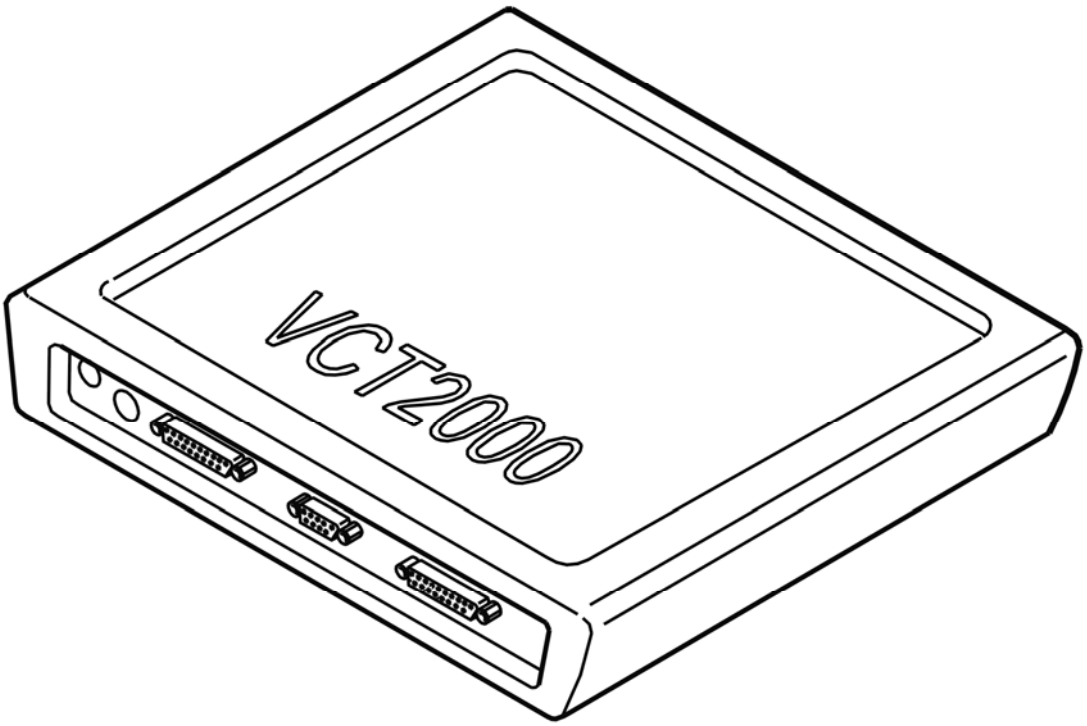

Fig. 284: Identifying VCT2000 Diagnostic Tool Symbol In VIDA
Courtesy of VOLVO CARS CORPORATION

Is the function OK?

- **YES**

  VERIFIED: Troubleshooting has been completed.

- **NO**

  Refer to **INFORMATION**

INFORMATION

FAULT-TRACING INFORMATION

The fault should have been detected and remedied. As this is not the case fault-tracing has failed.

Exit fault-tracing for this diagnostic trouble code (DTC) or make another attempt.

ECM-248D: FRONT HEATED OXYGEN SENSOR (HO2S), BANK 1. SIGNAL TOO LOW (B6294T; 2005-2006)

DIAGNOSTIC TROUBLE CODE (DTC) INFORMATION ECM-248D

see **DIAGNOSTIC TROUBLE CODE (DTC) INFORMATION ECM-248D**

SIGNAL TOO LOW

see **SIGNAL TOO LOW**

ECM-249B: FRONT HEATED OXYGEN SENSOR (HO2S), BANK 1. SIGNAL MISSING (B5254T2; 2005-2007)

DIAGNOSTIC TROUBLE CODE (DTC) INFORMATION ECM-249B

Condition

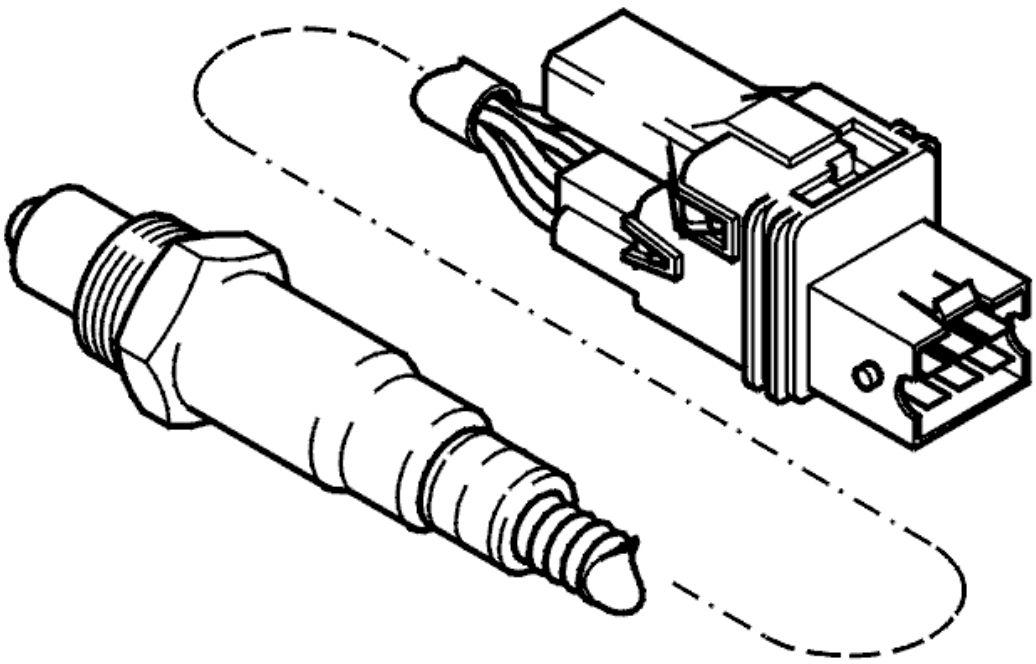

Fig. 285: Front Heated Oxygen Sensor
Courtesy of VOLVO CARS CORPORATION

The diagnostic trouble code (DTC) is stored if the engine control module (ECM) registers an open-circuit in the signal cable to the section of the front heated oxygen sensor (HO2S) (bank 1) that detects the oxygen content of

the exhaust gases.

Substitute Value

- None.

Possible Source

- Contact resistance or oxidation on the signal cable
- Open-circuit in the signal cable
- Damaged front heated oxygen sensor (HO2S).

Fault symptom[s]

- Malfunction indicator lamp (MIL) lit.

SIGNAL MISSING

CHECKING THE COMPONENTS AND WIRING

CAUTION: Do not apply rust solvent spray or grease to the heated oxygen sensor (HO2S) connector.

Check the heated oxygen sensor (HO2S) connector. Check for contact resistance. Check for an open-circuit. Check for oxidation.

Check the cable between engine control module (ECM) terminal #A41 (#A41) and heated oxygen sensor (HO2S) terminal #1. Check for an open-circuit.

NOTE: If possible, measure from the rear of the affected connectors in order to minimize any damage and future loose connections.

Try a new heated oxygen sensor (HO2S) if the above fault-tracing does not remedy the fault.

Remedy as necessary.

Other information

- see **CONNECTING THE BREAKOUT BOX**
- For 5 cylinder turbocharged engines -2004, see **SIGNAL DESCRIPTION**
- For 5 cylinder turbocharged engines 2005-, see **SIGNAL SPECIFICATION** .
- For 6 cylinder engines -2004, see **SIGNAL SPECIFICATION**
- For 6 cylinder engines 2005-, see **SIGNAL SPECIFICATION** .
- For B5xx4T, see **HEATED OXYGEN SENSOR (HO2S), REPLACING**

- For B6xx4T, see **HEATED OXYGEN SENSOR (HO2S), REPLACING** .
- see **CHECKING WIRING AND TERMINALS**

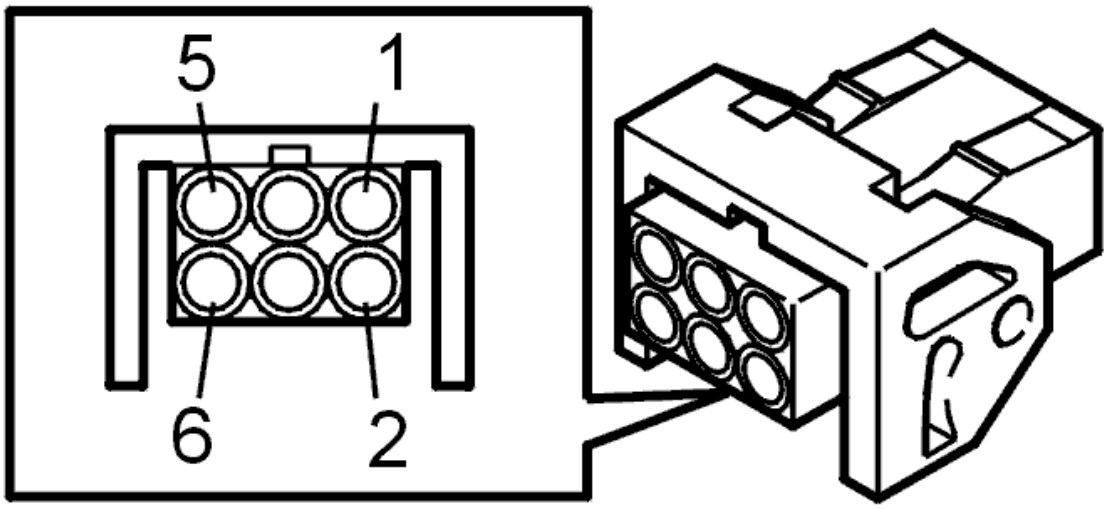

Fig. 286: Identifying Front Heated Oxygen Sensor Connector Terminals
Courtesy of VOLVO CARS CORPORATION

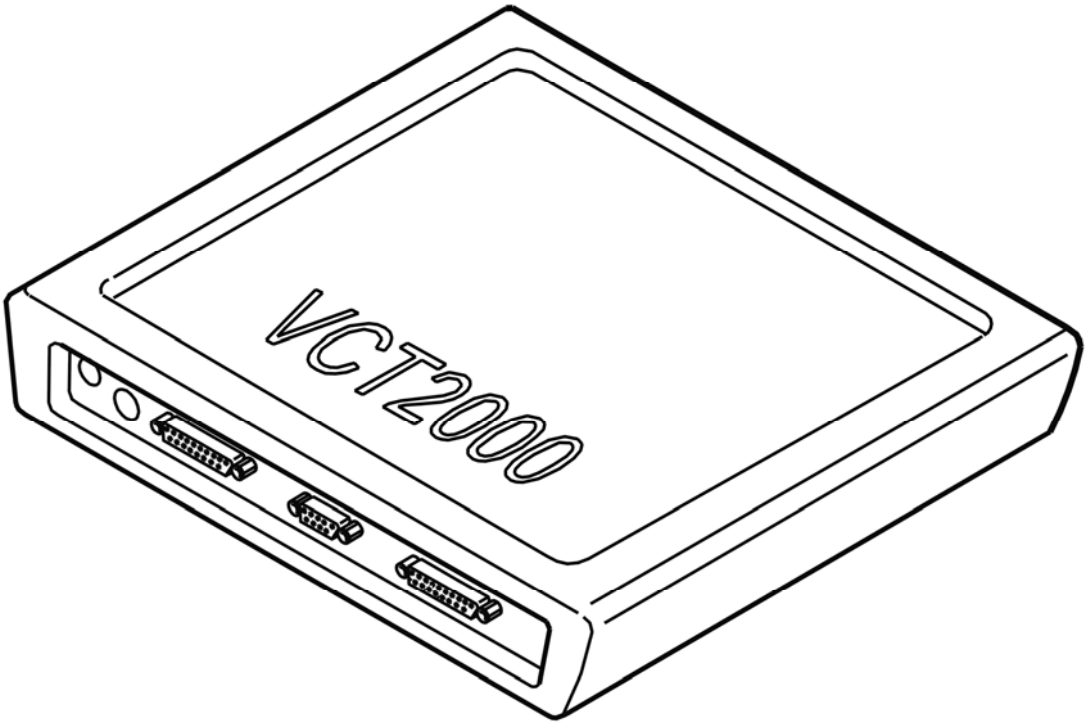

Fig. 287: Identifying VCT2000 Diagnostic Tool Symbol In VIDA
Courtesy of VOLVO CARS CORPORATION

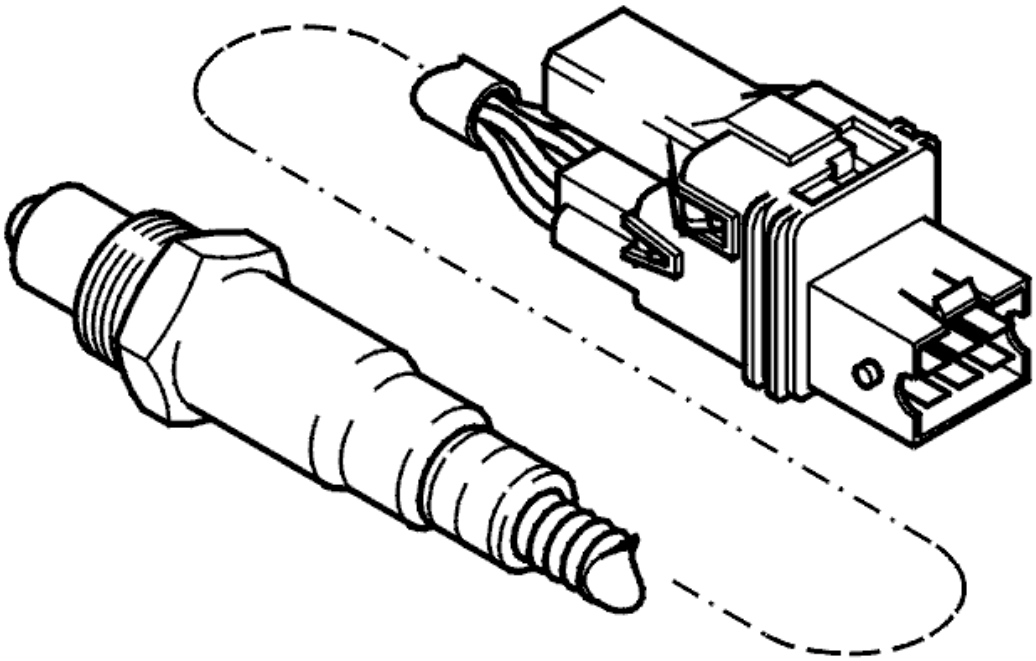

Fig. 288: Front Heated Oxygen Sensor
Courtesy of VOLVO CARS CORPORATION

- **Continue**

  Refer to **VERIFICATION**

VERIFICATION

VERIFICATION

HINT: After carrying out the repair, check that the fault has been remedied.

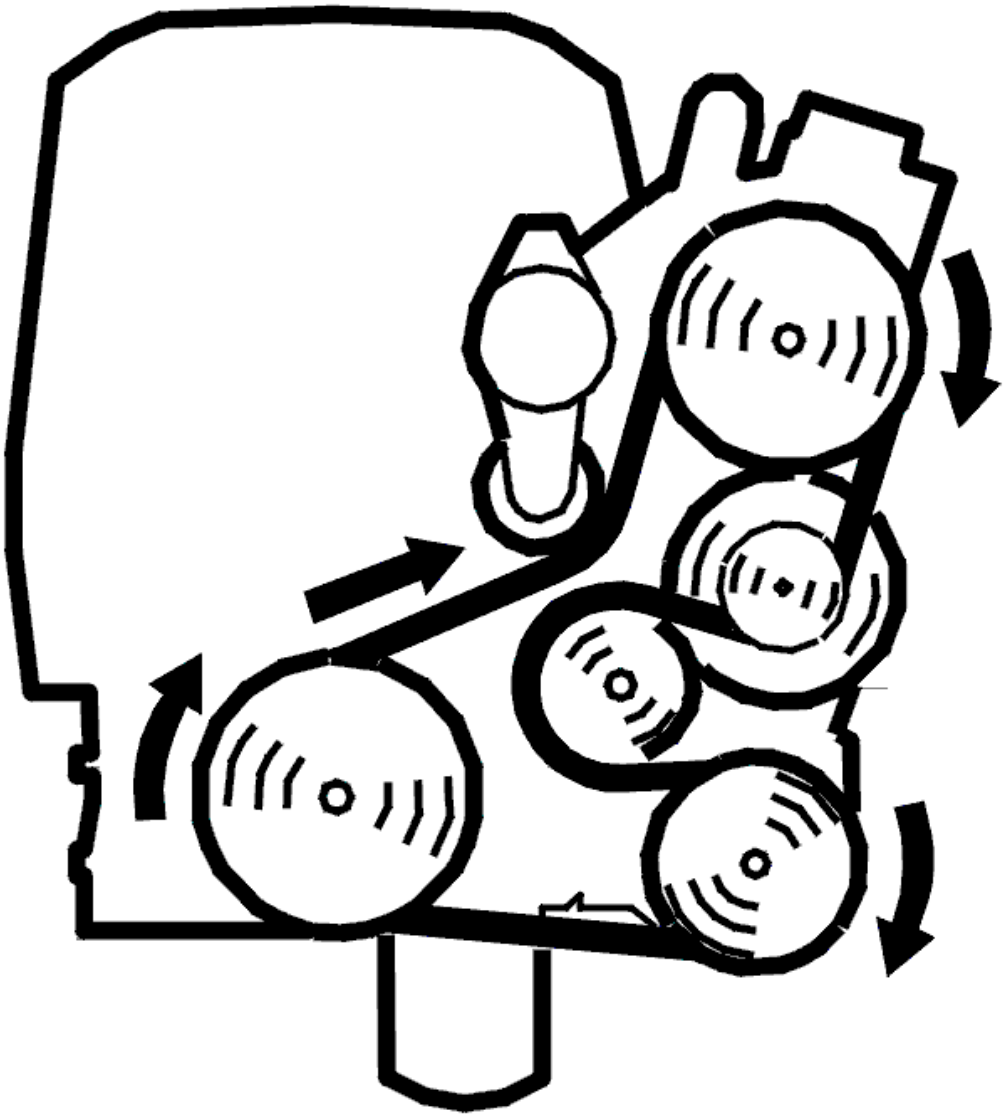

Fig. 289: Belt Routing / Engine Idling - Volvo
Courtesy of VOLVO CARS CORPORATION

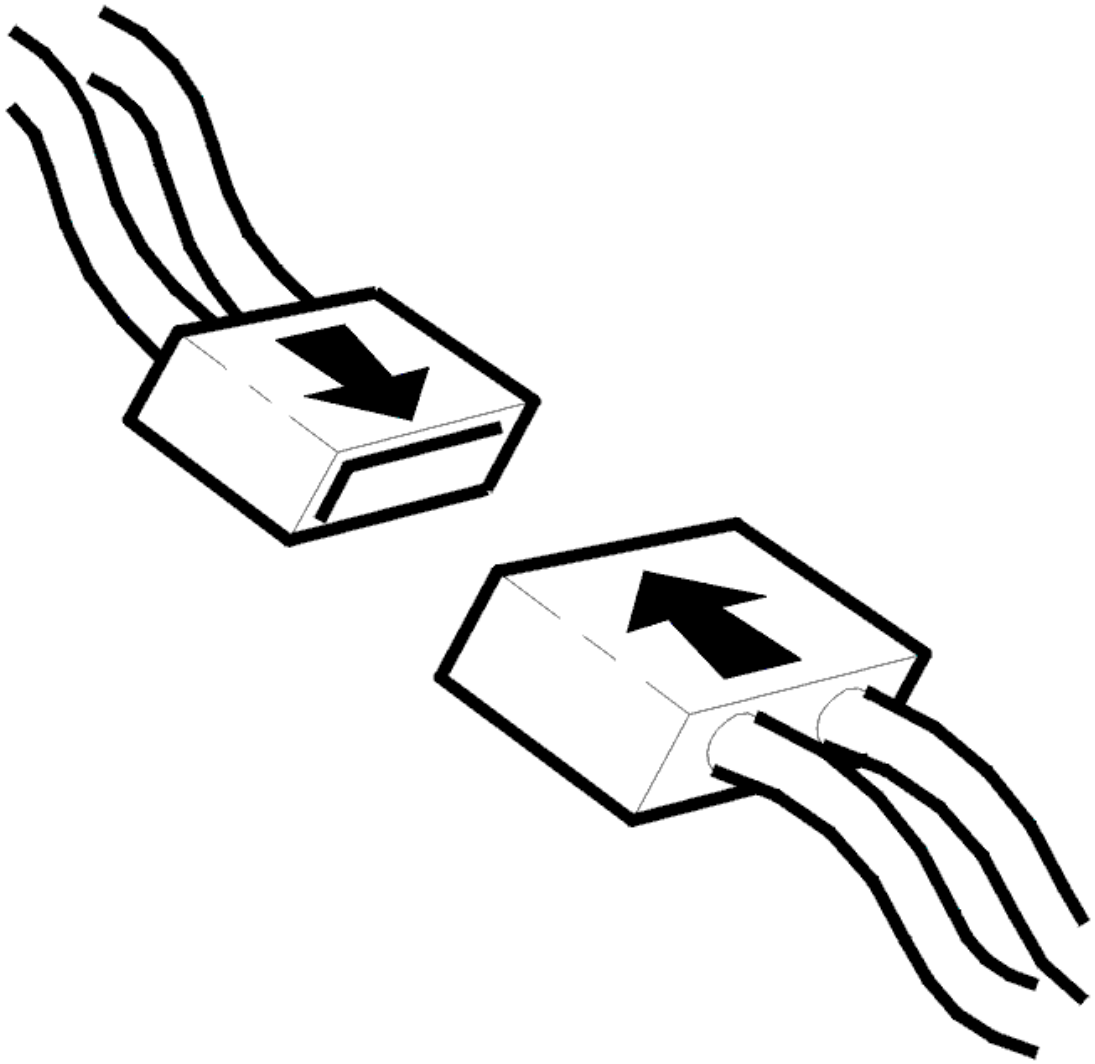

Fig. 290: Connecting Connector
Courtesy of VOLVO CARS CORPORATION

- Ignition off
- Reconnect the connectors, reinstall components etc.
- Test drive the car at an even speed (engine speed (RPM) above 2000 RPM) for at least 5 minutes
- Release the accelerator pedal (AP) quickly at least three times to simulate fuel shut-off
- Connect VCT2000 (or appropriate scan tool) to the data link connector (DLC) without switching off the engine.

NOTE: **If the engine is switched off, the stored fault status will be erased and the test drive will have to be repeated.**

Read off the diagnostic status and fault status for the diagnostic trouble code (DTC) by selecting the relevant diagnostic trouble code (DTC) from the list.

Check the fault status for the diagnostic trouble code (DTC) when the diagnostic is "Complete". If the function is correct, the fault status must be "No fault found" when the diagnostic is complete.

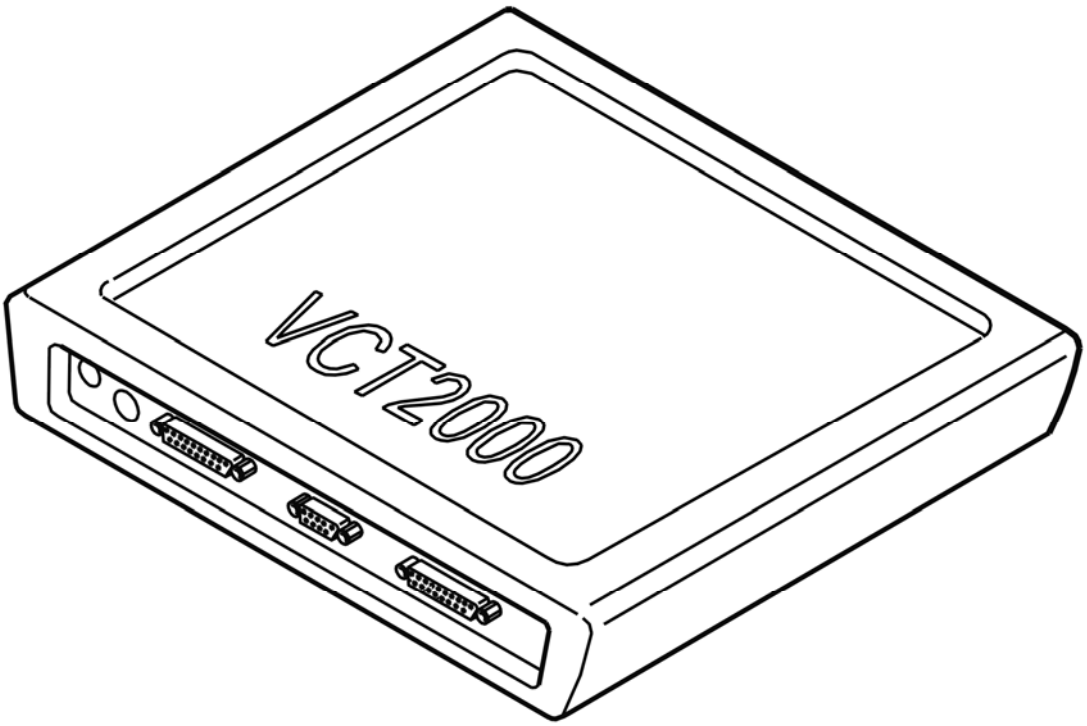

Fig. 291: Identifying VCT2000 Diagnostic Tool Symbol In VIDA
Courtesy of VOLVO CARS CORPORATION

Is the function OK?

- **YES**

  VERIFIED: Troubleshooting has been completed.

- **NO**

  Refer to **INFORMATION**

INFORMATION

FAULT-TRACING INFORMATION

The fault should have been detected and remedied. As this is not the case fault-tracing has failed.

Exit fault-tracing for this diagnostic trouble code (DTC) or make another attempt.

ECM-249B: FRONT HEATED OXYGEN SENSOR (HO2S), BANK 1. SIGNAL MISSING (B6294T; 2005-2006)

DIAGNOSTIC TROUBLE CODE (DTC) INFORMATION ECM-249B

see **DIAGNOSTIC TROUBLE CODE (DTC) INFORMATION ECM-249B**

SIGNAL MISSING

see **SIGNAL MISSING**

ECM-24A0: SWITCHED FRONT HEATED OXYGEN SENSORS (HO2S). FAULTY SIGNAL (B5254T2; B6294T; 2005-2006)

DIAGNOSTIC TROUBLE CODE (DTC) INFORMATION ECM-24A0

Condition

The diagnostic trouble code (DTC) is stored if the engine control module (ECM) detects that the front heated oxygen sensors (HO2S) (bank 1 and bank 2) have been switched. This means they are installed in the incorrect bank of cylinders.

The diagnostic trouble codes (DTCs) are diagnosed when the engine has been idling for 10 minutes

Substitute Value

- The heated oxygen sensor (HO2S) control is disabled
- Three-way catalytic converter (TWC) diagnostics are disabled.

Possible Source

- The front heated oxygen sensors (HO2S) are mounted in the incorrect cylinder banks
- Leakage in the fuel injection system
- Both the front heated oxygen sensors (HO2S) are damaged.

Fault symptom[s]

- Malfunction indicator lamp (MIL) lit.

FAULTY SIGNAL

CHECKING THE COMPONENT

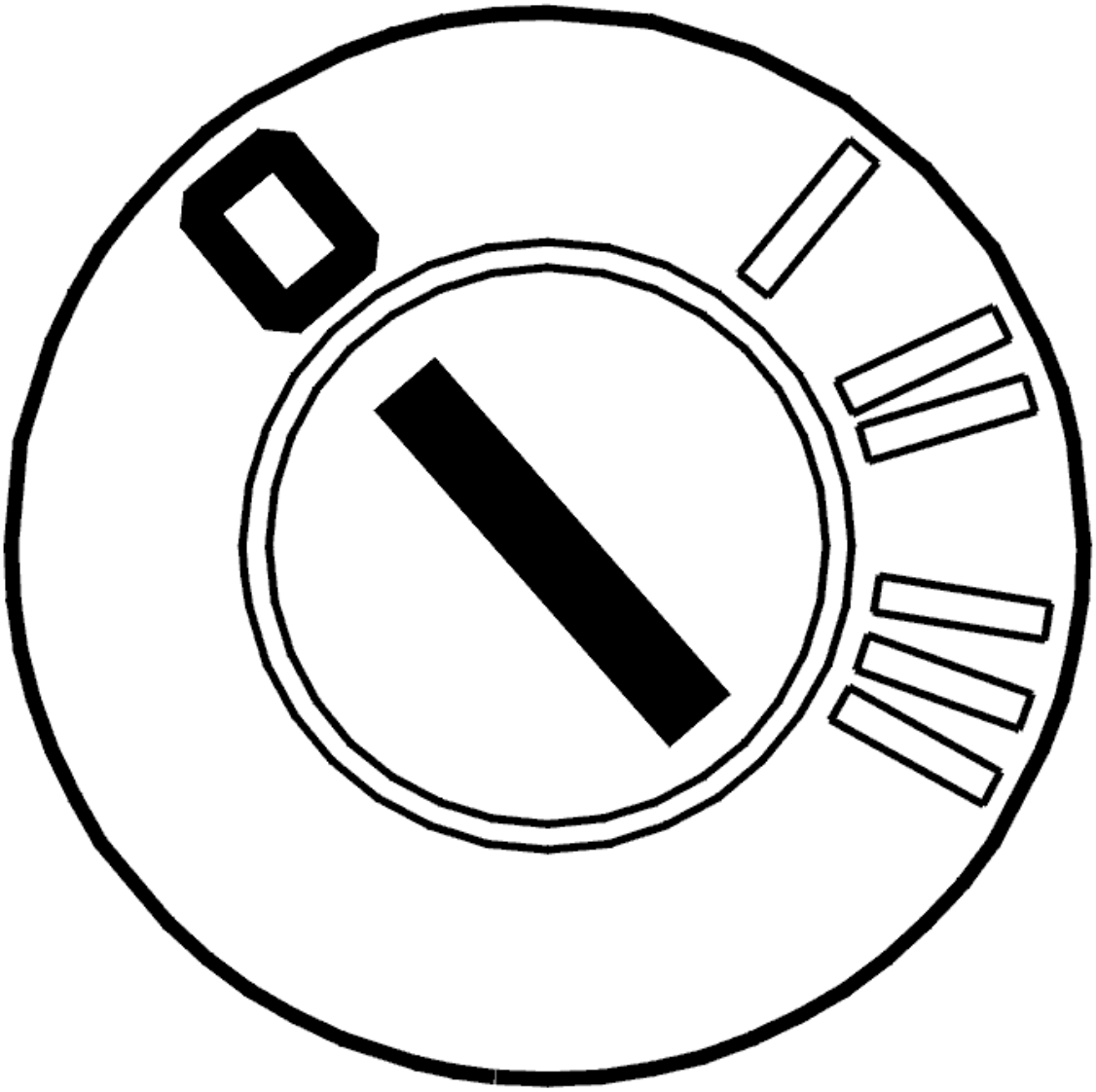

Fig. 292: Identifying Ignition OFF
Courtesy of VOLVO CARS CORPORATION

- Ignition off
- Check that the front heated oxygen sensors (HO2S) bank 1 and bank 2 have not been switched (mounted in the incorrect bank of cylinders)
- Remedy as necessary.

Other information:

- For B5xx4T, see **HEATED OXYGEN SENSOR (HO2S), REPLACING**
- For B6xx4T, see **HEATED OXYGEN SENSOR (HO2S), REPLACING** .

Have the heated oxygen sensors (HO2S) been switched?

- **YES**

  Refer to **VERIFICATION**

- **NO**

  Refer to **CHECKING THE FUEL INJECTION SYSTEM FOR LEAKAGE**

CHECKING THE FUEL INJECTION SYSTEM FOR LEAKAGE

- Check the fuel injection system for leakage
- Remedy as necessary.

  If no faults are found during the checks and the fault recurs as permanent, replace both heated oxygen sensors (HO2S).

  Other information:

  - For B5xx4T, see **HEATED OXYGEN SENSOR (HO2S), REPLACING**
  - For B6xx4T, see **HEATED OXYGEN SENSOR (HO2S), REPLACING** .

- **Continue**

  Refer to **VERIFICATION**

VERIFICATION

VERIFICATION

HINT: After carrying out the repair, check that the fault has been remedied.

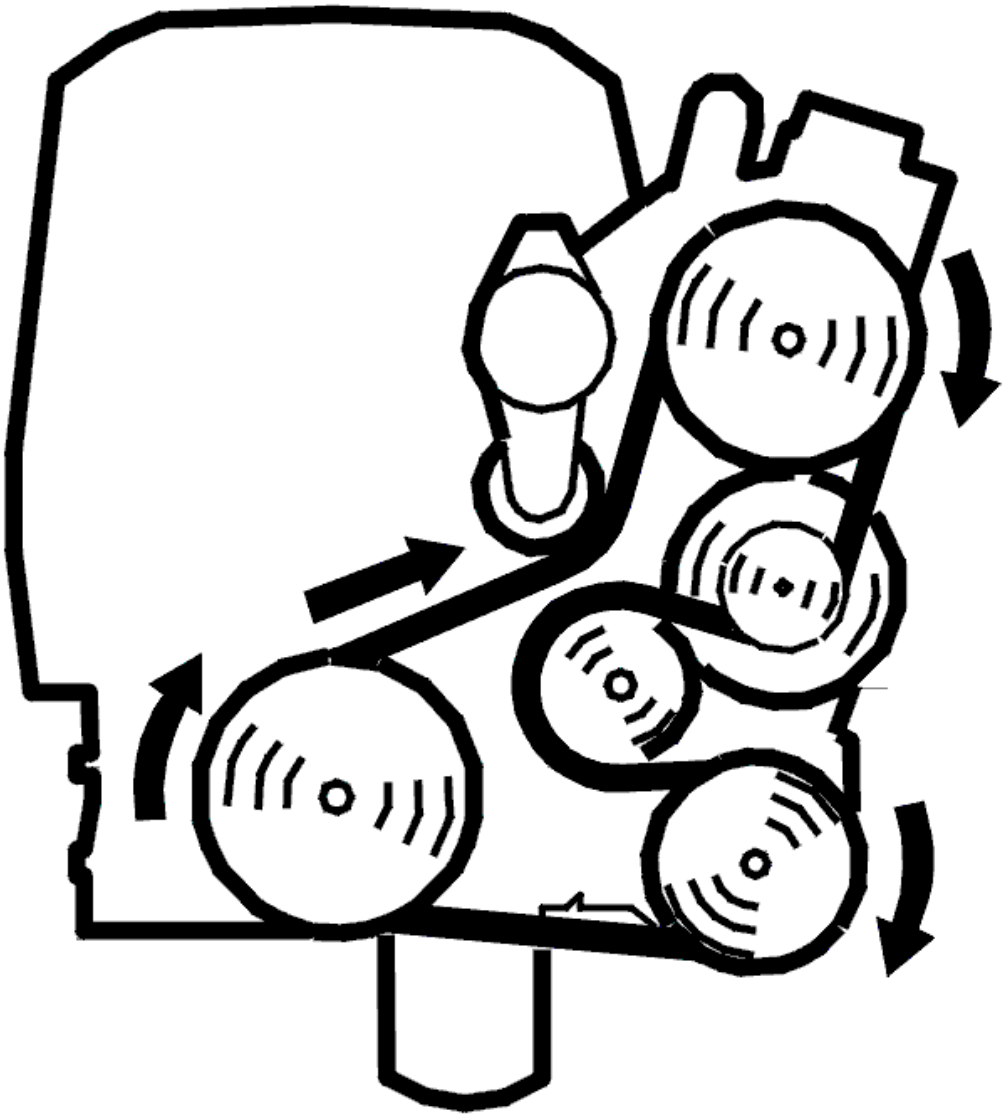

Fig. 293: Belt Routing / Engine Idling - Volvo
Courtesy of VOLVO CARS CORPORATION

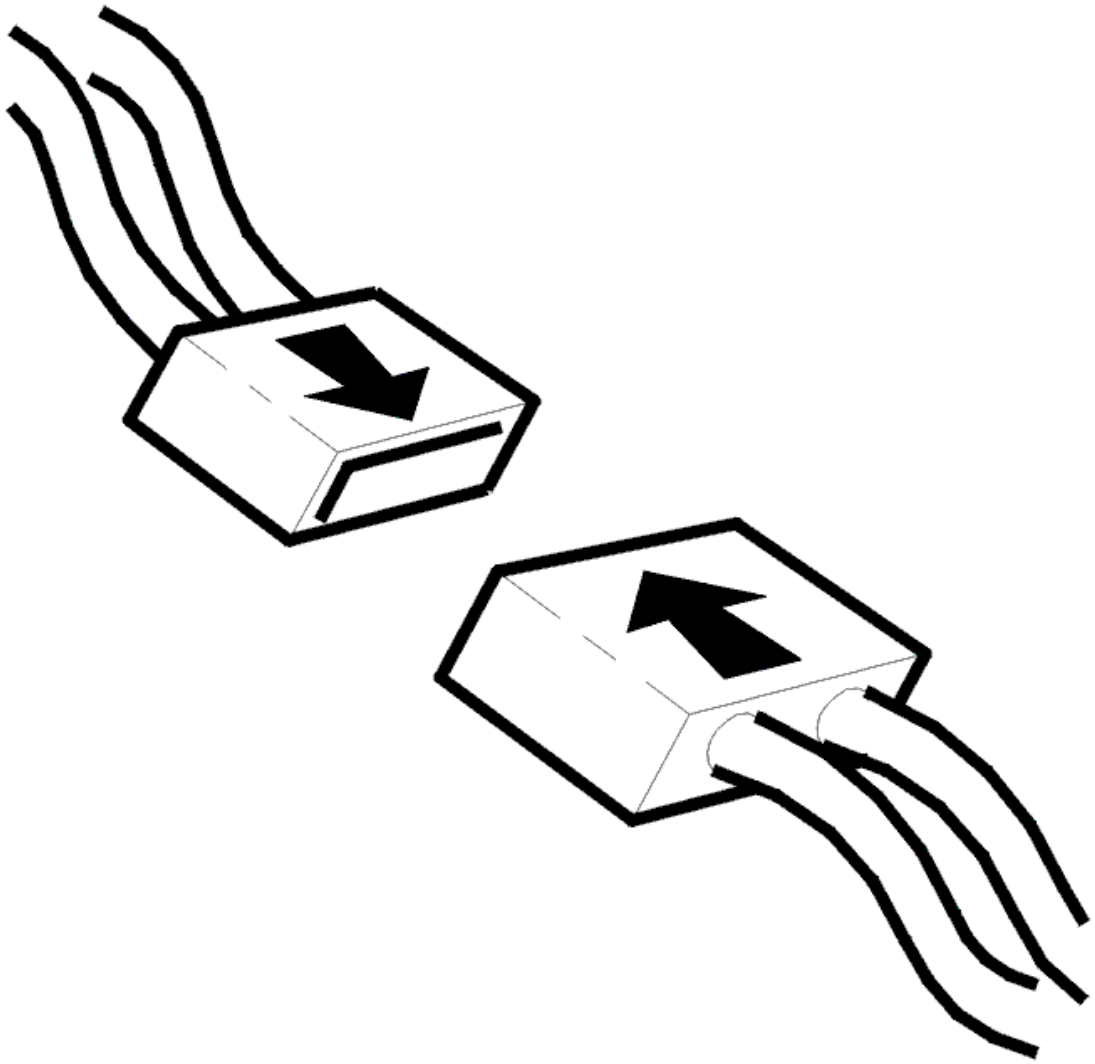

Fig. 294: Connecting Connector
Courtesy of VOLVO CARS CORPORATION

- Ignition off
- Reconnect the connectors, reinstall components etc.
- Start the engine. Allow the engine to idle for 10 minutes
- Read off diagnostic trouble codes (DTCs).

The fault has been remedied if status of the diagnostic trouble code (DTC) is intermittent.

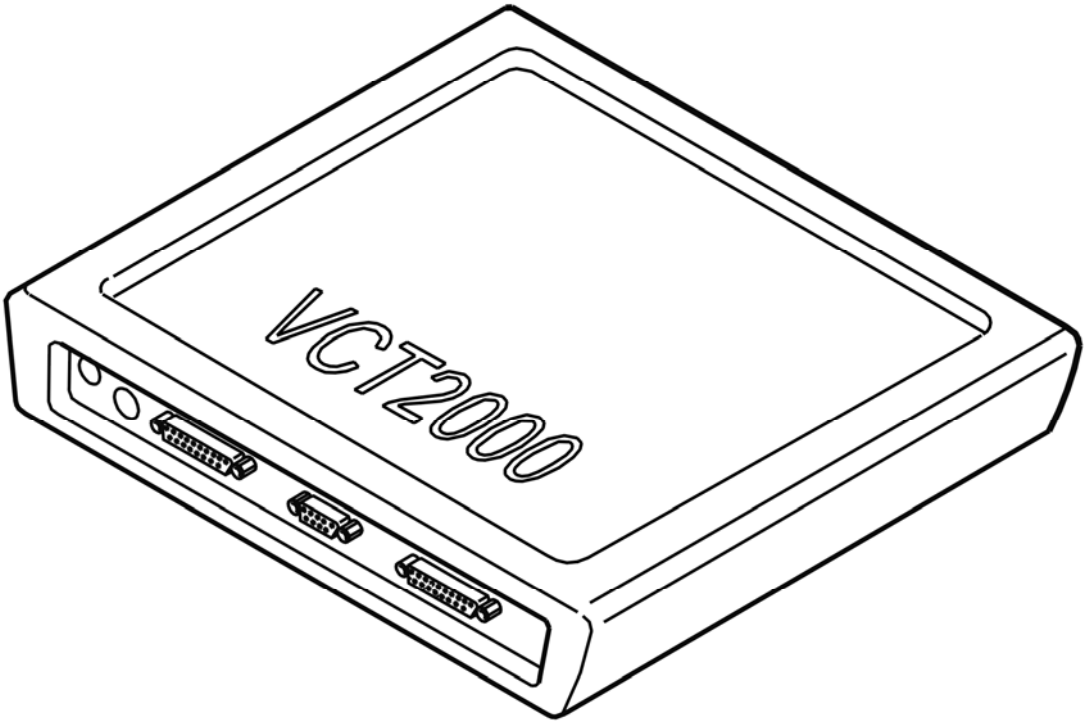

Fig. 295: Identifying VCT2000 Diagnostic Tool Symbol In VIDA
Courtesy of VOLVO CARS CORPORATION

Is the status of the diagnostic trouble code (DTC) intermittent?

- **YES**

  VERIFIED: Troubleshooting has been completed.

- **NO**

  Refer to **INFORMATION**

INFORMATION

FAULT-TRACING INFORMATION

The fault should have been detected and remedied. As this is not the case fault-tracing has failed.

Exit fault-tracing for this diagnostic trouble code (DTC) or make another attempt.

ECM-24AB: FRONT HEATED OXYGEN SENSOR (HO2S), BANK 1. SIGNAL MISSING (B5254T2; 2005-2007)

DIAGNOSTIC TROUBLE CODE (DTC) INFORMATION ECM-24AB

Condition

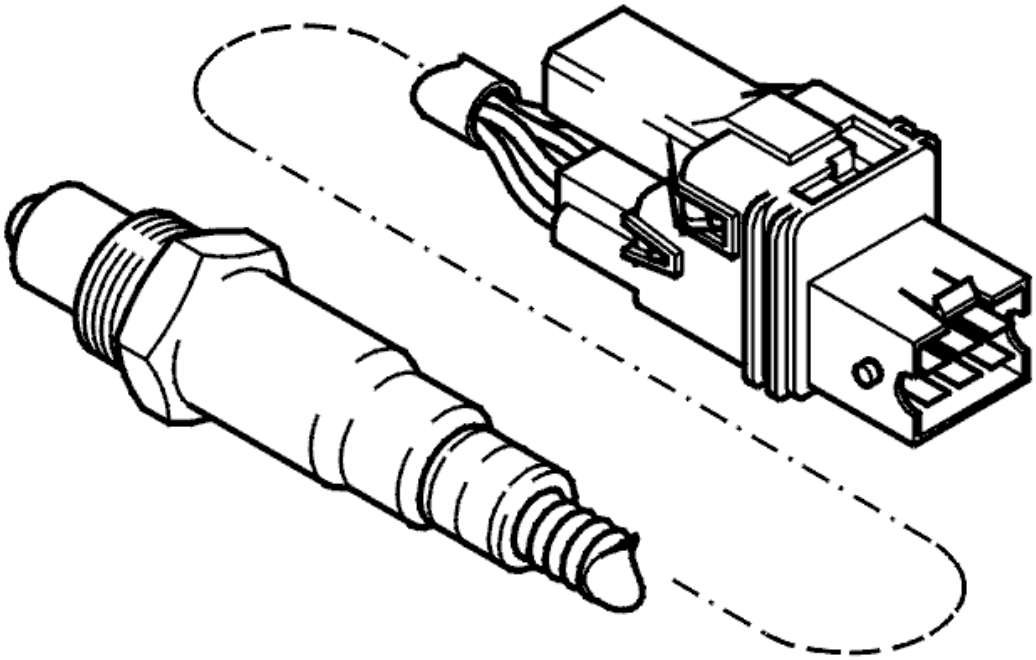

Fig. 296: Front Heated Oxygen Sensor
Courtesy of VOLVO CARS CORPORATION

The diagnostic trouble code (DTC) is stored if the engine control module (ECM) registers an open-circuit in the ground lead for the front heated oxygen sensor (HO2S) (bank 1).

Substitute Value

None.

Possible Source

- Open-circuit in the ground lead
- Damaged front heated oxygen sensor (HO2S) (bank 1).

Fault symptom[s]

- Malfunction indicator lamp (MIL) lit.

SIGNAL MISSING

CHECKING THE COMPONENTS AND WIRING

CAUTION: Do not apply rust solvent spray or grease to the heated oxygen sensor (HO2S) connector.

Check the heated oxygen sensor (HO2S) connector. Check for contact resistance. Check for an open-circuit. Check for oxidation.

Check the cable between engine control module (ECM) terminal #A42 (#A42) and heated oxygen sensor (HO2S) terminal #5. Check for an open-circuit.

NOTE: If possible, measure from the rear of the affected connectors in order to minimize any damage and future loose connections.

Try a new heated oxygen sensor (HO2S) if the above fault-tracing does not remedy the fault.

Remedy as necessary.

Other information

- see **CONNECTING THE BREAKOUT BOX**
- For 5 cylinder turbocharged engines -2004, see **SIGNAL DESCRIPTION**
- For 5 cylinder turbocharged engines 2005-, see **SIGNAL SPECIFICATION** .
- For 6 cylinder engines -2004, see **SIGNAL SPECIFICATION**
- For 6 cylinder engines 2005-, see **SIGNAL SPECIFICATION** .
- For B5xx4T, see **HEATED OXYGEN SENSOR (HO2S), REPLACING**
- For B6xx4T, see **HEATED OXYGEN SENSOR (HO2S), REPLACING** .
- see **CHECKING WIRING AND TERMINALS**

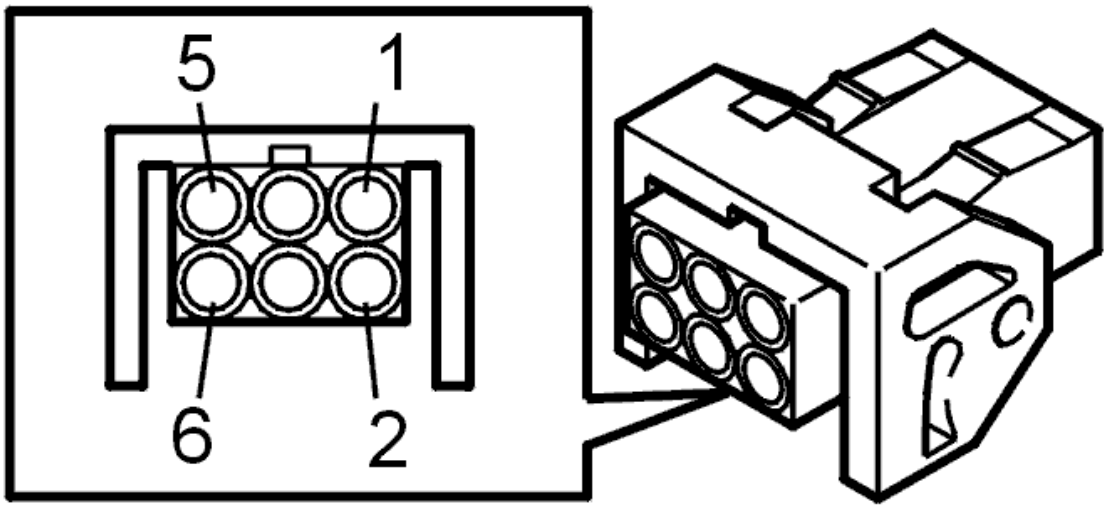

Fig. 297: Identifying Front Heated Oxygen Sensor Connector Terminals
Courtesy of VOLVO CARS CORPORATION

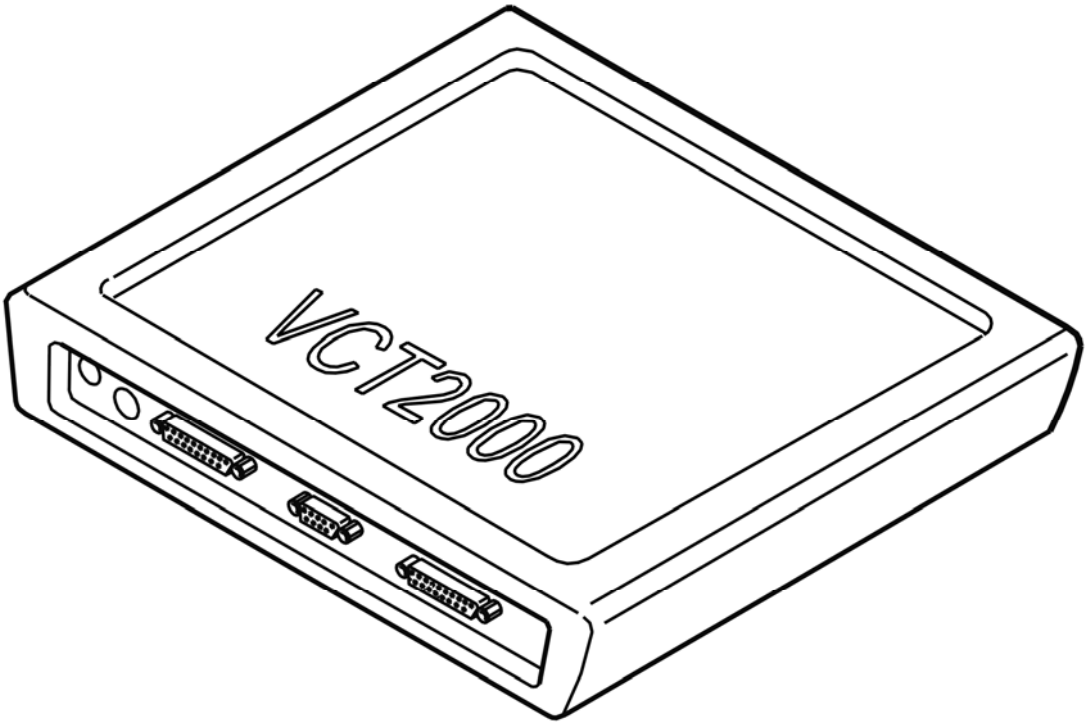

Fig. 298: Identifying VCT2000 Diagnostic Tool Symbol In VIDA
Courtesy of VOLVO CARS CORPORATION

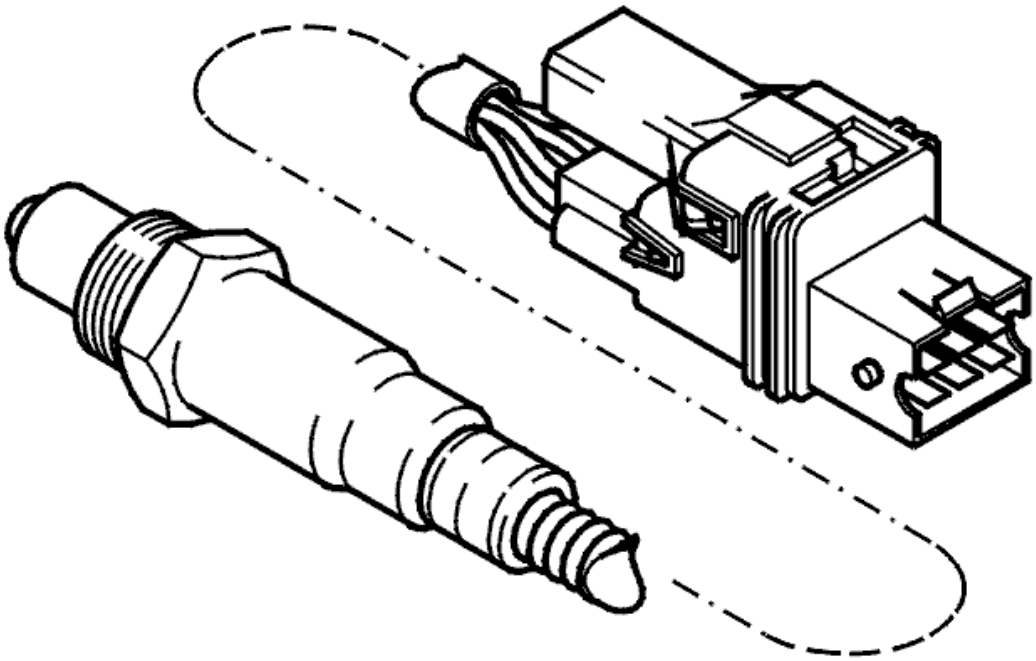

Fig. 299: Front Heated Oxygen Sensor
Courtesy of VOLVO CARS CORPORATION

- **Continue**

  Refer to **VERIFICATION**

VERIFICATION

VERIFICATION

HINT: After carrying out the repair, check that the fault has been remedied.

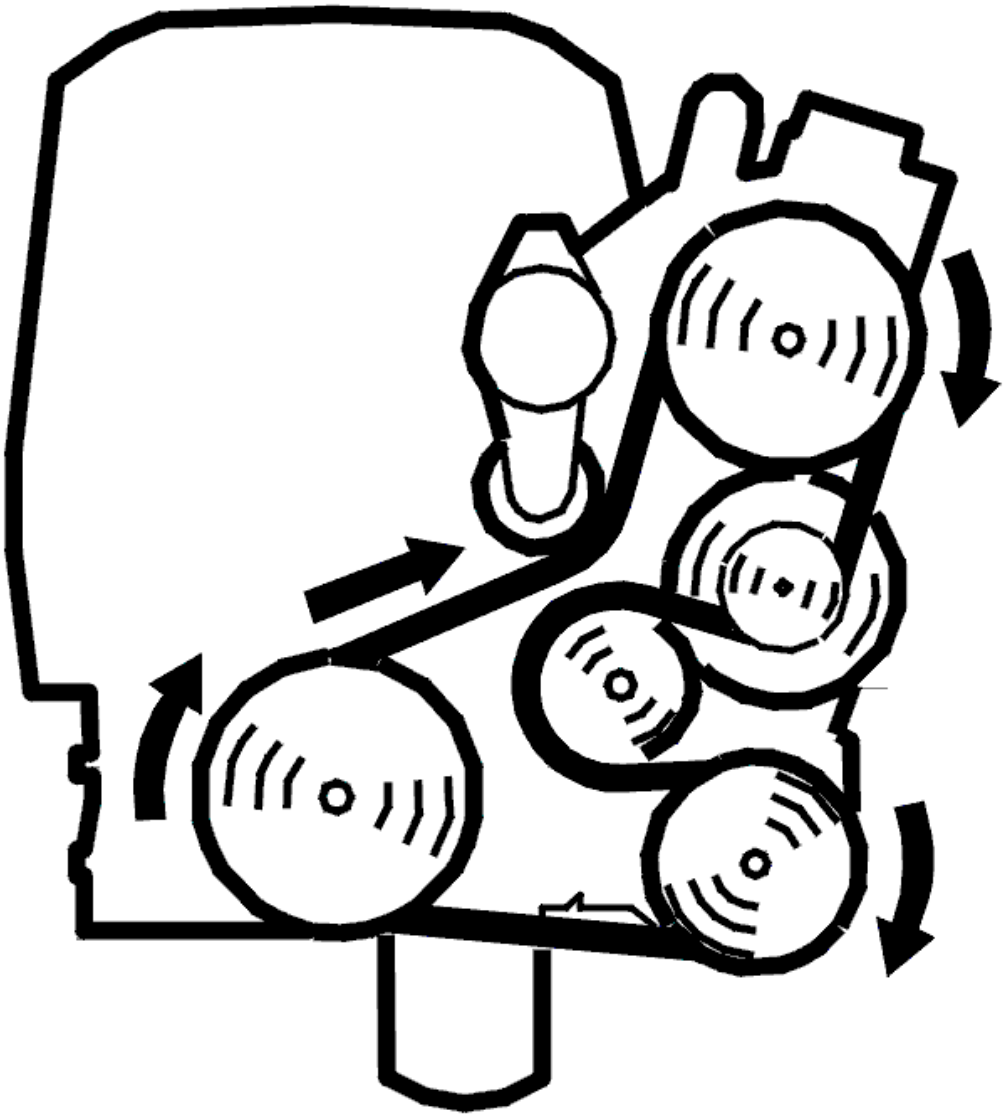

Fig. 300: Belt Routing / Engine Idling - Volvo
Courtesy of VOLVO CARS CORPORATION

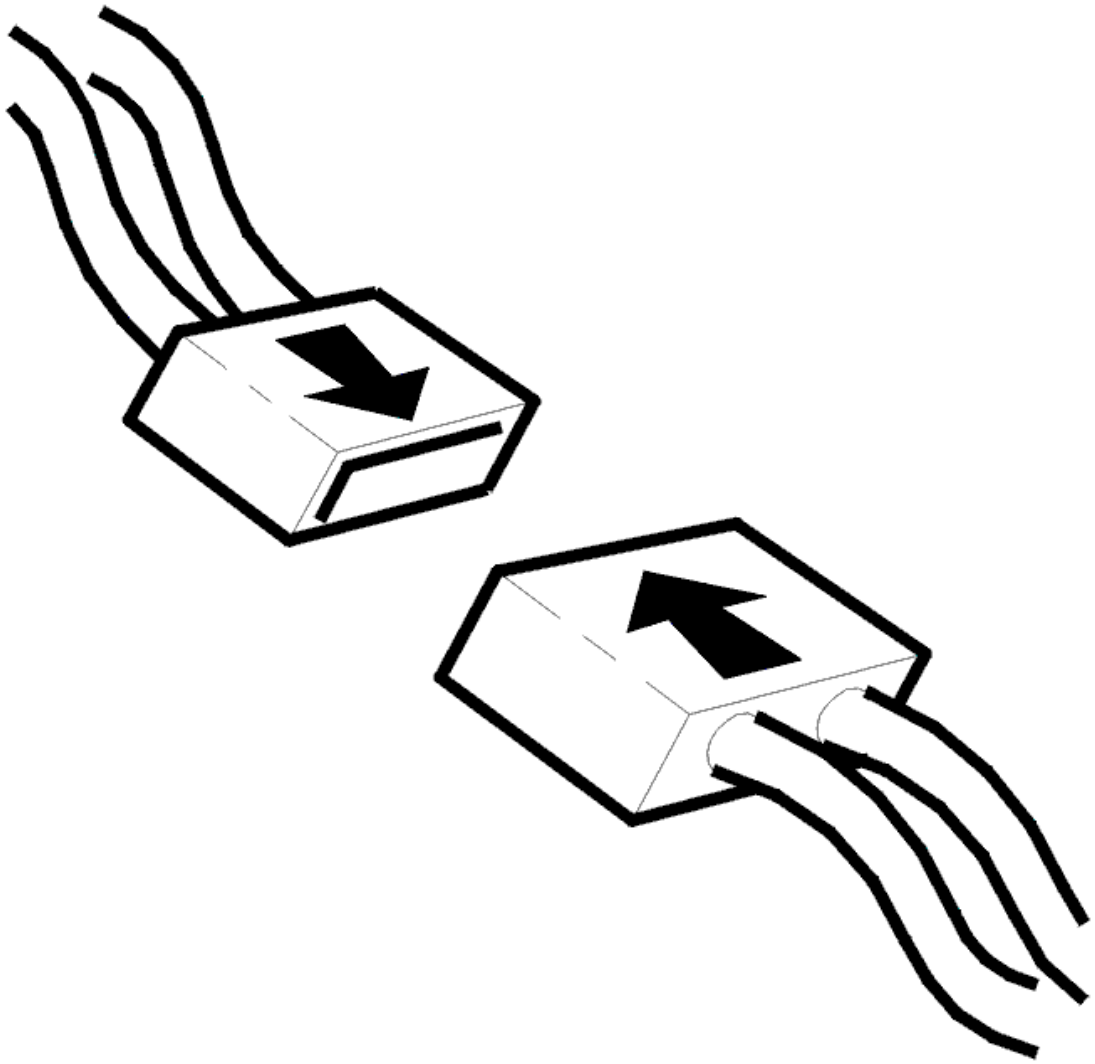

Fig. 301: Connecting Connector
Courtesy of VOLVO CARS CORPORATION

- Ignition off
- Reconnect the connectors, reinstall components etc.
- Test drive the car at an even speed (engine speed (RPM) above 2000 RPM) for at least 5 minutes
- Release the accelerator pedal (AP) quickly at least three times to simulate fuel shut-off
- Connect VCT2000 (or appropriate scan tool) to the data link connector (DLC) without switching off the engine.

NOTE: **If the engine is switched off, the stored fault status will be erased and the test drive will have to be repeated.**

Read off the diagnostic status and fault status for the diagnostic trouble code (DTC) by selecting the relevant diagnostic trouble code (DTC) from the list.

Check the fault status for the diagnostic trouble code (DTC) when the diagnostic is "Complete". If the function is correct, the fault status must be "No fault found" when the diagnostic is complete.

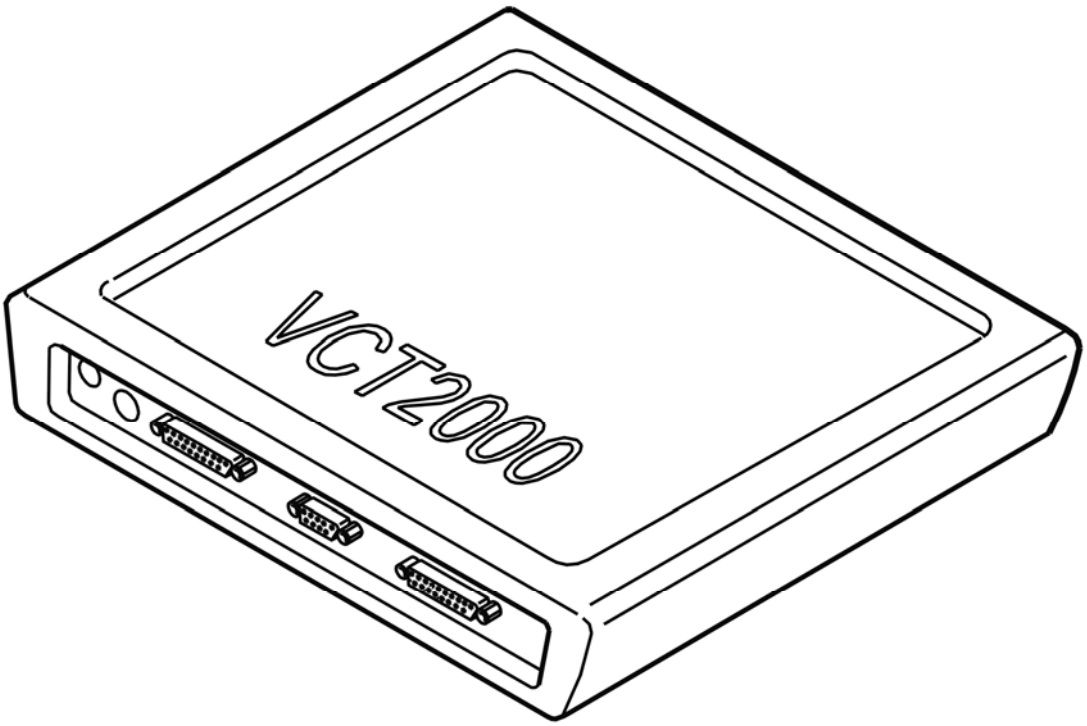

Fig. 302: Identifying VCT2000 Diagnostic Tool Symbol In VIDA
Courtesy of VOLVO CARS CORPORATION

Is the function OK?

- **YES**

  VERIFIED: Troubleshooting has been completed.

- **NO**

  Refer to **INFORMATION**

INFORMATION

FAULT-TRACING INFORMATION

The fault should have been detected and remedied. As this is not the case fault-tracing has failed.

Exit fault-tracing for this diagnostic trouble code (DTC) or make another attempt.

ECM-24AB: FRONT HEATED OXYGEN SENSOR (HO2S), BANK 1. SIGNAL MISSING (B6294T; 2005-2006)

DIAGNOSTIC TROUBLE CODE (DTC) INFORMATION ECM-24AB

see **DIAGNOSTIC TROUBLE CODE (DTC) INFORMATION ECM-24AB**

SIGNAL MISSING

see **SIGNAL MISSING**

ECM-24B0: FRONT HEATED OXYGEN SENSOR (HO2S), BANK 1. FAULTY SIGNAL (B5254T2; 2005-2007)

DIAGNOSTIC TROUBLE CODE (DTC) INFORMATION ECM-24B0

Condition

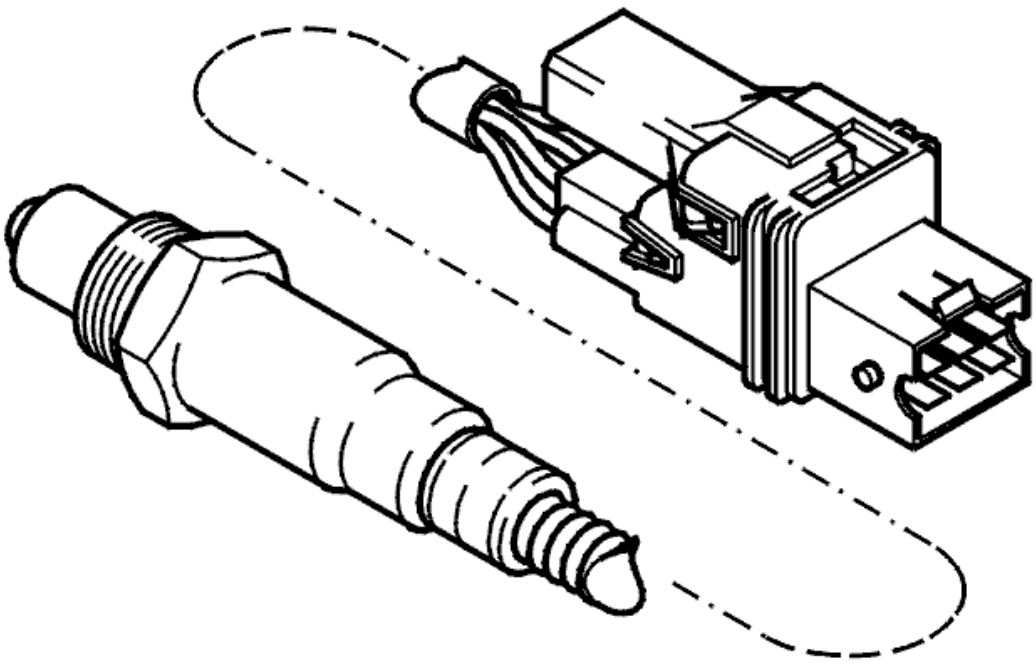

Fig. 303: Front Heated Oxygen Sensor
Courtesy of VOLVO CARS CORPORATION

The engine control module (ECM) monitors the function of the front heated oxygen sensor (HO2S) (bank 1) by checking its signal. The diagnostic trouble code (DTC) is stored if the engine control module (ECM) registers

that the signal from the heated oxygen sensor (HO2S) indicates an incorrect lean or rich fuel/air mixture compared to that anticipated by the engine control module (ECM).

NOTE: The fault may be in the front or rear heated oxygen sensor (HO2S) circuit.

Substitute Value

- Long-term fuel trim is switched off
- Three-way catalytic converter (TWC) diagnostics are disabled.

Possible Source

- Leakage in the exhaust system
- Short-circuit to supply voltage or ground in signal cable (-)
- Short-circuit to supply voltage or ground in the pump supply cable
- Short-circuit to supply voltage or ground in calibration supply cable
- Open-circuit in signal cable (+)
- Damaged heated oxygen sensor (HO2S).

Fault symptom[s]

- Malfunction indicator lamp (MIL) lit.

FAULTY SIGNAL

CHECKING COMPONENTS

Check the exhaust system for air leakage.

Check the cable for a short-circuit to supply voltage or ground.

Check between:

- The cable between engine control module (ECM) terminal #A42 (#A42) and heated oxygen sensor (HO2S) terminal #5
- The cable for pump current between engine control module (ECM) terminal #A24 (#A24) and heated oxygen sensor (HO2S) terminal #6
- The cable for calibration current between engine control module (ECM) terminal #A28 (#A28) and heated oxygen sensor (HO2S) terminal #2.

Check the cable between engine control module (ECM) terminal #A41 (#A41) and heated oxygen sensor (HO2S) terminal #1. Check for an open-circuit.

HINT: If the above fault-tracing does not remedy the fault, try replacing the heated oxygen sensors (HO2S), as the diagnostic trouble code (DTC) can also be stored by a damaged front/rear heated oxygen

sensor (HO2S).

Remedy as necessary.

Other information

- see **CHECKING FOR AIR LEAKAGE IN THE EXHAUST SYSTEM**
- For B5xx4T, see **HEATED OXYGEN SENSOR (HO2S), REPLACING**
- For B6xx4T, see **HEATED OXYGEN SENSOR (HO2S), REPLACING** .
- see **CHECKING WIRING AND TERMINALS**

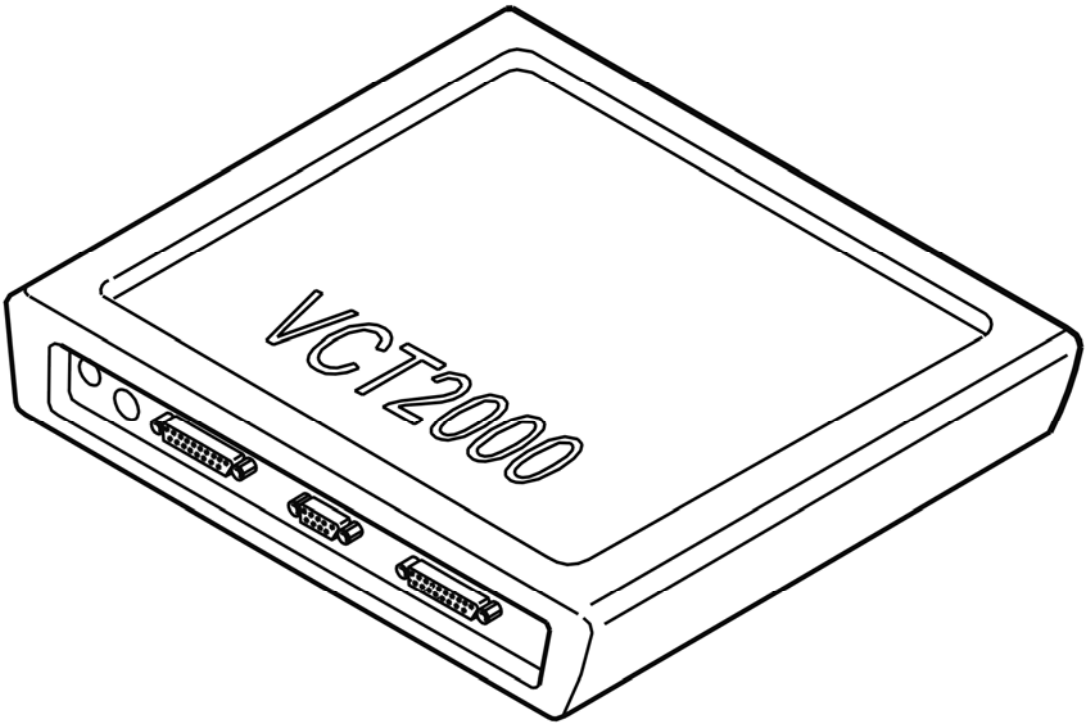

Fig. 304: Identifying VCT2000 Diagnostic Tool Symbol In VIDA
Courtesy of VOLVO CARS CORPORATION

- **Continue**

  Refer to **VERIFICATION**

VERIFICATION

VERIFICATION

HINT: After carrying out the repair, check that the fault has been remedied.

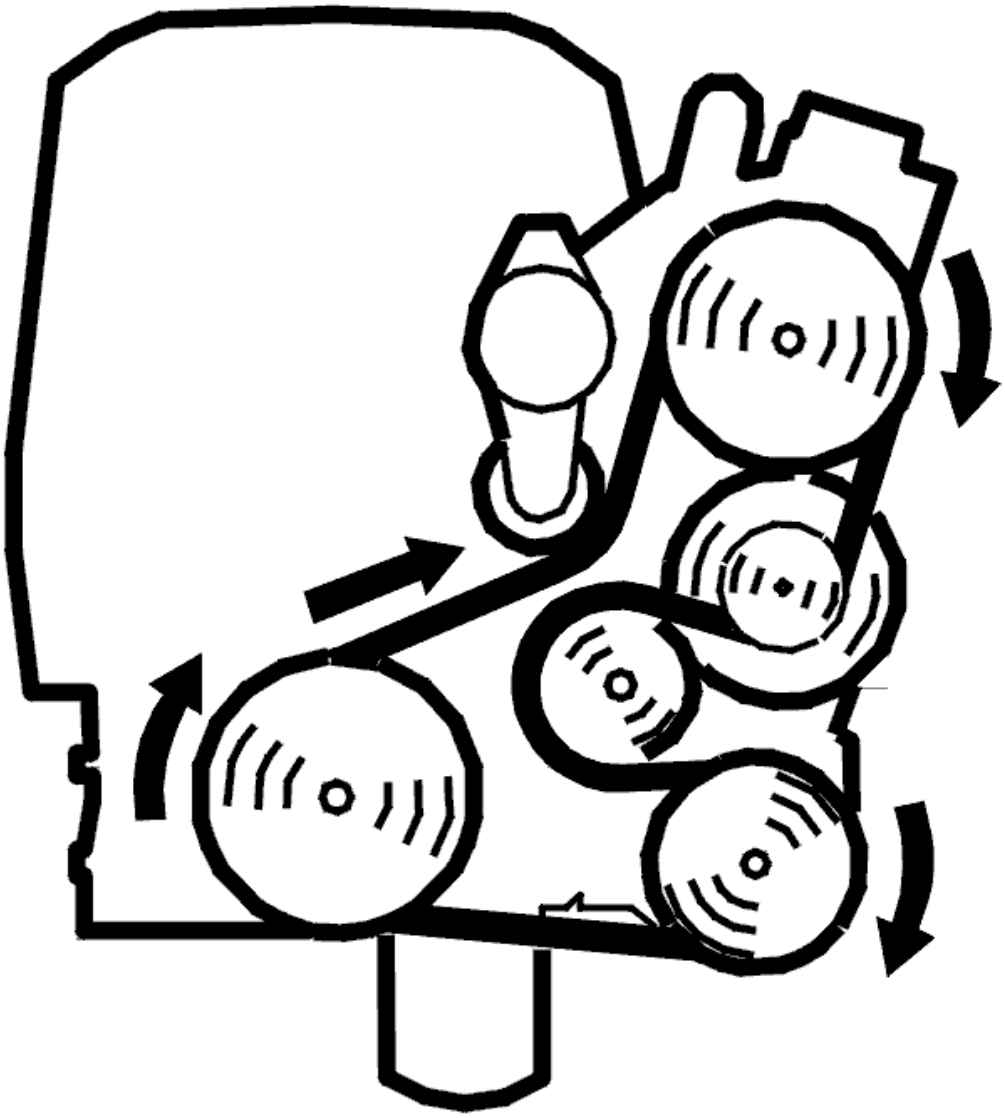

Fig. 305: Belt Routing / Engine Idling - Volvo
Courtesy of VOLVO CARS CORPORATION

- Ignition off
- Reconnect the connectors, reinstall components etc.
- Test drive the car at an even speed (engine speed (RPM) above 2000 RPM) for at least 10 minutes
- Release the accelerator pedal (AP) quickly at least three times to simulate fuel shut-off
- Connect VCT2000 (or appropriate scan tool) to the data link connector (DLC) without switching off the engine.

NOTE: **If the engine is switched off, the stored fault status will be erased and the test drive will have to be repeated.**

Read out the deviation between the front and rear heated oxygen sensor (HO2S).

Check that the value is between -0.03 and +0.03.

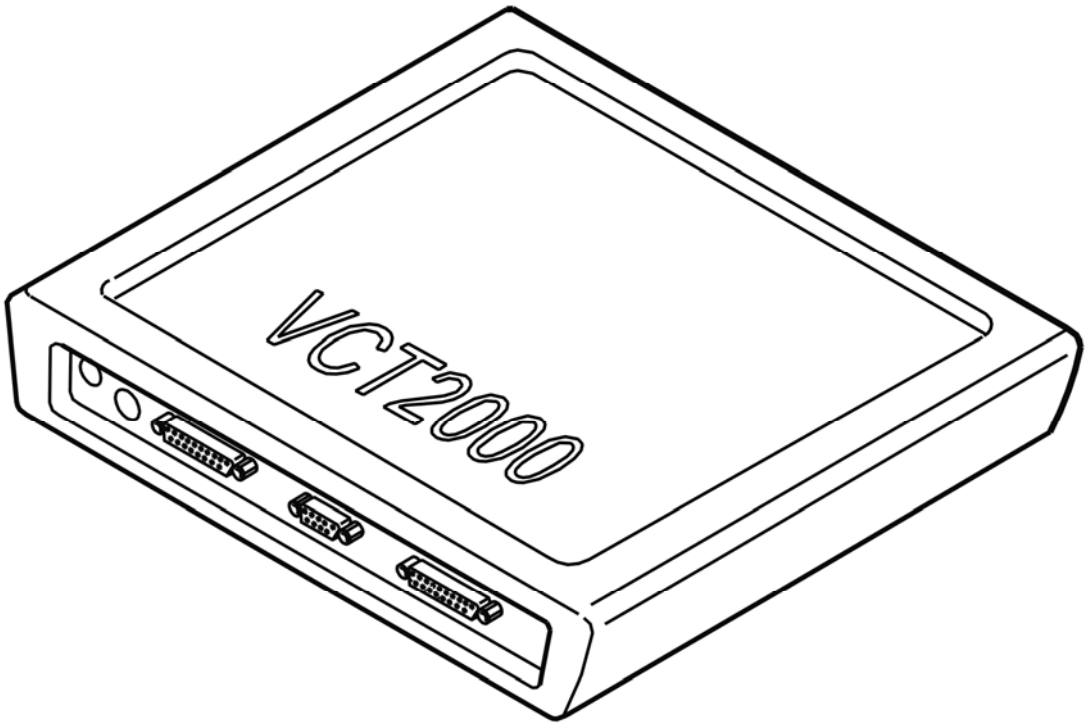

Fig. 306: Identifying VCT2000 Diagnostic Tool Symbol In VIDA
Courtesy of VOLVO CARS CORPORATION

Is the value OK?

- **YES**

  VERIFIED: Troubleshooting has been completed.

- **NO**

  Refer to **INFORMATION**

INFORMATION

FAULT-TRACING INFORMATION

The fault should have been detected and remedied. As this is not the case fault-tracing has failed.

Exit fault-tracing for this diagnostic trouble code (DTC) or make another attempt.

ECM-24B0: FRONT HEATED OXYGEN SENSOR (HO2S), BANK 1. FAULTY

SIGNAL (B6294T; 2005-2006)

DIAGNOSTIC TROUBLE CODE (DTC) INFORMATION ECM-24B0

see **DIAGNOSTIC TROUBLE CODE (DTC) INFORMATION ECM-24B0**

FAULTY SIGNAL

see **FAULTY SIGNAL**

ECM-24BB: FRONT HEATED OXYGEN SENSOR (HO2S), BANK 1. SIGNAL MISSING (B5254T2; 2005-2007)

DIAGNOSTIC TROUBLE CODE (DTC) INFORMATION ECM-24BB

Condition

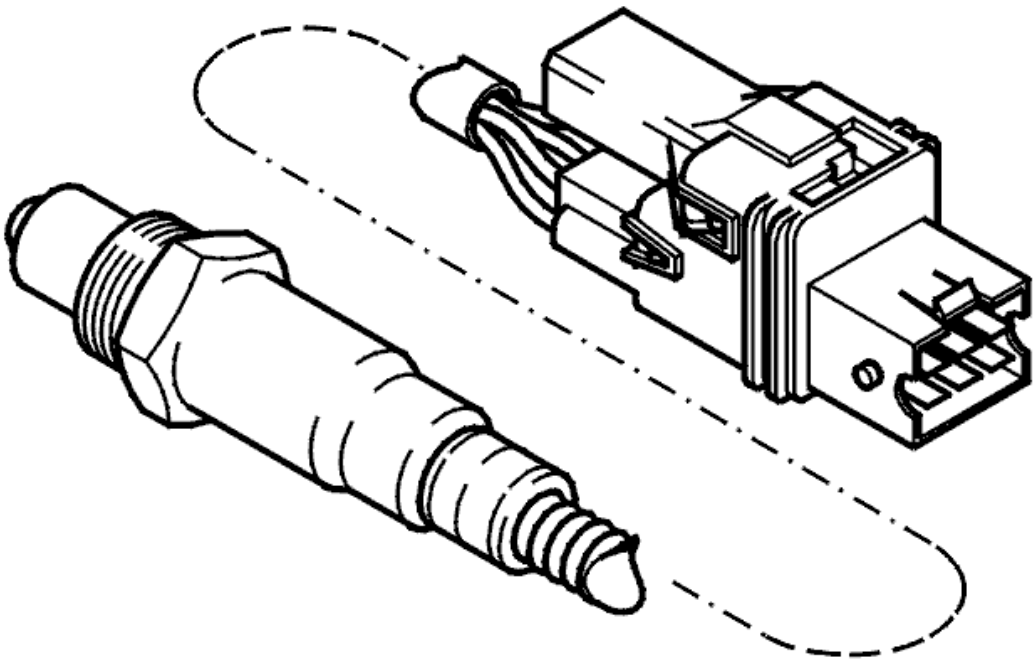

Fig. 307: Front Heated Oxygen Sensor
Courtesy of VOLVO CARS CORPORATION

The engine control module (ECM) monitors the function of the front heated oxygen sensor (HO2S) (bank 1) by checking its signal. The engine control module (ECM) compares the adaptation values of the front and rear heated oxygen sensor (HO2S). The diagnostic trouble code (DTC) is stored when the values deviate by more

than 3%.

NOTE: The fault may be in the front or rear heated oxygen sensor (HO2S) circuit.

Substitute Value

- Long-term fuel trim is switched off
- Three-way catalytic converter (TWC) diagnostics are disabled.

Possible Source

- Leakage in the exhaust system
- Heated oxygen sensor (HO2S) indicates an incorrectly rich fuel/air mixture
- Contact resistance or oxidation in the terminals
- Damaged heated oxygen sensor (HO2S).

Fault symptom[s]

- Malfunction indicator lamp (MIL) lit.

SIGNAL MISSING

CHECKING COMPONENTS

Check the connectors for the heated oxygen sensors (HO2S). Check for contact resistance. Check for oxidation.

Check the exhaust system for air leakage.

HINT: If the above fault-tracing does not remedy the fault, try replacing the heated oxygen sensors (HO2S), as the diagnostic trouble code (DTC) can also be stored by a damaged front/rear heated oxygen sensor (HO2S).

Remedy as necessary.

Other information

- see **CHECKING FOR AIR LEAKAGE IN THE EXHAUST SYSTEM**
- For B5xx4T, see **HEATED OXYGEN SENSOR (HO2S), REPLACING**
- For B6xx4T, see **HEATED OXYGEN SENSOR (HO2S), REPLACING** .
- see **CHECKING WIRING AND TERMINALS**

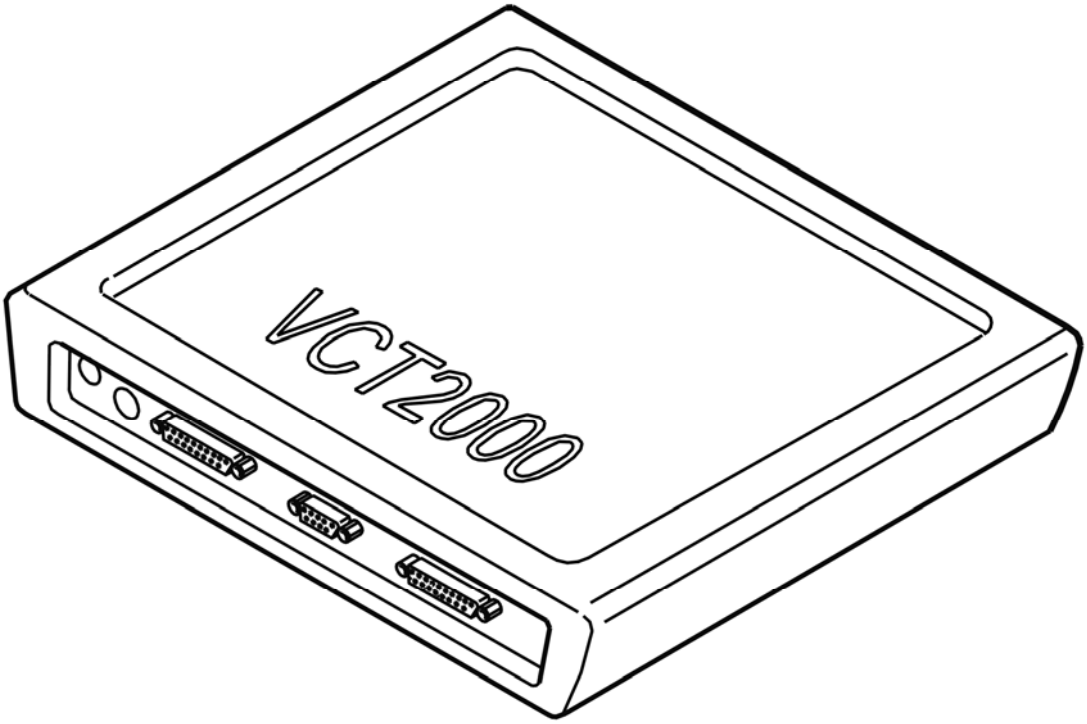

Fig. 308: Identifying VCT2000 Diagnostic Tool Symbol In VIDA
Courtesy of VOLVO CARS CORPORATION

- **Continue**

  Refer to **VERIFICATION**

VERIFICATION

VERIFICATION

HINT: After carrying out the repair, check that the fault has been remedied.

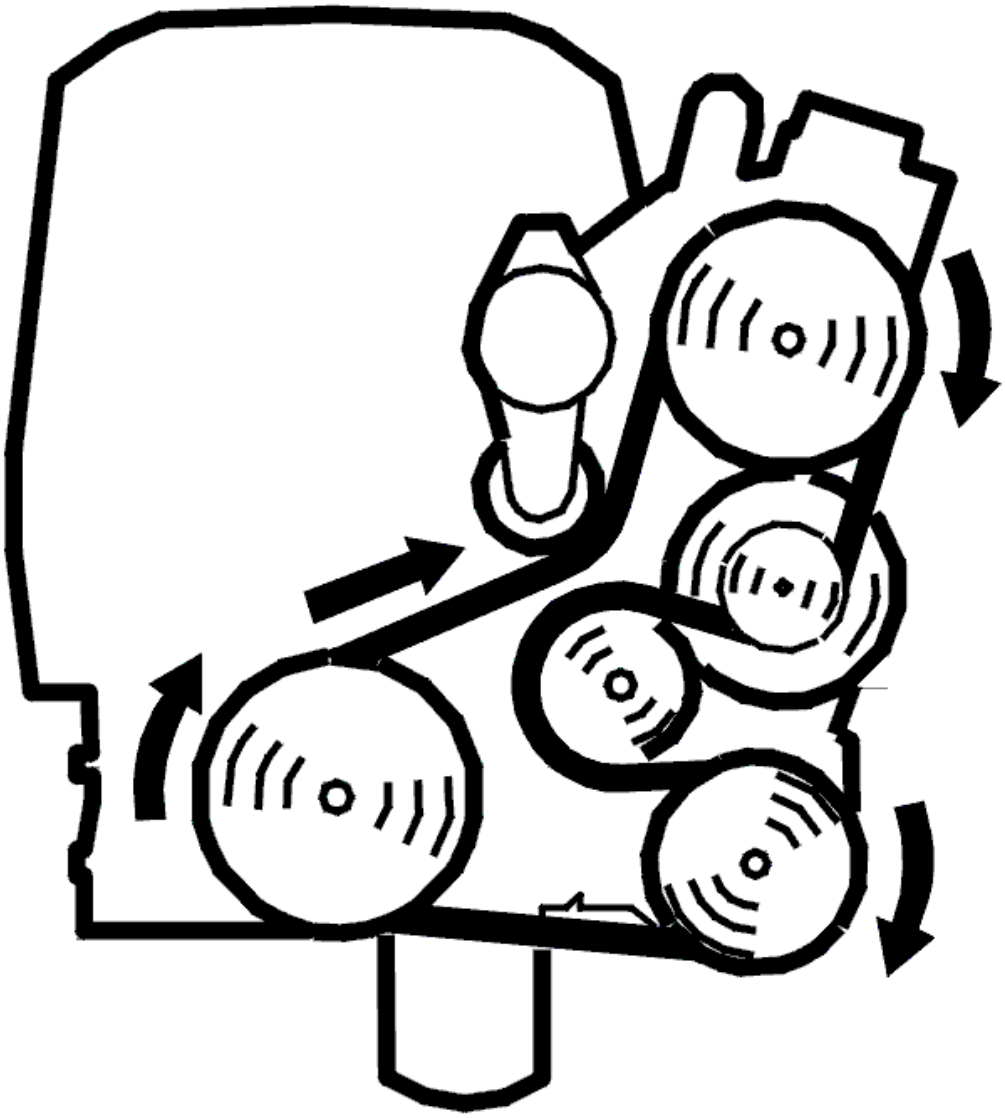

Fig. 309: Belt Routing / Engine Idling - Volvo
Courtesy of VOLVO CARS CORPORATION

- Ignition off
- Reconnect the connectors, reinstall components etc.
- Test drive the car at an even speed (engine speed (RPM) above 2000 RPM) for at least 10 minutes
- Release the accelerator pedal (AP) quickly at least three times to simulate fuel shut-off
- Connect VCT2000 (or appropriate scan tool) to the data link connector (DLC) without switching off the engine.

NOTE: **If the engine is switched off, the stored fault status will be erased and the test drive will have to be repeated.**

Read out the deviation between the front and rear heated oxygen sensor (HO2S).

Check that the value is between -0.03 and +0.03.

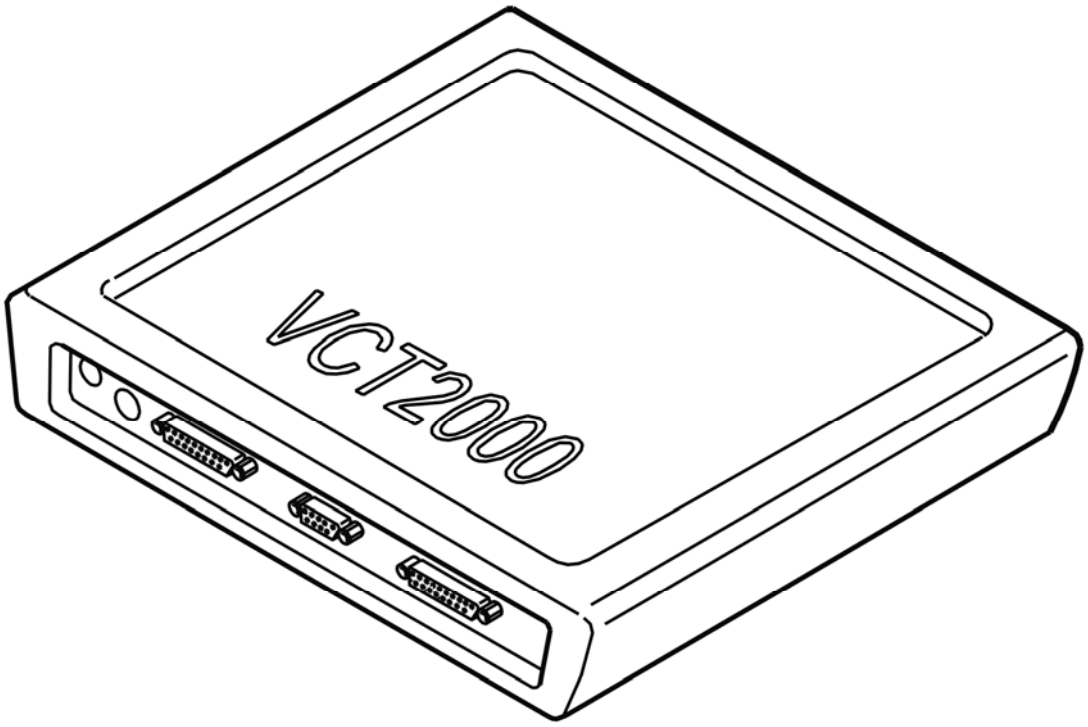

Fig. 310: Identifying VCT2000 Diagnostic Tool Symbol In VIDA
Courtesy of VOLVO CARS CORPORATION

Is the value OK?

- **YES**

  VERIFIED: Troubleshooting has been completed.

- **NO**

  Refer to **INFORMATION**

INFORMATION

FAULT-TRACING INFORMATION

The fault should have been detected and remedied. As this is not the case fault-tracing has failed.

Exit fault-tracing for this diagnostic trouble code (DTC) or make another attempt.

ECM-24BB: FRONT HEATED OXYGEN SENSOR (HO2S), BANK 1. SIGNAL

MISSING (B6294T; 2005-2006)

DIAGNOSTIC TROUBLE CODE (DTC) INFORMATION ECM-24BB

see **DIAGNOSTIC TROUBLE CODE (DTC) INFORMATION ECM-24BB**

SIGNAL MISSING

see **SIGNAL MISSING**

ECM-24BC: FRONT HEATED OXYGEN SENSOR (HO2S), BANK 1. SIGNAL TOO HIGH (B5254T2; 2005-2007)

DIAGNOSTIC TROUBLE CODE (DTC) INFORMATION ECM-24BC

Condition

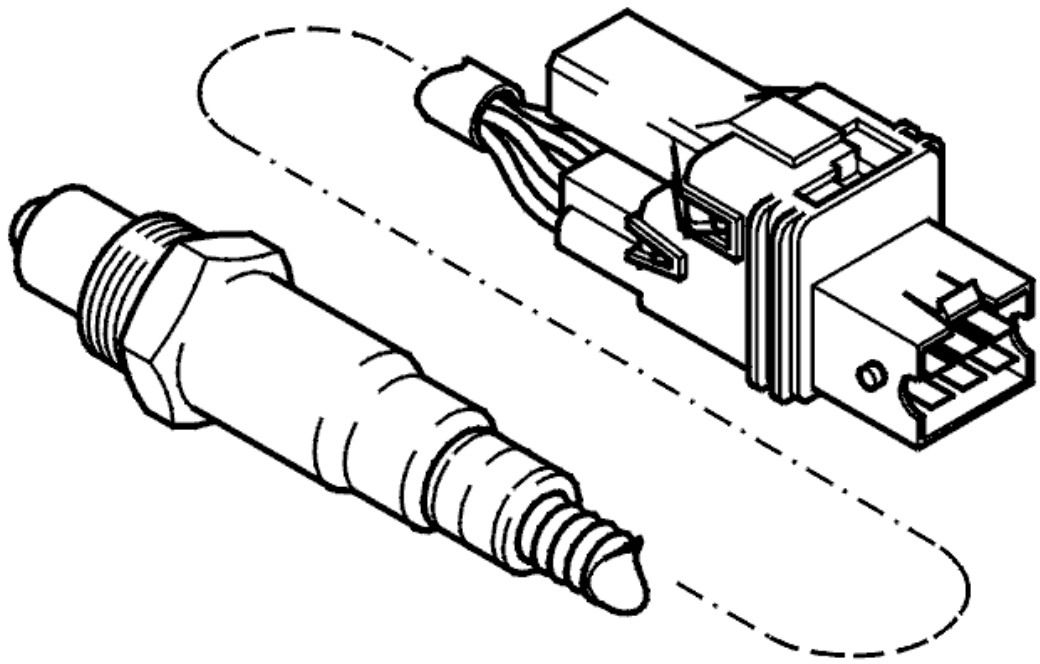

Fig. 311: Front Heated Oxygen Sensor
Courtesy of VOLVO CARS CORPORATION

The engine control module (ECM) monitors the function of the front heated oxygen sensor (HO2S) (bank 1) by checking its signal. The diagnostic trouble code (DTC) is stored if the engine control module (ECM) registers that the signal from the front heated oxygen sensor (HO2S) indicates a rich fuel/air mixture while the signal

from the rear heated oxygen sensor (HO2S) indicates a lean fuel/air mixture.

NOTE: The fault may be in the front or rear heated oxygen sensor (HO2S) circuit.

Substitute Value

- Long-term fuel trim is switched off
- Three-way catalytic converter (TWC) diagnostics are disabled.

Possible Source

- Leakage in the exhaust system
- Heated oxygen sensor (HO2S) indicates an incorrectly lean fuel/air mixture
- Damaged heated oxygen sensor (HO2S).

Fault symptom[s]

- Malfunction indicator lamp (MIL) lit.

SIGNAL TOO HIGH / SIGNAL TOO LOW

CHECKING COMPONENTS

Check the exhaust system for air leakage

HINT: If the above fault-tracing does not remedy the fault, try replacing the heated oxygen sensors (HO2S), as the diagnostic trouble code (DTC) can also be stored by a damaged front/rear heated oxygen sensor (HO2S).

Remedy as necessary.

Other information

- see **CHECKING FOR AIR LEAKAGE IN THE EXHAUST SYSTEM**
- For B5xx4T, see **HEATED OXYGEN SENSOR (HO2S), REPLACING**
- For B6xx4T, see **HEATED OXYGEN SENSOR (HO2S), REPLACING** .
- see **CHECKING WIRING AND TERMINALS**

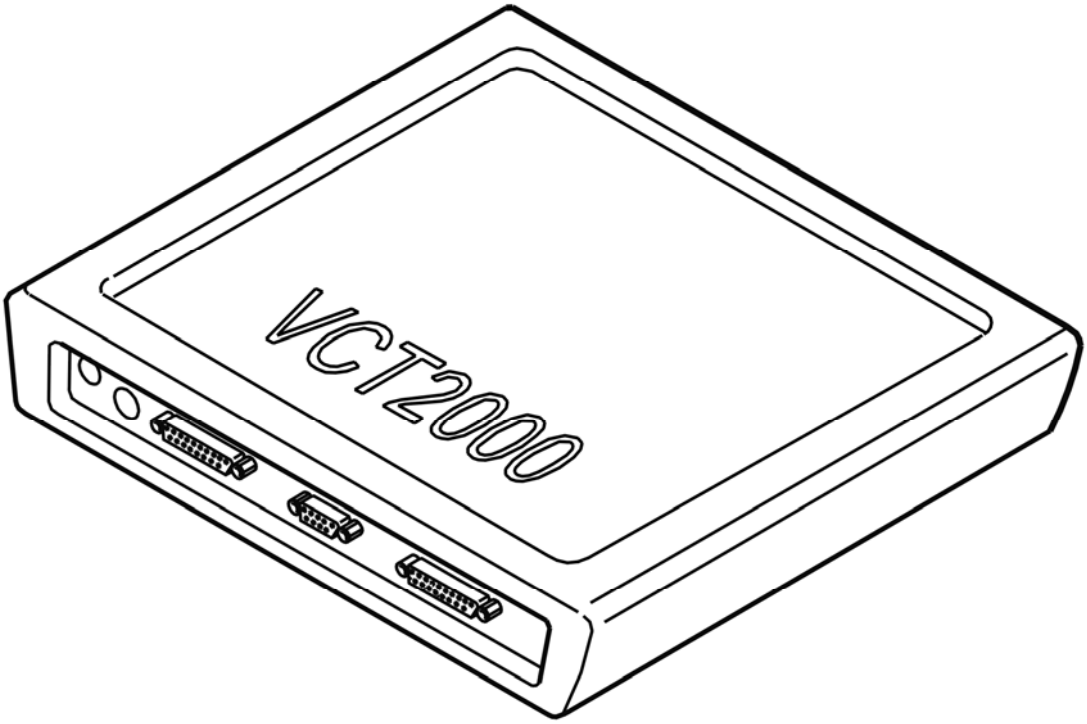

Fig. 312: Identifying VCT2000 Diagnostic Tool Symbol In VIDA
Courtesy of VOLVO CARS CORPORATION

- **Continue**

  Refer to **VERIFICATION**

VERIFICATION

VERIFICATION

HINT: After carrying out the repair, check that the fault has been remedied.

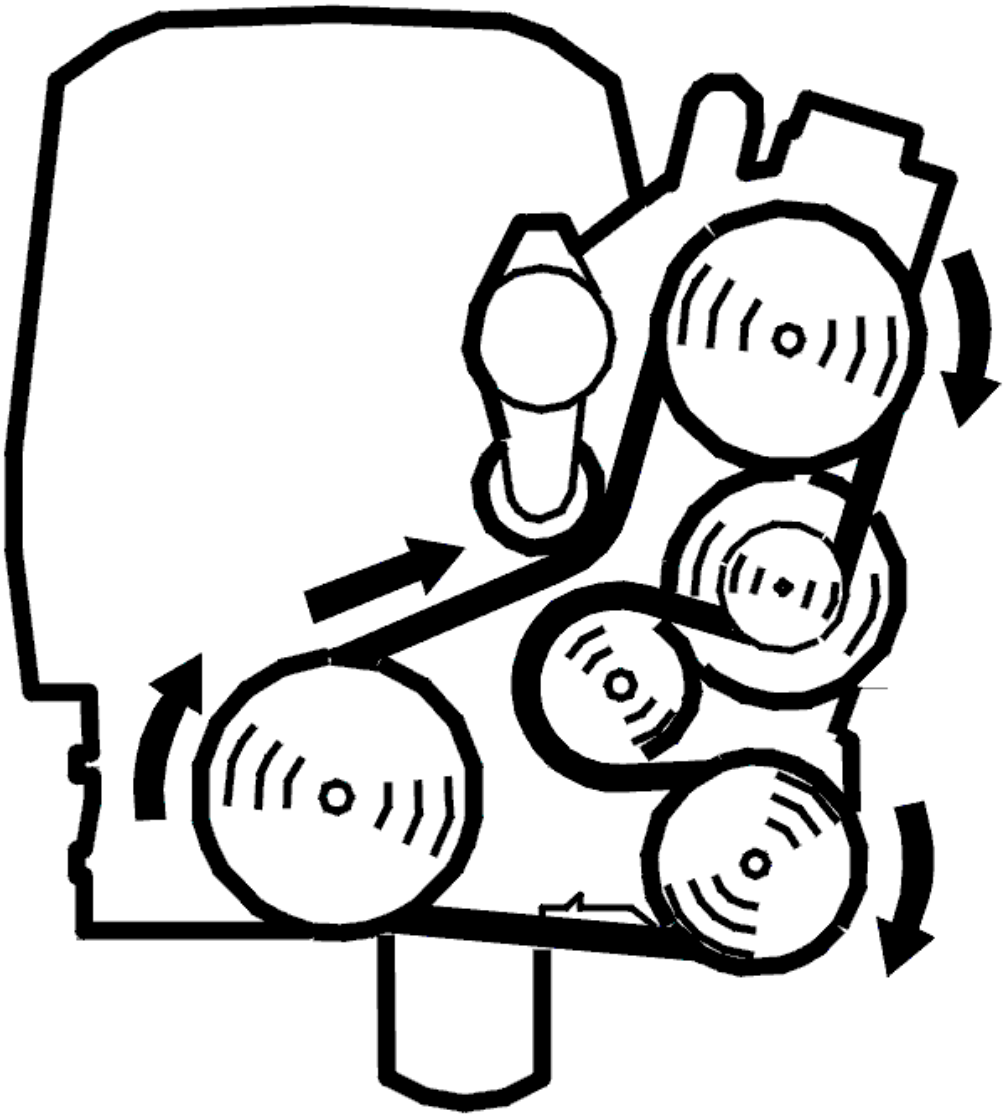

Fig. 313: Belt Routing / Engine Idling - Volvo
Courtesy of VOLVO CARS CORPORATION

- Ignition off
- Reconnect the connectors, reinstall components etc.
- Test drive the car at an even speed (engine speed (RPM) above 2000 RPM) for at least 10 minutes
- Release the accelerator pedal (AP) quickly at least three times to simulate fuel shut-off
- Connect VCT2000 (or appropriate scan tool) to the data link connector (DLC) without switching off the engine.

NOTE: **If the engine is switched off, the stored fault status will be erased and the test drive will have to be repeated.**

Read out the deviation between the front and rear heated oxygen sensor (HO2S).

Check that the value is between -0.03 and +0.03.

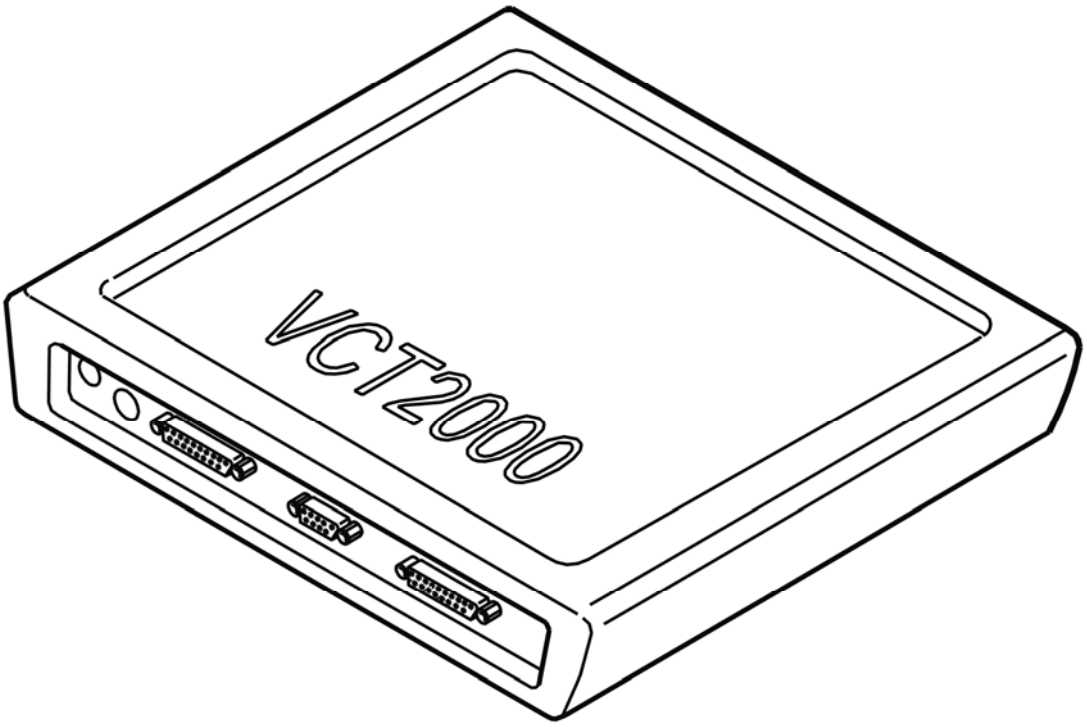

Fig. 314: Identifying VCT2000 Diagnostic Tool Symbol In VIDA
Courtesy of VOLVO CARS CORPORATION

Is the value OK?

- **YES**

  VERIFIED: Troubleshooting has been completed.

- **NO**

  Refer to **INFORMATION**

INFORMATION

FAULT-TRACING INFORMATION

The fault should have been detected and remedied. As this is not the case fault-tracing has failed.

Exit fault-tracing for this diagnostic trouble code (DTC) or make another attempt.

ECM-24BC: FRONT HEATED OXYGEN SENSOR (HO2S), BANK 1. SIGNAL

TOO HIGH (B6294T; 2005-2006)

DIAGNOSTIC TROUBLE CODE (DTC) INFORMATION ECM-24BC

see **DIAGNOSTIC TROUBLE CODE (DTC) INFORMATION ECM-24BC**

SIGNAL TOO HIGH / SIGNAL TOO LOW

see **SIGNAL TOO HIGH / SIGNAL TOO LOW**

ECM-24BD: FRONT HEATED OXYGEN SENSOR (HO2S), BANK 1. SIGNAL TOO LOW (B5254T2; 2005-2007)

DIAGNOSTIC TROUBLE CODE (DTC) INFORMATION ECM-24BD

Condition

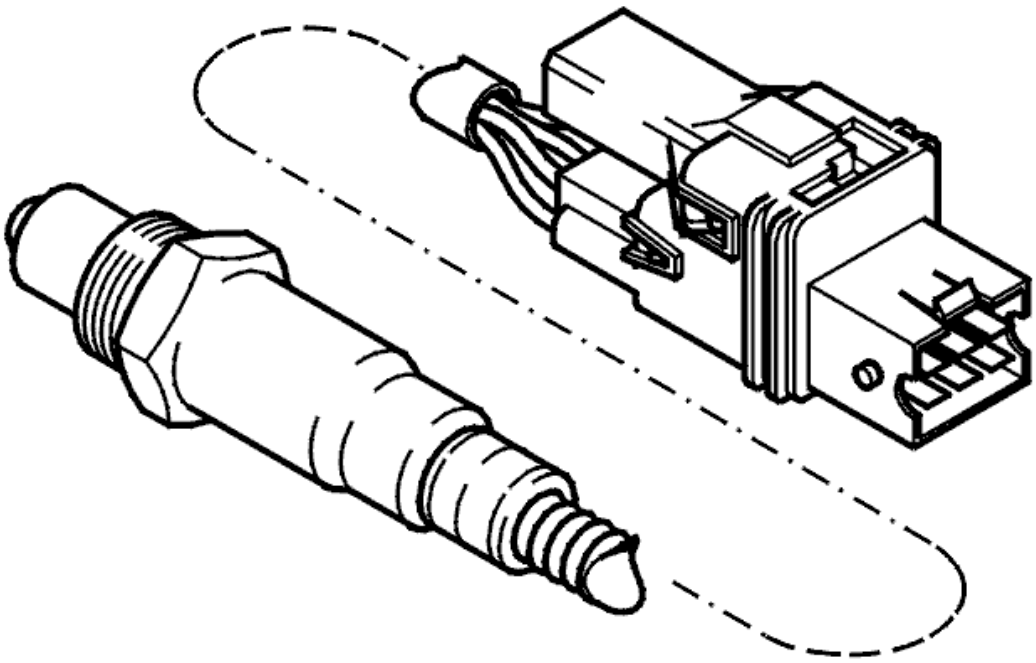

Fig. 315: Front Heated Oxygen Sensor
Courtesy of VOLVO CARS CORPORATION

The engine control module (ECM) monitors the function of the front heated oxygen sensor (HO2S) (bank 1) by checking its signal. The diagnostic trouble code (DTC) is stored if the engine control module (ECM) registers that the signal from the front heated oxygen sensor (HO2S) indicates a lean fuel/air mixture while the signal

from the rear heated oxygen sensor (HO2S) indicates a rich fuel/air mixture.

NOTE: The fault may be in the front or rear heated oxygen sensor (HO2S) circuit.

Substitute Value

- Long-term fuel trim is switched off
- Three-way catalytic converter (TWC) diagnostics are disabled.

Possible Source

- Leakage in the exhaust system
- Heated oxygen sensor (HO2S) indicates an incorrectly rich fuel/air mixture
- Damaged heated oxygen sensor (HO2S).

Fault symptom[s]

- Malfunction indicator lamp (MIL) lit.

SIGNAL TOO HIGH / SIGNAL TOO LOW

see **SIGNAL TOO HIGH / SIGNAL TOO LOW**

ECM-24BD: FRONT HEATED OXYGEN SENSOR (HO2S), BANK 1. SIGNAL TOO LOW (B6294T; 2005-2006)

DIAGNOSTIC TROUBLE CODE (DTC) INFORMATION ECM-24BD

see **DIAGNOSTIC TROUBLE CODE (DTC) INFORMATION ECM-24BD**

SIGNAL TOO HIGH / SIGNAL TOO LOW

see **SIGNAL TOO HIGH / SIGNAL TOO LOW**

ECM-24C0: FRONT HEATED OXYGEN SENSOR (HO2S), BANK 1. FAULTY SIGNAL (B5254T2; 2005-2007)

DIAGNOSTIC TROUBLE CODE (DTC) INFORMATION ECM-24C0

Condition

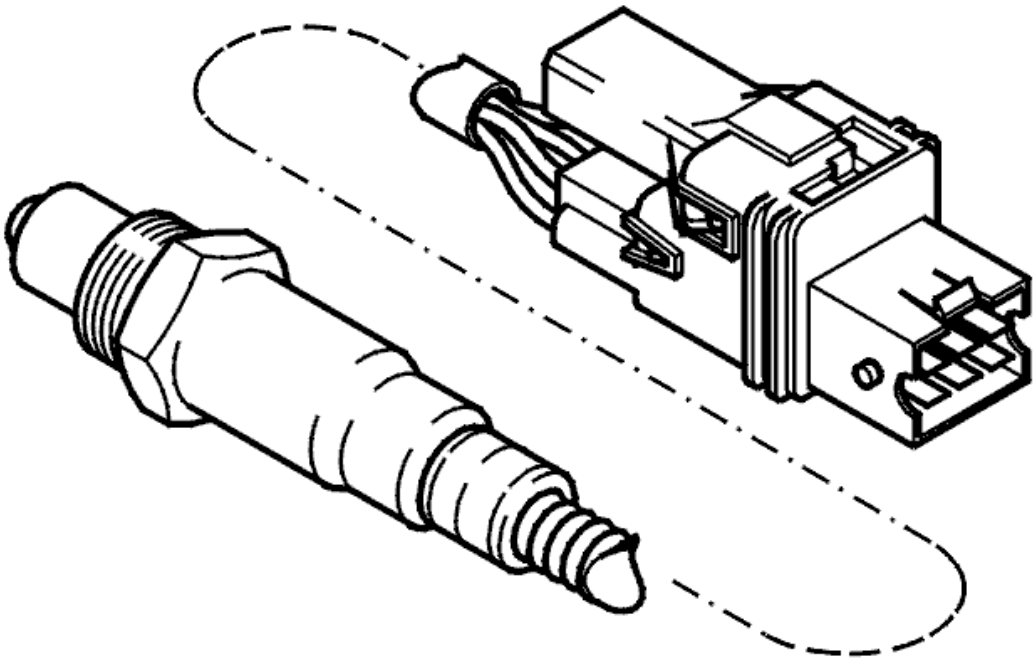

Fig. 316: Front Heated Oxygen Sensor
Courtesy of VOLVO CARS CORPORATION

The engine control module (ECM) monitors the function of the front heated oxygen sensor (HO2S) (bank 1) by checking its signal. The diagnostic trouble code (DTC) is stored if the engine control module (ECM) registers that the heated oxygen sensor (HO2S) only indicates air and no fuel/air mixture.

Substitute Value

- Long-term fuel trim is switched off
- Three-way catalytic converter (TWC) diagnostics are disabled.

Possible Source

- Incorrectly installed heated oxygen sensor (HO2S)
- Damaged front heated oxygen sensor (HO2S).

Fault symptom[s]

- Malfunction indicator lamp (MIL) lit.

FAULTY SIGNAL

CHECKING THE COMPONENTS AND WIRING

CAUTION: Do not apply rust solvent spray or grease to the heated oxygen sensor (HO2S) connector.

Check the heated oxygen sensor (HO2S) connector. Check for contact resistance. Check for an open-circuit. Check for oxidation.

Check that the heated oxygen sensor (HO2S) is correctly installed in the exhaust system.

Try a new heated oxygen sensor (HO2S) if the above fault-tracing does not remedy the fault.

Remedy as necessary.

Other information

- For 5 cylinder turbocharged engines -2004, see **SIGNAL DESCRIPTION**
- For 5 cylinder turbocharged engines 2005-, see **SIGNAL SPECIFICATION** .
- For 6 cylinder engines -2004, see **SIGNAL SPECIFICATION**
- For 6 cylinder engines 2005-, see **SIGNAL SPECIFICATION** .
- For B5xx4T, see **HEATED OXYGEN SENSOR (HO2S), REPLACING**
- For B6xx4T, see **HEATED OXYGEN SENSOR (HO2S), REPLACING** .
- see **CHECKING WIRING AND TERMINALS**

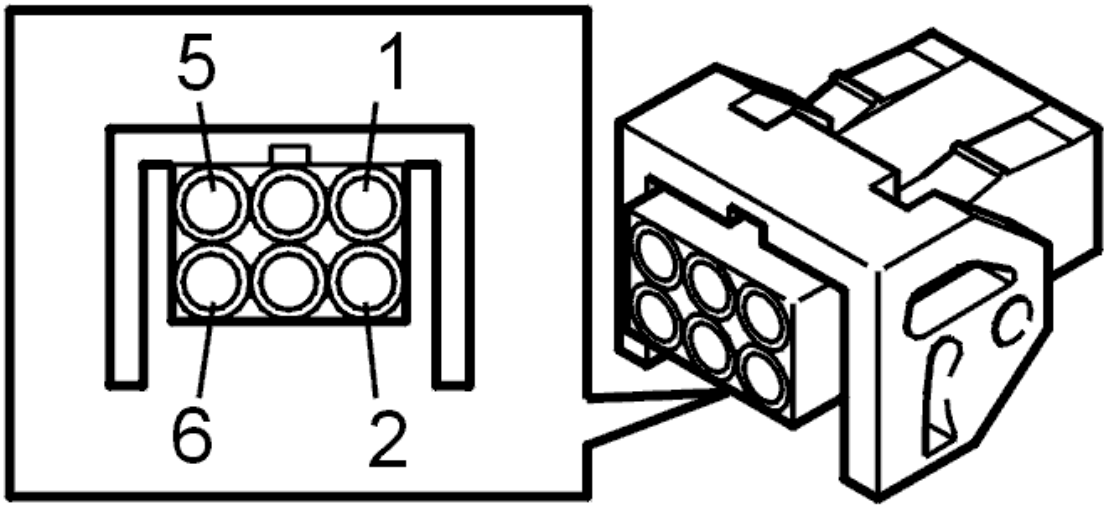

Fig. 317: Identifying Front Heated Oxygen Sensor Connector Terminals
Courtesy of VOLVO CARS CORPORATION

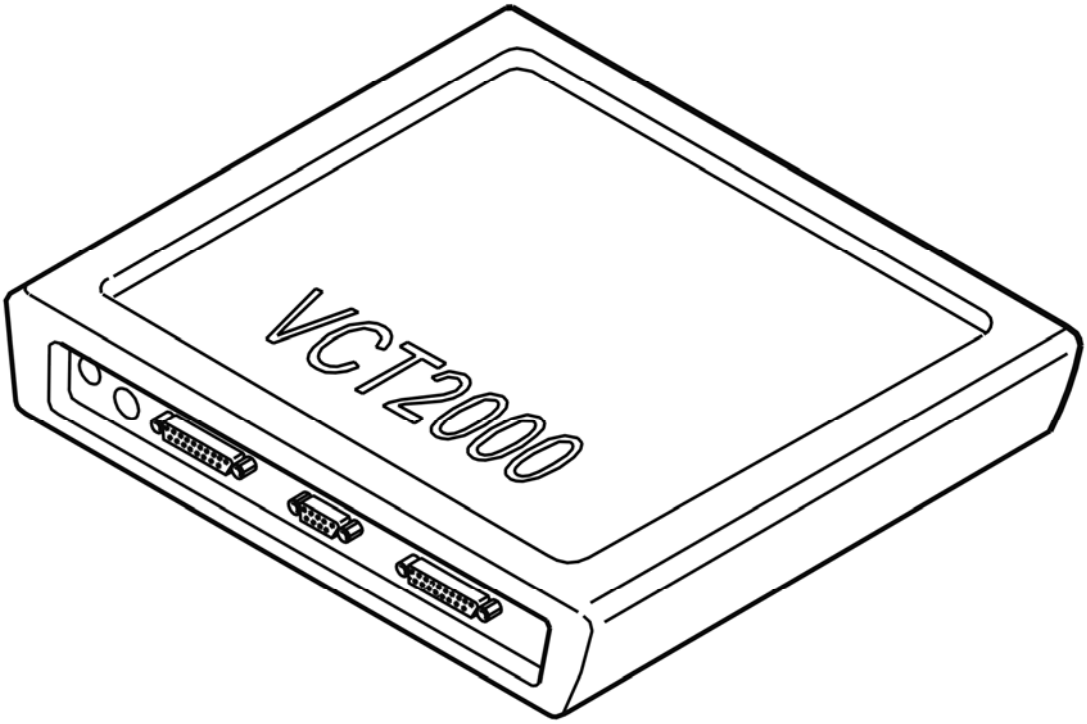

Fig. 318: Identifying VCT2000 Diagnostic Tool Symbol In VIDA
Courtesy of VOLVO CARS CORPORATION

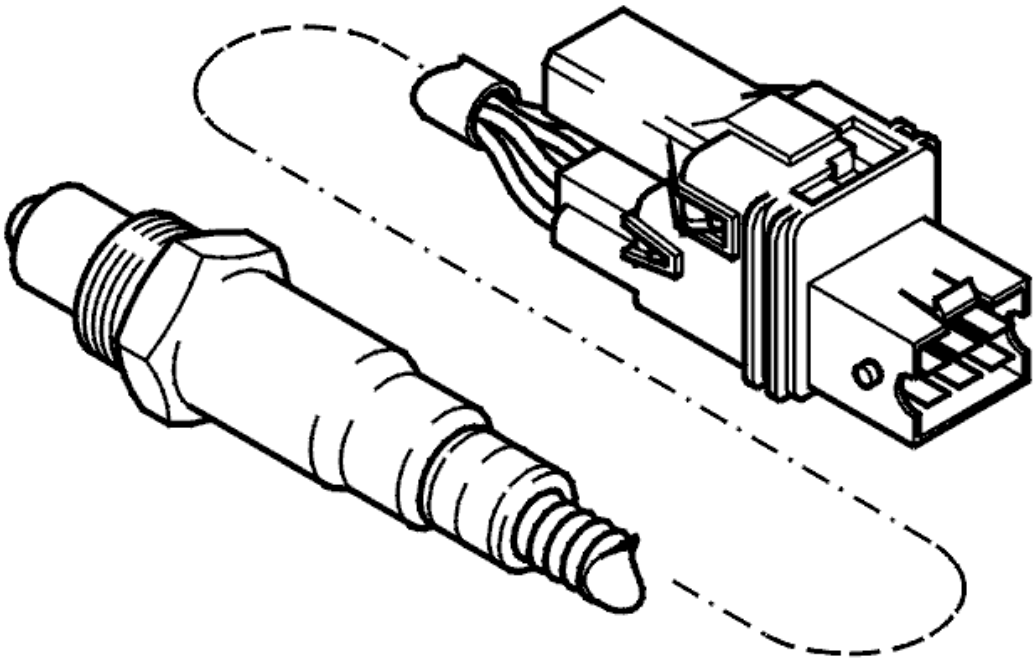

Fig. 319: Front Heated Oxygen Sensor
Courtesy of VOLVO CARS CORPORATION

- **Continue**

  Refer to **VERIFICATION**

VERIFICATION

VERIFICATION

HINT: After carrying out the repair, check that the fault has been remedied.

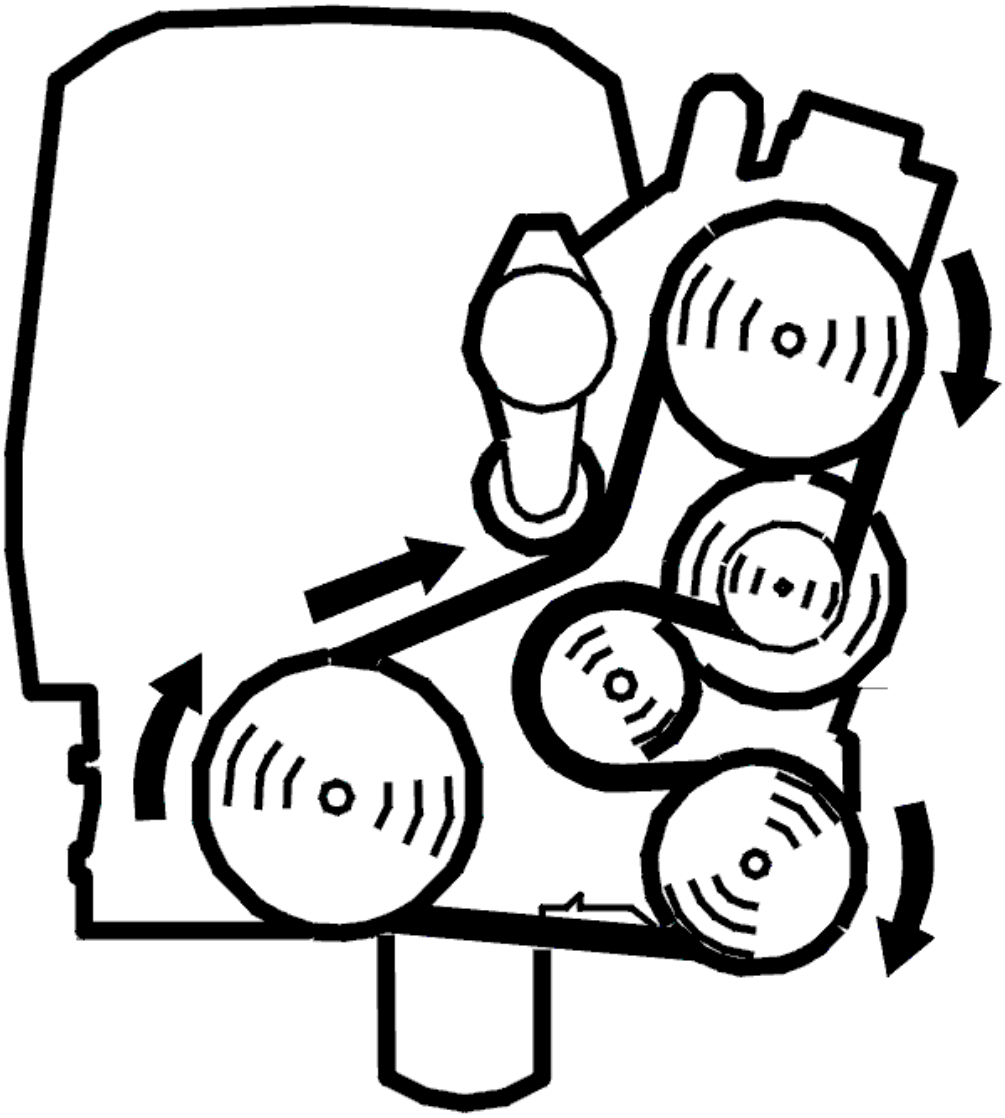

Fig. 320: Belt Routing / Engine Idling - Volvo
Courtesy of VOLVO CARS CORPORATION

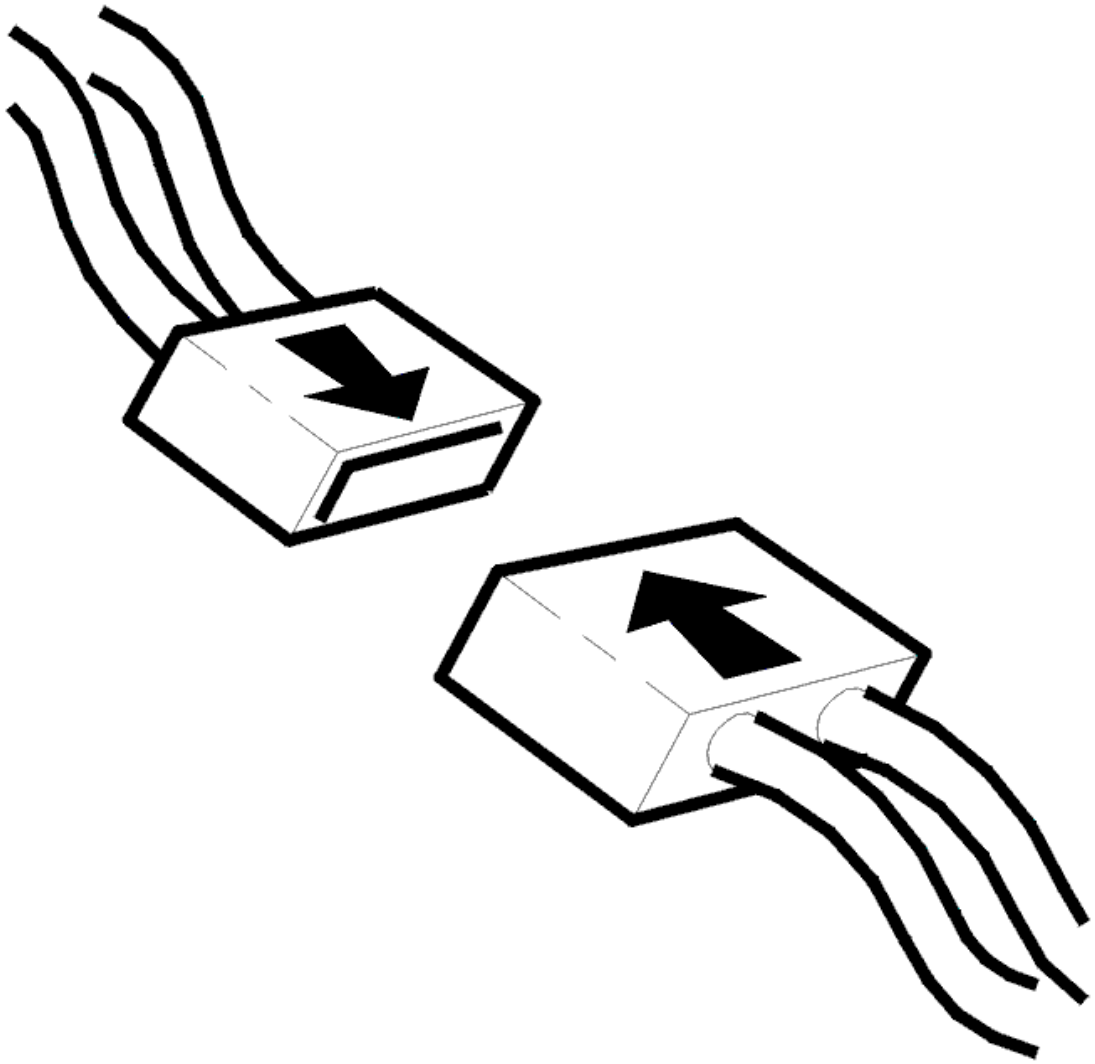

Fig. 321: Connecting Connector
Courtesy of VOLVO CARS CORPORATION

- Ignition off
- Reconnect the connectors, reinstall components etc.
- Test drive the car at an even speed (engine speed (RPM) above 2000 RPM) for at least 5 minutes
- Release the accelerator pedal (AP) quickly at least three times to simulate fuel shut-off
- Connect VCT2000 (or appropriate scan tool) to the data link connector (DLC) without switching off the engine.

NOTE: **If the engine is switched off, the stored fault status will be erased and the test drive will have to be repeated.**

Read off the diagnostic status and fault status for the diagnostic trouble code (DTC) by selecting the relevant diagnostic trouble code (DTC) from the list.

Check the fault status for the diagnostic trouble code (DTC) when the diagnostic is "Complete". If the function is correct, the fault status must be "No fault found" when the diagnostic is complete.

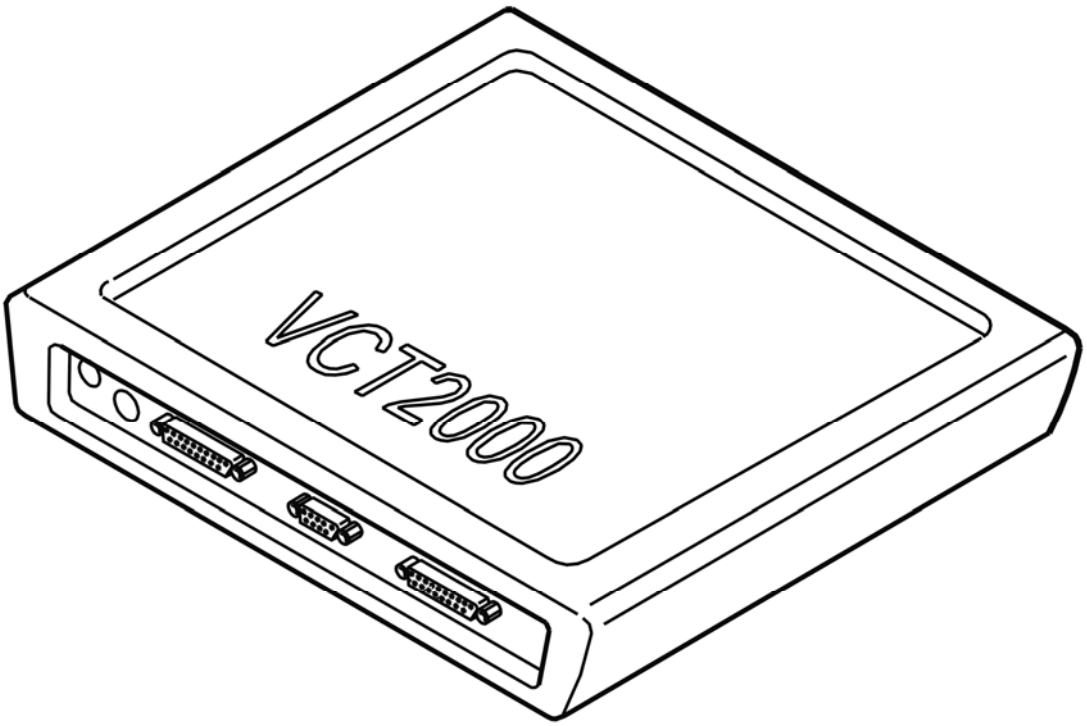

Fig. 322: Identifying VCT2000 Diagnostic Tool Symbol In VIDA
Courtesy of VOLVO CARS CORPORATION

Is the function OK?

- **YES**

  VERIFIED: Troubleshooting has been completed.

- **NO**

  Refer to **INFORMATION**

INFORMATION

FAULT-TRACING INFORMATION

The fault should have been detected and remedied. As this is not the case fault-tracing has failed.

Exit fault-tracing for this diagnostic trouble code (DTC) or make another attempt.

ECM-24C0: FRONT HEATED OXYGEN SENSOR (HO2S), BANK 1. FAULTY SIGNAL (B6294T; 2005-2006)

DIAGNOSTIC TROUBLE CODE (DTC) INFORMATION ECM-24C0

see **DIAGNOSTIC TROUBLE CODE (DTC) INFORMATION ECM-24C0**

FAULTY SIGNAL

see **FAULTY SIGNAL**

ECM-2500: FRONT HEATED OXYGEN SENSOR (HO2S), BANK 2, HEATING. FAULTY SIGNAL (B6294T; 2005-2006)

DIAGNOSTIC TROUBLE CODE (DTC) INFORMATION ECM-2500

Condition

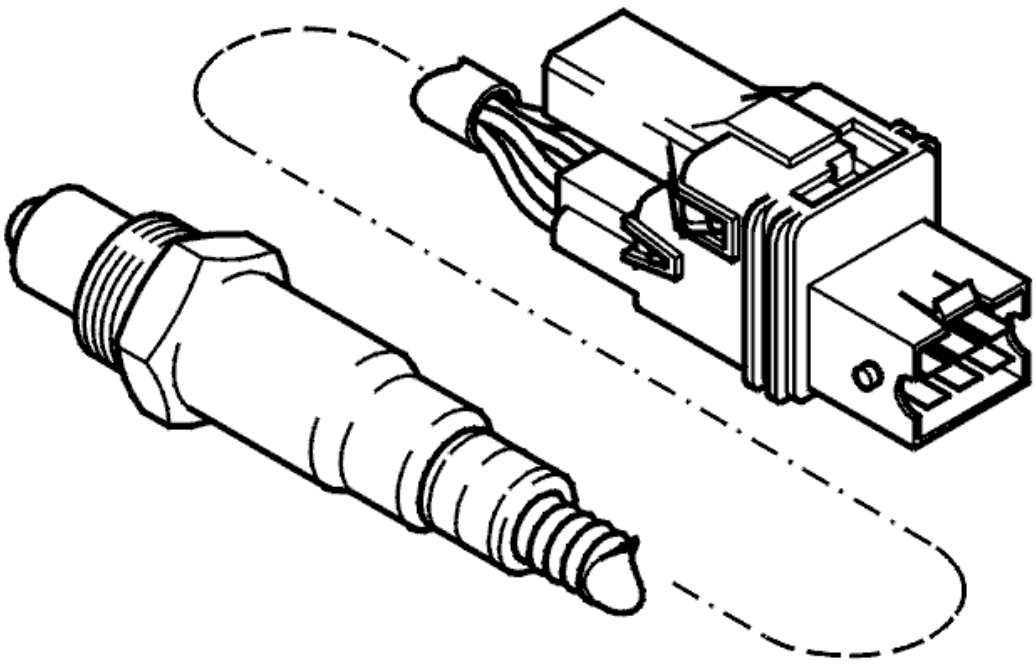

Fig. 323: Front Heated Oxygen Sensor
Courtesy of VOLVO CARS CORPORATION

The diagnostic trouble code (DTC) is stored if the engine control module (ECM) registers that the front heated oxygen sensor (HO2S) (bank 2) has not reached normal operating temperature.

Substitute Value

- None.

Possible Source

- Contact resistance and oxidation in the terminals
- Damaged front heated oxygen sensor (HO2S).

Fault symptom[s]

- Malfunction indicator lamp (MIL) lit.

FAULTY SIGNAL

CHECKING THE CONNECTOR

Check the connector for the rear heated oxygen sensor (HO2S) (bank 2). Check for contact resistance and oxidation. Remedy if necessary.

Try a new heated oxygen sensor (HO2S) if the above fault-tracing does not remedy the fault.

Other information

- For B5xx4T, see **HEATED OXYGEN SENSOR (HO2S), REPLACING**
- For B6xx4T, see **HEATED OXYGEN SENSOR (HO2S), REPLACING** .
- see **CHECKING WIRING AND TERMINALS**

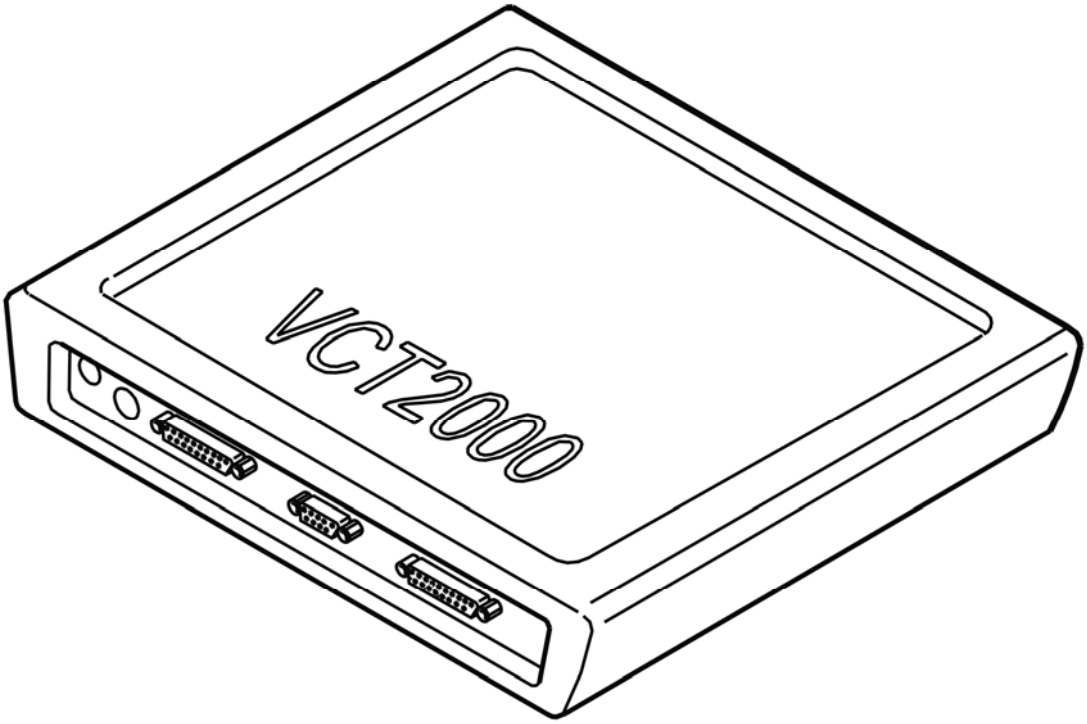

Fig. 324: Identifying VCT2000 Diagnostic Tool Symbol In VIDA
Courtesy of VOLVO CARS CORPORATION

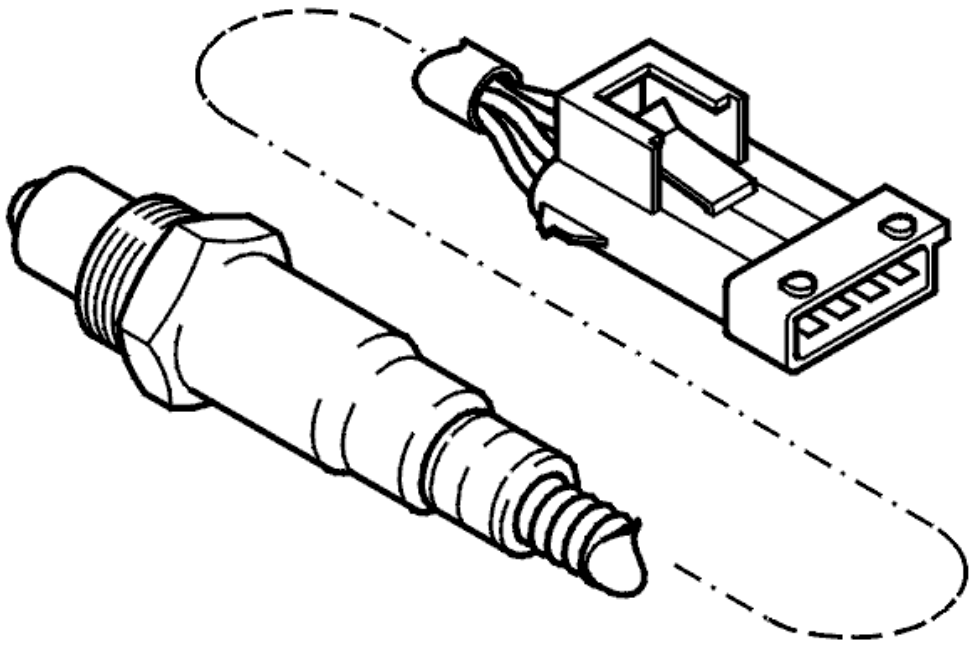

Fig. 325: Identifying Rear Heated Oxygen Sensor
Courtesy of VOLVO CARS CORPORATION

- **Continue**

  Refer to **VERIFICATION**

VERIFICATION

VERIFICATION

HINT: After carrying out the repair, check that the fault has been remedied.

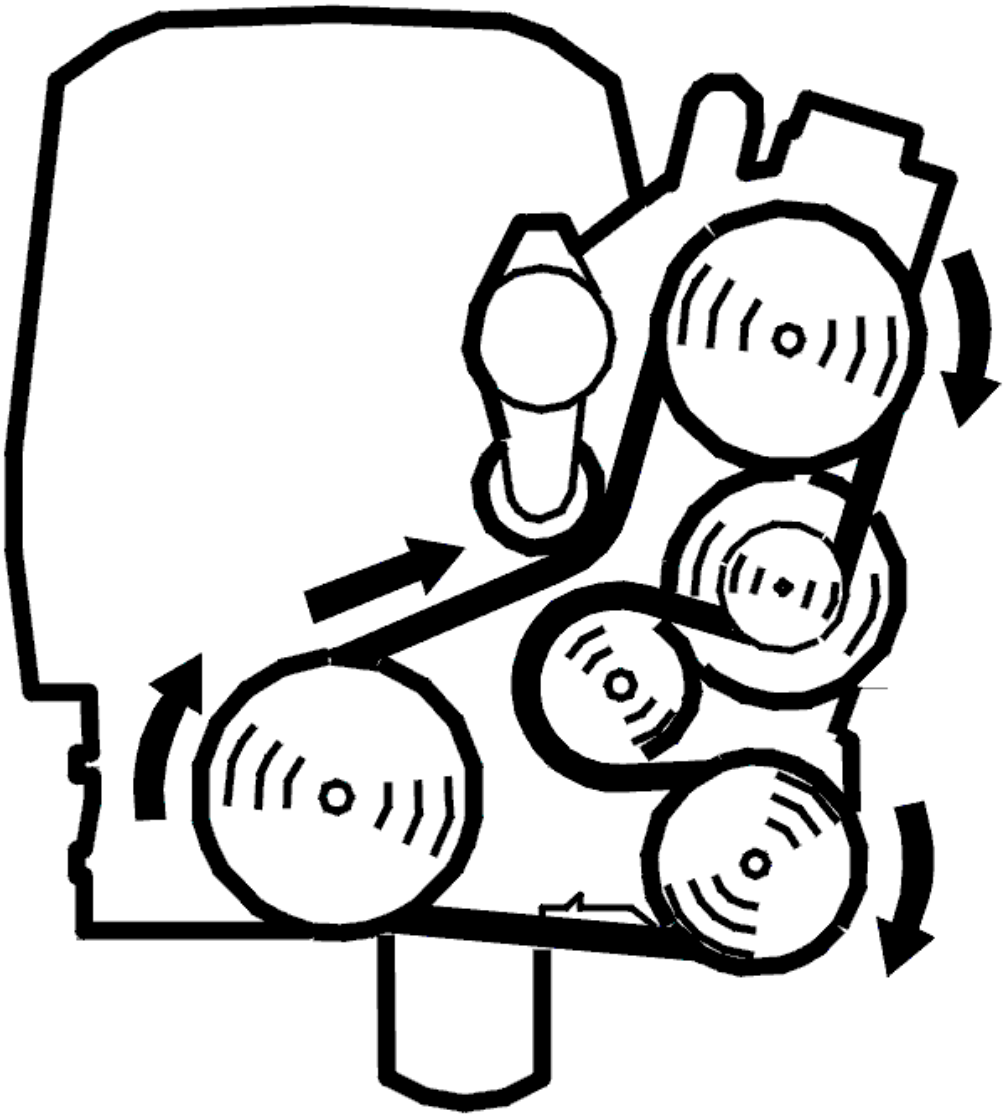

Fig. 326: Belt Routing / Engine Idling - Volvo
Courtesy of VOLVO CARS CORPORATION

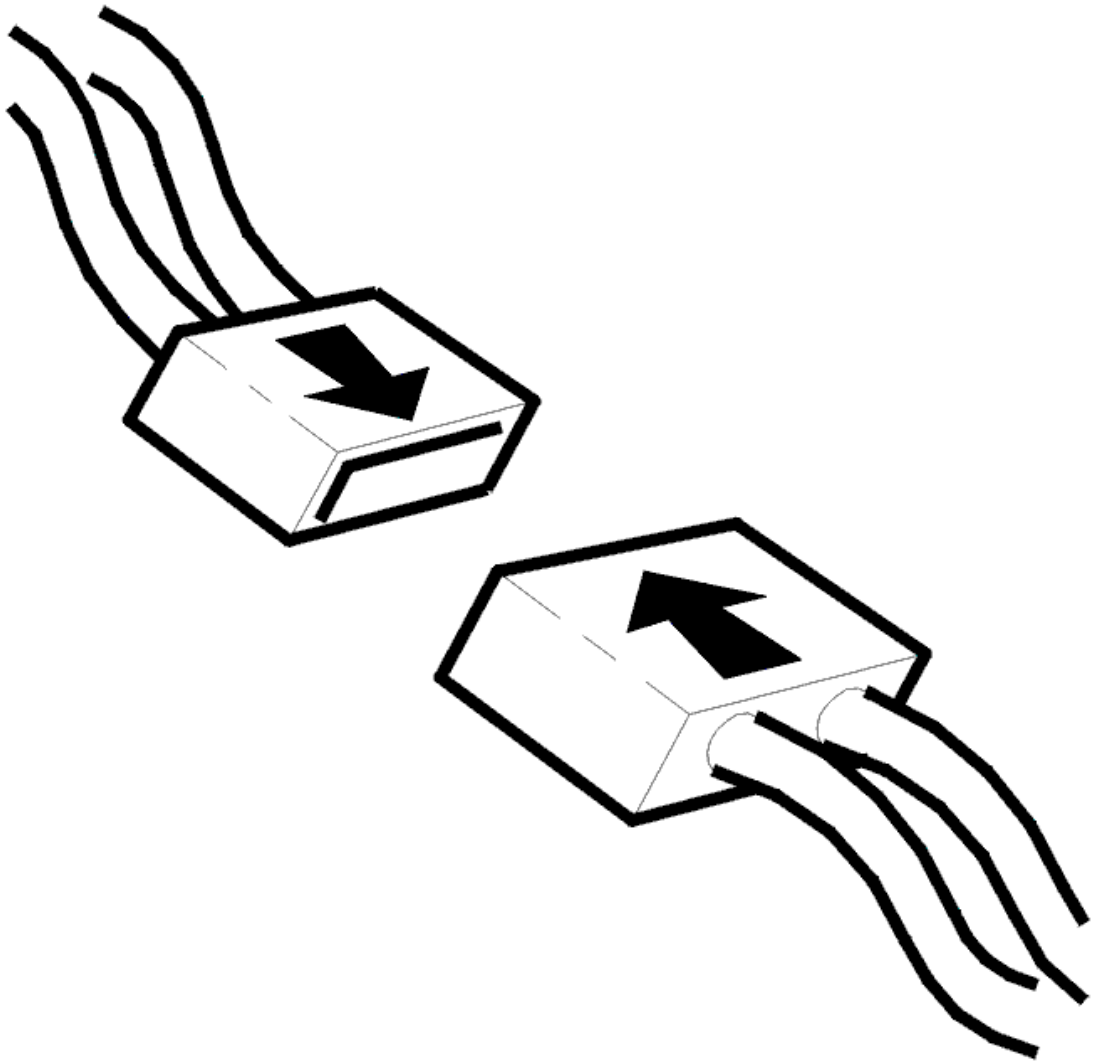

Fig. 327: Connecting Connector
Courtesy of VOLVO CARS CORPORATION

- Ignition off
- Reconnect the connectors, reinstall components etc.
- Start the engine. Allow the engine to idle for at least 1 minute
- Test drive the car at an even speed (approximately 80 km/h for at least 5 minutes)
- Connect VCT2000 (or appropriate scan tool) to the data link connector (DLC) without switching off the engine.

NOTE: **If the engine is switched off, the stored fault status will be erased and the test drive will have to be repeated.**

Read off the diagnostic status and fault status for the diagnostic trouble code (DTC) by selecting the relevant diagnostic trouble code (DTC) from the list.

Check the fault status for the diagnostic trouble code (DTC) when the diagnostic is "Complete". If the function is correct, the fault status must be "No fault found" when the diagnostic is complete.

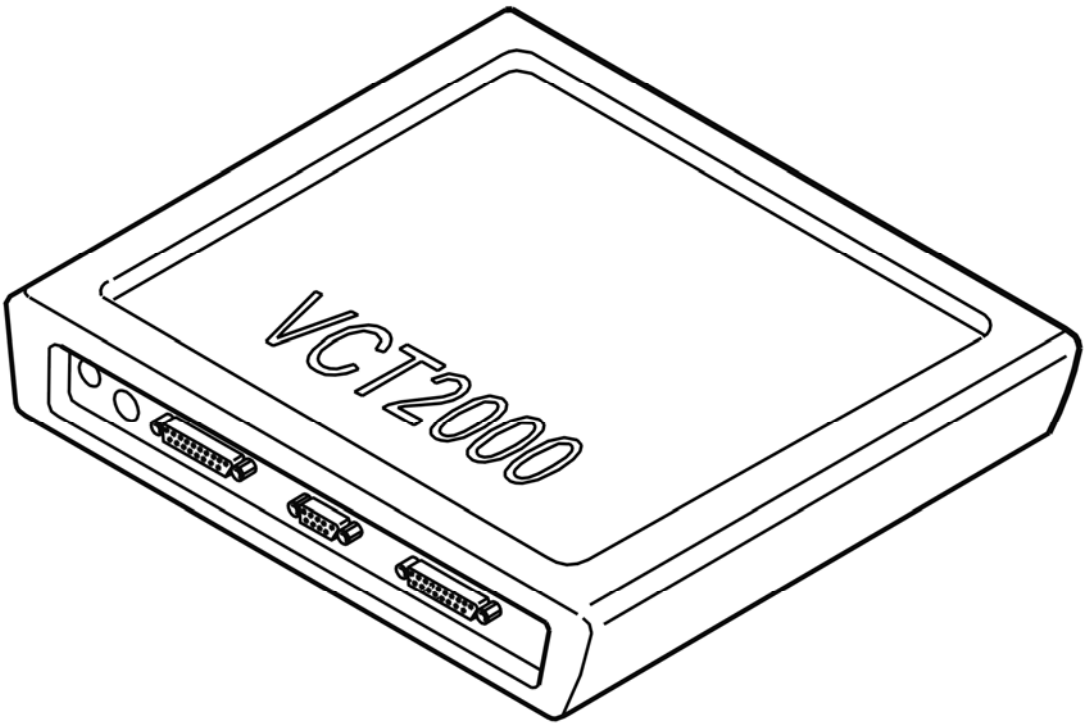

Fig. 328: Identifying VCT2000 Diagnostic Tool Symbol In VIDA
Courtesy of VOLVO CARS CORPORATION

Is the function OK?

- **YES**

  VERIFIED: Troubleshooting has been completed.

- **NO**

  Refer to **INFORMATION**

INFORMATION

FAULT-TRACING INFORMATION

The fault should have been detected and remedied. As this is not the case fault-tracing has failed.

Exit fault-tracing for this diagnostic trouble code (DTC) or make another attempt.

ECM-250B: FRONT HEATED OXYGEN SENSOR (HO2S), BANK 2, HEATING. SIGNAL MISSING (B6294T; 2005-2006)

DIAGNOSTIC TROUBLE CODE (DTC) INFORMATION ECM-250B

Condition

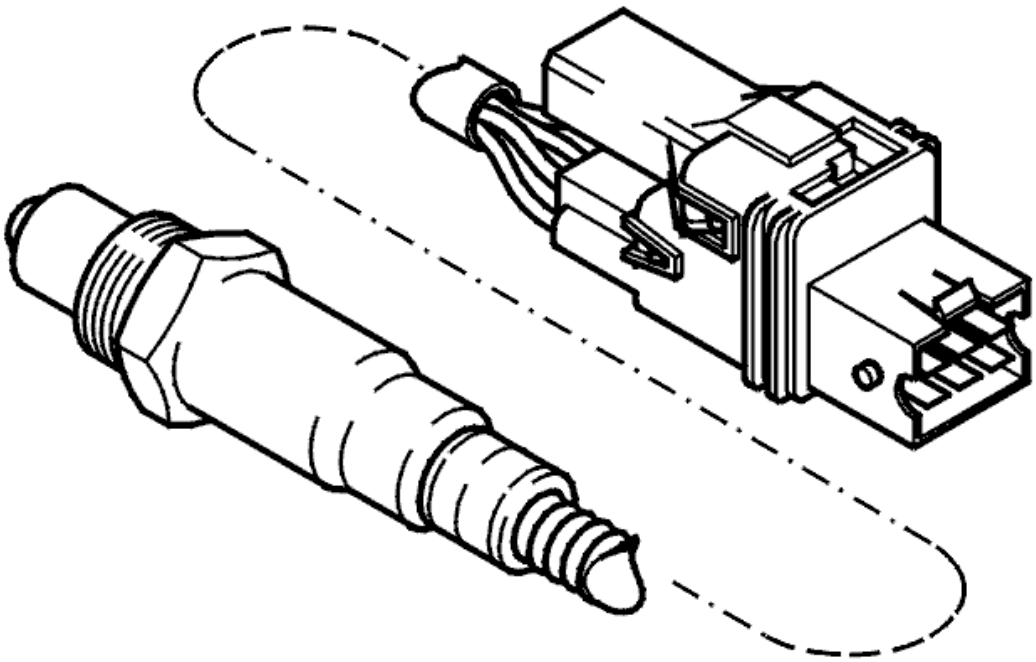

Fig. 329: Front Heated Oxygen Sensor
Courtesy of VOLVO CARS CORPORATION

The diagnostic trouble code (DTC) is stored if the engine control module (ECM) registers that there has been no control of the heater element for the front heated oxygen sensor (HO2S) (bank 2) for a certain amount of time.

Substitute Value

- None.

Possible Source

- Contact resistance and oxidation in the terminals
- Damaged front heated oxygen sensor (HO2S).

Fault symptom[s]

- Malfunction indicator lamp (MIL) lit.

SIGNAL TOO HIGH/SIGNAL TOO LOW/SIGNAL MISSING

CHECKING THE COMPONENTS AND WIRING

CAUTION: Do not apply rust solvent spray or grease to the heated oxygen sensor (HO2S) connector.

Check the heated oxygen sensor (HO2S) pre-heating circuit. Measure the resistance between terminals #3 and #4 in the probe connector.

NOTE: If possible, measure from the rear of the affected connectors in order to minimize any damage and future loose connections.

Try a new heated oxygen sensor (HO2S) if the above fault-tracing does not remedy the fault.

Remedy as necessary.

Other information

- see **CONNECTING THE BREAKOUT BOX**
- For 5 cylinder turbocharged engines -2004, see **SIGNAL DESCRIPTION**
- For 5 cylinder turbocharged engines 2005-, see **SIGNAL SPECIFICATION** .
- For 6 cylinder engines -2004, see **SIGNAL SPECIFICATION**
- For 6 cylinder engines 2005-, see **SIGNAL SPECIFICATION** .
- For resistance values: **COMPONENT SPECIFICATIONS**
- For B5xx4T, see **HEATED OXYGEN SENSOR (HO2S), REPLACING**
- For B6xx4T, see **HEATED OXYGEN SENSOR (HO2S), REPLACING** .
- see **CHECKING WIRING AND TERMINALS**

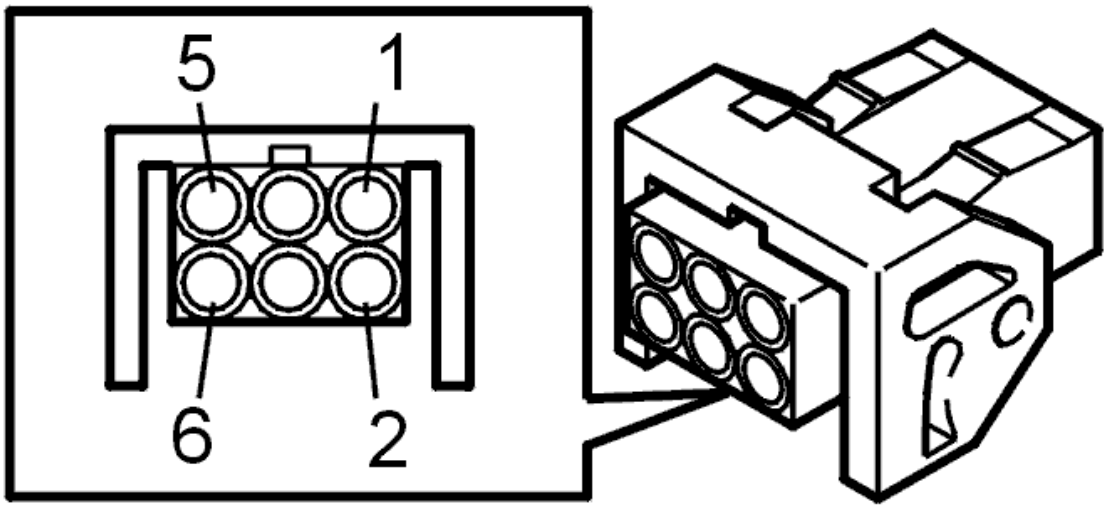

Fig. 330: Identifying Front Heated Oxygen Sensor Connector Terminals
Courtesy of VOLVO CARS CORPORATION

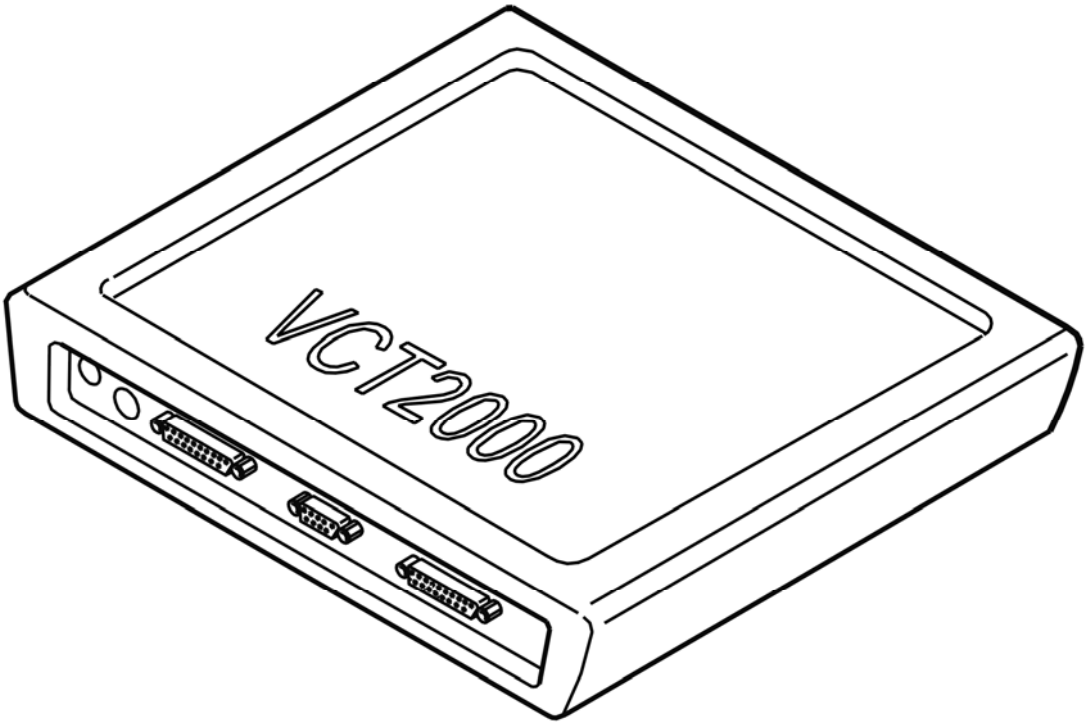

Fig. 331: Identifying VCT2000 Diagnostic Tool Symbol In VIDA
Courtesy of VOLVO CARS CORPORATION

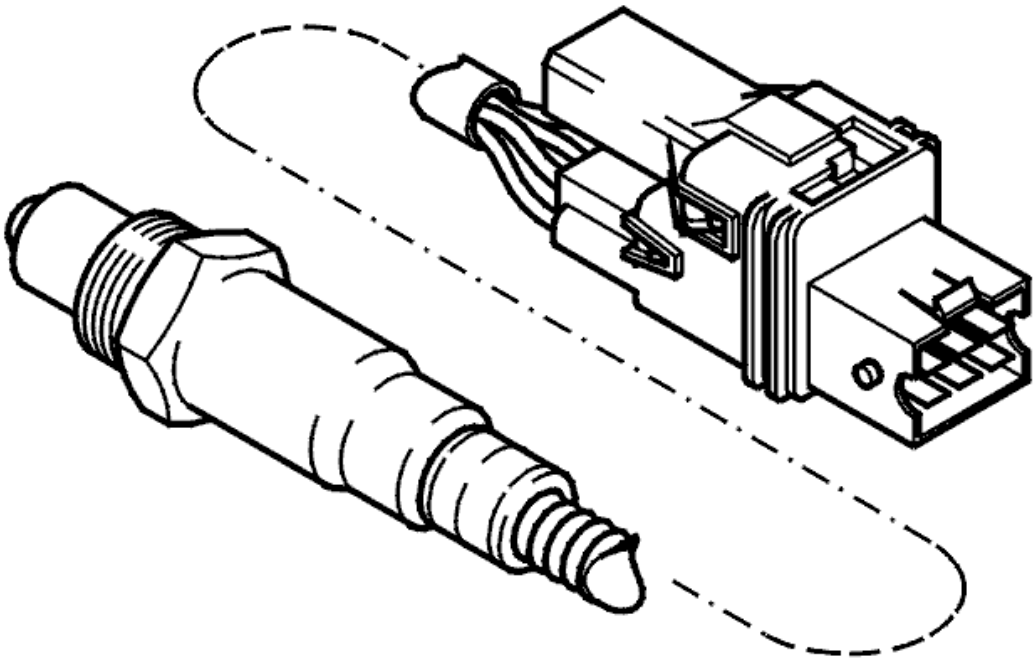

Fig. 332: Front Heated Oxygen Sensor
Courtesy of VOLVO CARS CORPORATION

- **Continue**

  Refer to **VERIFICATION**

VERIFICATION

VERIFICATION

HINT: After carrying out the repair, check that the fault has been remedied.

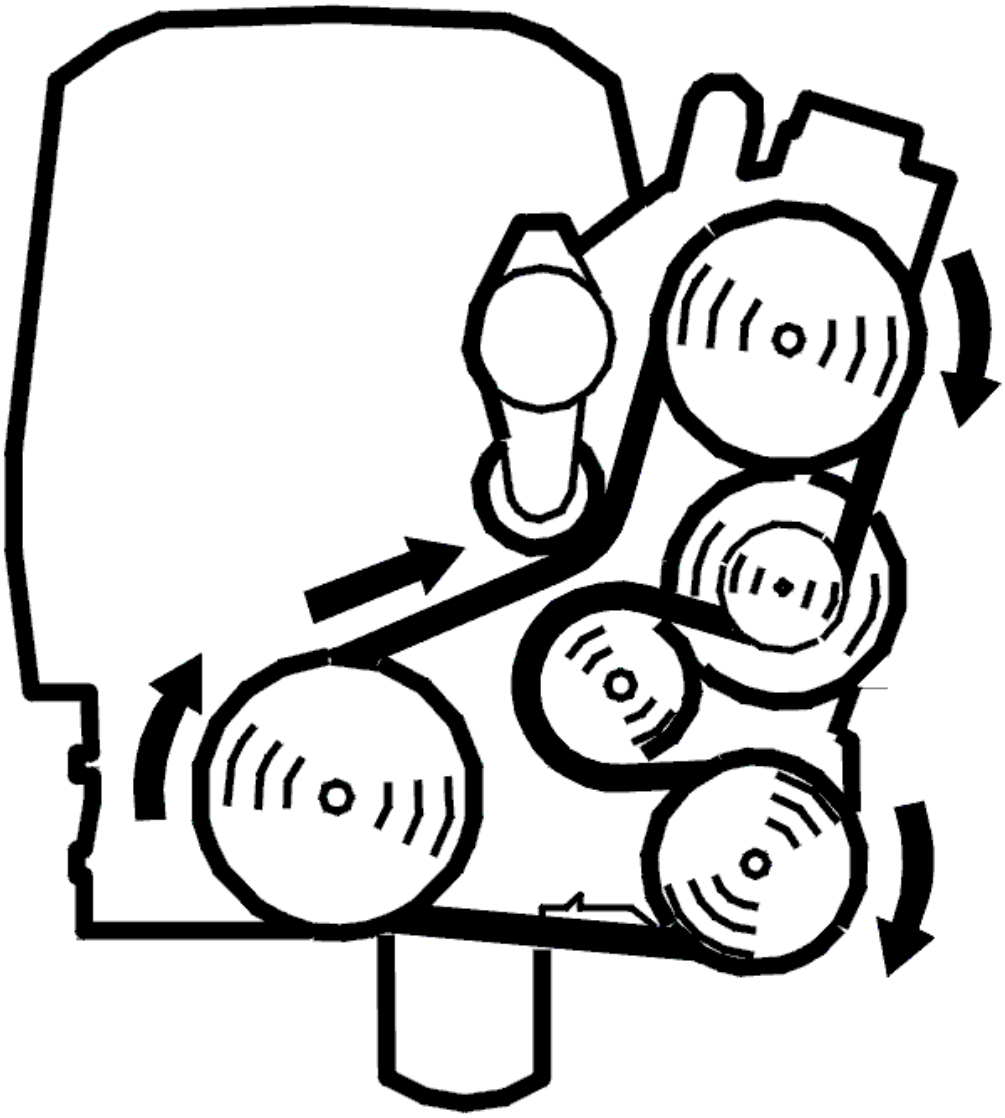

Fig. 333: Belt Routing / Engine Idling - Volvo
Courtesy of VOLVO CARS CORPORATION

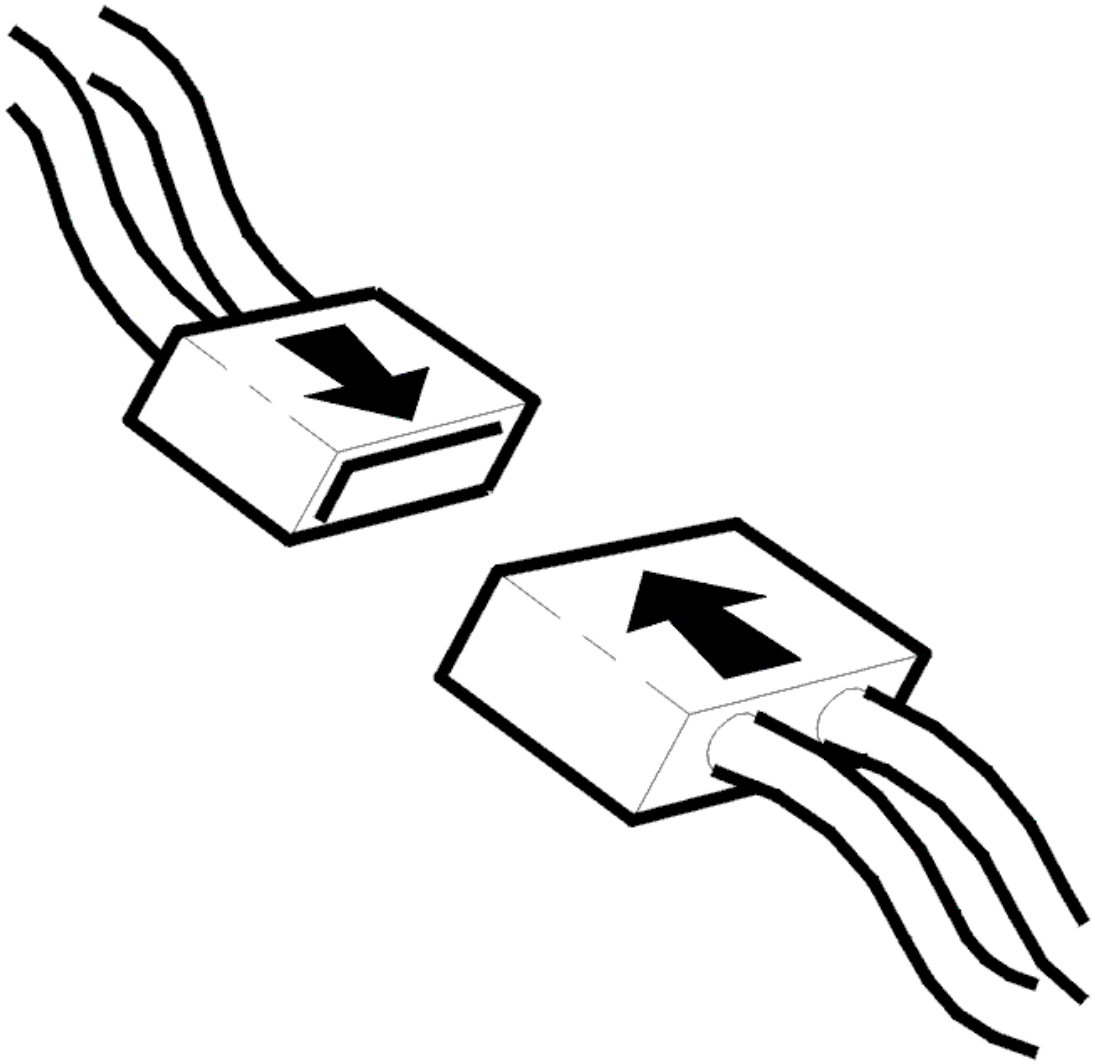

Fig. 334: Connecting Connector
Courtesy of VOLVO CARS CORPORATION

- Ignition off
- Reconnect the connectors, reinstall components etc.
- Start the engine. Allow the engine to idle for at least 1 minute
- Test drive the car at an even speed (approximately 80 km/h for at least 5 minutes)
- Connect VCT2000 (or appropriate scan tool) to the data link connector (DLC) without switching off the engine.

NOTE: **If the engine is switched off, the stored fault status will be erased and the test drive will have to be repeated.**

Read off the diagnostic status and fault status for the diagnostic trouble code (DTC) by selecting the relevant diagnostic trouble code (DTC) from the list.

Check the fault status for the diagnostic trouble code (DTC) when the diagnostic is "Complete". If the function is correct, the fault status must be "No fault found" when the diagnostic is complete.

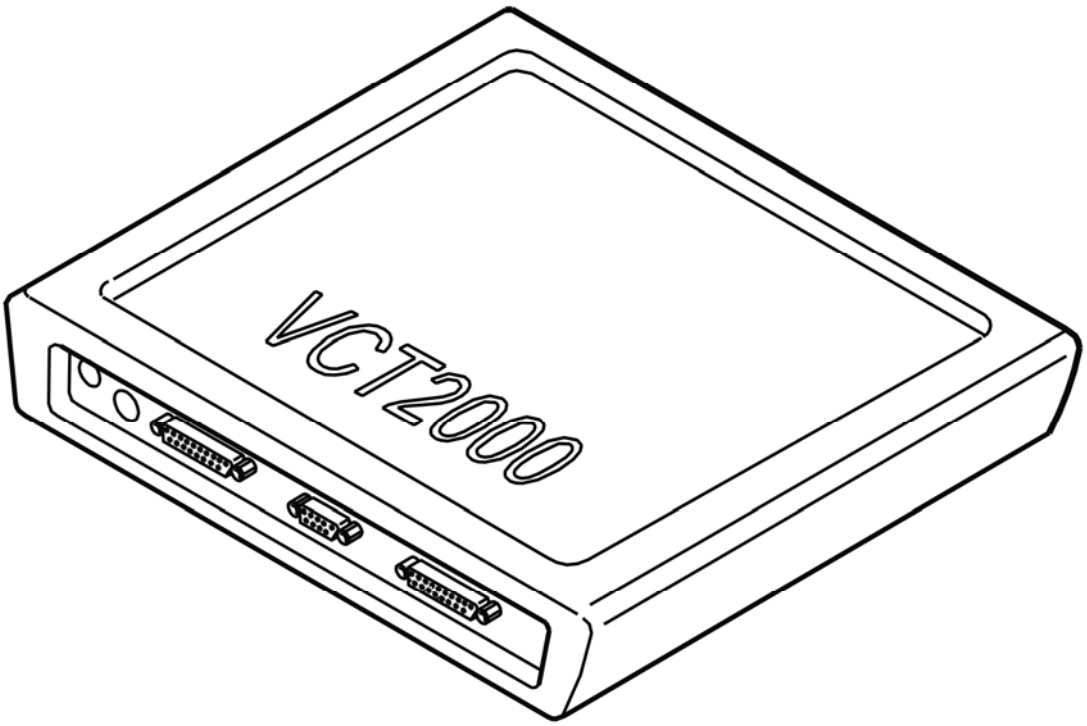

Fig. 335: Identifying VCT2000 Diagnostic Tool Symbol In VIDA
Courtesy of VOLVO CARS CORPORATION

Is the function OK?

- **YES**

  VERIFIED: Troubleshooting has been completed.

- **NO**

  Refer to **INFORMATION**

INFORMATION

FAULT-TRACING INFORMATION

The fault should have been detected and remedied. As this is not the case fault-tracing has failed.

Exit fault-tracing for this diagnostic trouble code (DTC) or make another attempt.

ECM-250C: FRONT HEATED OXYGEN SENSOR (HO2S), BANK 2, HEATING. SIGNAL TOO HIGH (B6294T; 2005-2006)

DIAGNOSTIC TROUBLE CODE (DTC) INFORMATION ECM-250C

Condition

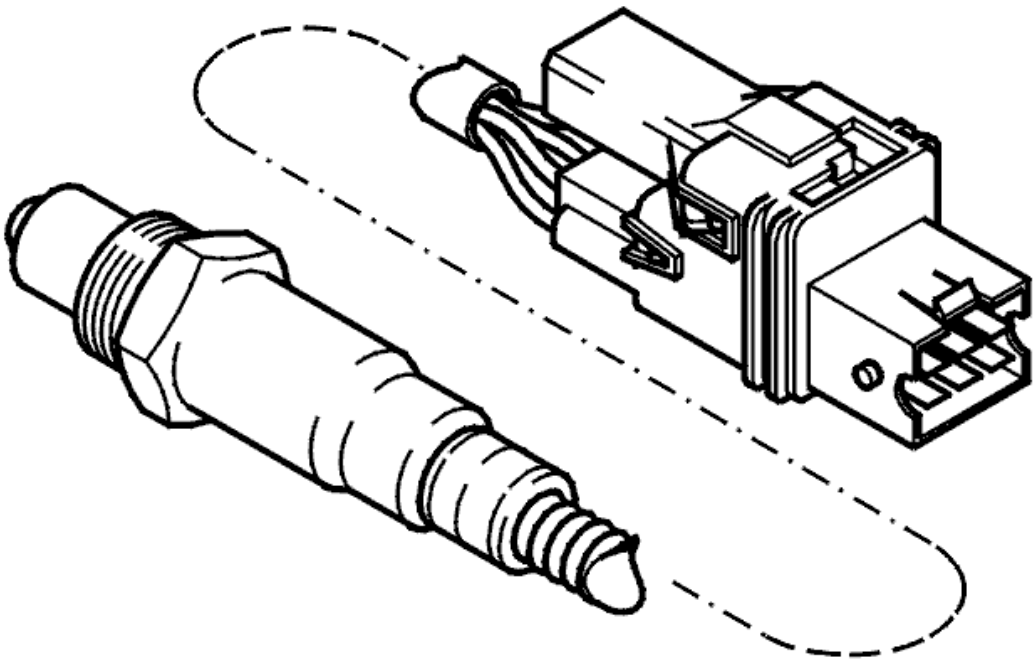

Fig. 336: Front Heated Oxygen Sensor
Courtesy of VOLVO CARS CORPORATION

The diagnostic trouble code (DTC) is stored if the engine control module (ECM) registers that the resistance in the preheating circuit for the front heated oxygen sensor (HO2S) (bank 2) is too high.

Substitute Value

- None.

Possible Source

- Contact resistance and oxidation in the terminals
- Damaged front heated oxygen sensor (HO2S).

Fault symptom[s]

- Malfunction indicator lamp (MIL) lit.

SIGNAL TOO HIGH/SIGNAL TOO LOW/SIGNAL MISSING

see **SIGNAL TOO HIGH/SIGNAL TOO LOW/SIGNAL MISSING**

ECM-250D: FRONT HEATED OXYGEN SENSOR (HO2S), BANK 2, HEATING. SIGNAL TOO LOW (B6294T; 2005-2006)

DIAGNOSTIC TROUBLE CODE (DTC) INFORMATION ECM-250D

Condition

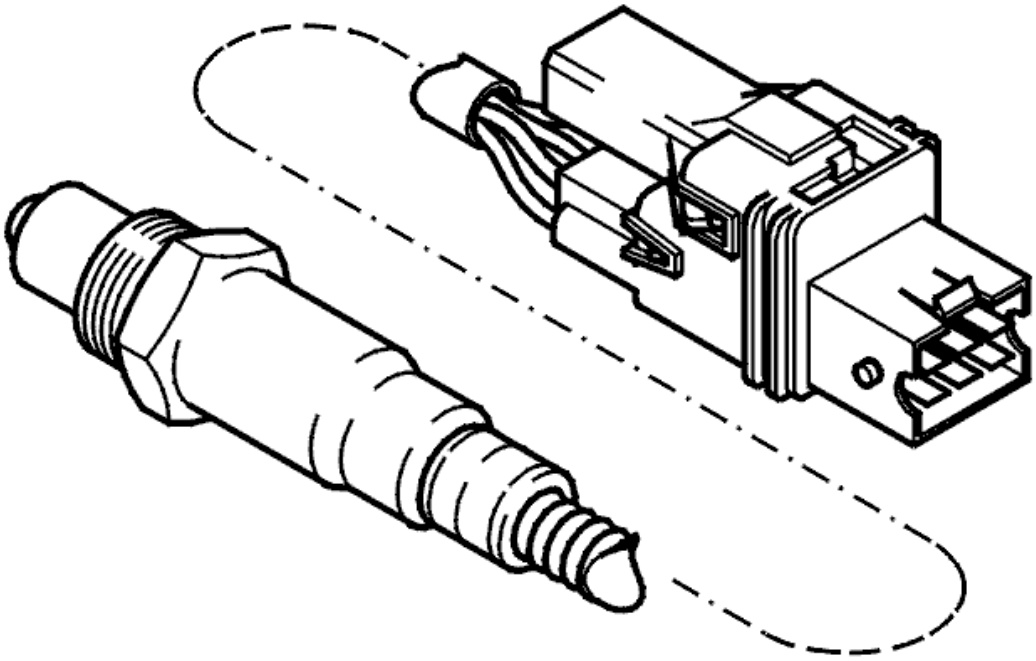

Fig. 337: Front Heated Oxygen Sensor
Courtesy of VOLVO CARS CORPORATION

The diagnostic trouble code (DTC) is stored if the engine control module (ECM) registers that the resistance in the preheating circuit for the front heated oxygen sensor (HO2S) (bank 2) is too low.

Substitute Value

- None.

Possible Source

- Damaged front heated oxygen sensor (HO2S).

Fault symptom[s]

- Malfunction indicator lamp (MIL) lit.

SIGNAL TOO HIGH/SIGNAL TOO LOW/SIGNAL MISSING

see **SIGNAL TOO HIGH/SIGNAL TOO LOW/SIGNAL MISSING**

ECM-252D: FRONT HEATED OXYGEN SENSOR (HO2S), BANK 2. SIGNAL MISSING (B6294T; 2005-2006)

DIAGNOSTIC TROUBLE CODE (DTC) INFORMATION ECM-252D

Condition

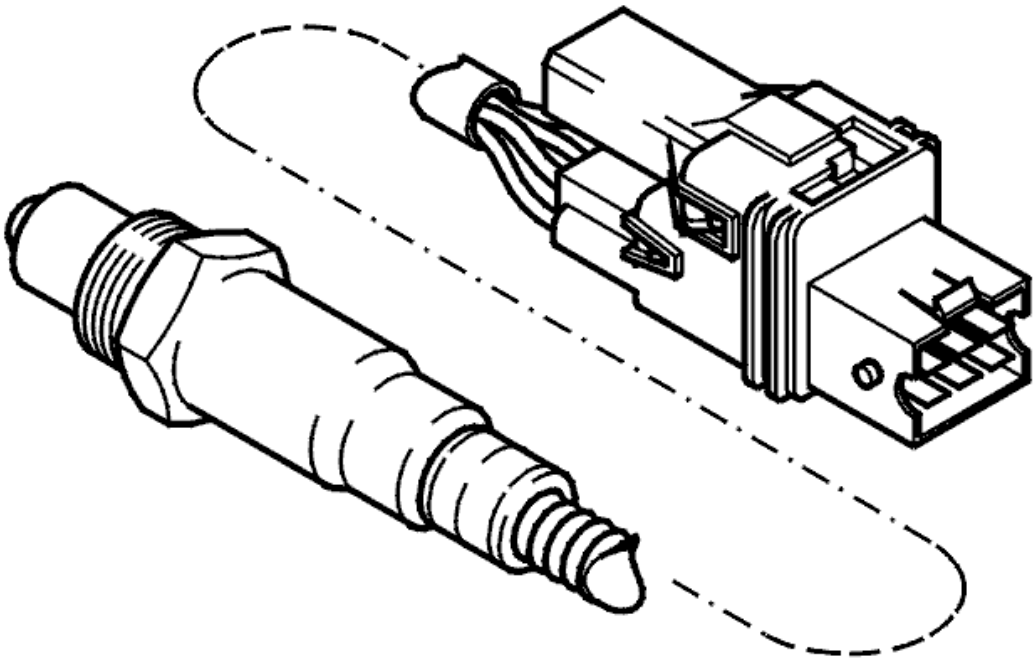

Fig. 338: Front Heated Oxygen Sensor
Courtesy of VOLVO CARS CORPORATION

The engine control module (ECM) monitors the aging of the front heated oxygen sensor (HO2S) by checking its

ability to react to changes in the exhaust gases. The diagnostic trouble code (DTC) is stored if the engine control module (ECM) registers that the heated oxygen sensor (HO2S) reacts too slowly to changes in the fuel/air mixture.

Substitute Value

- Three-way catalytic converter (TWC) diagnostics are disabled.

Possible Source

- The cables for the calibration current and the pump current are short-circuited to each other
- Open-circuit in signal cable (-)
- Open-circuit in the cable for calibration current
- Damaged front heated oxygen sensor (HO2S).

Fault symptom[s]

- Malfunction indicator lamp (MIL) lit.

SIGNAL MISSING

CHECKING COMPONENTS AND WIRING

CAUTION: Do not apply rust solvent spray or grease to the heated oxygen sensor (HO2S) connector.

- Check the heated oxygen sensor (HO2S) connector. Check for contact resistance and oxidation.

  Check the cable for calibration current between heated oxygen sensor (HO2S) terminal #2 and engine control module (ECM) terminal #A69 (#B9). Check the cable for pump current between heated oxygen sensor (HO2S) terminal #6 and engine control module (ECM) terminal #A25 (#A25). Check for a short-circuit to each other.

  Check the cable for an open-circuit.

  Check between:

  - Heated oxygen sensor (HO2S) terminal #5 and engine control module (ECM) terminal #A44 (#A44)
  - Heated oxygen sensor (HO2S) terminal #2 and engine control module (ECM) terminal #A69 (#B9).

  Remedy as necessary.

  Other information

  - see **CONNECTING THE BREAKOUT BOX**

- For 5 cylinder turbocharged engines -2004, see **SIGNAL DESCRIPTION**
- For 5 cylinder turbocharged engines 2005-, see **SIGNAL SPECIFICATION** .
- For 6 cylinder engines -2004, see **SIGNAL SPECIFICATION**
- For 6 cylinder engines 2005-, see **SIGNAL SPECIFICATION** .
- For B5xx4T, see **HEATED OXYGEN SENSOR (HO2S), REPLACING**
- For B6xx4T, see **HEATED OXYGEN SENSOR (HO2S), REPLACING** .
- see **CHECKING WIRING AND TERMINALS**

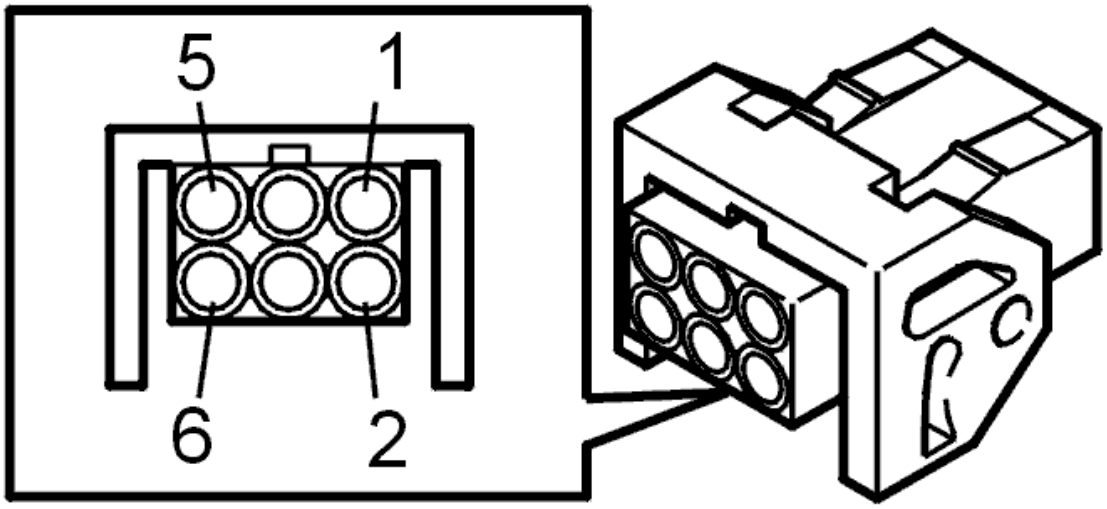

Fig. 339: Identifying Front Heated Oxygen Sensor Connector Terminals
Courtesy of VOLVO CARS CORPORATION

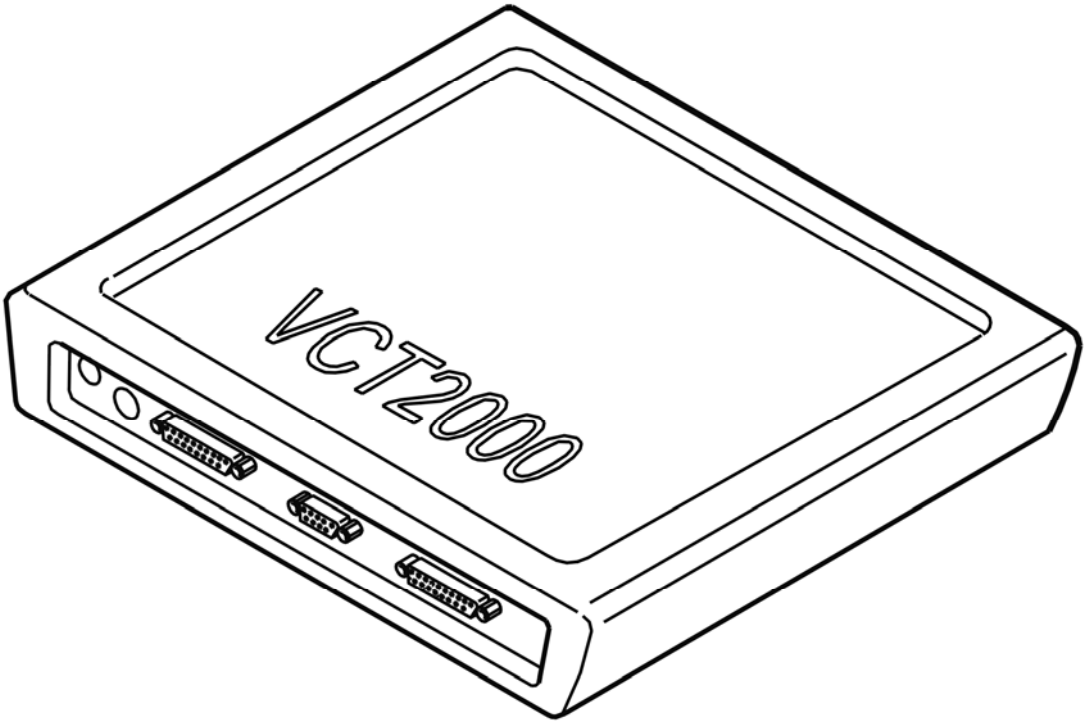

Fig. 340: Identifying VCT2000 Diagnostic Tool Symbol In VIDA
Courtesy of VOLVO CARS CORPORATION

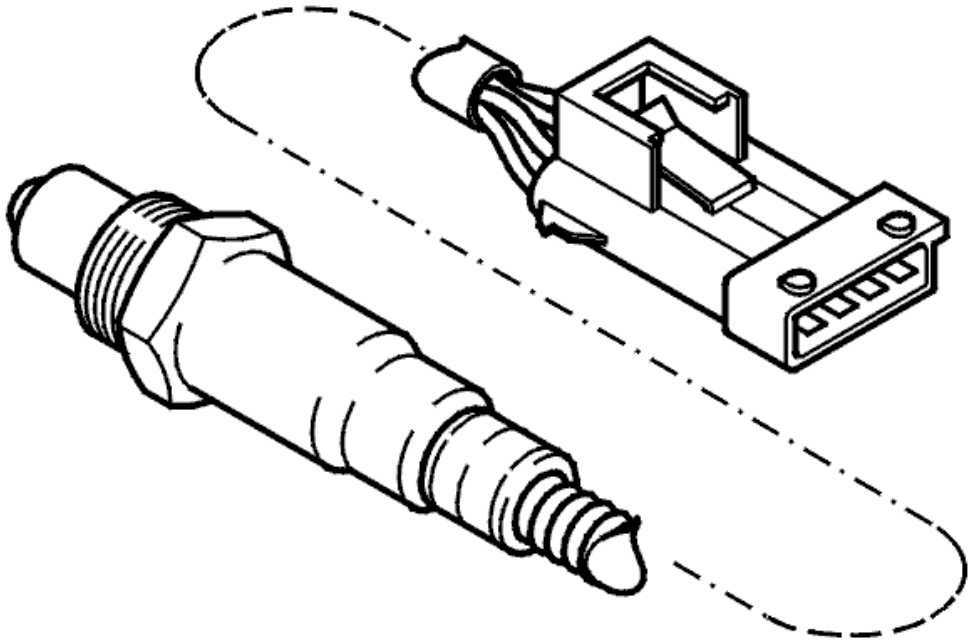

Fig. 341: Identifying Rear Heated Oxygen Sensor
Courtesy of VOLVO CARS CORPORATION

- **Continue**

  Refer to **VERIFICATION**

VERIFICATION

VERIFICATION

HINT: After carrying out the repair, check that the fault has been remedied.

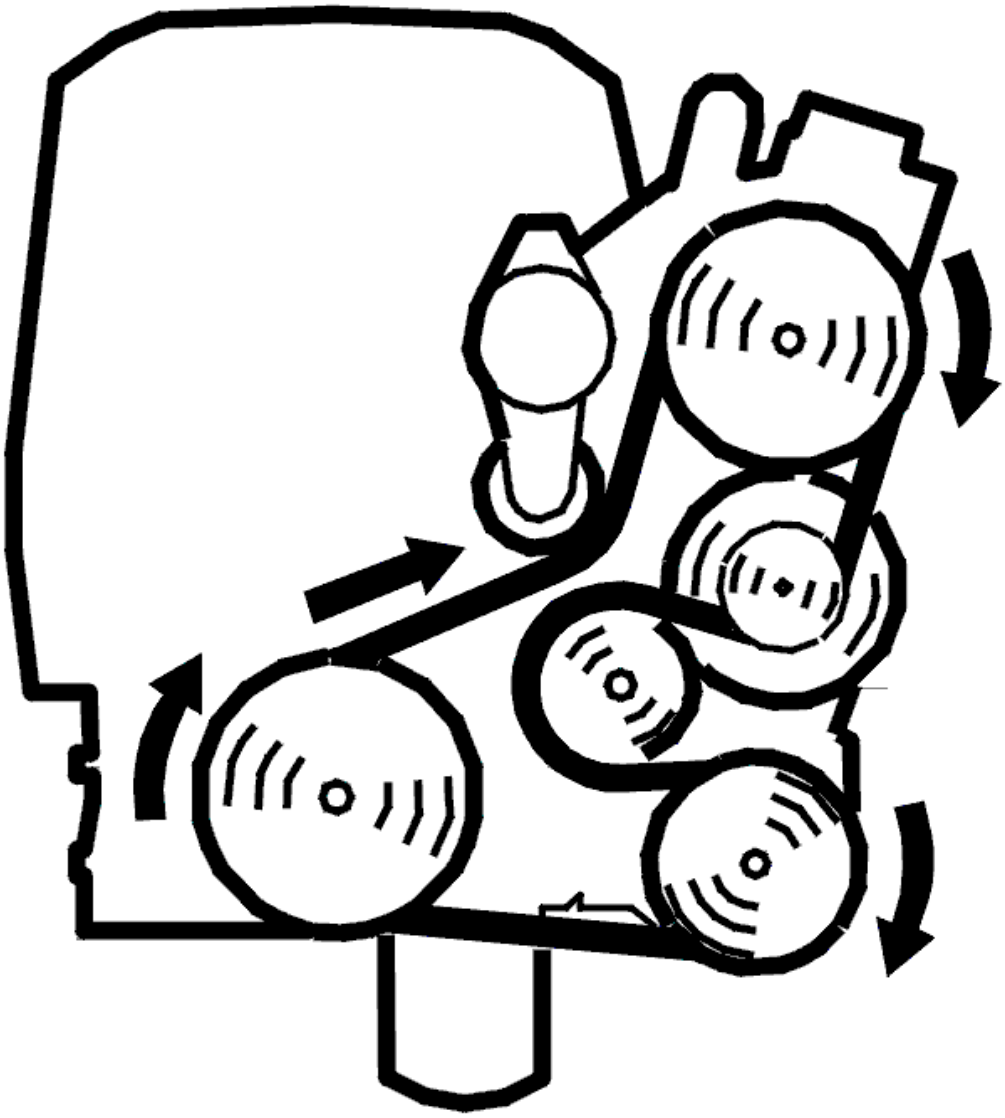

Fig. 342: Belt Routing / Engine Idling - Volvo
Courtesy of VOLVO CARS CORPORATION

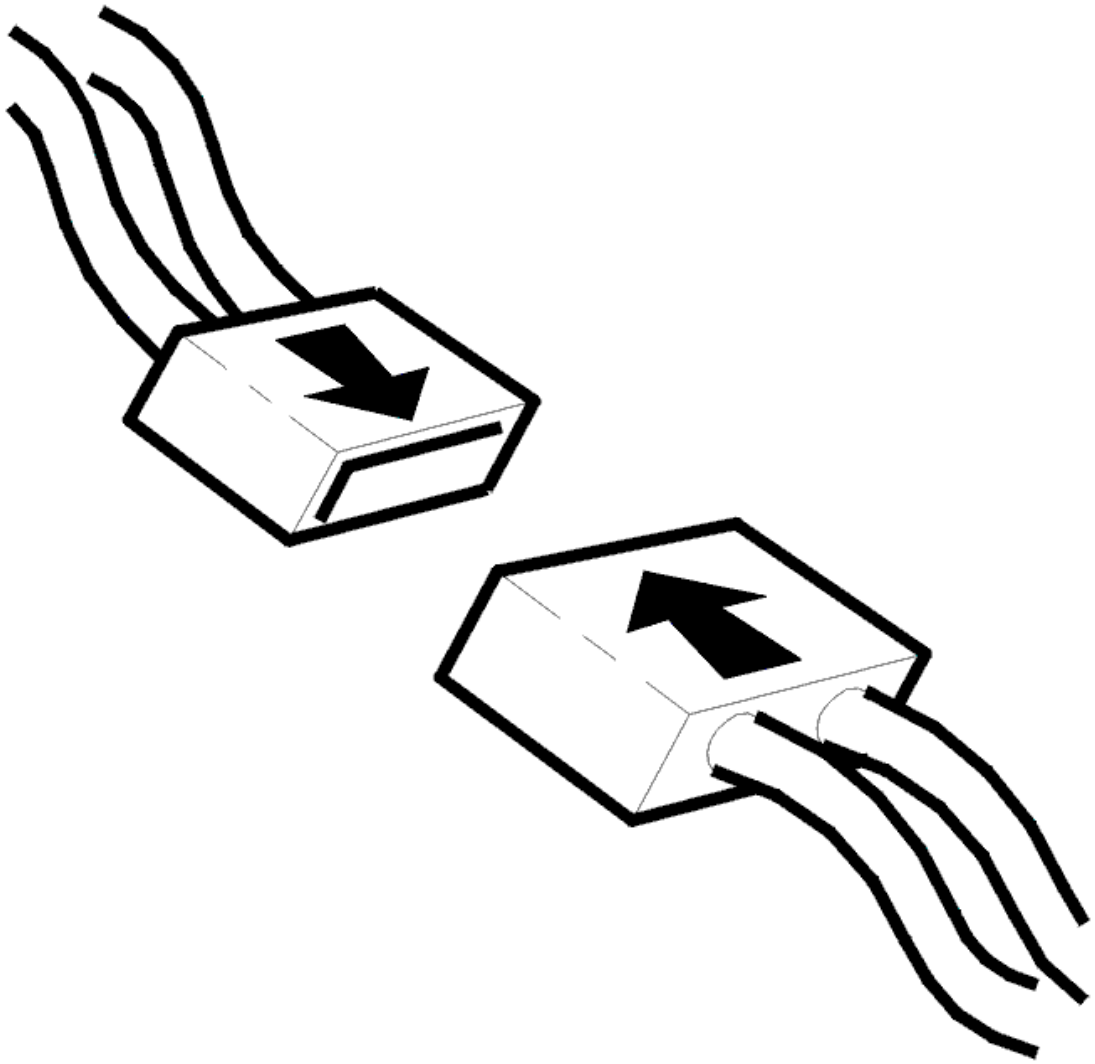

Fig. 343: Connecting Connector
Courtesy of VOLVO CARS CORPORATION

- Ignition off
- Reconnect the connectors, reinstall components etc.
- Test drive the car and perform a TRIP schedule: **VERIFYING REPAIRS**
- Connect VCT2000 (or appropriate scan tool) to the data link connector (DLC) without switching off the engine.

NOTE: **If the engine is switched off, the stored fault status will be erased and the test drive will have to be repeated.**

Read off the dynamic for the front heated oxygen sensor (HO2S).

The value should be higher than 1.0.

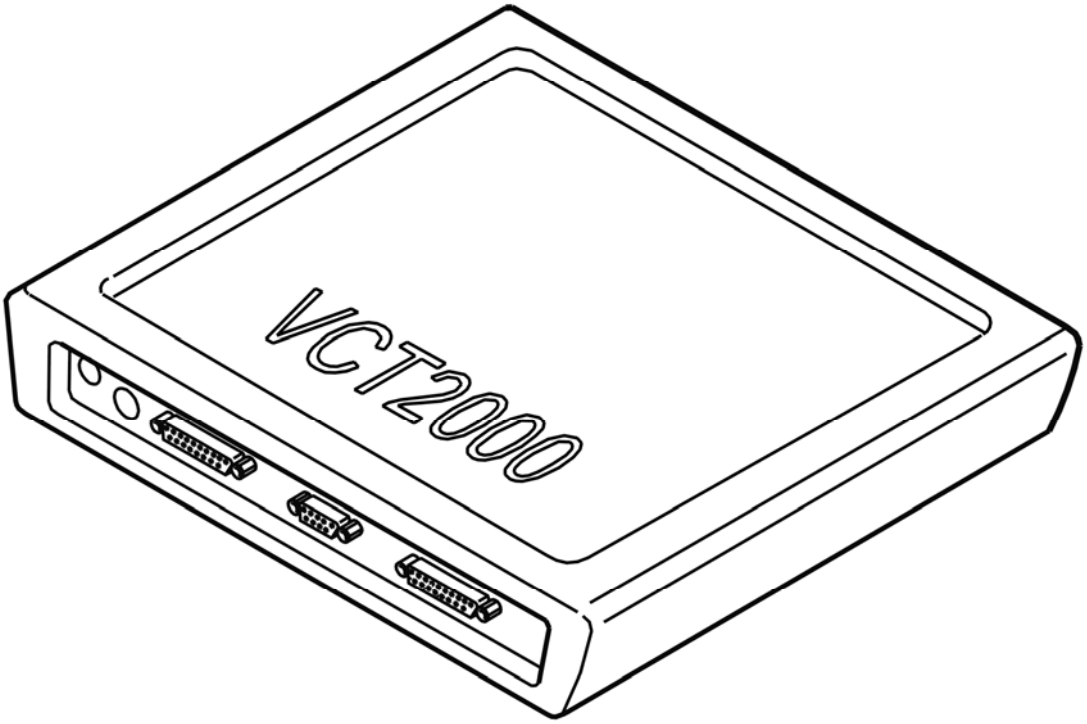

Fig. 344: Identifying VCT2000 Diagnostic Tool Symbol In VIDA
Courtesy of VOLVO CARS CORPORATION

Is the value OK?

- **YES**

  VERIFIED: Troubleshooting has been completed.

- **NO**

  Refer to **INFORMATION**

INFORMATION

FAULT-TRACING INFORMATION

The fault should have been detected and remedied. As this is not the case fault-tracing has failed.

Exit fault-tracing for this diagnostic trouble code (DTC) or make another attempt.

ECM-253B: FRONT HEATED OXYGEN SENSOR (HO2S), BANK 2. SIGNAL MISSING (B6294T; 2005-2006)

DIAGNOSTIC TROUBLE CODE (DTC) INFORMATION ECM-253B

Condition

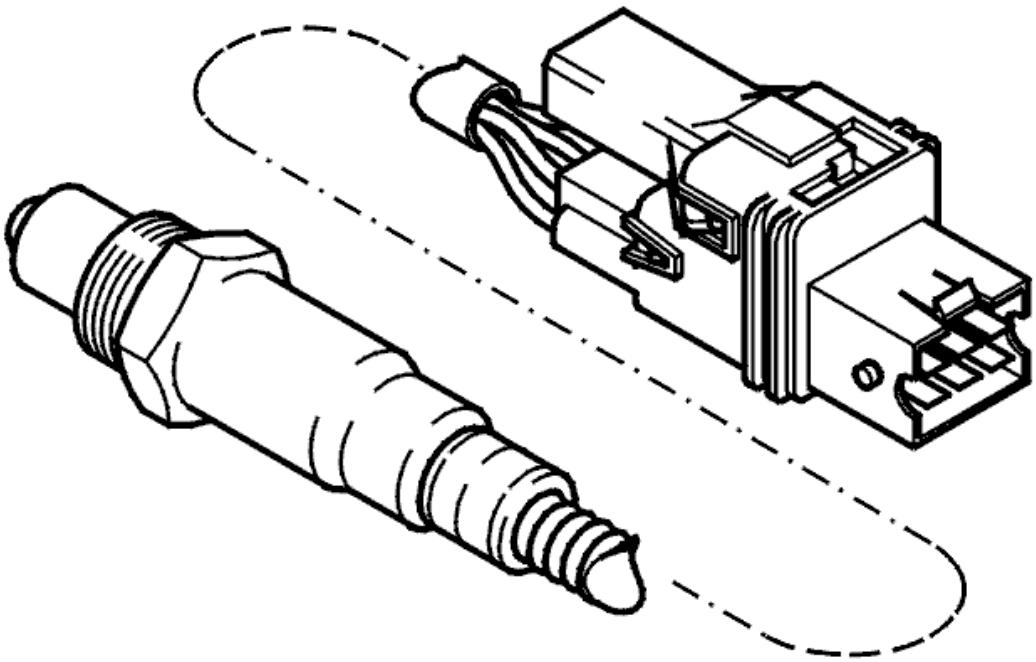

Fig. 345: Front Heated Oxygen Sensor
Courtesy of VOLVO CARS CORPORATION

The engine control module (ECM) monitors the function of the front heated oxygen sensor (HO2S) (bank 2) by checking its signal. The diagnostic trouble code (DTC) is stored if the voltage for the heated oxygen sensor (HO2S) preheating disrupts the heated oxygen sensor (HO2S) signal.

Substitute Value

- The heated oxygen sensor (HO2S) control is disabled
- Three-way catalytic converter (TWC) diagnostics are disabled.

Possible Source

- One of the cables for heated oxygen sensor (HO2S) preheating is short-circuited to the probe's other signal cables
- Damaged front heated oxygen sensor (HO2S).

Fault symptom[s]

- Malfunction indicator lamp (MIL) lit.

SIGNAL MISSING

CHECKING THE COMPONENTS AND WIRING

CAUTION: Do not apply rust solvent spray or grease to the heated oxygen sensor (HO2S) connector.

Check the power cable between the engine control module (ECM) and heated oxygen sensor (HO2S) connector terminal #3. Check for a short-circuit to the other signal cables for the heated oxygen sensor (HO2S).

Check the ground lead between engine control module (ECM) terminals #A70 (#B10) and heated oxygen sensor (HO2S) connector terminal #4. Check for a short-circuit to the other signal cables for the heated oxygen sensor (HO2S).

Try a new heated oxygen sensor (HO2S) if the wiring is OK.

Remedy as necessary.

Other information

- see **CONNECTING THE BREAKOUT BOX**
- For 5 cylinder turbocharged engines -2004, see **SIGNAL DESCRIPTION**
- For 5 cylinder turbocharged engines 2005-, see **SIGNAL SPECIFICATION** .
- For 6 cylinder engines -2004, see **SIGNAL SPECIFICATION**
- For 6 cylinder engines 2005-, see **SIGNAL SPECIFICATION** .
- For B5xx4T, see **HEATED OXYGEN SENSOR (HO2S), REPLACING**
- For B6xx4T, see **HEATED OXYGEN SENSOR (HO2S), REPLACING** .
- see **CHECKING WIRING AND TERMINALS**

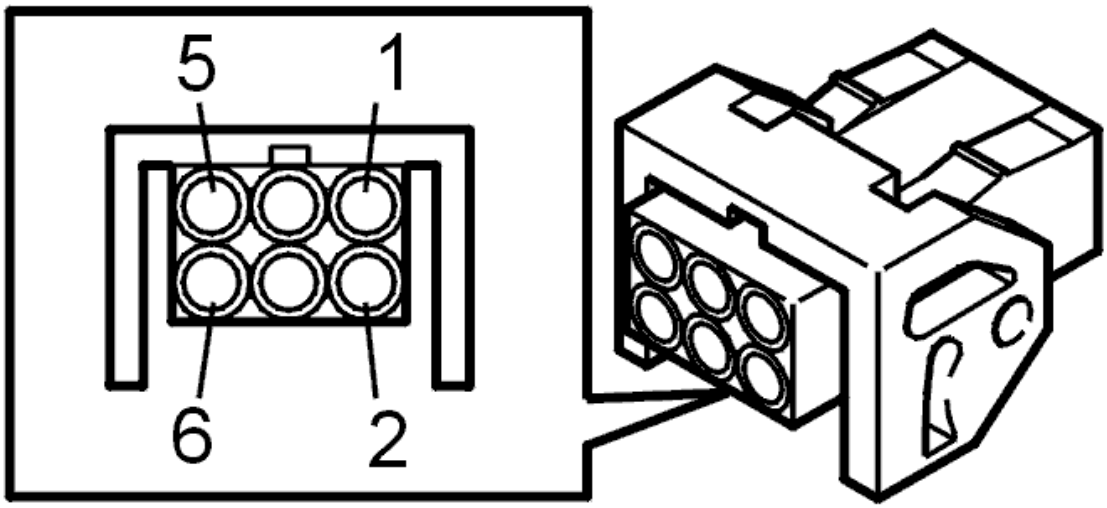

Fig. 346: Identifying Front Heated Oxygen Sensor Connector Terminals
Courtesy of VOLVO CARS CORPORATION

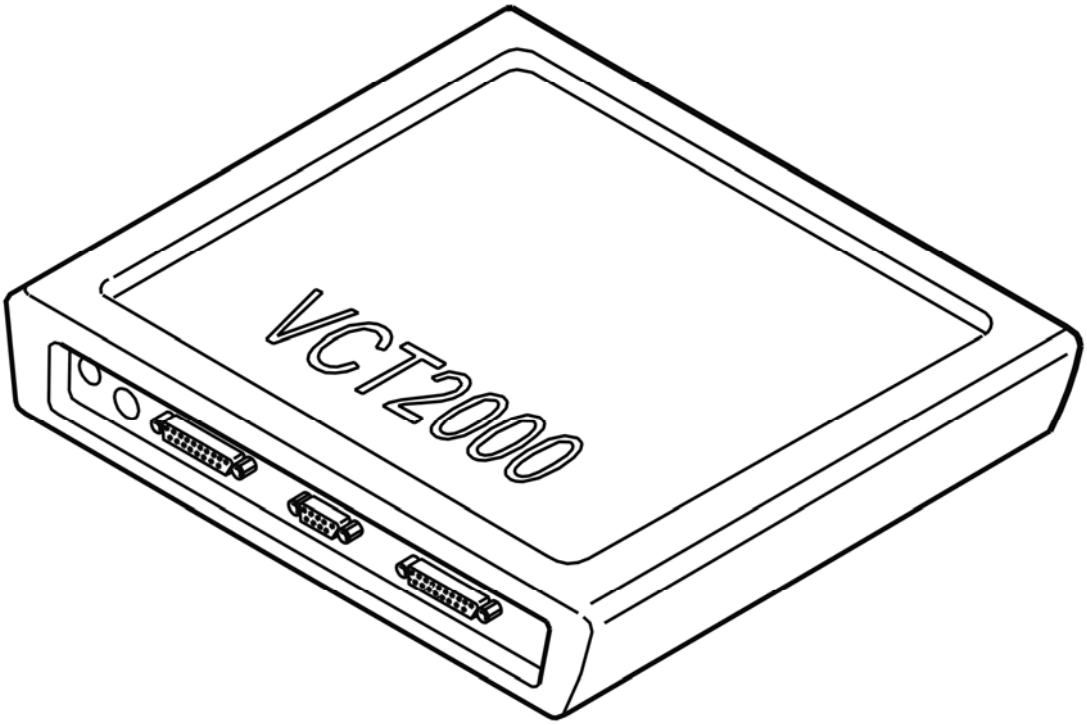

Fig. 347: Identifying VCT2000 Diagnostic Tool Symbol In VIDA
Courtesy of VOLVO CARS CORPORATION

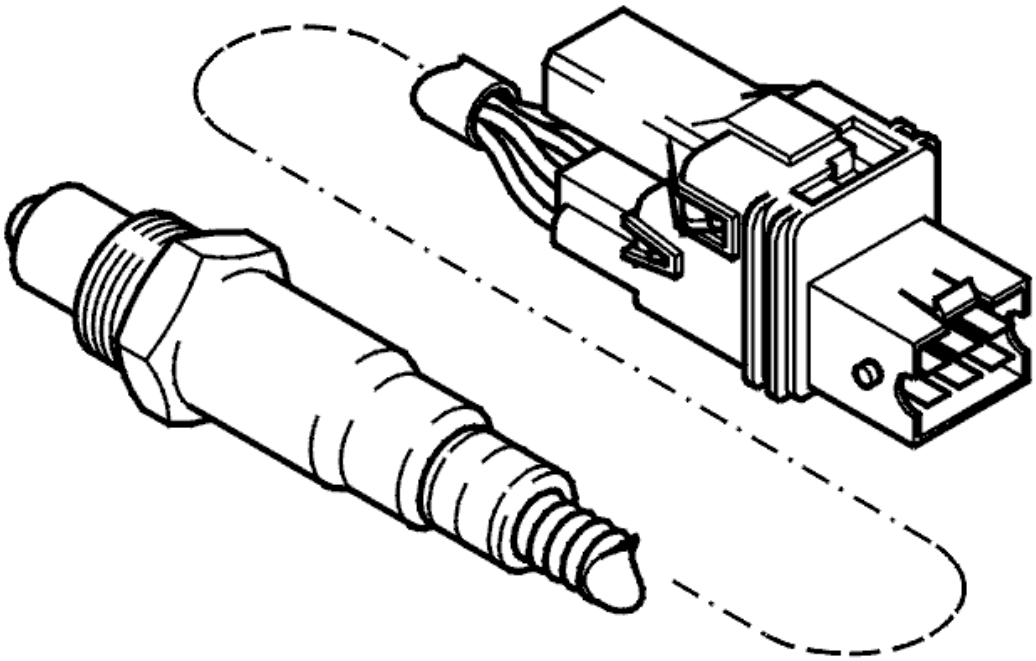

Fig. 348: Front Heated Oxygen Sensor
Courtesy of VOLVO CARS CORPORATION

- **Continue**

  Refer to **VERIFICATION**

VERIFICATION

VERIFICATION

HINT: After carrying out the repair, check that the fault has been remedied.

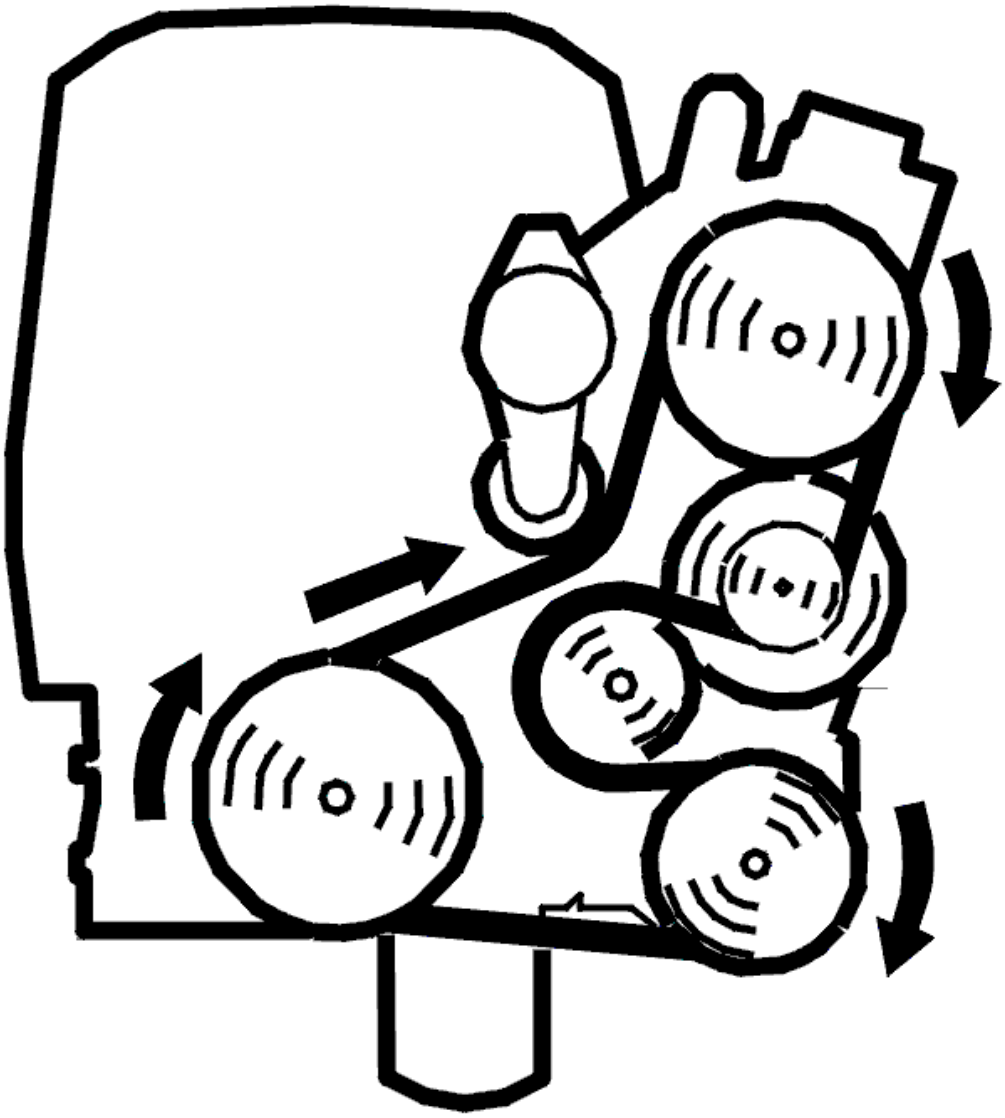

Fig. 349: Belt Routing / Engine Idling - Volvo
Courtesy of VOLVO CARS CORPORATION

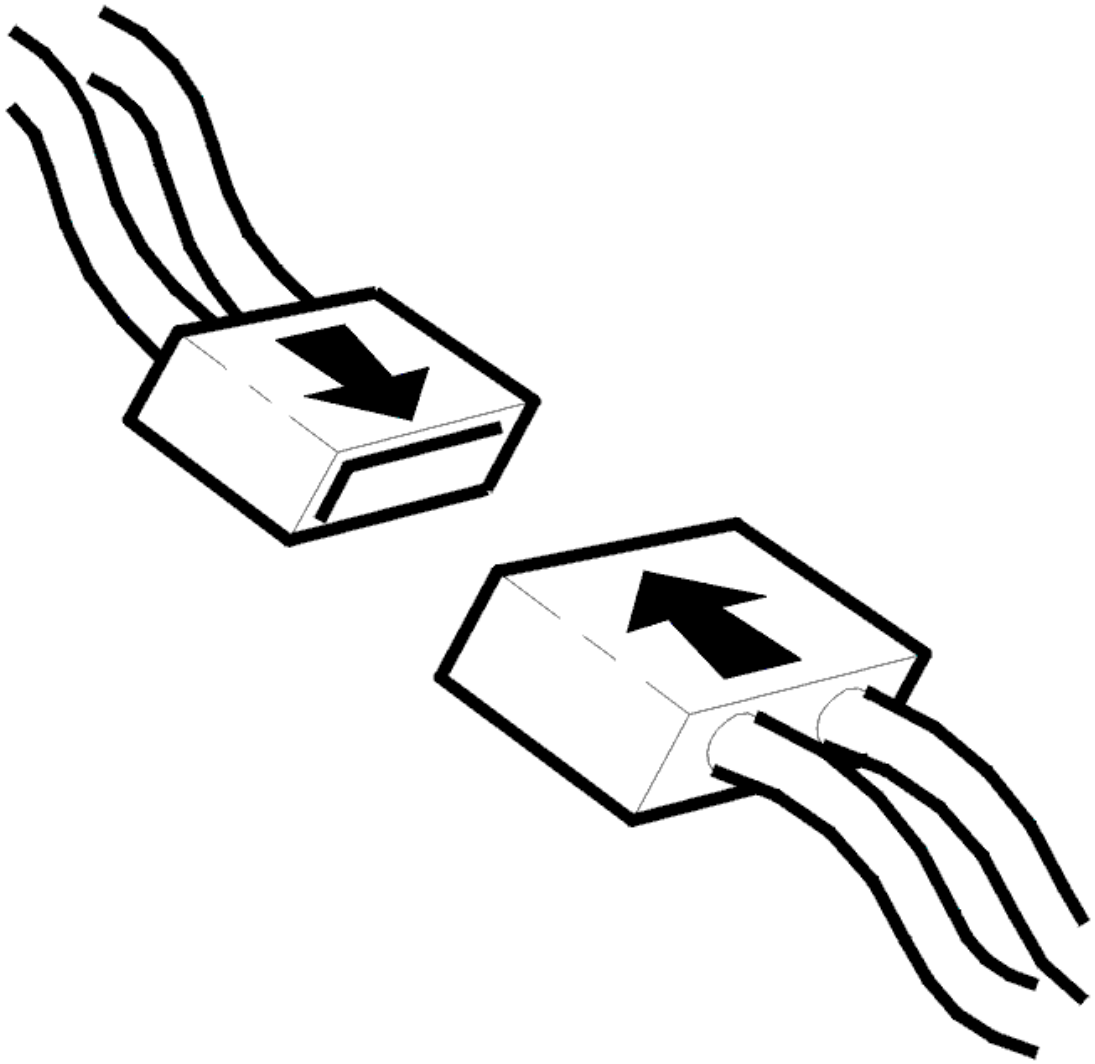

Fig. 350: Connecting Connector
Courtesy of VOLVO CARS CORPORATION

- Ignition off
- Reconnect the connectors, reinstall components etc.
- Allow the engine to cool (to below 40 °C). Then start the engine
- Connect VCT2000 (or appropriate scan tool) to the data link connector (DLC) without switching off the engine.

NOTE: **If the engine is switched off, the stored fault status will be erased and the test drive will have to be repeated.**

Read off the diagnostic status and fault status for the diagnostic trouble code (DTC) by selecting the relevant diagnostic trouble code (DTC) from the list.

Check the fault status for the diagnostic trouble code (DTC) when the diagnostic is "Complete". If the function is correct, the fault status must be "No fault found" when the diagnostic is complete.

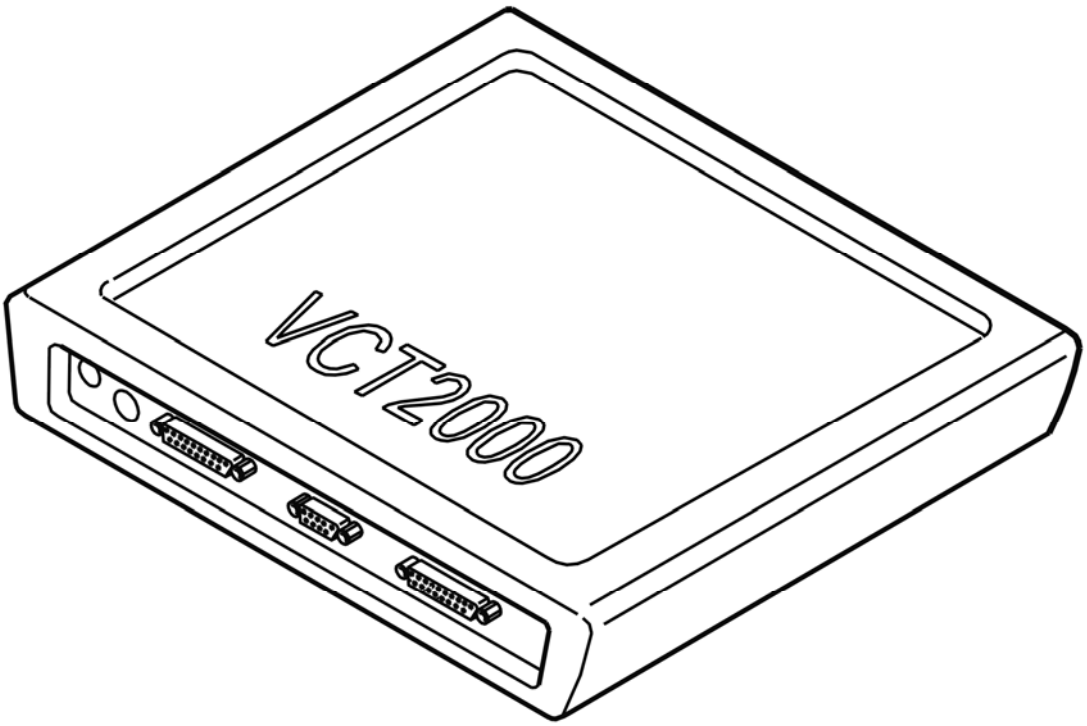

Fig. 351: Identifying VCT2000 Diagnostic Tool Symbol In VIDA
Courtesy of VOLVO CARS CORPORATION

Is the function OK?

- **YES**

  VERIFIED: Troubleshooting has been completed.

- **NO**

  Refer to **INFORMATION**

INFORMATION

FAULT-TRACING INFORMATION

The fault should have been detected and remedied. As this is not the case fault-tracing has failed.

Exit fault-tracing for this diagnostic trouble code (DTC) or make another attempt.

ECM-254B: FRONT HEATED OXYGEN SENSOR (HO2S), BANK 2, HEATING. SIGNAL MISSING (B6294T; 2005-2006)

DIAGNOSTIC TROUBLE CODE (DTC) INFORMATION ECM-254B

Condition

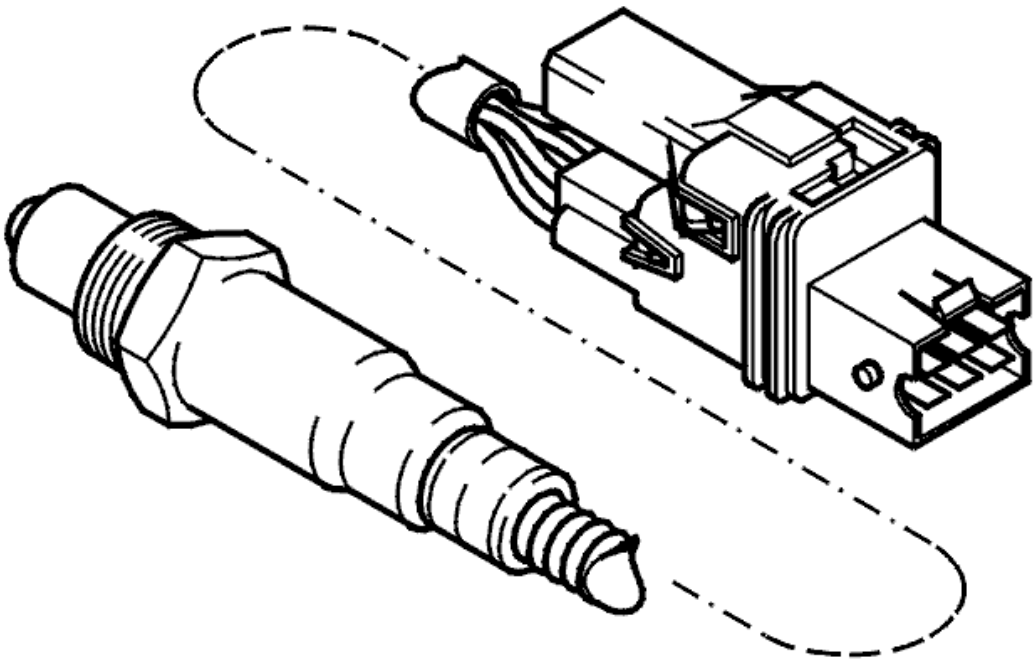

Fig. 352: Front Heated Oxygen Sensor
Courtesy of VOLVO CARS CORPORATION

The engine control module (ECM) regulates preheating by pulsing the current to the positive temperature coefficient (PTC) element (bank 2) in the front heated oxygen sensor (HO2S). Pulse lengths are dependent on the temperature of the heated oxygen sensor (H02S).

The diagnostic trouble code (DTC) is stored if the engine control module (ECM) registers that the signal is lower than a certain value when preheating is deactivated.

Substitute Value

- Heated oxygen sensor (HO2S) control is disabled.

Possible Source

- Contact resistance and oxidation in the terminals
- Open-circuit in the power supply from the system relay
- Damaged front heated oxygen sensor (HO2S) (bank 2).

Fault symptom[s]

- Malfunction indicator lamp (MIL) lit.

SIGNAL MISSING

CHECKING THE COMPONENTS AND WIRING

CAUTION: Do not apply rust solvent spray or grease to the heated oxygen sensor (HO2S) connector.

Check the signal cable between heated oxygen sensor (HO2S) #3 and the system relay. Check for contact resistance and oxidation.

Check the power supply between the system relay and heated oxygen sensor (HO2S) terminal #3. Check for an open-circuit.

NOTE: If possible, measure from the rear of the affected connectors in order to minimize any damage and future loose connections.

Try a new heated oxygen sensor (HO2S) if the above fault-tracing does not remedy the fault.

Remedy as necessary.

Other information

- see **CONNECTING THE BREAKOUT BOX**
- For 5 cylinder turbocharged engines -2004, see **SIGNAL DESCRIPTION**
- For 5 cylinder turbocharged engines 2005-, see **SIGNAL SPECIFICATION** .
- For 6 cylinder engines -2004, see **SIGNAL SPECIFICATION**
- For 6 cylinder engines 2005-, see **SIGNAL SPECIFICATION** .
- For B5xx4T, see **HEATED OXYGEN SENSOR (HO2S), REPLACING**
- For B6xx4T, see **HEATED OXYGEN SENSOR (HO2S), REPLACING** .
- see **CHECKING WIRING AND TERMINALS**

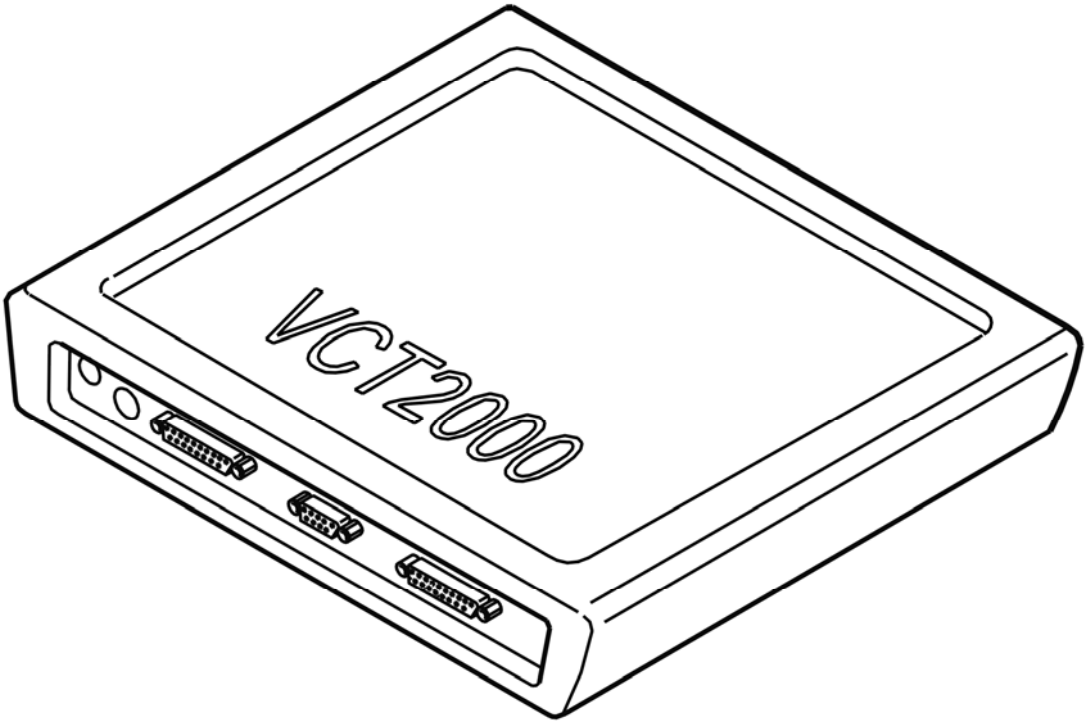

Fig. 353: Identifying VCT2000 Diagnostic Tool Symbol In VIDA
Courtesy of VOLVO CARS CORPORATION

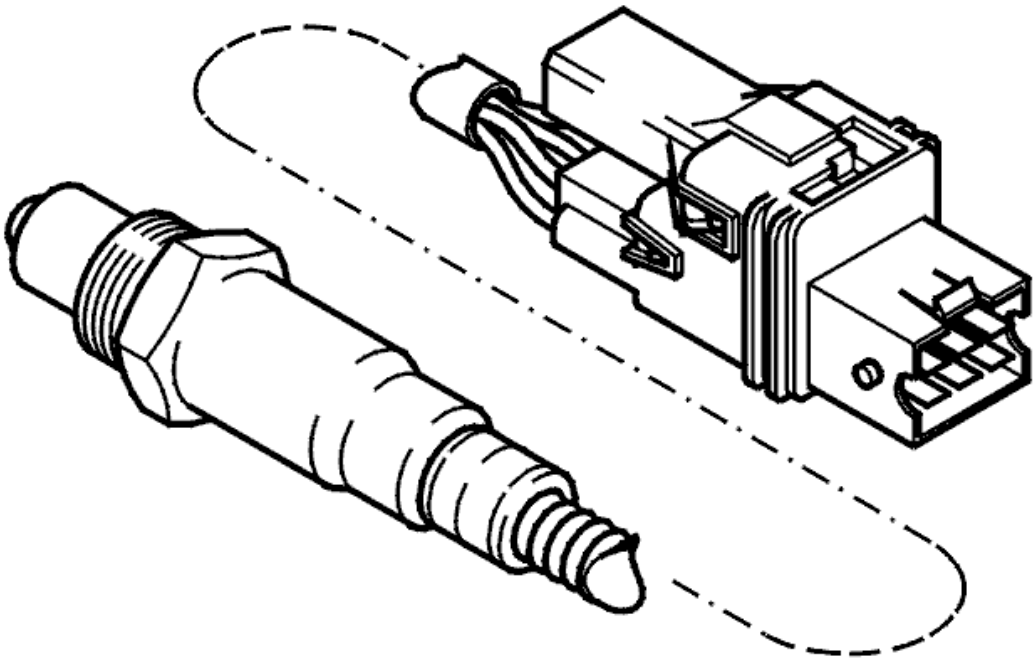

Fig. 354: Front Heated Oxygen Sensor
Courtesy of VOLVO CARS CORPORATION

- **Continue**

  Refer to **VERIFICATION**

VERIFICATION

VERIFICATION

HINT: After carrying out the repair, check that the fault has been remedied.

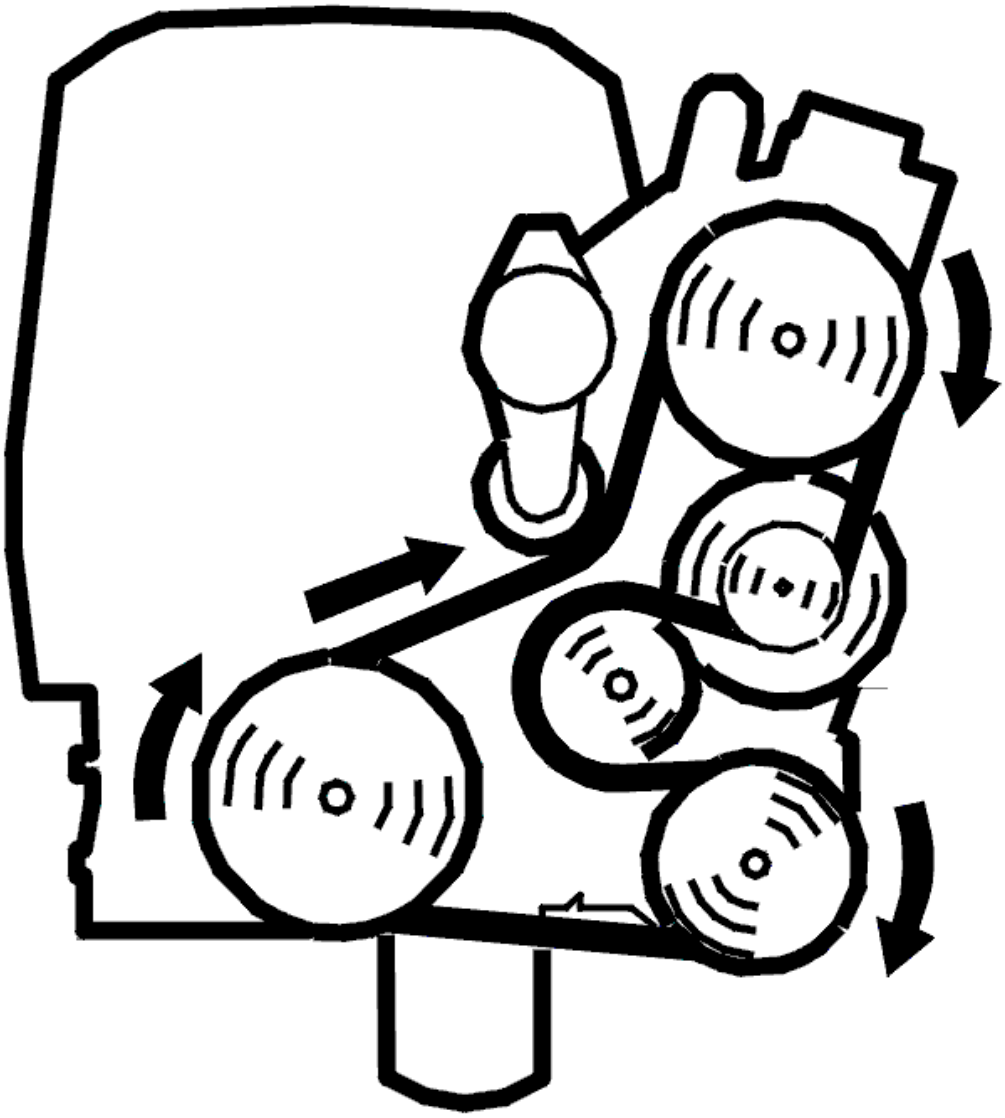

Fig. 355: Belt Routing / Engine Idling - Volvo
Courtesy of VOLVO CARS CORPORATION

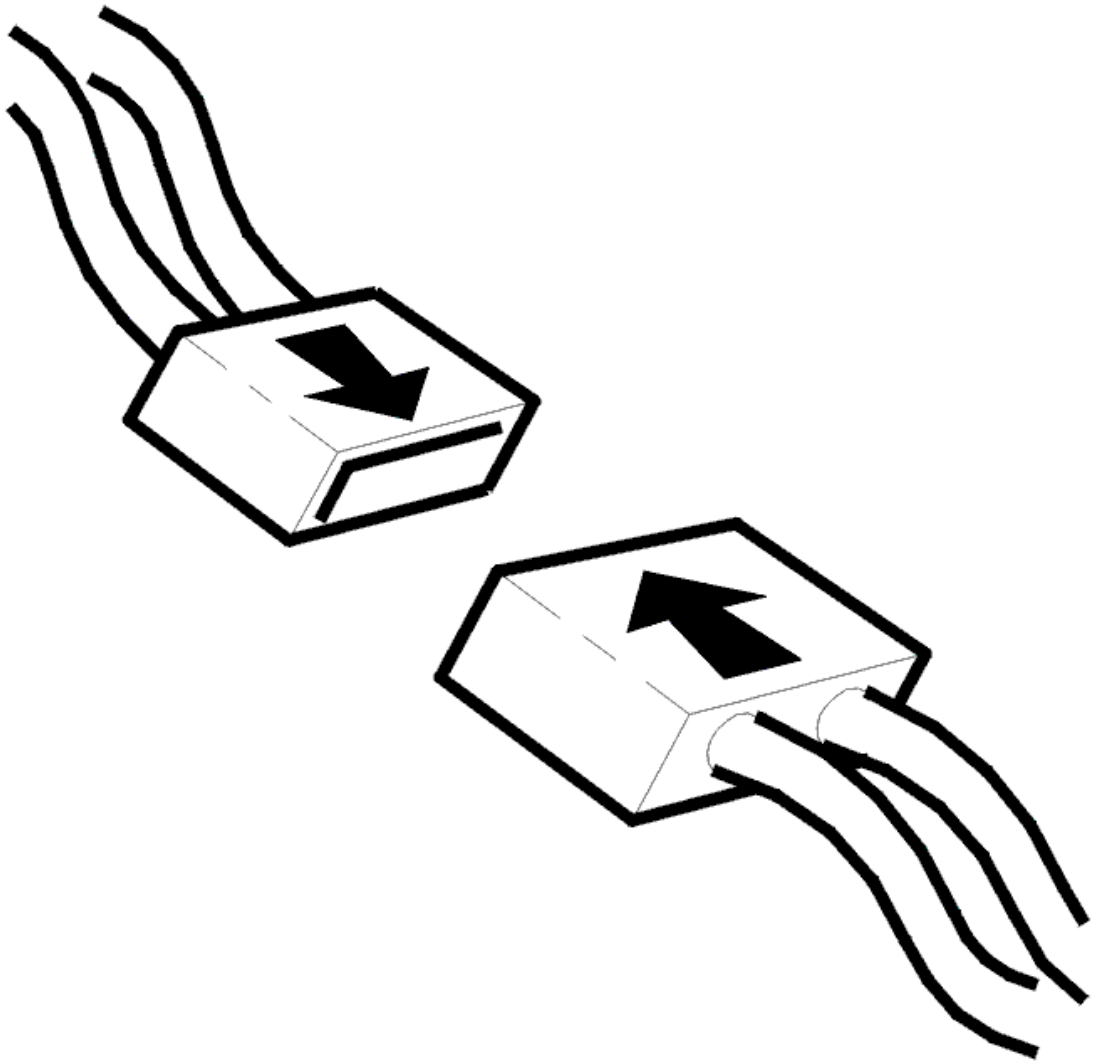

Fig. 356: Connecting Connector
Courtesy of VOLVO CARS CORPORATION

- Ignition off
- Reconnect the connectors, reinstall components etc.
- Test drive the car at an even speed (engine speed (RPM) above 2000 RPM) for at least 5 minutes
- Connect VCT2000 (or appropriate scan tool) to the data link connector (DLC) without switching off the engine.

NOTE: **If the engine is switched off, the stored fault status will be erased and the test drive will have to be repeated.**

Read off the diagnostic status and fault status for the diagnostic trouble code (DTC) by selecting the relevant diagnostic trouble code (DTC) from the list.

Check the fault status for the diagnostic trouble code (DTC) when the diagnostic is "Complete". If the function is correct, the fault status must be "No fault found" when the diagnostic is complete.

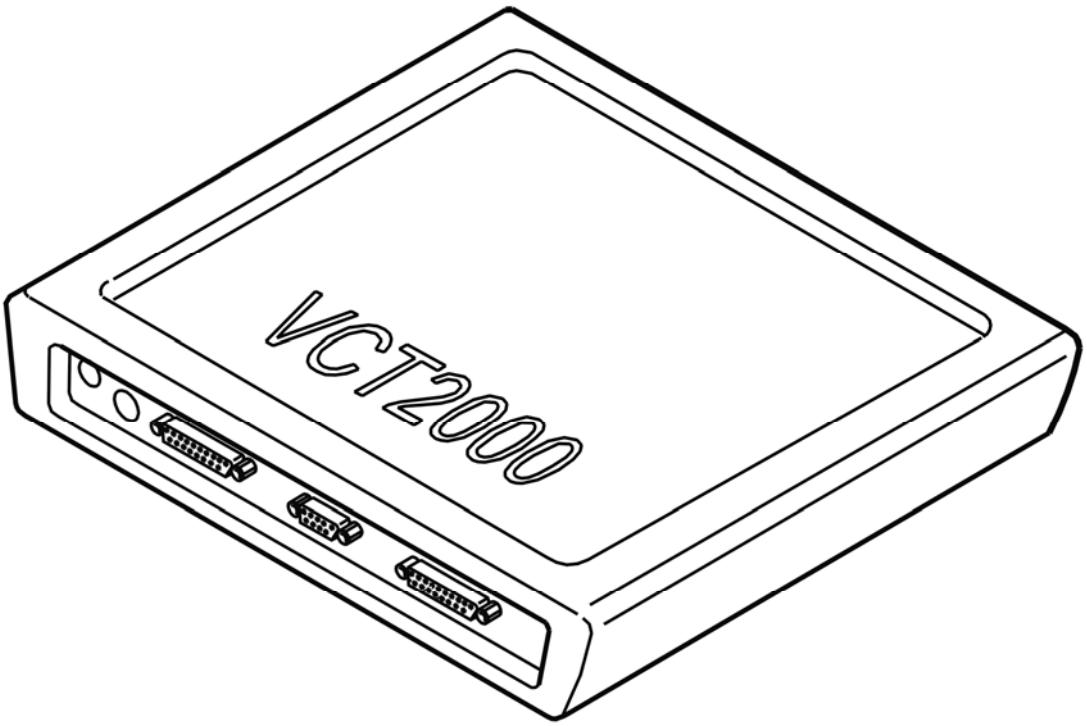

Fig. 357: Identifying VCT2000 Diagnostic Tool Symbol In VIDA
Courtesy of VOLVO CARS CORPORATION

Is the function OK?

- **YES**

  VERIFIED: Troubleshooting has been completed.

- **NO**

  Refer to **INFORMATION**

INFORMATION

FAULT-TRACING INFORMATION

The fault should have been detected and remedied. As this is not the case fault-tracing has failed.

Exit fault-tracing for this diagnostic trouble code (DTC) or make another attempt.

ECM-254C: FRONT HEATED OXYGEN SENSOR (HO2S), BANK 2, HEATING. SIGNAL TOO HIGH (B6294T; 2005-2006)

DIAGNOSTIC TROUBLE CODE (DTC) INFORMATION ECM-254C

Condition

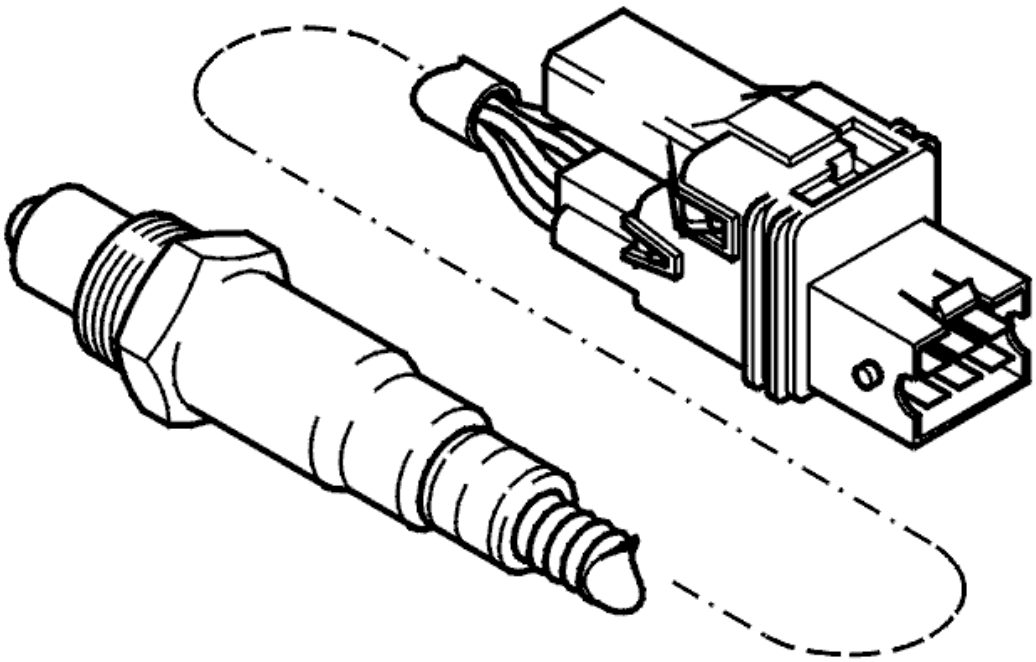

Fig. 358: Front Heated Oxygen Sensor
Courtesy of VOLVO CARS CORPORATION

The engine control module (ECM) regulates preheating by pulsing the current to the positive temperature coefficient (PTC) element (bank 2) in the front heated oxygen sensor (HO2S). Pulse lengths are dependent on the temperature of the heated oxygen sensor (H02S).

The diagnostic trouble code (DTC) is stored if the engine control module (ECM) registers that the signal is higher than a certain value when preheating is active.

Substitute Value

- Heated oxygen sensor (HO2S) control is disabled.

Possible Source

- Short-circuit to supply voltage in the signal cable
- Damaged front heated oxygen sensor (HO2S) (bank 2).

Fault symptom[s]

- Malfunction indicator lamp (MIL) lit.

SIGNAL TOO HIGH

CHECKING THE COMPONENTS AND WIRING

CAUTION: Do not apply rust solvent spray or grease to the heated oxygen sensor (HO2S) connector.

Check the signal cable between heated oxygen sensor (HO2S) #3 and the system relay. Check for a short-circuit to supply voltage.

NOTE: If possible, measure from the rear of the affected connectors in order to minimize any damage and future loose connections.

Try a new heated oxygen sensor (HO2S) if the above fault-tracing does not remedy the fault.

Remedy as necessary.

Other information

- see **CONNECTING THE BREAKOUT BOX**
- For 5 cylinder turbocharged engines -2004, see **SIGNAL DESCRIPTION**
- For 5 cylinder turbocharged engines 2005-, see **SIGNAL SPECIFICATION** .
- For 6 cylinder engines -2004, see **SIGNAL SPECIFICATION**
- For 6 cylinder engines 2005-, see **SIGNAL SPECIFICATION** .
- For B5xx4T, see **HEATED OXYGEN SENSOR (HO2S), REPLACING**
- For B6xx4T, see **HEATED OXYGEN SENSOR (HO2S), REPLACING** .
- see **CHECKING WIRING AND TERMINALS**

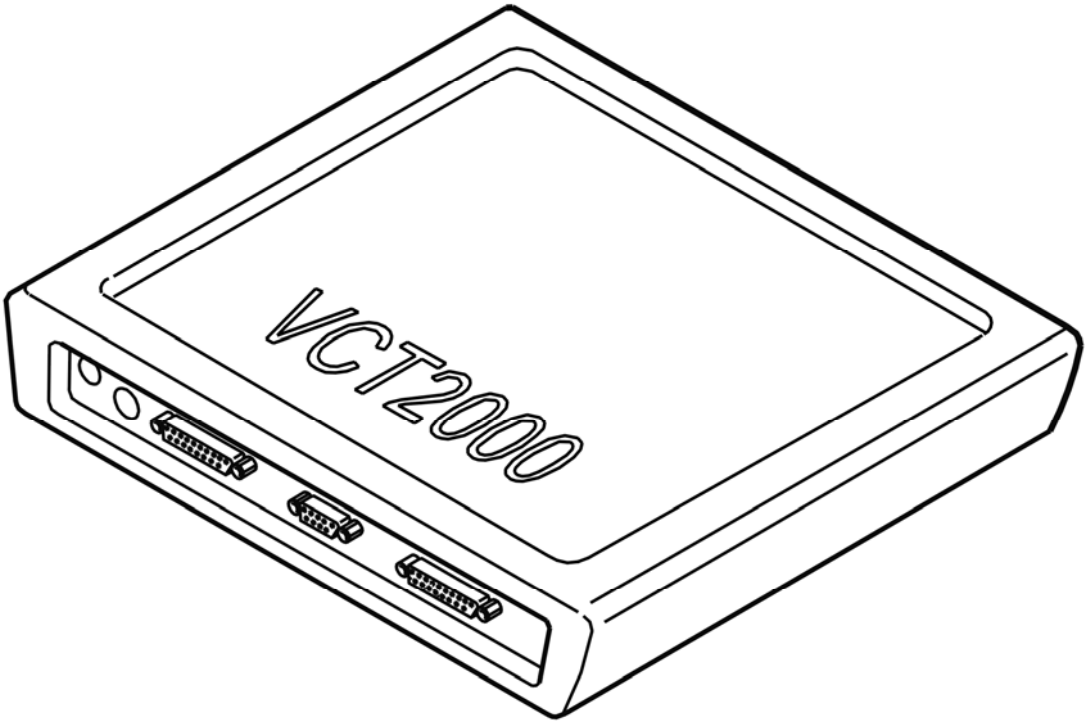

Fig. 359: Identifying VCT2000 Diagnostic Tool Symbol In VIDA
Courtesy of VOLVO CARS CORPORATION

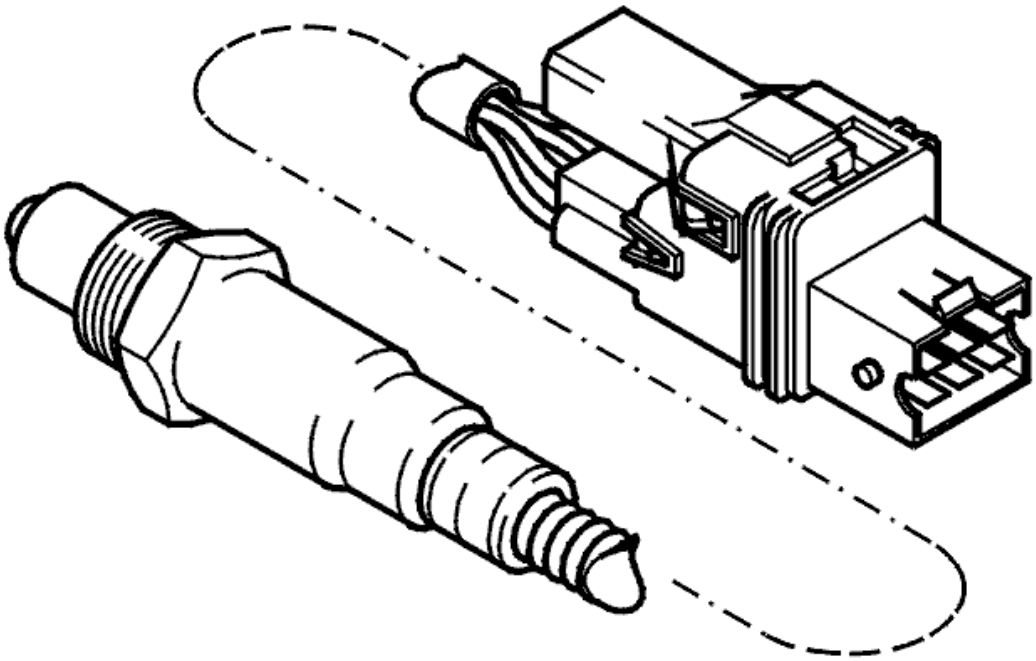

Fig. 360: Front Heated Oxygen Sensor
Courtesy of VOLVO CARS CORPORATION

- **Continue**

  Refer to **VERIFICATION**

VERIFICATION

VERIFICATION

HINT: After carrying out the repair, check that the fault has been remedied.

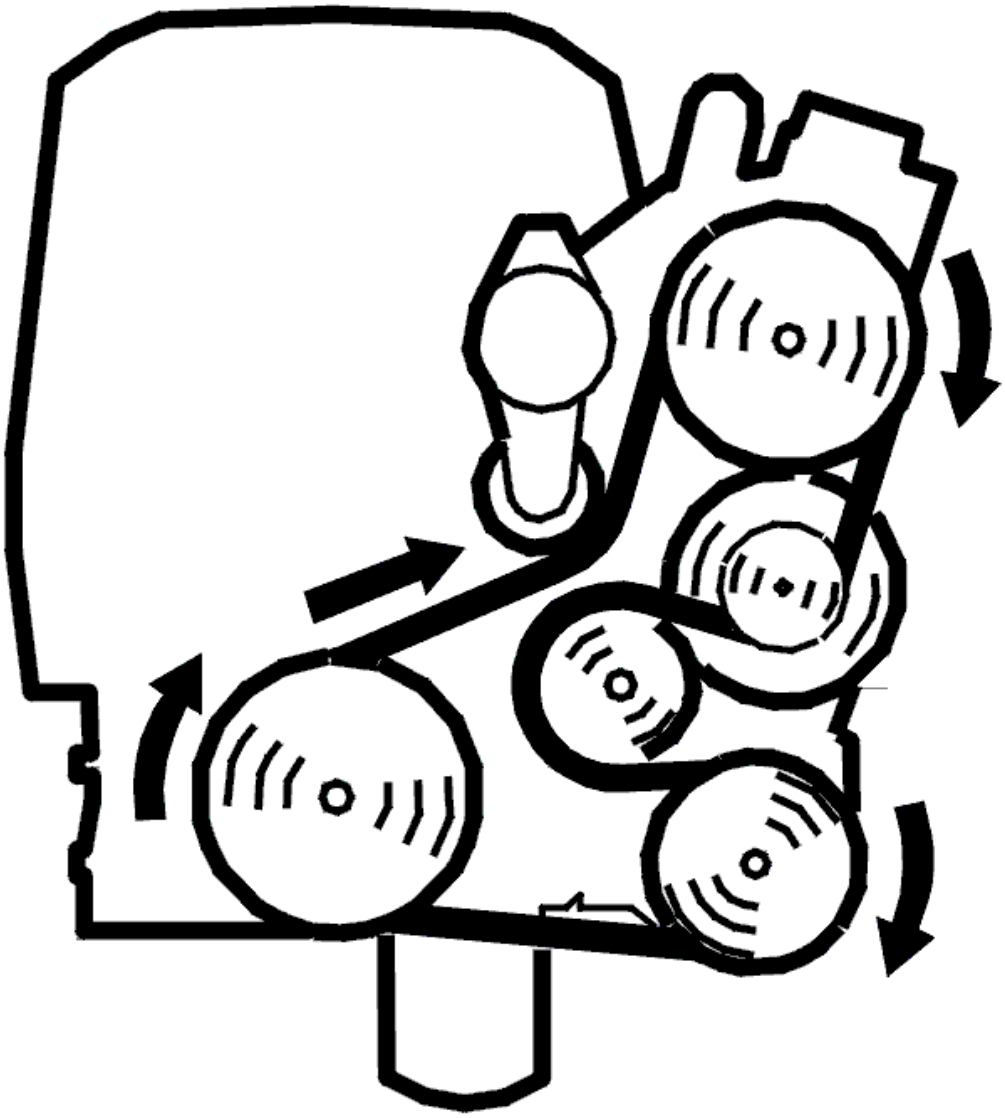

Fig. 361: Belt Routing / Engine Idling - Volvo
Courtesy of VOLVO CARS CORPORATION

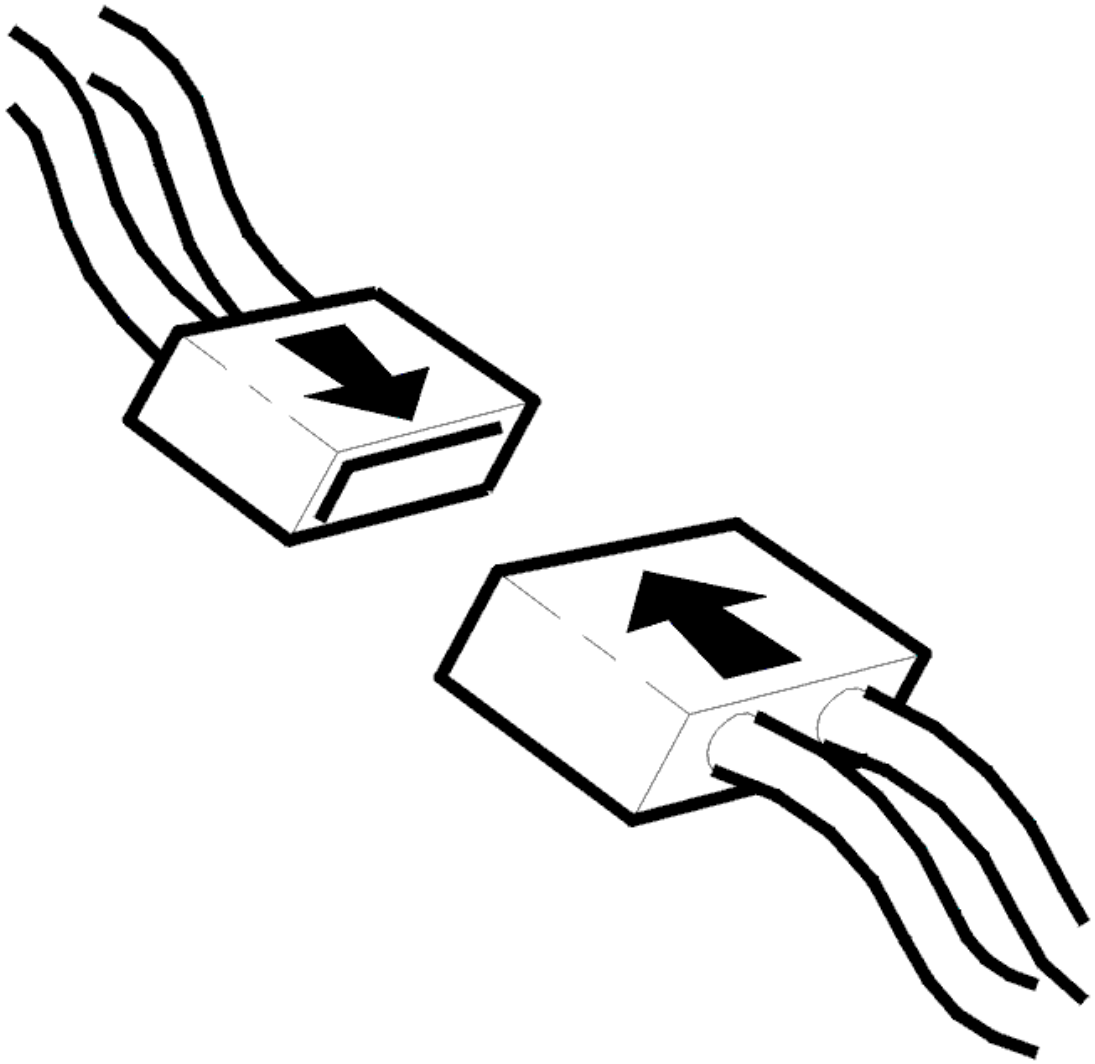

Fig. 362: Connecting Connector
Courtesy of VOLVO CARS CORPORATION

- Ignition off
- Reconnect the connectors, reinstall components etc.
- Test drive the car at an even speed (engine speed (RPM) above 2000 RPM) for at least 5 minutes
- Connect VCT2000 (or appropriate scan tool) to the data link connector (DLC) without switching off the engine.

NOTE: **If the engine is switched off, the stored fault status will be erased and the test drive will have to be repeated.**

Read off the diagnostic status and fault status for the diagnostic trouble code (DTC) by selecting the relevant diagnostic trouble code (DTC) from the list.

Check the fault status for the diagnostic trouble code (DTC) when the diagnostic is "Complete". If the function is correct, the fault status must be "No fault found" when the diagnostic is complete.

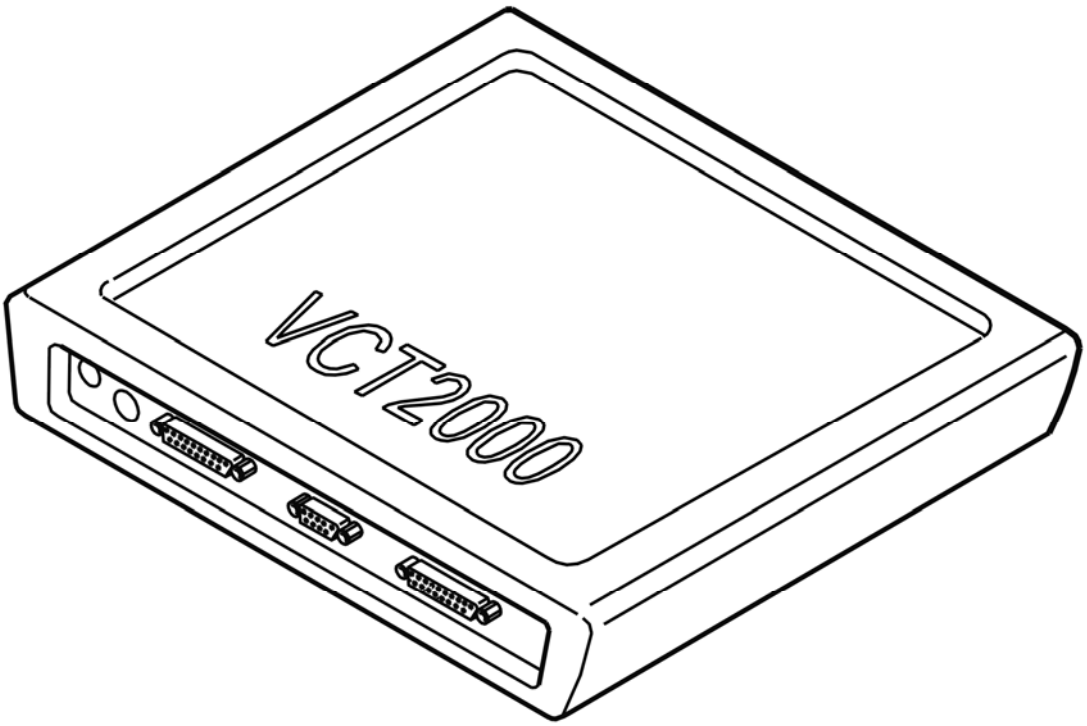

Fig. 363: Identifying VCT2000 Diagnostic Tool Symbol In VIDA
Courtesy of VOLVO CARS CORPORATION

Is the function OK?

- **YES**

  VERIFIED: Troubleshooting has been completed.

- **NO**

  Refer to **INFORMATION**

INFORMATION

FAULT-TRACING INFORMATION

The fault should have been detected and remedied. As this is not the case fault-tracing has failed.

Exit fault-tracing for this diagnostic trouble code (DTC) or make another attempt.

ECM-254D: FRONT HEATED OXYGEN SENSOR (HO2S), BANK 2, HEATING. SIGNAL TOO LOW (B6294T; 2005-2006)

DIAGNOSTIC TROUBLE CODE (DTC) INFORMATION ECM-254D

Condition

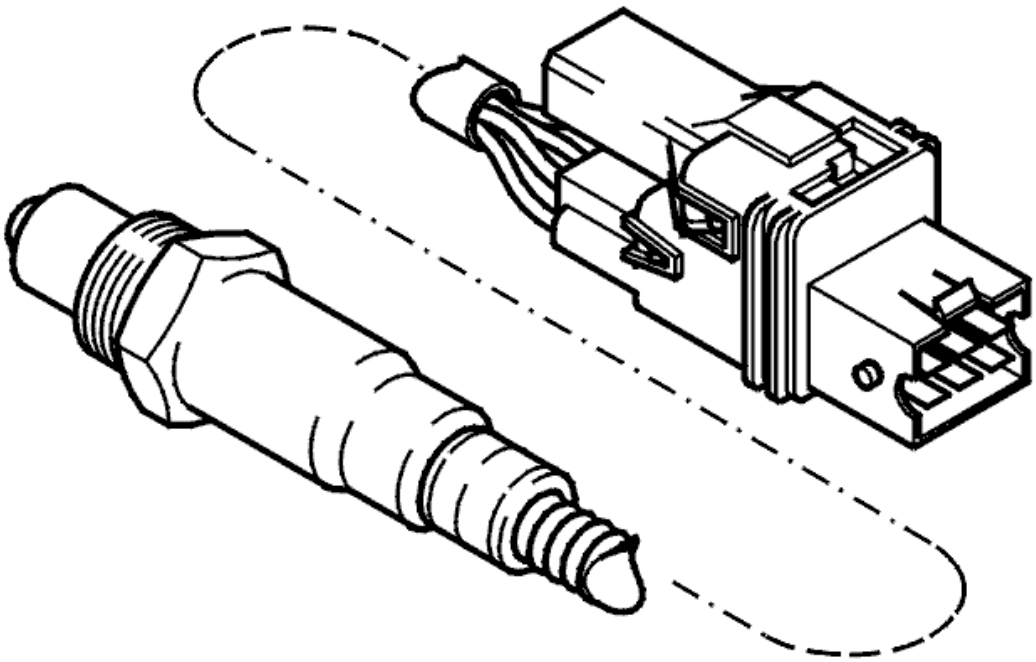

Fig. 364: Front Heated Oxygen Sensor
Courtesy of VOLVO CARS CORPORATION

The engine control module (ECM) regulates preheating by pulsing the current to the positive temperature coefficient (PTC) element (bank 2) in the front heated oxygen sensor (HO2S). Pulse lengths are dependent on the temperature of the heated oxygen sensor (H02S).

The diagnostic trouble code (DTC) is stored if the engine control module (ECM) registers that the signal is lower than a certain value when preheating is deactivated.

Substitute Value

- Heated oxygen sensor (HO2S) control is disabled.

Possible Source

- Short-circuit to ground in the signal cable
- Damaged front heated oxygen sensor (HO2S) (bank 2).

Fault symptom[s]

- Malfunction indicator lamp (MIL) lit.

SIGNAL TOO LOW

CHECKING THE COMPONENTS AND WIRING

CAUTION: Do not apply rust solvent spray or grease to the heated oxygen sensor (HO2S) connector.

Check the signal cable between heated oxygen sensor (HO2S) terminal #3 and the system relay. Check for a short-circuit to ground.

NOTE: If possible, measure from the rear of the affected connectors in order to minimize any damage and future loose connections.

Try a new heated oxygen sensor (HO2S) if the above fault-tracing does not remedy the fault.

Remedy as necessary.

Other information

- see **CONNECTING THE BREAKOUT BOX**
- For 5 cylinder turbocharged engines -2004, see **SIGNAL DESCRIPTION**
- For 5 cylinder turbocharged engines 2005-, see **SIGNAL SPECIFICATION** .
- For 6 cylinder engines -2004, see **SIGNAL SPECIFICATION**
- For 6 cylinder engines 2005-, see **SIGNAL SPECIFICATION** .
- For B5xx4T, see **HEATED OXYGEN SENSOR (HO2S), REPLACING**
- For B6xx4T, see **HEATED OXYGEN SENSOR (HO2S), REPLACING** .
- see **CHECKING WIRING AND TERMINALS**

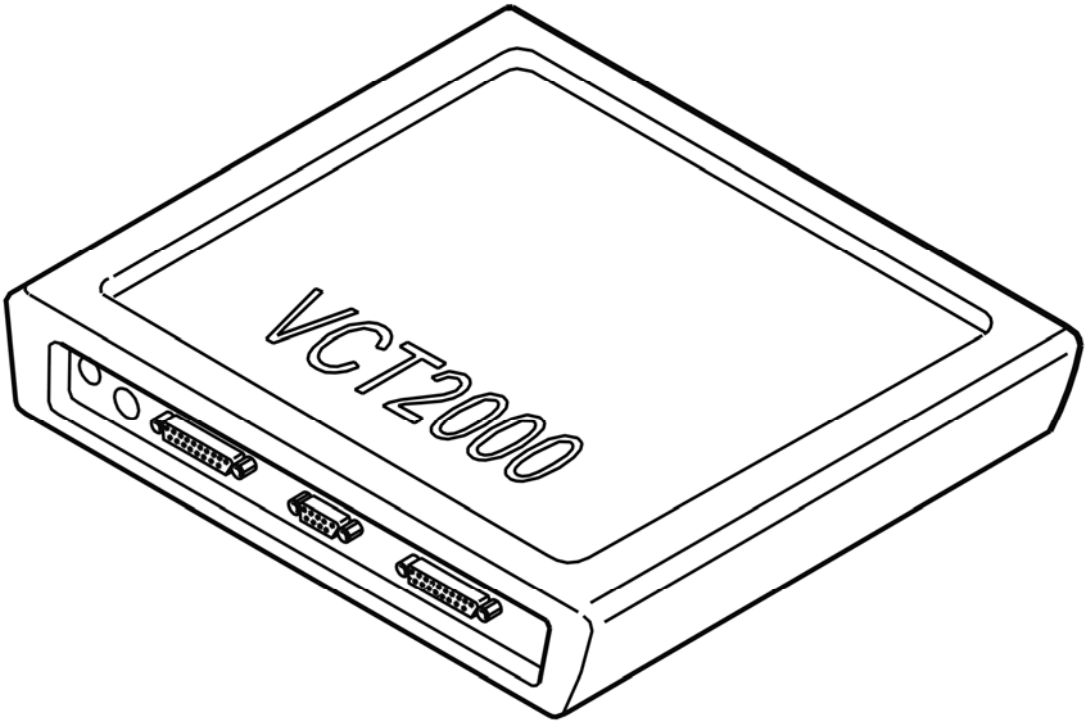

Fig. 365: Identifying VCT2000 Diagnostic Tool Symbol In VIDA
Courtesy of VOLVO CARS CORPORATION

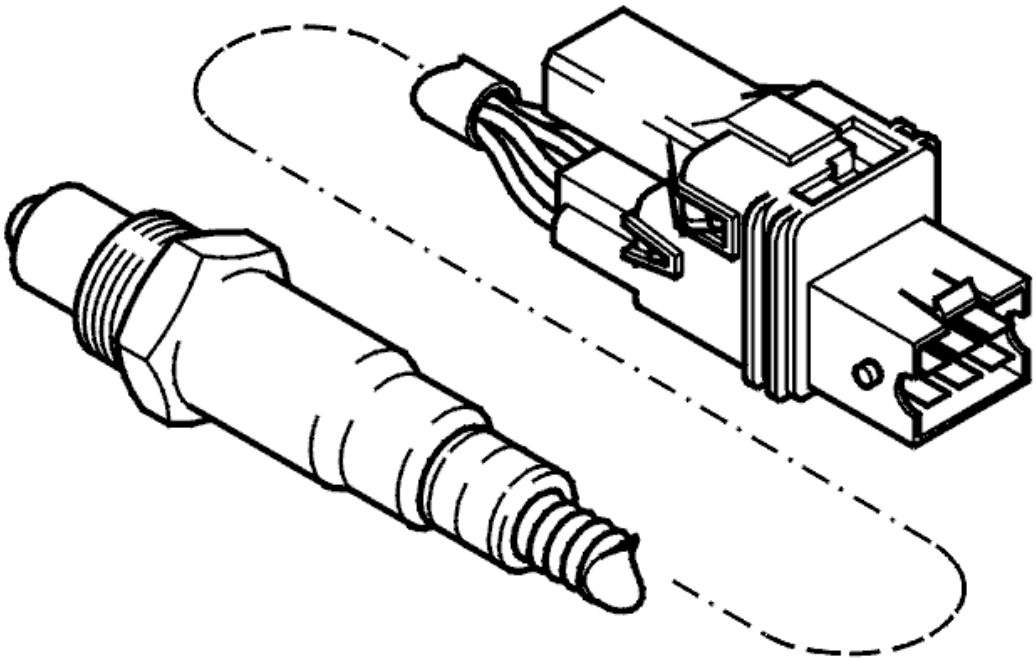

Fig. 366: Front Heated Oxygen Sensor
Courtesy of VOLVO CARS CORPORATION

- **Continue**

  Refer to **VERIFICATION**

VERIFICATION

VERIFICATION

HINT: After carrying out the repair, check that the fault has been remedied.

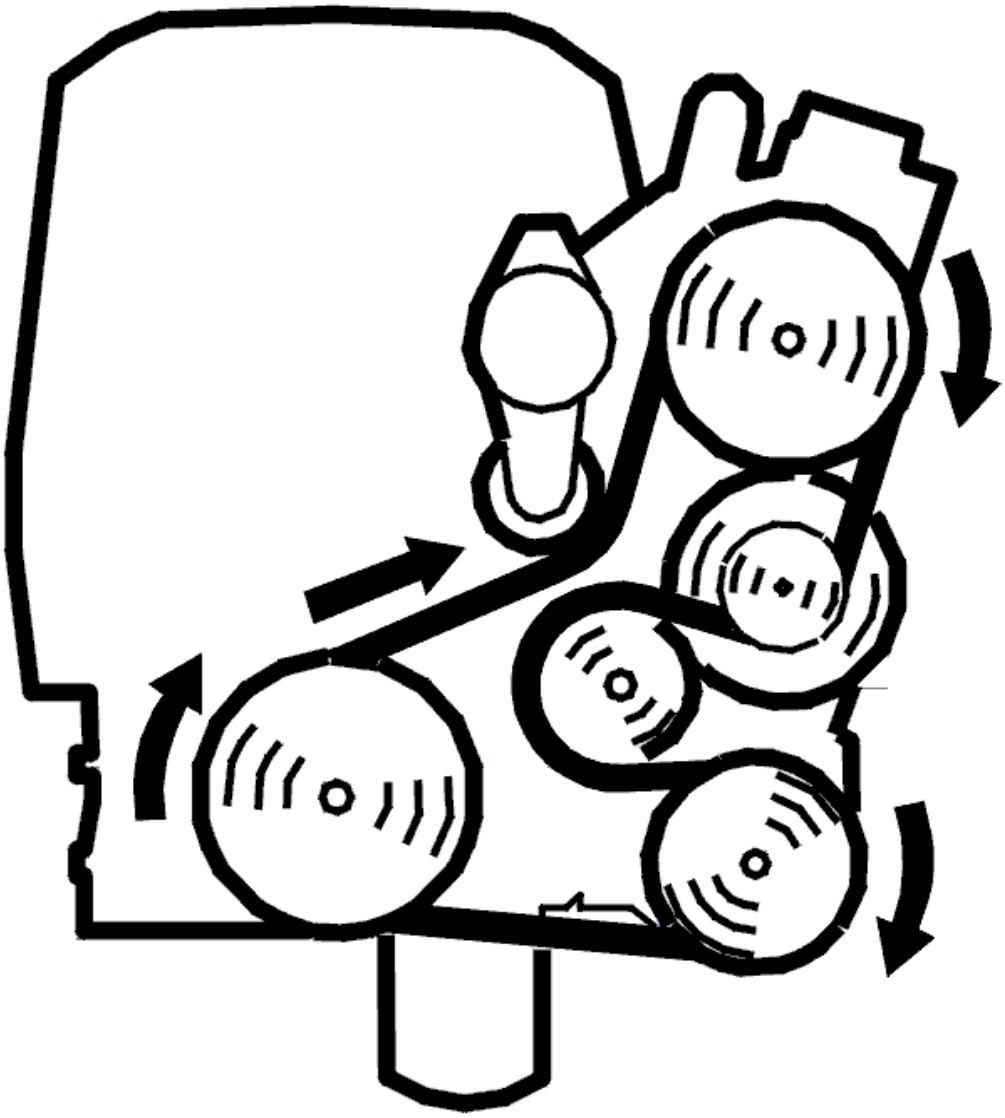

Fig. 367: Belt Routing / Engine Idling - Volvo
Courtesy of VOLVO CARS CORPORATION

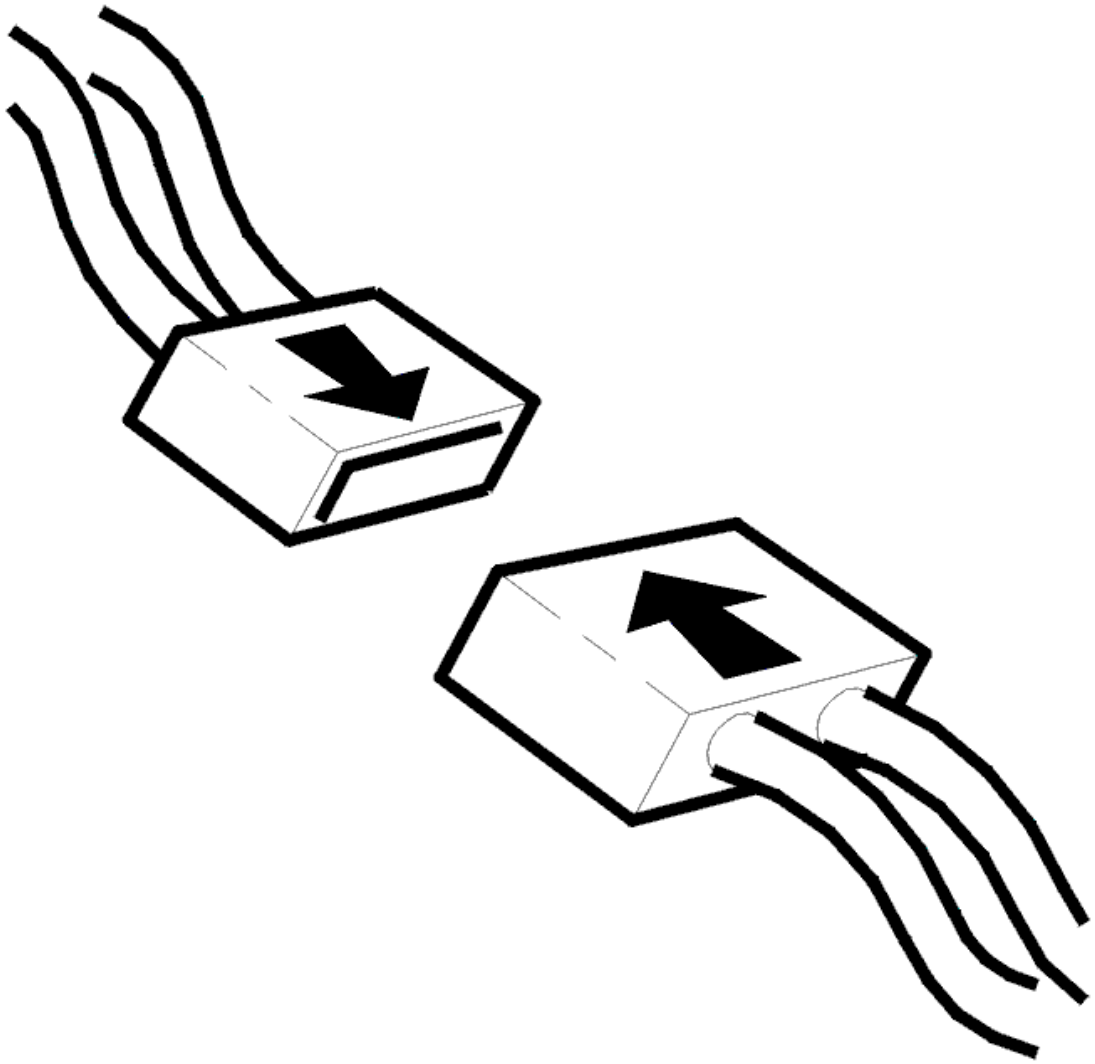

Fig. 368: Connecting Connector
Courtesy of VOLVO CARS CORPORATION

- Ignition off
- Reconnect the connectors, reinstall components etc.
- Test drive the car at an even speed (engine speed (RPM) above 2000 RPM) for at least 5 minutes
- Connect VCT2000 (or appropriate scan tool) to the data link connector (DLC) without switching off the engine.

NOTE: **If the engine is switched off, the stored fault status will be erased and the test drive will have to be repeated.**

Read off the diagnostic status and fault status for the diagnostic trouble code (DTC) by selecting the relevant diagnostic trouble code (DTC) from the list.

Check the fault status for the diagnostic trouble code (DTC) when the diagnostic is "Complete". If the function is correct, the fault status must be "No fault found" when the diagnostic is complete.

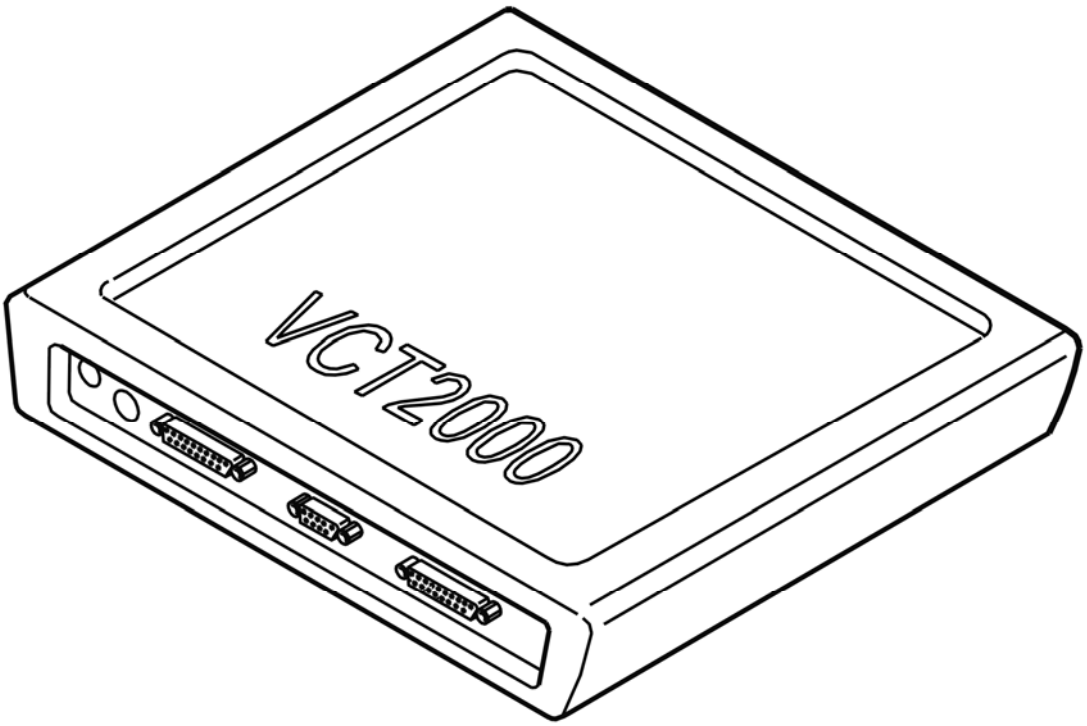

Fig. 369: Identifying VCT2000 Diagnostic Tool Symbol In VIDA
Courtesy of VOLVO CARS CORPORATION

Is the function OK?

- **YES**

  VERIFIED: Troubleshooting has been completed.

- **NO**

  Refer to **INFORMATION**

INFORMATION

FAULT-TRACING INFORMATION

The fault should have been detected and remedied. As this is not the case fault-tracing has failed.

Exit fault-tracing for this diagnostic trouble code (DTC) or make another attempt.

ECM-2550: FRONT HEATED OXYGEN SENSOR (HO2S), BANK 2. FAULTY SIGNAL (B6294T; 2005-2006)

DIAGNOSTIC TROUBLE CODE (DTC) INFORMATION ECM-2550

Condition

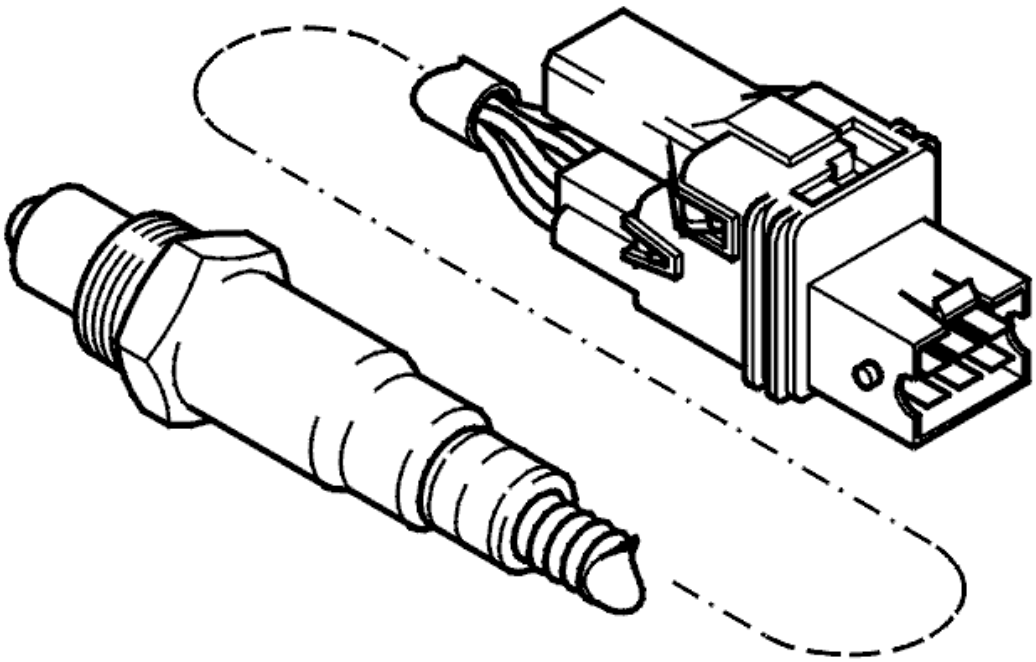

Fig. 370: Front Heated Oxygen Sensor
Courtesy of VOLVO CARS CORPORATION

The diagnostic trouble code (DTC) is stored if the engine control module (ECM) registers an internal fault in the control for the heated oxygen sensors (HO2S).

The diagnostic trouble code (DTC) can be diagnosed when the ignition is switched on.

Substitute Value

- None.

Possible Source

- Damaged engine control module (ECM).

Fault symptom[s]

- Malfunction indicator lamp (MIL) lit.

INTERNAL FAULT

see **INTERNAL FAULT**

ECM-255B: FRONT HEATED OXYGEN SENSOR (HO2S), BANK 2. SIGNAL MISSING (B6294T; 2005-2006)

DIAGNOSTIC TROUBLE CODE (DTC) INFORMATION ECM-255B

Condition

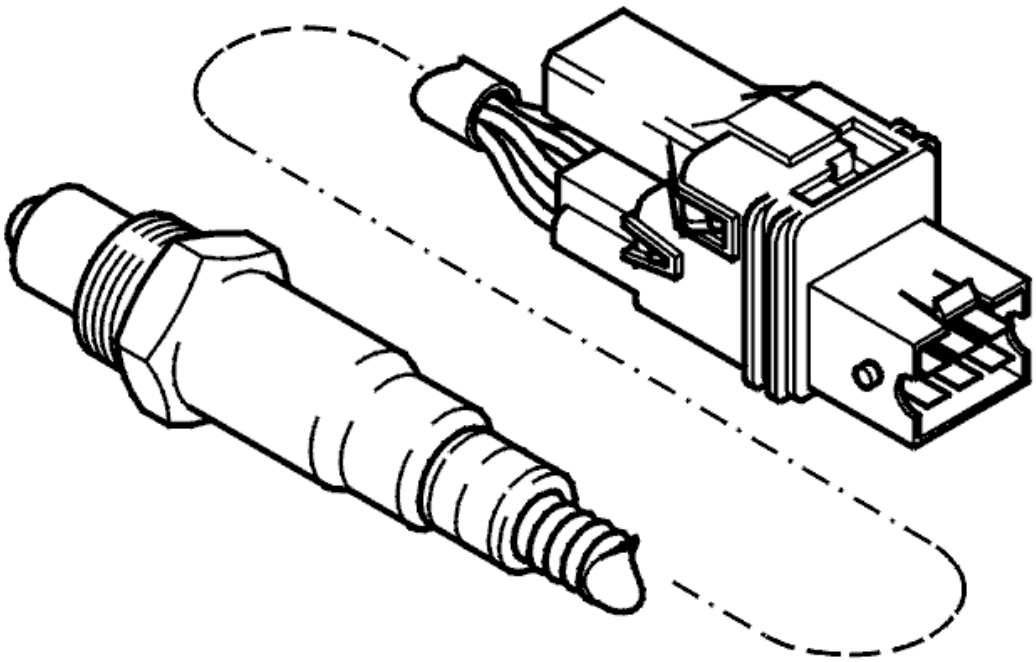

Fig. 371: Front Heated Oxygen Sensor
Courtesy of VOLVO CARS CORPORATION

The diagnostic trouble code (DTC) is stored if the engine control module (ECM) registers an internal fault in the control for the heated oxygen sensors (HO2S).

The diagnostic trouble code (DTC) can be diagnosed when the ignition is switched on.

Substitute Value

- None.

Possible Source

- Damaged engine control module (ECM).

Fault symptom[s]

- Malfunction indicator lamp (MIL) lit.

INTERNAL FAULT

see **INTERNAL FAULT**

ECM-255C: FRONT HEATED OXYGEN SENSOR (HO2S), BANK 2. SIGNAL TOO HIGH (B6294T; 2005-2006)

DIAGNOSTIC TROUBLE CODE (DTC) INFORMATION ECM-255C

Condition

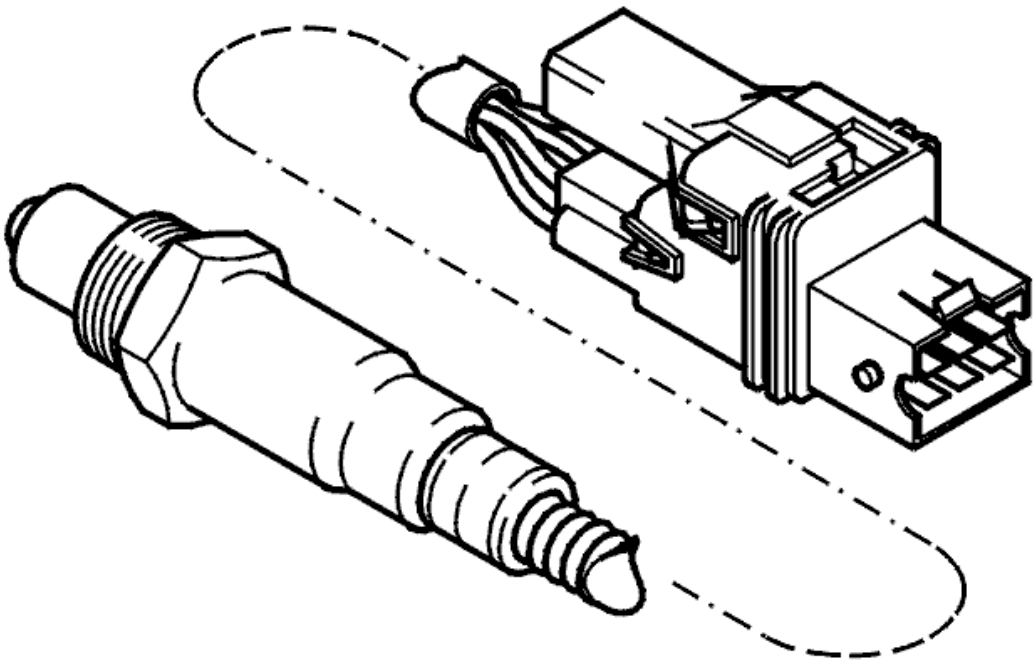

Fig. 372: Front Heated Oxygen Sensor
Courtesy of VOLVO CARS CORPORATION

The diagnostic trouble code (DTC) is stored if the engine control module (ECM) registers an internal fault in the control for the heated oxygen sensors (HO2S).

The diagnostic trouble code (DTC) can be diagnosed when the ignition is switched on.

Substitute Value

- None.

Possible Source

- Damaged engine control module (ECM).

Fault symptom[s]

- Malfunction indicator lamp (MIL) lit.

INTERNAL FAULT

see **INTERNAL FAULT**

ECM-255D: FRONT HEATED OXYGEN SENSOR (HO2S), BANK 2. SIGNAL TOO LOW (B6294T; 2005-2006)

DIAGNOSTIC TROUBLE CODE (DTC) INFORMATION ECM-255D

Condition

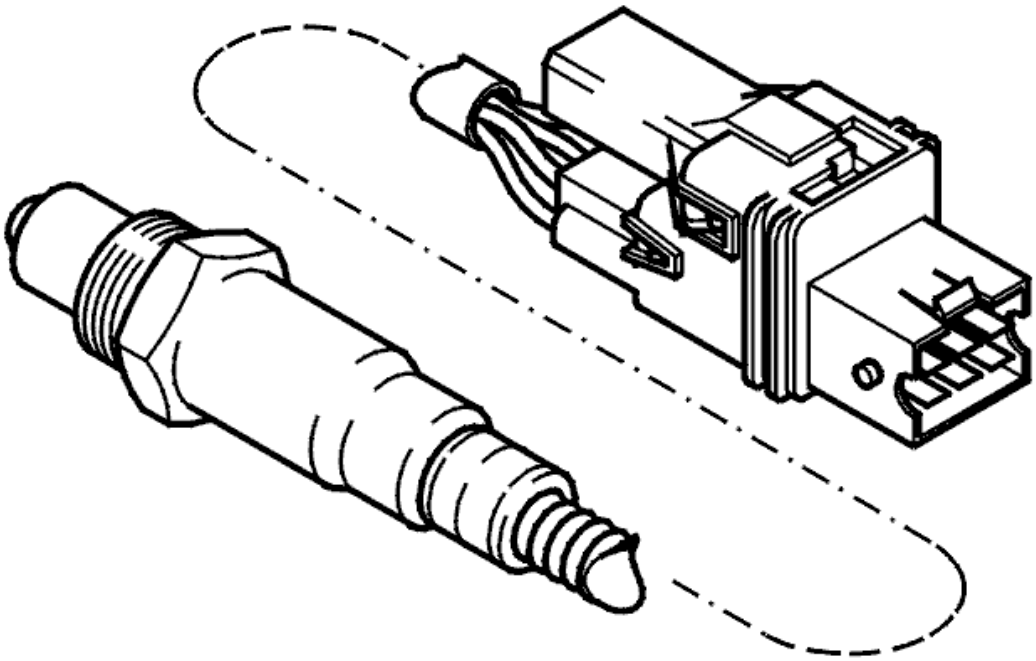

Fig. 373: Front Heated Oxygen Sensor
Courtesy of VOLVO CARS CORPORATION

The diagnostic trouble code (DTC) is stored if the engine control module (ECM) registers an internal fault in the control for the heated oxygen sensors (HO2S).

The diagnostic trouble code (DTC) can be diagnosed when the ignition is switched on.

Substitute Value

- None.

Possible Source

- Damaged engine control module (ECM).

Fault symptom[s]

- Malfunction indicator lamp (MIL) lit.

INTERNAL FAULT

see **INTERNAL FAULT**

ECM-256B: FRONT HEATED OXYGEN SENSOR (HO2S), BANK 2. SIGNAL MISSING (B6294T; 2005-2006)

DIAGNOSTIC TROUBLE CODE (DTC) INFORMATION ECM-256B

Condition

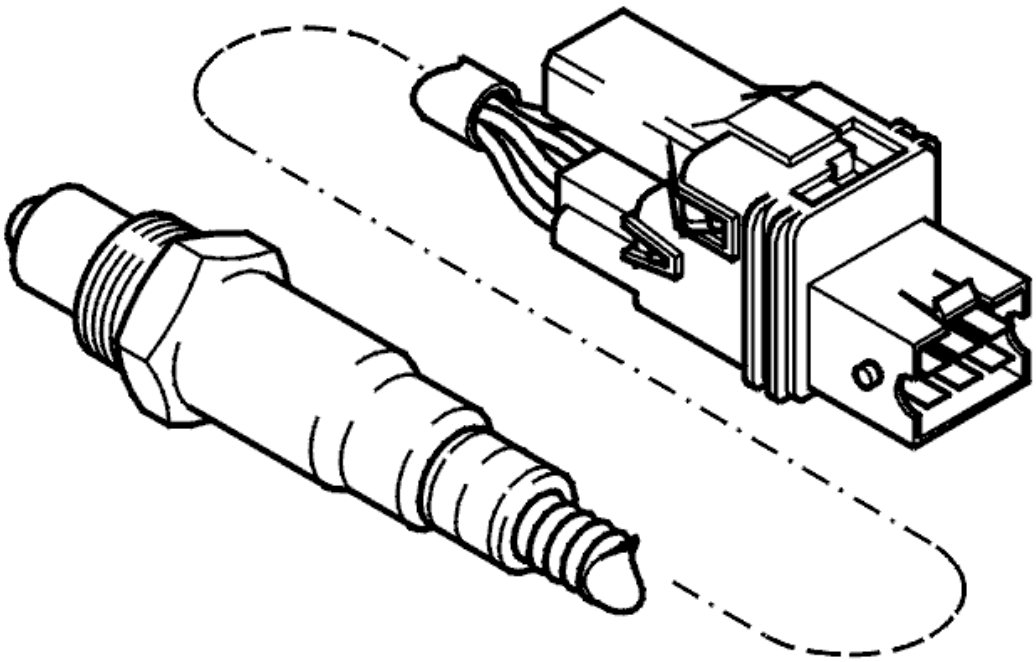

Fig. 374: Front Heated Oxygen Sensor
Courtesy of VOLVO CARS CORPORATION

The diagnostic trouble code (DTC) is stored if the engine control module (ECM) registers that the calibration current has ceased and the front heated oxygen sensor (HO2S) signal (bank 2) is implausibly high at fuel shut-off.

Substitute Value

- None.

Possible Source

- Contact resistance and oxidation in the terminals
- Open-circuit in the cable for calibration current
- Damaged front heated oxygen sensor (HO2S).

Fault symptom[s]

- Malfunction indicator lamp (MIL) lit.

SIGNAL MISSING

CHECKING THE COMPONENTS AND WIRING

CAUTION: Do not apply rust solvent spray or grease to the heated oxygen sensor (HO2S) connector.

Check the heated oxygen sensor (HO2S) connector. Check for contact resistance and oxidation.

Check the cable between engine control module (ECM) terminal #A69 (#B9) and heated oxygen sensor (HO2S) terminal #2. Check for an open-circuit.

NOTE: If possible, measure from the rear of the affected connectors in order to minimize any damage and future loose connections.

Try a new heated oxygen sensor (HO2S) if the above fault-tracing does not remedy the fault.

Remedy as necessary.

Other information

- see **CONNECTING THE BREAKOUT BOX**
- For 5 cylinder turbocharged engines -2004, see **SIGNAL DESCRIPTION**
- For 5 cylinder turbocharged engines 2005-, see **SIGNAL SPECIFICATION** .
- For 6 cylinder engines -2004, see **SIGNAL SPECIFICATION**
- For 6 cylinder engines 2005-, see **SIGNAL SPECIFICATION** .
- For B5xx4T, see **HEATED OXYGEN SENSOR (HO2S), REPLACING**
- For B6xx4T, see **HEATED OXYGEN SENSOR (HO2S), REPLACING** .
- see **CHECKING WIRING AND TERMINALS**

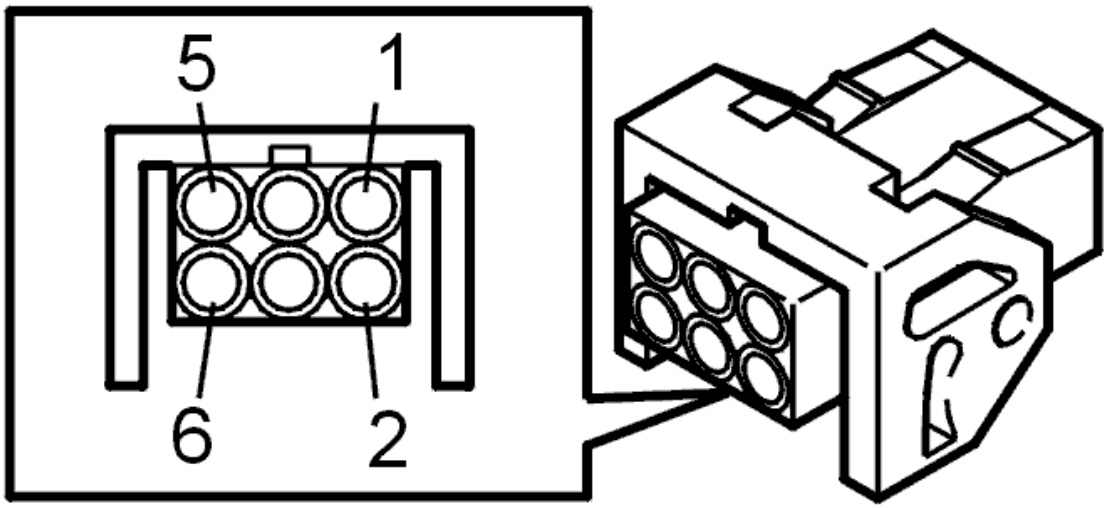

Fig. 375: Identifying Front Heated Oxygen Sensor Connector Terminals
Courtesy of VOLVO CARS CORPORATION

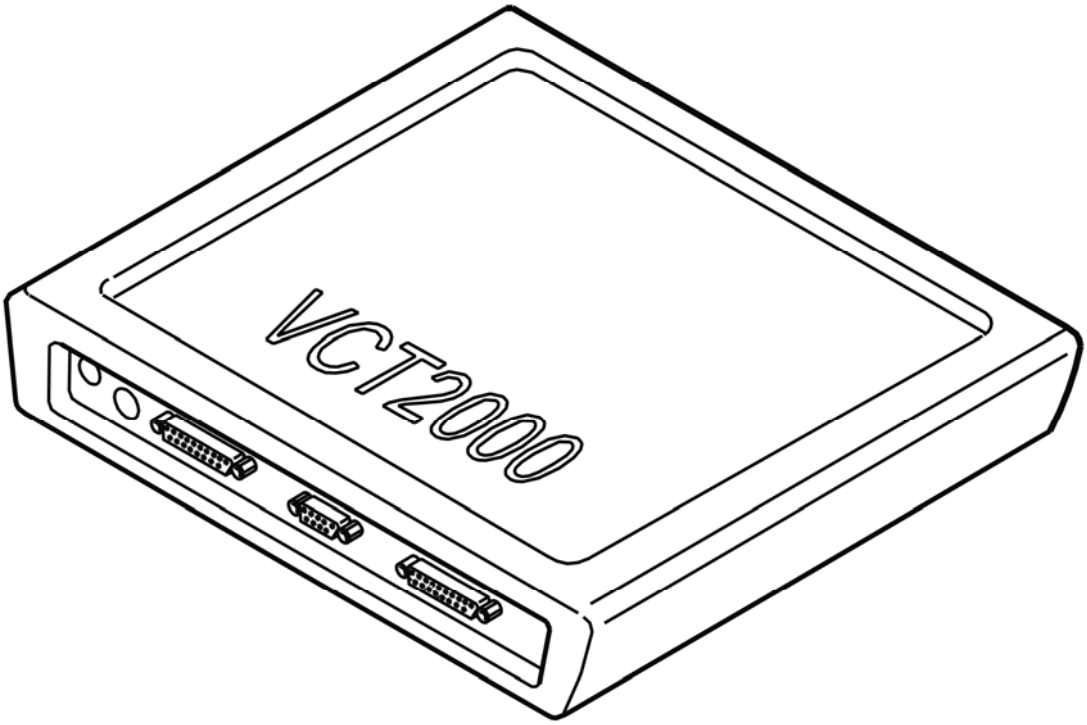

Fig. 376: Identifying VCT2000 Diagnostic Tool Symbol In VIDA
Courtesy of VOLVO CARS CORPORATION

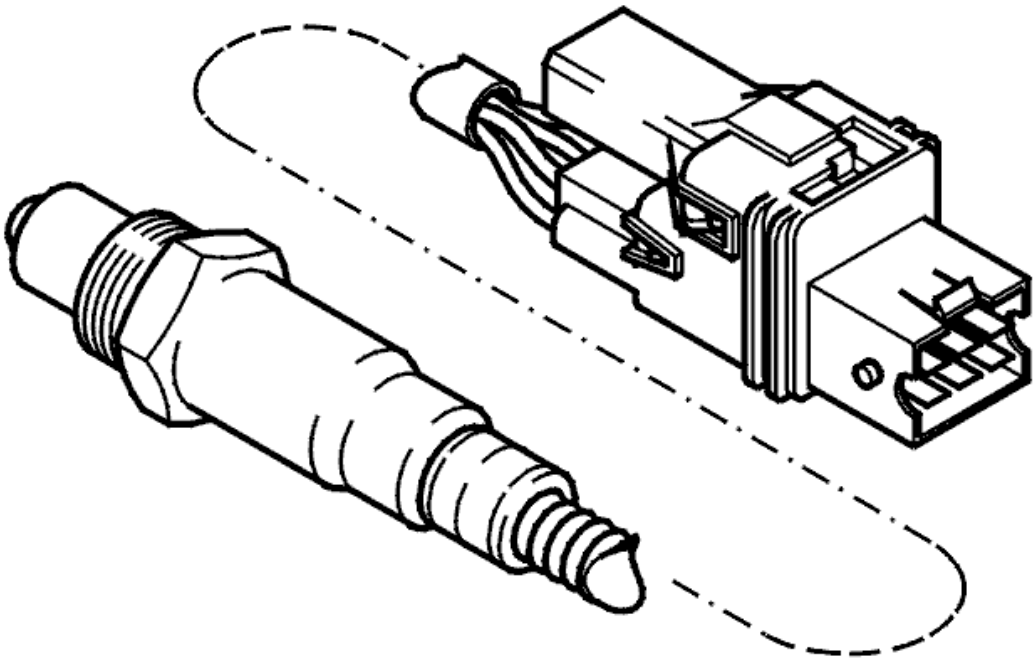

Fig. 377: Front Heated Oxygen Sensor
Courtesy of VOLVO CARS CORPORATION

- **Continue**

  Refer to **VERIFICATION**

VERIFICATION

VERIFICATION

HINT: After carrying out the repair, check that the fault has been remedied.

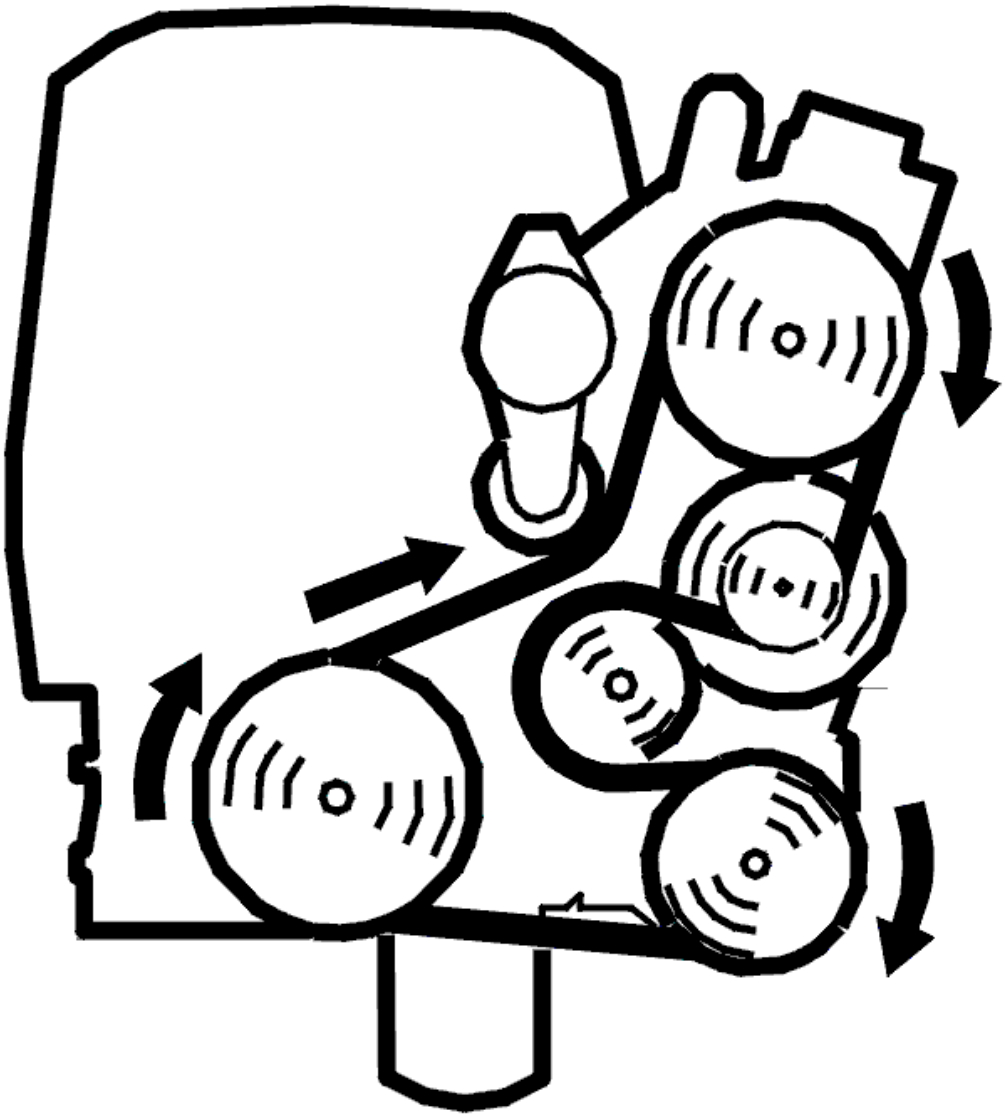

Fig. 378: Belt Routing / Engine Idling - Volvo
Courtesy of VOLVO CARS CORPORATION

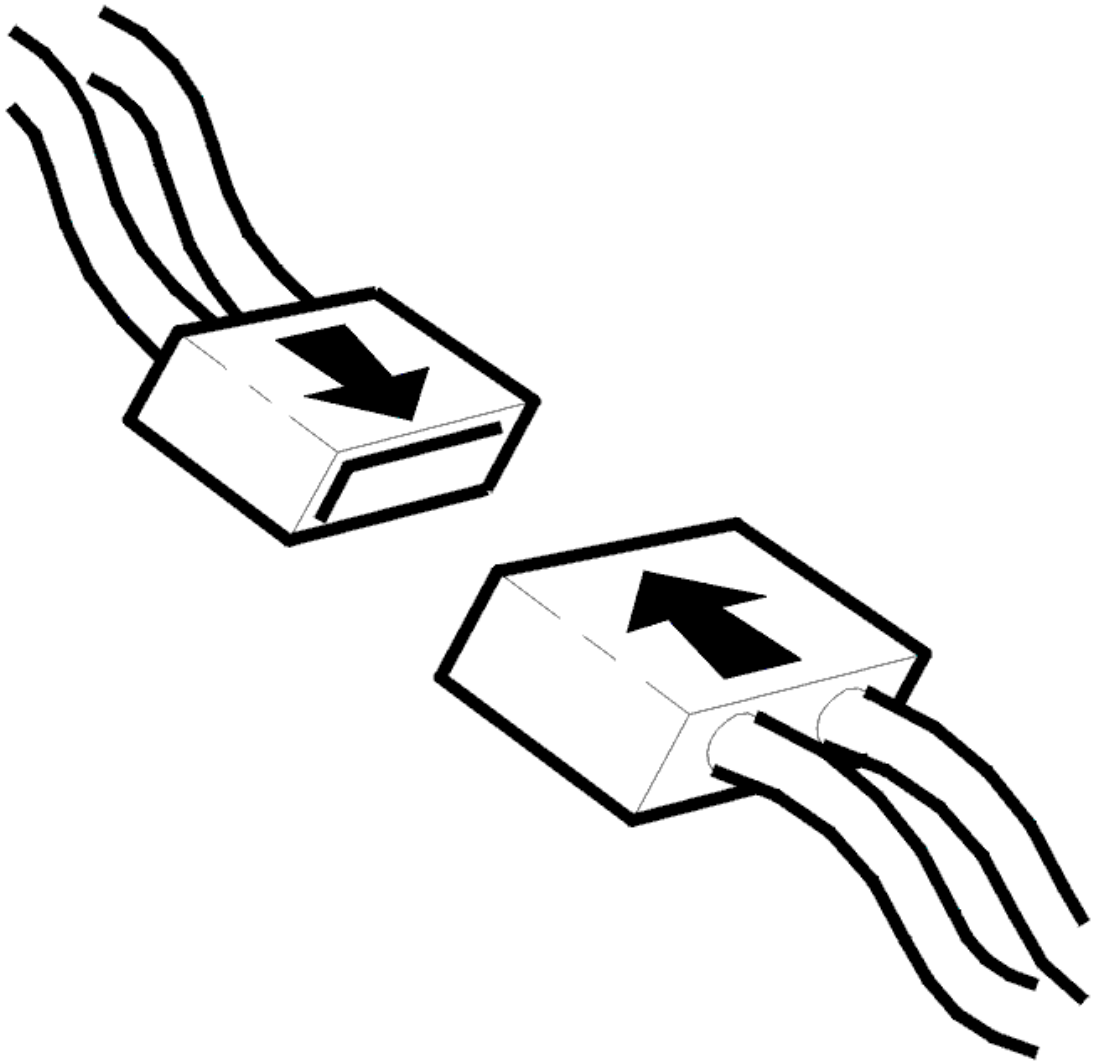

Fig. 379: Connecting Connector
Courtesy of VOLVO CARS CORPORATION

- Ignition off
- Reconnect the connectors, reinstall components etc.
- Test drive the car at an even speed (engine speed (RPM) above 2000 RPM) for at least 5 minutes
- Connect VCT2000 (or appropriate scan tool) to the data link connector (DLC) without switching off the engine.

NOTE: **If the engine is switched off, the stored fault status will be erased and the test drive will have to be repeated.**

Read off the diagnostic status and fault status for the diagnostic trouble code (DTC) by selecting the relevant diagnostic trouble code (DTC) from the list.

Check the fault status for the diagnostic trouble code (DTC) when the diagnostic is "Complete". If the function is correct, the fault status must be "No fault found" when the diagnostic is complete.

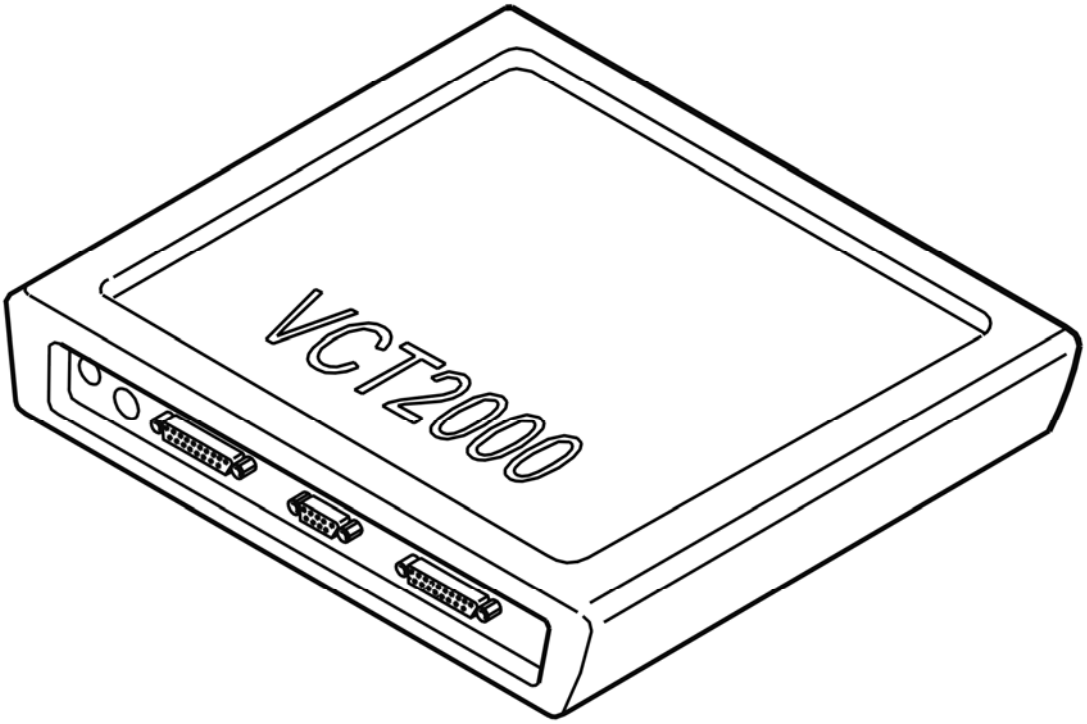

Fig. 380: Identifying VCT2000 Diagnostic Tool Symbol In VIDA
Courtesy of VOLVO CARS CORPORATION

Is the function OK?

- **YES**

  VERIFIED: Troubleshooting has been completed.

- **NO**

  Refer to **INFORMATION**

INFORMATION

FAULT-TRACING INFORMATION

The fault should have been detected and remedied. As this is not the case fault-tracing has failed.

Exit fault-tracing for this diagnostic trouble code (DTC) or make another attempt.

ECM-2570: FRONT HEATED OXYGEN SENSOR (HO2S), BANK 2. FAULTY SIGNAL (B6294T; 2005-2006)

DIAGNOSTIC TROUBLE CODE (DTC) INFORMATION ECM-2570

Condition

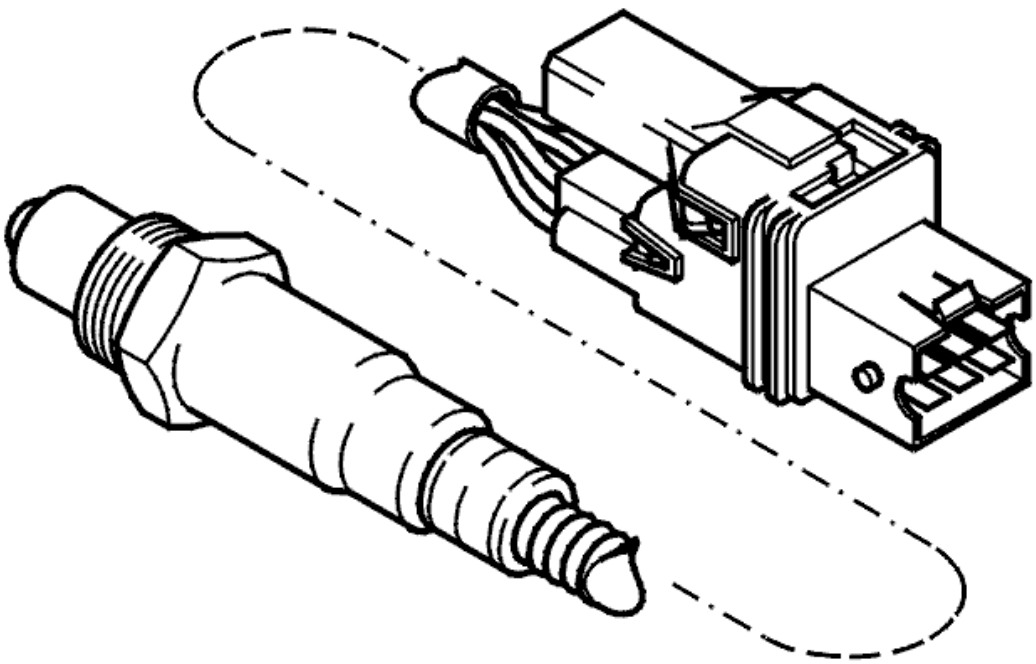

Fig. 381: Front Heated Oxygen Sensor
Courtesy of VOLVO CARS CORPORATION

The diagnostic trouble code (DTC) is stored if the engine control module (ECM) registers that the pump current has ceased and the front heated oxygen sensor (HO2S) signal (bank 2) has been set to a default value.

Substitute Value

- None.

Possible Source

- Contact resistance and oxidation in the terminals
- Open-circuit in the cable for pump current
- Damaged front heated oxygen sensor (HO2S).

Fault symptom[s]

- Malfunction indicator lamp (MIL) lit.

SIGNAL TOO HIGH / SIGNAL MISSING / FAULTY SIGNAL

CHECKING THE COMPONENTS AND WIRING

CAUTION: Do not apply rust solvent spray or grease to the heated oxygen sensor (HO2S) connector.

Check the heated oxygen sensor (HO2S) connector. Check for contact resistance and oxidation.

Check the cable between engine control module (ECM) terminal #A69 (#B9) and heated oxygen sensor (HO2S) terminal #2. Check for an open-circuit.

NOTE: If possible, measure from the rear of the affected connectors in order to minimize any damage and future loose connections.

Try a new heated oxygen sensor (HO2S) if the above fault-tracing does not remedy the fault.

Remedy as necessary.

Other information

- see **CONNECTING THE BREAKOUT BOX**
- For 5 cylinder turbocharged engines -2004, see **SIGNAL DESCRIPTION**
- For 5 cylinder turbocharged engines 2005-, see **SIGNAL SPECIFICATION** .
- For 6 cylinder engines -2004, see **SIGNAL SPECIFICATION**
- For 6 cylinder engines 2005-, see **SIGNAL SPECIFICATION** .
- For B5xx4T, see **HEATED OXYGEN SENSOR (HO2S), REPLACING**
- For B6xx4T, see **HEATED OXYGEN SENSOR (HO2S), REPLACING** .
- see **CHECKING WIRING AND TERMINALS**

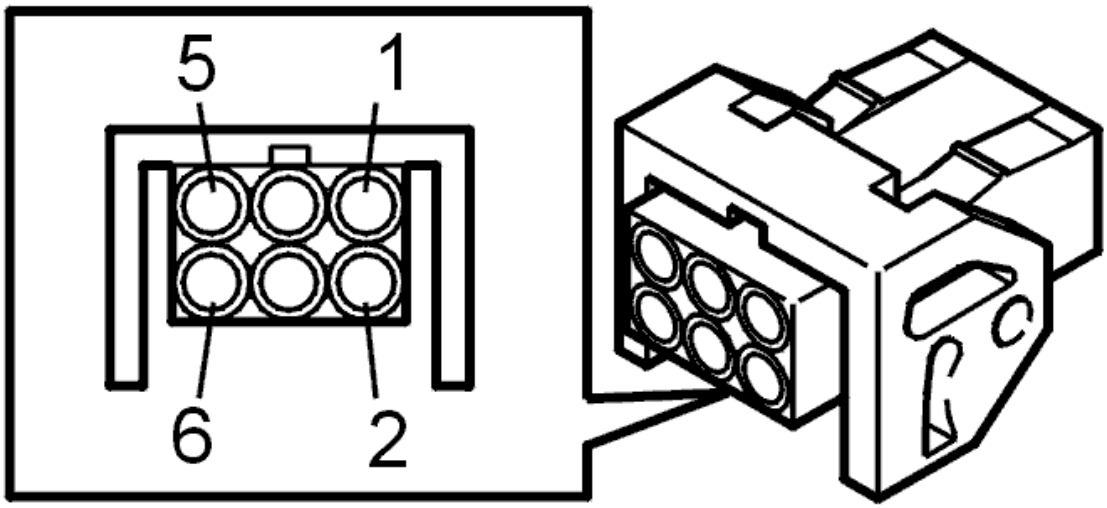

Fig. 382: Identifying Front Heated Oxygen Sensor Connector Terminals
Courtesy of VOLVO CARS CORPORATION

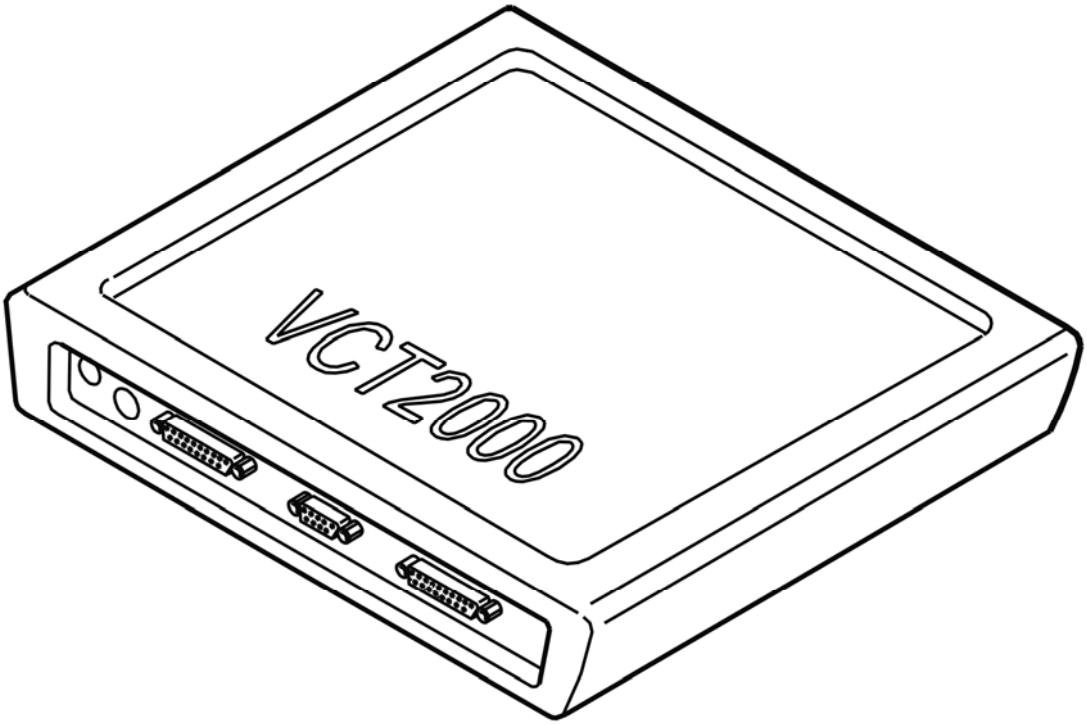

Fig. 383: Identifying VCT2000 Diagnostic Tool Symbol In VIDA
Courtesy of VOLVO CARS CORPORATION

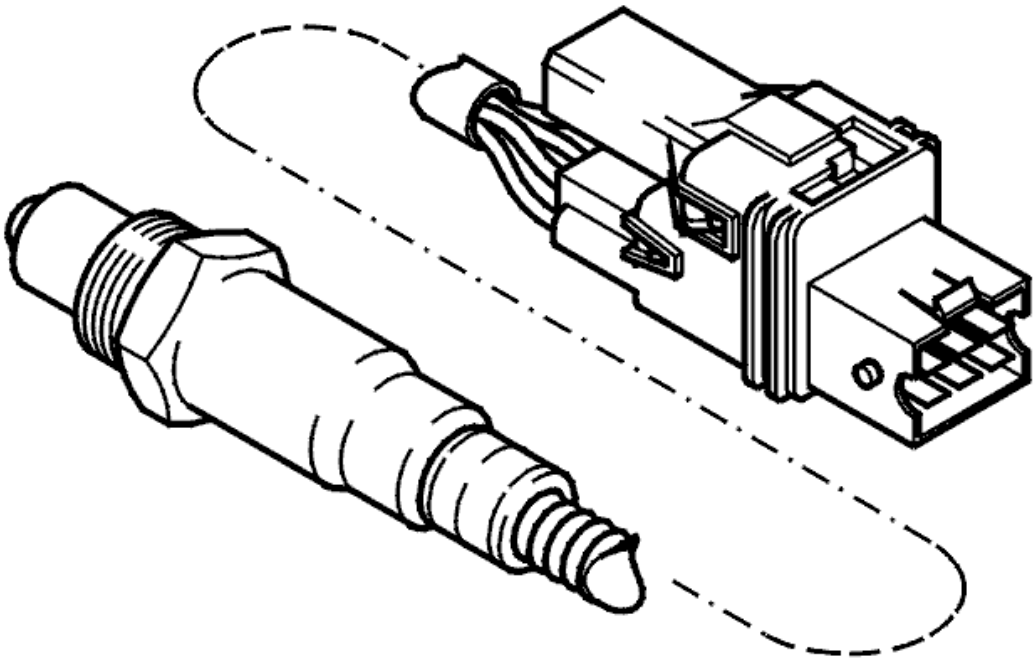

Fig. 384: Front Heated Oxygen Sensor
Courtesy of VOLVO CARS CORPORATION

- **Continue**

  Refer to **VERIFICATION**

VERIFICATION

VERIFICATION

HINT: After carrying out the repair, check that the fault has been remedied.

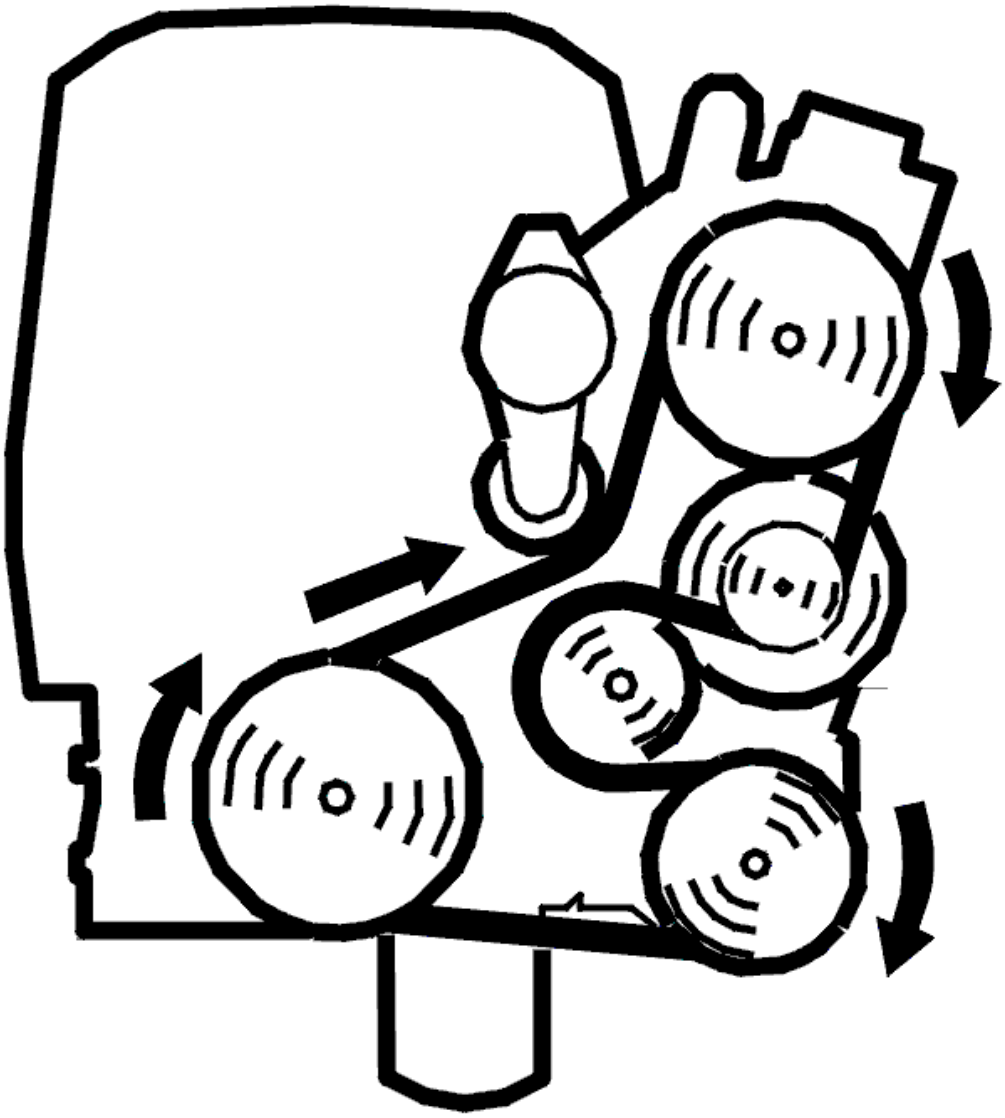

Fig. 385: Belt Routing / Engine Idling - Volvo
Courtesy of VOLVO CARS CORPORATION

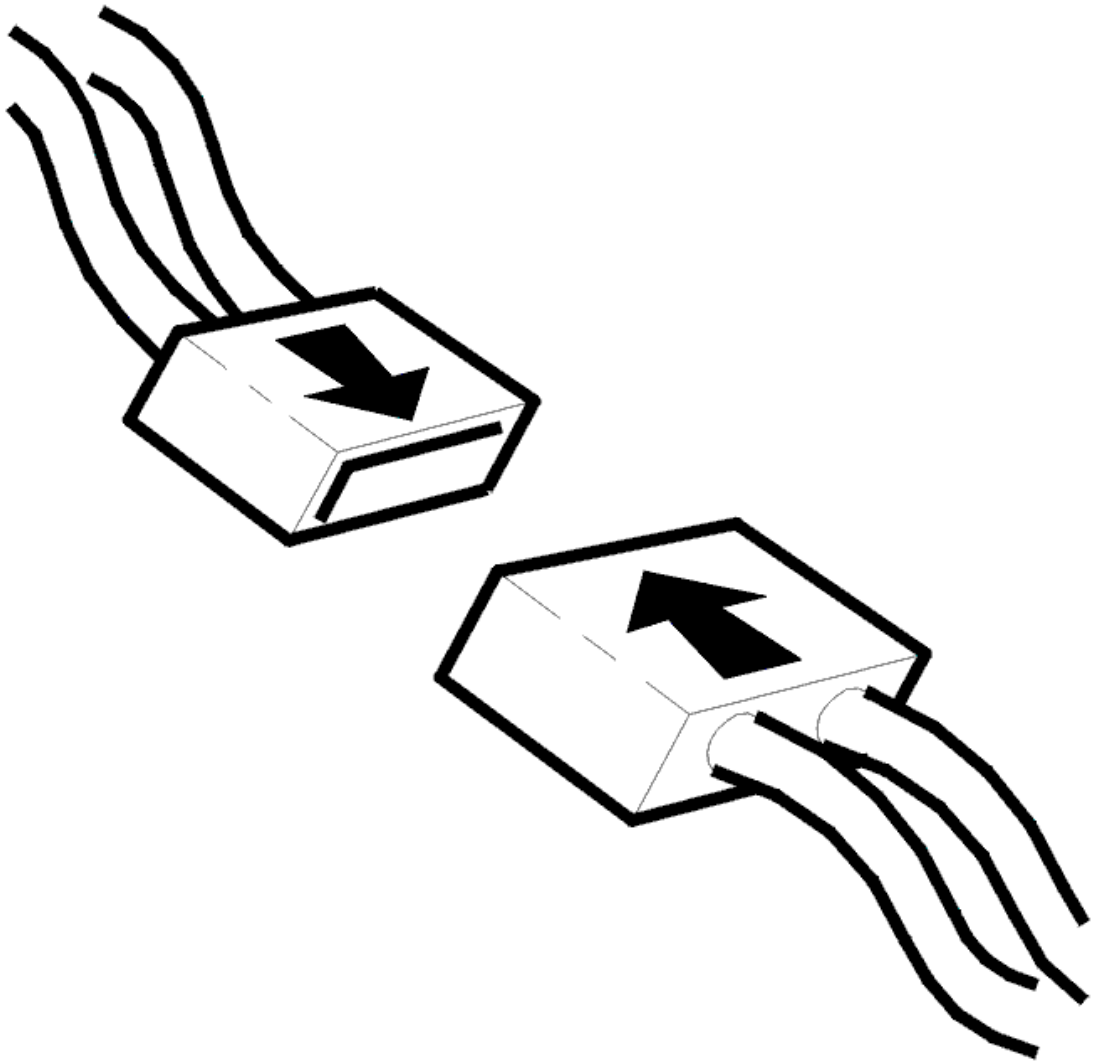

Fig. 386: Connecting Connector
Courtesy of VOLVO CARS CORPORATION

- Ignition off
- Reconnect the connectors, reinstall components etc.
- Test drive the car at an even speed (engine speed (RPM) above 2000 RPM) for at least 5 minutes
- Release the accelerator pedal (AP) quickly at least three times to simulate fuel shut-off
- Connect VCT2000 (or appropriate scan tool) to the data link connector (DLC) without switching off the engine.

NOTE: **If the engine is switched off, the stored fault status will be erased and the test drive will have to be repeated.**

Read off the diagnostic status and fault status for the diagnostic trouble code (DTC) by selecting the relevant diagnostic trouble code (DTC) from the list.

Check the fault status for the diagnostic trouble code (DTC) when the diagnostic is "Complete". If the function is correct, the fault status must be "No fault found" when the diagnostic is complete.

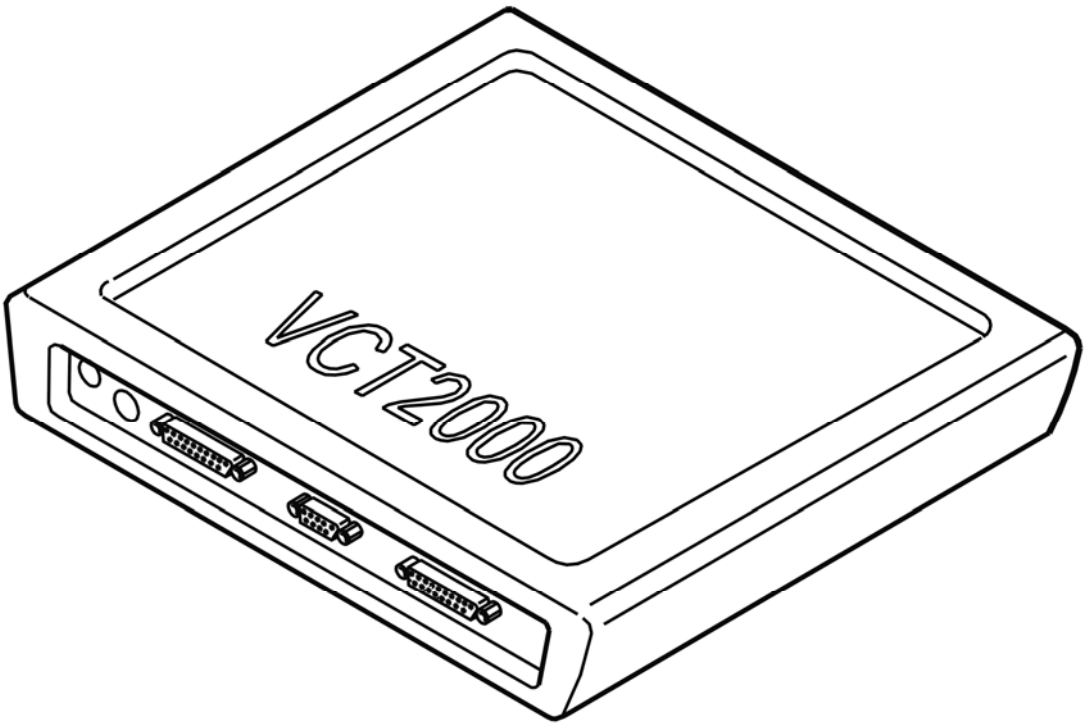

Fig. 387: Identifying VCT2000 Diagnostic Tool Symbol In VIDA
Courtesy of VOLVO CARS CORPORATION

Is the function OK?

- **YES**

  VERIFIED: Troubleshooting has been completed.

- **NO**

  Refer to **INFORMATION**

INFORMATION

FAULT-TRACING INFORMATION

The fault should have been detected and remedied. As this is not the case fault-tracing has failed.

Exit fault-tracing for this diagnostic trouble code (DTC) or make another attempt.

ECM-257B: FRONT HEATED OXYGEN SENSOR (HO2S), BANK 2. SIGNAL MISSING (B6294T; 2005-2006)

DIAGNOSTIC TROUBLE CODE (DTC) INFORMATION ECM-257B

Condition

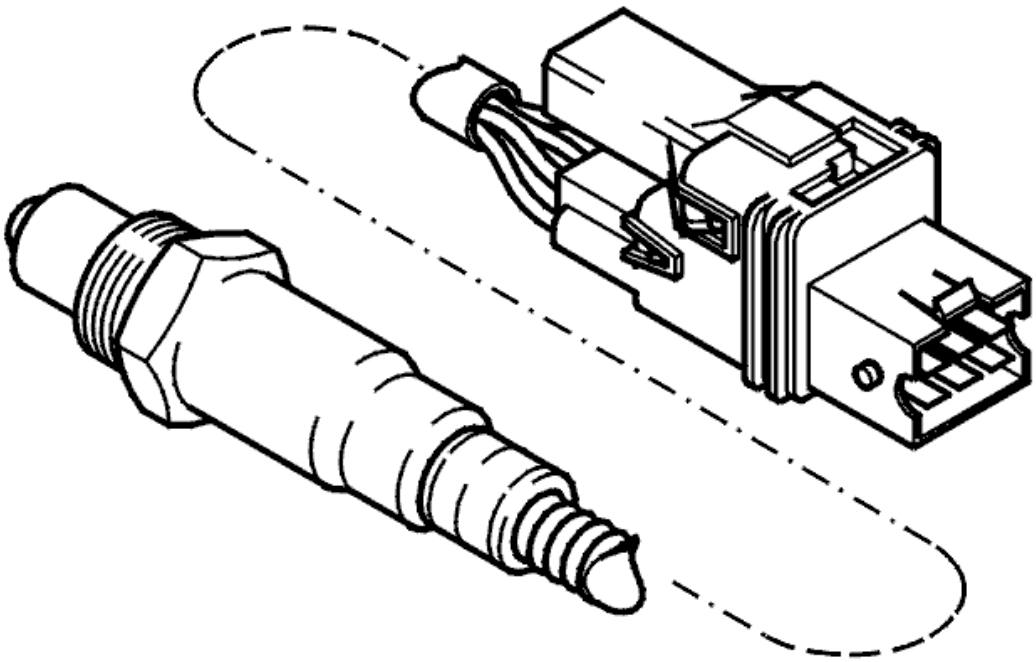

Fig. 388: Front Heated Oxygen Sensor
Courtesy of VOLVO CARS CORPORATION

The diagnostic trouble code (DTC) is stored if the engine control module (ECM) registers that the pump current has ceased and the front heated oxygen sensor (HO2S) signal (bank 2) has been set to a default value.

Substitute Value

- None.

Possible Source

- Contact resistance and oxidation in the terminals
- Open-circuit in the cable for pump current
- Damaged front heated oxygen sensor (HO2S).

Fault symptom[s]

- Malfunction indicator lamp (MIL) lit.

SIGNAL TOO HIGH / SIGNAL MISSING / FAULTY SIGNAL

see **SIGNAL TOO HIGH / SIGNAL MISSING / FAULTY SIGNAL**

ECM-257C: FRONT HEATED OXYGEN SENSOR (HO2S), BANK 2. SIGNAL TOO HIGH (B6294T; 2005-2006)

DIAGNOSTIC TROUBLE CODE (DTC) INFORMATION ECM-257C

Condition

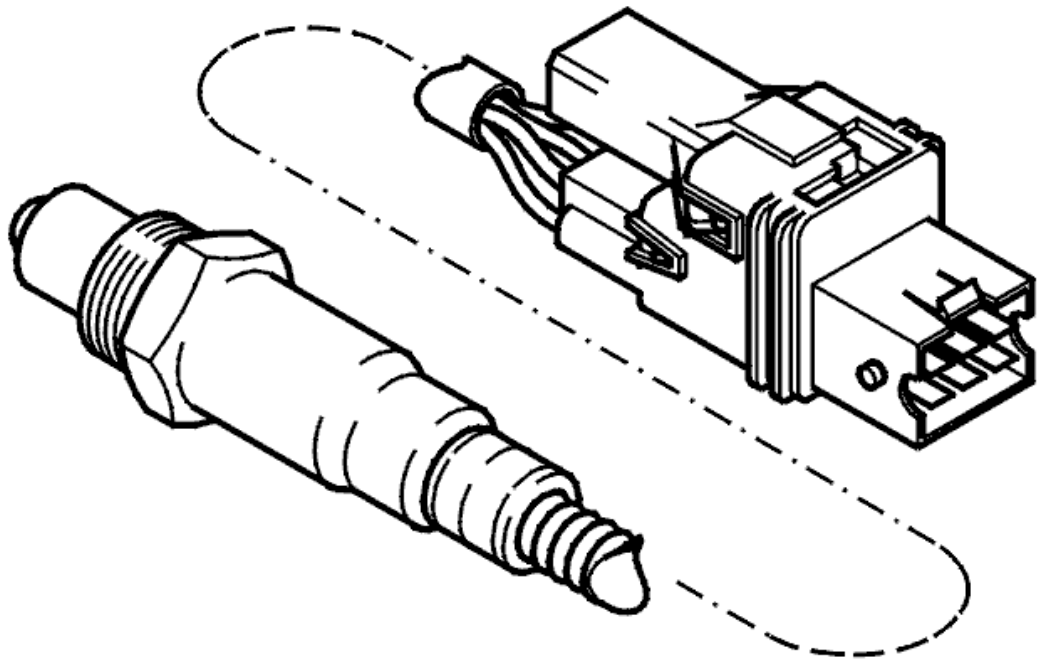

Fig. 389: Front Heated Oxygen Sensor
Courtesy of VOLVO CARS CORPORATION

The diagnostic trouble code (DTC) is stored if the engine control module (ECM) registers that the pump current has ceased and the front heated oxygen sensor (HO2S) signal (bank 2) has been set to a default value.

Substitute Value

- None.

Possible Source

- Contact resistance and oxidation in the terminals
- Open-circuit in the cable for pump current
- Damaged front heated oxygen sensor (HO2S).

Fault symptom[s]

- Malfunction indicator lamp (MIL) lit.

SIGNAL TOO HIGH / SIGNAL MISSING / FAULTY SIGNAL

see **SIGNAL TOO HIGH / SIGNAL MISSING / FAULTY SIGNAL**

ECM-258C: FRONT HEATED OXYGEN SENSOR (HO2S), BANK 2. SIGNAL TOO HIGH (B6294T; 2005-2006)

DIAGNOSTIC TROUBLE CODE (DTC) INFORMATION ECM-258C

Condition

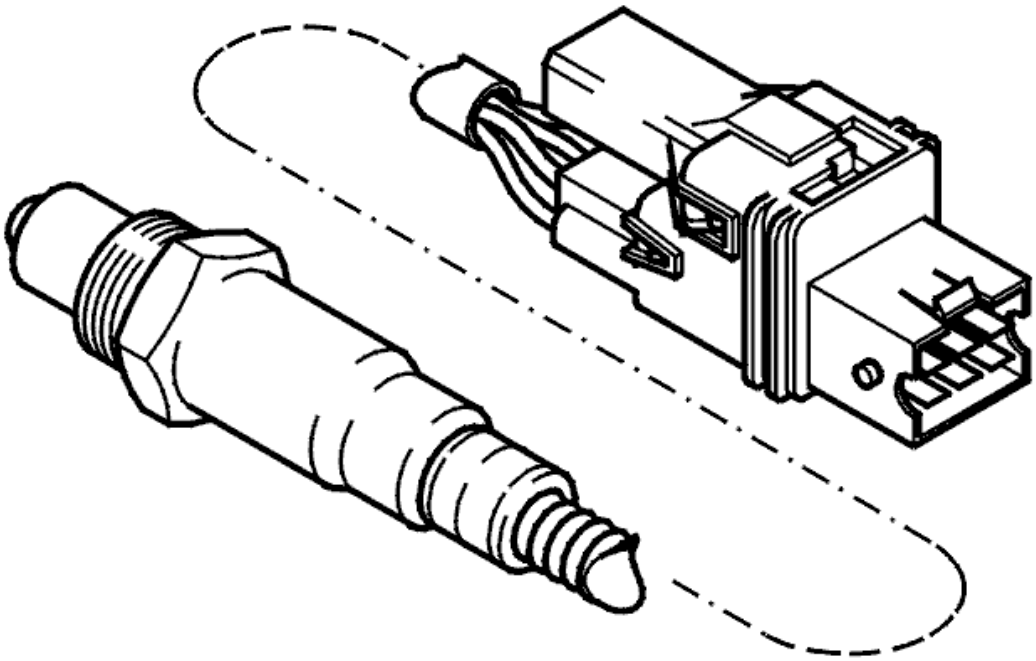

Fig. 390: Front Heated Oxygen Sensor
Courtesy of VOLVO CARS CORPORATION

The diagnostic trouble code (DTC) is stored if the engine control module (ECM) registers that there is a short-circuit to supply voltage in the signal cables for the front heated oxygen sensor (HO2S) (bank 2).

Substitute Value

- None.

Possible Source

- Short-circuit in the signal cables
- Damaged front heated oxygen sensor (HO2S).

Fault symptom[s]

- Malfunction indicator lamp (MIL) lit.

SIGNAL TOO HIGH

CHECKING THE COMPONENTS AND WIRING

CAUTION: Do not apply rust solvent spray or grease to the heated oxygen sensor (HO2S) connector.

Check the cable for a short-circuit to supply voltage.

Check between:

- The system relay and heated oxygen sensor (HO2S) terminal #3
- Engine control module (ECM) terminal #A70 (#B10) and heated oxygen sensor (HO2S) terminal #4.

NOTE: If possible, measure from the rear of the affected connectors in order to minimize any damage and future loose connections.

Try a new heated oxygen sensor (HO2S) if the above fault-tracing does not remedy the fault.

Remedy as necessary.

Other information

- see **CONNECTING THE BREAKOUT BOX**
- For 5 cylinder turbocharged engines -2004, see **SIGNAL DESCRIPTION**
- For 5 cylinder turbocharged engines 2005-, see **SIGNAL SPECIFICATION** .
- For 6 cylinder engines -2004, see **SIGNAL SPECIFICATION**
- For 6 cylinder engines 2005-, see **SIGNAL SPECIFICATION** .
- For B5xx4T, see **HEATED OXYGEN SENSOR (HO2S), REPLACING**
- For B6xx4T, see **HEATED OXYGEN SENSOR (HO2S), REPLACING** .
- see **CHECKING WIRING AND TERMINALS**

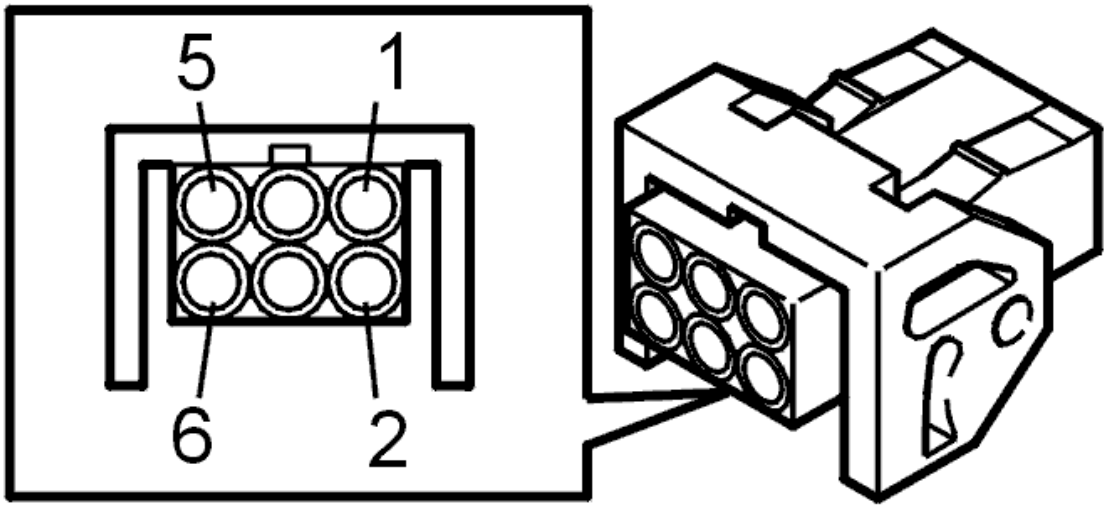

Fig. 391: Identifying Front Heated Oxygen Sensor Connector Terminals
Courtesy of VOLVO CARS CORPORATION

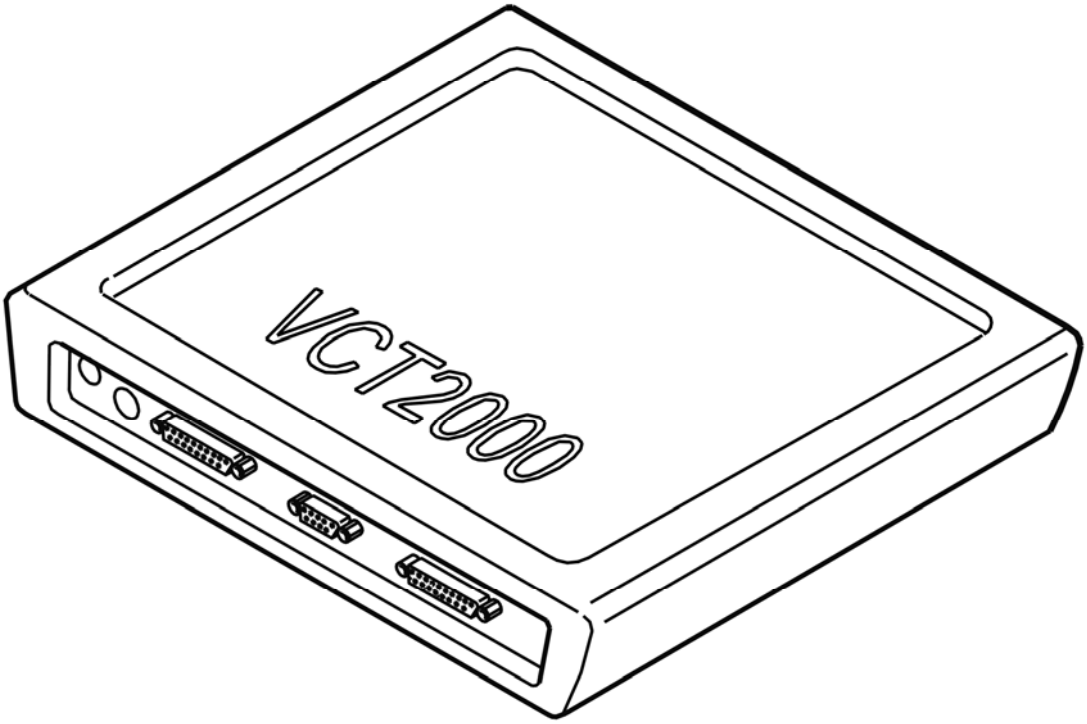

Fig. 392: Identifying VCT2000 Diagnostic Tool Symbol In VIDA
Courtesy of VOLVO CARS CORPORATION

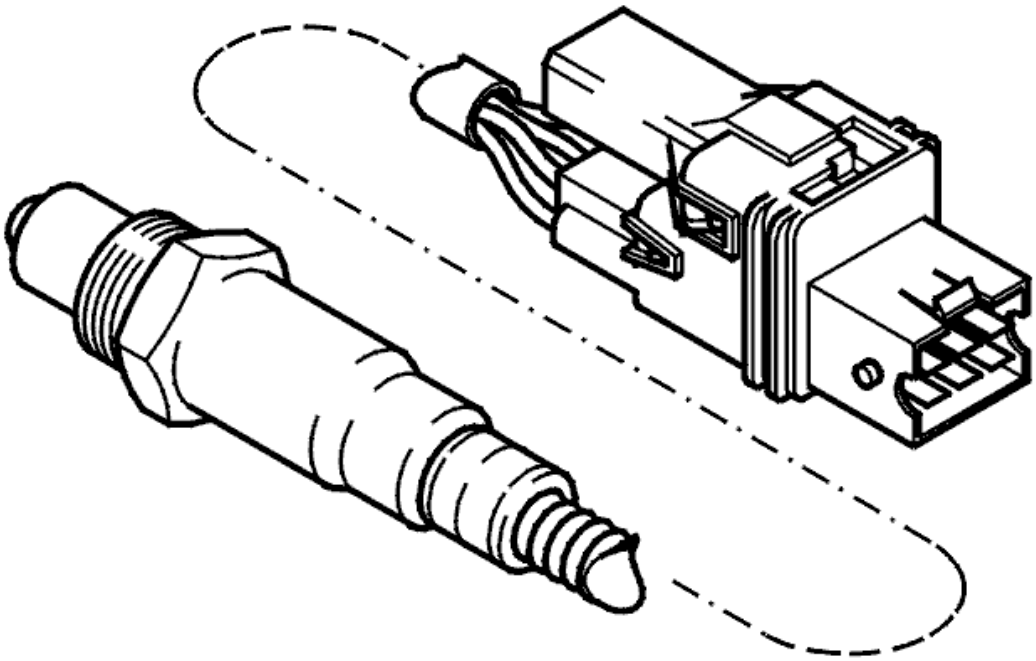

Fig. 393: Front Heated Oxygen Sensor
Courtesy of VOLVO CARS CORPORATION

- **Continue**

  Refer to **VERIFICATION**

VERIFICATION

VERIFICATION

HINT: After carrying out the repair, check that the fault has been remedied.

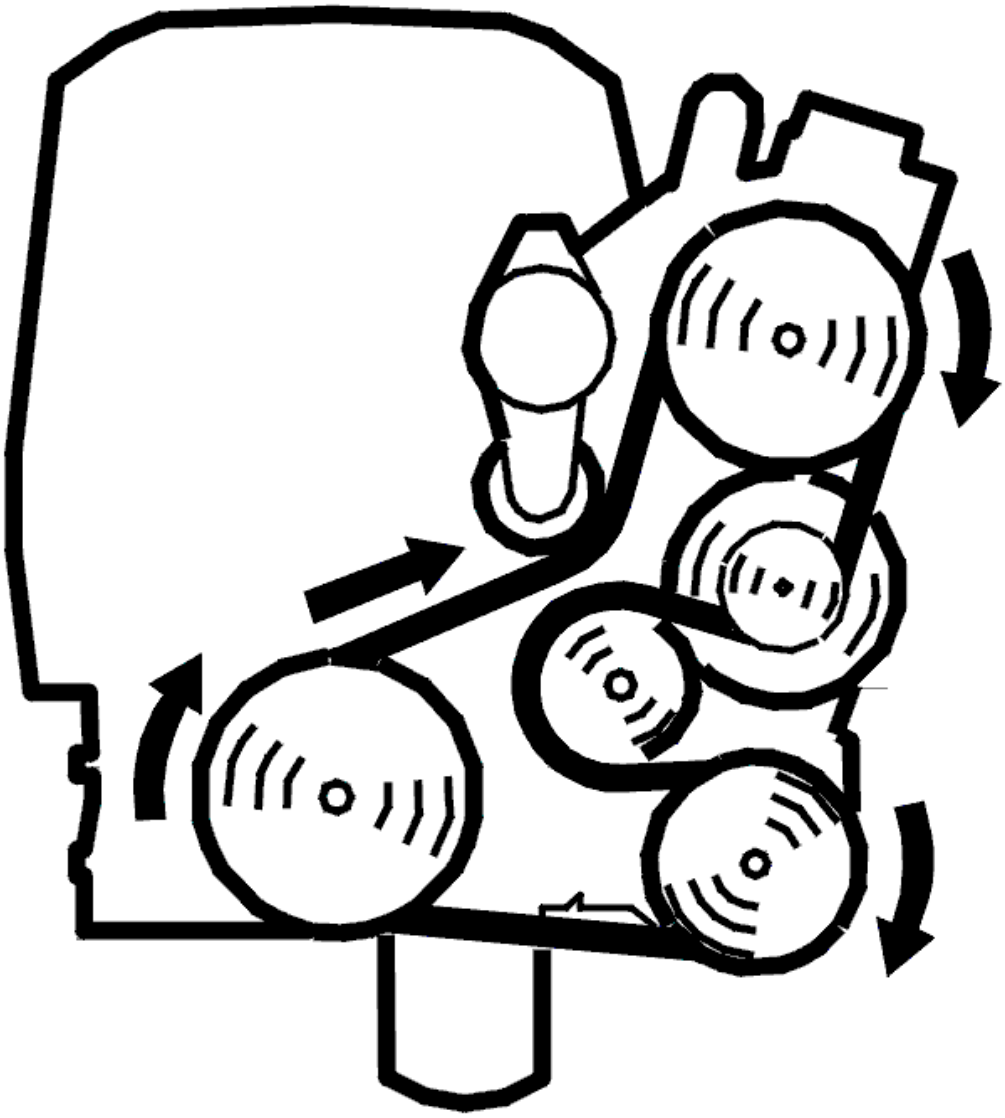

Fig. 394: Belt Routing / Engine Idling - Volvo
Courtesy of VOLVO CARS CORPORATION

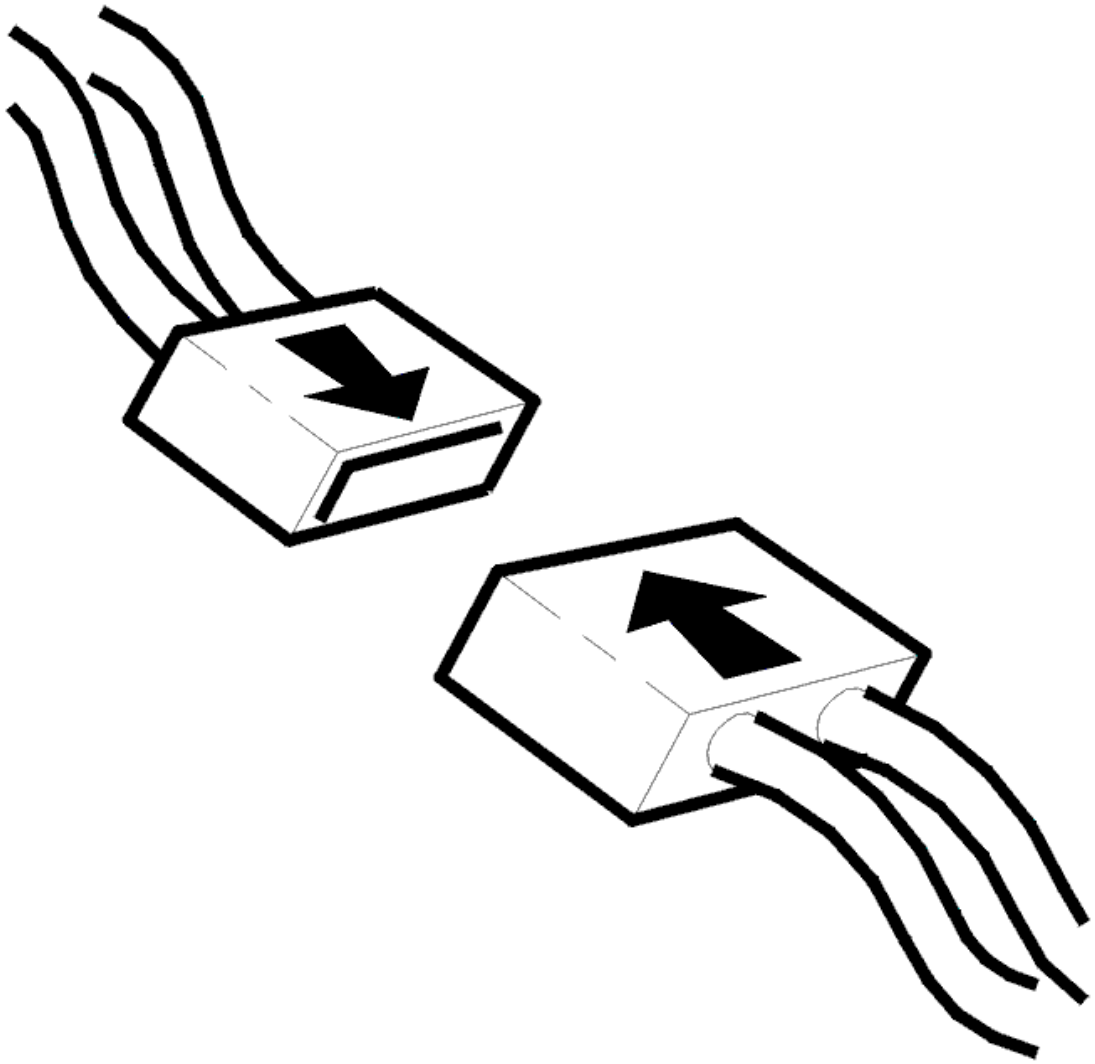

Fig. 395: Connecting Connector
Courtesy of VOLVO CARS CORPORATION

- Ignition off
- Reconnect the connectors, reinstall components etc.
- Test drive the car at an even speed (engine speed (RPM) above 2000 RPM) for at least 5 minutes
- Release the accelerator pedal (AP) quickly at least three times to simulate fuel shut-off
- Connect VCT2000 (or appropriate scan tool) to the data link connector (DLC) without switching off the engine.

NOTE: **If the engine is switched off, the stored fault status will be erased and the test drive will have to be repeated.**

Read off the diagnostic status and fault status for the diagnostic trouble code (DTC) by selecting the relevant diagnostic trouble code (DTC) from the list.

Check the fault status for the diagnostic trouble code (DTC) when the diagnostic is "Complete". If the function is correct, the fault status must be "No fault found" when the diagnostic is complete.

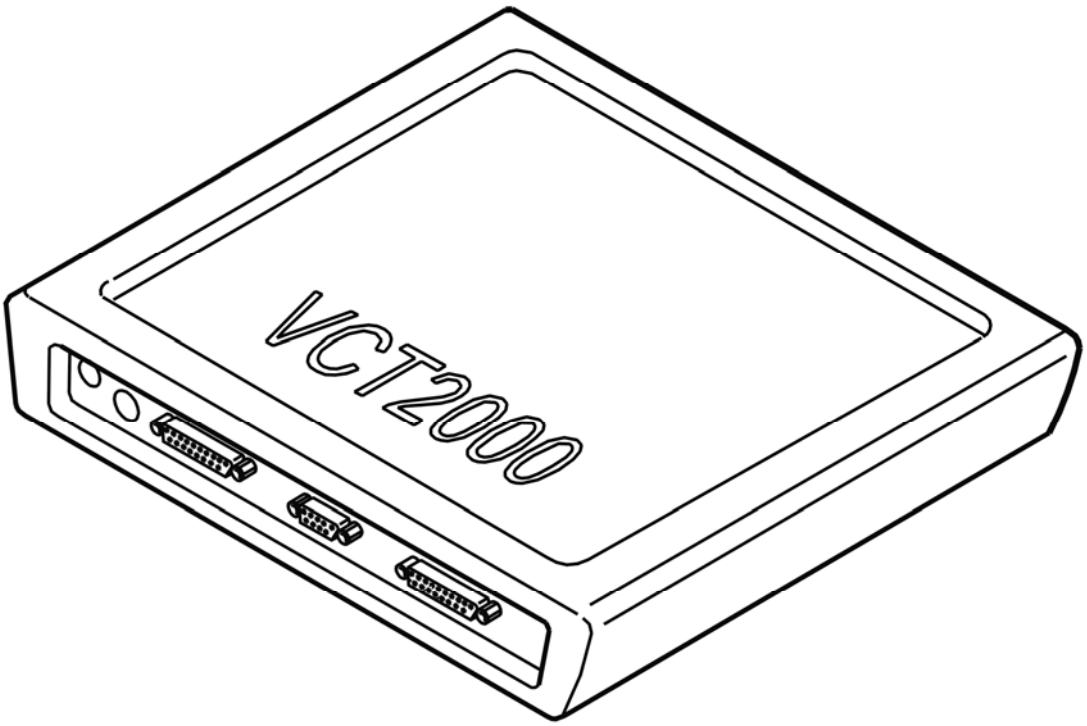

Fig. 396: Identifying VCT2000 Diagnostic Tool Symbol In VIDA
Courtesy of VOLVO CARS CORPORATION

Is the function OK?

- **YES**

  VERIFIED: Troubleshooting has been completed.

- **NO**

  Refer to **INFORMATION**

INFORMATION

FAULT-TRACING INFORMATION

The fault should have been detected and remedied. As this is not the case fault-tracing has failed.

Exit fault-tracing for this diagnostic trouble code (DTC) or make another attempt.

ECM-258D: FRONT HEATED OXYGEN SENSOR (HO2S), BANK 2. SIGNAL TOO LOW (B6294T; 2005-2006)

DIAGNOSTIC TROUBLE CODE (DTC) INFORMATION ECM-258D

Condition

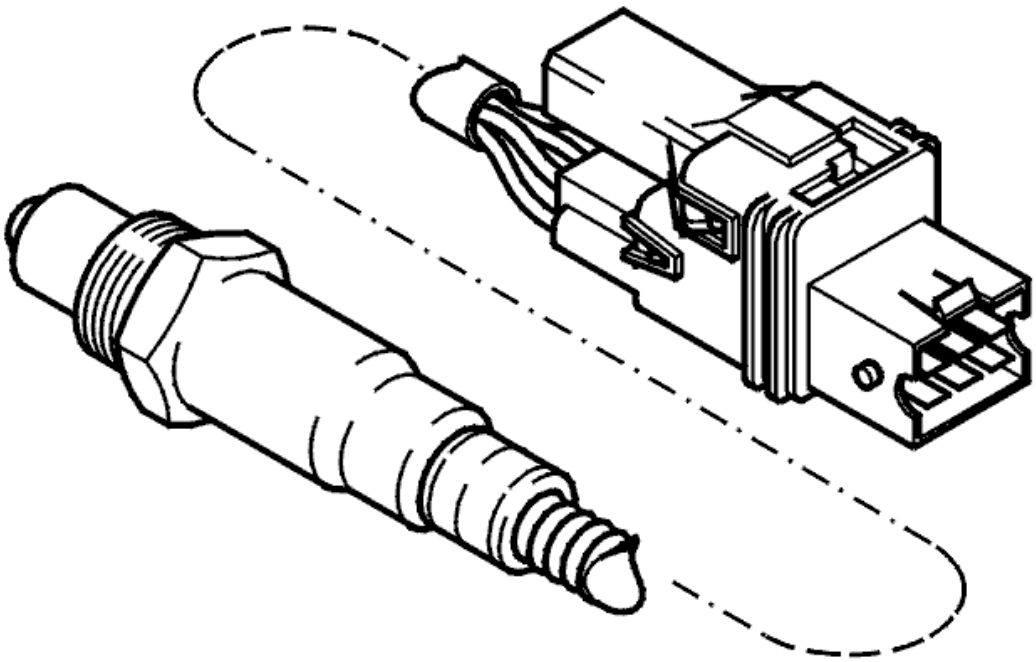

Fig. 397: Front Heated Oxygen Sensor
Courtesy of VOLVO CARS CORPORATION

The diagnostic trouble code (DTC) is stored if the engine control module (ECM) registers that there is a short-circuit to ground in the signal cables for the front heated oxygen sensor (HO2S) (bank 2).

Substitute Value

- None.

Possible Source

- Short-circuit in the signal cables
- Damaged front heated oxygen sensor (HO2S).

Fault symptom[s]

- Malfunction indicator lamp (MIL) lit.

SIGNAL TOO LOW

CHECKING THE COMPONENTS AND WIRING

CAUTION: Do not apply rust solvent spray or grease to the heated oxygen sensor (HO2S) connector.

Check the cable for a short-circuit to ground.

Check between:

- The system relay and heated oxygen sensor (HO2S) terminal #3
- Engine control module (ECM) terminal #A70 (#B10) and heated oxygen sensor (HO2S) terminal #4.

NOTE: If possible, measure from the rear of the affected connectors in order to minimize any damage and future loose connections.

Try a new heated oxygen sensor (HO2S) if the above fault-tracing does not remedy the fault.

Remedy as necessary.

Other information

- see **CONNECTING THE BREAKOUT BOX**
- For 5 cylinder turbocharged engines -2004, see **SIGNAL DESCRIPTION**
- For 5 cylinder turbocharged engines 2005-, see **SIGNAL SPECIFICATION** .
- For 6 cylinder engines -2004, see **SIGNAL SPECIFICATION**
- For 6 cylinder engines 2005-, see **SIGNAL SPECIFICATION** .
- For B5xx4T, see **HEATED OXYGEN SENSOR (HO2S), REPLACING**
- For B6xx4T, see **HEATED OXYGEN SENSOR (HO2S), REPLACING** .
- see **CHECKING WIRING AND TERMINALS**

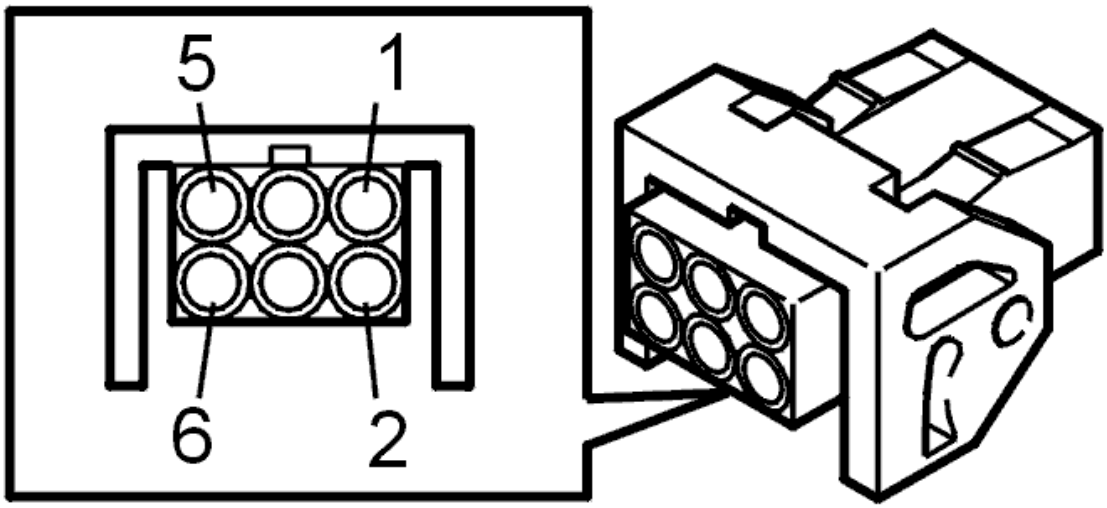

Fig. 398: Identifying Front Heated Oxygen Sensor Connector Terminals
Courtesy of VOLVO CARS CORPORATION

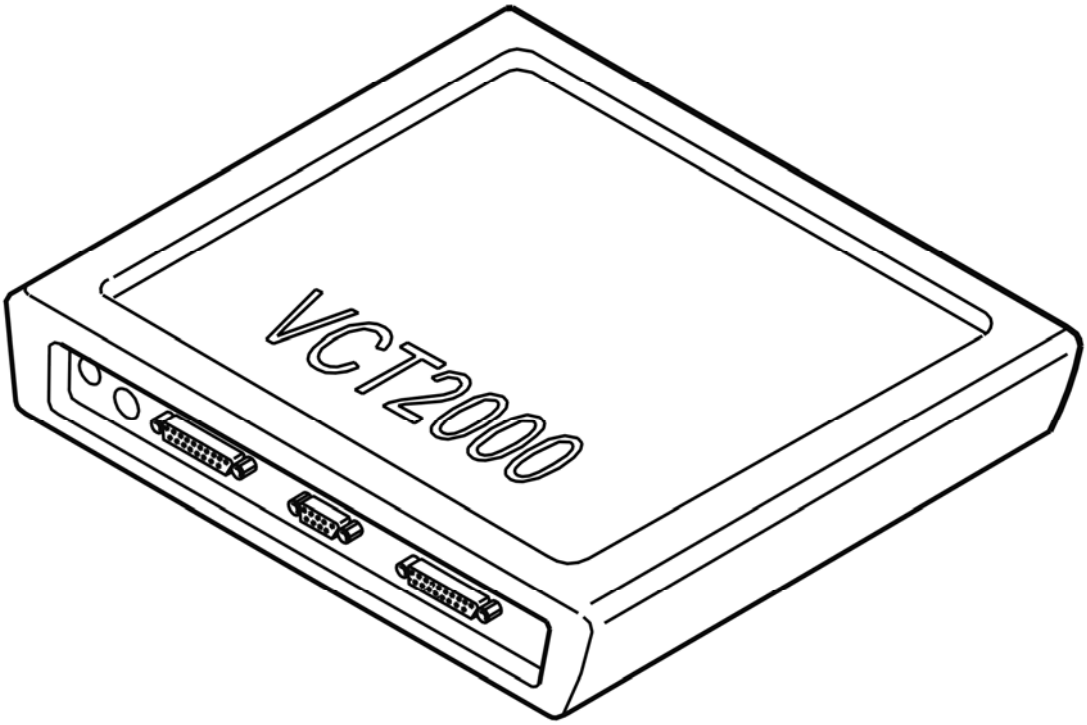

Fig. 399: Identifying VCT2000 Diagnostic Tool Symbol In VIDA
Courtesy of VOLVO CARS CORPORATION

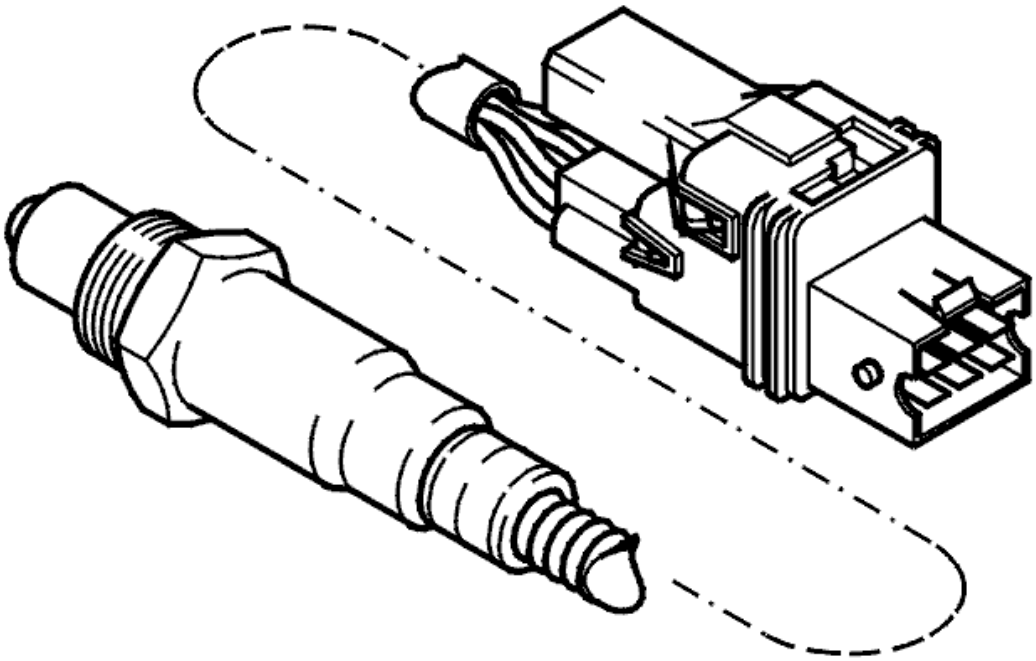

Fig. 400: Front Heated Oxygen Sensor
Courtesy of VOLVO CARS CORPORATION

- **Continue**

  Refer to **VERIFICATION**

VERIFICATION

VERIFICATION

HINT: After carrying out the repair, check that the fault has been remedied.

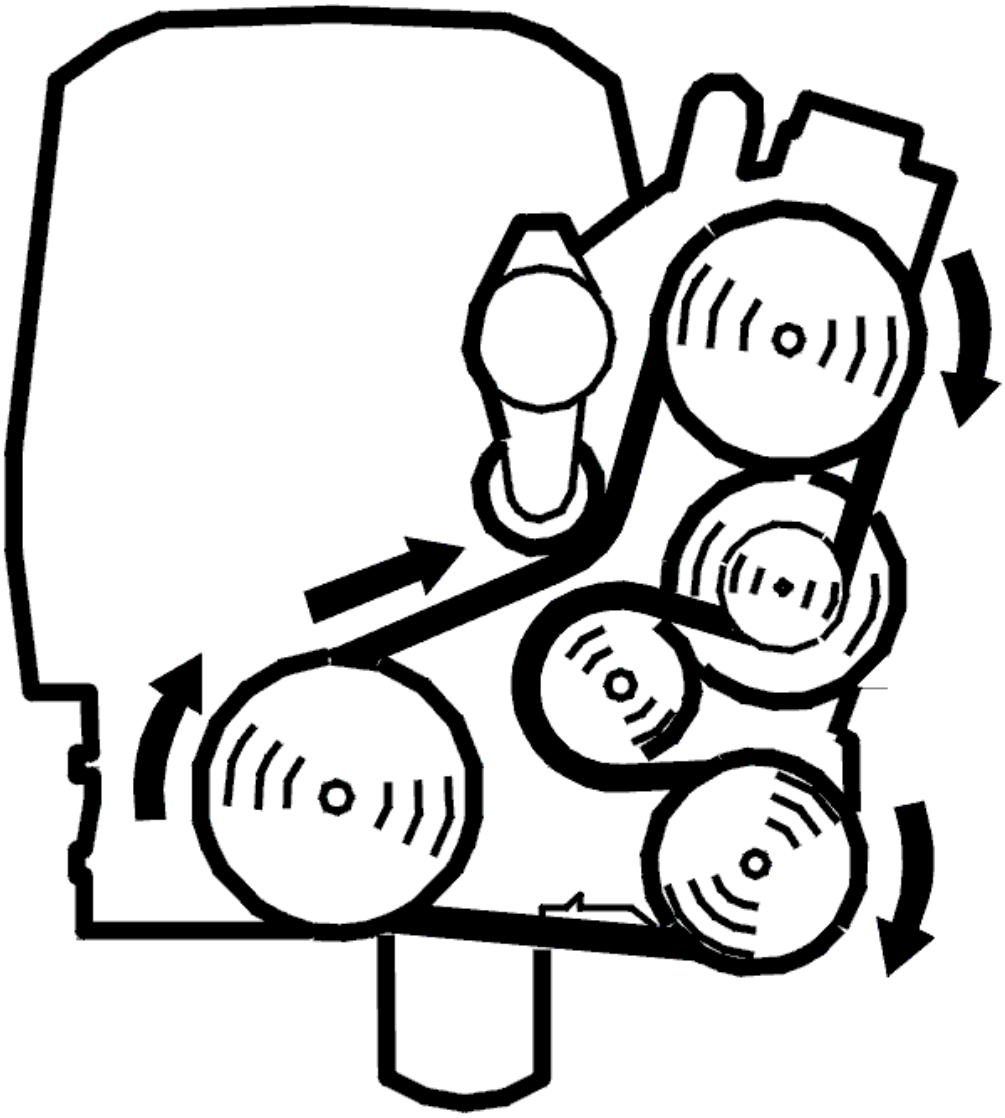

Fig. 401: Belt Routing / Engine Idling - Volvo
Courtesy of VOLVO CARS CORPORATION

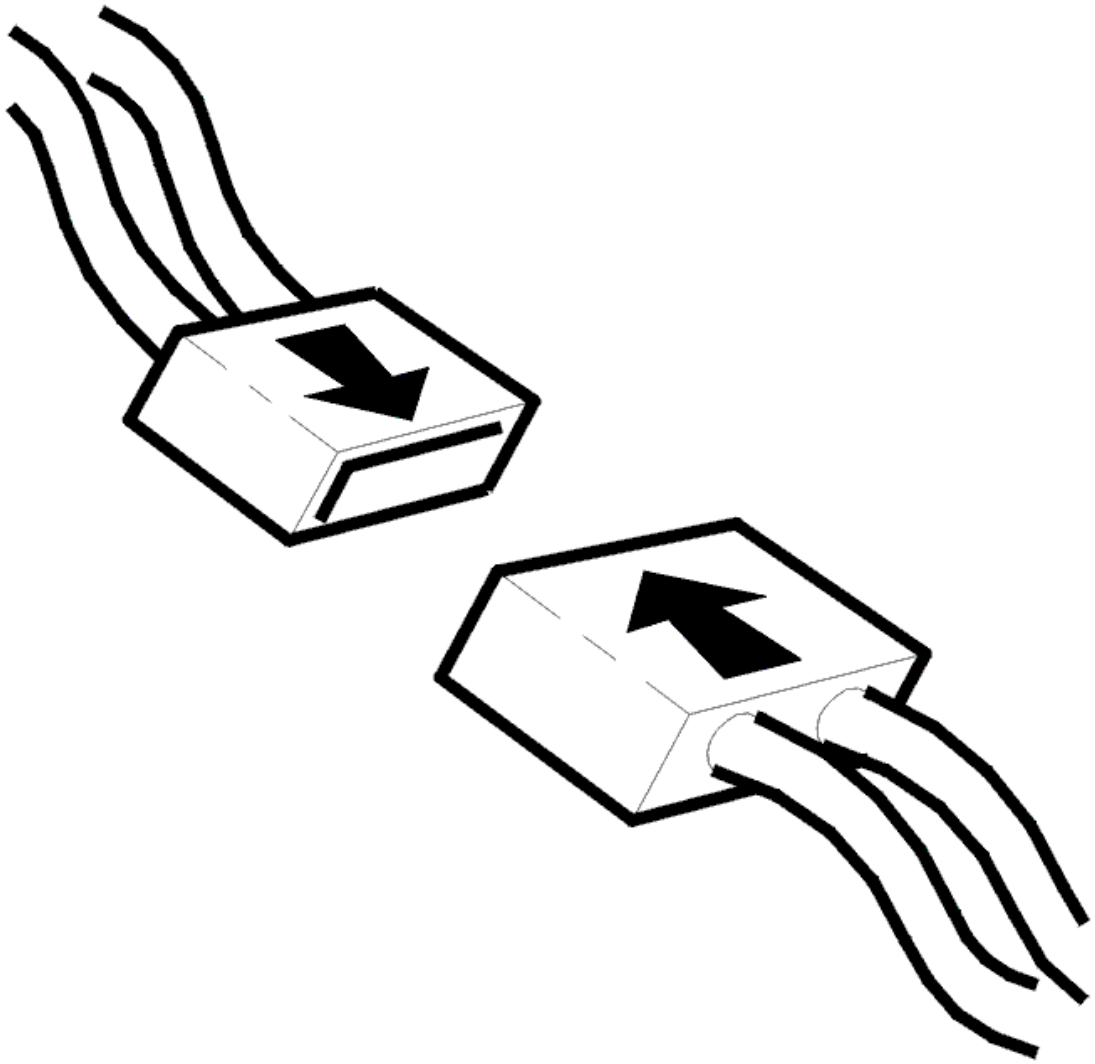

Fig. 402: Connecting Connector
Courtesy of VOLVO CARS CORPORATION

- Ignition off
- Reconnect the connectors, reinstall components etc.
- Test drive the car at an even speed (engine speed (RPM) above 2000 RPM) for at least 5 minutes
- Release the accelerator pedal (AP) quickly at least three times to simulate fuel shut-off
- Connect VCT2000 (or appropriate scan tool) to the data link connector (DLC) without switching off the engine.

NOTE: **If the engine is switched off, the stored fault status will be erased and the test drive will have to be repeated.**

Read off the diagnostic status and fault status for the diagnostic trouble code (DTC) by selecting the relevant diagnostic trouble code (DTC) from the list.

Check the fault status for the diagnostic trouble code (DTC) when the diagnostic is "Complete". If the function is correct, the fault status must be "No fault found" when the diagnostic is complete.

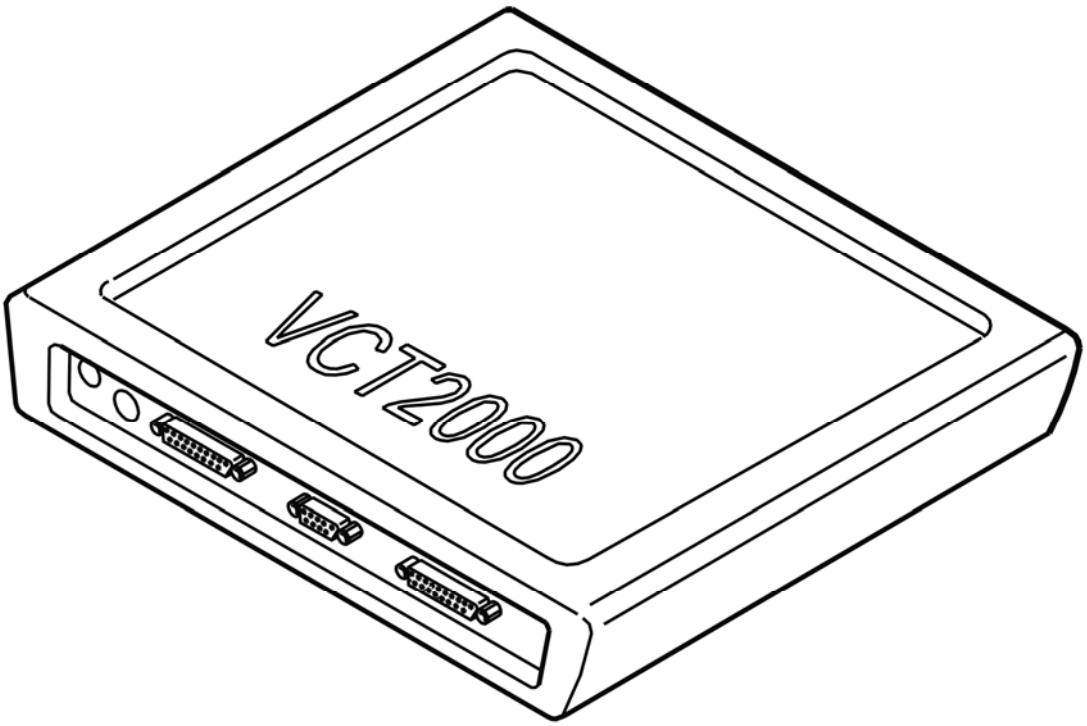

Fig. 403: Identifying VCT2000 Diagnostic Tool Symbol In VIDA
Courtesy of VOLVO CARS CORPORATION

Is the function OK?

- **YES**

  VERIFIED: Troubleshooting has been completed.

- **NO**

  Refer to **INFORMATION**

INFORMATION

FAULT-TRACING INFORMATION

The fault should have been detected and remedied. As this is not the case fault-tracing has failed.

Exit fault-tracing for this diagnostic trouble code (DTC) or make another attempt.

ECM-259B: FRONT HEATED OXYGEN SENSOR (HO2S), BANK 2. SIGNAL MISSING (B6294T; 2005-2006)

DIAGNOSTIC TROUBLE CODE (DTC) INFORMATION ECM-259B

Condition

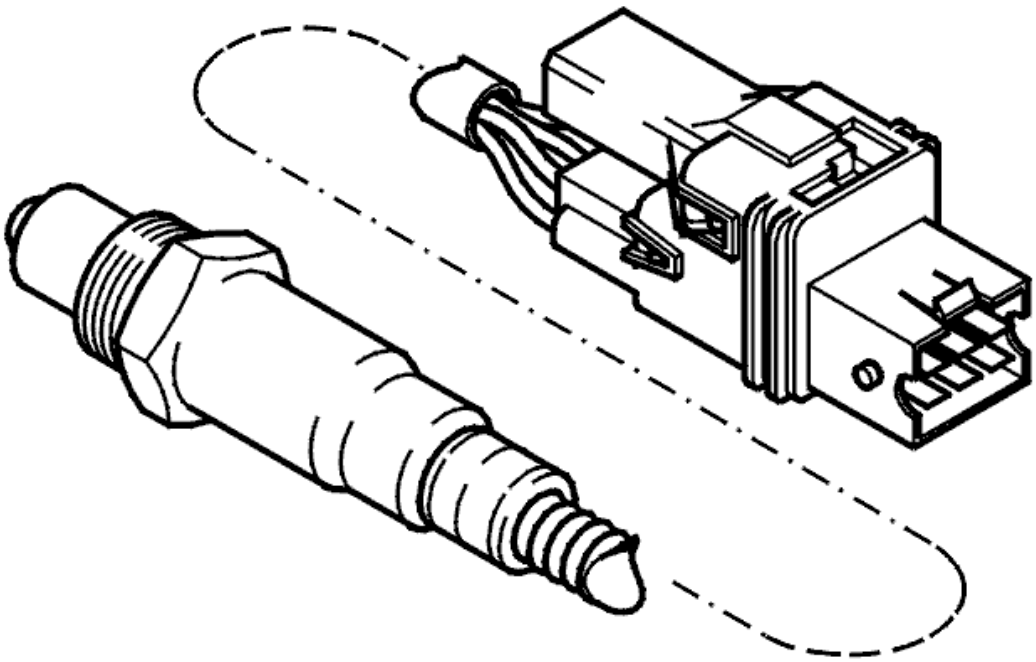

Fig. 404: Front Heated Oxygen Sensor
Courtesy of VOLVO CARS CORPORATION

The diagnostic trouble code (DTC) is stored if the engine control module (ECM) registers an open-circuit in the signal cable to the section of the front heated oxygen sensor (HO2S) (bank 2) that detects the oxygen content of the exhaust gases.

Substitute Value

- None.

Possible Source

- Contact resistance or oxidation on the signal cable
- Open-circuit in the signal cable
- Damaged front heated oxygen sensor (HO2S).

Fault symptom[s]

- Malfunction indicator lamp (MIL) lit.

SIGNAL MISSING

CHECKING THE COMPONENTS AND WIRING

CAUTION: Do not apply rust solvent spray or grease to the heated oxygen sensor (HO2S) connector.

Check the heated oxygen sensor (HO2S) connector. Check for contact resistance. Check for an open-circuit. Check for oxidation.

Check the cable between engine control module (ECM) terminal #A43 (#A43) and heated oxygen sensor (HO2S) terminal #1. Check for an open-circuit.

NOTE: If possible, measure from the rear of the affected connectors in order to minimize any damage and future loose connections.

Try a new heated oxygen sensor (HO2S) if the above fault-tracing does not remedy the fault.

Remedy as necessary.

Other information

- see **CONNECTING THE BREAKOUT BOX**
- For 5 cylinder turbocharged engines -2004, see **SIGNAL DESCRIPTION**
- For 5 cylinder turbocharged engines 2005-, see **SIGNAL SPECIFICATION** .
- For 6 cylinder engines -2004, see **SIGNAL SPECIFICATION**
- For 6 cylinder engines 2005-, see **SIGNAL SPECIFICATION** .
- For B5xx4T, see **HEATED OXYGEN SENSOR (HO2S), REPLACING**
- For B6xx4T, see **HEATED OXYGEN SENSOR (HO2S), REPLACING** .
- see **CHECKING WIRING AND TERMINALS**

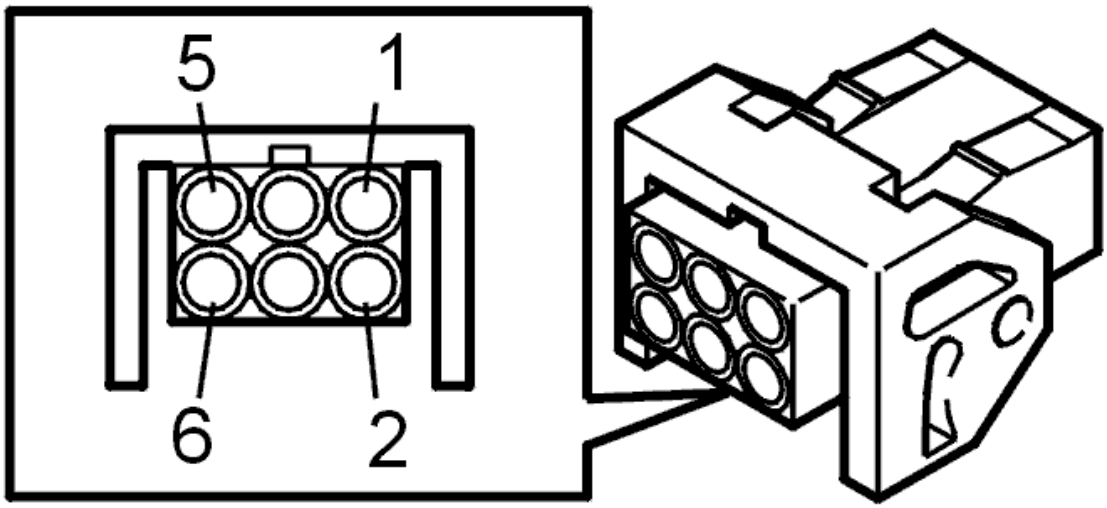

Fig. 405: Identifying Front Heated Oxygen Sensor Connector Terminals
Courtesy of VOLVO CARS CORPORATION

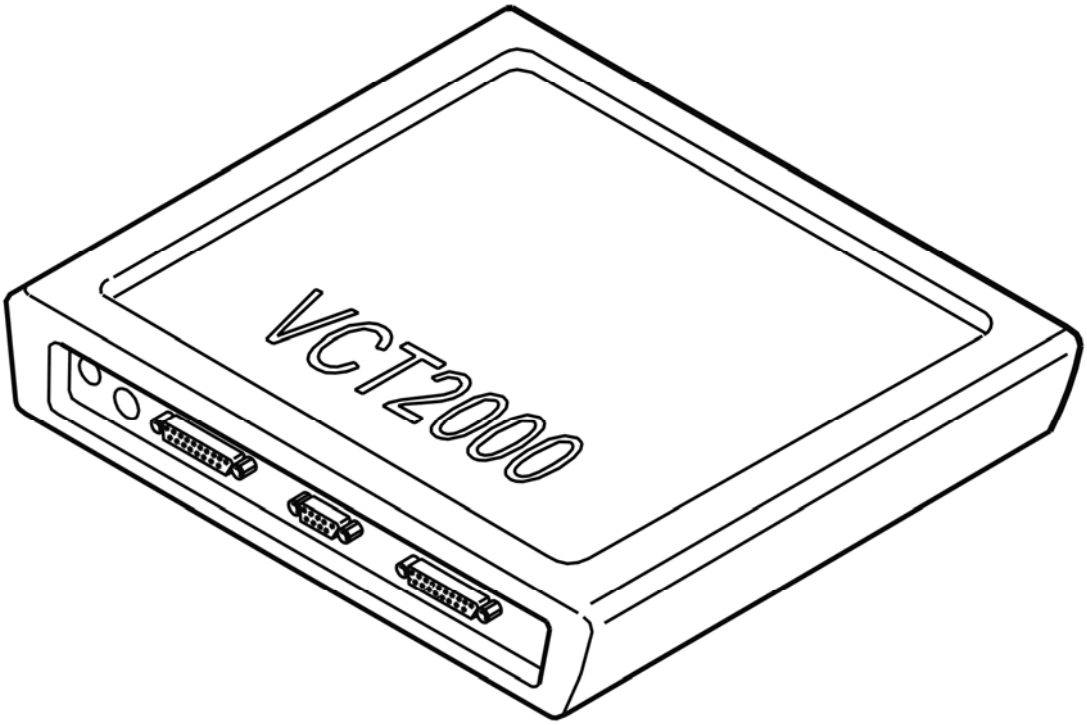

Fig. 406: Identifying VCT2000 Diagnostic Tool Symbol In VIDA
Courtesy of VOLVO CARS CORPORATION

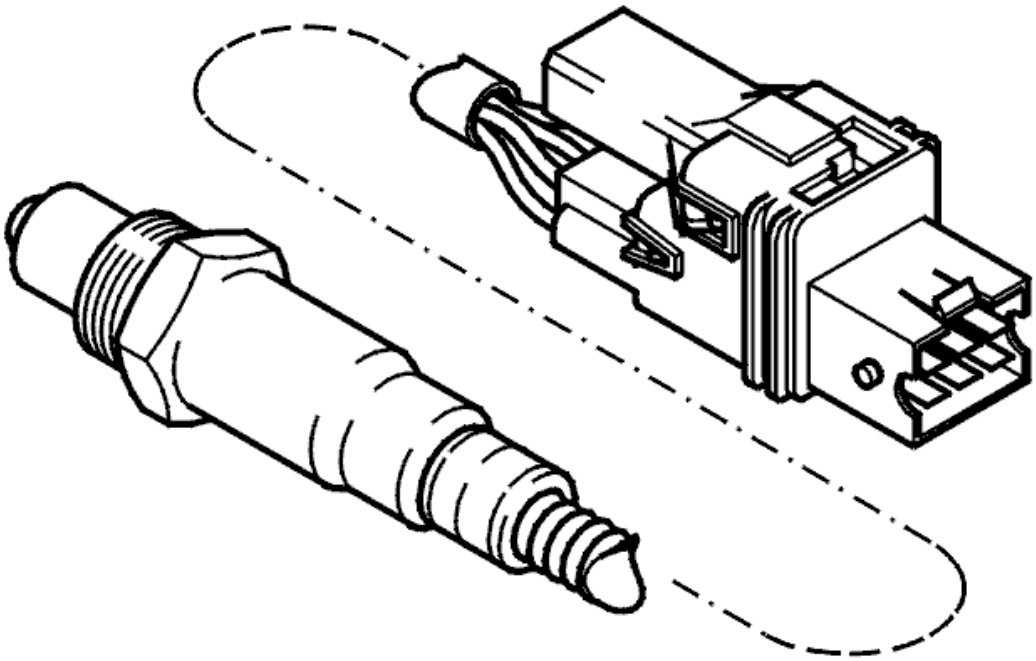

Fig. 407: Front Heated Oxygen Sensor
Courtesy of VOLVO CARS CORPORATION

- **Continue**

  Refer to **VERIFICATION**

VERIFICATION

VERIFICATION

HINT: After carrying out the repair, check that the fault has been remedied.

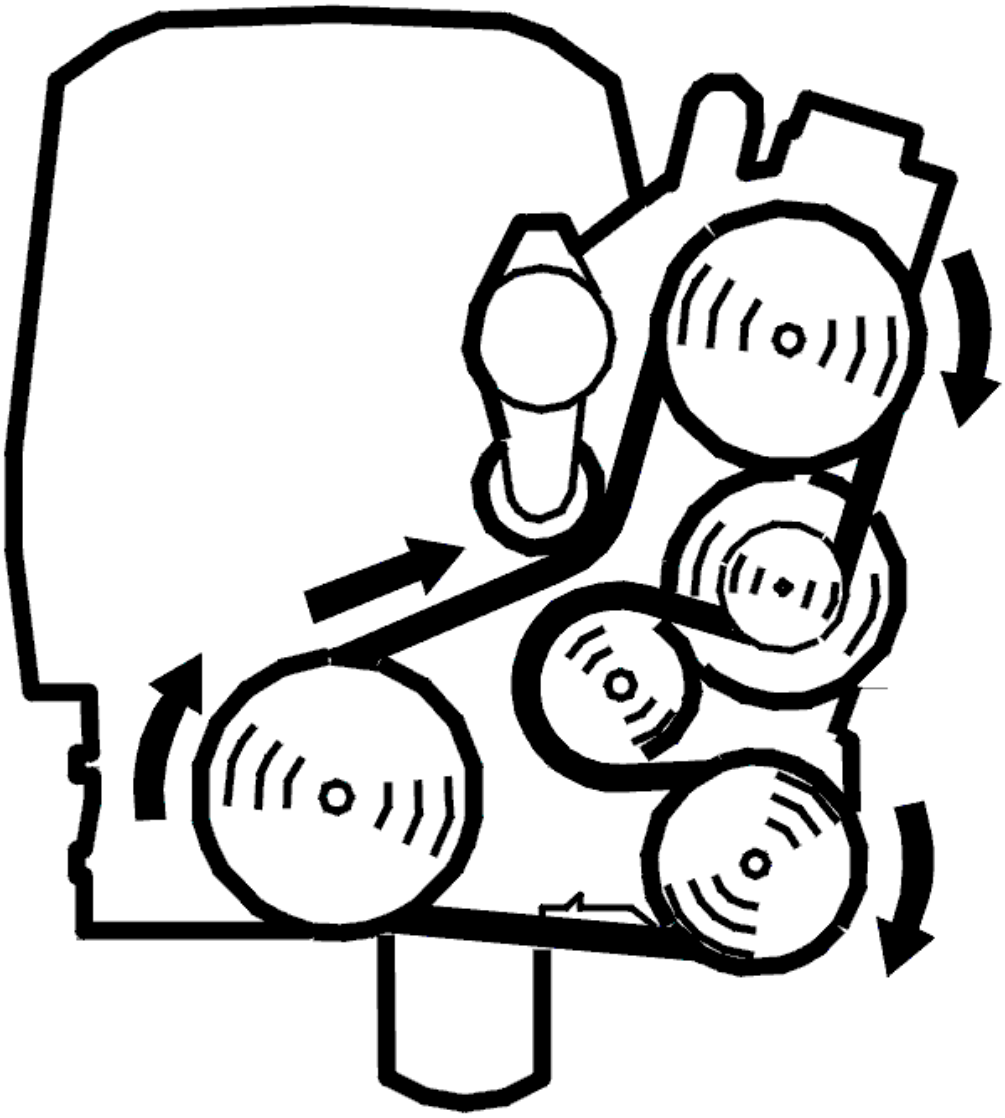

Fig. 408: Belt Routing / Engine Idling - Volvo
Courtesy of VOLVO CARS CORPORATION

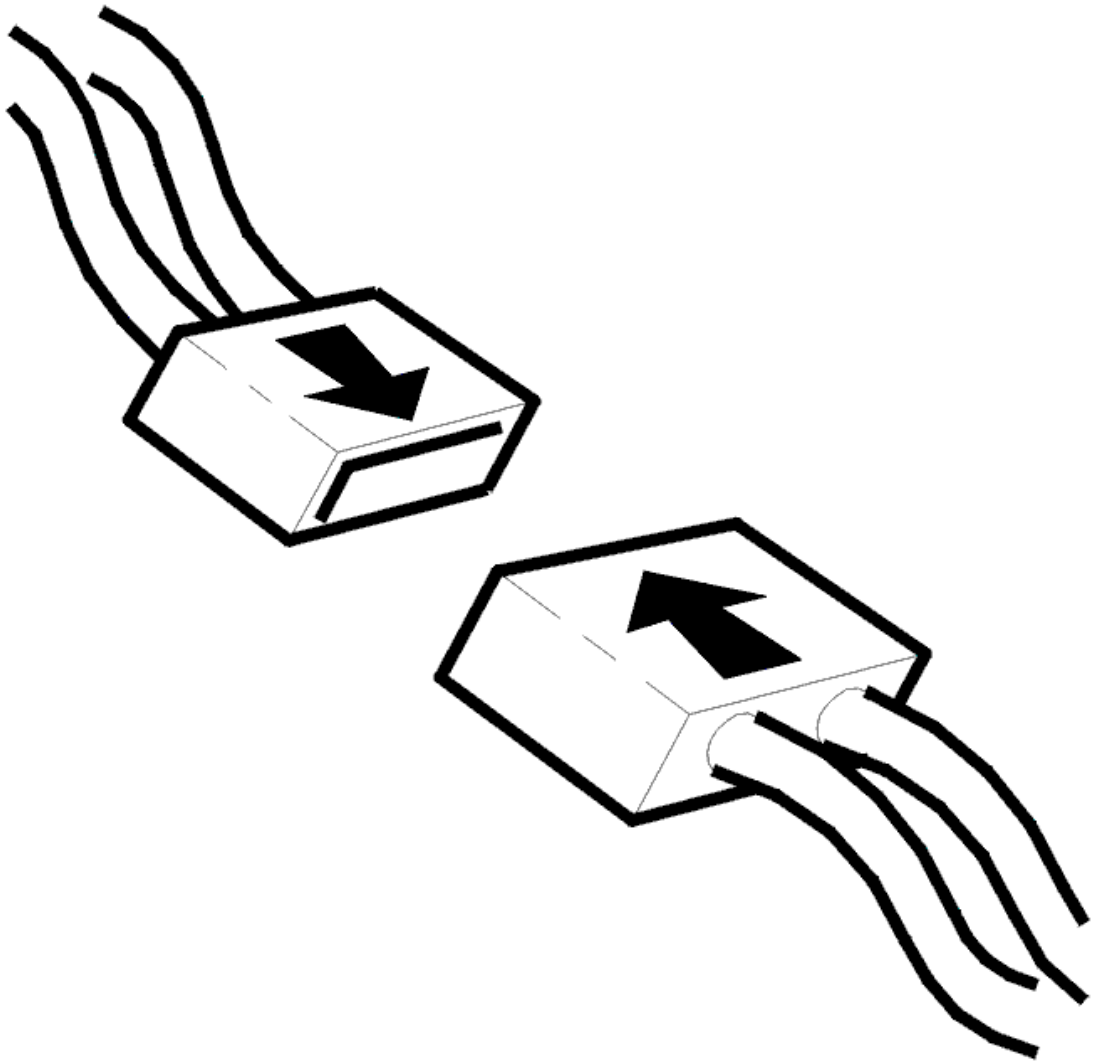

Fig. 409: Connecting Connector
Courtesy of VOLVO CARS CORPORATION

- Ignition off
- Reconnect the connectors, reinstall components etc.
- Test drive the car at an even speed (engine speed (RPM) above 2000 RPM) for at least 5 minutes
- Release the accelerator pedal (AP) quickly at least three times to simulate fuel shut-off
- Connect VCT2000 (or appropriate scan tool) to the data link connector (DLC) without switching off the engine.

NOTE: **If the engine is switched off, the stored fault status will be erased and the test drive will have to be repeated.**

Read off the diagnostic status and fault status for the diagnostic trouble code (DTC) by selecting the relevant diagnostic trouble code (DTC) from the list.

Check the fault status for the diagnostic trouble code (DTC) when the diagnostic is "Complete". If the function is correct, the fault status must be "No fault found" when the diagnostic is complete.

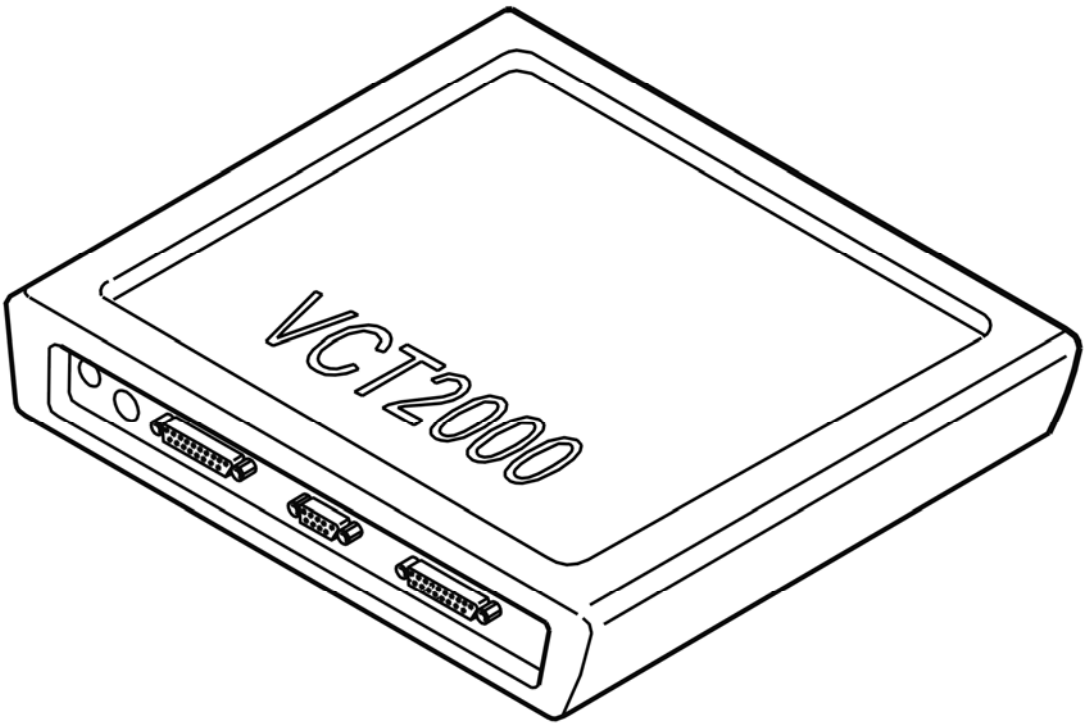

Fig. 410: Identifying VCT2000 Diagnostic Tool Symbol In VIDA
Courtesy of VOLVO CARS CORPORATION

Is the function OK?

- **YES**

  VERIFIED: Troubleshooting has been completed.

- **NO**

  Refer to **INFORMATION**

INFORMATION

FAULT-TRACING INFORMATION

The fault should have been detected and remedied. As this is not the case fault-tracing has failed.

Exit fault-tracing for this diagnostic trouble code (DTC) or make another attempt.

ECM-25AB: FRONT HEATED OXYGEN SENSOR (HO2S), BANK 2. SIGNAL MISSING (B6294T; 2005-2006)

DIAGNOSTIC TROUBLE CODE (DTC) INFORMATION ECM-25AB

Condition

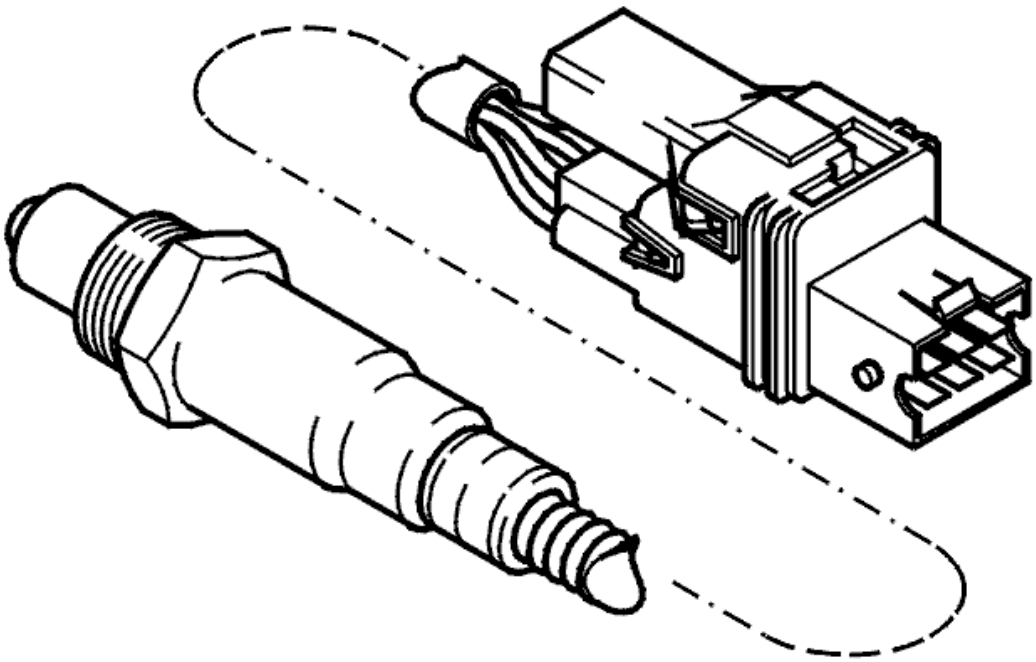

Fig. 411: Front Heated Oxygen Sensor
Courtesy of VOLVO CARS CORPORATION

The diagnostic trouble code (DTC) is stored if the engine control module (ECM) registers an open-circuit in the ground lead for the front heated oxygen sensor (HO2S) (bank 2).

Substitute Value

- None.

Possible Source

- Open-circuit in the ground lead
- Damaged front heated oxygen sensor (HO2S) (bank 2).

Fault symptom[s]

- Malfunction indicator lamp (MIL) lit.

SIGNAL MISSING

CHECKING THE COMPONENTS AND WIRING

CAUTION: Do not apply rust solvent spray or grease to the heated oxygen sensor (HO2S) connector.

Check the heated oxygen sensor (HO2S) connector. Check for contact resistance. Check for an open-circuit. Check for oxidation.

Check the cable between engine control module (ECM) terminal #A44 (#A44) and heated oxygen sensor (HO2S) terminal #5. Check for an open-circuit.

NOTE: If possible, measure from the rear of the affected connectors in order to minimize any damage and future loose connections.

Try a new heated oxygen sensor (HO2S) if the above fault-tracing does not remedy the fault.

Remedy as necessary.

Other information

- see **CONNECTING THE BREAKOUT BOX**
- For 5 cylinder turbocharged engines -2004, see **SIGNAL DESCRIPTION**
- For 5 cylinder turbocharged engines 2005-, see **SIGNAL SPECIFICATION** .
- For 6 cylinder engines -2004, see **SIGNAL SPECIFICATION**
- For 6 cylinder engines 2005-, see **SIGNAL SPECIFICATION** .
- For B5xx4T, see **HEATED OXYGEN SENSOR (HO2S), REPLACING**
- For B6xx4T, see **HEATED OXYGEN SENSOR (HO2S), REPLACING** .
- see **CHECKING WIRING AND TERMINALS** .

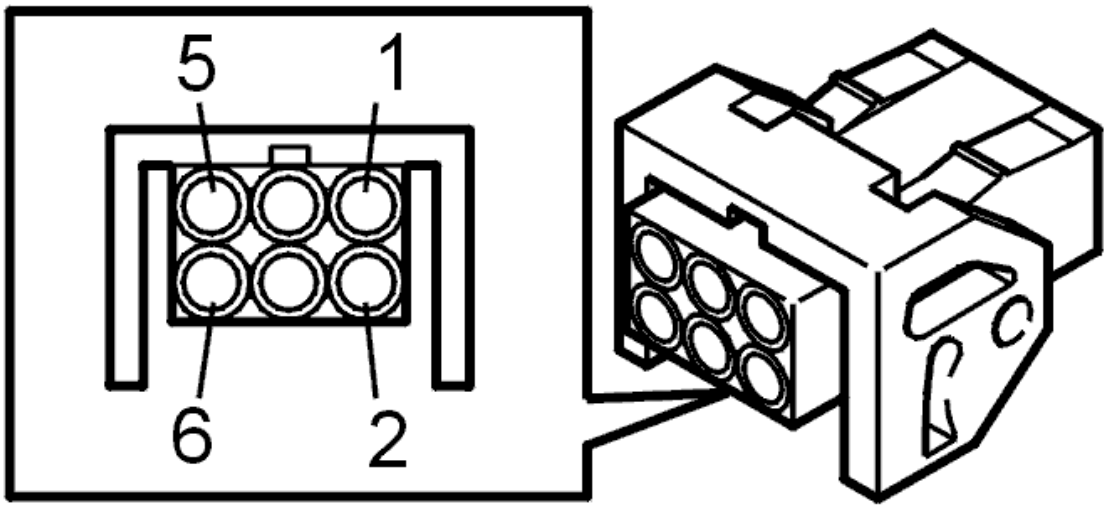

Fig. 412: Identifying Front Heated Oxygen Sensor Connector Terminals
Courtesy of VOLVO CARS CORPORATION

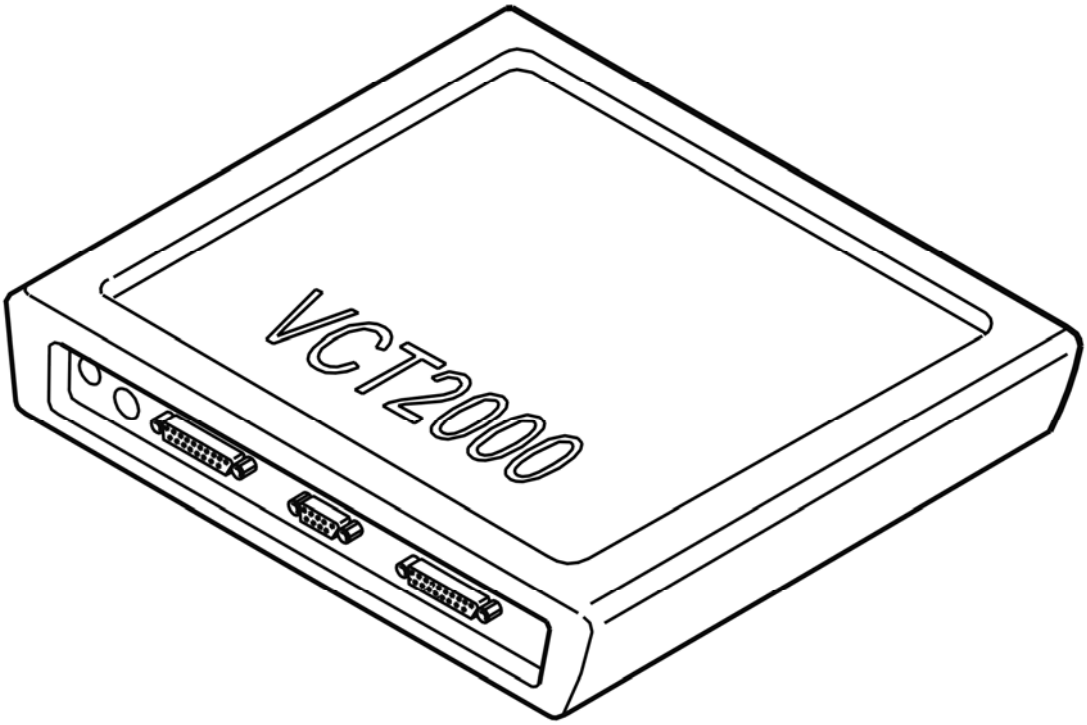

Fig. 413: Identifying VCT2000 Diagnostic Tool Symbol In VIDA
Courtesy of VOLVO CARS CORPORATION

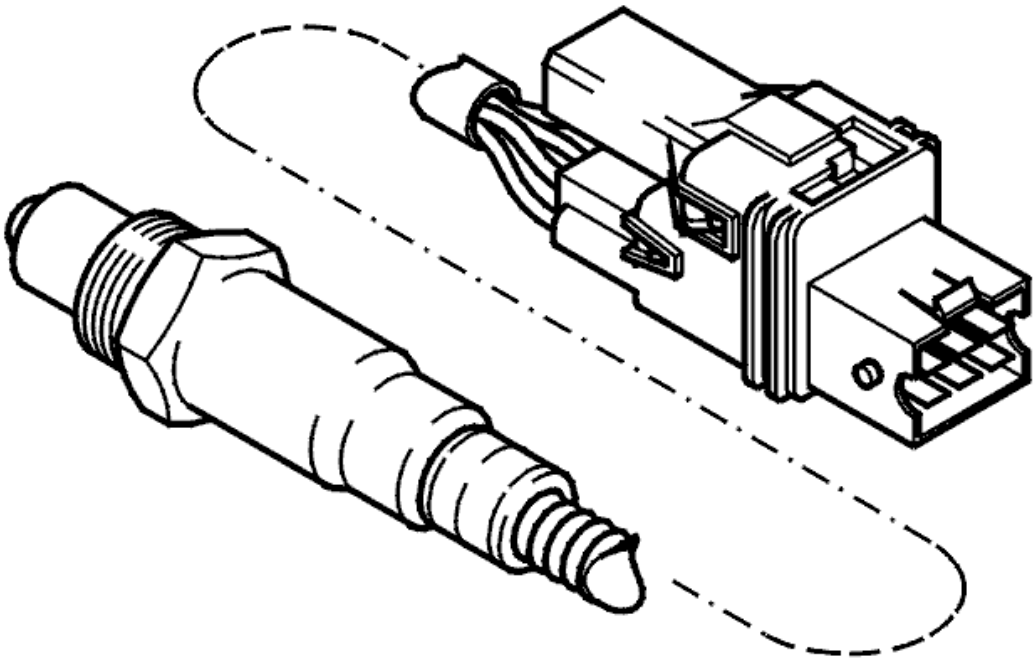

Fig. 414: Front Heated Oxygen Sensor
Courtesy of VOLVO CARS CORPORATION

- **Continue**

  Refer to **VERIFICATION**

VERIFICATION

VERIFICATION

HINT: After carrying out the repair, check that the fault has been remedied.

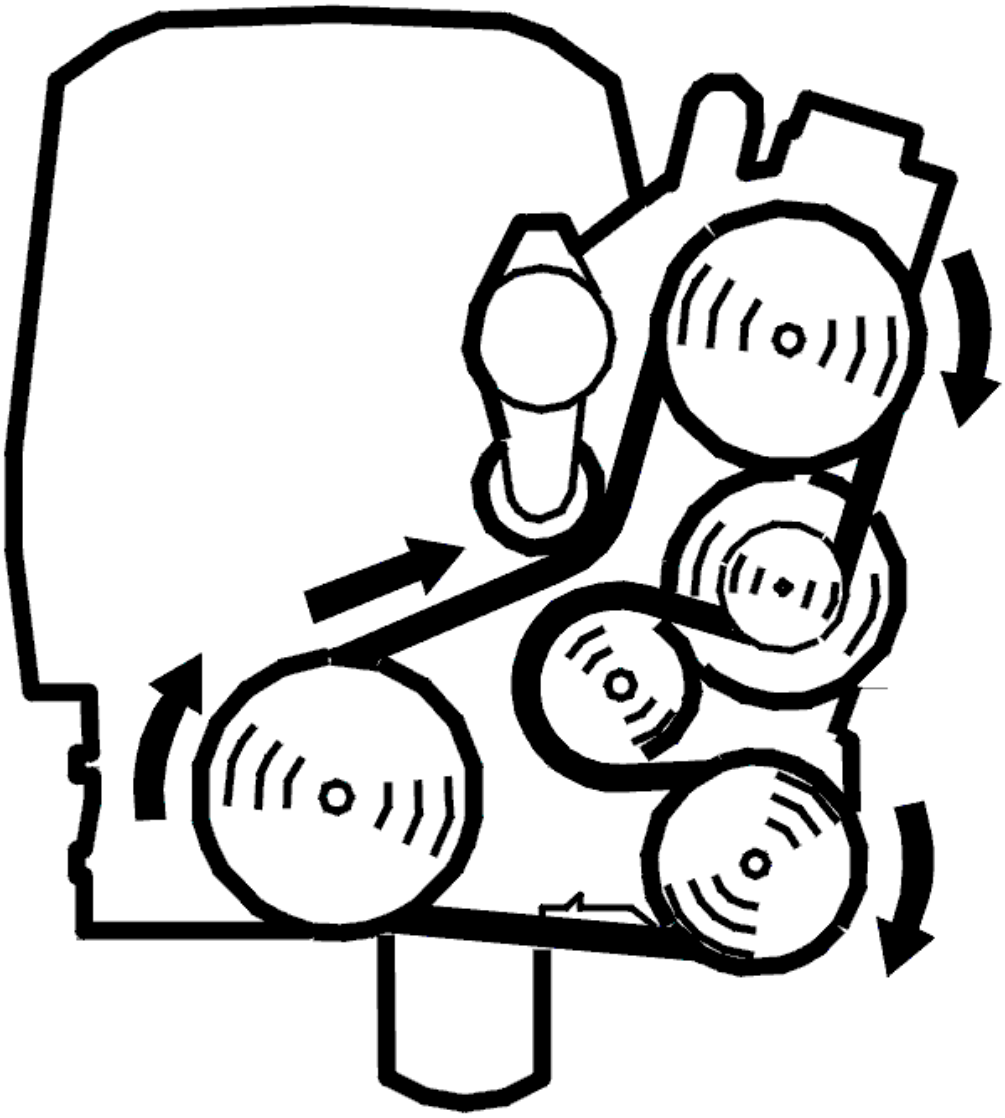

Fig. 415: Belt Routing / Engine Idling - Volvo
Courtesy of VOLVO CARS CORPORATION

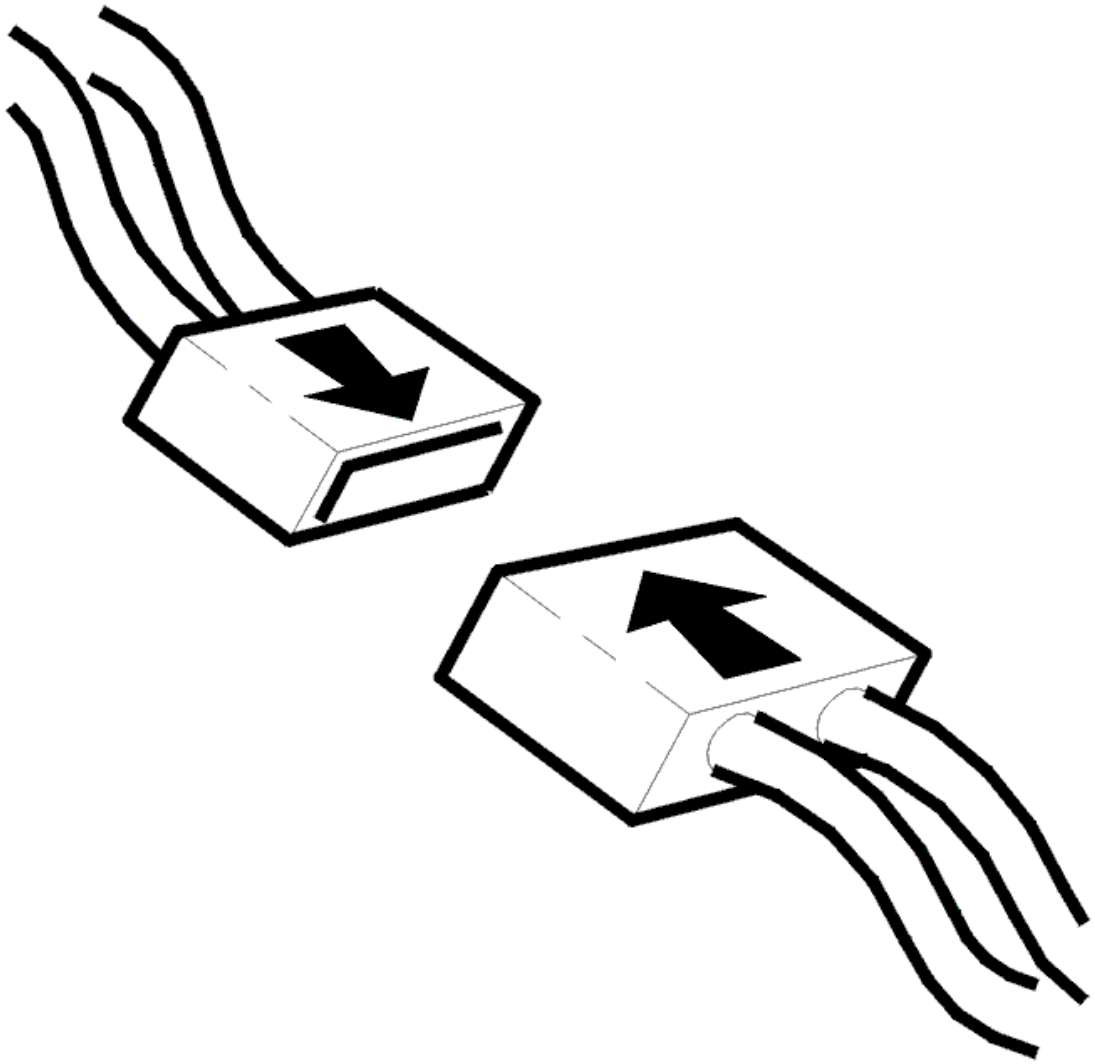

Fig. 416: Connecting Connector
Courtesy of VOLVO CARS CORPORATION

- Ignition off
- Reconnect the connectors, reinstall components etc.
- Test drive the car at an even speed (engine speed (RPM) above 2000 RPM) for at least 5 minutes
- Release the accelerator pedal (AP) quickly at least three times to simulate fuel shut-off
- Connect VCT2000 (or appropriate scan tool) to the data link connector (DLC) without switching off the engine.

NOTE: **If the engine is switched off, the stored fault status will be erased and the test drive will have to be repeated.**

Read off the diagnostic status and fault status for the diagnostic trouble code (DTC) by selecting the relevant diagnostic trouble code (DTC) from the list.

Check the fault status for the diagnostic trouble code (DTC) when the diagnostic is "Complete". If the function is correct, the fault status must be "No fault found" when the diagnostic is complete.

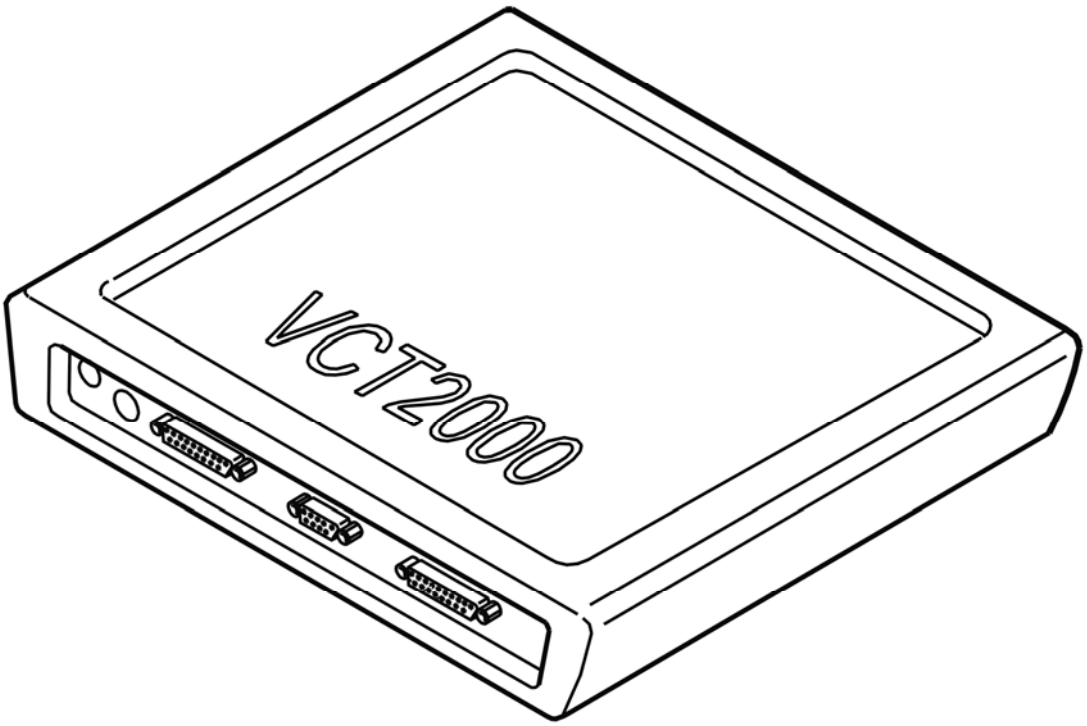

Fig. 417: Identifying VCT2000 Diagnostic Tool Symbol In VIDA
Courtesy of VOLVO CARS CORPORATION

Is the function OK?

- **YES**

  VERIFIED: Troubleshooting has been completed.

- **NO**

  Refer to **INFORMATION**

INFORMATION

FAULT-TRACING INFORMATION

The fault should have been detected and remedied. As this is not the case fault-tracing has failed.

Exit fault-tracing for this diagnostic trouble code (DTC) or make another attempt.

ECM-25B0: FRONT HEATED OXYGEN SENSOR (HO2S), BANK 2. FAULTY SIGNAL (B6294T; 2005-2006)

DIAGNOSTIC TROUBLE CODE (DTC) INFORMATION ECM-25B0

Condition

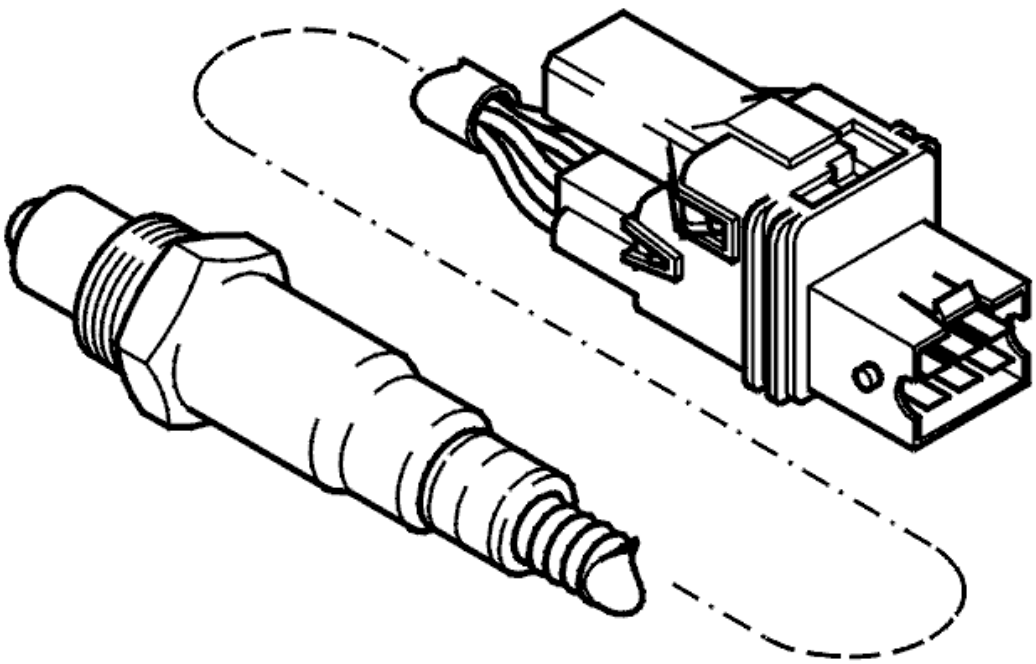

Fig. 418: Front Heated Oxygen Sensor
Courtesy of VOLVO CARS CORPORATION

The engine control module (ECM) monitors the function of the front heated oxygen sensor (HO2S) (bank 2) by checking its signal. The diagnostic trouble code (DTC) is stored if the engine control module (ECM) registers that the signal from the heated oxygen sensor (HO2S) indicates an incorrect lean or rich fuel/air mixture compared to that anticipated by the engine control module (ECM).

NOTE: The fault may be in the front or rear heated oxygen sensor (HO2S) circuit.

Substitute Value

- The heated oxygen sensor (HO2S) control is disabled
- Three-way catalytic converter (TWC) diagnostics are disabled.

Possible Source

- Leakage in the exhaust system
- Short-circuit to supply voltage or ground in signal cable (-)
- Short-circuit to supply voltage or ground in the pump supply cable
- Short-circuit to supply voltage or ground in calibration supply cable
- Open-circuit in signal cable (+)
- Damaged heated oxygen sensor (HO2S).

Fault symptom[s]

- Malfunction indicator lamp (MIL) lit.

FAULTY SIGNAL

CHECKING COMPONENTS

Check the exhaust system for air leakage.

Check the cable for a short-circuit to supply voltage or ground.

Check between:

- The cable between engine control module (ECM) terminal #A44 (#A44) and heated oxygen sensor (HO2S) terminal #5
- The cable for pump current between engine control module (ECM) terminal #A25 (#A25) and heated oxygen sensor (HO2S) terminal #6
- The cable for calibration current between engine control module (ECM) terminal #A69 (#B9) and heated oxygen sensor (HO2S) terminal #2.

Check the cable between engine control module (ECM) terminal #A43 (#A43) and heated oxygen sensor (HO2S) terminal #1. Check for an open-circuit.

HINT: If the above fault-tracing does not remedy the fault, try replacing the heated oxygen sensors (HO2S), as the diagnostic trouble code (DTC) can also be stored by a damaged front/rear heated oxygen sensor (HO2S).

Remedy as necessary.

Other information

- see **CHECKING FOR AIR LEAKAGE IN THE EXHAUST SYSTEM**
- For B5xx4T, see **HEATED OXYGEN SENSOR (HO2S), REPLACING**
- For B6xx4T, see **HEATED OXYGEN SENSOR (HO2S), REPLACING** .
- see **CHECKING WIRING AND TERMINALS**

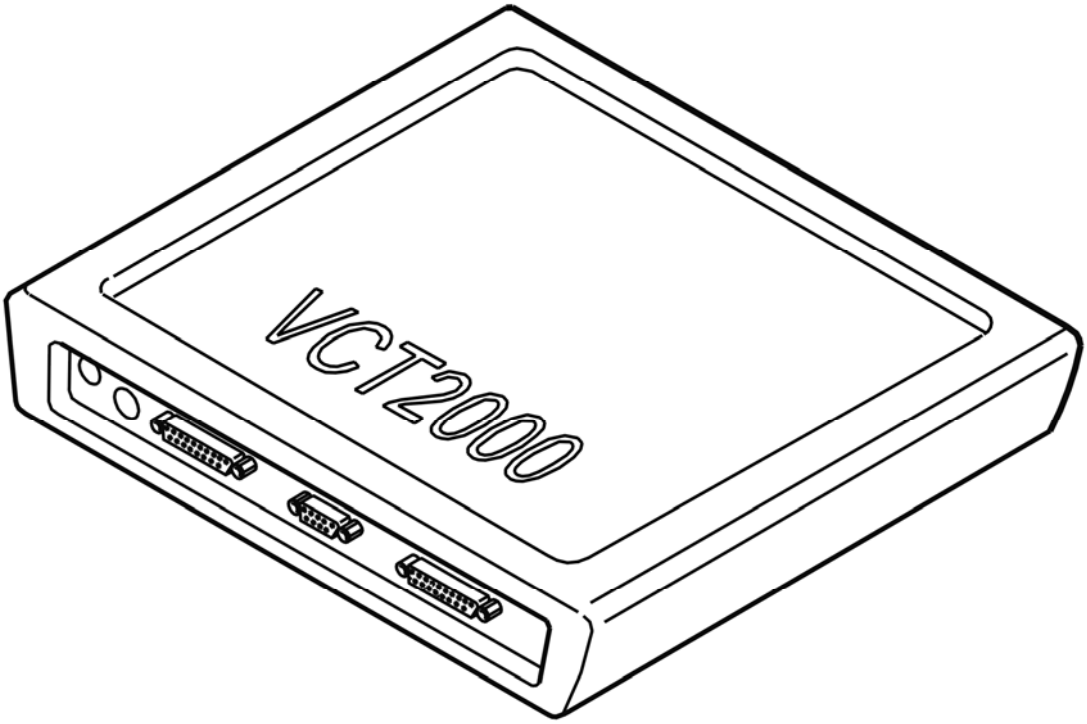

Fig. 419: Identifying VCT2000 Diagnostic Tool Symbol In VIDA
Courtesy of VOLVO CARS CORPORATION

- **Continue**

  Refer to **VERIFICATION**

VERIFICATION

VERIFICATION

HINT: After carrying out the repair, check that the fault has been remedied.

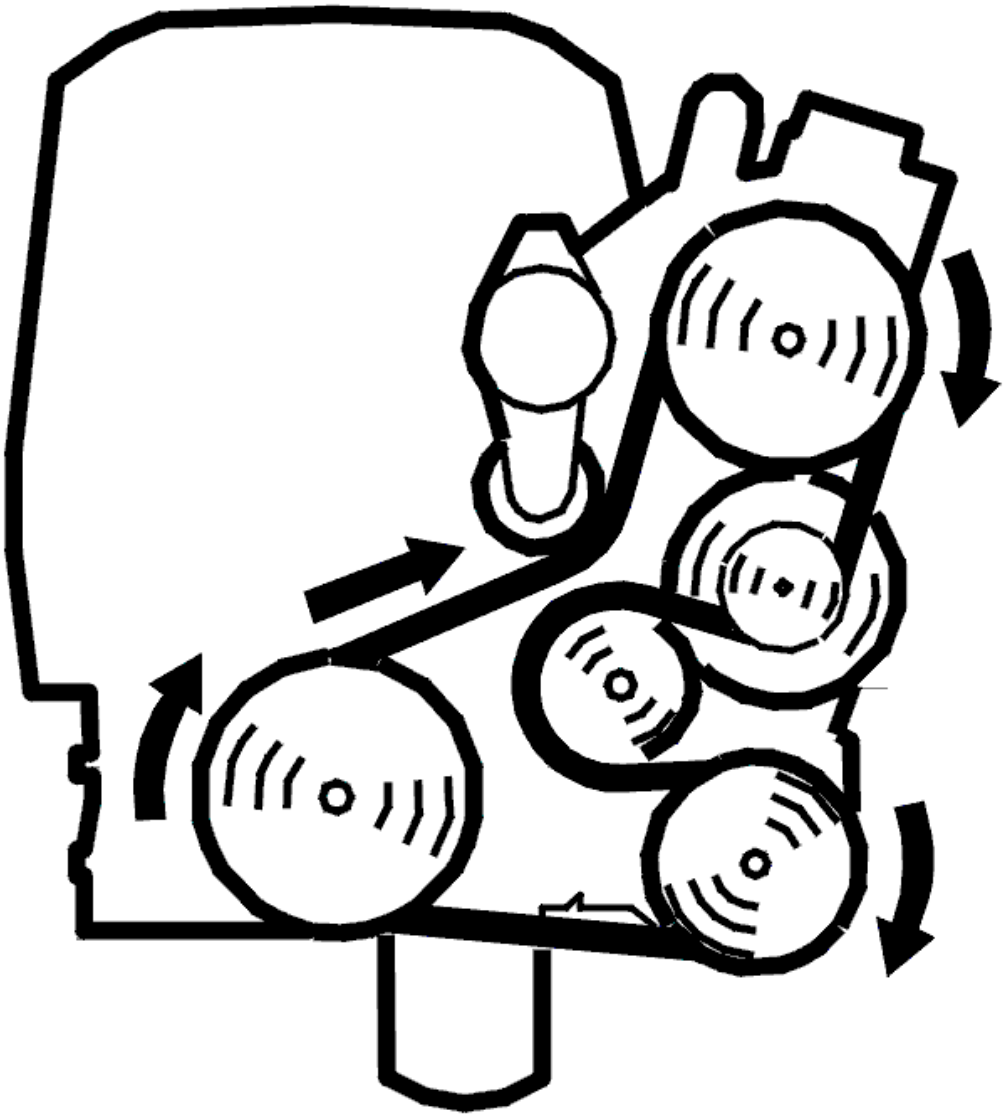

Fig. 420: Belt Routing / Engine Idling - Volvo
Courtesy of VOLVO CARS CORPORATION

- Ignition off
- Reconnect the connectors, reinstall components etc.
- Test drive the car at an even speed (engine speed (RPM) above 2000 RPM) for at least 10 minutes
- Release the accelerator pedal (AP) quickly at least three times to simulate fuel shut-off
- Connect VCT2000 (or appropriate scan tool) to the data link connector (DLC) without switching off the engine.

NOTE: **If the engine is switched off, the stored fault status will be erased and the test drive will have to be repeated.**

Read out the deviation between the front and rear heated oxygen sensor (HO2S).

Check that the value is between -0.03 and +0.03.

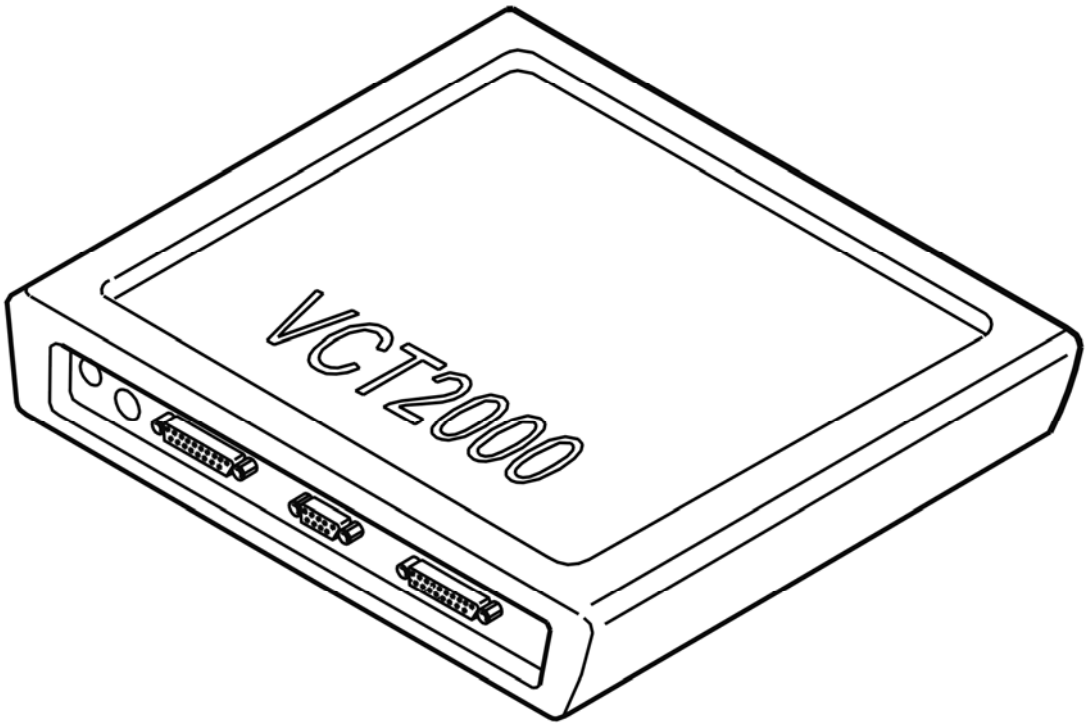

Fig. 421: Identifying VCT2000 Diagnostic Tool Symbol In VIDA
Courtesy of VOLVO CARS CORPORATION

Is the value OK?

- **YES**

  VERIFIED: Troubleshooting has been completed.

- **NO**

  Refer to **INFORMATION**

INFORMATION

FAULT-TRACING INFORMATION

The fault should have been detected and remedied. As this is not the case fault-tracing has failed.

Exit fault-tracing for this diagnostic trouble code (DTC) or make another attempt.

ECM-25BB: FRONT HEATED OXYGEN SENSOR (HO2S), BANK 2. SIGNAL

MISSING (B6294T; 2005-2006)

DIAGNOSTIC TROUBLE CODE (DTC) INFORMATION ECM-25BB

Condition

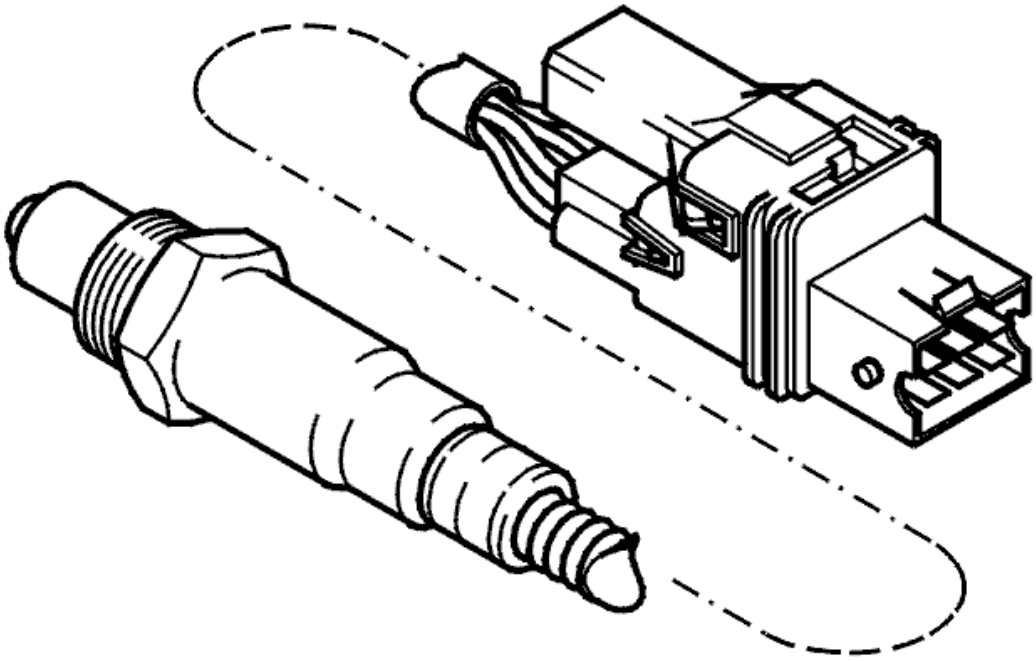

Fig. 422: Front Heated Oxygen Sensor
Courtesy of VOLVO CARS CORPORATION

The engine control module (ECM) monitors the function of the front heated oxygen sensor (HO2S) (bank 2) by checking its signal. The engine control module (ECM) compares the adaptation values of the front and rear heated oxygen sensor (HO2S). The diagnostic trouble code (DTC) is stored when the values deviate by more than 3%.

NOTE: The fault may be in the front or rear heated oxygen sensor (HO2S) circuit.

Substitute Value

- The heated oxygen sensor (HO2S) control is disabled
- Three-way catalytic converter (TWC) diagnostics are disabled.

Possible Source

- Leakage in the exhaust system
- Heated oxygen sensor (HO2S) indicates an incorrectly rich fuel/air mixture
- Contact resistance or oxidation in the terminals
- Damaged heated oxygen sensor (HO2S).

Fault symptom[s]

- Malfunction indicator lamp (MIL) lit.

SIGNAL MISSING

CHECKING COMPONENTS

Check the connectors for the heated oxygen sensors (HO2S). Check for contact resistance. Check for oxidation.

Check the exhaust system for air leakage.

HINT: If the above fault-tracing does not remedy the fault, try replacing the heated oxygen sensors (HO2S), as the diagnostic trouble code (DTC) can also be stored by a damaged front/rear heated oxygen sensor (HO2S).

Remedy as necessary.

Other information

- see **CHECKING FOR AIR LEAKAGE IN THE EXHAUST SYSTEM**
- For B5xx4T, see **HEATED OXYGEN SENSOR (HO2S), REPLACING**
- For B6xx4T, see **HEATED OXYGEN SENSOR (HO2S), REPLACING** .
- see **CHECKING WIRING AND TERMINALS**

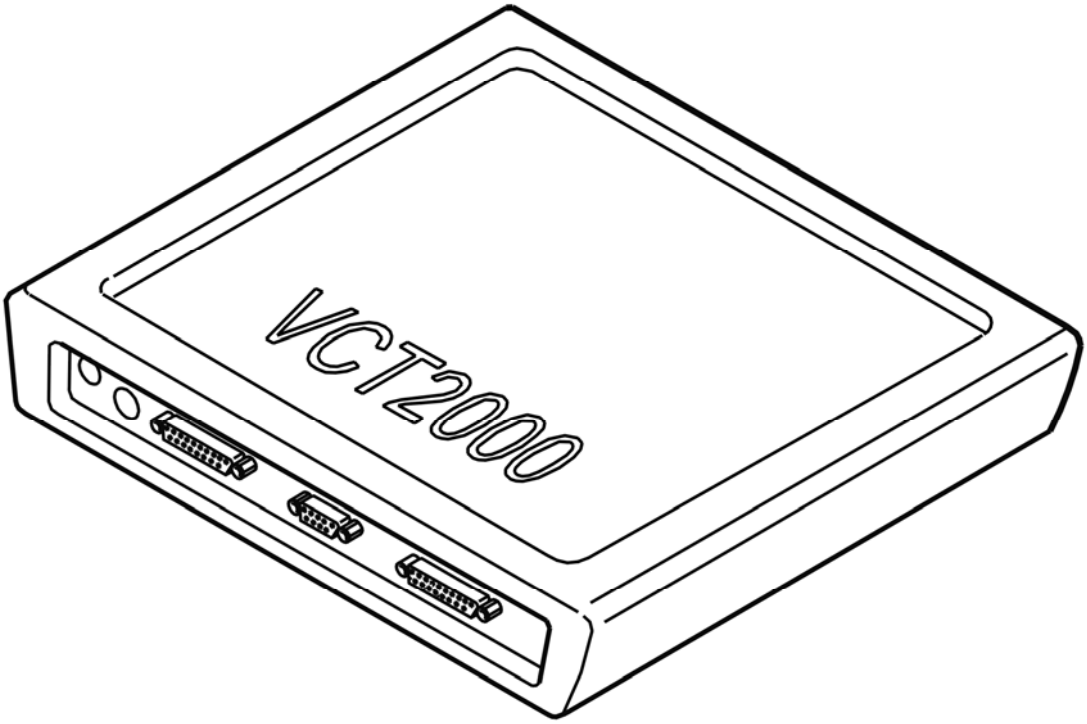

Fig. 423: Identifying VCT2000 Diagnostic Tool Symbol In VIDA
Courtesy of VOLVO CARS CORPORATION

- **Continue**

  Refer to **VERIFICATION**

VERIFICATION

VERIFICATION

HINT: After carrying out the repair, check that the fault has been remedied.

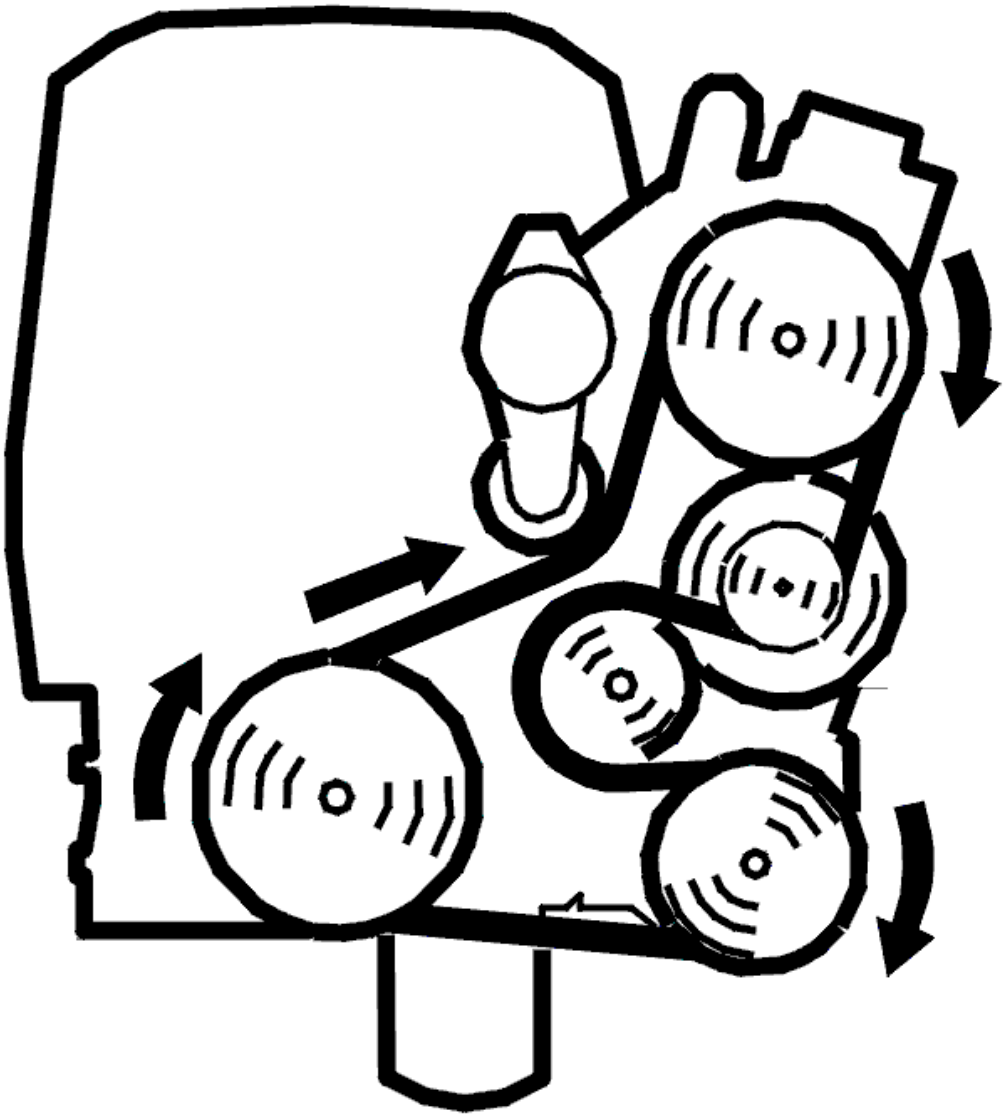

Fig. 424: Belt Routing / Engine Idling - Volvo
Courtesy of VOLVO CARS CORPORATION

- Ignition off
- Reconnect the connectors, reinstall components etc.
- Test drive the car at an even speed (engine speed (RPM) above 2000 RPM) for at least 10 minutes
- Release the accelerator pedal (AP) quickly at least three times to simulate fuel shut-off
- Connect VCT2000 (or appropriate scan tool) to the data link connector (DLC) without switching off the engine.

NOTE: **If the engine is switched off, the stored fault status will be erased and the test drive will have to be repeated.**

Read out the deviation between the front and rear heated oxygen sensor (HO2S).

Check that the value is between -0.03 and +0.03.

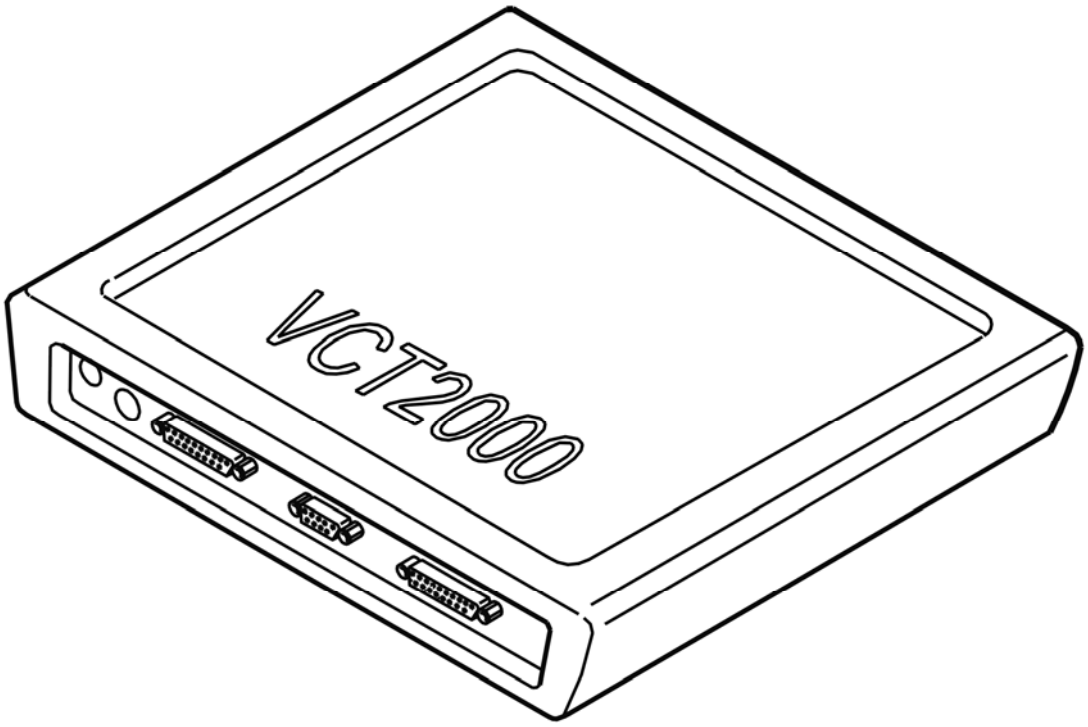

Fig. 425: Identifying VCT2000 Diagnostic Tool Symbol In VIDA
Courtesy of VOLVO CARS CORPORATION

Is the value OK?

- **YES**

  VERIFIED: Troubleshooting has been completed.

- **NO**

  Refer to **INFORMATION**

INFORMATION

FAULT-TRACING INFORMATION

The fault should have been detected and remedied. As this is not the case fault-tracing has failed.

Exit fault-tracing for this diagnostic trouble code (DTC) or make another attempt.

ECM-25BC: FRONT HEATED OXYGEN SENSOR (HO2S), BANK 2. SIGNAL

TOO HIGH (B6294T; 2005-2006)

DIAGNOSTIC TROUBLE CODE (DTC) INFORMATION ECM-25BC

Condition

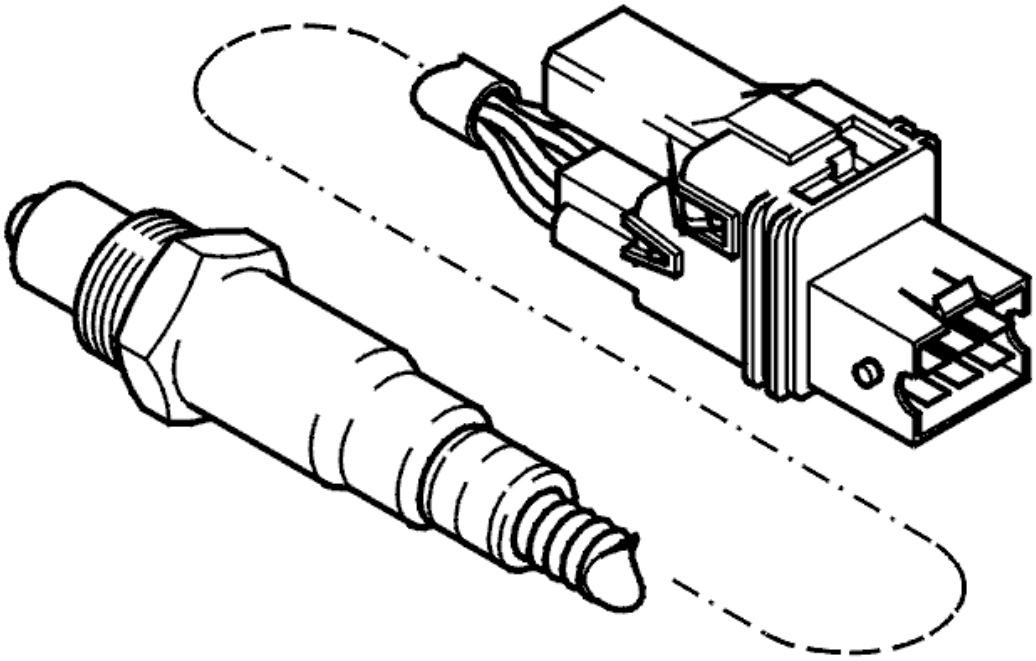

Fig. 426: Front Heated Oxygen Sensor
Courtesy of VOLVO CARS CORPORATION

The engine control module (ECM) monitors the function of the front heated oxygen sensor (HO2S) (bank 2) by checking its signal. The diagnostic trouble code (DTC) is stored if the engine control module (ECM) registers that the signal from the front heated oxygen sensor (HO2S) indicates a rich fuel/air mixture while the signal from the rear heated oxygen sensor (HO2S) indicates a lean fuel/air mixture.

NOTE: The fault may be in the front or rear heated oxygen sensor (HO2S) circuit.

Substitute Value

- The heated oxygen sensor (HO2S) control is disabled
- Three-way catalytic converter (TWC) diagnostics are disabled.

Possible Source

- Leakage in the exhaust system
- Heated oxygen sensor (HO2S) indicates an incorrectly lean fuel/air mixture
- Damaged heated oxygen sensor (HO2S).

Fault symptom[s]

- Malfunction indicator lamp (MIL) lit.

SIGNAL TOO HIGH / SIGNAL TOO LOW

CHECKING COMPONENTS

Check the exhaust system for air leakage.

HINT: If the above fault-tracing does not remedy the fault, try replacing the heated oxygen sensors (HO2S), as the diagnostic trouble code (DTC) can also be stored by a damaged front/rear heated oxygen sensor (HO2S).

Remedy as necessary.

Other information

- see **CHECKING FOR AIR LEAKAGE IN THE EXHAUST SYSTEM**
- For B5xx4T, see **HEATED OXYGEN SENSOR (HO2S), REPLACING**
- For B6xx4T, see **HEATED OXYGEN SENSOR (HO2S), REPLACING** .
- see **CHECKING WIRING AND TERMINALS**

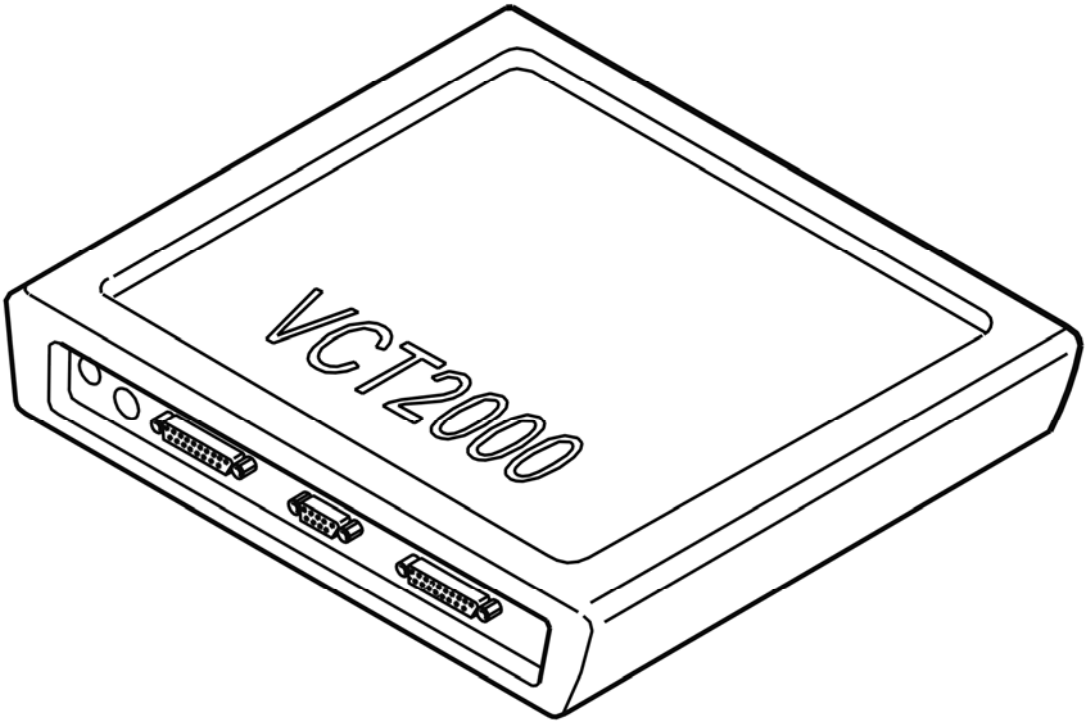

Fig. 427: Identifying VCT2000 Diagnostic Tool Symbol In VIDA
Courtesy of VOLVO CARS CORPORATION

- **Continue**

  Refer to **VERIFICATION**

VERIFICATION

VERIFICATION

HINT: After carrying out the repair, check that the fault has been remedied.

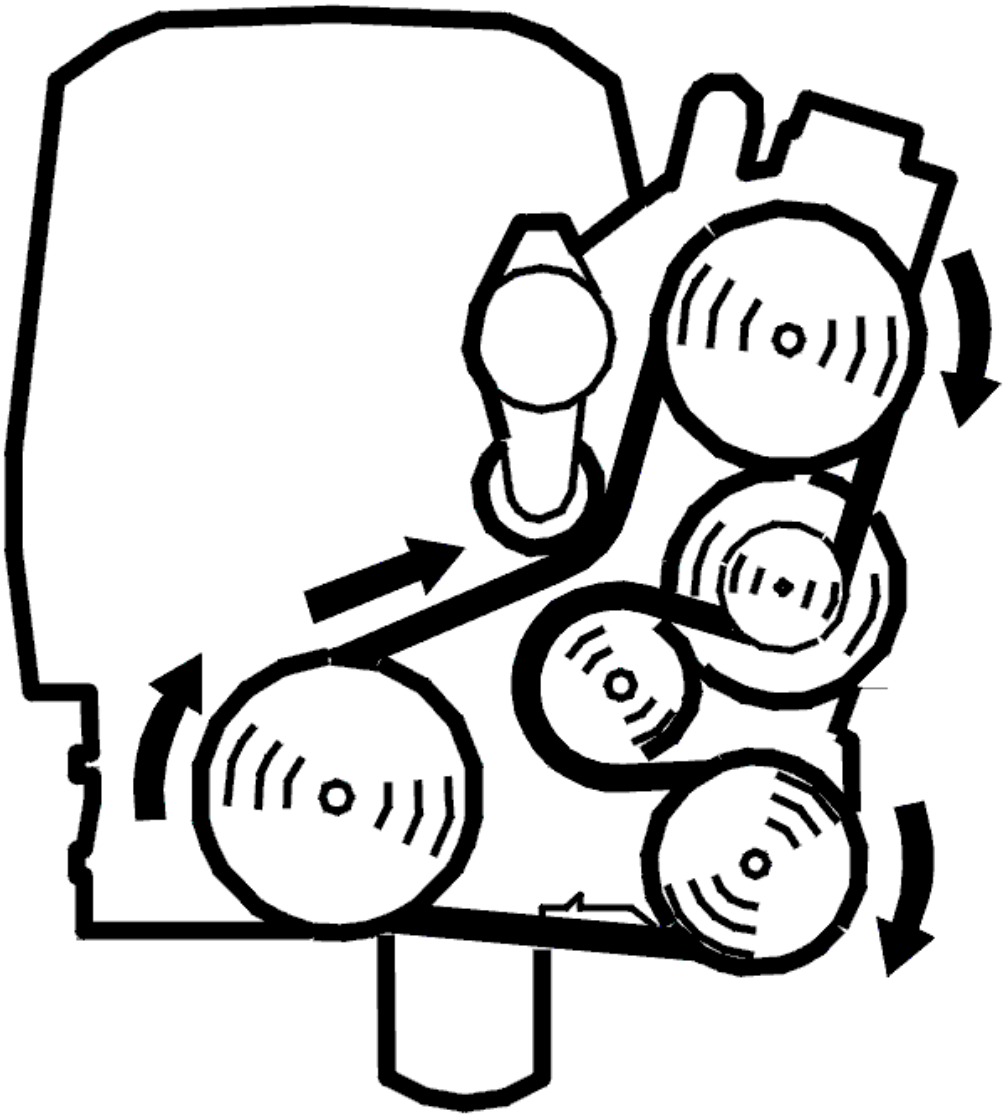

Fig. 428: Belt Routing / Engine Idling - Volvo
Courtesy of VOLVO CARS CORPORATION

- Ignition off
- Reconnect the connectors, reinstall components etc.
- Test drive the car at an even speed (engine speed (RPM) above 2000 RPM) for at least 10 minutes
- Release the accelerator pedal (AP) quickly at least three times to simulate fuel shut-off
- Connect VCT2000 (or appropriate scan tool) to the data link connector (DLC) without switching off the engine.

NOTE: **If the engine is switched off, the stored fault status will be erased and the test drive will have to be repeated.**

Read out the deviation between the front and rear heated oxygen sensor (HO2S).

Check that the value is between -0.03 and +0.03.

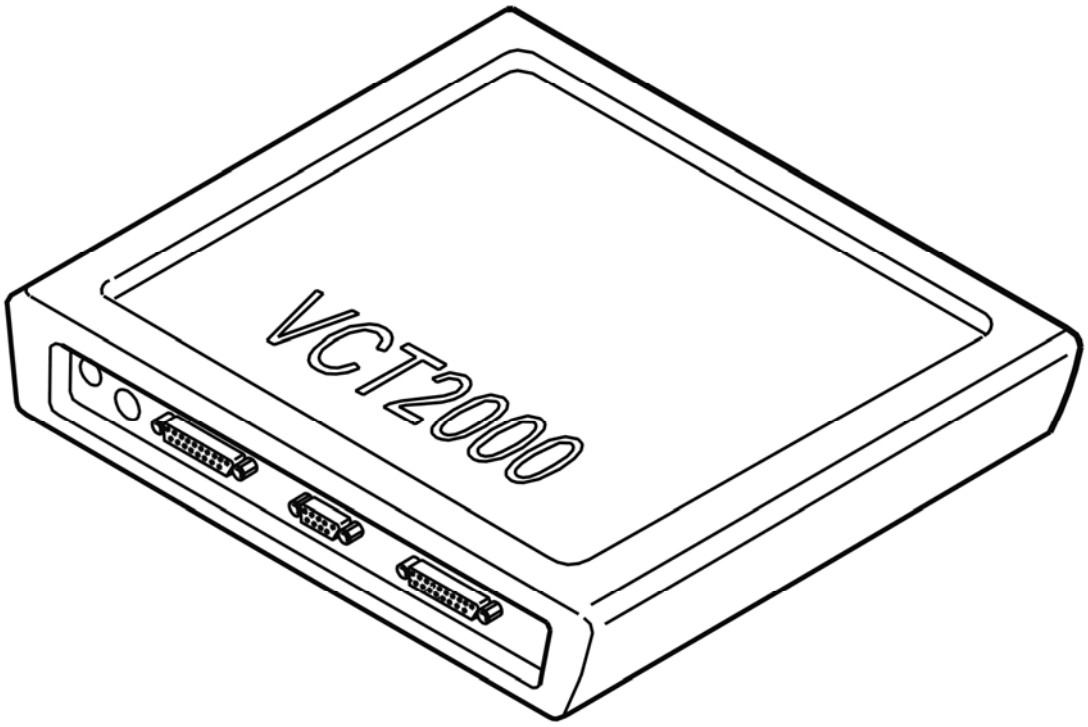

Fig. 429: Identifying VCT2000 Diagnostic Tool Symbol In VIDA
Courtesy of VOLVO CARS CORPORATION

Is the value OK?

- **YES**

  VERIFIED: Troubleshooting has been completed.

- **NO**

  Refer to **INFORMATION**

INFORMATION

FAULT-TRACING INFORMATION

The fault should have been detected and remedied. As this is not the case fault-tracing has failed.

Exit fault-tracing for this diagnostic trouble code (DTC) or make another attempt.

ECM-25BD: FRONT HEATED OXYGEN SENSOR (HO2S), BANK 2. SIGNAL

TOO LOW (B6294T; 2005-2006)

DIAGNOSTIC TROUBLE CODE (DTC) INFORMATION ECM-25BD

Condition

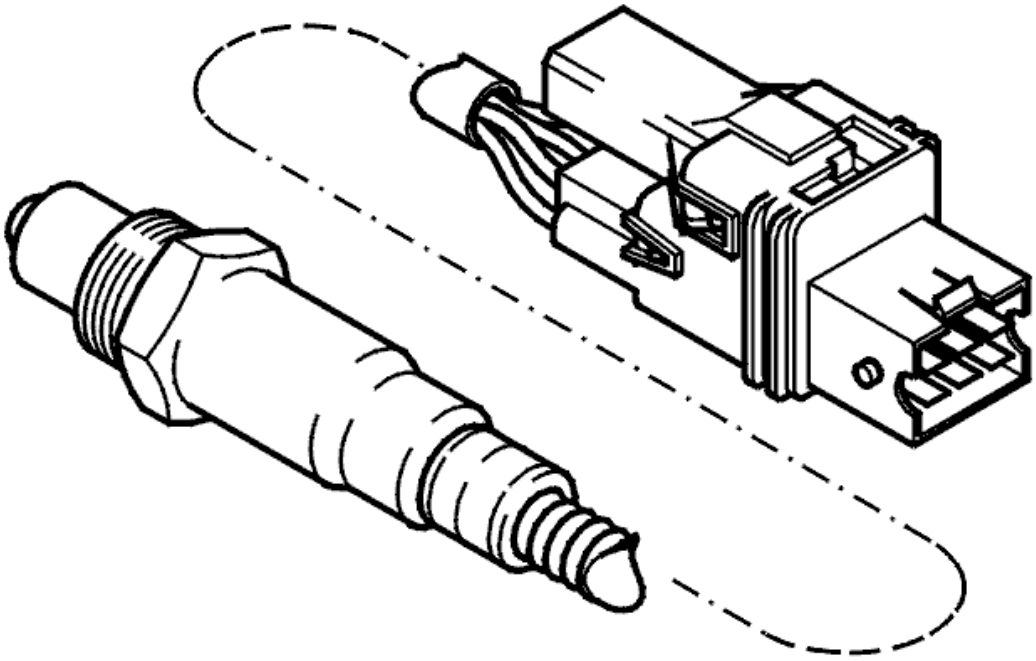

Fig. 430: Front Heated Oxygen Sensor
Courtesy of VOLVO CARS CORPORATION

The engine control module (ECM) monitors the function of the front heated oxygen sensor (HO2S) (bank 2) by checking its signal. The diagnostic trouble code (DTC) is stored if the engine control module (ECM) registers that the signal from the front heated oxygen sensor (HO2S) indicates a lean fuel/air mixture while the signal from the rear heated oxygen sensor (HO2S) indicates a rich fuel/air mixture.

NOTE: The fault may be in the front or rear heated oxygen sensor (HO2S) circuit.

Substitute Value

- The heated oxygen sensor (HO2S) control is disabled
- Three-way catalytic converter (TWC) diagnostics are disabled.

Possible Source

- Leakage in the exhaust system
- Heated oxygen sensor (HO2S) indicates an incorrectly rich fuel/air mixture
- Damaged heated oxygen sensor (HO2S).

Fault symptom[s]

- Malfunction indicator lamp (MIL) lit.

SIGNAL TOO HIGH / SIGNAL TOO LOW

see **SIGNAL TOO HIGH / SIGNAL TOO LOW**

ECM-25C0: FRONT HEATED OXYGEN SENSOR (HO2S), BANK 2. FAULTY SIGNAL (B6294T; 2005-2006)

DIAGNOSTIC TROUBLE CODE (DTC) INFORMATION ECM-25C0

Condition

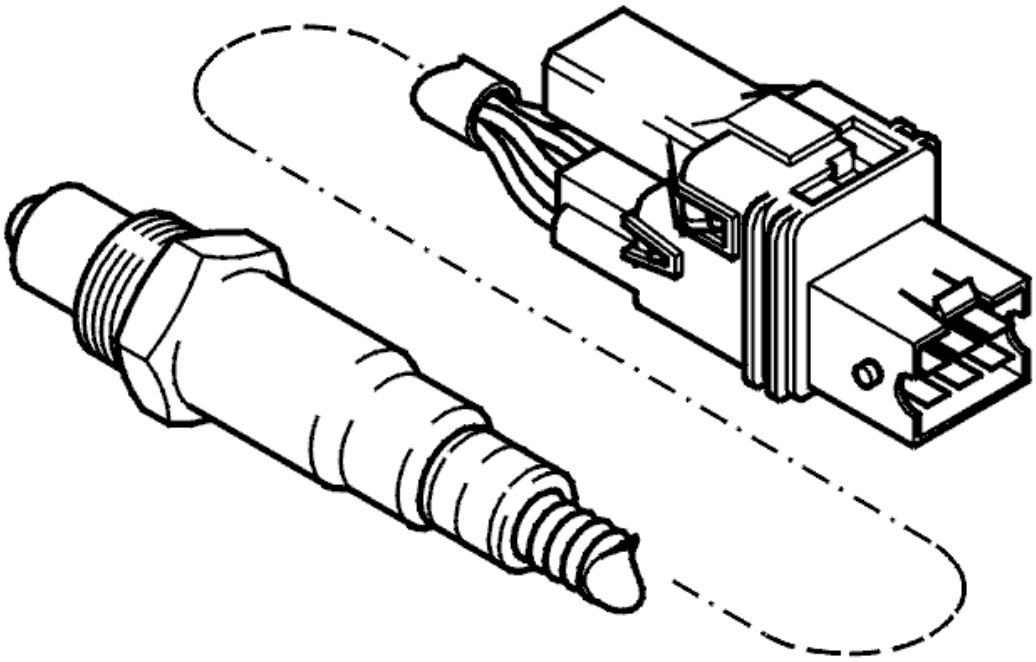

Fig. 431: Front Heated Oxygen Sensor
Courtesy of VOLVO CARS CORPORATION

The engine control module (ECM) monitors the function of the front heated oxygen sensor (HO2S) (bank 2) by checking its signal. The diagnostic trouble code (DTC) is stored if the engine control module (ECM) registers that the heated oxygen sensor (HO2S) only indicates air and no fuel/air mixture.

Substitute Value

- The heated oxygen sensor (HO2S) control is disabled
- Three-way catalytic converter (TWC) diagnostics are disabled.

Possible Source

- Incorrectly installed heated oxygen sensor (HO2S)
- Damaged front heated oxygen sensor (HO2S).

Fault symptom[s]

- Malfunction indicator lamp (MIL) lit.

FAULTY SIGNAL

CHECKING THE COMPONENTS AND WIRING

CAUTION: Do not apply rust solvent spray or grease to the heated oxygen sensor (HO2S) connector.

Check the heated oxygen sensor (HO2S) connector. Check for contact resistance. Check for an open-circuit. Check for oxidation.

Check that the heated oxygen sensor (HO2S) is correctly installed in the exhaust system.

Try a new heated oxygen sensor (HO2S) if the above fault-tracing does not remedy the fault.

Remedy as necessary.

Other information

- For 5 cylinder turbocharged engines -2004, see **SIGNAL DESCRIPTION**
- For 5 cylinder turbocharged engines 2005-, see **SIGNAL SPECIFICATION** .
- For 6 cylinder engines -2004, see **SIGNAL SPECIFICATION**
- For 6 cylinder engines 2005-, see **SIGNAL SPECIFICATION** .
- For B5xx4T, see **HEATED OXYGEN SENSOR (HO2S), REPLACING**
- For B6xx4T, see **HEATED OXYGEN SENSOR (HO2S), REPLACING** .
- see **CHECKING WIRING AND TERMINALS**

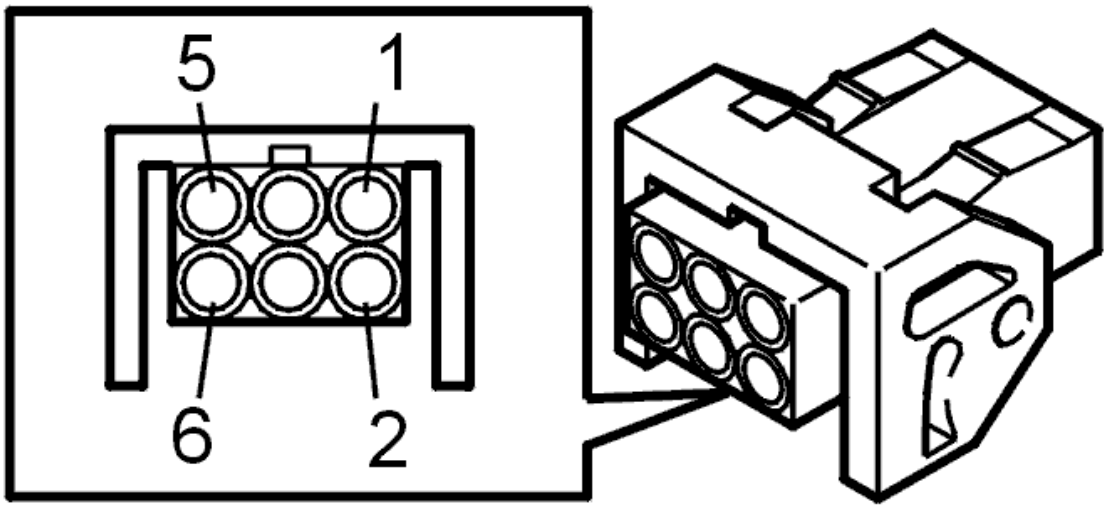

Fig. 432: Identifying Front Heated Oxygen Sensor Connector Terminals
Courtesy of VOLVO CARS CORPORATION

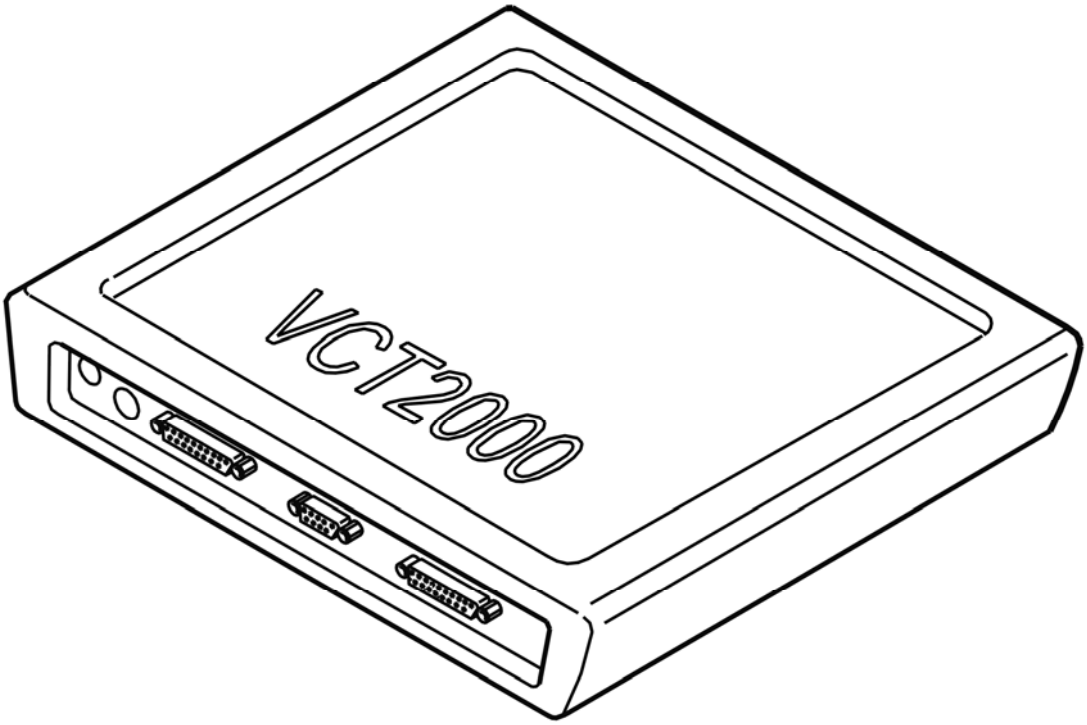

Fig. 433: Identifying VCT2000 Diagnostic Tool Symbol In VIDA
Courtesy of VOLVO CARS CORPORATION

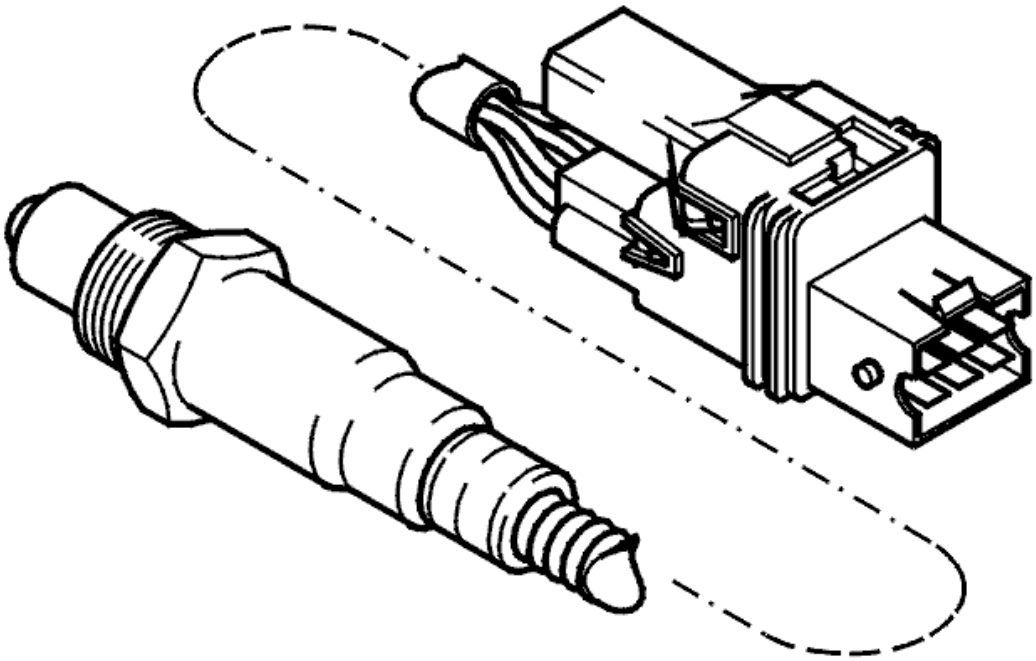

Fig. 434: Front Heated Oxygen Sensor
Courtesy of VOLVO CARS CORPORATION

- **Continue**

  Refer to **VERIFICATION**

VERIFICATION

VERIFICATION

HINT: After carrying out the repair, check that the fault has been remedied.

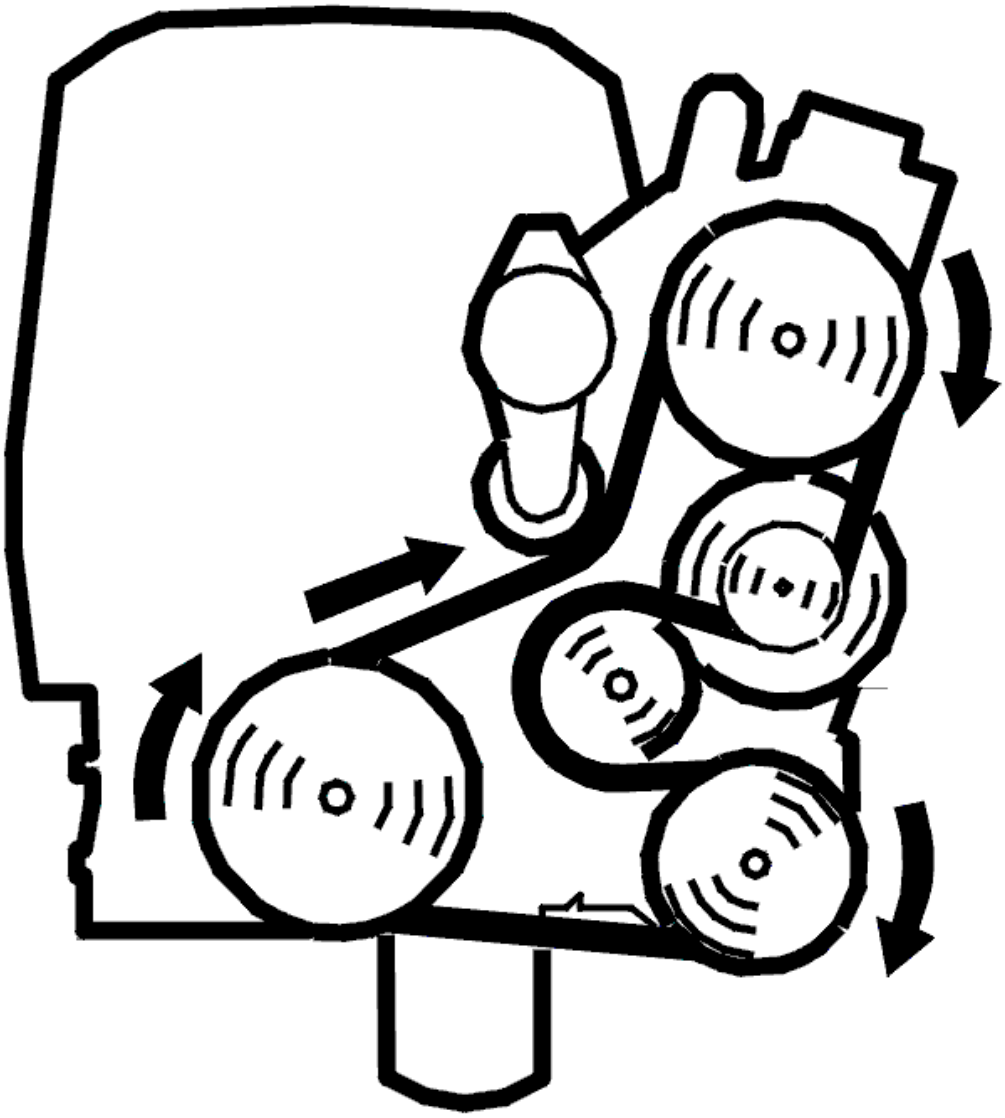

Fig. 435: Belt Routing / Engine Idling - Volvo
Courtesy of VOLVO CARS CORPORATION

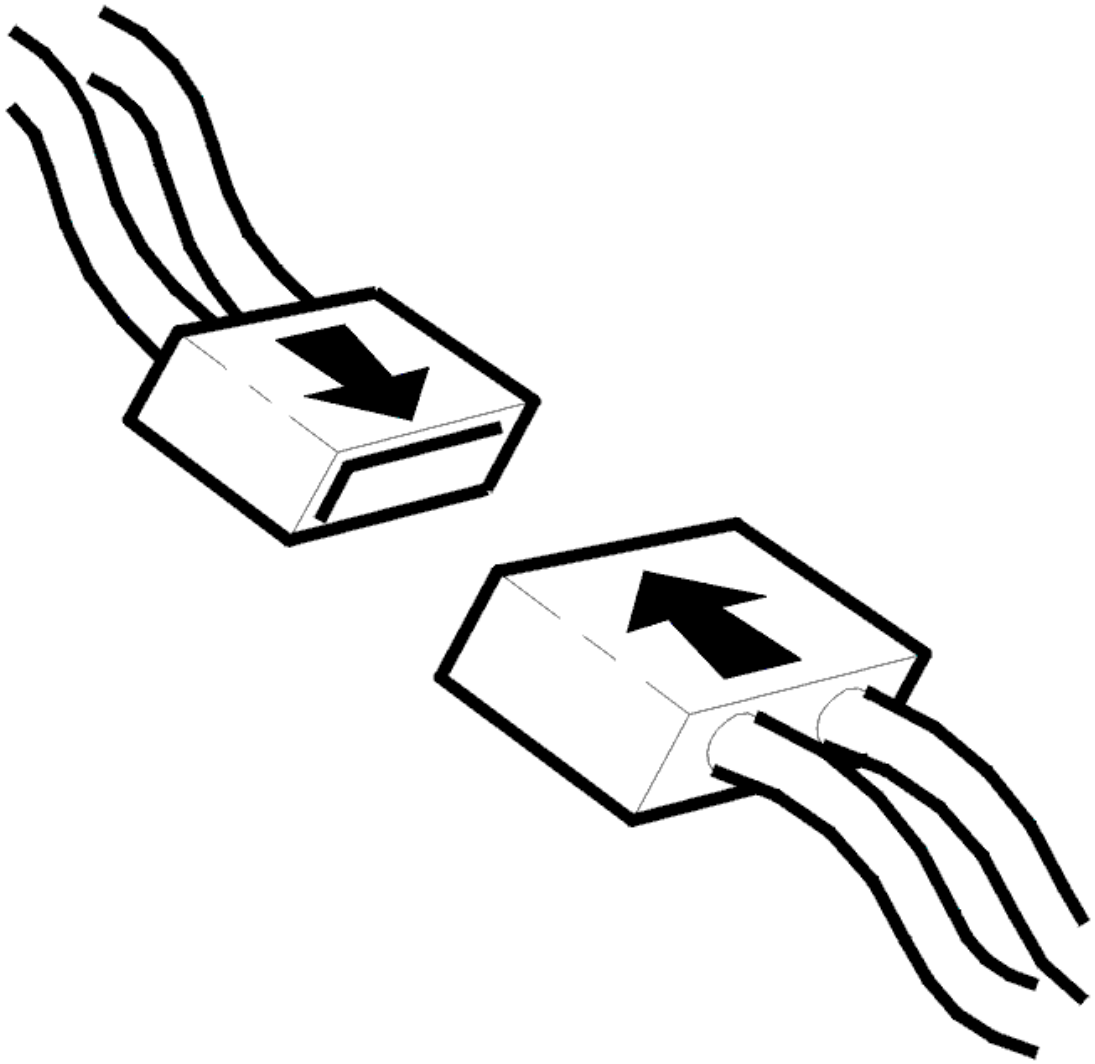

Fig. 436: Connecting Connector
Courtesy of VOLVO CARS CORPORATION

- Ignition off
- Reconnect the connectors, reinstall components etc.
- Test drive the car at an even speed (engine speed (RPM) above 2000 RPM) for at least 5 minutes
- Release the accelerator pedal (AP) quickly at least three times to simulate fuel shut-off
- Connect VCT2000 (or appropriate scan tool) to the data link connector (DLC) without switching off the engine.

NOTE: **If the engine is switched off, the stored fault status will be erased and the test drive will have to be repeated.**

Read off the diagnostic status and fault status for the diagnostic trouble code (DTC) by selecting the relevant diagnostic trouble code (DTC) from the list.

Check the fault status for the diagnostic trouble code (DTC) when the diagnostic is "Complete". If the function is correct, the fault status must be "No fault found" when the diagnostic is complete.

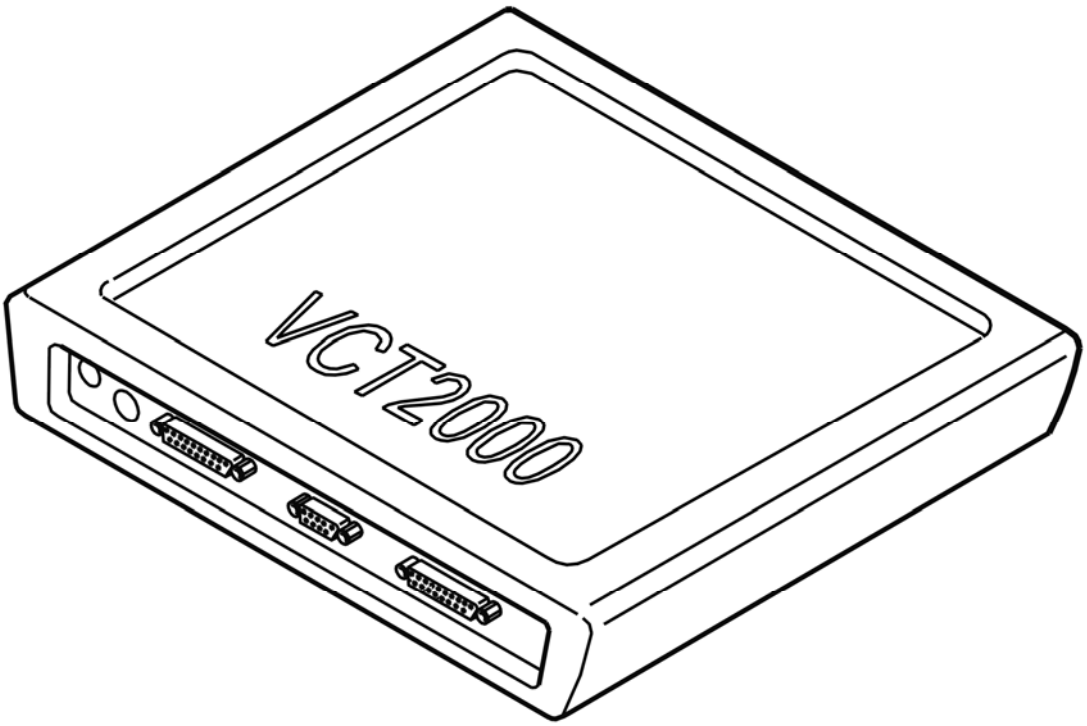

Fig. 437: Identifying VCT2000 Diagnostic Tool Symbol In VIDA
Courtesy of VOLVO CARS CORPORATION

Is the function OK?

- **YES**

  VERIFIED: Troubleshooting has been completed.

- **NO**

  Refer to **INFORMATION**

INFORMATION

FAULT-TRACING INFORMATION

The fault should have been detected and remedied. As this is not the case fault-tracing has failed.

Exit fault-tracing for this diagnostic trouble code (DTC) or make another attempt.

ECM-260A: LONG-TERM FUEL TRIM. LOWER LIMIT (B5254T2; 2003-2004)

DIAGNOSTIC TROUBLE CODE (DTC) INFORMATION

Condition

The control module receives information from the heated oxygen sensor (HO2S) about the fuel / air mixture when idling at both the lower and upper part-load range. If the fuel / air mixture deviates from lambda=1, the short-term fuel trim will compensate for this by adjusting the injection time so that lambda=1 is achieved. When the short-term fuel trim makes an adjustment, the integrator median must be adjusted by the long-term trim. Diagnostic trouble code (DTC) ECM-260A is stored when the long-term trim must be adjusted to almost maximum in the upper part load area

Substitute Value

none

Possible Source

Upper limit:

- intake air leakage
- exhaust system air leakage
- low fuel pressure
- defective heated oxygen sensor (HO2S)

Lower limit:

- intake air leakage
- high fuel pressure
- leaking injectors
- defective mass air flow (MAF) sensor
- contaminated engine oil
- oil level too high
- defective heated oxygen sensor (HO2S)

Fault symptom[s]

- none

LOWER LIMIT

CHECKING FUEL INJECTION SYSTEM

Check intake system for air leakage according to **CHECK FOR AIR LEAKS IN THE INTAKE SYSTEM** .

HINT: Air leakage in the intake system can occur through the canister purge (CP) valve, the secondary air solenoid valve and power brake booster.

Check the exhaust system for leakage according to **CHECKING FOR AIR LEAKAGE IN THE EXHAUST SYSTEM** .

Check fuel and residual pressure according to **CHECKING FUEL AND RESIDUAL PRESSURES** .

Check that the oil level is between the minimum and maximum markings

Check engine dilution by, reading off the short-term fuel trim with the engine running, plug the crankcase ventilation and read off the short-term fuel trim again, the value should be more or less unchanged

Remedy as necessary.

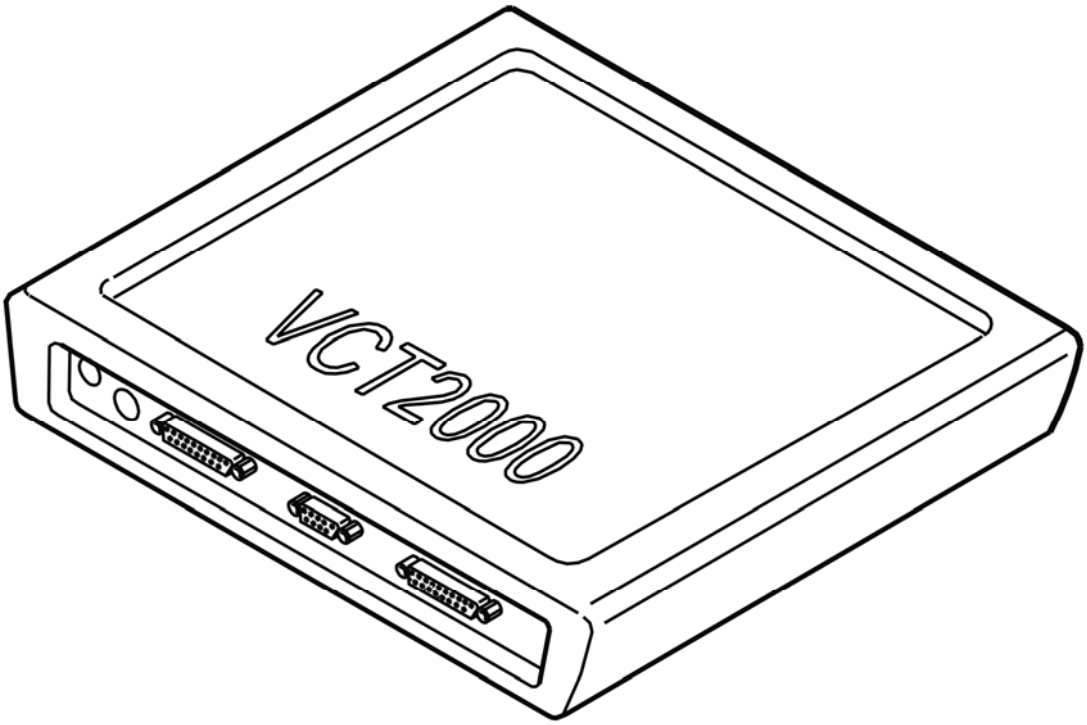

Fig. 438: Identifying VCT2000 Diagnostic Tool Symbol In VIDA
Courtesy of VOLVO CARS CORPORATION

Was a fault detected?

- **YES**

  Refer to **VERIFICATION**

- **NO**

  Refer to **CHECKING MASS AIR FLOW (MAF) SENSOR**

CHECKING MASS AIR FLOW (MAF) SENSOR

Test drive the car for approximately 10 minutes

Read off the mass air flow (MAF) sensor correction factor. The value must be between 0.8 and 1.2

NOTE: There must not be any air leakage when this test is carried out.

Remedy as necessary.

Other information

- To replace mass air flow (MAF) sensor, see **MASS AIR FLOW (MAF) SENSOR, REPLACING** .

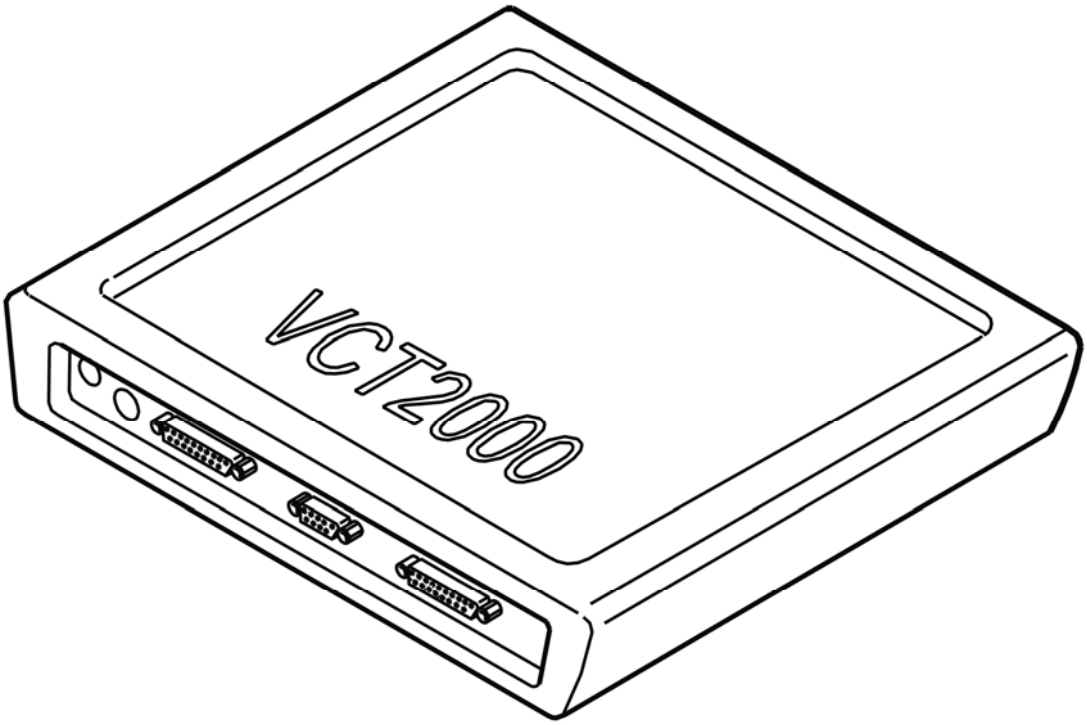

Fig. 439: Identifying VCT2000 Diagnostic Tool Symbol In VIDA
Courtesy of VOLVO CARS CORPORATION

- **Continue**

Refer to **VERIFICATION**

VERIFICATION

VERIFICATION

Test drive the car according to the TRIP schedule, see **VERIFYING REPAIRS** .

Do not turn off engine after test drive.

Connect the car to VIDA (Volvo scan tool) again.

Read off fuel trim status.

There should not be any faults when fuel trim is finished.

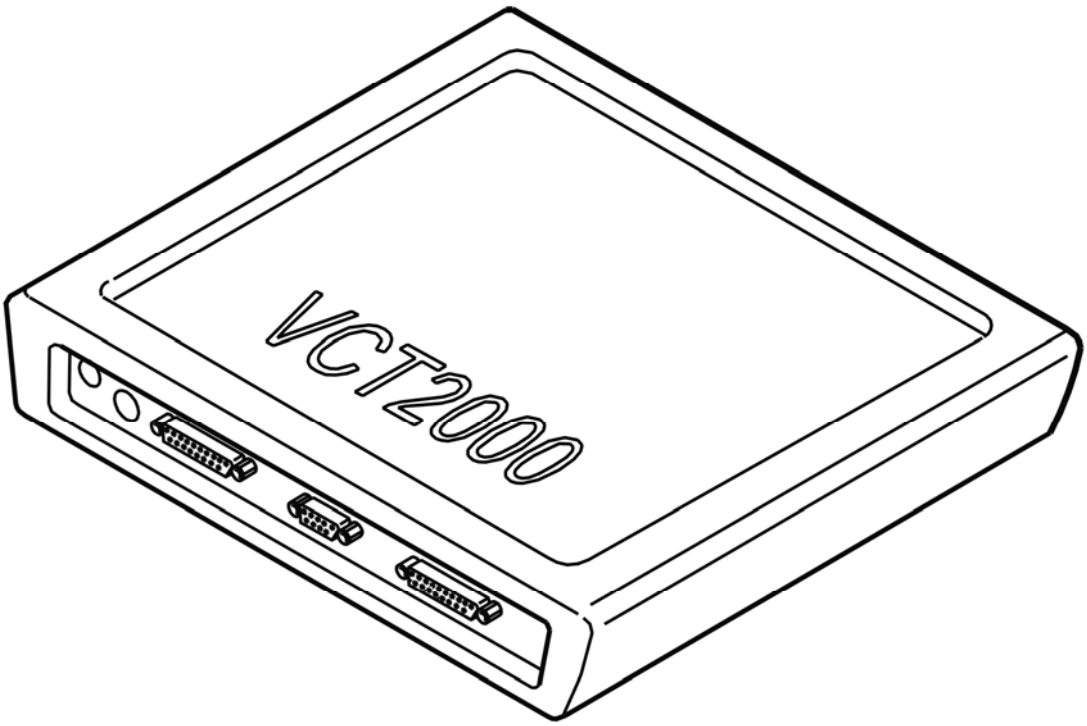

Fig. 440: Identifying VCT2000 Diagnostic Tool Symbol In VIDA
Courtesy of VOLVO CARS CORPORATION

Was a fault detected?

- **YES**

  Refer to **INFORMATION**

- **NO**

  VERIFIED: Troubleshooting has been completed.

INFORMATION

FAULT-TRACING INFORMATION

The fault should have been detected and remedied. As this is not the case fault-tracing has failed.

Exit fault-tracing for this diagnostic trouble code (DTC) or make another attempt.

ECM-260A: LONG-TERM FUEL TRIM. LOWER LIMIT (B6294T; 2003-2004)

DIAGNOSTIC TROUBLE CODE (DTC) INFORMATION

Condition

The control module receives information from the heated oxygen sensor (HO2S) about the fuel / air mixture when idling at both the lower and upper part-load range. If the fuel / air mixture deviates from lambda=1, the short-term fuel trim will compensate for this by adjusting the injection time so that lambda=1 is achieved. When the short-term fuel trim makes an adjustment, the integrator median must be adjusted by the long-term trim. Diagnostic trouble code (DTC) ECM-260A will be stored when the long-term trim must be adjusted to almost maximum in the upper part load area for bank 1 (cyl 1, 2 and 3).

Diagnostic trouble code (DTC) ECM-270A is stored for bank 2 (cyl 4, 5 and 6)

Substitute Value

none

Possible Source

Upper limit:

- intake air leakage
- exhaust system air leakage
- low fuel pressure
- defective heated oxygen sensor (HO2S)

Lower limit:

- intake air leakage
- high fuel pressure
- leaking injectors

- defective mass air flow (MAF) sensor
- contaminated engine oil
- oil level too high
- defective heated oxygen sensor (HO2S)

Fault symptom[s]

- none

LOWER LIMIT

CHECKING FUEL INJECTION SYSTEM

Check intake system for air leakage according to **CHECK FOR AIR LEAKS IN THE INTAKE SYSTEM** .

HINT: Air leakage in the intake system can occur through the canister purge (CP) valve, the secondary air solenoid valve and power brake booster.

Check the exhaust system for leakage according to **CHECKING FOR AIR LEAKAGE IN THE EXHAUST SYSTEM** .

Check fuel and residual pressure according to **CHECKING FUEL AND RESIDUAL PRESSURES** .

Check that the oil level is between the minimum and maximum markings

Check engine dilution by, reading off the short-term fuel trim with the engine running, plug the crankcase ventilation and read off the short-term fuel trim again, the value should be more or less unchanged

Remedy as necessary.

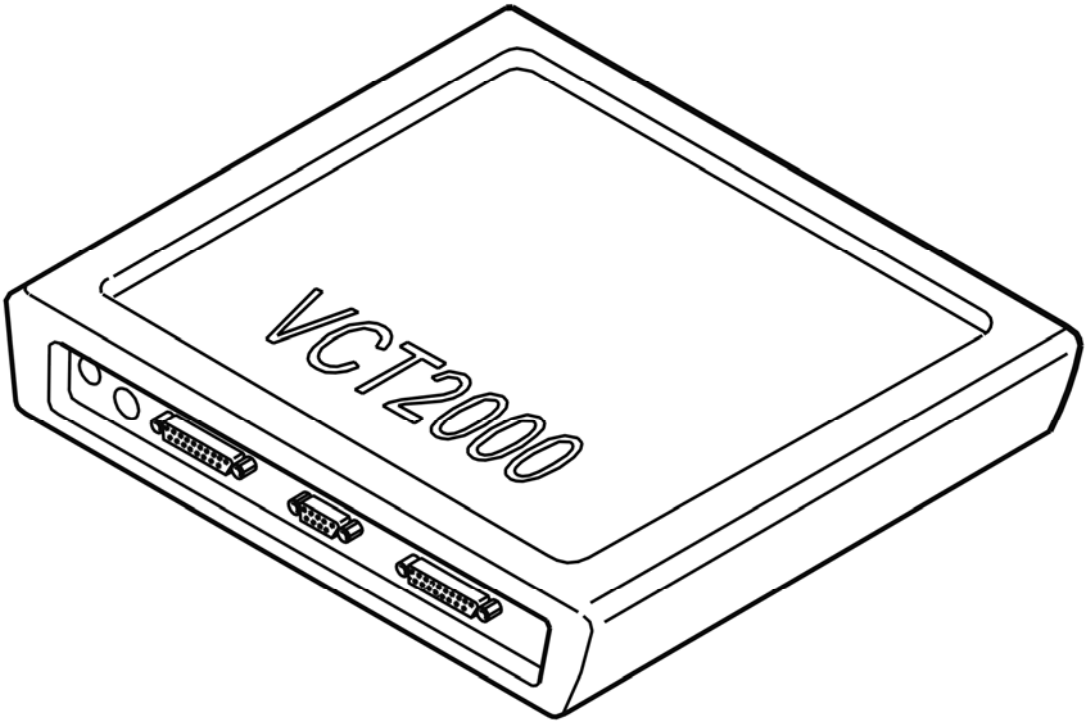

Fig. 441: Identifying VCT2000 Diagnostic Tool Symbol In VIDA
Courtesy of VOLVO CARS CORPORATION

Was a fault detected?

- **YES**

  Refer to **VERIFICATION**

- **NO**

  Refer to **CHECKING MASS AIR FLOW (MAF) SENSOR**

CHECKING MASS AIR FLOW (MAF) SENSOR

Test drive the car for approximately 10 minutes

Read off the mass air flow (MAF) sensor correction factor. The value must be between 0.8 and 1.2

NOTE: There must not be any air leakage when this test is carried out.

Remedy as necessary.

Other information

- To replace mass air flow (MAF) sensor, see **MASS AIR FLOW (MAF) SENSOR, REPLACING** .

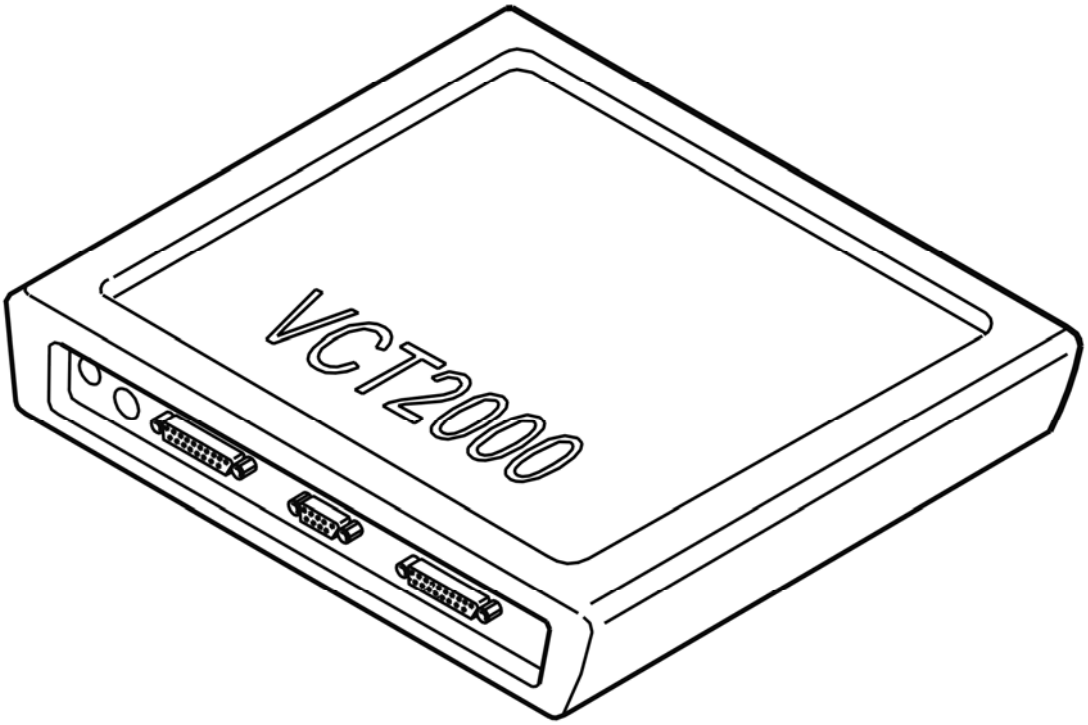

Fig. 442: Identifying VCT2000 Diagnostic Tool Symbol In VIDA
Courtesy of VOLVO CARS CORPORATION

- **Continue**

  Refer to **VERIFICATION**

VERIFICATION

VERIFICATION

Test drive the car according to the TRIP schedule, see **VERIFYING REPAIRS** .

Do not turn off engine after test drive.

Connect the car to VIDA (Volvo scan tool) again.

Read off fuel trim status.

There should not be any faults when fuel trim is finished.

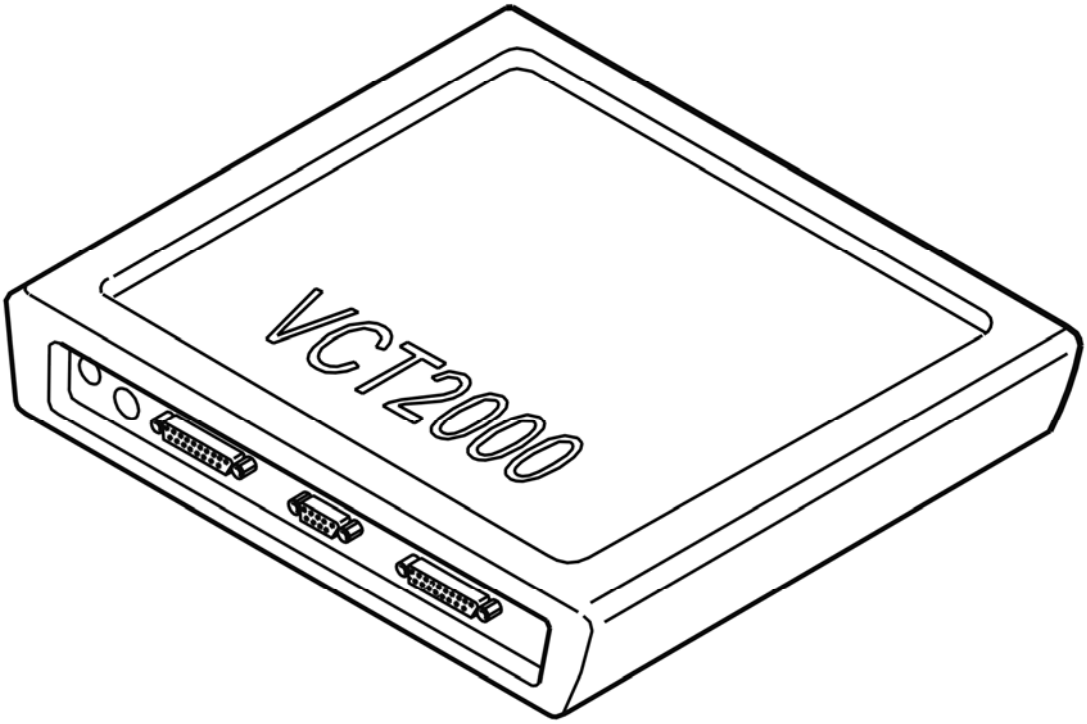

Fig. 443: Identifying VCT2000 Diagnostic Tool Symbol In VIDA
Courtesy of VOLVO CARS CORPORATION

Was a fault detected?

- **YES**

  Refer to **INFORMATION**

- **NO**

  VERIFIED: Troubleshooting has been completed.

INFORMATION

FAULT-TRACING INFORMATION

The fault should have been detected and remedied. As this is not the case fault-tracing has failed.

Exit fault-tracing for this diagnostic trouble code (DTC) or make another attempt.

ECM-260A: LONG-TERM FUEL TRIM. UPPER LIMIT (B5254T2; 2003-2004)

DIAGNOSTIC TROUBLE CODE (DTC) INFORMATION

see **DIAGNOSTIC TROUBLE CODE (DTC) INFORMATION**

UPPER LIMIT

CHECKING FUEL INJECTION SYSTEM

Check the induction system for air leaks. See **AIR LEAKAGE IN THE INTAKE SYSTEM, CHECKING**

HINT: Air leakage in the intake system can occur through the evaporative emission system (EVAP) valve, the secondary air solenoid valve and power brake booster.

Remedy as necessary.

- **Continue**

  Refer to **CHECKING THE FUEL PRESSURE AND RESIDUAL PRESSURE IN THE WORKSHOP**

CHECKING THE FUEL INJECTION SYSTEM

Test drive the car for approximately 10 minutes

Check the mass air flow (MAF) sensor. Read off its correction factor. The value should be between 0.8 and 1.2.

NOTE: There must not be any air leakage when this test is carried out.

Remedy as necessary.

Other information

- see **MASS AIR FLOW (MAF) SENSOR, REPLACING**

Fig. 444: Identifying VCT2000 Diagnostic Tool Symbol In VIDA
Courtesy of VOLVO CARS CORPORATION

- **Continue**

  Refer to **VERIFICATION**

VERIFICATION

VERIFICATION

Test drive the car according to the TRIP schedule, see **VERIFYING REPAIRS** .

Do not turn off engine after test drive.

Connect the car to VIDA (Volvo scan tool) again.

Read off fuel trim status.

There should not be any faults when fuel trim is finished.

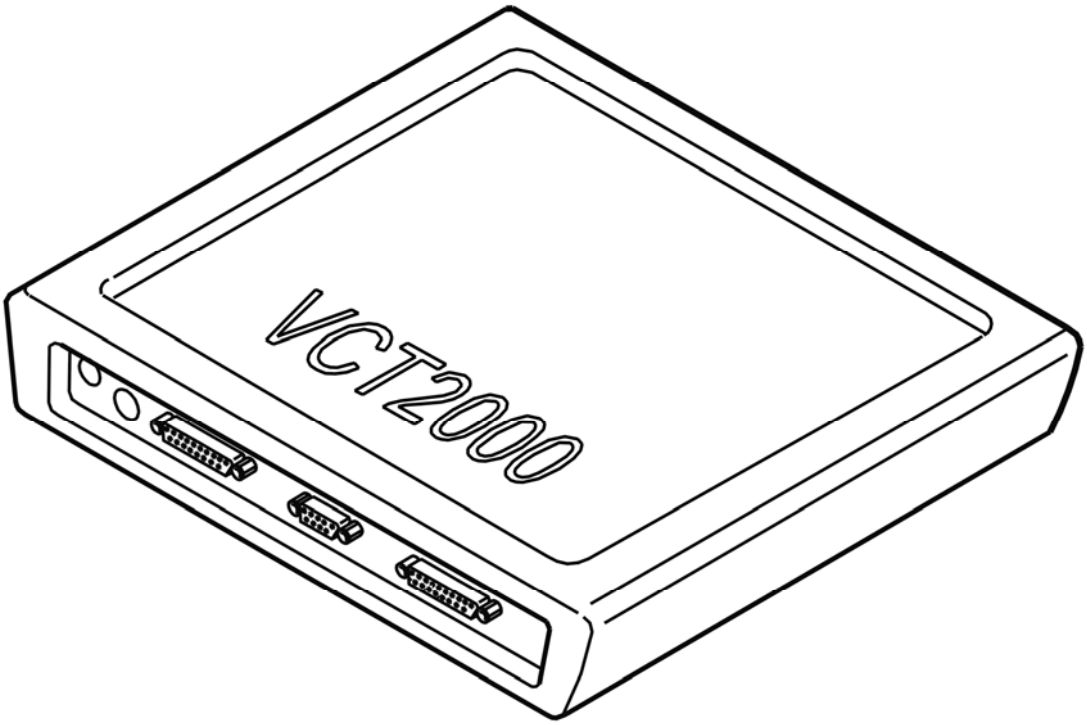

Fig. 445: Identifying VCT2000 Diagnostic Tool Symbol In VIDA
Courtesy of VOLVO CARS CORPORATION

Was a fault detected?

- **YES**

  Refer to **INFORMATION**

- **NO**

  VERIFIED: Troubleshooting has been completed.

INFORMATION

FAULT-TRACING INFORMATION

The fault should have been detected and remedied. As this is not the case fault-tracing has failed.

Exit fault-tracing for this diagnostic trouble code (DTC) or make another attempt.

CHECKING THE FUEL PRESSURE AND RESIDUAL PRESSURE IN THE WORKSHOP

CHOOSING A METHOD FOR TAKING A READING

NOTE: For vehicles with demand activated fuel pumps (FP), perform Quick test of fuel pump (FP) using VIDA (Volvo scan tool).

The fuel pressure can be measured with the car stationary or while being driven. Residual pressure is measured with the car stationary.

When the car is being driven, see **TAKING FUEL PRESSURE READINGS WHILE DRIVING THE CAR** .

- **Continue**

  Refer to **MEASURING THE LINE PRESSURE**

MEASURING THE LINE PRESSURE

- Connect the pressure gauge according to **CONNECTING FUEL PRESSURE GAUGE**
- Remove the soundproofing panel
- Remove the fuel pump (FP) relay (CMI 12 in the passenger compartment)
- Connect a cable to the relay base as shown in the illustration.

  Read off the line pressure from the pressure gauge. The line pressure must be 375-395 kPa

  Check the residual pressure if the fuel pressure is OK.

  Remedy as necessary

  Other information

  - For -2004, see: **CENTRAL ELECTRONIC MODULE (CEM), REPLACING**
  - For 2005-, see: **CENTRAL ELECTRONIC MODULE (CEM), REPLACING** .
  - For the location of and to replace the fuel pump (FP), see **RIGHT SIDE FUEL PUMP WITH LEVEL SENSOR**
  - see **REPLACING THE FUEL FILTER**
  - To disconnect the pressure gauge, see **DISCONNECTING FUEL PRESSURE GAUGE** .

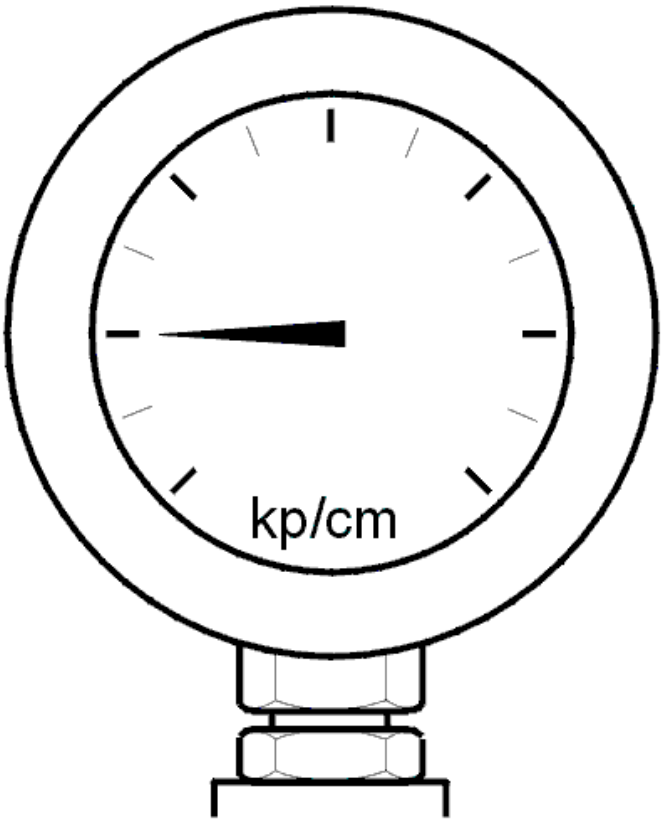

Fig. 446: Identifying Pressure Gauge
Courtesy of VOLVO CARS CORPORATION

Is the rest pressure to be checked?

- **YES**

  Refer to **CHECKING THE RESIDUAL PRESSURE**

- **NO**

  Refer to **CHECKING THE FUEL INJECTION SYSTEM**

CHECKING THE RESIDUAL PRESSURE

- Switch off the ignition
- Disconnect the cable between the terminals on the relay base
- Reinstall the fuel pump (FP) relay.

  The line pressure must not fall below 200 kPa within 20 minutes of the fuel pump (FP) being shut-off.

  Remedy as necessary

Other information

- see **INJECTOR/PULSE DAMPER, REPLACEMENT**
- For -2004, see: **CENTRAL ELECTRONIC MODULE (CEM), REPLACING**
- For 2005-, see: **CENTRAL ELECTRONIC MODULE (CEM), REPLACING** .
- For the location of and to replace the fuel pump (FP), see **RIGHT SIDE FUEL PUMP WITH LEVEL SENSOR**
- To disconnect the pressure gauge, see **DISCONNECTING FUEL PRESSURE GAUGE** .

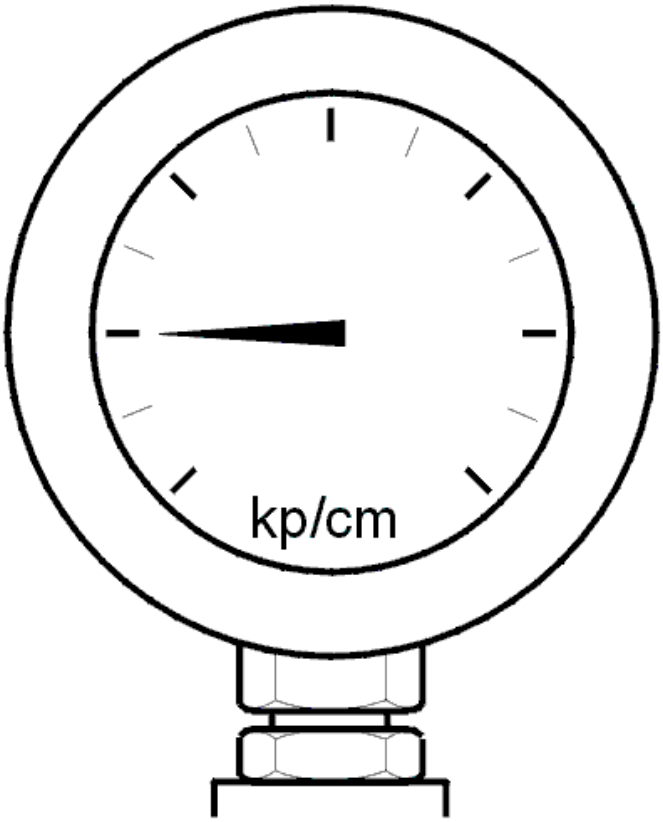

Fig. 447: Identifying Pressure Gauge
Courtesy of VOLVO CARS CORPORATION

- **Continue**

Refer to **CHECKING THE FUEL INJECTION SYSTEM**

ECM-260A: LONG-TERM FUEL TRIM. UPPER LIMIT (B6294T; 2003-2004)

DIAGNOSTIC TROUBLE CODE (DTC) INFORMATION

see **DIAGNOSTIC TROUBLE CODE (DTC) INFORMATION**

UPPER LIMIT

CHECKING FUEL INJECTION SYSTEM

Check intake system for air leakage according to **INTAKE AND EXHAUST SYSTEM - CLEANING, INSPECTION AND ADJUSTMENT** .

HINT: Air leakage in the intake system can occur through the canister purge (CP) valve, the secondary air solenoid valve and power brake booster.

Check fuel pressure according to **CHECKING FUEL AND RESIDUAL PRESSURES** .

Test drive the car for approximately 10 minutes

Check the mass air flow (MAF) sensor by read off its correction factors. The value should be between 0.8 and 1.2

NOTE: There must not be any air leakage when this test is carried out.

Remedy as necessary.

Other information

- To access/replace the mass air flow (MAF) sensor, see **FUEL SYSTEM - REMOVAL, REPLACEMENT AND INSTALLATION** .

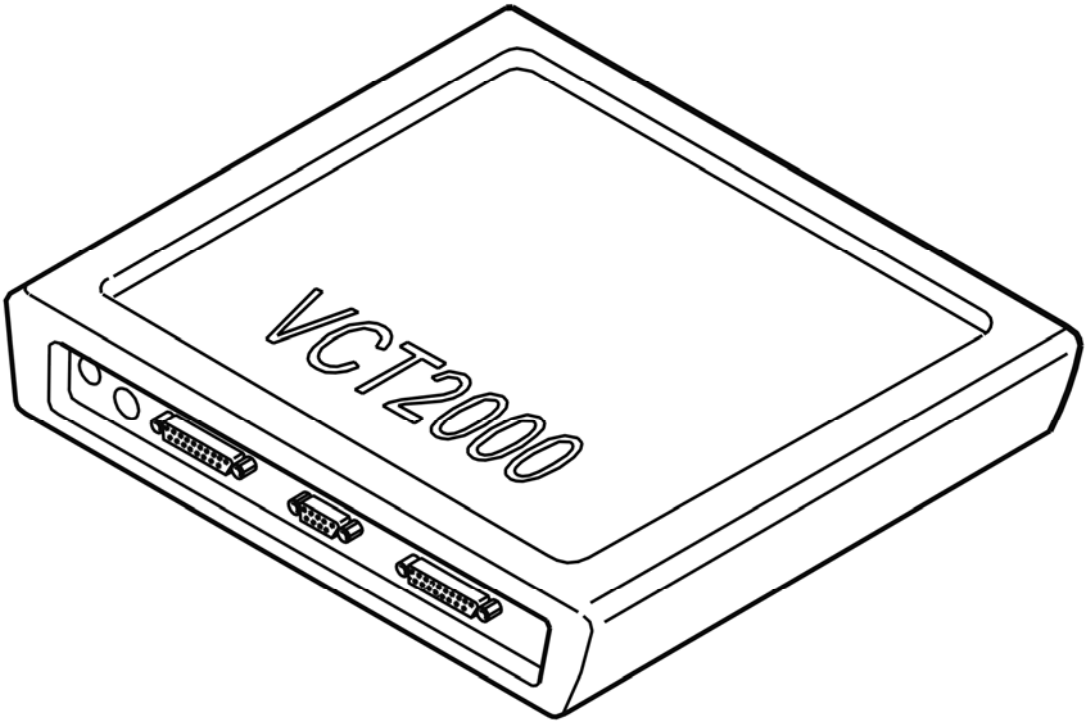

Fig. 1: Identifying VCT2000 Diagnostic Tool Symbol In VIDA
Courtesy of VOLVO CARS CORPORATION

- **Continue**

  Refer to **VERIFICATION**

VERIFICATION

VERIFICATION

Test drive the car according to the TRIP schedule, see **VERIFYING REPAIRS** .

Do not turn off engine after test drive.

Connect the car to VIDA (Volvo scan tool) again.

Read off fuel trim status.

There should not be any faults when fuel trim is finished.

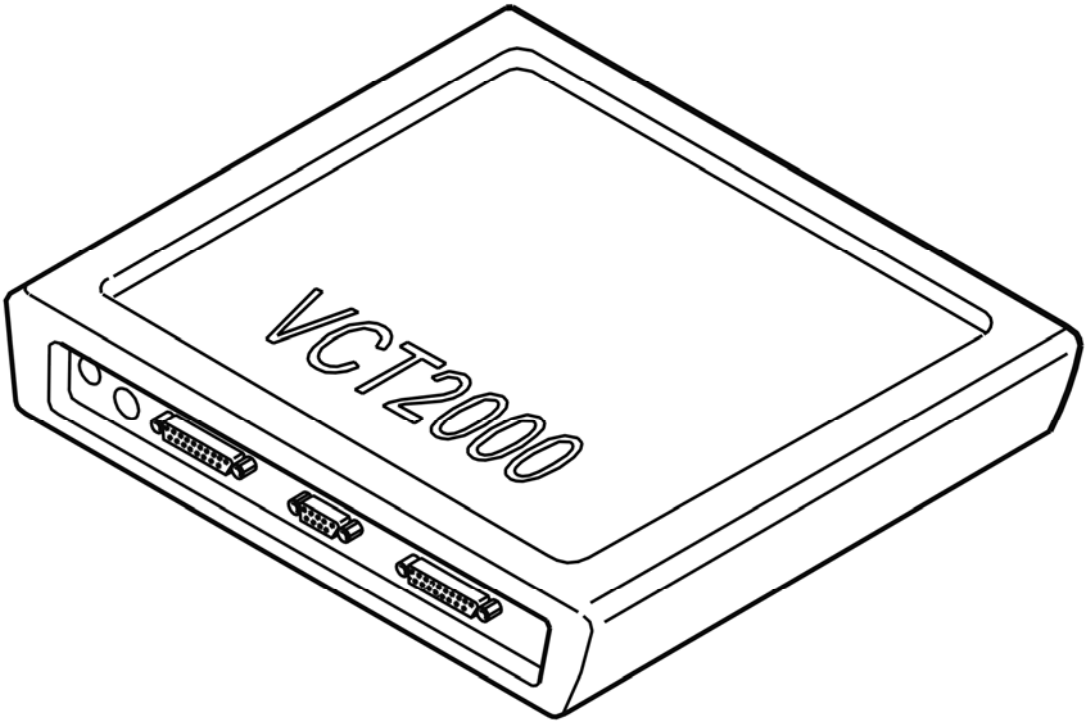

Fig. 2: Identifying VCT2000 Diagnostic Tool Symbol In VIDA
Courtesy of VOLVO CARS CORPORATION

Was a fault detected?

- **YES**

  Refer to **INFORMATION**

- **NO**

  VERIFIED: Troubleshooting has been completed.

INFORMATION

FAULT-TRACING INFORMATION

The fault should have been detected and remedied. As this is not the case fault-tracing has failed.

Exit fault-tracing for this diagnostic trouble code (DTC) or make another attempt.

ECM-261A: LONG-TERM FUEL TRIM. LOWER LIMIT (B5254T2; 2003-2004)

DIAGNOSTIC TROUBLE CODE (DTC) INFORMATION

Condition

The control module receives information from the heated oxygen sensor (HO2S) about the fuel / air mixture when idling at both the lower and upper part-load range. If the fuel / air mixture deviates from lambda=1, the short-term fuel trim will compensate for this by adjusting the injection time so that lambda=1 is achieved. When the short-term fuel trim makes an adjustment, the integrator median must be adjusted by the long-term trim. Diagnostic trouble code (DTC) ECM-261A will be stored when the long-term trim must be adjusted to almost maximum in the lower part load area.

Substitute Value

none

Possible Source

Upper limit:

- intake air leakage
- exhaust system air leakage
- low fuel pressure
- defective heated oxygen sensor (HO2S)

Lower limit:

- intake air leakage
- high fuel pressure
- leaking injectors
- defective mass air flow (MAF) sensor
- contaminated engine oil
- oil level too high
- defective heated oxygen sensor (HO2S)

Fault symptom[s]

- none

LOWER LIMIT

CHECKING FUEL INJECTION SYSTEM

Check intake system for air leakage according to **INTAKE AND EXHAUST SYSTEM - CLEANING, INSPECTION AND ADJUSTMENT** .

HINT: Air leakage in the intake system can occur through the canister purge (CP) valve, the secondary air solenoid valve and power brake booster.

Check the exhaust system for leakage according to **INTAKE AND EXHAUST SYSTEM - CLEANING, INSPECTION AND ADJUSTMENT**

Check fuel and residual pressure according to **CHECKING FUEL AND RESIDUAL PRESSURES**

Check that the oil level is between the minimum and maximum markings

Check engine dilution by, reading off the short-term fuel trim with the engine running, plug the crankcase ventilation and read off the short-term fuel trim again, the value should be more or less unchanged

Remedy as necessary.

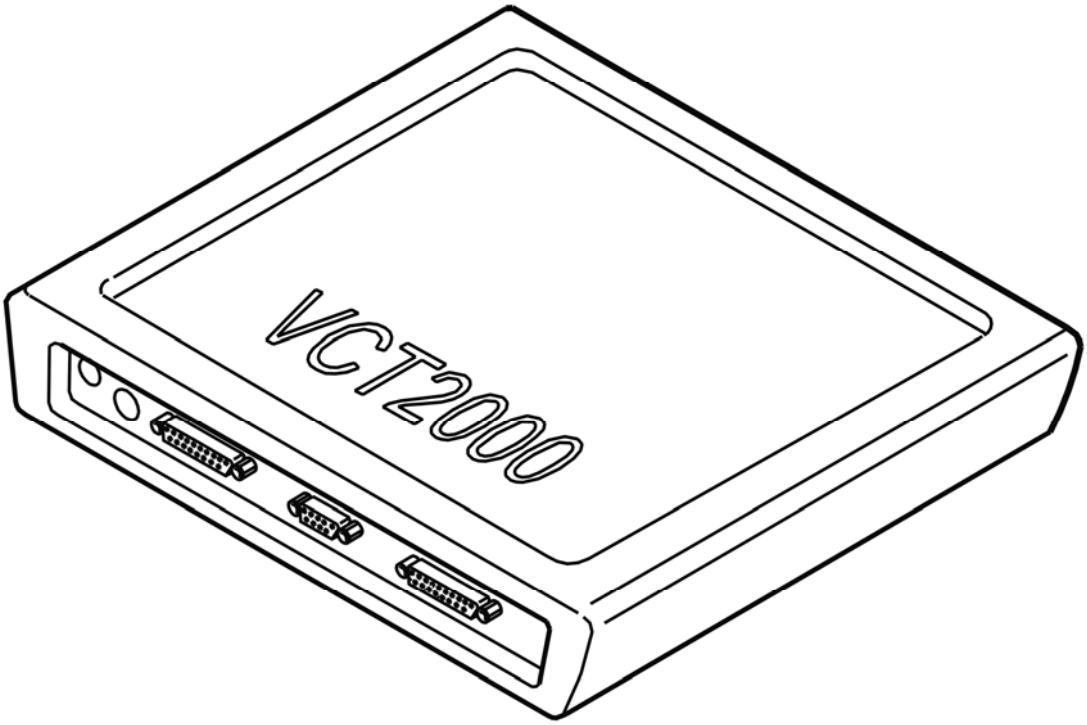

Fig. 3: Identifying VCT2000 Diagnostic Tool Symbol In VIDA
Courtesy of VOLVO CARS CORPORATION

Was a fault detected?

- **YES**

  Refer to **VERIFICATION**

- **NO**

  Refer to **CHECKING MASS AIR FLOW (MAF) SENSOR**

CHECKING MASS AIR FLOW (MAF) SENSOR

Test drive the car for approximately 10 minutes

Read off the mass air flow (MAF) sensor correction factor. The value must be between 0.8 and 1.2.

NOTE: There must not be any air leakage when this test is carried out.

Remedy as necessary.

Other information

- To replace mass air flow (MAF) sensor, see **FUEL SYSTEM - REMOVAL, REPLACEMENT AND INSTALLATION** .

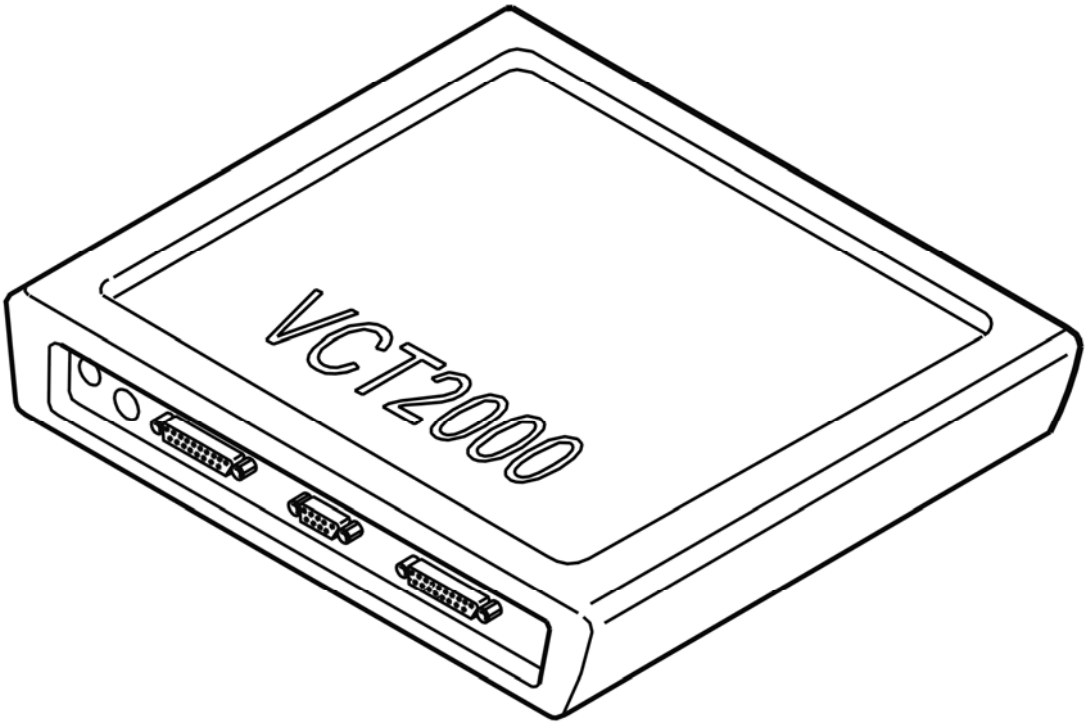

Fig. 4: Identifying VCT2000 Diagnostic Tool Symbol In VIDA
Courtesy of VOLVO CARS CORPORATION

- **Continue**

  Refer to **VERIFICATION**

VERIFICATION

VERIFICATION

Test drive the car according to the TRIP schedule, see **VERIFYING REPAIRS** .

Do not turn off engine after test drive.

Connect the car to VIDA (Volvo scan tool) again.

Read off fuel trim status.

There should not be any faults when fuel trim is finished.

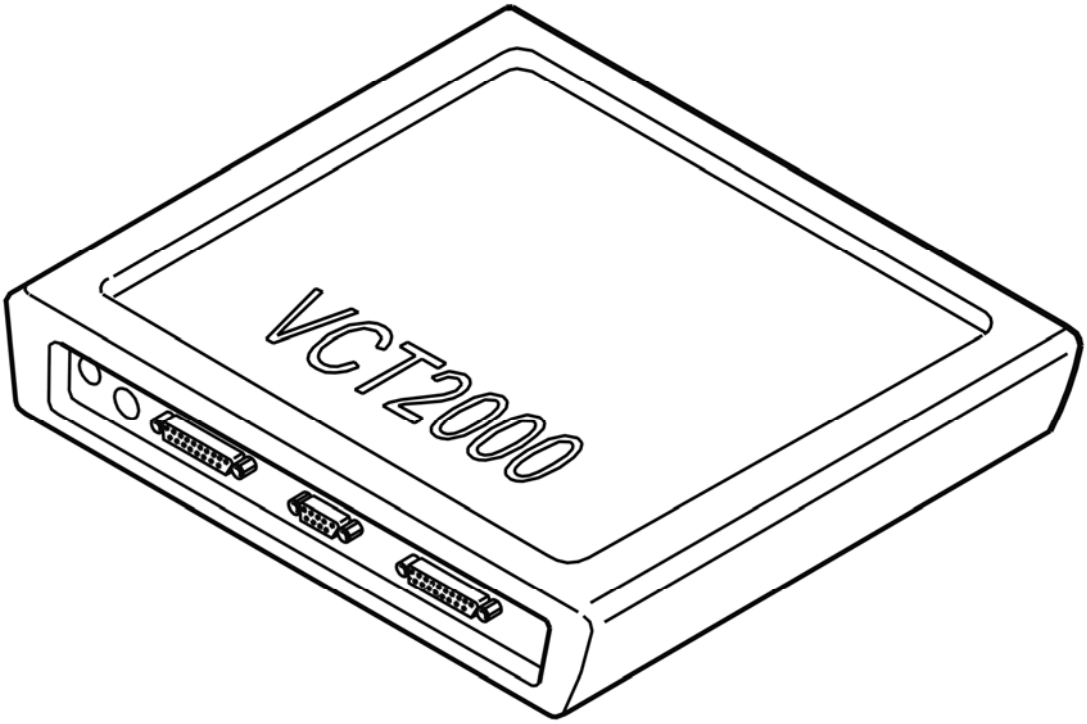

Fig. 5: Identifying VCT2000 Diagnostic Tool Symbol In VIDA
Courtesy of VOLVO CARS CORPORATION

Was a fault detected?

- **YES**

  Refer to **INFORMATION**

- **NO**

  VERIFIED: Troubleshooting has been completed.

INFORMATION

FAULT-TRACING INFORMATION

The fault should have been detected and remedied. As this is not the case fault-tracing has failed.

Exit fault-tracing for this diagnostic trouble code (DTC) or make another attempt.

ECM-261A: LONG-TERM FUEL TRIM. LOWER LIMIT (B6294T; 2003-2004)

DIAGNOSTIC TROUBLE CODE (DTC) INFORMATION

Condition

The control module receives information from the heated oxygen sensor (HO2S) about the fuel / air mixture when idling at both the lower and upper part-load range. If the fuel / air mixture deviates from lambda=1, the short-term fuel trim will compensate for this by adjusting the injection time so that lambda=1 is achieved. When the short-term fuel trim makes an adjustment, the integrator median must be adjusted by the long-term trim. Diagnostic trouble code (DTC) ECM-261A will be stored when the long-term trim must be adjusted to almost maximum in the lower part load area.

Substitute Value

none

Possible Source

Upper limit:

- intake air leakage
- exhaust system air leakage
- low fuel pressure
- defective heated oxygen sensor (HO2S)

Lower limit:

- intake air leakage
- high fuel pressure
- leaking injectors
- defective mass air flow (MAF) sensor
- contaminated engine oil
- oil level too high
- defective heated oxygen sensor (HO2S)

Fault symptom[s]

- none

LOWER LIMIT

CHECKING FUEL INJECTION SYSTEM

Check intake system for air leakage according to **INTAKE AND EXHAUST SYSTEM - CLEANING, INSPECTION AND ADJUSTMENT** .

HINT: Air leakage in the intake system can occur through the canister purge (CP) valve, the secondary air solenoid valve and power brake booster.

Check the exhaust system for leakage according to **INTAKE AND EXHAUST SYSTEM - CLEANING, INSPECTION AND ADJUSTMENT**

Check fuel and residual pressure according to **CHECKING FUEL AND RESIDUAL PRESSURES**

Check that the oil level is between the minimum and maximum markings

Check engine dilution by, reading off the short-term fuel trim with the engine running, plug the crankcase ventilation and read off the short-term fuel trim again, the value should be more or less unchanged

Remedy as necessary.

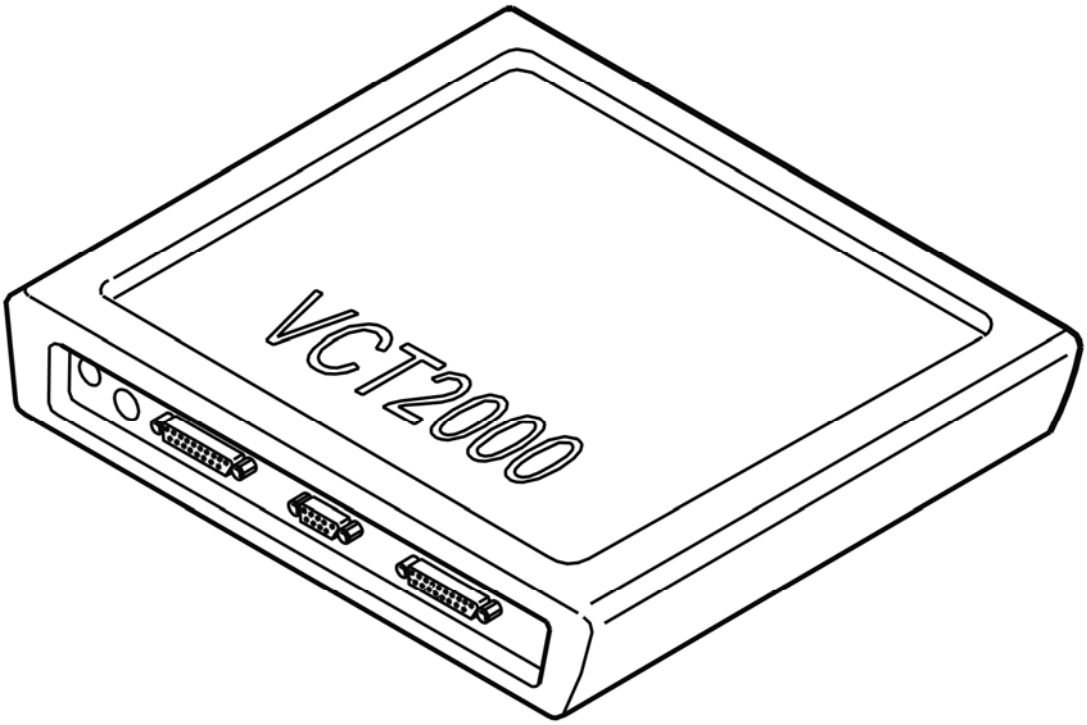

Fig. 6: Identifying VCT2000 Diagnostic Tool Symbol In VIDA
Courtesy of VOLVO CARS CORPORATION

Was a fault detected?

- **YES**

  Refer to **VERIFICATION**

- **NO**

  Refer to **CHECKING MASS AIR FLOW (MAF) SENSOR**

CHECKING MASS AIR FLOW (MAF) SENSOR

Test drive the car for approximately 10 minutes

Read off the mass air flow (MAF) sensor correction factor. The value must be between 0.8 and 1.2.

NOTE: There must not be any air leakage when this test is carried out.

Remedy as necessary.

Other information

- To replace mass air flow (MAF) sensor, see **FUEL SYSTEM - REMOVAL, REPLACEMENT AND INSTALLATION** .

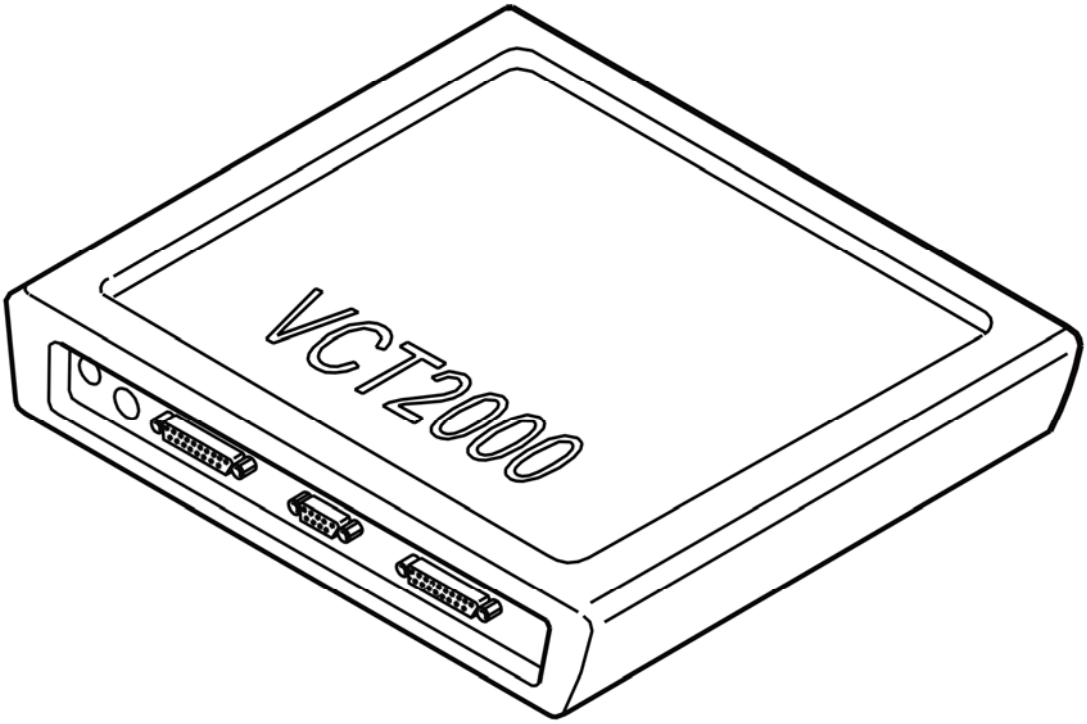

Fig. 7: Identifying VCT2000 Diagnostic Tool Symbol In VIDA
Courtesy of VOLVO CARS CORPORATION

- **Continue**

  Refer to **VERIFICATION**

VERIFICATION

VERIFICATION

Test drive the car according to the TRIP schedule, see **VERIFYING REPAIRS** .

Do not turn off engine after test drive.

Connect the car to VIDA (Volvo scan tool) again.

Read off fuel trim status.

There should not be any faults when fuel trim is finished.

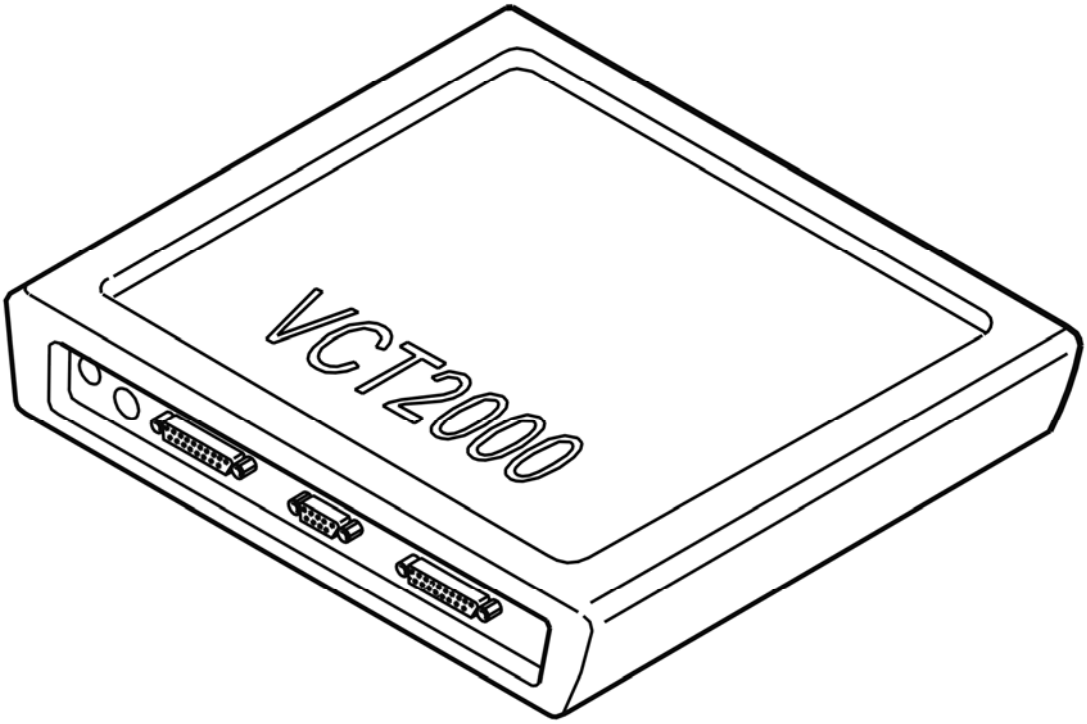

Fig. 8: Identifying VCT2000 Diagnostic Tool Symbol In VIDA
Courtesy of VOLVO CARS CORPORATION

Was a fault detected?

- **YES**

  Refer to **INFORMATION**

- **NO**

  VERIFIED: Troubleshooting has been completed.

INFORMATION

FAULT-TRACING INFORMATION

The fault should have been detected and remedied. As this is not the case fault-tracing has failed.

Exit fault-tracing for this diagnostic trouble code (DTC) or make another attempt.

ECM-261A: LONG-TERM FUEL TRIM. UPPER LIMIT (B5254T2; 2003-2004)

DIAGNOSTIC TROUBLE CODE (DTC) INFORMATION

see **DIAGNOSTIC TROUBLE CODE (DTC) INFORMATION**

UPPER LIMIT

CHECKING FOR AIR LEAKAGE IN THE INTAKE SYSTEM

Check the induction system for air leaks. See **INTAKE AND EXHAUST SYSTEM - CLEANING, INSPECTION AND ADJUSTMENT**

HINT: Air leakage in the intake system can occur through the canister purge (CP) valve, the secondary air solenoid valve and power brake booster.

Remedy as necessary.

- **Continue**

  Refer to **CHECKING THE FUEL PRESSURE AND RESIDUAL PRESSURE IN THE WORKSHOP**

CHECKING THE FUEL INJECTION SYSTEM

Test drive the car for approximately 10 minutes

Check the mass air flow (MAF) sensor. Read off its correction factor. The value should be between 0.8 and 1.2.

NOTE: There must not be any air leakage when this test is carried out.

Remedy as necessary.

Other information

- see **MASS AIR FLOW (MAF) SENSOR, REPLACING**

Fig. 9: Identifying VCT2000 Diagnostic Tool Symbol In VIDA
Courtesy of VOLVO CARS CORPORATION

- **Continue**

  Refer to **VERIFICATION**

CHECKING THE FUEL PRESSURE AND RESIDUAL PRESSURE IN THE WORKSHOP

CHOOSING A METHOD FOR TAKING A READING

NOTE: For vehicles with demand activated fuel pumps (FP), perform Quick test of fuel pump (FP) using VIDA (Volvo scan tool).

The fuel pressure can be measured with the car stationary or while being driven. Residual pressure is measured with the car stationary.

When the car is being driven, see **TAKING FUEL PRESSURE READINGS WHILE DRIVING THE CAR** .

- **Continue**

  Refer to **MEASURING THE LINE PRESSURE**

MEASURING THE LINE PRESSURE

- Connect the pressure gauge according to **CONNECTING FUEL PRESSURE GAUGE**
- Remove the soundproofing panel
- Remove the fuel pump (FP) relay (CMI 12 in the passenger compartment)
- Connect a cable to the relay base as shown in the illustration.

  Read off the line pressure from the pressure gauge. The line pressure must be 375-395 kPa

  Check the residual pressure if the fuel pressure is OK.

  Remedy as necessary

  Other information

  - For -2004, see: **CENTRAL ELECTRONIC MODULE (CEM), REPLACING**
  - For 2005-, see: **CENTRAL ELECTRONIC MODULE (CEM), REPLACING** .
  - For the location of/or to replace the fuel pump (FP), see **FUEL SYSTEM - REMOVAL, REPLACEMENT AND INSTALLATION**
  - see **REPLACING THE FUEL FILTER**
  - To disconnect the pressure gauge, see **DISCONNECTING FUEL PRESSURE GAUGE** .

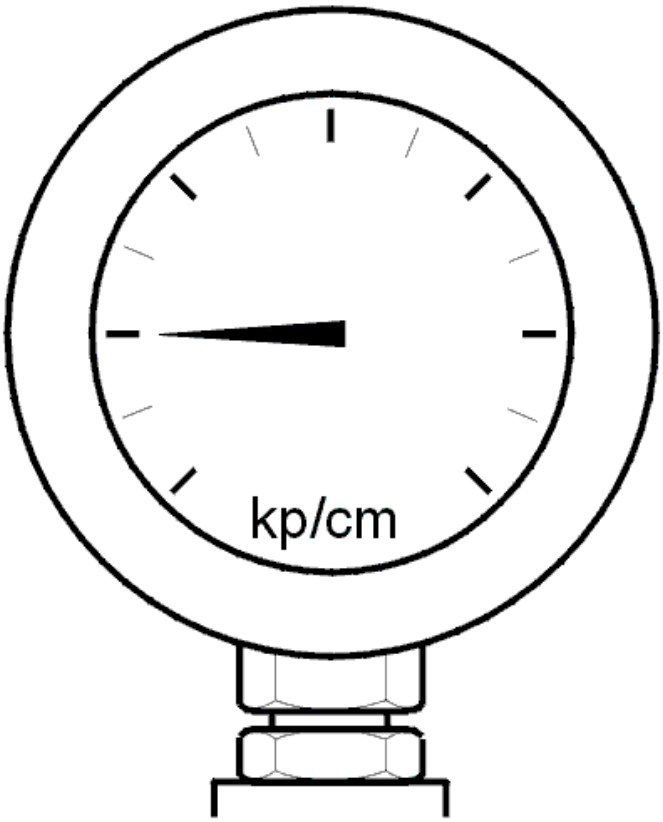

Fig. 10: Identifying Pressure Gauge
Courtesy of VOLVO CARS CORPORATION

Is the rest pressure to be checked?

- **YES**

  Refer to **CHECKING THE RESIDUAL PRESSURE**

- **NO**

  Refer to **CHECKING THE FUEL INJECTION SYSTEM**

CHECKING THE RESIDUAL PRESSURE

- Switch off the ignition
- Disconnect the cable between the terminals on the relay base
- Reinstall the fuel pump (FP) relay.

  The line pressure must not fall below 200 kPa within 20 minutes of the fuel pump (FP) being shut-off.

  Remedy as necessary

Other information

- see **INJECTOR/PULSE DAMPER, REPLACEMENT**
- For -2004, see: **CENTRAL ELECTRONIC MODULE (CEM), REPLACING**
- For 2005-, see: **CENTRAL ELECTRONIC MODULE (CEM), REPLACING** .
- For the location of/or to replace the fuel pump (FP), see **FUEL SYSTEM - REMOVAL, REPLACEMENT AND INSTALLATION**
- To disconnect the pressure gauge, see **DISCONNECTING FUEL PRESSURE GAUGE** .

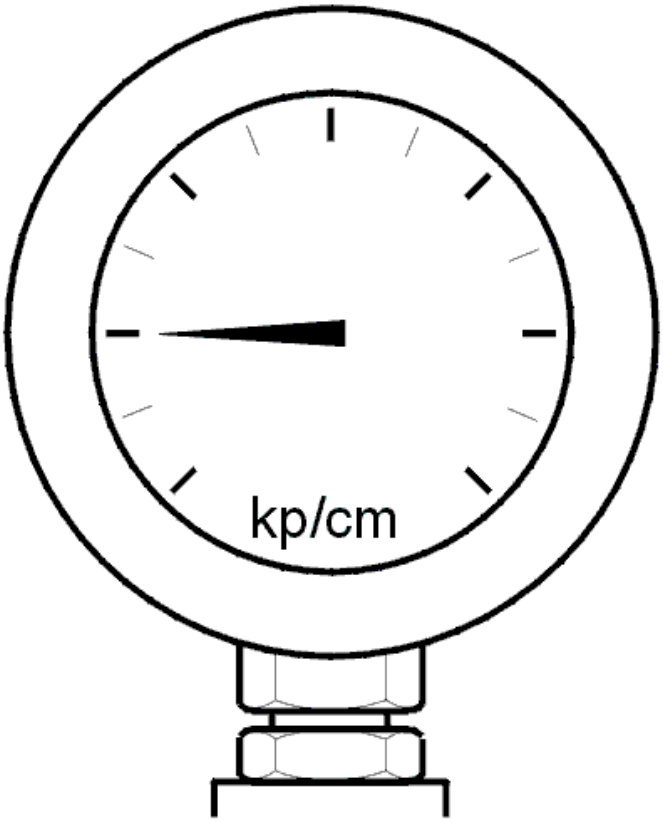

Fig. 11: Identifying Pressure Gauge
Courtesy of VOLVO CARS CORPORATION

- **Continue**

  Refer to **CHECKING THE FUEL INJECTION SYSTEM**

VERIFICATION

VERIFICATION

Test drive the car according to the TRIP schedule, see **VERIFYING REPAIRS** .

Do not turn off engine after test drive.

Connect the car to VIDA (Volvo scan tool) again.

Read off fuel trim status.

There should not be any faults when fuel trim is finished.

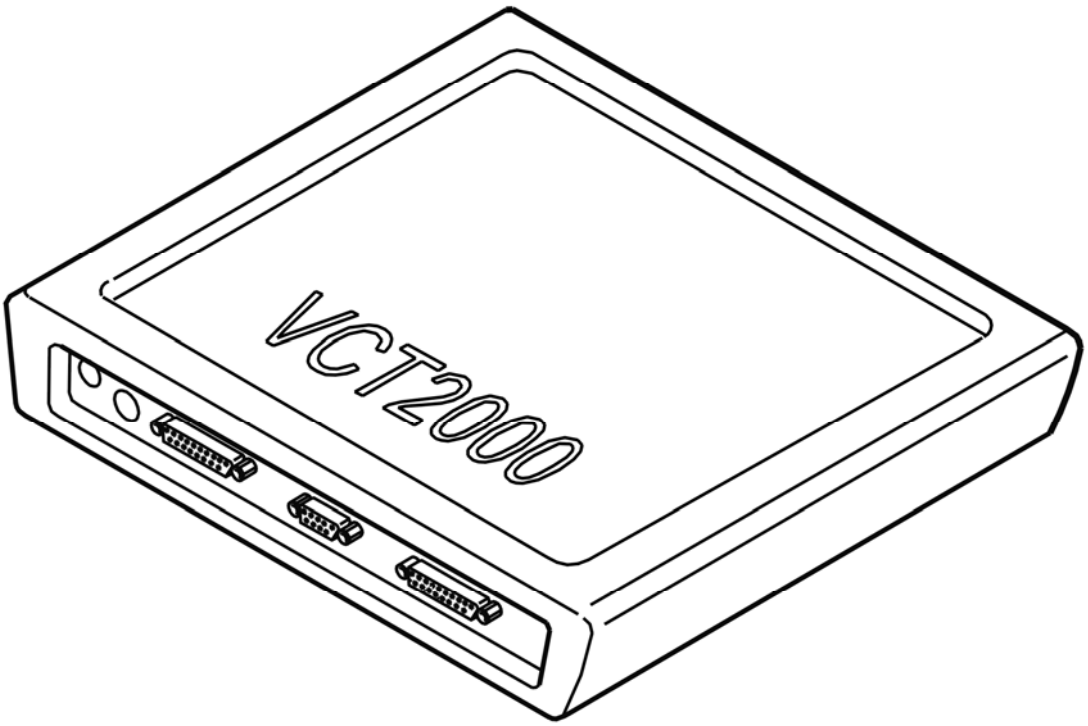

Fig. 12: Identifying VCT2000 Diagnostic Tool Symbol In VIDA
Courtesy of VOLVO CARS CORPORATION

Was a fault detected?

- **YES**

  Refer to **INFORMATION**

- **NO**

  VERIFIED: Troubleshooting has been completed.

INFORMATION

FAULT-TRACING INFORMATION

The fault should have been detected and remedied. As this is not the case fault-tracing has failed.

Exit fault-tracing for this diagnostic trouble code (DTC) or make another attempt.

ECM-261A: LONG-TERM FUEL TRIM. UPPER LIMIT (B6294T; 2003-2004)

DIAGNOSTIC TROUBLE CODE (DTC) INFORMATION

see **DIAGNOSTIC TROUBLE CODE (DTC) INFORMATION**

UPPER LIMIT

CHECKING FUEL INJECTION SYSTEM

Check intake system for air leakage according to **INTAKE AND EXHAUST SYSTEM - CLEANING, INSPECTION AND ADJUSTMENT** .

HINT: Air leakage in the intake system can occur through the canister purge (CP) valve, the secondary air solenoid valve and power brake booster.

Check fuel pressure according to **CHECKING FUEL AND RESIDUAL PRESSURES**

Test drive the car for approximately 10 minutes

Read off the mass air flow (MAF) sensor correction factor. The value must be between 0.8 and 1.2.

NOTE: There must not be any air leakage when this test is carried out.

Remedy as necessary.

Other information

- To replace mass air flow (MAF) sensor, see **FUEL SYSTEM - REMOVAL, REPLACEMENT AND INSTALLATION** .

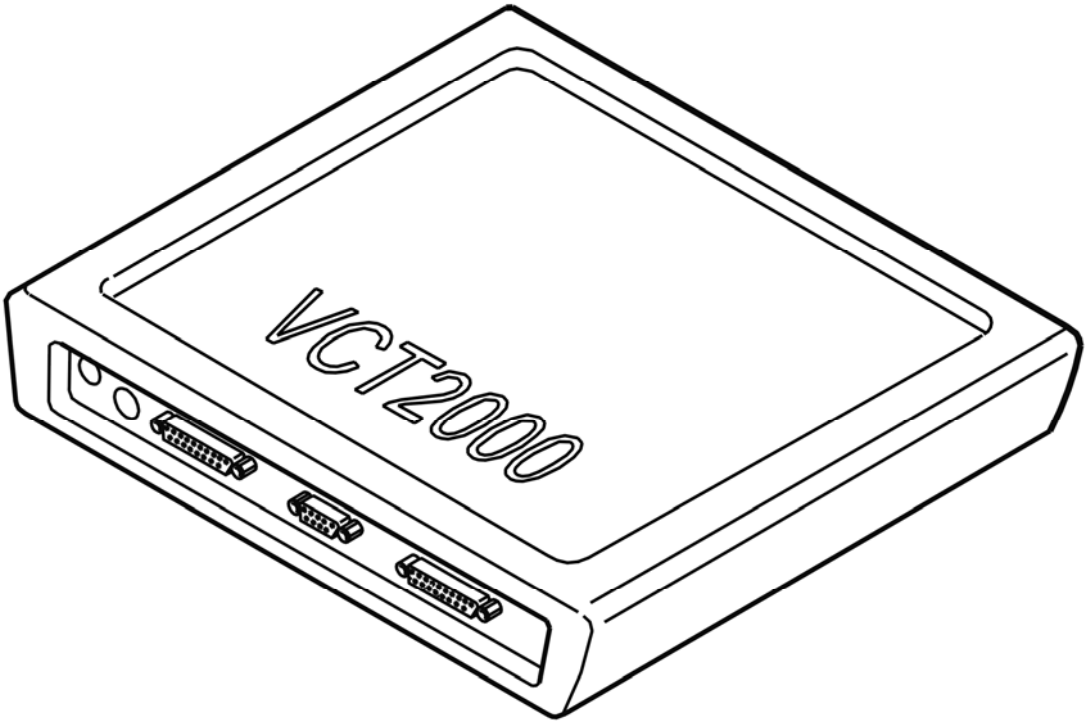

Fig. 13: Identifying VCT2000 Diagnostic Tool Symbol In VIDA
Courtesy of VOLVO CARS CORPORATION

- **Continue**

  Refer to **VERIFICATION**

VERIFICATION

VERIFICATION

Test drive the car according to the TRIP schedule, see **VERIFYING REPAIRS** .

Do not turn off engine after test drive.

Connect the car to VIDA (Volvo scan tool) again.

Read off fuel trim status.

There should not be any faults when fuel trim is finished.

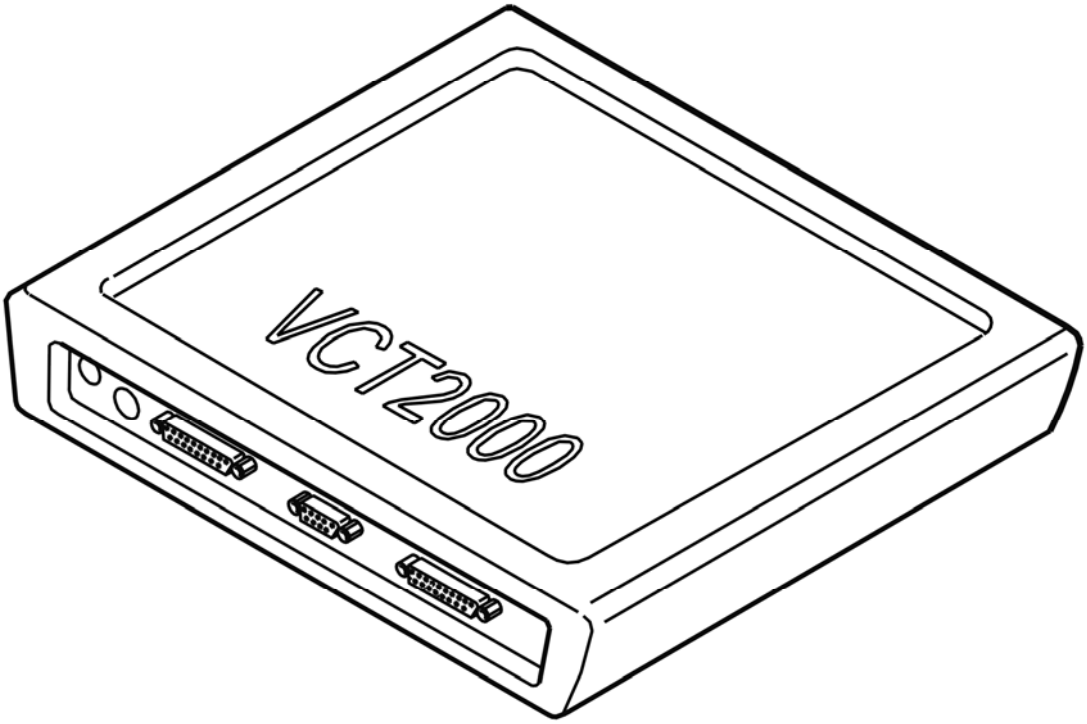

Fig. 14: Identifying VCT2000 Diagnostic Tool Symbol In VIDA
Courtesy of VOLVO CARS CORPORATION

Was a fault detected?

- **YES**

  Refer to **INFORMATION**

- **NO**

  VERIFIED: Troubleshooting has been completed.

INFORMATION

FAULT-TRACING INFORMATION

The fault should have been detected and remedied. As this is not the case fault-tracing has failed.

Exit fault-tracing for this diagnostic trouble code (DTC) or make another attempt.

ECM-262A: LONG-TERM FUEL TRIM. LOWER LIMIT (B5254T2; 2003-2004)

DIAGNOSTIC TROUBLE CODE (DTC) INFORMATION

Condition

The control module receives information from the heated oxygen sensor (HO2S) about the fuel / air mixture when idling at both the lower and upper part-load range. If the fuel / air mixture deviates from lambda=1, the short-term fuel trim will compensate for this by adjusting the injection time so that lambda=1 is achieved. When the short-term fuel trim makes an adjustment, the integrator median must be adjusted by the long-term trim. Diagnostic trouble code (DTC) ECM-262A will be stored when the long-term trim must be adjusted almost to maximum in the idle range.

Substitute Value

none

Possible Source

Upper limit:

- intake air leakage
- exhaust system air leakage
- defective heated oxygen sensor (HO2S)

Lower limit:

- intake air leakage
- high fuel pressure
- leaking injectors
- defective mass air flow (MAF) sensor
- contaminated engine oil
- oil level too high
- defective heated oxygen sensor (HO2S)

Fault symptom[s]

- none

LOWER LIMIT

CHECKING FUEL INJECTION SYSTEM

Check the induction system for air leaks. See **INTAKE AND EXHAUST SYSTEM - CLEANING, INSPECTION AND ADJUSTMENT**

HINT: Air leakage in the intake system can occur through the canister purge (CP) valve, the secondary air solenoid valve and power brake booster.

Check the exhaust system for air leakage. See **INTAKE AND EXHAUST SYSTEM - CLEANING, INSPECTION AND ADJUSTMENT**

Check the fuel pressure and residual pressure. See **FUEL SYSTEM - CLEANING, INSPECTION AND ADJUSTMENT**

Check that the oil level is between the minimum and maximum markings

Check engine dilution by, reading off the short-term fuel trim with the engine running, plug the crankcase ventilation and read off the short-term fuel trim again, the value should be more or less unchanged

Remedy as necessary.

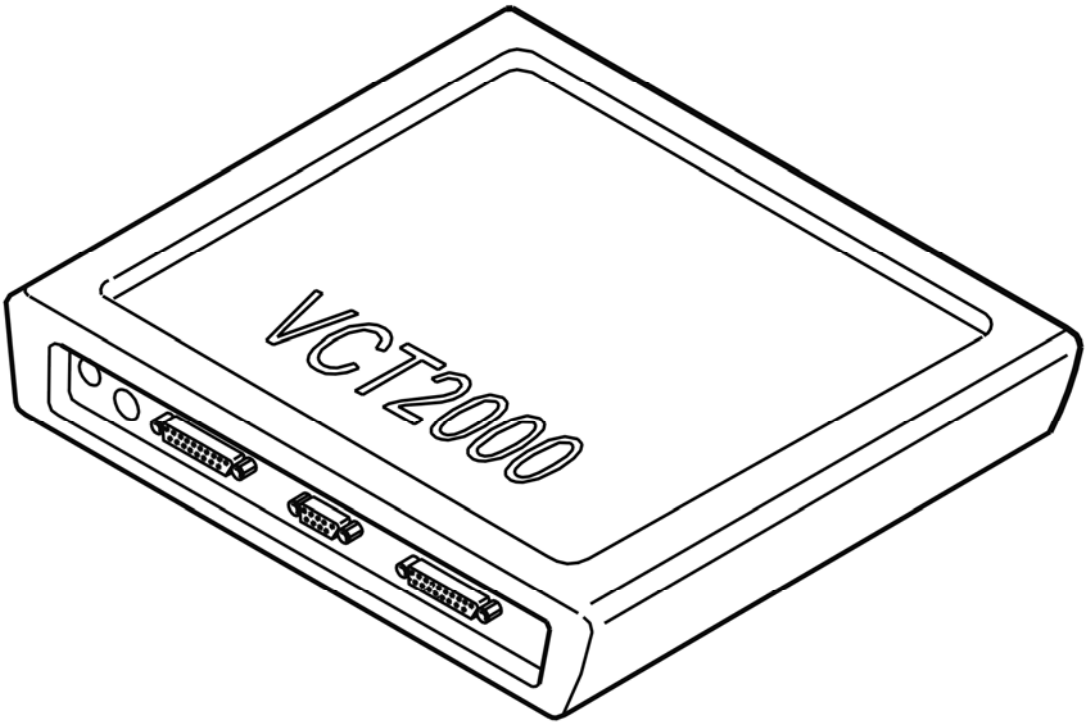

Fig. 15: Identifying VCT2000 Diagnostic Tool Symbol In VIDA
Courtesy of VOLVO CARS CORPORATION

- **Continue**

  Refer to **CHECKING MASS AIR FLOW (MAF) SENSOR**

CHECKING MASS AIR FLOW (MAF) SENSOR

Read off the mass air flow (MAF) sensor correction factor. The value must be between 2 and 12.

NOTE: There must not be any air leakage when this test is carried out.

Remedy as necessary.

Other information

- see **MASS AIR FLOW (MAF) SENSOR, REPLACING**

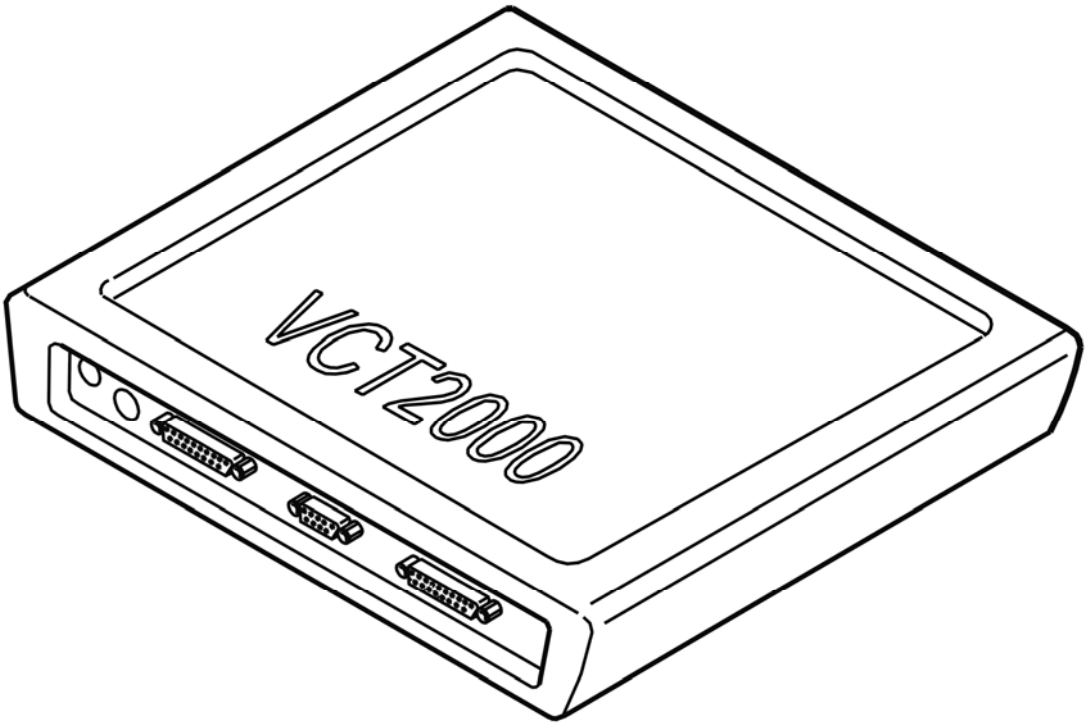

Fig. 16: Identifying VCT2000 Diagnostic Tool Symbol In VIDA
Courtesy of VOLVO CARS CORPORATION

- **Continue**

  Refer to **VERIFICATION**

VERIFICATION

VERIFICATION

Test drive the car according to the TRIP schedule, see **VERIFYING REPAIRS** .

Do not turn off engine after test drive.

Connect the car to VIDA (Volvo scan tool) again.

Read off fuel trim status.

There should not be any faults when fuel trim is finished.

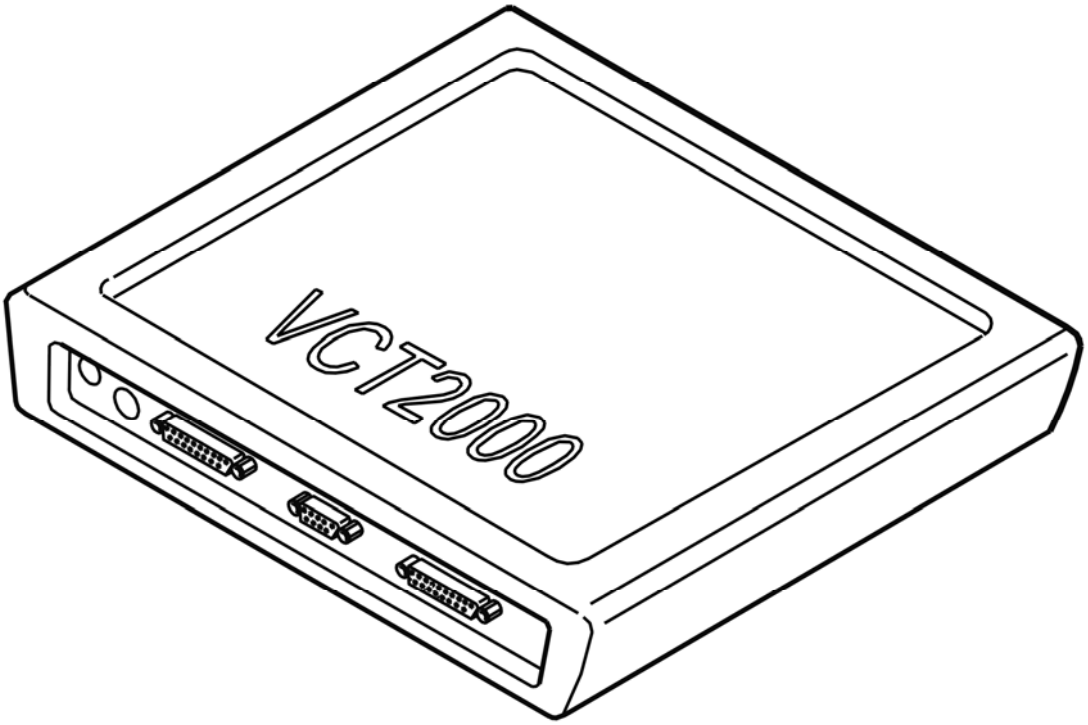

Fig. 17: Identifying VCT2000 Diagnostic Tool Symbol In VIDA
Courtesy of VOLVO CARS CORPORATION

Was a fault detected?

- **YES**

  Refer to **INFORMATION**

- **NO**

  VERIFIED: Troubleshooting has been completed.

INFORMATION

FAULT-TRACING INFORMATION

The fault should have been detected and remedied. As this is not the case fault-tracing has failed.

Exit fault-tracing for this diagnostic trouble code (DTC) or make another attempt.

ECM-262A: LONG-TERM FUEL TRIM. LOWER LIMIT (B6294T; 2003-2004)

DIAGNOSTIC TROUBLE CODE (DTC) INFORMATION

Condition

The control module receives information from the heated oxygen sensor (HO2S) about the fuel / air mixture when idling at both the lower and upper part-load range. If the fuel / air mixture deviates from lambda=1, the short-term fuel trim will compensate for this by adjusting the injection time so that lambda=1 is achieved. When the short-term fuel trim makes an adjustment, the integrator median must be adjusted by the long-term trim. Diagnostic trouble code (DTC) ECM-262A will be stored when the long-term trim must be adjusted almost to maximum in the idle range.

Substitute Value

none

Possible Source

Upper limit:

- intake air leakage
- exhaust system air leakage
- defective heated oxygen sensor (HO2S)

Lower limit:

- intake air leakage
- high fuel pressure
- leaking injectors
- defective mass air flow (MAF) sensor
- contaminated engine oil
- oil level too high
- defective heated oxygen sensor (HO2S)

Fault symptom[s]

- none

LOWER LIMIT

CHECKING FUEL INJECTION SYSTEM

Check the induction system for air leaks.

HINT: Air leakage in the intake system can occur through the canister purge (CP) valve, the secondary air solenoid valve and power brake booster.

Check the exhaust system for air leakage.

Checking fuel and residual pressure.

Check that the oil level is between the minimum and maximum markings

Check engine dilution by, reading off the short-term fuel trim with the engine running, plug the crankcase ventilation and read off the short-term fuel trim again, the value should be more or less unchanged

Remedy as necessary.

Other information

- see **INTAKE AND EXHAUST SYSTEM - CLEANING, INSPECTION AND ADJUSTMENT**
- see **INTAKE AND EXHAUST SYSTEM - CLEANING, INSPECTION AND ADJUSTMENT**
- see **FUEL SYSTEM - CLEANING, INSPECTION AND ADJUSTMENT**

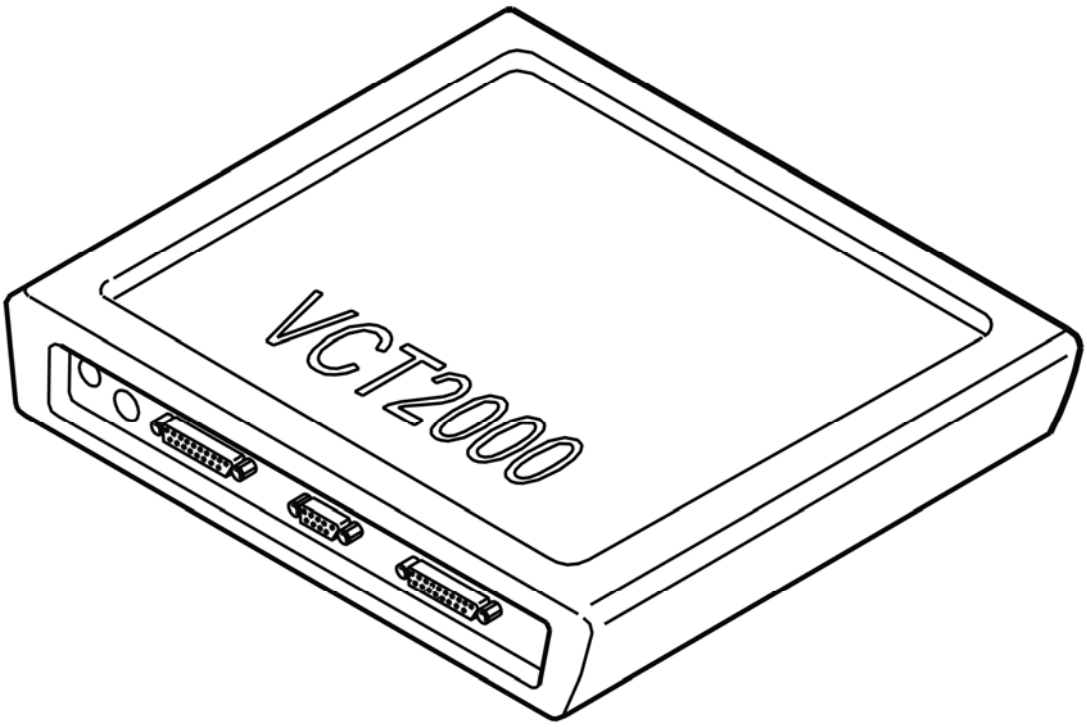

Fig. 18: Identifying VCT2000 Diagnostic Tool Symbol In VIDA
Courtesy of VOLVO CARS CORPORATION

- **Continue**

  Refer to **CHECKING MASS AIR FLOW (MAF) SENSOR**

CHECKING MASS AIR FLOW (MAF) SENSOR

Read off the mass air flow (MAF) sensor correction factor. The value must be between 2 and 12.

NOTE: There must not be any air leakage when this test is carried out.

Remedy as necessary.

Other information

- see **REPLACING THE MASS AIR FLOW (MAF) SENSOR**

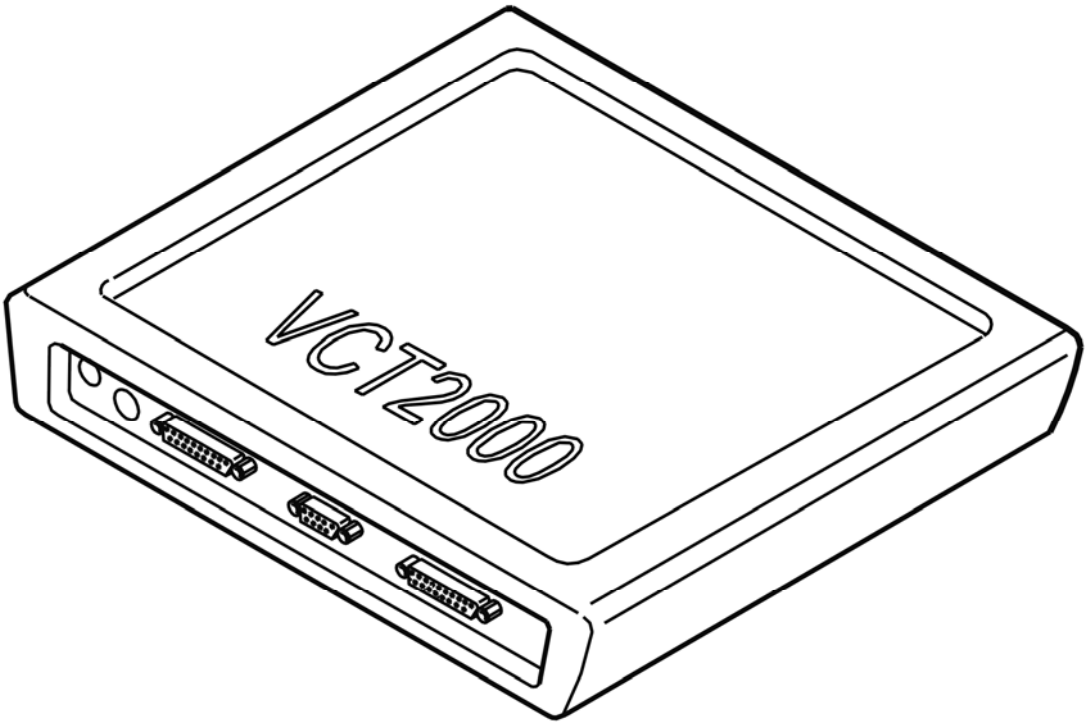

Fig. 19: Identifying VCT2000 Diagnostic Tool Symbol In VIDA
Courtesy of VOLVO CARS CORPORATION

- **Continue**

  Refer to **VERIFICATION**

VERIFICATION

VERIFICATION

Test drive the car according to the TRIP schedule, see **VERIFYING REPAIRS** .

Do not turn off engine after test drive.

Connect the car to VIDA (Volvo scan tool) again.

Read off fuel trim status.

There should not be any faults when fuel trim is finished.

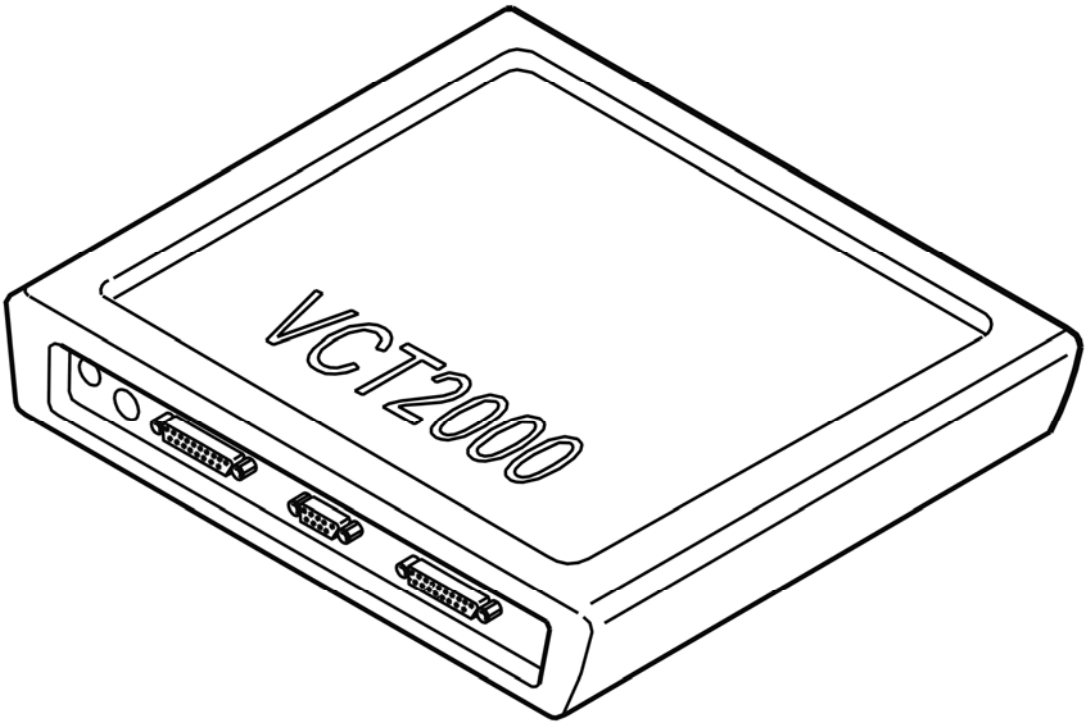

Fig. 20: Identifying VCT2000 Diagnostic Tool Symbol In VIDA
Courtesy of VOLVO CARS CORPORATION

Was a fault detected?

- **YES**

  Refer to **INFORMATION**

- **NO**

VERIFIED: Troubleshooting has been completed.

INFORMATION

FAULT-TRACING INFORMATION

The fault should have been detected and remedied. As this is not the case fault-tracing has failed.

Exit fault-tracing for this diagnostic trouble code (DTC) or make another attempt.

ECM-262A: LONG-TERM FUEL TRIM. UPPER LIMIT (B5254T2; 2003-2004)

DIAGNOSTIC TROUBLE CODE (DTC) INFORMATION

see **DIAGNOSTIC TROUBLE CODE (DTC) INFORMATION**

UPPER LIMIT

CHECKING FUEL INJECTION SYSTEM

Check intake system for air leakage according to **INTAKE AND EXHAUST SYSTEM - CLEANING, INSPECTION AND ADJUSTMENT** .

HINT: Air leakage in the intake system can occur through the canister purge (CP) valve, the secondary air solenoid valve and power brake booster.

Start the engine and idle it for 10 minutes.

Check the mass air flow (MAF) sensor by read off its correction factors. The value should be between 2 and 12

NOTE: There must not be any air leakage when this test is carried out.

Remedy as necessary.

Other information

- To replace mass air flow (MAF) sensor, see **FUEL SYSTEM - REMOVAL, REPLACEMENT AND INSTALLATION** .

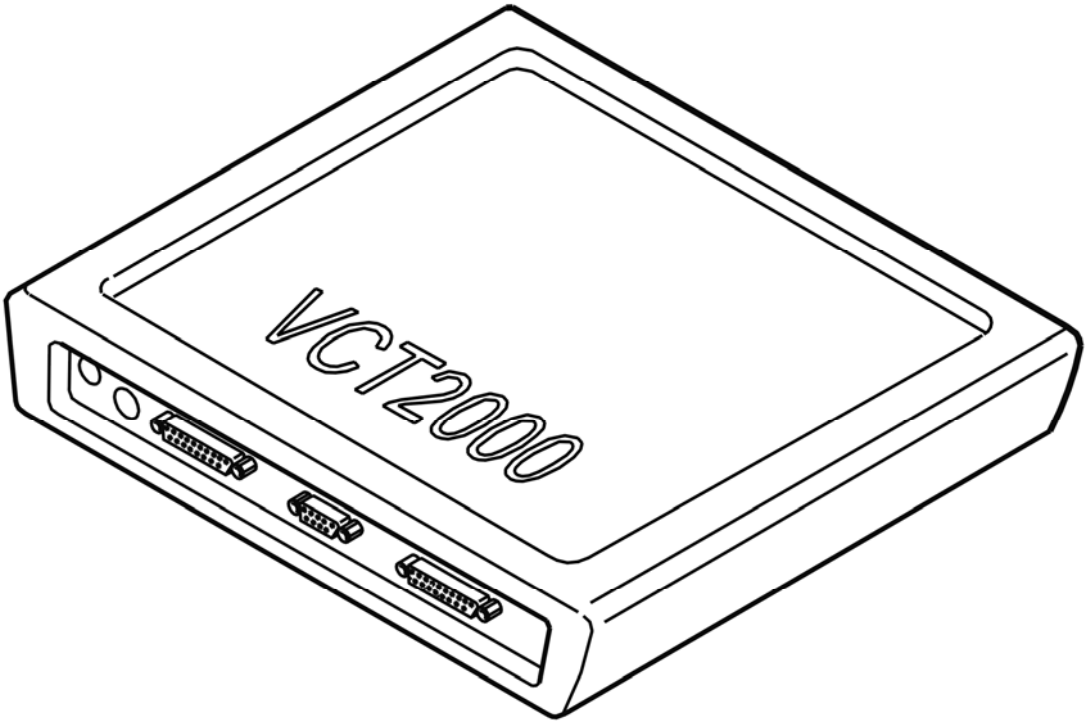

Fig. 21: Identifying VCT2000 Diagnostic Tool Symbol In VIDA
Courtesy of VOLVO CARS CORPORATION

- **Continue**

  Refer to **VERIFICATION**

VERIFICATION

VERIFICATION

Test drive the car according to the TRIP schedule, see **VERIFYING REPAIRS** .

Do not turn off engine after test drive.

Connect the car to VIDA (Volvo scan tool) again.

Read off fuel trim status.

There should not be any faults when fuel trim is finished.

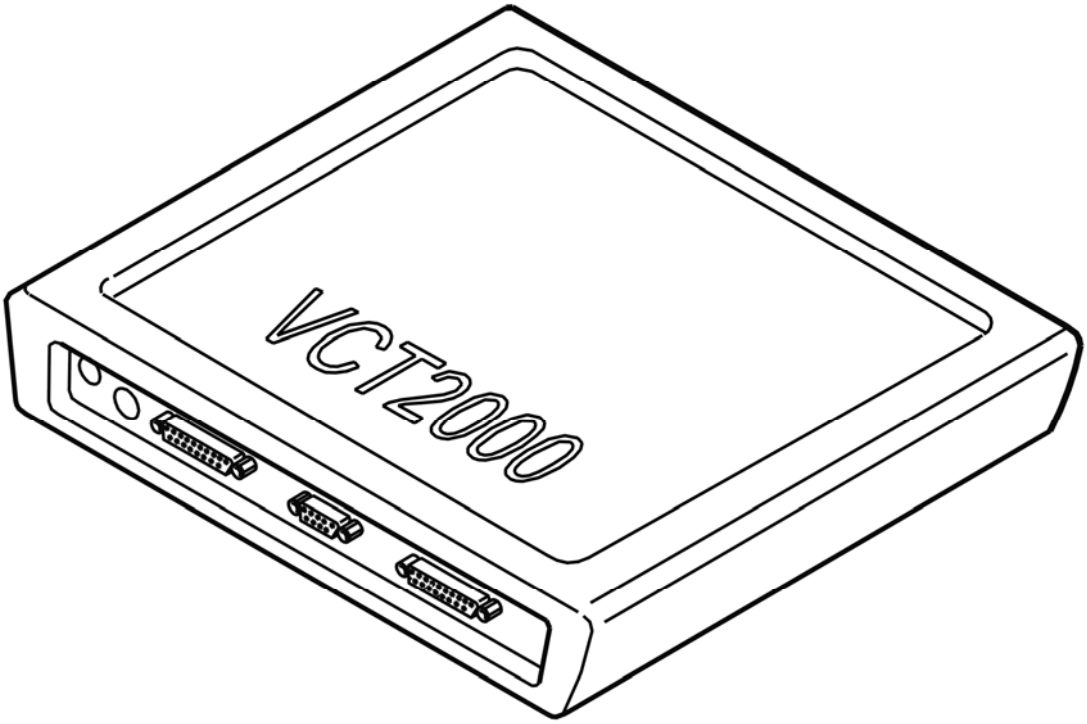

Fig. 22: Identifying VCT2000 Diagnostic Tool Symbol In VIDA
Courtesy of VOLVO CARS CORPORATION

Was a fault detected?

- **YES**

  Refer to **INFORMATION**

- **NO**

  VERIFIED: Troubleshooting has been completed.

INFORMATION

FAULT-TRACING INFORMATION

The fault should have been detected and remedied. As this is not the case fault-tracing has failed.

Exit fault-tracing for this diagnostic trouble code (DTC) or make another attempt.

ECM-262A: LONG-TERM FUEL TRIM. UPPER LIMIT (B6294T; 2003-2004)

DIAGNOSTIC TROUBLE CODE (DTC) INFORMATION

see **DIAGNOSTIC TROUBLE CODE (DTC) INFORMATION**

UPPER LIMIT

CHECKING FUEL INJECTION SYSTEM

Check intake system for air leakage according to **INTAKE AND EXHAUST SYSTEM - CLEANING, INSPECTION AND ADJUSTMENT** .

HINT: Air leakage in the intake system can occur through the canister purge (CP) valve, the secondary air solenoid valve and power brake booster.

Start the engine and idle it for 10 minutes.

Check the mass air flow (MAF) sensor by read off its correction factors. The value should be between 2 and 12

NOTE: There must not be any air leakage when this test is carried out.

Remedy as necessary.

Other information

- To replace mass air flow (MAF) sensor, see **FUEL SYSTEM - REMOVAL, REPLACEMENT AND INSTALLATION** .

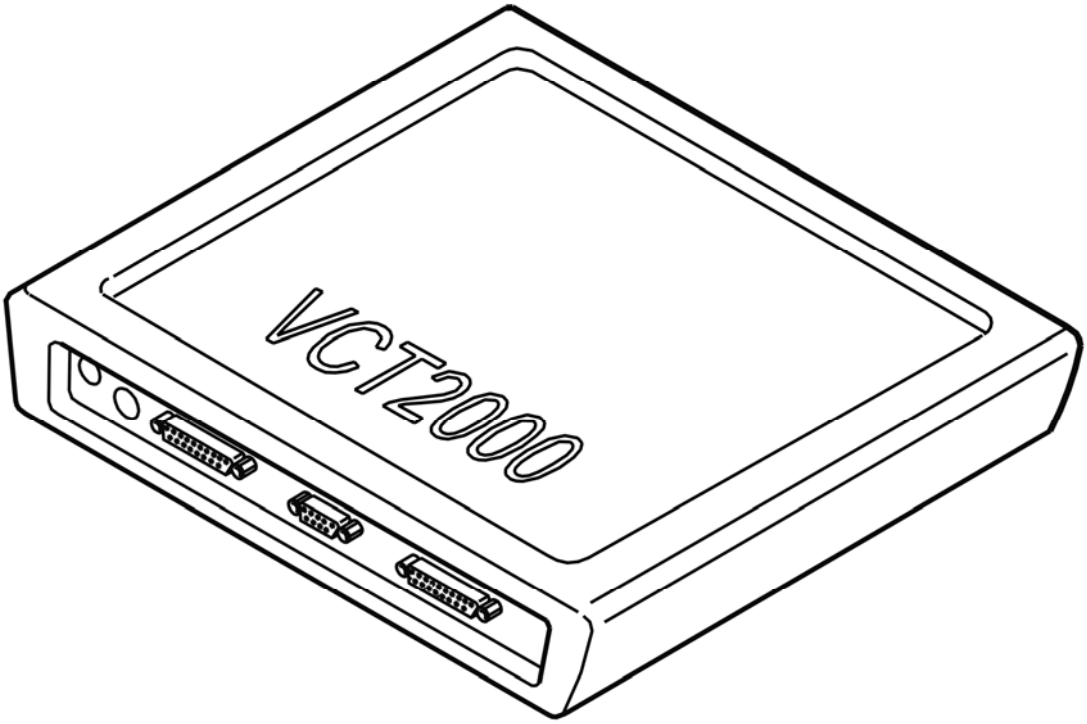

Fig. 23: Identifying VCT2000 Diagnostic Tool Symbol In VIDA
Courtesy of VOLVO CARS CORPORATION

- **Continue**

  Refer to **VERIFICATION**

VERIFICATION

VERIFICATION

Test drive the car according to the TRIP schedule, see **VERIFYING REPAIRS** .

Do not turn off engine after test drive.

Connect the car to VIDA (Volvo scan tool) again.

Read off fuel trim status.

There should not be any faults when fuel trim is finished.

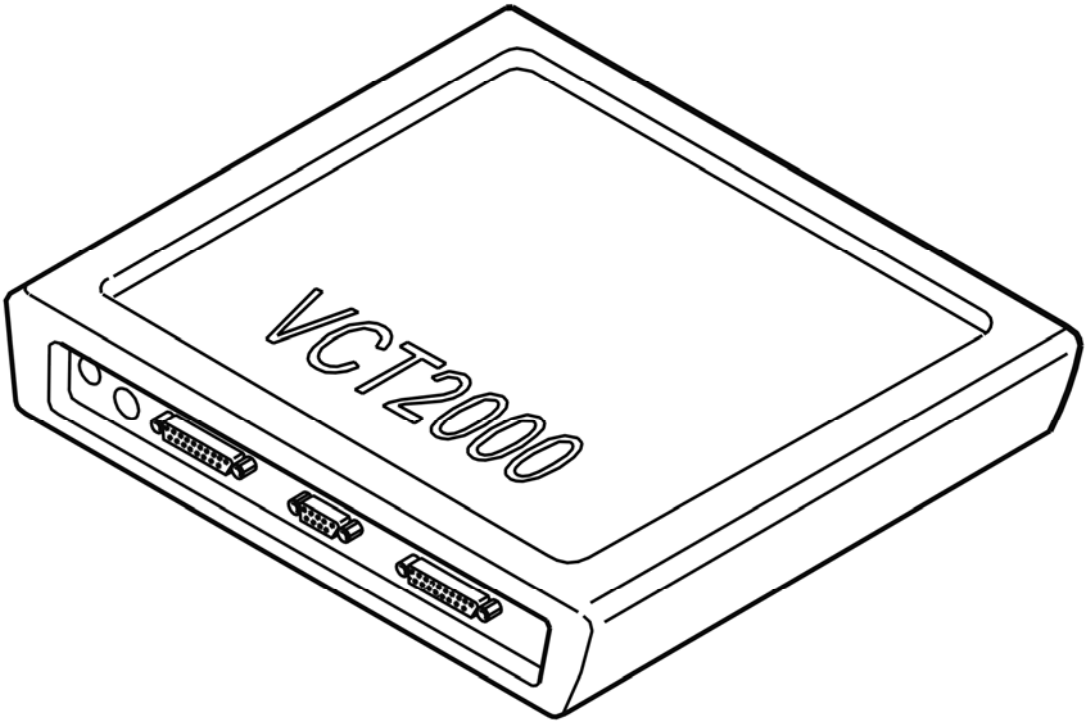

Fig. 24: Identifying VCT2000 Diagnostic Tool Symbol In VIDA
Courtesy of VOLVO CARS CORPORATION

Was a fault detected?

- **YES**

  Refer to **INFORMATION**

- **NO**

  VERIFIED: Troubleshooting has been completed.

INFORMATION

FAULT-TRACING INFORMATION

The fault should have been detected and remedied. As this is not the case fault-tracing has failed.

Exit fault-tracing for this diagnostic trouble code (DTC) or make another attempt.

ECM-268A: LONG-TERM FUEL TRIM. FAULTY SIGNAL (B5254T2; B6294T; 2003-2004)

DIAGNOSTIC TROUBLE CODE (DTC) INFORMATION

Condition

The control module receives information from the heated oxygen sensor (HO2S) about the fuel / air mixture. If the fuel / air mixture deviates from lambda=1, the short-term fuel trim will compensate for this by adjusting the injection time so that lambda=1 is achieved. Diagnostic Trouble Code (DTC) ECM-268A will be stored if the short-term fuel trim deviates too much from its central position (value) when the long-term fuel trim diagnostics are activated.

Substitute Value

none

Possible Source

Upper limit

- intake air leakage
- exhaust system air leakage
- low fuel pressure
- defective heated oxygen sensor (HO2S)

Lower limit

- intake air leakage
- high fuel pressure
- leaking injectors
- defective mass air flow (MAF) sensor
- contaminated engine oil
- oil level too high
- defective heated oxygen sensor (HO2S)

Fault symptom[s]

- none

FAULT-TRACING INFORMATION

see **FAULT-TRACING INFORMATION**

ECM-270A: ADAPTIVE LAMBDA CONTROL, BANK 2. BOTTOM LIMIT (B6294T; 2003-2004)

DIAGNOSTIC TROUBLE CODE (DTC) INFORMATION

Condition

The control module receives information from the heated oxygen sensor (HO2S) about the fuel / air mixture when idling at both the lower and upper part-load range. If the fuel / air mixture deviates from lambda=1, the short-term fuel trim will compensate for this by adjusting the injection time so that lambda=1 is achieved. When the short-term fuel trim makes an adjustment, the integrator median must be adjusted by the long-term trim. Diagnostic trouble code (DTC) ECM-270A will be stored when the long-term trim must be adjusted almost to maximum in the upper part of the load area.

Substitute Value

none

Possible Source

Upper limit:

- intake air leakage
- exhaust system air leakage
- low fuel pressure
- defective heated oxygen sensor (HO2S)

Lower limit:

- intake air leakage
- high fuel pressure
- leaking injectors
- defective mass air flow (MAF) sensor
- contaminated engine oil
- oil level too high
- defective heated oxygen sensor (HO2S)

Fault symptom[s]

- none

LOWER LIMIT

see **LOWER LIMIT**

ECM-270A: ADAPTIVE LAMBDA CONTROL, BANK 2. UPPER LIMIT (B6294T; 2003-2004)

DIAGNOSTIC TROUBLE CODE (DTC) INFORMATION

see **DIAGNOSTIC TROUBLE CODE (DTC) INFORMATION**

UPPER LIMIT

see **UPPER LIMIT**

ECM-271A: ADAPTIVE LAMBDA CONTROL, BANK 2. BOTTOM LIMIT (B6294T; 2003-2004)

DIAGNOSTIC TROUBLE CODE (DTC) INFORMATION

Condition

The control module receives information from the heated oxygen sensor (HO2S) about the fuel / air mixture when idling at both the lower and upper part-load range. If the fuel / air mixture deviates from lambda=1, the short-term fuel trim will compensate for this by adjusting the injection time so that lambda=1 is achieved. When the short-term fuel trim makes an adjustment, the integrator median must be adjusted by the long-term trim. Diagnostic trouble code (DTC) ECM-271A will be stored when the long-term trim must be adjusted to almost maximum in the lower part load area.

Substitute Value

none

Possible Source

Upper limit:

- intake air leakage
- exhaust system air leakage
- low fuel pressure
- defective heated oxygen sensor (HO2S)

Lower limit:

- intake air leakage
- high fuel pressure
- leaking injectors
- defective mass air flow (MAF) sensor
- contaminated engine oil
- oil level too high
- defective heated oxygen sensor (HO2S)

Fault symptom[s]

- none

LOWER LIMIT

see **LOWER LIMIT**

ECM-271A: ADAPTIVE LAMBDA CONTROL, BANK 2. UPPER LIMIT (B6294T; 2003-2004)

DIAGNOSTIC TROUBLE CODE (DTC) INFORMATION

see **DIAGNOSTIC TROUBLE CODE (DTC) INFORMATION**

UPPER LIMIT

see **UPPER LIMIT**

ECM-2720: ENGINE COOLANT TEMPERATURE (ECT) SENSOR. FAULTY SIGNAL (B5254T2; 2005)

DIAGNOSTIC TROUBLE CODE (DTC) INFORMATION

Condition

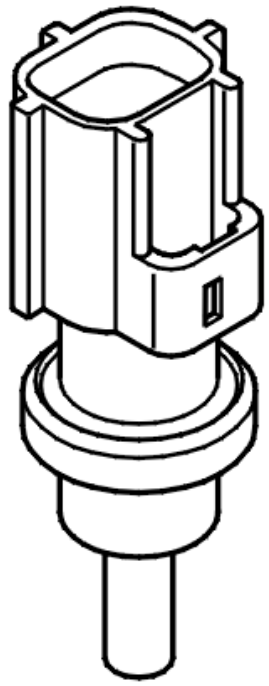

Fig. 25: Identifying Engine Coolant Temperature (ECT) Sensor
Courtesy of VOLVO CARS CORPORATION

The engine control module (ECM) checks the signal for engine coolant temperature (ECT).

After the engine is started, the engine control module (ECM) calculates the theoretical engine coolant temperature (ECT) based on factors such as time since start, engine speed (RPM) and load. The diagnostic trouble code (DTC) is stored if the signal from the engine coolant temperature (ECT) sensor is static and does not correspond to the calculated temperature.

The diagnostic trouble code (DTC) is stored together with another diagnostic trouble code (DTC) for the engine coolant temperature (ECT) sensor.

The diagnostic trouble code (DTC) can be diagnosed when the engine is running.

Substitute Value

- None.

Possible Source

- Contact resistance or oxidation in the connectors
- Damaged temperature sensor.

Fault symptom[s]

- Malfunction indicator lamp (MIL) lit
- The engine is difficult to start.

FAULT-TRACING

CHECKING THE COMPONENT

WARNING: Engine cooling fan (FC) can also operate if the ignition is switched off when this diagnostic trouble code (DTC) is stored.

HINT: To avoid injury, disconnect the power supply to the engine cooling fan (FC) during fault-tracing.

- Check the connector on the engine coolant temperature (ECT) sensor. Check for contact resistance and oxidation.

  This diagnostic trouble code (DTC) is stored if the engine coolant temperature (ECT) sensor freezes. This may happen if the coolant level is low or there is too little glycol in the coolant. Check the engine coolant level and its freezing point.

  HINT: The diagnostic trouble code (DTC) can be caused by a thermostat that doesn't open.

  Replace the engine coolant temperature (ECT) sensor if the above does not remedy the fault.

  Remedy as necessary.

  Other information

  - For B5xx4T, see **REPLACING THE THERMOSTAT AND/OR ENGINE COOLANT TEMPERATURE SENSOR**
  - For B6xx4T, see **ENGINE COOLANT TEMPERATURE (ECT) SENSOR, REPLACING** .
  - see **CHECKING WIRING AND TERMINALS**

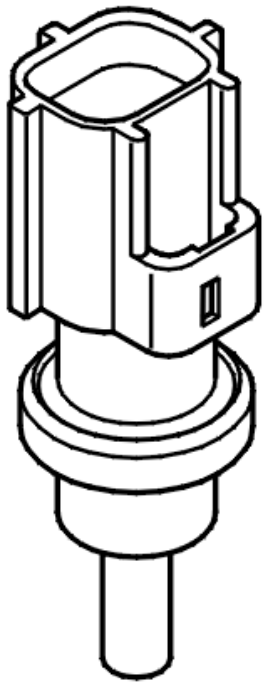

Fig. 26: Identifying Engine Coolant Temperature (ECT) Sensor
Courtesy of VOLVO CARS CORPORATION

- **Continue**

  Refer to **VERIFICATION**

VERIFICATION

VERIFICATION

HINT: After carrying out the repair, check that the fault has been remedied.

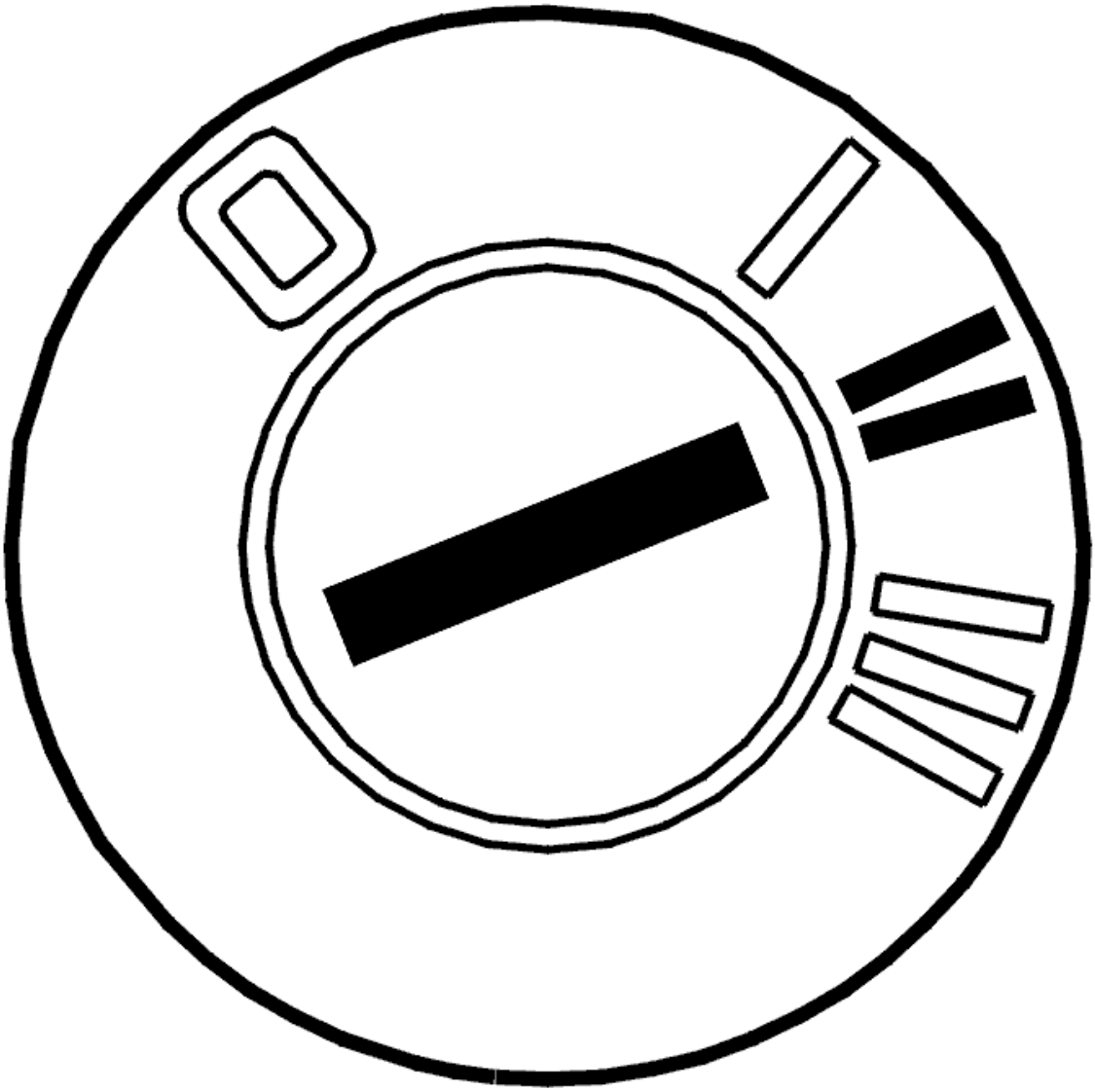

Fig. 27: Identifying Ignition ON
Courtesy of VOLVO CARS CORPORATION

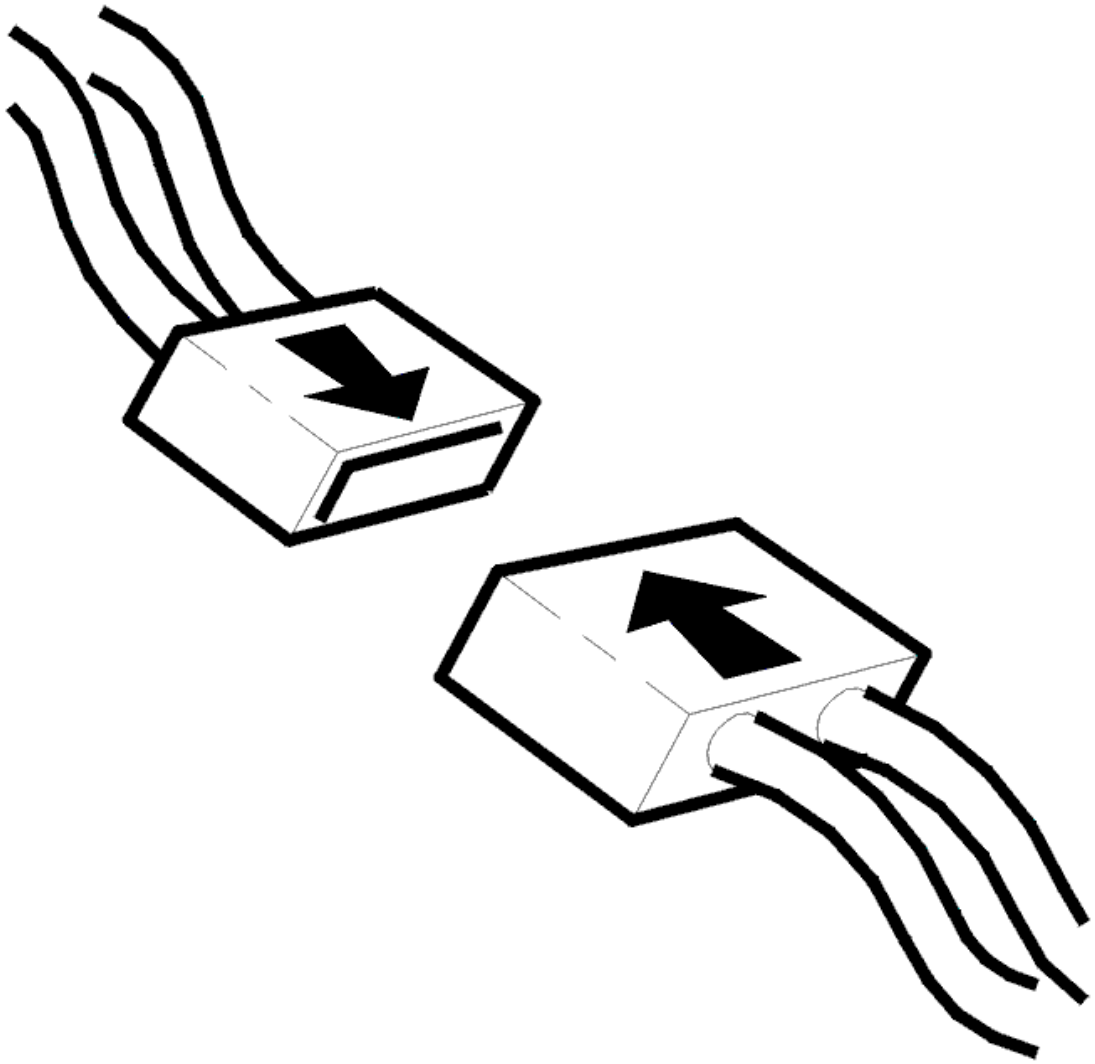

Fig. 28: Connecting Connector
Courtesy of VOLVO CARS CORPORATION

- Ignition off
- Reconnect the connectors, reinstall components etc.
- Ignition on
- Read off the engine coolant temperature (ECT) sensor.

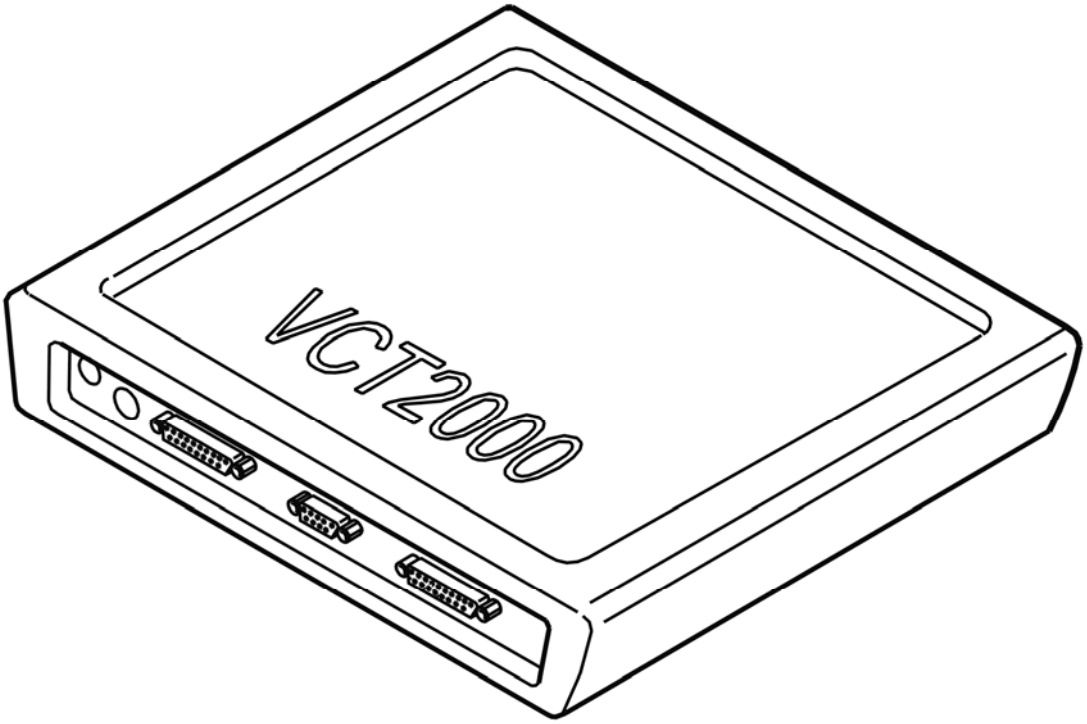

Fig. 29: Identifying VCT2000 Diagnostic Tool Symbol In VIDA
Courtesy of VOLVO CARS CORPORATION

Is the temperature within its permitted range?

- **YES**

  VERIFIED: Troubleshooting has been completed.

- **NO**

  Refer to **INFORMATION**

INFORMATION

FAULT-TRACING INFORMATION

The fault should have been detected and remedied. As this is not the case fault-tracing has failed.

Exit fault-tracing for this diagnostic trouble code (DTC) or make another attempt.

ECM-2720: ENGINE COOLANT TEMPERATURE (ECT) SENSOR. FAULTY SIGNAL (B6294T; 2005)

DIAGNOSTIC TROUBLE CODE (DTC) INFORMATION

Condition

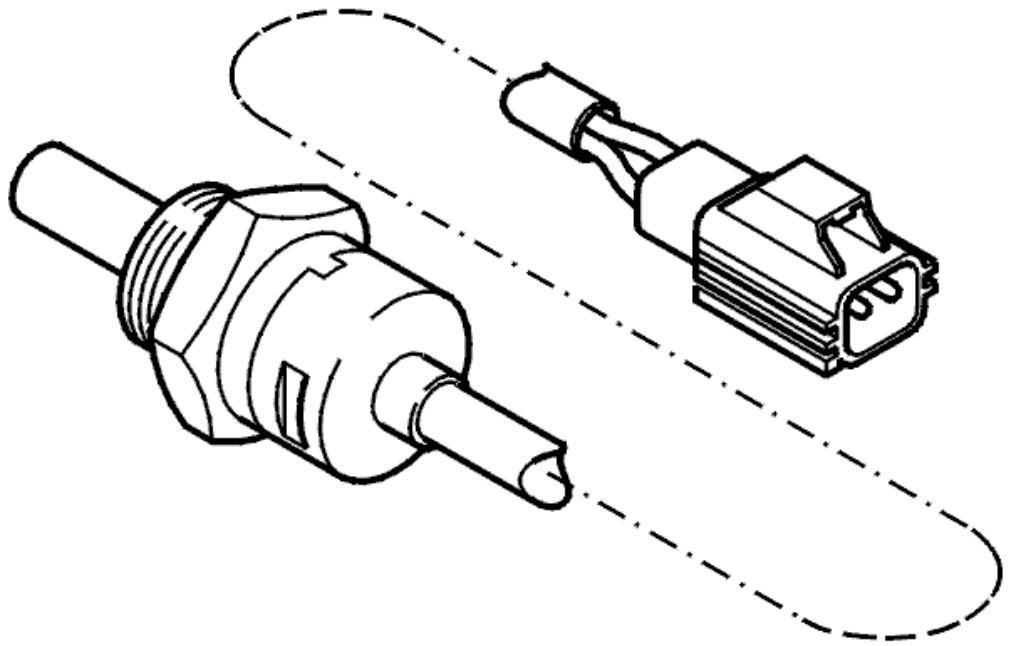

Fig. 30: Identifying Engine Coolant Temperature Sensor
Courtesy of VOLVO CARS CORPORATION

The engine control module (ECM) checks the signal for engine coolant temperature (ECT).

After the engine is started, the engine control module (ECM) calculates the theoretical engine coolant temperature (ECT) based on factors such as time since start, engine speed (RPM) and load. The diagnostic trouble code (DTC) is stored if the signal from the engine coolant temperature (ECT) sensor is static and does not correspond to the calculated temperature.

The diagnostic trouble code (DTC) is stored together with another diagnostic trouble code (DTC) for the engine coolant temperature (ECT) sensor.

The diagnostic trouble code (DTC) can be diagnosed when the engine is running.

Substitute Value

- None.

Possible Source

- Contact resistance or oxidation in the connectors
- Damaged temperature sensor.

Fault symptom[s]

- Malfunction indicator lamp (MIL) lit
- The engine is difficult to start.

FAULTY SIGNAL

CHECKING THE WIRING

WARNING: **Before fault-tracing can begin, the engine cooling fan (FC) connector must be disconnected to prevent the engine cooling fan (FC) engaging. A diagnostic trouble code (DTC) for the engine cooling fan (FC) control module may be stored. After fault-tracing the connector must be reconnected.**

NOTE: **This diagnostic trouble code (DTC) is stored if the engine coolant temperature (ECT) sensor freezes. This may happen if the coolant level is low or there is too little glycol in the coolant. Check the engine coolant level and its freezing point. Remedy as necessary.**

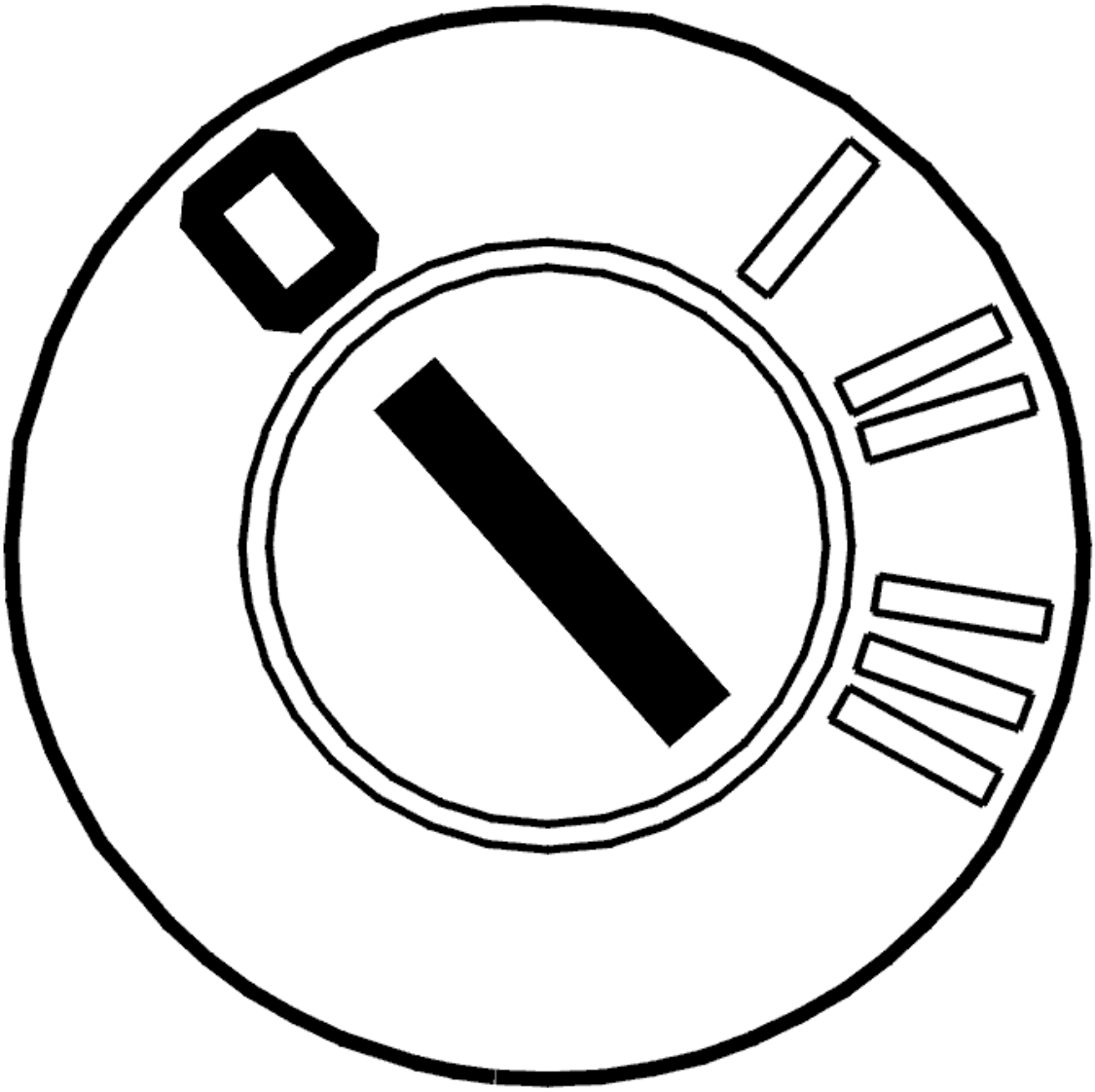

Fig. 31: Identifying Ignition OFF
Courtesy of VOLVO CARS CORPORATION

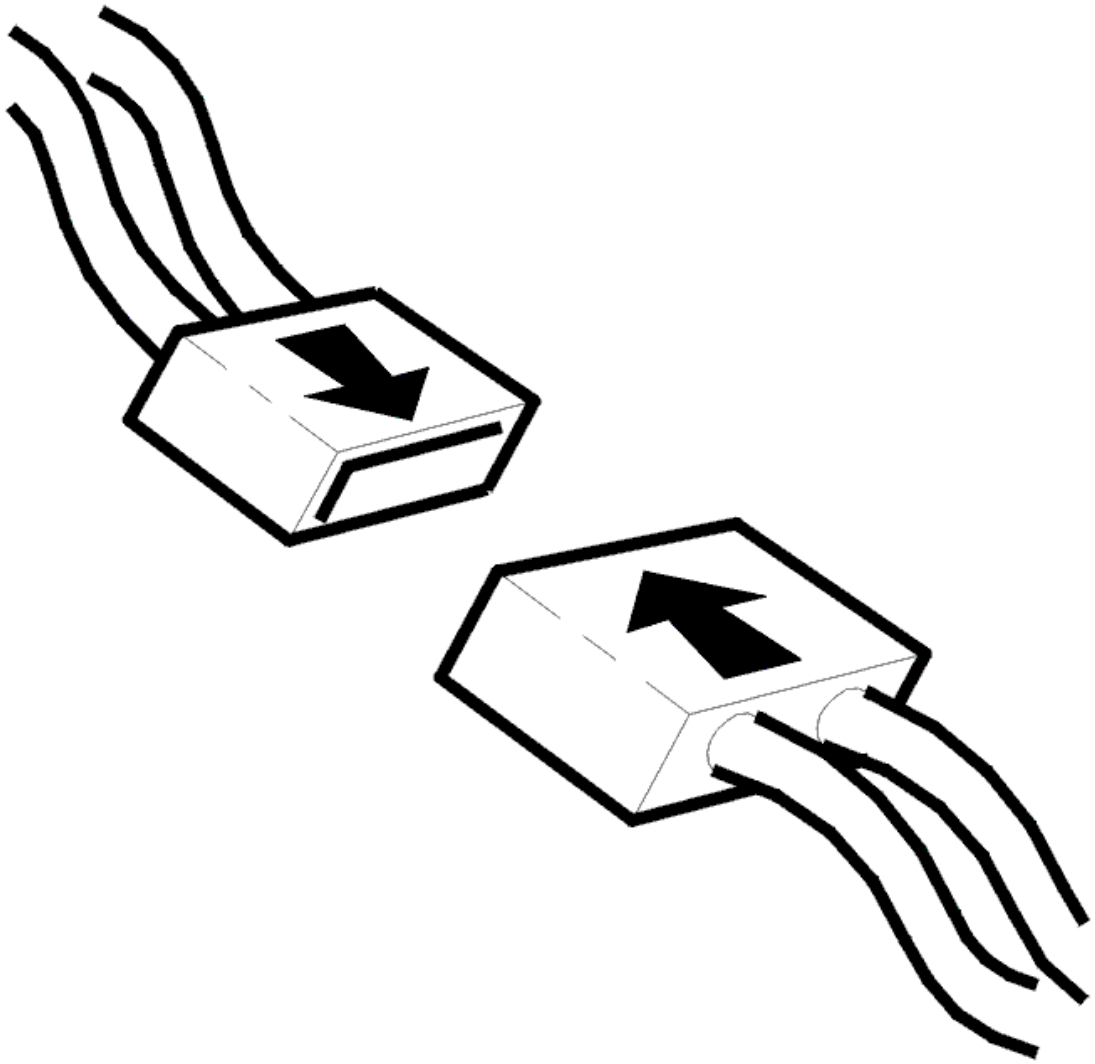

Fig. 32: Connecting Connector
Courtesy of VOLVO CARS CORPORATION

- Ignition off
- Check the ground lead between control module terminal #A60 (#A60) and engine coolant temperature (ECT) sensor terminal #2. Check for an open-circuit
- Reinstall the components, reconnect the connectors etc.

Other information

- see **CHECKING WIRING AND TERMINALS**
- see **CONNECTING THE BREAKOUT BOX**
- For B5xx4T, see **REPLACING THE THERMOSTAT AND/OR ENGINE COOLANT TEMPERATURE SENSOR**
- For B6xx4T, see **ENGINE COOLANT TEMPERATURE (ECT) SENSOR, REPLACING** .

- see **COMPONENT SPECIFICATIONS**
- For 6 cylinder engines -2004, see **SIGNAL SPECIFICATION**
- For 6 cylinder engines 2005-, see **SIGNAL SPECIFICATION** .

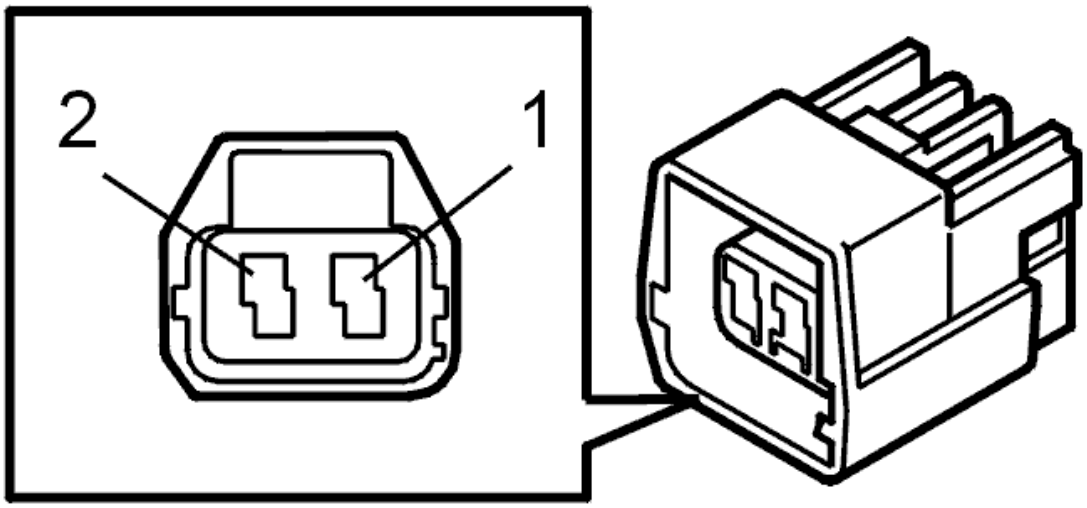

Fig. 33: Identifying Camshaft Reset Valve Connector Terminals
Courtesy of VOLVO CARS CORPORATION

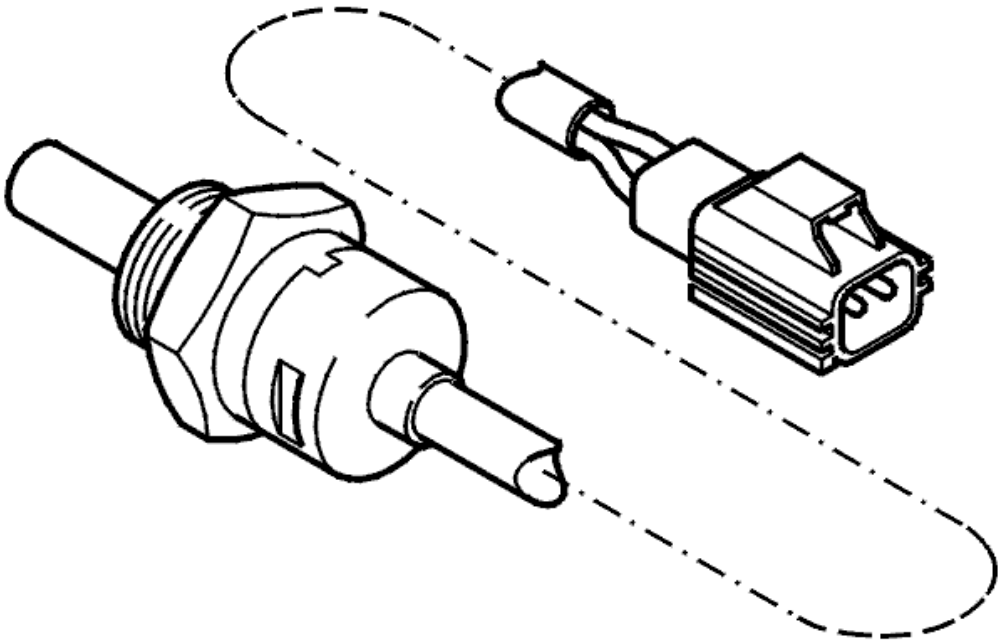

Fig. 34: Identifying Engine Coolant Temperature Sensor

Courtesy of VOLVO CARS CORPORATION

Were any faults found in the ground cable?

- **YES**

  Refer to **VERIFICATION**

- **NO**

  Refer to **CHECKING ENGINE COOLANT TEMPERATURE (ECT)**

CHECKING ENGINE COOLANT TEMPERATURE (ECT)

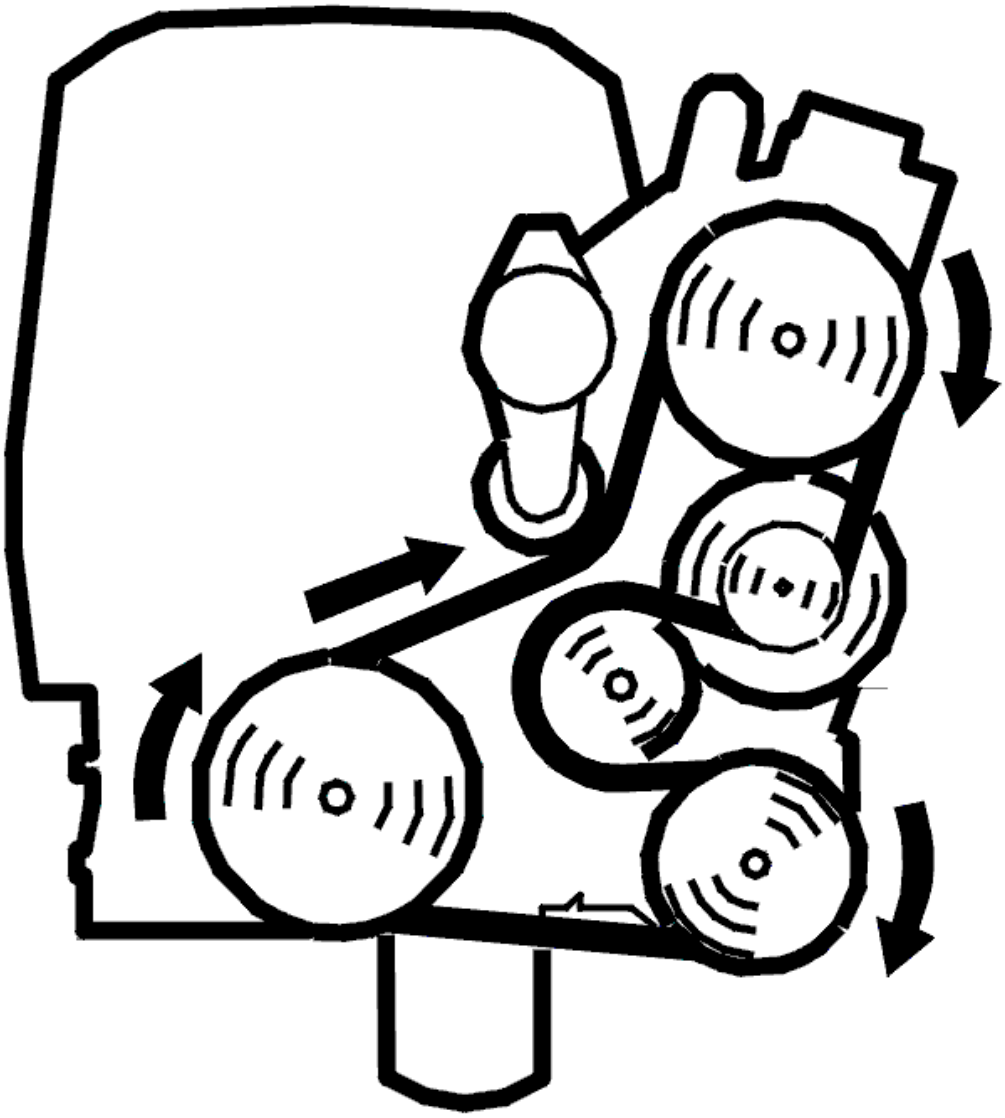

Fig. 35: Belt Routing / Engine Idling - Volvo
Courtesy of VOLVO CARS CORPORATION

- Fault-tracing must begin with the engine cold (+20°C) so that the engine coolant temperature (ECT) sensor can be tested over as wide a temperature range as possible
- Switch off the climate control system
- Start the engine.

Read off the engine coolant temperature (ECT).

Check that the engine coolant temperature (ECT) is within its permitted range and corresponds with the engine warming up.

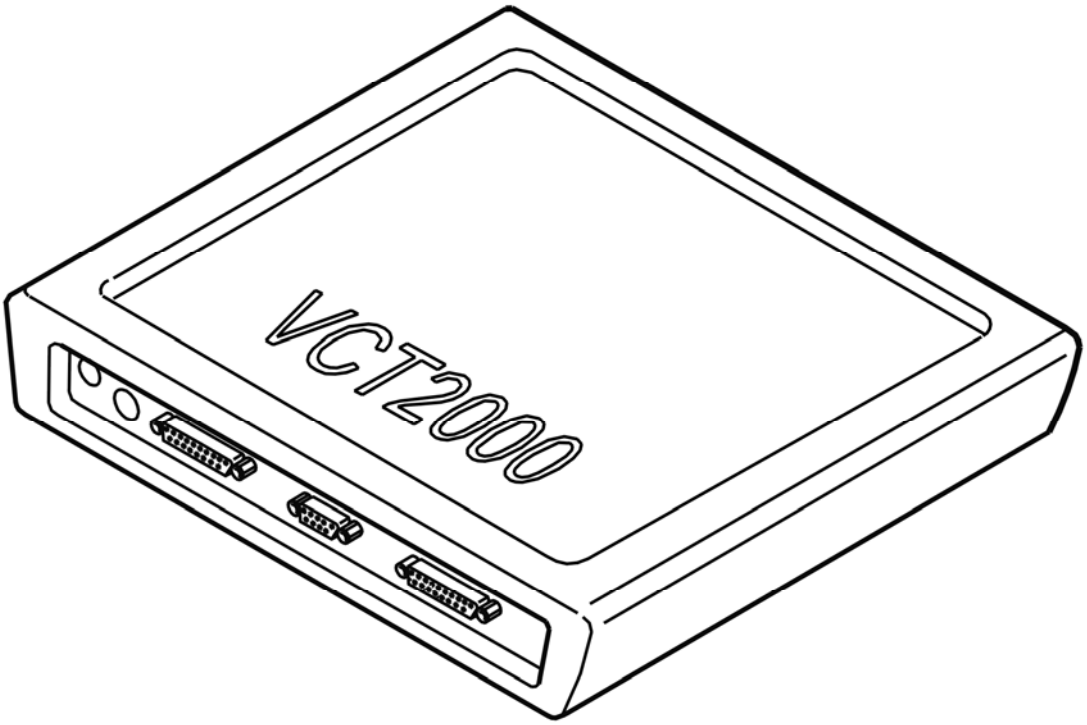

Fig. 36: Identifying VCT2000 Diagnostic Tool Symbol In VIDA
Courtesy of VOLVO CARS CORPORATION

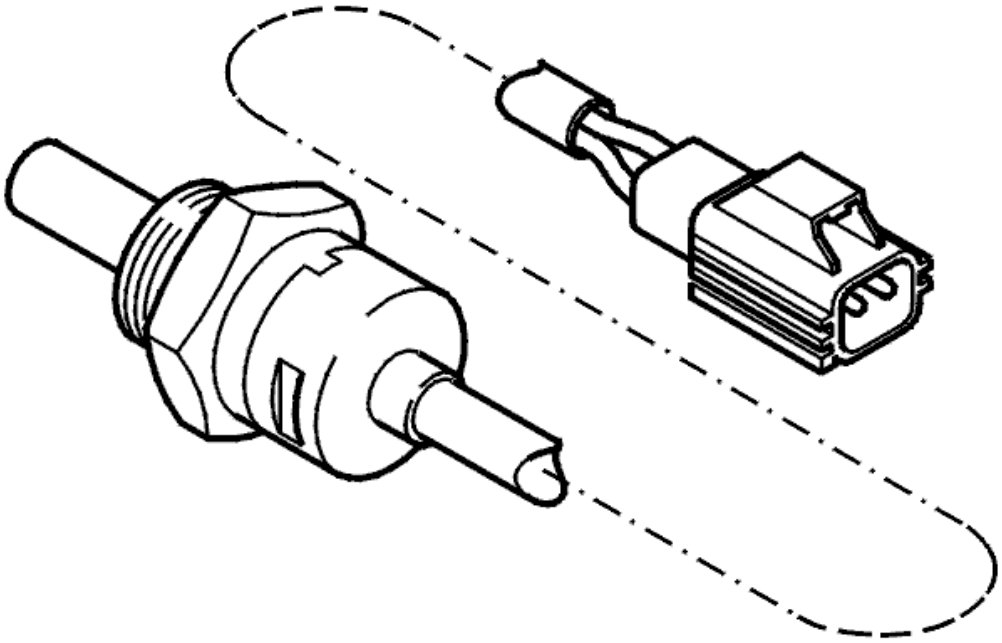

Fig. 37: Identifying Engine Coolant Temperature Sensor
Courtesy of VOLVO CARS CORPORATION

Is the temperature within its permitted range?

- **YES**

  Refer to **CHECKING THERMOSTAT**

- **NO**

  Refer to **REPLACING THE COMPONENT**

CHECKING THERMOSTAT

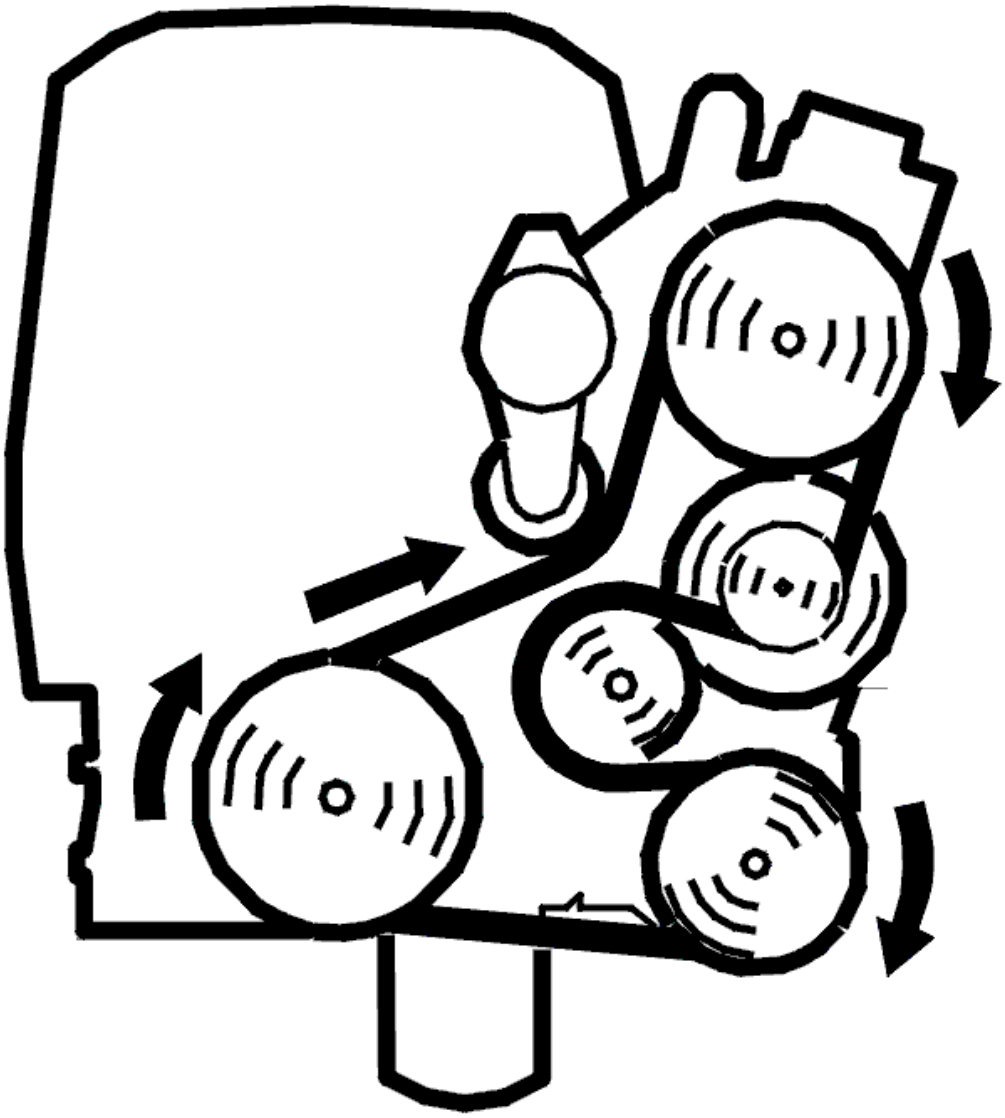

Fig. 38: Belt Routing / Engine Idling - Volvo
Courtesy of VOLVO CARS CORPORATION

- Start the engine. Run the engine until the engine coolant temperature (ECT) reaches approximately 100 ° C
- Activate the engine cooling fan (FC) with the engine running
- Wait approximately 90 seconds and then shut-off the engine cooling fan (FC).

  Read off the engine coolant temperature (ECT). If the temperature is 85 °C or lower when the fan stops, the thermostat is damaged.

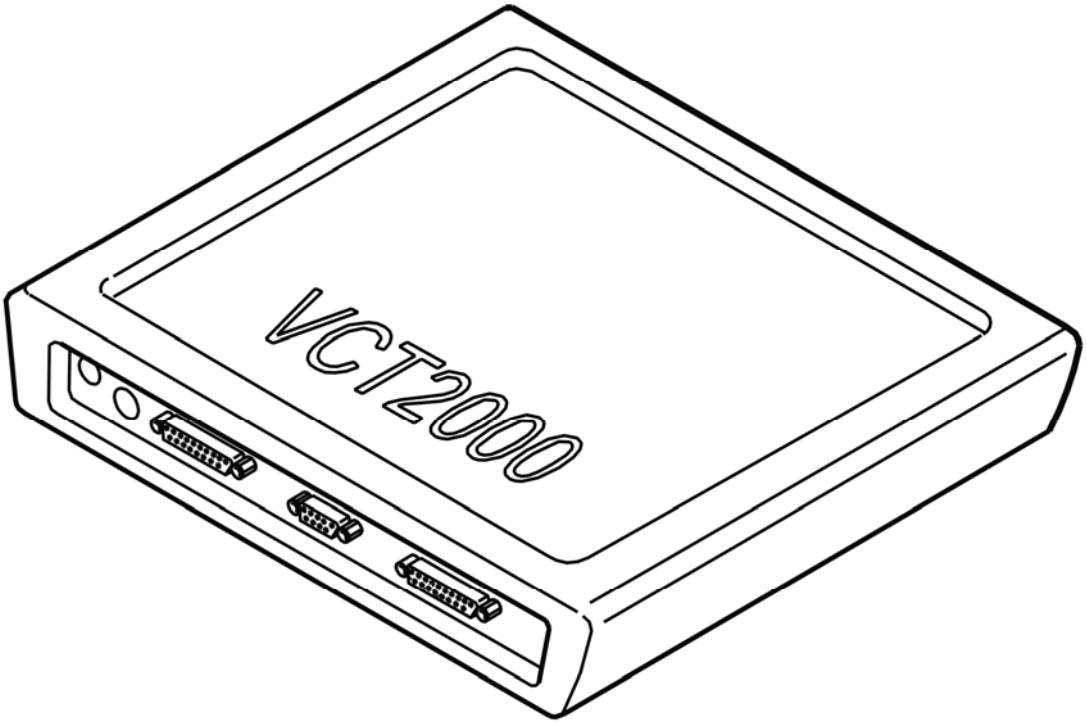

Fig. 39: Identifying VCT2000 Diagnostic Tool Symbol In VIDA
Courtesy of VOLVO CARS CORPORATION

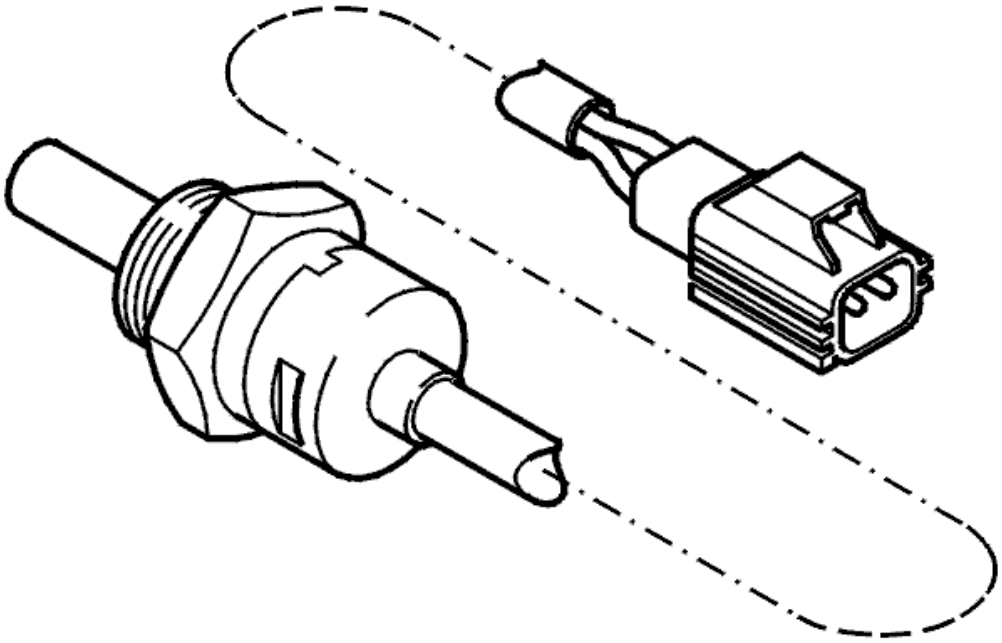

Fig. 40: Identifying Engine Coolant Temperature Sensor
Courtesy of VOLVO CARS CORPORATION

Is the temperature lower than 86 °C?

- **YES**

  Refer to **REPLACING THE COMPONENT**

- **NO**

  FAULT TRACING FAILED: The fault should have been detected and remedied. As this is not the case fault-tracing has failed. Exit fault-tracing for this diagnostic trouble code (DTC) or make another attempt.

REPLACING THE COMPONENT

Try a new thermostat:

- For B5xx4Tx -2004, see **REPLACING THE THERMOSTAT AND/OR ENGINE COOLANT TEMPERATURE SENSOR**
- For B6xx4T, see **THERMOSTAT, REPLACING** .

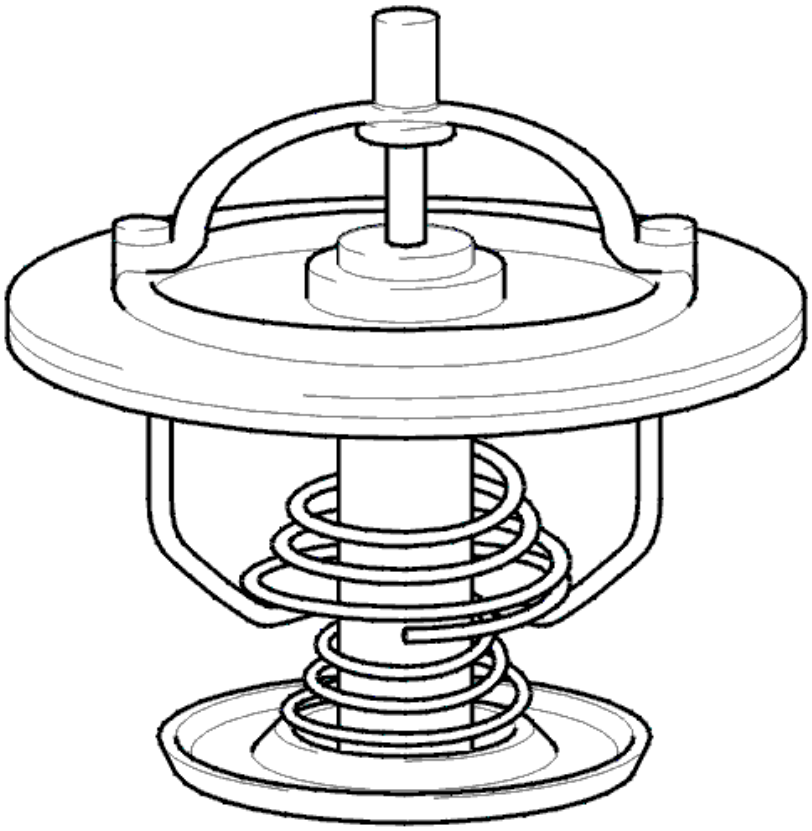

Fig. 41: Checking Thermostat
Courtesy of VOLVO CARS CORPORATION

REPLACING THE COMPONENT

Try a new engine coolant temperature (ECT) sensor:

- For B5xx4T, see **REPLACING THE THERMOSTAT AND/OR ENGINE COOLANT TEMPERATURE SENSOR**
- For B6xx4T, see **ENGINE COOLANT TEMPERATURE (ECT) SENSOR, REPLACING** .

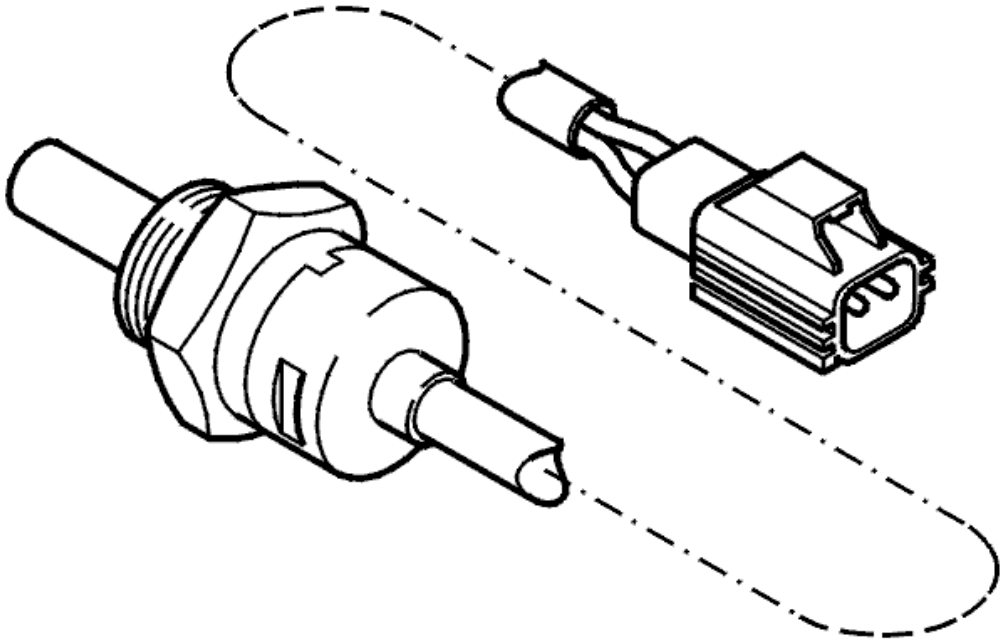

Fig. 42: Identifying Engine Coolant Temperature Sensor
Courtesy of VOLVO CARS CORPORATION

- **Continue**

  Refer to **VERIFICATION**

VERIFICATION

VERIFICATION

HINT: After carrying out the repair, check that the fault has been remedied.

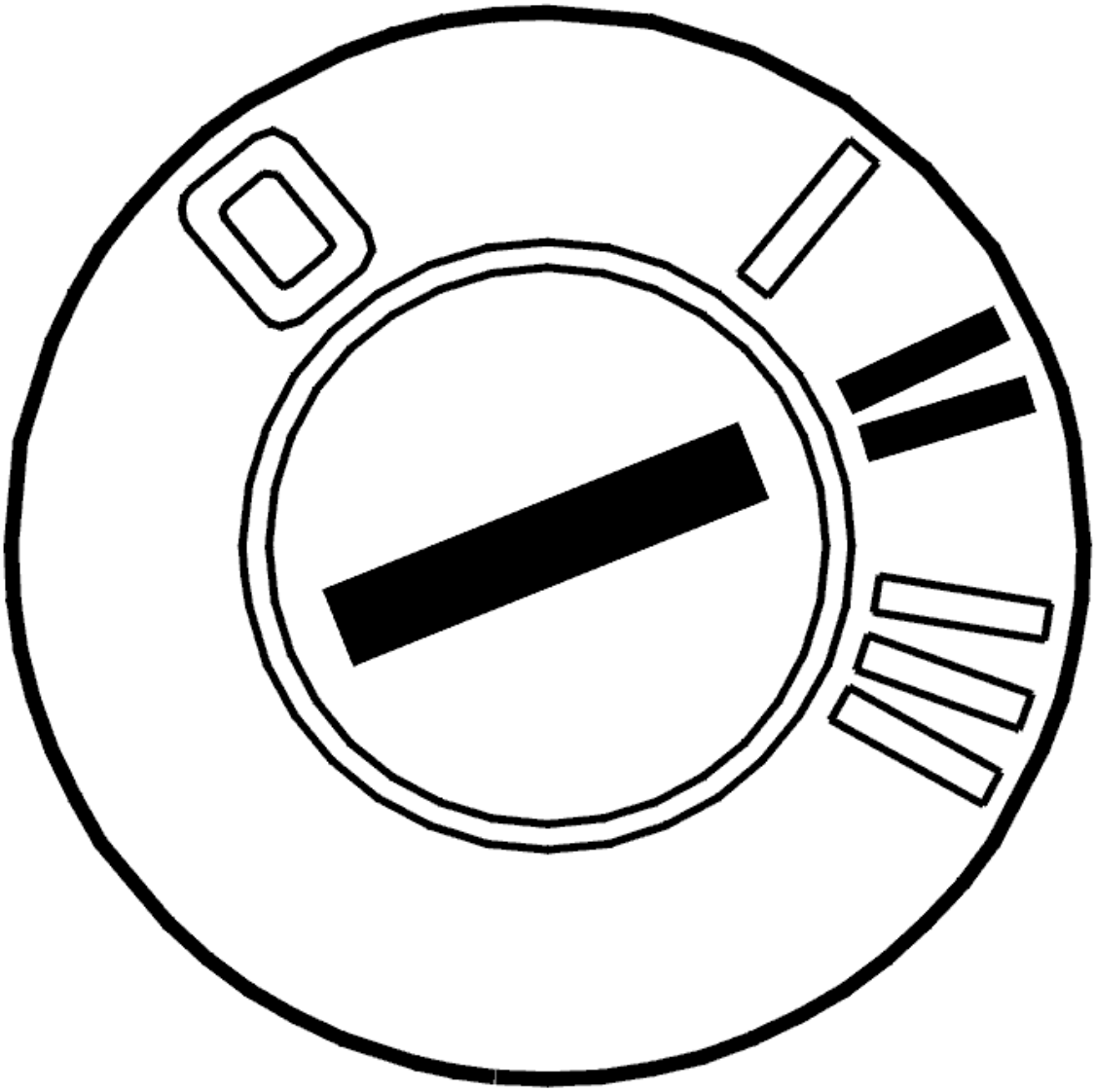

Fig. 43: Identifying Ignition ON
Courtesy of VOLVO CARS CORPORATION

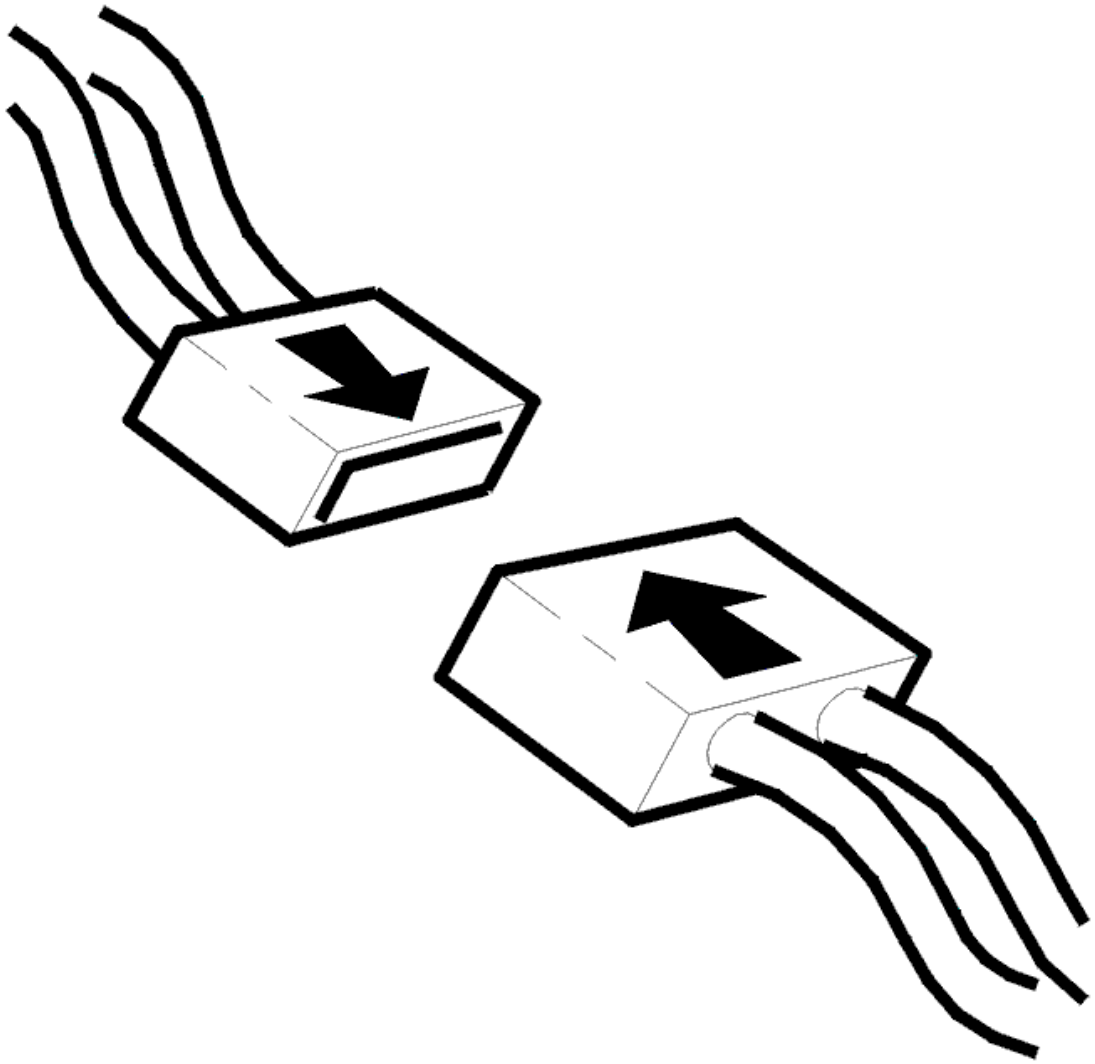

Fig. 44: Connecting Connector
Courtesy of VOLVO CARS CORPORATION

- Ignition off
- Reconnect the connectors, reinstall components etc.
- Ignition on
- Read off the engine coolant temperature (ECT) sensor.

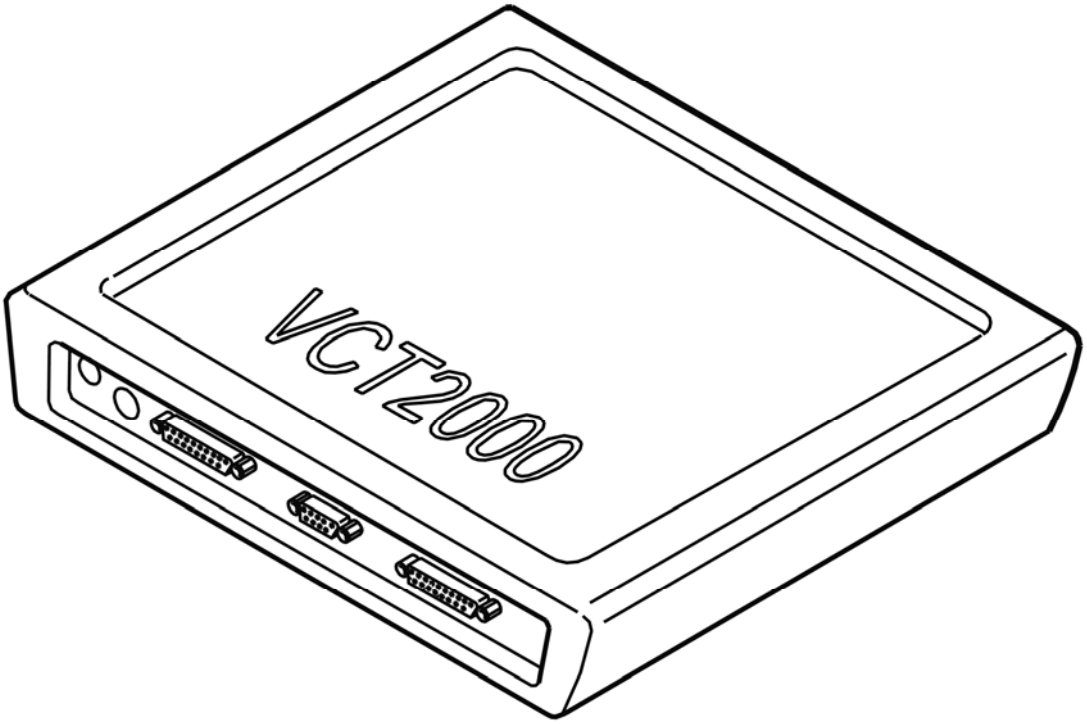

Fig. 45: Identifying VCT2000 Diagnostic Tool Symbol In VIDA
Courtesy of VOLVO CARS CORPORATION

Is the temperature within its permitted range?

- **YES**

  VERIFIED: Troubleshooting has been completed.

- **NO**

  Refer to **INFORMATION**

INFORMATION

FAULT-TRACING INFORMATION

The fault should have been detected and remedied. As this is not the case fault-tracing has failed.

Exit fault-tracing for this diagnostic trouble code (DTC) or make another attempt.

ECM-272A: ADAPTIVE LAMBDA CONTROL, BANK 2. BOTTOM LIMIT (B6294T; 2003-2004)

DIAGNOSTIC TROUBLE CODE (DTC) INFORMATION

Condition

The control module receives information from the heated oxygen sensor (HO2S) about the fuel / air mixture when idling at both the lower and upper part-load range. If the fuel / air mixture deviates from lambda=1, the short-term fuel trim will compensate for this by adjusting the injection time so that lambda=1 is achieved. When the short-term fuel trim makes an adjustment, the integrator median must be adjusted by the long-term trim. Diagnostic trouble code (DTC) ECM-272A will be stored when the long-term trim must be adjusted almost to maximum in the idle range.

Substitute Value

none

Possible Source

Upper limit:

- intake air leakage
- exhaust system air leakage
- defective heated oxygen sensor (HO2S)

Lower limit:

- intake air leakage
- high fuel pressure
- leaking injectors
- defective mass air flow (MAF) sensor
- contaminated engine oil
- oil level too high
- defective heated oxygen sensor (HO2S)

Fault symptom[s]

- none

LOWER LIMIT

see **LOWER LIMIT**

ECM-272A: ADAPTIVE LAMBDA CONTROL, BANK 2. UPPER LIMIT (B6294T; 2003-2004)

DIAGNOSTIC TROUBLE CODE (DTC) INFORMATION

see **DIAGNOSTIC TROUBLE CODE (DTC) INFORMATION**

UPPER LIMIT

see **UPPER LIMIT**

ECM-272D: ENGINE COOLANT TEMPERATURE (ECT) SENSOR. SIGNAL TOO LOW (B5254T2; B6294T; 2005)

DIAGNOSTIC TROUBLE CODE (DTC) INFORMATION

Condition

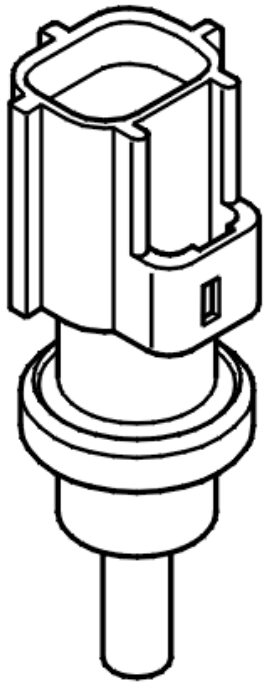

Fig. 46: Identifying Engine Coolant Temperature (ECT) Sensor
Courtesy of VOLVO CARS CORPORATION

The engine control module (ECM) checks the signal for engine coolant temperature (ECT).

After the engine is started, the engine control module (ECM) calculates the theoretical engine coolant temperature (ECT) based on factors such as time since start, engine speed (RPM) and load. The diagnostic trouble code (DTC) is stored if the signal from the engine coolant temperature (ECT) sensor is lower than the calculated temperature.

The diagnostic trouble code (DTC) can be diagnosed when the engine is running.

Substitute Value

- None.

Possible Source

- Contact resistance or oxidation in the connectors
- Damaged temperature sensor.

Fault symptom[s]

- Malfunction indicator lamp (MIL) lit
- The engine is difficult to start.

FAULT-TRACING

see **FAULT-TRACING**

ECM-272D: ENGINE COOLANT TEMPERATURE (ECT) SENSOR. SIGNAL TOO LOW (B6294T; 2005)

DIAGNOSTIC TROUBLE CODE (DTC) INFORMATION

Condition

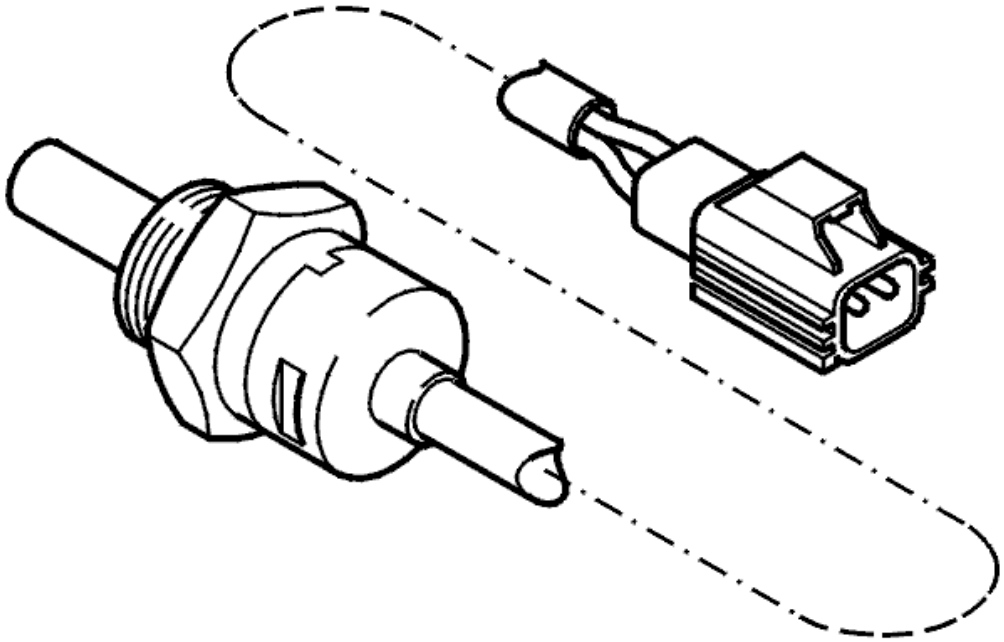

Fig. 47: Identifying Engine Coolant Temperature Sensor
Courtesy of VOLVO CARS CORPORATION

The engine control module (ECM) checks the signal for engine coolant temperature (ECT).

After the engine is started, the engine control module (ECM) calculates the theoretical engine coolant temperature (ECT) based on factors such as time since start, engine speed (RPM) and load. The diagnostic trouble code (DTC) is stored if the signal from the engine coolant temperature (ECT) sensor is lower than the calculated temperature.

The diagnostic trouble code (DTC) can be diagnosed when the engine is running.

Substitute Value

- None.

Possible Source

- Contact resistance or oxidation in the connectors
- Damaged temperature sensor.

Fault symptom[s]

- Malfunction indicator lamp (MIL) lit
- The engine is difficult to start.

SIGNAL TOO LOW

CHECKING THE WIRING

WARNING: Before fault-tracing can begin, the engine cooling fan (FC) connector must be disconnected to prevent the engine cooling fan (FC) engaging. A diagnostic trouble code (DTC) for the engine cooling fan (FC) control module may be stored. After fault-tracing the connector must be reconnected.

NOTE: This diagnostic trouble code (DTC) is stored if the engine coolant temperature (ECT) sensor freezes. This may happen if the coolant level is low or there is too little glycol in the coolant. Check the engine coolant level and its freezing point. Remedy as necessary.

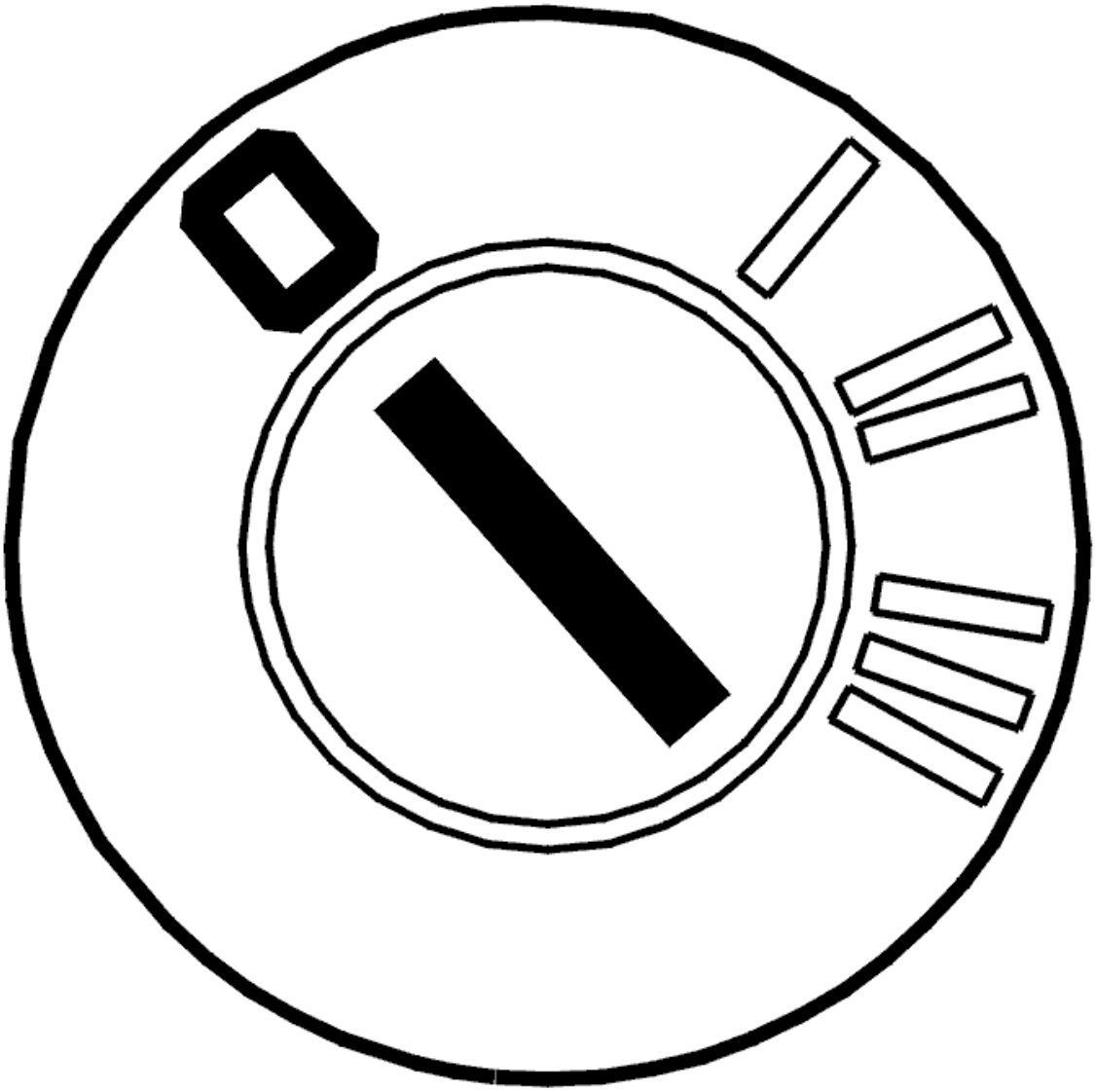

Fig. 48: Identifying Ignition OFF
Courtesy of VOLVO CARS CORPORATION

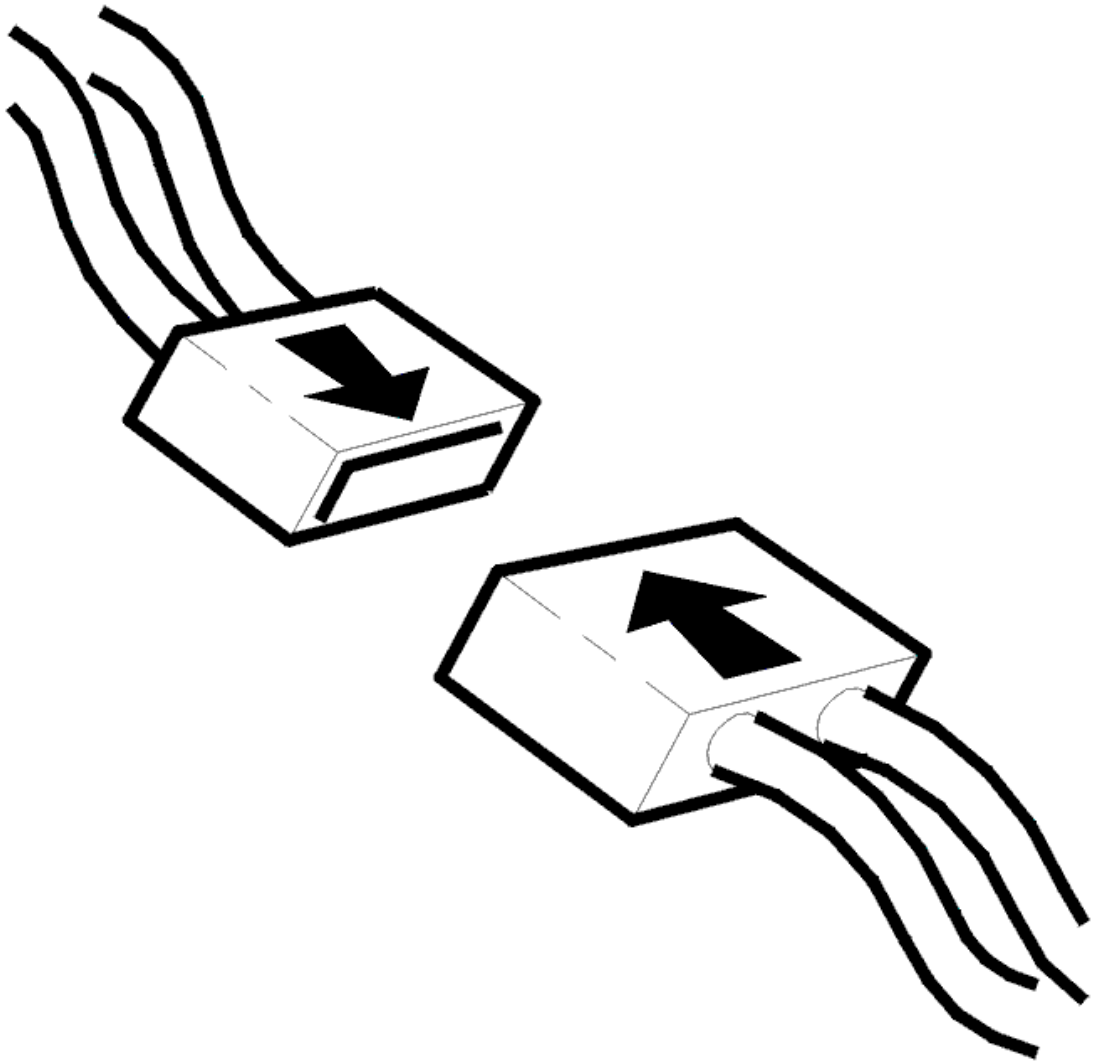

Fig. 49: Connecting Connector
Courtesy of VOLVO CARS CORPORATION

- Ignition off
- Check the ground lead between control module terminal #A60 (#A60) and engine coolant temperature (ECT) sensor terminal #2. Check for an open-circuit
- Reinstall the components, reconnect the connectors etc.

Other information

- see **CHECKING WIRING AND TERMINALS**
- see **CONNECTING THE BREAKOUT BOX**
- For B5xx4T, see **REPLACING THE THERMOSTAT AND/OR ENGINE COOLANT TEMPERATURE SENSOR**
- For B6xx4T, see **ENGINE COOLANT TEMPERATURE (ECT) SENSOR, REPLACING** .

- see **COMPONENT SPECIFICATIONS**
- For 6 cylinder engines -2004, see **SIGNAL SPECIFICATION**
- For 6 cylinder engines 2005-, see **SIGNAL SPECIFICATION** .

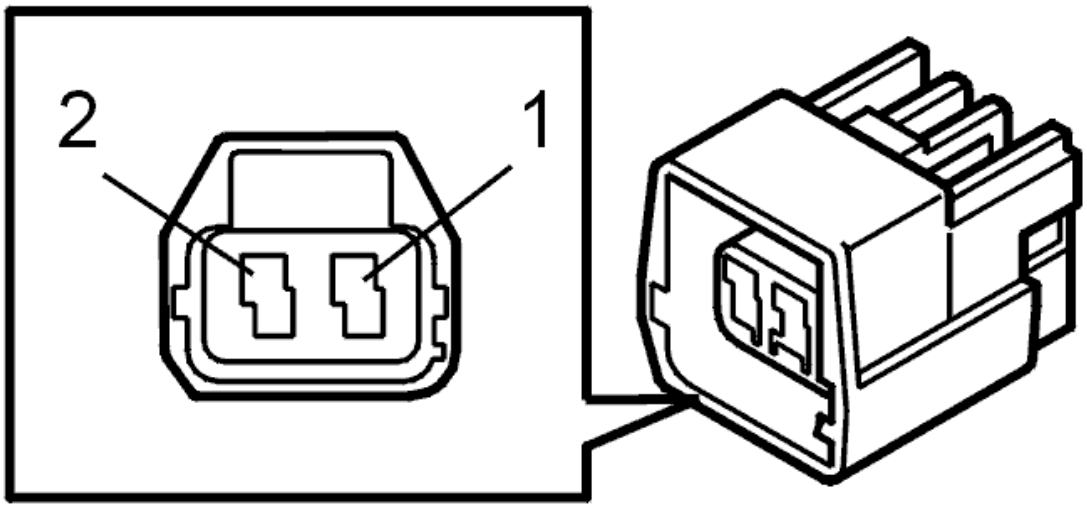

Fig. 50: Identifying Camshaft Reset Valve Connector Terminals
Courtesy of VOLVO CARS CORPORATION

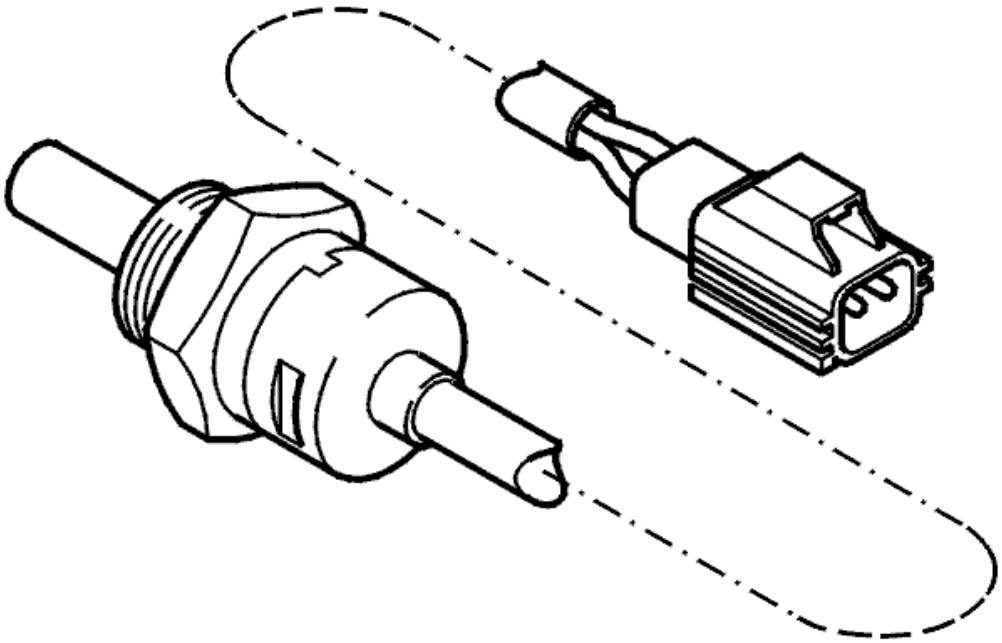

Fig. 51: Identifying Engine Coolant Temperature Sensor

Courtesy of VOLVO CARS CORPORATION

Were any faults found in the ground cable?

- **YES**

  Refer to **VERIFICATION**

- **NO**

  Refer to **CHECKING ENGINE COOLANT TEMPERATURE (ECT)**

CHECKING ENGINE COOLANT TEMPERATURE (ECT)

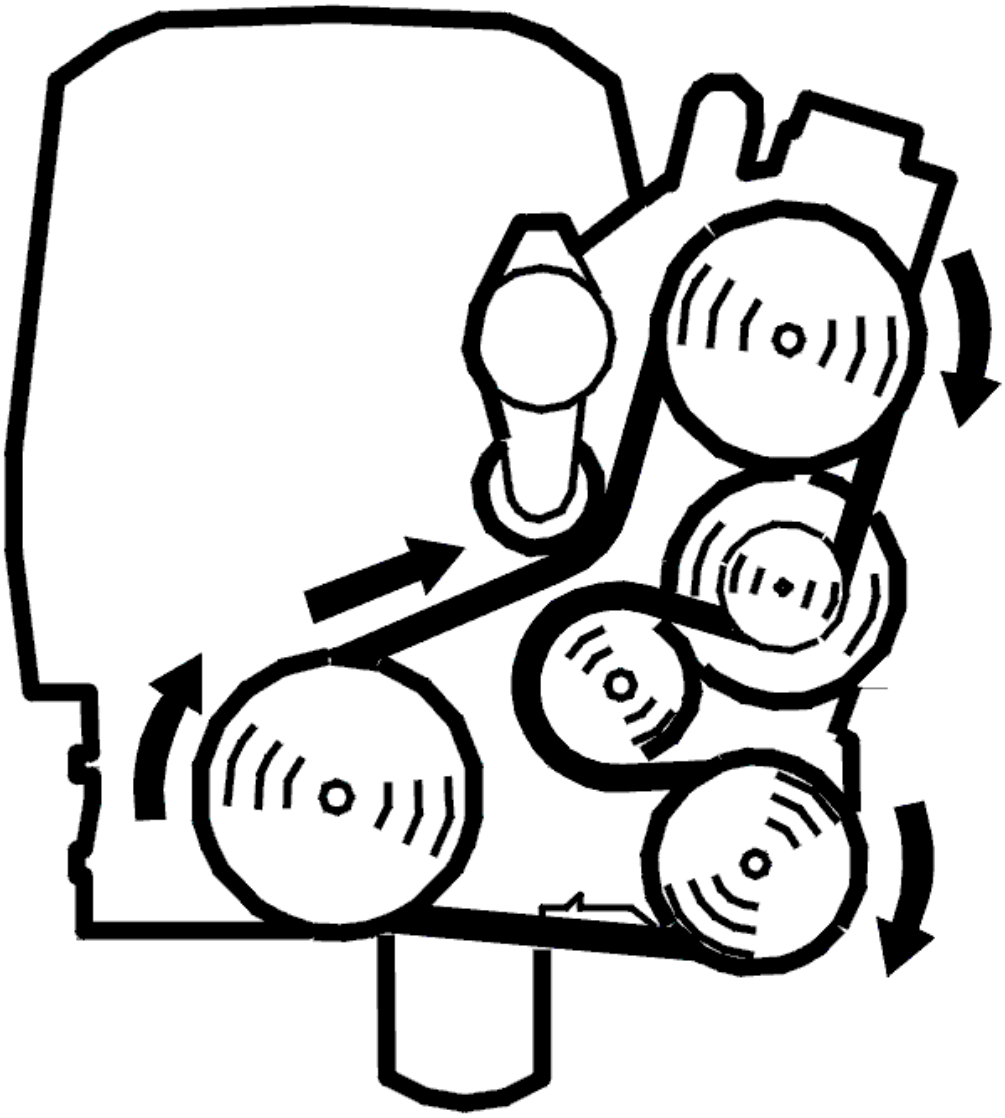

Fig. 52: Belt Routing / Engine Idling - Volvo
Courtesy of VOLVO CARS CORPORATION

- Fault-tracing must begin with the engine cold (+20°C) so that the engine coolant temperature (ECT) sensor can be tested over as wide a temperature range as possible
- Switch off the climate control system
- Start the engine.

  Read off the engine coolant temperature (ECT).

  Check that the engine coolant temperature (ECT) is within its permitted range and corresponds with the engine warming up.

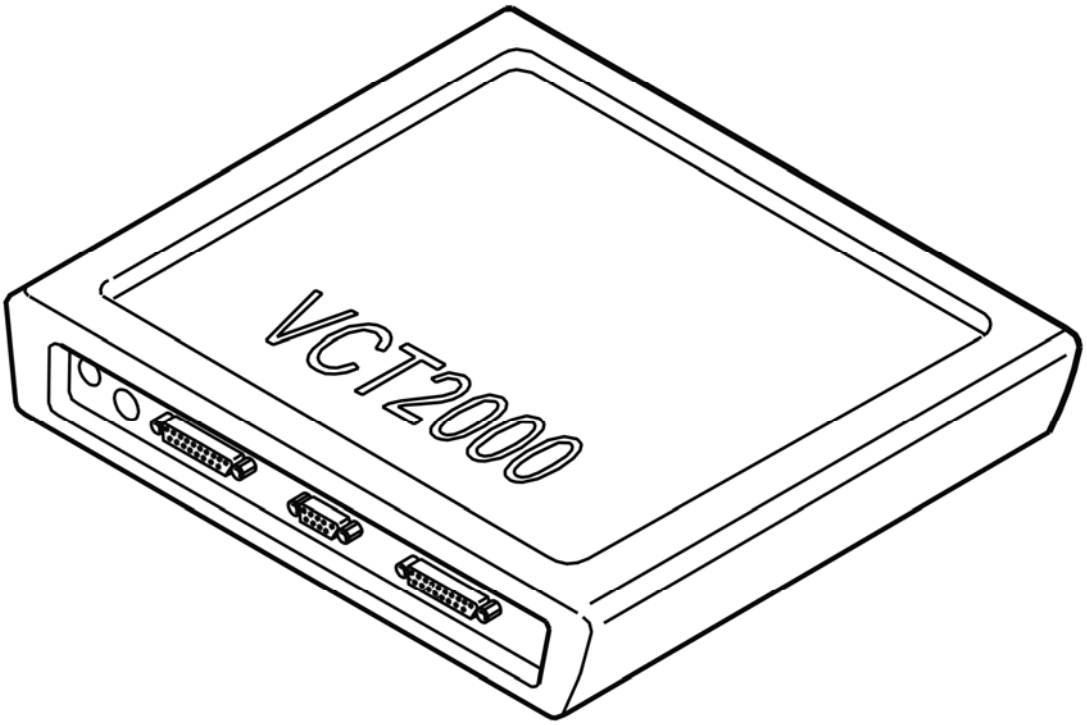

Fig. 53: Identifying VCT2000 Diagnostic Tool Symbol In VIDA
Courtesy of VOLVO CARS CORPORATION

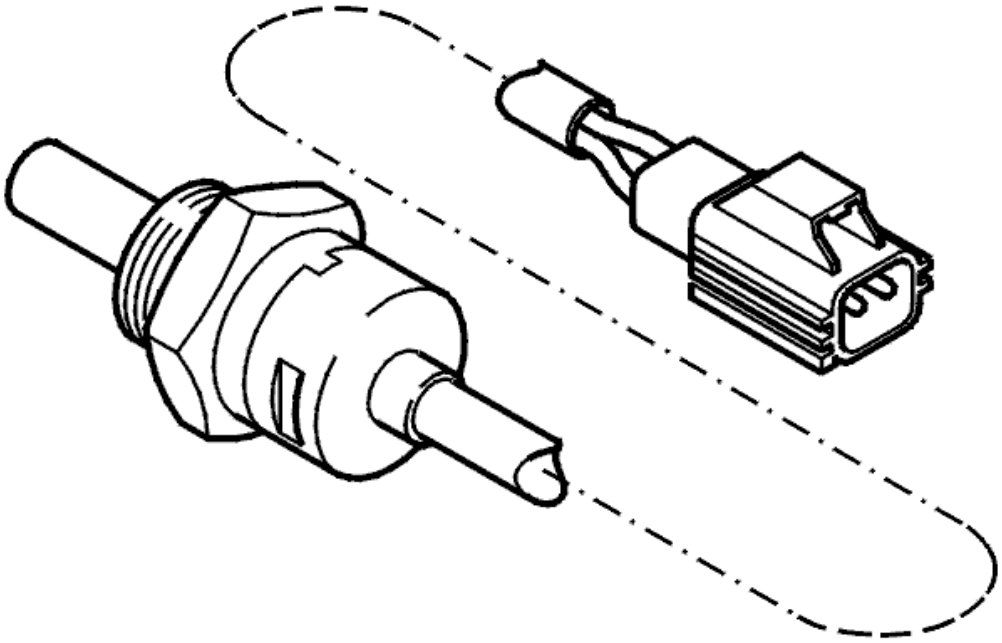

Fig. 54: Identifying Engine Coolant Temperature Sensor
Courtesy of VOLVO CARS CORPORATION

Is the temperature within its permitted range?

- **YES**

  Refer to **CHECKING THERMOSTAT**

- **NO**

  Refer to **REPLACING THE COMPONENT**

CHECKING THERMOSTAT

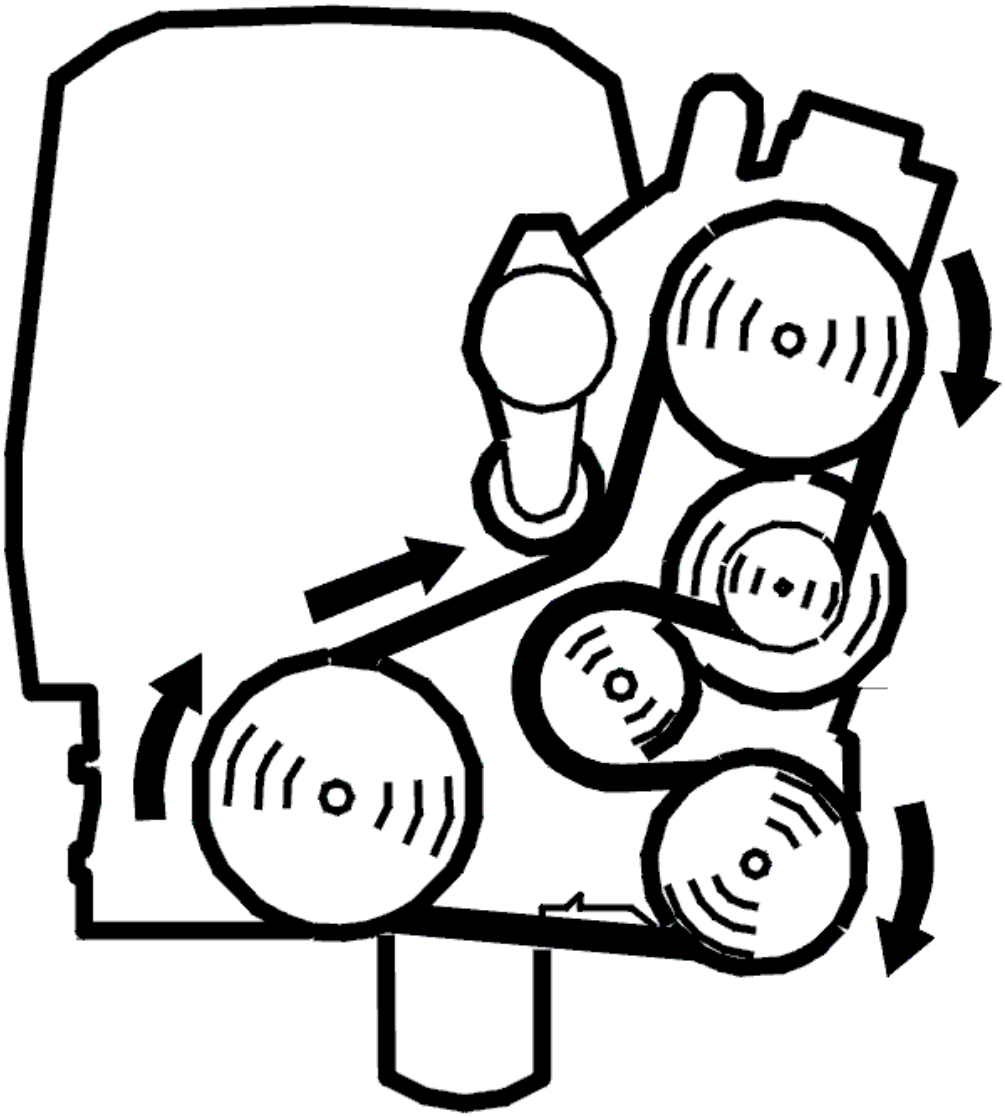

Fig. 55: Belt Routing / Engine Idling - Volvo
Courtesy of VOLVO CARS CORPORATION

- Start the engine. Run the engine until the engine coolant temperature (ECT) reaches approximately 100 ° C
- Activate the engine cooling fan (FC) with the engine running
- Wait for approximately 90 seconds. Then switch off the engine cooling fan (FC).

  Read off the engine coolant temperature (ECT). If the temperature is 85 °C or lower when the fan stops, the thermostat is damaged.

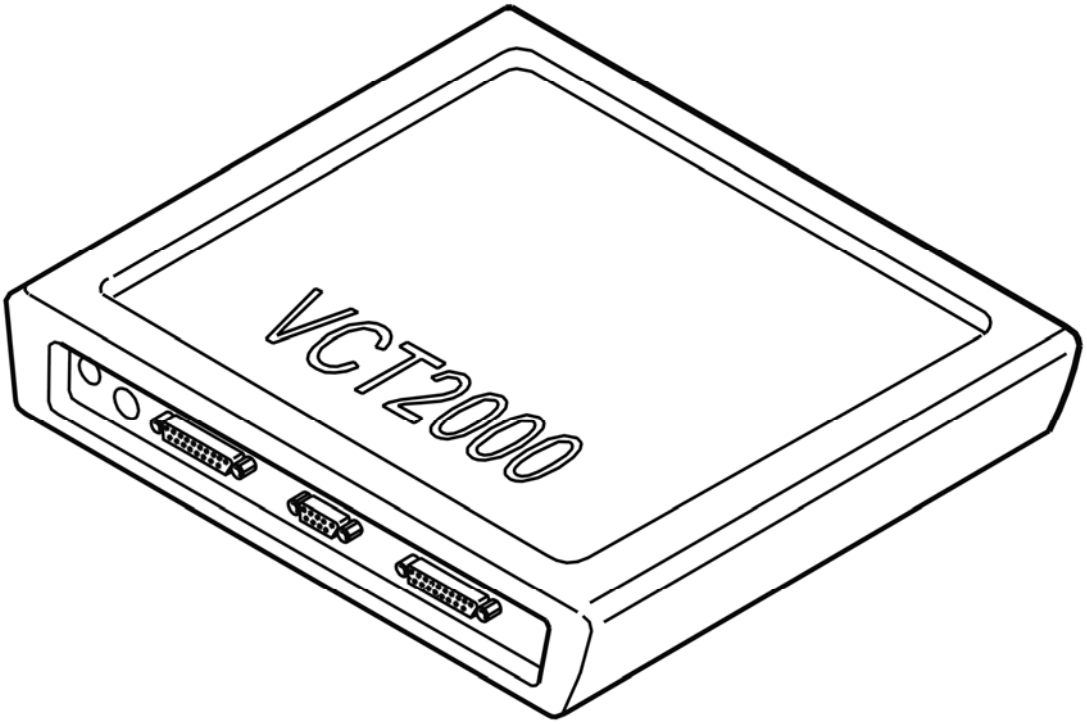

Fig. 56: Identifying VCT2000 Diagnostic Tool Symbol In VIDA
Courtesy of VOLVO CARS CORPORATION

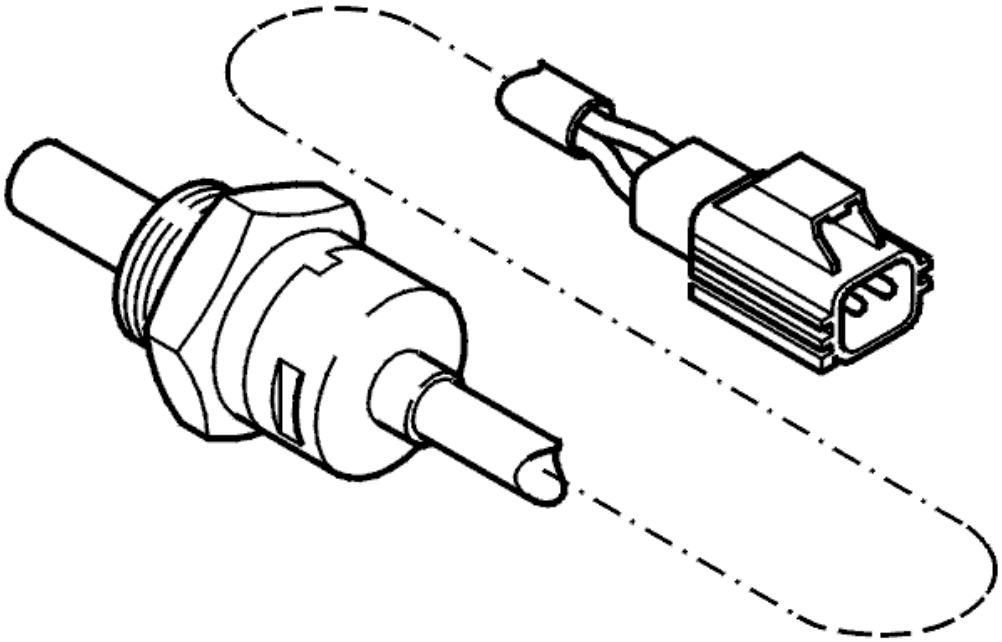

Fig. 57: Identifying Engine Coolant Temperature Sensor
Courtesy of VOLVO CARS CORPORATION

Is the temperature lower than 86 °C?

- **YES**

  Refer to **REPLACING THE COMPONENT**

- **NO**

  FAULT TRACING FAILED: The fault should have been detected and remedied. As this is not the case fault-tracing has failed. Exit fault-tracing for this diagnostic trouble code (DTC) or make another attempt.

REPLACING THE COMPONENT

Try a new thermostat:

- For B5xx4Tx -2004, see **REPLACING THE THERMOSTAT AND/OR ENGINE COOLANT TEMPERATURE SENSOR**
- For B6xx4T, see **THERMOSTAT, REPLACING** .

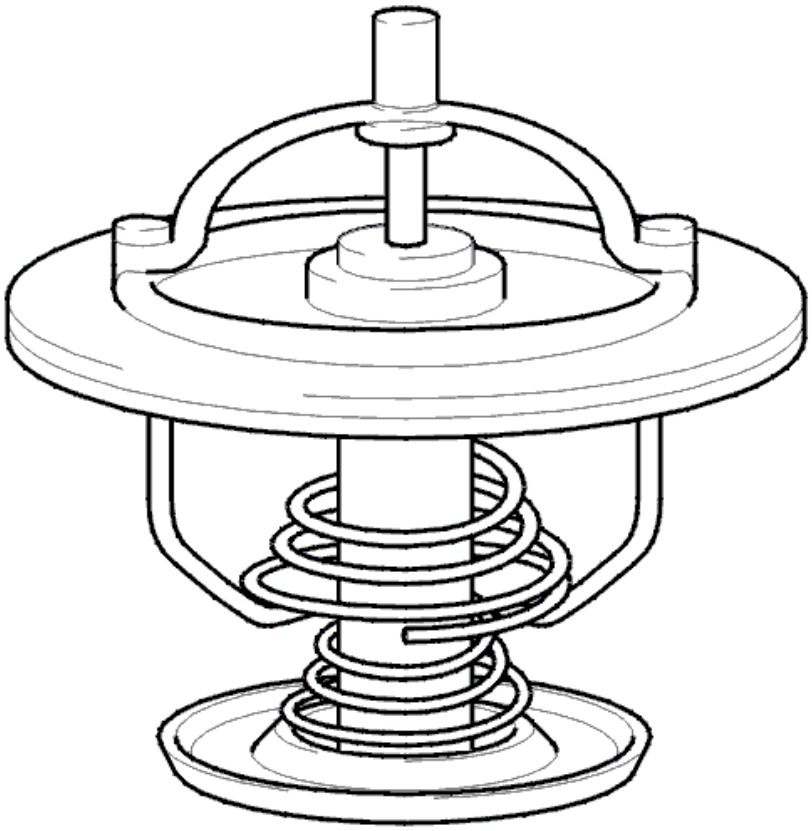

Fig. 58: Checking Thermostat
Courtesy of VOLVO CARS CORPORATION

REPLACING THE COMPONENT

Try a new engine coolant temperature (ECT) sensor:

- For B5xx4T, see **REPLACING THE THERMOSTAT AND/OR ENGINE COOLANT TEMPERATURE SENSOR**
- For B6xx4T, see **ENGINE COOLANT TEMPERATURE (ECT) SENSOR, REPLACING** .

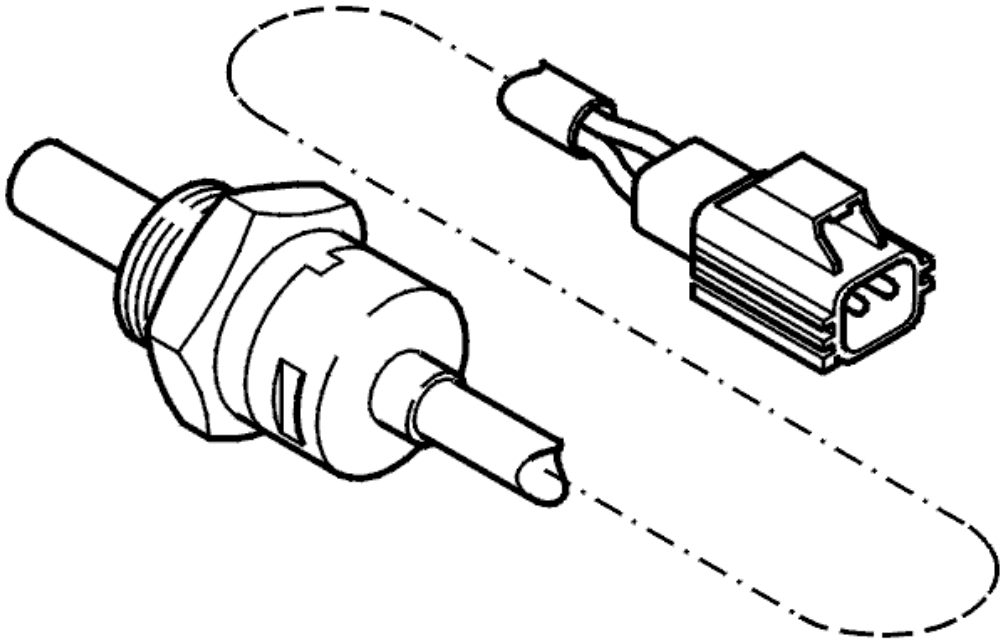

Fig. 59: Identifying Engine Coolant Temperature Sensor
Courtesy of VOLVO CARS CORPORATION

- **Continue**

  Refer to **VERIFICATION**

VERIFICATION

VERIFICATION

HINT: After carrying out the repair, check that the fault has been remedied.

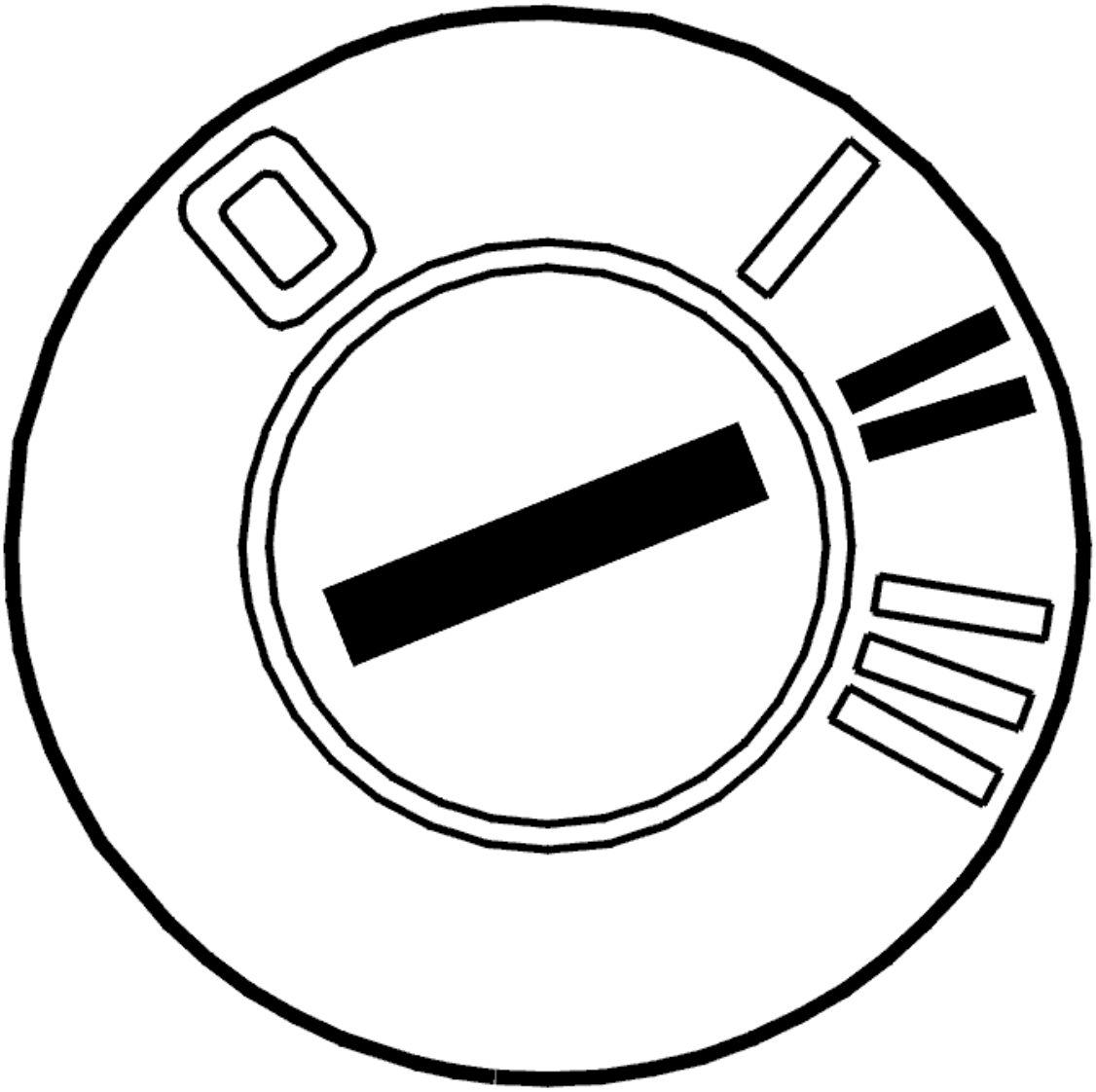

Fig. 60: Identifying Ignition ON
Courtesy of VOLVO CARS CORPORATION

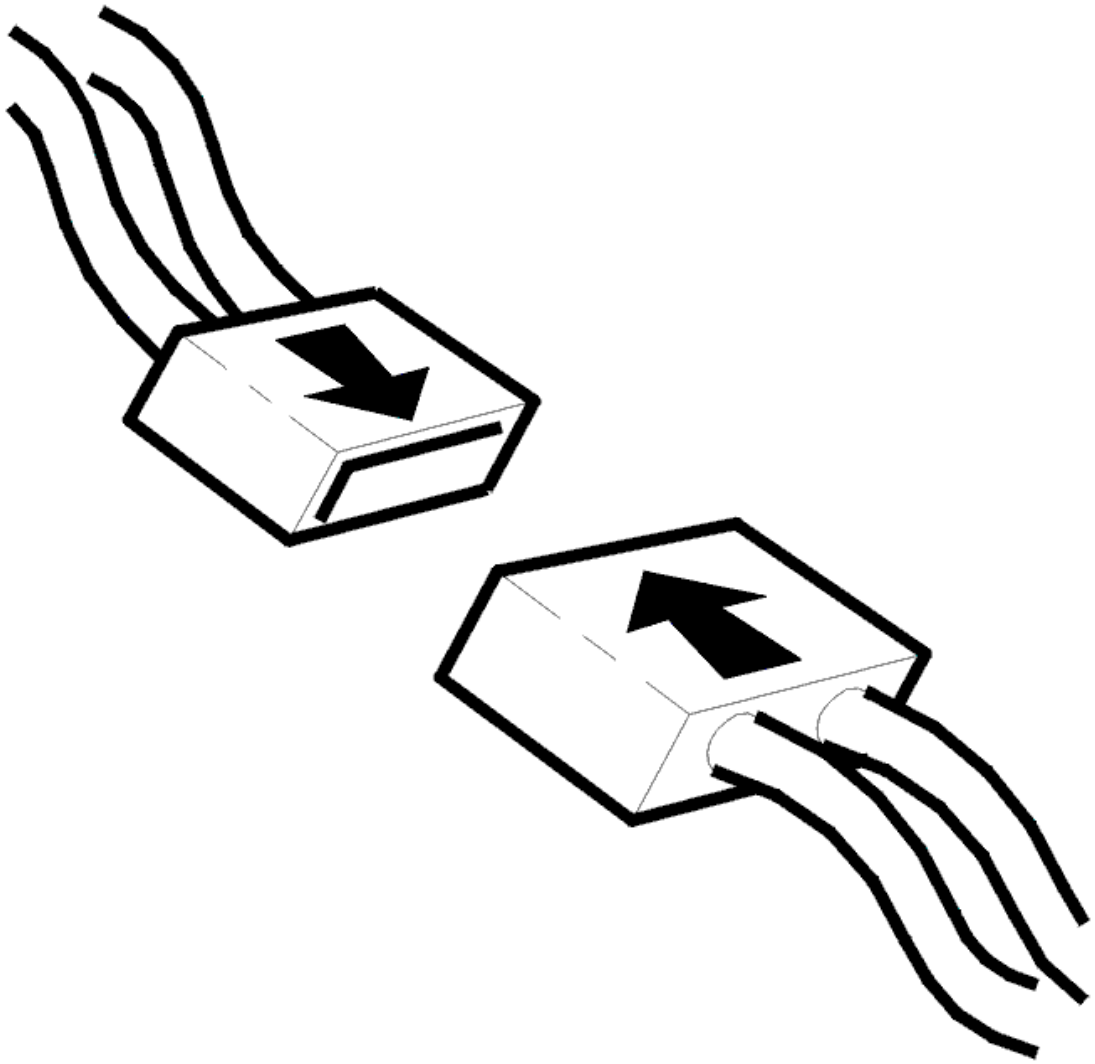

Fig. 61: Connecting Connector
Courtesy of VOLVO CARS CORPORATION

- Ignition off
- Reconnect the connectors, reinstall components etc.
- Ignition on
- Read off the engine coolant temperature (ECT) sensor.

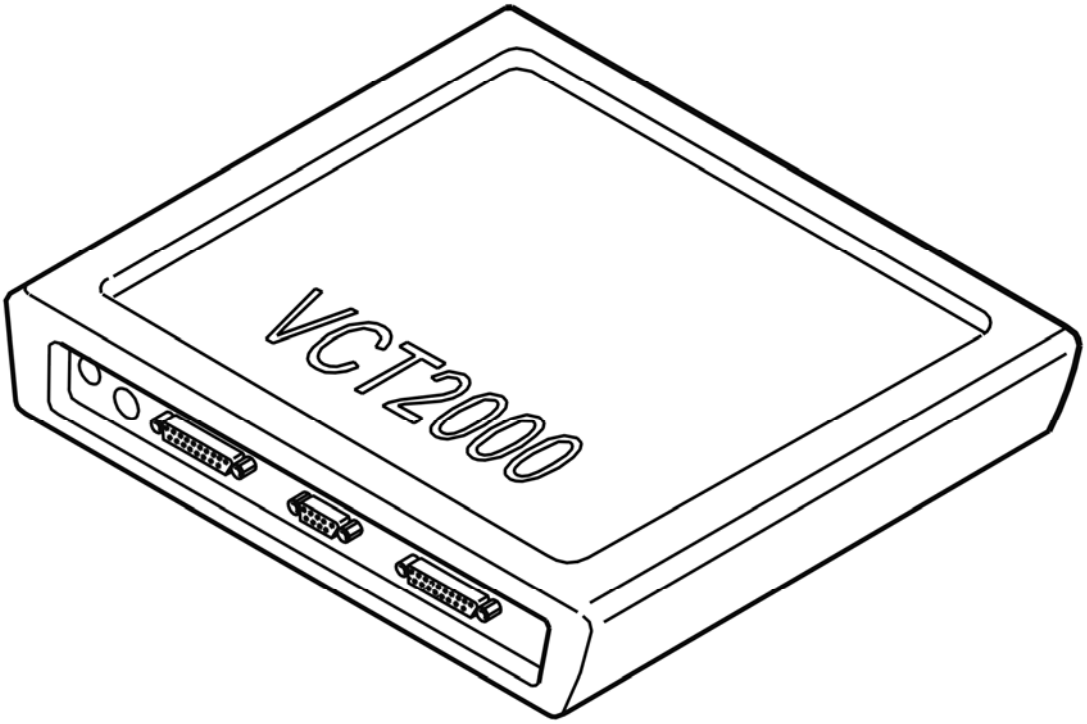

Fig. 62: Identifying VCT2000 Diagnostic Tool Symbol In VIDA
Courtesy of VOLVO CARS CORPORATION

Is the temperature within its permitted range?

- **YES**

  VERIFIED: Troubleshooting has been completed.

- **NO**

  Refer to **INFORMATION**

INFORMATION

FAULT-TRACING INFORMATION

The fault should have been detected and remedied. As this is not the case fault-tracing has failed.

Exit fault-tracing for this diagnostic trouble code (DTC) or make another attempt.

ECM-273C: ENGINE COOLANT TEMPERATURE (ECT) SENSOR. SIGNAL TOO HIGH (B5254T2; 2005)

DIAGNOSTIC TROUBLE CODE (DTC) INFORMATION ECM-273C

Condition

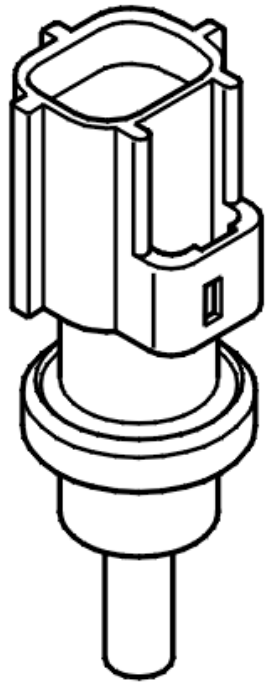

Fig. 63: Identifying Engine Coolant Temperature (ECT) Sensor
Courtesy of VOLVO CARS CORPORATION

The engine control module (ECM) checks the signal for engine coolant temperature (ECT).

A diagnostic trouble code (DTC) is stored if the engine control module (ECM) receives a signal from the engine coolant temperature (ECT) sensor corresponding to a temperature that is higher than a certain value.

The diagnostic trouble code (DTC) can be diagnosed when the ignition is switched on.

Substitute Value

- Initial boost pressure
- The engine coolant temperature (ECT) is calculated based on a model. Three-way catalytic converter (TWC) heating and fuel trim at start (starting trim), idle diagnostic and misfire diagnostic are disabled
- The engine cooling fan (FC) runs at a predefined speed.

Possible Source

- Short-circuit to ground in the signal cable
- Damaged temperature sensor.

Fault symptom[s]

- Malfunction indicator lamp (MIL) lit
- The engine is difficult to start.

SIGNAL TOO HIGH

CHECKING THE WIRING AND COMPONENT

WARNING: Before fault-tracing can begin, the engine cooling fan (FC) connector must be disconnected to prevent the engine cooling fan (FC) engaging. A diagnostic trouble code (DTC) for engine cooling fan (FC) low-speed may be stored. After fault-tracing the connector must be reconnected.

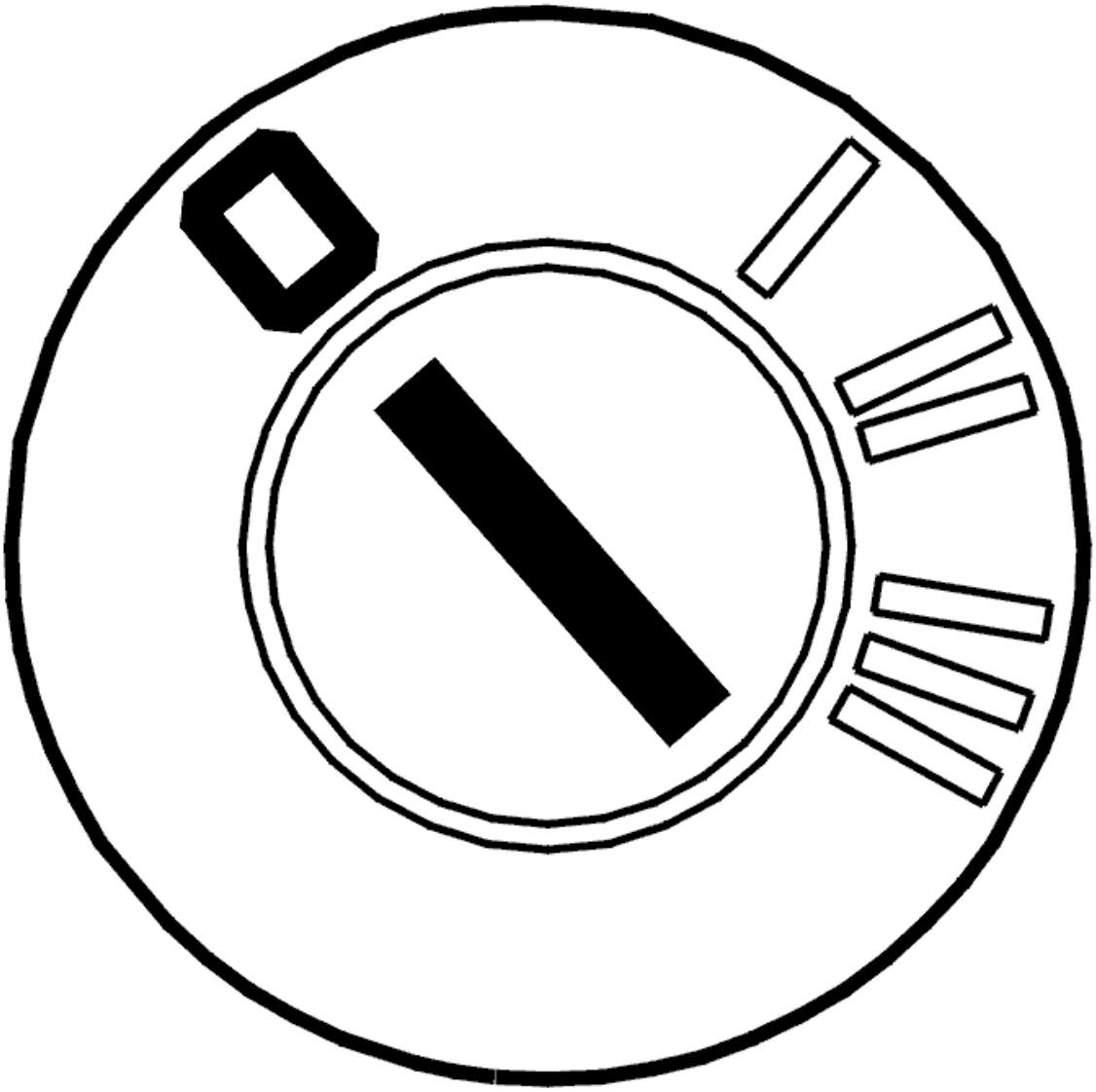

Fig. 64: Identifying Ignition OFF
Courtesy of VOLVO CARS CORPORATION

- Ignition off.

  Check the resistance of the engine coolant temperature (ECT) sensor. Take readings between terminals #1 and #2 on the component.

  Check the signal cable between engine control module (ECM) terminal #A4 (#A4) and engine coolant temperature (ECT) sensor terminal #1. Check for a short-circuit to ground.

  If no faults are found and the fault is permanent, replace the engine coolant temperature (ECT) sensor.

  Remedy as necessary.

  Other information

- see **CONNECTING THE BREAKOUT BOX**
- For 5 cylinder turbocharged engines -2004, see **SIGNAL DESCRIPTION**
- For 5 cylinder turbocharged engines 2005-, see **SIGNAL SPECIFICATION** .
- For B5xx4T, see **REPLACING THE THERMOSTAT AND/OR ENGINE COOLANT TEMPERATURE SENSOR**
- For B6xx4T, see **ENGINE COOLANT TEMPERATURE (ECT) SENSOR, REPLACING** .
- see **CHECKING WIRING AND TERMINALS**

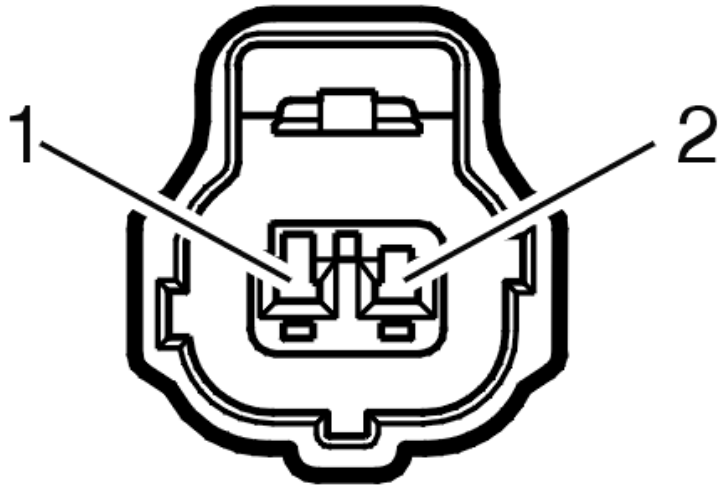

Fig. 65: Identifying 2-Bit Connector
Courtesy of VOLVO CARS CORPORATION

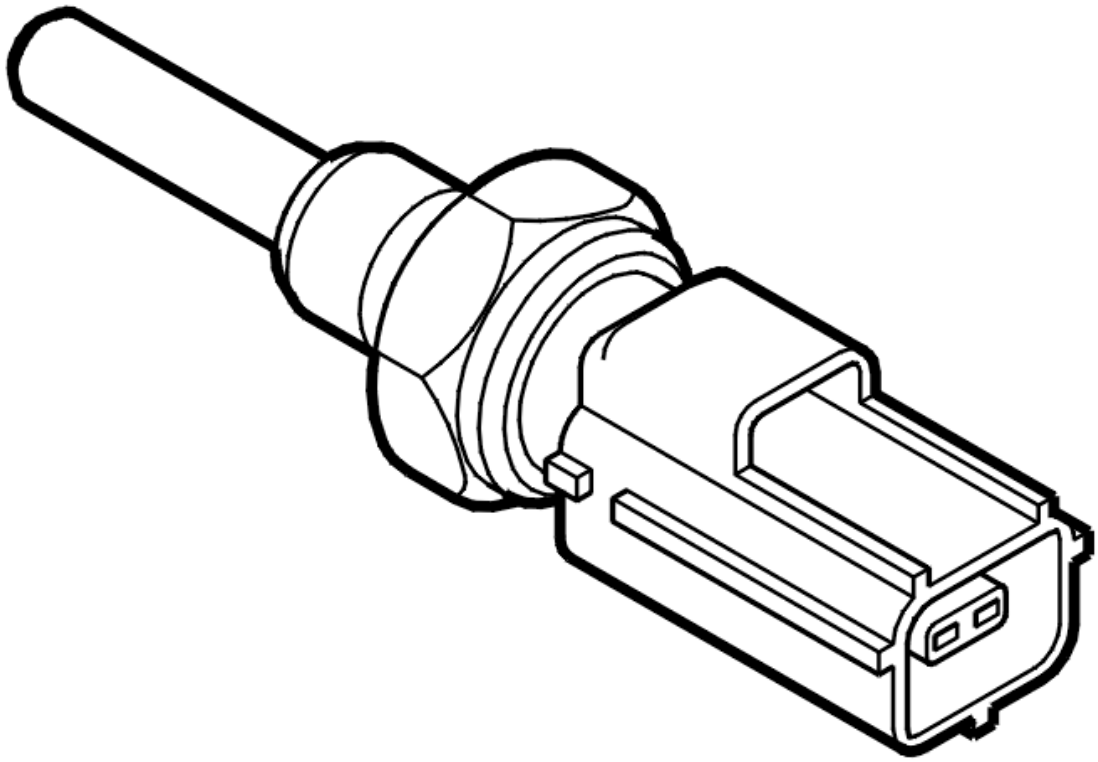

Fig. 66: Identifying 2-Bit Connector Side View
Courtesy of VOLVO CARS CORPORATION

- **Continue**

  Refer to **VERIFICATION**

VERIFICATION

VERIFICATION

HINT: After carrying out the repair, check that the fault has been remedied.

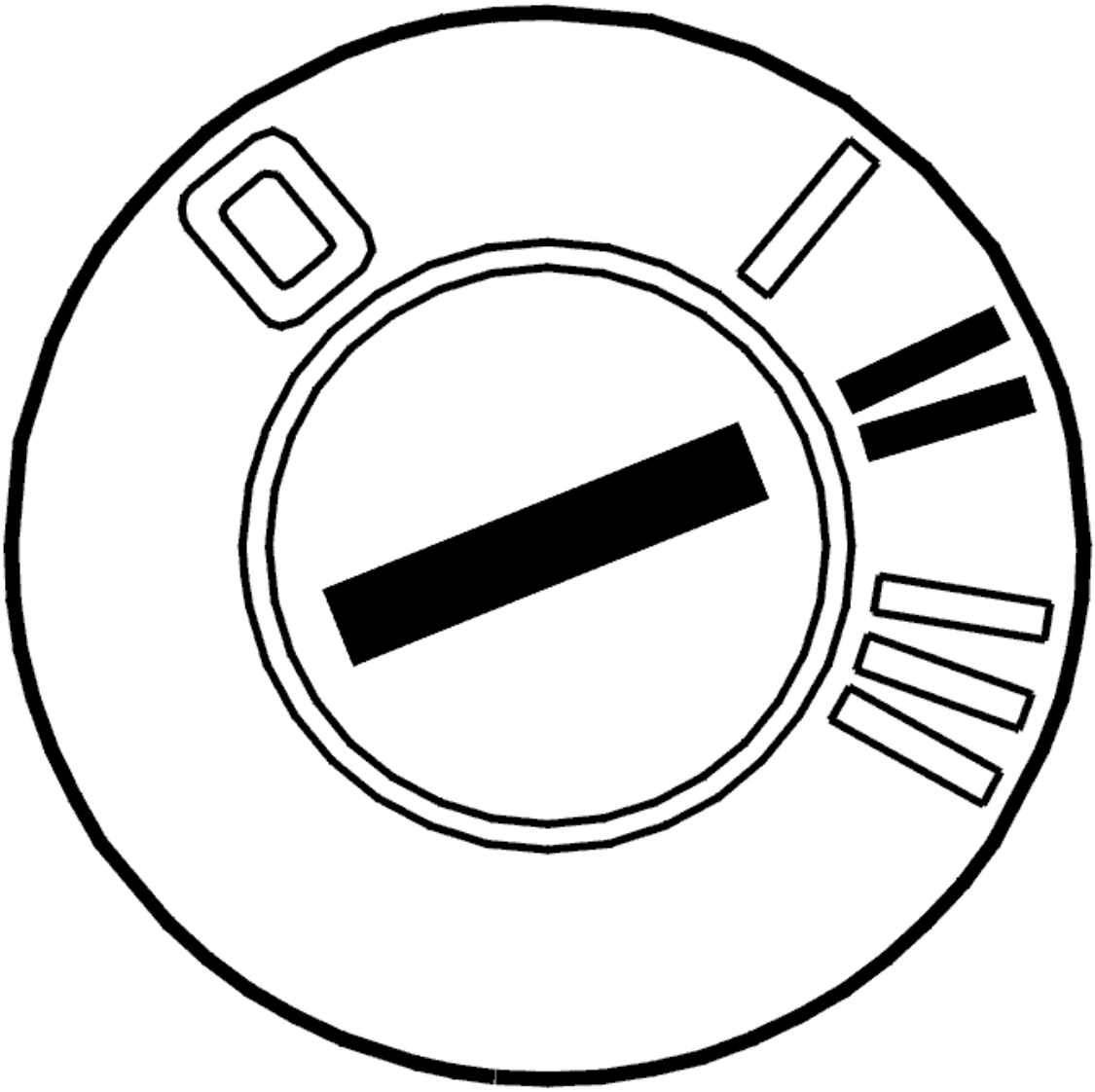

Fig. 67: Identifying Ignition ON
Courtesy of VOLVO CARS CORPORATION

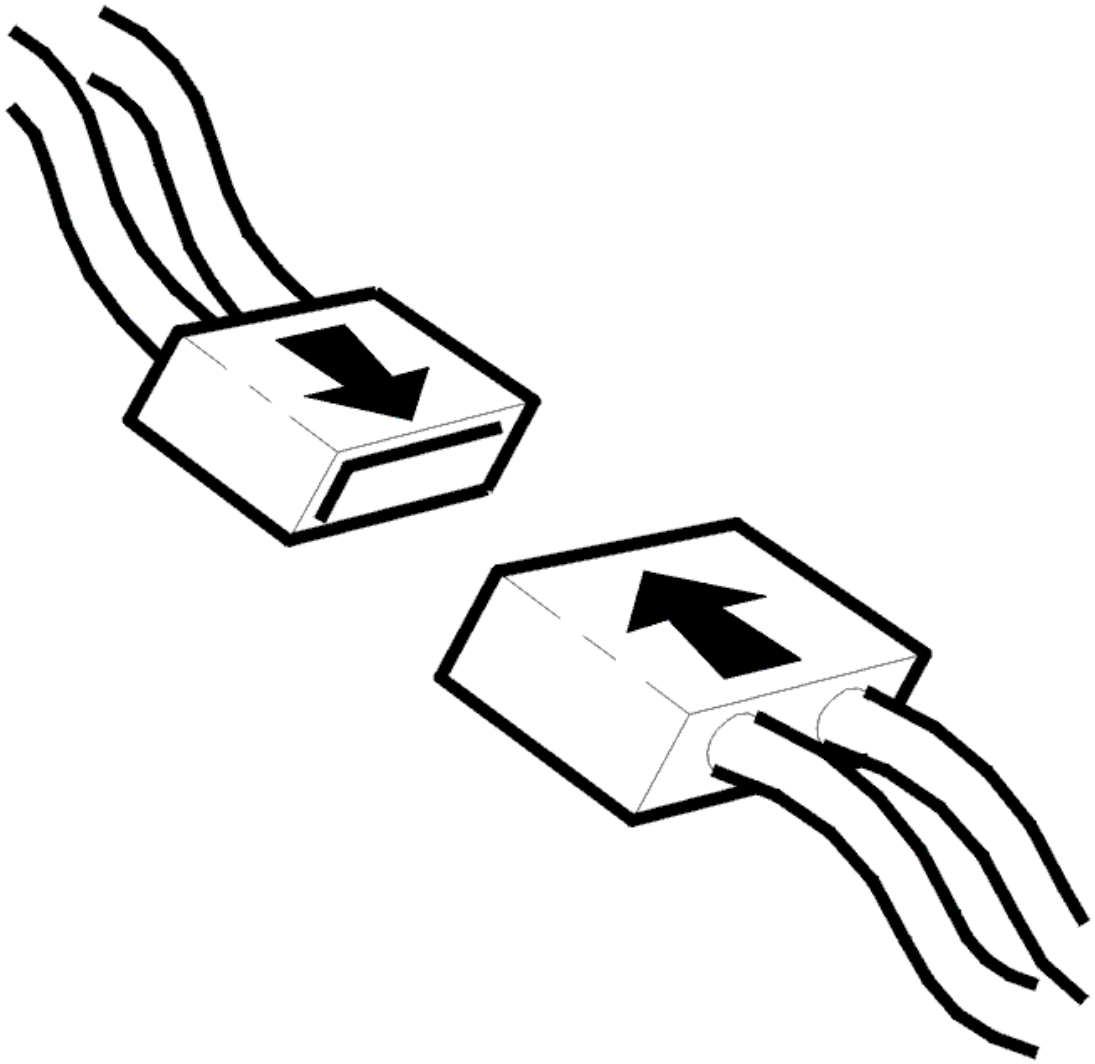

Fig. 68: Connecting Connector
Courtesy of VOLVO CARS CORPORATION

- Ignition off
- Reconnect the connectors, reinstall components etc.
- Ignition on
- Read off the engine coolant temperature (ECT) sensor.

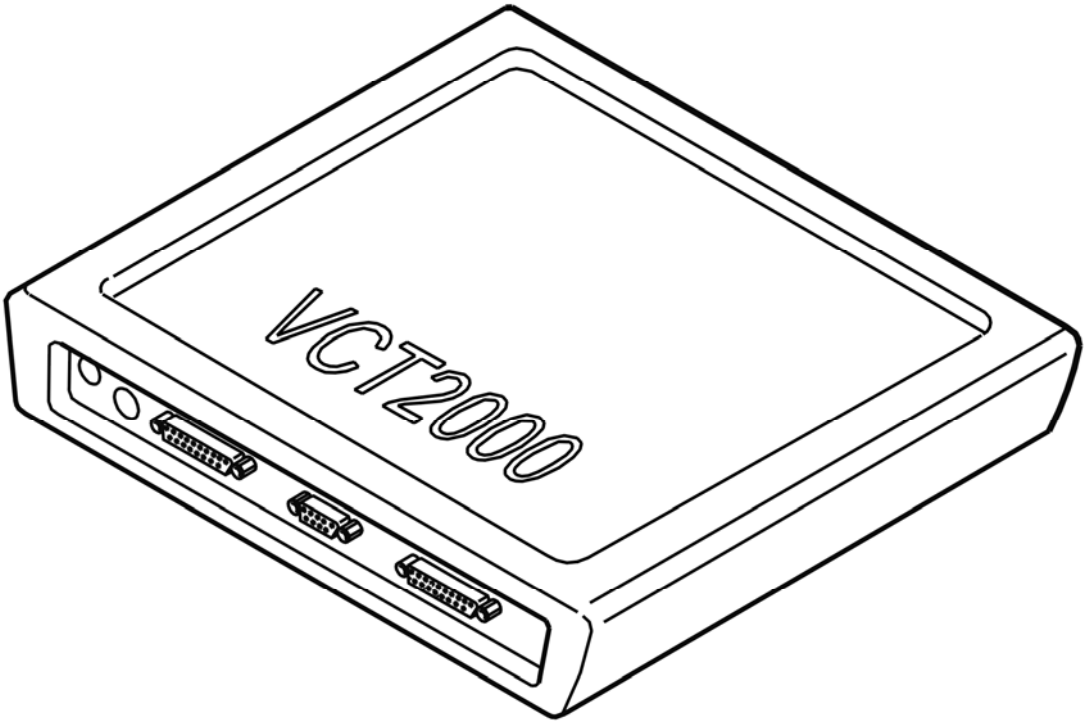

Fig. 69: Identifying VCT2000 Diagnostic Tool Symbol In VIDA
Courtesy of VOLVO CARS CORPORATION

Is the temperature within its permitted range?

- **YES**

  VERIFIED: Troubleshooting has been completed.

- **NO**

  Refer to **INFORMATION**

INFORMATION

FAULT-TRACING INFORMATION

The fault should have been detected and remedied. As this is not the case fault-tracing has failed.

Exit fault-tracing for this diagnostic trouble code (DTC) or make another attempt.

ECM-273C: ENGINE COOLANT TEMPERATURE (ECT) SENSOR. SIGNAL TOO HIGH (B5254T2; 2007)

DIAGNOSTIC TROUBLE CODE (DTC) INFORMATION ECM-273C

Condition

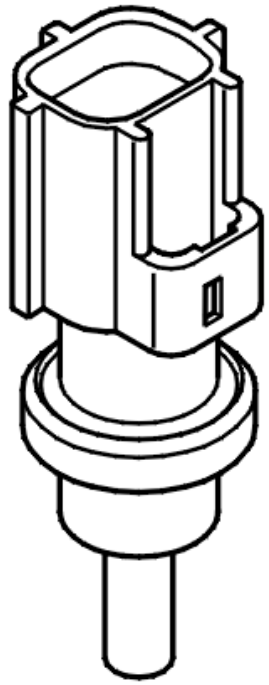

Fig. 70: Identifying Engine Coolant Temperature (ECT) Sensor
Courtesy of VOLVO CARS CORPORATION

The engine control module (ECM) checks the signal for engine coolant temperature (ECT).

A diagnostic trouble code (DTC) is stored if the engine control module (ECM) receives a signal from the engine coolant temperature (ECT) sensor corresponding to a temperature that is higher than a certain value.

The diagnostic trouble code (DTC) can be diagnosed when the ignition is switched on.

Substitute Value

- Initial boost pressure
- The engine coolant temperature (ECT) is calculated based on a model. Three-way catalytic converter (TWC) heating and fuel trim at start (starting trim), idle diagnostic and misfire diagnostic are disabled
- The engine cooling fan (FC) runs at a predefined speed.

Possible Source

- Short-circuit to ground in the signal cable
- Damaged temperature sensor.

Fault symptom[s]

- Malfunction indicator lamp (MIL) lit
- The engine is difficult to start.

SIGNAL TOO HIGH

CHECKING THE COMPONENT AND WIRING

WARNING: The engine cooling fan (FC) can also operate if the ignition is switched off when this diagnostic trouble code (DTC) is stored.

HINT: To avoid injury, disconnect the power supply to the engine cooling fan (FC) during fault-tracing.

Check the resistance of the engine coolant temperature (ECT) sensor. Take readings between terminals #1 and #2 on the engine coolant temperature (ECT) sensor.

Check the signal cable. Check for a short-circuit to ground.

Take readings between:

- Engine Control Module (ECM) #A42 (#A42) and engine temperature sensor #1.

Remedy as necessary.

Other information:

- see **CONNECTING THE BREAKOUT BOX**
- see **SIGNAL SPECIFICATION** (Engine Control Module (ECM))
- see **SIGNAL SPECIFICATION** (Engine Management System)
- see **THERMOSTAT / TEMPERATURE SENSOR, ENGINE COOLANT, REPLACING**
- see **CHECKING WIRING AND TERMINALS**

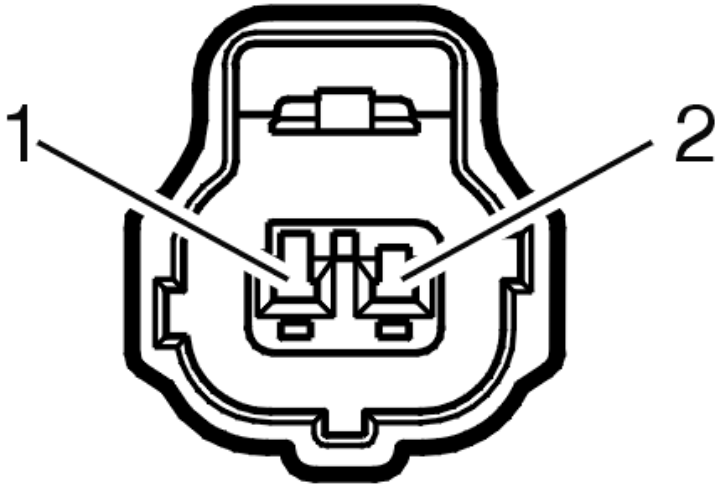

Fig. 71: Identifying 2-Bit Connector
Courtesy of VOLVO CARS CORPORATION

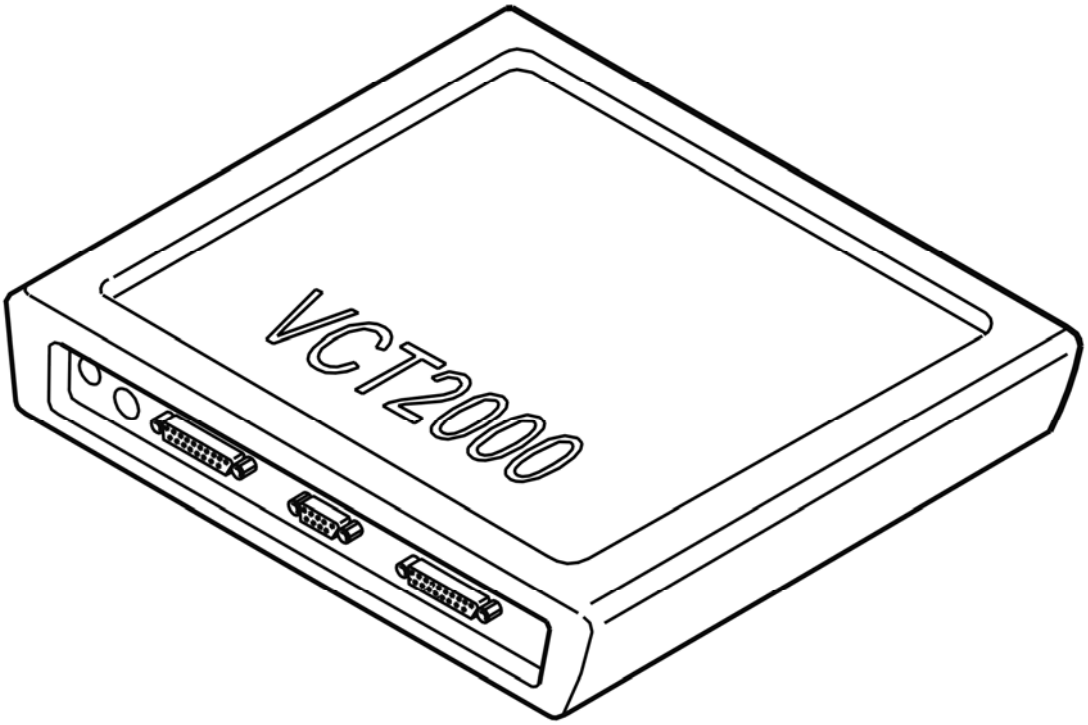

Fig. 72: Identifying VCT2000 Diagnostic Tool Symbol In VIDA
Courtesy of VOLVO CARS CORPORATION

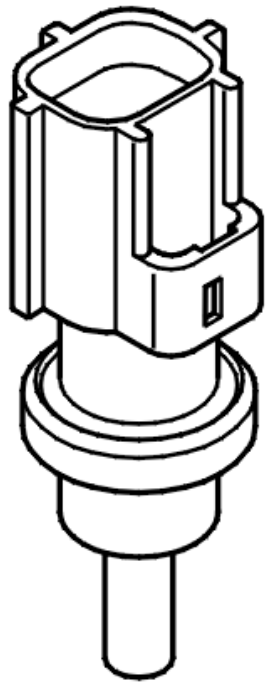

Fig. 73: Identifying Engine Coolant Temperature (ECT) Sensor
Courtesy of VOLVO CARS CORPORATION

- **Continue**

  Refer to **VERIFICATION**

VERIFICATION

VERIFICATION

HINT: After carrying out the repair, check that the fault has been remedied.

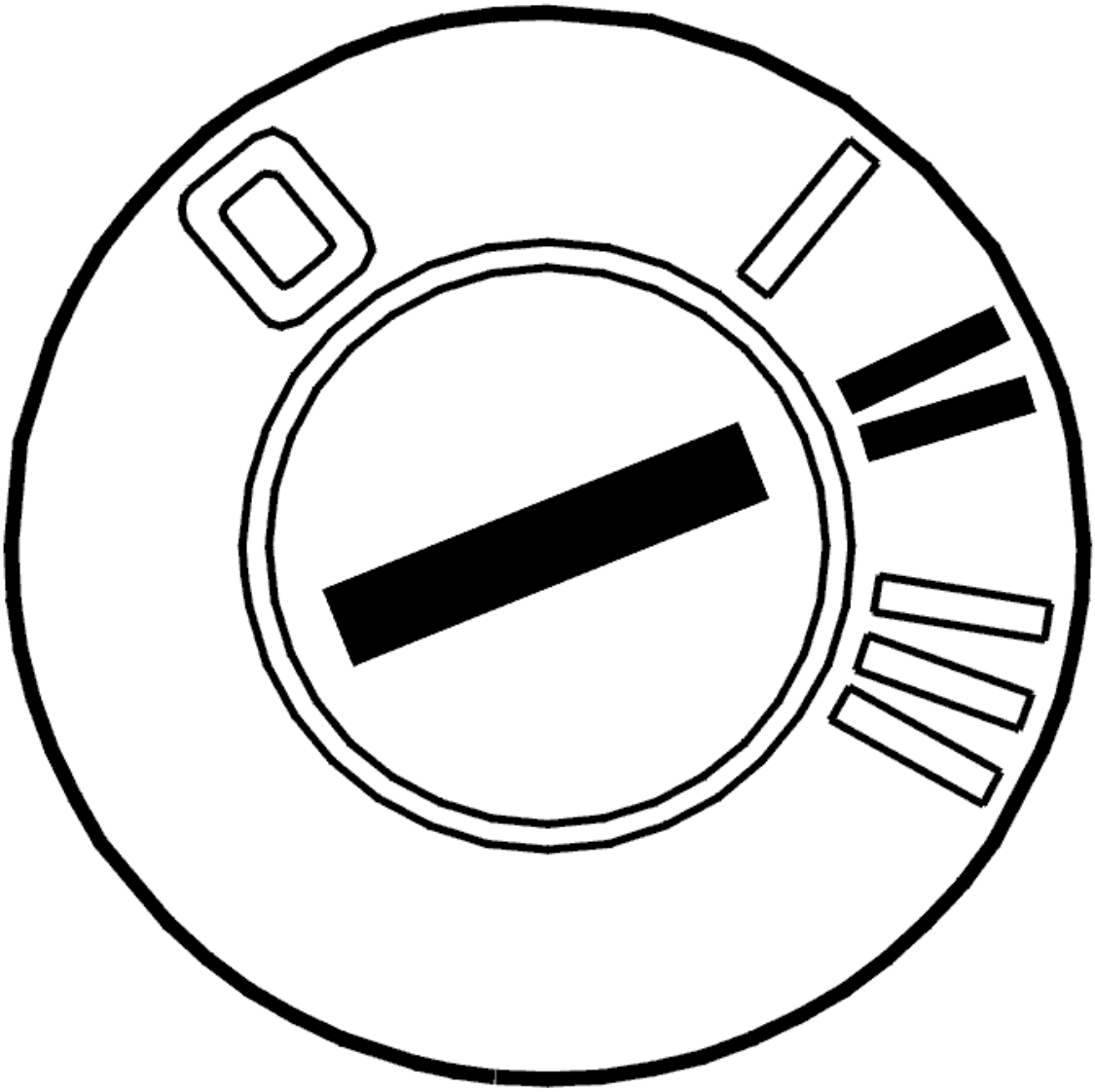

Fig. 74: Identifying Ignition ON
Courtesy of VOLVO CARS CORPORATION

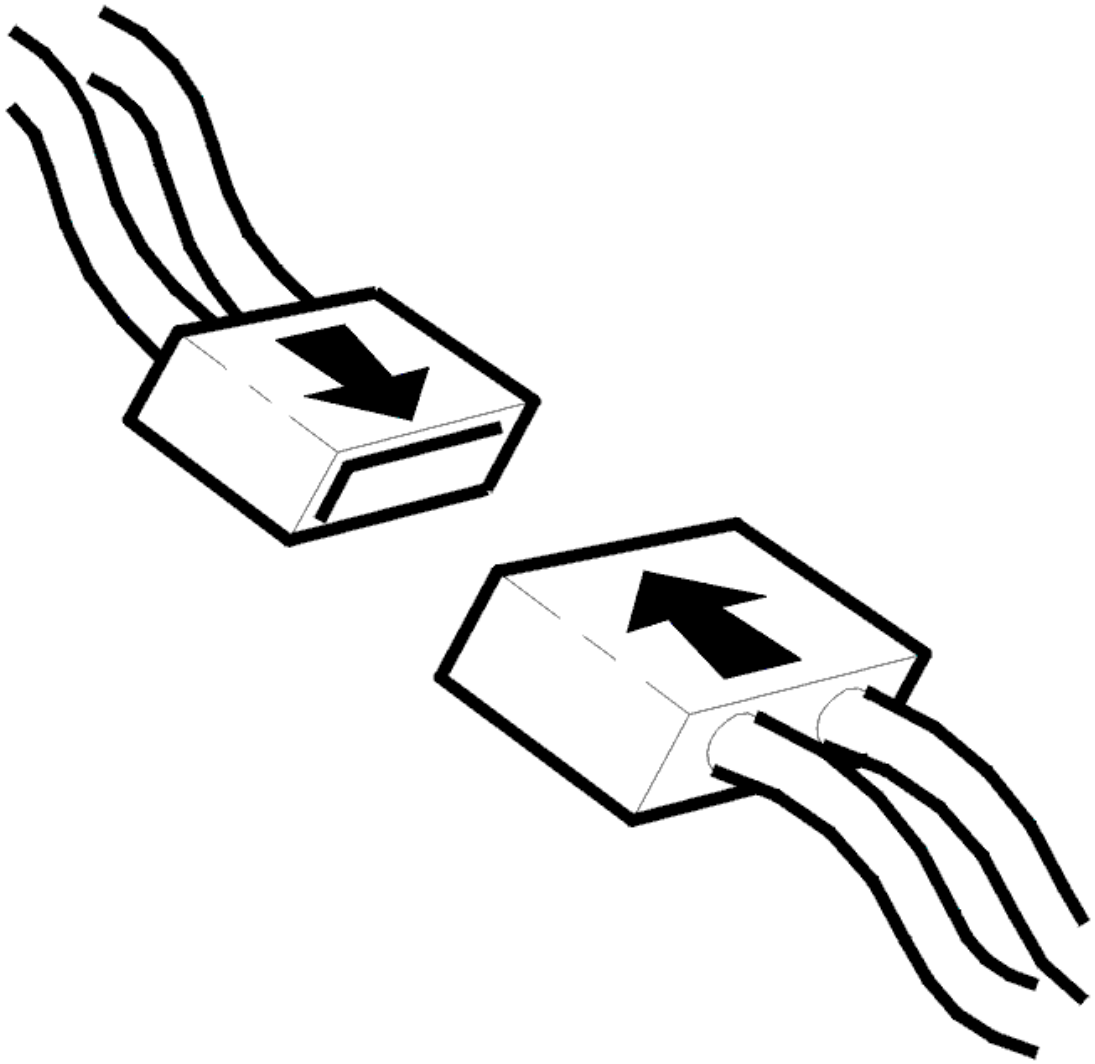

Fig. 75: Connecting Connector
Courtesy of VOLVO CARS CORPORATION

- Verification should begin with a cold engine (+20 °C) so that the engine coolant temperature (ECT) sensor can be tested over as wide a temperature range as possible
- Ignition off
- Reconnect the connectors, reinstall components etc.
- Start the engine.

  Read off the engine coolant temperature (ECT) sensor signal.

  Check that the engine coolant temperature (ECT) is within its permitted range and corresponds with the engine warming up.

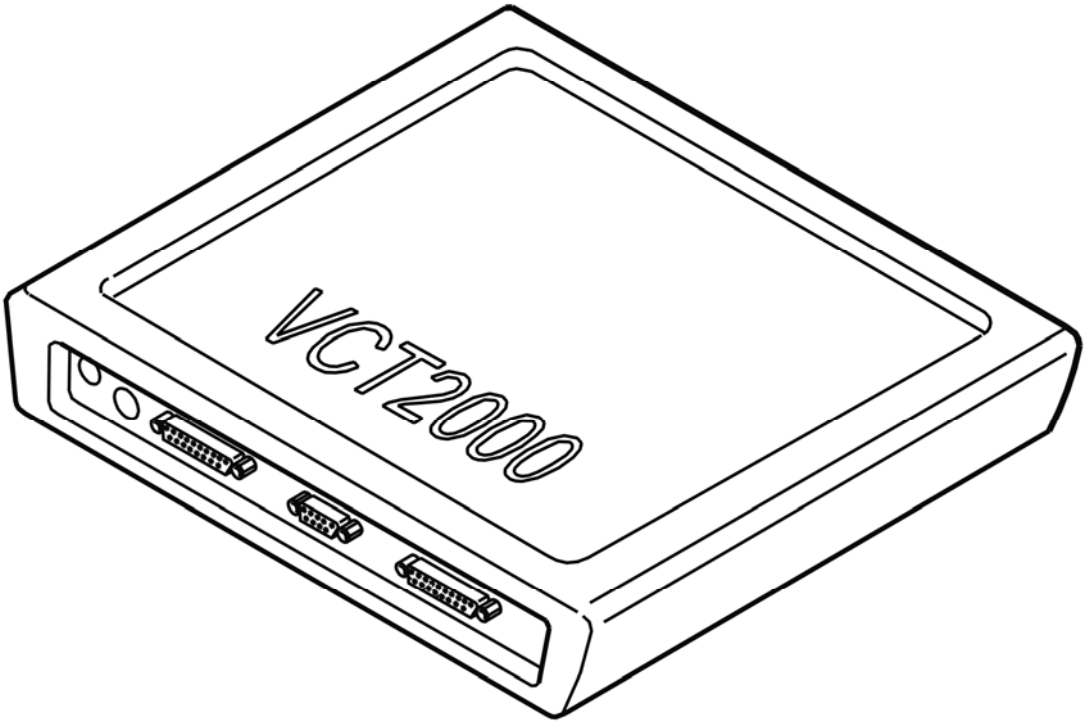

Fig. 76: Identifying VCT2000 Diagnostic Tool Symbol In VIDA
Courtesy of VOLVO CARS CORPORATION

Is the temperature within its permitted range?

- **YES**

  VERIFIED: Troubleshooting has been completed.

- **NO**

  Refer to **INFORMATION**

INFORMATION

FAULT-TRACING INFORMATION

The fault should have been detected and remedied. As this is not the case fault-tracing has failed.

Exit fault-tracing for this diagnostic trouble code (DTC) or make another attempt.

ECM-273C: ENGINE COOLANT TEMPERATURE (ECT) SENSOR. SIGNAL TOO HIGH (B6294T; 2005)

DIAGNOSTIC TROUBLE CODE (DTC) INFORMATION ECM-273C

Condition

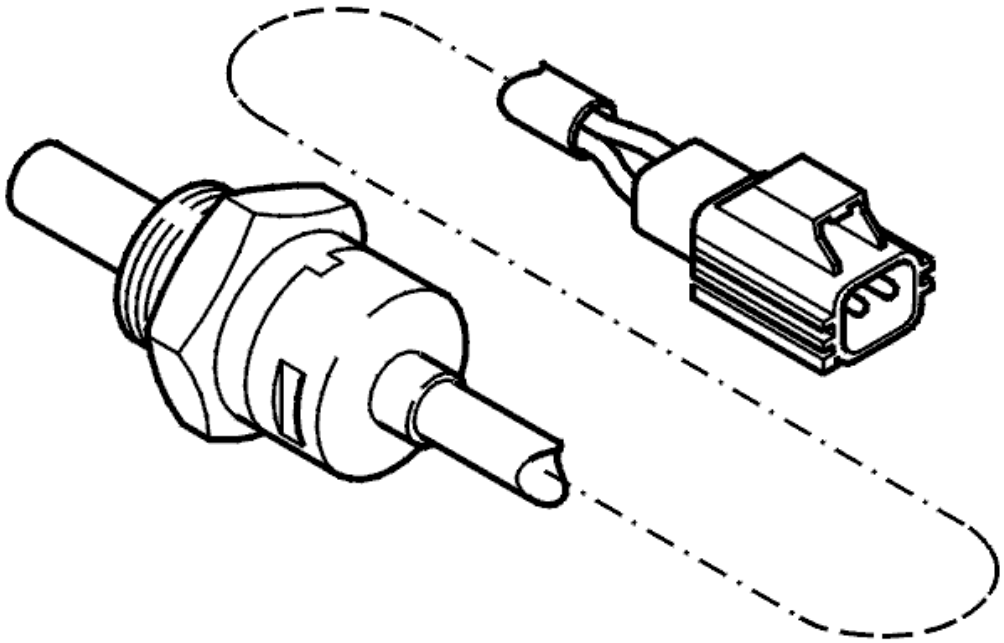

Fig. 77: Identifying Engine Coolant Temperature Sensor
Courtesy of VOLVO CARS CORPORATION

The engine control module (ECM) checks the signal for engine coolant temperature (ECT).

A diagnostic trouble code (DTC) is stored if the engine control module (ECM) receives a signal from the engine coolant temperature (ECT) sensor corresponding to a temperature that is higher than a certain value.

The diagnostic trouble code (DTC) can be diagnosed when the ignition is switched on.

Substitute Value

- Initial boost pressure
- The engine coolant temperature (ECT) is calculated based on a model. Three-way catalytic converter (TWC) heating and fuel trim at start (starting trim), idle diagnostic and misfire diagnostic are disabled
- The engine cooling fan (FC) runs at a predefined speed.

Possible Source

- Short-circuit to ground in the signal cable
- Damaged temperature sensor.

Fault symptom[s]

- Malfunction indicator lamp (MIL) lit
- The engine is difficult to start.

SIGNAL TOO HIGH

CHECKING THE WIRING AND COMPONENT

WARNING: Before fault-tracing can begin, the engine cooling fan (FC) connector must be disconnected to prevent the engine cooling fan (FC) engaging. A diagnostic trouble code (DTC) for engine cooling fan (FC) low-speed may be stored. After fault-tracing the connector must be reconnected.

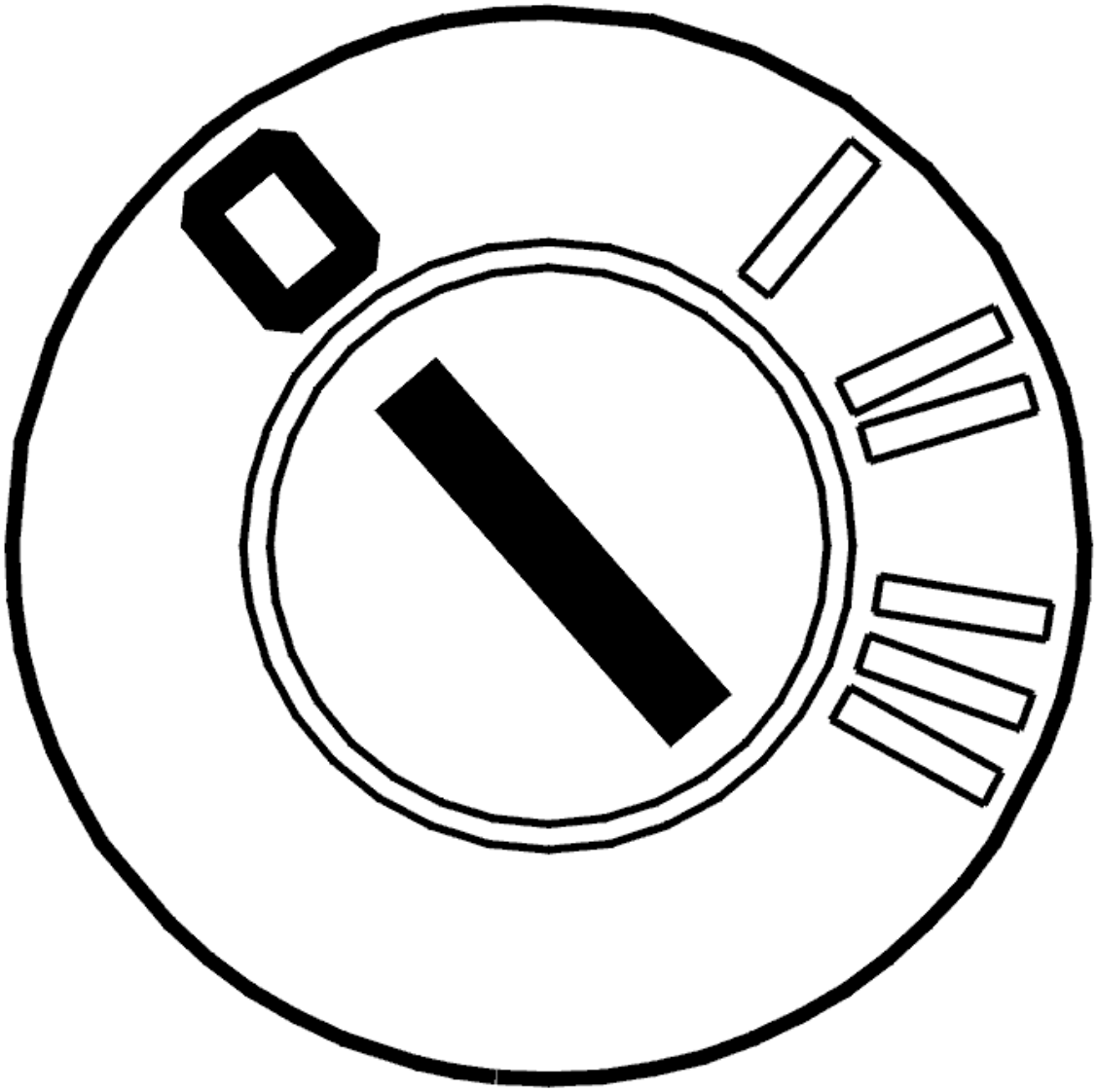

Fig. 78: Identifying Ignition OFF
Courtesy of VOLVO CARS CORPORATION

- Ignition off.

  Check the resistance of the engine coolant temperature (ECT) sensor. Take readings between terminals #1 and #2 on the component.

  Check the signal cable between engine control module (ECM) terminal #A4 (#A4) and engine coolant temperature (ECT) sensor terminal #1. Check for a short-circuit to ground.

  If no faults are found and the fault is permanent, replace the engine coolant temperature (ECT) sensor.

  Remedy as necessary.

  Other information

- see **CONNECTING THE BREAKOUT BOX**
- For 6 cylinder engines -2004, see **SIGNAL SPECIFICATION**
- For 6 cylinder engines 2005-, see **SIGNAL SPECIFICATION** .
- see **COMPONENT SPECIFICATIONS**
- For B5xx4T, see **REPLACING THE THERMOSTAT AND/OR ENGINE COOLANT TEMPERATURE SENSOR**
- For B6xx4T, see **ENGINE COOLANT TEMPERATURE (ECT) SENSOR, REPLACING** .
- see **CHECKING WIRING AND TERMINALS**

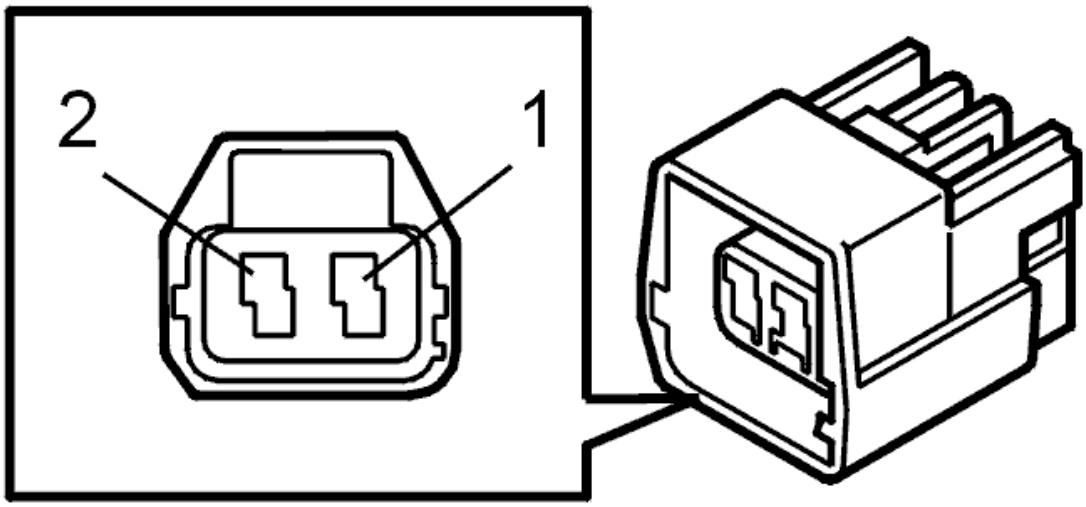

Fig. 79: Identifying Camshaft Reset Valve Connector Terminals
Courtesy of VOLVO CARS CORPORATION

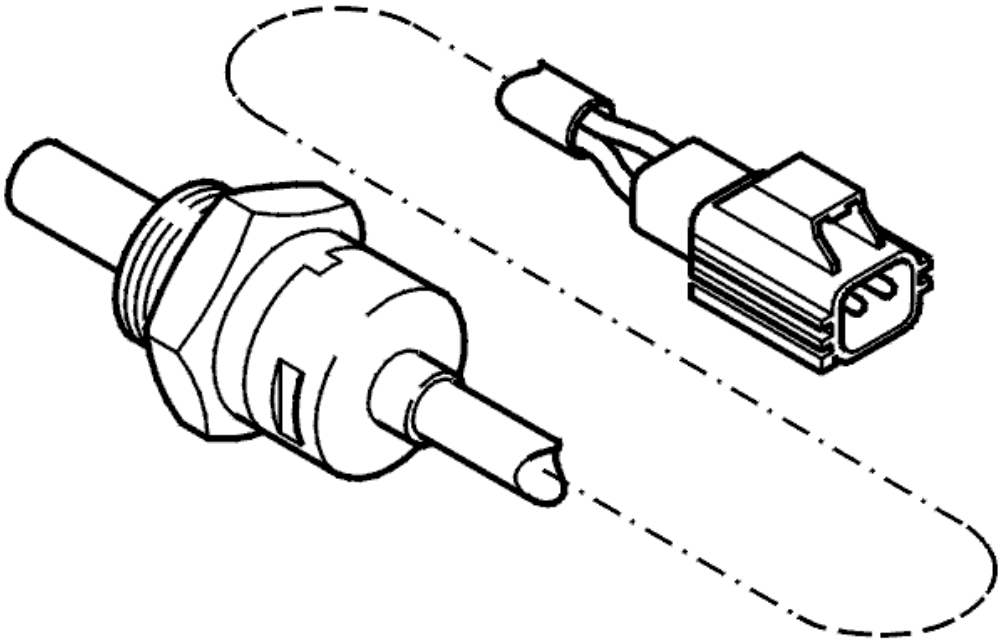

Fig. 80: Identifying Engine Coolant Temperature Sensor
Courtesy of VOLVO CARS CORPORATION

- **Continue**

  Refer to **VERIFICATION**

VERIFICATION

VERIFICATION

HINT: After carrying out the repair, check that the fault has been remedied.

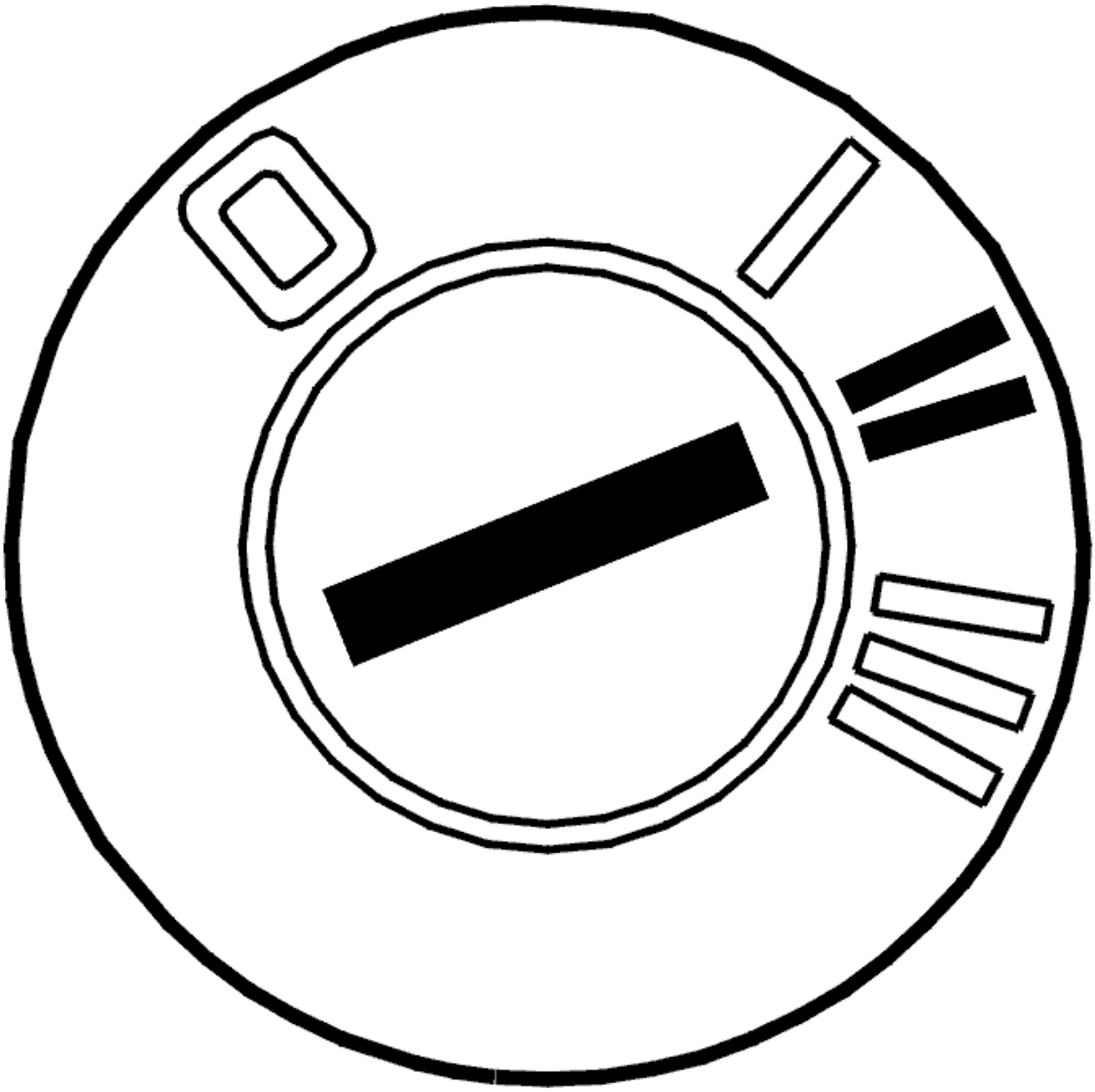

Fig. 81: Identifying Ignition ON
Courtesy of VOLVO CARS CORPORATION

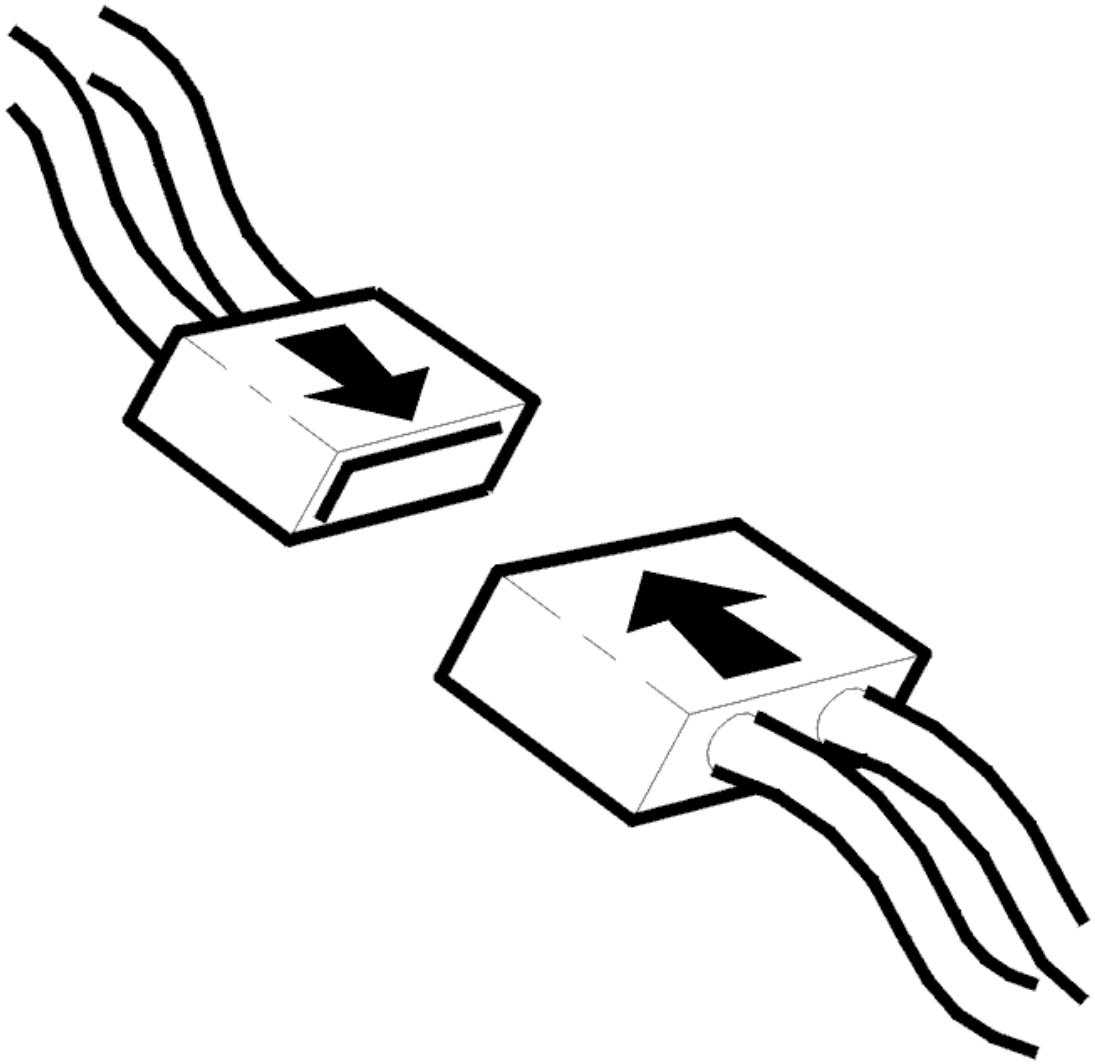

Fig. 82: Connecting Connector
Courtesy of VOLVO CARS CORPORATION

- Ignition off
- Reconnect the connectors, reinstall components etc.
- Ignition on
- Read off the engine coolant temperature (ECT) sensor.

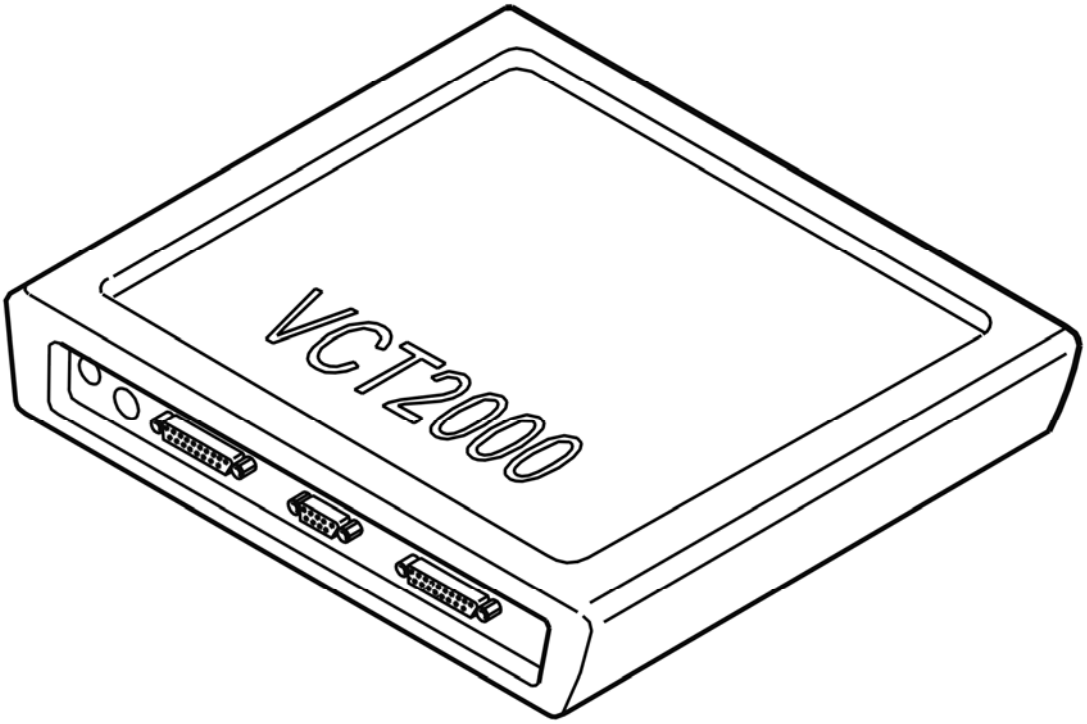

Fig. 83: Identifying VCT2000 Diagnostic Tool Symbol In VIDA
Courtesy of VOLVO CARS CORPORATION

Is the temperature within its permitted range?

- **YES**

  VERIFIED: Troubleshooting has been completed.

- **NO**

  Refer to **INFORMATION**

INFORMATION

FAULT-TRACING INFORMATION

The fault should have been detected and remedied. As this is not the case fault-tracing has failed.

Exit fault-tracing for this diagnostic trouble code (DTC) or make another attempt.

ECM-273D: ENGINE COOLANT TEMPERATURE (ECT) SENSOR. SIGNAL TOO LOW (B5254T2; 2005-2007)

DIAGNOSTIC TROUBLE CODE (DTC) INFORMATION ECM-273D

Condition

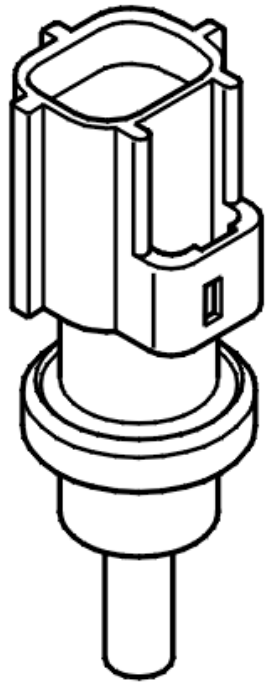

Fig. 84: Identifying Engine Coolant Temperature (ECT) Sensor
Courtesy of VOLVO CARS CORPORATION

The engine control module (ECM) checks the signal for engine coolant temperature (ECT).

A diagnostic trouble code (DTC) is stored if the engine control module (ECM) receives a signal from the engine coolant temperature (ECT) sensor corresponding to a temperature that is lower than a certain value.

The diagnostic trouble code (DTC) can be diagnosed when the ignition is switched on.

Substitute Value

- Initial boost pressure
- The engine coolant temperature (ECT) is calculated based on a model. Three-way catalytic converter (TWC) heating and fuel trim at start (starting trim), idle diagnostic and misfire diagnostic are disabled
- The engine cooling fan (FC) runs at a predefined speed.

Possible Source

- Contact resistance and oxidation in the terminals
- Open-circuit in the signal cable
- Open-circuit in the signal ground cable
- Short-circuit to supply voltage in the signal cable
- Damaged temperature sensor.

Fault symptom[s]

- Malfunction indicator lamp (MIL) lit
- The engine is difficult to start.

SIGNAL TOO LOW

CHECKING THE CONNECTOR

WARNING: **Before fault-tracing can begin, the engine cooling fan (FC) connector must be disconnected to prevent the engine cooling fan (FC) engaging. A diagnostic trouble code (DTC) for the engine cooling fan (FC) control module may be stored. After fault-tracing the connector must be reconnected.**

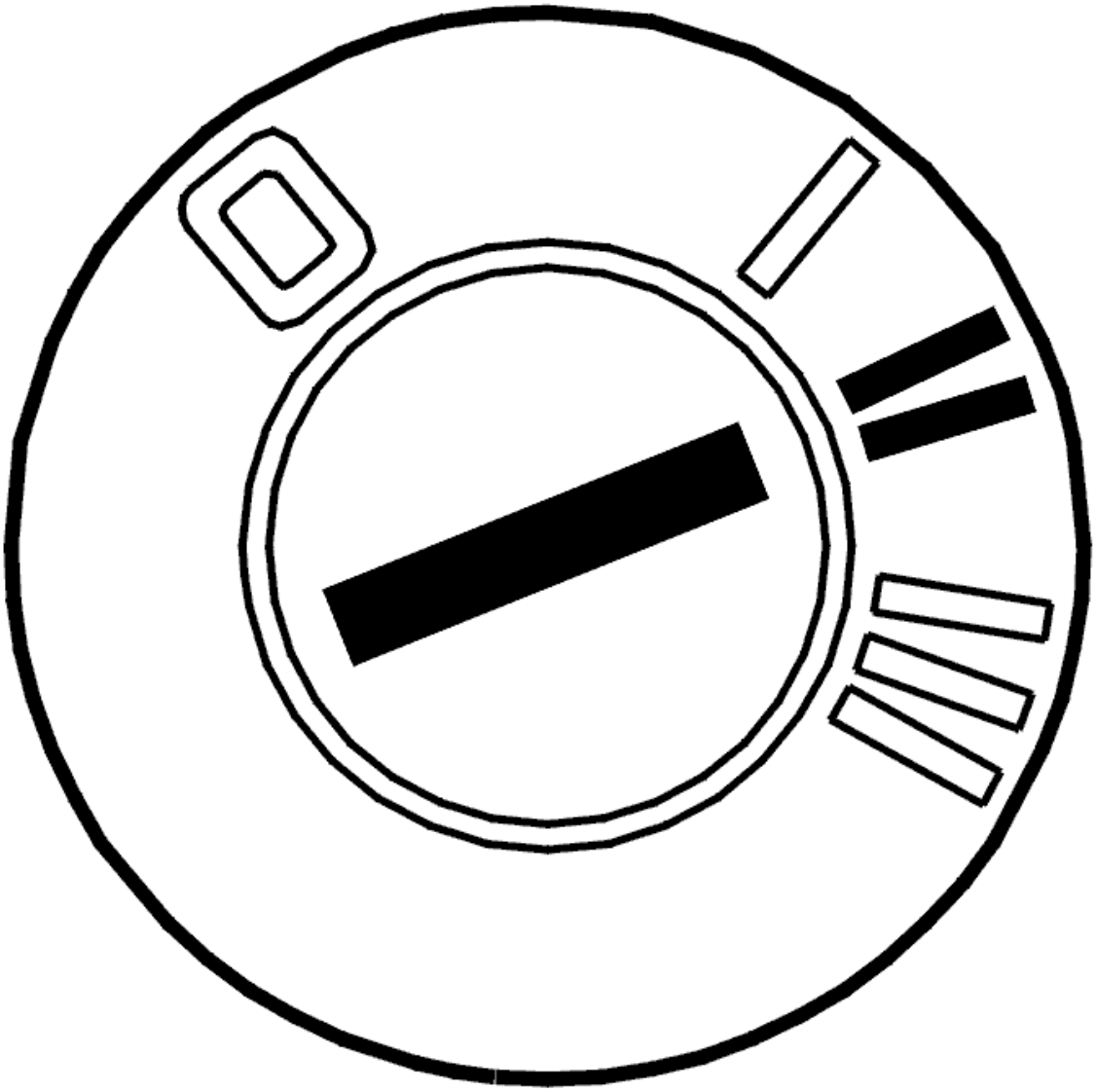

Fig. 85: Identifying Ignition ON
Courtesy of VOLVO CARS CORPORATION

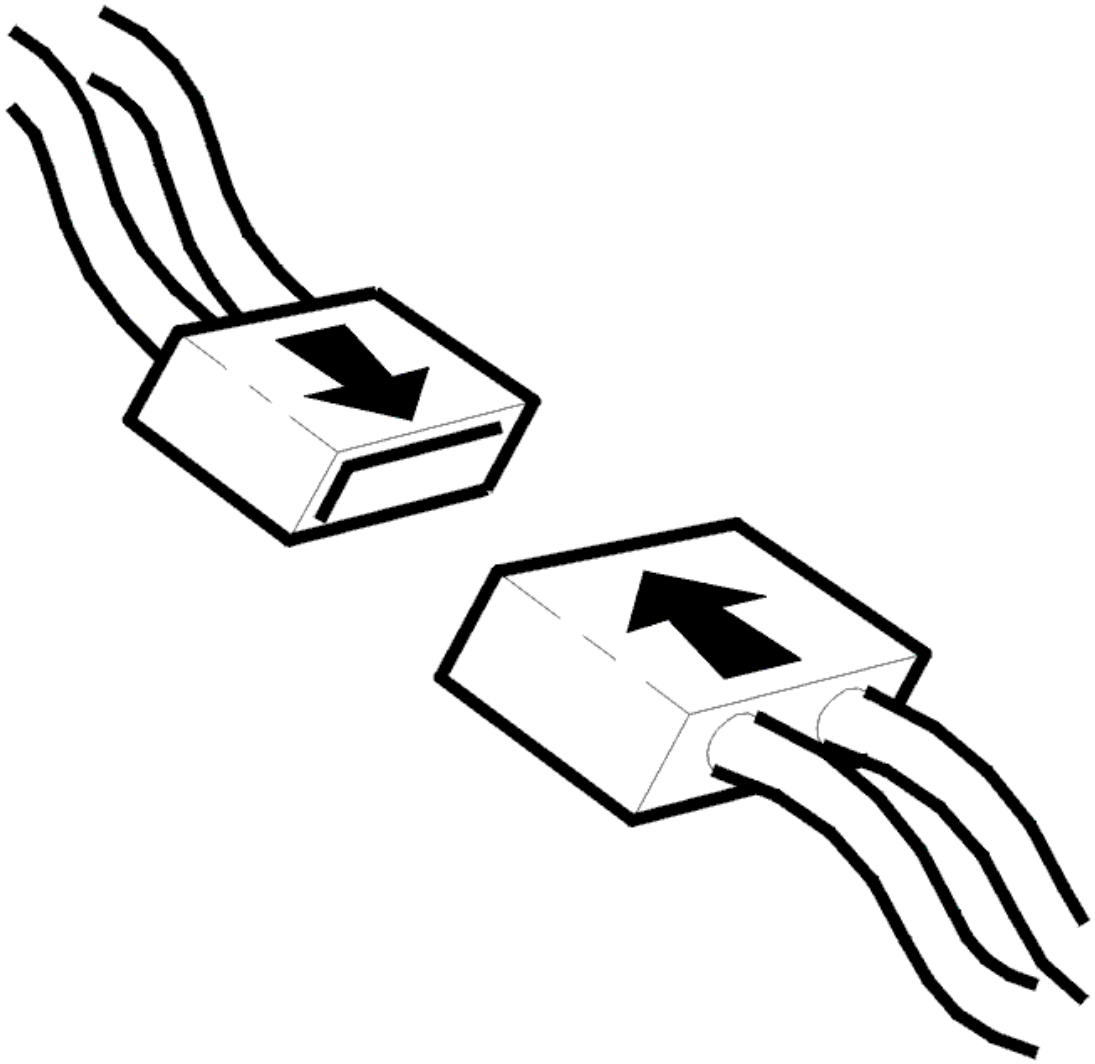

Fig. 86: Connecting Connector
Courtesy of VOLVO CARS CORPORATION

- Ignition off
- Check the connector on the engine coolant temperature (ECT) sensor. Check for contact resistance and oxidation
- Reinstall the components, reconnect the connectors etc.
- Ignition on
- Read off the engine coolant temperature (ECT) sensor.

  If the temperature is now within its permitted range, the fault was caused by poor contact in the connector.

  Other information

- For B5xx4T, see **REPLACING THE THERMOSTAT AND/OR ENGINE COOLANT TEMPERATURE SENSOR**
- For B6xx4T, see **ENGINE COOLANT TEMPERATURE (ECT) SENSOR, REPLACING** .
- see **CHECKING WIRING AND TERMINALS**

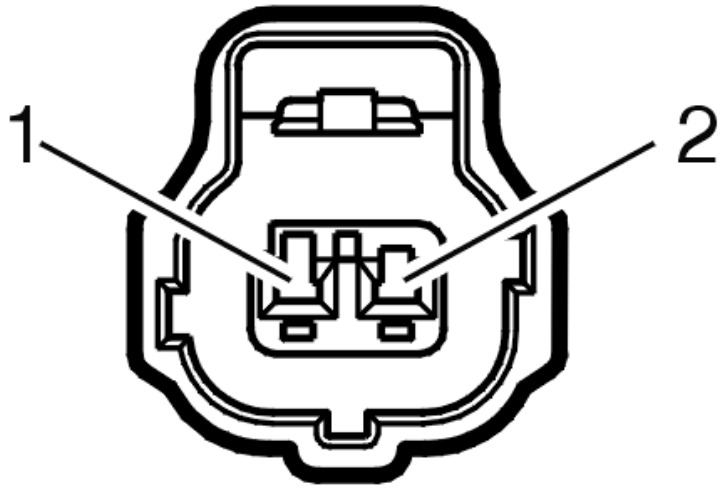

Fig. 87: Identifying 2-Bit Connector
Courtesy of VOLVO CARS CORPORATION

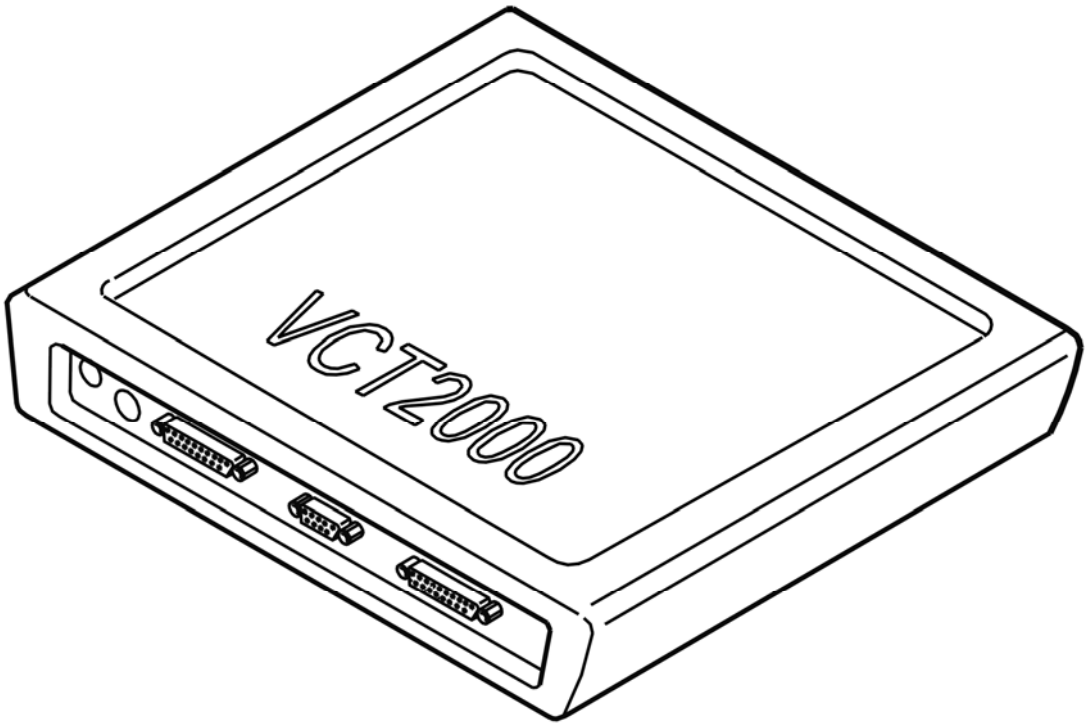

Fig. 88: Identifying VCT2000 Diagnostic Tool Symbol In VIDA
Courtesy of VOLVO CARS CORPORATION

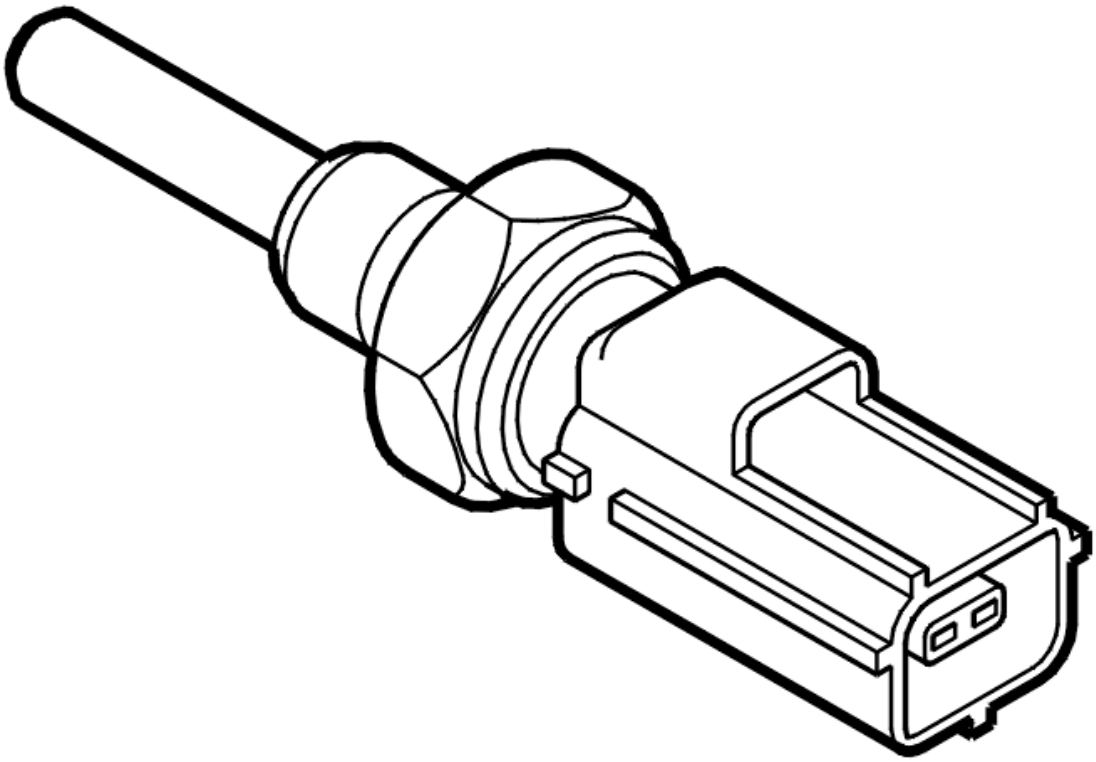

Fig. 89: Identifying 2-Bit Connector Side View
Courtesy of VOLVO CARS CORPORATION

Is the temperature within its permitted range?

- **YES**

  OKAY: Troubleshooting has been completed.

- **NO**

  Refer to **CHECKING THE WIRING AND COMPONENT**

CHECKING THE WIRING AND COMPONENT

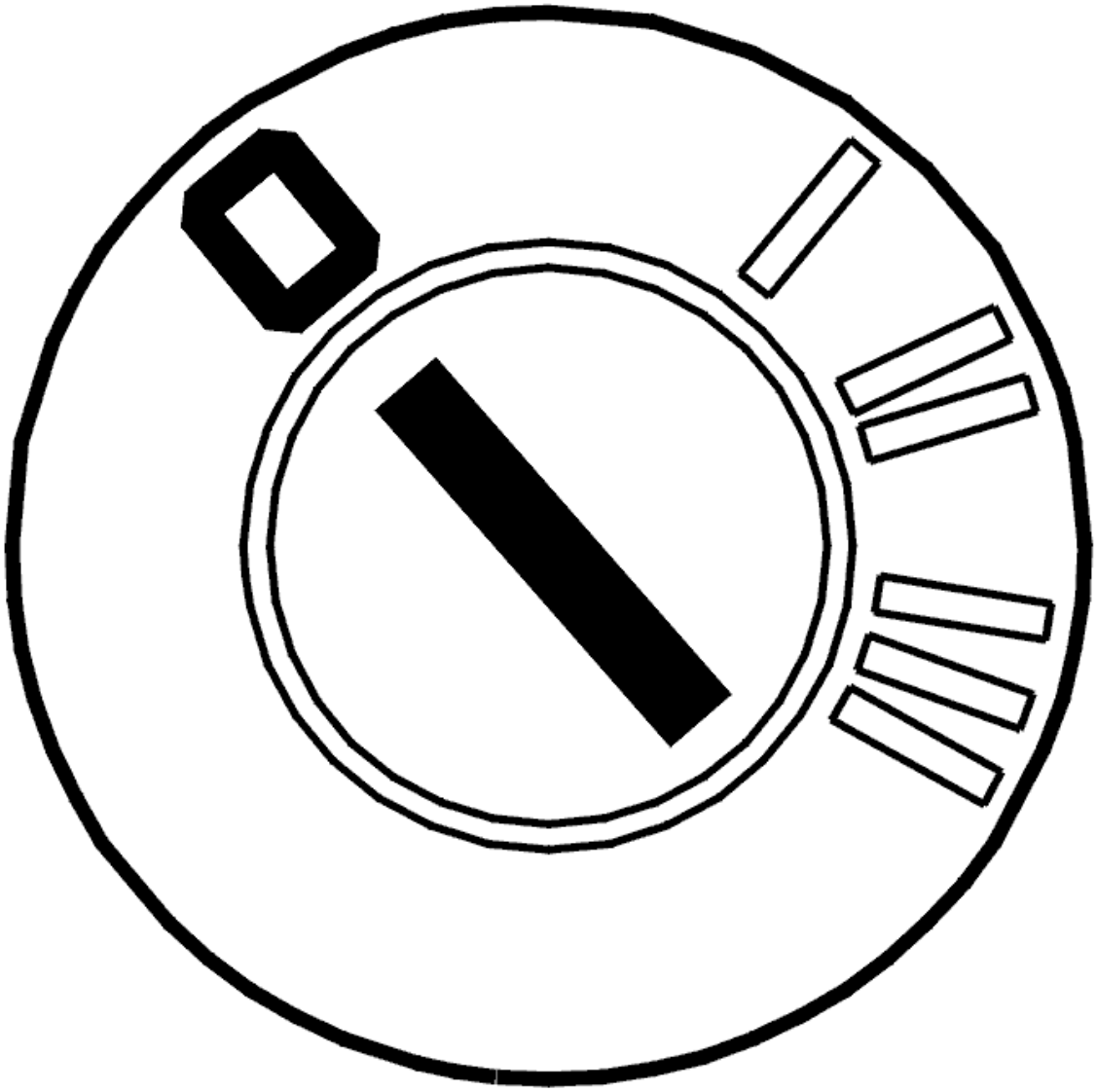

Fig. 90: Identifying Ignition OFF
Courtesy of VOLVO CARS CORPORATION

- Ignition off.

  Check the resistance of the engine coolant temperature (ECT) sensor between terminals #1 and #2 (component side).

  NOTE: The engine coolant temperature (ECT) sensor may be damaged if there has been a short-circuit to supply voltage in the signal cable. Check this before replacing the sensor.

  Check the signal cable between engine control module (ECM) terminal #A4 (#A4) and engine coolant temperature (ECT) sensor terminal #1. Check for an open-circuit. Check for a short-circuit to supply voltage.

HINT: With the ignition on and engine coolant temperature (ECT) sensor connector disconnected the voltage between terminal #1 and ground terminal should be approximately 5 V.

Check the ground lead between control module terminal #A60 (#A60) and engine coolant temperature (ECT) sensor terminal #2. Check for an open-circuit.

If no faults are found and the fault is permanent, replace the engine coolant temperature (ECT) sensor.

Remedy as necessary.

Other information

- see **CONNECTING THE BREAKOUT BOX**
- For 5 cylinder turbocharged engines -2004, see **SIGNAL DESCRIPTION**
- For 5 cylinder turbocharged engines 2005-, see **SIGNAL SPECIFICATION** .
- see **COMPONENT SPECIFICATIONS**
- For B5xx4T, see **REPLACING THE THERMOSTAT AND/OR ENGINE COOLANT TEMPERATURE SENSOR**
- For B6xx4T, see **ENGINE COOLANT TEMPERATURE (ECT) SENSOR, REPLACING** .
- see **CHECKING WIRING AND TERMINALS**

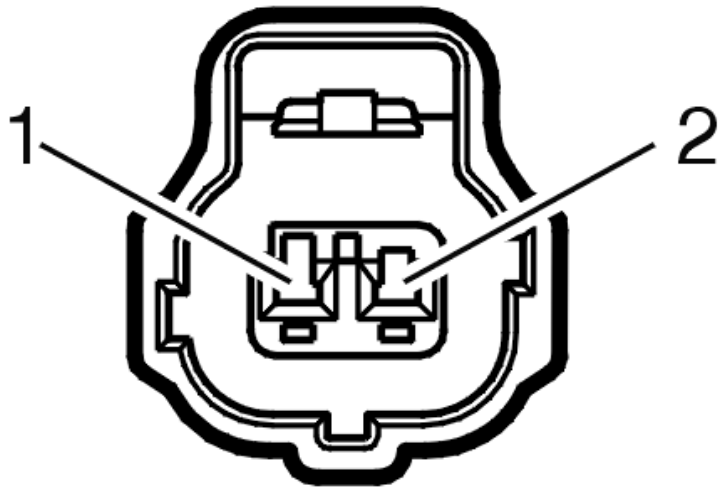

Fig. 91: Identifying 2-Bit Connector
Courtesy of VOLVO CARS CORPORATION

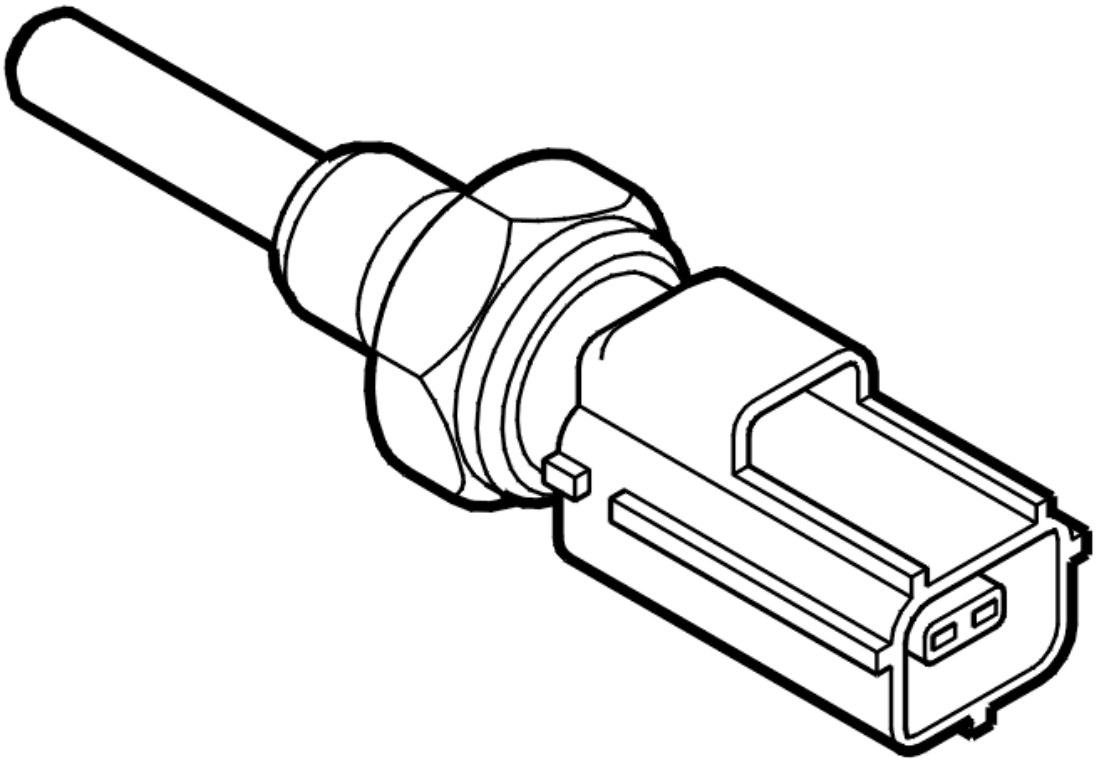

Fig. 92: Identifying 2-Bit Connector Side View
Courtesy of VOLVO CARS CORPORATION

- **Continue**

  Refer to **VERIFICATION**

VERIFICATION

VERIFICATION

HINT: After carrying out the repair, check that the fault has been remedied.

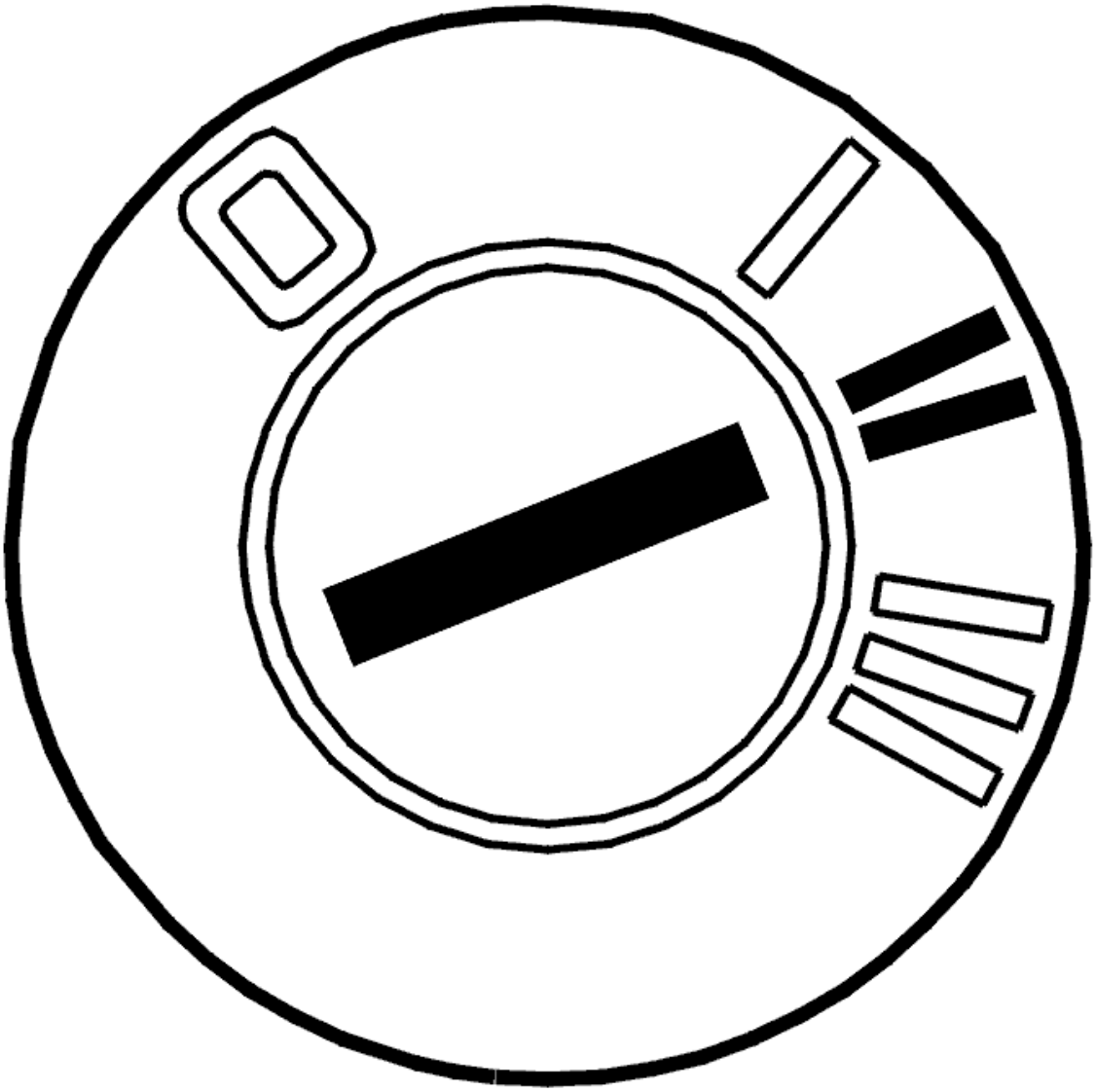

Fig. 93: Identifying Ignition ON
Courtesy of VOLVO CARS CORPORATION

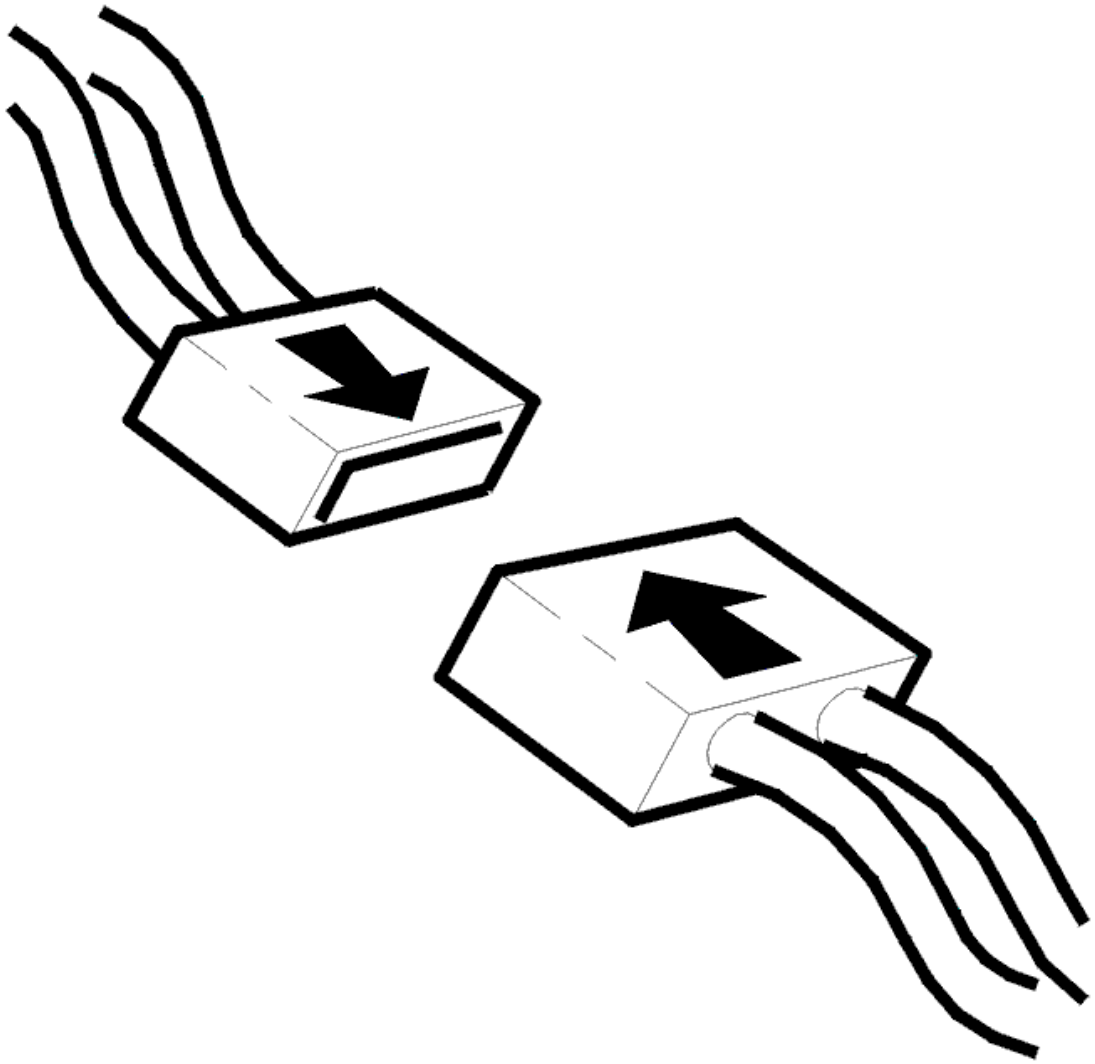

Fig. 94: Connecting Connector
Courtesy of VOLVO CARS CORPORATION

- Ignition off
- Reconnect the connectors, reinstall components etc.
- Ignition on
- Read off the engine coolant temperature (ECT) sensor.

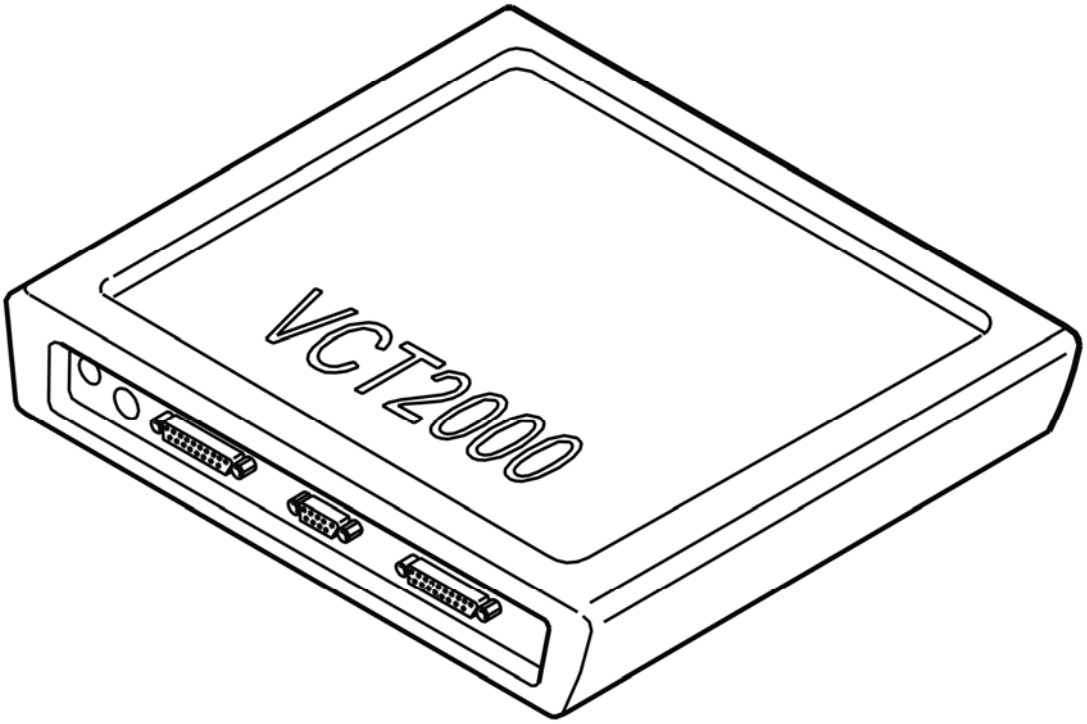

Fig. 95: Identifying VCT2000 Diagnostic Tool Symbol In VIDA
Courtesy of VOLVO CARS CORPORATION

Is the temperature within its permitted range?

- **YES**

  VERIFIED: Troubleshooting has been completed.

- **NO**

  Refer to **INFORMATION**

INFORMATION

FAULT-TRACING INFORMATION

The fault should have been detected and remedied. As this is not the case fault-tracing has failed.

Exit fault-tracing for this diagnostic trouble code (DTC) or make another attempt.

ECM-273D: ENGINE COOLANT TEMPERATURE (ECT) SENSOR. SIGNAL TOO LOW (B6294T; 2005-2006)

DIAGNOSTIC TROUBLE CODE (DTC) INFORMATION ECM-273D

Condition

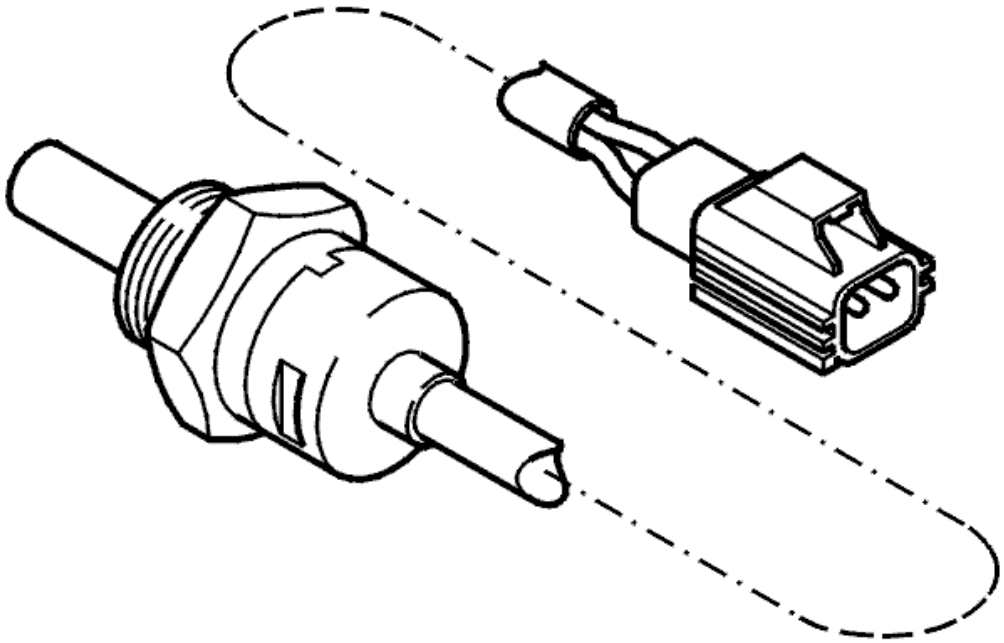

Fig. 96: Identifying Engine Coolant Temperature Sensor
Courtesy of VOLVO CARS CORPORATION

The engine control module (ECM) checks the signal for engine coolant temperature (ECT).

A diagnostic trouble code (DTC) is stored if the engine control module (ECM) receives a signal from the engine coolant temperature (ECT) sensor corresponding to a temperature that is higher than a certain value.

The diagnostic trouble code (DTC) can be diagnosed when the ignition is switched on.

Substitute Value

- Initial boost pressure
- The engine coolant temperature (ECT) is calculated based on a model. Three-way catalytic converter (TWC) heating and fuel trim at start (starting trim), idle diagnostic and misfire diagnostic are disabled
- The engine cooling fan (FC) runs at a predefined speed.

Possible Source

- Short-circuit to ground in the signal cable
- Damaged temperature sensor.

Fault symptom[s]

- Malfunction indicator lamp (MIL) lit
- The engine is difficult to start.

SIGNAL TOO LOW

CHECKING THE CONNECTOR

WARNING: **Before fault-tracing can begin, the engine cooling fan (FC) connector must be disconnected to prevent the engine cooling fan (FC) engaging. A diagnostic trouble code (DTC) for the engine cooling fan (FC) control module may be stored. After fault-tracing the connector must be reconnected.**

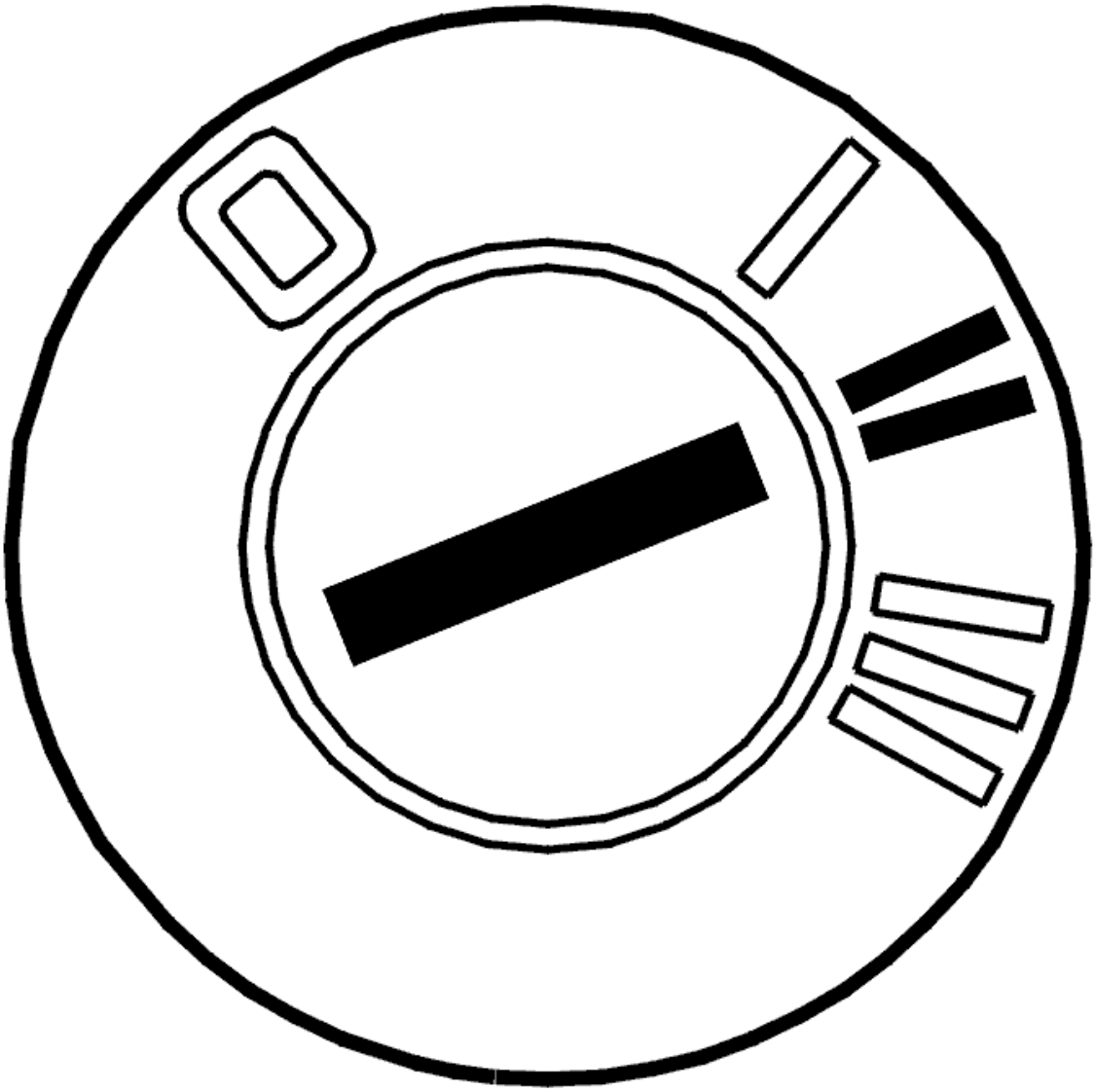

Fig. 97: Identifying Ignition ON
Courtesy of VOLVO CARS CORPORATION

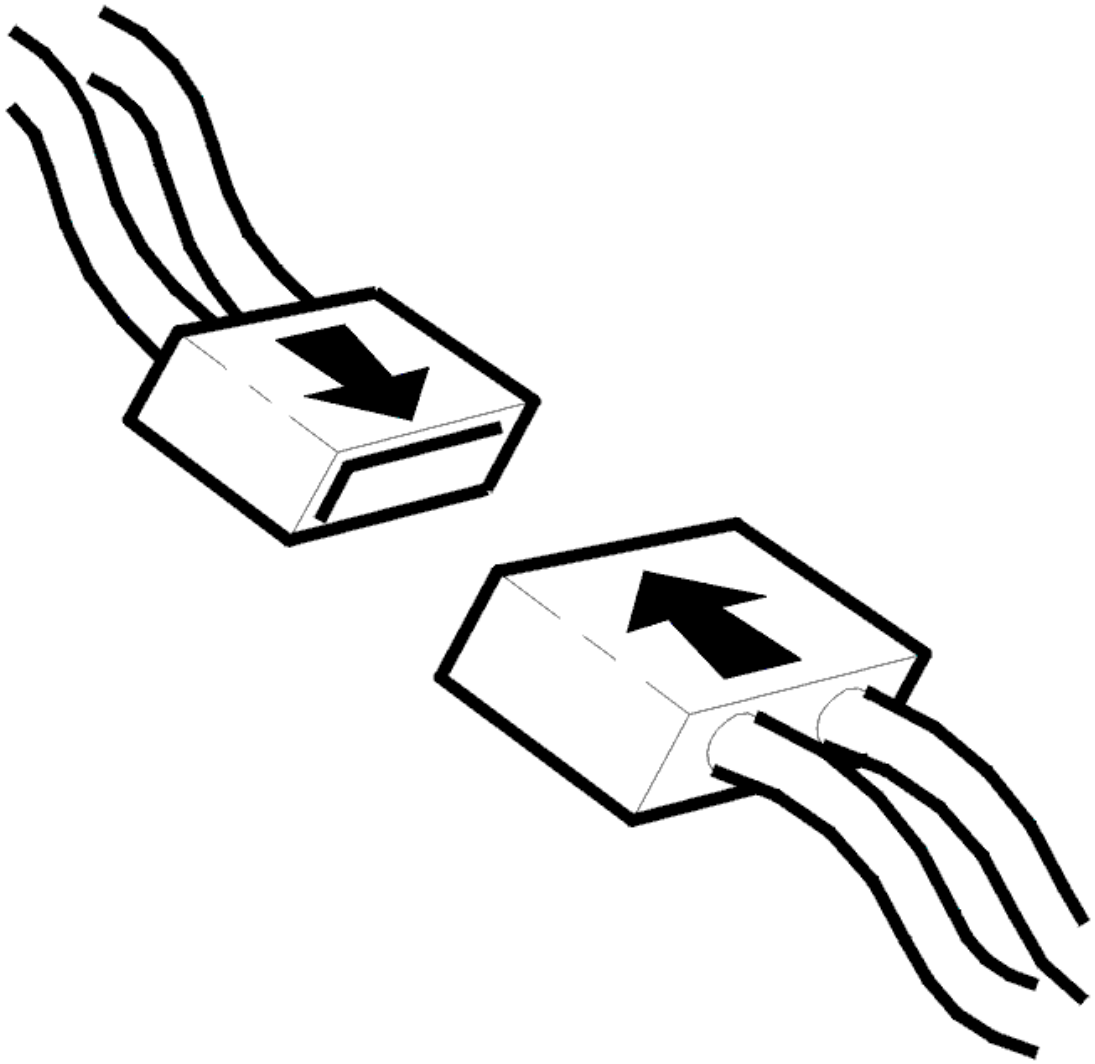

Fig. 98: Connecting Connector
Courtesy of VOLVO CARS CORPORATION

- Ignition off
- Check the connector on the engine coolant temperature (ECT) sensor. Check for contact resistance and oxidation
- Reinstall the components, reconnect the connectors etc.
- Ignition on
- Read off the engine coolant temperature (ECT) sensor.

  If the temperature is now within its permitted range, the fault was caused by poor contact in the connector.

  Other information

- For B5xx4T, see **REPLACING THE THERMOSTAT AND/OR ENGINE COOLANT TEMPERATURE SENSOR**
- For B6xx4T, see **ENGINE COOLANT TEMPERATURE (ECT) SENSOR, REPLACING** .
- see **CHECKING WIRING AND TERMINALS**

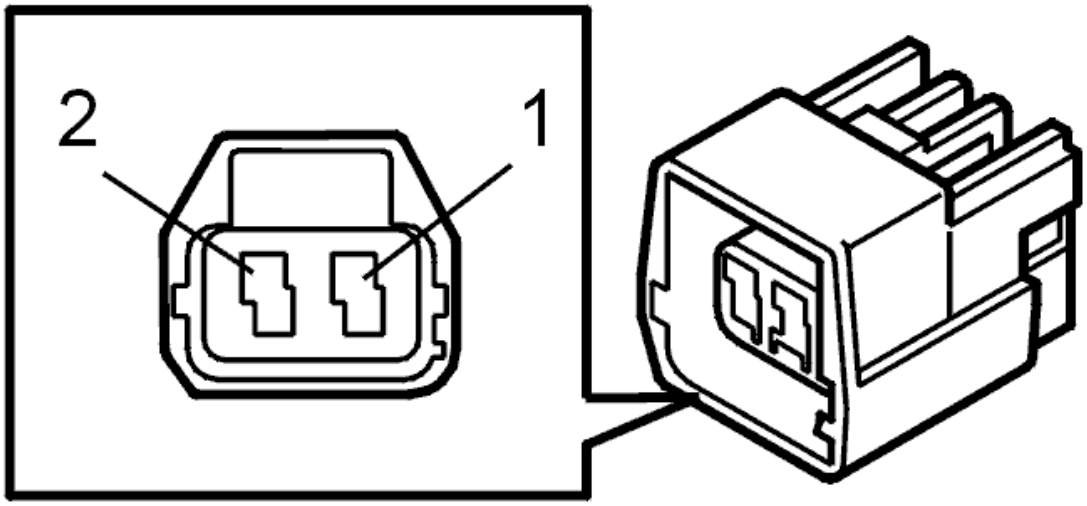

Fig. 99: Identifying Camshaft Reset Valve Connector Terminals
Courtesy of VOLVO CARS CORPORATION

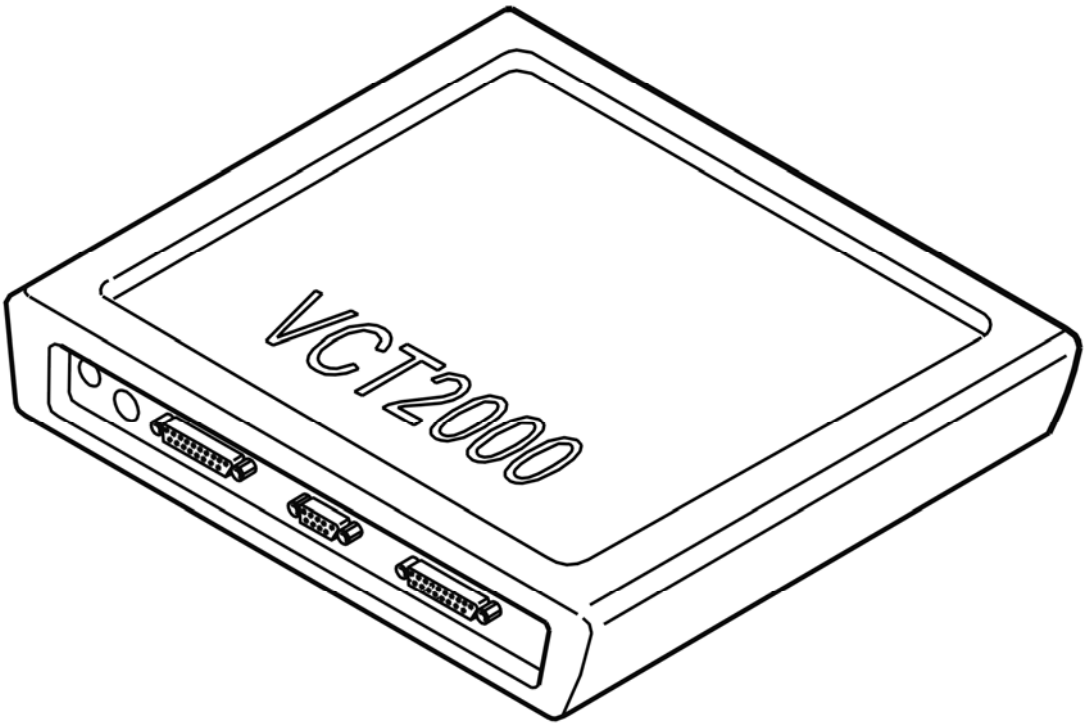

Fig. 100: Identifying VCT2000 Diagnostic Tool Symbol In VIDA
Courtesy of VOLVO CARS CORPORATION

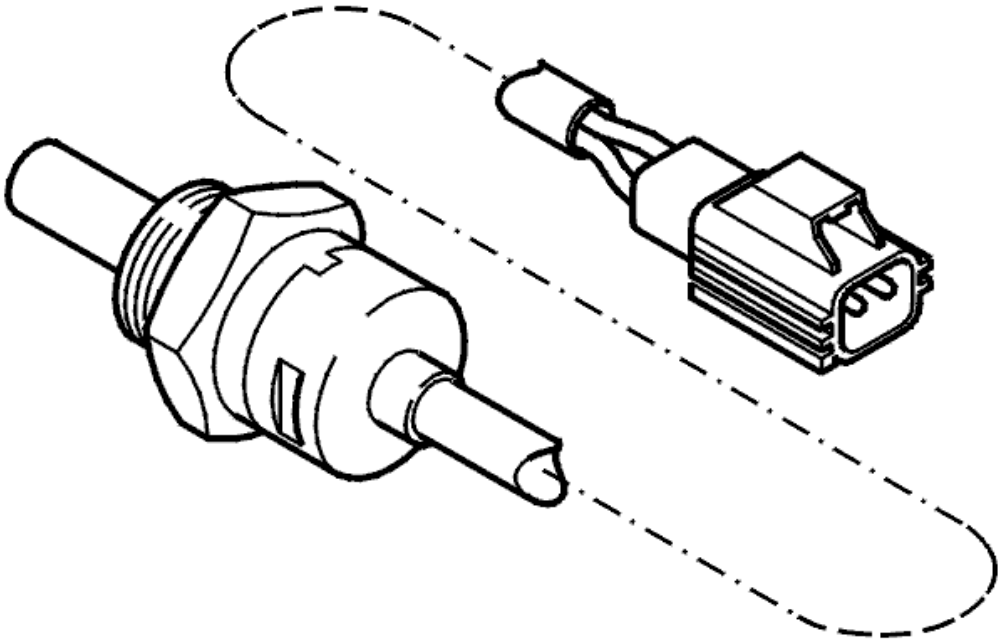

Fig. 101: Identifying Engine Coolant Temperature Sensor
Courtesy of VOLVO CARS CORPORATION

Is the temperature within its permitted range?

- **YES**

  OKAY: Troubleshooting has been completed.

- **NO**

  Refer to **CHECKING THE WIRING AND COMPONENT**

CHECKING THE WIRING AND COMPONENT

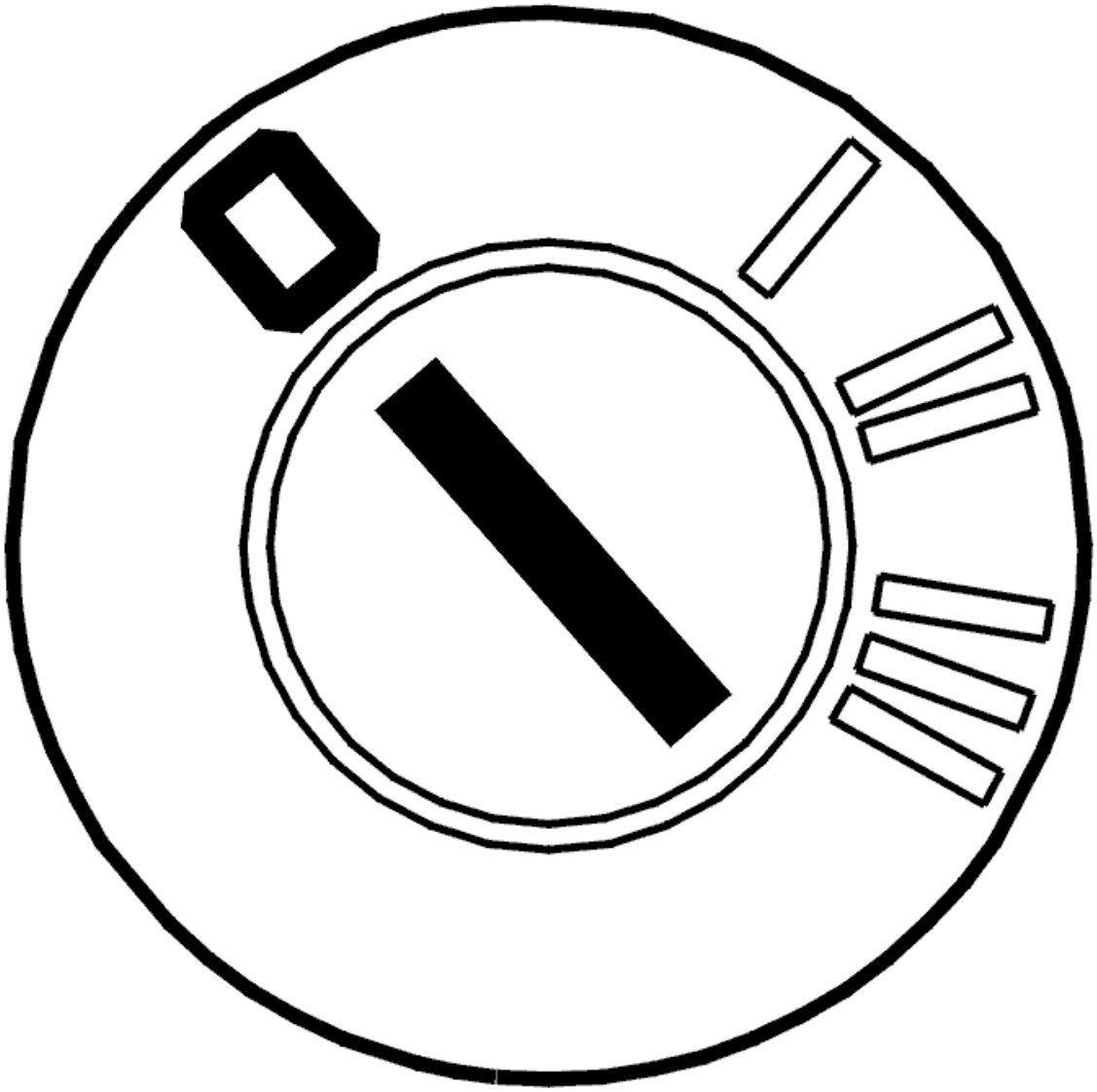

Fig. 102: Identifying Ignition OFF
Courtesy of VOLVO CARS CORPORATION

- Ignition off.

  Check the resistance of the engine coolant temperature (ECT) sensor. Take readings between terminals #1 and #2 on the component.

  NOTE: The engine coolant temperature (ECT) sensor may be damaged if there has been a short-circuit to supply voltage in the signal cable. Check this before replacing the sensor.

  Check the signal cable between engine control module (ECM) terminal #A4 (#A4) and engine coolant temperature (ECT) sensor terminal #1. Check for an open-circuit. Check for a short-circuit to supply voltage.

HINT: With the ignition on and engine coolant temperature (ECT) sensor connector disconnected the voltage between terminal #1 and ground terminal should be approximately 5 V.

Check the ground lead between control module terminal #A60 (#A60) and engine coolant temperature (ECT) sensor terminal #2. Check for an open-circuit.

If no faults are found and the fault is permanent, replace the engine coolant temperature (ECT) sensor.

Remedy as necessary.

Other information

- see **CONNECTING THE BREAKOUT BOX**
- For 6 cylinder engines -2004, see **SIGNAL SPECIFICATION**
- For 6 cylinder engines 2005-, see **SIGNAL SPECIFICATION** .
- see **COMPONENT SPECIFICATIONS**
- For B5xx4T, see **REPLACING THE THERMOSTAT AND/OR ENGINE COOLANT TEMPERATURE SENSOR**
- For B6xx4T, see **ENGINE COOLANT TEMPERATURE (ECT) SENSOR, REPLACING** .
- see **CHECKING WIRING AND TERMINALS**

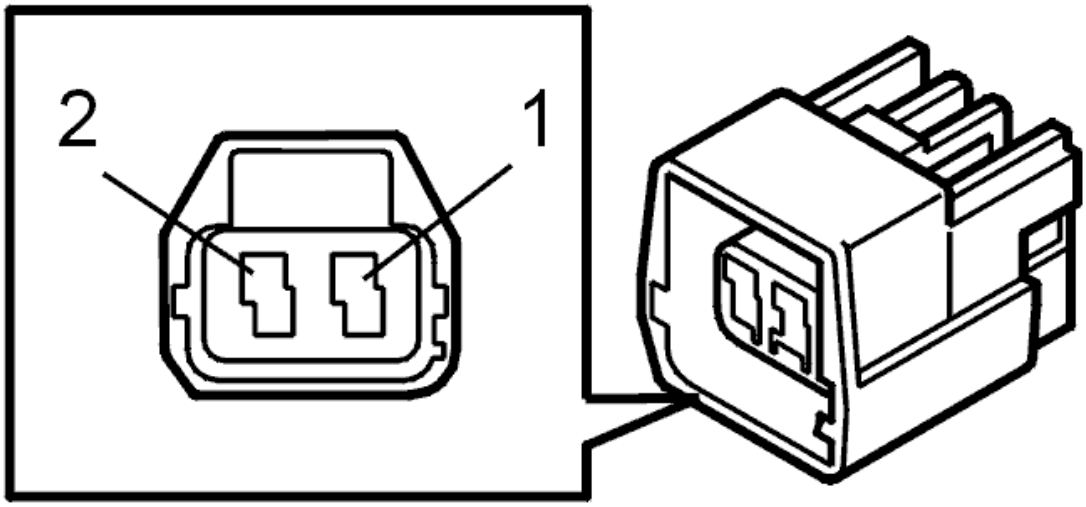

Fig. 103: Identifying Camshaft Reset Valve Connector Terminals
Courtesy of VOLVO CARS CORPORATION

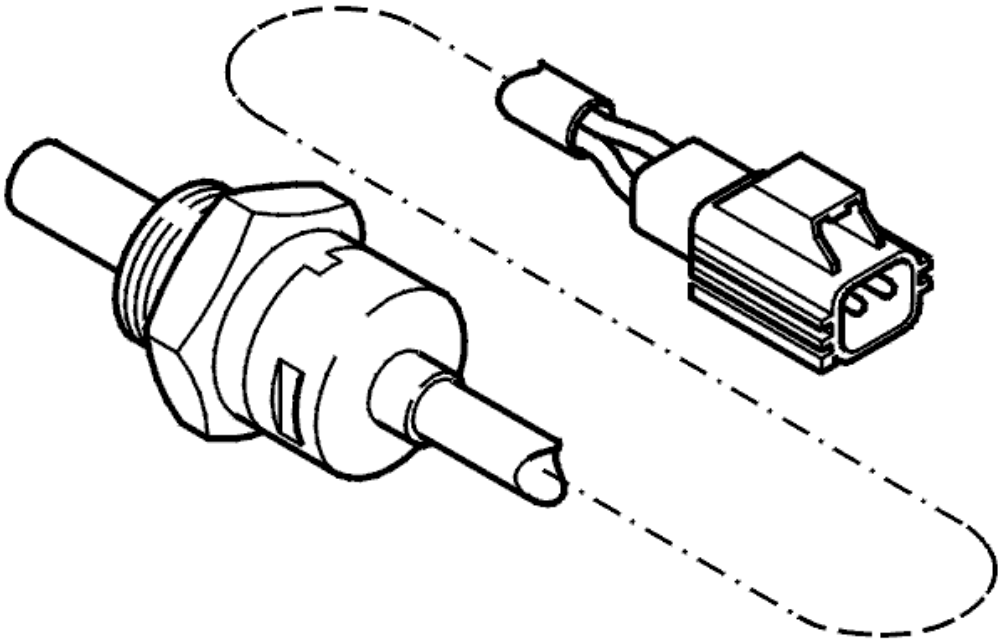

Fig. 104: Identifying Engine Coolant Temperature Sensor
Courtesy of VOLVO CARS CORPORATION

- **Continue**

  Refer to **VERIFICATION**

VERIFICATION

VERIFICATION

HINT: After carrying out the repair, check that the fault has been remedied.

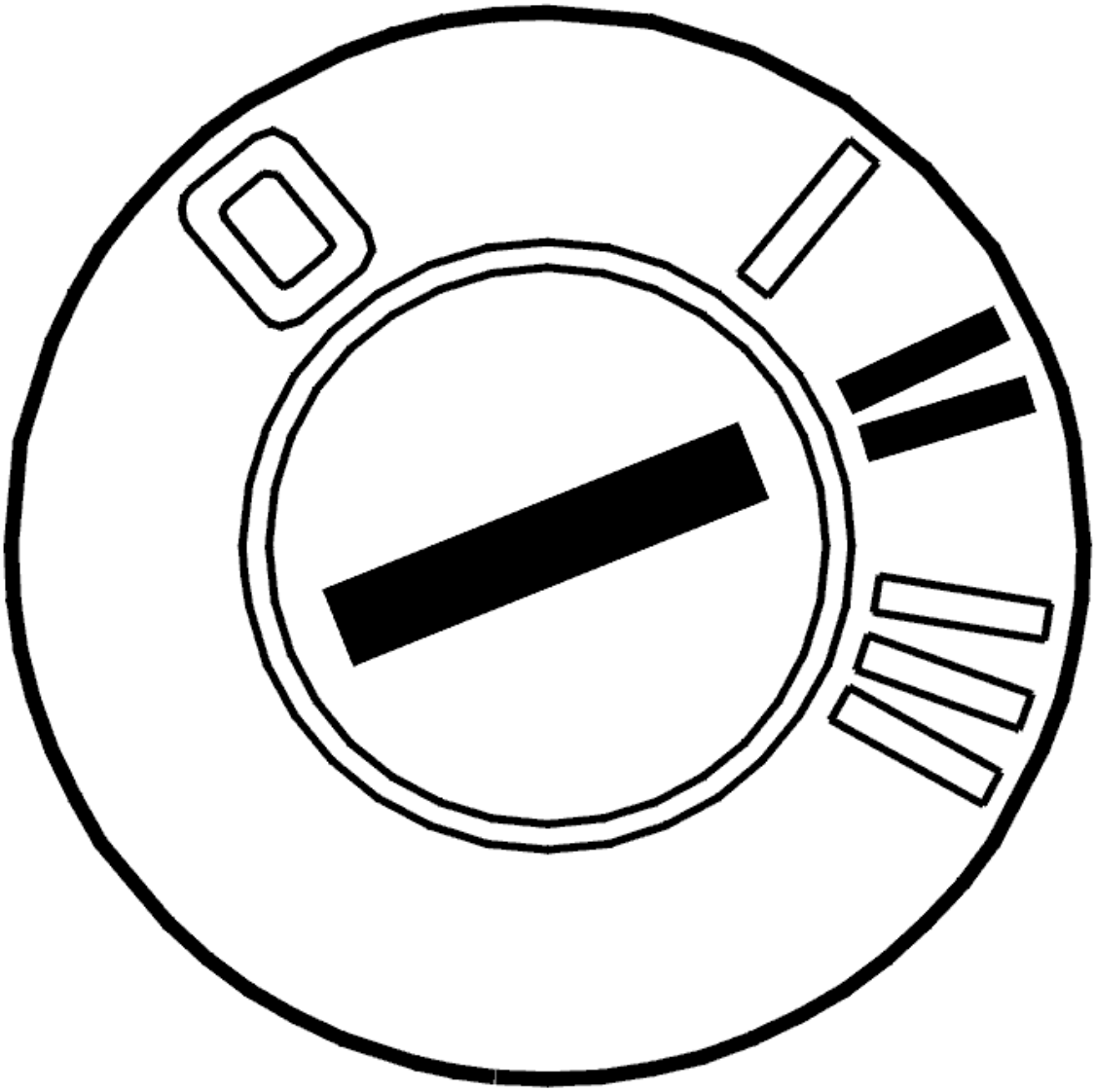

Fig. 105: Identifying Ignition ON
Courtesy of VOLVO CARS CORPORATION

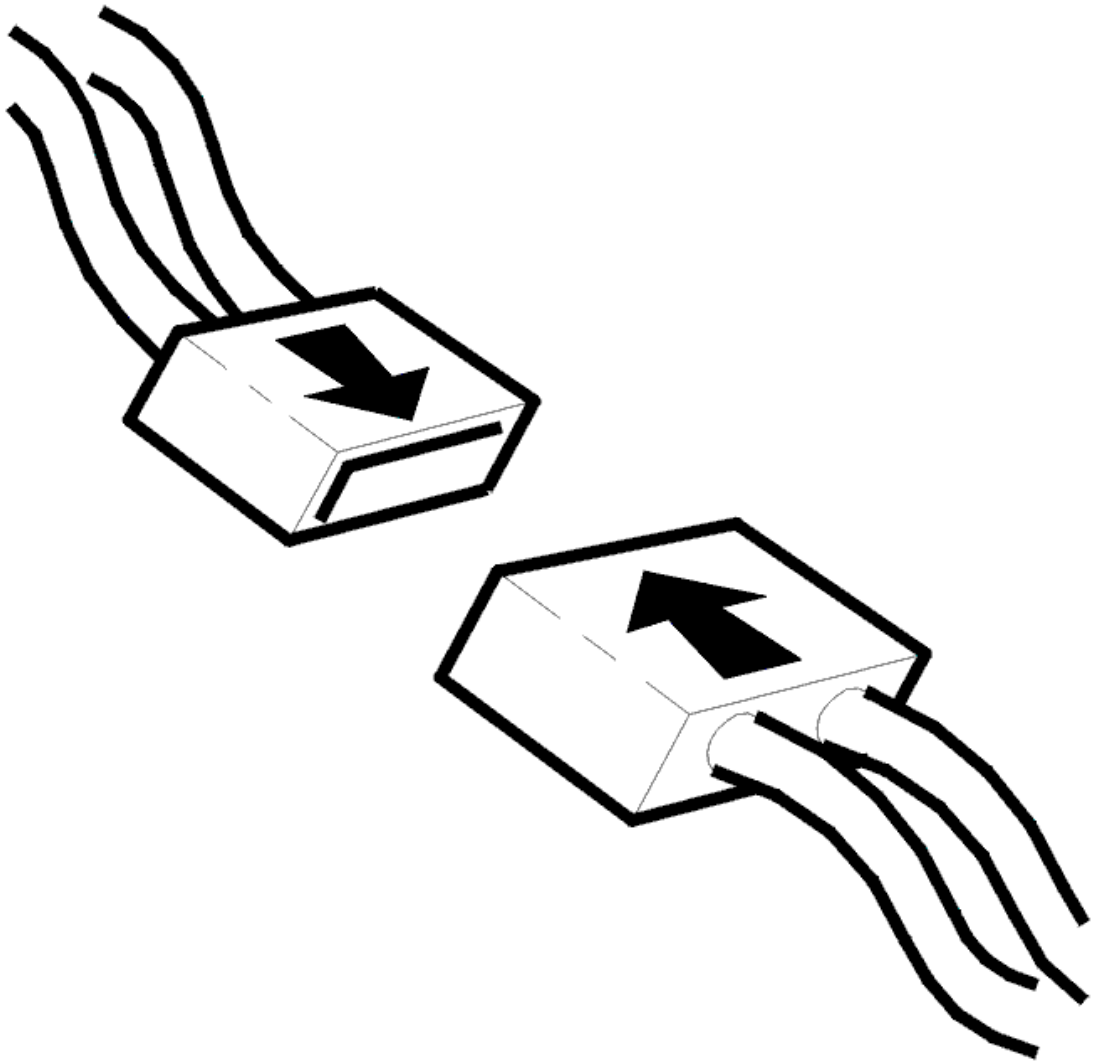

Fig. 106: Connecting Connector
Courtesy of VOLVO CARS CORPORATION

- Ignition off
- Reconnect the connectors, reinstall components etc.
- Ignition on
- Read off the engine coolant temperature (ECT) sensor.

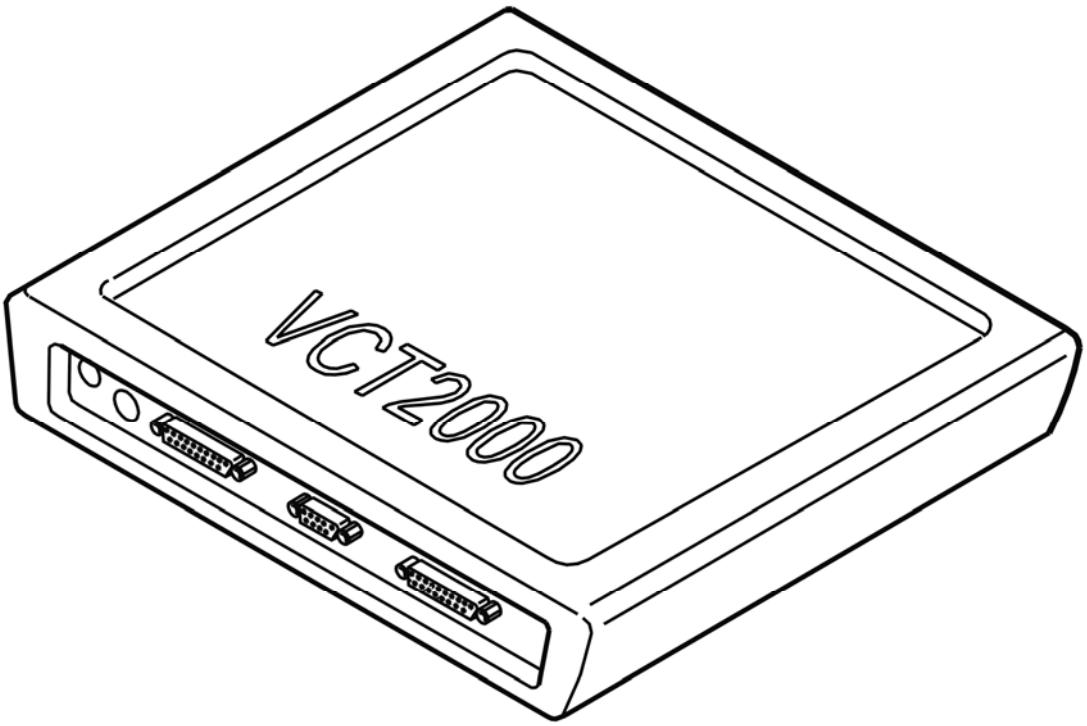

Fig. 107: Identifying VCT2000 Diagnostic Tool Symbol In VIDA
Courtesy of VOLVO CARS CORPORATION

Is the temperature within its permitted range?

- **YES**

  VERIFIED: Troubleshooting has been completed.

- **NO**

  Refer to **INFORMATION**

INFORMATION

FAULT-TRACING INFORMATION

The fault should have been detected and remedied. As this is not the case fault-tracing has failed.

Exit fault-tracing for this diagnostic trouble code (DTC) or make another attempt.

ECM-2740: ENGINE COOLANT TEMPERATURE (ECT) SENSOR. FAULTY SIGNAL (B5254T2; 2005-2007)

DIAGNOSTIC TROUBLE CODE (DTC) INFORMATION

see **DIAGNOSTIC TROUBLE CODE (DTC) INFORMATION**

FAULT-TRACING

see **FAULT-TRACING**

ECM-274C: ENGINE COOLANT TEMPERATURE (ECT) SENSOR. SIGNAL TOO HIGH (B5254T2; 2006-2007)

DIAGNOSTIC TROUBLE CODE (DTC) INFORMATION ECM-274C

Condition

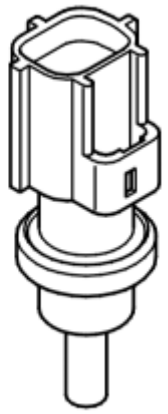

Fig. 108: Identifying Engine Coolant Temperature (ECT) Sensor
Courtesy of VOLVO CARS CORPORATION

Engine Control Module (ECM) checks the signal for engine temperature. If the engine temperature (signal) exceeds a certain limit, the control module checks current operating condition and compares to a calculated engine temperature. Calculations are based on, among other things, speed and load. If the signal from the engine temperature sensor matches a temperature that is higher than a certain limit value and is not reduced within a certain time, the control module interprets this as a malfunction and the diagnostic trouble code (DTC) is generated.

The diagnostic trouble code (DTC) can be diagnosed when the engine is running.

Substitute Value

- The engine coolant temperature (ECT) is calculated based on a model.

Possible Source

- Damaged engine coolant temperature (ECT) sensor.
- Contact resistance or oxidation in the terminals.
- Insufficient coolant in cooling system.
- Damaged thermostat.
- Clogged radiator.

Fault symptom[s]

- Malfunction indicator light (MIL), on
- Engine is difficult to start

FAULT-TRACING

see **FAULT-TRACING**

ECM-274D: ENGINE COOLANT TEMPERATURE (ECT) SENSOR. SIGNAL TOO LOW (B5254T2; 2005-2007)

DIAGNOSTIC TROUBLE CODE (DTC) INFORMATION

see **DIAGNOSTIC TROUBLE CODE (DTC) INFORMATION**

FAULT-TRACING

see **FAULT-TRACING**

ECM-275C: ENGINE COOLANT TEMPERATURE (ECT) SENSOR. SIGNAL TOO HIGH (B5254T2; 2006-2007)

DIAGNOSTIC TROUBLE CODE (DTC) INFORMATION ECM-275C

Condition

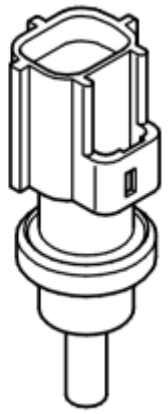

Fig. 109: Identifying Engine Coolant Temperature (ECT) Sensor
Courtesy of VOLVO CARS CORPORATION

Engine Control Module (ECM) checks the signal for engine temperature at start. This is done by the control module saving the values from inlet, fuel and engine temperature sensors at the moment of start. Then the control module compares the values. If the signal from the engine temperature sensor matches a temperature that exceeds a certain limit in relation to the other, the control module interprets this as a malfunction and the diagnostic trouble code (DTC) is generated.

The diagnostic trouble code (DTC) can be diagnosed after approx. 10 minutes with the engine running.

Substitute Value

- The engine coolant temperature (ECT) is calculated based on a model.

Possible Source

- Damaged engine coolant temperature (ECT) sensor.
- Contact resistance or oxidation in the terminals.

Fault symptom[s]

- Malfunction indicator light (MIL), on
- Engine is difficult to start

FAULT-TRACING

CHECKING THE STATUS

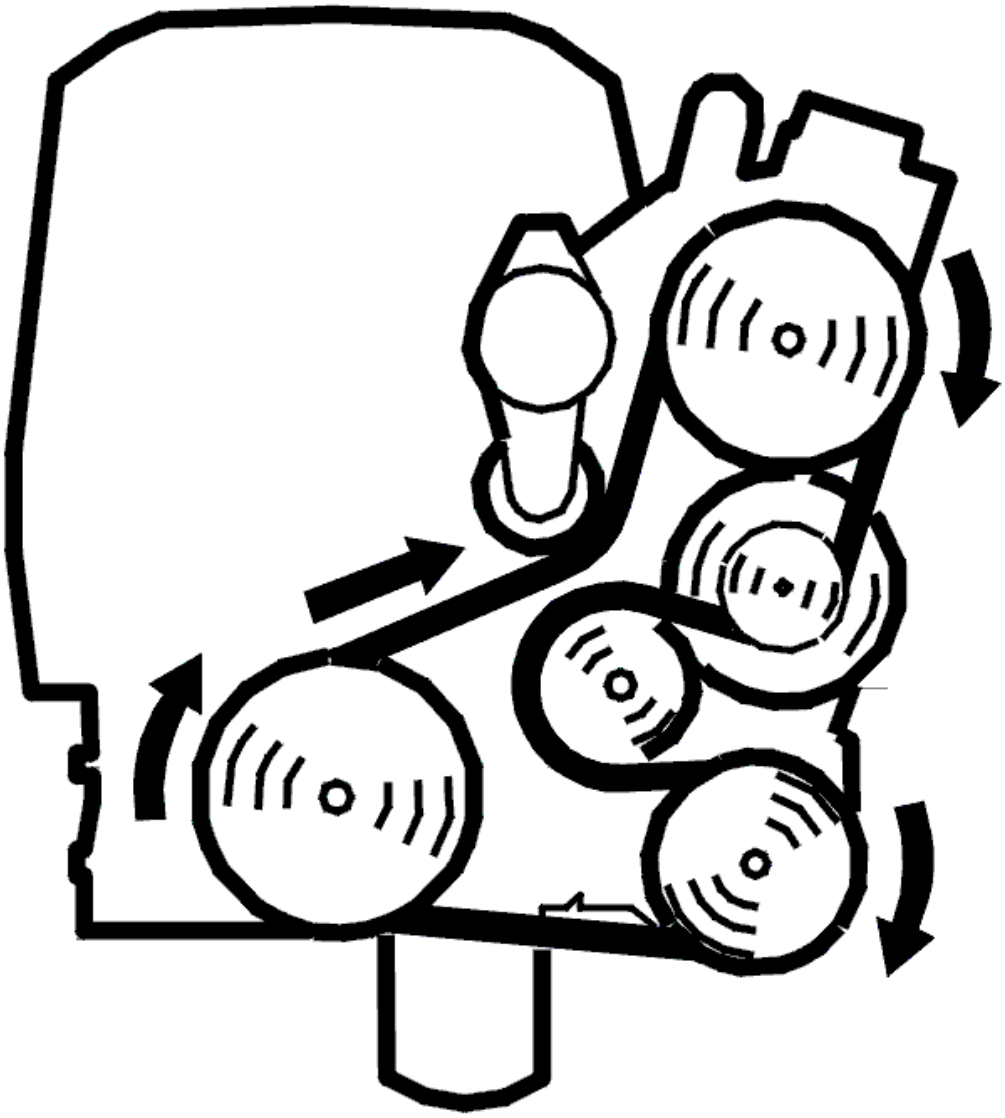

Fig. 110: Belt Routing / Engine Idling - Volvo
Courtesy of VOLVO CARS CORPORATION

Check whether the fault is permanent or intermittent by reading off the signal from the engine coolant temperature (ECT) sensor.

NOTE: **In order for the correct values to be shown, reading of the temperatures must take place at the moment of start.**

- Start the engine.

Check that the engine temperature is reasonable.

The fault is permanent if the signal is incorrect. The fault is intermittent if the signal is correct.

HINT: Remove the engine temperature sensor, but leave the connector in place. Leave the engine hood

open, then the engine temperature sensor shall show the same temperature as outdoor temperature.

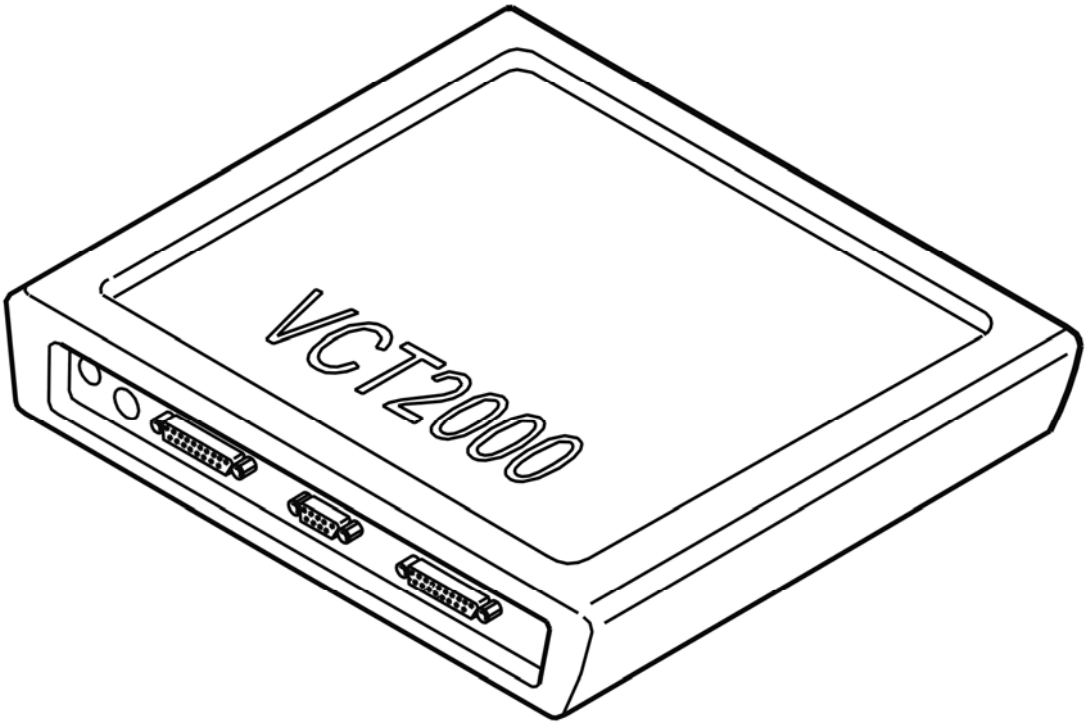

Fig. 111: Identifying VCT2000 Diagnostic Tool Symbol In VIDA
Courtesy of VOLVO CARS CORPORATION

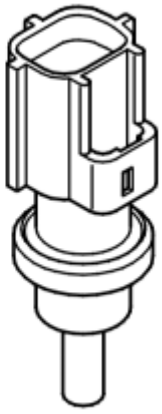

Fig. 112: Identifying Engine Coolant Temperature (ECT) Sensor
Courtesy of VOLVO CARS CORPORATION

- **Continue**

Refer to **CHECKING THE COMPONENT AND WIRING**

CHECKING THE COMPONENT AND WIRING

Fig. 113: Identifying Ignition In Off Position
Courtesy of VOLVO CARS CORPORATION

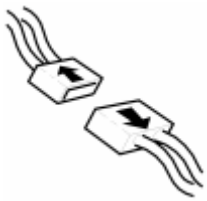

Fig. 114: Identifying Connectors
Courtesy of VOLVO CARS CORPORATION

- Ignition off.
- Unplug the engine temperature sensor connectors.

NOTE: The contact is gold-plated which requires the greatest care to not damage the contact, making it unusable.

- Check the connectors. Check for loose connections. Check for contact resistance. Check for oxidation.

  Check the engine temperature sensor's resistance between #1 and #2 (against the sensor).

  Remedy as necessary.

  Other information

  - see **CONNECTING THE BREAKOUT BOX**
  - For 5 cylinder turbocharged engines -2004, see **SIGNAL DESCRIPTION**
  - For 5 cylinder turbocharged engines 2005-, see **SIGNAL SPECIFICATION** .
  - see **COMPONENT SPECIFICATIONS**
  - For B5xx4T, see **REPLACING THE THERMOSTAT AND/OR ENGINE COOLANT TEMPERATURE SENSOR**
  - For B6xx4T, see **ENGINE COOLANT TEMPERATURE (ECT) SENSOR, REPLACING** .
  - see **CHECKING WIRING AND TERMINALS**

Fig. 115: Identifying 2-Bit Connector
Courtesy of VOLVO CARS CORPORATION

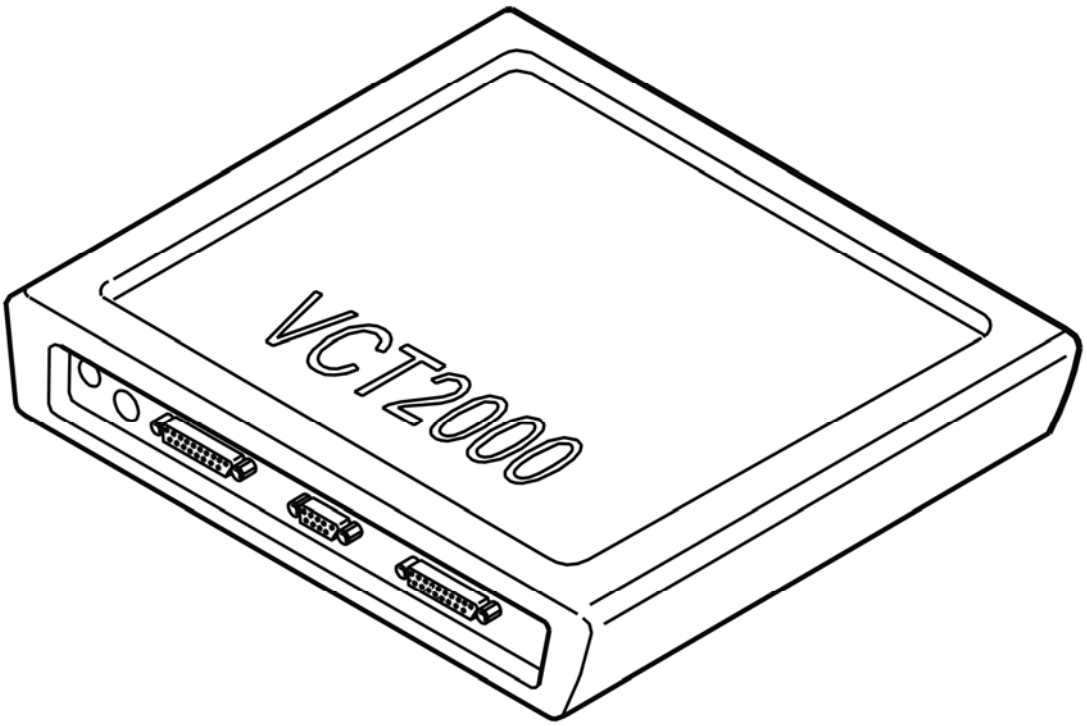

Fig. 116: Identifying VCT2000 Diagnostic Tool Symbol In VIDA
Courtesy of VOLVO CARS CORPORATION

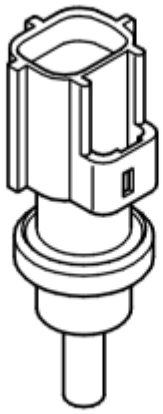

Fig. 117: Identifying Engine Coolant Temperature (ECT) Sensor
Courtesy of VOLVO CARS CORPORATION

- **Continue**

  Refer to **VERIFICATION**

VERIFICATION

VERIFICATION

HINT: After carrying out the repair, check that the fault has been remedied.

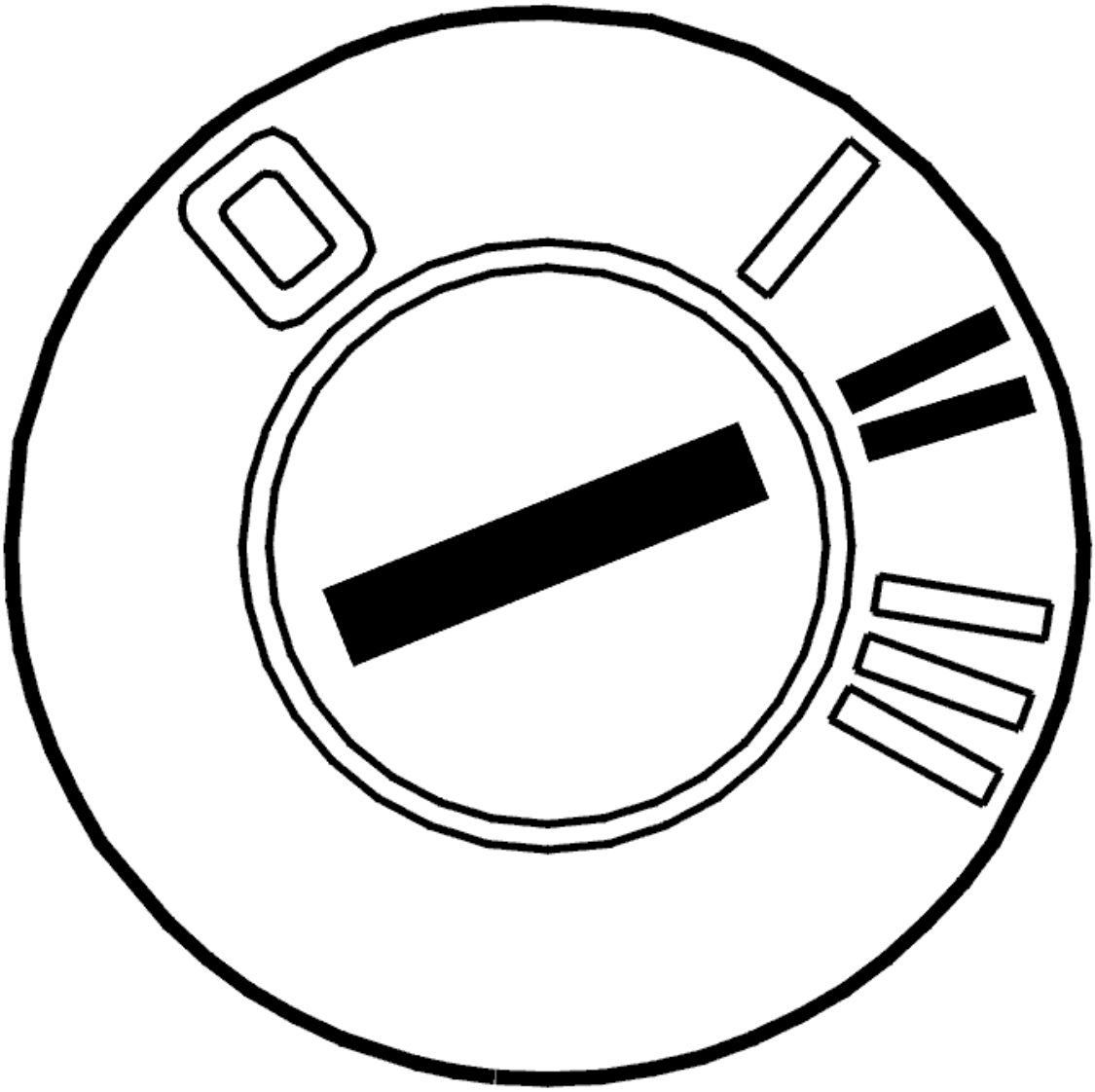

Fig. 118: Identifying Ignition ON
Courtesy of VOLVO CARS CORPORATION

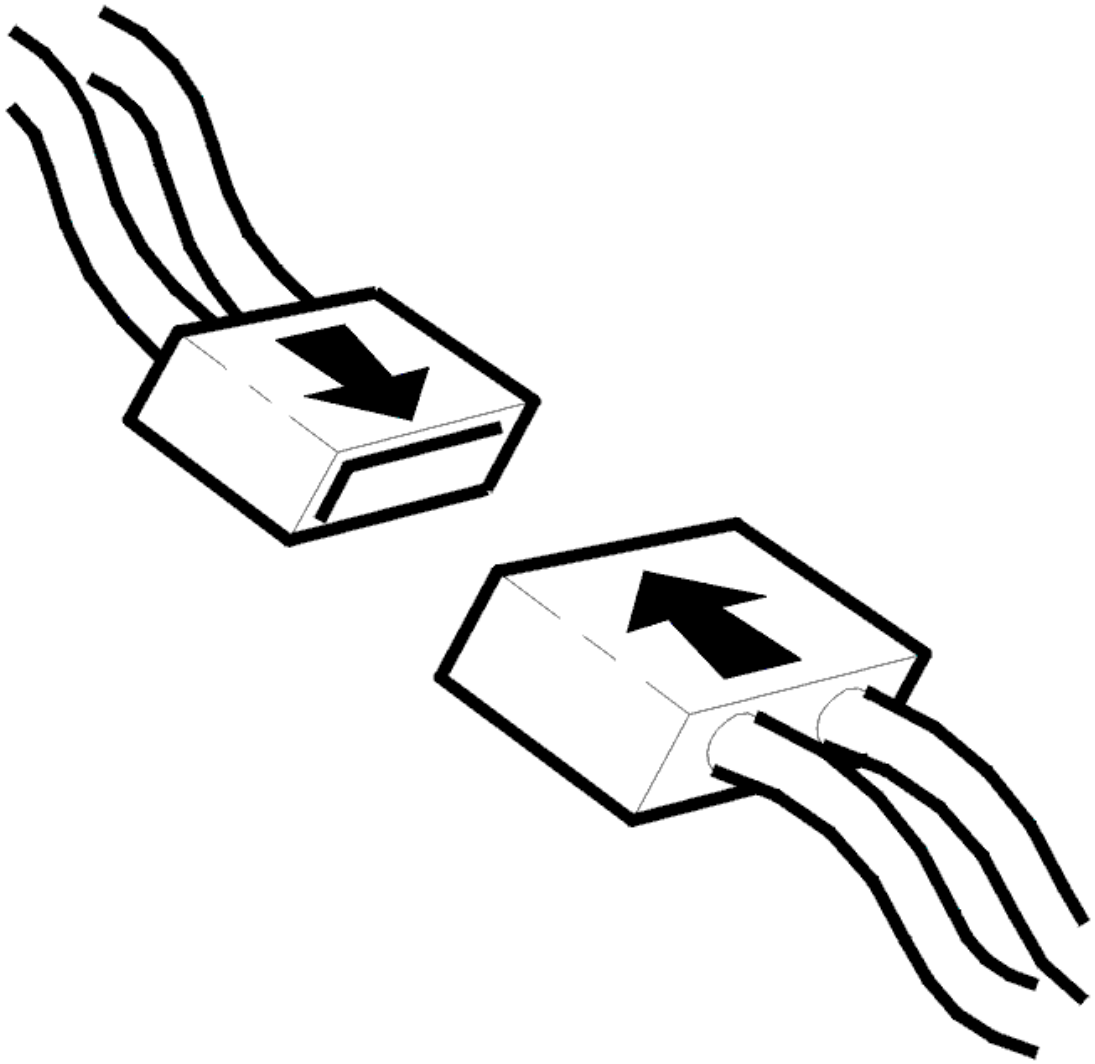

Fig. 119: Connecting Connector
Courtesy of VOLVO CARS CORPORATION

- Ignition off
- Reconnect the connectors, reinstall components etc.
- Ignition on.

  Read off the engine coolant temperature (ECT) sensor signal. Check that the signal is within its permitted range.

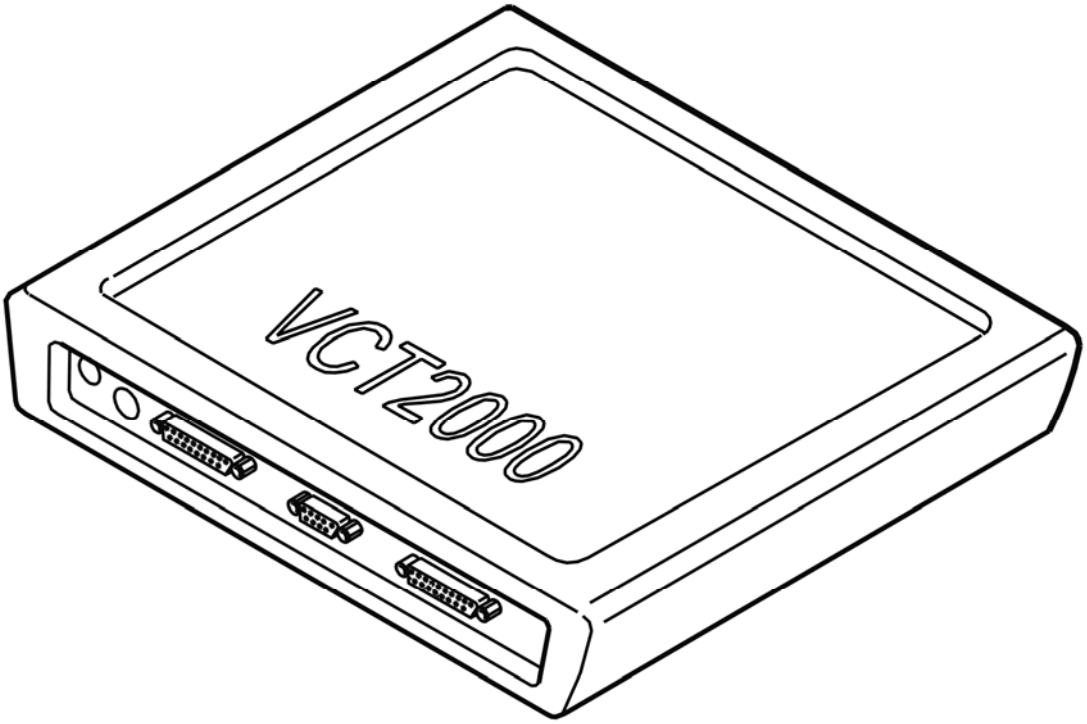

Fig. 120: Identifying VCT2000 Diagnostic Tool Symbol In VIDA
Courtesy of VOLVO CARS CORPORATION

Is the value OK?

- **YES**

  VERIFIED: Troubleshooting has been completed.

- **NO**

  Refer to **INFORMATION**

INFORMATION

FAULT-TRACING INFORMATION

The fault should have been detected and remedied. As this is not the case fault-tracing has failed.

Exit fault-tracing for this diagnostic trouble code (DTC) or make another attempt.

ECM-275D: ENGINE COOLANT TEMPERATURE (ECT) SENSOR. SIGNAL TOO LOW (B5254T2; 2006-2007)

DIAGNOSTIC TROUBLE CODE (DTC) INFORMATION ECM-275D

Condition

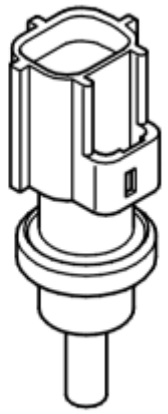

Fig. 121: Identifying Engine Coolant Temperature (ECT) Sensor
Courtesy of VOLVO CARS CORPORATION

Engine Control Module (ECM) checks the signal for engine temperature at start. This is done by the control module saving the values from inlet, fuel and engine temperature sensors at the moment of start. Then the control module compares the values. If the signal from the engine temperature sensor matches a temperature that is below a certain limit in relation to the other, the control module interprets this as a malfunction and the diagnostic trouble code (DTC) is generated.

The diagnostic trouble code (DTC) can be diagnosed after approx. 10 minutes with the engine running.

Substitute Value

- The engine coolant temperature (ECT) is calculated based on a model.

Possible Source

- Damaged engine coolant temperature (ECT) sensor.
- Contact resistance or oxidation in the terminals.

Fault symptom[s]

- Malfunction indicator light (MIL), on
- Engine is difficult to start

FAULT-TRACING

see **FAULT-TRACING**

ECM-278A: ADAPTIVE LAMBDA CONTROL, BANK 2. BOTTOM LIMIT (B6294T; 2003-2004)

DIAGNOSTIC TROUBLE CODE (DTC) INFORMATION

Condition

The control module receives information from the heated oxygen sensor (HO2S) about the fuel / air mixture. If the fuel / air mixture deviates from lambda=1, the short-term fuel trim will compensate for this by adjusting the injection time so that lambda=1 is achieved. Diagnostic trouble code (DTC) ECM-278A will be stored if the short-term fuel trim deviates (when long-term fuel trim diagnostics are activated) too much from the center position (value) for bank 2 (cylinders 4, 5 and 6).

Diagnostic trouble code (DTC) ECM-268A is stored for bank 1 (cylinders 1, 2 and 3).

Substitute Value

none

Possible Source

Upper limit

- intake air leakage
- exhaust system air leakage
- low fuel pressure
- defective heated oxygen sensor (HO2S).

Lower limit

- intake air leakage
- high fuel pressure
- leaking injectors
- defective mass air flow (MAF) sensor
- contaminated engine oil
- oil level too high
- defective heated oxygen sensor (HO2S).

Fault symptom[s]

- none.

FAULT-TRACING INFORMATION

see **FAULT-TRACING INFORMATION**

ECM-2800: FUEL PRESSURE SENSOR. SIGNAL TOO LOW (B5254T2; 2005-2007)

DIAGNOSTIC TROUBLE CODE (DTC) INFORMATION ECM-2800

Condition

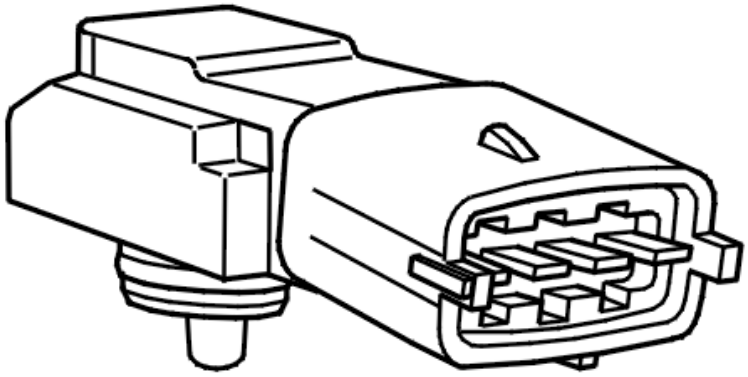

Fig. 122: Identifying Fuel Pressure Sensor
Courtesy of VOLVO CARS CORPORATION

The engine control module (ECM) checks the signal from the fuel pressure sensor.

The diagnostic trouble code (DTC) is stored if the engine control module (ECM) registers that the signal from the fuel pressure sensor is within the normal signal range of the sensor but that the signal is below a calculated desired value for the fuel pressure.

The diagnostic trouble code (DTC) can be diagnosed when the engine is running.

Substitute Value

- None.

Possible Source

- Short-circuit to ground in the signal cable
- Damaged fuel pressure sensor.

Fault symptom[s]

- Driving/Poor performance/lacks power
- Driving/Engine stalls/Unsure when/at all times

SIGNAL TOO LOW

CHECKING THE STATUS

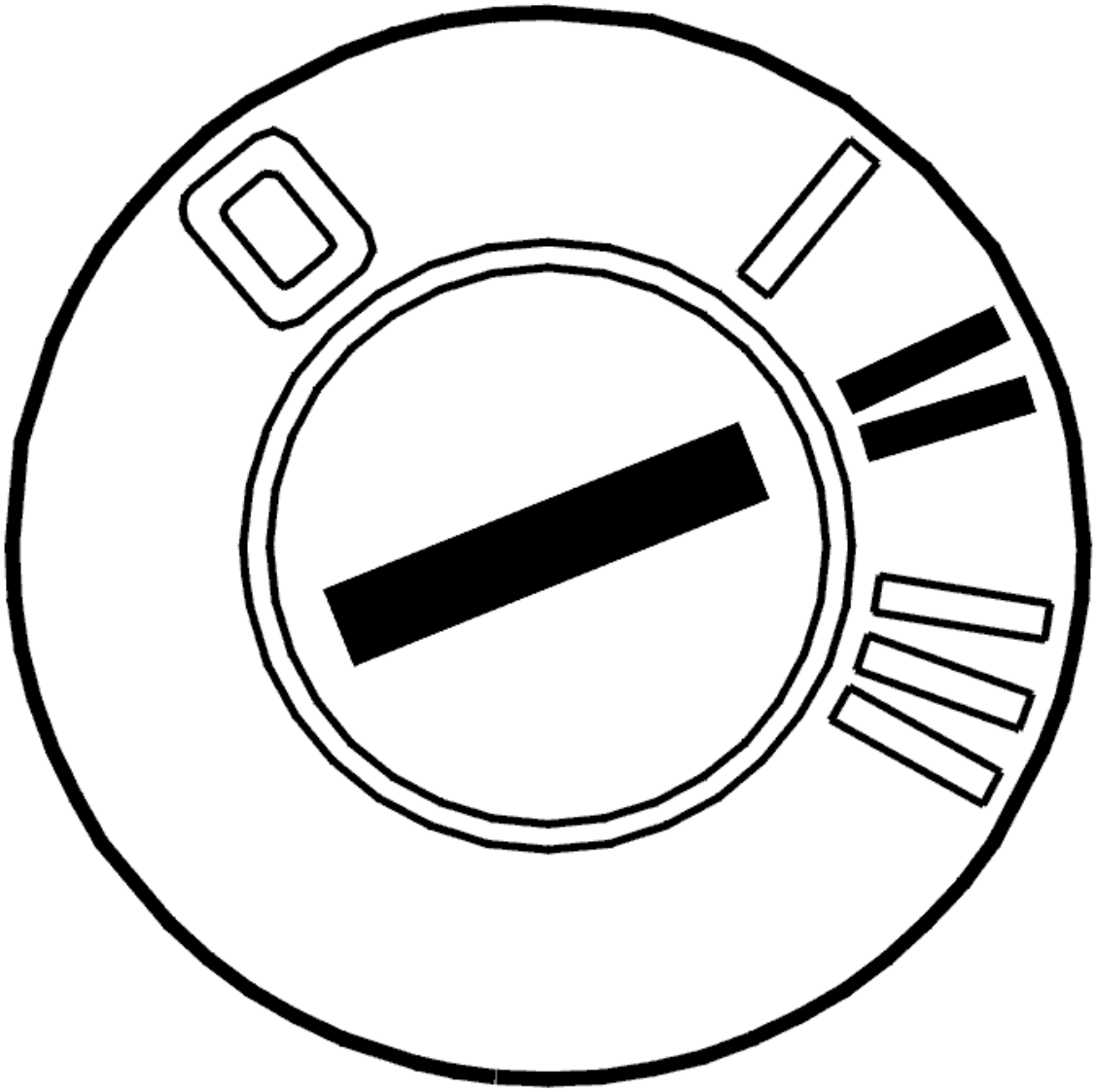

Fig. 123: Identifying Ignition ON
Courtesy of VOLVO CARS CORPORATION

- Ignition on.

  Check whether the fault is permanent or intermittent by reading off the signal from the fuel pressure sensor.

  With the engine at operating temperature and idling, the signal must be approximately 400 kPa.

  The fault is permanent if the signal is incorrect.

  The fault is intermittent if the signal is correct.

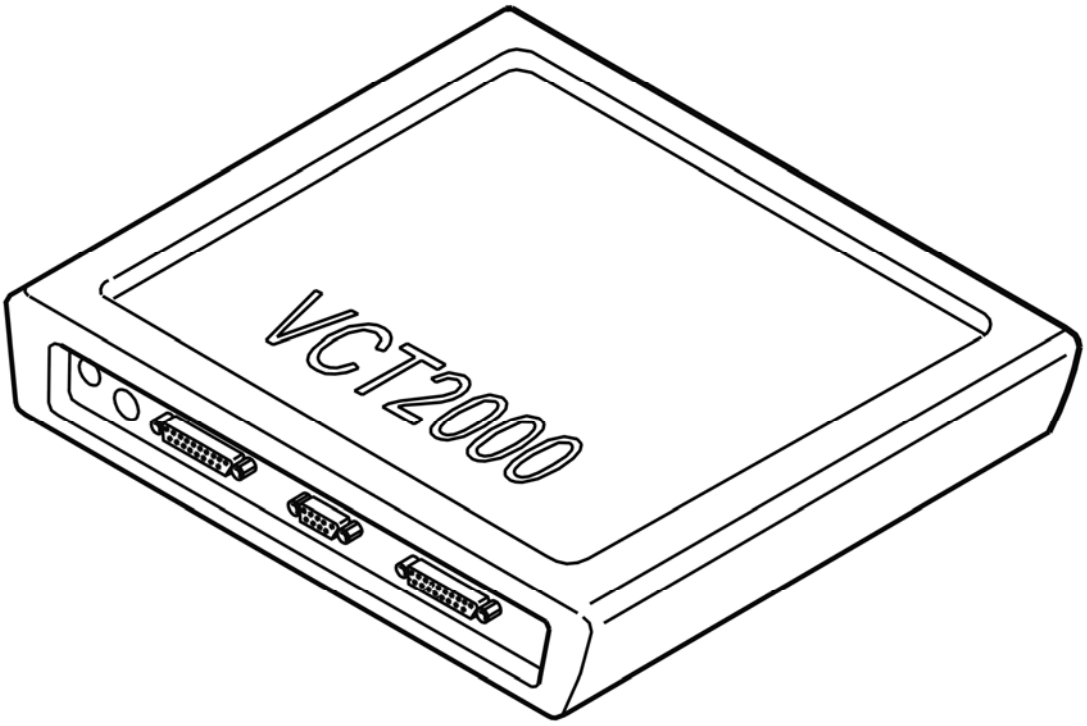

Fig. 124: Identifying VCT2000 Diagnostic Tool Symbol In VIDA
Courtesy of VOLVO CARS CORPORATION

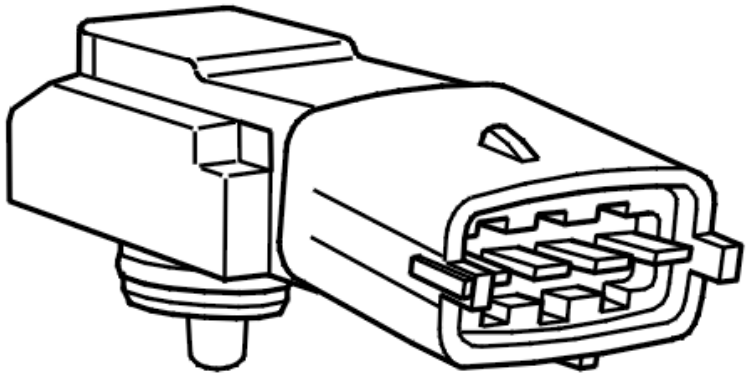

Fig. 125: Identifying Fuel Pressure Sensor
Courtesy of VOLVO CARS CORPORATION

- **Continue**

  Refer to **CHECKING COMPONENTS AND WIRING**

CHECKING COMPONENTS AND WIRING

Check the signal cable between control module terminal #A2 (#A2) and fuel pressure sensor terminal #4. Check for a short-circuit to ground.

Remedy as necessary.

Try a new fuel pressure sensor if no fault is found during the above fault-tracing.

Other information:

- see **CHECKING WIRING AND TERMINALS**
- For resistance values, see **COMPONENT SPECIFICATIONS**
- To connect the breakout box, see **CONNECTING THE BREAKOUT BOX**
- For 5 cylinder turbocharged engines -2004, see **SIGNAL DESCRIPTION**
- For 5 cylinder turbocharged engines 2005-, see **SIGNAL SPECIFICATION** .

- To access or replace the fuel pressure sensor, see **FUEL PRESSURE SENSOR, REPLACEMENT** .

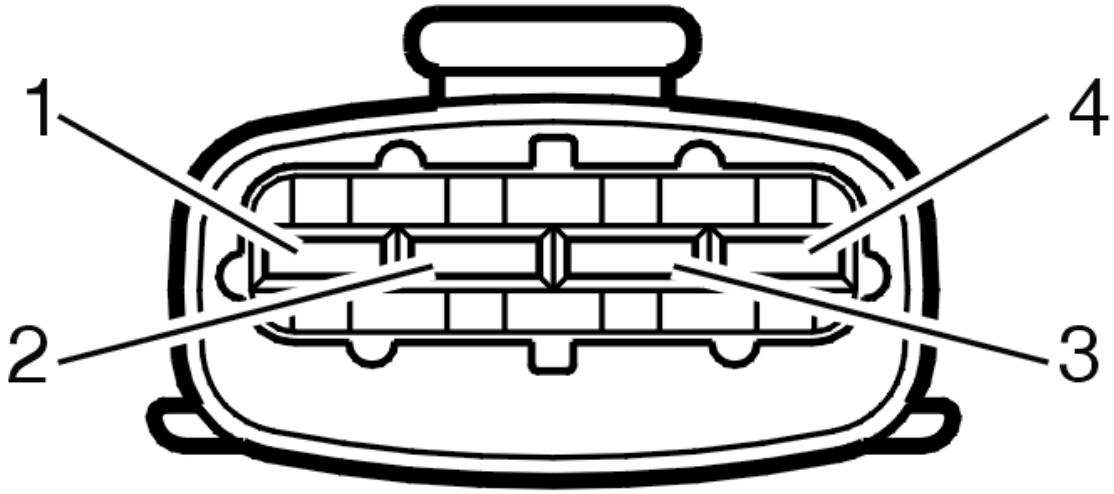

Fig. 126: Identifying 4-Bit Connector
Courtesy of VOLVO CARS CORPORATION

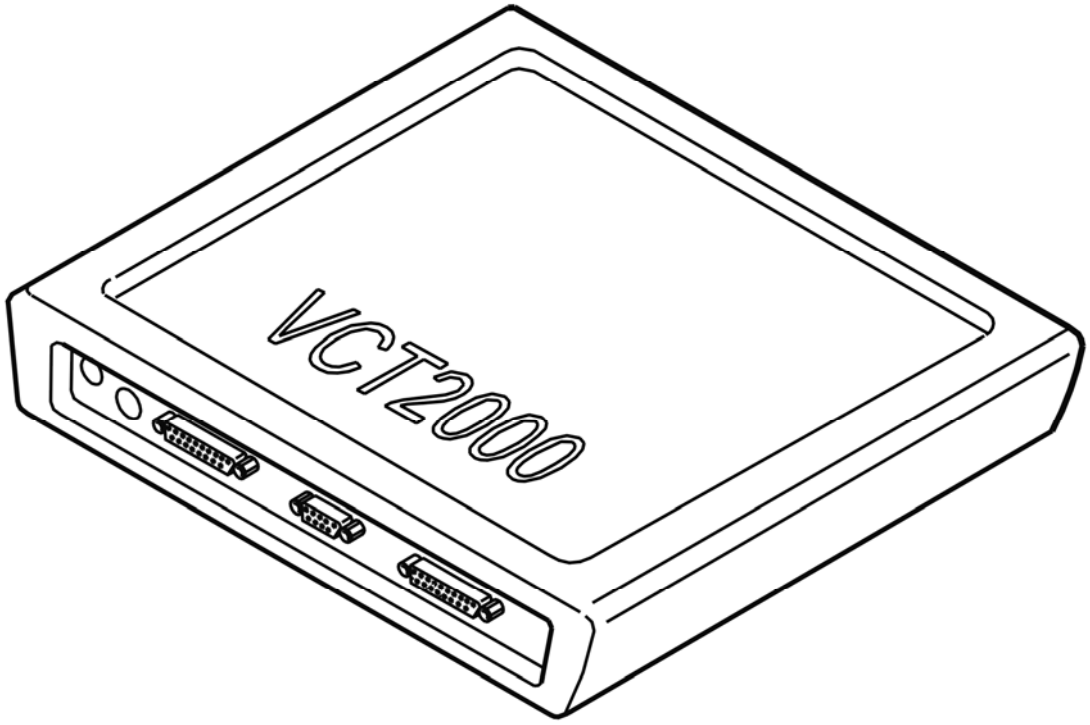

Fig. 127: Identifying VCT2000 Diagnostic Tool Symbol In VIDA
Courtesy of VOLVO CARS CORPORATION

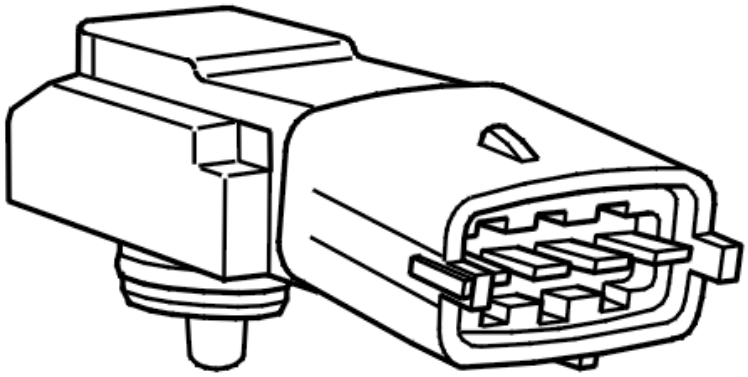

Fig. 128: Identifying Fuel Pressure Sensor
Courtesy of VOLVO CARS CORPORATION

- **Continue**

  Refer to **VERIFICATION**

VERIFICATION

VERIFICATION

HINT: After carrying out the repair, check that the fault has been remedied.

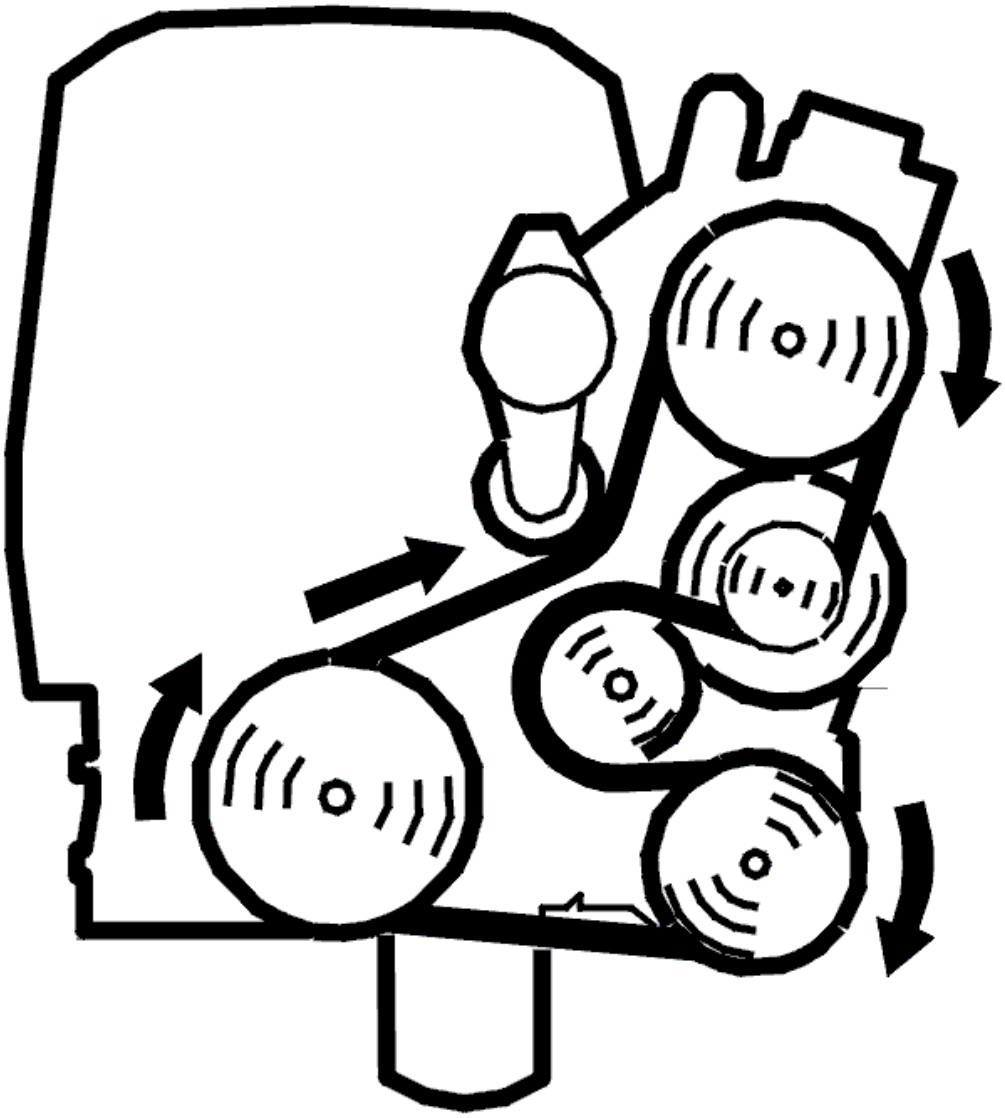

Fig. 129: Belt Routing / Engine Idling - Volvo
Courtesy of VOLVO CARS CORPORATION

- Reinstall the connectors, components etc.
- Start the engine and run it to normal operating temperature
- Read off the fuel pressure sensor signal.

  Check that the fuel pressure is approximately 400 kPa with the engine idling at operating temperature.

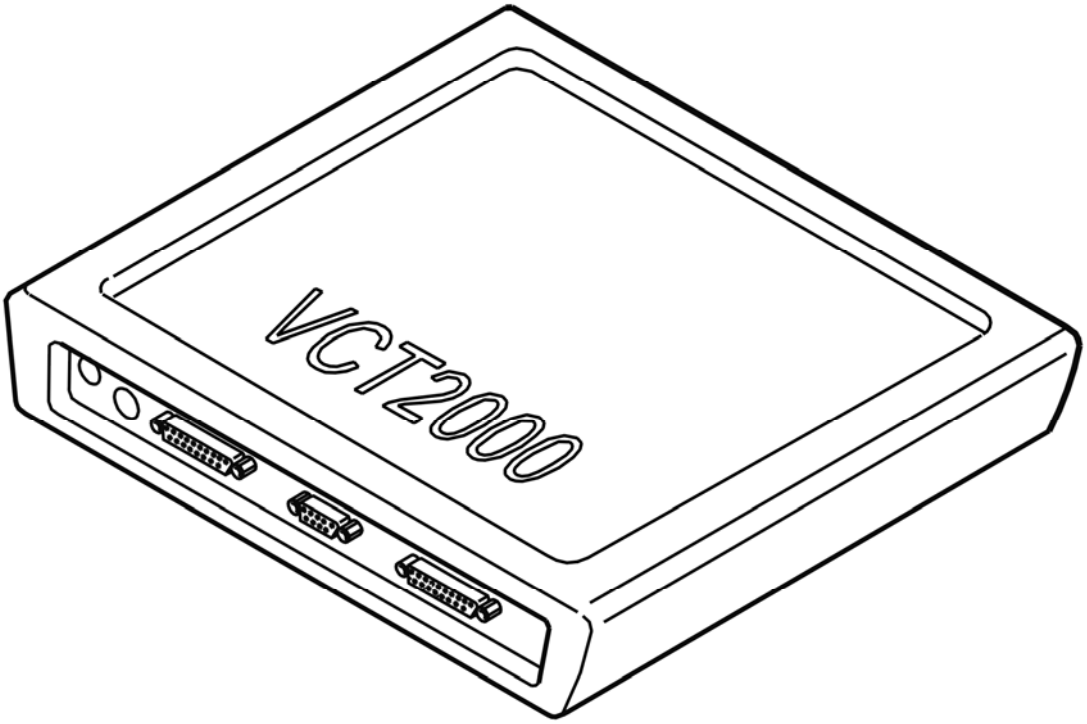

Fig. 130: Identifying VCT2000 Diagnostic Tool Symbol In VIDA
Courtesy of VOLVO CARS CORPORATION

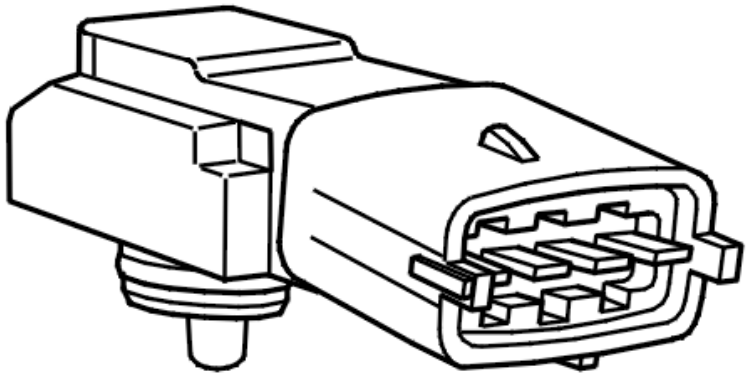

Fig. 131: Identifying Fuel Pressure Sensor
Courtesy of VOLVO CARS CORPORATION

Is the fuel pressure correct?

- **YES**

  VERIFIED: Troubleshooting has been completed.

- **NO**

  Refer to **INFORMATION**

INFORMATION

FAULT-TRACING INFORMATION

The fault should have been detected and remedied. As this is not the case fault-tracing has failed.

Exit fault-tracing for this diagnostic trouble code (DTC) or make another attempt.

ECM-2800: FUEL PRESSURE SENSOR. SIGNAL TOO LOW (B6294T; 2005-2006)

DIAGNOSTIC TROUBLE CODE (DTC) INFORMATION ECM-2800

see **DIAGNOSTIC TROUBLE CODE (DTC) INFORMATION ECM-2800**

SIGNAL TOO LOW

see **SIGNAL TOO LOW**

ECM-280A: FRONT HEATED OXYGEN SENSOR (HO2S), BANK 1. FAULTY SIGNAL. INTERMITTENT FAULT (B5254T2; B6294T; 2003-2004)

DIAGNOSTIC TROUBLE CODE (DTC) INFORMATION

Condition

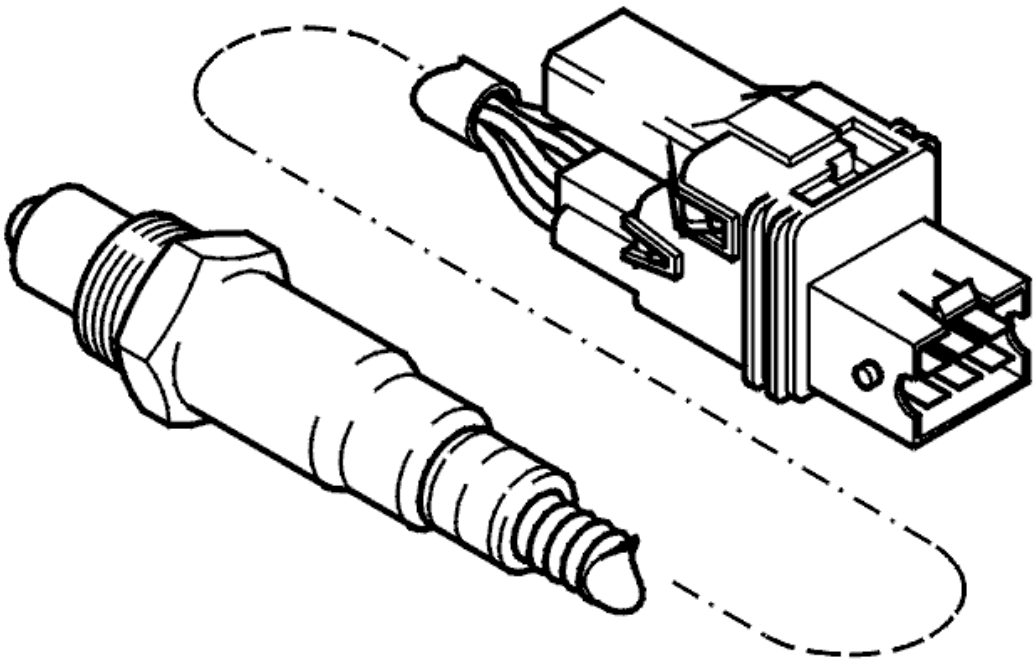

Fig. 132: Front Heated Oxygen Sensor
Courtesy of VOLVO CARS CORPORATION

Probe monitoring begins after probe preheating diagnostics are complete. Diagnostic trouble code (DTC) ECM-280A is stored if there is a fault in the front heated oxygen sensor (HO2S) or its wiring causing the signal to deviate from its permitted range

The control module registers four different types of fault:

1. Signal too high

   The control module compares the front and rear adaptation values. A diagnostic trouble code (DTC) is stored when the values deviate by more than 3%.

   NOTE: The fault may be in the front or rear heated oxygen sensor (HO2S) circuit.

   - the control module registers that the signal from the front probe is above 4.8 V for too long
   - the signal from the front probe does not deviate from lambda= 1
   - the signal from the front probe is showing a lean fuel mixture while the signal from the rear probe is showing a rich mixture
   - the signal from the front probe is showing a rich fuel mixture while the signal from the rear probe is showing a lean mixture.
2. Signal too low

   The control module monitors the aging of the probe by checking its dynamics when switching between lean and rich mixtures. The diagnostic trouble code (DTC) is stored if the control module registers that the probe is operating too slowly.

   - the control module registers that the signal from the front probe is above 4.8 V for too long
   - the signal from the front probe does not deviate from lambda= 1
   - the signal from the front probe is showing a lean fuel mixture while the signal from the rear probe is showing a rich mixture
   - the signal from the front probe is showing a rich fuel mixture while the signal from the rear probe is showing a lean mixture.
3. Signal missing

   The control module monitors cross-induction from the probe preheating. Diagnostic trouble code (DTC) is stored when cross induction exceeds the permitted value.

   - the control module registers that the signal from the front probe is above 4.8 V for too long
   - the signal from the front probe does not deviate from lambda= 1
   - the signal from the front probe is showing a lean fuel mixture while the signal from the rear probe is showing a rich mixture
   - the signal from the front probe is showing a rich fuel mixture while the signal from the rear probe is showing a lean mixture.
4. Faulty signal

   A diagnostic trouble code (DTC) stored when:

   - the control module registers that the signal from the front probe is above 4.8 V for too long
   - the signal from the front probe does not deviate from lambda= 1
   - the signal from the front probe is showing a lean fuel mixture while the signal from the rear probe

is showing a rich mixture
- the signal from the front probe is showing a rich fuel mixture while the signal from the rear probe is showing a lean mixture.

Substitute Value

- The rear heated oxygen sensor (HO2S) control is disabled
- Three-way catalytic converter (TWC) diagnostic is disabled

Possible Source

Signal too high:

- air leakage in the exhaust system
- short-circuit to power supply or ground in the signal cable (+) or supply cable for pump current
- defective heated oxygen sensor (HO2S)

Signal too low:

- the cable for calibration current and the cable for pump current are short-circuited to each other
- open-circuit in signal cable (-)
- open-circuit in cable for calibration current
- defective heated oxygen sensor (HO2S).

Signal missing:

- signal cable (+) and signal cable (-) short-circuited to each other
- one of the cables for heated oxygen sensor (HO2S) preheating is short-circuited to the probe's other wiring
- defective heated oxygen sensor (HO2S).

Faulty signal:

- short-circuit to supply voltage or ground in signal cable (+)
- short-circuit to supply voltage or ground in signal cable (-)
- short-circuit to supply voltage or ground in pump current cable
- short-circuit to supply voltage or ground in calibration current cable
- open-circuit in signal cable (+)
- defective heated oxygen sensor (HO2S).

Fault symptom[s]

- malfunction indicator lamp (MIL) lit.

FAULTY SIGNAL. INTERMITTENT FAULT

CHECKING CONNECTORS AND WIRING

CAUTION: Do not apply rust solvent spray or grease to the heated oxygen sensor (HO2S) connector.

Check the heated oxygen sensor (HO2S) connector. Check for contact resistance and oxidation. Check for loose connections.

Check the signal cable (+) between heated oxygen sensor (HO2S) terminal #1 and control module terminal #A41 (#A41). Check the signal cable (-) between heated oxygen sensor (HO2S) terminal #5 and the control module terminal #A42 (#A42). Check the cable for calibration current between heated oxygen sensor (HO2S) terminal #2 and control module terminal #A28 (#A28). Check the cable for pump current between heated oxygen sensor (HO2S) terminal #6 and control module terminal #A24 (#A24). Check for an intermittent short-circuit to supply voltage.

Check the signal cable (+) between heated oxygen sensor (HO2S) terminal #1 and control module terminal #A41 (#A41). Check the signal cable (-) between heated oxygen sensor (HO2S) terminal #5 and control module terminal #A42 (#A42). Check the cable for calibration current between heated oxygen sensor (HO2S) terminal #2 and the control module terminal #A28 (#A28). Check the cable for pump current between heated oxygen sensor (HO2S) terminal #6 and control module terminal #A24 (#A24). Check for an intermittent short-circuit to ground.

Check the signal cable (+) between heated oxygen sensor (HO2S) terminal #1 and control module terminal #A41 (#A41). Check for an intermittent open-circuit.

Other information

- To connect the breakout box / access the control module, see **CONNECTING THE BREAKOUT BOX**
- For B5xx4T, see **HEATED OXYGEN SENSOR (HO2S), REPLACING**
- For B6xx4T, see **HEATED OXYGEN SENSOR (HO2S), REPLACING** .
- For 5 cylinder turbocharged engines -2004, see **SIGNAL DESCRIPTION**
- For 5 cylinder turbocharged engines 2005-, see **SIGNAL SPECIFICATION** .
- For 6 cylinder engines -2004, see **SIGNAL SPECIFICATION**
- For 6 cylinder engines 2005-, see **SIGNAL SPECIFICATION** .
- see **CHECKING WIRING AND TERMINALS** .

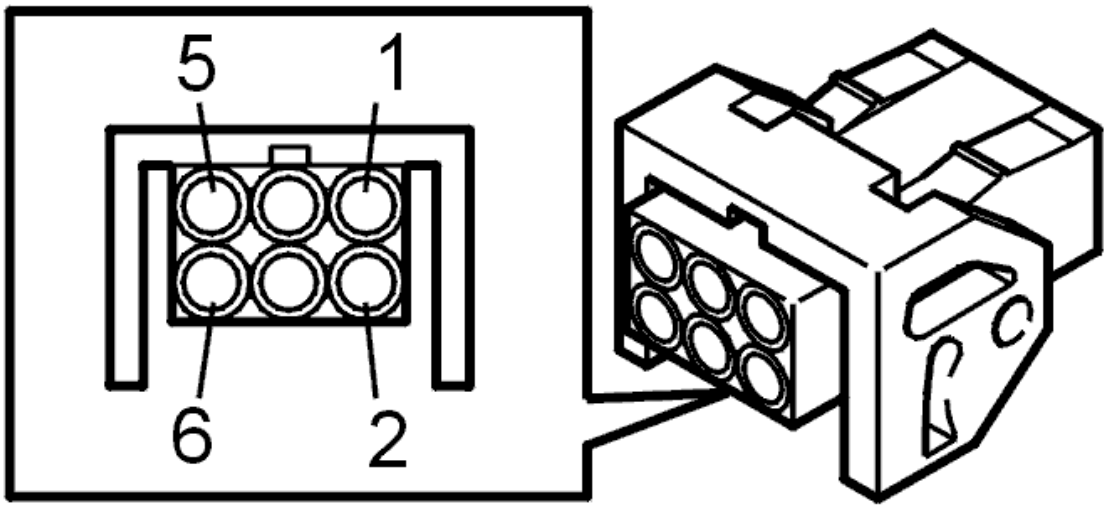

Fig. 133: Identifying Front Heated Oxygen Sensor Connector Terminals
Courtesy of VOLVO CARS CORPORATION

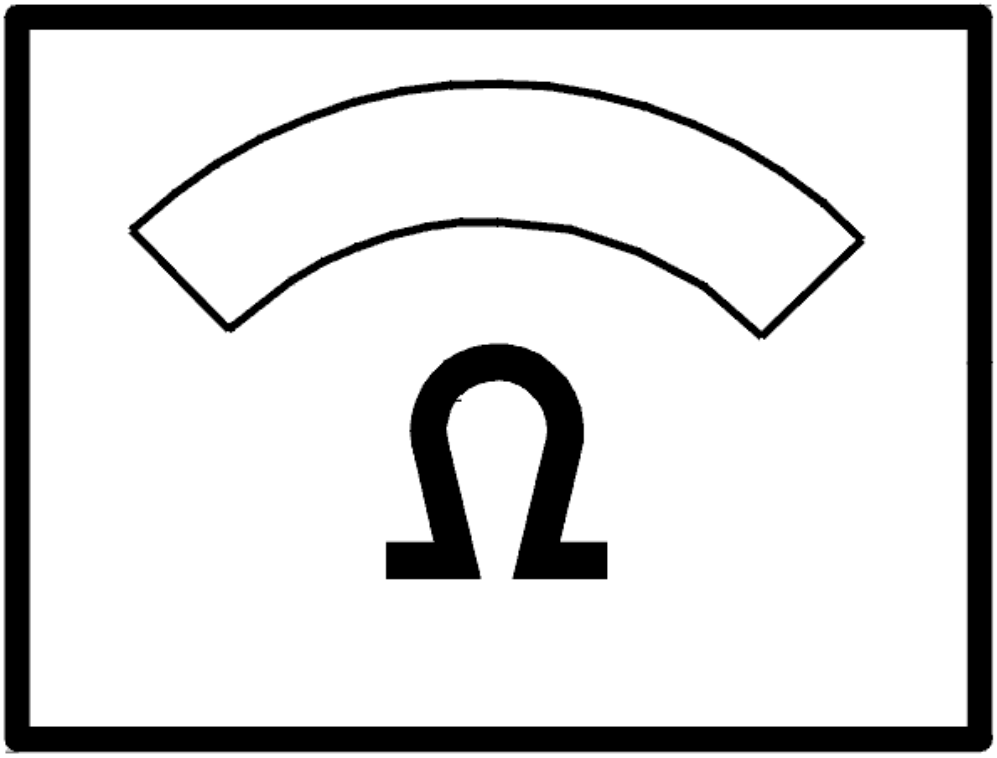

Fig. 134: Identifying Ohm Meter
Courtesy of VOLVO CARS CORPORATION

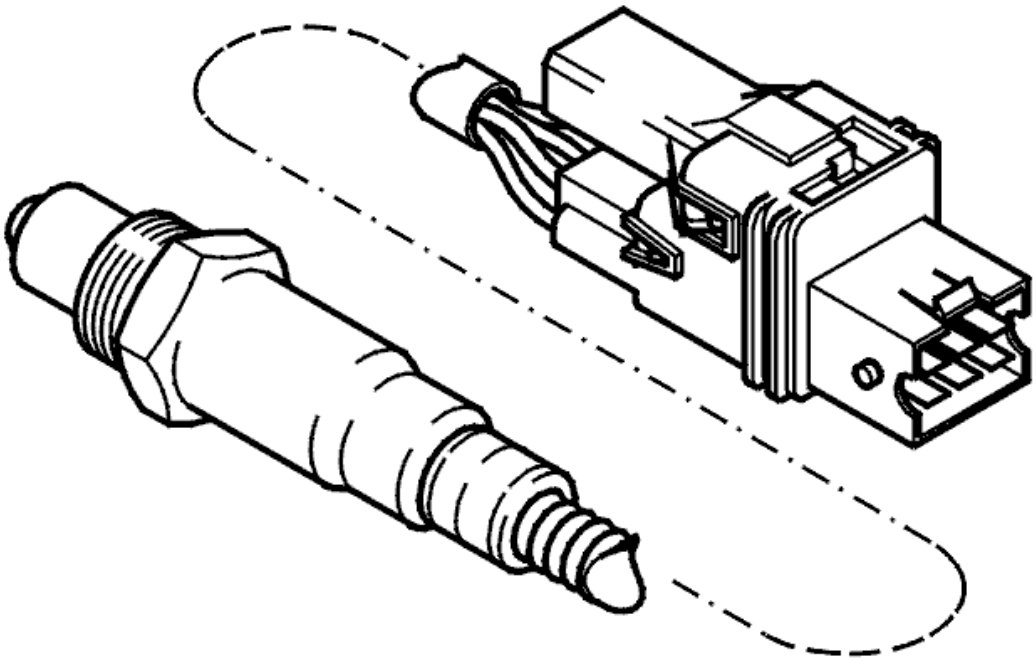

Fig. 135: Front Heated Oxygen Sensor
Courtesy of VOLVO CARS CORPORATION

- **Continue**

  Refer to **INFORMATION**

INFORMATION

FAULT-TRACING INFORMATION

If the fault is intermittent, do not verify fault-tracing if the fault does not recur.

It is possible to view the information again, or leave fault-tracing for this diagnostic trouble code (DTC).

ECM-280A: FRONT HEATED OXYGEN SENSOR (HO2S), BANK 1. FAULTY SIGNAL. PERMANENT FAULT (B5254T2; B6294T; 2003-2004)

DIAGNOSTIC TROUBLE CODE (DTC) INFORMATION

see **DIAGNOSTIC TROUBLE CODE (DTC) INFORMATION**

FAULTY SIGNAL. PERMANENT FAULT

CHECKING CONNECTOR, WIRING AND COMPONENTS

CAUTION: Do not apply rust solvent spray or grease to the heated oxygen sensor (HO2S) connector.

Check the heated oxygen sensor (HO2S) connector. Check for contact resistance and oxidation.

Check the signal cable (+) between the heated oxygen sensor (HO2S) terminal #1 and control module terminal #A41 (#A41). Check the signal cable (-) between heated oxygen sensor (HO2S) terminal #5 and the control module terminal #A42 (#A42). Check the cable for calibration current between heated oxygen sensor (HO2S) terminal #2 and control module terminal #A28 (#A28). Check the cable for pump current between heated oxygen sensor (HO2S) terminal #6 and control module terminal #A24 (#A24). Check these cables for a short-circuit to supply voltage and a short-circuit to ground.

Check the signal cable (+) between heated oxygen sensor (HO2S) terminal #1 and control module terminal #A41 (#A41). Check for an open-circuit.

If the connector and cables are OK try a new heated oxygen sensor (HO2S).

Remedy as necessary.

Other information

- To connect the breakout box / access the control module, see **CONNECTING THE BREAKOUT BOX**
- For B5xx4T, see **HEATED OXYGEN SENSOR (HO2S), REPLACING**
- For B6xx4T, see **HEATED OXYGEN SENSOR (HO2S), REPLACING** .
- For 5 cylinder turbocharged engines -2004, see **SIGNAL DESCRIPTION**
- For 5 cylinder turbocharged engines 2005-, see **SIGNAL SPECIFICATION** .
- For 6 cylinder engines -2004, see **SIGNAL SPECIFICATION**
- For 6 cylinder engines 2005-, see **SIGNAL SPECIFICATION** .
- see **CHECKING WIRING AND TERMINALS** .

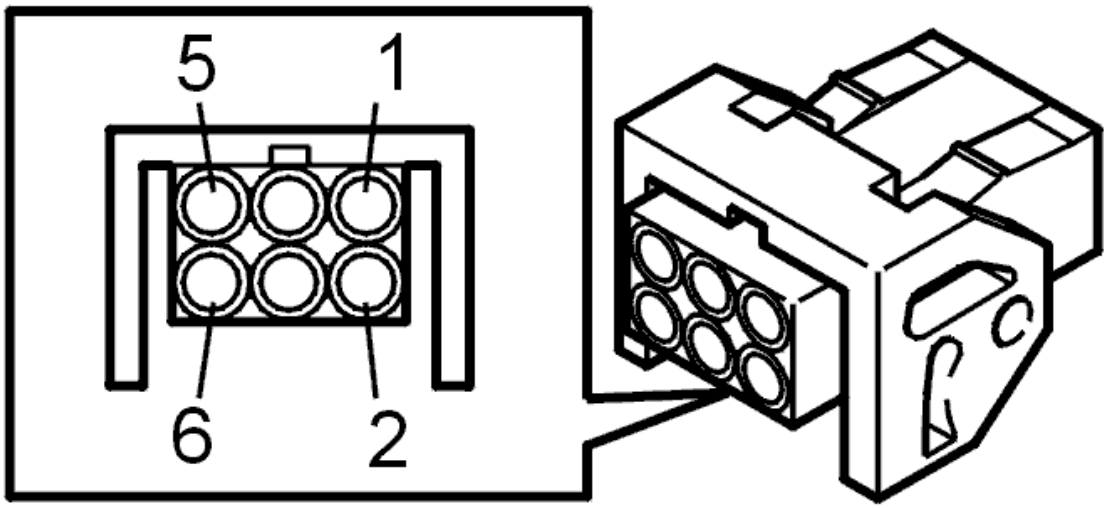

Fig. 136: Identifying Front Heated Oxygen Sensor Connector Terminals
Courtesy of VOLVO CARS CORPORATION

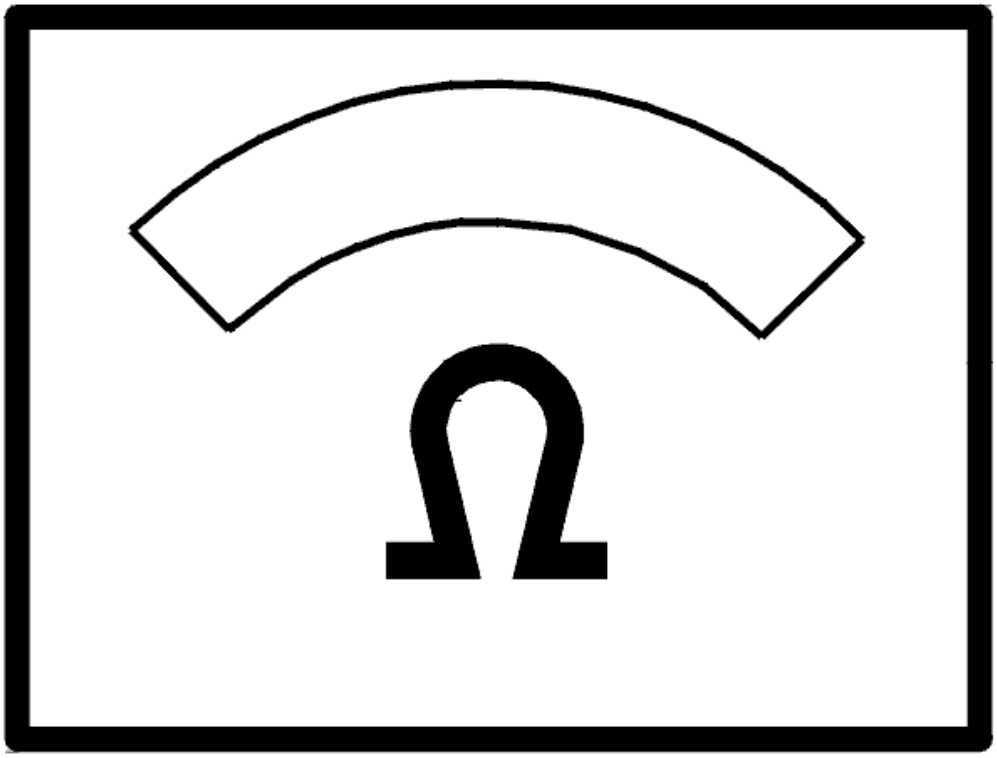

Fig. 137: Identifying Ohm Meter
Courtesy of VOLVO CARS CORPORATION

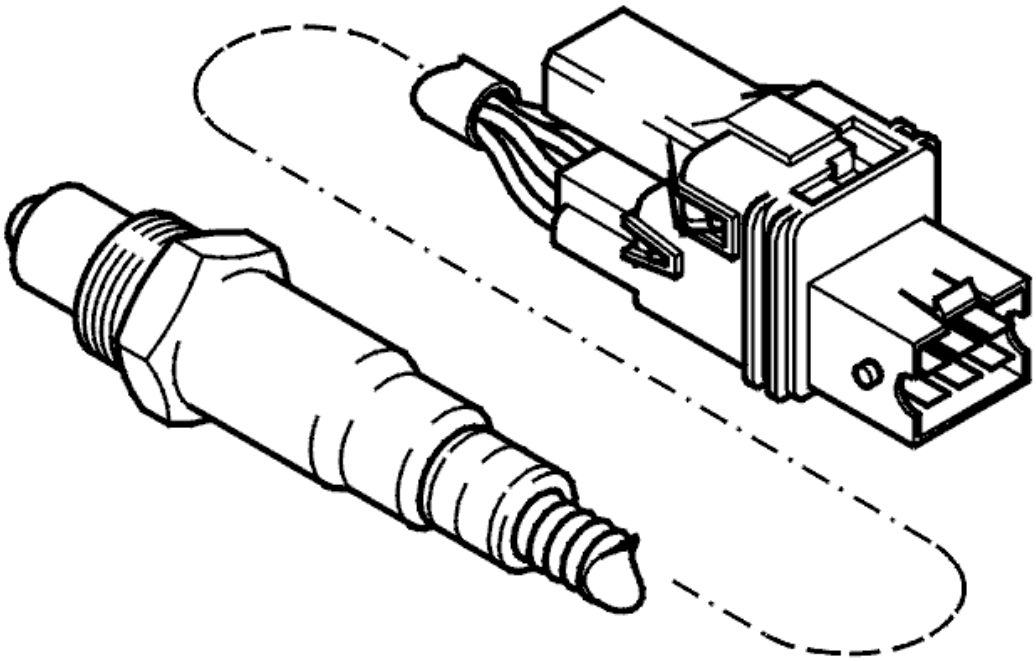

Fig. 138: Front Heated Oxygen Sensor
Courtesy of VOLVO CARS CORPORATION

- **Continue**

  Refer to **VERIFICATION**

VERIFICATION

VERIFICATION

HINT: After carrying out the repair, check that the fault has been remedied.

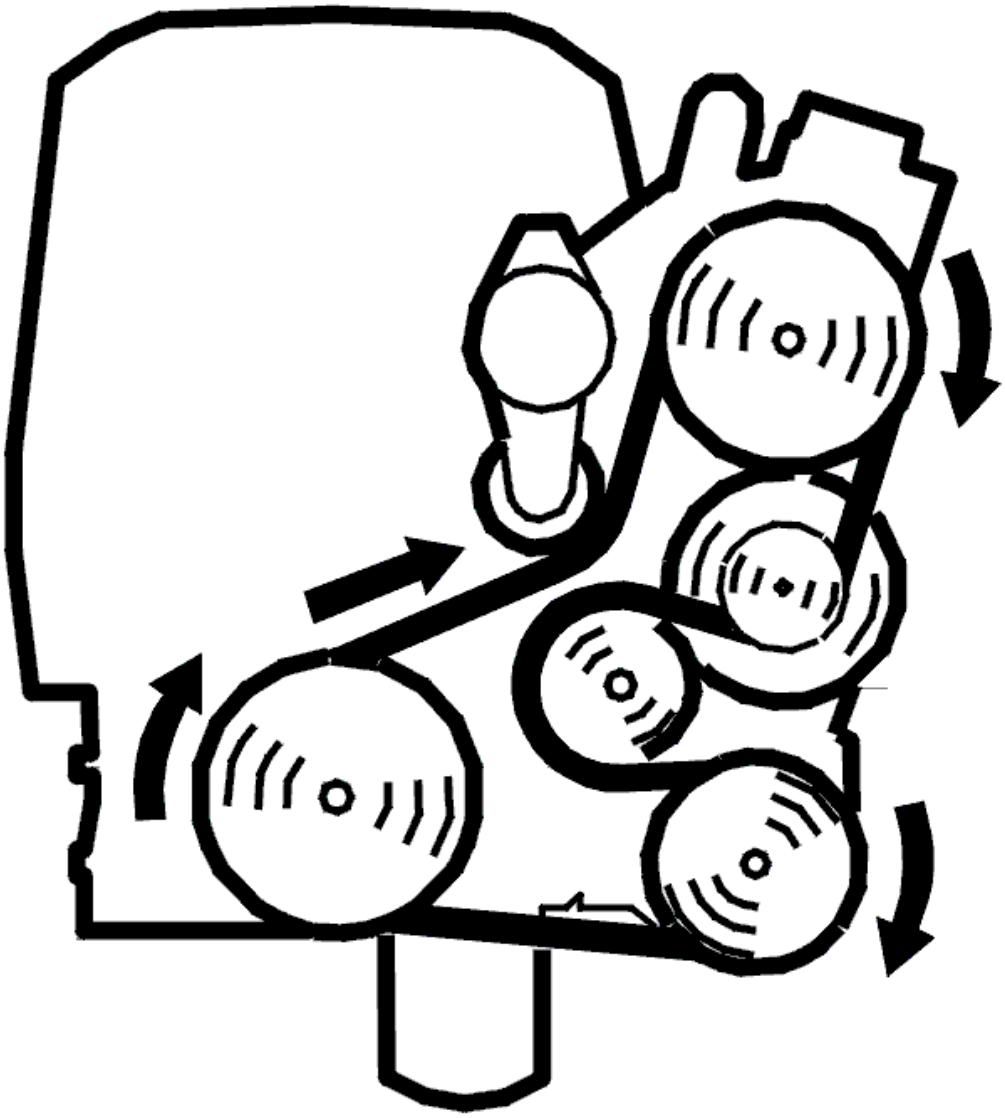

Fig. 139: Belt Routing / Engine Idling - Volvo
Courtesy of VOLVO CARS CORPORATION

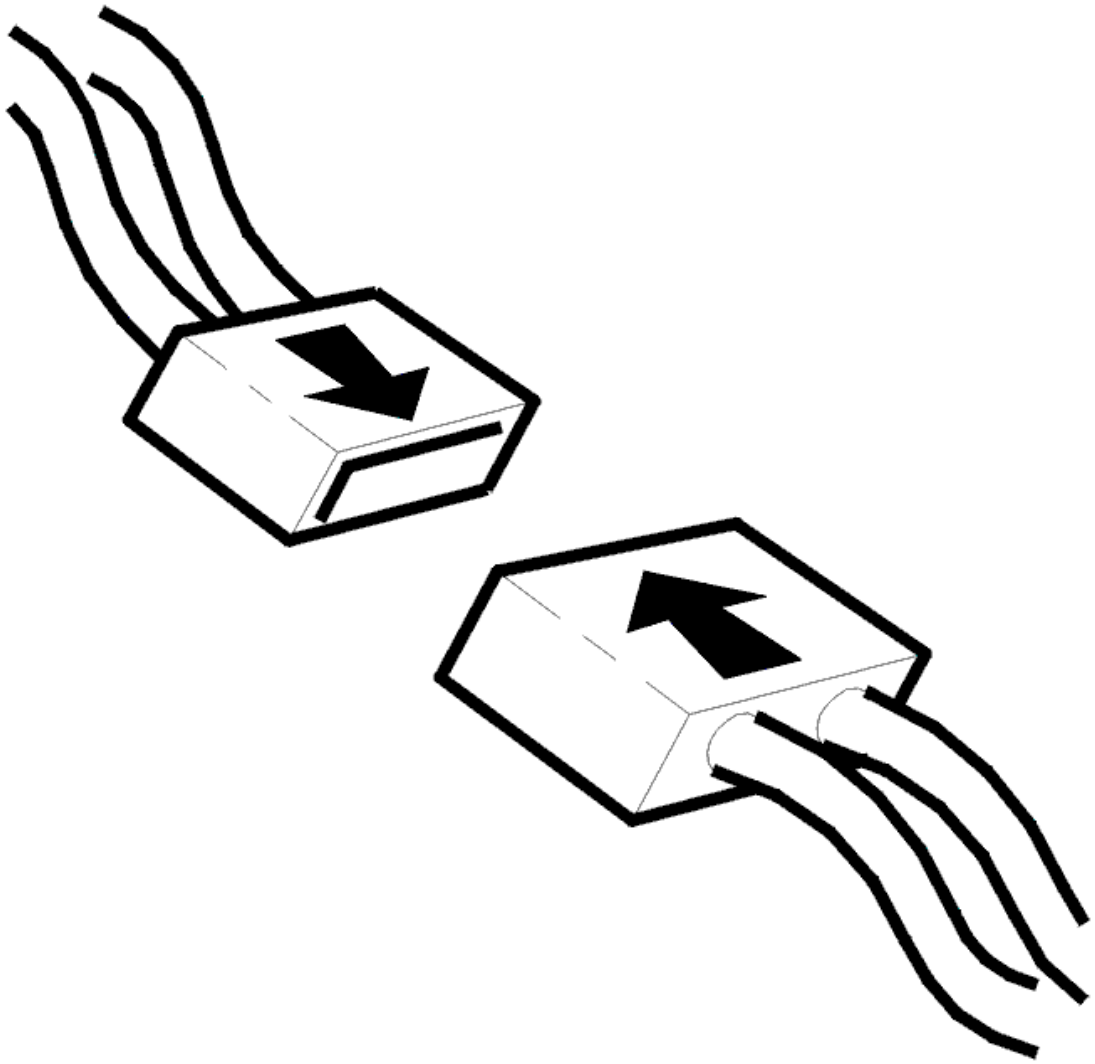

Fig. 140: Connecting Connector
Courtesy of VOLVO CARS CORPORATION

- Ignition off.
- Reconnect connectors, reinstall components.
- Test drive the car according to the TRIP schedule, see **VERIFYING REPAIRS** .

NOTE: **After test driving the engine should not be turned off. The test drive must be carried out again.**

Connect VIDA (Volvo scan tool) again and read out the front heated oxygen sensor (HO2S) diagnostic trouble code (DTC) status.

The text NOT READY is displayed if diagnosis is underway.

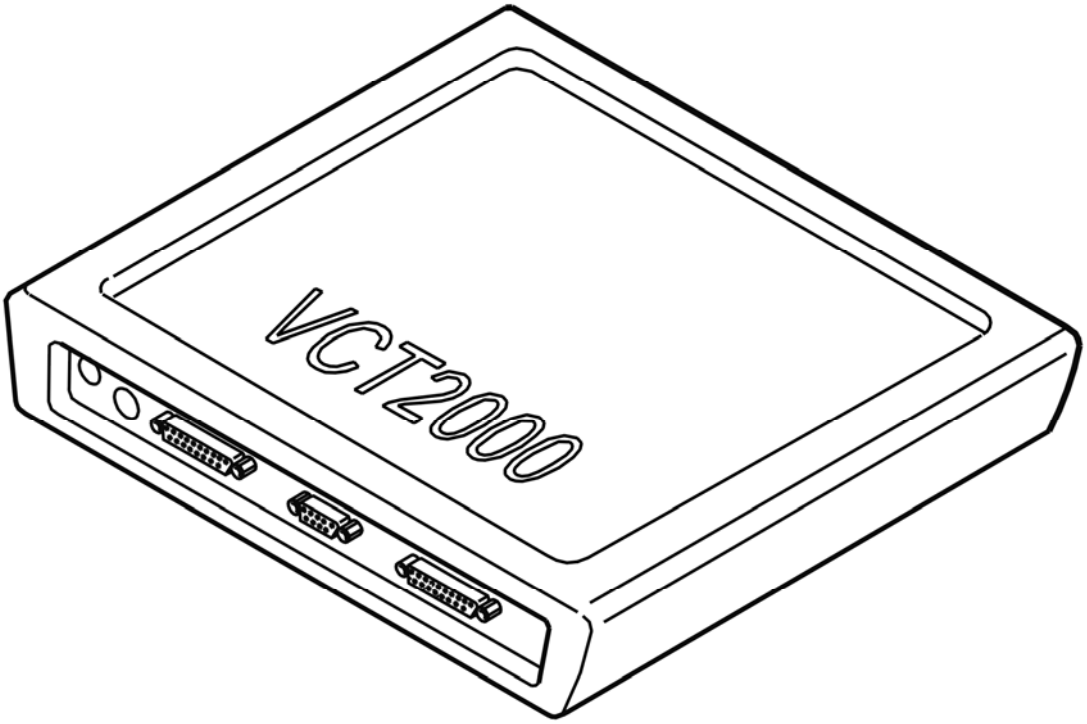

Fig. 141: Identifying VCT2000 Diagnostic Tool Symbol In VIDA
Courtesy of VOLVO CARS CORPORATION

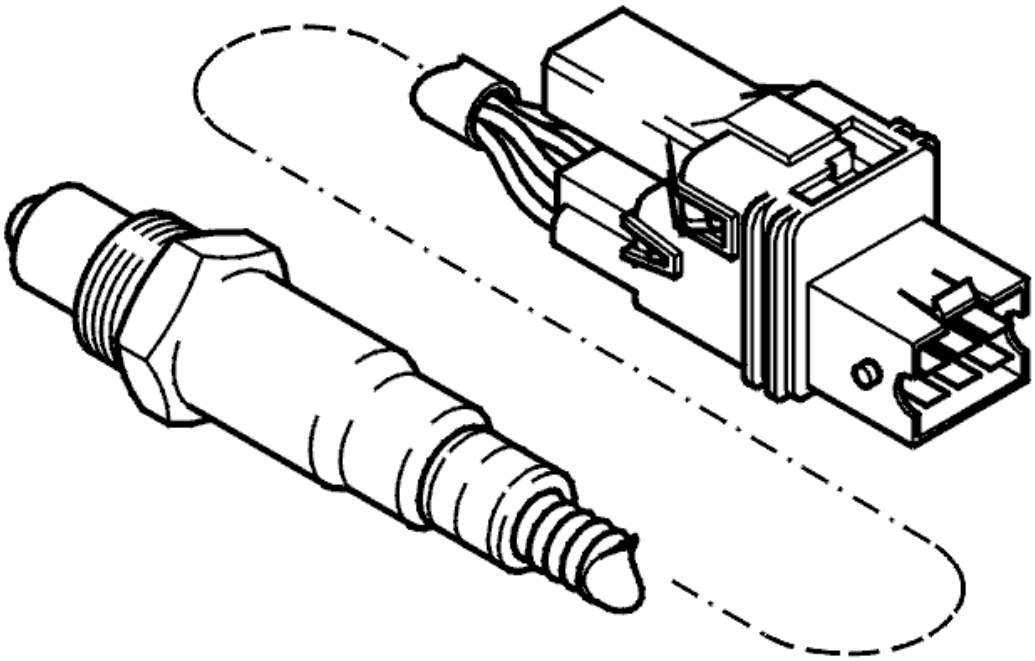

Fig. 142: Front Heated Oxygen Sensor
Courtesy of VOLVO CARS CORPORATION

Is FAULT NOT REGISTERED displayed?

- **YES**

  VERIFIED: Troubleshooting has been completed.

- **NO**

  Refer to **INFORMATION**

INFORMATION

FAULT-TRACING INFORMATION

The fault should have been detected and remedied. As this is not the case fault-tracing has failed.

Exit fault-tracing for this diagnostic trouble code (DTC) or make another attempt.

ECM-280A: FRONT HEATED OXYGEN SENSOR (HO2S), BANK 1. SIGNAL MISSING. INTERMITTENT FAULT (B5254T2; B6294T; 2003-2004)

DIAGNOSTIC TROUBLE CODE (DTC) INFORMATION

see **DIAGNOSTIC TROUBLE CODE (DTC) INFORMATION**

SIGNAL MISSING. INTERMITTENT FAULT

CHECKING THE WIRING

CAUTION: Do not apply rust solvent spray or grease to the heated oxygen sensor (HO2S) connector.

Check the signal cable (+) between heated oxygen sensor (HO2S) terminal #1 and control module terminal #A41 (#A41). Check the signal cable (-) between heated oxygen sensor (HO2S) terminal #5 and control module terminal #A42 (#A42). Check for a short-circuit to each other.

Check the power supply to heated oxygen sensor (HO2S) terminal #3 and the signal cable between heated oxygen sensor (HO2S) terminal #4 and control module terminal #A18 (#A18). Check for an intermittent short-circuit to the other wiring for the heated oxygen sensor (HO2S).

Other information

- To connect the breakout box / access the control module, see **CONNECTING THE BREAKOUT BOX**
- For B5xx4T, see **HEATED OXYGEN SENSOR (HO2S), REPLACING**
- For B6xx4T, see **HEATED OXYGEN SENSOR (HO2S), REPLACING** .
- For 5 cylinder turbocharged engines -2004, see **SIGNAL DESCRIPTION**
- For 5 cylinder turbocharged engines 2005-, see **SIGNAL SPECIFICATION** .
- For 6 cylinder engines -2004, see **SIGNAL SPECIFICATION**
- For 6 cylinder engines 2005-, see **SIGNAL SPECIFICATION** .
- see **CHECKING WIRING AND TERMINALS** .

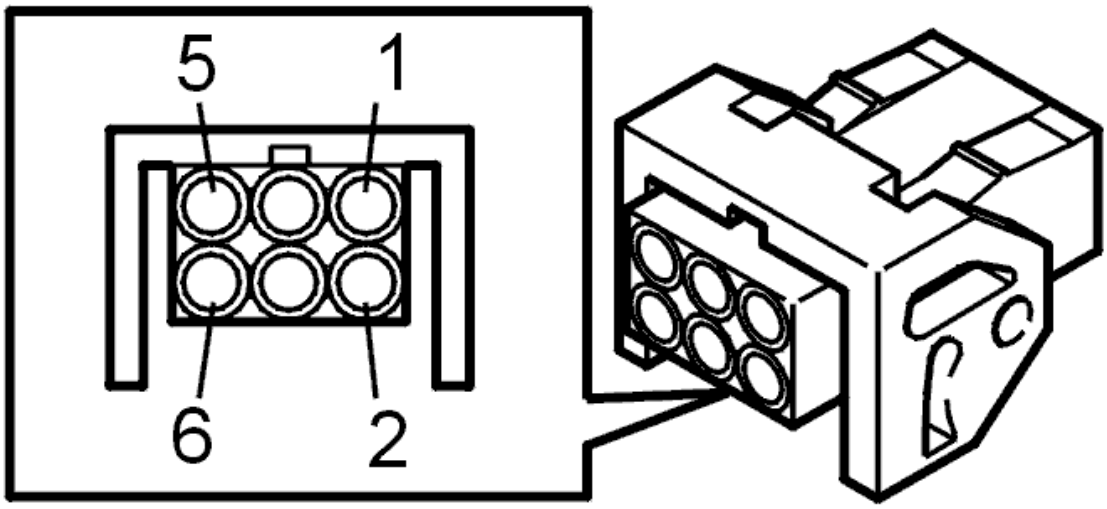

Fig. 143: Identifying Front Heated Oxygen Sensor Connector Terminals
Courtesy of VOLVO CARS CORPORATION

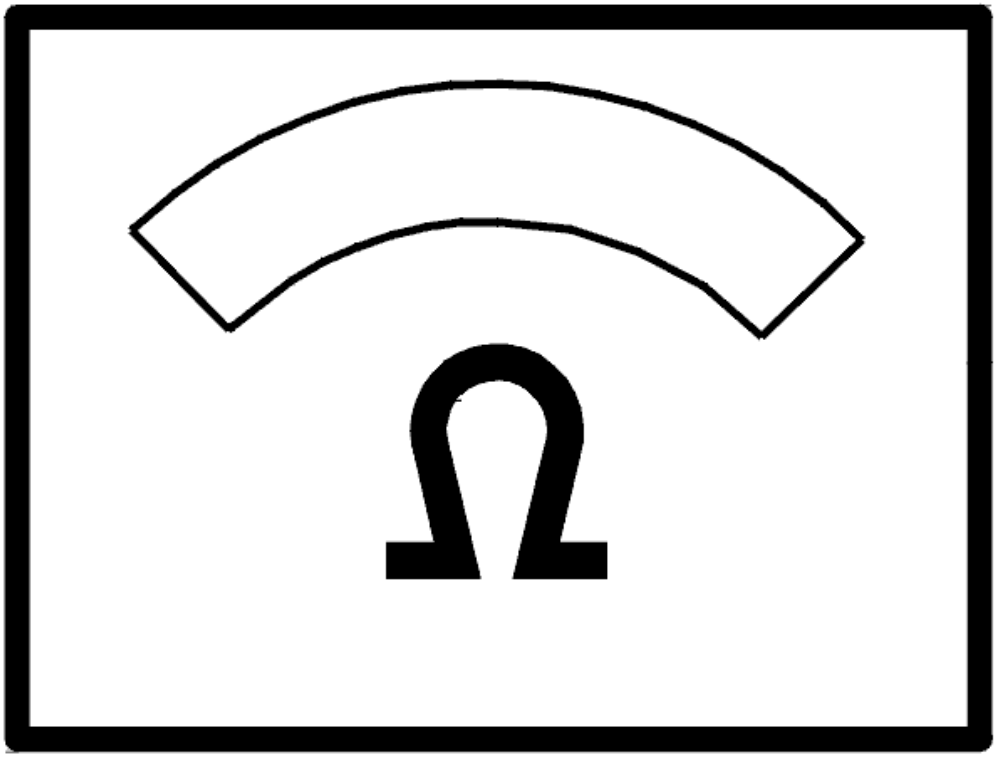

Fig. 144: Identifying Ohm Meter
Courtesy of VOLVO CARS CORPORATION

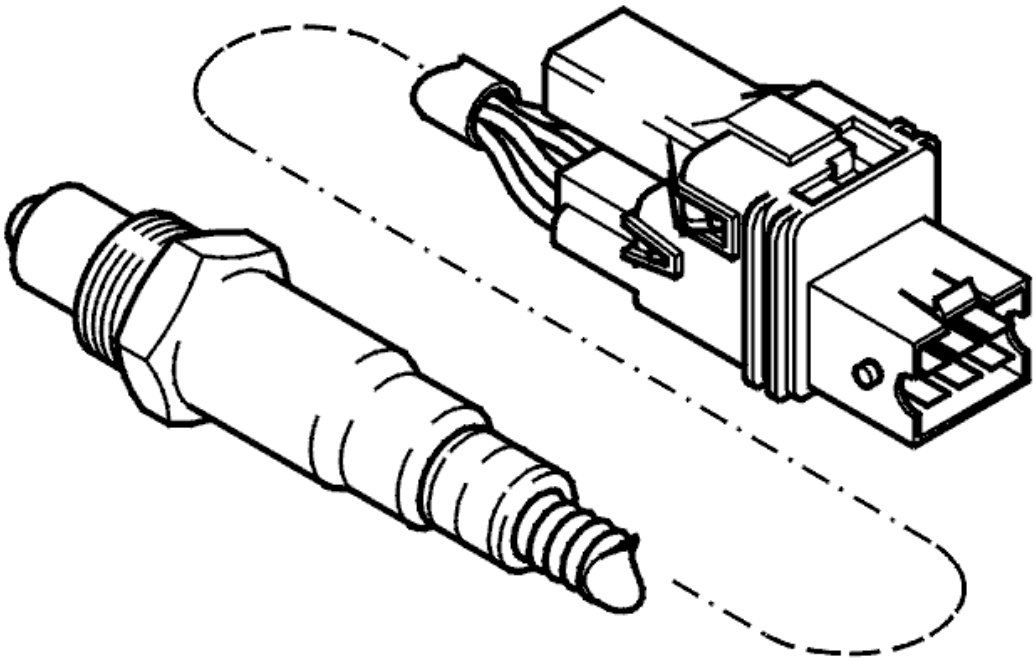

Fig. 145: Front Heated Oxygen Sensor
Courtesy of VOLVO CARS CORPORATION

- **Continue**

  Refer to **INFORMATION**

INFORMATION

FAULT-TRACING INFORMATION

If the fault is intermittent, do not verify fault-tracing if the fault does not recur.

It is possible to view the information again, or leave fault-tracing for this diagnostic trouble code (DTC).

ECM-280A: FRONT HEATED OXYGEN SENSOR (HO2S), BANK 1. SIGNAL MISSING. PERMANENT FAULT (B5254T2; B6294T; 2003-2004)

DIAGNOSTIC TROUBLE CODE (DTC) INFORMATION

see **DIAGNOSTIC TROUBLE CODE (DTC) INFORMATION**

SIGNAL MISSING. PERMANENT FAULT

CHECKING COMPONENTS AND WIRING

CAUTION: Do not apply rust solvent spray or grease to the heated oxygen sensor (HO2S) connector.

Check the signal cable (+) between heated oxygen sensor (HO2S) terminal #1 and control module terminal #A41 (#A41). Check the signal cable (-) between heated oxygen sensor (HO2S) terminal #5 and control module terminal #A42 (#A42). Check for a short-circuit to each other.

Check the power supply to heated oxygen sensor (HO2S) terminal #3 and the signal cable between heated oxygen sensor (HO2S) terminal #4 and control module terminal #A18 (#A18). Check for a short-circuit to the other cables for the heated oxygen sensor (HO2S).

Try a new heated oxygen sensor (HO2S) if the wiring is OK.

Remedy as necessary.

Other information

- To connect the breakout box / access the control module, see **CONNECTING THE BREAKOUT BOX**
- For B5xx4T, see **HEATED OXYGEN SENSOR (HO2S), REPLACING**
- For B6xx4T, see **HEATED OXYGEN SENSOR (HO2S), REPLACING** .
- For 5 cylinder turbocharged engines -2004, see **SIGNAL DESCRIPTION**
- For 5 cylinder turbocharged engines 2005-, see **SIGNAL SPECIFICATION** .
- For 6 cylinder engines -2004, see **SIGNAL SPECIFICATION**
- For 6 cylinder engines 2005-, see **SIGNAL SPECIFICATION** .
- see **CHECKING WIRING AND TERMINALS** .

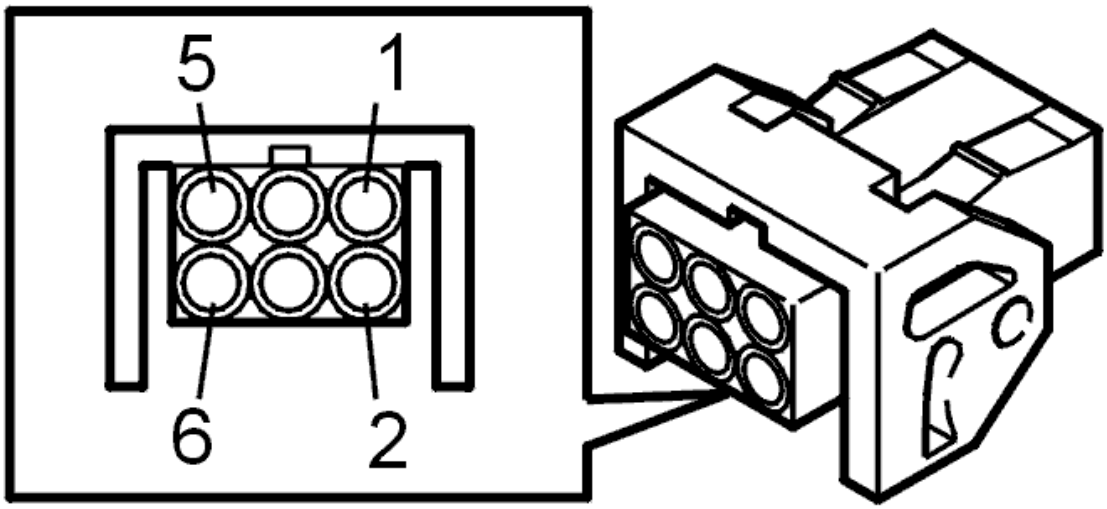

Fig. 146: Identifying Front Heated Oxygen Sensor Connector Terminals
Courtesy of VOLVO CARS CORPORATION

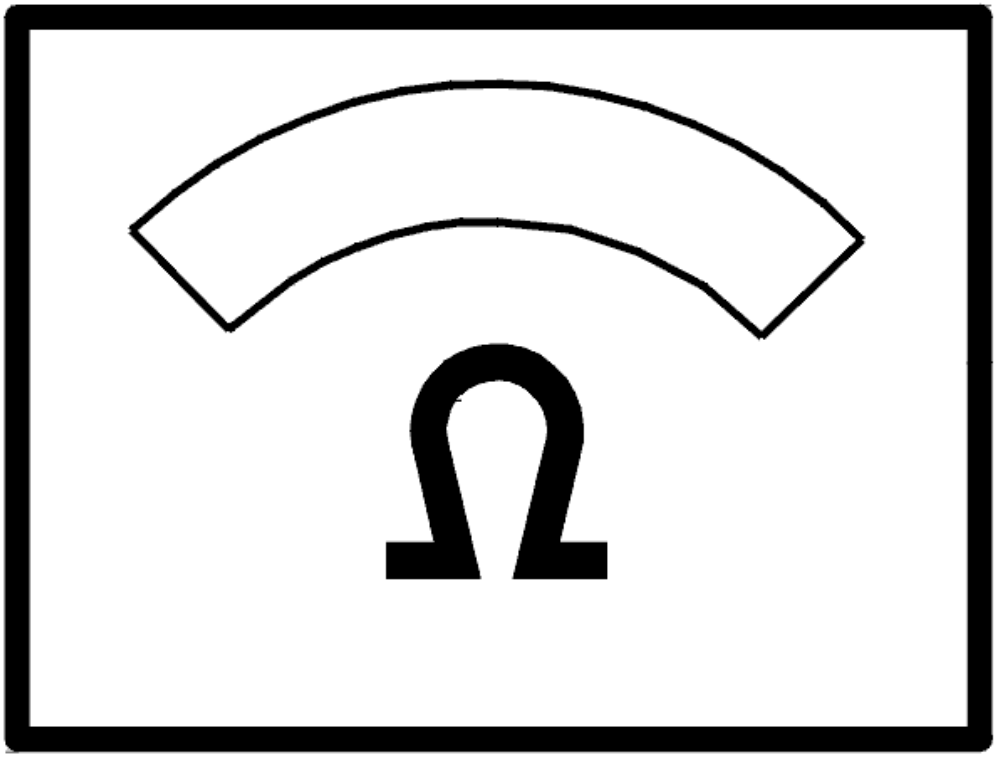

Fig. 147: Identifying Ohm Meter
Courtesy of VOLVO CARS CORPORATION

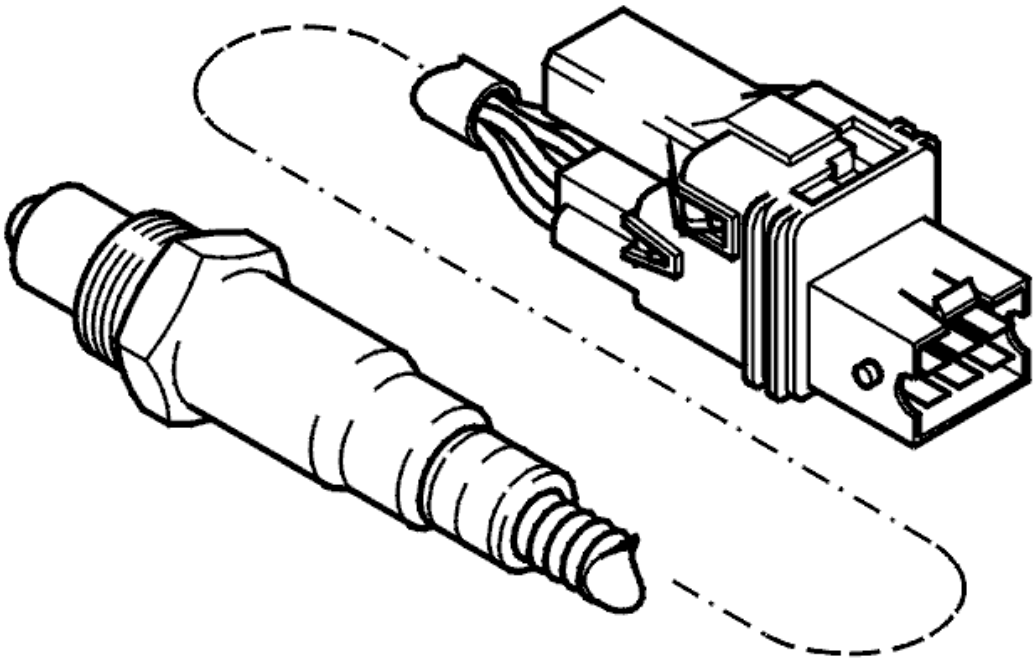

Fig. 148: Front Heated Oxygen Sensor
Courtesy of VOLVO CARS CORPORATION

- **Continue**

  Refer to **VERIFICATION**

VERIFICATION

VERIFICATION

HINT: After carrying out the repair, check that the fault has been remedied.

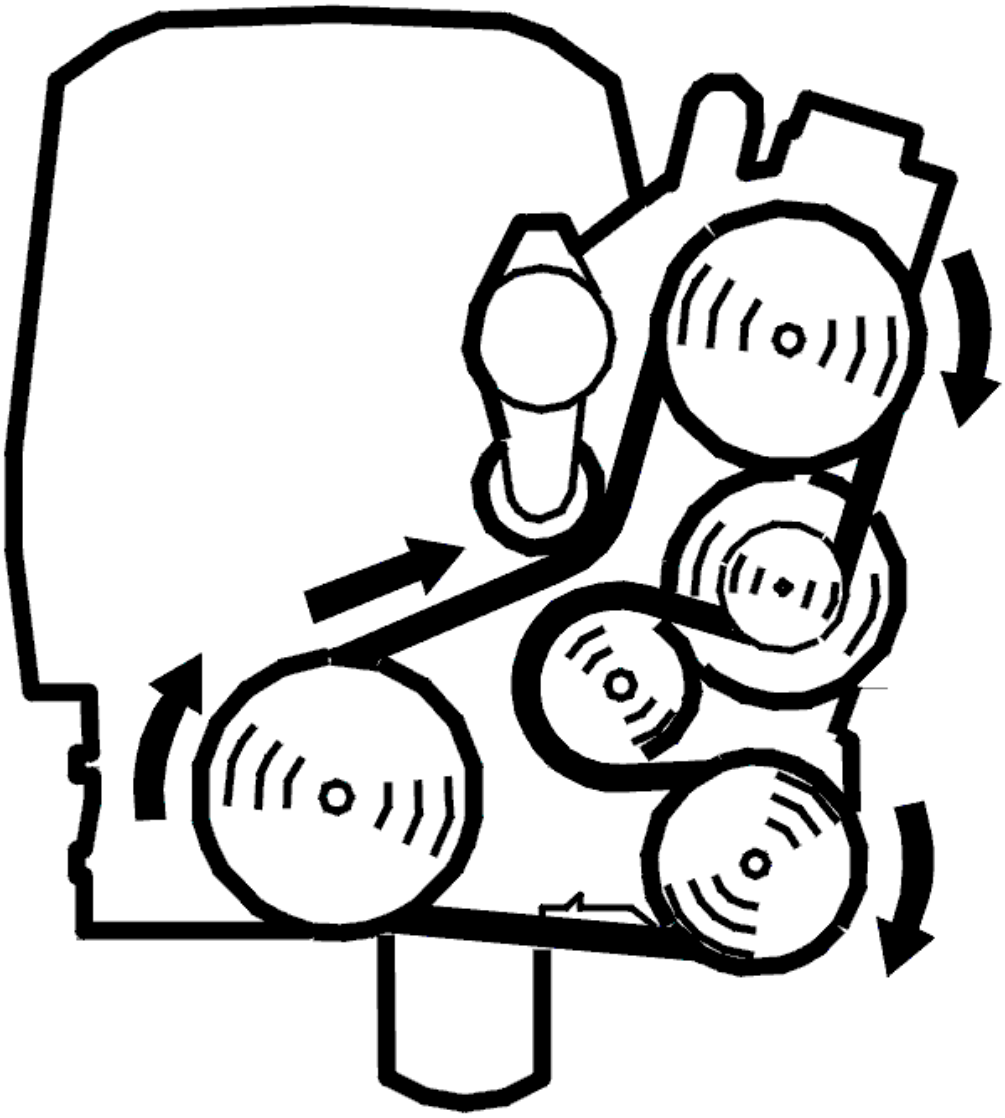

Fig. 149: Belt Routing / Engine Idling - Volvo
Courtesy of VOLVO CARS CORPORATION

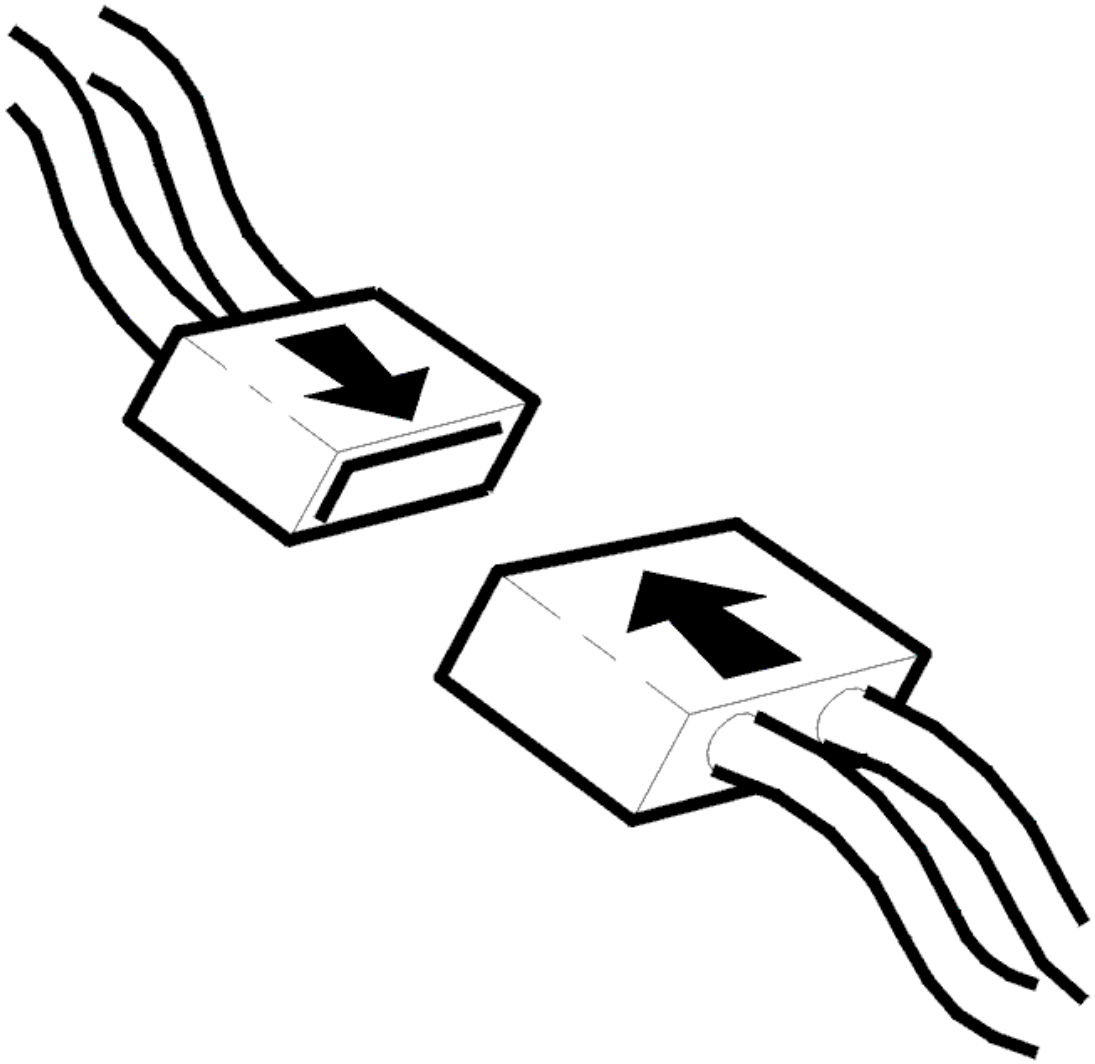

Fig. 150: Connecting Connector
Courtesy of VOLVO CARS CORPORATION

- Ignition off.
- Reconnect connectors, reinstall components.
- Start the engine and let it idle for a maximum of 5 minutes.

  Read off the front heated oxygen sensor (HO2S) signal diagnostic trouble code (DTC) status.

  The text NOT READY is displayed if diagnosis is underway.

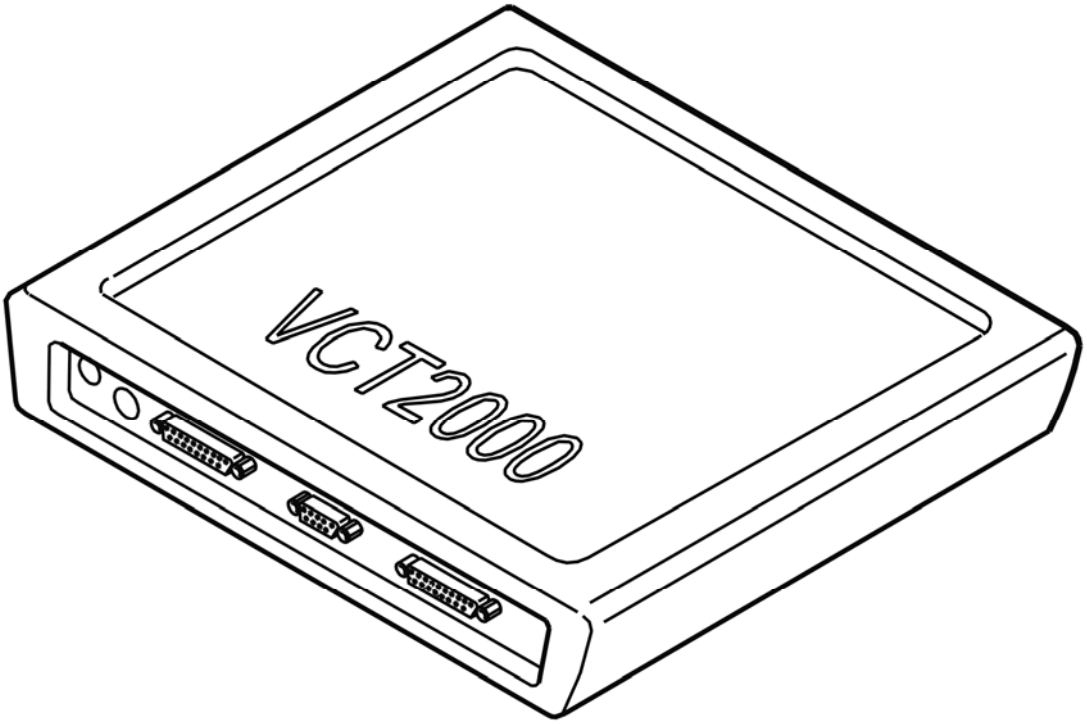

Fig. 151: Identifying VCT2000 Diagnostic Tool Symbol In VIDA
Courtesy of VOLVO CARS CORPORATION

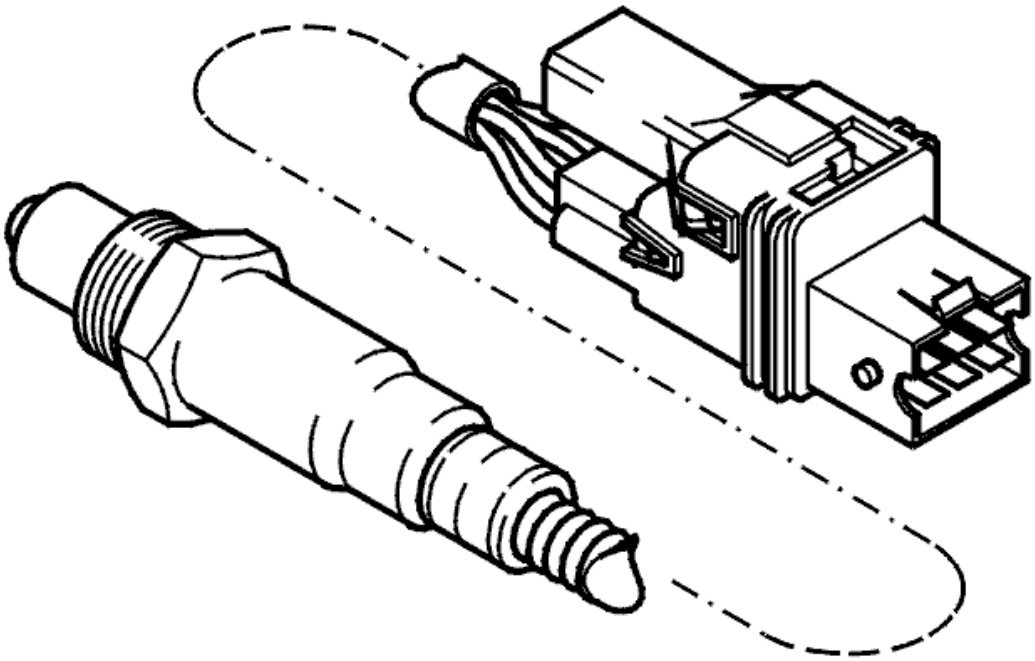

Fig. 152: Front Heated Oxygen Sensor
Courtesy of VOLVO CARS CORPORATION

Is FAULT NOT REGISTERED displayed?

- **YES**

  VERIFIED: Troubleshooting has been completed.

- **NO**

  Refer to **INFORMATION**

INFORMATION

FAULT-TRACING INFORMATION

The fault should have been detected and remedied. As this is not the case fault-tracing has failed.

Exit fault-tracing for this diagnostic trouble code (DTC) or make another attempt.

ECM-280A: FRONT HEATED OXYGEN SENSOR (HO2S), BANK 1. SIGNAL TOO HIGH (B6294T; 2003-2004)

DIAGNOSTIC TROUBLE CODE (DTC) INFORMATION

see **DIAGNOSTIC TROUBLE CODE (DTC) INFORMATION**

SIGNAL TOO HIGH

CHECKING FOR AIR LEAKAGE IN THE EXHAUST SYSTEM

Check for air leakage. See **INTAKE AND EXHAUST SYSTEM - CLEANING, INSPECTION AND ADJUSTMENT** .

Remedy as necessary.

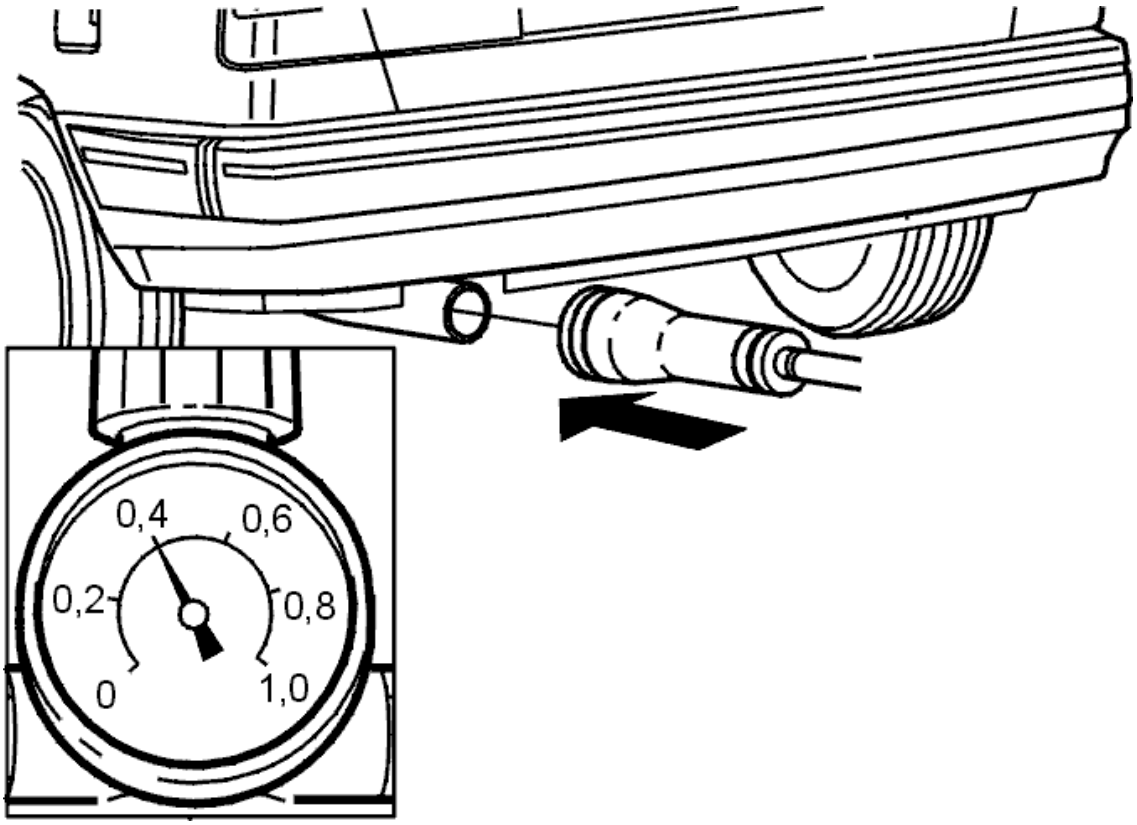

Fig. 153: Checking For Air Leakage In Exhaust System
Courtesy of VOLVO CARS CORPORATION

Was there any air leakage?

- **YES**

  Refer to **VERIFICATION**

- **NO**

  Refer to **CHECKING COMPONENTS AND WIRING**

CHECKING COMPONENTS AND WIRING

CAUTION: Do not apply rust solvent spray or grease to the heated oxygen sensor (HO2S) connector.

Front heated oxygen sensor (HO2S), bank 1:

Check the signal cable (+) between heated oxygen sensor (HO2S) terminal #1 and control module terminal #A41 (#A41). Check the cable for pump current between heated oxygen sensor (HO2S) terminal #6 and control module terminal #A24 (#A24). Check for an open-circuit. Check for a short-circuit to ground. Check for a short-circuit to supply voltage.

Front heated oxygen sensor (HO2S), bank 2:

Check the signal cable (+) between heated oxygen sensor (HO2S) terminal #1 and control module terminal #A43 (#A43). Check the cable for pump current between heated oxygen sensor (HO2S) terminal #6 and control module terminal #A25 (#A25). Check for an open-circuit, short-circuit to ground and a short-circuit to supply voltage.

Replace both heated oxygen sensors (HO2S) if the wiring is OK and no faults are found.

Remedy as necessary.

HINT: If the fault remains after fault-tracing/remedying, the fault may be in the circuit for the rear heated oxygen sensor (HO2S).

Other information:

- To connect the breakout box / access the control module, see **CONNECTING THE BREAKOUT BOX**
- For B5xx4T, see **HEATED OXYGEN SENSOR (HO2S), REPLACING**
- For B6xx4T, see **HEATED OXYGEN SENSOR (HO2S), REPLACING** .
- For 6 cylinder engines -2004, see **SIGNAL SPECIFICATION**
- For 6 cylinder engines 2005-, see **SIGNAL SPECIFICATION** .
- see **CHECKING WIRING AND TERMINALS** .

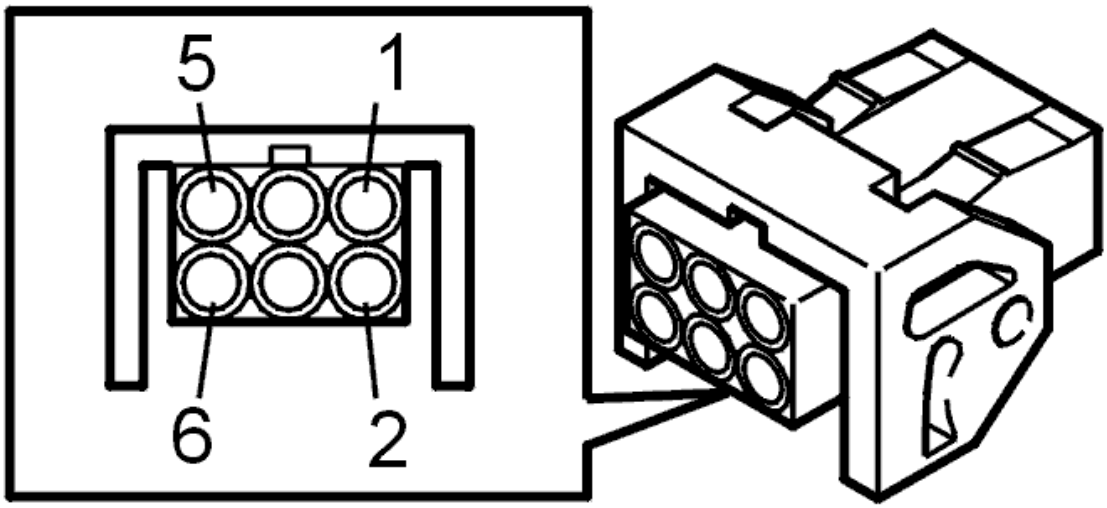

Fig. 154: Identifying Front Heated Oxygen Sensor Connector Terminals
Courtesy of VOLVO CARS CORPORATION

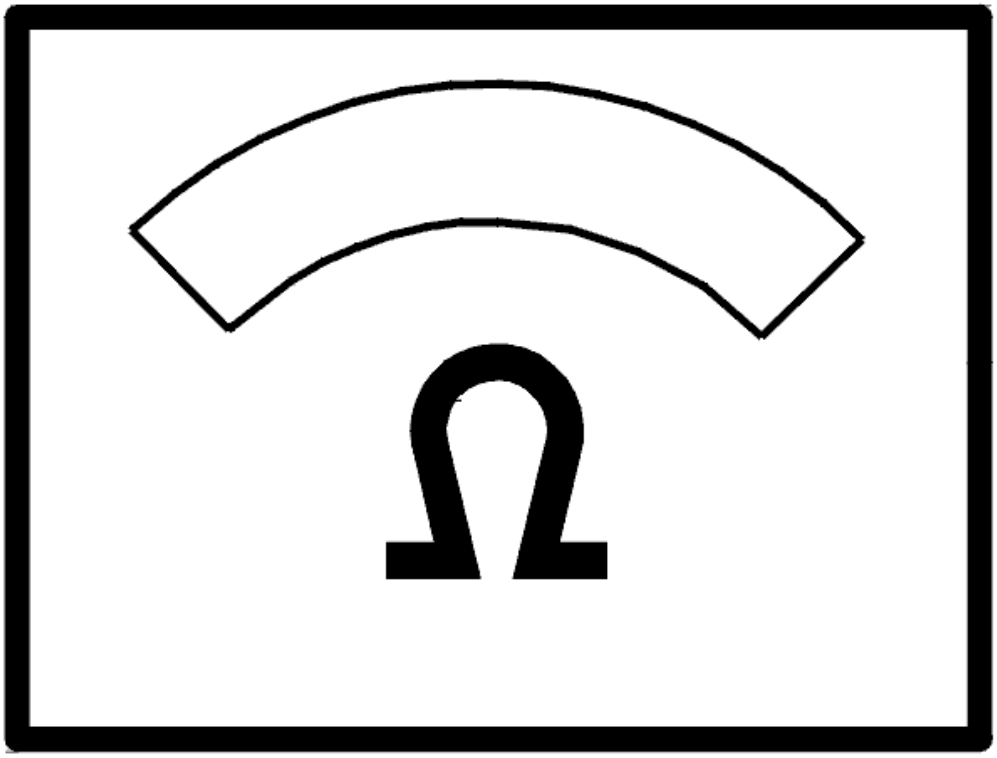

Fig. 155: Identifying Ohm Meter
Courtesy of VOLVO CARS CORPORATION

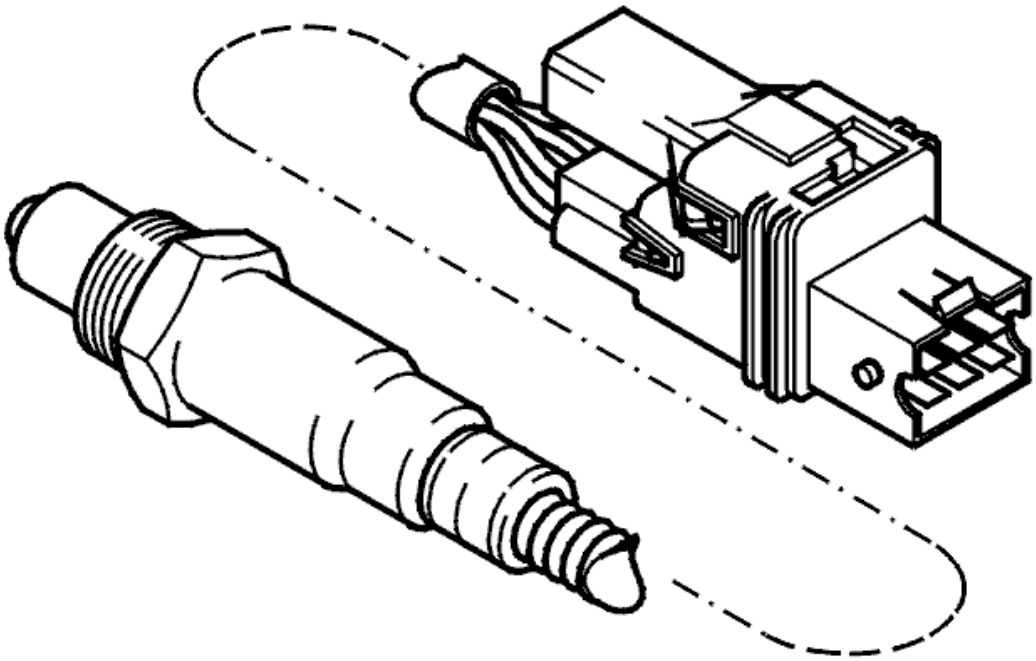

Fig. 156: Front Heated Oxygen Sensor
Courtesy of VOLVO CARS CORPORATION

- **Continue**

  Refer to **VERIFICATION**

VERIFICATION

HINT: After carrying out the repair, check that the fault has been remedied.

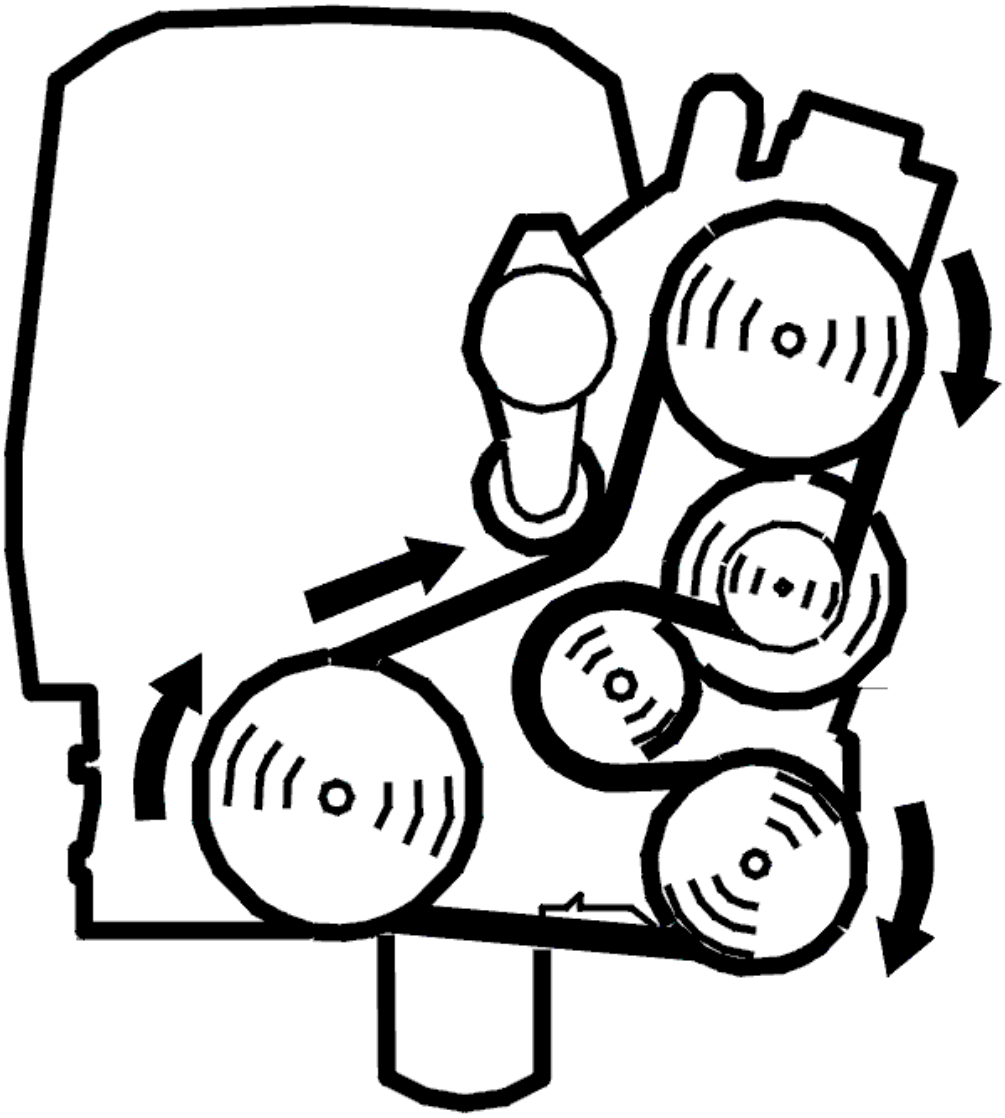

Fig. 157: Belt Routing / Engine Idling - Volvo
Courtesy of VOLVO CARS CORPORATION

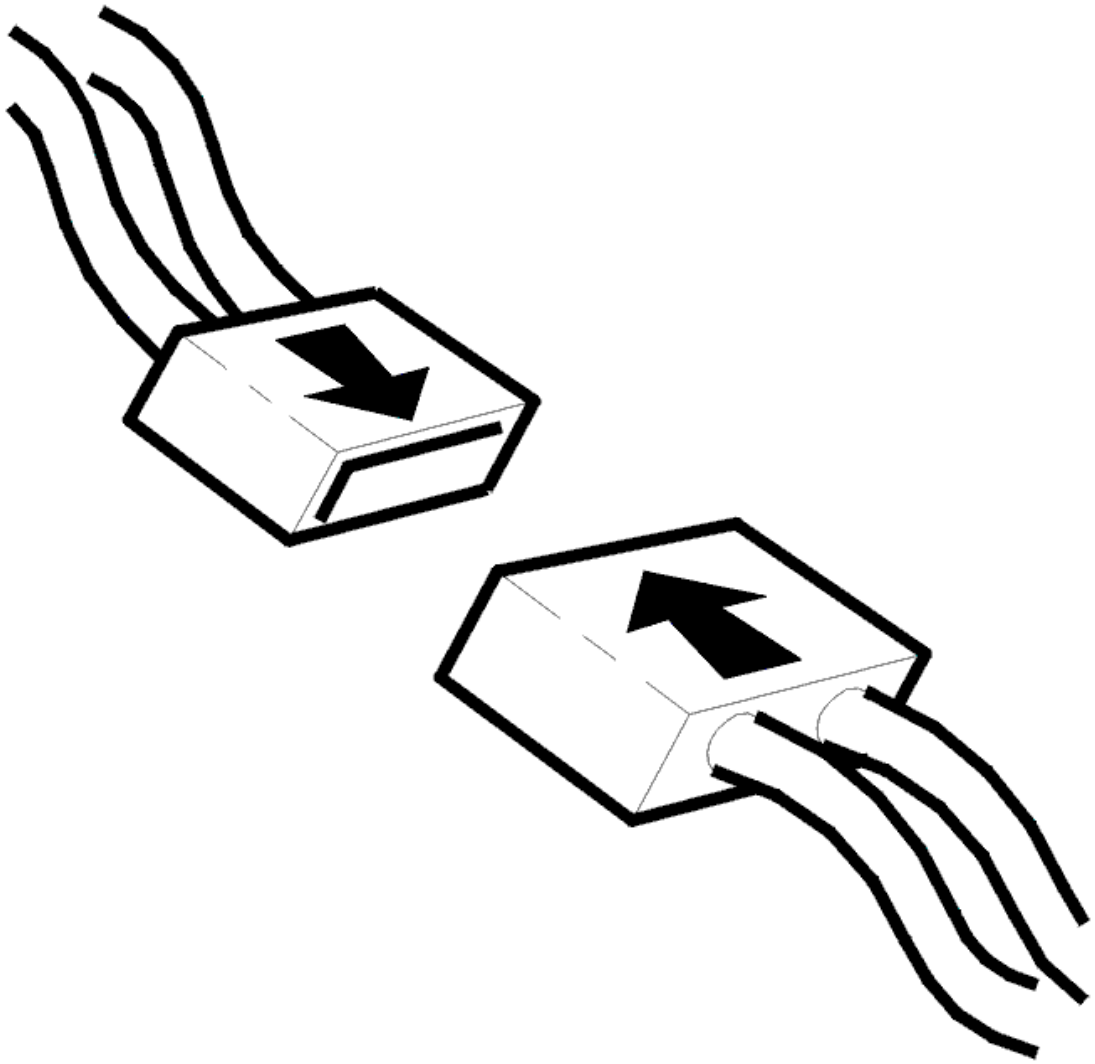

Fig. 158: Connecting Connector
Courtesy of VOLVO CARS CORPORATION

- Ignition off
- Reconnect the connectors. Reinstall the components
- Test drive the car according to the TRIP schedule. See **VERIFYING REPAIRS** .

  Connect VIDA (Volvo scan tool) again and read out the difference between the front and rear heated oxygen sensors (HO2S).

  The value must be lower than +/-0.01.

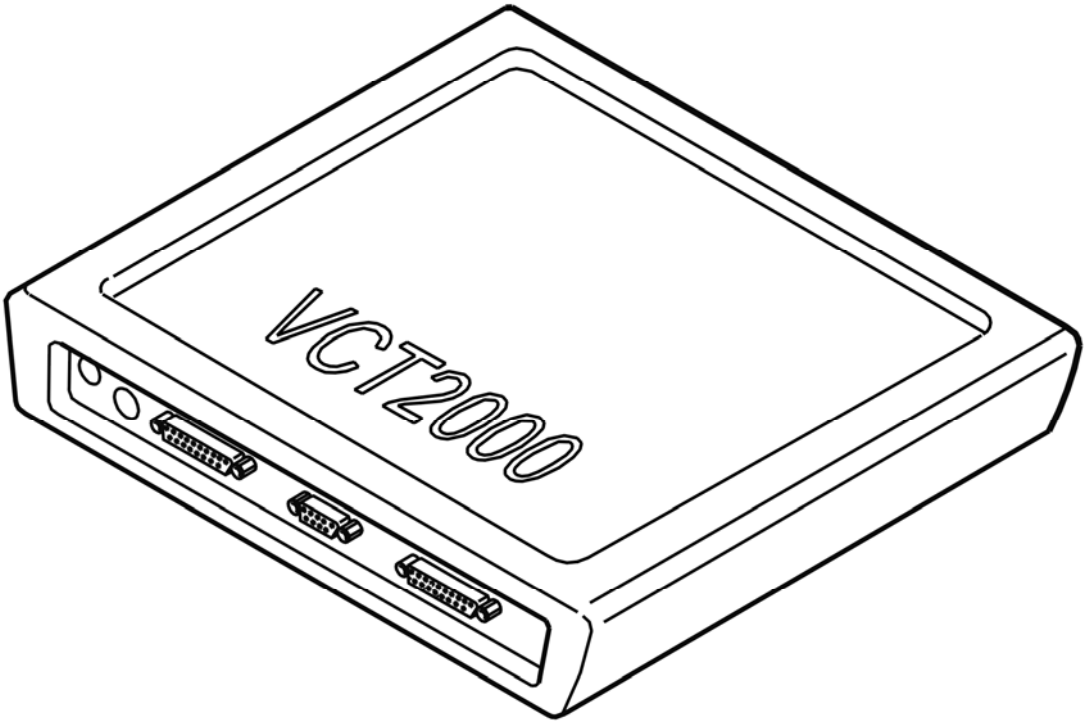

Fig. 159: Identifying VCT2000 Diagnostic Tool Symbol In VIDA
Courtesy of VOLVO CARS CORPORATION

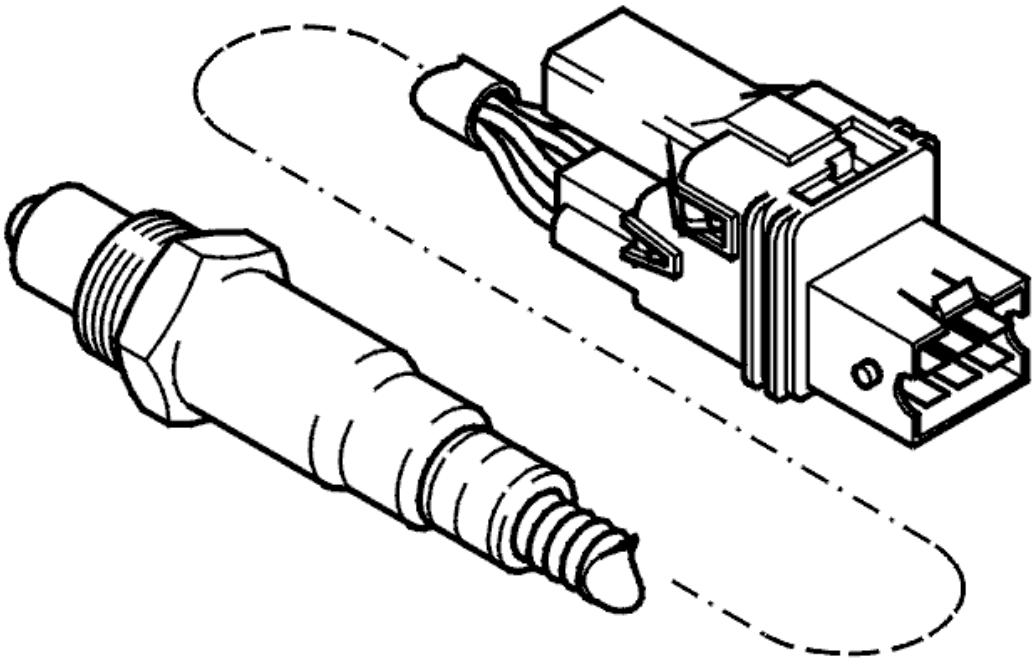

Fig. 160: Front Heated Oxygen Sensor
Courtesy of VOLVO CARS CORPORATION

Is the value lower than +/- 0.01?

- **YES**

  OKAY: Troubleshooting has been completed.

- **NO**

  Refer to **CHECKING COMPONENTS AND WIRING**

CHECKING COMPONENTS AND WIRING

CAUTION: Do not apply rust solvent spray or grease to the heated oxygen sensor (HO2S) connector.

HINT: The fault may be caused by a fault in the circuit for the rear heated oxygen sensor (HO2S).

Check the rear heated oxygen sensor (HO2S) connector. Check for contact resistance and oxidation.

Check the signal cable (+) between heated oxygen sensor (HO2S) terminal #4 and control module terminal

#A61 (#B1). Check the signal cable (-) between heated oxygen sensor (HO2S) terminal #3 and control module terminal #A62 (#B2). Check for an open-circuit. Check for a short-circuit to ground. Check for a short-circuit to supply voltage.

Replace the rear heated oxygen sensor (HO2S) if the wiring is OK.

Remedy as necessary.

Other information:

- To connect the breakout box / access the control module, see **CONNECTING THE BREAKOUT BOX**
- For B5xx4T, see **HEATED OXYGEN SENSOR (HO2S), REPLACING**
- For B6xx4T, see **HEATED OXYGEN SENSOR (HO2S), REPLACING** .
- see **CHECKING WIRING AND TERMINALS** .

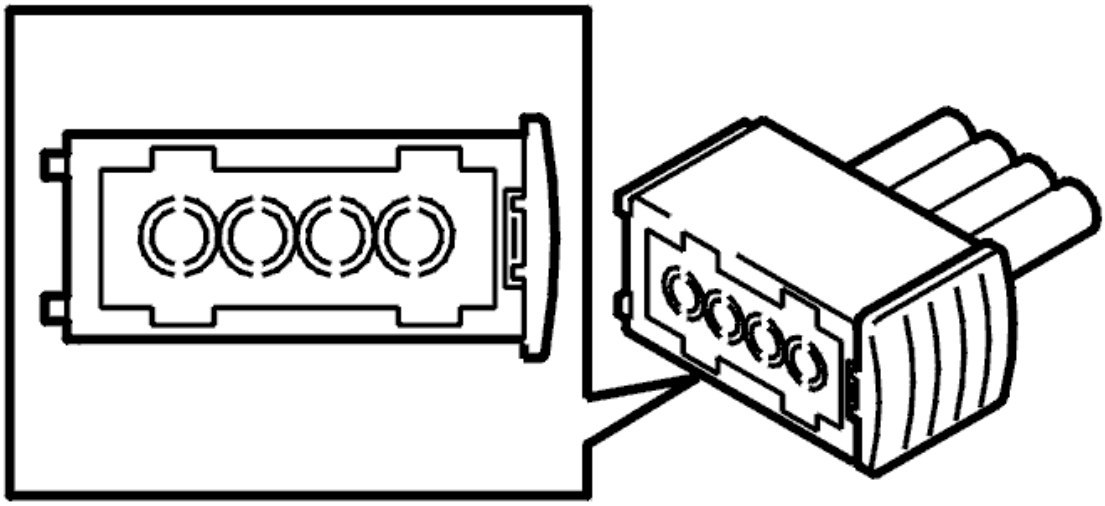

Fig. 161: Identifying Rear Heated Oxygen Sensor (HO2S) Connector
Courtesy of VOLVO CARS CORPORATION

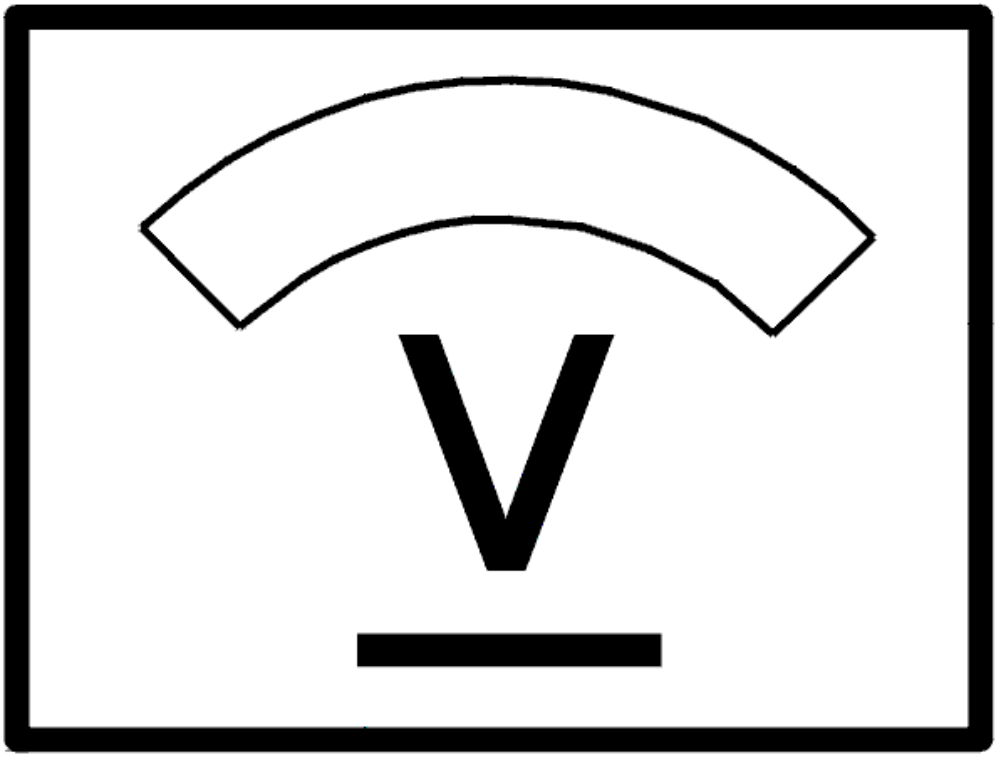

Fig. 162: Identifying Voltage Display
Courtesy of VOLVO CARS CORPORATION

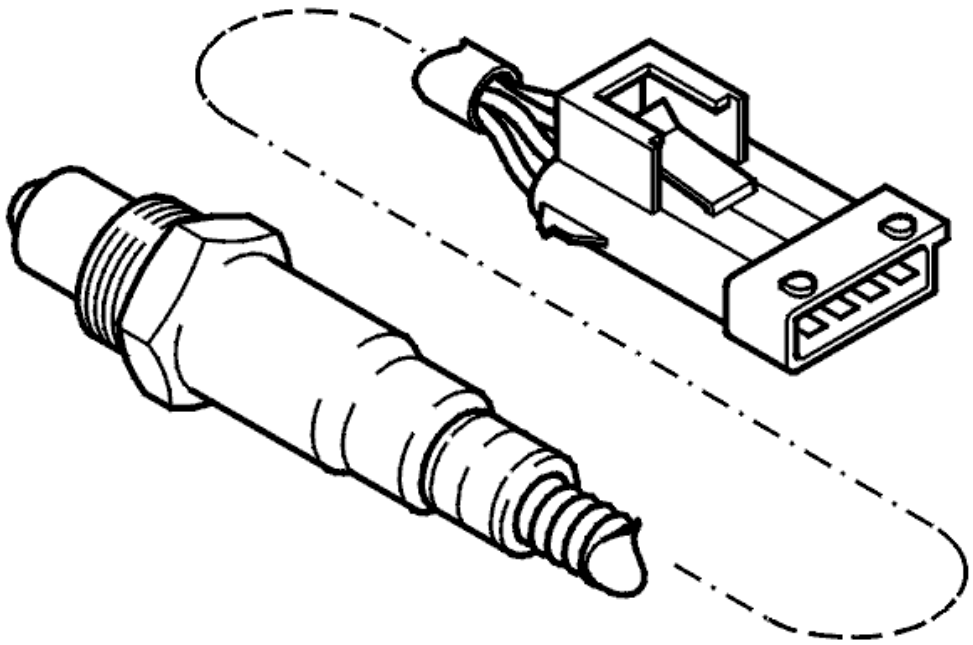

Fig. 163: Identifying Rear Heated Oxygen Sensor (HO2S)
Courtesy of VOLVO CARS CORPORATION

- **Continue**

  Refer to **VERIFICATION**

VERIFICATION

VERIFICATION

HINT: After carrying out the repair, check that the fault has been remedied.

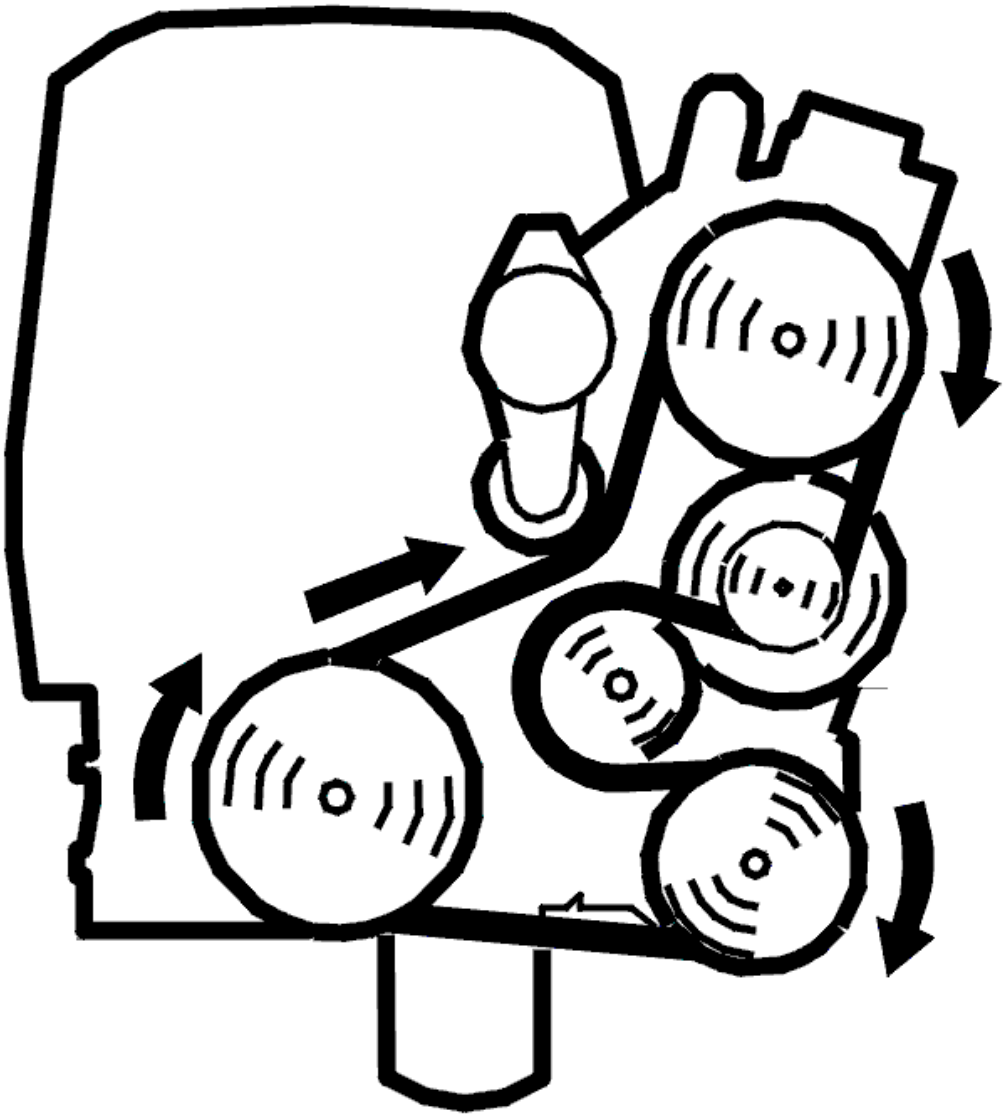

Fig. 164: Belt Routing / Engine Idling - Volvo
Courtesy of VOLVO CARS CORPORATION

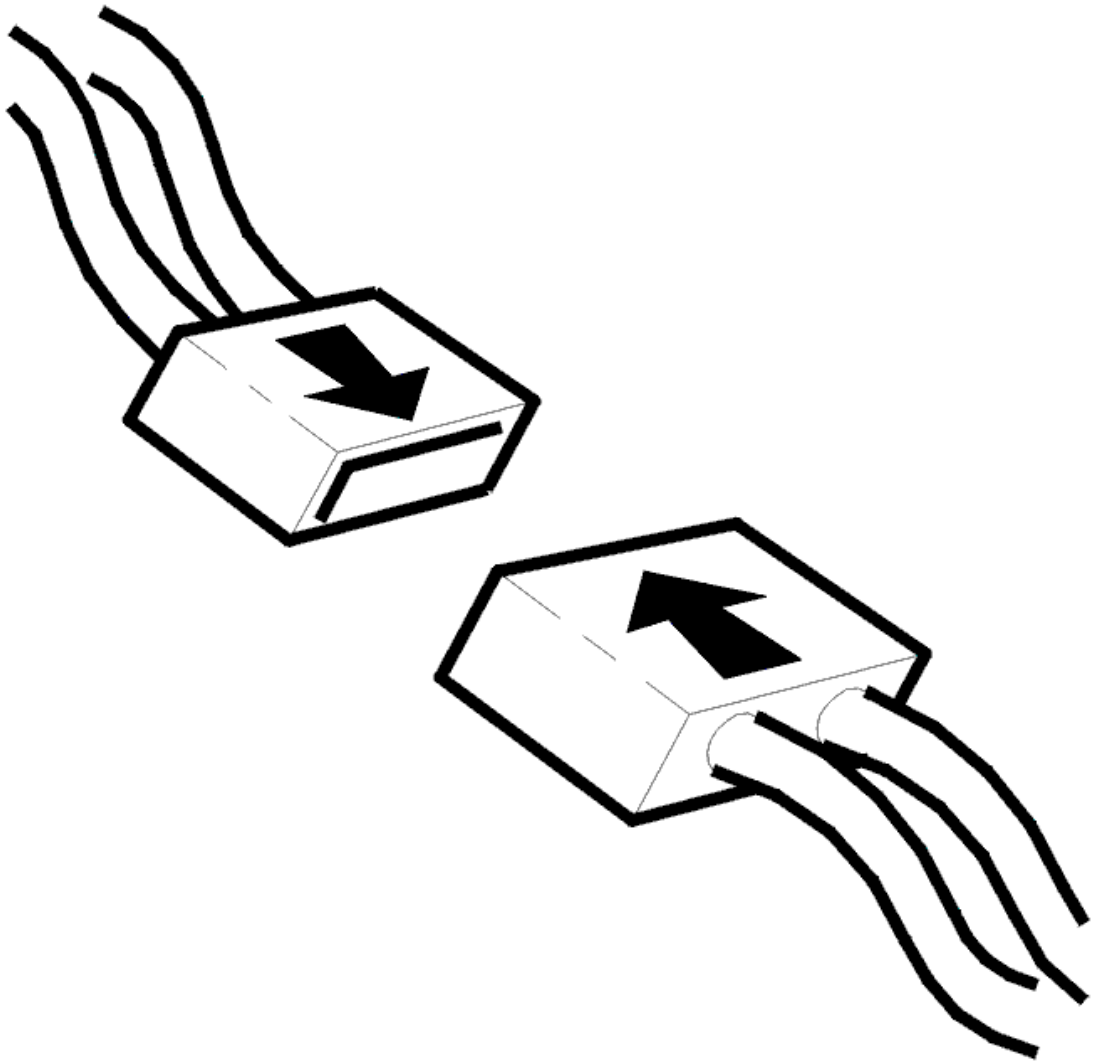

Fig. 165: Connecting Connector
Courtesy of VOLVO CARS CORPORATION

- Ignition off
- Reconnect the connectors, reinstall components etc.
- Test drive the car according to the TRIP schedule. See **VERIFYING REPAIRS** .

  Connect VIDA (Volvo scan tool) again and read out the difference between the front and rear heated oxygen sensors (HO2S).

  The value must be lower than +/-0.01.

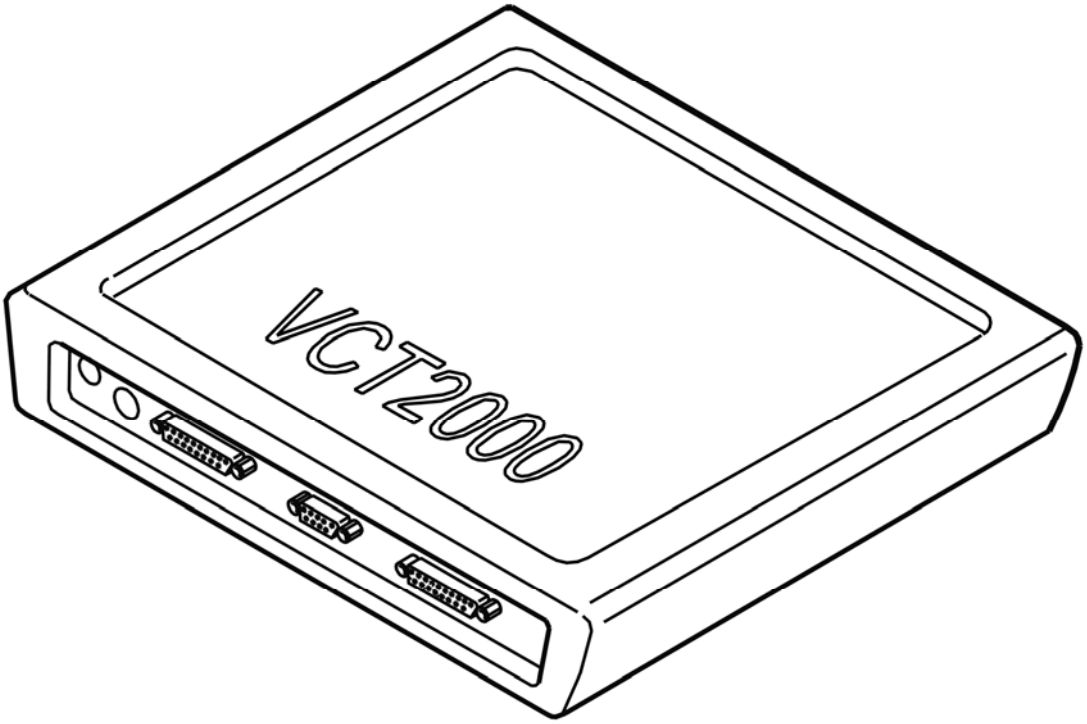

Fig. 166: Identifying VCT2000 Diagnostic Tool Symbol In VIDA
Courtesy of VOLVO CARS CORPORATION

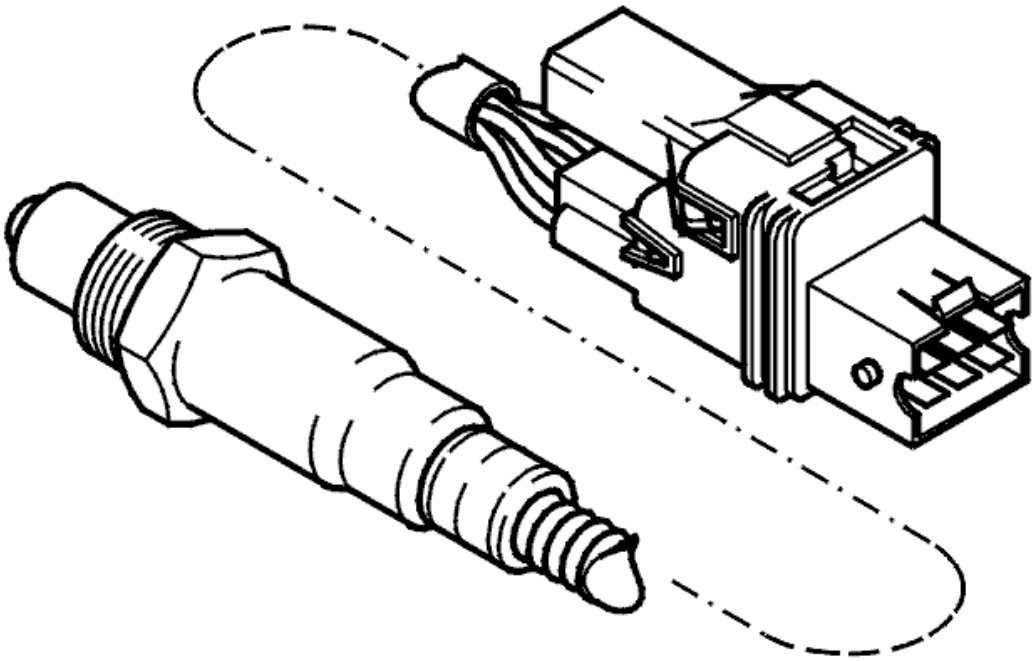

Fig. 167: Front Heated Oxygen Sensor
Courtesy of VOLVO CARS CORPORATION

Is the value lower than +/- 0.01?

- **YES**

  VERIFIED: Troubleshooting has been completed.

- **NO**

  Refer to **INFORMATION**

INFORMATION

FAULT-TRACING INFORMATION

The fault should have been detected and remedied. As this is not the case fault-tracing has failed.

Exit fault-tracing for this diagnostic trouble code (DTC) or make another attempt.

ECM-280A: FRONT HEATED OXYGEN SENSOR (HO2S), BANK 1. SIGNAL TOO HIGH. INTERMITTENT FAULT (B5254T2; 2003-2004)

DIAGNOSTIC TROUBLE CODE (DTC) INFORMATION

see **DIAGNOSTIC TROUBLE CODE (DTC) INFORMATION**

SIGNAL TOO HIGH

CHECKING FOR AIR LEAKAGE IN THE EXHAUST SYSTEM

Check for air leakage. See **INTAKE AND EXHAUST SYSTEM - CLEANING, INSPECTION AND ADJUSTMENT** .

Remedy as necessary.

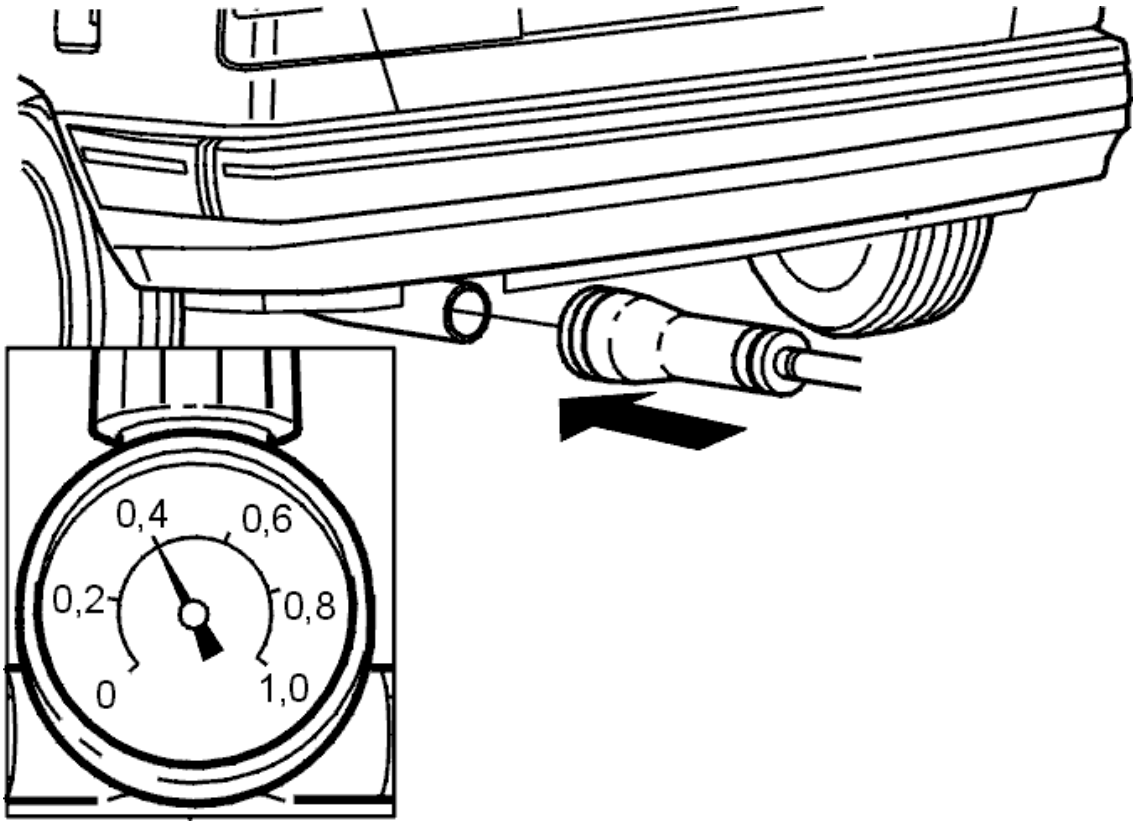

Fig. 168: Checking For Air Leakage In Exhaust System
Courtesy of VOLVO CARS CORPORATION

Was there any air leakage?

- **YES**

  Refer to **VERIFICATION**

- **NO**

  Refer to **CHECKING COMPONENTS AND WIRING**

CHECKING COMPONENTS AND WIRING

CAUTION: Do not apply rust solvent spray or grease to the heated oxygen sensor (HO2S) connector.

Check signal cable (+) between heated oxygen sensor (HO2S) terminal #1 and control module terminal #A41 (#A41). Check the cable for pump current between heated oxygen sensor (HO2S) terminal #6 and control module terminal #A24 (#A24). Check for a short-circuit to supply voltage.

Check signal cable (+) between heated oxygen sensor (HO2S) terminal #1 and control module terminal #A41 (#A41). Check the cable for pump current between heated oxygen sensor (HO2S) terminal #6 and control module terminal #A24 (#A24). Check for a short-circuit to ground.

Try a new heated oxygen sensor (HO2S) if the wiring is OK.

Remedy as necessary.

HINT: If the fault remains after fault-tracing, it may indicate that the fault is in the circuit for the rear heated oxygen sensor (HO2S).

Other information

- To connect the breakout box / access the control module, see **CONNECTING THE BREAKOUT BOX**
- For B5xx4T, see **HEATED OXYGEN SENSOR (HO2S), REPLACING**
- For B6xx4T, see **HEATED OXYGEN SENSOR (HO2S), REPLACING** .
- For 5 cylinder turbocharged engines -2004, see **SIGNAL DESCRIPTION**
- For 5 cylinder turbocharged engines 2005-, see **SIGNAL SPECIFICATION** .
- For 6 cylinder engines -2004, see **SIGNAL SPECIFICATION**
- For 6 cylinder engines 2005-, see **SIGNAL SPECIFICATION** .
- see **CHECKING WIRING AND TERMINALS** .

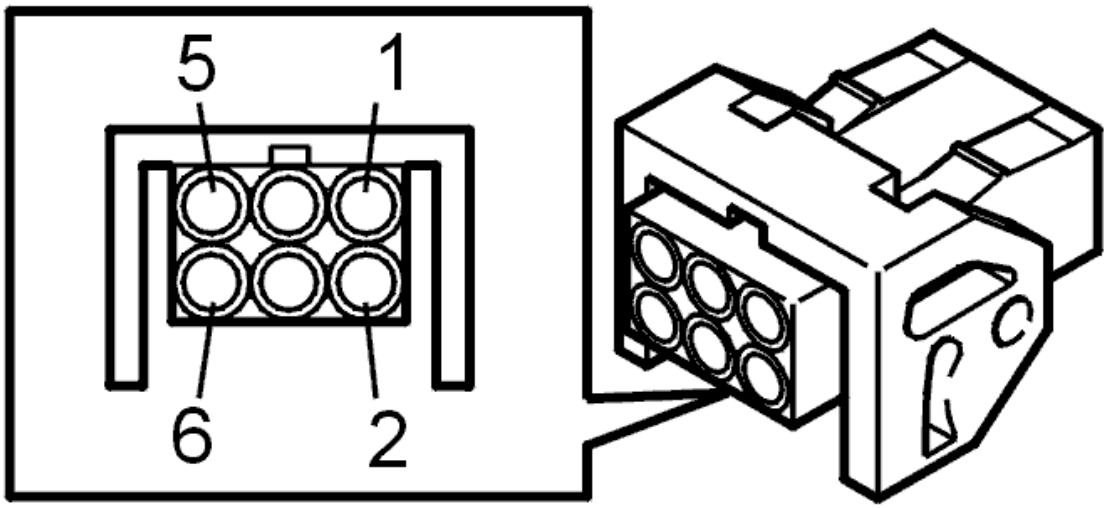

Fig. 169: Identifying Front Heated Oxygen Sensor Connector Terminals
Courtesy of VOLVO CARS CORPORATION

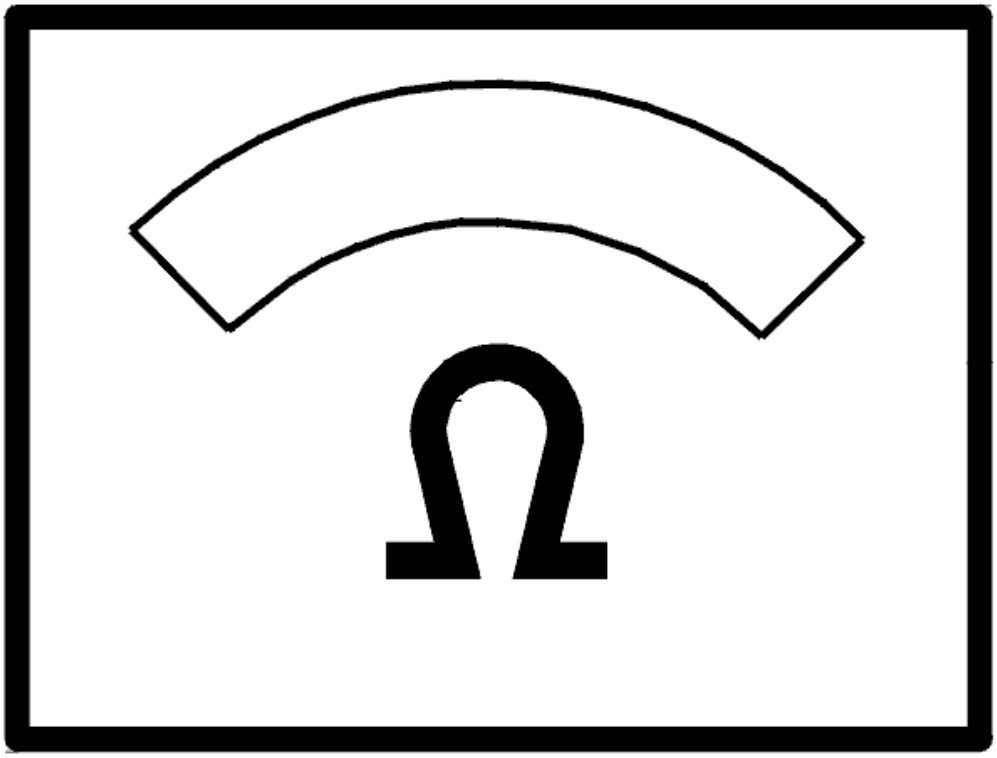

Fig. 170: Identifying Ohm Meter
Courtesy of VOLVO CARS CORPORATION

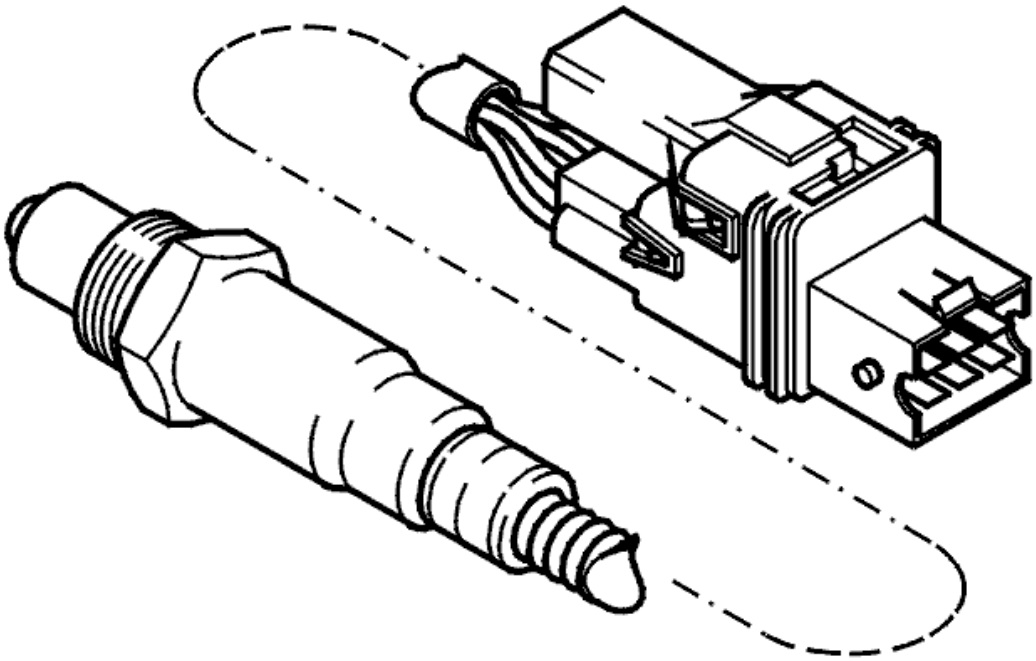

Fig. 171: Front Heated Oxygen Sensor
Courtesy of VOLVO CARS CORPORATION

- **Continue**

  Refer to **VERIFICATION**

VERIFICATION

HINT: After carrying out the repair, check that the fault has been remedied.

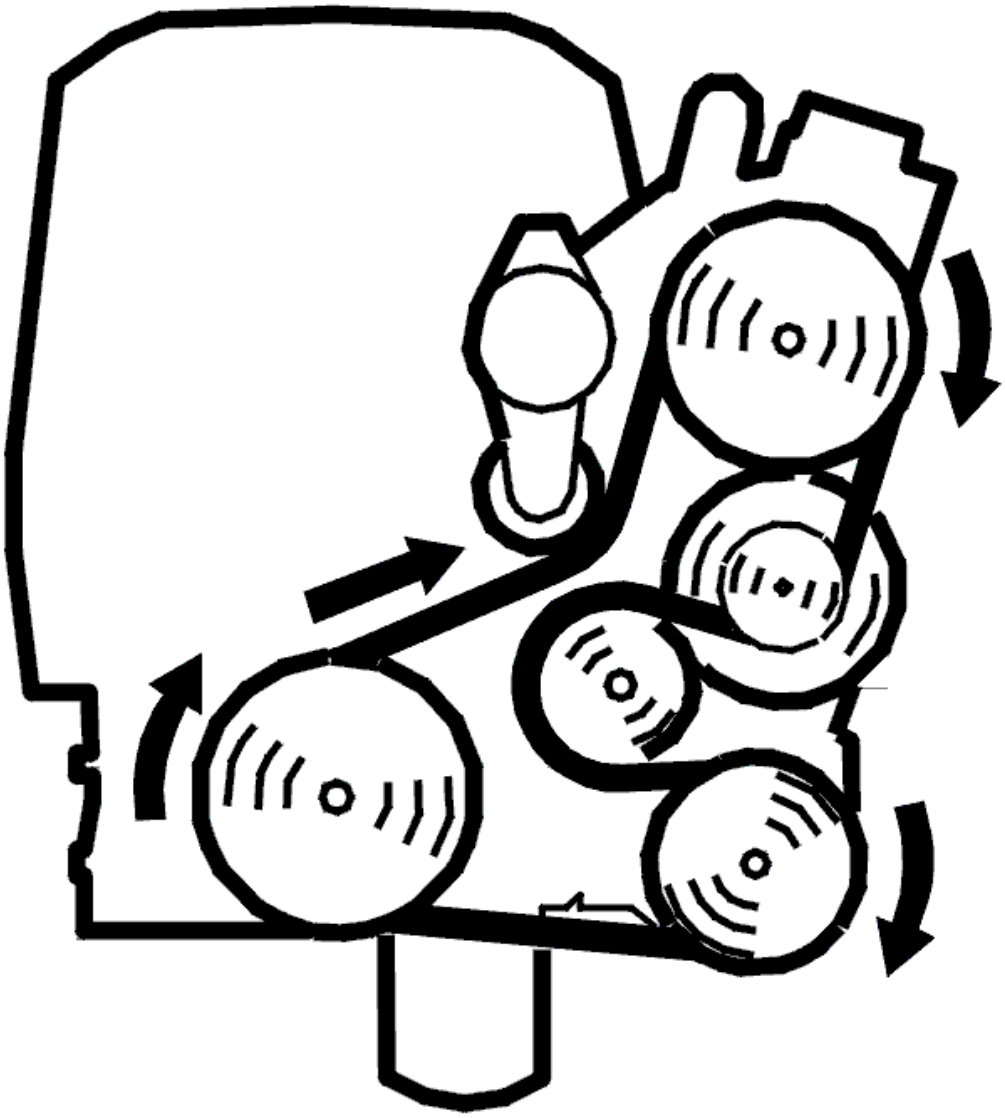

Fig. 172: Belt Routing / Engine Idling - Volvo
Courtesy of VOLVO CARS CORPORATION

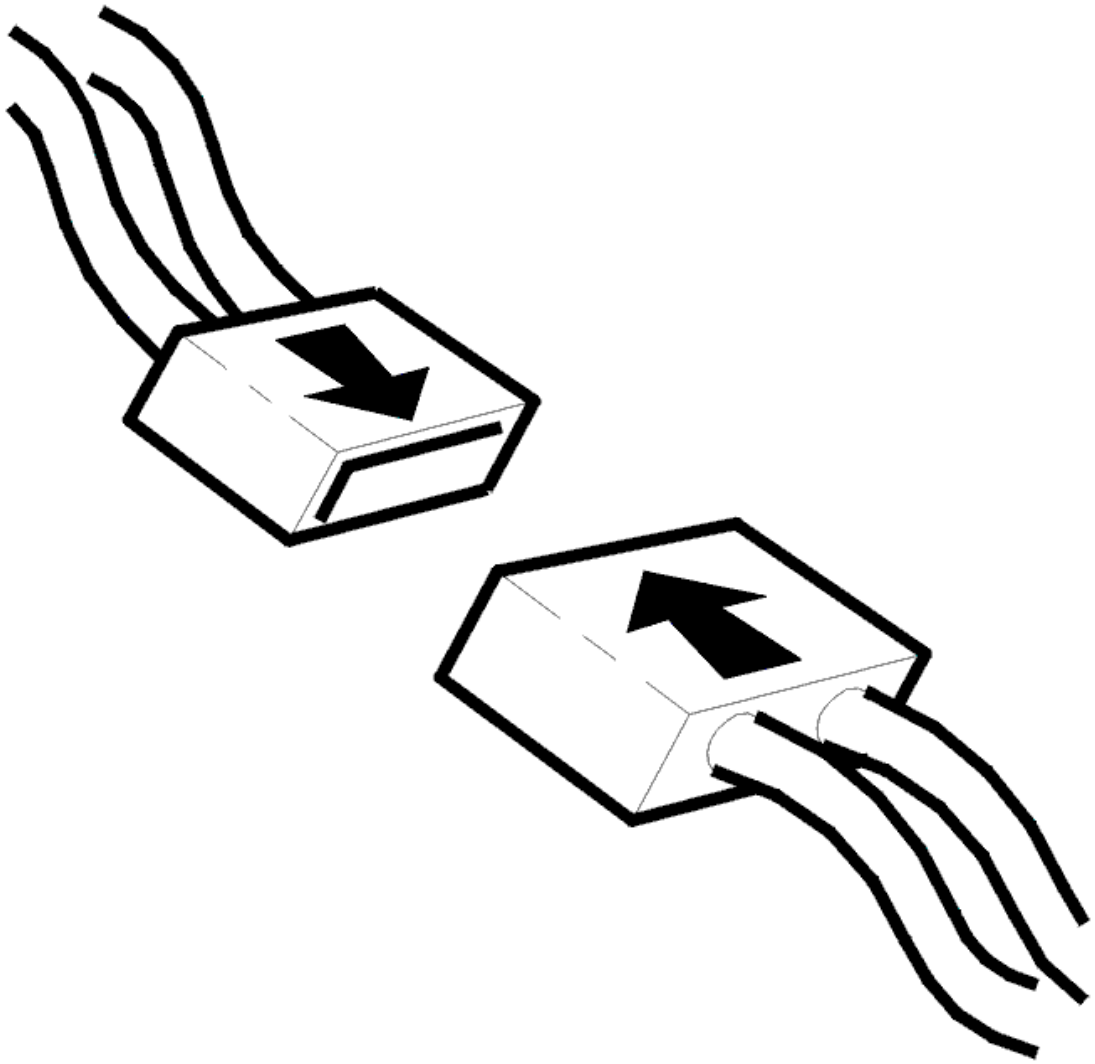

Fig. 173: Connecting Connector
Courtesy of VOLVO CARS CORPORATION

- Ignition off
- Reconnect the connectors. Reinstall the components
- Test drive the car according to the TRIP schedule. See **VERIFYING REPAIRS** .

  Connect VIDA (Volvo scan tool) again and read out the difference between the front and rear heated oxygen sensors (HO2S).

  The value must be lower than +/-0.01.

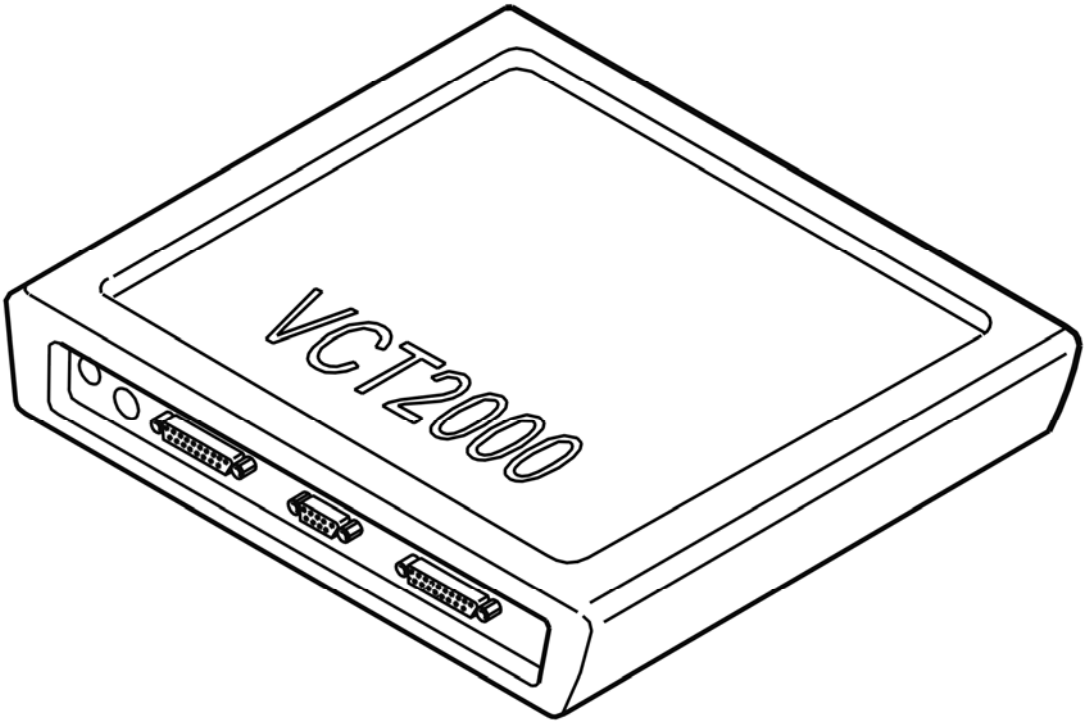

Fig. 174: Identifying VCT2000 Diagnostic Tool Symbol In VIDA
Courtesy of VOLVO CARS CORPORATION

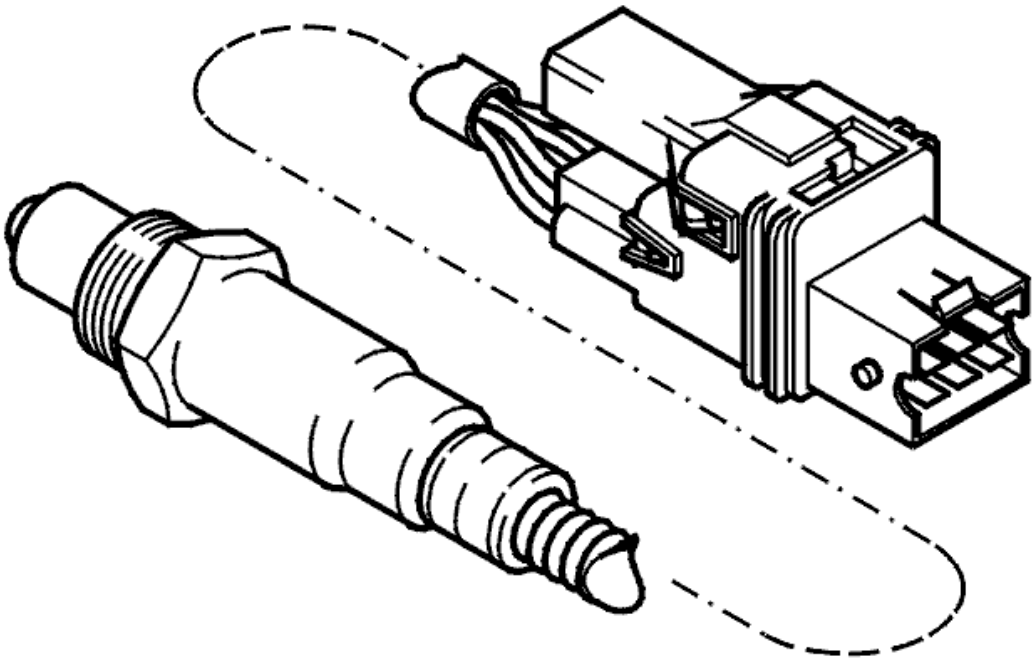

Fig. 175: Front Heated Oxygen Sensor
Courtesy of VOLVO CARS CORPORATION

Is the value lower than +/- 0.01?

- **YES**

  OKAY: Troubleshooting has been completed.

- **NO**

  Refer to **CHECKING COMPONENTS AND WIRING**

CHECKING COMPONENTS AND WIRING

CAUTION: Do not apply rust solvent spray or grease to the heated oxygen sensor (HO2S) connector.

HINT: The fault may be caused by a fault in the circuit for the rear heated oxygen sensor (HO2S).

Check the rear heated oxygen sensor (HO2S) connector. Check for contact resistance and oxidation.

Check the signal cable (+) between heated oxygen sensor (HO2S) terminal #4 and control module terminal

#A61 (#B1). Check the signal cable (-) between heated oxygen sensor (HO2S) terminal #3 and control module terminal #A62 (#B2). Check for an open-circuit. Check for a short-circuit to ground. Check for a short-circuit to supply voltage.

Try a new heated oxygen sensor (HO2S) if the wiring is OK.

Remedy as necessary.

Other information

- To connect the breakout box / access the control module, see **CONNECTING THE BREAKOUT BOX**
- For B5xx4T, see **HEATED OXYGEN SENSOR (HO2S), REPLACING**
- For B6xx4T, see **HEATED OXYGEN SENSOR (HO2S), REPLACING** .
- For 5 cylinder turbocharged engines -2004, see **SIGNAL DESCRIPTION**
- For 5 cylinder turbocharged engines 2005-, see **SIGNAL SPECIFICATION** .
- For 6 cylinder engines -2004, see **SIGNAL SPECIFICATION**
- For 6 cylinder engines 2005-, see **SIGNAL SPECIFICATION** .
- see **CHECKING WIRING AND TERMINALS** .

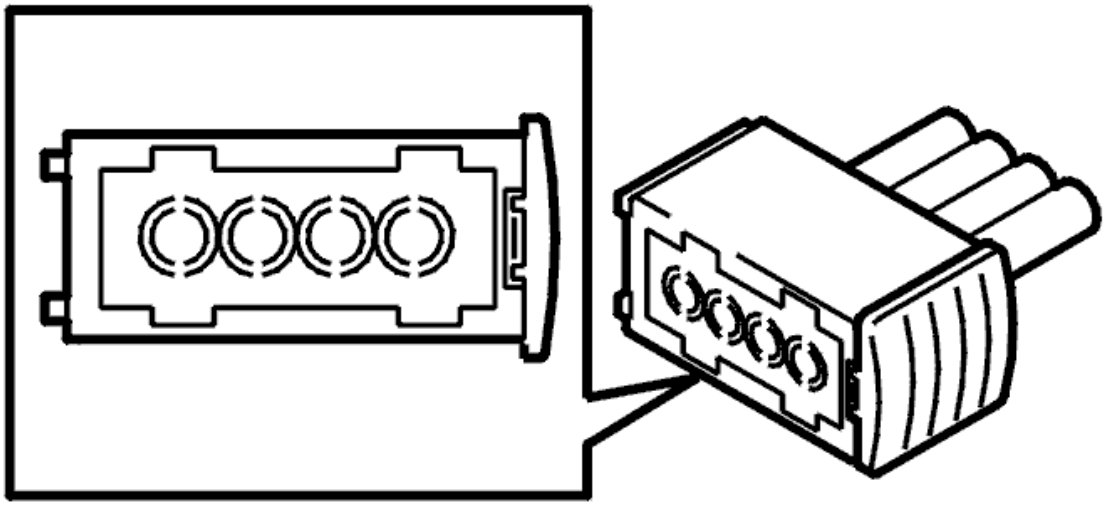

Fig. 176: Identifying Rear Heated Oxygen Sensor (HO2S) Connector
Courtesy of VOLVO CARS CORPORATION

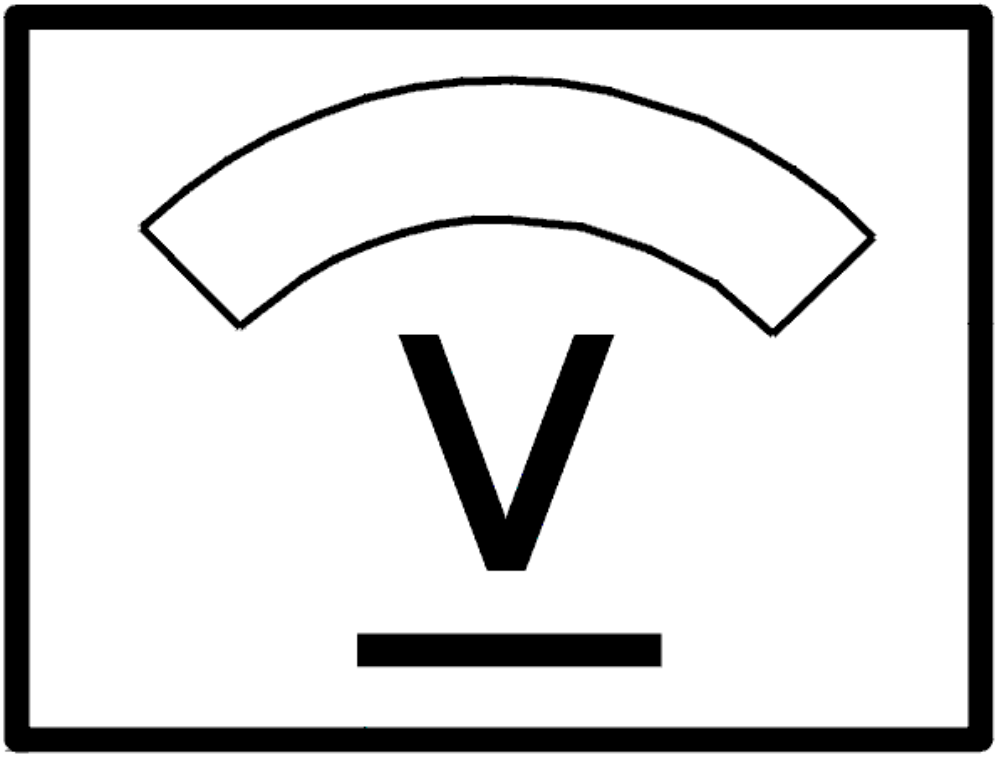

Fig. 177: Identifying Voltage Display
Courtesy of VOLVO CARS CORPORATION

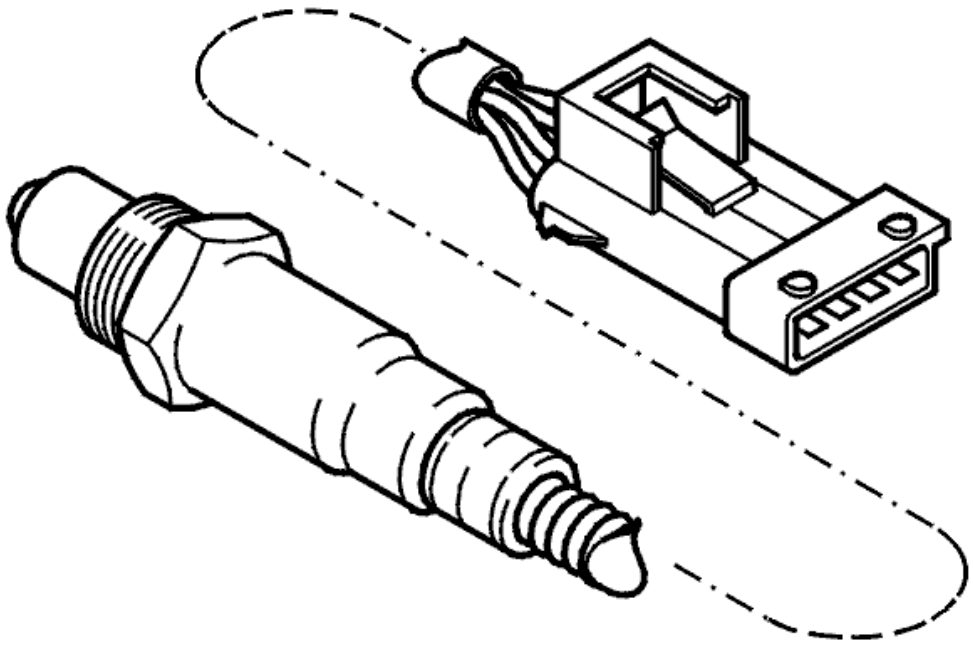

Fig. 178: Identifying Rear Heated Oxygen Sensor (HO2S)
Courtesy of VOLVO CARS CORPORATION

- **Continue**

  Refer to **VERIFICATION**

VERIFICATION

VERIFICATION

HINT: After carrying out the repair, check that the fault has been remedied.

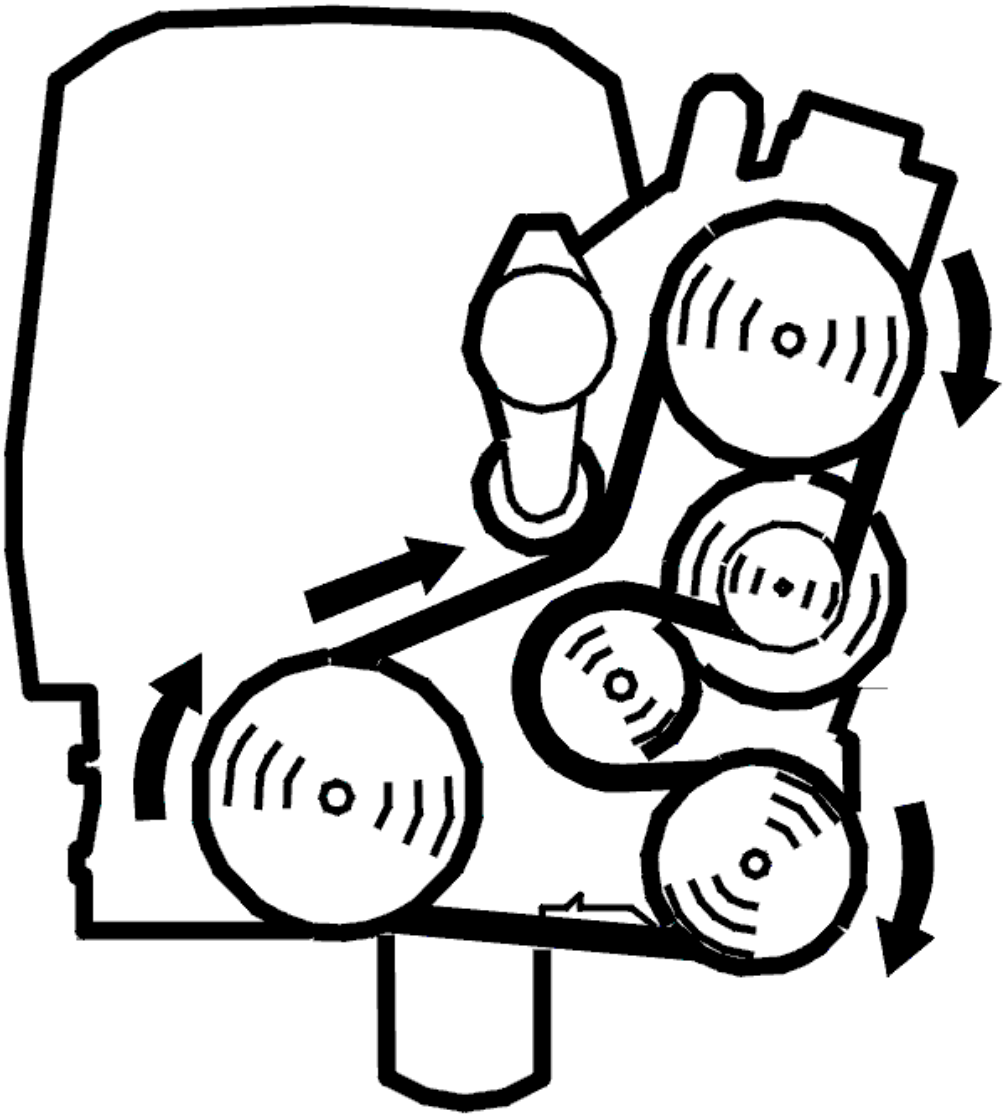

Fig. 179: Belt Routing / Engine Idling - Volvo
Courtesy of VOLVO CARS CORPORATION

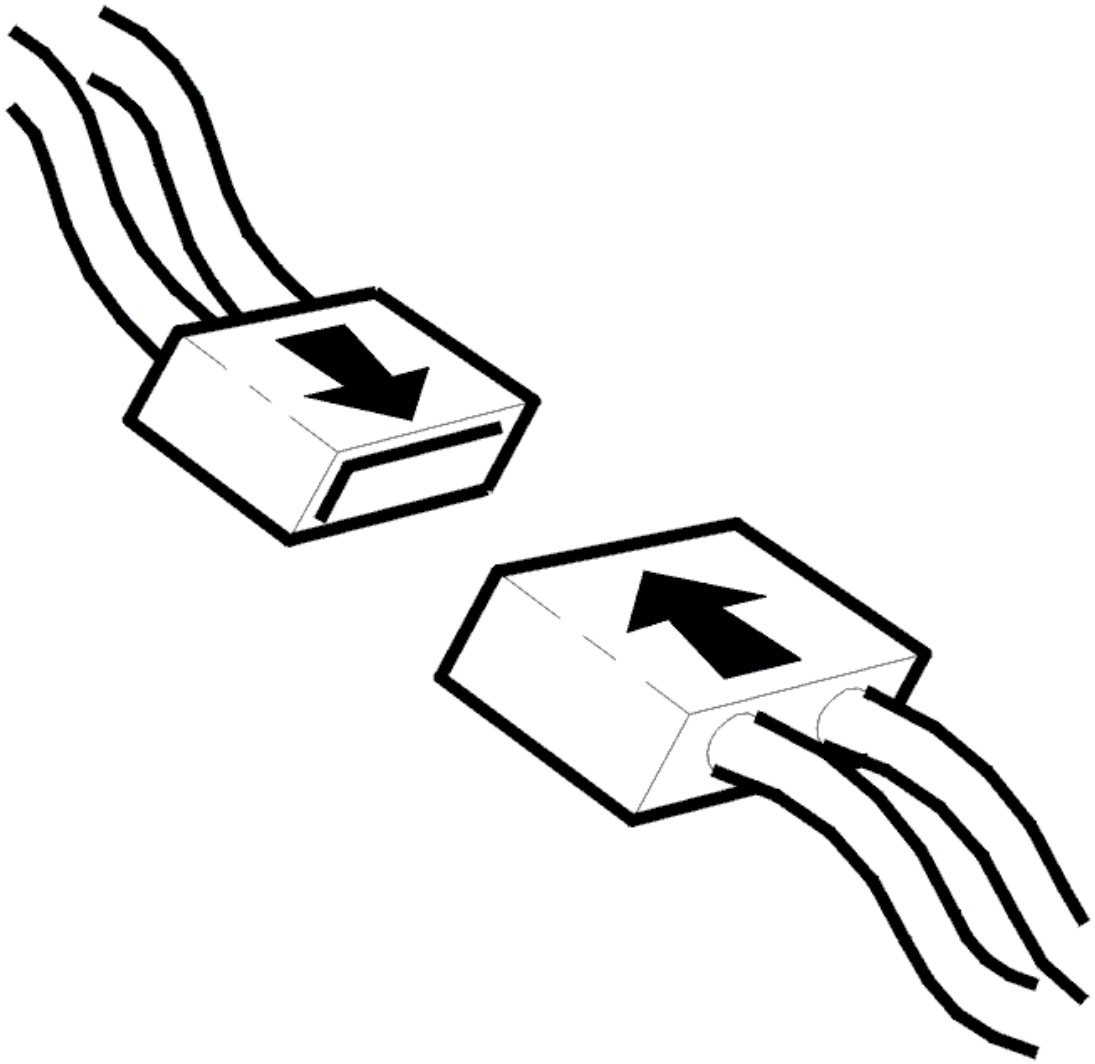

Fig. 180: Connecting Connector
Courtesy of VOLVO CARS CORPORATION

- Ignition off
- Reconnect the connectors, reinstall components etc.
- Test drive the car according to the TRIP schedule. See **VERIFYING REPAIRS** .

  Connect VIDA (Volvo scan tool) again and read out the difference between the front and rear heated oxygen sensors (HO2S).

  The value must be lower than +/-0.01.

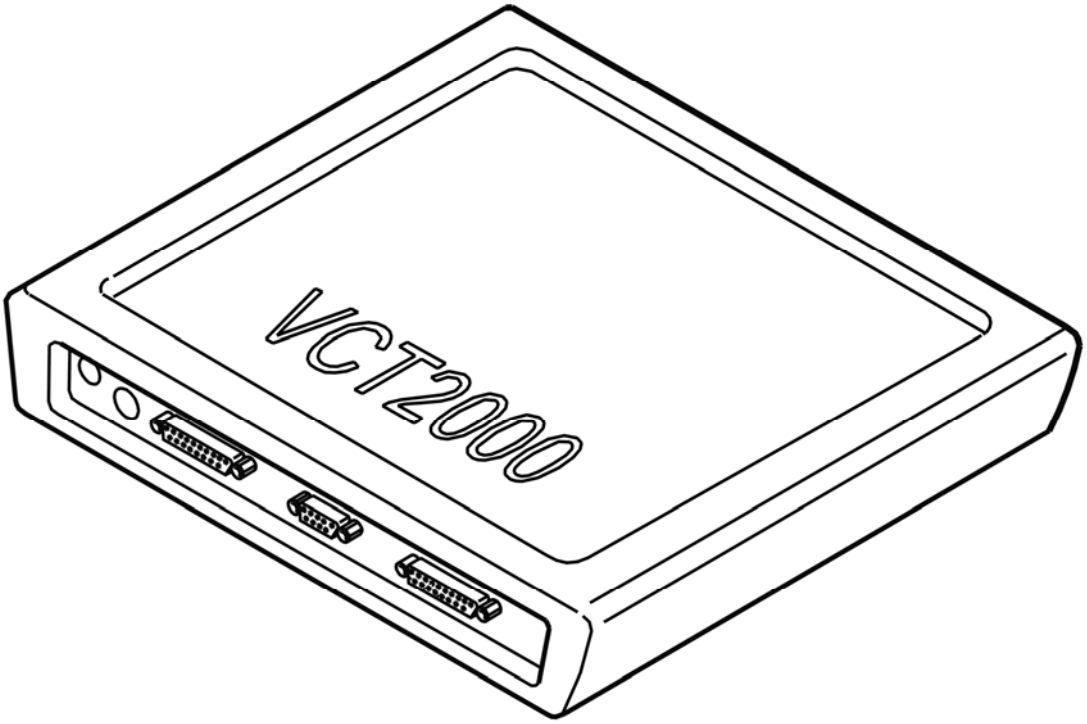

Fig. 181: Identifying VCT2000 Diagnostic Tool Symbol In VIDA
Courtesy of VOLVO CARS CORPORATION

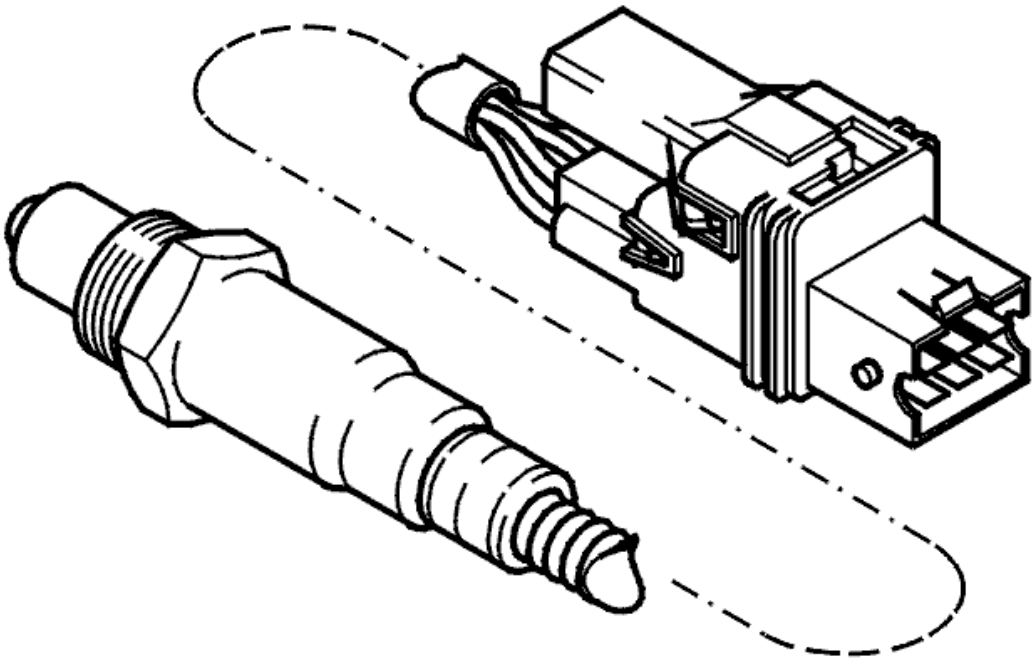

Fig. 182: Front Heated Oxygen Sensor
Courtesy of VOLVO CARS CORPORATION

Is the value lower than +/- 0.01?

- **YES**

  VERIFIED: Troubleshooting has been completed.

- **NO**

  Refer to **INFORMATION**

INFORMATION

FAULT-TRACING INFORMATION

The fault should have been detected and remedied. As this is not the case fault-tracing has failed.

Exit fault-tracing for this diagnostic trouble code (DTC) or make another attempt.

ECM-280A: FRONT HEATED OXYGEN SENSOR (HO2S), BANK 1. SIGNAL TOO LOW. INTERMITTENT FAULT (B5254T2; B6294T; 2003-2004)

DIAGNOSTIC TROUBLE CODE (DTC) INFORMATION

see **DIAGNOSTIC TROUBLE CODE (DTC) INFORMATION**

SIGNAL TOO LOW. INTERMITTENT FAULT

CHECKING CONNECTORS AND WIRING

CAUTION: Do not apply rust solvent spray or grease to the heated oxygen sensor (HO2S) connector.

Check the heated oxygen sensor (HO2S) connector. Check for contact resistance and oxidation. Check for loose connections.

Check the signal cable (-) between heated oxygen sensor (HO2S) terminal #5 and control module terminal #A42 (#A42). Check the cable for calibration current between heated oxygen sensor (HO2S) terminal #2 and control module terminal #A28 (#A28). Check for an intermittent open-circuit.

Check the cable for calibration current between heated oxygen sensor (HO2S) terminal #2 and control module terminal #A28 (#A28). Check the cable for pump current between heated oxygen sensor (HO2S) terminal #6 and control module terminal #A24 (#A24). Check for an intermittent short-circuit to each other.

Other information

- To connect the breakout box / access the control module, see **CONNECTING THE BREAKOUT BOX**
- For B5xx4T, see **HEATED OXYGEN SENSOR (HO2S), REPLACING**
- For B6xx4T, see **HEATED OXYGEN SENSOR (HO2S), REPLACING** .
- For 5 cylinder turbocharged engines -2004, see **SIGNAL DESCRIPTION**
- For 5 cylinder turbocharged engines 2005-, see **SIGNAL SPECIFICATION** .
- For 6 cylinder engines -2004, see **SIGNAL SPECIFICATION**
- For 6 cylinder engines 2005-, see **SIGNAL SPECIFICATION** .
- see **CHECKING WIRING AND TERMINALS** .

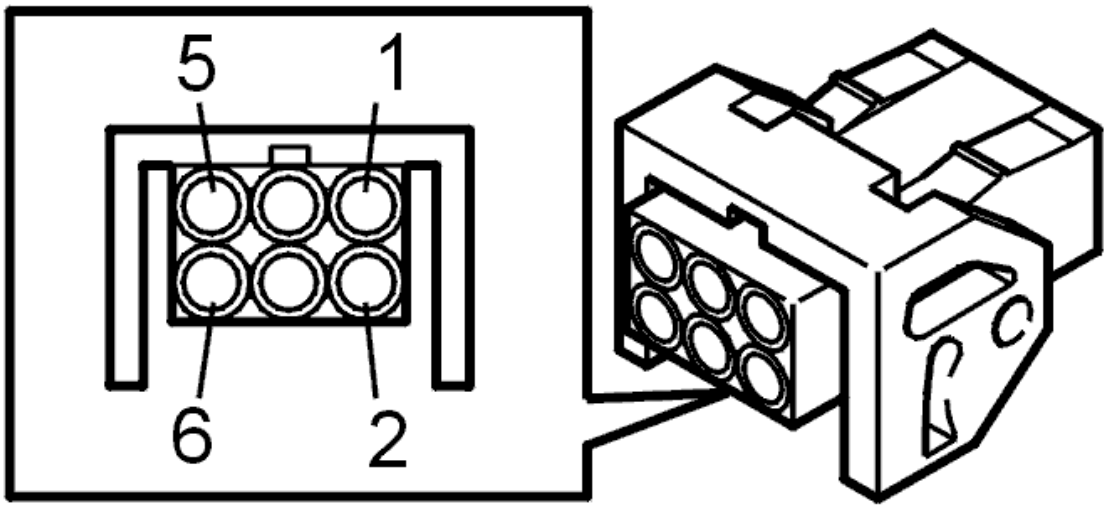

Fig. 183: Identifying Front Heated Oxygen Sensor Connector Terminals
Courtesy of VOLVO CARS CORPORATION

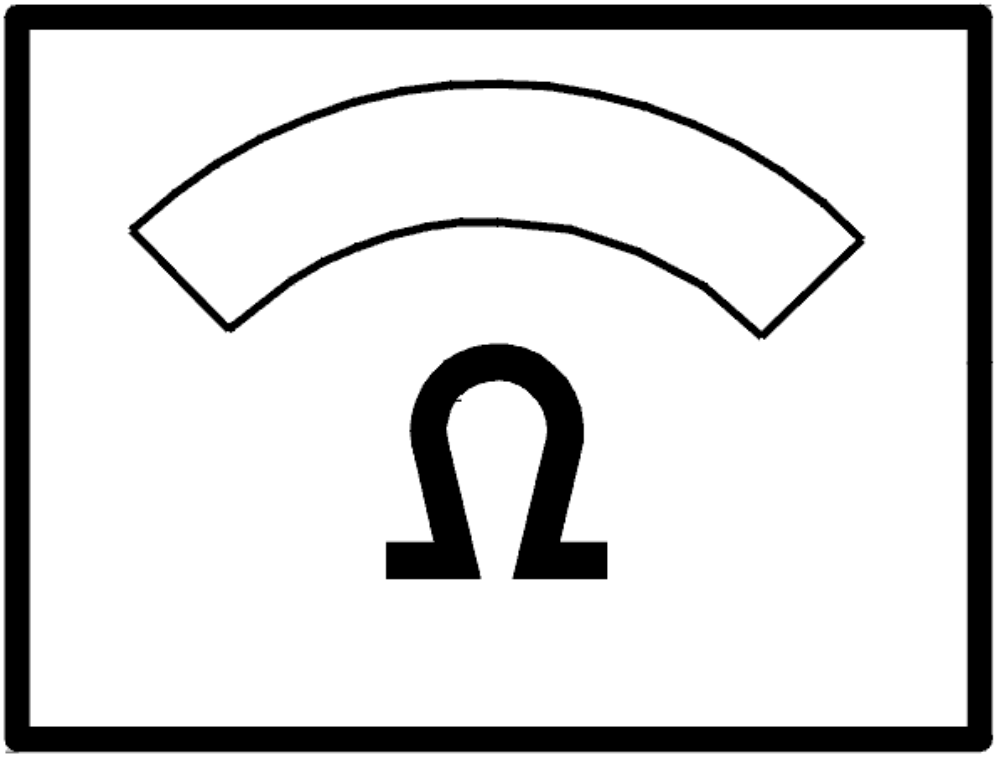

Fig. 184: Identifying Ohm Meter
Courtesy of VOLVO CARS CORPORATION

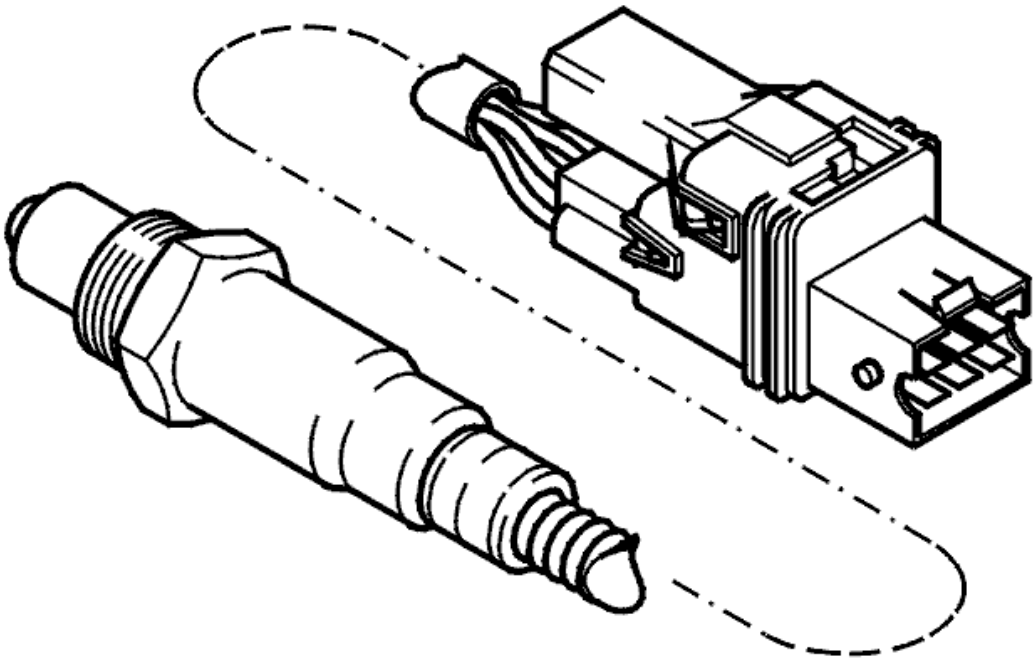

Fig. 185: Front Heated Oxygen Sensor
Courtesy of VOLVO CARS CORPORATION

- **Continue**

  Refer to **INFORMATION**

INFORMATION

FAULT-TRACING INFORMATION

If the fault is intermittent, do not verify fault-tracing if the fault does not recur.

It is possible to view the information again, or leave fault-tracing for this diagnostic trouble code (DTC).

ECM-280A: FRONT HEATED OXYGEN SENSOR (HO2S), BANK 1. SIGNAL TOO LOW. PERMANENT FAULT (B5254T2; B6294T; 2003-2004)

DIAGNOSTIC TROUBLE CODE (DTC) INFORMATION

see **DIAGNOSTIC TROUBLE CODE (DTC) INFORMATION**

SIGNAL TOO LOW. PERMANENT FAULT

CHECKING CONNECTOR, WIRING AND COMPONENTS

CAUTION: Do not apply rust solvent spray or grease to the heated oxygen sensor (HO2S) connector.

Check the heated oxygen sensor (HO2S) connector. Check for contact resistance and oxidation.

Check the signal cable (-) between heated oxygen sensor (HO2S) terminal #5 and control module terminal #A42 (#A42). Check the cable for calibration current between heated oxygen sensor (HO2S) terminal #2 and control module terminal #A28 (#A28). Check for an open-circuit.

Check the cable for calibration current between heated oxygen sensor (HO2S) terminal #2 and control module terminal #A28 (#A28). Check the cable for the pump current between heated oxygen sensor (HO2S) terminal #6 and control module terminal #A24 (#A24). Check for a short-circuit to each other.

If the connector and cables are OK try a new heated oxygen sensor (HO2S).

Remedy as necessary.

Other information

- To connect the breakout box / access the control module, see **CONNECTING THE BREAKOUT BOX**
- For B5xx4T, see **HEATED OXYGEN SENSOR (HO2S), REPLACING**
- For B6xx4T, see **HEATED OXYGEN SENSOR (HO2S), REPLACING** .
- For 5 cylinder turbocharged engines -2004, see **SIGNAL DESCRIPTION**
- For 5 cylinder turbocharged engines 2005-, see **SIGNAL SPECIFICATION** .
- For 6 cylinder engines -2004, see **SIGNAL SPECIFICATION**
- For 6 cylinder engines 2005-, see **SIGNAL SPECIFICATION** .
- see **CHECKING WIRING AND TERMINALS** .

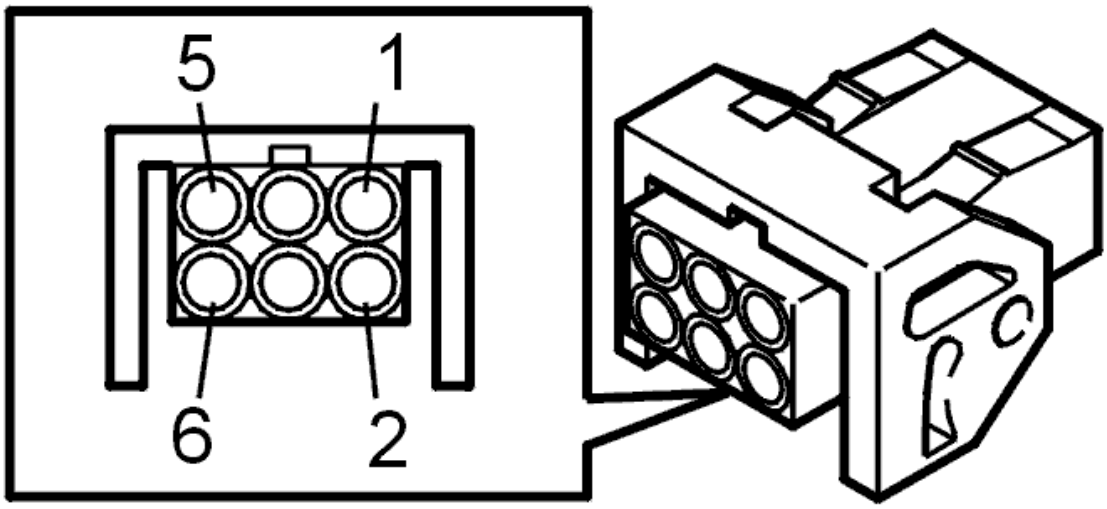

Fig. 186: Identifying Front Heated Oxygen Sensor Connector Terminals
Courtesy of VOLVO CARS CORPORATION

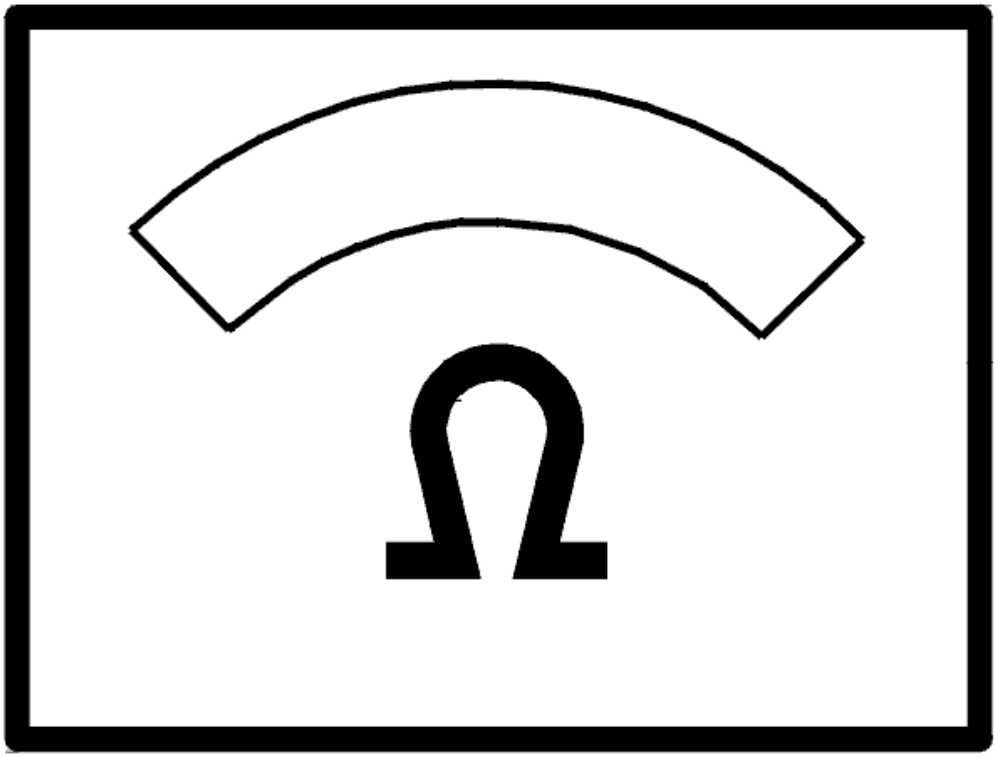

Fig. 187: Identifying Ohm Meter
Courtesy of VOLVO CARS CORPORATION

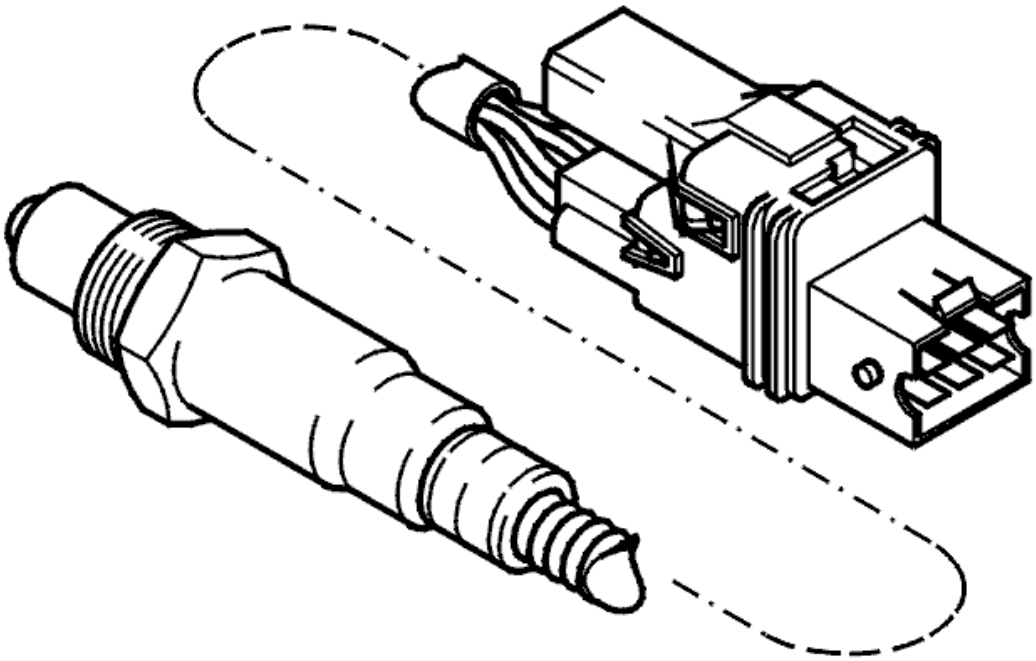

Fig. 188: Front Heated Oxygen Sensor
Courtesy of VOLVO CARS CORPORATION

- **Continue**

  Refer to **VERIFICATION**

VERIFICATION

VERIFICATION

HINT: After carrying out the repair, check that the fault has been remedied.

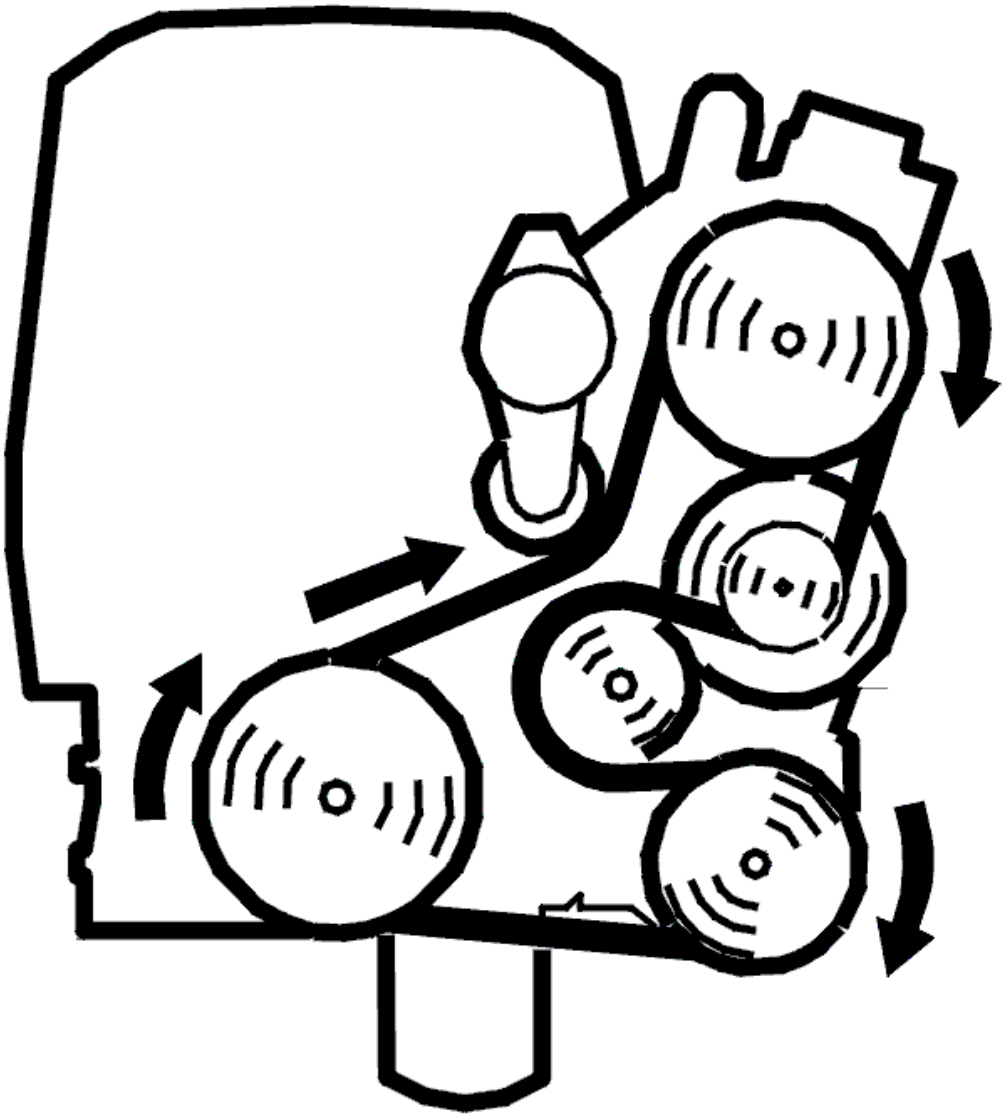

Fig. 189: Belt Routing / Engine Idling - Volvo
Courtesy of VOLVO CARS CORPORATION

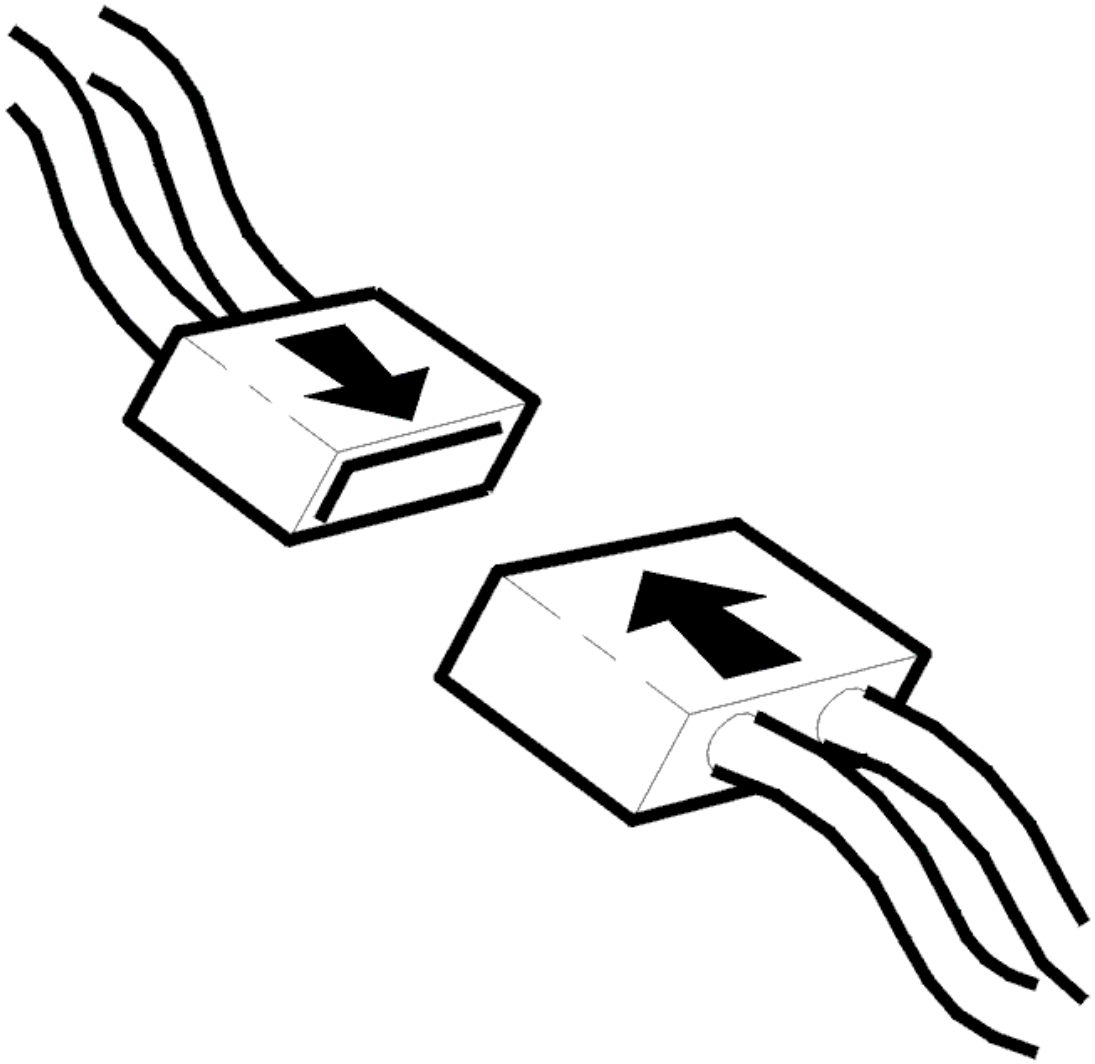

Fig. 190: Connecting Connector
Courtesy of VOLVO CARS CORPORATION

- Ignition off.
- Reconnect connectors, reinstall components.
- Test drive the car according to the TRIP schedule, see **VERIFYING REPAIRS** .

NOTE: **After test driving the engine should not be turned off. The test drive must be carried out again.**

Connect VIDA (Volvo scan tool) again and read out the front heated oxygen sensor (HO2S) diagnostic trouble code (DTC) status.

The value should be higher than 1.0.

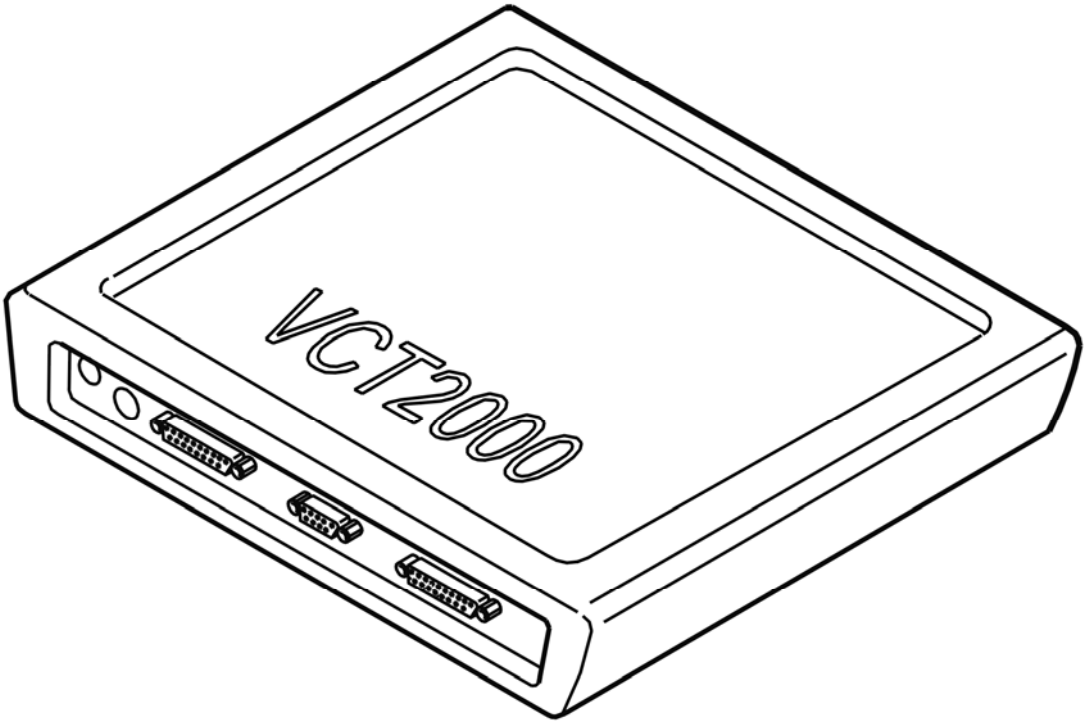

Fig. 191: Identifying VCT2000 Diagnostic Tool Symbol In VIDA
Courtesy of VOLVO CARS CORPORATION

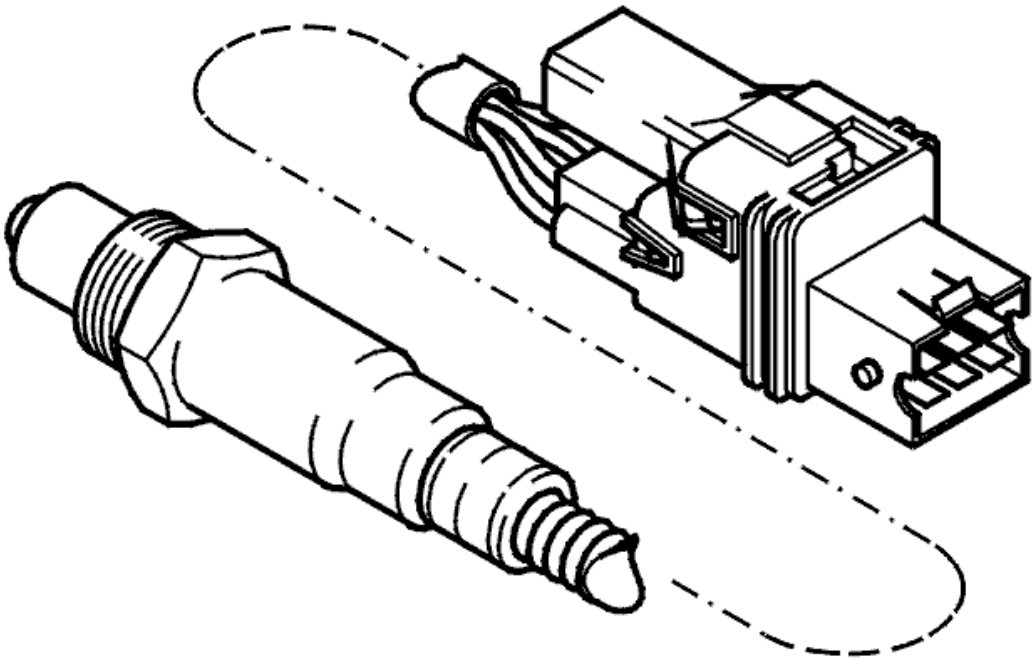

Fig. 192: Front Heated Oxygen Sensor
Courtesy of VOLVO CARS CORPORATION

Is the value higher than 1.0?

- **YES**

  VERIFIED: Troubleshooting has been completed.

- **NO**

  Refer to **INFORMATION**

INFORMATION

FAULT-TRACING INFORMATION

The fault should have been detected and remedied. As this is not the case fault-tracing has failed.

Exit fault-tracing for this diagnostic trouble code (DTC) or make another attempt.

ECM-280B: FUEL PRESSURE SENSOR. SIGNAL MISSING (B5254T2; 2005-2007)

DIAGNOSTIC TROUBLE CODE (DTC) INFORMATION ECM-280B

Condition

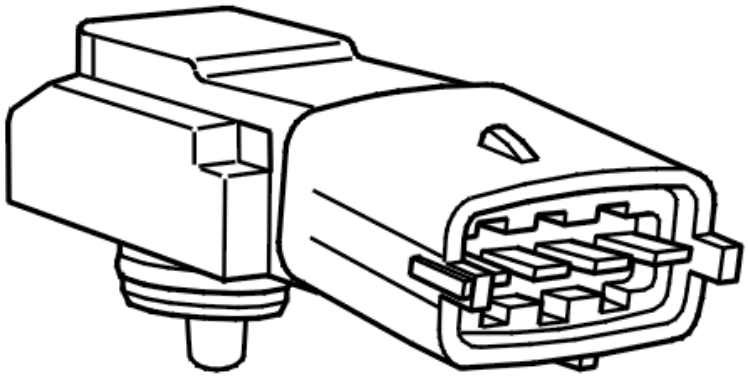

Fig. 193: Identifying Fuel Pressure Sensor
Courtesy of VOLVO CARS CORPORATION

The engine control module (ECM) checks the signal from the fuel pressure sensor.

The diagnostic trouble code (DTC) is stored if the engine control module (ECM) registers that the signal from the fuel pressure sensor is within the normal signal range of the sensor but that the signal is below a calculated desired value for the fuel pressure.

The diagnostic trouble code (DTC) can be diagnosed when the engine is running.

Substitute Value

- None.

Possible Source

- Short-circuit to ground in the signal cable
- Damaged fuel pressure sensor.

Fault symptom[s]

- Driving/Poor performance/lacks power
- Driving/Engine stalls/Unsure when/at all times

SIGNAL MISSING

CHECKING THE STATUS

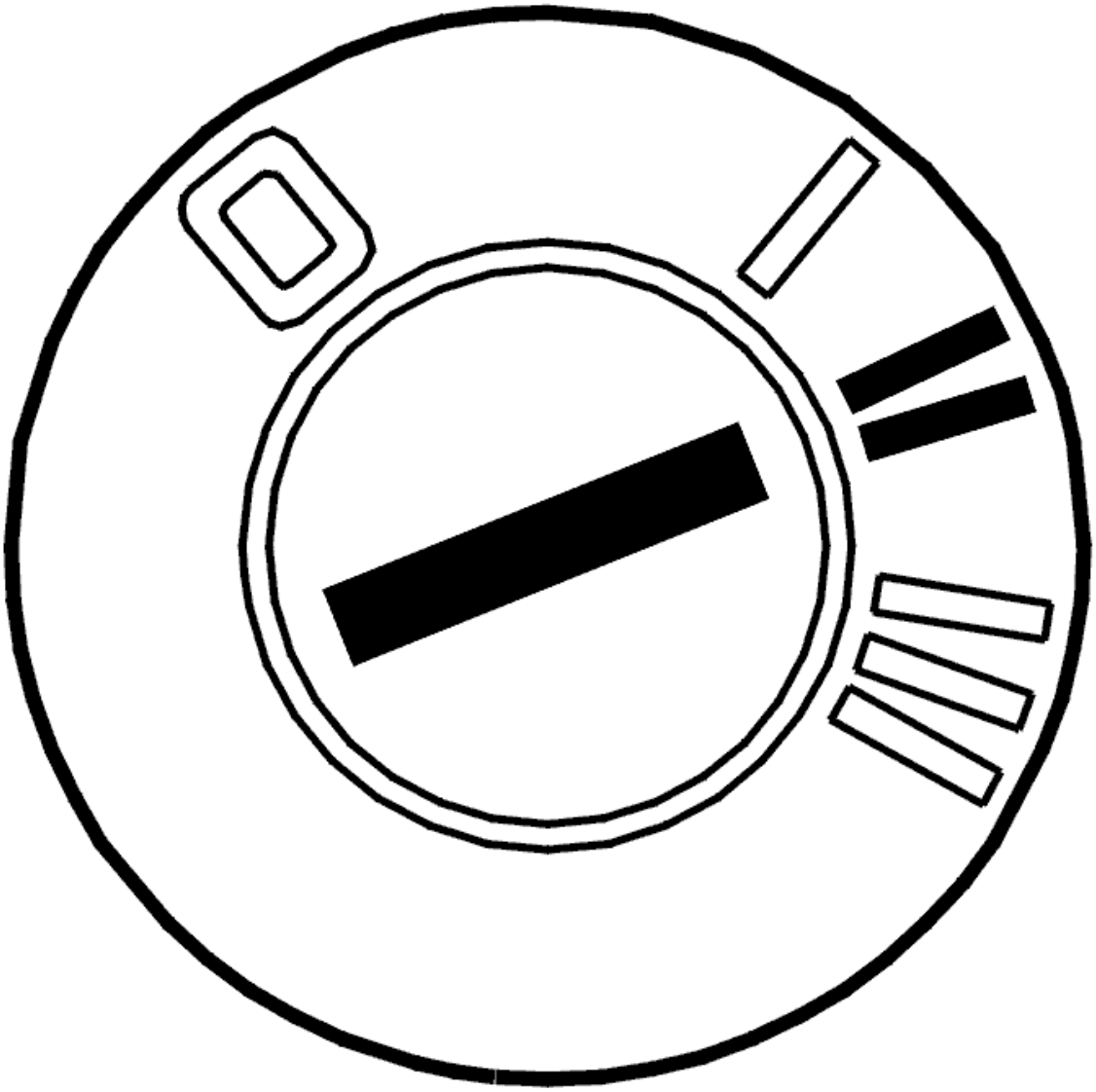

Fig. 194: Identifying Ignition ON
Courtesy of VOLVO CARS CORPORATION

- Ignition on.

  Check whether the fault is permanent or intermittent by reading off the signal from the fuel pressure sensor.

With the engine at operating temperature and idling, the signal must be approximately 400 kPa.

The fault is permanent if the signal is incorrect.

The fault is intermittent if the signal is correct.

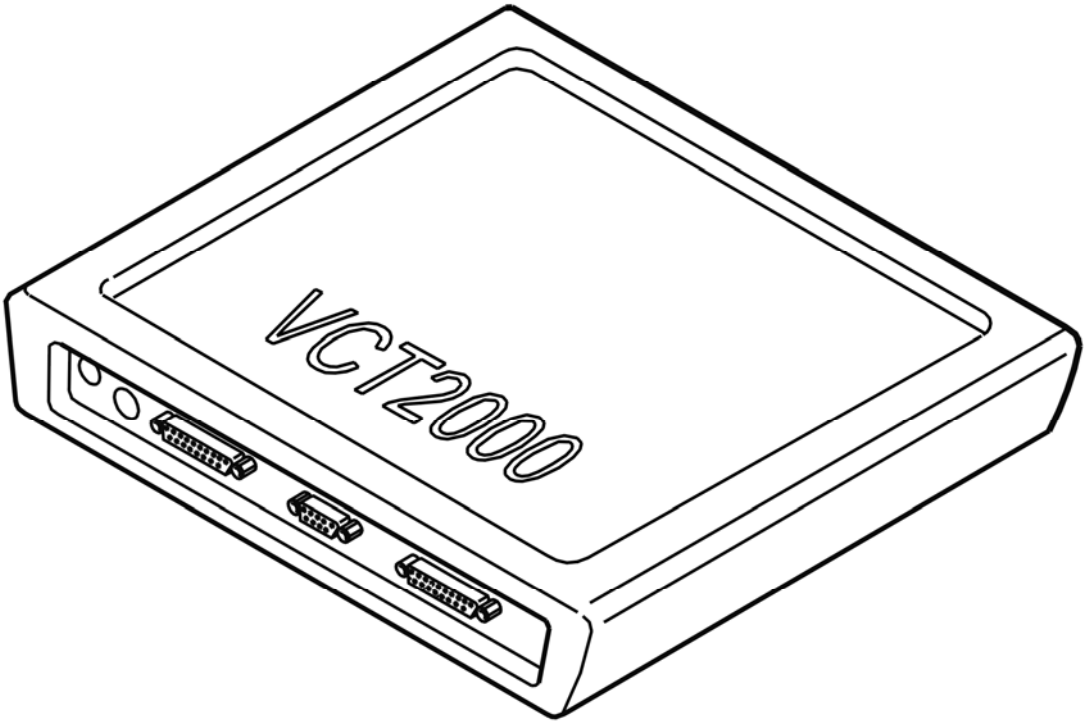

Fig. 195: Identifying VCT2000 Diagnostic Tool Symbol In VIDA
Courtesy of VOLVO CARS CORPORATION

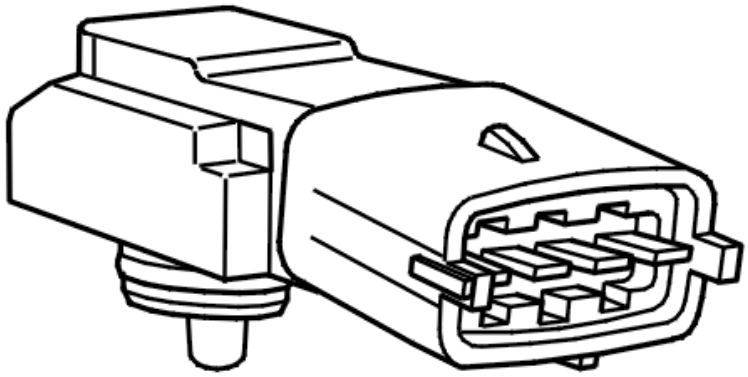

Fig. 196: Identifying Fuel Pressure Sensor
Courtesy of VOLVO CARS CORPORATION

- **Continue**

  Refer to **CHECKING COMPONENTS AND WIRING**

CHECKING COMPONENTS AND WIRING

Check the fuel pressure sensor connectors. Check for contact resistance and oxidation.

Check the signal cable between engine control module (ECM) terminal #A2 (#A2) and fuel pressure sensor terminal #4. Check for a short-circuit to supply voltage. Check for an open-circuit.

Check the ground lead between control module terminal #A60 (#A60) and fuel pressure sensor terminal #1. Check for an open-circuit.

Remedy as necessary.

Try a new fuel pressure sensor if no fault is found during the above fault-tracing.

Other information:

- see **CONNECTING THE BREAKOUT BOX**

- For 5 cylinder turbocharged engines -2004, see **SIGNAL DESCRIPTION**
- For 5 cylinder turbocharged engines 2005-, see **SIGNAL SPECIFICATION** .
- For 6 cylinder engines -2004, see **SIGNAL SPECIFICATION**
- For 6 cylinder engines 2005-, see **SIGNAL SPECIFICATION** .
- For resistance values: **COMPONENT SPECIFICATIONS**
- see **FUEL PRESSURE SENSOR, REPLACEMENT**
- see **CHECKING WIRING AND TERMINALS**

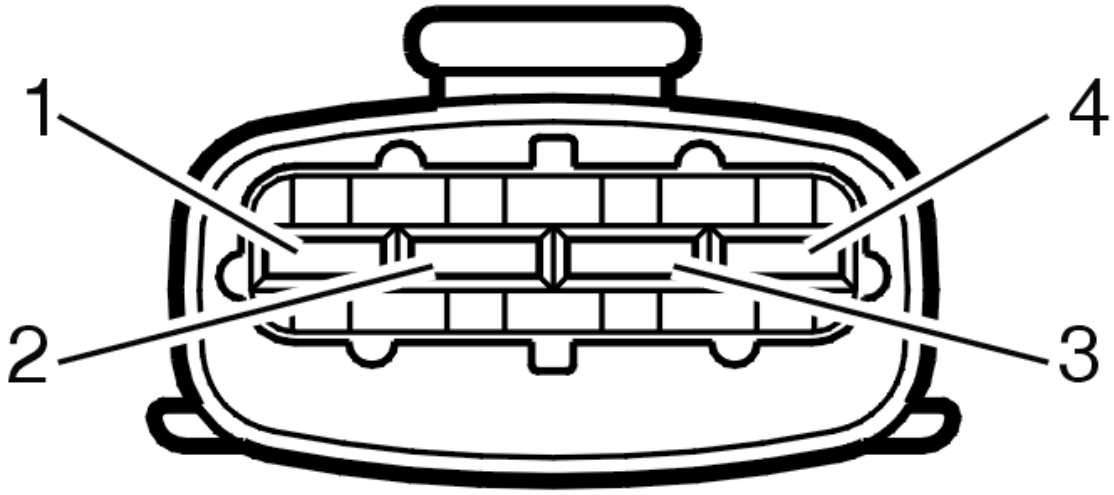

Fig. 197: Identifying 4-Bit Connector
Courtesy of VOLVO CARS CORPORATION

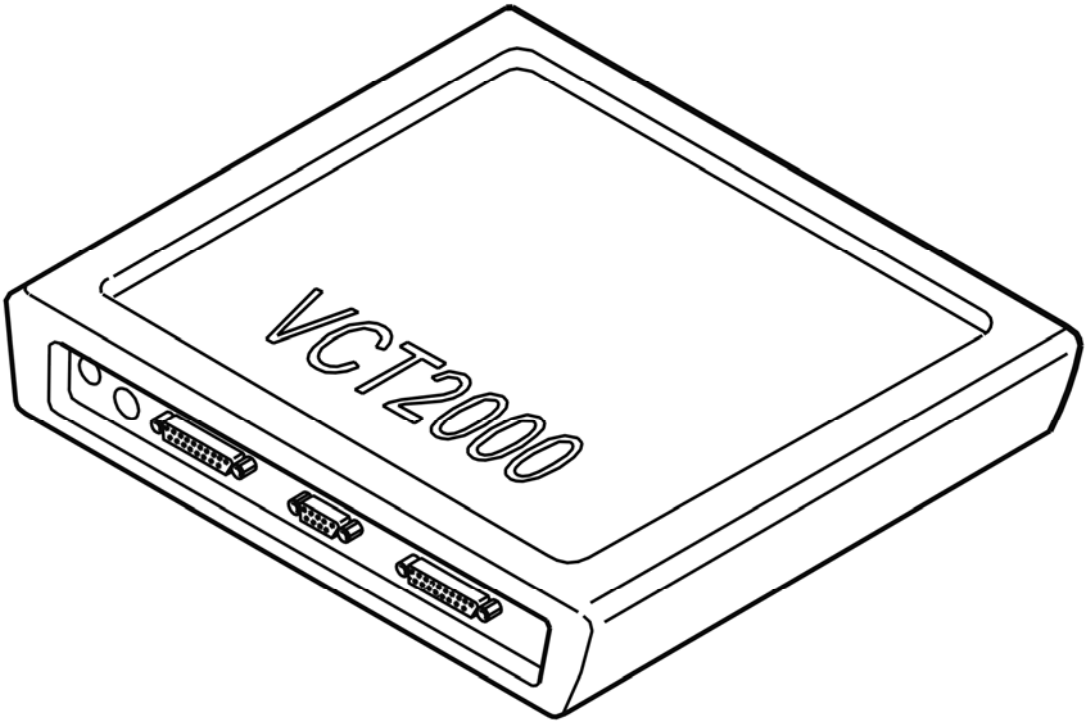

Fig. 198: Identifying VCT2000 Diagnostic Tool Symbol In VIDA
Courtesy of VOLVO CARS CORPORATION

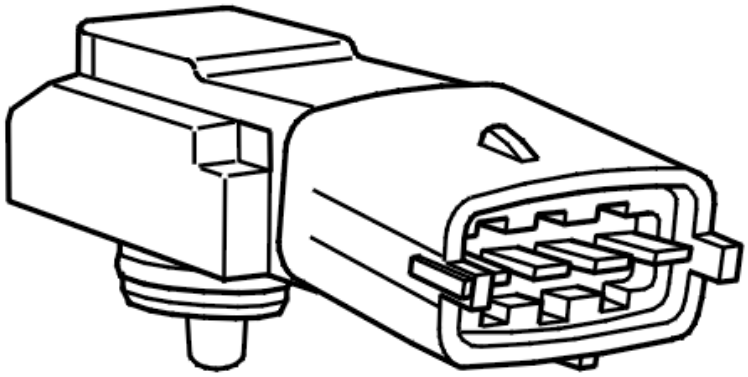

Fig. 199: Identifying Fuel Pressure Sensor
Courtesy of VOLVO CARS CORPORATION

- **Continue**

  Refer to **VERIFICATION**

VERIFICATION

VERIFICATION

HINT: After carrying out the repair, check that the fault has been remedied.

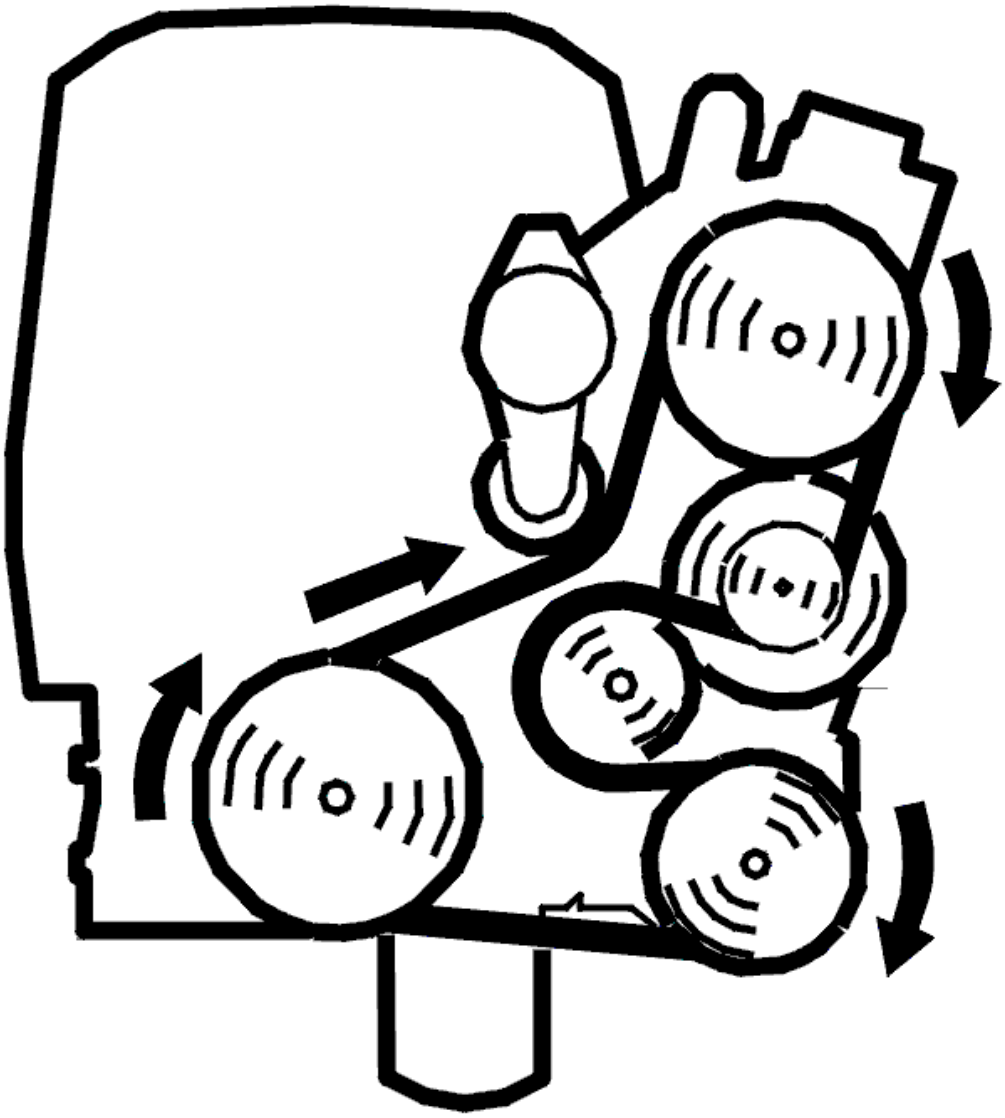

Fig. 200: Belt Routing / Engine Idling - Volvo
Courtesy of VOLVO CARS CORPORATION

- Reinstall the connectors, components etc.
- Start the engine and run it to normal operating temperature
- Read off the fuel pressure sensor signal.

  Check that the fuel pressure is approximately 400 kPa with the engine idling at operating temperature.

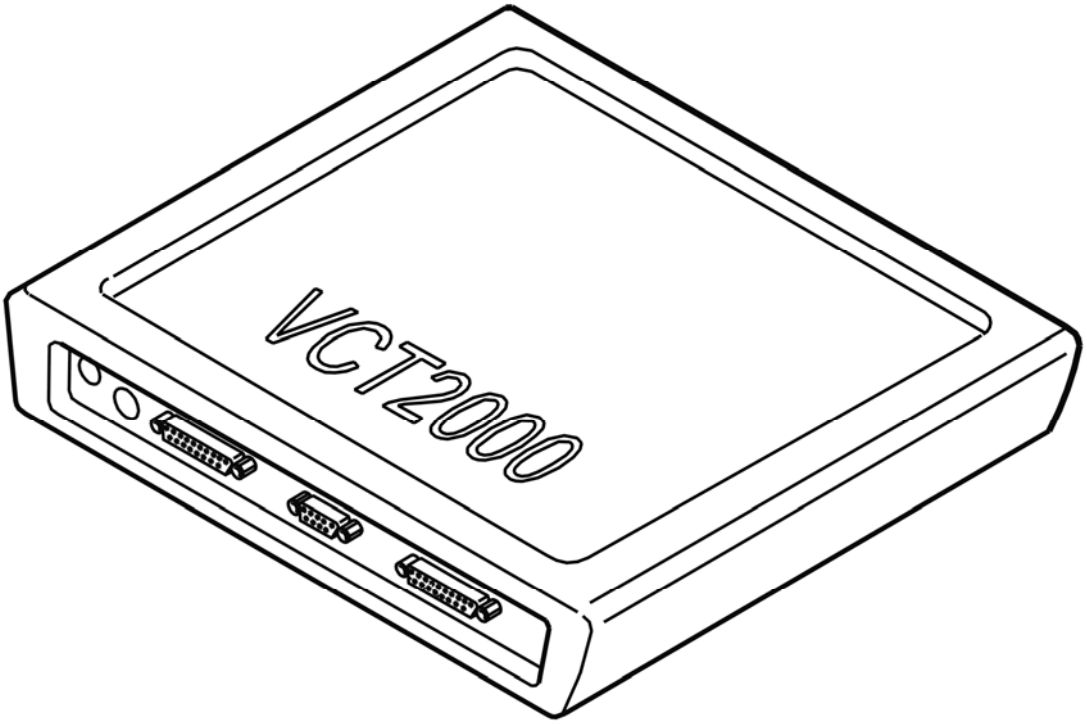

Fig. 201: Identifying VCT2000 Diagnostic Tool Symbol In VIDA
Courtesy of VOLVO CARS CORPORATION

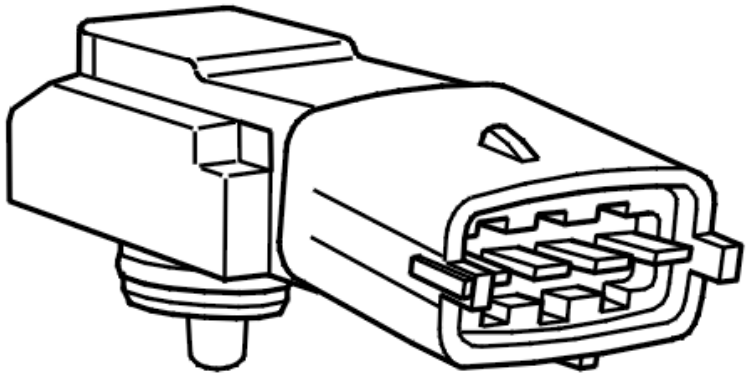

Fig. 202: Identifying Fuel Pressure Sensor
Courtesy of VOLVO CARS CORPORATION

Is the fuel pressure correct?

- **YES**

  VERIFIED: Troubleshooting has been completed.

- **NO**

  Refer to **INFORMATION**

INFORMATION

FAULT-TRACING INFORMATION

The fault should have been detected and remedied. As this is not the case fault-tracing has failed.

Exit fault-tracing for this diagnostic trouble code (DTC) or make another attempt.

ECM-280B: FUEL PRESSURE SENSOR. SIGNAL MISSING (B5254T2; 2007)

DIAGNOSTIC TROUBLE CODE (DTC) INFORMATION ECM-280B

Condition

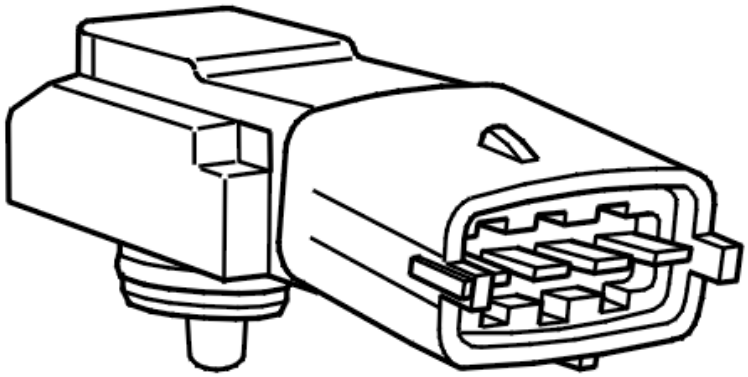

Fig. 203: Identifying Fuel Pressure Sensor
Courtesy of VOLVO CARS CORPORATION

The engine control module (ECM) checks the signal from the fuel pressure sensor.

The diagnostic trouble code (DTC) is stored if the engine control module (ECM) registers that the signal from the fuel pressure sensor is within the normal signal range of the sensor but that the signal is below a calculated desired value for the fuel pressure.

The diagnostic trouble code (DTC) can be diagnosed when the engine is running.

Substitute Value

- None.

Possible Source

- Short-circuit to ground in the signal cable
- Damaged fuel pressure sensor.

Fault symptom[s]

- Driving/Poor performance/lacks power
- Driving/Engine stalls/Unsure when/at all times

SIGNAL MISSING

CHECKING THE STATUS

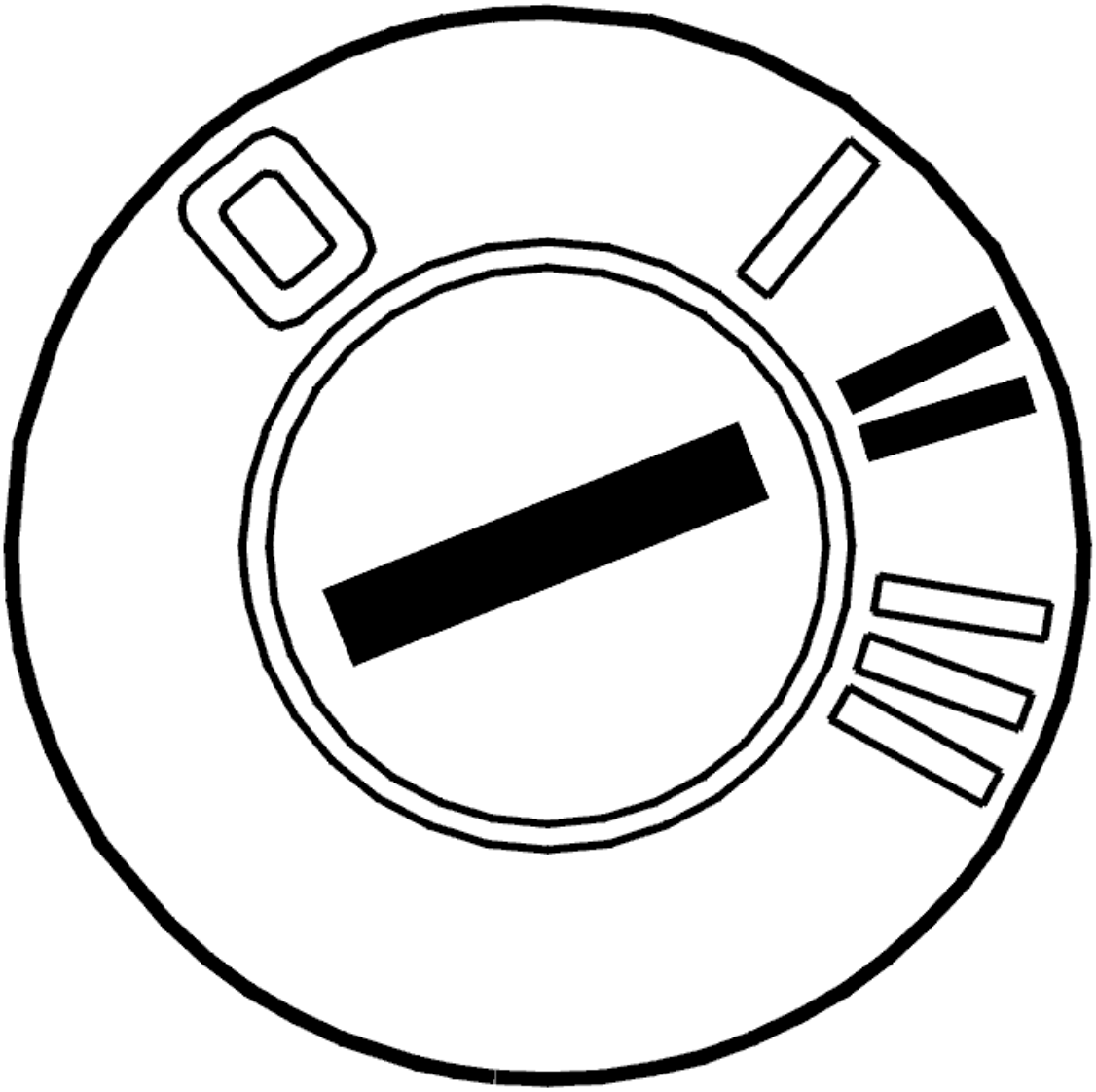

Fig. 204: Identifying Ignition ON
Courtesy of VOLVO CARS CORPORATION

- Ignition on.

  Check whether the fault is permanent or intermittent by reading off the signal from the fuel pressure sensor.

With the engine at operating temperature and idling, the signal must be approximately 400 kPa.

The fault is permanent if the signal is incorrect.

The fault is intermittent if the signal is correct.

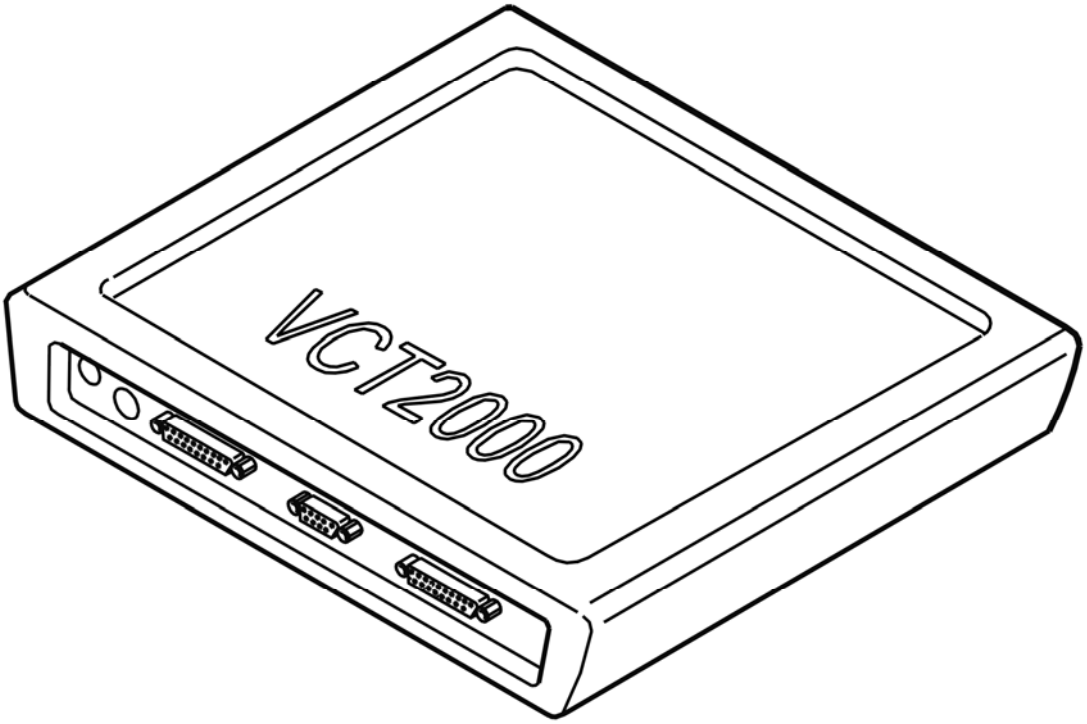

Fig. 205: Identifying VCT2000 Diagnostic Tool Symbol In VIDA
Courtesy of VOLVO CARS CORPORATION

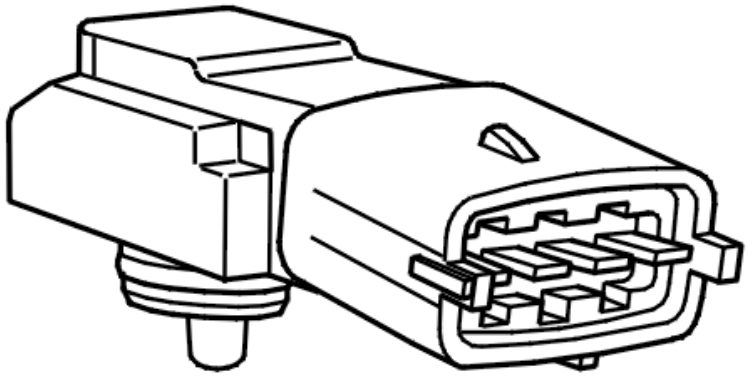

Fig. 206: Identifying Fuel Pressure Sensor
Courtesy of VOLVO CARS CORPORATION

- **Continue**

  Refer to **CHECKING COMPONENTS AND WIRING**

CHECKING COMPONENTS AND WIRING

Check the fuel pressure sensor connectors. Check for contact resistance and oxidation.

Check the signal cable between engine control module (ECM) terminal #A2 (#A2) and fuel pressure sensor terminal #4. Check for a short-circuit to supply voltage. Check for an open-circuit.

Check the ground lead between control module terminal #A60 (#A60) and fuel pressure sensor terminal #1. Check for an open-circuit.

Remedy as necessary.

Try a new fuel pressure sensor if no fault is found during the above fault-tracing.

Other information:

- see **CONNECTING THE BREAKOUT BOX**

- For 5 cylinder turbocharged engines -2004, see **SIGNAL DESCRIPTION**
- For 5 cylinder turbocharged engines 2005-, see **SIGNAL SPECIFICATION** .
- For 6 cylinder engines -2004, see **SIGNAL SPECIFICATION**
- For 6 cylinder engines 2005-, see **SIGNAL SPECIFICATION** .
- For resistance values: **COMPONENT SPECIFICATIONS**
- see **FUEL PRESSURE SENSOR, REPLACEMENT**
- see **CHECKING WIRING AND TERMINALS**

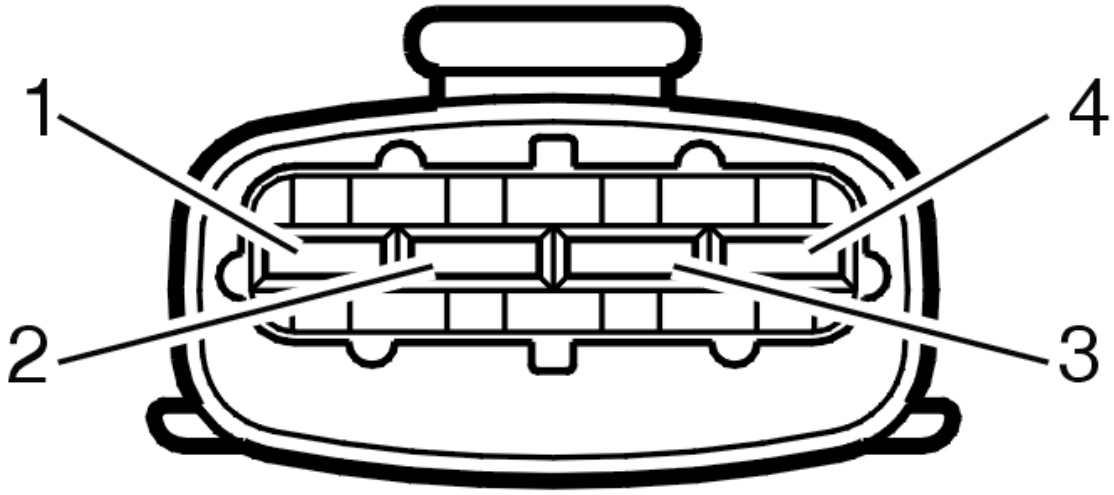

Fig. 207: Identifying 4-Bit Connector
Courtesy of VOLVO CARS CORPORATION

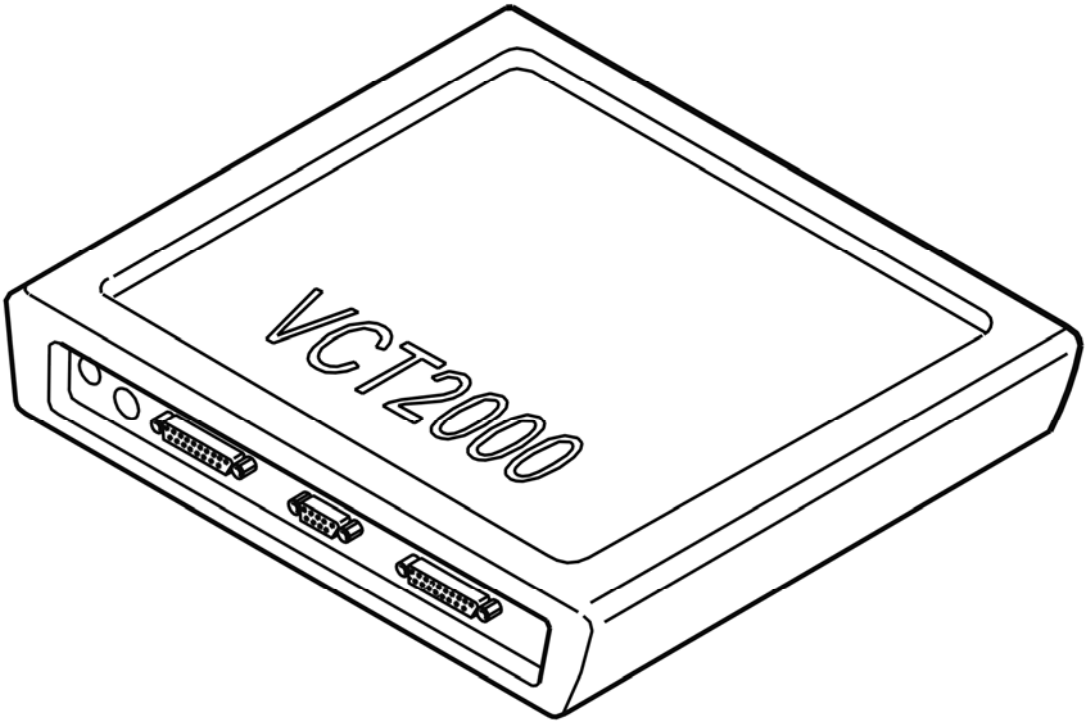

Fig. 208: Identifying VCT2000 Diagnostic Tool Symbol In VIDA
Courtesy of VOLVO CARS CORPORATION

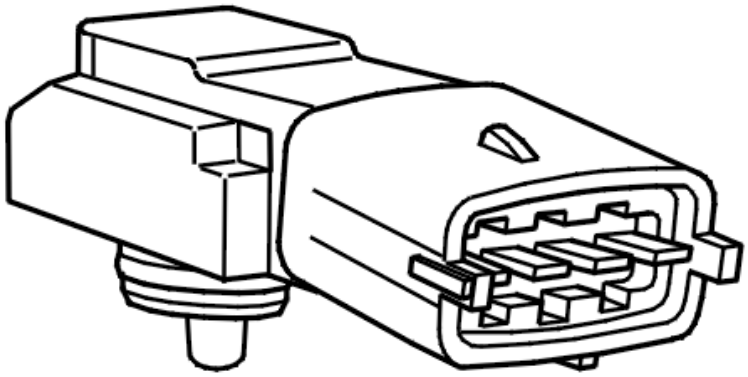

Fig. 209: Identifying Fuel Pressure Sensor
Courtesy of VOLVO CARS CORPORATION

- **Continue**

  Refer to **VERIFICATION**

VERIFICATION

VERIFICATION

HINT: After carrying out the repair, check that the fault has been remedied.

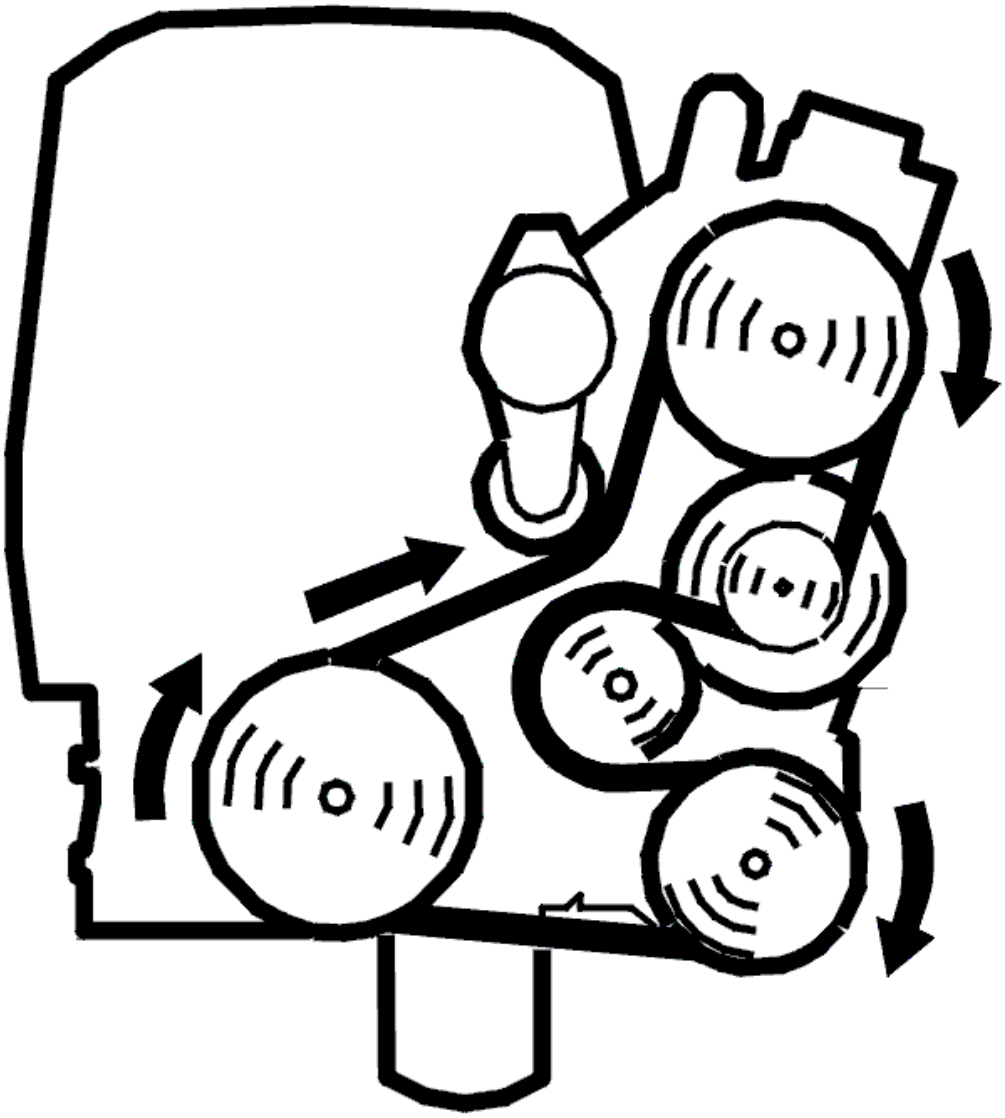

Fig. 210: Belt Routing / Engine Idling - Volvo
Courtesy of VOLVO CARS CORPORATION

- Reinstall the connectors, components etc.
- Start the engine and run it to normal operating temperature
- Read off the fuel pressure sensor signal.

  Check that the fuel pressure is approximately 400 kPa with the engine idling at operating temperature.

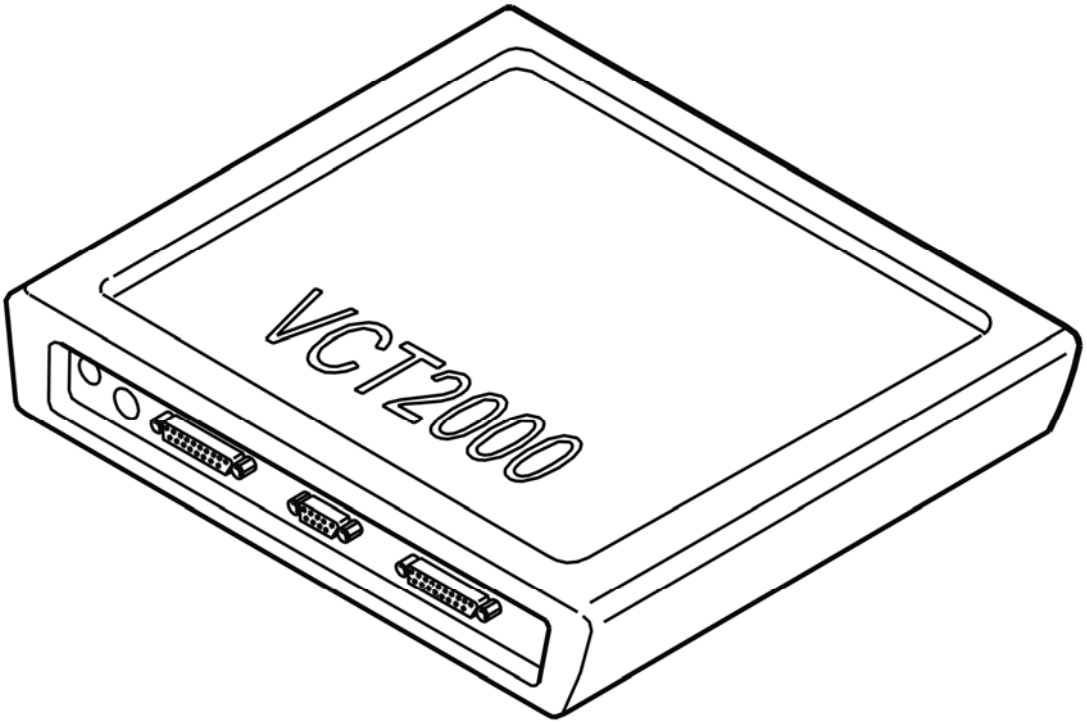

Fig. 211: Identifying VCT2000 Diagnostic Tool Symbol In VIDA
Courtesy of VOLVO CARS CORPORATION

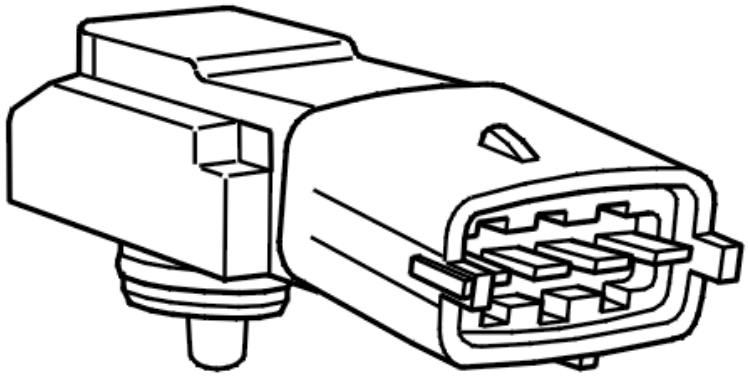

Fig. 212: Identifying Fuel Pressure Sensor
Courtesy of VOLVO CARS CORPORATION

Is the fuel pressure correct?

- **YES**

  VERIFIED: Troubleshooting has been completed.

- **NO**

  Refer to **INFORMATION**

INFORMATION

FAULT-TRACING INFORMATION

The fault should have been detected and remedied. As this is not the case fault-tracing has failed.

Exit fault-tracing for this diagnostic trouble code (DTC) or make another attempt.

ECM-280B: FUEL PRESSURE SENSOR. SIGNAL MISSING (B6294T; 2005-2006)

DIAGNOSTIC TROUBLE CODE (DTC) INFORMATION ECM-280B

see **DIAGNOSTIC TROUBLE CODE (DTC) INFORMATION ECM-280B**

SIGNAL MISSING

see **SIGNAL MISSING**

ECM-280C: FUEL PRESSURE SENSOR. SIGNAL TOO HIGH (B5254T2; 2005-2007)

DIAGNOSTIC TROUBLE CODE (DTC) INFORMATION ECM-280C

Condition

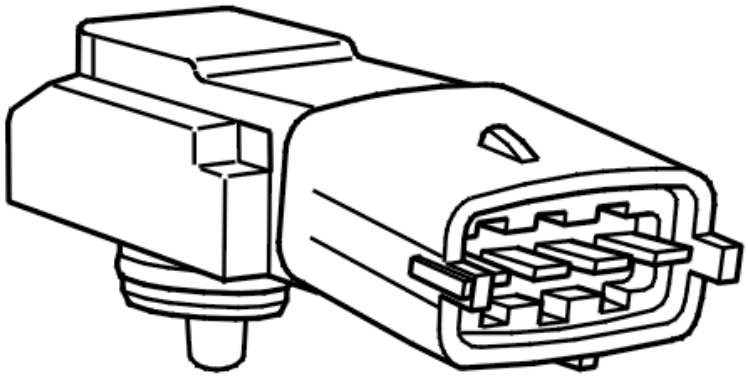

Fig. 213: Identifying Fuel Pressure Sensor
Courtesy of VOLVO CARS CORPORATION

The diagnostic trouble code (DTC) is stored if the engine control module (ECM) registers that the signal from the fuel pressure sensor is too high.

The diagnostic trouble code (DTC) can be diagnosed at ignition on and with the engine running.

Substitute Value

- None.

Possible Source

- Short-circuit to ground in the signal cable
- Damaged temperature sensor.

Fault symptom[s]

- None.

SIGNAL TOO HIGH

CHECKING THE STATUS

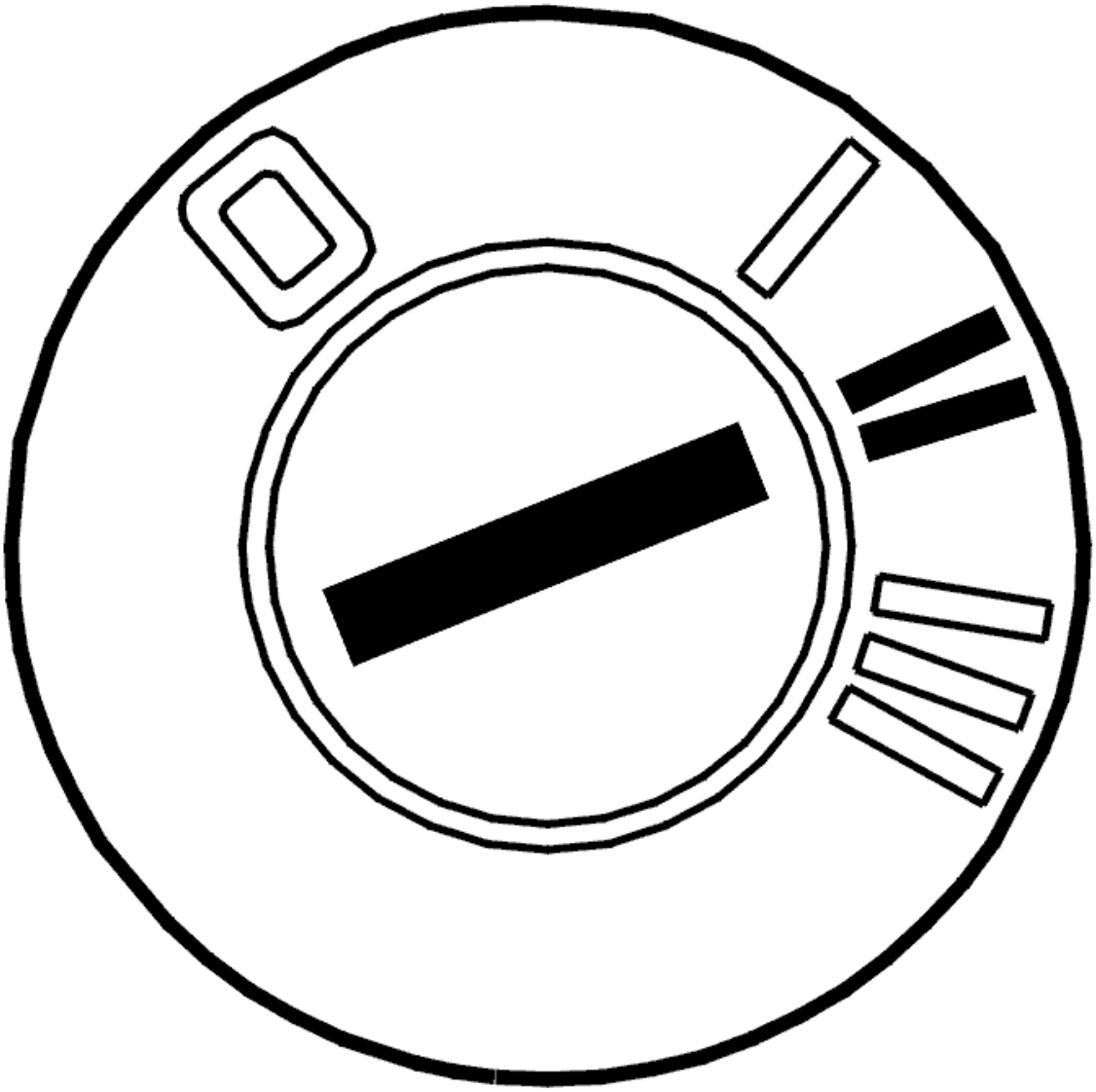

Fig. 214: Identifying Ignition ON
Courtesy of VOLVO CARS CORPORATION

- Ignition on.

  Check whether the fault is permanent or intermittent by reading off the signal from the fuel pressure sensor.

  With the engine at operating temperature and idling, the signal must be approximately 400 kPa.

  The fault is permanent if the signal is incorrect.

  The fault is intermittent if the signal is correct.

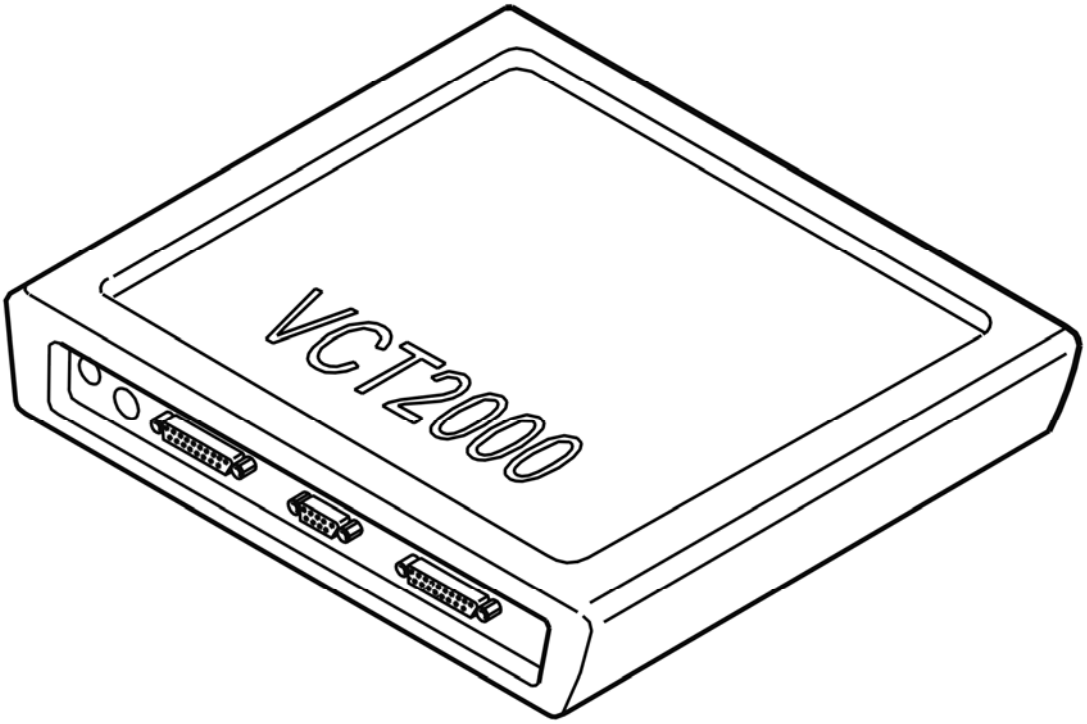

Fig. 215: Identifying VCT2000 Diagnostic Tool Symbol In VIDA
Courtesy of VOLVO CARS CORPORATION

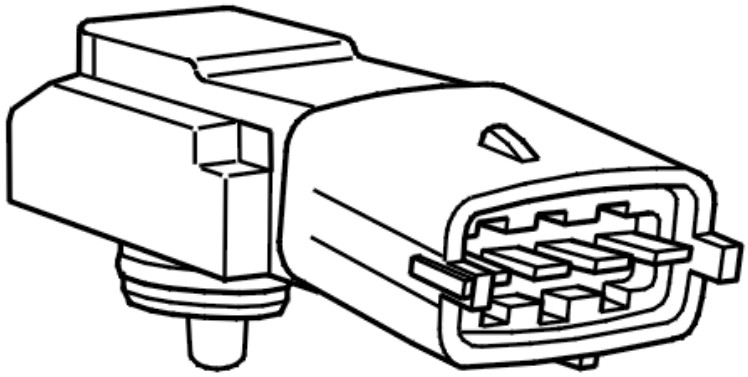

Fig. 216: Identifying Fuel Pressure Sensor
Courtesy of VOLVO CARS CORPORATION

- **Continue**

  Refer to **CHECKING COMPONENTS AND WIRING**

CHECKING COMPONENTS AND WIRING

Check the fuel pressure sensor connectors. Check for contact resistance and oxidation.

Check the signal cable between control module terminal #A2 (#A2) and fuel pressure sensor terminal #4. Check for a short-circuit to supply voltage. Check for an open-circuit.

Check the ground lead between control module terminal #A60 (#A60) and fuel pressure sensor terminal #1. Check for an open-circuit.

Remedy as necessary.

Try a new fuel pressure sensor if no fault is found during the above fault-tracing.

Other information:

- see **CHECKING WIRING AND TERMINALS**

- For resistance values, see **COMPONENT SPECIFICATIONS**
- To connect the breakout box, see **CONNECTING THE BREAKOUT BOX**
- For 5 cylinder turbocharged engines -2004, see **SIGNAL DESCRIPTION**
- For 5 cylinder turbocharged engines 2005-, see **SIGNAL SPECIFICATION** .
- To access or replace the fuel pressure sensor, see **FUEL PRESSURE SENSOR, REPLACEMENT** .

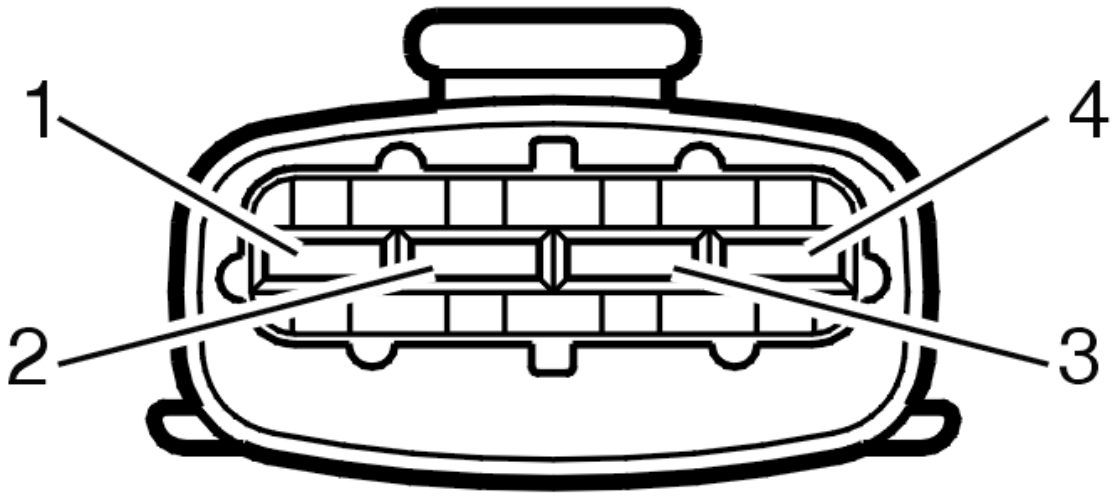

Fig. 217: Identifying 4-Bit Connector
Courtesy of VOLVO CARS CORPORATION

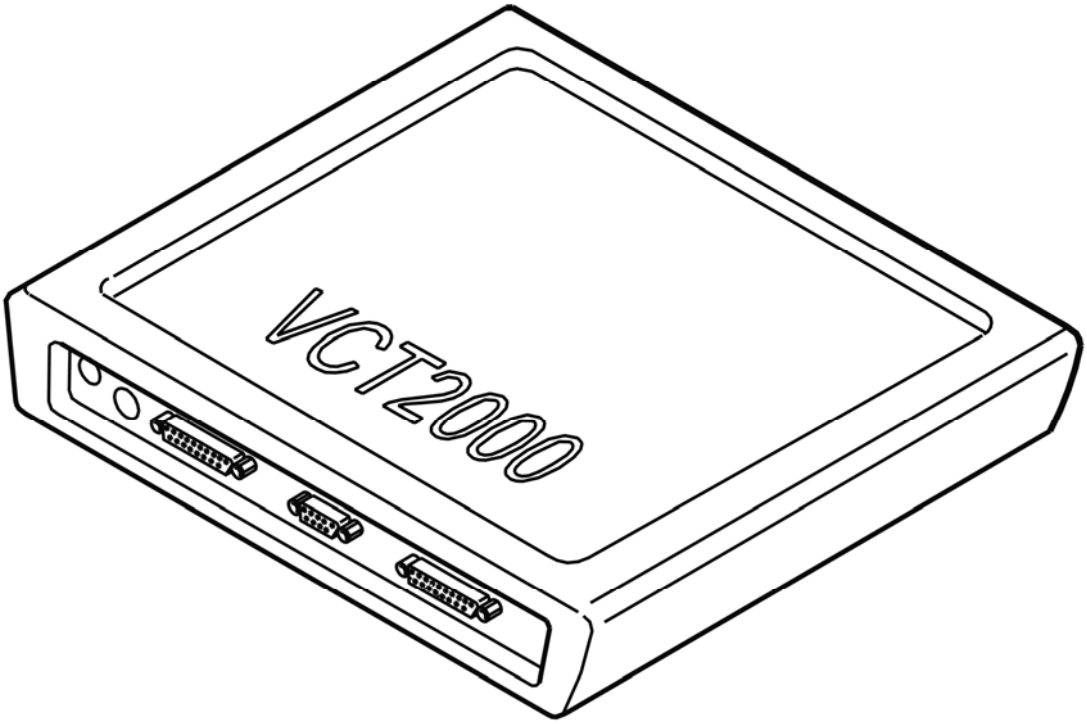

Fig. 218: Identifying VCT2000 Diagnostic Tool Symbol In VIDA
Courtesy of VOLVO CARS CORPORATION

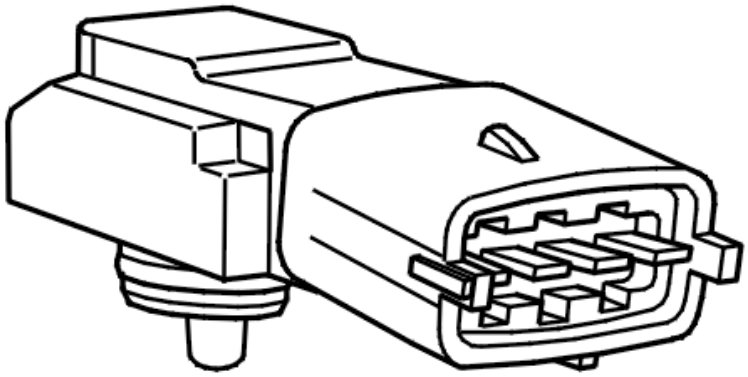

Fig. 219: Identifying Fuel Pressure Sensor
Courtesy of VOLVO CARS CORPORATION

- **Continue**

  Refer to **VERIFICATION**

VERIFICATION

VERIFICATION

HINT: After carrying out the repair, check that the fault has been remedied.

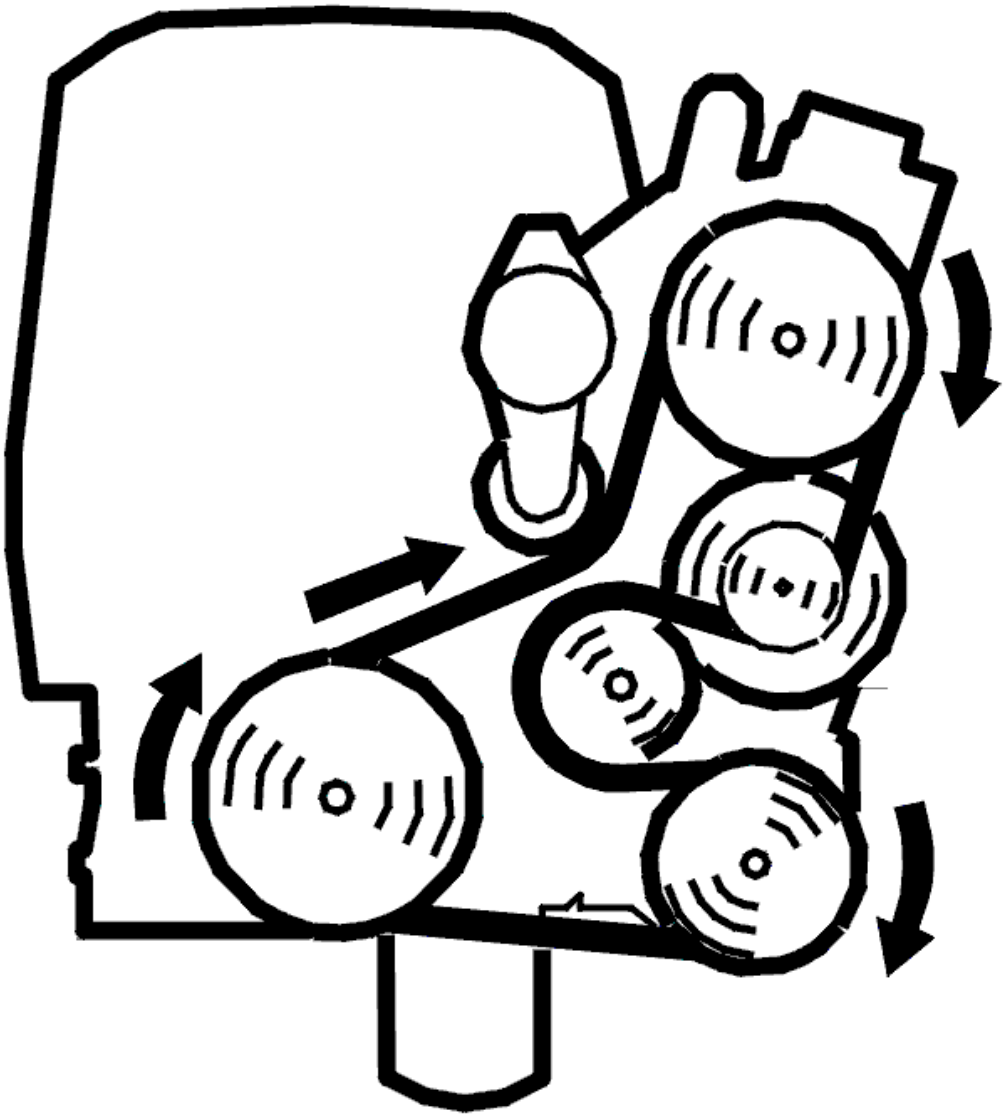

Fig. 220: Belt Routing / Engine Idling - Volvo
Courtesy of VOLVO CARS CORPORATION

- Reinstall the connectors, components etc.
- Start the engine and run it to normal operating temperature
- Read off the fuel pressure sensor signal.

  Check that the fuel pressure is approximately 400 kPa with the engine idling at operating temperature.

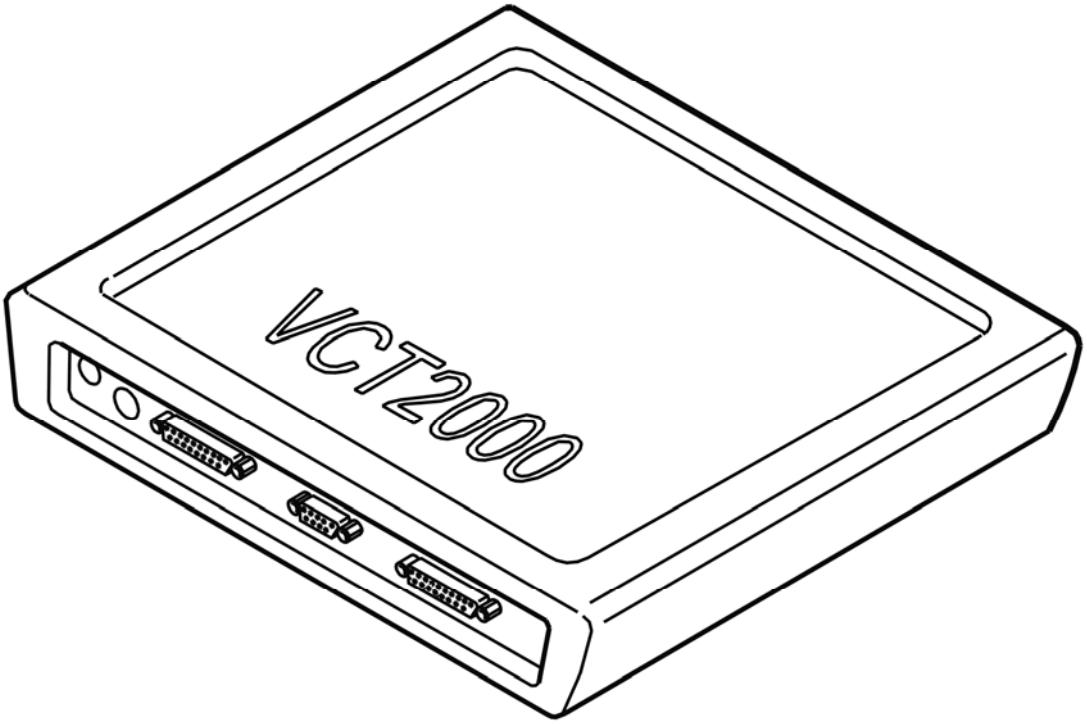

Fig. 221: Identifying VCT2000 Diagnostic Tool Symbol In VIDA
Courtesy of VOLVO CARS CORPORATION

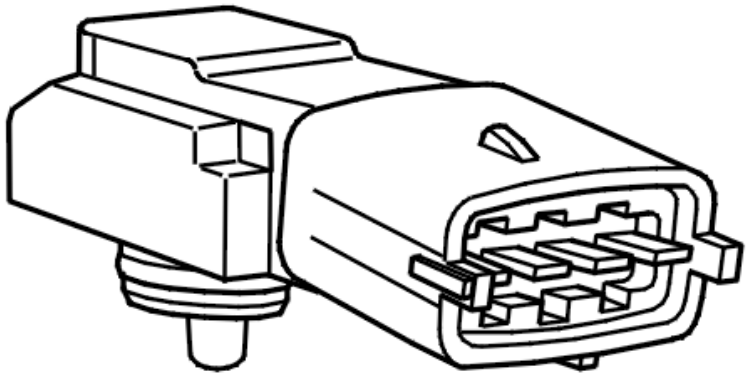

Fig. 222: Identifying Fuel Pressure Sensor
Courtesy of VOLVO CARS CORPORATION

Is the fuel pressure correct?

- **YES**

  VERIFIED: Troubleshooting has been completed.

- **NO**

  Refer to **INFORMATION**

INFORMATION

FAULT-TRACING INFORMATION

The fault should have been detected and remedied. As this is not the case fault-tracing has failed.

Exit fault-tracing for this diagnostic trouble code (DTC) or make another attempt.

ECM-280C: FUEL PRESSURE SENSOR. SIGNAL TOO HIGH (B6294T; 2005-2006)

DIAGNOSTIC TROUBLE CODE (DTC) INFORMATION ECM-280C

see **DIAGNOSTIC TROUBLE CODE (DTC) INFORMATION ECM-280C**

SIGNAL TOO HIGH

see **SIGNAL TOO HIGH**

ECM-280C: SWITCHED FRONT HEATED OXYGEN SENSORS (HO2S). FAULTY SIGNAL (B6294T; 2003-2004)

DIAGNOSTIC TROUBLE CODE (DTC) INFORMATION ECM-280C

Condition

Diagnostic trouble code (DTC) ECM-280C is stored if the engine control module (ECM) detects that both front heated oxygen sensors (HO2S) bank 1 and 2 have been switched (mounted in the incorrect bank of cylinders). The diagnostic trouble codes (DTCs) are diagnosed when the engine has been idling for 10 minutes

Substitute Value

- Long-term fuel trim is switched off
- Three-way catalytic converter (TWC) diagnostics are disabled.

Possible Source

Faulty signal:

- Front heated oxygen sensors (HO2S) are mounted in the incorrect cylinder banks
- Fuel injection system leakage
- Both the front heated oxygen sensors (HO2S) are defective.

Fault symptom[s]

- Malfunction indicator lamp (MIL) lit.

FAULTY SIGNAL

see **FAULTY SIGNAL**

ECM-280D: FUEL PRESSURE SENSOR. SIGNAL TOO LOW (B5254T2; 2005-2007)

DIAGNOSTIC TROUBLE CODE (DTC) INFORMATION ECM-280D

Condition

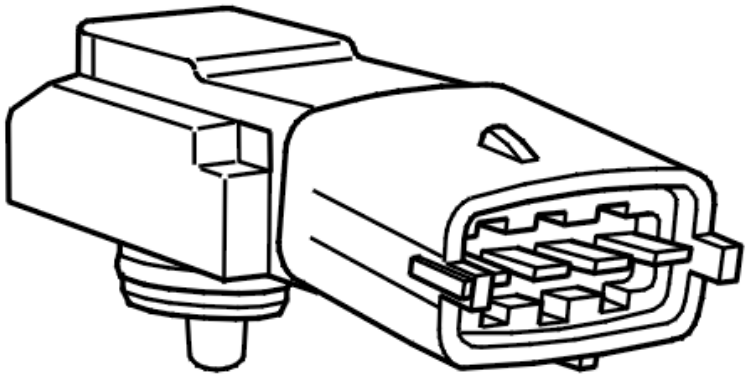

Fig. 223: Identifying Fuel Pressure Sensor
Courtesy of VOLVO CARS CORPORATION

The diagnostic trouble code (DTC) is stored if the engine control module (ECM) registers that the signal from the fuel pressure sensor is too low.

The diagnostic trouble code (DTC) can be diagnosed at ignition on and with the engine running.

Substitute Value

- None.

Possible Source

- Contact resistance or oxidation in the terminals
- Short-circuit to supply voltage in the signal cable
- Open-circuit in the signal cable
- Open-circuit in the signal ground cable
- Damaged temperature sensor.

Fault symptom[s]

- None.

SIGNAL TOO LOW

see **SIGNAL TOO LOW**

ECM-280D: FUEL PRESSURE SENSOR. SIGNAL TOO LOW (B6294T; 2005-2006)

DIAGNOSTIC TROUBLE CODE (DTC) INFORMATION ECM-280D

see **DIAGNOSTIC TROUBLE CODE (DTC) INFORMATION ECM-280D**

SIGNAL TOO LOW

see **SIGNAL TOO LOW**

ECM-2810: FRONT HEATED OXYGEN SENSOR (HO2S), BANK 1 HEATING. FAULTY SIGNAL. INTERMITTENT FAULT (B5254T2; B6294T; 2003-2004)

DIAGNOSTIC TROUBLE CODE (DTC) INFORMATION

Condition

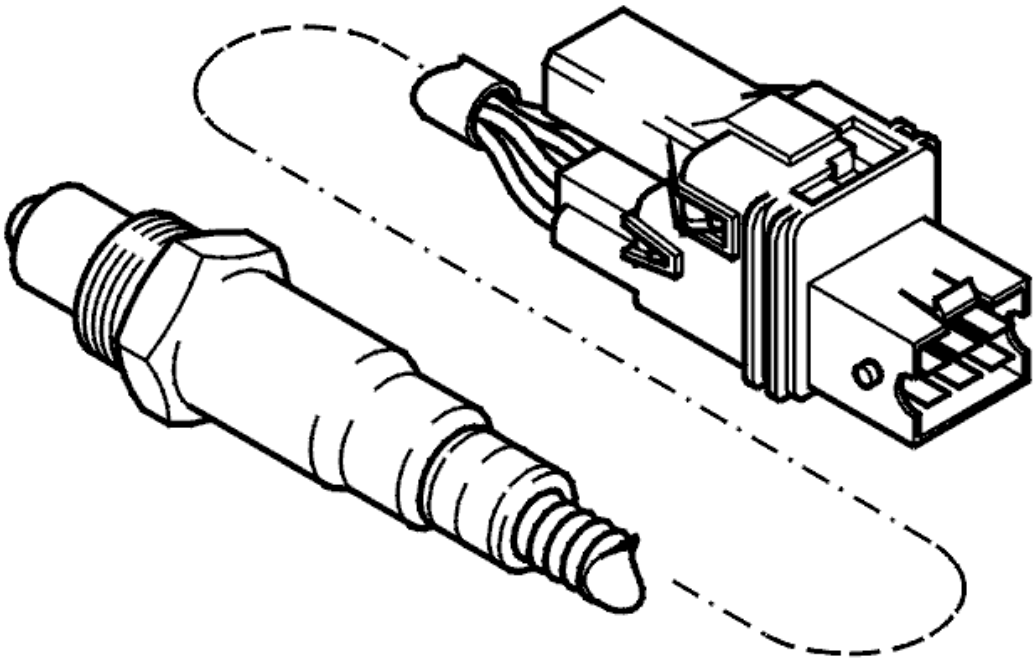

Fig. 224: Front Heated Oxygen Sensor
Courtesy of VOLVO CARS CORPORATION

The control module controls preheating by pulsing the current to the PTC-element. Pulse lengths are dependent on heated oxygen sensor (H02S) temperature. Diagnostic trouble code (DTC) ECM-2810 is stored if the control module registers that the signal is constantly 2.5 V, higher than 3.5 V at current pulse or lower than 2.3 V at no pulse.

Diagnostic trouble code (DTC) ECM-2810 is stored if the control module registers that heated oxygen sensor pre-heating does not function within 17 seconds of dew (condensation) point in the exhaust system being reached.

Substitute Value

- fuel trim shut off.

Possible Source

Signal too high:

- short-circuit to supply voltage in the signal cable
- defective heated oxygen sensor (HO2S).

Signal too low:

- short-circuit to ground in the signal cable
- defective heated oxygen sensor (HO2S).

Signal missing:

- contact resistance and oxidation
- open-circuit in power supply from system relay.

Faulty signal:

- defective heated oxygen sensor (HO2S).

Fault symptom[s]

- MIL-lamp lights.

FAULTY SIGNAL. INTERMITTENT FAULT

FAULT-TRACING INFORMATION

Control module previously registered a fault. The fault is now no longer present.

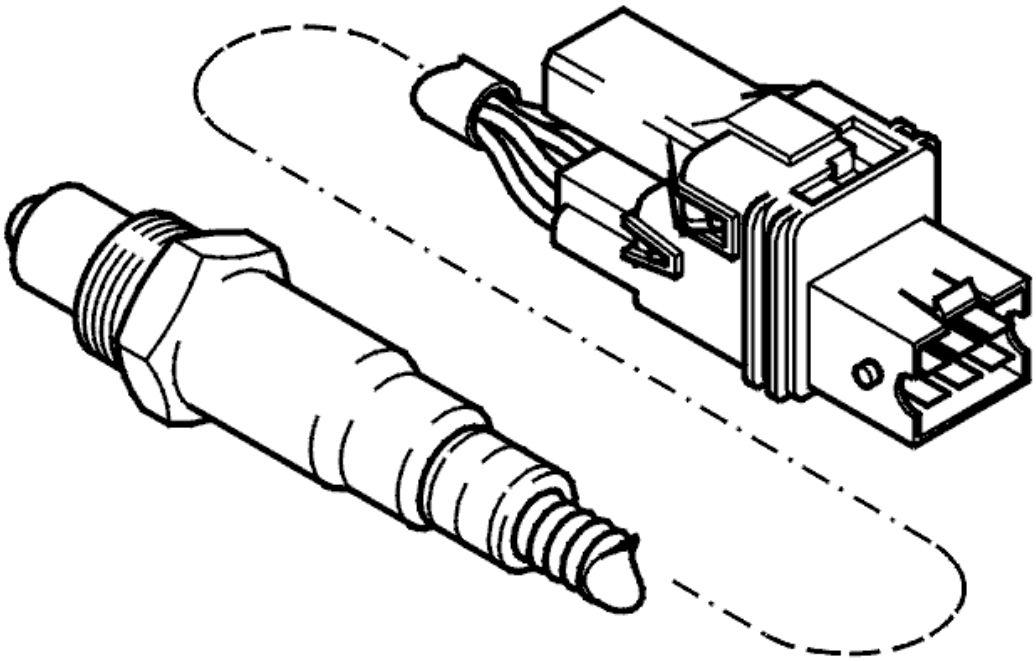

Fig. 225: Front Heated Oxygen Sensor
Courtesy of VOLVO CARS CORPORATION

- **Continue**

  Refer to **INFORMATION**

INFORMATION

FAULT-TRACING INFORMATION

If the fault is intermittent, do not verify fault-tracing if the fault does not recur.

It is possible to view the information again, or leave fault-tracing for this diagnostic trouble code (DTC).

ECM-2810: FRONT HEATED OXYGEN SENSOR (HO2S), BANK 1 HEATING. FAULTY SIGNAL. PERMANENT FAULT (B5254T2; B6294T; 2003-2004)

DIAGNOSTIC TROUBLE CODE (DTC) INFORMATION

see **DIAGNOSTIC TROUBLE CODE (DTC) INFORMATION**

FAULTY SIGNAL. PERMANENT FAULT

REPLACING THE COMPONENT

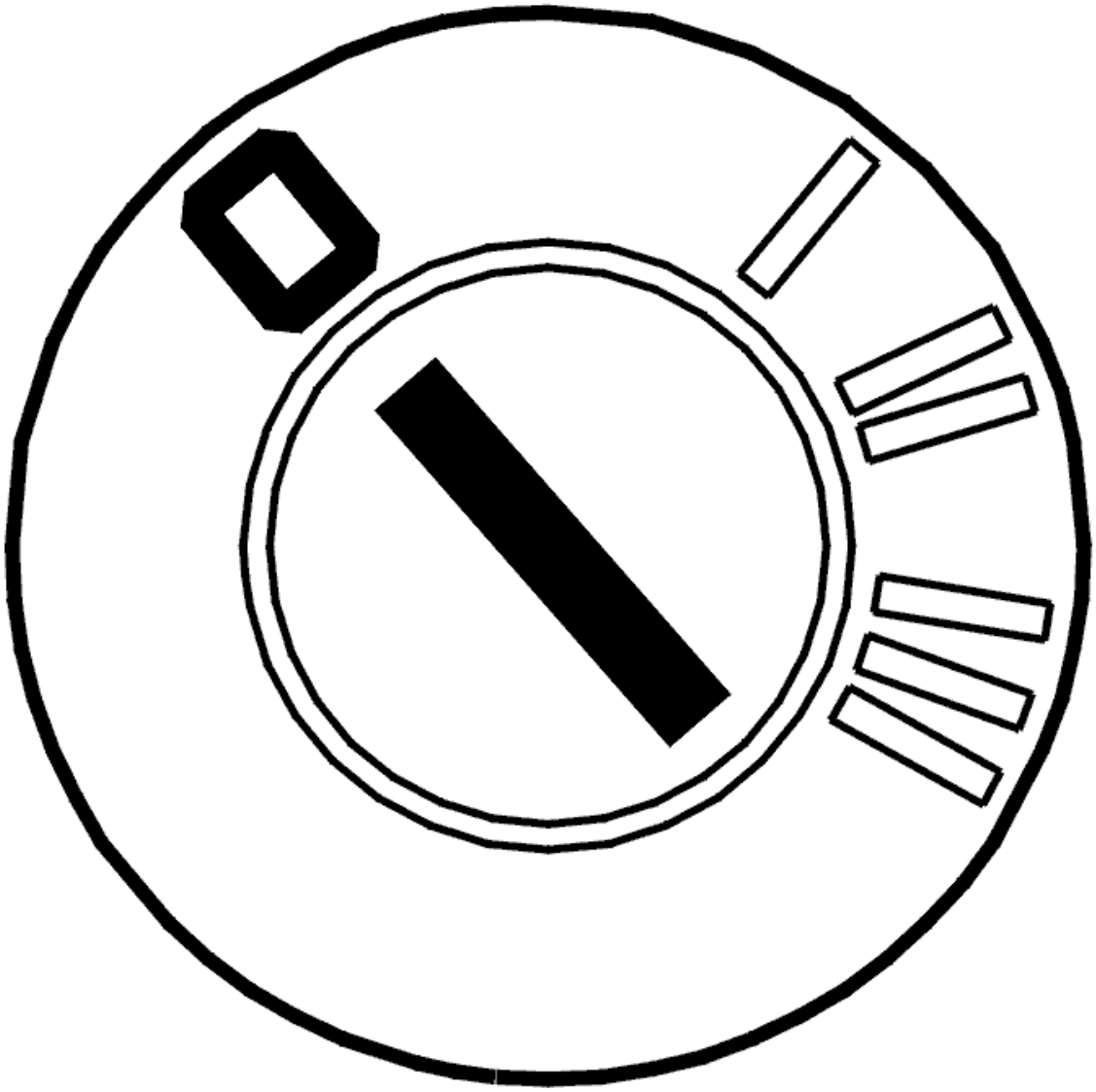

Fig. 226: Identifying Ignition OFF
Courtesy of VOLVO CARS CORPORATION

- Ignition off.

  The control module has registered a fault in the heated oxygen sensor (HO2S). Try a new heated oxygen sensor (HO2S).
  - For B5xx4T, see **HEATED OXYGEN SENSOR (HO2S), REPLACING**
  - For B6xx4T, see **HEATED OXYGEN SENSOR (HO2S), REPLACING** .

  .

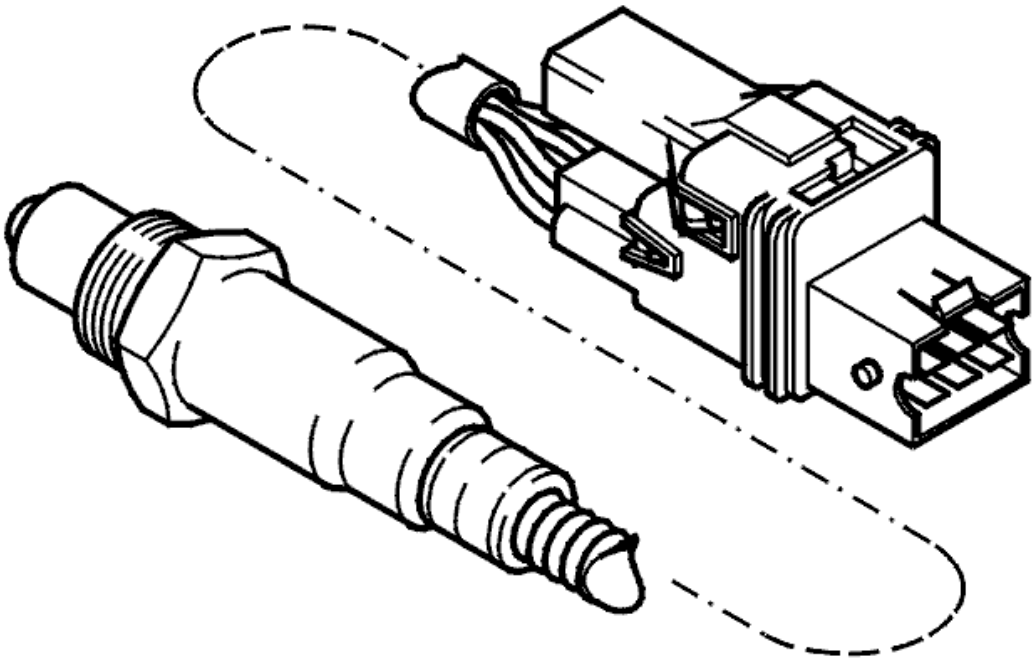

Fig. 227: Front Heated Oxygen Sensor
Courtesy of VOLVO CARS CORPORATION

- **Continue**

  Refer to **INFORMATION**

INFORMATION

FAULT-TRACING INFORMATION

In case of this defect, troubleshooting is not followed by verification.

The information can be displayed again or the fault-tracing for this fault can be interrupted.

ECM-2810: FRONT HEATED OXYGEN SENSOR (HO2S), BANK 1 HEATING. SIGNAL MISSING. INTERMITTENT FAULT (B5254T2; B6294T; 2003-2004)

DIAGNOSTIC TROUBLE CODE (DTC) INFORMATION

see **DIAGNOSTIC TROUBLE CODE (DTC) INFORMATION**

SIGNAL MISSING. INTERMITTENT FAULT

CHECKING WIRING AND CONNECTORS

Check the heated oxygen sensor (HO2S) connector. Check for contact resistance and oxidation. Check for loose connections.

Check the signal cable between heated oxygen sensor (HO2S) terminal #4 and control module terminal #A18 (#A18). Check the power supply between system relay terminal #3 and heated oxygen sensor (HO2S) terminal #3. Check for an intermittent open-circuit.

Other information

- To connect the breakout box / access the control module, see **CONNECTING THE BREAKOUT BOX**
- For B5xx4T, see **HEATED OXYGEN SENSOR (HO2S), REPLACING**
- For B6xx4T, see **HEATED OXYGEN SENSOR (HO2S), REPLACING** .
- For 5 cylinder turbocharged engines -2004, see **SIGNAL DESCRIPTION**
- For 5 cylinder turbocharged engines 2005-, see **SIGNAL SPECIFICATION** .
- For 6 cylinder engines -2004, see **SIGNAL SPECIFICATION**
- For 6 cylinder engines 2005-, see **SIGNAL SPECIFICATION** .
- see **CHECKING WIRING AND TERMINALS** .

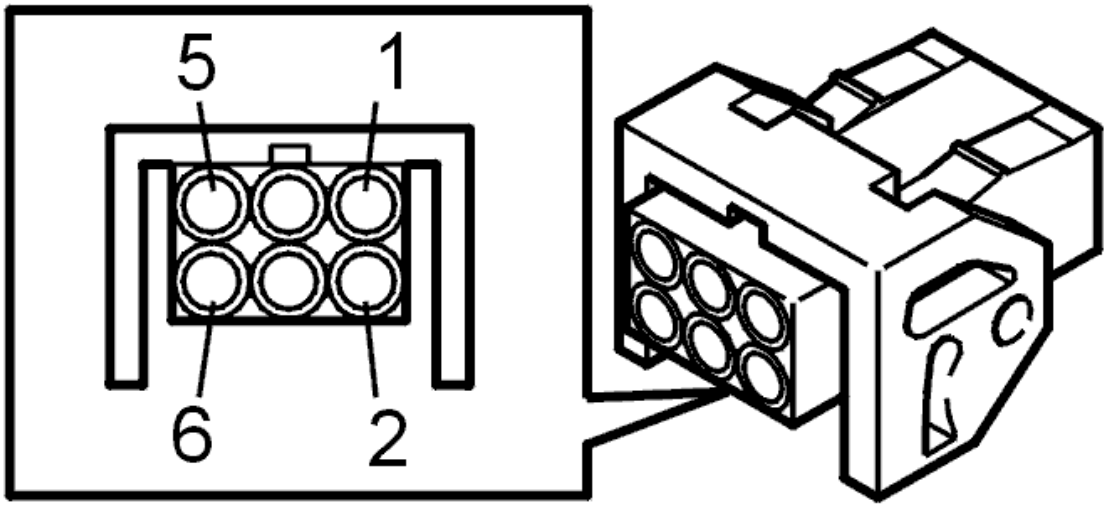

Fig. 228: Identifying Front Heated Oxygen Sensor Connector Terminals
Courtesy of VOLVO CARS CORPORATION

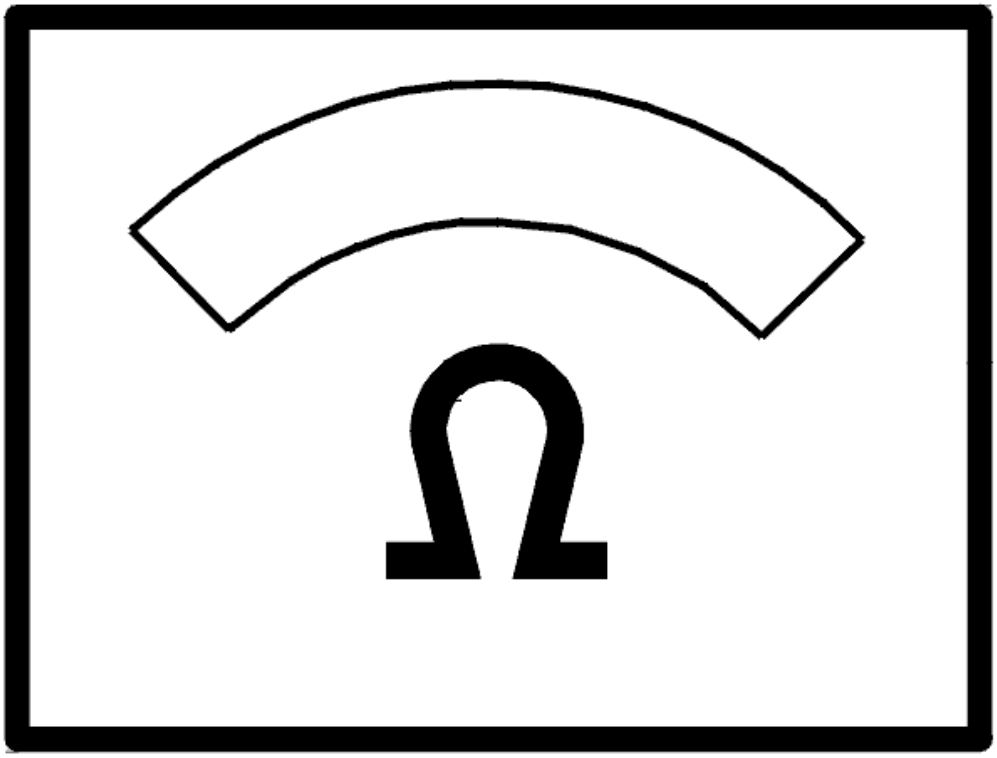

Fig. 229: Identifying Ohm Meter
Courtesy of VOLVO CARS CORPORATION

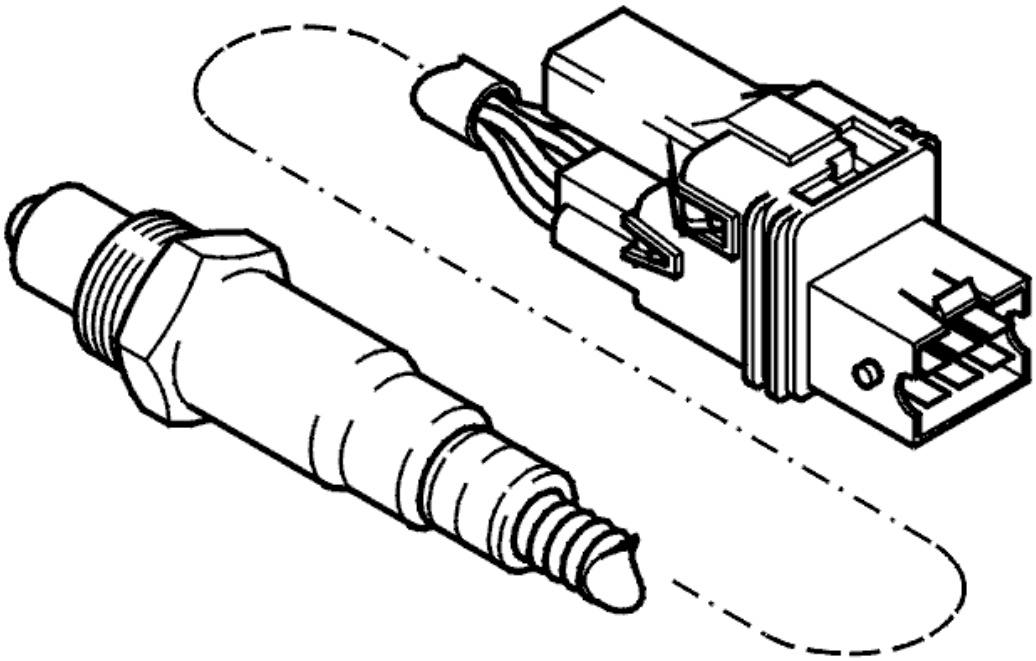

Fig. 230: Front Heated Oxygen Sensor
Courtesy of VOLVO CARS CORPORATION

- **Continue**

  Refer to **INFORMATION**

INFORMATION

FAULT-TRACING INFORMATION

If the fault is intermittent, do not verify fault-tracing if the fault does not recur.

It is possible to view the information again, or leave fault-tracing for this diagnostic trouble code (DTC).

ECM-2810: FRONT HEATED OXYGEN SENSOR (HO2S), BANK 1 HEATING. SIGNAL MISSING. PERMANENT FAULT (B5254T2; B6294T; 2003-2004)

DIAGNOSTIC TROUBLE CODE (DTC) INFORMATION

see **DIAGNOSTIC TROUBLE CODE (DTC) INFORMATION**

SIGNAL MISSING. PERMANENT FAULT

CHECKING THE CONNECTOR

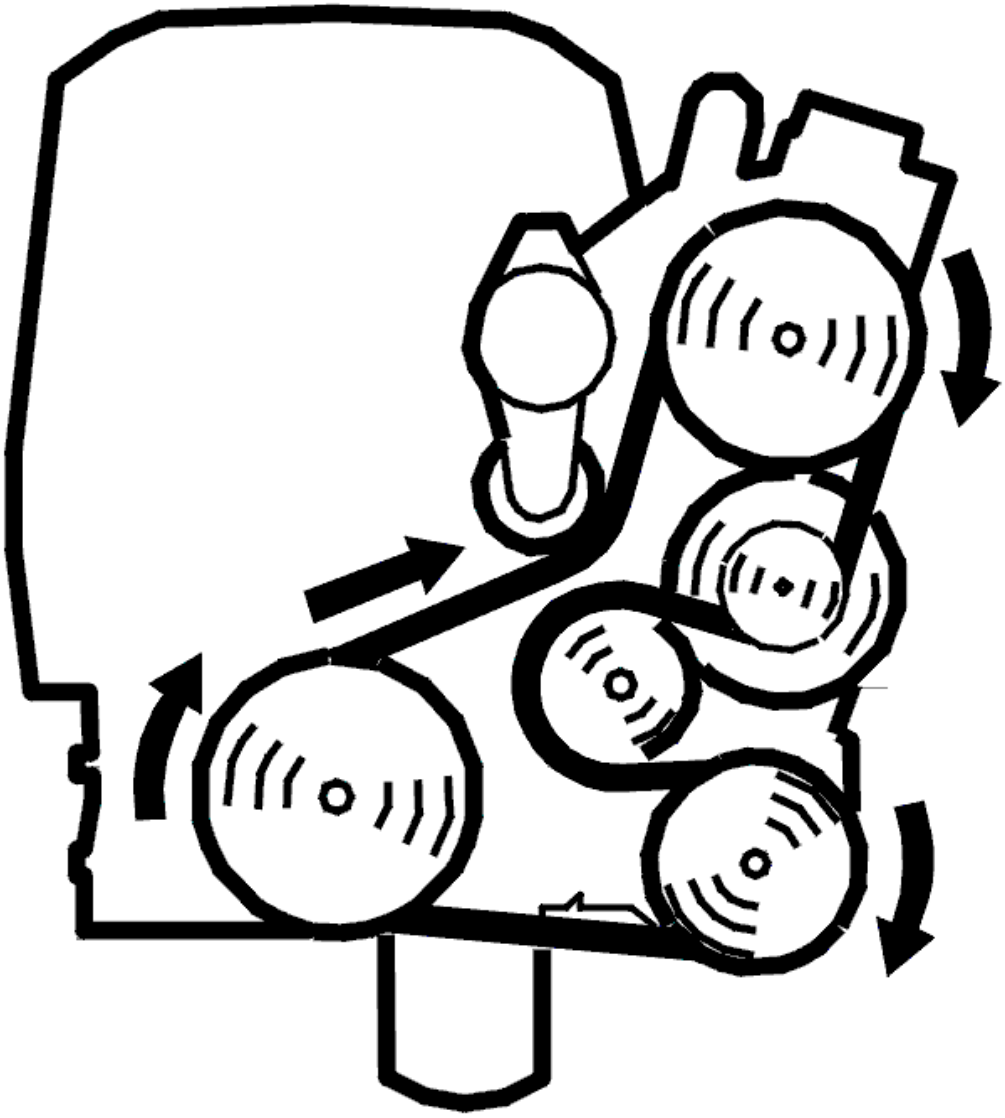

Fig. 231: Belt Routing / Engine Idling - Volvo
Courtesy of VOLVO CARS CORPORATION

- Ignition off
- Check the heated oxygen sensor (HO2S) connector. Check for contact resistance and oxidation
- Reinstall the components, reconnect the connectors etc.
- Start the engine. Allow the engine to idle.

  Read off the diagnostic trouble code (DTC) status for the front heated oxygen sensor (HO2S).

  The text NOT READY is displayed if the diagnostic is still running.

  Other information

- For B5xx4T, see **HEATED OXYGEN SENSOR (HO2S), REPLACING**
- For B6xx4T, see **HEATED OXYGEN SENSOR (HO2S), REPLACING** .
- For 5 cylinder turbocharged engines -2004, see **SIGNAL DESCRIPTION**
- For 5 cylinder turbocharged engines 2005-, see **SIGNAL SPECIFICATION** .
- For 6 cylinder engines -2004, see **SIGNAL SPECIFICATION**
- For 6 cylinder engines 2005-, see **SIGNAL SPECIFICATION** .
- see **CHECKING WIRING AND TERMINALS** .

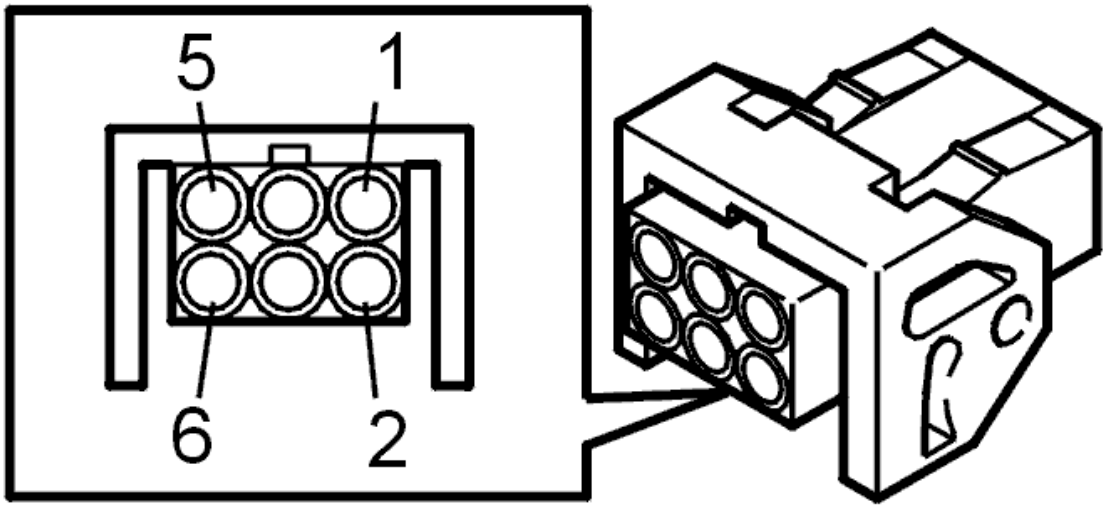

Fig. 232: Identifying Front Heated Oxygen Sensor Connector Terminals
Courtesy of VOLVO CARS CORPORATION

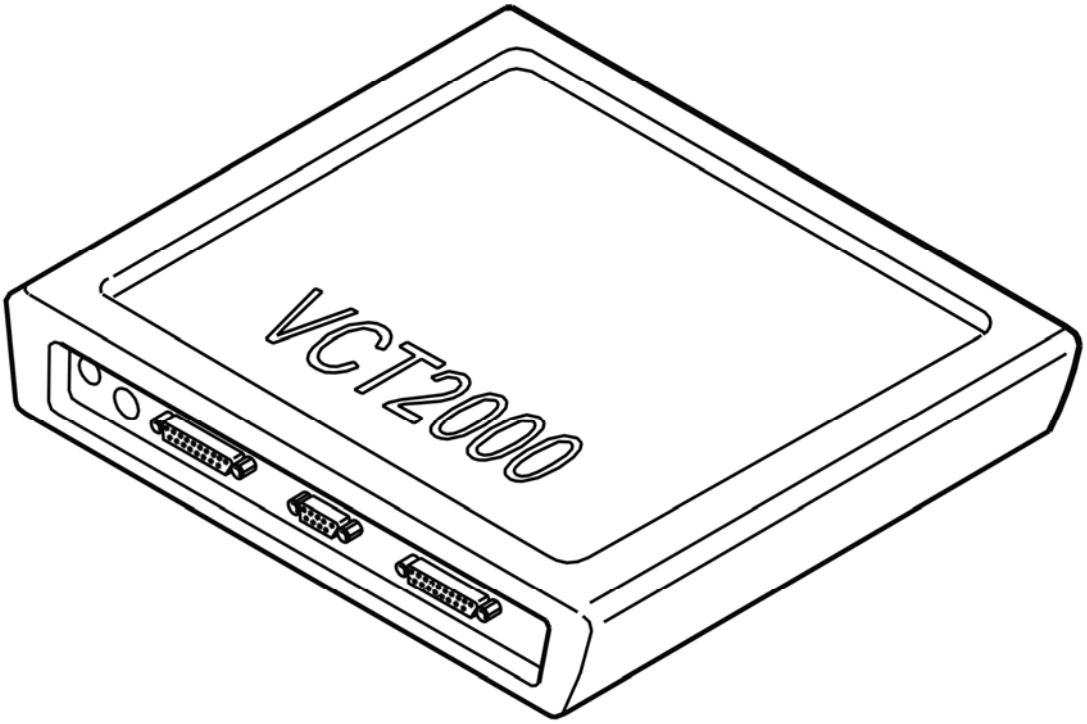

Fig. 233: Identifying VCT2000 Diagnostic Tool Symbol In VIDA
Courtesy of VOLVO CARS CORPORATION

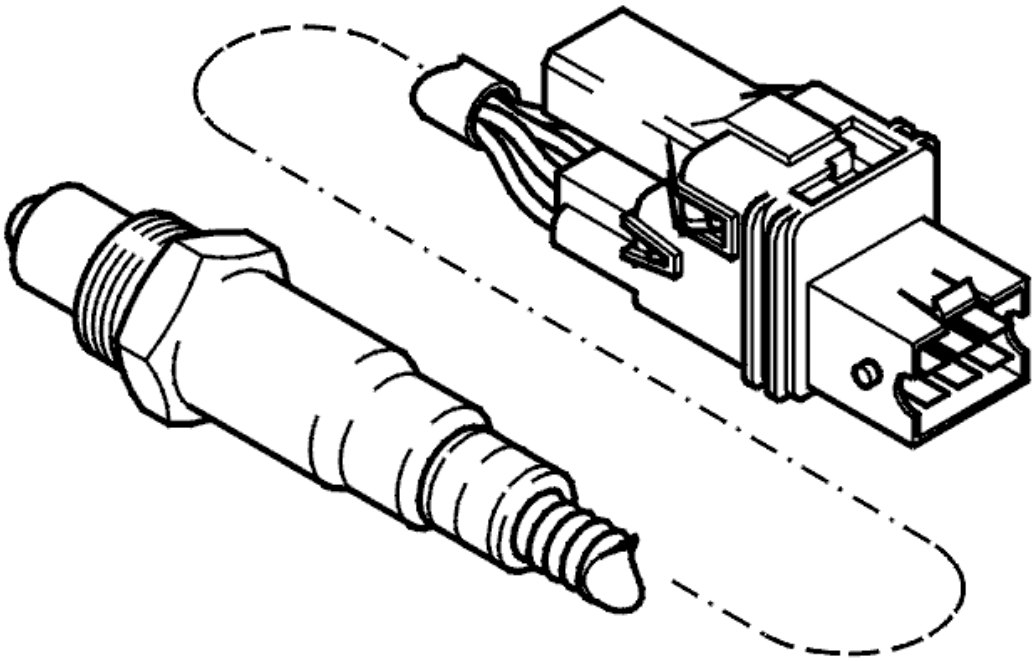

Fig. 234: Front Heated Oxygen Sensor
Courtesy of VOLVO CARS CORPORATION

Is FAULT NOT DETECTED displayed?

- **YES**

  OKAY: Troubleshooting has been completed.

- **NO**

  Refer to **CHECKING COMPONENTS AND WIRING**

CHECKING COMPONENTS AND WIRING

Check the resistance of the heated oxygen sensor (HO2S) between terminals #3 and #4.

Check the signal cable between heated oxygen sensor (HO2S) terminal #4 and control module terminal #A18 (#A18). Check the power supply between system relay terminal #3 and heated oxygen sensor (HO2S) terminal #3. Check for an open-circuit.

Remedy as necessary.

Other information

- To connect the breakout box / access the control module, see **CONNECTING THE BREAKOUT BOX**
- For B5xx4T, see **HEATED OXYGEN SENSOR (HO2S), REPLACING**
- For B6xx4T, see **HEATED OXYGEN SENSOR (HO2S), REPLACING** .
- For resistance values, see **COMPONENT SPECIFICATIONS**
- For 5 cylinder turbocharged engines -2004, see **SIGNAL DESCRIPTION**
- For 5 cylinder turbocharged engines 2005-, see **SIGNAL SPECIFICATION** .
- For 6 cylinder engines -2004, see **SIGNAL SPECIFICATION**
- For 6 cylinder engines 2005-, see **SIGNAL SPECIFICATION** .
- see **CHECKING WIRING AND TERMINALS** .

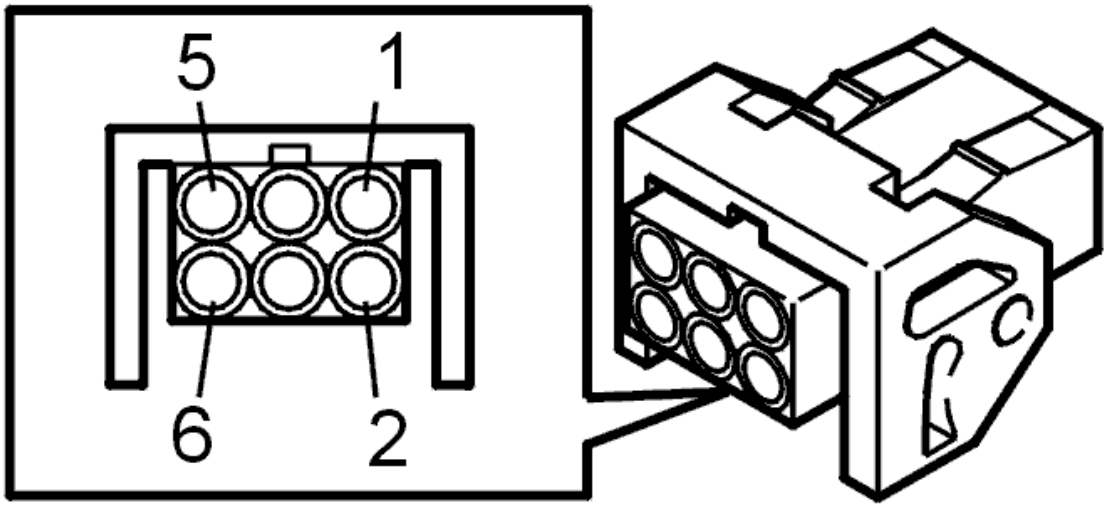

Fig. 235: Identifying Front Heated Oxygen Sensor Connector Terminals
Courtesy of VOLVO CARS CORPORATION

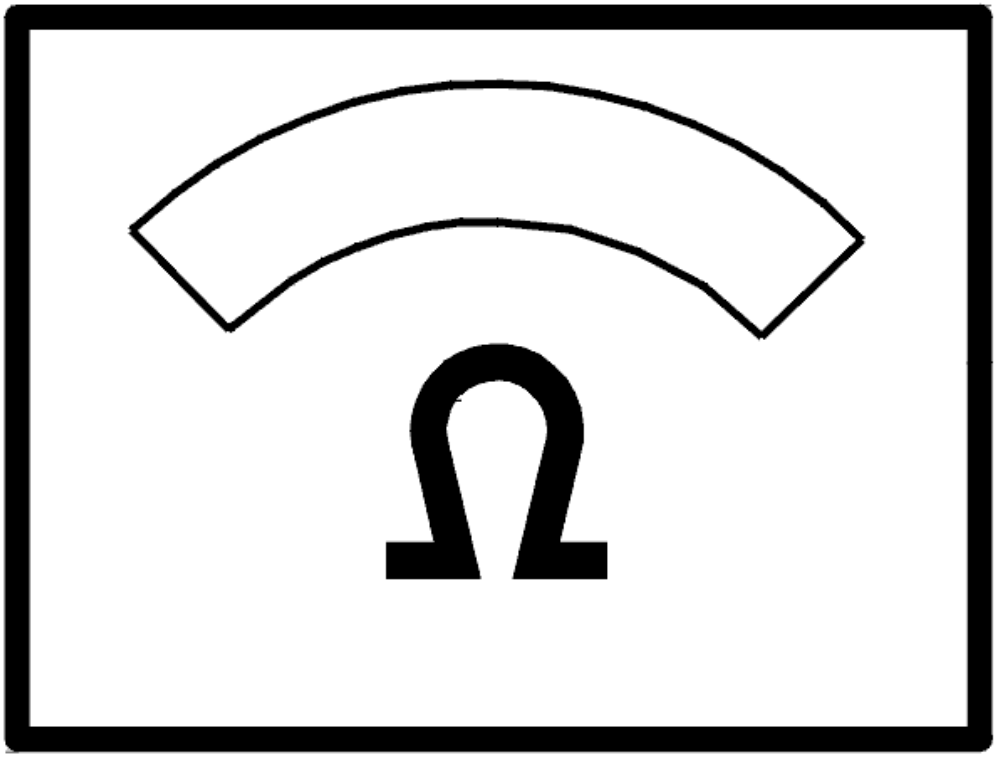

Fig. 236: Identifying Ohm Meter
Courtesy of VOLVO CARS CORPORATION

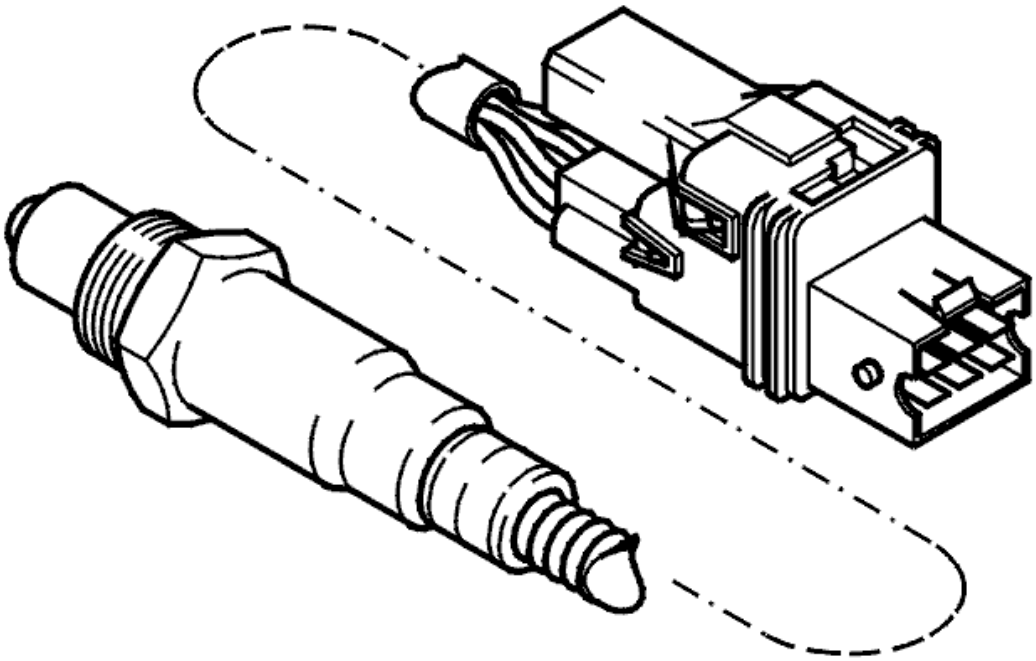

Fig. 237: Front Heated Oxygen Sensor
Courtesy of VOLVO CARS CORPORATION

- **Continue**

  Refer to **VERIFICATION**

VERIFICATION

VERIFICATION

HINT: After carrying out the repair, check that the fault has been remedied.

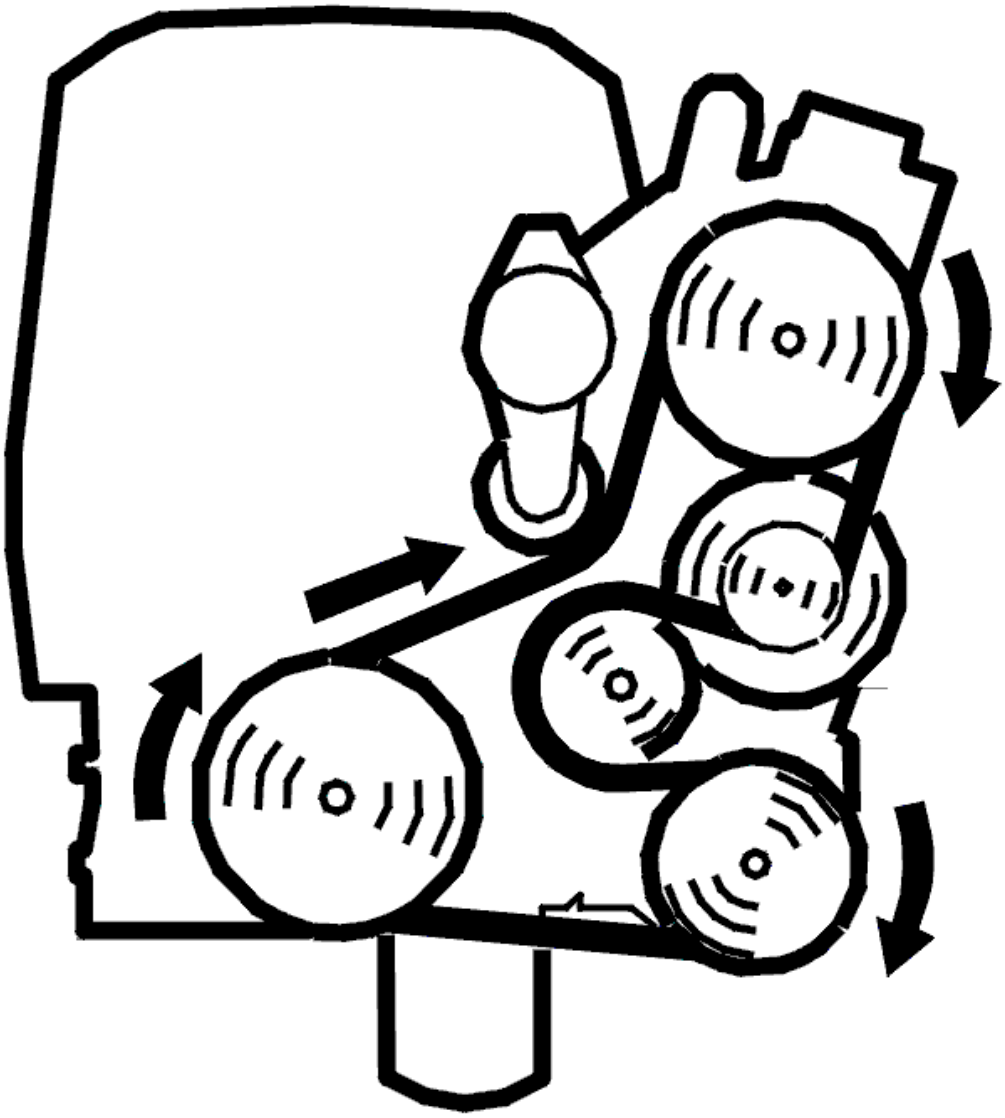

Fig. 238: Belt Routing / Engine Idling - Volvo
Courtesy of VOLVO CARS CORPORATION

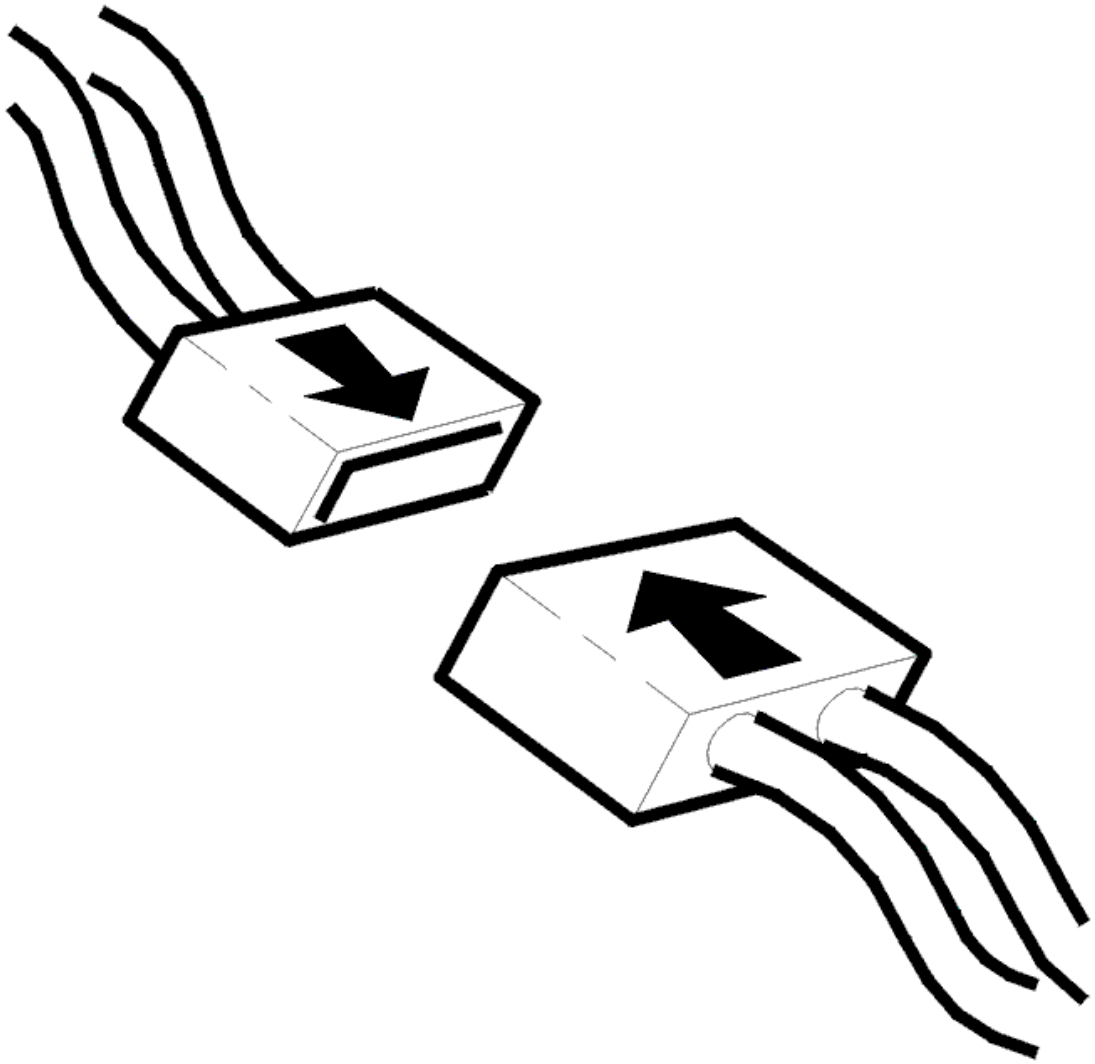

Fig. 239: Connecting Connector
Courtesy of VOLVO CARS CORPORATION

- Ignition off.
- Reinstall components, reconnect connectors etc.
- Start the engine and let it idle.

Read off the front heated oxygen sensor (HO2S) signal diagnostic trouble code (DTC) status.

The text NOT READY is displayed if diagnosis is underway.

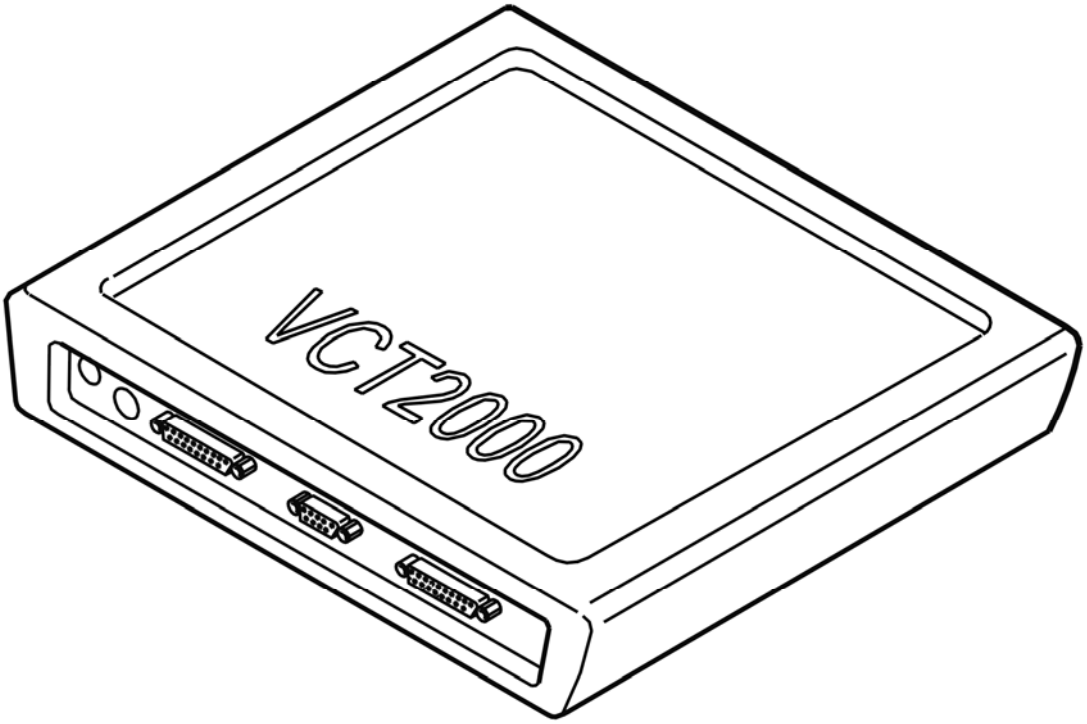

Fig. 240: Identifying VCT2000 Diagnostic Tool Symbol In VIDA
Courtesy of VOLVO CARS CORPORATION

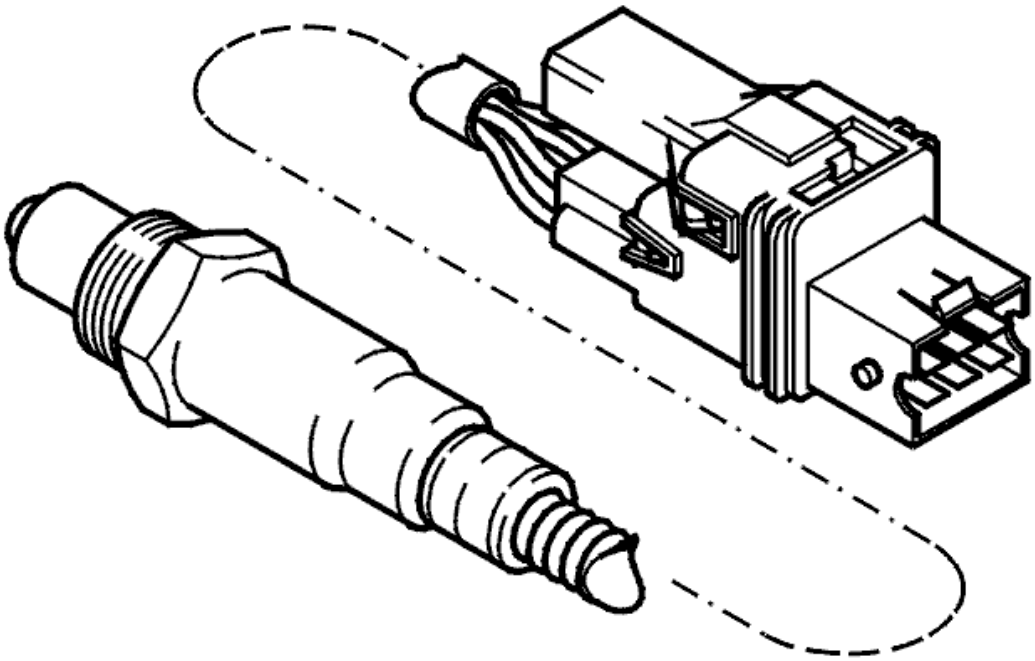

Fig. 241: Front Heated Oxygen Sensor
Courtesy of VOLVO CARS CORPORATION

Is FAULT NOT REGISTERED displayed?

- **YES**

  VERIFIED: Troubleshooting has been completed.

- **NO**

  Refer to **INFORMATION**

INFORMATION

FAULT-TRACING INFORMATION

The fault should have been detected and remedied. As this is not the case fault-tracing has failed.

Exit fault-tracing for this diagnostic trouble code (DTC) or make another attempt.

ECM-2810: FRONT HEATED OXYGEN SENSOR (HO2S), BANK 1 HEATING. SIGNAL TOO HIGH. INTERMITTENT FAULT (B5254T2; B6294T; 2003-2004)

DIAGNOSTIC TROUBLE CODE (DTC) INFORMATION

see **DIAGNOSTIC TROUBLE CODE (DTC) INFORMATION**

SIGNAL TOO HIGH. INTERMITTENT FAULT

CHECKING THE WIRING

Check the signal cable between heated oxygen sensor (HO2S) terminal #4 and control module terminal #A18 (#A18). Check for an intermittent short-circuit to supply voltage.

Other information

- To connect the breakout box / access the control module, see **CONNECTING THE BREAKOUT BOX**
- For B5xx4T, see **HEATED OXYGEN SENSOR (HO2S), REPLACING**
- For B6xx4T, see **HEATED OXYGEN SENSOR (HO2S), REPLACING** .
- For 5 cylinder turbocharged engines -2004, see **SIGNAL DESCRIPTION**
- For 5 cylinder turbocharged engines 2005-, see **SIGNAL SPECIFICATION** .
- For 6 cylinder engines -2004, see **SIGNAL SPECIFICATION**
- For 6 cylinder engines 2005-, see **SIGNAL SPECIFICATION** .
- see **CHECKING WIRING AND TERMINALS** .

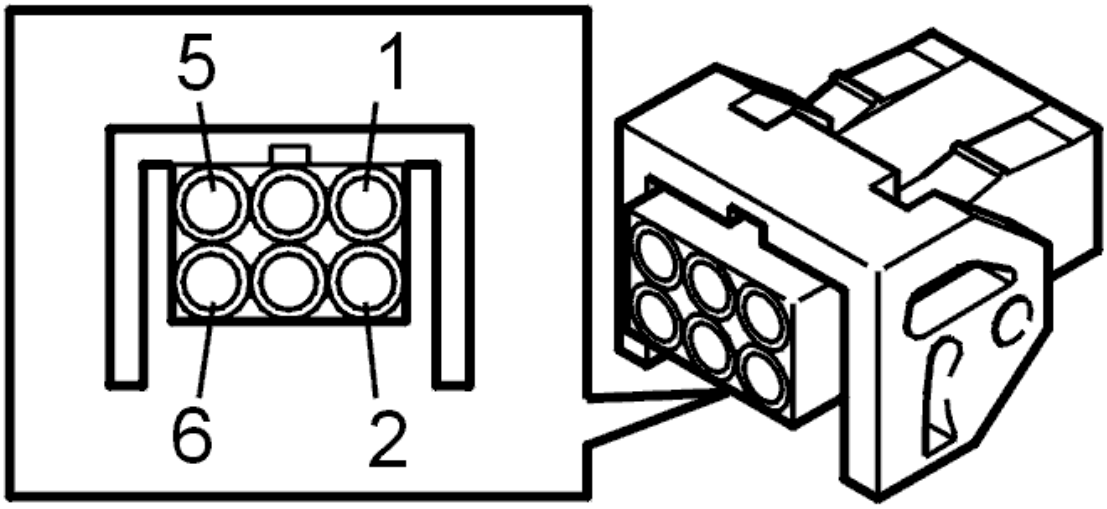

Fig. 242: Identifying Front Heated Oxygen Sensor Connector Terminals
Courtesy of VOLVO CARS CORPORATION

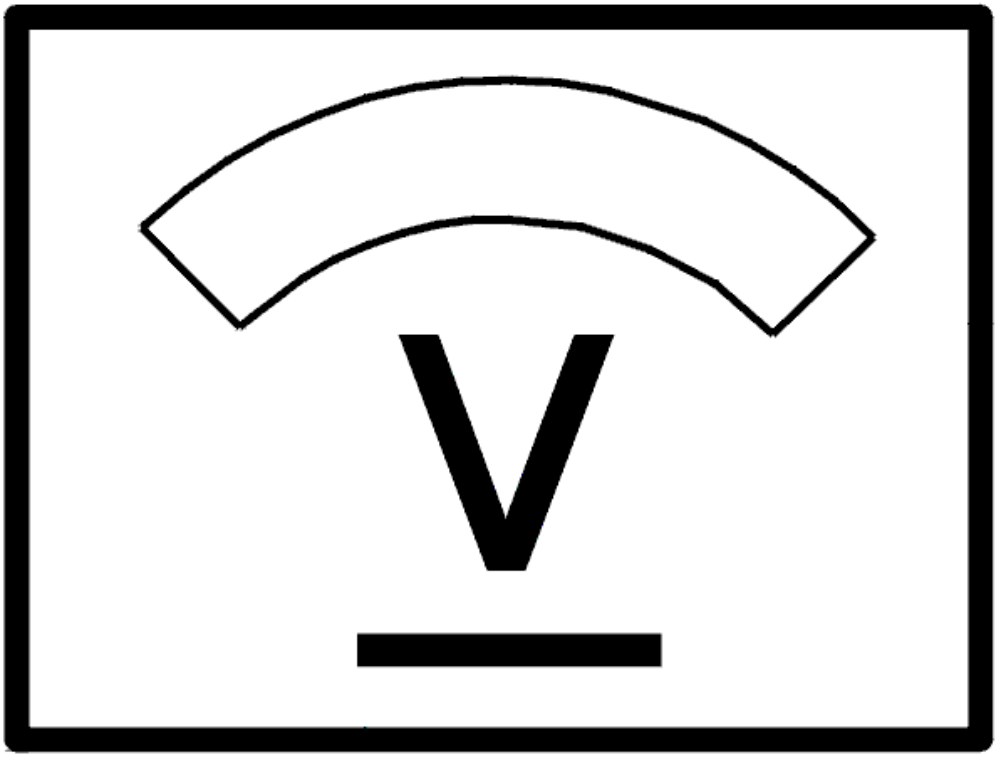

Fig. 243: Identifying Voltage Display
Courtesy of VOLVO CARS CORPORATION

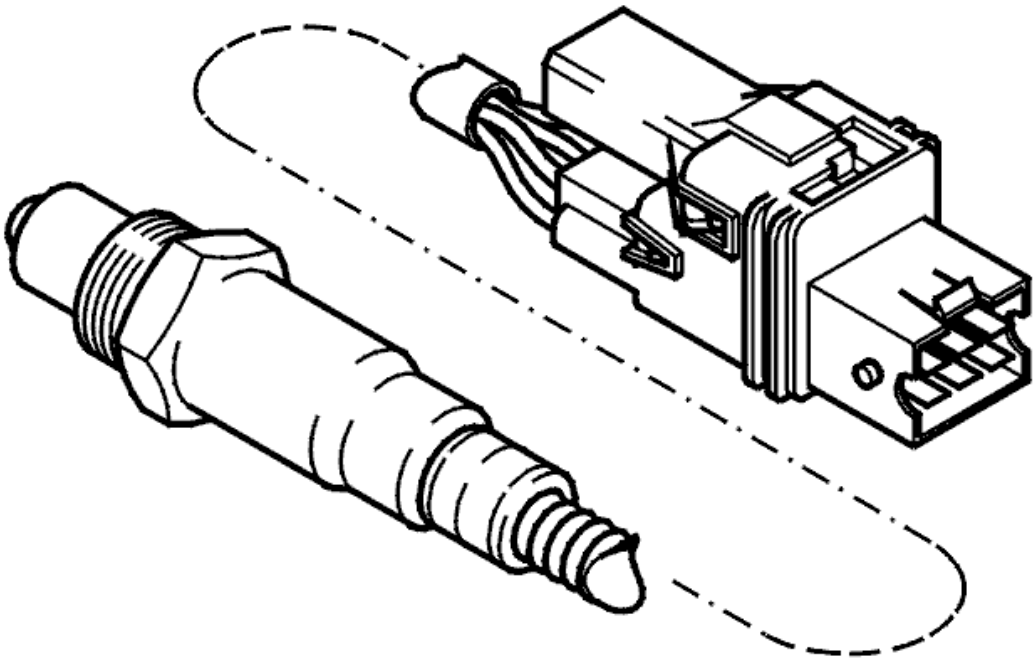

Fig. 244: Front Heated Oxygen Sensor
Courtesy of VOLVO CARS CORPORATION

- **Continue**

  Refer to **INFORMATION**

INFORMATION

FAULT-TRACING INFORMATION

If the fault is intermittent, do not verify fault-tracing if the fault does not recur.

It is possible to view the information again, or leave fault-tracing for this diagnostic trouble code (DTC).

ECM-2810: FRONT HEATED OXYGEN SENSOR (HO2S), BANK 1 HEATING. SIGNAL TOO HIGH. PERMANENT FAULT (B5254T2; B6294T; 2003-2004)

DIAGNOSTIC TROUBLE CODE (DTC) INFORMATION

see **DIAGNOSTIC TROUBLE CODE (DTC) INFORMATION**

SIGNAL TOO HIGH. PERMANENT FAULT

CHECKING COMPONENTS AND WIRING

Check the resistance of the heated oxygen sensor (HO2S) between terminals #3 and #4.

Check the signal cable between heated oxygen sensor (HO2S) terminal #4 and control module terminal #A18 (#A18). Check for a short-circuit to supply voltage.

HINT: Use a test lamp with at least a 3 W bulb to determine whether the cable is short-circuited to supply voltage.

Remedy as necessary.

Other information

- To connect the breakout box / access the control module, see **CONNECTING THE BREAKOUT BOX**
- For B5xx4T, see **HEATED OXYGEN SENSOR (HO2S), REPLACING**
- For B6xx4T, see **HEATED OXYGEN SENSOR (HO2S), REPLACING** .
- For resistance values, see **COMPONENT SPECIFICATIONS**
- For 5 cylinder turbocharged engines -2004, see **SIGNAL DESCRIPTION**
- For 5 cylinder turbocharged engines 2005-, see **SIGNAL SPECIFICATION** .
- For 6 cylinder engines -2004, see **SIGNAL SPECIFICATION**
- For 6 cylinder engines 2005-, see **SIGNAL SPECIFICATION** .
- see **CHECKING WIRING AND TERMINALS** .

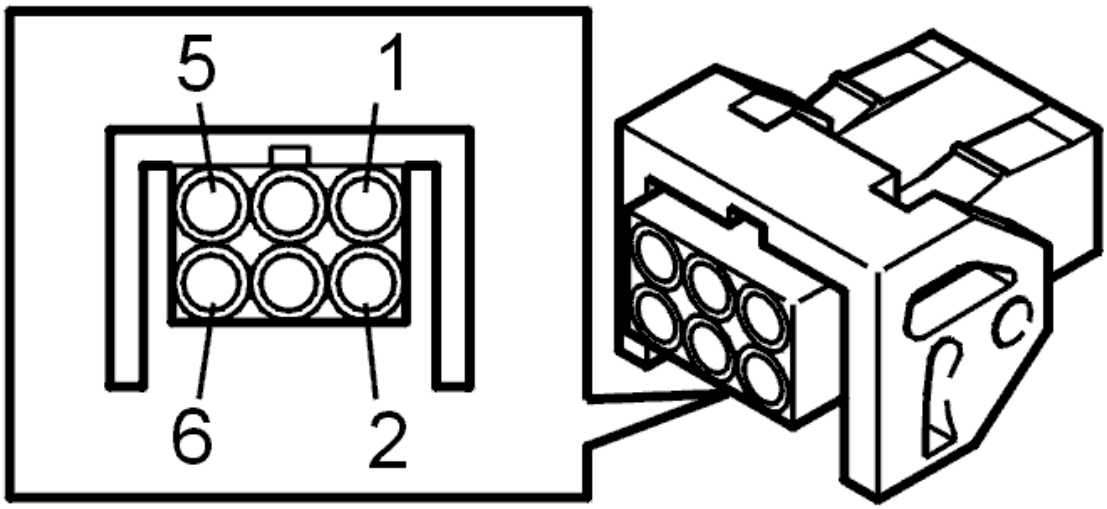

Fig. 245: Identifying Front Heated Oxygen Sensor Connector Terminals
Courtesy of VOLVO CARS CORPORATION

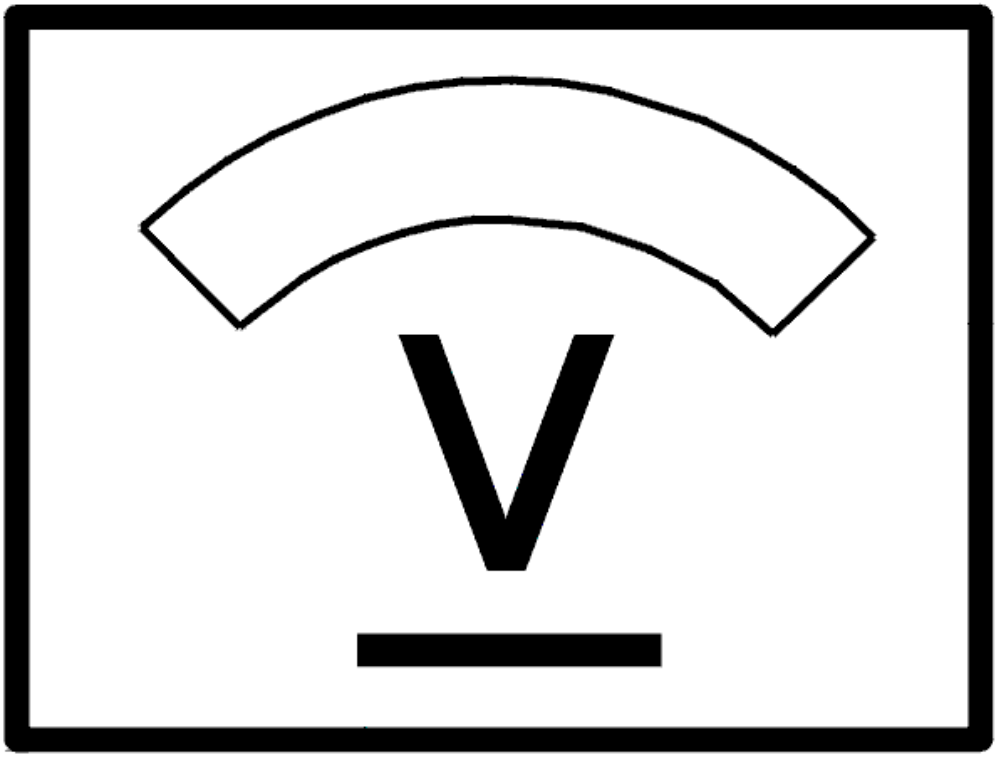

Fig. 246: Identifying Voltage Display
Courtesy of VOLVO CARS CORPORATION

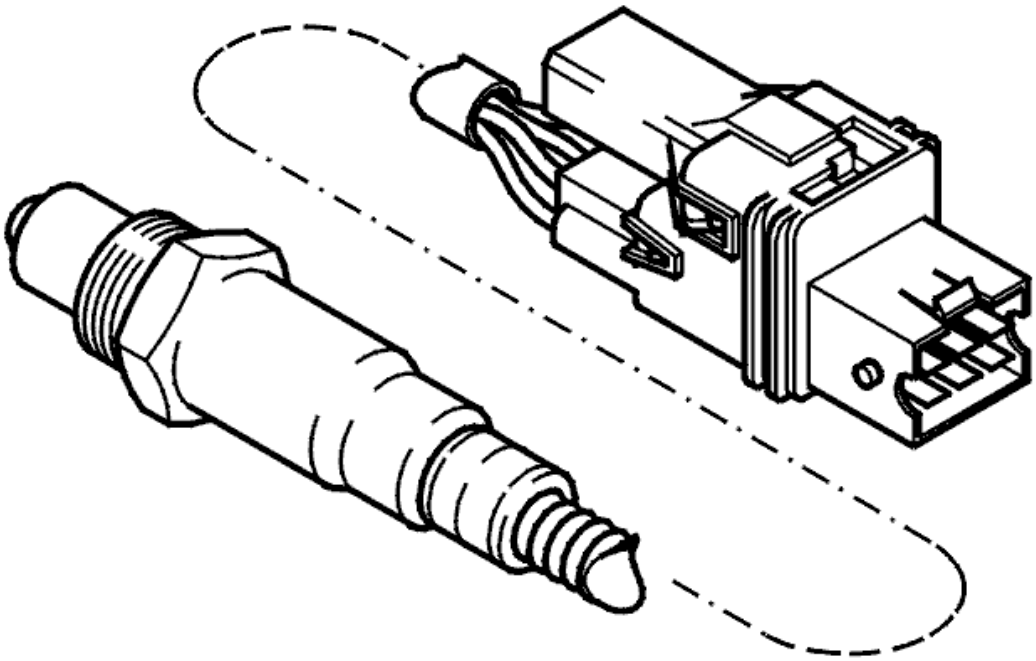

Fig. 247: Front Heated Oxygen Sensor
Courtesy of VOLVO CARS CORPORATION

- **Continue**

  Refer to **VERIFICATION**

VERIFICATION

VERIFICATION

HINT: After carrying out the repair, check that the fault has been remedied.

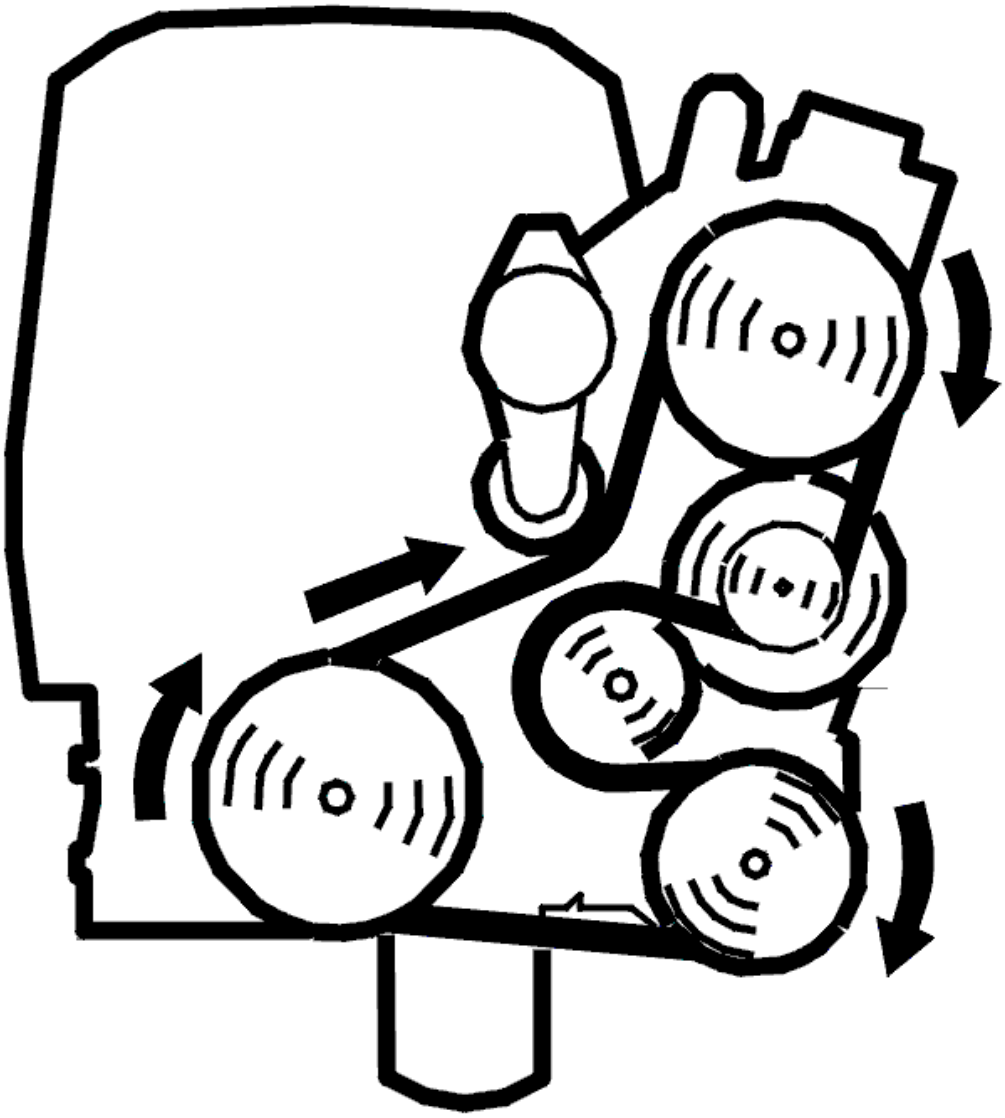

Fig. 248: Belt Routing / Engine Idling - Volvo
Courtesy of VOLVO CARS CORPORATION

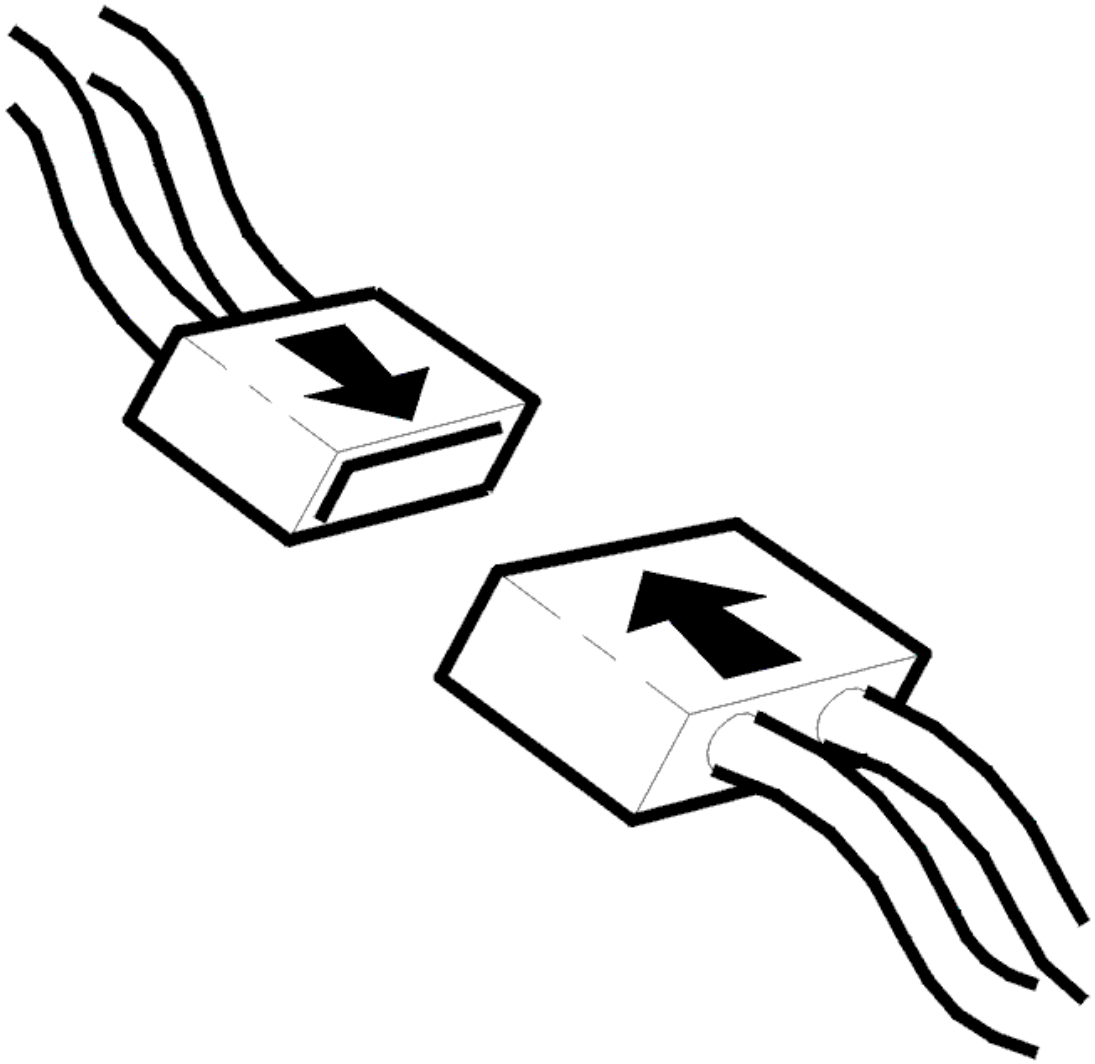

Fig. 249: Connecting Connector
Courtesy of VOLVO CARS CORPORATION

- Ignition off.
- Reinstall components, reconnect connectors etc.
- Start the engine and let it idle.

Read off the front heated oxygen sensor (HO2S) signal diagnostic trouble code (DTC) status.

The text NOT READY is displayed if diagnosis is underway.

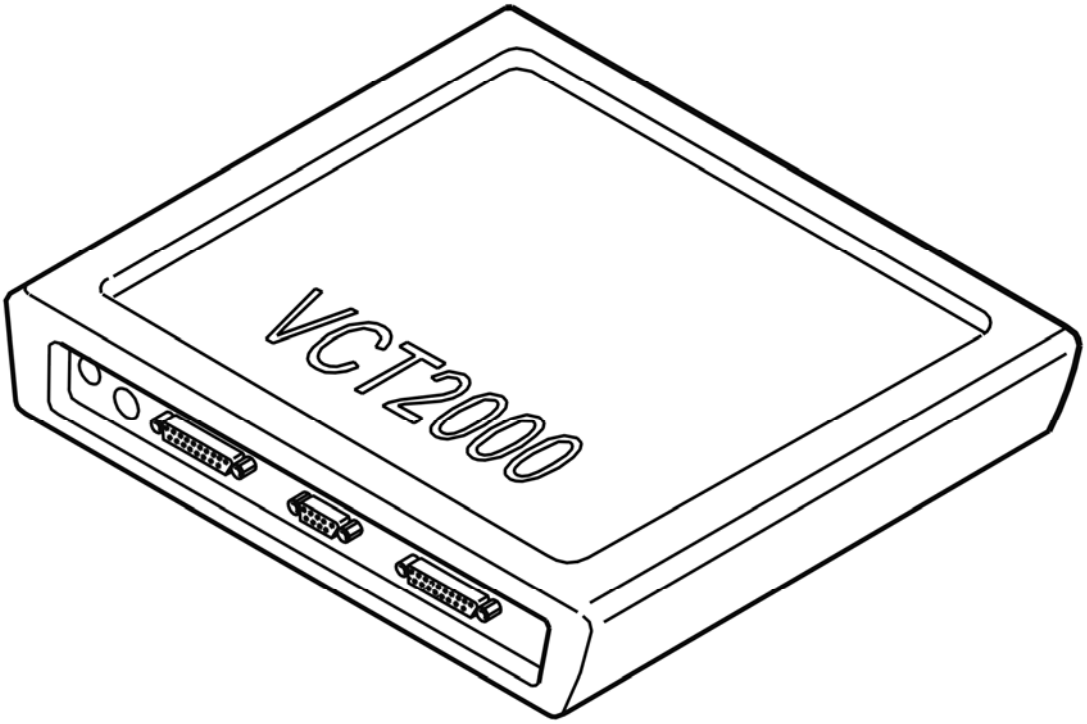

Fig. 250: Identifying VCT2000 Diagnostic Tool Symbol In VIDA
Courtesy of VOLVO CARS CORPORATION

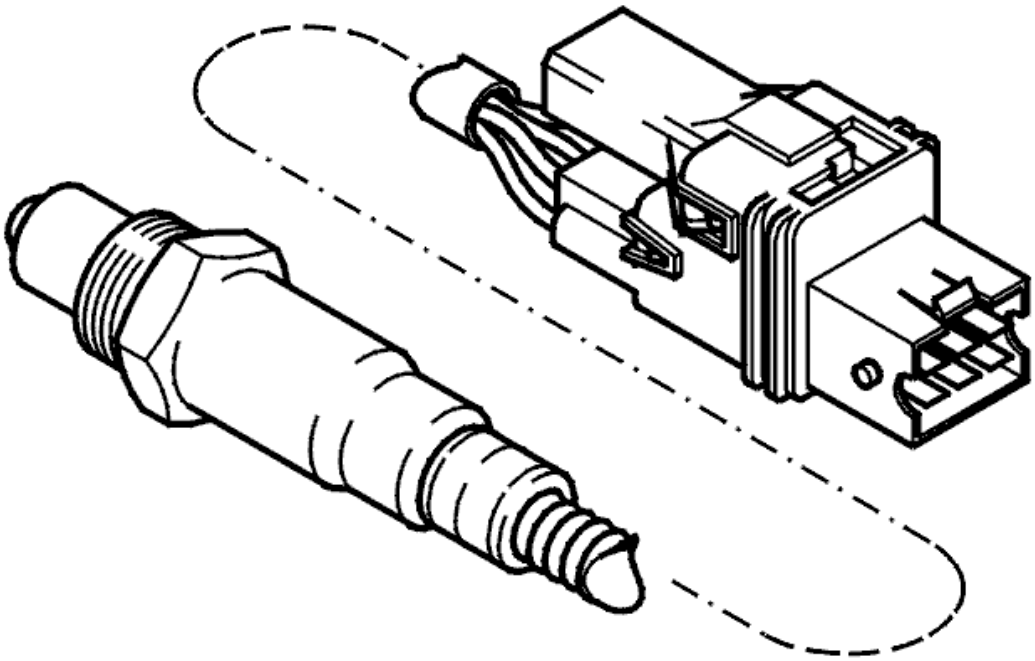

Fig. 251: Front Heated Oxygen Sensor
Courtesy of VOLVO CARS CORPORATION

Is FAULT NOT REGISTERED displayed?

- **YES**

  VERIFIED: Troubleshooting has been completed.

- **NO**

  Refer to **INFORMATION**

INFORMATION

FAULT-TRACING INFORMATION

The fault should have been detected and remedied. As this is not the case fault-tracing has failed.

Exit fault-tracing for this diagnostic trouble code (DTC) or make another attempt.

ECM-2810: FRONT HEATED OXYGEN SENSOR (HO2S), BANK 1 HEATING. SIGNAL TOO LOW. INTERMITTENT FAULT (B5254T2; B6294T; 2003-2004)

DIAGNOSTIC TROUBLE CODE (DTC) INFORMATION

see **DIAGNOSTIC TROUBLE CODE (DTC) INFORMATION**

SIGNAL TOO LOW. INTERMITTENT FAULT

CHECKING THE WIRING

Check the signal cable between heated oxygen sensor (HO2S) terminal #4 and control module terminal #A18 (#A18). Check for an intermittent short-circuit to ground.

Other information

- To connect the breakout box / access the control module, see **CONNECTING THE BREAKOUT BOX**
- For B5xx4T, see **HEATED OXYGEN SENSOR (HO2S), REPLACING**
- For B6xx4T, see **HEATED OXYGEN SENSOR (HO2S), REPLACING** .
- For 5 cylinder turbocharged engines -2004, see **SIGNAL DESCRIPTION**
- For 5 cylinder turbocharged engines 2005-, see **SIGNAL SPECIFICATION** .
- For 6 cylinder engines -2004, see **SIGNAL SPECIFICATION**
- For 6 cylinder engines 2005-, see **SIGNAL SPECIFICATION** .
- see **CHECKING WIRING AND TERMINALS** .

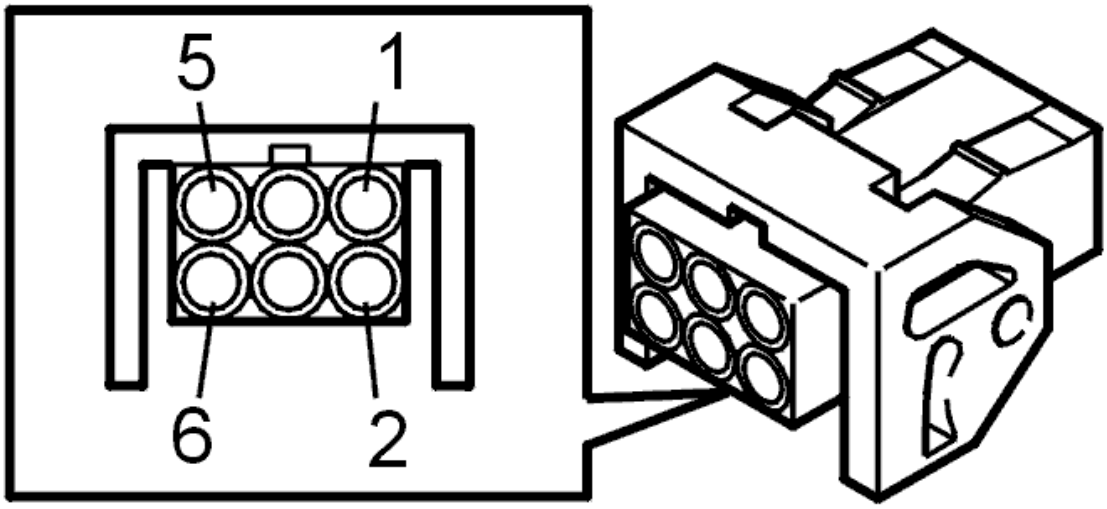

Fig. 252: Identifying Front Heated Oxygen Sensor Connector Terminals
Courtesy of VOLVO CARS CORPORATION

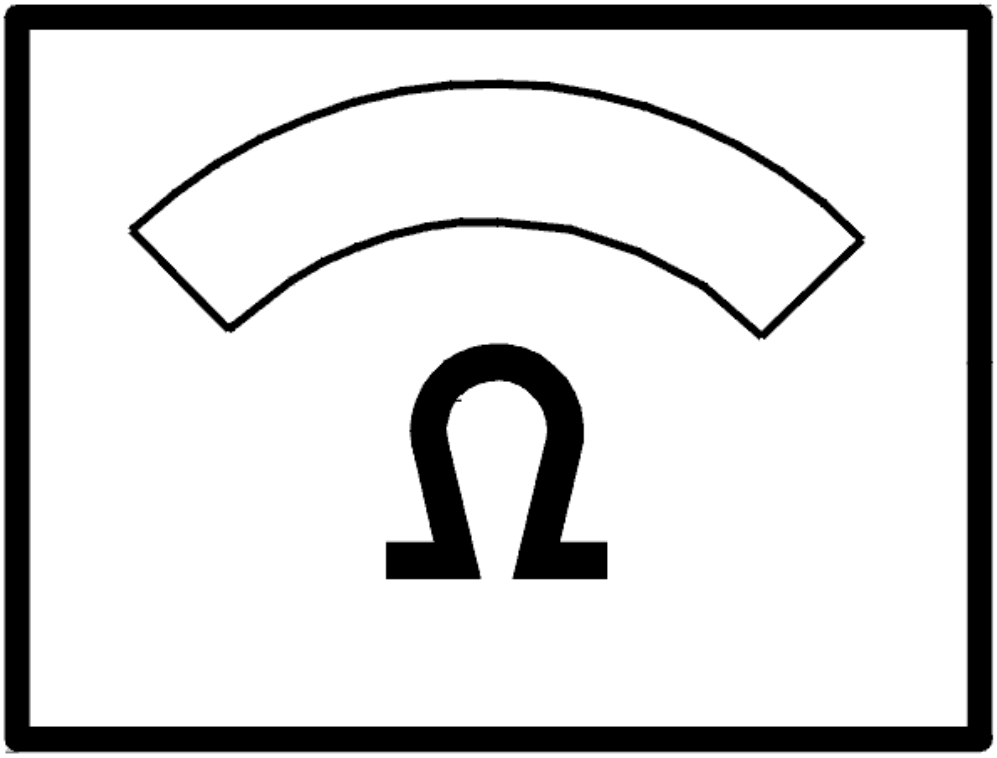

Fig. 253: Identifying Ohm Meter
Courtesy of VOLVO CARS CORPORATION

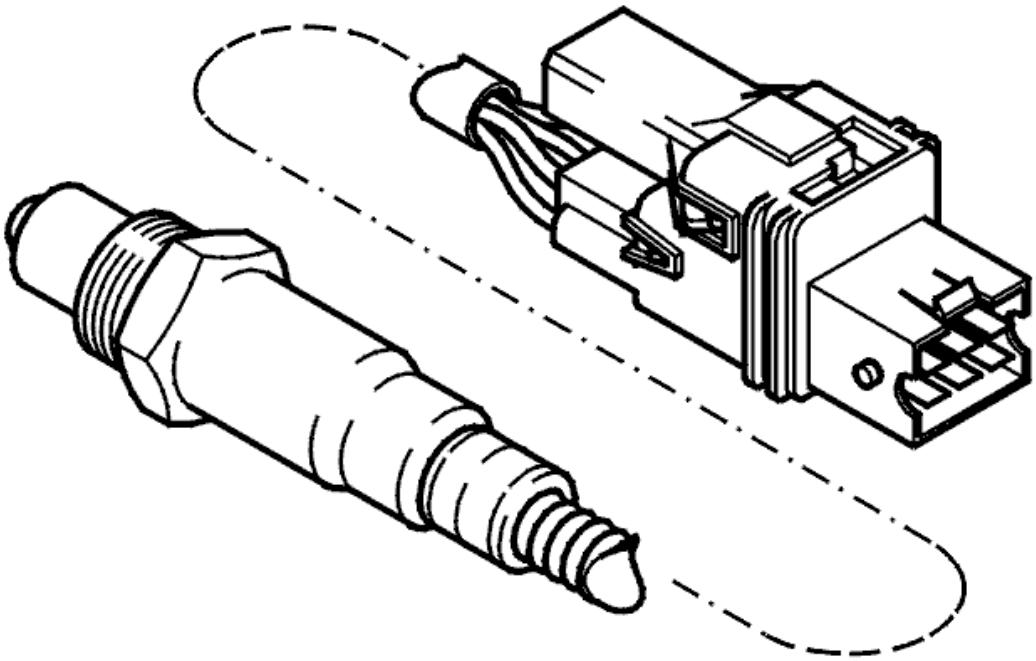

Fig. 254: Front Heated Oxygen Sensor
Courtesy of VOLVO CARS CORPORATION

- **Continue**

  Refer to **INFORMATION**

INFORMATION

FAULT-TRACING INFORMATION

If the fault is intermittent, do not verify fault-tracing if the fault does not recur.

It is possible to view the information again, or leave fault-tracing for this diagnostic trouble code (DTC).

ECM-2810: FRONT HEATED OXYGEN SENSOR (HO2S), BANK 1 HEATING. SIGNAL TOO LOW. PERMANENT FAULT (B5254T2; B6294T; 2003-2004)

DIAGNOSTIC TROUBLE CODE (DTC) INFORMATION

see **DIAGNOSTIC TROUBLE CODE (DTC) INFORMATION**

SIGNAL TOO LOW. PERMANENT FAULT

CHECKING COMPONENTS AND WIRING

Check the resistance of the heated oxygen sensor (HO2S) between terminals #3 and #4.

Check the signal cable between heated oxygen sensor (HO2S) terminal #4 and control module terminal #A18 (#A18). Check for a short-circuit to ground.

Remedy as necessary.

Other information

- To connect the breakout box / access the control module, see **CONNECTING THE BREAKOUT BOX**
- For B5xx4T, see **HEATED OXYGEN SENSOR (HO2S), REPLACING**
- For B6xx4T, see **HEATED OXYGEN SENSOR (HO2S), REPLACING** .
- For resistance values, see **COMPONENT SPECIFICATIONS**
- For 5 cylinder turbocharged engines -2004, see **SIGNAL DESCRIPTION**
- For 5 cylinder turbocharged engines 2005-, see **SIGNAL SPECIFICATION** .
- For 6 cylinder engines -2004, see **SIGNAL SPECIFICATION**
- For 6 cylinder engines 2005-, see **SIGNAL SPECIFICATION** .
- see **CHECKING WIRING AND TERMINALS** .

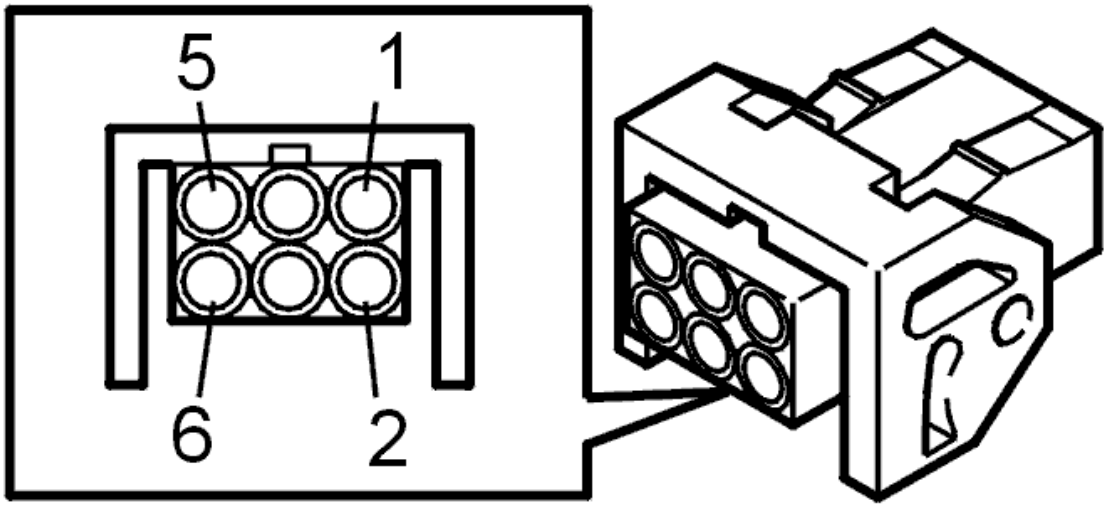

Fig. 255: Identifying Front Heated Oxygen Sensor Connector Terminals
Courtesy of VOLVO CARS CORPORATION

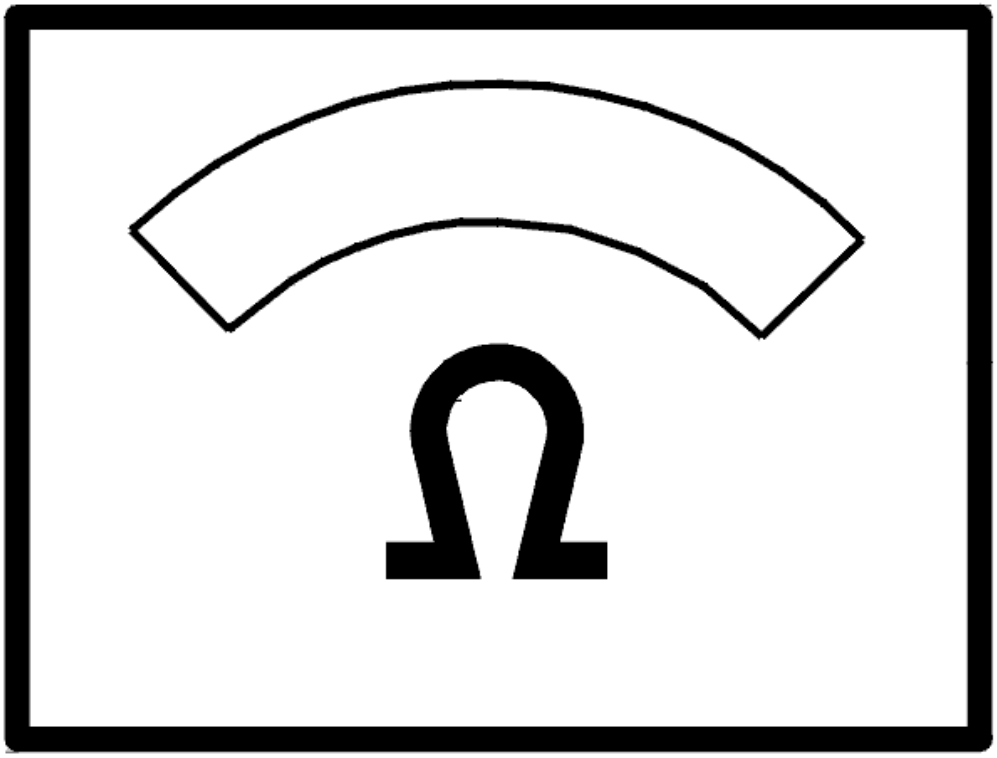

Fig. 256: Identifying Ohm Meter
Courtesy of VOLVO CARS CORPORATION

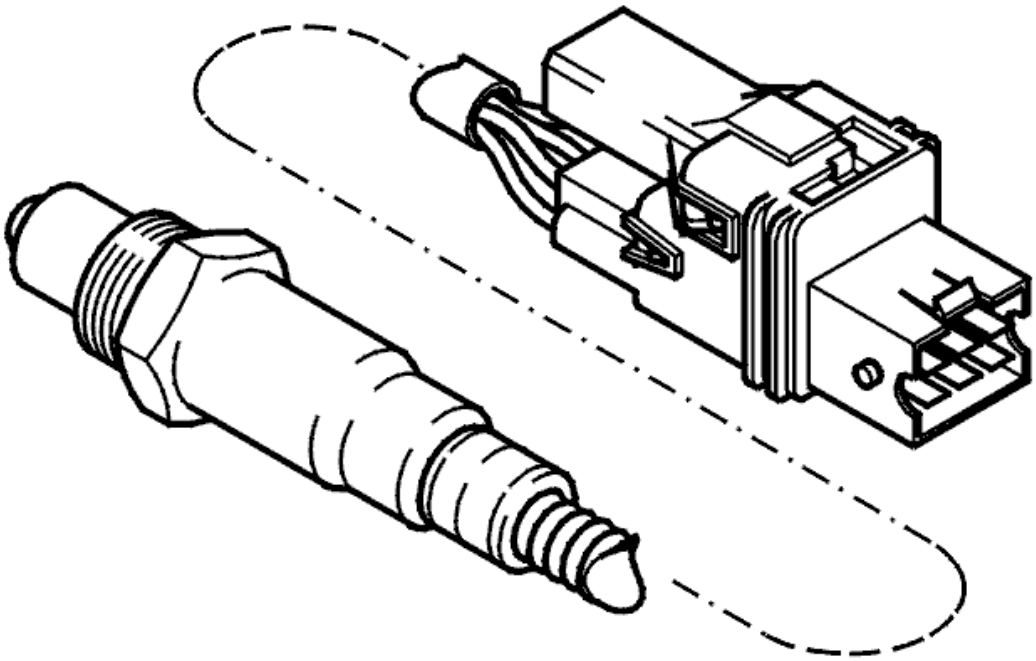

Fig. 257: Front Heated Oxygen Sensor
Courtesy of VOLVO CARS CORPORATION

- **Continue**

  Refer to **VERIFICATION**

VERIFICATION

VERIFICATION

HINT: After carrying out the repair, check that the fault has been remedied.

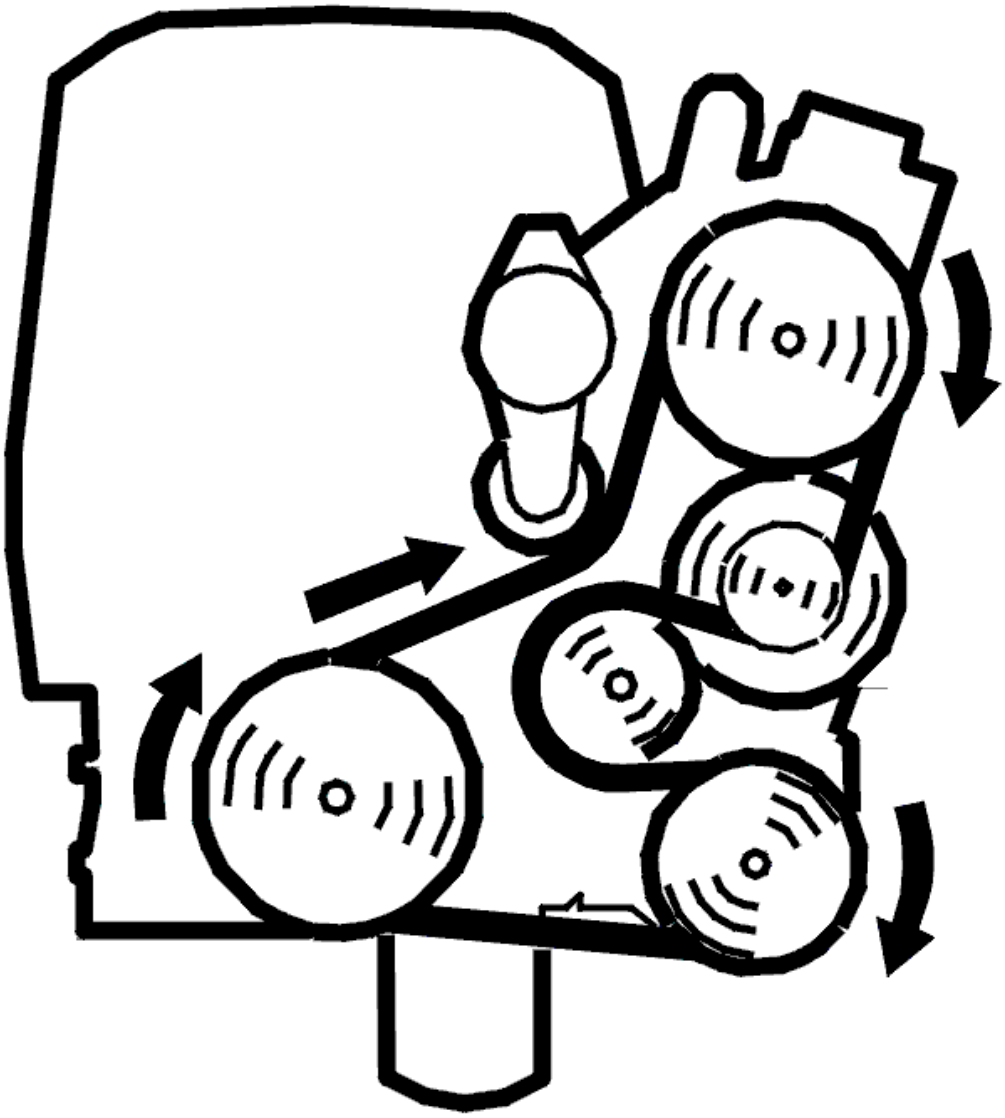

Fig. 258: Belt Routing / Engine Idling - Volvo
Courtesy of VOLVO CARS CORPORATION

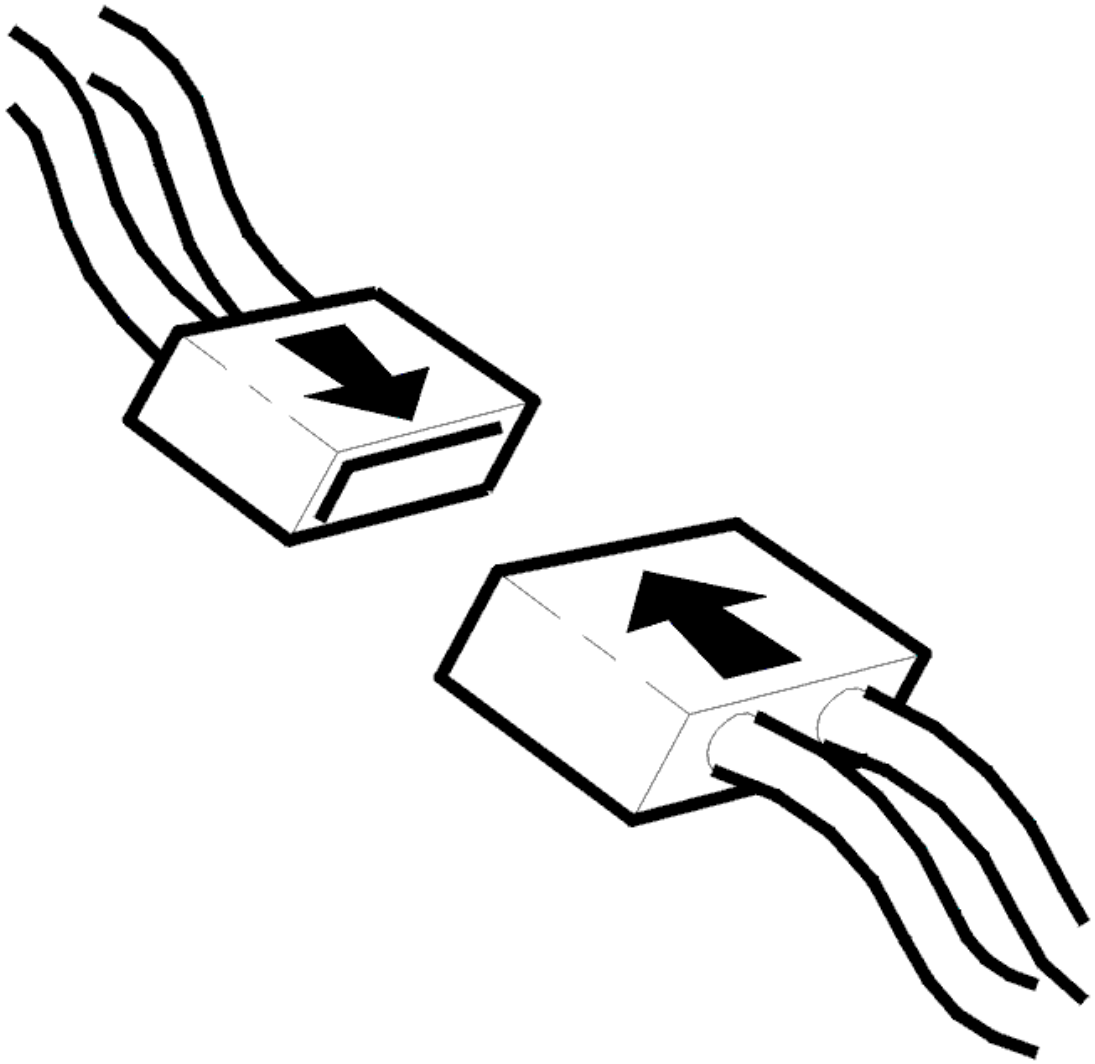

Fig. 259: Connecting Connector
Courtesy of VOLVO CARS CORPORATION

- Ignition off.
- Reinstall components, reconnect connectors etc.
- Start the engine and let it idle.

Read off the front heated oxygen sensor (HO2S) signal diagnostic trouble code (DTC) status.

The text NOT READY is displayed if diagnosis is underway.

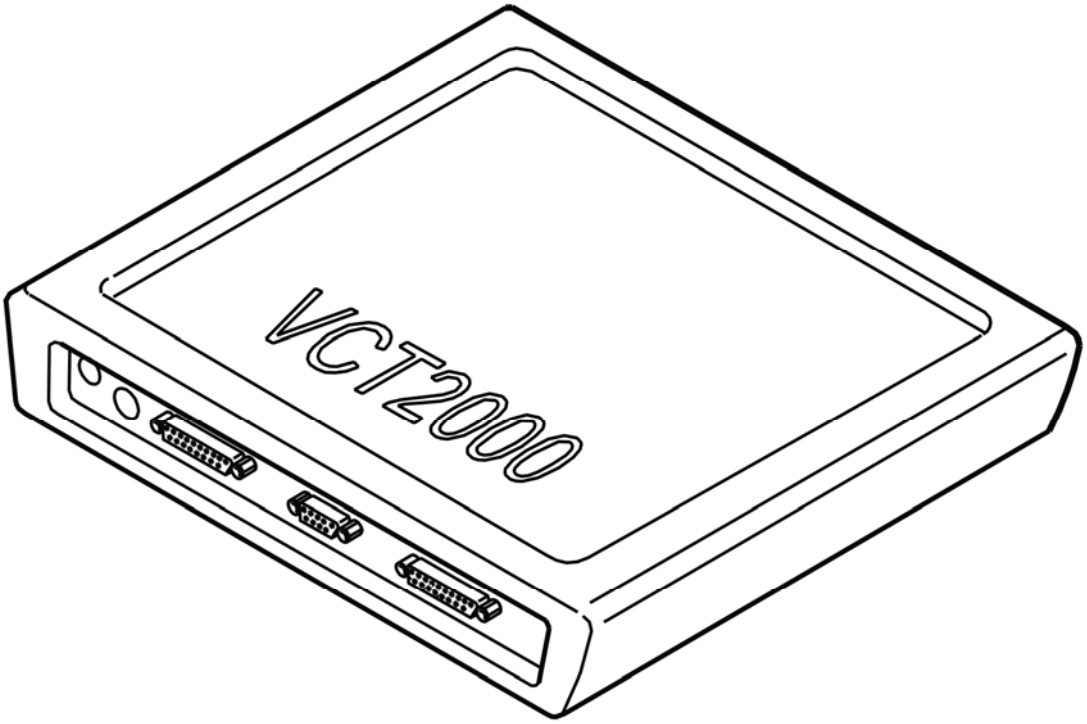

Fig. 260: Identifying VCT2000 Diagnostic Tool Symbol In VIDA
Courtesy of VOLVO CARS CORPORATION

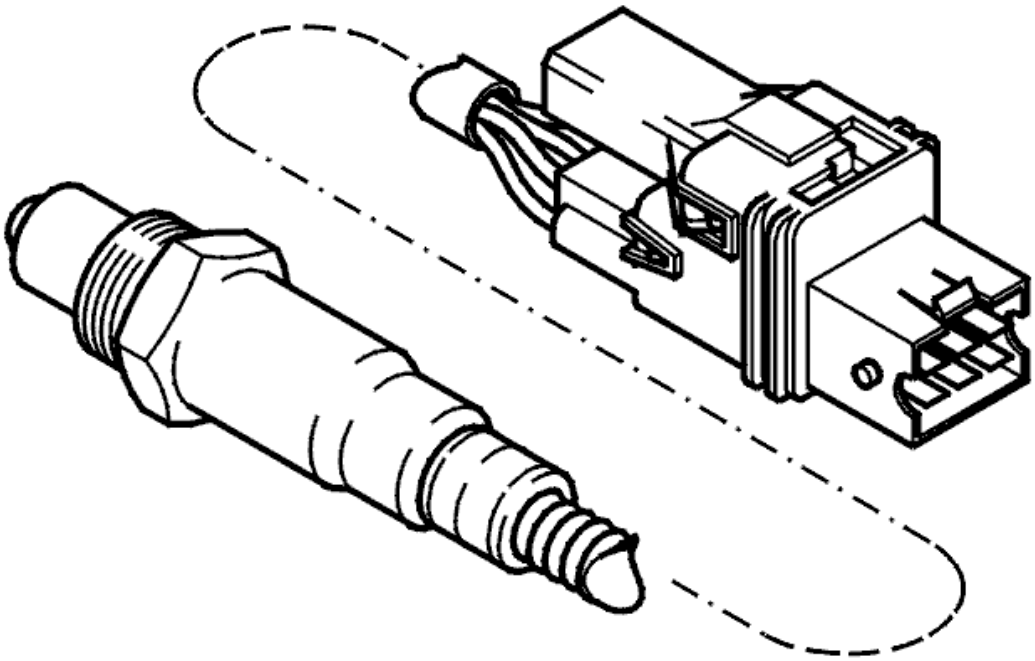

Fig. 261: Front Heated Oxygen Sensor
Courtesy of VOLVO CARS CORPORATION

Is FAULT NOT REGISTERED displayed?

- **YES**

  VERIFIED: Troubleshooting has been completed.

- **NO**

  Refer to **INFORMATION**

INFORMATION

FAULT-TRACING INFORMATION

The fault should have been detected and remedied. As this is not the case fault-tracing has failed.

Exit fault-tracing for this diagnostic trouble code (DTC) or make another attempt.

ECM-281C: TEXT MESSAGE. PRESSURE TOO HIGH (B5254T2; 2007)

DIAGNOSTIC TROUBLE CODE (DTC) INFORMATION ECM-281C

Condition

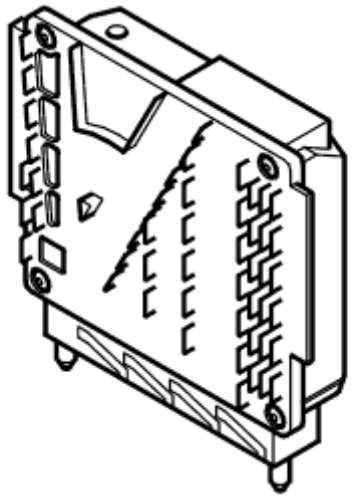

Fig. 262: Identifying Control Module
Courtesy of VOLVO CARS CORPORATION

NOTE: **If the diagnostic trouble code is generated, it is an indication that the fuel pressure has exceeded 800 kPa, there is a risk of fuel leakage.**

The engine control module (ECM) controls the fuel pressure via the fuel pump (FP) control module using a pulse width modulation (PWM) signal. The fuel pump (FP) control module then controls the fuel pump (FP) depending on the pressure requested by the engine control module (ECM). The diagnostic trouble code (DTC) is stored if the actual pressure (measured pressure from the fuel pressure sensor) rises too high in comparison with the requested pressure (target pressure) during a certain time frame.

The diagnostic trouble code (DTC) can be diagnosed when the engine is idling.

Substitute Value

- Predefined value used.

Possible Source

- Damaged fuel pump control module.
- Damaged fuel pump unit.
- The cable for voltage supply to the fuel pump is short-circuited to supply voltage.
- Damaged fuel pressure sensor

Fault symptom[s]

- Message in information display
- Malfunction indicator lamp (MIL) lit

- Deterioration in performance
- The engine stops.

FAULT-TRACING

CHECKING THE FUEL INJECTION SYSTEM

Fig. 263: Identifying Belt Routing
Courtesy of VOLVO CARS CORPORATION

NOTE: **If the diagnostic trouble code is generated, it is an indication that the fuel pressure has exceeded 800 kPa, there is a risk of fuel leakage. Therefore, it may be good to perform a check of the fuel system.**

- Start the engine. Allow the engine to idle.

Check the fuel system for leaks.

Remedy as necessary.

- **Continue**

  Refer to **CHECKING THE FUEL PRESSURE SENSOR**

CHECKING THE FUEL PRESSURE SENSOR

NOTE: **If diagnostic trouble codes (DTC) for the fuel pressure sensor or atmospheric pressure sensor are stored, these diagnostic trouble codes (DTC) must be fault-traced and remedied first.**

HINT: The method below is used to check whether the diagnostic trouble code (DTC) was caused by a faulty fuel pressure sensor. This can be done by comparing the fuel pressure sensor signal (displayed in VIDA (Volvo scan tool)) with the actual fuel pressure (displayed on a manometer connected to the wiring for the fuel injection system).

- Connect the pressure gauge:**FUEL PRESSURE GAUGE**

CAUTION: **The pressure in the fuel injection system can reach approx. 800 kPa when this diagnostic trouble code is stored, use an adapted pressure gauge.**

- Run the engine to operating temperature. Allow the engine to idle.
- Air conditioning (A/C) off.

Read off the relative fuel pressure.

The relative fuel pressure is calculated from the fuel pressure sensor and the atmospheric pressure sensor signal (= absolute pressure minus atmospheric pressure).

Check that the value on the manometer and the value displayed in VIDA (Volvo scan tool) are roughly the same. If the values are different, the circuit for the fuel pressure sensor is defective.

Fig. 264: Identifying VCT2000 Diagnostic Tool Symbol In VIDA
Courtesy of VOLVO CARS CORPORATION

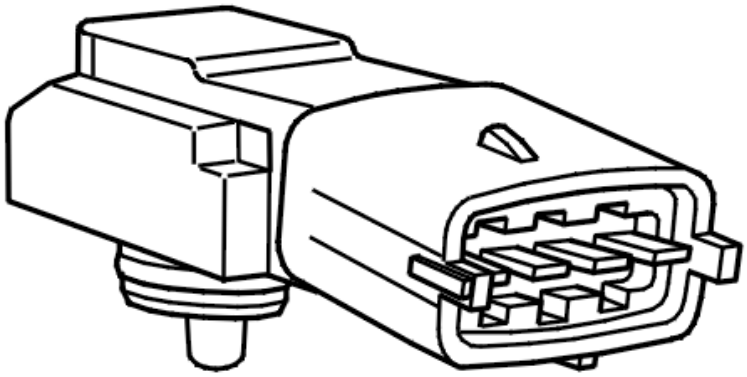

Fig. 265: Identifying Fuel Pressure Sensor
Courtesy of VOLVO CARS CORPORATION

Is the fuel pressure sensor correct?

- **YES**

  Refer to **CHECKING COMPONENTS**

- **NO**

  Refer to **CHECKING THE COMPONENT AND WIRING**

CHECKING COMPONENTS

Check the connectors between fuel pump module and the fuel pump for contact resistance and oxidation.

Remedy as necessary.

Try a new fuel pump (FP) control module if no fault is found during the above fault-tracing.

Other information

- see **FUEL PUMP DRIVER MODULE**
- see **CHECKING WIRING AND TERMINALS**

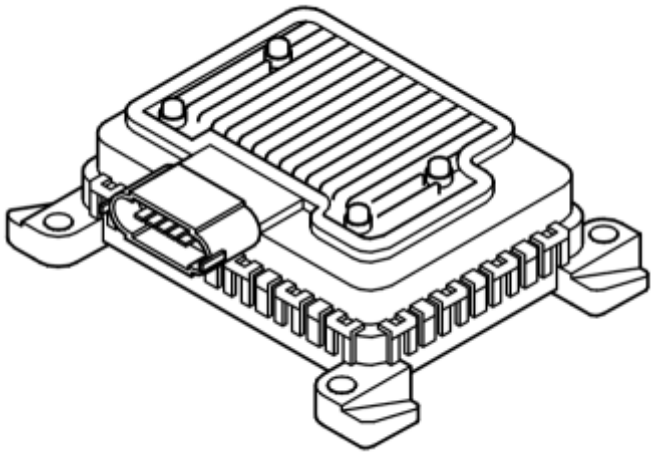

Fig. 266: Identifying Control Module Fuel Pump (FP)
Courtesy of VOLVO CARS CORPORATION

- **Continue**

  Refer to **VERIFICATION**

CHECKING THE COMPONENT AND WIRING

Check the fuel pressure sensor connectors. Check for contact resistance and oxidation.

Remedy as necessary.

Try a new fuel pressure sensor if no fault is found during the above fault-tracing.

Other information

- see **CHECKING WIRING AND TERMINALS**
- see **TEMPERATURE AND PRESSURE SENSORS, REPLACING**

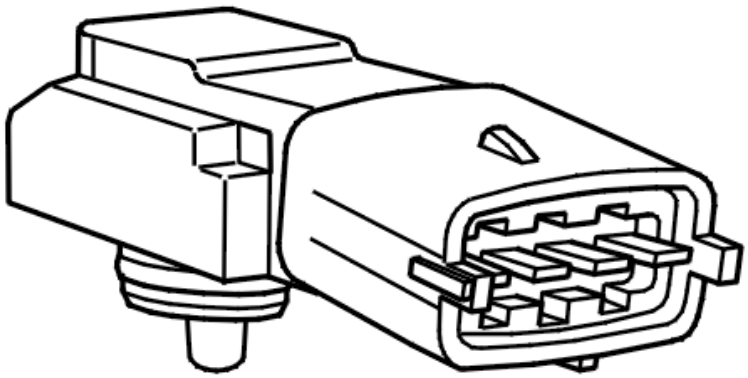

Fig. 267: Identifying Fuel Pressure Sensor
Courtesy of VOLVO CARS CORPORATION

- **Continue**

  Refer to **VERIFICATION**

VERIFICATION

VERIFICATION

HINT: After carrying out the repair, check that the fault has been remedied.

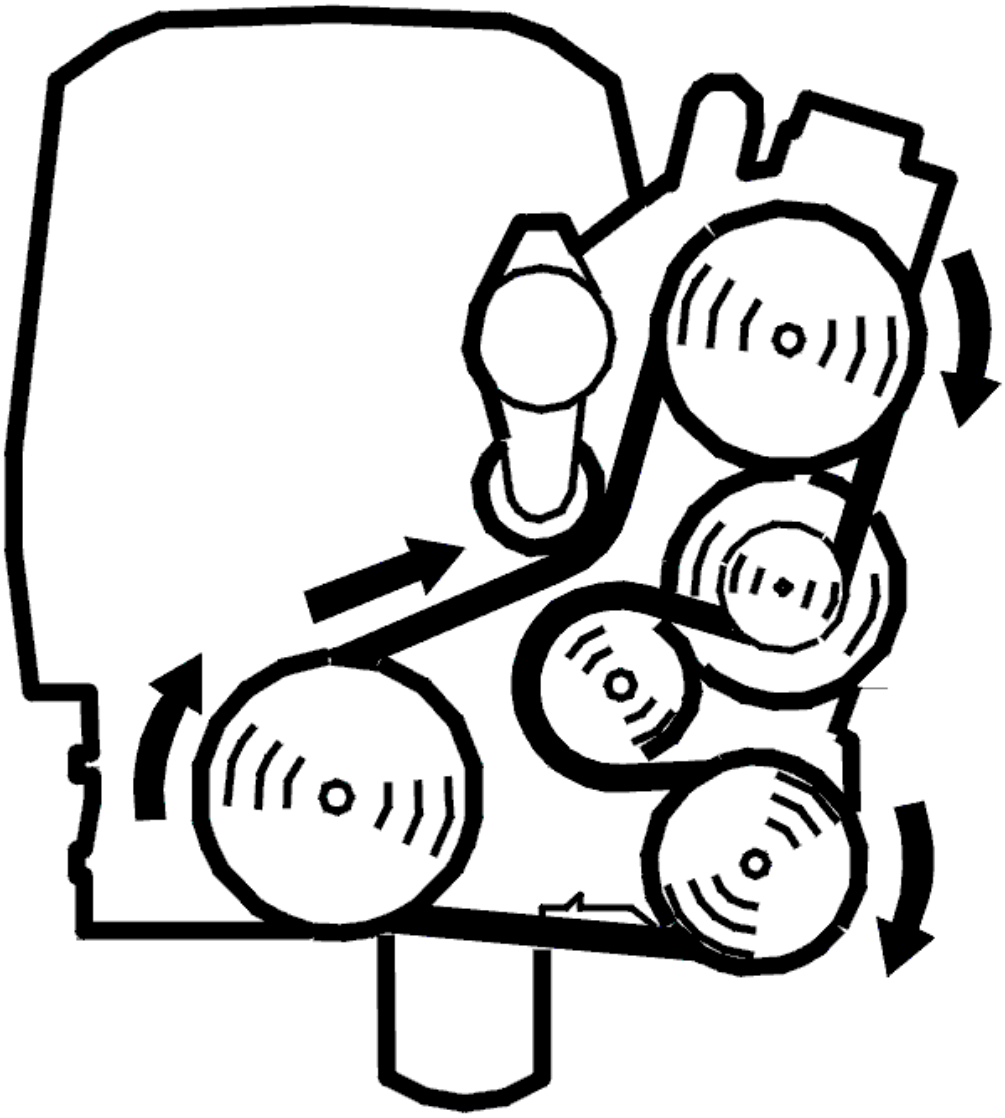

Fig. 268: Belt Routing / Engine Idling - Volvo
Courtesy of VOLVO CARS CORPORATION

- Connect a manometer.
- Run the engine to operating temperature. Allow the engine to idle.
- Air conditioning (A/C) off.

Read off the relative fuel pressure.

The relative fuel pressure is calculated from the fuel pressure sensor and the atmospheric pressure sensor signal (= absolute pressure minus atmospheric pressure).

Check that the value on the manometer and the value displayed in VIDA (Volvo scan tool) are the same. If the values are different, this indicates incorrect function.

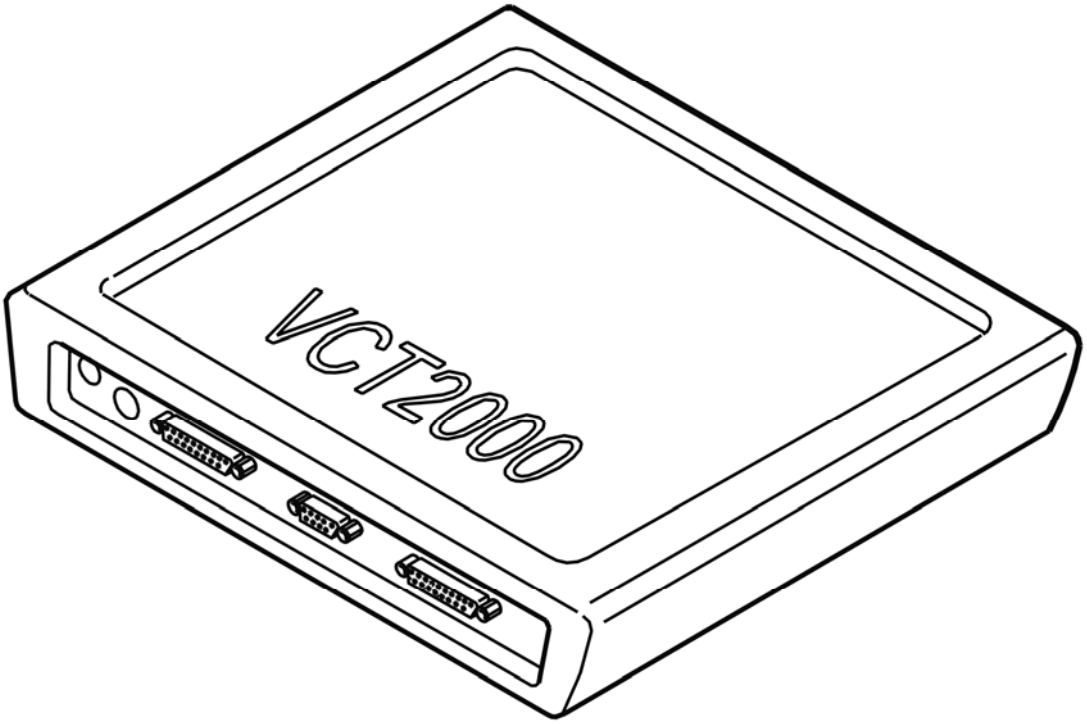

Fig. 269: Identifying VCT2000 Diagnostic Tool Symbol In VIDA
Courtesy of VOLVO CARS CORPORATION

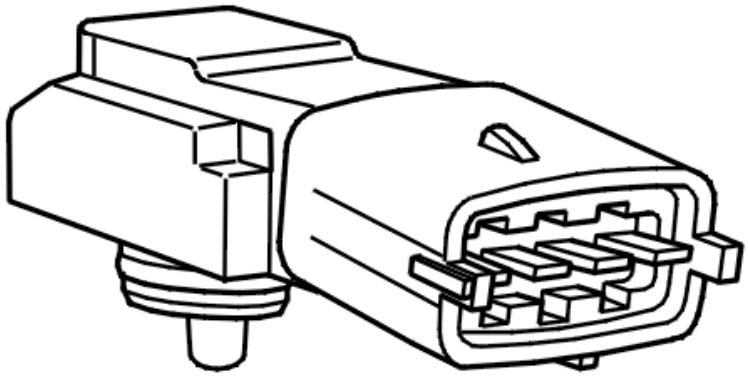

Fig. 270: Identifying Fuel Pressure Sensor
Courtesy of VOLVO CARS CORPORATION

Is the function OK?

- **YES**

  VERIFIED: Troubleshooting has been completed.

- **NO**

  Refer to **INFORMATION**

VERIFICATION

VERIFICATION

HINT: After carrying out the repair, check that the fault has been remedied.

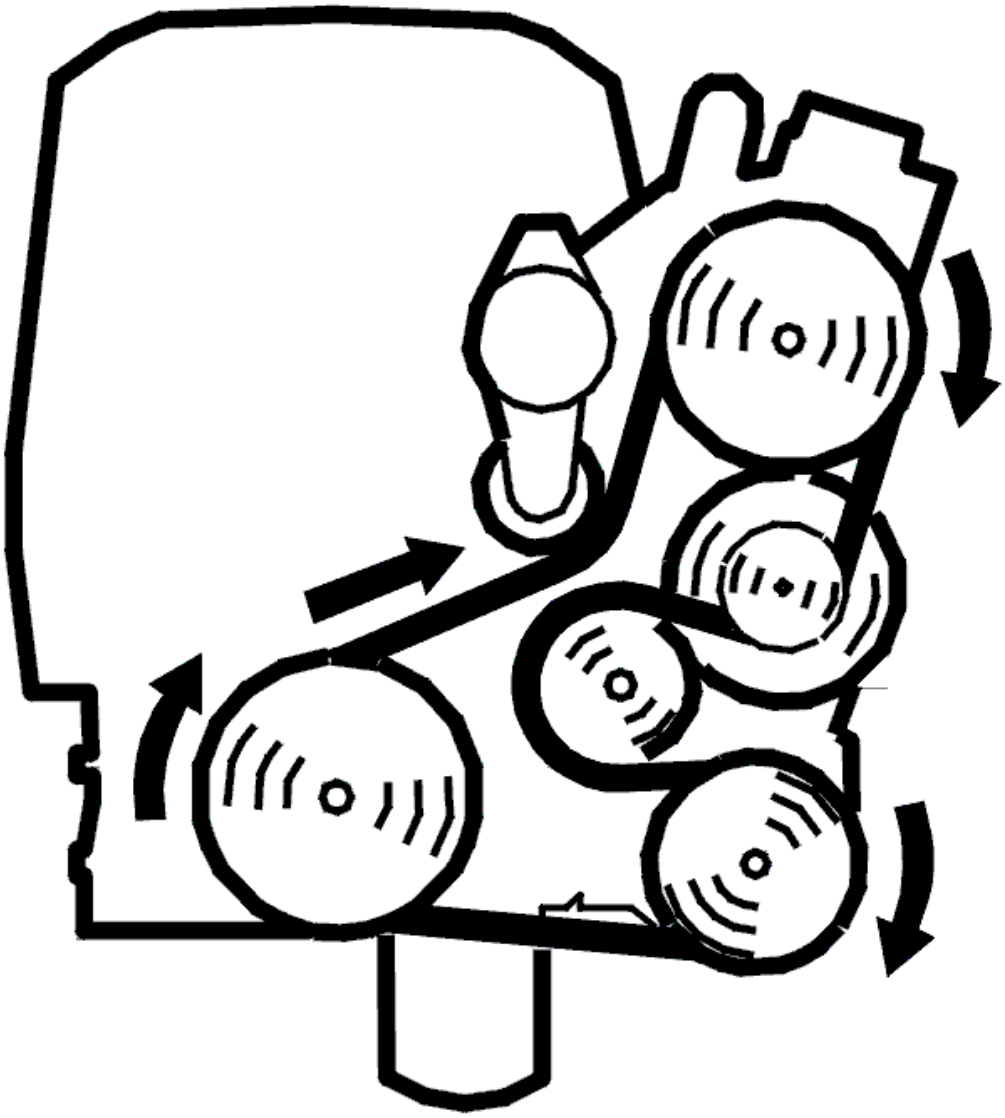

Fig. 271: Belt Routing / Engine Idling - Volvo
Courtesy of VOLVO CARS CORPORATION

- Run the engine to operating temperature. Allow the engine to idle.
- air conditioning (A/C) off
- Read off the fuel pressure and the fuel pressure desired value.
- Start the quick test when the engine is running at idling.

During the course of the quick test, the control module regulates the pressure for different target values in different steps (530, 490, 450, 410, 440, 490, 530 kPa). Each step takes 10 seconds. The test usually starts with the pressure momentarily going up to 650 kPa.

NOTE: **Because the by-pass valve in the fuel pump (FP) will be open at approximately 650 kPa, the pressure will not go higher than this.**

HINT: The illustration to the left shows an example of normal regulation.

- The upper digital display and the graphic display (red font color) indicate the absolute fuel pressure, calculated from the fuel pressure sensor
- The central digital display and the graphic display (blue font color) indicate the control module target value for the absolute fuel pressure
- The lower digital display indicates the relative fuel pressure (white font color), calculated from the fuel pressure sensor and the atmospheric pressure sensor (= absolute pressure minus atmospheric pressure). If a manometer is connected during the test, it must indicate this pressure.

Check that the value for absolute fuel pressure is the same as the target value for absolute fuel pressure. If the values are not the same, this indicates a fault in the pressure regulation. The values may differ during the quick test when the target value is changed. This is due to sluggishness in the fuel regulation and is normal. In some cases, it can take up to 5 seconds before the fuel pressure reaches the target value for the fuel pressure.

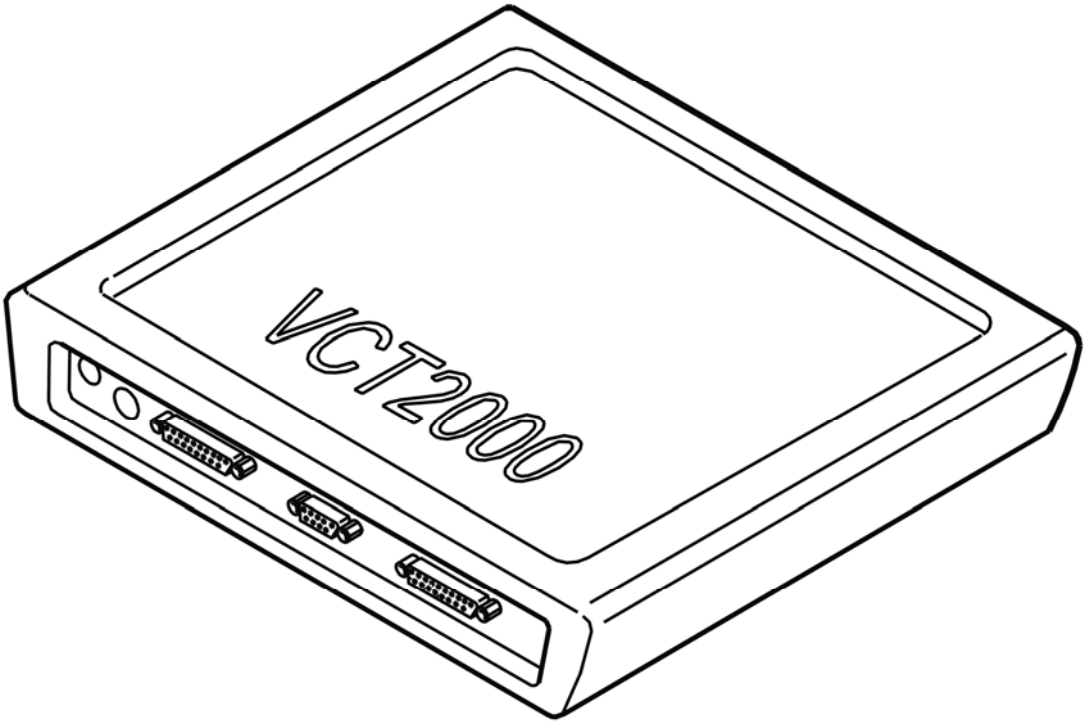

Fig. 272: Identifying VCT2000 Diagnostic Tool Symbol In VIDA
Courtesy of VOLVO CARS CORPORATION

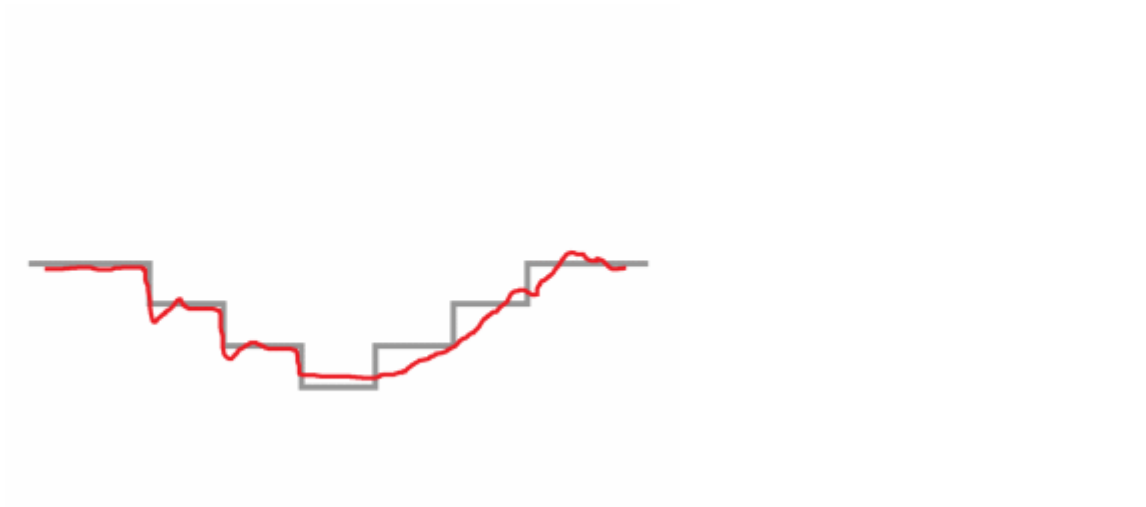

Fig. 273: Identifying Upper Digital Display And Graphic Display (Red Font Color)
Courtesy of VOLVO CARS CORPORATION

Is the function OK?

- **YES**

  VERIFIED: Troubleshooting has been completed.

- **NO**

  Refer to **INFORMATION**

INFORMATION

FAULT-TRACING INFORMATION

The fault should have been detected and remedied. As this is not the case fault-tracing has failed.

Exit fault-tracing for this diagnostic trouble code (DTC) or make another attempt.

ECM-2900: FUEL PRESSURE. FAULTY SIGNAL (B5254T2; 2005-2007)

DIAGNOSTIC TROUBLE CODE (DTC) INFORMATION ECM-2900

Condition

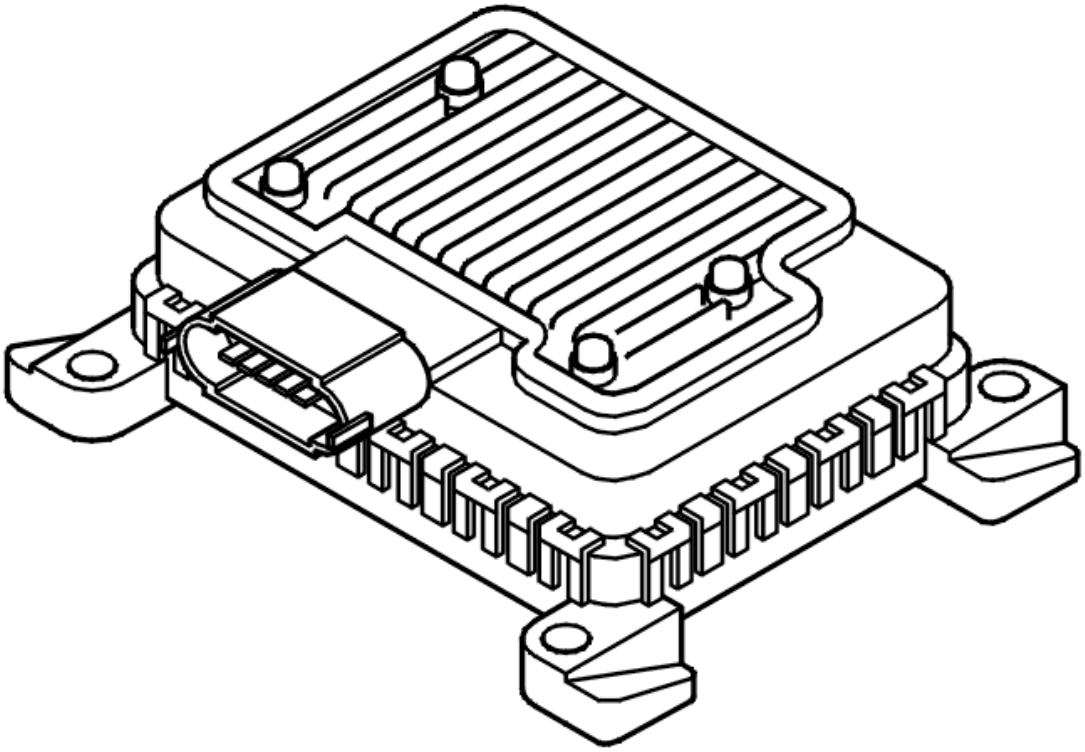

Fig. 274: Identifying Fuel Pump (FP) Control Module
Courtesy of VOLVO CARS CORPORATION

The engine control module (ECM) controls the fuel pressure via the fuel pump (FP) control module using a pulse width modulation (PWM) signal. The fuel pump (FP) control module then controls the fuel pump (FP) depending on the pressure requested by the engine control module (ECM). The diagnostic trouble code (DTC) is stored if the control capacity of the engine control module (ECM) for fuel pressure reaches the highest or lowest value and the desired fuel pressure (target value) is not achieved.

The diagnostic trouble code (DTC) can be diagnosed when the engine is running.

Substitute Value

- None.

Possible Source

- Leakage in the fuel lines
- Damaged fuel pressure sensor
- Damaged fuel pump
- Damaged fuel pump control module.

Fault symptom[s]

- Malfunction indicator lamp (MIL) lit
- Deterioration in performance
- The engine stops.
- Starting/Engine does not start/Engine turns

FAULTY SIGNAL

CHECKING THE DIAGNOSTIC TROUBLE CODES (DTCS)

Check if there are diagnostic trouble codes stored for fuel pressure sensor or ambient pressure sensor, in that case troubleshoot and fix these first.

Do you want to continue with this procedure?

- **YES**

  Refer to **CHECKING THE FUEL PRESSURE SENSOR**

CHECKING THE FUEL PRESSURE SENSOR

NOTE: **If diagnostic trouble codes (DTC) for the fuel pressure sensor or atmospheric pressure sensor are stored, these diagnostic trouble codes (DTC) must be fault-traced and remedied first.**

HINT: The method below is used to check whether the diagnostic trouble code (DTC) was caused by a faulty fuel pressure sensor. This can be done by comparing the fuel pressure sensor signal (displayed in VIDA (Volvo scan tool)) with the actual fuel pressure (displayed on a manometer connected to the wiring for the fuel injection system). This method assumes that the manometer for measuring fuel pressure is correctly calibrated.

- To connect the manometer, see **FUEL PRESSURE GAUGE**
- Run the engine to operating temperature. Allow the engine to idle
- air conditioning (A/C) off
- Read off the relative fuel pressure.

  The relative fuel pressure is calculated from the fuel pressure sensor and the atmospheric pressure sensor signal (= absolute pressure minus atmospheric pressure).

  Check that the value on the manometer and the value displayed in VIDA (Volvo scan tool) are the same. If the values are different, the circuit for the fuel pressure sensor is defective.

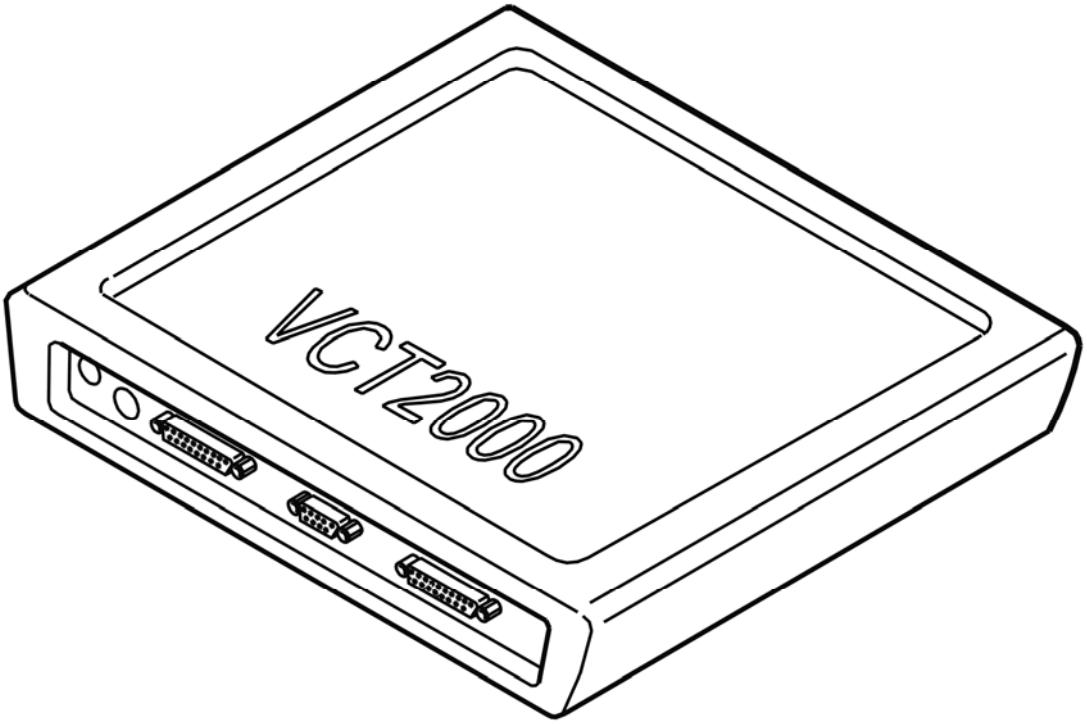

Fig. 275: Identifying VCT2000 Diagnostic Tool Symbol In VIDA
Courtesy of VOLVO CARS CORPORATION

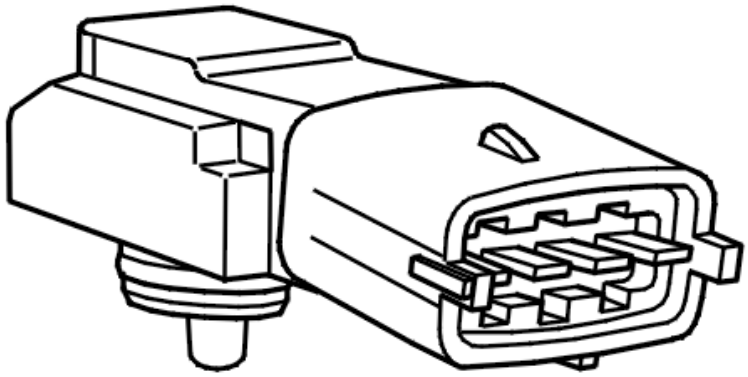

Fig. 276: Identifying Fuel Pressure Sensor
Courtesy of VOLVO CARS CORPORATION

Are the values equal?

- **YES**

  Refer to **CHECKING COMPONENTS**

- **NO**

  Refer to **CHECKING COMPONENTS AND WIRING**

CHECKING COMPONENTS

Check that the fuel level in the tank is not too low (almost no fuel).

Check the connectors between the pump control module and the fuel pump (FP). Check for contact resistance and oxidation.

Check the fuel lines and fuel filter for blockage and leaks.

Remedy as necessary.

Try a new fuel pump (FP) if no fault is found during the above fault-tracing.

HINT: The diagnostic trouble code (DTC) can also be caused by a defective pump control module.

Other information:

- see **CHECKING WIRING AND TERMINALS**
- To access or replace the fuel pump (FP), see **LEVEL SENSOR, FUEL TANK/FUEL PUMP, REPLACEMENT**
- To access or replace the pump control module, see **CONTROL MODULE FUEL PUMP (FP), REPLACING** .

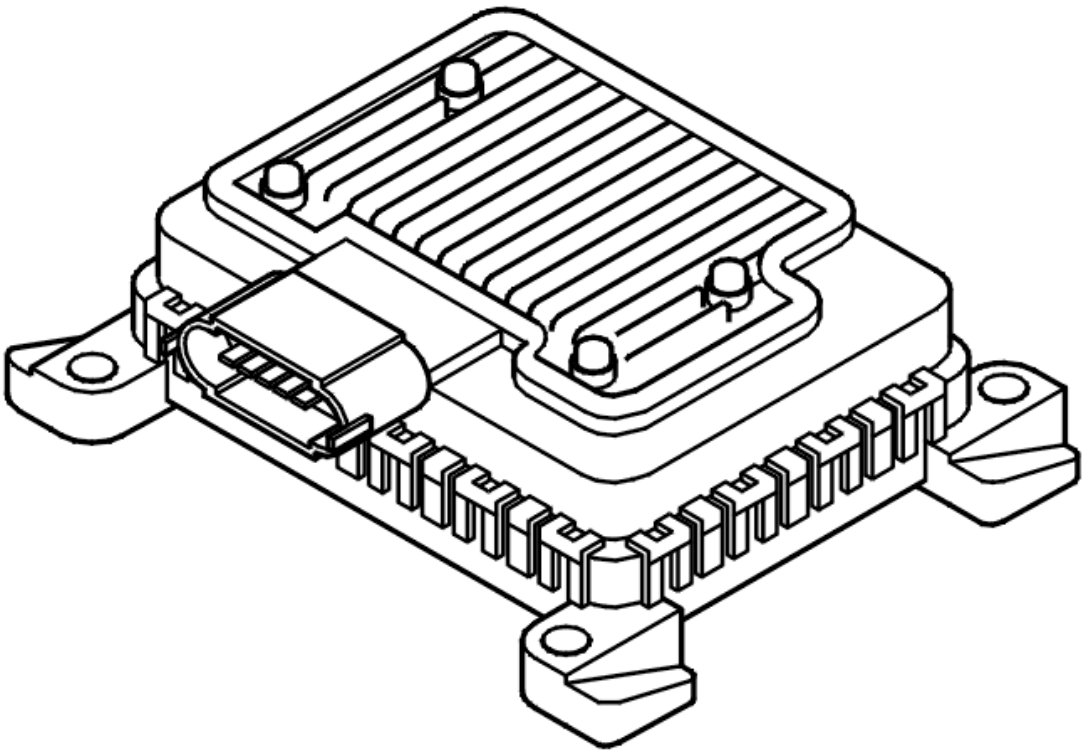

Fig. 277: Identifying Fuel Pump (FP) Control Module
Courtesy of VOLVO CARS CORPORATION

- **Continue**

  Refer to **VERIFICATION**

CHECKING COMPONENTS AND WIRING

Check the fuel pressure sensor connectors. Check for contact resistance and oxidation.

Remedy as necessary.

Try a new fuel pressure sensor if no fault is found during the above fault-tracing.

Other information:

- see **CHECKING WIRING AND TERMINALS**
- To connect the breakout box, see **CONNECTING THE BREAKOUT BOX**
- For 5 cylinder turbocharged engines -2004, see **SIGNAL DESCRIPTION**
- For 5 cylinder turbocharged engines 2005-, see **SIGNAL SPECIFICATION** .
- To access or replace the fuel pressure sensor, see **FUEL PRESSURE SENSOR, REPLACEMENT** .

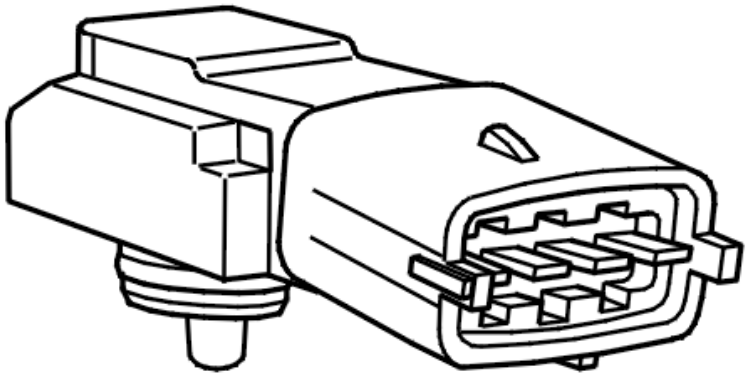

Fig. 278: Identifying Fuel Pressure Sensor
Courtesy of VOLVO CARS CORPORATION

- **Continue**

  Refer to **VERIFICATION**

VERIFICATION

VERIFICATION

HINT: After carrying out the repair, check that the fault has been remedied.

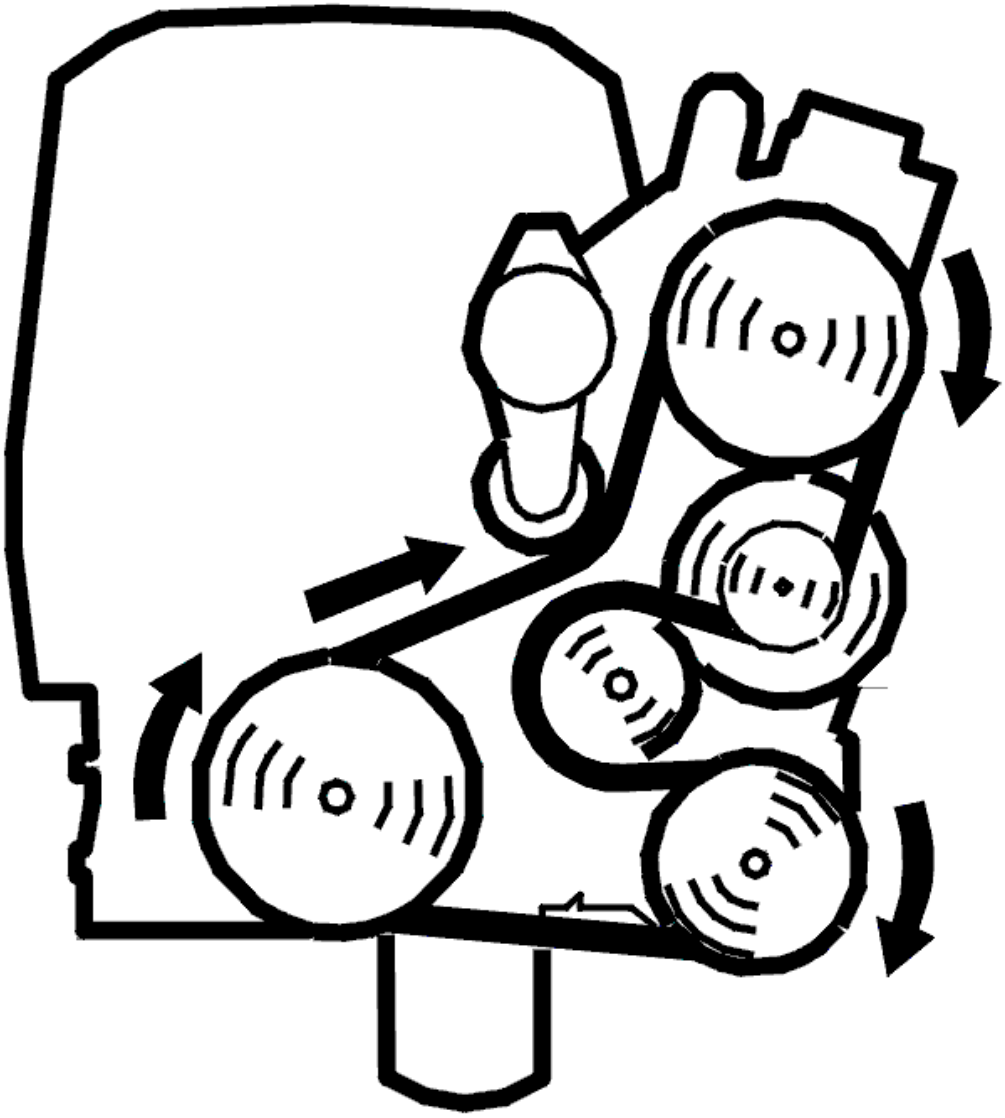

Fig. 279: Belt Routing / Engine Idling - Volvo
Courtesy of VOLVO CARS CORPORATION

- Reinstall the connectors, components etc.
- Start the engine and run it to normal operating temperature
- Read off the fuel pump (FP) load.

  Check that the engine starts and that the signal is approximately 35% (±5%) when the engine is idling at operating temperature.

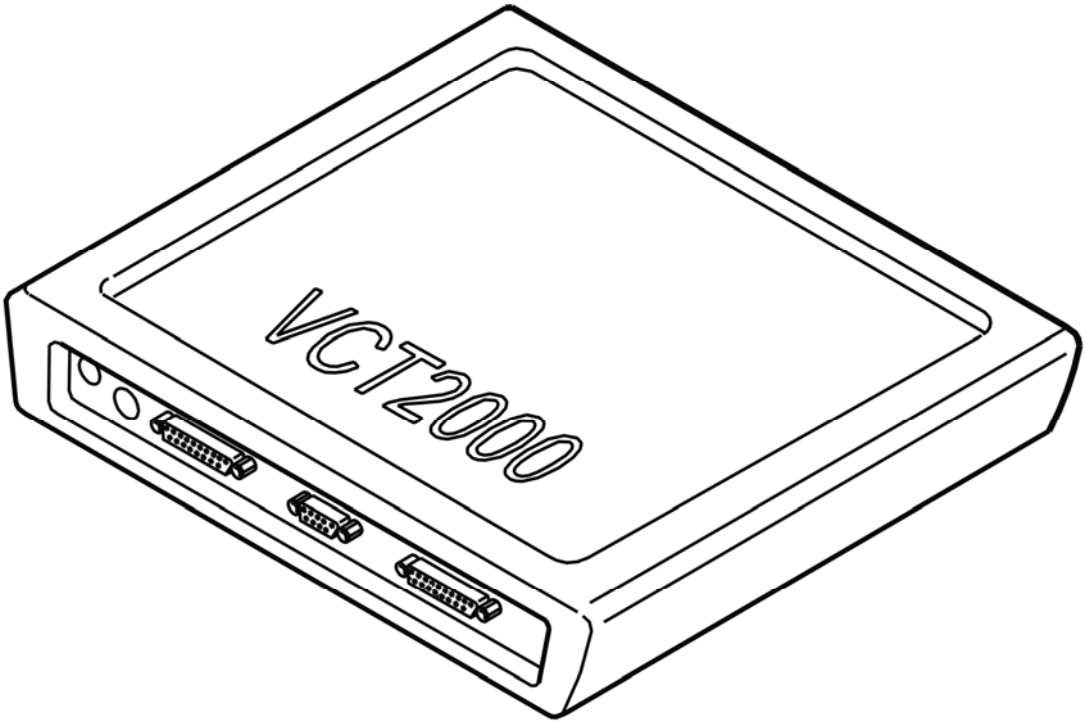

Fig. 280: Identifying VCT2000 Diagnostic Tool Symbol In VIDA
Courtesy of VOLVO CARS CORPORATION

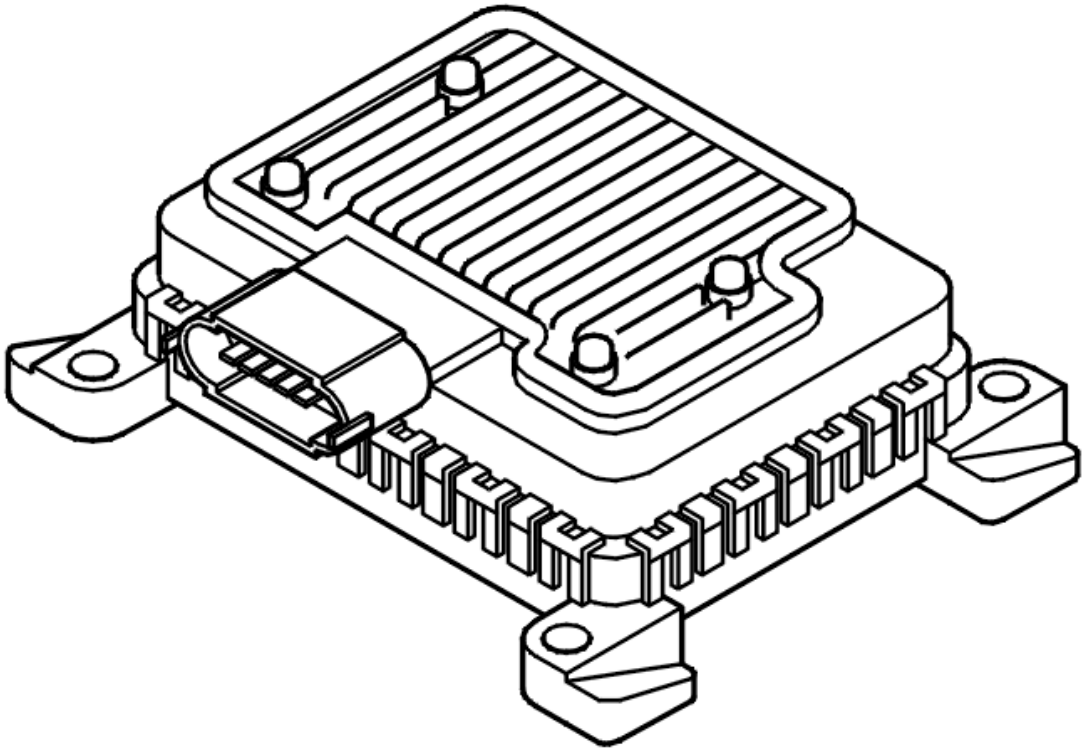

Fig. 281: Identifying Fuel Pump (FP) Control Module
Courtesy of VOLVO CARS CORPORATION

Is the function correct?

- **YES**

  VERIFIED: Troubleshooting has been completed.

- **NO**

  Refer to **INFORMATION**

INFORMATION

FAULT-TRACING INFORMATION

The fault should have been detected and remedied. As this is not the case fault-tracing has failed.

Exit fault-tracing for this diagnostic trouble code (DTC) or make another attempt.

ECM-2900: FUEL PRESSURE. FAULTY SIGNAL (B6294T; 2005-2006)

DIAGNOSTIC TROUBLE CODE (DTC) INFORMATION ECM-2900

see **DIAGNOSTIC TROUBLE CODE (DTC) INFORMATION ECM-2900**

FAULTY SIGNAL

see **FAULTY SIGNAL**

ECM-290A: FRONT HEATED OXYGEN SENSOR (HO2S), BANK 2. SIGNAL TOO HIGH (B6294T; 2003-2004)

DIAGNOSTIC TROUBLE CODE (DTC) INFORMATION

Condition

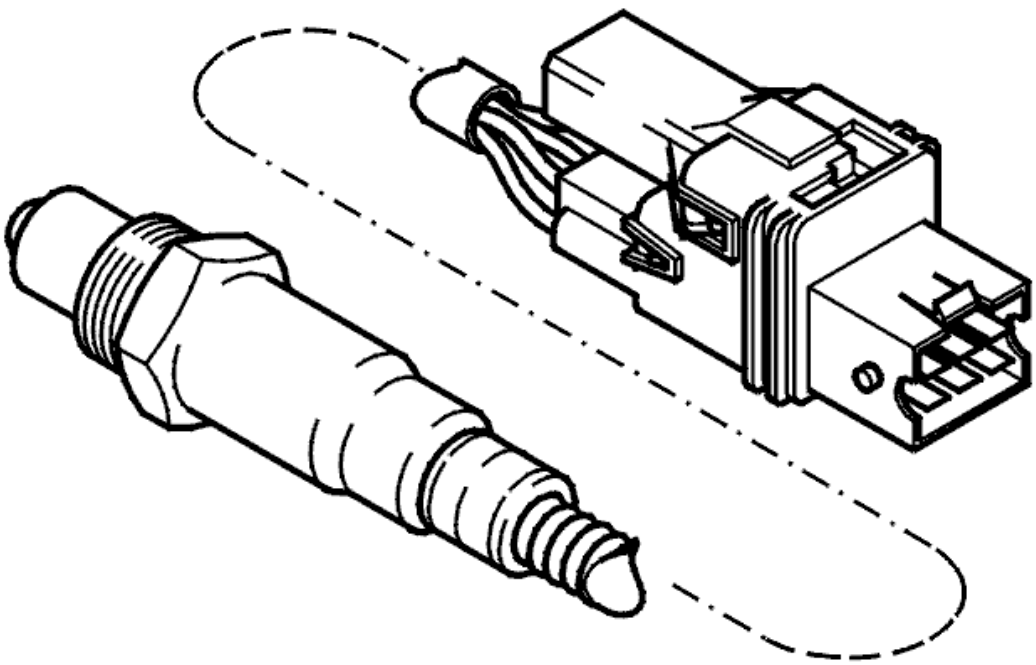

Fig. 282: Identifying Front Heated Oxygen Sensor (HO2S)
Courtesy of VOLVO CARS CORPORATION

Probe monitoring begins after probe preheating diagnostics are complete. Diagnostic trouble code (DTC) ECM-290A is stored if there is a fault in the front heated oxygen sensor (HO2S) or its wiring causing the signal to deviate from its permitted range.

The control module registers four different types of fault:

1. Signal too high

The control module compares the front and rear adaptation values. A diagnostic trouble code (DTC) is stored when the values deviate by more than 3%.

NOTE: The fault may be in the front or rear heated oxygen sensor (HO2S) circuit.

- the control module registers that the signal from the front probe is above 4.8 V for too long
- - the signal from the front probe does not deviate fromlambda= 1
- the signal from the front probe is showing a lean fuel mixture while the signal from the rear probe is showing a rich mixture
- the signal from the front probe is showing a rich fuel mixture while the signal from the rear probe is showing a lean mixture.

2. Signal too low

   The control module monitors the aging of the probe by checking its dynamics when switching between lean and rich mixtures. The diagnostic trouble code (DTC) is stored if the control module registers that the probe is operating too slowly.

   - the control module registers that the signal from the front probe is above 4.8 V for too long
   - - the signal from the front probe does not deviate fromlambda= 1
   - the signal from the front probe is showing a lean fuel mixture while the signal from the rear probe is showing a rich mixture
   - the signal from the front probe is showing a rich fuel mixture while the signal from the rear probe is showing a lean mixture.

3. Signal missing

   The control module monitors cross-induction from the probe preheating. Diagnostic trouble code (DTC) is stored when cross induction exceeds the permitted value.

   - the control module registers that the signal from the front probe is above 4.8 V for too long
   - - the signal from the front probe does not deviate fromlambda= 1
   - the signal from the front probe is showing a lean fuel mixture while the signal from the rear probe is showing a rich mixture
   - the signal from the front probe is showing a rich fuel mixture while the signal from the rear probe is showing a lean mixture.

4. Faulty signal

   A diagnostic trouble code (DTC) stored when:

   - the control module registers that the signal from the front probe is above 4.8 V for too long
   - - the signal from the front probe does not deviate fromlambda= 1
   - the signal from the front probe is showing a lean fuel mixture while the signal from the rear probe is showing a rich mixture
   - the signal from the front probe is showing a rich fuel mixture while the signal from the rear probe is

showing a lean mixture.

Substitute Value

- The rear heated oxygen sensor (HO2S) control is disabled
- Three-way catalytic converter (TWC) diagnostic is disabled

Possible Source

Signal too high:

- air leakage in the exhaust system
- short-circuit to power supply or ground in the signal cable (+) or supply cable for pump current
- defective heated oxygen sensor (HO2S)

Signal too low:

- the cable for calibration current and the cable for pump current are short-circuited to each other
- open-circuit in signal cable (-)
- open-circuit in cable for calibration current
- defective heated oxygen sensor (HO2S).

Signal missing:

- Signal cable (+) and signal cable (-) short-circuited to each other
- one of the cables for heated oxygen sensor (HO2S) preheating is short-circuited to the probe's other wiring
- defective heated oxygen sensor (HO2S).

Faulty signal:

- short-circuit to supply voltage or ground in signal cable (+)
- short-circuit to supply voltage or ground in signal cable (-)
- short-circuit to supply voltage or ground in pump current cable
- short-circuit to supply voltage or ground in calibration current cable
- open-circuit in signal cable (+)
- defective heated oxygen sensor (HO2S).

Fault symptom[s]

- malfunction indicator lamp (MIL) lit.

SIGNAL TOO HIGH

CHECKING FOR AIR LEAKAGE IN THE EXHAUST SYSTEM

Check for air leakage. See **INTAKE AND EXHAUST SYSTEM - CLEANING, INSPECTION AND ADJUSTMENT** .

Remedy as necessary.

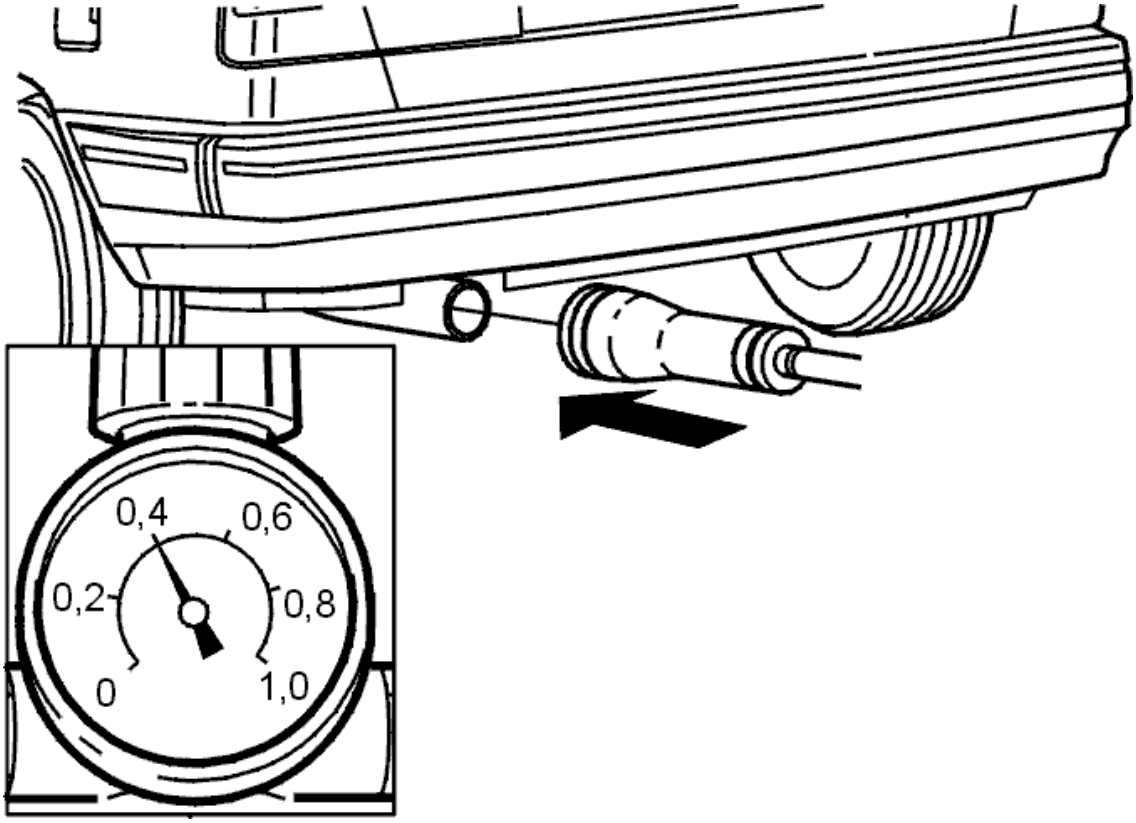

Fig. 283: Checking For Air Leakage In Exhaust System
Courtesy of VOLVO CARS CORPORATION

Was there any air leakage?

- **YES**

  Refer to **VERIFICATION**

- **NO**

  Refer to **CHECKING COMPONENTS AND WIRING**

CHECKING COMPONENTS AND WIRING

CAUTION: Do not apply rust solvent spray or grease to the heated oxygen sensor (HO2S) connector.

Front heated oxygen sensor (HO2S), bank 1:

Check the signal cable (+) between heated oxygen sensor (HO2S) terminal #1 and control module terminal #A41 (#A41). Check the cable for pump current between heated oxygen sensor (HO2S) terminal #6 and control module terminal #A24 (#A24). Check for an open-circuit. Check for a short-circuit to ground. Check for a short-circuit to supply voltage.

Front heated oxygen sensor (HO2S), bank 2:

Check the signal cable (+) between heated oxygen sensor (HO2S) terminal #1 and control module terminal #A43 (#A43). Check the cable for pump current between heated oxygen sensor (HO2S) terminal #6 and control module terminal #A25 (#A25). Check for an open-circuit, short-circuit to ground and a short-circuit to supply voltage.

Replace both heated oxygen sensors (HO2S) if the wiring is OK and no faults are found.

Remedy as necessary.

HINT: If the fault remains after fault-tracing/remedying, the fault may be in the circuit for the rear heated oxygen sensor (HO2S).

Other information:

- To connect the breakout box / access the control module, see **CONNECTING THE BREAKOUT BOX**
- For B5xx4T, see **HEATED OXYGEN SENSOR (HO2S), REPLACING**
- For B6xx4T, see **HEATED OXYGEN SENSOR (HO2S), REPLACING** .
- For 6 cylinder engines -2004, see **SIGNAL SPECIFICATION**
- For 6 cylinder engines 2005-, see **SIGNAL SPECIFICATION** .
- see **CHECKING WIRING AND TERMINALS** .

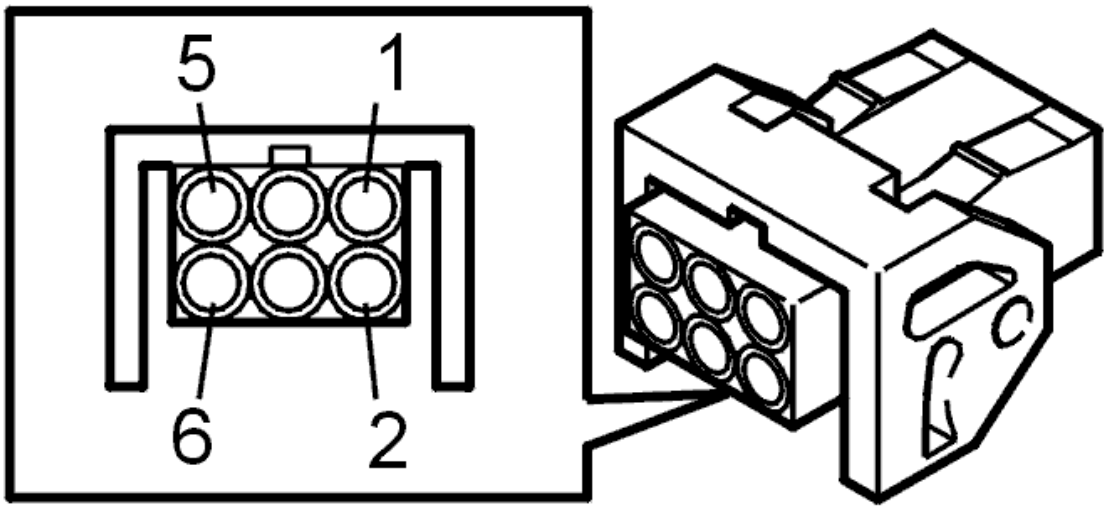

Fig. 284: Identifying Front Heated Oxygen Sensor Connector Terminals

Courtesy of VOLVO CARS CORPORATION

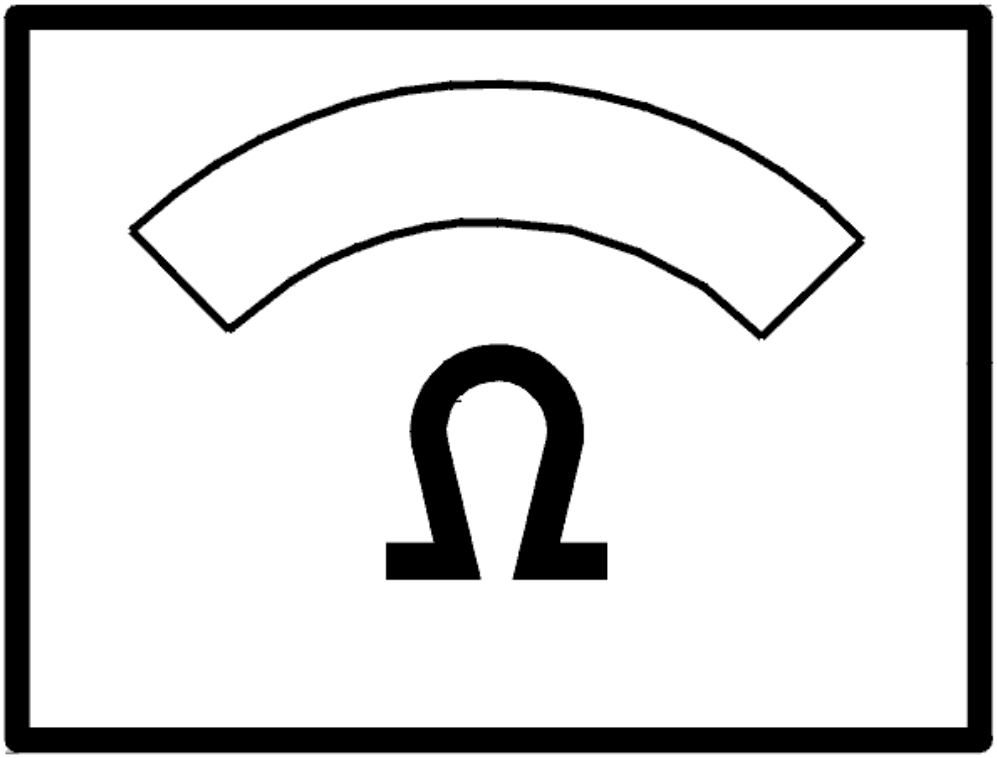

Fig. 285: Identifying Ohm Meter
Courtesy of VOLVO CARS CORPORATION

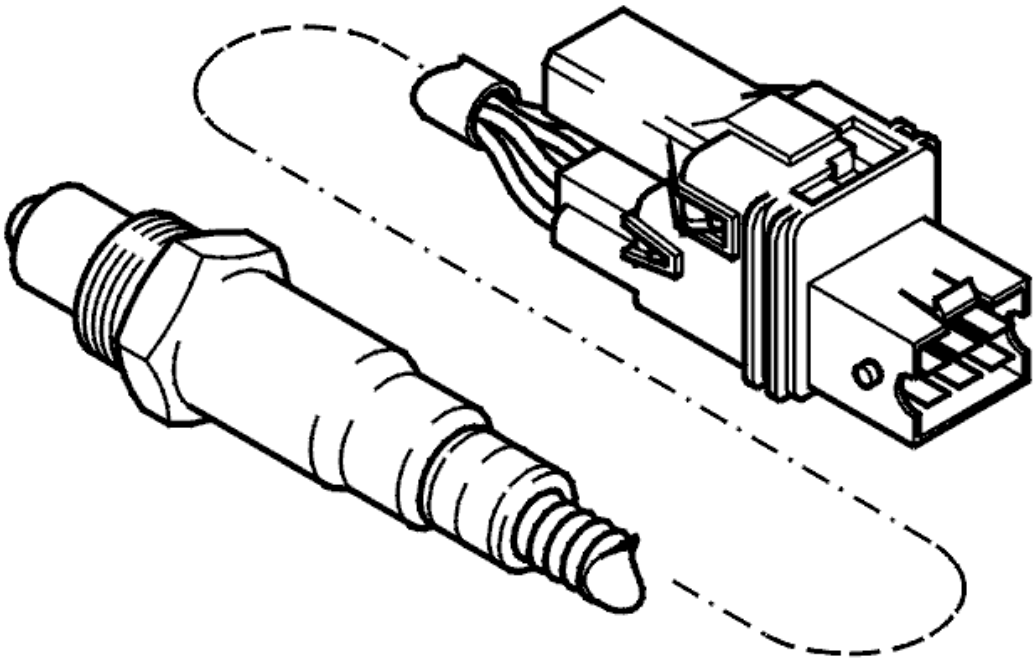

Fig. 286: Front Heated Oxygen Sensor
Courtesy of VOLVO CARS CORPORATION

- **Continue**

  Refer to **VERIFICATION**

VERIFICATION

HINT: After carrying out the repair, check that the fault has been remedied.

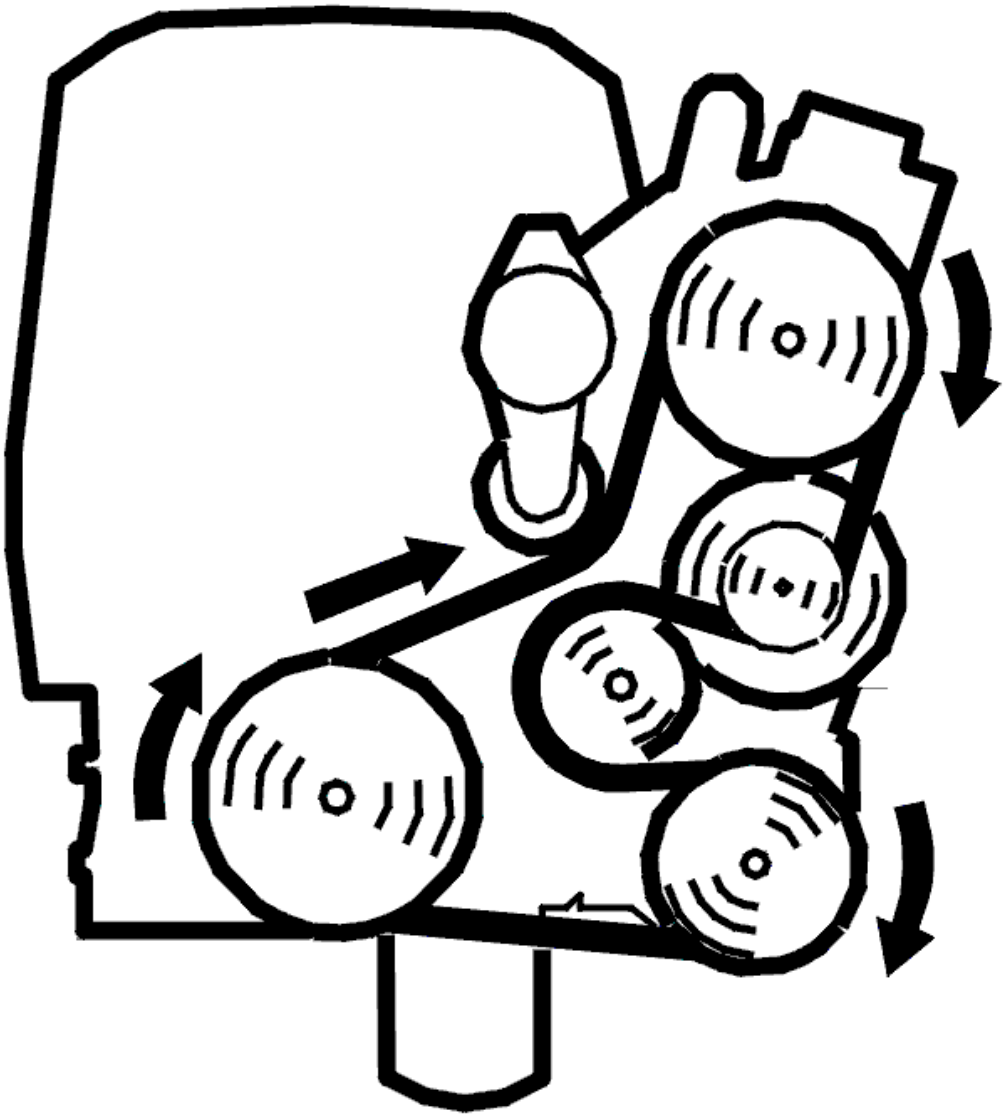

Fig. 287: Belt Routing / Engine Idling - Volvo
Courtesy of VOLVO CARS CORPORATION

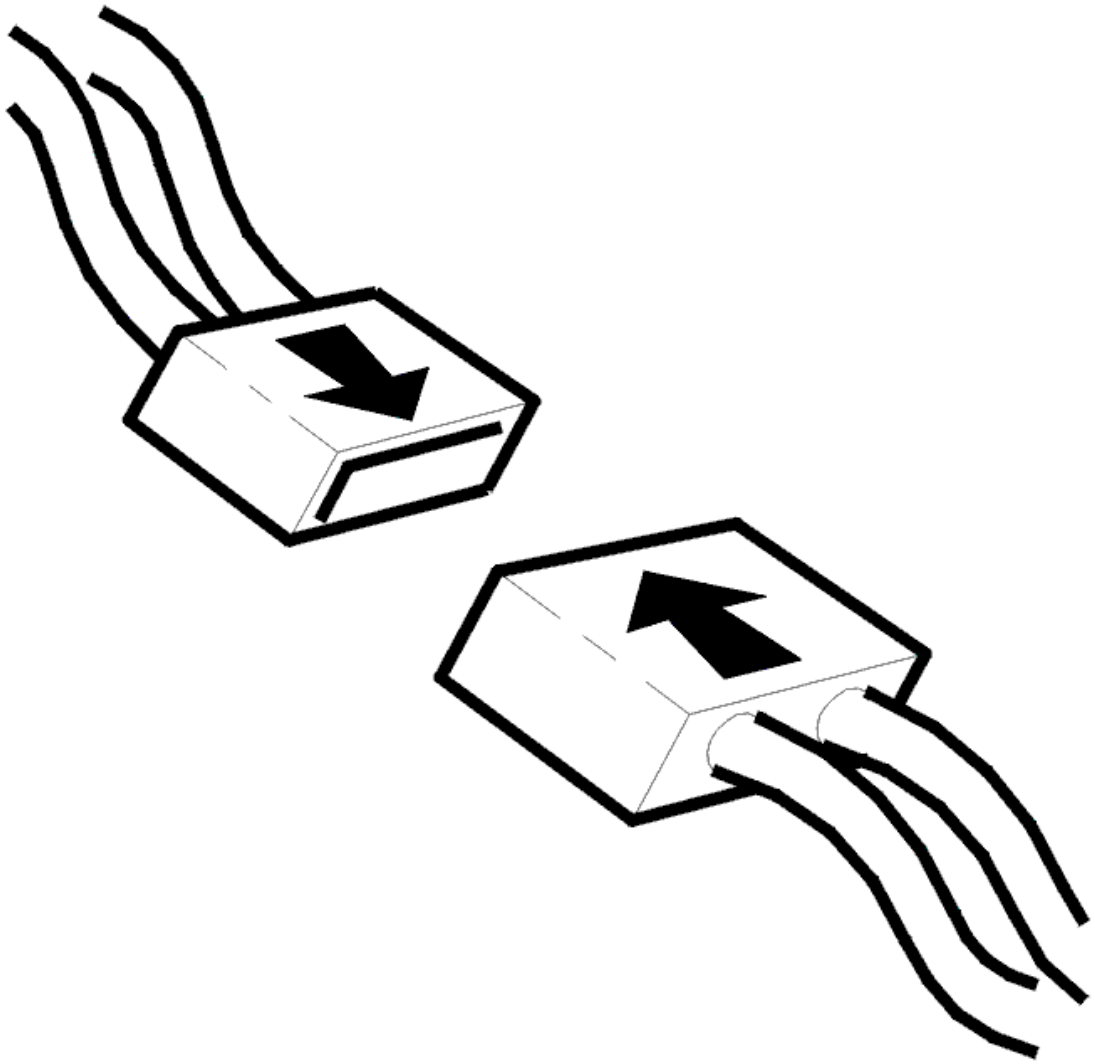

Fig. 288: Connecting Connector
Courtesy of VOLVO CARS CORPORATION

- Ignition off
- Reconnect the connectors. Reinstall the components
- Test drive the car according to the TRIP schedule. See **VERIFYING REPAIRS** .

  Connect VIDA (Volvo scan tool) again and read out the difference between the front and rear heated oxygen sensors (HO2S).

  The value must be lower than +/-0.01.

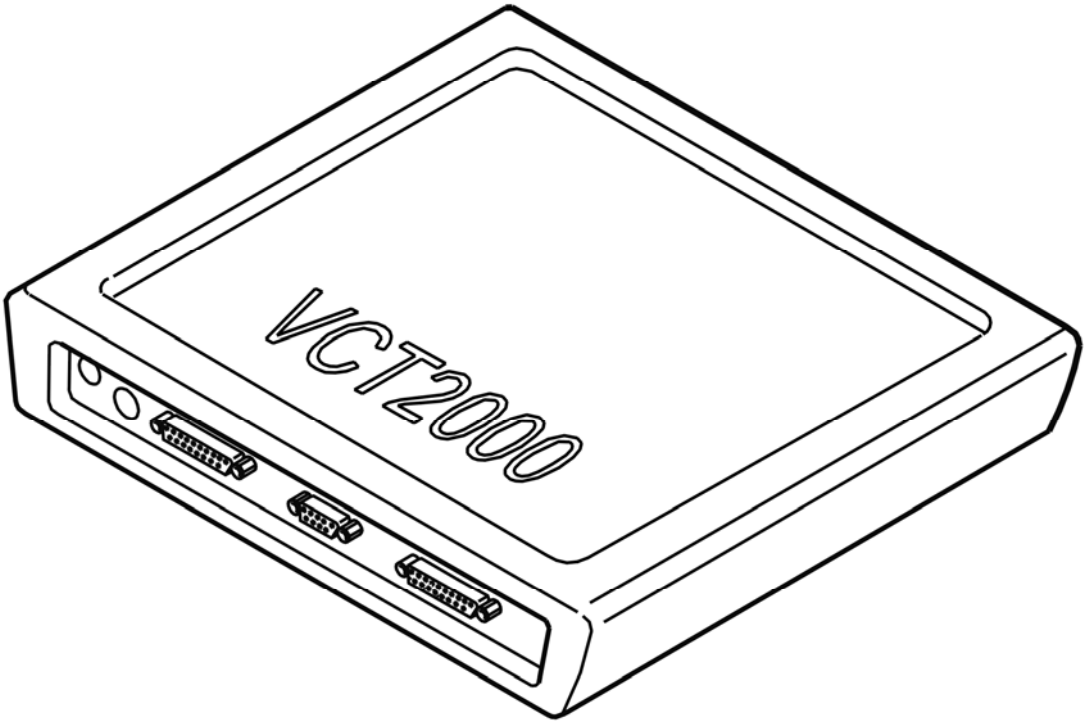

Fig. 289: Identifying VCT2000 Diagnostic Tool Symbol In VIDA
Courtesy of VOLVO CARS CORPORATION

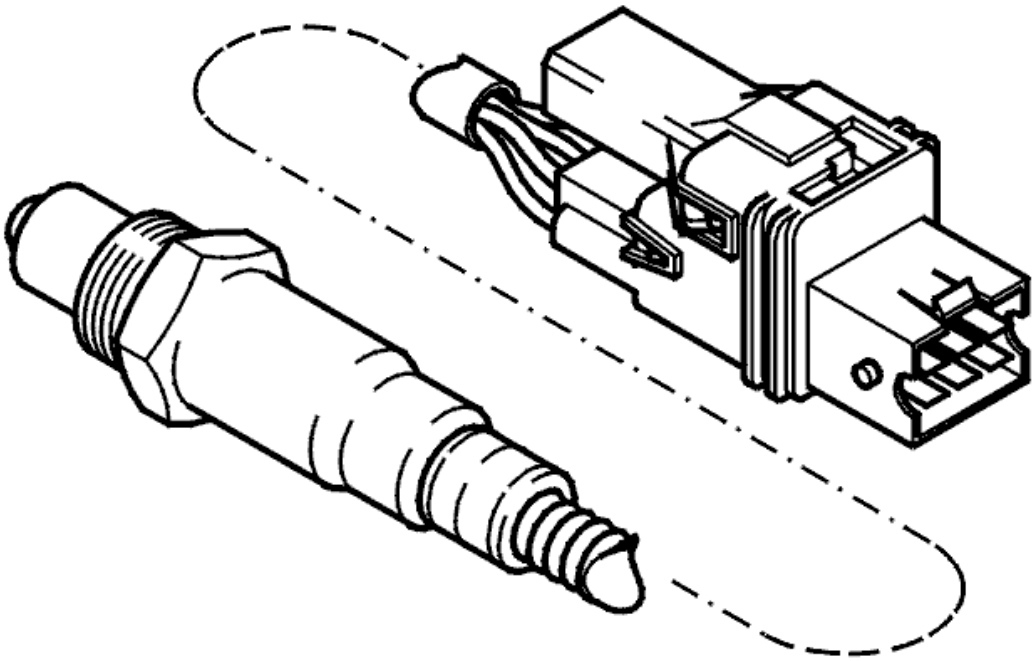

Fig. 290: Front Heated Oxygen Sensor
Courtesy of VOLVO CARS CORPORATION

Is the value lower than +/- 0.01?

- **YES**

  OKAY: Troubleshooting has been completed.

- **NO**

  Refer to **CHECKING COMPONENTS AND WIRING**

CHECKING COMPONENTS AND WIRING

CAUTION: Do not apply rust solvent spray or grease to the heated oxygen sensor (HO2S) connector.

HINT: The fault may be caused by a fault in the circuit for the rear heated oxygen sensor (HO2S).

Check the rear heated oxygen sensor (HO2S) connector. Check for contact resistance and oxidation.

Check the signal cable (+) between heated oxygen sensor (HO2S) terminal #4 and control module terminal

#A61 (#B1). Check the signal cable (-) between heated oxygen sensor (HO2S) terminal #3 and control module terminal #A62 (#B2). Check for an open-circuit. Check for a short-circuit to ground. Check for a short-circuit to supply voltage.

Replace the rear heated oxygen sensor (HO2S) if the wiring is OK.

Remedy as necessary.

Other information:

- To connect the breakout box / access the control module, see **CONNECTING THE BREAKOUT BOX**
- For B5xx4T, see **HEATED OXYGEN SENSOR (HO2S), REPLACING**
- For B6xx4T, see **HEATED OXYGEN SENSOR (HO2S), REPLACING** .
- For 6 cylinder engines -2004, see **SIGNAL SPECIFICATION**
- For 6 cylinder engines 2005-, see **SIGNAL SPECIFICATION** .
- see **CHECKING WIRING AND TERMINALS** .

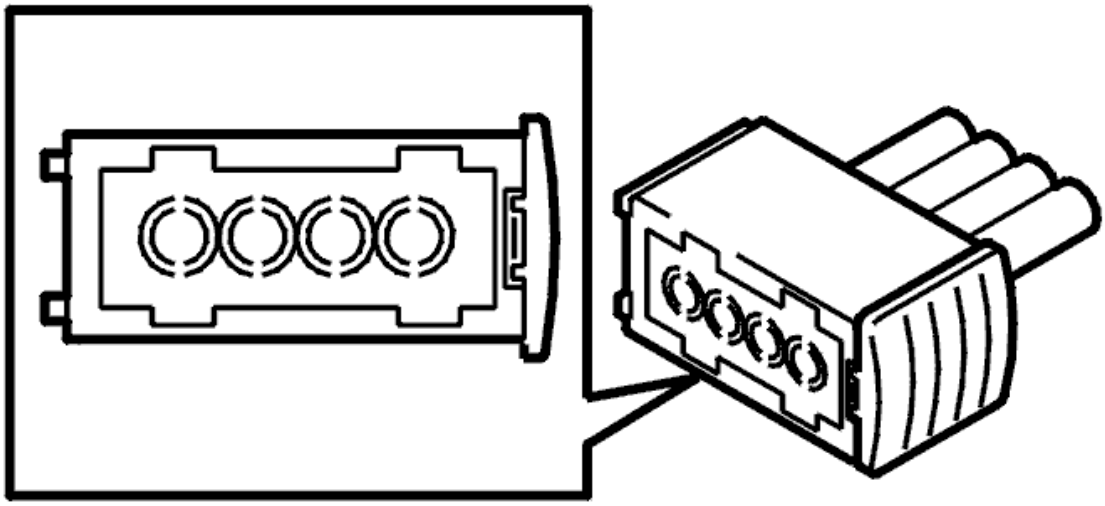

Fig. 291: Identifying Rear Heated Oxygen Sensor (HO2S) Connector
Courtesy of VOLVO CARS CORPORATION

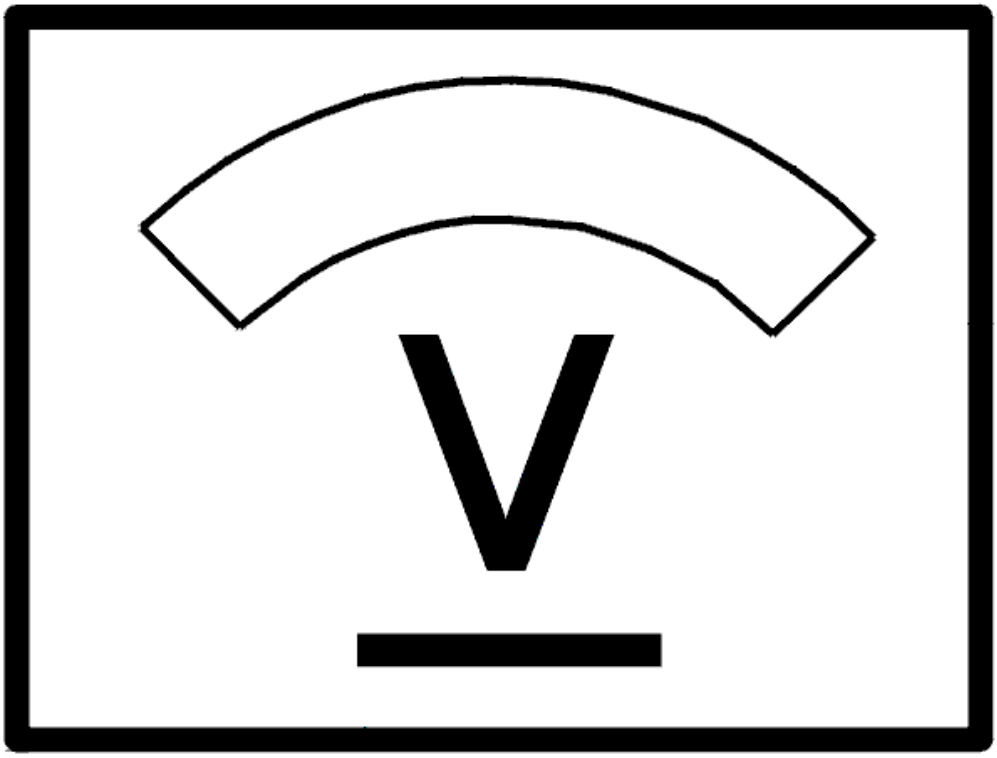

Fig. 292: Identifying Voltage Display
Courtesy of VOLVO CARS CORPORATION

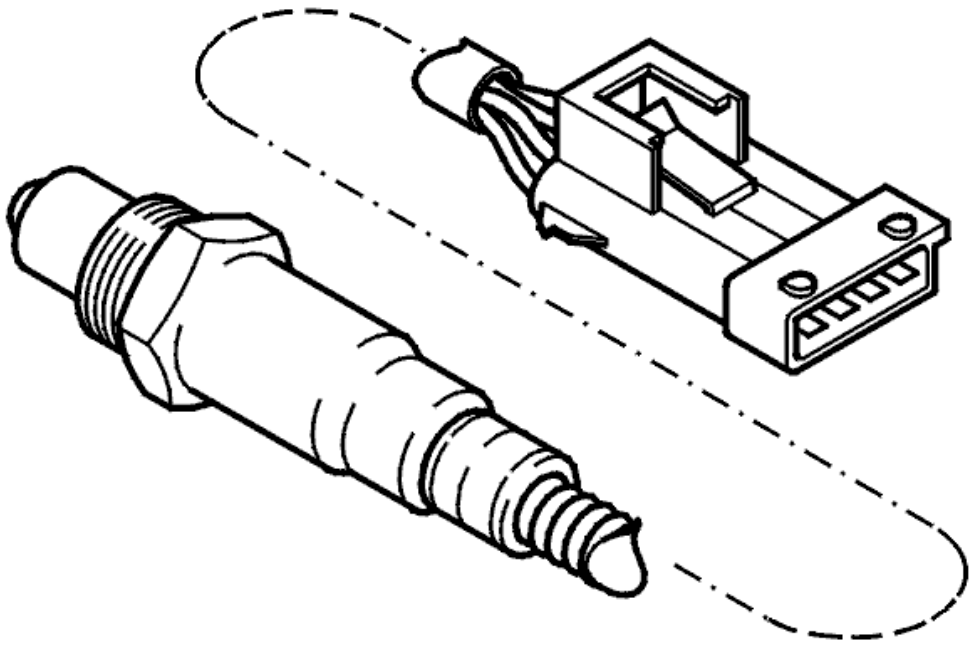

Fig. 293: Identifying Rear Heated Oxygen Sensor (HO2S)
Courtesy of VOLVO CARS CORPORATION

- **Continue**

  Refer to **VERIFICATION**

VERIFICATION

VERIFICATION

HINT: After carrying out the repair, check that the fault has been remedied.

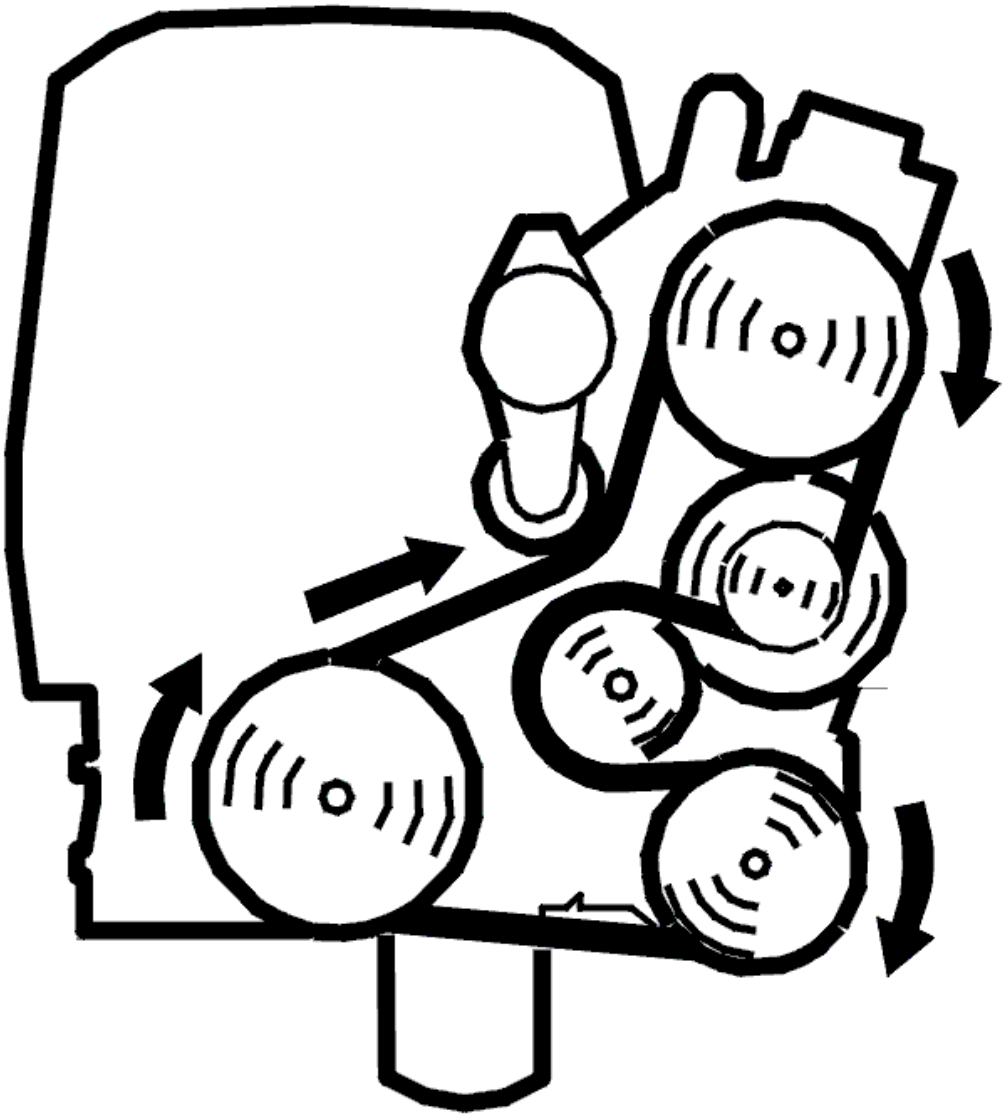

Fig. 294: Belt Routing / Engine Idling - Volvo
Courtesy of VOLVO CARS CORPORATION

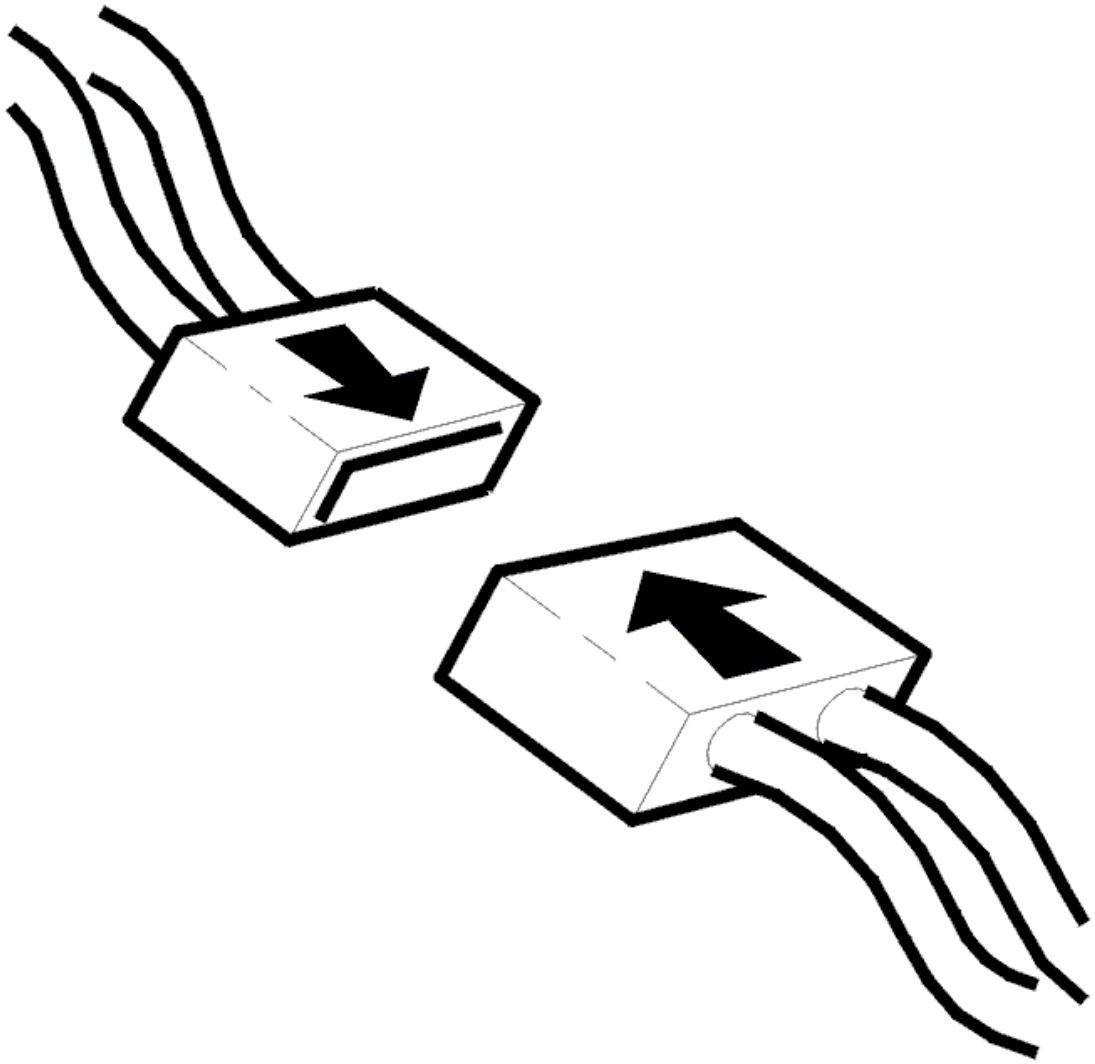

Fig. 295: Connecting Connector
Courtesy of VOLVO CARS CORPORATION

- Ignition off
- Reconnect connectors, reinstall components etc.
- Test drive the car according to the TRIP schedule. See **VERIFYING REPAIRS** .

  Connect VIDA (Volvo scan tool) again and read out the difference between the front and rear heated oxygen sensors (HO2S).

  The value must be lower than +/-0.01.

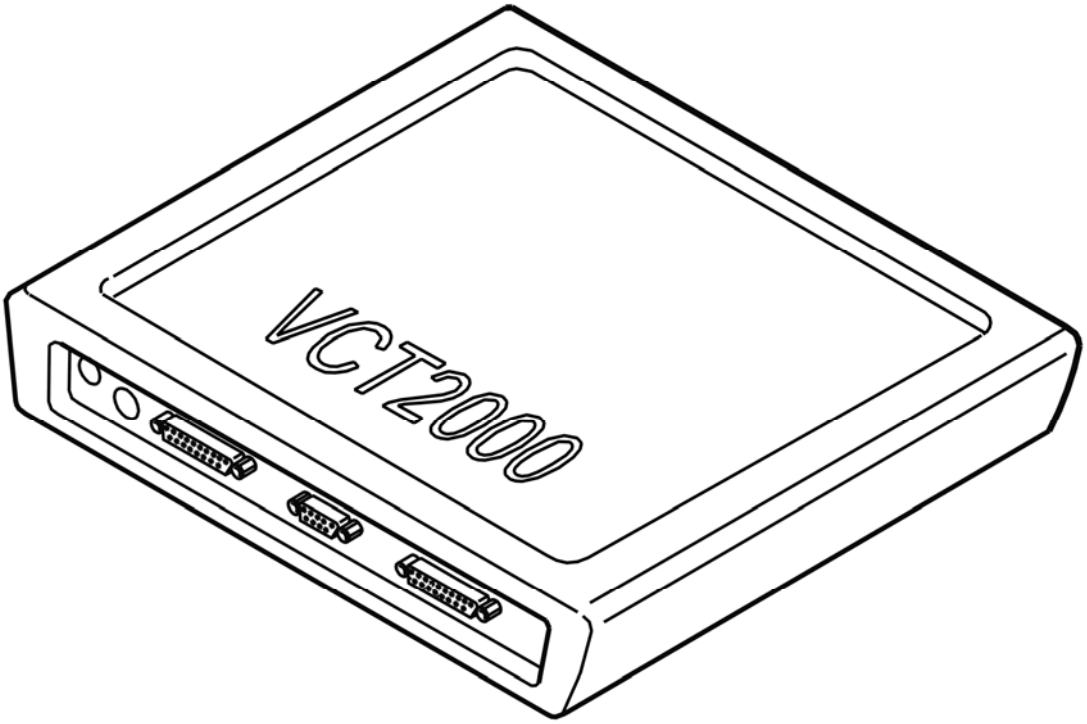

Fig. 296: Identifying VCT2000 Diagnostic Tool Symbol In VIDA
Courtesy of VOLVO CARS CORPORATION

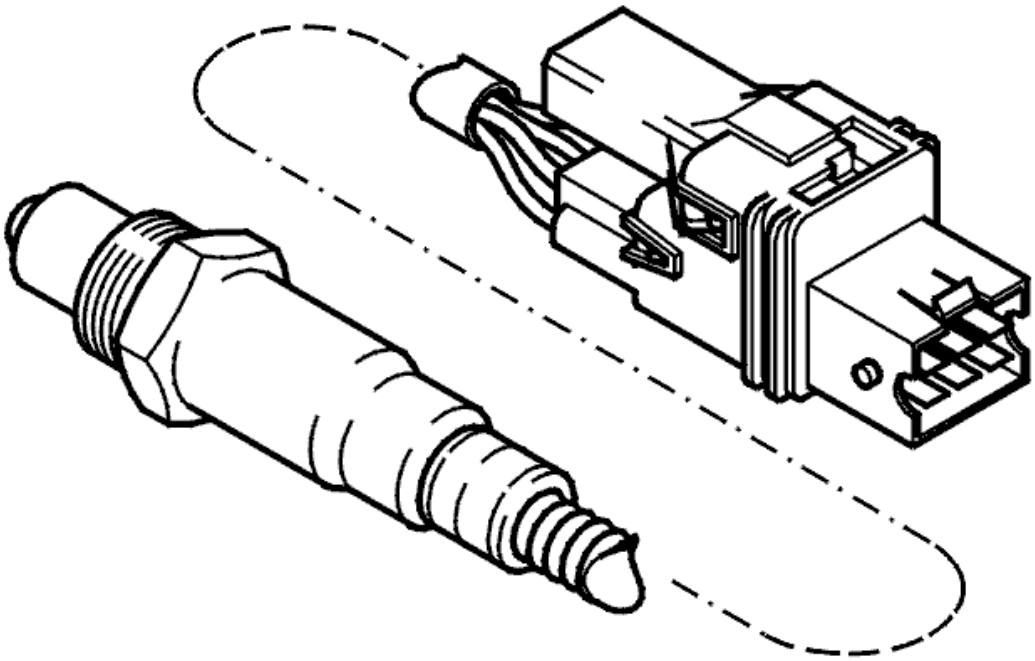

Fig. 297: Identifying Front Heated Oxygen Sensor (HO2S)
Courtesy of VOLVO CARS CORPORATION

Is the value lower than +/- 0.01?

- **YES**

  VERIFIED: Troubleshooting has been completed.

- **NO**

  Refer to **INFORMATION**

INFORMATION

FAULT-TRACING INFORMATION

The fault should have been detected and remedied. As this is not the case fault-tracing has failed.

Exit fault-tracing for this diagnostic trouble code (DTC) or make another attempt.

ECM-290A: FRONT LAMBDA PROBE, BANK 2. FAULTY SIGNAL. INTERMITTENT FAULT (B6294T; 2003-2004)

DIAGNOSTIC TROUBLE CODE (DTC) INFORMATION

see **DIAGNOSTIC TROUBLE CODE (DTC) INFORMATION**

FAULTY SIGNAL. INTERMITTENT FAULT

CHECKING CONNECTORS AND WIRING

CAUTION: Do not apply rust solvent spray or grease to the heated oxygen sensor (HO2S) connector.

Check the heated oxygen sensor (HO2S) connector. Check for contact resistance and oxidation. Check for loose connections.

Check the signal cable (+) between heated oxygen sensor (HO2S) terminal #1 and control module terminal #A43 (#A43). Check the signal cable (-) between heated oxygen sensor (HO2S) terminal #5 and control module terminal #A44 (#A44). Check the cable for calibration current between heated oxygen sensor (HO2S) terminal #2 and control module terminal #A69 (#B9). Check the cable for pump current between heated oxygen sensor (HO2S) terminal #6 and control module terminal #A25 (#A25). Check for an intermittent short-circuit to supply voltage.

Check the signal cable (+) between heated oxygen sensor (HO2S) terminal #1 and control module terminal #A43 (#A43). Check the signal cable (-) between heated oxygen sensor (HO2S) terminal #5 and control module terminal #A44 (#A44). Check the cable for calibration current between heated oxygen sensor (HO2S) terminal #2 and control module terminal #A69 (#B9). Check the cable for pump current between heated oxygen sensor (HO2S) terminal #6 and control module terminal #A25 (#A25). Check for a short-circuit to ground.

Check the signal cable (+) between heated oxygen sensor (HO2S) terminal #1 and control module terminal #A43 (#A43). Check for an intermittent open-circuit.

Other information:

- To connect the breakout box / access the control module, see **CONNECTING THE BREAKOUT BOX**
- For B5xx4T, see **HEATED OXYGEN SENSOR (HO2S), REPLACING**
- For B6xx4T, see **HEATED OXYGEN SENSOR (HO2S), REPLACING** .
- For 6 cylinder engines -2004, see **SIGNAL SPECIFICATION**
- For 6 cylinder engines 2005-, see **SIGNAL SPECIFICATION** .
- see **CHECKING WIRING AND TERMINALS** .

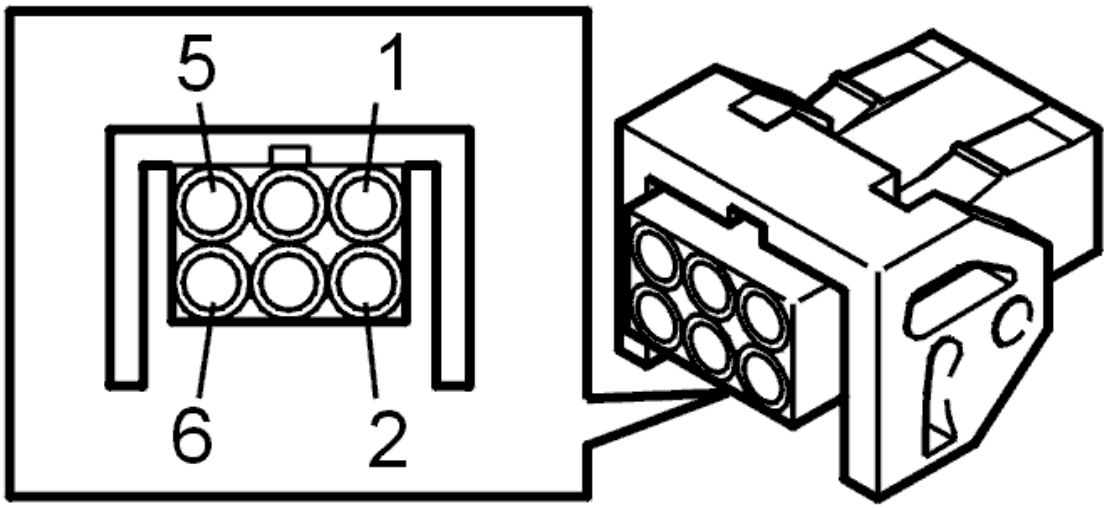

Fig. 298: Identifying Front Heated Oxygen Sensor (HO2S) Connector Terminals
Courtesy of VOLVO CARS CORPORATION

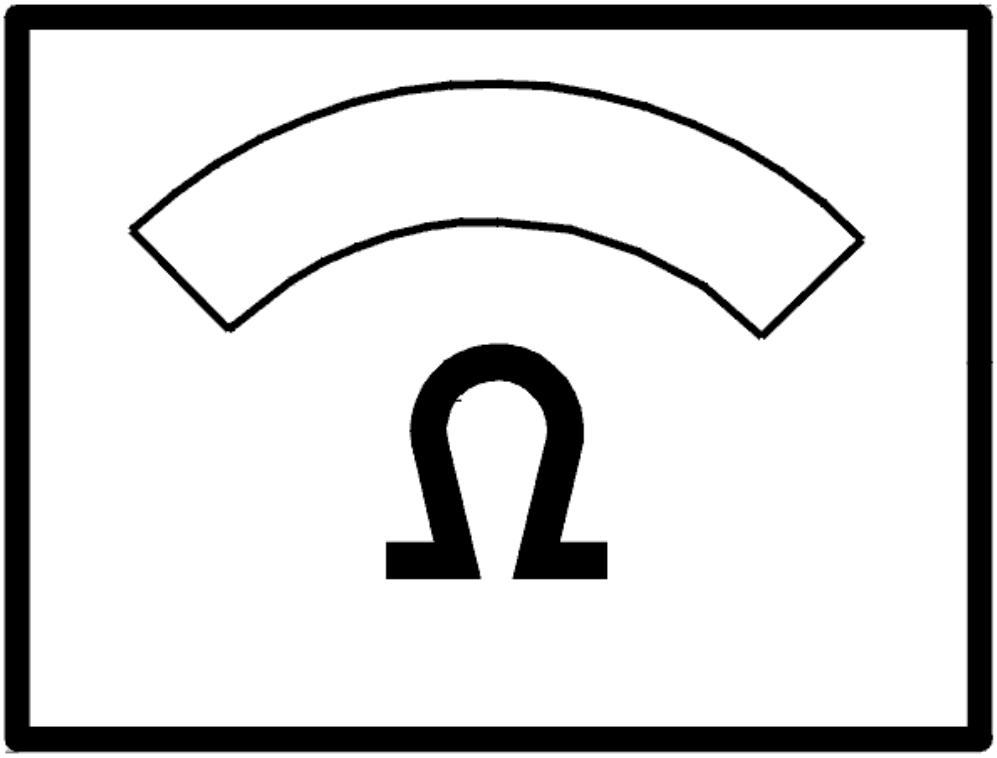

Fig. 299: Identifying Ohm Meter
Courtesy of VOLVO CARS CORPORATION

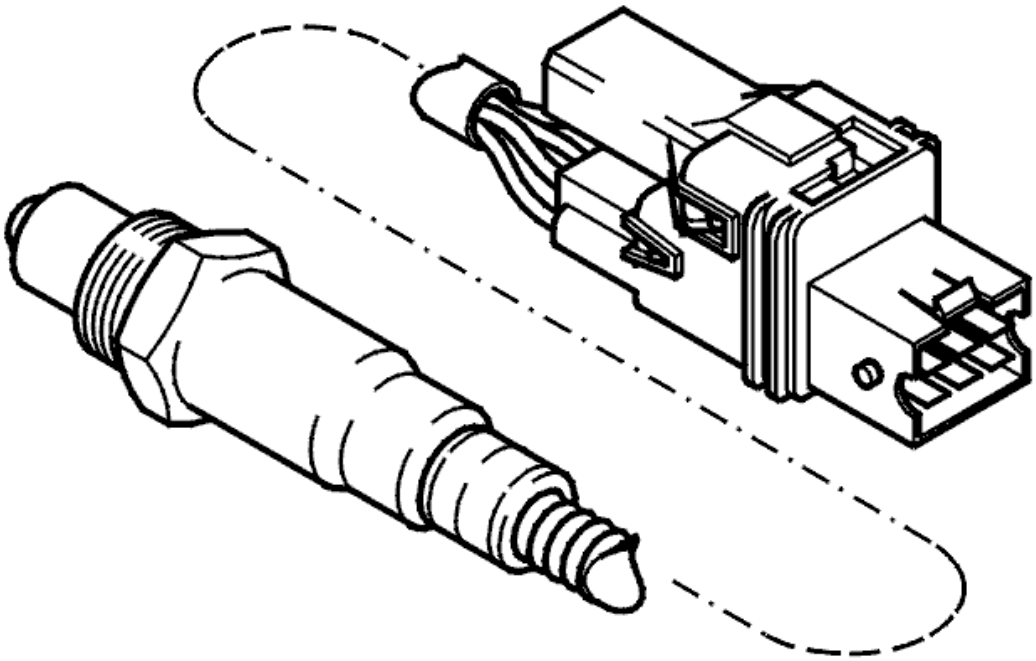

Fig. 300: Identifying Front Heated Oxygen Sensor (HO2S)
Courtesy of VOLVO CARS CORPORATION

- **Continue**

  Refer to **INFORMATION**

INFORMATION

FAULT-TRACING INFORMATION

If the fault is intermittent, do not verify fault-tracing if the fault does not recur.

It is possible to view the information again, or leave fault-tracing for this diagnostic trouble code (DTC).

ECM-290A: FRONT LAMBDA PROBE, BANK 2. FAULTY SIGNAL. PERMANENT FAULT (B6294T; 2003-2004)

DIAGNOSTIC TROUBLE CODE (DTC) INFORMATION

see **DIAGNOSTIC TROUBLE CODE (DTC) INFORMATION**

FAULTY SIGNAL. PERMANENT FAULT

CHECKING CONNECTOR, WIRING AND COMPONENTS

CAUTION: Do not apply rust solvent spray or grease to the heated oxygen sensor (HO2S) connector.

Check the heated oxygen sensor (HO2S) connector. Check for contact resistance and oxidation.

Check the signal cable (+) between heated oxygen sensor (HO2S) terminal #1 and control module terminal #A43 (#A43). Check the signal cable (-) between heated oxygen sensor (HO2S) terminal #5 and control module terminal #A44 (#A44). Check the cable for calibration current between heated oxygen sensor (HO2S) terminal #2 and control module terminal #A69 (#B9). Check the cable for pump current between heated oxygen sensor (HO2S) terminal #6 and control module terminal #A25 (#A25). Check for a short-circuit to supply voltage.

Check the signal cable (+) between heated oxygen sensor (HO2S) terminal #1 and control module terminal #A43 (#A43). Check the signal cable (-) between heated oxygen sensor (HO2S) terminal #5 and control module terminal #A44 (#A44). Check the cable for calibration current between heated oxygen sensor (HO2S) terminal #2 and control module terminal #A69 (#B9). Check the cable for pump current between heated oxygen sensor (HO2S) terminal #6 and control module terminal #A25 (#A25). Check for a short-circuit to ground.

Check the signal cable (+) between heated oxygen sensor (HO2S) terminal #1 and control module terminal #A43 (#A43). Check for an open-circuit.

If the connector and cables are OK try a new heated oxygen sensor (HO2S).

Remedy as necessary.

Other information:

- To connect the breakout box / access the control module, see **CONNECTING THE BREAKOUT BOX**
- For B5xx4T, see **HEATED OXYGEN SENSOR (HO2S), REPLACING**
- For B6xx4T, see **HEATED OXYGEN SENSOR (HO2S), REPLACING** .
- For 6 cylinder engines -2004, see **SIGNAL SPECIFICATION**
- For 6 cylinder engines 2005-, see **SIGNAL SPECIFICATION** .
- see **CHECKING WIRING AND TERMINALS** .

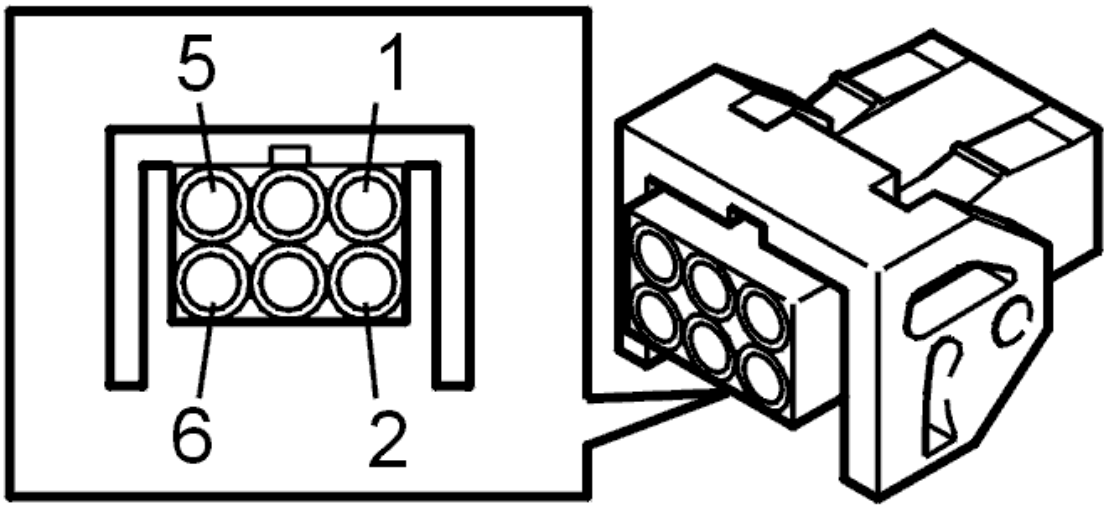

Fig. 301: Identifying Front Heated Oxygen Sensor (HO2S) Connector Terminals
Courtesy of VOLVO CARS CORPORATION

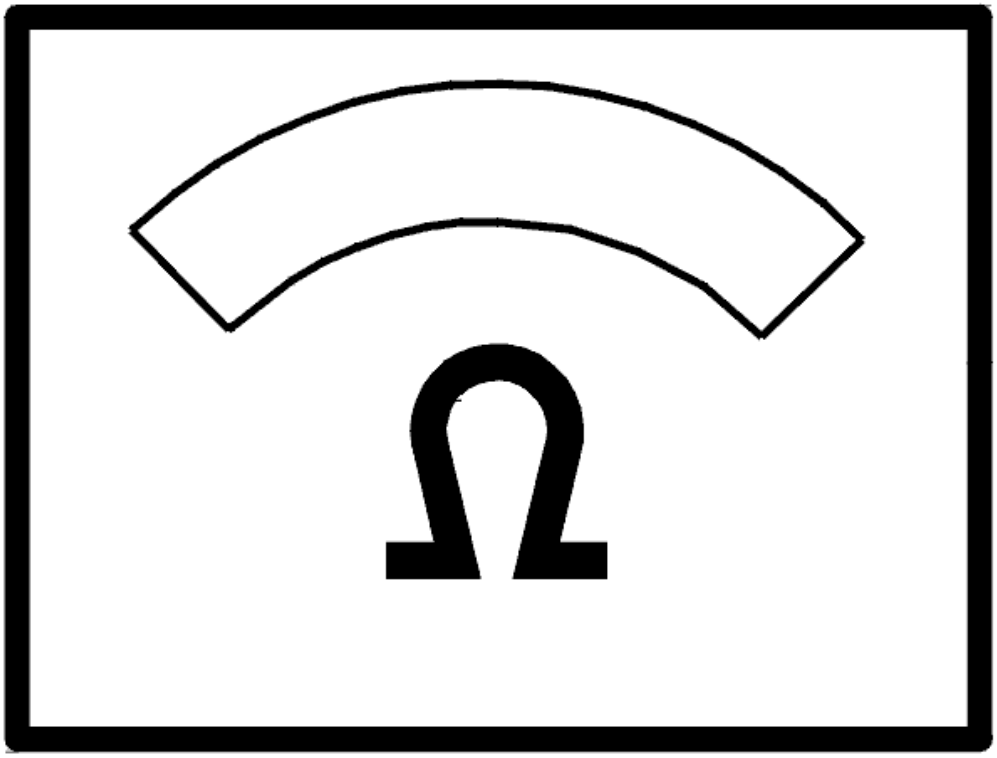

Fig. 302: Identifying Ohm Meter
Courtesy of VOLVO CARS CORPORATION

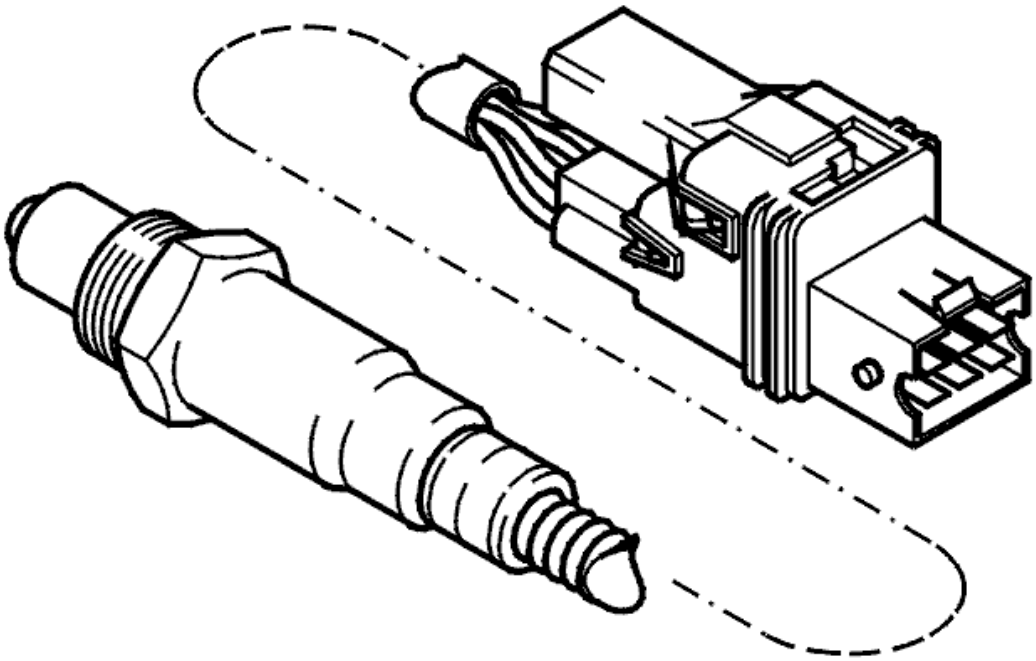

Fig. 303: Identifying Front Heated Oxygen Sensor (HO2S)
Courtesy of VOLVO CARS CORPORATION

- **Continue**

  Refer to **VERIFICATION**

VERIFICATION

VERIFICATION

HINT: After carrying out the repair, check that the fault has been remedied.

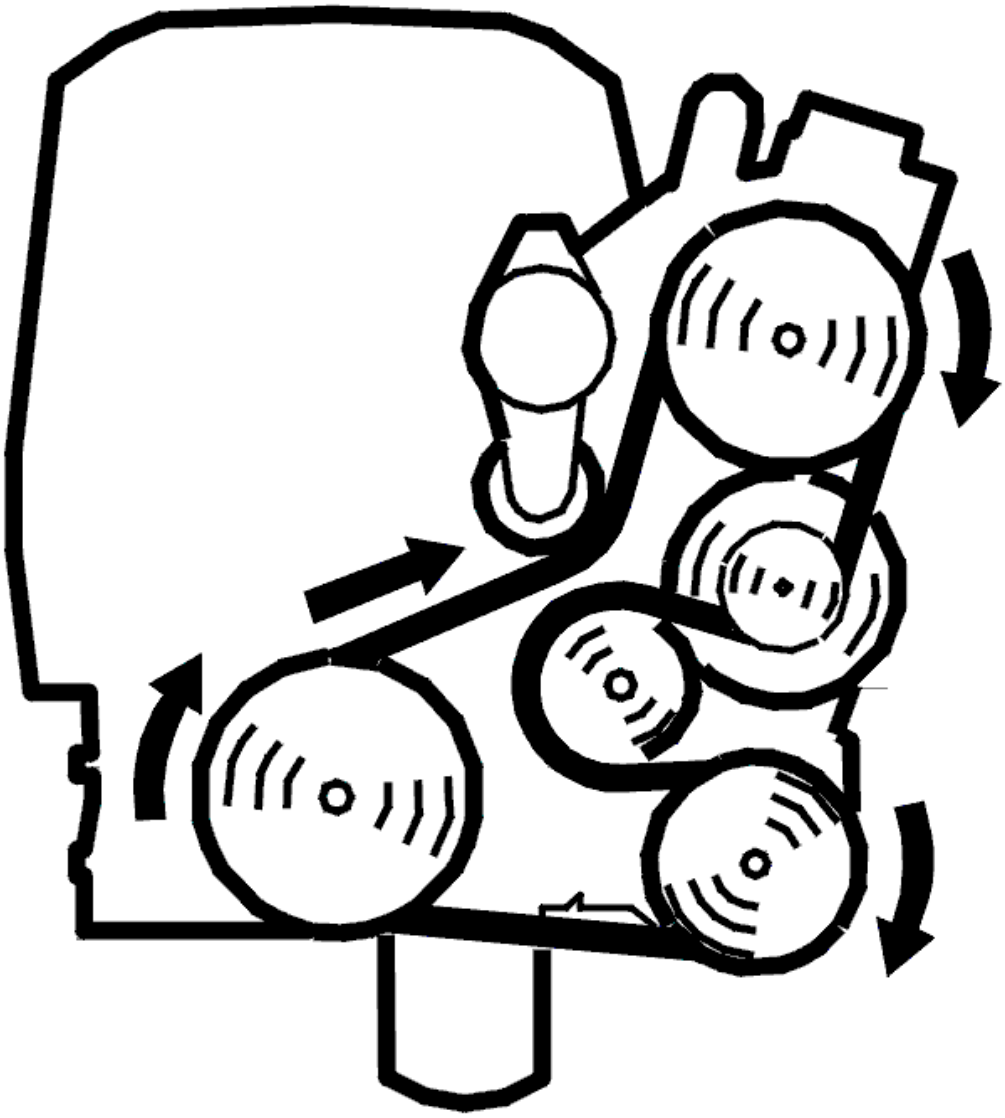

Fig. 304: Belt Routing / Engine Idling - Volvo
Courtesy of VOLVO CARS CORPORATION

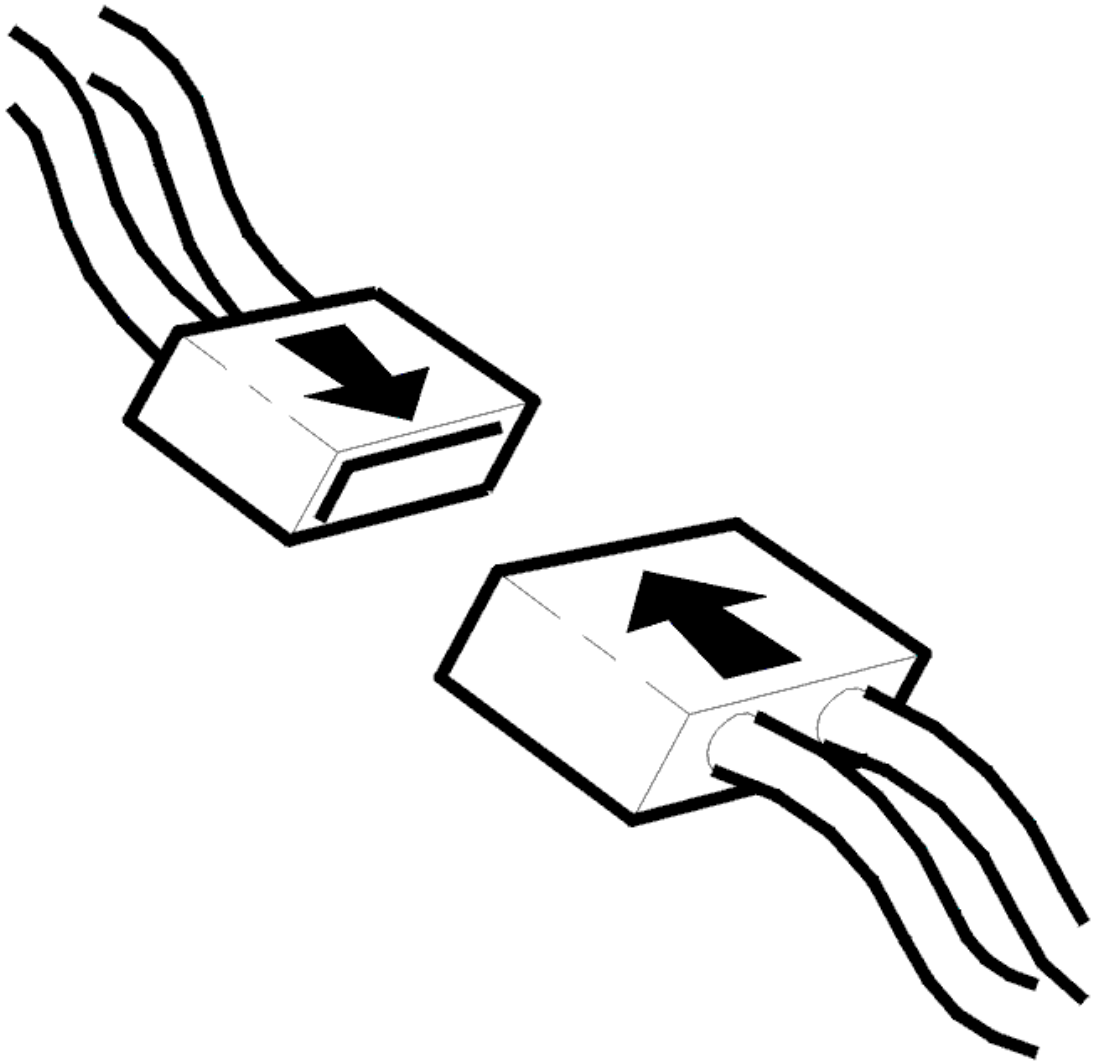

Fig. 305: Connecting Connector
Courtesy of VOLVO CARS CORPORATION

- {Ignition off.
- Reconnect connectors, reinstall components.
- Test drive the car according to the TRIP schedule, see **VERIFYING REPAIRS** .

NOTE: After test driving the engine should not be turned off. The test drive must be carried out again.

Connect VIDA (Volvo scan tool) again and read out the front heated oxygen sensor (HO2S) diagnostic trouble code (DTC) status.

The text NOT READY is displayed if diagnosis is underway.

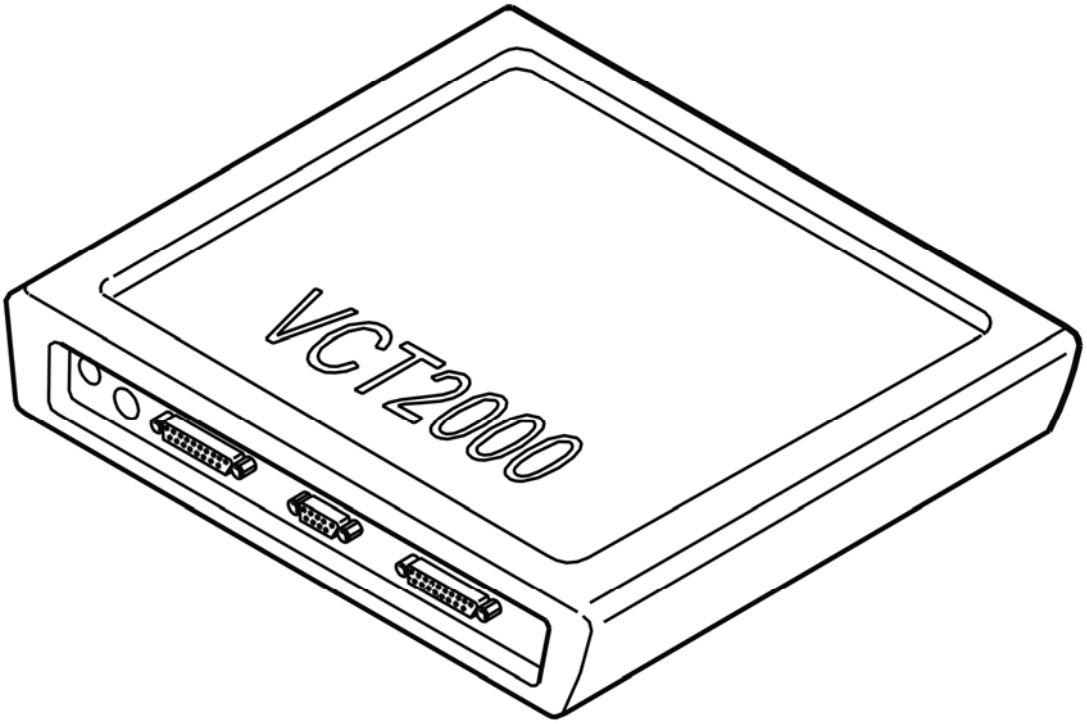

Fig. 306: Identifying VCT2000 Diagnostic Tool Symbol In VIDA
Courtesy of VOLVO CARS CORPORATION

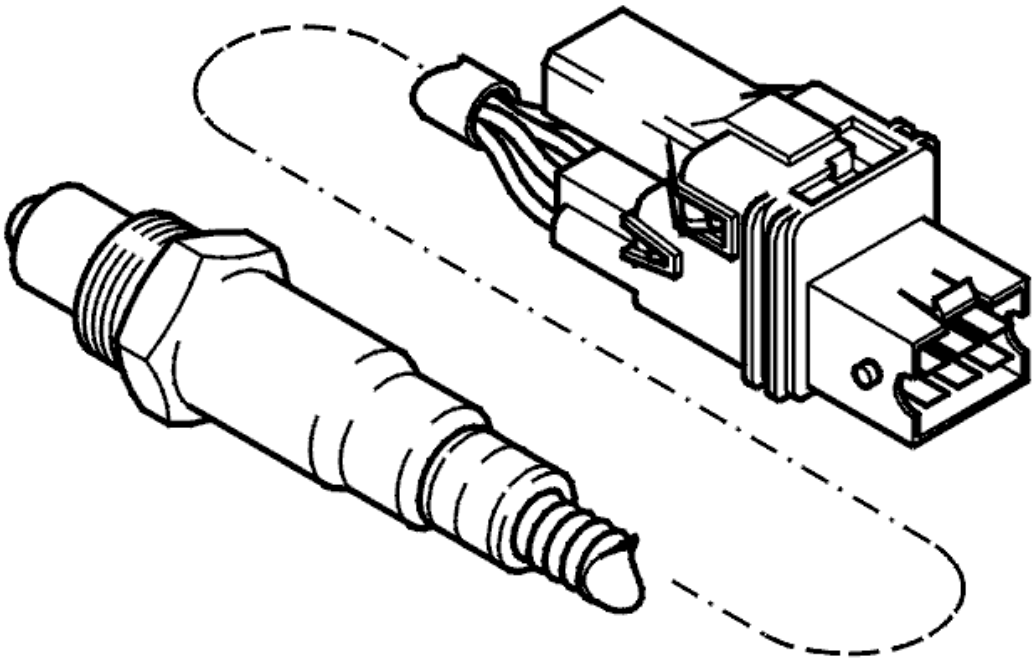

Fig. 307: Identifying Front Heated Oxygen Sensor (HO2S)
Courtesy of VOLVO CARS CORPORATION

Is FAULT NOT REGISTERED displayed?

- **YES**

  VERIFIED: Troubleshooting has been completed.

- **NO**

  Refer to **INFORMATION**

INFORMATION

FAULT-TRACING INFORMATION

The fault should have been detected and remedied. As this is not the case fault-tracing has failed.

Exit fault-tracing for this diagnostic trouble code (DTC) or make another attempt.

ECM-290A: FRONT LAMBDA PROBE, BANK 2. NO SIGNAL. INTERMITTENT FAULT (B6294T; 2003-2004)

DIAGNOSTIC TROUBLE CODE (DTC) INFORMATION

see **DIAGNOSTIC TROUBLE CODE (DTC) INFORMATION**

SIGNAL MISSING. INTERMITTENT FAULT

CHECKING THE WIRING

CAUTION: Do not apply rust solvent spray or grease to the heated oxygen sensor (HO2S) connector.

Check the signal cable (+) between heated oxygen sensor (HO2S) terminal #1 and control module terminal #A43 (#A43). Check the signal cable (-) between heated oxygen sensor (HO2S) terminal #5 control module terminal #A44 (#A44). Check for an intermittent short-circuit to each other.

Check the power supply to heated oxygen sensor (HO2S) terminal #3. Check the signal cable between heated oxygen sensor (HO2S) terminal #4 and control module terminal #A17 (#A17). Check for an intermittent short-circuit to the other cables for the heated oxygen sensor (HO2S).

Other information:

- To connect the breakout box / access the control module, see **CONNECTING THE BREAKOUT BOX**
- For 6 cylinder engines -2004, see **SIGNAL SPECIFICATION**
- For 6 cylinder engines 2005-, see **SIGNAL SPECIFICATION** .
- see **CHECKING WIRING AND TERMINALS** .

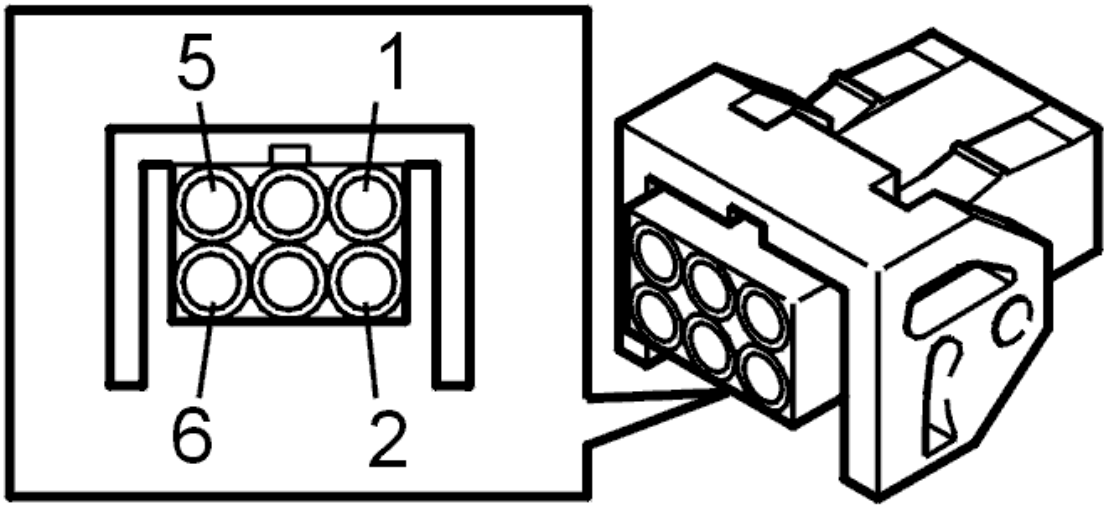

Fig. 308: Identifying Front Heated Oxygen Sensor (HO2S) Connector Terminals
Courtesy of VOLVO CARS CORPORATION

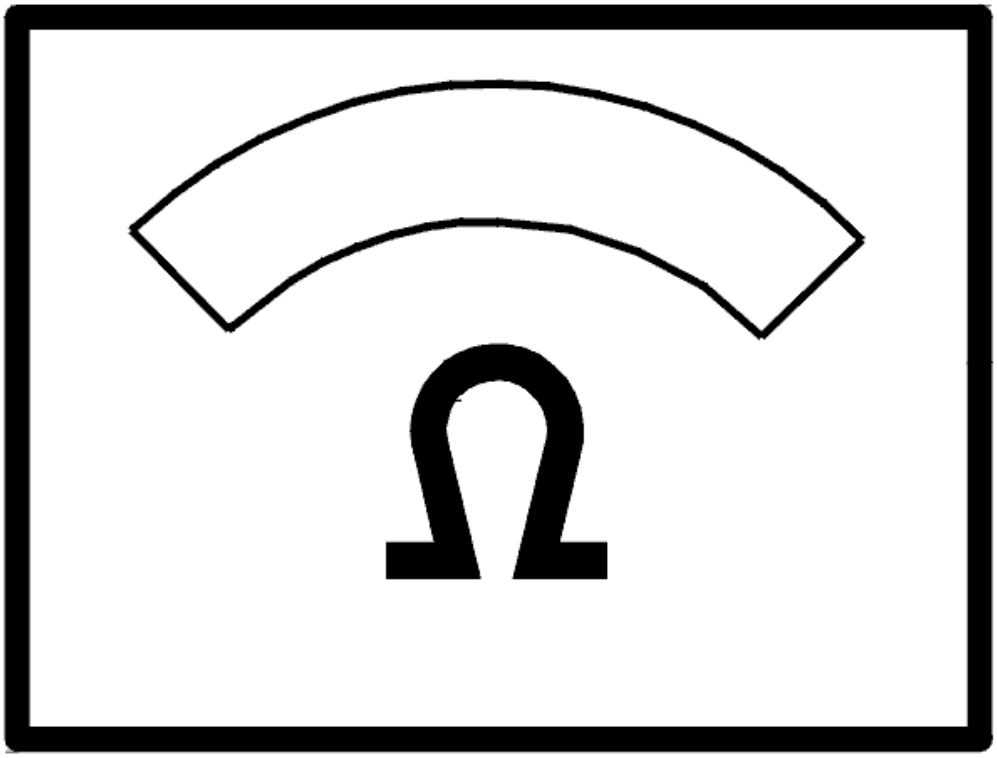

Fig. 309: Identifying Ohm Meter
Courtesy of VOLVO CARS CORPORATION

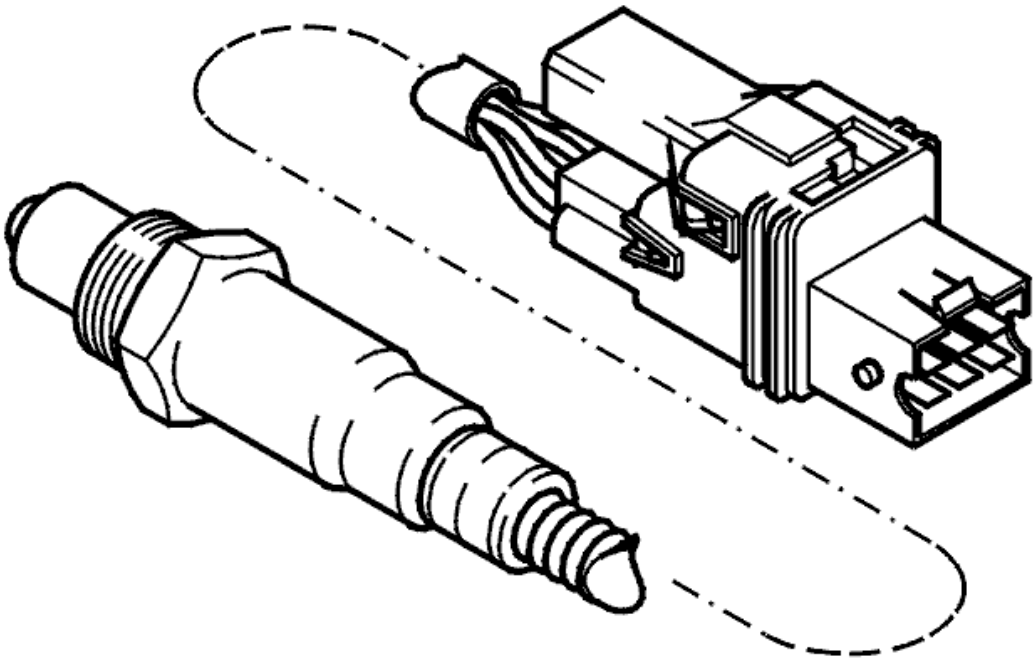

Fig. 310: Identifying Front Heated Oxygen Sensor (HO2S)
Courtesy of VOLVO CARS CORPORATION

- **Continue**

  Refer to **INFORMATION**

INFORMATION

FAULT-TRACING INFORMATION

If the fault is intermittent, do not verify fault-tracing if the fault does not recur.

It is possible to view the information again, or leave fault-tracing for this diagnostic trouble code (DTC).

ECM-290A: FRONT LAMBDA PROBE, BANK 2. NO SIGNAL. PERMANENT FAULT (B6294T; 2003-2004)

DIAGNOSTIC TROUBLE CODE (DTC) INFORMATION

see **DIAGNOSTIC TROUBLE CODE (DTC) INFORMATION**

SIGNAL MISSING. PERMANENT FAULT

CHECKING COMPONENTS AND WIRING

CAUTION: Do not apply rust solvent spray or grease to the heated oxygen sensor (HO2S) connector.

Check the signal cable (+) between heated oxygen sensor (HO2S) terminal #1 and control module terminal #A43 (#A43). Check the signal cable (-) between heated oxygen sensor (HO2S) terminal #5 control module terminal #A44 (#A44). Check for a short-circuit to each other.

Check the power supply to heated oxygen sensor (HO2S) terminal #3. Check the signal cable between heated oxygen sensor (HO2S) terminal #4 and control module terminal #A17 (#A17). Check for a short-circuit to the other wiring for the heated oxygen sensor (HO2S).

Try a new heated oxygen sensor (HO2S) if the wiring is OK.

Remedy as necessary.

Other information:

- To connect the breakout box / access the control module, see **CONNECTING THE BREAKOUT BOX**
- For B5xx4T, see **HEATED OXYGEN SENSOR (HO2S), REPLACING**
- For B6xx4T, see **HEATED OXYGEN SENSOR (HO2S), REPLACING** .
- For 6 cylinder engines -2004, see **SIGNAL SPECIFICATION**
- For 6 cylinder engines 2005-, see **SIGNAL SPECIFICATION** .
- see **CHECKING WIRING AND TERMINALS** .

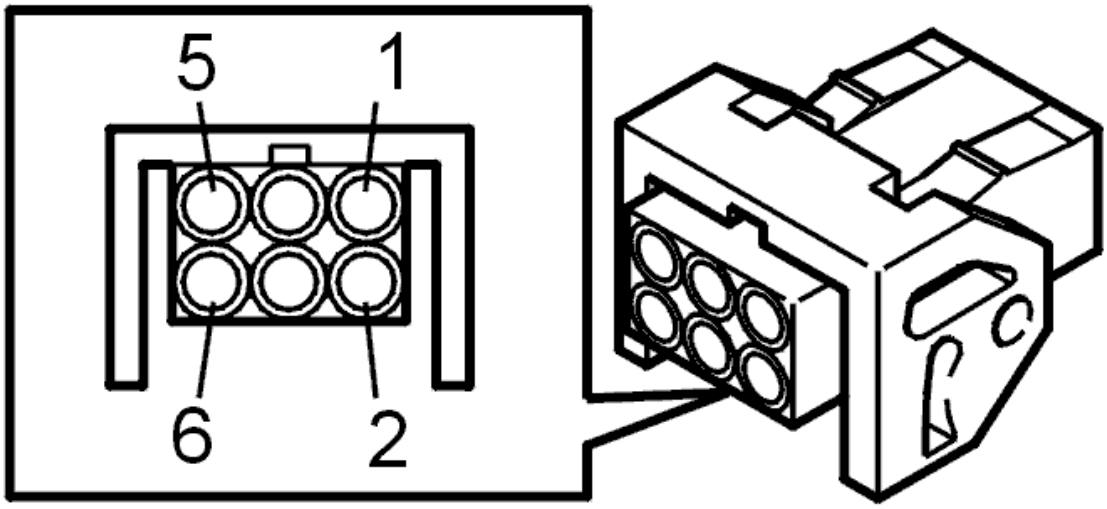

Fig. 311: Identifying Front Heated Oxygen Sensor (HO2S) Connector Terminals
Courtesy of VOLVO CARS CORPORATION

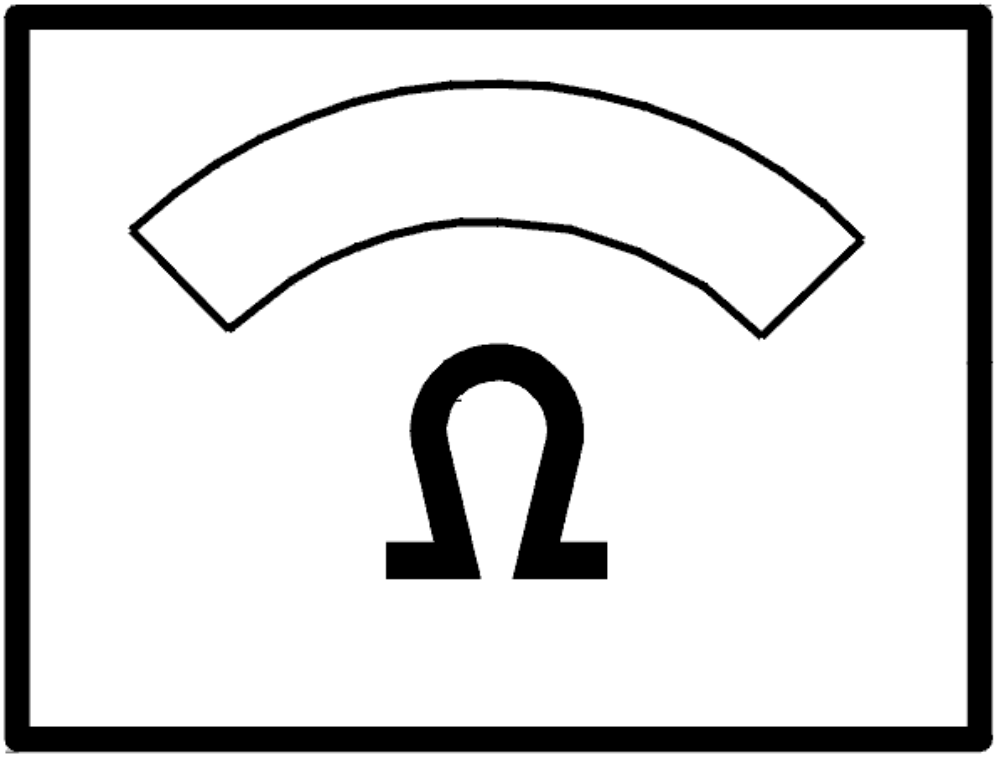

Fig. 312: Identifying Ohm Meter
Courtesy of VOLVO CARS CORPORATION

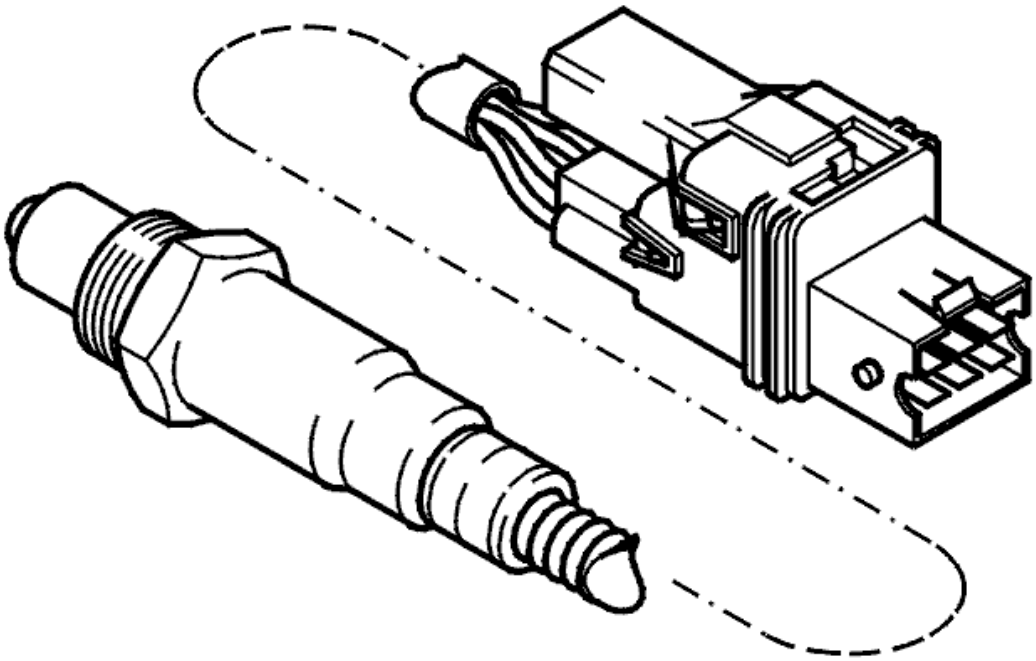

Fig. 313: Identifying Front Heated Oxygen Sensor (HO2S)
Courtesy of VOLVO CARS CORPORATION

- **Continue**

  Refer to **VERIFICATION**

VERIFICATION

VERIFICATION

HINT: After carrying out the repair, check that the fault has been remedied.

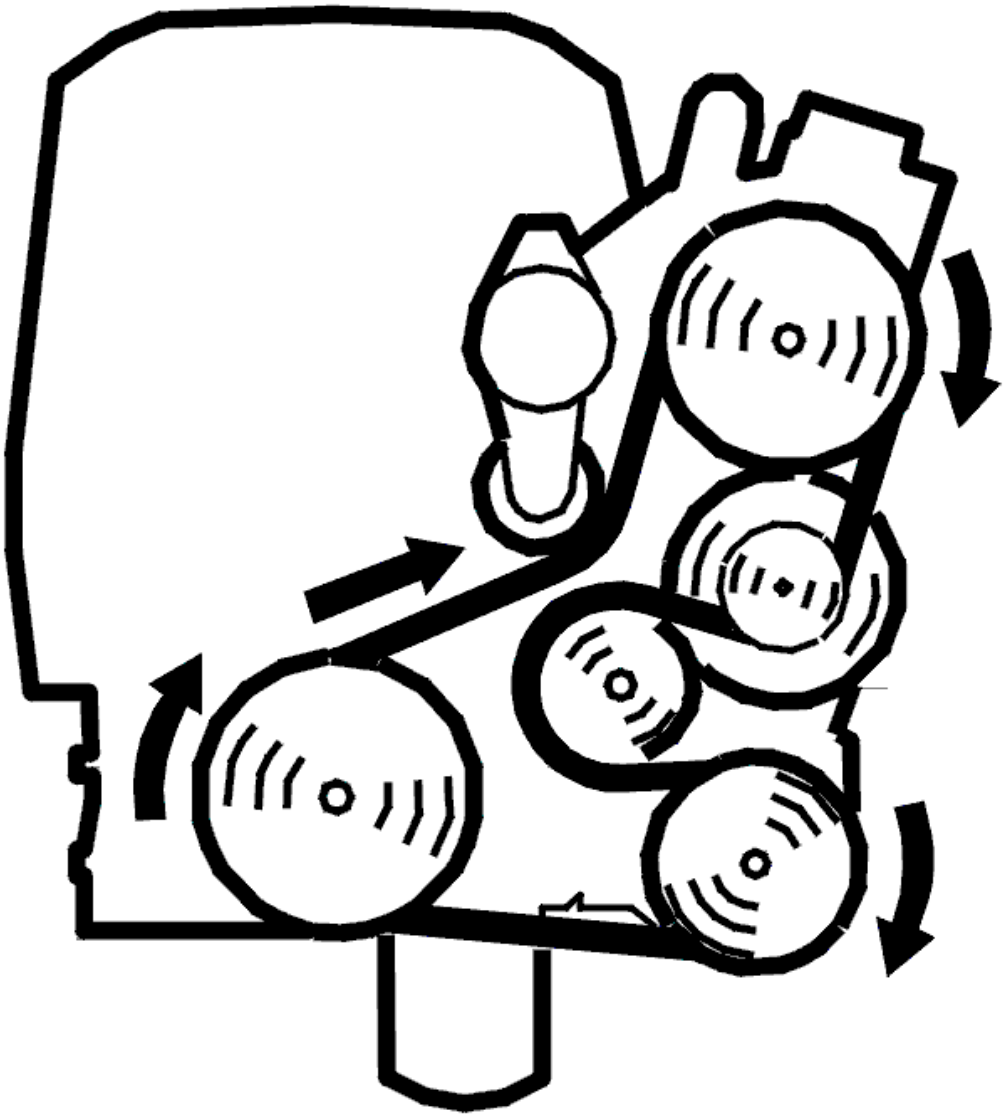

Fig. 314: Belt Routing / Engine Idling - Volvo
Courtesy of VOLVO CARS CORPORATION

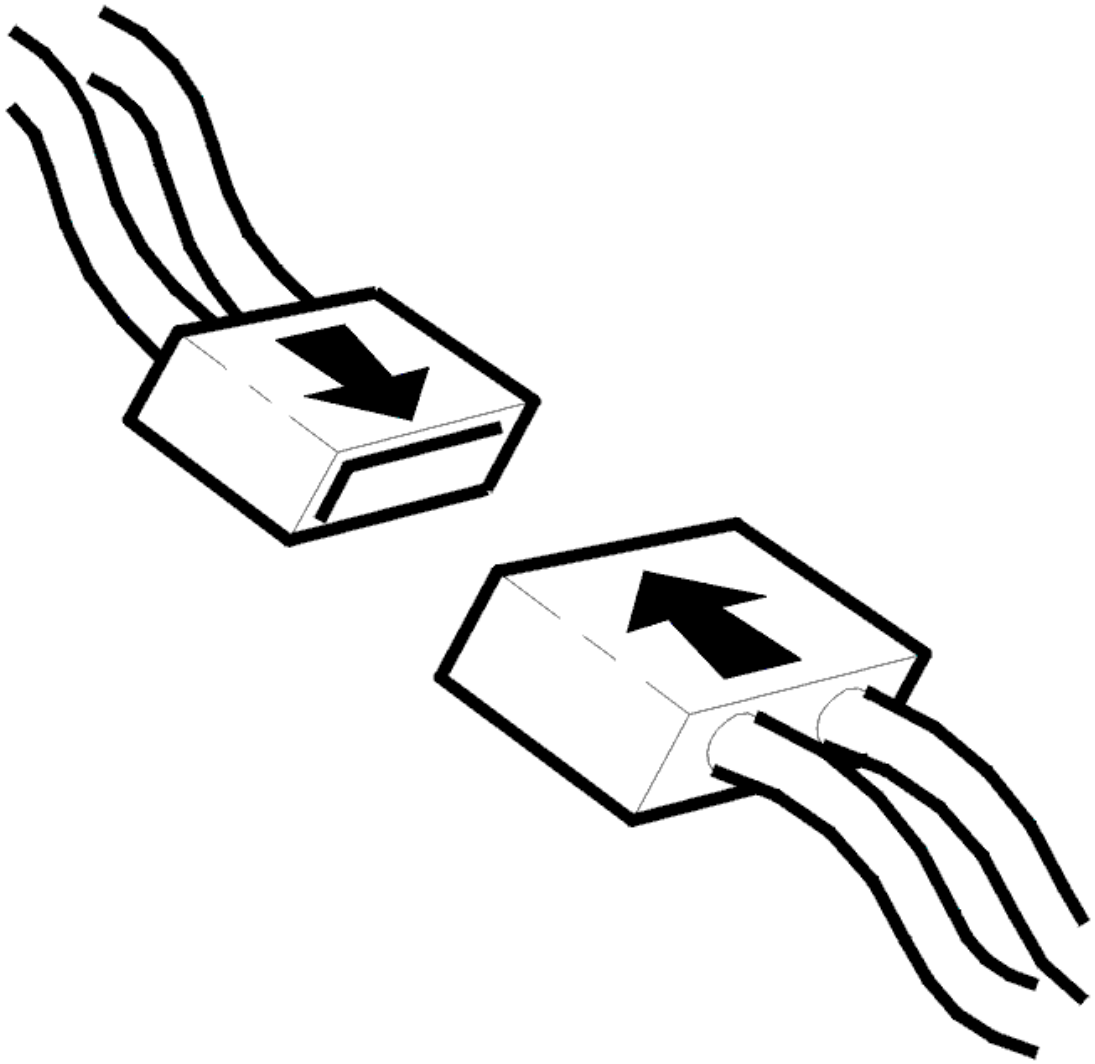

Fig. 315: Connecting Connector
Courtesy of VOLVO CARS CORPORATION

- Ignition off.
- Reconnect connectors, reinstall components.
- Start the engine and let it idle for a maximum of 5 minutes.

  Read off the front heated oxygen sensor (HO2S) signal diagnostic trouble code (DTC) status.

  The text NOT READY is displayed if diagnosis is underway.

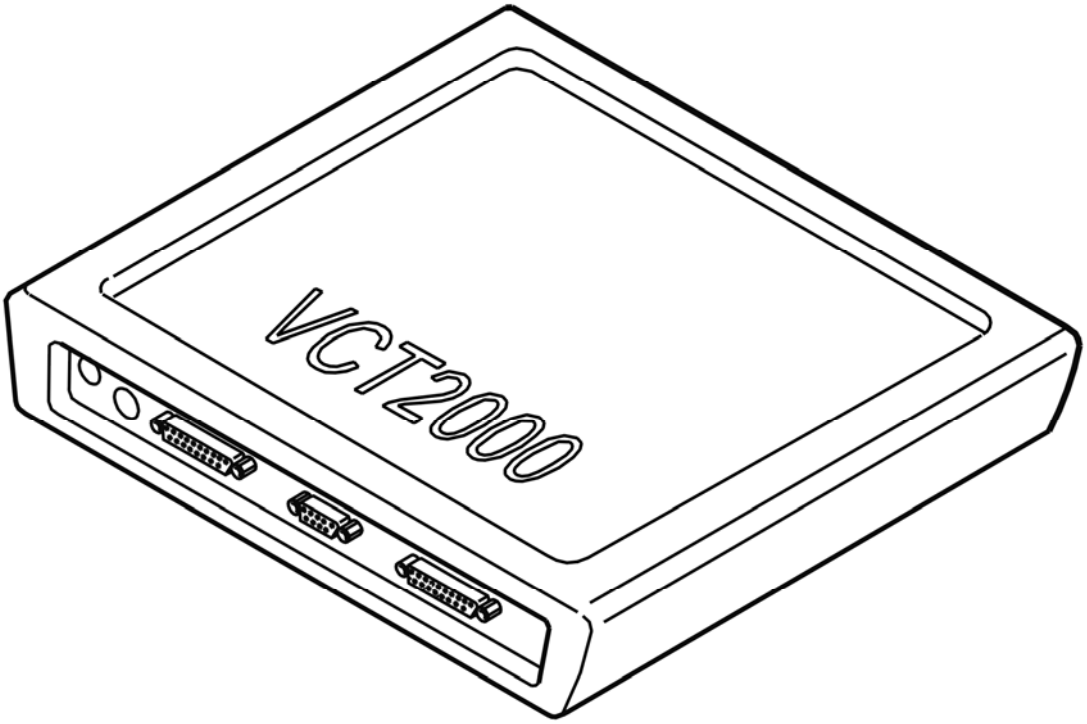

Fig. 316: Identifying VCT2000 Diagnostic Tool Symbol In VIDA
Courtesy of VOLVO CARS CORPORATION

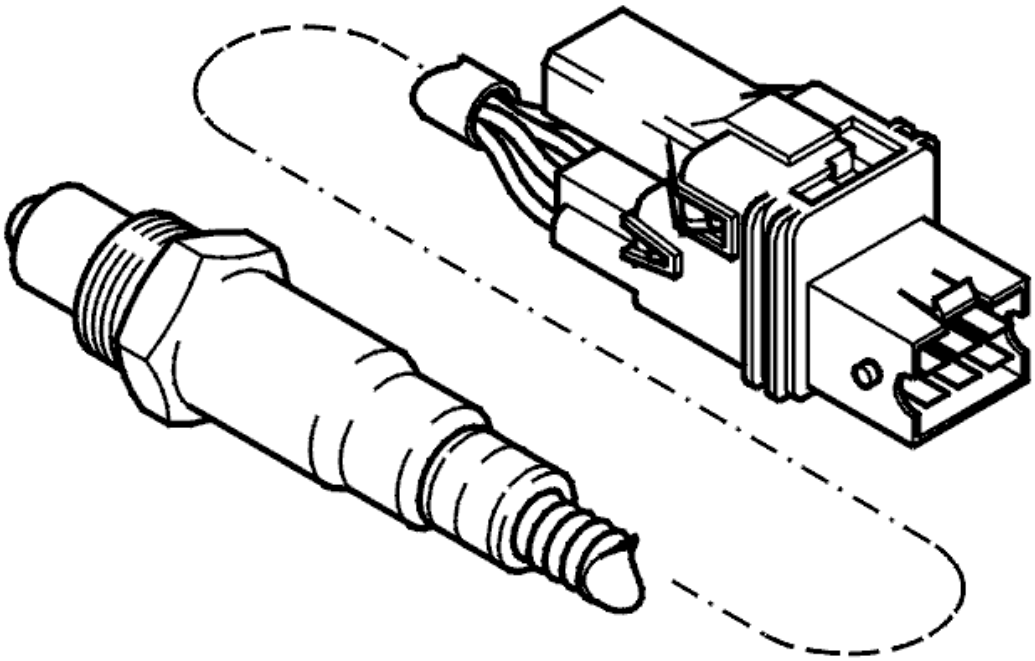

Fig. 317: Identifying Front Heated Oxygen Sensor (HO2S)
Courtesy of VOLVO CARS CORPORATION

Is FAULT NOT REGISTERED displayed?

- **YES**

  VERIFIED: Troubleshooting has been completed.

- **NO**

  Refer to **INFORMATION**

INFORMATION

FAULT-TRACING INFORMATION

The fault should have been detected and remedied. As this is not the case fault-tracing has failed.

Exit fault-tracing for this diagnostic trouble code (DTC) or make another attempt.

ECM-290A: FRONT LAMBDA PROBE, BANK 2. SIGNAL TOO LOW. INTERMITTENT FAULT (B6294T; 2003-2004)

DIAGNOSTIC TROUBLE CODE (DTC) INFORMATION

see **DIAGNOSTIC TROUBLE CODE (DTC) INFORMATION**

SIGNAL TOO LOW. INTERMITTENT FAULT

CHECKING CONNECTORS AND WIRING

CAUTION: Do not apply rust solvent spray or grease to the heated oxygen sensor (HO2S) connector.

Check the heated oxygen sensor (HO2S) connector. Check for contact resistance and oxidation. Check for loose connections.

Check the signal cable (-) between heated oxygen sensor (HO2S) terminal #5 and control module terminal #A44 (#A44). Check the cable for calibration current between heated oxygen sensor (HO2S) terminal #2 and heated oxygen sensor (HO2S) terminal #A69 (#B9). Check for an intermittent open-circuit.

Check the cable for calibration current between heated oxygen sensor (HO2S) terminal #2 and control module terminal #A69 (#B9). Check the cable for pump current between heated oxygen sensor (HO2S) terminal #6 and control module terminal #A25 (#A25). Check for an intermittent short-circuit to each other.

Other information:

- To connect the breakout box / access the control module, see **CONNECTING THE BREAKOUT BOX**
- For B5xx4T, see **HEATED OXYGEN SENSOR (HO2S), REPLACING**
- For B6xx4T, see **HEATED OXYGEN SENSOR (HO2S), REPLACING** .
- For 6 cylinder engines -2004, see **SIGNAL SPECIFICATION**
- For 6 cylinder engines 2005-, see **SIGNAL SPECIFICATION** .
- see **CHECKING WIRING AND TERMINALS** .

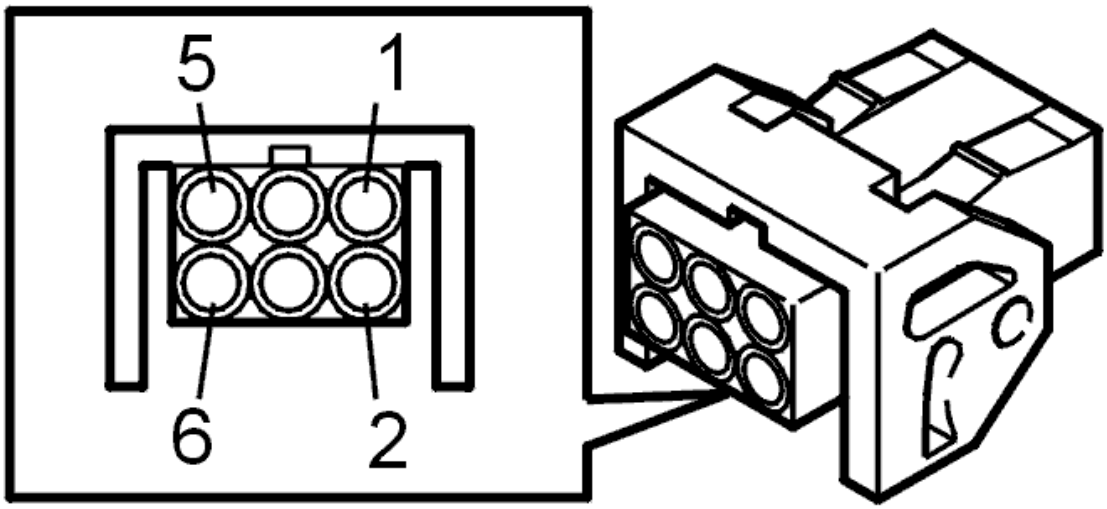

Fig. 318: Identifying Front Heated Oxygen Sensor (HO2S) Connector Terminals
Courtesy of VOLVO CARS CORPORATION

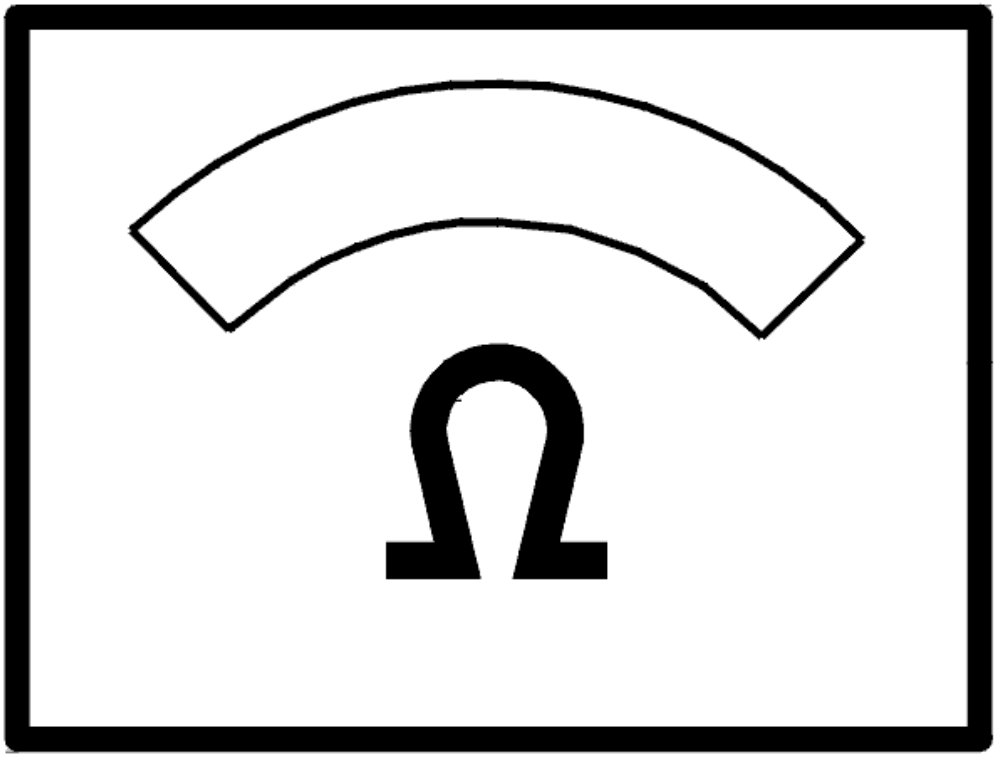

Fig. 319: Identifying Ohm Meter
Courtesy of VOLVO CARS CORPORATION

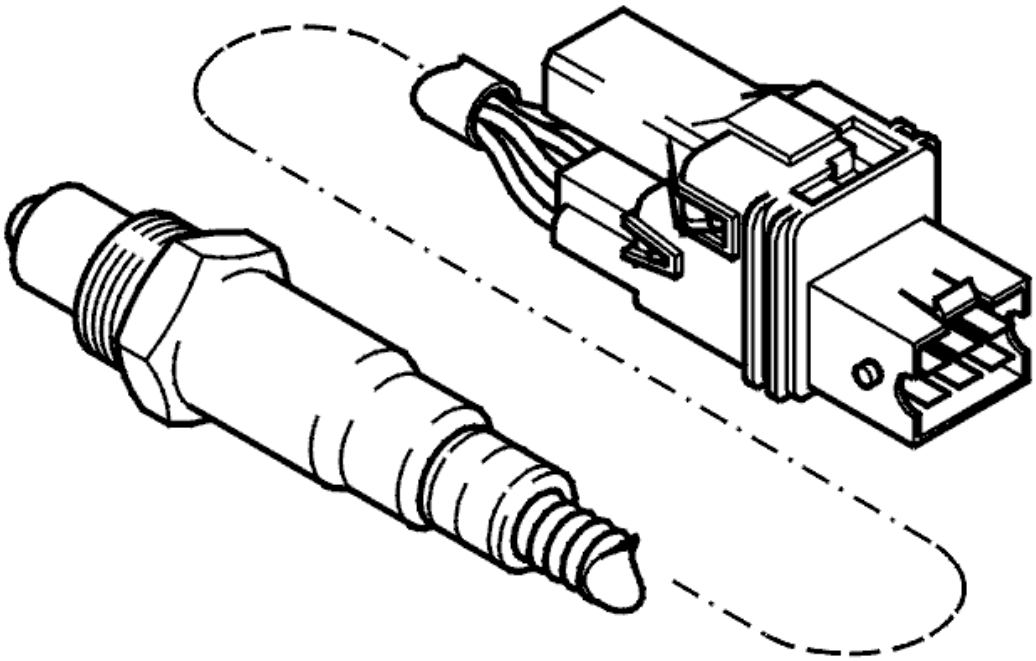

Fig. 320: Identifying Front Heated Oxygen Sensor (HO2S)
Courtesy of VOLVO CARS CORPORATION

- **Continue**

  Refer to **INFORMATION**

INFORMATION

FAULT-TRACING INFORMATION

If the fault is intermittent, do not verify fault-tracing if the fault does not recur.

It is possible to view the information again, or leave fault-tracing for this diagnostic trouble code (DTC).

ECM-290A: FRONT LAMBDA PROBE, BANK 2. SIGNAL TOO LOW. PERMANENT FAULT (B6294T; 2003-2004)

DIAGNOSTIC TROUBLE CODE (DTC) INFORMATION

see **DIAGNOSTIC TROUBLE CODE (DTC) INFORMATION**

SIGNAL TOO LOW. PERMANENT FAULT

CHECKING CONNECTOR, WIRING AND COMPONENTS

CAUTION: Do not apply rust solvent spray or grease to the heated oxygen sensor (HO2S) connector.

Check the heated oxygen sensor (HO2S) connector. Check for contact resistance and oxidation.

Check the signal cable (-) between heated oxygen sensor (HO2S) terminal #5 and control module terminal #A44 (#A44). Check the cable for calibration current between heated oxygen sensor (HO2S) terminal #2 and heated oxygen sensor (HO2S) terminal #A69 (#B9). Check for an open-circuit.

Check the cable for calibration current between heated oxygen sensor (HO2S) terminal #2 and control module terminal #A69 (#B9). Check the cable for pump current between heated oxygen sensor (HO2S) terminal #6 and control module terminal #A25 (#A54). Check for a short-circuit to each other.

If the connector and cables are OK try a new heated oxygen sensor (HO2S).

Remedy as necessary.

Other information:

- To connect the breakout box / access the control module, see **CONNECTING THE BREAKOUT BOX**
- For B5xx4T, see **HEATED OXYGEN SENSOR (HO2S), REPLACING**
- For B6xx4T, see **HEATED OXYGEN SENSOR (HO2S), REPLACING** .
- For 6 cylinder engines -2004, see **SIGNAL SPECIFICATION**
- For 6 cylinder engines 2005-, see **SIGNAL SPECIFICATION** .
- see **CHECKING WIRING AND TERMINALS** .

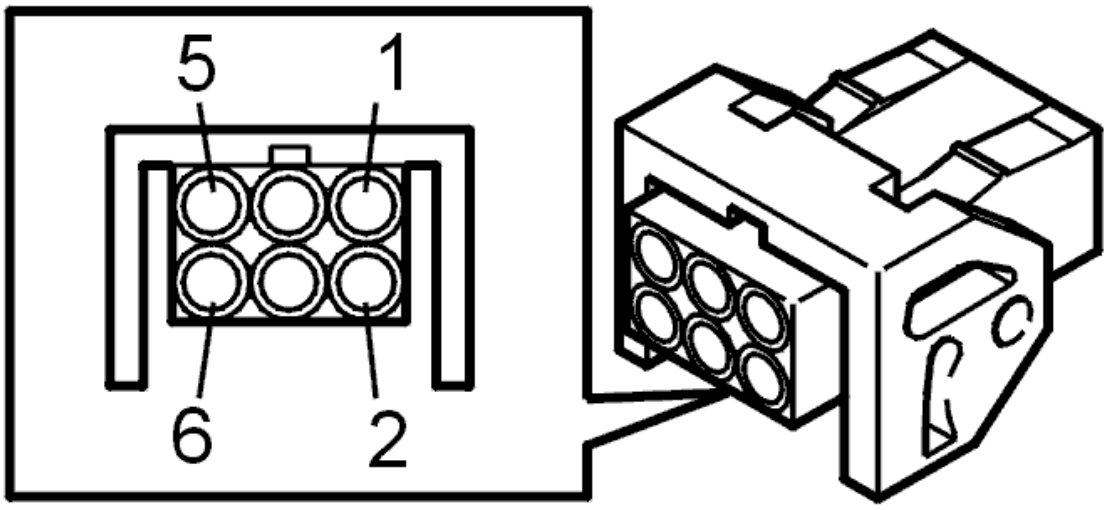

Fig. 321: Identifying Front Heated Oxygen Sensor (HO2S) Connector Terminals
Courtesy of VOLVO CARS CORPORATION

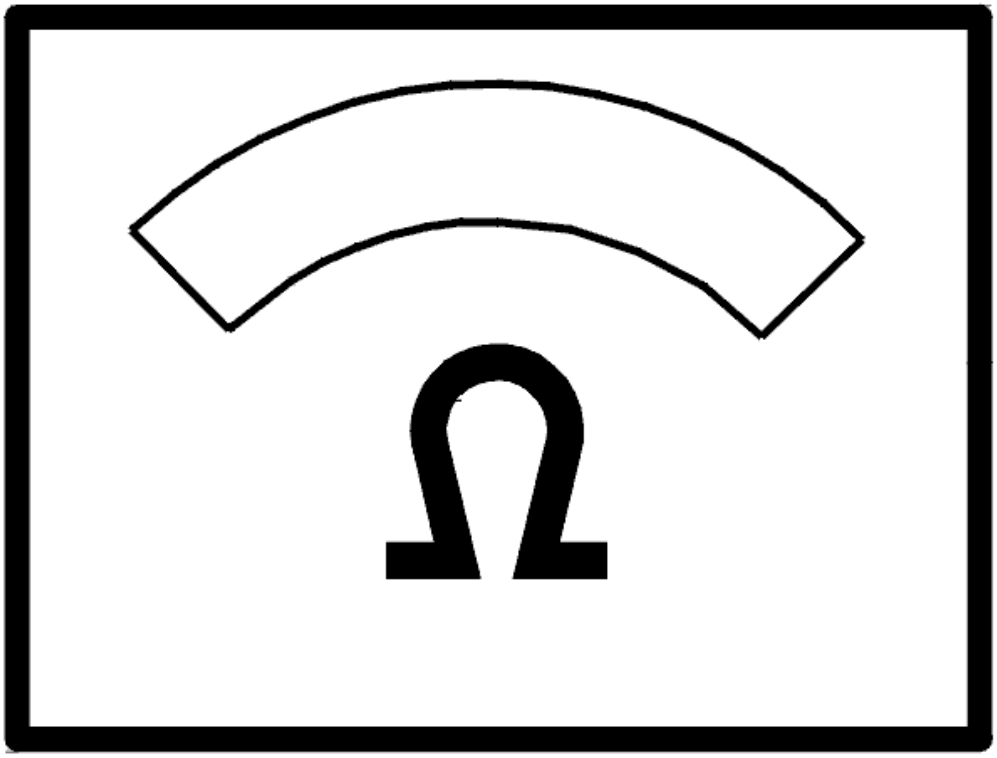

Fig. 322: Identifying Ohm Meter
Courtesy of VOLVO CARS CORPORATION

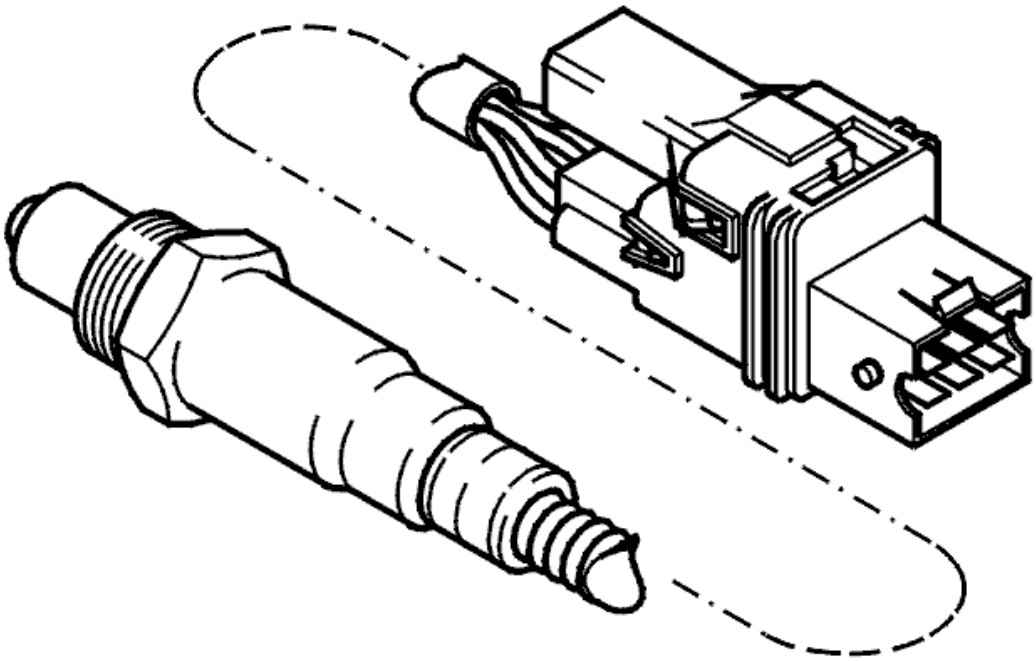

Fig. 323: Identifying Front Heated Oxygen Sensor (HO2S)
Courtesy of VOLVO CARS CORPORATION

- **Continue**

  Refer to **VERIFICATION**

VERIFICATION

VERIFICATION

HINT: After carrying out the repair, check that the fault has been remedied.

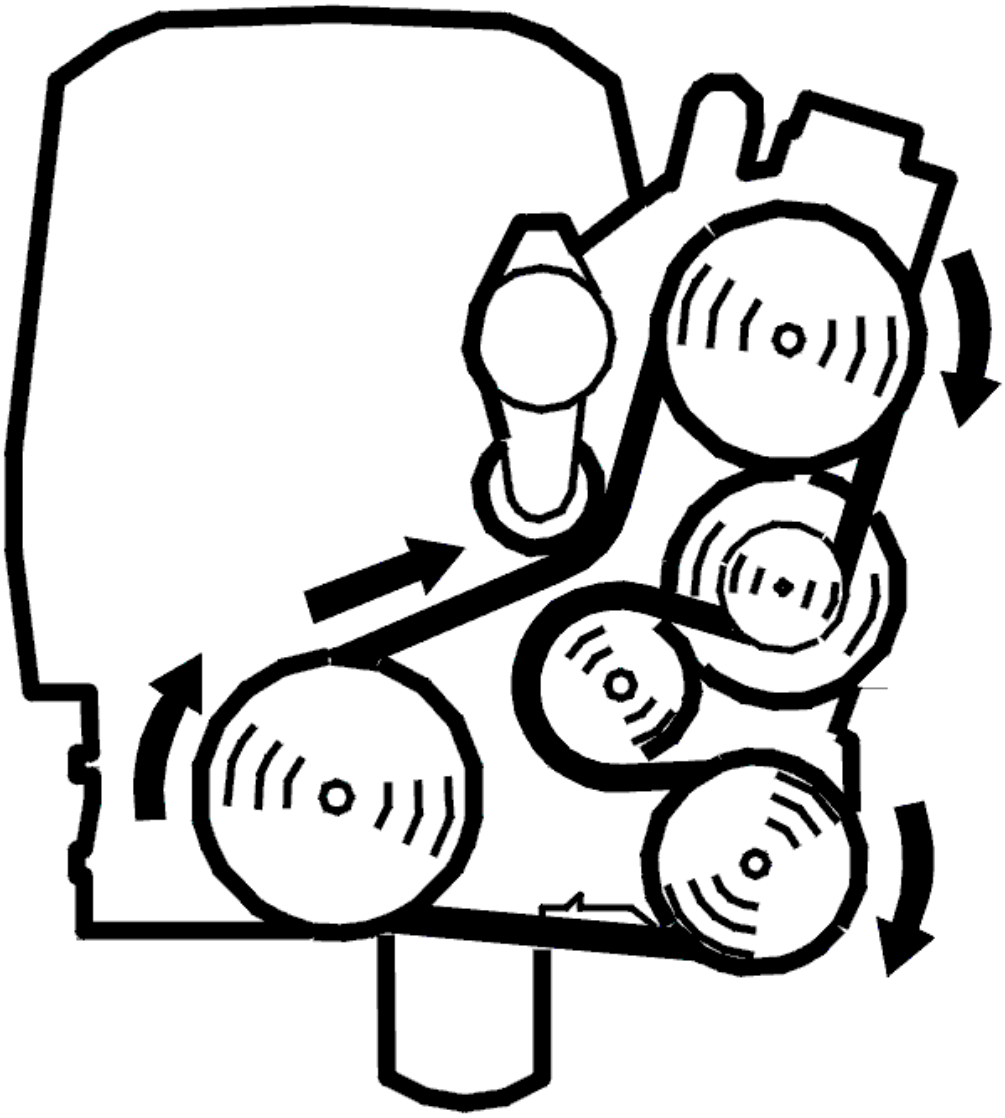

Fig. 324: Belt Routing / Engine Idling - Volvo
Courtesy of VOLVO CARS CORPORATION

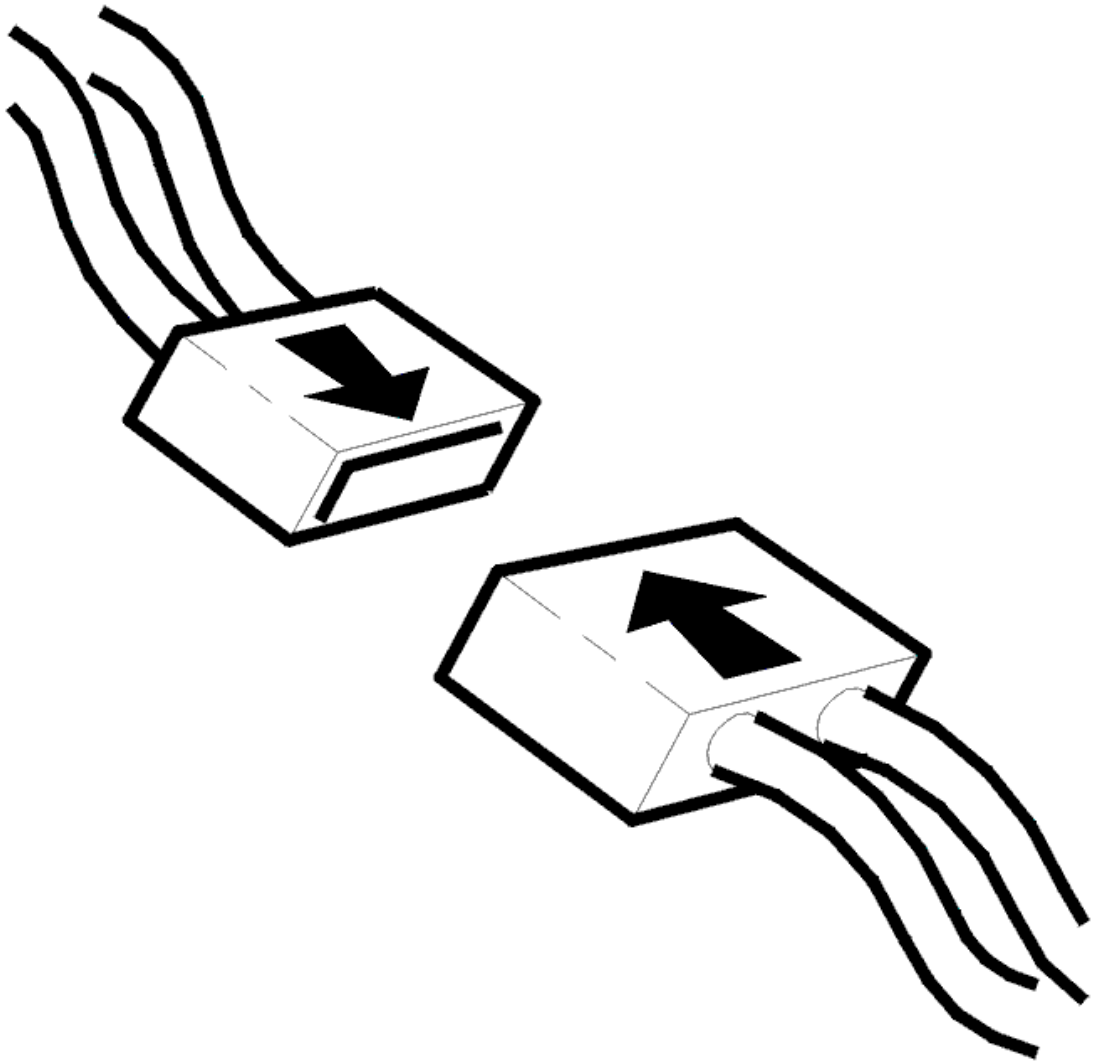

Fig. 325: Connecting Connector
Courtesy of VOLVO CARS CORPORATION

- Ignition off.
- Reconnect connectors, reinstall components.
- Test drive the car according to the TRIP schedule, see **VERIFYING REPAIRS** .

NOTE: **After test driving the engine should not be turned off. The test drive must be carried out again.**

Connect VIDA (Volvo scan tool) again and read out the front heated oxygen sensor (HO2S) diagnostic trouble code (DTC) status.

The value should be higher than 1.0.

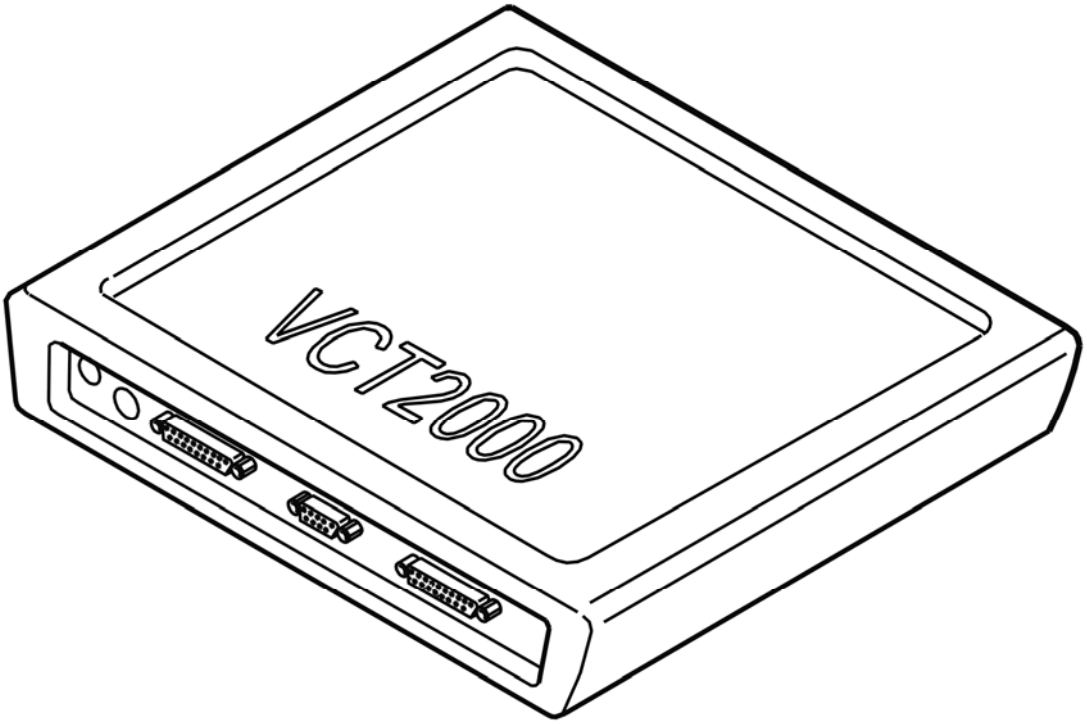

Fig. 326: Identifying VCT2000 Diagnostic Tool Symbol In VIDA
Courtesy of VOLVO CARS CORPORATION

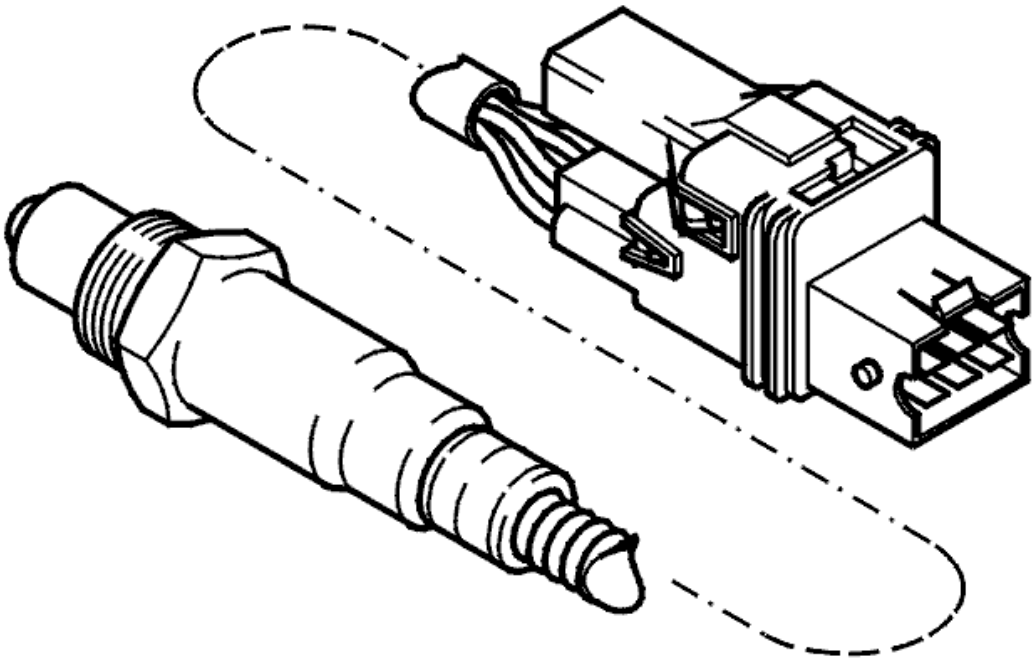

Fig. 327: Identifying Front Heated Oxygen Sensor (HO2S)
Courtesy of VOLVO CARS CORPORATION

Is the value higher than 1.0?

- **YES**

  VERIFIED: Troubleshooting has been completed.

- **NO**

  Refer to **INFORMATION**

INFORMATION

FAULT-TRACING INFORMATION

The fault should have been detected and remedied. As this is not the case fault-tracing has failed.

Exit fault-tracing for this diagnostic trouble code (DTC) or make another attempt.

ECM-290B: FUEL PRESSURE. SIGNAL MISSING (B5254T2; 2005-2007)

DIAGNOSTIC TROUBLE CODE (DTC) INFORMATION ECM-290B

Condition

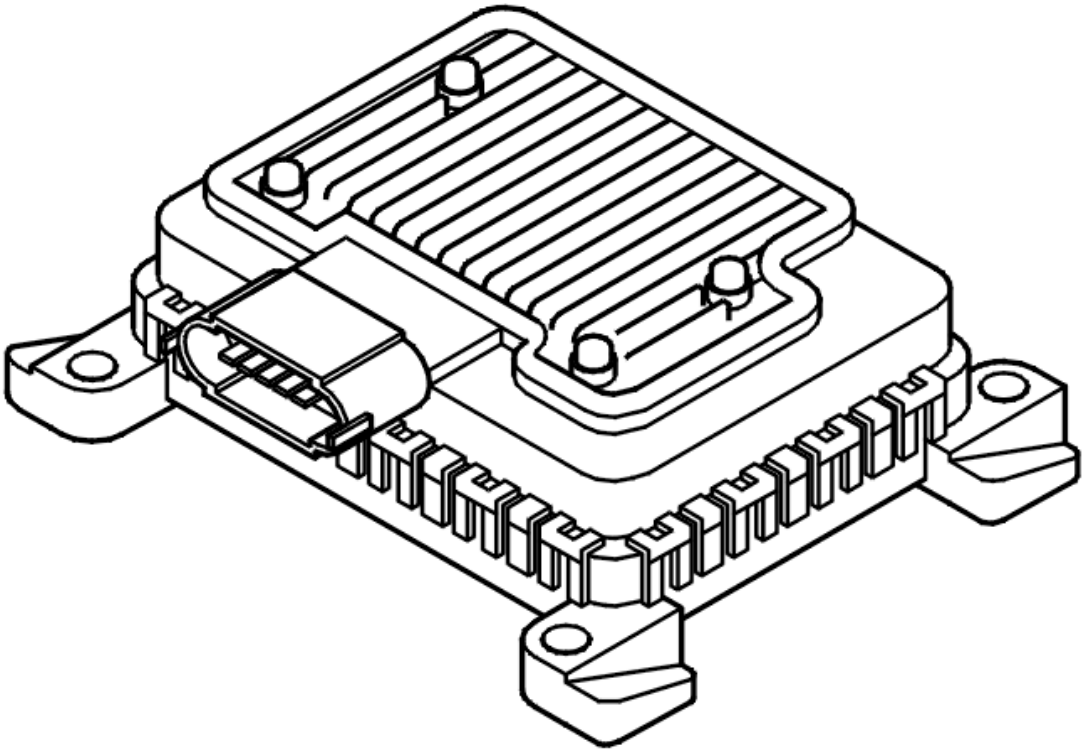

Fig. 328: Identifying Fuel Pump (FP) Control Module
Courtesy of VOLVO CARS CORPORATION

The engine control module (ECM) controls the fuel pressure via the fuel pump (FP) control module using a pulse width modulation (PWM) signal. The fuel pump (FP) control module then controls the fuel pump (FP) depending on the pressure requested by the engine control module (ECM). The diagnostic trouble code (DTC) is stored if the actual pressure (measured pressure from the fuel pressure sensor) pulses too much.

The diagnostic trouble code (DTC) can be diagnosed when the engine is running.

Substitute Value

- None.

Possible Source

- Air in the fuel lines
- Blocked fuel lines
- Damaged fuel pressure sensor
- Damaged fuel pump
- Damaged fuel pump control module.

Fault symptom[s]

- Malfunction indicator lamp (MIL) lit
- Deterioration in performance
- The engine stops.

SIGNAL MISSING (2005)

CHECKING THE DIAGNOSTIC TROUBLE CODES (DTCS)

Check if there are diagnostic trouble codes stored for fuel pressure sensor or ambient pressure sensor, in that case troubleshoot and fix these first.

Do you want to continue with this procedure?

- **YES**

  Refer to **CHECKING THE FUEL PRESSURE SENSOR**

CHECKING THE FUEL PRESSURE SENSOR

NOTE: **If diagnostic trouble codes (DTC) for the fuel pressure sensor or atmospheric pressure sensor are stored, these diagnostic trouble codes (DTC) must be fault-traced and remedied first.**

HINT: The method below is used to check whether the diagnostic trouble code (DTC) was caused by a faulty fuel pressure sensor. This can be done by checking whether the fuel pressure sensor signal (displayed in VIDA (Volvo scan tool)) is unstable, while the actual fuel pressure (displayed on a manometer connected to the wiring for the fuel injection system) is stable.

- To connect the manometer, see **FUEL PRESSURE GAUGE**
- Run the engine to operating temperature. Allow the engine to idle
- air conditioning (A/C) off
- Read off the relative fuel pressure.

  The relative fuel pressure is calculated from the fuel pressure sensor and the atmospheric pressure sensor signal (= absolute pressure minus atmospheric pressure).

  Check the value on the manometer and the value displayed in VIDA (Volvo scan tool). If the fuel pressure sensor signal (displayed in VIDA) is unstable while the actual fuel pressure (displayed on the manometer connected to the wiring for the fuel injection system) is stable, this indicates that the circuit for the fuel pressure sensor is defective.

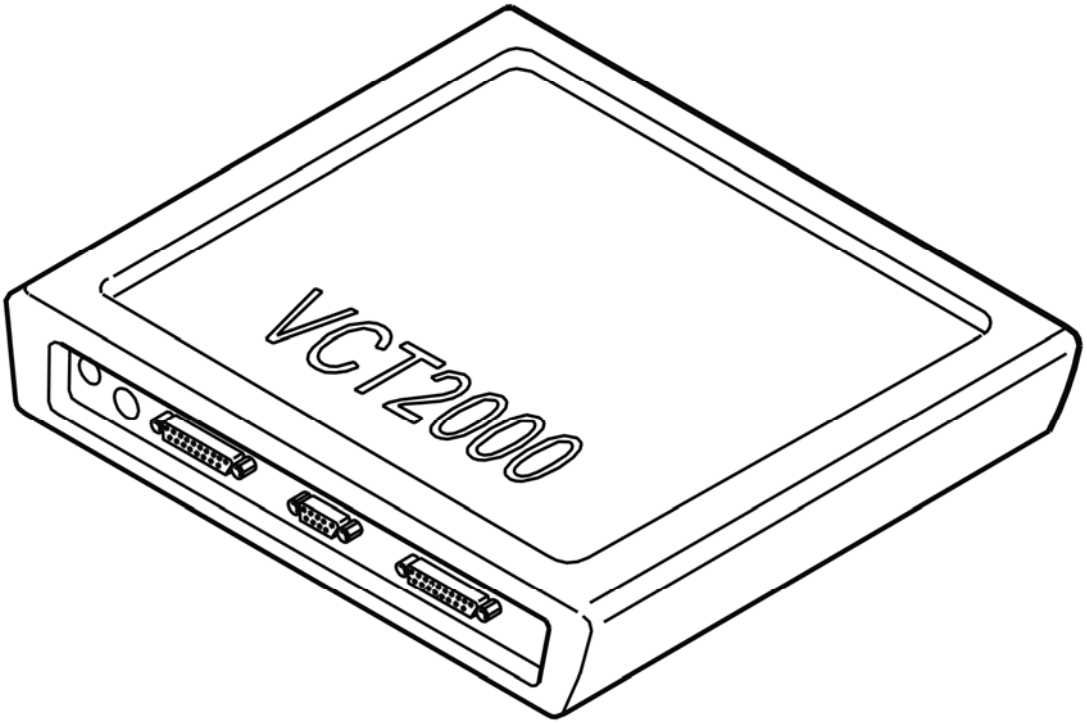

Fig. 329: Identifying VCT2000 Diagnostic Tool Symbol In VIDA
Courtesy of VOLVO CARS CORPORATION

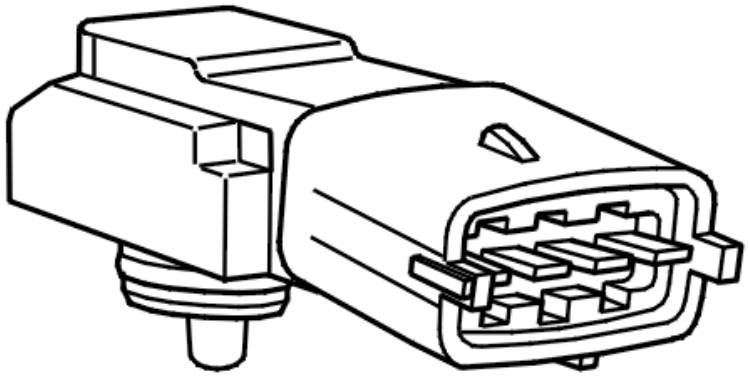

Fig. 330: Identifying Fuel Pressure Sensor
Courtesy of VOLVO CARS CORPORATION

Are the values equal?

- **YES**

  Refer to **CHECKING COMPONENTS**

- **NO**

  Refer to **CHECKING COMPONENTS AND WIRING**

CHECKING COMPONENTS

Check that the fuel level in the tank is not too low (almost no fuel).

Check the connectors between the pump control module and the fuel pump (FP). Check for contact resistance and oxidation.

Check the fuel lines and fuel filter for blockage and leaks.

Remedy as necessary.

Try a new fuel pump (FP) if no fault is found during the above fault-tracing.

HINT: The diagnostic trouble code (DTC) can also be caused by a defective pump control module.

Other information

- see **CHECKING WIRING AND TERMINALS**
- see **LEVEL SENSOR, FUEL TANK, RIGHT-HAND/FUEL TANK, REPLACING**
- see **FUEL PUMP DRIVER MODULE**

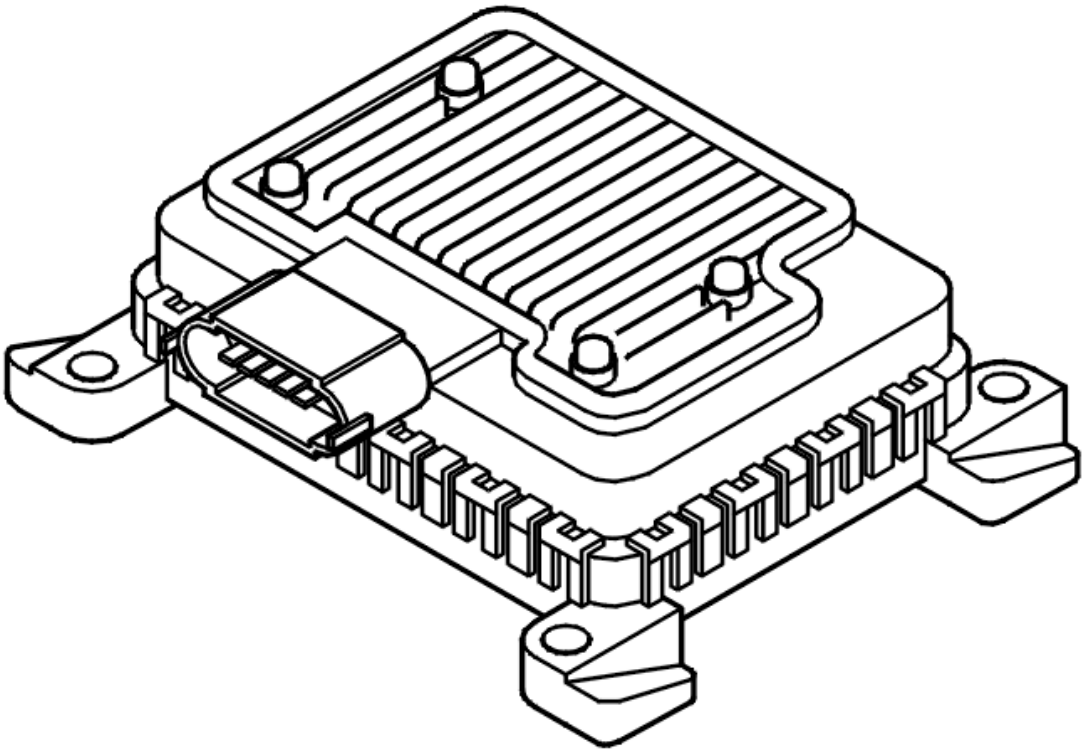

Fig. 331: Identifying Fuel Pump (FP) Control Module
Courtesy of VOLVO CARS CORPORATION

- **Continue**

  Refer to **VERIFICATION**

CHECKING COMPONENTS AND WIRING

Check the fuel pressure sensor connectors. Check for contact resistance and oxidation.

Remedy as necessary.

Try a new fuel pressure sensor if no fault is found during the above fault-tracing.

Other information

- see **CHECKING WIRING AND TERMINALS**
- To connect the breakout box, see **CONNECTING THE BREAKOUT BOX**
- For 5 cylinder turbocharged engines -2004, see **SIGNAL DESCRIPTION**
- For 5 cylinder turbocharged engines 2005-, see **SIGNAL SPECIFICATION** .
- see **FUEL PRESSURE SENSOR, REPLACEMENT**

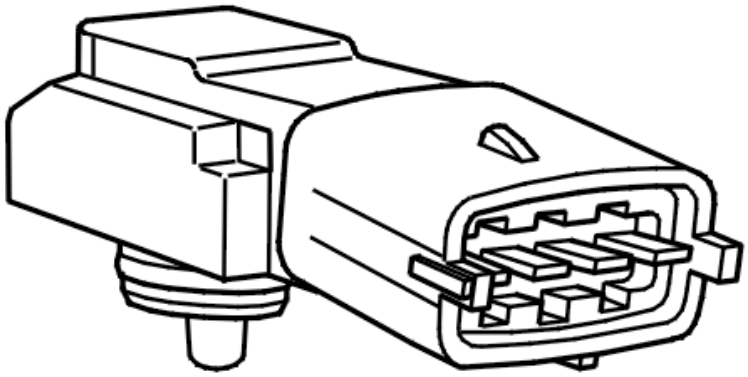

Fig. 332: Identifying Fuel Pressure Sensor
Courtesy of VOLVO CARS CORPORATION

- **Continue**

  Refer to **VERIFICATION**

VERIFICATION

VERIFICATION

HINT: After carrying out the repair, check that the fault has been remedied.

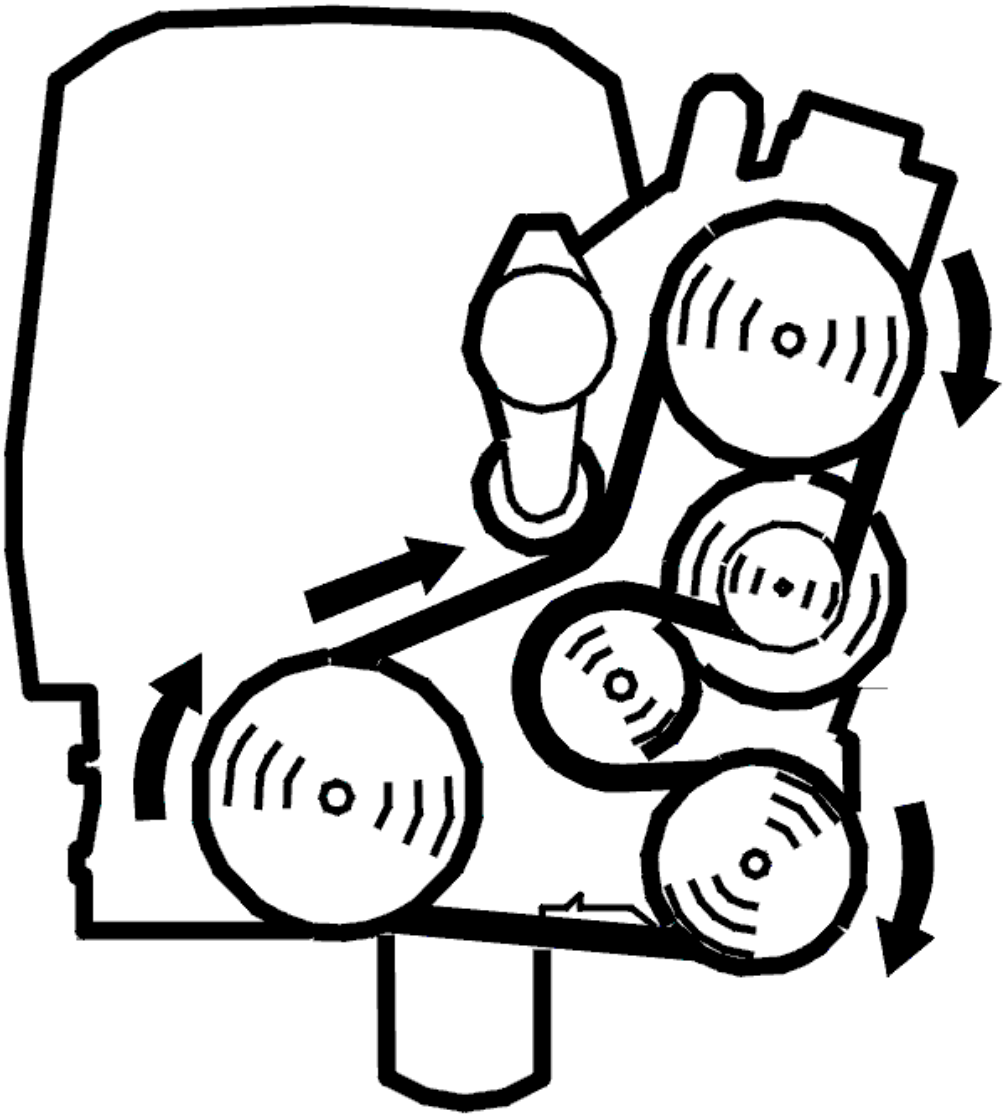

Fig. 333: Belt Routing / Engine Idling - Volvo
Courtesy of VOLVO CARS CORPORATION

- Connect the manometer, see **FUEL PRESSURE GAUGE**
- Run the engine to operating temperature. Allow the engine to idle
- air conditioning (A/C) off
- Read off the relative fuel pressure.

  The relative fuel pressure is calculated from the fuel pressure sensor and the atmospheric pressure sensor signal (= absolute pressure minus atmospheric pressure).

  Check that the value on the manometer and the value displayed in VIDA (Volvo scan tool) are the same. If the values are different, this indicates incorrect function.

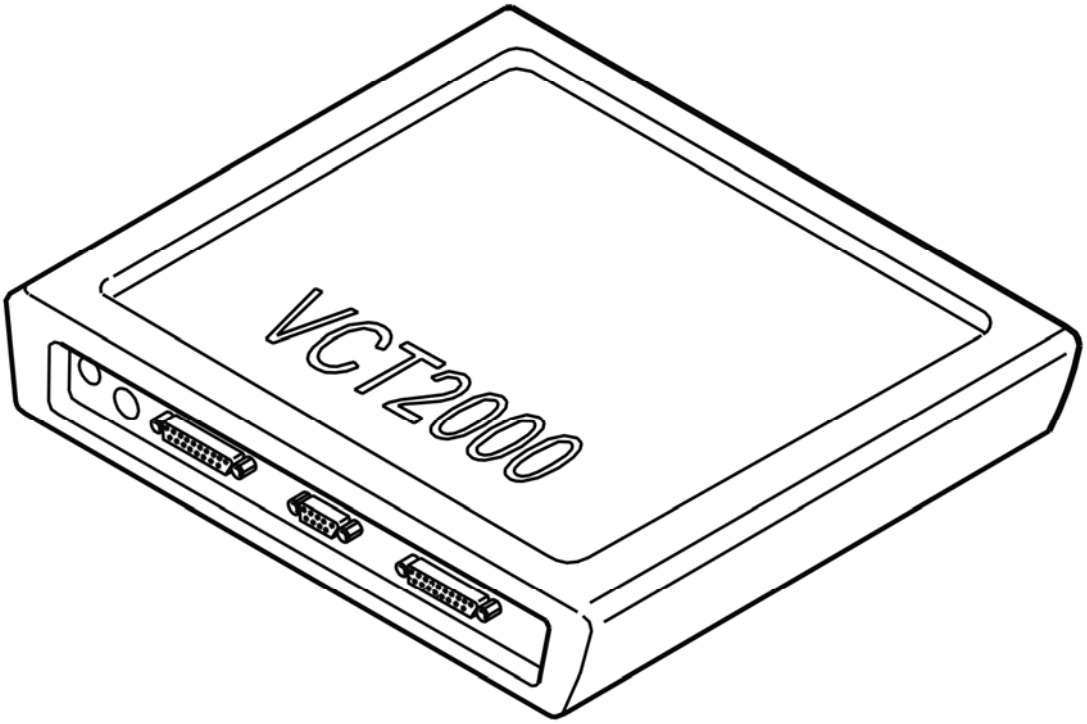

Fig. 334: Identifying VCT2000 Diagnostic Tool Symbol In VIDA
Courtesy of VOLVO CARS CORPORATION

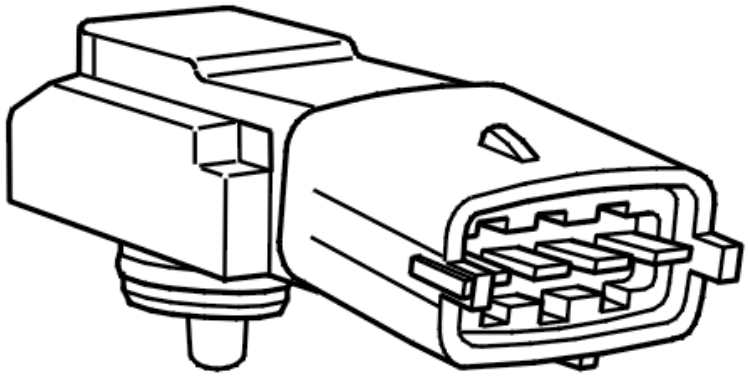

Fig. 335: Identifying Fuel Pressure Sensor
Courtesy of VOLVO CARS CORPORATION

Is the function OK?

- **YES**

  VERIFIED: Troubleshooting has been completed.

- **NO**

  Refer to **INFORMATION**

INFORMATION

FAULT-TRACING INFORMATION

The fault should have been detected and remedied. As this is not the case fault-tracing has failed.

Exit fault-tracing for this diagnostic trouble code (DTC) or make another attempt.

SIGNAL MISSING (2006, 2007)

CHECKING THE DIAGNOSTIC TROUBLE CODES (DTCS)

Check if there are diagnostic trouble codes stored for fuel pressure sensor or ambient pressure sensor, in that case troubleshoot and fix these first.

Do you want to continue with this procedure?

- **YES**

  Refer to **CHECKING THE FUEL PRESSURE SENSOR**

CHECKING THE FUEL PRESSURE SENSOR

NOTE: **If diagnostic trouble codes (DTC) for the fuel pressure sensor or atmospheric pressure sensor are stored, these diagnostic trouble codes (DTC) must be fault-traced and remedied first.**

HINT: The method below is used to check whether the diagnostic trouble code (DTC) was caused by a faulty fuel pressure sensor. This can be done by checking whether the fuel pressure sensor signal (displayed in VIDA (Volvo scan tool)) is unstable, while the actual fuel pressure (displayed on a manometer connected to the wiring for the fuel injection system) is stable.

- To connect the manometer, see **FUEL PRESSURE GAUGE**
- Run the engine to operating temperature. Allow the engine to idle
- air conditioning (A/C) off
- Read off the relative fuel pressure.

  The relative fuel pressure is calculated from the fuel pressure sensor and the atmospheric pressure sensor signal (= absolute pressure minus atmospheric pressure).

  Check the value on the manometer and the value displayed in VIDA (Volvo scan tool). If the fuel pressure sensor signal (displayed in VIDA) is unstable while the actual fuel pressure (displayed on the manometer connected to the wiring for the fuel injection system) is stable, this indicates that the circuit for the fuel pressure sensor is defective.

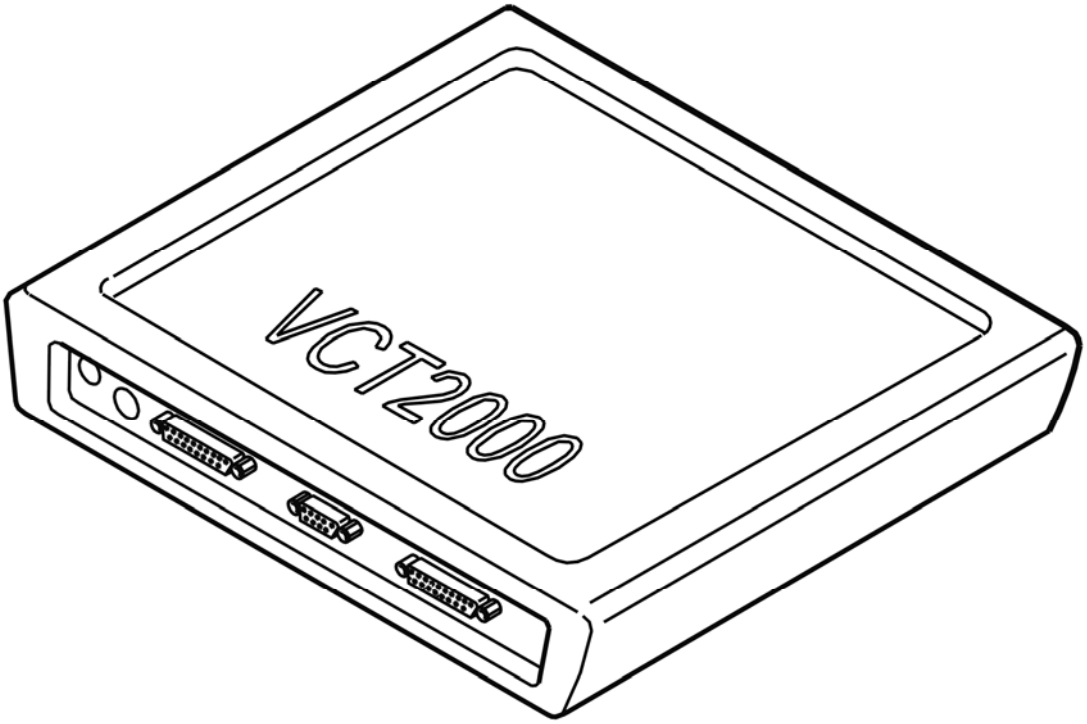

Fig. 336: Identifying VCT2000 Diagnostic Tool Symbol In VIDA
Courtesy of VOLVO CARS CORPORATION

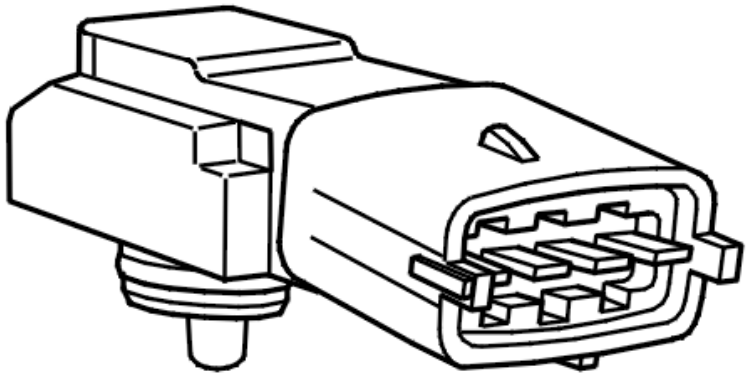

Fig. 337: Identifying Fuel Pressure Sensor
Courtesy of VOLVO CARS CORPORATION

Are the values equal?

- **YES**

  Refer to **CHECKING COMPONENTS**

- **NO**

  Refer to **CHECKING COMPONENTS AND WIRING**

CHECKING COMPONENTS

Check that the fuel level in the tank is not too low (almost no fuel).

Check the connectors between the pump control module and the fuel pump (FP). Check for contact resistance and oxidation.

Check the fuel lines and fuel filter for blockage and leaks.

Remedy as necessary.

Try a new fuel pump (FP) if no fault is found during the above fault-tracing.

HINT: The diagnostic trouble code (DTC) can also be caused by a defective pump control module.

Other information

- see **CHECKING WIRING AND TERMINALS**
- see **LEVEL SENSOR, FUEL TANK, RIGHT-HAND/FUEL TANK, REPLACING**
- see **FUEL PUMP DRIVER MODULE**

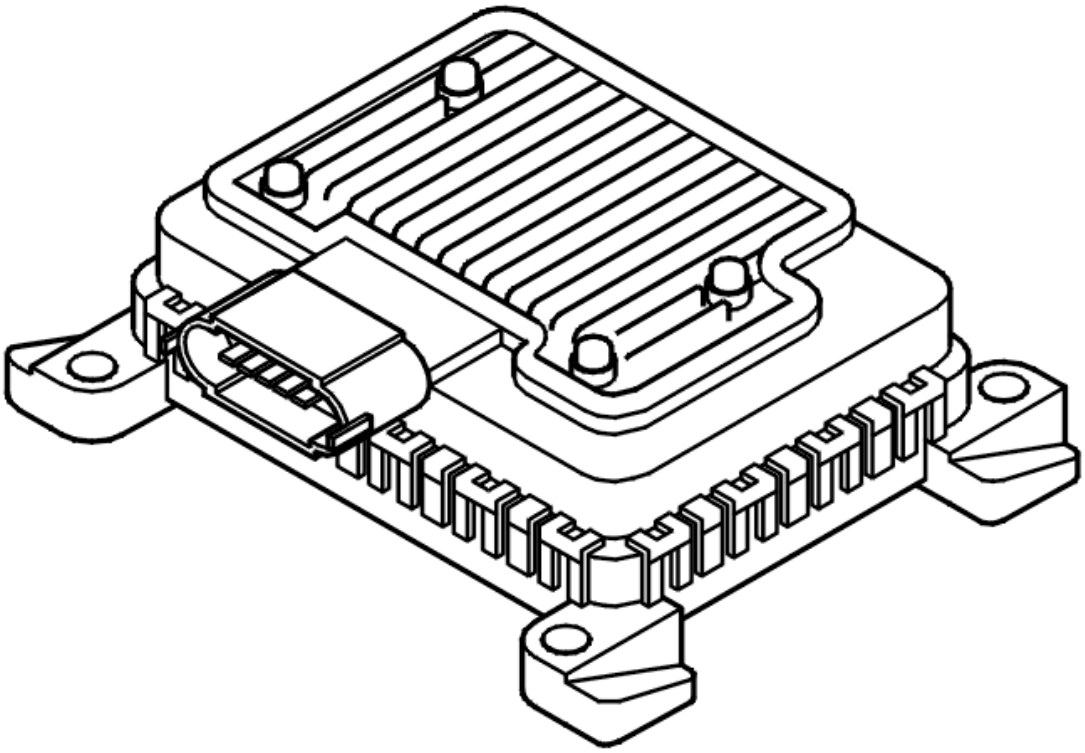

Fig. 338: Identifying Fuel Pump (FP) Control Module
Courtesy of VOLVO CARS CORPORATION

- **Continue**

  Refer to **VERIFICATION**

CHECKING COMPONENTS AND WIRING

Check the fuel pressure sensor connectors. Check for contact resistance and oxidation.

Remedy as necessary.

Try a new fuel pressure sensor if no fault is found during the above fault-tracing.

Other information

- see **CHECKING WIRING AND TERMINALS**
- To connect the breakout box, see **CONNECTING THE BREAKOUT BOX**
- For 5 cylinder turbocharged engines -2004, see **SIGNAL DESCRIPTION**
- For 5 cylinder turbocharged engines 2005-, see **SIGNAL SPECIFICATION** .
- see **FUEL PRESSURE SENSOR, REPLACEMENT**

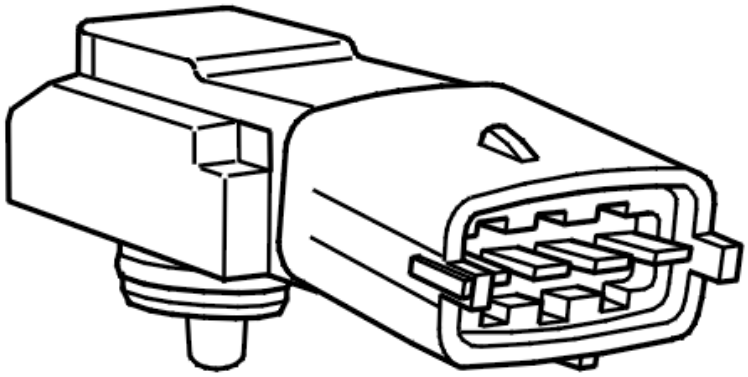

Fig. 339: Identifying Fuel Pressure Sensor
Courtesy of VOLVO CARS CORPORATION

- **Continue**

  Refer to **VERIFICATION**

VERIFICATION

VERIFICATION

HINT: After carrying out the repair, check that the fault has been remedied.

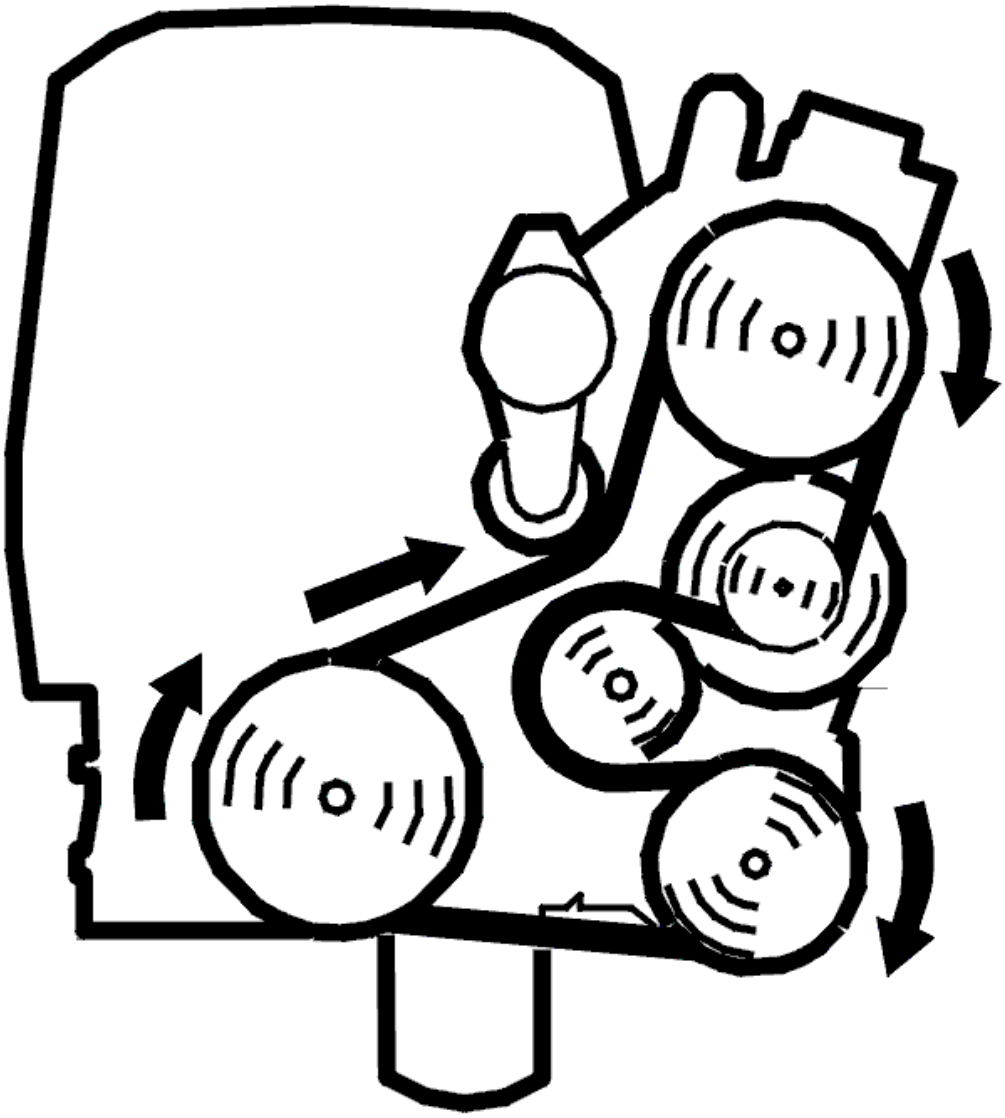

Fig. 340: Belt Routing / Engine Idling - Volvo
Courtesy of VOLVO CARS CORPORATION

- Connect the manometer, see **FUEL PRESSURE GAUGE**
- Run the engine to operating temperature. Allow the engine to idle
- air conditioning (A/C) off
- Read off the relative fuel pressure.

  The relative fuel pressure is calculated from the fuel pressure sensor and the atmospheric pressure sensor signal (= absolute pressure minus atmospheric pressure).

  Check that the value on the manometer and the value displayed in VIDA (Volvo scan tool) are the same. If the values are different, this indicates incorrect function.

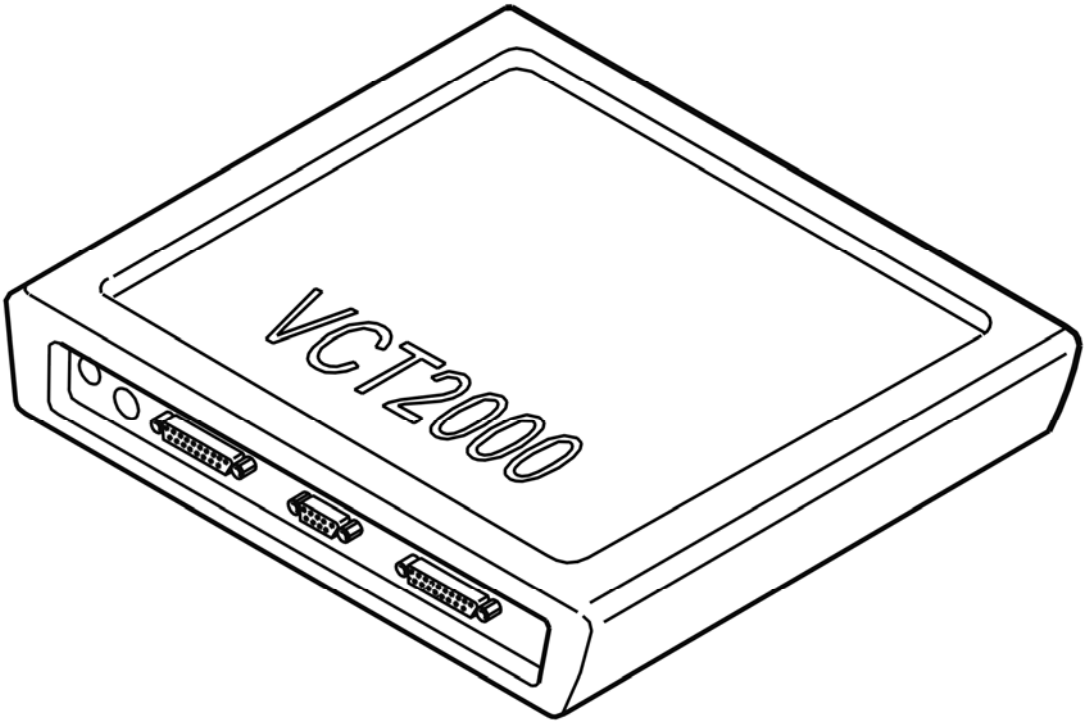

Fig. 341: Identifying VCT2000 Diagnostic Tool Symbol In VIDA
Courtesy of VOLVO CARS CORPORATION

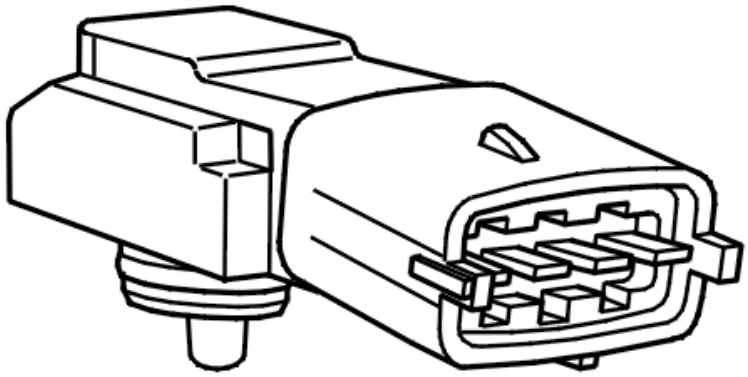

Fig. 342: Identifying Fuel Pressure Sensor
Courtesy of VOLVO CARS CORPORATION

Is the function OK?

- **YES**

  VERIFIED: Troubleshooting has been completed.

- **NO**

  Refer to **INFORMATION**

INFORMATION

FAULT-TRACING INFORMATION

The fault should have been detected and remedied. As this is not the case fault-tracing has failed.

Exit fault-tracing for this diagnostic trouble code (DTC) or make another attempt.

ECM-290B: FUEL PRESSURE. SIGNAL MISSING (B6294T; 2005-2006)

DIAGNOSTIC TROUBLE CODE (DTC) INFORMATION ECM-290B

see **DIAGNOSTIC TROUBLE CODE (DTC) INFORMATION ECM-290B**

SIGNAL MISSING (2005)

CHECKING THE DIAGNOSTIC TROUBLE CODES (DTCS)

Check if there are diagnostic trouble codes stored for fuel pressure sensor or ambient pressure sensor, in that case troubleshoot and fix these first.

Do you want to continue with this procedure?

- **YES**

  Refer to **CHECKING THE FUEL PRESSURE SENSOR**

CHECKING THE FUEL PRESSURE SENSOR

NOTE: **If diagnostic trouble codes (DTC) for the fuel pressure sensor or atmospheric pressure sensor are stored, these diagnostic trouble codes (DTC) must be fault-traced and remedied first.**

HINT: The method below is used to check whether the diagnostic trouble code (DTC) was caused by a faulty fuel pressure sensor. This can be done by checking whether the fuel pressure sensor signal (displayed in VIDA (Volvo scan tool)) is unstable, while the actual fuel pressure (displayed on a manometer connected to the wiring for the fuel injection system) is stable.

- To connect the manometer, see **FUEL PRESSURE GAUGE**
- Run the engine to operating temperature. Allow the engine to idle
- air conditioning (A/C) off
- Read off the relative fuel pressure.

  The relative fuel pressure is calculated from the fuel pressure sensor and the atmospheric pressure sensor signal (= absolute pressure minus atmospheric pressure).

  Check the value on the manometer and the value displayed in VIDA (Volvo scan tool). If the fuel pressure sensor signal (displayed in VIDA) is unstable while the actual fuel pressure (displayed on the manometer connected to the wiring for the fuel injection system) is stable, this indicates that the circuit for the fuel pressure sensor is defective.

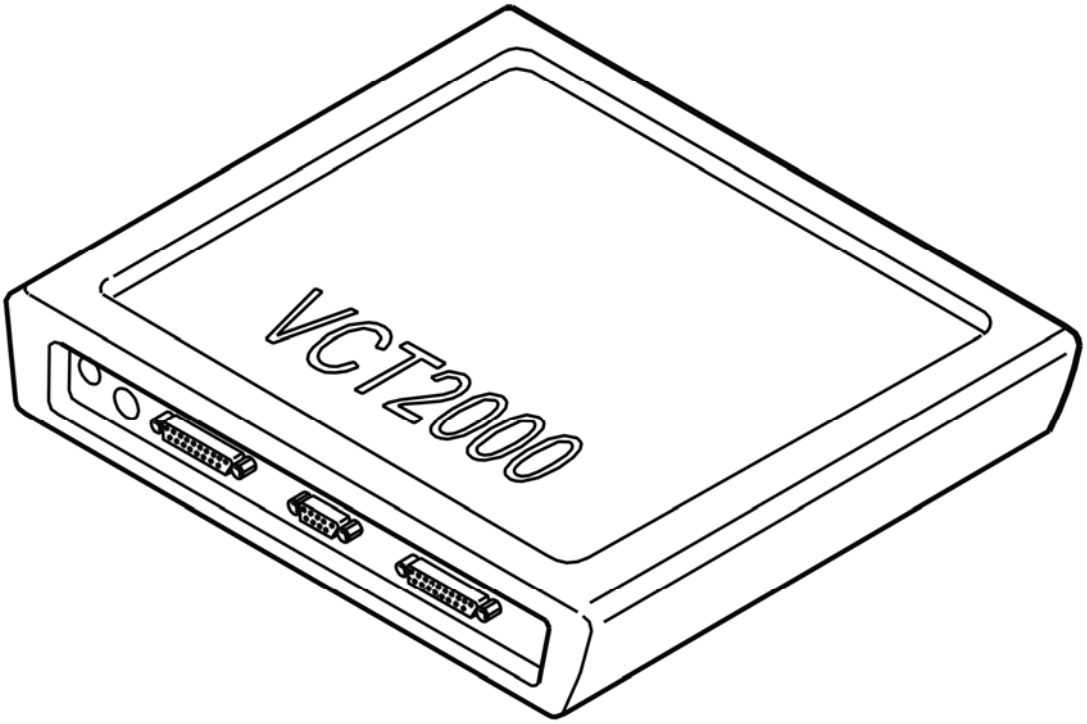

Fig. 343: Identifying VCT2000 Diagnostic Tool Symbol In VIDA
Courtesy of VOLVO CARS CORPORATION

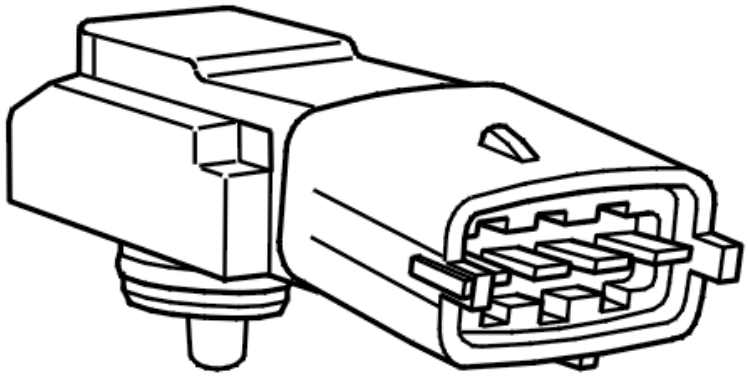

Fig. 344: Identifying Fuel Pressure Sensor
Courtesy of VOLVO CARS CORPORATION

Are the values equal?

- **YES**

  Refer to **CHECKING COMPONENTS**

- **NO**

  Refer to **CHECKING COMPONENTS AND WIRING**

CHECKING COMPONENTS

Check that the fuel level in the tank is not too low (almost no fuel).

Check the connectors between the pump control module and the fuel pump (FP). Check for contact resistance and oxidation.

Check the fuel lines and fuel filter for blockage and leaks.

Remedy as necessary.

Try a new fuel pump (FP) if no fault is found during the above fault-tracing.

HINT: The diagnostic trouble code (DTC) can also be caused by a defective pump control module.

Other information

- see **CHECKING WIRING AND TERMINALS**
- see **LEVEL SENSOR, FUEL TANK, RIGHT-HAND/FUEL TANK, REPLACING**
- see **FUEL PUMP DRIVER MODULE**

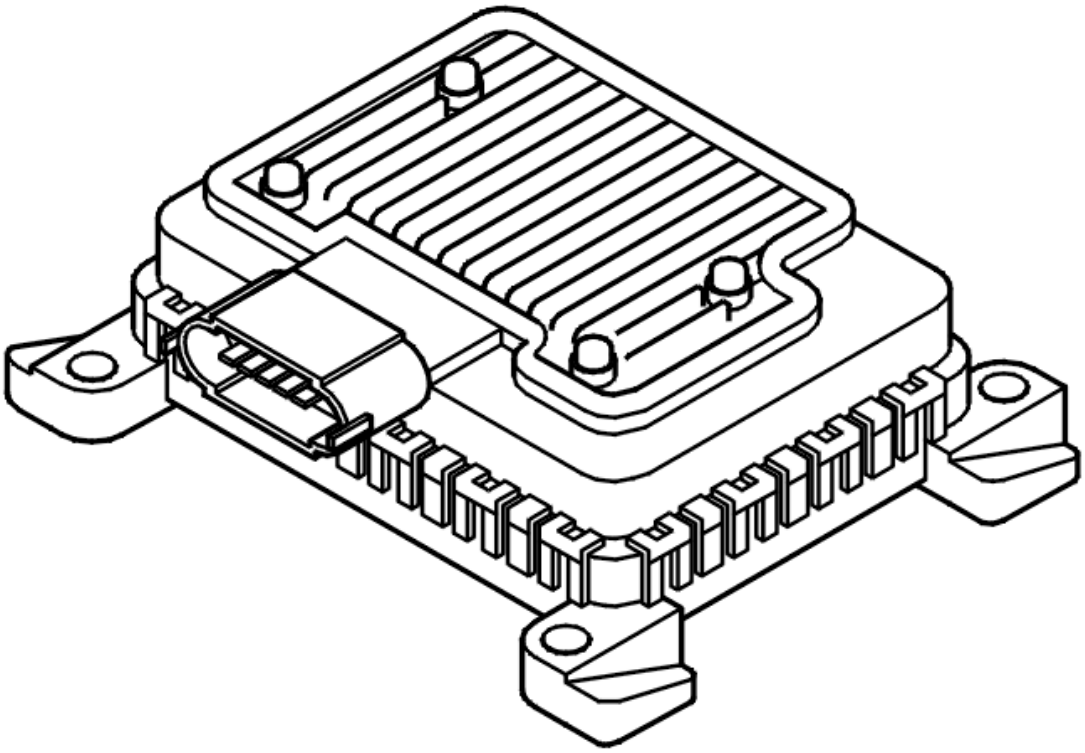

Fig. 345: Identifying Fuel Pump (FP) Control Module
Courtesy of VOLVO CARS CORPORATION

- **Continue**

  Refer to **VERIFICATION**

CHECKING COMPONENTS AND WIRING

Check the fuel pressure sensor connectors. Check for contact resistance and oxidation.

Remedy as necessary.

Try a new fuel pressure sensor if no fault is found during the above fault-tracing.

Other information

- see **CHECKING WIRING AND TERMINALS**
- To connect the breakout box, see **CONNECTING THE BREAKOUT BOX**
- For 6 cylinder engines -2004, see **SIGNAL SPECIFICATION**
- For 6 cylinder engines 2005-, see **SIGNAL SPECIFICATION** .
- see **CONTROL MODULE FUEL PUMP (FP), REPLACING**

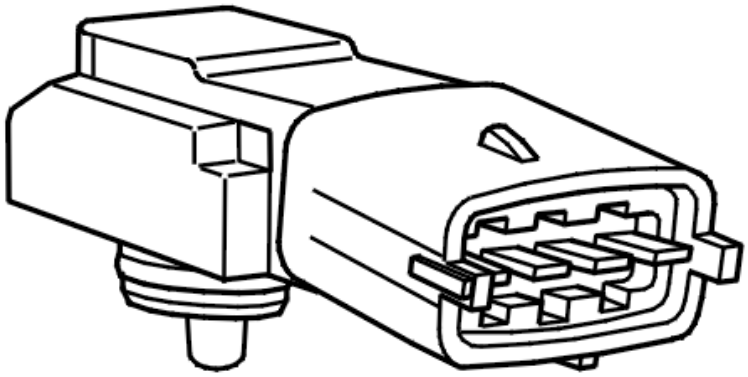

Fig. 346: Identifying Fuel Pressure Sensor
Courtesy of VOLVO CARS CORPORATION

- **Continue**

  Refer to **VERIFICATION**

VERIFICATION

VERIFICATION

HINT: After carrying out the repair, check that the fault has been remedied.

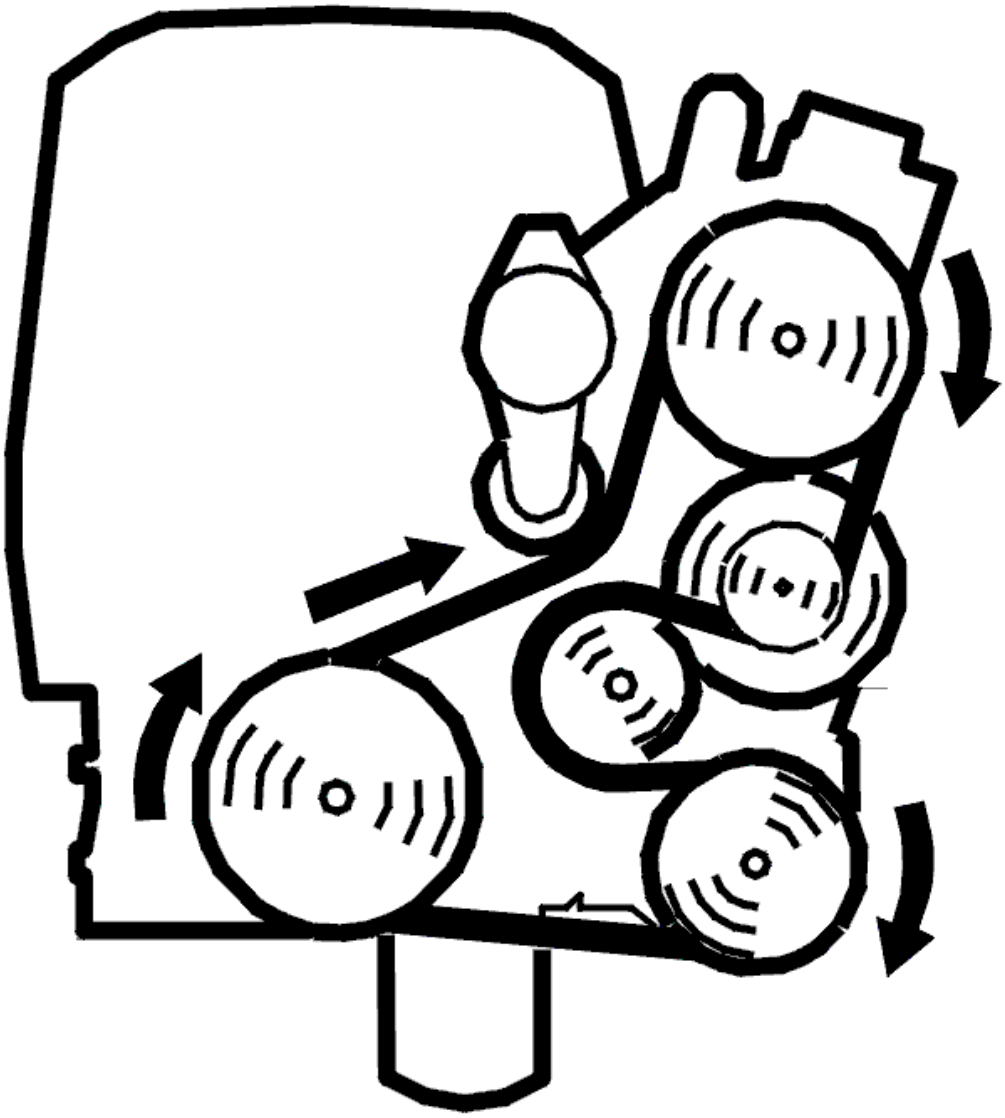

Fig. 347: Belt Routing / Engine Idling - Volvo
Courtesy of VOLVO CARS CORPORATION

- Connect the manometer, see **FUEL PRESSURE GAUGE**
- Run the engine to operating temperature. Allow the engine to idle
- air conditioning (A/C) off
- Read off the relative fuel pressure.

  The relative fuel pressure is calculated from the fuel pressure sensor and the atmospheric pressure sensor signal (= absolute pressure minus atmospheric pressure).

  Check that the value on the manometer and the value displayed in VIDA (Volvo scan tool) are the same. If the values are different, this indicates incorrect function.

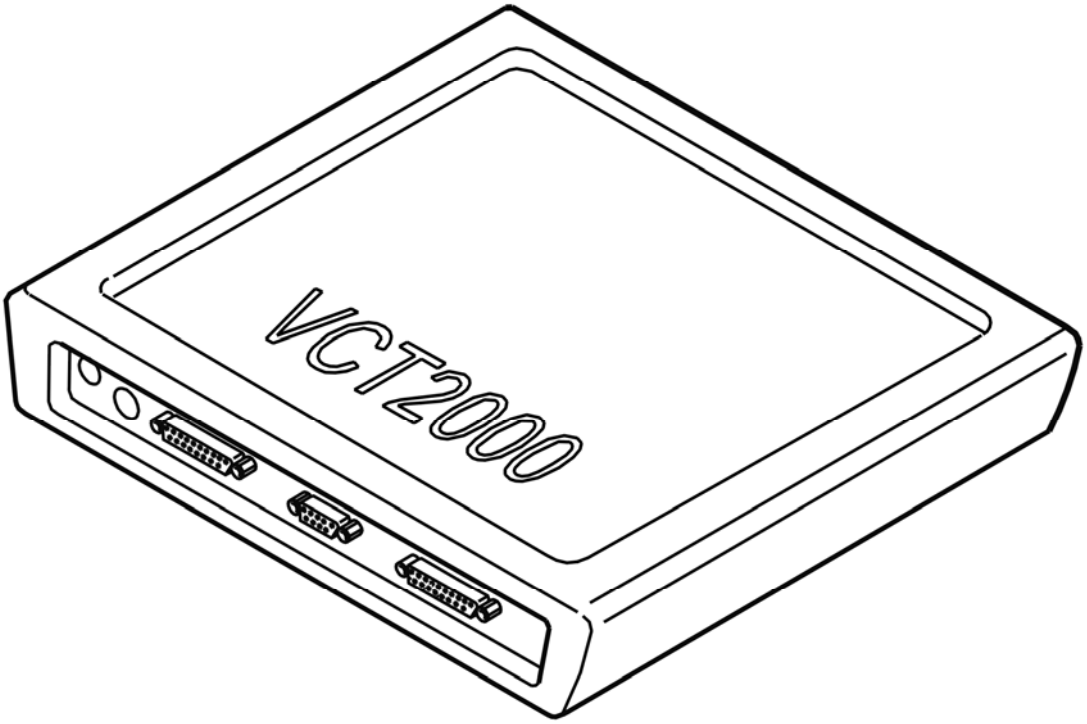

Fig. 348: Identifying VCT2000 Diagnostic Tool Symbol In VIDA
Courtesy of VOLVO CARS CORPORATION

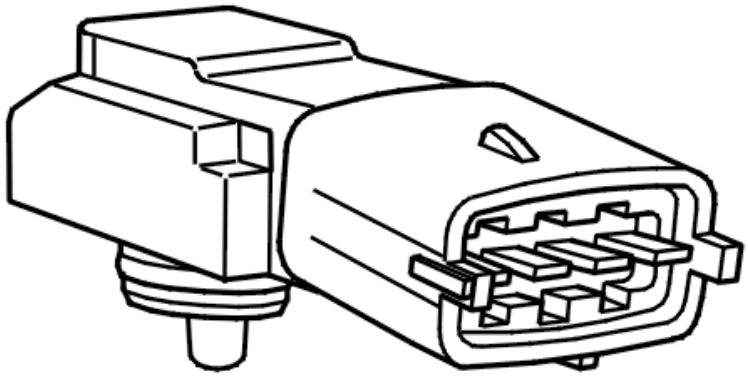

Fig. 349: Identifying Fuel Pressure Sensor
Courtesy of VOLVO CARS CORPORATION

Is the function OK?

- **YES**

  VERIFIED: Troubleshooting has been completed.

- **NO**

  Refer to **INFORMATION**

INFORMATION

FAULT-TRACING INFORMATION

The fault should have been detected and remedied. As this is not the case fault-tracing has failed.

Exit fault-tracing for this diagnostic trouble code (DTC) or make another attempt.

SIGNAL MISSING (2006)

CHECKING THE DIAGNOSTIC TROUBLE CODES (DTCS)

Check if there are diagnostic trouble codes stored for fuel pressure sensor or ambient pressure sensor, in that case troubleshoot and fix these first.

Do you want to continue with this procedure?

- **YES**

  Refer to **CHECKING THE FUEL PRESSURE SENSOR**

CHECKING THE FUEL PRESSURE SENSOR

NOTE: **If diagnostic trouble codes (DTC) for the fuel pressure sensor or atmospheric pressure sensor are stored, these diagnostic trouble codes (DTC) must be fault-traced and remedied first.**

HINT: The method below is used to check whether the diagnostic trouble code (DTC) was caused by a faulty fuel pressure sensor. This can be done by checking whether the fuel pressure sensor signal (displayed in VIDA (Volvo scan tool)) is unstable, while the actual fuel pressure (displayed on a manometer connected to the wiring for the fuel injection system) is stable.

- To connect the manometer, see **FUEL PRESSURE GAUGE**
- Run the engine to operating temperature. Allow the engine to idle
- air conditioning (A/C) off
- Read off the relative fuel pressure.

  The relative fuel pressure is calculated from the fuel pressure sensor and the atmospheric pressure sensor signal (= absolute pressure minus atmospheric pressure).

  Check the value on the manometer and the value displayed in VIDA (Volvo scan tool). If the fuel pressure sensor signal (displayed in VIDA) is unstable while the actual fuel pressure (displayed on the manometer connected to the wiring for the fuel injection system) is stable, this indicates that the circuit for the fuel pressure sensor is defective.

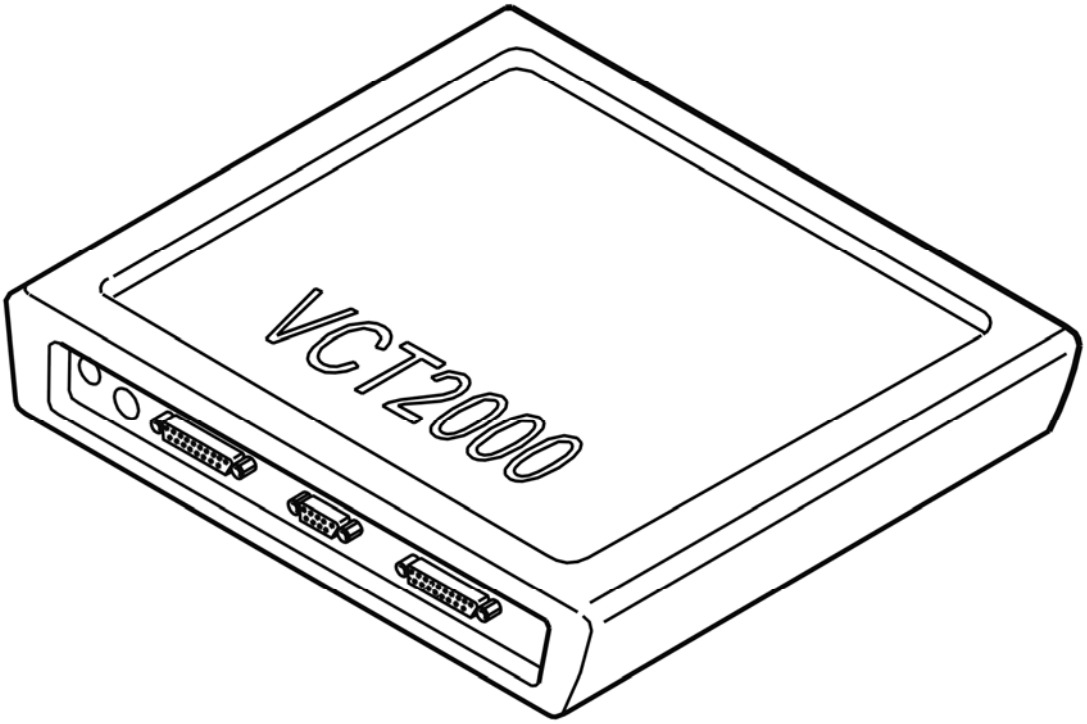

Fig. 350: Identifying VCT2000 Diagnostic Tool Symbol In VIDA
Courtesy of VOLVO CARS CORPORATION

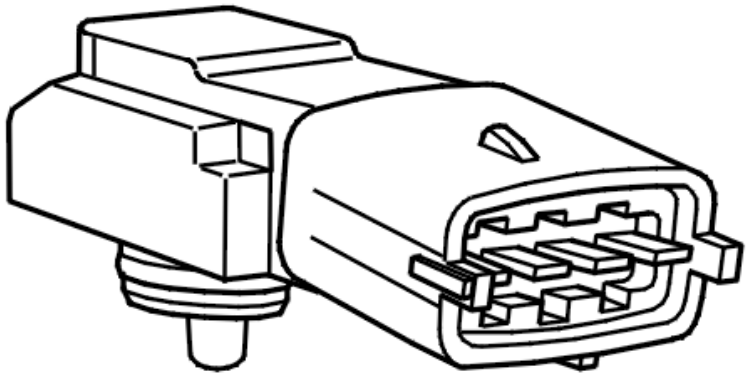

Fig. 351: Identifying Fuel Pressure Sensor
Courtesy of VOLVO CARS CORPORATION

Are the values equal?

- **YES**

  Refer to **CHECKING COMPONENTS**

- **NO**

  Refer to **CHECKING COMPONENTS AND WIRING**

CHECKING COMPONENTS

Check that the fuel level in the tank is not too low (almost no fuel).

Check the connectors between the pump control module and the fuel pump (FP). Check for contact resistance and oxidation.

Check the fuel lines and fuel filter for blockage and leaks.

Remedy as necessary.

Try a new fuel pump (FP) if no fault is found during the above fault-tracing.

HINT: The diagnostic trouble code (DTC) can also be caused by a defective pump control module.

Other information

- see **CHECKING WIRING AND TERMINALS**
- see **LEVEL SENSOR, FUEL TANK, RIGHT-HAND/FUEL TANK, REPLACING**
- see **CONTROL MODULE FUEL PUMP (FP), REPLACING**

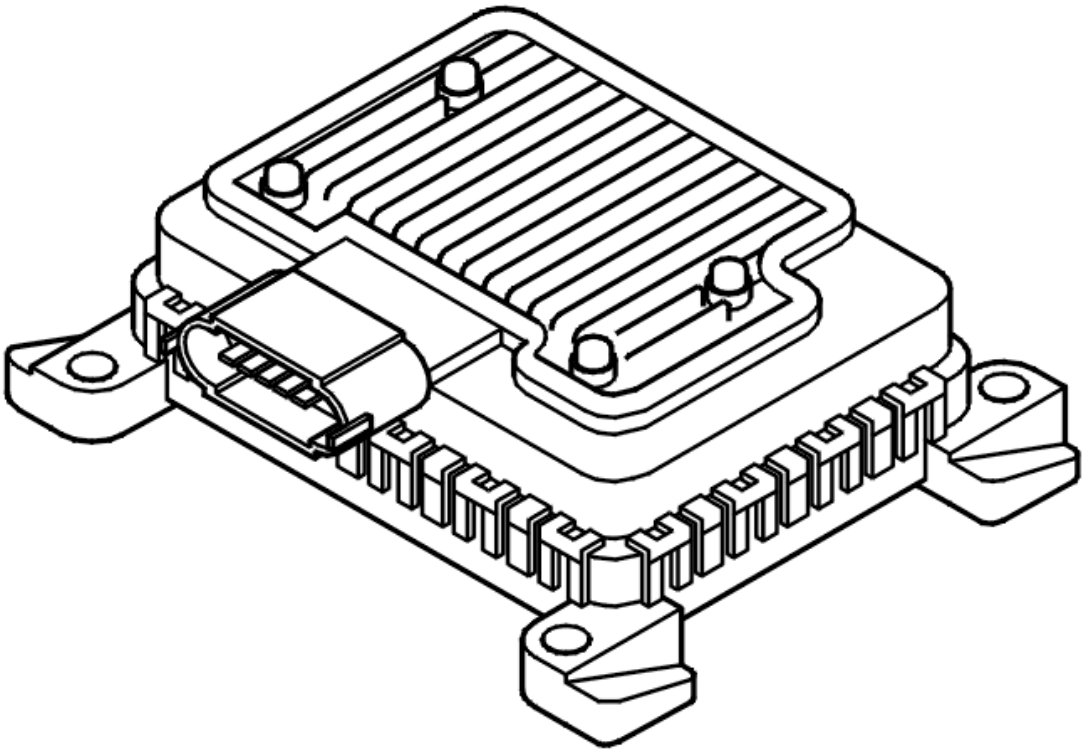

Fig. 352: Identifying Fuel Pump (FP) Control Module
Courtesy of VOLVO CARS CORPORATION

- **Continue**

  Refer to **VERIFICATION**

CHECKING COMPONENTS AND WIRING

Check the fuel pressure sensor connectors. Check for contact resistance and oxidation.

Remedy as necessary.

Try a new fuel pressure sensor if no fault is found during the above fault-tracing.

Other information

- see **CHECKING WIRING AND TERMINALS**
- To connect the breakout box, see **CONNECTING THE BREAKOUT BOX**
- For 6 cylinder engines -2004, see **SIGNAL SPECIFICATION**
- For 6 cylinder engines 2005-, see **SIGNAL SPECIFICATION** .
- see **CONTROL MODULE FUEL PUMP (FP), REPLACING**

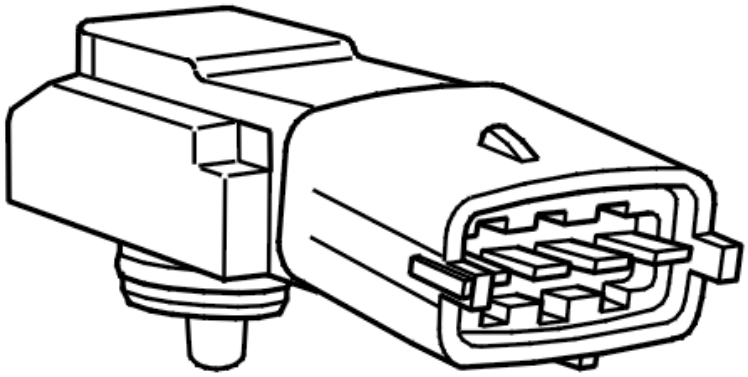

Fig. 353: Identifying Fuel Pressure Sensor
Courtesy of VOLVO CARS CORPORATION

- **Continue**

  Refer to **VERIFICATION**

VERIFICATION

VERIFICATION

HINT: After carrying out the repair, check that the fault has been remedied.

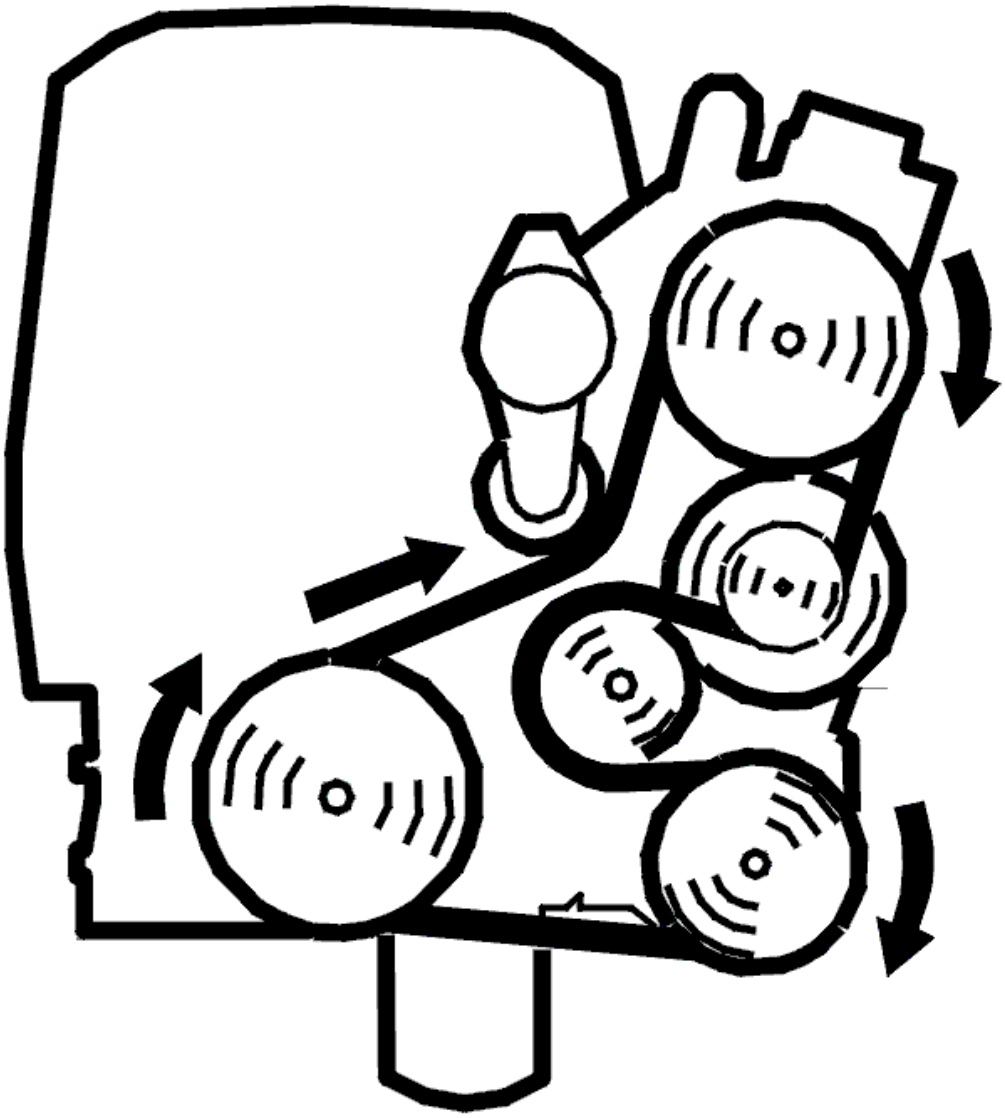

Fig. 354: Belt Routing / Engine Idling - Volvo
Courtesy of VOLVO CARS CORPORATION

- Connect the manometer, see **FUEL PRESSURE GAUGE**
- Run the engine to operating temperature. Allow the engine to idle
- air conditioning (A/C) off
- Read off the relative fuel pressure.

  The relative fuel pressure is calculated from the fuel pressure sensor and the atmospheric pressure sensor signal (= absolute pressure minus atmospheric pressure).

  Check that the value on the manometer and the value displayed in VIDA (Volvo scan tool) are the same. If the values are different, this indicates incorrect function.

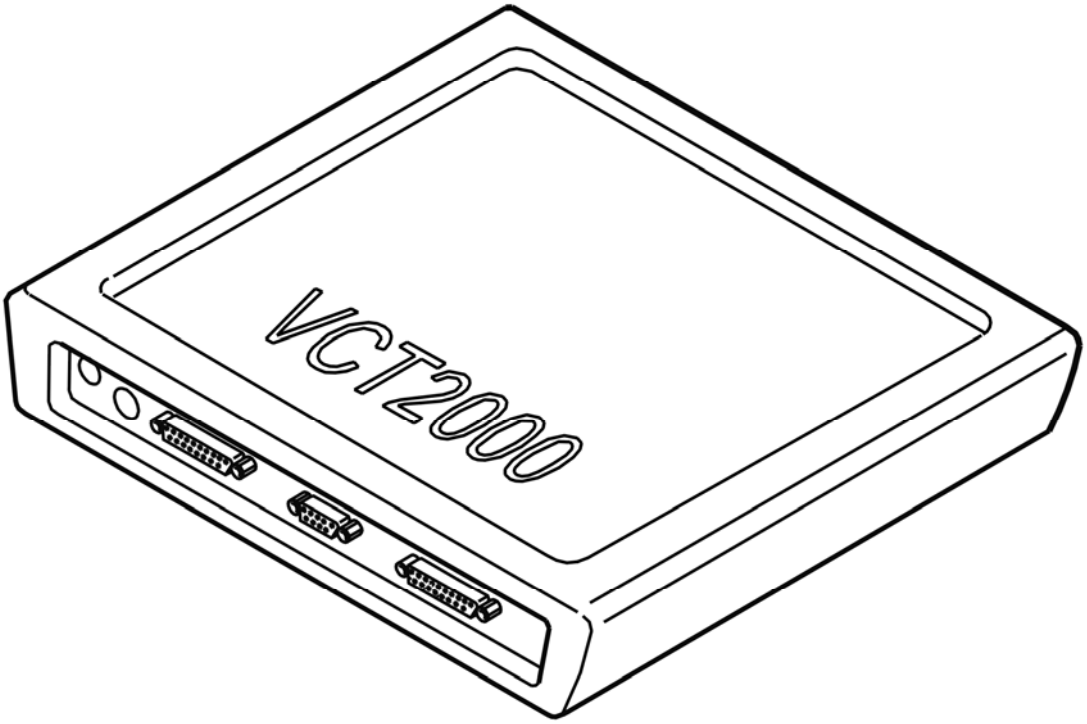

Fig. 355: Identifying VCT2000 Diagnostic Tool Symbol In VIDA
Courtesy of VOLVO CARS CORPORATION

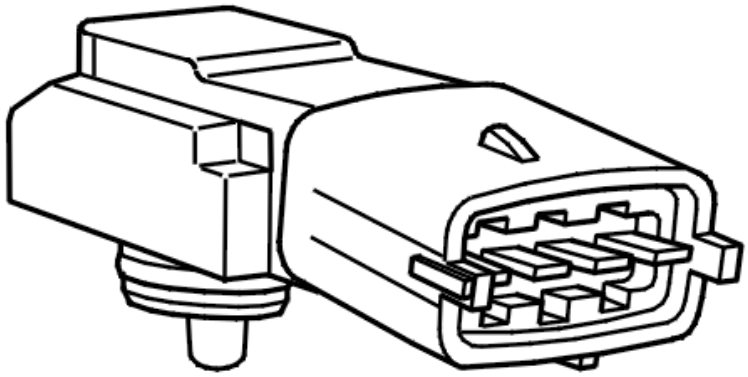

Fig. 356: Identifying Fuel Pressure Sensor
Courtesy of VOLVO CARS CORPORATION

Is the function OK?

- **YES**

  VERIFIED: Troubleshooting has been completed.

- **NO**

  Refer to **INFORMATION**

INFORMATION

FAULT-TRACING INFORMATION

The fault should have been detected and remedied. As this is not the case fault-tracing has failed.

Exit fault-tracing for this diagnostic trouble code (DTC) or make another attempt.

ECM-290C: FUEL PRESSURE. SIGNAL TOO HIGH (B5254T2; B6294T; 2005-2006)

DIAGNOSTIC TROUBLE CODE (DTC) INFORMATION ECM-290C

Condition

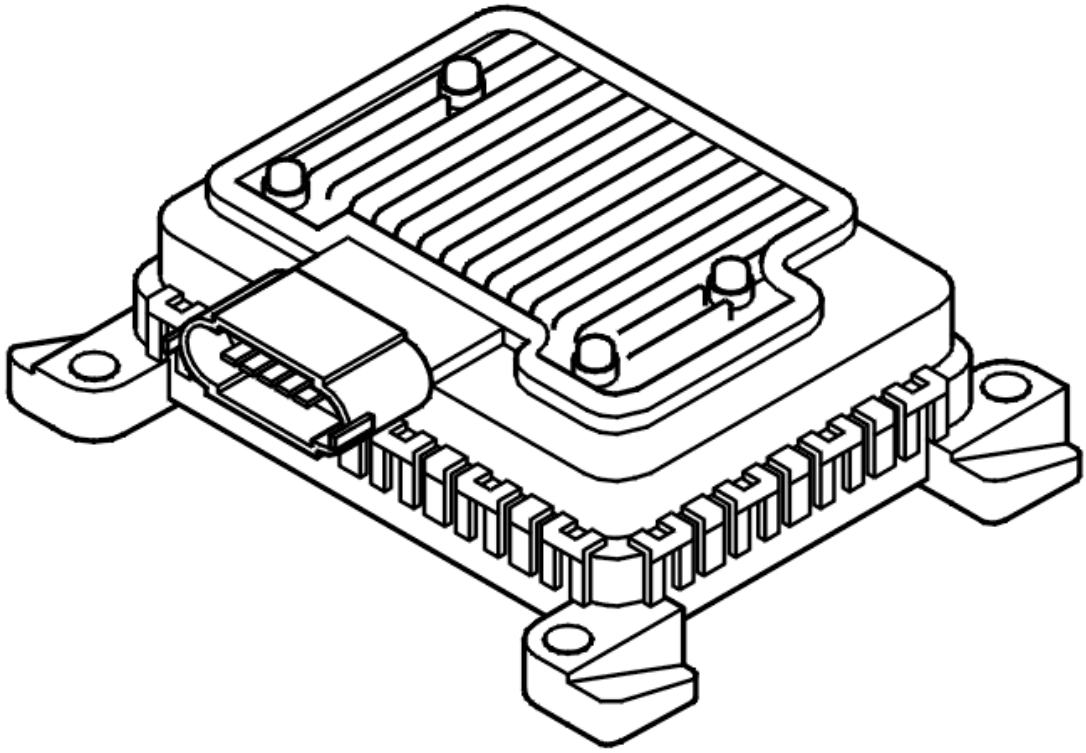

Fig. 357: Identifying Fuel Pump (FP) Control Module
Courtesy of VOLVO CARS CORPORATION

The engine control module (ECM) controls the fuel pressure via the fuel pump (FP) control module using a pulse width modulation (PWM) signal. The fuel pump (FP) control module then controls the fuel pump (FP) depending on the pressure requested by the engine control module (ECM). The diagnostic trouble code (DTC) is stored if the actual pressure (measured pressure from the fuel pressure sensor) rises too high in comparison with the requested pressure (target pressure) during a certain time frame.

The diagnostic trouble code (DTC) can be diagnosed when the engine is running.

Substitute Value

- None.

Possible Source

- Damaged fuel pressure sensor
- Damaged fuel pump control module.

Fault symptom[s]

- Malfunction indicator lamp (MIL) lit
- Deterioration in performance
- The engine stops.

SIGNAL TOO HIGH

CHECKING THE DIAGNOSTIC TROUBLE CODES (DTCS)

Check if there are diagnostic trouble codes stored for fuel pressure sensor or ambient pressure sensor, in that case troubleshoot and fix these first.

Do you want to continue with this procedure?

- **YES**

  Refer to **CHECKING THE FUEL PRESSURE SENSOR**

CHECKING THE FUEL PRESSURE SENSOR

NOTE: **If diagnostic trouble codes (DTC) for the fuel pressure sensor or atmospheric pressure sensor are stored, these diagnostic trouble codes (DTC) must be fault-traced and remedied first.**

HINT: The method below is used to check whether the diagnostic trouble code (DTC) was caused by a faulty fuel pressure sensor. This can be done by comparing the fuel pressure sensor signal (displayed in VIDA (Volvo scan tool)) with the actual fuel pressure (displayed on a manometer connected to the wiring for the fuel injection system).

- Connect the manometer, see **FUEL PRESSURE GAUGE** .

  NOTE: **The pressure in the fuel injection system can reach approximately 650 kPa when this diagnostic trouble code (DTC) is stored. Use an adapted manometer.**

- Run the engine to operating temperature. Allow the engine to idle
- air conditioning (A/C) off
- Read off the relative fuel pressure.

  The relative fuel pressure is calculated from the fuel pressure sensor and the atmospheric pressure sensor signal (= absolute pressure minus atmospheric pressure).

  Check that the value on the manometer and the value displayed in VIDA (Volvo scan tool) are roughly the same. If the values are different, the circuit for the fuel pressure sensor is defective.

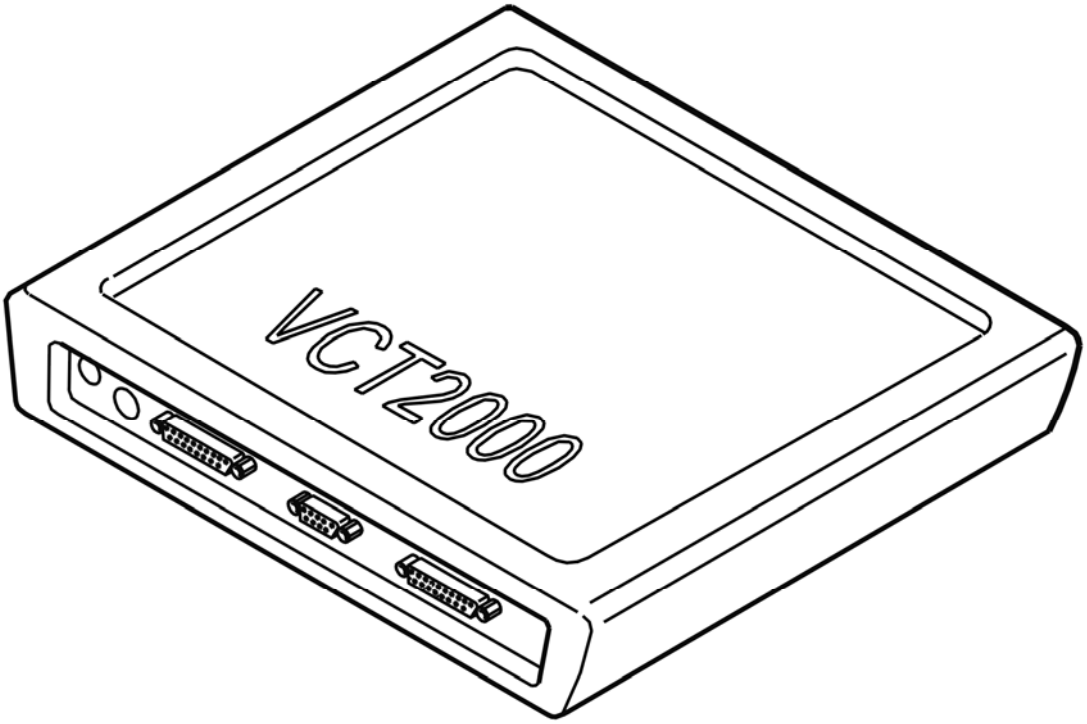

Fig. 358: Identifying VCT2000 Diagnostic Tool Symbol In VIDA
Courtesy of VOLVO CARS CORPORATION

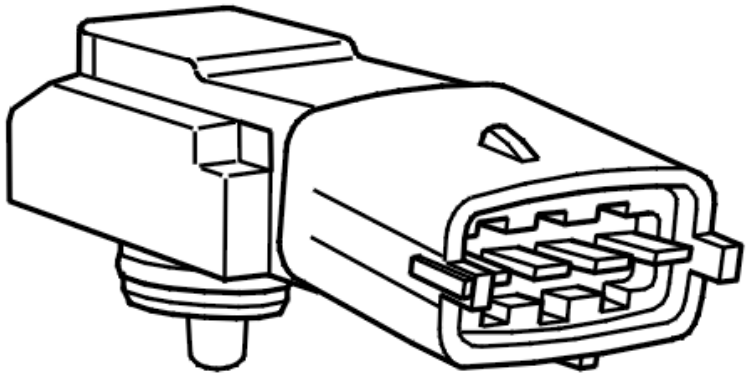

Fig. 359: Identifying Fuel Pressure Sensor
Courtesy of VOLVO CARS CORPORATION

Are the values equal?

- **YES**

  Refer to **CHECKING COMPONENTS**

- **NO**

  Refer to **CHECKING COMPONENTS AND WIRING**

CHECKING COMPONENTS

Check the connectors between the pump control module and the fuel pump (FP). Check for contact resistance and oxidation.

Remedy as necessary.

Try a new pump unit if no fault is found during the above fault-tracing.

Other information:

- see **CHECKING WIRING AND TERMINALS**
- To access or replace the pump control module, see **CONTROL MODULE FUEL PUMP (FP), REPLACING** .

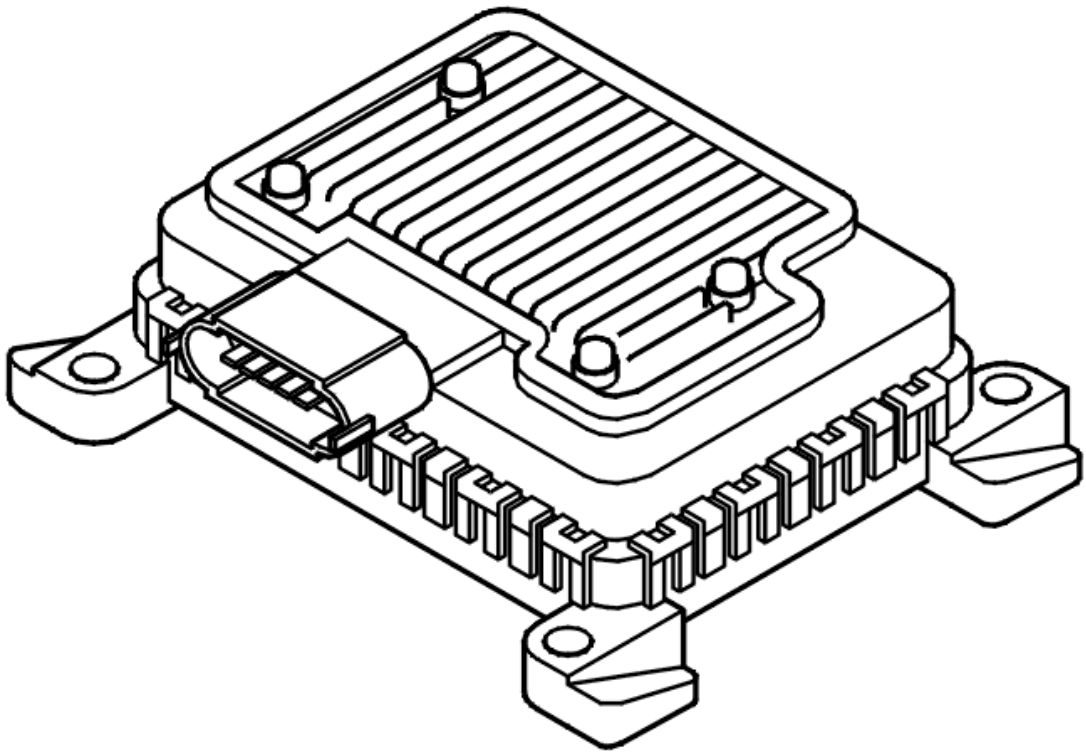

Fig. 360: Identifying Fuel Pump (FP) Control Module
Courtesy of VOLVO CARS CORPORATION

- **Continue**

  Refer to **VERIFICATION**

CHECKING COMPONENTS AND WIRING

Check the fuel pressure sensor connectors. Check for contact resistance and oxidation.

Remedy as necessary.

Try a new fuel pressure sensor if no fault is found during the above fault-tracing.

Other information:

- see **CHECKING WIRING AND TERMINALS**
- To connect the breakout box, see **CONNECTING THE BREAKOUT BOX**

- For 5 cylinder turbocharged engines -2004, see **SIGNAL DESCRIPTION**
- For 5 cylinder turbocharged engines 2005-, see **SIGNAL SPECIFICATION** .
- For 6 cylinder engines -2004, see **SIGNAL SPECIFICATION**
- For 6 cylinder engines 2005-, see **SIGNAL SPECIFICATION** .
- To access or replace the fuel pressure sensor, see **FUEL PRESSURE SENSOR, REPLACEMENT** .

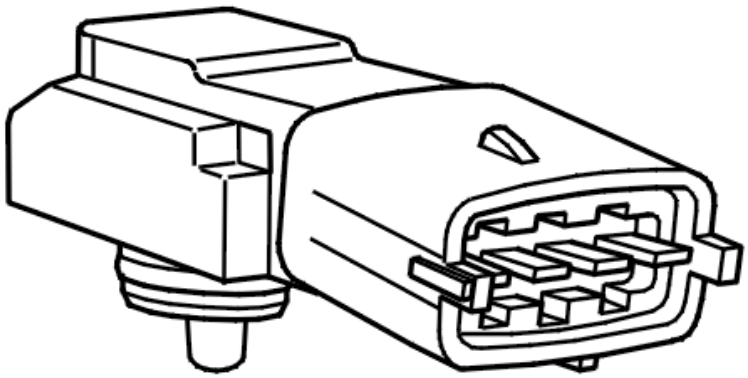

Fig. 361: Identifying Fuel Pressure Sensor
Courtesy of VOLVO CARS CORPORATION

- **Continue**

  Refer to **VERIFICATION**

VERIFICATION

VERIFICATION

HINT: After carrying out the repair, check that the fault has been remedied.

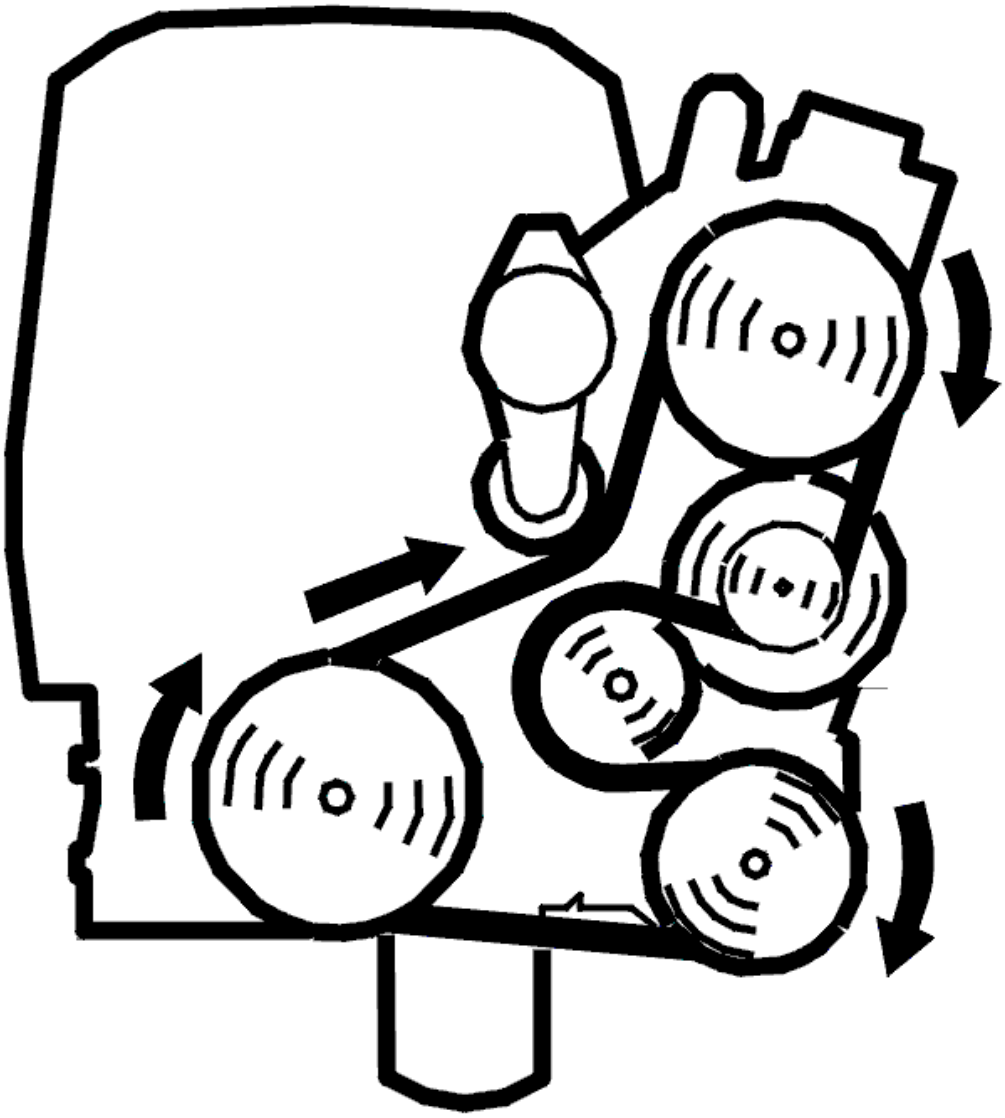

Fig. 362: Belt Routing / Engine Idling - Volvo
Courtesy of VOLVO CARS CORPORATION

- Connect the manometer, see **FUEL PRESSURE GAUGE**
- Run the engine to operating temperature. Allow the engine to idle
- air conditioning (A/C) off
- Read off the relative fuel pressure.

  The relative fuel pressure is calculated from the fuel pressure sensor and the atmospheric pressure sensor signal (= absolute pressure minus atmospheric pressure).

  Check that the value on the manometer and the value displayed in VIDA (Volvo scan tool) are the same. If the values are different, this indicates incorrect function.

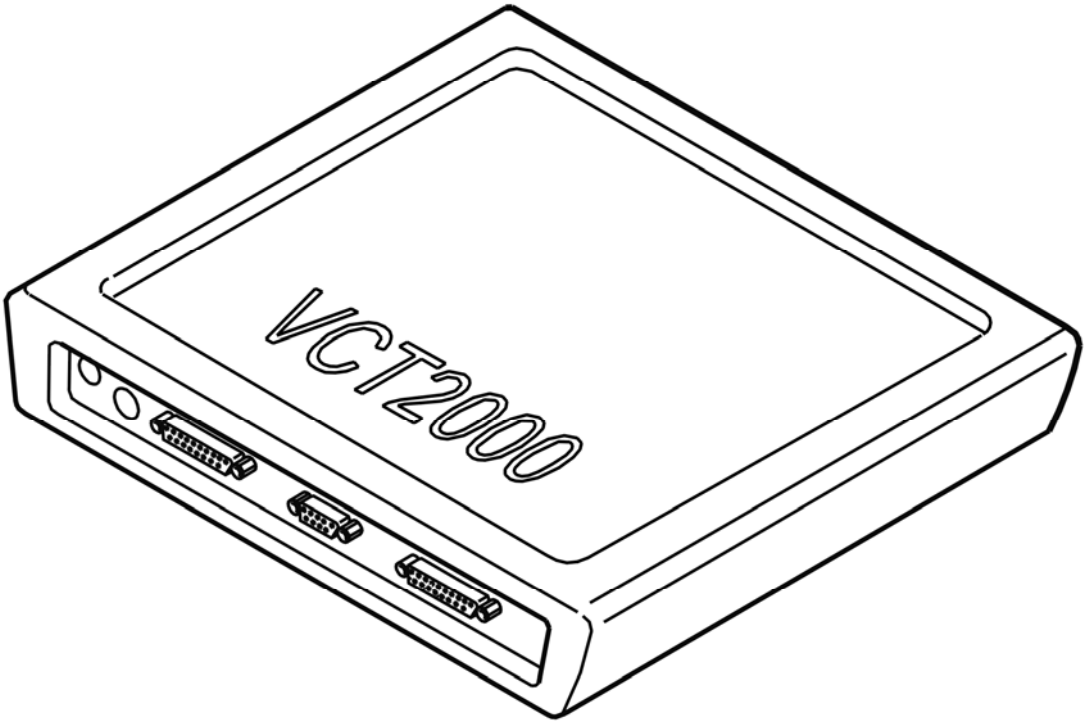

Fig. 363: Identifying VCT2000 Diagnostic Tool Symbol In VIDA
Courtesy of VOLVO CARS CORPORATION

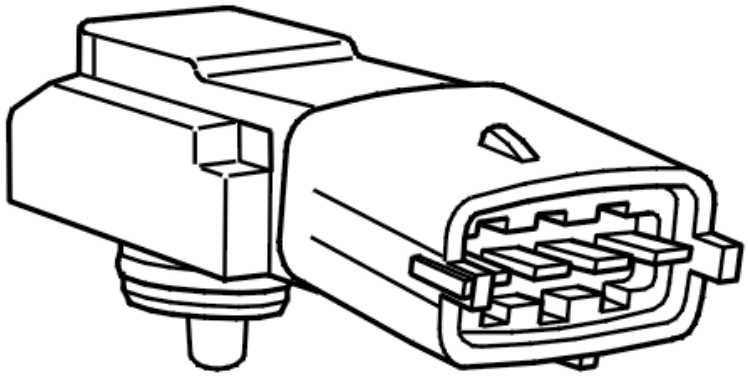

Fig. 364: Identifying Fuel Pressure Sensor
Courtesy of VOLVO CARS CORPORATION

Is the function OK?

- **YES**

  VERIFIED: Troubleshooting has been completed.

- **NO**

  Refer to **INFORMATION**

VERIFICATION

VERIFICATION

HINT: After carrying out the repair, check that the fault has been remedied.

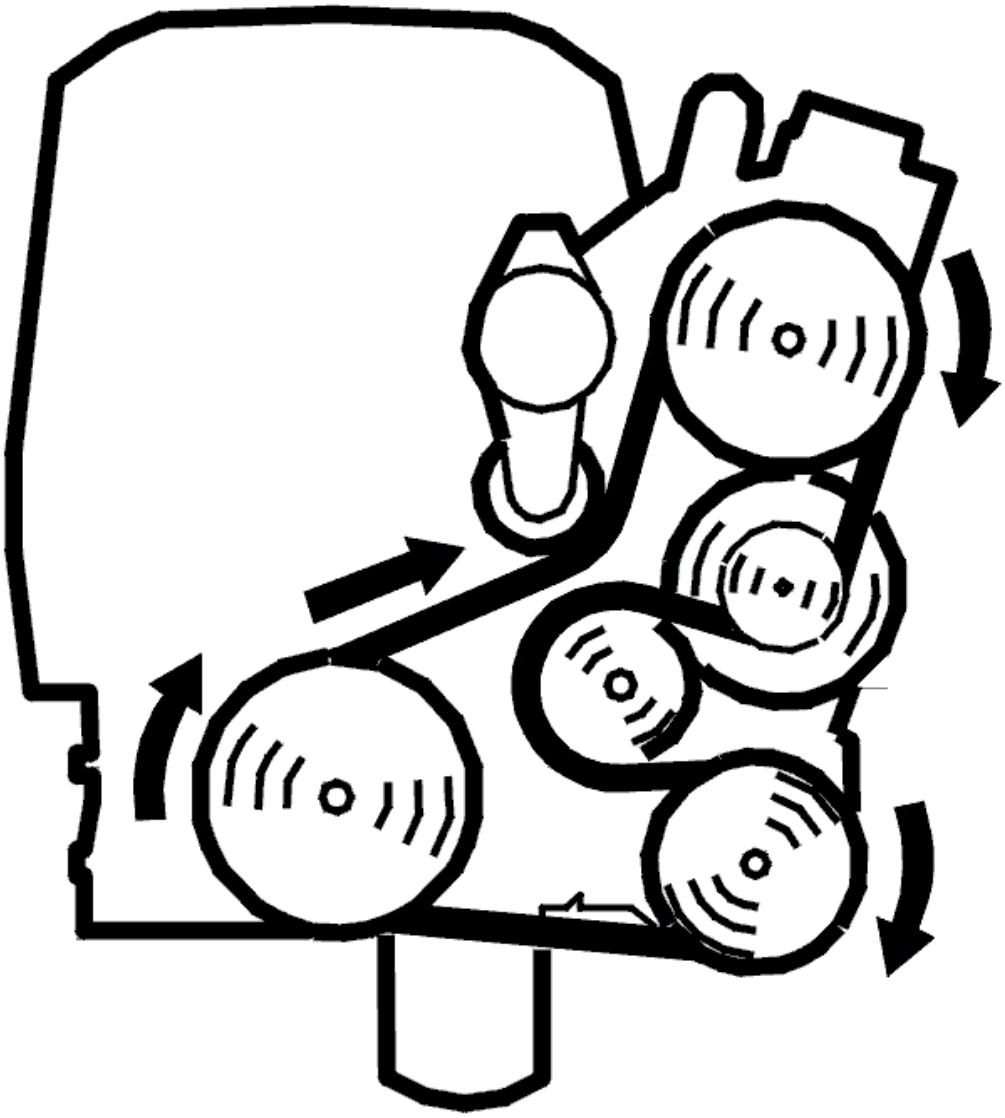

Fig. 365: Belt Routing / Engine Idling - Volvo
Courtesy of VOLVO CARS CORPORATION

- Run the engine to operating temperature. Allow the engine to idle
- air conditioning (A/C) off
- Read off the fuel pressure and the fuel pressure desired value
- Start the quick test when the engine is running at idling.

During the course of the quick test, the control module will steer the pressure to different target values in different stages (400, 500, 600 and finally 700 kPa), after which the pressure will be decreased in stages to the same pressure. Each stage lasts for approximately 5 seconds.

NOTE: **Because the by-pass valve in the fuel pump (FP) will be open at approximately 650 kPa, the pressure will not go higher than this.**

HINT: The illustration to the left shows an example of normal regulation.

- The upper digital display and the graphic display (red font color) indicate the absolute fuel pressure, calculated from the fuel pressure sensor
- The lower digital display and the graphic display (yellow font color) indicate the control module target value for the absolute fuel pressure
- The lower digital display indicates the relative fuel pressure (white font color), calculated from the fuel pressure sensor and the atmospheric pressure sensor (= absolute pressure minus atmospheric pressure). If a manometer is connected during the test, it should indicate this pressure.

Check that the value for absolute fuel pressure is the same as the target value for absolute fuel pressure. If the values are not the same, this indicates a fault in the pressure regulation. The values may differ during the quick test when the target value is changed. This is due to sluggishness in the fuel regulation and is normal. In some cases, it can take up to 5 seconds before the fuel pressure reaches the target value for the fuel pressure.

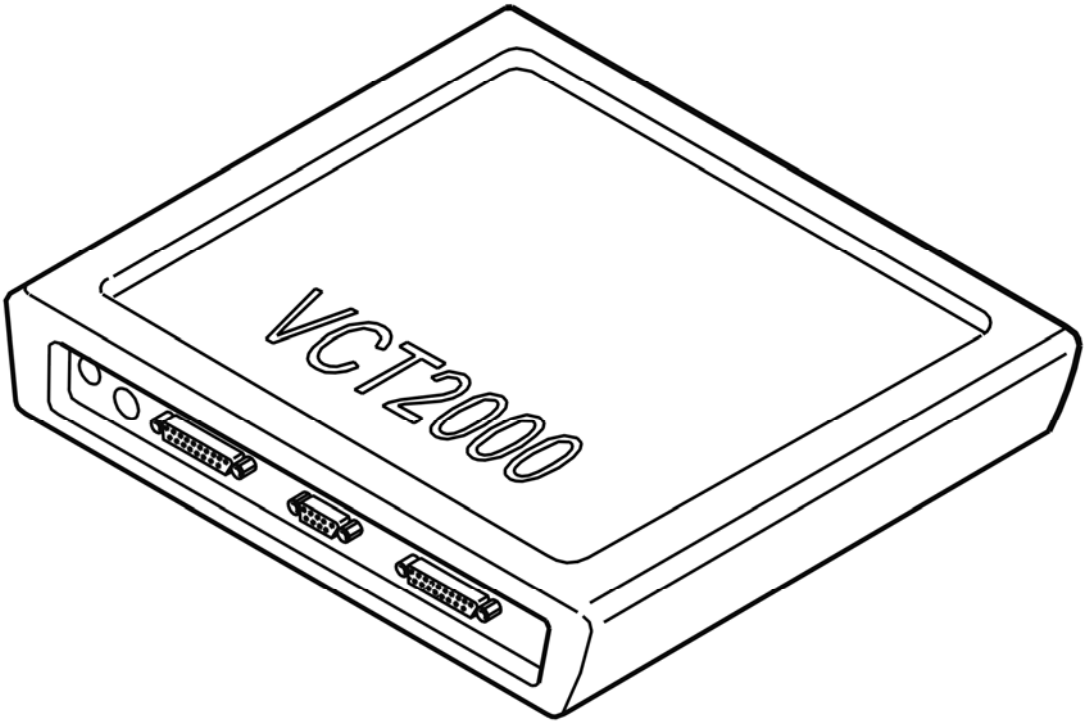

Fig. 366: Identifying VCT2000 Diagnostic Tool Symbol In VIDA
Courtesy of VOLVO CARS CORPORATION

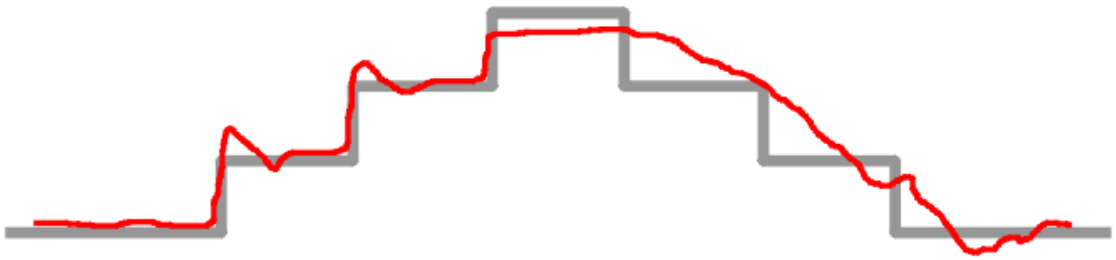

Fig. 367: Identifying Example Of Normal Regulation
Courtesy of VOLVO CARS CORPORATION

Is the function OK?

- **YES**

  VERIFIED: Troubleshooting has been completed.

- **NO**

  Refer to **INFORMATION**

INFORMATION

FAULT-TRACING INFORMATION

The fault should have been detected and remedied. As this is not the case fault-tracing has failed.

Exit fault-tracing for this diagnostic trouble code (DTC) or make another attempt.

ECM-290C: FUEL PRESSURE. SIGNAL TOO HIGH (B5254T2; 2007)

DIAGNOSTIC TROUBLE CODE (DTC) INFORMATION ECM-290C

see **DIAGNOSTIC TROUBLE CODE (DTC) INFORMATION ECM-290C**

SIGNAL TOO HIGH

CHECKING THE DIAGNOSTIC TROUBLE CODES (DTCS)

Check if there are diagnostic trouble codes stored for fuel pressure sensor or ambient pressure sensor, in that case troubleshoot and fix these first.

Do you want to continue with this procedure?

- **YES**

  Refer to **CHECKING THE FUEL PRESSURE SENSOR**

CHECKING THE FUEL PRESSURE SENSOR

NOTE: If diagnostic trouble codes (DTC) for the fuel pressure sensor or atmospheric pressure sensor are stored, these diagnostic trouble codes (DTC) must be fault-traced and remedied first.

HINT: The method below is used to check whether the diagnostic trouble code (DTC) was caused by a faulty fuel pressure sensor. This can be done by comparing the fuel pressure sensor signal (displayed in VIDA (Volvo scan tool)) with the actual fuel pressure (displayed on a manometer connected to the wiring for the fuel injection system).

- Connect the manometer, see **FUEL PRESSURE GAUGE** .

  NOTE: The pressure in the fuel injection system can reach approximately 650 kPa when this diagnostic trouble code (DTC) is stored. Use an adapted manometer.

- Run the engine to operating temperature. Allow the engine to idle
- air conditioning (A/C) off
- Read off the relative fuel pressure.

  The relative fuel pressure is calculated from the fuel pressure sensor and the atmospheric pressure sensor signal (= absolute pressure minus atmospheric pressure).

  Check that the value on the manometer and the value displayed in VIDA (Volvo scan tool) are roughly the same. If the values are different, the circuit for the fuel pressure sensor is defective.

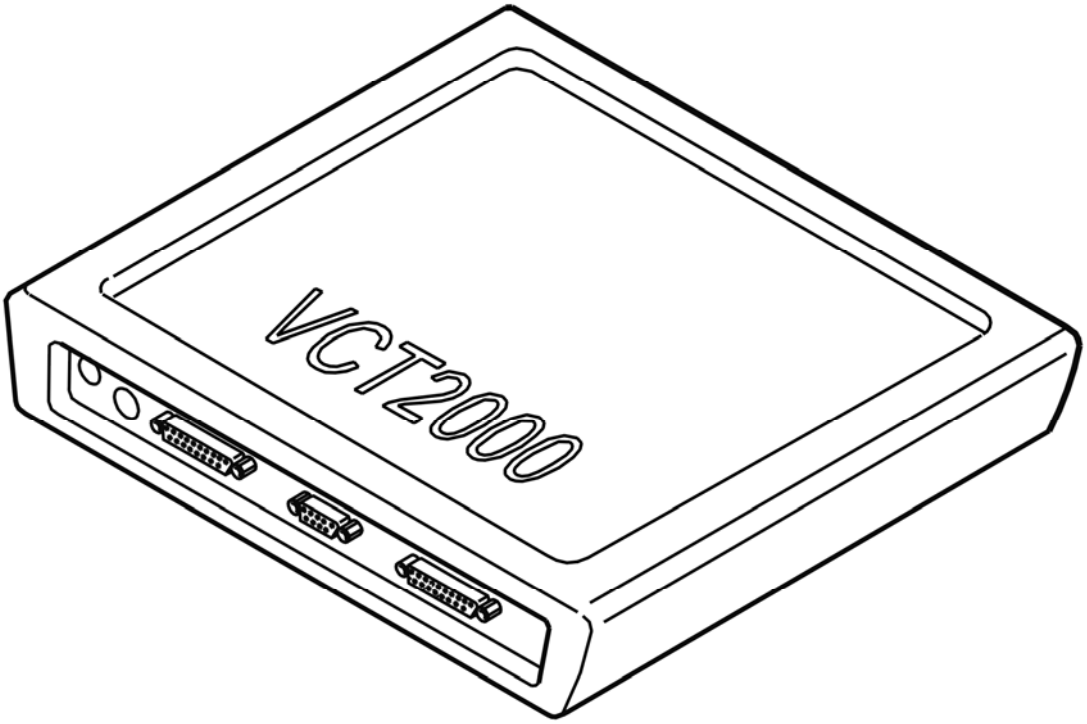

Fig. 368: Identifying VCT2000 Diagnostic Tool Symbol In VIDA
Courtesy of VOLVO CARS CORPORATION

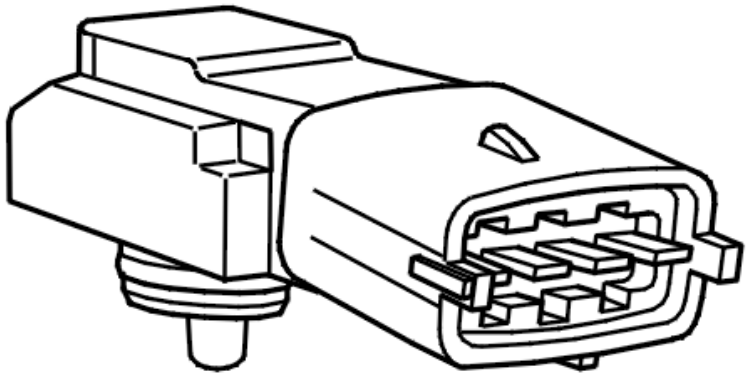

Fig. 369: Identifying Fuel Pressure Sensor
Courtesy of VOLVO CARS CORPORATION

Are the values equal?

- **YES**

  Refer to **CHECKING COMPONENTS**

- **NO**

  Refer to **CHECKING COMPONENTS AND WIRING**

CHECKING COMPONENTS

Check the connectors between the pump control module and the fuel pump (FP). Check for contact resistance and oxidation.

Remedy as necessary.

Try a new pump unit if no fault is found during the above fault-tracing.

Other information:

- see **CHECKING WIRING AND TERMINALS**
- see **FUEL PUMP DRIVER MODULE**

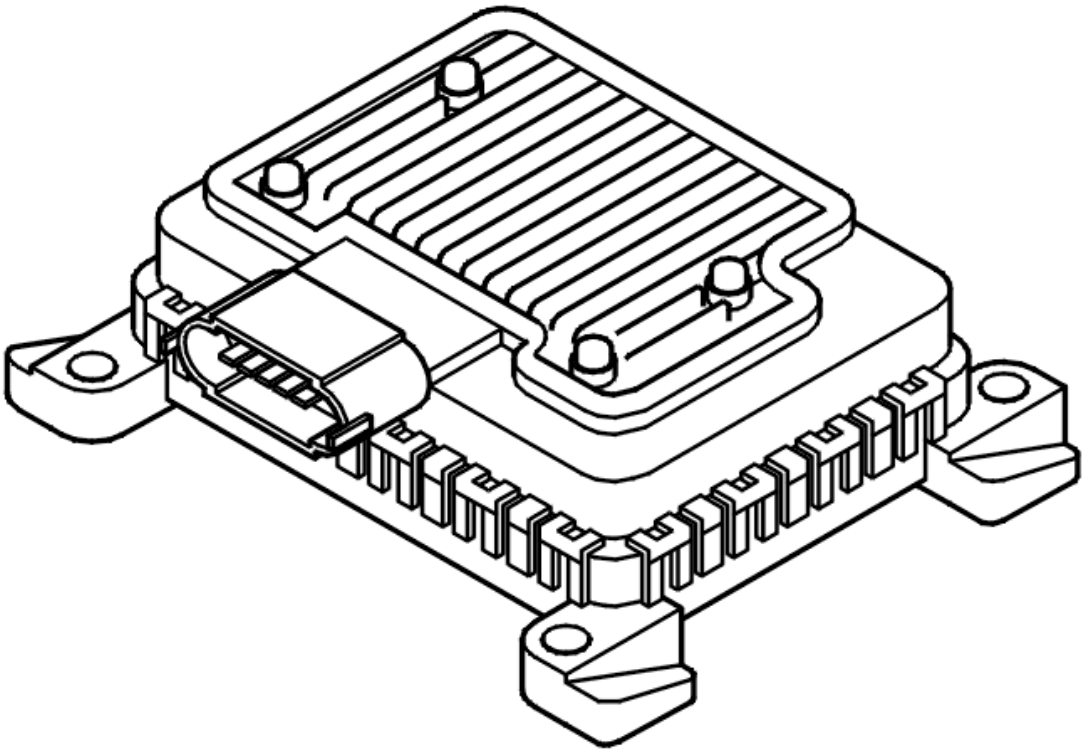

Fig. 370: Identifying Fuel Pump (FP) Control Module
Courtesy of VOLVO CARS CORPORATION

- **Continue**

  Refer to **VERIFICATION**

CHECKING COMPONENTS AND WIRING

Check the fuel pressure sensor connectors. Check for contact resistance and oxidation.

Remedy as necessary.

Try a new fuel pressure sensor if no fault is found during the above fault-tracing.

Other information:

- see **CHECKING WIRING AND TERMINALS**
- To connect the breakout box, see **CONNECTING THE BREAKOUT BOX**
- For 5 cylinder turbocharged engines -2004, see **SIGNAL DESCRIPTION**

- For 5 cylinder turbocharged engines 2005-, see **SIGNAL SPECIFICATION** .
- To access or replace the fuel pressure sensor, see **FUEL PRESSURE SENSOR, REPLACEMENT** .

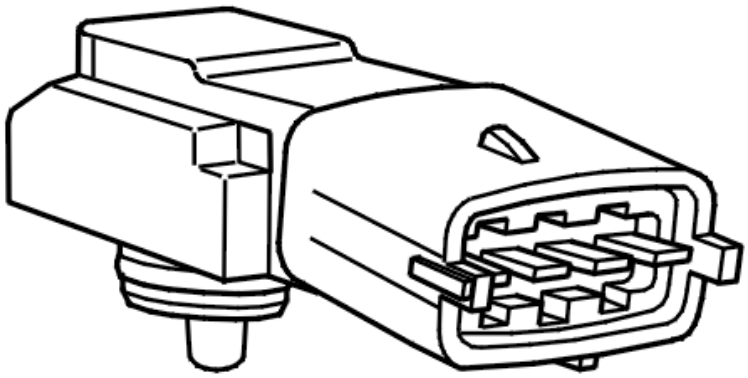

Fig. 371: Identifying Fuel Pressure Sensor
Courtesy of VOLVO CARS CORPORATION

- **Continue**

  Refer to **VERIFICATION**

VERIFICATION

VERIFICATION

HINT: After carrying out the repair, check that the fault has been remedied.

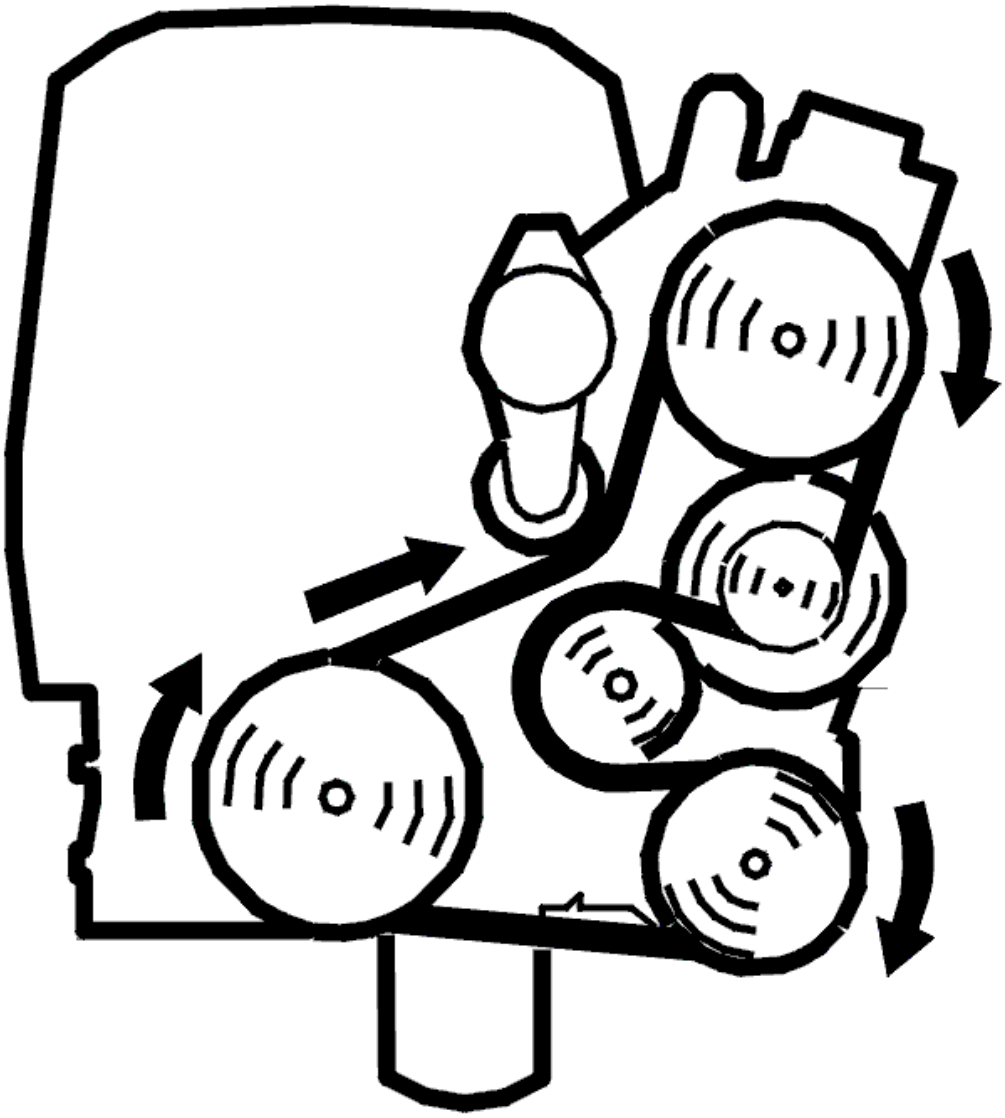

Fig. 372: Belt Routing / Engine Idling - Volvo
Courtesy of VOLVO CARS CORPORATION

- Connect the manometer, see **FUEL PRESSURE GAUGE**
- Run the engine to operating temperature. Allow the engine to idle
- air conditioning (A/C) off
- Read off the relative fuel pressure.

  The relative fuel pressure is calculated from the fuel pressure sensor and the atmospheric pressure sensor signal (= absolute pressure minus atmospheric pressure).

  Check that the value on the manometer and the value displayed in VIDA (Volvo scan tool) are the same. If the values are different, this indicates incorrect function.

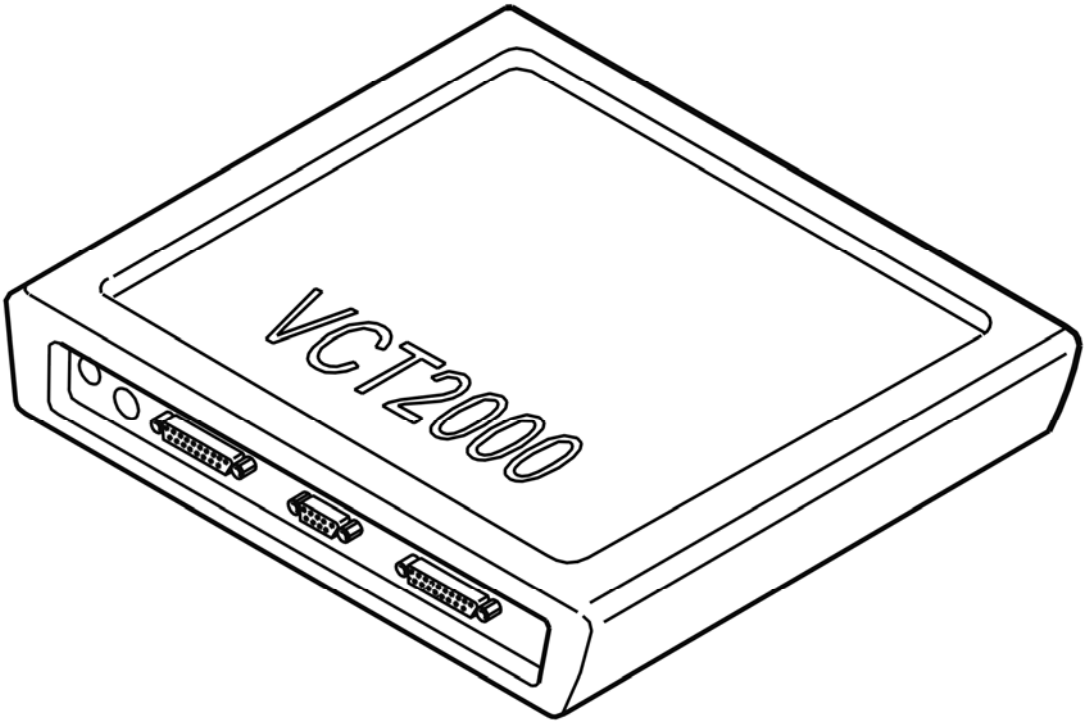

Fig. 373: Identifying VCT2000 Diagnostic Tool Symbol In VIDA
Courtesy of VOLVO CARS CORPORATION

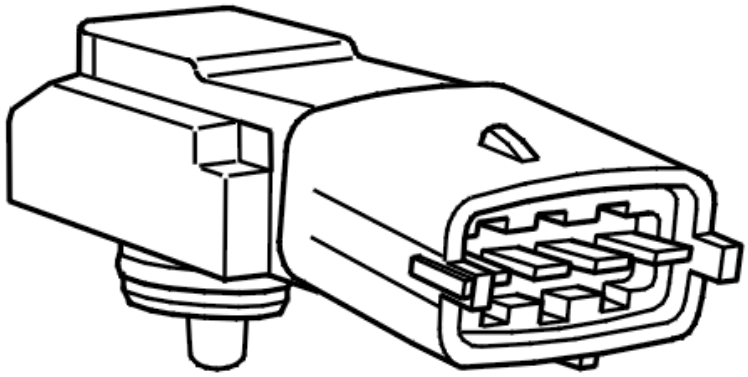

Fig. 374: Identifying Fuel Pressure Sensor
Courtesy of VOLVO CARS CORPORATION

Is the function OK?

- **YES**

  VERIFIED: Troubleshooting has been completed.

- **NO**

  Refer to **INFORMATION**

VERIFICATION

VERIFICATION

HINT: After carrying out the repair, check that the fault has been remedied.

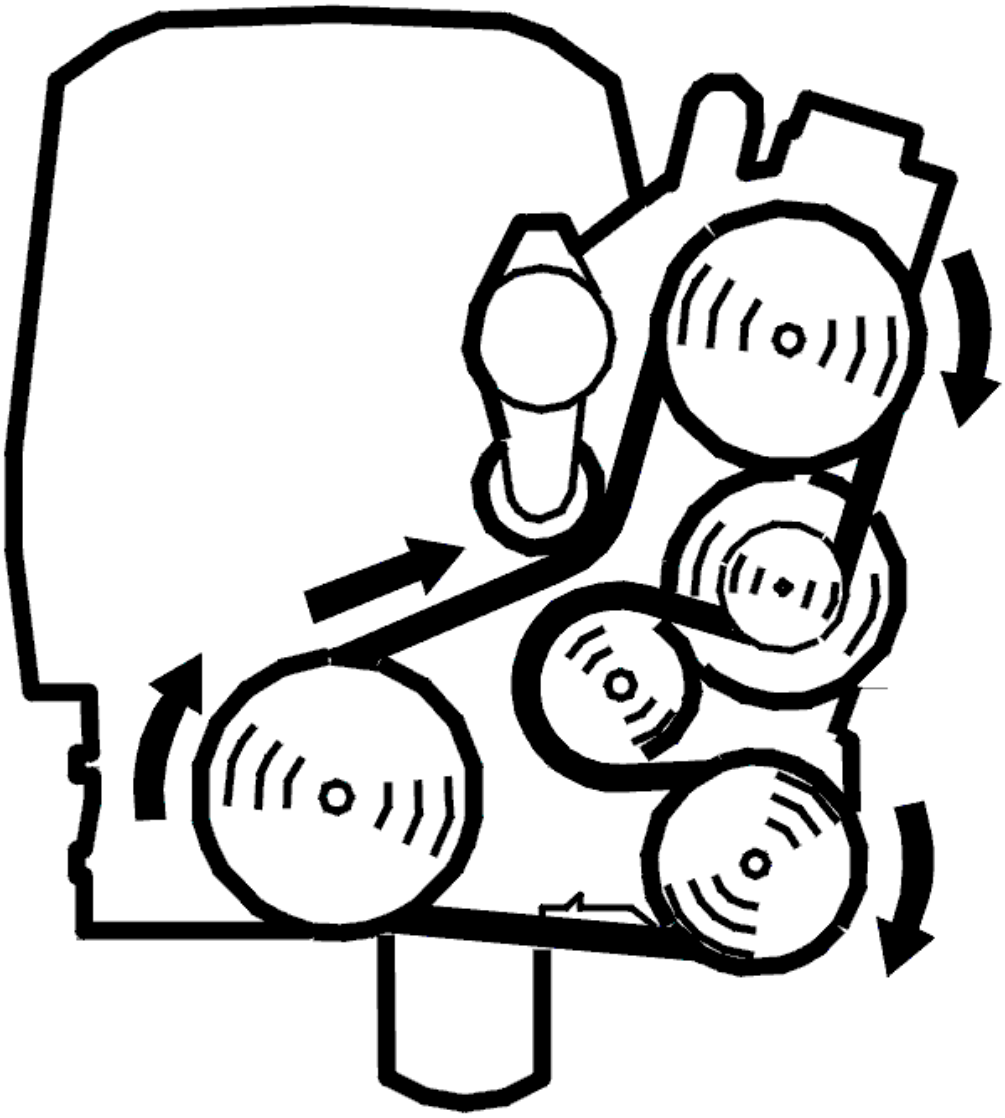

Fig. 375: Belt Routing / Engine Idling - Volvo
Courtesy of VOLVO CARS CORPORATION

- Run the engine to operating temperature. Allow the engine to idle.
- air conditioning (A/C) off
- Read off the fuel pressure and the fuel pressure desired value.
- Start the quick test when the engine is running at idling.

During the course of the quick test, the control module regulates the pressure for different target values in different steps (530, 490, 450, 410, 440, 490, 530 kPa). Each step takes 10 seconds. The test usually starts with the pressure momentarily going up to 650 kPa.

NOTE: **Because the by-pass valve in the fuel pump (FP) will be open at approximately 650 kPa, the pressure will not go higher than this.**

HINT: The illustration to the left shows an example of normal regulation.

- The upper digital display and the graphic display (red font color) indicate the absolute fuel pressure, calculated from the fuel pressure sensor
- The central digital display and the graphic display (blue font color) indicate the control module target value for the absolute fuel pressure
- The lower digital display indicates the relative fuel pressure (white font color), calculated from the fuel pressure sensor and the atmospheric pressure sensor (= absolute pressure minus atmospheric pressure). If a manometer is connected during the test, it must indicate this pressure.

Check that the value for absolute fuel pressure is the same as the target value for absolute fuel pressure. If the values are not the same, this indicates a fault in the pressure regulation. The values may differ during the quick test when the target value is changed. This is due to sluggishness in the fuel regulation and is normal. In some cases, it can take up to 5 seconds before the fuel pressure reaches the target value for the fuel pressure.

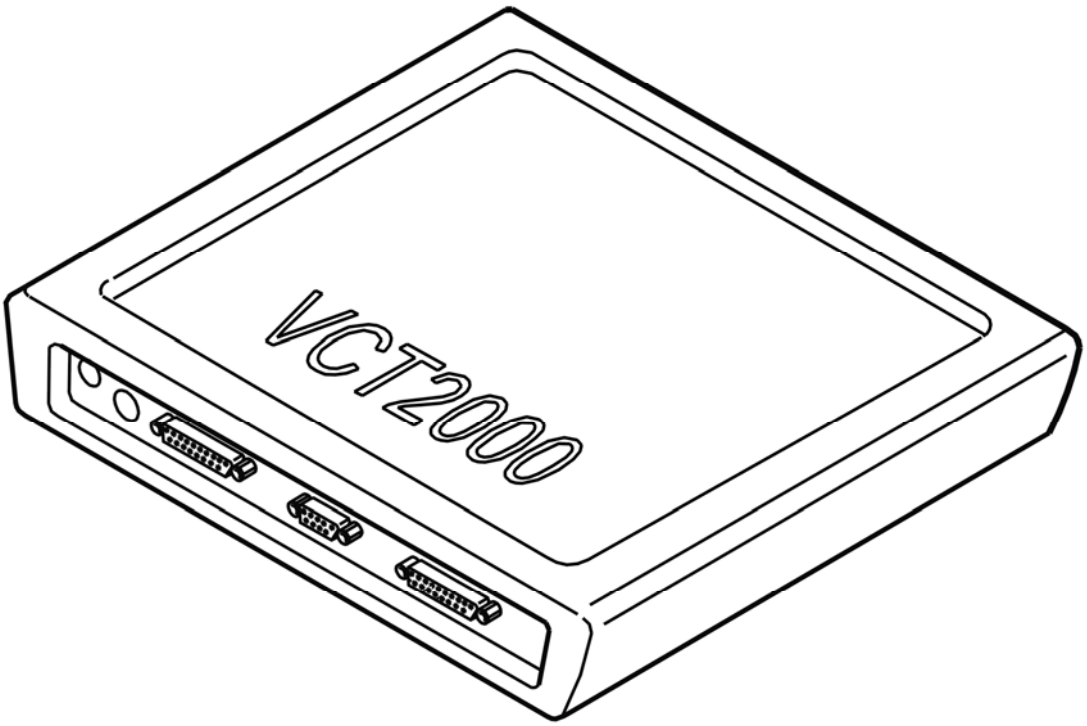

Fig. 376: Identifying VCT2000 Diagnostic Tool Symbol In VIDA
Courtesy of VOLVO CARS CORPORATION

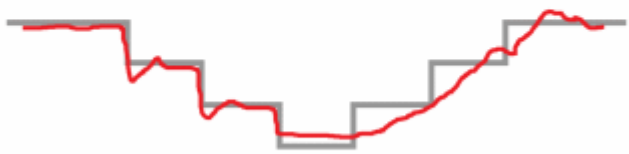

Fig. 377: Identifying Upper Digital Display And Graphic Display (Red Font Color)
Courtesy of VOLVO CARS CORPORATION

Is the function OK?

- **YES**

  VERIFIED: Troubleshooting has been completed.

- **NO**

  Refer to **INFORMATION**

INFORMATION

FAULT-TRACING INFORMATION

The fault should have been detected and remedied. As this is not the case fault-tracing has failed.

Exit fault-tracing for this diagnostic trouble code (DTC) or make another attempt.

ECM-290D: FUEL PRESSURE. SIGNAL TOO LOW (B5254T2; 2007)

DIAGNOSTIC TROUBLE CODE (DTC) INFORMATION ECM-290D

Condition

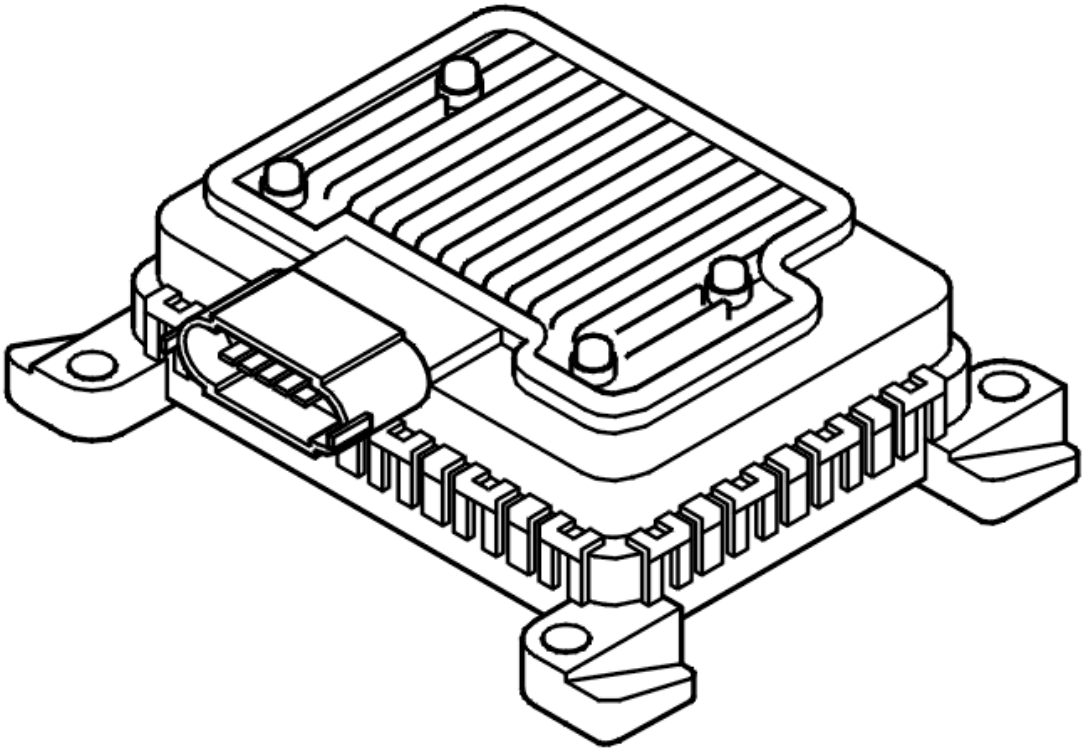

Fig. 378: Identifying Fuel Pump (FP) Control Module
Courtesy of VOLVO CARS CORPORATION

The engine control module (ECM) controls the fuel pressure via the fuel pump (FP) control module using a pulse width modulation (PWM) signal. The fuel pump (FP) control module then controls the fuel pump (FP) depending on the pressure requested by the engine control module (ECM). The diagnostic trouble code (DTC) is stored if the actual pressure (measured pressure from the fuel pressure sensor) is too low in comparison with the requested pressure (target pressure) during a certain time frame.

The diagnostic trouble code (DTC) can be diagnosed when the engine is running.

Substitute Value

- None.

Possible Source

- Leakage at the fuel lines
- Damaged fuel pressure sensor
- Damaged fuel pump
- Damaged fuel pump control module.

Fault symptom[s]

- Malfunction indicator lamp (MIL) lit
- Deterioration in performance
- The engine stops.
- Starting/Engine does not start/Engine turns

SIGNAL TOO LOW

CHECKING THE DIAGNOSTIC TROUBLE CODES (DTCS)

Check if there are diagnostic trouble codes stored for fuel pressure sensor or ambient pressure sensor, in that case troubleshoot and fix these first.

Do you want to continue with this procedure?

- **YES**

  Refer to **CHECKING THE FUEL PRESSURE SENSOR**

- **NO**

  OKAY: Troubleshooting has been completed.

CHECKING THE FUEL PRESSURE SENSOR

NOTE: **If diagnostic trouble codes (DTC) for the fuel pressure sensor or atmospheric pressure sensor are stored, these diagnostic trouble codes (DTC) must be fault-traced and remedied first.**

HINT: The method below is used to check whether the diagnostic trouble code (DTC) was caused by a faulty fuel pressure sensor. This can be done by comparing the fuel pressure sensor signal (displayed in VIDA (Volvo scan tool)) with the actual fuel pressure (displayed on a manometer connected to the wiring for the fuel injection system). This method assumes that the manometer for measuring fuel pressure is correctly calibrated.

- To connect the manometer, see **FUEL PRESSURE GAUGE**
- Run the engine to operating temperature. Allow the engine to idle
- air conditioning (A/C) off
- Read off the relative fuel pressure.

  The relative fuel pressure is calculated from the fuel pressure sensor and the atmospheric pressure sensor signal (= absolute pressure minus atmospheric pressure).

  Check that the value on the manometer and the value displayed in VIDA (Volvo scan tool) are the same. If the values are different, the circuit for the fuel pressure sensor is defective.

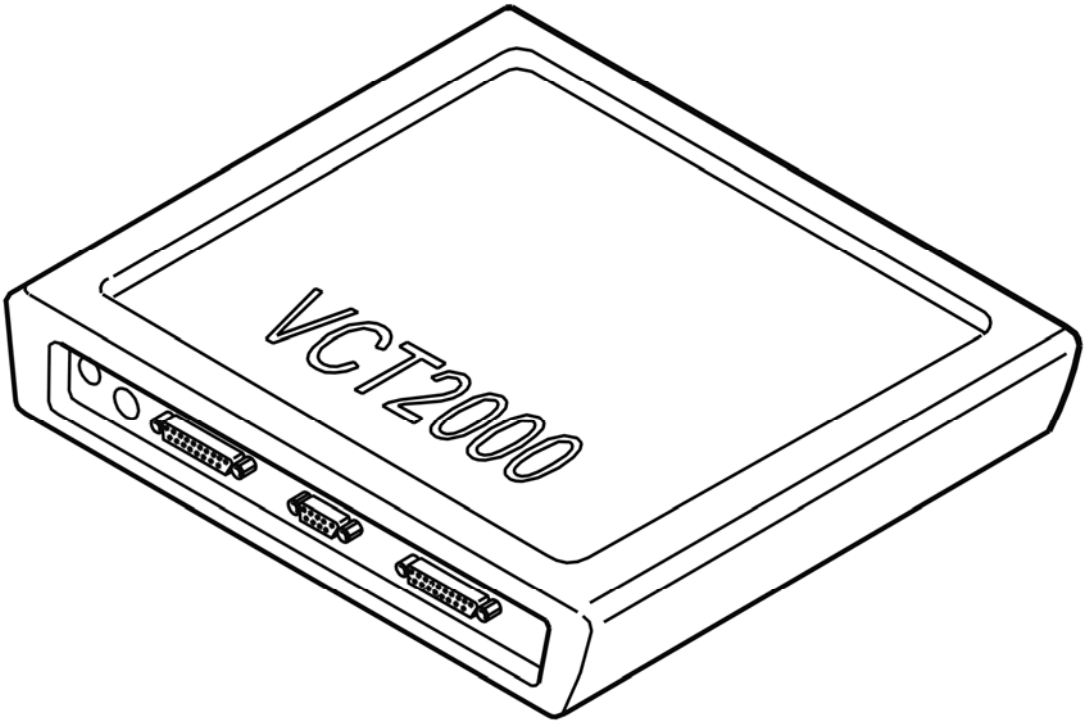

Fig. 379: Identifying VCT2000 Diagnostic Tool Symbol In VIDA
Courtesy of VOLVO CARS CORPORATION

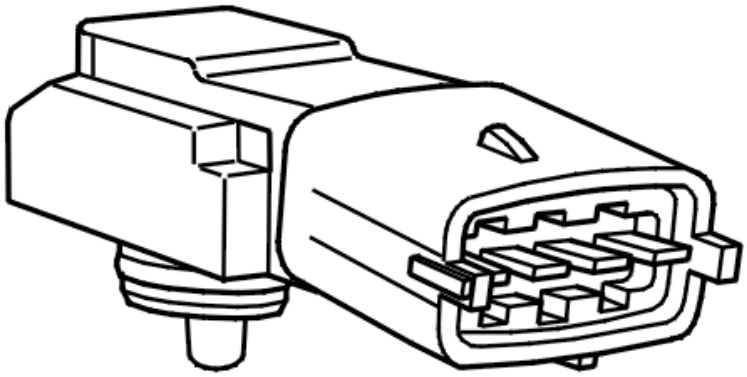

Fig. 380: Identifying Fuel Pressure Sensor
Courtesy of VOLVO CARS CORPORATION

Is the fuel pressure sensor correct?

- **YES**

  Refer to **CHECKING REGULATION OF THE FUEL PRESSURE**

- **NO**

  Refer to **CHECKING COMPONENTS AND WIRING**

CHECKING REGULATION OF THE FUEL PRESSURE

WARNING: **In this test, the pressure in the fuel injection system will reach approximately 650 kPa. Disconnect the pressure gauge, as it is not intended to be used at such high pressures.**

HINT: The method described below is used to check the control of the pressure in the fuel injection system by activating the quick test for the fuel pump (FP). If the pressure gauge for pressures up to 650 kPa is connected, the fuel pressure sensor can also be checked during this test.

NOTE: In this test, the complete flow capacity of the system is not tested.

- Disconnect the manometer unless it is adapted for pressures higher than 650 kPa
- Run the engine to operating temperature. Allow the engine to idle
- air conditioning (A/C) off
- Read off the fuel pressure and the fuel pressure desired value
- Start the quick test when the engine is running at idling.

During the course of the quick test, the control module regulates the pressure for different target values in different steps (530, 490, 450, 410, 440, 490, 530 kPa). Each step takes 10 seconds. The test usually starts with the pressure momentarily going up to 650 kPa.

NOTE: Because the by-pass valve in the fuel pump (FP) will be open at approximately 650 kPa, the pressure will not go higher than this.

HINT: The illustration to the left shows an example of normal regulation.

- The upper digital display and the graphic display (red font color) indicate the absolute fuel pressure, calculated from the fuel pressure sensor
- The lower digital display and the graphic display (yellow font color) indicate the control module target value for the absolute fuel pressure
- The lower digital display indicates the relative fuel pressure (white font color), calculated from the fuel pressure sensor and the atmospheric pressure sensor (= absolute pressure minus atmospheric pressure). If a manometer is connected during the test, it should indicate this pressure.

Check that the value for absolute fuel pressure is the same as the target value for absolute fuel pressure. If the values are not the same, this indicates a fault in the pressure regulation. The values may differ during the quick test when the target value is changed. This is due to sluggishness in the fuel regulation and is normal. In some cases, it can take up to 5 seconds before the fuel pressure reaches the target value for the fuel pressure.

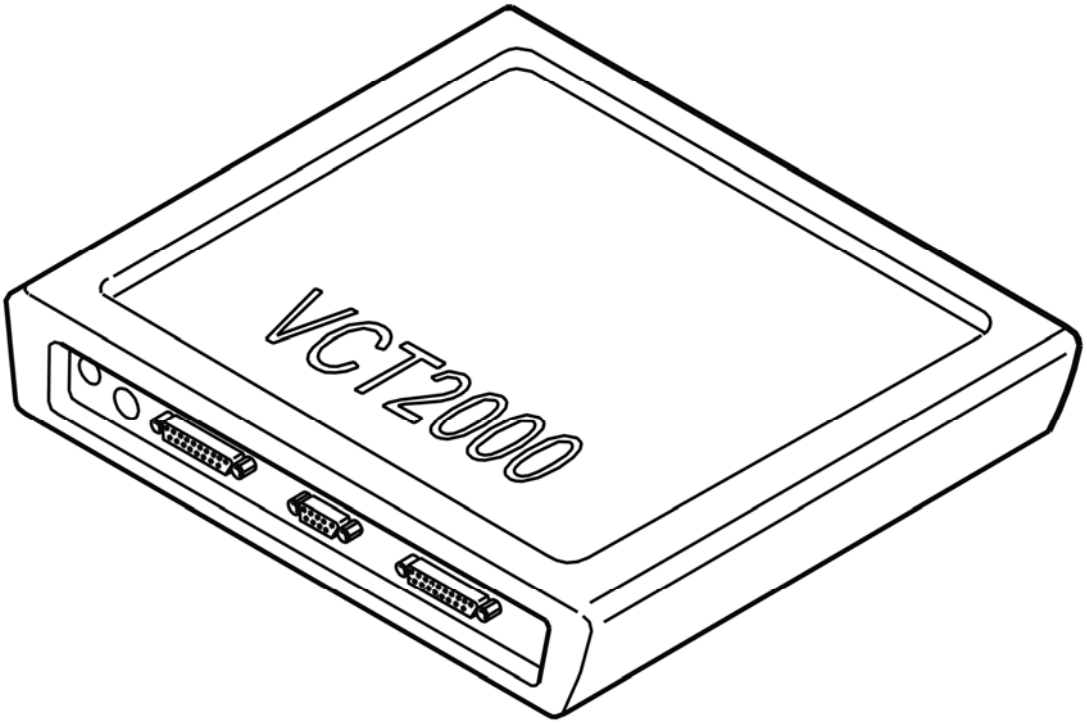

Fig. 381: Identifying VCT2000 Diagnostic Tool Symbol In VIDA
Courtesy of VOLVO CARS CORPORATION

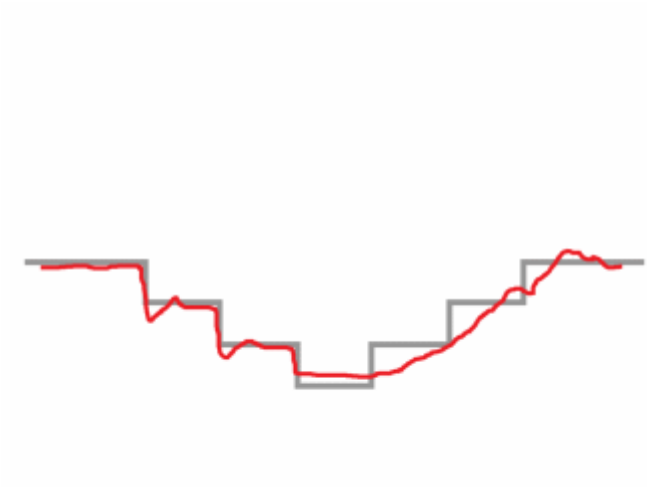

Fig. 382: Identifying Upper Digital Display And Graphic Display (Red Font Color)
Courtesy of VOLVO CARS CORPORATION

Is the pressure regulation correct?

- **YES**

Refer to **CHECKING COMPONENTS**

- **NO**

  Refer to **CHECKING COMPONENTS**

CHECKING COMPONENTS

HINT: The fault may be intermittent or be due to the flow capacity in the system being too low.

Check that the fuel level in the tank is not too low (almost no fuel).

Check the fuel lines between the fuel pump (FP) and the fuel rail for the injectors for leakage.

Check the fuel pressure sensor connectors. Check for contact resistance and oxidation.

Check the pump control module connector. Check for contact resistance and oxidation.

Check the fuel lines and fuel filter for blockage.

Remedy as necessary.

Try a new fuel pump (FP) if no fault is found during the above fault-tracing.

Other information:

- see **CHECKING WIRING AND TERMINALS**
- To connect the breakout box, see **CONNECTING THE BREAKOUT BOX**
- For 5 cylinder turbocharged engines -2004, see **SIGNAL DESCRIPTION**
- For 5 cylinder turbocharged engines 2005-, see **SIGNAL SPECIFICATION** .
- see **LEVEL SENSOR, FUEL TANK, RIGHT-HAND/FUEL TANK, REPLACING**
- see **FUEL PUMP DRIVER MODULE**

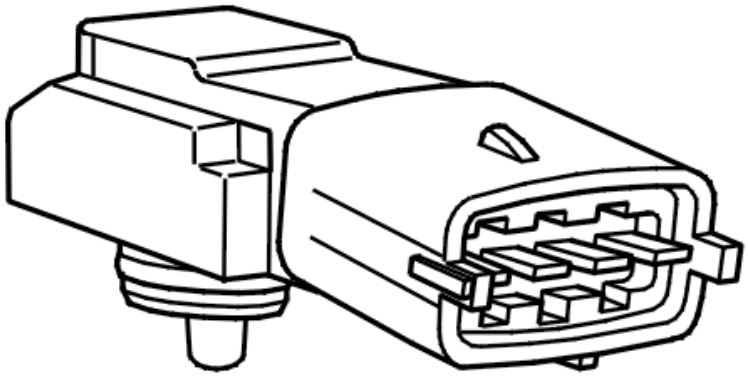

Fig. 383: Identifying Fuel Pressure Sensor
Courtesy of VOLVO CARS CORPORATION

- **Continue**

  Refer to **INFORMATION**

CHECKING COMPONENTS AND WIRING

Check the fuel pressure sensor connectors. Check for contact resistance and oxidation.

Remedy as necessary.

Try a new fuel pressure sensor if no fault is found during the above fault-tracing.

Other information:

- see **CHECKING WIRING AND TERMINALS**
- To connect the breakout box, see **CONNECTING THE BREAKOUT BOX**
- For 5 cylinder turbocharged engines -2004, see **SIGNAL DESCRIPTION**
- For 5 cylinder turbocharged engines 2005-, see **SIGNAL SPECIFICATION** .
- To access or replace the fuel pressure sensor, see **FUEL PRESSURE SENSOR, REPLACEMENT** .

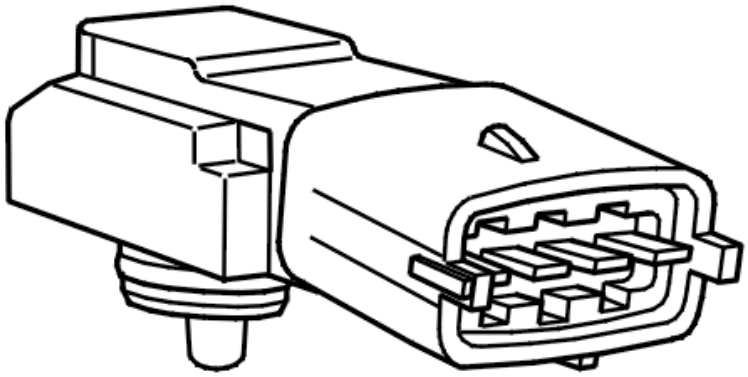

Fig. 384: Identifying Fuel Pressure Sensor
Courtesy of VOLVO CARS CORPORATION

- **Continue**

  Refer to **VERIFICATION**

CHECKING COMPONENTS

Check that the fuel level in the tank is not too low (almost no fuel).

Check the connectors between the pump control module and the fuel pump (FP). Check for contact resistance and oxidation.

Check the fuel lines and fuel filter for blockage.

Remedy as necessary.

Try a new fuel pump (FP) if no fault is found during the above fault-tracing.

HINT: The diagnostic trouble code (DTC) can also be caused by a defective pump control module.

Other information:

- see **CHECKING WIRING AND TERMINALS**
- see **LEVEL SENSOR, FUEL TANK, RIGHT-HAND/FUEL TANK, REPLACING**
- see **FUEL PUMP DRIVER MODULE**
- **Continue**

  Refer to **VERIFICATION**

INFORMATION

FAULT-TRACING INFORMATION

If the fault is intermittent, do not verify fault-tracing if the fault does not recur.

It is possible to view the information again, or leave fault-tracing for this diagnostic trouble code (DTC).

VERIFICATION

VERIFICATION

HINT: After carrying out the repair, check that the fault has been remedied.

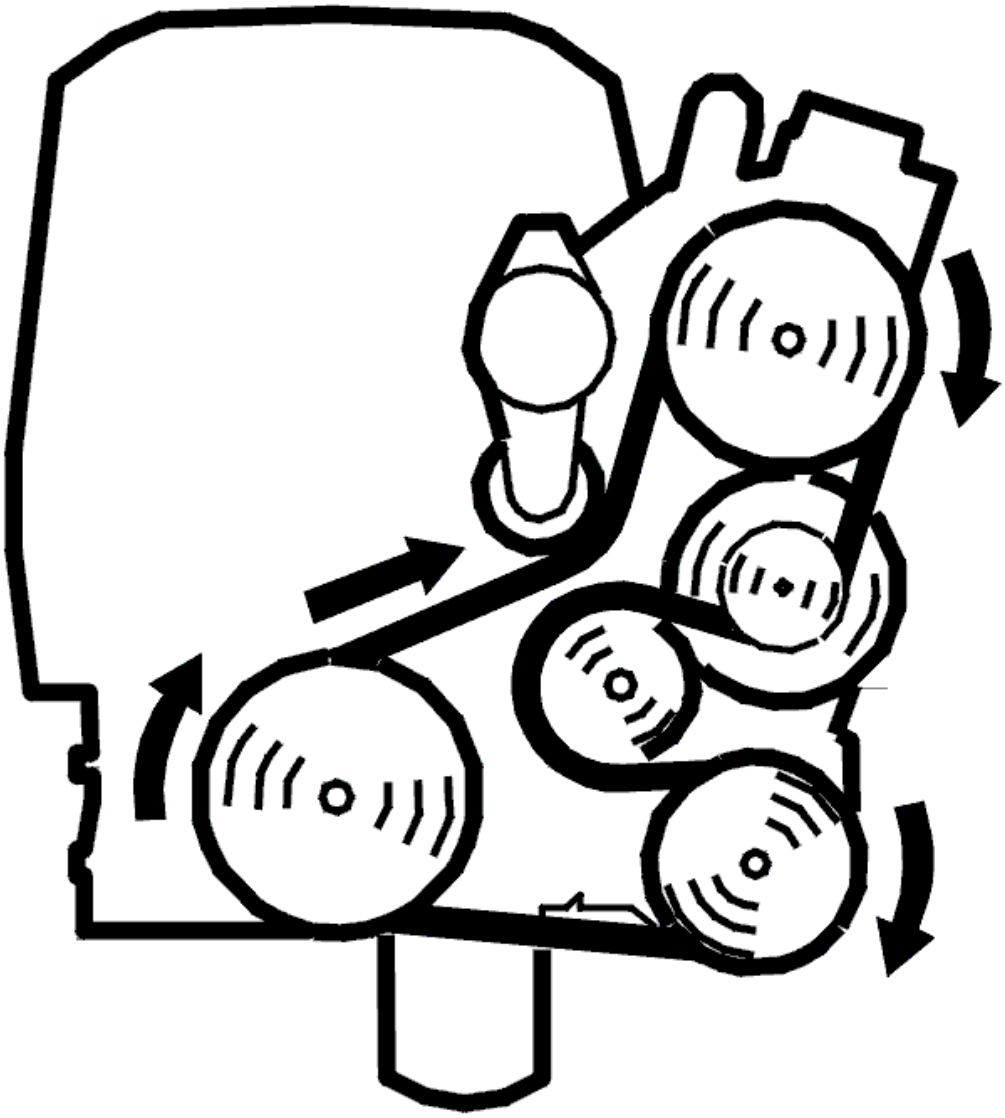

Fig. 385: Belt Routing / Engine Idling - Volvo
Courtesy of VOLVO CARS CORPORATION

- Run the engine to operating temperature. Allow the engine to idle
- air conditioning (A/C) off
- Read off the fuel pressure and the fuel pressure desired value
- Start the quick test when the engine is running at idling.

During the course of the quick test, the control module regulates the pressure for different target values in different steps (530, 490, 450, 410, 440, 490, 530 kPa). Each step takes 10 seconds. The test usually starts with the pressure momentarily going up to 650 kPa.

NOTE: **Because the by-pass valve in the fuel pump (FP) will be open at approximately 650 kPa, the pressure will not go higher than this.**

HINT: The illustration to the left shows an example of normal regulation.

- The upper digital display and the graphic display (red font color) indicate the absolute fuel pressure, calculated from the fuel pressure sensor
- The lower digital display and the graphic display (yellow font color) indicate the control module target value for the absolute fuel pressure
- The lower digital display indicates the relative fuel pressure (white font color), calculated from the fuel pressure sensor and the atmospheric pressure sensor (= absolute pressure minus atmospheric pressure). If a manometer is connected during the test, it should indicate this pressure.

Check that the value for absolute fuel pressure is the same as the target value for absolute fuel pressure. If the values are not the same, this indicates a fault in the pressure regulation. The values may differ during the quick test when the target value is changed. This is due to sluggishness in the fuel regulation and is normal. In some cases, it can take up to 5 seconds before the fuel pressure reaches the target value for the fuel pressure.

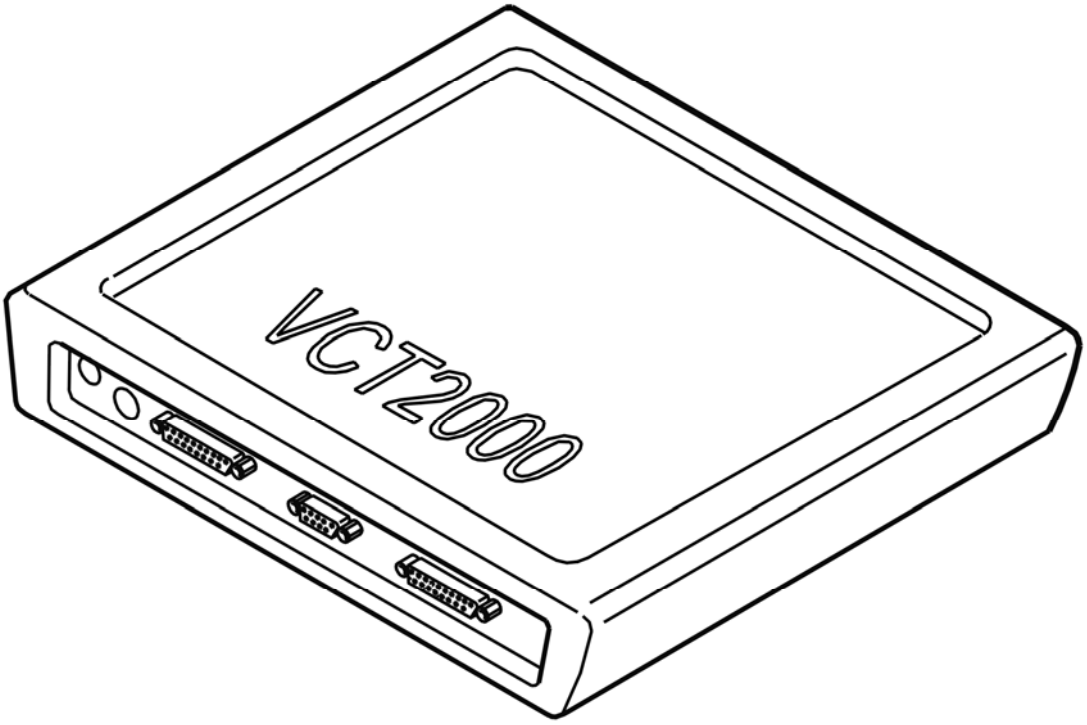

Fig. 386: Identifying VCT2000 Diagnostic Tool Symbol In VIDA
Courtesy of VOLVO CARS CORPORATION

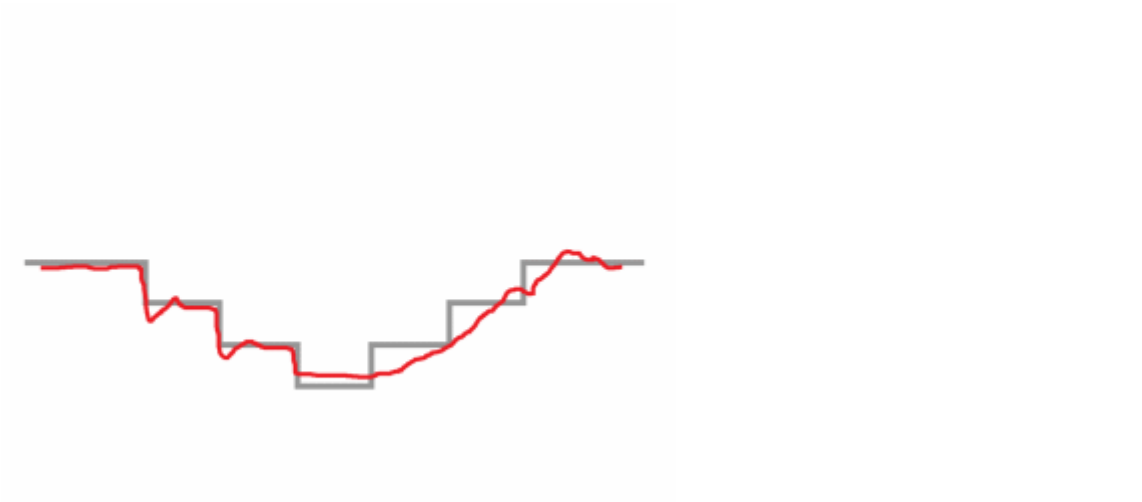

Fig. 387: Identifying Upper Digital Display And Graphic Display (Red Font Color)
Courtesy of VOLVO CARS CORPORATION

Is the function OK?

- **YES**

  VERIFIED: Troubleshooting has been completed.

- **NO**

  Refer to **INFORMATION**

VERIFICATION

VERIFICATION

HINT: After carrying out the repair, check that the fault has been remedied.

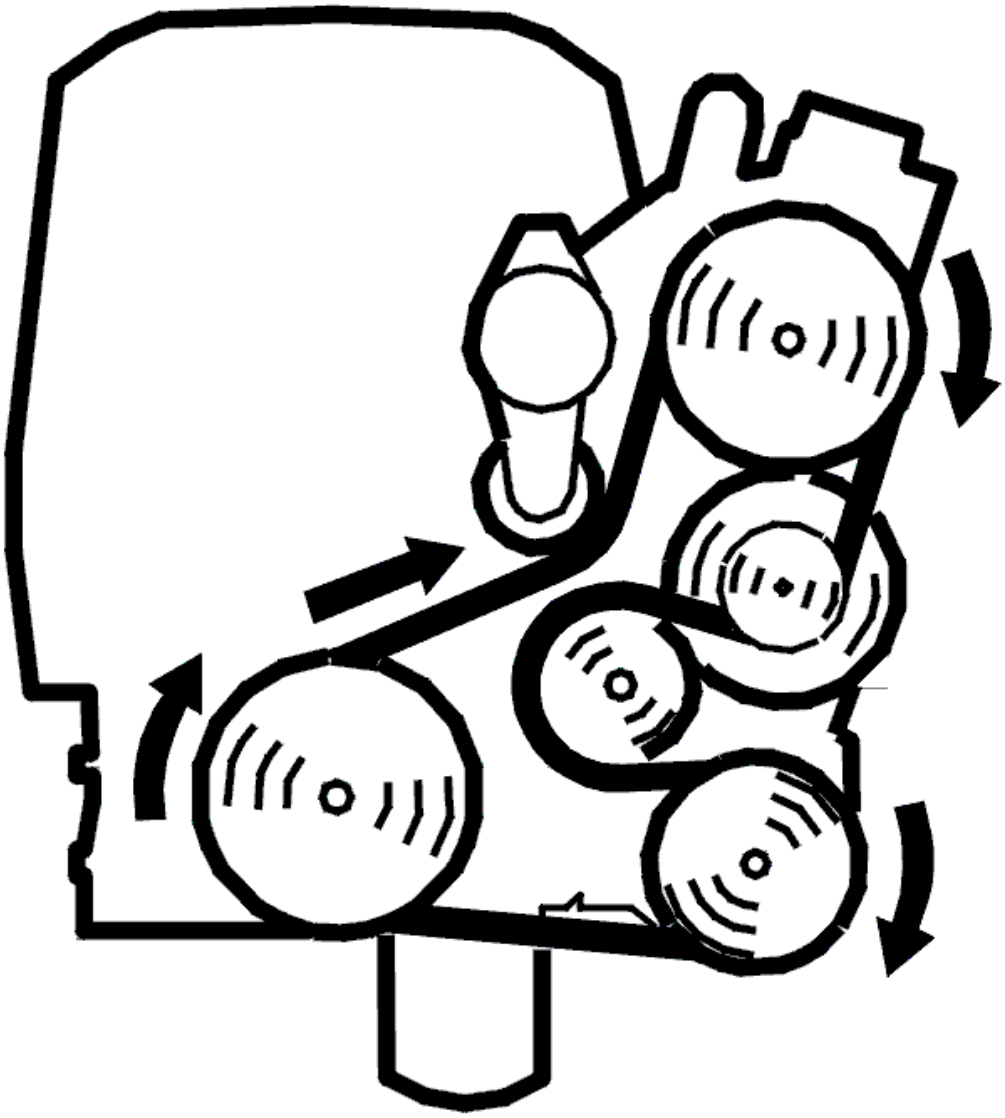

Fig. 388: Belt Routing / Engine Idling - Volvo
Courtesy of VOLVO CARS CORPORATION

- Connect the manometer, see **FUEL PRESSURE GAUGE**
- Run the engine to operating temperature. Allow the engine to idle
- air conditioning (A/C) off
- Read off the relative fuel pressure.

  The relative fuel pressure is calculated from the fuel pressure sensor and the atmospheric pressure sensor signal (= absolute pressure minus atmospheric pressure).

  Check that the value on the manometer and the value displayed in VIDA (Volvo scan tool) are the same. If the values are different, this indicates incorrect function.

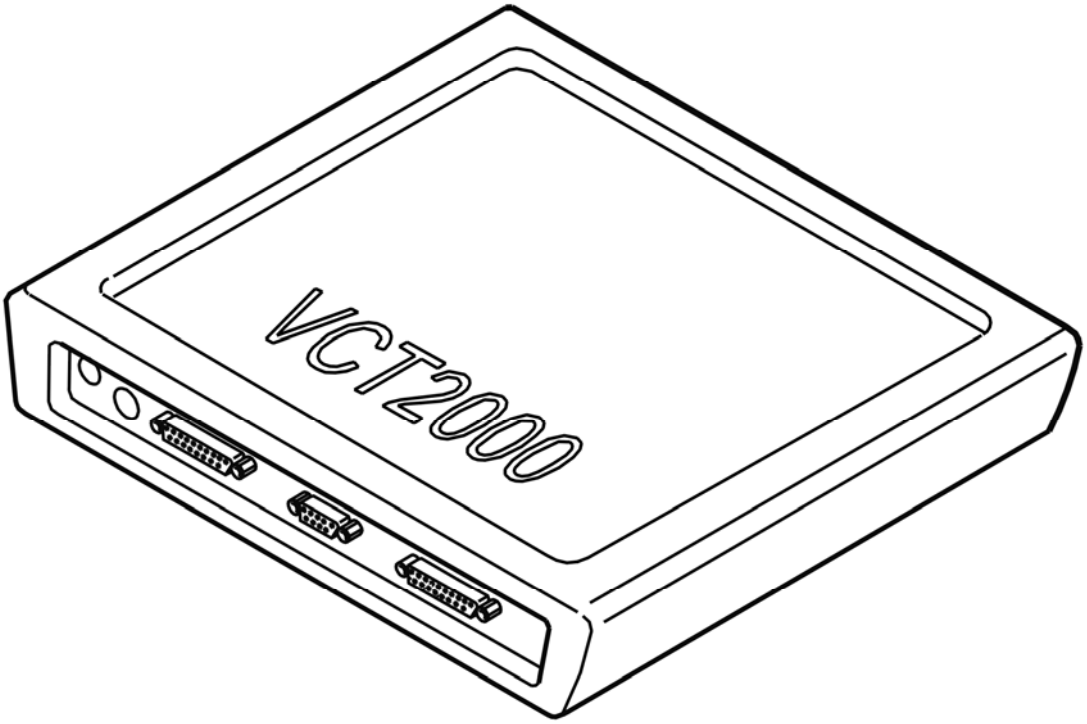

Fig. 389: Identifying VCT2000 Diagnostic Tool Symbol In VIDA
Courtesy of VOLVO CARS CORPORATION

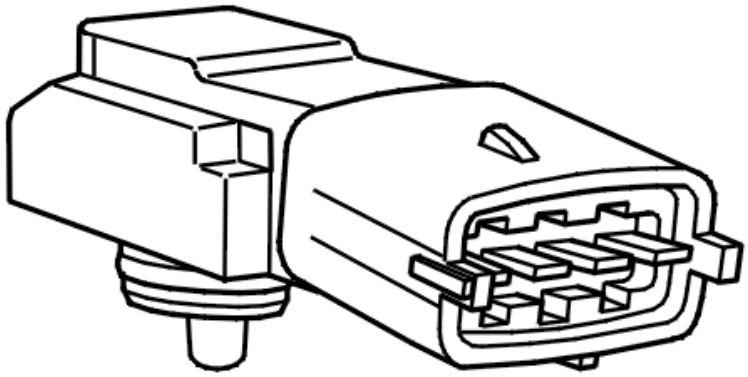

Fig. 390: Identifying Fuel Pressure Sensor
Courtesy of VOLVO CARS CORPORATION

Is the function OK?

- **YES**

  VERIFIED: Troubleshooting has been completed.

- **NO**

  Refer to **INFORMATION**

INFORMATION

FAULT-TRACING INFORMATION

The fault should have been detected and remedied. As this is not the case fault-tracing has failed.

Exit fault-tracing for this diagnostic trouble code (DTC) or make another attempt.

ECM-290D: FUEL PRESSURE. SIGNAL TOO LOW (B5254T2; B6294T; 2005-2006)

DIAGNOSTIC TROUBLE CODE (DTC) INFORMATION ECM-290D

see **DIAGNOSTIC TROUBLE CODE (DTC) INFORMATION ECM-290D**

SIGNAL TOO LOW

CHECKING THE DIAGNOSTIC TROUBLE CODES (DTCS)

Check if there are diagnostic trouble codes stored for fuel pressure sensor or ambient pressure sensor, in that case troubleshoot and fix these first.

Do you want to continue with this procedure?

- **YES**

  Refer to **CHECKING THE FUEL PRESSURE SENSOR**

- **NO**

  OKAY: Troubleshooting has been completed.

CHECKING THE FUEL PRESSURE SENSOR

NOTE: **If diagnostic trouble codes (DTC) for the fuel pressure sensor or atmospheric pressure sensor are stored, these diagnostic trouble codes (DTC) must be fault-traced and remedied first.**

HINT: The method below is used to check whether the diagnostic trouble code (DTC) was caused by a faulty fuel pressure sensor. This can be done by comparing the fuel pressure sensor signal (displayed in VIDA (Volvo scan tool)) with the actual fuel pressure (displayed on a manometer connected to the wiring for the fuel injection system). This method assumes that the manometer for measuring fuel pressure is correctly calibrated.

- To connect the manometer, see **FUEL PRESSURE GAUGE**
- Run the engine to operating temperature. Allow the engine to idle
- air conditioning (A/C) off
- Read off the relative fuel pressure.

  The relative fuel pressure is calculated from the fuel pressure sensor and the atmospheric pressure sensor signal (= absolute pressure minus atmospheric pressure).

  Check that the value on the manometer and the value displayed in VIDA (Volvo scan tool) are the same. If the values are different, the circuit for the fuel pressure sensor is defective.

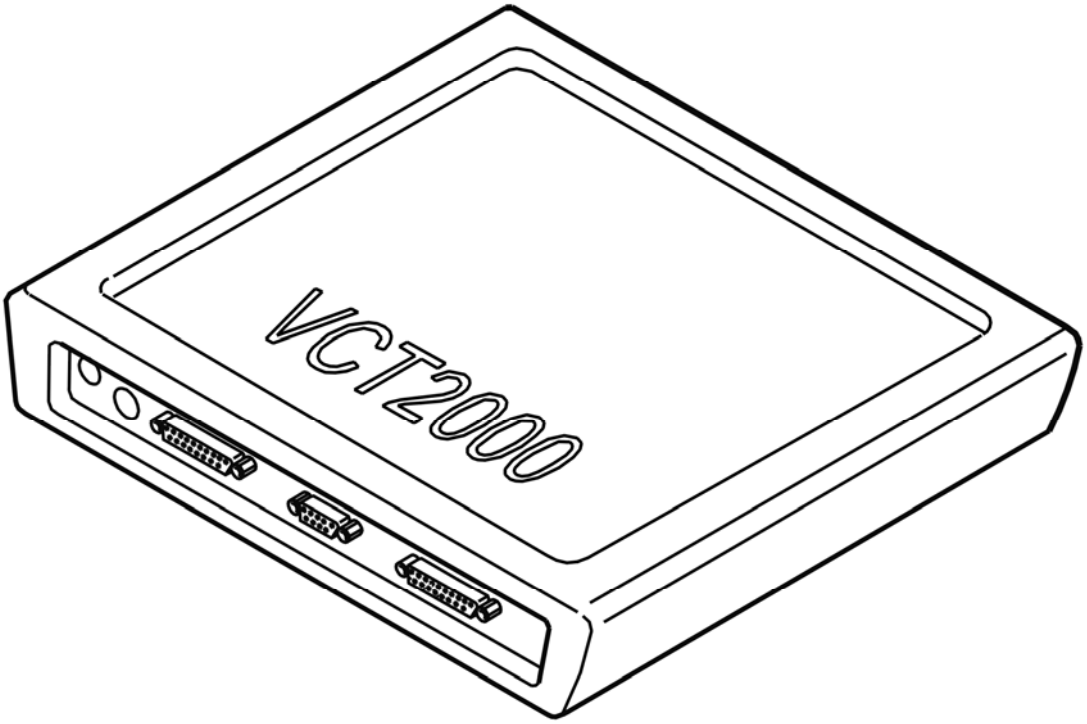

Fig. 1: Identifying VCT2000 Diagnostic Tool Symbol In VIDA
Courtesy of VOLVO CARS CORPORATION

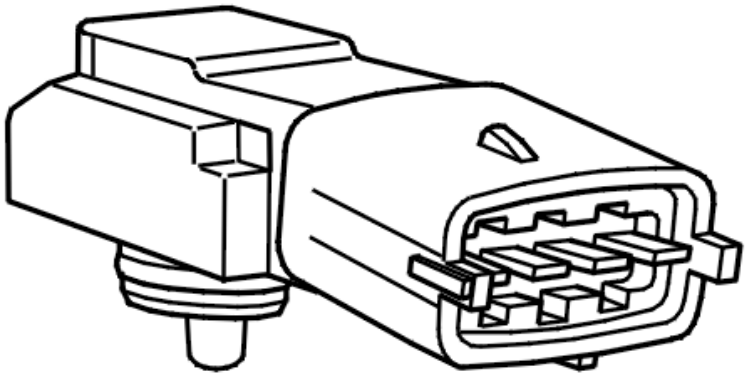

Fig. 2: Identifying Fuel Pressure Sensor
Courtesy of VOLVO CARS CORPORATION

Is the fuel pressure sensor correct?

- **YES**

  Refer to **CHECKING REGULATION OF THE FUEL PRESSURE**

- **NO**

  Refer to **CHECKING COMPONENTS AND WIRING**

CHECKING REGULATION OF THE FUEL PRESSURE

WARNING: **In this test, the pressure in the fuel injection system will reach approximately 650 kPa. Disconnect the pressure gauge, as it is not intended to be used at such high pressures.**

HINT: The method described below is used to check the control of the pressure in the fuel injection system by activating the quick test for the fuel pump (FP). If the pressure gauge for pressures up to 650 kPa is connected, the fuel pressure sensor can also be checked during this test.

NOTE: In this test, the complete flow capacity of the system is not tested.

- Disconnect the manometer unless it is adapted for pressures higher than 650 kPa
- Run the engine to operating temperature. Allow the engine to idle
- air conditioning (A/C) off
- Read off the fuel pressure and the fuel pressure desired value
- Start the quick test when the engine is running at idling.

During the course of the quick test, the control module will steer the pressure to different target values in different stages (400, 500, 600 and finally 700 kPa), after which the pressure will be decreased in stages to the same pressure. Each stage lasts for approximately 5 seconds.

NOTE: Because the by-pass valve in the fuel pump (FP) will be open at approximately 650 kPa, the pressure will not go higher than this.

HINT: The illustration to the left shows an example of normal regulation.

- The upper digital display and the graphic display (red font color) indicate the absolute fuel pressure, calculated from the fuel pressure sensor
- The lower digital display and the graphic display (yellow font color) indicate the control module target value for the absolute fuel pressure
- The lower digital display indicates the relative fuel pressure (white font color), calculated from the fuel pressure sensor and the atmospheric pressure sensor (= absolute pressure minus atmospheric pressure). If a manometer is connected during the test, it should indicate this pressure.

Check that the value for absolute fuel pressure is the same as the target value for absolute fuel pressure. If the values are not the same, this indicates a fault in the pressure regulation. The values may differ during the quick test when the target value is changed. This is due to sluggishness in the fuel regulation and is normal. In some cases, it can take up to 5 seconds before the fuel pressure reaches the target value for the fuel pressure.

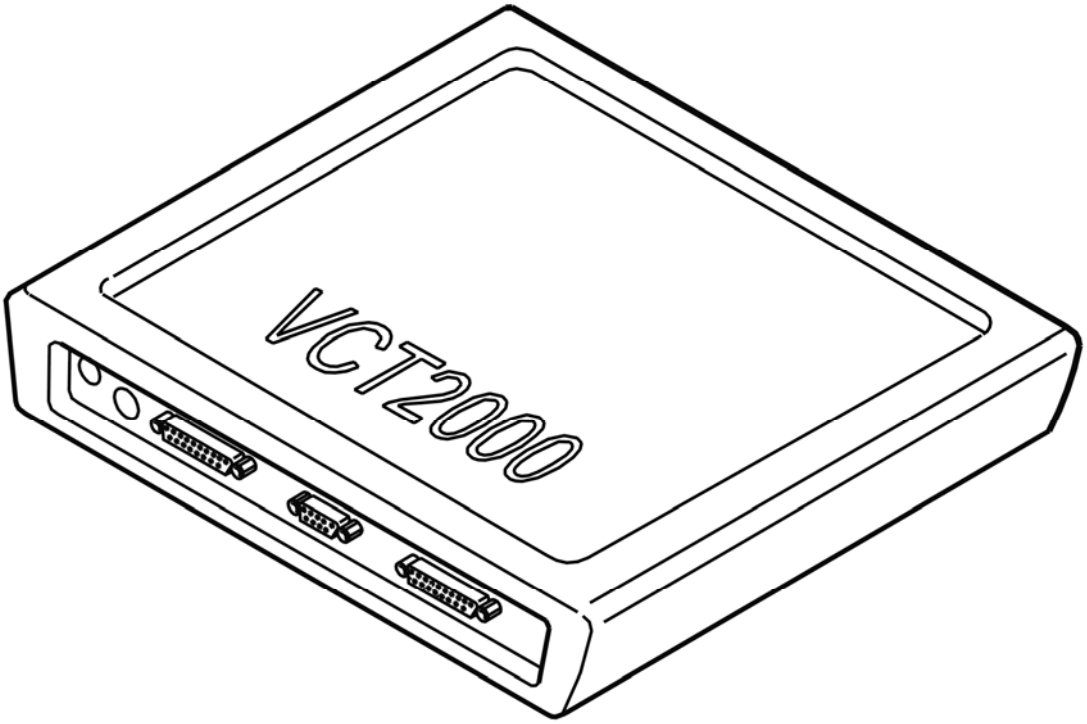

Fig. 3: Identifying VCT2000 Diagnostic Tool Symbol In VIDA
Courtesy of VOLVO CARS CORPORATION

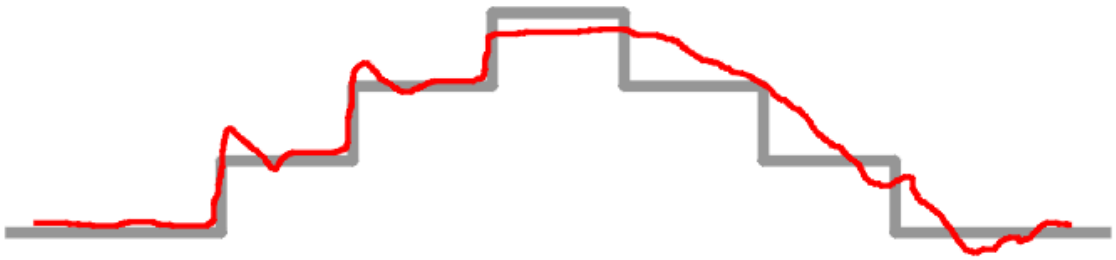

Fig. 4: Identifying Example Of Normal Regulation
Courtesy of VOLVO CARS CORPORATION

Is the pressure regulation correct?

- **YES**

  Refer to **CHECKING COMPONENTS**

- **NO**

  Refer to **CHECKING COMPONENTS**

CHECKING COMPONENTS

HINT: The fault may be intermittent or be due to the flow capacity in the system being too low.

Check that the fuel level in the tank is not too low (almost no fuel).

Check the fuel lines between the fuel pump (FP) and the fuel rail for the injectors for leakage.

Check the fuel pressure sensor connectors. Check for contact resistance and oxidation.

Check the pump control module connector. Check for contact resistance and oxidation.

Check the fuel lines and fuel filter for blockage.

Remedy as necessary.

Try a new fuel pump (FP) if no fault is found during the above fault-tracing.

Other information:

- see **CHECKING WIRING AND TERMINALS**
- To connect the breakout box, see **CONNECTING THE BREAKOUT BOX**
- For 5 cylinder turbocharged engines -2004, see **SIGNAL DESCRIPTION**
- For 5 cylinder turbocharged engines 2005-, see **SIGNAL SPECIFICATION** .
- For 6 cylinder engines -2004, see **SIGNAL SPECIFICATION**
- For 6 cylinder engines 2005-, see **SIGNAL SPECIFICATION** .
- To access or replace the fuel pump (FP), see **LEVEL SENSOR, FUEL TANK/FUEL PUMP, REPLACEMENT**
- To access or replace the pump control module, see **CONTROL MODULE FUEL PUMP (FP), REPLACING** .

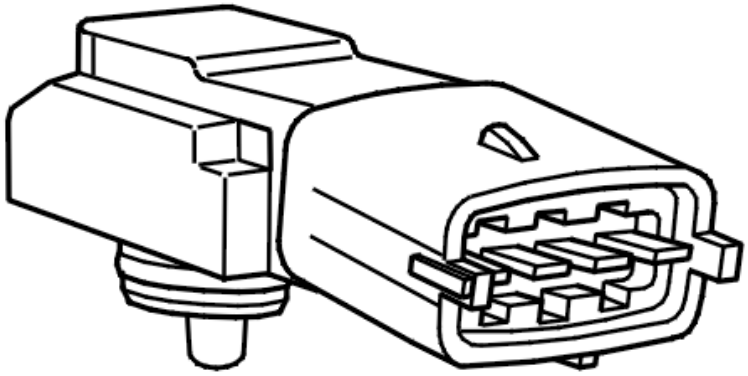

Fig. 5: Identifying Fuel Pressure Sensor
Courtesy of VOLVO CARS CORPORATION

- **Continue**

  Refer to **INFORMATION**

CHECKING COMPONENTS AND WIRING

Check the fuel pressure sensor connectors. Check for contact resistance and oxidation.

Remedy as necessary.

Try a new fuel pressure sensor if no fault is found during the above fault-tracing.

Other information:

- see **CHECKING WIRING AND TERMINALS**
- To connect the breakout box, see **CONNECTING THE BREAKOUT BOX**
- For 5 cylinder turbocharged engines -2004, see **SIGNAL DESCRIPTION**
- For 5 cylinder turbocharged engines 2005-, see **SIGNAL SPECIFICATION** .
- For 6 cylinder engines -2004, see **SIGNAL SPECIFICATION**
- For 6 cylinder engines 2005-, see **SIGNAL SPECIFICATION** .
- To access or replace the fuel pressure sensor, see **FUEL PRESSURE SENSOR, REPLACEMENT** .

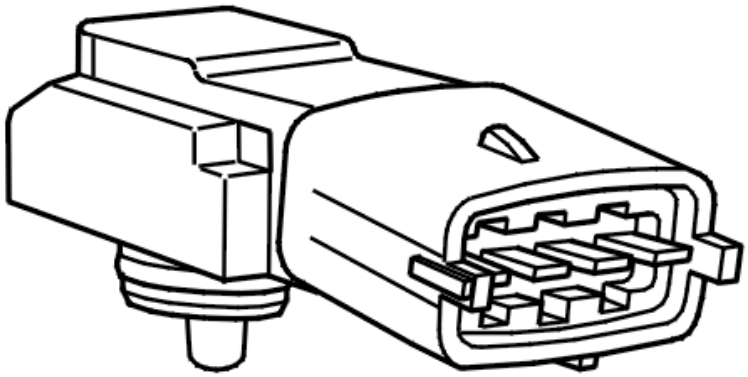

Fig. 6: Identifying Fuel Pressure Sensor
Courtesy of VOLVO CARS CORPORATION

- **Continue**

  Refer to **VERIFICATION**

CHECKING COMPONENTS

Check that the fuel level in the tank is not too low (almost no fuel).

Check the connectors between the pump control module and the fuel pump (FP). Check for contact resistance and oxidation.

Check the fuel lines and fuel filter for blockage.

Remedy as necessary.

Try a new fuel pump (FP) if no fault is found during the above fault-tracing.

HINT: The diagnostic trouble code (DTC) can also be caused by a defective pump control module.

Other information:

- see **CHECKING WIRING AND TERMINALS**
- To access or replace the fuel pump (FP), see **LEVEL SENSOR, FUEL TANK/FUEL PUMP, REPLACEMENT**
- To access or replace the pump control module, see **CONTROL MODULE FUEL PUMP (FP), REPLACING** .

- **Continue**

  Refer to **VERIFICATION**

INFORMATION

FAULT-TRACING INFORMATION

If the fault is intermittent, do not verify fault-tracing if the fault does not recur.

It is possible to view the information again, or leave fault-tracing for this diagnostic trouble code (DTC).

VERIFICATION

VERIFICATION

HINT: After carrying out the repair, check that the fault has been remedied.

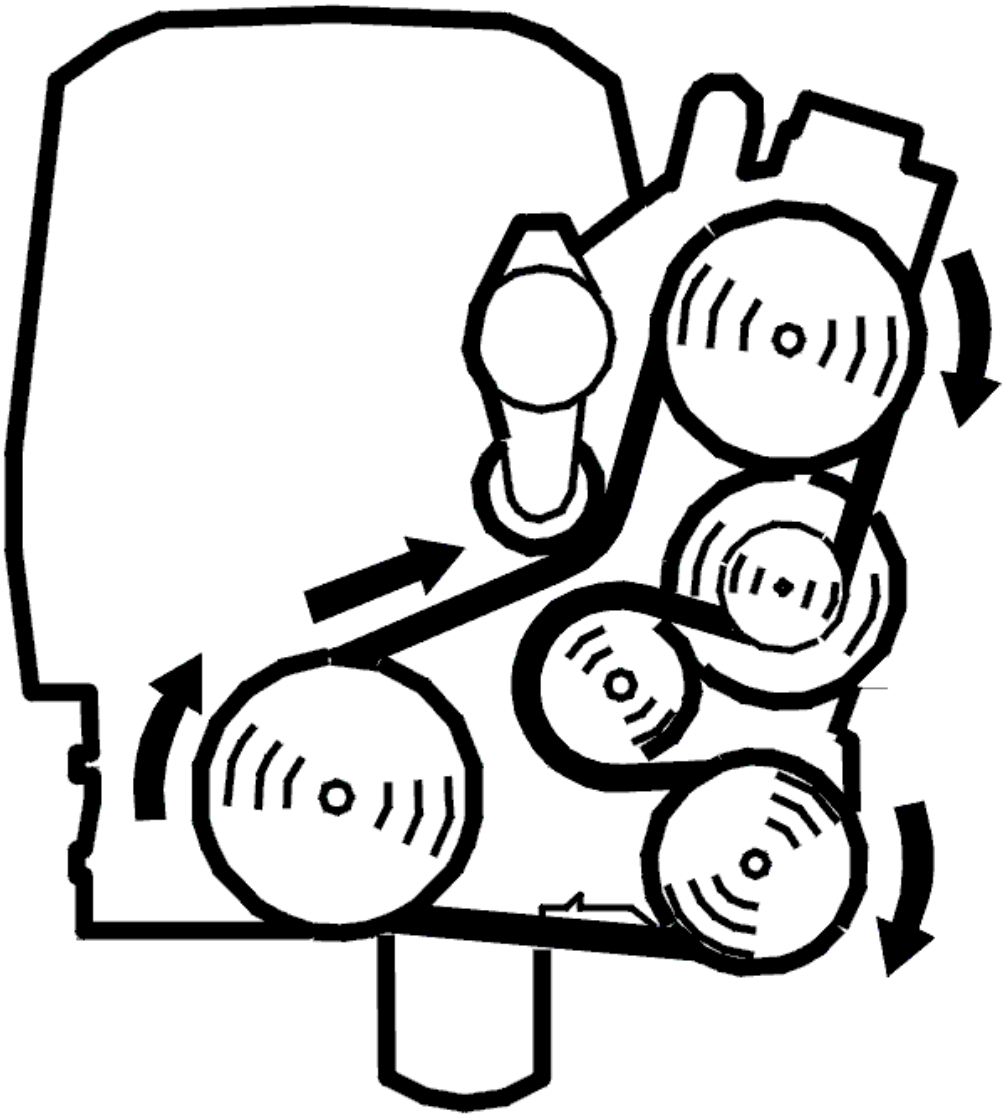

Fig. 7: Belt Routing / Engine Idling - Volvo
Courtesy of VOLVO CARS CORPORATION

- Run the engine to operating temperature. Allow the engine to idle
- air conditioning (A/C) off
- Read off the fuel pressure and the fuel pressure desired value
- Start the quick test when the engine is running at idling.

During the course of the quick test, the control module will steer the pressure to different target values in different stages (400, 500, 600 and finally 700 kPa), after which the pressure will be decreased in stages to the same pressure. Each stage lasts for approximately 5 seconds.

NOTE: **Because the by-pass valve in the fuel pump (FP) will be open at approximately 650 kPa, the pressure will not go higher than this.**

HINT: The illustration to the left shows an example of normal regulation.

- The upper digital display and the graphic display (red font color) indicate the absolute fuel pressure, calculated from the fuel pressure sensor
- The lower digital display and the graphic display (yellow font color) indicate the control module target value for the absolute fuel pressure
- The lower digital display indicates the relative fuel pressure (white font color), calculated from the fuel pressure sensor and the atmospheric pressure sensor (= absolute pressure minus atmospheric pressure). If a manometer is connected during the test, it should indicate this pressure.

Check that the value for absolute fuel pressure is the same as the target value for absolute fuel pressure. If the values are not the same, this indicates a fault in the pressure regulation. The values may differ during the quick test when the target value is changed. This is due to sluggishness in the fuel regulation and is normal. In some cases, it can take up to 5 seconds before the fuel pressure reaches the target value for the fuel pressure.

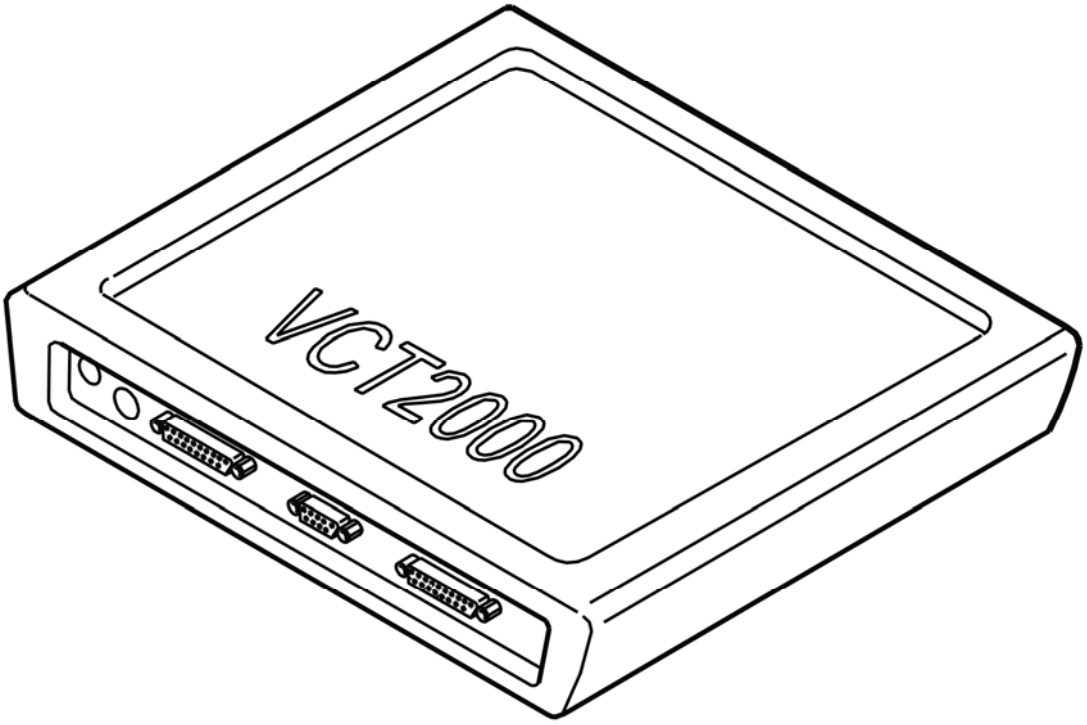

Fig. 8: Identifying VCT2000 Diagnostic Tool Symbol In VIDA
Courtesy of VOLVO CARS CORPORATION

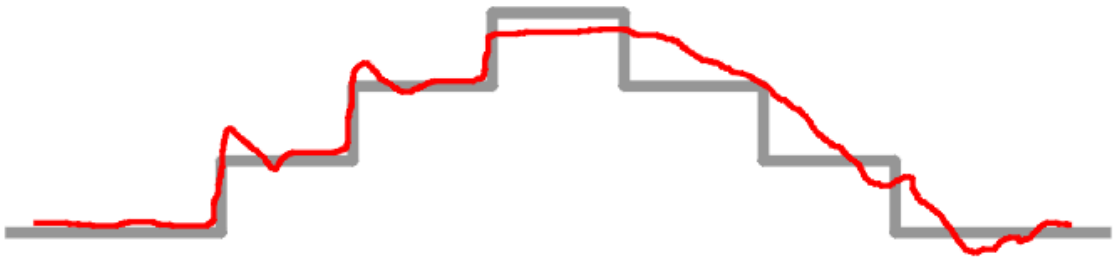

Fig. 9: Identifying Example Of Normal Regulation
Courtesy of VOLVO CARS CORPORATION

Is the function OK?

- **YES**

  VERIFIED: Troubleshooting has been completed.

- **NO**

  Refer to **INFORMATION**

VERIFICATION

VERIFICATION

HINT: After carrying out the repair, check that the fault has been remedied.

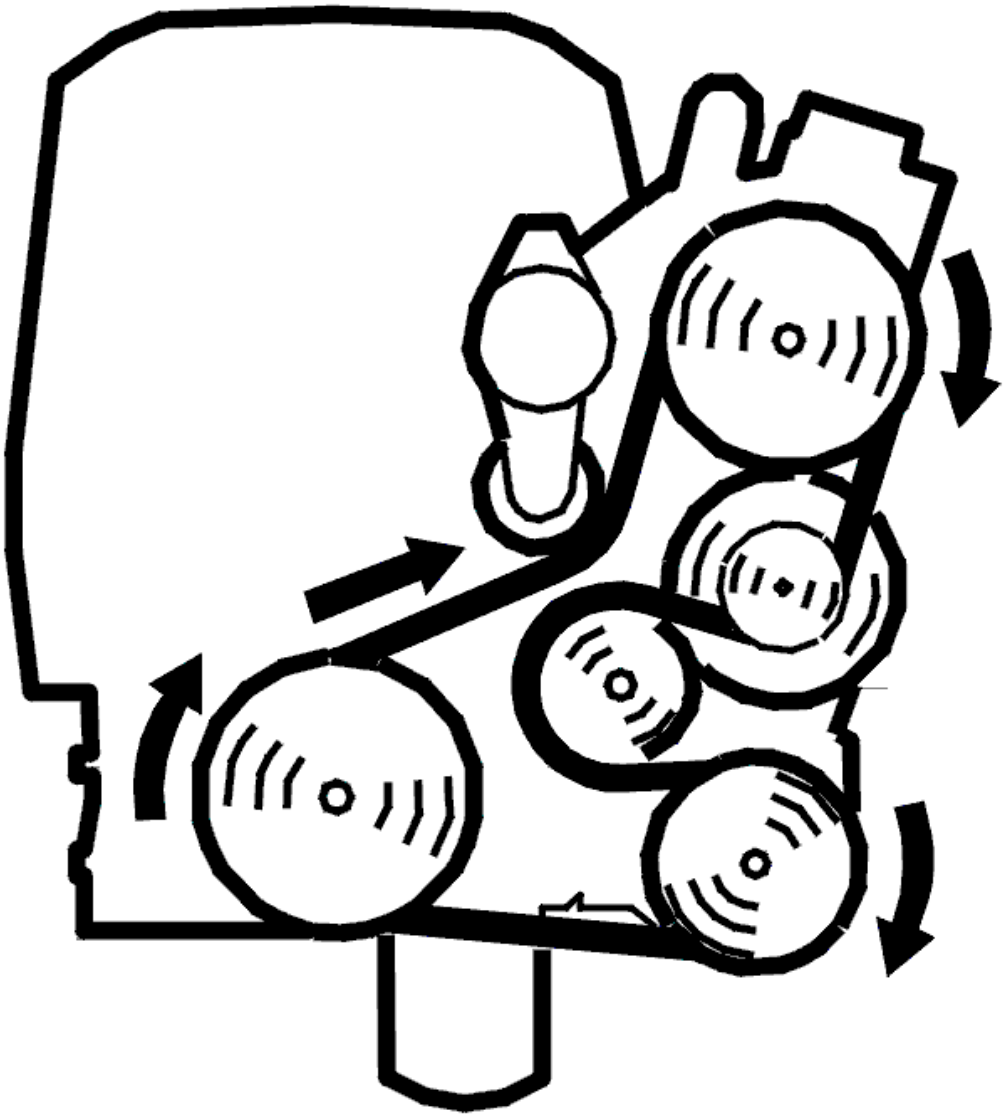

Fig. 10: Belt Routing / Engine Idling - Volvo
Courtesy of VOLVO CARS CORPORATION

- Connect the manometer, see **FUEL PRESSURE GAUGE**
- Run the engine to operating temperature. Allow the engine to idle
- air conditioning (A/C) off
- Read off the relative fuel pressure.

  The relative fuel pressure is calculated from the fuel pressure sensor and the atmospheric pressure sensor signal (= absolute pressure minus atmospheric pressure).

  Check that the value on the manometer and the value displayed in VIDA (Volvo scan tool) are the same. If the values are different, this indicates incorrect function.

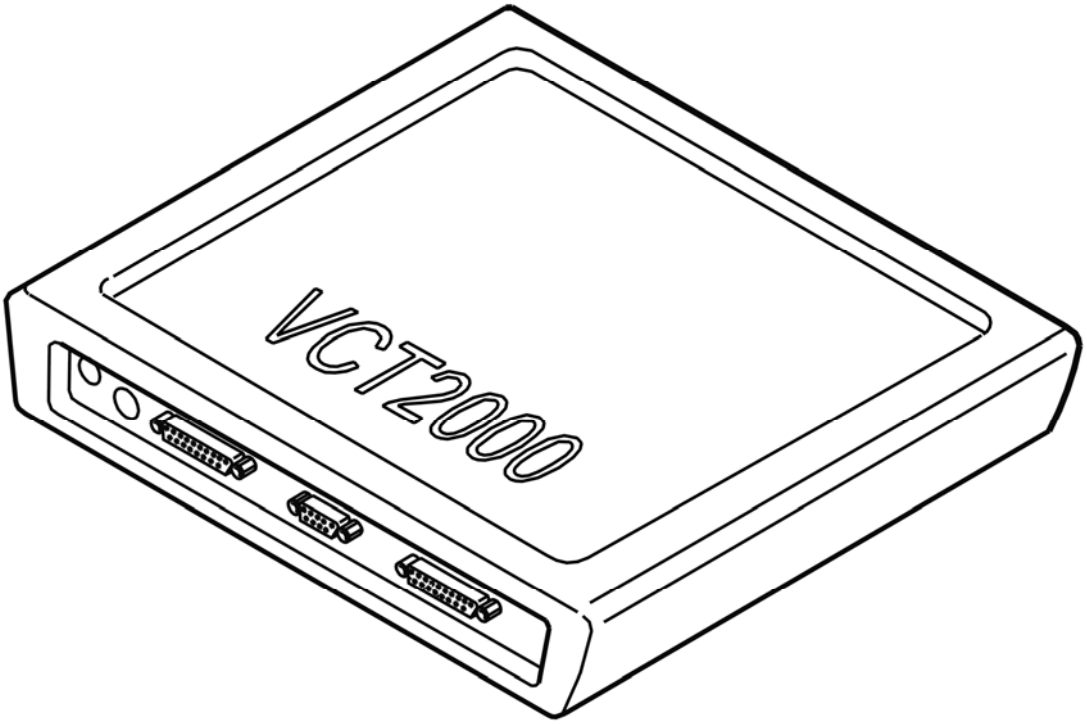

Fig. 11: Identifying VCT2000 Diagnostic Tool Symbol In VIDA
Courtesy of VOLVO CARS CORPORATION

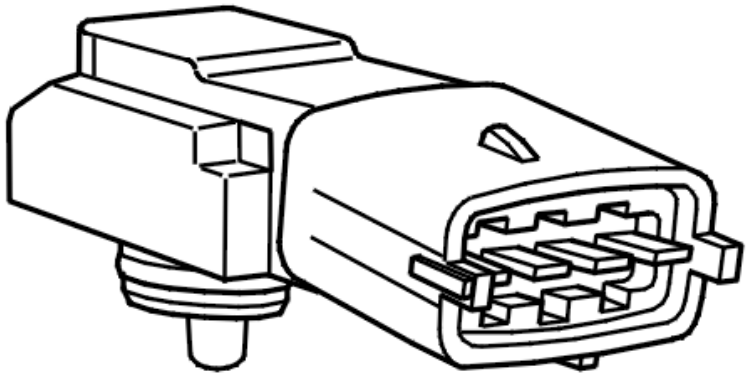

Fig. 12: Identifying Fuel Pressure Sensor
Courtesy of VOLVO CARS CORPORATION

Is the function OK?

- **YES**

  VERIFIED: Troubleshooting has been completed.

- **NO**

  Refer to **INFORMATION**

INFORMATION

FAULT-TRACING INFORMATION

The fault should have been detected and remedied. As this is not the case fault-tracing has failed.

Exit fault-tracing for this diagnostic trouble code (DTC) or make another attempt.

ECM-2910: FRONT HEATED OXYGEN SENSOR (HO2S) PREHEATING, BANK 2. SIGNAL MISSING (B6294T; 2003-2004)

DIAGNOSTIC TROUBLE CODE (DTC) INFORMATION

Condition

The control module controls preheating by pulsing the current to the PTC-element. The length of the pulses depend on the temperature of the heated oxygen sensor (H02S). Diagnostic trouble code (DTC) ECM-2910 is stored if the control module registers that the signal is a constant 2.5 V, higher than 3.5 V at current pulse or lower than 2.3 V at no current pulse.

Diagnostic trouble code (DTC) ECM-2910 is stored if the control module registers that heated oxygen sensor pre-heating does not function within 17 seconds of dew (condensation) point in the exhaust system being reached.

Substitute Value

- fuel trim is shut off.

Possible Source

Signal too high:

- short-circuit to supply voltage in the signal cable
- defective heated oxygen sensor (HO2S).

Signal too low:

- short-circuit to ground in the signal cable
- defective heated oxygen sensor (HO2S).

Signal missing:

- contact resistance and oxidation
- open-circuit in the power supply from the system relay.

Faulty signal:

- defective heated oxygen sensor (HO2S).

Fault symptom[s]

- The malfunction indicator lamp (MIL) lights.

SIGNAL MISSING

CHECKING THE CONNECTOR

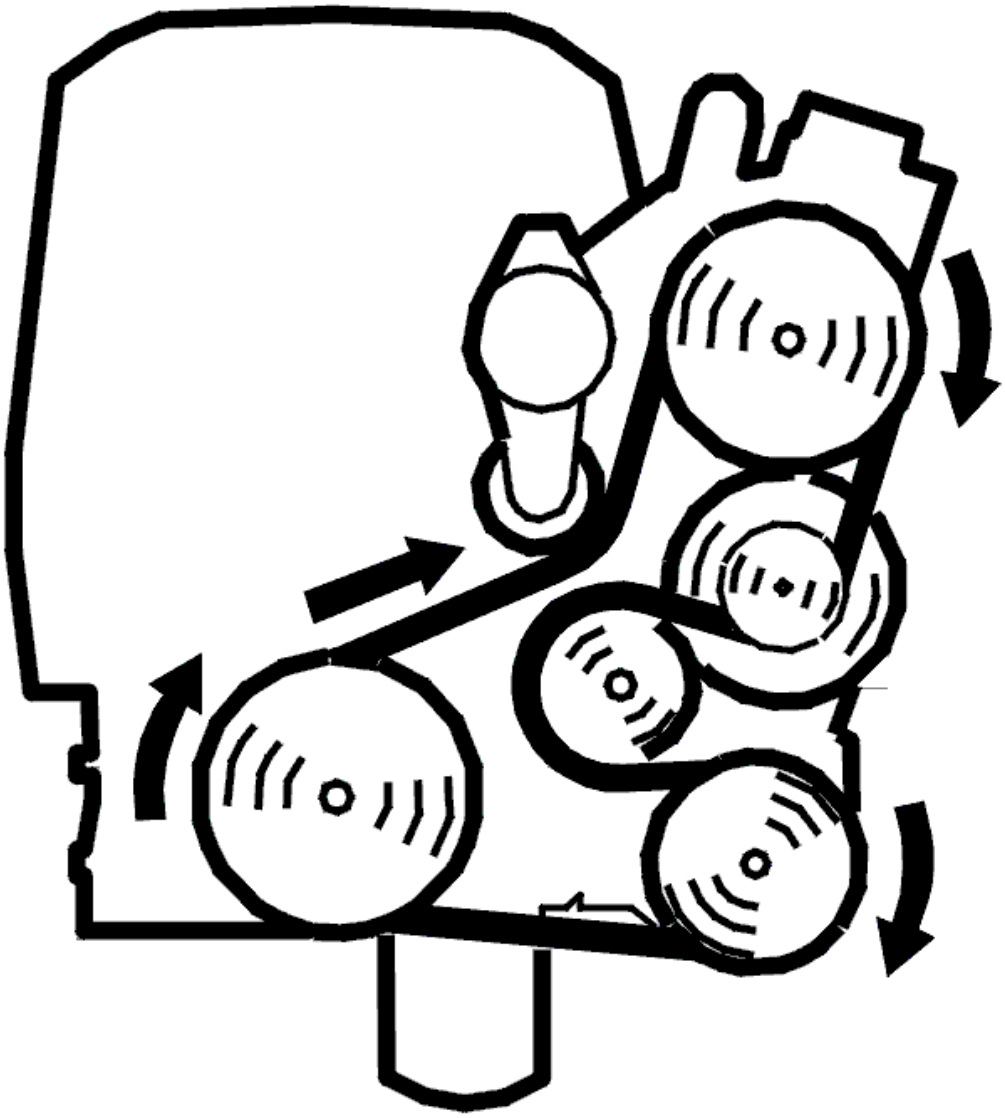

Fig. 13: Belt Routing / Engine Idling - Volvo
Courtesy of VOLVO CARS CORPORATION

- Ignition off
- Check the heated oxygen sensor (HO2S) connector. Check for contact resistance and oxidation
- Reinstall the components, reconnect the connectors etc.
- Start the engine. Allow the engine to idle.

Read off the diagnostic trouble code (DTC) status for the front heated oxygen sensor (HO2S).

The text "NOT READY" is displayed if the diagnosis is running.

Other information

- For 6 cylinder engines -2004, see **SIGNAL SPECIFICATION**

- For 6 cylinder engines 2005-, see **SIGNAL SPECIFICATION** .
- To access or replace the heated oxygen sensor (HO2S), see **HEATED OXYGEN SENSOR (HO2S), REPLACING**
- see **CHECKING WIRING AND TERMINALS**

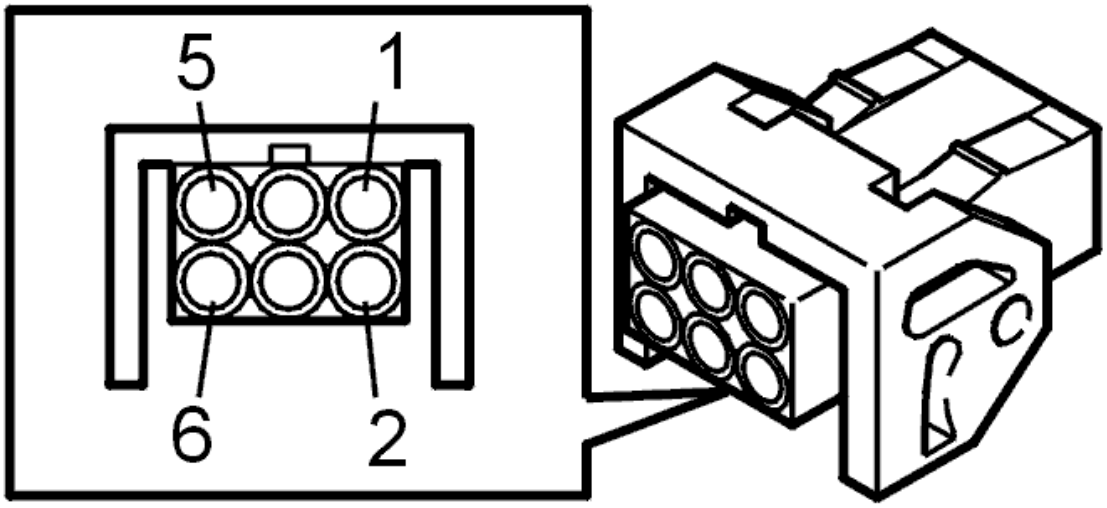

Fig. 14: Identifying Front Heated Oxygen Sensor Connector Terminals
Courtesy of VOLVO CARS CORPORATION

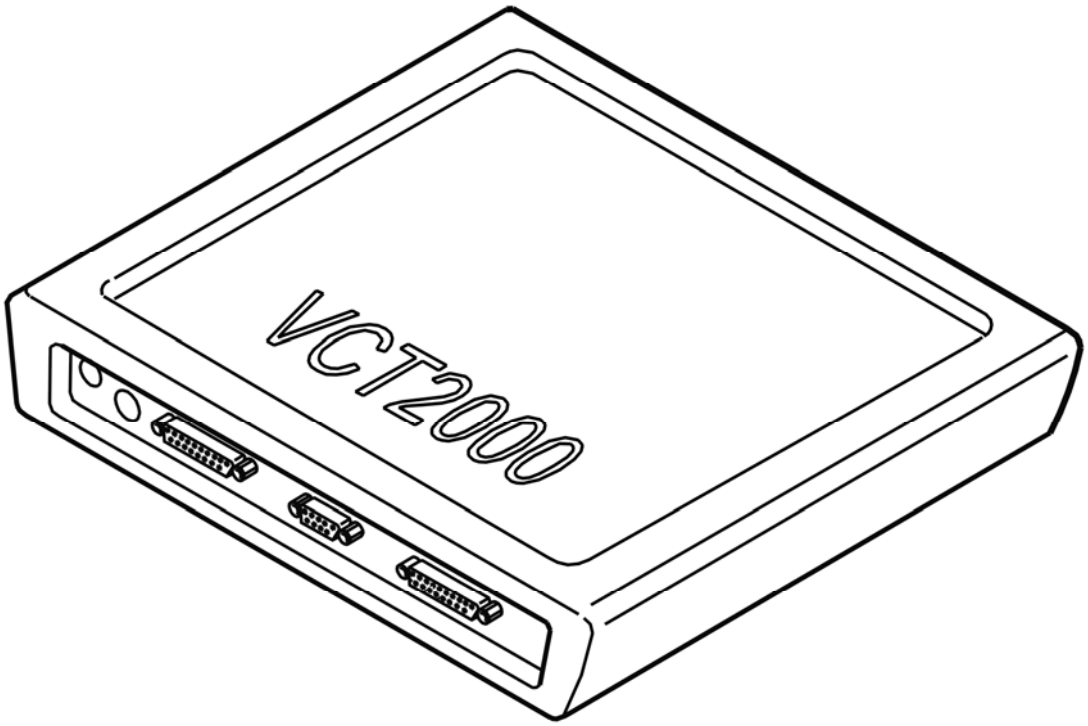

Fig. 15: Identifying VCT2000 Diagnostic Tool Symbol In VIDA
Courtesy of VOLVO CARS CORPORATION

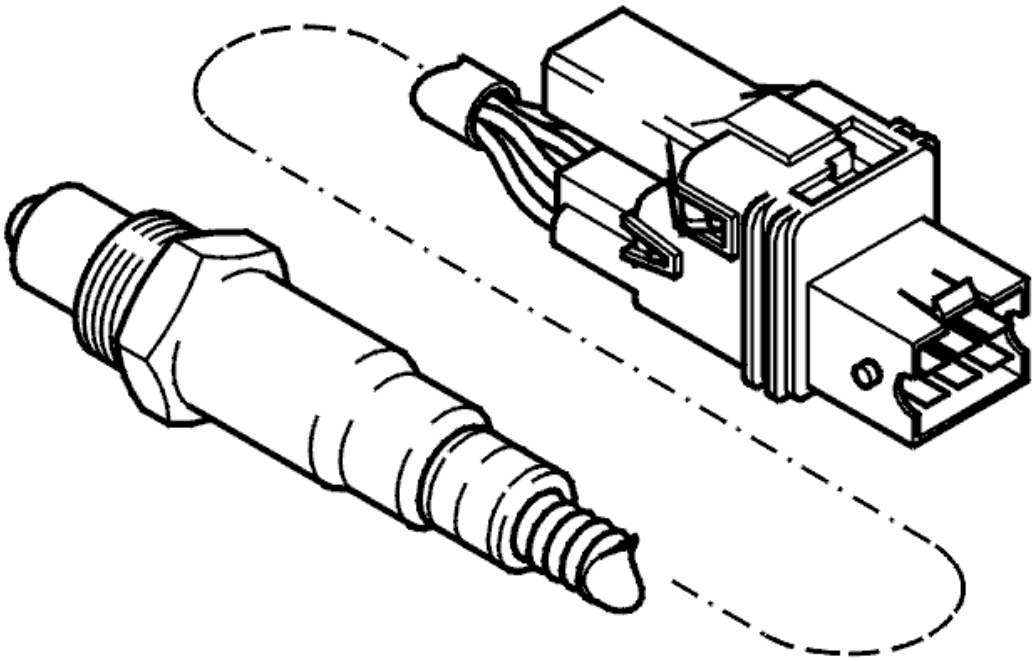

Fig. 16: Front Heated Oxygen Sensor
Courtesy of VOLVO CARS CORPORATION

Is "FAULT NOT DETECTED" displayed?

- **YES**

  OKAY: Troubleshooting has been completed.

- **NO**

  Refer to **CHECKING COMPONENTS AND WIRING**

CHECKING COMPONENTS AND WIRING

Check the resistance of the heated oxygen sensor (HO2S) between terminals #3 and #4.

Check the signal cable between heated oxygen sensor (HO2S) terminal #4 and control module terminal #A70 (#B10). Check the power supply between system relay terminal #5 and heated oxygen sensor (HO2S) terminal #3. Check for an open-circuit.

Remedy as necessary.

Other information

- For 6 cylinder engines -2004, see **SIGNAL SPECIFICATION**
- For 6 cylinder engines 2005-, see **SIGNAL SPECIFICATION** .
- To connect the breakout box / access the control module, see **CONNECTING THE BREAKOUT BOX**
- To access or replace the heated oxygen sensor (HO2S), see **HEATED OXYGEN SENSOR (HO2S), REPLACING**
- For resistance values, see **COMPONENT SPECIFICATIONS**
- see **CHECKING WIRING AND TERMINALS** .

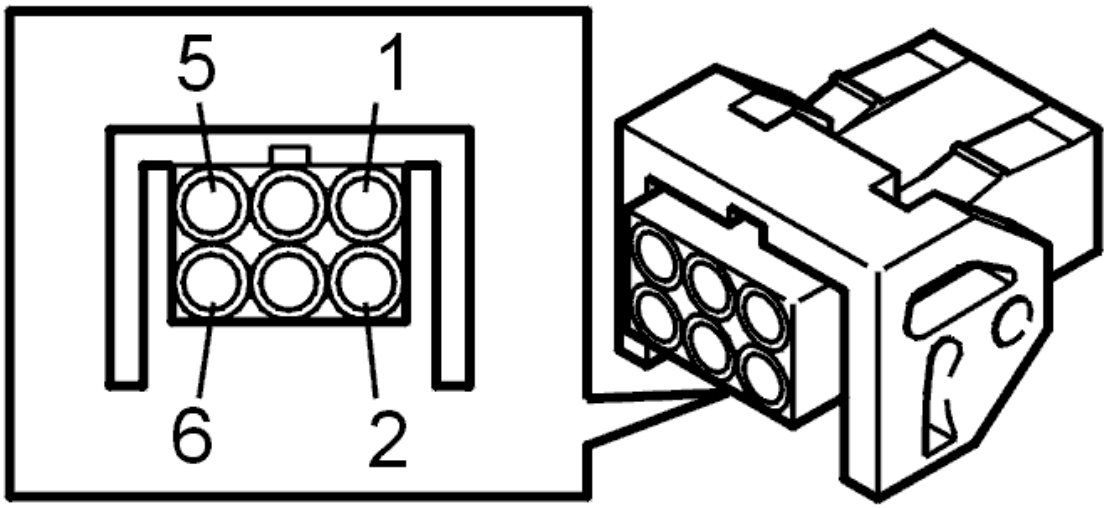

Fig. 17: Identifying Front Heated Oxygen Sensor Connector Terminals
Courtesy of VOLVO CARS CORPORATION

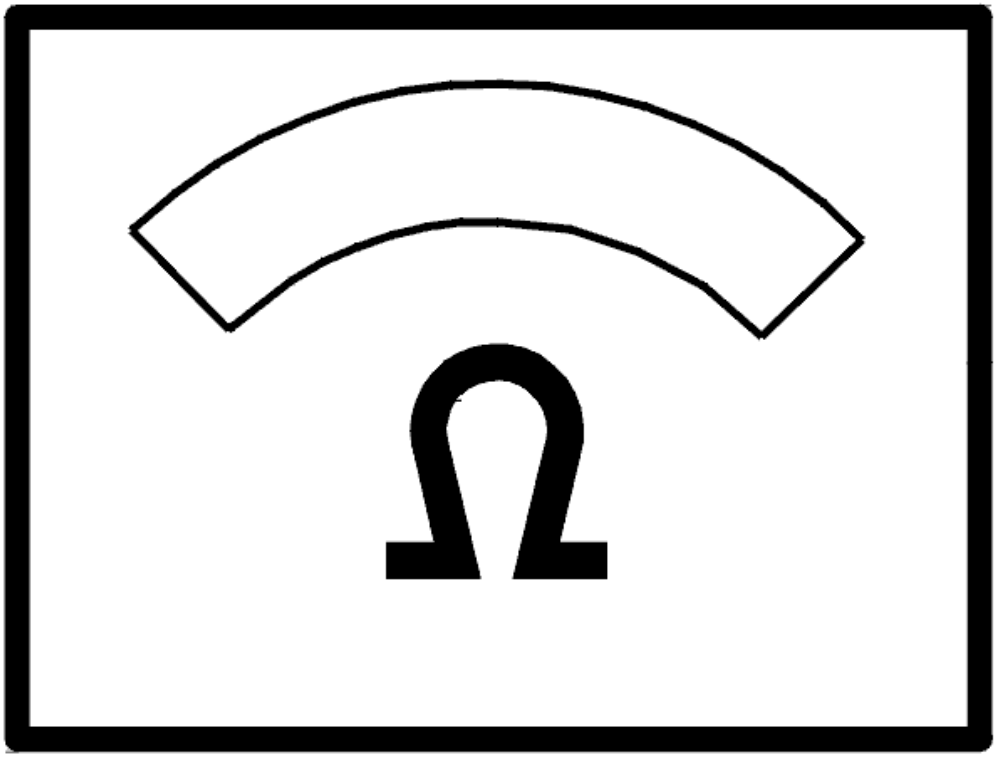

Fig. 18: Identifying Ohm Meter
Courtesy of VOLVO CARS CORPORATION

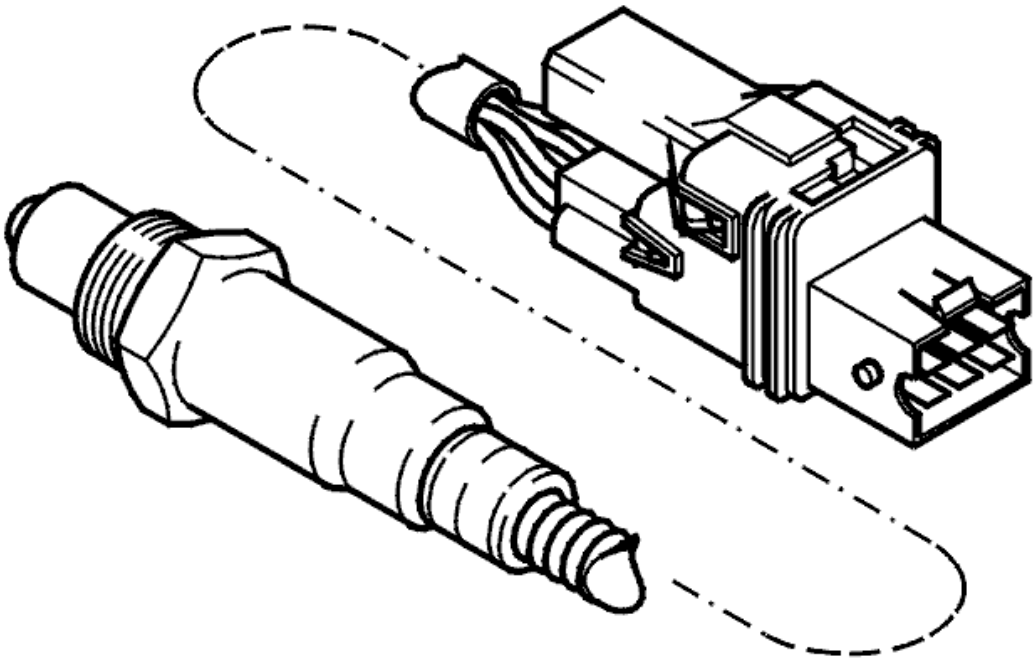

Fig. 19: Front Heated Oxygen Sensor
Courtesy of VOLVO CARS CORPORATION

- **Continue**

  Refer to **VERIFICATION**

VERIFICATION

VERIFICATION

HINT: After carrying out the repair, check that the fault has been remedied.

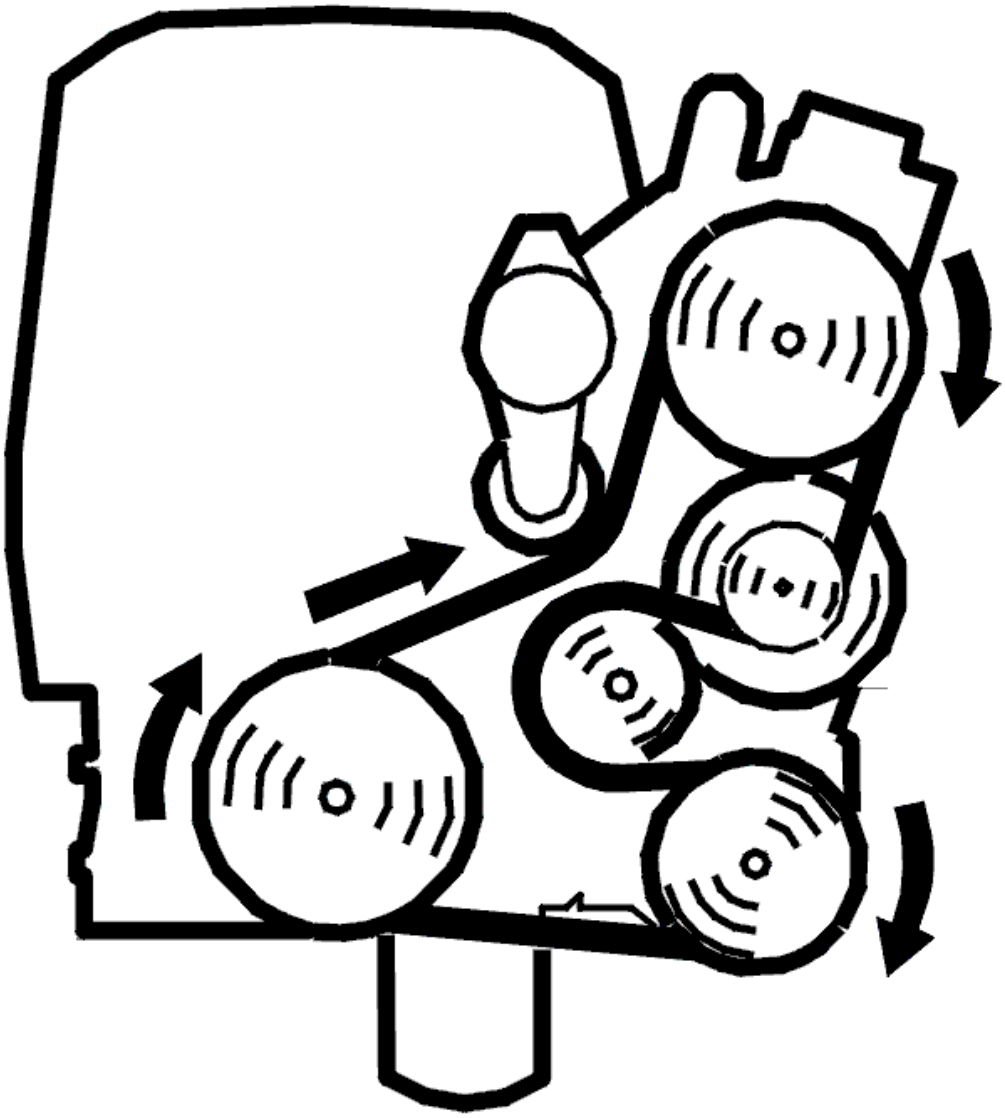

Fig. 20: Belt Routing / Engine Idling - Volvo
Courtesy of VOLVO CARS CORPORATION

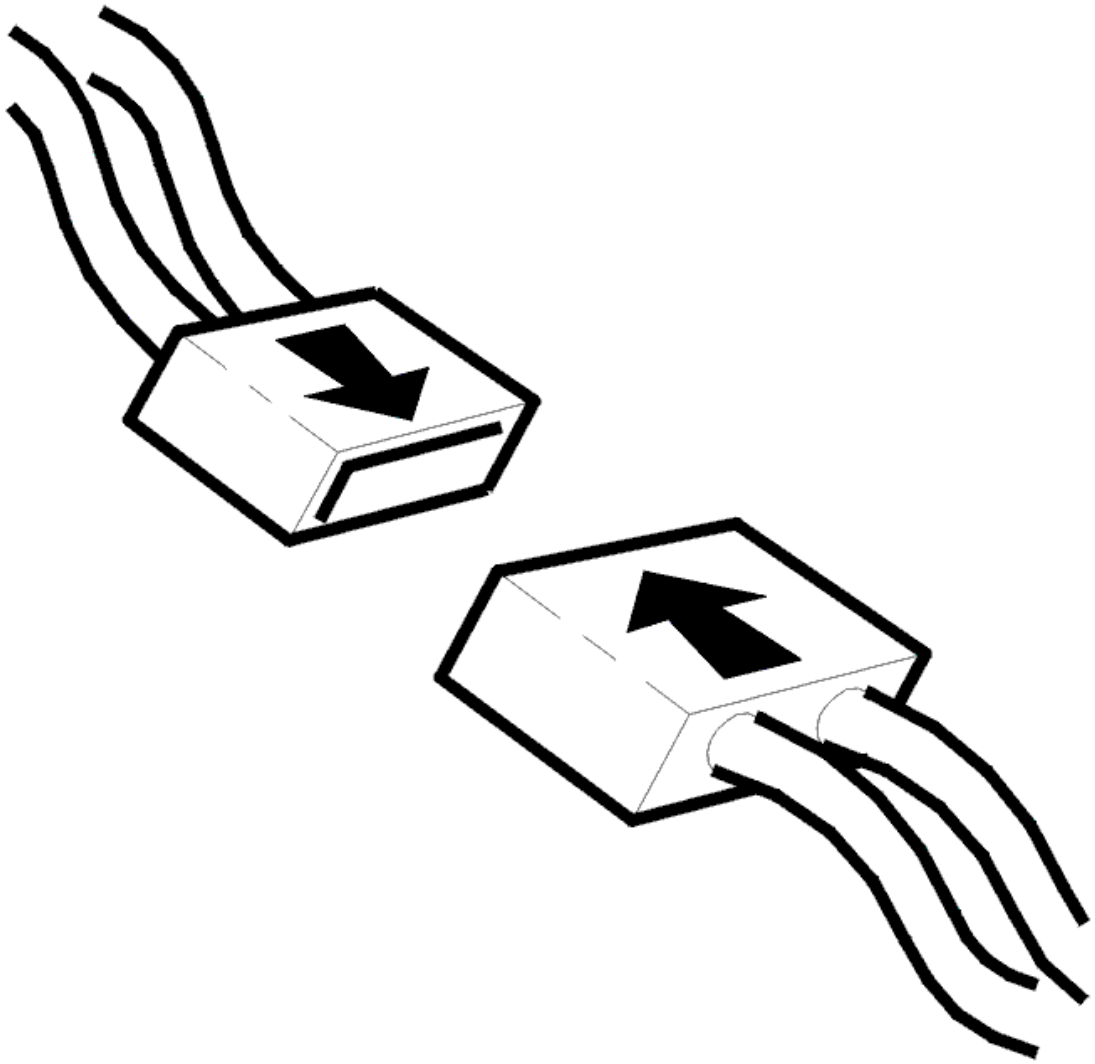

Fig. 21: Connecting Connector
Courtesy of VOLVO CARS CORPORATION

- Ignition off
- Reinstall the components, reconnect the connectors etc.
- Start the engine. Allow the engine to idle.

  Read off the diagnostic trouble code (DTC) status for the front heated oxygen sensor (HO2S).

  The text NOT READY is displayed if the diagnosis is underway.

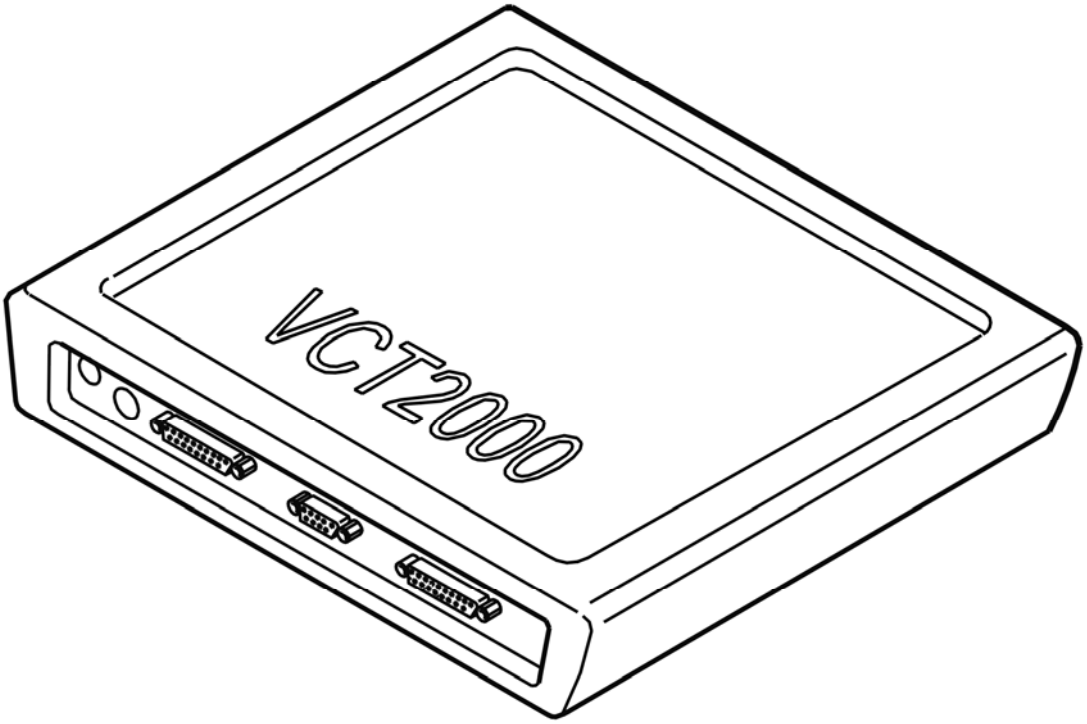

Fig. 22: Identifying VCT2000 Diagnostic Tool Symbol In VIDA
Courtesy of VOLVO CARS CORPORATION

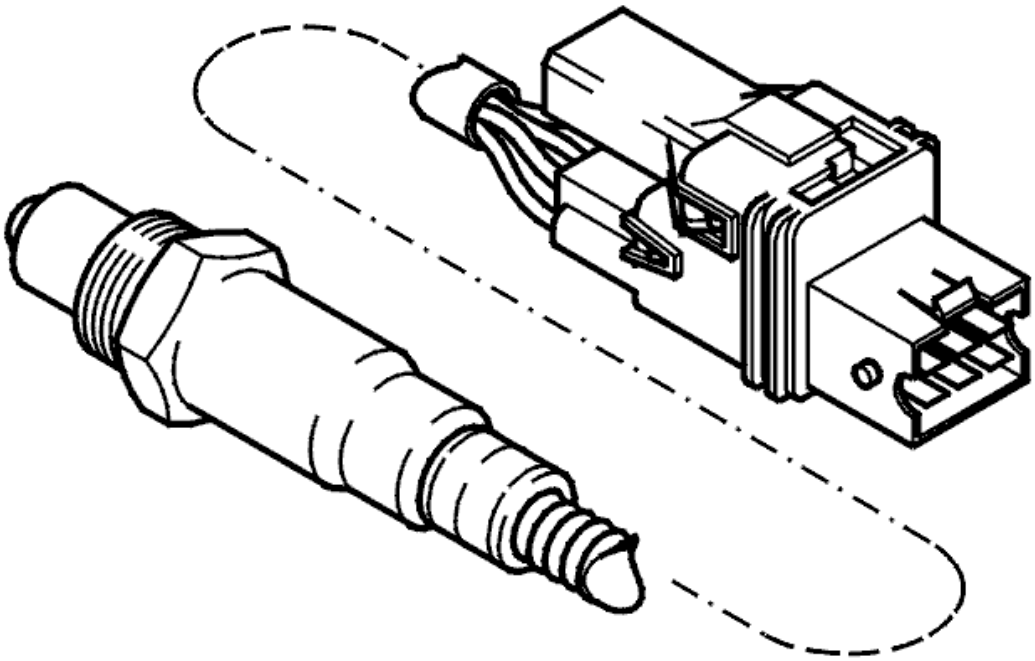

Fig. 23: Front Heated Oxygen Sensor
Courtesy of VOLVO CARS CORPORATION

Is NOT DETECTED displayed?

- **YES**

  VERIFIED: Troubleshooting has been completed.

- **NO**

  Refer to **INFORMATION**

INFORMATION

FAULT-TRACING INFORMATION

The fault should have been detected and remedied. As this is not the case fault-tracing has failed.

Exit fault-tracing for this diagnostic trouble code (DTC) or make another attempt.

ECM-2910: FRONT HEATED OXYGEN SENSOR (HO2S) PREHEATING, BANK 2. SIGNAL TOO HIGH (B6294T; 2003-2004)

DIAGNOSTIC TROUBLE CODE (DTC) INFORMATION

see **DIAGNOSTIC TROUBLE CODE (DTC) INFORMATION**

SIGNAL TOO HIGH

CHECKING COMPONENTS AND WIRING

Check the resistance of the heated oxygen sensor (HO2S) between terminals #3 and #4.

Check the signal cable between heated oxygen sensor (HO2S) terminal #4 and control module terminal #A70 (#B10). Check for a short-circuit to supply voltage.

Remedy as necessary.

Other information

- For 6 cylinder engines -2004, see **SIGNAL SPECIFICATION**
- For 6 cylinder engines 2005-, see **SIGNAL SPECIFICATION** .
- To connect the breakout box / access the control module, see **CONNECTING THE BREAKOUT BOX**
- To access or replace the heated oxygen sensor (HO2S), see **HEATED OXYGEN SENSOR (HO2S), REPLACING**
- For resistance values, see **COMPONENT SPECIFICATIONS**
- see **CHECKING WIRING AND TERMINALS** .

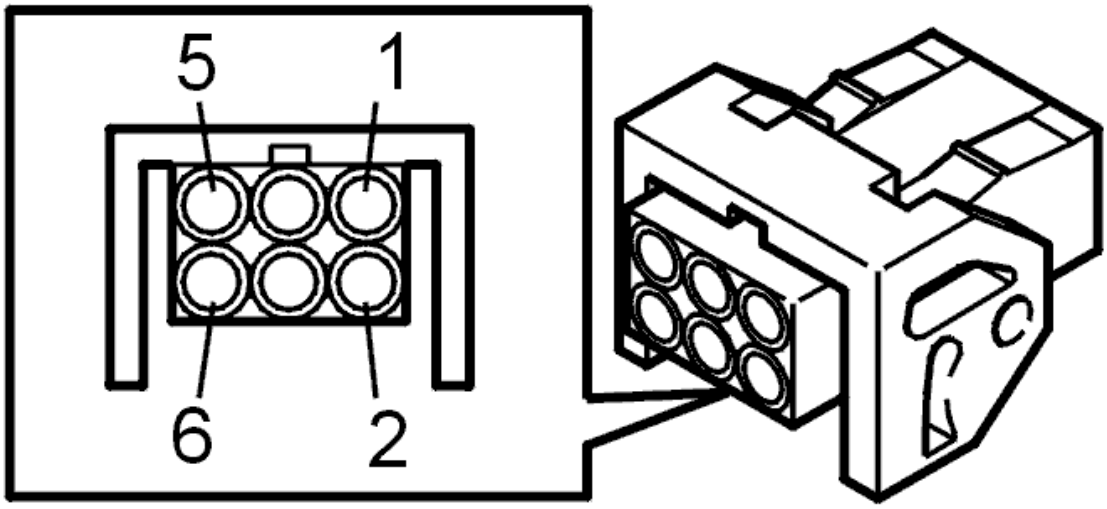

Fig. 24: Identifying Front Heated Oxygen Sensor Connector Terminals
Courtesy of VOLVO CARS CORPORATION

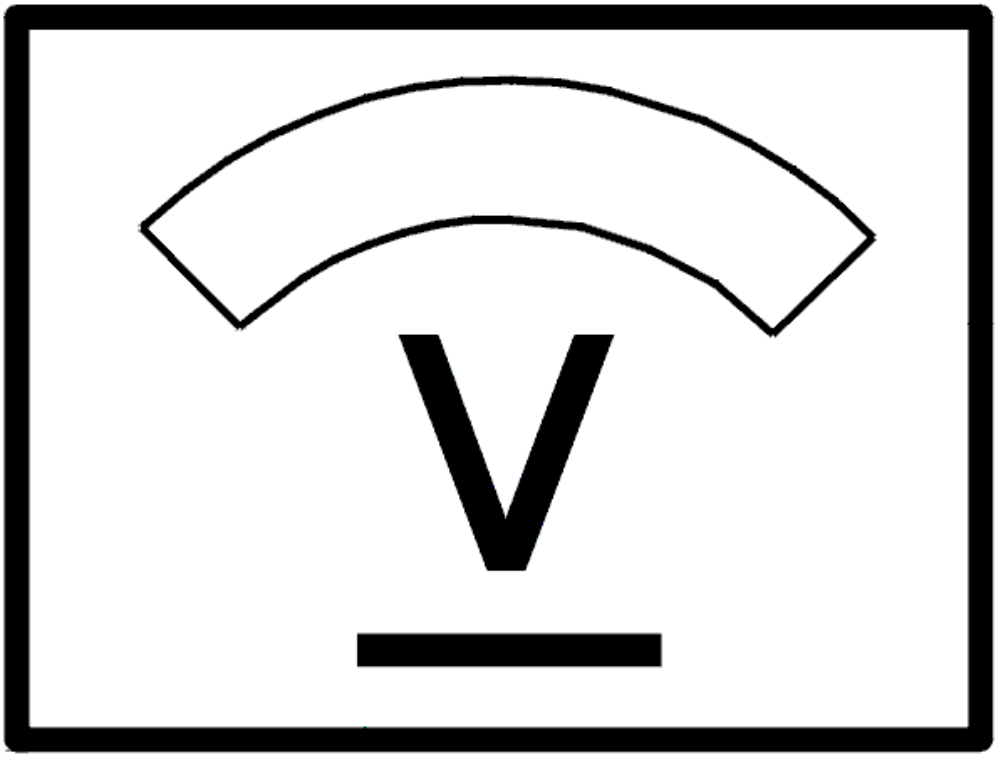

Fig. 25: Identifying Voltage Display
Courtesy of VOLVO CARS CORPORATION

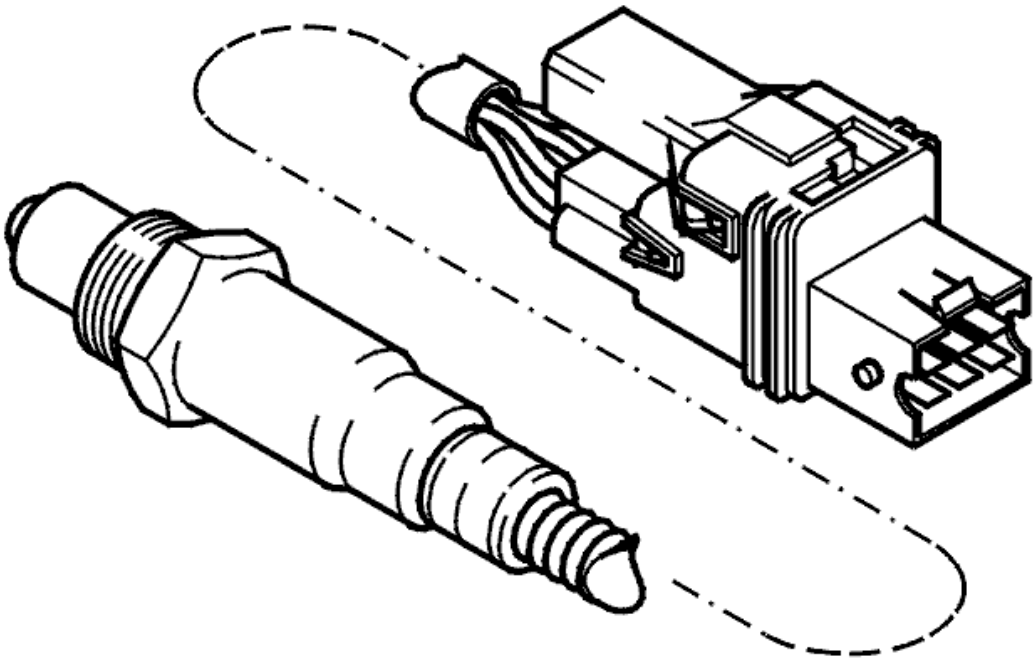

Fig. 26: Front Heated Oxygen Sensor
Courtesy of VOLVO CARS CORPORATION

- **Continue**

  Refer to **VERIFICATION**

VERIFICATION

VERIFICATION

HINT: After carrying out the repair, check that the fault has been remedied.

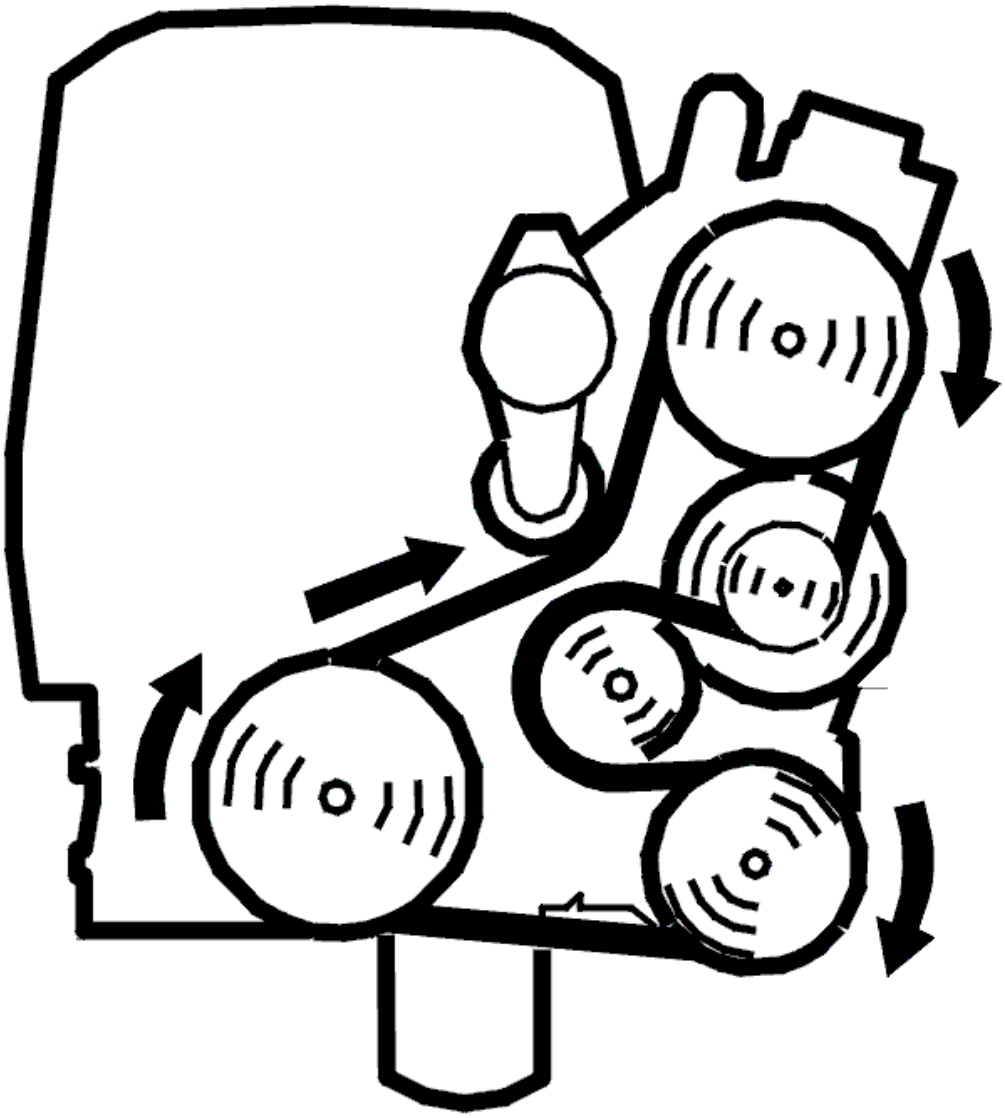

Fig. 27: Belt Routing / Engine Idling - Volvo
Courtesy of VOLVO CARS CORPORATION

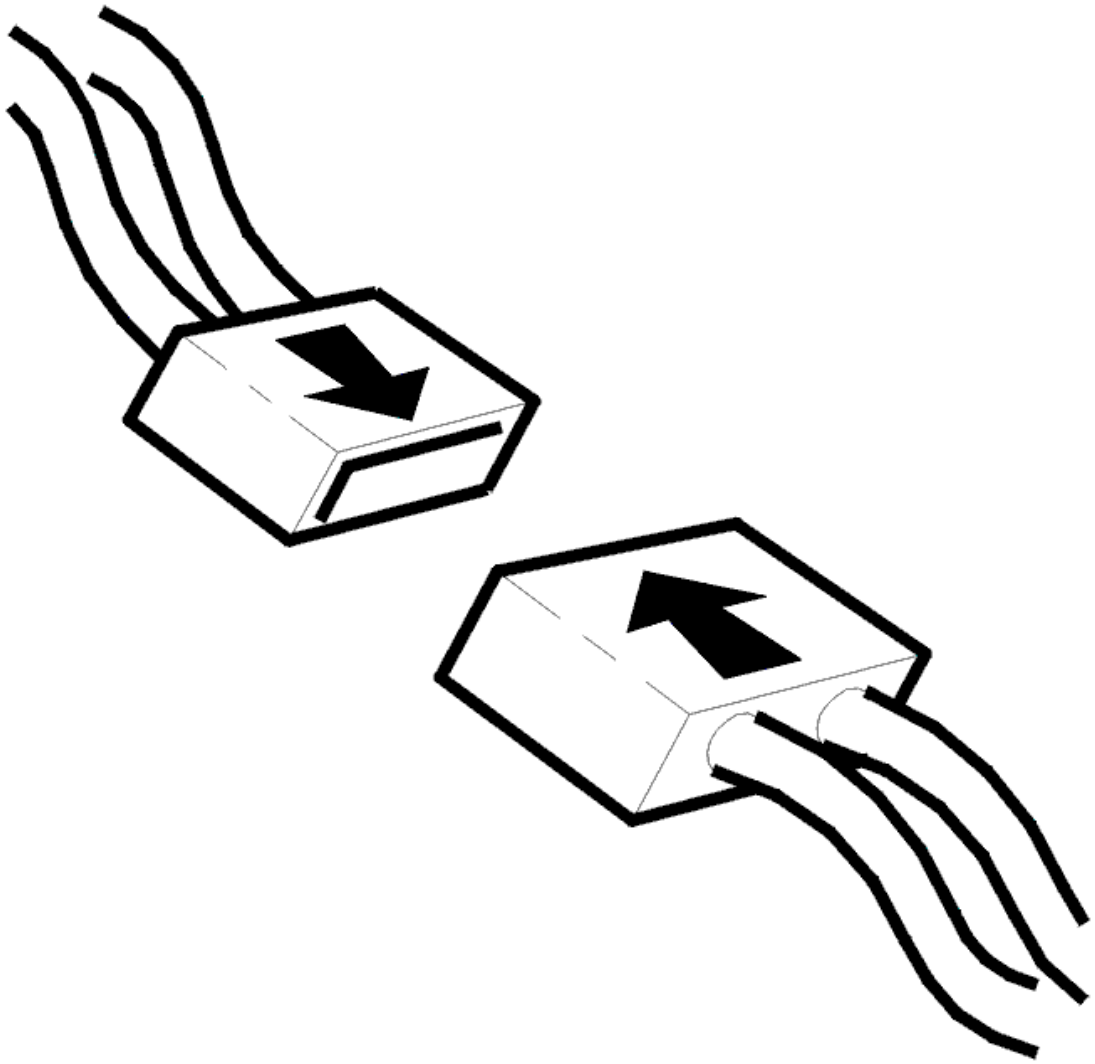

Fig. 28: Connecting Connector
Courtesy of VOLVO CARS CORPORATION

- Ignition off
- Reinstall the components, reconnect the connectors etc.
- Start the engine. Allow the engine to idle.

  Read off the diagnostic trouble code (DTC) status for the front heated oxygen sensor (HO2S).

  The text NOT READY is displayed if the diagnosis is underway.

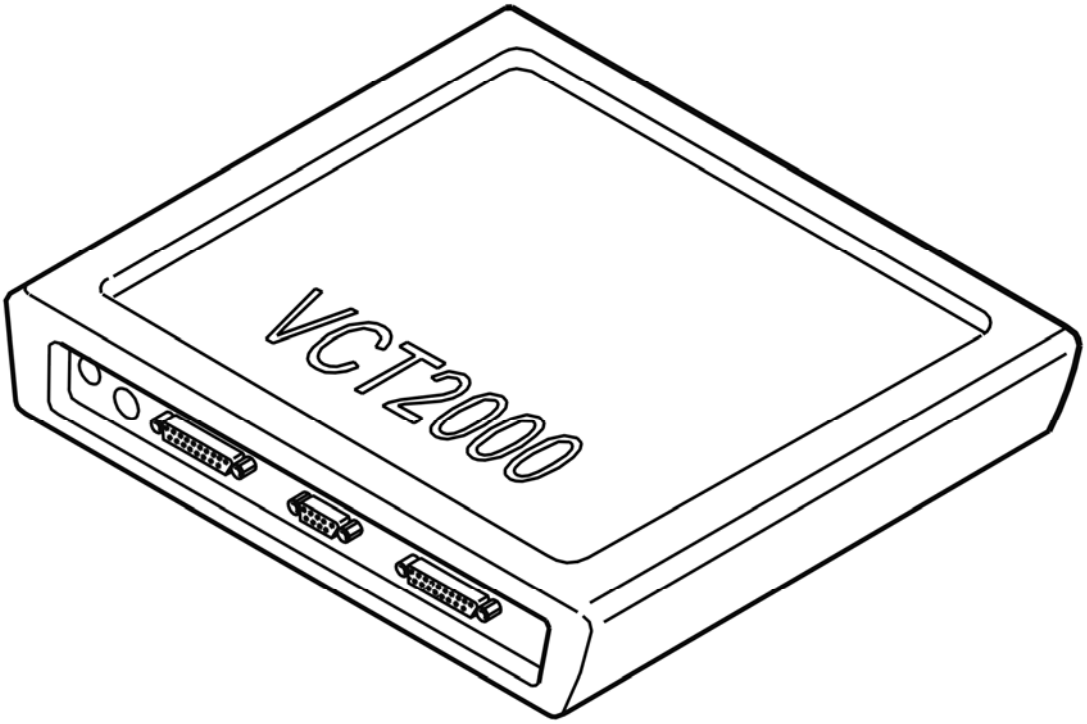

Fig. 29: Identifying VCT2000 Diagnostic Tool Symbol In VIDA
Courtesy of VOLVO CARS CORPORATION

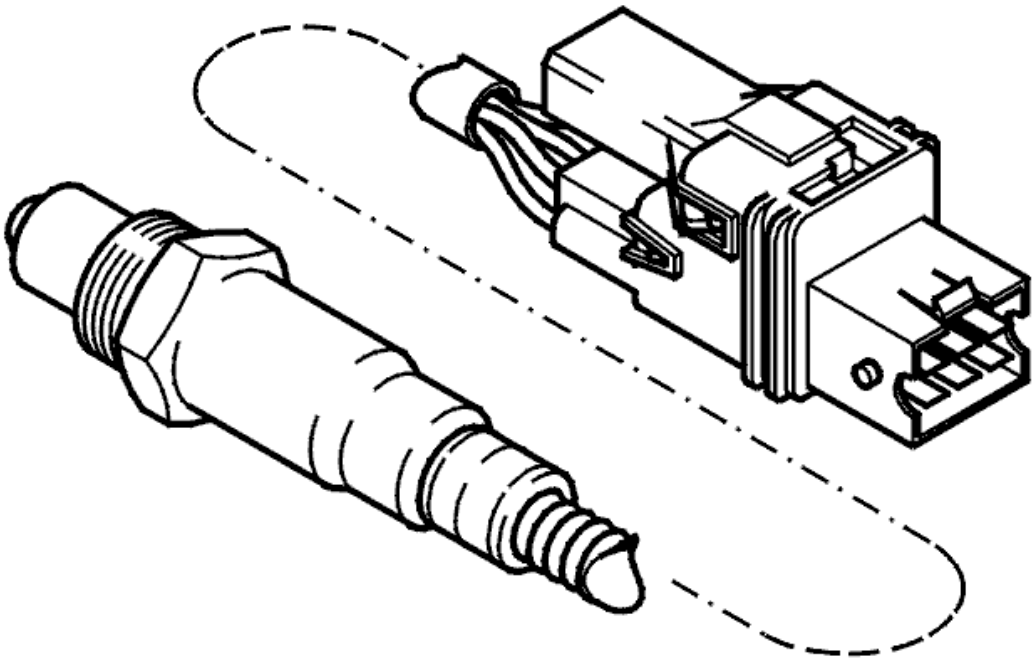

Fig. 30: Front Heated Oxygen Sensor
Courtesy of VOLVO CARS CORPORATION

Is NOT DETECTED displayed?

- **YES**

  VERIFIED: Troubleshooting has been completed.

- **NO**

  Refer to **INFORMATION**

INFORMATION

FAULT-TRACING INFORMATION

The fault should have been detected and remedied. As this is not the case fault-tracing has failed.

Exit fault-tracing for this diagnostic trouble code (DTC) or make another attempt.

ECM-2910: FRONT HEATED OXYGEN SENSOR (HO2S) PREHEATING, BANK 2. SIGNAL TOO LOW (B6294T; 2003-2004)

DIAGNOSTIC TROUBLE CODE (DTC) INFORMATION

see **DIAGNOSTIC TROUBLE CODE (DTC) INFORMATION**

SIGNAL TOO LOW

CHECKING COMPONENTS AND WIRING

Check the resistance of the heated oxygen sensor (HO2S) between terminals #3 and #4.

Check the signal cable between heated oxygen sensor (HO2S) terminal #4 and control module terminal #A70 (#B10). Check for a short-circuit to ground.

Remedy as necessary.

Other information

- For 6 cylinder engines -2004, see **SIGNAL SPECIFICATION**
- For 6 cylinder engines 2005-, see **SIGNAL SPECIFICATION** .
- To connect the breakout box / access the control module, see **CONNECTING THE BREAKOUT BOX**
- To access or replace the heated oxygen sensor (HO2S), see **HEATED OXYGEN SENSOR (HO2S), REPLACING**
- For resistance values, see **COMPONENT SPECIFICATIONS**
- see **CHECKING WIRING AND TERMINALS** .

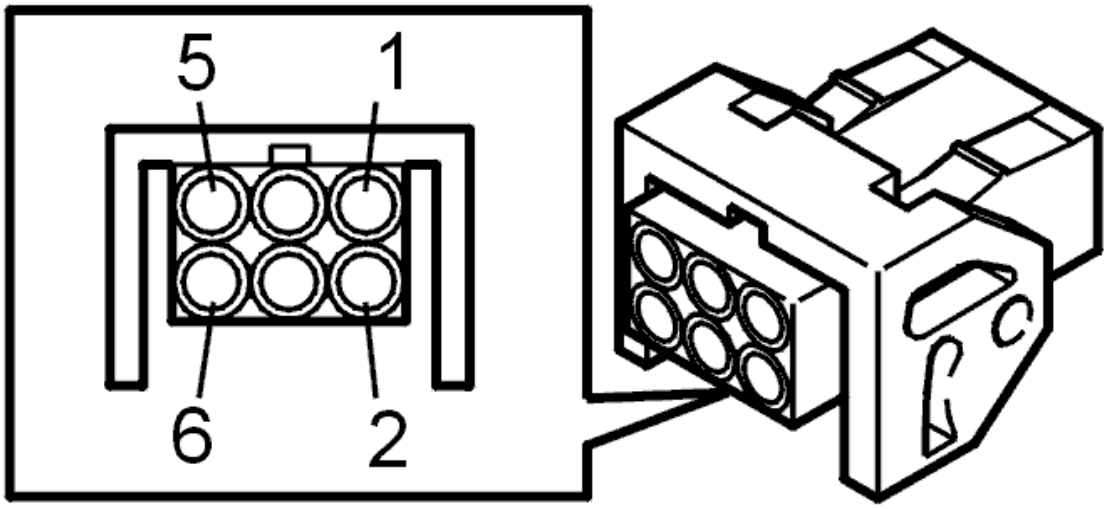

Fig. 31: Identifying Front Heated Oxygen Sensor Connector Terminals
Courtesy of VOLVO CARS CORPORATION

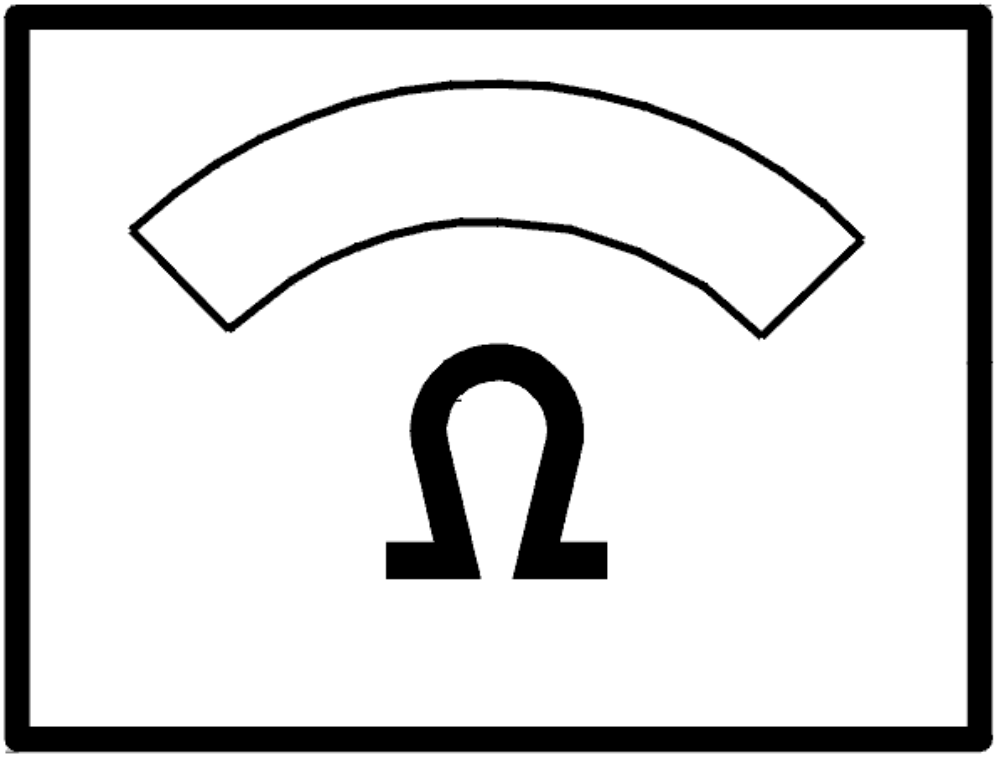

Fig. 32: Identifying Ohm Meter
Courtesy of VOLVO CARS CORPORATION

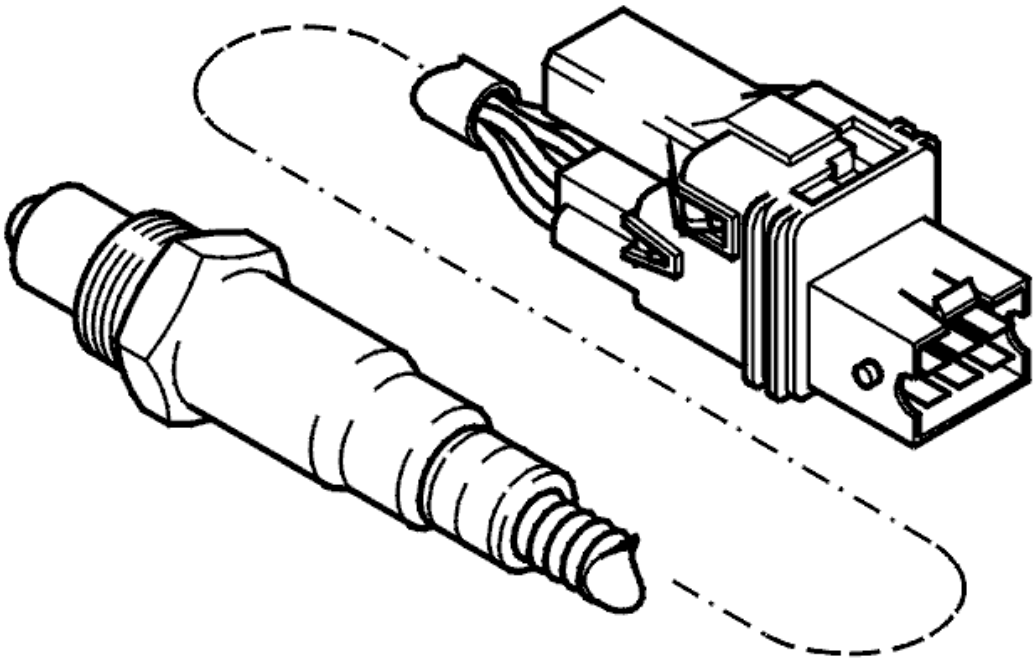

Fig. 33: Front Heated Oxygen Sensor
Courtesy of VOLVO CARS CORPORATION

- **Continue**

  Refer to **VERIFICATION**

VERIFICATION

VERIFICATION

HINT: After carrying out the repair, check that the fault has been remedied.

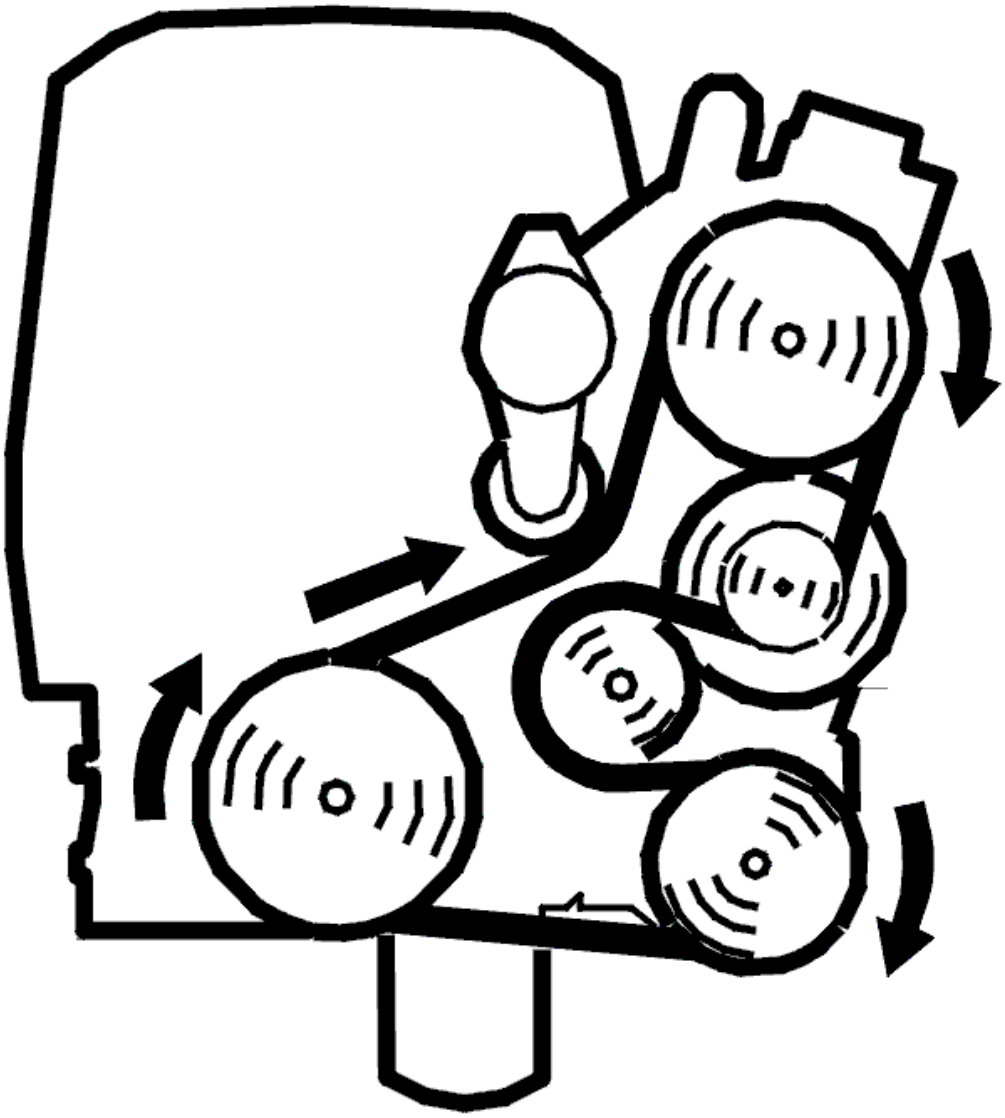

Fig. 34: Belt Routing / Engine Idling - Volvo
Courtesy of VOLVO CARS CORPORATION

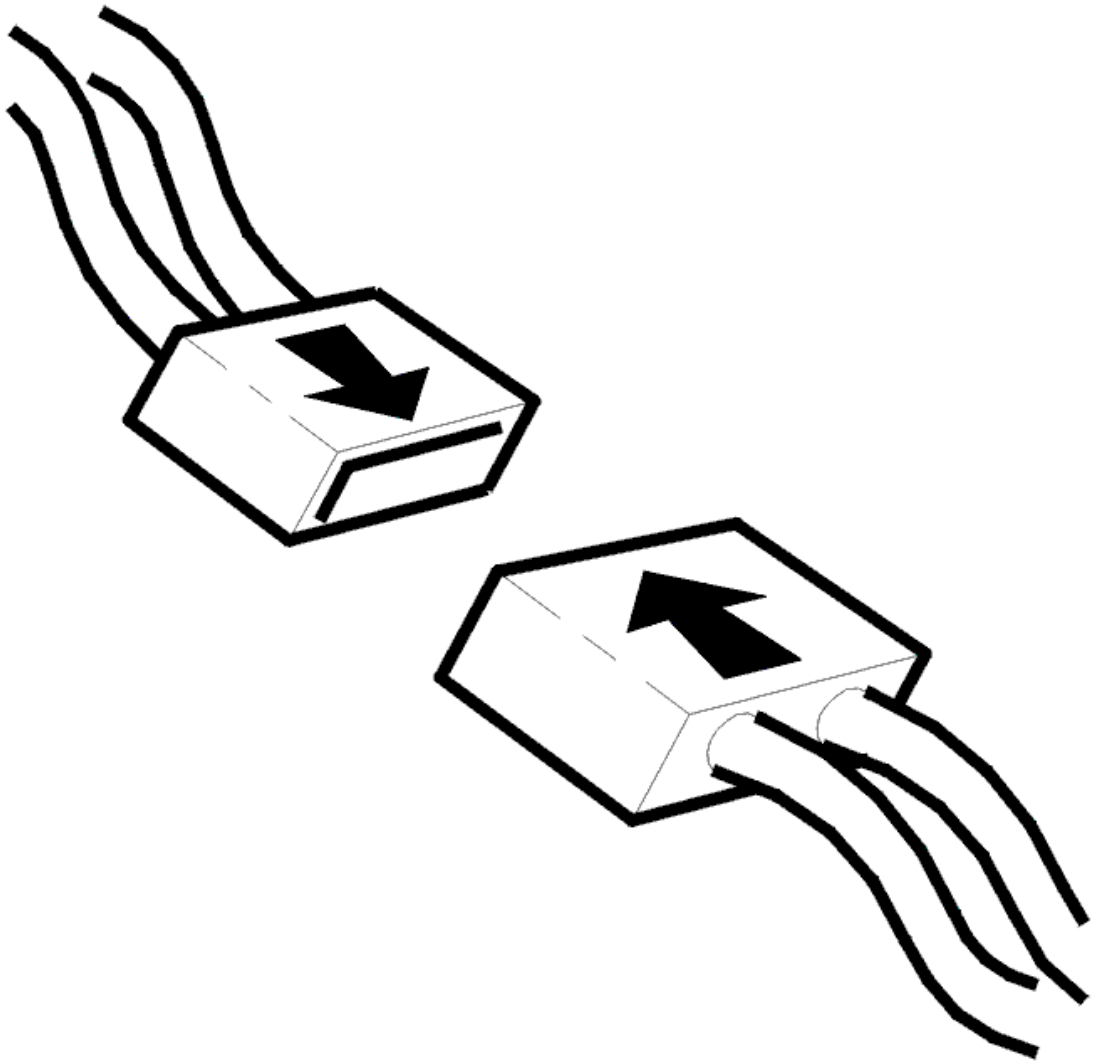

Fig. 35: Connecting Connector
Courtesy of VOLVO CARS CORPORATION

- Ignition off
- Reinstall the components, reconnect the connectors etc.
- Start the engine. Allow the engine to idle.

  Read off the diagnostic trouble code (DTC) status for the front heated oxygen sensor (HO2S).

  The text NOT READY is displayed if the diagnosis is underway.

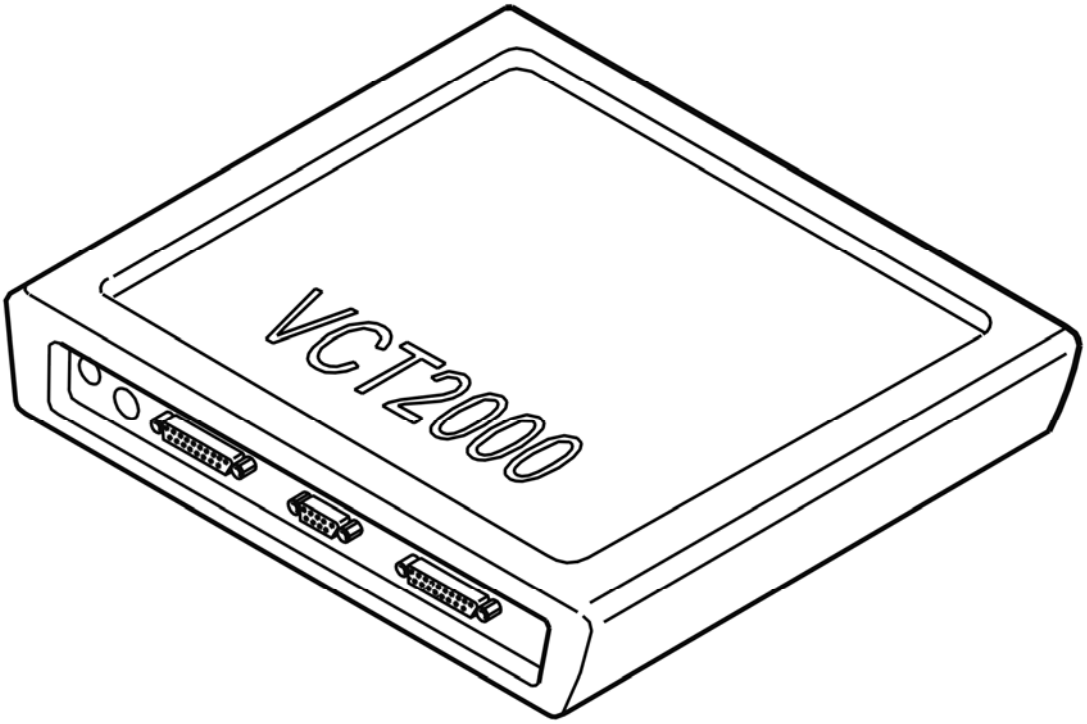

Fig. 36: Identifying VCT2000 Diagnostic Tool Symbol In VIDA
Courtesy of VOLVO CARS CORPORATION

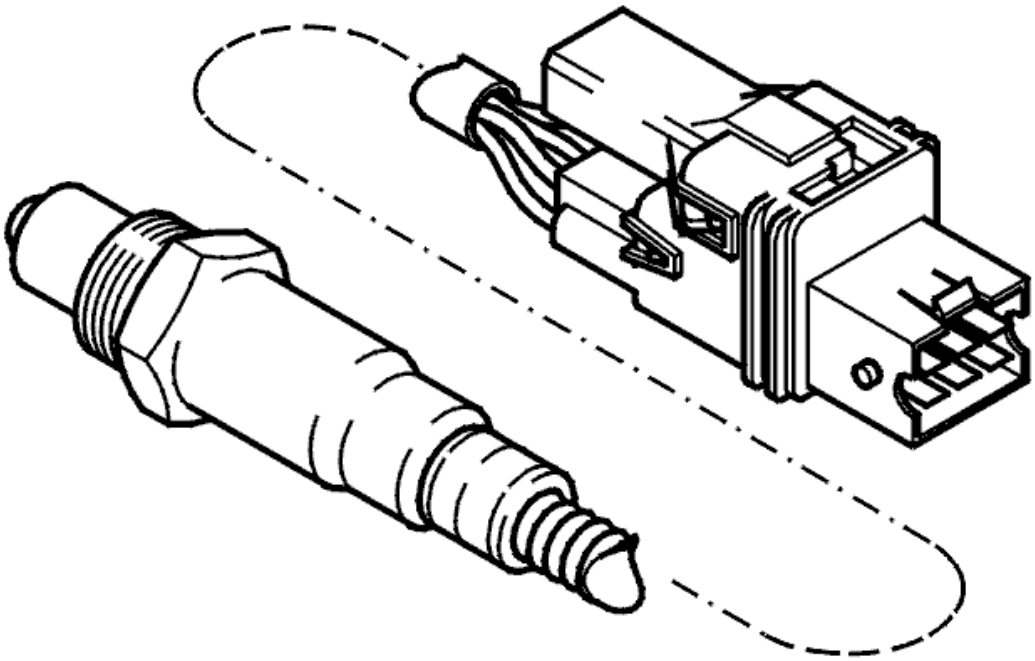

Fig. 37: Front Heated Oxygen Sensor
Courtesy of VOLVO CARS CORPORATION

Is NOT DETECTED displayed?

- **YES**

  VERIFIED: Troubleshooting has been completed.

- **NO**

  Refer to **INFORMATION**

INFORMATION

FAULT-TRACING INFORMATION

The fault should have been detected and remedied. As this is not the case fault-tracing has failed.

Exit fault-tracing for this diagnostic trouble code (DTC) or make another attempt.

ECM-2910: FRONT LAMBDA PROBE PRE-HEATING, BANK 2. FAULTY SIGNAL. INTERMITTENT FAULT. (B6294T; 2003-2004)

DIAGNOSTIC TROUBLE CODE (DTC) INFORMATION

see **DIAGNOSTIC TROUBLE CODE (DTC) INFORMATION**

FAULTY SIGNAL. INTERMITTENT FAULT

FAULT-TRACING INFORMATION

Control module previously registered a fault. The fault is now no longer present.

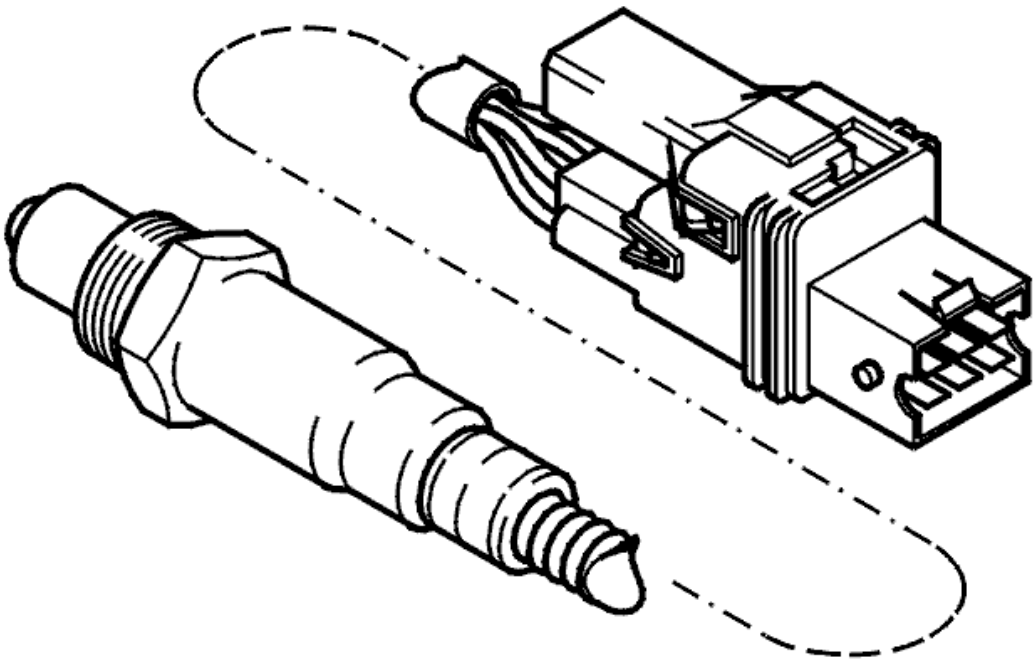

Fig. 38: Front Heated Oxygen Sensor
Courtesy of VOLVO CARS CORPORATION

- **Continue**

  Refer to **INFORMATION**

INFORMATION

FAULT-TRACING INFORMATION

If the fault is intermittent, do not verify fault-tracing if the fault does not recur.

It is possible to view the information again, or leave fault-tracing for this diagnostic trouble code (DTC).

ECM-2910: FRONT LAMBDA PROBE PRE-HEATING, BANK 2. FAULTY SIGNAL. PERMANENT FAULT. (B6294T; 2003-2004)

DIAGNOSTIC TROUBLE CODE (DTC) INFORMATION

see **DIAGNOSTIC TROUBLE CODE (DTC) INFORMATION**

FAULTY SIGNAL. PERMANENT FAULT

REPLACING THE COMPONENT

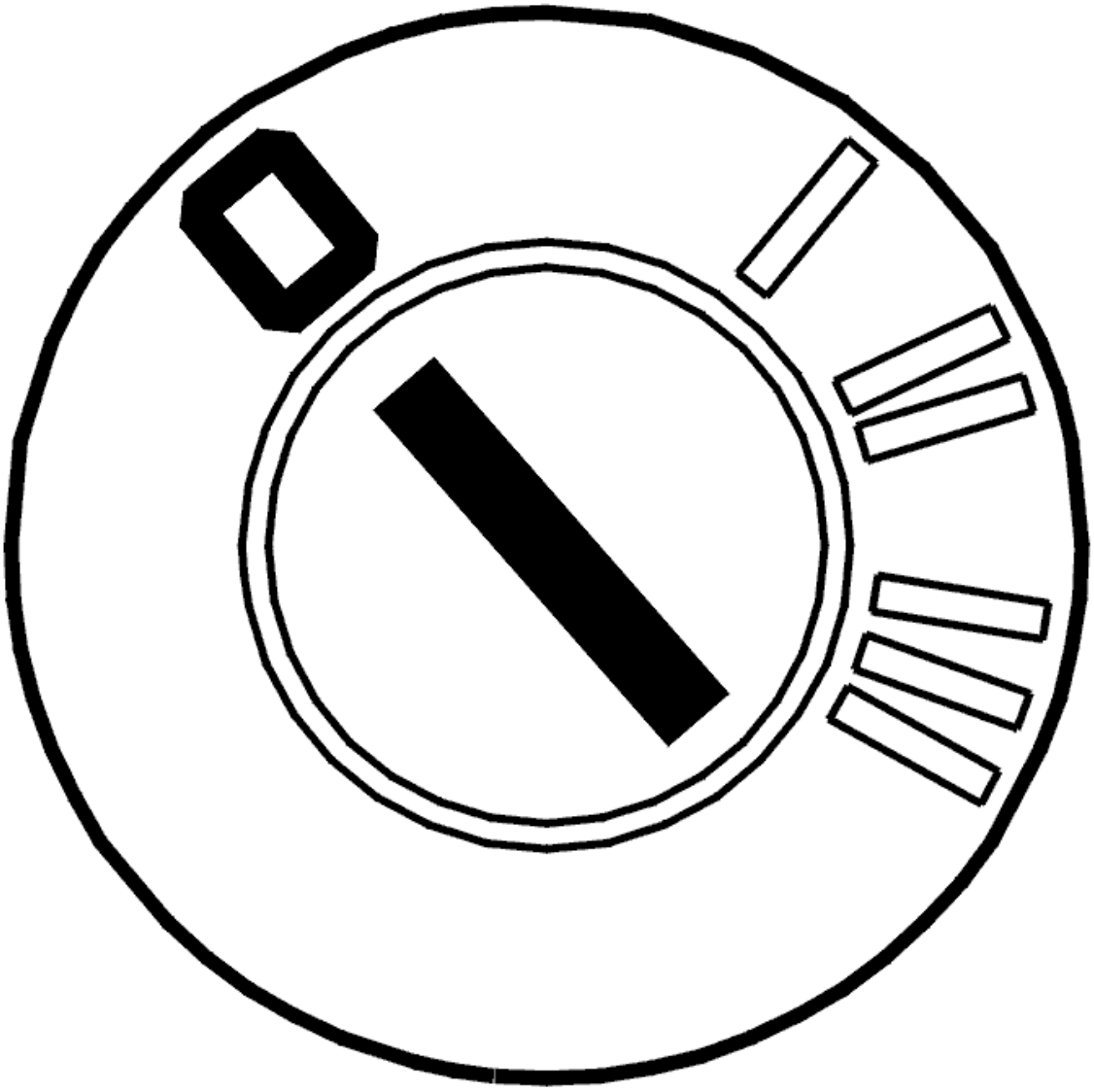

Fig. 39: Identifying Ignition OFF
Courtesy of VOLVO CARS CORPORATION

- Ignition off.

The control module has registered a fault in the heated oxygen sensor (HO2S). Try a new heated oxygen sensor (HO2S). See **HEATED OXYGEN SENSOR (HO2S), REPLACING** .

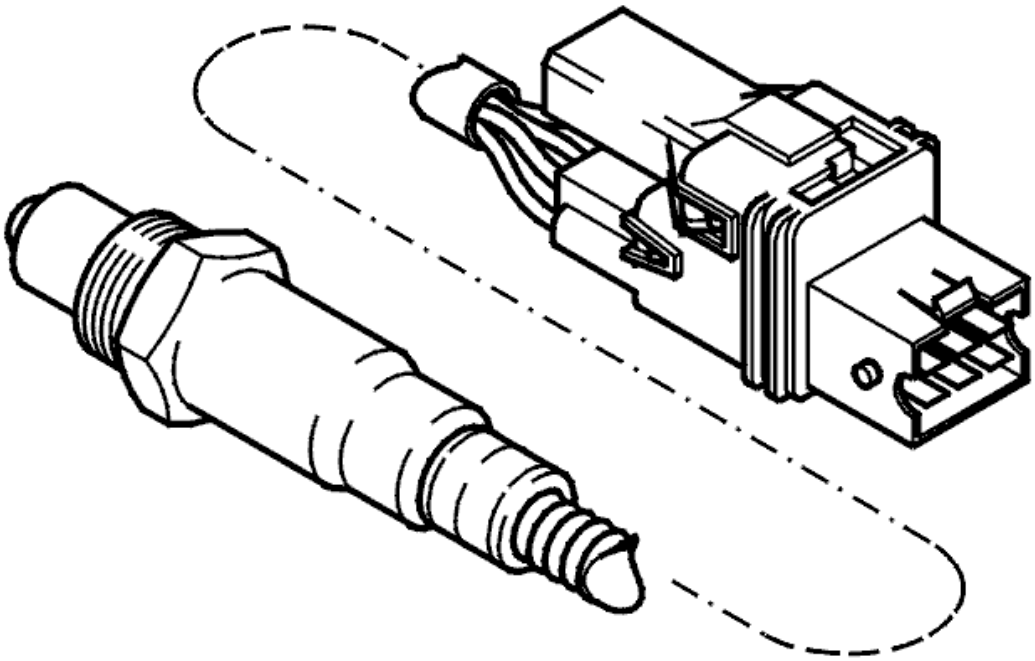

Fig. 40: Front Heated Oxygen Sensor
Courtesy of VOLVO CARS CORPORATION

- **Continue**

  Refer to **VERIFICATION**

VERIFICATION

VERIFICATION

HINT: After carrying out the repair, check that the fault has been remedied.

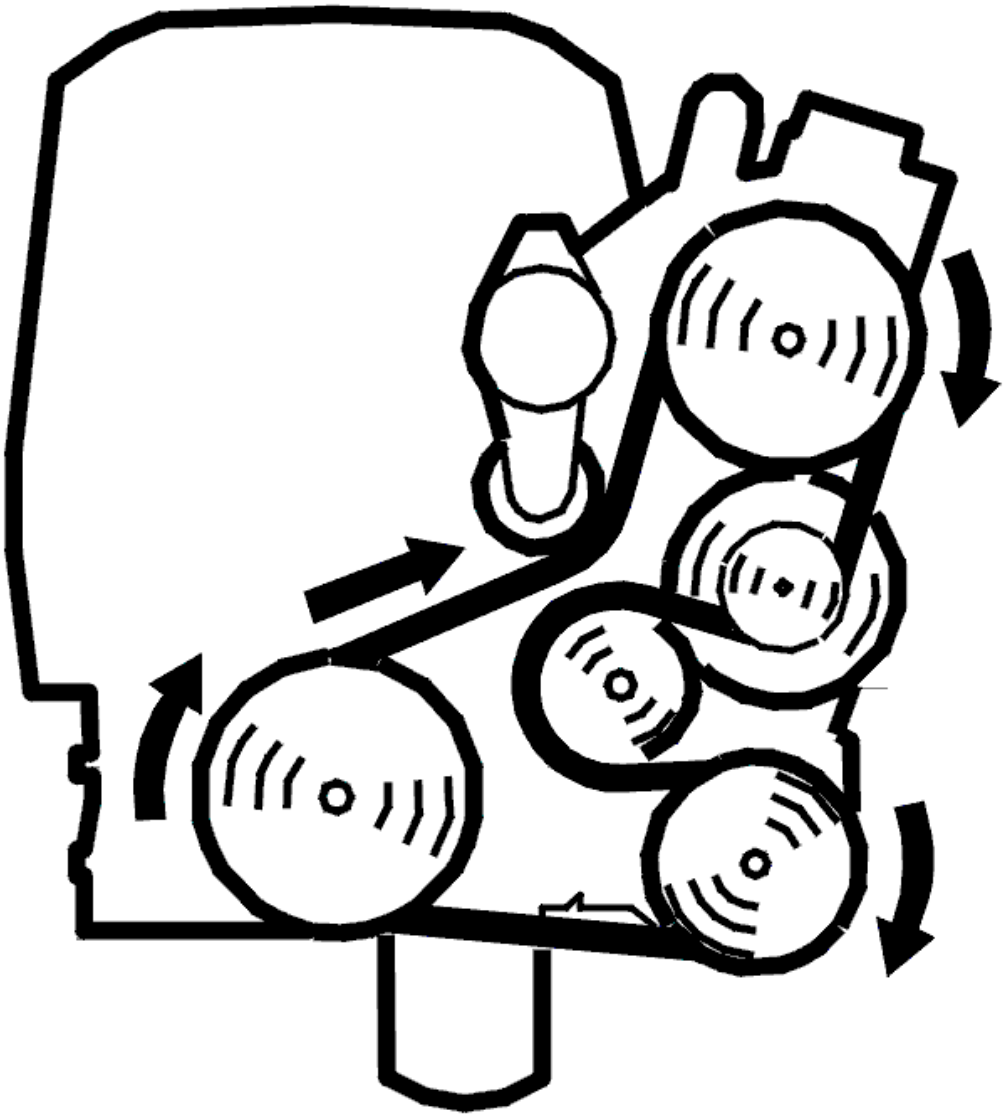

Fig. 41: Belt Routing / Engine Idling - Volvo
Courtesy of VOLVO CARS CORPORATION

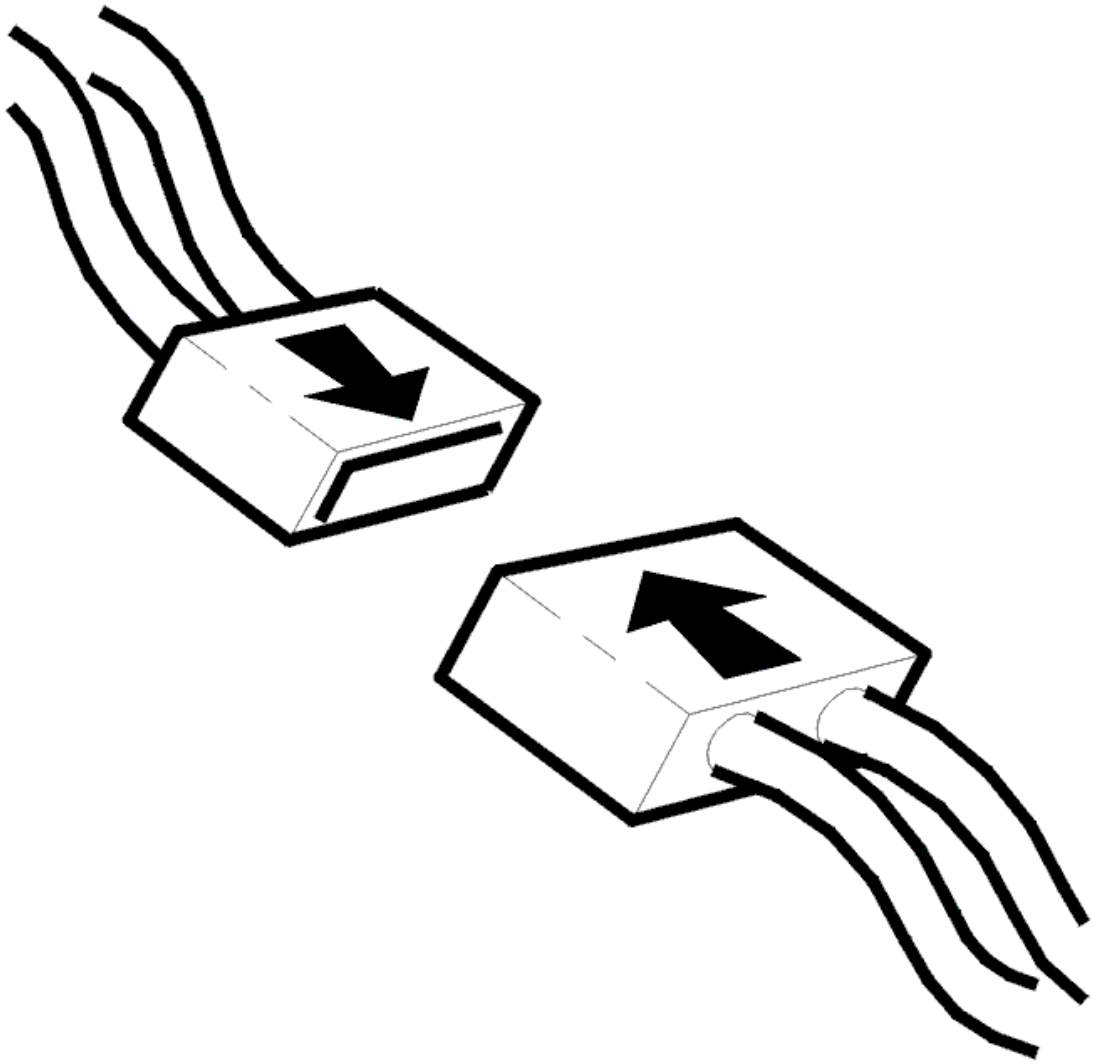

Fig. 42: Connecting Connector
Courtesy of VOLVO CARS CORPORATION

- Ignition off
- Reinstall the components, reconnect the connectors etc.
- Start the engine. Allow the engine to idle.

  Read off the diagnostic trouble code (DTC) status for the front heated oxygen sensor (HO2S).

  The text NOT READY is displayed if the diagnosis is underway.

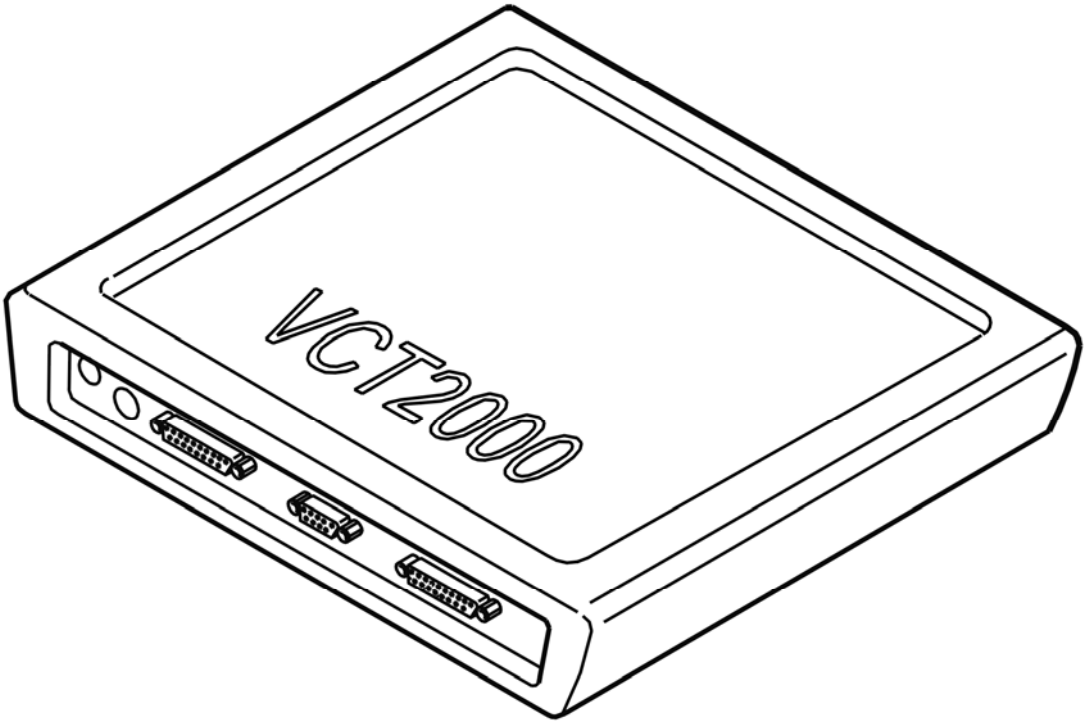

Fig. 43: Identifying VCT2000 Diagnostic Tool Symbol In VIDA
Courtesy of VOLVO CARS CORPORATION

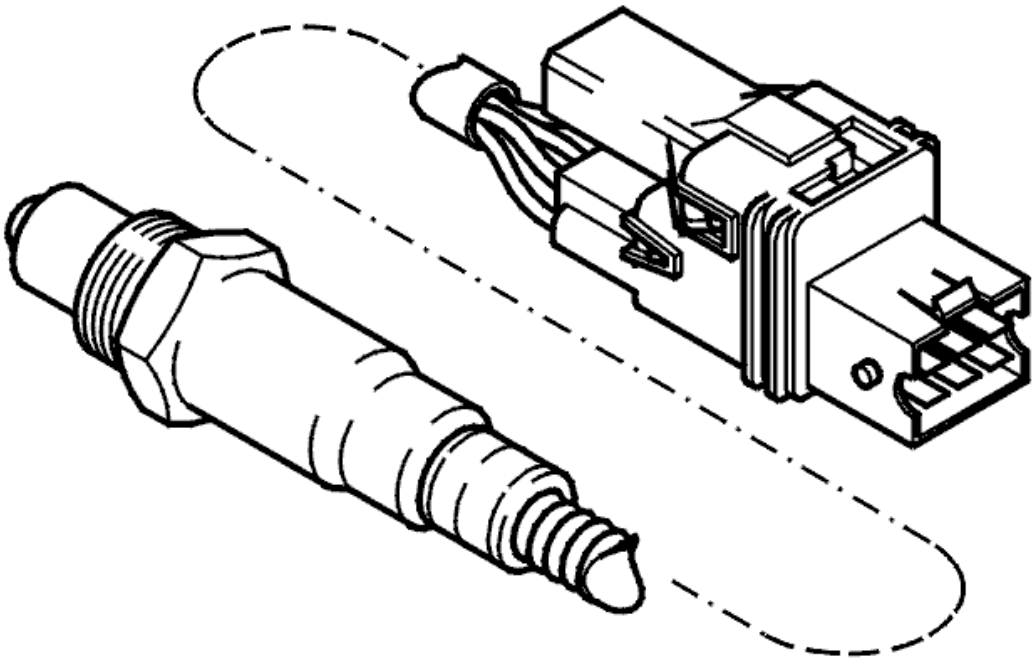

Fig. 44: Front Heated Oxygen Sensor
Courtesy of VOLVO CARS CORPORATION

Is NOT DETECTED displayed?

- **YES**

  VERIFIED: Troubleshooting has been completed.

- **NO**

  Refer to **INFORMATION**

INFORMATION

FAULT-TRACING INFORMATION

The fault should have been detected and remedied. As this is not the case fault-tracing has failed.

Exit fault-tracing for this diagnostic trouble code (DTC) or make another attempt.

ECM-291B: FUEL PUMP CONTROL MODULE. SIGNAL MISSING (B5254T2; 2005-2007)

DIAGNOSTIC TROUBLE CODE (DTC) INFORMATION ECM-291B

Condition

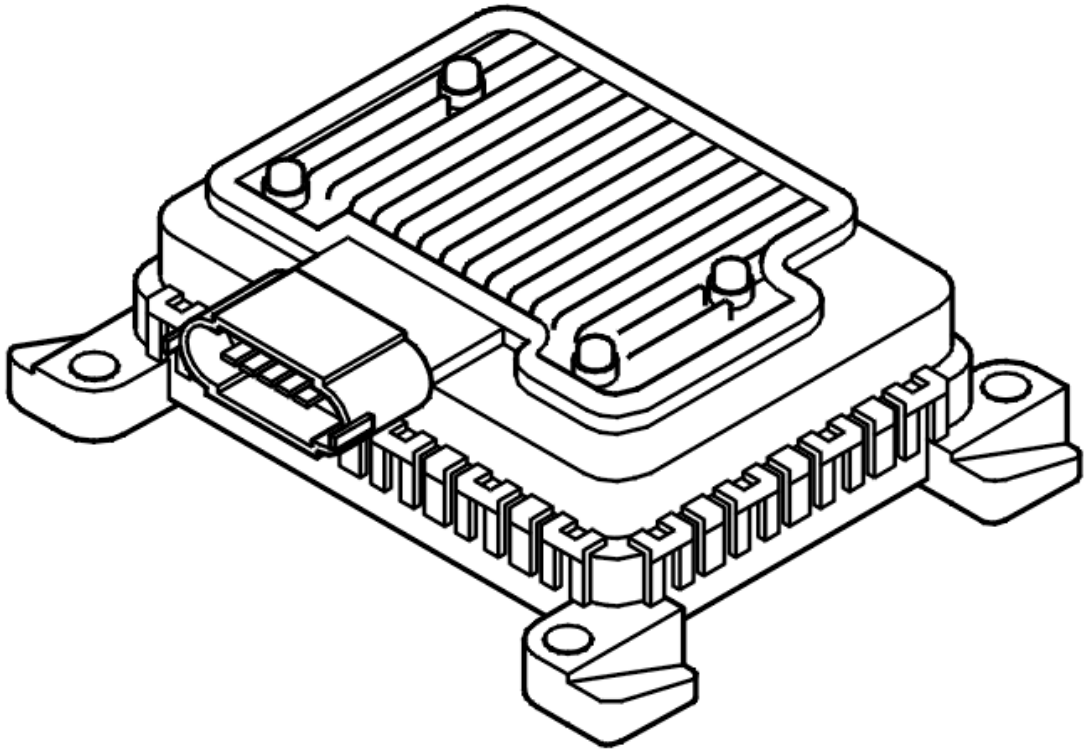

Fig. 45: Identifying Fuel Pump (FP) Control Module
Courtesy of VOLVO CARS CORPORATION

The engine control module (ECM) controls the fuel pressure via the fuel pump (FP) control module using a pulse width modulation (PWM) signal. The fuel pump (FP) control module then controls the fuel pump (FP) depending on the pressure requested by the engine control module (ECM). The diagnostic trouble code (DTC) is stored if there is no PWM signal between the engine control module (ECM) and the fuel pump (FP) control module.

The diagnostic trouble code (DTC) can be diagnosed when the engine is running.

Substitute Value

- None.

Possible Source

- Short-circuit to supply voltage in the signal cable
- Damaged fuel pump control module.

Fault symptom[s]

- The starter motor turns but the engine does not start
- The engine stops.

SIGNAL TOO HIGH/SIGNAL TOO LOW/SIGNAL MISSING (2005)

CHECKING THE STATUS

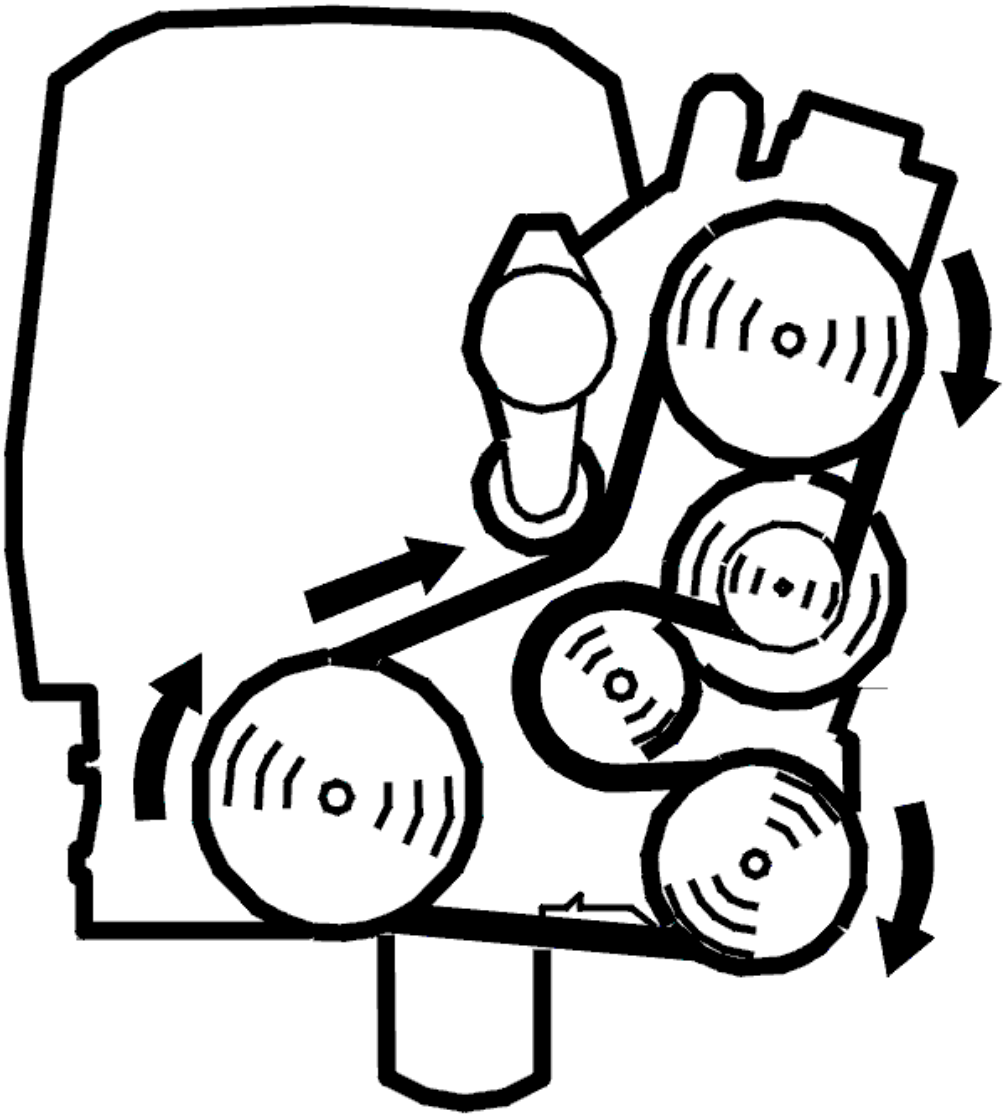

Fig. 46: Belt Routing / Engine Idling - Volvo
Courtesy of VOLVO CARS CORPORATION

- Start the engine and run it to normal operating temperature
- Read off the fuel pump (FP) load.

Check whether the fault is permanent or intermittent by checking the value of the fuel pump (FP) load (signal from the engine control module (ECM) to the fuel pump (FP) control module).

Check that the signal is approximately 35% (±5%) with the engine idling at operating temperature.

The fault is permanent if the signal is incorrect or the engine will not start.

The fault is intermittent if the signal is correct.

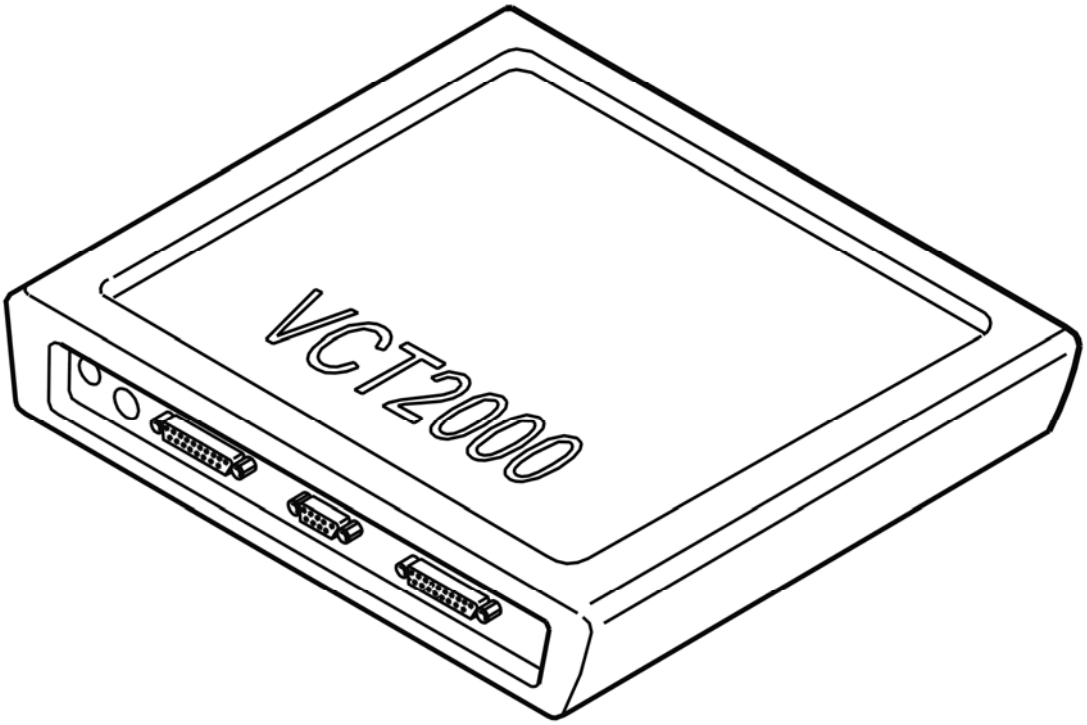

Fig. 47: Identifying VCT2000 Diagnostic Tool Symbol In VIDA
Courtesy of VOLVO CARS CORPORATION

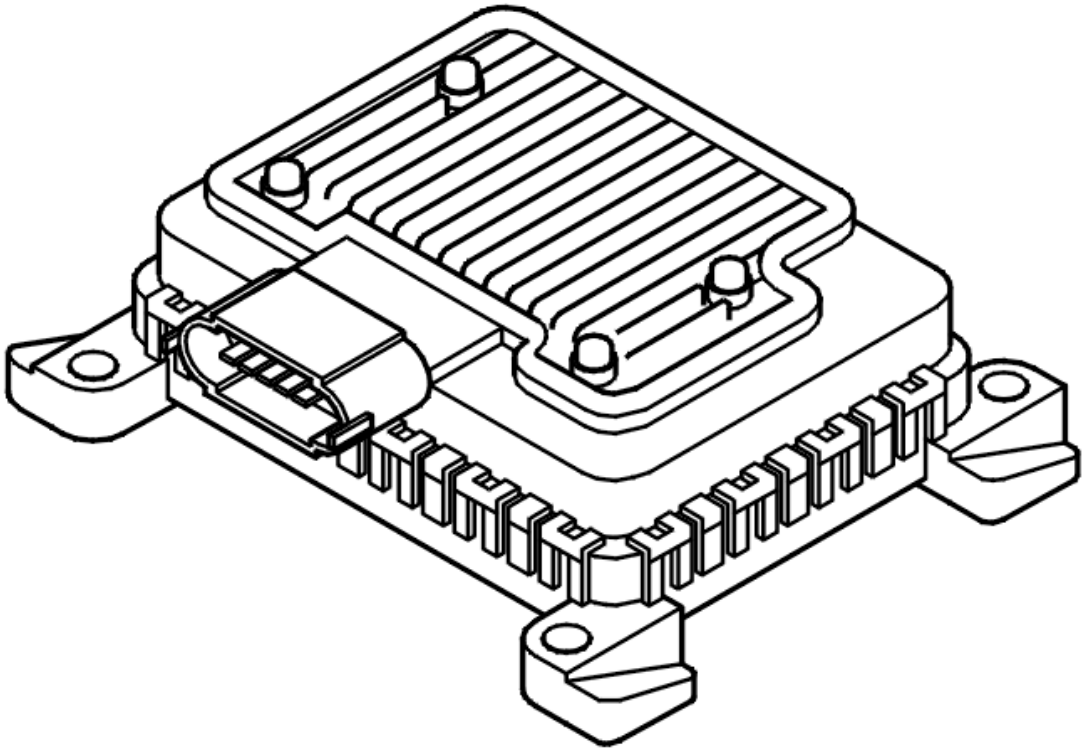

Fig. 48: Identifying Fuel Pump (FP) Control Module
Courtesy of VOLVO CARS CORPORATION

- **Continue**

  Refer to **CHECKING COMPONENTS AND WIRING**

CHECKING COMPONENTS AND WIRING

Check the pump control module connector. Check for contact resistance and oxidation.

Check the cable between Engine Control Module (ECM) terminal #B47 (#B57) and pump control module terminal #1. Check for an open circuit, short circuit to ground and supply voltage.

Remedy as necessary.

HINT: The diagnostic trouble code (DTC) may be caused by a defective pump control module.

Other information:

- see **CHECKING WIRING AND TERMINALS**
- To connect the breakout box, see **CONNECTING THE BREAKOUT BOX**
- For 5 cylinder turbocharged engines -2004, see **SIGNAL DESCRIPTION**

- For 5 cylinder turbocharged engines 2005-, see **SIGNAL SPECIFICATION** .
- see **FUEL PUMP DRIVER MODULE**

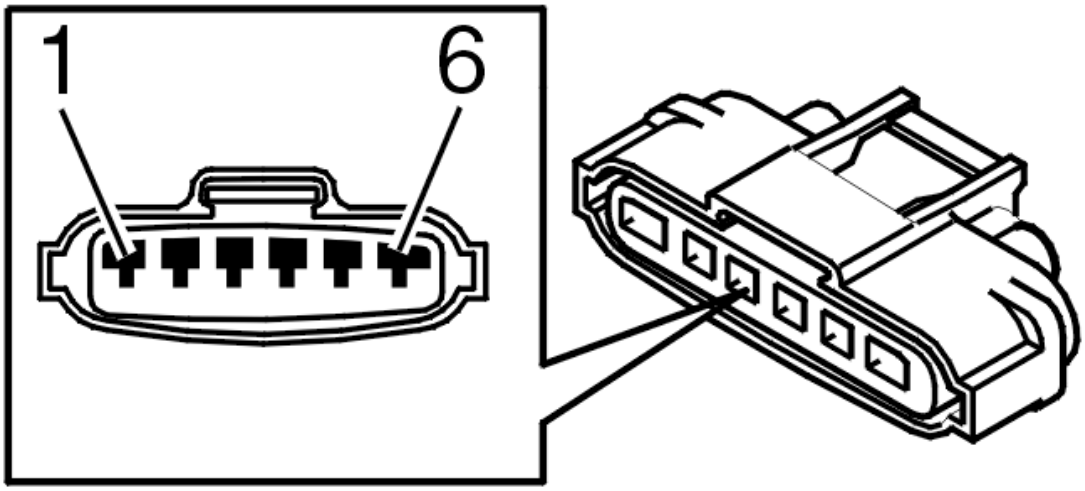

Fig. 49: Identifying 6-Bit Connector
Courtesy of VOLVO CARS CORPORATION

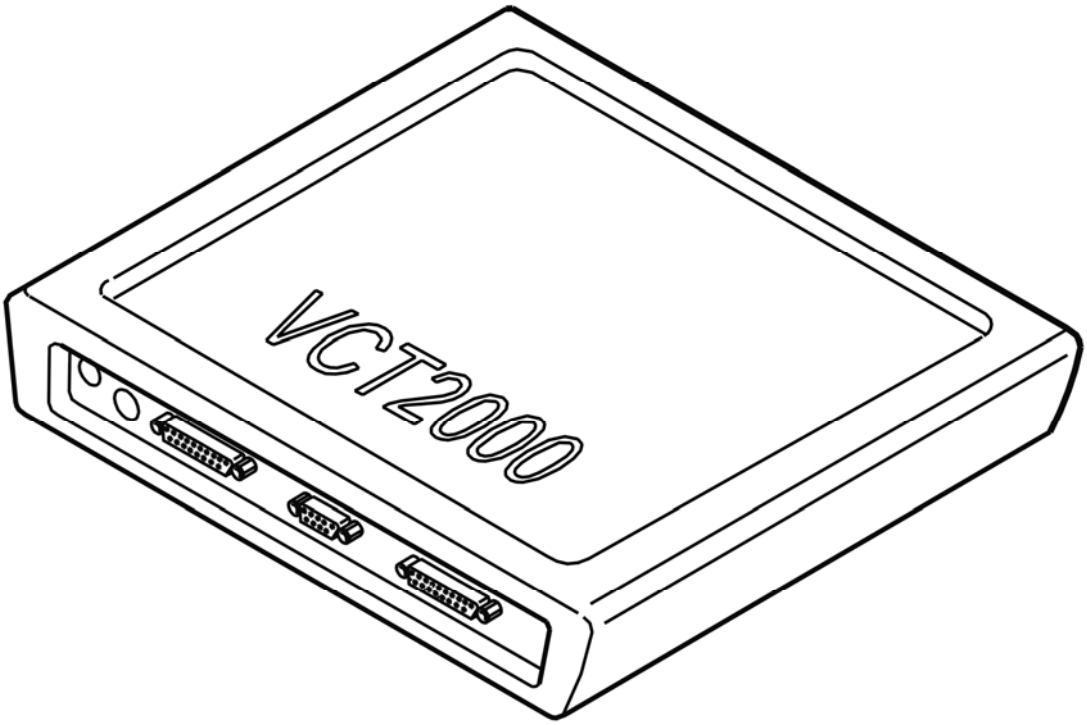

Fig. 50: Identifying VCT2000 Diagnostic Tool Symbol In VIDA
Courtesy of VOLVO CARS CORPORATION

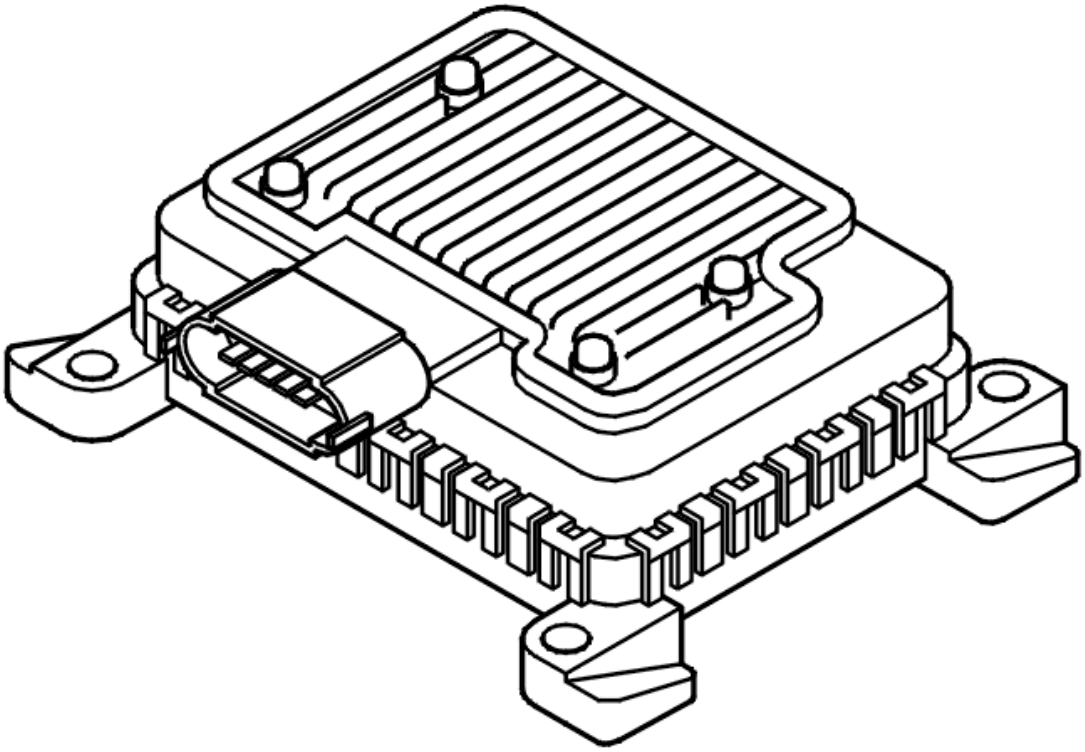

Fig. 51: Identifying Fuel Pump (FP) Control Module
Courtesy of VOLVO CARS CORPORATION

- **Continue**

  Refer to **VERIFICATION**

VERIFICATION

VERIFICATION

HINT: After carrying out the repair, check that the fault has been remedied.

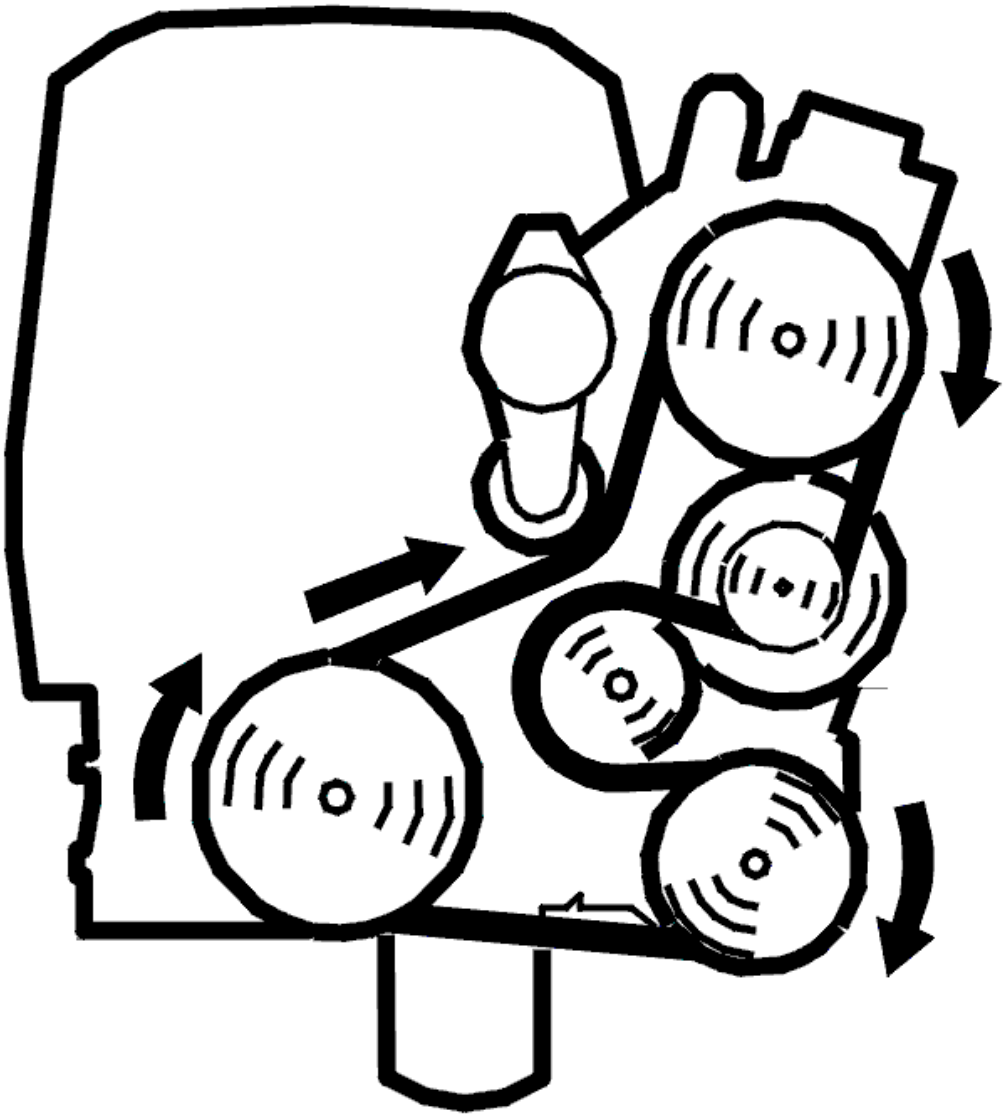

Fig. 52: Belt Routing / Engine Idling - Volvo
Courtesy of VOLVO CARS CORPORATION

- Reinstall the connectors, components etc.
- Start the engine and run it to normal operating temperature
- Read off the fuel pump (FP) load.

  Check that the engine starts and that the signal is approximately 35% (±5%) when the engine is idling at operating temperature.

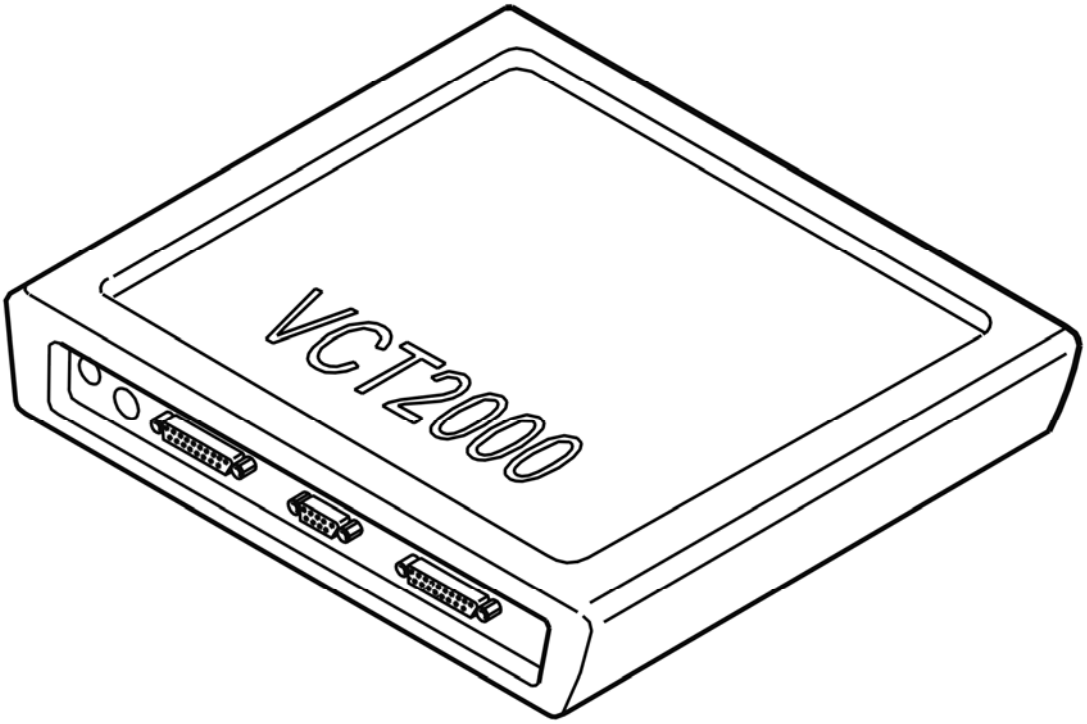

Fig. 53: Identifying VCT2000 Diagnostic Tool Symbol In VIDA
Courtesy of VOLVO CARS CORPORATION

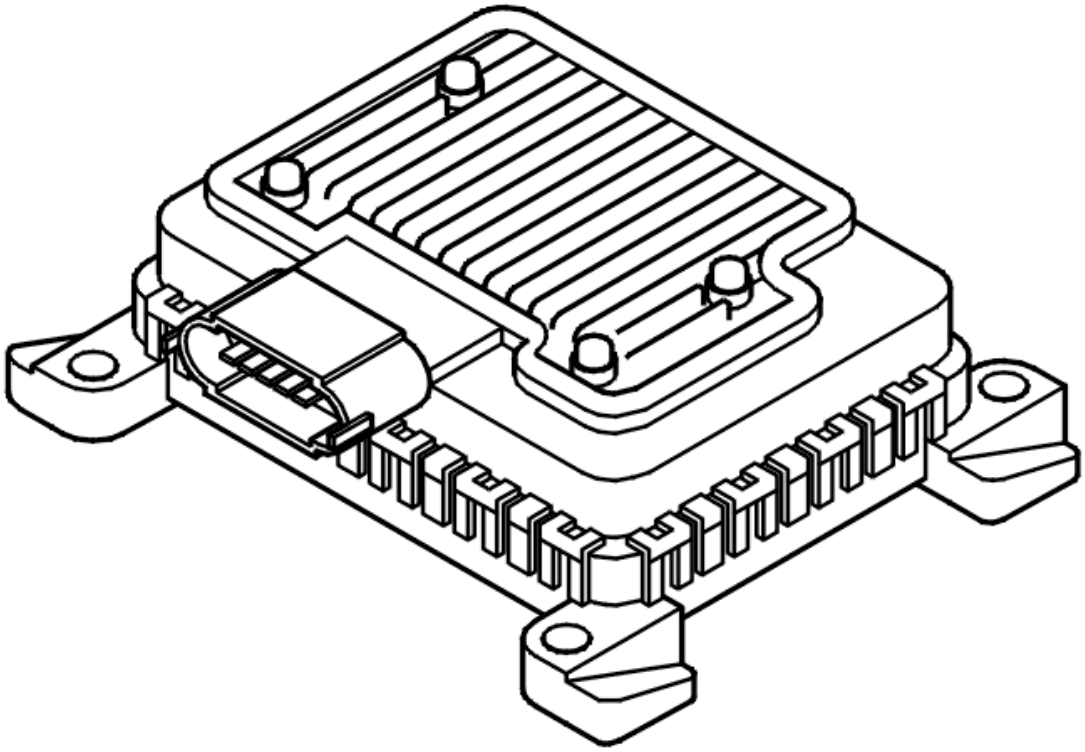

Fig. 54: Identifying Fuel Pump (FP) Control Module
Courtesy of VOLVO CARS CORPORATION

Is the function correct?

- **YES**

  VERIFIED: Troubleshooting has been completed.

- **NO**

  Refer to **INFORMATION**

INFORMATION

FAULT-TRACING INFORMATION

The fault should have been detected and remedied. As this is not the case fault-tracing has failed.

Exit fault-tracing for this diagnostic trouble code (DTC) or make another attempt.

SIGNAL TOO HIGH/SIGNAL TOO LOW/SIGNAL MISSING (2006, 2007)

CHECKING THE STATUS

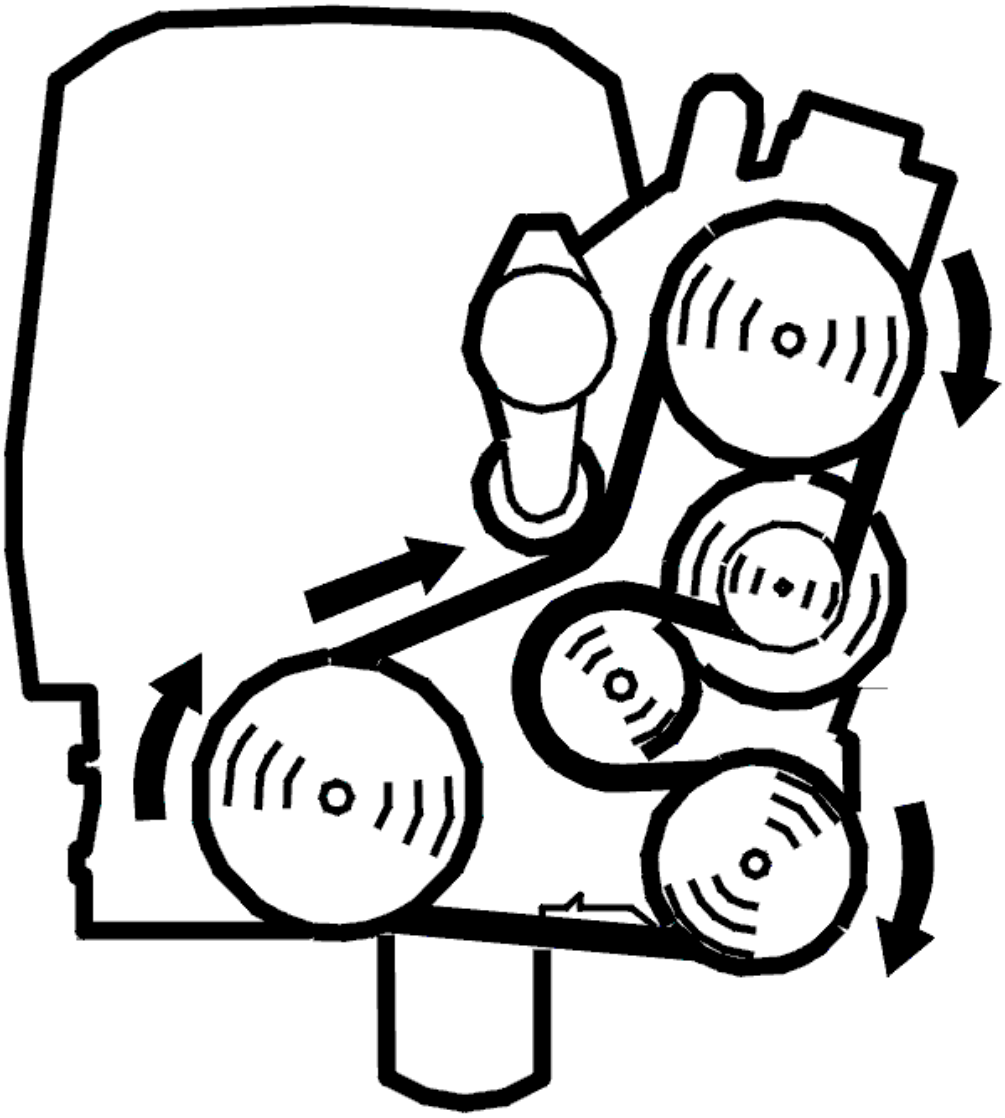

Fig. 55: Belt Routing / Engine Idling - Volvo
Courtesy of VOLVO CARS CORPORATION

- Start the engine and run it to normal operating temperature
- Read off the fuel pump (FP) load.

  Check whether the fault is permanent or intermittent by checking the value of the fuel pump (FP) load (signal from the engine control module (ECM) to the fuel pump (FP) control module).

  Check that the signal is approximately 35% (±5%) with the engine idling at operating temperature.

  The fault is permanent if the signal is incorrect or the engine will not start.

  The fault is intermittent if the signal is correct.

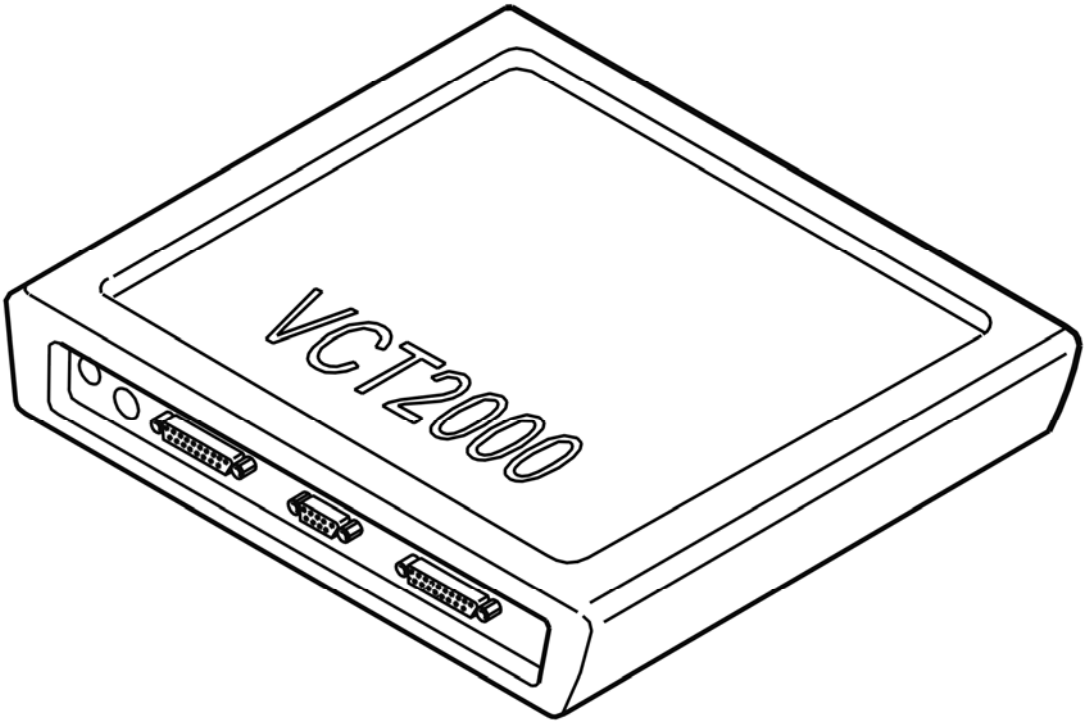

Fig. 56: Identifying VCT2000 Diagnostic Tool Symbol In VIDA
Courtesy of VOLVO CARS CORPORATION

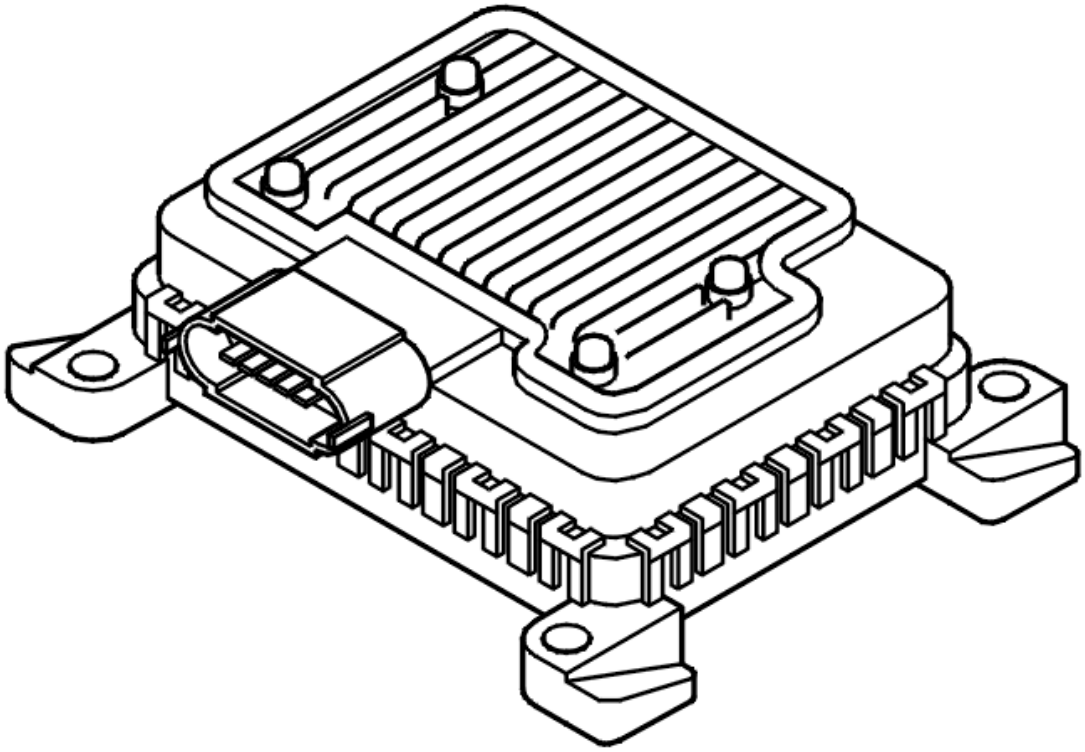

Fig. 57: Identifying Fuel Pump (FP) Control Module
Courtesy of VOLVO CARS CORPORATION

- **Continue**

  Refer to **CHECKING COMPONENTS AND WIRING**

CHECKING COMPONENTS AND WIRING

Check the pump control module connector. Check for contact resistance and oxidation.

Check the cable between Engine Control Module (ECM) terminal #B47 (#B57) and pump control module terminal #1. Check for an open circuit, short circuit to ground and supply voltage.

Remedy as necessary.

HINT: The diagnostic trouble code (DTC) may be caused by a defective pump control module.

Other information:

- see **CHECKING WIRING AND TERMINALS**
- To connect the breakout box, see **CONNECTING THE BREAKOUT BOX**
- For 5 cylinder turbocharged engines -2004, see **SIGNAL DESCRIPTION**

- For 5 cylinder turbocharged engines 2005-, see **SIGNAL SPECIFICATION** .
- see **FUEL PUMP DRIVER MODULE**

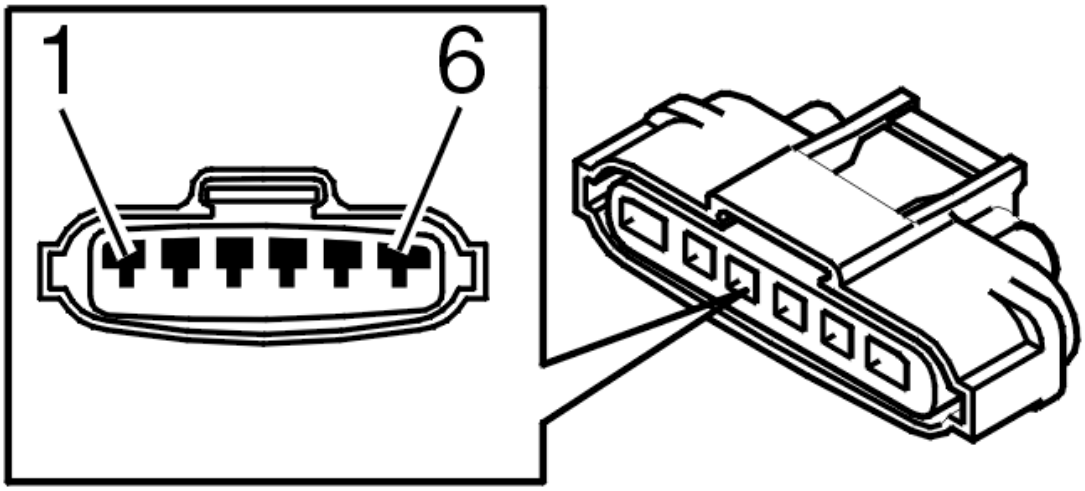

Fig. 58: Identifying 6-Bit Connector
Courtesy of VOLVO CARS CORPORATION

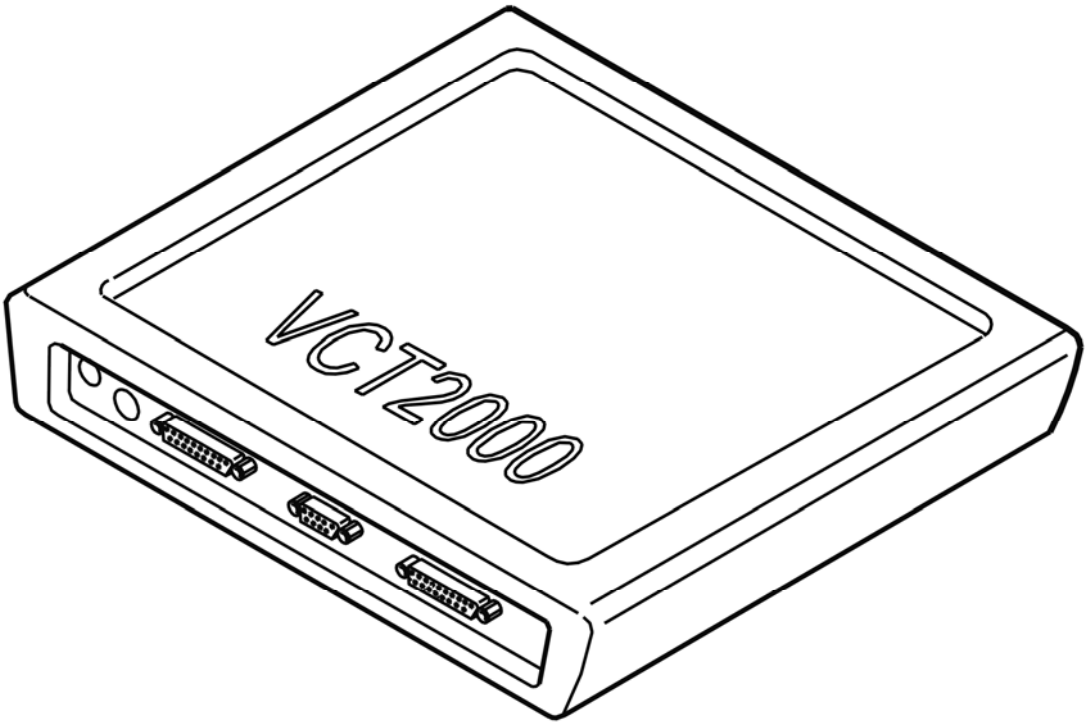

Fig. 59: Identifying VCT2000 Diagnostic Tool Symbol In VIDA
Courtesy of VOLVO CARS CORPORATION

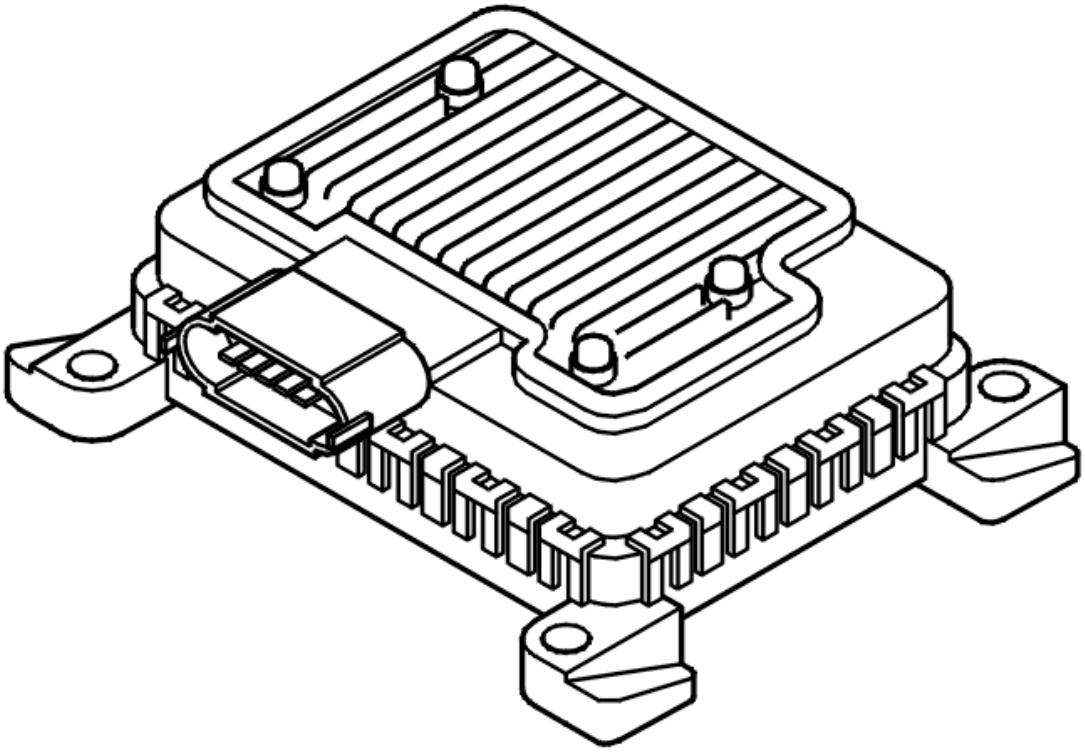

Fig. 60: Identifying Fuel Pump (FP) Control Module
Courtesy of VOLVO CARS CORPORATION

- **Continue**

  Refer to **VERIFICATION**

VERIFICATION

VERIFICATION

HINT: After carrying out the repair, check that the fault has been remedied.

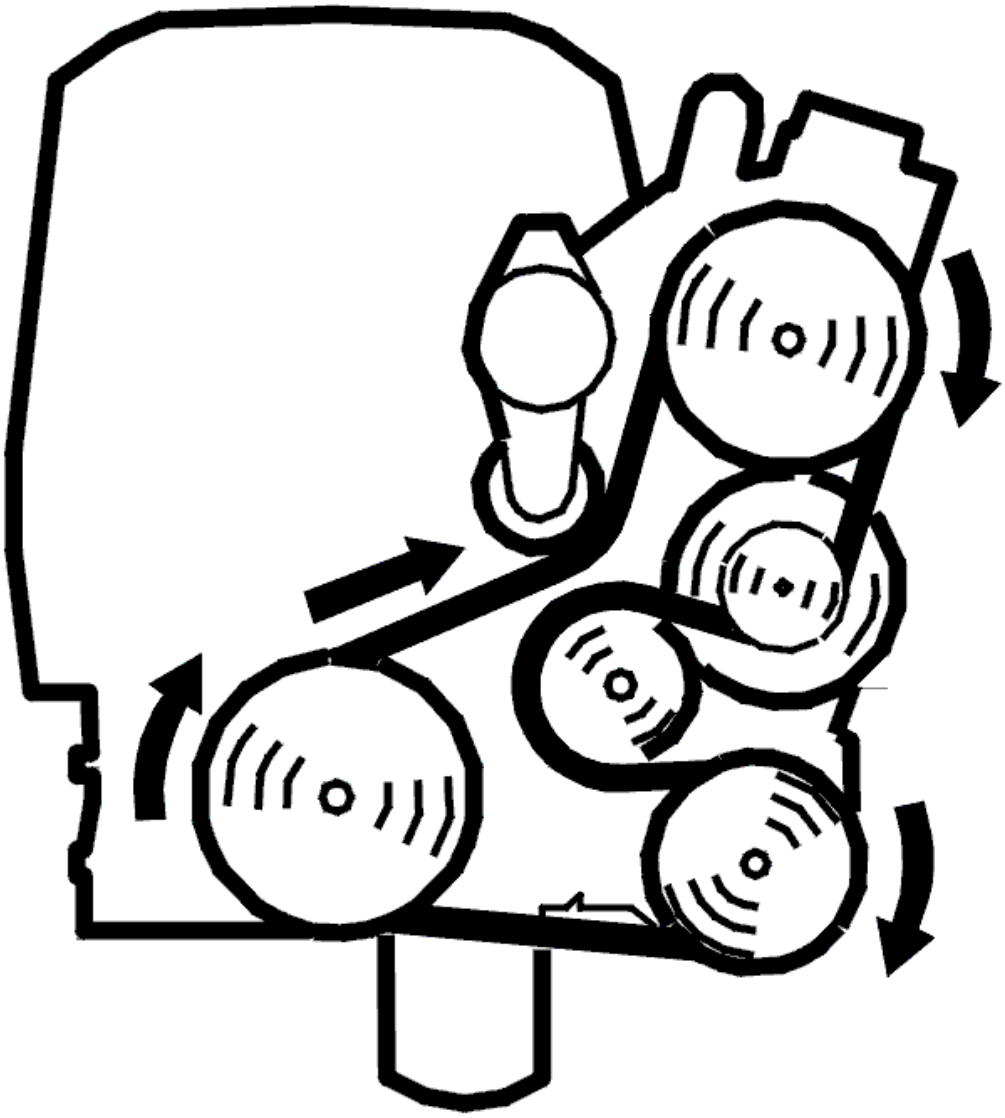

Fig. 61: Belt Routing / Engine Idling - Volvo
Courtesy of VOLVO CARS CORPORATION

- Reinstall the connectors, components etc.
- Start the engine and run it to normal operating temperature
- Read off the fuel pump (FP) load.

  Check that the engine starts and that the signal is approximately 35% (±5%) when the engine is idling at operating temperature.

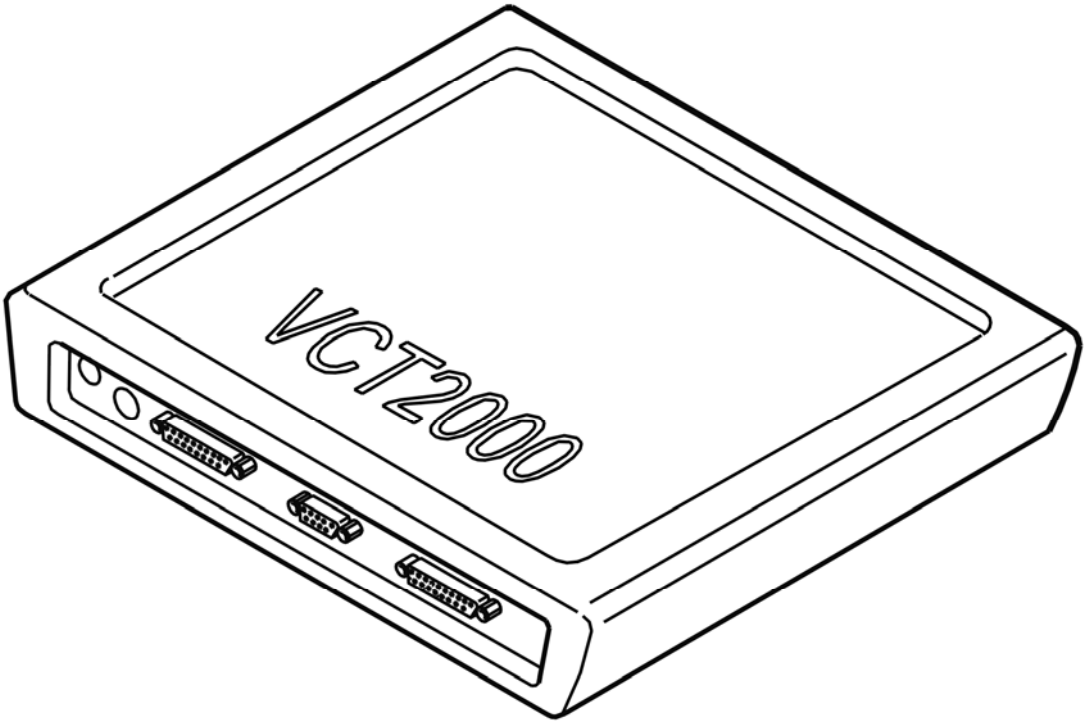

Fig. 62: Identifying VCT2000 Diagnostic Tool Symbol In VIDA
Courtesy of VOLVO CARS CORPORATION

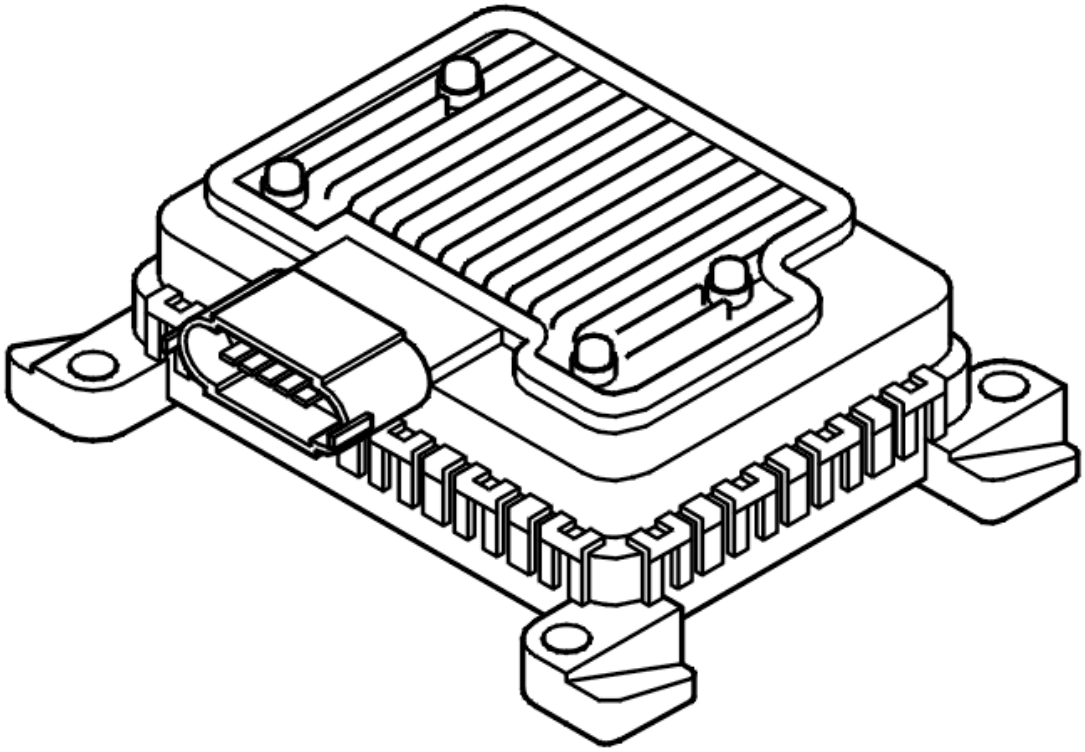

Fig. 63: Identifying Fuel Pump (FP) Control Module
Courtesy of VOLVO CARS CORPORATION

Is the function correct?

- **YES**

  VERIFIED: Troubleshooting has been completed.

- **NO**

  Refer to **INFORMATION**

INFORMATION

FAULT-TRACING INFORMATION

The fault should have been detected and remedied. As this is not the case fault-tracing has failed.

Exit fault-tracing for this diagnostic trouble code (DTC) or make another attempt.

ECM-291B: FUEL PUMP CONTROL MODULE. SIGNAL MISSING (B6294T; 2005-2006)

DIAGNOSTIC TROUBLE CODE (DTC) INFORMATION ECM-291B

see **DIAGNOSTIC TROUBLE CODE (DTC) INFORMATION ECM-291B**

SIGNAL TOO HIGH/SIGNAL TOO LOW/SIGNAL MISSING (2005)

see **SIGNAL TOO HIGH/SIGNAL TOO LOW/SIGNAL MISSING (2005)**

SIGNAL TOO HIGH/SIGNAL TOO LOW/SIGNAL MISSING (2006)

CHECKING THE STATUS

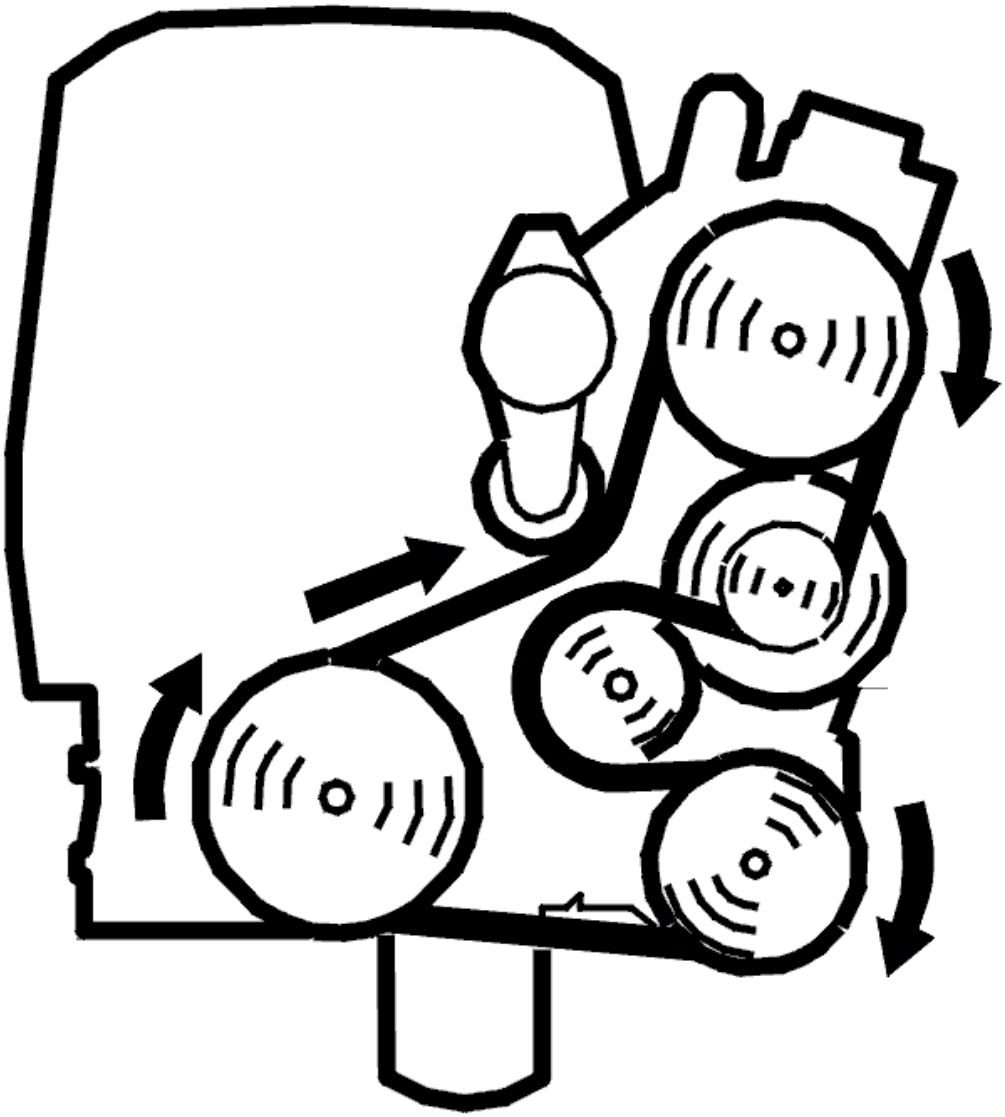

Fig. 64: Belt Routing / Engine Idling - Volvo
Courtesy of VOLVO CARS CORPORATION

- Start the engine and run it to normal operating temperature

- Read off the fuel pump (FP) load.

  Check whether the fault is permanent or intermittent by checking the value of the fuel pump (FP) load (signal from the engine control module (ECM) to the fuel pump (FP) control module).

  Check that the signal is approximately 35% (±5%) with the engine idling at operating temperature.

  The fault is permanent if the signal is incorrect or the engine will not start.

  The fault is intermittent if the signal is correct.

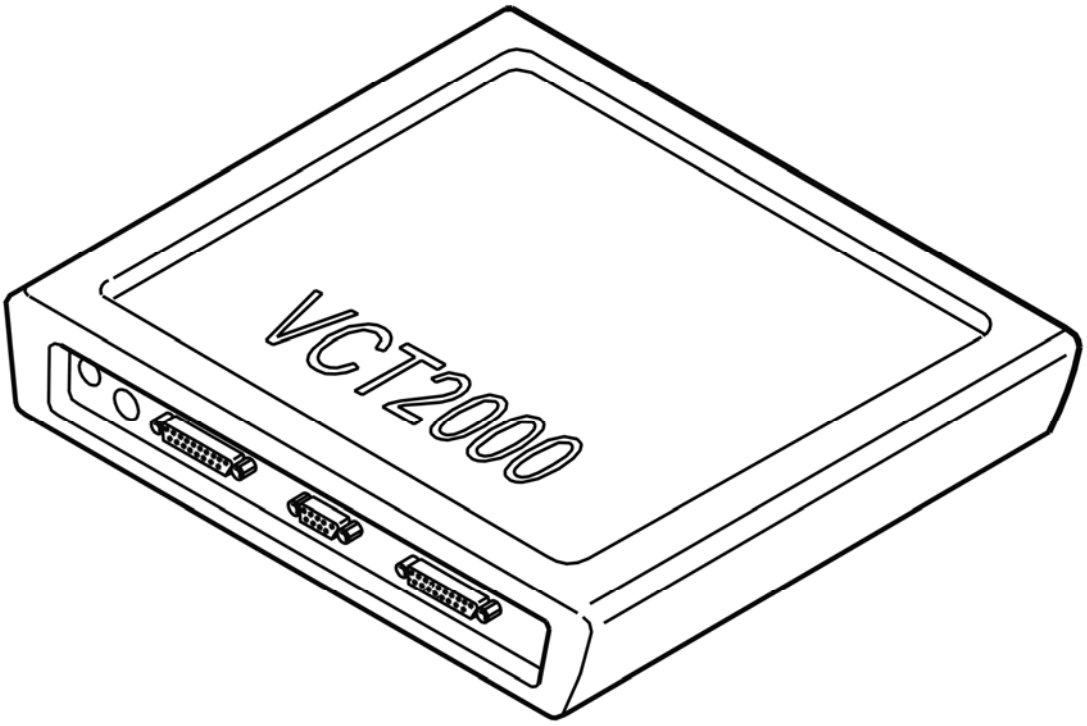

Fig. 65: Identifying VCT2000 Diagnostic Tool Symbol In VIDA
Courtesy of VOLVO CARS CORPORATION

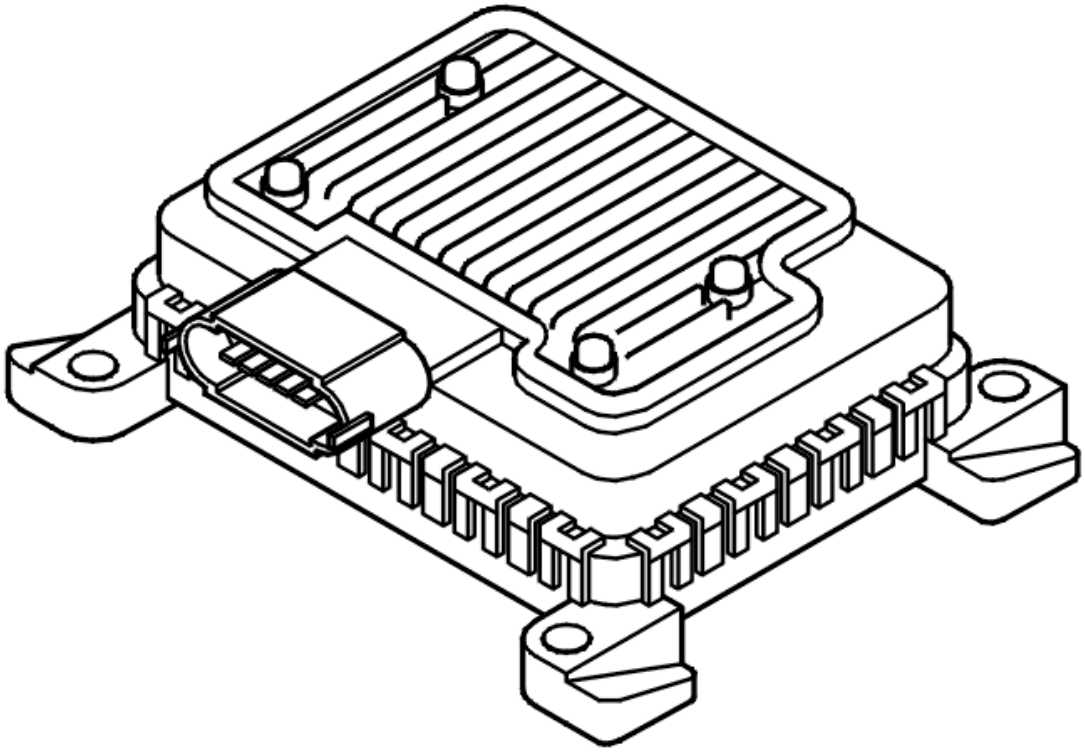

Fig. 66: Identifying Fuel Pump (FP) Control Module
Courtesy of VOLVO CARS CORPORATION

- **Continue**

  Refer to **CHECKING COMPONENTS AND WIRING**

CHECKING COMPONENTS AND WIRING

Check the pump control module connector. Check for contact resistance and oxidation.

Check the cable between Engine Control Module (ECM) terminal #B47 (#B57) and pump control module terminal #1. Check for an open circuit, short circuit to ground and supply voltage.

Remedy as necessary.

HINT: The diagnostic trouble code (DTC) may be caused by a defective pump control module.

Other information:

- see **CHECKING WIRING AND TERMINALS**
- To connect the breakout box, see **CONNECTING THE BREAKOUT BOX**
- For 6 cylinder engines -2004, see **SIGNAL SPECIFICATION**

- For 6 cylinder engines 2005-, see **SIGNAL SPECIFICATION** .
- see **CONTROL MODULE FUEL PUMP (FP), REPLACING**

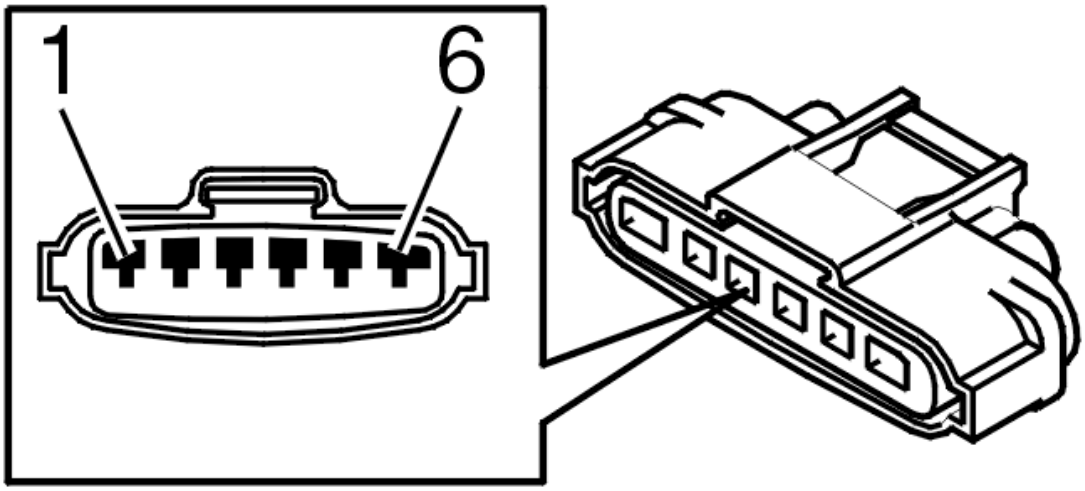

Fig. 67: Identifying 6-Bit Connector
Courtesy of VOLVO CARS CORPORATION

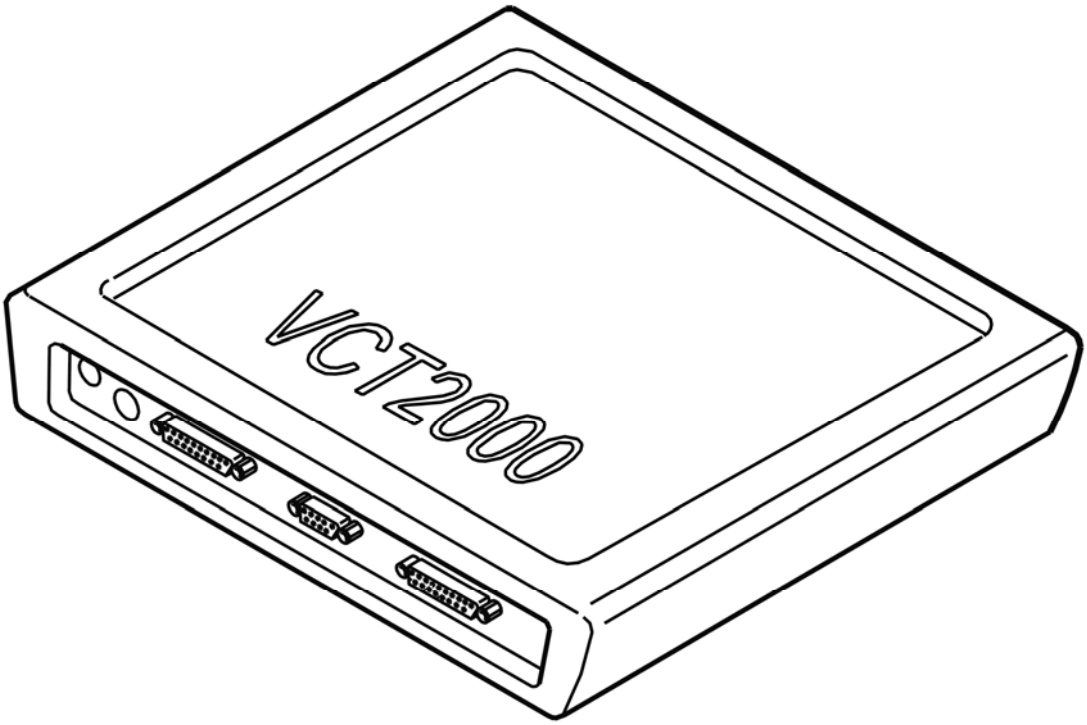

Fig. 68: Identifying VCT2000 Diagnostic Tool Symbol In VIDA
Courtesy of VOLVO CARS CORPORATION

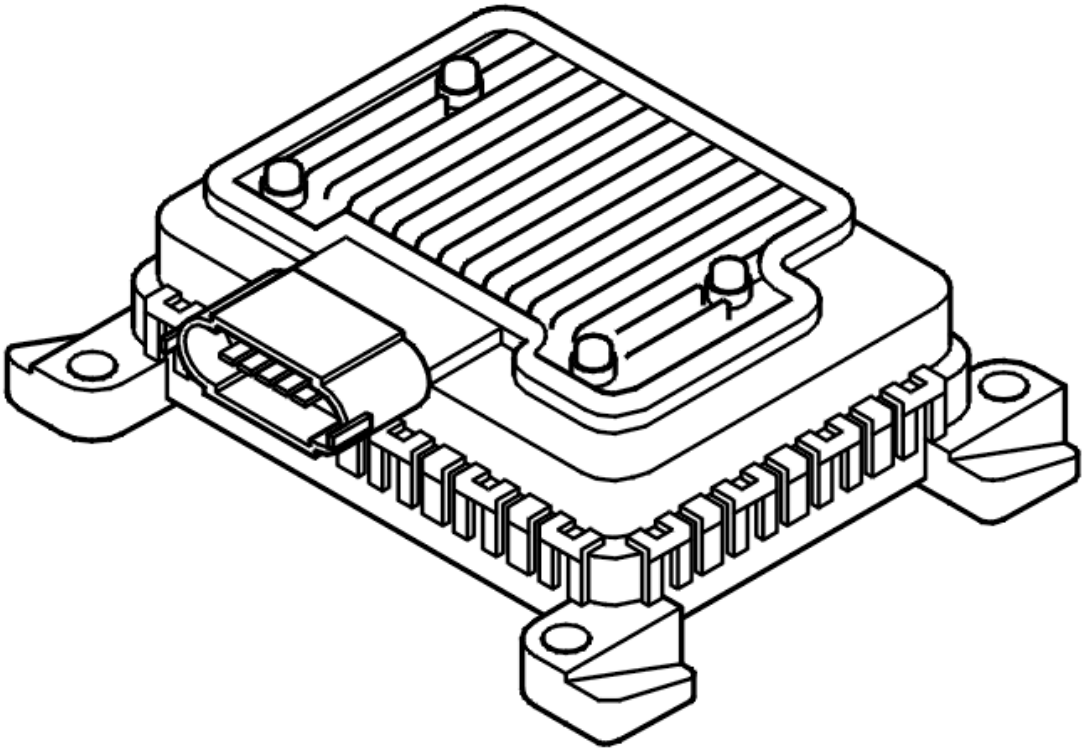

Fig. 69: Identifying Fuel Pump (FP) Control Module
Courtesy of VOLVO CARS CORPORATION

- **Continue**

  Refer to **VERIFICATION**

VERIFICATION

VERIFICATION

HINT: After carrying out the repair, check that the fault has been remedied.

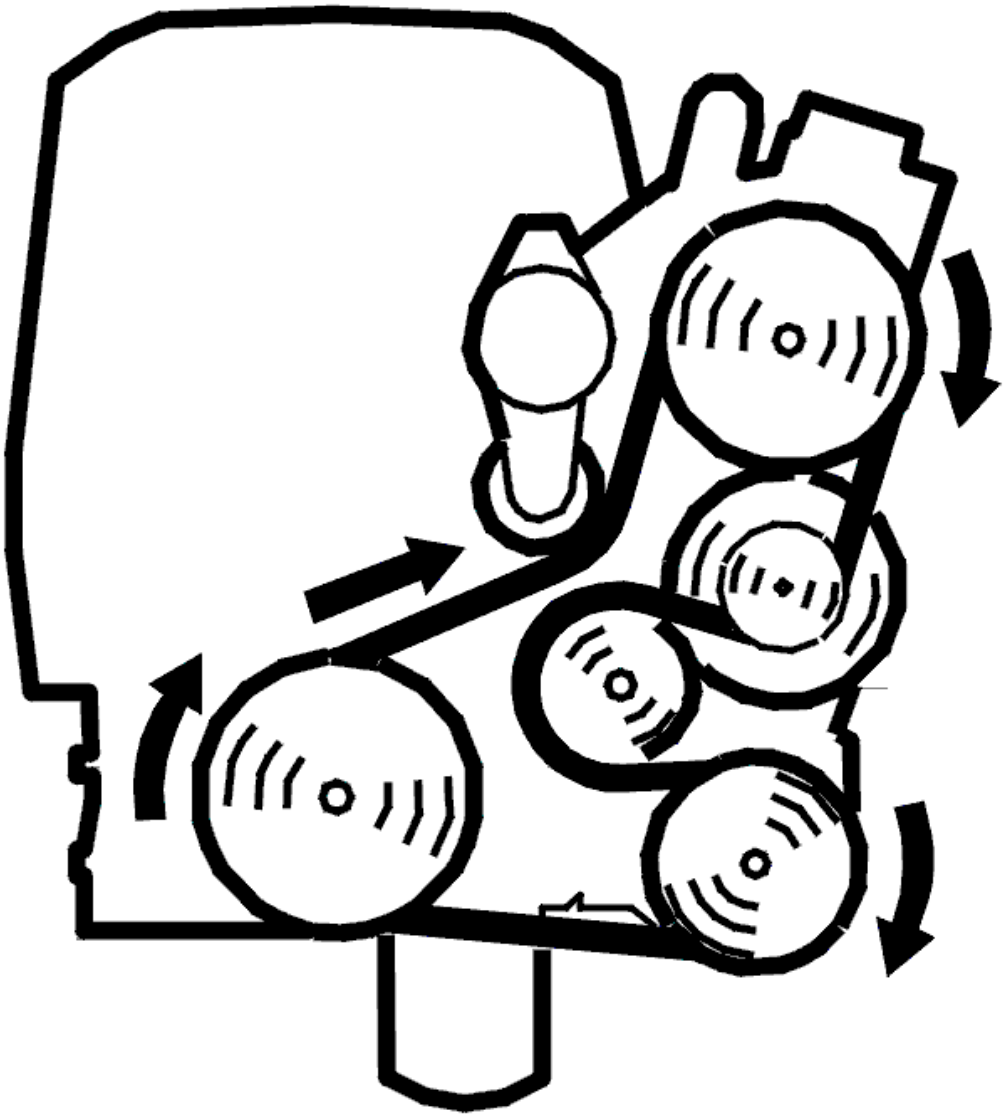

Fig. 70: Belt Routing / Engine Idling - Volvo
Courtesy of VOLVO CARS CORPORATION

- Reinstall the connectors, components etc.
- Start the engine and run it to normal operating temperature
- Read off the fuel pump (FP) load.

  Check that the engine starts and that the signal is approximately 35% (±5%) when the engine is idling at operating temperature.

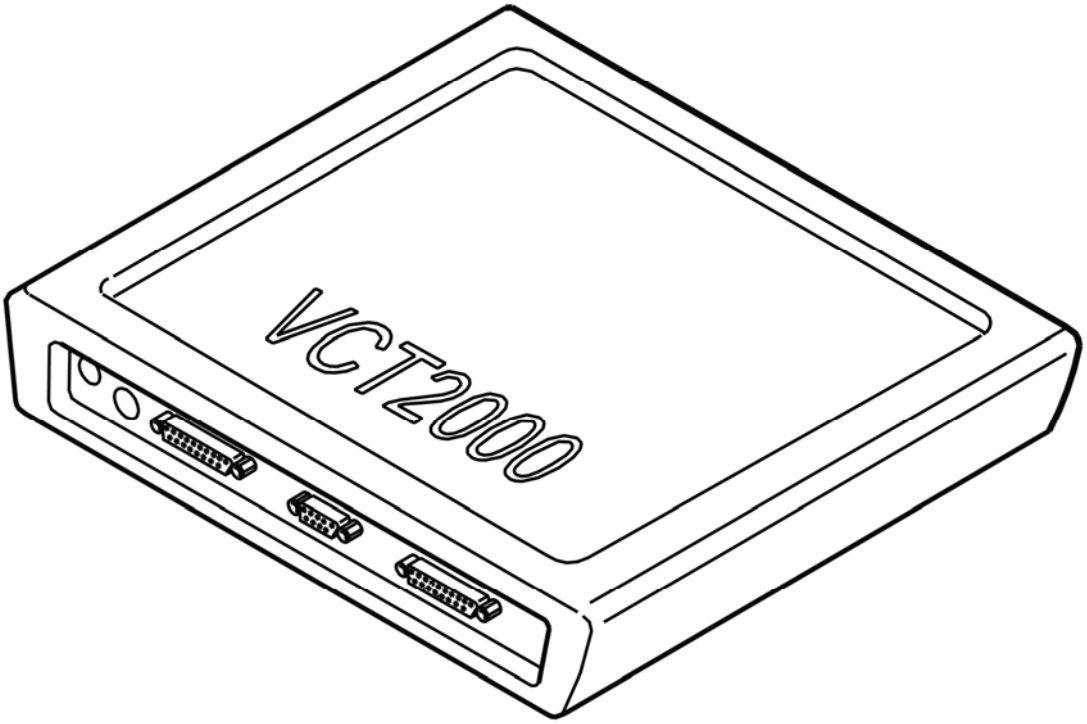

Fig. 71: Identifying VCT2000 Diagnostic Tool Symbol In VIDA
Courtesy of VOLVO CARS CORPORATION

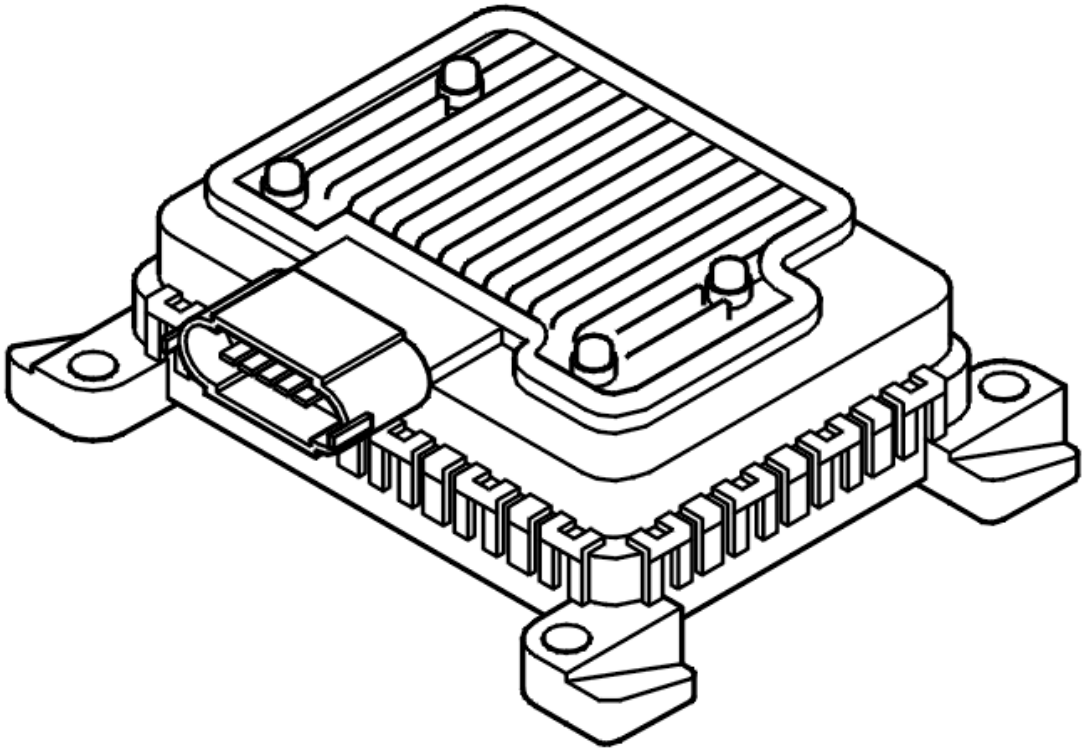

Fig. 72: Identifying Fuel Pump (FP) Control Module
Courtesy of VOLVO CARS CORPORATION

Is the function correct?

- **YES**

  VERIFIED: Troubleshooting has been completed.

- **NO**

  Refer to **INFORMATION**

INFORMATION

FAULT-TRACING INFORMATION

The fault should have been detected and remedied. As this is not the case fault-tracing has failed.

Exit fault-tracing for this diagnostic trouble code (DTC) or make another attempt.

ECM-291C: FUEL PUMP CONTROL MODULE. SIGNAL TOO HIGH (B5254T2; 2005-2007)

DIAGNOSTIC TROUBLE CODE (DTC) INFORMATION ECM-291C

Condition

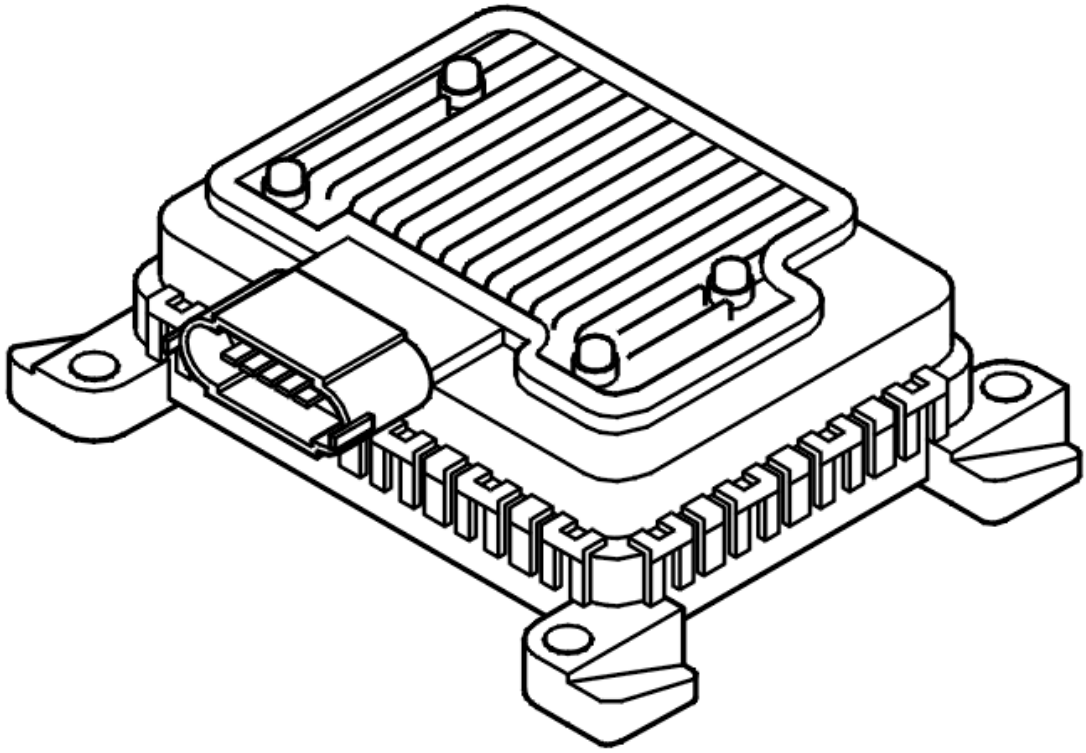

Fig. 73: Identifying Fuel Pump (FP) Control Module
Courtesy of VOLVO CARS CORPORATION

The engine control module (ECM) controls the fuel pressure via the fuel pump (FP) control module using a pulse width modulation (PWM) signal. The fuel pump (FP) control module then controls the fuel pump (FP) depending on the pressure requested by the engine control module (ECM). The diagnostic trouble code (DTC) is stored if the PWM signal between the engine control module (ECM) and the fuel pump (FP) control module is too high.

The diagnostic trouble code (DTC) can be diagnosed when the engine is running.

Substitute Value

- None.

Possible Source

- Short-circuit to supply voltage in the signal cable
- Damaged fuel pump control module.

Fault symptom[s]

- The starter motor turns but the engine does not start
- The engine stops.

SIGNAL TOO HIGH/SIGNAL TOO LOW/SIGNAL MISSING (2005)

see **SIGNAL TOO HIGH/SIGNAL TOO LOW/SIGNAL MISSING (2005)**

SIGNAL TOO HIGH/SIGNAL TOO LOW/SIGNAL MISSING (2006, 2007)

see **SIGNAL TOO HIGH/SIGNAL TOO LOW/SIGNAL MISSING (2006, 2007)**

ECM-291C: FUEL PUMP CONTROL MODULE. SIGNAL TOO HIGH (B6294T; 2005-2006)

DIAGNOSTIC TROUBLE CODE (DTC) INFORMATION ECM-291C

see **DIAGNOSTIC TROUBLE CODE (DTC) INFORMATION ECM-291C**

SIGNAL TOO HIGH/SIGNAL TOO LOW/SIGNAL MISSING (2005)

see **SIGNAL TOO HIGH/SIGNAL TOO LOW/SIGNAL MISSING (2005)**

SIGNAL TOO HIGH/SIGNAL TOO LOW/SIGNAL MISSING (2006)

see **SIGNAL TOO HIGH/SIGNAL TOO LOW/SIGNAL MISSING (2006)**

ECM-291D: FUEL PUMP CONTROL MODULE. SIGNAL TOO LOW (B5254T2; 2005-2007)

DIAGNOSTIC TROUBLE CODE (DTC) INFORMATION ECM-291D

Condition

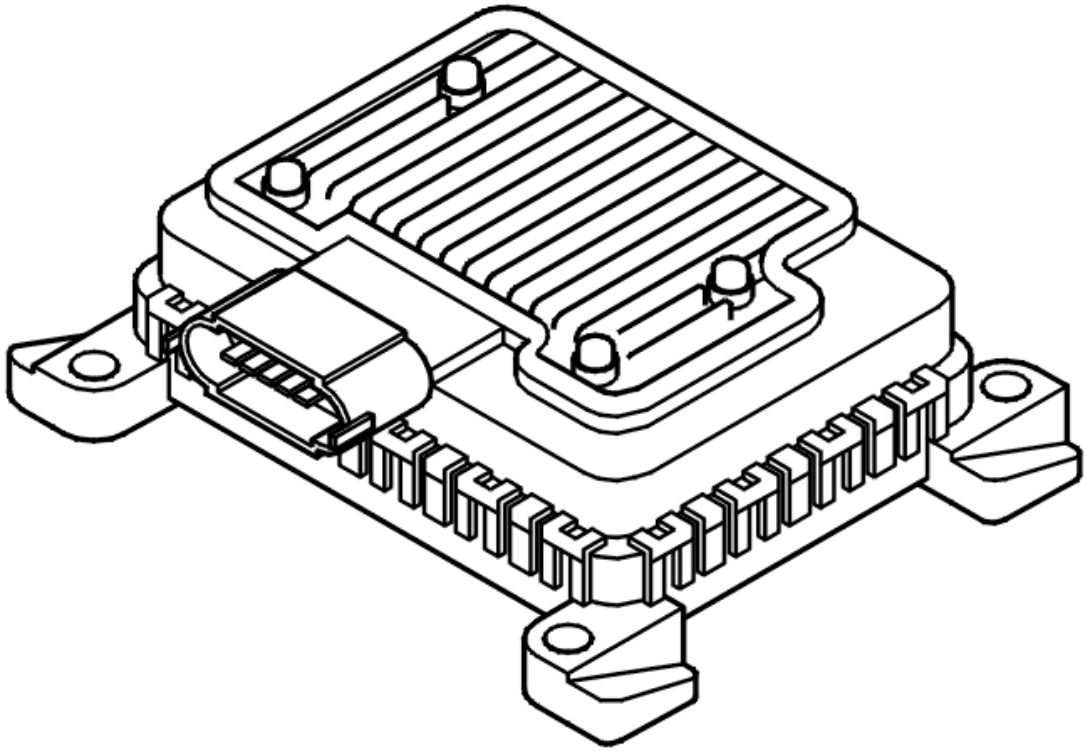

Fig. 74: Identifying Fuel Pump (FP) Control Module
Courtesy of VOLVO CARS CORPORATION

The engine control module (ECM) controls the fuel pressure via the fuel pump (FP) control module using a pulse width modulation (PWM) signal. The fuel pump (FP) control module then controls the fuel pump (FP) depending on the pressure requested by the engine control module (ECM). The diagnostic trouble code (DTC) is stored if the PWM signal between the engine control module (ECM) and the fuel pump (FP) control module is too low.

The diagnostic trouble code (DTC) can be diagnosed when the engine is running.

Substitute Value

- None.

Possible Source

- Short-circuit to ground in the signal cable
- Damaged fuel pump control module.

Fault symptom[s]

- The starter motor turns but the engine does not start

- The engine stops.

SIGNAL TOO HIGH/SIGNAL TOO LOW/SIGNAL MISSING (2005)

see **SIGNAL TOO HIGH/SIGNAL TOO LOW/SIGNAL MISSING (2005)**

SIGNAL TOO HIGH/SIGNAL TOO LOW/SIGNAL MISSING (2006, 2007)

see **SIGNAL TOO HIGH/SIGNAL TOO LOW/SIGNAL MISSING (2006, 2007)**

ECM-291D: FUEL PUMP CONTROL MODULE. SIGNAL TOO LOW (B6294T; 2005-2006)

DIAGNOSTIC TROUBLE CODE (DTC) INFORMATION ECM-291D

see **DIAGNOSTIC TROUBLE CODE (DTC) INFORMATION ECM-291D**

SIGNAL TOO HIGH/SIGNAL TOO LOW/SIGNAL MISSING (2005)

see **SIGNAL TOO HIGH/SIGNAL TOO LOW/SIGNAL MISSING (2005)**

SIGNAL TOO HIGH/SIGNAL TOO LOW/SIGNAL MISSING (2006)

see **SIGNAL TOO HIGH/SIGNAL TOO LOW/SIGNAL MISSING (2006)**

ECM-2A00: FUEL TEMPERATURE SENSOR. FAULTY SIGNAL (B5254T2; 2006)

DIAGNOSTIC TROUBLE CODE (DTC) INFORMATION ECM-2A00

Condition

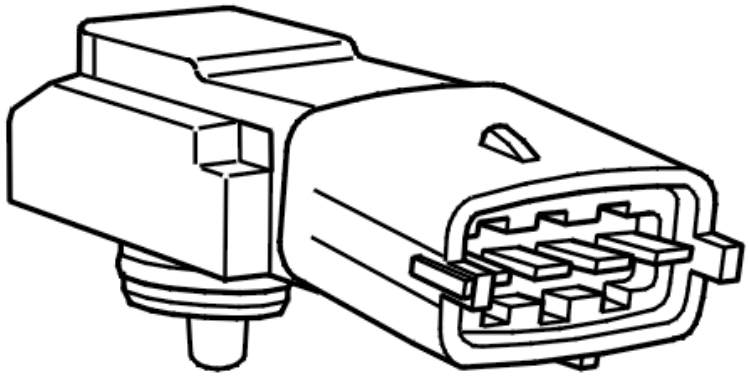

Fig. 75: Identifying Fuel Pressure Sensor
Courtesy of VOLVO CARS CORPORATION

The engine control module (ECM) checks the signal from the fuel temperature sensor. The fuel temperature sensor is integrated in the fuel pressure sensor. The diagnostic trouble code (DTC) is stored if the engine control module (ECM) registers that the signal from the fuel temperature sensor is incorrect.

The diagnostic trouble code (DTC) can be diagnosed when the ignition is switched on.

Substitute Value

- None.

Possible Source

- Contact resistance or oxidation in the terminals
- Short-circuit to supply voltage in the signal cable
- Short-circuit to ground in the signal cable.
- Open-circuit in the signal cable
- Open-circuit in the signal ground cable
- Damaged fuel temperature sensor.

Fault symptom[s]

- None.

FAULT-TRACING

CHECKING THE STATUS

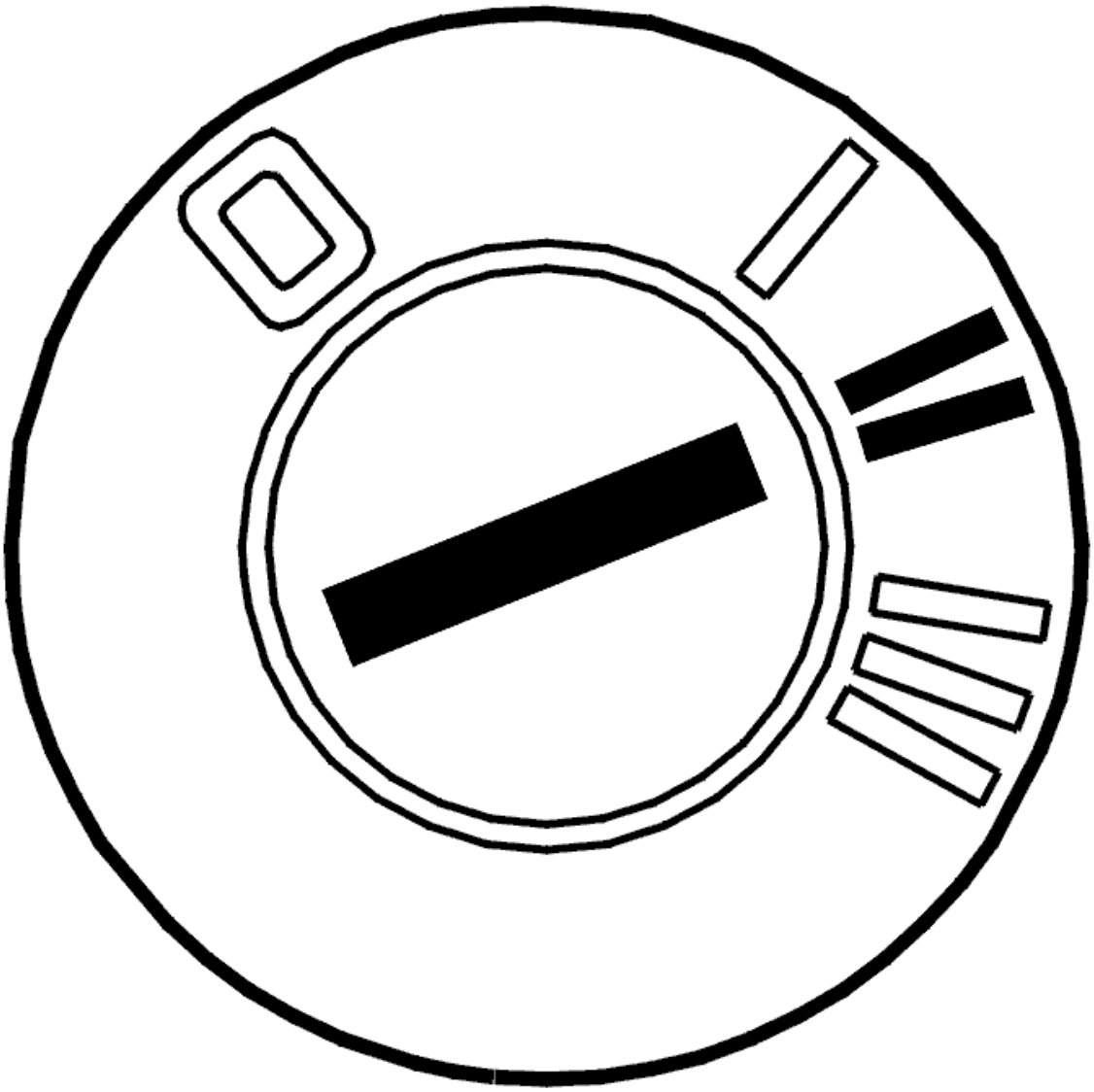

Fig. 76: Identifying Ignition ON
Courtesy of VOLVO CARS CORPORATION

- Ignition on.

  Check whether the fault is permanent or intermittent by reading off the signal from the fuel pressure sensor.

Check that the signal is within its permitted range. The signal is measured in the fuel rail for the injectors.

The fault is permanent if the signal is incorrect.

The fault is intermittent if the signal is correct.

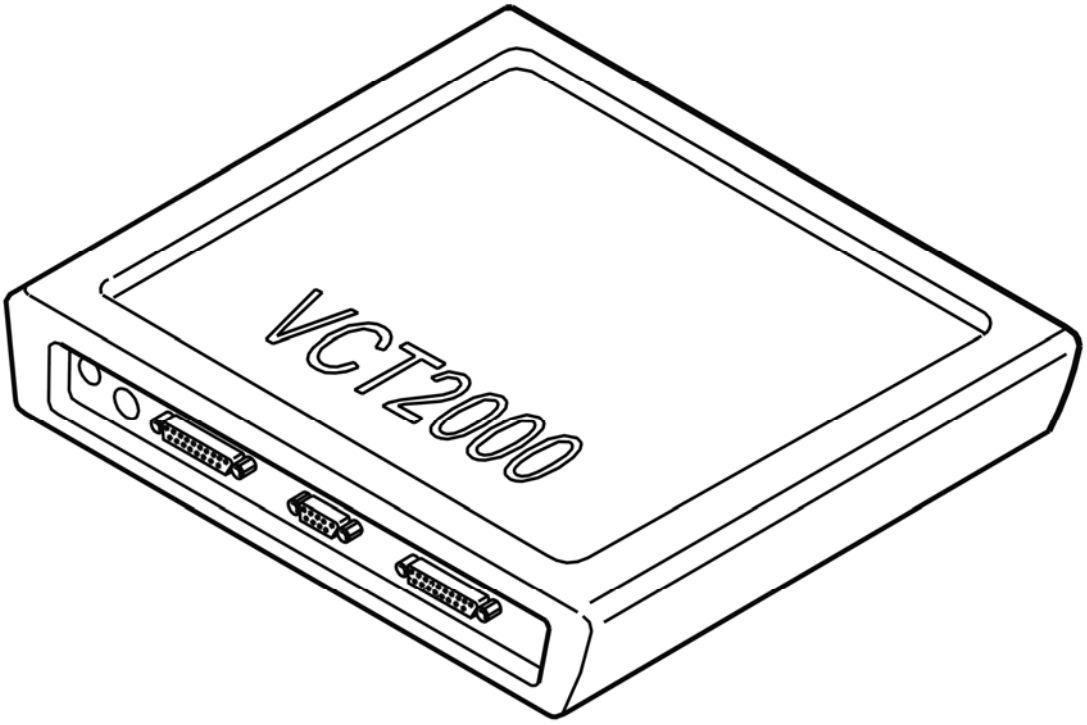

Fig. 77: Identifying VCT2000 Diagnostic Tool Symbol In VIDA
Courtesy of VOLVO CARS CORPORATION

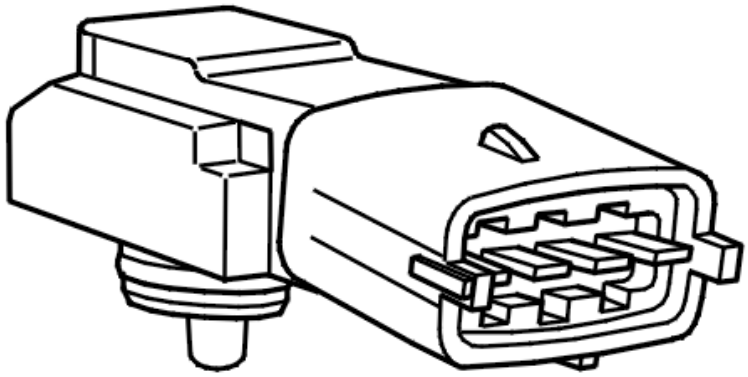

Fig. 78: Identifying Fuel Pressure Sensor
Courtesy of VOLVO CARS CORPORATION

- **Continue**

  Refer to **CHECKING COMPONENTS AND WIRING**

CHECKING COMPONENTS AND WIRING

HINT: The fuel temperature sensor is integrated in the fuel pressure sensor.

Check the fuel pressure sensor connectors. Check for contact resistance and oxidation.

Check the fuel pressure sensor resistance. Take readings between terminals #1 and #2.

Check the signal cable between control module terminal #A3 (#A3) and fuel pressure sensor terminal #2. Check for a short-circuit to supply voltage. Check for an open-circuit.

Check the ground lead between control module terminal #A60 (#A60) and fuel pressure sensor terminal #1. Check for an open-circuit.

Remedy as necessary.

Other information:

- see **CHECKING WIRING AND TERMINALS**
- For resistance values, see **COMPONENT SPECIFICATIONS**
- To connect the breakout box, see **CONNECTING THE BREAKOUT BOX**
- For 5 cylinder turbocharged engines -2004, see **SIGNAL DESCRIPTION**
- For 5 cylinder turbocharged engines 2005-, see **SIGNAL SPECIFICATION** .
- To access or replace the fuel pressure sensor, see **FUEL PRESSURE SENSOR, REPLACEMENT** .

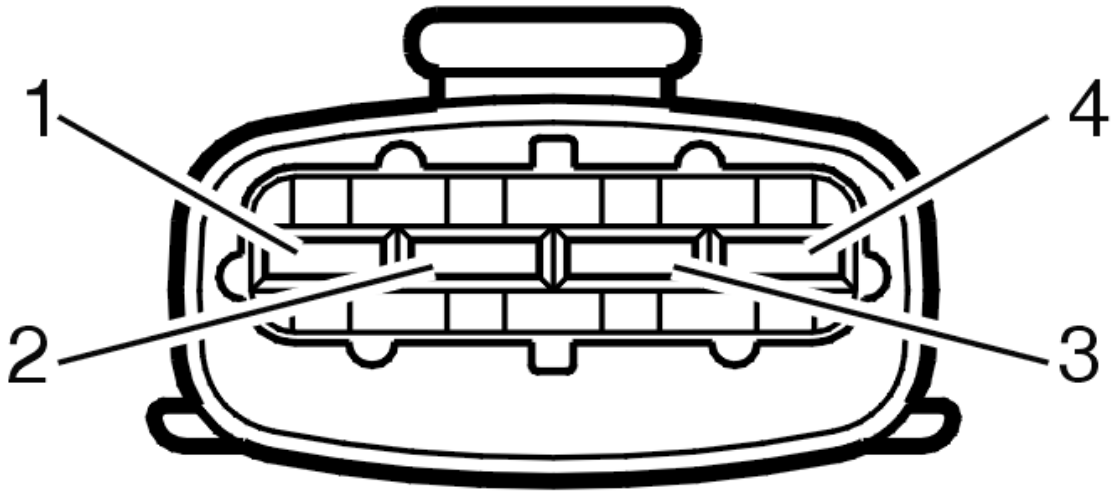

Fig. 79: Identifying 4-Bit Connector
Courtesy of VOLVO CARS CORPORATION

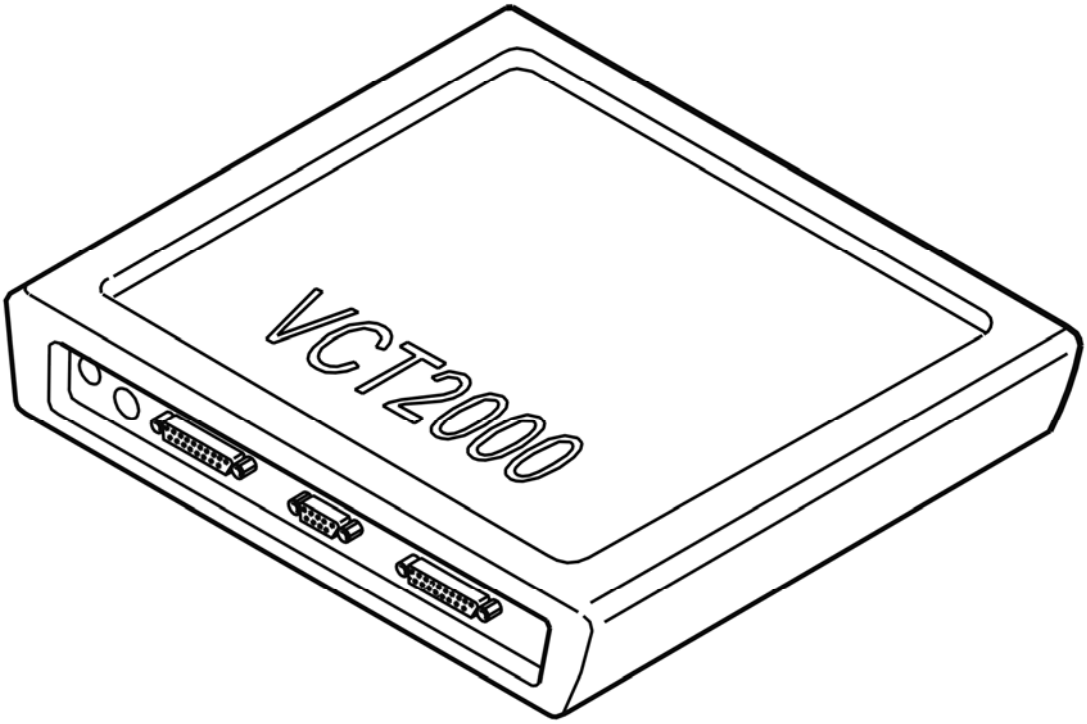

Fig. 80: Identifying VCT2000 Diagnostic Tool Symbol In VIDA
Courtesy of VOLVO CARS CORPORATION

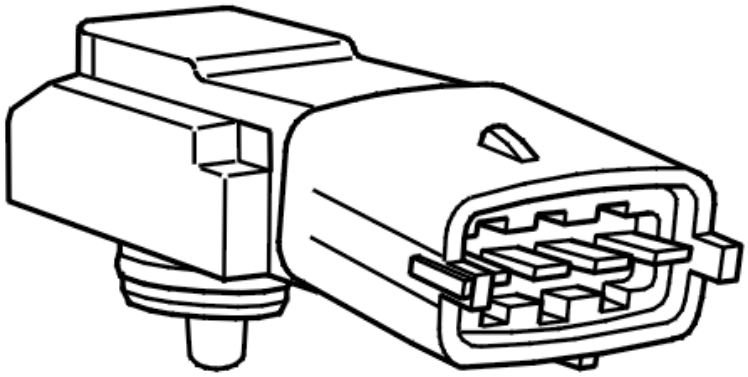

Fig. 81: Identifying Fuel Pressure Sensor
Courtesy of VOLVO CARS CORPORATION

- **Continue**

  Refer to **VERIFICATION**

VERIFICATION

VERIFICATION

HINT: After carrying out the repair, check that the fault has been remedied.

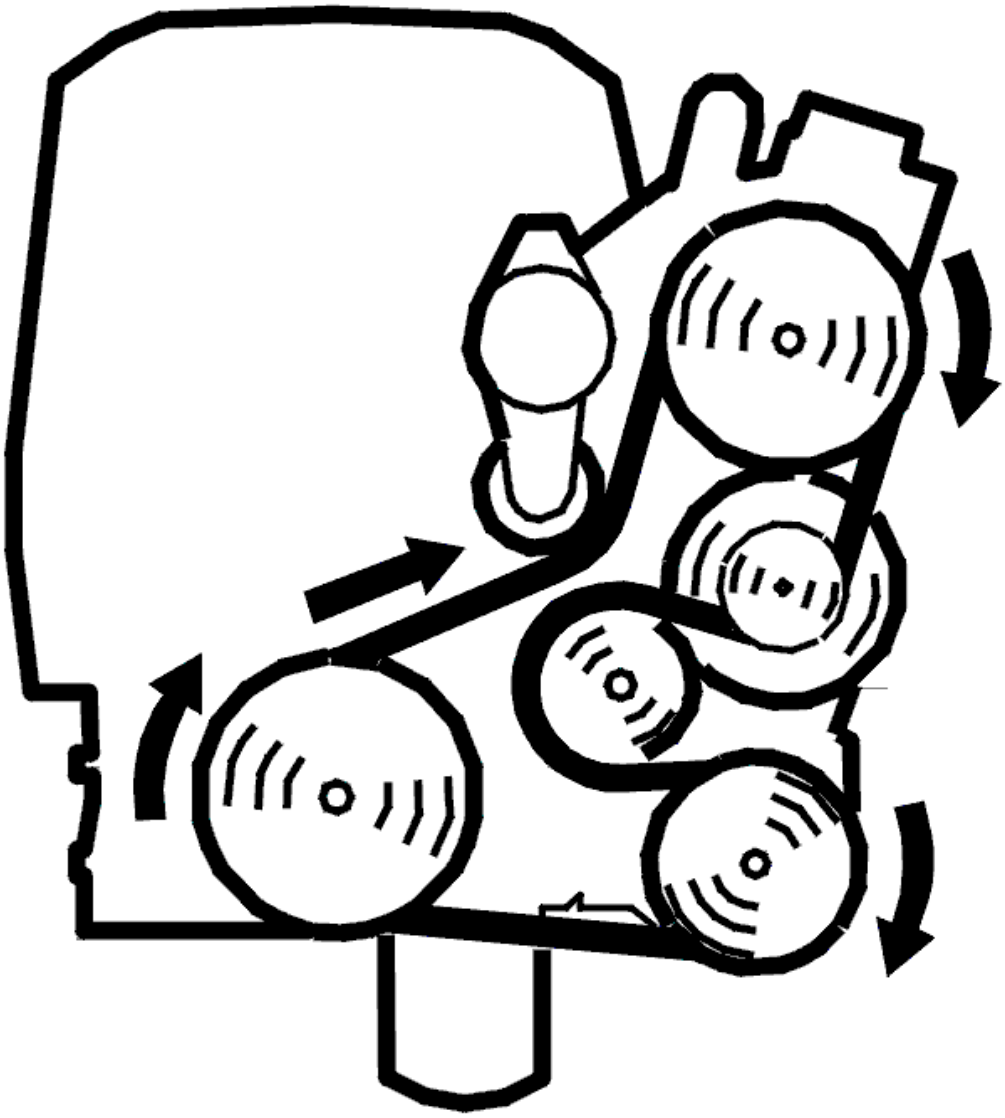

Fig. 82: Belt Routing / Engine Idling - Volvo
Courtesy of VOLVO CARS CORPORATION

- Reinstall the connectors, components etc.
- Start the engine and run it to normal operating temperature
- Read off the fuel temperature sensor signal.

  Check that the signal is within its permitted range. The signal is measured in the fuel rail for the injectors.

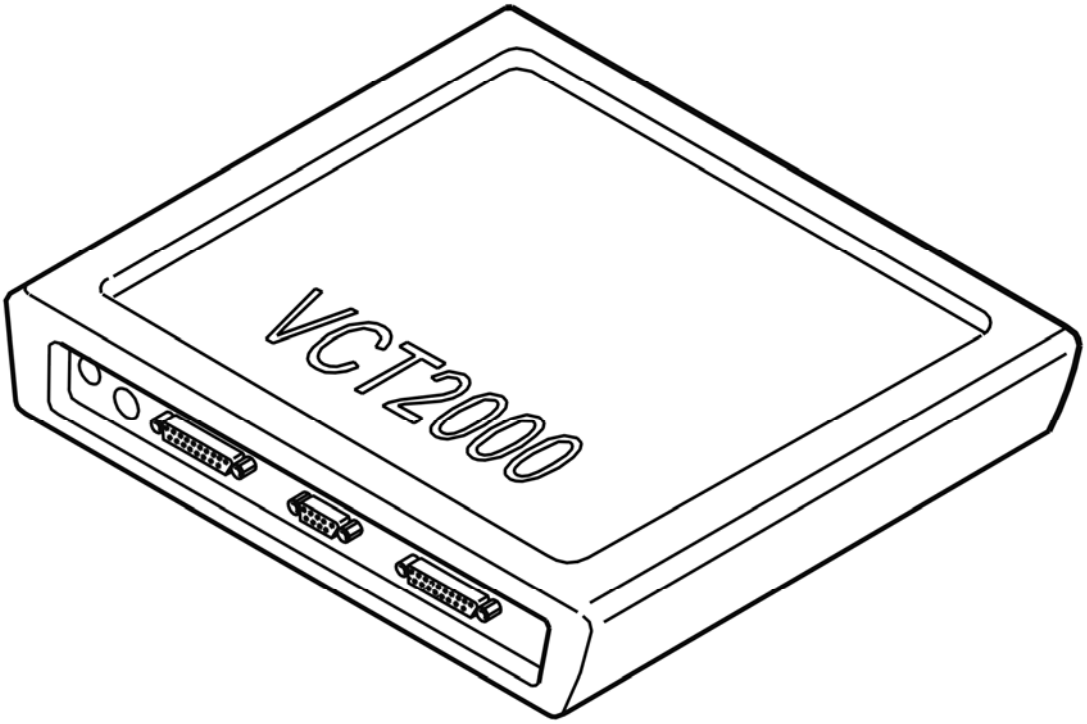

Fig. 83: Identifying VCT2000 Diagnostic Tool Symbol In VIDA
Courtesy of VOLVO CARS CORPORATION

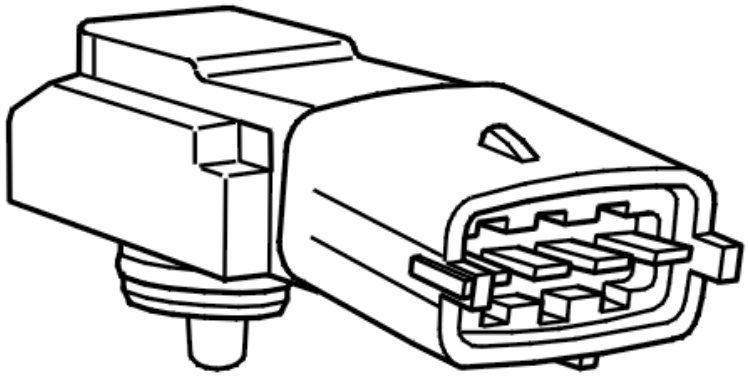

Fig. 84: Identifying Fuel Pressure Sensor
Courtesy of VOLVO CARS CORPORATION

Is the signal OK?

- **YES**

  VERIFIED: Troubleshooting has been completed.

- **NO**

  Refer to **INFORMATION**

INFORMATION

FAULT-TRACING INFORMATION

The fault should have been detected and remedied. As this is not the case fault-tracing has failed.

Exit fault-tracing for this diagnostic trouble code (DTC) or make another attempt.

ECM-2A0A: REAR HEATED OXYGEN SENSOR (HO2S). FAULTY SIGNAL (B5254T2; B6294T; 2003-2004)

DIAGNOSTIC TROUBLE CODE (DTC) INFORMATION ECM-2A0A

Condition

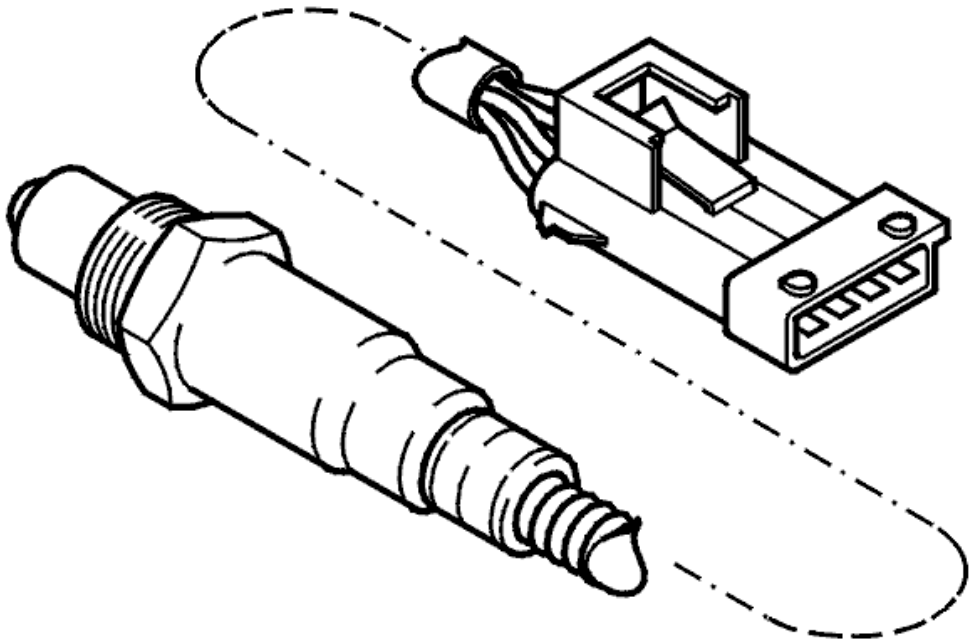

Fig. 85: Identifying Rear Heated Oxygen Sensor
Courtesy of VOLVO CARS CORPORATION

The engine control module (ECM) checks that there are no faults in the probe or the wiring. Diagnostic trouble code (DTC) ECM-2A0A is stored if the control module registers that the signal deviates from the permitted operating range.

Substitute Value

- twin heated oxygen sensor (HO2S) control is disabled
- Three-way catalytic converter (TWC) diagnostics are disabled.

Possible Source

Signal too high:

- Short-circuit to supply voltage in the signal cable
- Short-circuit to supply voltage in the ground lead
- Defective heated oxygen sensor (HO2S).

Signal too low:

- Short-circuit to ground in the signal cable
- Short-circuit to ground in the ground lead
- Defective heated oxygen sensor (HO2S).

Faulty signal:

- Short-circuit in the signal cable for the pre-heating circuit
- Short-circuit in the ground lead for the preheating circuit
- Defective heated oxygen sensor (HO2S).

Signal missing:

- Contact resistance or oxidation in the connectors
- Open-circuit in the signal cable
- Open-circuit in the ground lead
- Defective heated oxygen sensor (HO2S).

Fault symptom[s]

- Malfunction indicator lamp (MIL) lit.

FAULTY SIGNAL

CHECKING COMPONENTS AND WIRING

CAUTION: Do not apply rust solvent spray or grease to the heated oxygen sensor (HO2S) connector.

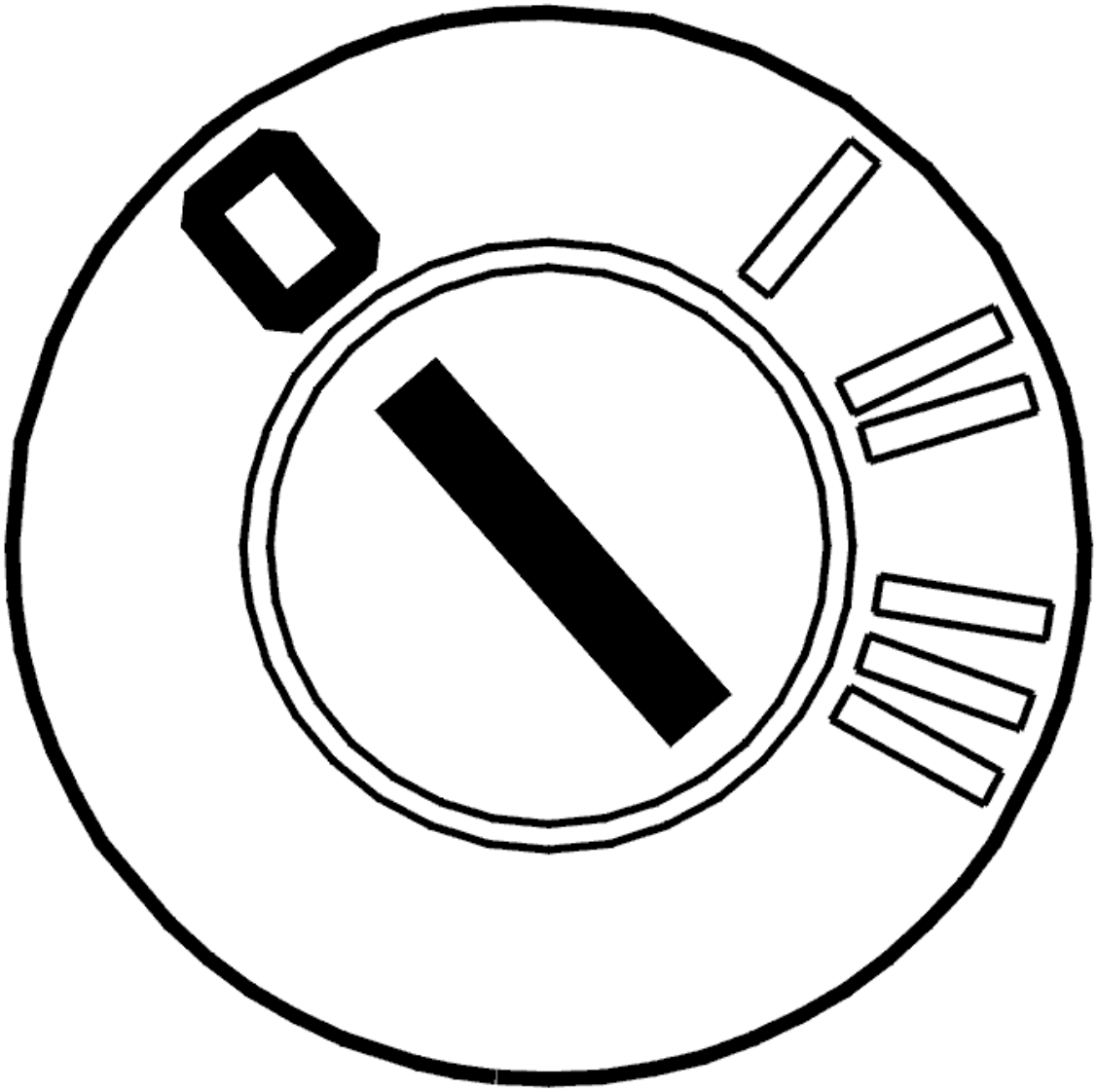

Fig. 86: Identifying Ignition OFF
Courtesy of VOLVO CARS CORPORATION

- Ignition off.

  Check the signal cable (+) for the heated oxygen sensor (HO2S) between control module terminal #A61 and preheating cable terminal #A6. Check for a short-circuit to each other.

  Check the signal cable (-) for the heated oxygen sensor (HO2S) between control module terminal #A62 and preheating cable terminal #A6. Check for a short-circuit to each other.

  Try a new heated oxygen sensor (HO2S) if the wiring is OK.

  Remedy as necessary.

  Other information:

- To connect the breakout box / access the control module, see **CONNECTING THE BREAKOUT BOX**
- For B5xx4T, see **HEATED OXYGEN SENSOR (HO2S), REPLACING**
- For B6xx4T, see **HEATED OXYGEN SENSOR (HO2S), REPLACING** .
- For resistance values, see **COMPONENT SPECIFICATIONS**
- For 5 cylinder turbocharged engines -2004, see **SIGNAL DESCRIPTION**
- For 5 cylinder turbocharged engines 2005-, see **SIGNAL SPECIFICATION** .
- For 6 cylinder engines -2004, see **SIGNAL SPECIFICATION**
- For 6 cylinder engines 2005-, see **SIGNAL SPECIFICATION** .
- see **CHECKING WIRING AND TERMINALS** .

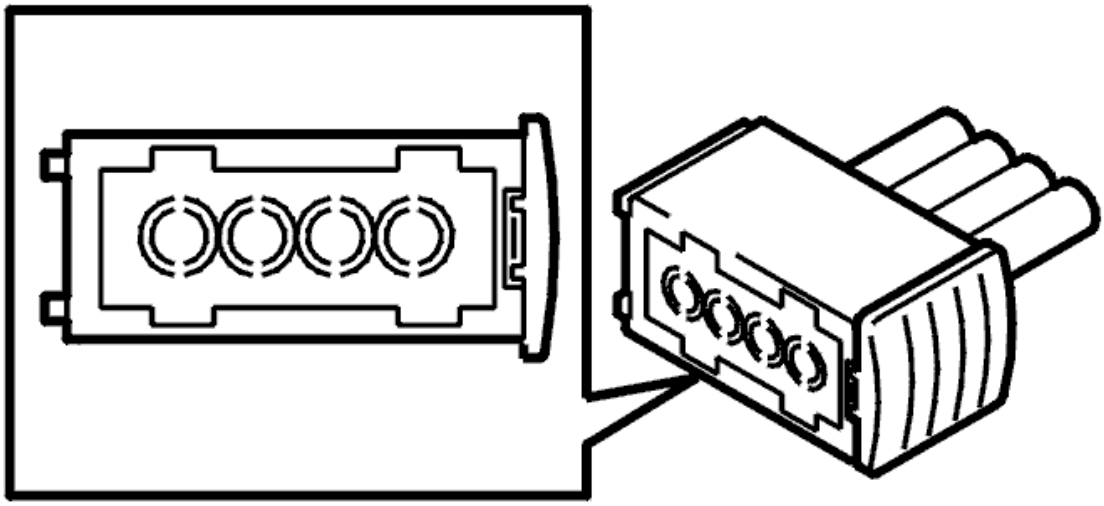

Fig. 87: Identifying Heated Oxygen Sensor
Courtesy of VOLVO CARS CORPORATION

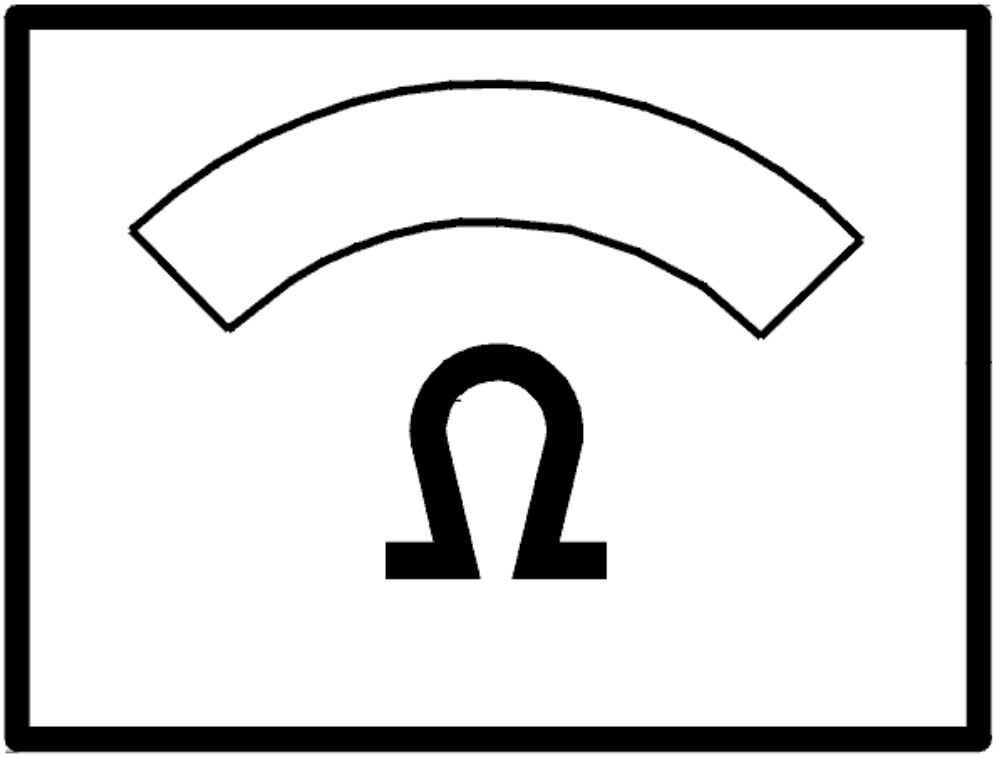

Fig. 88: Identifying Ohm Meter
Courtesy of VOLVO CARS CORPORATION

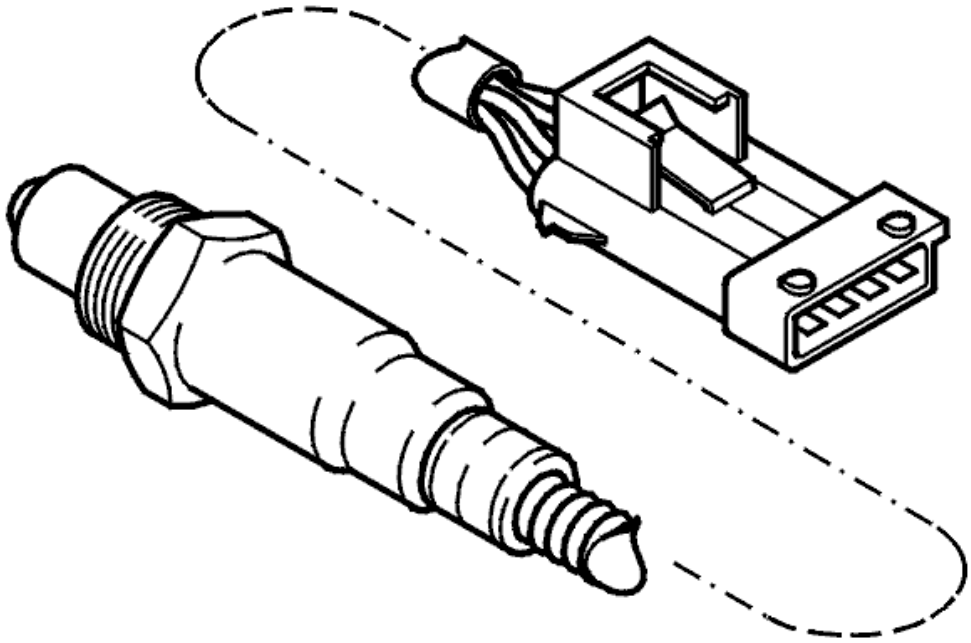

Fig. 89: Identifying Rear Heated Oxygen Sensor
Courtesy of VOLVO CARS CORPORATION

- **Continue**

  Refer to **VERIFICATION**

VERIFICATION

VERIFICATION

HINT: After carrying out the repair, check that the fault has been remedied.

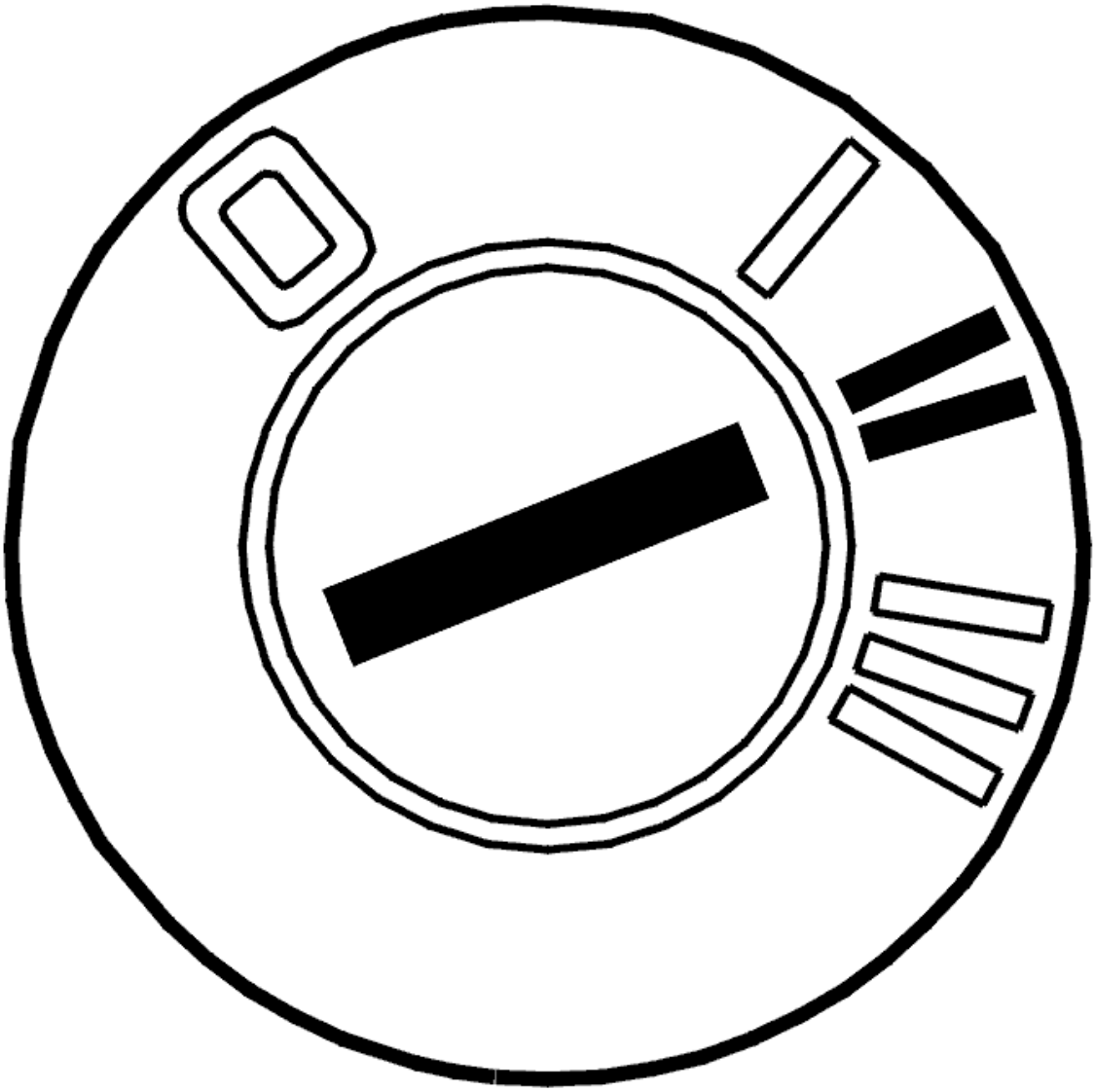

Fig. 90: Identifying Ignition ON
Courtesy of VOLVO CARS CORPORATION

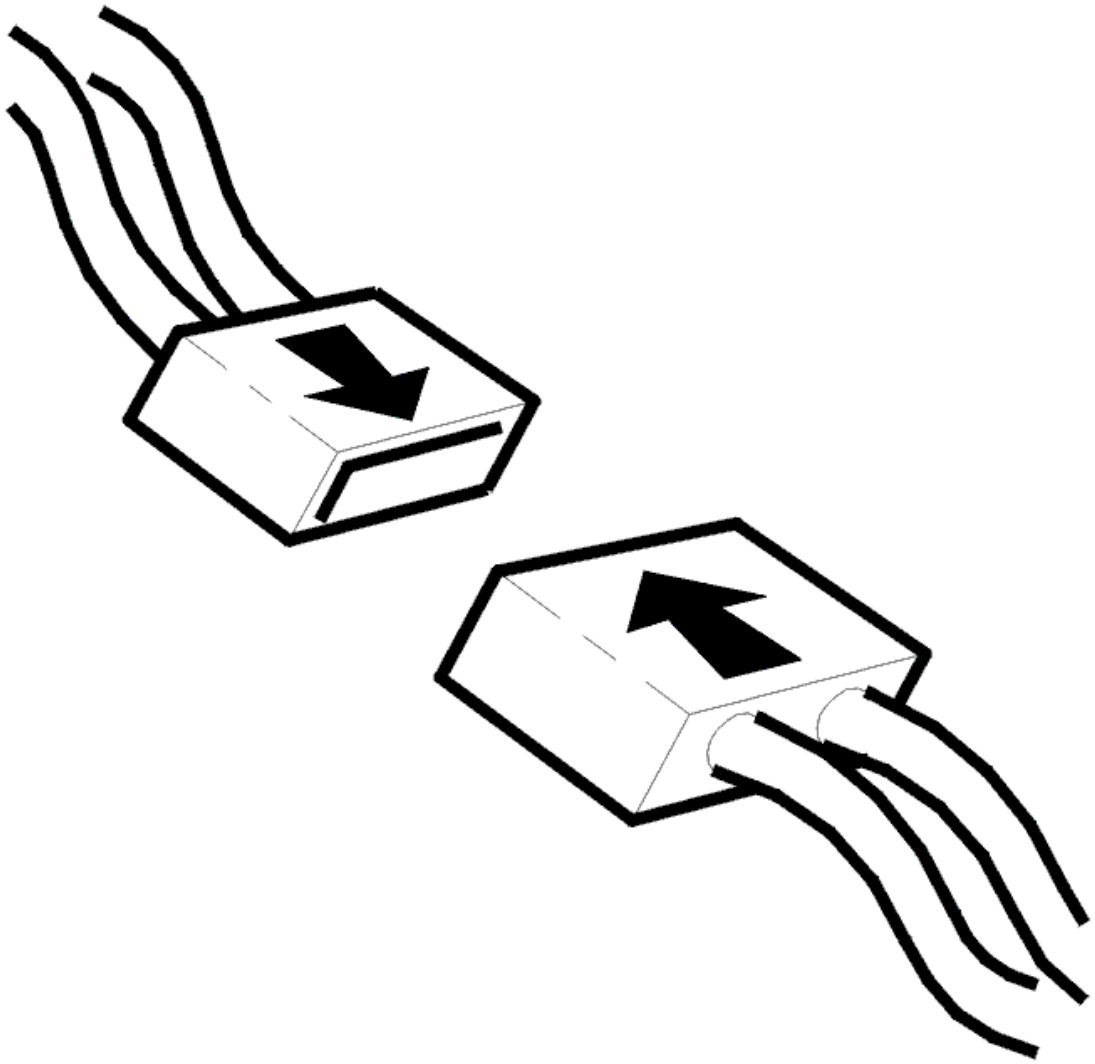

Fig. 91: Connecting Connector
Courtesy of VOLVO CARS CORPORATION

- Ignition off.
- Reconnect connectors, reinstall components
- Test drive car as follows:

  A/C on

  Drive the car so that idle, normal and high speeds are reached. Let the car operate in these phases for a few minutes.

  Accelerate at full throttle a number of times so that high boost pressure is reached (applies only to turbo models).

Total test drive time must be 15 minutes.

NOTE: After test driving the engine should not be turned off. The test drive must be carried out again.

Connect VIDA (Volvo scan tool) again and read out the heated oxygen sensor (HO2S) diagnostic trouble code (DTC) status.

The text NOT READY is displayed if diagnosis is underway.

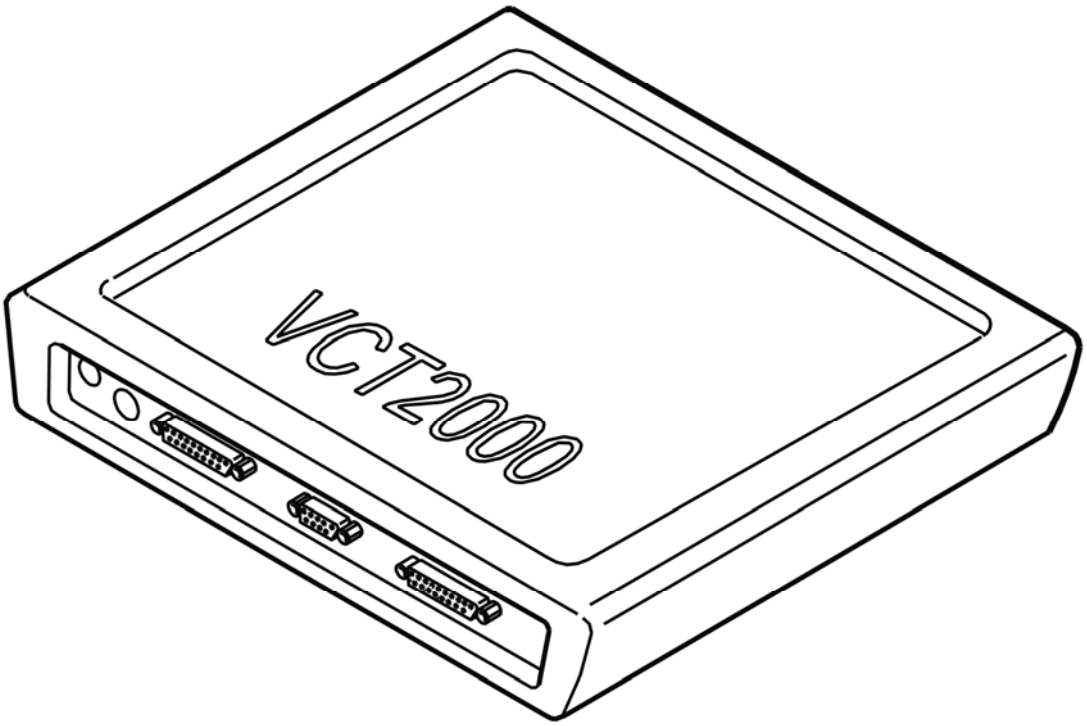

Fig. 92: Identifying VCT2000 Diagnostic Tool Symbol In VIDA
Courtesy of VOLVO CARS CORPORATION

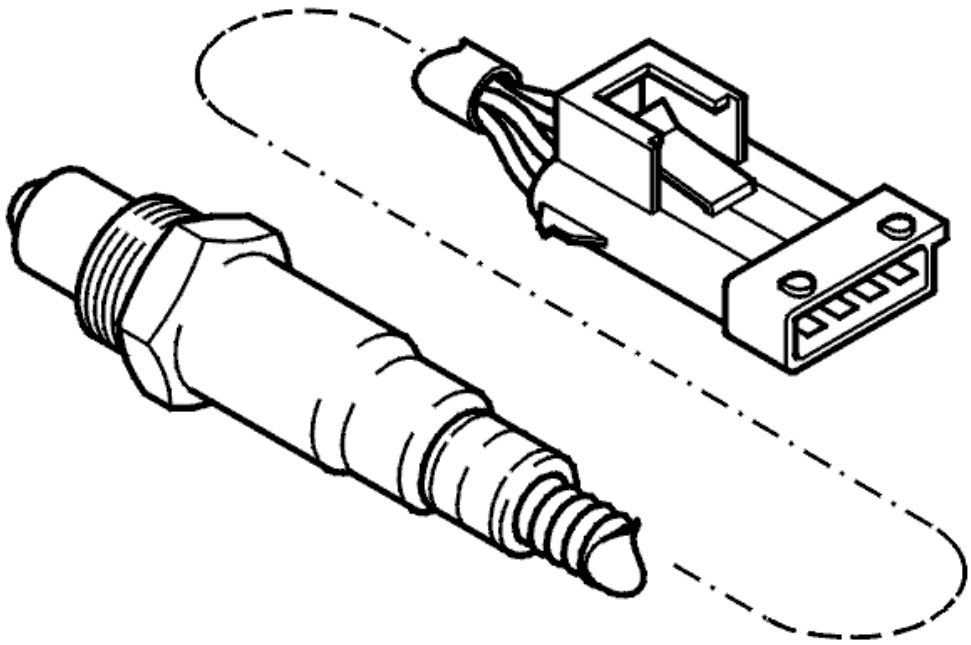

Fig. 93: Identifying Rear Heated Oxygen Sensor
Courtesy of VOLVO CARS CORPORATION

Is FAULT NOT REGISTERED displayed?

- **YES**

  VERIFIED: Troubleshooting has been completed.

- **NO**

  Refer to **INFORMATION**

INFORMATION

FAULT-TRACING INFORMATION

The fault should have been detected and remedied. As this is not the case fault-tracing has failed.

Exit fault-tracing for this diagnostic trouble code (DTC) or make another attempt.

ECM-2A0A: REAR HEATED OXYGEN SENSOR (HO2S). SIGNAL MISSING (B5254T2; B6294T; 2003-2004)

DIAGNOSTIC TROUBLE CODE (DTC) INFORMATION ECM-2A0A

see **DIAGNOSTIC TROUBLE CODE (DTC) INFORMATION ECM-2A0A**

SIGNAL MISSING

CHECKING THE CONNECTOR

CAUTION: Do not apply rust solvent spray or grease to the heated oxygen sensor (HO2S) connector.

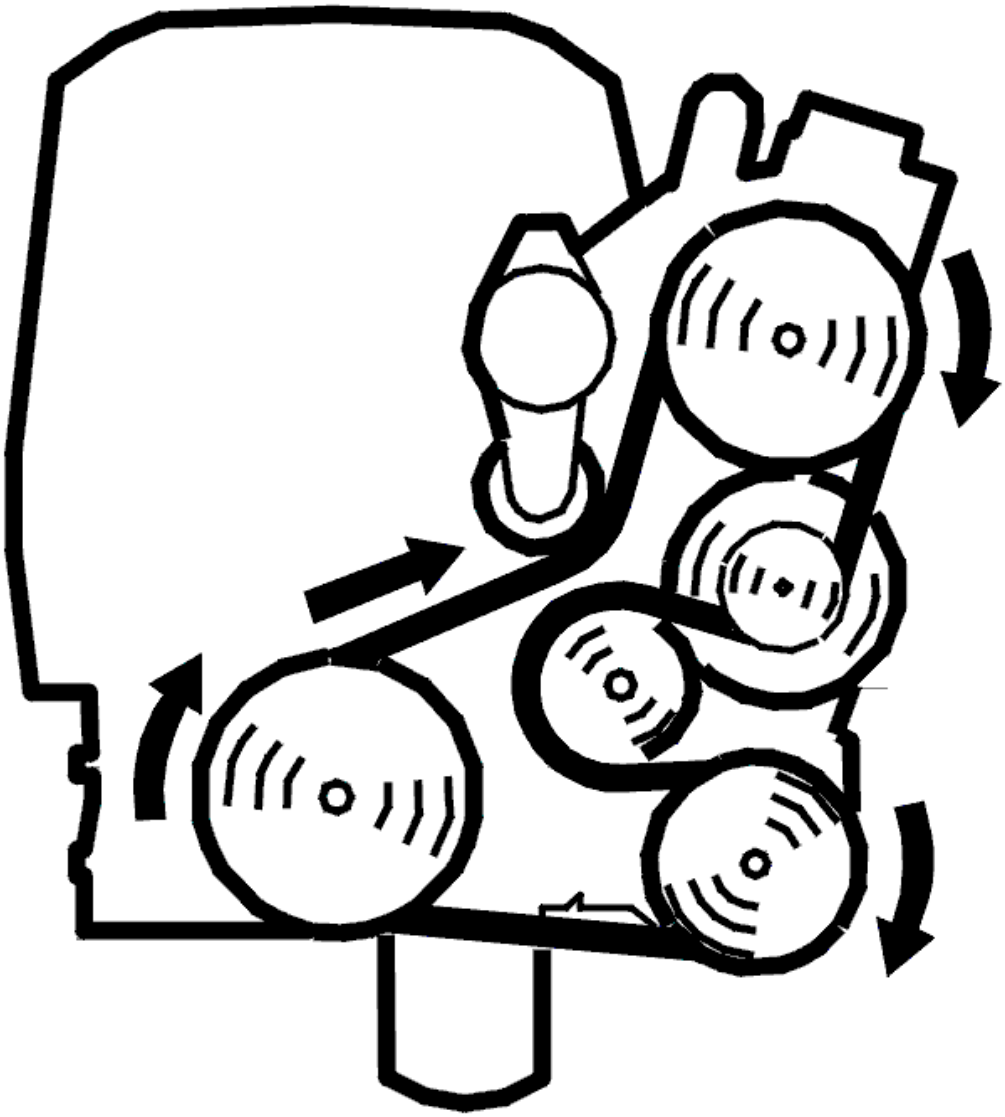

Fig. 94: Belt Routing / Engine Idling - Volvo
Courtesy of VOLVO CARS CORPORATION

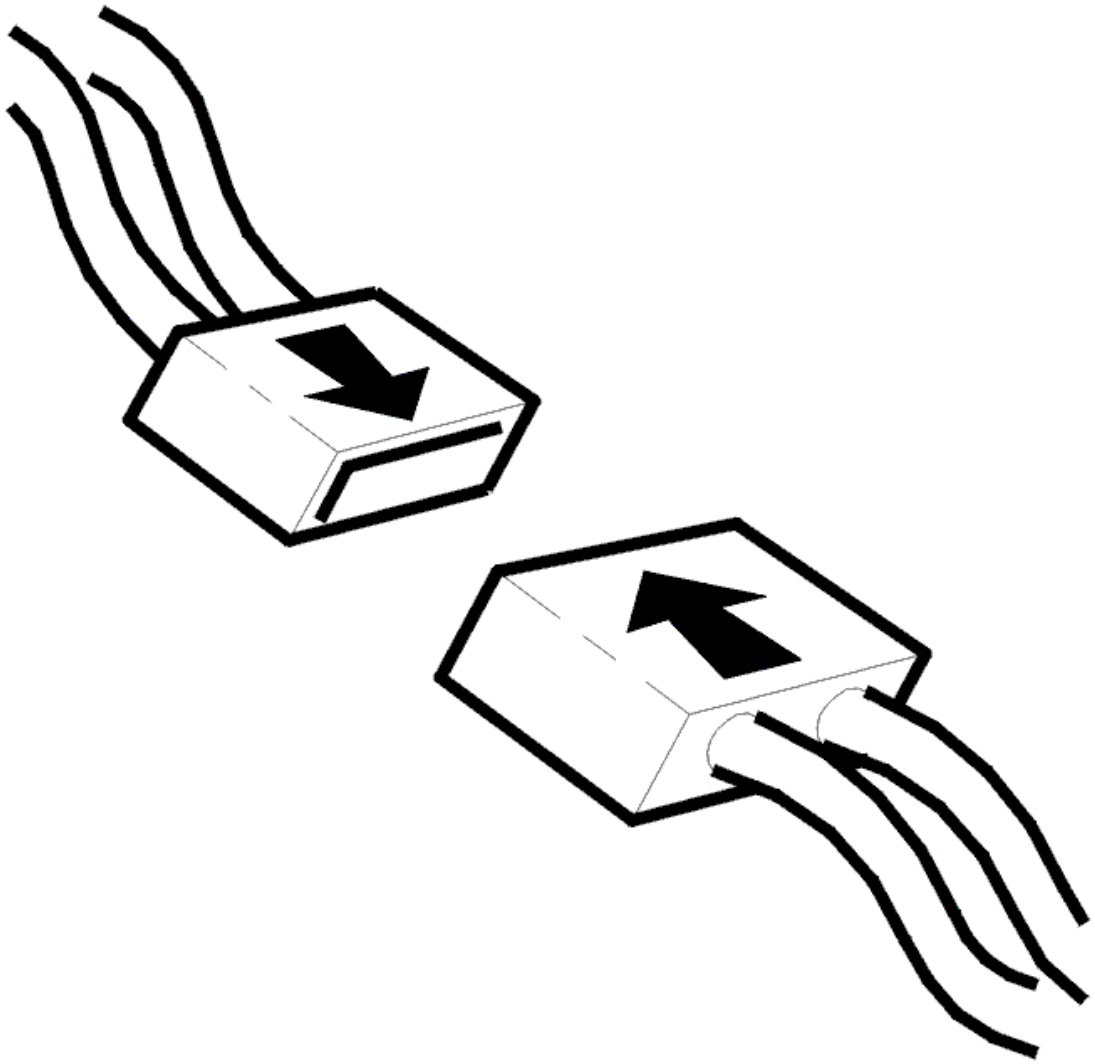

Fig. 95: Connecting Connector
Courtesy of VOLVO CARS CORPORATION

- Ignition off
- Check the heated oxygen sensor (HO2S) connector. Check for contact resistance and oxidation
- Reinstall the components, reconnect the connectors etc.
- Start the engine. Allow the engine to idle.

Read off the signal for the rear heated oxygen sensor (HO2S).

NOTE: It may take up to approximately 3 minutes before fuel trim has begun and the signal can be read off.

Check that the signal is within its permitted range. The signal must be free of interference and between 0.6 - 0.3 V.

If the signal is now OK this indicates that the fault was caused by a poor connection in the connector.

Other information:

- To connect the breakout box / access the control module, see **CONNECTING THE BREAKOUT BOX**
- For B5xx4T, see **HEATED OXYGEN SENSOR (HO2S), REPLACING**
- For B6xx4T, see **HEATED OXYGEN SENSOR (HO2S), REPLACING** .
- For 5 cylinder turbocharged engines -2004, see **SIGNAL DESCRIPTION**
- For 5 cylinder turbocharged engines 2005-, see **SIGNAL SPECIFICATION** .
- For 6 cylinder engines -2004, see **SIGNAL SPECIFICATION**
- For 6 cylinder engines 2005-, see **SIGNAL SPECIFICATION** .
- see **CHECKING WIRING AND TERMINALS** .

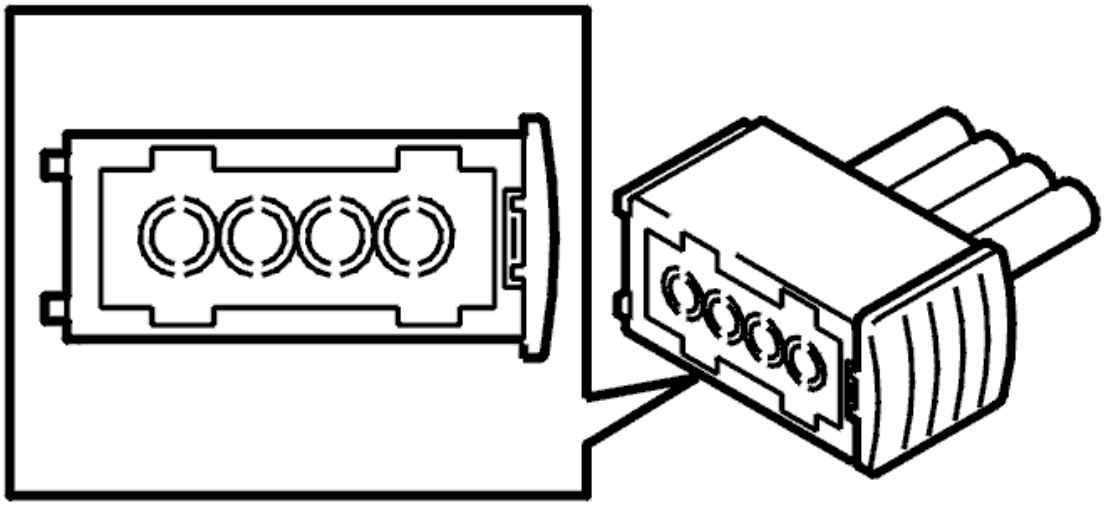

Fig. 96: Identifying Heated Oxygen Sensor
Courtesy of VOLVO CARS CORPORATION

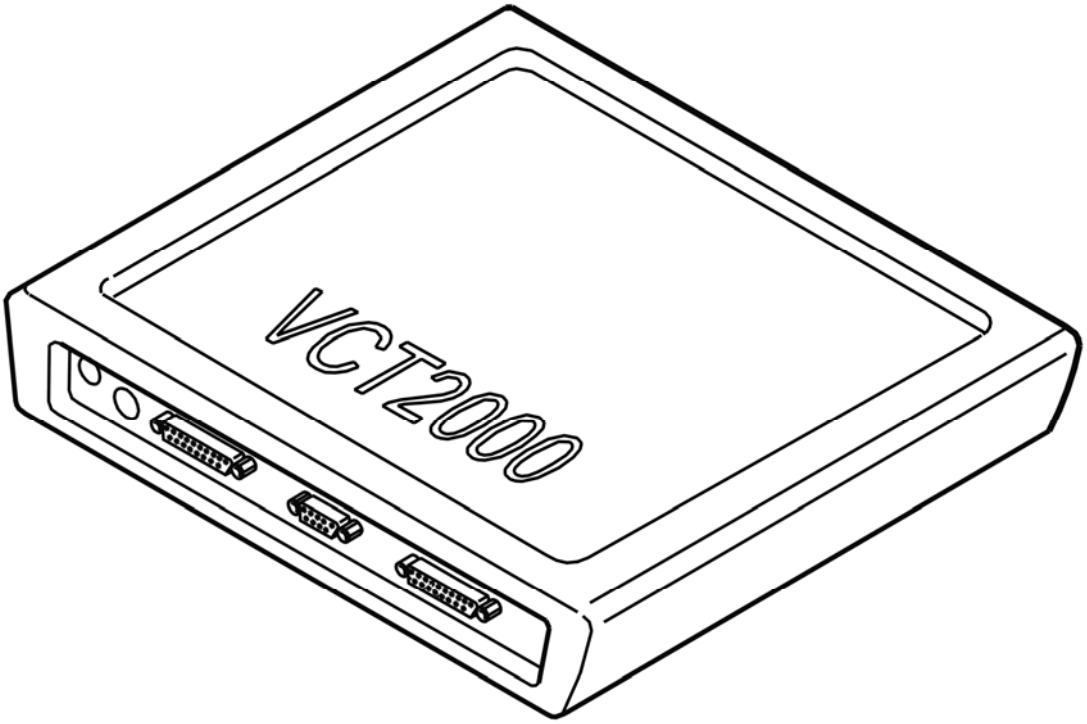

Fig. 97: Identifying VCT2000 Diagnostic Tool Symbol In VIDA
Courtesy of VOLVO CARS CORPORATION

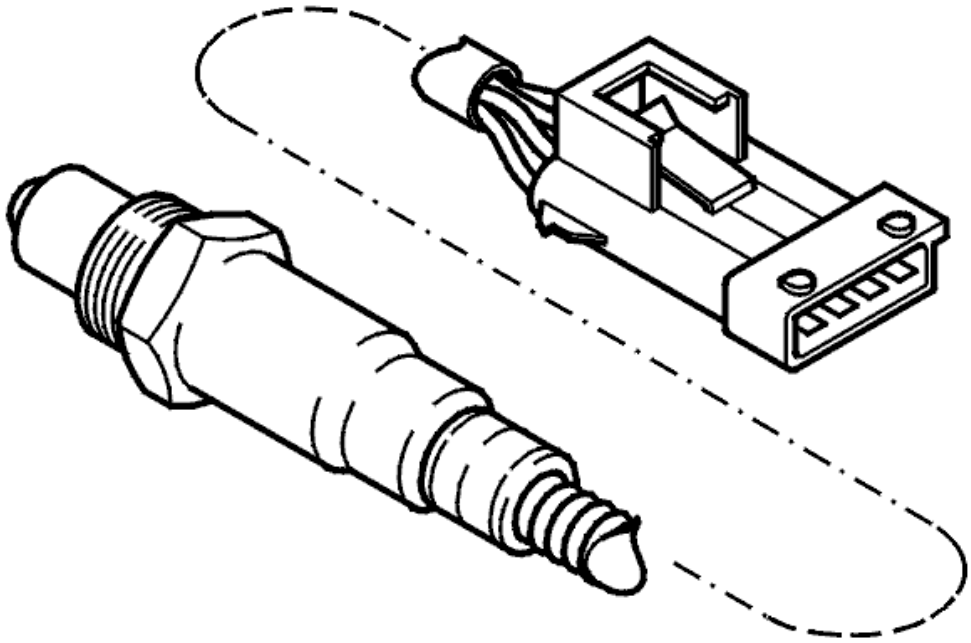

Fig. 98: Identifying Rear Heated Oxygen Sensor
Courtesy of VOLVO CARS CORPORATION

Is the signal OK?

- **YES**

  OKAY: Troubleshooting has been completed.

- **NO**

  Refer to **CHECKING COMPONENTS AND WIRING**

CHECKING COMPONENTS AND WIRING

Check the signal cable (+) between heated oxygen sensor (HO2S) terminal #4 and control module terminal #A61 (#B1). Check the signal cable (-) between heated oxygen sensor (HO2S) terminal #3 and control module terminal #A62 (#B2). Check for an open-circuit.

Try a new heated oxygen sensor (HO2S) if the wiring is OK.

Remedy as necessary.

Other information:

- To connect the breakout box / access the control module, see **CONNECTING THE BREAKOUT BOX**
- For B5xx4T, see **HEATED OXYGEN SENSOR (HO2S), REPLACING**
- For B6xx4T, see **HEATED OXYGEN SENSOR (HO2S), REPLACING** .
- For 5 cylinder turbocharged engines -2004, see **SIGNAL DESCRIPTION**
- For 5 cylinder turbocharged engines 2005-, see **SIGNAL SPECIFICATION** .
- For 6 cylinder engines -2004, see **SIGNAL SPECIFICATION**
- For 6 cylinder engines 2005-, see **SIGNAL SPECIFICATION** .
- see **CHECKING WIRING AND TERMINALS** .

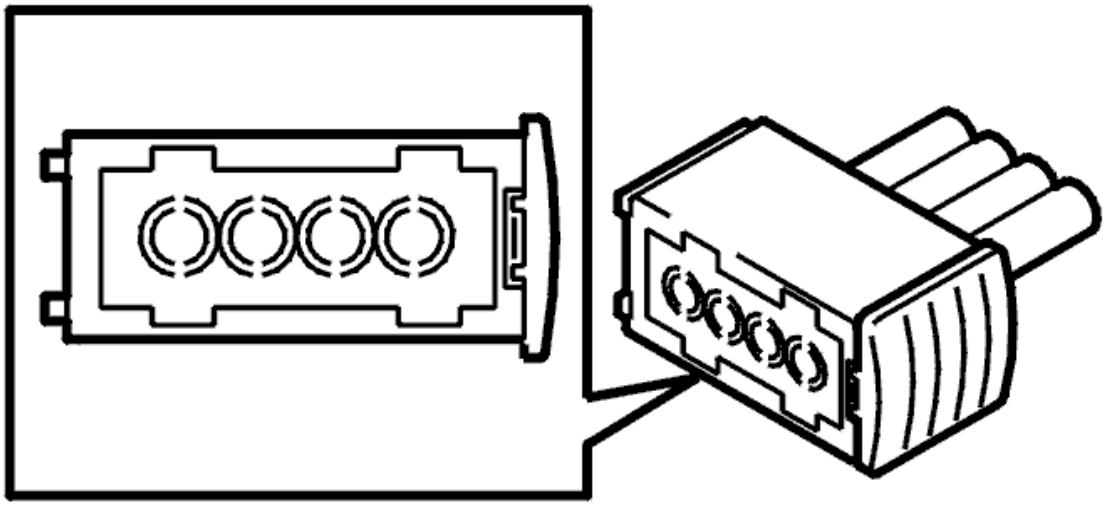

Fig. 99: Identifying Heated Oxygen Sensor
Courtesy of VOLVO CARS CORPORATION

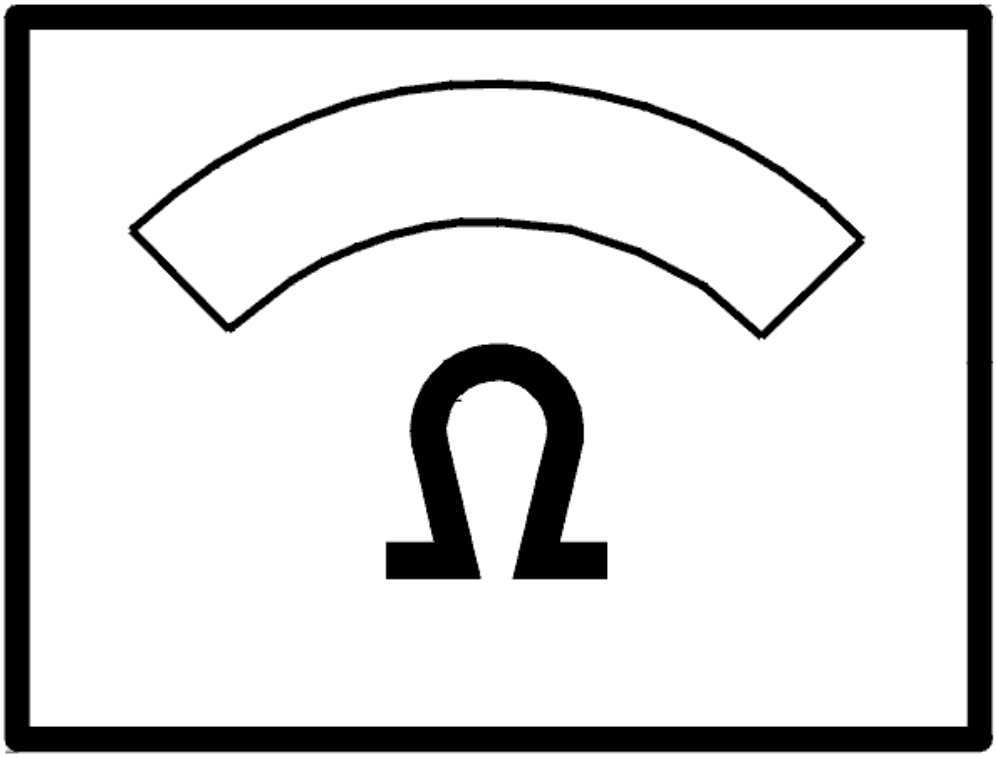

Fig. 100: Identifying Ohm Meter
Courtesy of VOLVO CARS CORPORATION

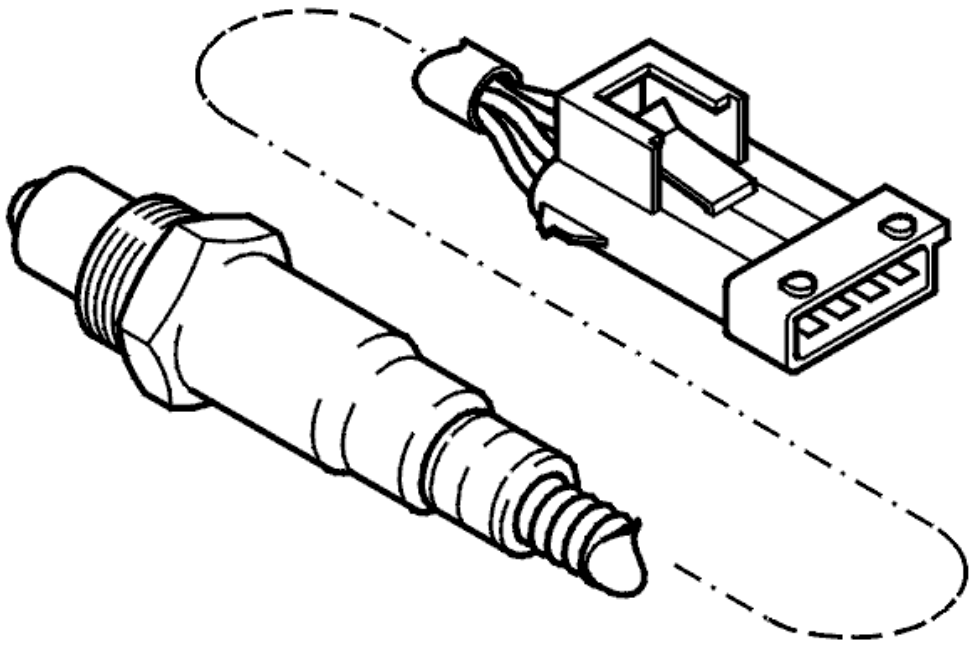

Fig. 101: Identifying Rear Heated Oxygen Sensor
Courtesy of VOLVO CARS CORPORATION

- **Continue**

  Refer to **VERIFICATION**

VERIFICATION

VERIFICATION

HINT: After carrying out the repair, check that the fault has been remedied.

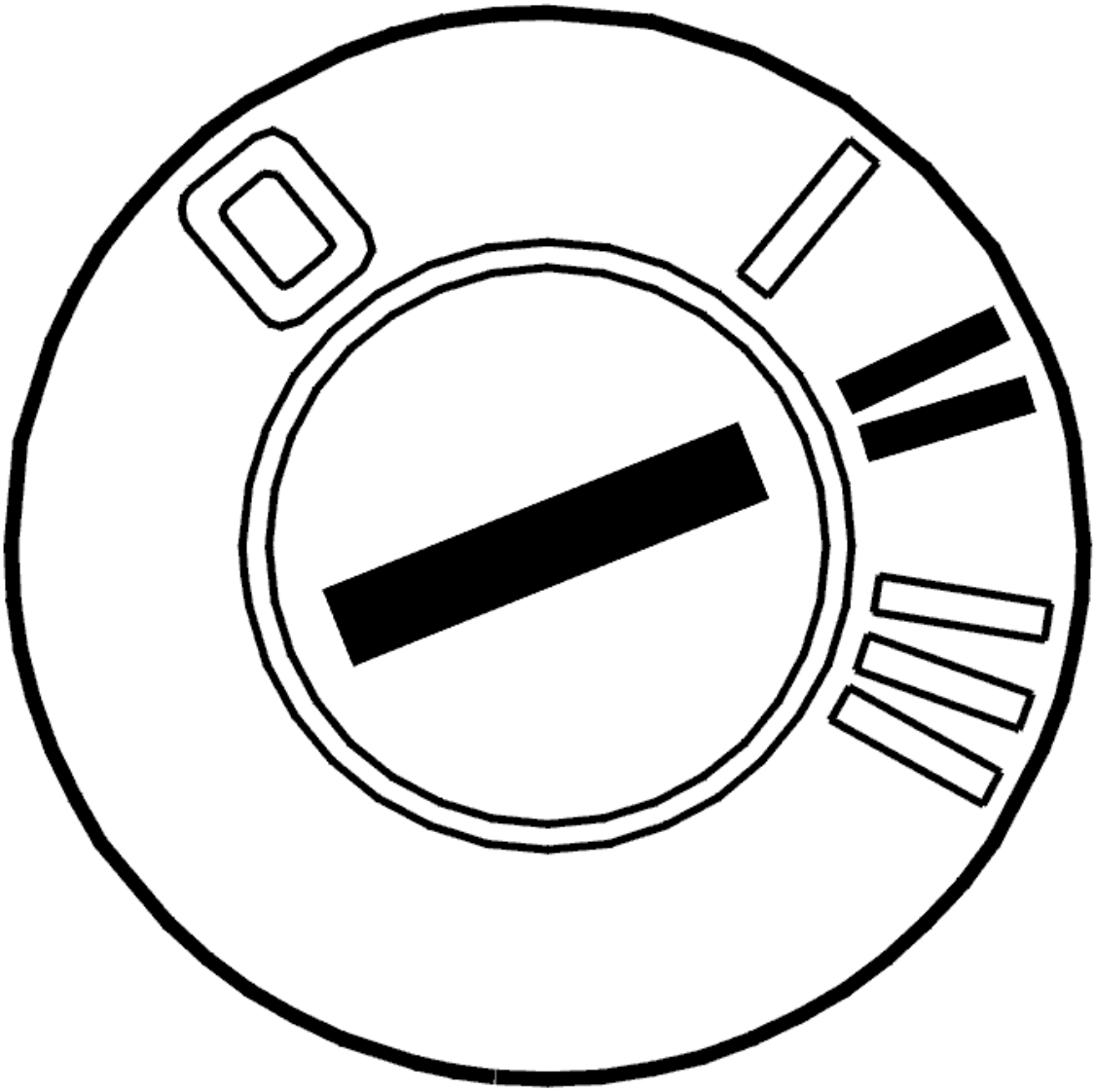

Fig. 102: Identifying Ignition ON
Courtesy of VOLVO CARS CORPORATION

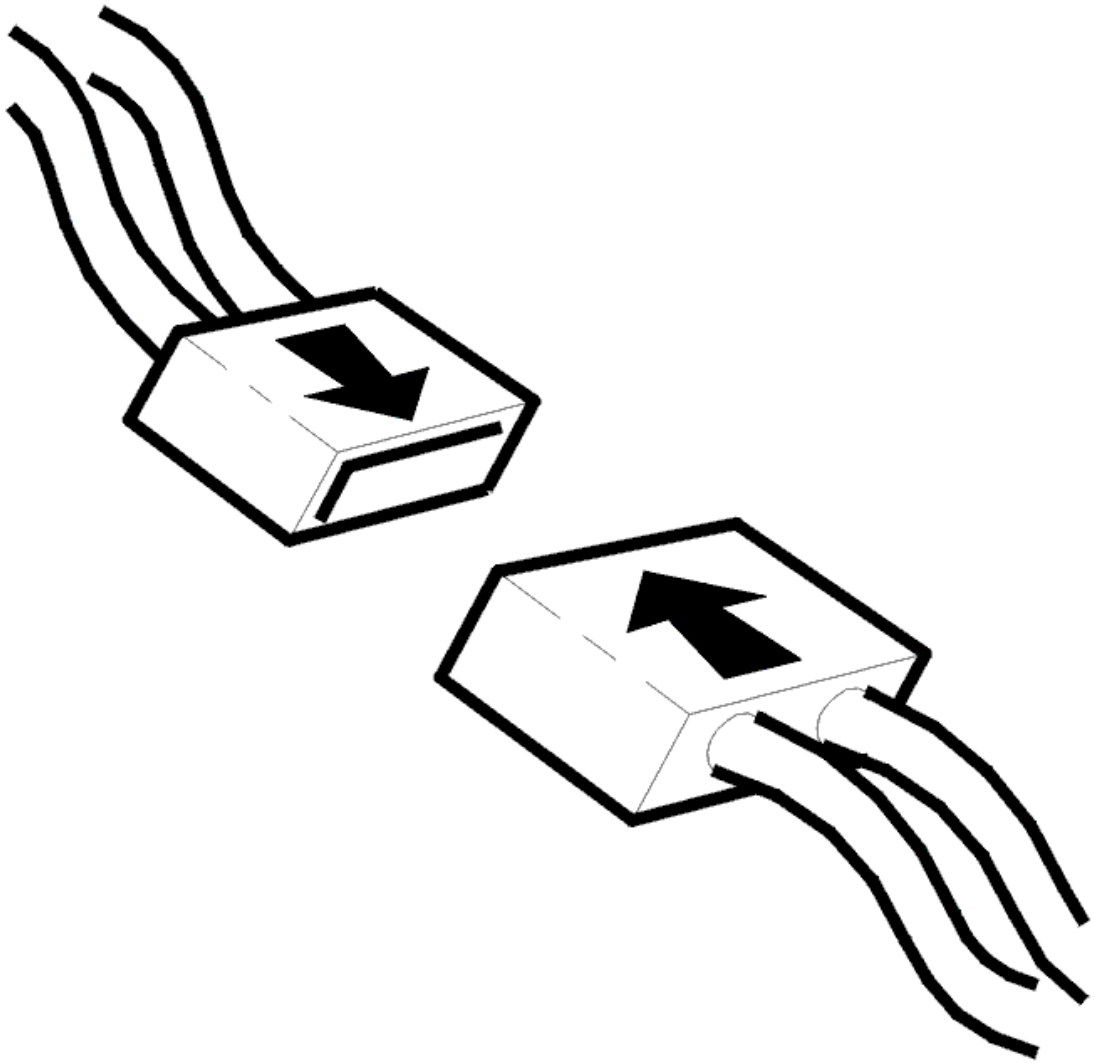

Fig. 103: Connecting Connector
Courtesy of VOLVO CARS CORPORATION

- Ignition off.
- Reconnect connectors, reinstall components
- Test drive car as follows:

  A/C on

  Drive the car so that idle, normal and high speeds are reached. Let the car operate in these phases for a few minutes.

  Accelerate at full throttle a number of times so that high boost pressure is reached (applies only to turbo models).

Total test drive time must be 15 minutes.

NOTE: After test driving the engine should not be turned off. The test drive must be carried out again.

Connect VIDA (Volvo scan tool) again and read out the heated oxygen sensor (HO2S) diagnostic trouble code (DTC) status.

The text NOT READY is displayed if diagnosis is underway.

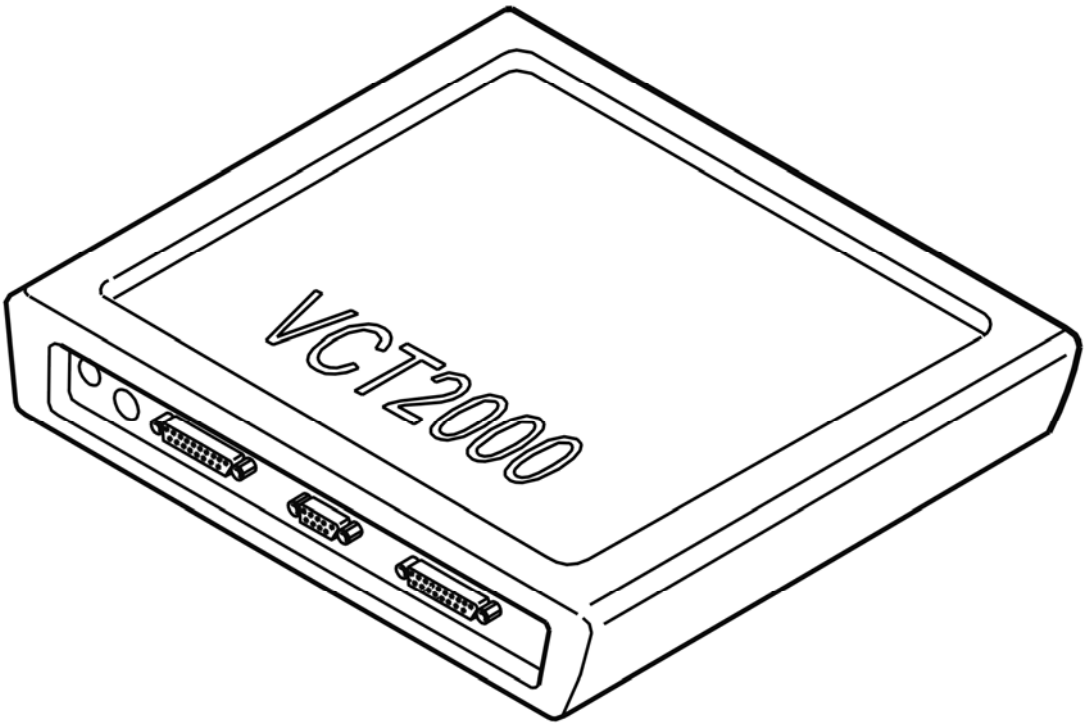

Fig. 104: Identifying VCT2000 Diagnostic Tool Symbol In VIDA
Courtesy of VOLVO CARS CORPORATION

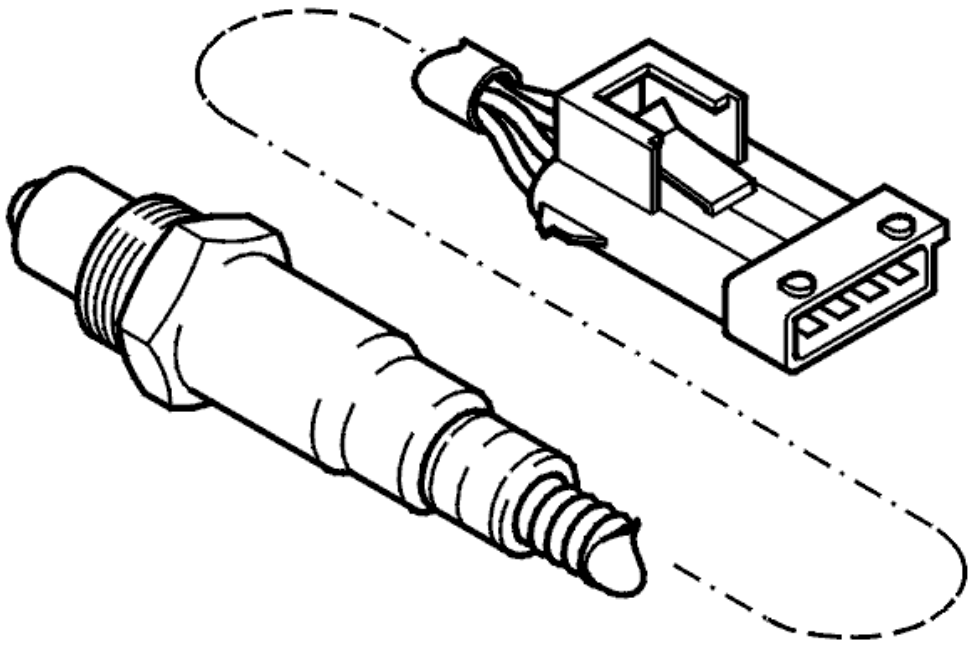

Fig. 105: Identifying Rear Heated Oxygen Sensor
Courtesy of VOLVO CARS CORPORATION

Is FAULT NOT REGISTERED displayed?

- **YES**

  VERIFIED: Troubleshooting has been completed.

- **NO**

  Refer to **INFORMATION**

INFORMATION

FAULT-TRACING INFORMATION

The fault should have been detected and remedied. As this is not the case fault-tracing has failed.

Exit fault-tracing for this diagnostic trouble code (DTC) or make another attempt.

ECM-2A0A: REAR HEATED OXYGEN SENSOR (HO2S). SIGNAL TOO HIGH (B5254T2; B6294T; 2003-2004)

DIAGNOSTIC TROUBLE CODE (DTC) INFORMATION ECM-2A0A

see **DIAGNOSTIC TROUBLE CODE (DTC) INFORMATION ECM-2A0A**

SIGNAL TOO HIGH

CHECKING COMPONENTS AND WIRING

CAUTION: Do not apply rust solvent spray or grease to the heated oxygen sensor (HO2S) connector.

Check the signal cable (+) between heated oxygen sensor (HO2S) terminal #4 and control module terminal #A61 (#B1). Check the signal cable (-) between heated oxygen sensor (HO2S) terminal #3 and control module terminal #A62 (#B2). Check for a short-circuit to supply voltage.

HINT: Use a test lamp with at least a 3 W bulb to determine whether the cable is short-circuited to supply voltage.

Try a new heated oxygen sensor (HO2S) if the wiring is OK.

Remedy as necessary.

Other information:

- To connect the breakout box / access the control module, see **CONNECTING THE BREAKOUT BOX**
- For B5xx4T, see **HEATED OXYGEN SENSOR (HO2S), REPLACING**
- For B6xx4T, see **HEATED OXYGEN SENSOR (HO2S), REPLACING** .
- For 5 cylinder turbocharged engines -2004, see **SIGNAL DESCRIPTION**
- For 5 cylinder turbocharged engines 2005-, see **SIGNAL SPECIFICATION** .
- For 6 cylinder engines -2004, see **SIGNAL SPECIFICATION**
- For 6 cylinder engines 2005-, see **SIGNAL SPECIFICATION** .
- see **CHECKING WIRING AND TERMINALS** .

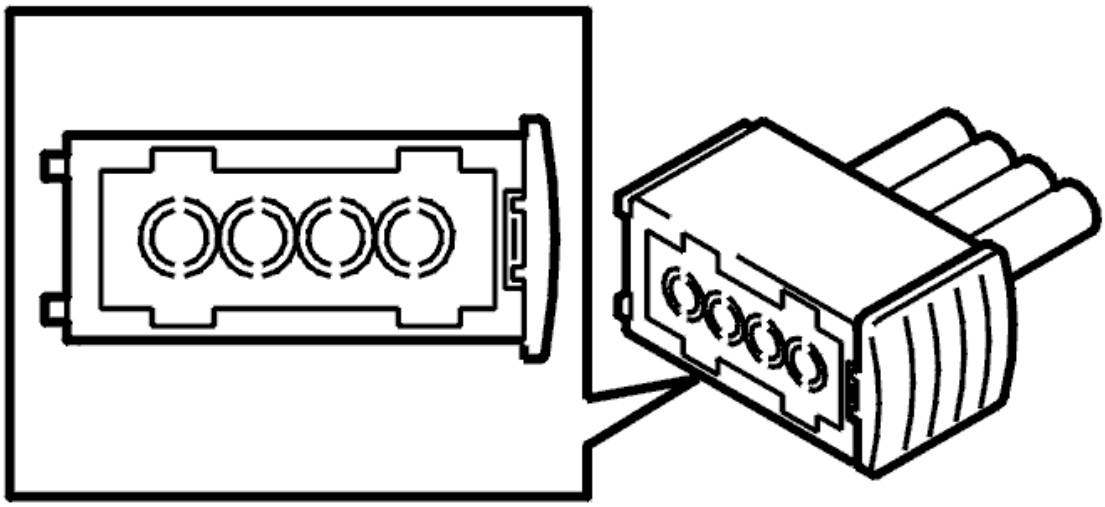

Fig. 106: Identifying Heated Oxygen Sensor
Courtesy of VOLVO CARS CORPORATION

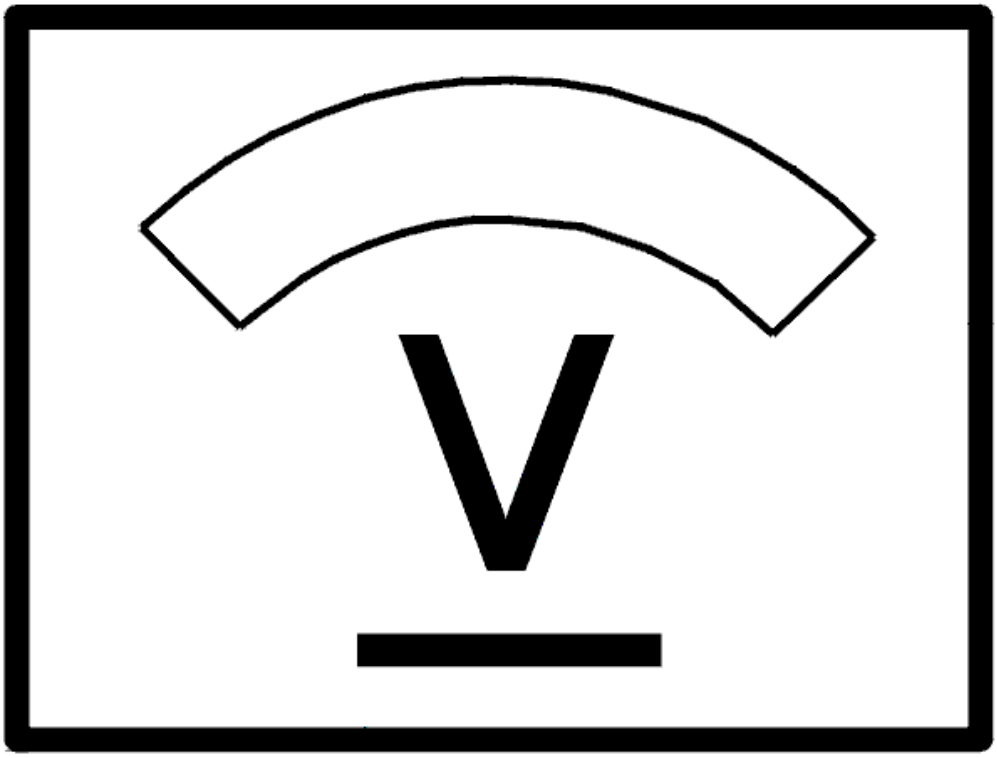

Fig. 107: Identifying Voltage Display
Courtesy of VOLVO CARS CORPORATION

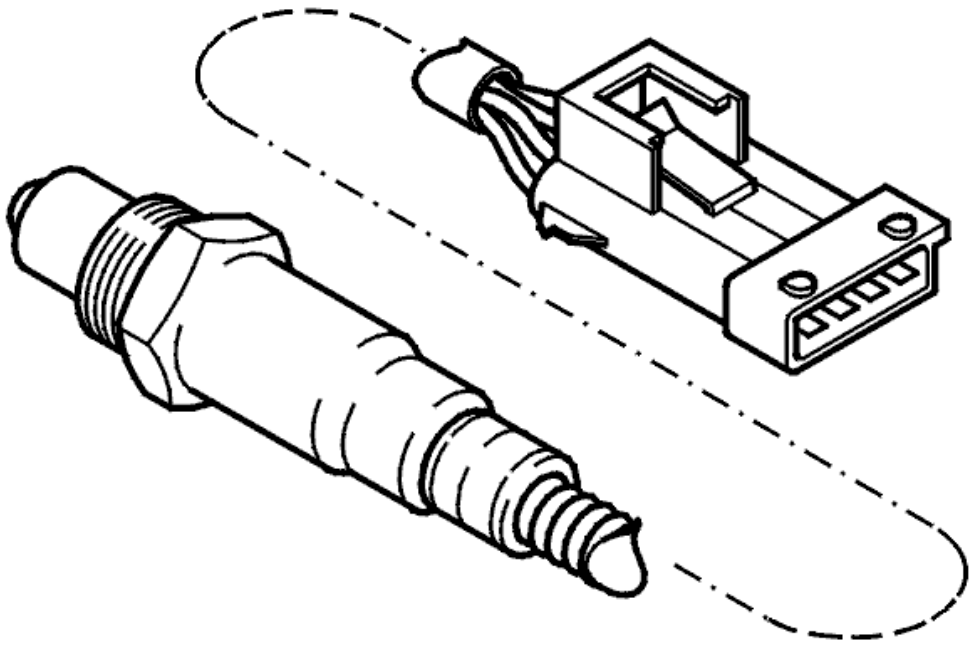

Fig. 108: Identifying Rear Heated Oxygen Sensor
Courtesy of VOLVO CARS CORPORATION

- **Continue**

  Refer to **VERIFICATION**

VERIFICATION

VERIFICATION

HINT: After carrying out the repair, check that the fault has been remedied.

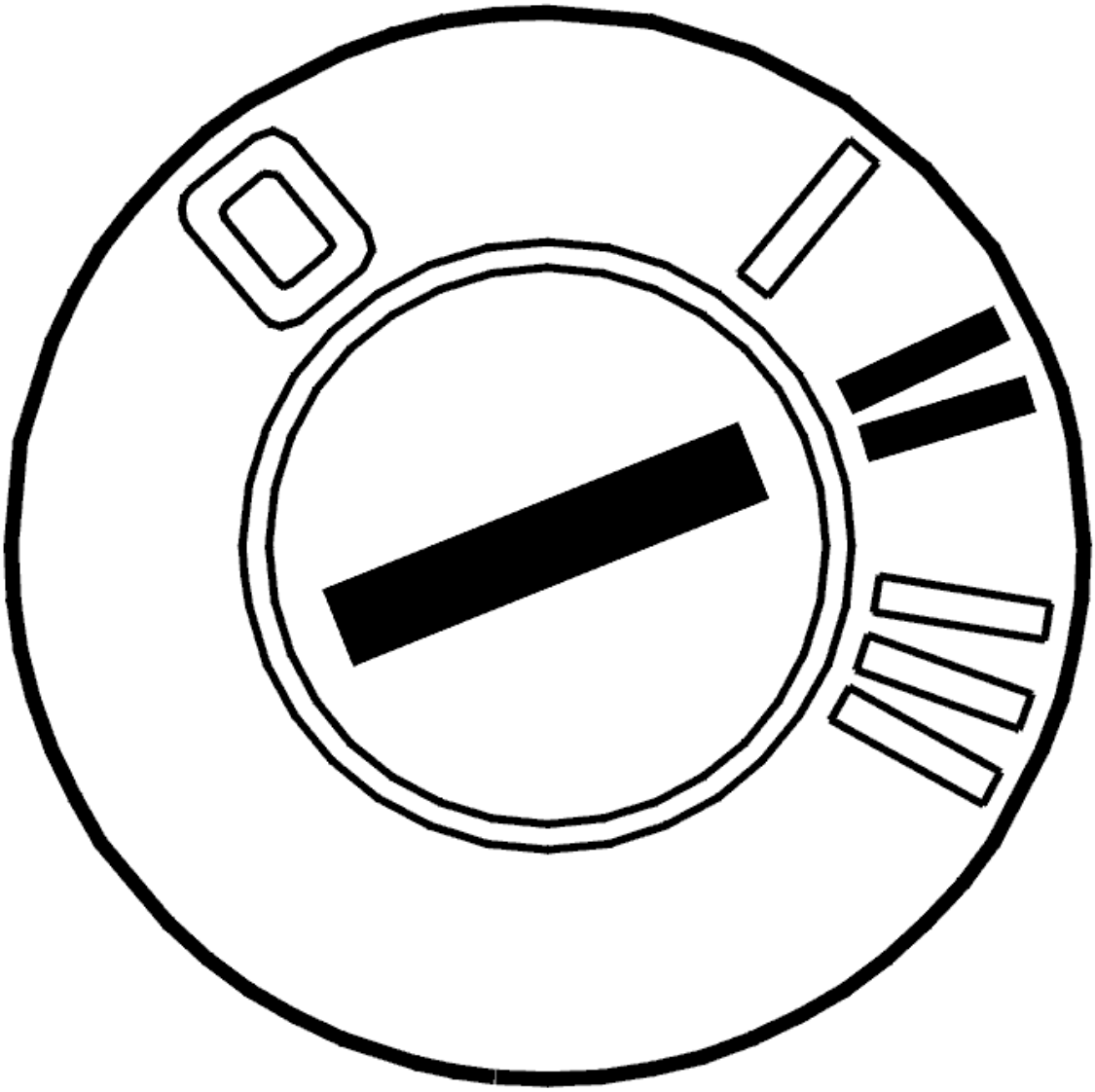

Fig. 109: Identifying Ignition ON
Courtesy of VOLVO CARS CORPORATION

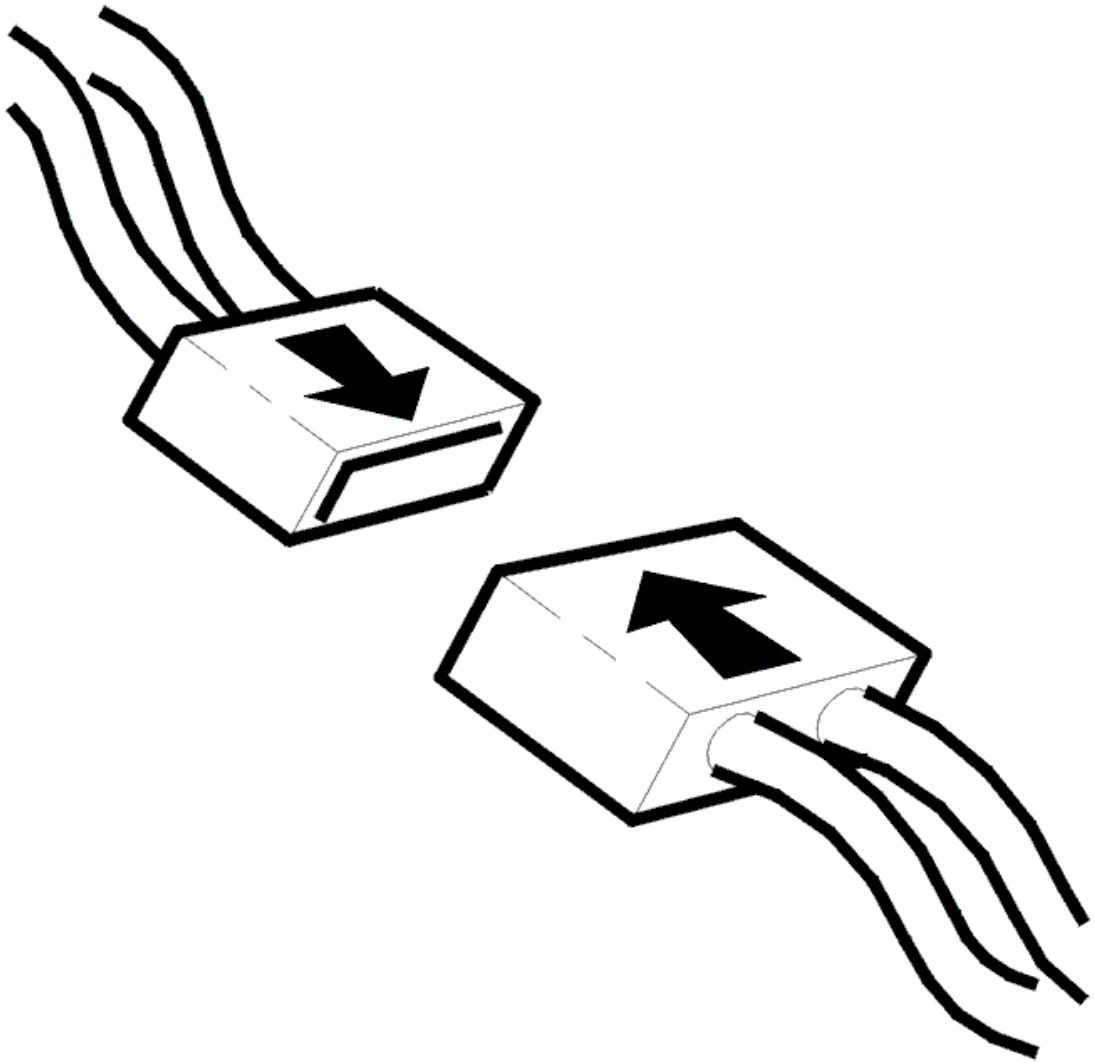

Fig. 110: Connecting Connector
Courtesy of VOLVO CARS CORPORATION

- Ignition off.
- Reconnect connectors, reinstall components
- Test drive car as follows:

  A/C on

  Drive the car so that idle, normal and high speeds are reached. Let the car operate in these phases for a few minutes.

  Accelerate at full throttle a number of times so that high boost pressure is reached (applies only to turbo models).

Total test drive time must be 15 minutes.

NOTE: After test driving the engine should not be turned off. The test drive must be carried out again.

Connect VIDA (Volvo scan tool) again and read out the heated oxygen sensor (HO2S) diagnostic trouble code (DTC) status.

The text NOT READY is displayed if diagnosis is underway.

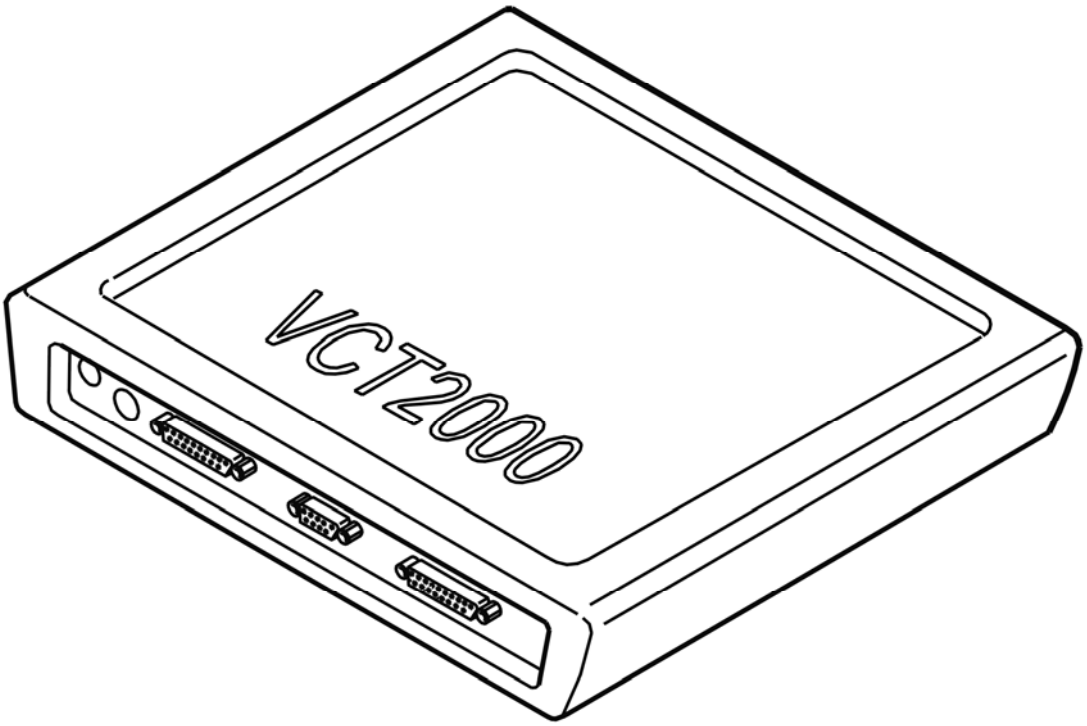

Fig. 111: Identifying VCT2000 Diagnostic Tool Symbol In VIDA
Courtesy of VOLVO CARS CORPORATION

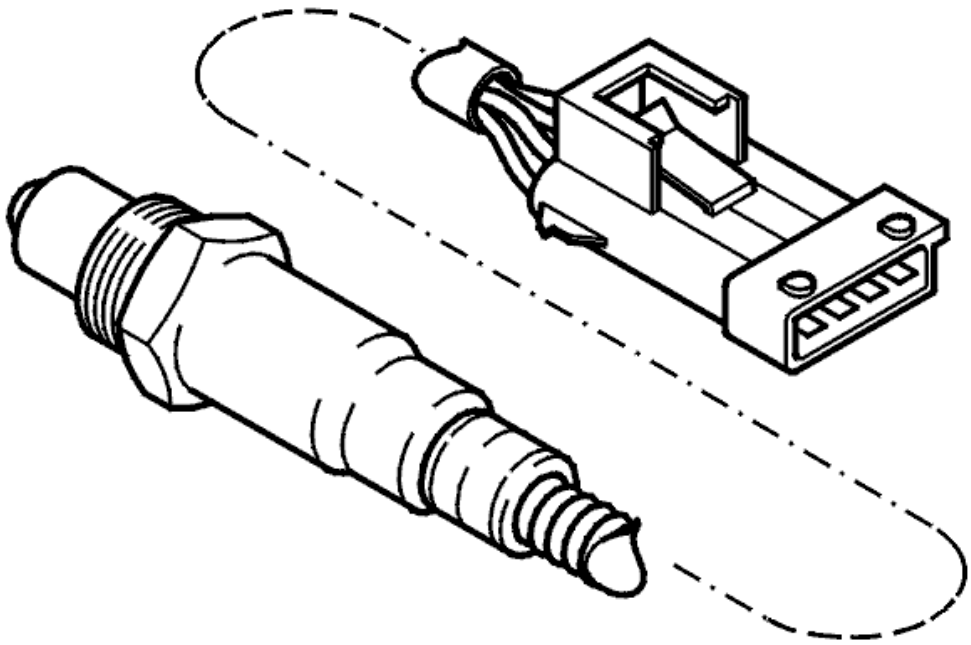

Fig. 112: Identifying Rear Heated Oxygen Sensor
Courtesy of VOLVO CARS CORPORATION

Is FAULT NOT REGISTERED displayed?

- **YES**

  VERIFIED: Troubleshooting has been completed.

- **NO**

  Refer to **INFORMATION**

INFORMATION

FAULT-TRACING INFORMATION

The fault should have been detected and remedied. As this is not the case fault-tracing has failed.

Exit fault-tracing for this diagnostic trouble code (DTC) or make another attempt.

ECM-2A0A: REAR HEATED OXYGEN SENSOR (HO2S). SIGNAL TOO LOW (B5254T2; B6294T; 2003-2004)

DIAGNOSTIC TROUBLE CODE (DTC) INFORMATION ECM-2A0A

see **DIAGNOSTIC TROUBLE CODE (DTC) INFORMATION ECM-2A0A**

SIGNAL TOO LOW

CHECKING THE WIRING AND COMPONENT

CAUTION: Do not apply rust solvent spray or grease to the heated oxygen sensor (HO2S) connector.

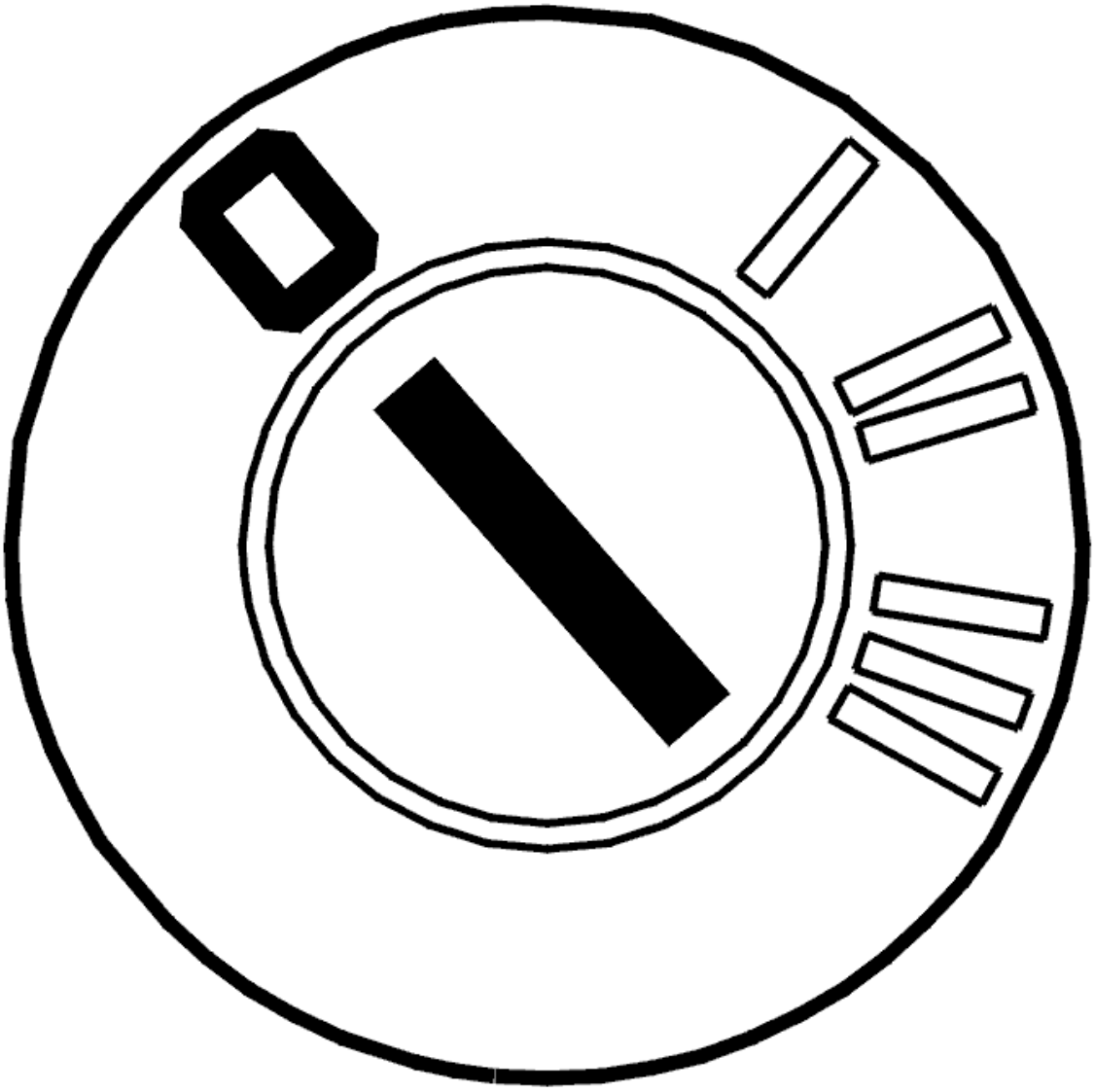

Fig. 113: Identifying Ignition OFF
Courtesy of VOLVO CARS CORPORATION

- Ignition off.

Check the signal cable (+) between heated oxygen sensor (HO2S) terminal #4 and control module terminal #A61 (#B1). Check the signal cable (-) between heated oxygen sensor (HO2S) terminal #3 and control module terminal #A62 (#B2). Check for a short-circuit to ground.

Try a new heated oxygen sensor (HO2S) if the wiring is OK.

Remedy as necessary.

Other information:

- To connect the breakout box / access the control module, see **CONNECTING THE BREAKOUT BOX**
- For B5xx4T, see **HEATED OXYGEN SENSOR (HO2S), REPLACING**
- For B6xx4T, see **HEATED OXYGEN SENSOR (HO2S), REPLACING** .
- For 5 cylinder turbocharged engines -2004, see **SIGNAL DESCRIPTION**
- For 5 cylinder turbocharged engines 2005-, see **SIGNAL SPECIFICATION** .
- For 6 cylinder engines -2004, see **SIGNAL SPECIFICATION**
- For 6 cylinder engines 2005-, see **SIGNAL SPECIFICATION** .
- see **CHECKING WIRING AND TERMINALS** .

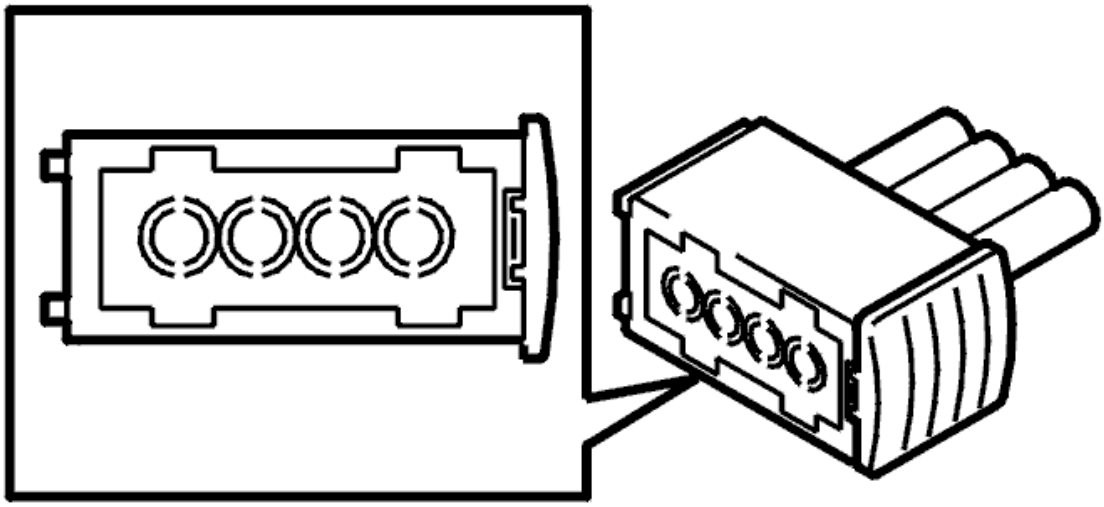

Fig. 114: Identifying Heated Oxygen Sensor
Courtesy of VOLVO CARS CORPORATION

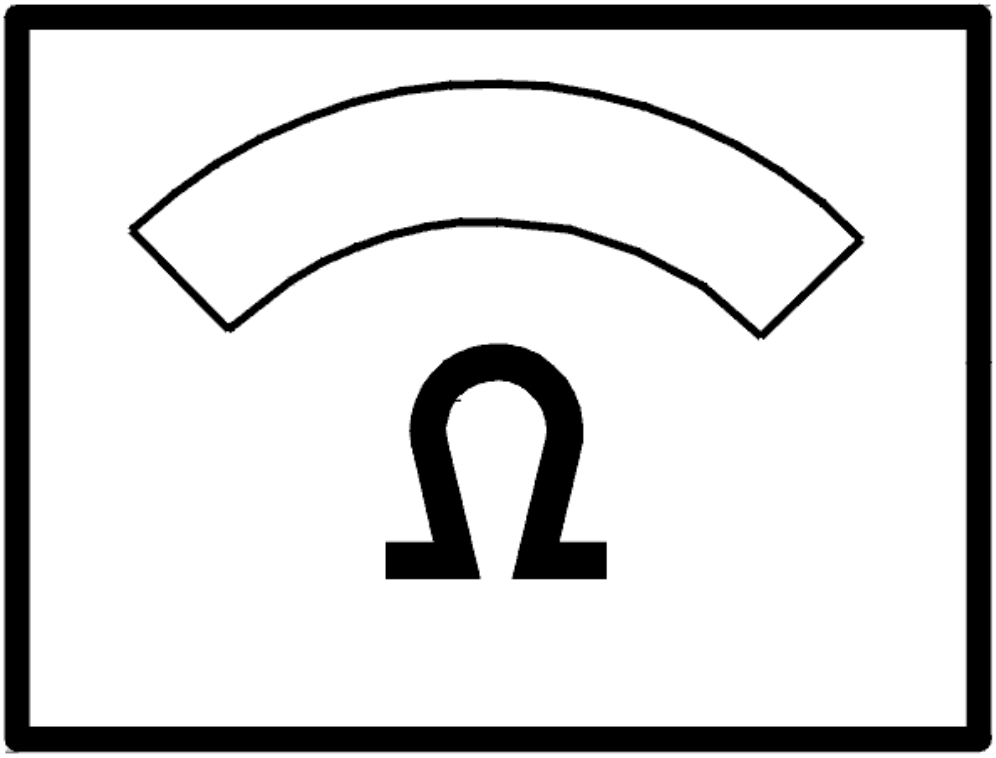

Fig. 115: Identifying Ohm Meter
Courtesy of VOLVO CARS CORPORATION

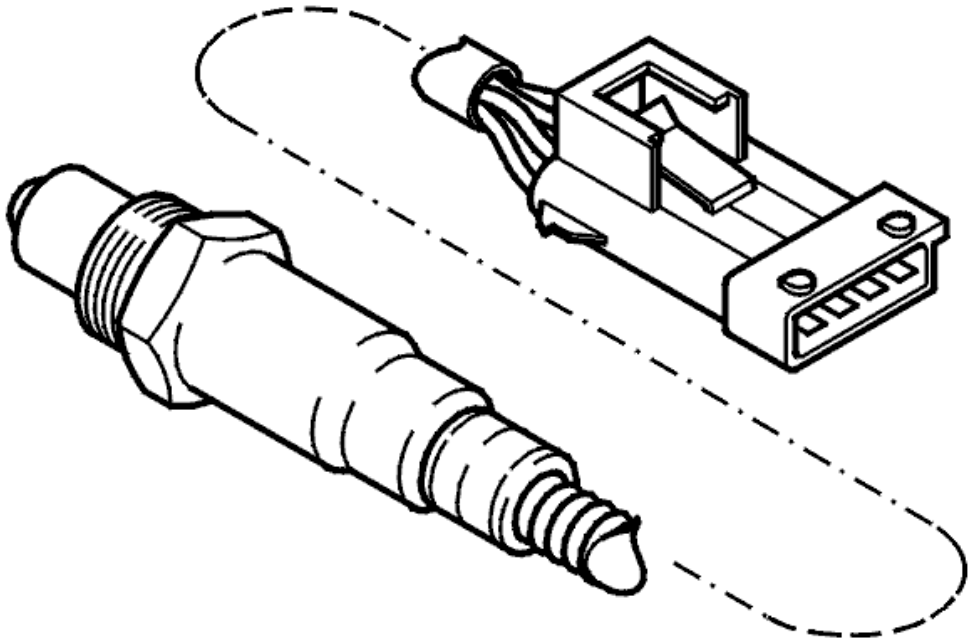

Fig. 116: Identifying Rear Heated Oxygen Sensor
Courtesy of VOLVO CARS CORPORATION

- **Continue**

  Refer to **VERIFICATION**

VERIFICATION

VERIFICATION

HINT: After carrying out the repair, check that the fault has been remedied.

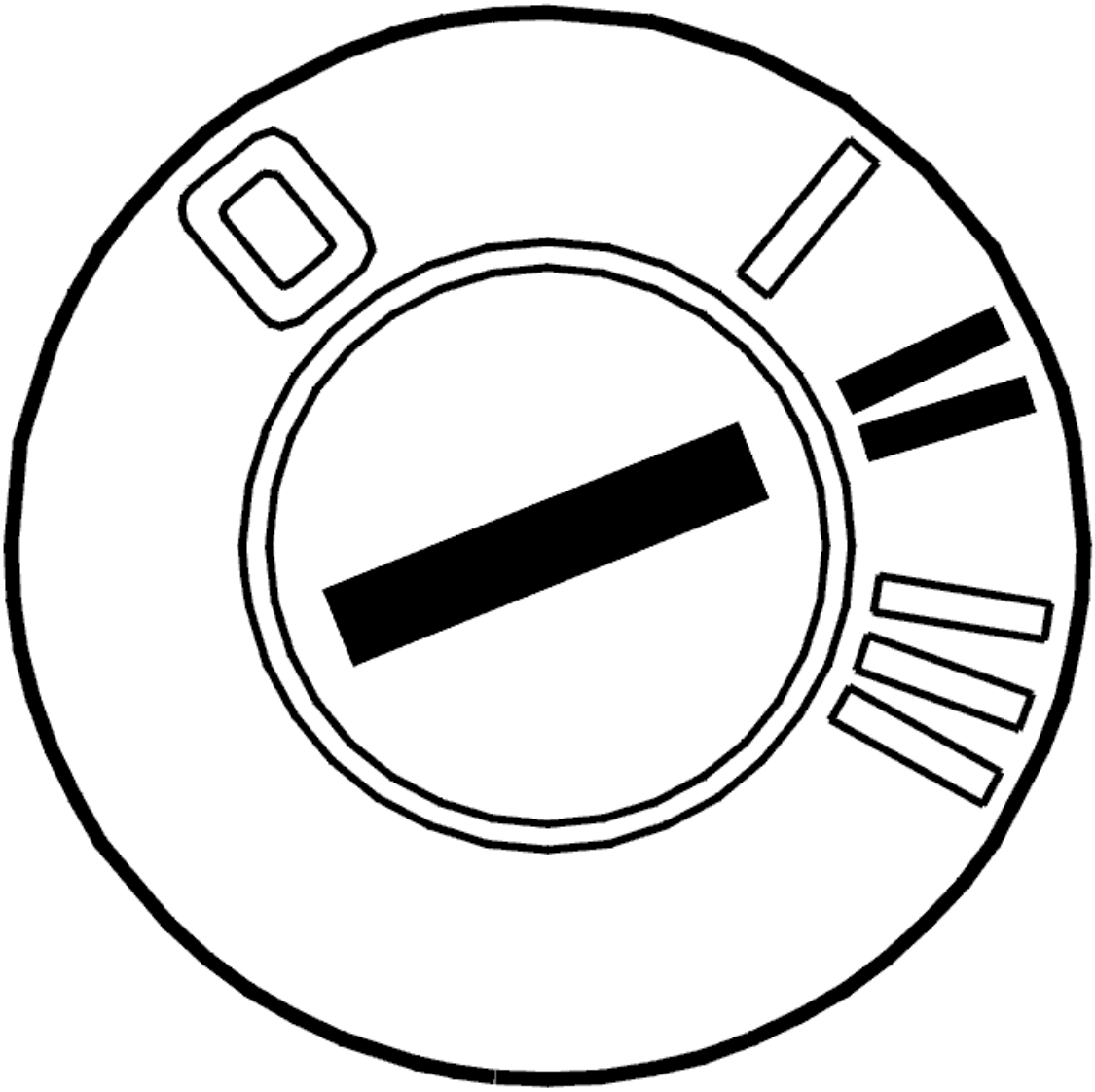

Fig. 117: Identifying Ignition ON
Courtesy of VOLVO CARS CORPORATION

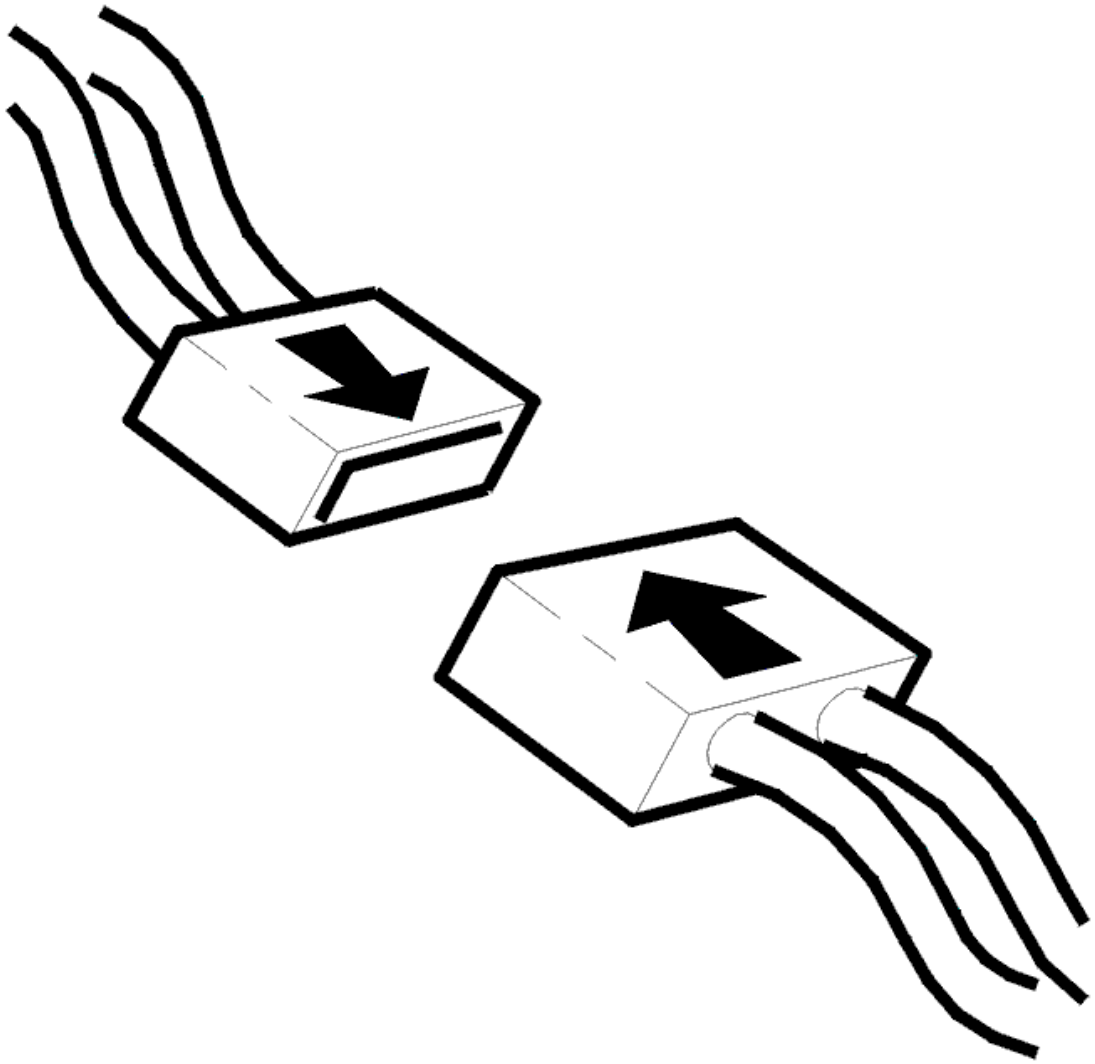

Fig. 118: Connecting Connector
Courtesy of VOLVO CARS CORPORATION

- Ignition off.
- Reconnect connectors, reinstall components
- Test drive car as follows:

  A/C on

  Drive the car so that idle, normal and high speeds are reached. Let the car operate in these phases for a few minutes.

  Accelerate at full throttle a number of times so that high boost pressure is reached (applies only to turbo models).

Total test drive time must be 15 minutes.

NOTE: After test driving the engine should not be turned off. The test drive must be carried out again.

Connect VIDA (Volvo scan tool) again and read out the heated oxygen sensor (HO2S) diagnostic trouble code (DTC) status.

The text NOT READY is displayed if diagnosis is underway.

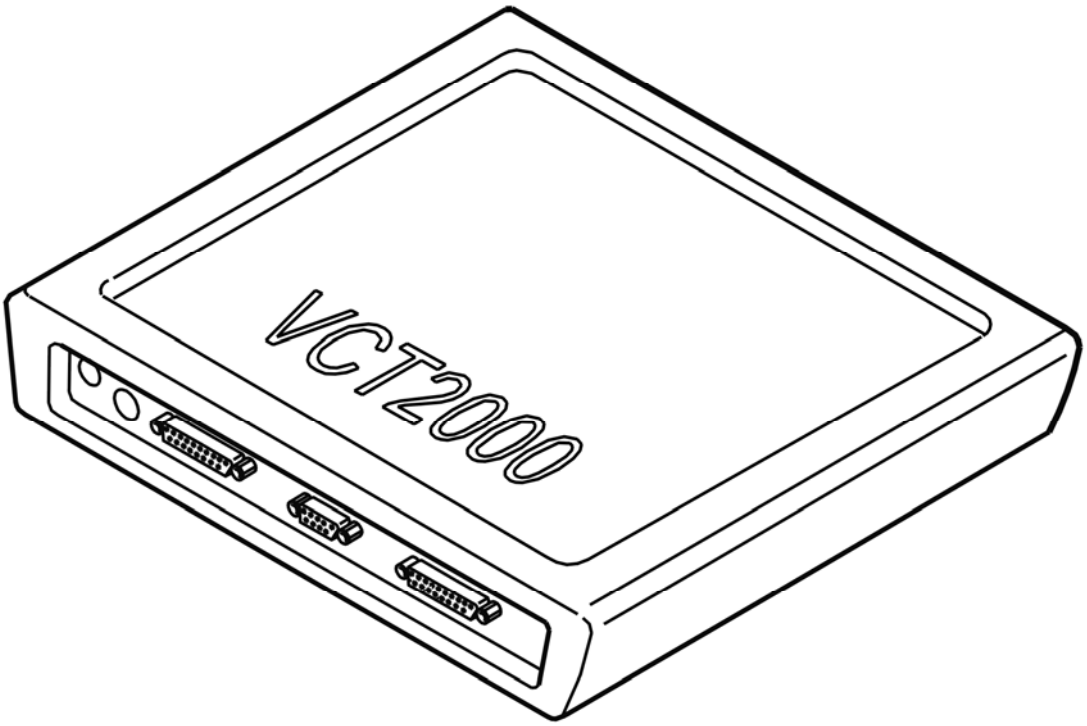

Fig. 119: Identifying VCT2000 Diagnostic Tool Symbol In VIDA
Courtesy of VOLVO CARS CORPORATION

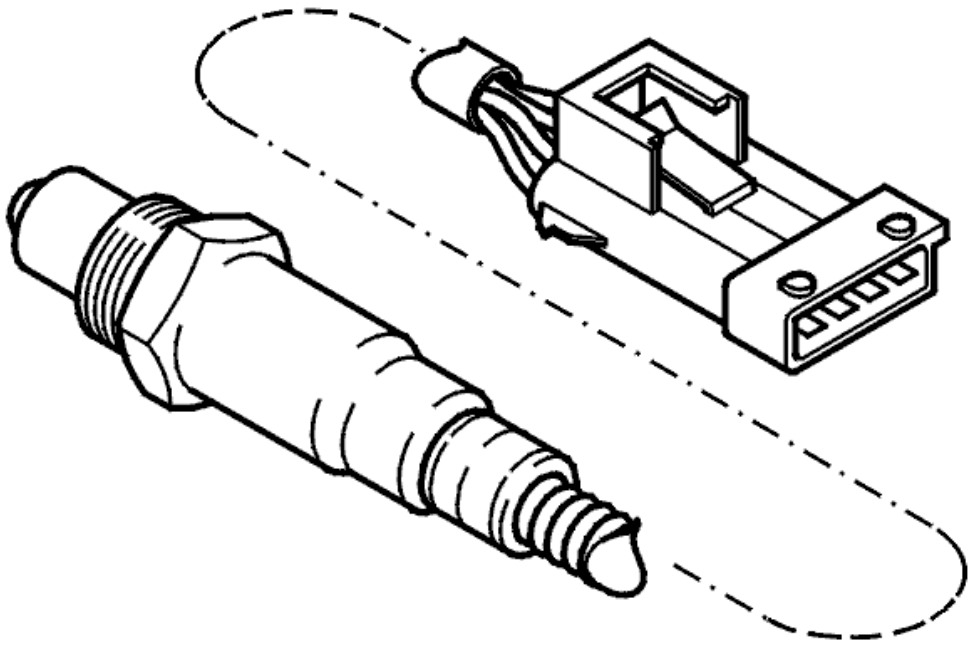

Fig. 120: Identifying Rear Heated Oxygen Sensor
Courtesy of VOLVO CARS CORPORATION

Is FAULT NOT REGISTERED displayed?

- **YES**

  VERIFIED: Troubleshooting has been completed.

- **NO**

  Refer to **INFORMATION**

INFORMATION

FAULT-TRACING INFORMATION

The fault should have been detected and remedied. As this is not the case fault-tracing has failed.

Exit fault-tracing for this diagnostic trouble code (DTC) or make another attempt.

ECM-2A0B: FUEL TEMPERATURE SENSOR. SIGNAL MISSING (B5254T2; 2006)

DIAGNOSTIC TROUBLE CODE (DTC) INFORMATION ECM-2A0B

Condition

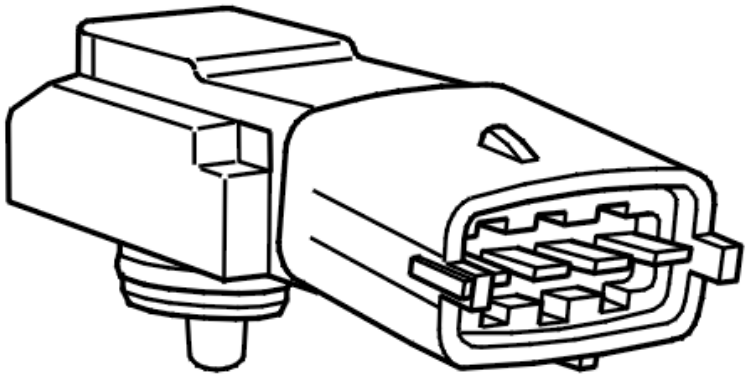

Fig. 121: Identifying Fuel Pressure Sensor
Courtesy of VOLVO CARS CORPORATION

The engine control module (ECM) checks the signal from the fuel temperature sensor. The fuel temperature sensor is integrated in the fuel pressure sensor. The diagnostic trouble code (DTC) is stored if the engine control module (ECM) registers that there is no signal from the fuel temperature sensor.

The diagnostic trouble code (DTC) can be diagnosed when the ignition is switched on.

Substitute Value

- None.

Possible Source

- Contact resistance or oxidation in the terminals
- Short-circuit to supply voltage in the signal cable
- Short-circuit to ground in the signal cable.
- Open-circuit in the signal cable

- Open-circuit in the signal ground cable
- Damaged fuel temperature sensor.

Fault symptom[s]

- None.

FAULT-TRACING

see **FAULT-TRACING**

ECM-2A0C: FUEL TEMPERATURE SENSOR. SIGNAL TOO HIGH (B5254T2; 2005-2007)

DIAGNOSTIC TROUBLE CODE (DTC) INFORMATION ECM-2A0C

Condition

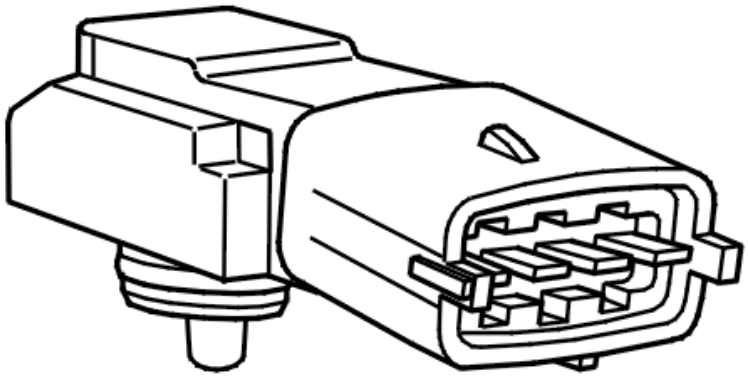

Fig. 122: Identifying Fuel Pressure Sensor
Courtesy of VOLVO CARS CORPORATION

The engine control module (ECM) checks the signal from the fuel temperature sensor. The fuel temperature sensor is integrated in the fuel pressure sensor. The diagnostic trouble code (DTC) is stored if the engine control

module (ECM) registers that the signal from the fuel temperature sensor is too high.

The diagnostic trouble code (DTC) can be diagnosed at ignition on and with the engine running.

Substitute Value

- None.

Possible Source

- Short-circuit to ground in the signal cable
- Damaged temperature sensor.

Fault symptom[s]

- None.

SIGNAL TOO HIGH

CHECKING THE STATUS

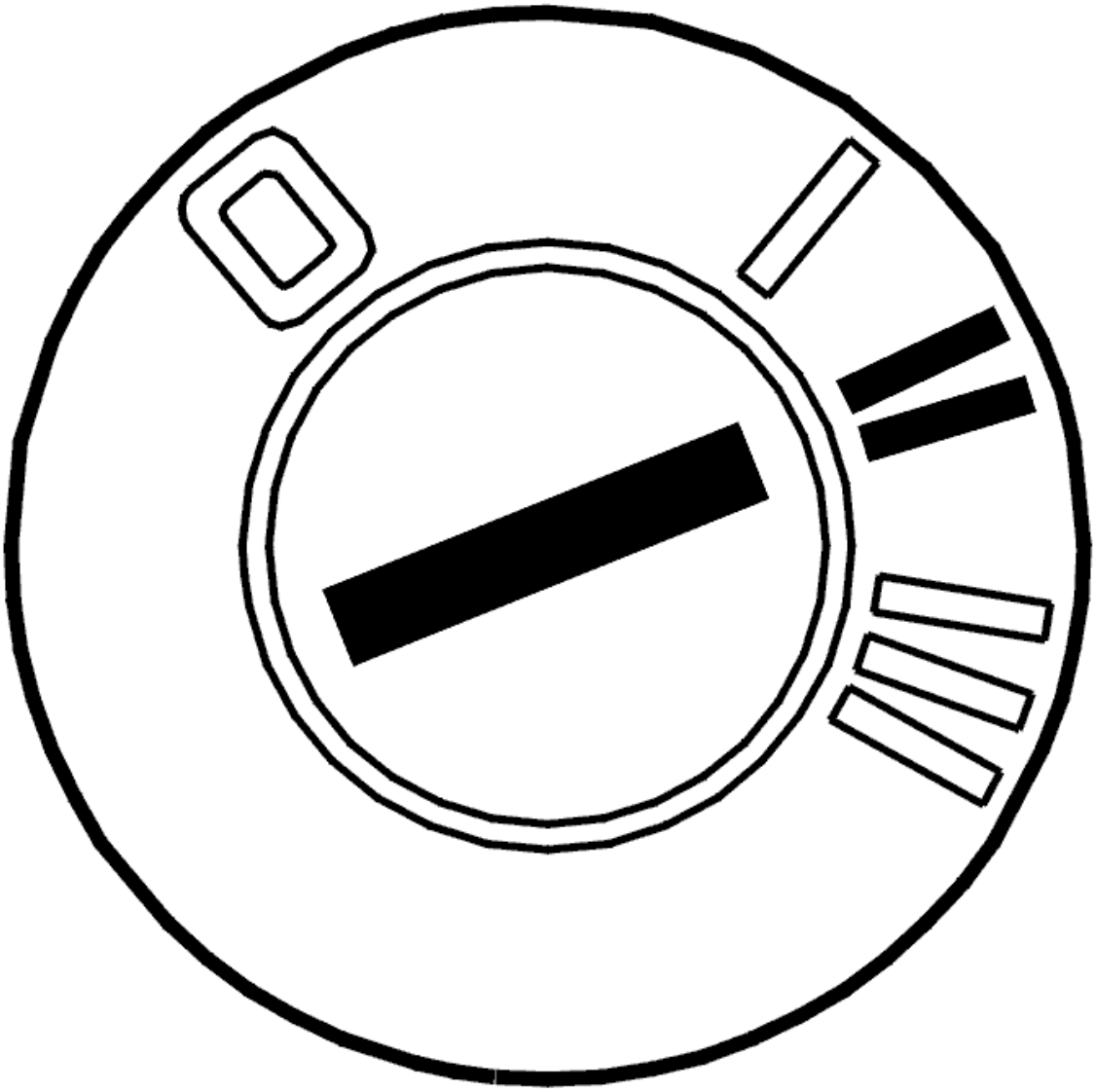

Fig. 123: Identifying Ignition ON
Courtesy of VOLVO CARS CORPORATION

- Ignition on.

  Check whether the fault is permanent or intermittent by reading off the signal from the fuel pressure sensor.

  Check that the signal is within its permitted range. The signal is measured in the fuel rail for the injectors.

  The fault is permanent if the signal is incorrect.

  The fault is intermittent if the signal is correct.

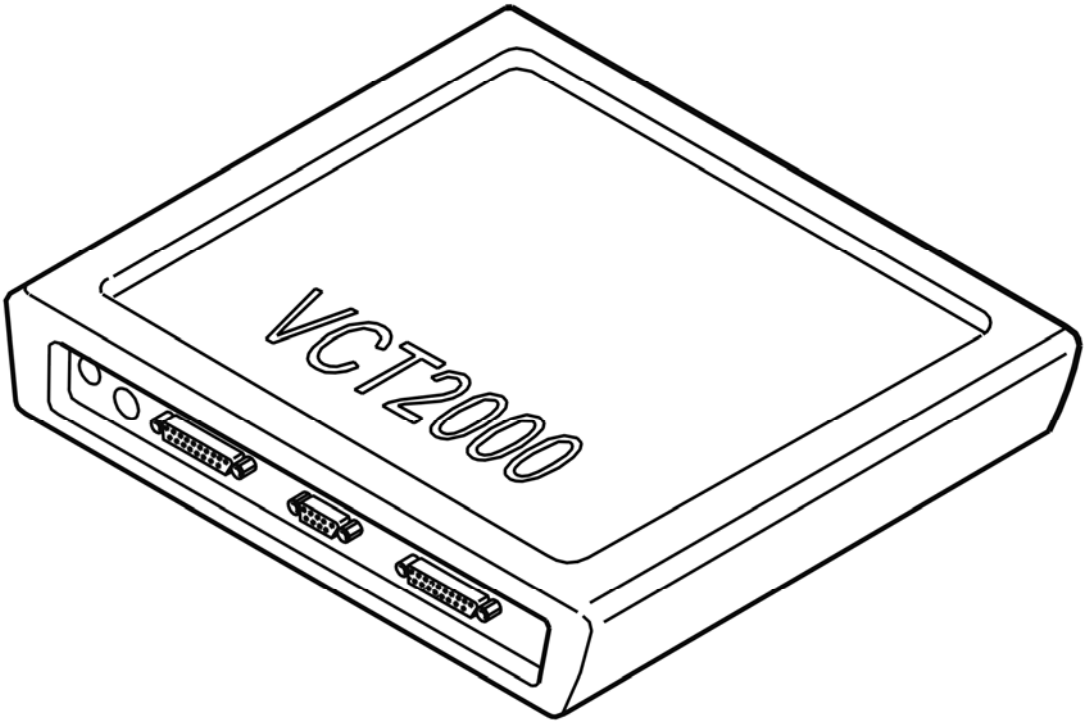

Fig. 124: Identifying VCT2000 Diagnostic Tool Symbol In VIDA
Courtesy of VOLVO CARS CORPORATION

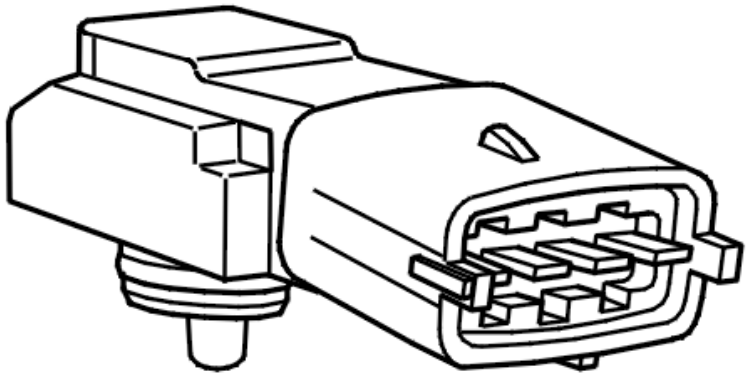

Fig. 125: Identifying Fuel Pressure Sensor
Courtesy of VOLVO CARS CORPORATION

- **Continue**

  Refer to **CHECKING COMPONENTS AND WIRING**

CHECKING COMPONENTS AND WIRING

HINT: The fuel temperature sensor is integrated in the fuel pressure sensor.

Check the fuel pressure sensor resistance. Take readings between terminals #1 and #2.

Check the signal cable between control module terminal #A3 (#A3) and fuel pressure sensor terminal #2. Check for a short-circuit to ground.

Remedy as necessary.

Other information:

- see **CHECKING WIRING AND TERMINALS**
- For resistance values, see **COMPONENT SPECIFICATIONS**
- To connect the breakout box, see **CONNECTING THE BREAKOUT BOX**

- For 5 cylinder turbocharged engines -2004, see **SIGNAL DESCRIPTION**
- For 5 cylinder turbocharged engines 2005-, see **SIGNAL SPECIFICATION** .
- To access or replace the fuel pressure sensor, see **FUEL PRESSURE SENSOR, REPLACEMENT** .

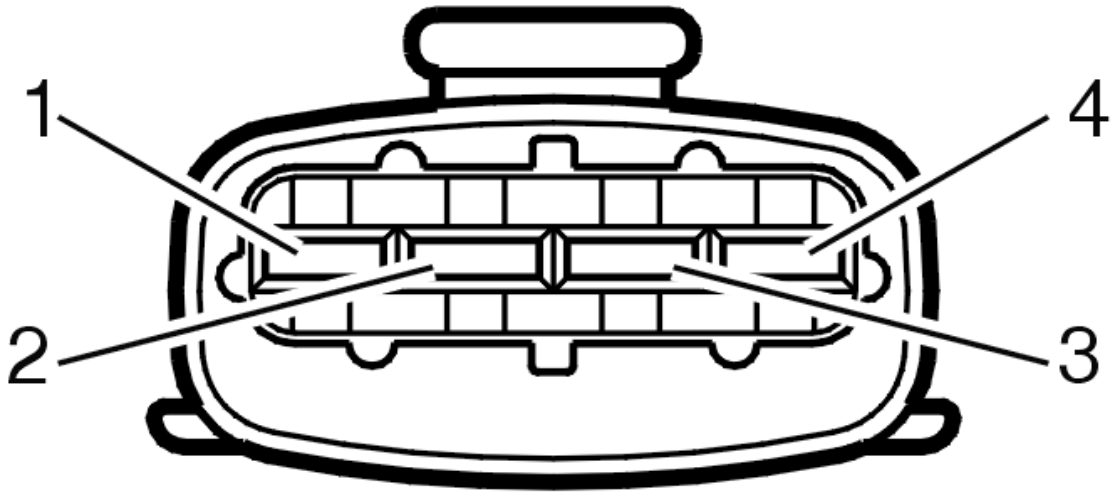

Fig. 126: Identifying 4-Bit Connector
Courtesy of VOLVO CARS CORPORATION

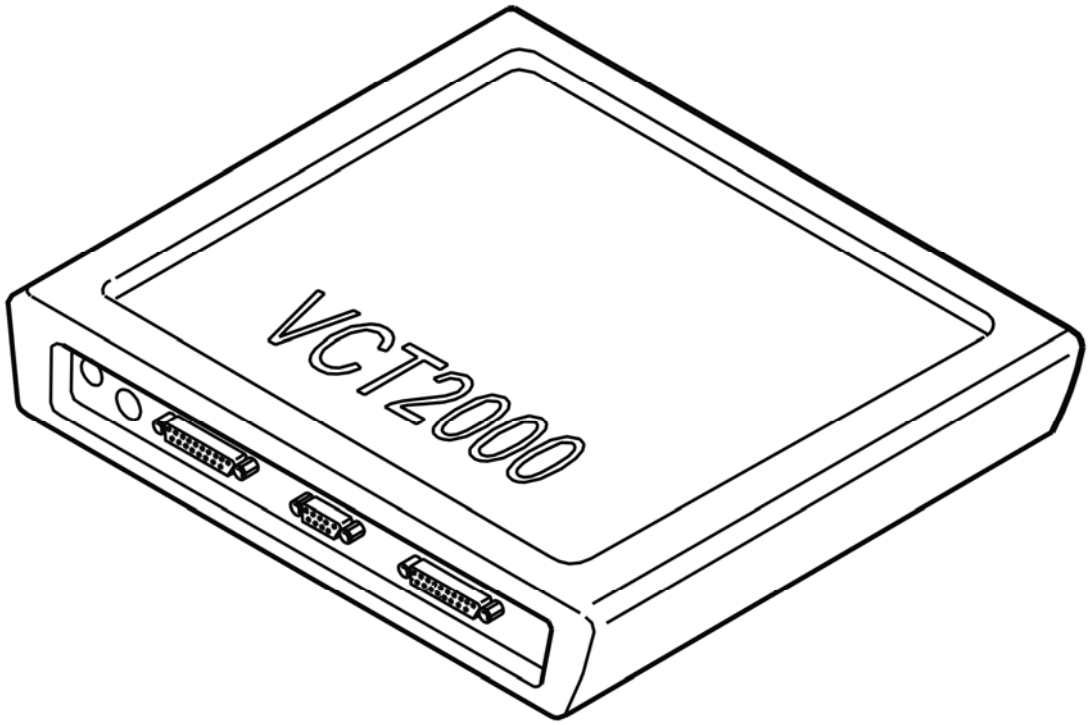

Fig. 127: Identifying VCT2000 Diagnostic Tool Symbol In VIDA

Courtesy of VOLVO CARS CORPORATION

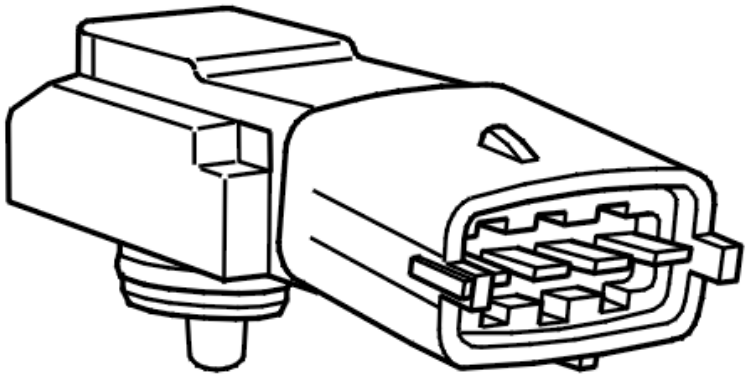

Fig. 128: Identifying Fuel Pressure Sensor
Courtesy of VOLVO CARS CORPORATION

- **Continue**

  Refer to **VERIFICATION**

VERIFICATION

VERIFICATION

HINT: After carrying out the repair, check that the fault has been remedied.

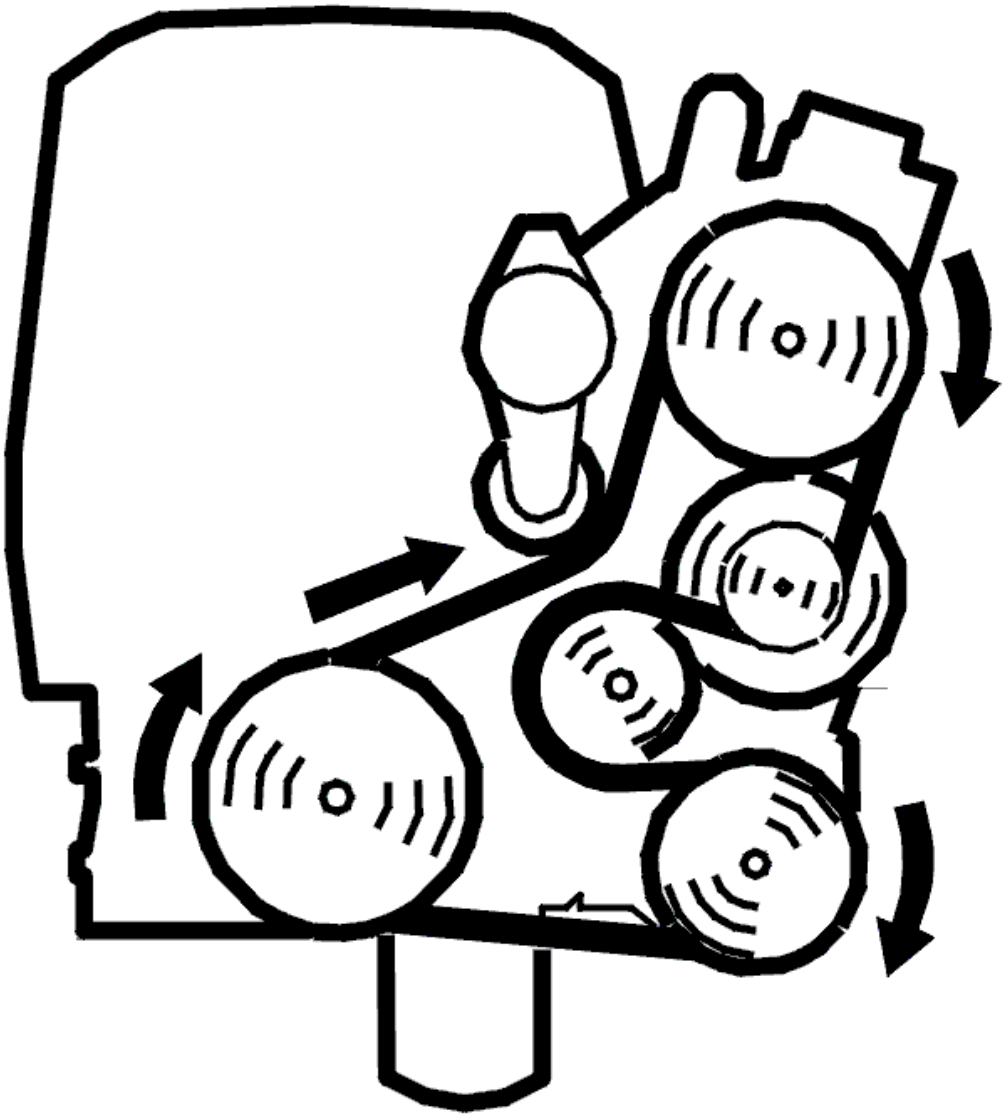

Fig. 129: Belt Routing / Engine Idling - Volvo
Courtesy of VOLVO CARS CORPORATION

- Reinstall the connectors, components etc.
- Start the engine and run it to normal operating temperature
- Read off the fuel temperature sensor signal.

  Check that the signal is within its permitted range. The signal is measured in the fuel rail for the injectors.

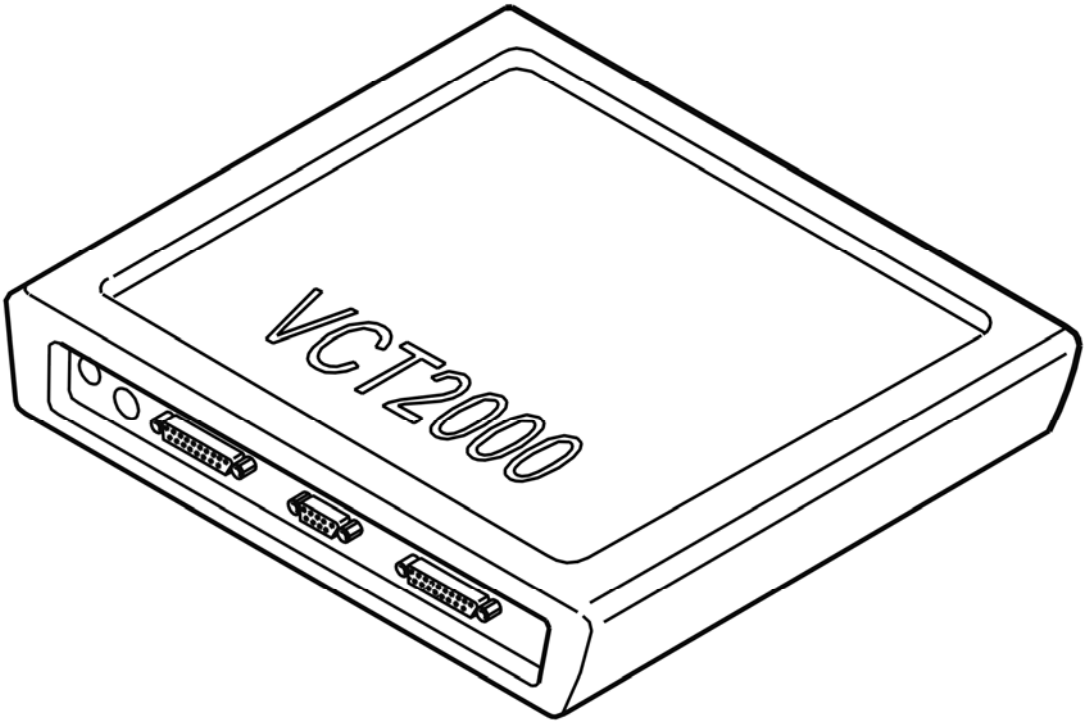

Fig. 130: Identifying VCT2000 Diagnostic Tool Symbol In VIDA
Courtesy of VOLVO CARS CORPORATION

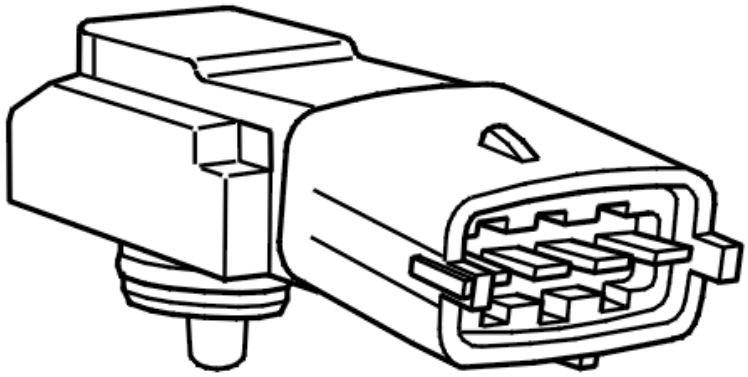

Fig. 131: Identifying Fuel Pressure Sensor
Courtesy of VOLVO CARS CORPORATION

Is the signal OK?

- **YES**

  VERIFIED: Troubleshooting has been completed.

- **NO**

  Refer to **INFORMATION**

INFORMATION

FAULT-TRACING INFORMATION

The fault should have been detected and remedied. As this is not the case fault-tracing has failed.

Exit fault-tracing for this diagnostic trouble code (DTC) or make another attempt.

ECM-2A0C: FUEL TEMPERATURE SENSOR. SIGNAL TOO HIGH (B6294T; 2005-2006)

DIAGNOSTIC TROUBLE CODE (DTC) INFORMATION ECM-2A0C

see **DIAGNOSTIC TROUBLE CODE (DTC) INFORMATION ECM-2A0C**

SIGNAL TOO HIGH

see **SIGNAL TOO HIGH**

ECM-2A0D: FUEL TEMPERATURE SENSOR. SIGNAL TOO LOW (B5254T2; 2005-2007)

DIAGNOSTIC TROUBLE CODE (DTC) INFORMATION ECM-2A0D

Condition

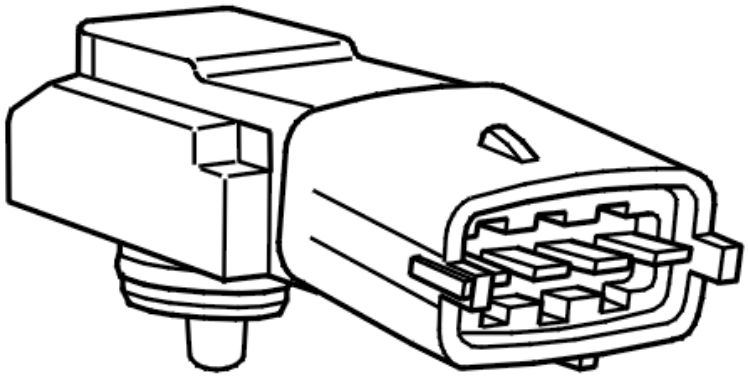

Fig. 132: Identifying Fuel Pressure Sensor
Courtesy of VOLVO CARS CORPORATION

The engine control module (ECM) checks the signal from the fuel temperature sensor. The fuel temperature sensor is integrated in the fuel pressure sensor. The diagnostic trouble code (DTC) is stored if the engine control module (ECM) detects that the signal from the engine coolant temperature (ECT) sensor is too low.

The diagnostic trouble code (DTC) can be diagnosed at ignition on and with the engine running.

Substitute Value

- None.

Possible Source

- Contact resistance or oxidation in the terminals
- Short-circuit to supply voltage in the signal cable
- Open-circuit in the signal cable
- Open-circuit in the signal ground cable
- Damaged temperature sensor.

Fault symptom[s]

- None.

FAULT-TRACING

see **FAULT-TRACING**

ECM-2A0D: FUEL TEMPERATURE SENSOR. SIGNAL TOO LOW (B6294T; 2005-2006)

DIAGNOSTIC TROUBLE CODE (DTC) INFORMATION ECM-2A0D

see **DIAGNOSTIC TROUBLE CODE (DTC) INFORMATION ECM-2A0D**

FAULT-TRACING

see **FAULT-TRACING**

ECM-2A10: FUEL TEMPERATURE SENSOR. SIGNAL TOO HIGH (B5254T2; 2006-2007)

DIAGNOSTIC TROUBLE CODE (DTC) INFORMATION ECM-2A10

Condition

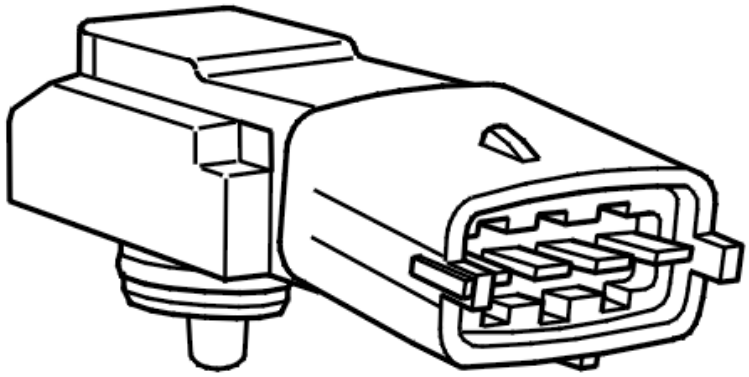

Fig. 133: Identifying Fuel Pressure Sensor
Courtesy of VOLVO CARS CORPORATION

The engine control module (ECM) controls the fuel temperature signal while driving. This is done through the control module comparing values from the intake, fuel and engine temperature sensors. If the signal from the fuel temperature sensor matches a temperature that exceeds a certain limit in relation to the other, the control module interprets this as a malfunction and the diagnostic trouble code (DTC) is generated.

The diagnostic trouble code (DTC) can be diagnosed when the engine is idling.

Substitute Value

- Predefined value for fuel temperature.

Possible Source

- Contact resistance or oxidation in the terminals
- Damaged fuel temperature sensor.

Fault symptom[s]

- Malfunction indicator light (MIL), on

FAULT-TRACING

CHECKING THE STATUS

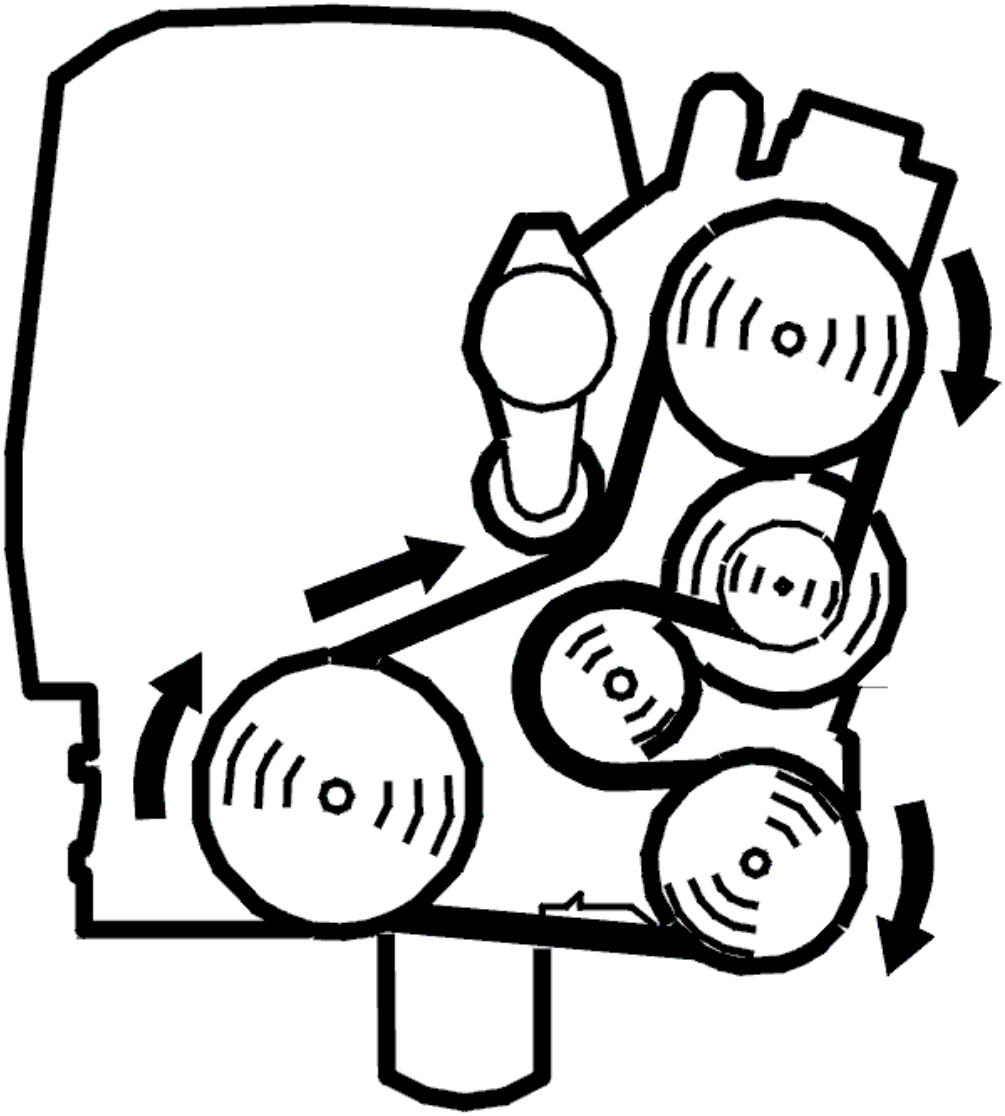

Fig. 134: Belt Routing / Engine Idling - Volvo
Courtesy of VOLVO CARS CORPORATION

Check whether the fault is permanent or intermittent by reading the signals from the fuel, outside and engine temperature sensors.

- Start the engine.

Check that the fuel temperature is within its permitted range. The fuel temperature should not be lower than the outdoor temperature and a maximum of 40 °C above the engine temperature.

The fault is permanent if the signal is incorrect. The fault is intermittent if the signal is correct.

HINT: Remove the fuel temperature sensor, but let the connector remain connected. The fuel temperature sensor is integrated in the fuel pressure sensor. The sensor should then show the same temperature as the outdoor temperature.

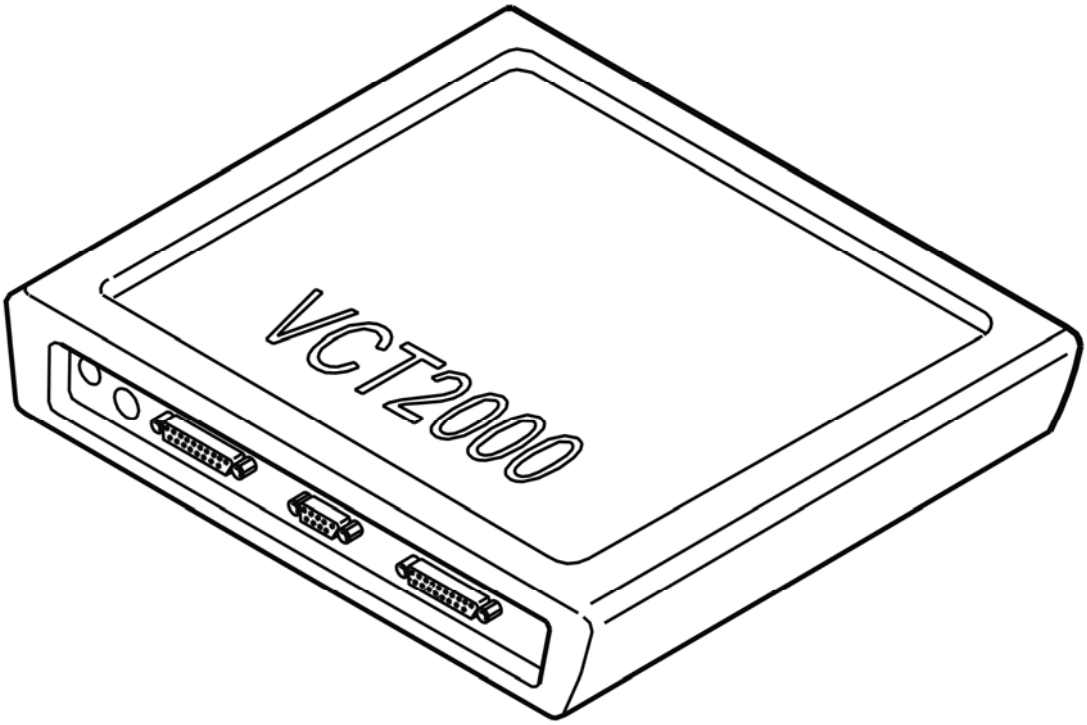

Fig. 135: Identifying VCT2000 Diagnostic Tool Symbol In VIDA
Courtesy of VOLVO CARS CORPORATION

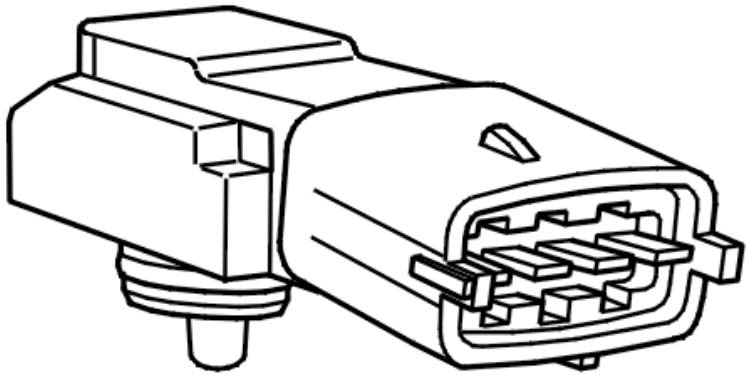

Fig. 136: Identifying Fuel Pressure Sensor
Courtesy of VOLVO CARS CORPORATION

- **Continue**

  Refer to **CHECKING THE COMPONENT AND WIRING**

CHECKING THE COMPONENT AND WIRING

Fig. 137: Identifying Ignition In Off Position
Courtesy of VOLVO CARS CORPORATION

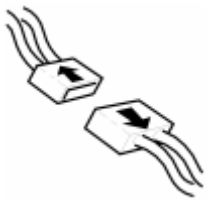

Fig. 138: Identifying Connectors
Courtesy of VOLVO CARS CORPORATION

- Ignition off.
- Disconnect the fuel temperature sensor connector.
- Check the connectors. Check for loose connections. Check for contact resistance. Check for oxidation.

  Check the resistance of the sensor between #1 and #2 (to the sensor).

  Remedy as necessary.

  Other information

  - see **CONNECTING THE BREAKOUT BOX**
  - For 5 cylinder turbocharged engines -2004, see **SIGNAL DESCRIPTION**
  - For 5 cylinder turbocharged engines 2005-, see **SIGNAL SPECIFICATION** .
  - see **COMPONENT SPECIFICATIONS**
  - see **FUEL PRESSURE SENSOR, REPLACEMENT**
  - see **CHECKING WIRING AND TERMINALS**

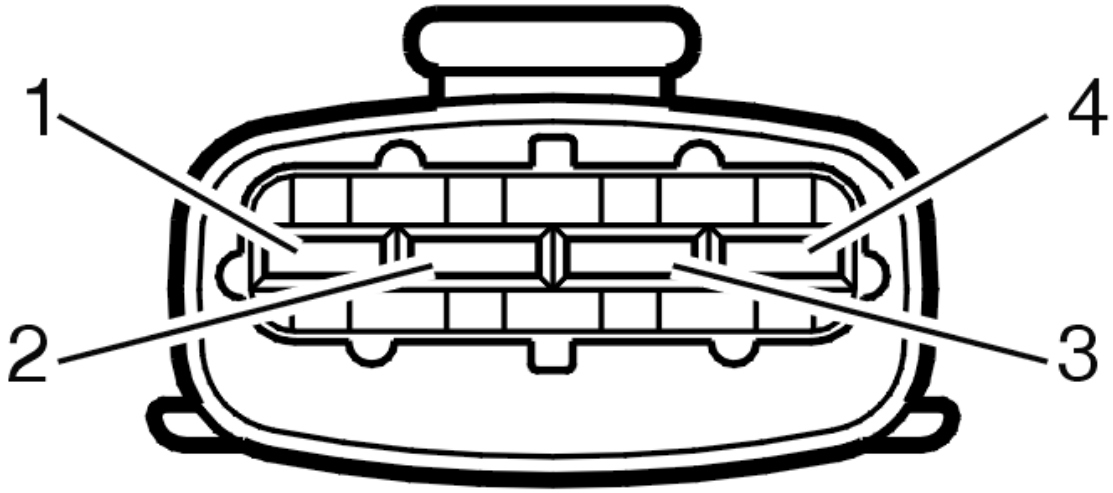

Fig. 139: Identifying 4-Bit Connector
Courtesy of VOLVO CARS CORPORATION

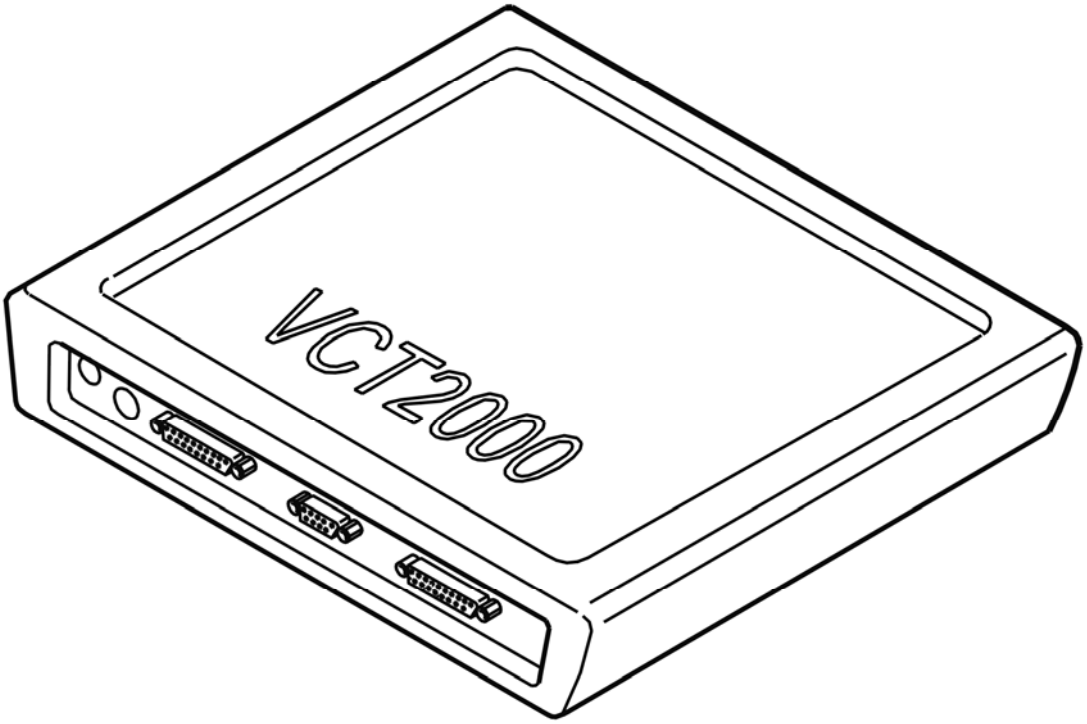

Fig. 140: Identifying VCT2000 Diagnostic Tool Symbol In VIDA
Courtesy of VOLVO CARS CORPORATION

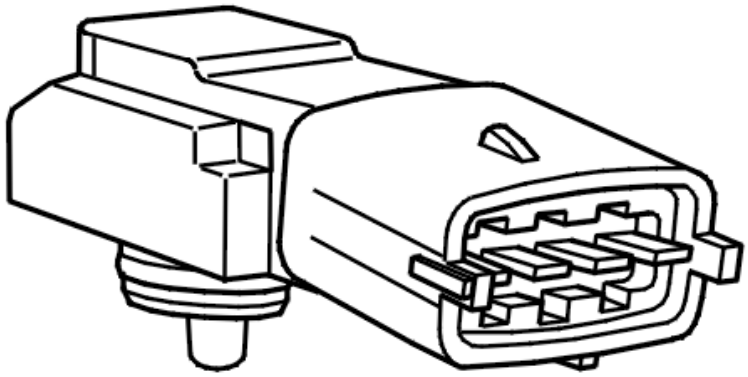

Fig. 141: Identifying Fuel Pressure Sensor
Courtesy of VOLVO CARS CORPORATION

- **Continue**

  Refer to **VERIFICATION**

VERIFICATION

VERIFICATION

HINT: After carrying out the repair, check that the fault has been remedied.

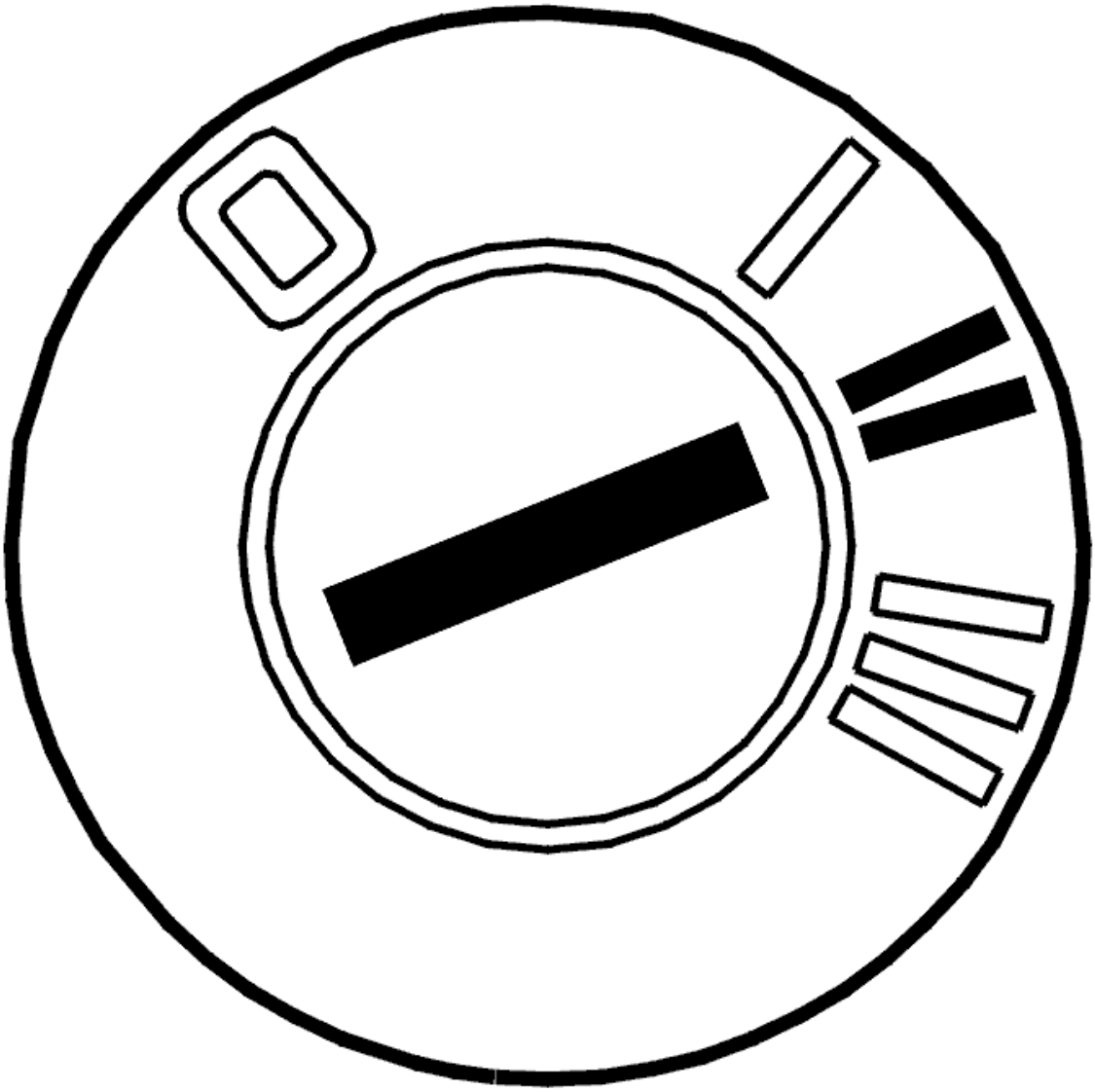

Fig. 142: Identifying Ignition ON
Courtesy of VOLVO CARS CORPORATION

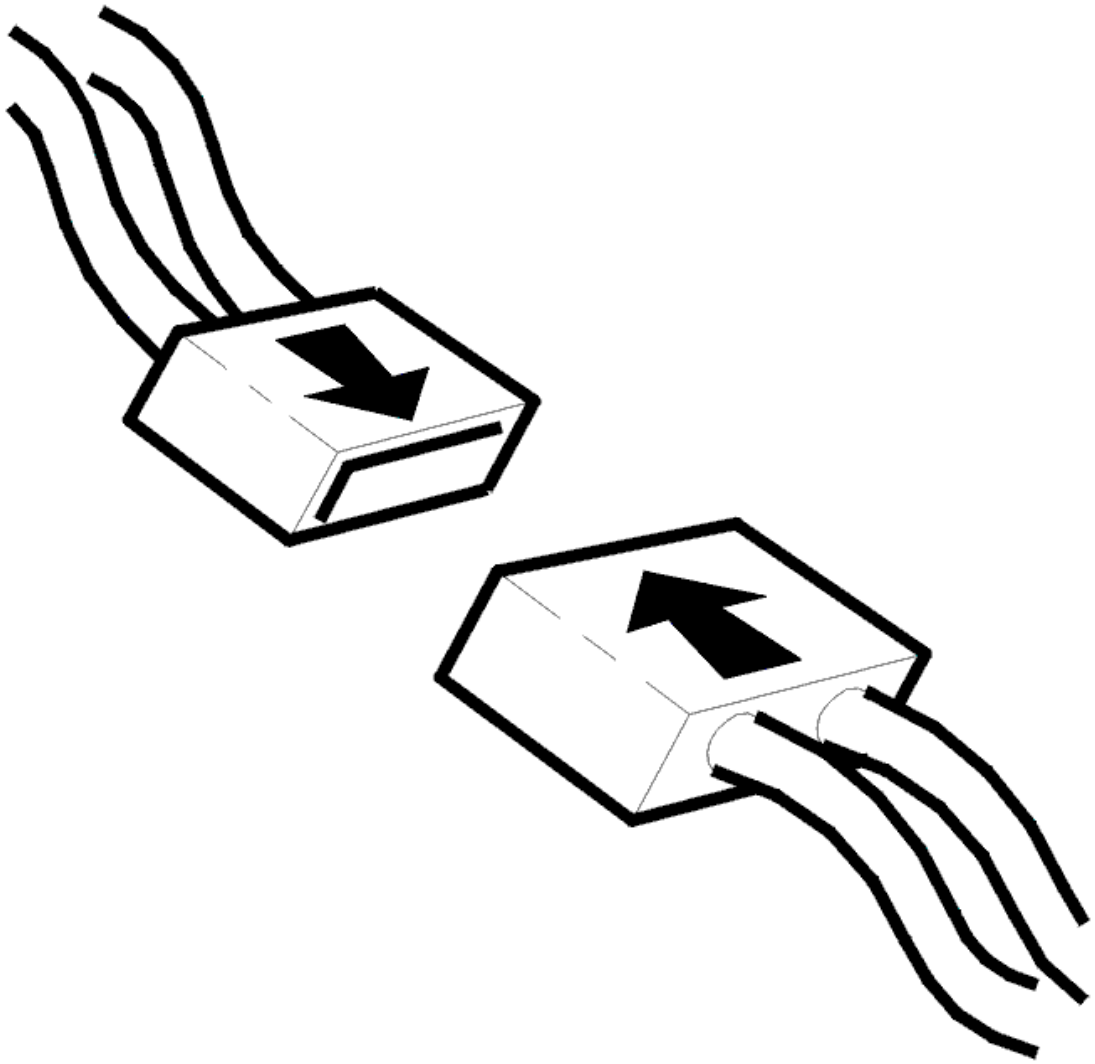

Fig. 143: Connecting Connector
Courtesy of VOLVO CARS CORPORATION

- Ignition off
- Reconnect the connectors, reinstall components etc.
- Ignition on.

Read off the fuel temperature sensor signal. Check that the signal is within its permitted range.

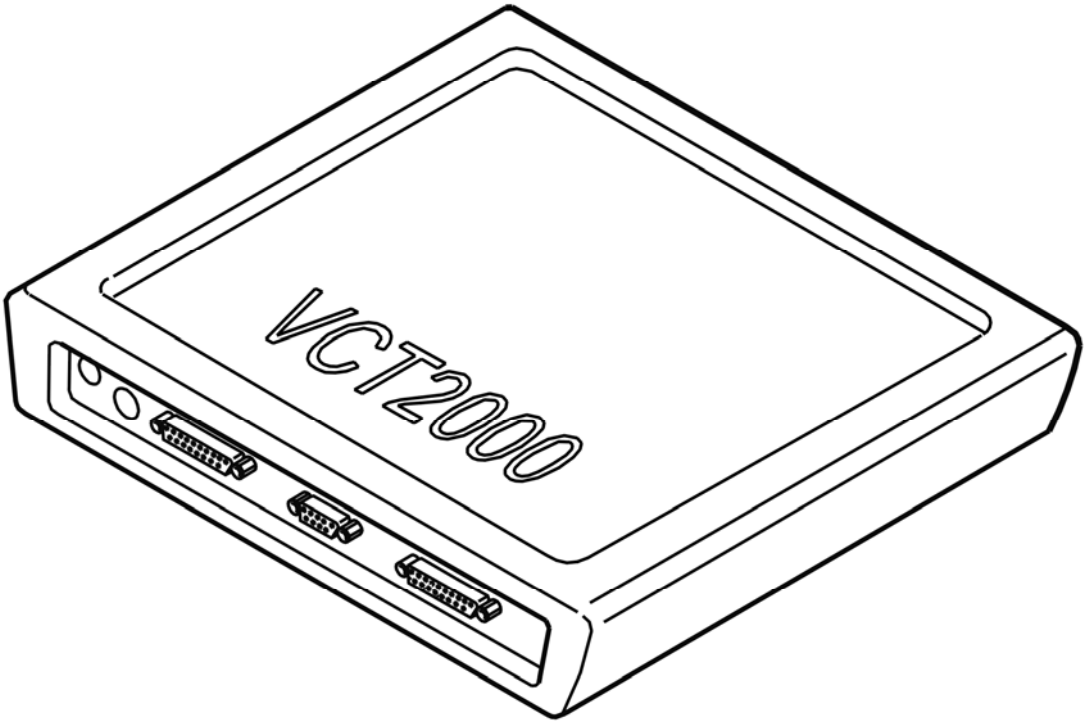

Fig. 144: Identifying VCT2000 Diagnostic Tool Symbol In VIDA
Courtesy of VOLVO CARS CORPORATION

Is the value OK?

- **YES**

  VERIFIED: Troubleshooting has been completed.

- **NO**

  Refer to **INFORMATION**

INFORMATION

FAULT-TRACING INFORMATION

The fault should have been detected and remedied. As this is not the case fault-tracing has failed.

Exit fault-tracing for this diagnostic trouble code (DTC) or make another attempt.

ECM-2A1A: REAR HEATED OXYGEN SENSOR (HO2S) AGING FAULTY SIGNAL (B5254T2; B6294T; 2003-2004)

DIAGNOSTIC TROUBLE CODE (DTC) INFORMATION

Condition

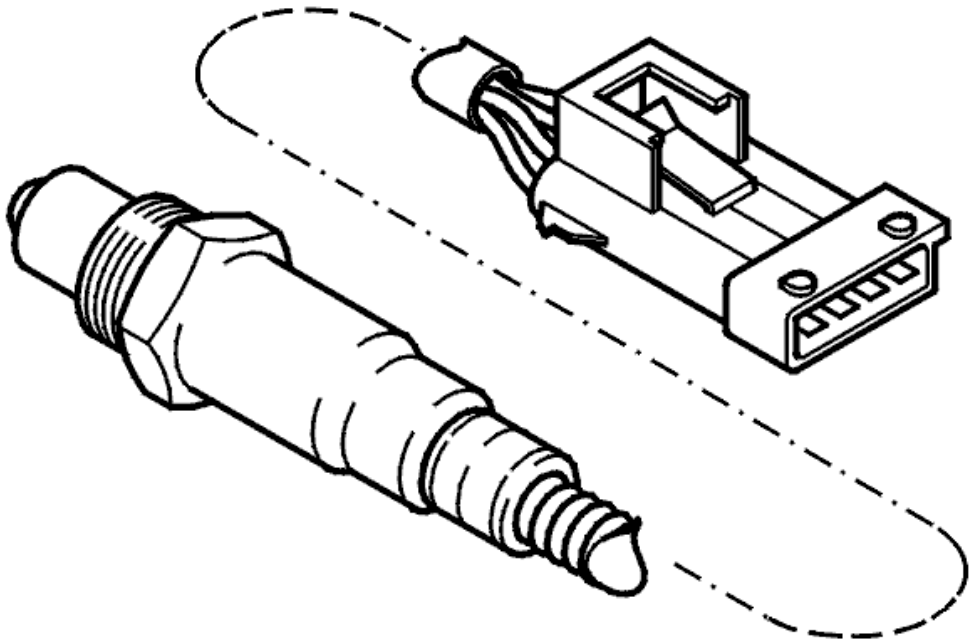

Fig. 145: Identifying Rear Heated Oxygen Sensor
Courtesy of VOLVO CARS CORPORATION

The control module checks the rear heated oxygen sensor (HO2S) dynamics. The control module checks that the probe has registered both lean and rich fuel mixtures. If this is not the case, the control module alters the fuel mixture. Diagnostic trouble code (DTC) ECM-2A1A (bank 1) is stored if the rear probe is still not registering lean (signal too low) or rich (signal too high) fuel mixture. At fuel shut-off, the probe must show lean fuel mixture. Diagnostic trouble code (DTC) ECM-2A1A (bank 1), signal missing, is stored if the switch over time from lean to rich fuel mixture is too long.

Substitute Value

- None.

Possible Source

- Leakage in the exhaust system
- Defective heated oxygen sensor (HO2S).

Fault symptom[s]

- The malfunction indicator lamp (MIL) lights.

PERMANENT FAULT

CHECKING FOR AIR LEAKAGE IN THE EXHAUST SYSTEM

Check for air leakage. See **CHECKING FOR AIR LEAKAGE IN THE EXHAUST SYSTEM** .

Remedy as necessary.

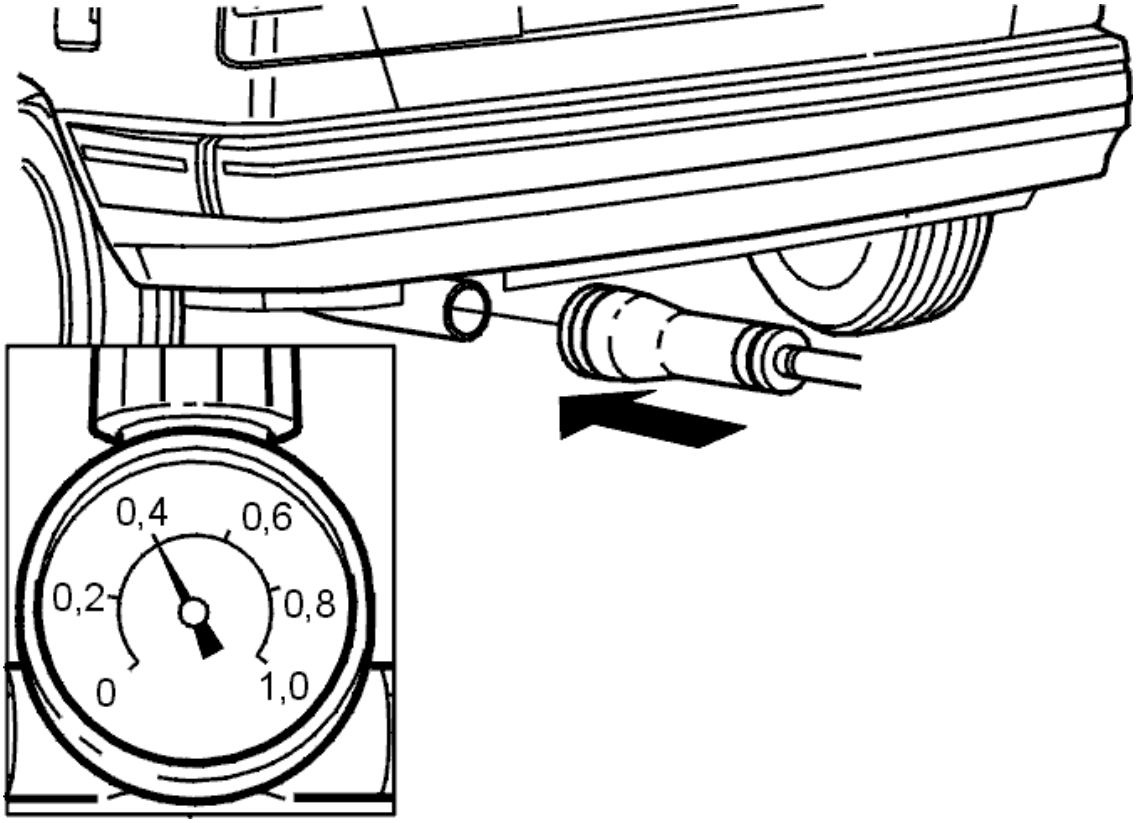

Fig. 146: Checking For Air Leakage In Exhaust System
Courtesy of VOLVO CARS CORPORATION

Was there any air leakage?

- **YES**

  ECM-ver1

- **NO**

  Refer to **REPLACING THE COMPONENT**

REPLACING THE COMPONENT

Try a new heated oxygen sensor (HO2S).

Other information

- For B5xx4T, see **HEATED OXYGEN SENSOR (HO2S), REPLACING**
- For B6xx4T, see **HEATED OXYGEN SENSOR (HO2S), REPLACING** .
- To connect the breakout box / access the control module, see **CONNECTING THE BREAKOUT BOX**
- For 5 cylinder turbocharged engines -2004, see **SIGNAL DESCRIPTION**
- For 5 cylinder turbocharged engines 2005-, see **SIGNAL SPECIFICATION** .
- For 6 cylinder engines -2004, see **SIGNAL SPECIFICATION**
- For 6 cylinder engines 2005-, see **SIGNAL SPECIFICATION** .

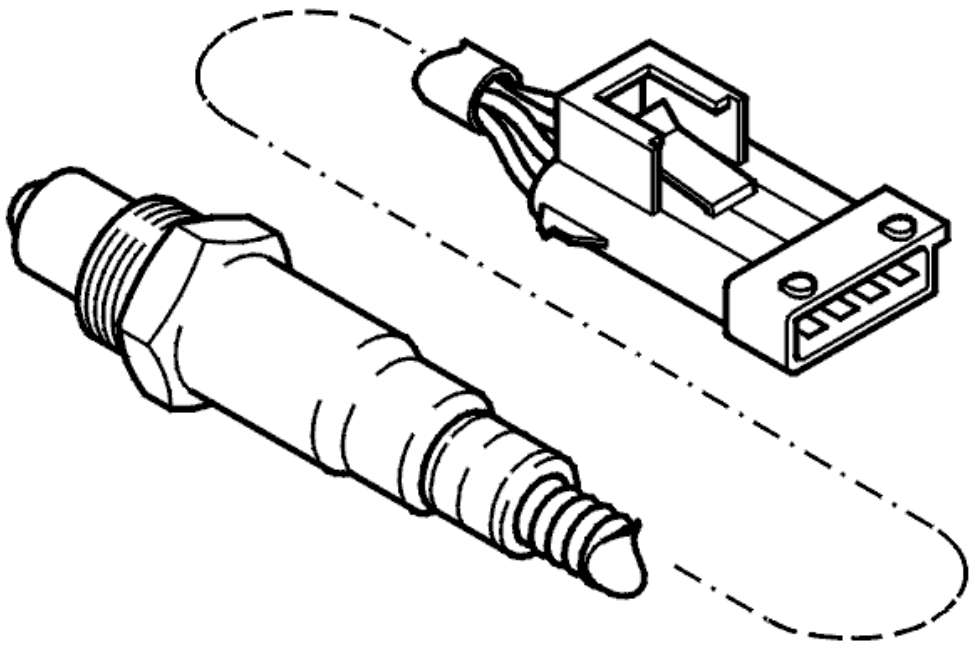

Fig. 147: Identifying Rear Heated Oxygen Sensor
Courtesy of VOLVO CARS CORPORATION

- **Continue**

  Refer to **VERIFICATION**

VERIFICATION

VERIFICATION

HINT: After carrying out the repair, check that the fault has been remedied.

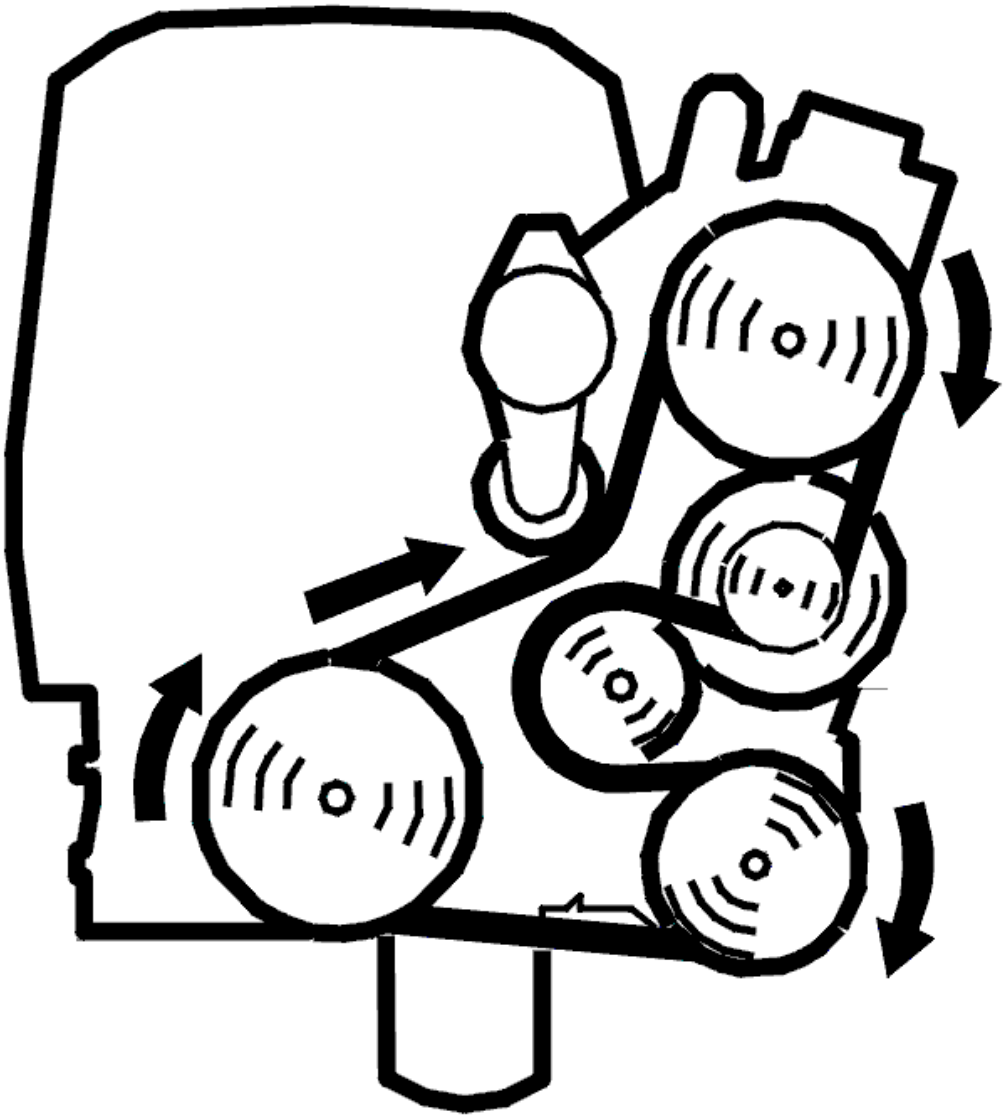

Fig. 148: Belt Routing / Engine Idling - Volvo
Courtesy of VOLVO CARS CORPORATION

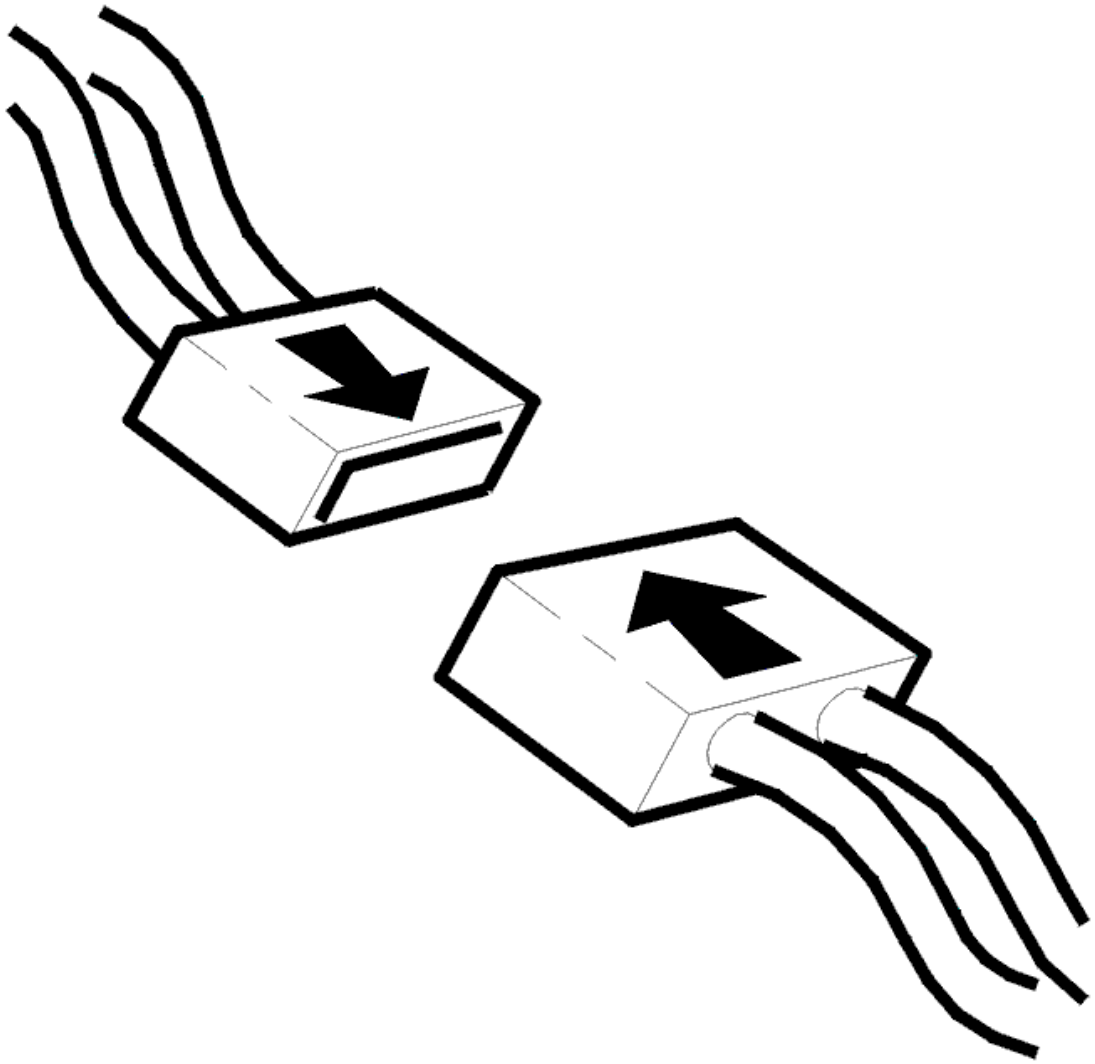

Fig. 149: Connecting Connector
Courtesy of VOLVO CARS CORPORATION

- Ignition off.
- Reconnect connectors, reinstall components.
- Test drive car as follows:

  A/C on

  Drive the car so that idle, normal and high speeds are reached. Let the car operate in these phases for a few minutes.

  Accelerate at full throttle a number of times so that high boost pressure is reached (applies only to turbo models).

Total test drive time must be 15 minutes.

NOTE: After test driving the engine should not be turned off. The test drive must be carried out again.

Connect VIDA (Volvo scan tool) again and read out the heated oxygen sensor (HO2S) diagnostic trouble code (DTC) status.

The text NOT READY is displayed if diagnosis is underway.

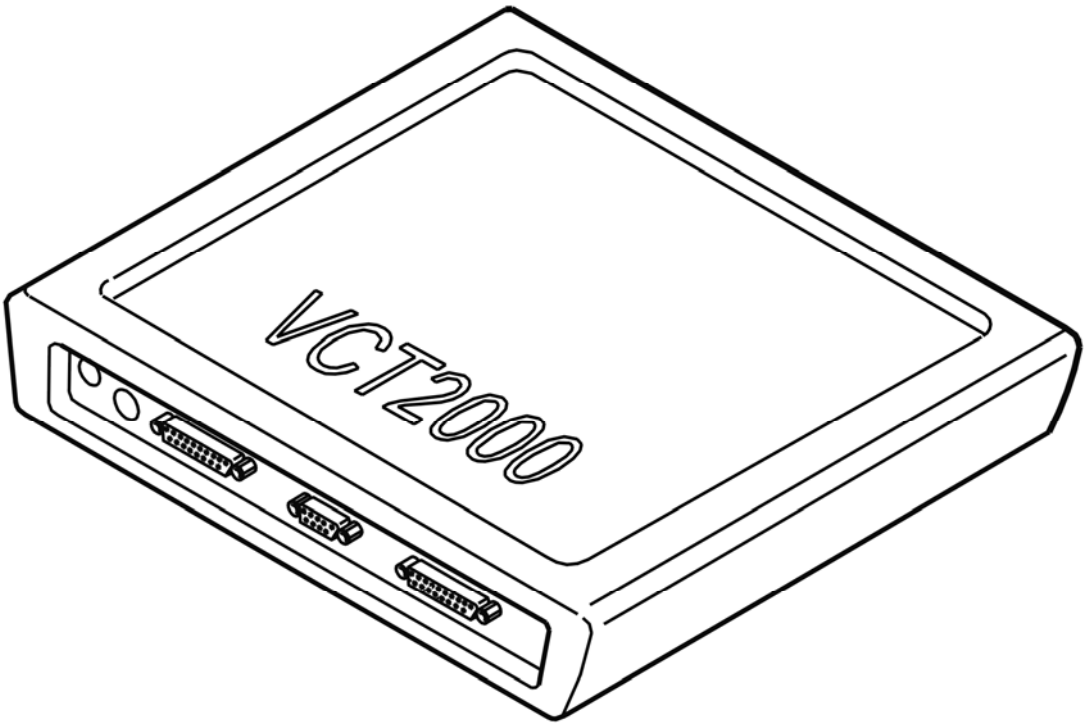

Fig. 150: Identifying VCT2000 Diagnostic Tool Symbol In VIDA
Courtesy of VOLVO CARS CORPORATION

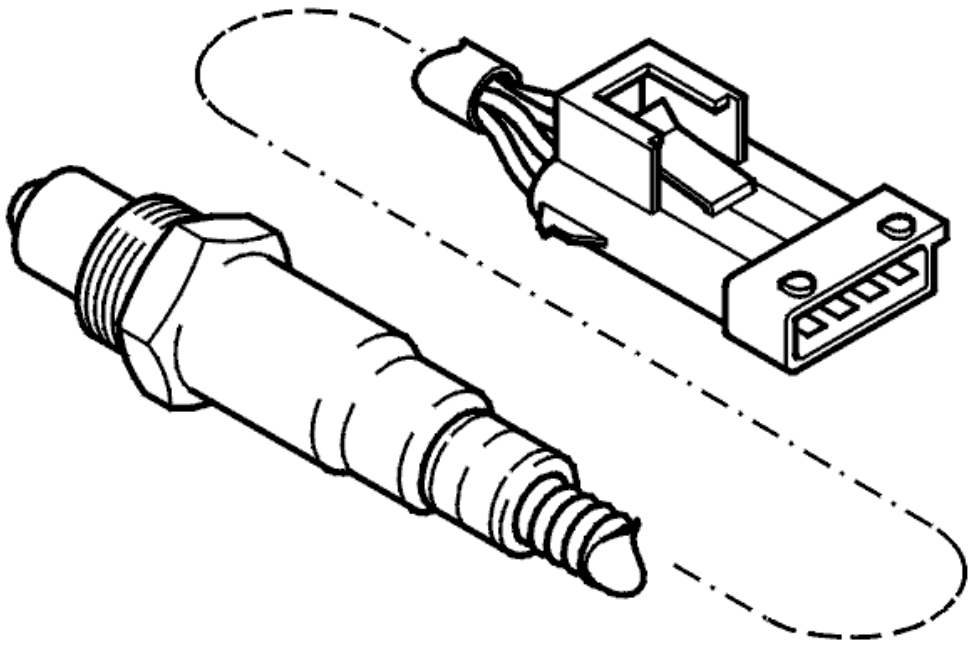

Fig. 151: Identifying Rear Heated Oxygen Sensor
Courtesy of VOLVO CARS CORPORATION

Is FAULT NOT REGISTERED displayed?

- **YES**

  VERIFIED: Troubleshooting has been completed.

- **NO**

  Refer to **INFORMATION**

INFORMATION

FAULT-TRACING INFORMATION

The fault should have been detected and remedied. As this is not the case fault-tracing has failed.

Exit fault-tracing for this diagnostic trouble code (DTC) or make another attempt.

ECM-2A1B: FUEL TEMPERATURE SENSOR. SIGNAL TOO LOW (B5254T2; 2006)

DIAGNOSTIC TROUBLE CODE (DTC) INFORMATION ECM-2A1B

Condition

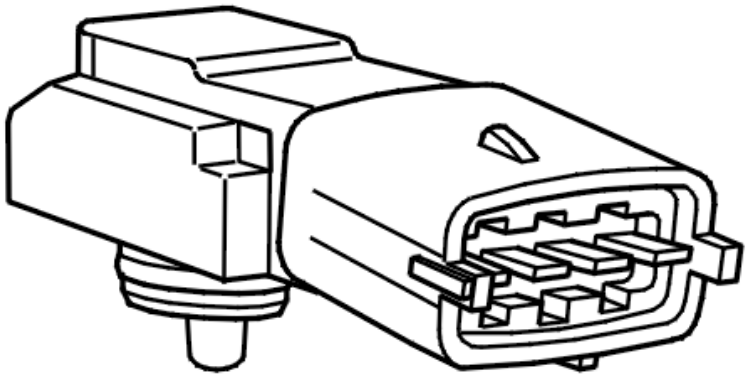

Fig. 152: Identifying Fuel Pressure Sensor
Courtesy of VOLVO CARS CORPORATION

The engine control module (ECM) controls the fuel temperature signal while driving. This is done through the control module comparing values from the intake, fuel and engine temperature sensors. If the signal from the fuel temperature sensor matches a temperature that is below a certain limit in relation to the other, the control module interprets this as a malfunction and the diagnostic trouble code (DTC) is generated.

The diagnostic trouble code (DTC) can be diagnosed when the engine is idling.

Substitute Value

- Predefined value for fuel temperature.

Possible Source

- Contact resistance or oxidation in the terminals
- Damaged fuel temperature sensor.

Fault symptom[s]

- Malfunction indicator light (MIL), on

FAULT-TRACING

see **FAULT-TRACING**

ECM-2A1C: FUEL TEMPERATURE SENSOR. SIGNAL TOO HIGH (B5254T2; 2006-2007)

DIAGNOSTIC TROUBLE CODE (DTC) INFORMATION ECM-2A1C

Condition

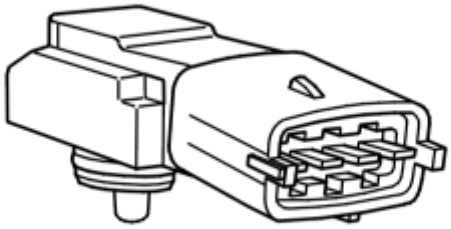

Fig. 153: Identifying Fuel Temperature Sensor
Courtesy of VOLVO CARS CORPORATION

Engine Control Module (ECM) checks the signal for fuel temperature at start. This is done by the control module saving the values from inlet, fuel and engine temperature sensors at the moment of start. Then the control module compares the values. If the signal from the fuel temperature sensor matches a temperature that exceeds a certain limit in relation to the other, the control module interprets this as a malfunction and the diagnostic trouble code (DTC) is generated.

The diagnostic trouble code (DTC) can be diagnosed after approx. 10 minutes with the engine running.

Substitute Value

- Predefined value for fuel temperature.

Possible Source

- Damaged fuel temperature sensor.

- Contact resistance or oxidation in the terminals.

Fault symptom[s]

- Malfunction indicator light (MIL), on

FAULT-TRACING

CHECKING THE STATUS

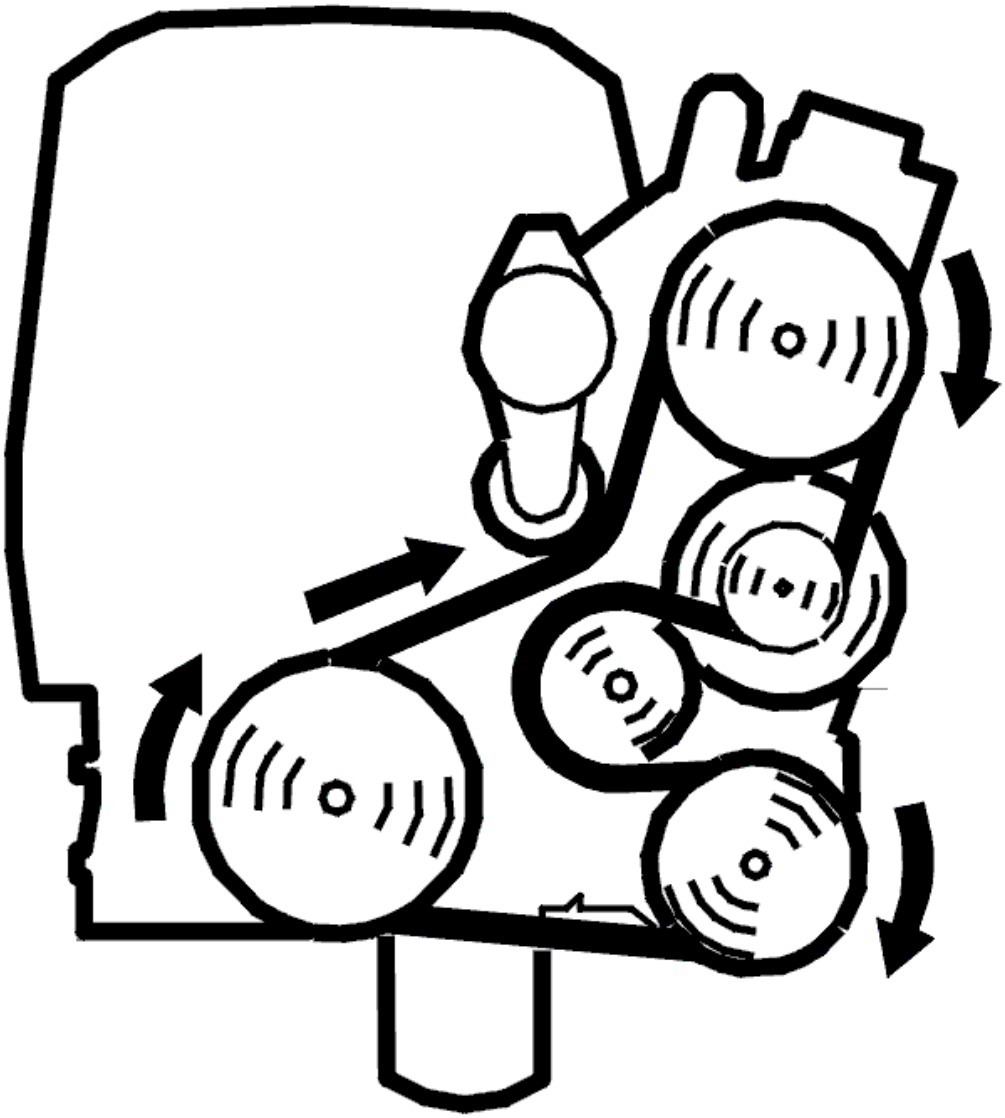

Fig. 154: Belt Routing / Engine Idling - Volvo
Courtesy of VOLVO CARS CORPORATION

Check whether the problem is permanent or intermittent by reading the signals from the fuel, inlet and engine temperature sensors.

NOTE: **In order for the correct values to be shown, reading of the temperatures must take place at the moment of start.**

- Start the engine.

Check that the fuel temperature is within its permitted range. The fuel temperature should not be lower than the outdoor temperature and a maximum of 10 °C above the engine temperature.

The fault is permanent if the signal is incorrect. The fault is intermittent if the signal is correct.

HINT: Remove the fuel temperature sensor, but let the connector remain connected. The fuel temperature sensor is integrated in the fuel pressure sensor. The sensor should then show the same temperature as the outdoor temperature.

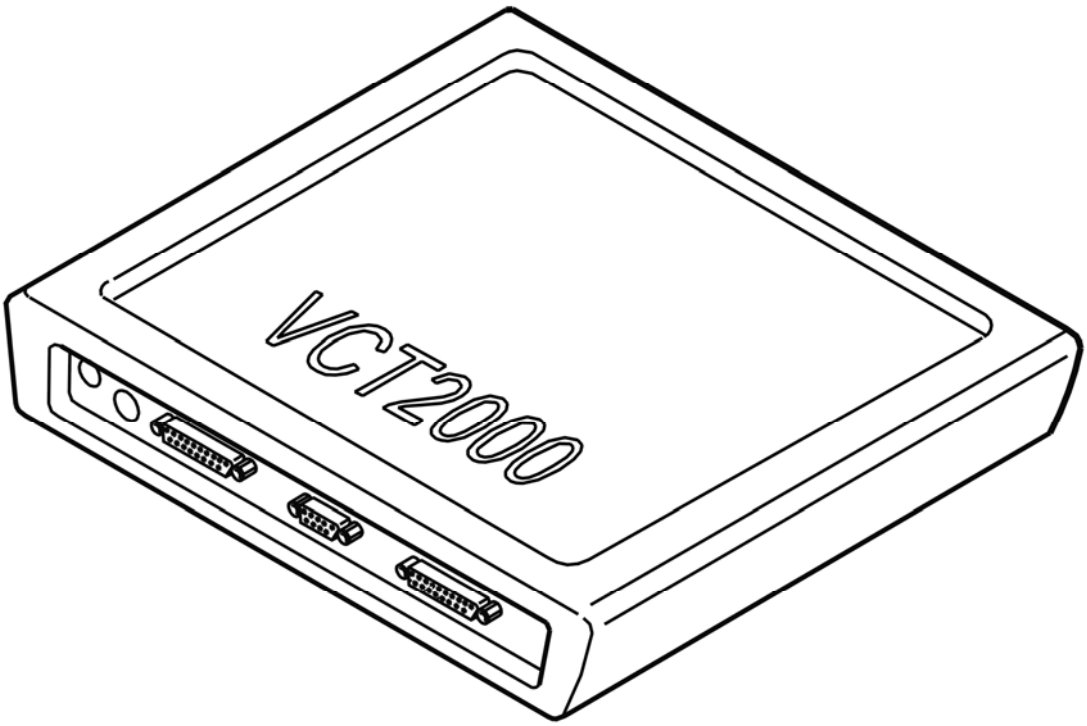

Fig. 155: Identifying VCT2000 Diagnostic Tool Symbol In VIDA
Courtesy of VOLVO CARS CORPORATION

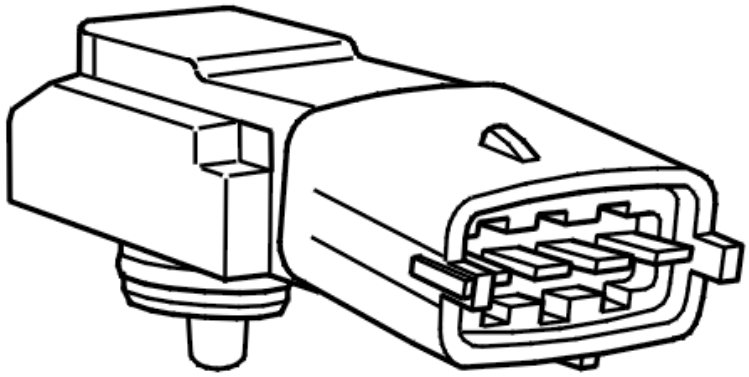

Fig. 156: Identifying Fuel Pressure Sensor
Courtesy of VOLVO CARS CORPORATION

- **Continue**

  Refer to **CHECKING THE COMPONENT AND WIRING**

CHECKING THE COMPONENT AND WIRING

Fig. 157: Identifying Ignition In Off Position
Courtesy of VOLVO CARS CORPORATION

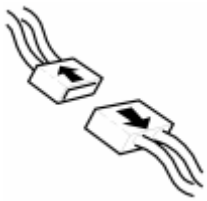

Fig. 158: Identifying Connectors
Courtesy of VOLVO CARS CORPORATION

- Ignition off.
- Disconnect the fuel temperature sensor connector.
- Check the connectors. Check for loose connections. Check for contact resistance. Check for oxidation.

  Check the resistance of the sensor between #1 and #2 (to the sensor).

  Remedy as necessary.

  NOTE: Verifying is started with cold engine (+20 °C).

  Other information

  - see **CONNECTING THE BREAKOUT BOX**
  - For 5 cylinder turbocharged engines -2004, see **SIGNAL DESCRIPTION**
  - For 5 cylinder turbocharged engines 2005-, see **SIGNAL SPECIFICATION** .
  - see **COMPONENT SPECIFICATIONS**
  - see **FUEL PRESSURE SENSOR, REPLACEMENT**
  - see **CHECKING WIRING AND TERMINALS**

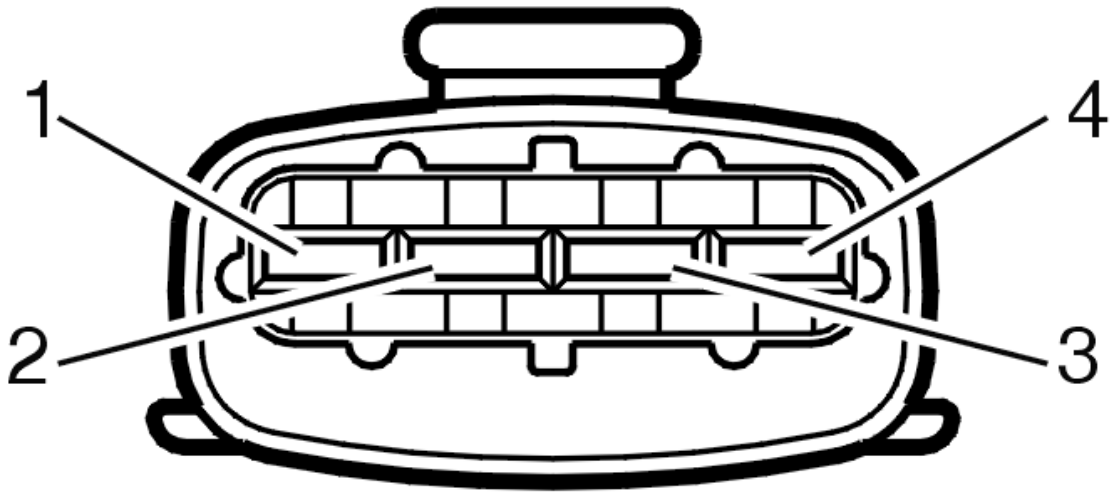

Fig. 159: Identifying 4-Bit Connector
Courtesy of VOLVO CARS CORPORATION

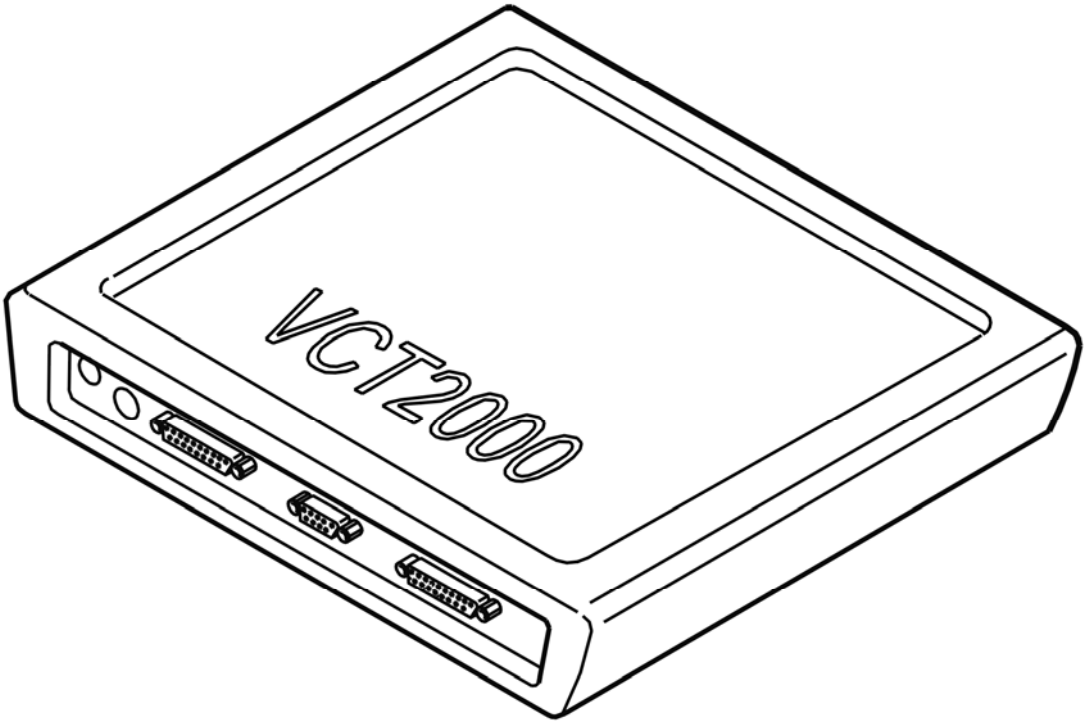

Fig. 160: Identifying VCT2000 Diagnostic Tool Symbol In VIDA
Courtesy of VOLVO CARS CORPORATION

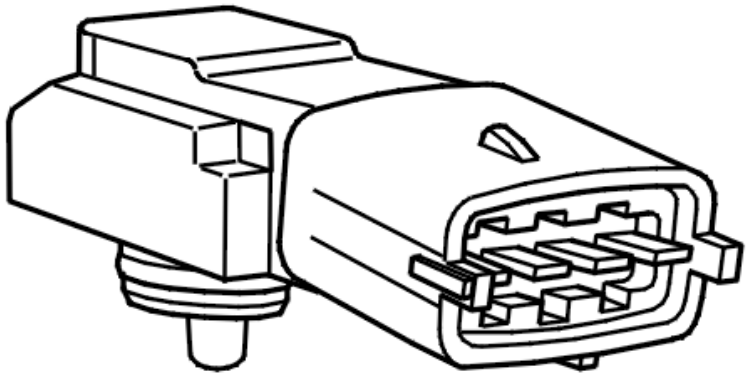

Fig. 161: Identifying Fuel Pressure Sensor
Courtesy of VOLVO CARS CORPORATION

- **Continue**

  Refer to **VERIFICATION**

VERIFICATION

VERIFICATION

HINT: After carrying out the repair, check that the fault has been remedied.

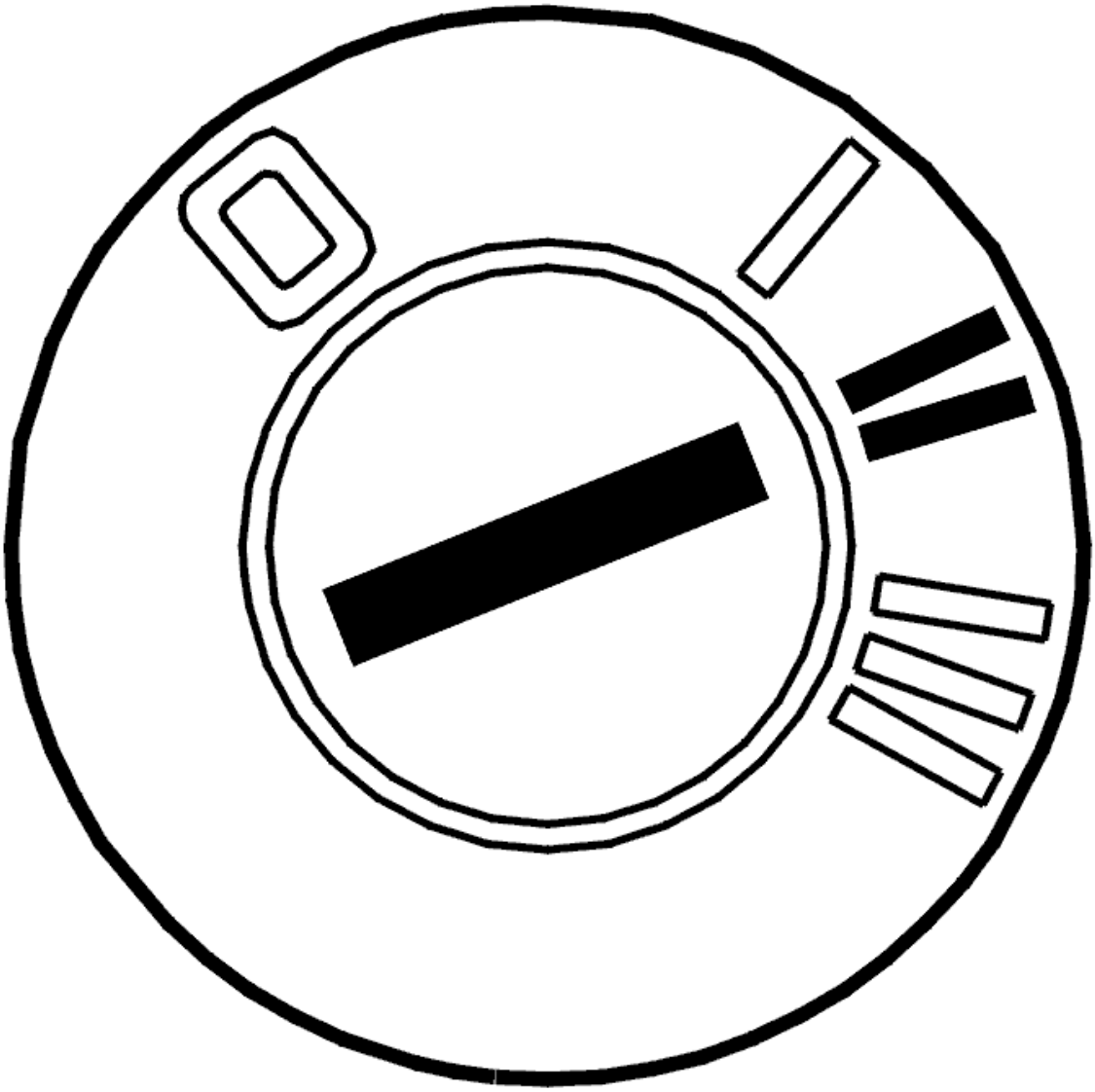

Fig. 162: Identifying Ignition ON
Courtesy of VOLVO CARS CORPORATION

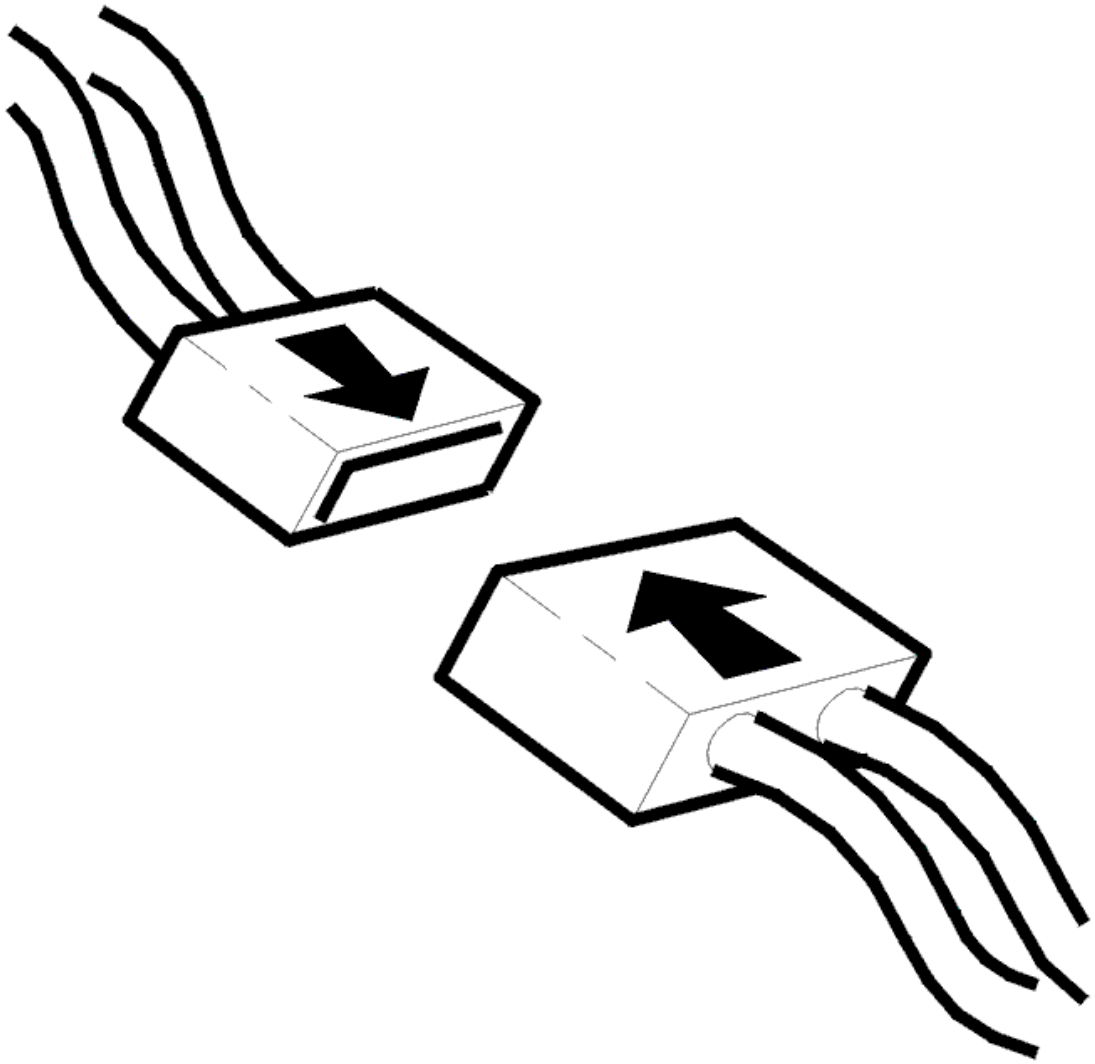

Fig. 163: Connecting Connector
Courtesy of VOLVO CARS CORPORATION

- Ignition off
- Reconnect the connectors, reinstall components etc.
- Ignition on.

Read off the fuel temperature sensor signal. Check that the signal is within its permitted range.

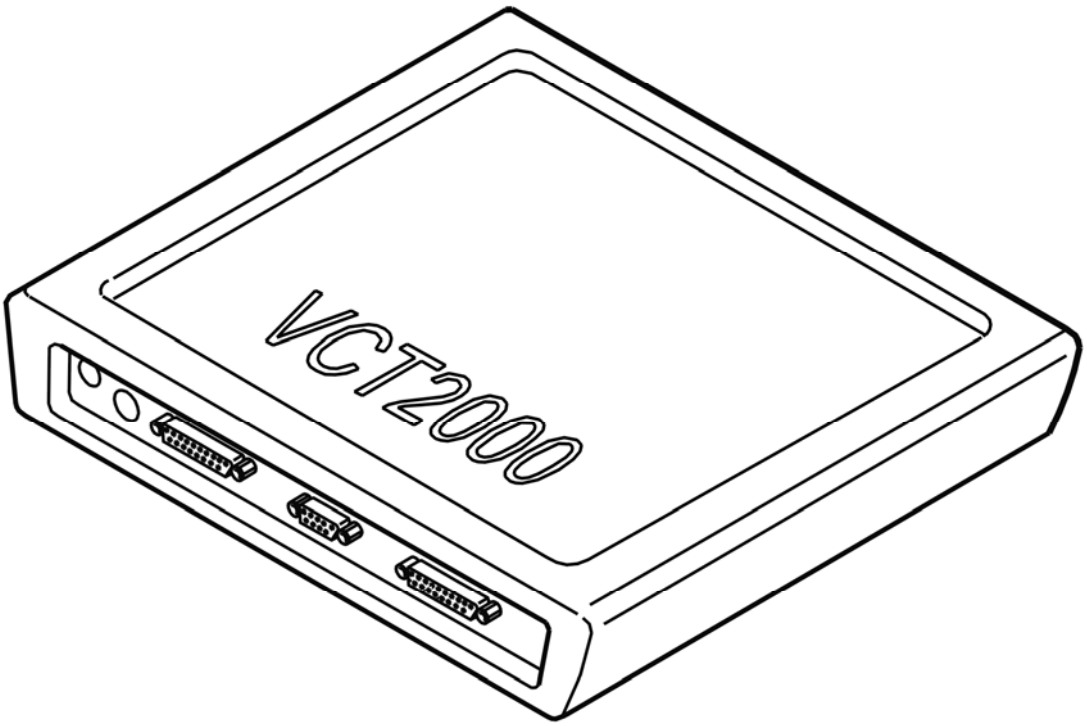

Fig. 164: Identifying VCT2000 Diagnostic Tool Symbol In VIDA
Courtesy of VOLVO CARS CORPORATION

Is the value OK?

- **YES**

  VERIFIED: Troubleshooting has been completed.

- **NO**

  Refer to **INFORMATION**

INFORMATION

FAULT-TRACING INFORMATION

The fault should have been detected and remedied. As this is not the case fault-tracing has failed.

Exit fault-tracing for this diagnostic trouble code (DTC) or make another attempt.

ECM-2A1D: FUEL TEMPERATURE SENSOR. SIGNAL TOO LOW (B5254T2; 2006-2007)

DIAGNOSTIC TROUBLE CODE (DTC) INFORMATION ECM-2A1D

Condition

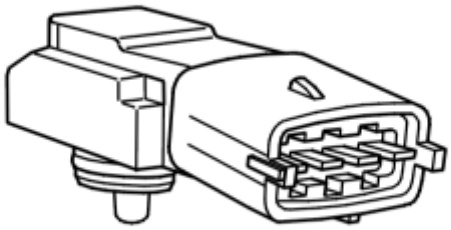

Fig. 165: Identifying Fuel Temperature Sensor
Courtesy of VOLVO CARS CORPORATION

Engine Control Module (ECM) checks the signal for fuel temperature at start. This is done by the control module saving the values from inlet, fuel and engine temperature sensors at the moment of start. Then the control module compares the values. If the signal from the fuel temperature sensor matches a temperature that is below a certain limit in relation to the other, the control module interprets this as a malfunction and the diagnostic trouble code (DTC) is generated.

The diagnostic trouble code (DTC) can be diagnosed after approx. 10 minutes with the engine running.

Substitute Value

- Predefined value for fuel temperature.

Possible Source

- Damaged fuel temperature sensor.
- Contact resistance or oxidation in the terminals.

Fault symptom[s]

- Malfunction indicator light (MIL), on

FAULT-TRACING

see **FAULT-TRACING**

ECM-2A20: HEATED OXYGEN SENSOR (HO2S) BANK 1, PREHEATING.

SIGNAL MISSING (B5254T2; B6294T; 2003-2004)

DIAGNOSTIC TROUBLE CODE (DTC) INFORMATION

Condition

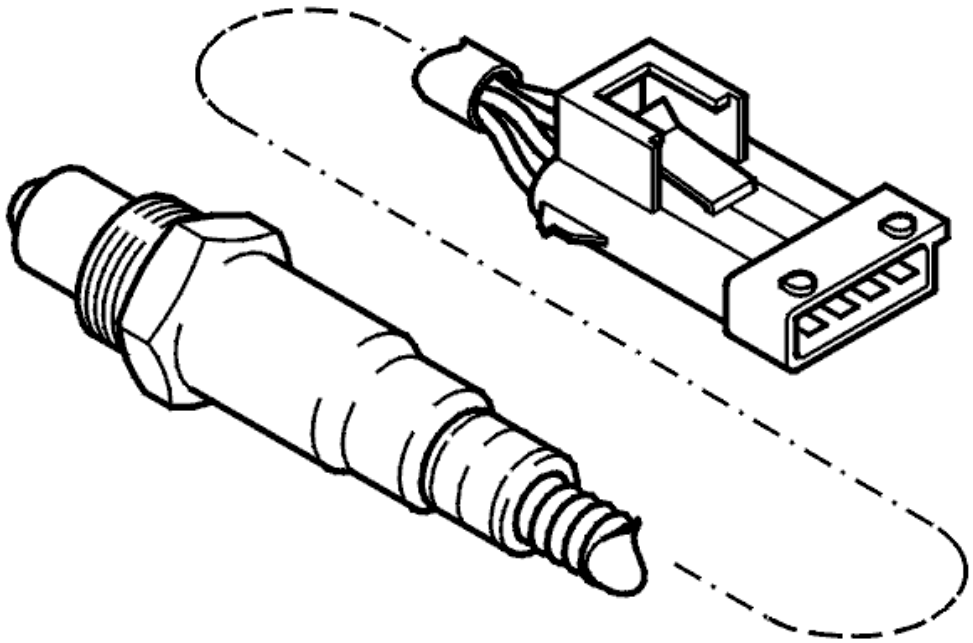

Fig. 166: Identifying Rear Heated Oxygen Sensor
Courtesy of VOLVO CARS CORPORATION

The control module controls rear heated oxygen sensor (HO2S) preheating by pulsing the current to the positive temperature coefficient (PTC) element in the heated oxygen sensor (HO2S). Pulse lengths are dependent on the temperature of the heated oxygen sensor (H02S).

Diagnostic trouble code (DTC) ECM-2A20 (bank 1) is stored if the control module registers that the signal is higher than a particular value when preheating is activate (signal too high) or lower than a certain value when preheating is deactivated (signal too low or signal missing).

Substitute Value

- The fuel trim is shut off.

Possible Source

Signal too high:

- Short-circuit to supply voltage in the signal cable
- Defective heated oxygen sensor (HO2S).

Signal too low:

- Short-circuit to ground in the signal cable
- Defective heated oxygen sensor (HO2S).

Signal missing:

- Contact resistance and oxidation
- Open-circuit in the power supply from the system relay
- Defective heated oxygen sensor (HO2S).

Fault symptom[s]

- The malfunction indicator lamp (MIL) lights.

SIGNAL MISSING

CHECKING THE CONNECTOR

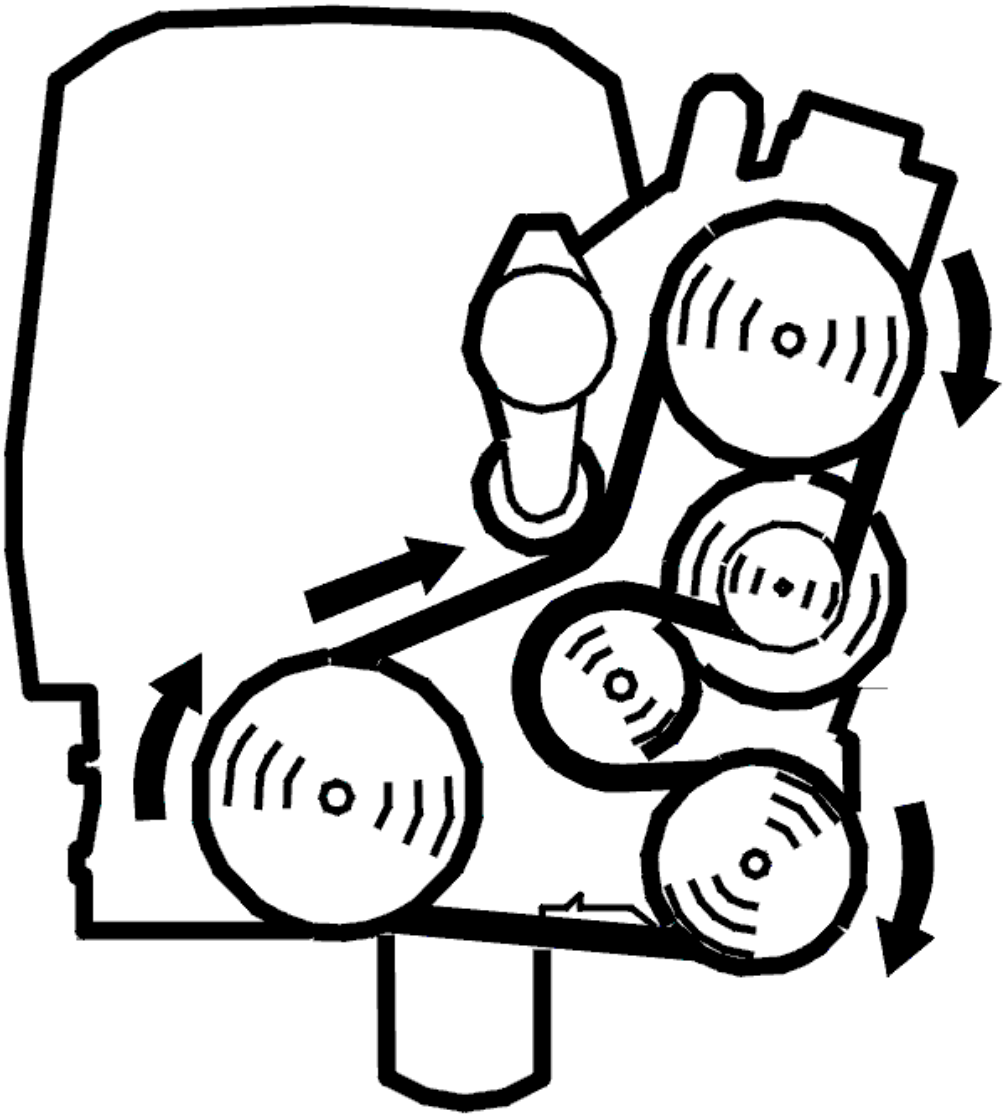

Fig. 167: Belt Routing / Engine Idling - Volvo
Courtesy of VOLVO CARS CORPORATION

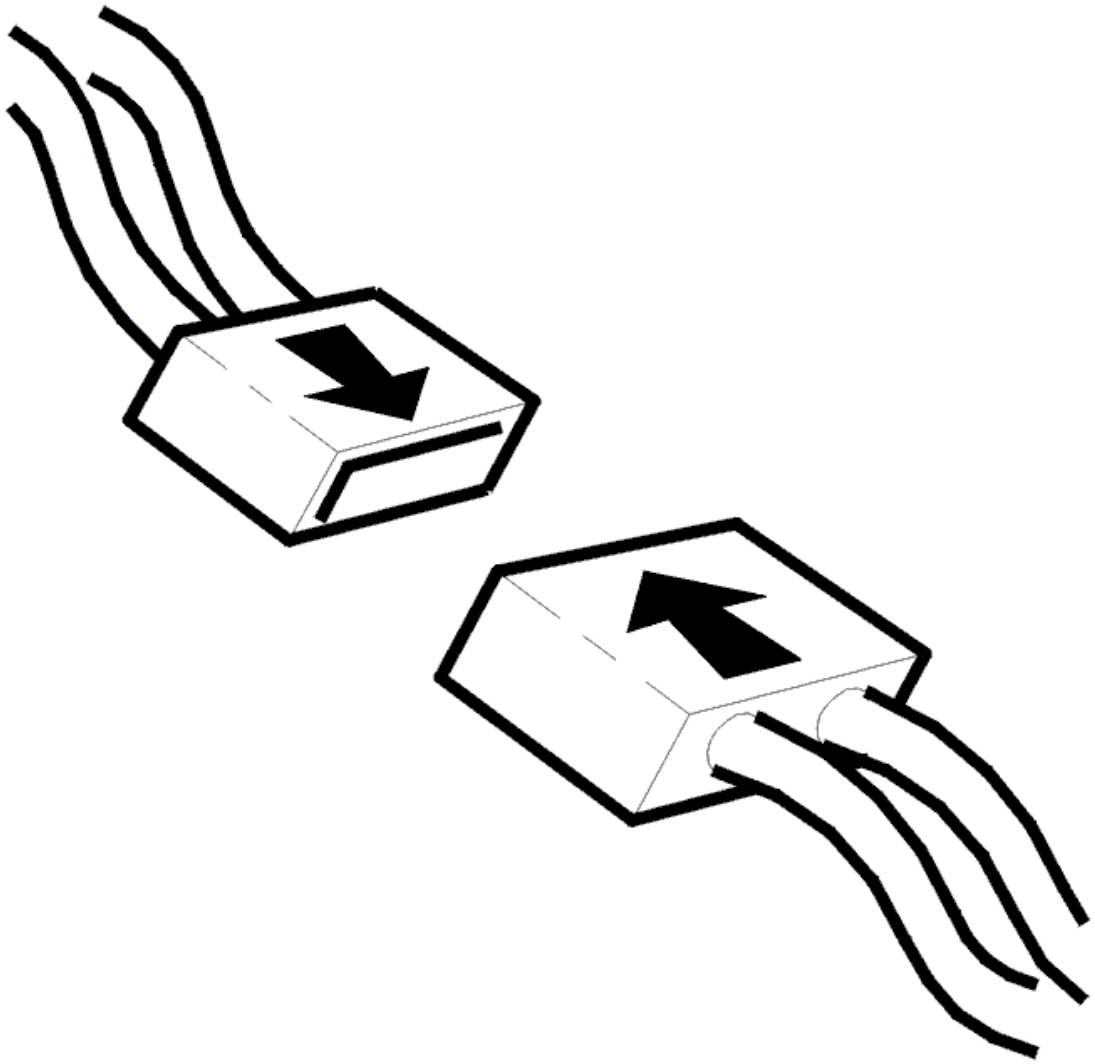

Fig. 168: Connecting Connector
Courtesy of VOLVO CARS CORPORATION

- Ignition off
- Check the heated oxygen sensor (HO2S) connector. Check for contact resistance and oxidation
- Reinstall the components, reconnect the connectors etc.
- Start the engine. Allow the engine to idle.

Read off the status of the diagnostic trouble code (DTC) for the rear heated oxygen sensor (HO2S).

The text "NOT READY" is displayed if the diagnosis is running.

Other information

- For 5 cylinder turbocharged engines -2004, see **SIGNAL DESCRIPTION**

- For 5 cylinder turbocharged engines 2005-, see **SIGNAL SPECIFICATION** .
- For 6 cylinder engines -2004, see **SIGNAL SPECIFICATION**
- For 6 cylinder engines 2005-, see **SIGNAL SPECIFICATION** .
- For B5xx4T, see **HEATED OXYGEN SENSOR (HO2S), REPLACING**
- For B6xx4T, see **HEATED OXYGEN SENSOR (HO2S), REPLACING** .
- see **CHECKING WIRING AND TERMINALS** .

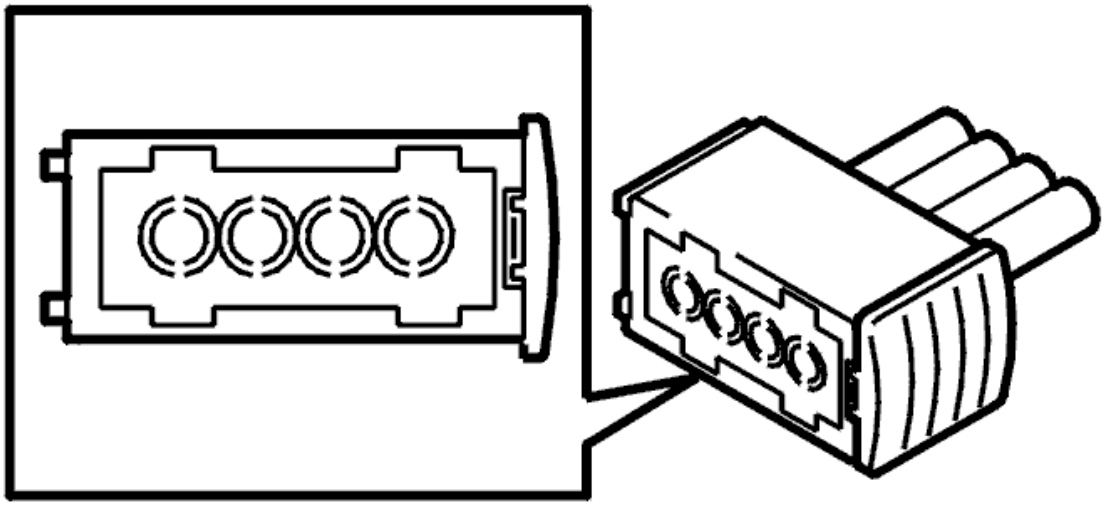

Fig. 169: Identifying Heated Oxygen Sensor
Courtesy of VOLVO CARS CORPORATION

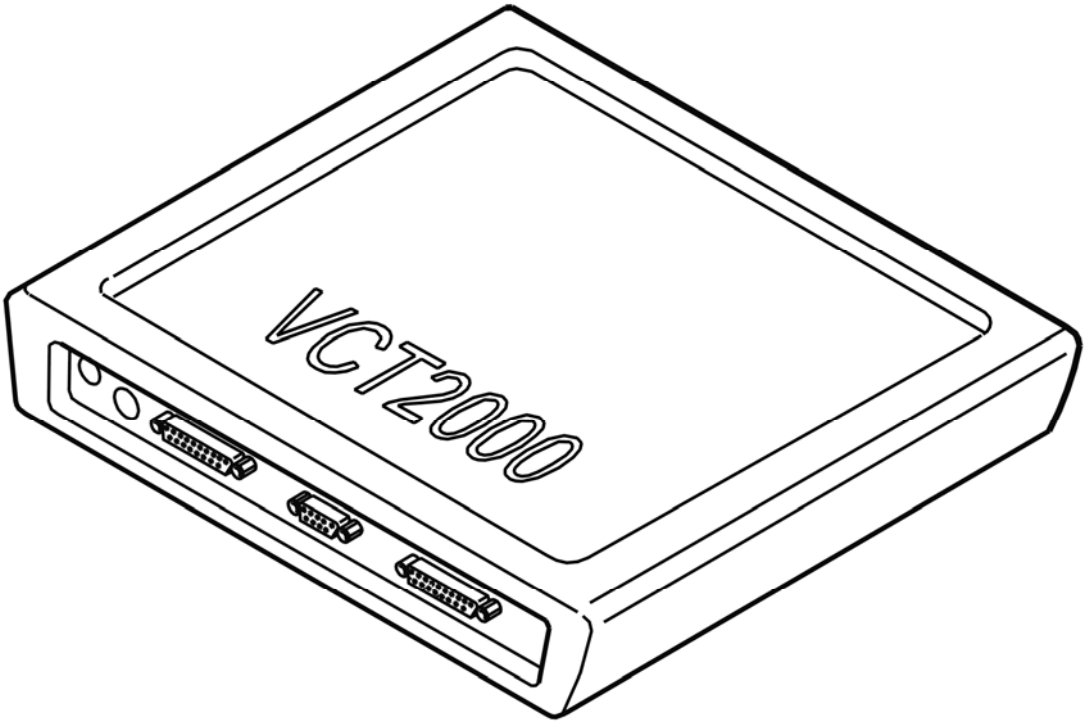

Fig. 170: Identifying VCT2000 Diagnostic Tool Symbol In VIDA
Courtesy of VOLVO CARS CORPORATION

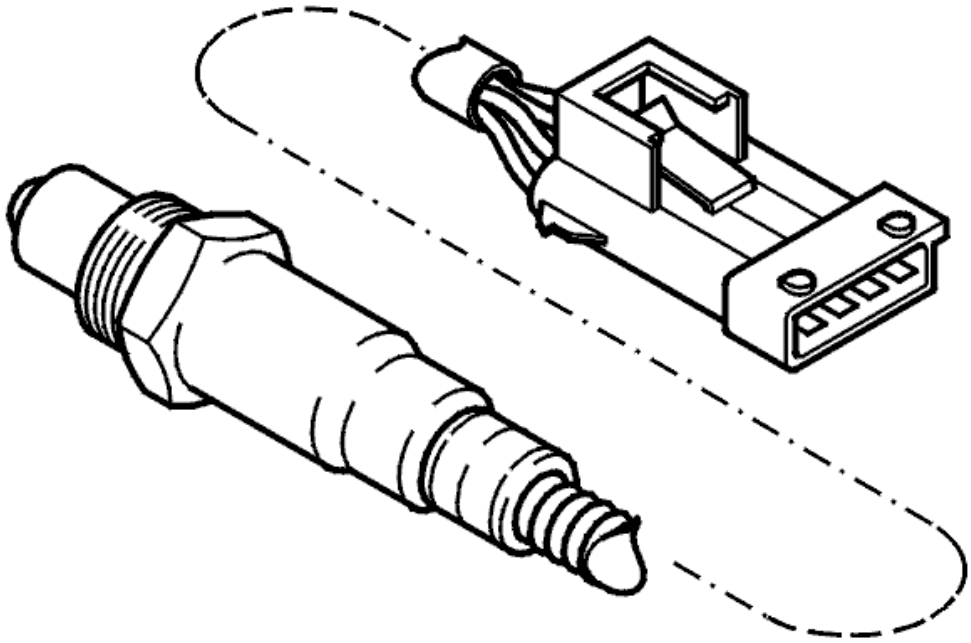

Fig. 171: Identifying Rear Heated Oxygen Sensor
Courtesy of VOLVO CARS CORPORATION

Is "FAULT NOT DETECTED" displayed?

- **YES**

  OKAY: Troubleshooting has been completed.

- **NO**

  Refer to **CHECKING COMPONENTS AND WIRING**

CHECKING COMPONENTS AND WIRING

Check the resistance of the heated oxygen sensor (HO2S) between terminals #1 and #2.

Check the signal cable between heated oxygen sensor (HO2S) terminal #2 and control module terminal #A6 (#A6). Check the power supply between system relay terminal #3 and heated oxygen sensor (HO2S) terminal #1. Check for an open-circuit.

Remedy as necessary.

Other information

- For 5 cylinder turbocharged engines -2004, see **SIGNAL DESCRIPTION**
- For 5 cylinder turbocharged engines 2005-, see **SIGNAL SPECIFICATION** .
- For 6 cylinder engines -2004, see **SIGNAL SPECIFICATION**
- For 6 cylinder engines 2005-, see **SIGNAL SPECIFICATION** .
- To connect the breakout box / access the control module, see **CONNECTING THE BREAKOUT BOX**
- For B5xx4T, see **HEATED OXYGEN SENSOR (HO2S), REPLACING**
- For B6xx4T, see **HEATED OXYGEN SENSOR (HO2S), REPLACING** .
- For resistance values, see **COMPONENT SPECIFICATIONS**
- see **CHECKING WIRING AND TERMINALS** .

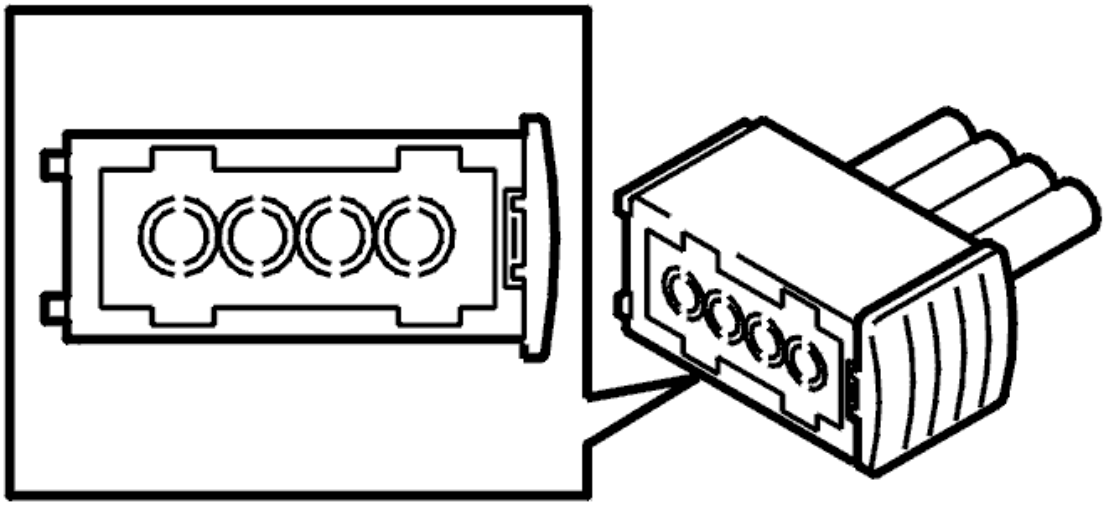

Fig. 172: Identifying Heated Oxygen Sensor
Courtesy of VOLVO CARS CORPORATION

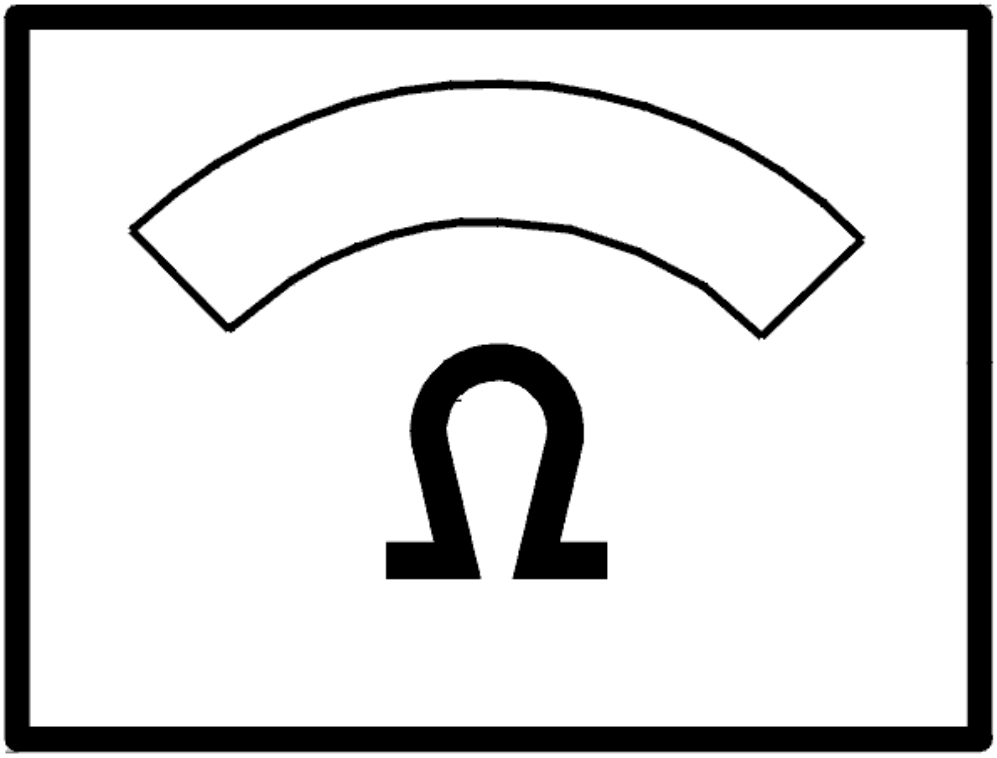

Fig. 173: Identifying Ohm Meter
Courtesy of VOLVO CARS CORPORATION

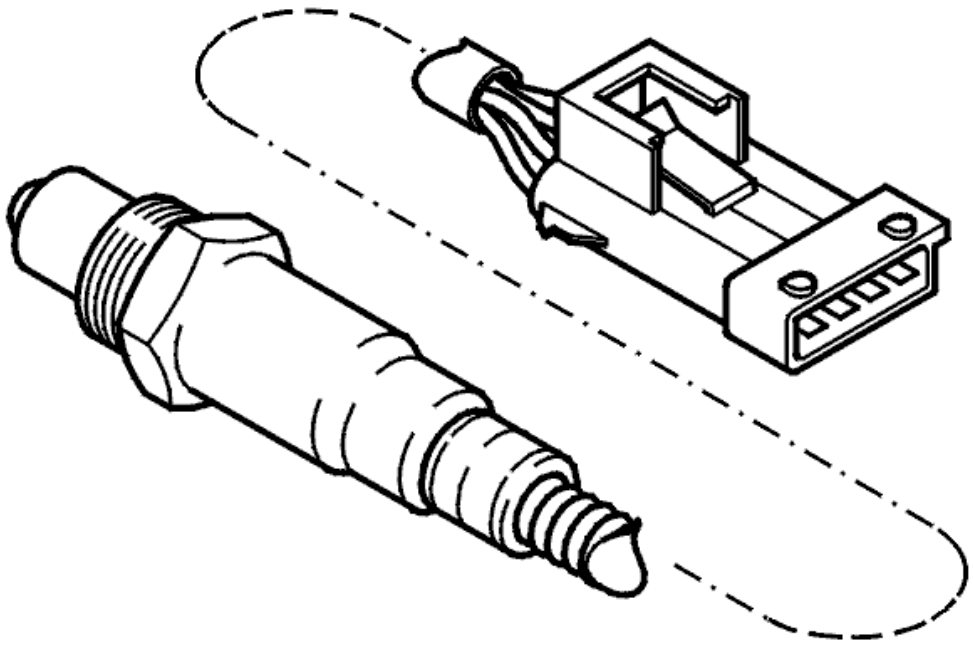

Fig. 174: Identifying Rear Heated Oxygen Sensor
Courtesy of VOLVO CARS CORPORATION

- **Continue**

  Refer to **VERIFICATION**

VERIFICATION

VERIFICATION

HINT: After carrying out the repair, check that the fault has been remedied.

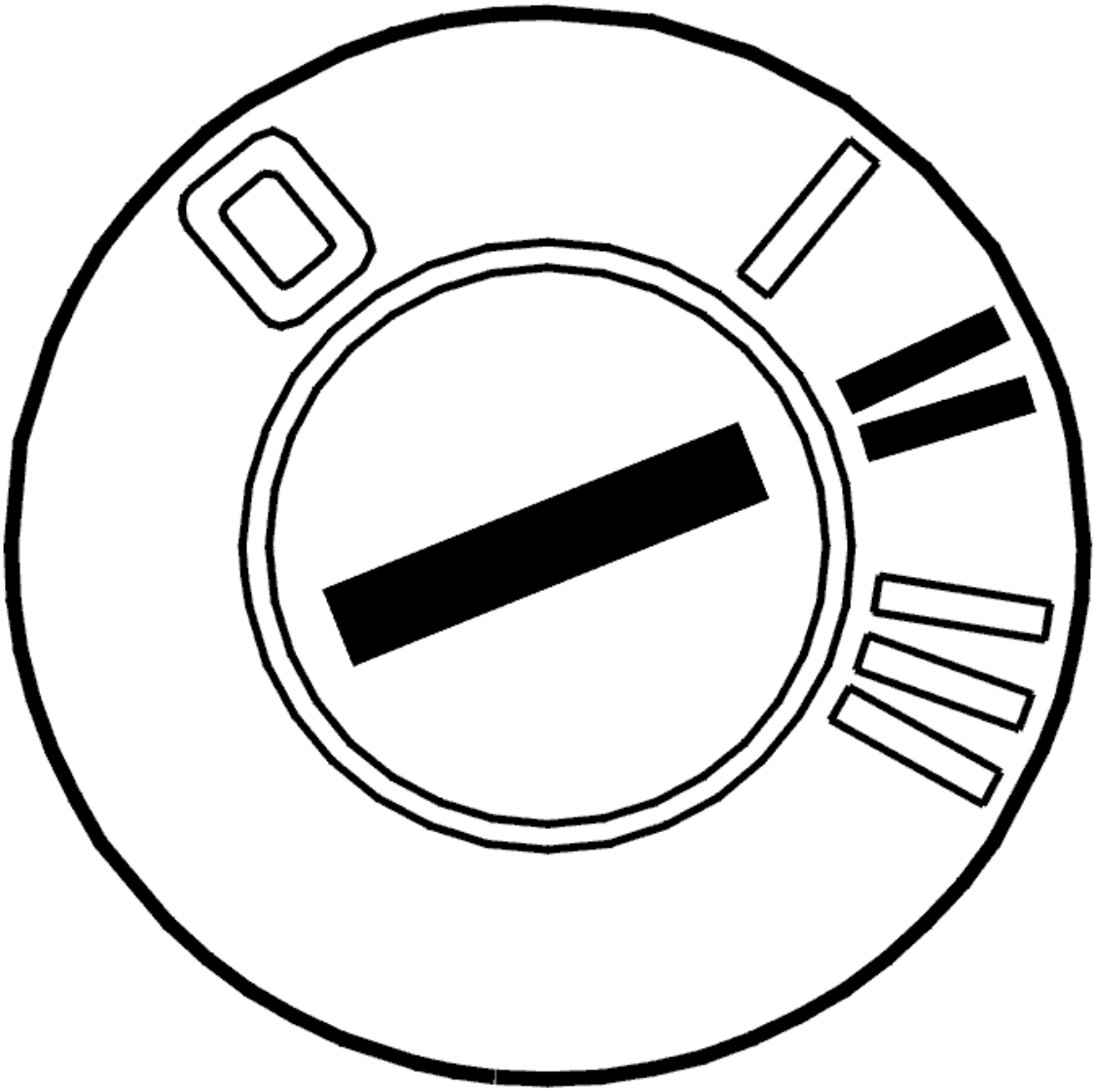

Fig. 175: Identifying Ignition ON
Courtesy of VOLVO CARS CORPORATION

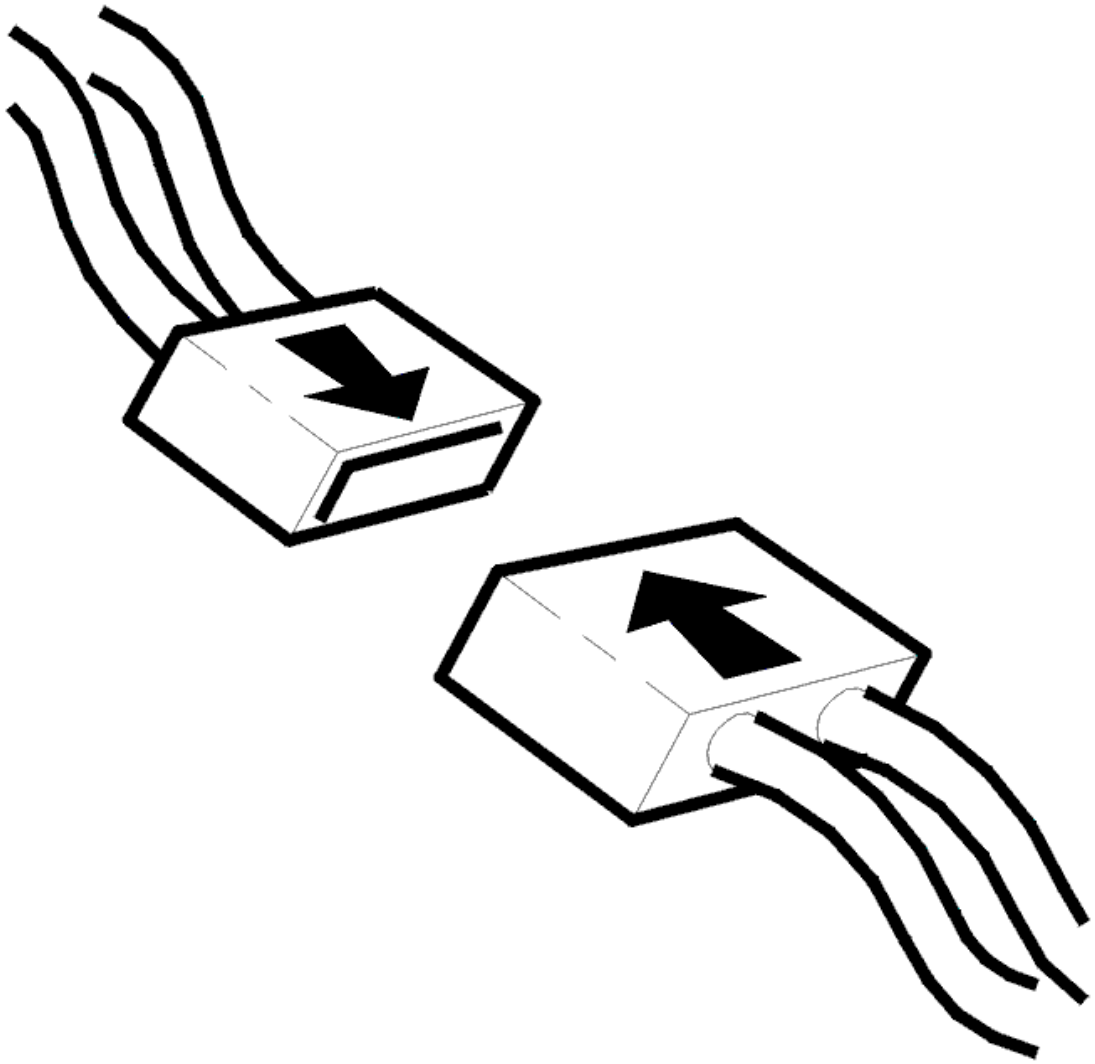

Fig. 176: Connecting Connector
Courtesy of VOLVO CARS CORPORATION

- Ignition off.
- Reconnect connectors, reinstall components.
- Start the engine and let it idle.

Read off the rear heated oxygen sensor (HO2S) signal diagnostic trouble code (DTC) status.

The text NOT READY is displayed if the diagnosis is underway.

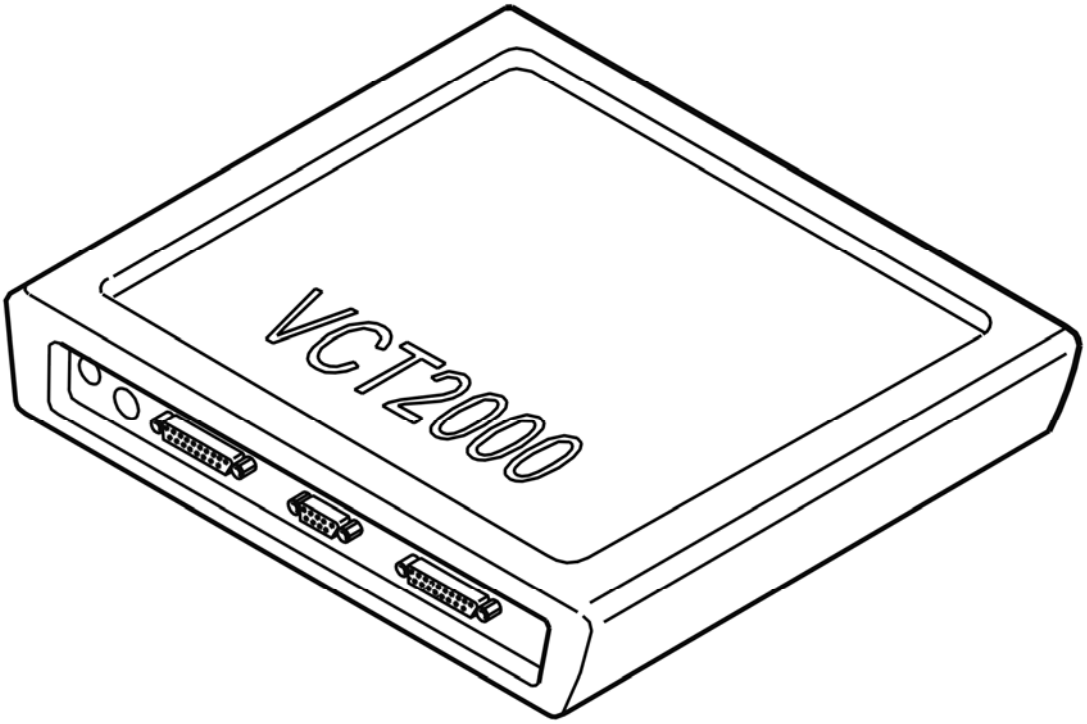

Fig. 177: Identifying VCT2000 Diagnostic Tool Symbol In VIDA
Courtesy of VOLVO CARS CORPORATION

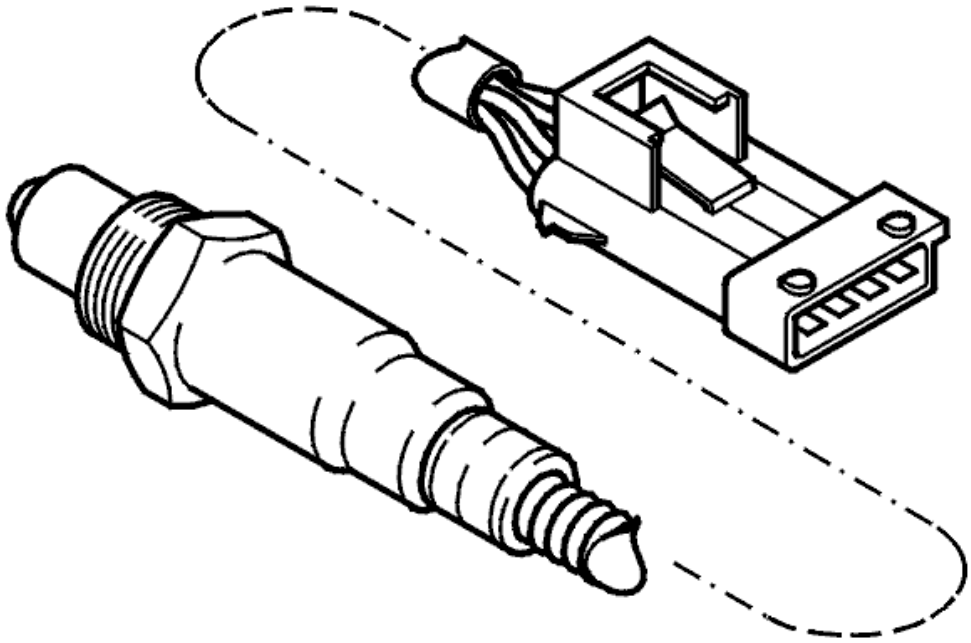

Fig. 178: Identifying Rear Heated Oxygen Sensor
Courtesy of VOLVO CARS CORPORATION

Is FAULT NOT REGISTERED displayed?

- **YES**

  VERIFIED: Troubleshooting has been completed.

- **NO**

  Refer to **INFORMATION**

INFORMATION

FAULT-TRACING INFORMATION

The fault should have been detected and remedied. As this is not the case fault-tracing has failed.

Exit fault-tracing for this diagnostic trouble code (DTC) or make another attempt.

ECM-2A20: HEATED OXYGEN SENSOR (HO2S) BANK 1, PREHEATING. SIGNAL TOO HIGH (B5254T2; B6294T; 2003-2004)

DIAGNOSTIC TROUBLE CODE (DTC) INFORMATION

see **DIAGNOSTIC TROUBLE CODE (DTC) INFORMATION**

SIGNAL TOO HIGH

CHECKING COMPONENTS AND WIRING

Check the resistance of the heated oxygen sensor (HO2S) between terminals #1 and #2.

Check the signal cable between heated oxygen sensor (HO2S) terminal #2 and control module terminal #A6 (#A6). Check for a short-circuit to supply voltage.

Remedy as necessary.

Other information

- For 5 cylinder turbocharged engines -2004, see **SIGNAL DESCRIPTION**
- For 5 cylinder turbocharged engines 2005-, see **SIGNAL SPECIFICATION** .
- For 6 cylinder engines -2004, see **SIGNAL SPECIFICATION**
- For 6 cylinder engines 2005-, see **SIGNAL SPECIFICATION** .
- To connect the breakout box / access the control module, see **CONNECTING THE BREAKOUT BOX**
- For B5xx4T, see **HEATED OXYGEN SENSOR (HO2S), REPLACING**
- For B6xx4T, see **HEATED OXYGEN SENSOR (HO2S), REPLACING** .
- For resistance values, see **COMPONENT SPECIFICATIONS**
- see **CHECKING WIRING AND TERMINALS** .

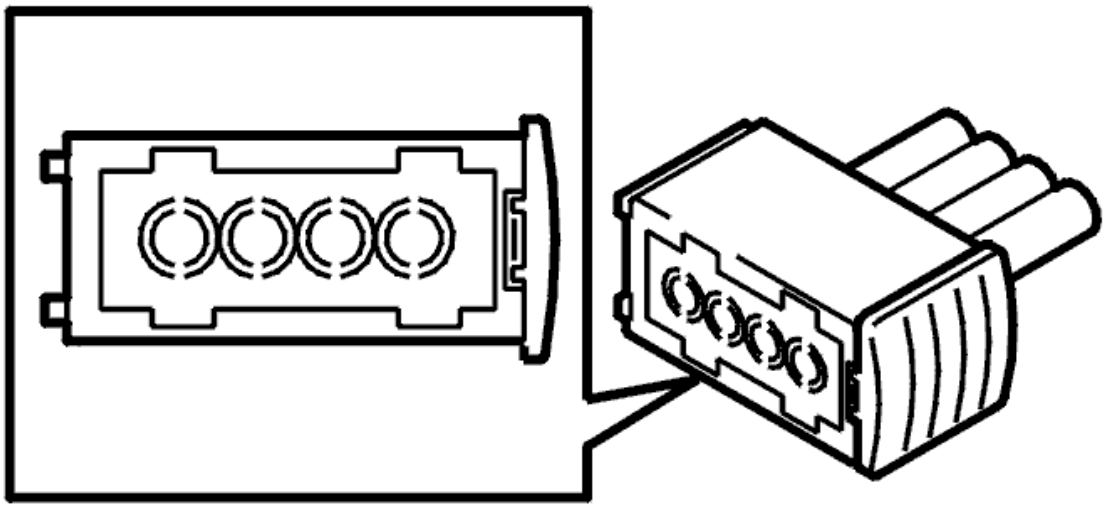

Fig. 179: Identifying Heated Oxygen Sensor
Courtesy of VOLVO CARS CORPORATION

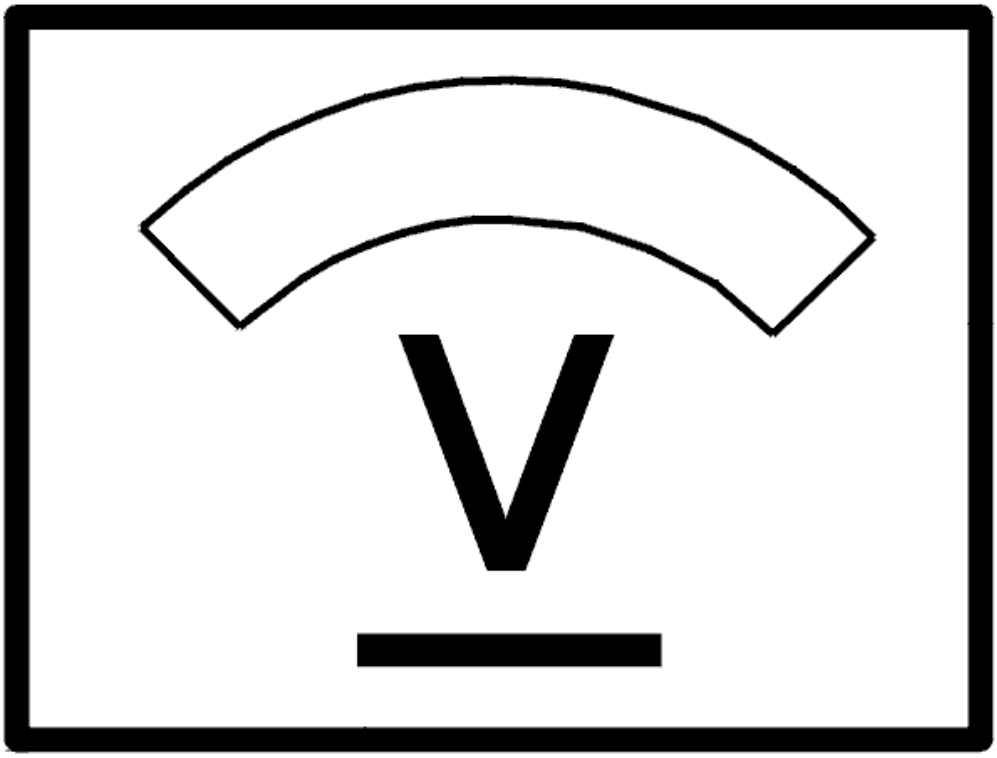

Fig. 180: Identifying Voltage Display
Courtesy of VOLVO CARS CORPORATION

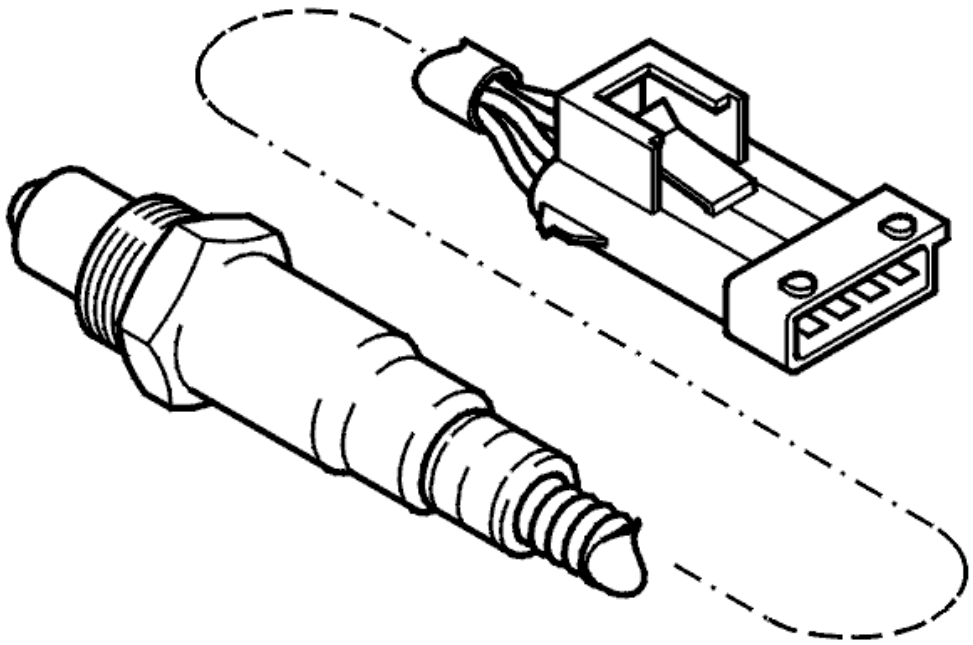

Fig. 181: Identifying Rear Heated Oxygen Sensor
Courtesy of VOLVO CARS CORPORATION

- **Continue**

  Refer to **VERIFICATION**

VERIFICATION

VERIFICATION

HINT: After carrying out the repair, check that the fault has been remedied.

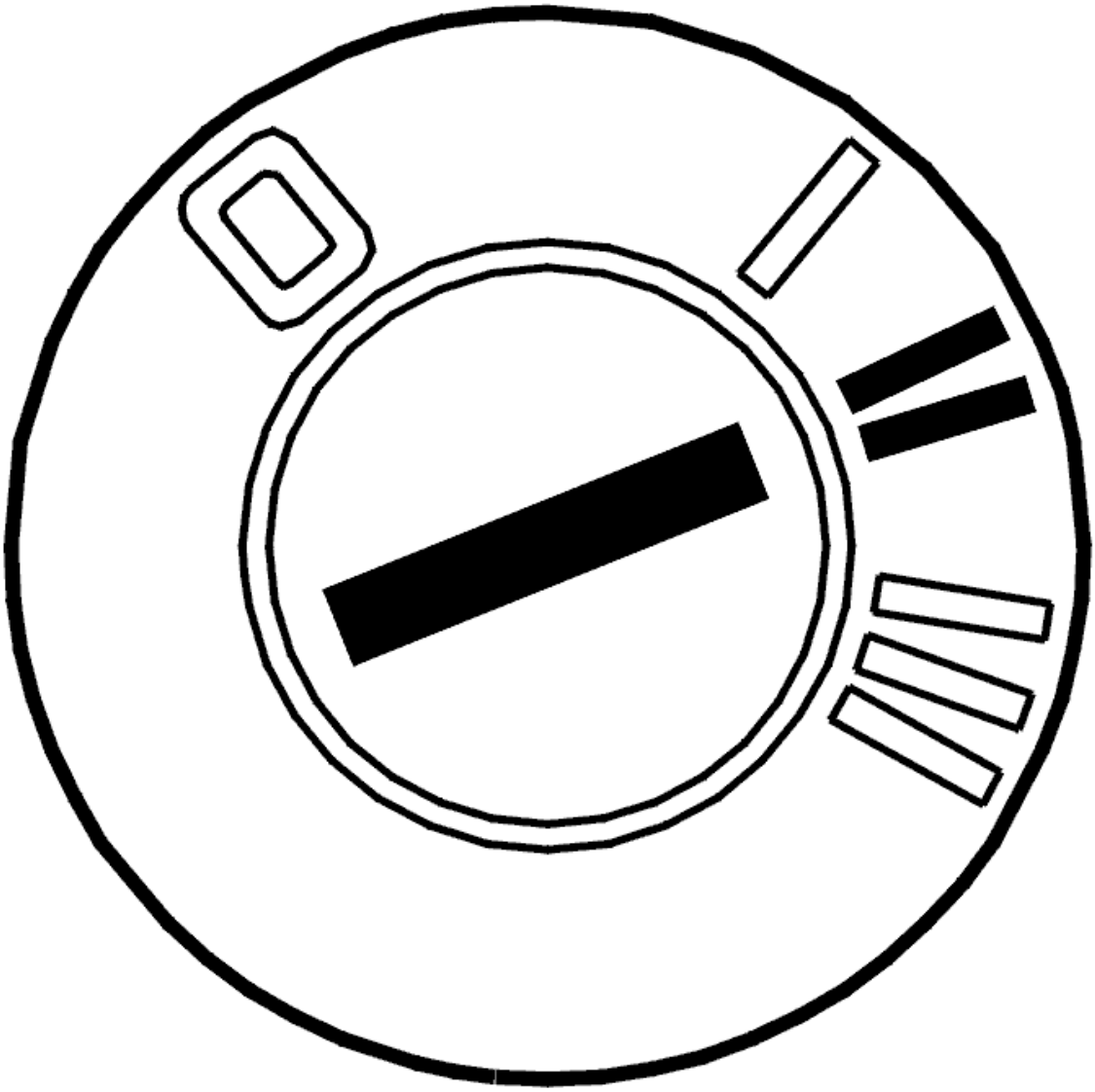

Fig. 182: Identifying Ignition ON
Courtesy of VOLVO CARS CORPORATION

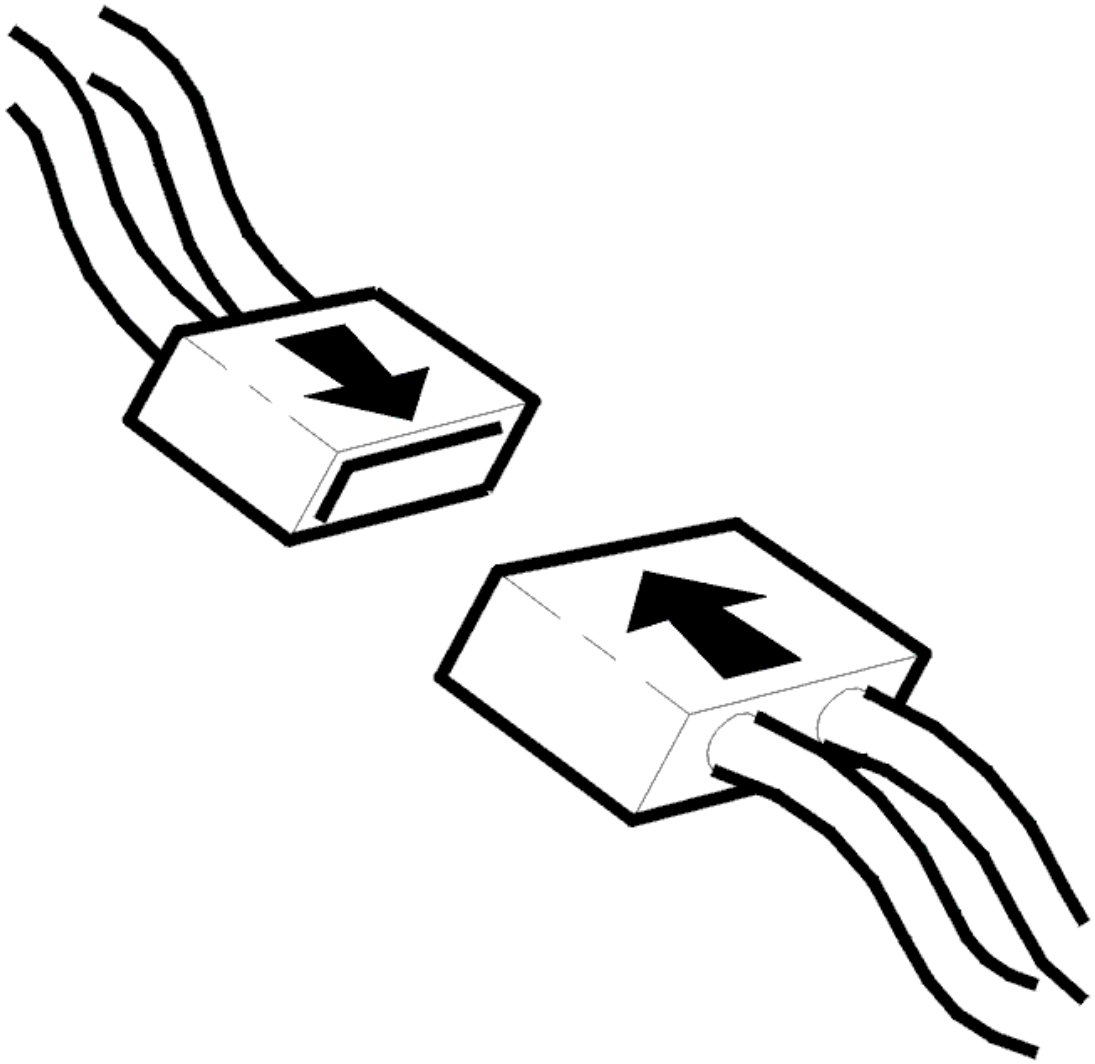

Fig. 183: Connecting Connector
Courtesy of VOLVO CARS CORPORATION

- Ignition off.
- Reconnect connectors, reinstall components.
- Start the engine and let it idle.

Read off the rear heated oxygen sensor (HO2S) signal diagnostic trouble code (DTC) status.

The text NOT READY is displayed if the diagnosis is underway.

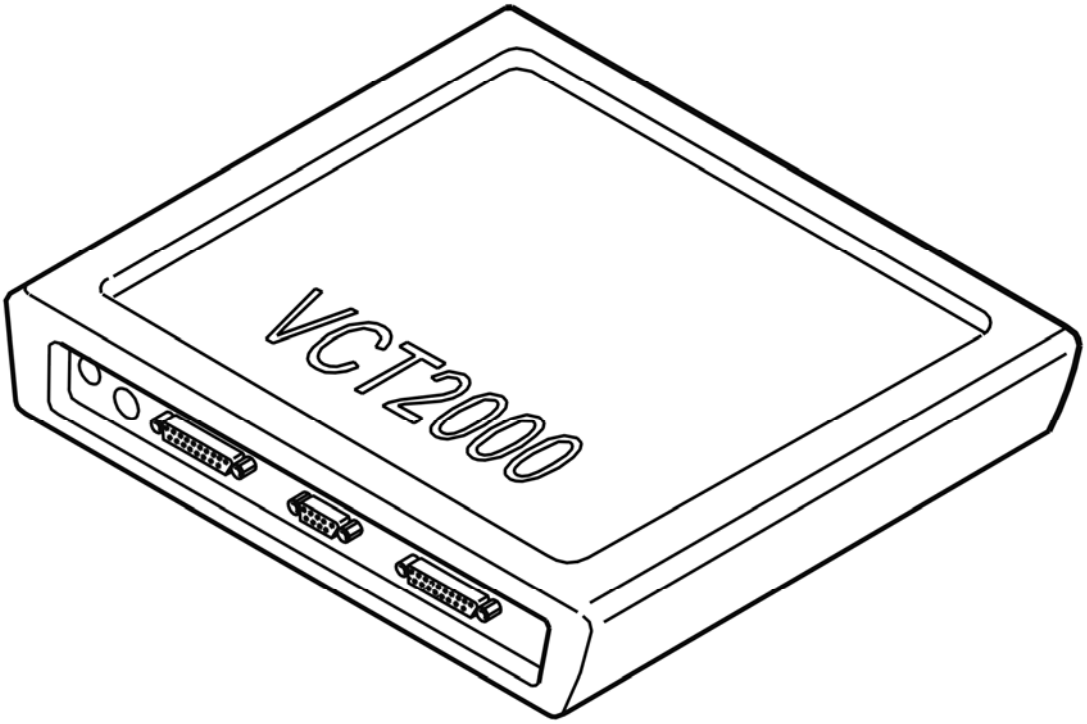

Fig. 184: Identifying VCT2000 Diagnostic Tool Symbol In VIDA
Courtesy of VOLVO CARS CORPORATION

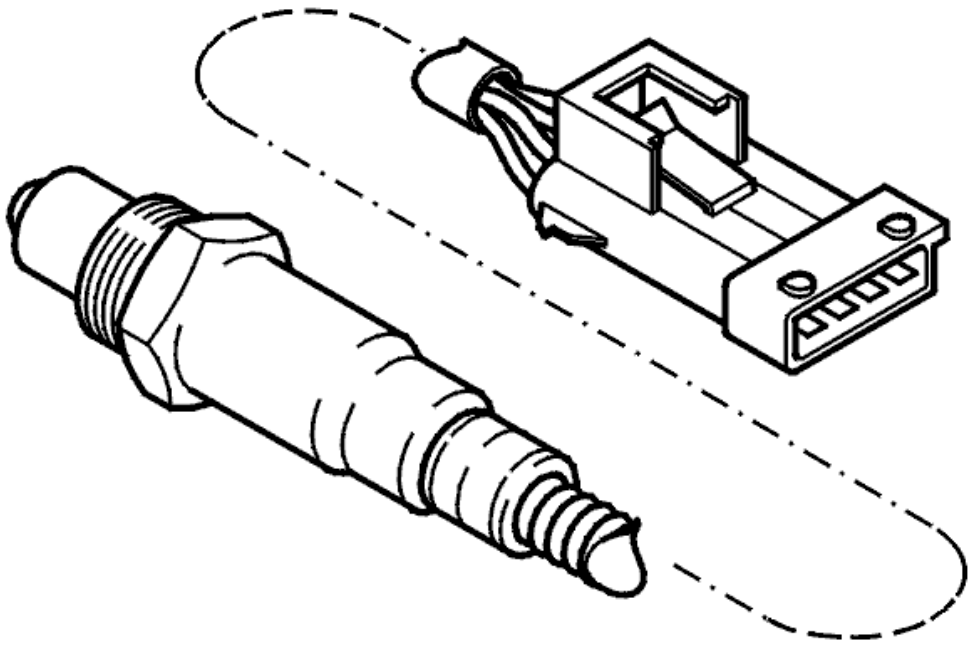

Fig. 185: Identifying Rear Heated Oxygen Sensor
Courtesy of VOLVO CARS CORPORATION

Is FAULT NOT REGISTERED displayed?

- **YES**

  VERIFIED: Troubleshooting has been completed.

- **NO**

  Refer to **INFORMATION**

INFORMATION

FAULT-TRACING INFORMATION

The fault should have been detected and remedied. As this is not the case fault-tracing has failed.

Exit fault-tracing for this diagnostic trouble code (DTC) or make another attempt.

ECM-2A20: HEATED OXYGEN SENSOR (HO2S) BANK 1, PREHEATING. SIGNAL TOO LOW (B5254T2; B6294T; 2003-2004)

DIAGNOSTIC TROUBLE CODE (DTC) INFORMATION

see **DIAGNOSTIC TROUBLE CODE (DTC) INFORMATION**

SIGNAL TOO LOW

CHECKING COMPONENTS AND WIRING

Check the resistance of the heated oxygen sensor (HO2S) between terminals #1 and #2.

Check the signal cable between heated oxygen sensor (HO2S) terminal #2 and control module terminal #A6 (#A6). Check for a short-circuit to ground.

Remedy as necessary.

Other information

- For 5 cylinder turbocharged engines -2004, see **SIGNAL DESCRIPTION**
- For 5 cylinder turbocharged engines 2005-, see **SIGNAL SPECIFICATION** .
- For 6 cylinder engines -2004, see **SIGNAL SPECIFICATION**
- For 6 cylinder engines 2005-, see **SIGNAL SPECIFICATION** .
- To connect the breakout box / access the control module, see **CONNECTING THE BREAKOUT BOX**
- For B5xx4T, see **HEATED OXYGEN SENSOR (HO2S), REPLACING**
- For B6xx4T, see **HEATED OXYGEN SENSOR (HO2S), REPLACING** .
- For resistance values, see **COMPONENT SPECIFICATIONS**
- see **CHECKING WIRING AND TERMINALS** .

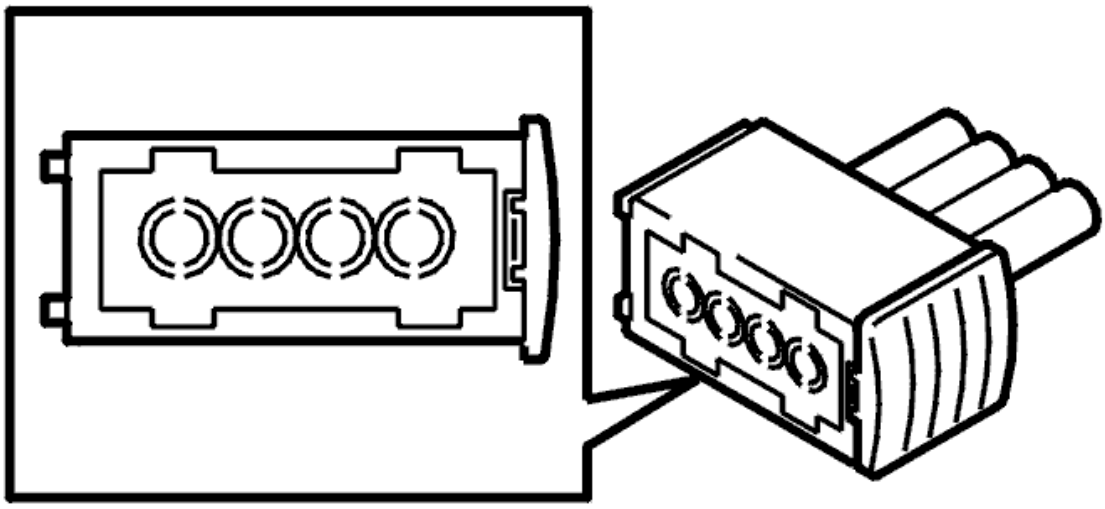

Fig. 186: Identifying Heated Oxygen Sensor
Courtesy of VOLVO CARS CORPORATION

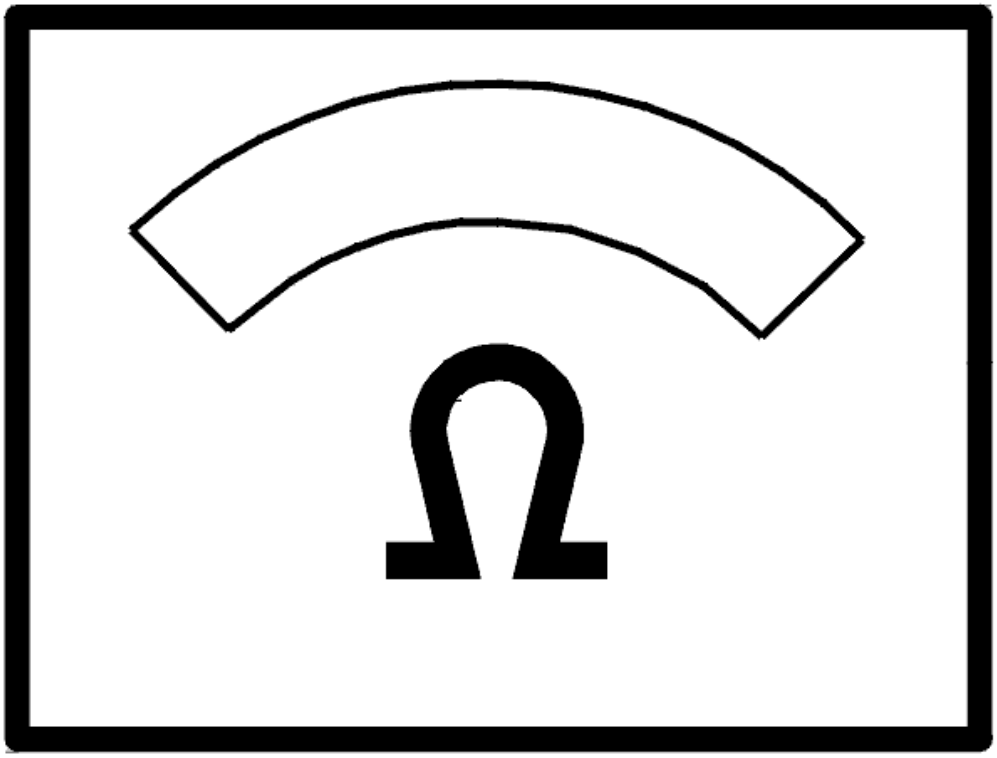

Fig. 187: Identifying Ohm Meter
Courtesy of VOLVO CARS CORPORATION

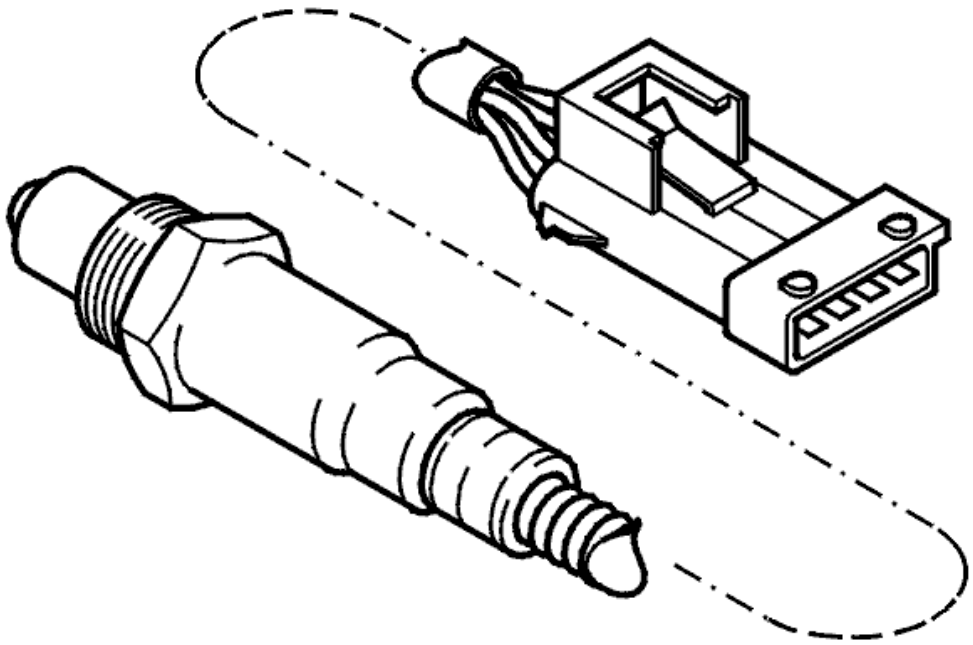

Fig. 188: Identifying Rear Heated Oxygen Sensor
Courtesy of VOLVO CARS CORPORATION

- **Continue**

  Refer to **VERIFICATION**

VERIFICATION

VERIFICATION

HINT: After carrying out the repair, check that the fault has been remedied.

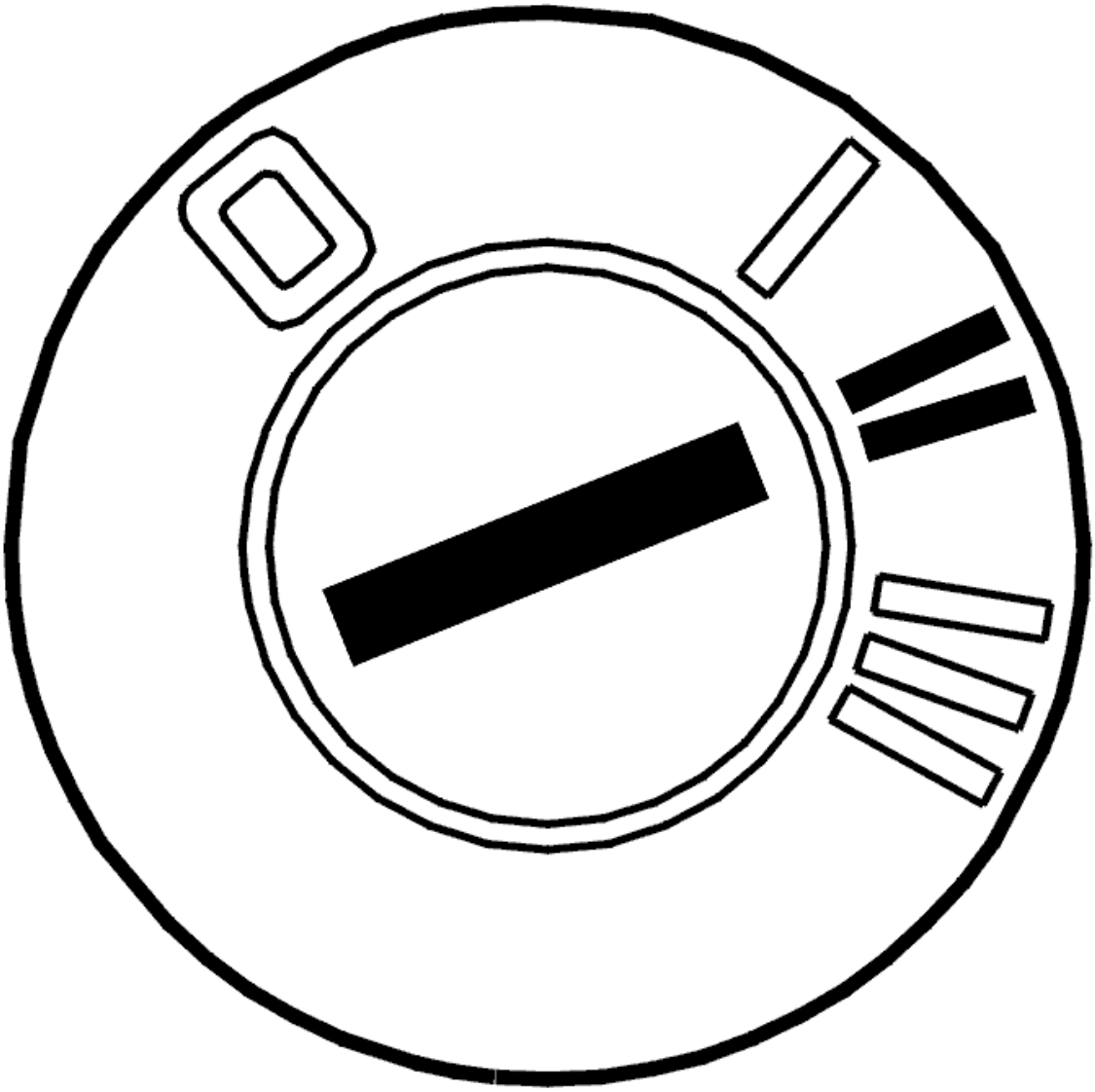

Fig. 189: Identifying Ignition ON
Courtesy of VOLVO CARS CORPORATION

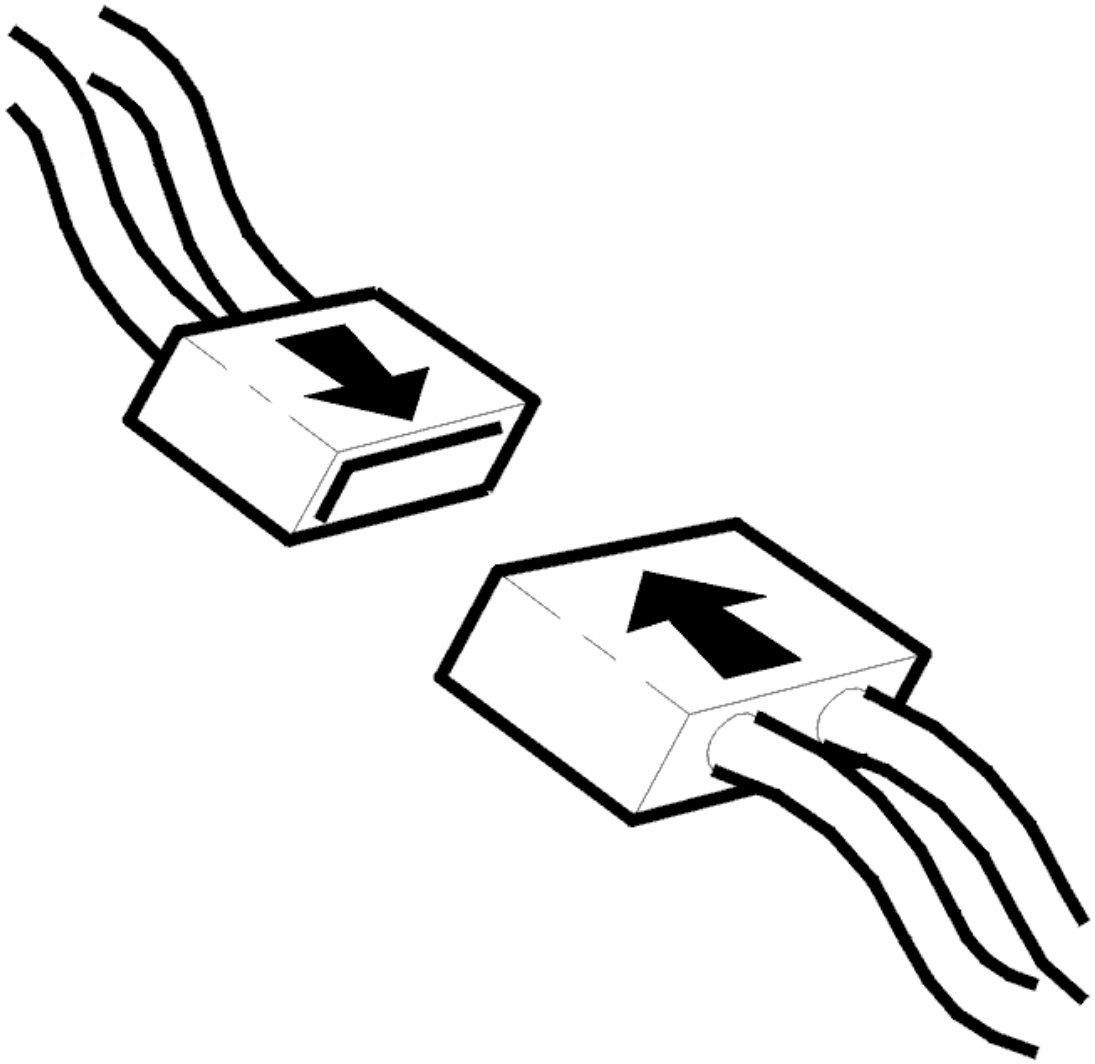

Fig. 190: Connecting Connector
Courtesy of VOLVO CARS CORPORATION

- Ignition off.
- Reconnect connectors, reinstall components.
- Start the engine and let it idle.

Read off the rear heated oxygen sensor (HO2S) signal diagnostic trouble code (DTC) status.

The text NOT READY is displayed if the diagnosis is underway.

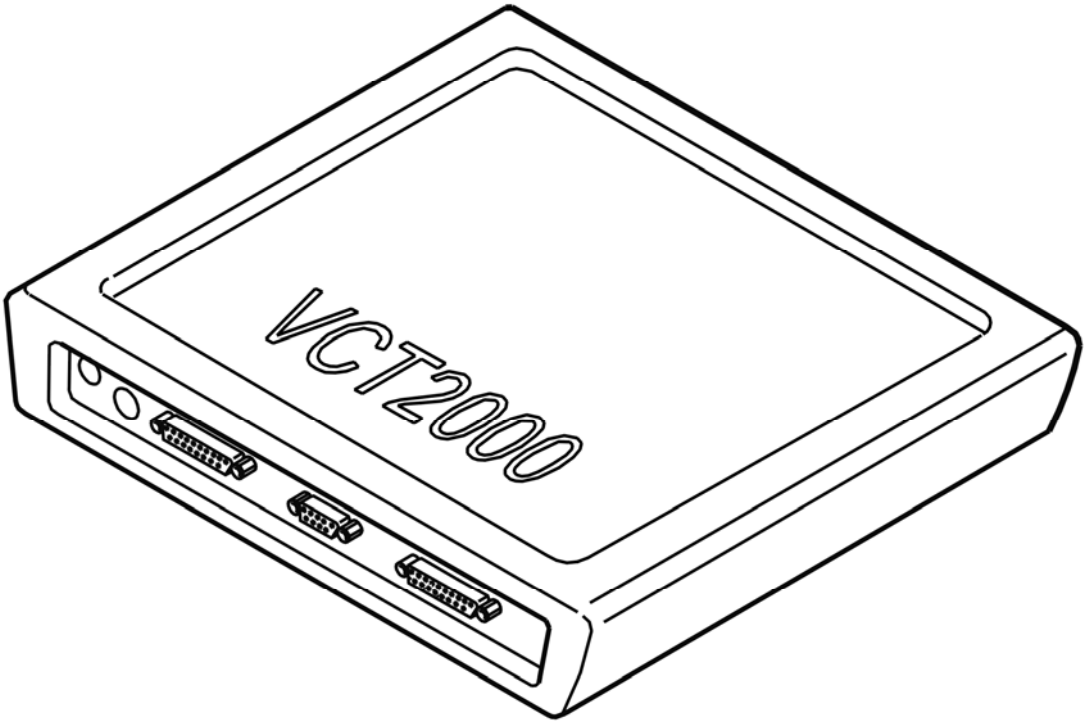

Fig. 191: Identifying VCT2000 Diagnostic Tool Symbol In VIDA
Courtesy of VOLVO CARS CORPORATION

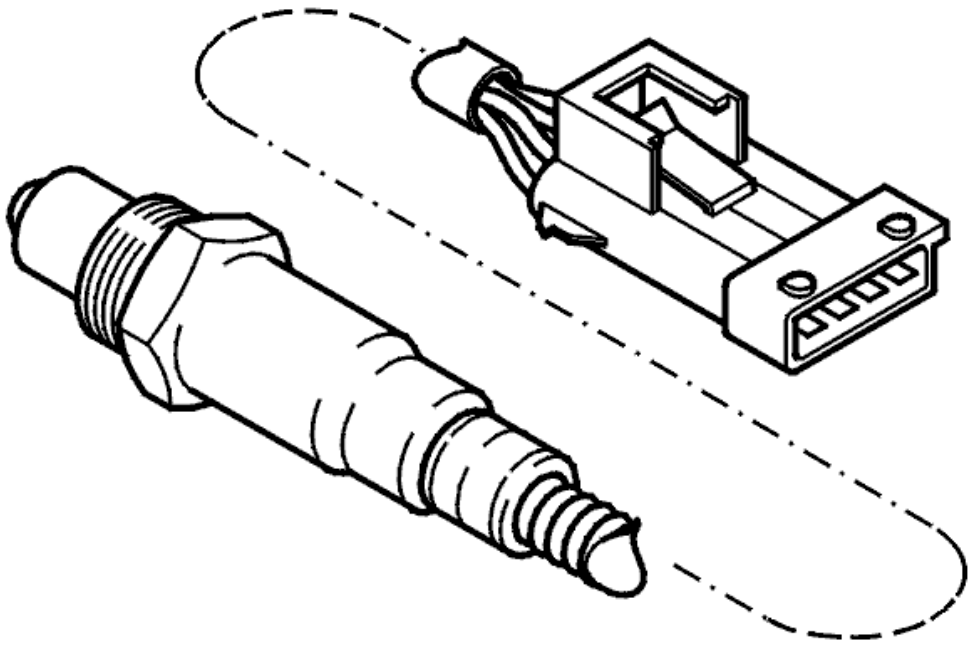

Fig. 192: Identifying Rear Heated Oxygen Sensor
Courtesy of VOLVO CARS CORPORATION

Is FAULT NOT REGISTERED displayed?

- **YES**

  VERIFIED: Troubleshooting has been completed.

- **NO**

  Refer to **INFORMATION**

INFORMATION

FAULT-TRACING INFORMATION

The fault should have been detected and remedied. As this is not the case fault-tracing has failed.

Exit fault-tracing for this diagnostic trouble code (DTC) or make another attempt.

ECM-2A2A: REAR HEATED OXYGEN SENSOR (HO2S) PREHEATING. FAULTY SIGNAL (B5254T2; B6294T; 2003-2004)

DIAGNOSTIC TROUBLE CODE (DTC) INFORMATION

Condition

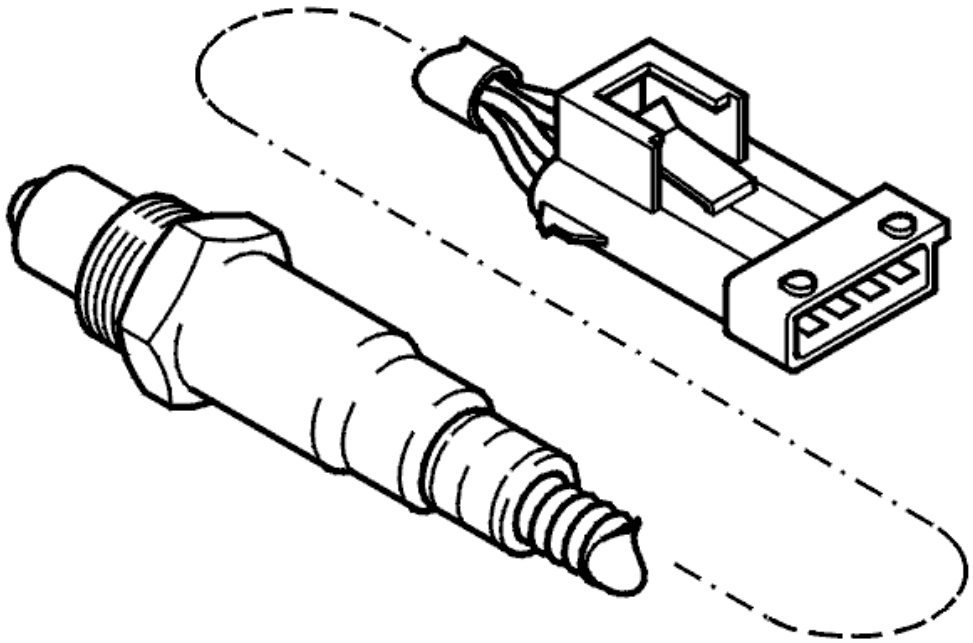

Fig. 193: Identifying Rear Heated Oxygen Sensor
Courtesy of VOLVO CARS CORPORATION

Diagnostic trouble code (DTC) ECM-2A2A (bank 1) is stored if the control module registers that the resistance of the rear heated oxygen sensor (HO2S) in the pre-heating circuit is too high for a certain amount of time.

Substitute Value

- None.

Possible Source

Faulty signal:

- Contact resistance and oxidation
- Defective heated oxygen sensor (HO2S).

Fault symptom[s]

- The malfunction indicator lamp (MIL) lights.

FAULTY SIGNAL

CHECKING THE CONNECTOR

Check the connector for the rear heated oxygen sensor (HO2S). Check for contact resistance and oxidation. Remedy if necessary.

Try a new rear heated oxygen sensor (HO2S) if the above corrective action does not remedy the fault.

Other information

- For B5xx4T, see **HEATED OXYGEN SENSOR (HO2S), REPLACING**
- For B6xx4T, see **HEATED OXYGEN SENSOR (HO2S), REPLACING** .
- see **CHECKING WIRING AND TERMINALS** .

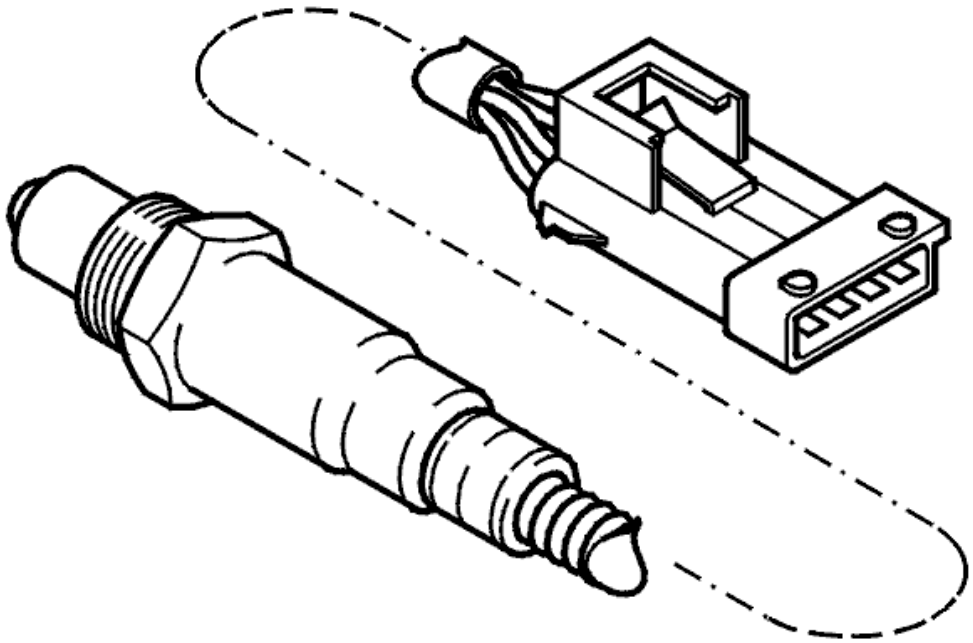

Fig. 194: Identifying Rear Heated Oxygen Sensor
Courtesy of VOLVO CARS CORPORATION

- **Continue**

  Refer to **VERIFICATION**

VERIFICATION

VERIFICATION

HINT: After carrying out the repair, check that the fault has been remedied.

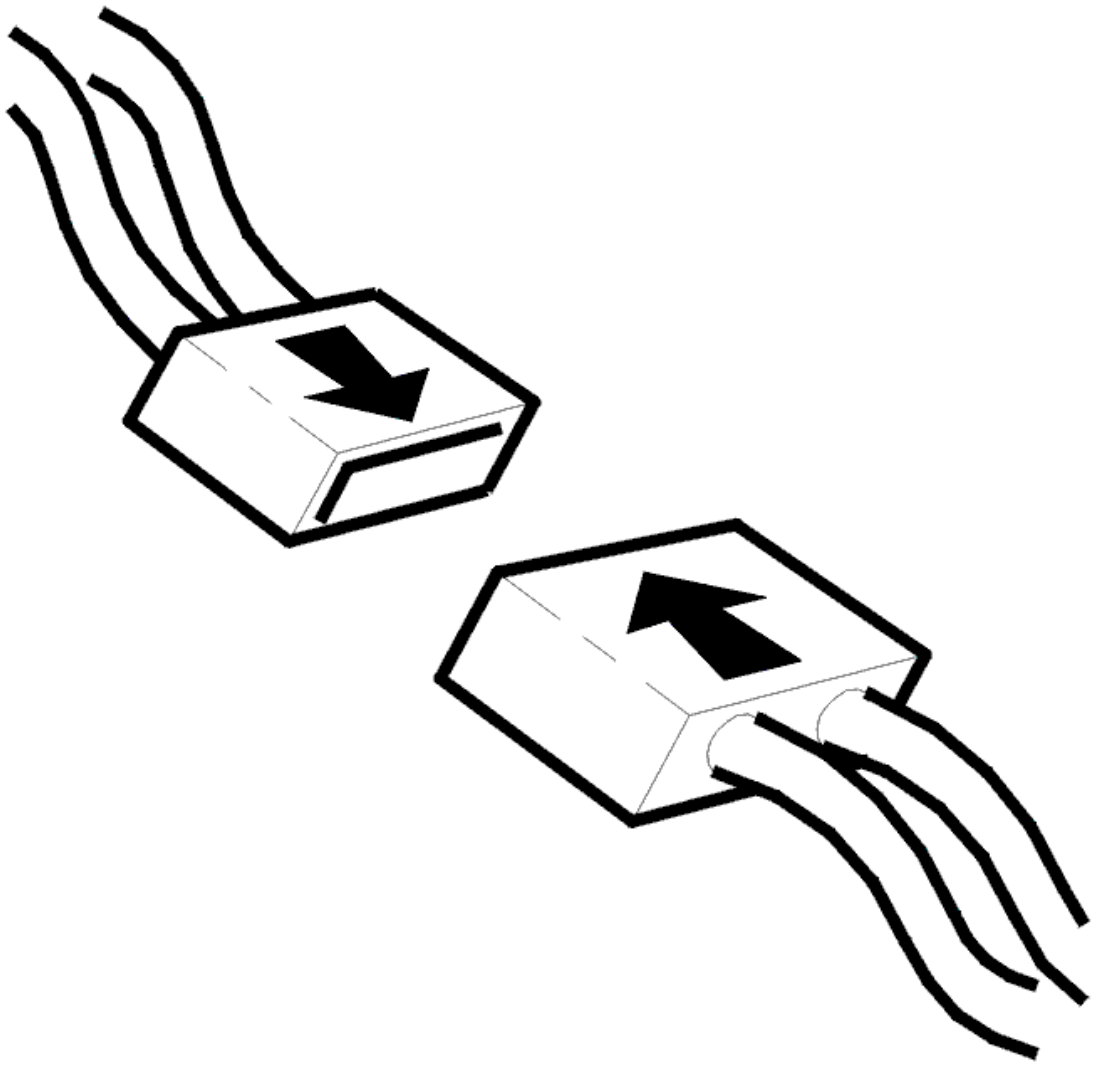

Fig. 195: Connecting Connector
Courtesy of VOLVO CARS CORPORATION

- Ignition off
- Reinstall the components, reconnect the connectors etc.
- Test drive the car according to the TRIP schedule, see **VERIFYING REPAIRS**
- Do not switch off the engine after the test drive
- Connect the car to VIDA (Volvo scan tool) again. Read off the diagnostic trouble code (DTC) status for the rear heated oxygen sensor (HO2S)

- There must not be any faults when the diagnostic is complete.

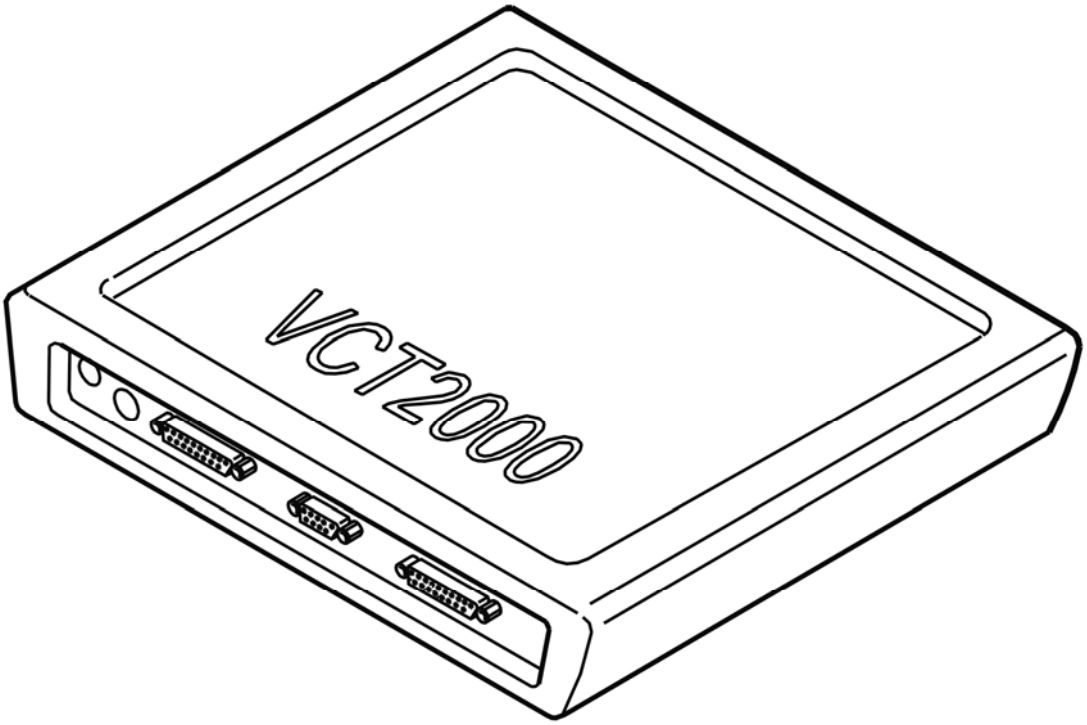

Fig. 196: Identifying VCT2000 Diagnostic Tool Symbol In VIDA
Courtesy of VOLVO CARS CORPORATION

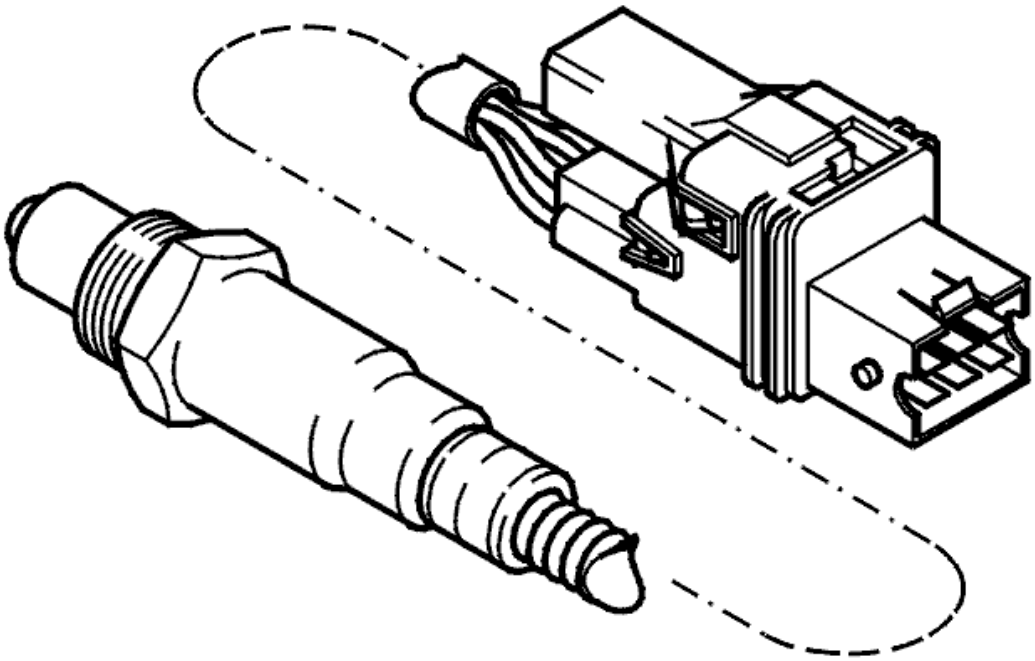

Fig. 197: Front Heated Oxygen Sensor
Courtesy of VOLVO CARS CORPORATION

Was a fault detected?

- **YES**

  VERIFIED: Troubleshooting has been completed.

- **NO**

  Refer to **INFORMATION**

INFORMATION

FAULT-TRACING INFORMATION

The fault should have been detected and remedied. As this is not the case fault-tracing has failed.

Exit fault-tracing for this diagnostic trouble code (DTC) or make another attempt.

ECM-2B00: THERMOSTAT. FAULTY SIGNAL (B5254T2; 2005-2007)

DIAGNOSTIC TROUBLE CODE (DTC) INFORMATION ECM-2B00

Condition

During the engine warm up phase the way the engine temperature should increase is calculated. Factors such as engine load and the start temperature are taken into account. This test takes place during the engine warm-up phase (under "normal operation") and continues until the engine temperature has reached 84 °C. For the test to start, the starting temperature of the engine must be below 35 °C, the outside temperature must be -7 to +35 °C and at least 15 minutes must have passed since the engine was last run.

The diagnostic trouble code (DTC) is stored if the calculated increase in temperature does not correspond to the actual increase (measured by the engine coolant temperature (ECT) sensor).

HINT: This diagnostic trouble code (DTC) can also be caused by faults that store diagnostic trouble codes (DTCs) for outside temperature sensors.

Substitute Value

- None.

Possible Source

- Damaged engine coolant temperature (ECT) sensor
- Damaged thermostat.

Fault symptom[s]

- Malfunction indicator lamp (MIL) lit.

FAULTY SIGNAL

see **FAULTY SIGNAL**

ECM-2B00: THERMOSTAT. FAULTY SIGNAL (B6294T; 2005-2006)

DIAGNOSTIC TROUBLE CODE (DTC) INFORMATION ECM-2B00

see **DIAGNOSTIC TROUBLE CODE (DTC) INFORMATION ECM-2B00**

FAULTY SIGNAL

see **FAULTY SIGNAL**

ECM-2C0B: INJECTOR CYL 1. SIGNAL MISSING (B6294T; 2005-2006)

DIAGNOSTIC TROUBLE CODE (DTC) INFORMATION

Condition

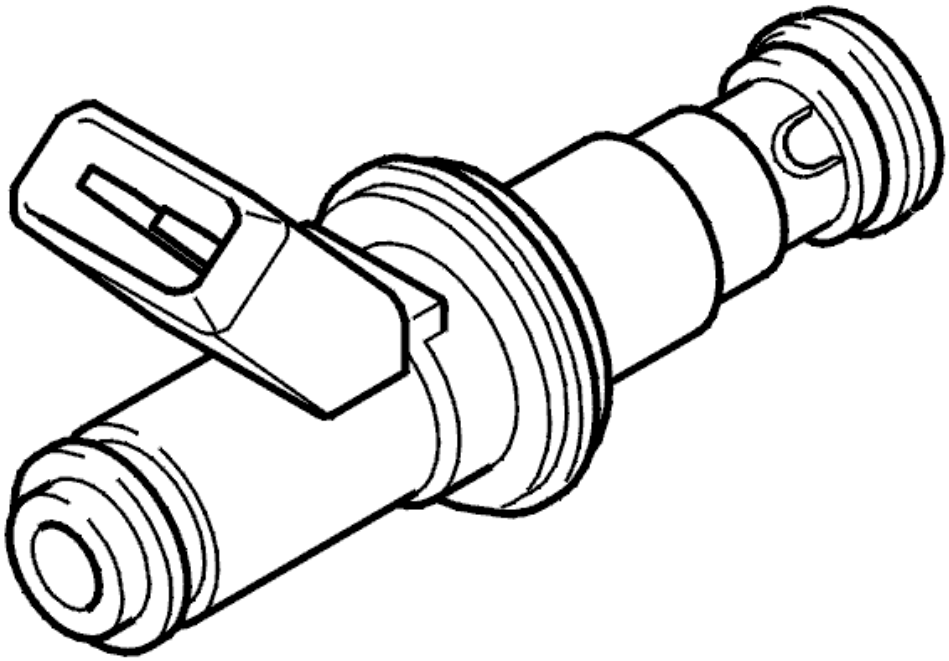

Fig. 198: Identifying Injector
Courtesy of VOLVO CARS CORPORATION

The engine control module (ECM) checks the circuit for the injectors.

The diagnostic trouble code (DTC) is stored if the engine control module (ECM) detects that the signal for one of the injector circuits is missing.

The diagnostic trouble code (DTC) indicates which injector is being referred to.

- ECM-2C0B: injector 1
- ECM-2C1B: injector 2
- ECM-2C2B: injector 3
- ECM-2C3B: injector 4
- ECM-2C4B: injector 5
- ECM-2C5B: injector 6.

The diagnostic trouble code (DTC) can be diagnosed when the engine is running.

Substitute Value

- None.

Possible Source

- Contact resistance in the terminals
- Open-circuit in the signal cable
- Open-circuit in the power supply to the injector
- Damaged injector
- Damaged mass air flow (MAF) sensor.

Fault symptom[s]

- Malfunction indicator lamp (MIL) lit
- The engine is not firing on all cylinders.

SIGNAL MISSING

CHECKING COMPONENTS AND WIRING

Check the cable that relates to the diagnostic trouble code (DTC). Check for an open-circuit.

Check between:

- Engine control module (ECM) terminal #A16 (#A16) and injector terminal #2 (ECM-2C0B, injector 1)
- Engine control module (ECM) terminal #A15 (#A15) and injector terminal #2 (ECM-2C1B, injector 2)
- Engine control module (ECM) terminal #A33 (#A33) and injector terminal #2 (ECM-2C2B, injector 3)
- Engine control module (ECM) terminal #A32 (#A32) and injector terminal #2 (ECM-2C3B, injector 4)
- Engine control module (ECM) terminal #A34 (#A34) and injector terminal #2 (ECM-2C4B, injector 5)
- Engine control module (ECM) terminal #A52 (#A52) and injector terminal #2 (ECM-2C5B, injector 6).

Remedy as necessary.

Other information

- see **CONNECTING THE BREAKOUT BOX**
- For 6 cylinder engines -2004, see **SIGNAL SPECIFICATION**
- For 6 cylinder engines 2005-, see **SIGNAL SPECIFICATION** .
- For B5xx4T, see **INJECTOR/PULSE DAMPER, REPLACEMENT**
- For B6xx4T, see **INJECTOR / PULSATION DAMPER, REPLACING** .
- see **CHECKING WIRING AND TERMINALS**

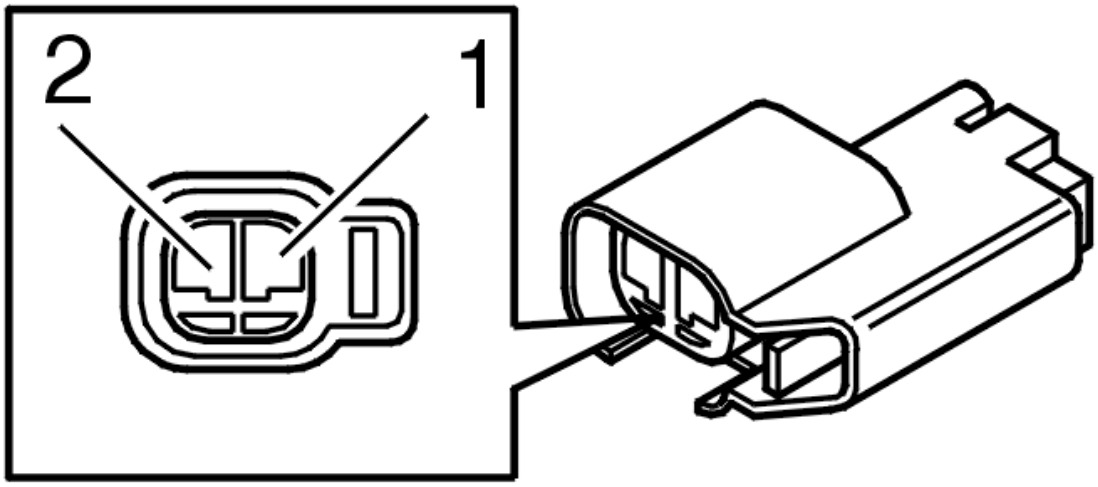

Fig. 199: Identifying 2-Bit Connector
Courtesy of VOLVO CARS CORPORATION

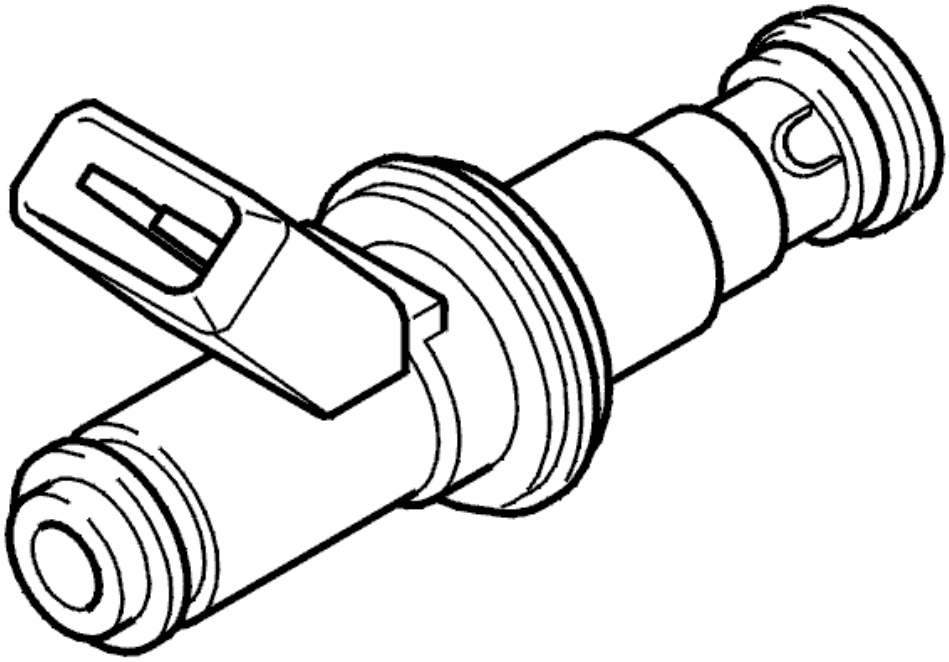

Fig. 200: Identifying Injector
Courtesy of VOLVO CARS CORPORATION

- **Continue**

  Refer to **VERIFICATION**

VERIFICATION

VERIFICATION

HINT: After carrying out the repair, check that the fault has been remedied.

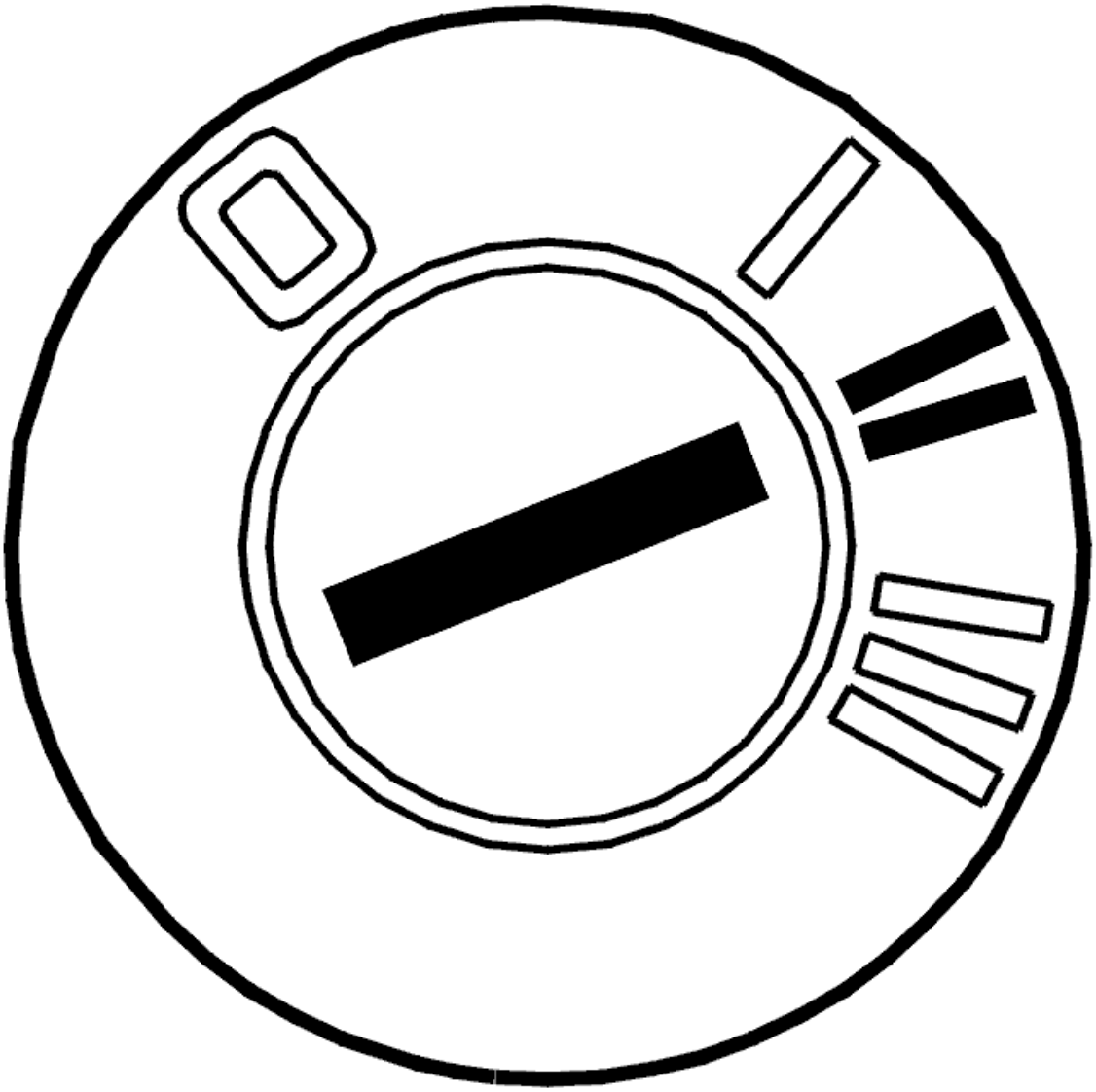

Fig. 201: Identifying Ignition ON
Courtesy of VOLVO CARS CORPORATION

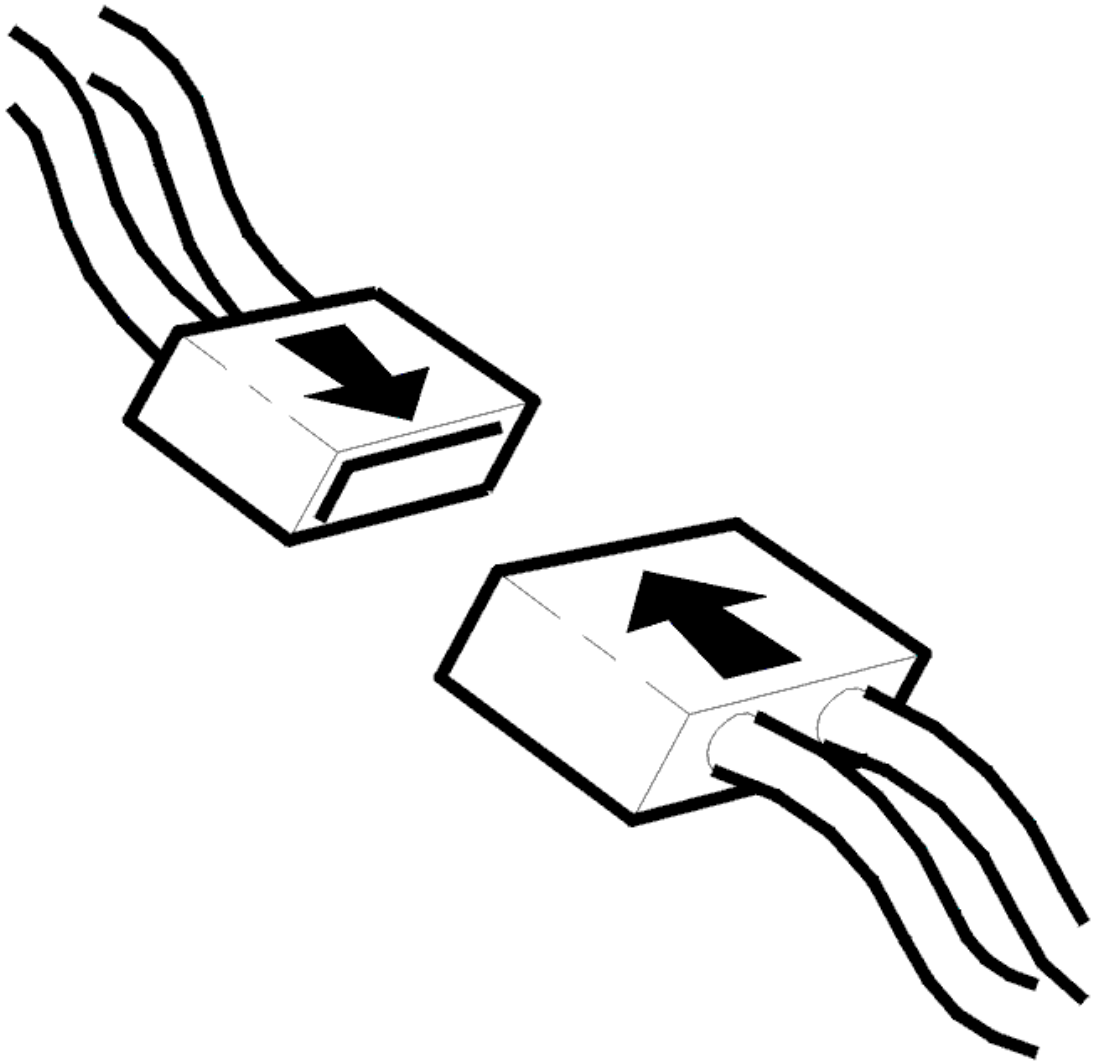

Fig. 202: Connecting Connector
Courtesy of VOLVO CARS CORPORATION

- Ignition off
- Reconnect connectors, reinstall components etc.
- Ignition on
- Activate the relevant injector.

  A "click" should be heard when the injector is activated.

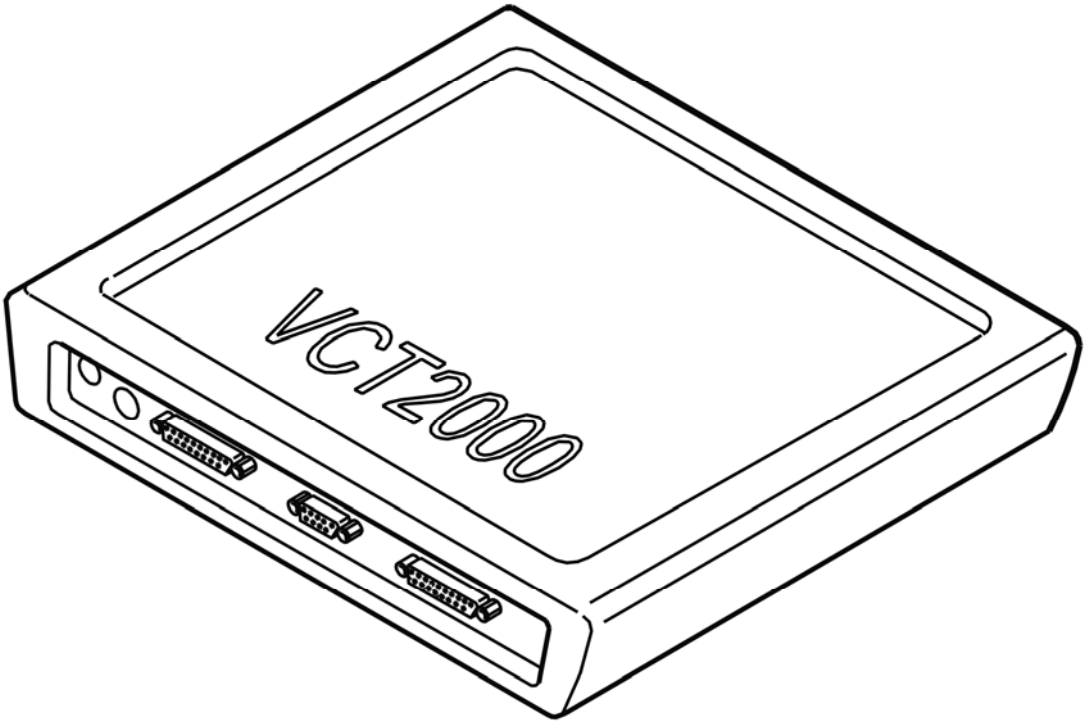

Fig. 203: Identifying VCT2000 Diagnostic Tool Symbol In VIDA
Courtesy of VOLVO CARS CORPORATION

Is the injector working?

- **YES**

  VERIFIED: Troubleshooting has been completed.

- **NO**

  Refer to **INFORMATION**

INFORMATION

FAULT-TRACING INFORMATION

The fault should have been detected and remedied. As this is not the case fault-tracing has failed.

Exit fault-tracing for this diagnostic trouble code (DTC) or make another attempt.

ECM-2C0C: INJECTOR CYL 1. SIGNAL TOO HIGH (B6294T; 2005-2006)

DIAGNOSTIC TROUBLE CODE (DTC) INFORMATION

Condition

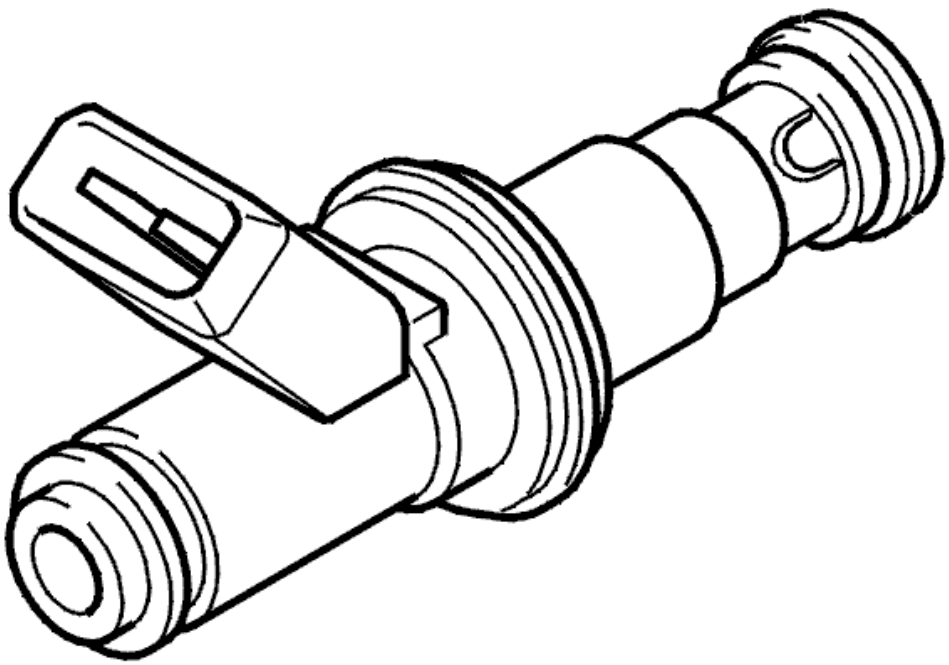

Fig. 204: Identifying Injector
Courtesy of VOLVO CARS CORPORATION

The engine control module (ECM) checks the circuit for the injectors.

The diagnostic trouble code (DTC) is stored if the engine control module (ECM) detects that the signal for one of the injector circuits is too high.

The diagnostic trouble code (DTC) indicates which injector is being referred to.

- ECM-2C0C: injector 1
- ECM-2C1C: injector 2
- ECM-2C2C: injector 3
- ECM-2C3C: injector 4
- ECM-2C4C: injector 5
- ECM-2C5C: injector 6.

The diagnostic trouble code (DTC) can be diagnosed at ignition on and with the engine running.

Substitute Value

- None.

Possible Source

- Short-circuit to supply voltage in the signal cable
- Damaged injector.

Fault symptom[s]

- Malfunction indicator lamp (MIL) lit
- The engine is not firing on all cylinders.

SIGNAL TOO HIGH

CHECKING COMPONENTS AND WIRING

Check the cable that relates to the diagnostic trouble code (DTC). Check for a short-circuit to supply voltage.

Check between:

- Engine control module (ECM) terminal #A16 (#A16) and injector terminal #2 (ECM-2C0C, injector 1)
- Engine control module (ECM) terminal #A15 (#A15) and injector terminal #2 (ECM-2C1C, injector 2)
- Engine control module (ECM) terminal #A33 (#A33) and injector terminal #2 (ECM-2C2C, injector 3)
- Engine control module (ECM) terminal #A32 (#A32) and injector terminal #2 (ECM-2C3C, injector 4)
- Engine control module (ECM) terminal #A34 (#A34) and injector terminal #2 (ECM-2C4C, injector 5)
- Engine control module (ECM) terminal #A52 (#A52) and injector terminal #2 (ECM-2C5C, injector 6).

Remedy as necessary.

Other information

- see **CONNECTING THE BREAKOUT BOX**
- For 6 cylinder engines -2004, see **SIGNAL SPECIFICATION**
- For 6 cylinder engines 2005-, see **SIGNAL SPECIFICATION** .
- For B5xx4T, see **INJECTOR/PULSE DAMPER, REPLACEMENT**
- For B6xx4T, see **INJECTOR / PULSATION DAMPER, REPLACING** .
- see **CHECKING WIRING AND TERMINALS**

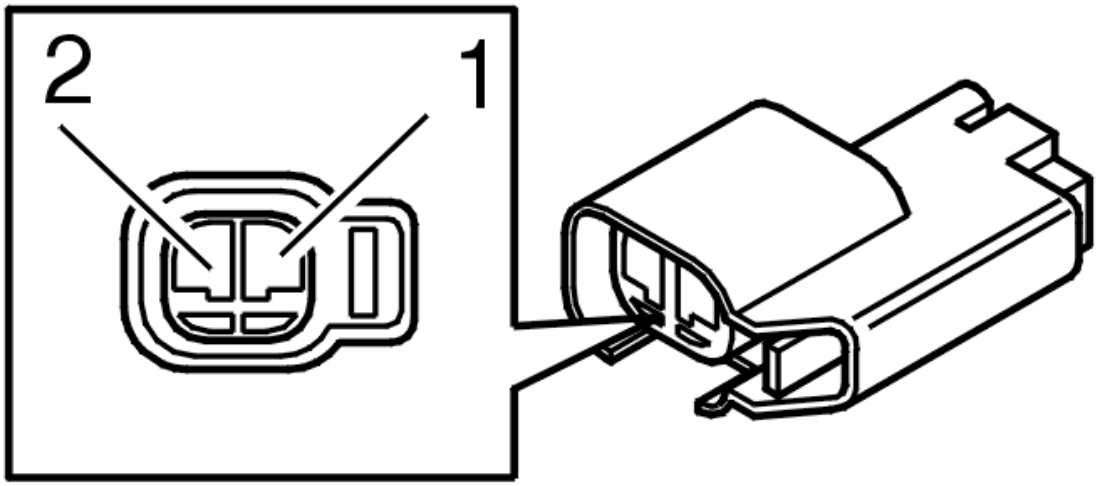

Fig. 205: Identifying 2-Bit Connector
Courtesy of VOLVO CARS CORPORATION

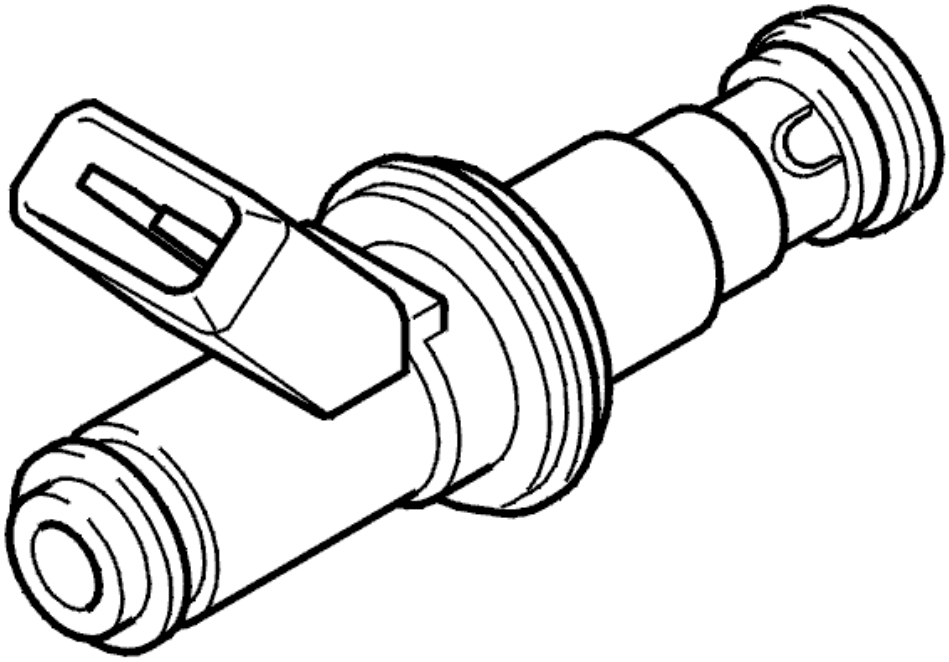

Fig. 206: Identifying Injector
Courtesy of VOLVO CARS CORPORATION

- **Continue**

  Refer to **VERIFICATION**

VERIFICATION

VERIFICATION

HINT: After carrying out the repair, check that the fault has been remedied.

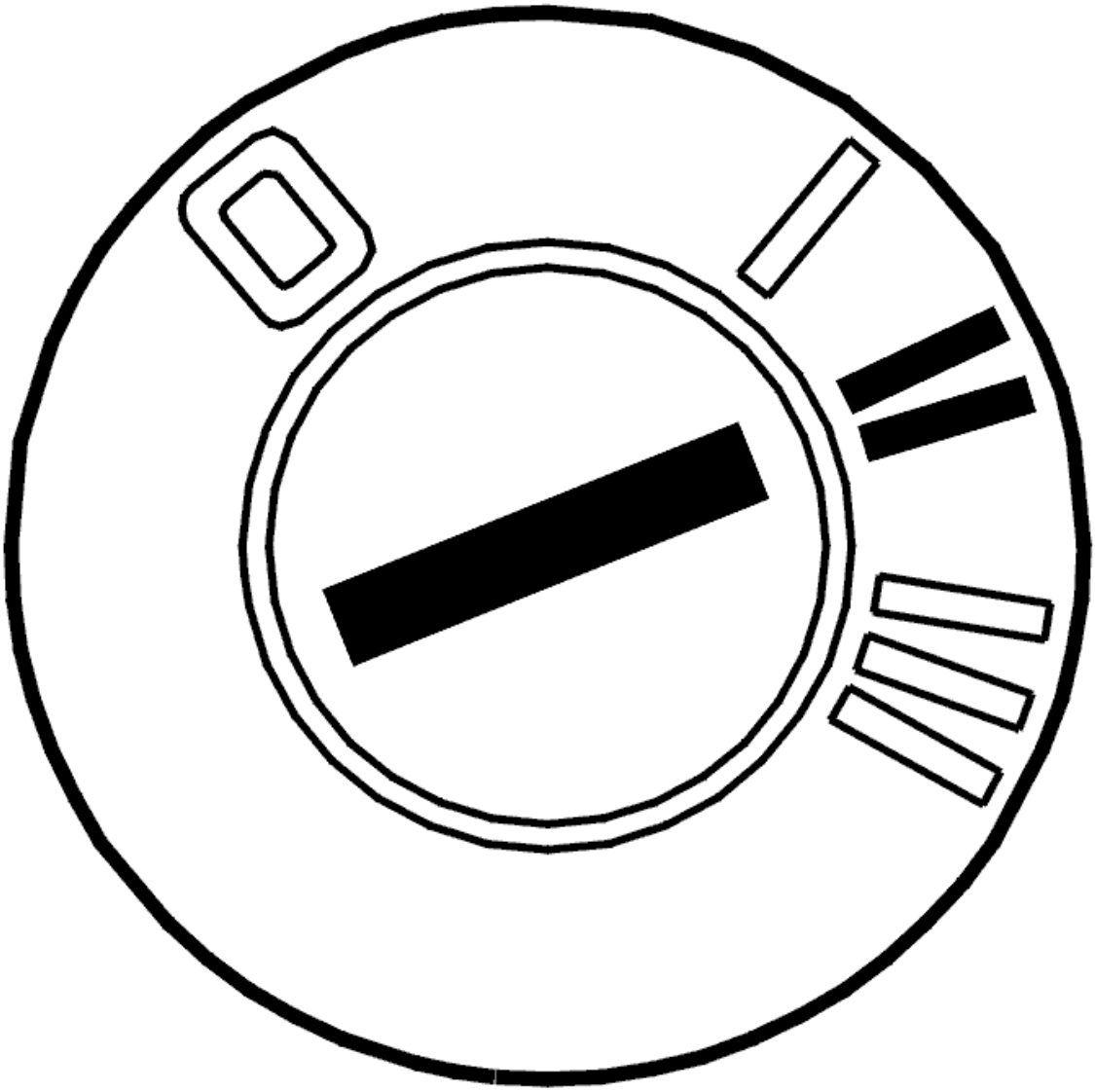

Fig. 207: Identifying Ignition ON
Courtesy of VOLVO CARS CORPORATION

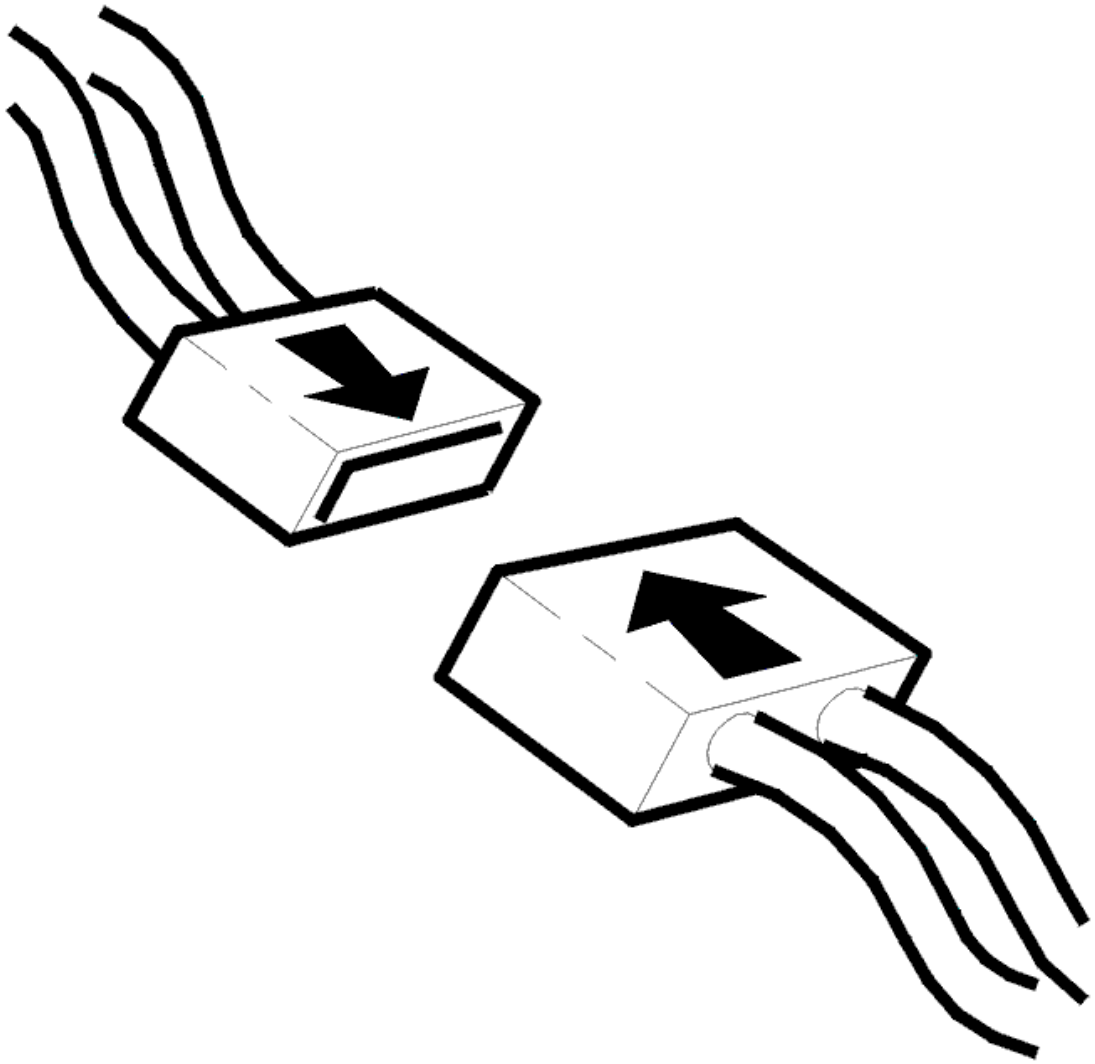

Fig. 208: Connecting Connector
Courtesy of VOLVO CARS CORPORATION

- Ignition off
- Reconnect connectors, reinstall components etc.
- Ignition on
- Activate the relevant injector.

  A "click" should be heard when the injector is activated.

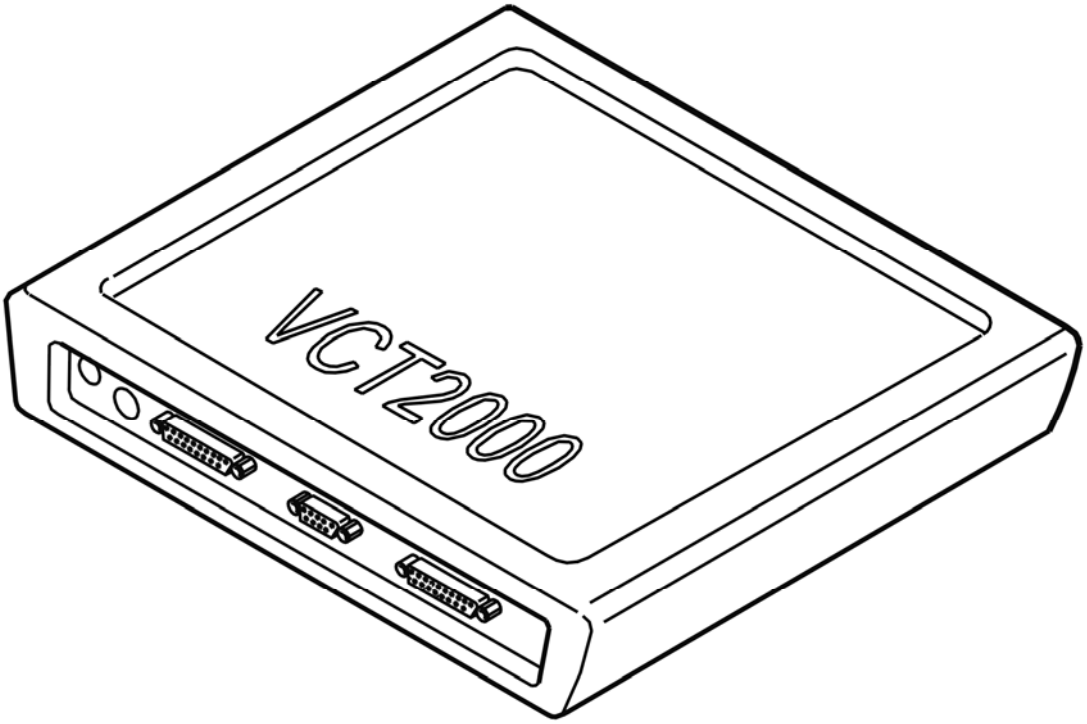

Fig. 209: Identifying VCT2000 Diagnostic Tool Symbol In VIDA
Courtesy of VOLVO CARS CORPORATION

Is the injector working?

- **YES**

  VERIFIED: Troubleshooting has been completed.

- **NO**

  Refer to **INFORMATION**

INFORMATION

FAULT-TRACING INFORMATION

The fault should have been detected and remedied. As this is not the case fault-tracing has failed.

Exit fault-tracing for this diagnostic trouble code (DTC) or make another attempt.

ECM-2C0D: INJECTOR CYL 1. SIGNAL TOO LOW (B6294T; 2005-2006)

DIAGNOSTIC TROUBLE CODE (DTC) INFORMATION

Condition

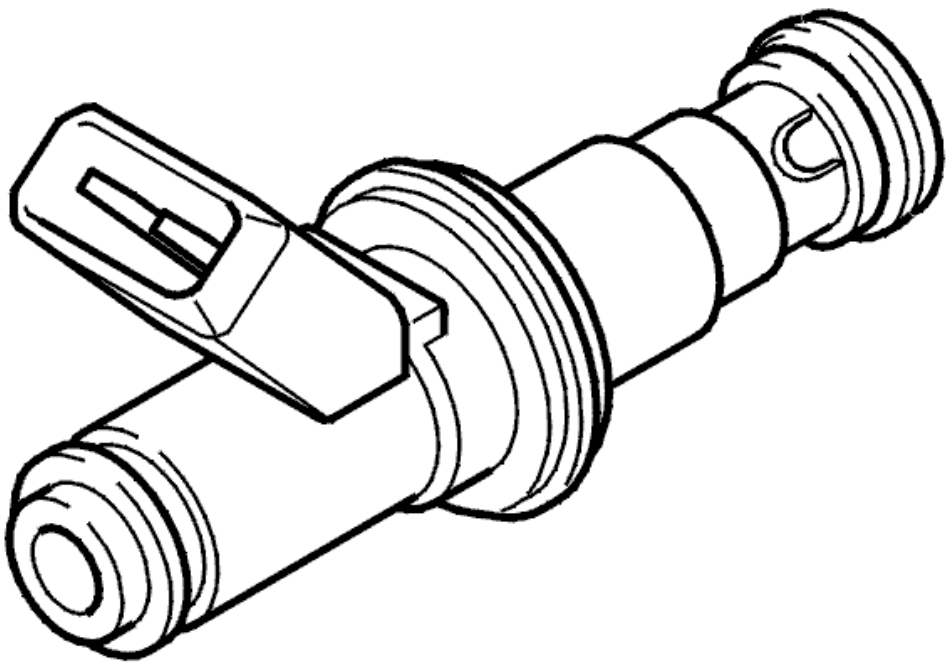

Fig. 210: Identifying Injector
Courtesy of VOLVO CARS CORPORATION

The engine control module (ECM) checks the circuit for the injectors.

The diagnostic trouble code (DTC) is stored if the engine control module (ECM) detects that the signal for one of the injector circuits is too low.

The diagnostic trouble code (DTC) indicates which injector is being referred to.

- ECM-2C0D: injector 1
- ECM-2C1D: injector 2
- ECM-2C2D: injector 3
- ECM-2C3D: injector 4
- ECM-2C4D: injector 5
- ECM-2C5D: injector 6.

The diagnostic trouble code (DTC) can be diagnosed at ignition on and with the engine running.

Substitute Value

- None.

Possible Source

- Short-circuit to ground in the signal cable
- Damaged injector.

Fault symptom[s]

- Malfunction indicator lamp (MIL) lit
- The engine is not firing on all cylinders.

SIGNAL TOO LOW

CHECKING COMPONENTS AND WIRING

Check the cable that relates to the diagnostic trouble code (DTC). Check for a short-circuit to ground.

Check between:

- Engine control module (ECM) terminal #A16 (#A16) and injector terminal #2 (ECM-2C0D, injector 1)
- Engine control module (ECM) terminal #A15 (#A15) and injector terminal #2 (ECM-2C1D, injector 2)
- Engine control module (ECM) terminal #A33 (#A33) and injector terminal #2 (ECM-2C2D, injector 3)
- Engine control module (ECM) terminal #A32 (#A32) and injector terminal #2 (ECM-2C3D, injector 4)
- Engine control module (ECM) terminal #A34 (#A34) and injector terminal #2 (ECM-2C4D, injector 5)
- Engine control module (ECM) terminal #A52 (#A52) and injector terminal #2 (ECM-2C4D, injector 6).

Remedy as necessary.

Other information

- see **CONNECTING THE BREAKOUT BOX**
- For 6 cylinder engines -2004, see **SIGNAL SPECIFICATION**
- For 6 cylinder engines 2005-, see **SIGNAL SPECIFICATION** .
- For B5xx4T, see **INJECTOR/PULSE DAMPER, REPLACEMENT**
- For B6xx4T, see **INJECTOR / PULSATION DAMPER, REPLACING** .
- see **CHECKING WIRING AND TERMINALS**

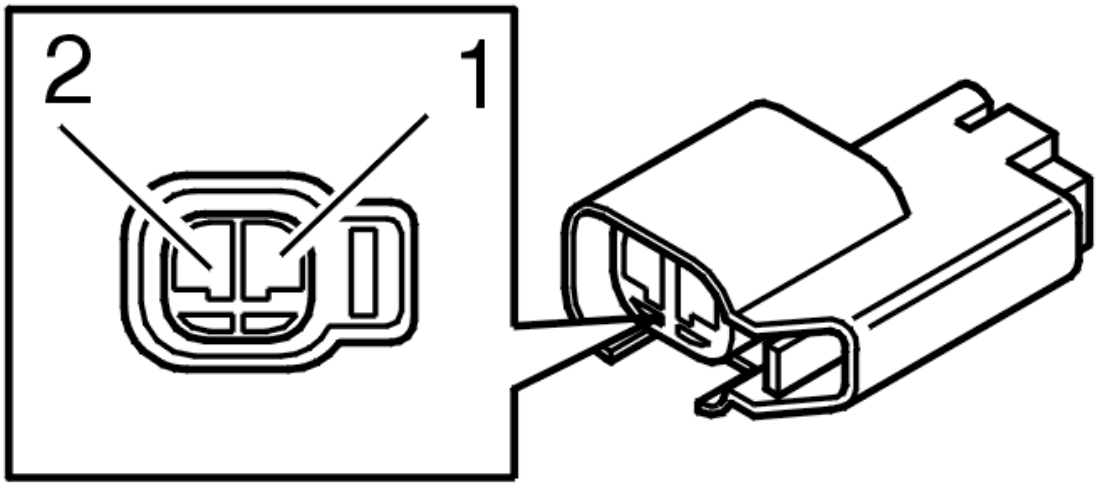

Fig. 211: Identifying 2-Bit Connector
Courtesy of VOLVO CARS CORPORATION

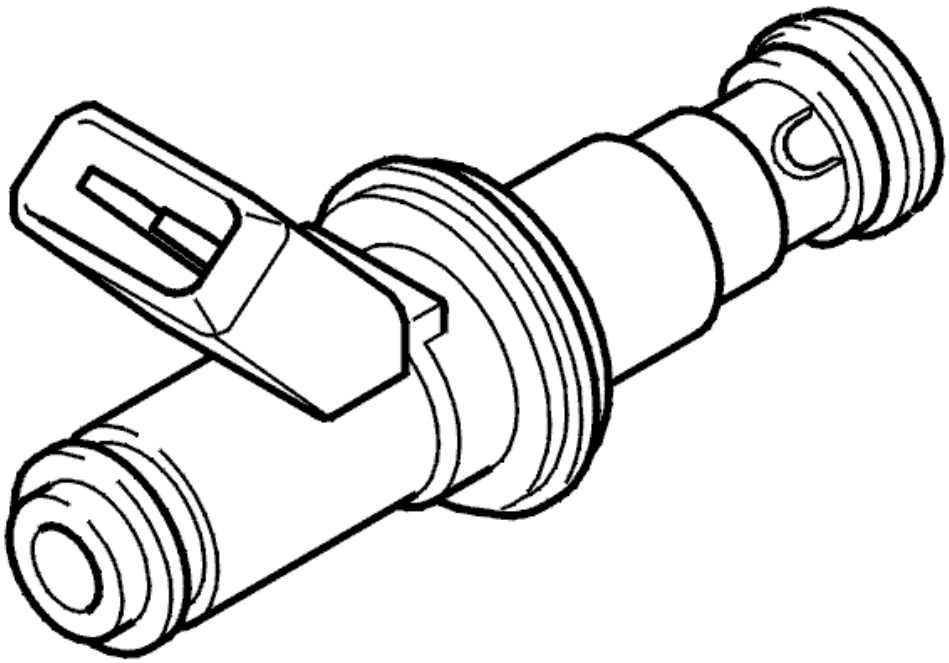

Fig. 212: Identifying Injector
Courtesy of VOLVO CARS CORPORATION

- **Continue**

  Refer to **VERIFICATION**

VERIFICATION

VERIFICATION

HINT: After carrying out the repair, check that the fault has been remedied.

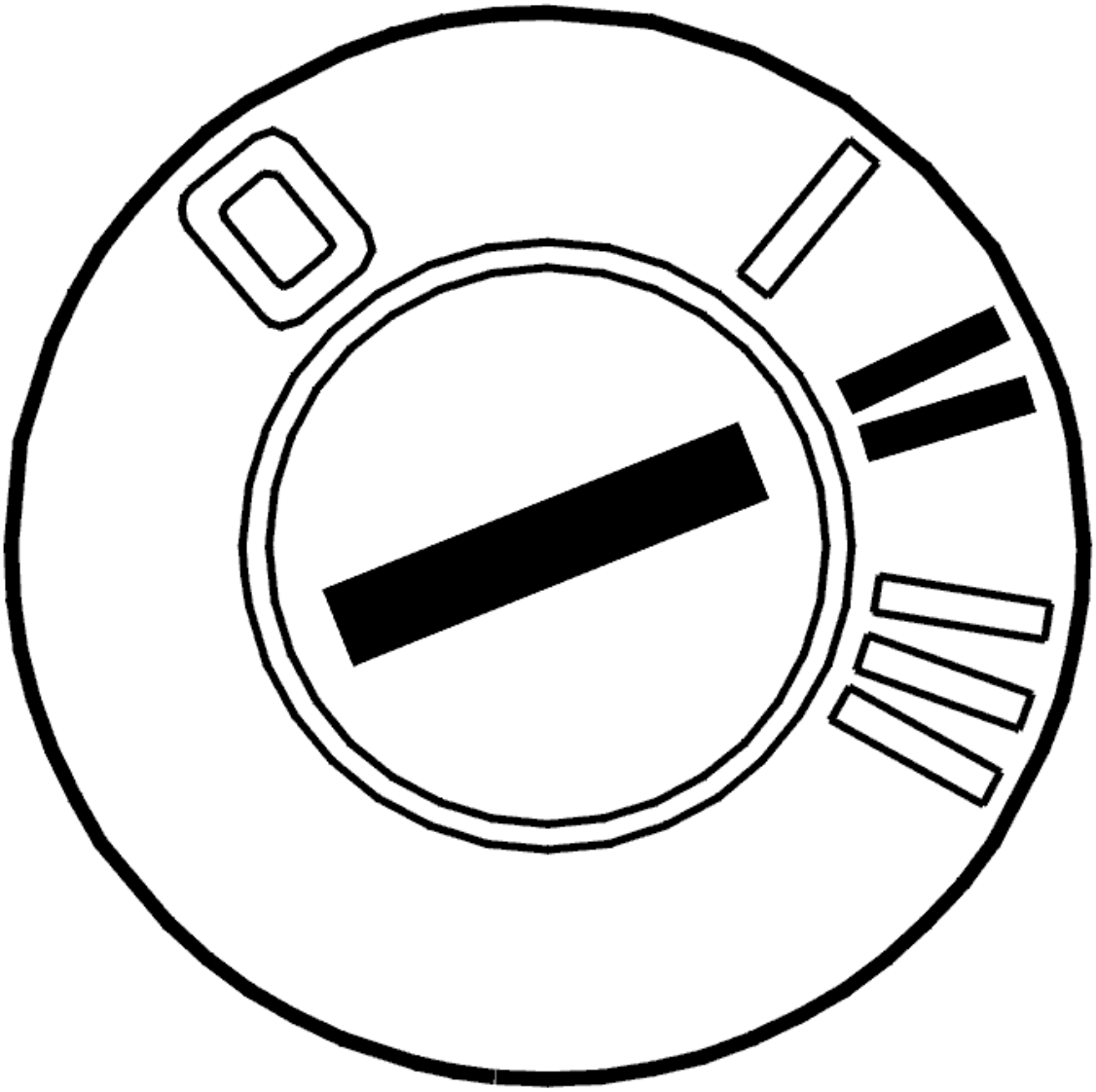

Fig. 213: Identifying Ignition ON
Courtesy of VOLVO CARS CORPORATION

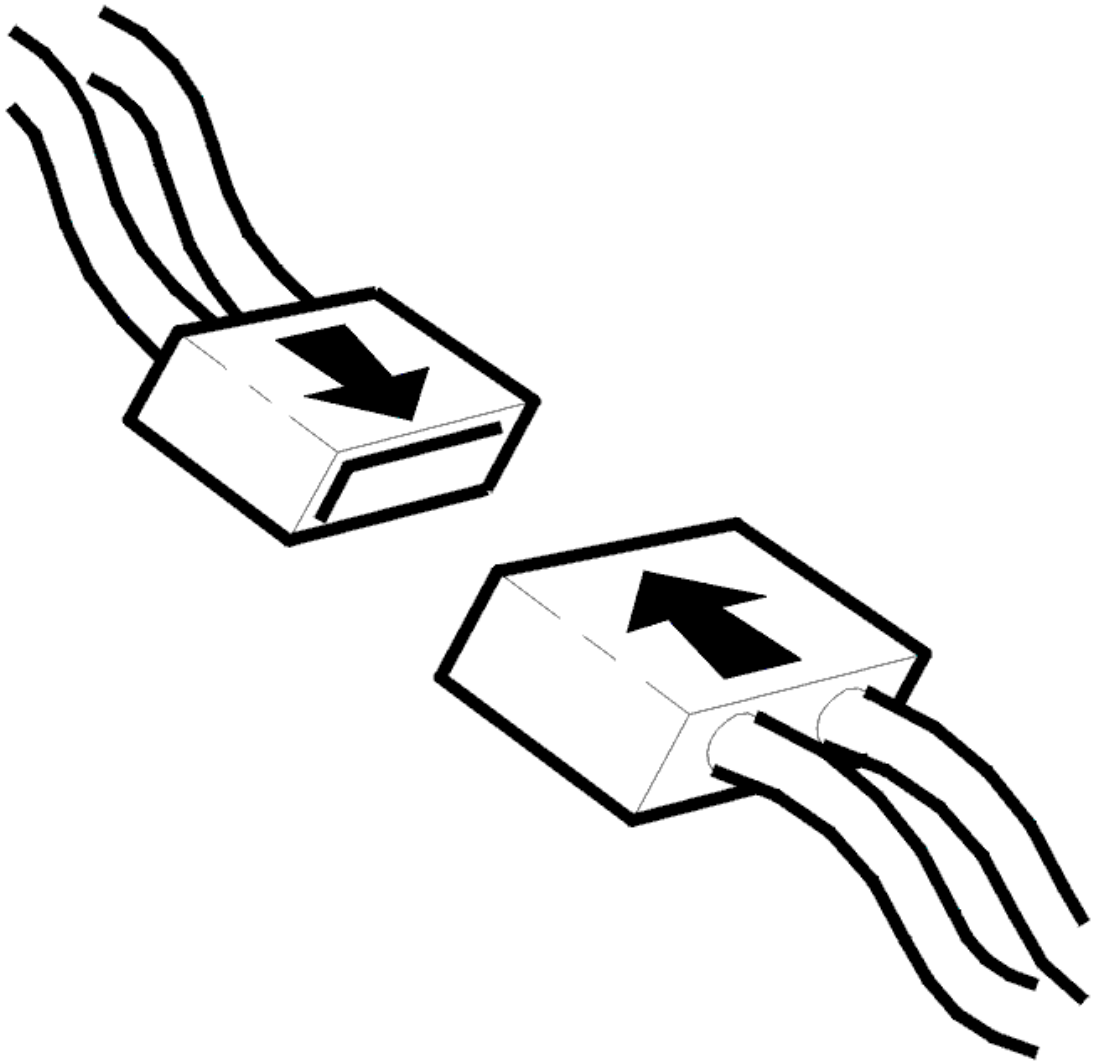

Fig. 214: Connecting Connector
Courtesy of VOLVO CARS CORPORATION

- Ignition off
- Reconnect connectors, reinstall components etc.
- Ignition on
- Activate the relevant injector.

  A "click" should be heard when the injector is activated.

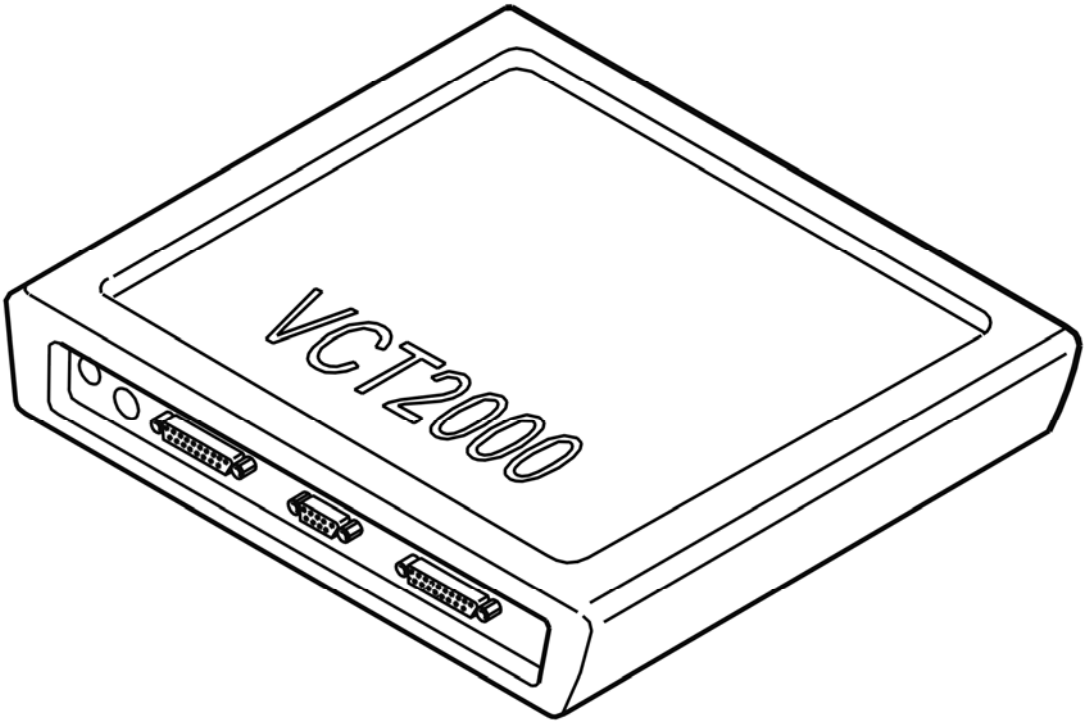

Fig. 215: Identifying VCT2000 Diagnostic Tool Symbol In VIDA
Courtesy of VOLVO CARS CORPORATION

Is the injector working?

- **YES**

  VERIFIED: Troubleshooting has been completed.

- **NO**

  Refer to **INFORMATION**

INFORMATION

FAULT-TRACING INFORMATION

The fault should have been detected and remedied. As this is not the case fault-tracing has failed.

Exit fault-tracing for this diagnostic trouble code (DTC) or make another attempt.

ECM-3000: CAMSHAFT POSITION (CMP) SENSOR, INTAKE. FAULTY SIGNAL OR SIGNAL MISSING (B5254T2; B6294T; 2003-2004)

DIAGNOSTIC TROUBLE CODE (DTC) INFORMATION

Condition

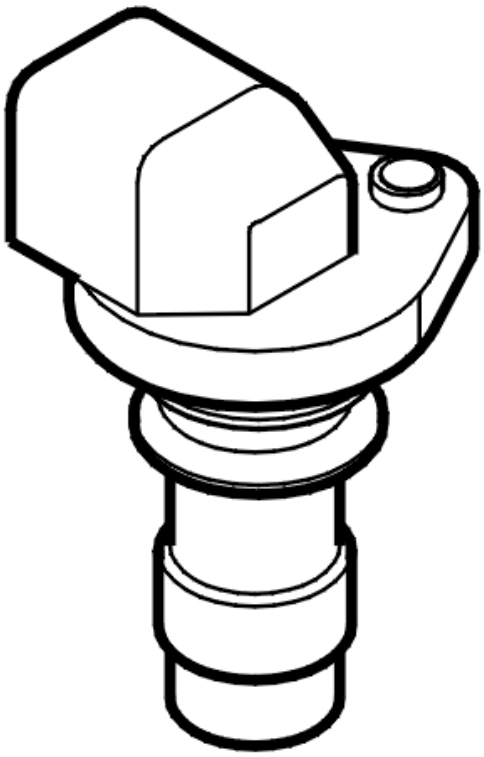

Fig. 216: Identifying Camshaft Position (CMP) Sensor
Courtesy of VOLVO CARS CORPORATION

Diagnostic trouble code (DTC) ECM-3000 covers camshaft position (CMP) sensor, intake.

Diagnostic trouble code (DTC) ECM-3010 covers camshaft position (CMP) sensor, exhaust.

Diagnostic trouble code (DTC) is stored ECM-3000 or ECM-3010 is stored if the pulse width modulation signal from the camshaft position (CMP) sensor is constantly high (signal too high) or low (signal too low).

Diagnostic trouble code (DTC) ECM-3000 or ECM-3010 is stored if the pulse width modulation signal from the camshaft position (CMP) sensor is missing but returns sporadically (missing signal).

Diagnostic trouble code (DTC) ECM-3000 or ECM-3010 is stored if the pulse width modulation signal from the camshaft position (CMP) sensor is sporadically missing (faulty signal).

The fault is diagnosed by the control module when the engine is running.

Possible Source

Signal too high:

- Open-circuit in the signal cable
- Short-circuit to supply voltage in the signal cable
- Short-circuit to ground in the power cable
- Open-circuit in the ground lead
- Defective camshaft position (CMP) sensor.

Signal too low:

- Short-circuit to ground in the signal cable
- Open-circuit in the power cable
- Loose connections.

Signal missing:

- The camshaft position (CMP) sensor is in the wrong position
- Defective camshaft position (CMP) sensor
- Loose connections.
- Incorrectly installed camshaft.

Faulty signal:

- The camshaft position (CMP) sensor is in the wrong position
- Defective camshaft position (CMP) sensor
- Loose connections.
- Incorrectly installed camshaft.

Fault symptom[s]

- The engine is difficult to start.

FAULTY SIGNAL OR SIGNAL MISSING

CHECKING THE STATUS

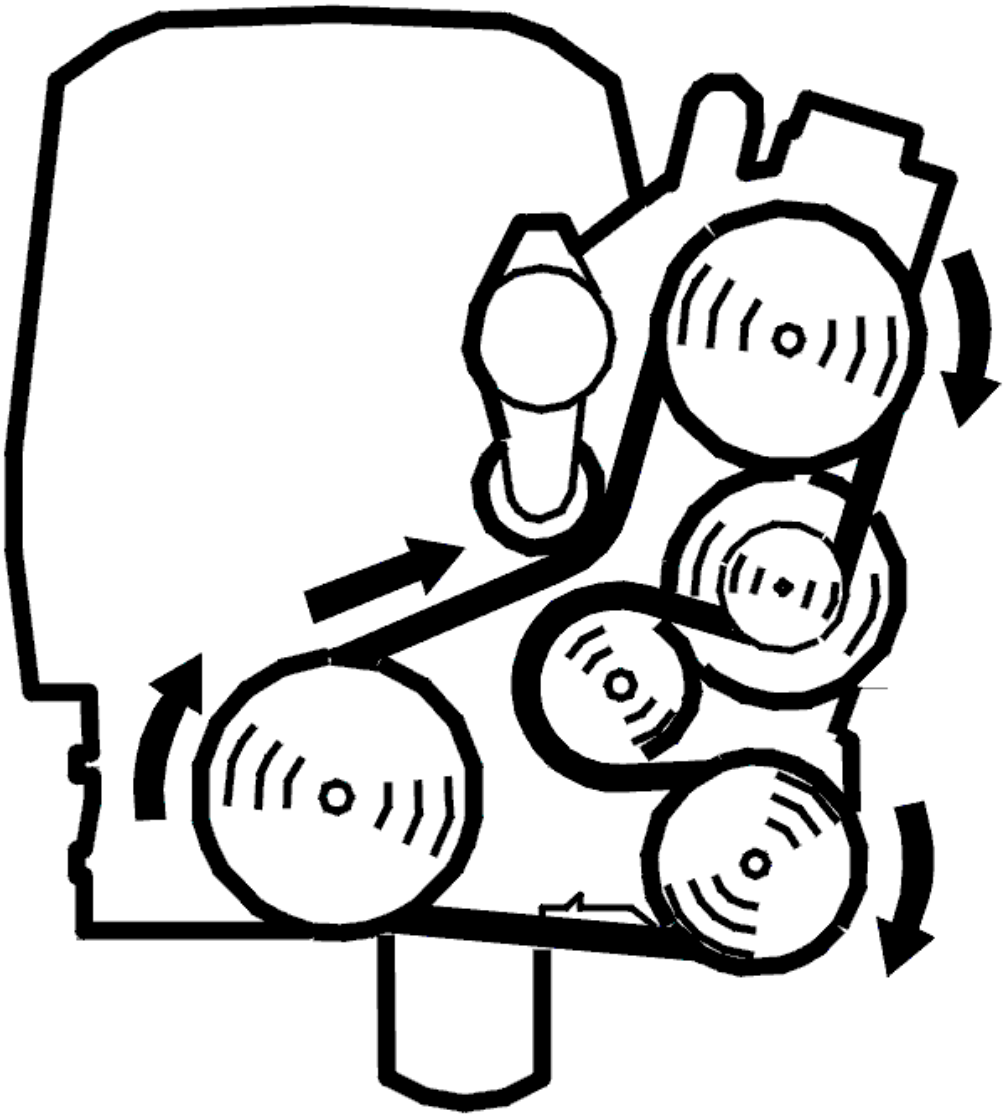

Fig. 217: Belt Routing / Engine Idling - Volvo
Courtesy of VOLVO CARS CORPORATION

- Start the engine.

  Read off the fault status of the camshaft position (CMP) sensor. "DIAGNOSIS COMPLETE" must be displayed when the camshaft position (CMP) sensor has been tested. If the fault status is "NO FAULT FOUND" when the diagnostic is complete there is an intermittent fault.

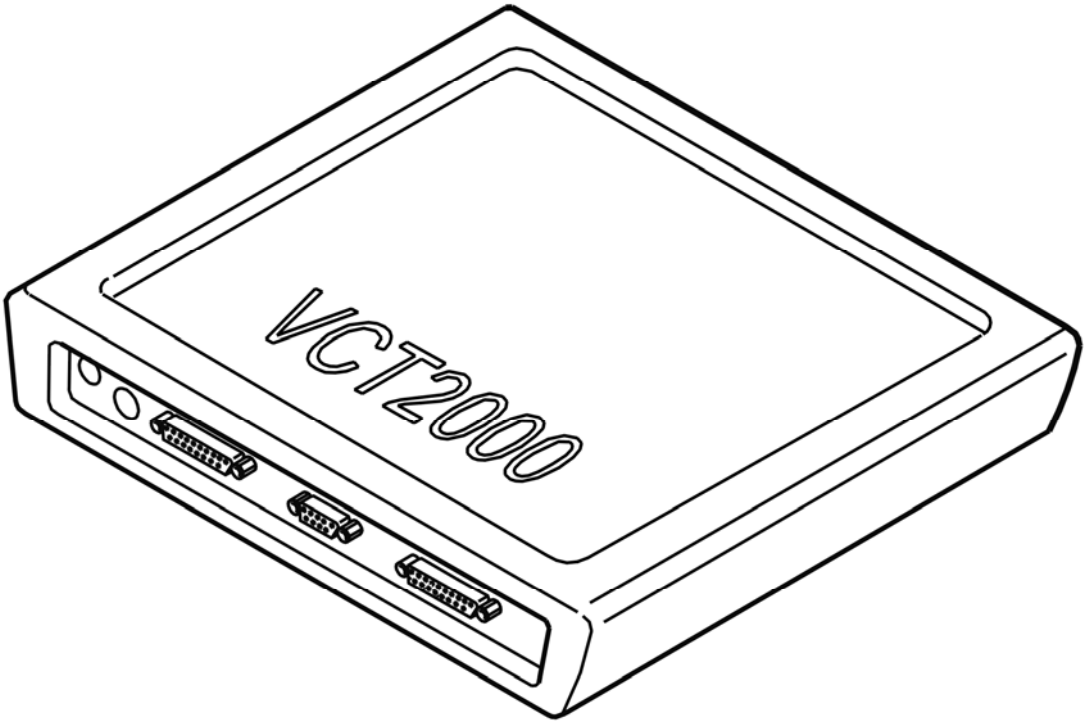

Fig. 218: Identifying VCT2000 Diagnostic Tool Symbol In VIDA
Courtesy of VOLVO CARS CORPORATION

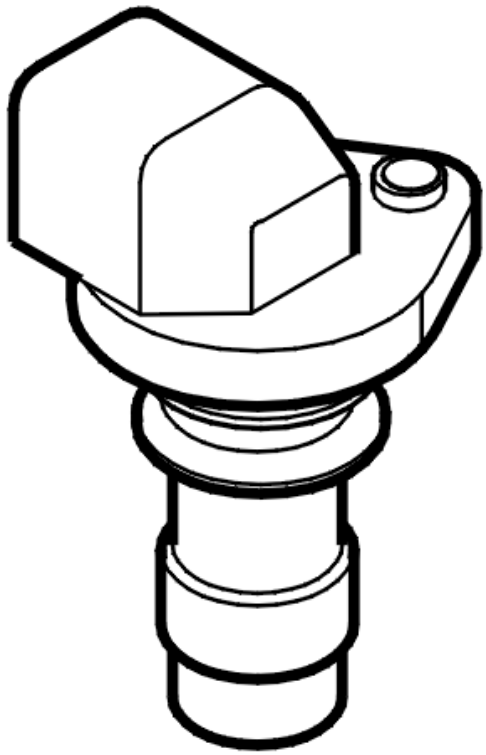

Fig. 219: Identifying Camshaft Position (CMP) Sensor
Courtesy of VOLVO CARS CORPORATION

- **Continue**

  Refer to **CHECKING COMPONENTS AND CONNECTORS**

CHECKING COMPONENTS AND CONNECTORS

Check the camshaft position (CMP) sensor and control module connectors. Check for contact resistance and oxidation.

Check that the camshaft position (CMP) sensor is correctly installed and that neither the sensor or the housing is damaged. Damage may affect the position of the sensor in relation to the camshaft rotor.

Try a new camshaft position (CMP) sensor if no fault is found during the above fault-tracing.

Remedy as necessary.

Other information

- To connect the breakout box / access the control module, see **CONNECTING THE BREAKOUT BOX**
- For the location of components in the engine compartment, see **LOCATION OF COMPONENTS, ENGINE COMPARTMENT**

- For 5 cylinder turbocharged engines -2004, see **SIGNAL DESCRIPTION**
- For 5 cylinder turbocharged engines 2005-, see **SIGNAL SPECIFICATION** .
- For 6 cylinder engines -2004, see **SIGNAL SPECIFICATION**
- For 6 cylinder engines 2005-, see **SIGNAL SPECIFICATION** .
- see **CHECKING WIRING AND TERMINALS** .

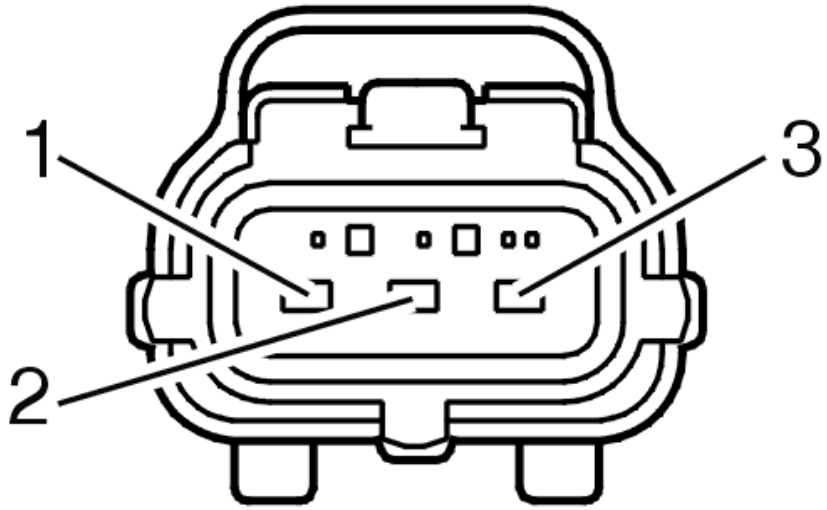

Fig. 220: Identifying Camshaft Position (CMP) Sensor Connector Terminals
Courtesy of VOLVO CARS CORPORATION

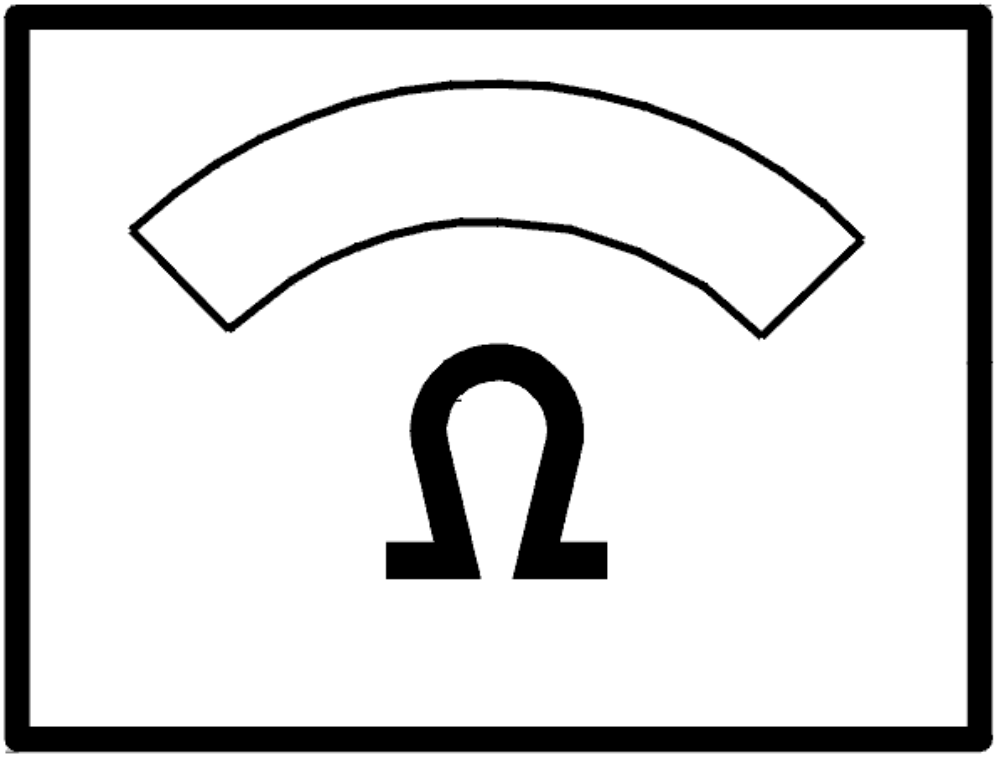

Fig. 221: Identifying Ohm Meter
Courtesy of VOLVO CARS CORPORATION

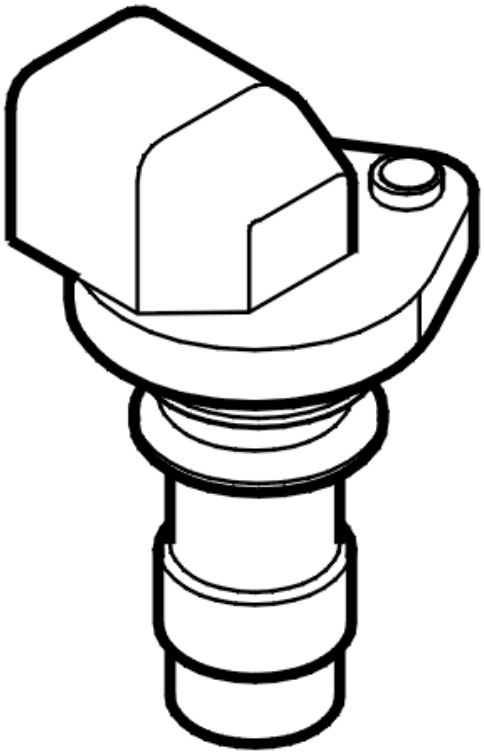

Fig. 222: Identifying Camshaft Position (CMP) Sensor
Courtesy of VOLVO CARS CORPORATION

- **Continue**

  Refer to **VERIFICATION**

VERIFICATION

VERIFICATION

HINT: After carrying out the repair, check that the fault has been remedied.

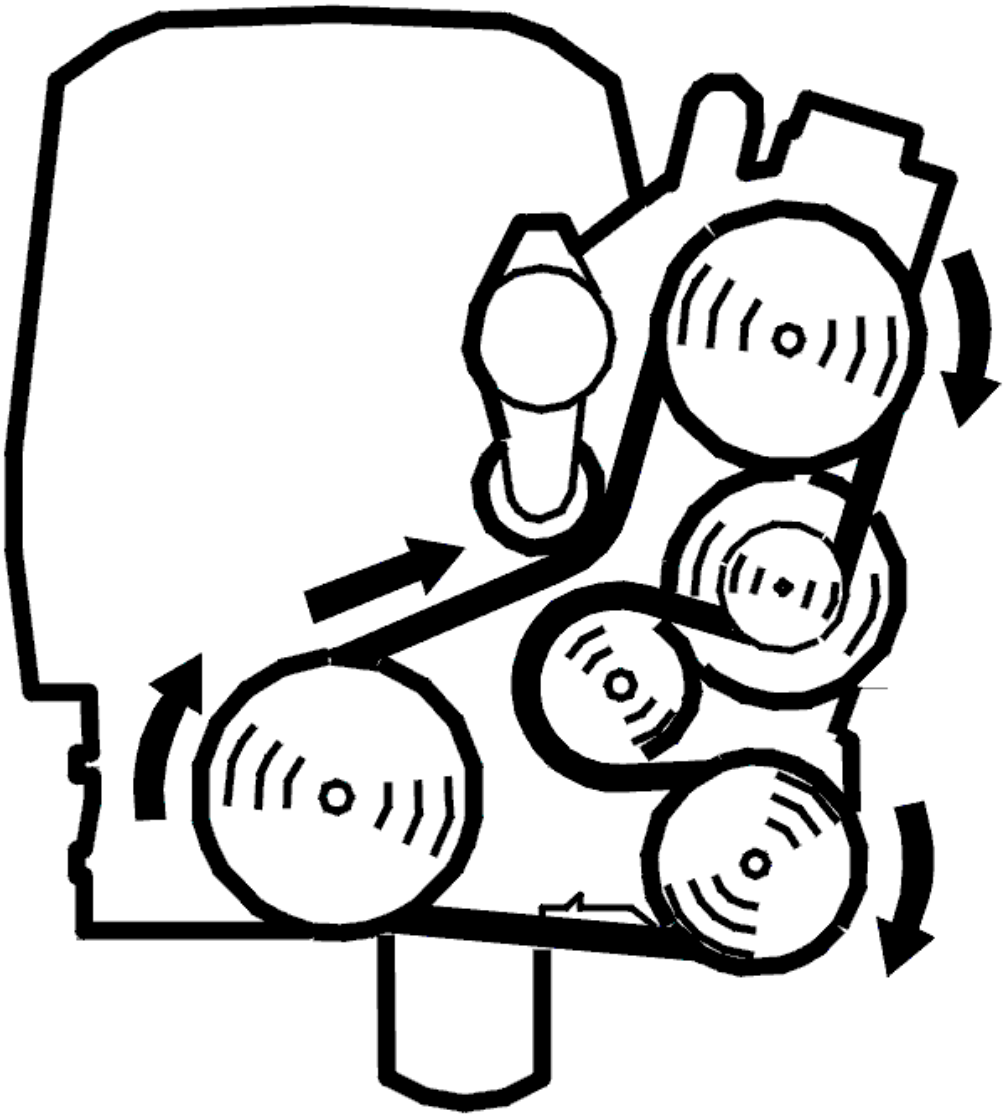

Fig. 223: Belt Routing / Engine Idling - Volvo
Courtesy of VOLVO CARS CORPORATION

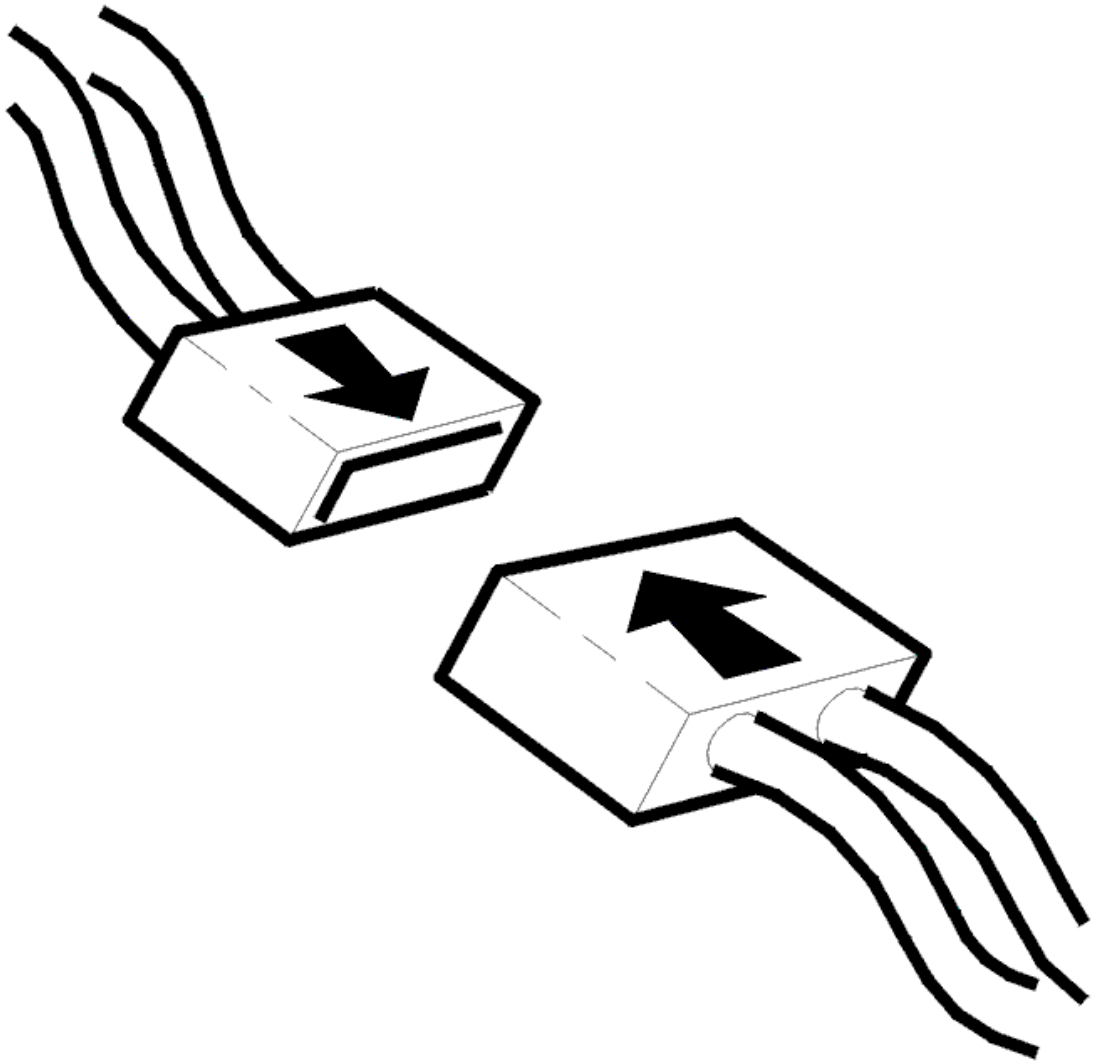

Fig. 224: Connecting Connector
Courtesy of VOLVO CARS CORPORATION

- Start the engine.

  Read off the fault status of the camshaft position (CMP) sensor.

  When the camshaft position (CMP) sensor is tested, diagnostic ready should be displayed.

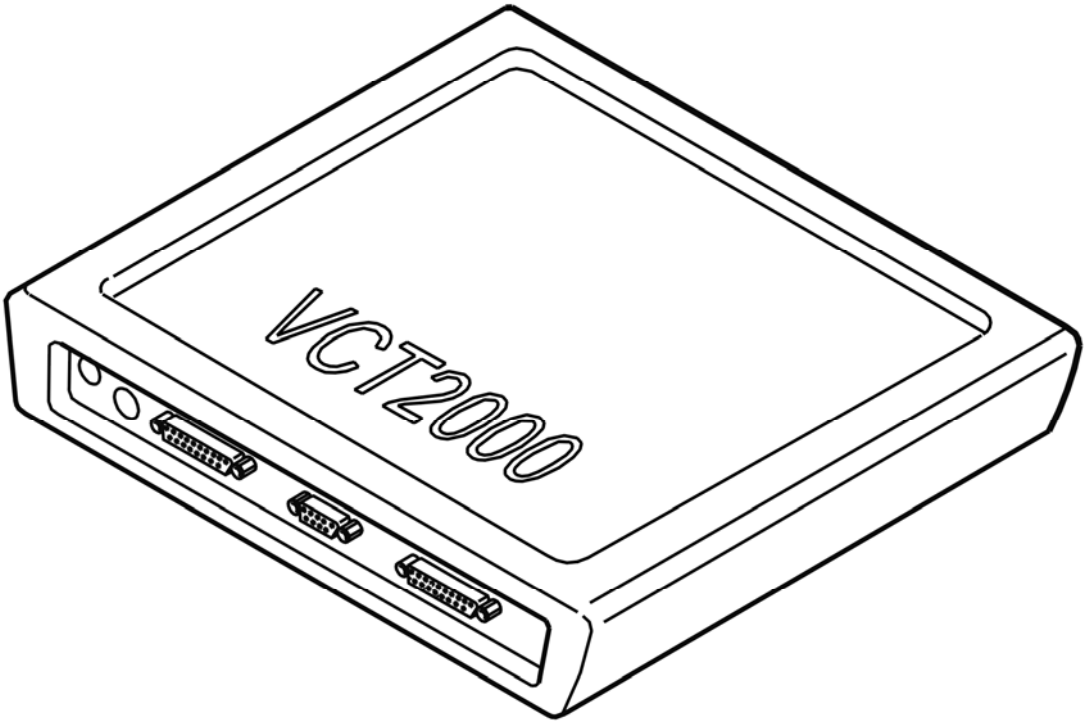

Fig. 225: Identifying VCT2000 Diagnostic Tool Symbol In VIDA
Courtesy of VOLVO CARS CORPORATION

Does the status display fault found?

- **YES**

  Refer to **INFORMATION**

- **NO**

  VERIFIED: Troubleshooting has been completed.

INFORMATION

FAULT-TRACING INFORMATION

The fault should have been detected and remedied. As this is not the case fault-tracing has failed.

Exit fault-tracing for this diagnostic trouble code (DTC) or make another attempt.

ECM-3000: CAMSHAFT POSITION (CMP) SENSOR, INTAKE. SIGNAL TOO HIGH (B5254T2; B6294T; 2003-2004)

DIAGNOSTIC TROUBLE CODE (DTC) INFORMATION

see **DIAGNOSTIC TROUBLE CODE (DTC) INFORMATION**

SIGNAL TOO HIGH

CHECKING THE STATUS

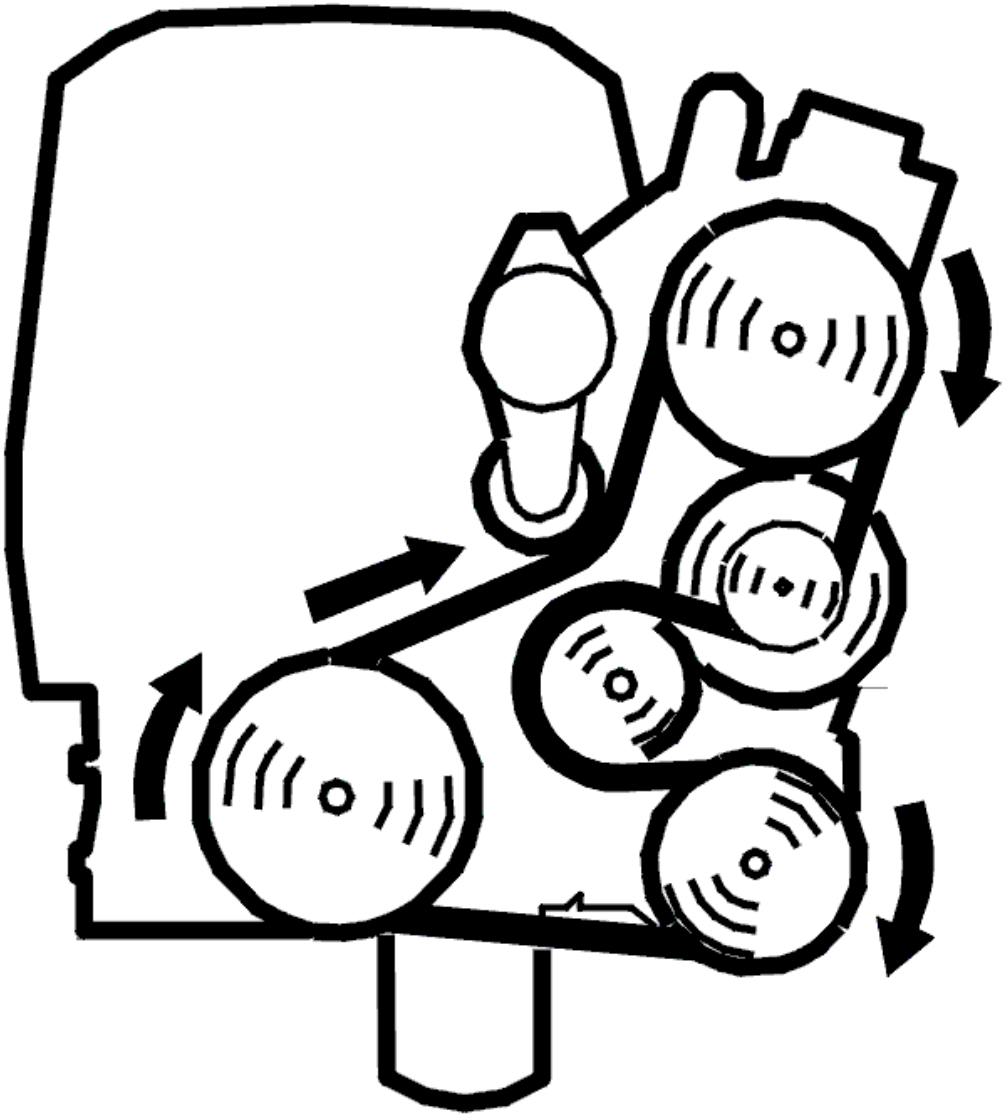

Fig. 226: Belt Routing / Engine Idling - Volvo
Courtesy of VOLVO CARS CORPORATION

- Start the engine.

  Read off the fault status of the camshaft position (CMP) sensor. "DIAGNOSIS COMPLETE" must be displayed when the camshaft position (CMP) sensor has been tested. If the fault status is "NO FAULT FOUND" when the diagnostic is complete there is an intermittent fault.

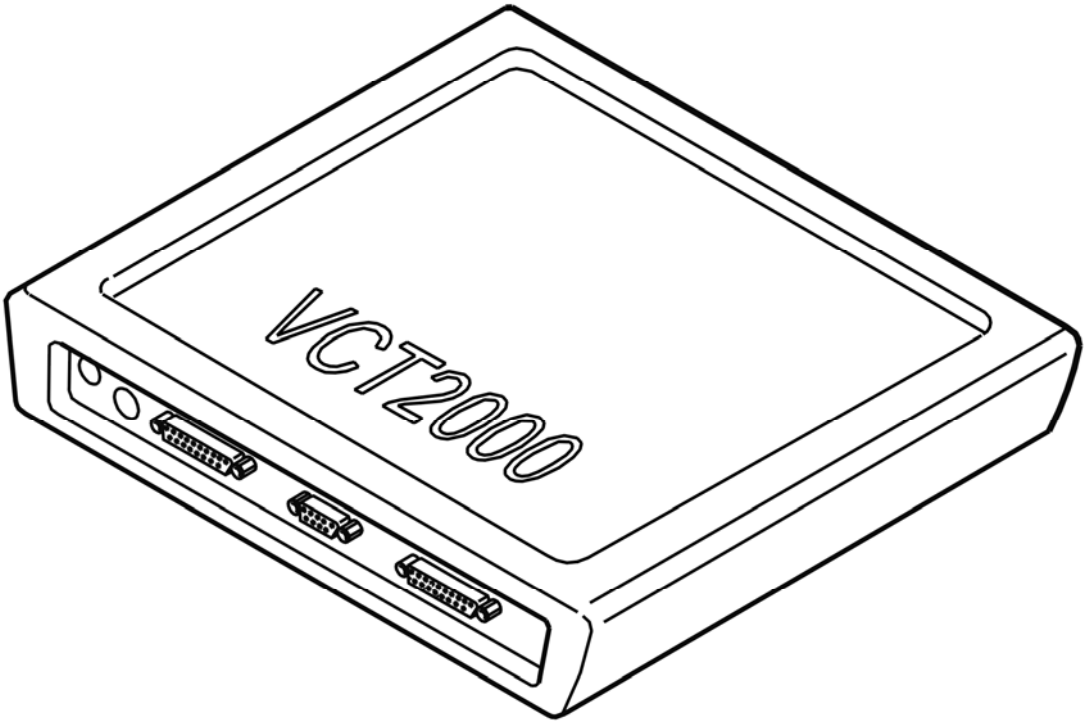

Fig. 227: Identifying VCT2000 Diagnostic Tool Symbol In VIDA
Courtesy of VOLVO CARS CORPORATION

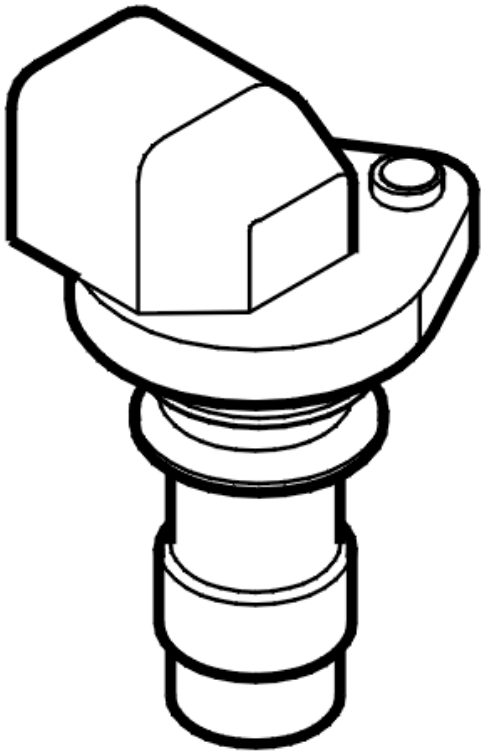

Fig. 228: Identifying Camshaft Position (CMP) Sensor
Courtesy of VOLVO CARS CORPORATION

- **Continue**

  Refer to **CHECKING CONNECTORS AND WIRING**

CHECKING CONNECTORS AND WIRING

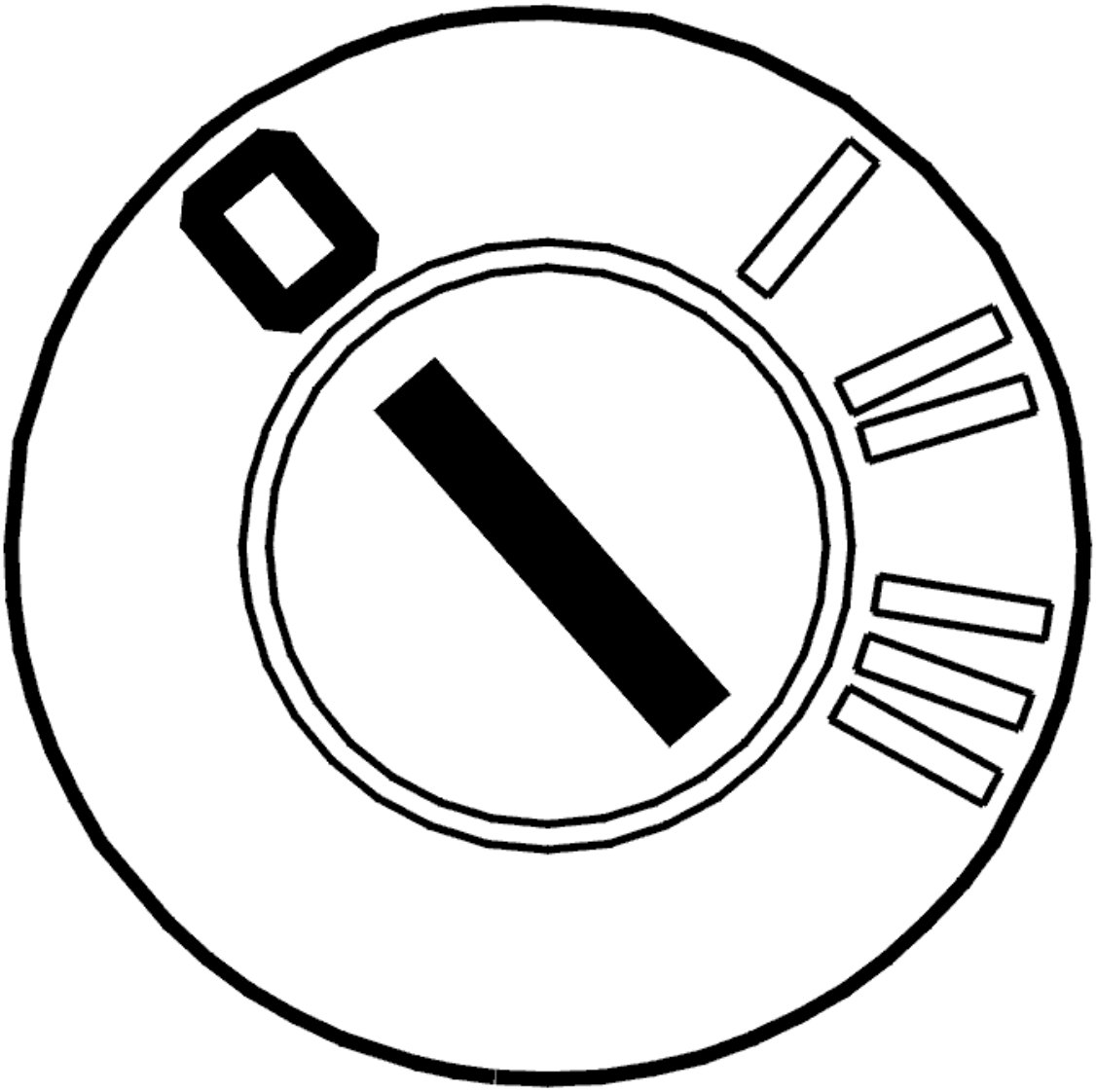

Fig. 229: Identifying Ignition OFF
Courtesy of VOLVO CARS CORPORATION

- Ignition off.

  Check the connector for the camshaft position (CMP) sensor. Check for contact resistance and oxidation. Check for loose connections. Check for damage carefully.

  Check the signal cable between control module terminal #A47 (#A47) and camshaft position (CMP) sensor connector terminal #3. Check for an open-circuit. Check for a short-circuit to supply voltage.

  HINT: Use a test lamp with at least a 3 W bulb to determine whether the cable is short-circuited to supply voltage. Check the ground lead between control module terminal #A65 (#A65) and camshaft position (CMP) sensor connector terminal #2. Check for an open-circuit.

  Check the power cable between control module terminal #A29 (#A29) and camshaft position (CMP)

sensor connector terminal #1. Check for a short-circuit to ground. Try a new camshaft position (CMP) sensor if no fault is found during the above fault-tracing.

Remedy as necessary.

Other information

- see **CHECKING WIRING AND TERMINALS**
- To connect the breakout box / access the control module, see **CONNECTING THE BREAKOUT BOX**
- For the location of components in the engine compartment, see **LOCATION OF COMPONENTS, ENGINE COMPARTMENT**
- For 5 cylinder turbocharged engines -2004, see **SIGNAL DESCRIPTION**
- For 5 cylinder turbocharged engines 2005-, see **SIGNAL SPECIFICATION** .
- For 6 cylinder engines -2004, see **SIGNAL SPECIFICATION**
- For 6 cylinder engines 2005-, see **SIGNAL SPECIFICATION** .

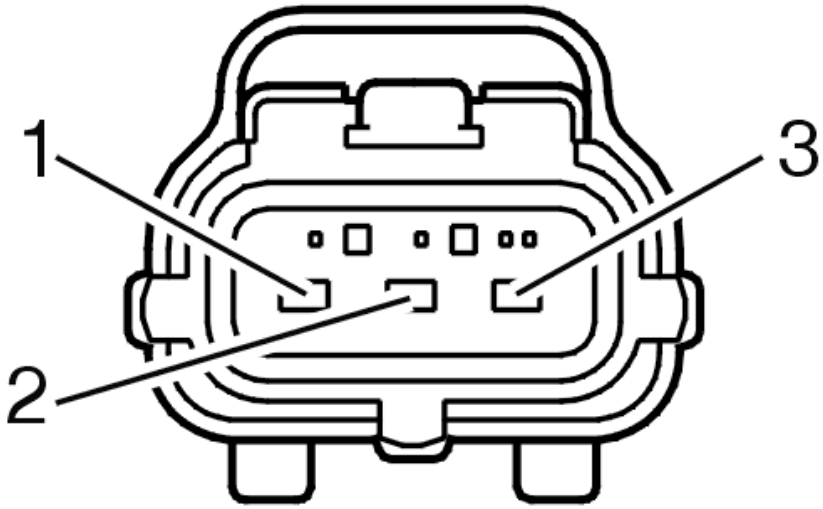

Fig. 230: Identifying Camshaft Position (CMP) Sensor Connector Terminals
Courtesy of VOLVO CARS CORPORATION

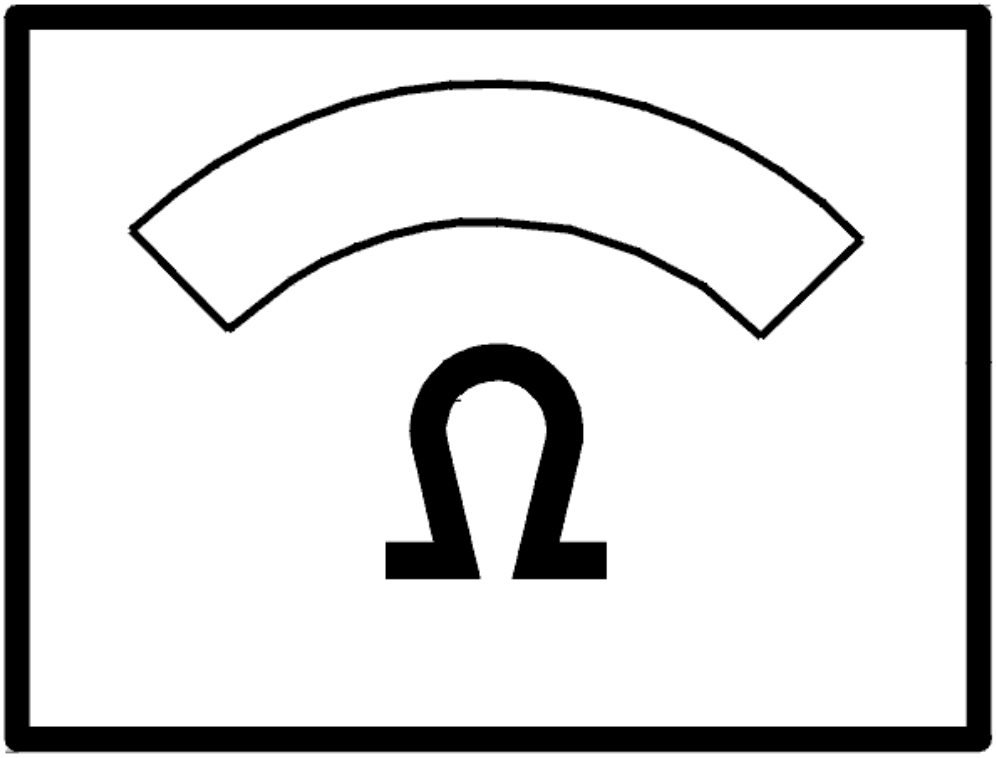

Fig. 231: Identifying Ohm Meter
Courtesy of VOLVO CARS CORPORATION

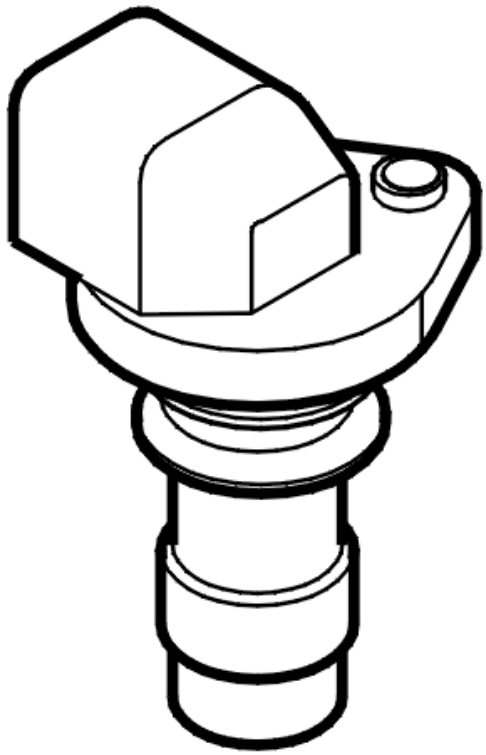

Fig. 232: Identifying Camshaft Position (CMP) Sensor
Courtesy of VOLVO CARS CORPORATION

- **Continue**

  Refer to **VERIFICATION**

VERIFICATION

VERIFICATION

HINT: After carrying out the repair, check that the fault has been remedied.

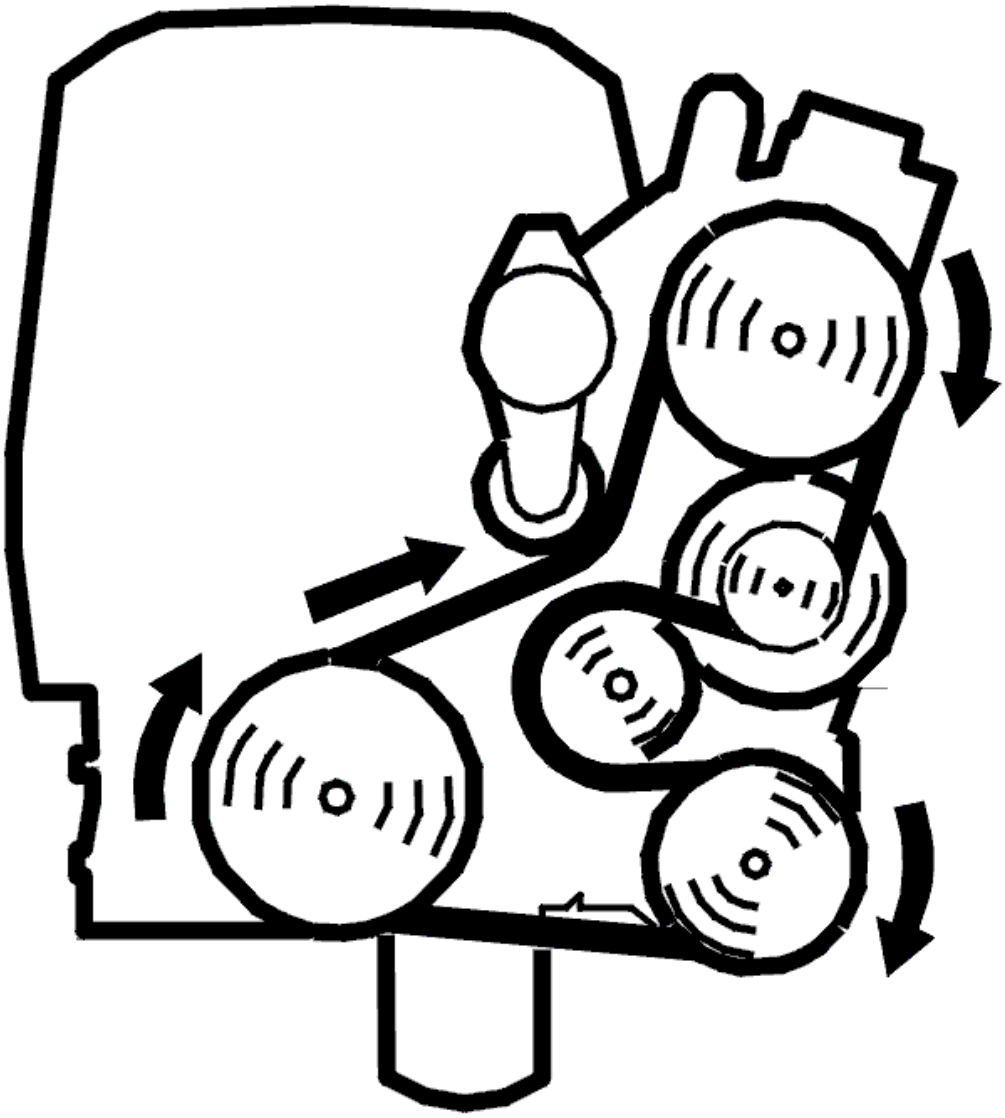

Fig. 233: Belt Routing / Engine Idling - Volvo
Courtesy of VOLVO CARS CORPORATION

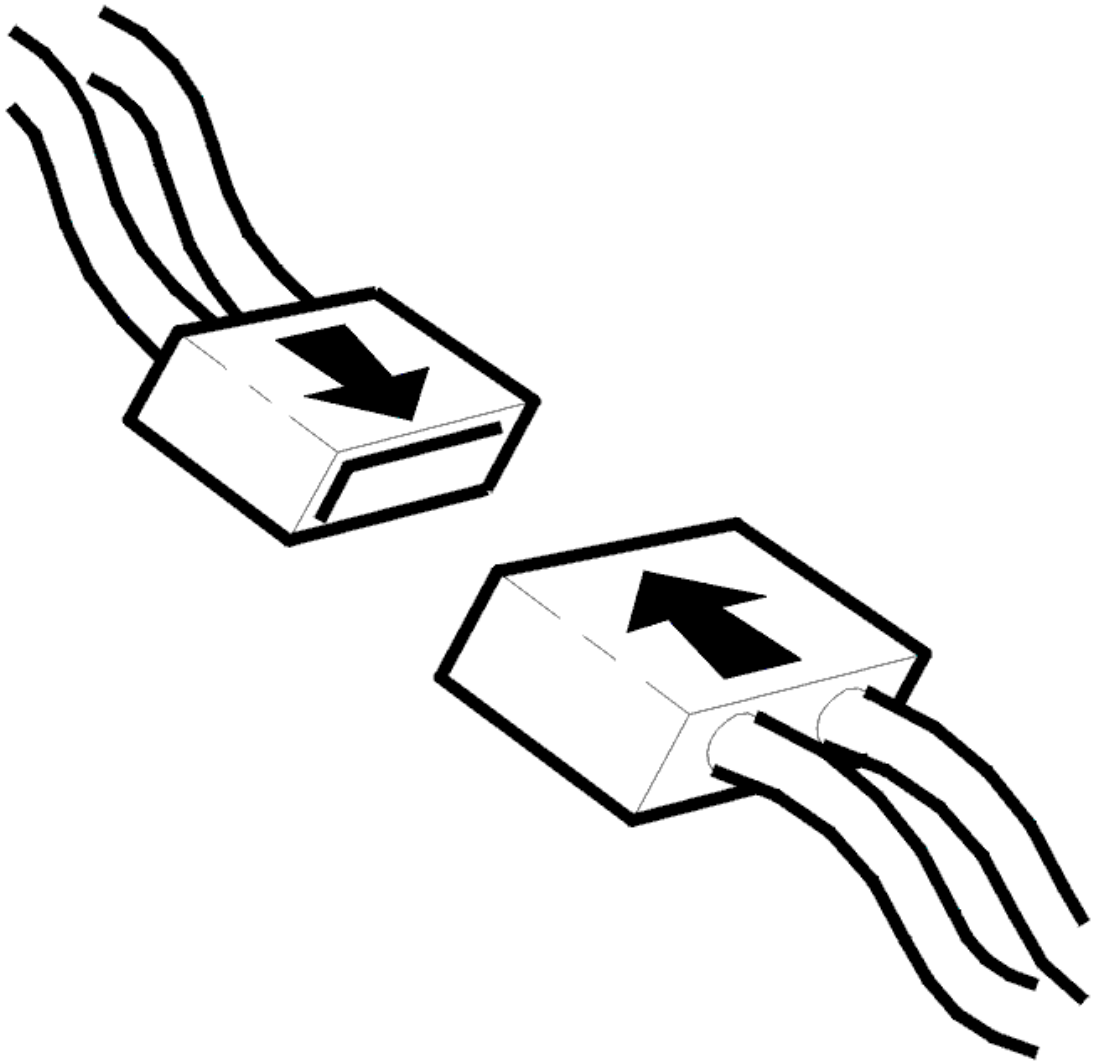

Fig. 234: Connecting Connector
Courtesy of VOLVO CARS CORPORATION

- Start the engine.

  Read off the fault status of the camshaft position (CMP) sensor.

  When the camshaft position (CMP) sensor is tested, diagnostic ready should be displayed.

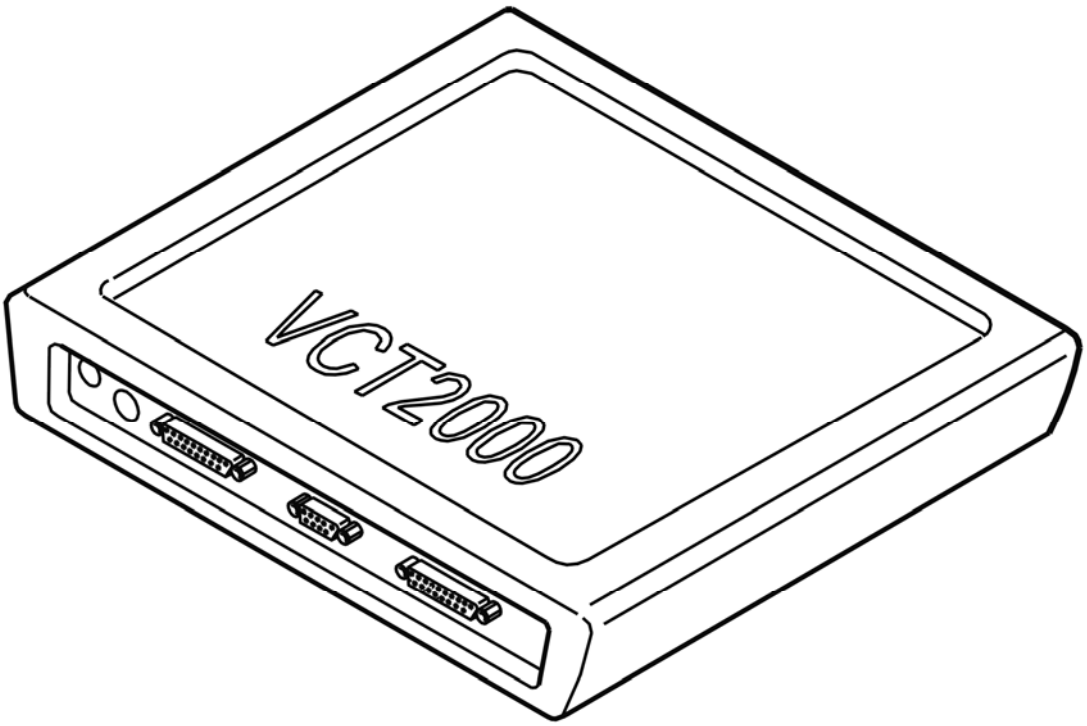

Fig. 235: Identifying VCT2000 Diagnostic Tool Symbol In VIDA
Courtesy of VOLVO CARS CORPORATION

Does the status display fault found?

- **YES**

  Refer to **INFORMATION**

- **NO**

  VERIFIED: Troubleshooting has been completed.

INFORMATION

FAULT-TRACING INFORMATION

The fault should have been detected and remedied. As this is not the case fault-tracing has failed.

Exit fault-tracing for this diagnostic trouble code (DTC) or make another attempt.

ECM-3000: CAMSHAFT POSITION (CMP) SENSOR, INTAKE. SIGNAL TOO LOW (B5254T2; B6294T; 2003-2004)

DIAGNOSTIC TROUBLE CODE (DTC) INFORMATION

see **DIAGNOSTIC TROUBLE CODE (DTC) INFORMATION**

SIGNAL TOO LOW

CHECKING THE STATUS

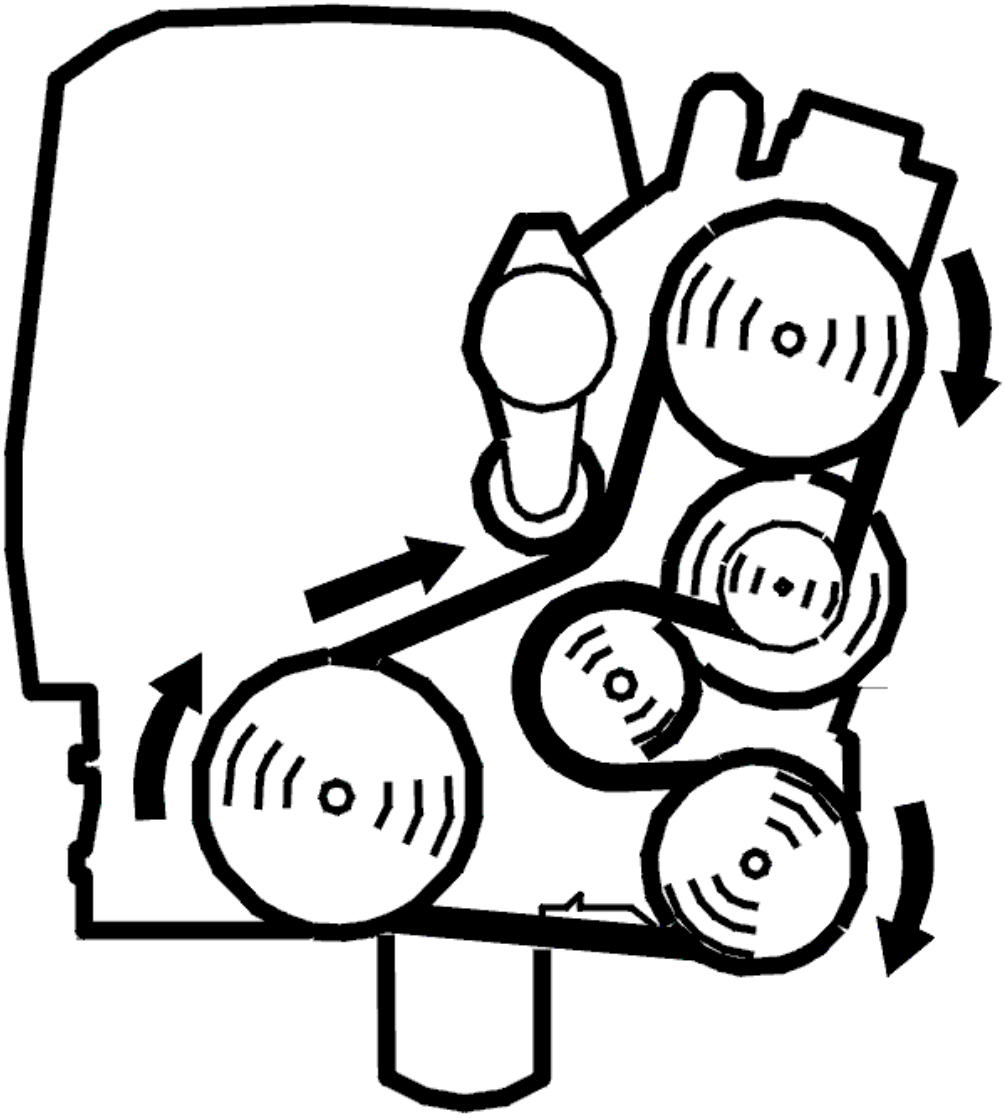

Fig. 236: Belt Routing / Engine Idling - Volvo
Courtesy of VOLVO CARS CORPORATION

- start the engine.

  Read off the fault status of the camshaft position (CMP) sensor. "DIAGNOSIS COMPLETE" must be displayed when the camshaft position (CMP) sensor has been tested. If the fault status is "NO FAULT FOUND" when the diagnostic is complete there is an intermittent fault.

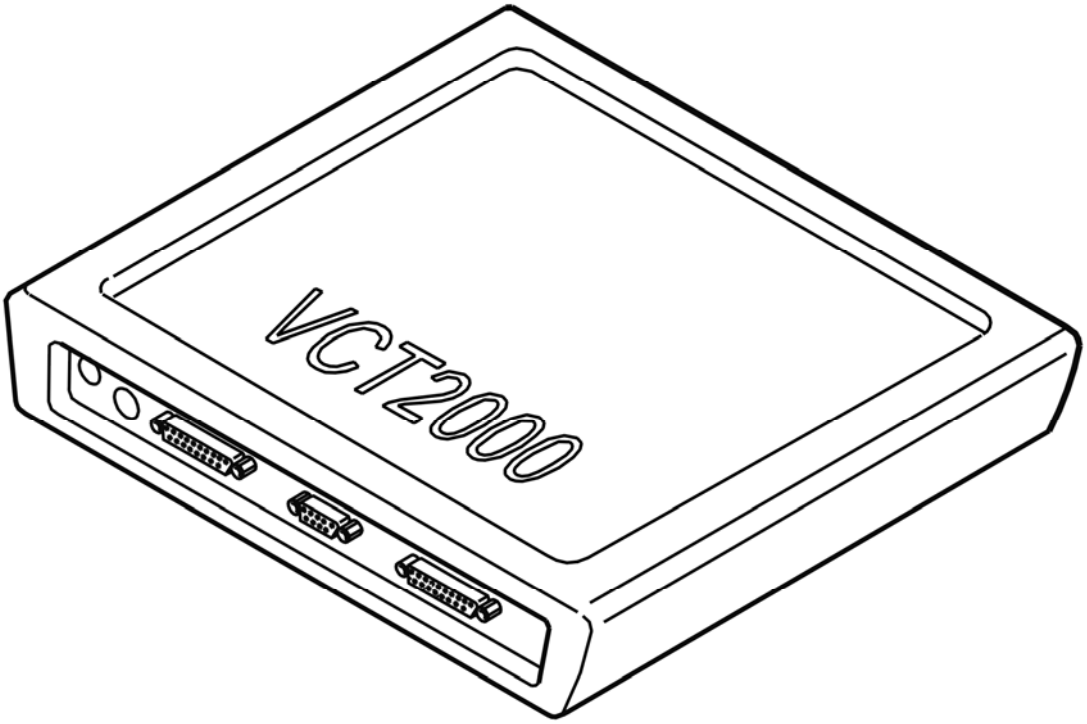

Fig. 237: Identifying VCT2000 Diagnostic Tool Symbol In VIDA
Courtesy of VOLVO CARS CORPORATION

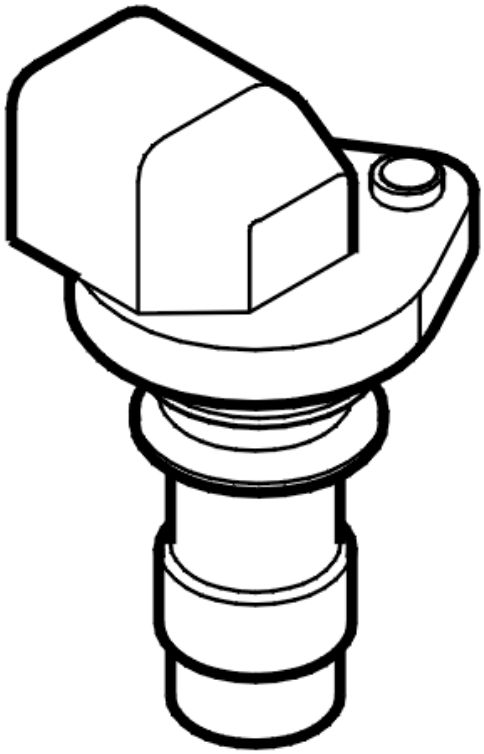

Fig. 238: Identifying Camshaft Position (CMP) Sensor
Courtesy of VOLVO CARS CORPORATION

- **Continue**

  Refer to **CHECKING THE WIRING**

CHECKING THE WIRING

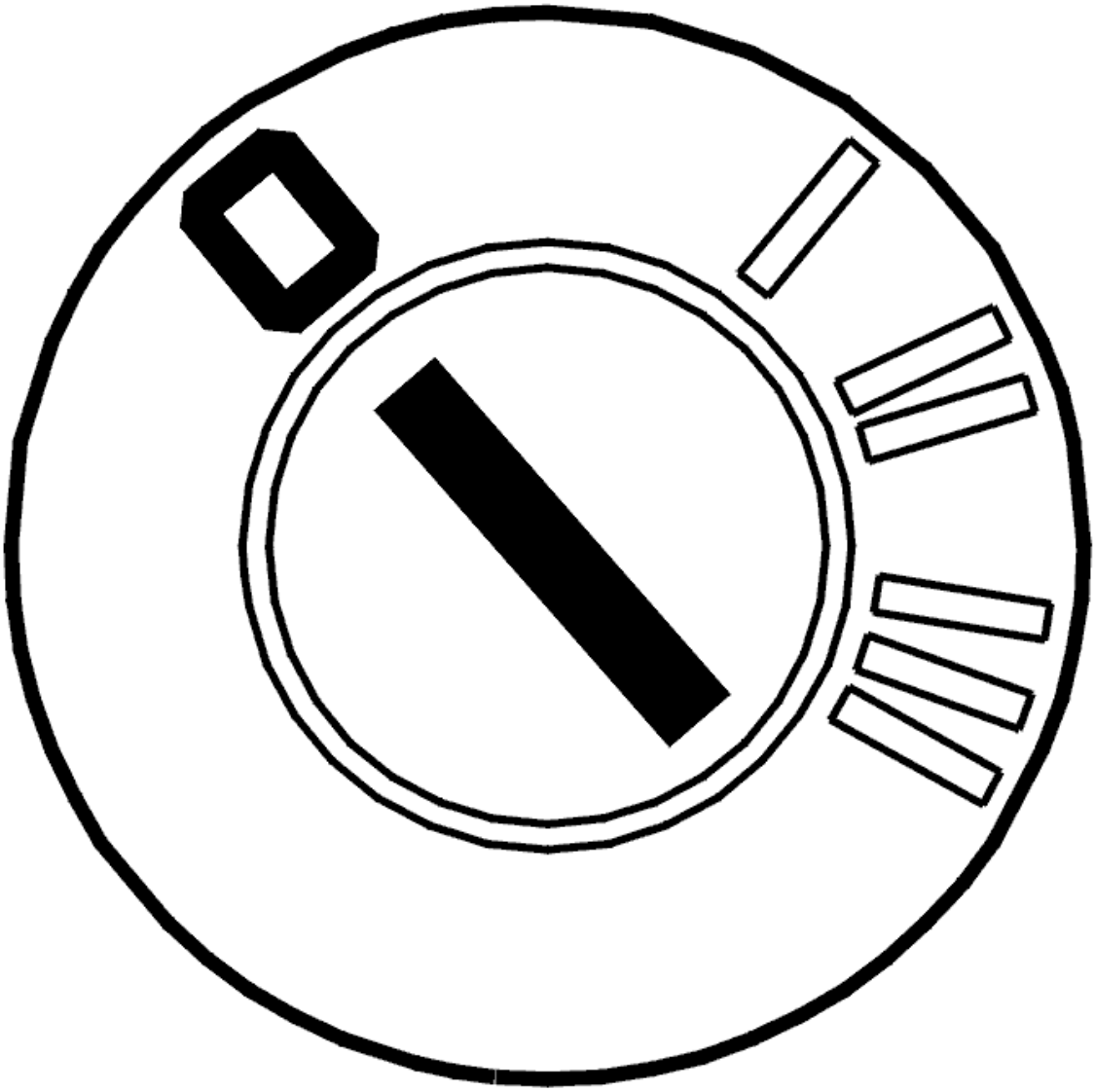

Fig. 239: Identifying Ignition OFF
Courtesy of VOLVO CARS CORPORATION

- Ignition off.

  Check the signal cable between control module terminal #A47 (#A47) and camshaft position (CMP) sensor connector terminal #3. Check for a short-circuit to ground. Check the power cable between control module terminal #A29 (#A29) and camshaft position (CMP) sensor connector terminal #1. Check for an open-circuit.

  HINT: With the ignition on and the camshaft position (CMP) sensor connector disconnected, the voltage between terminal #1 and ground terminal should be approximately 5 V.

  Remedy as necessary.

  Other information

- To connect the breakout box / access the control module, see **CONNECTING THE BREAKOUT BOX**
- For the location of components in the engine compartment, see **LOCATION OF COMPONENTS, ENGINE COMPARTMENT**
- For 5 cylinder turbocharged engines -2004, see **SIGNAL DESCRIPTION**
- For 5 cylinder turbocharged engines 2005-, see **SIGNAL SPECIFICATION** .
- For 6 cylinder engines -2004, see **SIGNAL SPECIFICATION**
- For 6 cylinder engines 2005-, see **SIGNAL SPECIFICATION** .
- see **CHECKING WIRING AND TERMINALS** .

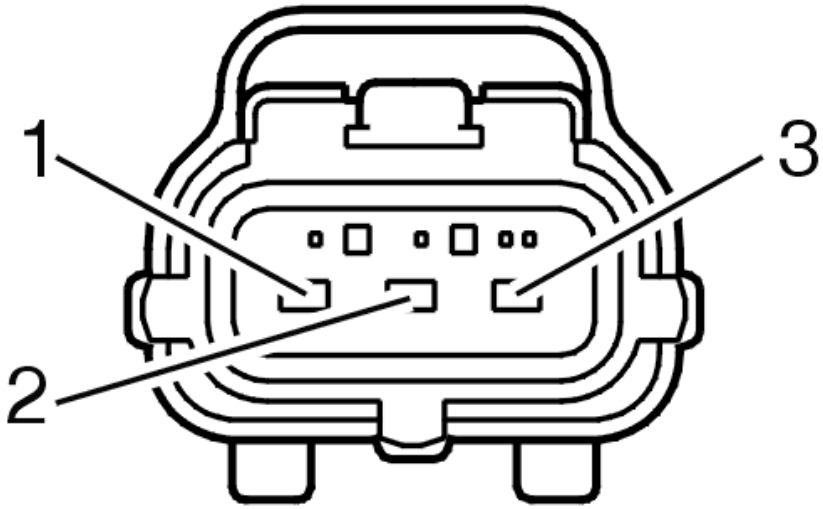

Fig. 240: Identifying Camshaft Position (CMP) Sensor Connector Terminals
Courtesy of VOLVO CARS CORPORATION

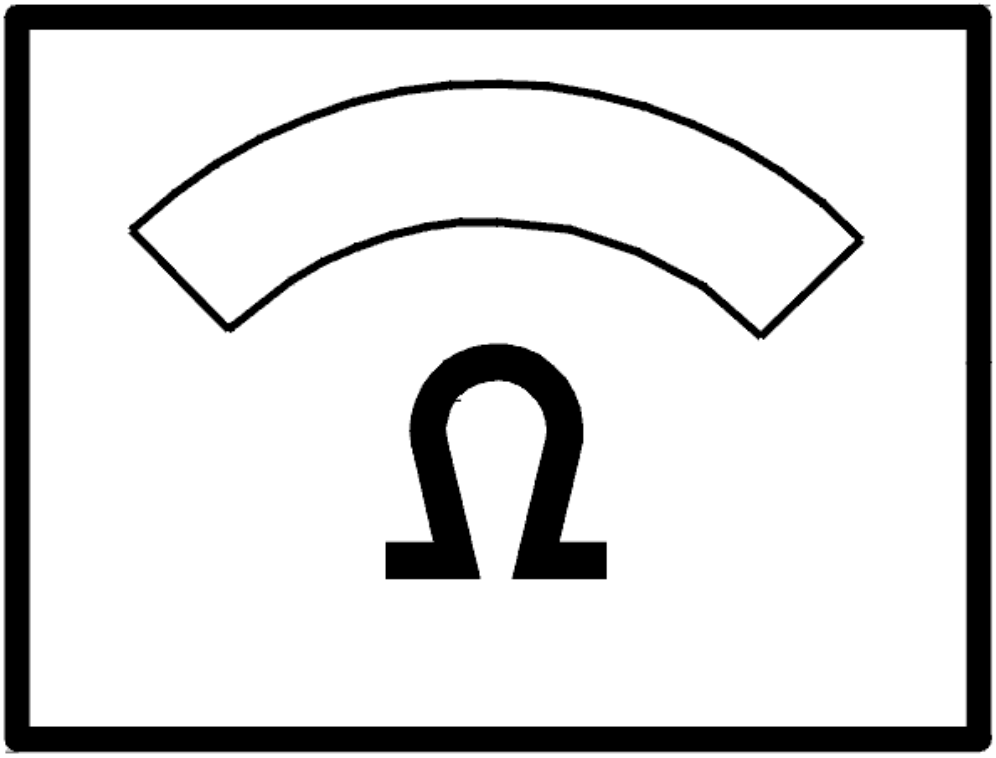

Fig. 241: Identifying Ohm Meter
Courtesy of VOLVO CARS CORPORATION

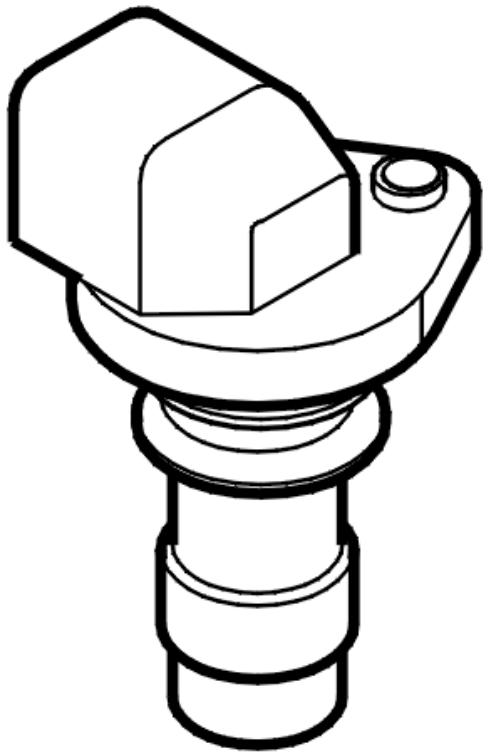

Fig. 242: Identifying Camshaft Position (CMP) Sensor
Courtesy of VOLVO CARS CORPORATION

- **Continue**

  Refer to **VERIFICATION**

VERIFICATION

VERIFICATION

HINT: After carrying out the repair, check that the fault has been remedied.

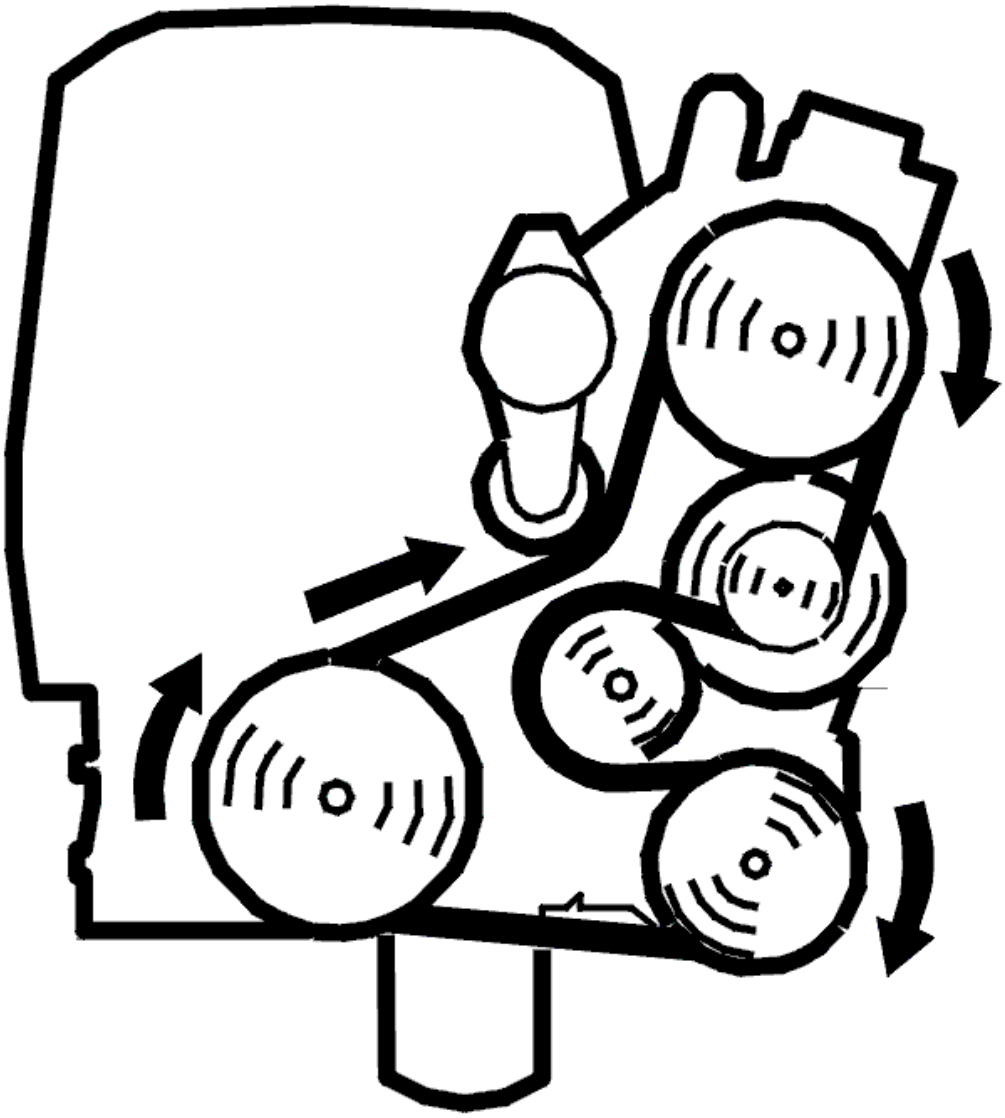

Fig. 243: Belt Routing / Engine Idling - Volvo
Courtesy of VOLVO CARS CORPORATION

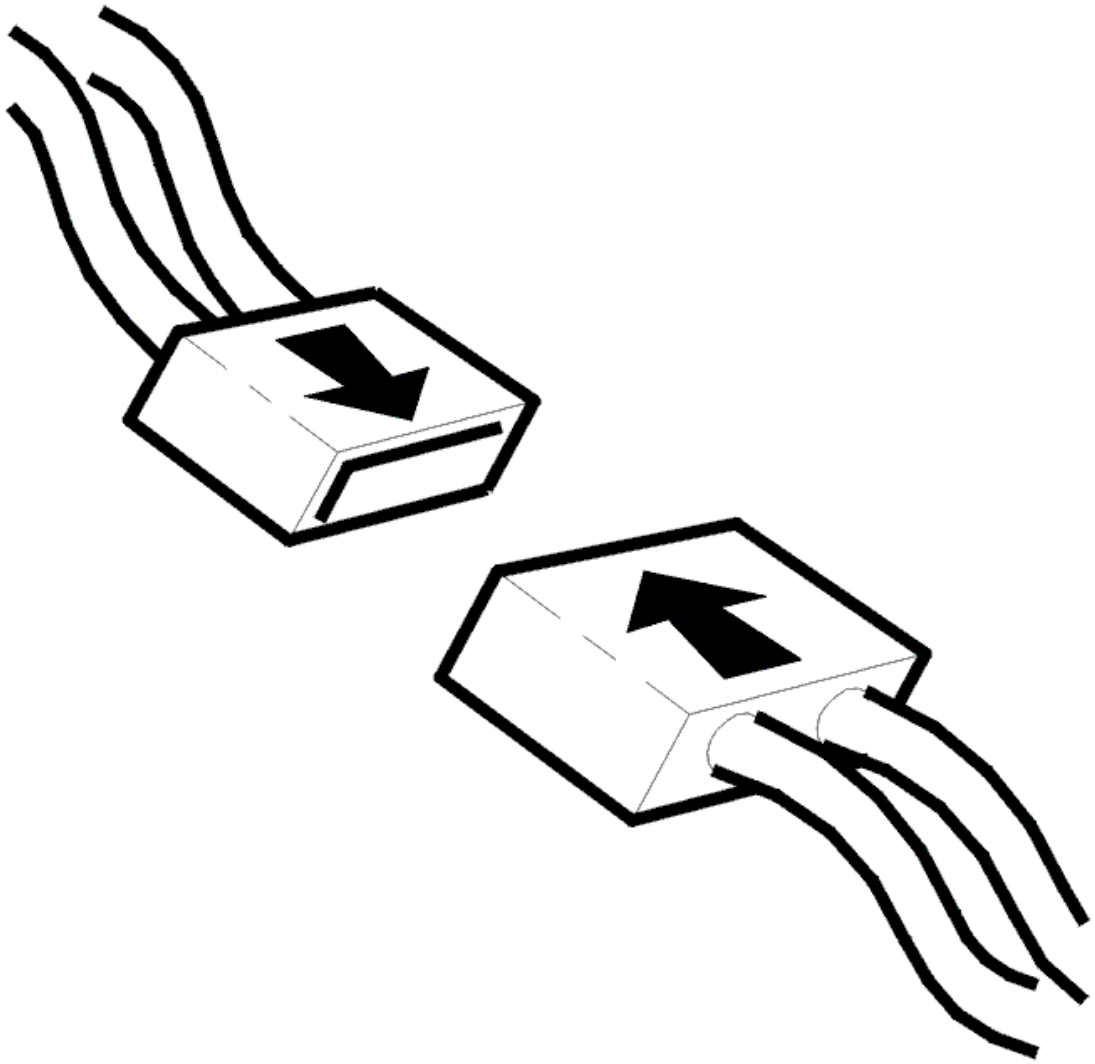

Fig. 244: Connecting Connector
Courtesy of VOLVO CARS CORPORATION

- Start the engine.

  Read off the fault status of the camshaft position (CMP) sensor.

  When the camshaft position (CMP) sensor is tested, diagnostic ready should be displayed.

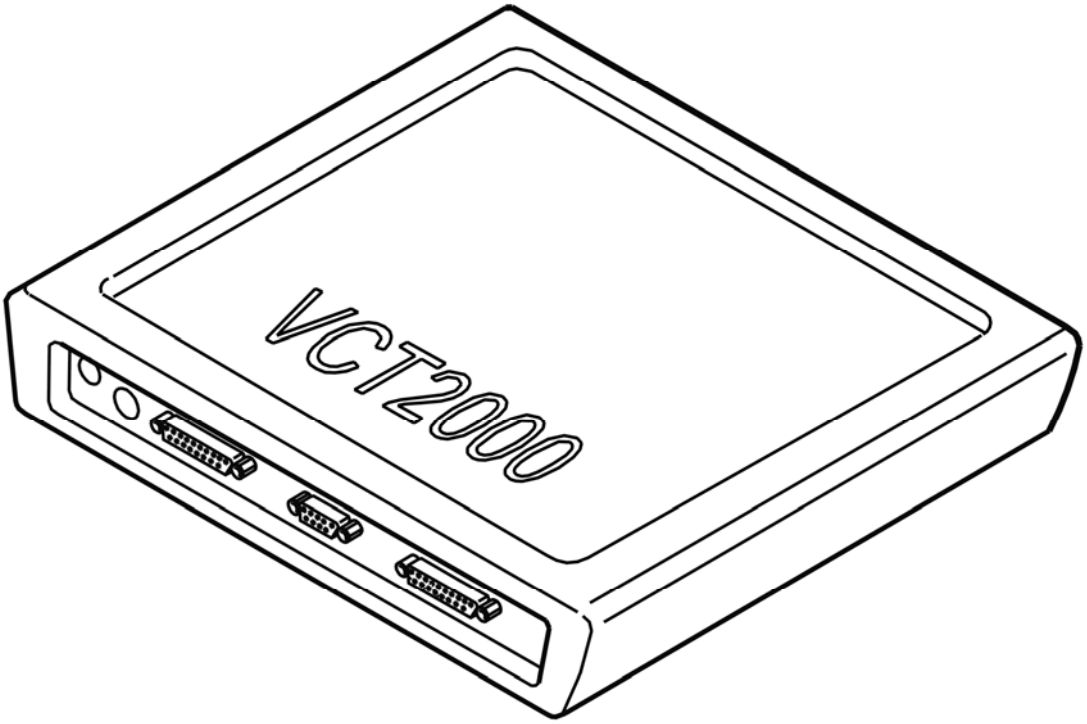

Fig. 245: Identifying VCT2000 Diagnostic Tool Symbol In VIDA
Courtesy of VOLVO CARS CORPORATION

Does the status display fault found?

- **YES**

  Refer to **INFORMATION**

- **NO**

  VERIFIED: Troubleshooting has been completed.

INFORMATION

FAULT-TRACING INFORMATION

The fault should have been detected and remedied. As this is not the case fault-tracing has failed.

Exit fault-tracing for this diagnostic trouble code (DTC) or make another attempt.

ECM-3000: ENGINE CONTROL MODULE (ECM), INTERNAL FAULT. FAULTY SIGNAL (B5254T2; 2005-2007)

DIAGNOSTIC TROUBLE CODE (DTC) INFORMATION ECM-3000

Condition

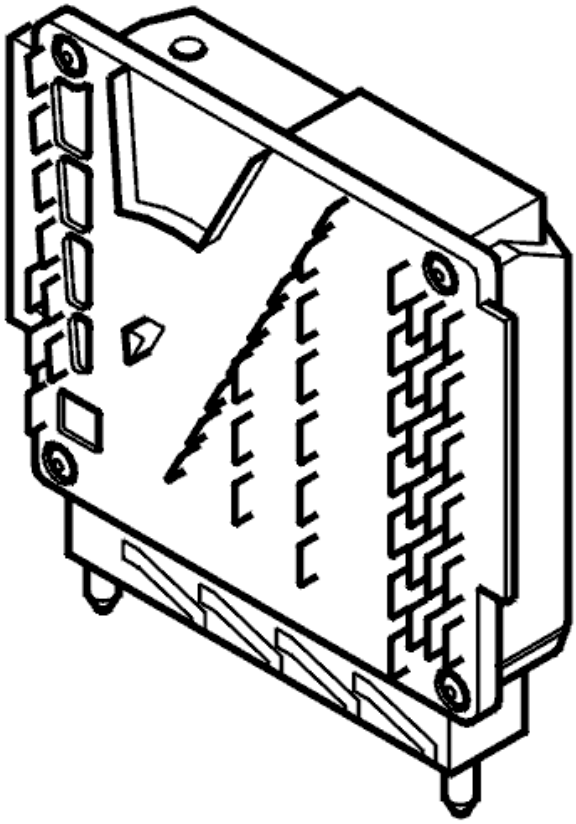

Fig. 246: Engine Control Module
Courtesy of VOLVO CARS CORPORATION

The diagnostic trouble code (DTC) is stored if the engine control module (ECM) detects a fault in the control module internal circuit for knock control.

The diagnostic trouble code (DTC) can be diagnosed when the ignition is switched on.

Substitute Value

- Safety retardation of ignition advance
- Reduced boost pressure.

Possible Source

- Damaged engine control module (ECM).

Fault symptom[s]

- Malfunction indicator lamp (MIL) lit
- Poor performance.

INTERNAL FAULT

see **INTERNAL FAULT**

ECM-3000: ENGINE CONTROL MODULE (ECM), INTERNAL FAULT. FAULTY SIGNAL (B6294T; 2005-2006)

DIAGNOSTIC TROUBLE CODE (DTC) INFORMATION ECM-3000

see **DIAGNOSTIC TROUBLE CODE (DTC) INFORMATION ECM-3000**

INTERNAL FAULT

see **INTERNAL FAULT**

ECM-3010: CAMSHAFT POSITION (CMP) SENSOR, EXHAUST. FAULTY SIGNAL OR SIGNAL MISSING (B5254T2; B6294T; 2003-2004)

DIAGNOSTIC TROUBLE CODE (DTC) INFORMATION

see **DIAGNOSTIC TROUBLE CODE (DTC) INFORMATION**

FAULTY SIGNAL OR SIGNAL MISSING

CHECKING THE STATUS

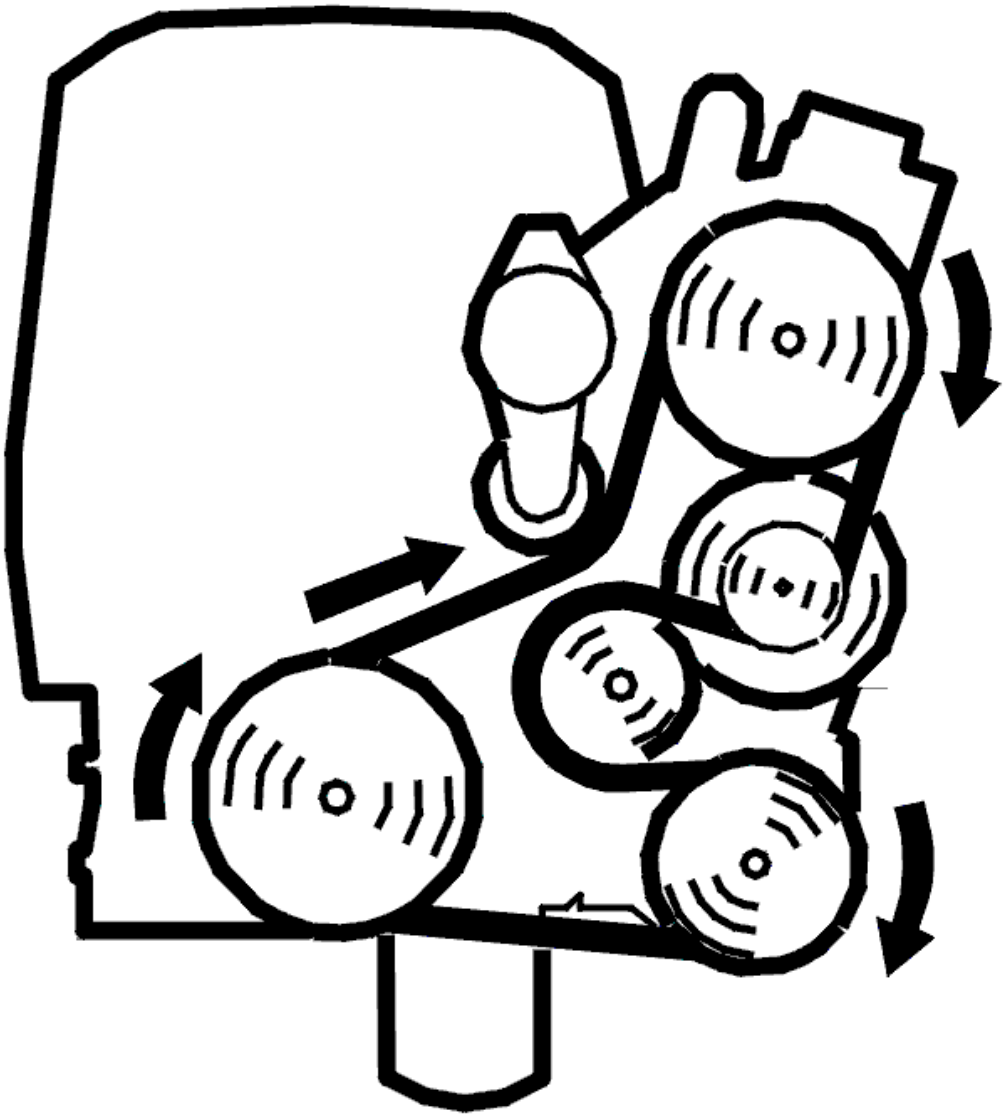

Fig. 247: Belt Routing / Engine Idling - Volvo
Courtesy of VOLVO CARS CORPORATION

- Start the engine.

  Read off the fault status of the camshaft position (CMP) sensor. Check the status of the fault when the diagnostic status is COMPLETED. If the fault status is "NO FAULT FOUND" when the diagnostic status is COMPLETE there is an intermittent fault.

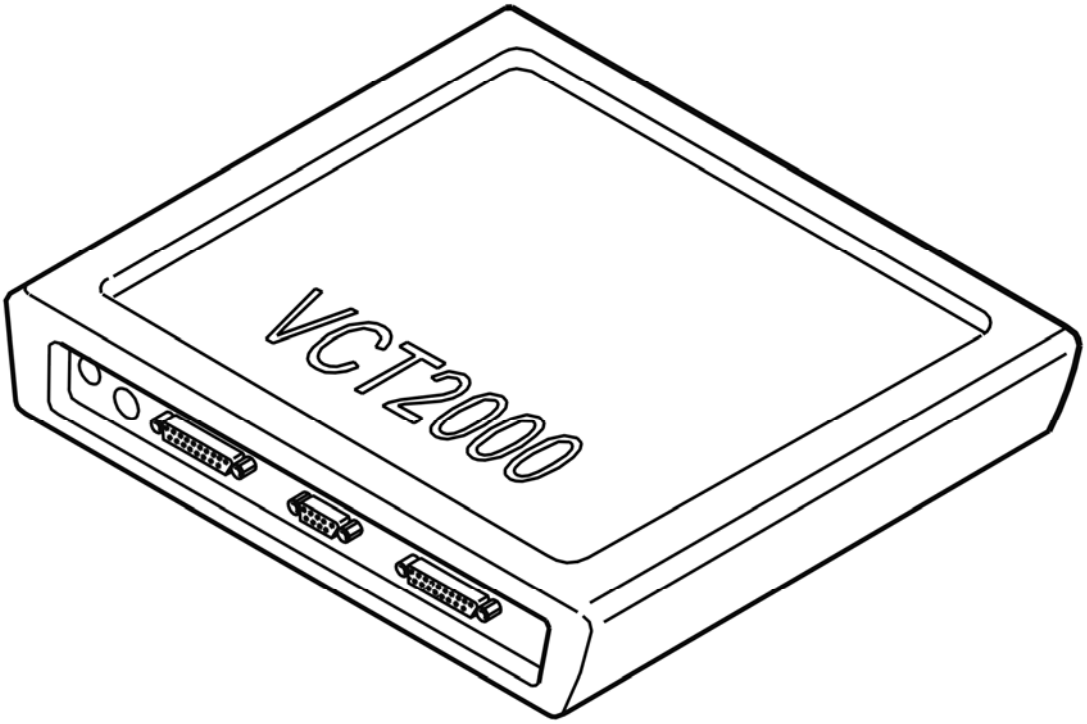

Fig. 248: Identifying VCT2000 Diagnostic Tool Symbol In VIDA
Courtesy of VOLVO CARS CORPORATION

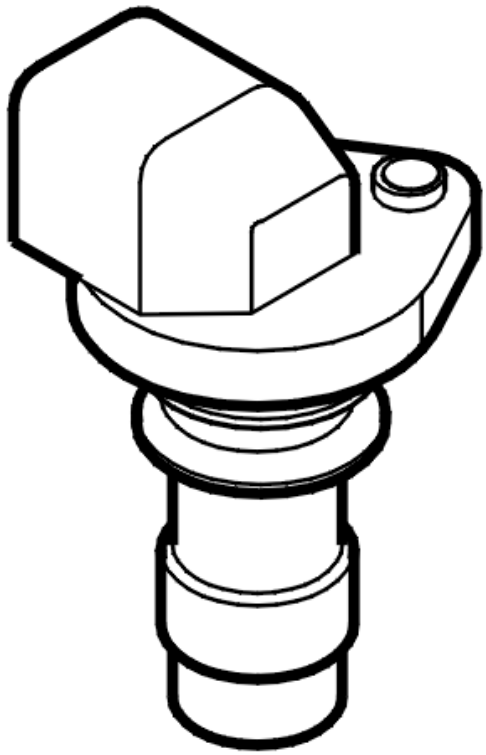

Fig. 249: Identifying Camshaft Position (CMP) Sensor
Courtesy of VOLVO CARS CORPORATION

- **Continue**

  Refer to **CHECKING COMPONENTS AND CONNECTORS**

CHECKING COMPONENTS AND CONNECTORS

Check the camshaft position (CMP) sensor and control module connectors. Check for contact resistance and oxidation.

Check that the camshaft position (CMP) sensor is correctly installed and that neither the sensor or the housing is damaged. Damage may affect the position of the sensor in relation to the camshaft rotor.

Remedy as necessary.

Try a new camshaft position (CMP) sensor if no fault is found during the above fault-tracing.

Other information:

- To connect the breakout box / access the control module, see **CONNECTING THE BREAKOUT BOX**
- For the location of components in the engine compartment, see **LOCATION OF COMPONENTS, ENGINE COMPARTMENT**

- For 5 cylinder turbocharged engines -2004, see **SIGNAL DESCRIPTION**
- For 5 cylinder turbocharged engines 2005-, see **SIGNAL SPECIFICATION** .
- For 6 cylinder engines -2004, see **SIGNAL SPECIFICATION**
- For 6 cylinder engines 2005-, see **SIGNAL SPECIFICATION** .
- see **CHECKING WIRING AND TERMINALS** .

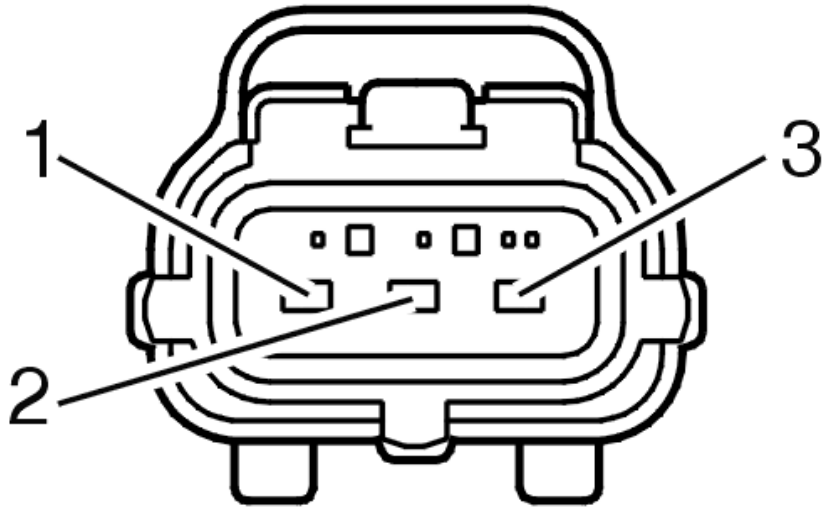

Fig. 250: Identifying Camshaft Position (CMP) Sensor Connector Terminals
Courtesy of VOLVO CARS CORPORATION

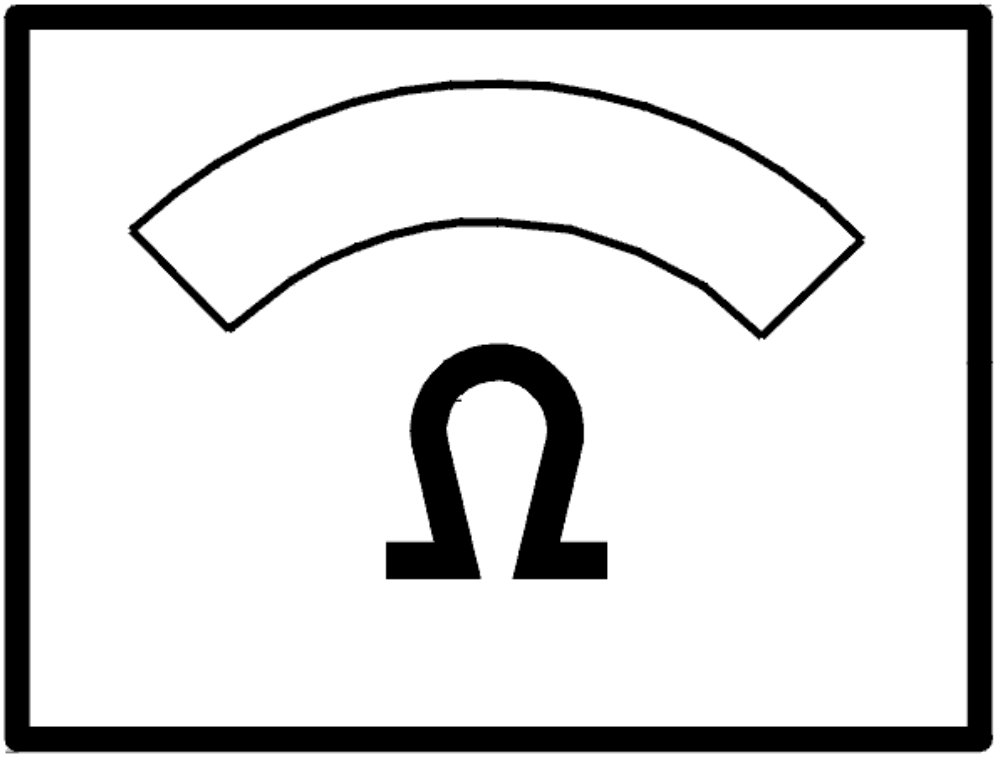

Fig. 251: Identifying Ohm Meter
Courtesy of VOLVO CARS CORPORATION

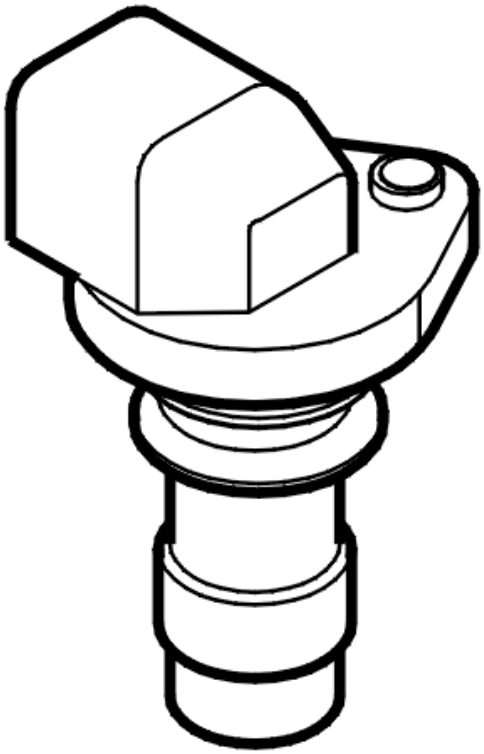

Fig. 252: Identifying Camshaft Position (CMP) Sensor
Courtesy of VOLVO CARS CORPORATION

- **Continue**

  Refer to **VERIFICATION**

VERIFICATION

VERIFICATION

HINT: After carrying out the repair, check that the fault has been remedied.

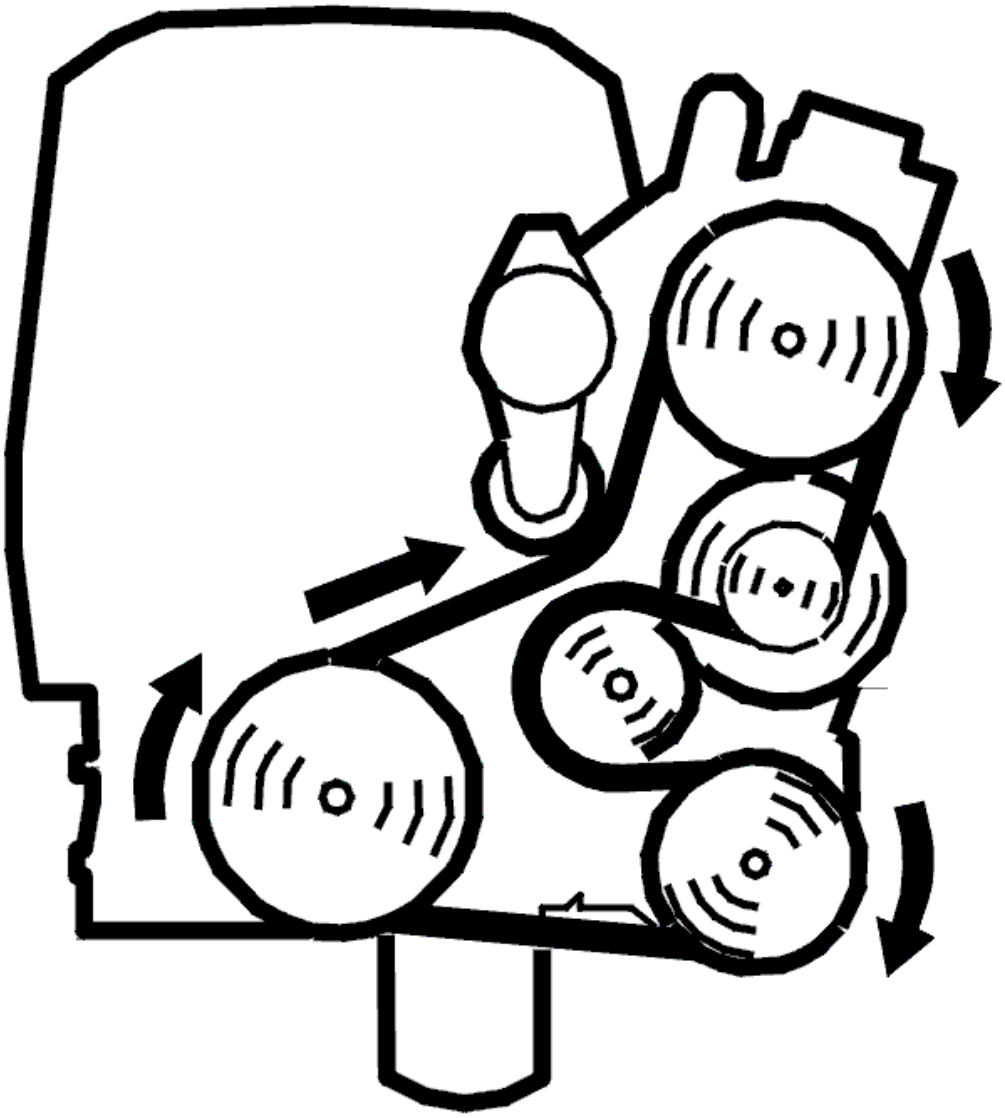

Fig. 253: Belt Routing / Engine Idling - Volvo
Courtesy of VOLVO CARS CORPORATION

- Reinstall the connectors, components etc.
- Start the engine. Rev the engine to approximately 4000 RPM a few times
- Read off the diagnostic status and the fault status for diagnostic trouble code (DTC) ECM-3010.

  Check that the fault status is "NO FAULT FOUND" when the diagnostic status is COMPLETED. If the fault status is "FAULT FOUND" when the diagnostic status is COMPLETED there is a fault.

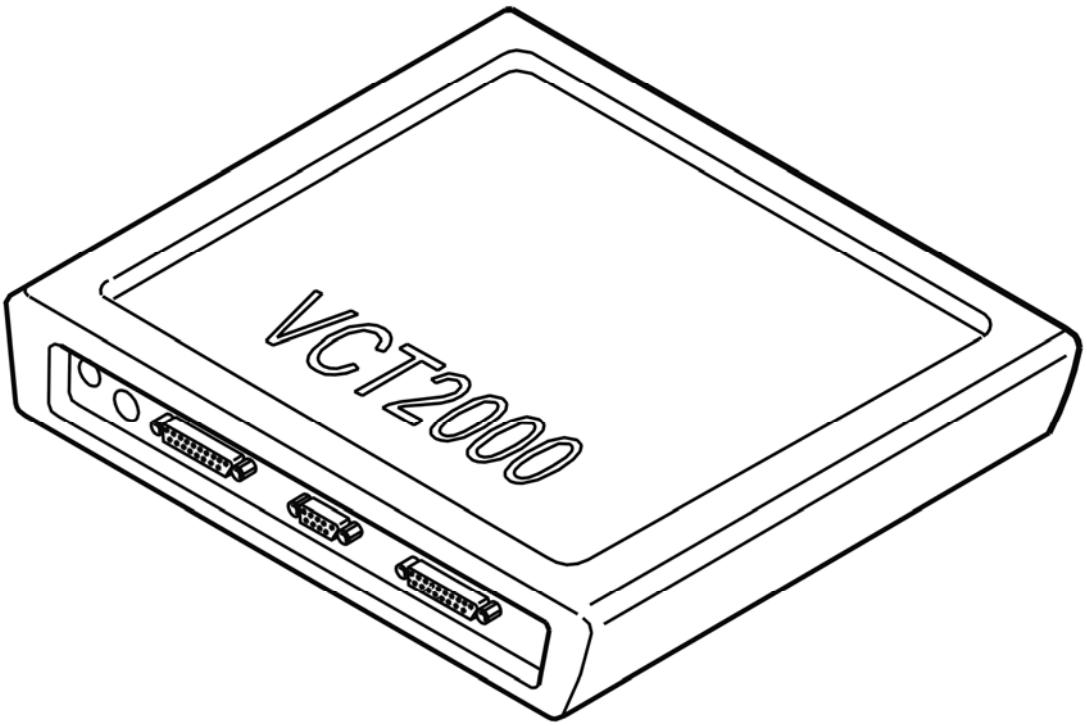

Fig. 254: Identifying VCT2000 Diagnostic Tool Symbol In VIDA
Courtesy of VOLVO CARS CORPORATION

Is the fault status "NO FAULT FOUND"?

- **YES**

  VERIFIED: Troubleshooting has been completed.

- **NO**

  Refer to **INFORMATION**

INFORMATION

FAULT-TRACING INFORMATION

The fault should have been detected and remedied. As this is not the case fault-tracing has failed.

Exit fault-tracing for this diagnostic trouble code (DTC) or make another attempt.

ECM-3010: CAMSHAFT POSITION (CMP) SENSOR, EXHAUST. SIGNAL TOO HIGH (B5254T2; B6294T; 2003-2004)

DIAGNOSTIC TROUBLE CODE (DTC) INFORMATION

see **DIAGNOSTIC TROUBLE CODE (DTC) INFORMATION**

SIGNAL TOO HIGH

CHECKING THE STATUS

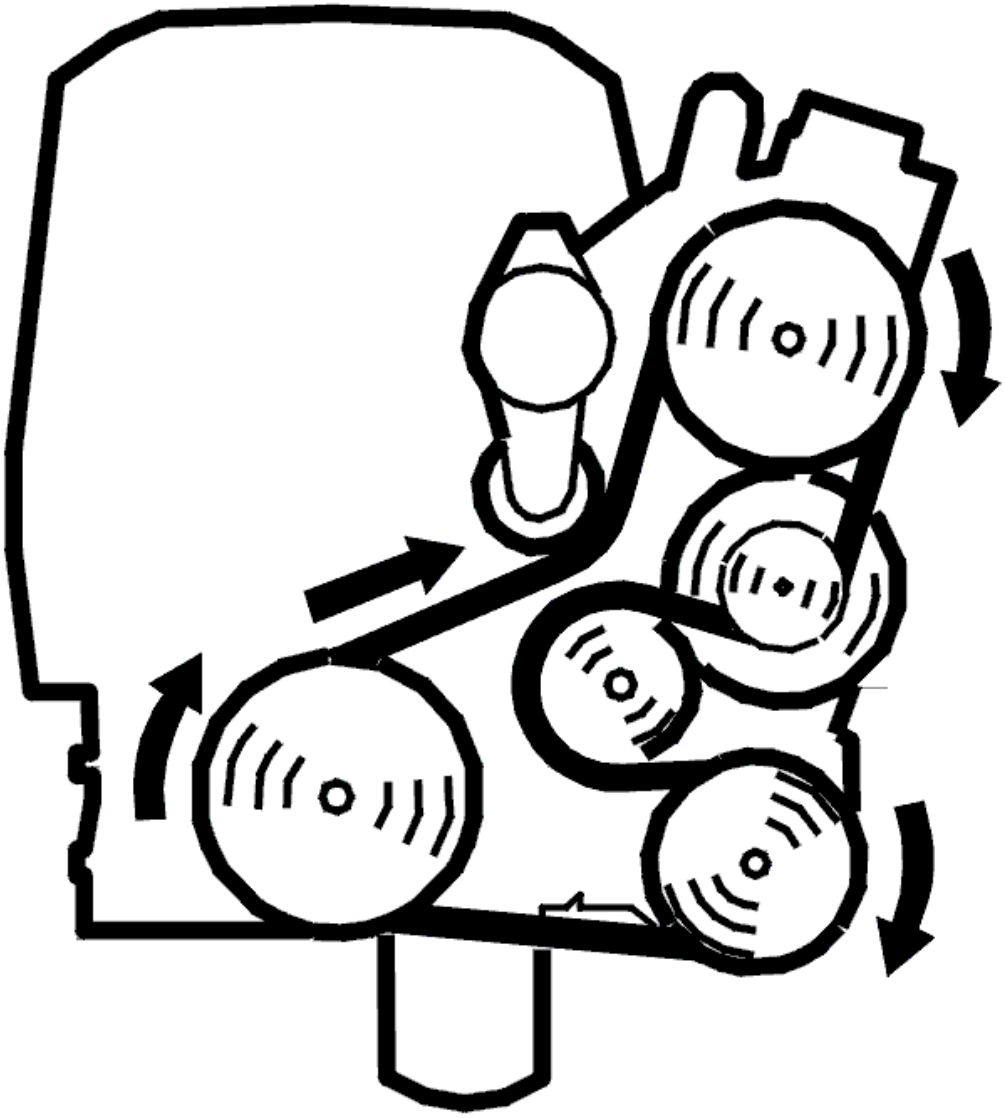

Fig. 255: Belt Routing / Engine Idling - Volvo
Courtesy of VOLVO CARS CORPORATION

- Start the engine.

  Read off the fault status of the camshaft position (CMP) sensor. Check the status of the fault when the diagnostic status is COMPLETED. If the fault status is "NO FAULT FOUND" when the diagnostic status is COMPLETE there is an intermittent fault.

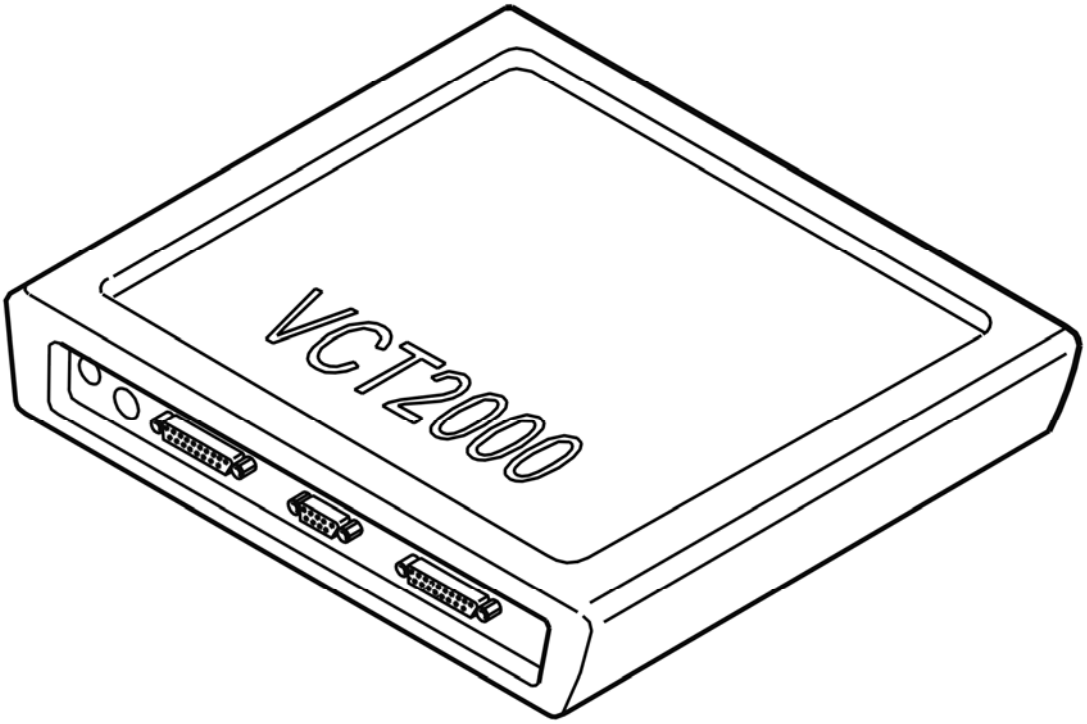

Fig. 256: Identifying VCT2000 Diagnostic Tool Symbol In VIDA
Courtesy of VOLVO CARS CORPORATION

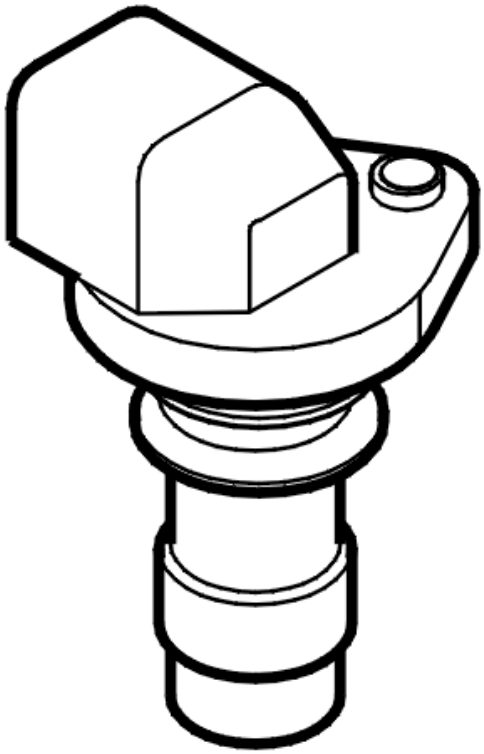

Fig. 257: Identifying Camshaft Position (CMP) Sensor
Courtesy of VOLVO CARS CORPORATION

- **Continue**

  Refer to **CHECKING THE WIRING**

CHECKING THE WIRING

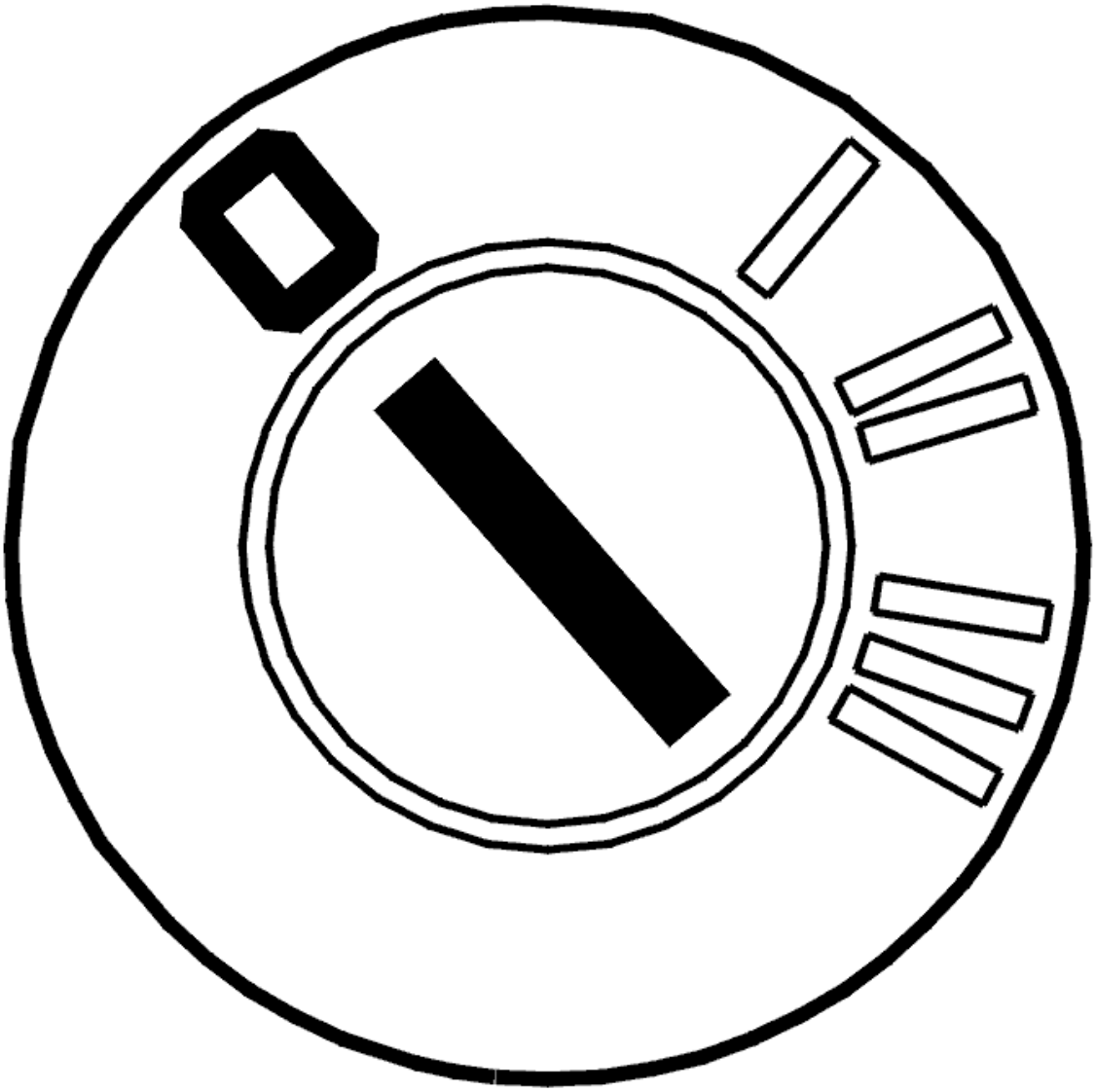

Fig. 258: Identifying Ignition OFF
Courtesy of VOLVO CARS CORPORATION

- Ignition off
- Check the connector for the camshaft position (CMP) sensor. Check for contact resistance and oxidation. Check for loose connections. Check for damage carefully.

  Check the signal cable between control module terminal #A27 (#A27) and camshaft position (CMP) sensor connector terminal #3. Check for an open-circuit. Check for a short-circuit to supply voltage.

  Check the ground lead between control module terminal #A65 (#A65) and camshaft position (CMP) sensor connector terminal #2. Check for an open-circuit.

  Check the power cable between control module terminal #A29 (#A29) and camshaft position (CMP) sensor connector terminal #1. Check for a short-circuit to ground.

Try a new camshaft position (CMP) sensor if no fault is found during the above fault-tracing.

Other information:

- To connect the breakout box / access the control module, see **CONNECTING THE BREAKOUT BOX**
- For the location of components in the engine compartment, see **LOCATION OF COMPONENTS, ENGINE COMPARTMENT**
- For 5 cylinder turbocharged engines -2004, see **SIGNAL DESCRIPTION**
- For 5 cylinder turbocharged engines 2005-, see **SIGNAL SPECIFICATION** .
- For 6 cylinder engines -2004, see **SIGNAL SPECIFICATION**
- For 6 cylinder engines 2005-, see **SIGNAL SPECIFICATION** .
- see **CHECKING WIRING AND TERMINALS** .

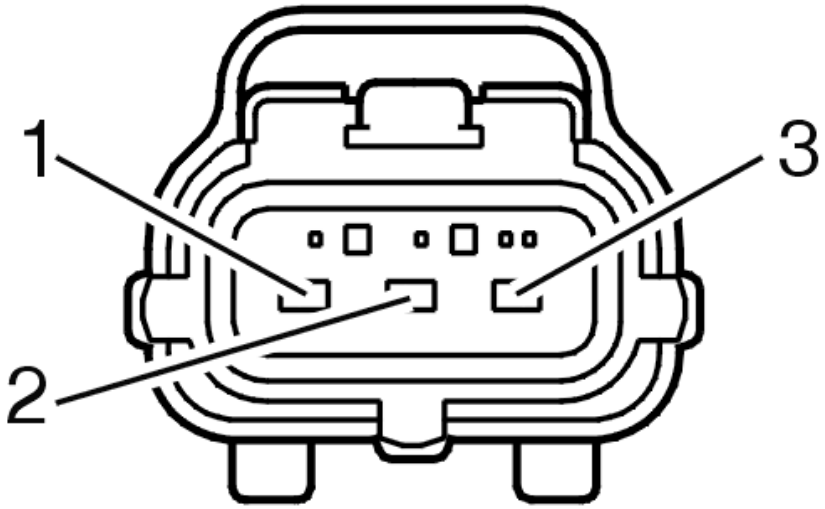

Fig. 259: Identifying Camshaft Position (CMP) Sensor Connector Terminals
Courtesy of VOLVO CARS CORPORATION

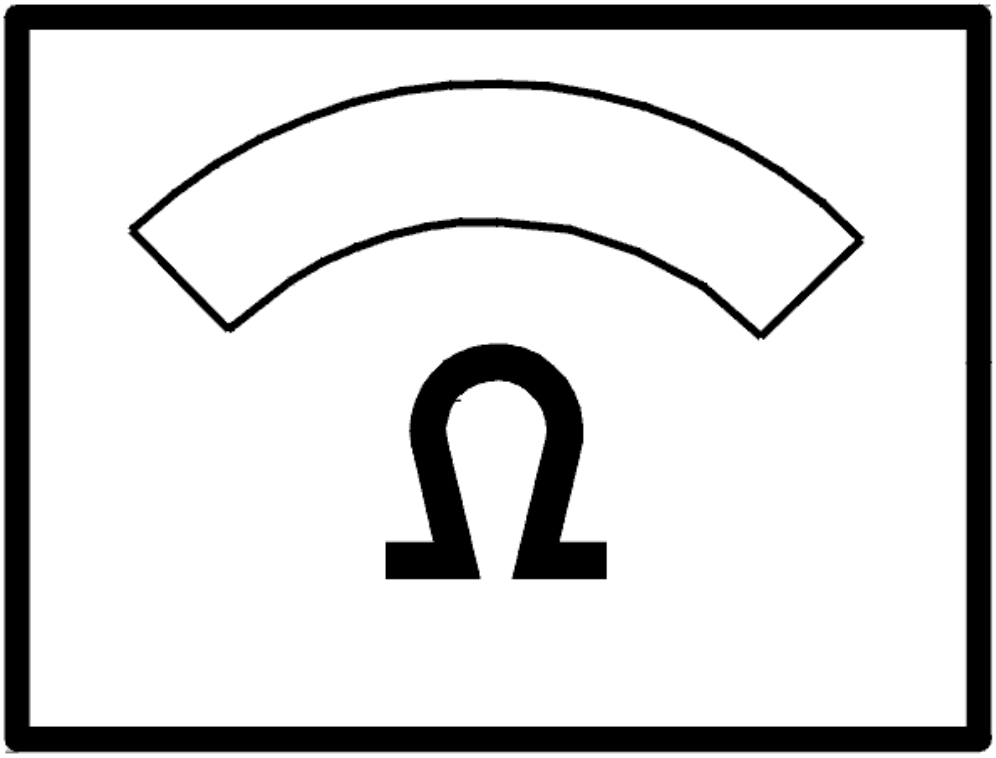

Fig. 260: Identifying Ohm Meter
Courtesy of VOLVO CARS CORPORATION

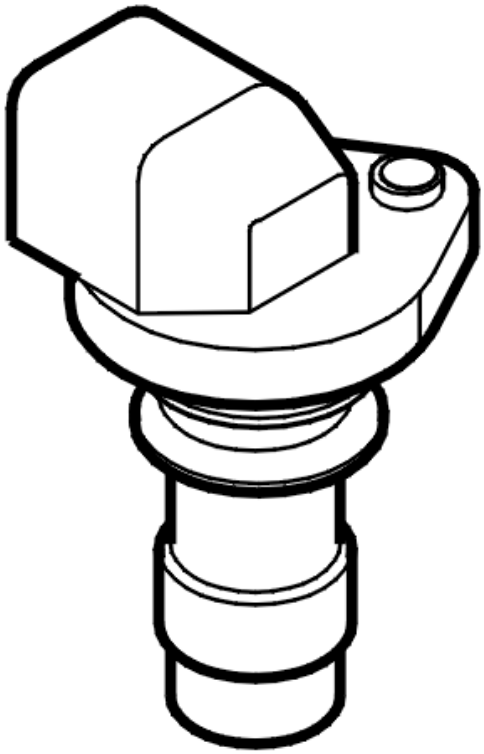

Fig. 261: Identifying Camshaft Position (CMP) Sensor
Courtesy of VOLVO CARS CORPORATION

- **Continue**

  Refer to **VERIFICATION**

VERIFICATION

VERIFICATION

HINT: After carrying out the repair, check that the fault has been remedied.

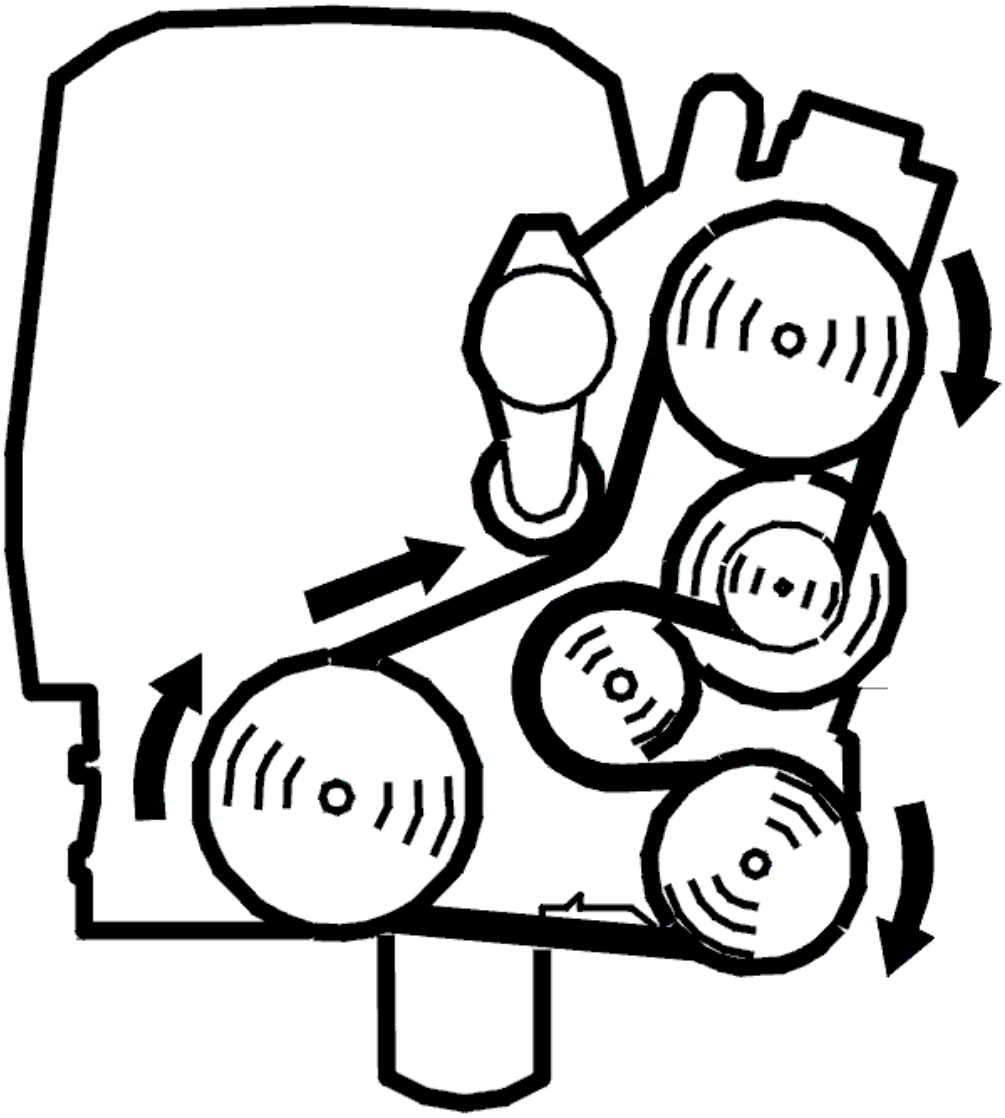

Fig. 262: Belt Routing / Engine Idling - Volvo
Courtesy of VOLVO CARS CORPORATION

- Reinstall the connectors, components etc.
- Start the engine. Rev the engine to approximately 4000 RPM a few times
- Read off the diagnostic status and the fault status for diagnostic trouble code (DTC) ECM-3010.

  Check that the fault status is "NO FAULT FOUND" when the diagnostic status is COMPLETED. If the fault status is "FAULT FOUND" when the diagnostic status is COMPLETED there is a fault.

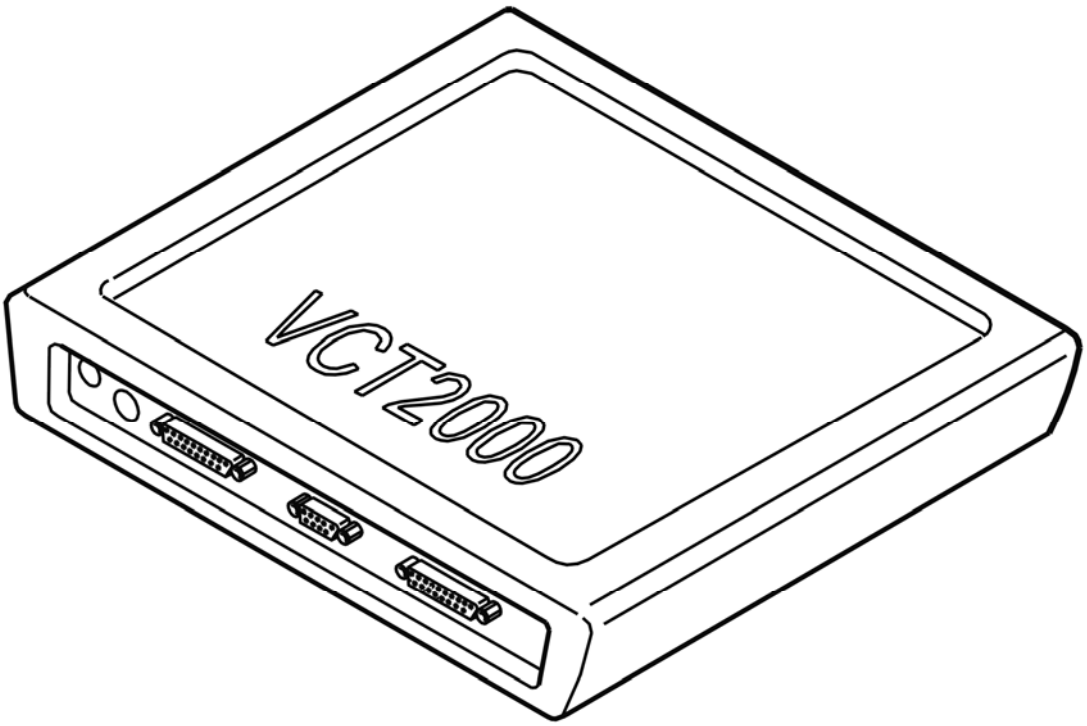

Fig. 263: Identifying VCT2000 Diagnostic Tool Symbol In VIDA
Courtesy of VOLVO CARS CORPORATION

Is the fault status "NO FAULT FOUND"?

- **YES**

  VERIFIED: Troubleshooting has been completed.

- **NO**

  Refer to **INFORMATION**

INFORMATION

FAULT-TRACING INFORMATION

The fault should have been detected and remedied. As this is not the case fault-tracing has failed.

Exit fault-tracing for this diagnostic trouble code (DTC) or make another attempt.

ECM-3010: CAMSHAFT POSITION (CMP) SENSOR, EXHAUST. SIGNAL TOO LOW (B5254T2; B6294T; 2003-2004)

DIAGNOSTIC TROUBLE CODE (DTC) INFORMATION

see **DIAGNOSTIC TROUBLE CODE (DTC) INFORMATION**

SIGNAL TOO LOW

CHECKING THE STATUS

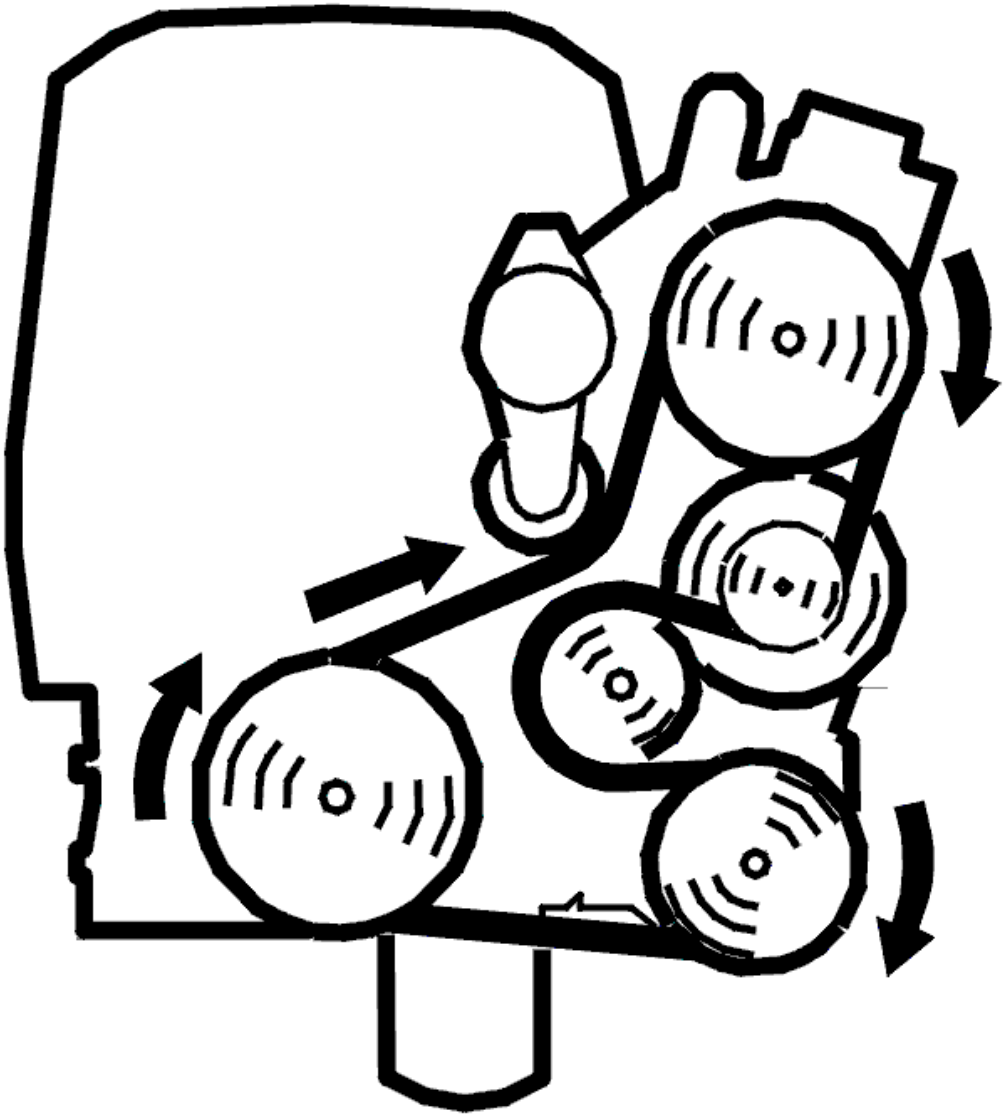

Fig. 264: Belt Routing / Engine Idling - Volvo
Courtesy of VOLVO CARS CORPORATION

- Start the engine.

  Read off the fault status of the camshaft position (CMP) sensor. Check the status of the fault when the diagnostic status is COMPLETED. If the fault status is "NO FAULT FOUND" when the diagnostic status is COMPLETE there is an intermittent fault.

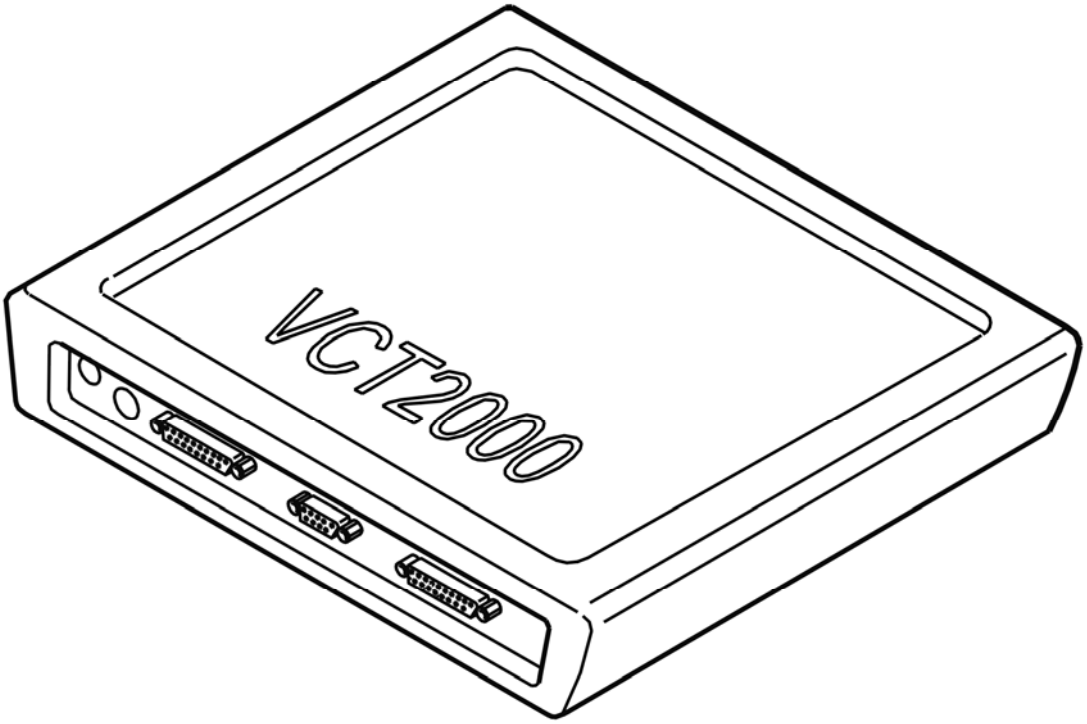

Fig. 265: Identifying VCT2000 Diagnostic Tool Symbol In VIDA
Courtesy of VOLVO CARS CORPORATION

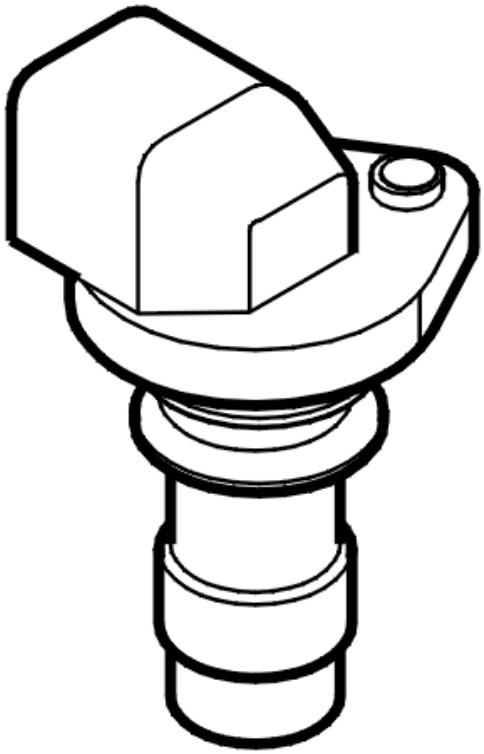

Fig. 266: Identifying Camshaft Position (CMP) Sensor
Courtesy of VOLVO CARS CORPORATION

- **Continue**

  Refer to **CHECKING CONNECTORS AND WIRING**

CHECKING CONNECTORS AND WIRING

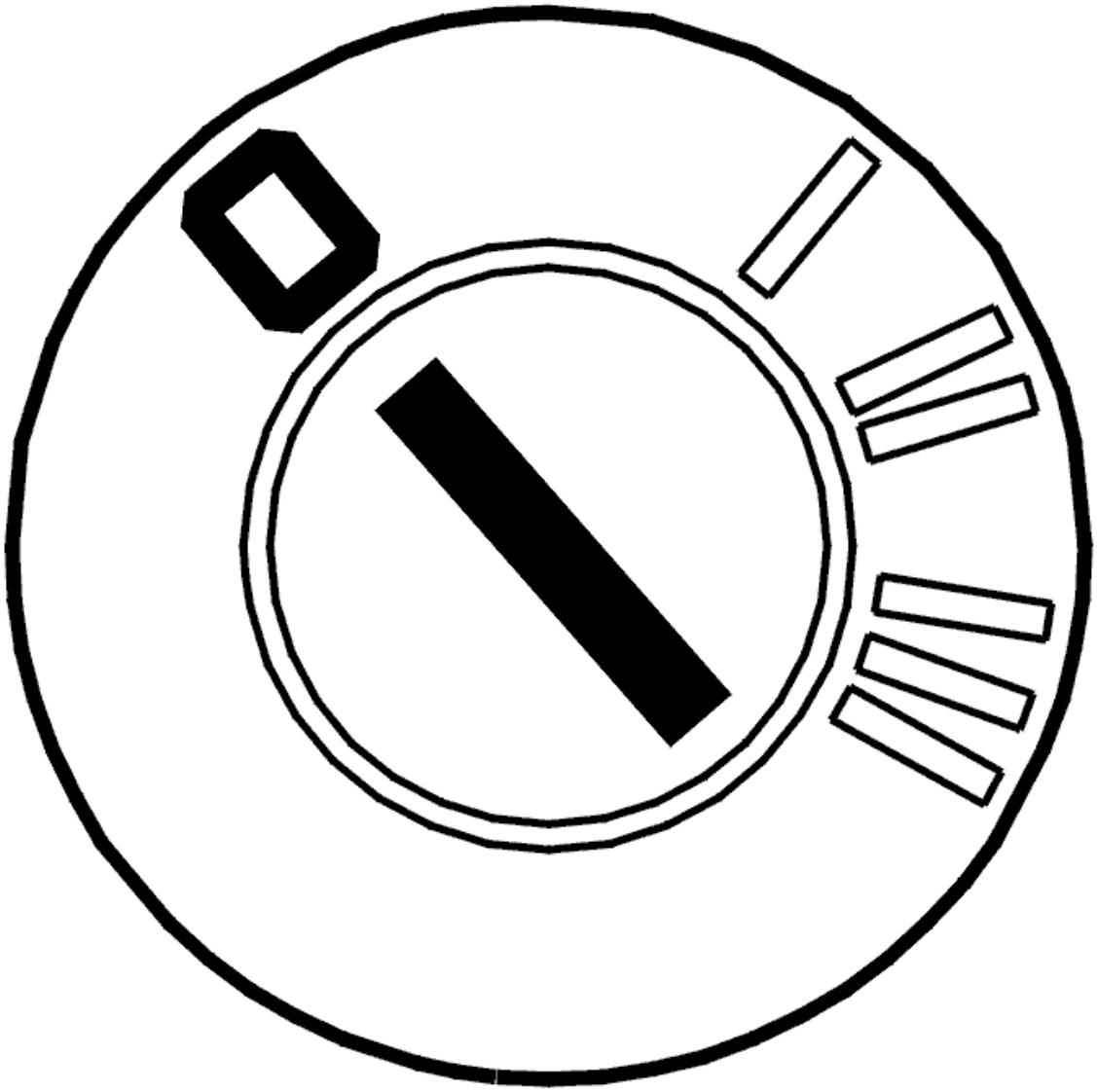

Fig. 267: Identifying Ignition OFF
Courtesy of VOLVO CARS CORPORATION

- Ignition off.

  Check the connector for the camshaft position (CMP) sensor. Check for contact resistance and oxidation.

  Check the signal cable between control module terminal #A27 (#A27) and camshaft position (CMP) sensor connector terminal #3. Check for an open-circuit. Check for a short-circuit to ground.

  Check the power cable between control module terminal #A29 (#A29) and camshaft position (CMP) sensor connector terminal #1. Check for an open-circuit.

  Try a new camshaft position (CMP) sensor if no fault is found during the above fault-tracing.

  Other information:

- To connect the breakout box / access the control module, see **CONNECTING THE BREAKOUT BOX**
- For the location of components in the engine compartment, see **LOCATION OF COMPONENTS, ENGINE COMPARTMENT**
- For 5 cylinder turbocharged engines -2004, see **SIGNAL DESCRIPTION**
- For 5 cylinder turbocharged engines 2005-, see **SIGNAL SPECIFICATION** .
- For 6 cylinder engines -2004, see **SIGNAL SPECIFICATION**
- For 6 cylinder engines 2005-, see **SIGNAL SPECIFICATION** .
- see **CHECKING WIRING AND TERMINALS** .

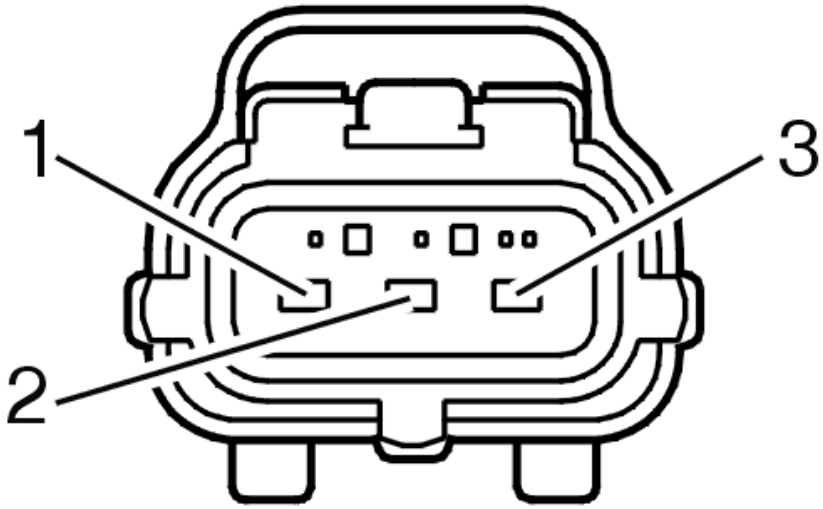

Fig. 268: Identifying Camshaft Position (CMP) Sensor Connector Terminals
Courtesy of VOLVO CARS CORPORATION

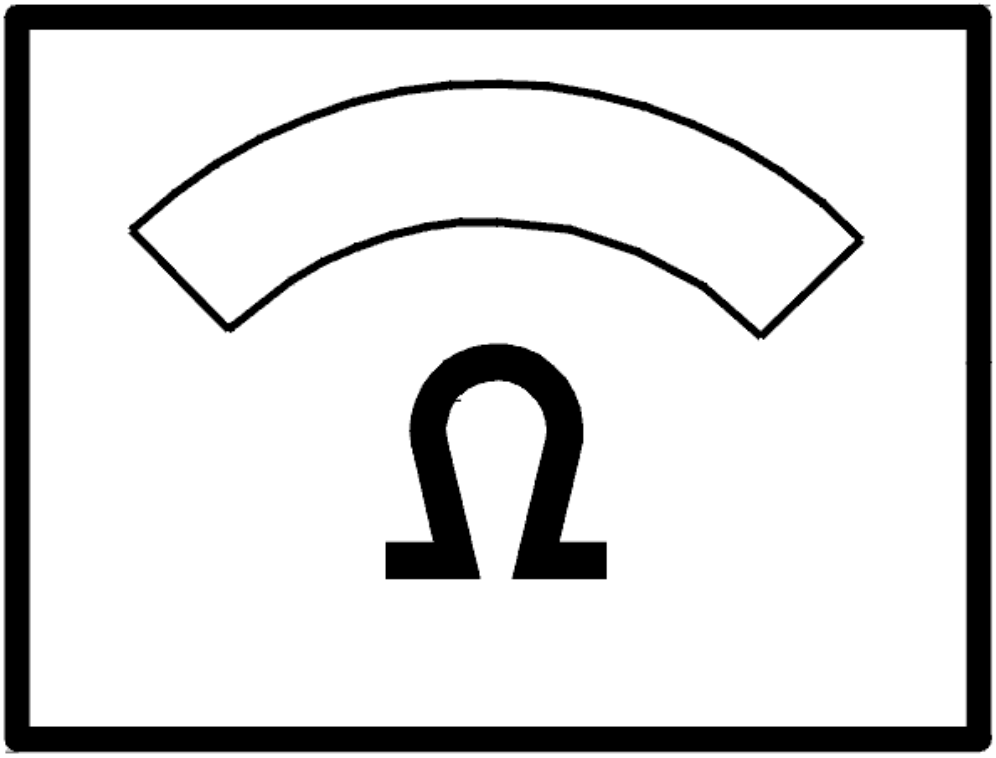

Fig. 269: Identifying Ohm Meter
Courtesy of VOLVO CARS CORPORATION

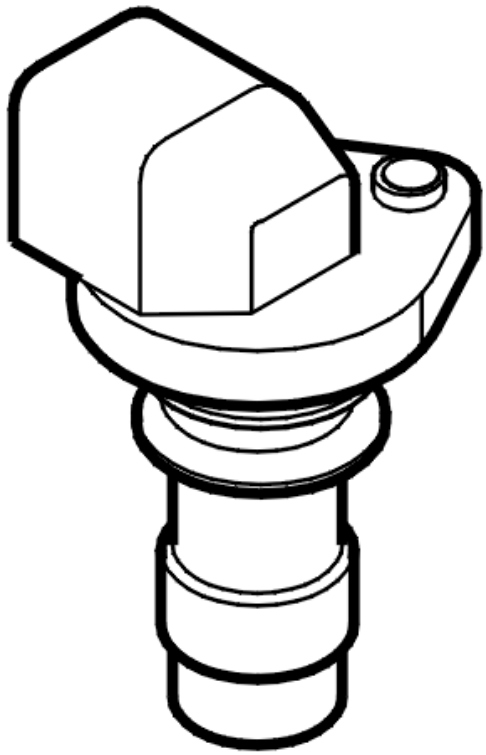

Fig. 270: Identifying Camshaft Position (CMP) Sensor
Courtesy of VOLVO CARS CORPORATION

- **Continue**

  Refer to **VERIFICATION**

VERIFICATION

VERIFICATION

HINT: After carrying out the repair, check that the fault has been remedied.

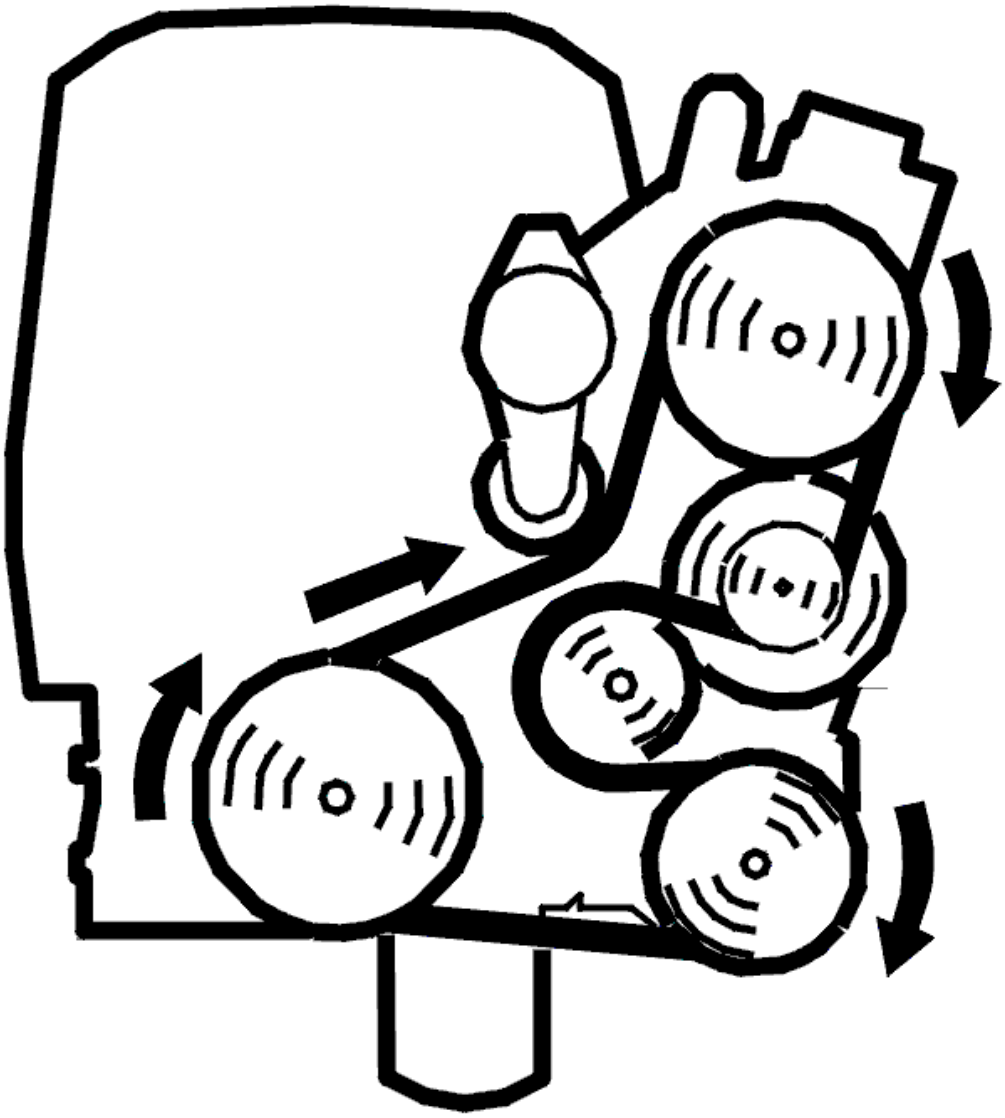

Fig. 271: Belt Routing / Engine Idling - Volvo
Courtesy of VOLVO CARS CORPORATION

- Reinstall the connectors, components etc.
- Start the engine. Rev the engine to approximately 4000 RPM a few times
- Read off the diagnostic status and the fault status for diagnostic trouble code (DTC) ECM-3010.

  Check that the fault status is "NO FAULT FOUND" when the diagnostic status is COMPLETED. If the fault status is "FAULT FOUND" when the diagnostic status is COMPLETED there is a fault.

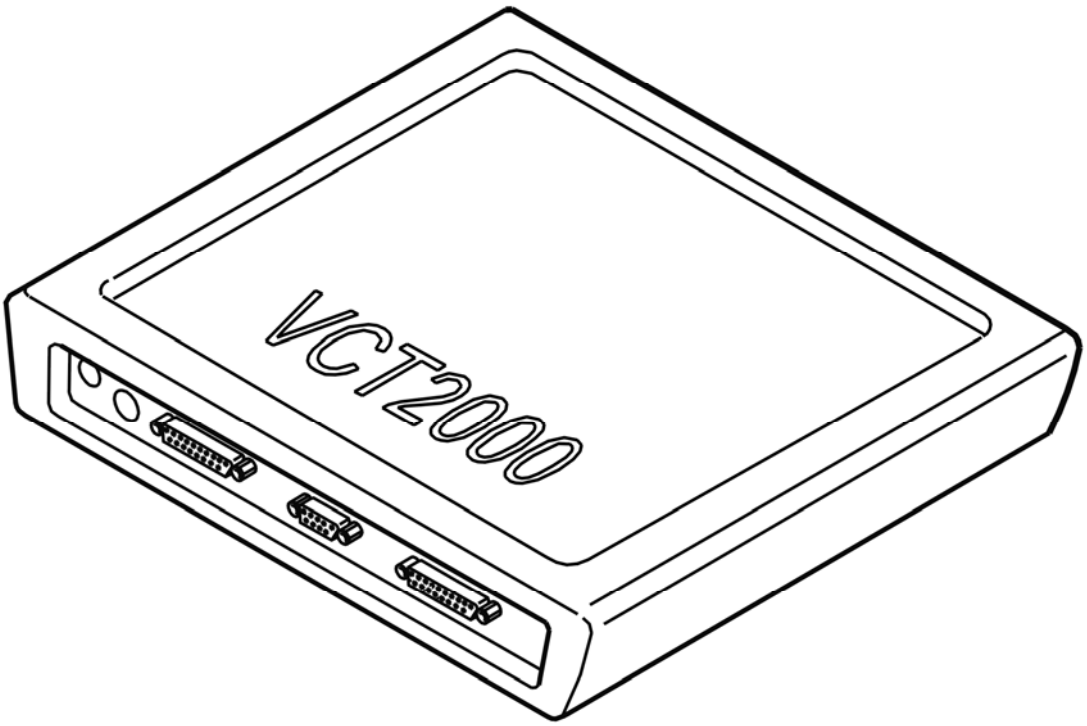

Fig. 272: Identifying VCT2000 Diagnostic Tool Symbol In VIDA
Courtesy of VOLVO CARS CORPORATION

Is the fault status "NO FAULT FOUND"?

- **YES**

  VERIFIED: Troubleshooting has been completed.

- **NO**

  Refer to **INFORMATION**

INFORMATION

FAULT-TRACING INFORMATION

The fault should have been detected and remedied. As this is not the case fault-tracing has failed.

Exit fault-tracing for this diagnostic trouble code (DTC) or make another attempt.

ECM-3010: ENGINE CONTROL MODULE (ECM), INTERNAL FAULT. FAULTY SIGNAL (B5254T2; 2005-2007)

DIAGNOSTIC TROUBLE CODE (DTC) INFORMATION ECM-3010

Condition

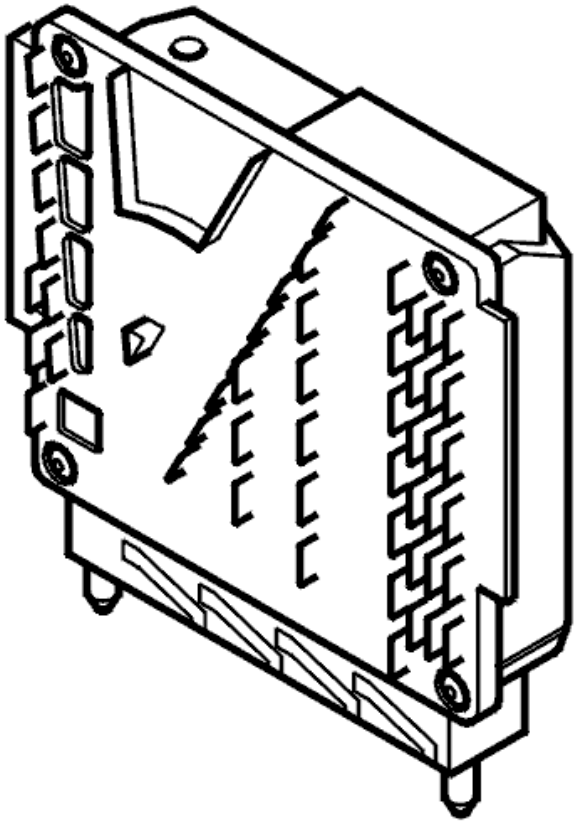

Fig. 273: Engine Control Module
Courtesy of VOLVO CARS CORPORATION

The diagnostic trouble code (DTC) is stored if the engine control module (ECM) detects a fault in the control module internal circuit for knock control.

The diagnostic trouble code (DTC) can be diagnosed when the ignition is switched on.

Substitute Value

- Safety retardation of ignition advance
- Reduced boost pressure.

Possible Source

- Damaged engine control module (ECM).

Fault symptom[s]

- Malfunction indicator lamp (MIL) lit
- Poor performance.

INTERNAL FAULT

see **INTERNAL FAULT**

ECM-3010: ENGINE CONTROL MODULE (ECM), INTERNAL FAULT. FAULTY SIGNAL (B6294T; 2005-2006)

DIAGNOSTIC TROUBLE CODE (DTC) INFORMATION ECM-3010

see **DIAGNOSTIC TROUBLE CODE (DTC) INFORMATION ECM-3010**

INTERNAL FAULT

see **INTERNAL FAULT**

ECM-3020: ENGINE CONTROL MODULE (ECM), INTERNAL FAULT. FAULTY SIGNAL (B5254T2; 2005-2007)

DIAGNOSTIC TROUBLE CODE (DTC) INFORMATION ECM-3020

Condition

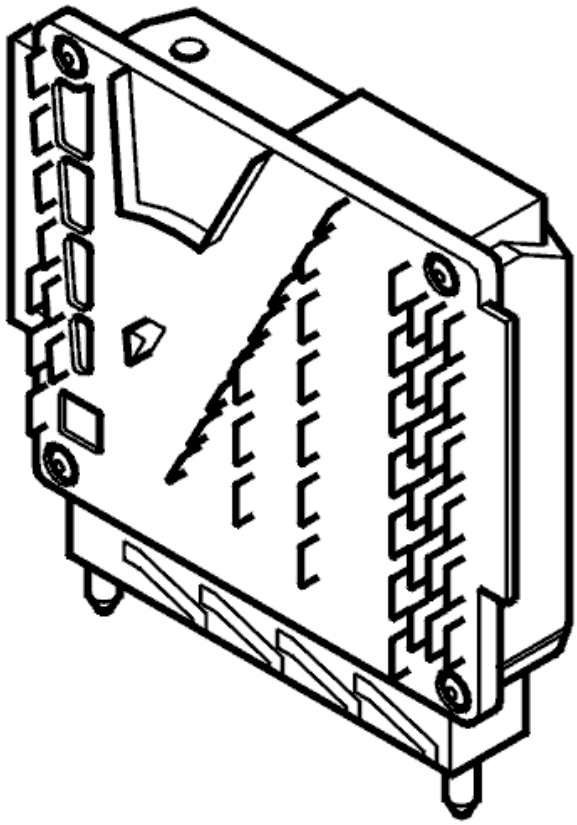

Fig. 274: Engine Control Module
Courtesy of VOLVO CARS CORPORATION

The diagnostic trouble code (DTC) is stored if the engine control module (ECM) detects a fault in the control module internal circuit for knock control.

The diagnostic trouble code (DTC) can be diagnosed when the ignition is switched on.

Substitute Value

- Safety retardation of ignition advance
- Reduced boost pressure.

Possible Source

- Damaged engine control module (ECM).

Fault symptom[s]

- Malfunction indicator lamp (MIL) lit
- Poor performance.

INTERNAL FAULT

see **INTERNAL FAULT**

ECM-3020: ENGINE CONTROL MODULE (ECM), INTERNAL FAULT. FAULTY SIGNAL (B6294T; 2005-2006)

DIAGNOSTIC TROUBLE CODE (DTC) INFORMATION ECM-3020

see **DIAGNOSTIC TROUBLE CODE (DTC) INFORMATION ECM-3020**

INTERNAL FAULT

see **INTERNAL FAULT**

ECM-303C: FRONT KNOCK SENSOR (KS). SIGNAL TOO HIGH (B5254T2; 2005-2007)

DIAGNOSTIC TROUBLE CODE (DTC) INFORMATION ECM-303C

Condition

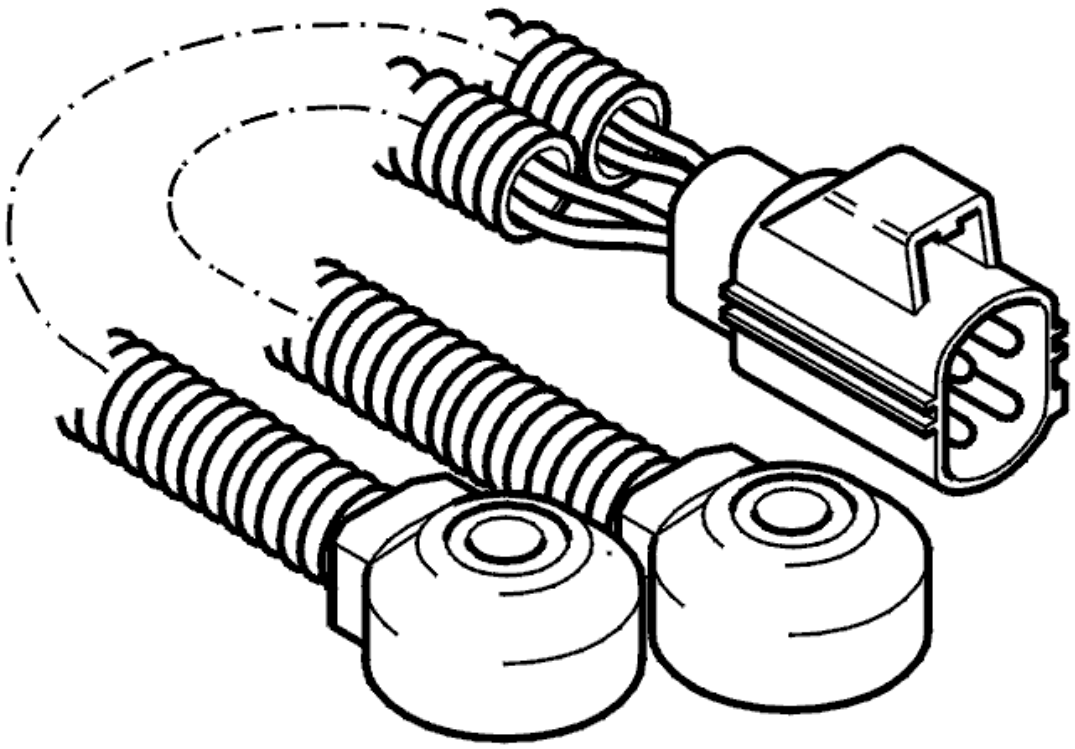

Fig. 275: Identifying Knock Sensor
Courtesy of VOLVO CARS CORPORATION

In certain operating conditions the engine control module (ECM) checks the signal from the front knock sensor (KS). The diagnostic trouble code (DTC) is stored if the signal from the front knock sensor (KS) is too high.

The diagnostic trouble code (DTC) can be diagnosed when the engine is running.

Substitute Value

- Safety retardation of ignition advance
- Reduced boost pressure.

Possible Source

- Short-circuit to supply voltage in the signal cable
- Noise from the engine.

Fault symptom[s]

- Poor performance.

SIGNAL TOO HIGH. PERMANENT FAULT

CHECKING COMPONENTS AND WIRING

Check the signal cable between knock sensor (KS) terminal #1 and control module terminal #A46 (#A46). Check the ground lead between knock sensor (KS) terminal #2 and control module terminal #A64 (#B4). Check for a short-circuit to supply voltage.

Check that the knock sensor (KS) is tightened to the correct torque.

HINT: The diagnostic trouble code (DTC) may be caused by a worn engine. Start the engine and listen for noise.

Remedy as necessary.

Other information

- To connect the breakout box / access the control module, see **CONNECTING THE BREAKOUT BOX**
- To access or replace the knock sensor (KS), see **KNOCK SENSOR (KS), REPLACING**
- For 5 cylinder turbocharged engines -2004, see **SIGNAL DESCRIPTION**
- For 5 cylinder turbocharged engines 2005-, see **SIGNAL SPECIFICATION** .
- see **CHECKING WIRING AND TERMINALS**

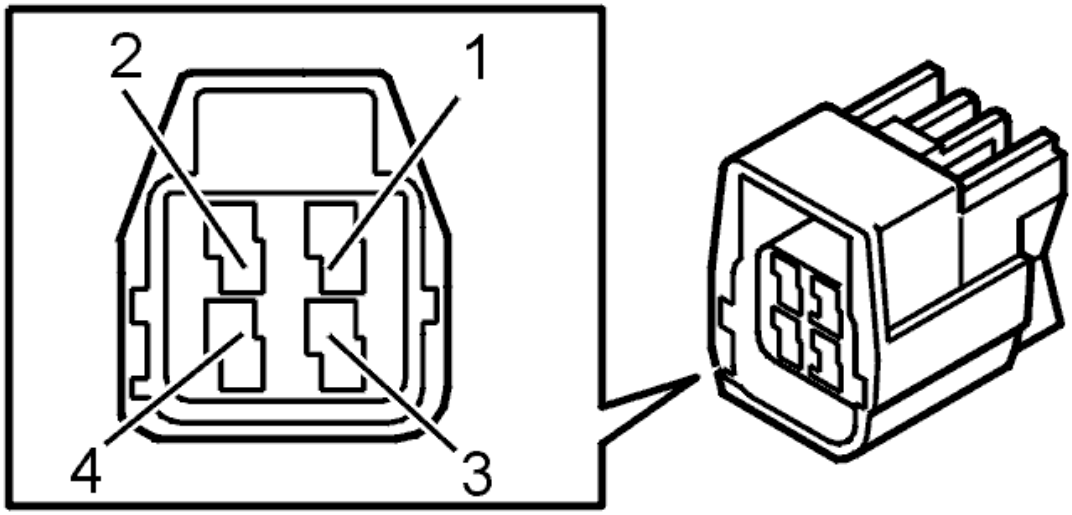

Fig. 276: Identifying Connector Terminals
Courtesy of VOLVO CARS CORPORATION

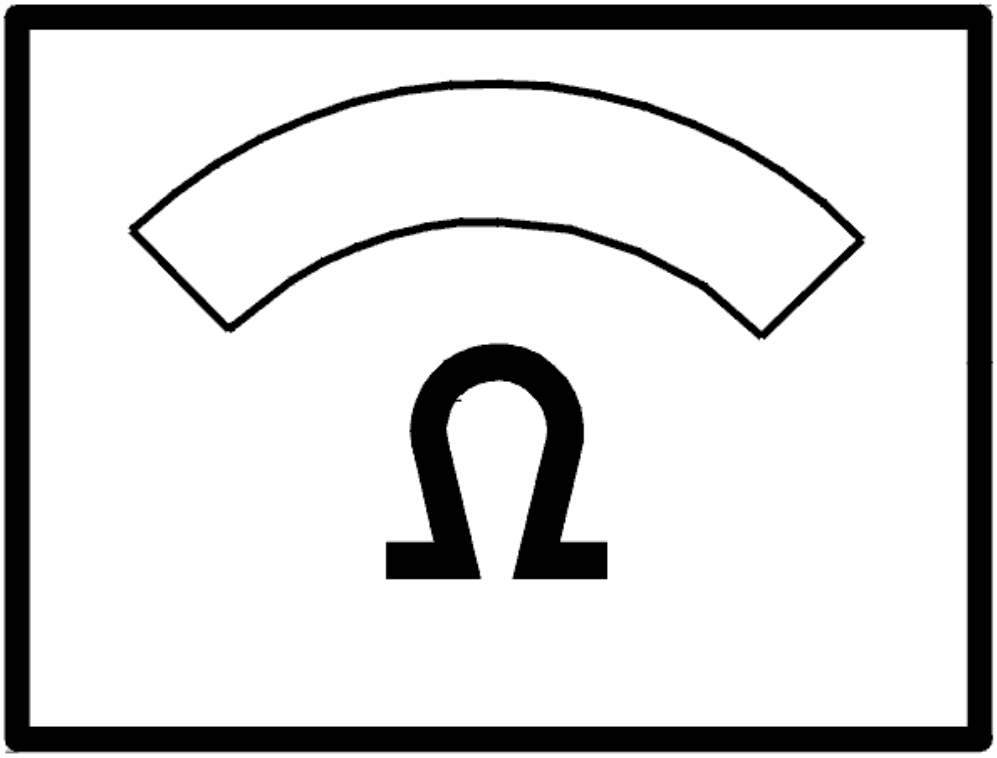

Fig. 277: Identifying Ohm Meter
Courtesy of VOLVO CARS CORPORATION

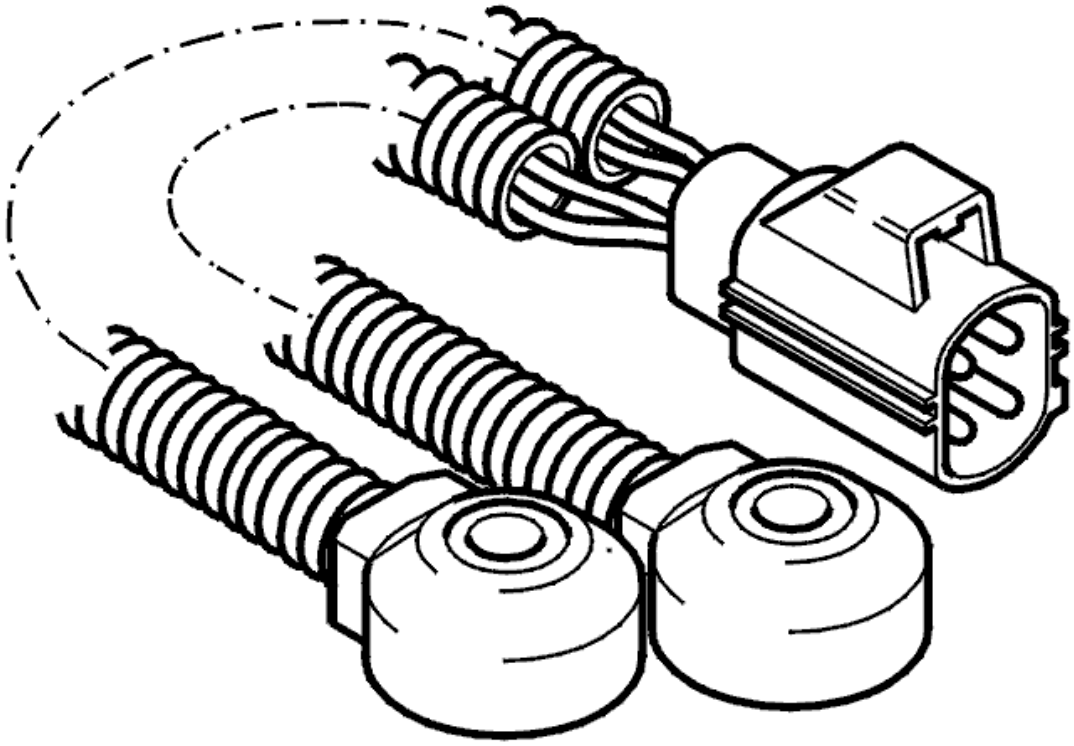

Fig. 278: Identifying Knock Sensor
Courtesy of VOLVO CARS CORPORATION

- **Continue**

  Refer to **VERIFICATION**

VERIFICATION

VERIFICATION

HINT: After carrying out the repair, check that the fault has been remedied.

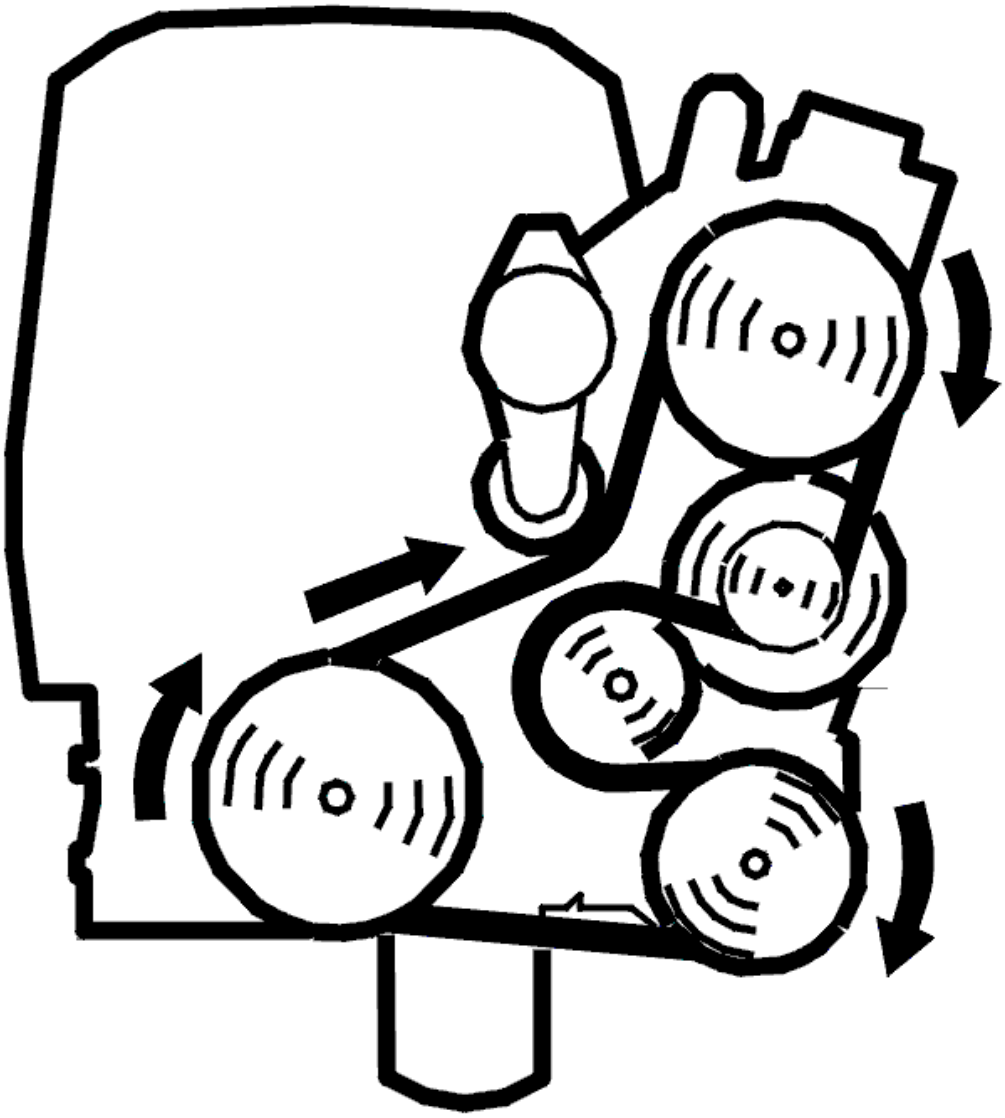

Fig. 279: Belt Routing / Engine Idling - Volvo
Courtesy of VOLVO CARS CORPORATION

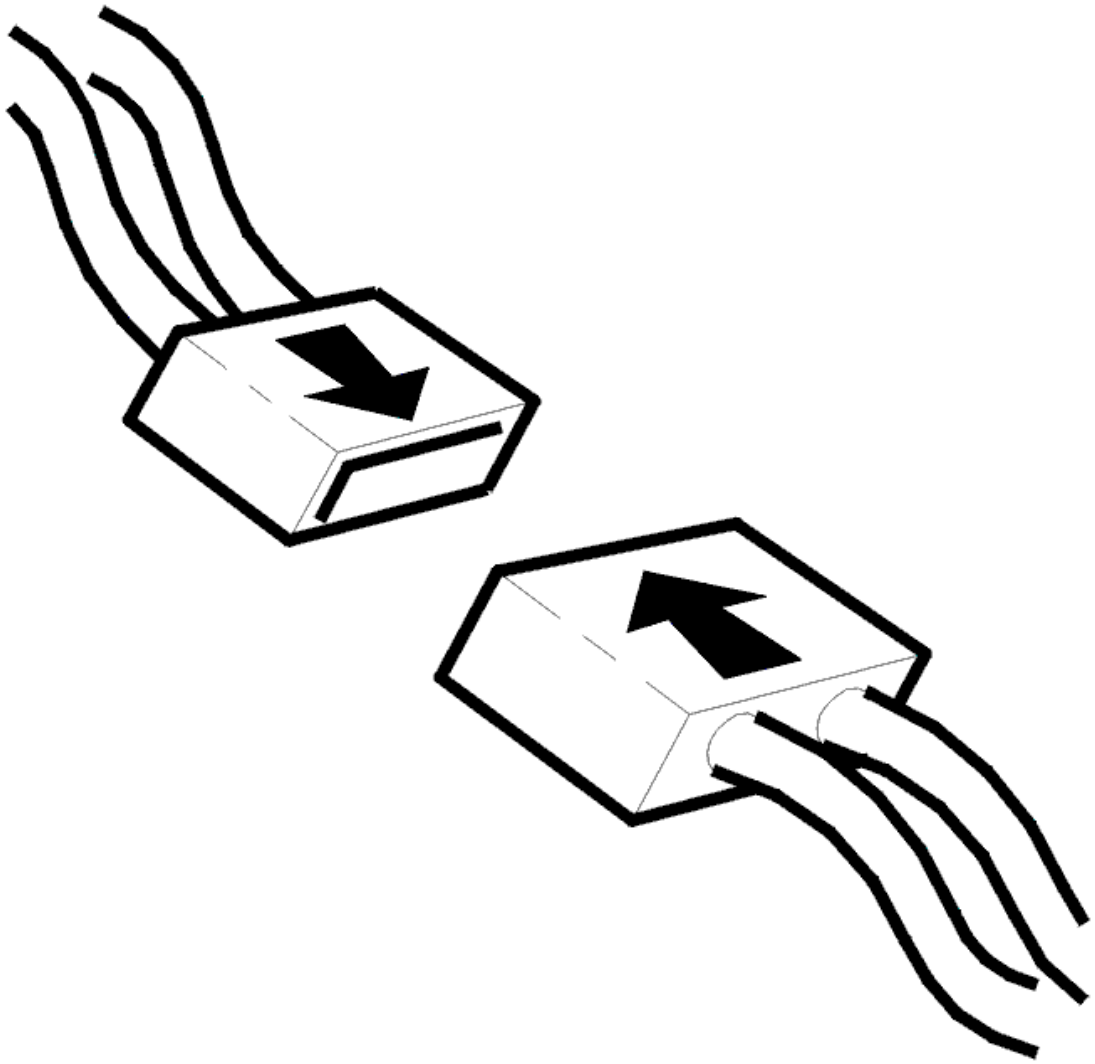

Fig. 280: Connecting Connector
Courtesy of VOLVO CARS CORPORATION

- Ignition off.
- Reconnect the connectors, reinstall components etc.
- Start engine and run to normal operating temperature.
- Rev the engine to 3500 RPM and read off the value of the knock sensor (KS) signal.

.

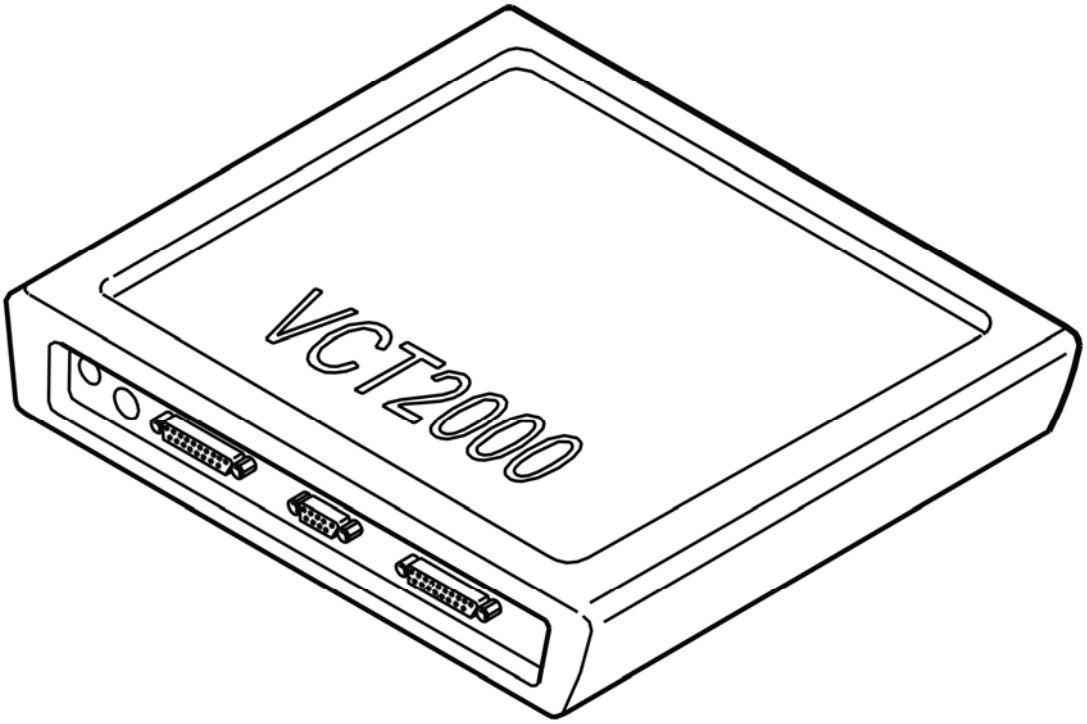

Fig. 281: Identifying VCT2000 Diagnostic Tool Symbol In VIDA
Courtesy of VOLVO CARS CORPORATION

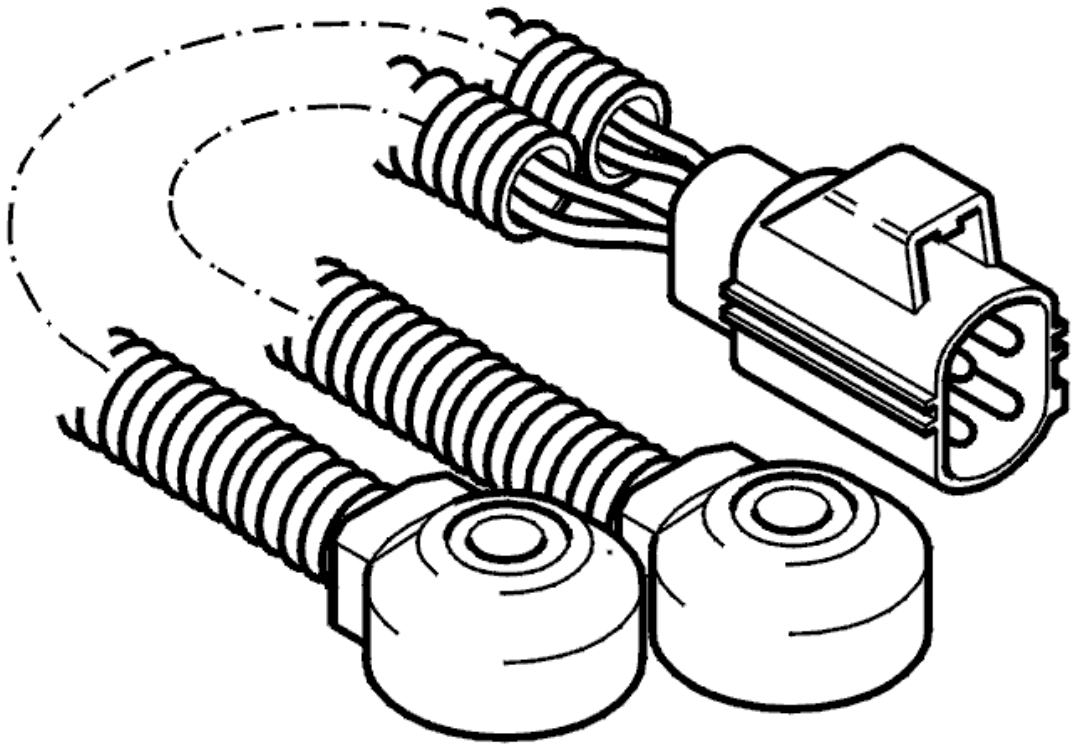

Fig. 282: Identifying Knock Sensor
Courtesy of VOLVO CARS CORPORATION

Is the value between 2-6?

- **YES**

  VERIFIED: Troubleshooting has been completed.

- **NO**

  Refer to **INFORMATION**

INFORMATION

FAULT-TRACING INFORMATION

The fault should have been detected and remedied. As this is not the case fault-tracing has failed.

Exit fault-tracing for this diagnostic trouble code (DTC) or make another attempt.

ECM-303C: FRONT KNOCK SENSOR (KS). SIGNAL TOO HIGH (B6294T; 2005-2006)

DIAGNOSTIC TROUBLE CODE (DTC) INFORMATION ECM-303C

see **DIAGNOSTIC TROUBLE CODE (DTC) INFORMATION ECM-303C**

SIGNAL TOO HIGH. PERMANENT FAULT

see **SIGNAL TOO HIGH. PERMANENT FAULT**

ECM-303D: FRONT KNOCK SENSOR (KS). SIGNAL TOO LOW (B5254T2; 2005-2007)

DIAGNOSTIC TROUBLE CODE (DTC) INFORMATION ECM-303D

Condition

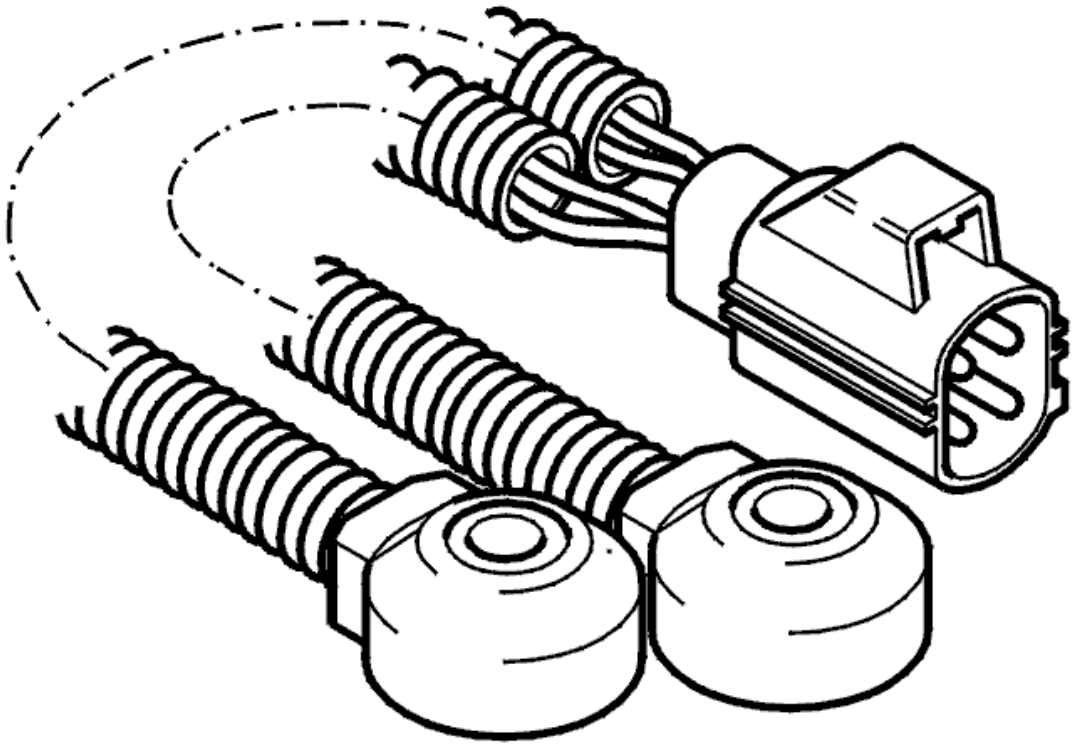

Fig. 283: Identifying Knock Sensor
Courtesy of VOLVO CARS CORPORATION

In certain operating conditions the engine control module (ECM) checks the signal from the front knock sensor (KS). The diagnostic trouble code (DTC) is stored if the signal from the front knock sensor (KS) is too low.

The diagnostic trouble code (DTC) can be diagnosed when the engine is running.

Substitute Value

- Safety retardation of ignition advance
- Reduced boost pressure.

Possible Source

- Contact resistance in the knock sensor (KS) terminals
- Open-circuit in the signal cable
- Short-circuit between the knock sensor (KS) signal cables
- Damaged knock sensor (KS).

Fault symptom[s]

- Poor performance.

SIGNAL TOO LOW. PERMANENT FAULT

CHECKING WIRING AND CONNECTORS

Check the knock sensor (KS) connector. Check for contact resistance and oxidation.

Check the signal cable between knock sensor (KS) terminal #1 and control module terminal #A46 (#A46). Check the ground lead between knock sensor (KS) terminal #2 and control module terminal #A64 (#B4). Check for an open-circuit. Check for a short-circuit to ground.

Check that the knock sensor (KS) is tightened to the correct torque.

Remedy as necessary.

Other information

- To connect the breakout box / access the control module, see **CONNECTING THE BREAKOUT BOX**
- To access or replace the knock sensor (KS), see **KNOCK SENSOR (KS), REPLACING**
- For 5 cylinder turbocharged engines -2004, see **SIGNAL DESCRIPTION**
- For 5 cylinder turbocharged engines 2005-, see **SIGNAL SPECIFICATION** .
- see **CHECKING WIRING AND TERMINALS** .

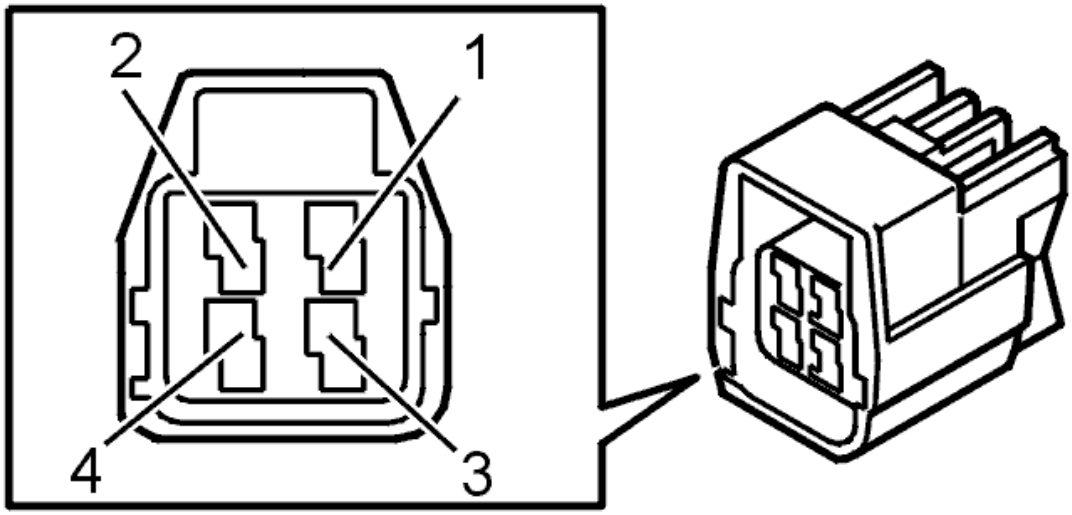

Fig. 284: Identifying Connector Terminals
Courtesy of VOLVO CARS CORPORATION

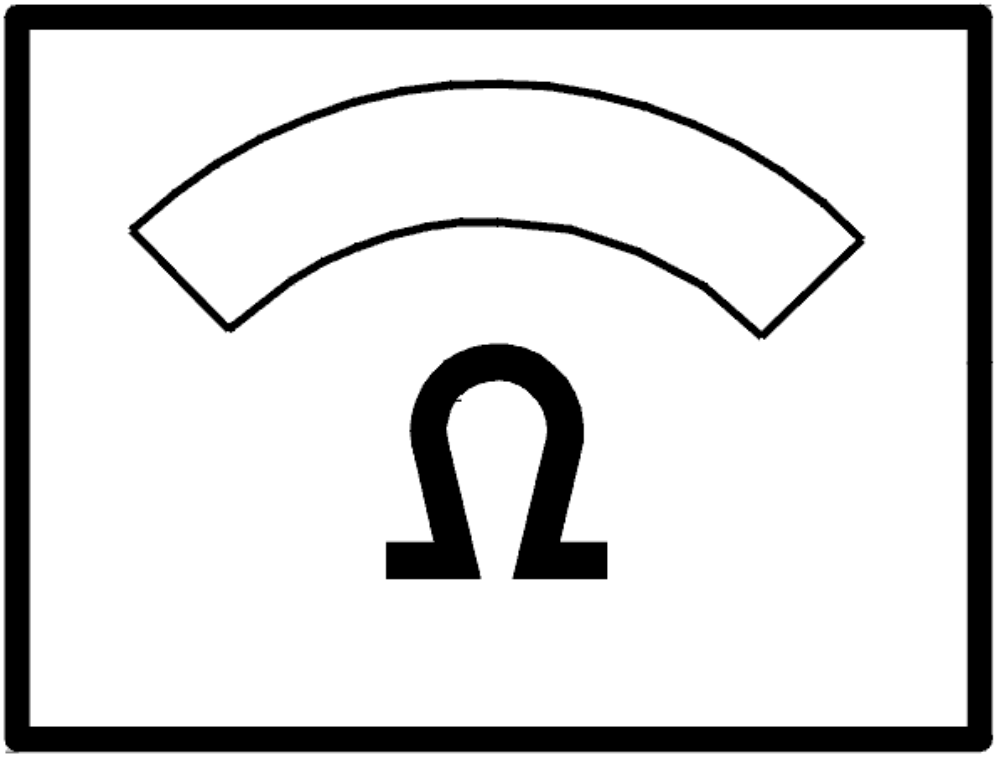

Fig. 285: Identifying Ohm Meter
Courtesy of VOLVO CARS CORPORATION

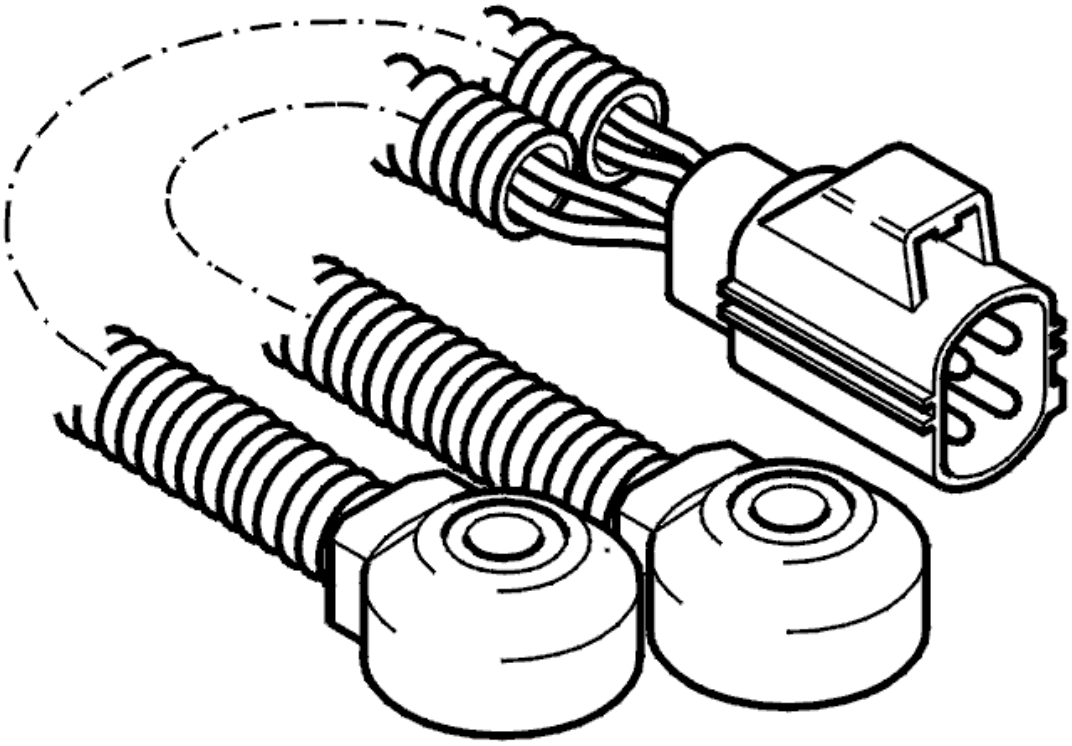

Fig. 286: Identifying Knock Sensor
Courtesy of VOLVO CARS CORPORATION

- **Continue**

  Refer to **CHECKING THE KNOCK SENSOR (KS) SIGNAL**

CHECKING THE KNOCK SENSOR (KS) SIGNAL

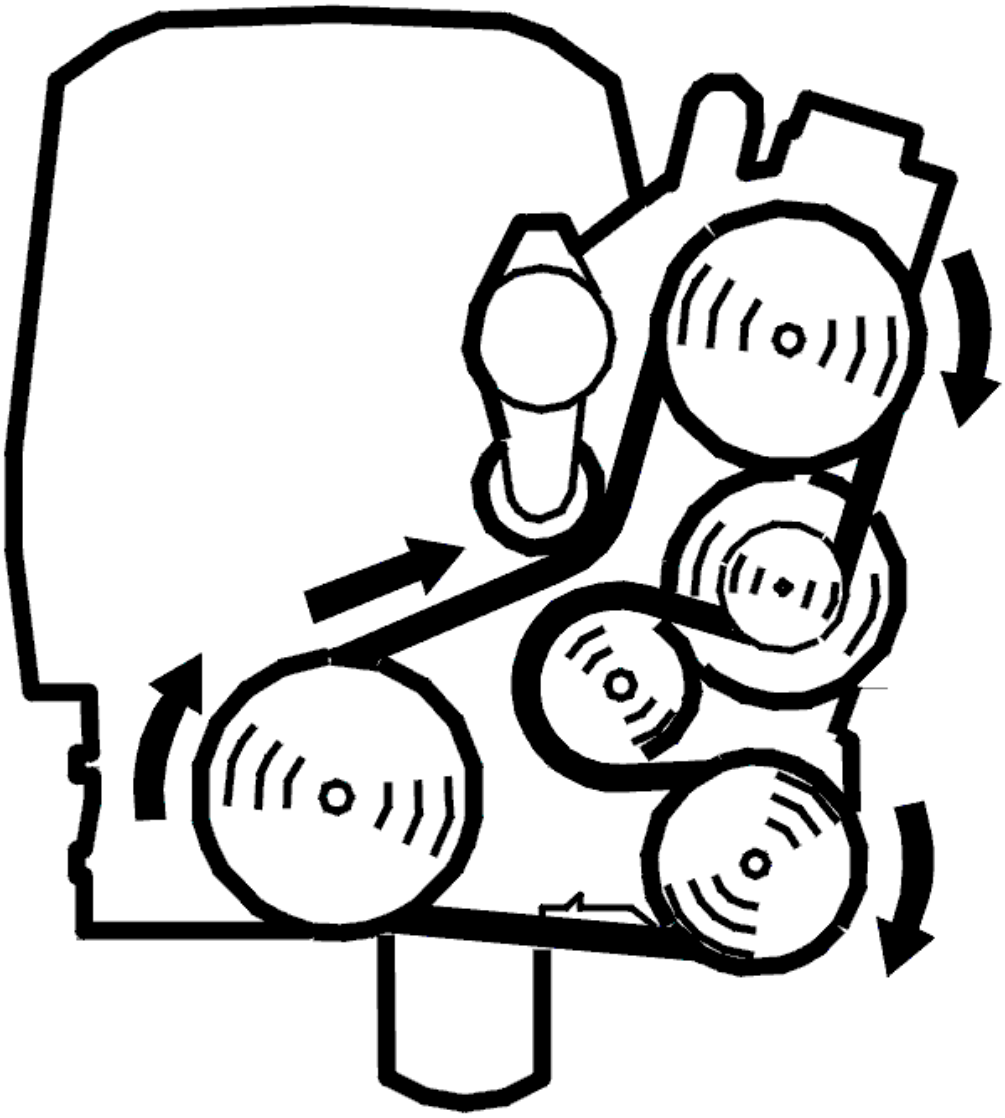

Fig. 287: Belt Routing / Engine Idling - Volvo
Courtesy of VOLVO CARS CORPORATION

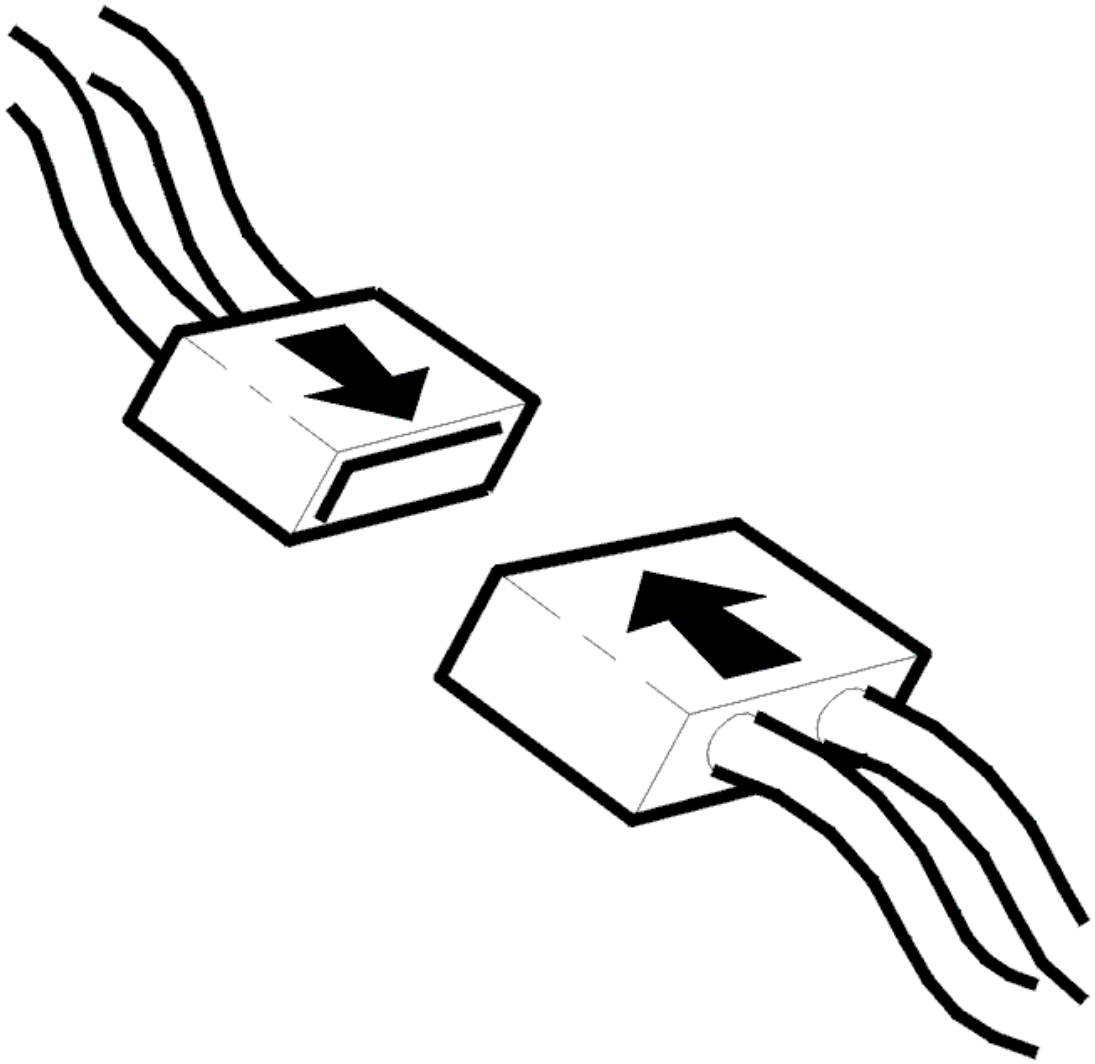

Fig. 288: Connecting Connector
Courtesy of VOLVO CARS CORPORATION

- Ignition off
- Reinstall the components, reconnect the connectors etc.
- Start the engine and run it to normal operating temperature
- Rev the engine to 3500 RPM. Read off the value of the knock sensor (KS) signal.

  The value must be between 2 and 6.

  If the value is now OK it means that the cause of the fault was loose connections in connector.

  Other information

  - To access or replace the knock sensor (KS), see **KNOCK SENSOR (KS), REPLACING**

- For 5 cylinder turbocharged engines -2004, see **SIGNAL DESCRIPTION**
- For 5 cylinder turbocharged engines 2005-, see **SIGNAL SPECIFICATION** .

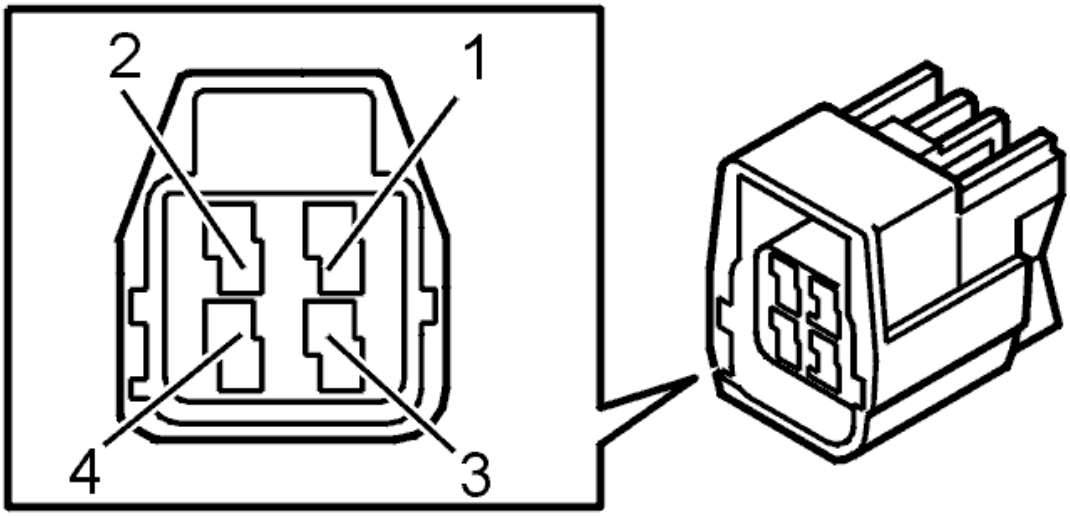

Fig. 289: Identifying Connector Terminals
Courtesy of VOLVO CARS CORPORATION

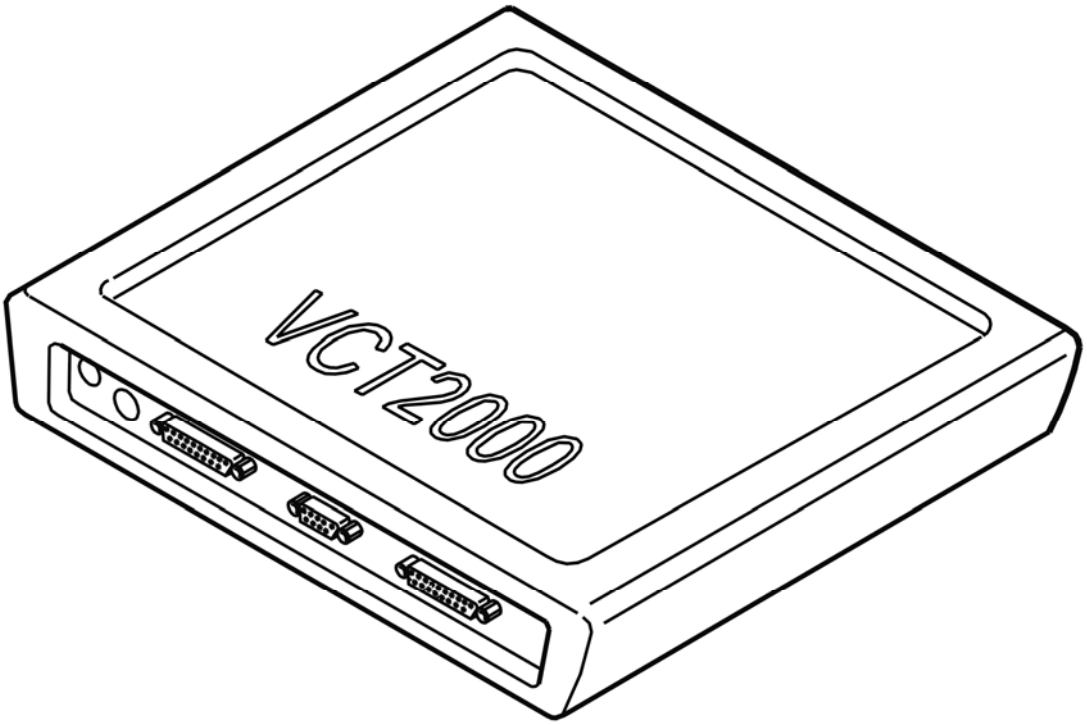

Fig. 290: Identifying VCT2000 Diagnostic Tool Symbol In VIDA
Courtesy of VOLVO CARS CORPORATION

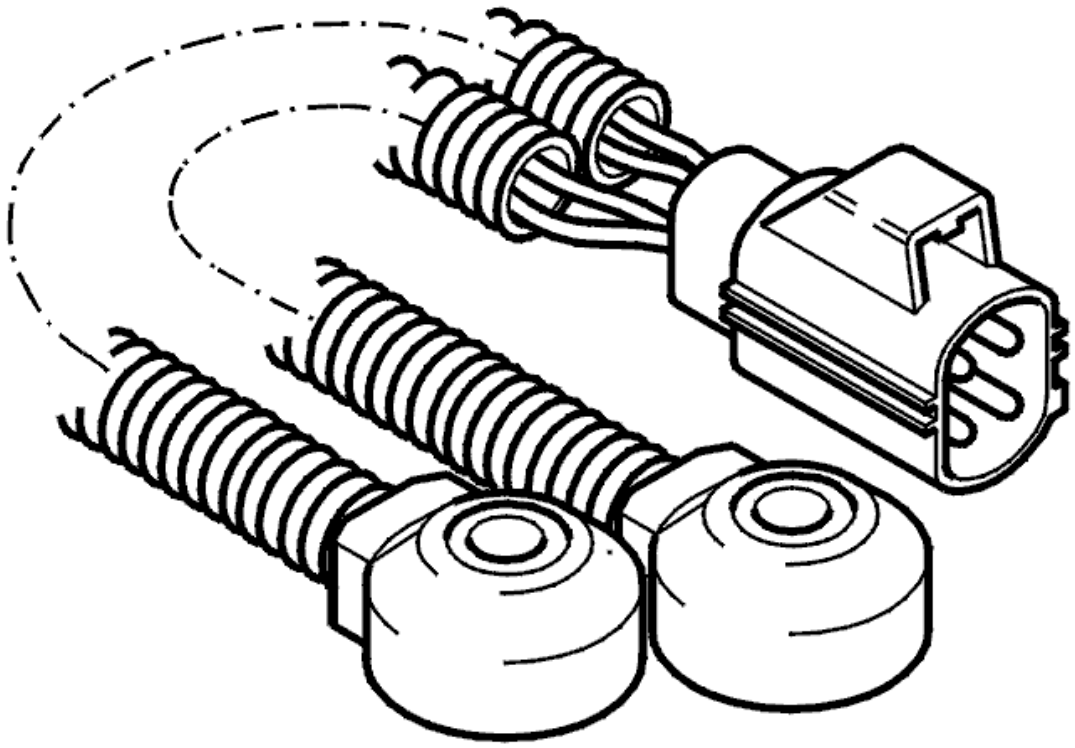

Fig. 291: Identifying Knock Sensor
Courtesy of VOLVO CARS CORPORATION

Is the value between 2 and 6?

- **OK**

  OKAY: Troubleshooting has been completed.

- **NOT OK**

  Refer to **REPLACING THE COMPONENT**

REPLACING THE COMPONENT

Replace the knock sensor (KS). See **KNOCK SENSOR (KS), REPLACING** .

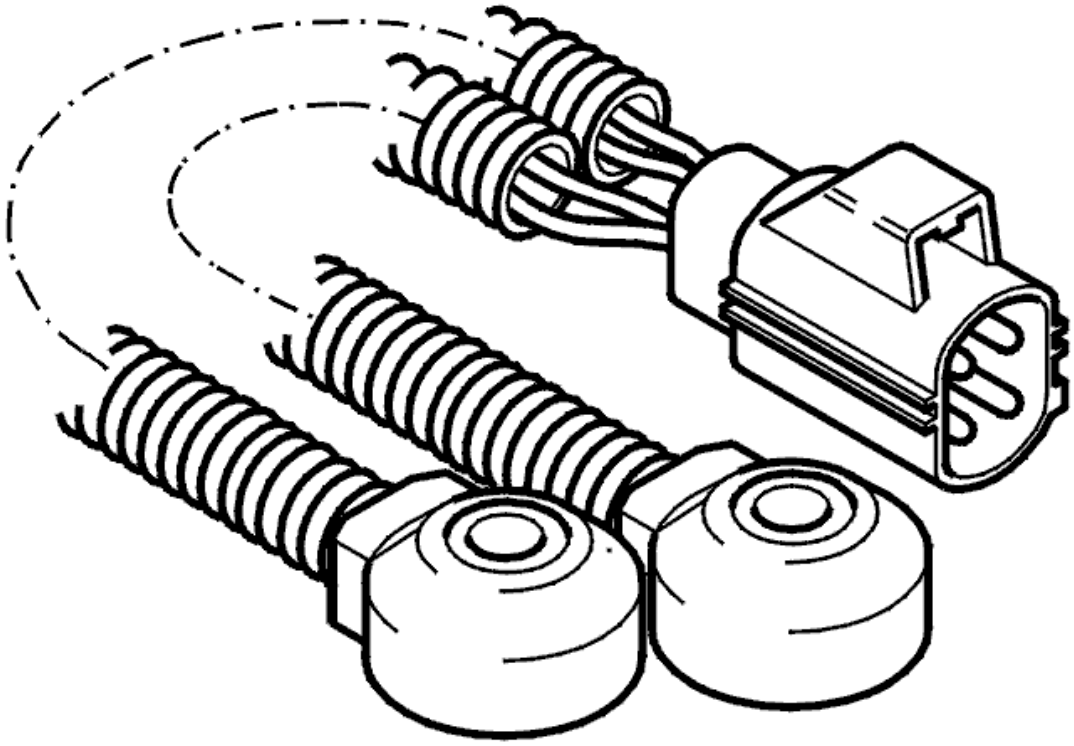

Fig. 292: Identifying Knock Sensor
Courtesy of VOLVO CARS CORPORATION

- **Continue**

  Refer to **VERIFICATION**

VERIFICATION

VERIFICATION

HINT: After carrying out the repair, check that the fault has been remedied.

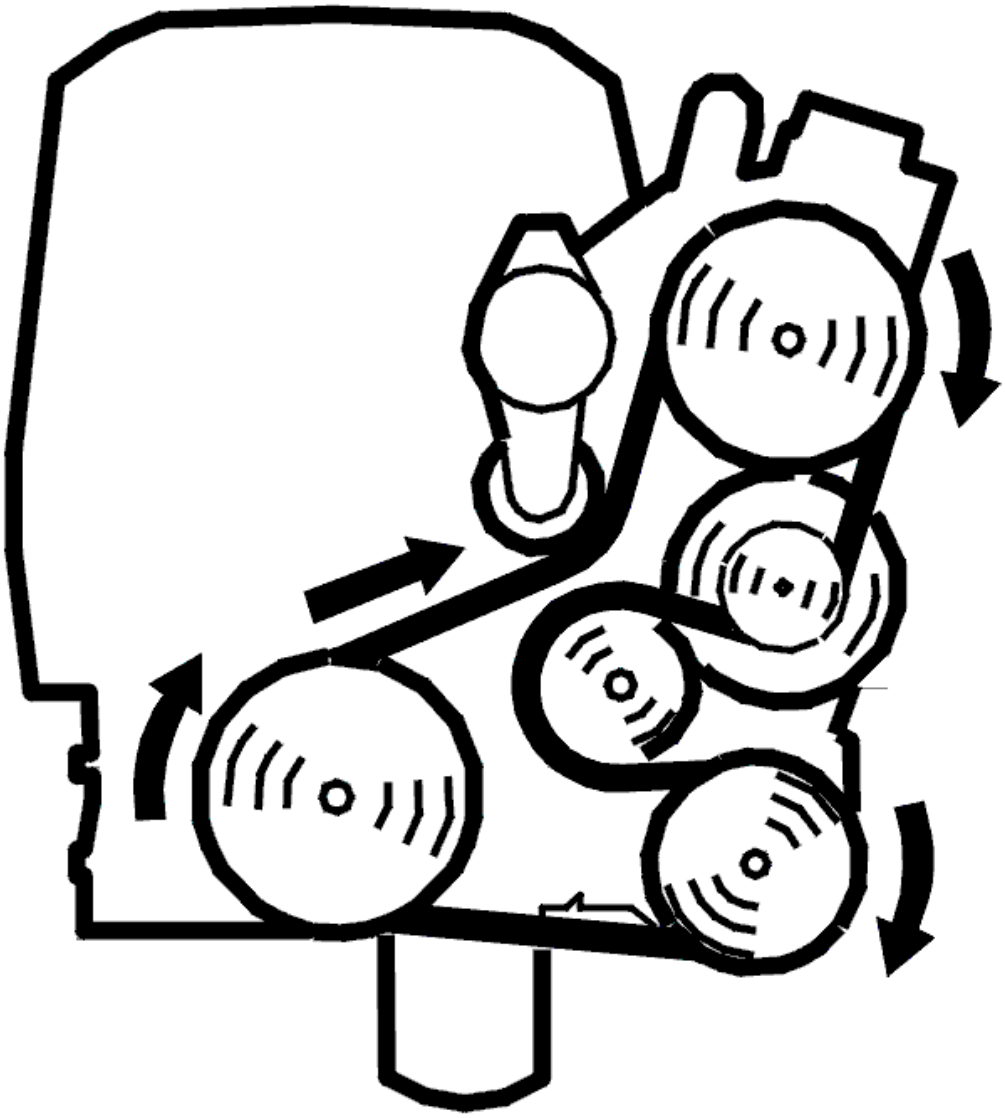

Fig. 293: Belt Routing / Engine Idling - Volvo
Courtesy of VOLVO CARS CORPORATION

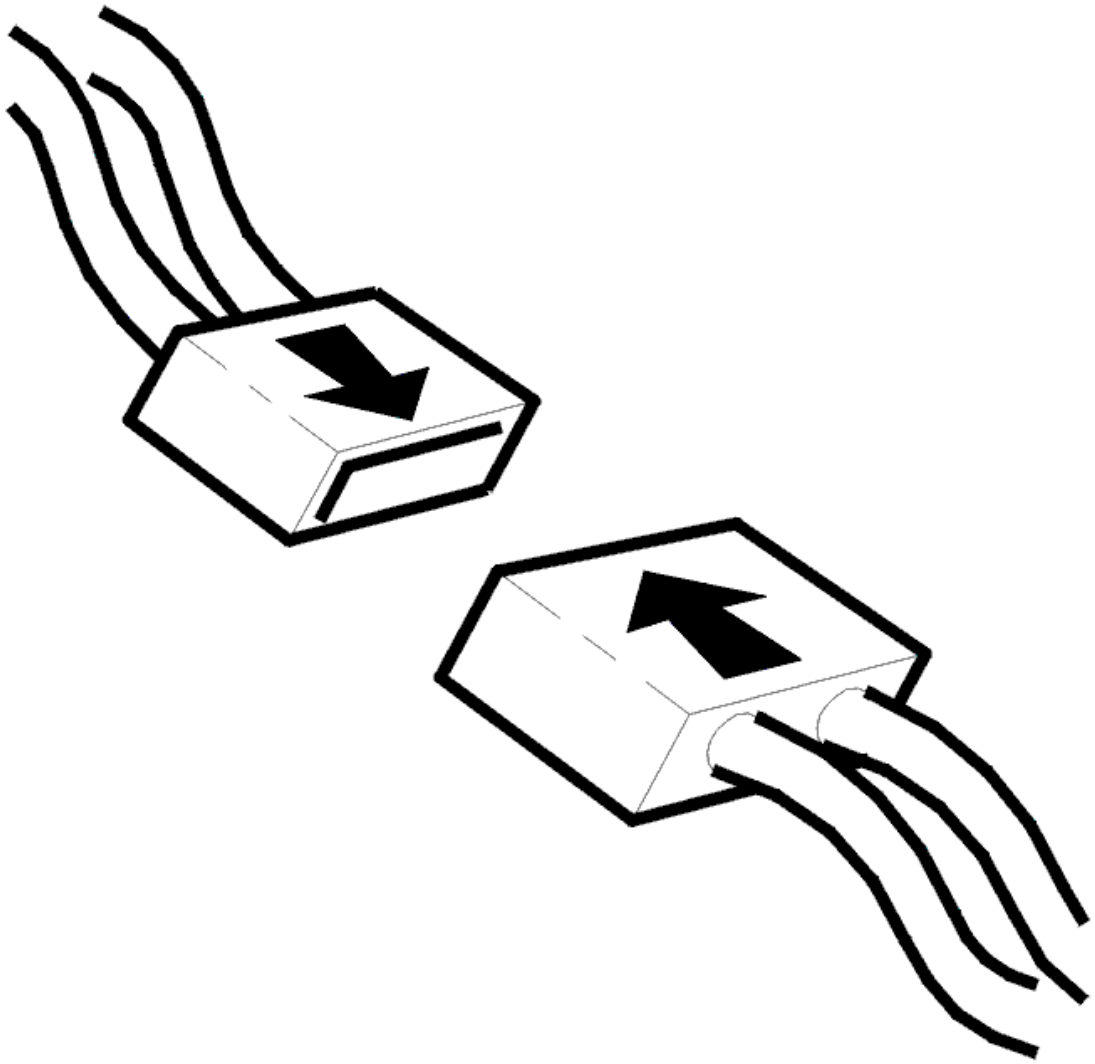

Fig. 294: Connecting Connector
Courtesy of VOLVO CARS CORPORATION

- Ignition off.
- Reconnect the connectors, reinstall components etc.
- Start engine and run to normal operating temperature.
- Rev the engine to 3500 RPM and read off the value of the knock sensor (KS) signal.

.

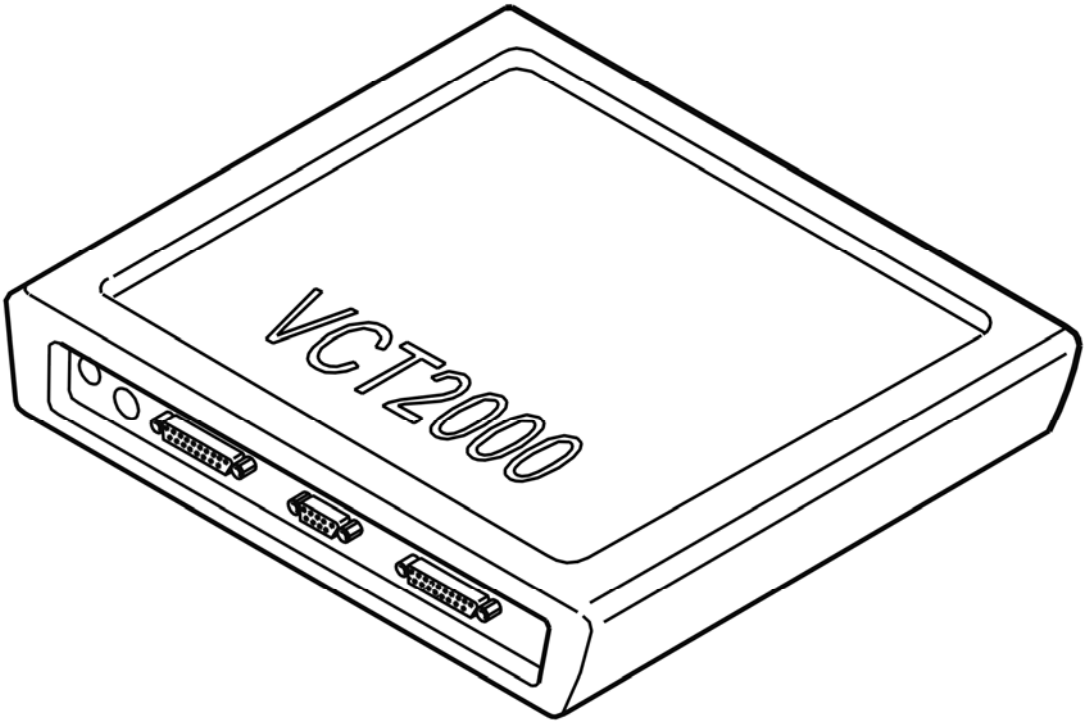

Fig. 295: Identifying VCT2000 Diagnostic Tool Symbol In VIDA
Courtesy of VOLVO CARS CORPORATION

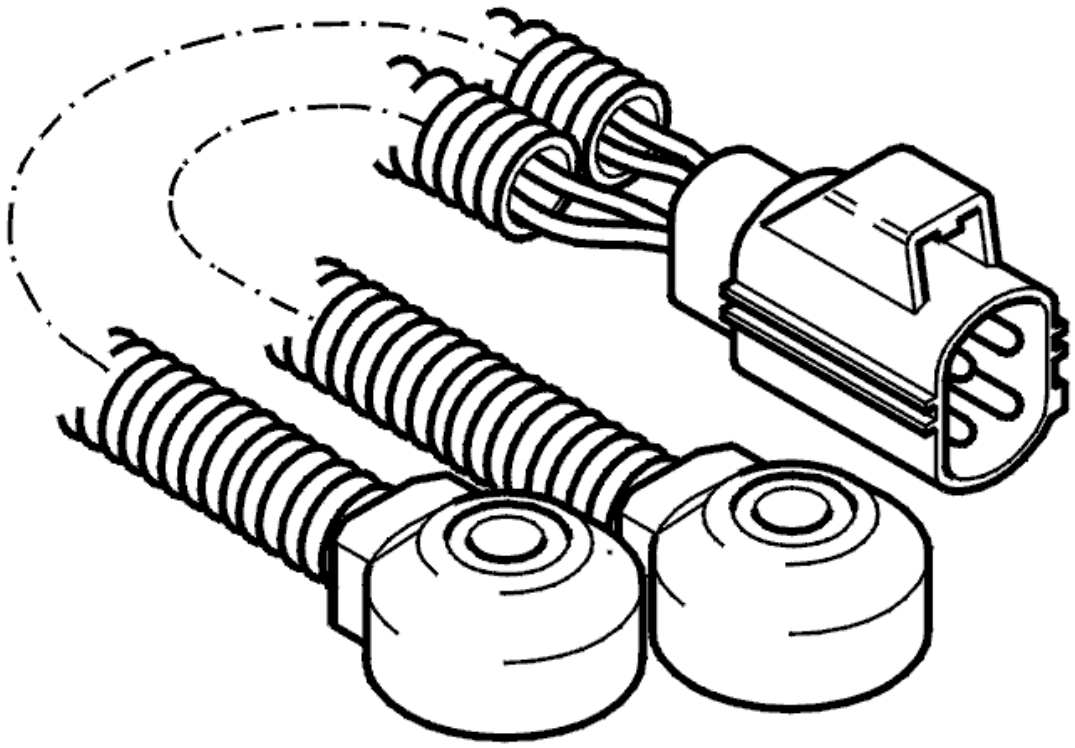

Fig. 296: Identifying Knock Sensor
Courtesy of VOLVO CARS CORPORATION

Is the value between 2-6?

- **YES**

  VERIFIED: Troubleshooting has been completed.

- **NO**

  Refer to **INFORMATION**

INFORMATION

FAULT-TRACING INFORMATION

The fault should have been detected and remedied. As this is not the case fault-tracing has failed.

Exit fault-tracing for this diagnostic trouble code (DTC) or make another attempt.

ECM-303D: FRONT KNOCK SENSOR (KS). SIGNAL TOO LOW (B6294T; 2005-2006)

DIAGNOSTIC TROUBLE CODE (DTC) INFORMATION ECM-303D

see **DIAGNOSTIC TROUBLE CODE (DTC) INFORMATION ECM-303D**

SIGNAL TOO LOW. PERMANENT FAULT

see **SIGNAL TOO LOW. PERMANENT FAULT**

ECM-304C: REAR KNOCK SENSOR (KS). SIGNAL TOO HIGH (B5254T2; 2005-2007)

DIAGNOSTIC TROUBLE CODE (DTC) INFORMATION ECM-304C

Condition

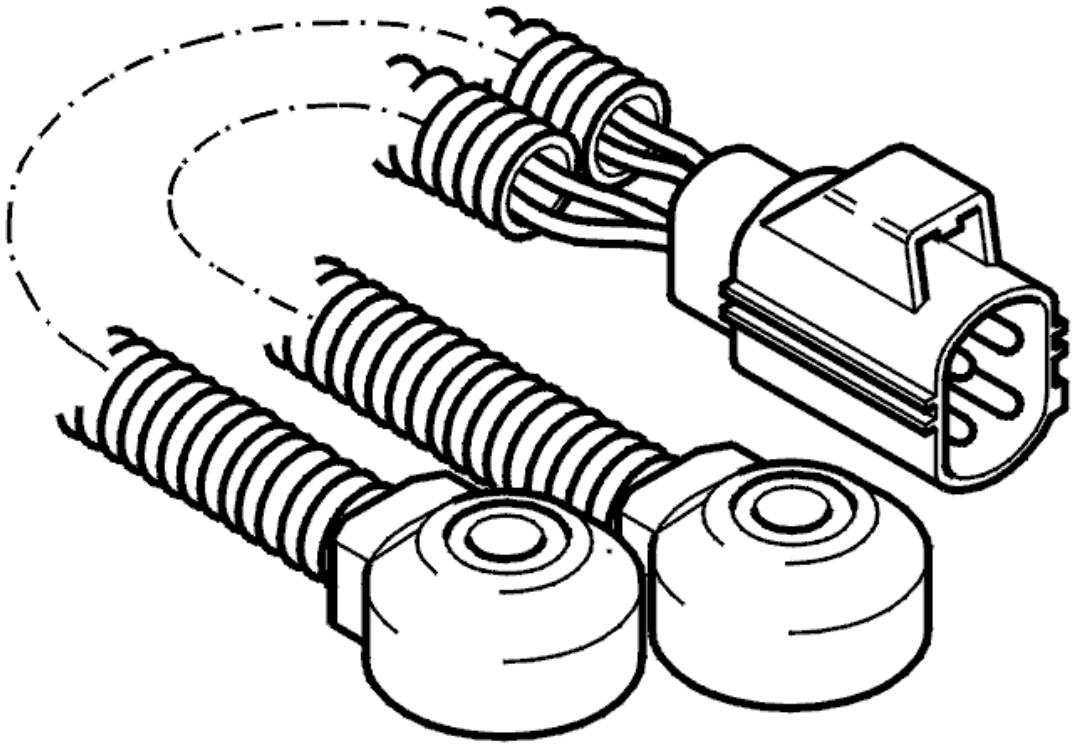

Fig. 297: Identifying Knock Sensor
Courtesy of VOLVO CARS CORPORATION

In certain operating conditions the engine control module (ECM) checks the signal from the rear knock sensor (KS). The diagnostic trouble code (DTC) is stored if the signal from the rear knock sensor (KS) is too high.

The diagnostic trouble code (DTC) can be diagnosed when the engine is running.

Substitute Value

- Safety retardation of ignition advance
- Reduced boost pressure.

Possible Source

- Short-circuit to supply voltage in the signal cable
- Noise from the engine.

Fault symptom[s]

- Poor performance.

SIGNAL TOO HIGH. PERMANENT FAULT

CHECKING COMPONENTS AND WIRING

Check the signal cable between knock sensor (KS) terminal #3 and control module terminal #A45 (#A45). Check the ground lead between knock sensor (KS) terminal #4 and control module #A67 (#B7). Check for a short-circuit to supply voltage.

Check that the knock sensor (KS) is tightened to the correct torque.

HINT: The diagnostic trouble code (DTC) may be caused by a worn engine. Start the engine and listen for noise.

Remedy as necessary.

Other information

- To connect the breakout box / access the control module, see **CONNECTING THE BREAKOUT BOX**
- For 5 cylinder turbocharged engines -2004, see **SIGNAL DESCRIPTION**
- For 5 cylinder turbocharged engines 2005-, see **SIGNAL SPECIFICATION** .
- To access or replace the knock sensor (KS), see **KNOCK SENSOR (KS), REPLACING**
- see **CHECKING WIRING AND TERMINALS** .

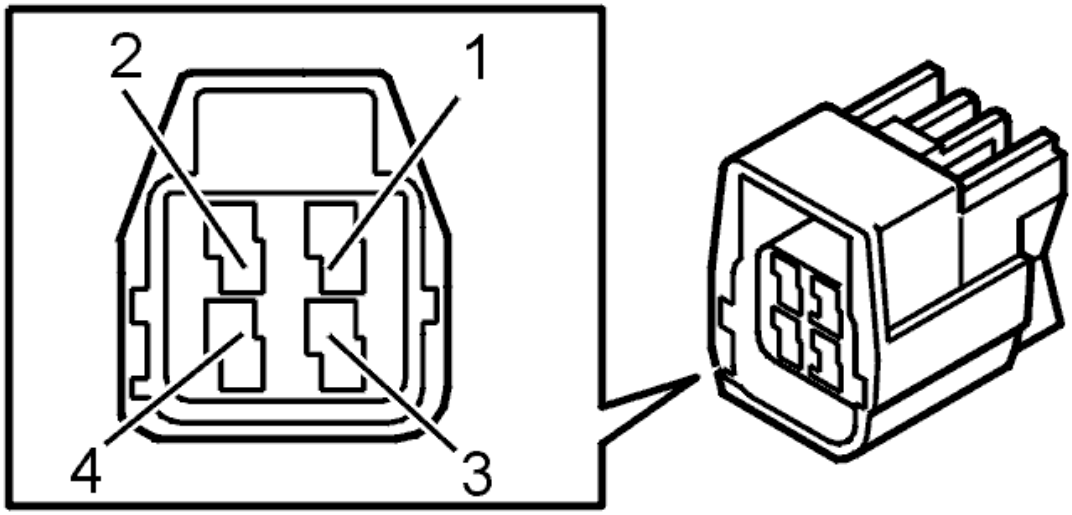

Fig. 298: Identifying Connector Terminals
Courtesy of VOLVO CARS CORPORATION

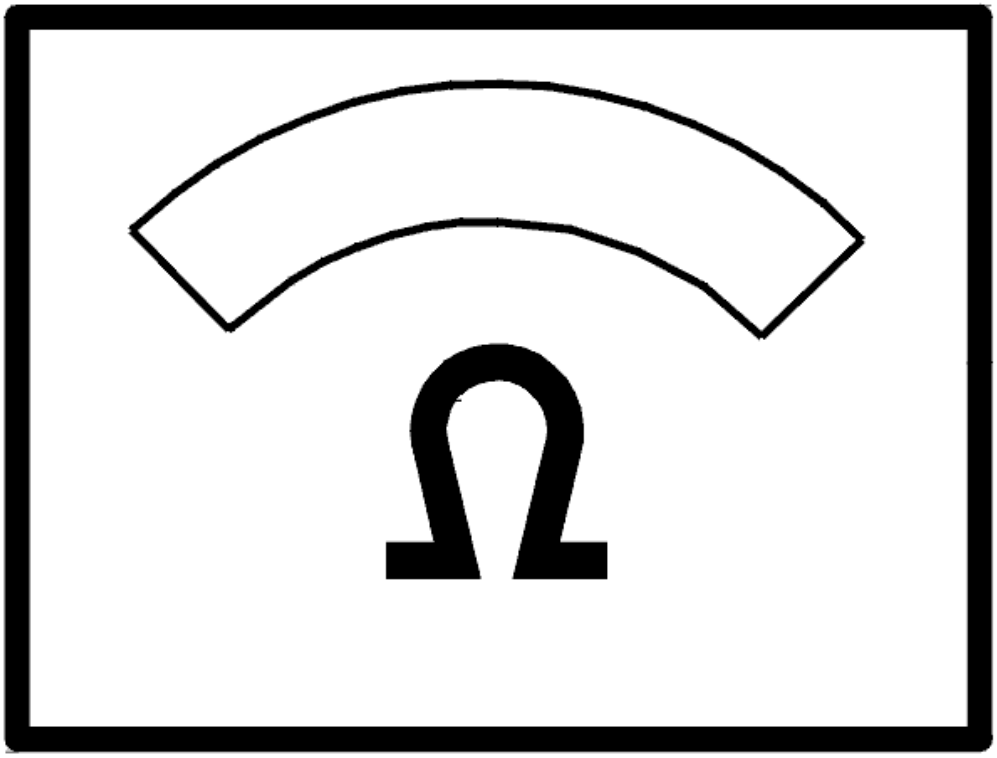

Fig. 299: Identifying Ohm Meter
Courtesy of VOLVO CARS CORPORATION

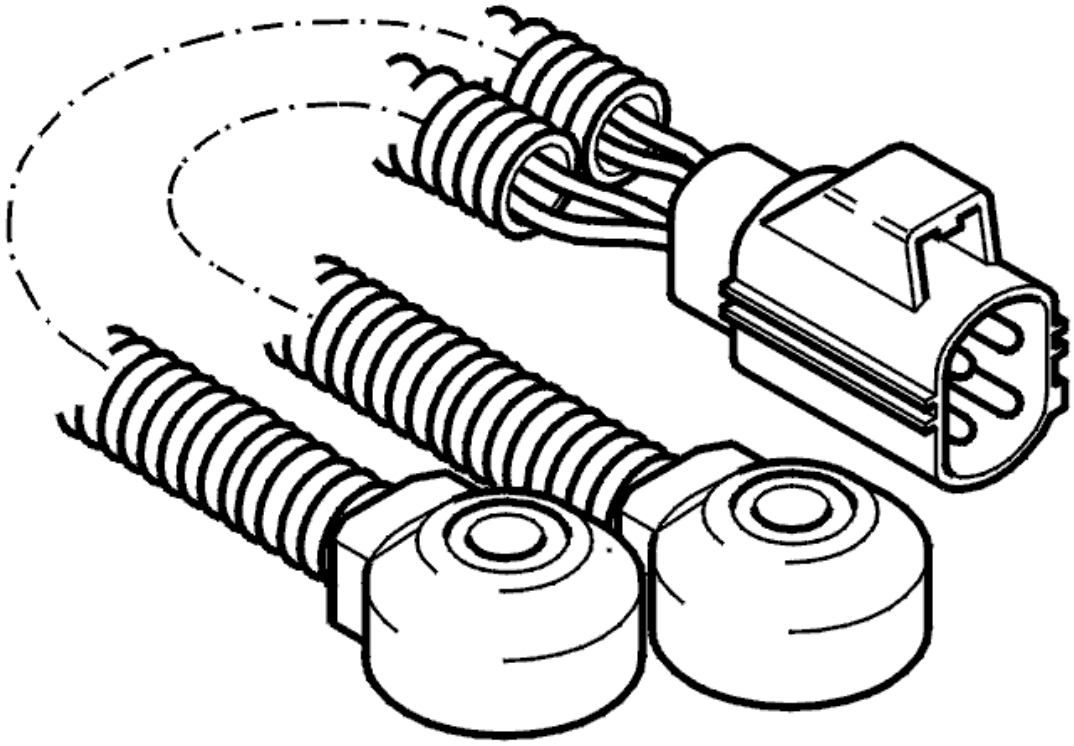

Fig. 300: Identifying Knock Sensor
Courtesy of VOLVO CARS CORPORATION

- **Continue**

  Refer to **VERIFICATION**

VERIFICATION

VERIFICATION

HINT: After carrying out the repair, check that the fault has been remedied.

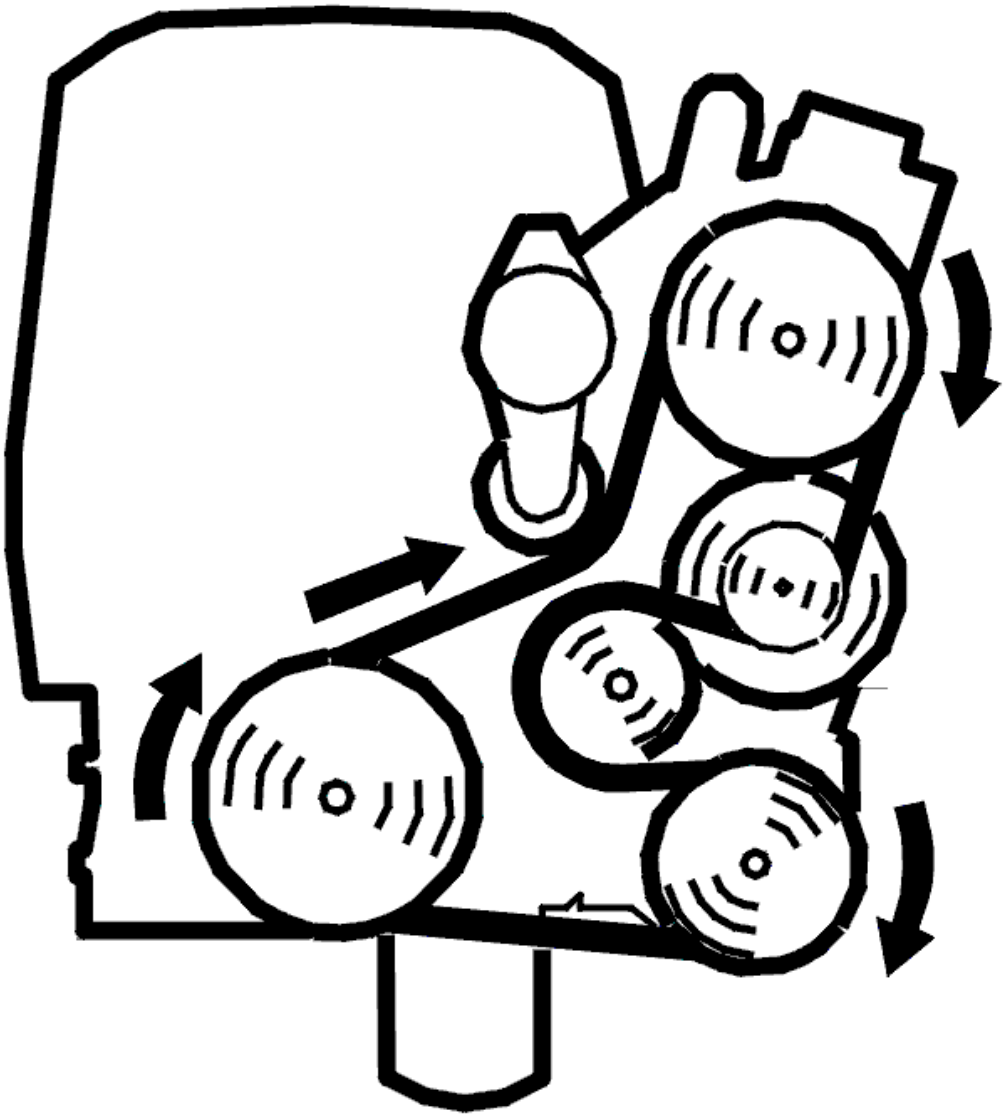

Fig. 301: Belt Routing / Engine Idling - Volvo
Courtesy of VOLVO CARS CORPORATION

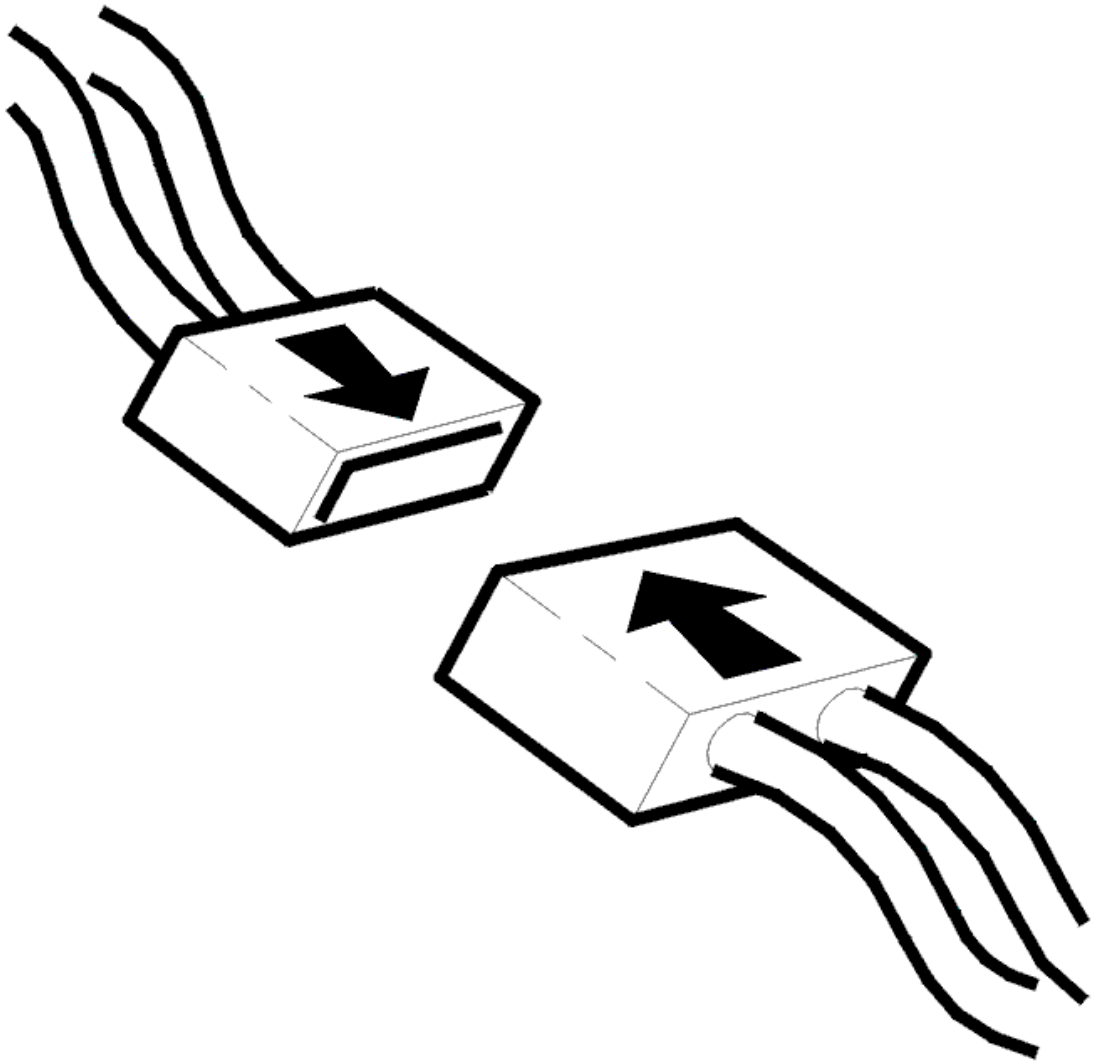

Fig. 302: Connecting Connector
Courtesy of VOLVO CARS CORPORATION

- Ignition off.
- Reconnect the connectors, reinstall components etc.
- Start engine and run to normal operating temperature.
- Rev the engine to 3500 RPM and read off the value of the knock sensor (KS) signal.

.

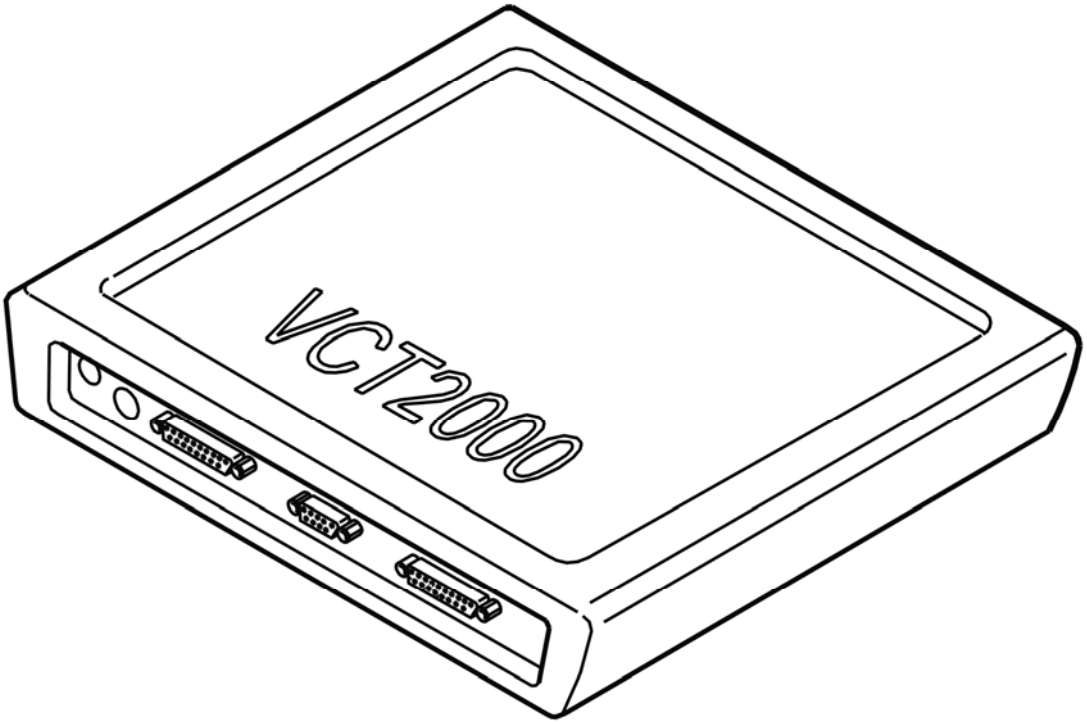

Fig. 303: Identifying VCT2000 Diagnostic Tool Symbol In VIDA
Courtesy of VOLVO CARS CORPORATION

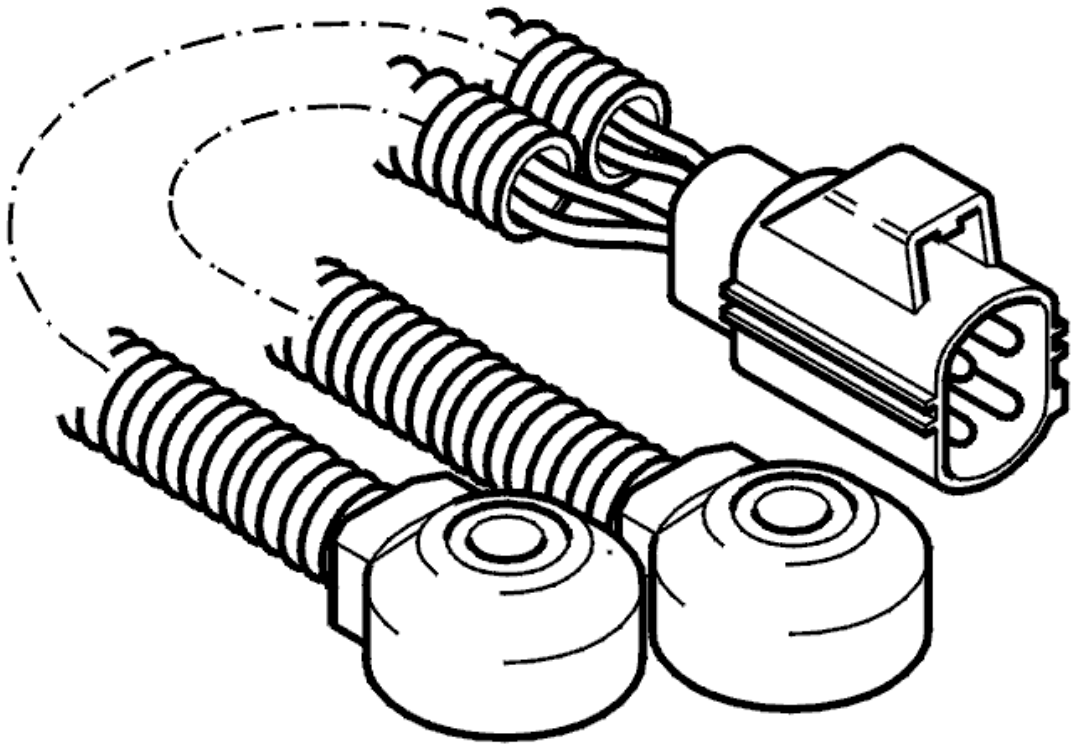

Fig. 304: Identifying Knock Sensor
Courtesy of VOLVO CARS CORPORATION

Is the value between 2-6?

- **YES**

  VERIFIED: Troubleshooting has been completed.

- **NO**

  Refer to **INFORMATION**

INFORMATION

FAULT-TRACING INFORMATION

The fault should have been detected and remedied. As this is not the case fault-tracing has failed.

Exit fault-tracing for this diagnostic trouble code (DTC) or make another attempt.

ECM-304C: REAR KNOCK SENSOR (KS). SIGNAL TOO HIGH (B6294T; 2005-2006)

DIAGNOSTIC TROUBLE CODE (DTC) INFORMATION ECM-304C

see **DIAGNOSTIC TROUBLE CODE (DTC) INFORMATION ECM-304C**

SIGNAL TOO HIGH. PERMANENT FAULT

see **SIGNAL TOO HIGH. PERMANENT FAULT**

ECM-304D: REAR KNOCK SENSOR (KS). SIGNAL TOO LOW (B5254T2; 2005-2007)

DIAGNOSTIC TROUBLE CODE (DTC) INFORMATION ECM-304D

Condition

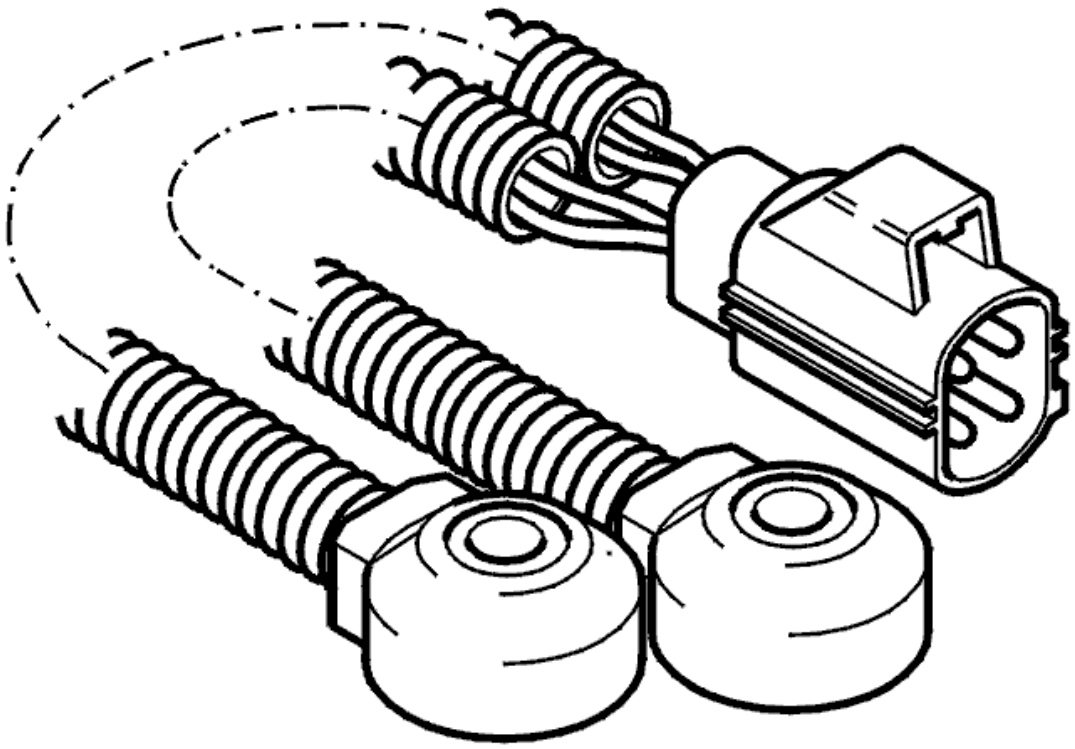

Fig. 305: Identifying Knock Sensor
Courtesy of VOLVO CARS CORPORATION

In certain operating conditions the engine control module (ECM) checks the signal from the rear knock sensor (KS). The diagnostic trouble code (DTC) is stored if the signal from the rear knock sensor (KS) is too low.

The diagnostic trouble code (DTC) can be diagnosed when the engine is running.

Substitute Value

- Safety retardation of ignition advance
- Reduced boost pressure.

Possible Source

- Contact resistance in the knock sensor (KS) terminals
- Open-circuit in the signal cable
- Short-circuit between the knock sensor (KS) signal cables
- Damaged knock sensor (KS).

Fault symptom[s]

- Poor performance.

SIGNAL TOO LOW. PERMANENT FAULT

CHECKING WIRING AND CONNECTORS

Check the knock sensor (KS) connector. Check for contact resistance and oxidation.

Check the signal cable between knock sensor (KS) terminal #3 and control module terminal #A45 (#A45). Check the ground lead between knock sensor (KS) terminal #4 and control module terminal #A67 (#B7). Check for an open-circuit. Check for a short-circuit to ground.

Check that the knock sensor (KS) is tightened to the correct torque.

Remedy as necessary.

Other information

- To connect the breakout box / access the control module, see **CONNECTING THE BREAKOUT BOX**
- To access or replace the knock sensor (KS), see **KNOCK SENSOR (KS), REPLACING**
- For 5 cylinder turbocharged engines -2004, see **SIGNAL DESCRIPTION**
- For 5 cylinder turbocharged engines 2005-, see **SIGNAL SPECIFICATION** .
- see **CHECKING WIRING AND TERMINALS** .

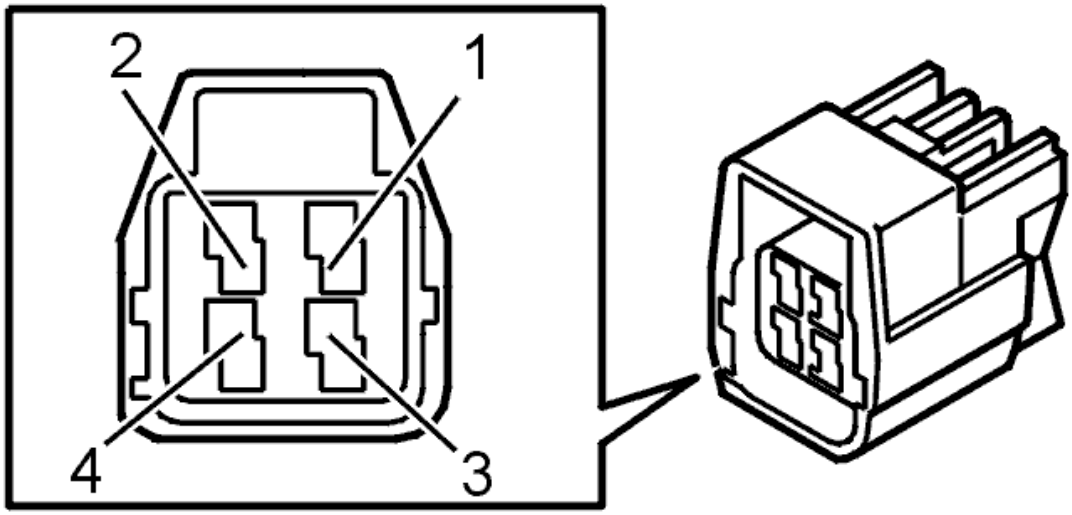

Fig. 306: Identifying Connector Terminals
Courtesy of VOLVO CARS CORPORATION

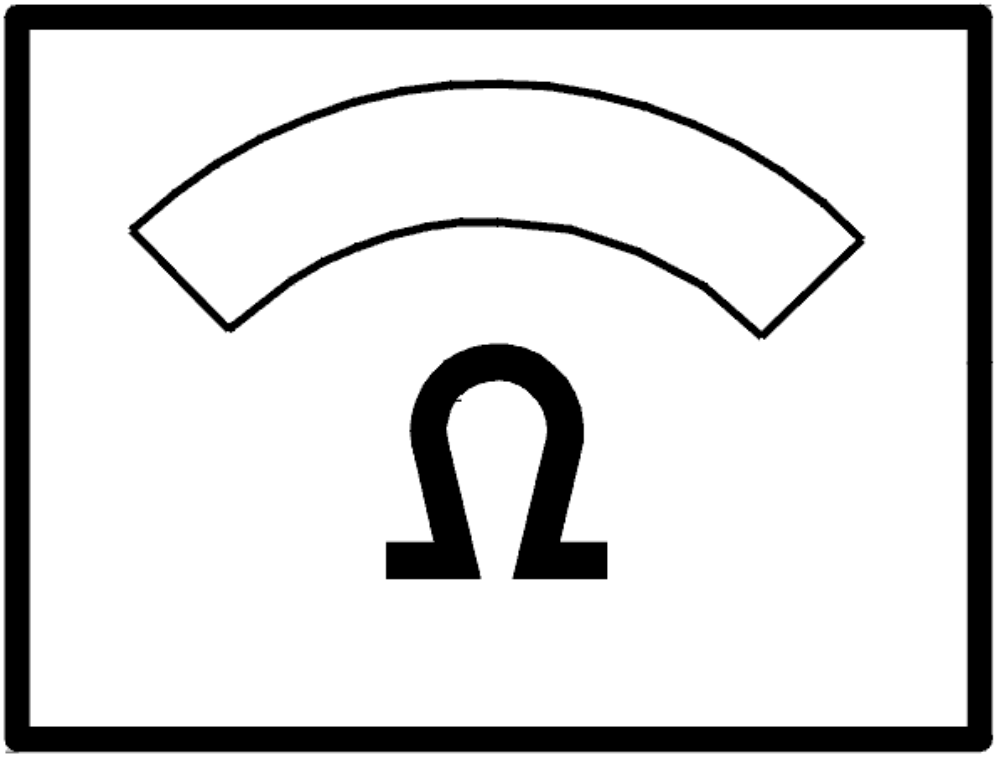

Fig. 307: Identifying Ohm Meter
Courtesy of VOLVO CARS CORPORATION

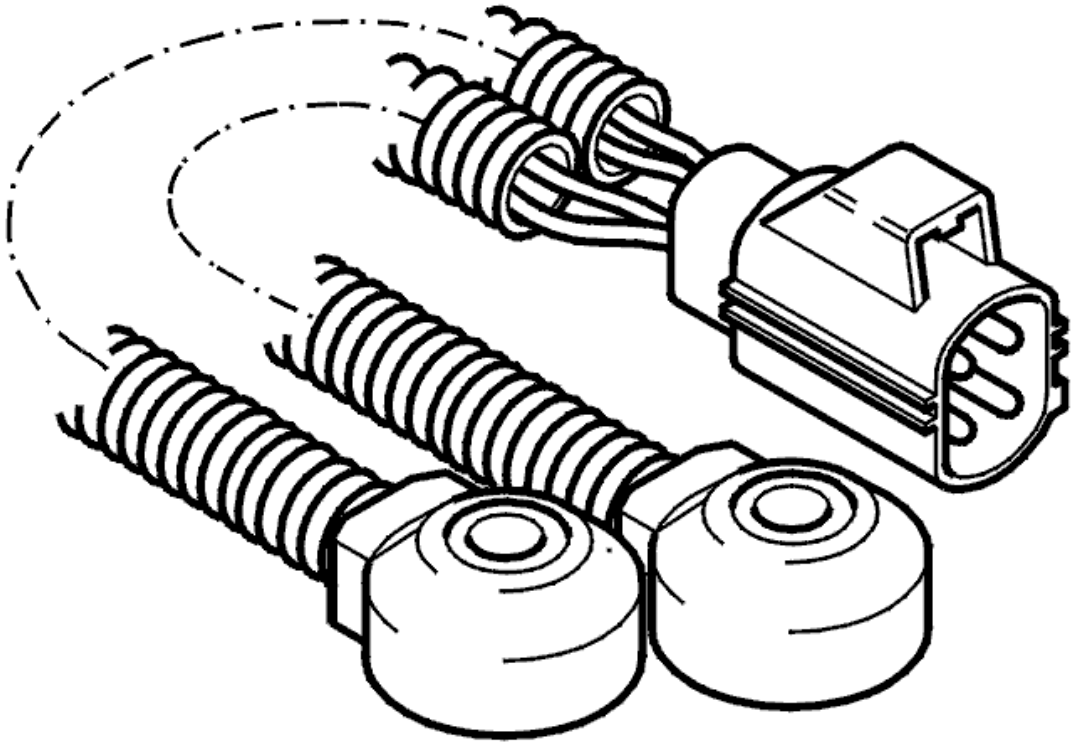

Fig. 308: Identifying Knock Sensor
Courtesy of VOLVO CARS CORPORATION

- **Continue**

  Refer to **CHECKING THE KNOCK SENSOR (KS) SIGNAL**

CHECKING THE KNOCK SENSOR (KS) SIGNAL

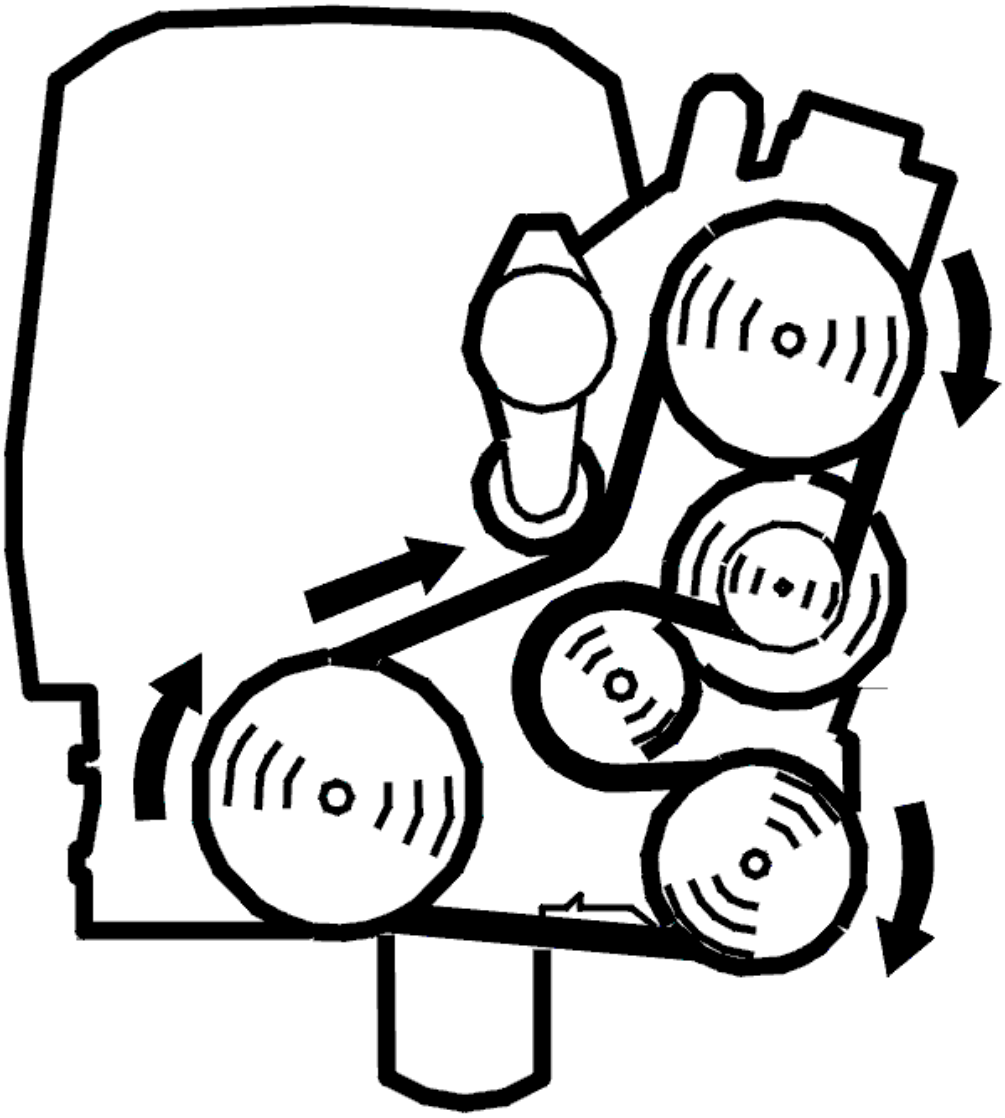

Fig. 309: Belt Routing / Engine Idling - Volvo
Courtesy of VOLVO CARS CORPORATION

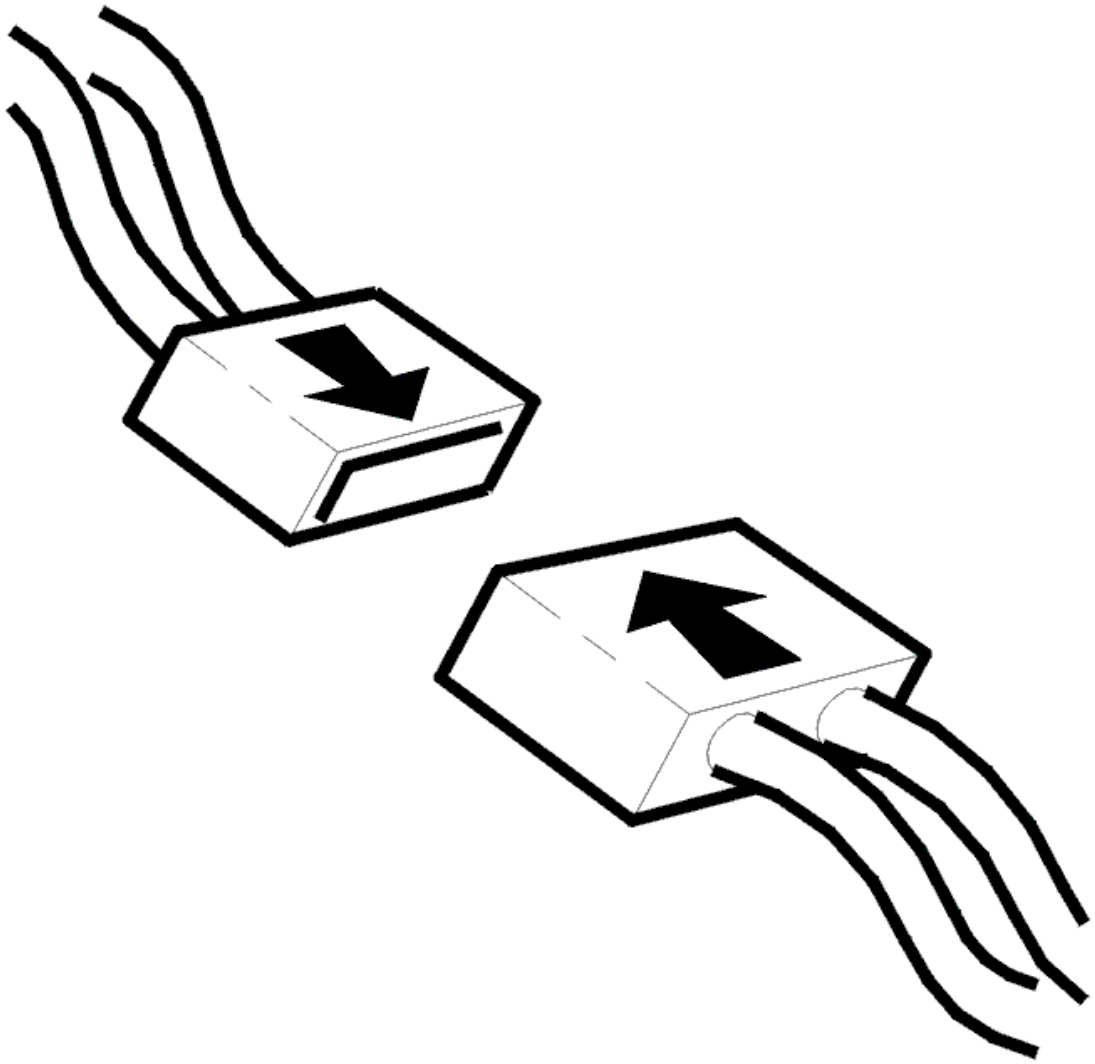

Fig. 310: Connecting Connector
Courtesy of VOLVO CARS CORPORATION

- Ignition off
- Reinstall the components, reconnect the connectors etc.
- Start the engine and run it to normal operating temperature
- Rev the engine to 3500 RPM. Read off the value of the knock sensor (KS) signal.

  The value must be 2-6.

  If the value is now OK it means that the cause of the fault was loose connections in connector.

  Other information

  - To access or replace the knock sensor (KS), see **KNOCK SENSOR (KS), REPLACING**

- For 5 cylinder turbocharged engines -2004, see **SIGNAL DESCRIPTION**
- For 5 cylinder turbocharged engines 2005-, see **SIGNAL SPECIFICATION** .

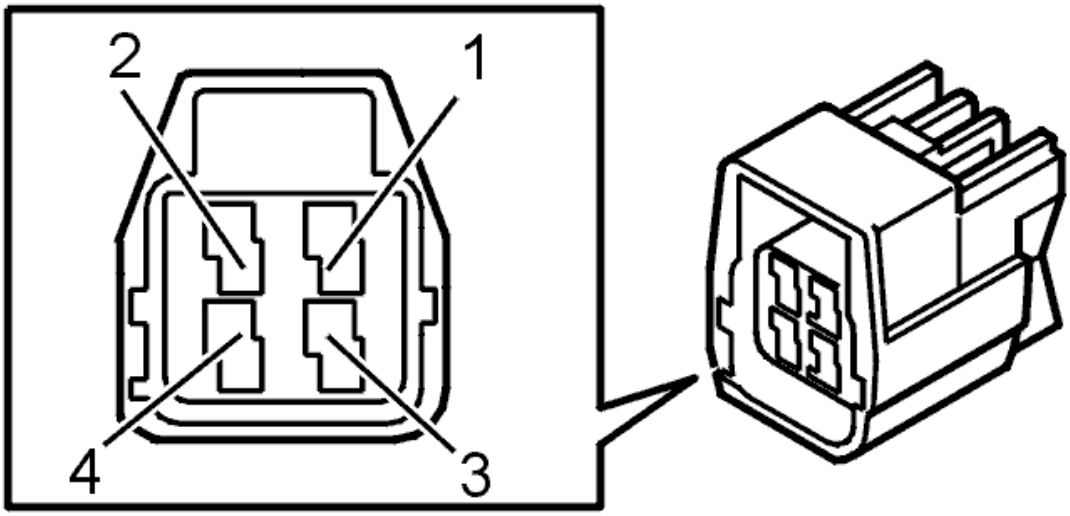

Fig. 311: Identifying Connector Terminals
Courtesy of VOLVO CARS CORPORATION

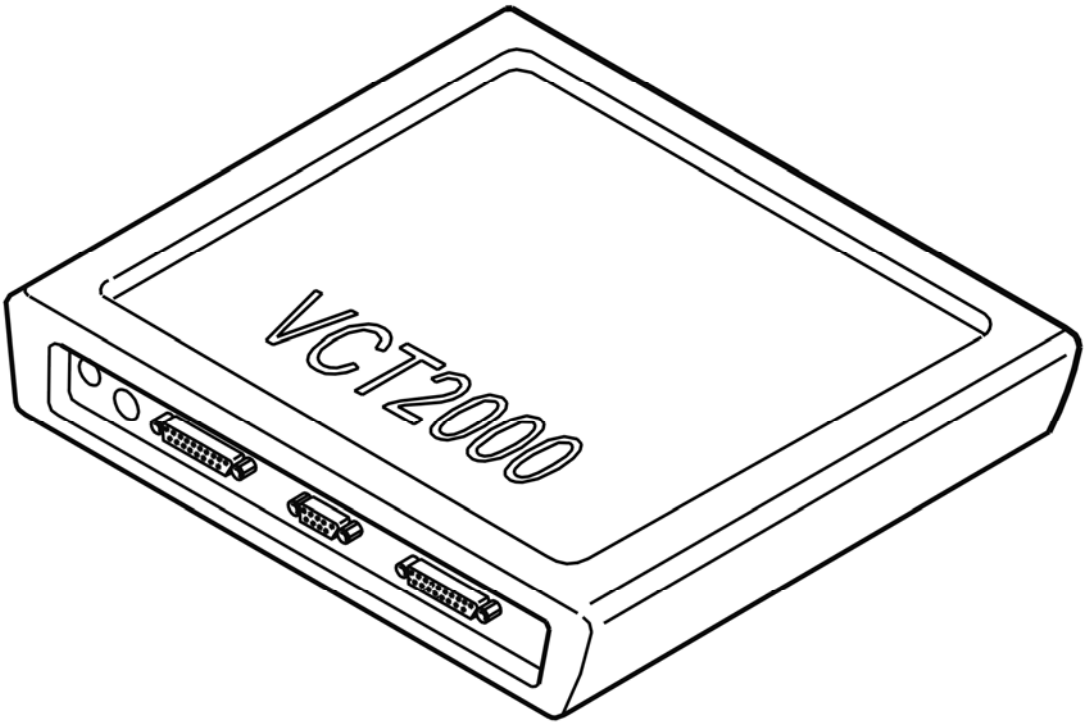

Fig. 312: Identifying VCT2000 Diagnostic Tool Symbol In VIDA
Courtesy of VOLVO CARS CORPORATION

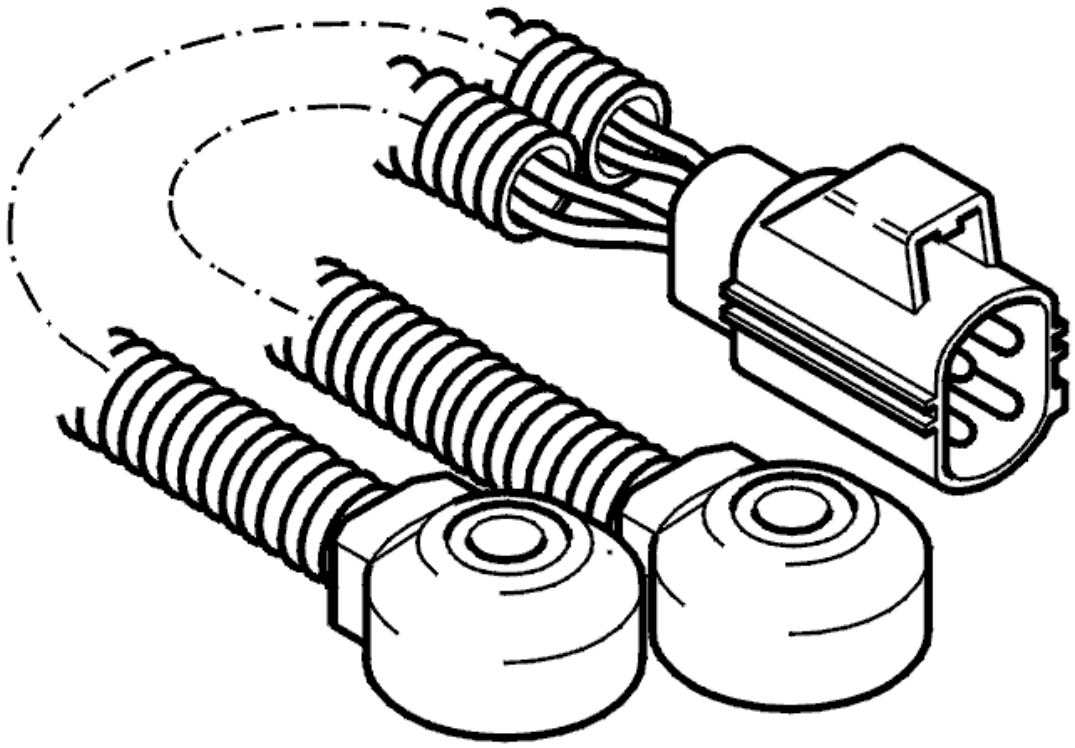

Fig. 313: Identifying Knock Sensor
Courtesy of VOLVO CARS CORPORATION

- **OK**

  OKAY: Troubleshooting has been completed.

- **NOT OK**

  Refer to **REPLACING THE COMPONENT**

REPLACING THE COMPONENT

Replace the knock sensor (KS). See **KNOCK SENSOR (KS), REPLACING** .

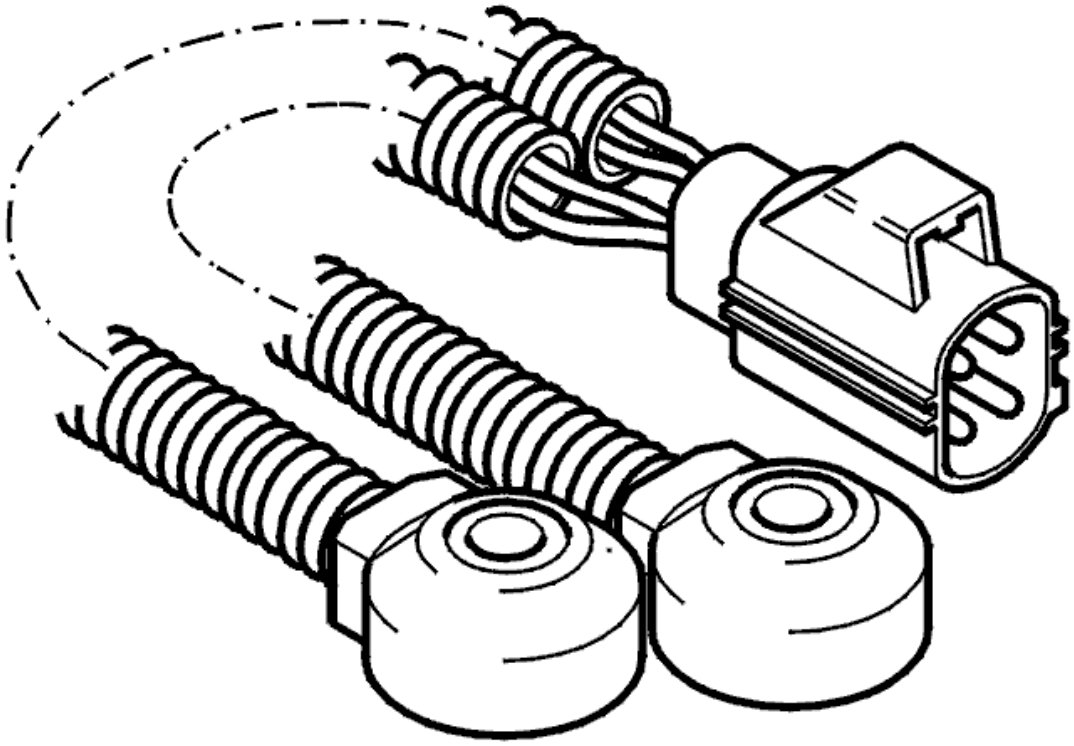

Fig. 314: Identifying Knock Sensor
Courtesy of VOLVO CARS CORPORATION

- **Continue**

  Refer to **VERIFICATION**

VERIFICATION

VERIFICATION

HINT: After carrying out the repair, check that the fault has been remedied.

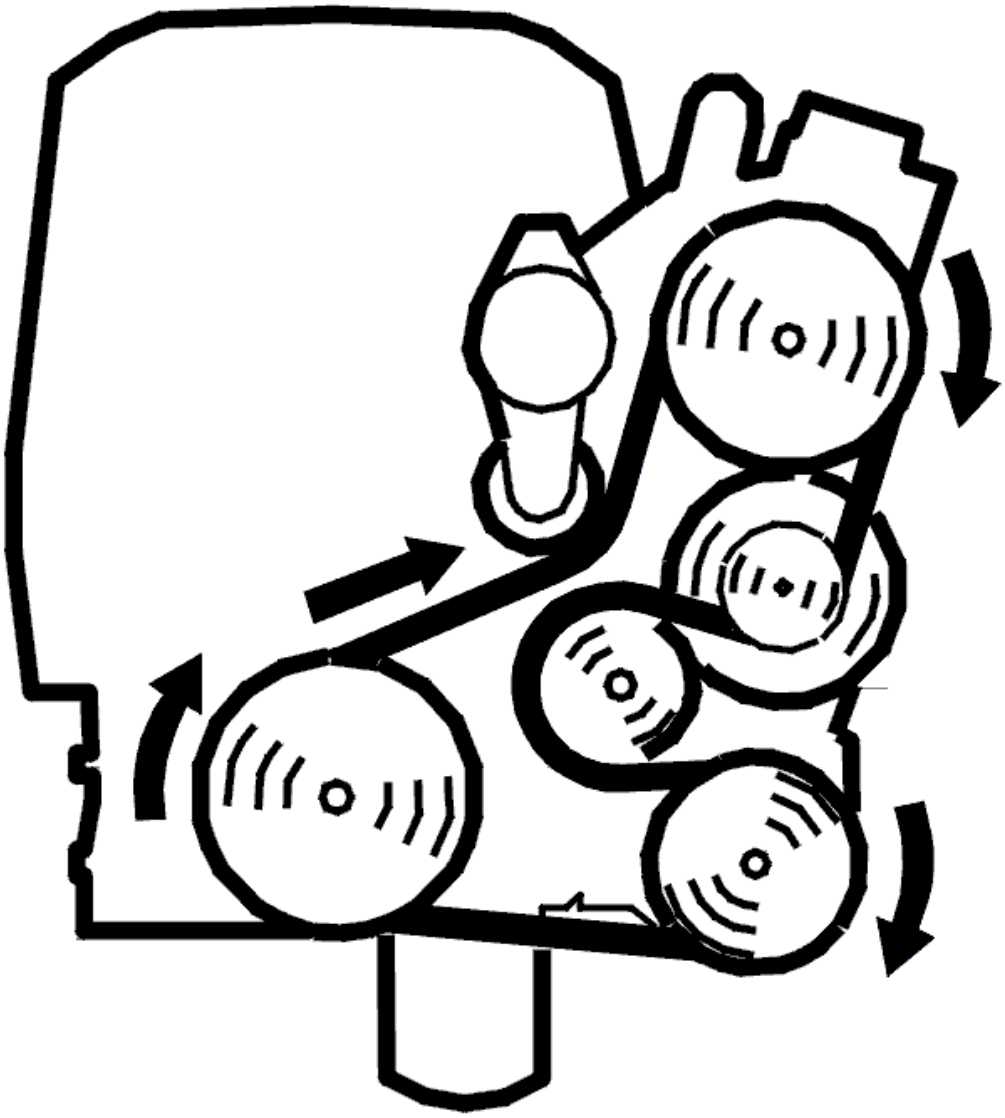

Fig. 315: Belt Routing / Engine Idling - Volvo
Courtesy of VOLVO CARS CORPORATION

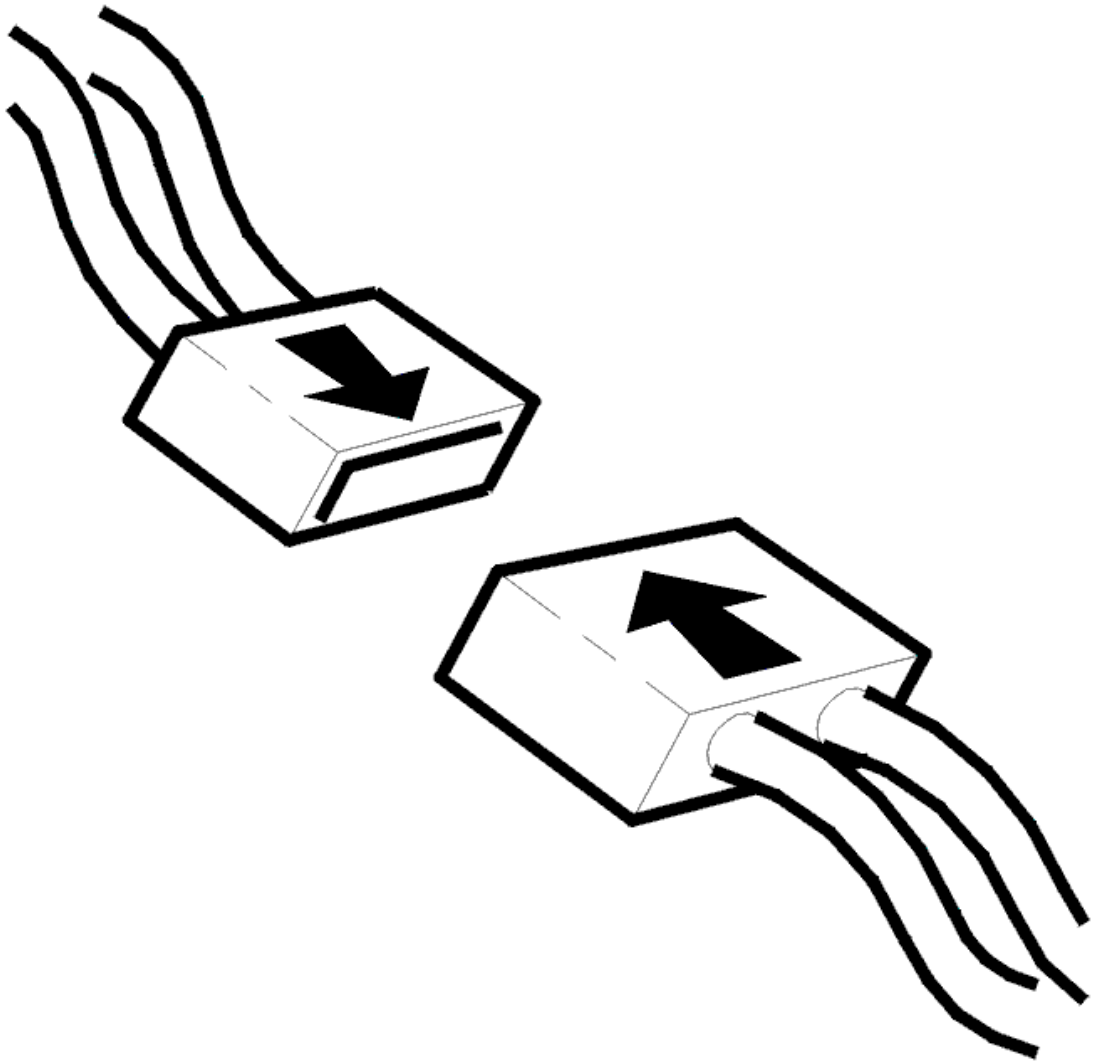

Fig. 316: Connecting Connector
Courtesy of VOLVO CARS CORPORATION

- Ignition off.
- Reconnect the connectors, reinstall components etc.
- Start engine and run to normal operating temperature.
- Rev the engine to 3500 RPM and read off the value of the knock sensor (KS) signal.

.

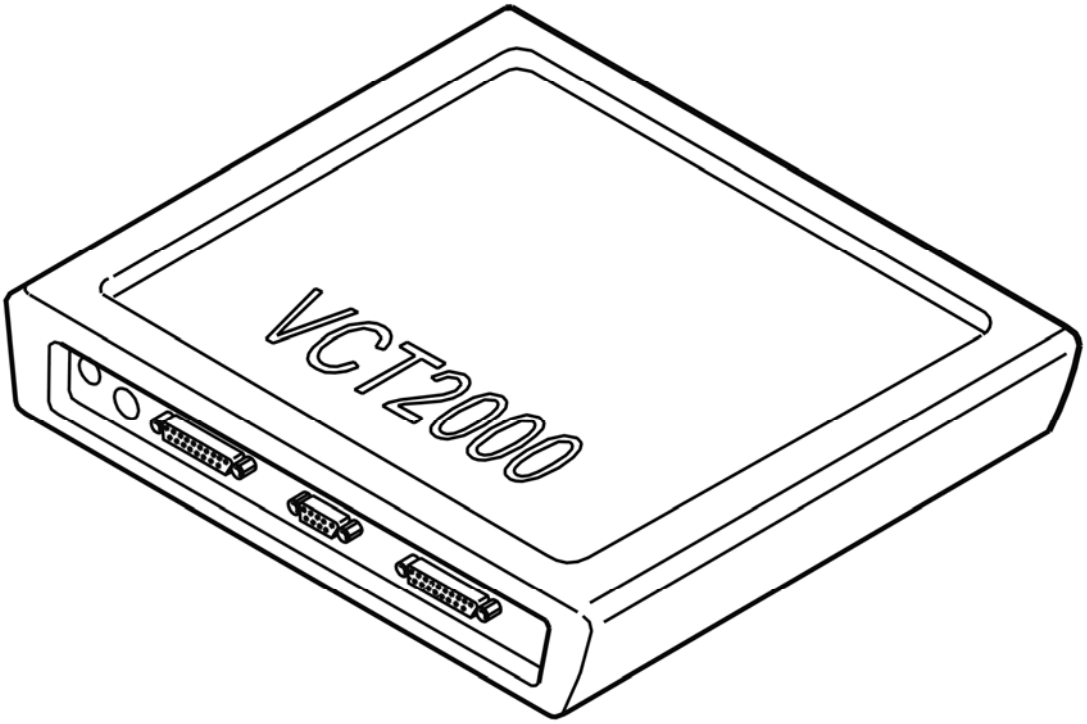

Fig. 317: Identifying VCT2000 Diagnostic Tool Symbol In VIDA
Courtesy of VOLVO CARS CORPORATION

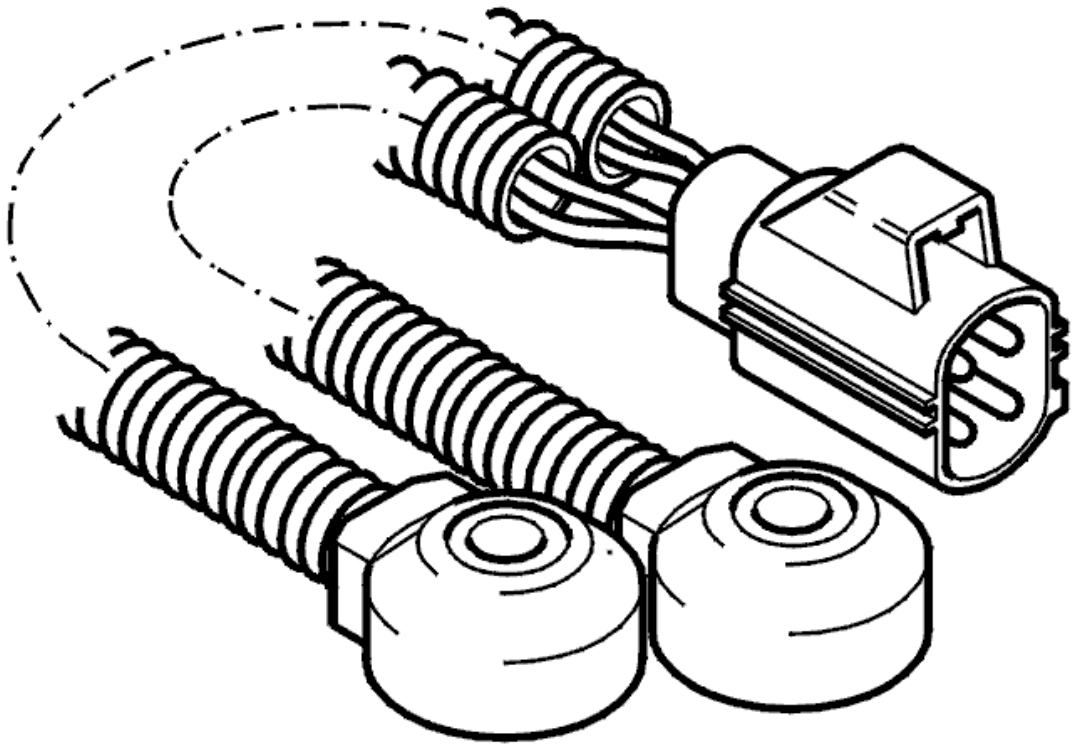

Fig. 318: Identifying Knock Sensor
Courtesy of VOLVO CARS CORPORATION

Is the value between 2-6?

- **YES**

  VERIFIED: Troubleshooting has been completed.

- **NO**

  Refer to **INFORMATION**

INFORMATION

FAULT-TRACING INFORMATION

The fault should have been detected and remedied. As this is not the case fault-tracing has failed.

Exit fault-tracing for this diagnostic trouble code (DTC) or make another attempt.

ECM-304D: REAR KNOCK SENSOR (KS). SIGNAL TOO LOW (B6294T; 2005-2006)

DIAGNOSTIC TROUBLE CODE (DTC) INFORMATION ECM-304D

see **DIAGNOSTIC TROUBLE CODE (DTC) INFORMATION ECM-304D**

SIGNAL TOO LOW. PERMANENT FAULT

see **SIGNAL TOO LOW. PERMANENT FAULT**

ECM-3100: ENGINE SPEED (RPM) SENSOR. SIGNAL MISSING (B5254T2; B6294T; 2003-2004)

DIAGNOSTIC TROUBLE CODE (DTC) INFORMATION

Condition

Diagnostic trouble code (DTC) ECM-3100 is stored if the signal from the engine speed (RPM) sensor is missing or if it gives an engine speed (RPM) signal which is too low in relation to the signal from the camshaft position (CMP) sensor and the control module interprets it as a fault.

Substitute Value

The control module uses the signal from the camshaft position (CMP) sensor if the camshaft position (CMP) sensor has been adapted.

Possible Source

- open-circuit in the signal cable or ground lead
- short-circuit to supply voltage or ground in the signal cable
- contact resistance in the terminals
- faulty engine speed (RPM) sensor
- damaged carrier plate.

Fault symptom[s]

- the engine does not start
- the engine cuts out.

SIGNAL MISSING

CHECKING CONNECTORS AND WIRING

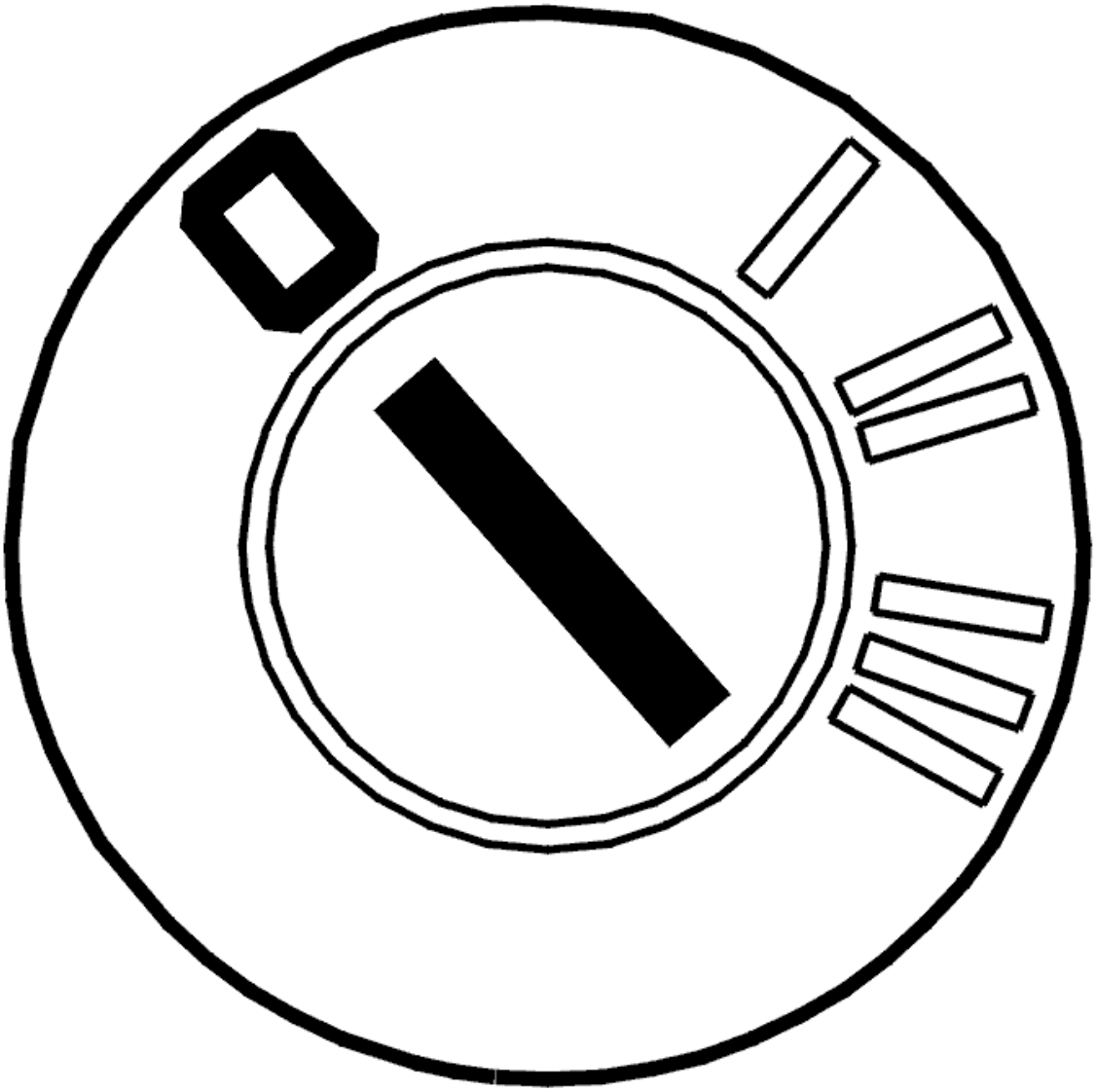

Fig. 319: Identifying Ignition OFF
Courtesy of VOLVO CARS CORPORATION

- Ignition off.

  Check the engine speed (RPM) sensor connector. Check for contact resistance and oxidation.

  Check the signal cable between:

  - engine speed (RPM) sensor terminal #1 and engine control module (ECM) terminal #A48 (#A48)
  - engine speed (RPM) sensor terminal #2 and engine control module (ECM) terminal #A66 (#B6).

  Check for an open-circuit. Check for a short-circuit to ground. Check for a short-circuit to supply voltage.

  Check the carrier plate, search for damage and other defects.

Remedy as necessary.

Other information:

- To connect the breakout box / access the control module, see **CONNECTING THE BREAKOUT BOX**
- To access or replace the engine speed (RPM) sensor, see **REPLACING THE ENGINE SPEED (RPM) SENSOR**
- For 5 cylinder turbocharged engines -2004, see **SIGNAL DESCRIPTION**
- For 5 cylinder turbocharged engines 2005-, see **SIGNAL SPECIFICATION** .
- see **CHECKING WIRING AND TERMINALS** .

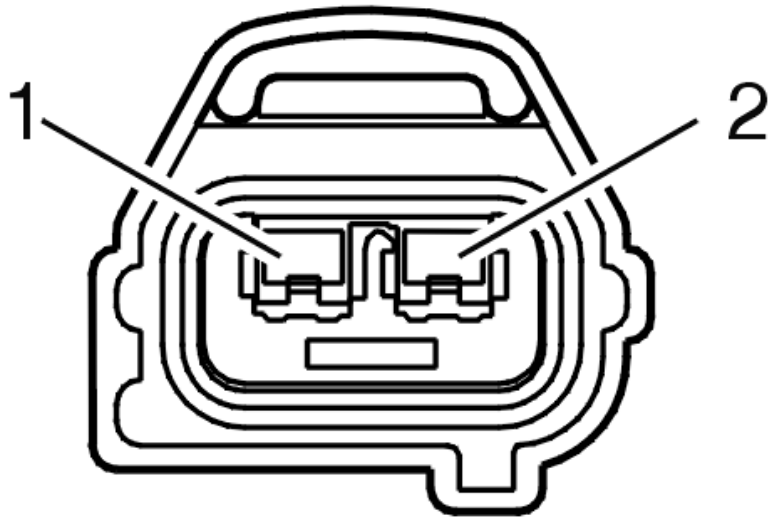

Fig. 320: Identifying Engine Speed (RPM) Sensor Terminals
Courtesy of VOLVO CARS CORPORATION

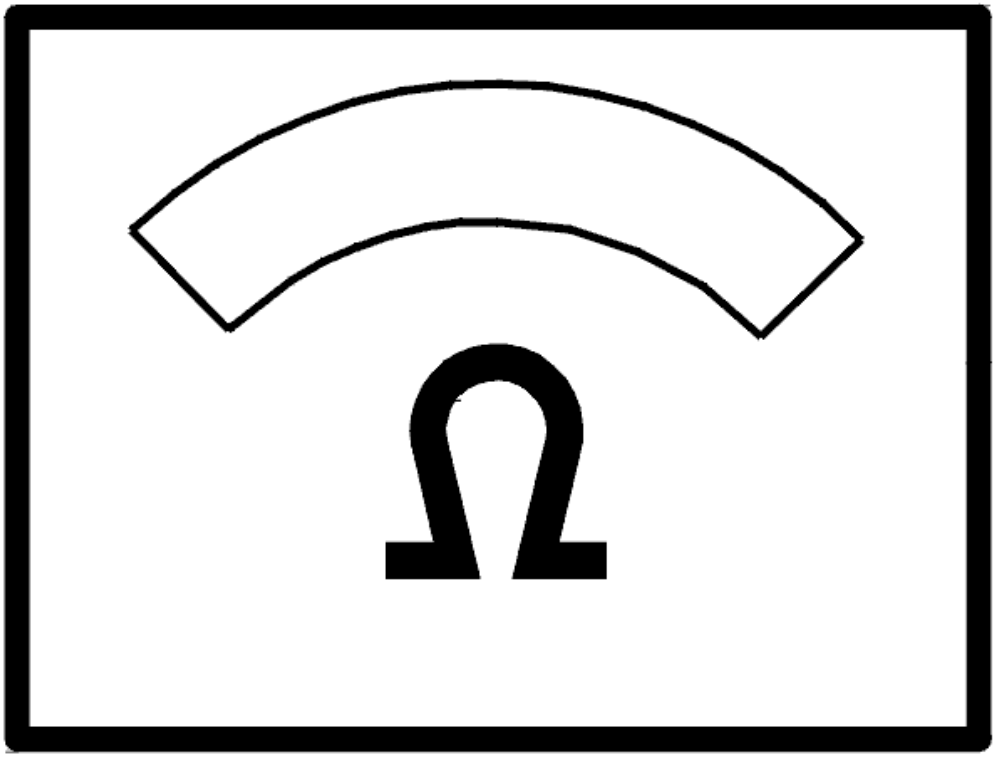

Fig. 321: Identifying Ohm Meter
Courtesy of VOLVO CARS CORPORATION

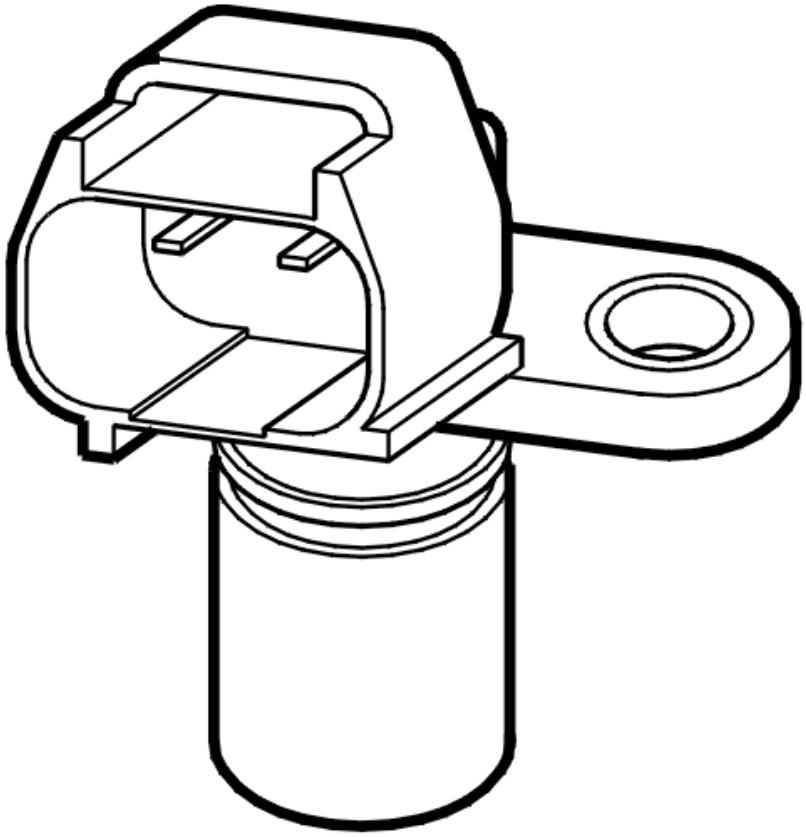

Fig. 322: Identifying Engine Speed (RPM) Sensor
Courtesy of VOLVO CARS CORPORATION

- **Continue**

  Refer to **VERIFICATION**

VERIFICATION

VERIFICATION

HINT: After carrying out the repair, check that the fault has been remedied.

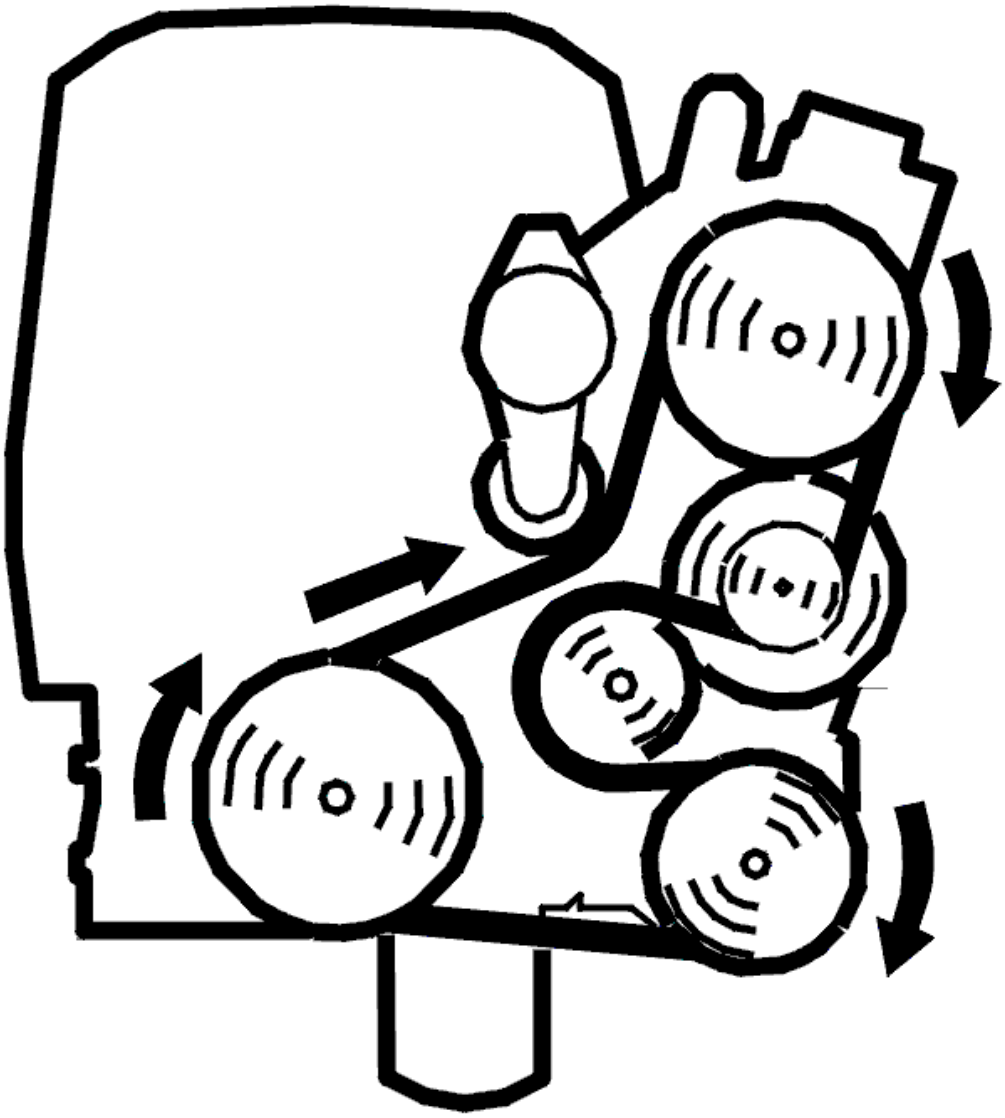

Fig. 323: Belt Routing / Engine Idling - Volvo
Courtesy of VOLVO CARS CORPORATION

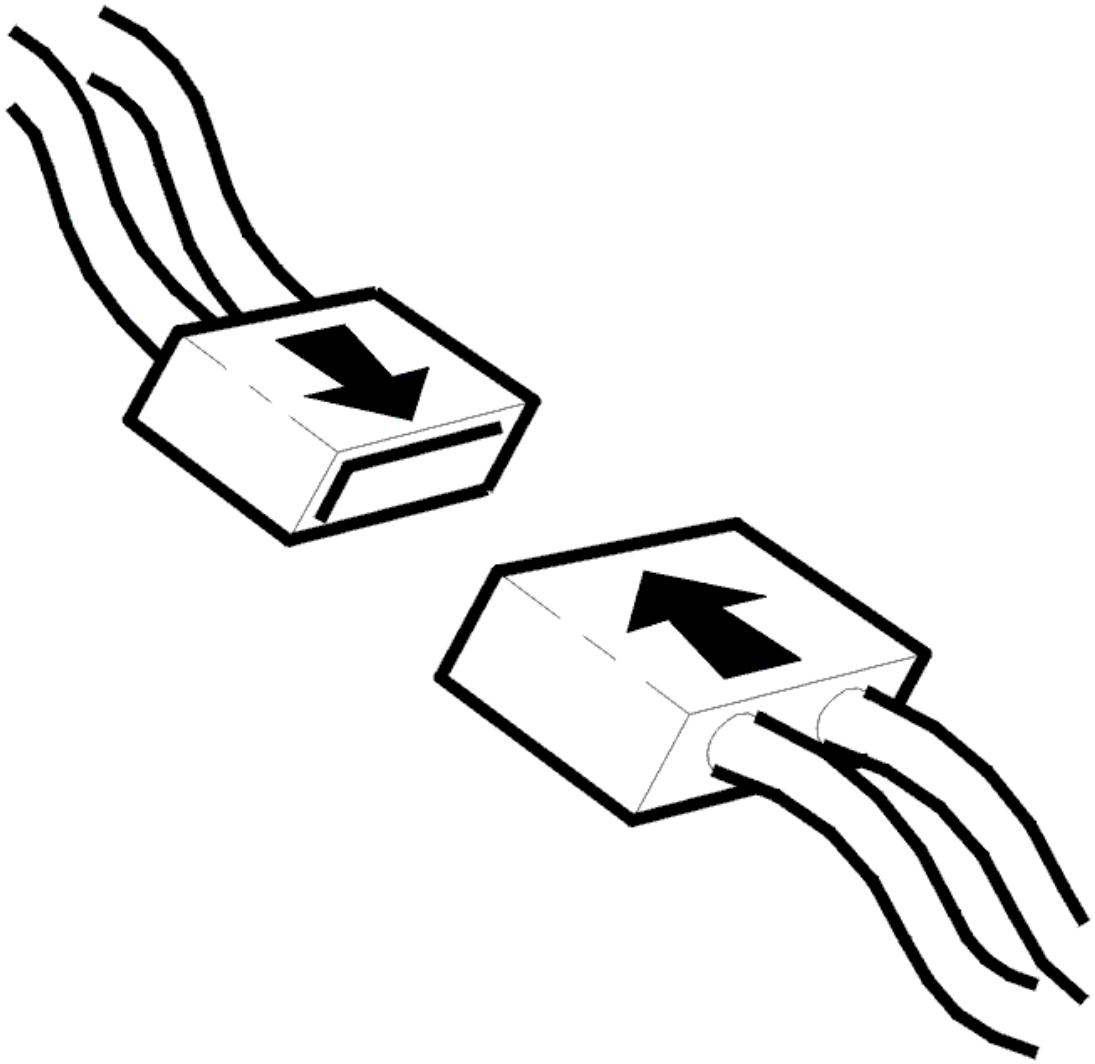

Fig. 324: Connecting Connector
Courtesy of VOLVO CARS CORPORATION

- Ignition off
- Reinstall the connectors, components etc.
- Start the engine.

  The car will not start if there is a fault in the engine speed (RPM) sensor signal.

Does the car start?

- **YES**

  VERIFIED: Troubleshooting has been completed.

- **NO**

  Refer to **INFORMATION**

INFORMATION

FAULT-TRACING INFORMATION

The fault should have been detected and remedied. As this is not the case fault-tracing has failed.

Exit fault-tracing for this diagnostic trouble code (DTC) or make another attempt.

ECM-3100: MISFIRE, AT LEAST ONE CYLINDER. START UP (B5254T2; 2005-2007)

DIAGNOSTIC TROUBLE CODE (DTC) INFORMATION ECM-3100

Condition

The diagnostic trouble code (DTC) is stored if the engine control module (ECM) detects a certain number of misfires during the first 1000 engine revolutions after the engine is started.

This diagnostic trouble code (DTC) is stored together with other diagnostic trouble codes (DTCs) which indicate which cylinders are misfiring.

Substitute Value

- Rear heated oxygen sensor control shut off
- Fuel trim switched off.

Possible Source

- Low fuel level
- Engine does not reach normal operating temperature between several cold starts
- Water in the spark plug wells
- Damaged spark plug
- Contaminated or incorrect fuel
- Poor fuel quality (summer fuel in winter).
- Blocked / leaking injector
- Air leakage
- Blocked crankcase ventilation.
- Damaged VVT-unit.
- Faulty fuel pressure
- Uneven compression

Fault symptom[s]

- Malfunction indicator lamp (MIL) lit
- The engine misfires
- The engine is difficult to start
- Deterioration in performance
- Uneven idle
- The engine is not firing on all cylinders.

EMISSIONS IMPACT / CATALYTIC CONVERTER DAMAGE / START UP

CHECKING THE FUEL INJECTION SYSTEM, IGNITION SYSTEM AND COMPONENTS

NOTE: In the event of diagnostic trouble codes (DTCs), that affect camshaft control or camshaft reset valve, these must be fault-traced first.

HINT: In certain cases, the engine control module (ECM) can determine which cylinder has misfired.

Check the fuel level in the fuel tank.

Check that the engine oil level is correct.

Look for moisture in the electrical terminals for the ignition coils and in the spark plug wells.

Check the spark plugs. Check for damage in the insulation and for any other damage.

Check the engine intake system for leakage.

Check the crankcase ventilation. Check for blockage.

Check the fuel pressure and residual pressure.

Check the compression of the engine.

Remedy as necessary.

Other information

- see **INTAKE AND EXHAUST SYSTEM - CLEANING, INSPECTION AND ADJUSTMENT**
- see **FUEL SYSTEM PRESSURE, CHECKING**
- see **CYLINDER LEAKAGE TEST**

- **Continue**

  Refer to **VERIFICATION**

VERIFICATION

VERIFICATION

HINT: After carrying out the repair, check that the fault has been remedied.

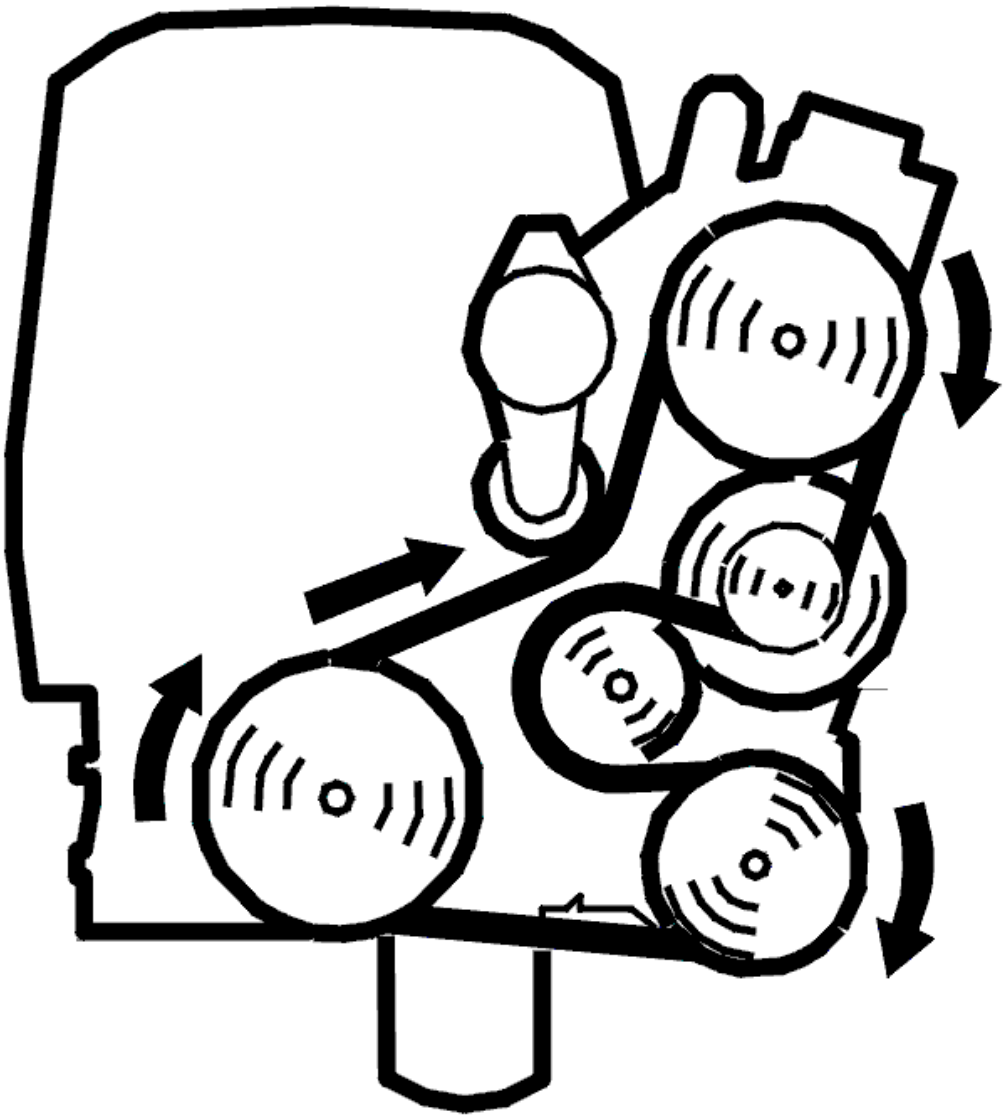

Fig. 325: Belt Routing / Engine Idling - Volvo
Courtesy of VOLVO CARS CORPORATION

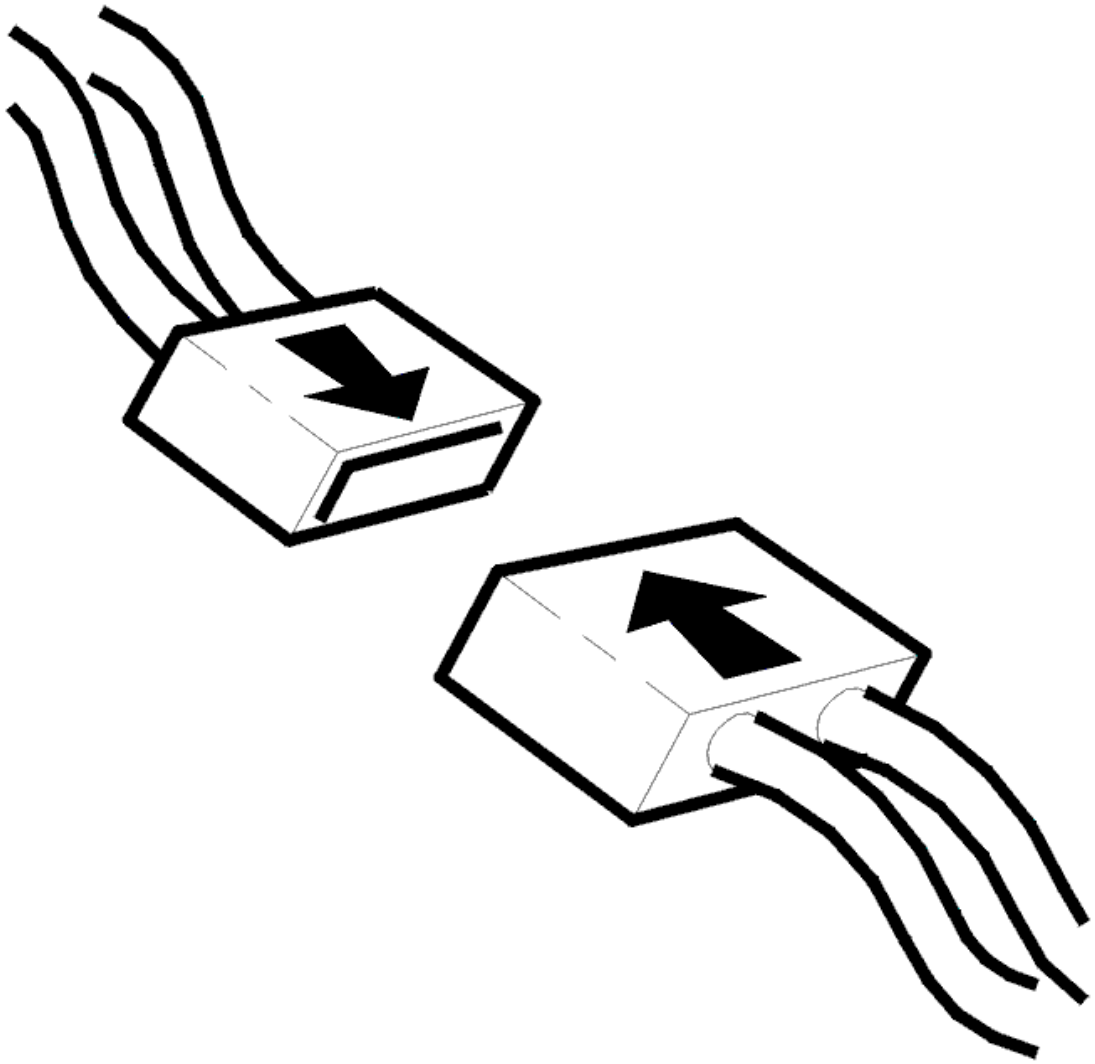

Fig. 326: Connecting Connector
Courtesy of VOLVO CARS CORPORATION

- Ignition off
- Reinstall the connectors, components etc.
- Start the engine.

Check that the misfire counter is not counting upwards. Check that the engine is firing on all cylinders.

NOTE: Misfire can occur at different engine speeds and loads.

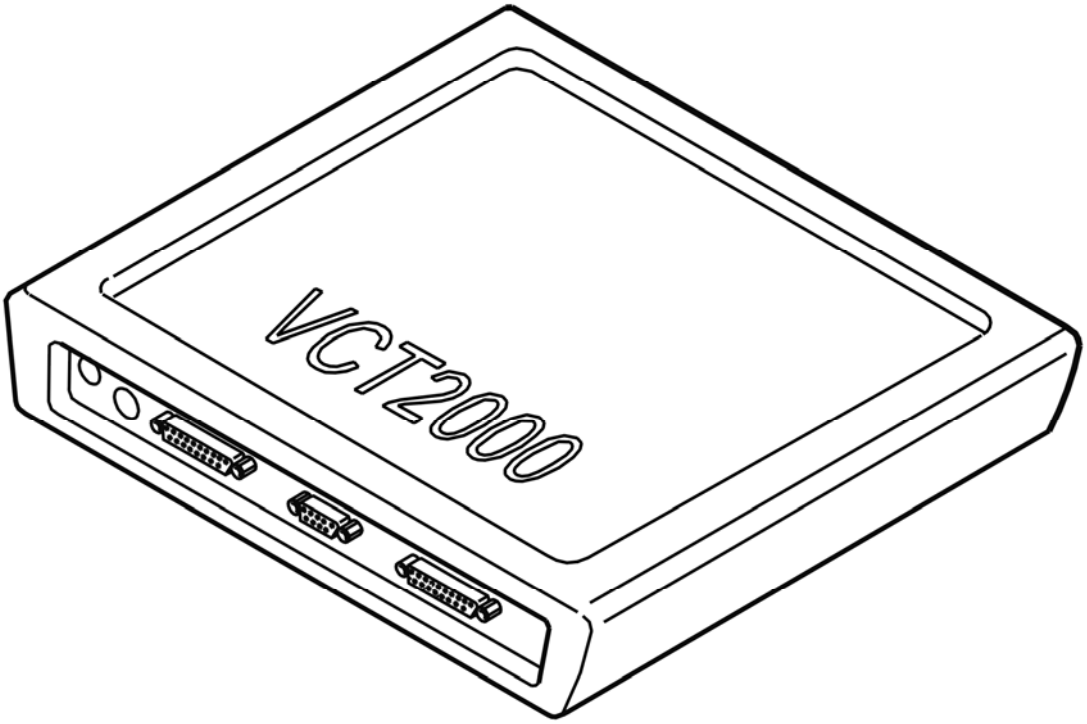

Fig. 327: Identifying VCT2000 Diagnostic Tool Symbol In VIDA
Courtesy of VOLVO CARS CORPORATION

Is the function OK?

- **YES**

  VERIFIED: Troubleshooting has been completed.

- **NO**

  Refer to **INFORMATION**

INFORMATION

FAULT-TRACING INFORMATION

The fault should have been detected and remedied. As this is not the case fault-tracing has failed.

Exit fault-tracing for this diagnostic trouble code (DTC) or make another attempt.

AIR-LEAKS: IN THE INTAKE SYSTEM, CHECKING

Special tools:

see **9995545**

see **9995544**

NOTE: **The illustrations in this service information are used for different model years and/or models. Some variation may occur. However, the essential information in the illustrations is always correct.**

REMOVAL

PREPARATIONS

Check that all hoses are undamaged. Check that all hoses are in place with their hose clips tightened.

CONNECT THE TEST PRESSURIZATION EQUIPMENT

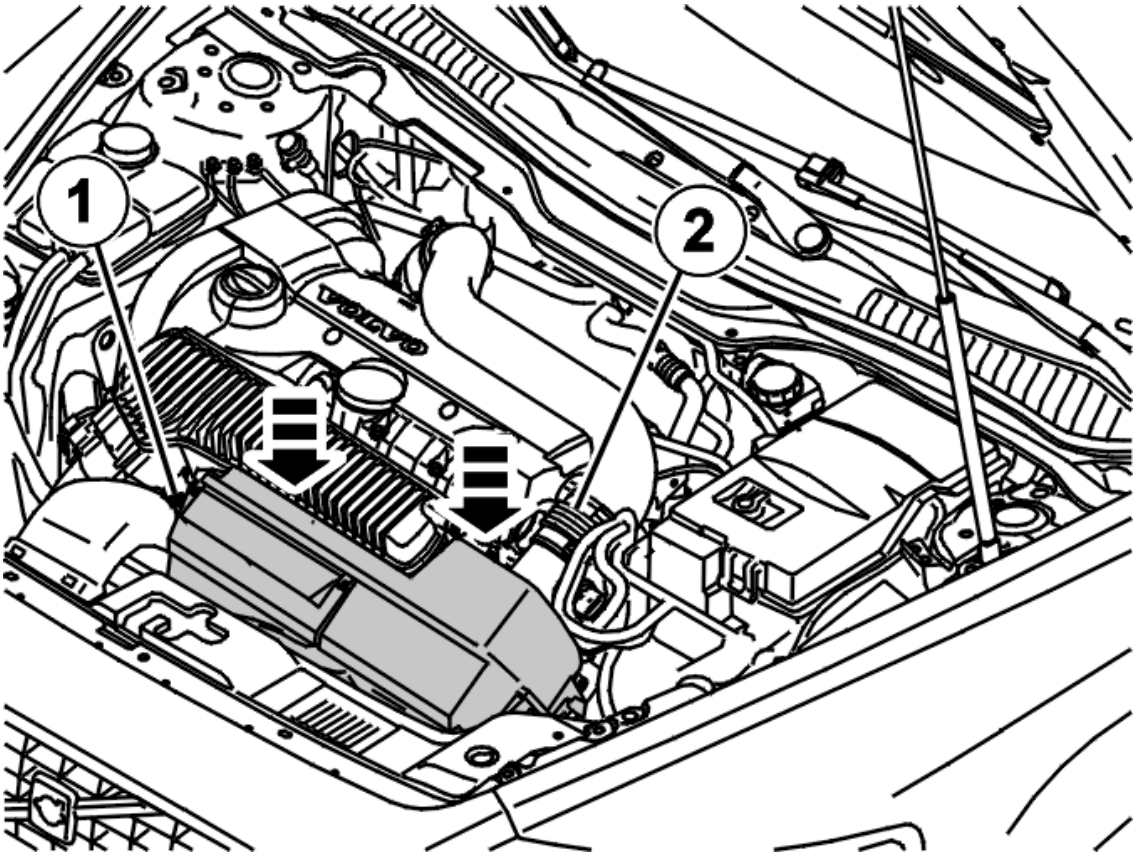

Fig. 328: Identifying Hose Clap & Turbocharger (TC)
Courtesy of VOLVO CARS CORPORATION

Remove:

- the hose clamp (2) between the mass air flow (MAF) sensor and the intake manifold for the turbocharger (TC)

- the screws for the intake manifold. Fold the pipe up. Connect tool see **9995545** and pressure regulator see **9995544** to the intake manifold. Tighten the hose clamp.

CHECK

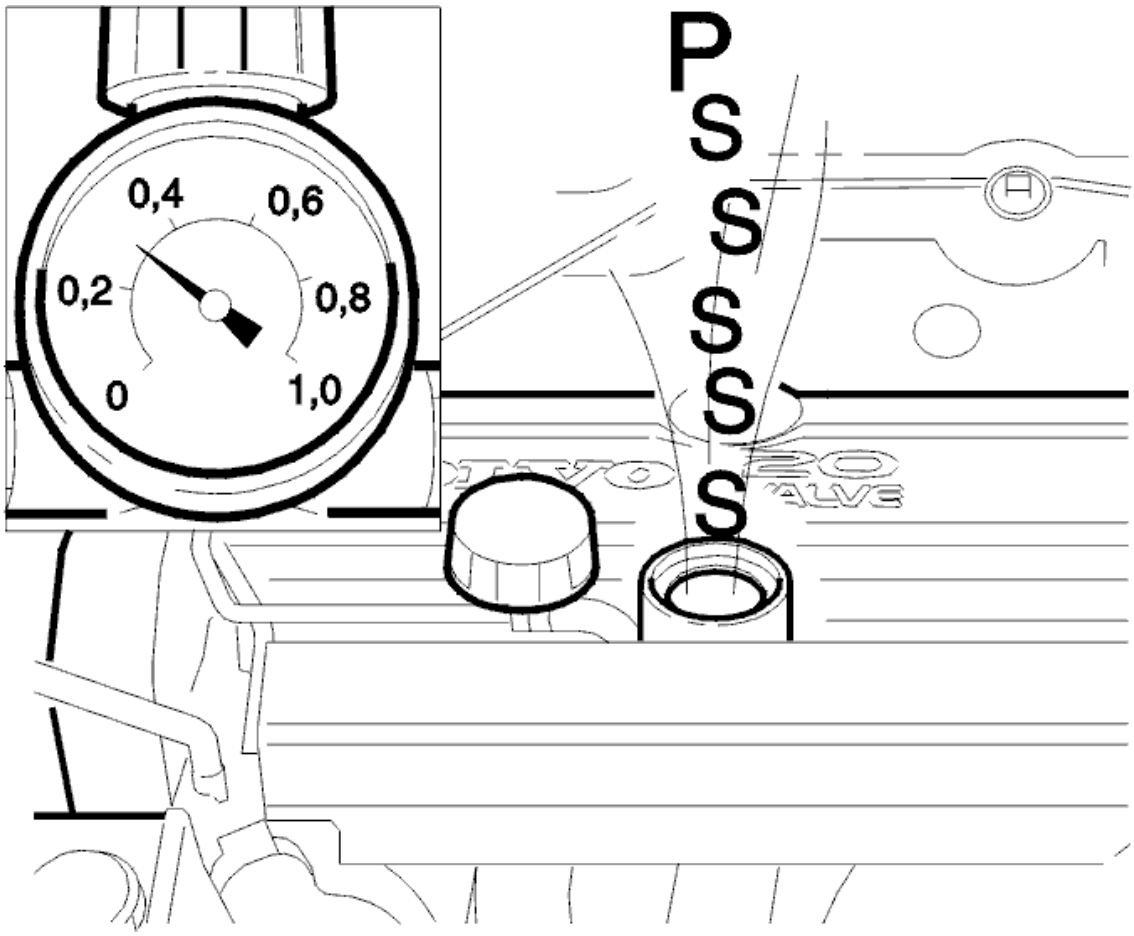

Fig. 329: Gentle Hissing Sound Heard From Oil Filler Opening
Courtesy of VOLVO CARS CORPORATION

Remove the oil filler cap. Connect the compressed air hose. Adjust the regulator to obtain a maximum pressure of **0.3 bar** .

There may be a gentle hissing sound from the oil filler opening. This is due to the opening of an intake valve and the leakage of cylinder pressure past the piston rings. If a leak is suspected, spray a soap solution onto the area. Remedy any leakage.

INSTALLATION

INSTALLING COMPONENTS

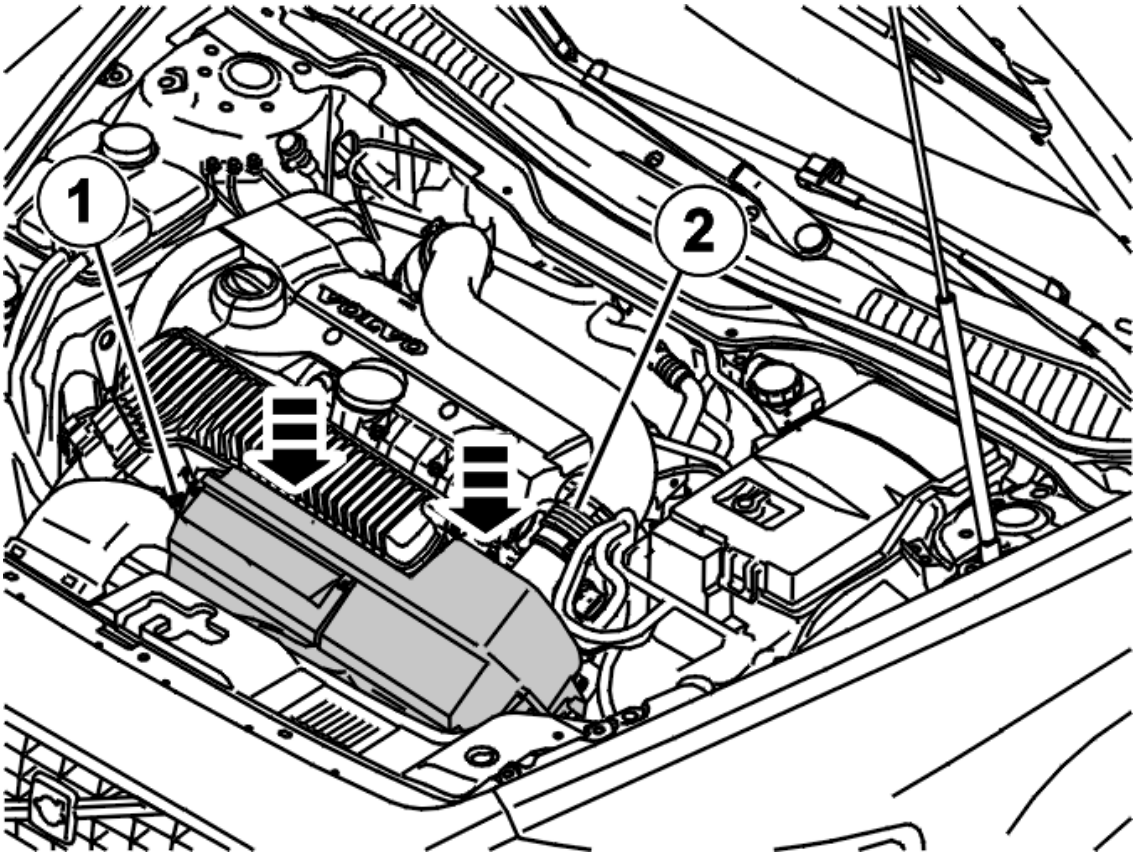

Fig. 330: Identifying Hose Clap & Turbocharger (TC)
Courtesy of VOLVO CARS CORPORATION

Install:

- the intake manifold between the mass air flow (MAF) sensor and the turbocharger (TC)
- the screws for the intake manifold. Tighten
- the hose clamp (2) at the mass air flow (MAF) sensor.

ECM-3100: MISFIRE, AT LEAST ONE CYLINDER. START UP (B6294T; 2005-2006)

DIAGNOSTIC TROUBLE CODE (DTC) INFORMATION ECM-3100

see **DIAGNOSTIC TROUBLE CODE (DTC) INFORMATION ECM-3100**

EMISSIONS IMPACT / CATALYTIC CONVERTER DAMAGE / START UP

see **EMISSIONS IMPACT / CATALYTIC CONVERTER DAMAGE / START UP**

ECM-310C: MISFIRE, AT LEAST ONE CYLINDER. CATALYTIC CONVERTER DAMAGE (B5254T2; 2005-2007)

DIAGNOSTIC TROUBLE CODE (DTC) INFORMATION ECM-310C

Condition

The diagnostic trouble code (DTC) is stored if the engine control module (ECM) detects misfires in more than one cylinder which could damage the catalytic converter. The diagnostic trouble code (DTC) can be diagnosed when the engine is running.

This diagnostic trouble code (DTC) is stored together with other diagnostic trouble codes (DTCs) which indicate which cylinders are misfiring.

Substitute Value

- Three-way catalytic converter (TWC) diagnosis shut off
- Leak diagnostic shut off
- Rear heated oxygen sensor control shut off
- Fuel trim switched off.

Possible Source

- Low fuel level
- Engine does not reach normal operating temperature between several cold starts
- Water in the spark plug wells
- Damaged spark plug
- Contaminated or incorrect fuel
- Poor fuel quality (summer fuel in winter).
- Blocked / leaking injector
- Air leakage
- Blocked crankcase ventilation.
- Damaged VVT-unit.
- Faulty fuel pressure
- Uneven compression

Fault symptom[s]

- Malfunction indicator lamp (MIL) lit
- The engine misfires
- The engine is difficult to start
- Deterioration in performance
- Uneven idle
- The engine is not firing on all cylinders.

EMISSIONS IMPACT / CATALYTIC CONVERTER DAMAGE / START UP

see **EMISSIONS IMPACT / CATALYTIC CONVERTER DAMAGE / START UP**

ECM-310C: MISFIRE, AT LEAST ONE CYLINDER. CATALYTIC CONVERTER DAMAGE (B6294T; 2005-2006)

DIAGNOSTIC TROUBLE CODE (DTC) INFORMATION ECM-310C

see **DIAGNOSTIC TROUBLE CODE (DTC) INFORMATION ECM-310C**

EMISSIONS IMPACT / CATALYTIC CONVERTER DAMAGE / START UP

see **EMISSIONS IMPACT / CATALYTIC CONVERTER DAMAGE / START UP**

ECM-310D: MISFIRE, AT LEAST ONE CYLINDER. AFFECTS EMISSIONS (B5254T2; 2005-2007)

DIAGNOSTIC TROUBLE CODE (DTC) INFORMATION ECM-310D

Condition

The diagnostic trouble code (DTC) is stored if the engine control module (ECM) detects misfires in more than one cylinder which could affect emissions. The diagnostic trouble code (DTC) can be diagnosed when the engine is running.

This diagnostic trouble code (DTC) is stored together with other diagnostic trouble codes (DTCs) which indicate which cylinders are misfiring.

Substitute Value

- Three-way catalytic converter (TWC) diagnosis shut off
- Leak diagnostic shut off
- Rear heated oxygen sensor control shut off
- Fuel trim switched off.

Possible Source

- Low fuel level
- Engine does not reach normal operating temperature between several cold starts
- Water in the spark plug wells
- Damaged spark plug
- Contaminated or incorrect fuel
- Poor fuel quality (summer fuel in winter).

- Air leakage
- Blocked crankcase ventilation.
- Damaged VVT-unit.
- Blocked / leaking injector
- Faulty fuel pressure
- Uneven compression

Fault symptom[s]

- Malfunction indicator lamp (MIL) lit
- The engine misfires
- The engine is difficult to start
- Deterioration in performance
- Uneven idle
- The engine is not firing on all cylinders.

EMISSIONS IMPACT / CATALYTIC CONVERTER DAMAGE / START UP

see **EMISSIONS IMPACT / CATALYTIC CONVERTER DAMAGE / START UP**

ECM-310D: MISFIRE, AT LEAST ONE CYLINDER. AFFECTS EMISSIONS (B6294T; 2005-2006)

DIAGNOSTIC TROUBLE CODE (DTC) INFORMATION ECM-310D

see **DIAGNOSTIC TROUBLE CODE (DTC) INFORMATION ECM-310D**

EMISSIONS IMPACT / CATALYTIC CONVERTER DAMAGE / START UP

see **EMISSIONS IMPACT / CATALYTIC CONVERTER DAMAGE / START UP**

ECM-3110: MISFIRE CYLINDER 1. START UP (B5254T2; 2005-2007)

DIAGNOSTIC TROUBLE CODE (DTC) INFORMATION

Condition

The diagnostic trouble code (DTC) is stored if the engine control module (ECM) detects misfiring during the first 1000 engine revolutions. The diagnostic trouble code (DTC) indicates which cylinder is misfiring. The diagnostic trouble code (DTC) can be diagnosed when the engine is running.

- ECM-3110: cylinder 1
- ECM-3120: cylinder 2

- ECM-3130: cylinder 3
- ECM-3140: cylinder 4
- ECM-3150: cylinder 5.

Substitute Value

- Rear heated oxygen sensor control shut off
- Fuel trim switched off.

Possible Source

- Low fuel level
- Engine does not reach normal operating temperature between several cold starts
- Water in the spark plug wells
- Damaged spark plug
- Contaminated or incorrect fuel
- Poor fuel quality (summer fuel in winter).
- Air leakage
- Blocked crankcase ventilation.
- Damaged VVT-unit.
- Blocked / leaking injector
- Faulty fuel pressure
- Uneven compression

Fault symptom[s]

- Malfunction indicator lamp (MIL) lit
- The engine misfires
- The engine is difficult to start
- Deterioration in performance
- Uneven idle
- The engine is not firing on all cylinders.

EMISSIONS IMPACT / CATALYTIC CONVERTER DAMAGE / START UP

see **EMISSIONS IMPACT / CATALYTIC CONVERTER DAMAGE / START UP**

ECM-311C: MISFIRE CYLINDER 1. CATALYTIC CONVERTER DAMAGE (B5254T2; 2005-2007)

DIAGNOSTIC TROUBLE CODE (DTC) INFORMATION

Condition

The diagnostic trouble code (DTC) is stored if the engine control module (ECM) detects misfiring which could damage the catalytic converter after the first 1000 engine revolutions after the engine is started. The diagnostic trouble code (DTC) indicates which cylinder is misfiring. The diagnostic trouble code (DTC) can be diagnosed when the engine is running.

- ECM-3110: cylinder 1
- ECM-3120: cylinder 2
- ECM-3130: cylinder 3
- ECM-3140: cylinder 4
- ECM-3150: cylinder 5.

Substitute Value

- Rear heated oxygen sensor control shut off
- Fuel trim switched off.

Possible Source

- Low fuel level
- Engine does not reach normal operating temperature between several cold starts
- Water in the spark plug wells
- Damaged spark plug
- Contaminated or incorrect fuel
- Poor fuel quality (summer fuel in winter).
- Air leakage
- Blocked crankcase ventilation.
- Damaged VVT-unit.
- Blocked / leaking injector
- Faulty fuel pressure
- Uneven compression

Fault symptom[s]

- Malfunction indicator lamp (MIL) lit
- The engine misfires
- The engine is difficult to start
- Deterioration in performance
- Uneven idle
- The engine is not firing on all cylinders.

EMISSIONS IMPACT / CATALYTIC CONVERTER DAMAGE / START UP

see **EMISSIONS IMPACT / CATALYTIC CONVERTER DAMAGE / START UP**

ECM-311D: MISFIRE CYLINDER 1. EMISSIONS IMPACT (B5254T2; 2005-2007)

DIAGNOSTIC TROUBLE CODE (DTC) INFORMATION

Condition

The diagnostic trouble code (DTC) is stored if the engine control module (ECM) detects misfiring which affects emissions after the first 1000 engine revolutions after the engine is started. The diagnostic trouble code (DTC) indicates which cylinder is misfiring. The diagnostic trouble code (DTC) can be diagnosed when the engine is running.

- ECM-3110: cylinder 1
- ECM-3120: cylinder 2
- ECM-3130: cylinder 3
- ECM-3140: cylinder 4
- ECM-3150: cylinder 5.

Substitute Value

- Rear heated oxygen sensor control shut off
- Fuel trim switched off.

Possible Source

- Low fuel level
- Engine does not reach normal operating temperature between several cold starts
- Water in the spark plug wells
- Damaged spark plug
- Contaminated or incorrect fuel
- Poor fuel quality (summer fuel in winter).
- Air leakage
- Blocked crankcase ventilation.
- Damaged VVT-unit.
- Blocked / leaking injector
- Faulty fuel pressure
- Uneven compression

Fault symptom[s]

- Malfunction indicator lamp (MIL) lit
- The engine misfires
- The engine is difficult to start
- Deterioration in performance
- Uneven idle
- The engine is not firing on all cylinders.

EMISSIONS IMPACT / CATALYTIC CONVERTER DAMAGE / START UP

see **EMISSIONS IMPACT / CATALYTIC CONVERTER DAMAGE / START UP**

ECM-3210: MISFIRE CYLINDER 1, START-UP. START UP (B6294T; 2005-2006)

DIAGNOSTIC TROUBLE CODE (DTC) INFORMATION

Condition

The diagnostic trouble code (DTC) is stored if the engine control module (ECM) detects misfiring during the first 1000 engine revolutions. The diagnostic trouble code (DTC) indicates which cylinder is misfiring. The diagnostic trouble code (DTC) can be diagnosed when the engine is running.

- ECM-3210: cylinder 1.
- ECM-3220: cylinder 2.
- ECM-3230: cylinder 3.
- ECM-3240: cylinder 4.
- ECM-3250: cylinder 5.
- ECM-3260: cylinder 6.

Substitute Value

- Rear heated oxygen sensor control shut off
- Fuel trim switched off.

Possible Source

- Low fuel level
- The engine does not reach normal operating temperature between several cold starts
- Water in the spark plug wells
- Damaged spark plug
- Contaminated or incorrect fuel
- Poor fuel quality (summer fuel in winter).

- Air leakage
- Blocked crankcase ventilation.
- Damaged VVT-unit.
- Blocked / leaking injector
- Faulty fuel pressure
- Uneven compression

Fault symptom[s]

- Malfunction indicator lamp (MIL) lit
- The engine misfires
- The engine is difficult to start
- Deterioration in performance
- Uneven idle
- The engine is not firing on all cylinders.

EMISSIONS IMPACT / CATALYTIC CONVERTER DAMAGE / START UP

see **EMISSIONS IMPACT / CATALYTIC CONVERTER DAMAGE / START UP**

ECM-321C: MISFIRE CYLINDER 1, THREE-WAY CATALYTIC CONVERTER (TWC) DAMAGE. CATALYTIC CONVERTER DAMAGE (B6294T; 2005-2006)

DIAGNOSTIC TROUBLE CODE (DTC) INFORMATION

Condition

The diagnostic trouble code (DTC) is stored if the engine control module (ECM) detects misfiring which could damage the catalytic converter after the first 1000 engine revolutions after the engine is started. The diagnostic trouble code (DTC) indicates which cylinder is misfiring. The diagnostic trouble code (DTC) can be diagnosed when the engine is running.

- ECM-3110: cylinder 1
- ECM-3120: cylinder 2
- ECM-3130: cylinder 3
- ECM-3140: cylinder 4
- ECM-3150: cylinder 5
- ECM-3160: cylinder 6.

Substitute Value

- Rear heated oxygen sensor control shut off

- Fuel trim switched off.

Possible Source

- Damaged spark plug
- Blocked / leaking injector
- Uneven compression
- Air leakage
- Faulty fuel pressure
- Low fuel level
- Water in the spark plug wells
- Contaminated or incorrect fuel
- The engine does not reach normal operating temperature between several cold starts
- Poor fuel quality (summer fuel in winter).

Fault symptom[s]

- Malfunction indicator lamp (MIL) lit
- The engine misfires
- The engine is difficult to start
- Deterioration in performance
- Uneven idle
- The engine is not firing on all cylinders.

EMISSIONS IMPACT / CATALYTIC CONVERTER DAMAGE / START UP

see **EMISSIONS IMPACT / CATALYTIC CONVERTER DAMAGE / START UP**

ECM-321D: MISFIRE CYLINDER 1, EMISSIONS IMPACT. EMISSIONS IMPACT (B6294T; 2005-2006)

DIAGNOSTIC TROUBLE CODE (DTC) INFORMATION

Condition

The diagnostic trouble code (DTC) is stored if the engine control module (ECM) detects misfiring which affect emissions after the first 1000 engine revolutions after the engine is started. The diagnostic trouble code (DTC) indicates which cylinder is misfiring. The diagnostic trouble code (DTC) can be diagnosed when the engine is running.

- ECM-3110: cylinder 1
- ECM-3120: cylinder 2

- ECM-3130: cylinder 3
- ECM-3140: cylinder 4
- ECM-3150: cylinder 5
- ECM-3160: cylinder 6.

Substitute Value

- Rear heated oxygen sensor control shut off
- Fuel trim switched off.

Possible Source

- Damaged spark plug
- Blocked / leaking injector
- Uneven compression
- Air leakage
- Faulty fuel pressure
- Low fuel level
- Water in the spark plug wells
- Contaminated or incorrect fuel
- The engine does not reach normal operating temperature between several cold starts
- Poor fuel quality (summer fuel in winter).

Fault symptom[s]

- Malfunction indicator lamp (MIL) lit
- The engine misfires
- The engine is difficult to start
- Deterioration in performance
- Uneven idle
- The engine is not firing on all cylinders.

EMISSIONS IMPACT / CATALYTIC CONVERTER DAMAGE / START UP

see **EMISSIONS IMPACT / CATALYTIC CONVERTER DAMAGE / START UP**

ECM-3300: IGNITION COIL CYLINDER 1, SIGNAL. SIGNAL MISSING. INTERMITTENT FAULT (B5254T2; 2003-2004)

DIAGNOSTIC TROUBLE CODE (DTC) INFORMATION

Condition

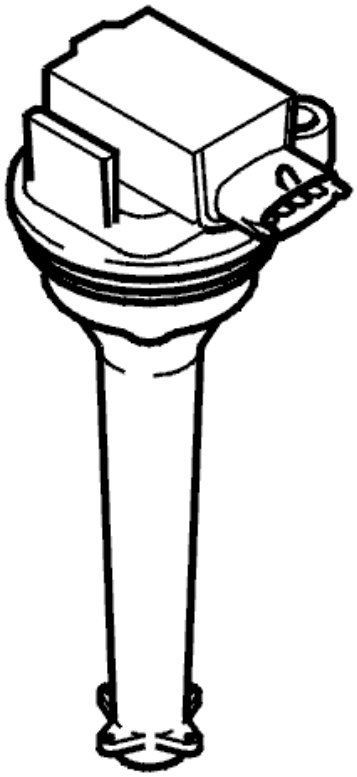

Fig. 331: Identifying Ignition Coil
Courtesy of VOLVO CARS CORPORATION

If there is an open-circuit or short-circuit to ground in the ignition coil primary winding circuit and engine speed (RPM) exceeds 1500 RPM, the control module interprets it as a fault and diagnostic trouble code (DTC) ECM-33X0 is stored.

Substitute Value

None

Possible Source

Signal too high:

- short-circuit to supply voltage in the signal cable

Signal too low:

- short-circuit to ground in the signal cable

Signal missing:

- open-circuit in the signal cable
- contact resistance in terminals.

Fault symptom[s]

- engine not firing on all cylinders
- malfunction indicator lamp (MIL) lit

SIGNAL MISSING. INTERMITTENT FAULT

CHECKING CABLES AND CONNECTORS

Check ignition coil connector for contact resistance and oxidation, see **CONTACT RESISTANCE AND OXIDATION** , and check for and loose connections according to **LOOSE CONNECTIONS (TERMINALS)**

Check signal cable between ignition coil #1 and control module:

- #A31 (#A31) (ECM 3300)
- #A30 (#A30) (ECM 3310)
- #A50 (#A50) (ECM 3320)
- #A52 (#A52) (ECM 3330)
- #A51 (#A51) (ECM 3340)

and power supply between system relay #3 and ignition coil #4 for an intermittent open-circuit according to **OPEN-CIRCUIT, INTERMITTENT FAULTS** .

Other information

- Connecting the breakout box/accessing the control module, see **CONNECTING THE BREAKOUT BOX** .
- To access/replace the ignition coil, see **REPLACING IGNITION COILS** .
- For 5 cylinder turbocharged engines -2004, see **SIGNAL DESCRIPTION**
- For 5 cylinder turbocharged engines 2005-, see **SIGNAL SPECIFICATION** .

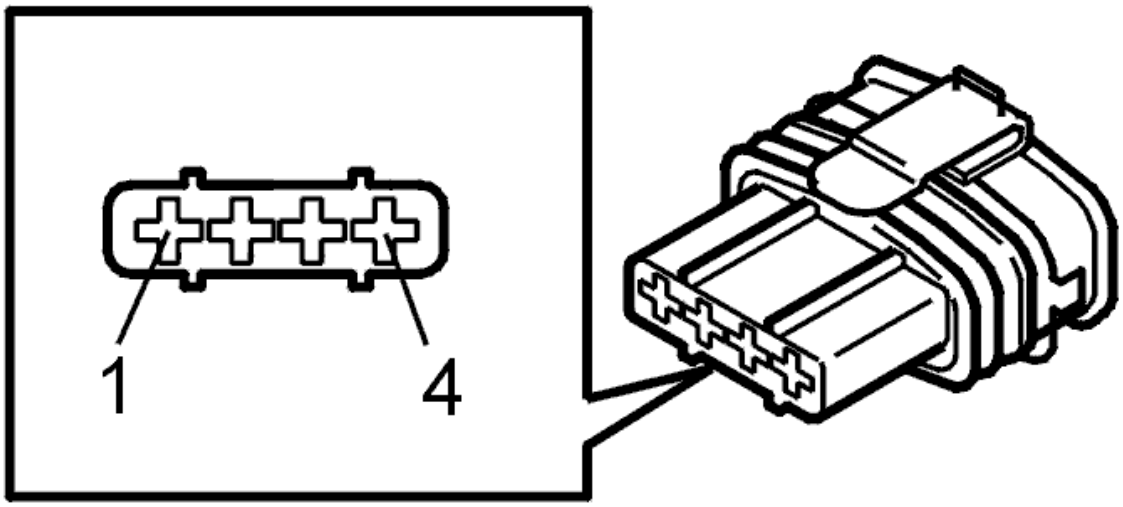

Fig. 332: Identifying Connector Terminals
Courtesy of VOLVO CARS CORPORATION

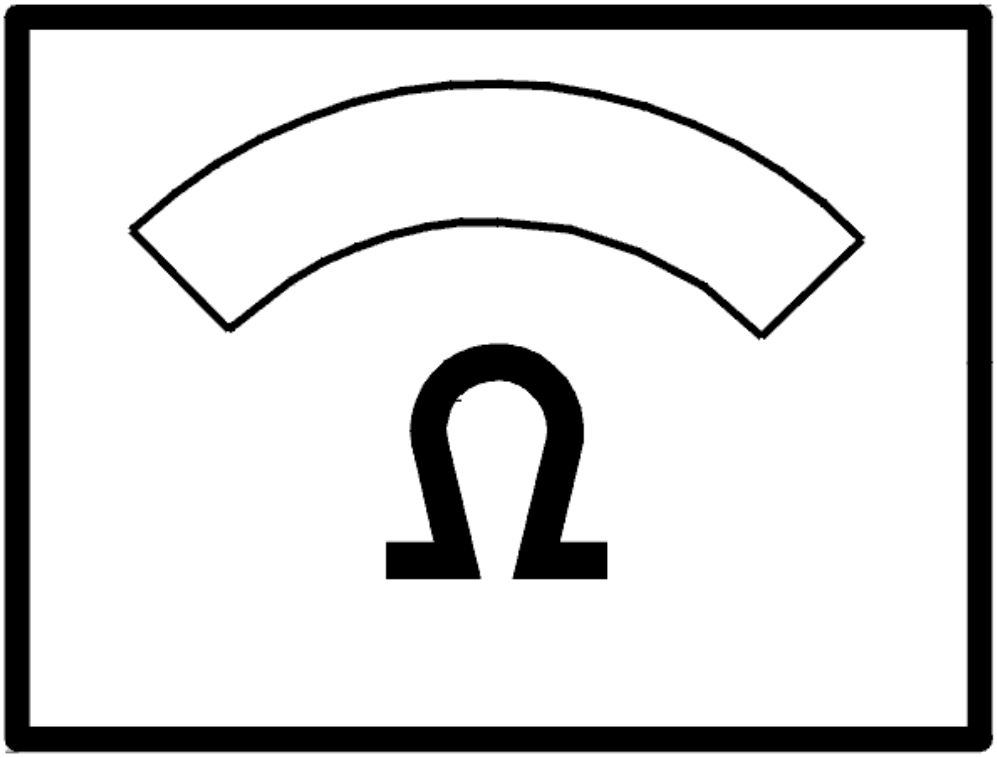

Fig. 333: Identifying Ohm Meter
Courtesy of VOLVO CARS CORPORATION

Fig. 334: Identifying Ignition Coil
Courtesy of VOLVO CARS CORPORATION

- **Continue**

  Refer to **INFORMATION**

INFORMATION

FAULT-TRACING INFORMATION

If the fault is intermittent, do not verify fault-tracing if the fault does not recur.

It is possible to view the information again, or leave fault-tracing for this diagnostic trouble code (DTC).

ECM-3300: IGNITION COIL CYLINDER 1, SIGNAL. SIGNAL MISSING. INTERMITTENT FAULT (B6294T; 2003-2004)

DIAGNOSTIC TROUBLE CODE (DTC) INFORMATION

see **DIAGNOSTIC TROUBLE CODE (DTC) INFORMATION**

SIGNAL MISSING. INTERMITTENT FAULT

CHECKING CABLES AND CONNECTORS

Check ignition coil connector for contact resistance and oxidation, see **CONTACT RESISTANCE AND OXIDATION** and check for loose connections according to **LOOSE CONNECTIONS (TERMINALS)**

Check signal cable between ignition coil #1 and control module:

- #A31 (#A31) (ECM 3300)
- #A50 (#A50) (ECM 3310)
- #A52 (#A52) (ECM 3320)
- #A49 (#A49) (ECM 3330)
- #A30 (#A30) (ECM 3340)
- #A51 (#A51) (ECM 3350)

and power supply between system relay #3 and ignition coil #4 for an intermittent open-circuit according to **OPEN-CIRCUIT, INTERMITTENT FAULTS** .

Other information

- Connecting the breakout box/accessing the control module, see **CONNECTING THE BREAKOUT BOX** .
- To access/replace the ignition coil, see **REPLACING IGNITION COIL** .
- For 6 cylinder engines -2004, see **SIGNAL SPECIFICATION**
- For 6 cylinder engines 2005-, see **SIGNAL SPECIFICATION** .

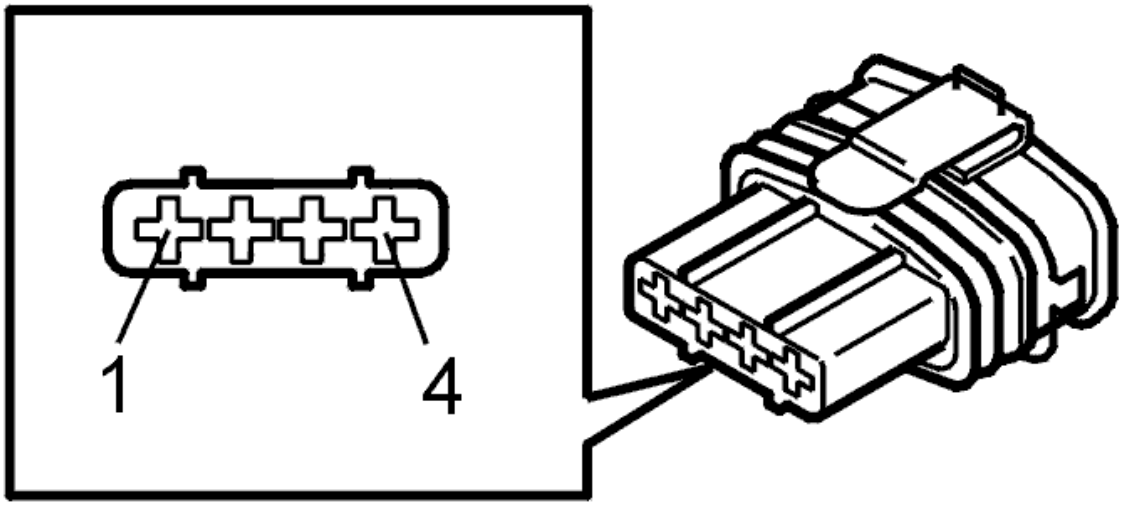

Fig. 335: Identifying Connector Terminals
Courtesy of VOLVO CARS CORPORATION

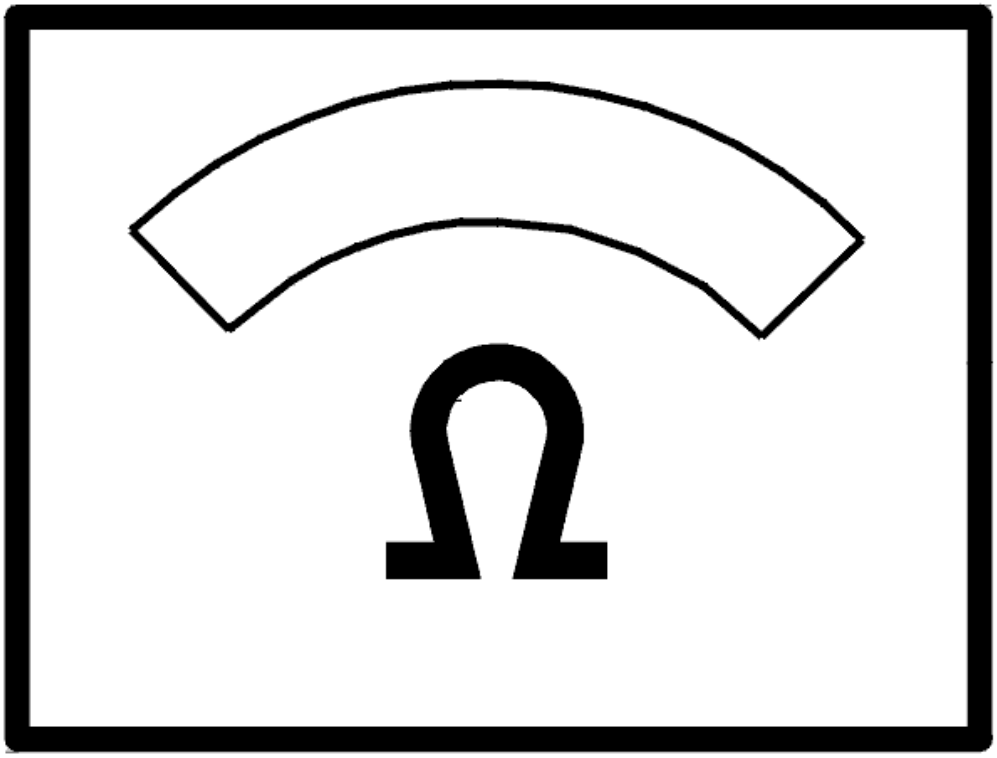

Fig. 336: Identifying Ohm Meter
Courtesy of VOLVO CARS CORPORATION

Fig. 337: Identifying Ignition Coil
Courtesy of VOLVO CARS CORPORATION

- **Continue**

  Refer to **INFORMATION**

INFORMATION

FAULT-TRACING INFORMATION

If the fault is intermittent, do not verify fault-tracing if the fault does not recur.

It is possible to view the information again, or leave fault-tracing for this diagnostic trouble code (DTC).

ECM-3300: IGNITION COIL CYLINDER 1, SIGNAL. SIGNAL MISSING. PERMANENT FAULT (B5254T2; 2003-2004)

DIAGNOSTIC TROUBLE CODE (DTC) INFORMATION

see **DIAGNOSTIC TROUBLE CODE (DTC) INFORMATION**

SIGNAL MISSING. PERMANENT FAULT

CHECKING CONNECTOR

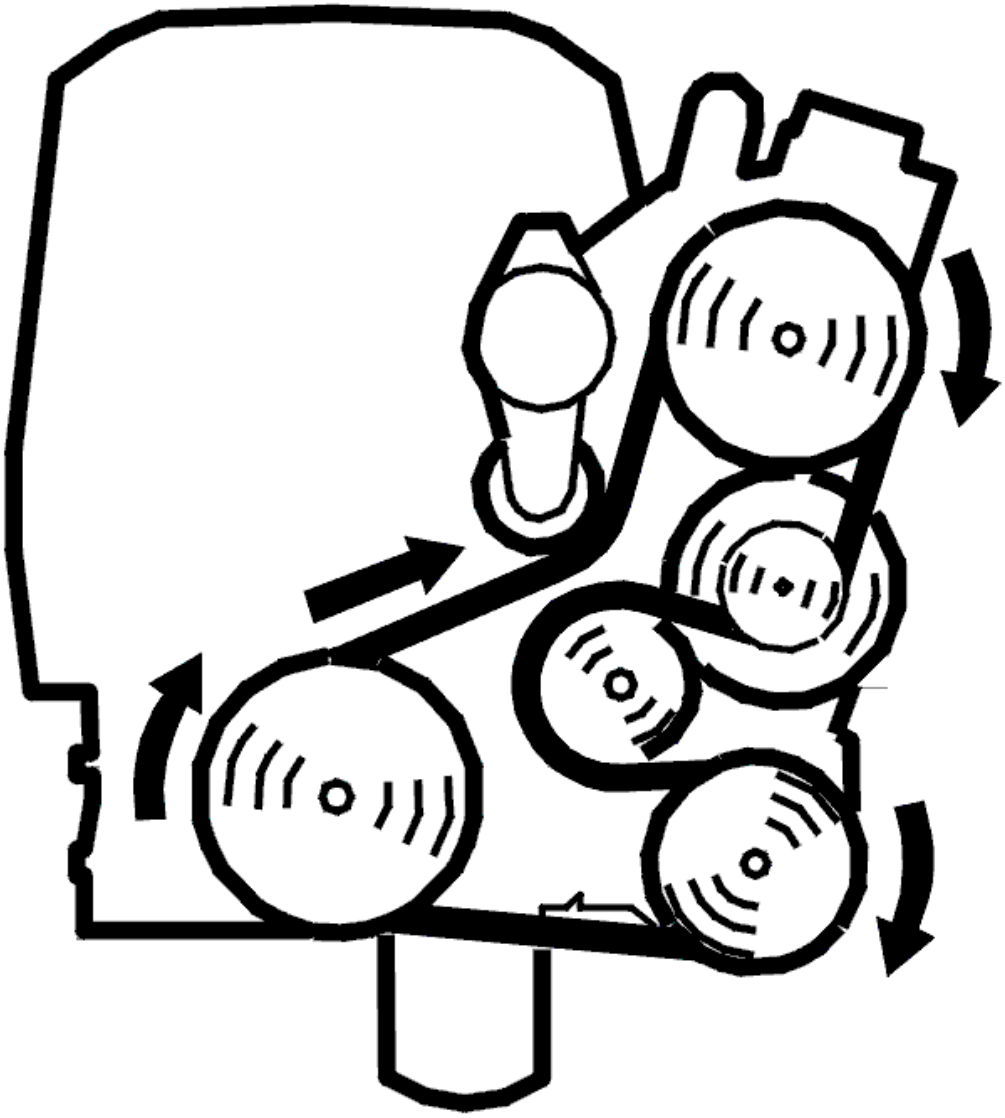

Fig. 338: Belt Routing / Engine Idling - Volvo
Courtesy of VOLVO CARS CORPORATION

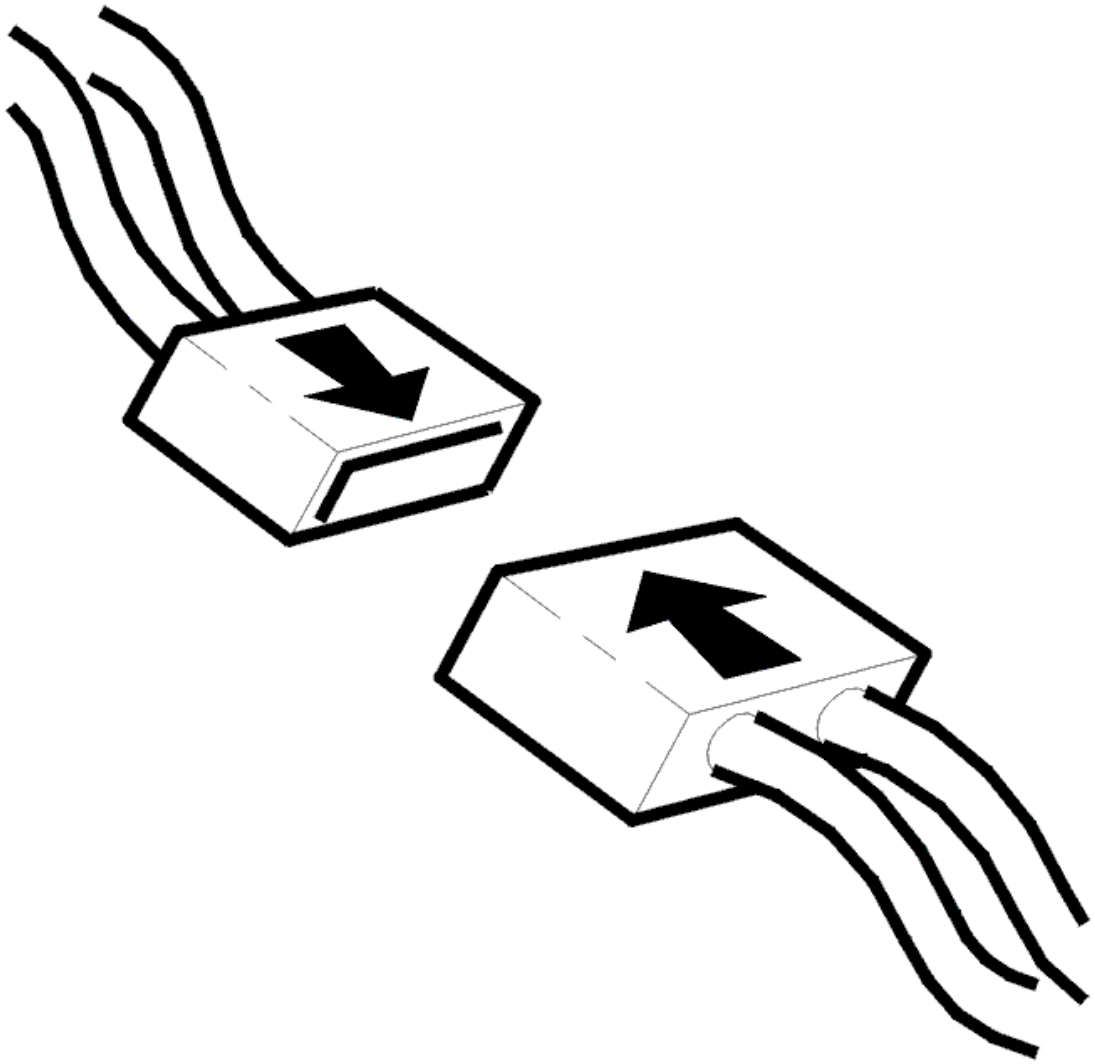

Fig. 339: Connecting Connector
Courtesy of VOLVO CARS CORPORATION

- Ignition off
- Check ignition coil connector for contact resistance and oxidation according to **CONTACT RESISTANCE AND OXIDATION** .
- Reinstall components, reconnect connectors etc.
- Start the engine and let it idle.

  Engine should fire on all cylinders.

  If the engine is OK it means that the cause of the fault has been loose connections in the connector.

  Other information

- To access/replace the ignition coil, see **REPLACING IGNITION COILS** .
- For 5 cylinder turbocharged engines -2004, see **SIGNAL DESCRIPTION**
- For 5 cylinder turbocharged engines 2005-, see **SIGNAL SPECIFICATION** .

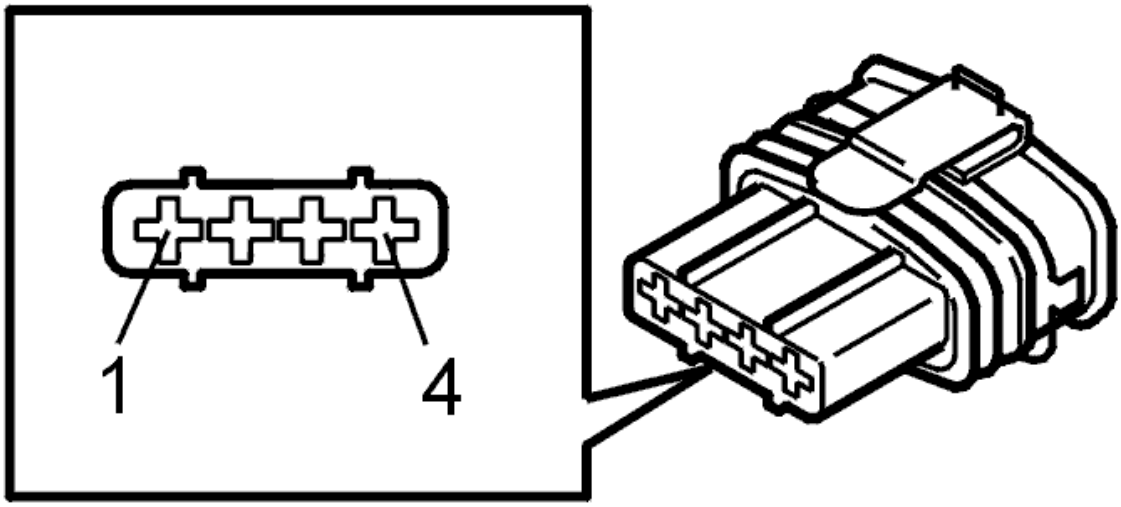

Fig. 340: Identifying Connector Terminals
Courtesy of VOLVO CARS CORPORATION

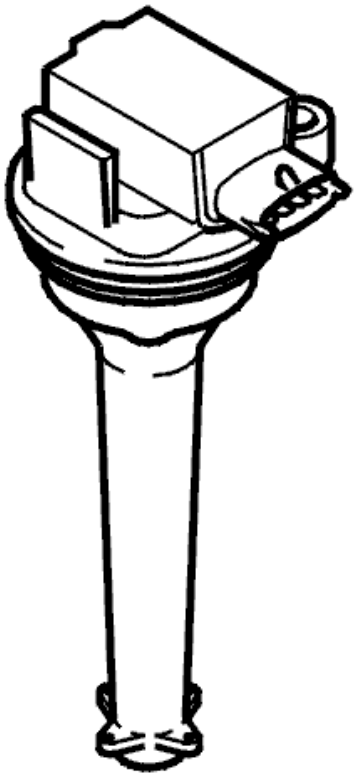

Fig. 341: Identifying Ignition Coil

Courtesy of VOLVO CARS CORPORATION

Is the engine idling evenly?

- **YES**

  OKAY: Troubleshooting has been completed.

- **NO**

  Refer to **CHECKING WIRING AND COMPONENTS**

CHECKING WIRING AND COMPONENTS

Check signal cable between ignition coil #1 and control module:

- #A31 (#A31) (ECM 3300)
- #A30 (#A30) (ECM 3310)
- #A50 (#A50) (ECM 3320)
- #A52 (#A52) (ECM 3330)
- #A51 (#A51) (ECM 3340)

and the power supply between system relay #3 and ignition coil #4 for an open-circuit according to **OPEN-CIRCUIT, PERMANENT FAULTS** .

Remedy as necessary.

Other information

- Connecting the breakout box/accessing the control module, see **CONNECTING THE BREAKOUT BOX** .
- To access/replace the ignition coil, see **REPLACING IGNITION COILS** .
- For 5 cylinder turbocharged engines -2004, see **SIGNAL DESCRIPTION**
- For 5 cylinder turbocharged engines 2005-, see **SIGNAL SPECIFICATION** .

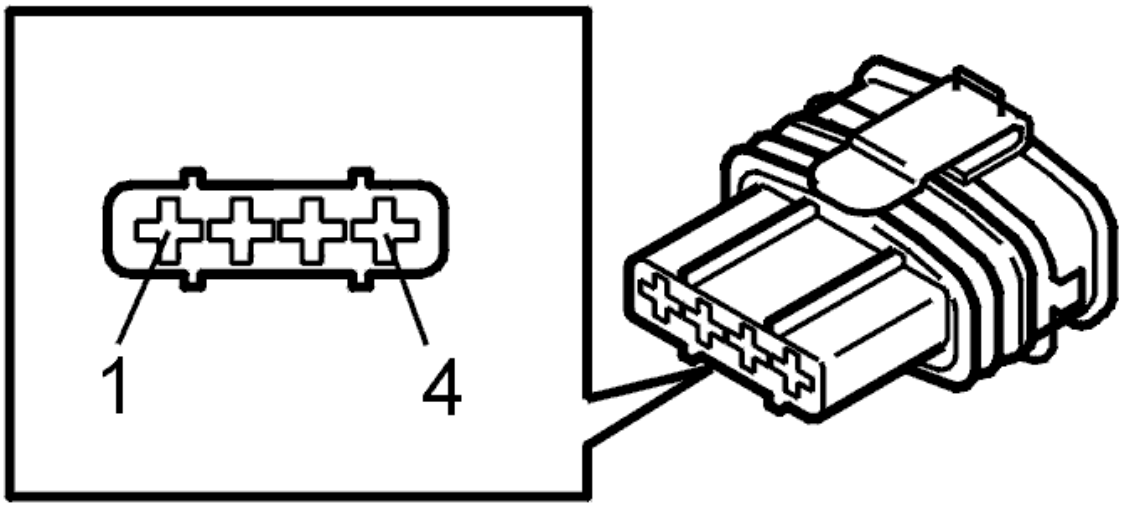

Fig. 342: Identifying Connector Terminals
Courtesy of VOLVO CARS CORPORATION

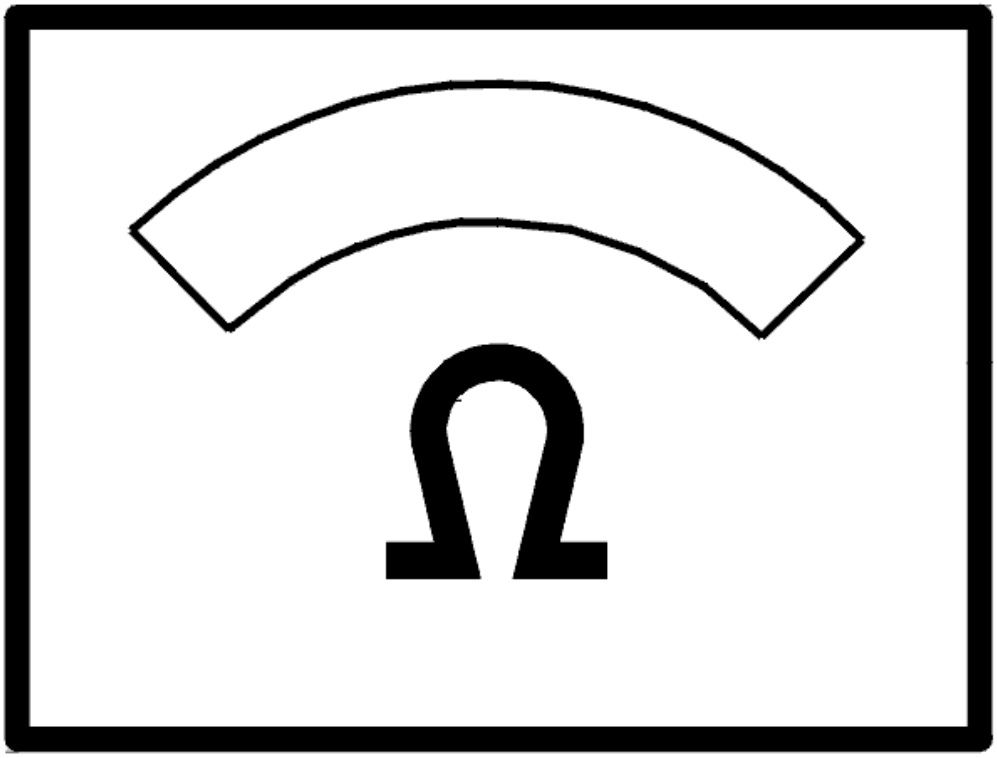

Fig. 343: Identifying Ohm Meter
Courtesy of VOLVO CARS CORPORATION

Fig. 344: Identifying Ignition Coil
Courtesy of VOLVO CARS CORPORATION

- **Continue**

  Refer to **VERIFICATION**

VERIFICATION

VERIFICATION

HINT: After carrying out the repair, check that the fault has been remedied.

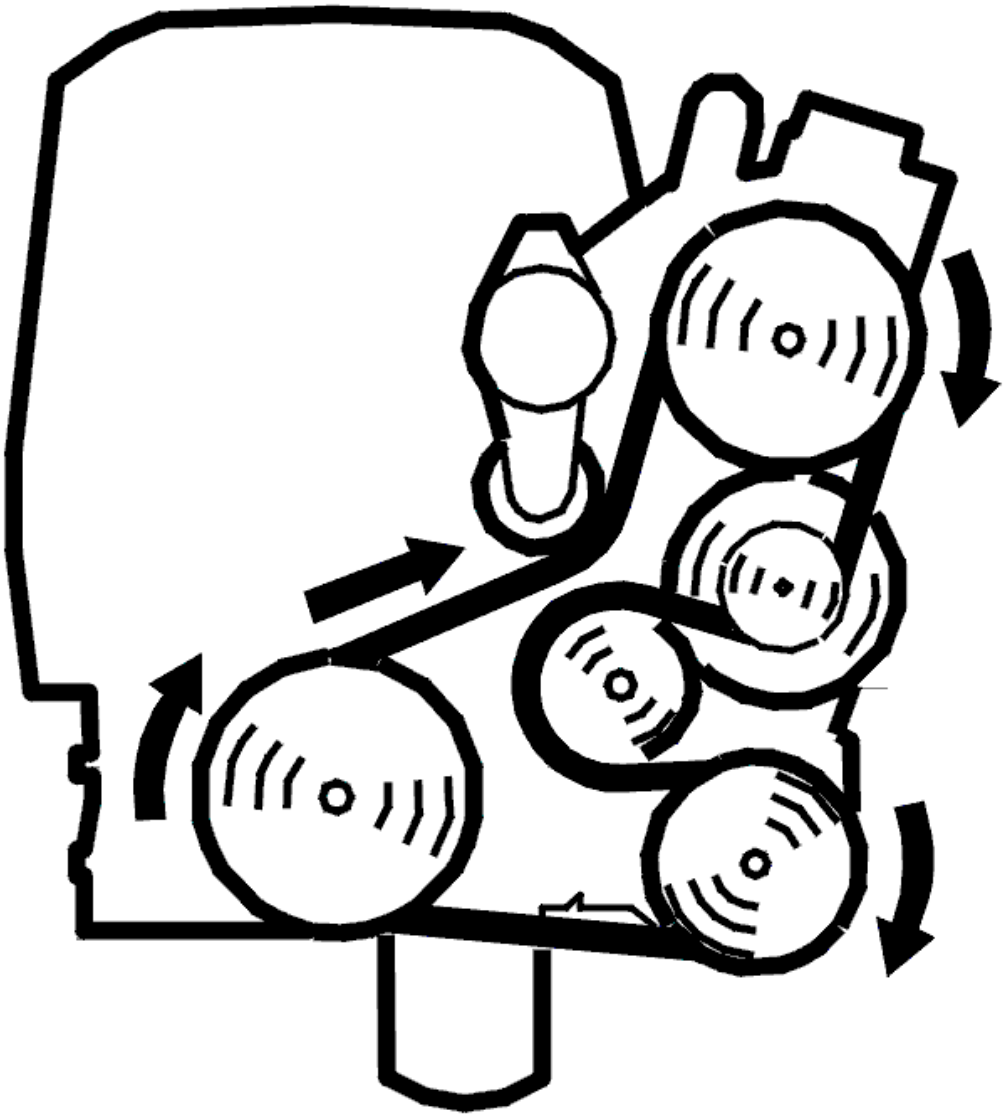

Fig. 345: Belt Routing / Engine Idling - Volvo
Courtesy of VOLVO CARS CORPORATION

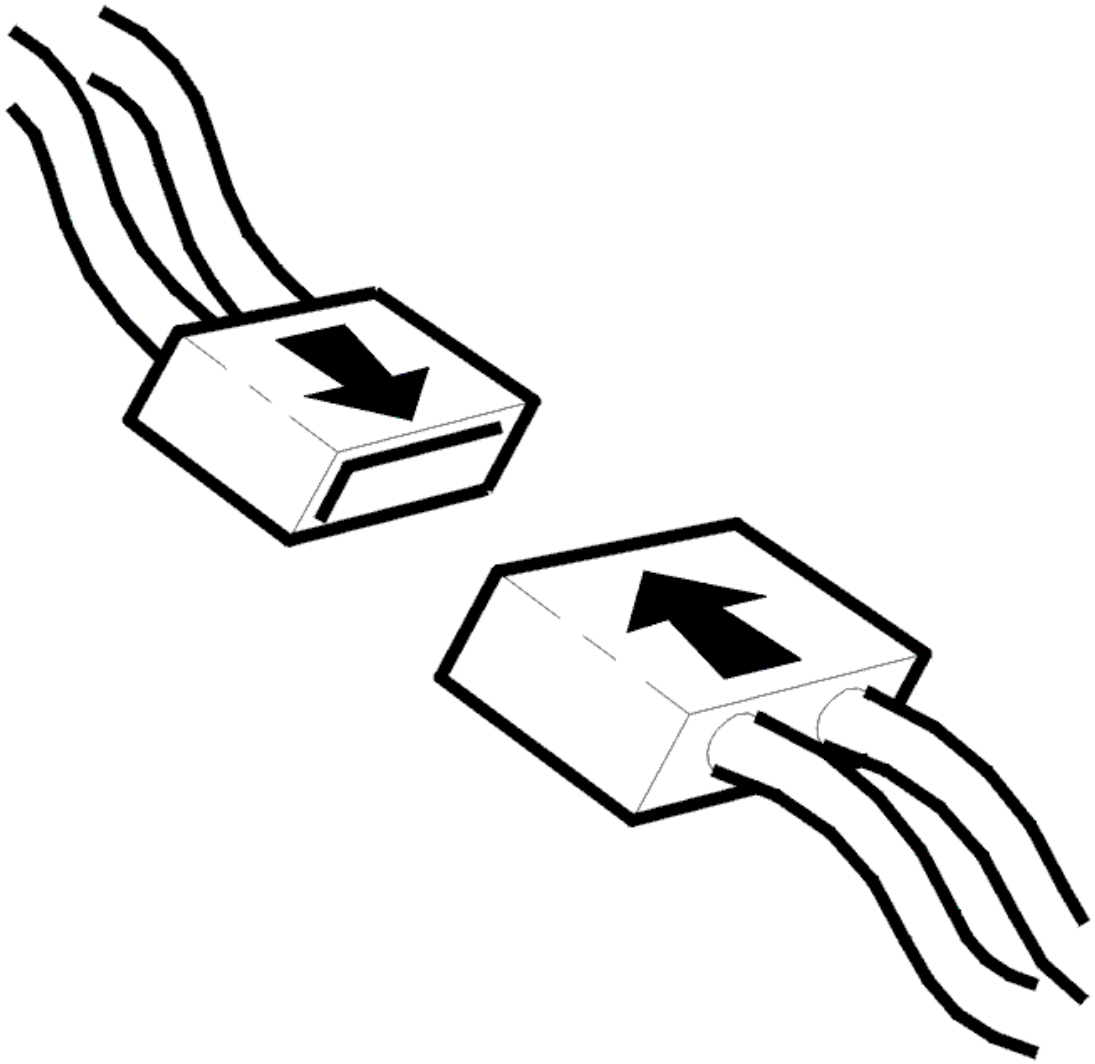

Fig. 346: Connecting Connector
Courtesy of VOLVO CARS CORPORATION

- Ignition off
- Reconnect connectors, reinstall components etc.
- Start the engine. Allow the engine to idle.

  The engine must fire on all cylinders.

Fig. 347: Identifying Ignition Coil
Courtesy of VOLVO CARS CORPORATION

Is the engine idling evenly?

- **YES**

  VERIFIED: Troubleshooting has been completed.

- **NO**

  Refer to **INFORMATION**

INFORMATION

FAULT-TRACING INFORMATION

The fault should have been detected and remedied. As this is not the case fault-tracing has failed.

Exit fault-tracing for this diagnostic trouble code (DTC) or make another attempt.

ECM-3300: IGNITION COIL CYLINDER 1, SIGNAL. SIGNAL MISSING. PERMANENT FAULT (B6294T; 2003-2004)

DIAGNOSTIC TROUBLE CODE (DTC) INFORMATION

see **DIAGNOSTIC TROUBLE CODE (DTC) INFORMATION**

SIGNAL MISSING. PERMANENT FAULT

CHECKING CONNECTOR

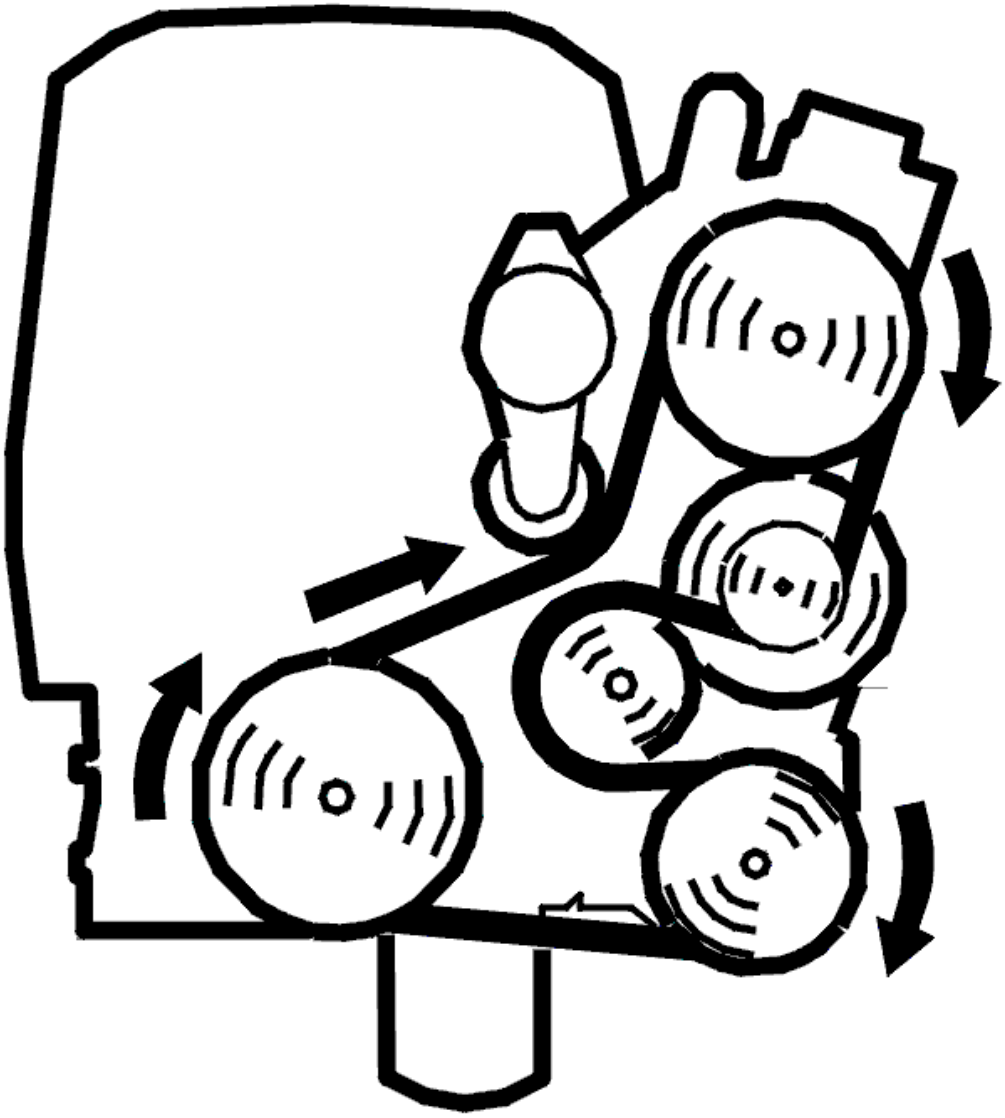

Fig. 348: Belt Routing / Engine Idling - Volvo
Courtesy of VOLVO CARS CORPORATION

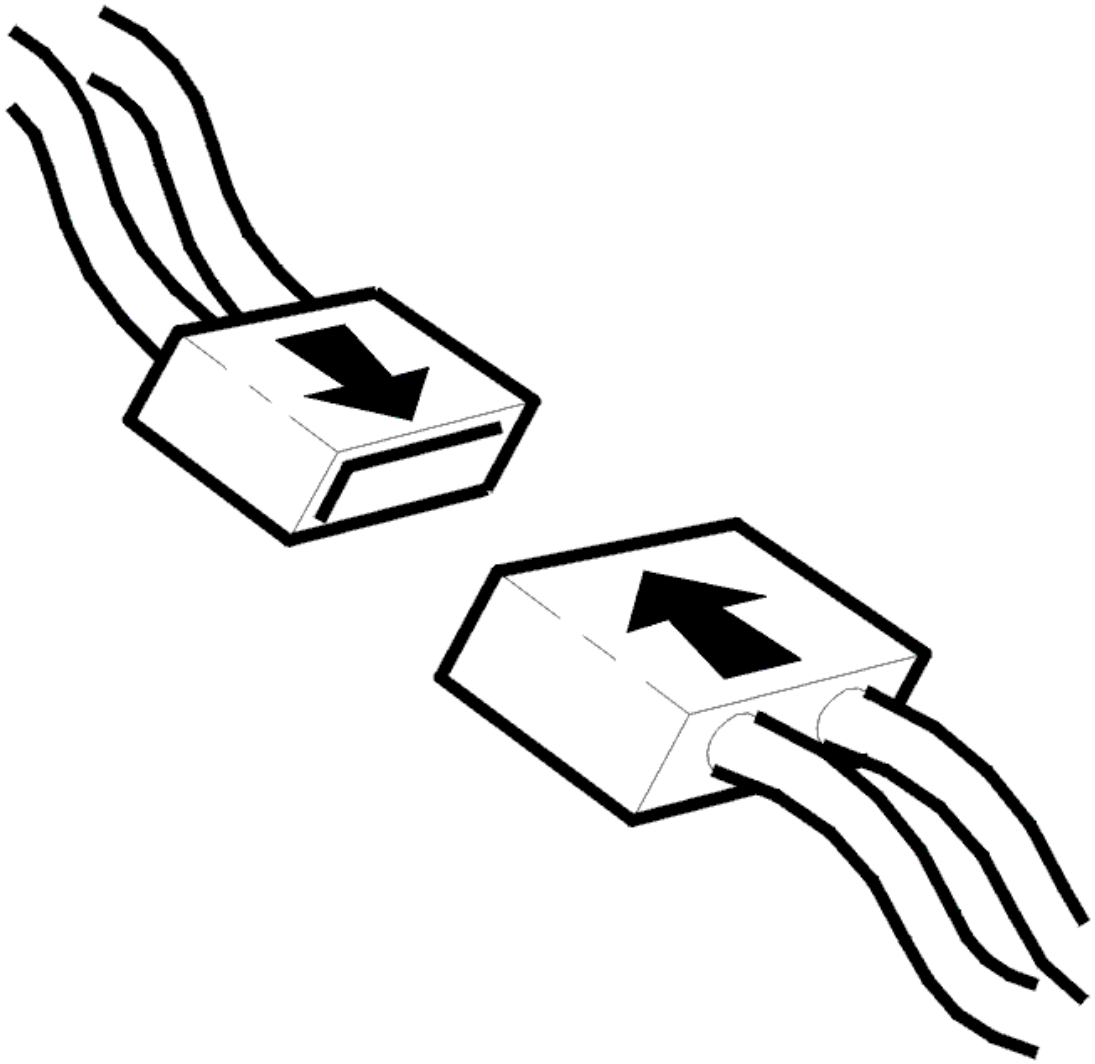

Fig. 349: Connecting Connector
Courtesy of VOLVO CARS CORPORATION

- Ignition off
- Check ignition coil connector for contact resistance and oxidation according to **CONTACT RESISTANCE AND OXIDATION** .
- Reinstall components, reconnect connectors etc.
- Start the engine and let it idle.

  Engine should fire on all cylinders.

  If the engine is OK it means that the cause of the fault has been loose connections in the connector.

  Other information

- To access/replace the ignition coil, see **REPLACING IGNITION COIL** .
- For 6 cylinder engines -2004, see **SIGNAL SPECIFICATION**
- For 6 cylinder engines 2005-, see **SIGNAL SPECIFICATION** .

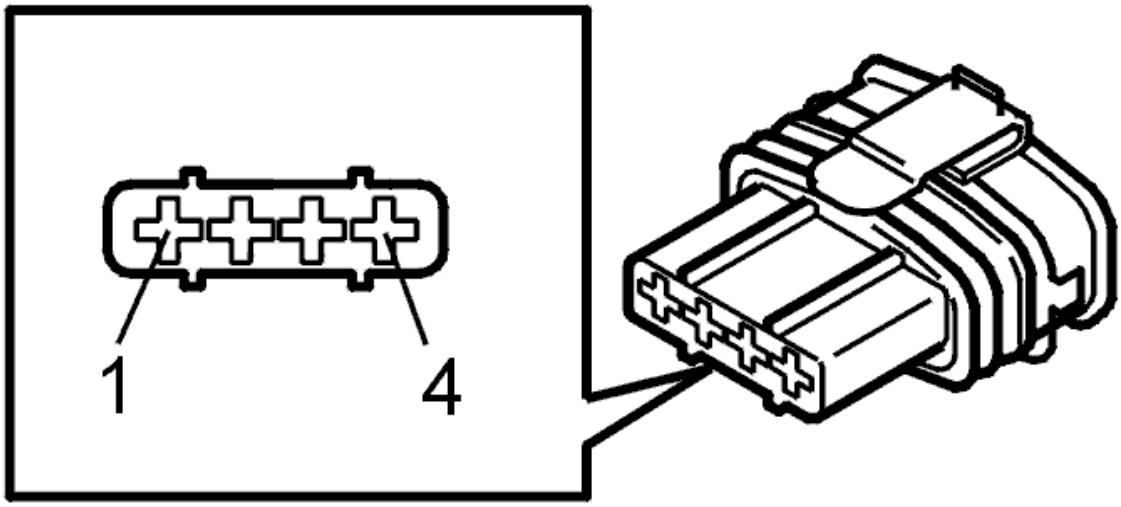

Fig. 350: Identifying Connector Terminals
Courtesy of VOLVO CARS CORPORATION

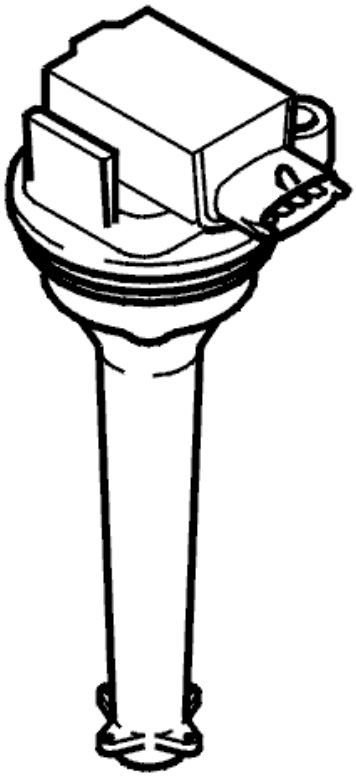

Fig. 351: Identifying Ignition Coil

Courtesy of VOLVO CARS CORPORATION

Is the engine idling evenly?

- **YES**

  OKAY: Troubleshooting has been completed.

- **NO**

  Refer to **CHECKING WIRING AND COMPONENTS**

CHECKING WIRING AND COMPONENTS

Check signal cable between ignition coil #1 and control module:

- #A31 (#A31) (ECM 3300)
- #A50 (#A50) (ECM 3310)
- #A52 (#52) (ECM 3320)
- #A49 (#49) (ECM 3330)
- #A30 (#30) (ECM 3340)
- #A51 (#A51) (ECM 3350)

and the power supply between system relay #3 and ignition coil #4 for an open-circuit according to **OPEN-CIRCUIT, PERMANENT FAULTS** .

Remedy as necessary.

Other information

- Connecting the breakout box/accessing the control module, see **CONNECTING THE BREAKOUT BOX** .
- To access/replace the ignition coil, see **REPLACING IGNITION COIL** .
- For 6 cylinder engines -2004, see **SIGNAL SPECIFICATION**
- For 6 cylinder engines 2005-, see **SIGNAL SPECIFICATION** .

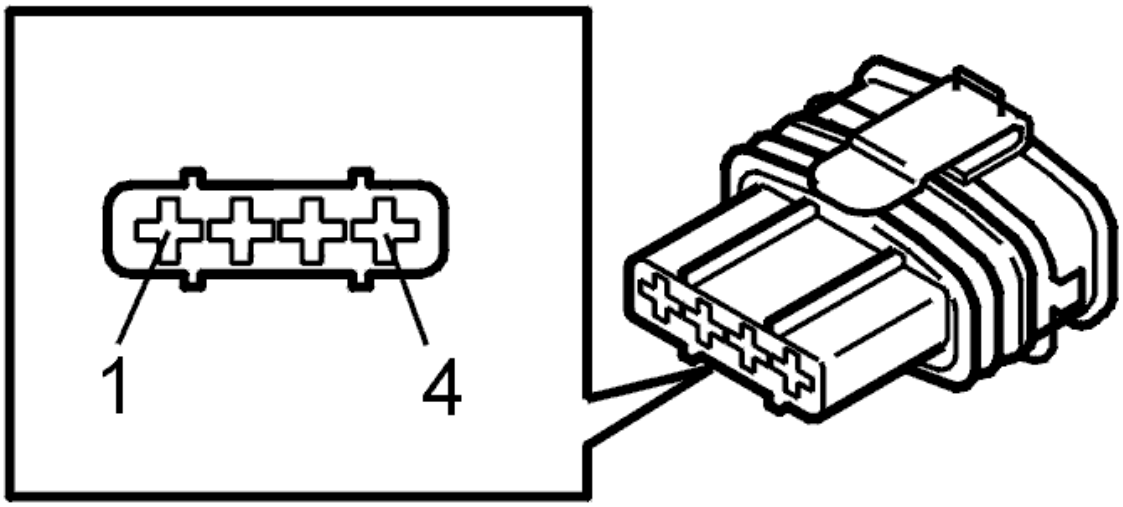

Fig. 352: Identifying Connector Terminals
Courtesy of VOLVO CARS CORPORATION

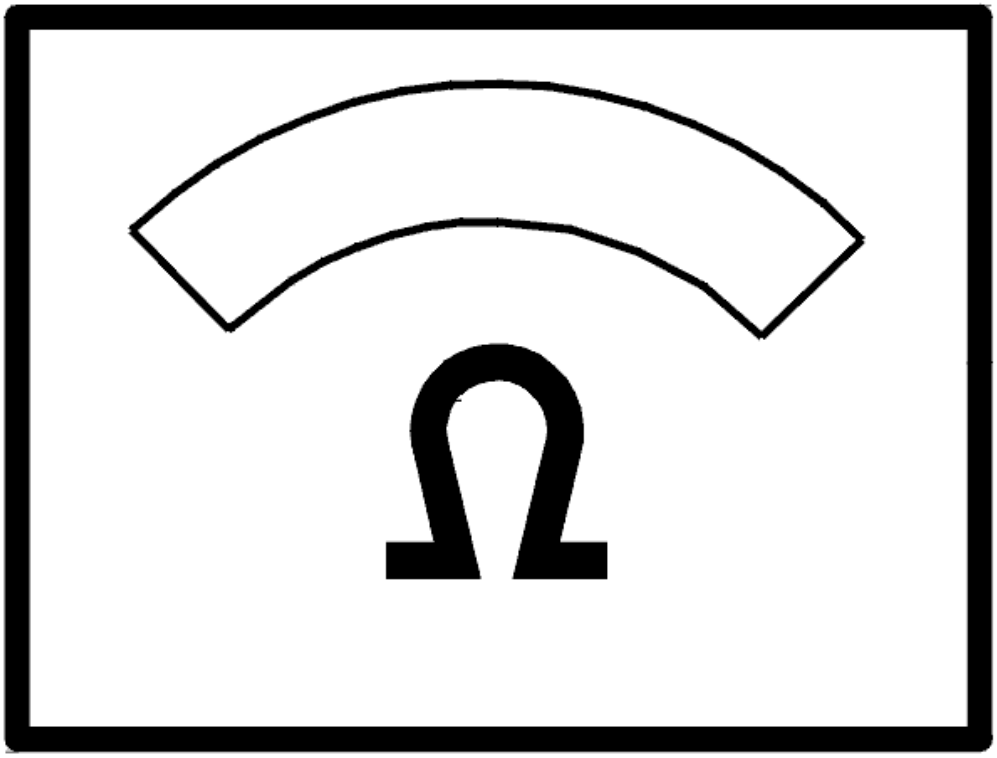

Fig. 353: Identifying Ohm Meter
Courtesy of VOLVO CARS CORPORATION

Fig. 354: Identifying Ignition Coil
Courtesy of VOLVO CARS CORPORATION

- **Continue**

  Refer to **VERIFICATION**

VERIFICATION

VERIFICATION

HINT: After carrying out the repair, check that the fault has been remedied.

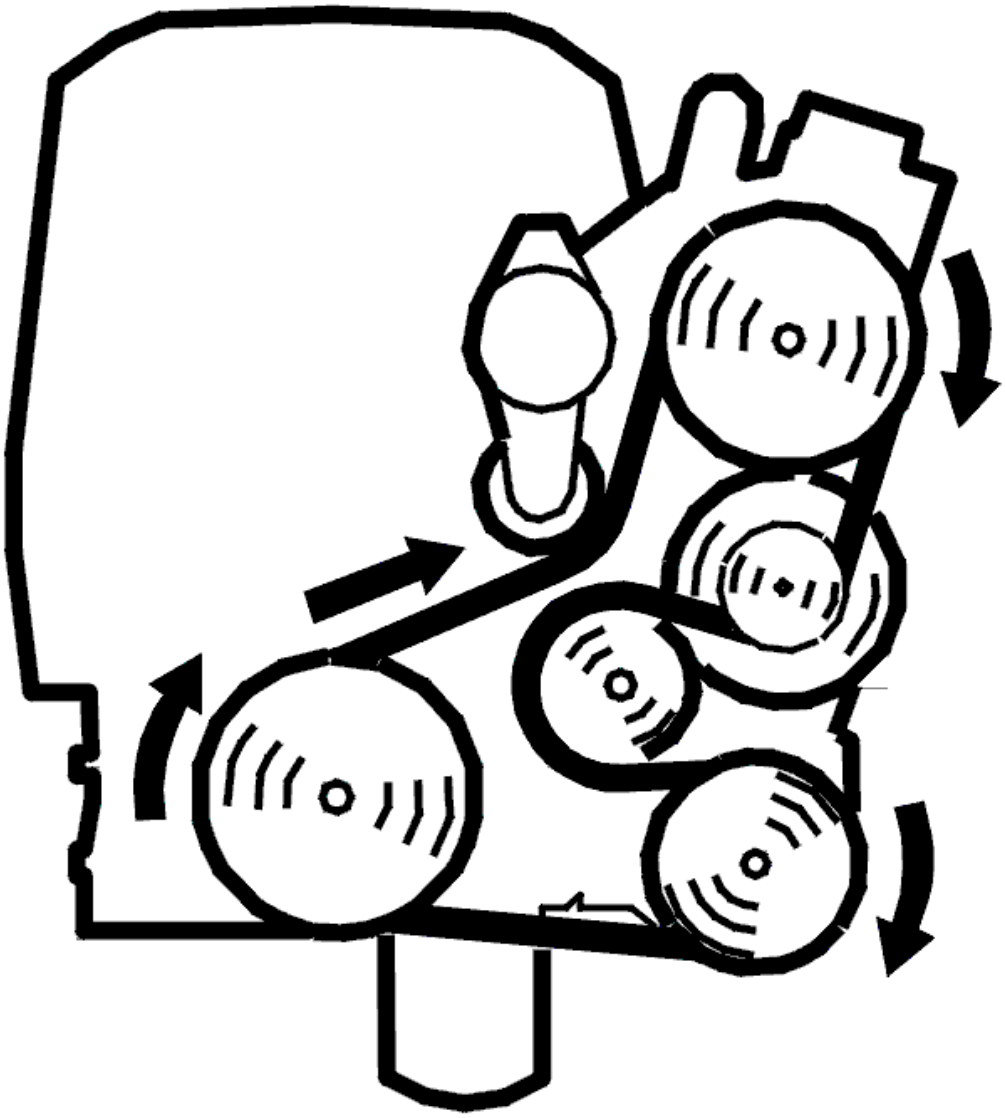

Fig. 355: Belt Routing / Engine Idling - Volvo
Courtesy of VOLVO CARS CORPORATION

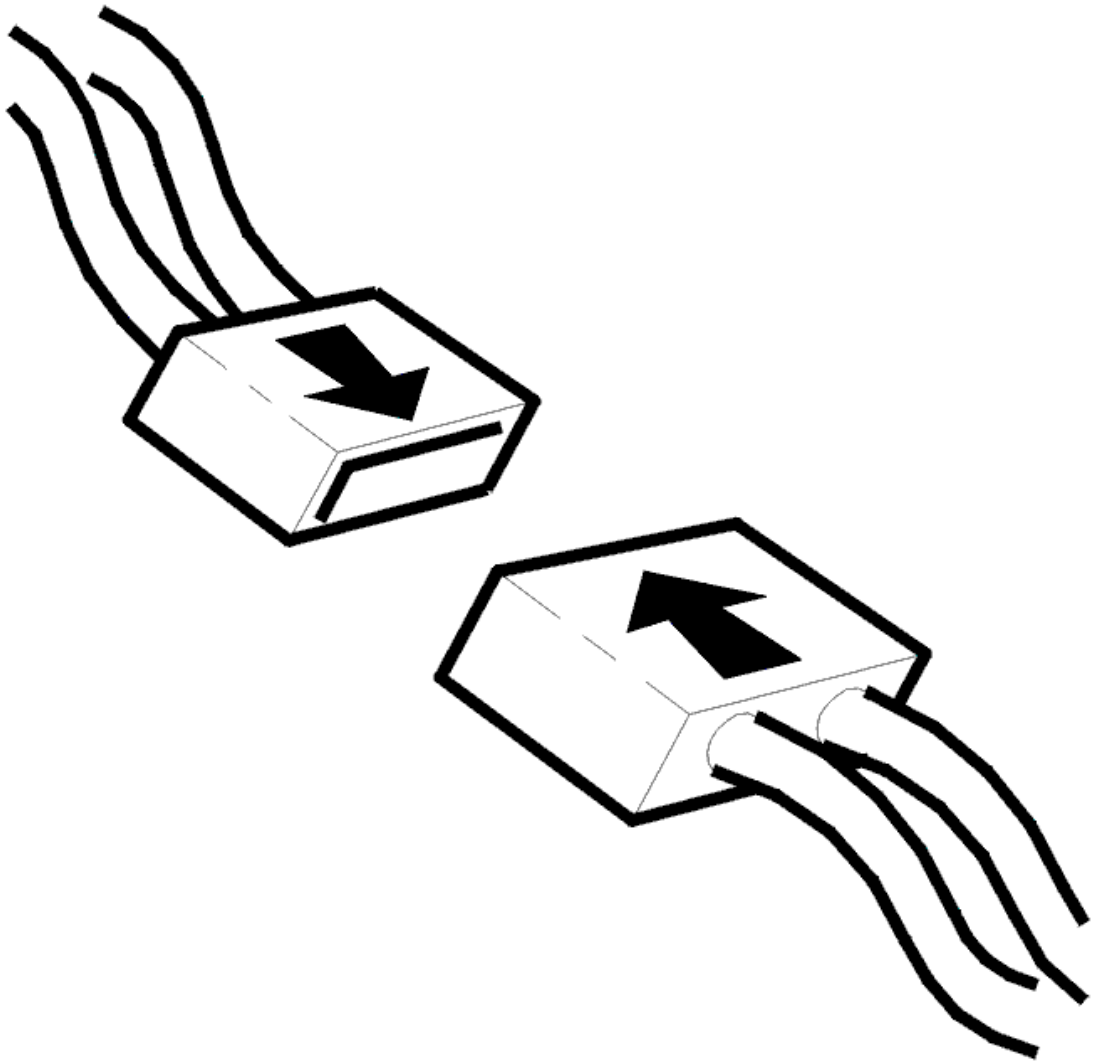

Fig. 356: Connecting Connector
Courtesy of VOLVO CARS CORPORATION

- Ignition off
- Reconnect connectors, reinstall components etc.
- Start the engine. Allow the engine to idle.

  The engine must fire on all cylinders.

Fig. 357: Identifying Ignition Coil
Courtesy of VOLVO CARS CORPORATION

Is the engine idling evenly?

- **YES**

  VERIFIED: Troubleshooting has been completed.

- **NO**

  Refer to **INFORMATION**

INFORMATION

FAULT-TRACING INFORMATION

The fault should have been detected and remedied. As this is not the case fault-tracing has failed.

Exit fault-tracing for this diagnostic trouble code (DTC) or make another attempt.

ECM-3300: IGNITION COIL CYLINDER 1, SIGNAL. SIGNAL TOO HIGH. INTERMITTENT FAULT (B5254T2; 2003-2004)

DIAGNOSTIC TROUBLE CODE (DTC) INFORMATION

see **DIAGNOSTIC TROUBLE CODE (DTC) INFORMATION**

SIGNAL TOO HIGH. INTERMITTENT FAULT

CHECKING CABLES

Check signal cable between ignition coil #1 and control module:

- #A31 (#A31) (ECM 3300)
- #A30 (#A30) (ECM 3310)
- #A50 (#A50) (ECM 3320)
- #A52 (#A52) (ECM 3330)
- #A51 (#A51) (ECM 3340)

for an intermittent short-circuit to supply voltage according to **SHORT-CIRCUIT TO SUPPLY VOLTAGE, INTERMITTENT FAULTS**

Other information

- Connecting the breakout box/accessing the control module, see **CONNECTING THE BREAKOUT BOX** .
- To access/replace the ignition coil, see **REPLACING IGNITION COILS** .
- For 5 cylinder turbocharged engines -2004, see **SIGNAL DESCRIPTION**
- For 5 cylinder turbocharged engines 2005-, see **SIGNAL SPECIFICATION** .

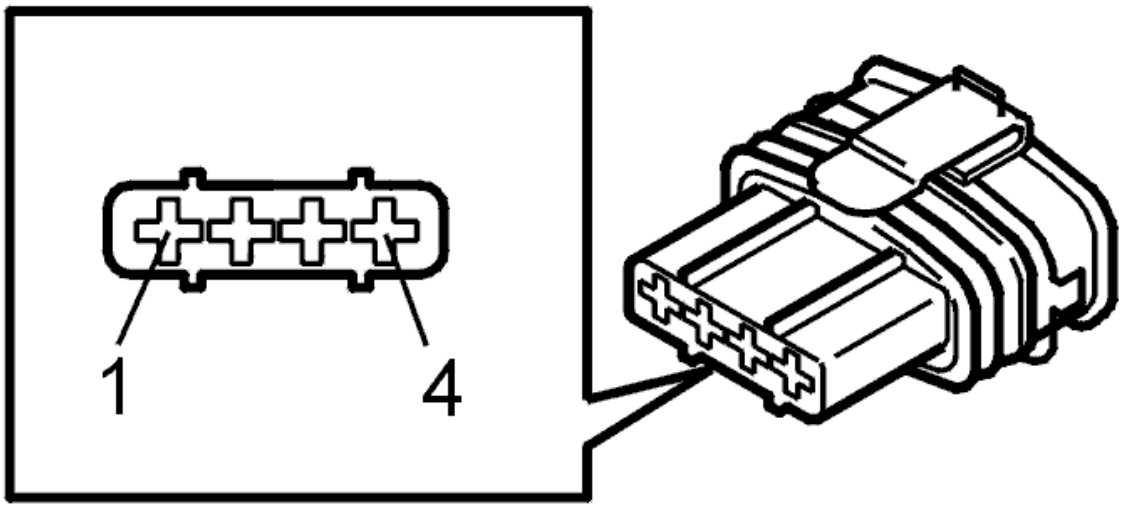

Fig. 358: Identifying Connector Terminals
Courtesy of VOLVO CARS CORPORATION

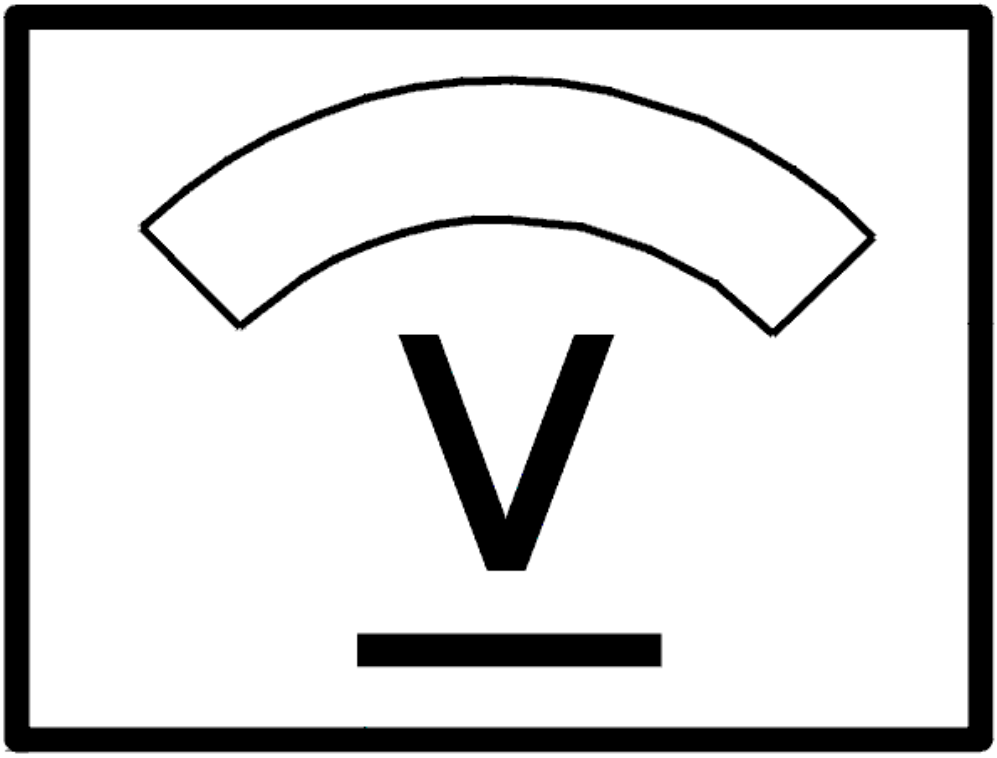

Fig. 359: Identifying Voltage Display
Courtesy of VOLVO CARS CORPORATION

Fig. 360: Identifying Ignition Coil
Courtesy of VOLVO CARS CORPORATION

- **Continue**

  Refer to **INFORMATION**

INFORMATION

FAULT-TRACING INFORMATION

If the fault is intermittent, do not verify fault-tracing if the fault does not recur.

It is possible to view the information again, or leave fault-tracing for this diagnostic trouble code (DTC).

ECM-3300: IGNITION COIL CYLINDER 1, SIGNAL. SIGNAL TOO HIGH. INTERMITTENT FAULT (B6294T; 2003-2004)

DIAGNOSTIC TROUBLE CODE (DTC) INFORMATION

see **DIAGNOSTIC TROUBLE CODE (DTC) INFORMATION**

SIGNAL TOO HIGH. INTERMITTENT FAULT

CHECKING CABLES

Check signal cable between ignition coil #1 and control module:

- #A31 (#A31) (ECM 3300)
- #A50 (#A50) (ECM 3310)
- #A52 (#A52) (ECM 3320)
- #A49 (#A49) (ECM 3330)
- #A30 (#A30) (ECM 3340)
- #A51 (#A51) (ECM 3350)

for an intermittent short-circuit to supply voltage according to **SHORT-CIRCUIT TO SUPPLY VOLTAGE, INTERMITTENT FAULTS**

Other information

- Connecting the breakout box/accessing the control module, see **CONNECTING THE BREAKOUT BOX** .
- To access/replace the ignition coil, see **REPLACING IGNITION COIL** .
- For 6 cylinder engines -2004, see **SIGNAL SPECIFICATION**
- For 6 cylinder engines 2005-, see **SIGNAL SPECIFICATION** .

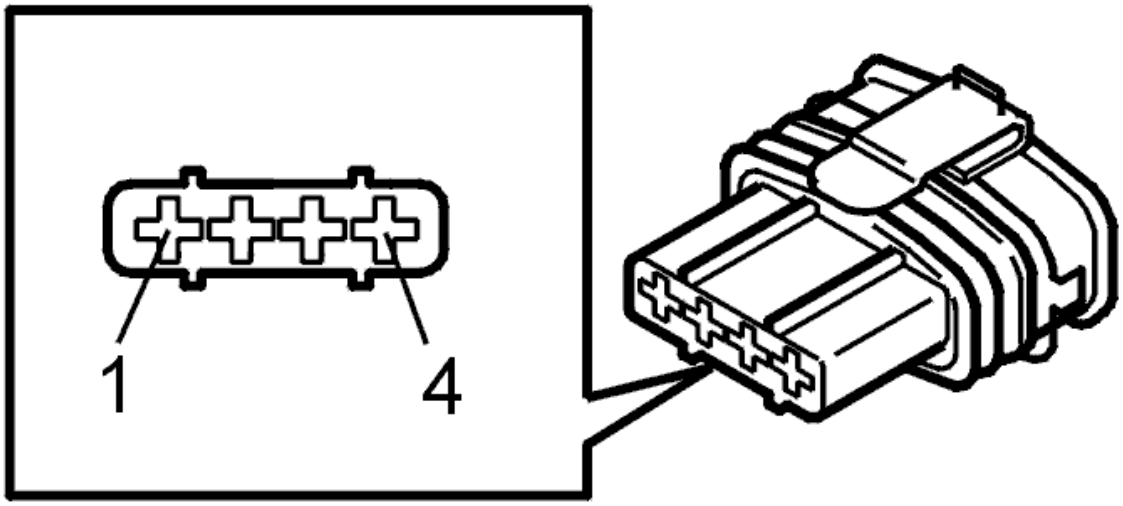

Fig. 361: Identifying Connector Terminals
Courtesy of VOLVO CARS CORPORATION

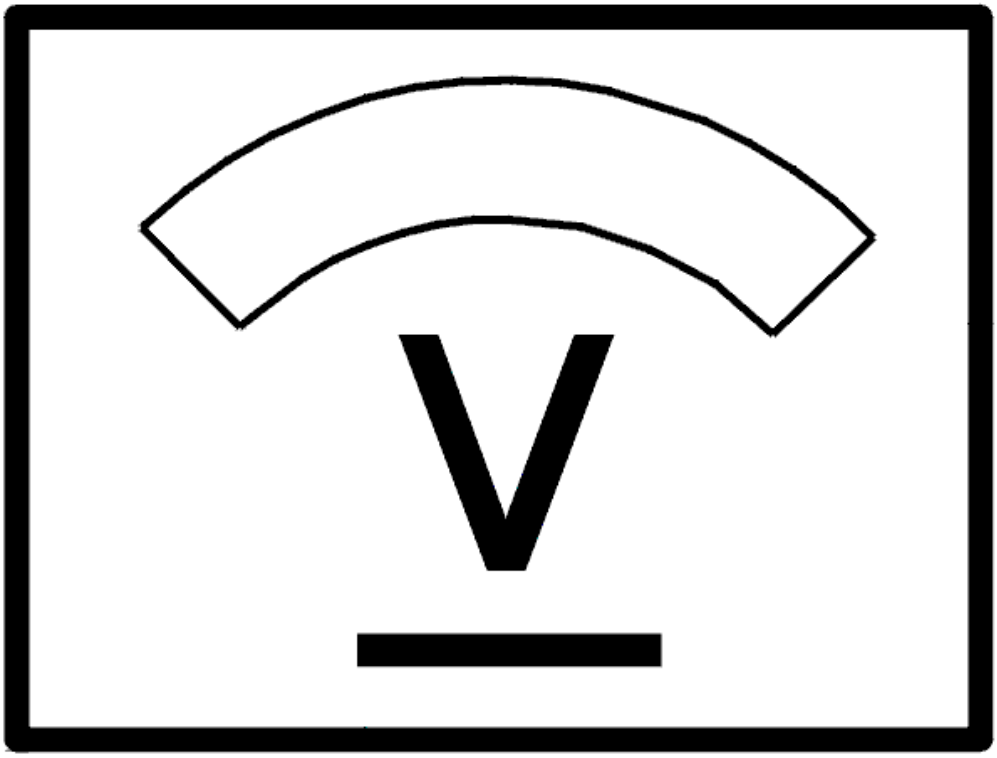

Fig. 362: Identifying Voltage Display
Courtesy of VOLVO CARS CORPORATION

Fig. 363: Identifying Ignition Coil
Courtesy of VOLVO CARS CORPORATION

- **Continue**

  Refer to **INFORMATION**

INFORMATION

FAULT-TRACING INFORMATION

If the fault is intermittent, do not verify fault-tracing if the fault does not recur.

It is possible to view the information again, or leave fault-tracing for this diagnostic trouble code (DTC).

ECM-3300: IGNITION COIL CYLINDER 1, SIGNAL. SIGNAL TOO HIGH. PERMANENT FAULT (B5254T2; 2003-2004)

DIAGNOSTIC TROUBLE CODE (DTC) INFORMATION

see **DIAGNOSTIC TROUBLE CODE (DTC) INFORMATION**

SIGNAL TOO HIGH. PERMANENT FAULT

CHECKING WIRING AND COMPONENTS

Check signal cable between ignition coil #1 and control module:

- #A31 (#A31) (ECM 3300)
- #A30 (#A30) (ECM 3310)
- #A50 (#A50) (ECM 3320)
- #A52 (#A52) (ECM 3330)
- #A51 (#A51) (ECM 3340)

and power supply between system relay #3 and ignition coil #4 for a short-circuit to supply voltage according to **SHORT-CIRCUIT TO SUPPLY VOLTAGE. PERMANENT FAULTS** .

HINT: Use an electrician's screwdriver with at least a 3 W bulb to determine whether the cable is short-circuited to supply voltage.

Remedy as necessary.

Other information

- Connecting the breakout box/accessing the control module, see **CONNECTING THE BREAKOUT BOX** .
- To access/replace the ignition coil, see **REPLACING IGNITION COILS** .
- For 5 cylinder turbocharged engines -2004, see **SIGNAL DESCRIPTION**
- For 5 cylinder turbocharged engines 2005-, see **SIGNAL SPECIFICATION** .

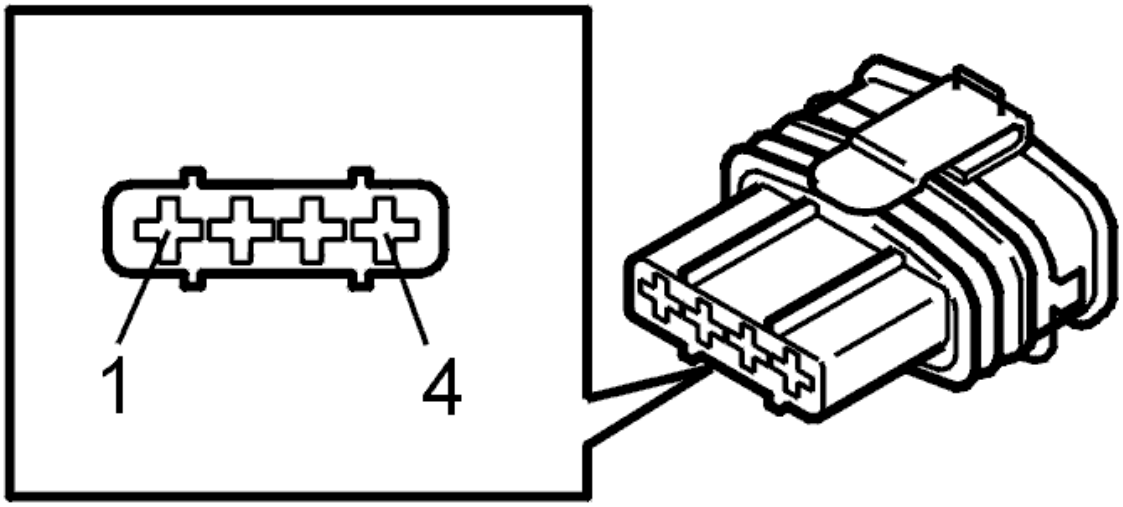

Fig. 364: Identifying Connector Terminals
Courtesy of VOLVO CARS CORPORATION

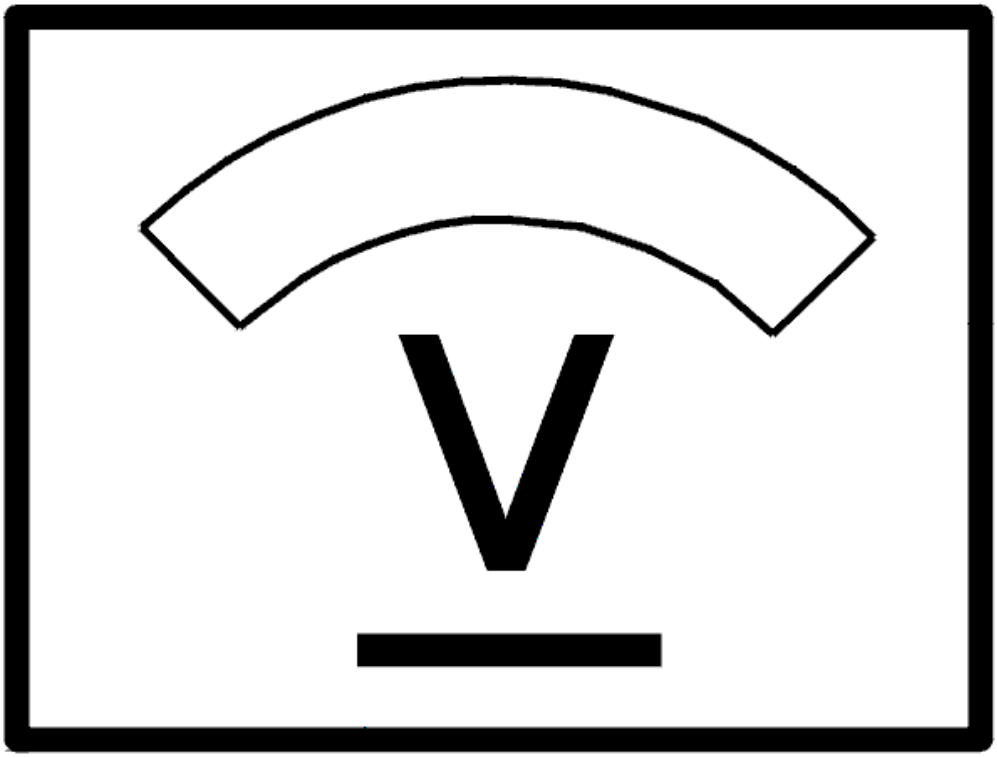

Fig. 365: Identifying Voltage Display
Courtesy of VOLVO CARS CORPORATION

Fig. 366: Identifying Ignition Coil
Courtesy of VOLVO CARS CORPORATION

- **Continue**

  Refer to **VERIFICATION**

VERIFICATION

VERIFICATION

HINT: After carrying out the repair, check that the fault has been remedied.

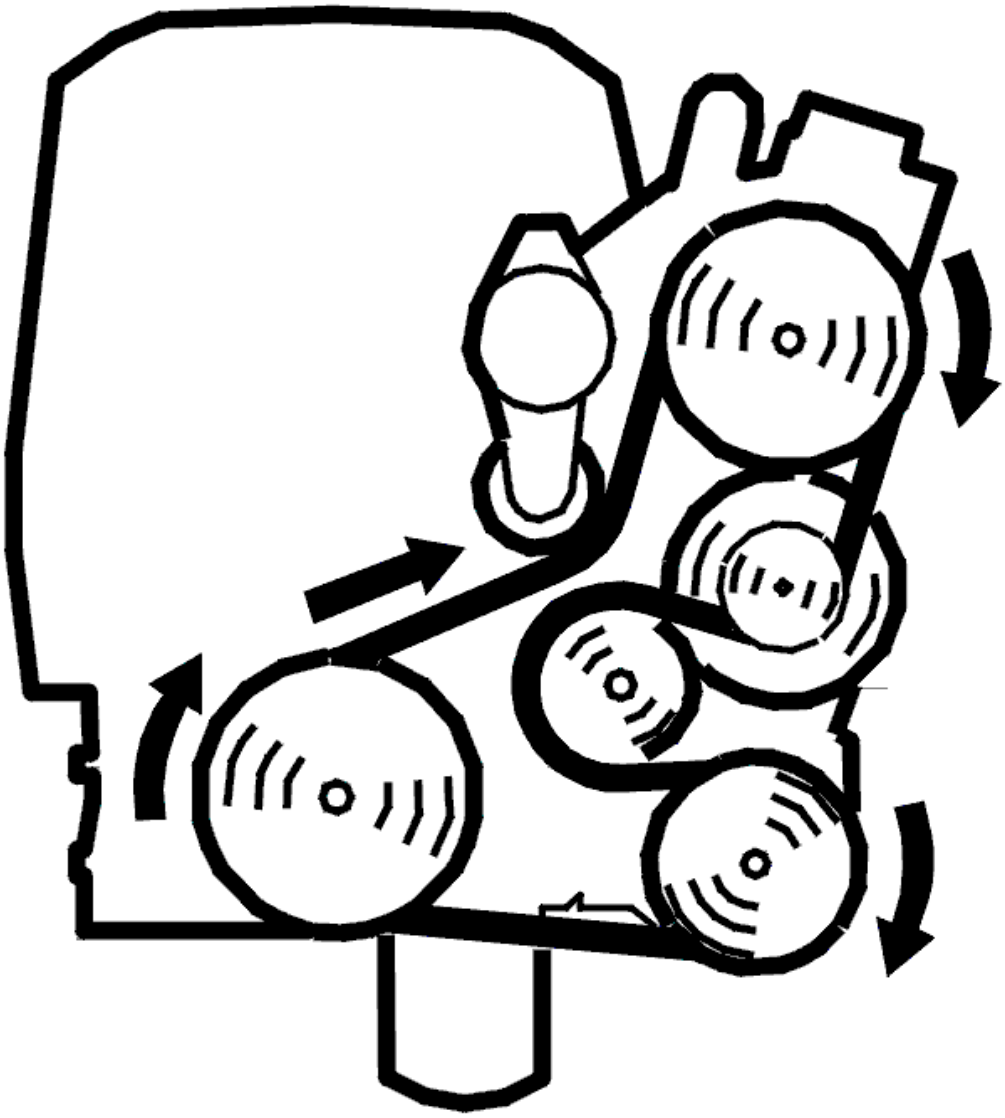

Fig. 367: Belt Routing / Engine Idling - Volvo
Courtesy of VOLVO CARS CORPORATION

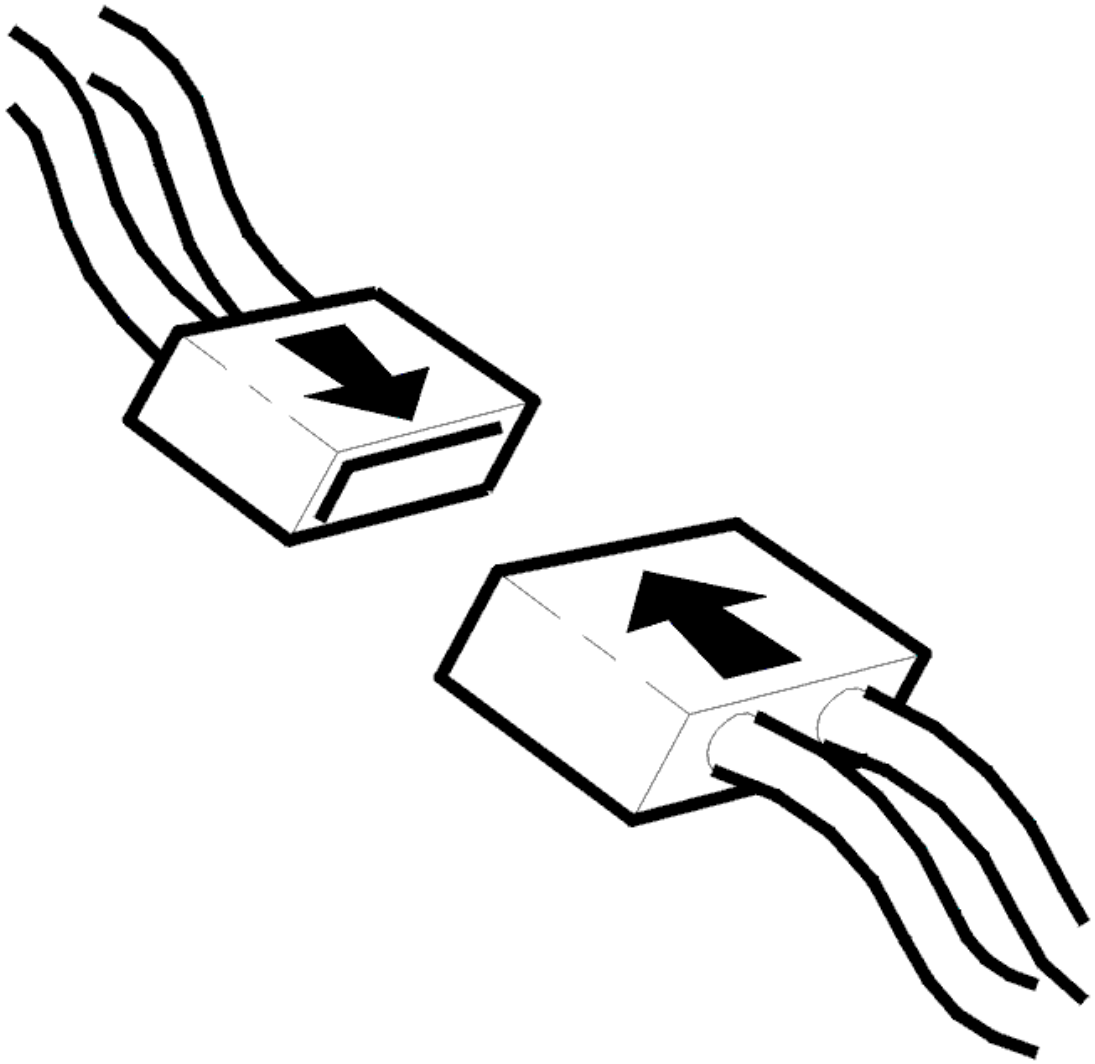

Fig. 368: Connecting Connector
Courtesy of VOLVO CARS CORPORATION

- Ignition off
- Reconnect connectors, reinstall components etc.
- Start the engine. Allow the engine to idle.

  The engine must fire on all cylinders.

Fig. 369: Identifying Ignition Coil
Courtesy of VOLVO CARS CORPORATION

Is the engine idling evenly?

- **YES**

  VERIFIED: Troubleshooting has been completed.

- **NO**

  Refer to **INFORMATION**

INFORMATION

FAULT-TRACING INFORMATION

The fault should have been detected and remedied. As this is not the case fault-tracing has failed.

Exit fault-tracing for this diagnostic trouble code (DTC) or make another attempt.

ECM-3300: IGNITION COIL CYLINDER 1, SIGNAL. SIGNAL TOO HIGH. PERMANENT FAULT (B6294T; 2003-2004)

DIAGNOSTIC TROUBLE CODE (DTC) INFORMATION

see **DIAGNOSTIC TROUBLE CODE (DTC) INFORMATION**

SIGNAL TOO HIGH. PERMANENT FAULT

CHECKING WIRING AND COMPONENTS

Check signal cable between ignition coil #1 and control module:

- #A31 (#A31) (ECM 3300)
- #A50 (#A50) (ECM 3310)
- #A52 (#A52) (ECM 3320)
- #A49 (#A49) (ECM 3330)
- #A30 (#A30) (ECM 3340)
- #A51 (#A51) (ECM 3350)

and power supply between system relay #3 and ignition coil #4 for a short-circuit to supply voltage according to **SHORT-CIRCUIT TO SUPPLY VOLTAGE. PERMANENT FAULTS** .

HINT: Use an electrician's screwdriver with at least a 3 W bulb to determine whether the cable is short-circuited to supply voltage.

Remedy as necessary.

Other information

- Connecting the breakout box/accessing the control module, see **CONNECTING THE BREAKOUT BOX** .
- To access/replace the ignition coil, see **REPLACING IGNITION COIL** .
- For 6 cylinder engines -2004, see **SIGNAL SPECIFICATION**
- For 6 cylinder engines 2005-, see **SIGNAL SPECIFICATION** .

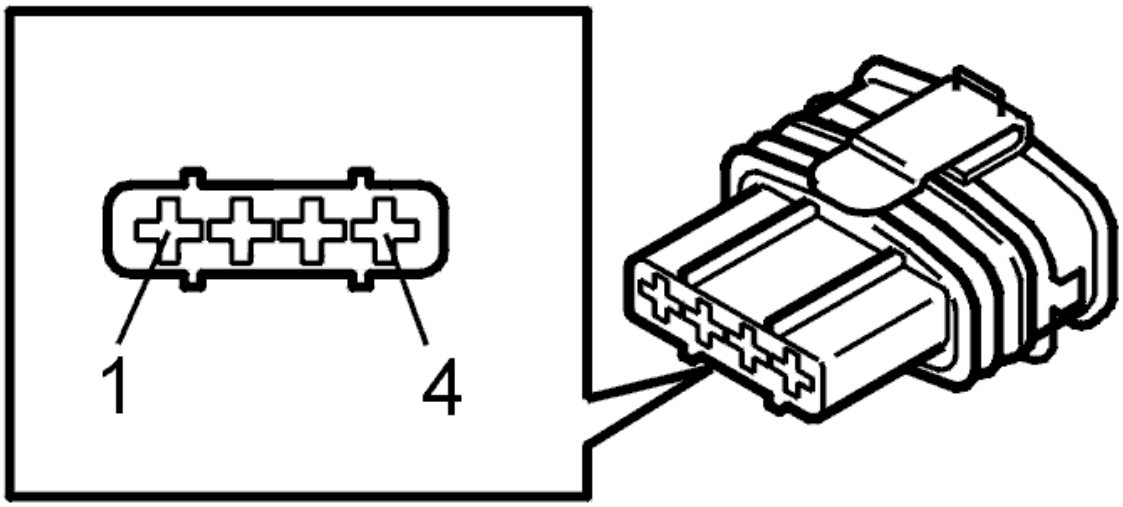

Fig. 370: Identifying Connector Terminals
Courtesy of VOLVO CARS CORPORATION

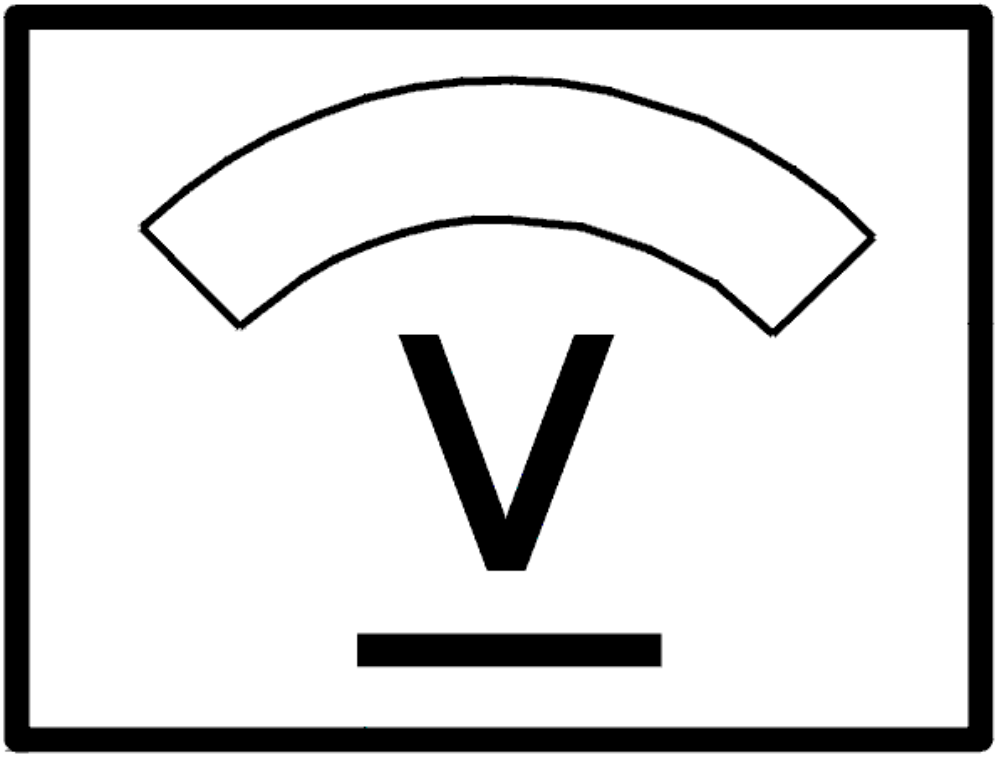

Fig. 371: Identifying Voltage Display
Courtesy of VOLVO CARS CORPORATION

Fig. 372: Identifying Ignition Coil
Courtesy of VOLVO CARS CORPORATION

- **Continue**

  Refer to **VERIFICATION**

VERIFICATION

VERIFICATION

HINT: After carrying out the repair, check that the fault has been remedied.

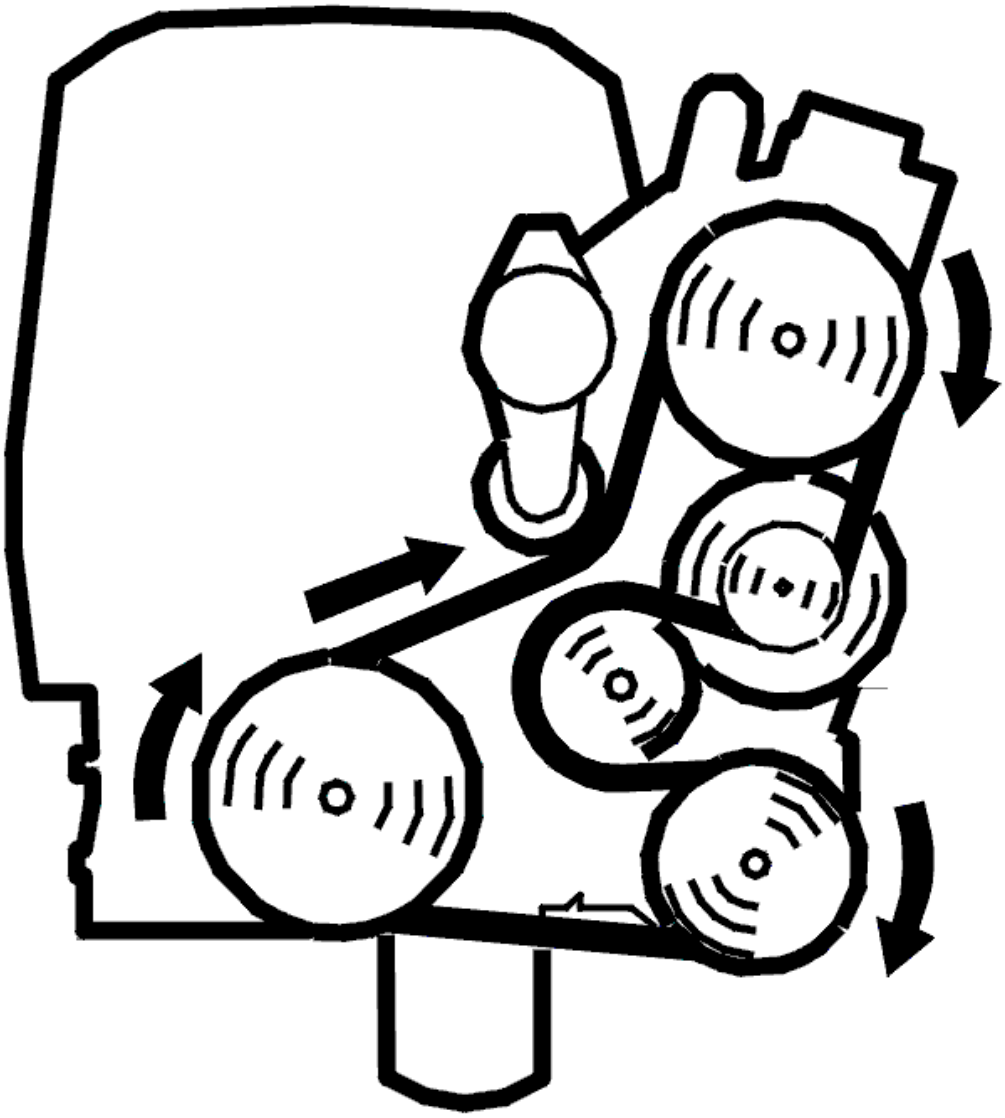

Fig. 373: Belt Routing / Engine Idling - Volvo
Courtesy of VOLVO CARS CORPORATION

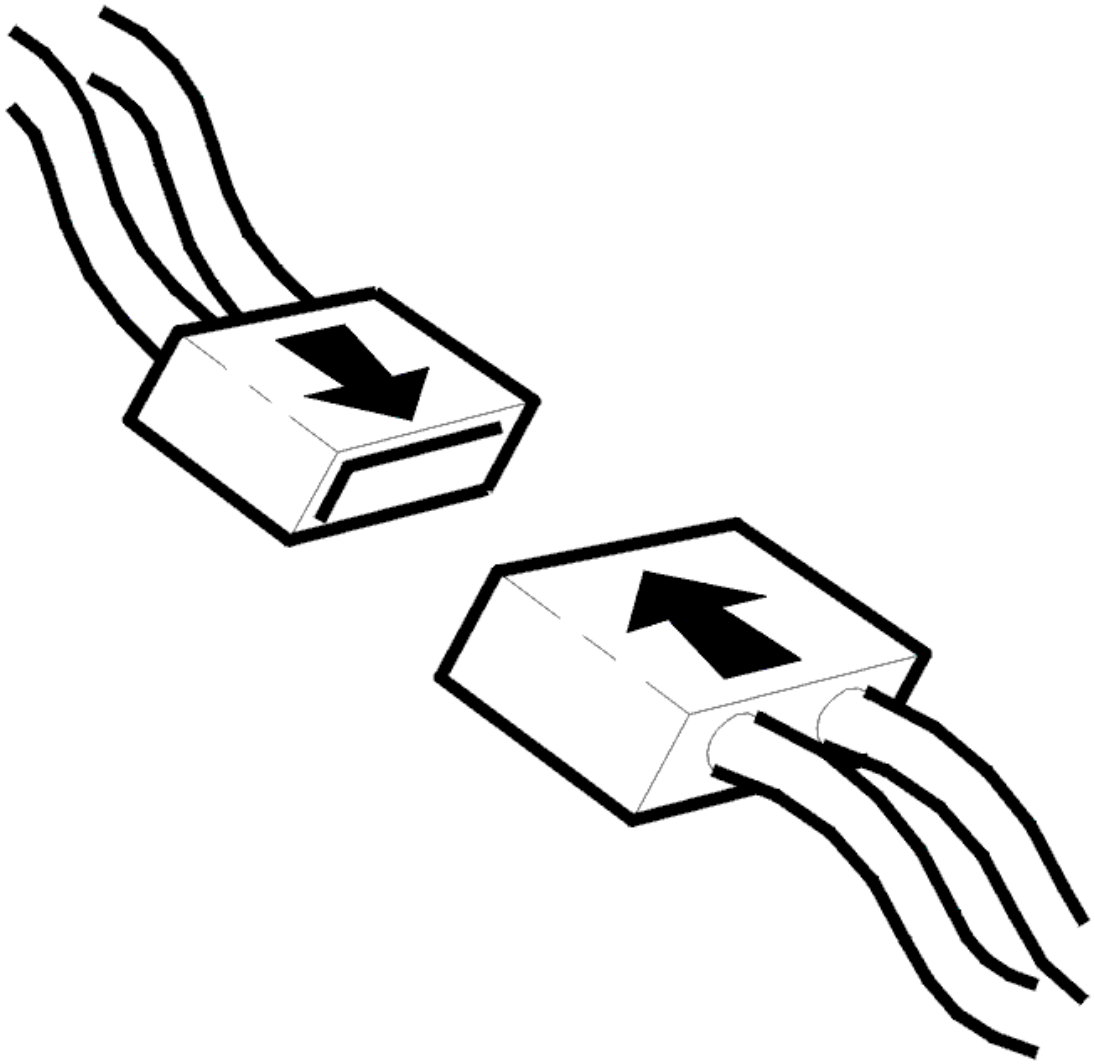

Fig. 374: Connecting Connector
Courtesy of VOLVO CARS CORPORATION

- Ignition off
- Reconnect connectors, reinstall components etc.
- Start the engine. Allow the engine to idle.

  The engine must fire on all cylinders.

Fig. 375: Identifying Ignition Coil
Courtesy of VOLVO CARS CORPORATION

Is the engine idling evenly?

- **YES**

  VERIFIED: Troubleshooting has been completed.

- **NO**

  Refer to **INFORMATION**

INFORMATION

FAULT-TRACING INFORMATION

The fault should have been detected and remedied. As this is not the case fault-tracing has failed.

Exit fault-tracing for this diagnostic trouble code (DTC) or make another attempt.

ECM-3300: IGNITION COIL CYLINDER 1, SIGNAL. SIGNAL TOO LOW. INTERMITTENT FAULT (B5254T2; 2003-2004)

DIAGNOSTIC TROUBLE CODE (DTC) INFORMATION

see **DIAGNOSTIC TROUBLE CODE (DTC) INFORMATION**

SIGNAL TOO LOW. INTERMITTENT FAULT

CHECKING CABLES

Check signal cable between ignition coil #1 and control module:

- #A31 (#A31) (ECM 3300)
- #A30 (#A30) (ECM 3310)
- #A50 (#50) (ECM 3320)
- #A52 (#52) (ECM 3330)
- #A51 (#A51) (ECM 3340)

for an intermittent short-circuit to ground according to **SHORT-CIRCUIT TO GROUND, PERMANENT FAULTS** .

Other information

- Connecting the breakout box/accessing the control module, see **CONNECTING THE BREAKOUT BOX** .
- To access/replace the ignition coil, see **REPLACING IGNITION COILS** .
- For 5 cylinder turbocharged engines -2004, see **SIGNAL DESCRIPTION**
- For 5 cylinder turbocharged engines 2005-, see **SIGNAL SPECIFICATION** .

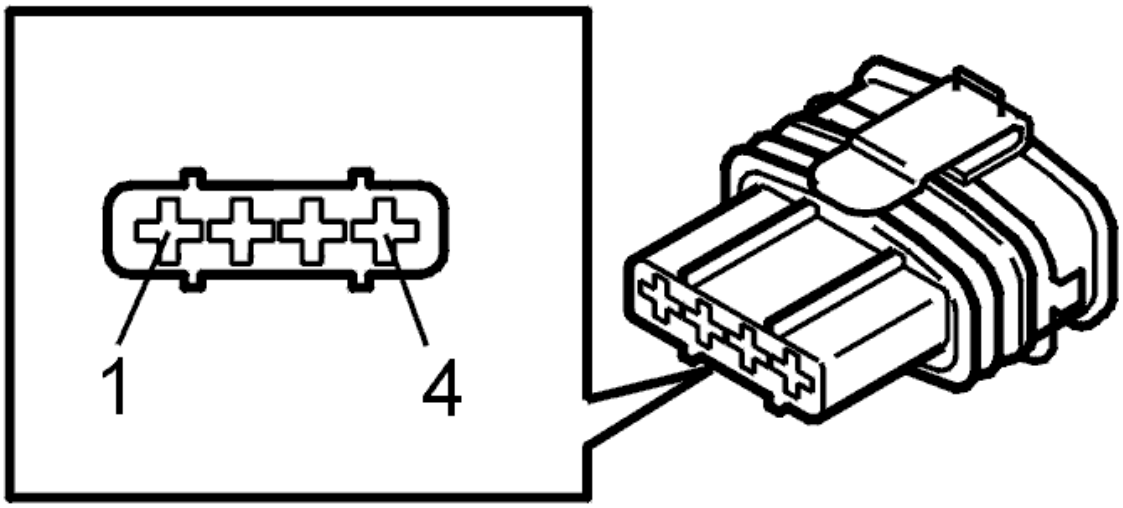

Fig. 376: Identifying Connector Terminals
Courtesy of VOLVO CARS CORPORATION

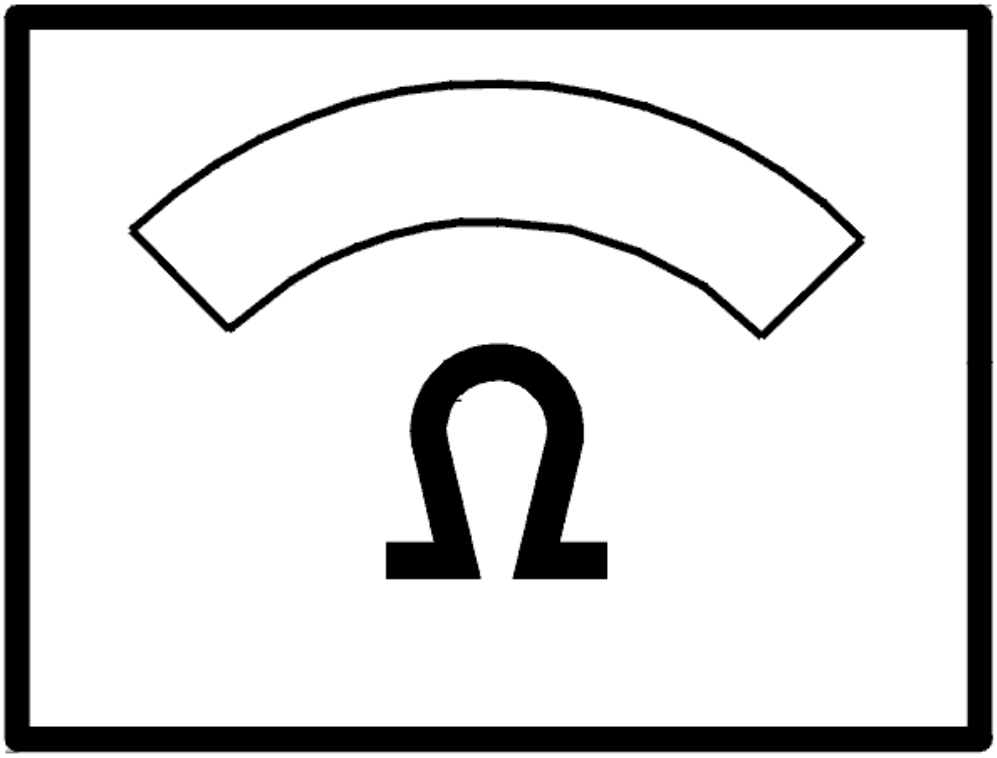

Fig. 377: Identifying Ohm Meter
Courtesy of VOLVO CARS CORPORATION

Fig. 378: Identifying Ignition Coil
Courtesy of VOLVO CARS CORPORATION

- **Continue**

  Refer to **INFORMATION**

INFORMATION

FAULT-TRACING INFORMATION

If the fault is intermittent, do not verify fault-tracing if the fault does not recur.

It is possible to view the information again, or leave fault-tracing for this diagnostic trouble code (DTC).

ECM-3300: IGNITION COIL CYLINDER 1, SIGNAL. SIGNAL TOO LOW. INTERMITTENT FAULT (B6294T; 2003-2004)

DIAGNOSTIC TROUBLE CODE (DTC) INFORMATION

see **DIAGNOSTIC TROUBLE CODE (DTC) INFORMATION**

SIGNAL TOO LOW. INTERMITTENT FAULT

CHECKING CABLES

Check signal cable between ignition coil #1 and control module:

- #A31 (#A31) (ECM 3300)
- #A50 (#A50) (ECM 3310)
- #A52 (#A52) (ECM 3320)
- #A49 (#A49) (ECM 3330)
- #A30 (#A30) (ECM 3340)
- #A51 (#A51) (ECM 3350)

for an intermittent short-circuit to ground according to **SHORT-CIRCUIT TO GROUND, PERMANENT FAULTS** .

Other information

- Connecting the breakout box/accessing the control module, see **CONNECTING THE BREAKOUT BOX** .
- To access/replace the ignition coil, see **REPLACING IGNITION COIL** .
- For 6 cylinder engines -2004, see **SIGNAL SPECIFICATION**
- For 6 cylinder engines 2005-, see **SIGNAL SPECIFICATION** .

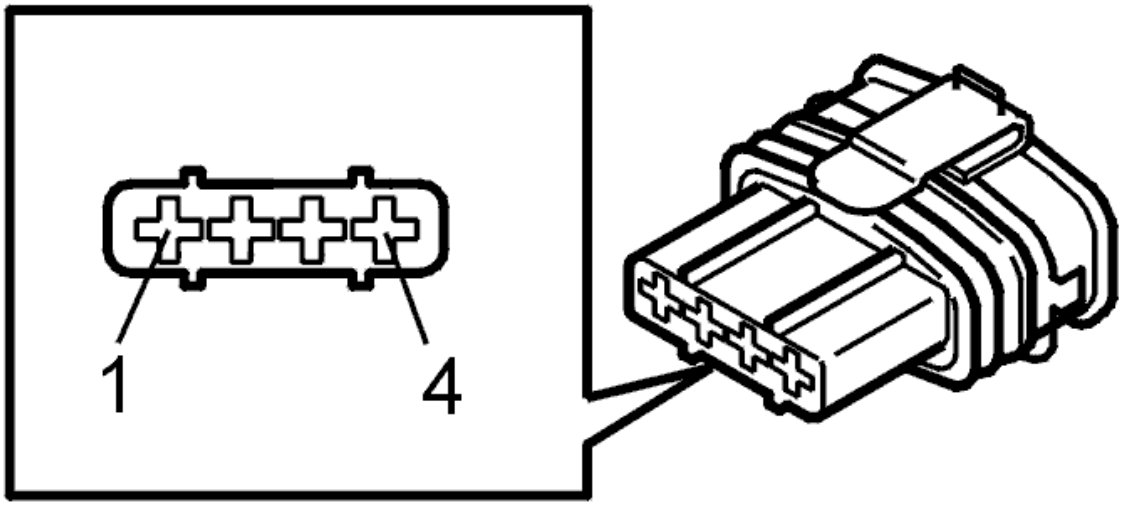

Fig. 379: Identifying Connector Terminals
Courtesy of VOLVO CARS CORPORATION

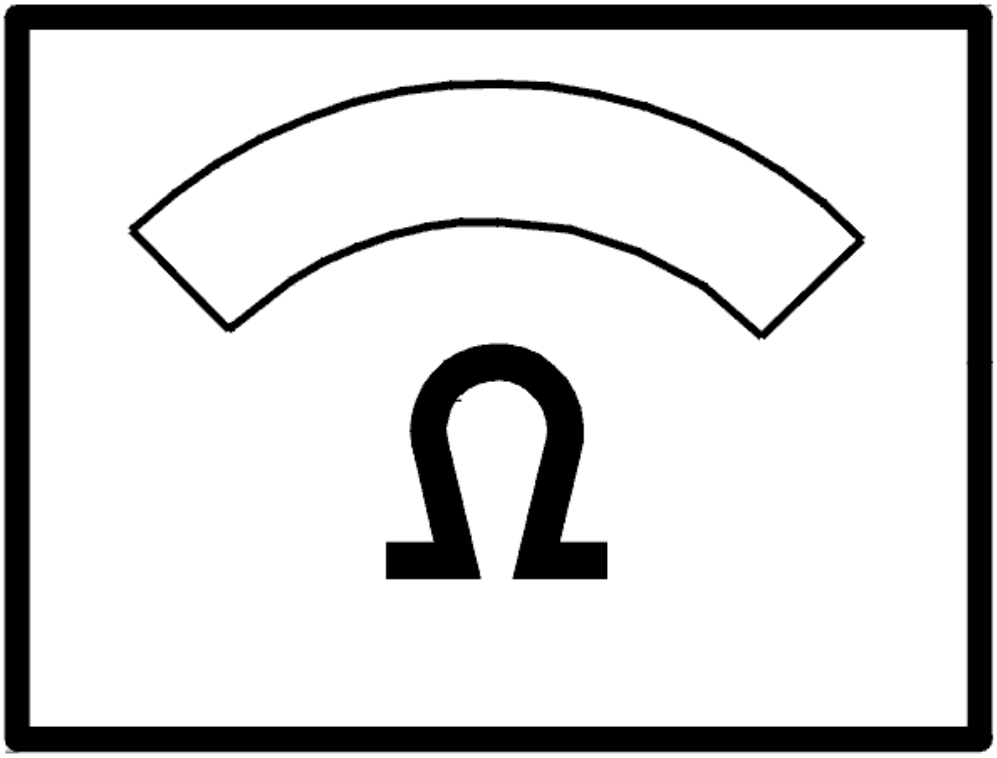

Fig. 380: Identifying Ohm Meter
Courtesy of VOLVO CARS CORPORATION

Fig. 381: Identifying Ignition Coil
Courtesy of VOLVO CARS CORPORATION

- **Continue**

  Refer to **INFORMATION**

INFORMATION

FAULT-TRACING INFORMATION

If the fault is intermittent, do not verify fault-tracing if the fault does not recur.

It is possible to view the information again, or leave fault-tracing for this diagnostic trouble code (DTC).

ECM-3300: IGNITION COIL CYLINDER 1, SIGNAL. SIGNAL TOO LOW. PERMANENT FAULT (B5254T2; 2003-2004)

DIAGNOSTIC TROUBLE CODE (DTC) INFORMATION

see **DIAGNOSTIC TROUBLE CODE (DTC) INFORMATION**

SIGNAL TOO LOW. PERMANENT FAULT

CHECKING WIRING AND COMPONENTS

Check signal cable between ignition coil #1 and control module:

- #A31 (#A31) (ECM 3300)
- #A30 (#A30) (ECM 3310)
- #A50 (#A50) (ECM 3320)
- #A52 (#A52) (ECM 3330)
- #A51 (#A51) (ECM 3340)

for a short-circuit to ground according to **SHORT-CIRCUIT TO GROUND, PERMANENT FAULTS** .

Remedy as necessary.

Other information

- Connecting the breakout box/accessing the control module, see **CONNECTING THE BREAKOUT BOX** .
- To access/replace the ignition coil, see **REPLACING IGNITION COILS** .
- For 5 cylinder turbocharged engines -2004, see **SIGNAL DESCRIPTION**
- For 5 cylinder turbocharged engines 2005-, see **SIGNAL SPECIFICATION** .

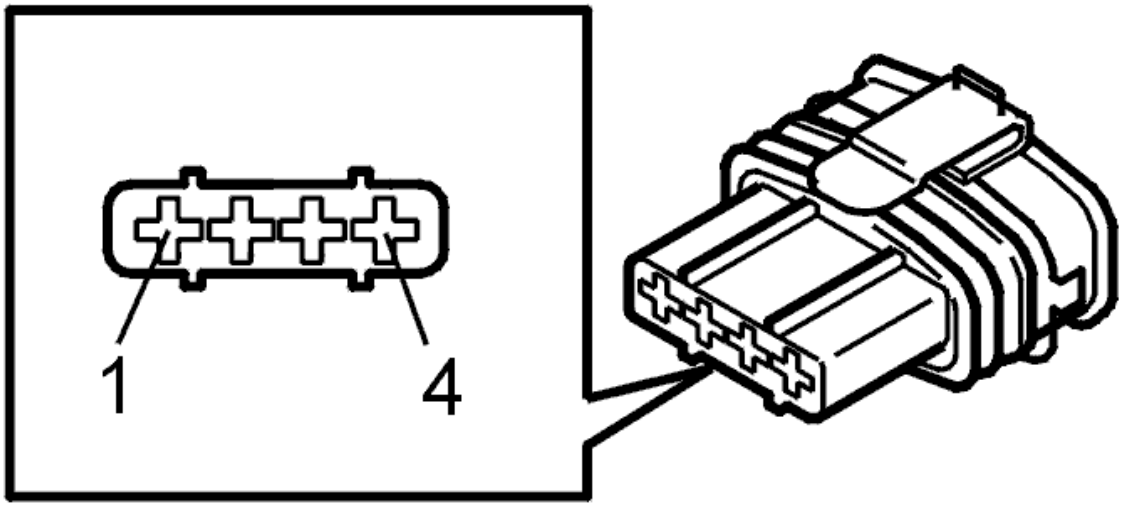

Fig. 382: Identifying Connector Terminals
Courtesy of VOLVO CARS CORPORATION

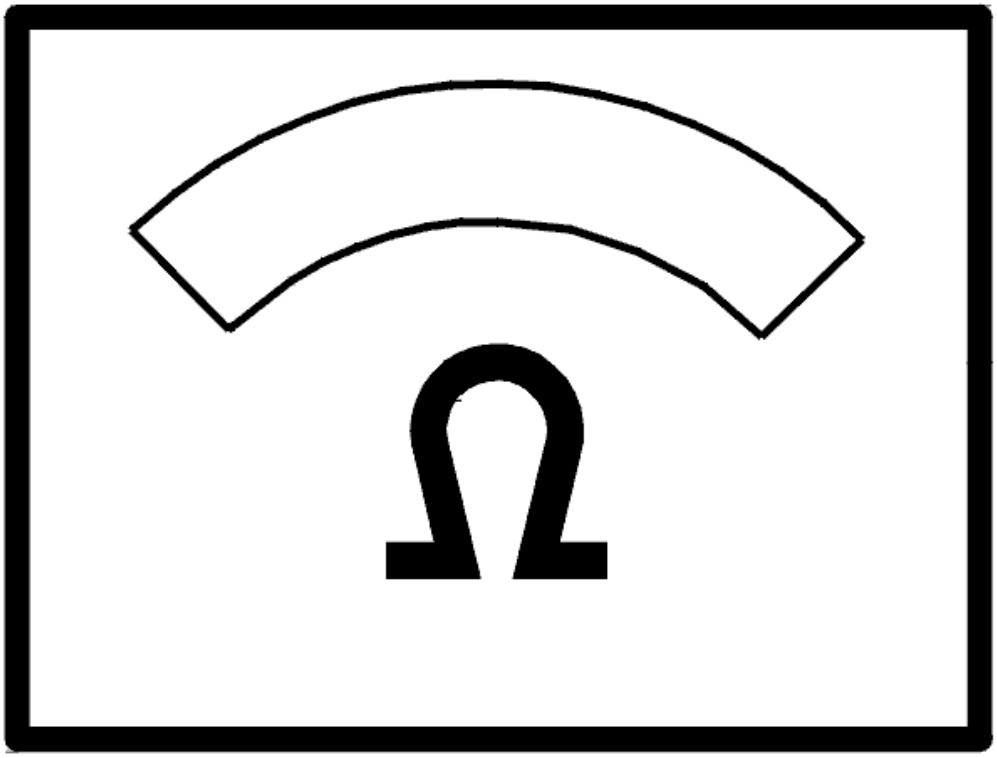

Fig. 383: Identifying Ohm Meter
Courtesy of VOLVO CARS CORPORATION

Fig. 384: Identifying Ignition Coil
Courtesy of VOLVO CARS CORPORATION

- **Continue**

  Refer to **VERIFICATION**

VERIFICATION

VERIFICATION

HINT: After carrying out the repair, check that the fault has been remedied.

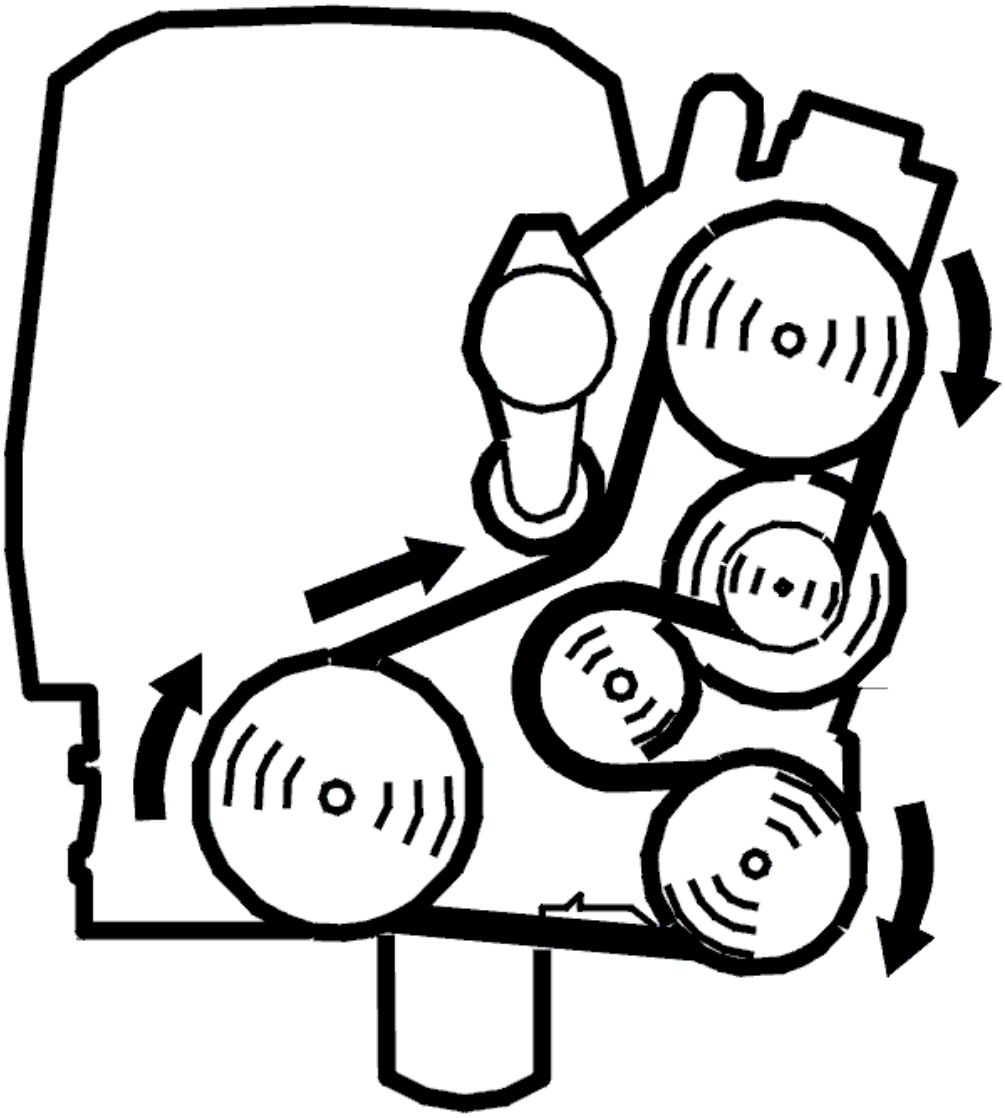

Fig. 385: Belt Routing / Engine Idling - Volvo
Courtesy of VOLVO CARS CORPORATION

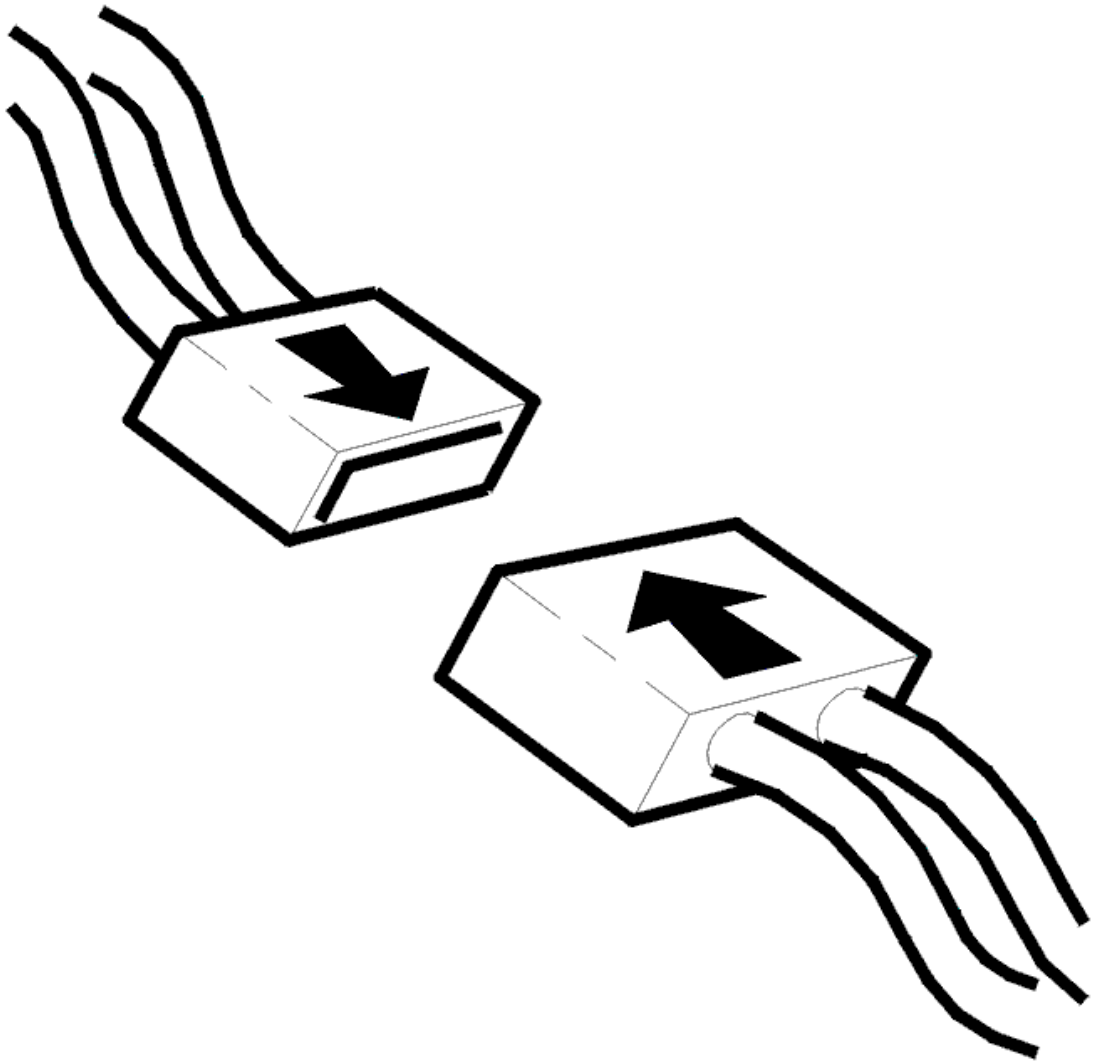

Fig. 386: Connecting Connector
Courtesy of VOLVO CARS CORPORATION

- Ignition off
- Reconnect connectors, reinstall components etc.
- Start the engine. Allow the engine to idle.

  The engine must fire on all cylinders.

Fig. 387: Identifying Ignition Coil
Courtesy of VOLVO CARS CORPORATION

Is the engine idling evenly?

- **YES**

  VERIFIED: Troubleshooting has been completed.

- **NO**

  Refer to **INFORMATION**

INFORMATION

FAULT-TRACING INFORMATION

The fault should have been detected and remedied. As this is not the case fault-tracing has failed.

Exit fault-tracing for this diagnostic trouble code (DTC) or make another attempt.

ECM-3300: IGNITION COIL CYLINDER 1, SIGNAL. SIGNAL TOO LOW. PERMANENT FAULT (B6294T; 2003-2004)

DIAGNOSTIC TROUBLE CODE (DTC) INFORMATION

see **DIAGNOSTIC TROUBLE CODE (DTC) INFORMATION**

SIGNAL TOO LOW. PERMANENT FAULT

CHECKING WIRING AND COMPONENTS

Check signal cable between ignition coil #1 and control module:

- #A31 (#A31) (ECM 3300)
- #A50 (#A50) (ECM 3310)
- #A52 (#A52) (ECM 3320)
- #A49 (#A49) (ECM 3330)
- #A30 (#A30) (ECM 3340)
- #A51 (#A51) (ECM 3350)

for a short-circuit to ground according to **SHORT-CIRCUIT TO GROUND, PERMANENT FAULTS** .

Remedy as necessary.

Other information

- Connecting the breakout box/accessing the control module, see **CONNECTING THE BREAKOUT BOX** .
- To access/replace the ignition coil, see **REPLACING IGNITION COIL** .
- For 6 cylinder engines -2004, see **SIGNAL SPECIFICATION**
- For 6 cylinder engines 2005-, see **SIGNAL SPECIFICATION** .

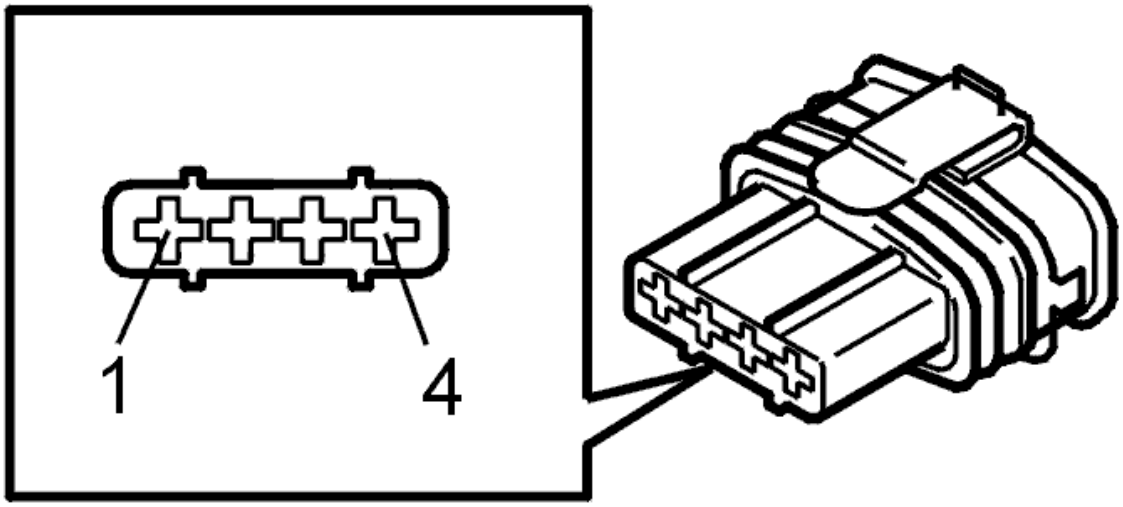

Fig. 388: Identifying Connector Terminals
Courtesy of VOLVO CARS CORPORATION

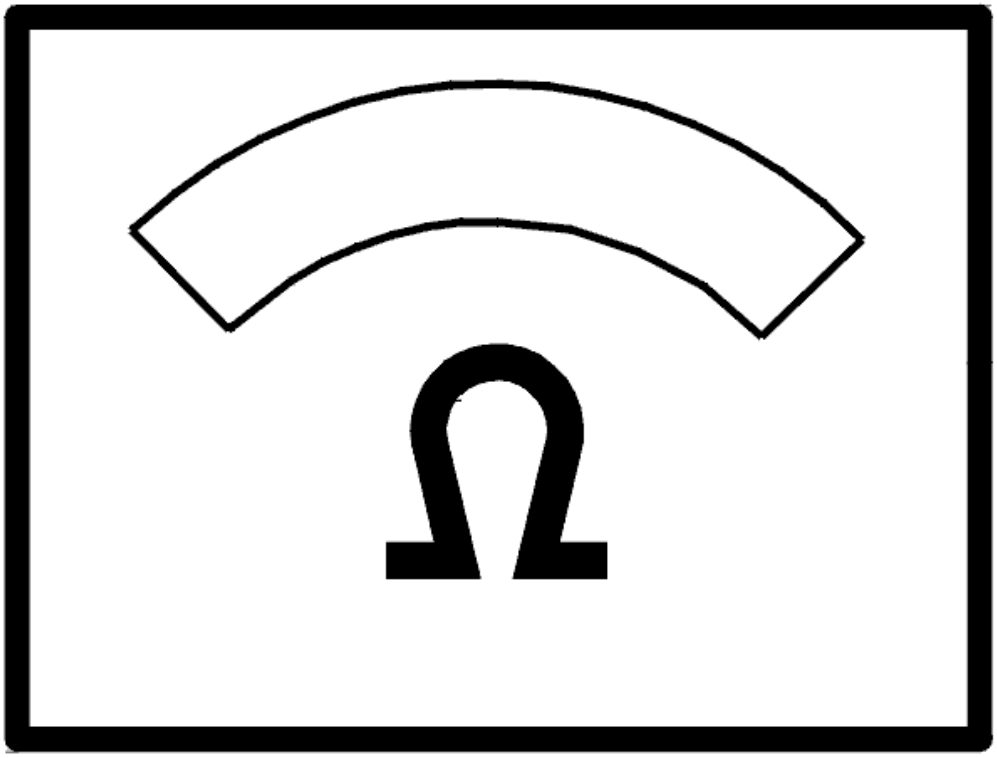

Fig. 389: Identifying Ohm Meter
Courtesy of VOLVO CARS CORPORATION

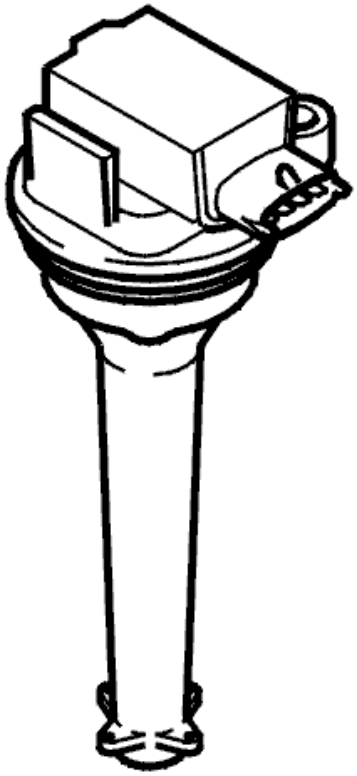

Fig. 390: Identifying Ignition Coil
Courtesy of VOLVO CARS CORPORATION

- **Continue**

  Refer to **VERIFICATION**

VERIFICATION

VERIFICATION

HINT: After carrying out the repair, check that the fault has been remedied.

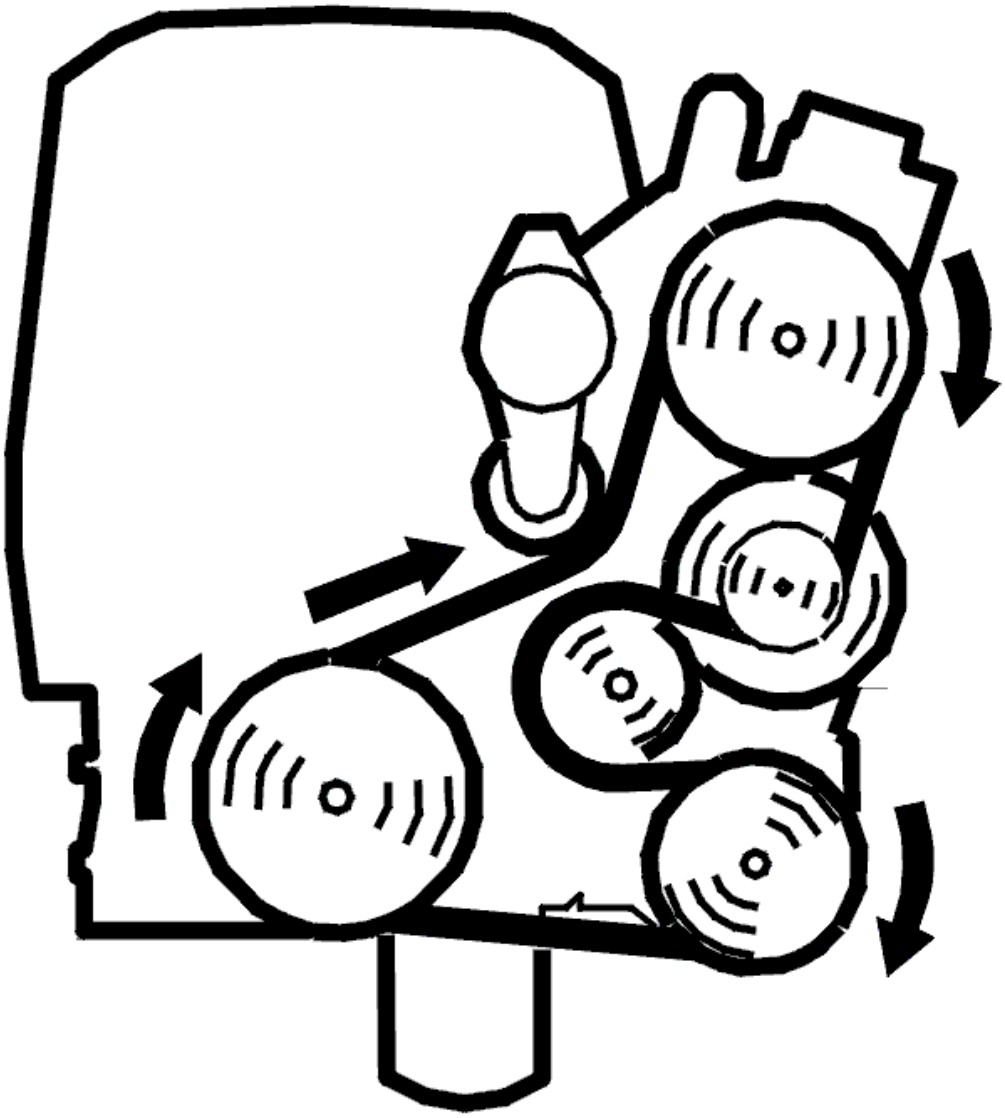

Fig. 391: Belt Routing / Engine Idling - Volvo
Courtesy of VOLVO CARS CORPORATION

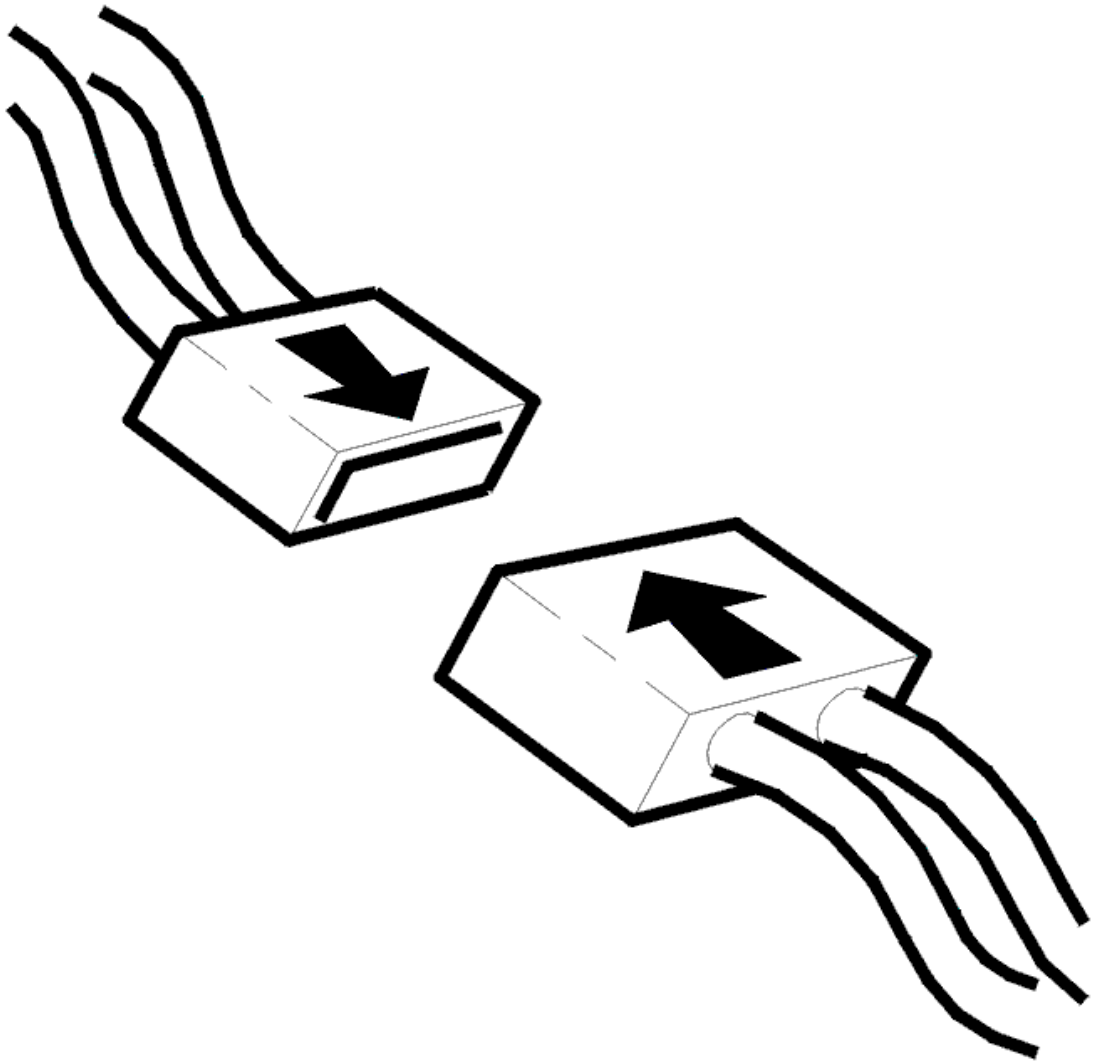

Fig. 392: Connecting Connector
Courtesy of VOLVO CARS CORPORATION

- Ignition off
- Reconnect connectors, reinstall components etc.
- Start the engine. Allow the engine to idle.

  The engine must fire on all cylinders.

Fig. 393: Identifying Ignition Coil
Courtesy of VOLVO CARS CORPORATION

Is the engine idling evenly?

- **YES**

  VERIFIED: Troubleshooting has been completed.

- **NO**

  Refer to **INFORMATION**

INFORMATION

FAULT-TRACING INFORMATION

The fault should have been detected and remedied. As this is not the case fault-tracing has failed.

Exit fault-tracing for this diagnostic trouble code (DTC) or make another attempt.

ECM-330B: ENGINE SPEED (RPM) SENSOR. SIGNAL MISSING (B5254T2; 2005-2007)

SIGNAL MISSING

CHECKING CONNECTORS AND WIRING

Fig. 394: Identifying Ignition In Off Position
Courtesy of VOLVO CARS CORPORATION

- Ignition off.

  Check the engine speed (RPM) sensor connector. Check for contact resistance and oxidation.

  Check the signal cable between:

  - The engine speed (RPM) sensor terminal #1 and Engine control module (ECM) terminal #A48 (#A48).
  - The engine speed (RPM) sensor terminal #2 and Engine control module (ECM) terminal #A66 (#B6).

  Check the signal line for open circuit, short-circuit to ground and short-circuit to voltage.

  Check the carrier plate.

  Remedy as necessary.

  Other information

  - see **CONNECTING THE BREAKOUT BOX**
  - For 5 cylinder turbocharged engines -2004, see **SIGNAL DESCRIPTION**
  - For 5 cylinder turbocharged engines 2005-, see **SIGNAL SPECIFICATION** .
  - see **REPLACING THE ENGINE SPEED (RPM) SENSOR**
  - see **CHECKING WIRING AND TERMINALS**

Fig. 395: Identifying Engine Speed (RPM) Sensor Terminals
Courtesy of VOLVO CARS CORPORATION

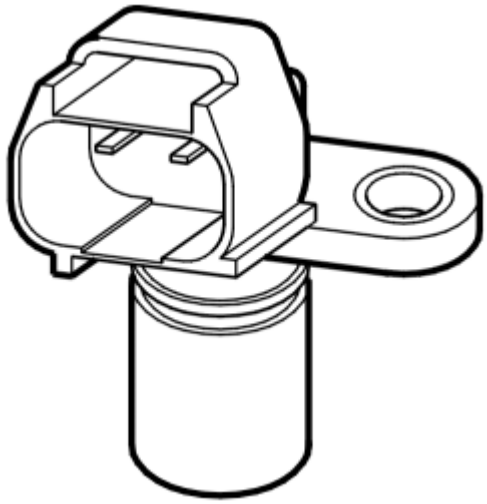

Fig. 396: Identifying Engine Speed (RPM) Sensor
Courtesy of VOLVO CARS CORPORATION

- **Continue**

  Refer to **VERIFICATION**

VERIFICATION

VERIFICATION

HINT: After carrying out the repair, check that the fault has been remedied.

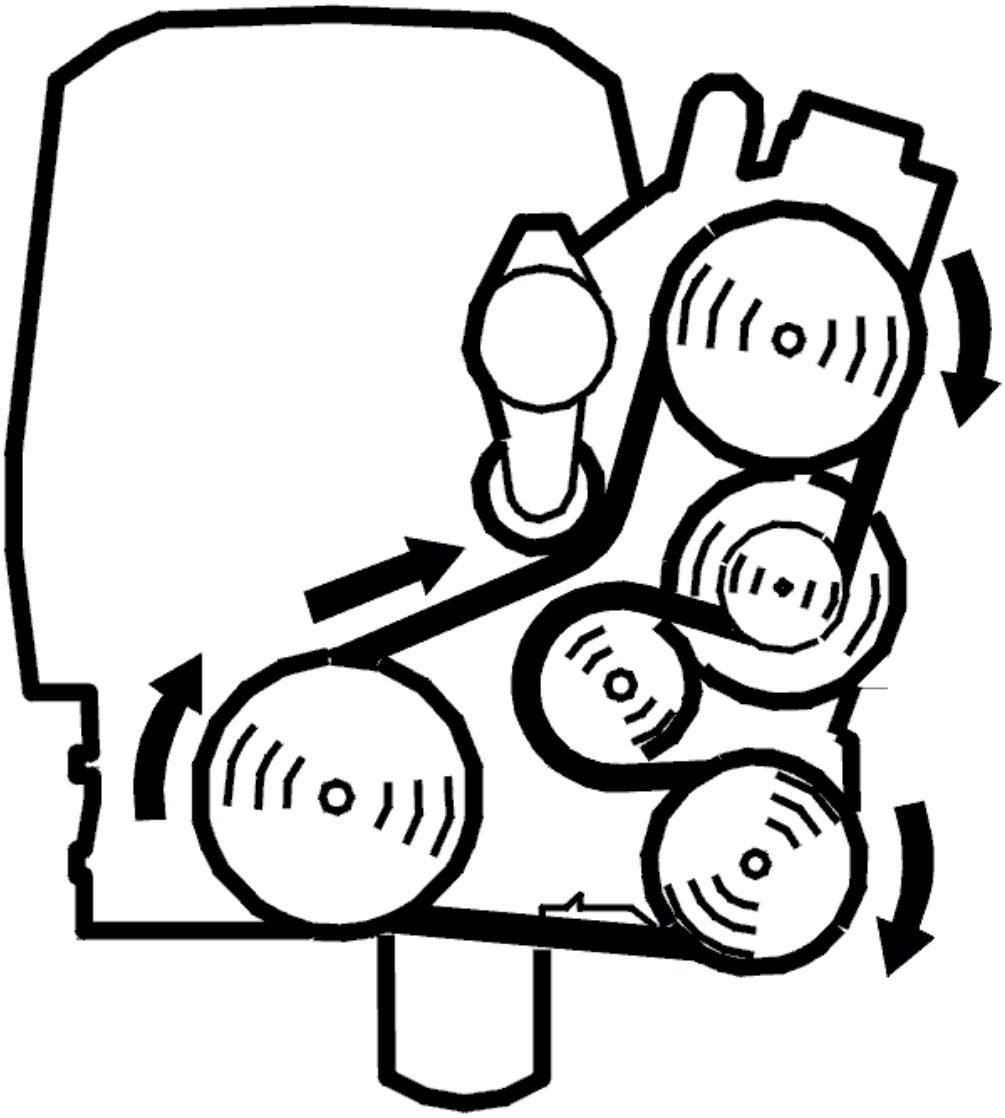

Fig. 397: Belt Routing / Engine Idling - Volvo
Courtesy of VOLVO CARS CORPORATION

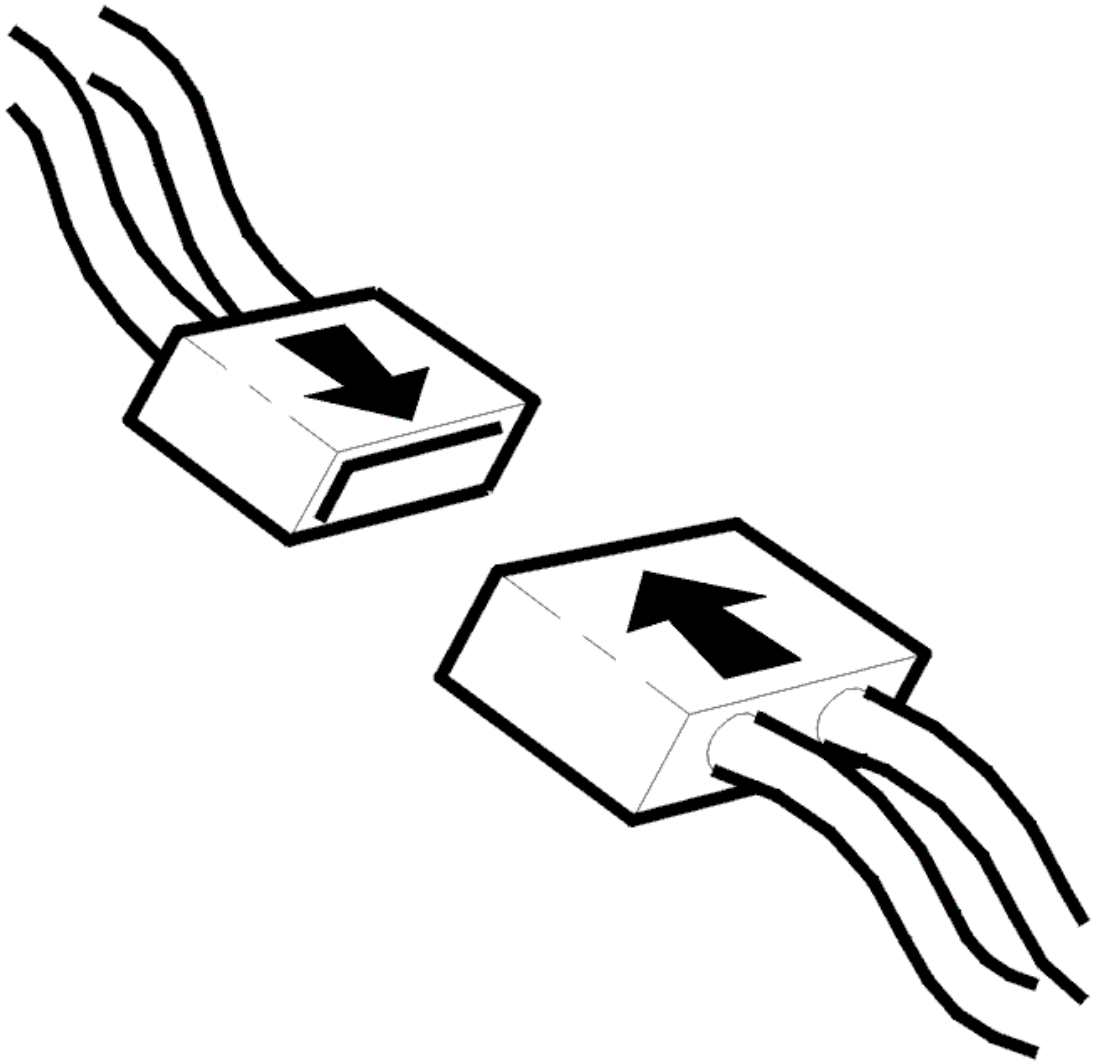

Fig. 398: Connecting Connector
Courtesy of VOLVO CARS CORPORATION

- Ignition off
- Reconnect the connectors, reinstall components etc.
- Start the engine
- Read off the diagnostic status and fault status for the diagnostic trouble code (DTC) by selecting the relevant diagnostic trouble code (DTC) from the list.

  Increase the engine speed a number of times until the diagnostic is "Complete".

  Check the fault status for the diagnostic trouble code (DTC) when the diagnostic is "Complete". If the function is correct, the fault status must be "No fault found" when the diagnostic is complete.

  HINT: In some cases several functions of the component will be diagnosed. The affects the amount

of time taken to run the diagnostic.

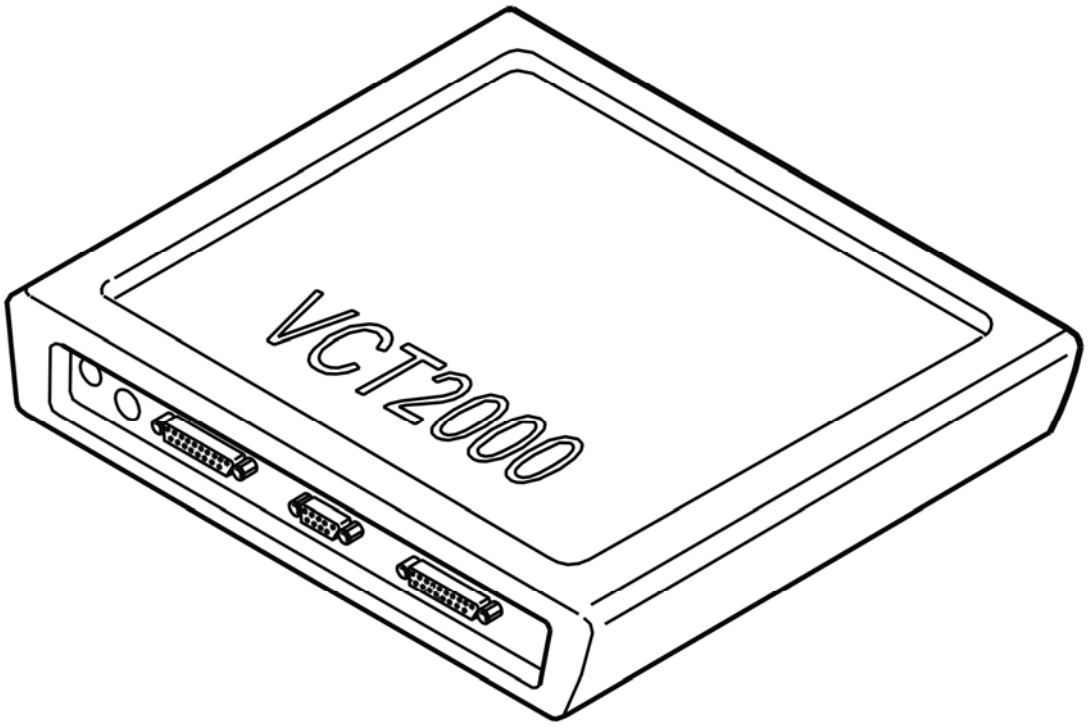

Fig. 399: Identifying VCT2000 Diagnostic Tool Symbol In VIDA
Courtesy of VOLVO CARS CORPORATION

Is the function OK?

- **YES**

  VERIFIED: Troubleshooting has been completed.

- **NO**

  Refer to **INFORMATION**

INFORMATION

FAULT-TRACING INFORMATION

The fault should have been detected and remedied. As this is not the case fault-tracing has failed.

Exit fault-tracing for this diagnostic trouble code (DTC) or make another attempt.

DIAGNOSTIC TROUBLE CODE (DTC) INFORMATION ECM-330B

Condition

If there is no signal from the engine speed (RPM) sensor or if its signal is lower than the engine speed signal from the camshaft position (CMP) sensor, the engine control module (ECM) interprets this as a fault and the diagnostic trouble code (DTC) is stored.

The diagnostic trouble code (DTC) can be diagnosed when the engine is running.

Substitute Value

The engine control module (ECM) uses the signal from the camshaft position (CMP) sensor if the camshaft position (CMP) sensor has been adapted.

Possible Source

- Open-circuit in the signal cable or ground lead
- Short-circuit to ground or supply voltage in the signal cable
- Contact resistance in the terminals
- Damaged engine speed (RPM) sensor
- Damaged carrier plate.

Fault symptom[s]

- The engine does not start
- The engine stops.

ECM-330B: ENGINE SPEED (RPM) SENSOR. SIGNAL MISSING (B6294T; 2005-2006)

SIGNAL MISSING

see **SIGNAL MISSING**

DIAGNOSTIC TROUBLE CODE (DTC) INFORMATION ECM-330B

see **DIAGNOSTIC TROUBLE CODE (DTC) INFORMATION ECM-330B**

ECM-3400: CAMSHAFT POSITION (CMP) SENSOR, INTAKE. FAULTY SIGNAL (B5254T2; 2005-2007)

DIAGNOSTIC TROUBLE CODE (DTC) INFORMATION

Condition

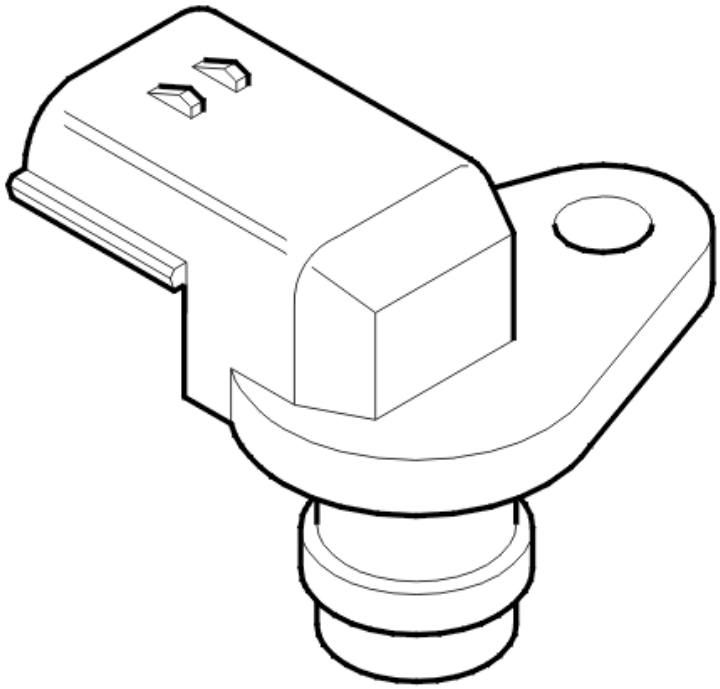

Fig. 400: Detecting Camshaft Flanks On Sensor
Courtesy of VOLVO CARS CORPORATION

Diagnostic trouble code (DTC) ECM-3400 covers camshaft position (CMP) sensor, intake.

Diagnostic trouble code (DTC) ECM-3410 covers camshaft position (CMP) sensor, exhaust.

The engine control module (ECM) checks the pulse width modulation (PWM) signal from the camshaft position (CMP) sensor.

The diagnostic trouble code (DTC) is stored if the signal from the camshaft position (CMP) sensor is missing sporadically. This is interpreted by the engine control module (ECM) as a fault. The diagnostic trouble code (DTC) can be diagnosed when the engine is running.

Substitute Value

- None.

Possible Source

- The camshaft position (CMP) sensor is in the wrong position
- Damaged camshaft position (CMP) sensor
- Loose connections.

Fault symptom[s]

- The engine is difficult to start.

FAULTY SIGNAL OR SIGNAL MISSING

CHECKING THE STATUS

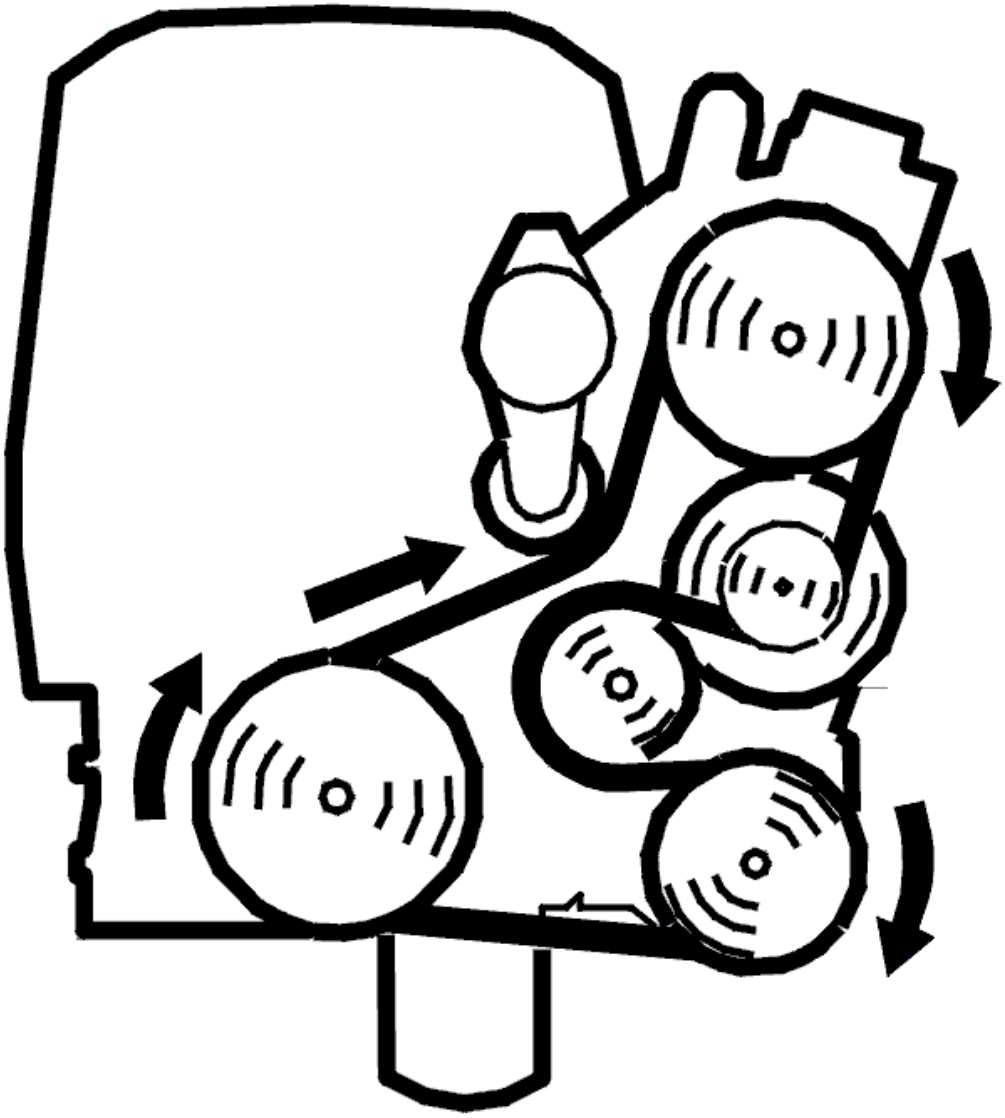

Fig. 401: Belt Routing / Engine Idling - Volvo
Courtesy of VOLVO CARS CORPORATION

- Start the engine.

  Read off the diagnostic status and fault status for the diagnostic trouble code (DTC) by selecting the relevant diagnostic trouble code (DTC) from the list.

Increase the engine speed a number of times until the diagnostic is "Complete".

Check whether the fault is permanent or intermittent. Read off the diagnostic trouble code (DTC) fault status when the diagnostic status is "Completed".

HINT: In some cases several functions of the component will be diagnosed. This affects the amount of time taken to run the diagnostic.

The fault is permanent if the fault status is "Fault found". If the fault status is "No fault found" the fault is intermittent and not presently active.

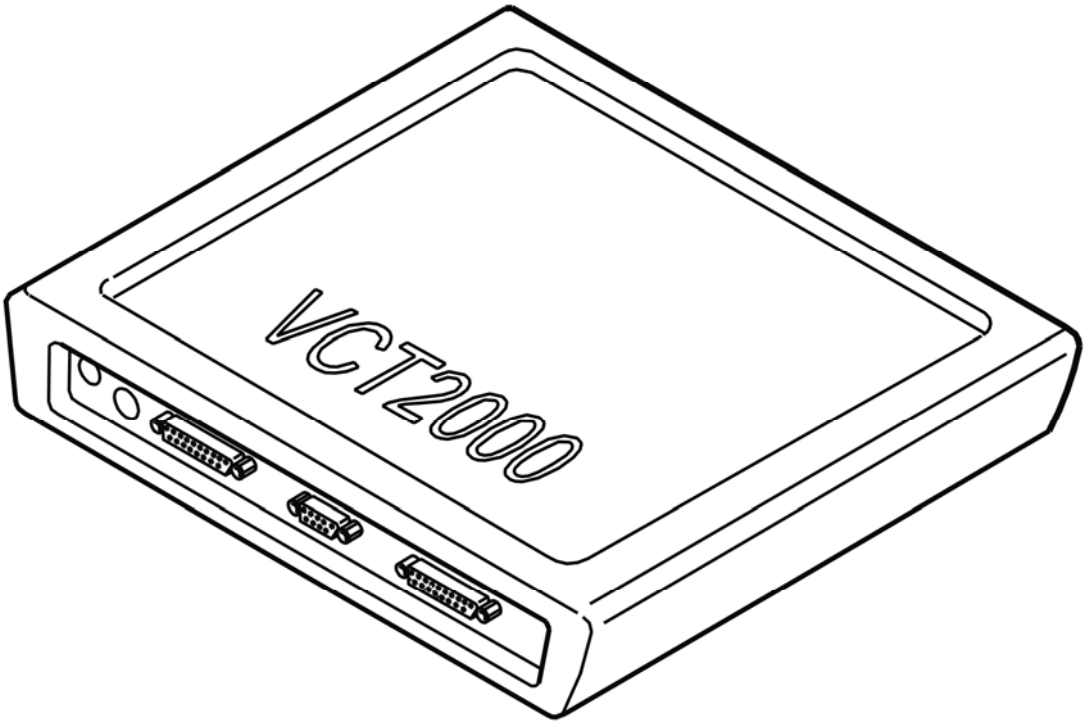

Fig. 402: Identifying VCT2000 Diagnostic Tool Symbol In VIDA
Courtesy of VOLVO CARS CORPORATION

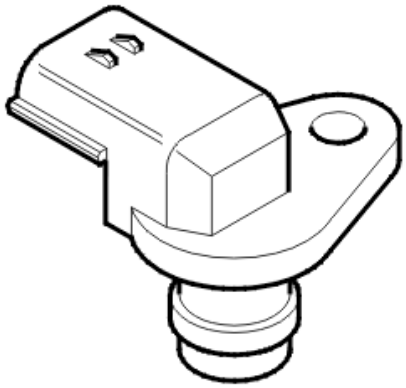

Fig. 403: Camshaft Position Sensor
Courtesy of VOLVO CARS CORPORATION

- **Continue**

  Refer to **CHECKING COMPONENTS AND WIRING**

CHECKING COMPONENTS AND WIRING

- Check the connector for the camshaft position (CMP) sensor. Check for contact resistance and oxidation.

  Check that the camshaft position (CMP) sensor is correctly installed. Check that neither the camshaft position (CMP) sensor nor the housing is damaged. Damage may affect the position of the sensor in relation to the camshaft rotor.

  HINT: This diagnostic trouble code (DTC) may be caused by a faulty camshaft position (CMP) sensor.

  Remedy as necessary.

  Other information

  - see **CONNECTING THE BREAKOUT BOX**
  - For 5 cylinder turbocharged engines -2004, see **SIGNAL DESCRIPTION**
  - For 5 cylinder turbocharged engines 2005-, see **SIGNAL SPECIFICATION** .
  - see **POSITION SENSOR CAMSHAFT, REPLACING**
  - see **CHECKING WIRING AND TERMINALS**

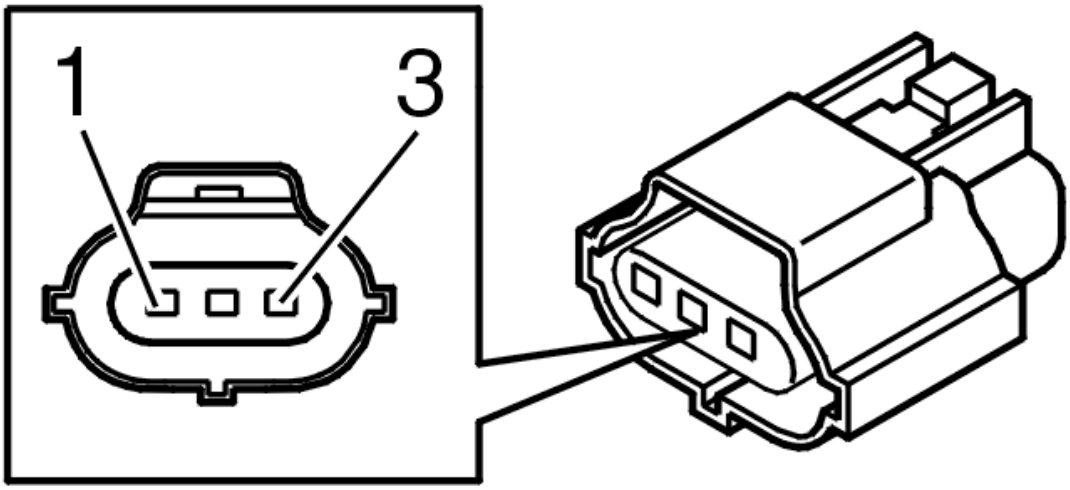

Fig. 404: Identifying 3-Bit Connector
Courtesy of VOLVO CARS CORPORATION

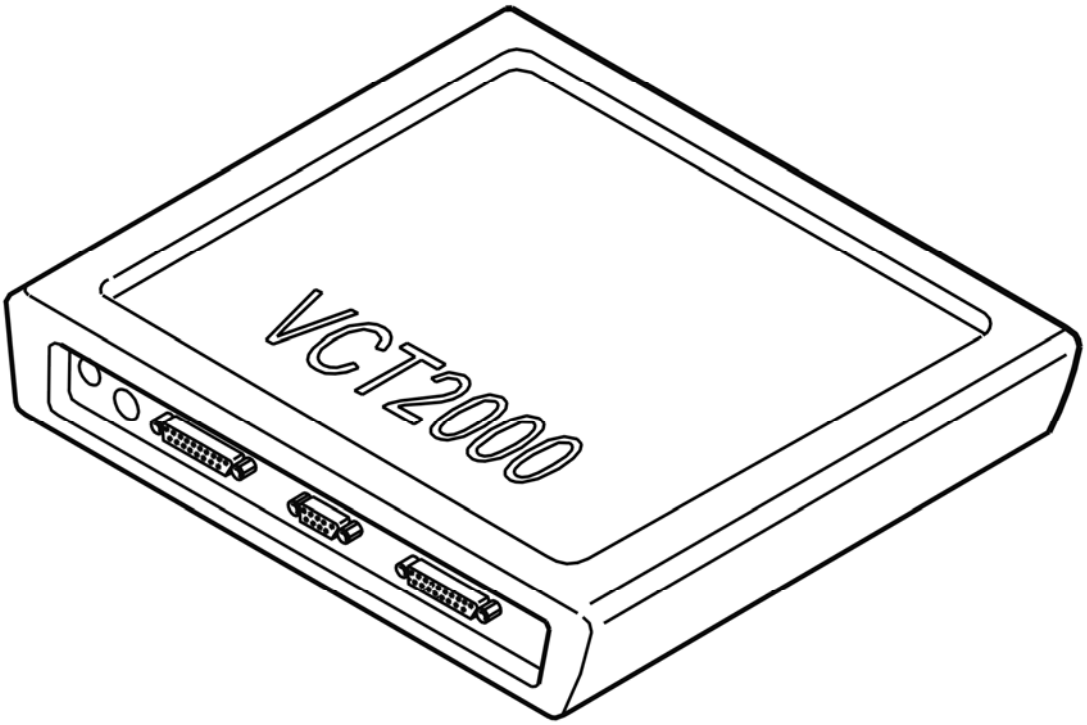

Fig. 405: Identifying VCT2000 Diagnostic Tool Symbol In VIDA
Courtesy of VOLVO CARS CORPORATION

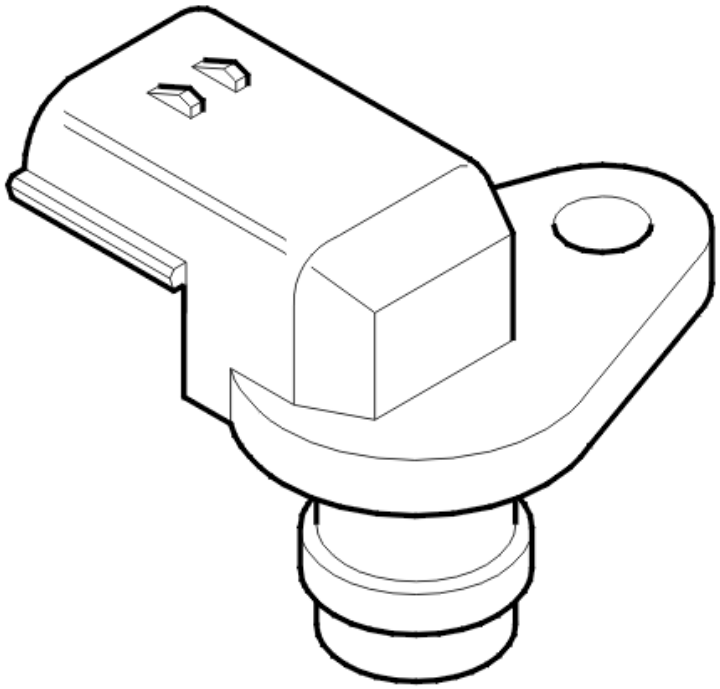

Fig. 406: Detecting Camshaft Flanks On Sensor
Courtesy of VOLVO CARS CORPORATION

- **Continue**

  Refer to **VERIFICATION**

VERIFICATION

VERIFICATION

HINT: After carrying out the repair, check that the fault has been remedied.

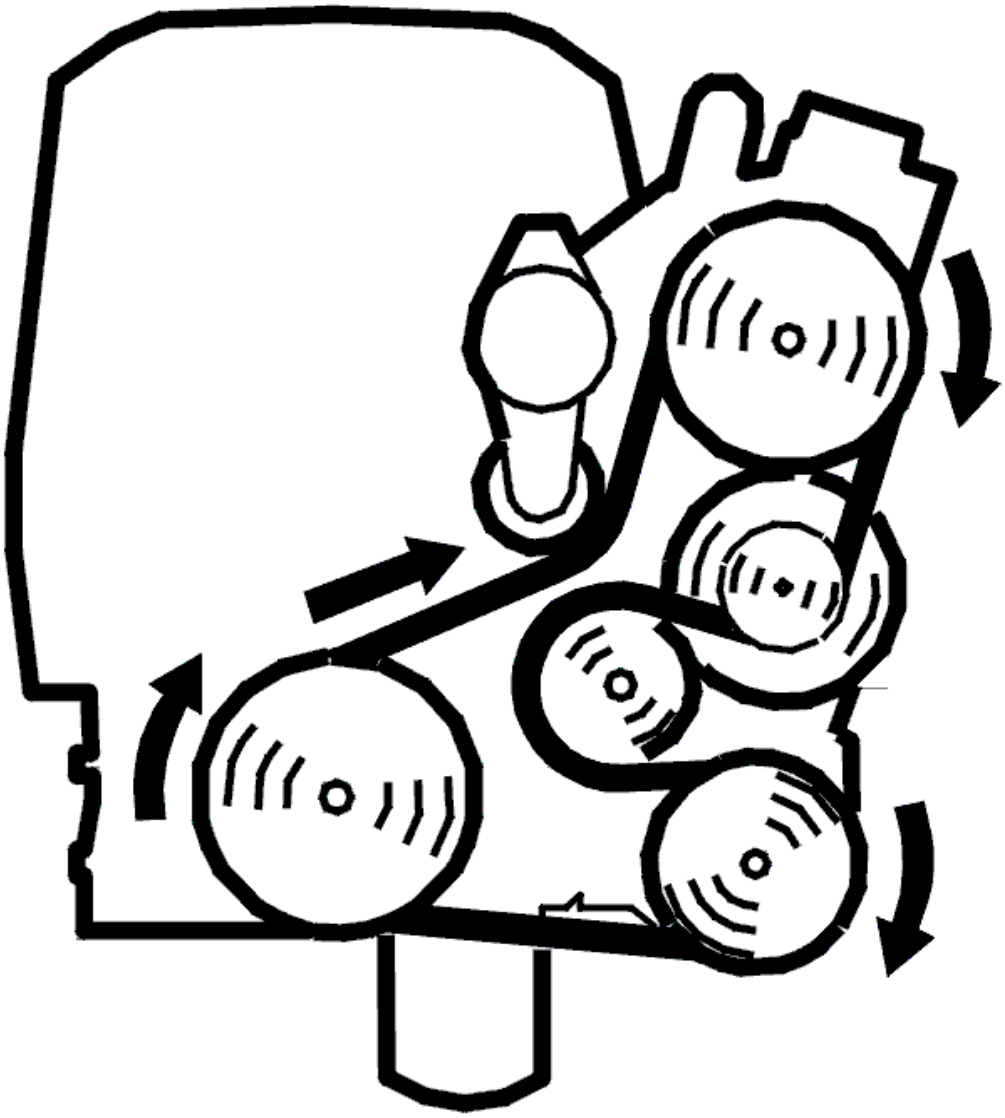

Fig. 407: Belt Routing / Engine Idling - Volvo
Courtesy of VOLVO CARS CORPORATION

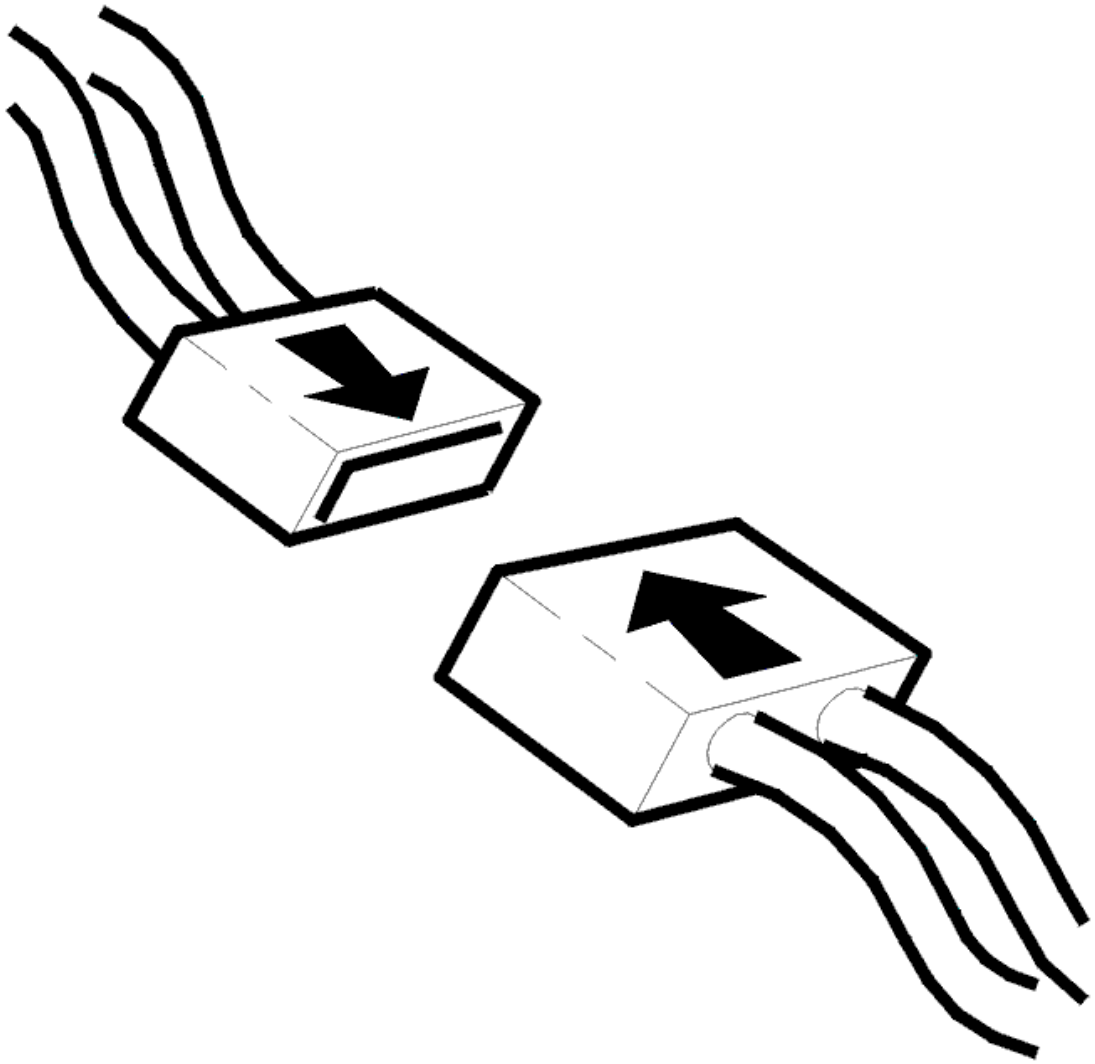

Fig. 408: Connecting Connector
Courtesy of VOLVO CARS CORPORATION

- Ignition off
- Reconnect the connectors, reinstall components etc.
- Start the engine
- Read off the diagnostic status and fault status for the diagnostic trouble code (DTC) by selecting the relevant diagnostic trouble code (DTC) from the list.

  Increase the engine speed a number of times until the diagnostic is "Complete".

  Check the fault status for the diagnostic trouble code (DTC) when the diagnostic is "Complete". If the function is correct, the fault status must be "No fault found" when the diagnostic is complete.

  HINT: In some cases several functions of the component will be diagnosed. The affects the amount

of time taken to run the diagnostic.

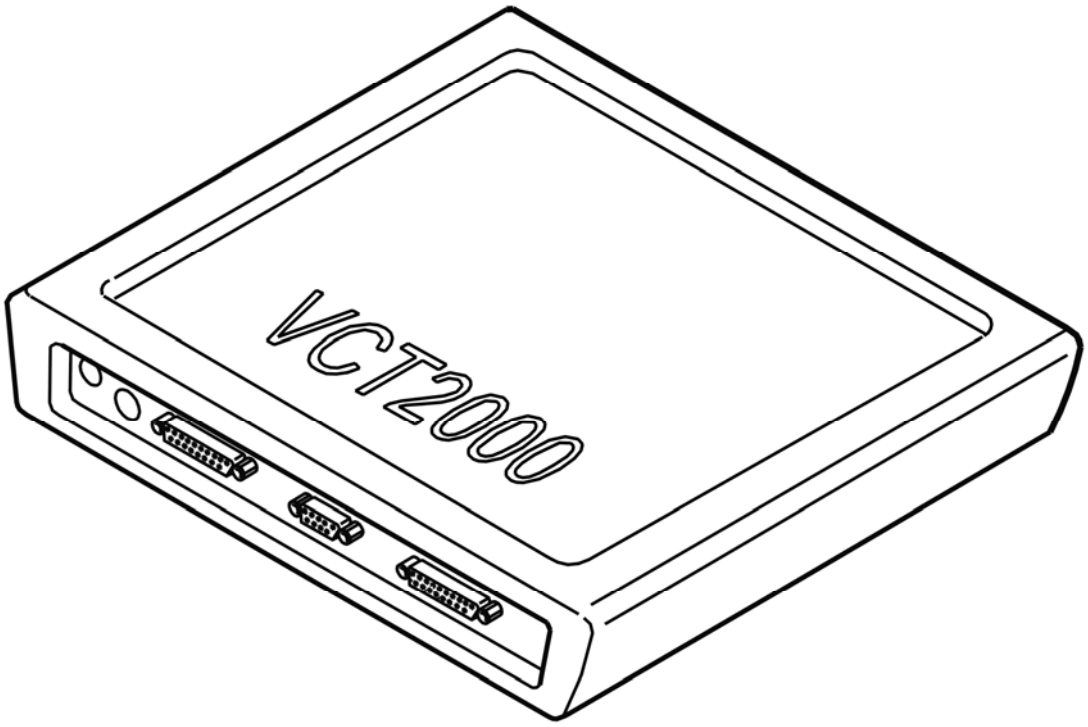

Fig. 409: Identifying VCT2000 Diagnostic Tool Symbol In VIDA
Courtesy of VOLVO CARS CORPORATION

Is the function OK?

- **YES**

  VERIFIED: Troubleshooting has been completed.

- **NO**

  Refer to **INFORMATION**

INFORMATION

FAULT-TRACING INFORMATION

The fault should have been detected and remedied. As this is not the case fault-tracing has failed.

Exit fault-tracing for this diagnostic trouble code (DTC) or make another attempt.

ECM-3400: CAMSHAFT POSITION (CMP) SENSOR, INTAKE. FAULTY

SIGNAL (B6294T; 2005-2006)

DIAGNOSTIC TROUBLE CODE (DTC) INFORMATION

see **DIAGNOSTIC TROUBLE CODE (DTC) INFORMATION**

FAULTY SIGNAL OR SIGNAL MISSING

see **FAULTY SIGNAL OR SIGNAL MISSING**

ECM-3400: KNOCK SENSOR (KS), TEST PULSE. SIGNAL TOO HIGH/SIGNAL TOO LOW. INTERMITTENT FAULT (B5254T2; B6294T; 2003-2004)

DIAGNOSTIC TROUBLE CODE (DTC) INFORMATION

Condition

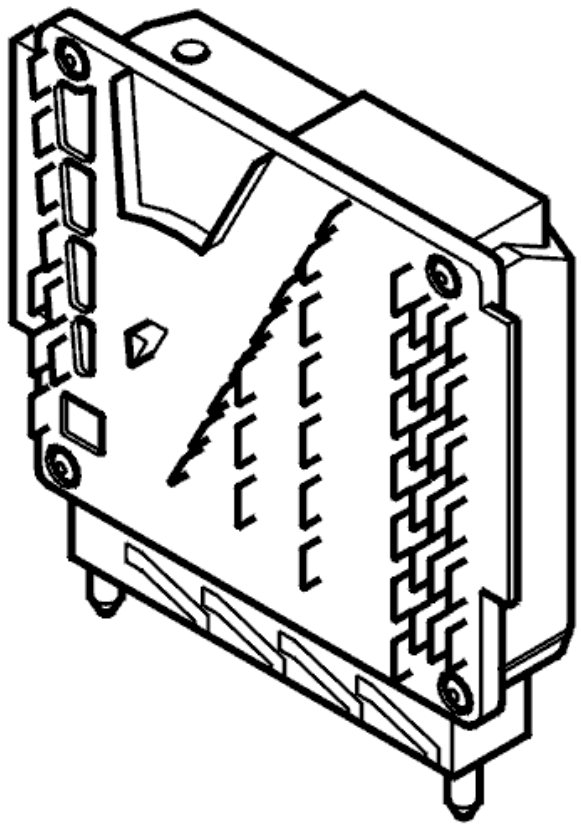

Fig. 410: Engine Control Module
Courtesy of VOLVO CARS CORPORATION

Diagnostic trouble code (DTC) ECM-3400 is stored within 2 minutes if the control module detects a fault in control module knock control circuit.

Substitute Value

- ignition retarded for safety reasons
- reduced boost pressure

Possible Source

- defective control module

Fault symptom[s]

- malfunction indicator lamp (MIL) lit

SIGNAL TOO HIGH/SIGNAL TOO LOW. INTERMITTENT FAULT

see **SIGNAL TOO HIGH/SIGNAL TOO LOW. INTERMITTENT FAULT**

ECM-3400: KNOCK SENSOR (KS), TEST PULSE. SIGNAL TOO HIGH/SIGNAL TOO LOW. PERMANENT FAULT (B5254T2; B6294T; 2003-2004)

DIAGNOSTIC TROUBLE CODE (DTC) INFORMATION

see **DIAGNOSTIC TROUBLE CODE (DTC) INFORMATION**

SIGNAL TOO HIGH / SIGNAL TOO LOW. PERMANENT FAULT

REPLACING THE COMPONENT

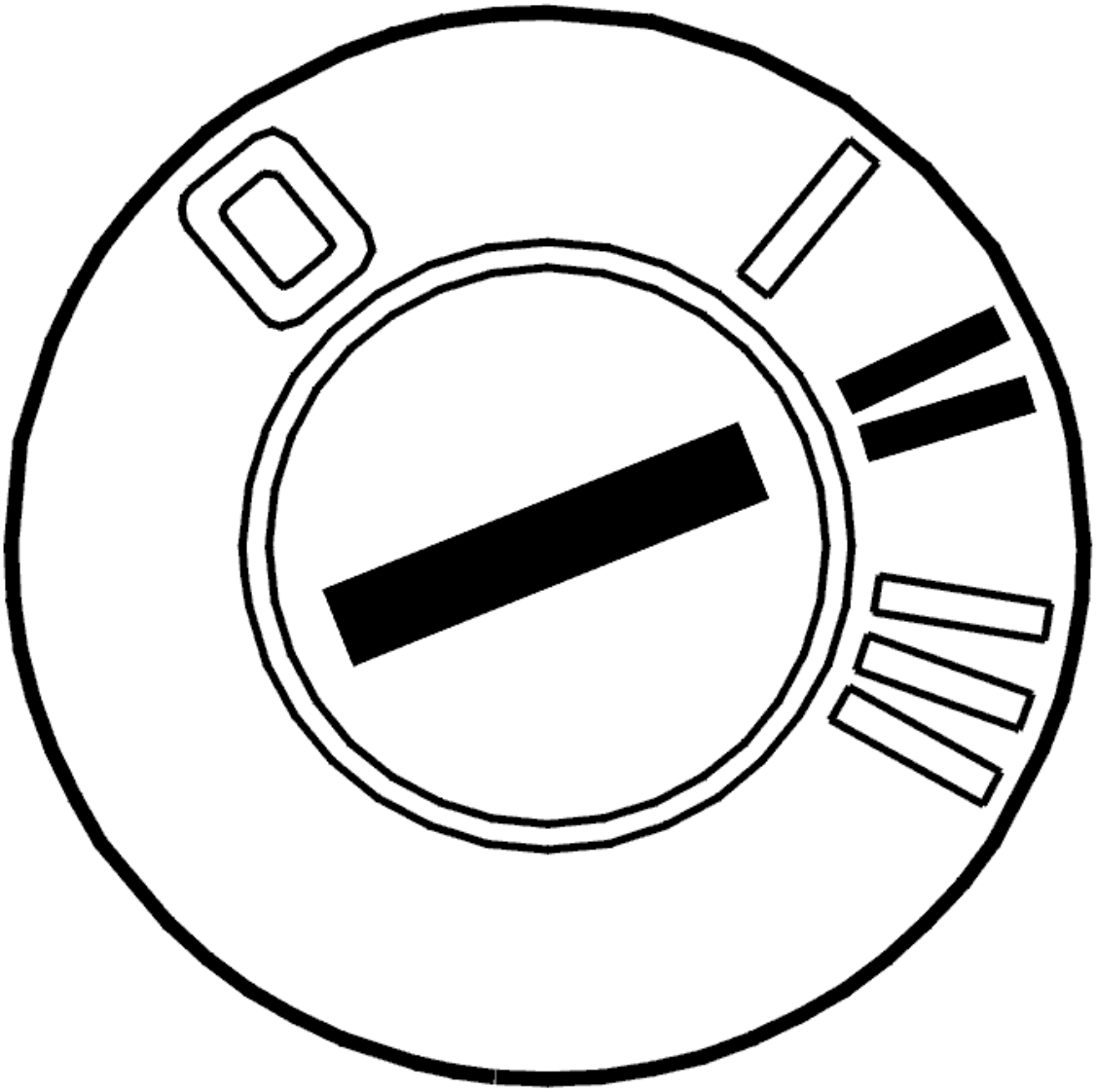

Fig. 411: Identifying Ignition ON
Courtesy of VOLVO CARS CORPORATION

- Ignition off.

  The control module has registered an internal fault. Try a new control module according to **ENGINE CONTROL MODULE (ECM), REPLACING** .

  NOTE: When replacing a control module, new software must be programmed into the new control module.

Graphic under process

Fig. 412: Identifying Engine Control Module
Courtesy of VOLVO CARS CORPORATION

- **Continue**

  Refer to **INFORMATION**

INFORMATION

FAULT-TRACING INFORMATION

In case of this defect, troubleshooting is not followed by verification.

The information can be displayed again or the fault-tracing for this fault can be interrupted.

ECM-340B: CAMSHAFT POSITION (CMP) SENSOR, INTAKE. SIGNAL MISSING (B5254T2; 2005-2007)

DIAGNOSTIC TROUBLE CODE (DTC) INFORMATION

Condition

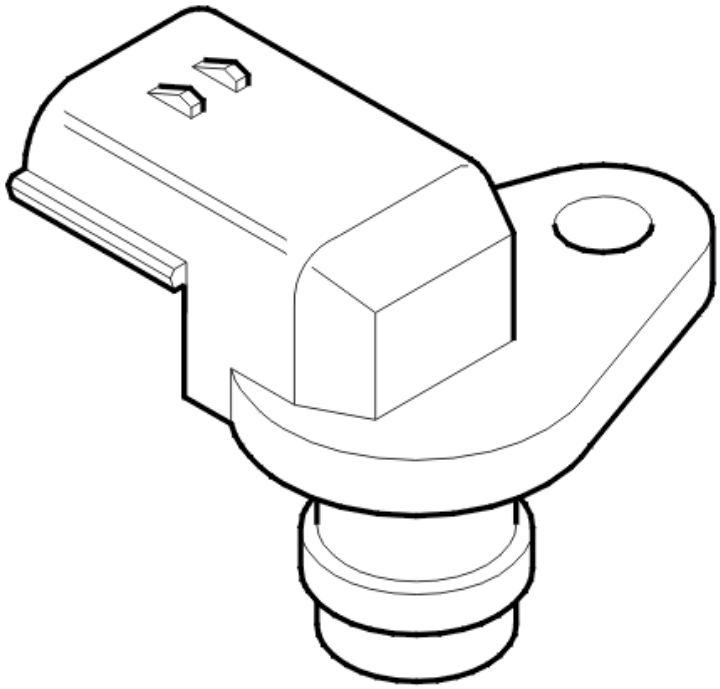

Fig. 413: Detecting Camshaft Flanks On Sensor
Courtesy of VOLVO CARS CORPORATION

Diagnostic trouble code (DTC) ECM-340B is for the camshaft position (CMP) sensor, intake.

Diagnostic trouble code (DTC) ECM-341B is for the camshaft position (CMP) sensor, exhaust.

The engine control module (ECM) checks the pulse width modulation (PWM) signal from the camshaft position (CMP) sensor.

If there is no signal from the camshaft position (CMP) sensor although it appears sporadically, the engine control module (ECM) interprets this as a fault and the diagnostic trouble code (DTC) is stored. The diagnostic trouble code (DTC) can be diagnosed when the engine is running.

Substitute Value

- None.

Possible Source

- The camshaft position (CMP) sensor is in the wrong position
- Damaged camshaft position (CMP) sensor
- Loose connections.

Fault symptom[s]

- The engine is difficult to start.

FAULTY SIGNAL OR SIGNAL MISSING

see **FAULTY SIGNAL OR SIGNAL MISSING**

ECM-340B: CAMSHAFT POSITION (CMP) SENSOR, INTAKE. SIGNAL MISSING (B6294T; 2005-2006)

DIAGNOSTIC TROUBLE CODE (DTC) INFORMATION

see **DIAGNOSTIC TROUBLE CODE (DTC) INFORMATION**

FAULTY SIGNAL OR SIGNAL MISSING

see **FAULTY SIGNAL OR SIGNAL MISSING**

ECM-340C: CAMSHAFT POSITION SENSOR, INTAKE. SIGNAL TOO HIGH (B5254T2; 2005-2007)

DIAGNOSTIC TROUBLE CODE (DTC) INFORMATION

Condition

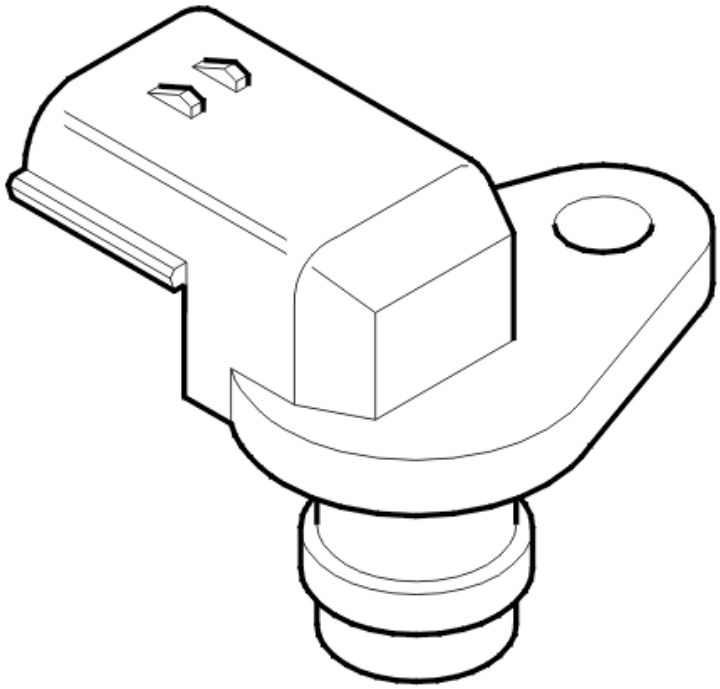

Fig. 414: Detecting Camshaft Flanks On Sensor
Courtesy of VOLVO CARS CORPORATION

Diagnostic trouble code (DTC) ECM-340C is for the camshaft position (CMP) sensor, intake.

Diagnostic trouble code (DTC) ECM-341C is for the camshaft position (CMP) sensor, exhaust.

The engine control module (ECM) checks the pulse width modulation (PWM) signal from the camshaft position (CMP) sensor.

The diagnostic trouble code (DTC) is stored if the signal from the camshaft position (CMP) sensor is constantly high. This is interpreted by the engine control module (ECM) as a fault. The diagnostic trouble code (DTC) can be diagnosed when the engine is running.

Substitute Value

- None.

Possible Source

- Open-circuit in the signal cable
- Short-circuit to supply voltage in the signal cable
- Short-circuit to ground in the power cable

- Open-circuit in the ground lead
- Damaged camshaft position (CMP) sensor.

Fault symptom[s]

- The engine is difficult to start.

SIGNAL TOO HIGH

CHECKING THE STATUS

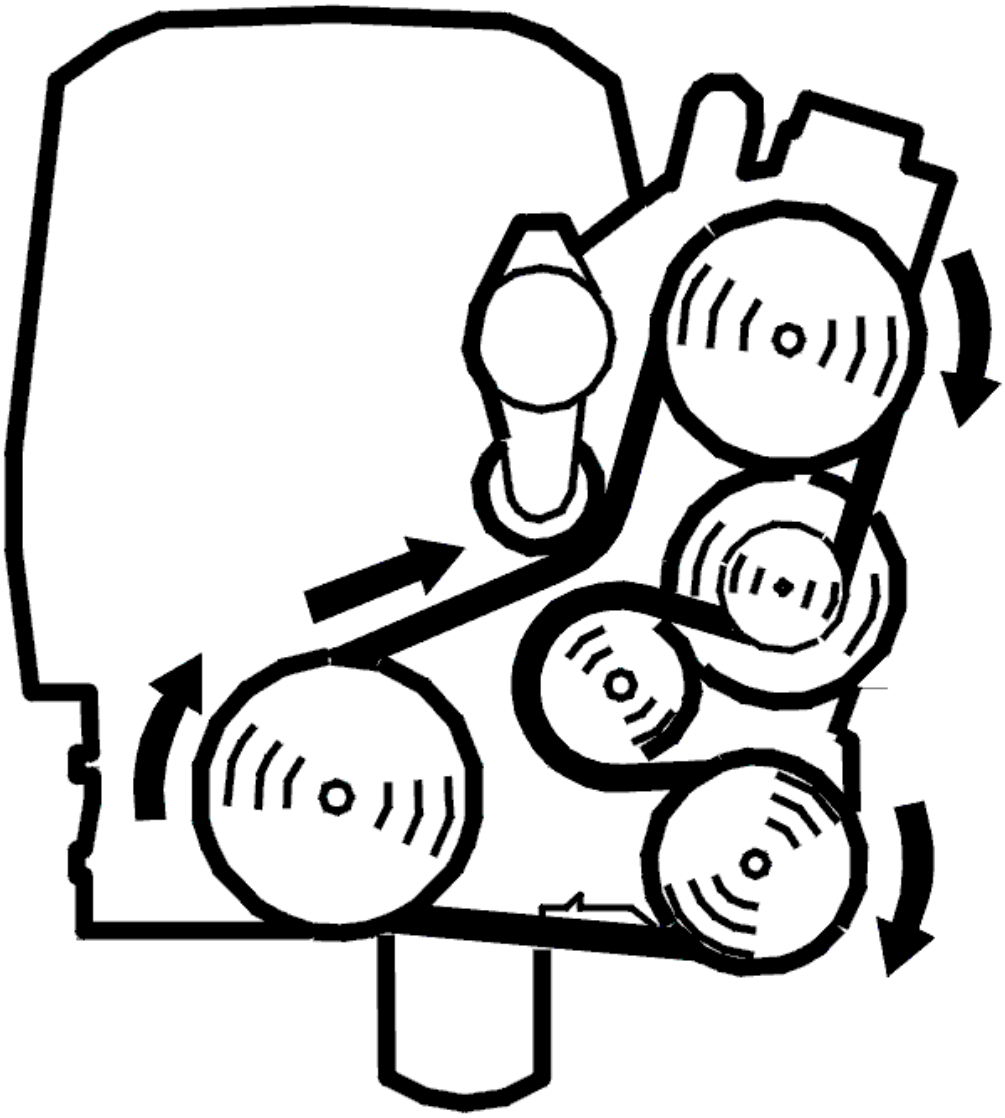

Fig. 415: Belt Routing / Engine Idling - Volvo
Courtesy of VOLVO CARS CORPORATION

- Start the engine.

Read off the diagnostic status and fault status for the diagnostic trouble code (DTC) by selecting the relevant diagnostic trouble code (DTC) from the list.

Increase the engine speed a number of times until the diagnostic is "Complete".

Check whether the fault is permanent or intermittent. Read off the diagnostic trouble code (DTC) fault status when the diagnostic status is "Completed".

HINT: In some cases several functions of the component will be diagnosed. This affects the amount of time taken to run the diagnostic.

The fault is permanent if the fault status is "Fault found". If the fault status is "No fault found" the fault is intermittent and not presently active.

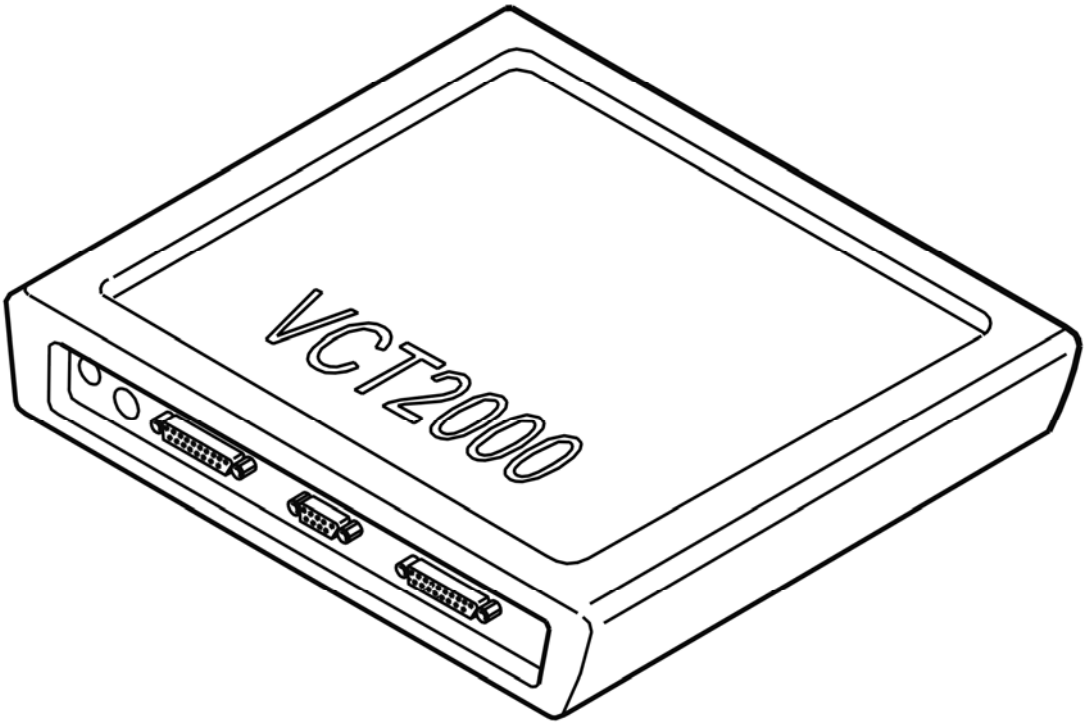

Fig. 416: Identifying VCT2000 Diagnostic Tool Symbol In VIDA
Courtesy of VOLVO CARS CORPORATION

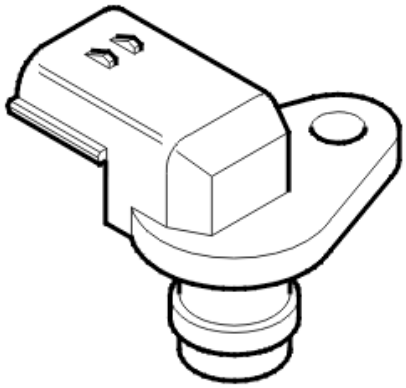

Fig. 417: Camshaft Position Sensor
Courtesy of VOLVO CARS CORPORATION

- **Continue**

  Refer to **CHECKING COMPONENTS AND WIRING**

CHECKING COMPONENTS AND WIRING

- Check the connector for the camshaft position (CMP) sensor. Check for contact resistance and oxidation.

  Check the signal cable between engine control module (ECM) terminal #A47 (#A47) and camshaft position (CMP) sensor connector terminal #3. Check for an open-circuit. Check for a short-circuit to supply voltage.

  Check the ground lead between engine control module (ECM) terminal #A65 (#B5) and camshaft position (CMP) sensor connector terminal #2. Check for an open-circuit.

  Check the power cable between engine control module (ECM) terminal #A29 (#A29) and camshaft position (CMP) sensor connector terminal #1. Check for a short-circuit to ground.

  Remedy as necessary.

  Other information

  - see **CONNECTING THE BREAKOUT BOX**
  - For 5 cylinder turbocharged engines -2004, see **SIGNAL DESCRIPTION**
  - For 5 cylinder turbocharged engines 2005-, see **SIGNAL SPECIFICATION** .
  - see **POSITION SENSOR CAMSHAFT, REPLACING**
  - see **CHECKING WIRING AND TERMINALS**

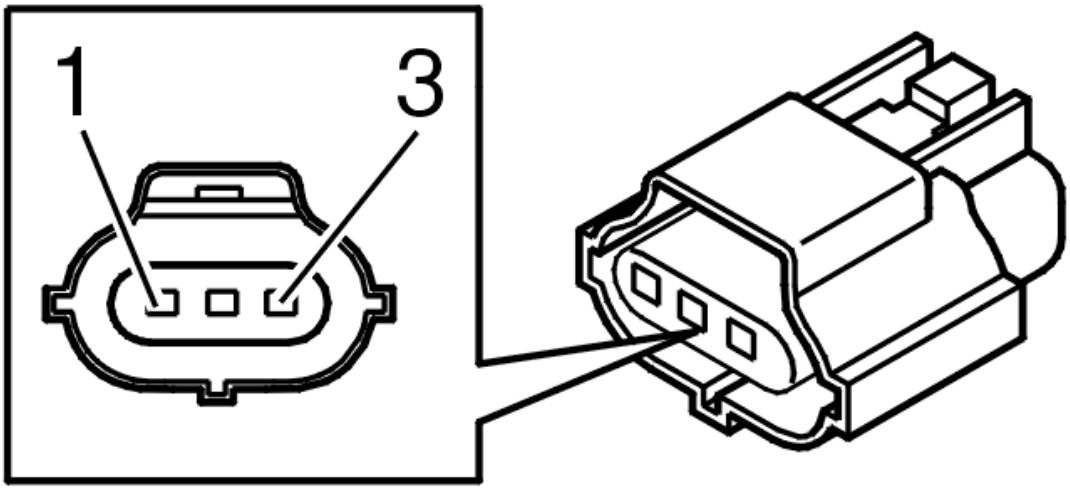

Fig. 418: Identifying 3-Bit Connector
Courtesy of VOLVO CARS CORPORATION

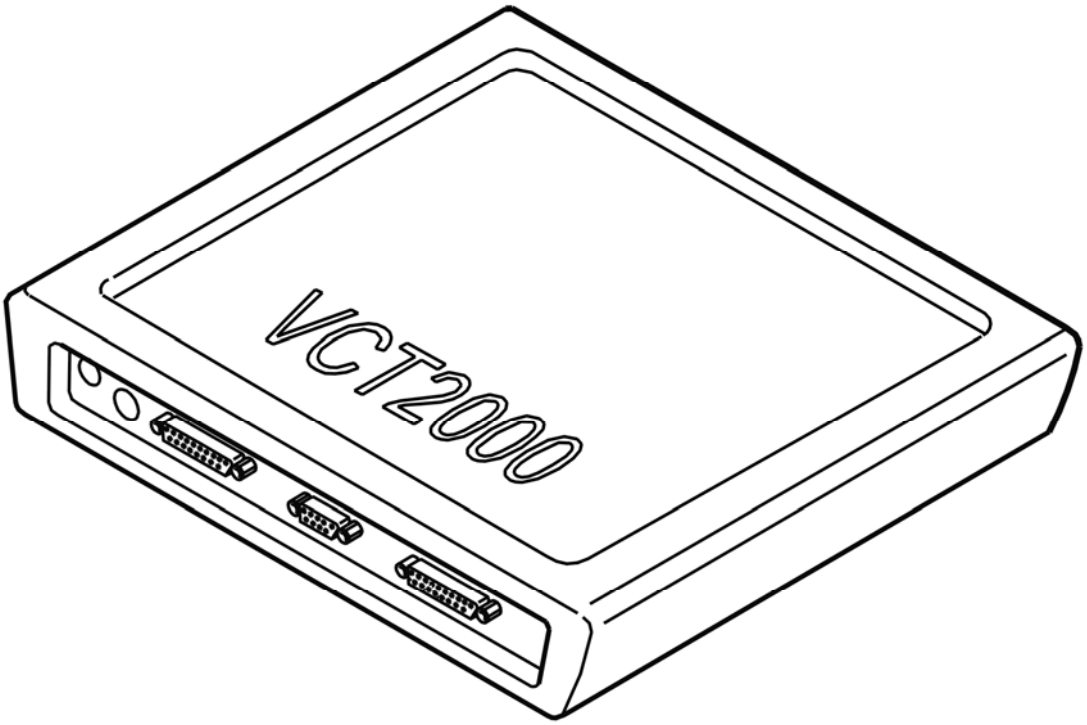

Fig. 419: Identifying VCT2000 Diagnostic Tool Symbol In VIDA
Courtesy of VOLVO CARS CORPORATION

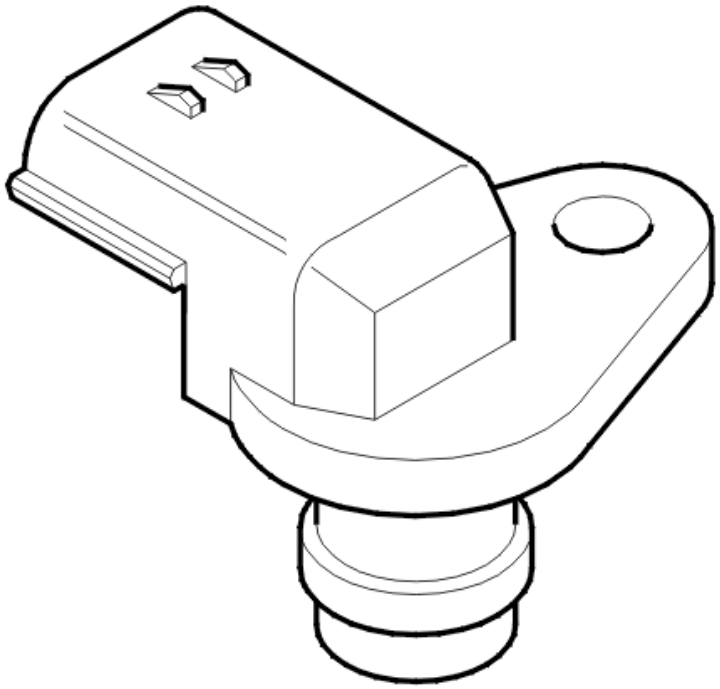

Fig. 420: Detecting Camshaft Flanks On Sensor
Courtesy of VOLVO CARS CORPORATION

- **Continue**

  Refer to **VERIFICATION**

VERIFICATION

VERIFICATION

HINT: After carrying out the repair, check that the fault has been remedied.

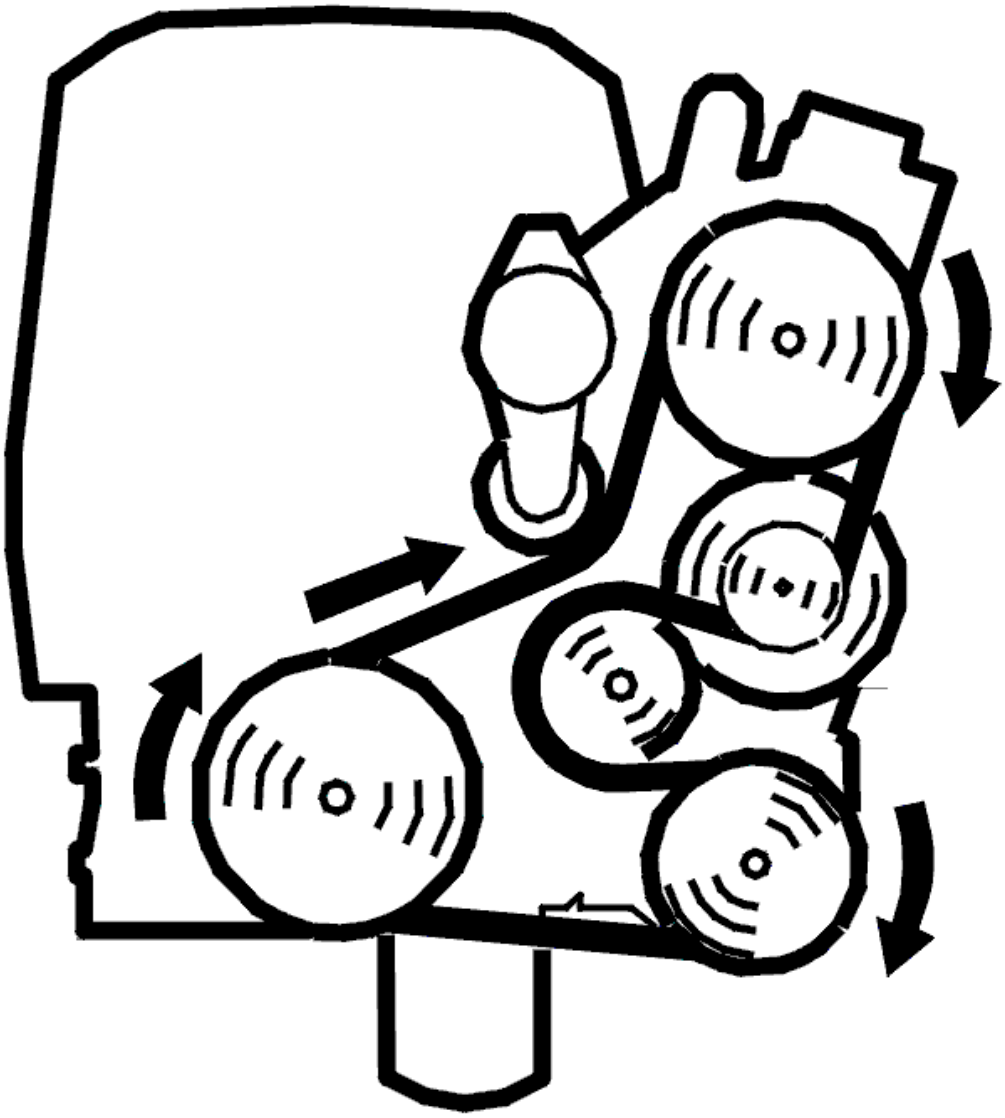

Fig. 421: Belt Routing / Engine Idling - Volvo
Courtesy of VOLVO CARS CORPORATION

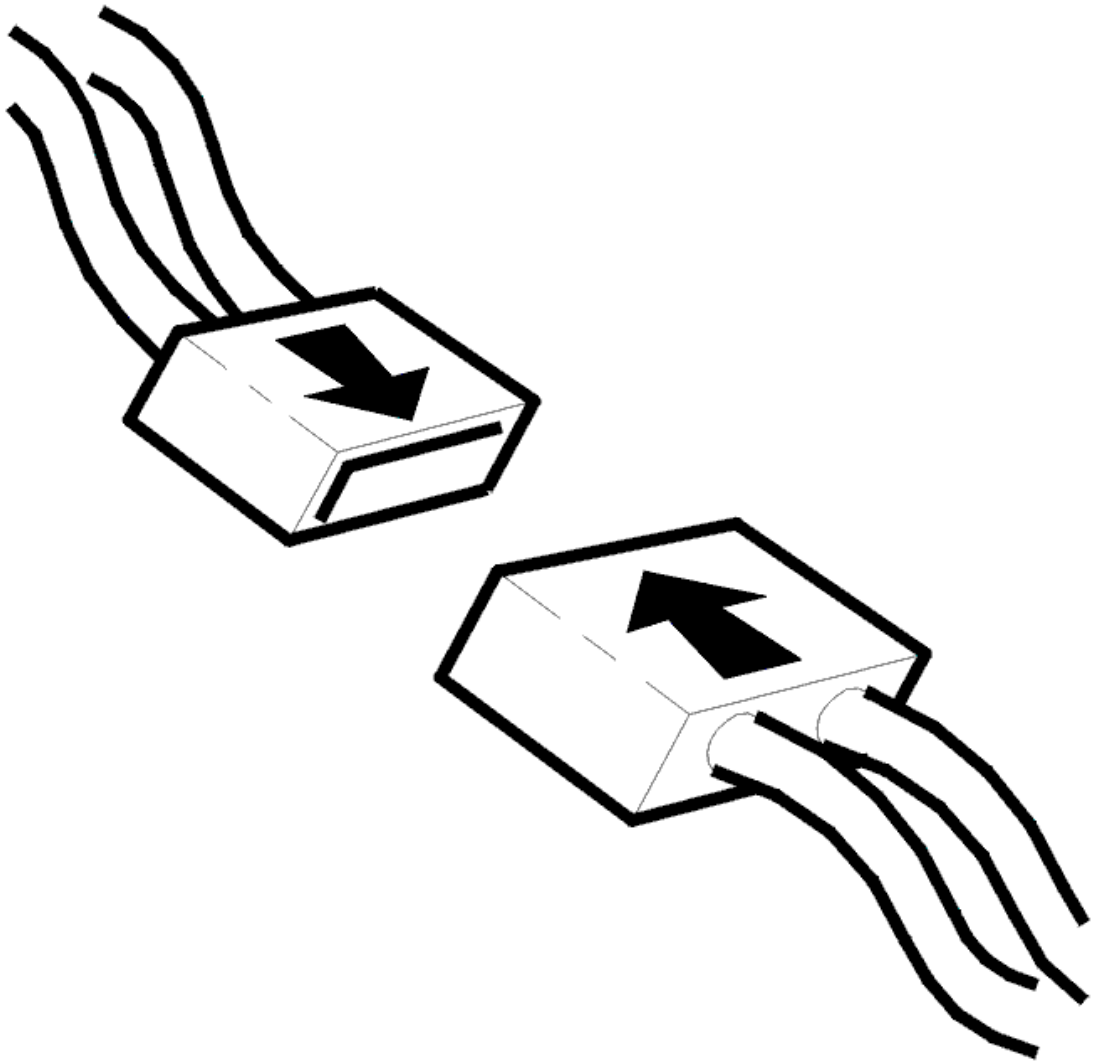

Fig. 422: Connecting Connector
Courtesy of VOLVO CARS CORPORATION

- Ignition off
- Reconnect the connectors, reinstall components etc.
- Start the engine
- Read off the diagnostic status and fault status for the diagnostic trouble code (DTC) by selecting the relevant diagnostic trouble code (DTC) from the list.

  Increase the engine speed a number of times until the diagnostic is "Complete".

  Check the fault status for the diagnostic trouble code (DTC) when the diagnostic is "Complete". If the function is correct, the fault status must be "No fault found" when the diagnostic is complete.

  HINT: In some cases several functions of the component will be diagnosed. The affects the amount

of time taken to run the diagnostic.

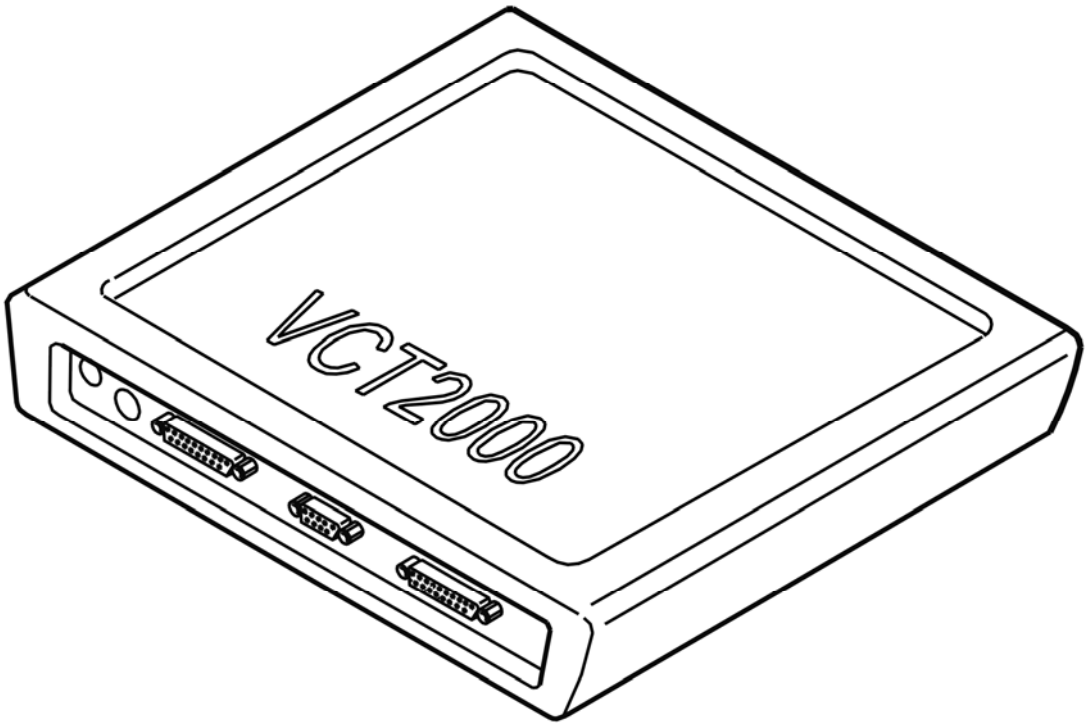

Fig. 423: Identifying VCT2000 Diagnostic Tool Symbol In VIDA
Courtesy of VOLVO CARS CORPORATION

Is the function OK?

- **YES**

  VERIFIED: Troubleshooting has been completed.

- **NO**

  Refer to **INFORMATION**

INFORMATION

FAULT-TRACING INFORMATION

The fault should have been detected and remedied. As this is not the case fault-tracing has failed.

Exit fault-tracing for this diagnostic trouble code (DTC) or make another attempt.

ECM-340C: CAMSHAFT POSITION SENSOR, INTAKE. SIGNAL TOO HIGH

(B6294T; 2005-2006)

DIAGNOSTIC TROUBLE CODE (DTC) INFORMATION

see **DIAGNOSTIC TROUBLE CODE (DTC) INFORMATION**

SIGNAL TOO HIGH

see **SIGNAL TOO HIGH**

ECM-340D: CAMSHAFT POSITION SENSOR, INTAKE. SIGNAL TOO LOW (B5254T2; 2005-2007)

DIAGNOSTIC TROUBLE CODE (DTC) INFORMATION

Condition

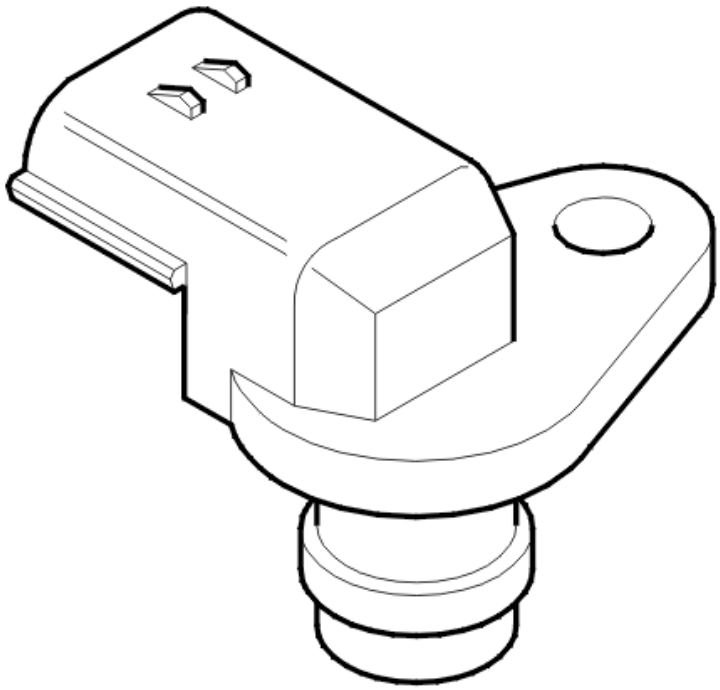

Fig. 424: Detecting Camshaft Flanks On Sensor
Courtesy of VOLVO CARS CORPORATION

Diagnostic trouble code (DTC) ECM-340D is for the camshaft position (CMP) sensor, intake.

Diagnostic trouble code (DTC) ECM-341D is for the camshaft position (CMP) sensor, exhaust.

The engine control module (ECM) checks the pulse width modulation (PWM) signal from the camshaft position (CMP) sensor.

The diagnostic trouble code (DTC) is stored if the signal from the camshaft position (CMP) sensor is constantly low. This is interpreted by the engine control module (ECM) as a fault. The diagnostic trouble code (DTC) can be diagnosed when the engine is running.

Substitute Value

- None.

Possible Source

- Short-circuit to ground in the signal cable
- Open-circuit in the power cable
- Loose connections.

Fault symptom[s]

- The engine is difficult to start.

SIGNAL TOO LOW

CHECKING THE STATUS

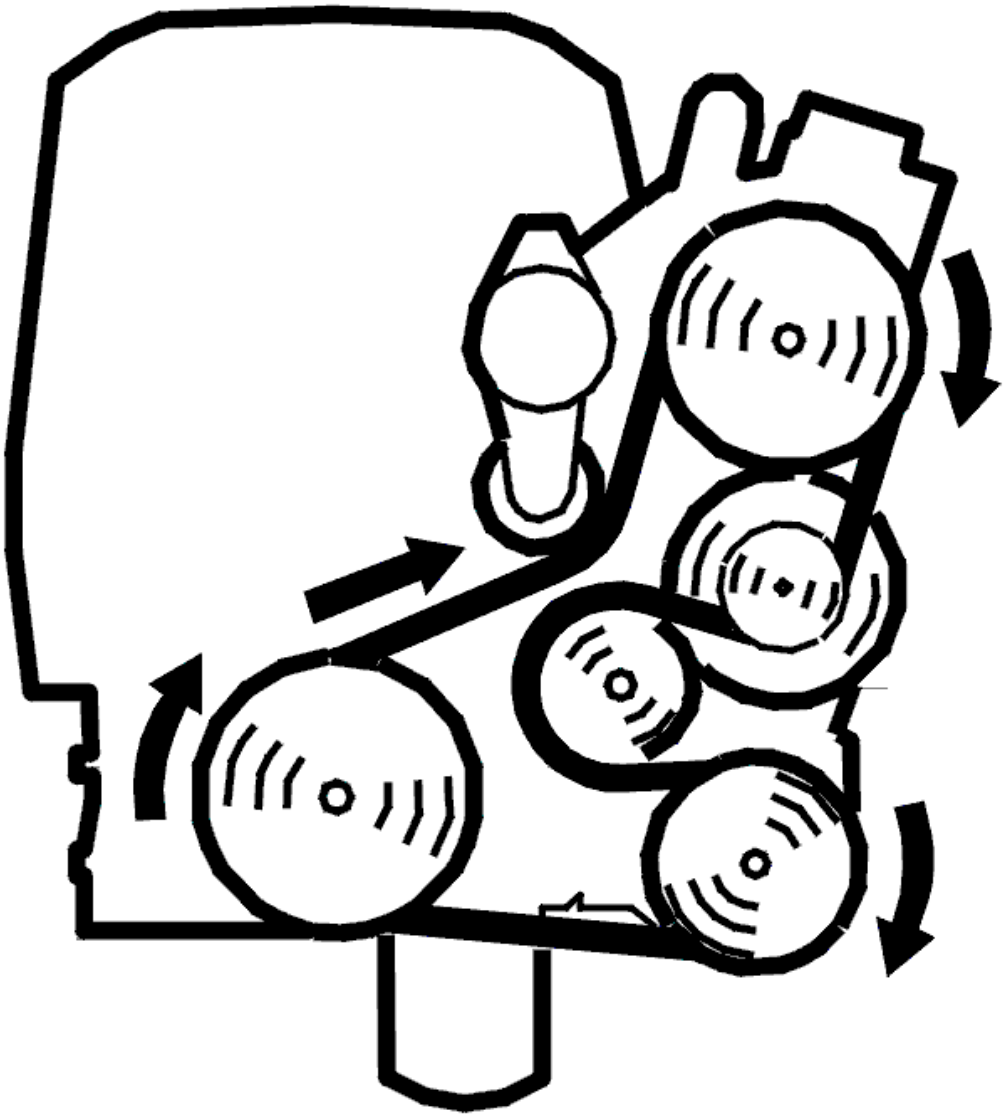

Fig. 425: Belt Routing / Engine Idling - Volvo
Courtesy of VOLVO CARS CORPORATION

- Start the engine.

  Read off the diagnostic status and fault status for the diagnostic trouble code (DTC) by selecting the relevant diagnostic trouble code (DTC) from the list.

  Increase the engine speed a number of times until the diagnostic is "Complete".

  Check whether the fault is permanent or intermittent. Read off the diagnostic trouble code (DTC) fault status when the diagnostic status is "Completed".

  HINT: In some cases several functions of the component will be diagnosed. This affects the amount of time taken to run the diagnostic.

The fault is permanent if the fault status is "Fault found". If the fault status is "No fault found" the fault is intermittent and not presently active.

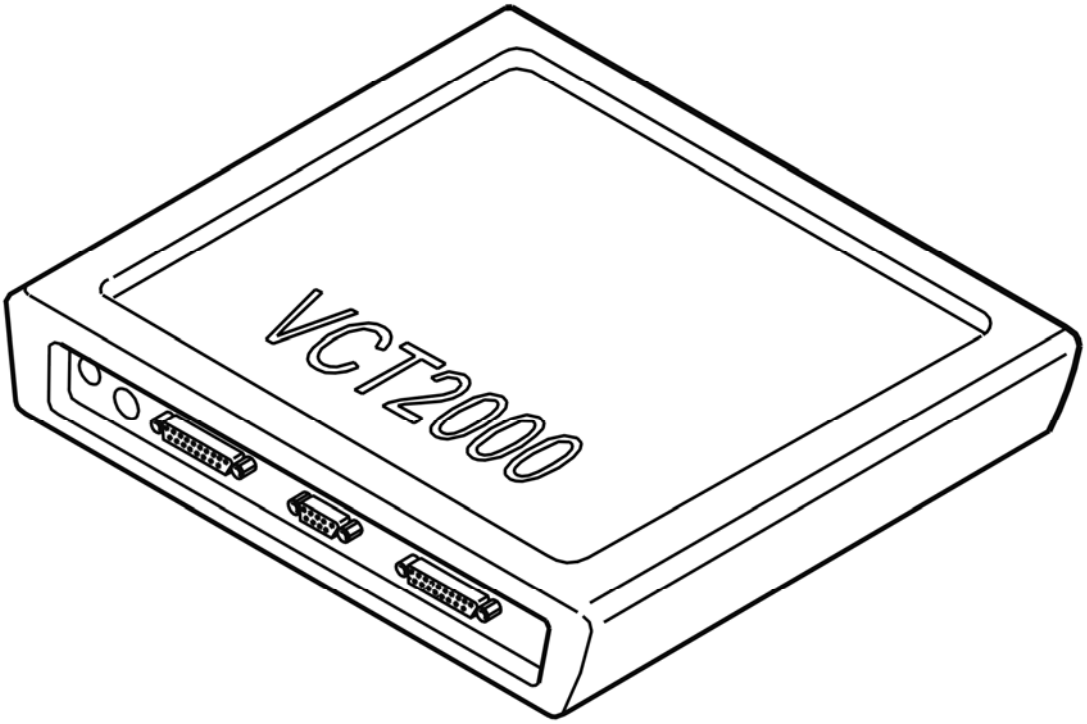

Fig. 426: Identifying VCT2000 Diagnostic Tool Symbol In VIDA
Courtesy of VOLVO CARS CORPORATION

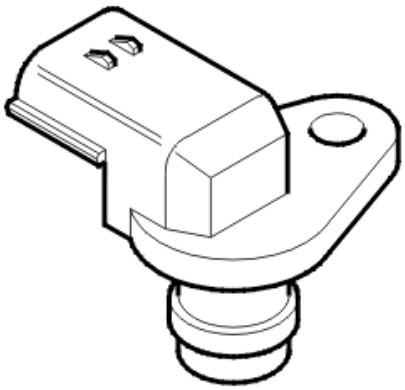

Fig. 427: Camshaft Position Sensor
Courtesy of VOLVO CARS CORPORATION

- **Continue**

Refer to **CHECKING COMPONENTS AND WIRING**

CHECKING COMPONENTS AND WIRING

Check the signal cable between engine control module (ECM) terminal #A47 (#A47) and camshaft position (CMP) sensor connector terminal #3. Check for a short-circuit to ground.

Check the power cable between engine control module (ECM) terminal #A29 (#A29) and camshaft position (CMP) sensor connector terminal #1. Check for an open-circuit.

HINT: With the ignition on and the camshaft position (CMP) sensor connector disconnected, the voltage between terminal #1 and ground terminal should be approximately 5 V.

Remedy as necessary.

Other information

- see **CONNECTING THE BREAKOUT BOX**
- For 5 cylinder turbocharged engines -2004, see **SIGNAL DESCRIPTION**
- For 5 cylinder turbocharged engines 2005-, see **SIGNAL SPECIFICATION** .
- see **POSITION SENSOR CAMSHAFT, REPLACING**
- see **CHECKING WIRING AND TERMINALS**

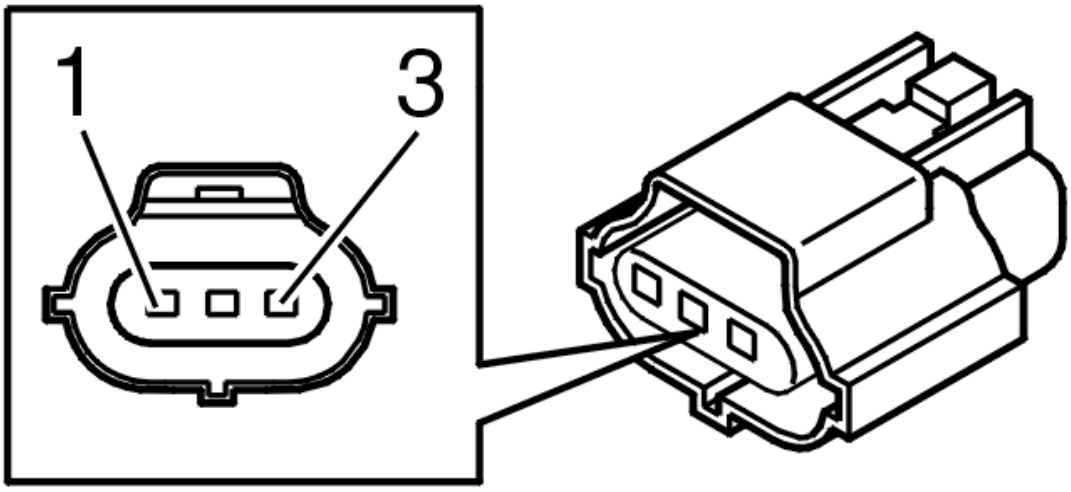

Fig. 428: Identifying 3-Bit Connector
Courtesy of VOLVO CARS CORPORATION

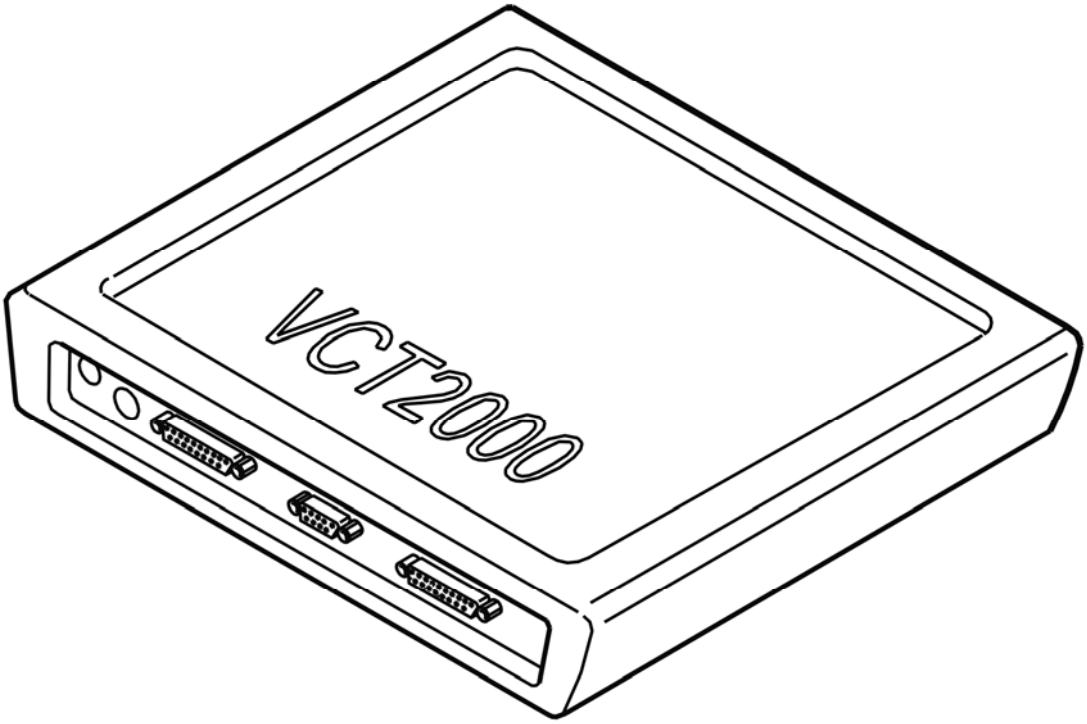

Fig. 429: Identifying VCT2000 Diagnostic Tool Symbol In VIDA
Courtesy of VOLVO CARS CORPORATION

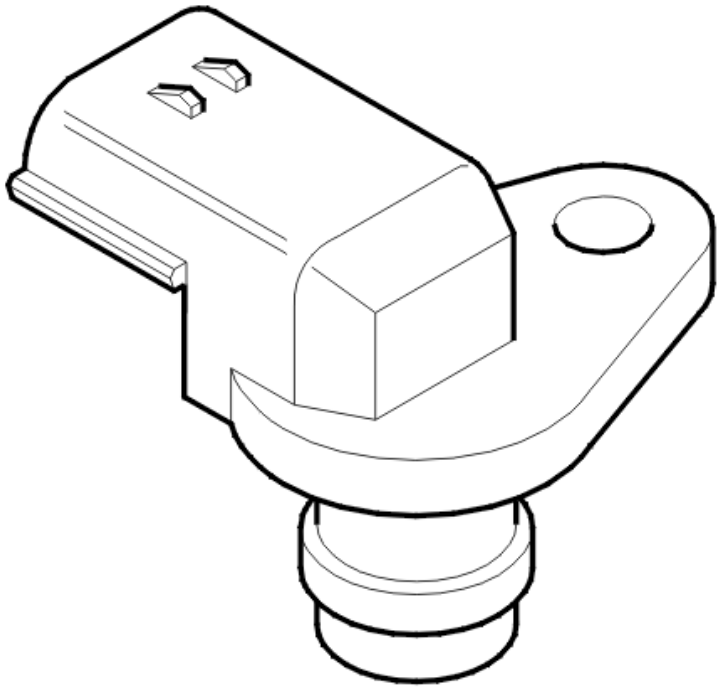

Fig. 430: Detecting Camshaft Flanks On Sensor
Courtesy of VOLVO CARS CORPORATION

- **Continue**

  Refer to **VERIFICATION**

VERIFICATION

VERIFICATION

HINT: After carrying out the repair, check that the fault has been remedied.

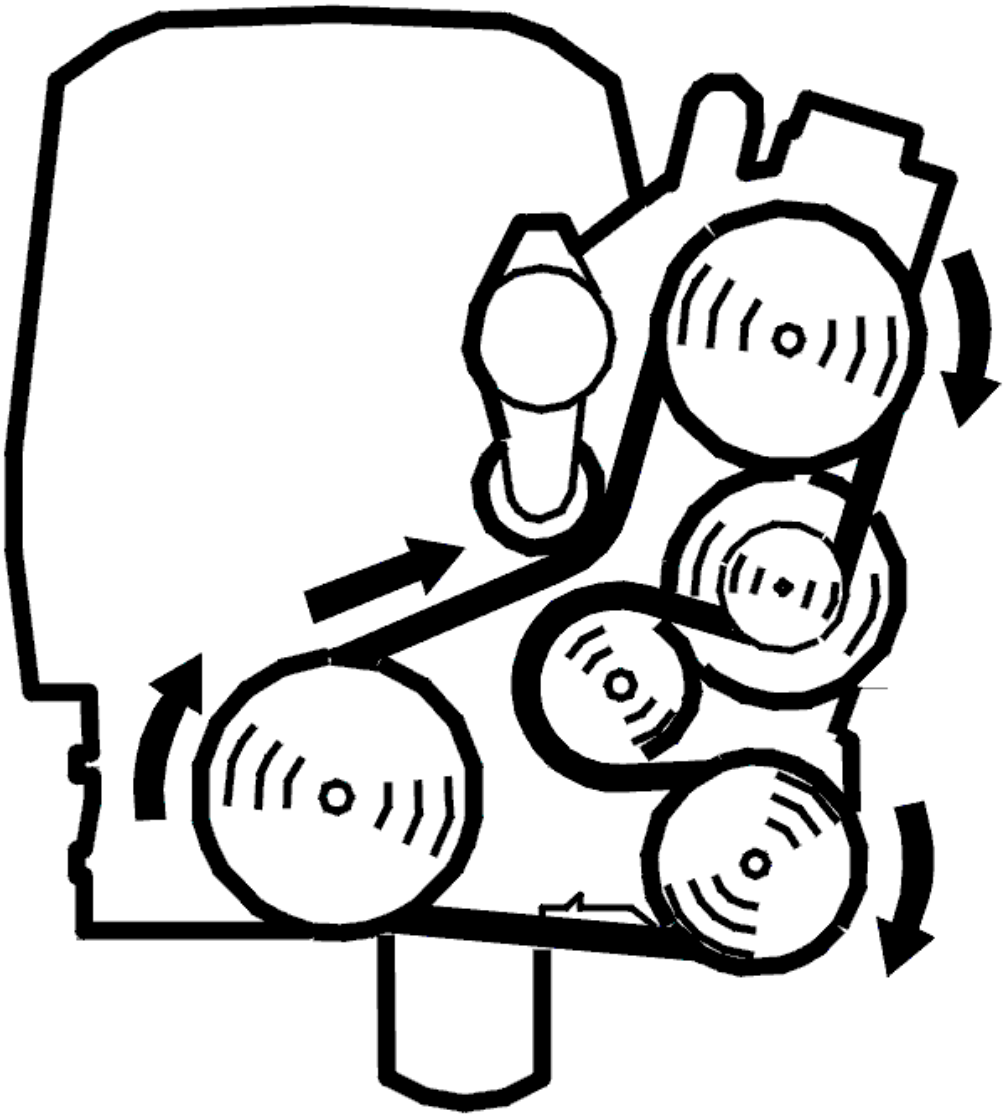

Fig. 431: Belt Routing / Engine Idling - Volvo
Courtesy of VOLVO CARS CORPORATION

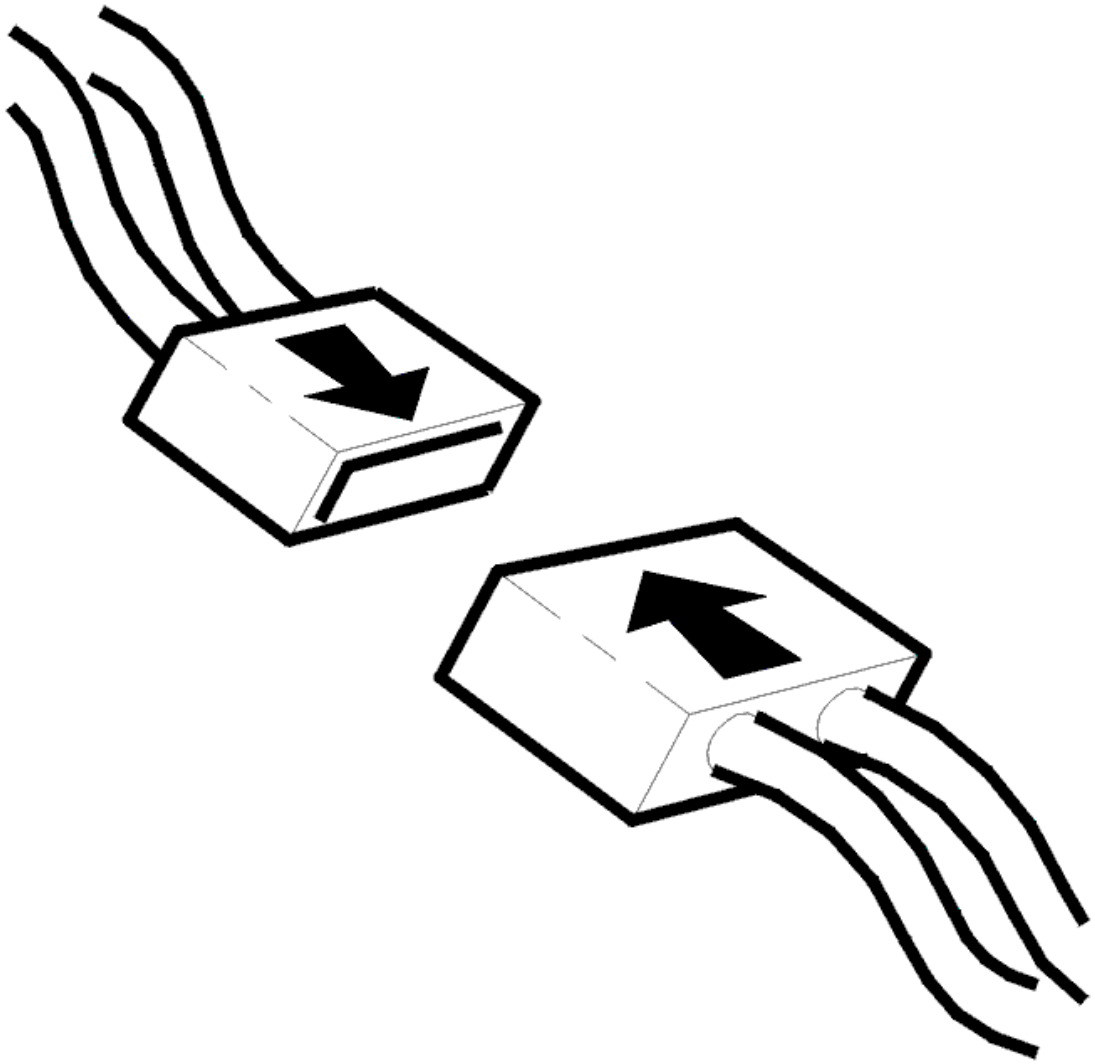

Fig. 432: Connecting Connector
Courtesy of VOLVO CARS CORPORATION

- Ignition off
- Reconnect the connectors, reinstall components etc.
- Start the engine
- Read off the diagnostic status and fault status for the diagnostic trouble code (DTC) by selecting the relevant diagnostic trouble code (DTC) from the list.

  Increase the engine speed a number of times until the diagnostic is "Complete".

  Check the fault status for the diagnostic trouble code (DTC) when the diagnostic is "Complete". If the function is correct, the fault status must be "No fault found" when the diagnostic is complete.

  HINT: In some cases several functions of the component will be diagnosed. The affects the amount

of time taken to run the diagnostic.

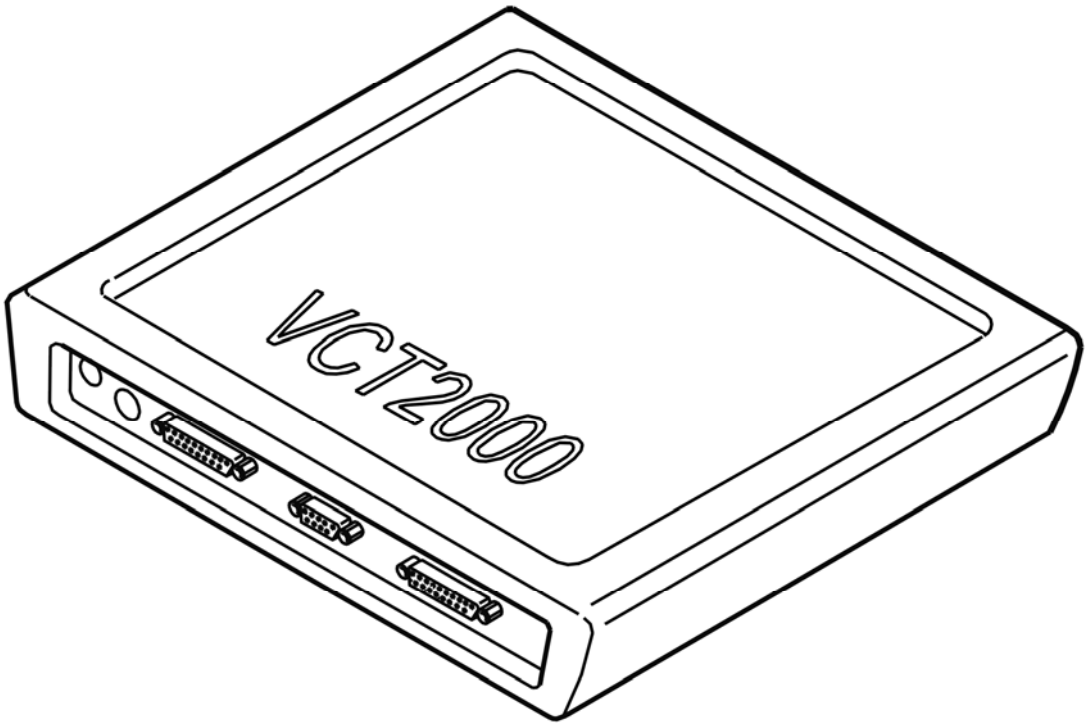

Fig. 433: Identifying VCT2000 Diagnostic Tool Symbol In VIDA
Courtesy of VOLVO CARS CORPORATION

Is the function OK?

- **YES**

  VERIFIED: Troubleshooting has been completed.

- **NO**

  Refer to **INFORMATION**

INFORMATION

FAULT-TRACING INFORMATION

The fault should have been detected and remedied. As this is not the case fault-tracing has failed.

Exit fault-tracing for this diagnostic trouble code (DTC) or make another attempt.

ECM-340D: CAMSHAFT POSITION SENSOR, INTAKE. SIGNAL TOO LOW

(B6294T; 2005-2006)

DIAGNOSTIC TROUBLE CODE (DTC) INFORMATION

see **DIAGNOSTIC TROUBLE CODE (DTC) INFORMATION**

SIGNAL TOO LOW

see **SIGNAL TOO LOW**

ECM-3410: CAMSHAFT POSITION (CMP) SENSOR, EXHAUST. FAULTY SIGNAL (B5254T2; 2005-2007)

DIAGNOSTIC TROUBLE CODE (DTC) INFORMATION

see **DIAGNOSTIC TROUBLE CODE (DTC) INFORMATION**

FAULTY SIGNAL OR SIGNAL MISSING

CHECKING THE STATUS

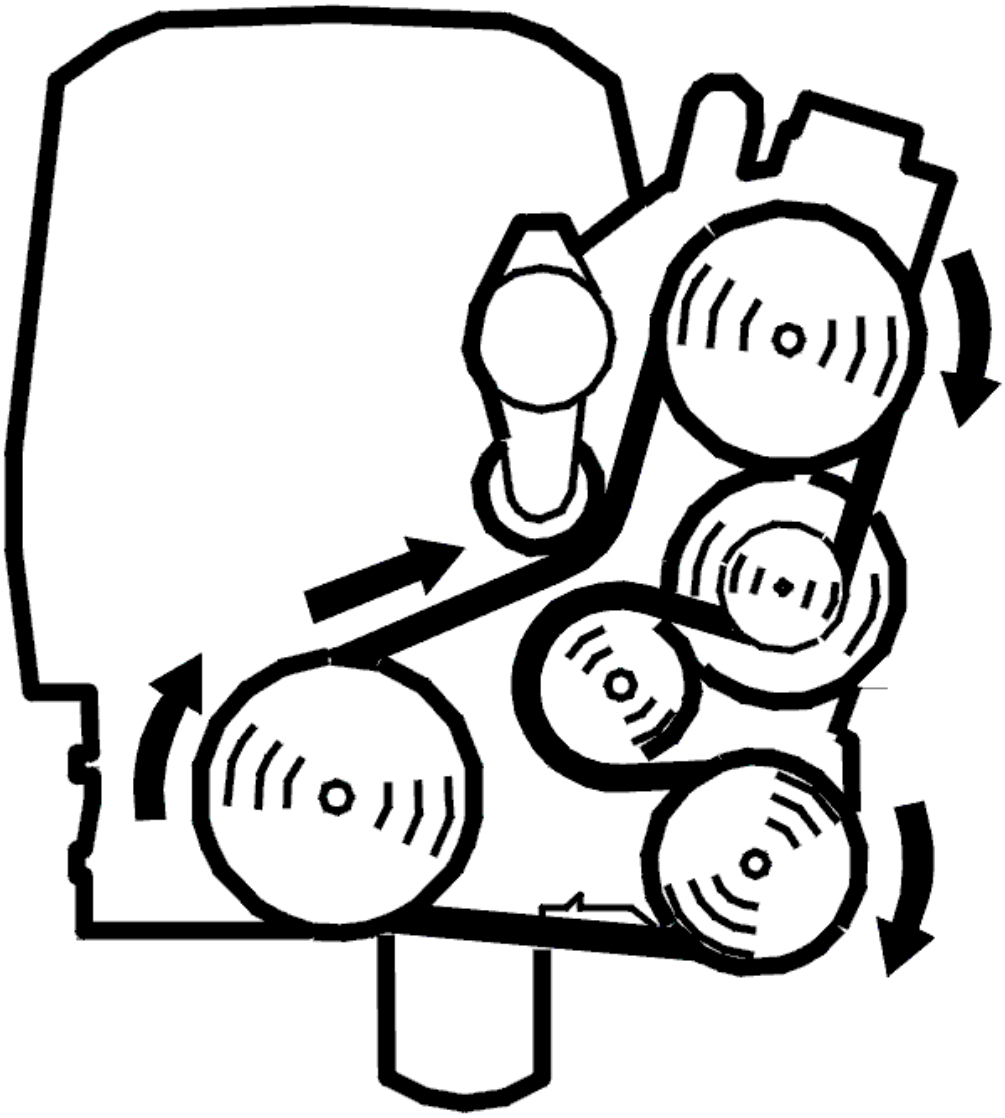

Fig. 434: Belt Routing / Engine Idling - Volvo
Courtesy of VOLVO CARS CORPORATION

- Start the engine.

  Read off the diagnostic status and fault status for the diagnostic trouble code (DTC) by selecting the relevant diagnostic trouble code (DTC) from the list.

  Increase the engine speed a number of times until the diagnostic is "Complete".

  Check whether the fault is permanent or intermittent. Read off the diagnostic trouble code (DTC) fault status when the diagnostic status is "Completed".

  HINT: In some cases several functions of the component will be diagnosed. This affects the amount of time taken to run the diagnostic.

The fault is permanent if the fault status is "Fault found". If the fault status is "No fault found" the fault is intermittent and not presently active.

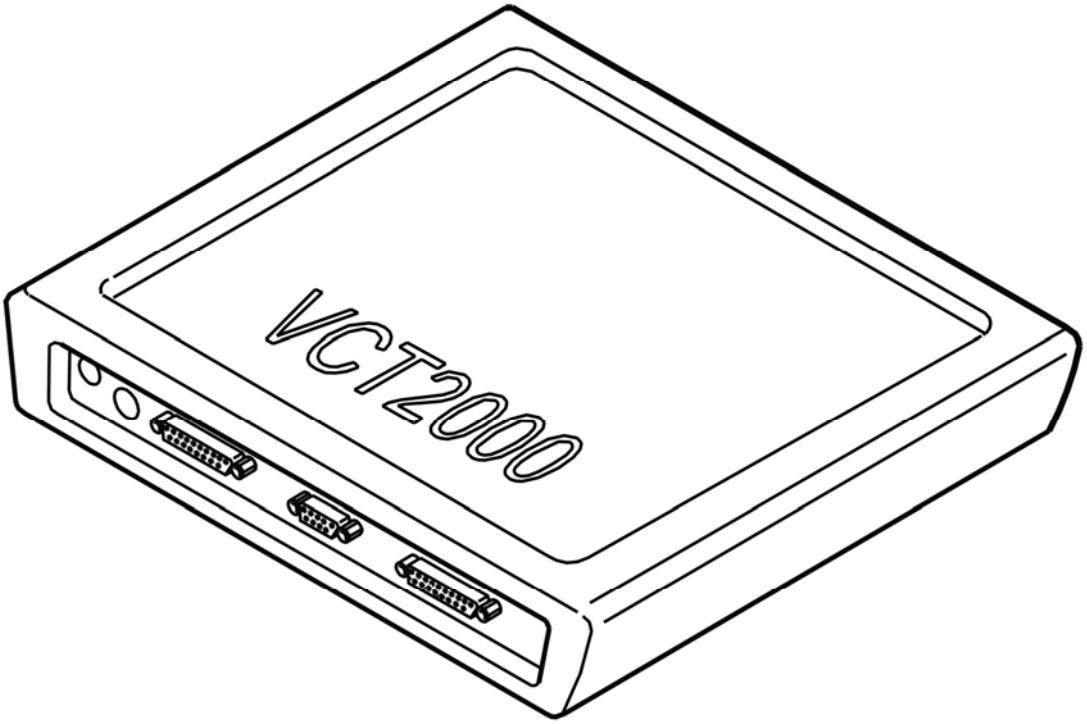

Fig. 435: Identifying VCT2000 Diagnostic Tool Symbol In VIDA
Courtesy of VOLVO CARS CORPORATION

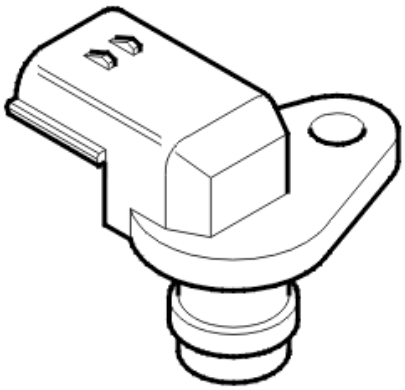

Fig. 436: Camshaft Position Sensor
Courtesy of VOLVO CARS CORPORATION

- **Continue**

Refer to **CHECKING COMPONENTS AND WIRING**

CHECKING COMPONENTS AND WIRING

- Check the connector for the camshaft position (CMP) sensor. Check for contact resistance and oxidation.

  Check that the camshaft position (CMP) sensor is correctly installed. Check that neither the camshaft position (CMP) sensor nor the housing is damaged. Damage may affect the position of the sensor in relation to the camshaft rotor.

  HINT: This diagnostic trouble code (DTC) may be caused by a faulty camshaft position (CMP) sensor.

  Remedy as necessary.

  Other information

  - see **CONNECTING THE BREAKOUT BOX**
  - For 5 cylinder turbocharged engines -2004, see **SIGNAL DESCRIPTION**
  - For 5 cylinder turbocharged engines 2005-, see **SIGNAL SPECIFICATION** .
  - see **POSITION SENSOR CAMSHAFT, REPLACING**
  - see **CHECKING WIRING AND TERMINALS**

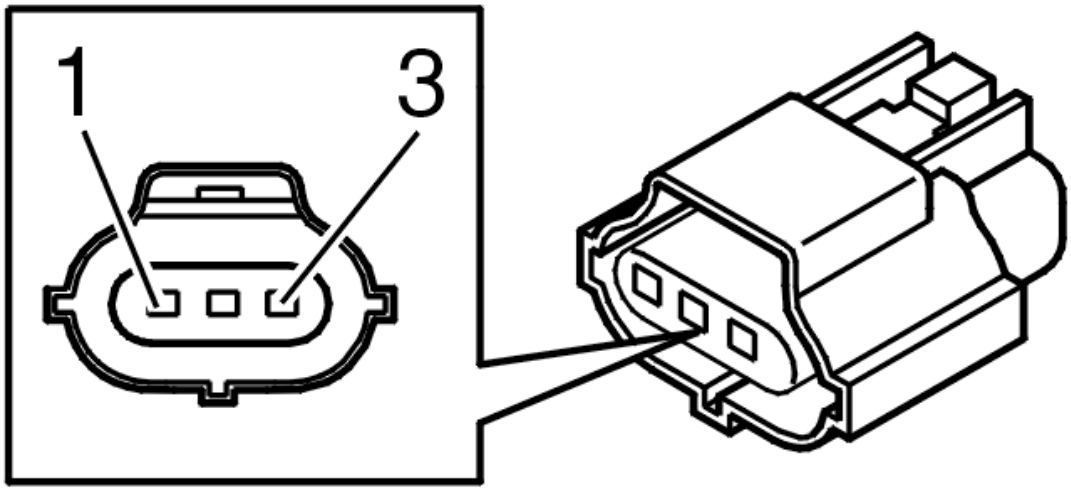

Fig. 437: Identifying 3-Bit Connector
Courtesy of VOLVO CARS CORPORATION

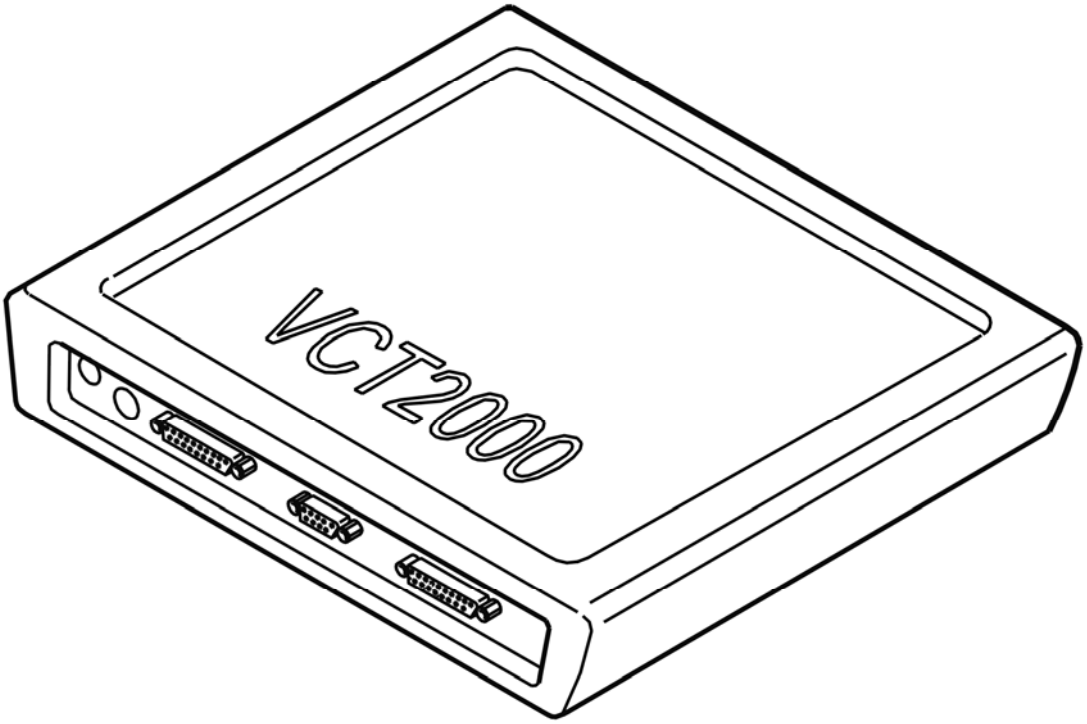

Fig. 438: Identifying VCT2000 Diagnostic Tool Symbol In VIDA
Courtesy of VOLVO CARS CORPORATION

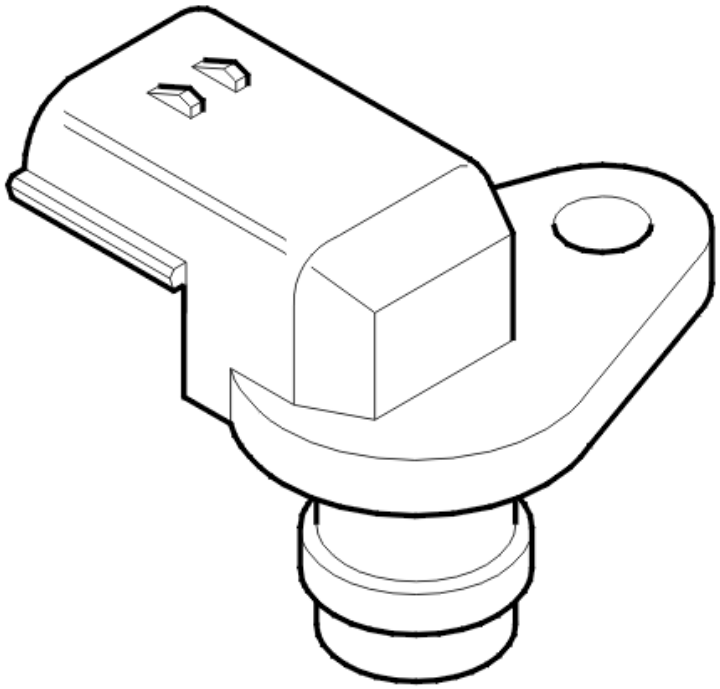

Fig. 439: Detecting Camshaft Flanks On Sensor
Courtesy of VOLVO CARS CORPORATION

- **Continue**

  Refer to **VERIFICATION**

VERIFICATION

VERIFICATION

HINT: After carrying out the repair, check that the fault has been remedied.

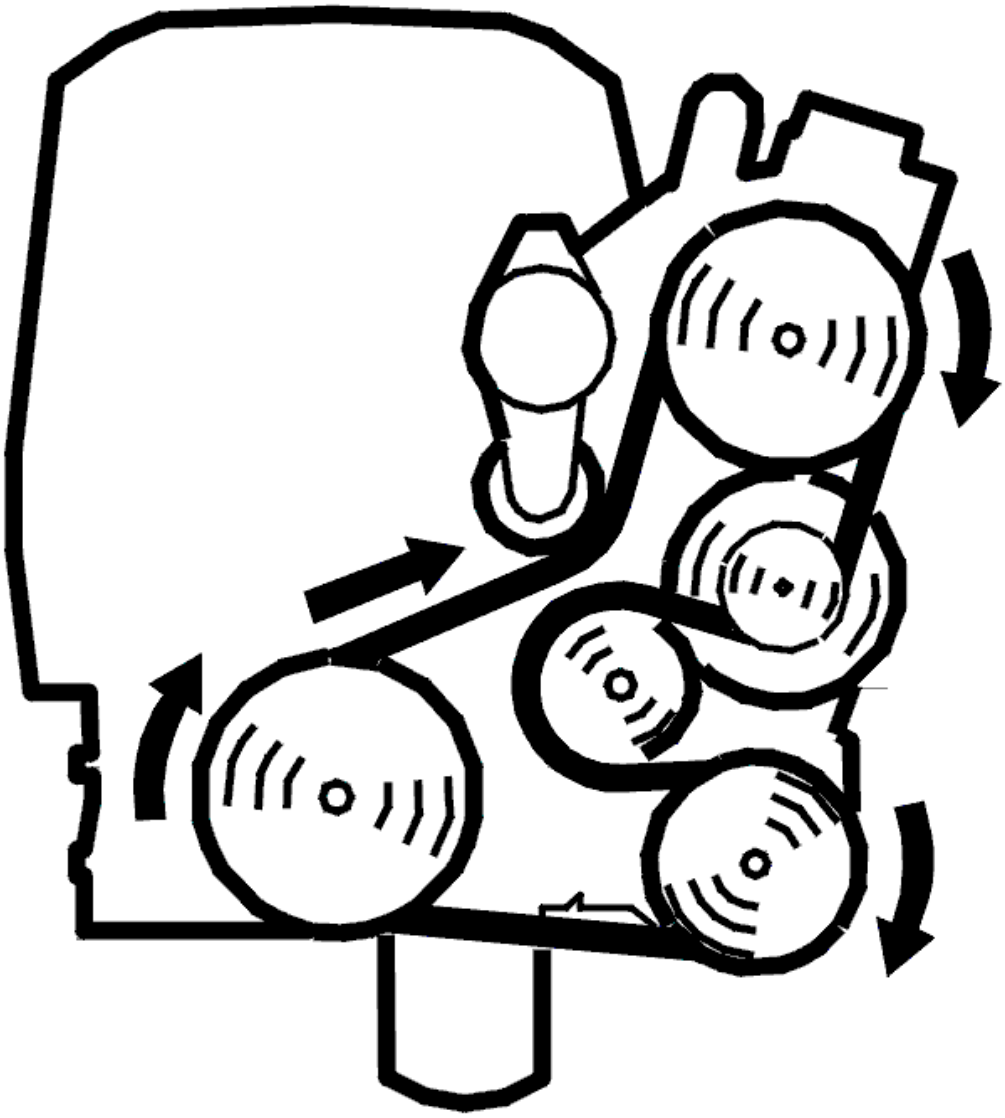

Fig. 440: Belt Routing / Engine Idling - Volvo
Courtesy of VOLVO CARS CORPORATION

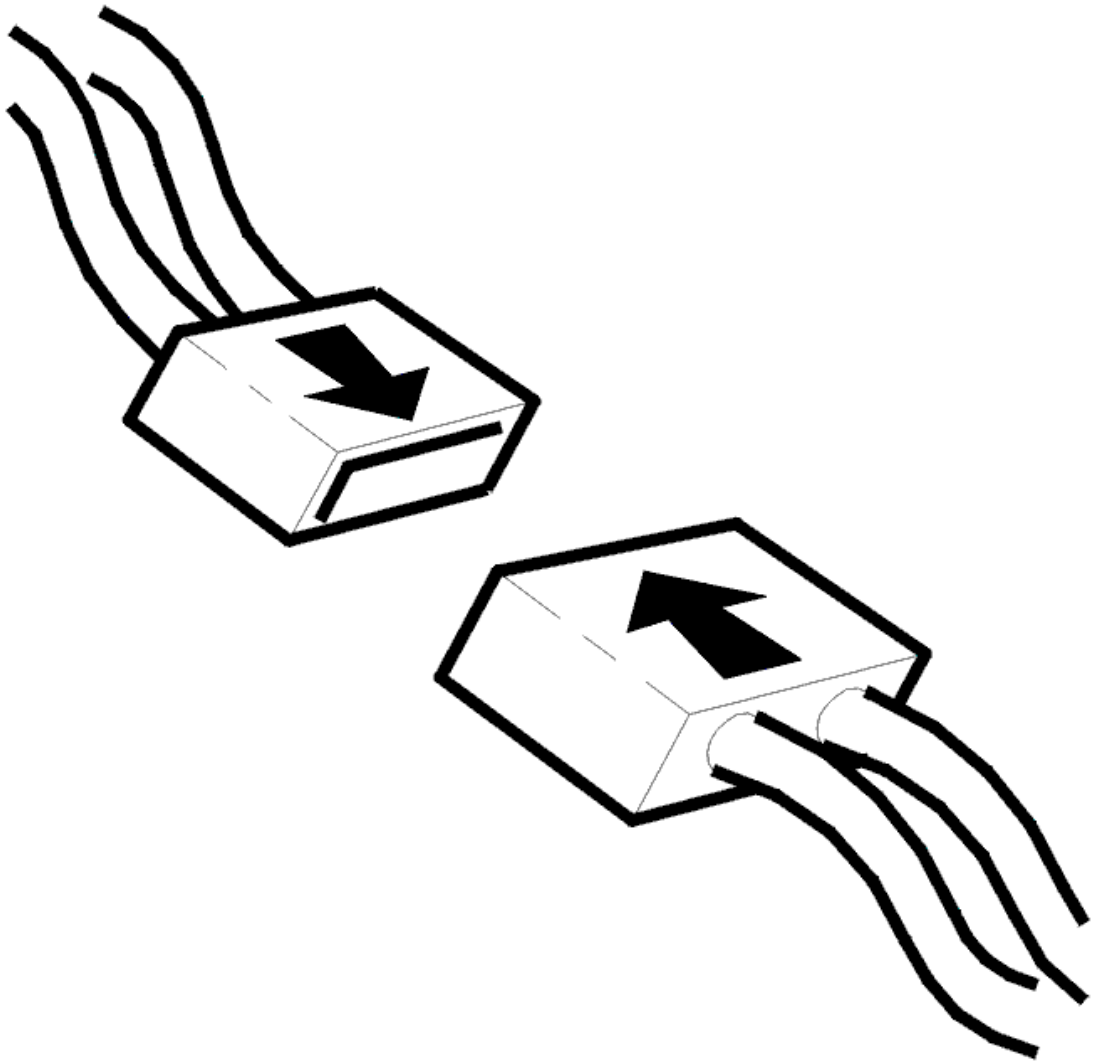

Fig. 441: Connecting Connector
Courtesy of VOLVO CARS CORPORATION

- Ignition off
- Reconnect the connectors, reinstall components etc.
- Start the engine
- Read off the diagnostic status and fault status for the diagnostic trouble code (DTC) by selecting the relevant diagnostic trouble code (DTC) from the list.

  Increase the engine speed a number of times until the diagnostic is "Complete".

  Check the fault status for the diagnostic trouble code (DTC) when the diagnostic is "Complete". If the function is correct, the fault status must be "No fault found" when the diagnostic is complete.

  HINT: In some cases several functions of the component will be diagnosed. The affects the amount

of time taken to run the diagnostic.

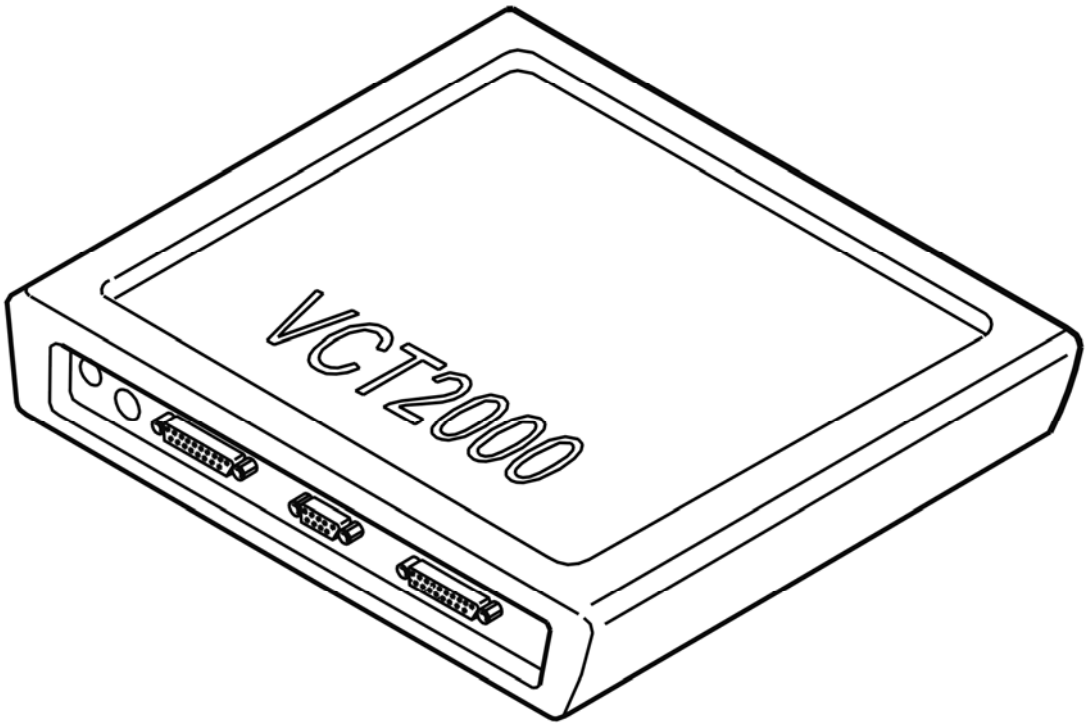

Fig. 442: Identifying VCT2000 Diagnostic Tool Symbol In VIDA
Courtesy of VOLVO CARS CORPORATION

Is the function OK?

- **YES**

  VERIFIED: Troubleshooting has been completed.

- **NO**

  Refer to **INFORMATION**

INFORMATION

FAULT-TRACING INFORMATION

The fault should have been detected and remedied. As this is not the case fault-tracing has failed.

Exit fault-tracing for this diagnostic trouble code (DTC) or make another attempt.

ECM-3410: CAMSHAFT POSITION (CMP) SENSOR, EXHAUST. FAULTY

SIGNAL (B6294T; 2005-2006)

DIAGNOSTIC TROUBLE CODE (DTC) INFORMATION

see **DIAGNOSTIC TROUBLE CODE (DTC) INFORMATION**

FAULTY SIGNAL OR SIGNAL MISSING

see **FAULTY SIGNAL OR SIGNAL MISSING**

ECM-3410: KNOCK SENSOR (KS) FRONT. SIGNAL TOO HIGH. INTERMITTENT FAULT (B5254T2; B6294T; 2003-2004)

DIAGNOSTIC TROUBLE CODE (DTC) INFORMATION

Condition

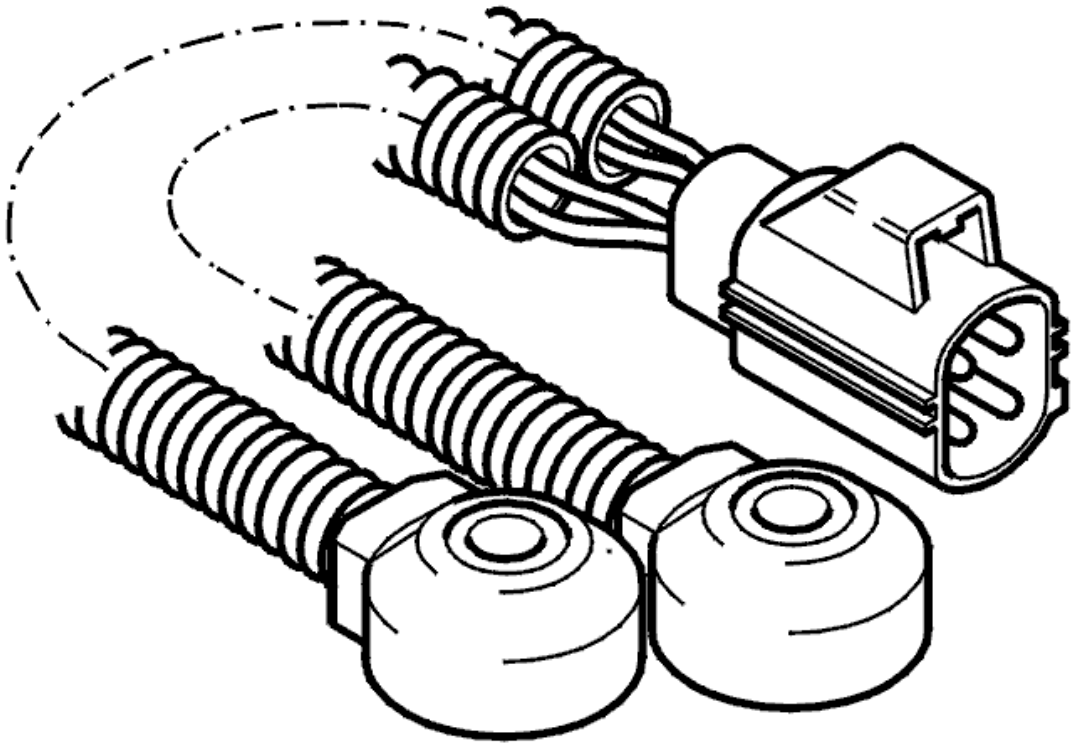

Fig. 443: Identifying Knock Sensor
Courtesy of VOLVO CARS CORPORATION

Diagnostic trouble code (DTC) ECM-3410 is stored if the engine speed (RPM) is over 3000 RPM, the engine coolant temperature (ECT) is above 40°C (104°F) and the signal from the front knock sensor (KS) is too high or too low.

Substitute Value

- ignition retarded for safety reasons
- reduced boost pressure

Possible Source

Signal too high:

- short-circuit to supply voltage in the signal cable
- worn engine

Signal too low:

- open-circuit in signal cable
- contact resistance in terminals
- defective knock sensor (KS)
- short-circuit between knock sensor (KS) signal cables

Fault symptom[s]

- none

SIGNAL TOO HIGH. INTERMITTENT FAULT

CHECKING CONNECTORS AND WIRING

Check the signal cable between knock sensor (KS) terminal #1 and control module #A46 (#A46). Check the ground lead between knock sensor (KS) terminal #2 and control module terminal #A64 (#B4). Check for an intermittent short-circuit to supply voltage.

Check that the knock sensor (KS) is tightened to the correct torque.

HINT: The diagnostic trouble code (DTC) may be caused by a worn engine. Start the engine and listen for noise.

Other information

- To connect the breakout box / access the control module, see **CONNECTING THE BREAKOUT BOX**
- For B5xx4T, see **KNOCK SENSOR (KS), REPLACING**
- For B6xx4T, see **KNOCK SENSOR (KS), REPLACING** .
- For 5 cylinder turbocharged engines -2004, see **SIGNAL DESCRIPTION**
- For 5 cylinder turbocharged engines 2005-, see **SIGNAL SPECIFICATION** .
- For 6 cylinder engines -2004, see **SIGNAL SPECIFICATION**

- For 6 cylinder engines 2005-, see **SIGNAL SPECIFICATION** .
- see **CHECKING WIRING AND TERMINALS** .

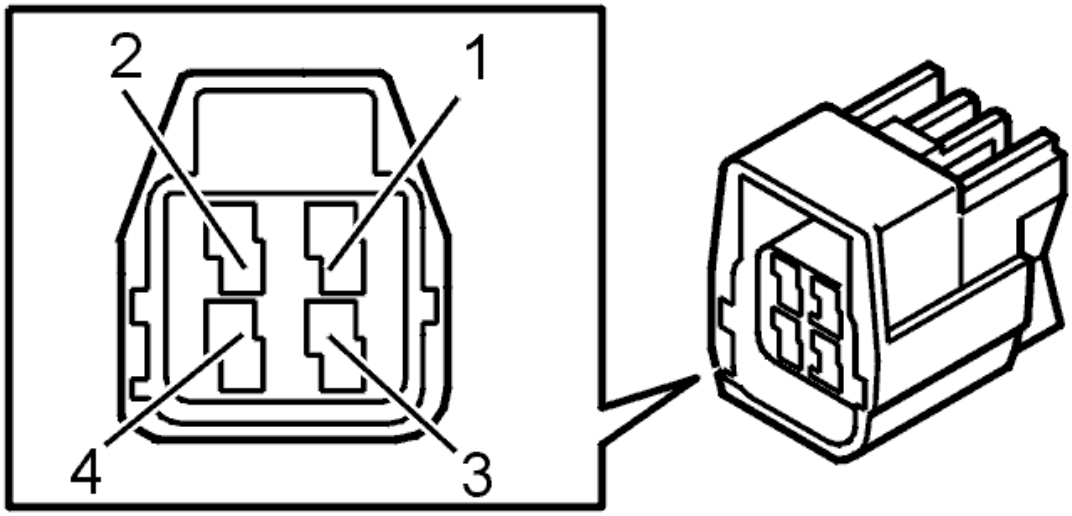

Fig. 444: Identifying Connector Terminals
Courtesy of VOLVO CARS CORPORATION

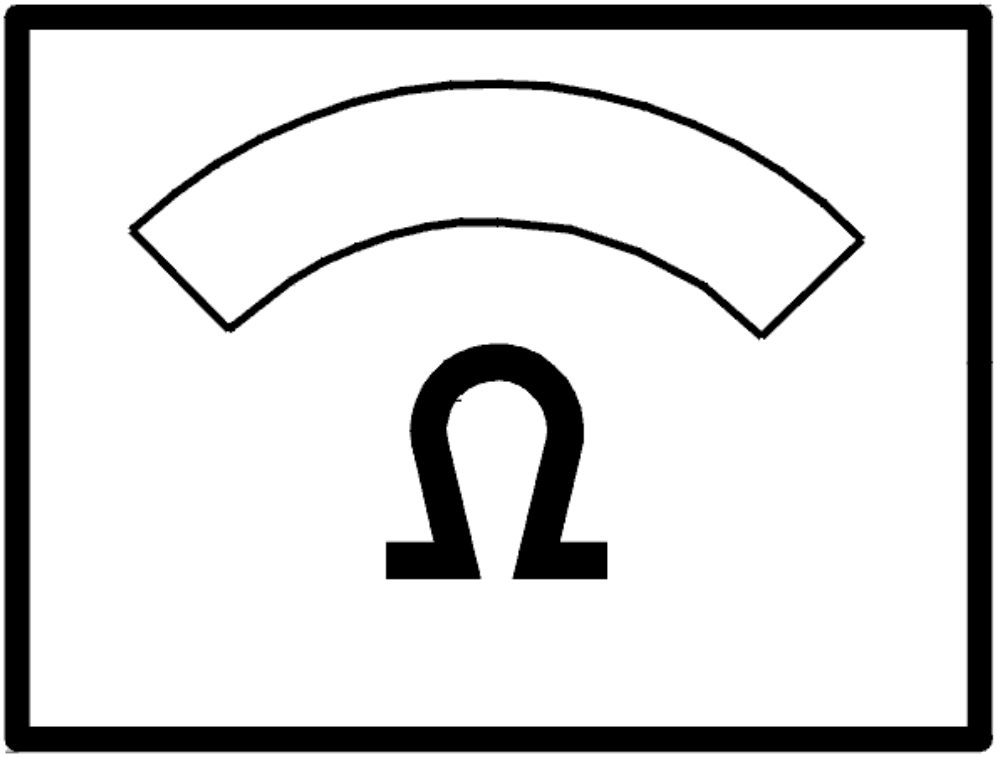

Fig. 445: Identifying Ohm Meter
Courtesy of VOLVO CARS CORPORATION

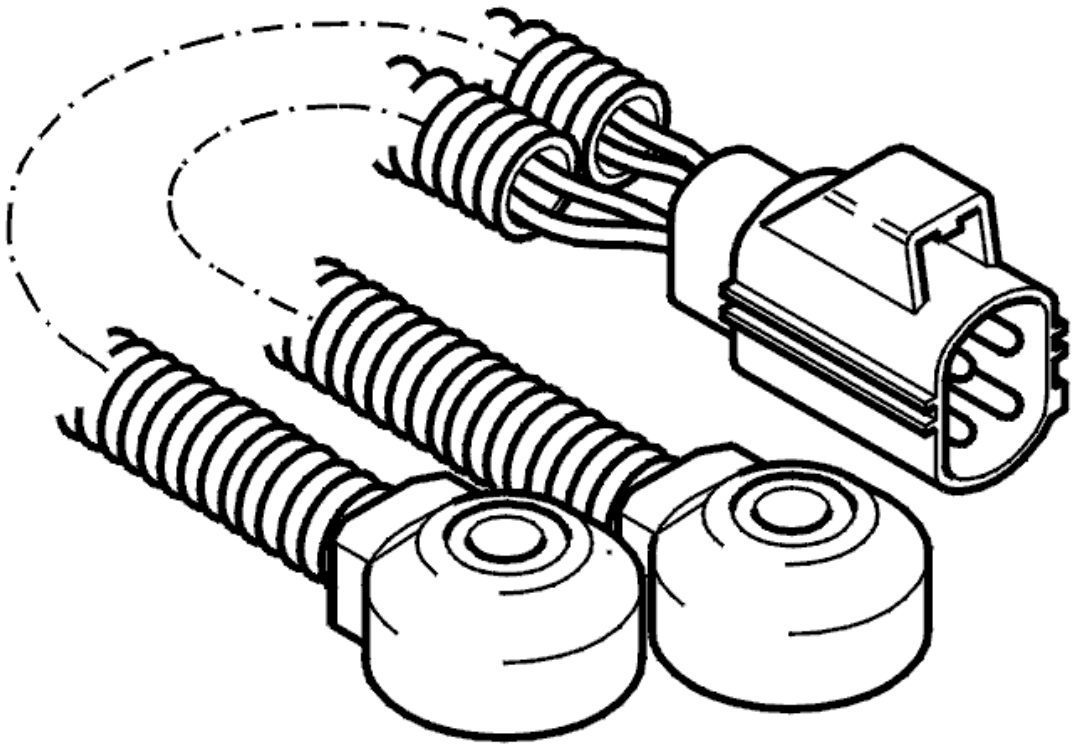

Fig. 446: Identifying Knock Sensor
Courtesy of VOLVO CARS CORPORATION

- **Continue**

  Refer to **INFORMATION**

INFORMATION

FAULT-TRACING INFORMATION

If the fault is intermittent, do not verify fault-tracing if the fault does not recur.

It is possible to view the information again, or leave fault-tracing for this diagnostic trouble code (DTC).

ECM-3410: KNOCK SENSOR (KS) FRONT. SIGNAL TOO HIGH. PERMANENT FAULT (B5254T2; B6294T; 2003-2004)

DIAGNOSTIC TROUBLE CODE (DTC) INFORMATION

see **DIAGNOSTIC TROUBLE CODE (DTC) INFORMATION**

SIGNAL TOO HIGH. PERMANENT FAULT

see **SIGNAL TOO HIGH. PERMANENT FAULT**

ECM-3410: KNOCK SENSOR (KS) FRONT. SIGNAL TOO LOW. INTERMITTENT FAULT (B5254T2; B6294T; 2003-2004)

DIAGNOSTIC TROUBLE CODE (DTC) INFORMATION

see **DIAGNOSTIC TROUBLE CODE (DTC) INFORMATION**

SIGNAL TOO LOW. INTERMITTENT FAULT

CHECKING WIRING AND CONNECTORS

Check the knock sensor (KS) connector. Check for contact resistance and oxidation. Check for loose connections.

Check the signal cable between knock sensor (KS) terminal #1 and control module terminal #A46 (#A46). Check the ground lead between knock sensor (KS) terminal #2 and control module terminal #A64 (#B4). Check for an intermittent open-circuit. Check for an intermittent short-circuit to ground.

Check that the knock sensor (KS) is tightened to the correct torque.

Other information

- To connect the breakout box / access the control module, see **CONNECTING THE BREAKOUT BOX**
- For B5xx4T, see **KNOCK SENSOR (KS), REPLACING**
- For B6xx4T, see **KNOCK SENSOR (KS), REPLACING** .
- For 5 cylinder turbocharged engines -2004, see **SIGNAL DESCRIPTION**
- For 5 cylinder turbocharged engines 2005-, see **SIGNAL SPECIFICATION** .
- For 6 cylinder engines -2004, see **SIGNAL SPECIFICATION**
- For 6 cylinder engines 2005-, see **SIGNAL SPECIFICATION** .
- see **CHECKING WIRING AND TERMINALS** .

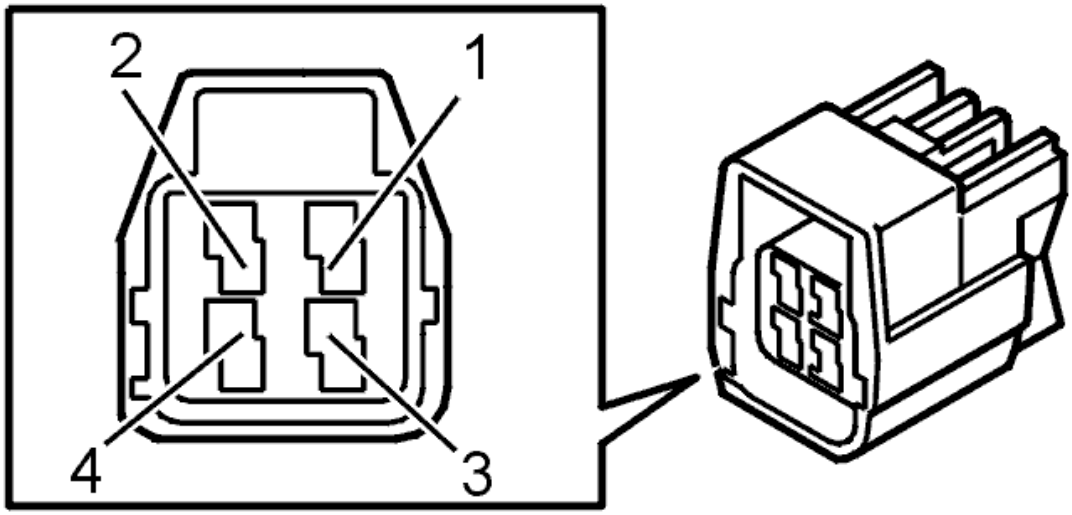

Fig. 447: Identifying Connector Terminals
Courtesy of VOLVO CARS CORPORATION

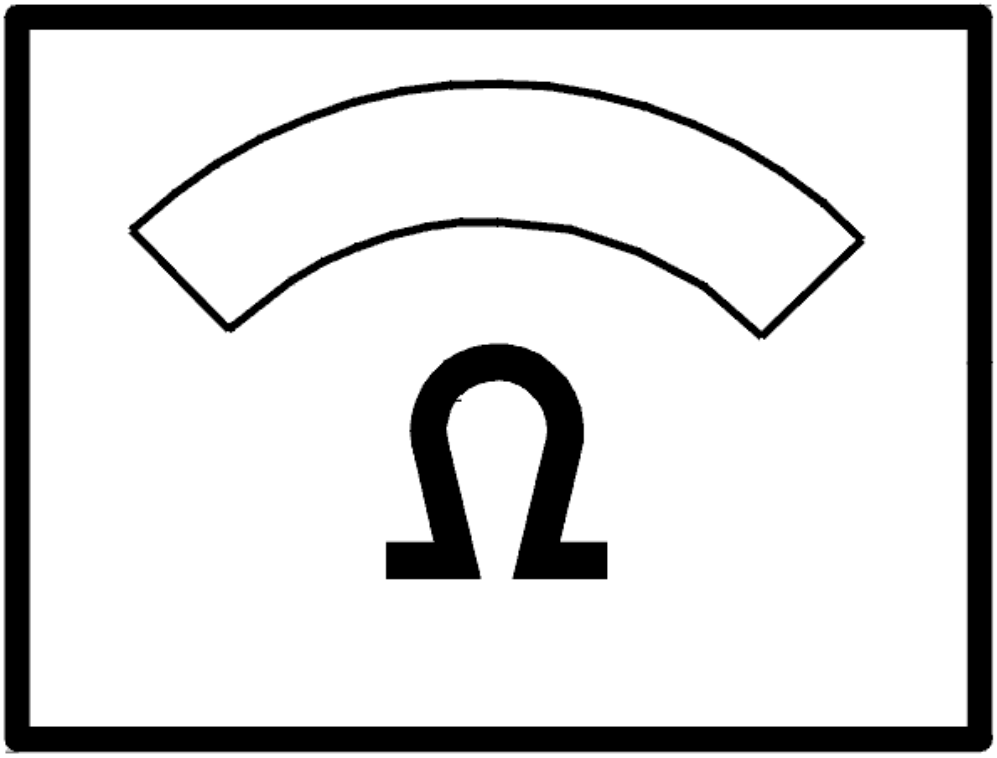

Fig. 448: Identifying Ohm Meter
Courtesy of VOLVO CARS CORPORATION

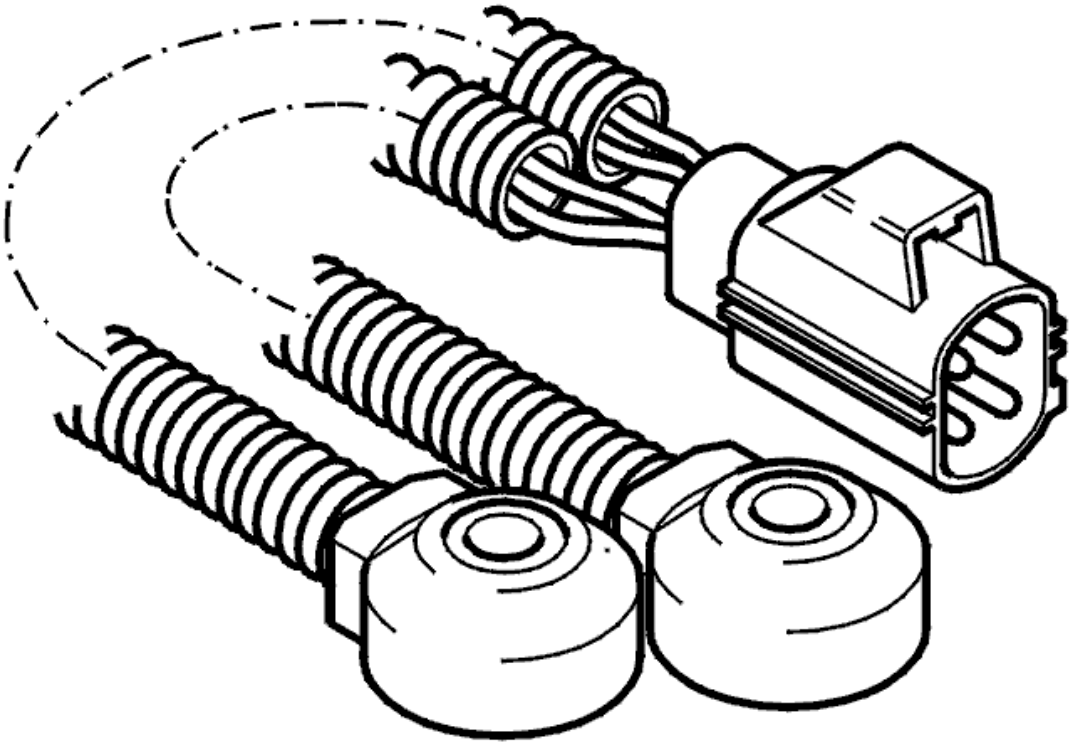

Fig. 449: Identifying Knock Sensor
Courtesy of VOLVO CARS CORPORATION

- **Continue**

  Refer to **INFORMATION**

INFORMATION

FAULT-TRACING INFORMATION

If the fault is intermittent, do not verify fault-tracing if the fault does not recur.

It is possible to view the information again, or leave fault-tracing for this diagnostic trouble code (DTC).

ECM-3410: KNOCK SENSOR (KS) FRONT. SIGNAL TOO LOW. PERMANENT FAULT (B5254T2; B6294T; 2003-2004)

DIAGNOSTIC TROUBLE CODE (DTC) INFORMATION

see **DIAGNOSTIC TROUBLE CODE (DTC) INFORMATION**

SIGNAL TOO LOW. PERMANENT FAULT

see **SIGNAL TOO LOW. PERMANENT FAULT**

ECM-341B: CAMSHAFT POSITION (CMP) SENSOR, EXHAUST. SIGNAL MISSING (B5254T2; 2005-2007)

DIAGNOSTIC TROUBLE CODE (DTC) INFORMATION

see **DIAGNOSTIC TROUBLE CODE (DTC) INFORMATION**

FAULTY SIGNAL OR SIGNAL MISSING

see **FAULTY SIGNAL OR SIGNAL MISSING**

ECM-341B: CAMSHAFT POSITION (CMP) SENSOR, EXHAUST. SIGNAL MISSING (B6294T; 2005-2006)

DIAGNOSTIC TROUBLE CODE (DTC) INFORMATION

see **DIAGNOSTIC TROUBLE CODE (DTC) INFORMATION**

FAULTY SIGNAL OR SIGNAL MISSING

see **FAULTY SIGNAL OR SIGNAL MISSING**

ECM-341C: CAMSHAFT POSITION SENSOR, EXHAUST. SIGNAL TOO HIGH (B5254T2; 2005-2007)

DIAGNOSTIC TROUBLE CODE (DTC) INFORMATION

see **DIAGNOSTIC TROUBLE CODE (DTC) INFORMATION**

SIGNAL TOO HIGH

CHECKING THE STATUS

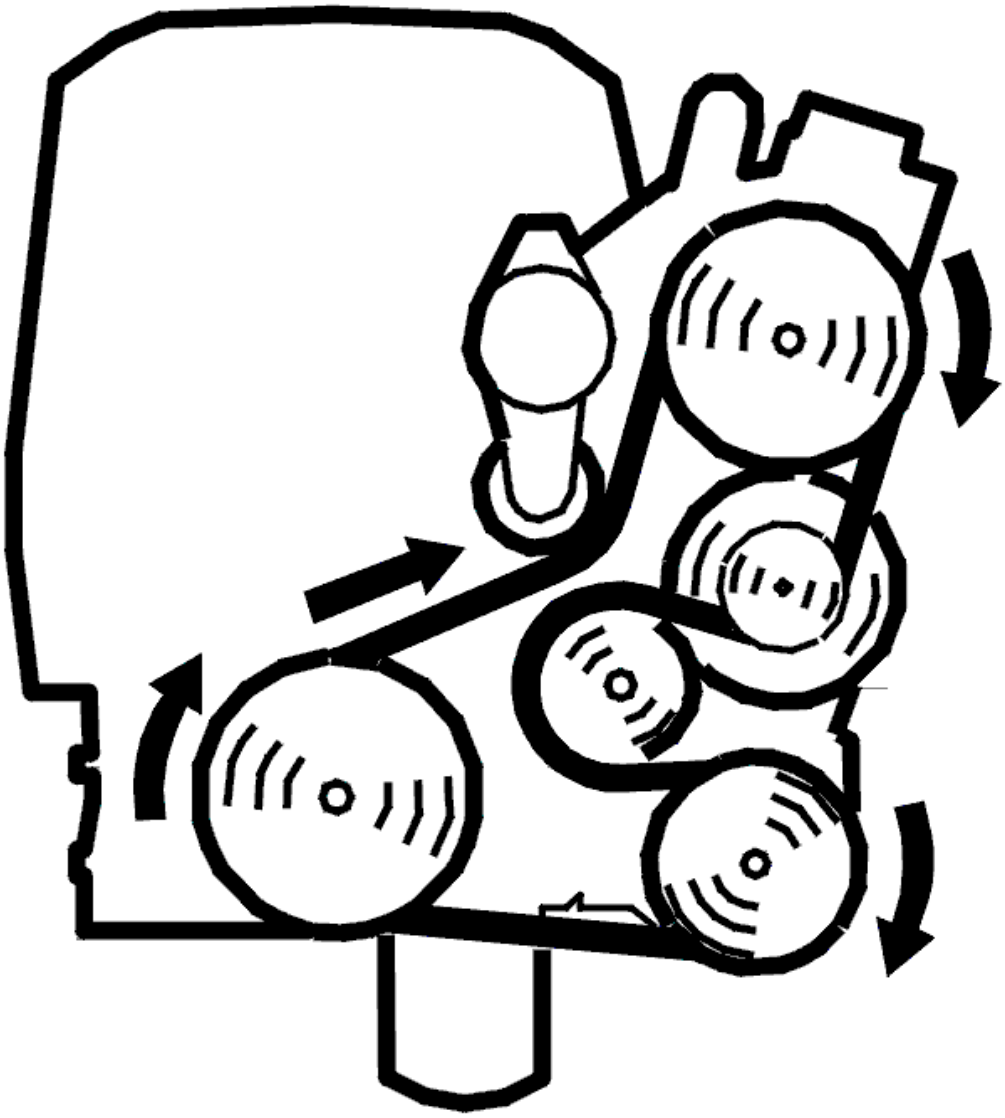

Fig. 450: Belt Routing / Engine Idling - Volvo
Courtesy of VOLVO CARS CORPORATION

- Start the engine.

  Read off the diagnostic status and fault status for the diagnostic trouble code (DTC) by selecting the relevant diagnostic trouble code (DTC) from the list.

  Increase the engine speed a number of times until the diagnostic is "Complete".

  Check whether the fault is permanent or intermittent. Read off the diagnostic trouble code (DTC) fault status when the diagnostic status is "Completed".

  HINT: In some cases several functions of the component will be diagnosed. The affects the amount of time taken to run the diagnostic.

The fault is permanent if the fault status is "Fault found". If the fault status is "No fault found" the fault is intermittent and not presently active.

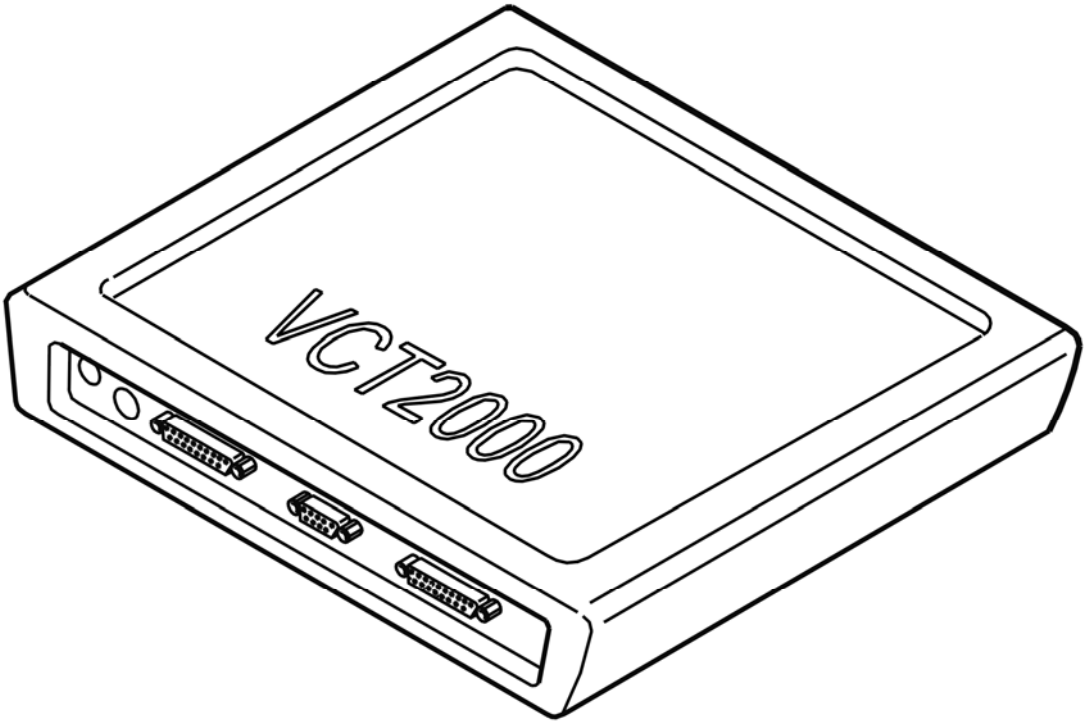

Fig. 451: Identifying VCT2000 Diagnostic Tool Symbol In VIDA
Courtesy of VOLVO CARS CORPORATION

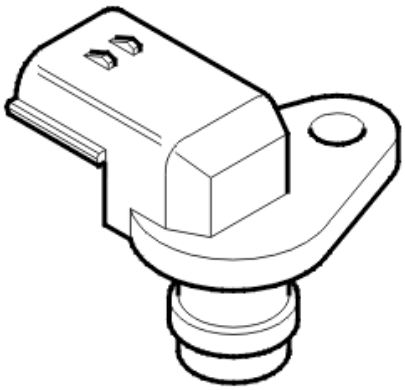

Fig. 452: Camshaft Position Sensor
Courtesy of VOLVO CARS CORPORATION

- **Continue**

Refer to **CHECKING COMPONENTS AND WIRING**

CHECKING COMPONENTS AND WIRING

- Check the connector for the camshaft position (CMP) sensor. Check for contact resistance and oxidation.

  Check the signal cable between engine control module (ECM) terminal #A27 (#A27) and camshaft position (CMP) sensor connector terminal #3. Check for an open-circuit. Check for a short-circuit to supply voltage.

  Check the ground lead between engine control module (ECM) terminal #A65 (#B5) and camshaft position (CMP) sensor connector terminal #2. Check for an open-circuit.

  Check the power cable between engine control module (ECM) terminal #A29 (#A29) and camshaft position (CMP) sensor connector terminal #1. Check for a short-circuit to ground.

  Remedy as necessary.

  Other information

  - see **CONNECTING THE BREAKOUT BOX**
  - For 5 cylinder turbocharged engines -2004, see **SIGNAL DESCRIPTION**
  - For 5 cylinder turbocharged engines 2005-, see **SIGNAL SPECIFICATION** .
  - see **POSITION SENSOR CAMSHAFT, REPLACING**
  - see **CHECKING WIRING AND TERMINALS**

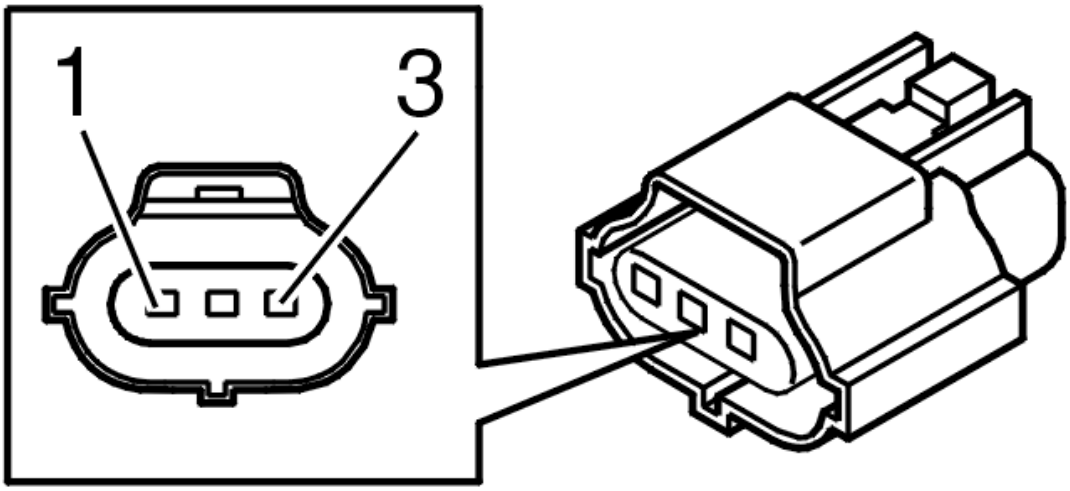

Fig. 453: Identifying 3-Bit Connector
Courtesy of VOLVO CARS CORPORATION

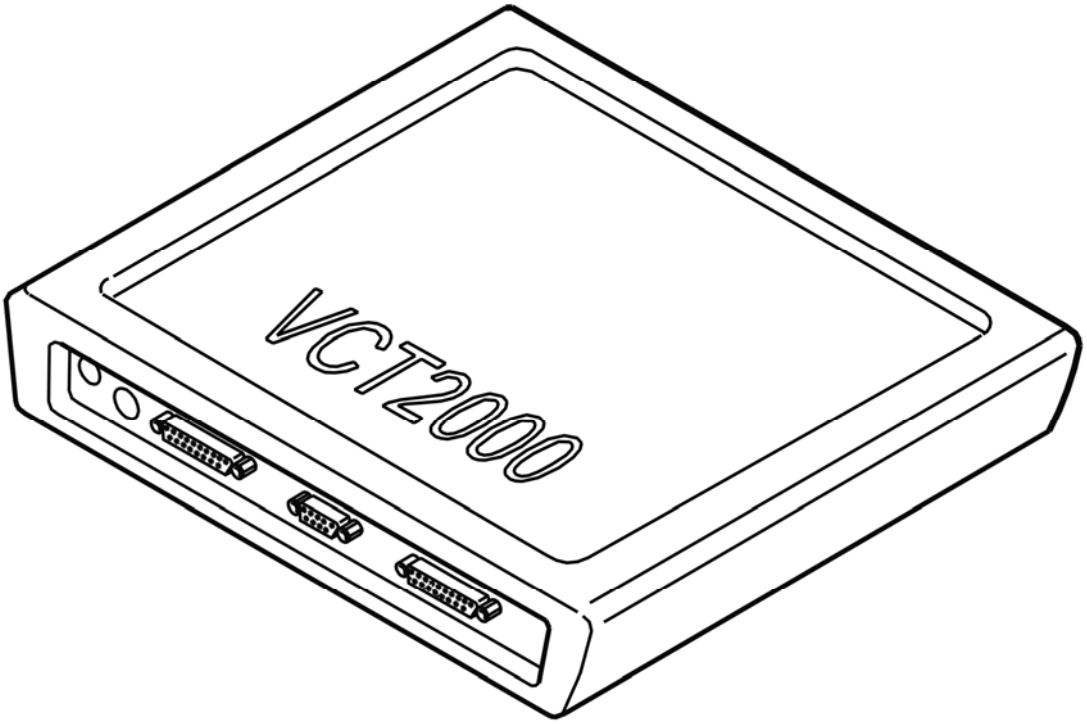

Fig. 454: Identifying VCT2000 Diagnostic Tool Symbol In VIDA
Courtesy of VOLVO CARS CORPORATION

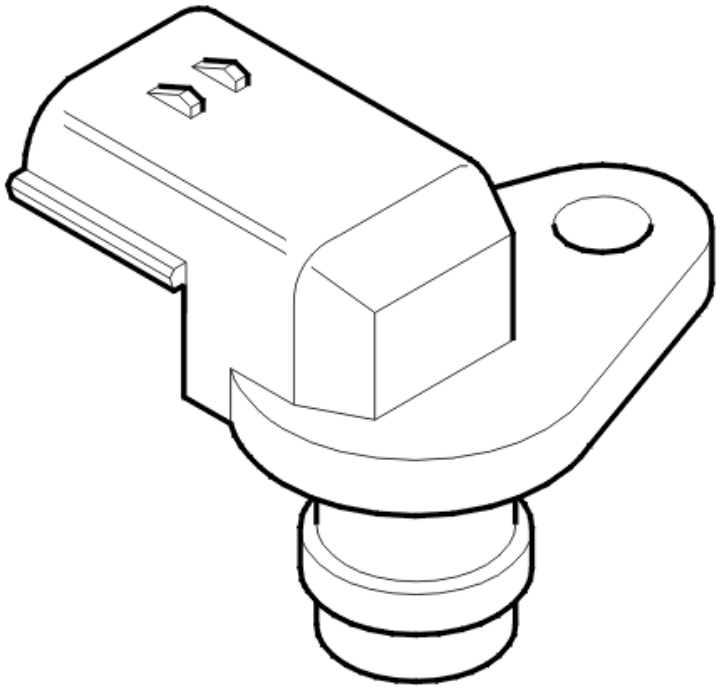

Fig. 455: Detecting Camshaft Flanks On Sensor
Courtesy of VOLVO CARS CORPORATION

- **Continue**

  Refer to **VERIFICATION**

VERIFICATION

VERIFICATION

HINT: After carrying out the repair, check that the fault has been remedied.

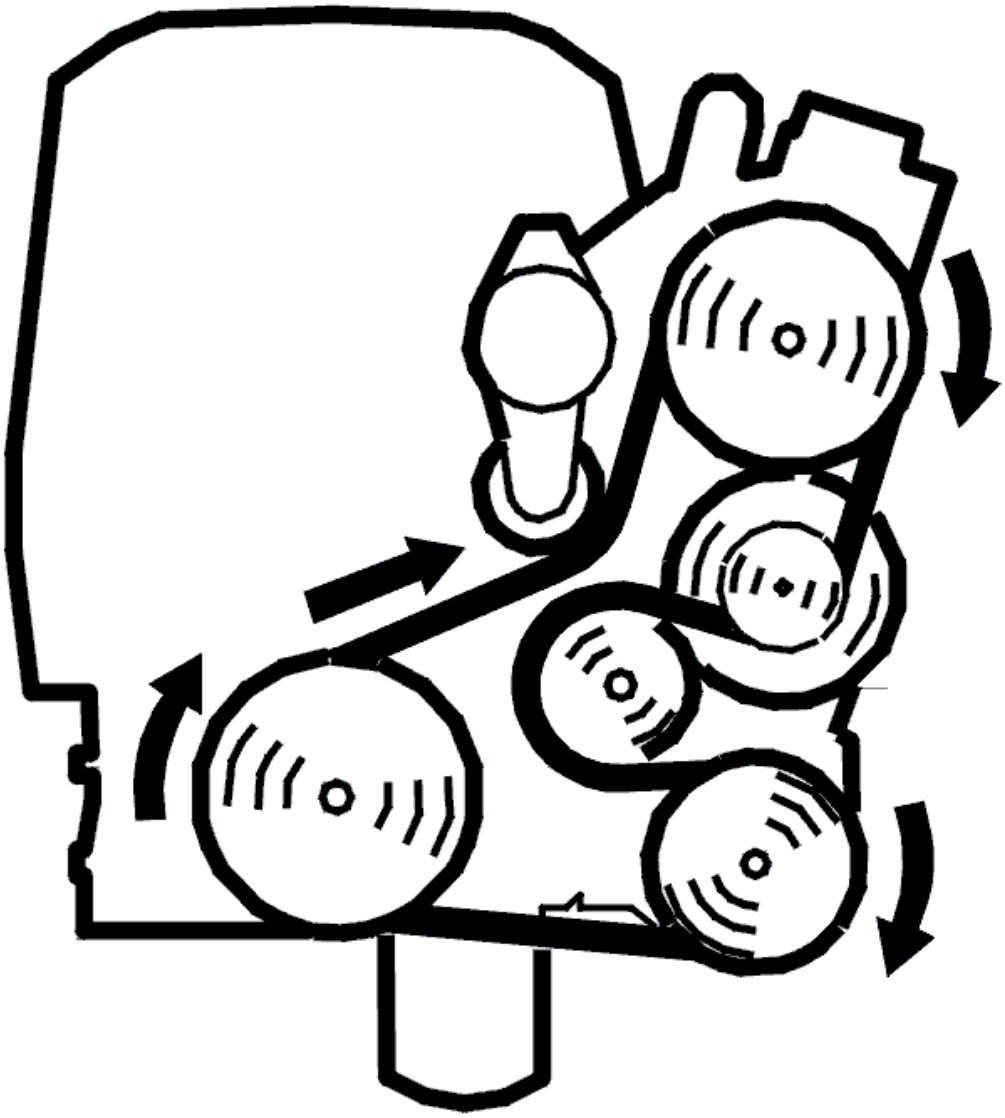

Fig. 456: Belt Routing / Engine Idling - Volvo
Courtesy of VOLVO CARS CORPORATION

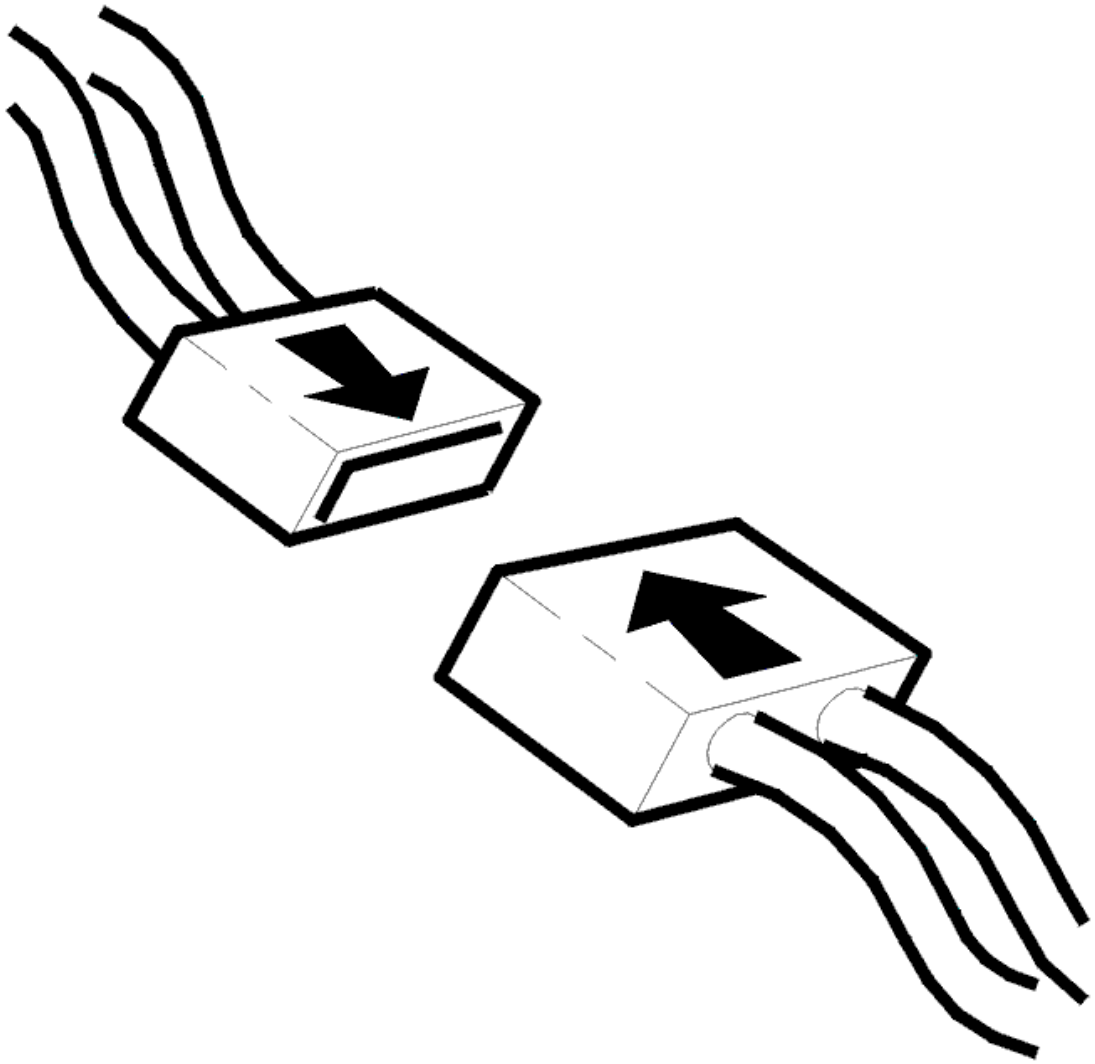

Fig. 457: Connecting Connector
Courtesy of VOLVO CARS CORPORATION

- Ignition off
- Reconnect the connectors, reinstall components etc.
- Start the engine
- Read off the diagnostic status and fault status for the diagnostic trouble code (DTC) by selecting the relevant diagnostic trouble code (DTC) from the list.

  Increase the engine speed a number of times until the diagnostic is "Complete".

  Check the fault status for the diagnostic trouble code (DTC) when the diagnostic is "Complete". If the function is correct, the fault status must be "No fault found" when the diagnostic is complete.

  HINT: In some cases several functions of the component will be diagnosed. The affects the amount

of time taken to run the diagnostic.

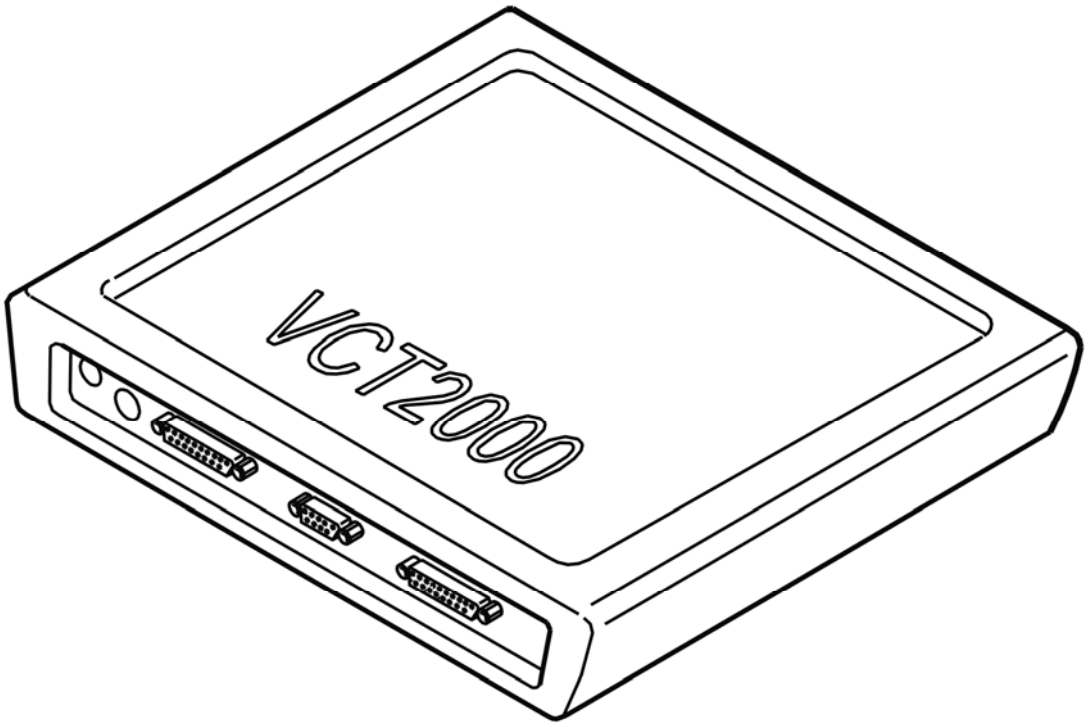

Fig. 458: Identifying VCT2000 Diagnostic Tool Symbol In VIDA
Courtesy of VOLVO CARS CORPORATION

Is the function OK?

- **YES**

  VERIFIED: Troubleshooting has been completed.

- **NO**

  Refer to **INFORMATION**

INFORMATION

FAULT-TRACING INFORMATION

The fault should have been detected and remedied. As this is not the case fault-tracing has failed.

Exit fault-tracing for this diagnostic trouble code (DTC) or make another attempt.

ECM-341C: CAMSHAFT POSITION SENSOR, EXHAUST. SIGNAL TOO HIGH

(B6294T; 2005-2006)

DIAGNOSTIC TROUBLE CODE (DTC) INFORMATION

see **DIAGNOSTIC TROUBLE CODE (DTC) INFORMATION**

SIGNAL TOO HIGH

see **SIGNAL TOO HIGH**

ECM-341D: CAMSHAFT POSITION SENSOR, EXHAUST. SIGNAL TOO LOW (B5254T2; 2005-2007)

DIAGNOSTIC TROUBLE CODE (DTC) INFORMATION

see **DIAGNOSTIC TROUBLE CODE (DTC) INFORMATION**

SIGNAL TOO LOW

CHECKING THE STATUS

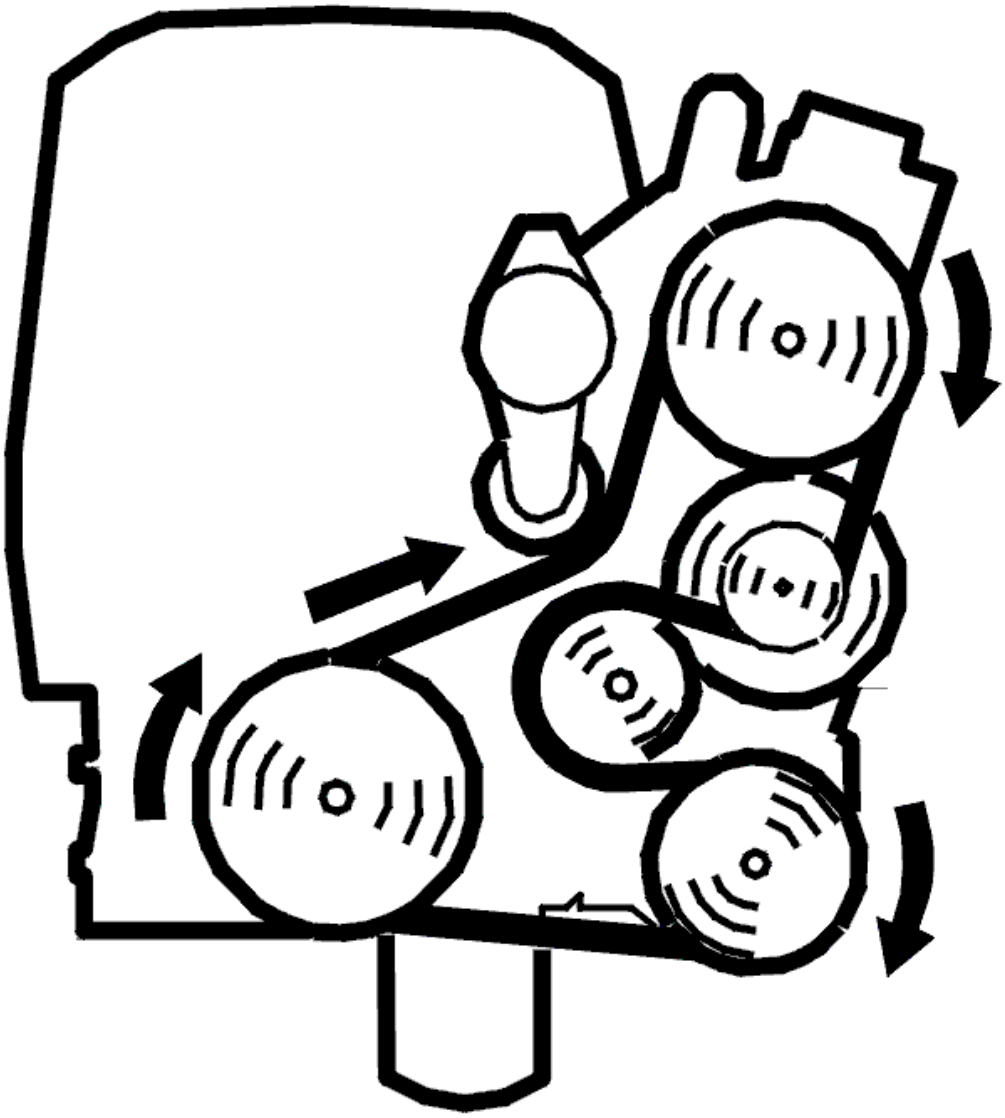

Fig. 459: Belt Routing / Engine Idling - Volvo
Courtesy of VOLVO CARS CORPORATION

- Start the engine.

  Read off the diagnostic status and fault status for the diagnostic trouble code (DTC) by selecting the relevant diagnostic trouble code (DTC) from the list.

  Increase the engine speed a number of times until the diagnostic is "Complete".

  Check whether the fault is permanent or intermittent. Read off the diagnostic trouble code (DTC) fault status when the diagnostic status is "Completed".

  HINT: In some cases several functions of the component will be diagnosed. The affects the amount of time taken to run the diagnostic.

The fault is permanent if the fault status is "Fault found". If the fault status is "No fault found" the fault is intermittent and not presently active.

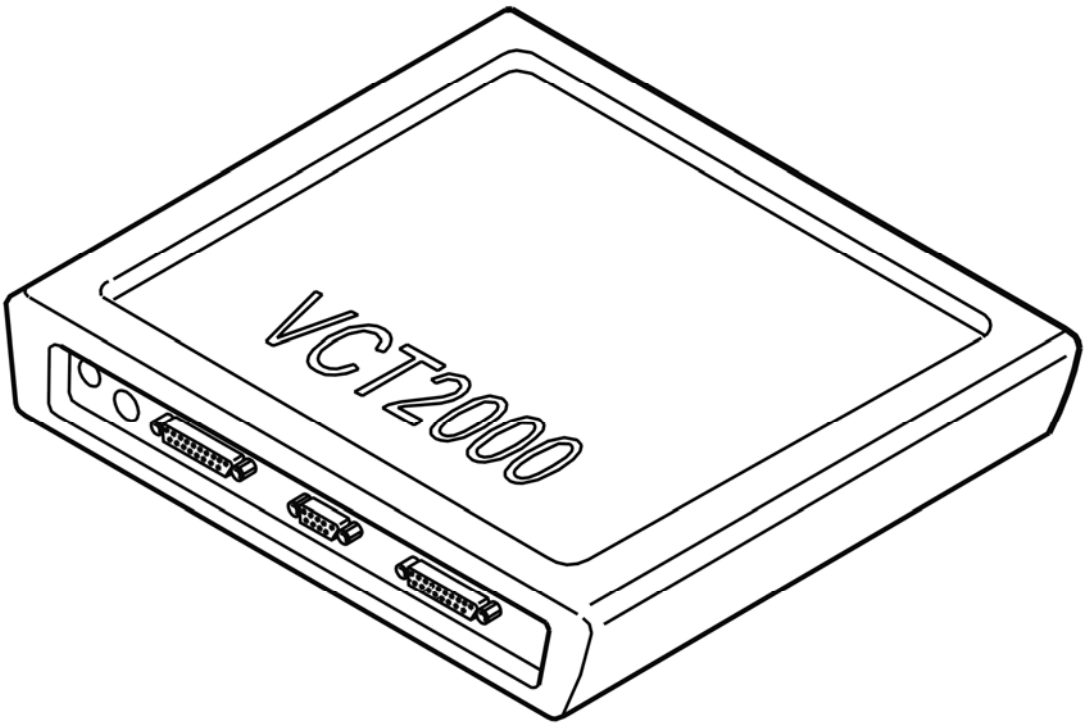

Fig. 460: Identifying VCT2000 Diagnostic Tool Symbol In VIDA
Courtesy of VOLVO CARS CORPORATION

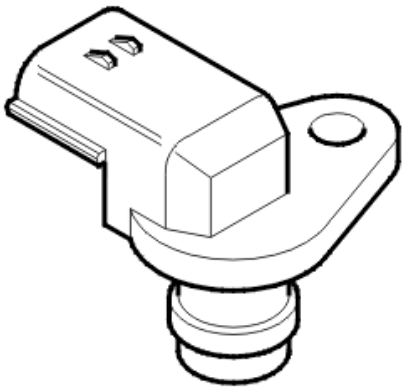

Fig. 461: Camshaft Position Sensor
Courtesy of VOLVO CARS CORPORATION

- **Continue**

Refer to **CHECKING COMPONENTS AND WIRING**

CHECKING COMPONENTS AND WIRING

Check the signal cable between engine control module (ECM) terminal #A46 (#A46) and camshaft position (CMP) sensor connector terminal #3. Check for a short-circuit to ground.

Check the power cable between engine control module (ECM) terminal #A29 (#A29) and camshaft position (CMP) sensor connector terminal #1. Check for an open-circuit.

HINT: With the ignition on and the camshaft position (CMP) sensor connector disconnected, the voltage between terminal #1 and ground terminal should be approximately 5 V.

Remedy as necessary.

Other information

- see **CONNECTING THE BREAKOUT BOX**
- For 5 cylinder turbocharged engines -2004, see **SIGNAL DESCRIPTION**
- For 5 cylinder turbocharged engines 2005-, see **SIGNAL SPECIFICATION** .
- see **POSITION SENSOR CAMSHAFT, REPLACING**
- see **CHECKING WIRING AND TERMINALS**

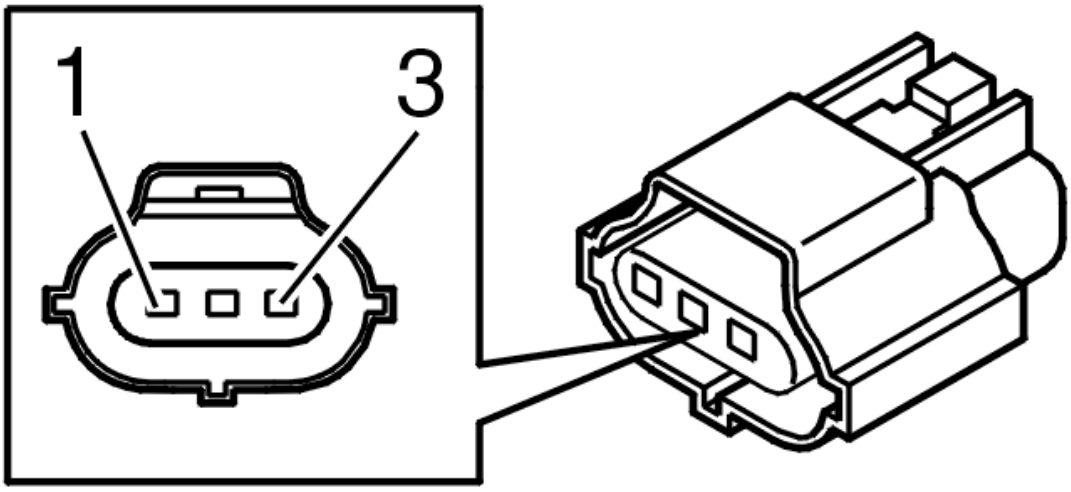

Fig. 462: Identifying 3-Bit Connector
Courtesy of VOLVO CARS CORPORATION

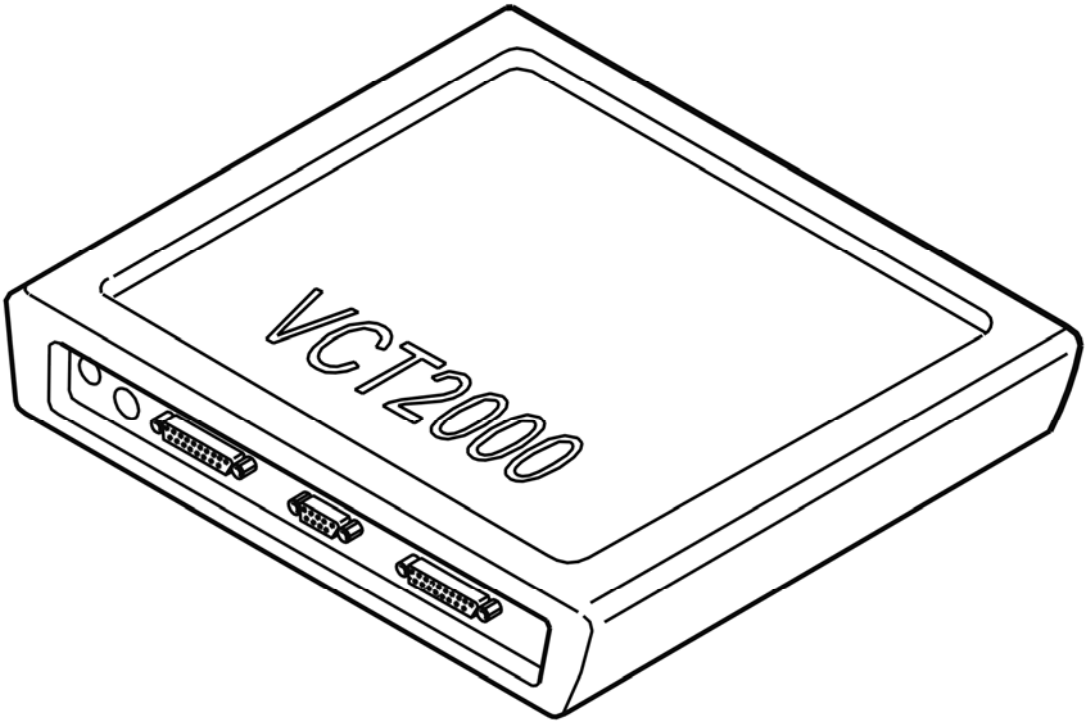

Fig. 463: Identifying VCT2000 Diagnostic Tool Symbol In VIDA
Courtesy of VOLVO CARS CORPORATION

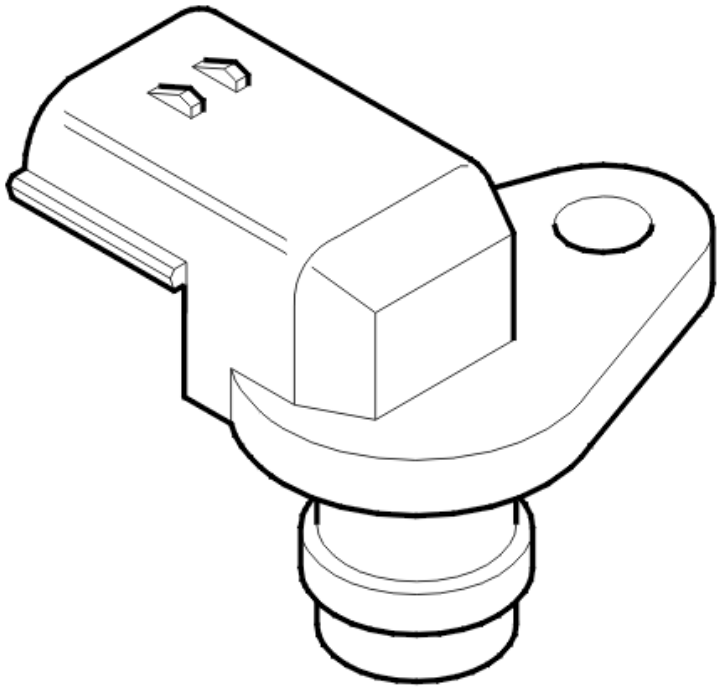

Fig. 464: Detecting Camshaft Flanks On Sensor
Courtesy of VOLVO CARS CORPORATION

- **Continue**

  Refer to **VERIFICATION**

VERIFICATION

VERIFICATION

HINT: After carrying out the repair, check that the fault has been remedied.

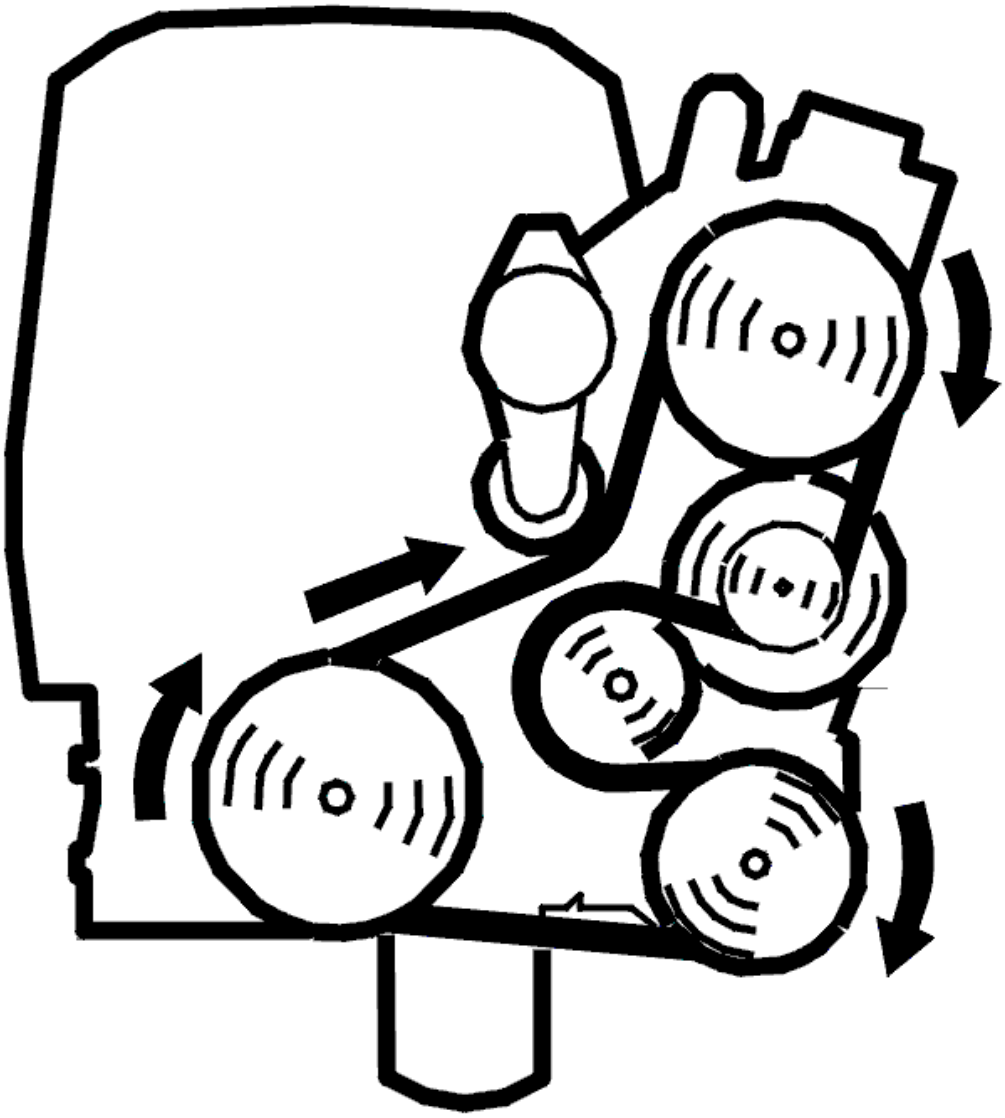

Fig. 465: Belt Routing / Engine Idling - Volvo
Courtesy of VOLVO CARS CORPORATION

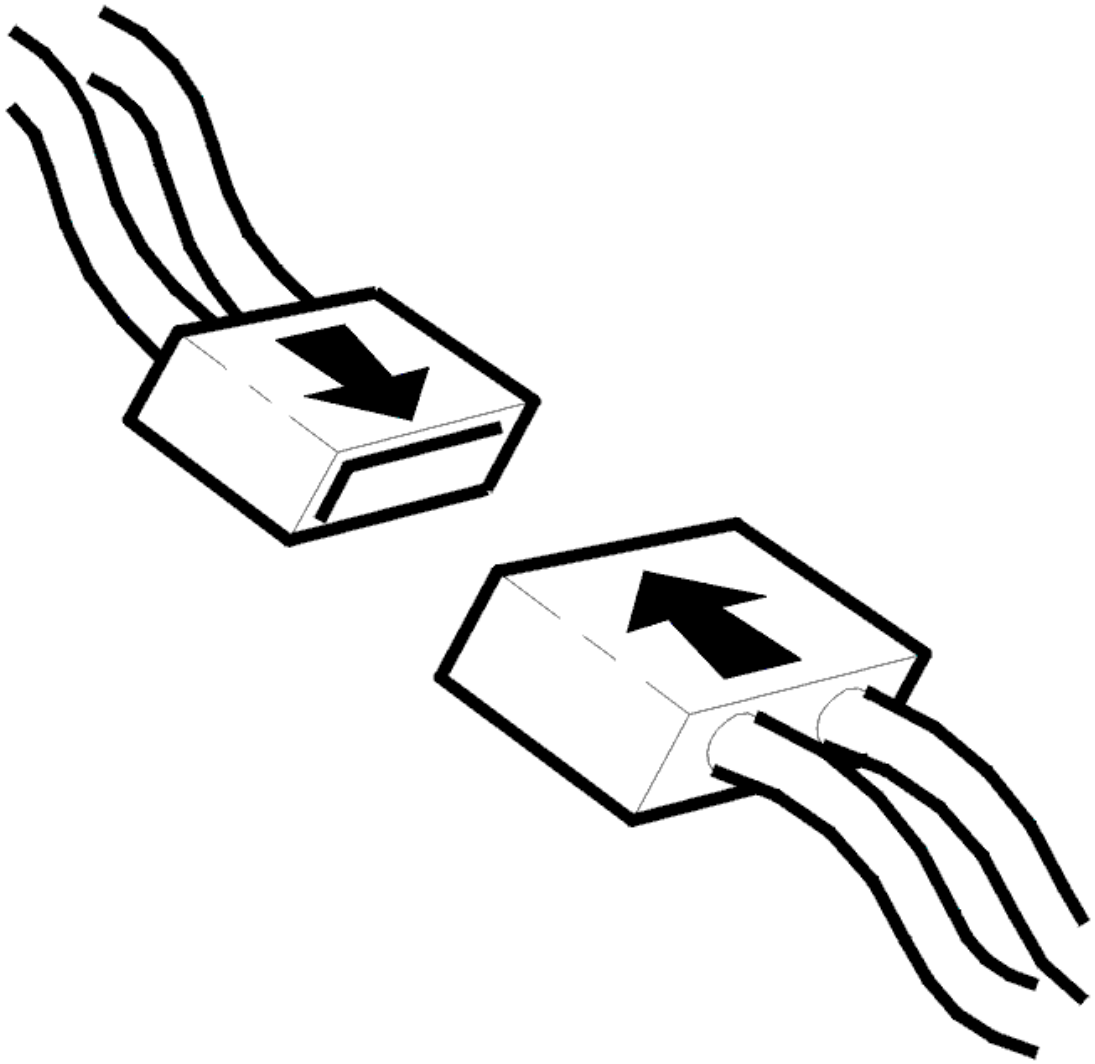

Fig. 466: Connecting Connector
Courtesy of VOLVO CARS CORPORATION

- Ignition off
- Reconnect the connectors, reinstall components etc.
- Start the engine
- Read off the diagnostic status and fault status for the diagnostic trouble code (DTC) by selecting the relevant diagnostic trouble code (DTC) from the list.

  Increase the engine speed a number of times until the diagnostic is "Complete".

  Check the fault status for the diagnostic trouble code (DTC) when the diagnostic is "Complete". If the function is correct, the fault status must be "No fault found" when the diagnostic is complete.

  HINT: In some cases several functions of the component will be diagnosed. The affects the amount

of time taken to run the diagnostic.

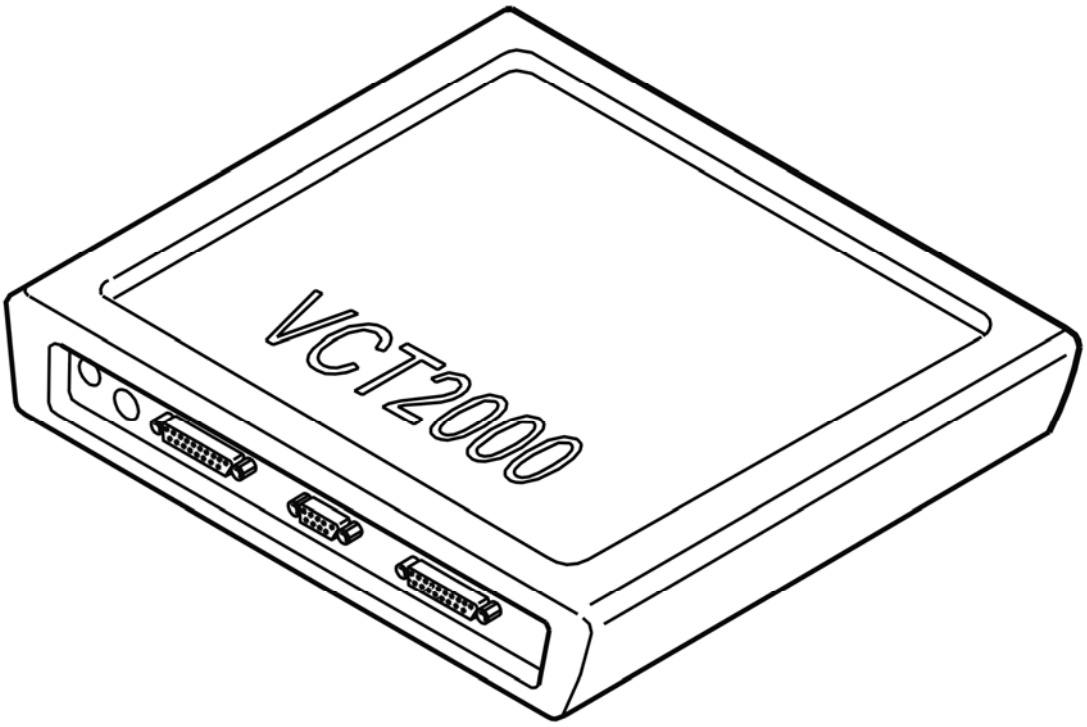

Fig. 467: Identifying VCT2000 Diagnostic Tool Symbol In VIDA
Courtesy of VOLVO CARS CORPORATION

Is the function OK?

- **YES**

  VERIFIED: Troubleshooting has been completed.

- **NO**

  Refer to **INFORMATION**

INFORMATION

FAULT-TRACING INFORMATION

The fault should have been detected and remedied. As this is not the case fault-tracing has failed.

Exit fault-tracing for this diagnostic trouble code (DTC) or make another attempt.

ECM-341D: CAMSHAFT POSITION SENSOR, EXHAUST. SIGNAL TOO LOW

(B6294T; 2005-2006)

DIAGNOSTIC TROUBLE CODE (DTC) INFORMATION

see **DIAGNOSTIC TROUBLE CODE (DTC) INFORMATION**

SIGNAL TOO LOW

see **SIGNAL TOO LOW**

ECM-3420: KNOCK SENSOR (KS) REAR. SIGNAL TOO HIGH. INTERMITTENT FAULT (B5254T2; B6294T; 2003-2004)

DIAGNOSTIC TROUBLE CODE (DTC) INFORMATION

Condition

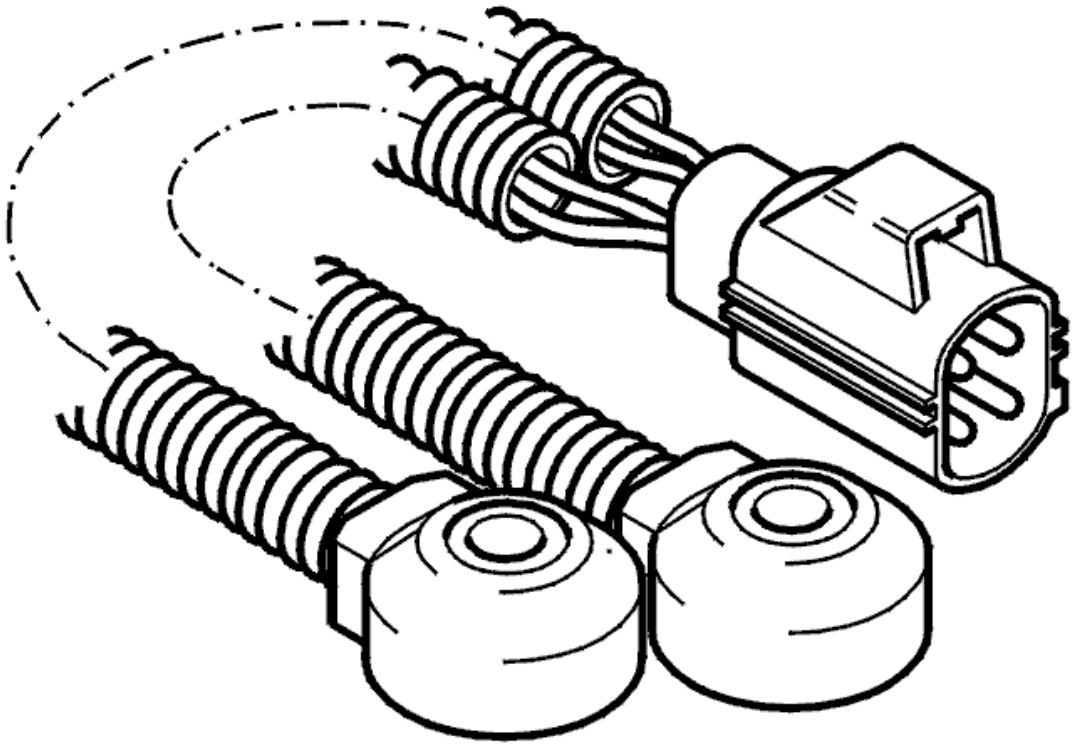

Fig. 468: Identifying Knock Sensor
Courtesy of VOLVO CARS CORPORATION

Diagnostic trouble code (DTC) ECM-3420 is stored if the engine speed (RPM) is over 3000 RPM, the engine coolant temperature (ECT) is above 40°C (104°F) and the signal from the rear knock sensor (KS) is too high or too low.

Substitute Value

- ignition retarded for safety reasons
- reduced boost pressure

Possible Source

Signal too high:

- short-circuit to supply voltage in the signal cable
- worn engine

Signal too low:

- open-circuit in signal cable
- contact resistance in terminals
- defective knock sensor (KS)
- short-circuit between knock sensor (KS) signal cables

Fault symptom[s]

- none

SIGNAL TOO HIGH. INTERMITTENT FAULT

CHECKING CONNECTORS AND WIRING

Check the signal cable between knock sensor (KS) terminal #3 and control module terminal #A45 (#A45). Check the ground lead between knock sensor (KS) terminal #4 and control module terminal #A67 (#B7). Check for an intermittent short-circuit to supply voltage.

Check that the knock sensor (KS) is tightened to the correct torque.

HINT: The diagnostic trouble code (DTC) may be caused by a worn engine. Start the engine and listen for noise.

Other information

- To connect the breakout box / access the control module, see **CONNECTING THE BREAKOUT BOX**
- For B5xx4T, see **KNOCK SENSOR (KS), REPLACING**
- For B6xx4T, see **KNOCK SENSOR (KS), REPLACING** .
- For 5 cylinder turbocharged engines -2004, see **SIGNAL DESCRIPTION**
- For 5 cylinder turbocharged engines 2005-, see **SIGNAL SPECIFICATION** .
- For 6 cylinder engines -2004, see **SIGNAL SPECIFICATION**

- For 6 cylinder engines 2005-, see **SIGNAL SPECIFICATION** .
- see **CHECKING WIRING AND TERMINALS** .

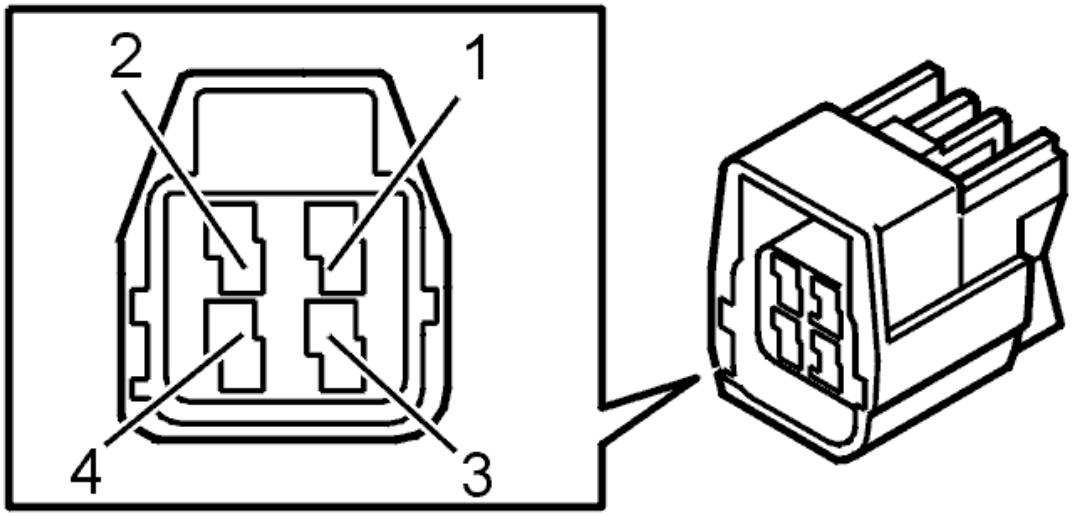

Fig. 469: Identifying Connector Terminals
Courtesy of VOLVO CARS CORPORATION

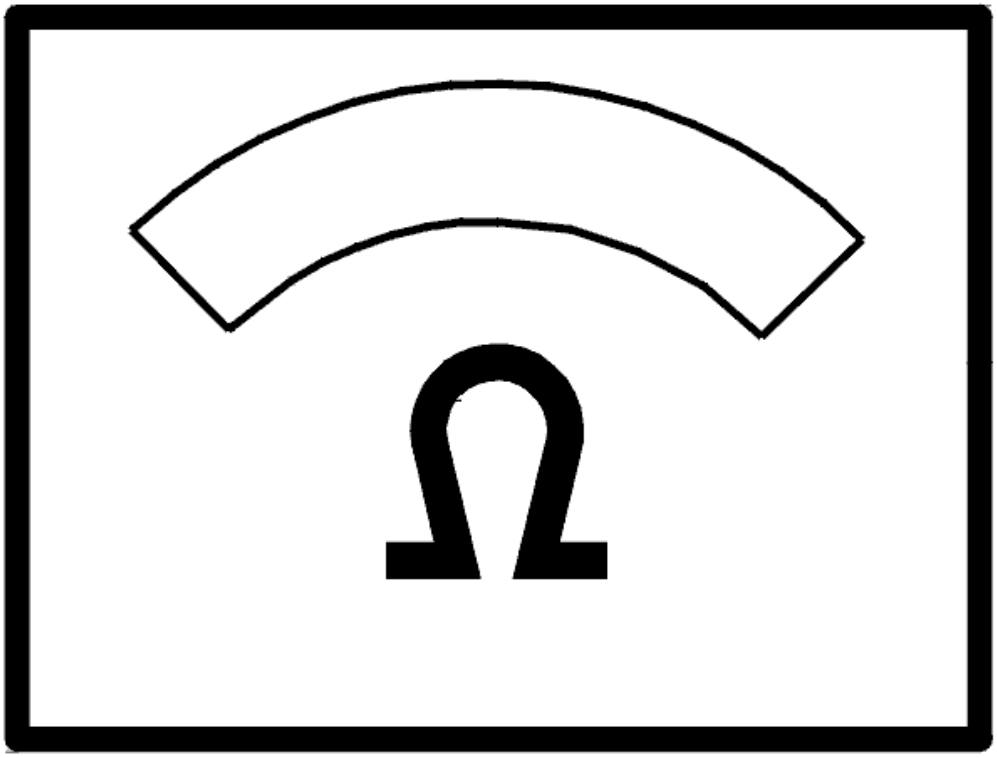

Fig. 470: Identifying Ohm Meter
Courtesy of VOLVO CARS CORPORATION

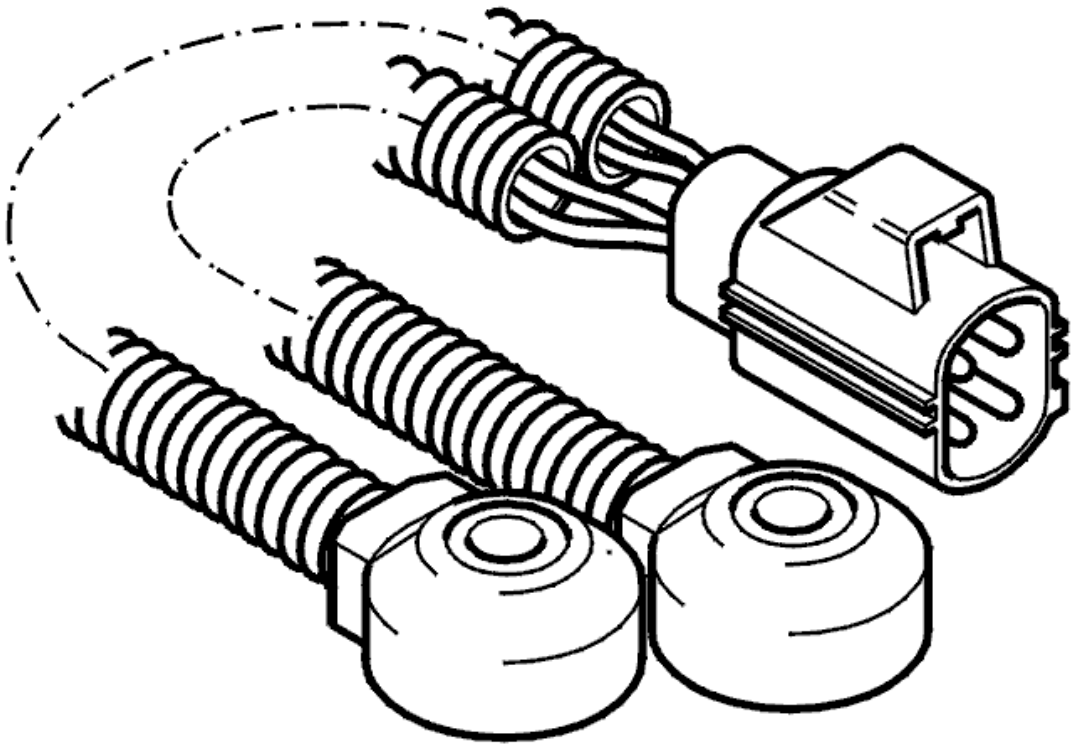

Fig. 471: Identifying Knock Sensor
Courtesy of VOLVO CARS CORPORATION

- **Continue**

  Refer to **INFORMATION**

INFORMATION

FAULT-TRACING INFORMATION

If the fault is intermittent, do not verify fault-tracing if the fault does not recur.

It is possible to view the information again, or leave fault-tracing for this diagnostic trouble code (DTC).

ECM-3420: KNOCK SENSOR (KS) REAR. SIGNAL TOO HIGH. PERMANENT FAULT (B5254T2; B6294T; 2003-2004)

DIAGNOSTIC TROUBLE CODE (DTC) INFORMATION

see **DIAGNOSTIC TROUBLE CODE (DTC) INFORMATION**

SIGNAL TOO HIGH. PERMANENT FAULT

see **SIGNAL TOO HIGH. PERMANENT FAULT**

ECM-3420: KNOCK SENSOR (KS) REAR. SIGNAL TOO LOW. INTERMITTENT FAULT (B5254T2; B6294T; 2003-2004)

DIAGNOSTIC TROUBLE CODE (DTC) INFORMATION

see **DIAGNOSTIC TROUBLE CODE (DTC) INFORMATION**

SIGNAL TOO LOW. INTERMITTENT FAULT

CHECKING WIRING AND CONNECTORS

Check the knock sensor (KS) connector. Check for contact resistance and oxidation. Check for loose connections.

Check the signal cable between knock sensor (KS) terminal #3 and control module terminal #A45 (#A45). Check the ground lead between knock sensor (KS) terminal #4 and control module terminal #A67 (#B7). Check for an intermittent open-circuit. Check for an intermittent short-circuit to ground.

Check that the knock sensor (KS) is tightened to the correct torque.

Other information

- To connect the breakout box / access the control module, see **CONNECTING THE BREAKOUT BOX**
- For B5xx4T, see **KNOCK SENSOR (KS), REPLACING**
- For B6xx4T, see **KNOCK SENSOR (KS), REPLACING** .
- For 5 cylinder turbocharged engines -2004, see **SIGNAL DESCRIPTION**
- For 5 cylinder turbocharged engines 2005-, see **SIGNAL SPECIFICATION** .
- For 6 cylinder engines -2004, see **SIGNAL SPECIFICATION**
- For 6 cylinder engines 2005-, see **SIGNAL SPECIFICATION** .
- see **CHECKING WIRING AND TERMINALS** .

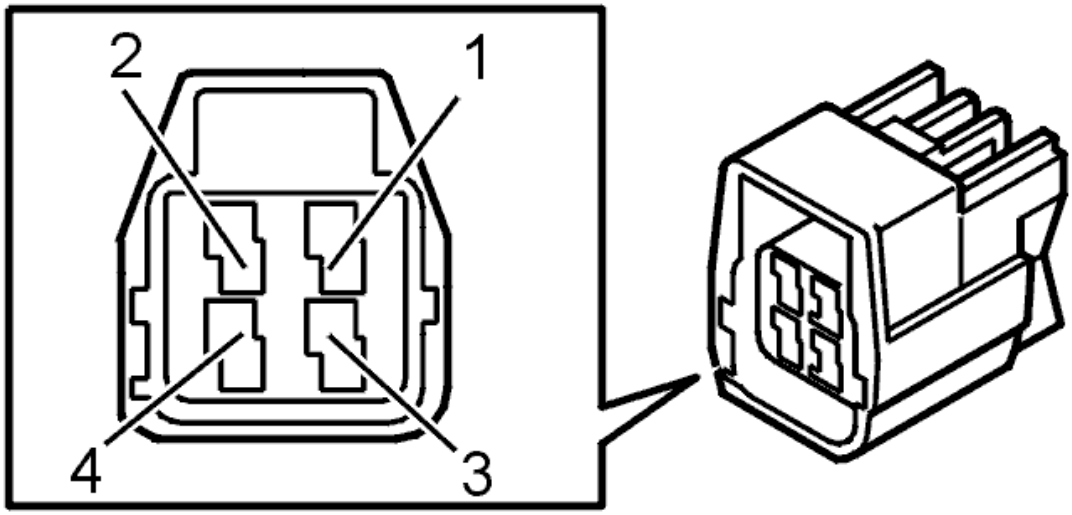

Fig. 472: Identifying Connector Terminals
Courtesy of VOLVO CARS CORPORATION

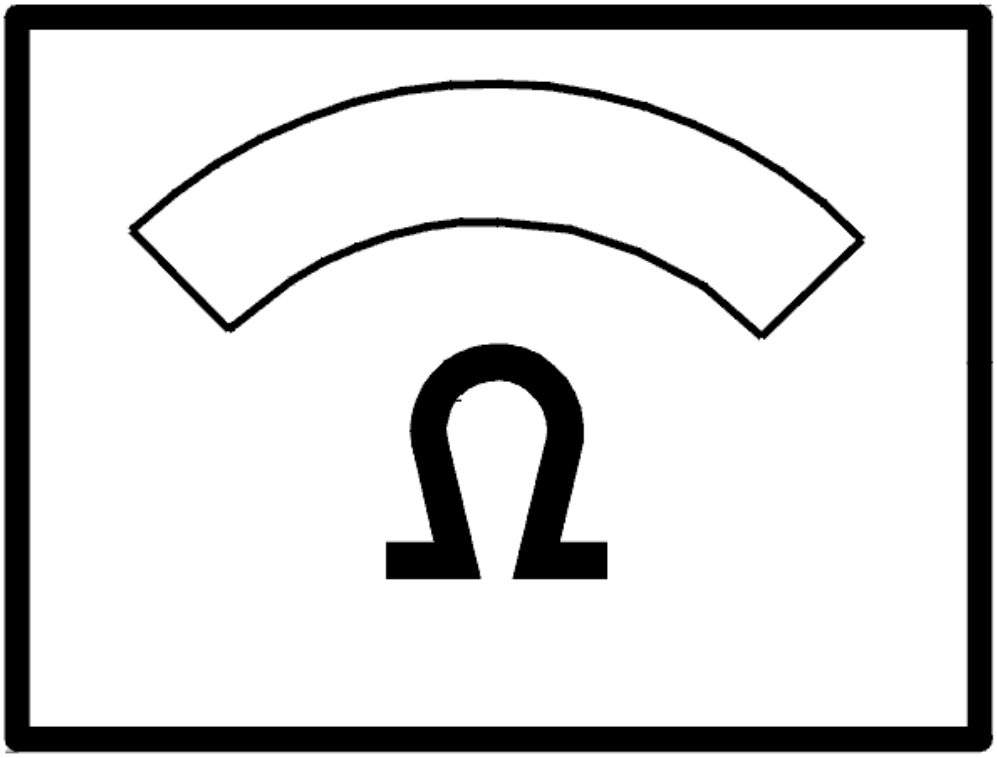

Fig. 473: Identifying Ohm Meter
Courtesy of VOLVO CARS CORPORATION

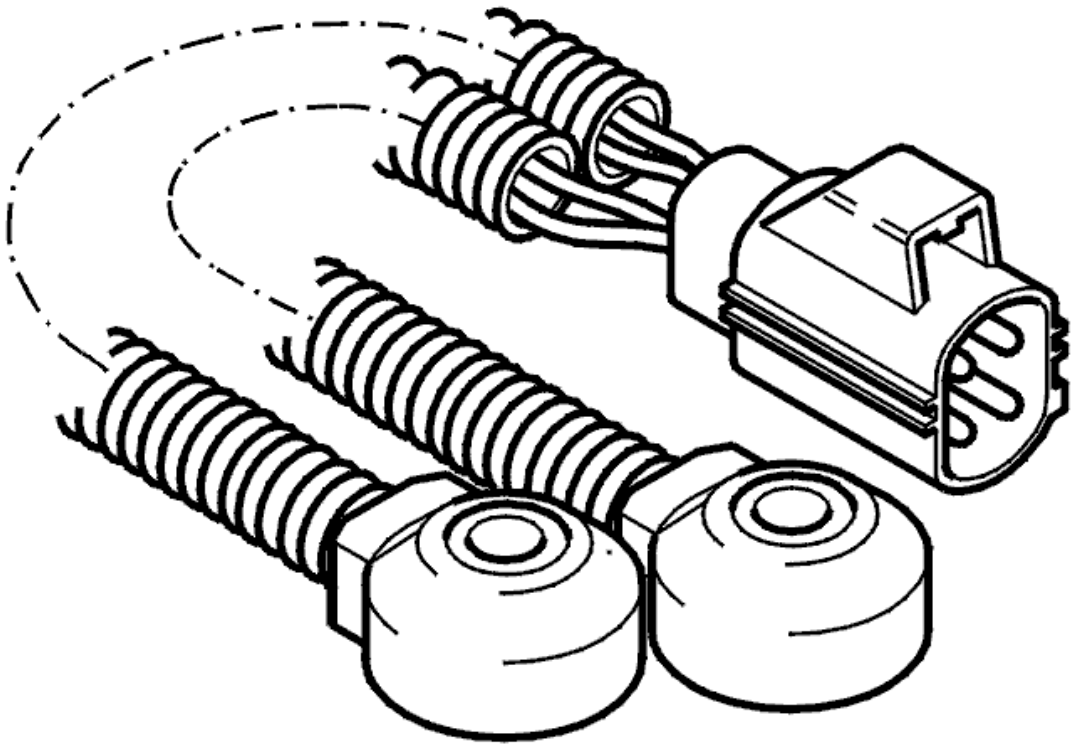

Fig. 474: Identifying Knock Sensor
Courtesy of VOLVO CARS CORPORATION

- **Continue**

  Refer to **INFORMATION**

INFORMATION

FAULT-TRACING INFORMATION

If the fault is intermittent, do not verify fault-tracing if the fault does not recur.

It is possible to view the information again, or leave fault-tracing for this diagnostic trouble code (DTC).

ECM-3420: KNOCK SENSOR (KS) REAR. SIGNAL TOO LOW. PERMANENT FAULT (B5254T2; B6294T; 2003-2004)

DIAGNOSTIC TROUBLE CODE (DTC) INFORMATION

see **DIAGNOSTIC TROUBLE CODE (DTC) INFORMATION**

SIGNAL TOO LOW. PERMANENT FAULT

see **SIGNAL TOO LOW. PERMANENT FAULT**

ECM-34E0: KNOCK SENSOR (KS), OFFSET. SIGNAL TOO HIGH/SIGNAL TOO LOW. INTERMITTENT FAULT (B5254T2; B6294T; 2003-2004)

DIAGNOSTIC TROUBLE CODE (DTC) INFORMATION

Condition

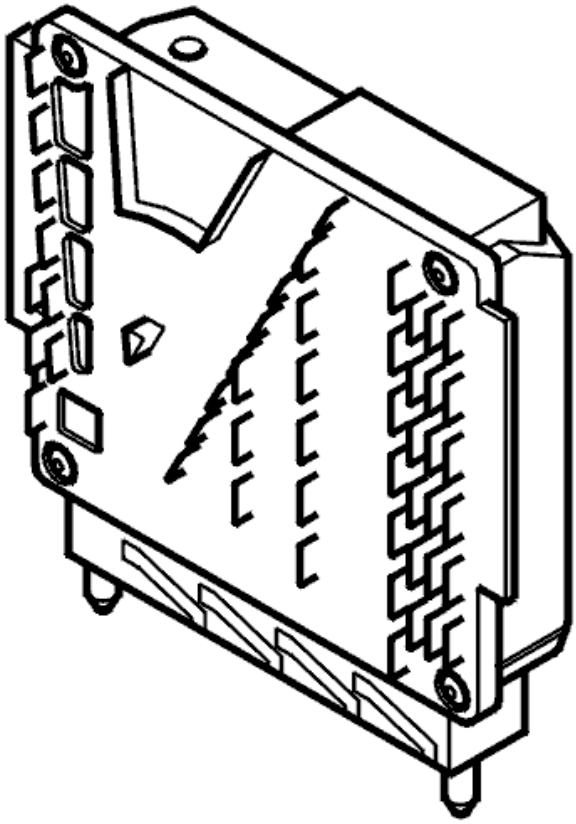

Fig. 475: Engine Control Module
Courtesy of VOLVO CARS CORPORATION

Diagnostic trouble code (DTC) ECM-34E0 is stored within 2 minutes if the control module detects a fault in control module knock control circuit.

Substitute Value

- ignition retarded for safety reasons
- reduced boost pressure

Possible Source

- fault in engine control module (ECM) knock control circuit

Fault symptom[s]

- malfunction indicator lamp (MIL) lit

SIGNAL TOO HIGH/SIGNAL TOO LOW. INTERMITTENT FAULT

see **SIGNAL TOO HIGH/SIGNAL TOO LOW. INTERMITTENT FAULT**

ECM-34E0: KNOCK SENSOR (KS), OFFSET. SIGNAL TOO HIGH/SIGNAL TOO LOW. PERMANENT FAULT (B5254T2; B6294T; 2003-2004)

DIAGNOSTIC TROUBLE CODE (DTC) INFORMATION

see **DIAGNOSTIC TROUBLE CODE (DTC) INFORMATION**

SIGNAL TOO HIGH/SIGNAL TOO LOW. PERMANENT FAULT

see **SIGNAL TOO HIGH/SIGNAL TOO LOW. PERMANENT FAULT**

ECM-34F0: KNOCK SENSOR (KS), TEST PULSE. SIGNAL TOO HIGH/SIGNAL TOO LOW. INTERMITTENT FAULT (B5254T2; B6294T; 2003-2004)

DIAGNOSTIC TROUBLE CODE (DTC) INFORMATION

Condition

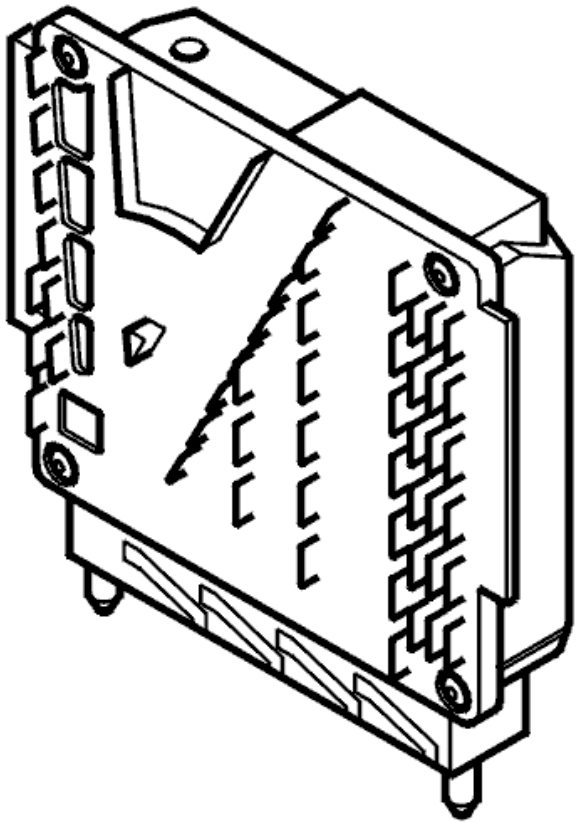

Fig. 476: Engine Control Module
Courtesy of VOLVO CARS CORPORATION

Diagnostic trouble code (DTC) ECM-34F0 is stored within 2 minutes if the control module detects a fault in control module knock control circuit.

Substitute Value

- ignition retarded for safety reasons
- reduced boost pressure

Possible Source

- defective control module

Fault symptom[s]

- malfunction indicator lamp (MIL) lit

SIGNAL TOO HIGH/SIGNAL TOO LOW. INTERMITTENT FAULT

see **SIGNAL TOO HIGH/SIGNAL TOO LOW. INTERMITTENT FAULT**

ECM-34F0: KNOCK SENSOR (KS), TEST PULSE. SIGNAL TOO HIGH/SIGNAL TOO LOW. PERMANENT FAULT (B5254T2; B6294T; 2003-2004)

DIAGNOSTIC TROUBLE CODE (DTC) INFORMATION

see **DIAGNOSTIC TROUBLE CODE (DTC) INFORMATION**

SIGNAL TOO HIGH/SIGNAL TOO LOW. PERMANENT FAULT

see **SIGNAL TOO HIGH/SIGNAL TOO LOW. PERMANENT FAULT**

ECM-3503: MISFIRE, AT LEAST ONE CYLINDER. EMISSIONS IMPACT / CATALYTIC CONVERTER DAMAGE (B5254T2; B6294T; 2003-2004)

DIAGNOSTIC TROUBLE CODE (DTC) INFORMATION

Condition

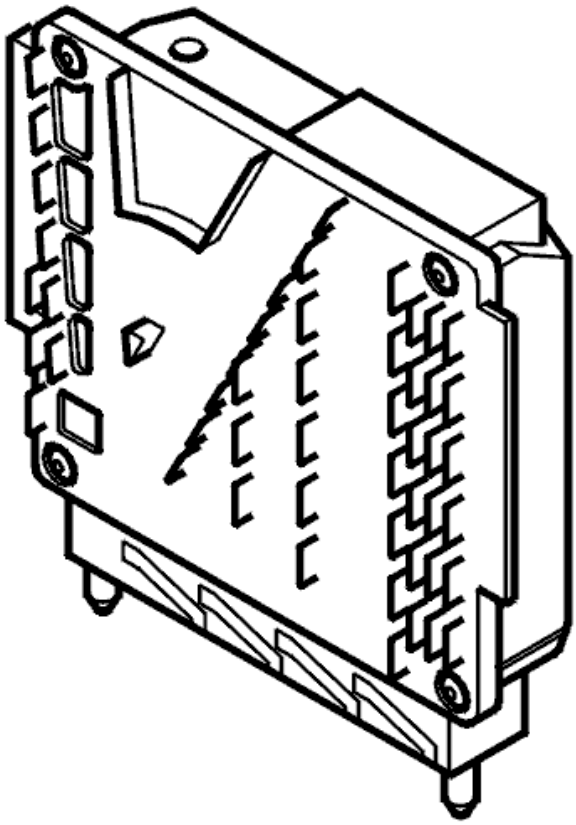

Fig. 477: Engine Control Module
Courtesy of VOLVO CARS CORPORATION

Diagnostic trouble code (DTC) ECM-3503 is stored at start up if the engine control module (ECM) detects misfiring during the first 1000 revs after engine start up.

Diagnostic trouble code (DTC) ECM-3503 emission effect or ECM-3503 three-way catalytic converter (TWC) damage is stored (depending on the seriousness of the misfire) if the engine control module (ECM) detects misfiring after the first 1000 revs after engine start up.

The diagnostic trouble code (DTC) is always stored together with a diagnostic trouble code (DTC) which indicates the cylinder which is misfiring (ECM-35X3).

Substitute Value

- Three-way catalytic converter (TWC) diagnosis shut off
- Leakage diagnosis shut off
- Rear heated oxygen sensor control shut off
- Fuel trim switched off.

Possible Source

- Low fuel level
- Repeated cold starting where the engine coolant temperature (ECT) has reached normal operating temperature between starts
- Water in the spark plug wells
- Defective spark plug
- Contaminated or incorrect fuel
- Poor fuel quality (summer fuel in winter).
- Blocked / leaking injector
- Air leakage
- Blocked crankcase ventilation.
- Damaged VVT-unit.
- Faulty fuel pressure
- Uneven compression

Fault symptom[s]

- The malfunction indicator lamp (MIL) flashes
- The engine misfires
- The engine is difficult to start
- Deterioration in performance
- Uneven idle
- The engine is not firing on all cylinders.

FAULT-TRACING INFORMATION

see **FAULT-TRACING INFORMATION**

ECM-350B: IGNITION COIL CYLINDER 1, SIGNAL. SIGNAL MISSING (B5254T2; 2005-2007)

DIAGNOSTIC TROUBLE CODE (DTC) INFORMATION

Condition

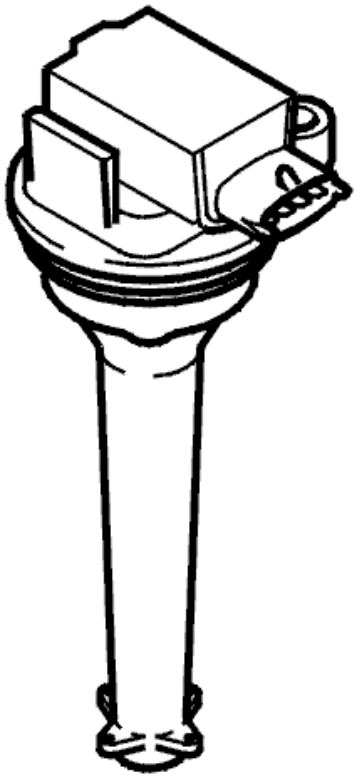

Fig. 478: Identifying Ignition Coil
Courtesy of VOLVO CARS CORPORATION

The engine control module (ECM) checks the signal cable for the ignition coil primary winding.

The diagnostic trouble code (DTC) is stored if the engine control module (ECM) detects that the signal for the primary winding for the ignition coil is missing.

The diagnostic trouble code (DTC) indicates which ignition coil is being referred to.

- ECM-350B: ignition coil 1
- ECM-351B: ignition coil 2

- ECM-352B: ignition coil 3
- ECM-353B: ignition coil 4
- ECM-354B: ignition coil 5.

The diagnostic trouble code (DTC) can be diagnosed when the engine is running.

Substitute Value

- None.

Possible Source

- Contact resistance in the terminals
- Open-circuit in the signal cable
- Damaged ignition coil.

Fault symptom[s]

- Malfunction indicator lamp (MIL) lit
- The engine is not firing on all cylinders.

SIGNAL MISSING

CHECKING COMPONENTS AND WIRING

- Check the connector for the ignition coil. Check for contact resistance. Check for oxidation.

  Check the cable that relates to the diagnostic trouble code (DTC). Check for an open-circuit.

  Check between:

  - Engine control module (ECM) #A50 (#A50) and ignition coil pin #2 (ECM-350B: ignition coil A, cylinder 1).
  - Engine control module (ECM) #A31 (#A31) and ignition coil pin #2 (ECM-351B: ignition coil B, cylinder 2).
  - Engine control module (ECM) #A51 (#A51) and ignition coil pin #2 (ECM-352B: ignition coil E, cylinder 3).
  - Engine control module (ECM) #A30 (#A30) and ignition coil pin #2 (ECM-353B: ignition coil C, cylinder 4).
  - Engine control module (ECM) #A52 (#A52) and ignition coil pin #2 (ECM-354B: ignition coil D, cylinder 5).

  Remedy as necessary.

  Other information

- see **CONNECTING THE BREAKOUT BOX**
- For 5 cylinder turbocharged engines -2004, see **SIGNAL DESCRIPTION**
- For 5 cylinder turbocharged engines 2005-, see **SIGNAL SPECIFICATION** .
- see **REPLACING IGNITION COILS**
- see **CHECKING WIRING AND TERMINALS**

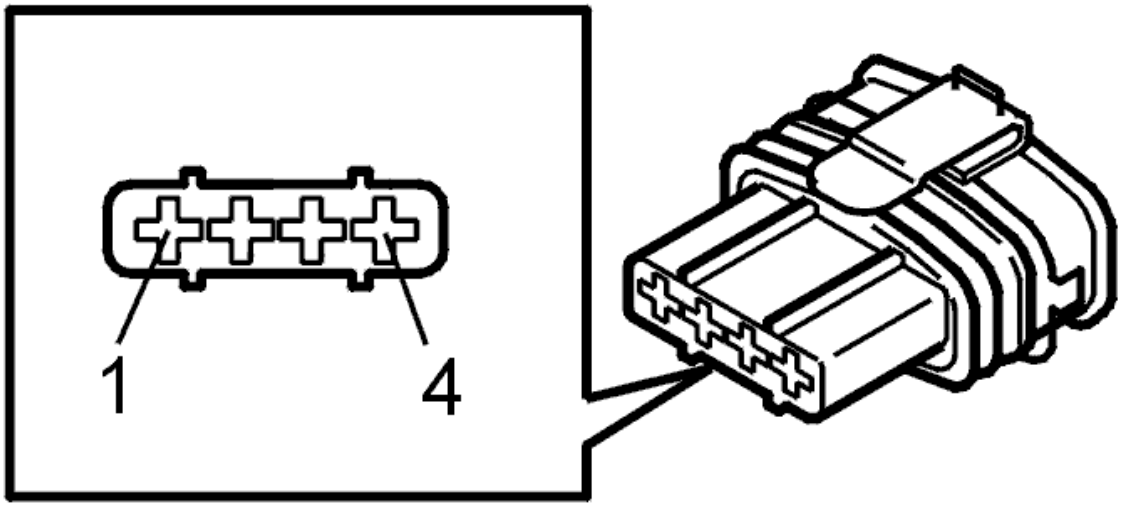

Fig. 479: Identifying Connector Terminals
Courtesy of VOLVO CARS CORPORATION

Fig. 480: Identifying Ignition Coil
Courtesy of VOLVO CARS CORPORATION

- **Continue**

  Refer to **VERIFICATION**

VERIFICATION

VERIFICATION

HINT: After carrying out the repair, check that the fault has been remedied.

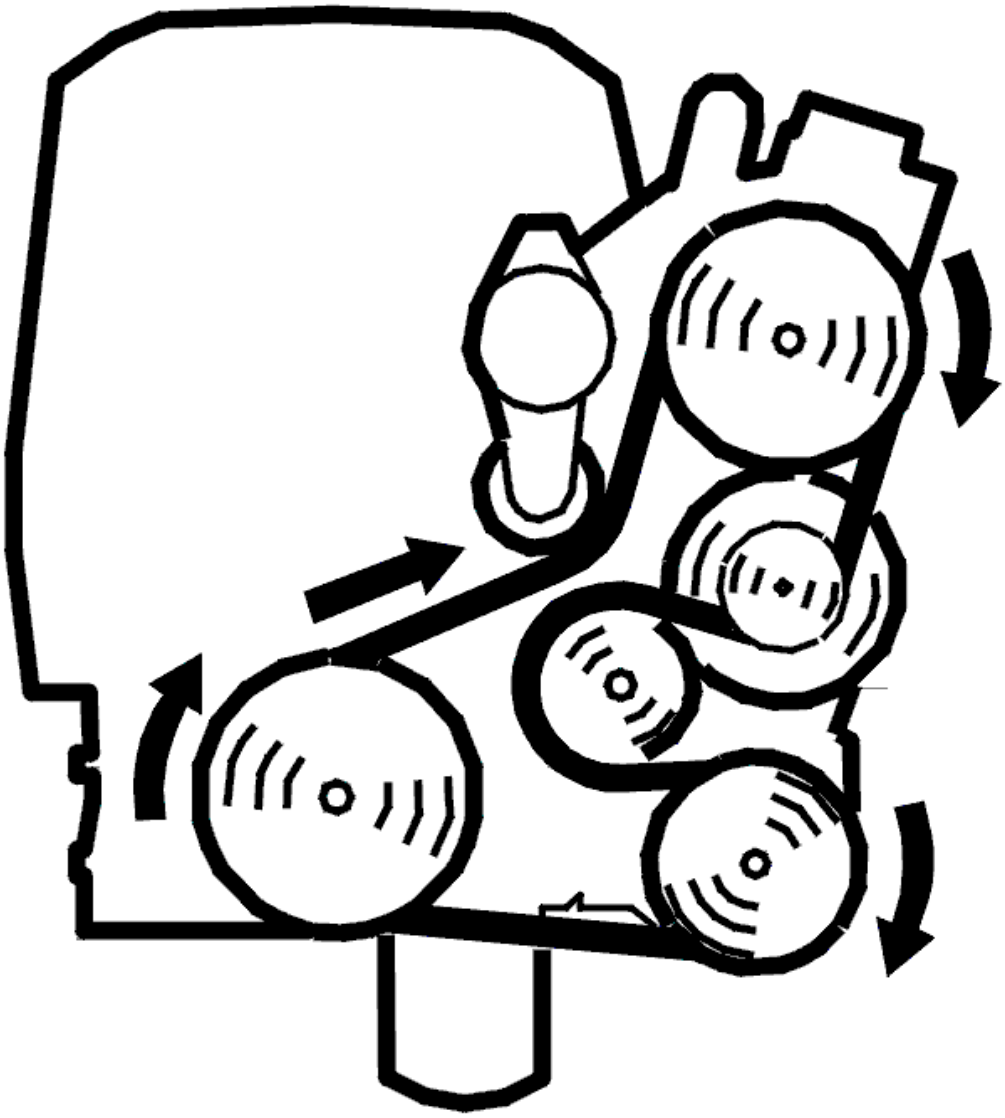

Fig. 481: Belt Routing / Engine Idling - Volvo
Courtesy of VOLVO CARS CORPORATION

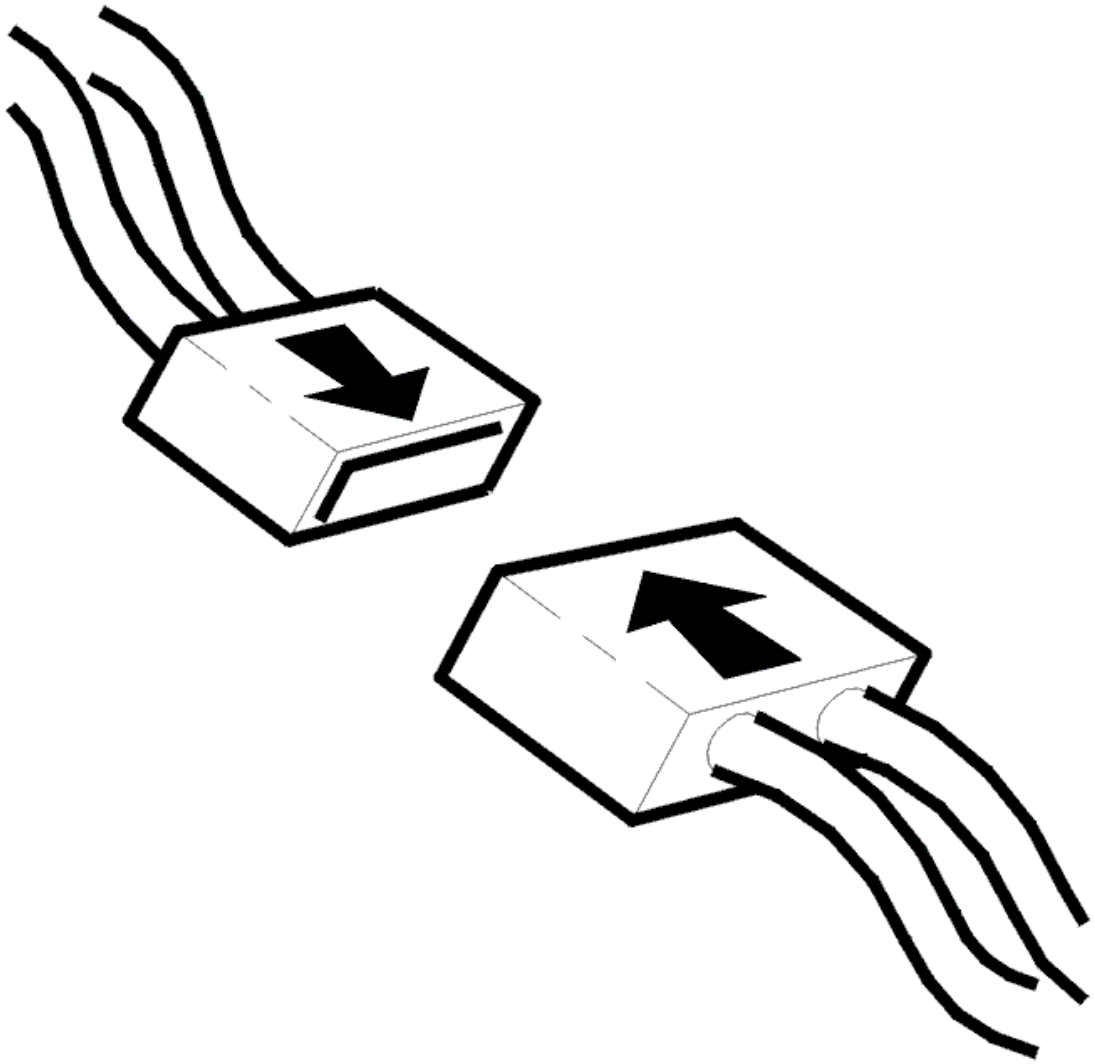

Fig. 482: Connecting Connector
Courtesy of VOLVO CARS CORPORATION

- Ignition off
- Reconnect connectors, reinstall components etc.
- Start the engine. Allow the engine to idle.

  The engine must fire on all cylinders.

Fig. 483: Identifying Ignition Coil
Courtesy of VOLVO CARS CORPORATION

Is the engine idling evenly?

- **YES**

  VERIFIED: Troubleshooting has been completed.

- **NO**

  Refer to **INFORMATION**

INFORMATION

FAULT-TRACING INFORMATION

The fault should have been detected and remedied. As this is not the case fault-tracing has failed.

Exit fault-tracing for this diagnostic trouble code (DTC) or make another attempt.

ECM-350C: IGNITION COIL CYLINDER 1, SIGNAL. SIGNAL TOO HIGH (B5254T2; 2005-2007)

DIAGNOSTIC TROUBLE CODE (DTC) INFORMATION

Condition

Fig. 484: Identifying Ignition Coil
Courtesy of VOLVO CARS CORPORATION

The engine control module (ECM) checks the signal cable for the ignition coil primary winding.

The diagnostic trouble code (DTC) is stored if the engine control module (ECM) detects that the signal for the primary winding for the ignition coil is too high.

The diagnostic trouble code (DTC) indicates which ignition coil is being referred to.

- ECM-350C: ignition coil 1
- ECM-351C: ignition coil 2
- ECM-352C: ignition coil 3
- ECM-353C: ignition coil 4
- ECM-354C: ignition coil 5.

The diagnostic trouble code (DTC) can be diagnosed when the engine is running.

Substitute Value

- None.

Possible Source

- Short-circuit to supply voltage in the signal cable
- Damaged ignition coil.

Fault symptom[s]

- Malfunction indicator lamp (MIL) lit
- The engine is not firing on all cylinders.

SIGNAL TOO HIGH

CHECKING COMPONENTS AND WIRING

Check the cable that relates to the diagnostic trouble code (DTC). Check for a short-circuit to supply voltage.

Check between:

- Engine control module (ECM) #A50 (#A50) and ignition coil pin #2 (ECM-350C: ignition coil A, cylinder 1).
- Engine control module (ECM) #A31 (#A31) and ignition coil pin #2 (ECM-351C: ignition coil B, cylinder 2).
- Engine control module (ECM) #A51 (#A51) and ignition coil pin #2 (ECM-352C: ignition coil E, cylinder 3).
- Engine control module (ECM) #A30 (#A30) and ignition coil pin #2 (ECM-353C: ignition coil C, cylinder 4).
- Engine control module (ECM) #A52 (#A52) and ignition coil pin #2 (ECM-354C: ignition coil D, cylinder 5).

Remedy as necessary.

Other information

- see **CONNECTING THE BREAKOUT BOX**
- For 5 cylinder turbocharged engines -2004, see **SIGNAL DESCRIPTION**
- For 5 cylinder turbocharged engines 2005-, see **SIGNAL SPECIFICATION** .
- see **REPLACING IGNITION COILS**
- see **CHECKING WIRING AND TERMINALS**

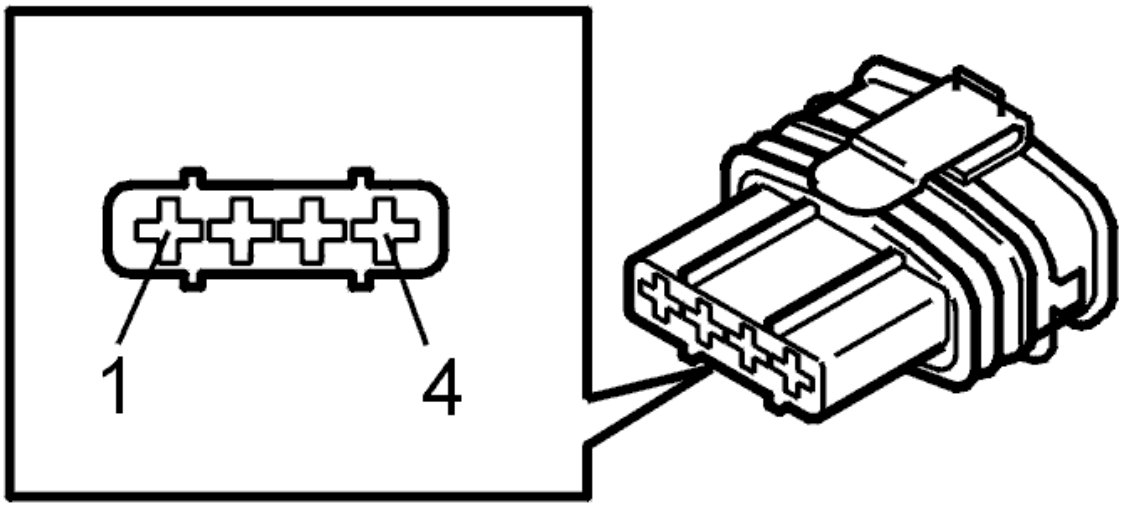

Fig. 485: Identifying Connector Terminals
Courtesy of VOLVO CARS CORPORATION

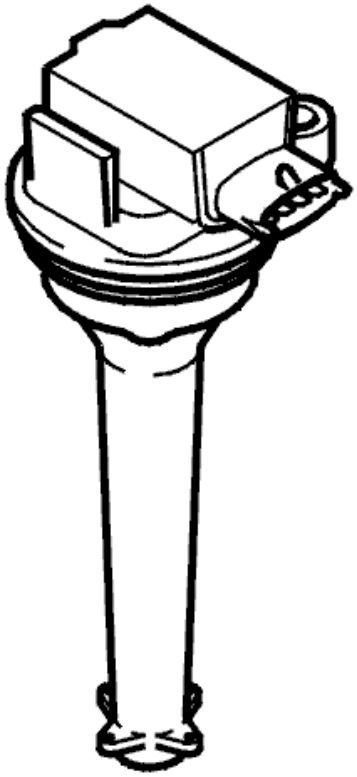

Fig. 486: Identifying Ignition Coil
Courtesy of VOLVO CARS CORPORATION

- **Continue**

  Refer to **VERIFICATION**

VERIFICATION

VERIFICATION

HINT: After carrying out the repair, check that the fault has been remedied.

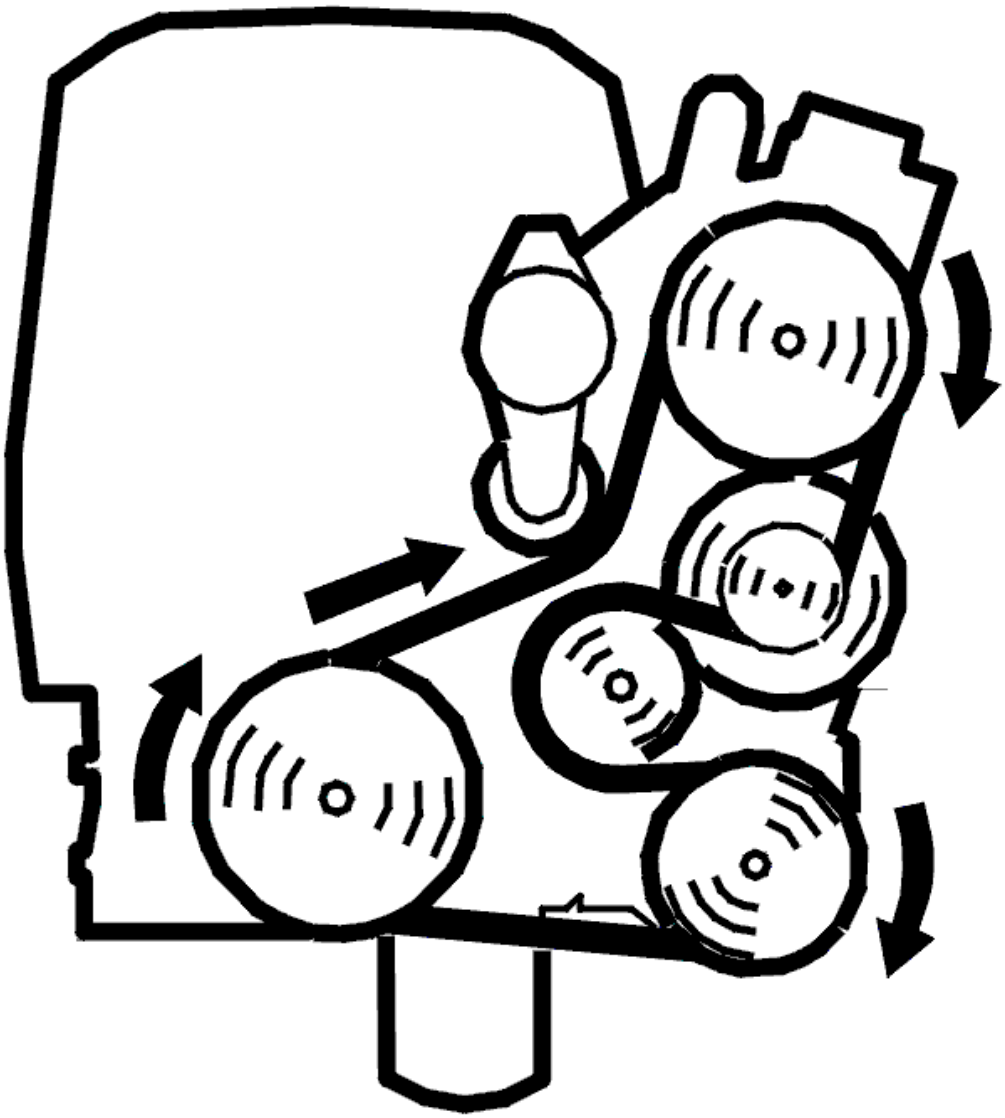

Fig. 487: Belt Routing / Engine Idling - Volvo
Courtesy of VOLVO CARS CORPORATION

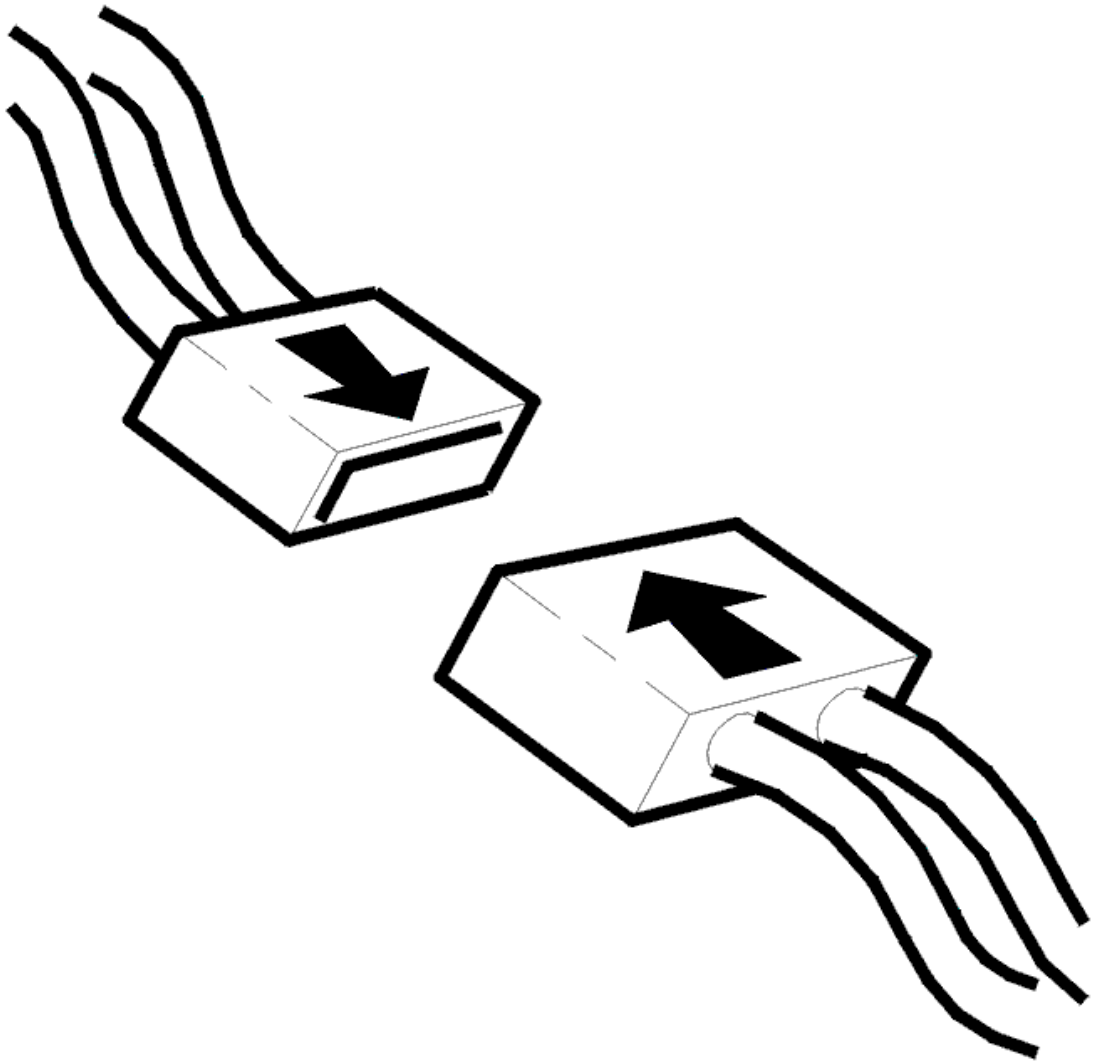

Fig. 488: Connecting Connector
Courtesy of VOLVO CARS CORPORATION

- Ignition off
- Reconnect connectors, reinstall components etc.
- Start the engine. Allow the engine to idle.

  The engine must fire on all cylinders.

Fig. 489: Identifying Ignition Coil
Courtesy of VOLVO CARS CORPORATION

Is the engine idling evenly?

- **YES**

  VERIFIED: Troubleshooting has been completed.

- **NO**

  Refer to **INFORMATION**

INFORMATION

FAULT-TRACING INFORMATION

The fault should have been detected and remedied. As this is not the case fault-tracing has failed.

Exit fault-tracing for this diagnostic trouble code (DTC) or make another attempt.

ECM-350D: IGNITION COIL CYLINDER 1, SIGNAL. SIGNAL TOO LOW (B5254T2; 2005-2007)

DIAGNOSTIC TROUBLE CODE (DTC) INFORMATION

Condition

Fig. 490: Identifying Ignition Coil
Courtesy of VOLVO CARS CORPORATION

The engine control module (ECM) checks the signal cable for the ignition coil primary winding.

The diagnostic trouble code (DTC) is stored if the engine control module (ECM) detects that the signal for the primary winding for the ignition coil is too low.

The diagnostic trouble code (DTC) indicates which ignition coil is being referred to.

- ECM-350D: ignition coil 1
- ECM-351D: ignition coil 2
- ECM-352D: ignition coil 3
- ECM-353D: ignition coil 4
- ECM-354D: ignition coil 5.

The diagnostic trouble code (DTC) can be diagnosed when the engine is running.

Substitute Value

- None.

Possible Source

- Short-circuit to ground in the signal cable
- Damaged ignition coil.

Fault symptom[s]

- Malfunction indicator lamp (MIL) lit
- The engine is not firing on all cylinders.

SIGNAL TOO LOW

CHECKING COMPONENTS AND WIRING

- Check the connector for the ignition coil. Check for contact resistance. Check for oxidation.

  Check the cable that relates to the diagnostic trouble code (DTC). Check for a short-circuit to ground.

  Check between:

  - Engine control module (ECM) #A50 (#A50) and ignition coil pin #2 (ECM-350D: ignition coil A, cylinder 1).
  - Engine control module (ECM) #A31 (#A31) and ignition coil pin #2 (ECM-351D: ignition coil B, cylinder 2).
  - Engine control module (ECM) #A51 (#A51) and ignition coil pin #2 (ECM-352D: ignition coil E, cylinder 3).
  - Engine control module (ECM) #A30 (#A30) and ignition coil pin #2 (ECM-353D: ignition coil C, cylinder 4).
  - Engine control module (ECM) #A52 (#A52) and ignition coil pin #2 (ECM-354D: ignition coil D, cylinder 5).

  Remedy as necessary.

  Other information

  - see **CONNECTING THE BREAKOUT BOX**
  - For 5 cylinder turbocharged engines -2004, see **SIGNAL DESCRIPTION**
  - For 5 cylinder turbocharged engines 2005-, see **SIGNAL SPECIFICATION** .
  - see **REPLACING IGNITION COILS**
  - see **CHECKING WIRING AND TERMINALS**

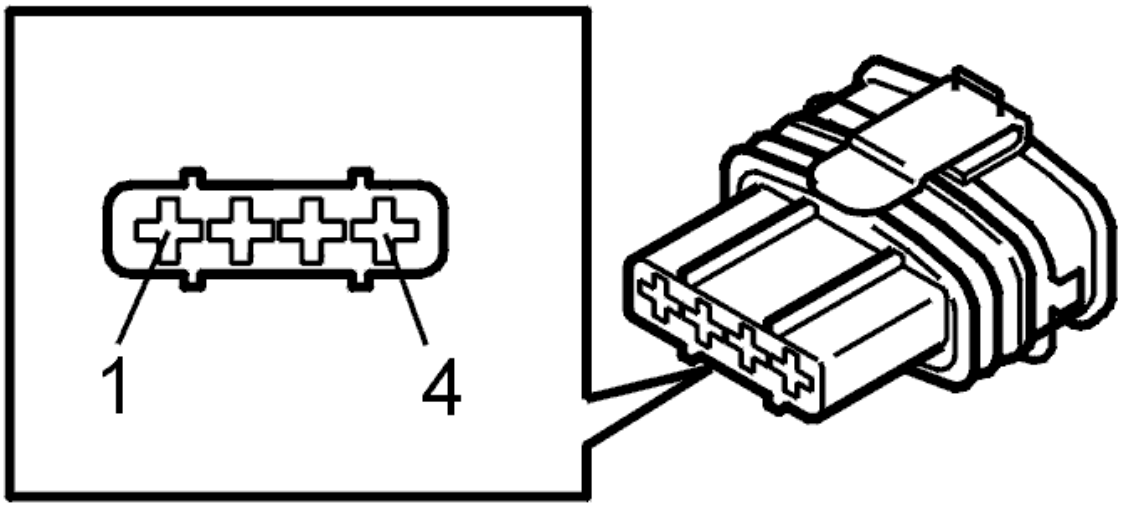

Fig. 491: Identifying Connector Terminals
Courtesy of VOLVO CARS CORPORATION

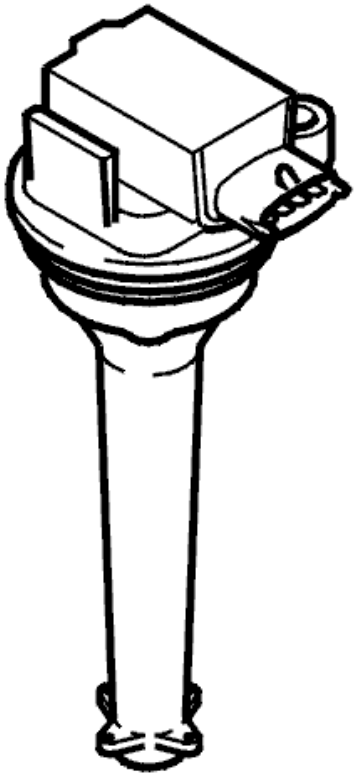

Fig. 492: Identifying Ignition Coil
Courtesy of VOLVO CARS CORPORATION

- **Continue**

  Refer to **VERIFICATION**

VERIFICATION

VERIFICATION

HINT: After carrying out the repair, check that the fault has been remedied.

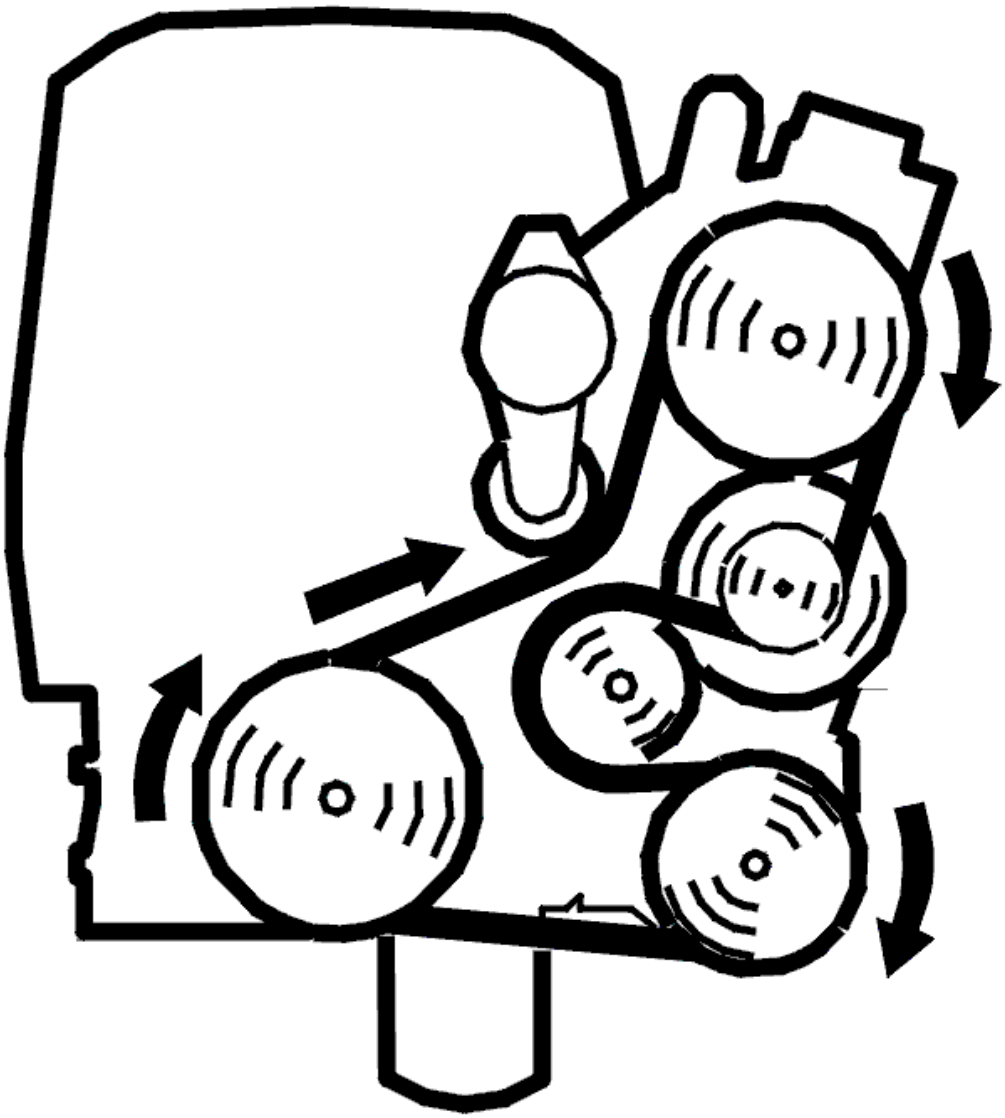

Fig. 493: Belt Routing / Engine Idling - Volvo
Courtesy of VOLVO CARS CORPORATION

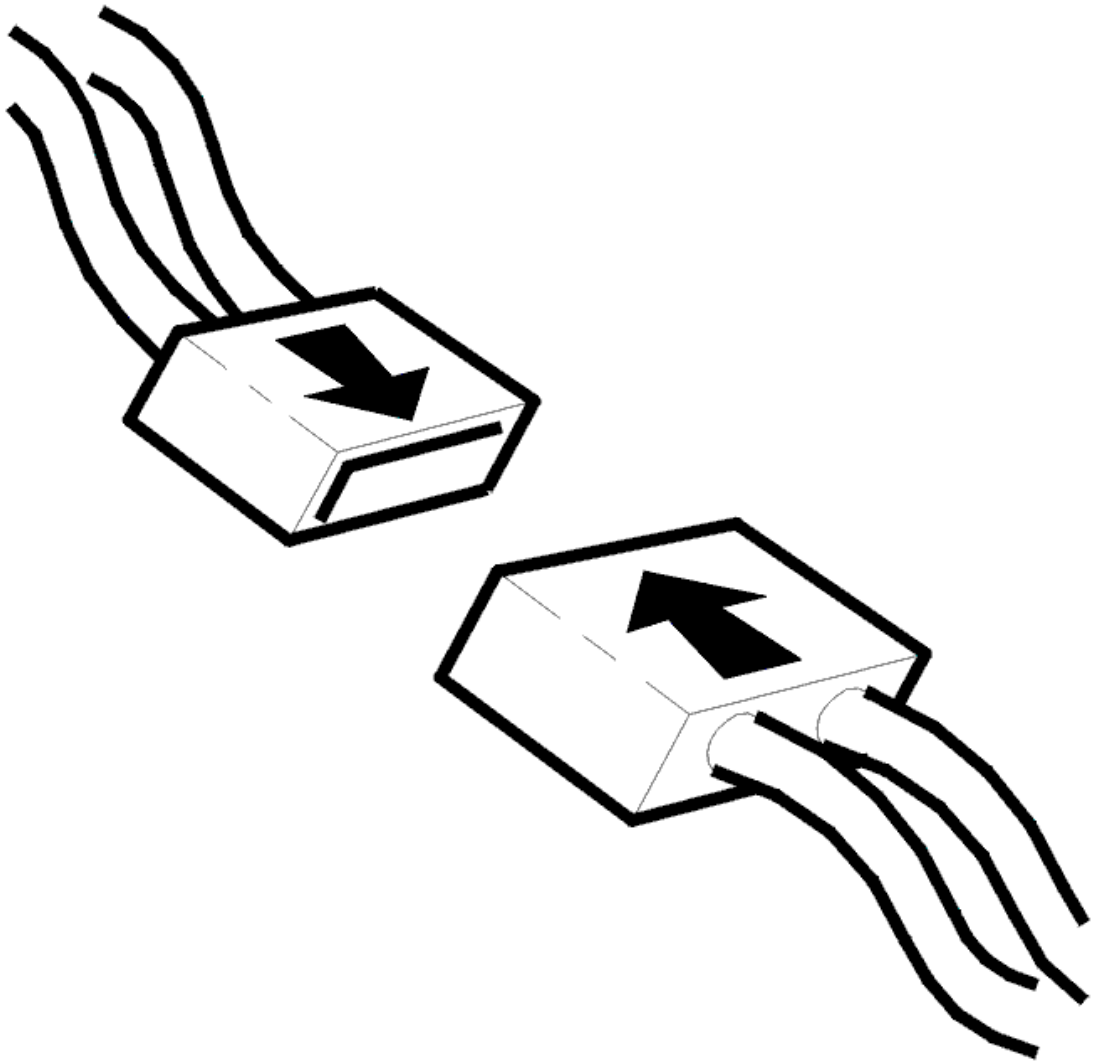

Fig. 494: Connecting Connector
Courtesy of VOLVO CARS CORPORATION

- Ignition off
- Reconnect connectors, reinstall components etc.
- Start the engine. Allow the engine to idle.

  The engine must fire on all cylinders.

Fig. 495: Identifying Ignition Coil
Courtesy of VOLVO CARS CORPORATION

Is the engine idling evenly?

- **YES**

  VERIFIED: Troubleshooting has been completed.

- **NO**

  Refer to **INFORMATION**

INFORMATION

FAULT-TRACING INFORMATION

The fault should have been detected and remedied. As this is not the case fault-tracing has failed.

Exit fault-tracing for this diagnostic trouble code (DTC) or make another attempt.

ECM-3513: MISFIRE CYLINDER 1. EMISSIONS IMPACT / CATALYTIC CONVERTER DAMAGE (B5254T2; B6294T; 2003-2004)

DIAGNOSTIC TROUBLE CODE (DTC) INFORMATION

Condition

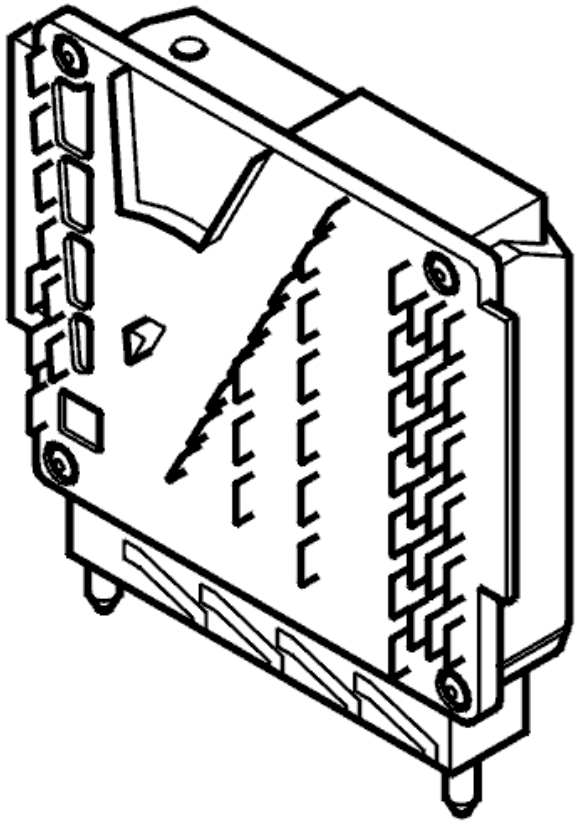

Fig. 496: Engine Control Module
Courtesy of VOLVO CARS CORPORATION

Diagnostic trouble code (DTC) ECM-35x3 is stored at start up if the engine control module (ECM) detects that a cylinder misfires during the first 1000 revs of the engine.

Diagnostic trouble code (DTC) ECM-35x3 emission effect or ECM-35x3 three-way catalytic converter (TWC) damage is stored (depending of the seriousness of the misfire) if the engine control module (ECM) detects misfiring after the first 1000 revs after engine start up.

The diagnostic trouble code (DTC) indicates which cylinder is misfiring.

Substitute Value

- Three-way catalytic converter (TWC) diagnosis shut off
- Leakage diagnosis shut off
- Rear heated oxygen sensor control shut off
- Fuel trim switched off.

Possible Source

- Low fuel level
- Repeated cold starting where the engine coolant temperature (ECT) has reached normal operating temperature between starts
- Water in the spark plug wells
- Defective spark plug
- Contaminated or incorrect fuel
- Incorrect oil grade (summer fuel in winter, certain markets).
- Blocked / leaking injector
- Air leakage
- Blocked crankcase ventilation.
- Damaged VVT-unit.
- Faulty fuel pressure
- Uneven compression

Fault symptom[s]

- The malfunction indicator lamp (MIL) flashes
- The engine misfires
- The engine is difficult to start
- Deterioration in performance
- Uneven idle
- The engine is not firing on all cylinders.

EMISSIONS IMPACT / CATALYTIC CONVERTER DAMAGE

CHECKING THE FUEL INJECTION SYSTEM, IGNITION SYSTEM AND COMPONENTS

NOTE: In the event of diagnostic trouble codes (DTCs), that affect camshaft control or camshaft reset valve, these must be fault-traced first.

The diagnostic trouble code (DTC) indicates which cylinder has misfired:

Diagnostic Trouble Code (DTC)	Misfiring cylinder
ECM-3513	1
ECM-3523	2
ECM-3533	3
ECM-3543	4
ECM-3553	5
ECM-3563	6

Check that the engine oil level is correct.

Check the spark plugs. Search for damage in the insulation and other damage.

Check the ignition spark.

Check the function of the crankcase ventilation.

Check the fuel pressure and residual pressure. See **CHECKING FUEL AND RESIDUAL PRESSURES**

Check if there is any air leakage. See **INTAKE AND EXHAUST SYSTEM - CLEANING, INSPECTION AND ADJUSTMENT**

Check that the engine seals tight. See **COMPRESSION TEST**

Check the flywheel for damage.

Other information:

- for information about the misfire diagnostic:
  - see **MISFIRE DIAGNOSTICS** .

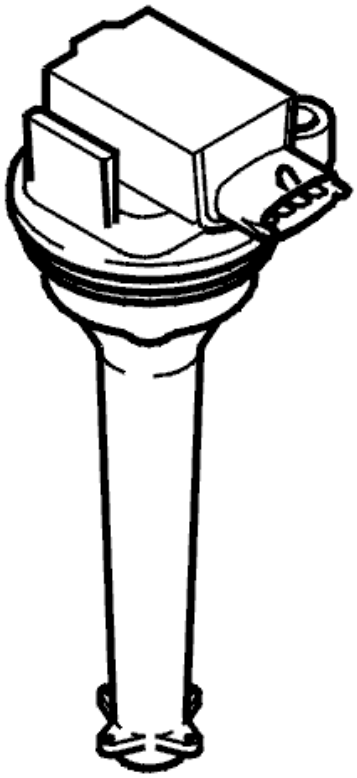

Fig. 497: Identifying Ignition Coil

Courtesy of VOLVO CARS CORPORATION

- **Continue**

  Refer to **VERIFICATION**

VERIFICATION

VERIFICATION

HINT: After carrying out the repair, check that the fault has been remedied.

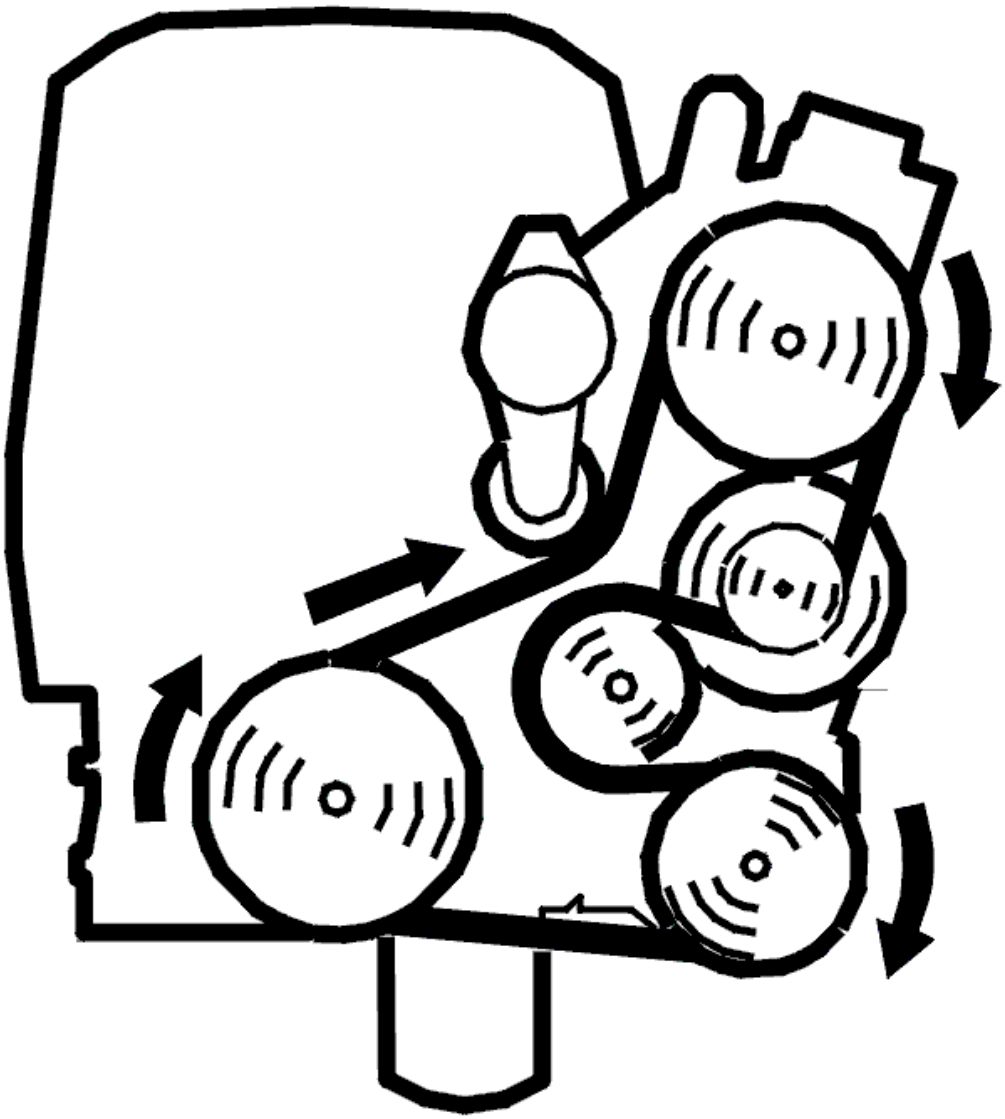

Fig. 498: Belt Routing / Engine Idling - Volvo
Courtesy of VOLVO CARS CORPORATION

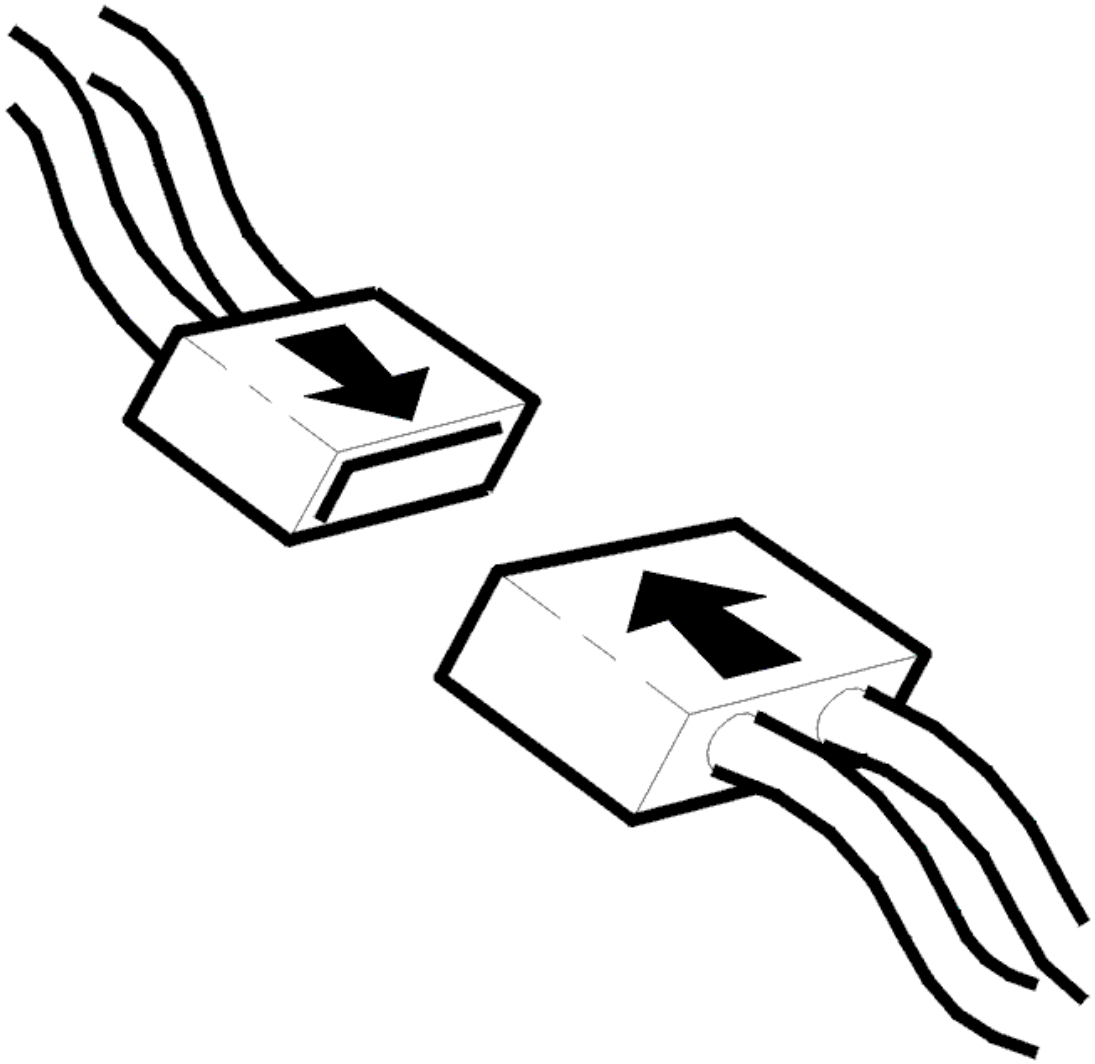

Fig. 499: Connecting Connector
Courtesy of VOLVO CARS CORPORATION

- Ignition off.
- Reinstall the connectors, components etc.
- Start the engine.

  Check that the misfire counter is not counting upwards. Check that the engine is firing on all cylinders. Also check if the misfire diagnosis is active, if not, check the conditions according to:
  - see **MISFIRE DIAGNOSTICS** .

Fig. 500: Identifying VCT2000 Diagnostic Tool Symbol In VIDA
Courtesy of VOLVO CARS CORPORATION

Does the misfire counter count up?

- **YES**

  Refer to **INFORMATION**

- **NO**

  VERIFIED: Troubleshooting has been completed.

INFORMATION

FAULT-TRACING INFORMATION

The fault should have been detected and remedied. As this is not the case fault-tracing has failed.

Exit fault-tracing for this diagnostic trouble code (DTC) or make another attempt.

COMPRESSION TEST

Special tools:

see **9999689**

see **1158540**

IGNITION SYSTEM

A check for cylinder leakage (also called "leak down") can be carried out instead of a compression test. See **CYLINDER LEAKAGE TEST**

Fig. 501: Identifying Low & High Voltage Circuit Caution
Courtesy of VOLVO CARS CORPORATION

CAUTION: The ignition system operates at high ignition charges and produces dangerous voltages in both the low and high voltage circuits.

There is dangerous voltage throughout the entire ignition system including connectors etc.

CONDITIONS

NOTE: The engine compression must always be checked with wide open throttle (WOT) and engine at operating temperature.

PREPARATIONS

Remove:

- the charge air pipe over the engine to improve accessibility.
- the upper timing belt cover.
- the cover over the ignition coils.
- the ignition coils.

Mark up and put to one side without disconnecting the connectors.

- the spark plugs.

NOTE: Separate the connector for the engine speed (RPM) sensor.

COMPRESSION TESTING

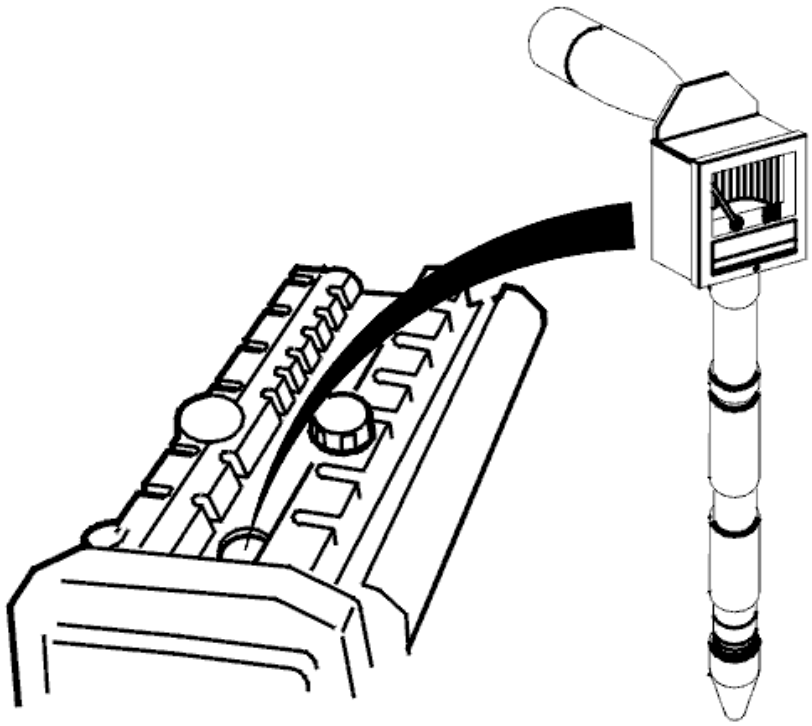

Fig. 502: Compression Testing
Courtesy of VOLVO CARS CORPORATION

NOTE: Compression testing should always be carried out at wide open throttle (WOT) and with the engine at operating temperature.

Diagnostic trouble codes (DTCs) will be stored because the engine speed (RPM) sensor and (where applicable) the camshaft position (CMP) sensor have been disconnected.

Have an assistant hold the accelerator pedal (AP) depressed at wide open throttle (WOT) during the compression test.

The starter motor is activated with the ignition key.

The ignition must be switched off after each cylinder has been compression tested.

NOTE: **It will no longer be possible to control the throttle if the ignition is on for longer than 2 minutes.**

The throttle function is controlled by the control module.

Use compression meter see **9999689**

with extension sleeve see **1158540** .

Engine type:	Normal value MPa:
Turbo	1.1 - 1.3
Turbo type LT	1.2 - 1.4
Normally aspirated engine	1.3 - 1.5

INSTALL

Install:

- the spark plugs.

  Tighten to **25 Nm** .

- the ignition coils according to the earlier markings.

  Tighten to **10 Nm** .

- the cover over the ignition coils.
- the upper timing belt cover.
- the disassembled connectors.
- charge air pipe.

  Remove the seals.

  Tighten the mountings and hose clamps.

ERASE DIAGNOSTIC TROUBLE CODES (DTCS) AND CHECK

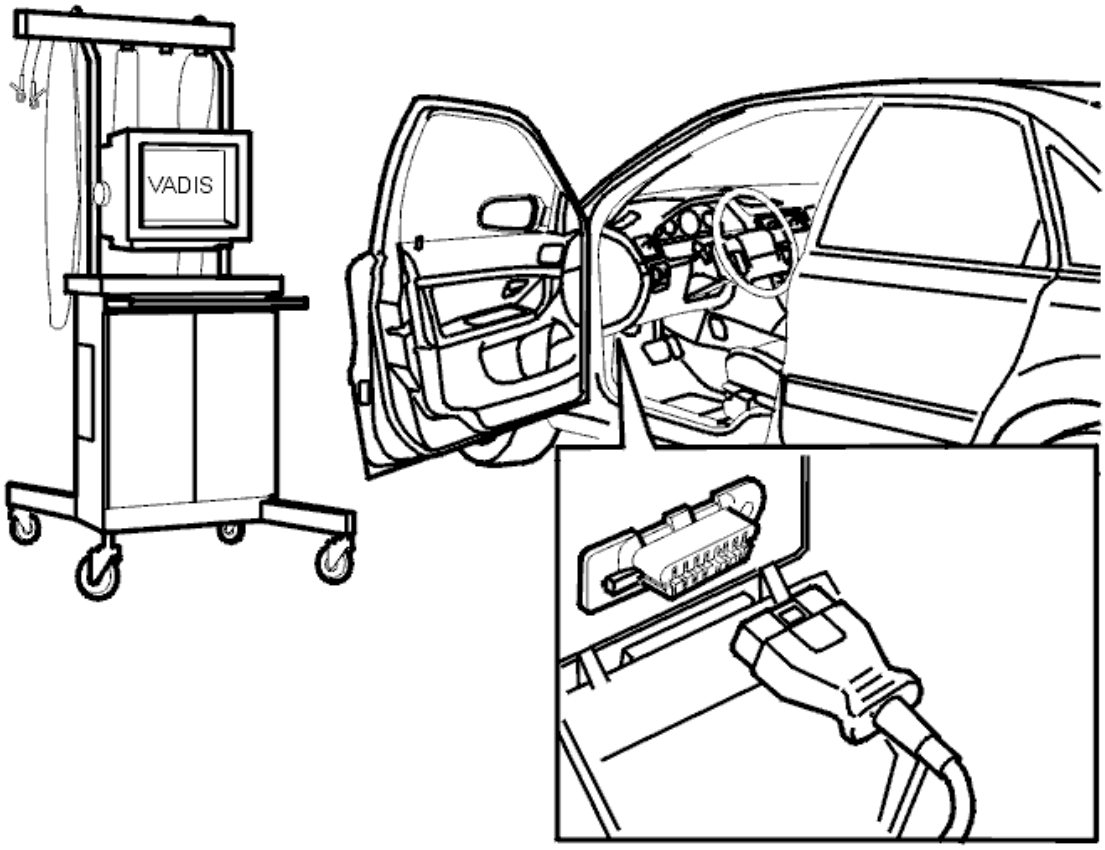

Fig. 503: Connecting VIDA Station
Courtesy of VOLVO CARS CORPORATION

Erase diagnostic trouble codes (DTCs):

Start the engine. Check that the engine is functioning normally.

Use VIDA (Volvo scan tool) to check which diagnostic trouble codes (DTCs) have been stored.

Erase the diagnostic trouble codes (DTCs).

Check the engine compartment. Wipe the engine compartment clean.

ENGINE PERFORMANCE

Ignition And Control Systems - Diagnostic Trouble Codes and Associated Procedures

ECM-353C: IGNITION COIL CYLINDER 4, SIGNAL. SIGNAL TOO HIGH (B5254T2; 2005-2007)

DIAGNOSTIC TROUBLE CODE (DTC) INFORMATION

see **DIAGNOSTIC TROUBLE CODE (DTC) INFORMATION**

SIGNAL TOO HIGH

see **SIGNAL TOO HIGH**

ECM-360B: IGNITION COIL CYLINDER 1, SIGNAL. SIGNAL MISSING (B6294T; 2005-2006)

DIAGNOSTIC TROUBLE CODE (DTC) INFORMATION

Condition

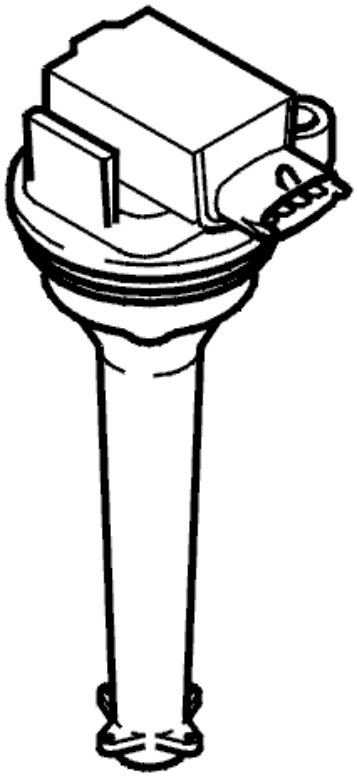

Fig. 1: Identifying Ignition Coil

Courtesy of VOLVO CARS CORPORATION

The engine control module (ECM) checks the signal cable for the ignition coil primary winding.

The diagnostic trouble code (DTC) is stored if the engine control module (ECM) detects that the signal for the primary winding for the ignition coil is missing.

The diagnostic trouble code (DTC) indicates which ignition coil is being referred to.

- ECM-360B: ignition coil 1
- ECM-361B: ignition coil 2
- ECM-362B: ignition coil 3
- ECM-363B: ignition coil 4
- ECM-364B: ignition coil 5
- ECM-365B: ignition coil 6.

The diagnostic trouble code (DTC) can be diagnosed when the engine is running.

Substitute Value

- None.

Possible Source

- Contact resistance in the terminals
- Open-circuit in the signal cable
- Damaged ignition coil.

Fault symptom[s]

- Malfunction indicator lamp (MIL) lit
- The engine is not firing on all cylinders.

SIGNAL MISSING

CHECKING COMPONENTS AND WIRING

- Check the connector for the ignition coil. Check for contact resistance. Check for oxidation.

  Check the cable that relates to the diagnostic trouble code (DTC). Check for an open-circuit.

  Check between:

  - Engine control module (ECM) terminal #A50 (#A50) and ignition coil terminal #2 (ECM-360D, ignition coil 1)

- Engine control module (ECM) terminal #A51 (#A51) and ignition coil terminal #2 (ECM-361D, ignition coil 2)
- Engine control module (ECM) terminal #A30 (#A30) and ignition coil terminal #2 (ECM-362D, ignition coil 3)
- Engine control module (ECM) terminal #A49 (#A49) and ignition coil terminal #2 (ECM-363D, ignition coil 4)
- Engine control module (ECM) terminal #A31 (#A31) and ignition coil terminal #2 (ECM-364D, ignition coil 5)
- Engine control module (ECM) terminal #A52 (#A52) and ignition coil terminal #2 (ECM-365D, ignition coil 6).

Remedy as necessary.

Other information

- see **CONNECTING THE BREAKOUT BOX**
- For 6 cylinder engines 2005-, see **SIGNAL SPECIFICATION** .
- see **REPLACING IGNITION COIL**
- see **CHECKING WIRING AND TERMINALS**

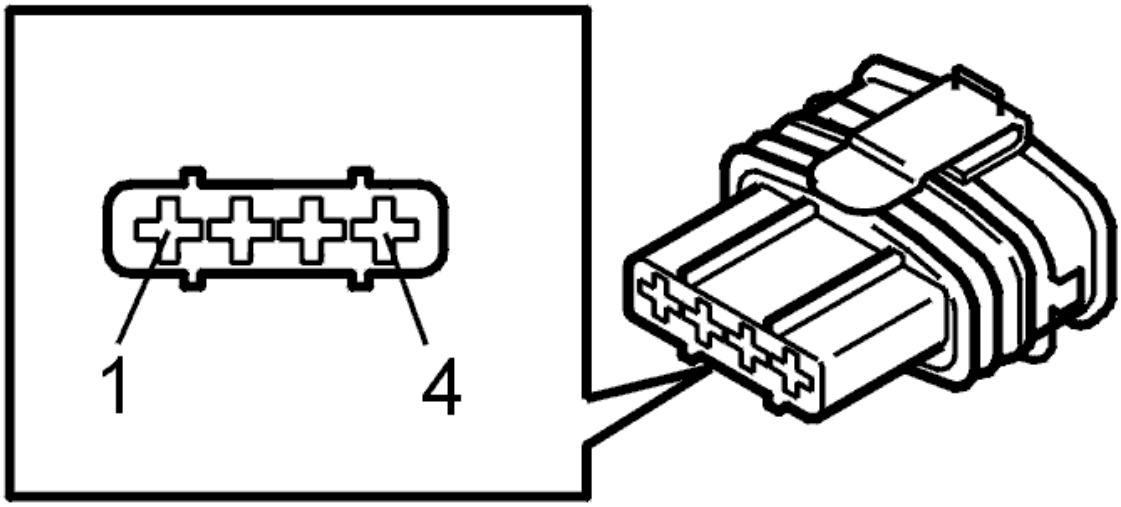

Fig. 2: Identifying Connector Terminals
Courtesy of VOLVO CARS CORPORATION

Fig. 3: Identifying Ignition Coil
Courtesy of VOLVO CARS CORPORATION

- **Continue**

  Refer to **VERIFICATION**

VERIFICATION

VERIFICATION

HINT: After carrying out the repair, check that the fault has been remedied.

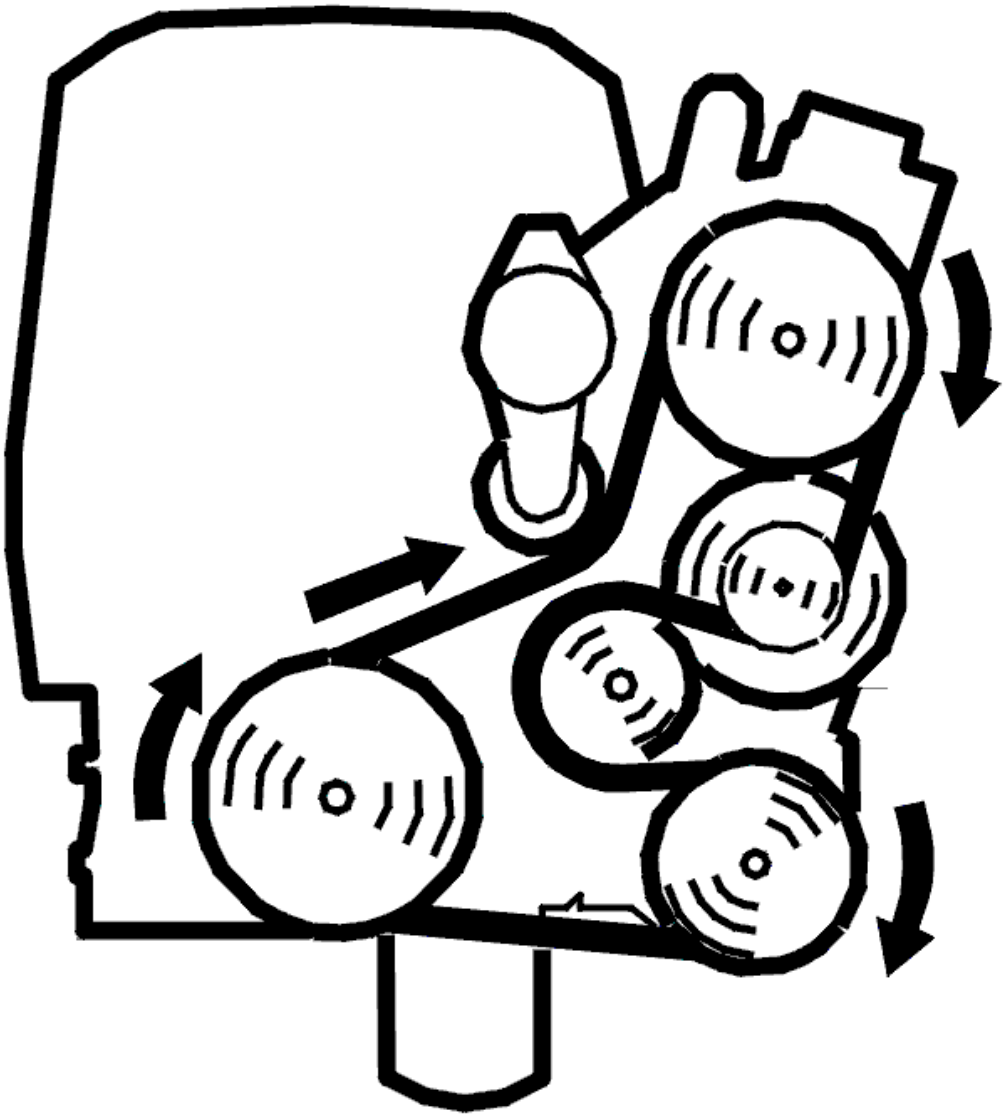

Fig. 4: Belt Routing / Engine Idling - Volvo
Courtesy of VOLVO CARS CORPORATION

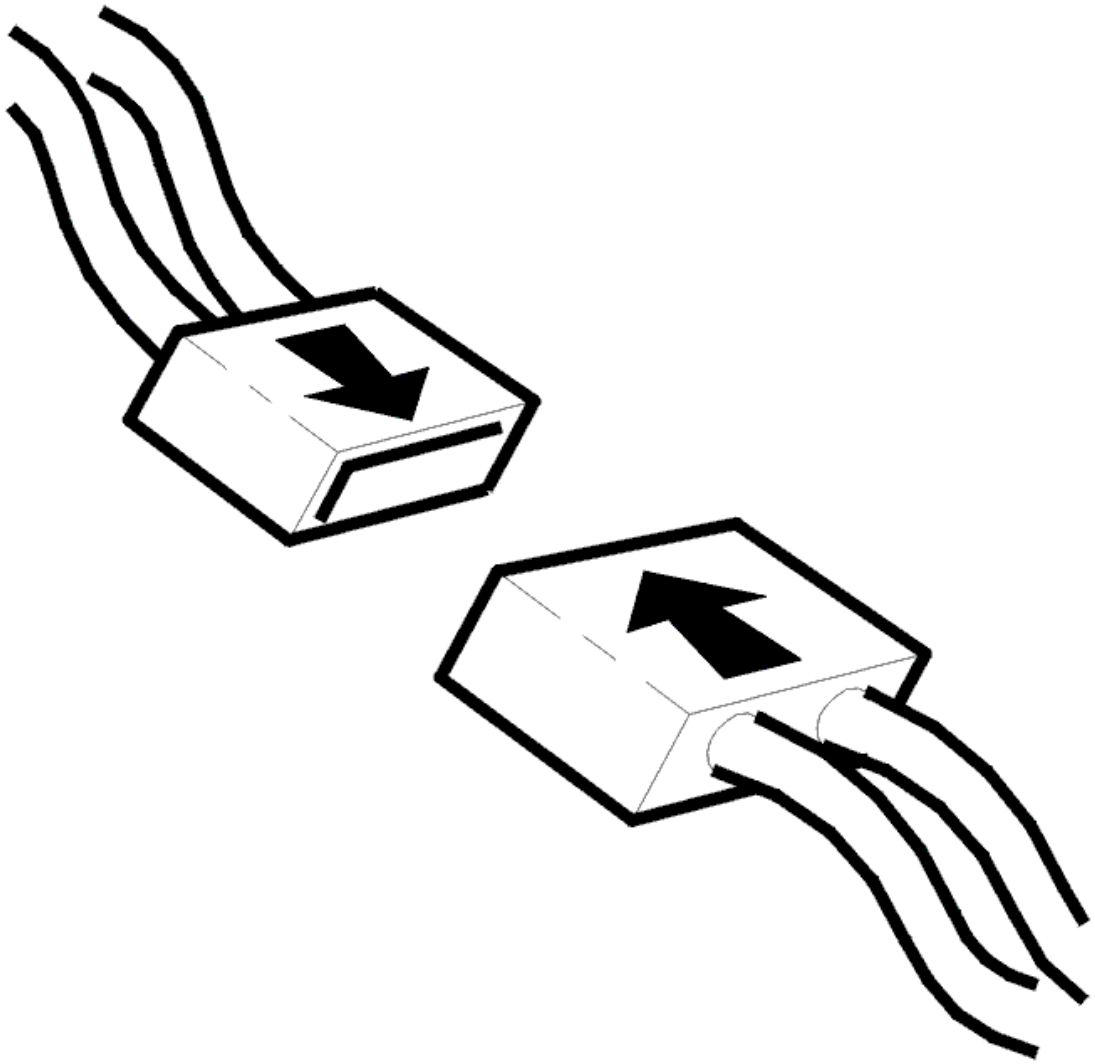

Fig. 5: Connecting Connector
Courtesy of VOLVO CARS CORPORATION

- Ignition off
- Reconnect connectors, reinstall components etc.
- Start the engine. Allow the engine to idle.

  The engine must fire on all cylinders.

Fig. 6: Identifying Ignition Coil
Courtesy of VOLVO CARS CORPORATION

Is the engine idling evenly?

- **YES**

  VERIFIED: Troubleshooting has been completed.

- **NO**

  Refer to **INFORMATION**

INFORMATION

FAULT-TRACING INFORMATION

The fault should have been detected and remedied. As this is not the case fault-tracing has failed.

Exit fault-tracing for this diagnostic trouble code (DTC) or make another attempt.

ECM-360C: IGNITION COIL CYLINDER 1, SIGNAL. SIGNAL TOO HIGH (B6294T; 2005-2006)

DIAGNOSTIC TROUBLE CODE (DTC) INFORMATION

Condition

Fig. 7: Identifying Ignition Coil
Courtesy of VOLVO CARS CORPORATION

The engine control module (ECM) checks the signal cable for the ignition coil primary winding.

The diagnostic trouble code (DTC) is stored if the engine control module (ECM) detects that the signal for the primary winding for the ignition coil is too high.

The diagnostic trouble code (DTC) indicates which ignition coil is being referred to.

- ECM-360C: ignition coil 1
- ECM-361C: ignition coil 2
- ECM-362C: ignition coil 3
- ECM-363C: ignition coil 4
- ECM-364C: ignition coil 5
- ECM-365C: ignition coil 6.

The diagnostic trouble code (DTC) can be diagnosed when the engine is running.

Substitute Value

- None.

Possible Source

- Short-circuit to supply voltage in the signal cable
- Damaged ignition coil.

Fault symptom[s]

- Malfunction indicator lamp (MIL) lit
- The engine is not firing on all cylinders.

SIGNAL TOO HIGH

CHECKING COMPONENTS AND WIRING

Check the cable that relates to the diagnostic trouble code (DTC). Check for a short-circuit to supply voltage.

Check between:

- Engine control module (ECM) terminal #A50 (#A50) and ignition coil terminal #2 (ECM-360C, ignition coil 1)
- Engine control module (ECM) terminal #A51 (#A51) and ignition coil terminal #2 (ECM-361C, ignition coil 2)
- Engine control module (ECM) terminal #A30 (#A30) and ignition coil terminal #2 (ECM-362C, ignition coil 3)
- Engine control module (ECM) terminal #A49 (#A49) and ignition coil terminal #2 (ECM-363C, ignition coil 4)
- Engine control module (ECM) terminal #A31 (#A31) and ignition coil terminal #2 (ECM-364C, ignition coil 5)
- Engine control module (ECM) terminal #A52 (#A52) and ignition coil terminal #2 (ECM-365C, ignition coil 6).

Remedy as necessary.

Other information

- see **CONNECTING THE BREAKOUT BOX**
- For 6 cylinder engines 2005-, see **SIGNAL SPECIFICATION** .
- see **REPLACING IGNITION COIL**
- see **CHECKING WIRING AND TERMINALS**

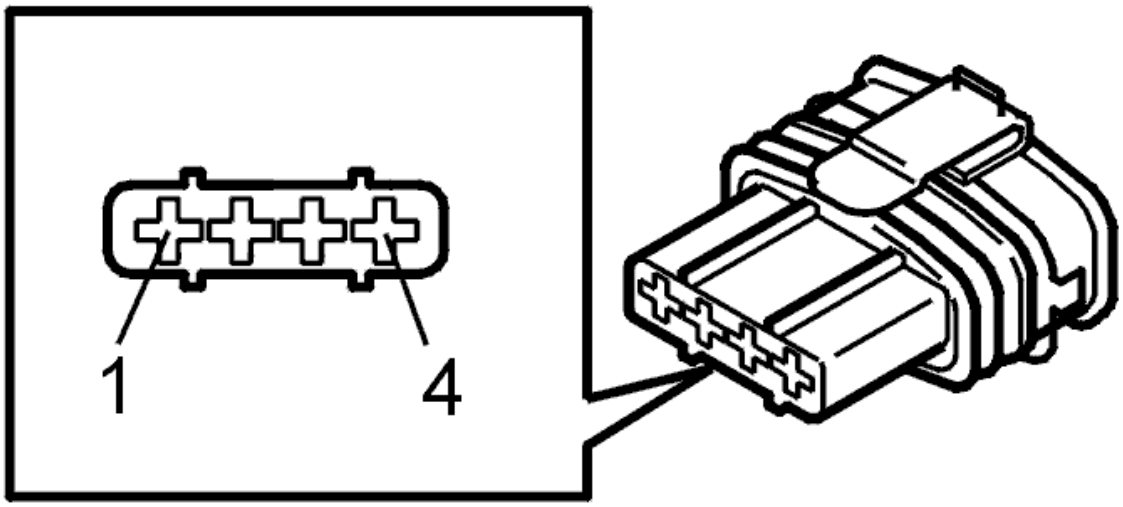

Fig. 8: Identifying Connector Terminals
Courtesy of VOLVO CARS CORPORATION

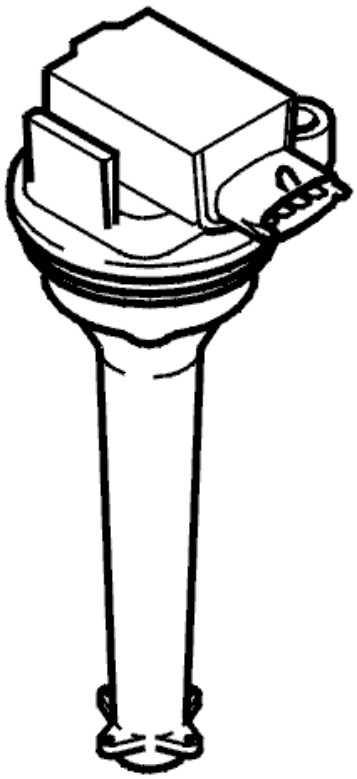

Fig. 9: Identifying Ignition Coil
Courtesy of VOLVO CARS CORPORATION

- **Continue**

  Refer to **VERIFICATION**

VERIFICATION

VERIFICATION

HINT: After carrying out the repair, check that the fault has been remedied.

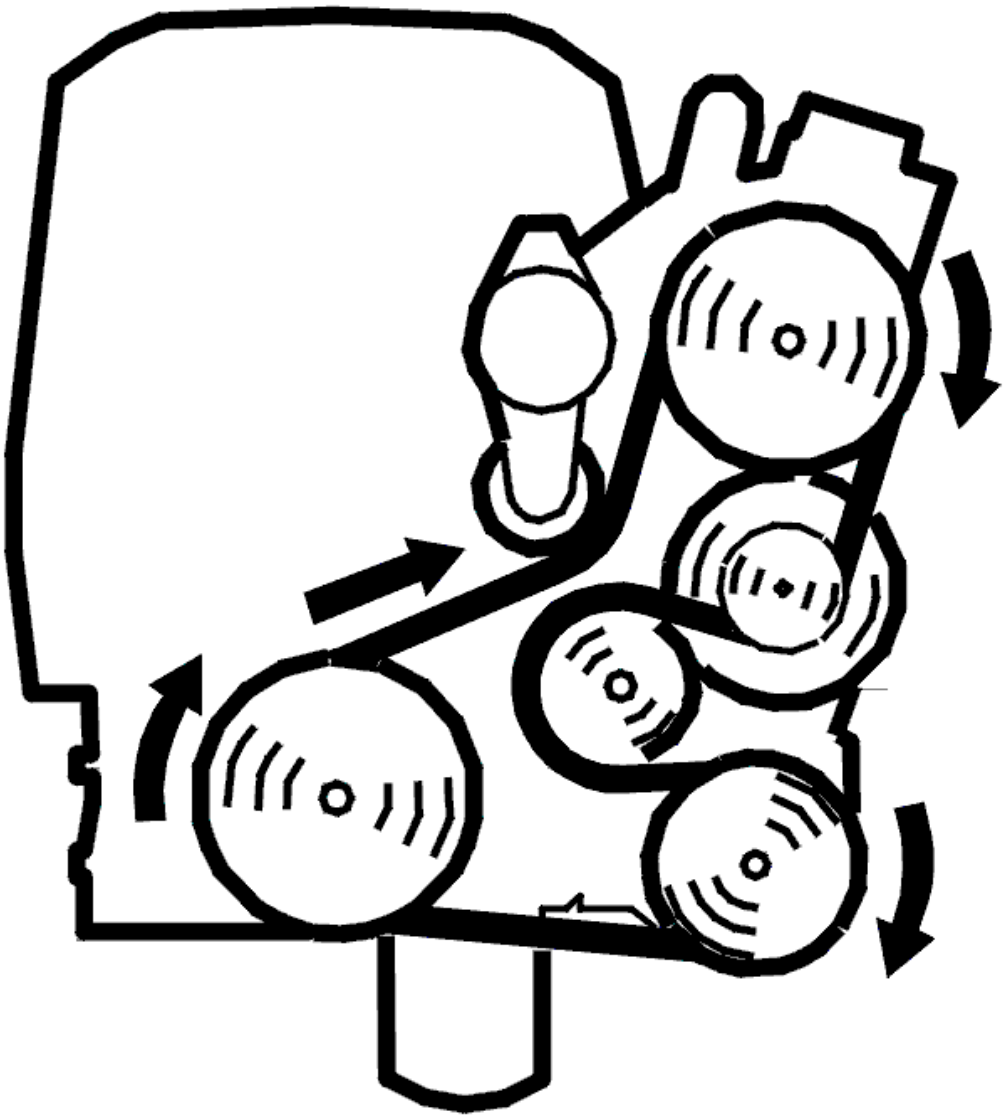

Fig. 10: Belt Routing / Engine Idling - Volvo
Courtesy of VOLVO CARS CORPORATION

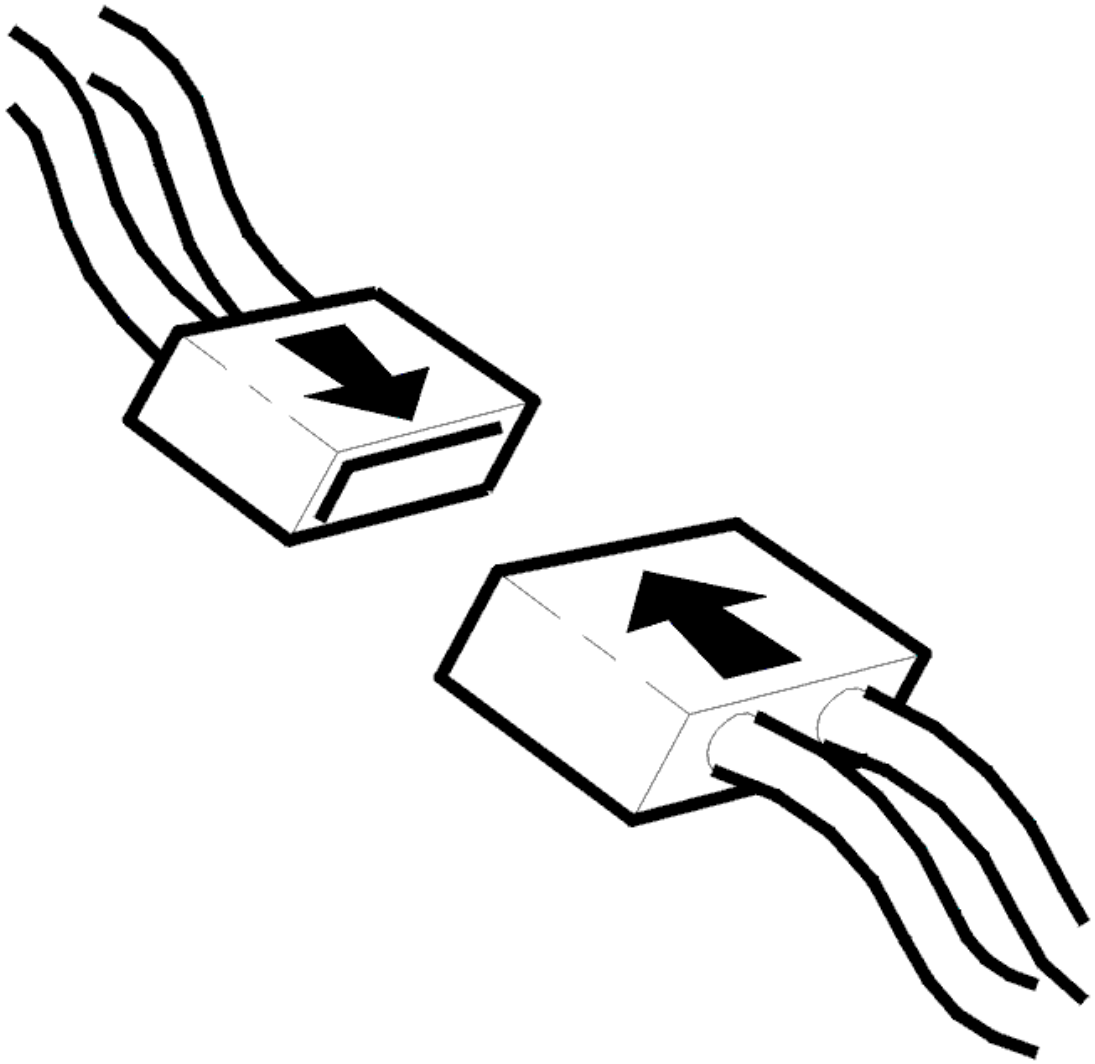

Fig. 11: Connecting Connector
Courtesy of VOLVO CARS CORPORATION

- Ignition off
- Reconnect connectors, reinstall components etc.
- Start the engine. Allow the engine to idle.

  The engine must fire on all cylinders.

Fig. 12: Identifying Ignition Coil
Courtesy of VOLVO CARS CORPORATION

Is the engine idling evenly?

- **YES**

  VERIFIED: Troubleshooting has been completed.

- **NO**

  Refer to **INFORMATION**

INFORMATION

FAULT-TRACING INFORMATION

The fault should have been detected and remedied. As this is not the case fault-tracing has failed.

Exit fault-tracing for this diagnostic trouble code (DTC) or make another attempt.

ECM-360D: IGNITION COIL CYLINDER 1, SIGNAL. SIGNAL TOO LOW (B6294T; 2005-2006)

DIAGNOSTIC TROUBLE CODE (DTC) INFORMATION

Condition

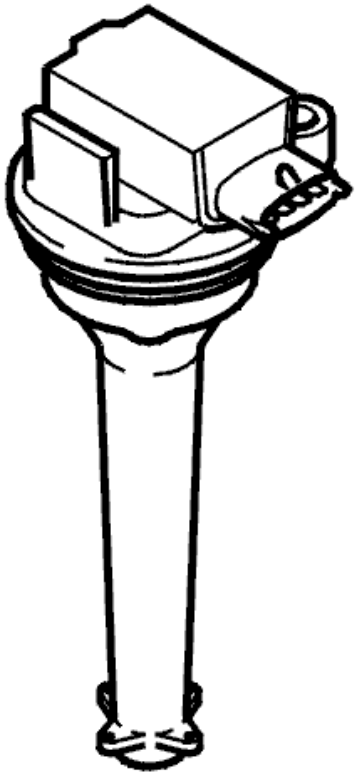

Fig. 13: Identifying Ignition Coil
Courtesy of VOLVO CARS CORPORATION

The engine control module (ECM) checks the signal cable for the ignition coil primary winding.

The diagnostic trouble code (DTC) is stored if the engine control module (ECM) detects that the signal for the primary winding for the ignition coil is too low.

The diagnostic trouble code (DTC) indicates which ignition coil is being referred to.

- ECM-360D: ignition coil 1
- ECM-361D: ignition coil 2
- ECM-362D: ignition coil 3
- ECM-363D: ignition coil 4
- ECM-364D: ignition coil 5
- ECM-365D: ignition coil 6.

The diagnostic trouble code (DTC) can be diagnosed when the engine is running.

Substitute Value

- None.

Possible Source

- Short-circuit to ground in the signal cable
- Damaged ignition coil.

Fault symptom[s]

- Malfunction indicator lamp (MIL) lit
- The engine is not firing on all cylinders.

SIGNAL TOO LOW

CHECKING COMPONENTS AND WIRING

- Check the connector for the ignition coil. Check for contact resistance. Check for oxidation.

  Check the cable that relates to the diagnostic trouble code (DTC). Check for a short-circuit to ground.

  Check between:

  - Engine control module (ECM) terminal #A50 (#A50) and ignition coil terminal #2 (ECM-360D, ignition coil 1)
  - Engine control module (ECM) terminal #A51 (#A51) and ignition coil terminal #2 (ECM-361D, ignition coil 2)
  - Engine control module (ECM) terminal #A30 (#A30) and ignition coil terminal #2 (ECM-362D, ignition coil 3)
  - Engine control module (ECM) terminal #A49 (#A49) and ignition coil terminal #2 (ECM-363D, ignition coil 4)
  - Engine control module (ECM) terminal #A31 (#A31) and ignition coil terminal #2 (ECM-364D, ignition coil 5)
  - Engine control module (ECM) terminal #A52 (#A52) and ignition coil terminal #2 (ECM-355D, ignition coil 6).

  Remedy as necessary.

  Other information

  - see **CONNECTING THE BREAKOUT BOX**
  - For 6 cylinder engines 2005-, see **SIGNAL SPECIFICATION** .
  - see **REPLACING IGNITION COIL**
  - see **CHECKING WIRING AND TERMINALS**

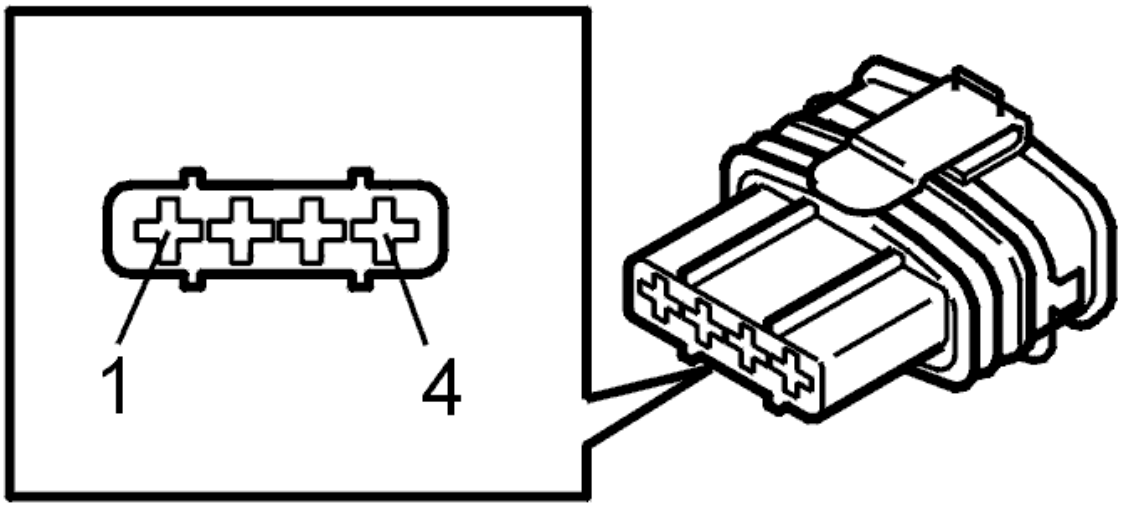

Fig. 14: Identifying Connector Terminals
Courtesy of VOLVO CARS CORPORATION

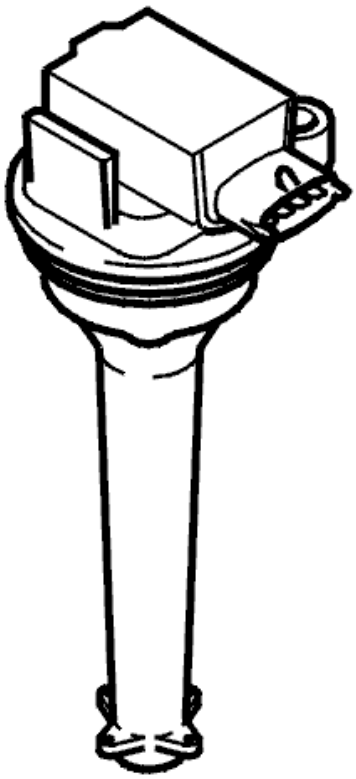

Fig. 15: Identifying Ignition Coil
Courtesy of VOLVO CARS CORPORATION

- **Continue**

  Refer to **VERIFICATION**

VERIFICATION

VERIFICATION

HINT: After carrying out the repair, check that the fault has been remedied.

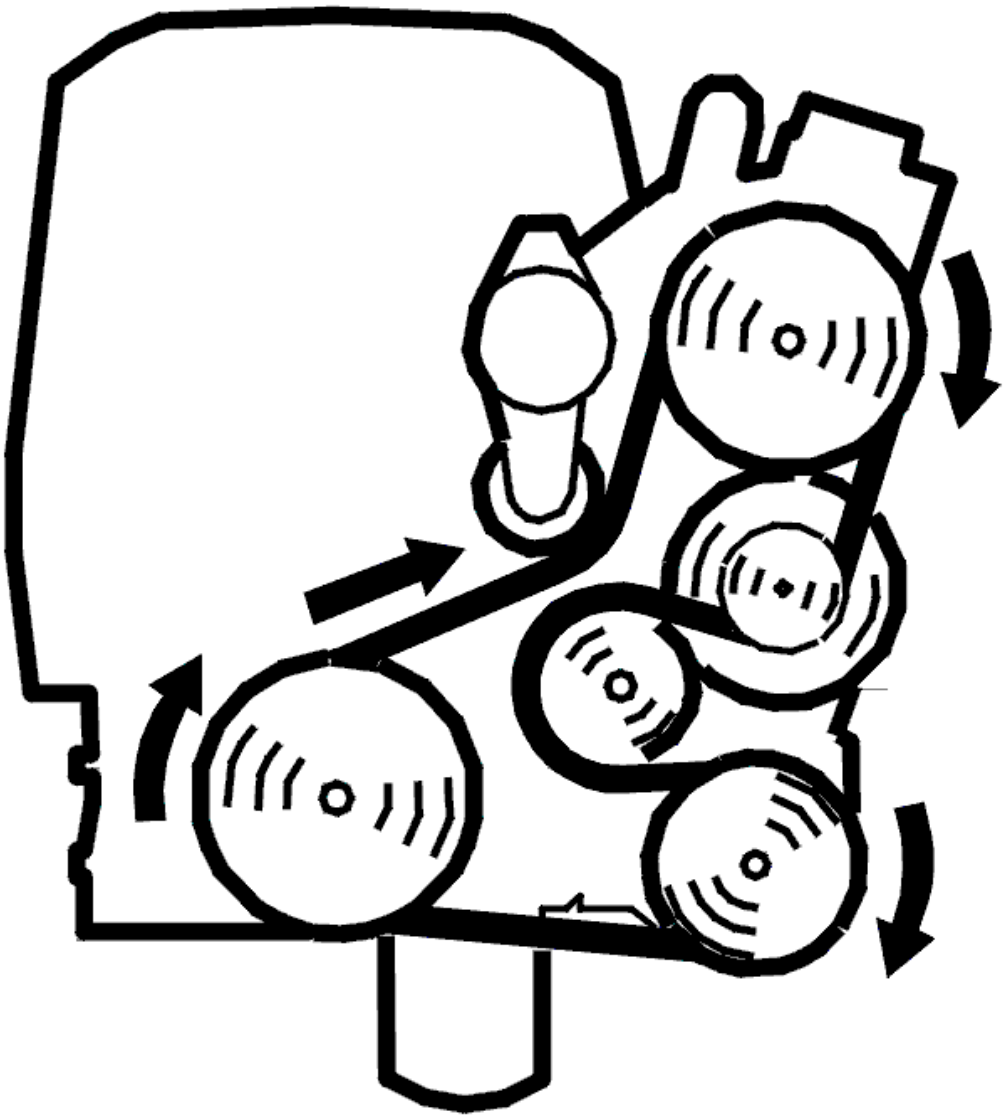

Fig. 16: Belt Routing / Engine Idling - Volvo
Courtesy of VOLVO CARS CORPORATION

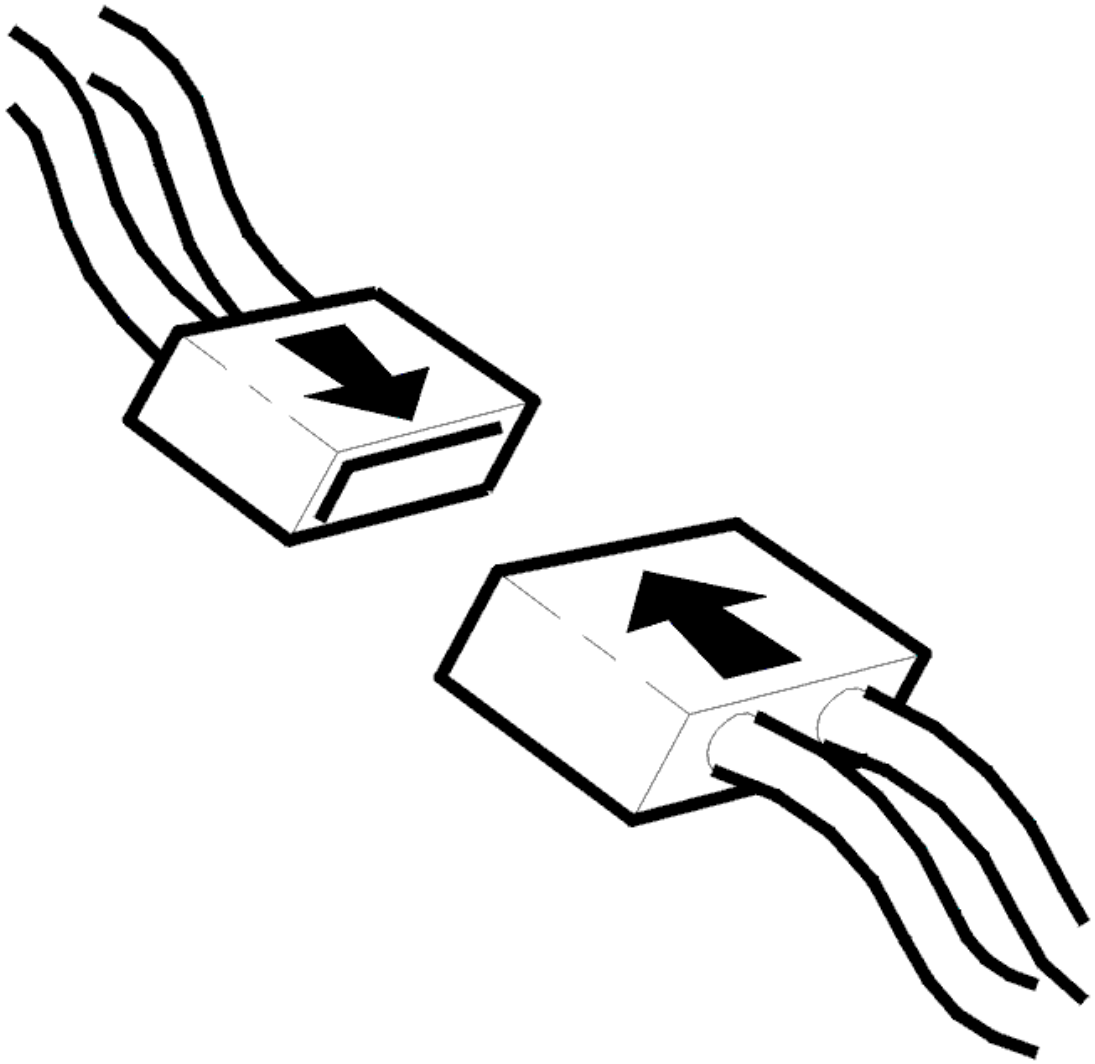

Fig. 17: Connecting Connector
Courtesy of VOLVO CARS CORPORATION

- Ignition off
- Reconnect connectors, reinstall components etc.
- Start the engine. Allow the engine to idle.

  The engine must fire on all cylinders.

Fig. 18: Identifying Ignition Coil
Courtesy of VOLVO CARS CORPORATION

Is the engine idling evenly?

- **YES**

  VERIFIED: Troubleshooting has been completed.

- **NO**

  Refer to **INFORMATION**

INFORMATION

FAULT-TRACING INFORMATION

The fault should have been detected and remedied. As this is not the case fault-tracing has failed.

Exit fault-tracing for this diagnostic trouble code (DTC) or make another attempt.

ECM-4000: CANISTER PURGE (CP) VALVE. SIGNAL MISSING. INTERMITTENT FAULT (B5254T2; B6294T; 2003-2004)

DIAGNOSTIC TROUBLE CODE (DTC) INFORMATION

Condition

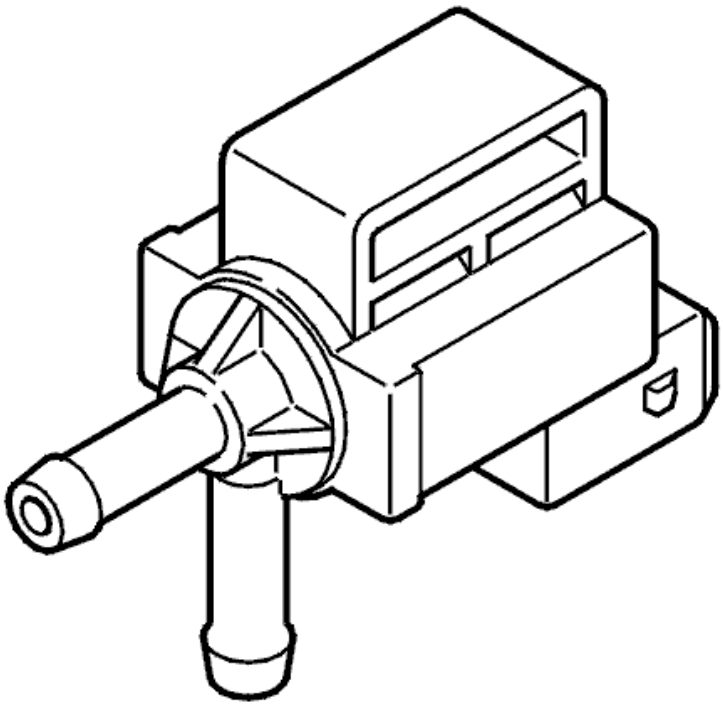

Fig. 19: Identifying Canister Purge (CP) Valve
Courtesy of VOLVO CARS CORPORATION

Diagnostic trouble code (DTC) ECM-4000 is stored if the signal from the canister purge (CP) valve is too high, too low or missing.

Substitute Value

twin heated oxygen sensor (HO2S) control disabled.

Possible Source

Signal too high:

- short-circuit to supply voltage in the signal cable
- defective canister purge (CP) valve

Signal too low:

- short-circuit to ground in the signal cable

Signal missing:

- open-circuit in the signal cable
- defective canister purge (CP) valve
- contact resistance in terminals
- open-circuit in power cable

Fault symptom[s]

- Malfunction indicator lamp (MIL) lit.

SIGNAL MISSING. INTERMITTENT FAULT

CHECKING WIRING AND CONNECTORS

Check the evaporative emission system (EVAP) valve connector. Check for contact resistance and oxidation. Check for loose connections.

Check the signal cable between control module terminal #A9 (#A9) and evaporative emission system (EVAP) valve terminal 2. Check the power supply between system relay terminal 3 and evaporative emission system (EVAP) valve terminal 1. Check for an intermittent open-circuit.

Other information:

- To connect the breakout box / access the control module, see **CONNECTING THE BREAKOUT BOX**
- For the location of components on 5 cylinder engines, see **LOCATION OF COMPONENTS, ENGINE COMPARTMENT**
- For the location of components on 6 cylinder turbocharged engines, see **LOCATION OF COMPONENTS, ENGINE COMPARTMENT**
- For 5 cylinder engines -2004, see **SIGNAL DESCRIPTION**
- For 6 cylinder engines -2004, see **SIGNAL SPECIFICATION**
- see **CHECKING WIRING AND TERMINALS** .

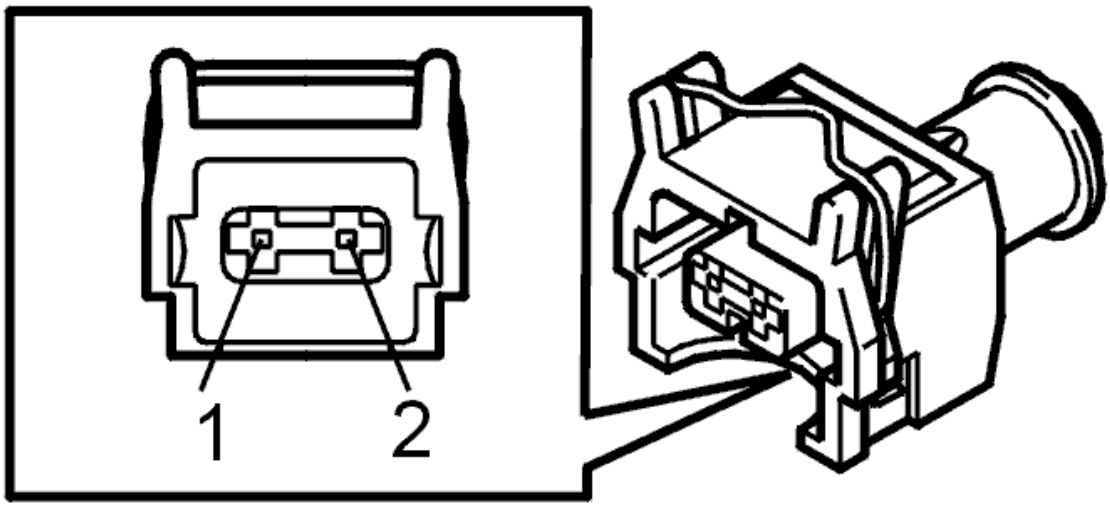

Fig. 20: Identifying 2 Pin Connector
Courtesy of VOLVO CARS CORPORATION

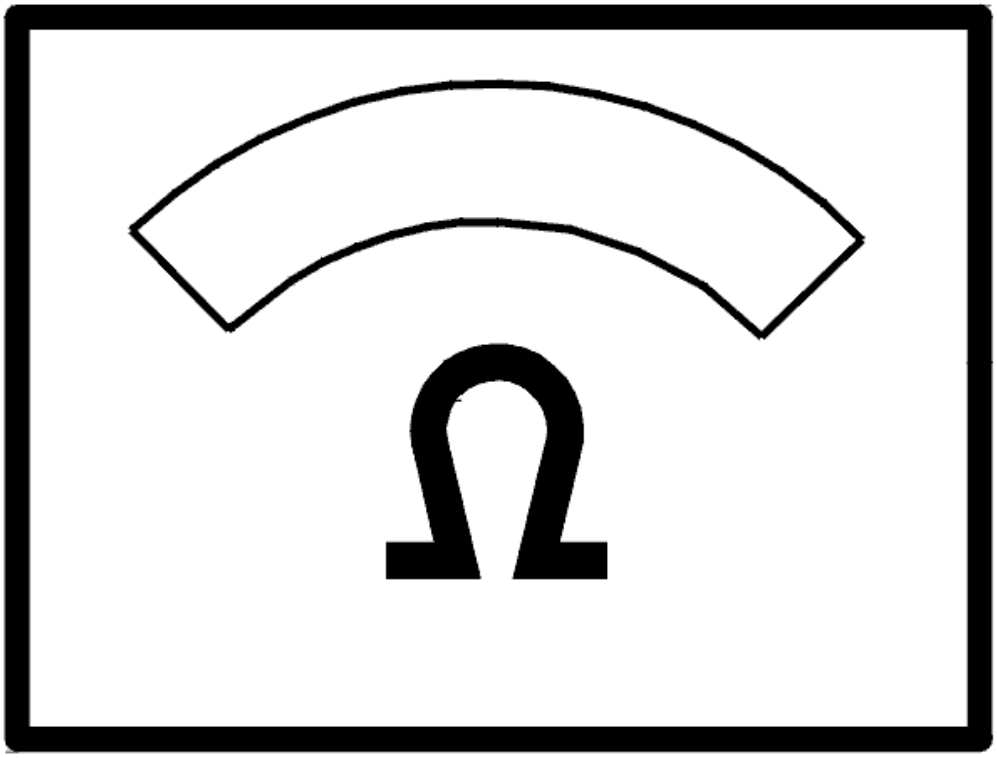

Fig. 21: Identifying Ohm Meter
Courtesy of VOLVO CARS CORPORATION

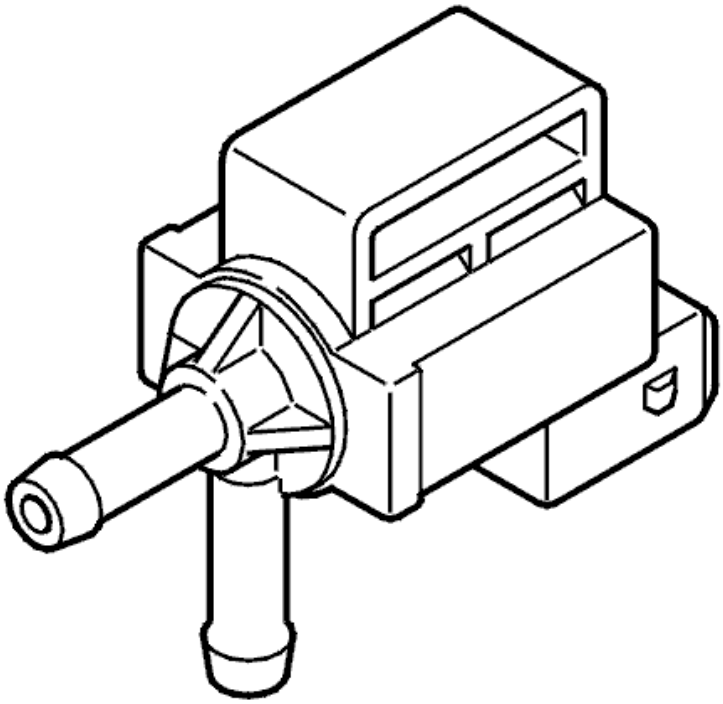

Fig. 22: Identifying Canister Purge (CP) Valve
Courtesy of VOLVO CARS CORPORATION

- **Continue**

  Refer to **INFORMATION**

INFORMATION

FAULT-TRACING INFORMATION

If the fault is intermittent, do not verify fault-tracing if the fault does not recur.

It is possible to view the information again, or leave fault-tracing for this diagnostic trouble code (DTC).

ECM-4000: CANISTER PURGE (CP) VALVE. SIGNAL MISSING. PERMANENT FAULT (B5254T2; B6294T; 2003-2004)

DIAGNOSTIC TROUBLE CODE (DTC) INFORMATION

see **DIAGNOSTIC TROUBLE CODE (DTC) INFORMATION**

SIGNAL MISSING. PERMANENT FAULT

CHECKING THE CONNECTOR

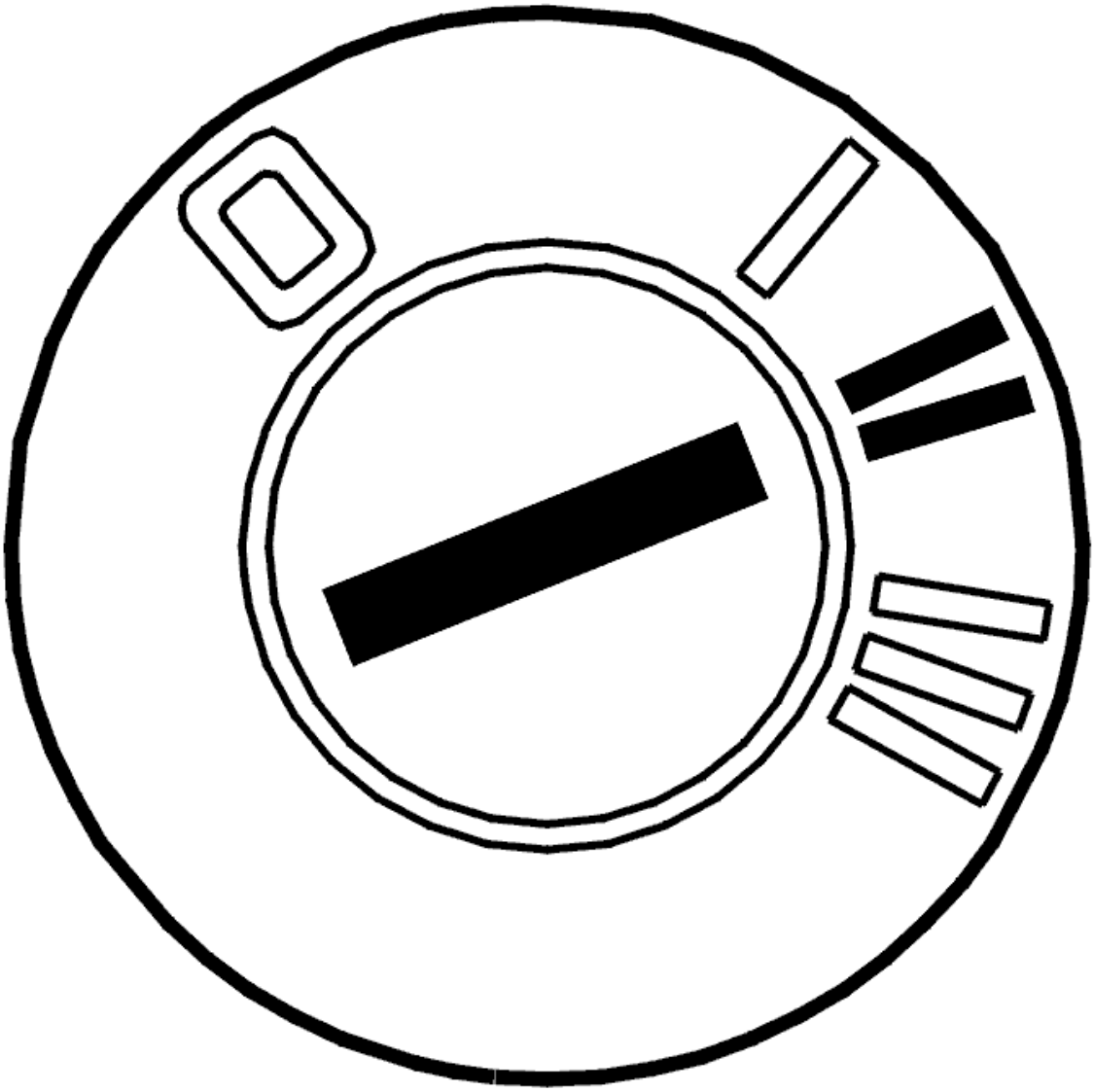

Fig. 23: Identifying Ignition ON
Courtesy of VOLVO CARS CORPORATION

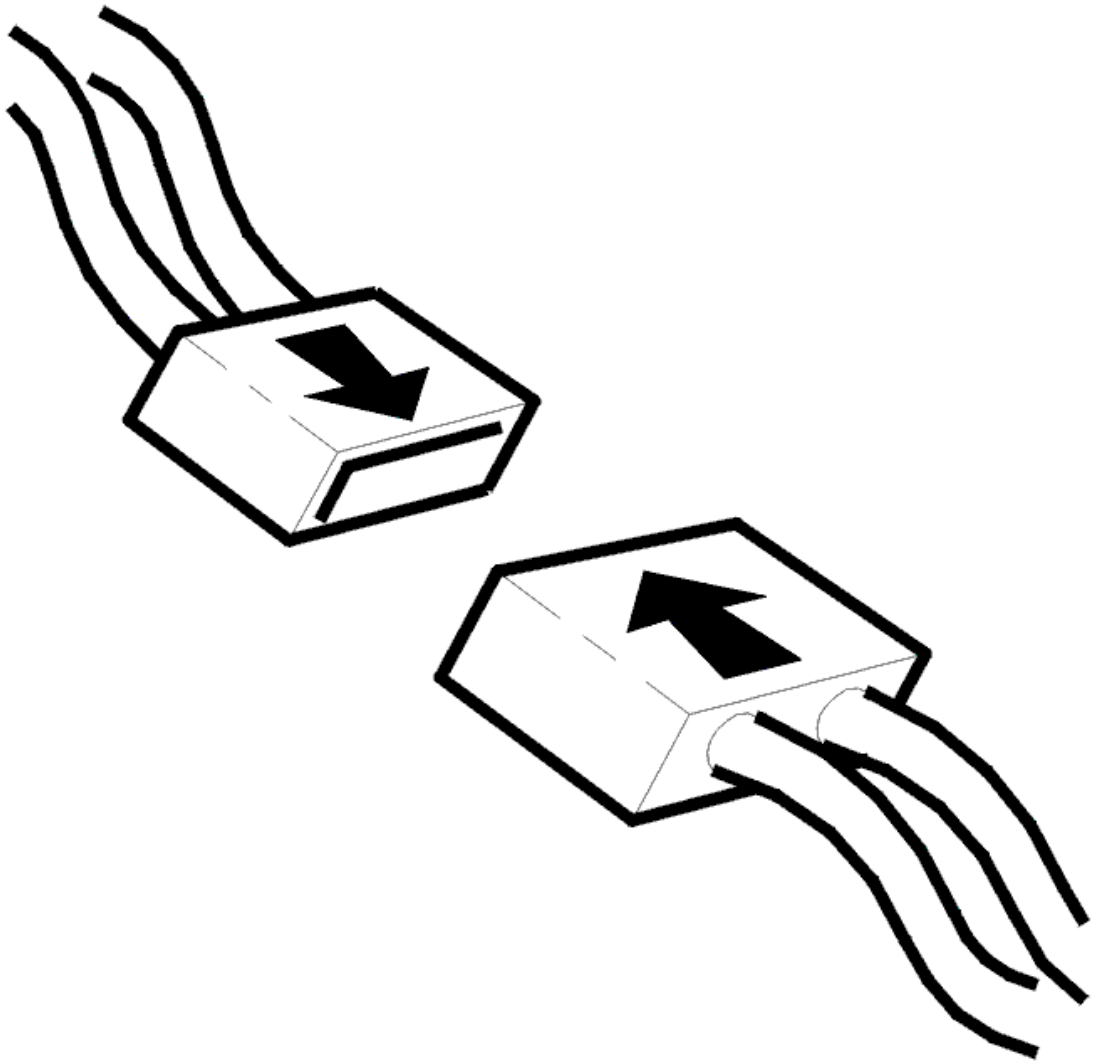

Fig. 24: Connecting Connector
Courtesy of VOLVO CARS CORPORATION

- Ignition off
- Check the evaporative emission system (EVAP) valve connector. Check for contact resistance and oxidation
- Reinstall the components, reconnect the connectors etc.
- Ignition on
- Activate the evaporative emission system (EVAP) valve.

  A click should be heard when the evaporative emission system (EVAP) valve is activated.

  If the evaporative emission system (EVAP) valve is now OK this indicates that the fault was caused by poor contact in the connector.

Other information:

- For the location of components on 5 cylinder engines, see **LOCATION OF COMPONENTS, ENGINE COMPARTMENT**
- For the location of components on 6 cylinder turbocharged engines, see **LOCATION OF COMPONENTS, ENGINE COMPARTMENT**
- For 5 cylinder turbocharged engines -2004, see **SIGNAL DESCRIPTION**
- For 6 cylinder engines -2004, see **SIGNAL SPECIFICATION**
- see **CHECKING WIRING AND TERMINALS** .

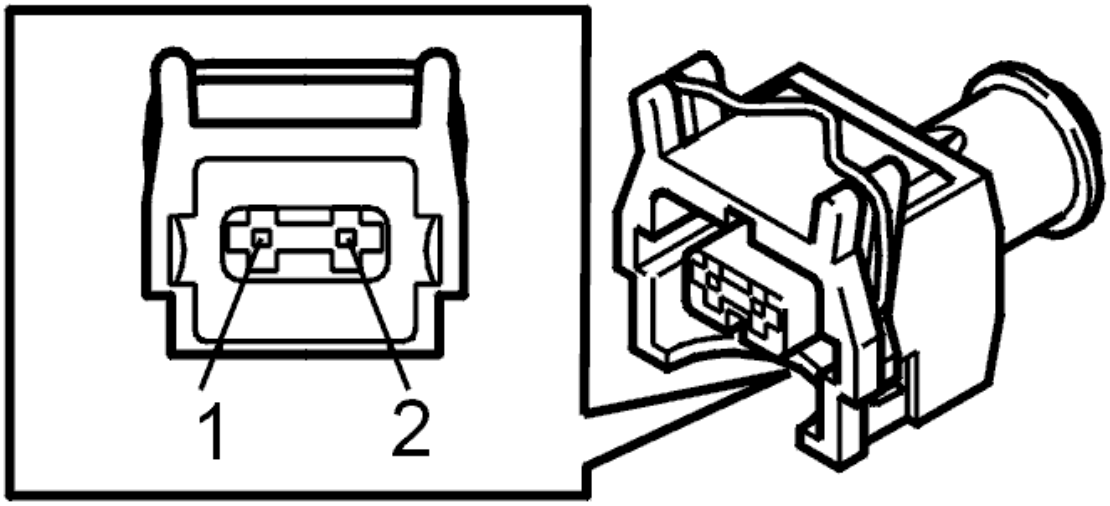

Fig. 25: Identifying 2 Pin Connector
Courtesy of VOLVO CARS CORPORATION

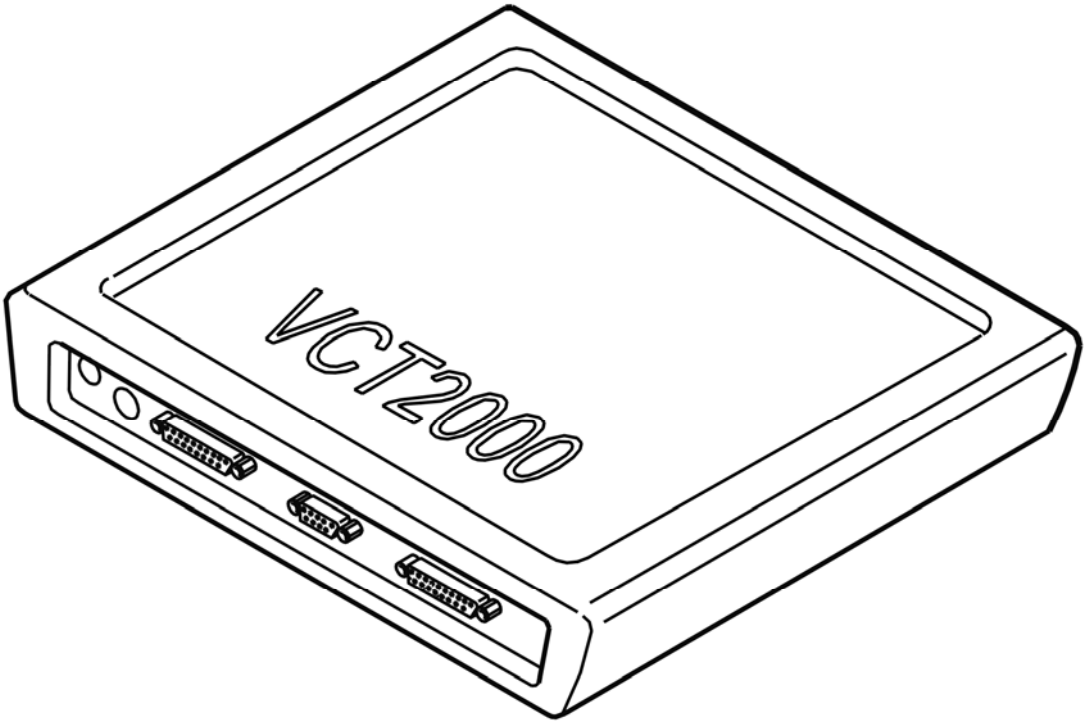

Fig. 26: Identifying VCT2000 Diagnostic Tool Symbol In VIDA
Courtesy of VOLVO CARS CORPORATION

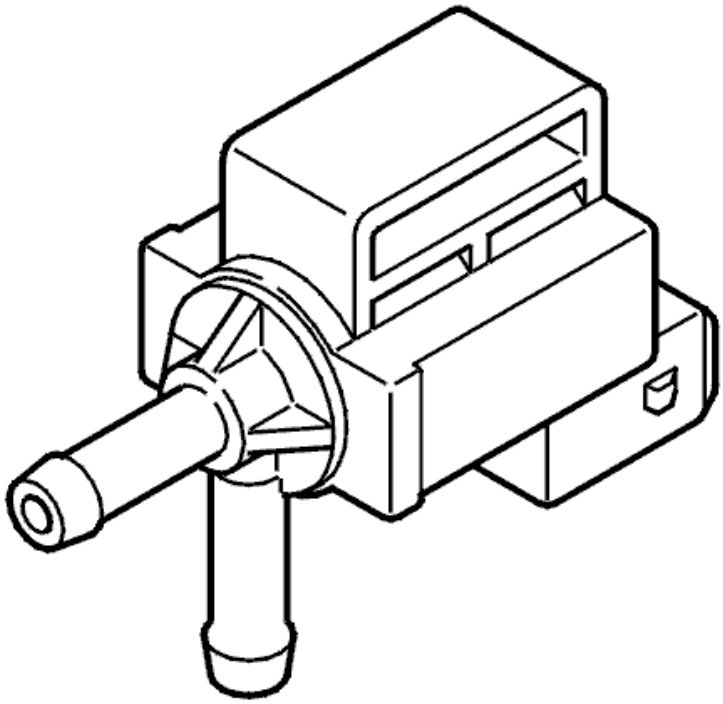

Fig. 27: Identifying Canister Purge (CP) Valve
Courtesy of VOLVO CARS CORPORATION

Is the evaporative emission system (EVAP) valve working?

- **YES**

  OKAY: Troubleshooting has been completed.

- **NO**

  Refer to **CHECKING COMPONENTS AND WIRING**

CHECKING COMPONENTS AND WIRING

Check the resistance of the evaporative emission system (EVAP) valve.

Check the signal cable between control module terminal #A9 (#A9) and evaporative emission system (EVAP) valve terminal 2. Check the power supply between system relay terminal 3 and evaporative emission system (EVAP) valve terminal 1. Check for an open-circuit.

Remedy as necessary.

Other information:

- To connect the breakout box / access the control module, see **CONNECTING THE BREAKOUT BOX**
- For the location of components on 5 cylinder engines, see **LOCATION OF COMPONENTS, ENGINE COMPARTMENT**
- For the location of components on 6 cylinder turbocharged engines, see **LOCATION OF COMPONENTS, ENGINE COMPARTMENT**
- For 5 cylinder turbocharged engines -2004, see **SIGNAL DESCRIPTION**
- For 6 cylinder engines -2004, see **SIGNAL SPECIFICATION**
- see **CHECKING WIRING AND TERMINALS** .

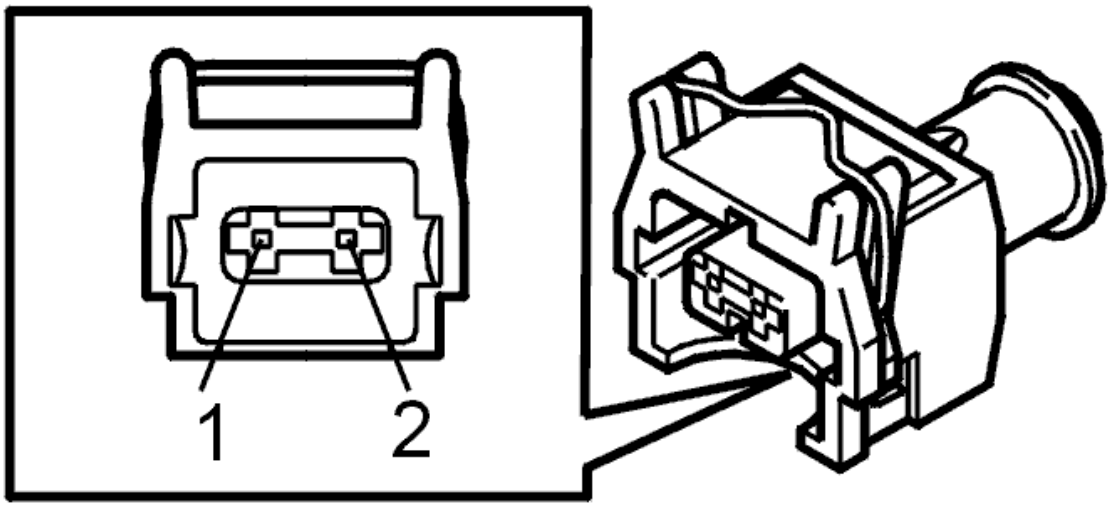

Fig. 28: Identifying 2 Pin Connector
Courtesy of VOLVO CARS CORPORATION

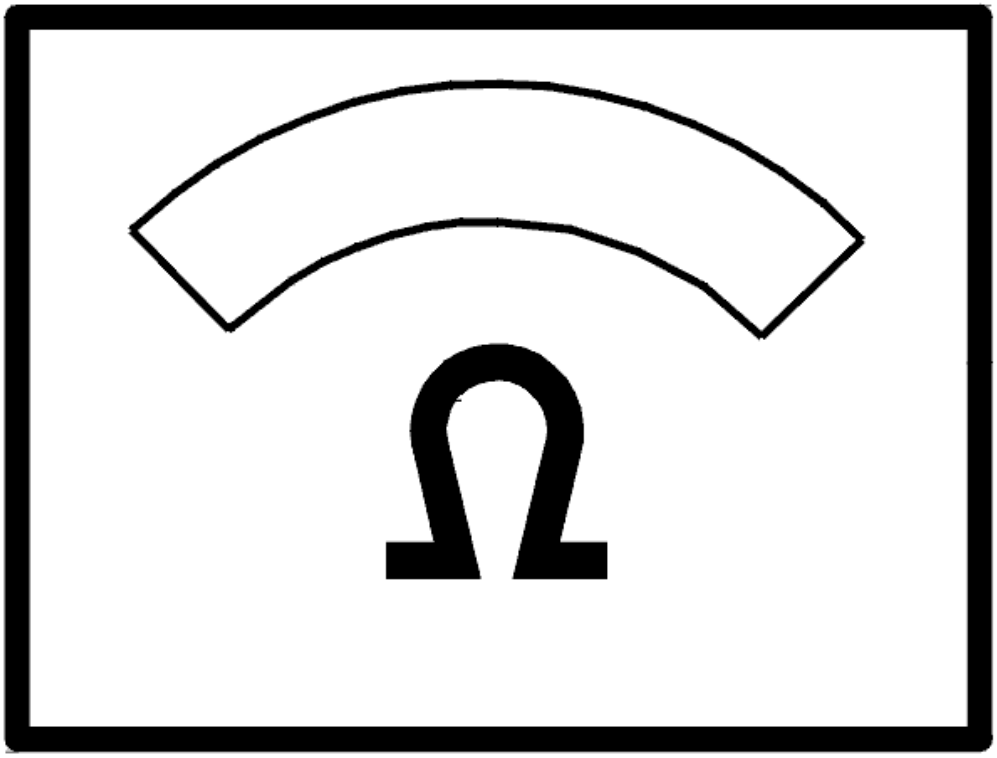

Fig. 29: Identifying Ohm Meter
Courtesy of VOLVO CARS CORPORATION

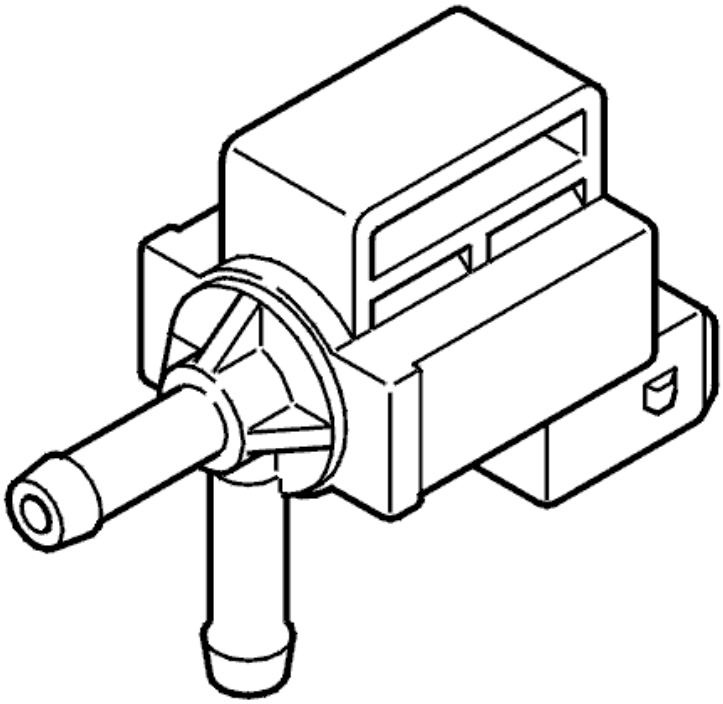

Fig. 30: Identifying Canister Purge (CP) Valve
Courtesy of VOLVO CARS CORPORATION

- **Continue**

  Refer to **VERIFICATION**

VERIFICATION

VERIFICATION

HINT: After carrying out the repair, check that the fault has been remedied.

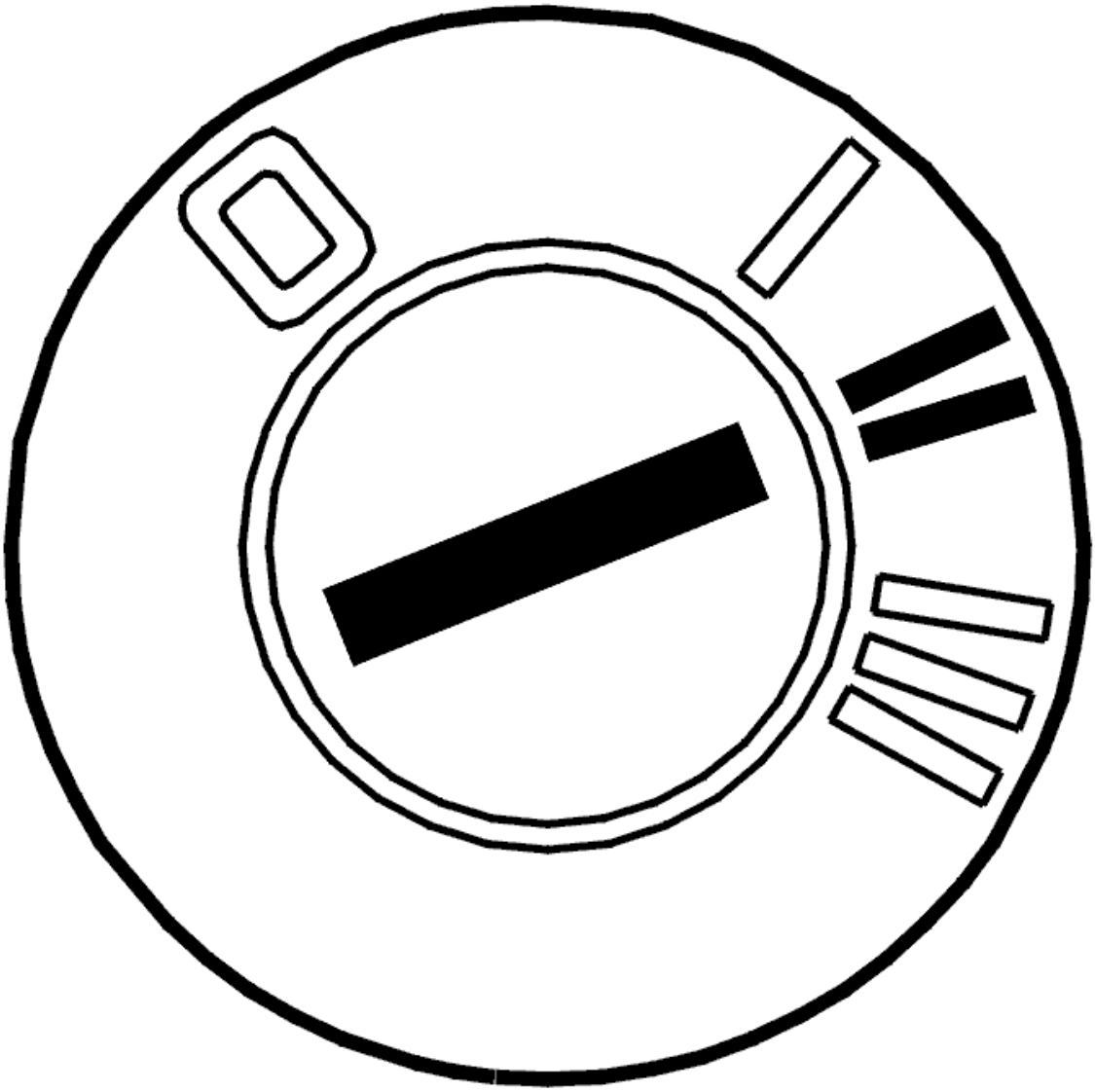

Fig. 31: Identifying Ignition ON
Courtesy of VOLVO CARS CORPORATION

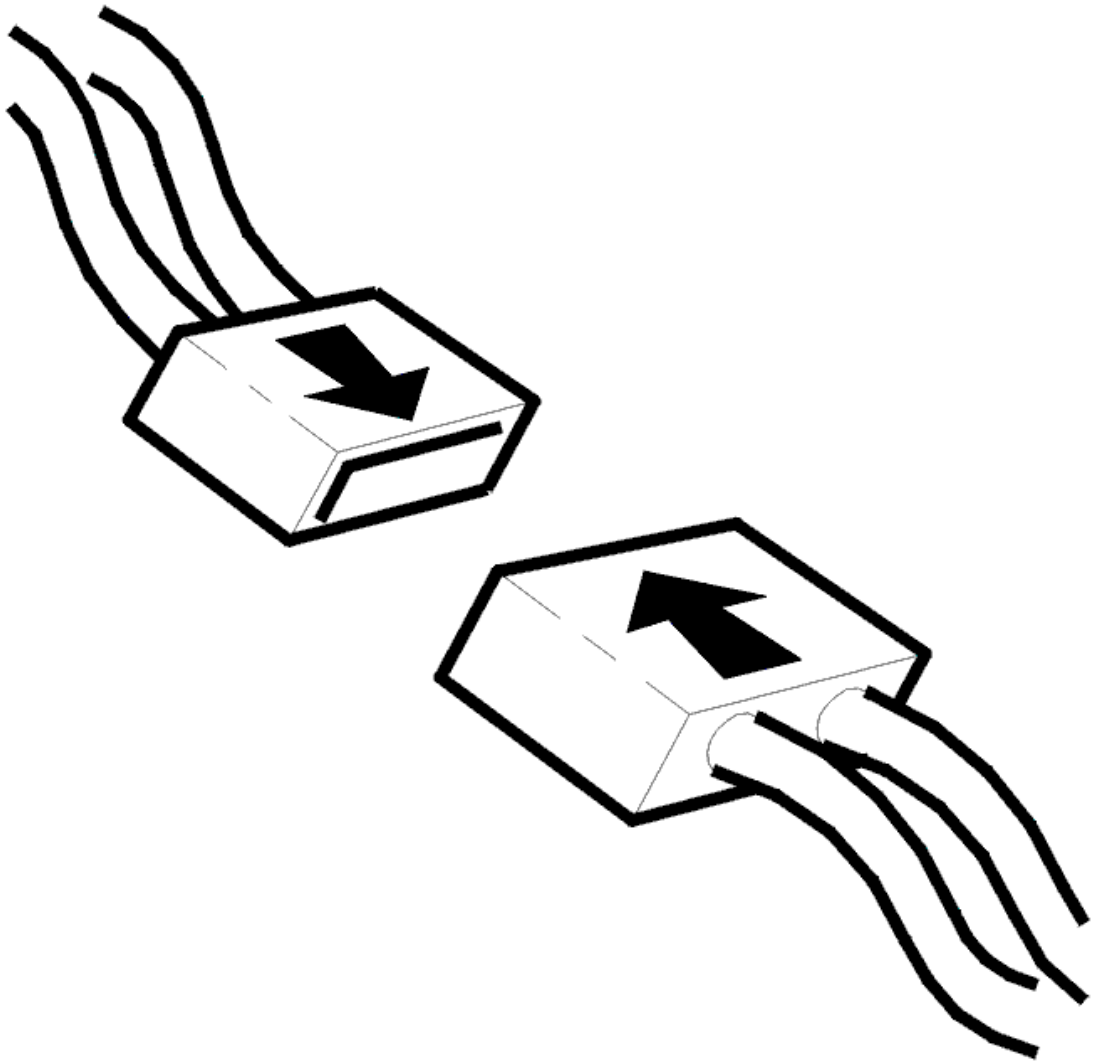

Fig. 32: Connecting Connector
Courtesy of VOLVO CARS CORPORATION

- Ignition off.
- Reconnect connectors, reinstall components
- Ignition on.
- Activate canister purge (CP) valve.

  A "click" should be heard when the canister purge (CP) valve is activated.

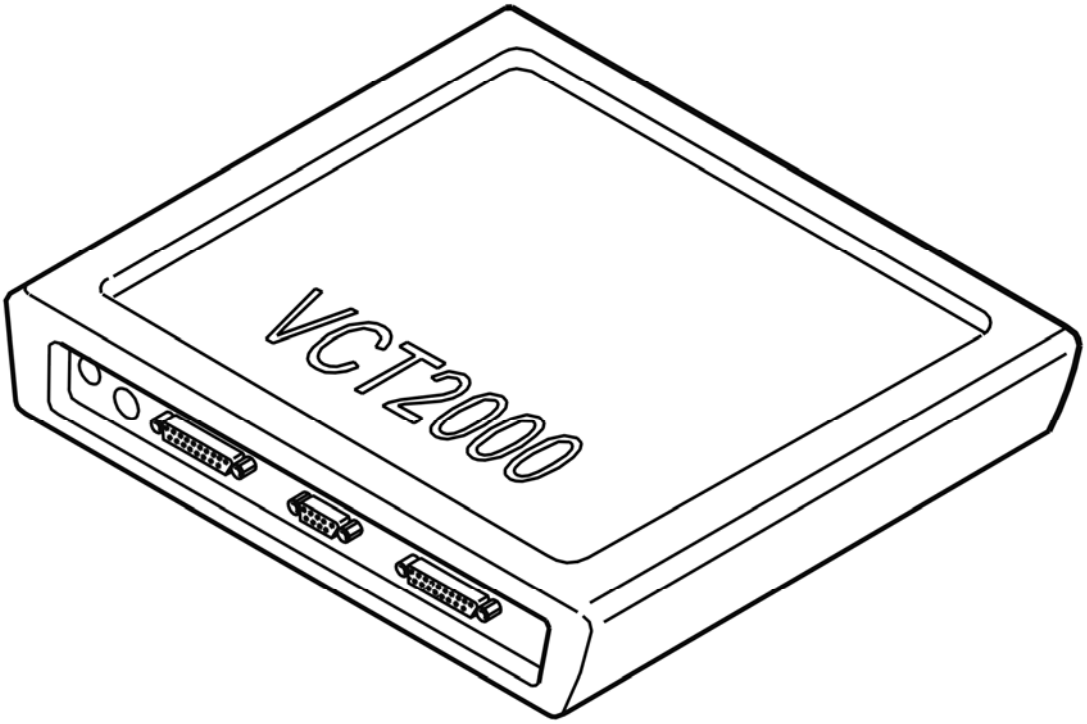

Fig. 33: Identifying VCT2000 Diagnostic Tool Symbol In VIDA
Courtesy of VOLVO CARS CORPORATION

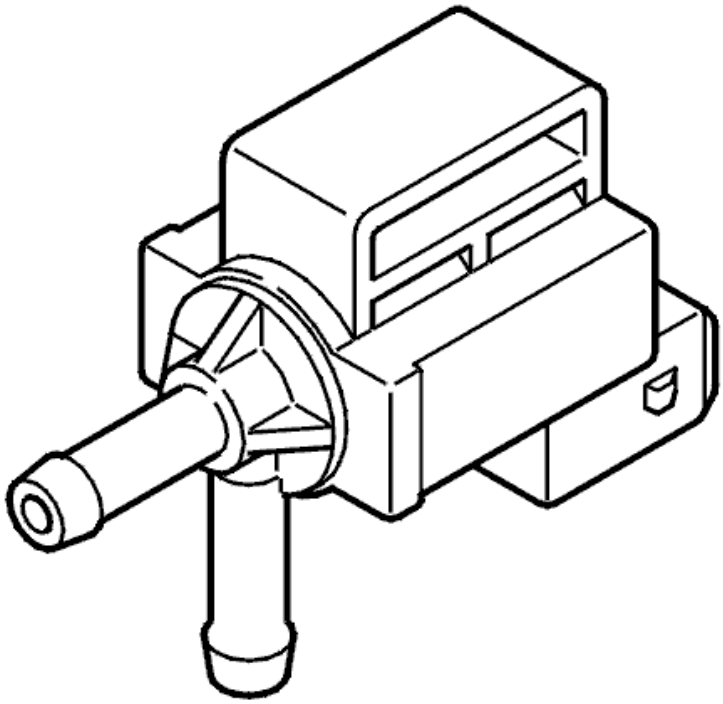

Fig. 34: Identifying Canister Purge (CP) Valve
Courtesy of VOLVO CARS CORPORATION

Is the canister purge (CP) valve working?

- **YES**

  VERIFIED: Troubleshooting has been completed.

- **NO**

  Refer to **INFORMATION**

INFORMATION

FAULT-TRACING INFORMATION

The fault should have been detected and remedied. As this is not the case fault-tracing has failed.

Exit fault-tracing for this diagnostic trouble code (DTC) or make another attempt.

ECM-4000: CANISTER PURGE (CP) VALVE. SIGNAL TOO HIGH. INTERMITTENT FAULT (B5254T2; B6294T; 2003-2004)

DIAGNOSTIC TROUBLE CODE (DTC) INFORMATION

see **DIAGNOSTIC TROUBLE CODE (DTC) INFORMATION**

SIGNAL TOO HIGH. INTERMITTENT FAULT

CHECKING THE WIRING

Check the signal cable between control module terminal #A9 (#A9) and evaporative emission system (EVAP) valve terminal 2. Check for an intermittent short-circuit to supply voltage.

Other information:

- To connect the breakout box / access the control module, see **CONNECTING THE BREAKOUT BOX**
- For the location of components on 5 cylinder engines, see **LOCATION OF COMPONENTS, ENGINE COMPARTMENT**
- For the location of components on 6 cylinder turbocharged engines, see **LOCATION OF COMPONENTS, ENGINE COMPARTMENT**
- For 5 cylinder turbocharged engines -2004, see **SIGNAL DESCRIPTION**
- For 6 cylinder engines -2004, see **SIGNAL SPECIFICATION**
- see **CHECKING WIRING AND TERMINALS** .

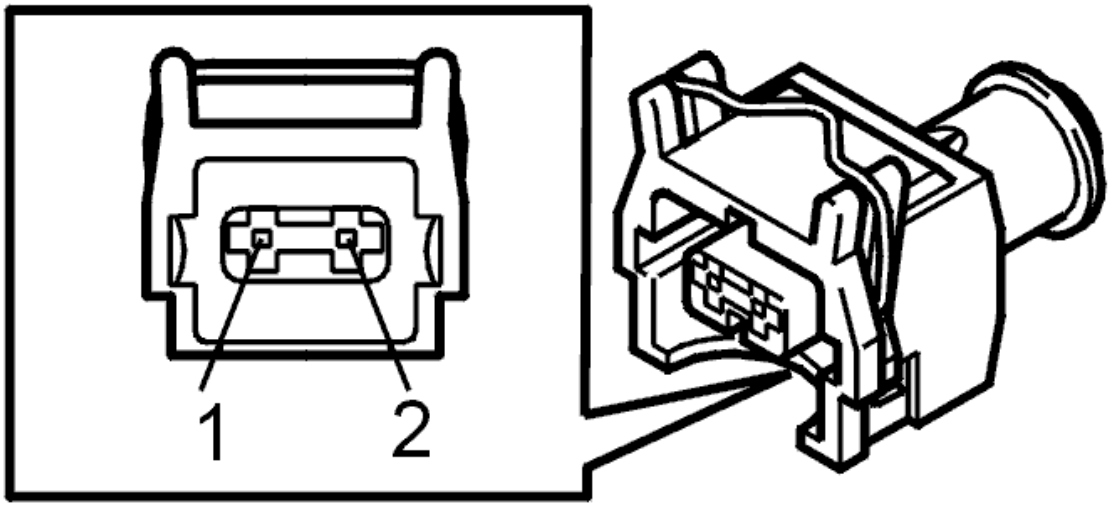

Fig. 35: Identifying 2 Pin Connector
Courtesy of VOLVO CARS CORPORATION

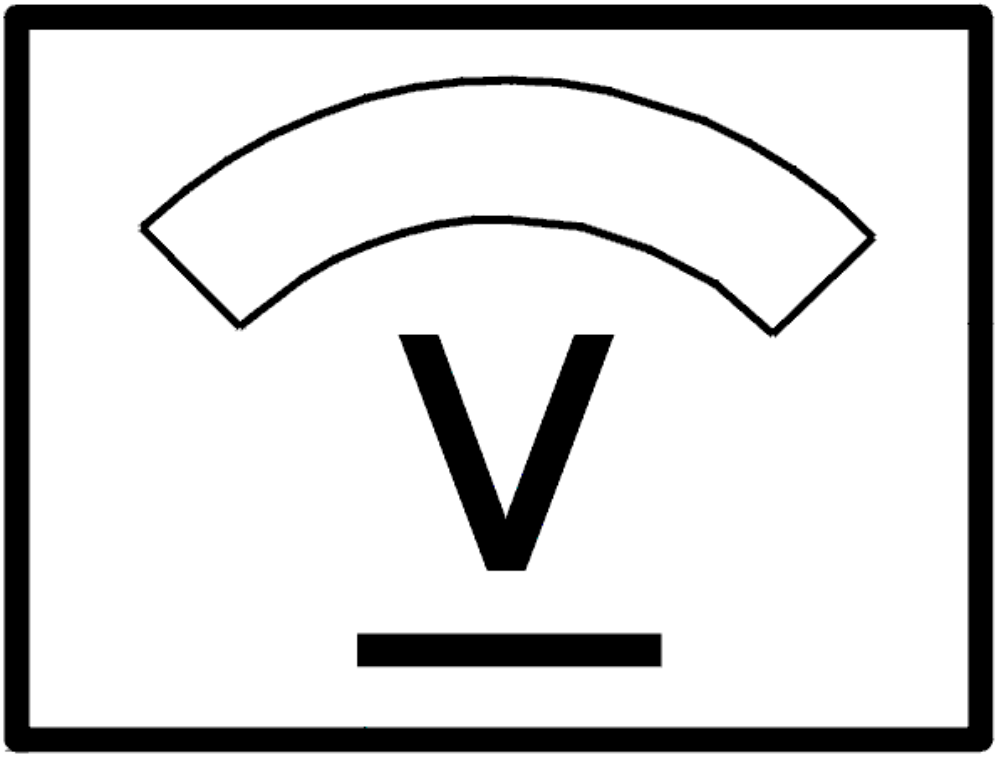

Fig. 36: Identifying Voltage Display
Courtesy of VOLVO CARS CORPORATION

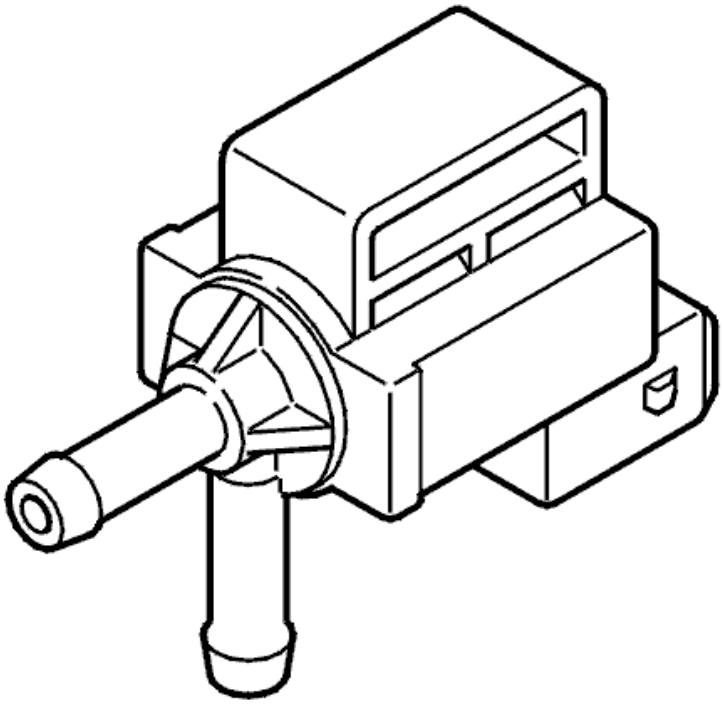

Fig. 37: Identifying Canister Purge (CP) Valve
Courtesy of VOLVO CARS CORPORATION

- **Continue**

  Refer to **INFORMATION**

INFORMATION

FAULT-TRACING INFORMATION

If the fault is intermittent, do not verify fault-tracing if the fault does not recur.

It is possible to view the information again, or leave fault-tracing for this diagnostic trouble code (DTC).

ECM-4000: CANISTER PURGE (CP) VALVE. SIGNAL TOO HIGH. PERMANENT FAULT (B5254T2; B6294T; 2003-2004)

DIAGNOSTIC TROUBLE CODE (DTC) INFORMATION

see **DIAGNOSTIC TROUBLE CODE (DTC) INFORMATION**

SIGNAL TOO HIGH. PERMANENT FAULT

CHECKING COMPONENTS AND WIRING

Check the resistance of the evaporative emission system (EVAP) valve.

Check the signal cable between control module terminal #A9 (#A9) and evaporative emission system (EVAP) valve terminal 2. Check for a short-circuit to supply voltage.

HINT: Use a test lamp with at least a 3 W bulb to determine whether the cable is short-circuited to supply voltage.

Remedy as necessary.

Other information:

- To connect the breakout box / access the control module, see **CONNECTING THE BREAKOUT BOX**
- For the location of components on 5 cylinder engines, see **LOCATION OF COMPONENTS, ENGINE COMPARTMENT**
- For the location of components on 6 cylinder turbocharged engines, see **LOCATION OF COMPONENTS, ENGINE COMPARTMENT**
- For resistance values, see **COMPONENT SPECIFICATIONS**
- For 5 cylinder turbocharged engines -2004, see **SIGNAL DESCRIPTION**
- For 6 cylinder engines -2004, see **SIGNAL SPECIFICATION**
- see **CHECKING WIRING AND TERMINALS** .

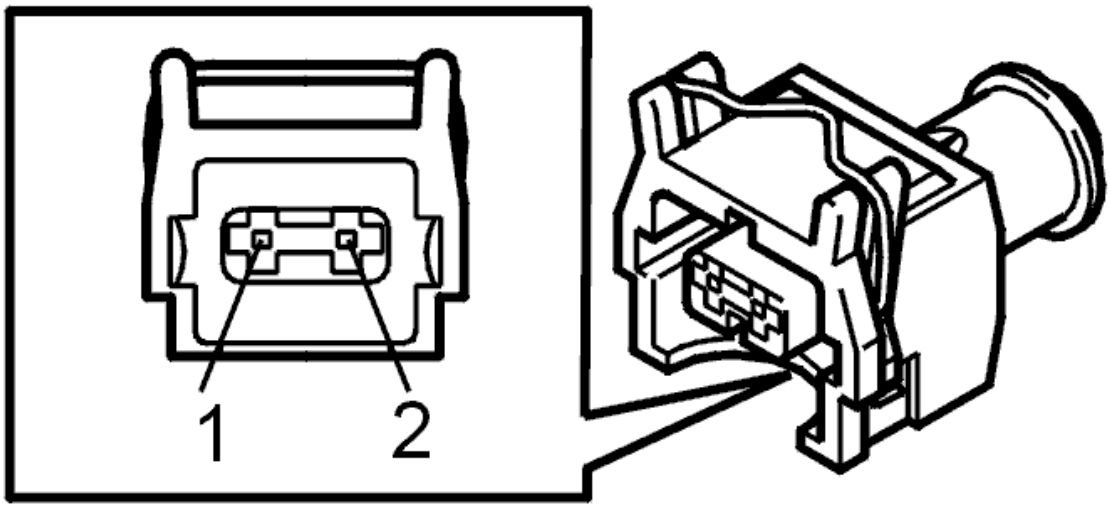

Fig. 38: Identifying 2 Pin Connector
Courtesy of VOLVO CARS CORPORATION

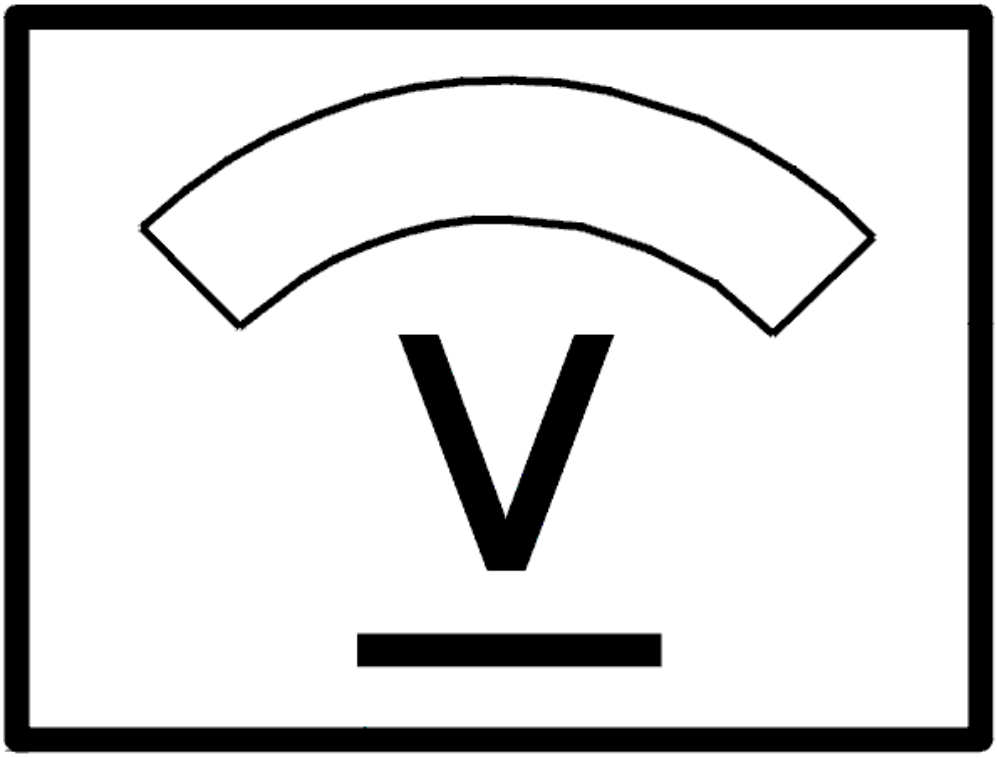

Fig. 39: Identifying Voltage Display
Courtesy of VOLVO CARS CORPORATION

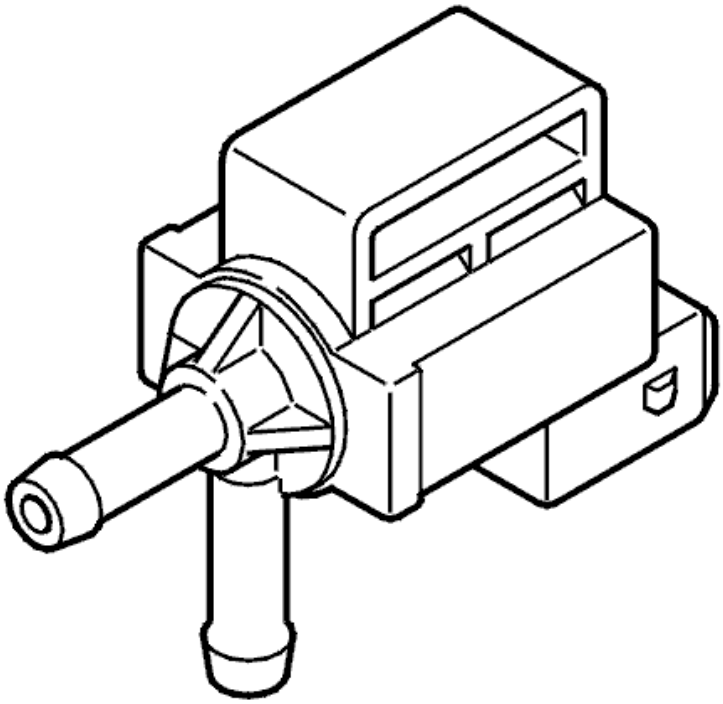

Fig. 40: Identifying Canister Purge (CP) Valve
Courtesy of VOLVO CARS CORPORATION

- **Continue**

  Refer to **VERIFICATION**

VERIFICATION

VERIFICATION

HINT: After carrying out the repair, check that the fault has been remedied.

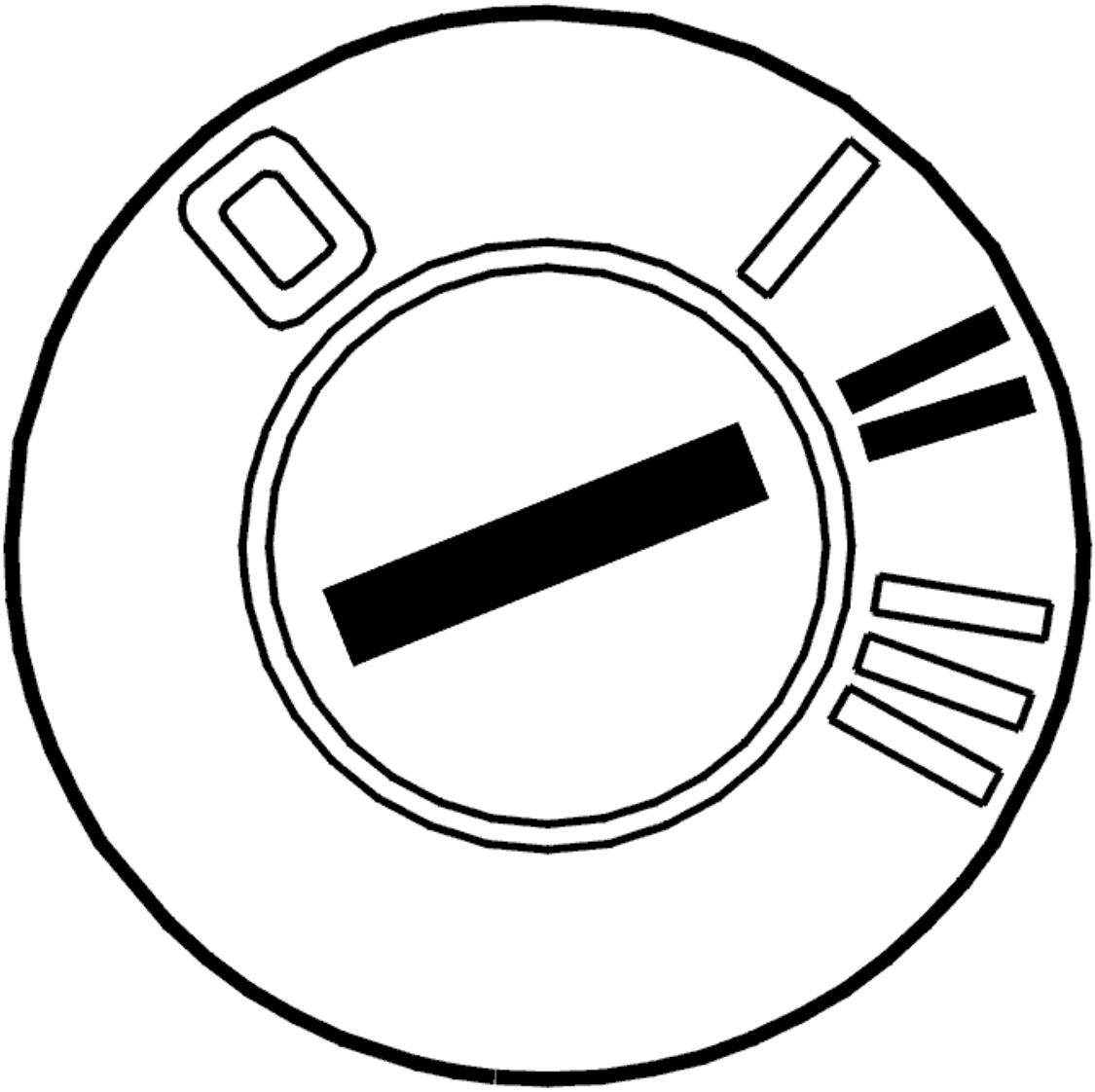

Fig. 41: Identifying Ignition ON
Courtesy of VOLVO CARS CORPORATION

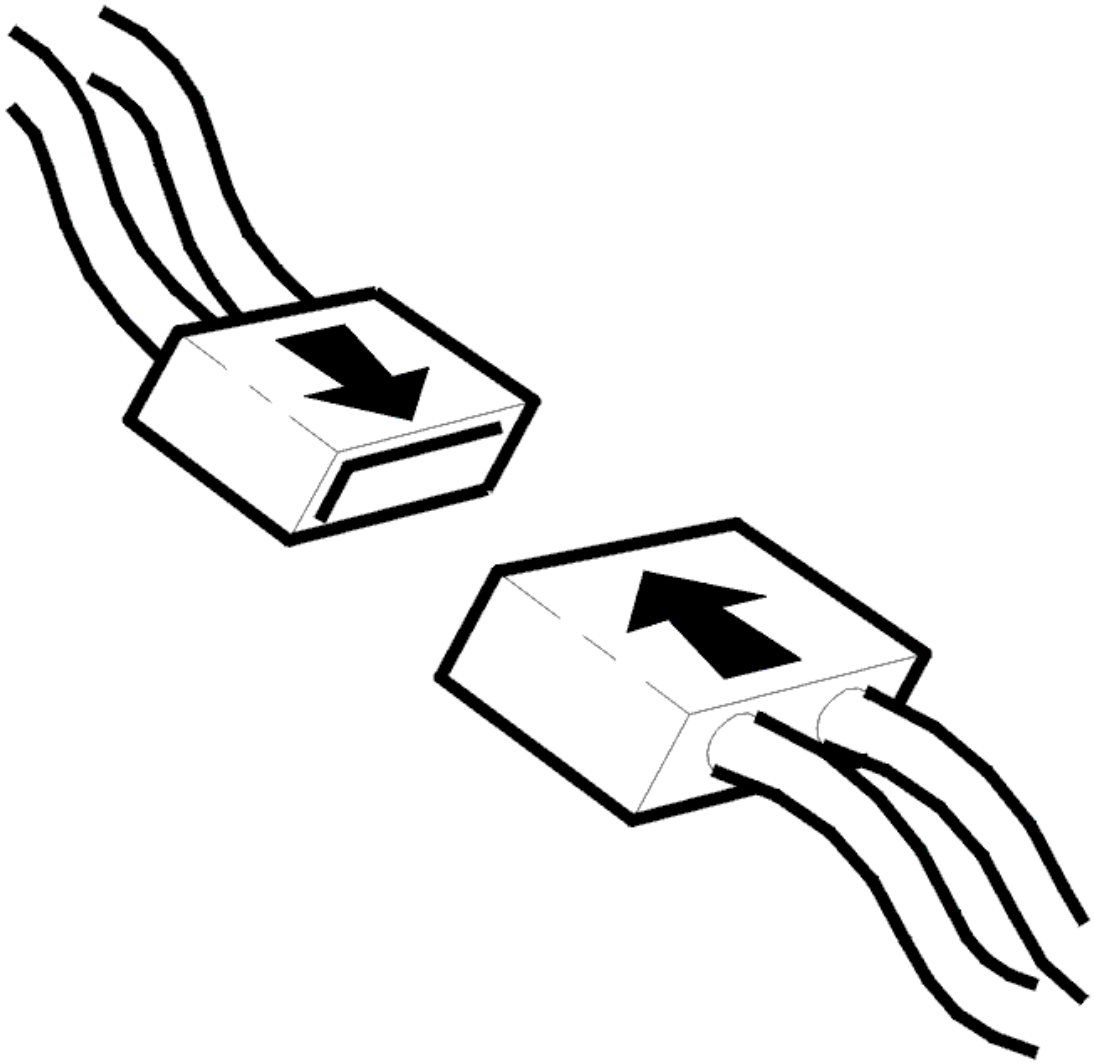

Fig. 42: Connecting Connector
Courtesy of VOLVO CARS CORPORATION

- Ignition off.
- Reconnect connectors, reinstall components
- Ignition on.
- Activate canister purge (CP) valve.

  A "click" should be heard when the canister purge (CP) valve is activated.

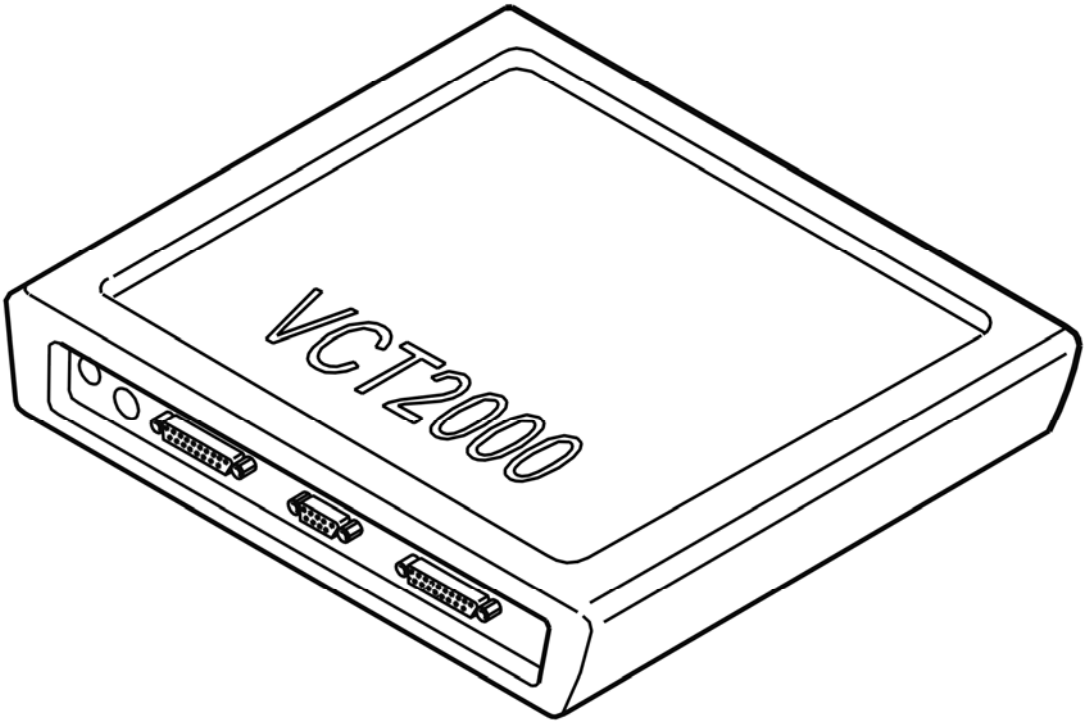

Fig. 43: Identifying VCT2000 Diagnostic Tool Symbol In VIDA
Courtesy of VOLVO CARS CORPORATION

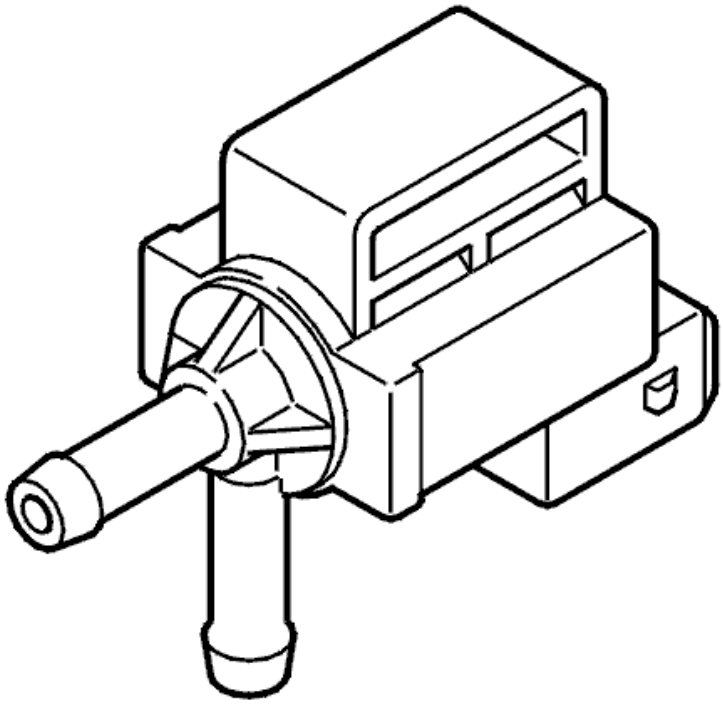

Fig. 44: Identifying Canister Purge (CP) Valve
Courtesy of VOLVO CARS CORPORATION

Is the canister purge (CP) valve working?

- **YES**

  VERIFIED: Troubleshooting has been completed.

- **NO**

  Refer to **INFORMATION**

INFORMATION

FAULT-TRACING INFORMATION

The fault should have been detected and remedied. As this is not the case fault-tracing has failed.

Exit fault-tracing for this diagnostic trouble code (DTC) or make another attempt.

ECM-4000: CANISTER PURGE (CP) VALVE. SIGNAL TOO LOW. INTERMITTENT FAULT (B5254T2; B6294T; 2003-2004)

DIAGNOSTIC TROUBLE CODE (DTC) INFORMATION

see **DIAGNOSTIC TROUBLE CODE (DTC) INFORMATION**

SIGNAL TOO LOW. INTERMITTENT FAULT

CHECKING THE WIRING

Check the signal cable between control module terminal #A9 (#A9) and evaporative emission system (EVAP) valve terminal 2. Check for an intermittent short-circuit to ground.

Other information:

- To connect the breakout box / access the control module, see **CONNECTING THE BREAKOUT BOX**
- For the location of components on 5 cylinder engines, see **LOCATION OF COMPONENTS, ENGINE COMPARTMENT**
- For the location of components on 6 cylinder turbocharged engines, see **LOCATION OF COMPONENTS, ENGINE COMPARTMENT**
- For 5 cylinder turbocharged engines -2004, see **SIGNAL DESCRIPTION**
- For 6 cylinder engines -2004, see **SIGNAL SPECIFICATION**
- see **CHECKING WIRING AND TERMINALS** .

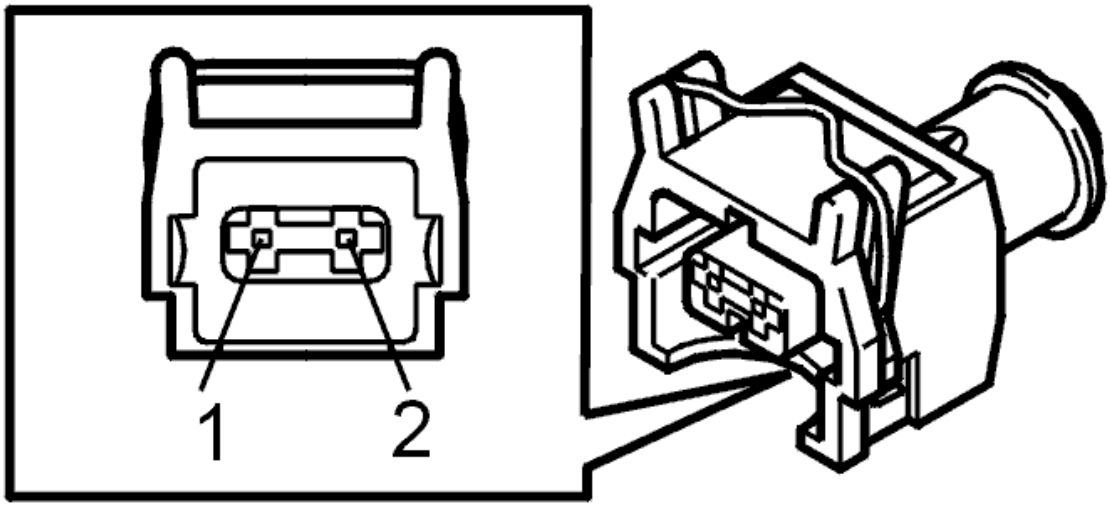

Fig. 45: Identifying 2 Pin Connector
Courtesy of VOLVO CARS CORPORATION

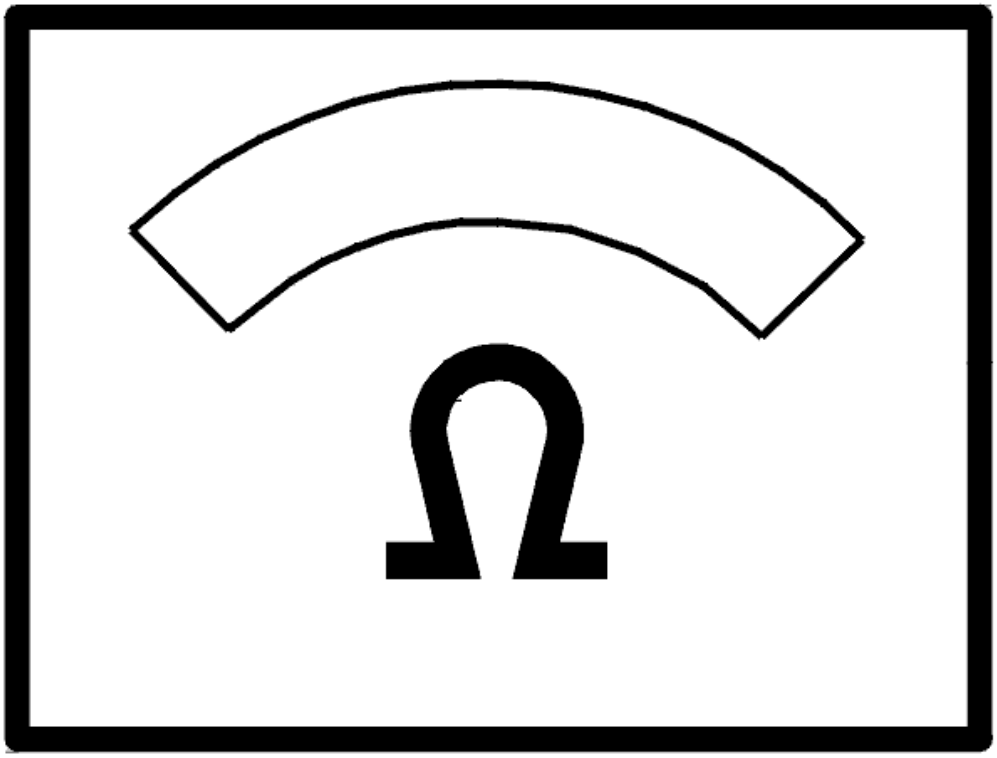

Fig. 46: Identifying Ohm Meter
Courtesy of VOLVO CARS CORPORATION

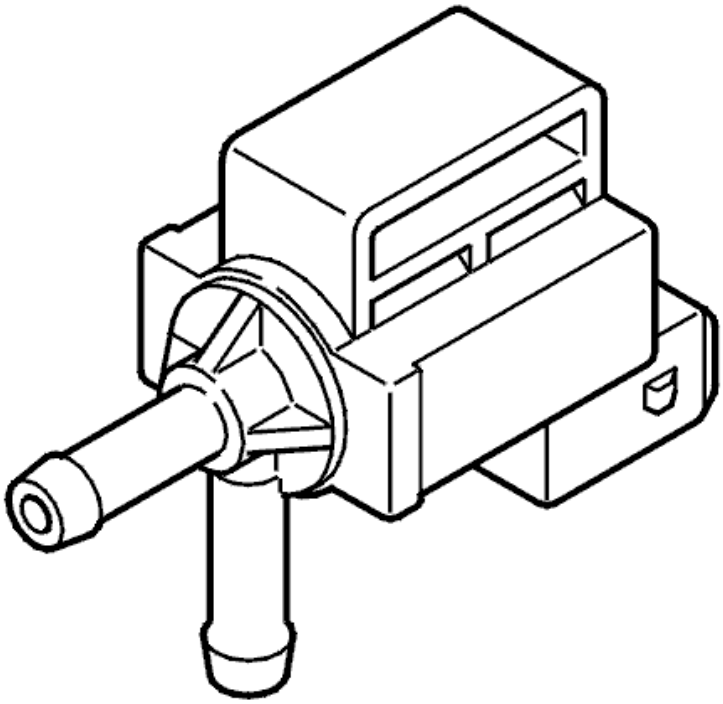

Fig. 47: Identifying Canister Purge (CP) Valve
Courtesy of VOLVO CARS CORPORATION

- **Continue**

  Refer to **INFORMATION**

INFORMATION

FAULT-TRACING INFORMATION

If the fault is intermittent, do not verify fault-tracing if the fault does not recur.

It is possible to view the information again, or leave fault-tracing for this diagnostic trouble code (DTC).

ECM-4000: CANISTER PURGE (CP) VALVE. SIGNAL TOO LOW. PERMANENT FAULT (B5254T2; B6294T; 2003-2004)

DIAGNOSTIC TROUBLE CODE (DTC) INFORMATION

see **DIAGNOSTIC TROUBLE CODE (DTC) INFORMATION**

SIGNAL TOO LOW. PERMANENT FAULT

CHECKING COMPONENTS AND WIRING

Check the resistance of the evaporative emission system (EVAP) valve.

Check the signal cable between control module terminal #A9 (#A9) and evaporative emission system (EVAP) valve terminal 2. Check for a short-circuit to ground.

Remedy as necessary.

Other information:

- To connect the breakout box / access the control module, see **CONNECTING THE BREAKOUT BOX**
- For the location of components on 5 cylinder engines, see **LOCATION OF COMPONENTS, ENGINE COMPARTMENT**
- For the location of components on 6 cylinder turbocharged engines, see **LOCATION OF COMPONENTS, ENGINE COMPARTMENT**
- For 5 cylinder turbocharged engines -2004, see **SIGNAL DESCRIPTION**
- For 6 cylinder engines -2004, see **SIGNAL SPECIFICATION**
- see **CHECKING WIRING AND TERMINALS** .

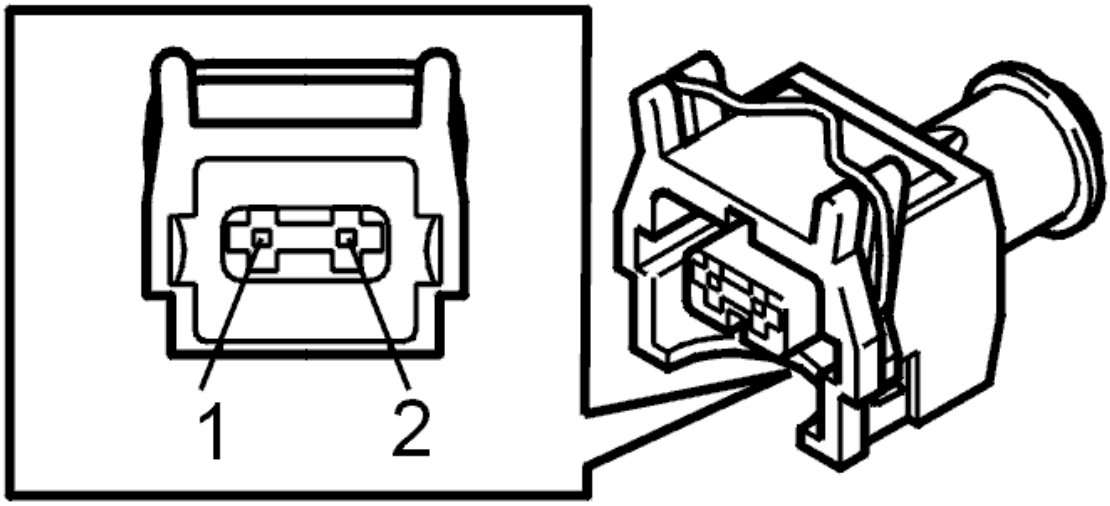

Fig. 48: Identifying 2 Pin Connector
Courtesy of VOLVO CARS CORPORATION

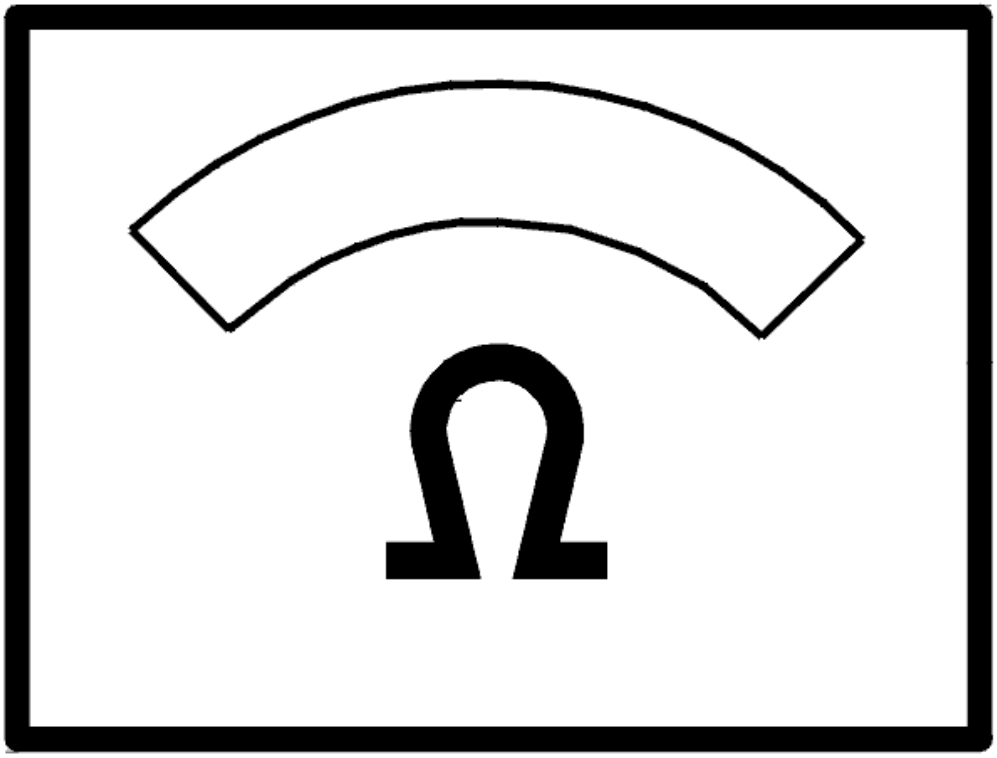

Fig. 49: Identifying Ohm Meter
Courtesy of VOLVO CARS CORPORATION

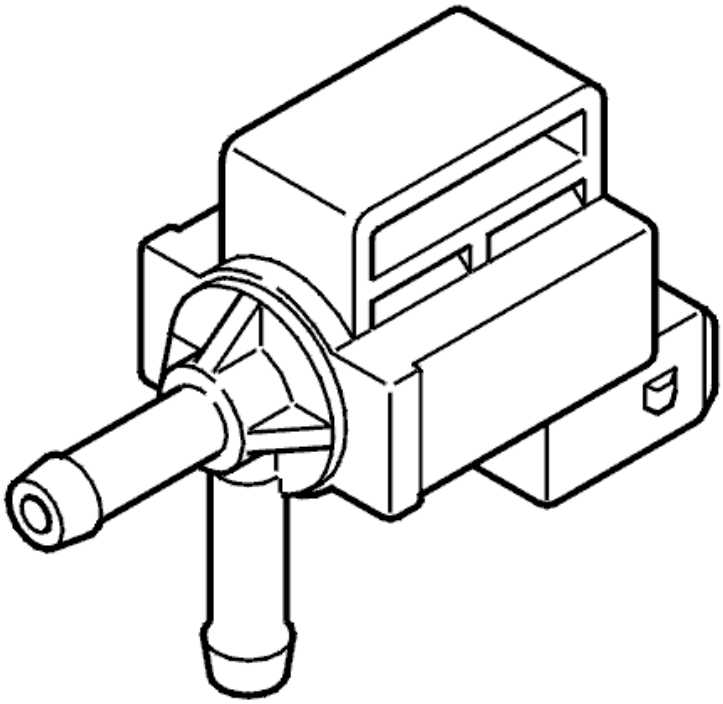

Fig. 50: Identifying Canister Purge (CP) Valve
Courtesy of VOLVO CARS CORPORATION

- **Continue**

  Refer to **VERIFICATION**

VERIFICATION

VERIFICATION

HINT: After carrying out the repair, check that the fault has been remedied.

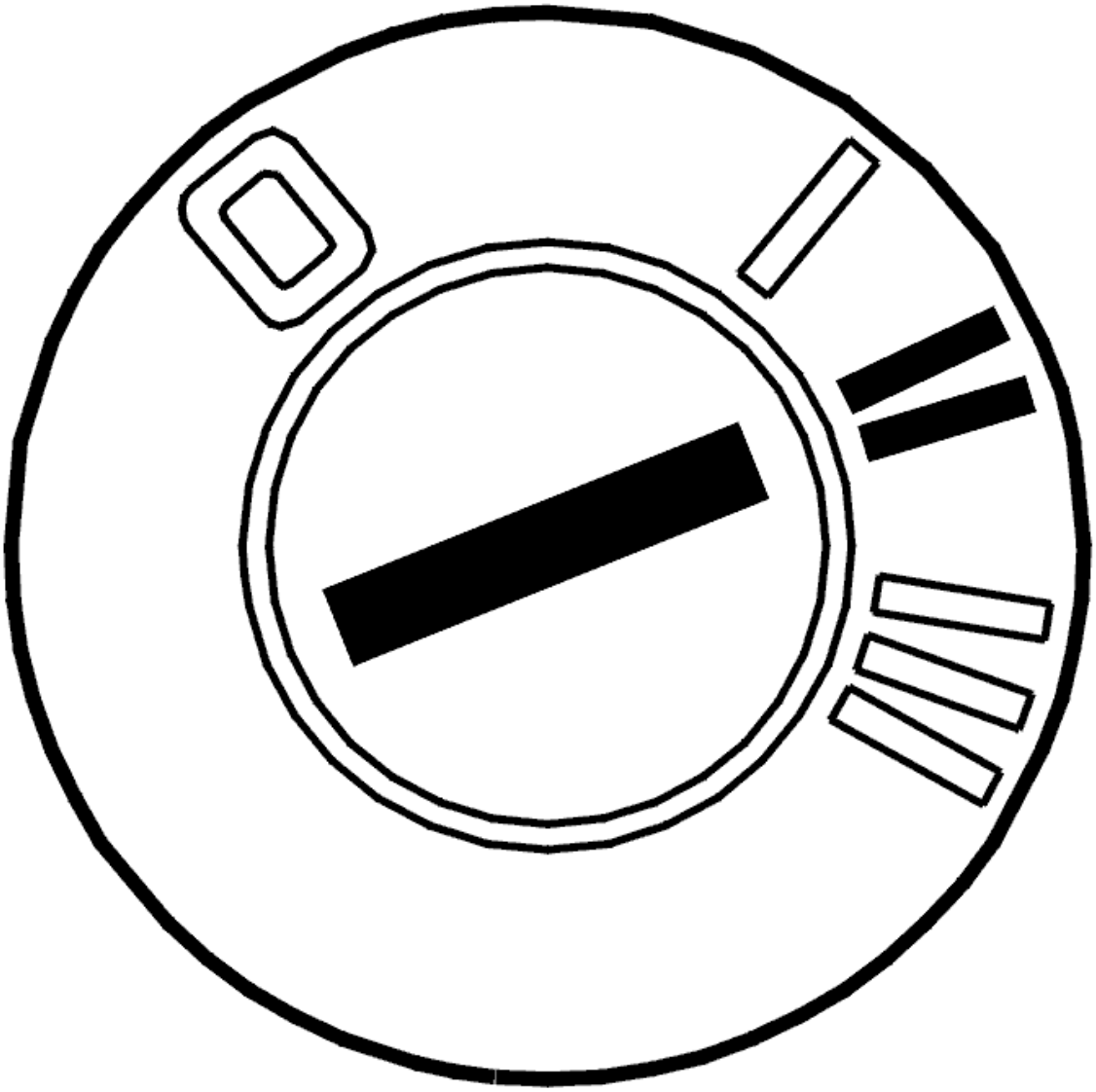

Fig. 51: Identifying Ignition ON
Courtesy of VOLVO CARS CORPORATION

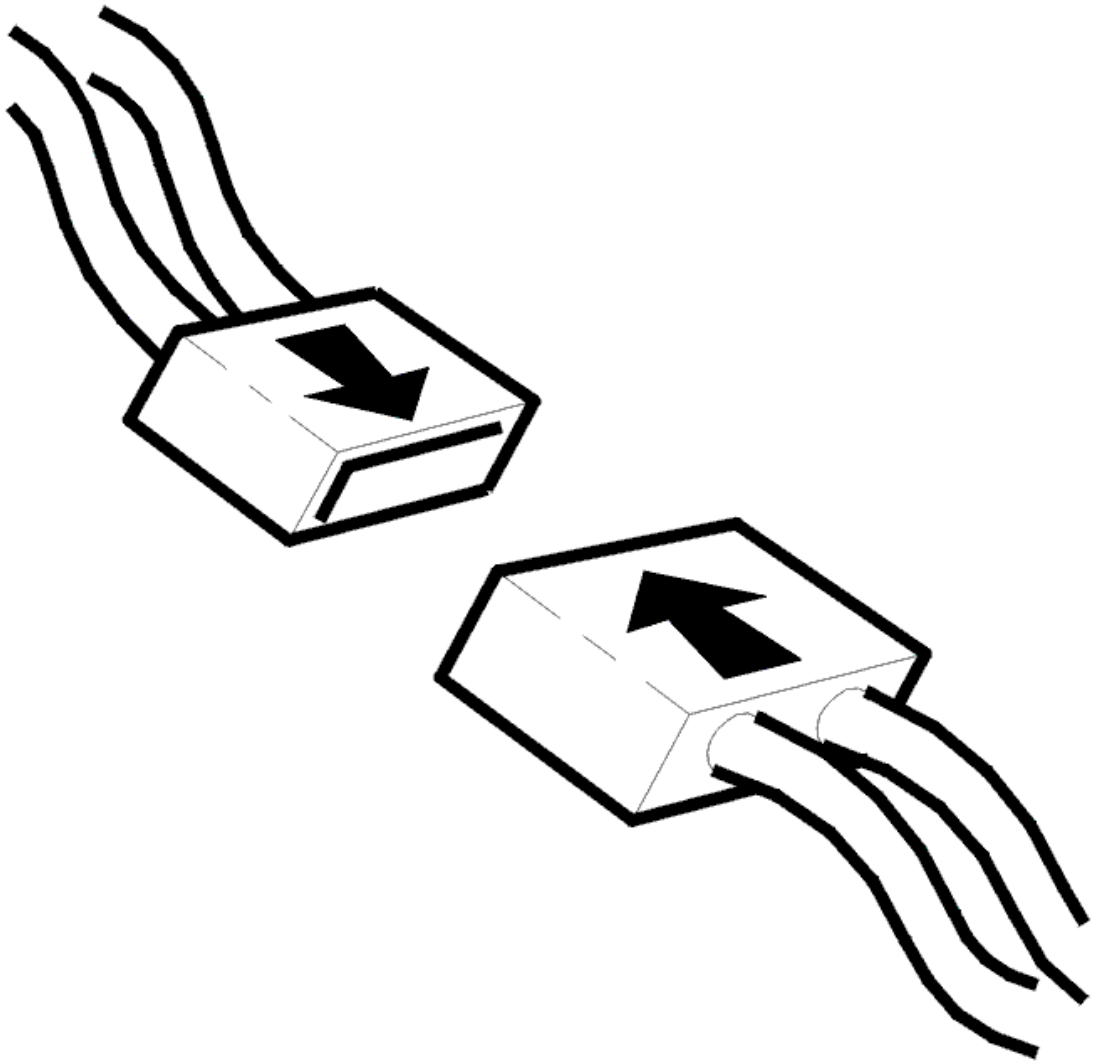

Fig. 52: Connecting Connector
Courtesy of VOLVO CARS CORPORATION

- Ignition off.
- Reconnect connectors, reinstall components
- Ignition on.
- Activate canister purge (CP) valve.

  A "click" should be heard when the canister purge (CP) valve is activated.

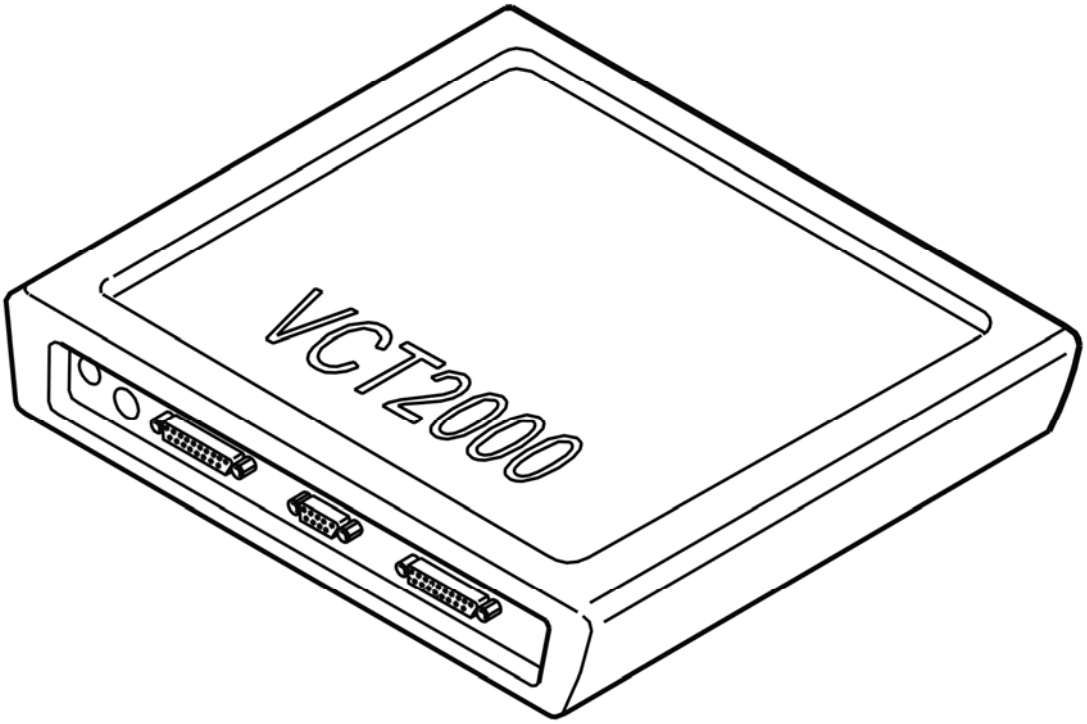

Fig. 53: Identifying VCT2000 Diagnostic Tool Symbol In VIDA
Courtesy of VOLVO CARS CORPORATION

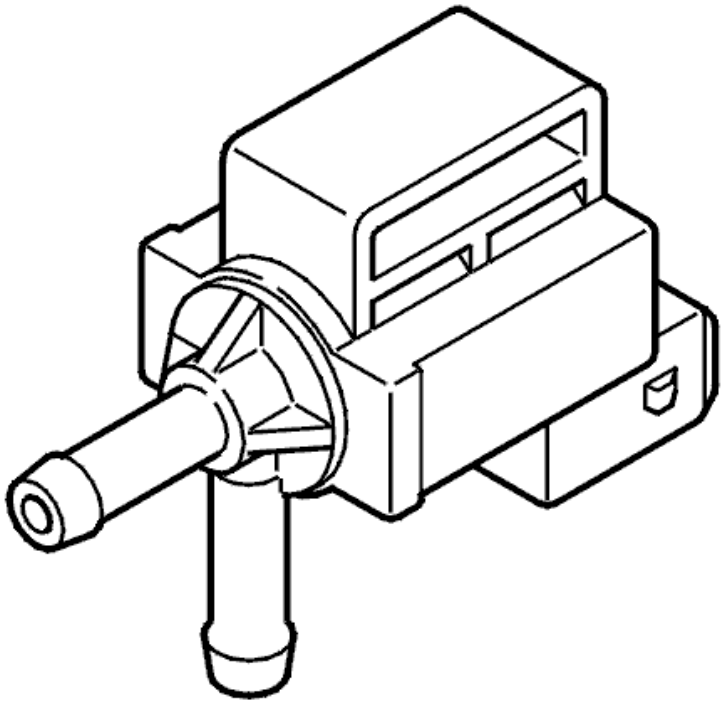

Fig. 54: Identifying Canister Purge (CP) Valve
Courtesy of VOLVO CARS CORPORATION

Is the canister purge (CP) valve working?

- **YES**

  VERIFIED: Troubleshooting has been completed.

- **NO**

  Refer to **INFORMATION**

INFORMATION

FAULT-TRACING INFORMATION

The fault should have been detected and remedied. As this is not the case fault-tracing has failed.

Exit fault-tracing for this diagnostic trouble code (DTC) or make another attempt.

ECM-4007: EVAPORATIVE EMISSION (EVAP) SYSTEM. SIGNAL TOO HIGH (B5254T2; B6294T; 2003-2004)

DIAGNOSTIC TROUBLE CODE (DTC) INFORMATION

Condition

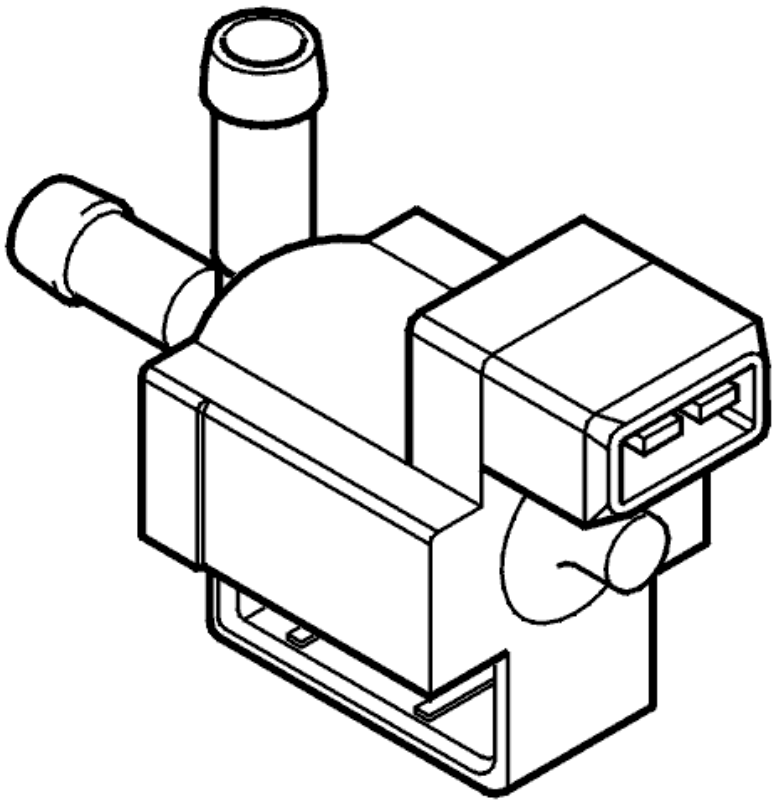

Fig. 55: Identifying EVAP Canister Purge Valve
Courtesy of VOLVO CARS CORPORATION

When the control module activates evaporative emission system (EVAP) control, the idle air trim or short-term fuel trim will change. Diagnostic trouble code (DTC) ECM-4007 is stored if the engine control module (ECM) does not detect any change in the idle air trim or in the long term fuel trim when evaporative emission (EVAP) control is active. The engine control module (ECM) interprets this as a faulty evaporative emission (EVAP) system.

Substitute Value

None.

Possible Source

Open:

- Faulty EVAP canister purge valve.

Closed:

- Blocked hose between the EVAP canister and the EVAP canister purge valve
- Blocked hose between the EVAP canister purge valve and the intake manifold
- Faulty EVAP canister purge valve.

Fault symptom[s]

- Malfunction indicator lamp (MIL) lit.

SIGNAL TOO HIGH

CHECKING THE COMPONENT

- Slacken off the EVAP canister purge valve
- Connect a vacuum pump to the EVAP canister purge valve terminal (B). Pump a vacuum. Check that there is no leakage through the EVAP canister purge valve by listening to and checking via the pump gauge that the pressure is stable
- Connect the EVAP canister purge valve connector
- Ignition on
- Activate the evaporative emission system (EVAP) valve. When the EVAP canister purge valve is activated, the valve opens and clicks. Check on the pump gauge that the vacuum drops (the pressure evens out) when the EVAP valve opens.

  If the function is OK, there must be no leakage when the EVAP canister purge valve is closed (stable pressure on the pump gauge) and the vacuum must drop when the EVAP canister purge valve opens (the pressure evens out).

  The EVAP canister purge valve is defective if the function is faulty.

  If the function of the EVAP canister purge valve is correct, check the hose and hose connections between the EVAP canister purge valve for leakage.

  Remedy as necessary.

  Other information:

  - For the location of components on 5 cylinder engines, see **LOCATION OF COMPONENTS, ENGINE COMPARTMENT**
  - For the location of components on 6 cylinder turbocharged engines, see **LOCATION OF COMPONENTS, ENGINE COMPARTMENT** .

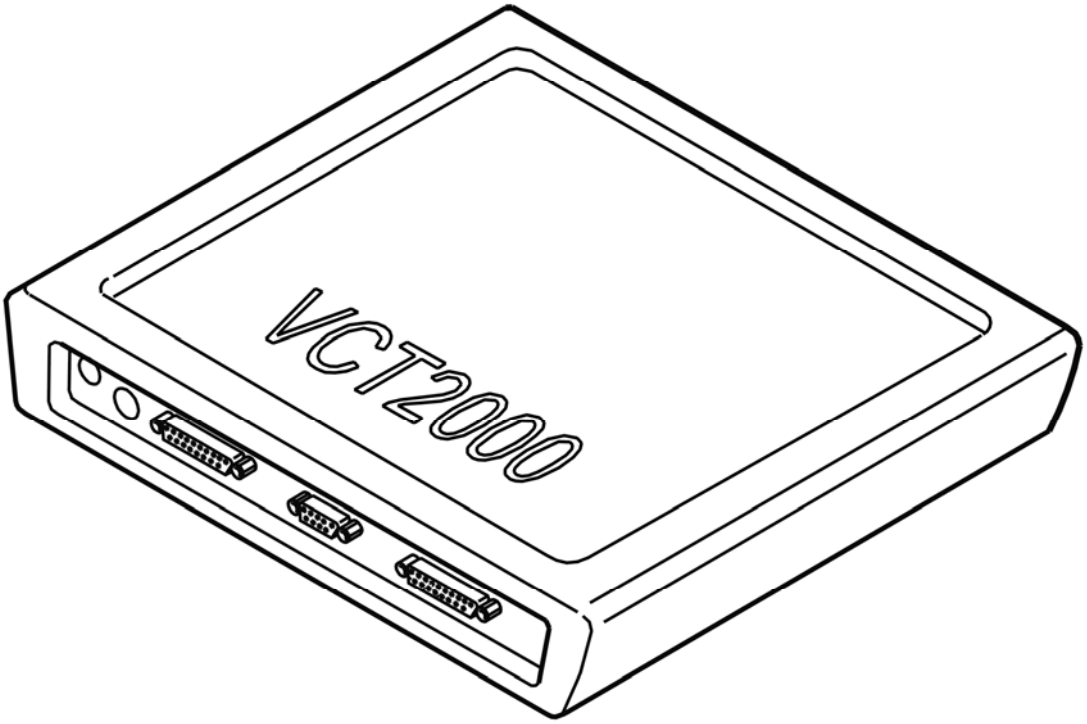

Fig. 56: Identifying VCT2000 Diagnostic Tool Symbol In VIDA
Courtesy of VOLVO CARS CORPORATION

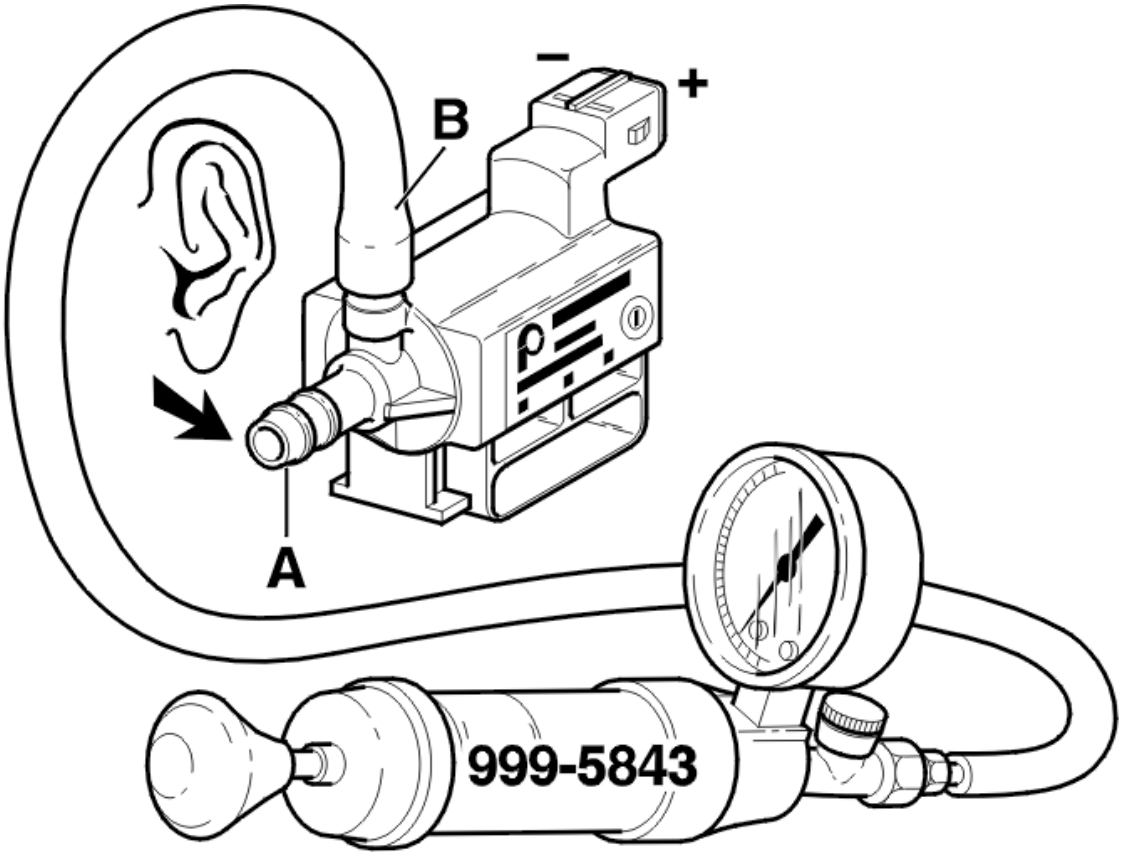

Fig. 57: Checking Canister Purge (CP) Valve
Courtesy of VOLVO CARS CORPORATION

- **Continue**

  Refer to **INFORMATION**

INFORMATION

FAULT-TRACING INFORMATION

In case of this defect, troubleshooting is not followed by verification.

The information can be displayed again or the fault-tracing for this fault can be interrupted.

ECM-4007: EVAPORATIVE EMISSION (EVAP) SYSTEM. SIGNAL TOO LOW (B5254T2; B6294T; 2003-2004)

DIAGNOSTIC TROUBLE CODE (DTC) INFORMATION

see **DIAGNOSTIC TROUBLE CODE (DTC) INFORMATION**

SIGNAL TOO LOW

CHECKING THE COMPONENT

- Slacken off the EVAP canister purge valve
- Connect a vacuum pump to the EVAP canister purge valve terminal (B). Pump a vacuum. Check that there is no leakage through the EVAP canister purge valve by listening to and checking via the pump gauge that the pressure is stable
- Connect the EVAP canister purge valve connector
- Ignition on
- Activate the evaporative emission system (EVAP) valve. When the EVAP canister purge valve is activated, the valve opens and clicks. Check on the pump gauge that the vacuum drops (the pressure evens out) when the EVAP valve opens.

  If the function is OK, there must be no leakage when the EVAP canister purge valve is closed (stable pressure on the pump gauge) and the vacuum must drop when the EVAP canister purge valve opens (the pressure evens out).

  The EVAP canister purge valve is defective if the function is faulty.

  If the function of the EVAP canister purge valve is OK, check:

  - The hose and hose terminals between the EVAP canister purge valve and the intake manifold. Check for leakage and blockages
  - The hose and hose terminals between the EVAP canister and the EVAP canister purge valve. Check for leakage and blockages.

  Remedy as necessary.

  Other information:

  - For the location of components on 5 cylinder engines, see **LOCATION OF COMPONENTS, ENGINE COMPARTMENT**
  - For the location of components on 6 cylinder turbocharged engines, see **LOCATION OF COMPONENTS, ENGINE COMPARTMENT**
  - To access or replace the hoses and/or EVAP canister, see **CARBON FILTER CONTAINER, REPLACING** .

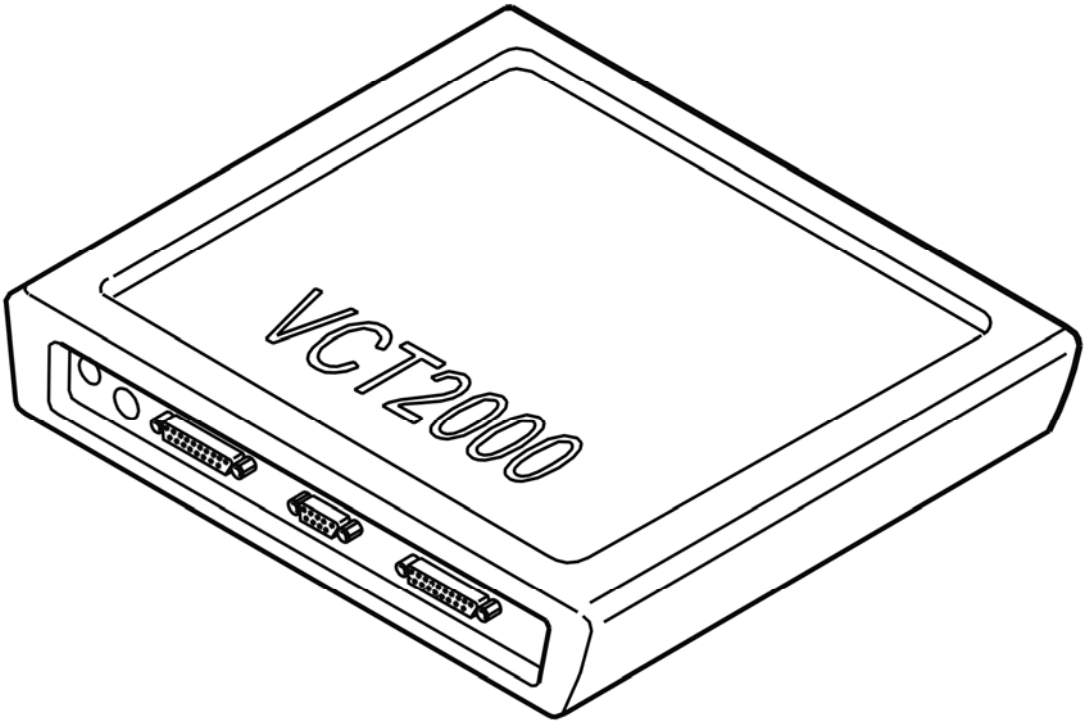

Fig. 58: Identifying VCT2000 Diagnostic Tool Symbol In VIDA
Courtesy of VOLVO CARS CORPORATION

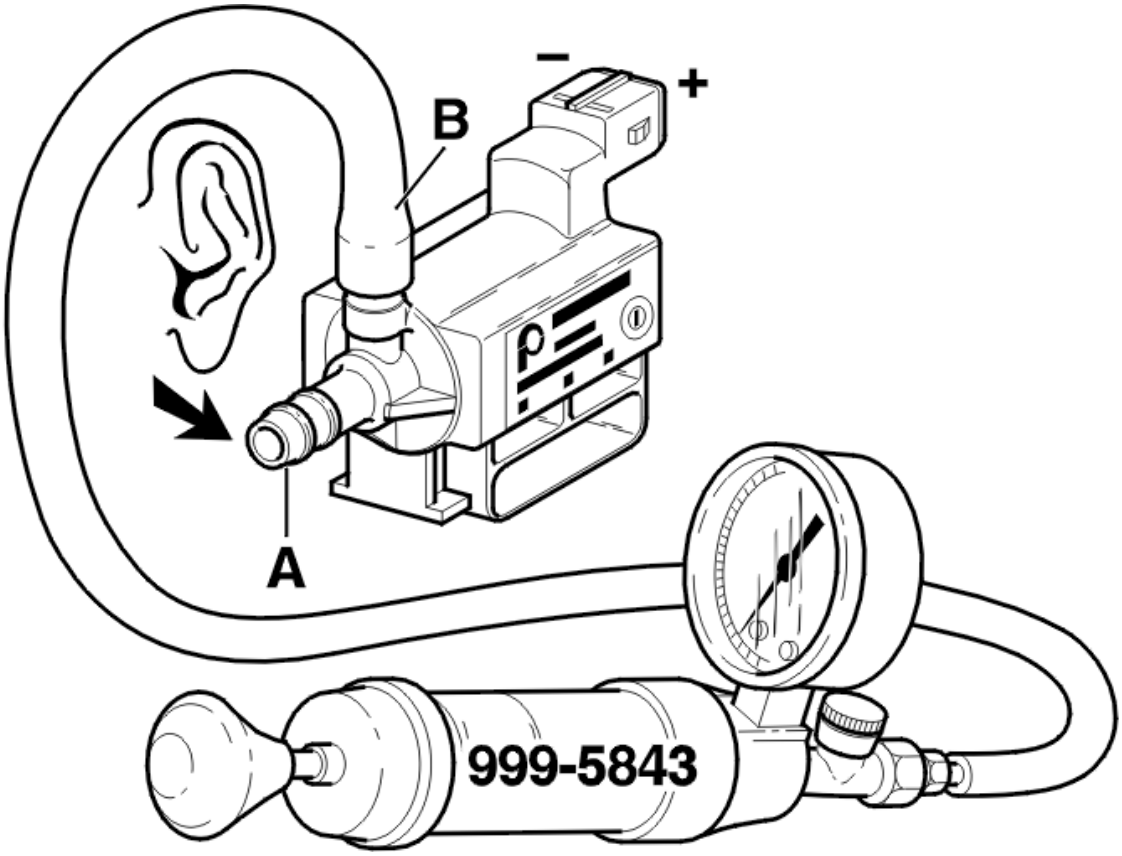

Fig. 59: Checking Canister Purge (CP) Valve
Courtesy of VOLVO CARS CORPORATION

- **Continue**

  Refer to **INFORMATION**

INFORMATION

FAULT-TRACING INFORMATION

In case of this defect, troubleshooting is not followed by verification.

The information can be displayed again or the fault-tracing for this fault can be interrupted.

ECM-400C: FUEL TANK SYSTEM, LEAKAGE (B5254T2; B6294T; 2003-2004)

DIAGNOSTIC TROUBLE CODE (DTC) INFORMATION

Condition

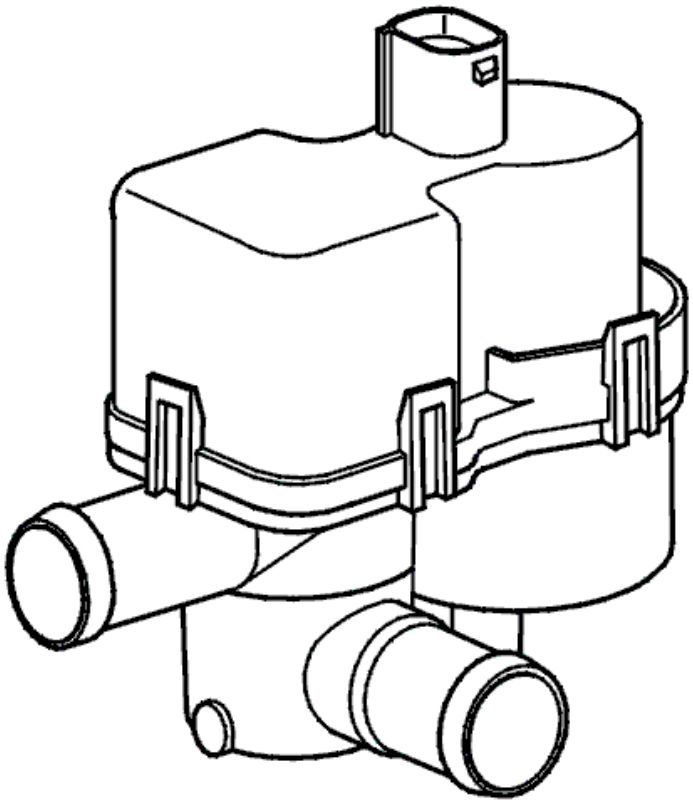

Fig. 60: Identifying Leak Diagnostic Pump
Courtesy of VOLVO CARS CORPORATION

If no fault is detected in the leak diagnostic unit, the control module runs a leak diagnostic of the fuel tank system. Diagnostic trouble code (DTC) ECM-400C is stored if the engine control module (ECM) detects a leak of 0.5-1.0 mm (minor leak) or a leak that is >1.0 mm (major leak). For more information about the leak diagnostics, see **LEAK DIAGNOSTICS (CERTAIN MARKETS ONLY)** .

Substitute Value

None.

Possible Source

Major leak:

- Fuel tank filler cap missing or not tightened
- Leakage that is 1 mm or greater in the fuel tank, fuel filler pipe, fuel tank filler cap, EVAP canister, canister purge (CP) valve, or in the hoses between these components
- The fuel gauge does not function (This fault is detected by the rear electrical module).

Minor leak:

- Leakage that is 0.5-1.0 mm or smaller in the fuel tank, fuel filler pipe, fuel tank filler cap, EVAP canister, canister purge (CP) valve, or in the hoses between these components
- The fuel gauge does not function (This fault is detected by the rear electrical module).

Fault symptom[s]

- Malfunction indicator lamp (MIL) lit.

LEAKAGE

CHECKING SOFTWARE

HINT: For vehicles of model year 2003-2005, the software in engine control module (ECM) should be checked before fault tracing of the fault relating to the leak from the tank system is carried out.

Fig. 61: Identifying Ignition On Position
Courtesy of VOLVO CARS CORPORATION

- Ignition on.

  Use the VCT2000 (or appropriate scan tool) to read out and check the software version in the Engine control module (ECM).

  NOTE: More instructions follow together with the read out.

Fig. 62: Identifying VCT2000 Diagnostic Tool Symbol In VIDA
Courtesy of VOLVO CARS CORPORATION

Has the latest software been downloaded to the control module?

- **YES**

  Refer to **PERFORM QUICK-TEST TANK SYSTEM**

PERFORM QUICK-TEST TANK SYSTEM

Fig. 63: Identifying Ignition On Position
Courtesy of VOLVO CARS CORPORATION

- Activate the test using the VCT2000.
- Read off initial parameters and check them according to start conditions for performing the test.
- Check that the test has started. Parameters run status shall go to "In progress" and the test phase shall go to "Reference".

NOTE: If the test does not start, check that the start conditions are fulfilled.

When the reference phase is finished, check of the tank system starts. The pressure in the tank starts to increase, see graph. Within 15 minutes the Engine control module makes a decision as to whether there is leakage in the tank system or not. The test is finished.

- Check parameters for test result and follow relevant instructions below.

NOTE: In the event of a the results from the estimated leakage must be entered in

NOTE: Estimated leakage shall be used to get an idea of the proximity to the diagnostic trouble code limit.

NOTE: If the estimated leakage is very near the diagnostic trouble code limit (greater than 0.3mm), troubleshooting should probably be performed despite the Tank system, test result shows "No leakage found", especially if a diagnostic trouble code for leakage has been stored earlier. If the estimated leakage is very near the diagnostic trouble code limit (greater than 0.3mm), troubleshooting should probably be performed despite the Tank system, test result shows "No leakage found", especially if a diagnostic trouble code for leakage has been stored earlier.

NOTE: Use diagnostic trouble code counter to, see the frequency of the problem. Also use frozen values to get an idea if external conditions may have affected the result. Compare with current conditions in the workshop.

Conditions for starting the quick test of the fuel tank system

- No DTCs related to EVAP purge valve or ambient air pressure sensor set.
- Battery voltage 11-15 V.
- Atmospheric pressure higher than 750 hPa, approx. 2500 m (8200 ft).

- Fuel level 0-85 %.
- Ambient air temperature 4-35 °C.

NOTE: **The battery voltage must be correct throughout the entire test. The test can take up to 15 minutes, depending on the quantity of fuel in the fuel tank. It is highly recommended to use the constant voltage charger, Midtronics PSC-550, during the test. For more information, see 30-04 (USA/CDN).**

Other information

- see **DESCRIPTION OF PARAMETERS, QUICK TEST OF THE FUEL TANK SYSTEM**
- see **TEST PHASES, QUICK TEST FUEL TANK SYSTEM**
- see **FUEL TANK SYSTEM, CHECK**
- see **TEST PRESSURIZING THE TANK SYSTEM**

Select alternative according to relevant test results:

1. DMTL, test result = "Problem found"

   Refer to **DMTL, TEST RESULT = "PROBLEM FOUND"**

2. Tank system, test result = "No leakage found"

   Refer to **TANK SYSTEM, TEST RESULT = "NO LEAKAGE FOUND"**

3. Tank system, test result = "Minor leakage found"

   Refer to **TANK SYSTEM, TEST RESULT = "MINOR LEAKAGE FOUND"**

4. Tank system, test result = "Major leakage found"

   Refer to **TANK SYSTEM, TEST RESULT = "MAJOR LEAKAGE FOUND"**

5. DMTL, test result and Tank system, test result = "Unknown"

   Refer to **DMTL, TEST RESULT AND TANK SYSTEM, TEST RESULT = "UNKNOWN"**

6. Cancel fault-tracing.

   FAULT NOT FOUND: Troubleshooting has been completed.

Fig. 64: Identifying VCT2000 Diagnostic Tool Symbol In VIDA
Courtesy of VOLVO CARS CORPORATION

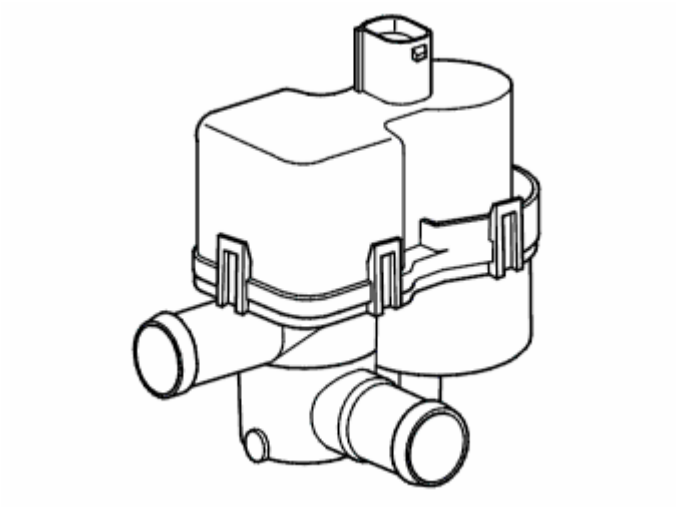

Fig. 65: Identifying Leak Diagnostic Pump
Courtesy of VOLVO CARS CORPORATION

DMTL, TEST RESULT = "PROBLEM FOUND"

If a problem is detected on the leakage diagnostics unit (DMTL), this may have been caused during the test itself. Checks on DMTL are normal electric checks of leakage diagnostics unit and cabling and is no indication of if there is leakage or not.

- Cancel troubleshooting for this problem.
- Read off diagnostic trouble codes again and start troubleshooting for the new diagnostic trouble code.

NOTE: The tank system's status is unknown since the test was interrupted.

TANK SYSTEM, TEST RESULT = "NO LEAKAGE FOUND"

Diagnostic trouble code limit (minor leakage):Estimated leakage = 0.40 mm

If no leakage was found, the Engine control module (ECM) has detected leakage in the tank system earlier, but the problem is not active at this time. The fault could be caused by leakage in the tank, filler pipe, fuel tank filler cap, canister, EVAP valve, leakage diagnosis unit or hoses between these components.

NOTE: Problems caused by a loose tank cap or loose hose connections may be difficult to find. If no leakage was found in the quick-test of the tank system

after completed checks and actions according to the above, the problem has likely been repaired.

NOTE: The parameter estimated leakage does not necessarily have to show 0 mm for a sealed system.

TANK SYSTEM, TEST RESULT = "MINOR LEAKAGE FOUND"

Diagnostic trouble code limit:Estimated leakage = 0.40 mm

- Check that the tank cap is properly fitted and that its seal is undamaged.
- Check the hoses and connections on the leak diagnostic unit, the canister, EVAP-valve and the fuel filler pipe visually. Check for damage or incorrect/loose installation.
- Remedy as necessary.
- Restart the test.

NOTE: Problems caused by a loose tank cap or loose hose connections may be difficult to find. If no leakage was found in the quick-test of the tank system after completed checks and actions according to the above, the problem has likely been repaired.

NOTE: By blocking the hose between canister and EVAP-valve and then repeating quick-test tank system, leakage through the EVAP-valve can be detected. If leakage was detected in a previous quick test of the fuel tank system but is not now detected when the hose between the canister and the EVAP valve is blocked, the leakage may be through the EVAP valve.

- Disconnect the hose between the EVAP canister purge valve and the EVAP canister from the connection to the EVAP canister purge valve.
- Block the hose while running the quick test of the fuel tank system.

- **Continue**

  Refer to **PERFORM QUICK-TEST TANK SYSTEM**

DMTL, TEST RESULT AND TANK SYSTEM, TEST RESULT = "UNKNOWN"

Engine control module (ECM) cannot perform check of tank system. This may be due to the conditions for start of the quick-test not being fulfilled, that they have changed during the course of the test, or that a problem has occurred during troubleshooting.

- Check that all conditions for start of the quick-test are fulfilled.
- Visually check hoses and connections on leakage diagnostics unit, canister, EVAP-valve, and filler pipe. Check for damage or incorrect/loose installation.
- Remedy as necessary.

- Restart the test.
- **Continue**

  Refer to **PERFORM QUICK-TEST TANK SYSTEM**

TANK SYSTEM, TEST RESULT = "MAJOR LEAKAGE FOUND"

Diagnostic trouble code limit:Tank pressure lower than 1500 Pa after 450 seconds in test phase "Major leakage".

- Check that the tank cap is properly fitted and that its seal is undamaged.
- Check the hoses and connections on the leak diagnostic unit, the canister, EVAP-valve and the fuel filler pipe visually. Check for damage or incorrect/loose installation.
- Remedy as necessary.
- Restart the test.

NOTE: **Problems caused by a loose tank cap or loose hose connections may be difficult to find. If no leakage was found in the quick-test of the tank system after completed checks and actions according to the above, the problem has likely been repaired.**

- **Continue**

  Refer to **PERFORM QUICK-TEST TANK SYSTEM**

ECM-400C: THREE-WAY CATALYTIC CONVERTER (TWC) EFFICIENCY, BANK 1. SIGNAL TOO HIGH (B5254T2; 2005-2007)

DIAGNOSTIC TROUBLE CODE (DTC) INFORMATION ECM-400C

Condition

The engine control module (ECM) continuously checks three-way catalytic converter (TWC) efficiency (bank 1) by comparing signals from the rear heated oxygen sensor (HO2S) with the signal from the front heated oxygen sensor (HO2S). The diagnostic trouble code (DTC) is stored if the efficiency of the three-way catalytic converter (TWC) deviates too much.

The diagnostic trouble code (DTC) is diagnosed when driving under specific driving conditions.

Substitute Value

- The rear long-term fuel trim is disabled.

Possible Source

- Misfiring
- Leakage in the intake system
- Leakage in the exhaust system
- Faulty fuel pressure
- Uneven compression
- Damaged catalytic converter.

Fault symptom[s]

- Malfunction indicator lamp (MIL) lit.

SIGNAL TOO HIGH

CHECKING THE COMPONENTS AND WIRING

Check the intake system for air leakage.

Check the exhaust system for air leakage.

Checking fuel and residual pressure.

Check the compression of the engine.

Remedy as necessary.

NOTE: Try a new heated oxygen sensor (HO2S) if the above fault-tracing does not remedy the fault.

Other information

- see **INTAKE AND EXHAUST SYSTEM - CLEANING, INSPECTION AND ADJUSTMENT**
- see **CHECKING FOR AIR LEAKAGE IN THE EXHAUST SYSTEM**
- see **CHECKING FUEL AND RESIDUAL PRESSURES**
- see **CYLINDER LEAKAGE TEST**
- For B5xx4T, see **THREE-WAY CATALYTIC CONVERTER (TWC), REPLACING**
- For B6xx4T, see **THREE-WAY CATALYTIC CONVERTER (TWC), REPLACING** .

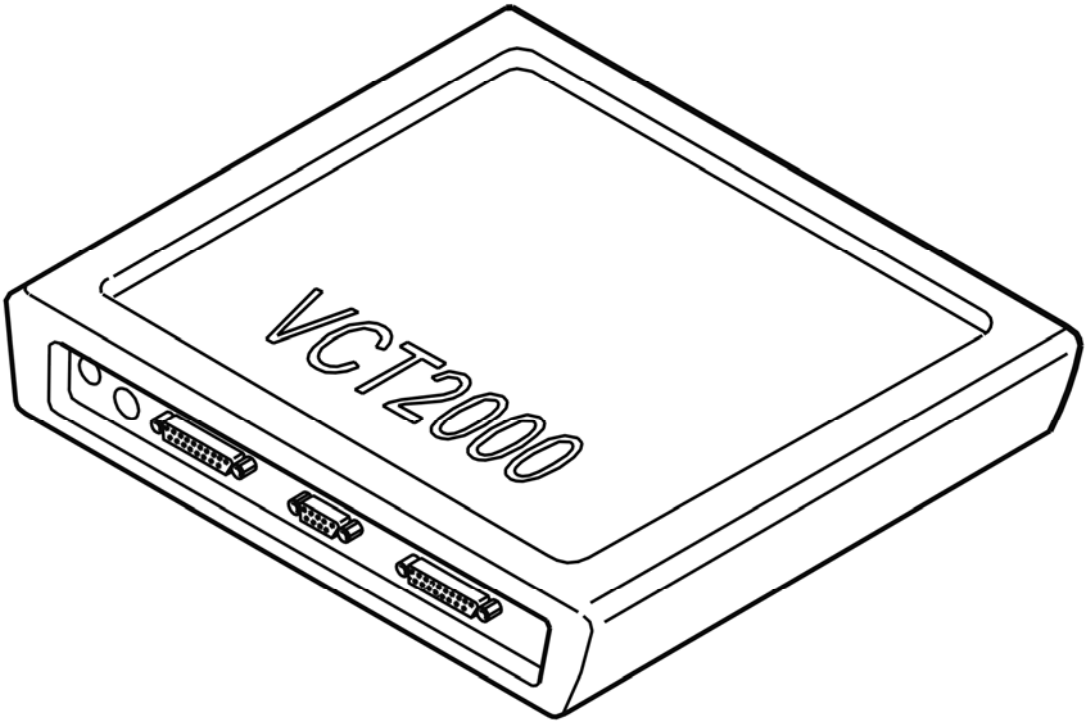

Fig. 66: Identifying VCT2000 Diagnostic Tool Symbol In VIDA
Courtesy of VOLVO CARS CORPORATION

- **Continue**

  Refer to **VERIFICATION**

VERIFICATION

VERIFICATION

HINT: After carrying out the repair, check that the fault has been remedied.

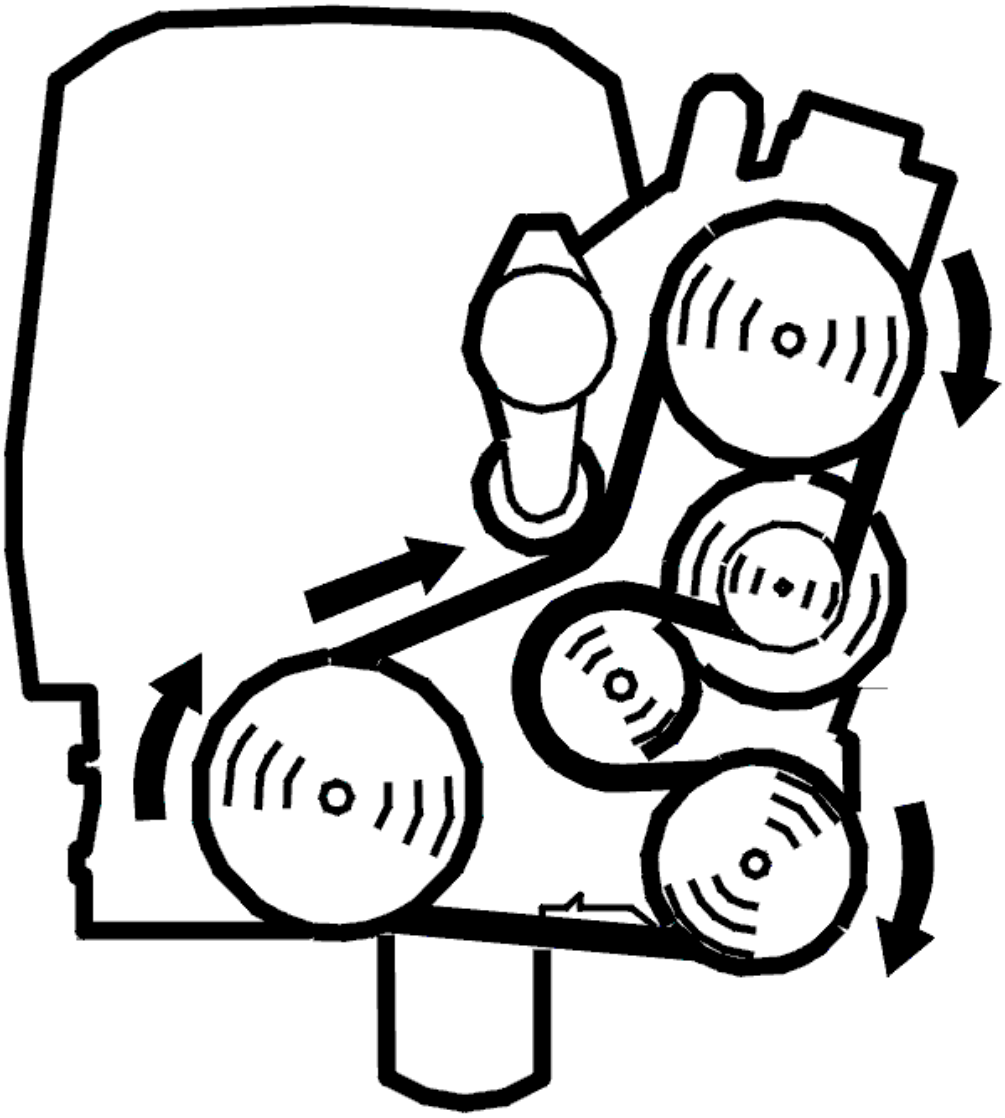

Fig. 67: Belt Routing / Engine Idling - Volvo
Courtesy of VOLVO CARS CORPORATION

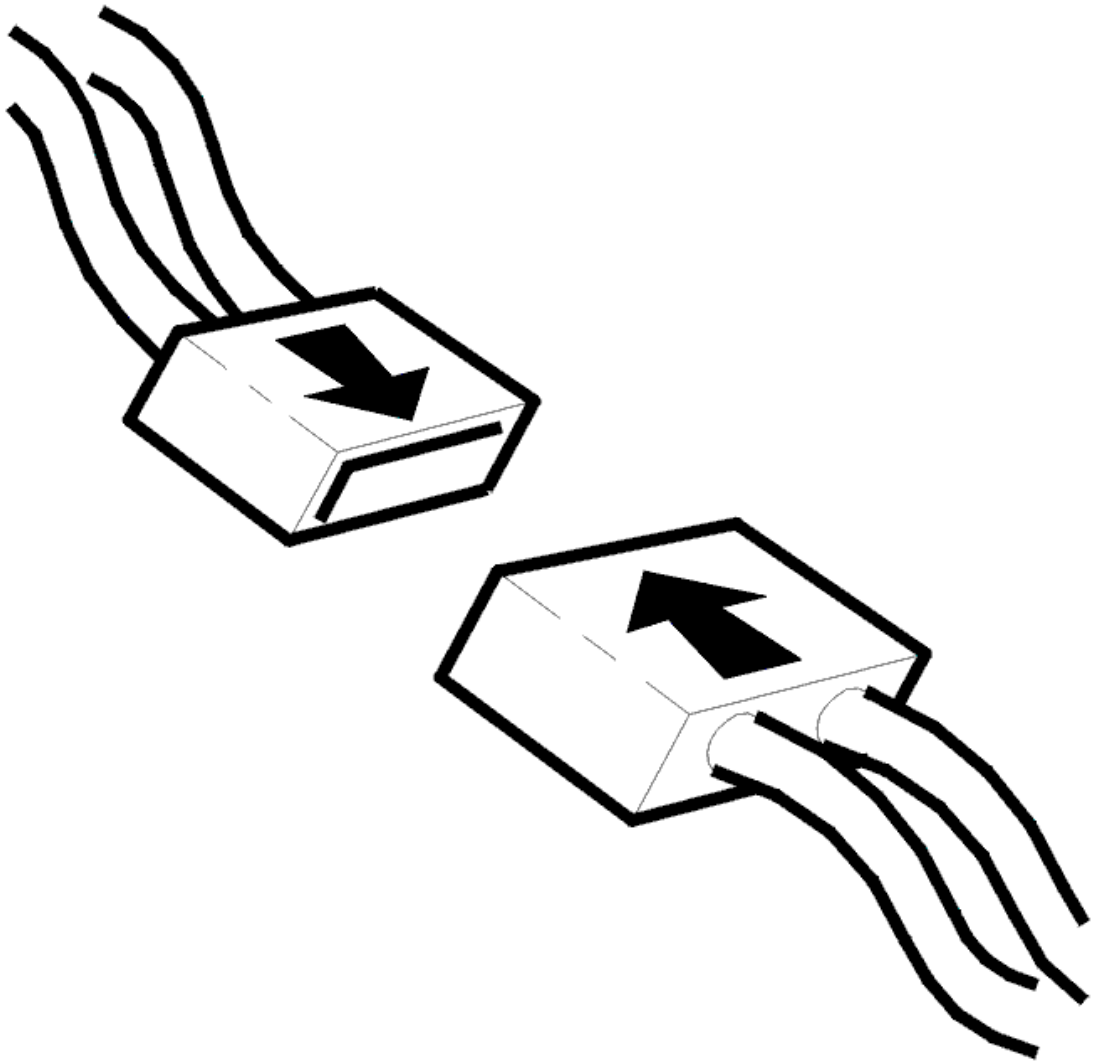

Fig. 68: Connecting Connector
Courtesy of VOLVO CARS CORPORATION

- Ignition off
- Reconnect the connectors, reinstall components etc.
- Test drive the vehicle on the road. Run a TRIP schedule so that the engine control module (ECM) compares the diagnostics. To run a TRIP schedule, see: **VERIFYING REPAIRS**
- Connect VCT2000 (or appropriate scan tool) to the data link connector (DLC) without switching off the engine.

NOTE: **If the engine is switched off, the stored fault status will be erased and the test drive will have to be repeated.**

Read off the diagnostic status and fault status for the diagnostic trouble code (DTC) by selecting the relevant diagnostic trouble code (DTC) from the list.

Check the fault status for the diagnostic trouble code (DTC) when the diagnostic is "Complete". If the function is correct, the fault status must be "No fault found" when the diagnostic is complete.

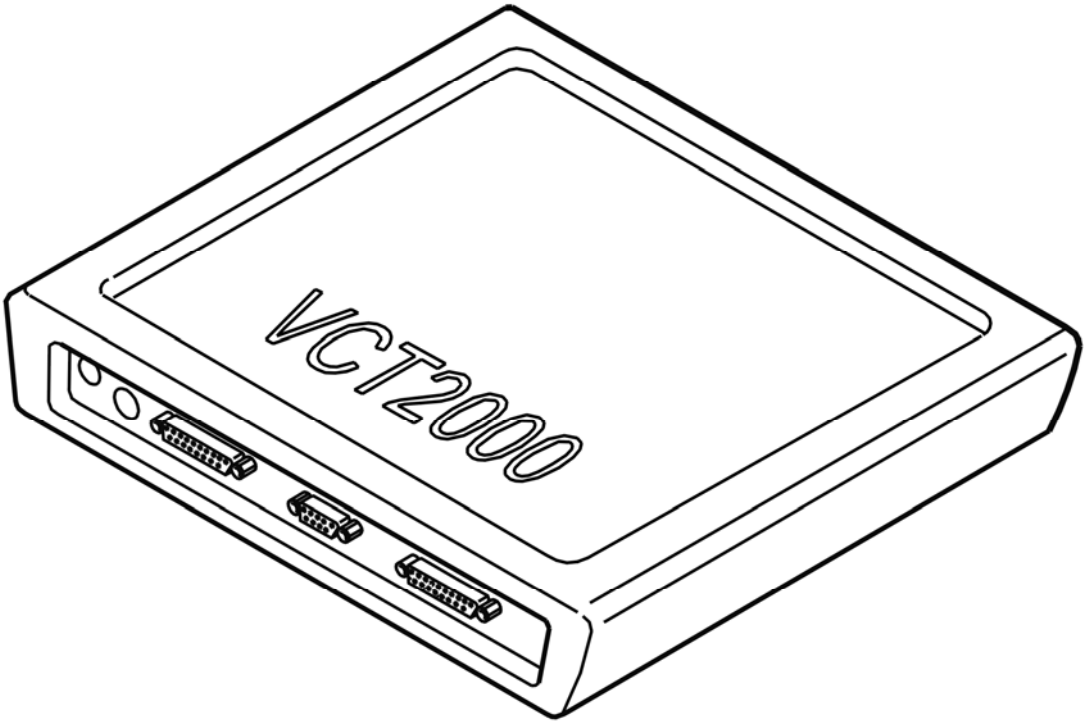

Fig. 69: Identifying VCT2000 Diagnostic Tool Symbol In VIDA
Courtesy of VOLVO CARS CORPORATION

Is the function OK?

- **YES**

  VERIFIED: Troubleshooting has been completed.

- **NO**

  Refer to **INFORMATION**

INFORMATION

FAULT-TRACING INFORMATION

The fault should have been detected and remedied. As this is not the case fault-tracing has failed.

Exit fault-tracing for this diagnostic trouble code (DTC) or make another attempt.

ECM-400C: THREE-WAY CATALYTIC CONVERTER (TWC) EFFICIENCY, BANK 1. SIGNAL TOO HIGH (B6294T; 2005-2006)

DIAGNOSTIC TROUBLE CODE (DTC) INFORMATION ECM-400C

see **DIAGNOSTIC TROUBLE CODE (DTC) INFORMATION ECM-400C**

SIGNAL TOO HIGH

see **SIGNAL TOO HIGH**

ECM-4010: LEAK DIAGNOSTIC UNIT, VALVE. SIGNAL MISSING (B5254T2; B6294T; 2003-2004)

DIAGNOSTIC TROUBLE CODE (DTC) INFORMATION

Condition

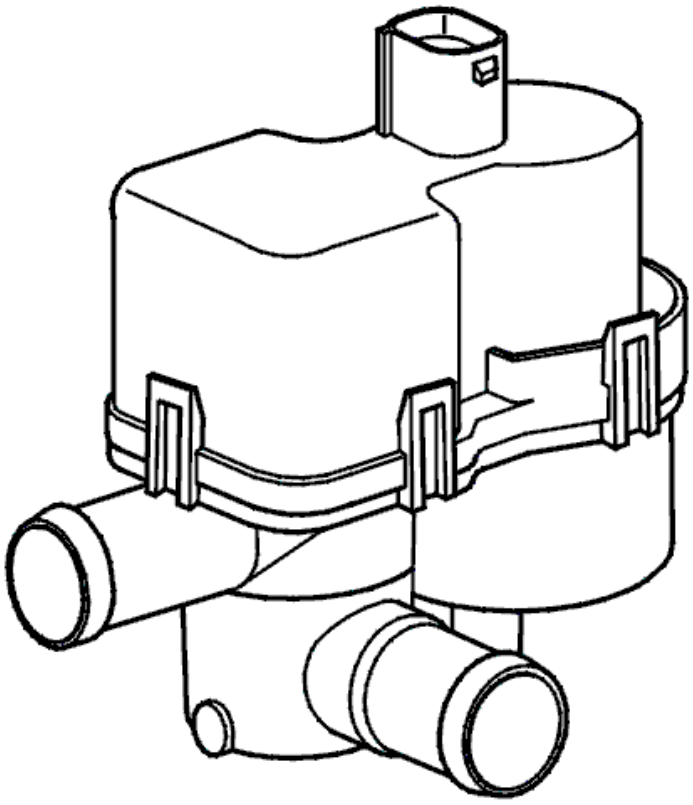

Fig. 70: Identifying Leak Diagnostic Pump
Courtesy of VOLVO CARS CORPORATION

Diagnostic trouble code (DTC) ECM-4010 is stored if the control module registers that the signal from the leak diagnostic pump valve is too high when the valve is activated or too low or missing when the valve is

deactivated.

The control module diagnoses the fault when the engine has been off for 8 hours and is then driven for 20 minutes.

Substitute Value

Leak diagnosis is blocked.

Possible Source

Signal too high:

- Short-circuit to supply voltage in the signal cable
- Defective valve.

Signal too low:

- Short-circuit to ground in the signal cable.

Signal missing:

- Contact resistance in the terminals
- Open-circuit in the signal cable
- Open-circuit in the power cable
- Defective valve.

Fault symptom[s]

- Malfunction indicator lamp (MIL) lit.

SIGNAL MISSING

CHECKING THE STATUS

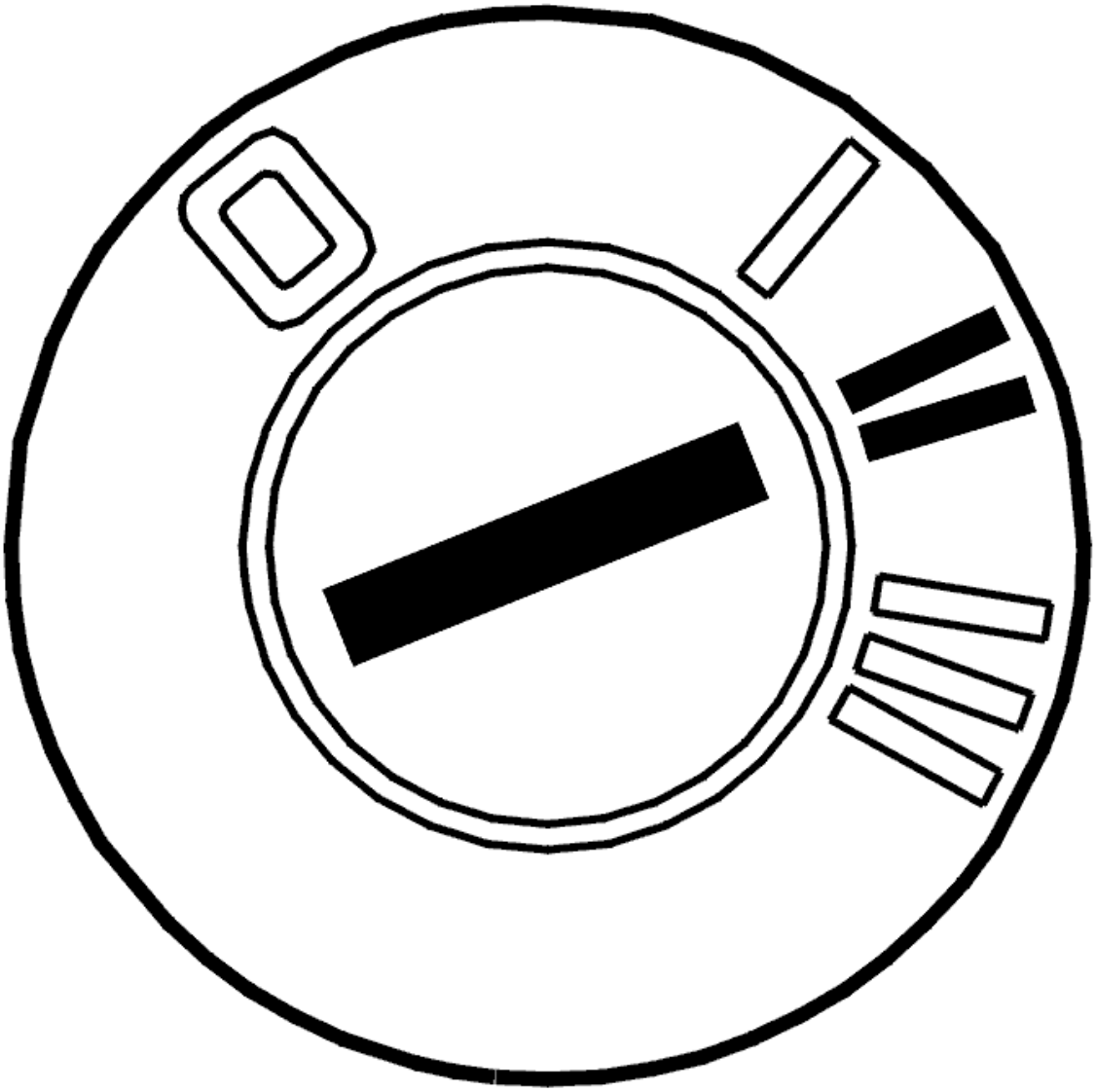

Fig. 71: Identifying Ignition ON
Courtesy of VOLVO CARS CORPORATION

- Ignition on.

  Activate the valve in the leak diagnostic unit to check whether the fault is permanent or intermittent.

  The valve clicks when it is activated.

  The fault is permanent if the valve does not activate.

  The fault is intermittent if the valve activates.

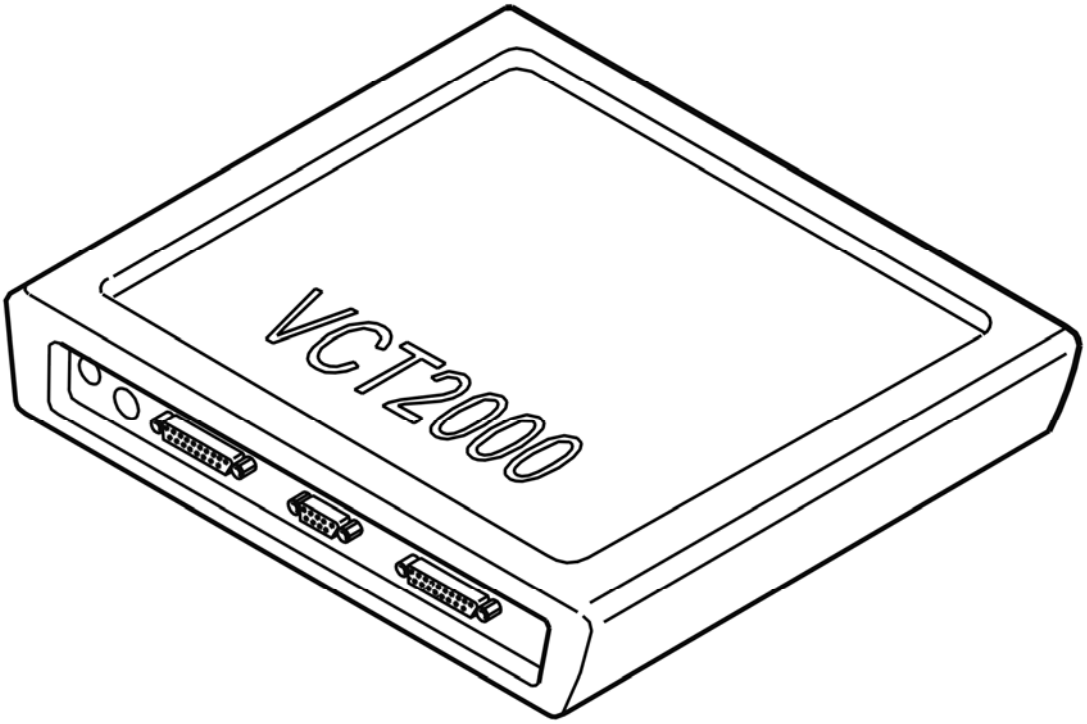

Fig. 72: Identifying VCT2000 Diagnostic Tool Symbol In VIDA
Courtesy of VOLVO CARS CORPORATION

- **Continue**

  Refer to **CHECKING COMPONENTS AND WIRING**

CHECKING COMPONENTS AND WIRING

Check the fuse before the circuit.

Check the leak diagnostic unit connectors. Check for contact resistance and oxidation.

Check the resistance of the valve between the leak diagnostic pump connector terminals #3 and #4 (leak diagnostic unit side).

Check the signal cable between control module terminal #B40 (#B50) and leak diagnostic unit terminal #3. Check for an open-circuit.

Check the power supply cable between system relay terminal #5 and leak diagnostic unit terminal #4. Check for an open-circuit.

Remedy as necessary.

Other information:

- see **CHECKING WIRING AND TERMINALS**
- For resistance values, see **COMPONENT SPECIFICATIONS**
- To connect the breakout box, see **CONNECTING THE BREAKOUT BOX**
- For 5 cylinder turbocharged engines -2004, see **SIGNAL DESCRIPTION**
- For 6 cylinder engines -2004, see **SIGNAL SPECIFICATION**
- To access or replace the leak diagnostic unit, see **LEAK DIAGNOSTIC PUMP, REPLACING**

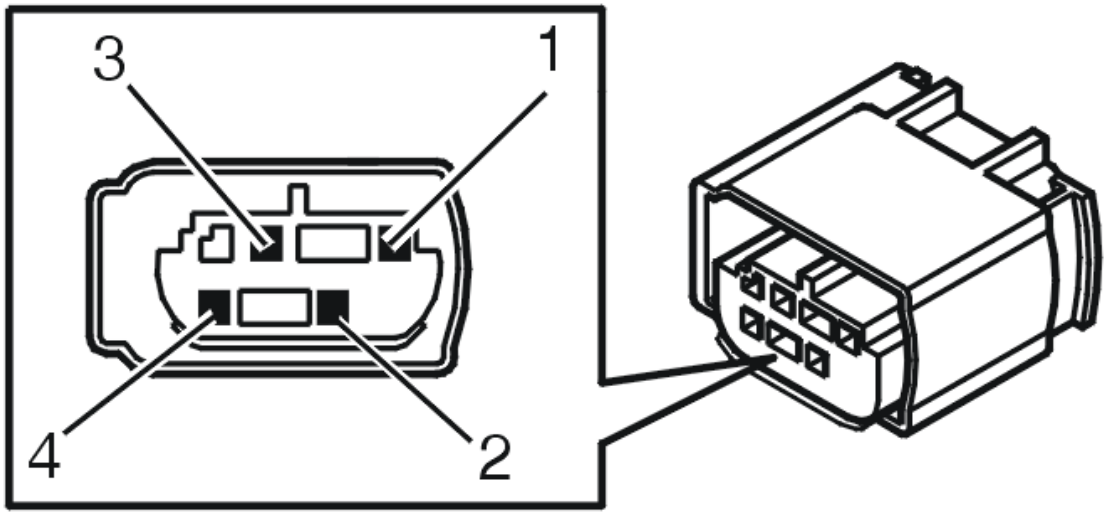

Fig. 73: Identifying Leak Diagnostic Unit Connector Terminals
Courtesy of VOLVO CARS CORPORATION

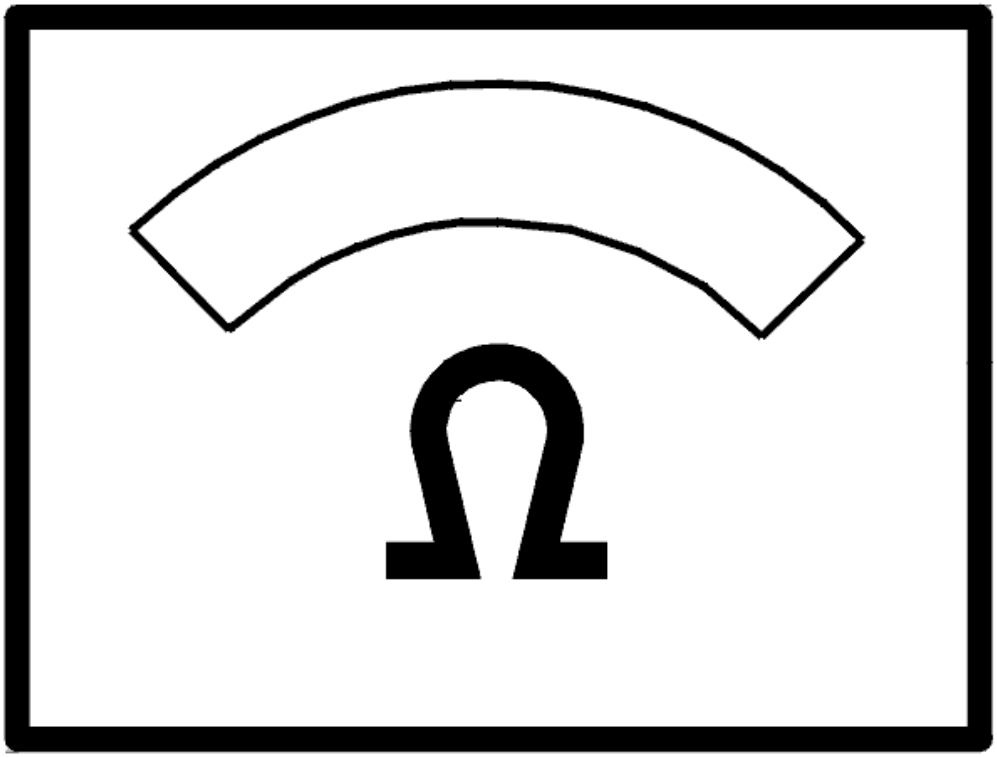

Fig. 74: Identifying Ohm Meter
Courtesy of VOLVO CARS CORPORATION

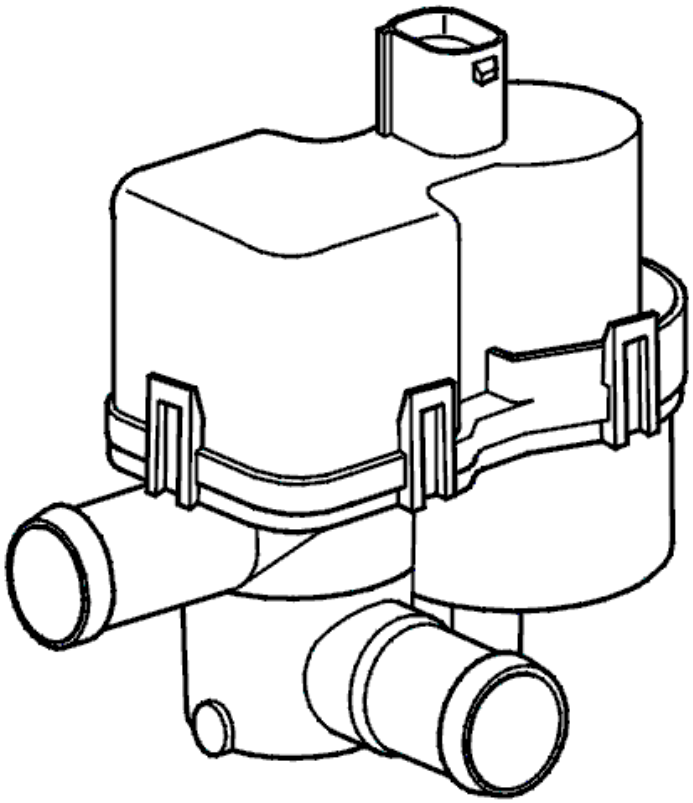

Fig. 75: Identifying Leak Diagnostic Pump
Courtesy of VOLVO CARS CORPORATION

- **Continue**

  Refer to **VERIFICATION**

VERIFICATION

VERIFICATION

HINT: After carrying out the repair, check that the fault has been remedied.

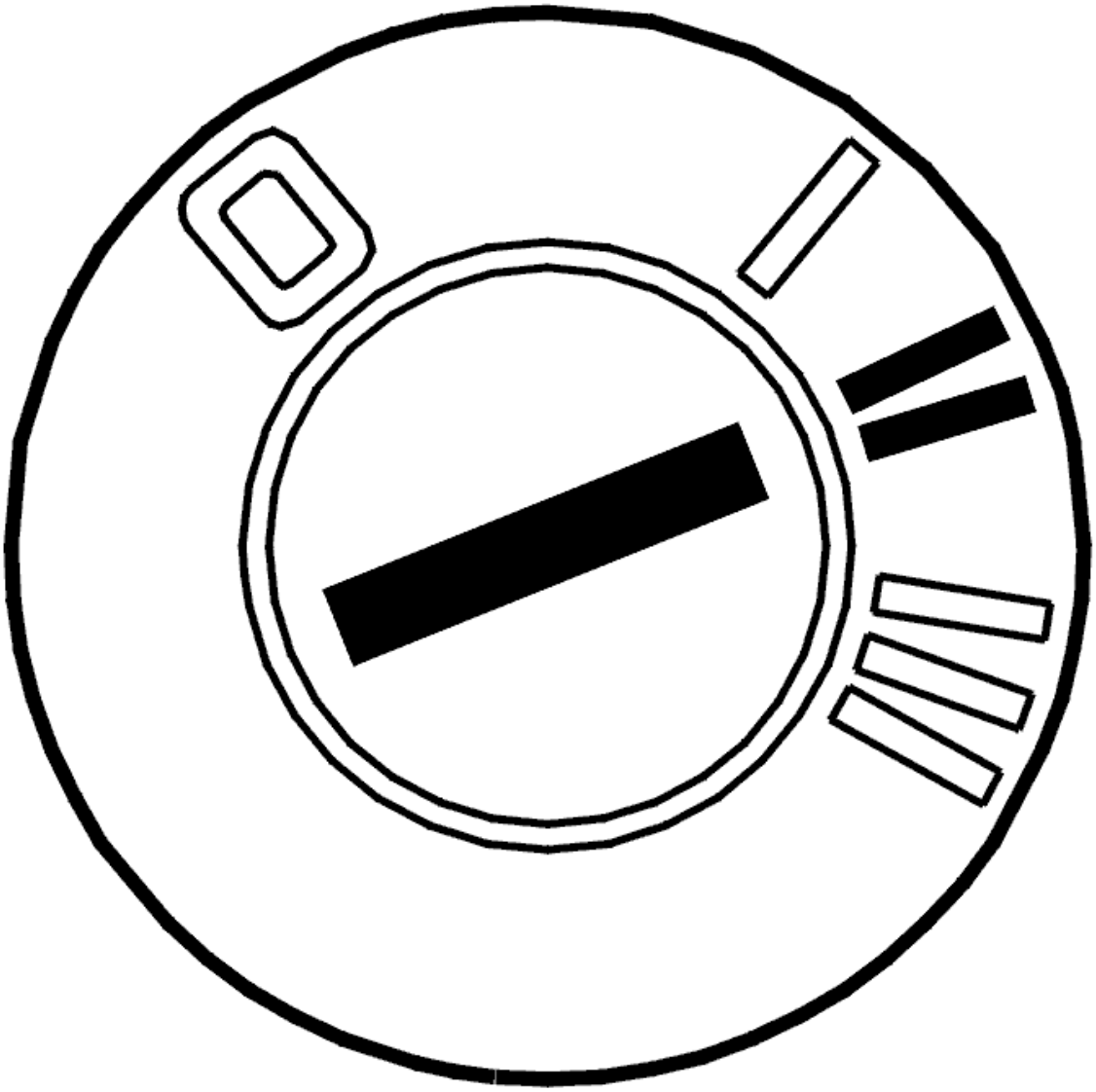

Fig. 76: Identifying Ignition ON
Courtesy of VOLVO CARS CORPORATION

- Ignition on
- Activate the valve in the leak diagnostic unit.

  The valve should click.

  Check that the function is OK.

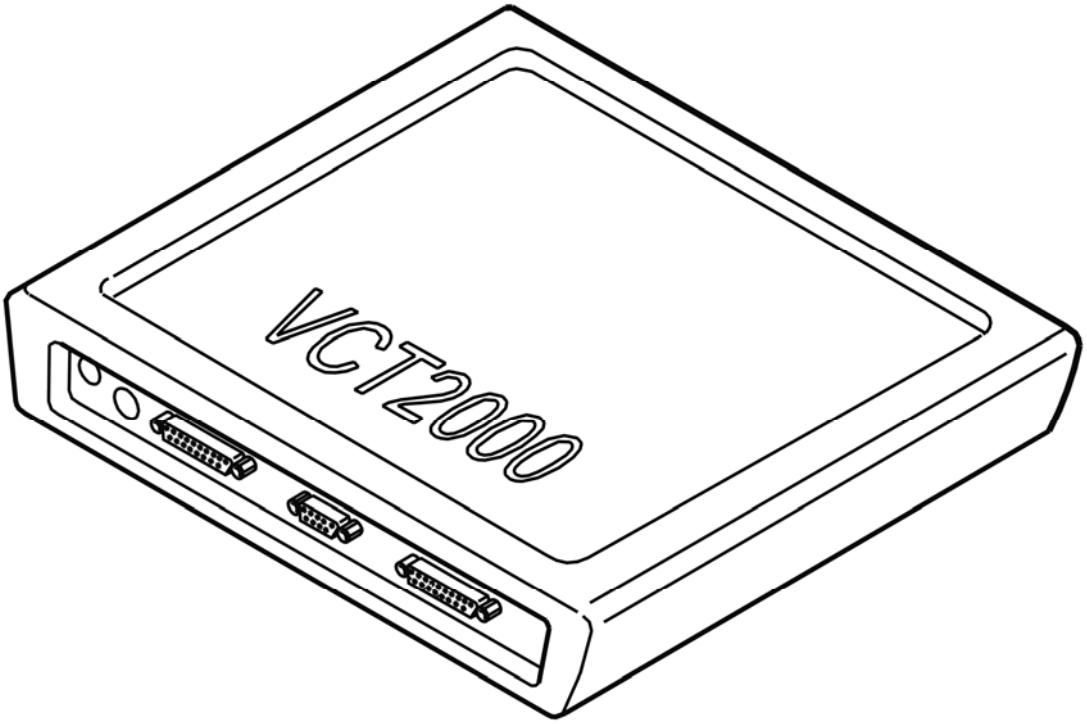

Fig. 77: Identifying VCT2000 Diagnostic Tool Symbol In VIDA
Courtesy of VOLVO CARS CORPORATION

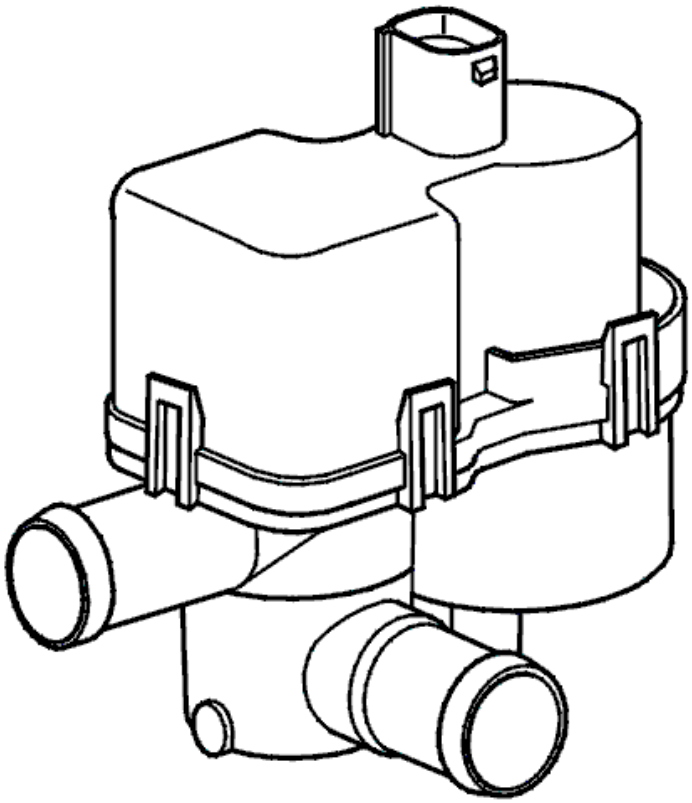

Fig. 78: Identifying Leak Diagnostic Pump
Courtesy of VOLVO CARS CORPORATION

Is the function OK?

- **YES**

  VERIFIED: Troubleshooting has been completed.

- **NO**

  Refer to **INFORMATION**

INFORMATION

FAULT-TRACING INFORMATION

The fault should have been detected and remedied. As this is not the case fault-tracing has failed.

Exit fault-tracing for this diagnostic trouble code (DTC) or make another attempt.

ECM-4010: LEAK DIAGNOSTIC UNIT, VALVE. SIGNAL TOO HIGH (B5254T2; B6294T; 2003-2004)

DIAGNOSTIC TROUBLE CODE (DTC) INFORMATION

see **DIAGNOSTIC TROUBLE CODE (DTC) INFORMATION**

SIGNAL TOO HIGH

CHECKING THE STATUS

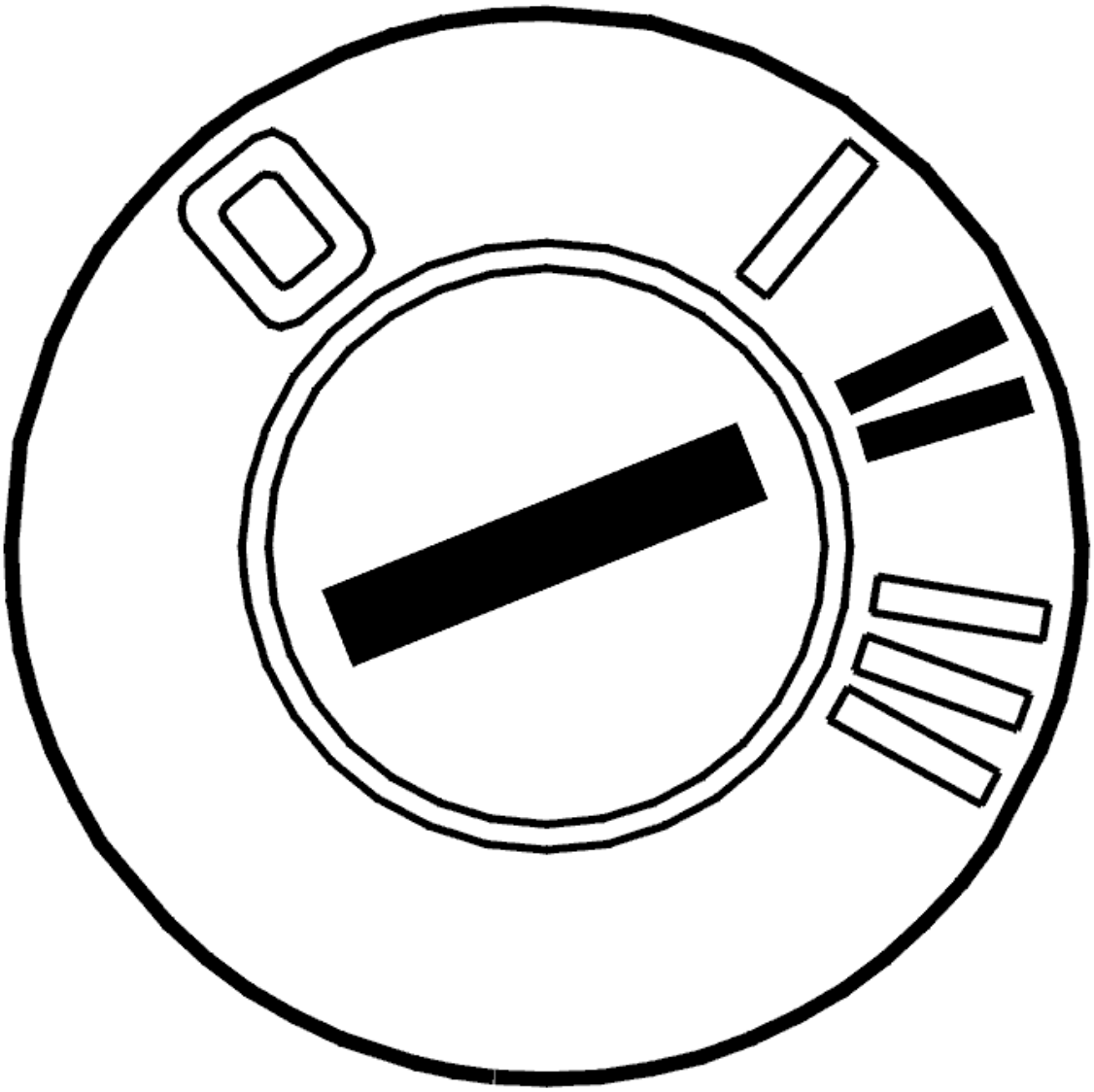

Fig. 79: Identifying Ignition ON
Courtesy of VOLVO CARS CORPORATION

- Ignition on.

  Activate the valve in the leak diagnostic unit to check whether the fault is permanent or intermittent.

  The valve clicks when it is activated.

The fault is permanent if the valve does not activate.

The fault is intermittent if the valve activates.

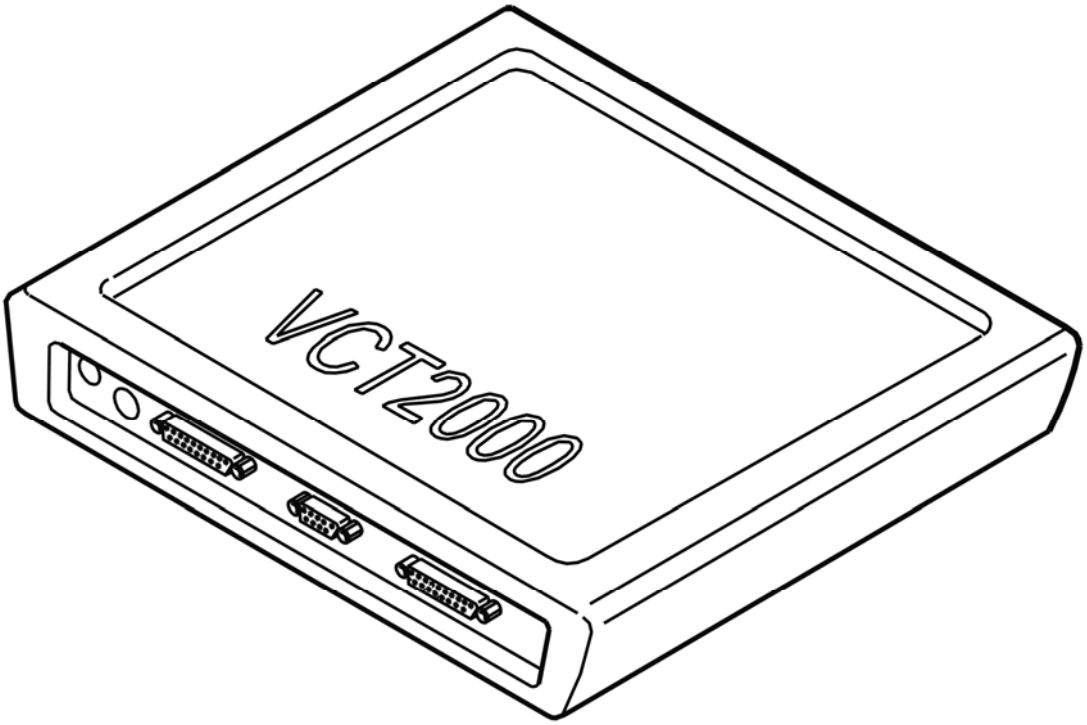

Fig. 80: Identifying VCT2000 Diagnostic Tool Symbol In VIDA
Courtesy of VOLVO CARS CORPORATION

- **Continue**

  Refer to **CHECKING COMPONENTS AND WIRING**

CHECKING COMPONENTS AND WIRING

Check the resistance of the valve between the leak diagnostic unit connector terminals #3 and #4 (leak diagnostic pump side).

Check the signal cable between control module terminal #B40 (#B50) and leak diagnostic unit terminal #3. Check for a short-circuit to supply voltage.

Try a new leak diagnostic unit if no fault is found during the above fault-tracing.

Remedy as necessary.

Other information:

- see **CHECKING WIRING AND TERMINALS**
- For resistance values, see **COMPONENT SPECIFICATIONS**
- To connect the breakout box, see **CONNECTING THE BREAKOUT BOX**
- For 5 cylinder turbocharged engines -2004, see **SIGNAL DESCRIPTION**
- For 6 cylinder engines -2004, see **SIGNAL SPECIFICATION**
- To access or replace the leak diagnostic unit, see **LEAK DIAGNOSTIC PUMP, REPLACING** .

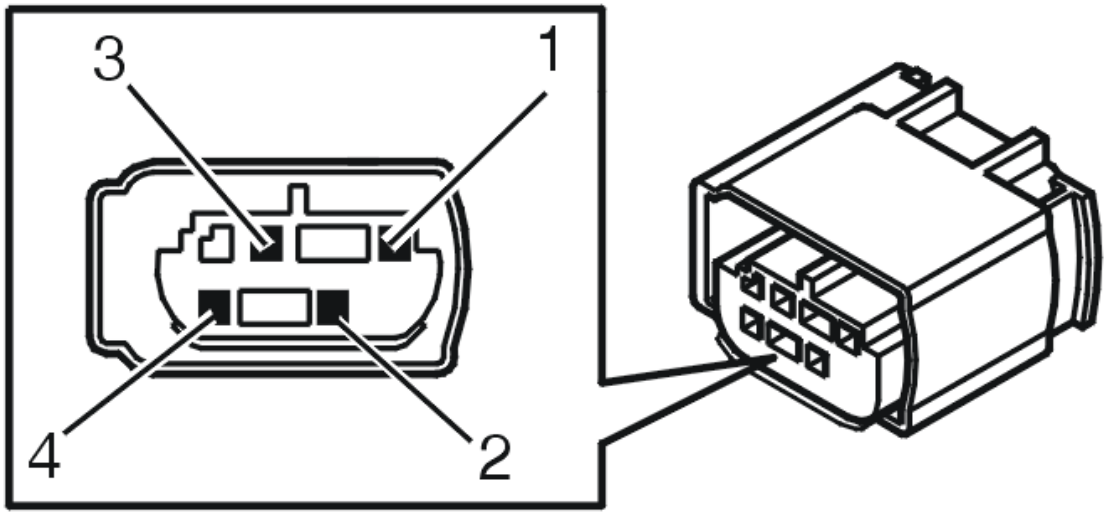

Fig. 81: Identifying Leak Diagnostic Unit Connector Terminals
Courtesy of VOLVO CARS CORPORATION

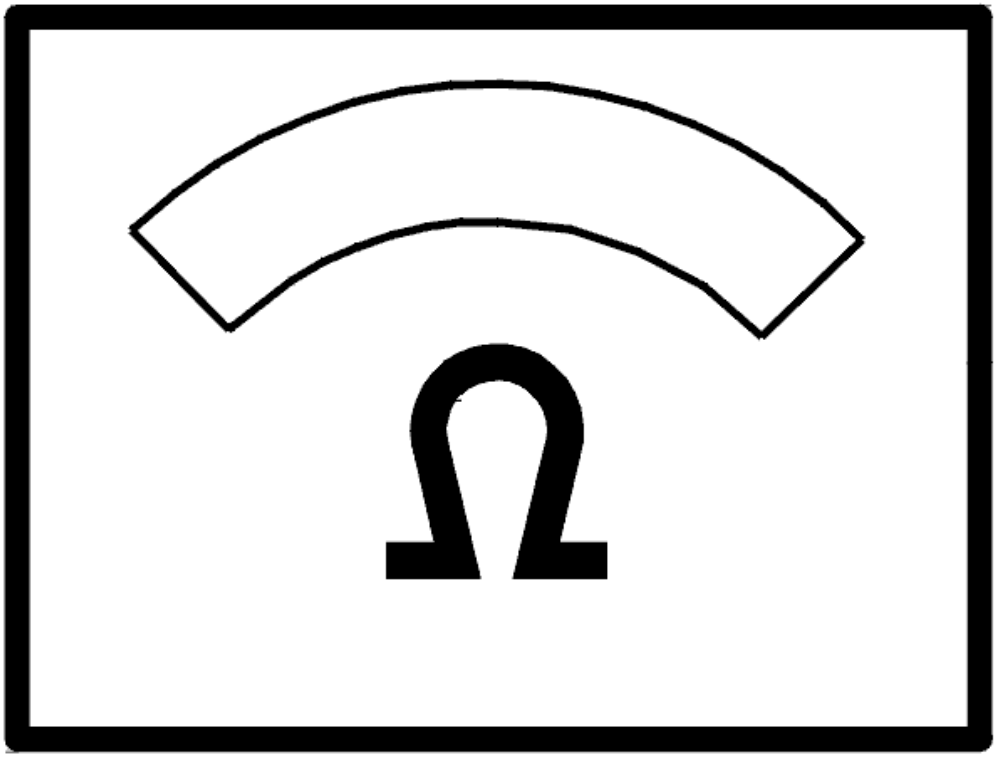

Fig. 82: Identifying Ohm Meter
Courtesy of VOLVO CARS CORPORATION

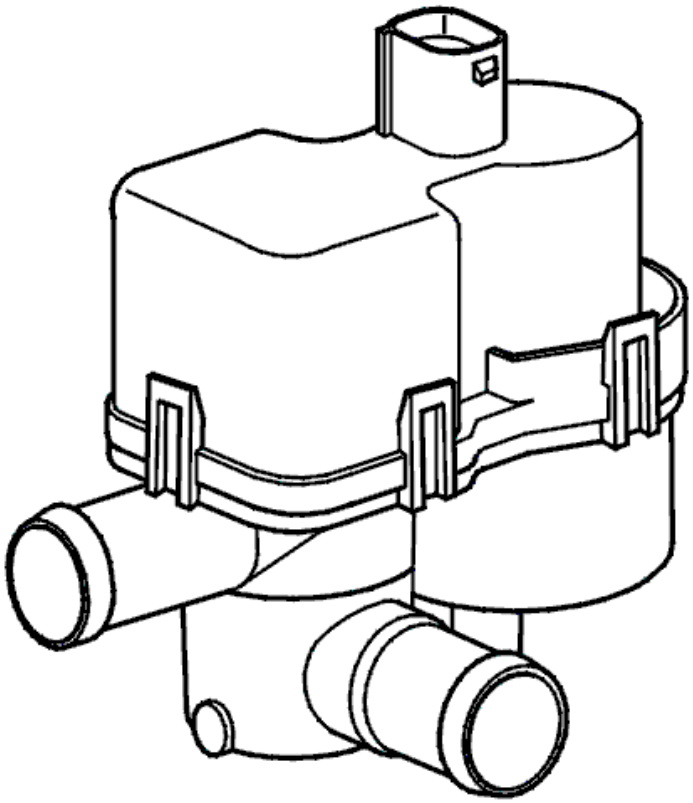

Fig. 83: Identifying Leak Diagnostic Pump
Courtesy of VOLVO CARS CORPORATION

- **Continue**

  Refer to **VERIFICATION**

VERIFICATION

VERIFICATION

HINT: After carrying out the repair, check that the fault has been remedied.

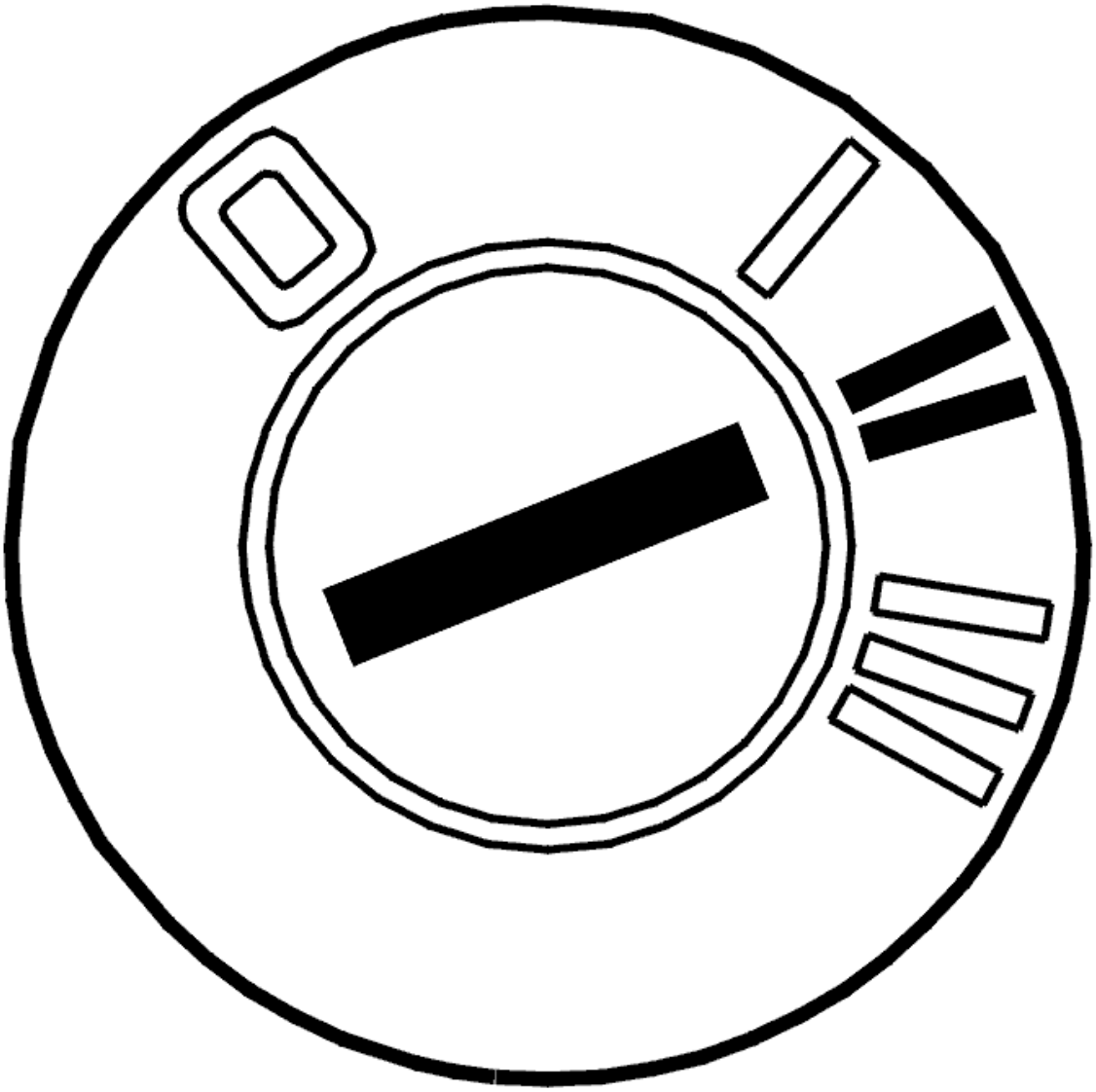

Fig. 84: Identifying Ignition ON
Courtesy of VOLVO CARS CORPORATION

- Ignition on
- Activate the valve in the leak diagnostic unit.

  The valve should click.

  Check that the function is OK.

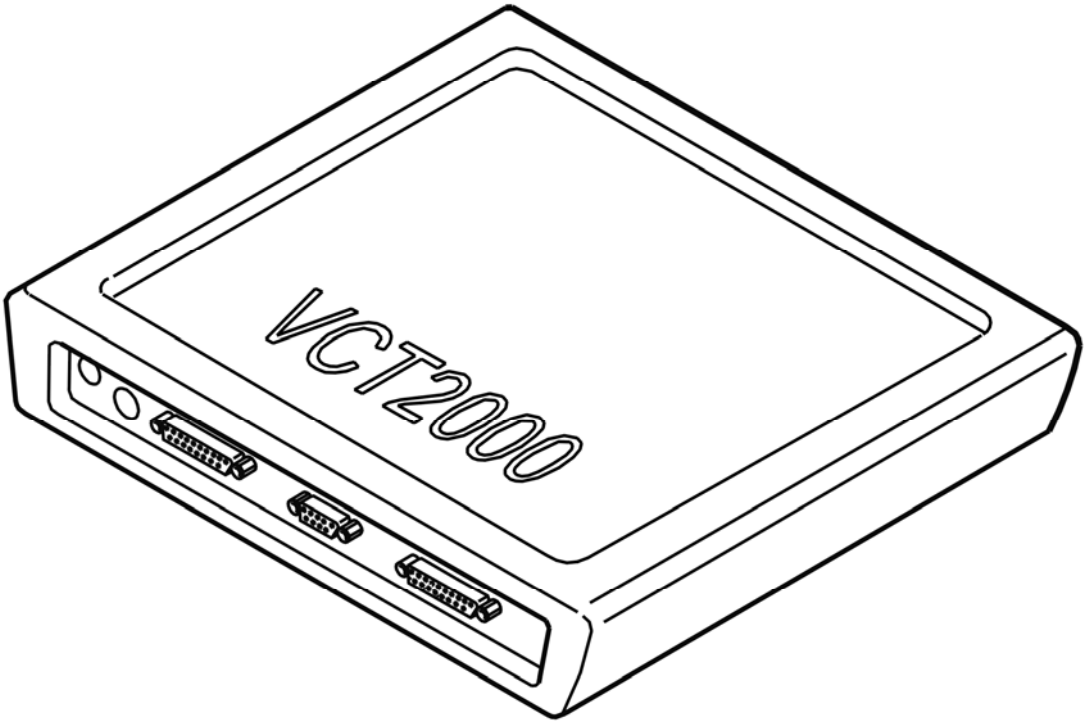

Fig. 85: Identifying VCT2000 Diagnostic Tool Symbol In VIDA
Courtesy of VOLVO CARS CORPORATION

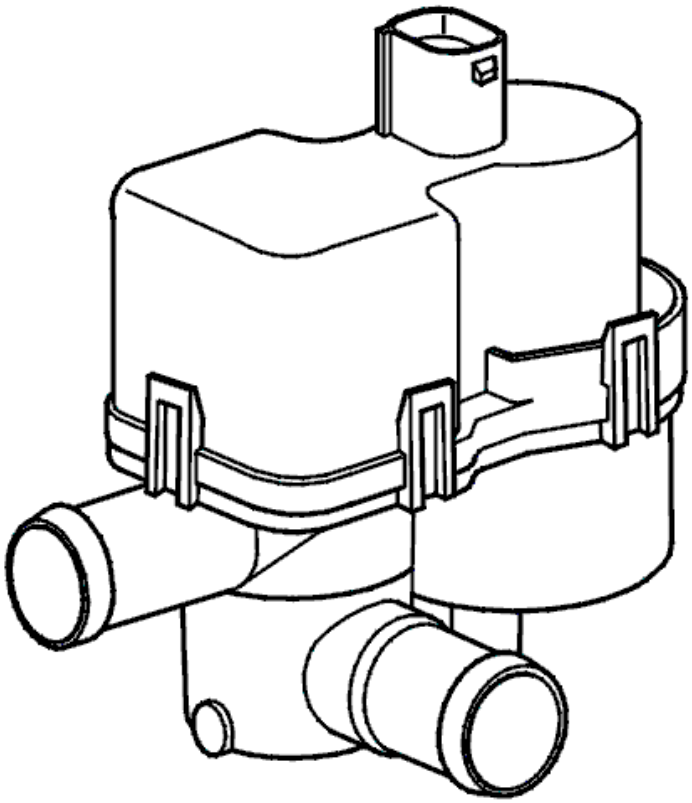

Fig. 86: Identifying Leak Diagnostic Pump
Courtesy of VOLVO CARS CORPORATION

Is the function OK?

- **YES**

  VERIFIED: Troubleshooting has been completed.

- **NO**

  Refer to **INFORMATION**

INFORMATION

FAULT-TRACING INFORMATION

The fault should have been detected and remedied. As this is not the case fault-tracing has failed.

Exit fault-tracing for this diagnostic trouble code (DTC) or make another attempt.

ECM-4010: LEAK DIAGNOSTIC UNIT, VALVE. SIGNAL TOO LOW (B5254T2; B6294T; 2003-2004)

DIAGNOSTIC TROUBLE CODE (DTC) INFORMATION

see **DIAGNOSTIC TROUBLE CODE (DTC) INFORMATION**

SIGNAL TOO LOW

CHECKING THE STATUS

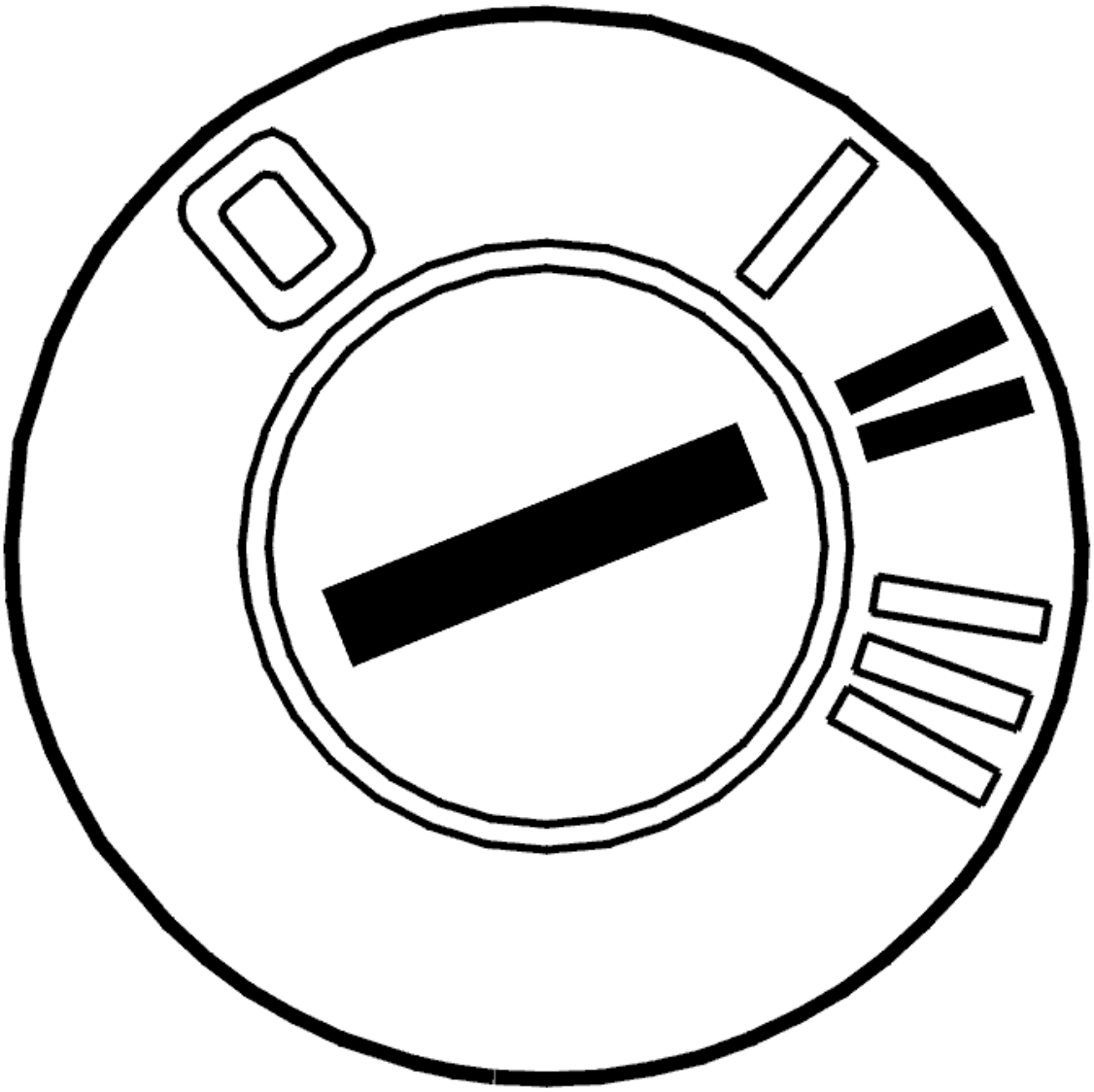

Fig. 87: Identifying Ignition ON
Courtesy of VOLVO CARS CORPORATION

- Ignition on.

  Activate the valve in the leak diagnostic unit to check whether the fault is permanent or intermittent.

  The valve clicks when it is activated.

The fault is permanent if the valve does not activate.

The fault is intermittent if the valve activates.

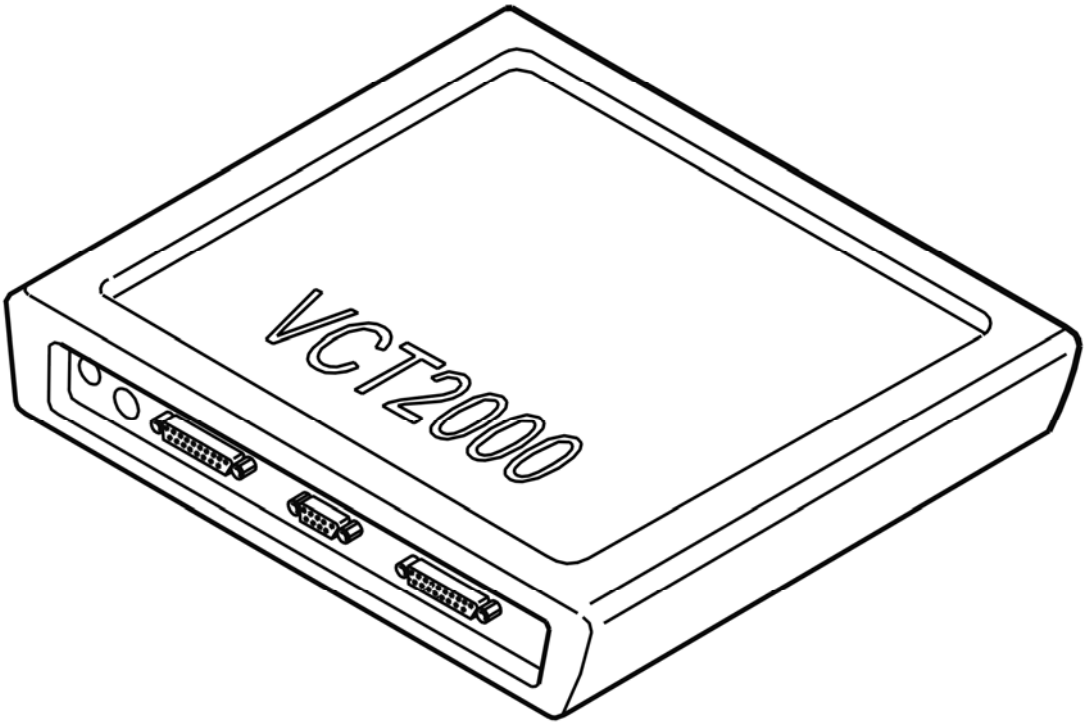

Fig. 88: Identifying VCT2000 Diagnostic Tool Symbol In VIDA
Courtesy of VOLVO CARS CORPORATION

- **Continue**

  Refer to **CHECKING THE WIRING**

CHECKING THE WIRING

Check the signal cable for the valve between control module terminal #B40 (#B50) and leak diagnostic unit terminal #3. Check for a short-circuit to ground.

Remedy as necessary.

Other information:

- see **CHECKING WIRING AND TERMINALS**
- For resistance values, see **COMPONENT SPECIFICATIONS**
- To connect the breakout box, see **CONNECTING THE BREAKOUT BOX**

- For 5 cylinder turbocharged engines -2004, see **SIGNAL DESCRIPTION**
- For 6 cylinder engines -2004, see **SIGNAL SPECIFICATION**
- To access or replace the leak diagnostic unit, see **LEAK DIAGNOSTIC PUMP, REPLACING**

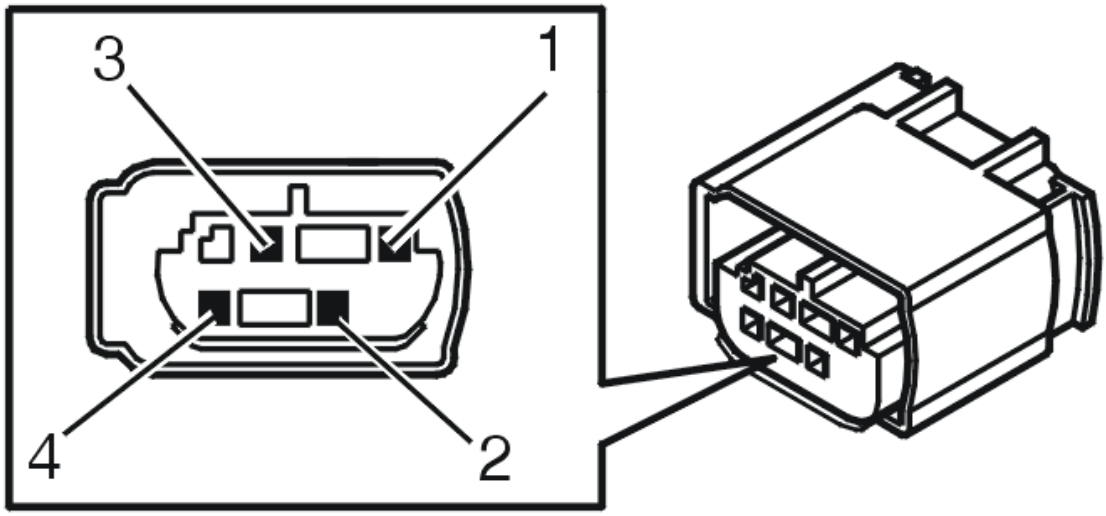

Fig. 89: Identifying Leak Diagnostic Unit Connector Terminals
Courtesy of VOLVO CARS CORPORATION

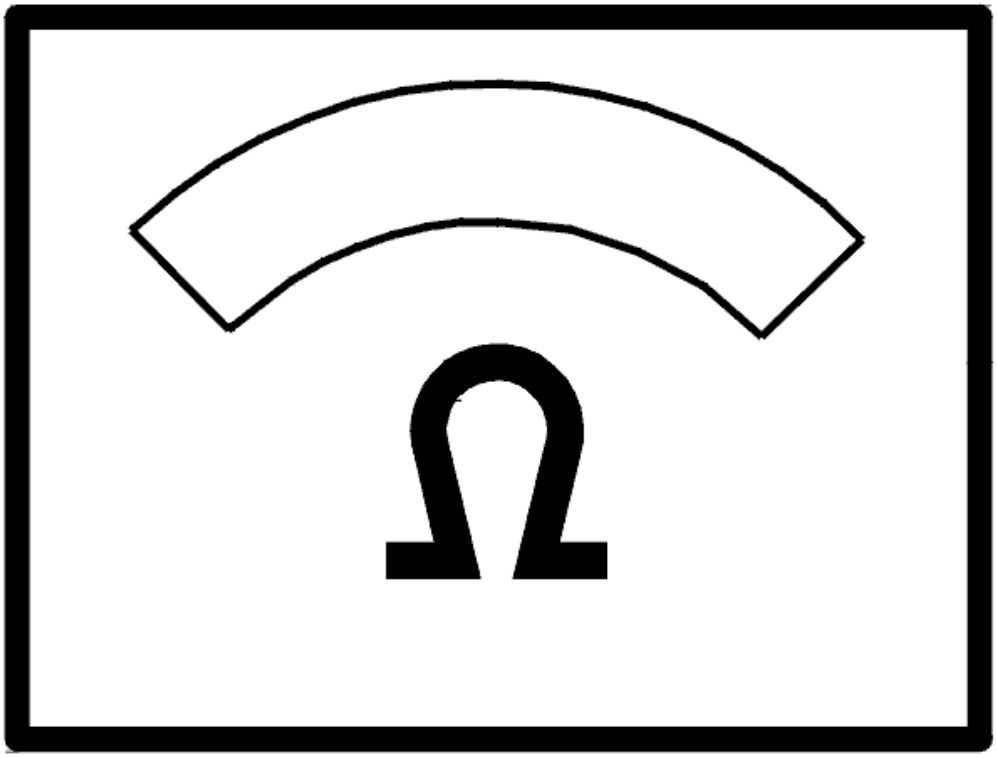

Fig. 90: Identifying Ohm Meter
Courtesy of VOLVO CARS CORPORATION

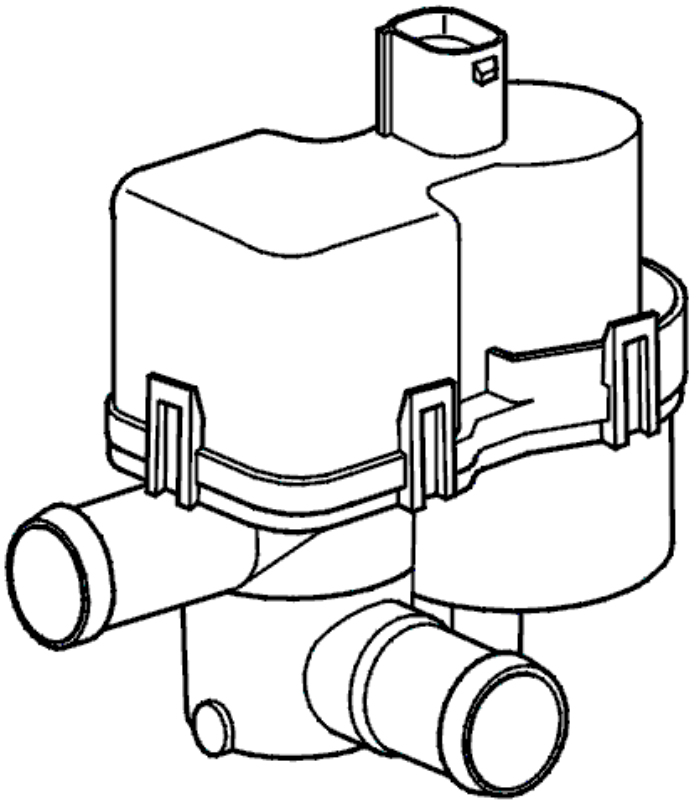

Fig. 91: Identifying Leak Diagnostic Pump
Courtesy of VOLVO CARS CORPORATION

- **Continue**

  Refer to **VERIFICATION**

VERIFICATION

VERIFICATION

HINT: After carrying out the repair, check that the fault has been remedied.

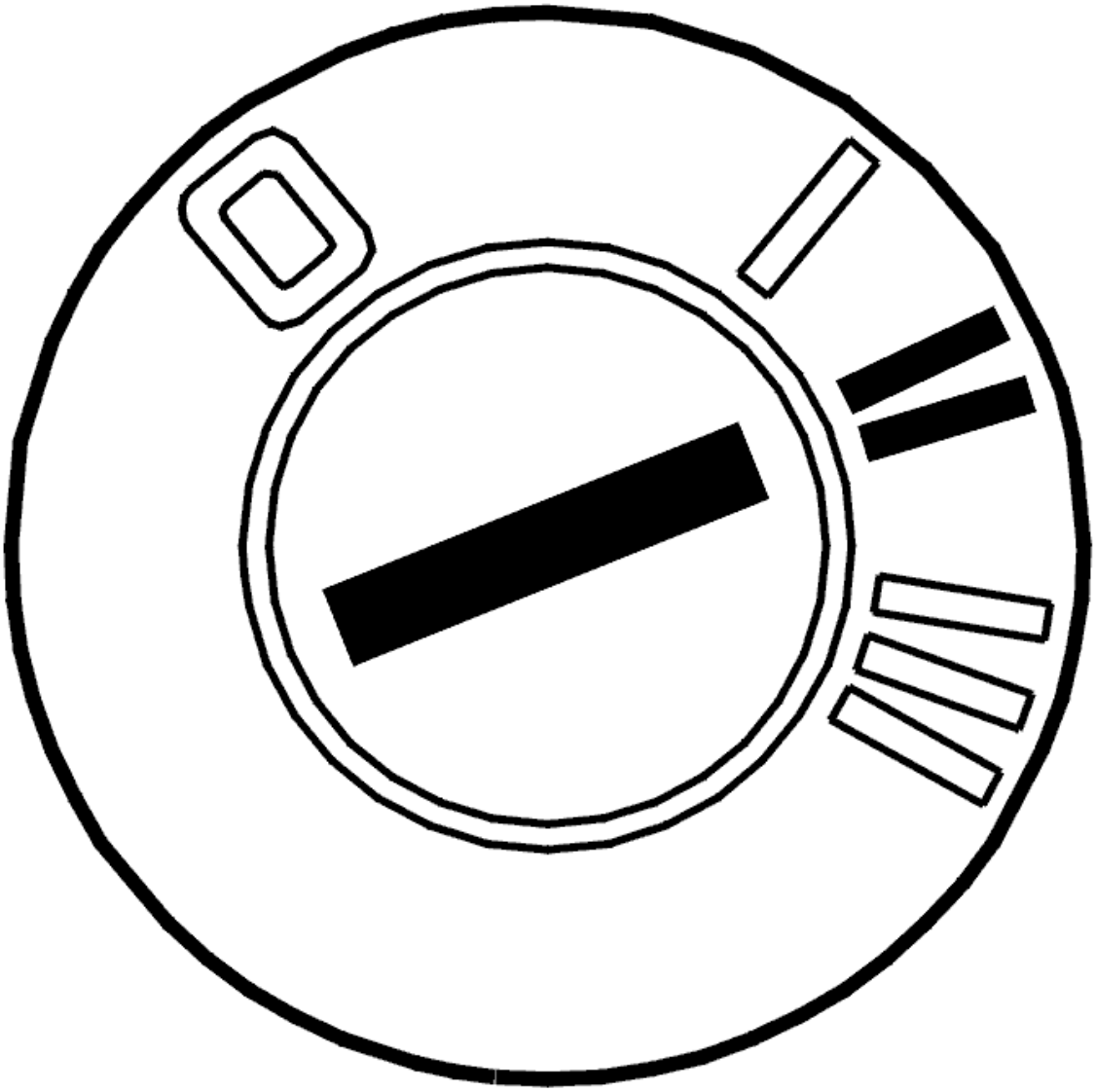

Fig. 92: Identifying Ignition ON
Courtesy of VOLVO CARS CORPORATION

- Ignition on
- Activate the valve in the leak diagnostic unit.

  The valve should click.

  Check that the function is OK.

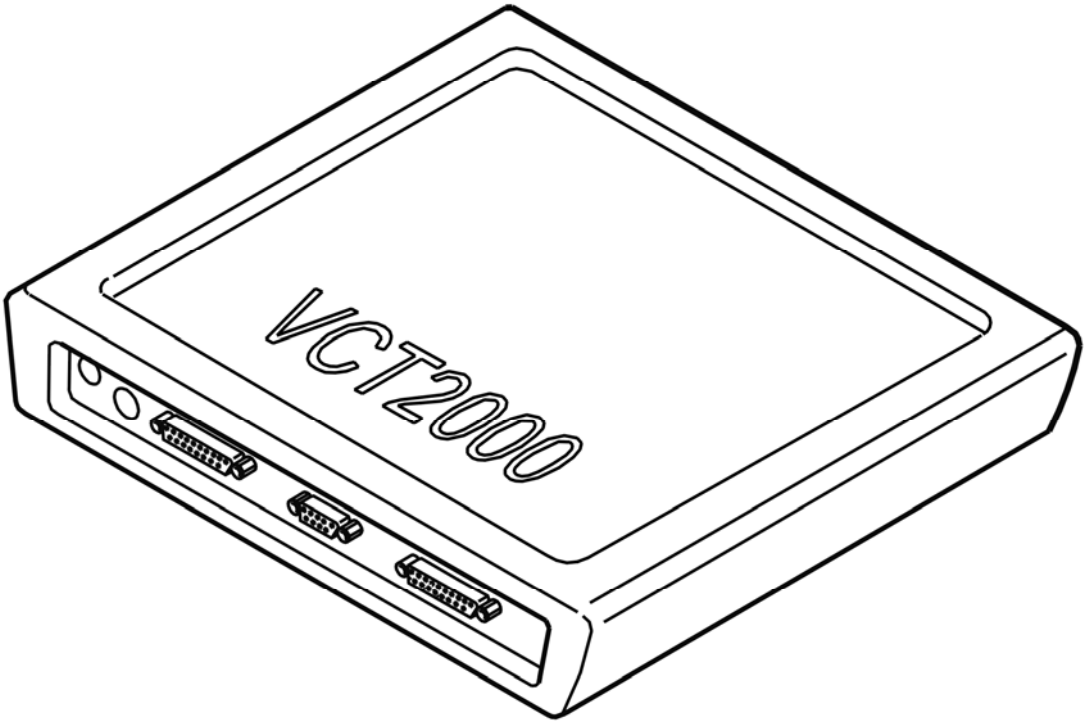

Fig. 93: Identifying VCT2000 Diagnostic Tool Symbol In VIDA
Courtesy of VOLVO CARS CORPORATION

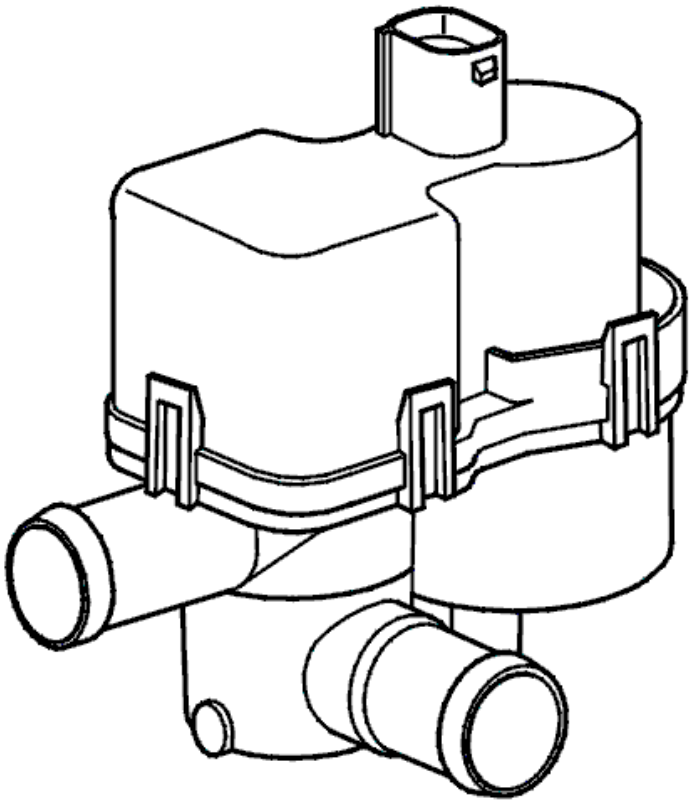

Fig. 94: Identifying Leak Diagnostic Pump
Courtesy of VOLVO CARS CORPORATION

Is the function OK?

- **YES**

  VERIFIED: Troubleshooting has been completed.

- **NO**

  Refer to **INFORMATION**

INFORMATION

FAULT-TRACING INFORMATION

The fault should have been detected and remedied. As this is not the case fault-tracing has failed.

Exit fault-tracing for this diagnostic trouble code (DTC) or make another attempt.

ECM-401C: THREE-WAY CATALYTIC CONVERTER (TWC) EFFICIENCY, BANK 2. SIGNAL TOO HIGH (B5254T2; 2005-2007)

DIAGNOSTIC TROUBLE CODE (DTC) INFORMATION ECM-401C

Condition

The engine control module (ECM) continuously checks three-way catalytic converter (TWC) efficiency (bank 2) by comparing signals from the rear heated oxygen sensor (HO2S) with the signal from the front heated oxygen sensor (HO2S). The diagnostic trouble code (DTC) is stored if the efficiency of the three-way catalytic converter (TWC) deviates too much.

The diagnostic trouble code (DTC) is diagnosed when driving under specific driving conditions.

Substitute Value

The rear long-term fuel trim is disabled.

Possible Source

- Misfiring
- Leakage in the intake system
- Leakage in the exhaust system
- Faulty fuel pressure
- Uneven compression
- Damaged catalytic converter.

Fault symptom[s]

- Malfunction indicator lamp (MIL) lit.

SIGNAL TOO HIGH

CHECKING THE COMPONENTS AND WIRING

Check the intake system for air leakage.

Check the exhaust system for air leakage.

Checking fuel and residual pressure.

Check the compression of the engine.

Remedy as necessary.

NOTE: Try a new heated oxygen sensor (HO2S) if the above fault-tracing does not remedy the fault.

Other information

- see **INTAKE AND EXHAUST SYSTEM - CLEANING, INSPECTION AND ADJUSTMENT**
- see **CHECKING FOR AIR LEAKAGE IN THE EXHAUST SYSTEM**
- see **CHECKING FUEL AND RESIDUAL PRESSURES**
- see **CYLINDER LEAKAGE TEST**
- For B5xx4T, see **THREE-WAY CATALYTIC CONVERTER (TWC), REPLACING**
- For B6xx4T, see **THREE-WAY CATALYTIC CONVERTER (TWC), REPLACING** .

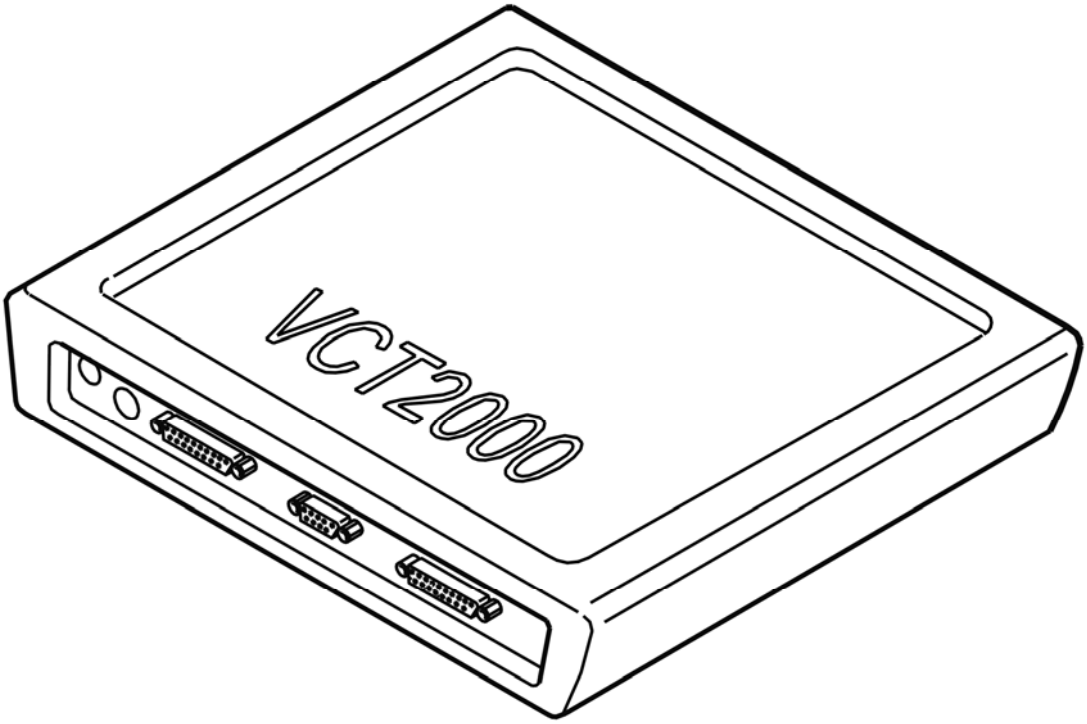

Fig. 95: Identifying VCT2000 Diagnostic Tool Symbol In VIDA
Courtesy of VOLVO CARS CORPORATION

- **Continue**

  Refer to **VERIFICATION**

VERIFICATION

VERIFICATION

HINT: After carrying out the repair, check that the fault has been remedied.

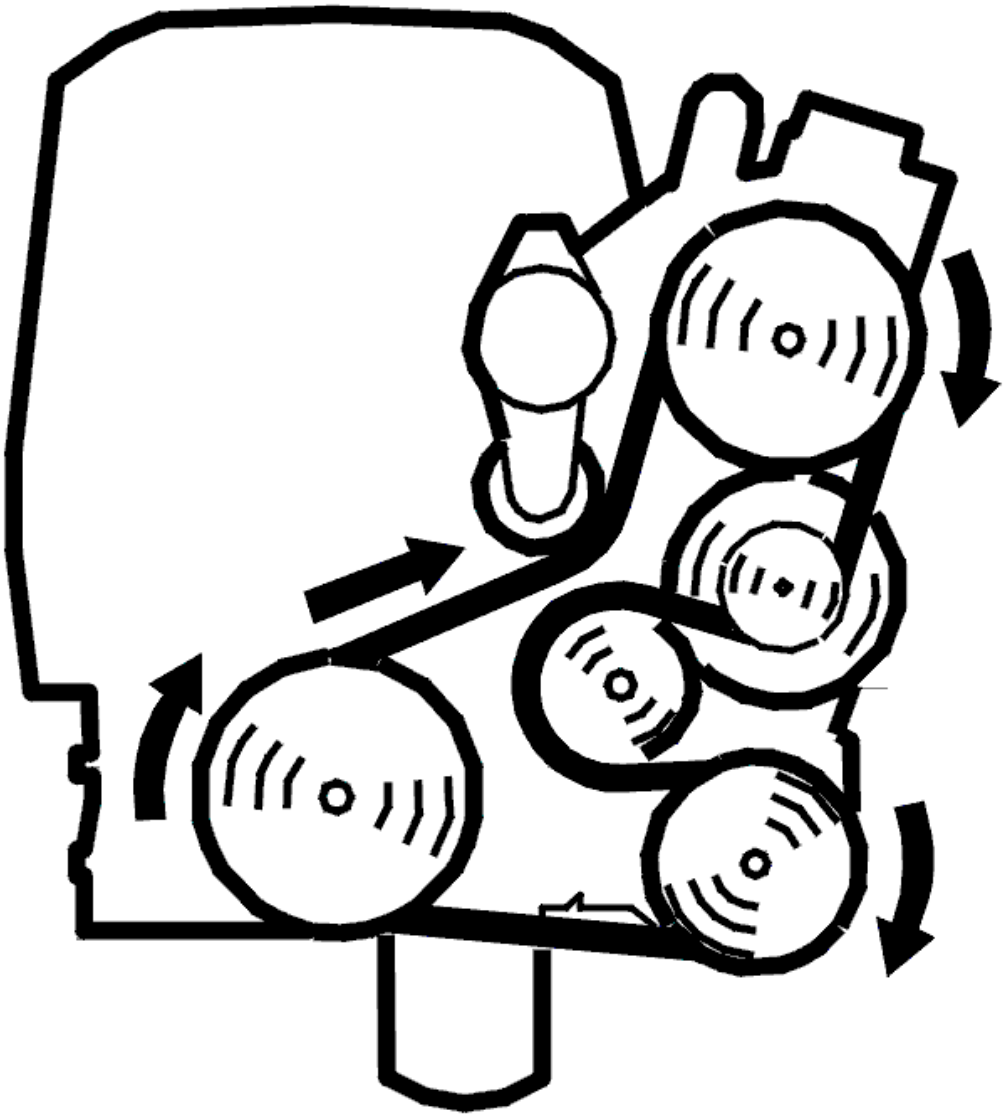

Fig. 96: Belt Routing / Engine Idling - Volvo
Courtesy of VOLVO CARS CORPORATION

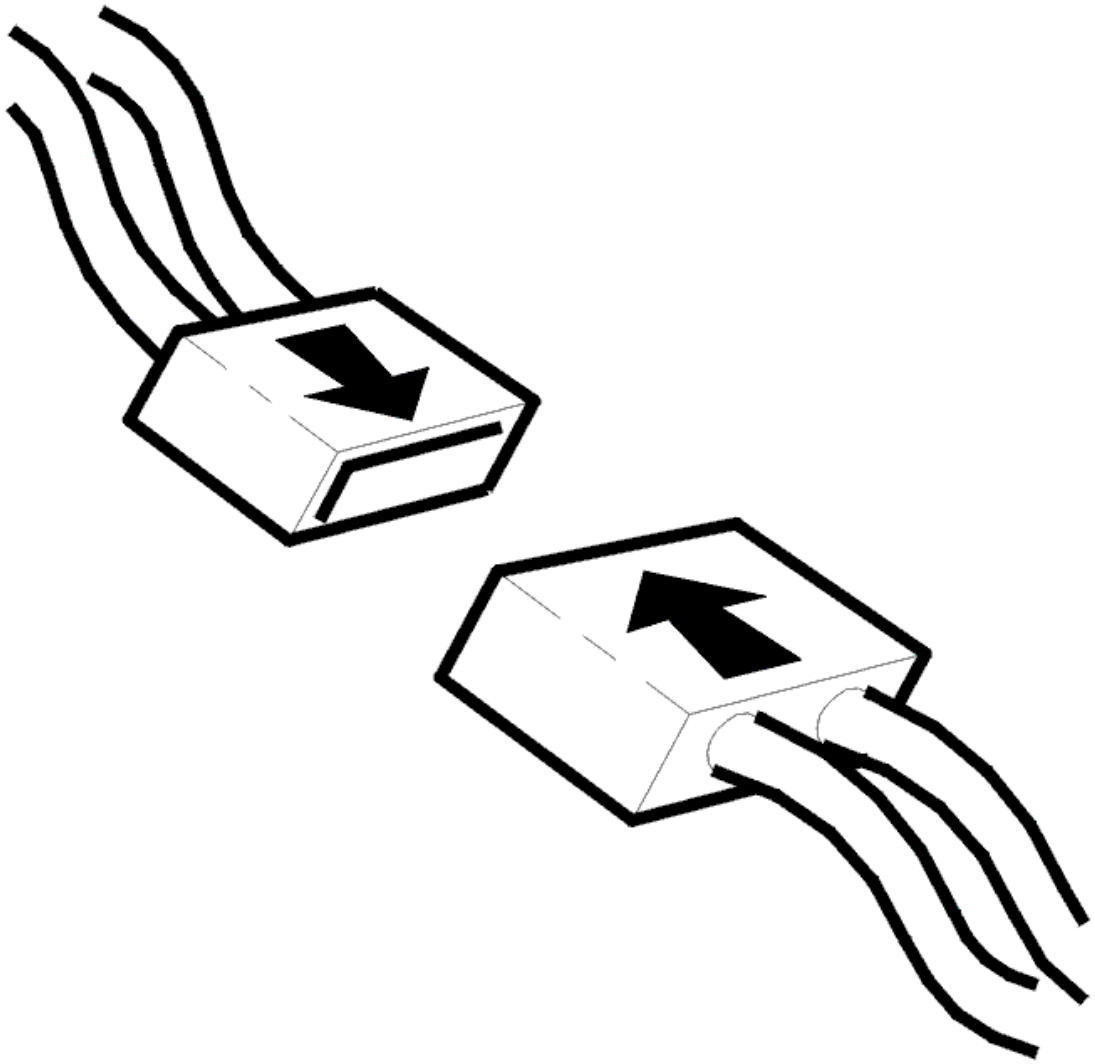

Fig. 97: Connecting Connector
Courtesy of VOLVO CARS CORPORATION

- Ignition off
- Reconnect the connectors, reinstall components etc.
- Test drive the vehicle on the road. Run a TRIP schedule so that the engine control module (ECM) compares the diagnostics. To run a TRIP schedule, see: **VERIFYING REPAIRS**
- Connect VCT2000 (or appropriate scan tool) to the data link connector (DLC) without switching off the engine.

NOTE: **If the engine is switched off, the stored fault status will be erased and the test drive will have to be repeated.**

Read off the diagnostic status and fault status for the diagnostic trouble code (DTC) by selecting the relevant diagnostic trouble code (DTC) from the list.

Check the fault status for the diagnostic trouble code (DTC) when the diagnostic is "Complete". If the function is correct, the fault status must be "No fault found" when the diagnostic is complete.

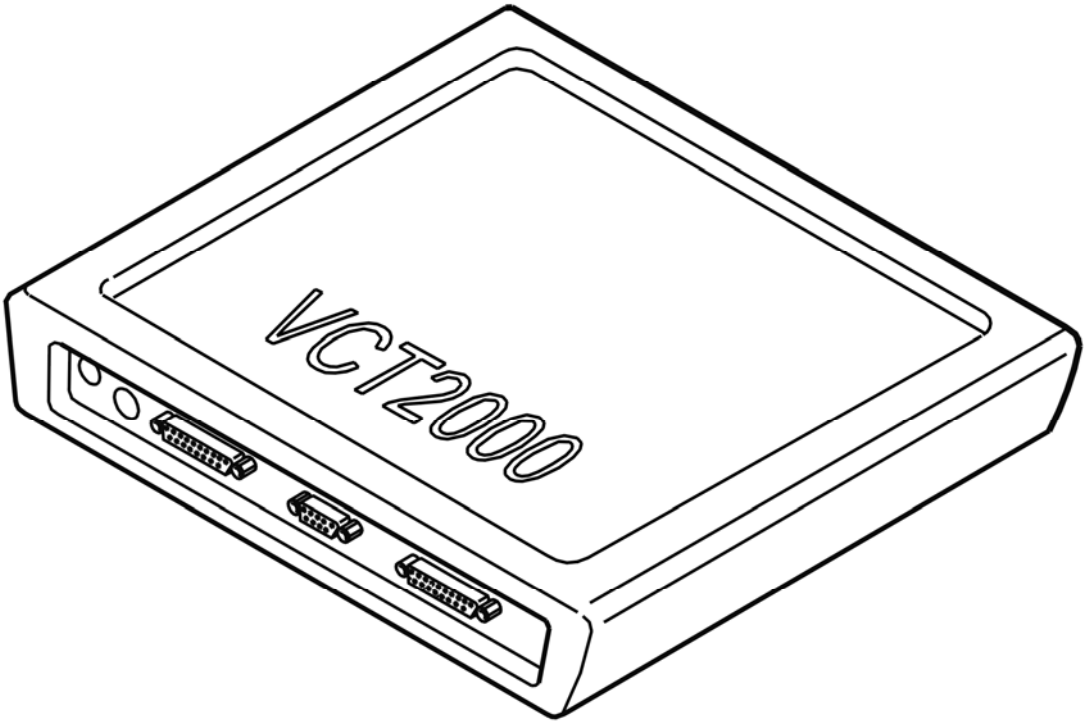

Fig. 98: Identifying VCT2000 Diagnostic Tool Symbol In VIDA
Courtesy of VOLVO CARS CORPORATION

Is the function OK?

- **YES**

  VERIFIED: Troubleshooting has been completed.

- **NO**

  Refer to **INFORMATION**

INFORMATION

FAULT-TRACING INFORMATION

The fault should have been detected and remedied. As this is not the case fault-tracing has failed.

Exit fault-tracing for this diagnostic trouble code (DTC) or make another attempt.

ECM-401C: THREE-WAY CATALYTIC CONVERTER (TWC) EFFICIENCY, BANK 2. SIGNAL TOO HIGH (B6294T; 2005-2006)

DIAGNOSTIC TROUBLE CODE (DTC) INFORMATION ECM-401C

see **DIAGNOSTIC TROUBLE CODE (DTC) INFORMATION ECM-401C**

SIGNAL TOO HIGH

see **SIGNAL TOO HIGH**

ECM-4024: LEAK DIAGNOSTIC UNIT, PUMP. SIGNAL MISSING (B5254T2; B6294T; 2003-2004)

DIAGNOSTIC TROUBLE CODE (DTC) INFORMATION

Condition

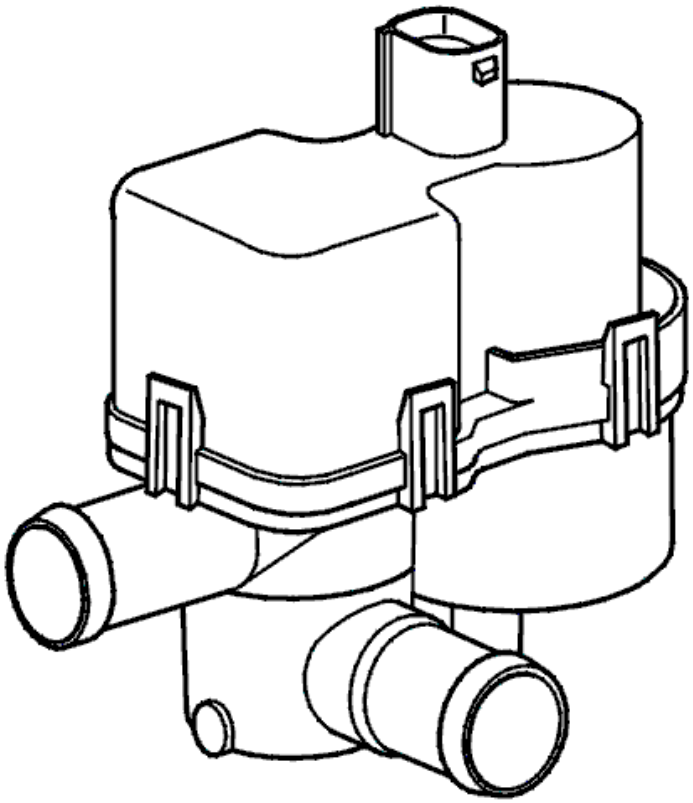

Fig. 99: Identifying Leak Diagnostic Pump
Courtesy of VOLVO CARS CORPORATION

Diagnostic trouble code (DTC) ECM-4024 is stored if the control module registers that the signal from the leak diagnostic unit pump is too high, too low or missing.

Substitute Value

The leak diagnostic is shut off.

Possible Source

Signal too high:

- Short-circuit to supply voltage in the signal cable
- Defective pump.

Signal too low:

- Short-circuit to ground in the signal cable.

Signal missing:

- Contact resistance in the terminals
- Open-circuit in the signal cable
- Open-circuit in the power cable
- Defective pump.

Fault symptom[s]

- Malfunction indicator lamp (MIL) lit.

SIGNAL MISSING

CHECKING COMPONENTS AND WIRING

Check the leak diagnostic unit connectors. Check for contact resistance and oxidation.

Check the resistance of the pump motor between the leak diagnostic unit connector terminals #1 and #4 (leak diagnostic pump side).

Check the signal cable between engine control module (ECM) terminal #B7 (#B17) and leak diagnostic pump terminal #1. Check for an open-circuit.

Check the power supply cable between system relay terminal #5 and leak diagnostic unit terminal #4. Check for an open-circuit.

Remedy as necessary.

Other information:

- see **CHECKING WIRING AND TERMINALS**

- For resistance values, see **COMPONENT SPECIFICATIONS**
- To connect the breakout box, see **CONNECTING THE BREAKOUT BOX**
- For 5 cylinder turbocharged engines -2004, see **SIGNAL DESCRIPTION**
- For 6 cylinder engines -2004, see **SIGNAL SPECIFICATION**
- To access or replace the leak diagnostic unit, see **LEAK DIAGNOSTIC PUMP, REPLACING** .

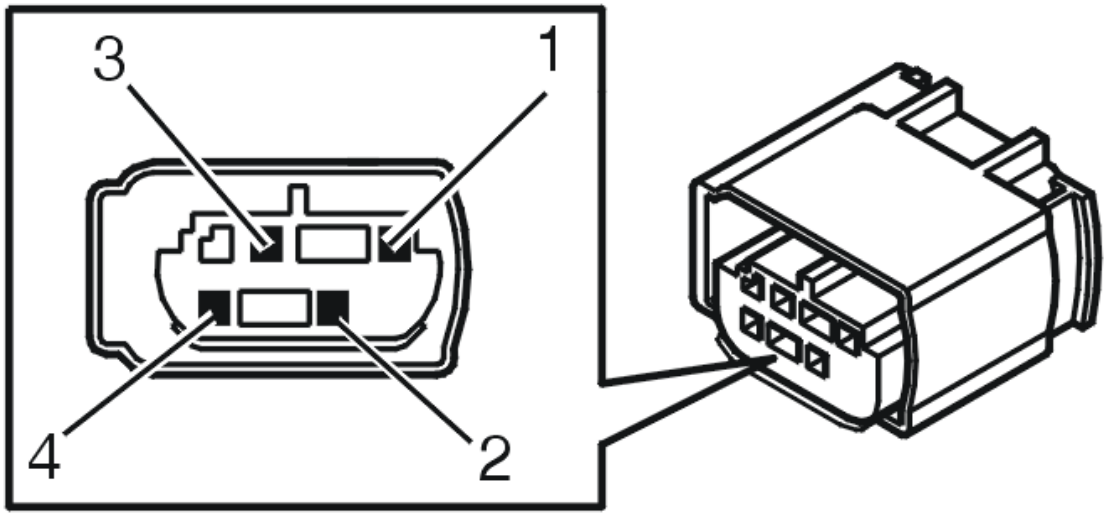

Fig. 100: Identifying Leak Diagnostic Unit Connector Terminals
Courtesy of VOLVO CARS CORPORATION

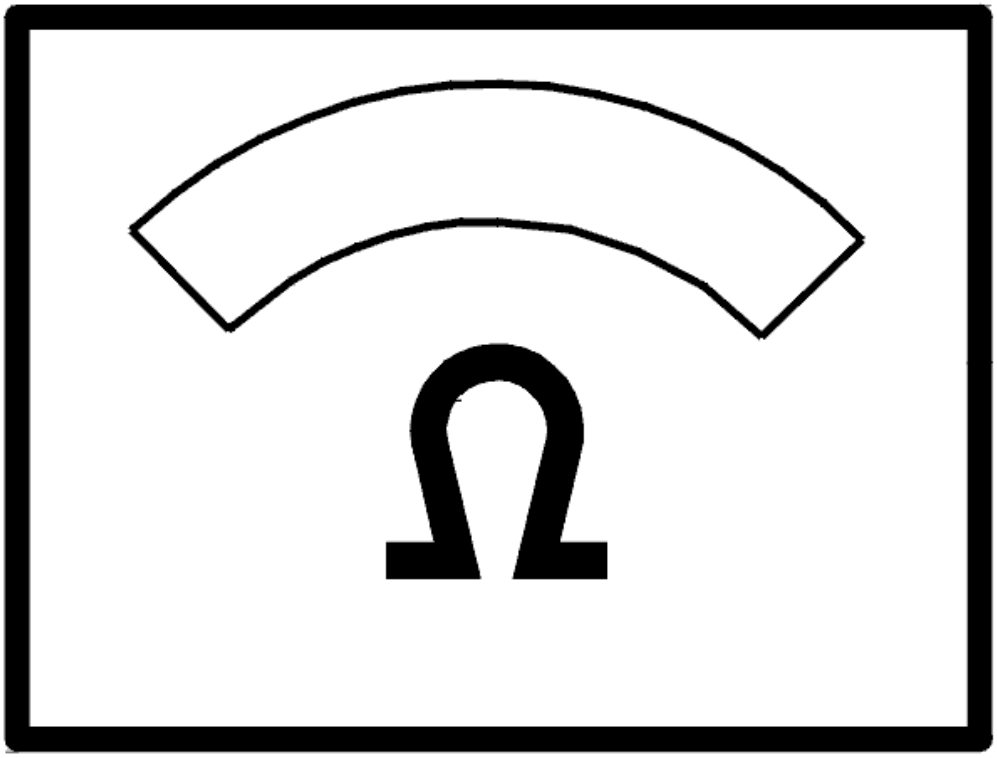

Fig. 101: Identifying Ohm Meter
Courtesy of VOLVO CARS CORPORATION

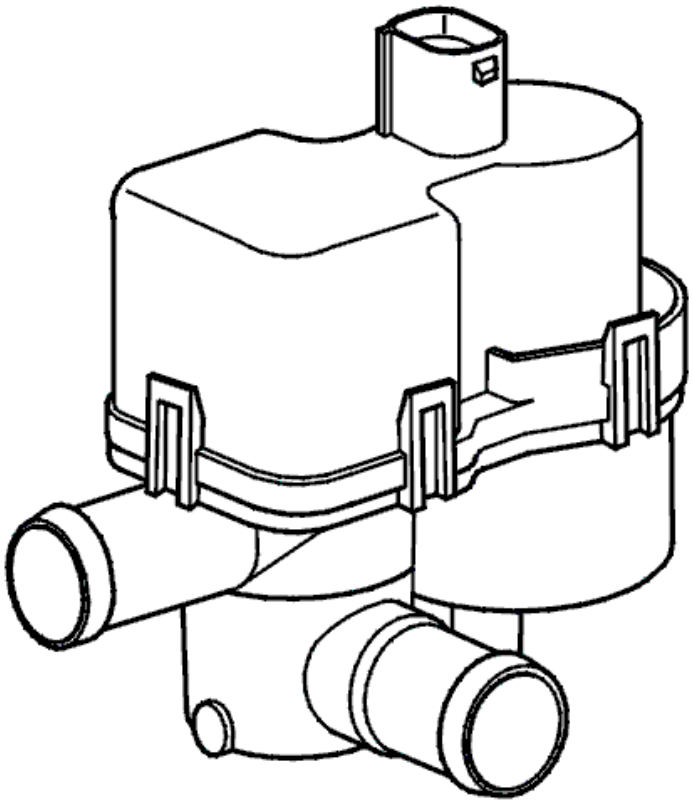

Fig. 102: Identifying Leak Diagnostic Pump
Courtesy of VOLVO CARS CORPORATION

- **Continue**

  Refer to **INFORMATION**

INFORMATION

FAULT-TRACING INFORMATION

Fault-tracing is not followed by verification for this fault.

HINT: After the diagnostic trouble codes (DTCs) are erased, the function of the leak diagnostic unit can be checked by running a quick test of the fuel tank system in the vehicle communication socket. If there is a fault, the fault status will be "FAULT FOUND" on the leak diagnostic unit.

The information can be displayed again or fault-tracing this fault can be interrupted.

ECM-4024: LEAK DIAGNOSTIC UNIT, PUMP. SIGNAL TOO HIGH (B5254T2; B6294T; 2003-2004)

DIAGNOSTIC TROUBLE CODE (DTC) INFORMATION

see **DIAGNOSTIC TROUBLE CODE (DTC) INFORMATION**

SIGNAL TOO HIGH

CHECKING COMPONENTS AND WIRING

Check the resistance of the pump motor between the leak diagnostic unit connector terminals #1 and #4 (leak diagnostic pump side).

Check the signal cable between engine control module (ECM) terminal #B7 (#B17) and leak diagnostic unit terminal #1. Check for a short-circuit to supply voltage.

Try a new leak diagnostic unit if no fault is found during the above fault-tracing.

Remedy as necessary.

Other information:

- see **CHECKING WIRING AND TERMINALS**
- For resistance values, see **COMPONENT SPECIFICATIONS**
- To connect the breakout box, see **CONNECTING THE BREAKOUT BOX**
- For 5 cylinder turbocharged engines -2004, see **SIGNAL DESCRIPTION**
- For 6 cylinder engines -2004, see **SIGNAL SPECIFICATION**
- To access or replace the leak diagnostic unit, see **LEAK DIAGNOSTIC PUMP, REPLACING** .

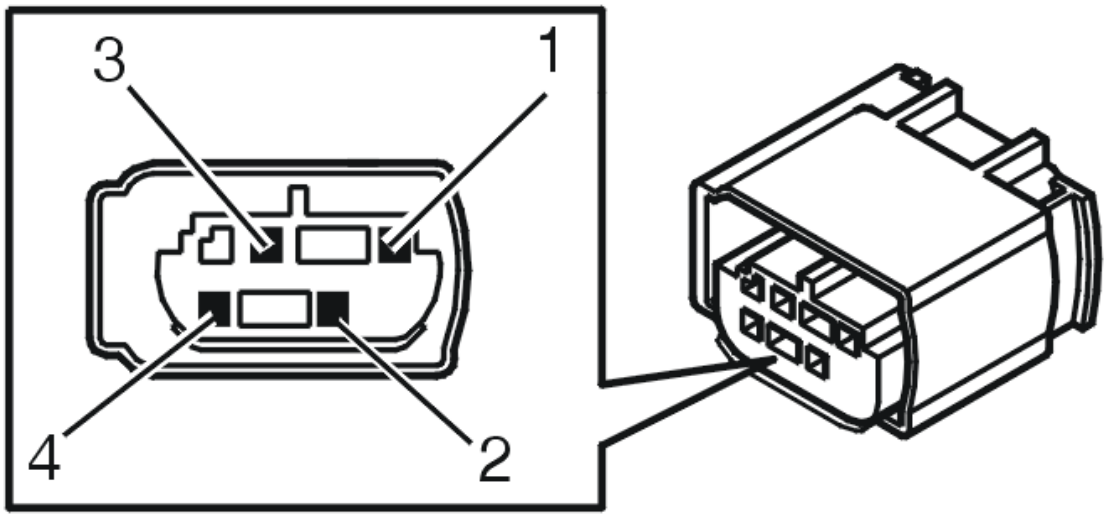

Fig. 103: Identifying Leak Diagnostic Unit Connector Terminals
Courtesy of VOLVO CARS CORPORATION

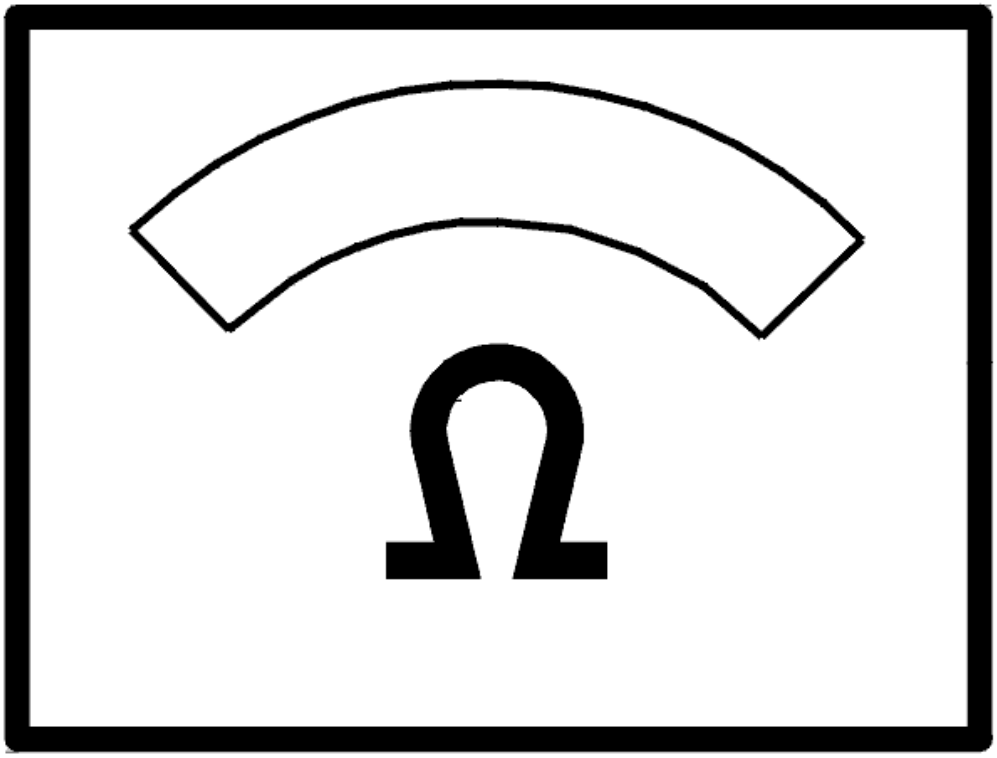

Fig. 104: Identifying Ohm Meter
Courtesy of VOLVO CARS CORPORATION

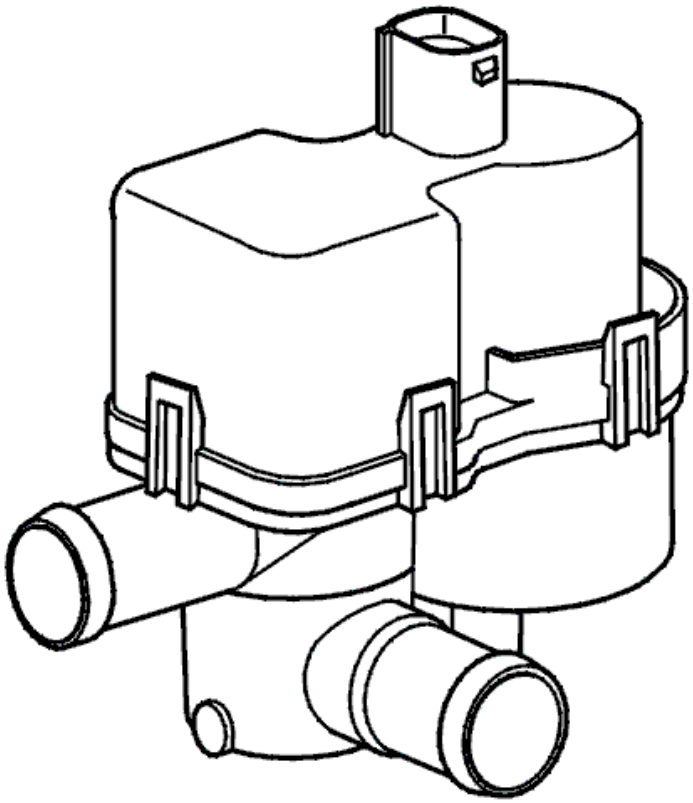

Fig. 105: Identifying Leak Diagnostic Pump
Courtesy of VOLVO CARS CORPORATION

- **Continue**

  Refer to **INFORMATION**

INFORMATION

FAULT-TRACING INFORMATION

Fault-tracing is not followed by verification for this fault.

HINT: After the diagnostic trouble codes (DTCs) are erased, the function of the leak diagnostic unit can be checked by running a quick test of the fuel tank system in the vehicle communication socket. If there is a fault, the fault status will be "FAULT FOUND" on the leak diagnostic unit.

The information can be displayed again or fault-tracing this fault can be interrupted.

ECM-4024: LEAK DIAGNOSTIC UNIT, PUMP. SIGNAL TOO LOW (B5254T2; B6294T; 2003-2004)

DIAGNOSTIC TROUBLE CODE (DTC) INFORMATION

see **DIAGNOSTIC TROUBLE CODE (DTC) INFORMATION**

SIGNAL TOO LOW

CHECKING THE WIRING

Check the signal cable between engine control module (ECM) terminal #B7 (#B17) and leak diagnostic unit terminal #1. Check for a short-circuit to ground.

Try a new leak diagnostic unit if no fault is found during the above fault-tracing.

Remedy as necessary.

Other information:

- see **CHECKING WIRING AND TERMINALS**
- For resistance values, see **COMPONENT SPECIFICATIONS**
- To connect the breakout box, see **CONNECTING THE BREAKOUT BOX**
- For 5 cylinder turbocharged engines -2004, see **SIGNAL DESCRIPTION**
- For 6 cylinder engines -2004, see **SIGNAL SPECIFICATION**
- To access or replace the leak diagnostic unit, see **LEAK DIAGNOSTIC PUMP, REPLACING** .

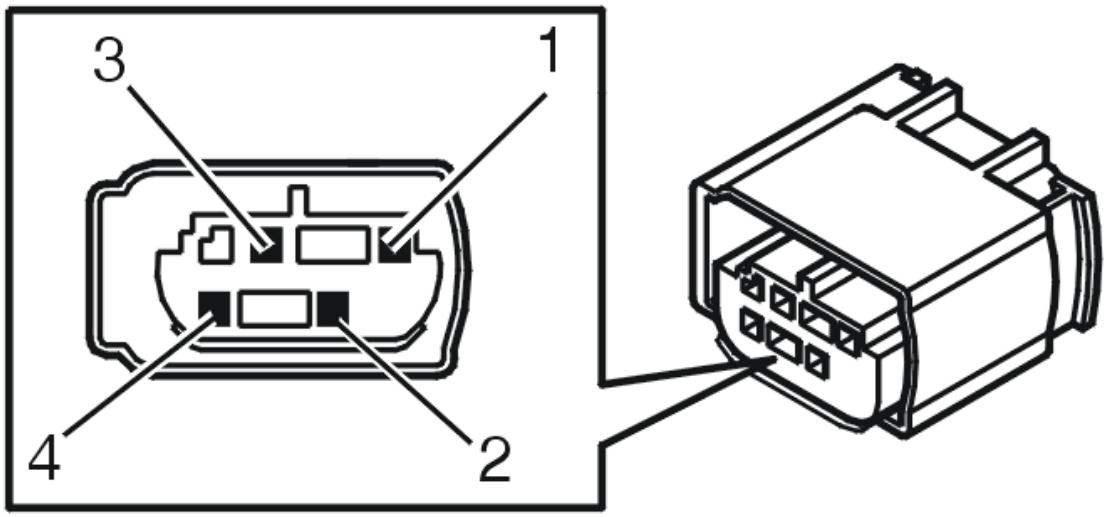

Fig. 106: Identifying Leak Diagnostic Unit Connector Terminals
Courtesy of VOLVO CARS CORPORATION

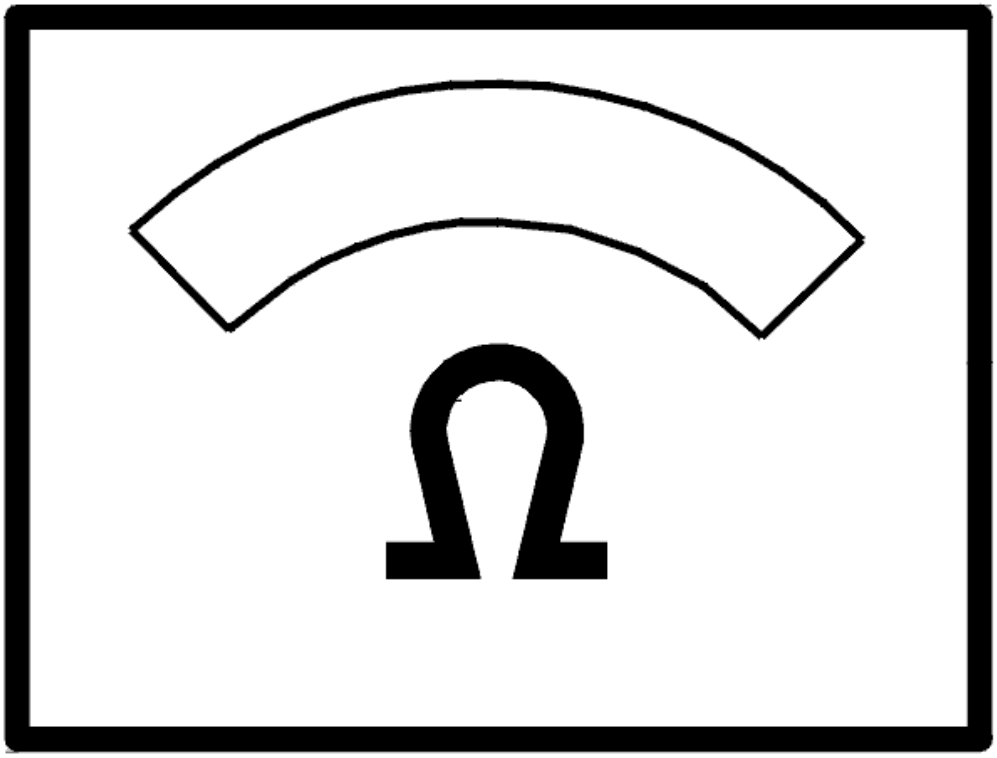

Fig. 107: Identifying Ohm Meter
Courtesy of VOLVO CARS CORPORATION

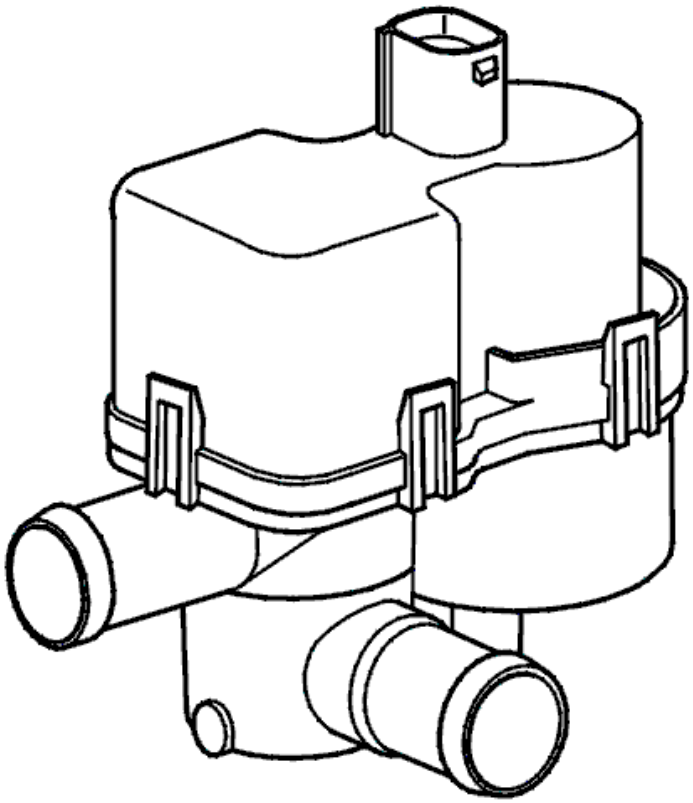

Fig. 108: Identifying Leak Diagnostic Pump
Courtesy of VOLVO CARS CORPORATION

- **Continue**

  Refer to **INFORMATION**

INFORMATION

FAULT-TRACING INFORMATION

Fault-tracing is not followed by verification for this fault.

HINT: After the diagnostic trouble codes (DTCs) are erased, the function of the leak diagnostic unit can be checked by running a quick test of the fuel tank system in the vehicle communication socket. If there is a fault, the fault status will be "FAULT FOUND" on the leak diagnostic unit.

The information can be displayed again or fault-tracing this fault can be interrupted.

ECM-4050: FUEL LEVEL SENSOR. FAULTY SIGNAL (B5254T2; B6294T; 2003-2004)

DIAGNOSTIC TROUBLE CODE (DTC) INFORMATION

Condition

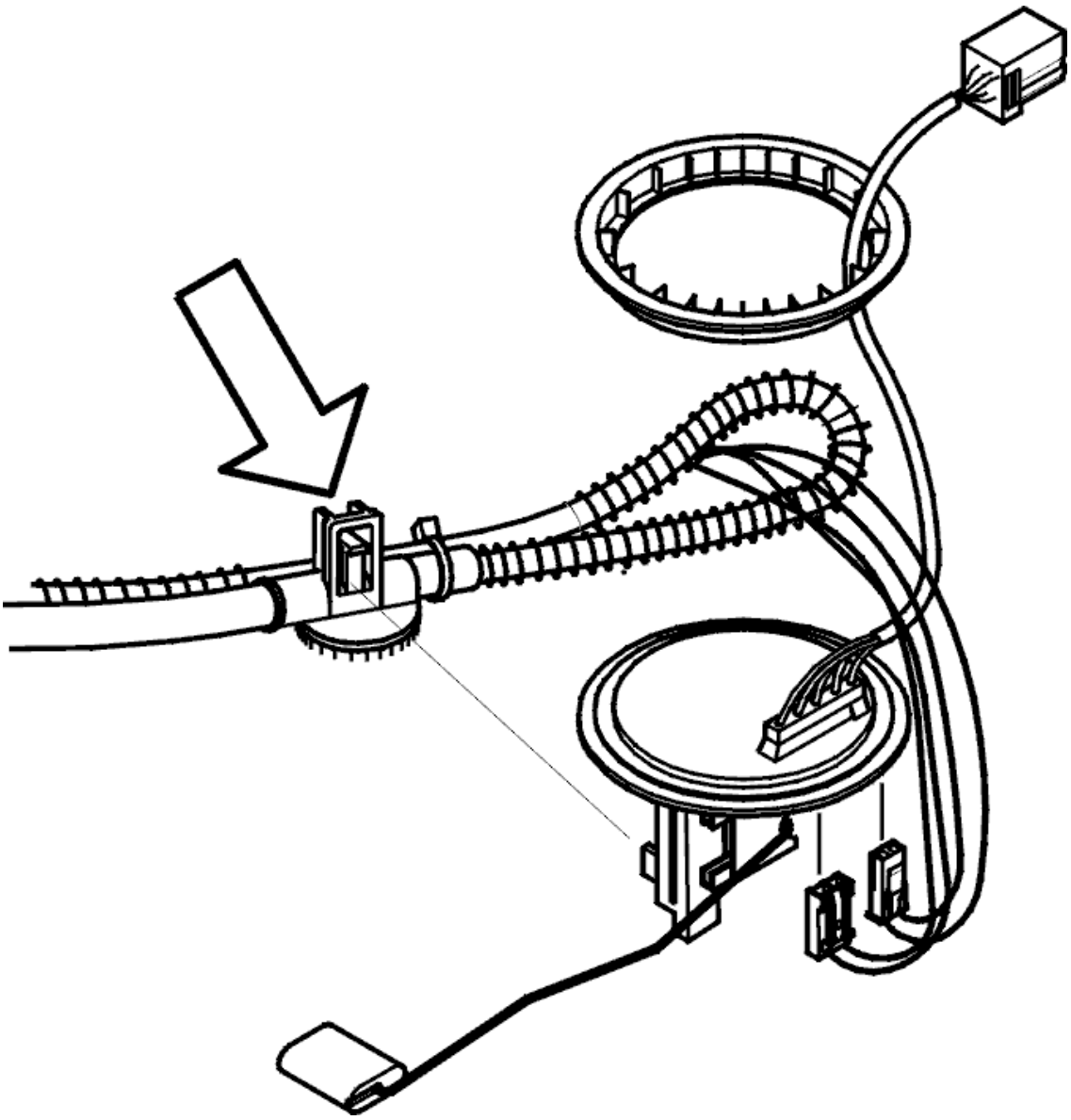

Fig. 109: Fuel Level Sensor Connector
Courtesy of VOLVO CARS CORPORATION

NOTE: For certain versions of model year 1999, diagnostic trouble code ECM-0023 is shown instead. Troubleshooting shall be performed according to ECM-4050.

The rear electronic module transmits information about the fuel level and the fault status of the fuel level sensor to the central electronic module (CEM). The central electronic module (CEM) transmits this information to the engine control module (ECM).

Diagnostic trouble code (DTC) REM-4A31, REM-4A33, REM-4A34, REM-4A37 or REM-4A38 is stored in the rear electronic module and diagnostic trouble code (DTC) ECM-4050 is stored in the engine control module

(ECM) (signal too high / low) if the rear electronic module has registered an electrical fault in the fuel level sensor.

Diagnostic trouble code (DTC) ECM-4050 (signal missing) is stored if the engine control module (ECM) registers a communication problem with the central electronic module (CEM).

Diagnostic trouble code (DTC) ECM-4050 is stored in the engine control module (ECM) (faulty signal) if the engine control module (ECM) has registered a fuel consumption of more that 12 liters while the rear electronic module has registered that the fuel level has fallen by less than 2 liters.

Substitute Value

None.

Possible Source

Signal too high:

- electrical fault in the right fuel level sensor

Signal too low:

- electrical fault in the left fuel level sensor

Signal missing:

- communication fault

Faulty signal:

- defective fuel level sensor

Fault symptom[s]

- Gauges/Fuel level not accurate/Value too high
- Gauges/Fuel level not accurate/Value too low

FAULT-TRACING INFORMATION

INFORMATION

No fault-tracing has been developed for this diagnostic trouble code (DTC).

That this trouble code is stored indicates a fault in another control module. Therefore, troubleshoot from the sending control module. This diagnostic trouble code (DTC) can first be erased when the root fault has been remedied and the diagnostic trouble code (DTC) for the root fault has been erased.

For further information on this diagnostic trouble code, see Diagnostic trouble code (DTC) information.

ECM-405C, FUEL LEVEL SENSOR (B5254T2; B6294T; 2003-2004)

DIAGNOSTIC TROUBLE CODE (DTC) INFORMATION

Condition

Information about the fuel level in the fuel tank is used to determine whether there are leaks during leak diagnosis.

If the control module detects diagnostic trouble code (DTC) ECM-4050 (fault in the fuel level sensor) and ECM-400C (leakage in the fuel tank system), diagnostic trouble code (DTC) ECM-405C is also stored. The diagnostic trouble code (DTC) for the fault is stored in the rear electrical module.

Substitute Value

None.

Possible Source

Faulty signal:

- Fault in the circuit for the fuel level sensor or faulty function (rear electrical module).

Fault symptom[s]

- Gauges/Fuel level not accurate/Value too low
- Gauges/Fuel level not accurate/Value too high

FAULT-TRACING INFORMATION

INFORMATION

No fault-tracing has been developed for the diagnostic trouble code (DTC) for this fault. The diagnostic trouble code (DTC) may also be stored in another system for which there are fault-tracing procedures. Read off diagnostic trouble codes (DTCs) from the affected system. Fault-trace the system.

ECM-406C: FUEL TANK SYSTEM, LEAKAGE. FUEL TANK FILLER CAP MISSING (B5254T2; B6294T; 2003-2004)

DIAGNOSTIC TROUBLE CODE (DTC) INFORMATION ECM-406C

Condition

If the engine control module (ECM) registers that fuel filling has been carried out through the fuel level being

changed, the position and installation of the fuel tank filler cap is checked. This is carried out by quicker leak diagnostics.

The check is carried out a few minutes after start if the vehicle speed is constant and exceeds 30 km/h and only if no fault is detected on the leak diagnostic unit.

The diagnostic trouble code (DTC) is stored if the engine control module (ECM) detects a leak after filling. This is interpreted as fuel tank filler cap missing or loosely installed.

Substitute Value

None.

Possible Source

- The fuel tank filler cap is missing or not properly tightened.

Fault symptom[s]

- None.

FUEL TANK FILLER CAP MISSING

CHECKING OTHER DIAGNOSTIC TROUBLE CODES (DTCS), ENGINE CONTROL MODULE (ECM)

HINT: This diagnostic trouble code (DTC) can only be stored after a refueling. The diagnostic detects major leaks in the fuel tank system. The most likely cause is that the fuel tank filler cap has not been installed correctly.

HINT: In the event of a permanent fault, a diagnostic trouble code (DTC) for a "Major leak" will also be stored after the major leak diagnostic is complete.

- Check if the diagnostic trouble code (DTC) for "Major leak" is stored in the engine control module (ECM), if so, fault-trace from it instead.
- If no diagnostic trouble code for "Major leak" is stored, perform a quick test of the tank system via VEHICLE COMMUNICATION to ensure that the fault was intermittent and probably caused by the fuel tank filler cap?

ECM-420C: EVAPORATIVE EMISSION SYSTEM (EVAP) VALVE. OPEN (B5254T2; 2005-2007)

DIAGNOSTIC TROUBLE CODE (DTC) INFORMATION ECM-420C

Condition

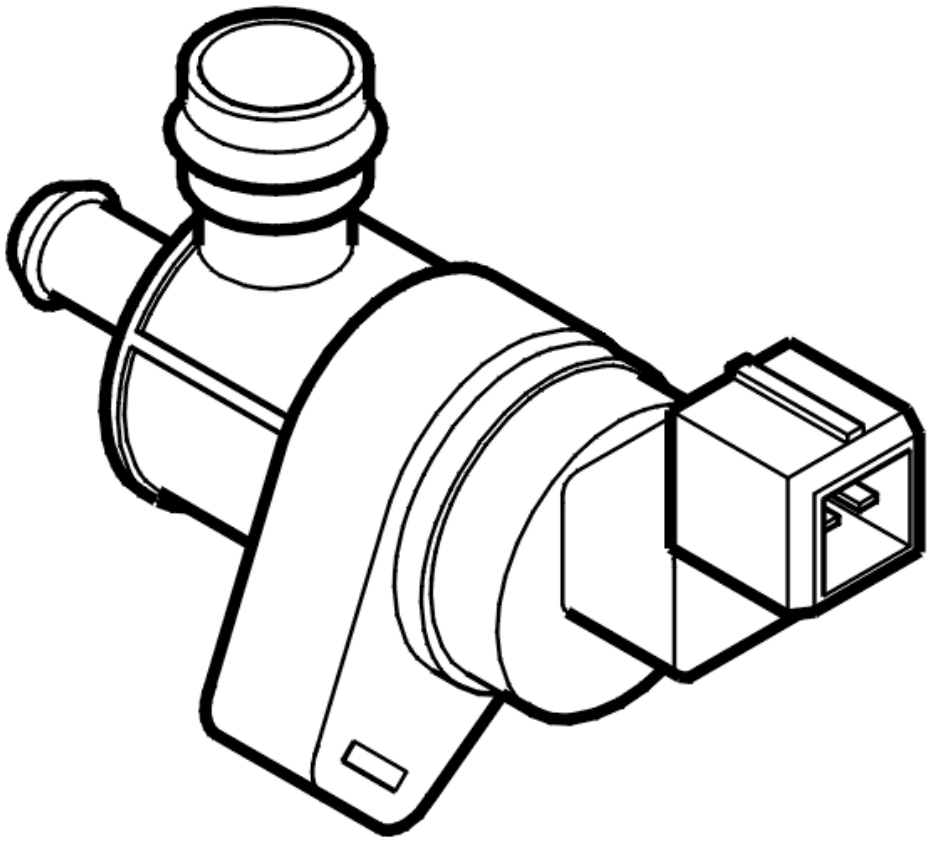

Fig. 110: Identifying Canister Purge (CP) Valve
Courtesy of VOLVO CARS CORPORATION

When the control module activates evaporative emission system (EVAP) control, the idle air trim or short-term fuel trim will change. The diagnostic trouble code (DTC) is stored if the engine control module (ECM) does not detect any change in the idle air trim or the long term fuel trim when evaporative emission (EVAP) control is active. The engine control module (ECM) interprets this as a damaged evaporative emission (EVAP) system.

Substitute Value

- None.

Possible Source

- Damaged evaporative emission system (EVAP) valve.

Fault symptom[s]

- Malfunction indicator lamp (MIL) lit.

OPEN

CHECKING THE COMPONENT

- Slacken off the evaporative emission system (EVAP) valve
- Connect a vacuum pump to the evaporative emission system (EVAP) valve terminal (B). Pump a vacuum. Check that there is no leakage through the evaporative emission system (EVAP) valve by listening to and checking via the pump gauge that the pressure is stable
- Connect the Evaporative emission system (EVAP) valve connector
- Ignition on
- Activate the evaporative emission system (EVAP) valve. When the Evaporative emission system (EVAP) valve is activated, the valve opens and clicks. Check on the pump gauge that the vacuum drops (the pressure evens out) when the evaporative emission system (EVAP) valve opens.

  If the function is OK, there must be no leakage when the evaporative emission system (EVAP) valve is closed (stable pressure on the pump gauge) and the vacuum must drop when the evaporative emission system (EVAP) valve opens (the pressure evens out).

  The evaporative emission system (EVAP) valve is damaged if the function is faulty.

  If the function of the evaporative emission system (EVAP) valve is correct, check the hose and hose connections between the evaporative emission system (EVAP) valve for leakage.

  Remedy as necessary.

  Other information

  - Location of components, 6 cylinder turbocharged engines: **LOCATION OF COMPONENTS, ENGINE COMPARTMENT**
  - Location of components, on 5 cylinder engines: **LOCATION OF COMPONENTS, ENGINE COMPARTMENT**

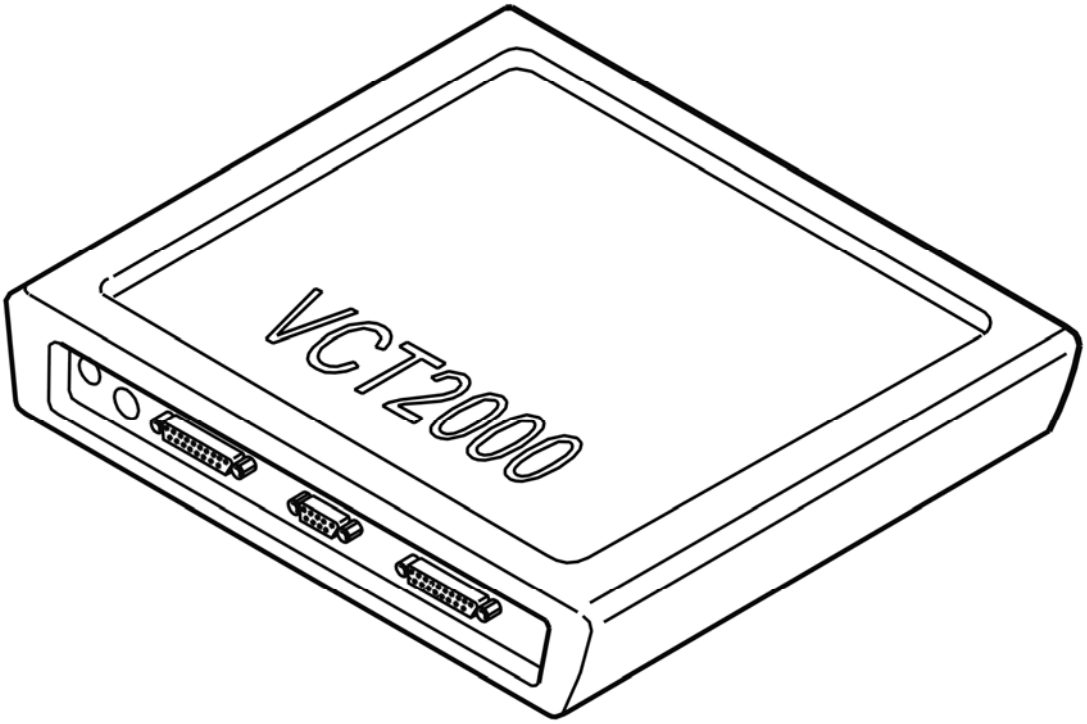

Fig. 111: Identifying VCT2000 Diagnostic Tool Symbol In VIDA
Courtesy of VOLVO CARS CORPORATION

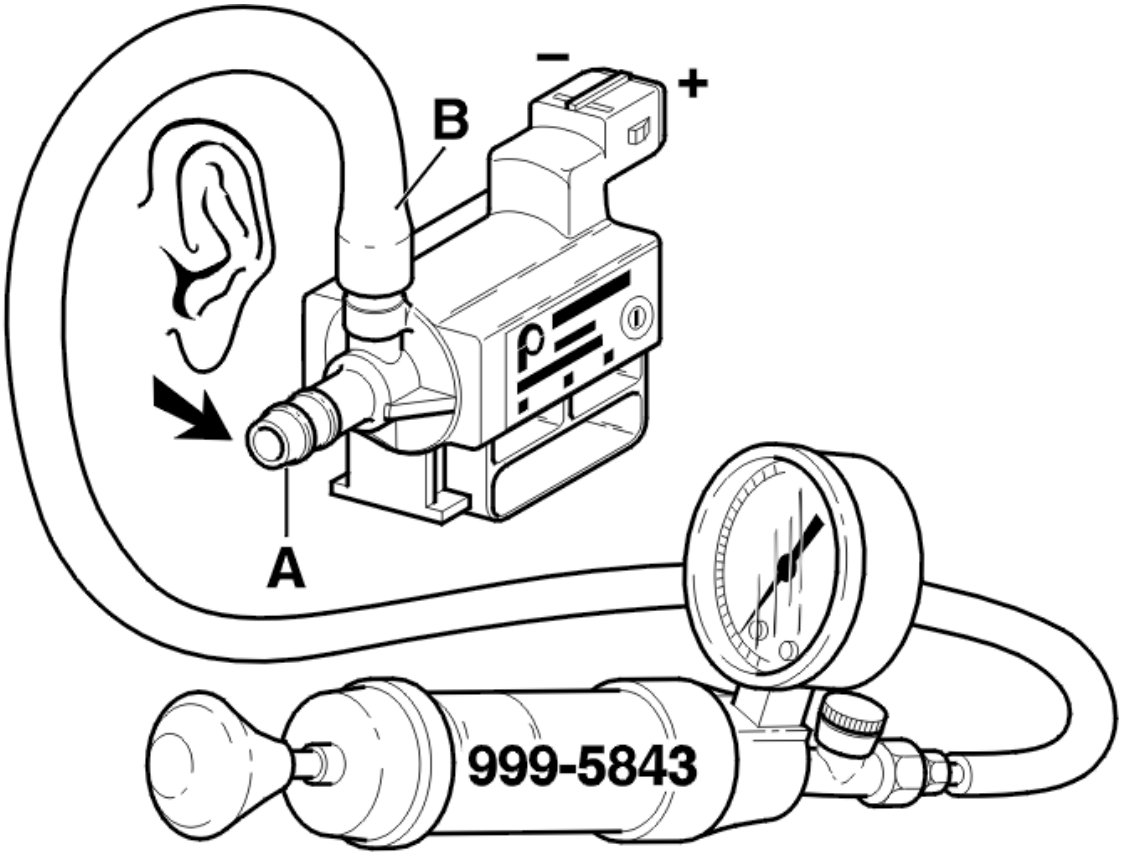

Fig. 112: Checking Canister Purge (CP) Valve
Courtesy of VOLVO CARS CORPORATION

- **Continue**

  Refer to **INFORMATION**

INFORMATION

FAULT-TRACING INFORMATION

In case of this defect, troubleshooting is not followed by verification.

The information can be displayed again or the fault-tracing for this fault can be interrupted.

ECM-420C: EVAPORATIVE EMISSION SYSTEM (EVAP) VALVE. OPEN (B6294T; 2005-2006)

DIAGNOSTIC TROUBLE CODE (DTC) INFORMATION ECM-420C

see **DIAGNOSTIC TROUBLE CODE (DTC) INFORMATION ECM-420C**

OPEN

see **OPEN**

ECM-420D: EVAPORATIVE EMISSION SYSTEM (EVAP). CLOSED (B5254T2; 2005-2007)

DIAGNOSTIC TROUBLE CODE (DTC) INFORMATION ECM-420D

Condition

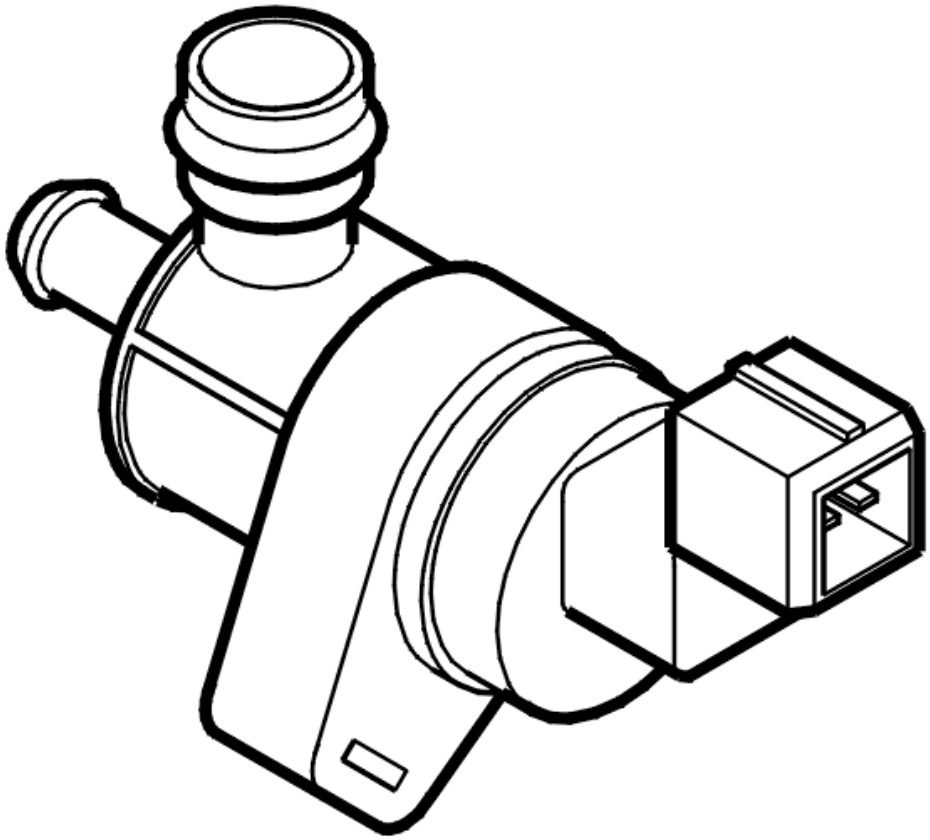

Fig. 113: Identifying Canister Purge (CP) Valve
Courtesy of VOLVO CARS CORPORATION

When the control module activates evaporative emission system (EVAP) control, the idle air trim or short-term fuel trim will change. The diagnostic trouble code (DTC) is stored if the engine control module (ECM) does not detect any change in the idle air trim or the long term fuel trim when evaporative emission (EVAP) control is active. The engine control module (ECM) interprets this as a damaged evaporative emission (EVAP) system.

Substitute Value

- None.

Possible Source

- Blocked hose between the EVAP canister and the evaporative emission system (EVAP) valve
- Blocked hose between the evaporative emission system (EVAP) valve and the intake manifold
- Damaged evaporative emission system (EVAP) valve.

Fault symptom[s]

- Malfunction indicator lamp (MIL) lit.

CLOSED

CHECKING THE COMPONENT

- Slacken off the evaporative emission system (EVAP) valve
- Connect a vacuum pump to the evaporative emission system (EVAP) valve terminal (B). Pump a vacuum. Check that there is no leakage through the evaporative emission system (EVAP) valve by listening to and checking via the pump gauge that the pressure is stable
- Connect the Evaporative emission system (EVAP) valve connector
- Ignition on
- Activate the evaporative emission system (EVAP) valve. When the Evaporative emission system (EVAP) valve is activated, the valve opens and clicks. Check on the pump gauge that the vacuum drops (the pressure evens out) when the evaporative emission system (EVAP) valve opens.

  If the function is OK, there must be no leakage when the evaporative emission system (EVAP) valve is closed (stable pressure on the pump gauge) and the vacuum must drop when the evaporative emission system (EVAP) valve opens (the pressure evens out).

  The evaporative emission system (EVAP) valve is damaged if the function is faulty.

  If the function of the Evaporative emission system (EVAP) valve is OK, check:

  - The hose and hose terminals between the Evaporative emission system (EVAP) valve and the intake manifold. Check for leakage and blockages
  - Check the hose and hose terminals between the EVAP canister and the Evaporative emission system (EVAP) valve. Check for leakage and blockages.

  Remedy as necessary.

  Other information

  - Location of components, 6 cylinder turbocharged engines: **LOCATION OF COMPONENTS, ENGINE COMPARTMENT**
  - Location of components, on 5 cylinder engines: **LOCATION OF COMPONENTS, ENGINE COMPARTMENT**
  - see **CARBON FILTER CONTAINER, REPLACING**

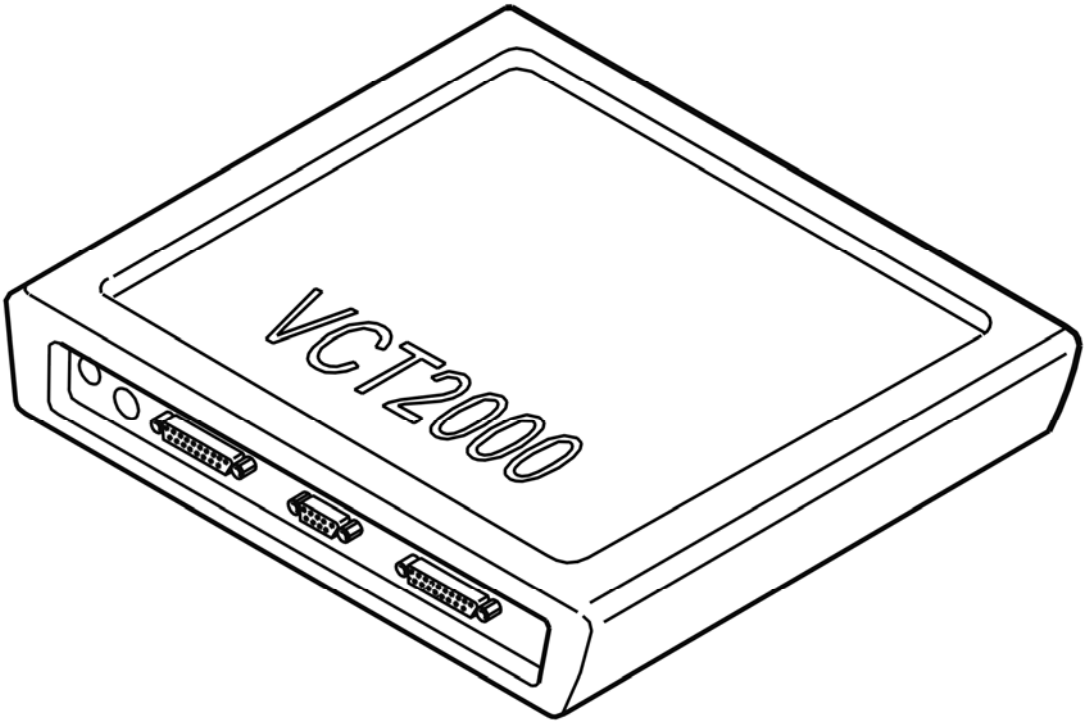

Fig. 114: Identifying VCT2000 Diagnostic Tool Symbol In VIDA
Courtesy of VOLVO CARS CORPORATION

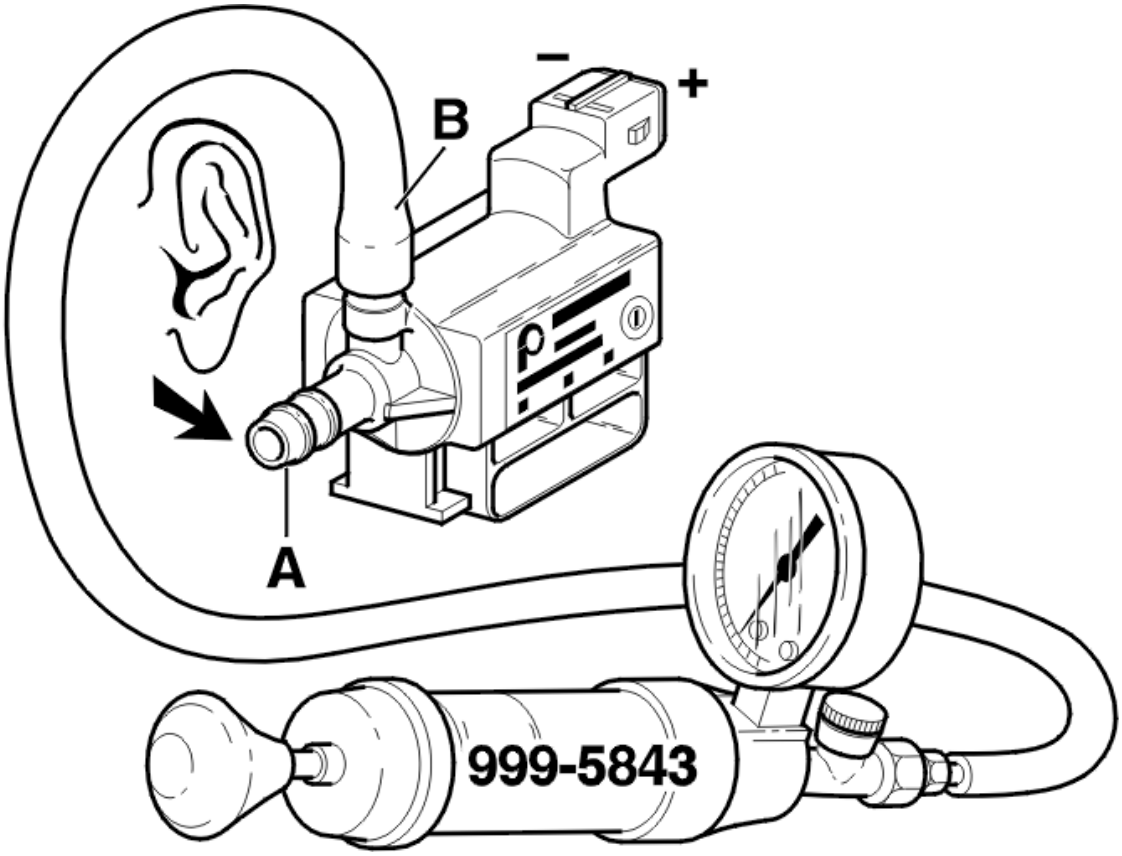

Fig. 115: Checking Canister Purge (CP) Valve
Courtesy of VOLVO CARS CORPORATION

- **Continue**

  Refer to **INFORMATION**

INFORMATION

FAULT-TRACING INFORMATION

In case of this defect, troubleshooting is not followed by verification.

The information can be displayed again or the fault-tracing for this fault can be interrupted.

ECM-420D: EVAPORATIVE EMISSION SYSTEM (EVAP). CLOSED (B6294T; 2005-2006)

DIAGNOSTIC TROUBLE CODE (DTC) INFORMATION ECM-420D

see **DIAGNOSTIC TROUBLE CODE (DTC) INFORMATION ECM-420D**

CLOSED

see **CLOSED**

ECM-421B: CANISTER PURGE (CP) VALVE. SIGNAL MISSING (B5254T2; 2005-2007)

DIAGNOSTIC TROUBLE CODE (DTC) INFORMATION ECM-421B

Condition

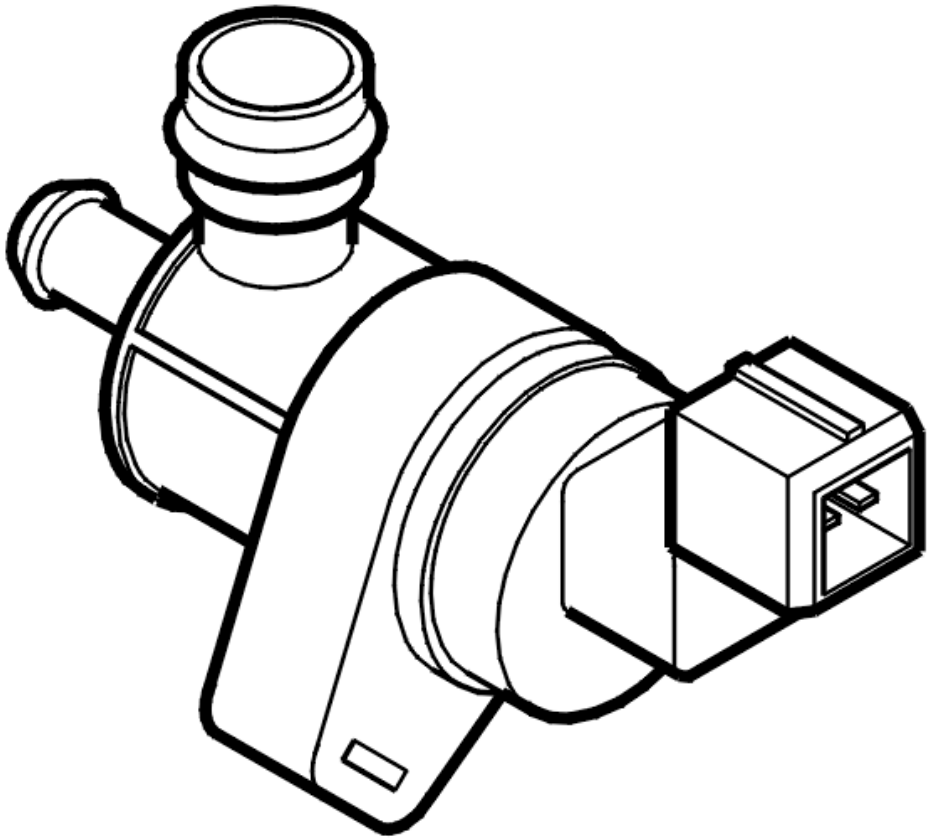

Fig. 116: Identifying Canister Purge (CP) Valve
Courtesy of VOLVO CARS CORPORATION

The diagnostic trouble code (DTC) is stored if the engine control module (ECM) detects that there is no signal from the evaporative emission system (EVAP) valve.

The diagnostic trouble code (DTC) can be diagnosed when the ignition is switched on.

Substitute Value

- twin heated oxygen sensor (HO2S) control disabled.

Possible Source

- Open-circuit in the signal cable
- Damaged evaporative emission system (EVAP) valve
- Contact resistance in the terminals
- Open-circuit in the power cable.

Fault symptom[s]

- Malfunction indicator lamp (MIL) lit.

SIGNAL MISSING

CHECKING THE CONNECTOR

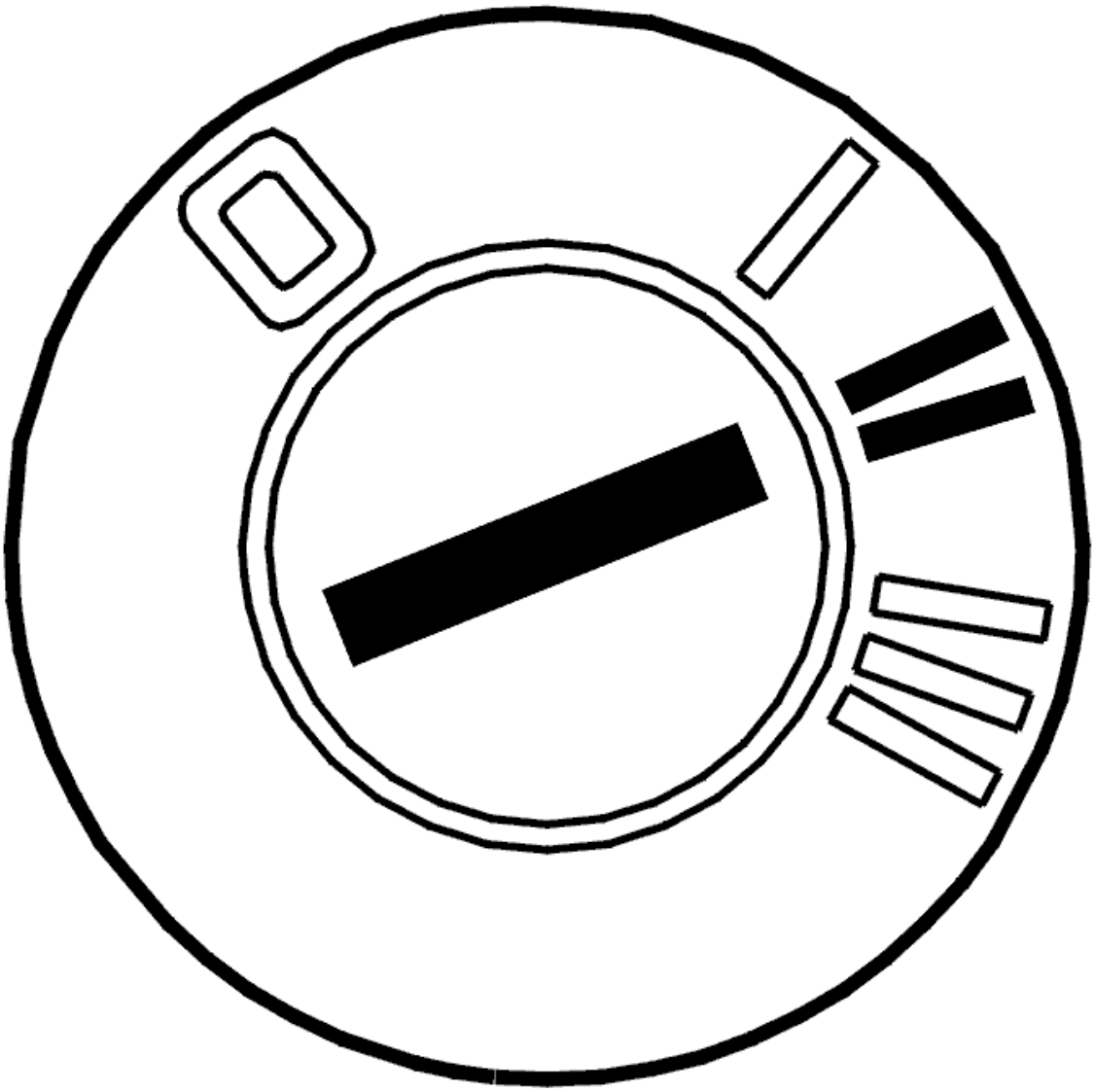

Fig. 117: Identifying Ignition ON
Courtesy of VOLVO CARS CORPORATION

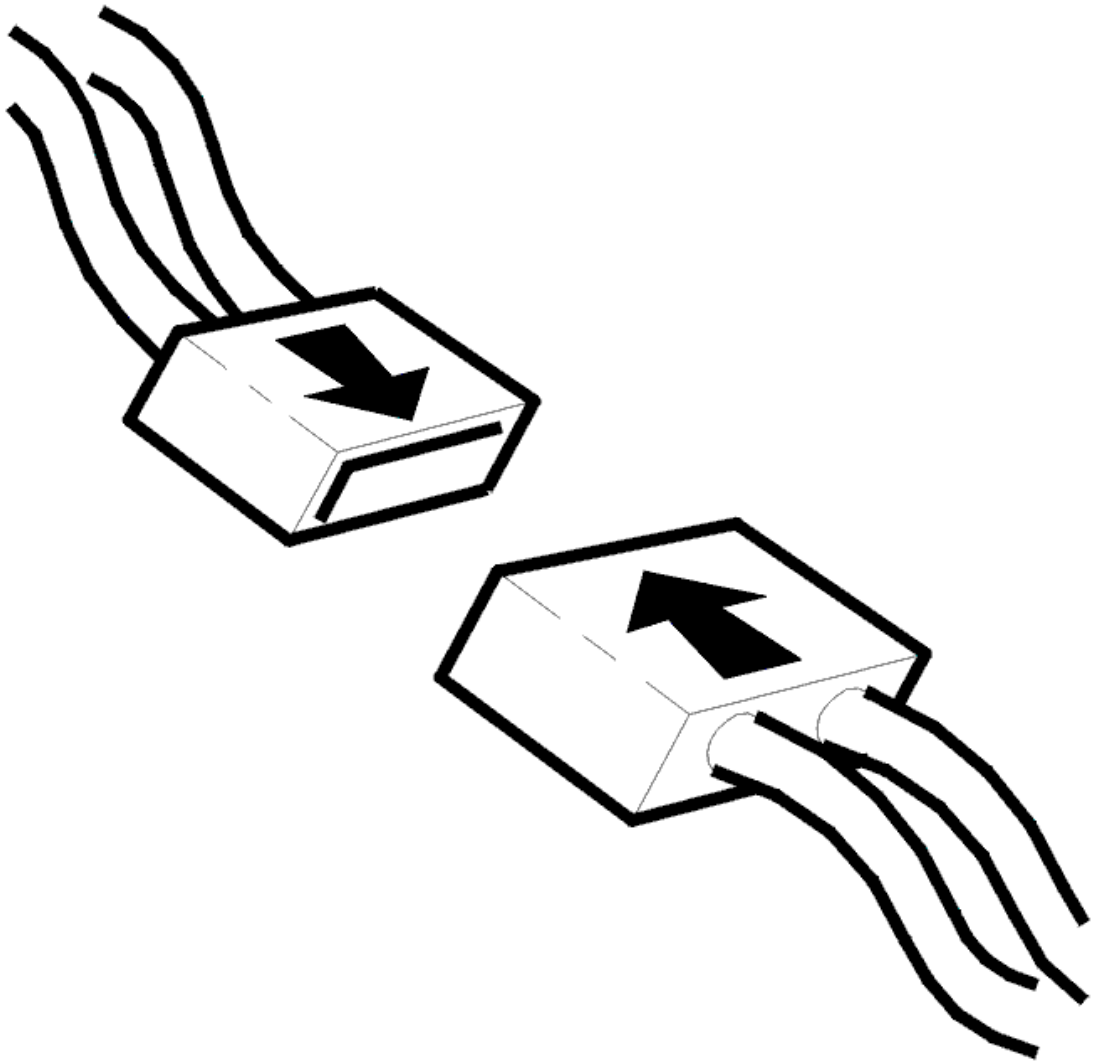

Fig. 118: Connecting Connector
Courtesy of VOLVO CARS CORPORATION

- Ignition off
- Check the evaporative emission system (EVAP) valve connector. Check for contact resistance and oxidation
- Reinstall the components, reconnect the connectors etc.
- Ignition on
- Activate the evaporative emission system (EVAP) valve.

  A click should be heard when the evaporative emission system (EVAP) valve is activated.

  If the evaporative emission system (EVAP) valve is now OK this indicates that the fault was caused by poor contact in the connector.

Other information

- For 5 cylinder turbocharged engines 2005-, see **SIGNAL SPECIFICATION** .
- For 6 cylinder engines 2005-, see **SIGNAL SPECIFICATION** .
- For the location of components on 5 cylinder engines, see: **LOCATION OF COMPONENTS, ENGINE COMPARTMENT**
- For the location of components on 6 cylinder turbocharged engines, see: **LOCATION OF COMPONENTS, ENGINE COMPARTMENT**
- see **CHECKING WIRING AND TERMINALS**

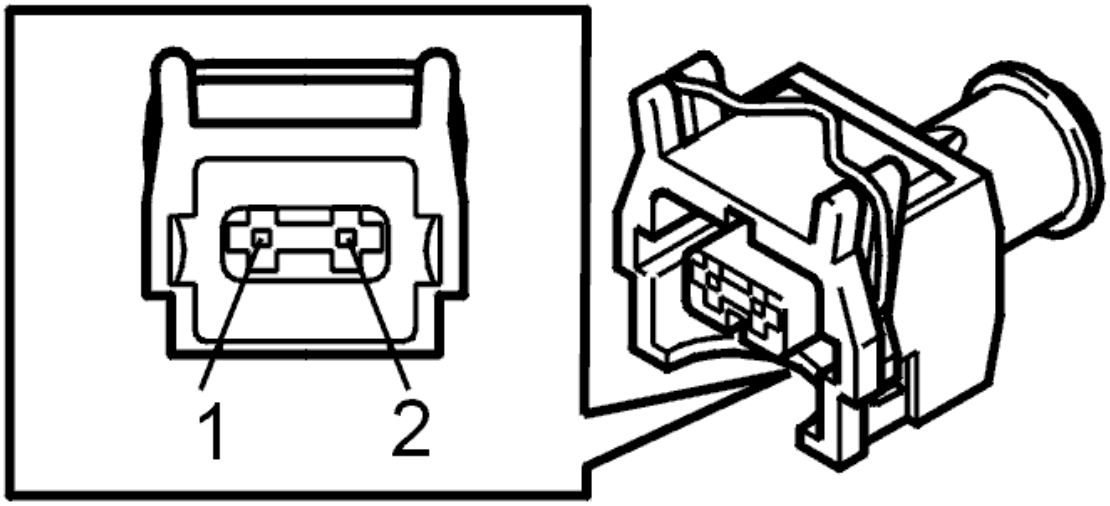

Fig. 119: Identifying 2 Pin Connector
Courtesy of VOLVO CARS CORPORATION

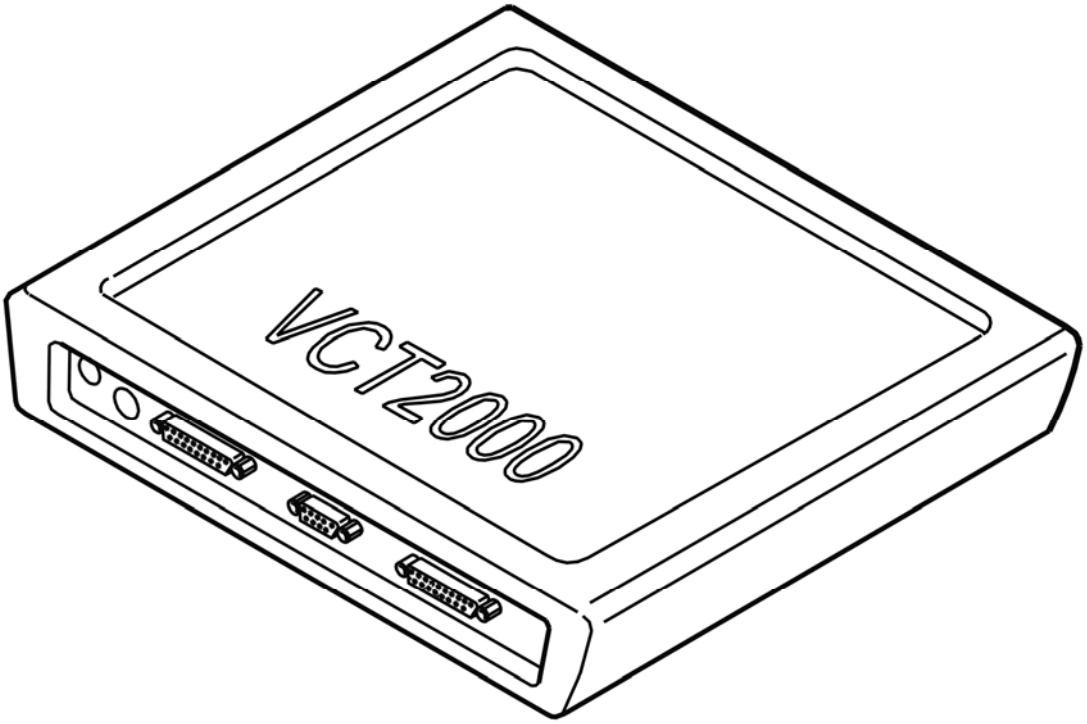

Fig. 120: Identifying VCT2000 Diagnostic Tool Symbol In VIDA
Courtesy of VOLVO CARS CORPORATION

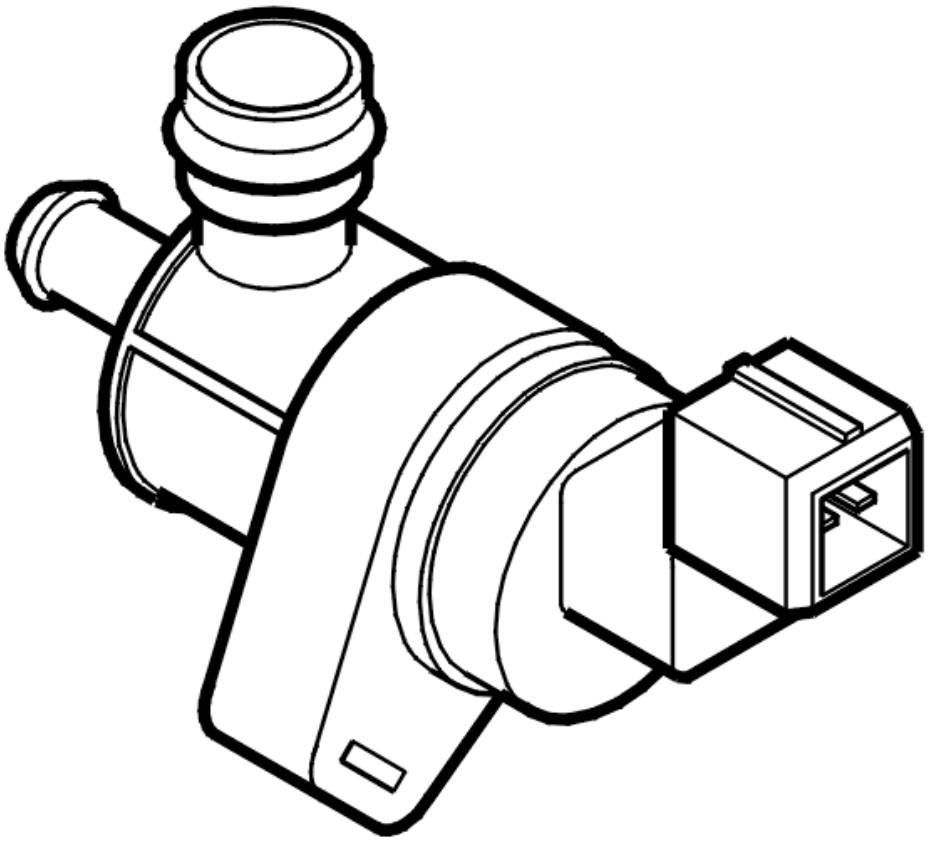

Fig. 121: Identifying Canister Purge (CP) Valve
Courtesy of VOLVO CARS CORPORATION

Is the evaporative emission system (EVAP) valve working?

- **YES**

  OKAY: Troubleshooting has been completed.

- **NO**

  Refer to **CHECKING THE COMPONENTS AND WIRING**

CHECKING THE COMPONENTS AND WIRING

Check the resistance of the evaporative emission system (EVAP) valve.

Check the signal cable between engine control module (ECM) terminal #A9 (#A9) and evaporative emission system (EVAP) valve terminal #2. Check for an open-circuit.

Check the power supply between system relay terminal #3 and evaporative emission system (EVAP) valve terminal #1. Check for an open-circuit.

Remedy as necessary.

Other information:

- see **CONNECTING THE BREAKOUT BOX**
- For 5 cylinder turbocharged engines 2005-, see **SIGNAL SPECIFICATION** .
- For 6 cylinder engines 2005-, see **SIGNAL SPECIFICATION** .
- For the location of components on 5 cylinder engines, see: **LOCATION OF COMPONENTS, ENGINE COMPARTMENT**
- For the location of components on 6 cylinder turbocharged engines, see: **LOCATION OF COMPONENTS, ENGINE COMPARTMENT**
- see **CHECKING WIRING AND TERMINALS**

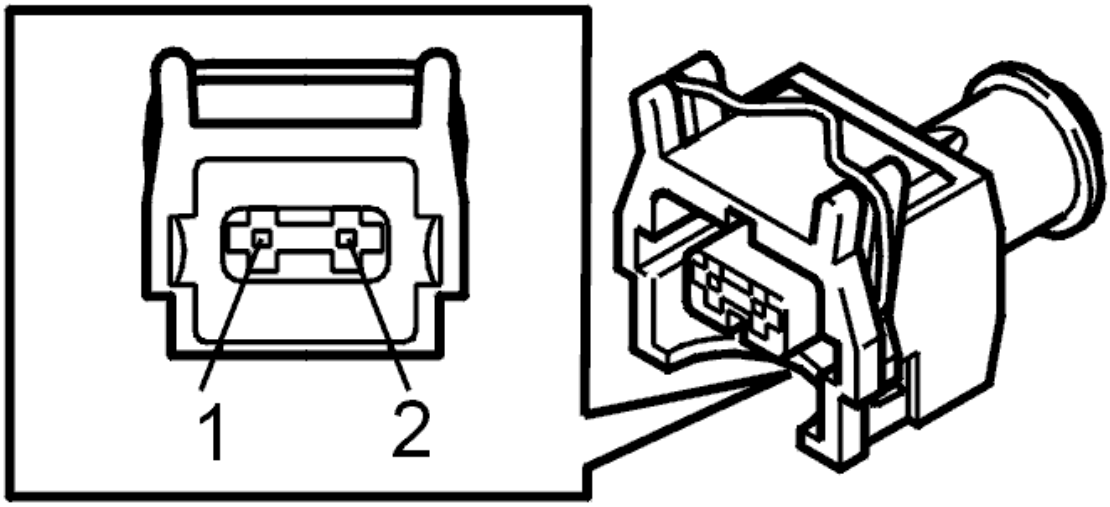

Fig. 122: Identifying 2 Pin Connector
Courtesy of VOLVO CARS CORPORATION

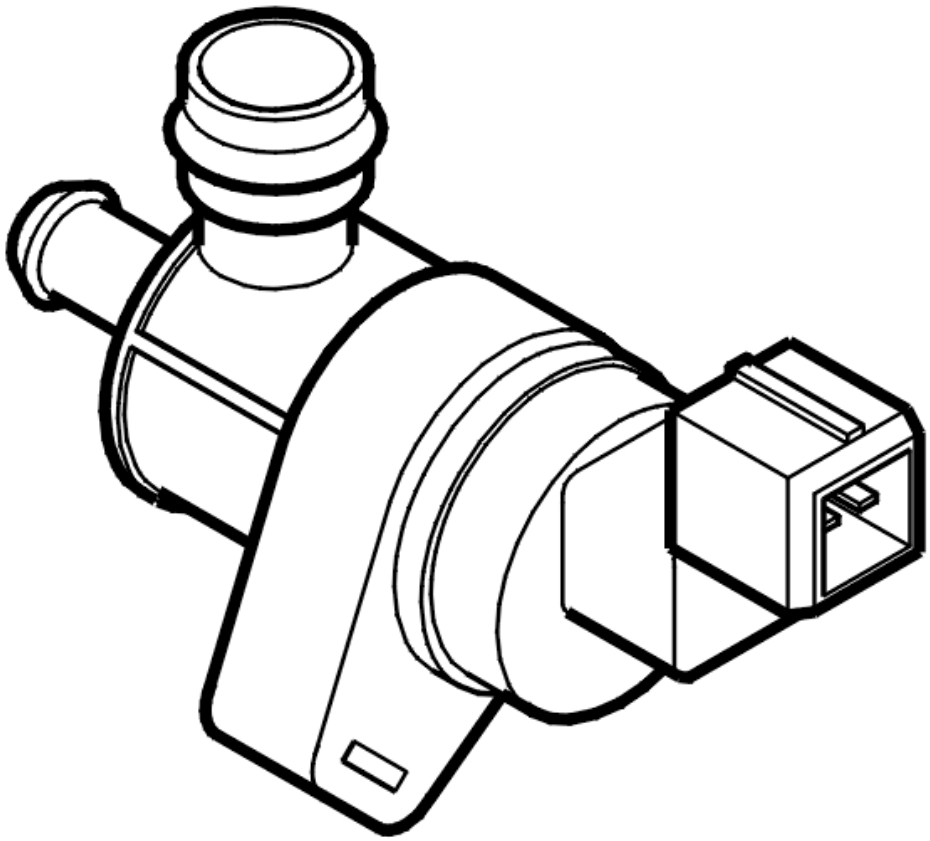

Fig. 123: Identifying Canister Purge (CP) Valve
Courtesy of VOLVO CARS CORPORATION

- **Continue**

  Refer to **VERIFICATION**

VERIFICATION

VERIFICATION

HINT: After carrying out the repair, check that the fault has been remedied.

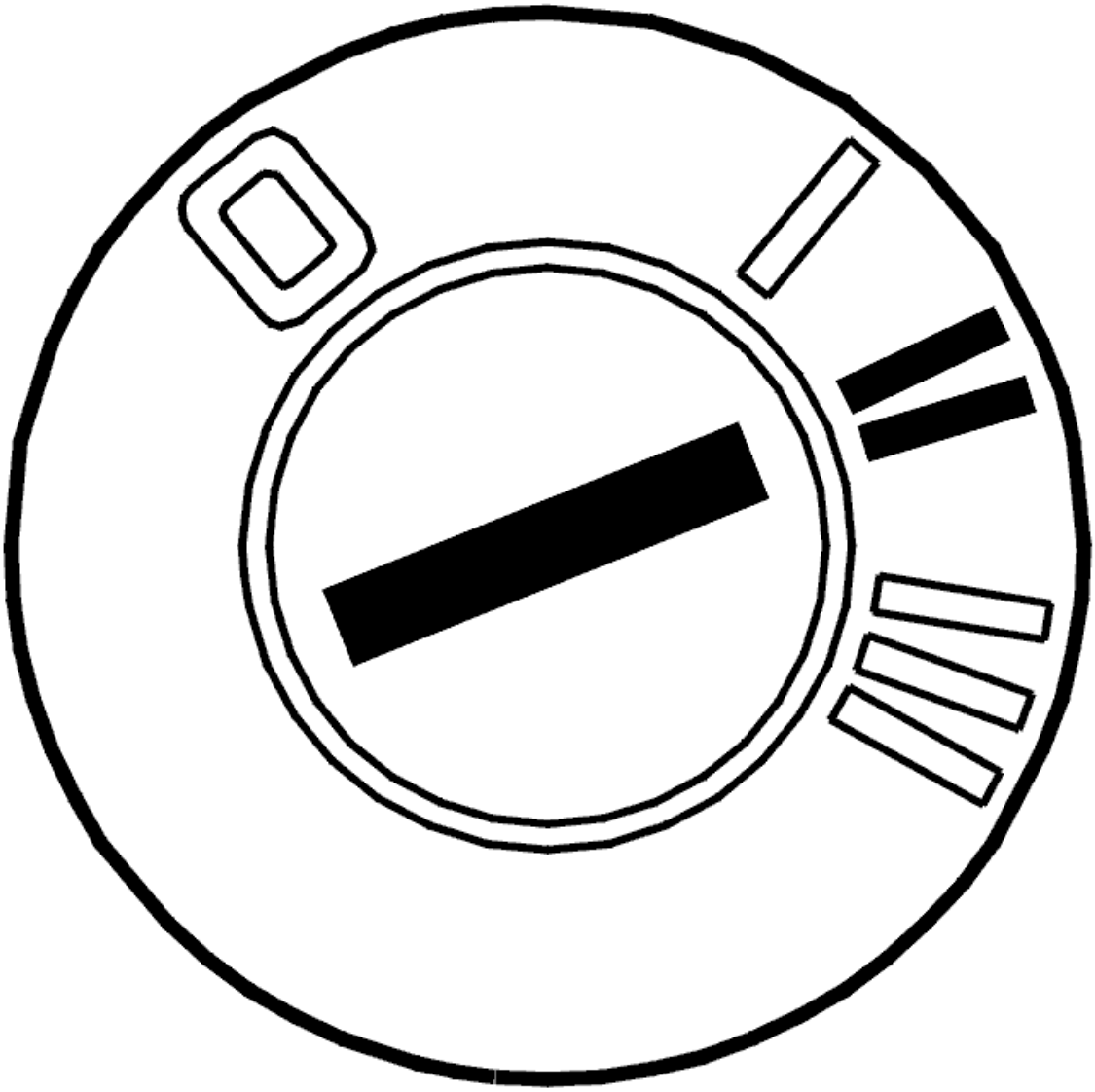

Fig. 124: Identifying Ignition ON
Courtesy of VOLVO CARS CORPORATION

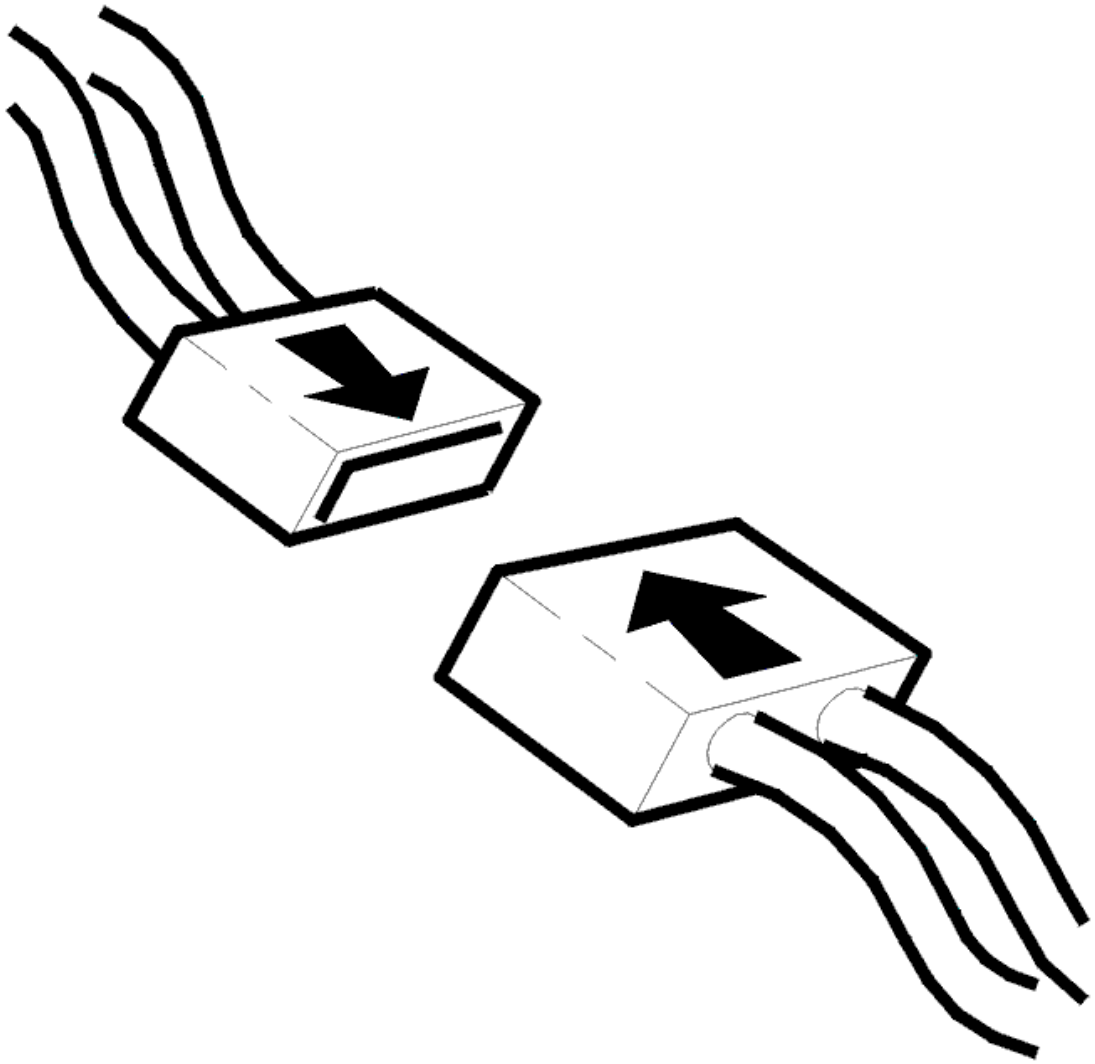

Fig. 125: Connecting Connector
Courtesy of VOLVO CARS CORPORATION

- Ignition off
- Reconnect the connectors, reinstall components etc.
- Ignition on
- Activate the evaporative emission system (EVAP) valve.

  A click should be heard when the evaporative emission system (EVAP) valve is activated.

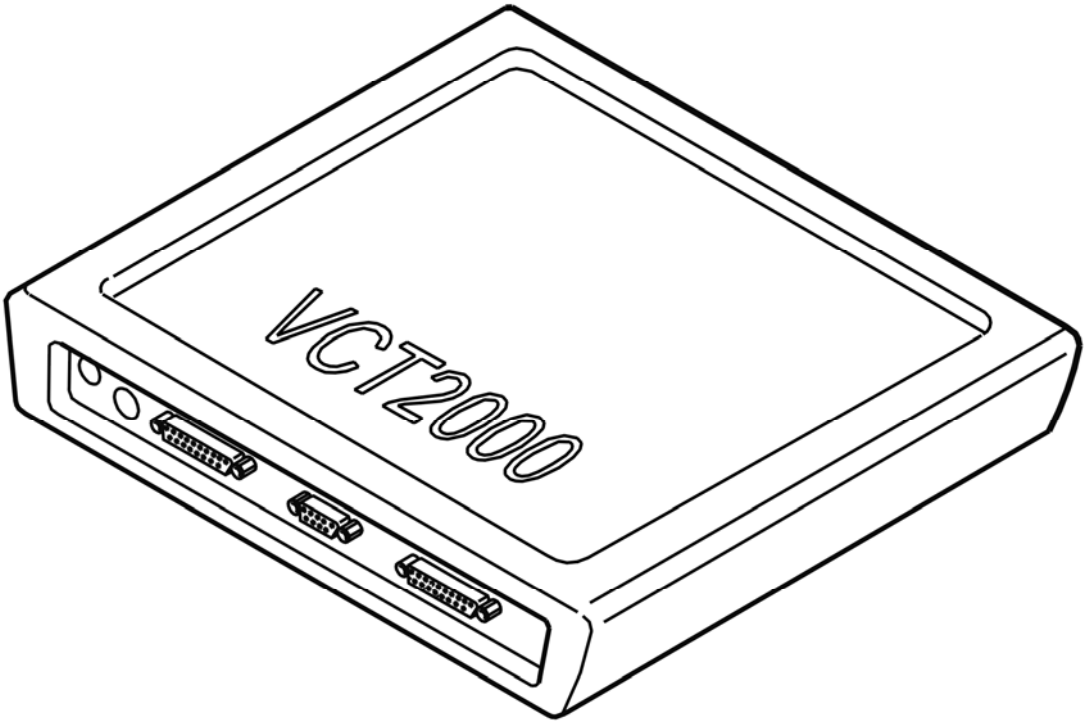

Fig. 126: Identifying VCT2000 Diagnostic Tool Symbol In VIDA
Courtesy of VOLVO CARS CORPORATION

Is the evaporative emission system (EVAP) valve working?

- **YES**

  VERIFIED: Troubleshooting has been completed.

- **NO**

  Refer to **INFORMATION**

INFORMATION

FAULT-TRACING INFORMATION

The fault should have been detected and remedied. As this is not the case fault-tracing has failed.

Exit fault-tracing for this diagnostic trouble code (DTC) or make another attempt.

ECM-421B: CANISTER PURGE (CP) VALVE. SIGNAL MISSING (B6294T; 2005-2006)

DIAGNOSTIC TROUBLE CODE (DTC) INFORMATION ECM-421B

see **DIAGNOSTIC TROUBLE CODE (DTC) INFORMATION ECM-421B**

SIGNAL MISSING

see **SIGNAL MISSING**

ECM-421C: EVAPORATIVE EMISSION SYSTEM (EVAP) VALVE. SIGNAL TOO HIGH (B5254T2; 2005-2007)

DIAGNOSTIC TROUBLE CODE (DTC) INFORMATION ECM-421C

Condition

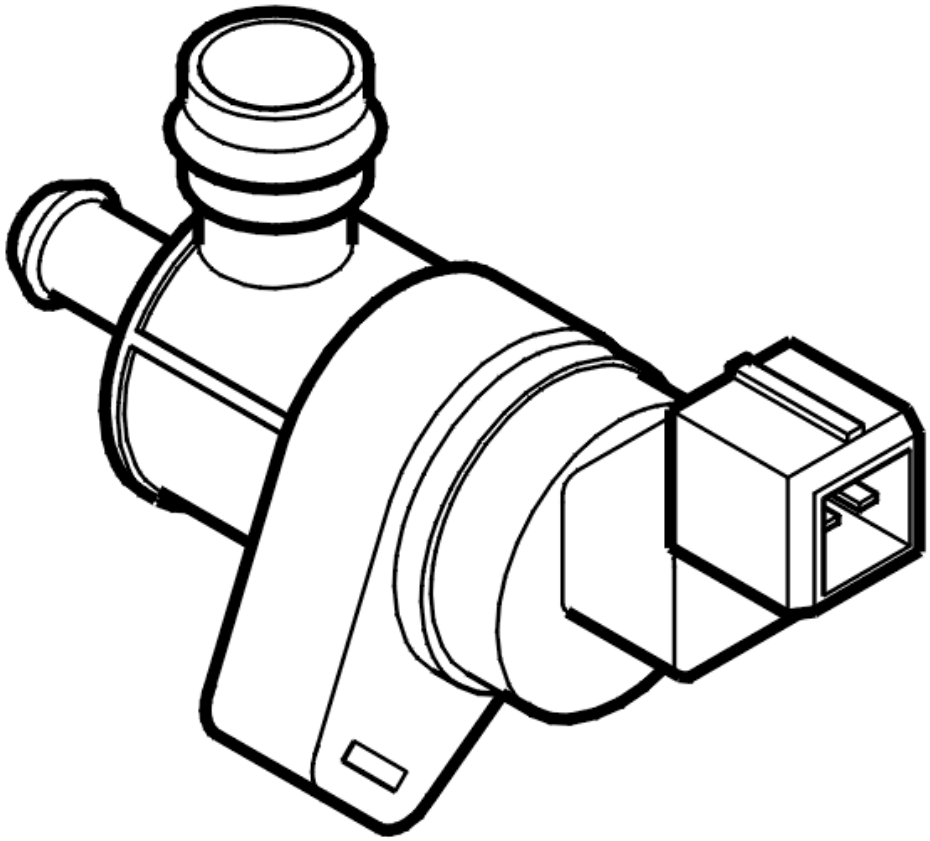

Fig. 127: Identifying Canister Purge (CP) Valve
Courtesy of VOLVO CARS CORPORATION

The diagnostic trouble code (DTC) is stored if the engine control module (ECM) registers that the signal from the evaporative emission system (EVAP) valve is too high.

The diagnostic trouble code (DTC) can be diagnosed when the ignition is switched on.

Substitute Value

- twin heated oxygen sensor (HO2S) control disabled.

Possible Source

- Short-circuit to supply voltage in the signal cable
- Damaged evaporative emission system (EVAP) valve.

Fault symptom[s]

- Malfunction indicator lamp (MIL) lit.

SIGNAL TOO HIGH

CHECKING THE COMPONENTS AND WIRING

Check the resistance of the evaporative emission system (EVAP) valve.

Check the signal cable between engine control module (ECM) terminal #A9 (#A9) and evaporative emission system (EVAP) valve terminal #2. Check for a short-circuit to supply voltage.

HINT: Use an electrician's screwdriver with at least a 3 W bulb to determine whether there is a short-circuit to supply voltage in the cable.

Remedy as necessary.

Other information:

- see **CONNECTING THE BREAKOUT BOX**
- For 5 cylinder turbocharged engines 2005-, see **SIGNAL SPECIFICATION** .
- For 6 cylinder engines 2005-, see **SIGNAL SPECIFICATION** .
- see **COMPONENT SPECIFICATIONS**
- For the location of components on 5 cylinder engines, see: **LOCATION OF COMPONENTS, ENGINE COMPARTMENT**
- For the location of components on 6 cylinder turbocharged engines, see: **LOCATION OF COMPONENTS, ENGINE COMPARTMENT**
- see **CHECKING WIRING AND TERMINALS**

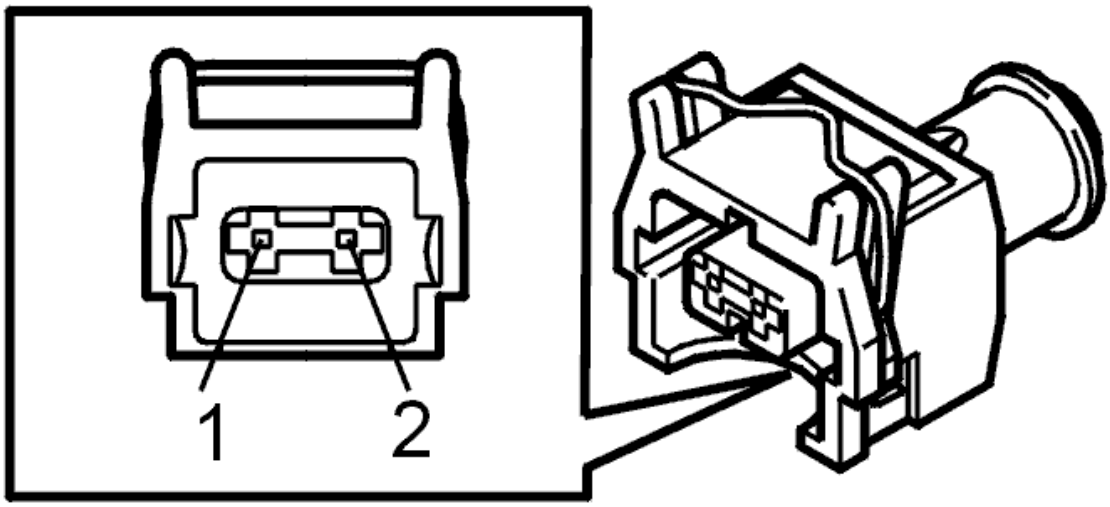

Fig. 128: Identifying 2 Pin Connector
Courtesy of VOLVO CARS CORPORATION

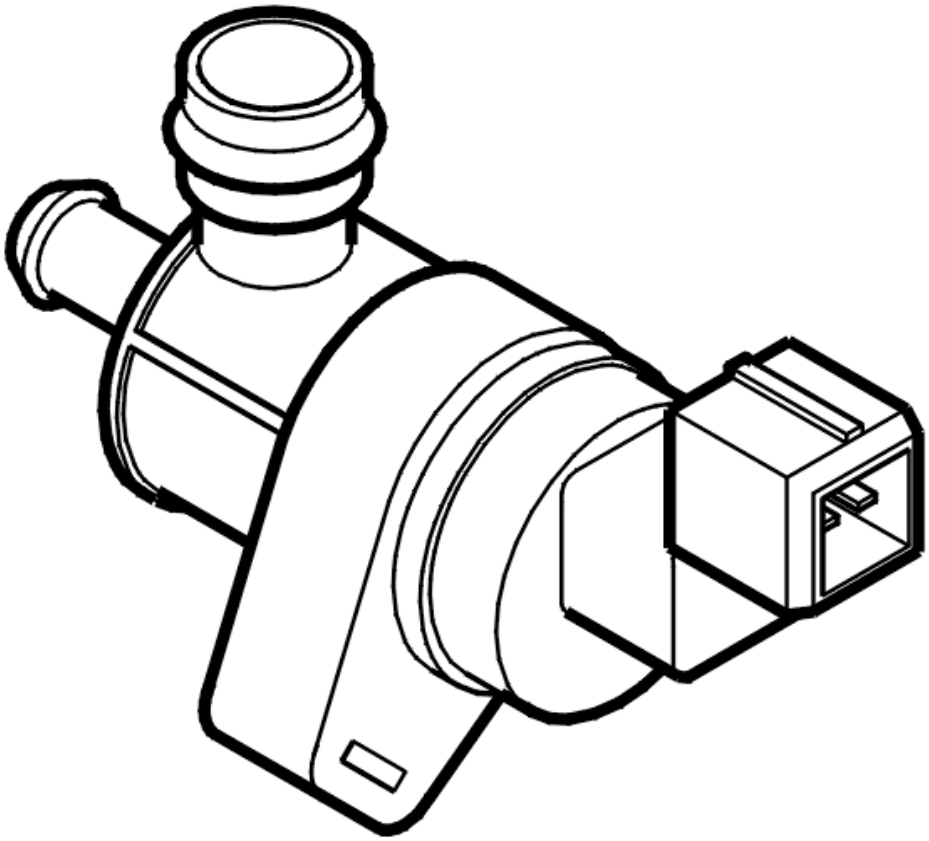

Fig. 129: Identifying Canister Purge (CP) Valve
Courtesy of VOLVO CARS CORPORATION

- **Continue**

  Refer to **VERIFICATION**

VERIFICATION

VERIFICATION

HINT: After carrying out the repair, check that the fault has been remedied.

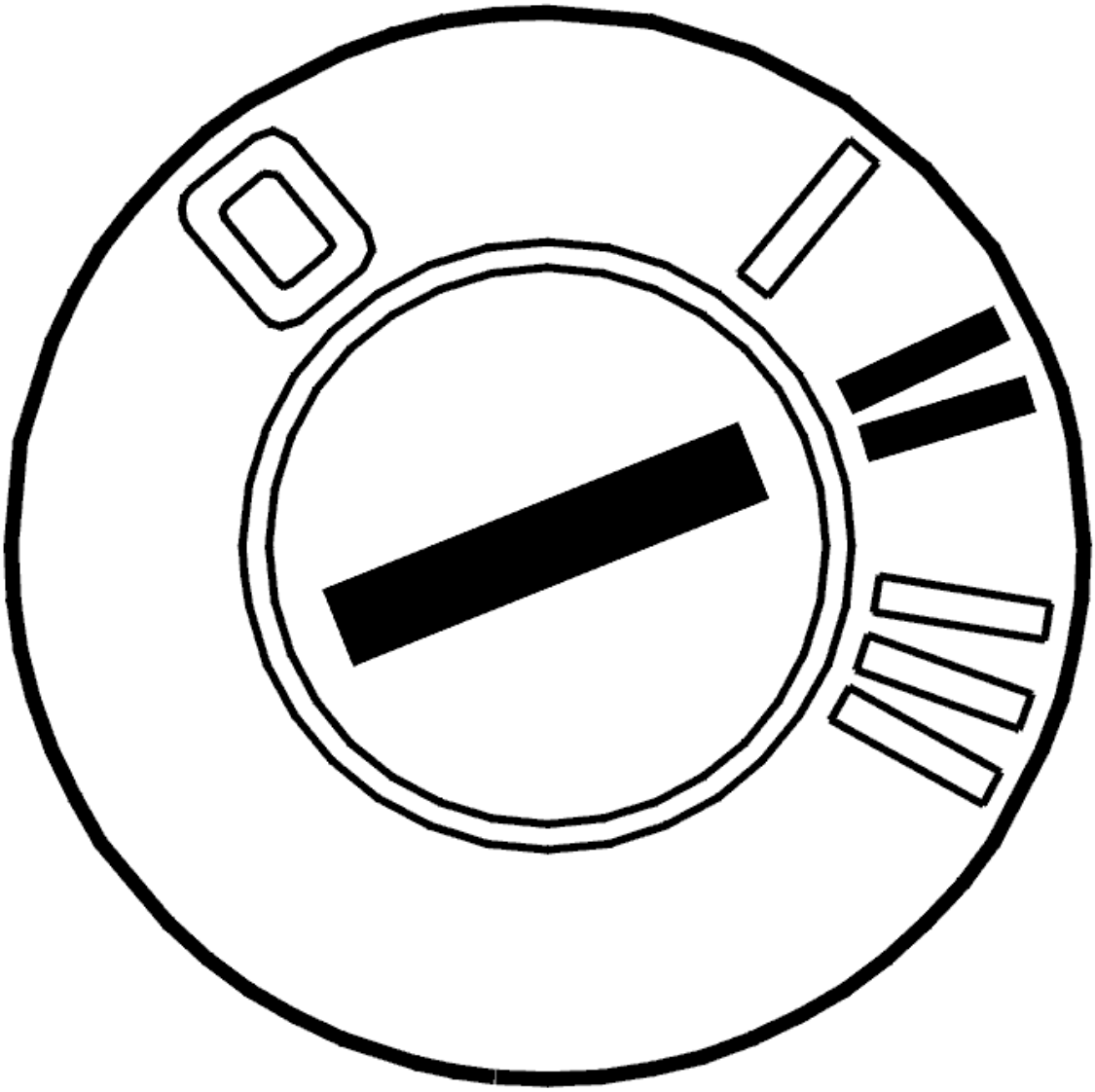

Fig. 130: Identifying Ignition ON
Courtesy of VOLVO CARS CORPORATION

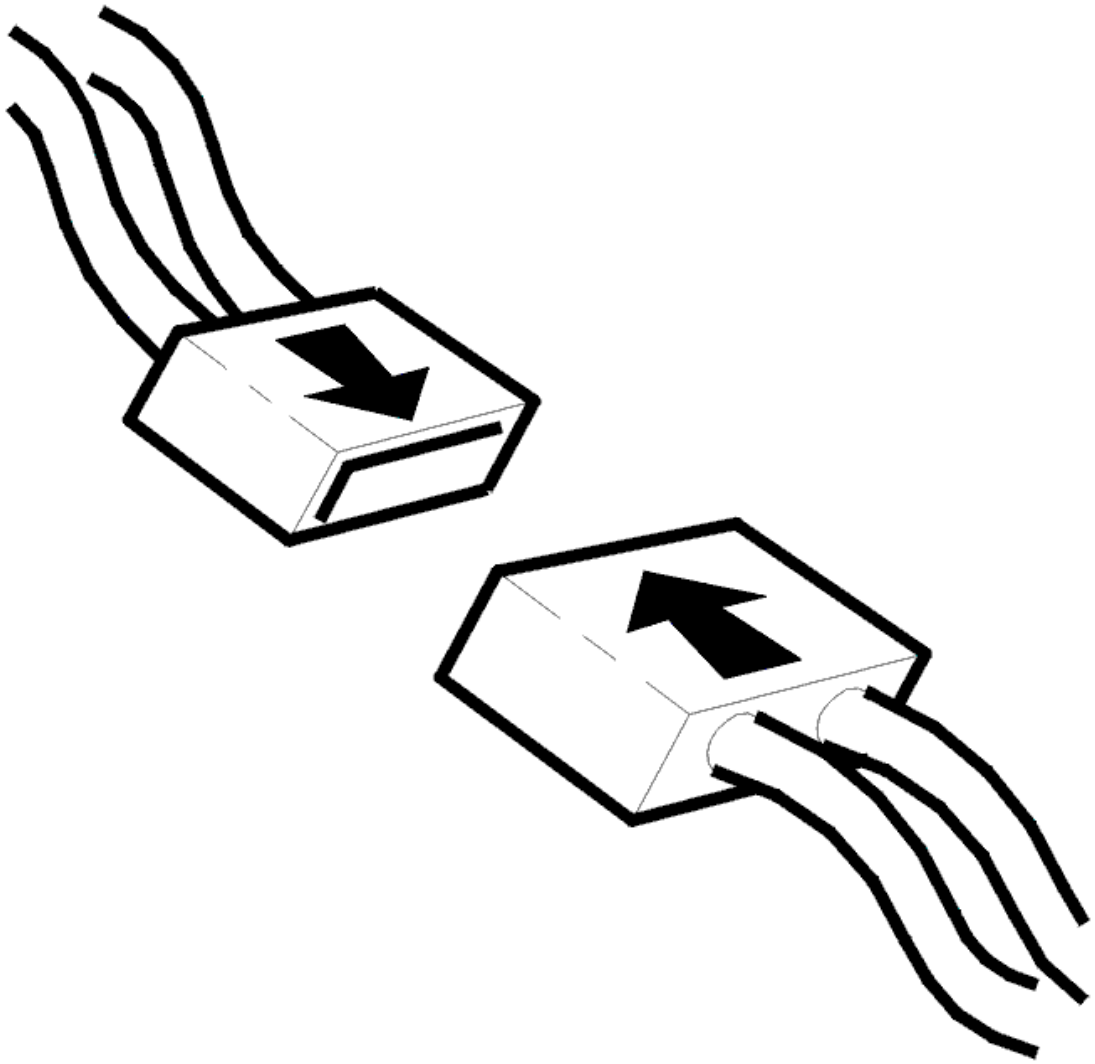

Fig. 131: Connecting Connector
Courtesy of VOLVO CARS CORPORATION

- Ignition off
- Reconnect the connectors, reinstall components etc.
- Ignition on
- Activate the evaporative emission system (EVAP) valve.

  A click should be heard when the evaporative emission system (EVAP) valve is activated.

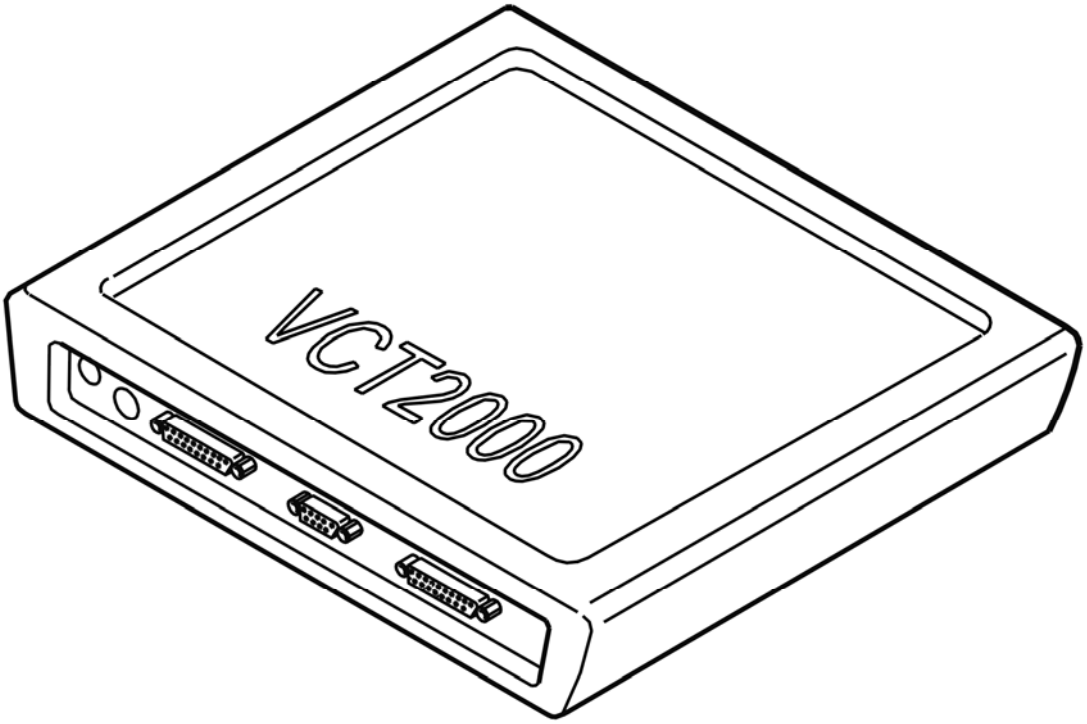

Fig. 132: Identifying VCT2000 Diagnostic Tool Symbol In VIDA
Courtesy of VOLVO CARS CORPORATION

Is the evaporative emission system (EVAP) valve working?

- **YES**

  VERIFIED: Troubleshooting has been completed.

- **NO**

  Refer to **INFORMATION**

INFORMATION

FAULT-TRACING INFORMATION

The fault should have been detected and remedied. As this is not the case fault-tracing has failed.

Exit fault-tracing for this diagnostic trouble code (DTC) or make another attempt.

ECM-421C: EVAPORATIVE EMISSION SYSTEM (EVAP) VALVE. SIGNAL TOO HIGH (B6294T; 2005-2006)

DIAGNOSTIC TROUBLE CODE (DTC) INFORMATION ECM-421C

see **DIAGNOSTIC TROUBLE CODE (DTC) INFORMATION ECM-421C**

SIGNAL TOO HIGH

see **SIGNAL TOO HIGH**

ECM-421D: EVAPORATIVE EMISSION SYSTEM (EVAP) VALVE. SIGNAL TOO LOW (B5254T2; 2005-2007)

DIAGNOSTIC TROUBLE CODE (DTC) INFORMATION ECM-421D

Condition

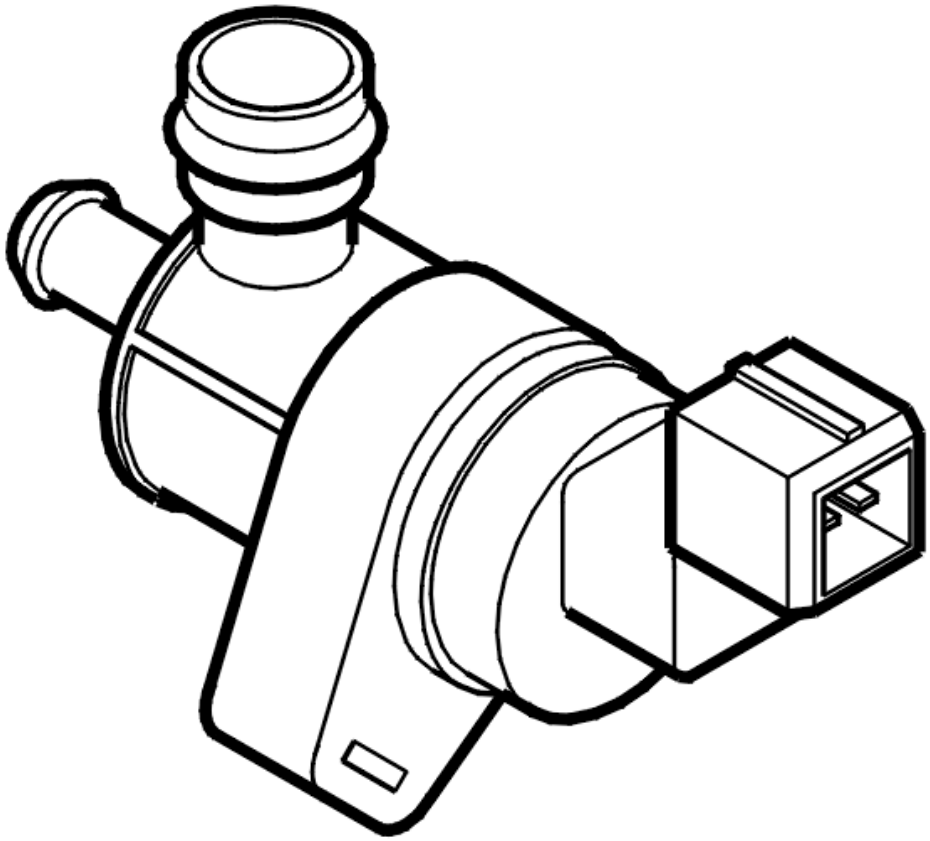

Fig. 133: Identifying Canister Purge (CP) Valve
Courtesy of VOLVO CARS CORPORATION

The diagnostic trouble code (DTC) is stored if the engine control module (ECM) registers that the signal from the evaporative emission system (EVAP) valve is too low.

The diagnostic trouble code (DTC) can be diagnosed when the ignition is switched on.

Substitute Value

- twin heated oxygen sensor (HO2S) control disabled.

Possible Source

- Short-circuit to ground in the signal cable.

Fault symptom[s]

- Malfunction indicator lamp (MIL) lit.

SIGNAL TOO LOW

CHECKING THE COMPONENTS AND WIRING

Check the resistance of the evaporative emission system (EVAP) valve.

Check the signal cable between engine control module (ECM) terminal #A9 (#A9) and evaporative emission system (EVAP) valve terminal #2. Check for a short-circuit to ground.

Remedy as necessary.

Other information:

- see **CONNECTING THE BREAKOUT BOX**
- For 5 cylinder turbocharged engines 2005-, see **SIGNAL SPECIFICATION** .
- For 6 cylinder engines 2005-, see **SIGNAL SPECIFICATION** .
- For the location of components on 5 cylinder engines, see: **LOCATION OF COMPONENTS, ENGINE COMPARTMENT**
- For the location of components on 6 cylinder turbocharged engines, see: **LOCATION OF COMPONENTS, ENGINE COMPARTMENT**
- see **CHECKING WIRING AND TERMINALS**

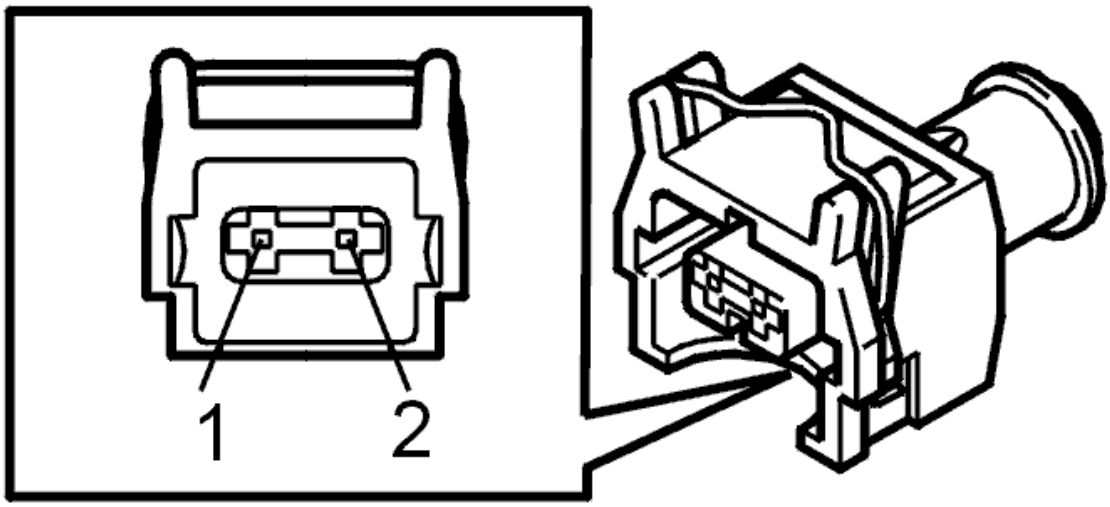

Fig. 134: Identifying 2 Pin Connector
Courtesy of VOLVO CARS CORPORATION

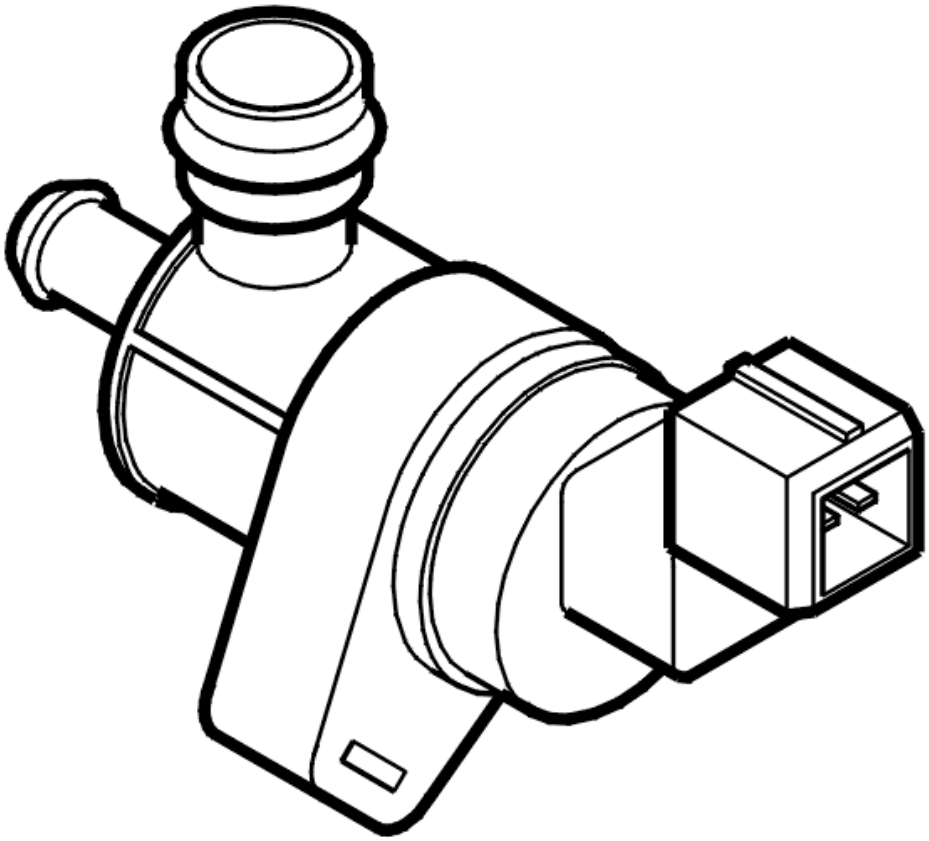

Fig. 135: Identifying Canister Purge (CP) Valve
Courtesy of VOLVO CARS CORPORATION

- **Continue**

  Refer to **VERIFICATION**

VERIFICATION

VERIFICATION

HINT: After carrying out the repair, check that the fault has been remedied.

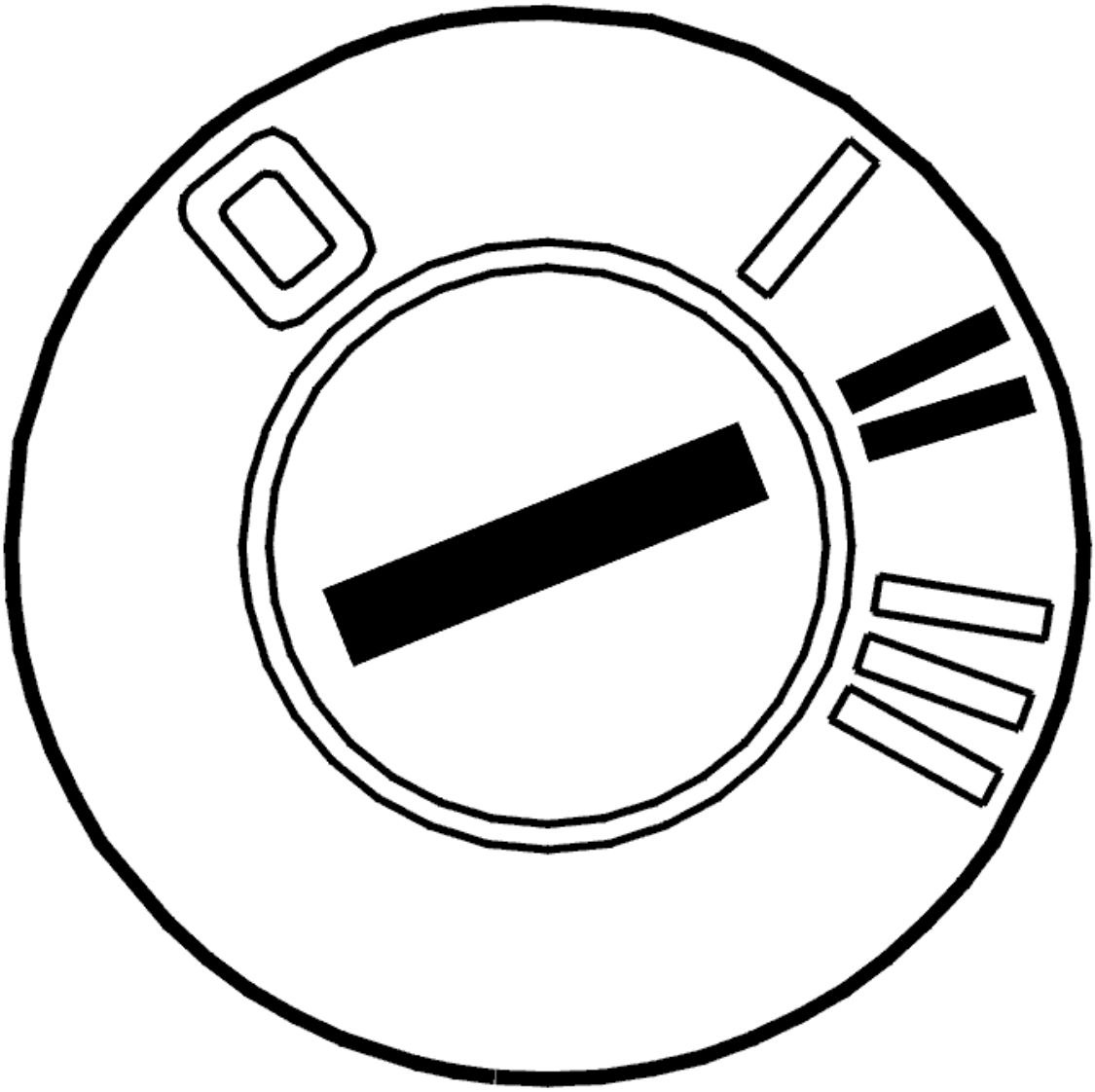

Fig. 136: Identifying Ignition ON
Courtesy of VOLVO CARS CORPORATION

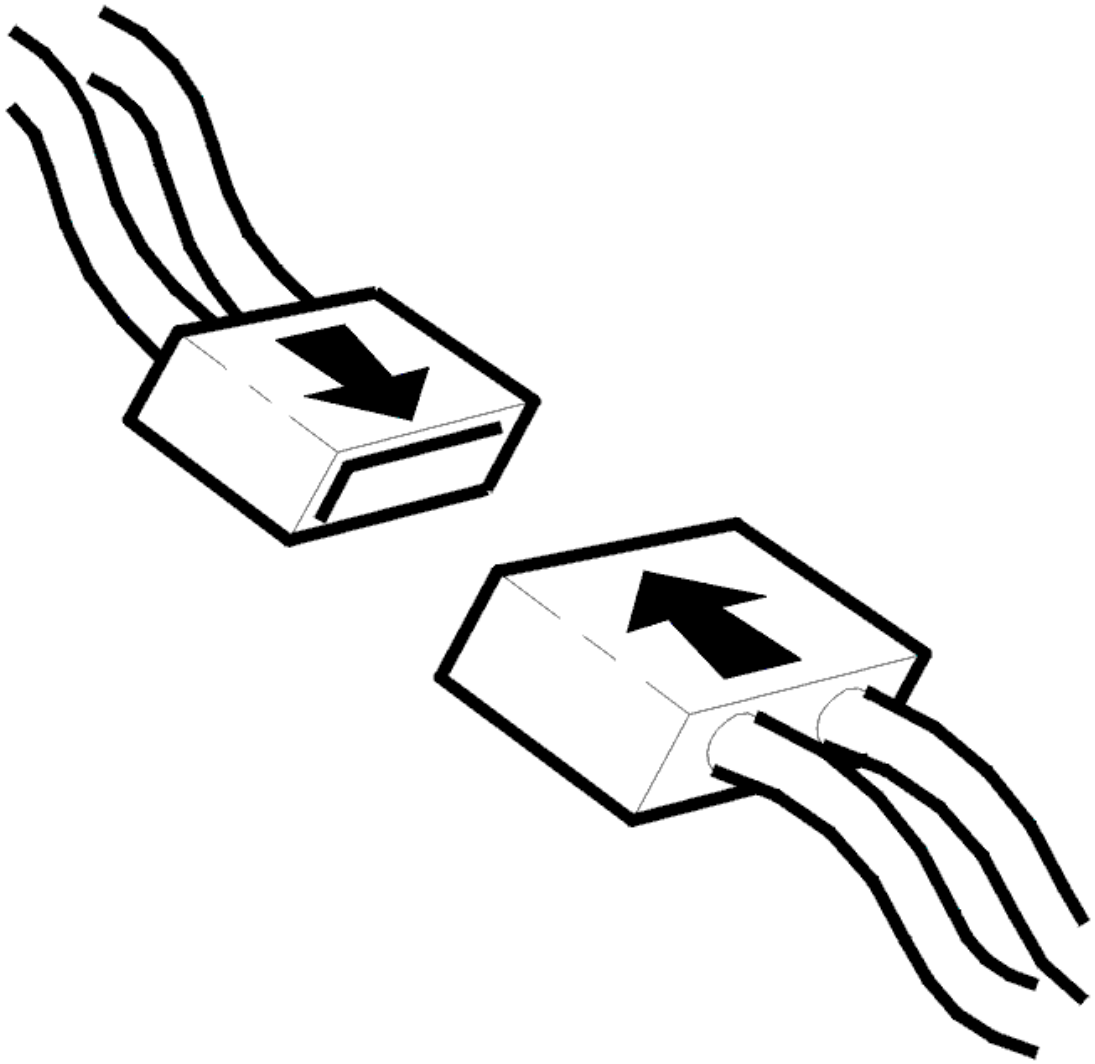

Fig. 137: Connecting Connector
Courtesy of VOLVO CARS CORPORATION

- Ignition off
- Reconnect the connectors, reinstall components etc.
- Ignition on
- Activate the evaporative emission system (EVAP) valve.

  A click should be heard when the evaporative emission system (EVAP) valve is activated.

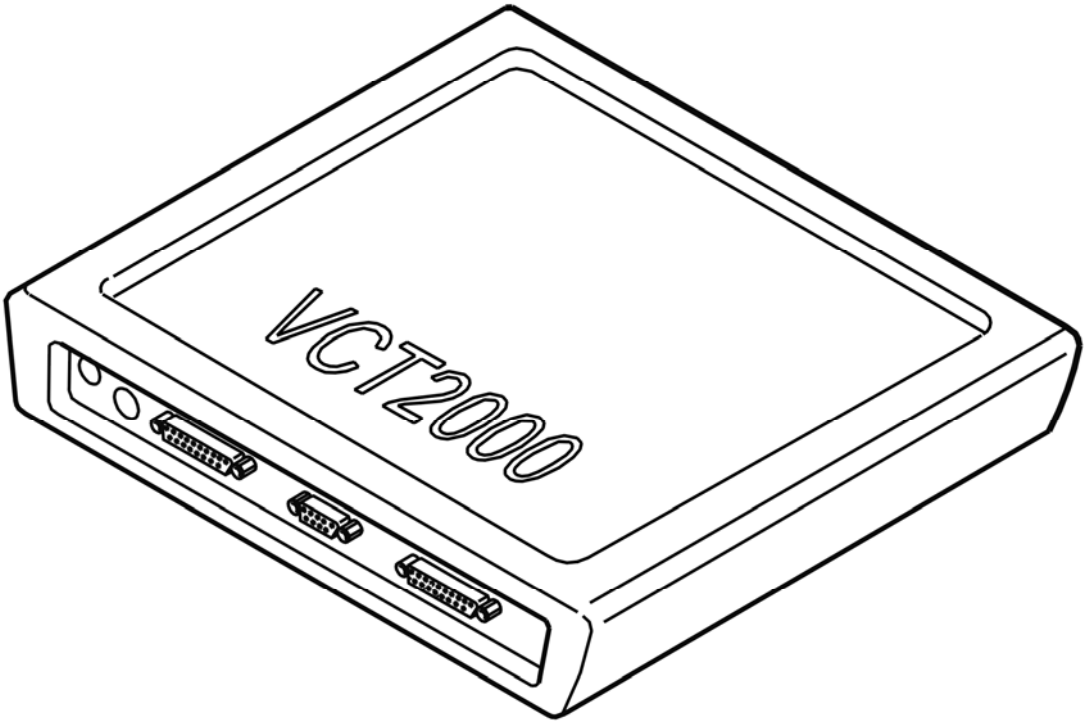

Fig. 138: Identifying VCT2000 Diagnostic Tool Symbol In VIDA
Courtesy of VOLVO CARS CORPORATION

Is the evaporative emission system (EVAP) valve working?

- **YES**

  VERIFIED: Troubleshooting has been completed.

- **NO**

  Refer to **INFORMATION**

INFORMATION

FAULT-TRACING INFORMATION

The fault should have been detected and remedied. As this is not the case fault-tracing has failed.

Exit fault-tracing for this diagnostic trouble code (DTC) or make another attempt.

ECM-421D: EVAPORATIVE EMISSION SYSTEM (EVAP) VALVE. SIGNAL TOO LOW (B6294T; 2005-2006)

DIAGNOSTIC TROUBLE CODE (DTC) INFORMATION ECM-421D

see **DIAGNOSTIC TROUBLE CODE (DTC) INFORMATION ECM-421D**

SIGNAL TOO LOW

see **SIGNAL TOO LOW**

ECM-430C: FUEL TANK SYSTEM, LEAKAGE. FUEL TANK FILLER CAP MISSING (B5254T2; 2005-2007)

DIAGNOSTIC TROUBLE CODE (DTC) INFORMATION ECM-430C

Condition

If the engine control module (ECM) registers that fuel filling has been carried out through the fuel level being changed, the position and installation of the fuel tank filler cap is checked. This is carried out by quicker leak diagnostics.

The check is carried out a few minutes after start if the vehicle speed is constant and exceeds 30 km/h and only if no fault is detected on the leak diagnostic unit.

The diagnostic trouble code (DTC) is stored if the engine control module (ECM) detects a leak after filling. This is interpreted as fuel tank filler cap missing or loosely installed.

Substitute Value

None.

Possible Source

- The fuel tank filler cap is missing or not properly tightened.

Fault symptom[s]

- None.

FUEL TANK FILLER CAP MISSING

CHECKING OTHER DIAGNOSTIC TROUBLE CODES (DTCS), ENGINE CONTROL MODULE (ECM)

HINT: This diagnostic trouble code (DTC) can only be stored after a refueling. The diagnostic detects major leaks in the fuel tank system. The most likely cause is that the fuel tank filler cap has not been installed correctly.

HINT: In the event of a permanent fault, a diagnostic trouble code (DTC) for a "Major leak" will also be stored after the major leak diagnostic is complete.

- Check if the diagnostic trouble code (DTC) for "Major leak" is stored in the engine control module (ECM), if so, fault-trace from it instead.
- If no diagnostic trouble code for "Major leak" is stored, perform a quick test of the tank system via VEHICLE COMMUNICATION to ensure that the fault was intermittent and probably caused by the fuel tank filler cap?

ECM-430C: FUEL TANK SYSTEM, LEAKAGE. FUEL TANK FILLER CAP MISSING (B6294T; 2005-2006)

DIAGNOSTIC TROUBLE CODE (DTC) INFORMATION ECM-430C

see **DIAGNOSTIC TROUBLE CODE (DTC) INFORMATION ECM-430C**

FUEL TANK FILLER CAP MISSING

see **FUEL TANK FILLER CAP MISSING**

ECM-431B: LEAK DIAGNOSTIC UNIT, PREHEATING. SIGNAL MISSING (B5254T2; 2005-2007)

DIAGNOSTIC TROUBLE CODE (DTC) INFORMATION ECM-431B

Condition

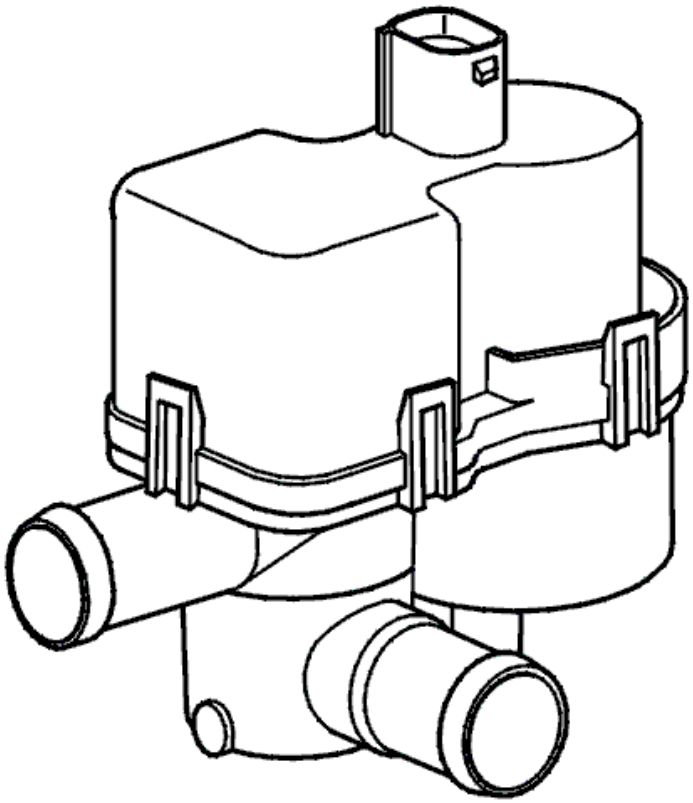

Fig. 139: Identifying Leak Diagnostic Pump
Courtesy of VOLVO CARS CORPORATION

The engine control module (ECM) checks the control signal to the heater element in the leak diagnostic unit.

The diagnostic trouble code (DTC) is stored if the engine control module (ECM) detects that the signal is too high.

The diagnostic trouble code (DTC) can be diagnosed when the leak diagnostic system is run.

Substitute Value

- None.

Possible Source

- Open-circuit in the signal cable.
- Damaged leak diagnostic pump.

Fault symptom[s]

- None.

SIGNAL MISSING

CHECKING THE WIRING

Check the cable between engine control module (ECM) terminal #B34 (#B44) and leak diagnostic unit terminal #2. Check for an open-circuit.

Remedy as necessary.

Other information

- see **CONNECTING THE BREAKOUT BOX**
- For 5 cylinder turbocharged engines 2005-, see **SIGNAL SPECIFICATION** .
- For 6 cylinder engines 2005-, see **SIGNAL SPECIFICATION** .
- see **LEAK DIAGNOSTIC PUMP, REPLACING**
- see **CHECKING WIRING AND TERMINALS**

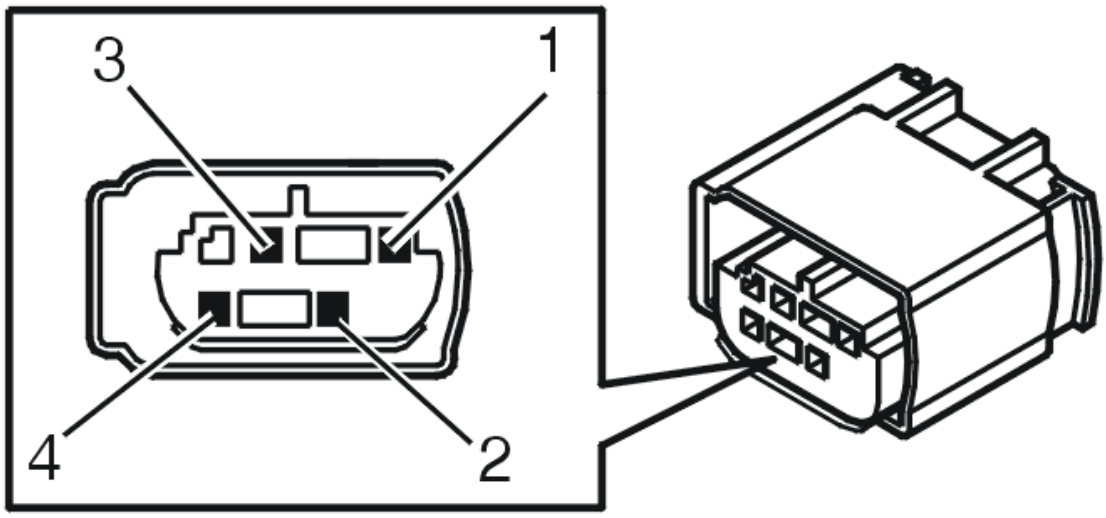

Fig. 140: Identifying Leak Diagnostic Unit Connector Terminals
Courtesy of VOLVO CARS CORPORATION

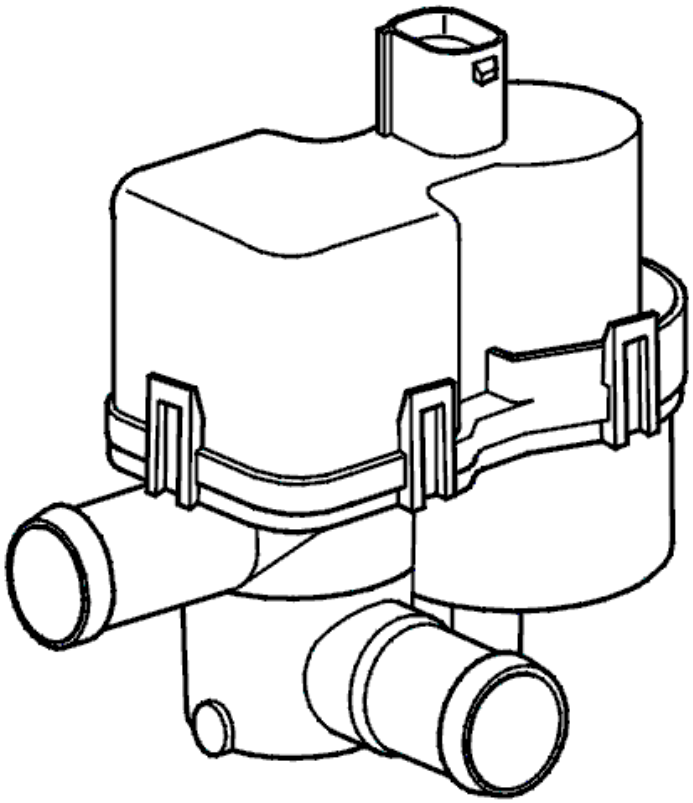

Fig. 141: Identifying Leak Diagnostic Pump
Courtesy of VOLVO CARS CORPORATION

- **Continue**

  Refer to **INFORMATION**

INFORMATION

FAULT-TRACING INFORMATION

Fault-tracing is not followed by verification for this fault.

HINT: After the diagnostic trouble codes (DTCs) are erased, the function of the leak diagnostic unit can be checked by running a quick test of the fuel tank system in the vehicle communication socket. If there is a fault, the fault status will be "FAULT FOUND" on the leak diagnostic unit.

The information can be displayed again or fault-tracing this fault can be interrupted.

ECM-431B: LEAK DIAGNOSTIC UNIT, PREHEATING. SIGNAL MISSING (B6294T; 2005-2006)

DIAGNOSTIC TROUBLE CODE (DTC) INFORMATION ECM-431B

see **DIAGNOSTIC TROUBLE CODE (DTC) INFORMATION ECM-431B**

SIGNAL MISSING

see **SIGNAL MISSING**

ECM-431C: LEAK DIAGNOSTIC UNIT, PREHEATING. SIGNAL TOO HIGH (B5254T2; 2005-2007)

DIAGNOSTIC TROUBLE CODE (DTC) INFORMATION ECM-431C

Condition

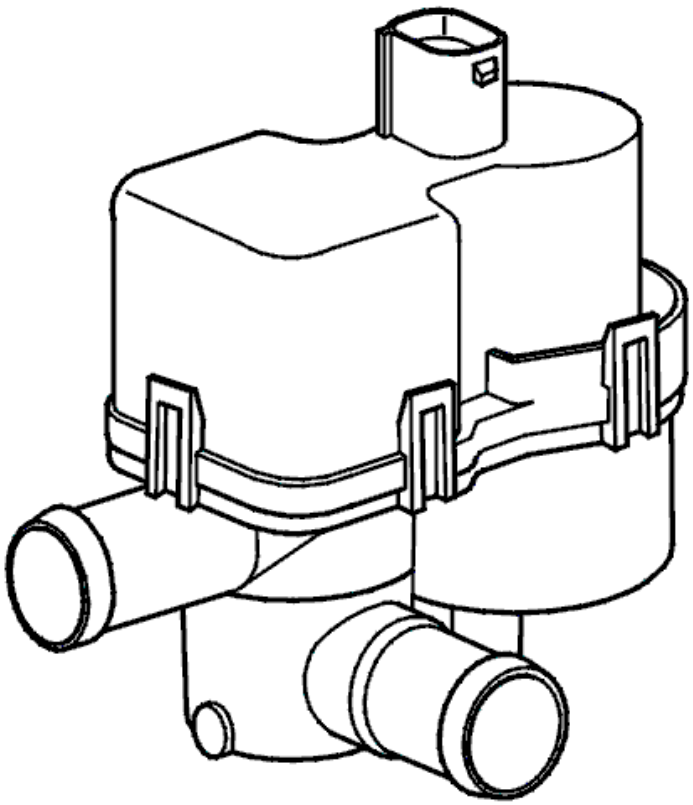

Fig. 142: Identifying Leak Diagnostic Pump
Courtesy of VOLVO CARS CORPORATION

The diagnostic trouble code (DTC) is stored if the engine control module (ECM) registers that the control signal to the heater element (PTC resistor) for the leak diagnostic unit is too high.

The diagnostic trouble code (DTC) can be diagnosed when the engine is running and the control module activates or deactivates preheating for the heater element for the leak diagnostic unit.

Substitute Value

- None.

Possible Source

- Short-circuit to supply voltage in the signal cable
- Damaged leak diagnostic unit.

Fault symptom[s]

- None.

SIGNAL TOO HIGH

CHECKING THE WIRING

Check the signal cable. Check for a short-circuit to supply voltage.

Take readings between:

- Engine control module (ECM) #B34 (#C44) and leakage diagnostic unit #2.

Remedy as necessary.

Other information

- see **CONNECTING THE BREAKOUT BOX**
- For 5 cylinder turbocharged engines 2005-, see **SIGNAL SPECIFICATION** .
- For 6 cylinder engines 2005-, see **SIGNAL SPECIFICATION** .
- see **LEAK DIAGNOSTIC PUMP, REPLACING**
- see **CHECKING WIRING AND TERMINALS**

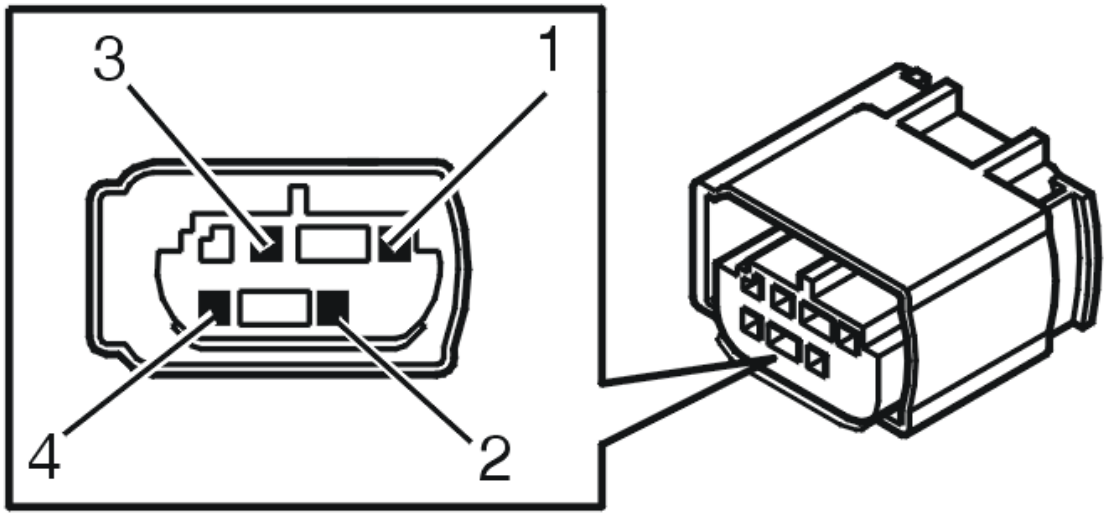

Fig. 143: Identifying Leak Diagnostic Unit Connector Terminals
Courtesy of VOLVO CARS CORPORATION

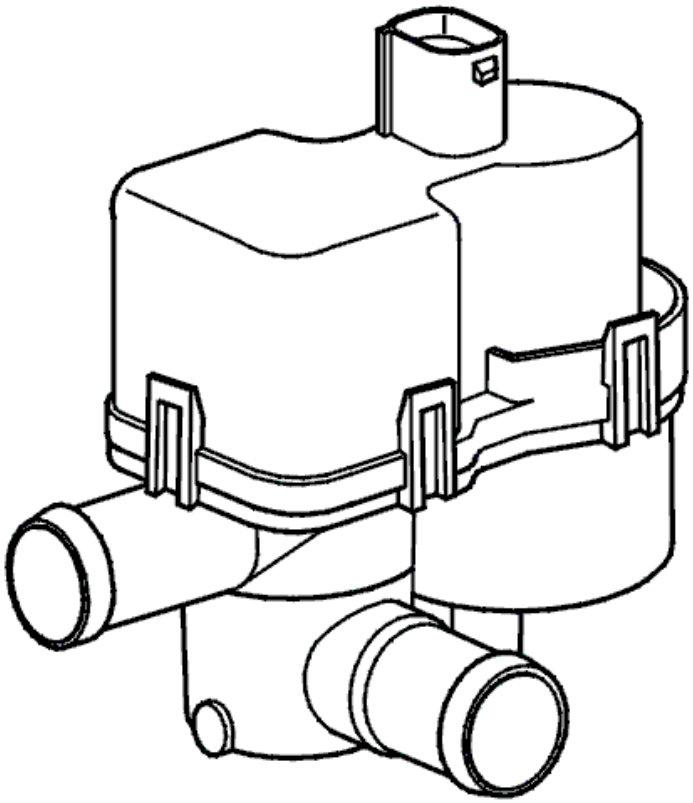

Fig. 144: Identifying Leak Diagnostic Pump
Courtesy of VOLVO CARS CORPORATION

- **Continue**

  Refer to **INFORMATION**

INFORMATION

FAULT-TRACING INFORMATION

Fault-tracing is not followed by verification for this fault.

HINT: After the diagnostic trouble codes (DTCs) are erased, the function of the leak diagnostic unit can be checked by running a quick test of the fuel tank system in the vehicle communication socket. If there is a fault, the fault status will be "FAULT FOUND" on the leak diagnostic unit.

The information can be displayed again or fault-tracing this fault can be interrupted.

ECM-431C: LEAK DIAGNOSTIC UNIT, PREHEATING. SIGNAL TOO HIGH

(B6294T; 2005-2006)

DIAGNOSTIC TROUBLE CODE (DTC) INFORMATION ECM-431C

see **DIAGNOSTIC TROUBLE CODE (DTC) INFORMATION ECM-431C**

SIGNAL TOO HIGH

see **SIGNAL TOO HIGH**

ECM-431D: LEAK DIAGNOSTIC UNIT, PREHEATING. SIGNAL TOO LOW (B5254T2; 2005-2007)

DIAGNOSTIC TROUBLE CODE (DTC) INFORMATION ECM-431D

Condition

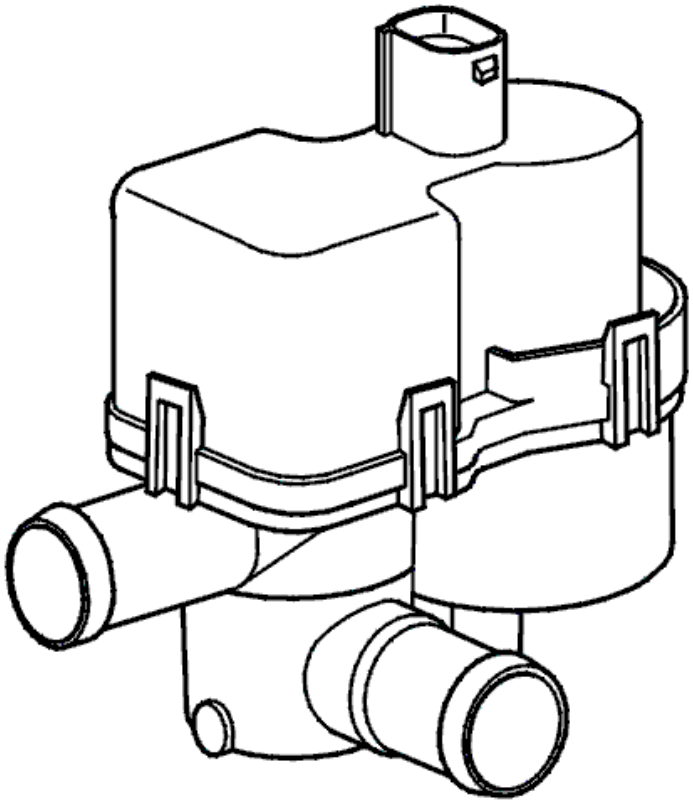

Fig. 145: Identifying Leak Diagnostic Pump
Courtesy of VOLVO CARS CORPORATION

The engine control module (ECM) checks the control signal to the heater element in the leak diagnostic unit.

The diagnostic trouble code (DTC) is stored if the engine control module (ECM) detects that the signal is too

low.

The diagnostic trouble code (DTC) can be diagnosed when the engine is running.

Substitute Value

- None.

Possible Source

- Short-circuit to ground in the signal cable.
- Damaged leak diagnostic pump.

Fault symptom[s]

- None.

SIGNAL TOO LOW

CHECKING THE WIRING

Check the signal cable. Check for a short-circuit to ground. Take readings between:

- Engine control module (ECM) #B34 (#C44) and leakage diagnostic unit #2.

Remedy as necessary.

Other information

- see **CONNECTING THE BREAKOUT BOX**
- For 5 cylinder turbocharged engines 2005-, see **SIGNAL SPECIFICATION** .
- For 6 cylinder engines 2005-, see **SIGNAL SPECIFICATION** .
- see **LEAK DIAGNOSTIC PUMP, REPLACING**
- see **CHECKING WIRING AND TERMINALS**

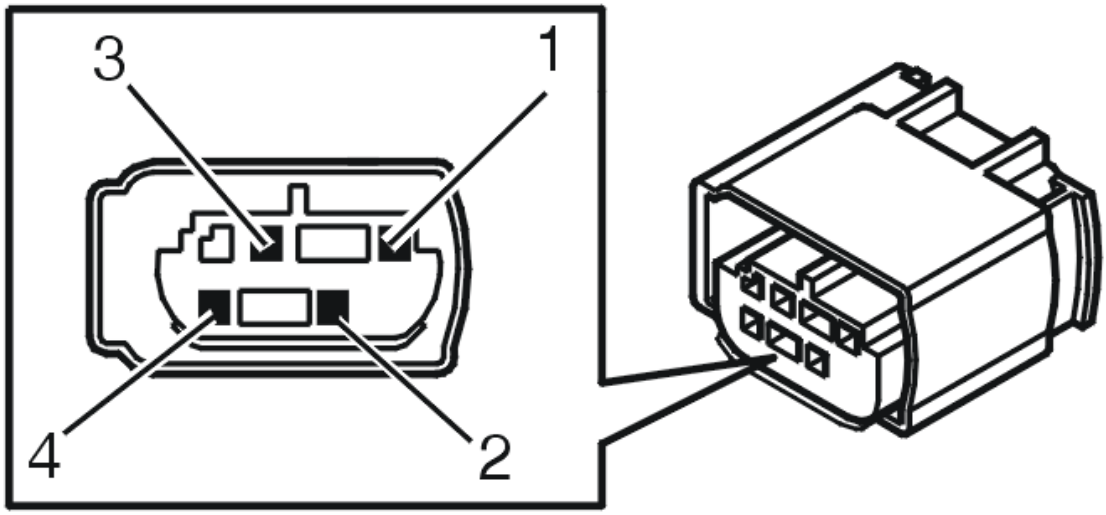

Fig. 146: Identifying Leak Diagnostic Unit Connector Terminals
Courtesy of VOLVO CARS CORPORATION

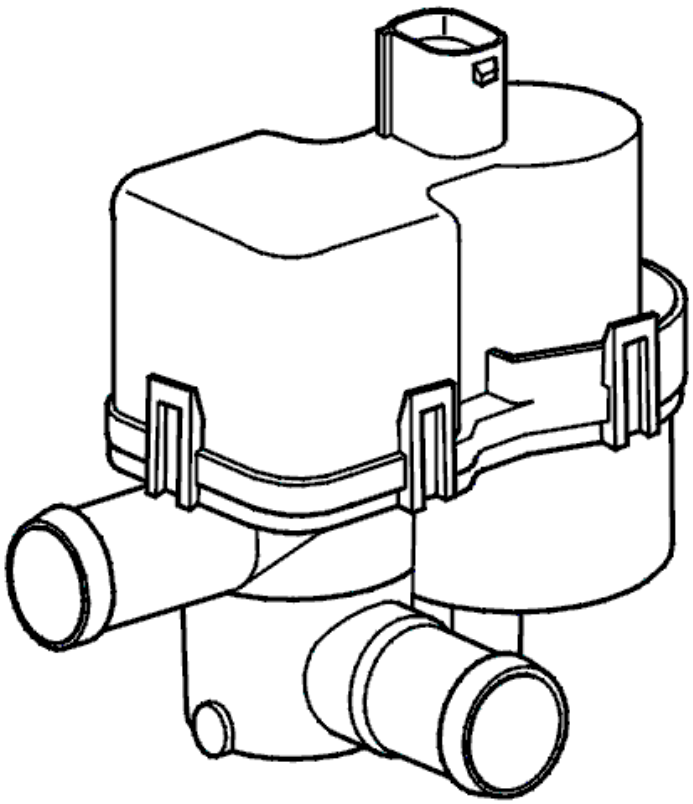

Fig. 147: Identifying Leak Diagnostic Pump
Courtesy of VOLVO CARS CORPORATION

- **Continue**

  Refer to **INFORMATION**

INFORMATION

FAULT-TRACING INFORMATION

Fault-tracing is not followed by verification for this fault.

HINT: After the diagnostic trouble codes (DTCs) are erased, the function of the leak diagnostic unit can be checked by running a quick test of the fuel tank system in the vehicle communication socket. If there is a fault, the fault status will be "FAULT FOUND" on the leak diagnostic unit.

The information can be displayed again or fault-tracing this fault can be interrupted.

ECM-431D: LEAK DIAGNOSTIC UNIT, PREHEATING. SIGNAL TOO LOW (B6294T; 2005-2006)

DIAGNOSTIC TROUBLE CODE (DTC) INFORMATION ECM-431D

see **DIAGNOSTIC TROUBLE CODE (DTC) INFORMATION ECM-431D**

SIGNAL TOO LOW

see **SIGNAL TOO LOW**

ECM-431D: LEAK DIAGNOSTIC UNIT. FAULTY SIGNAL (B5254T2; 2003-2004)

DIAGNOSTIC TROUBLE CODE (DTC) INFORMATION

Condition

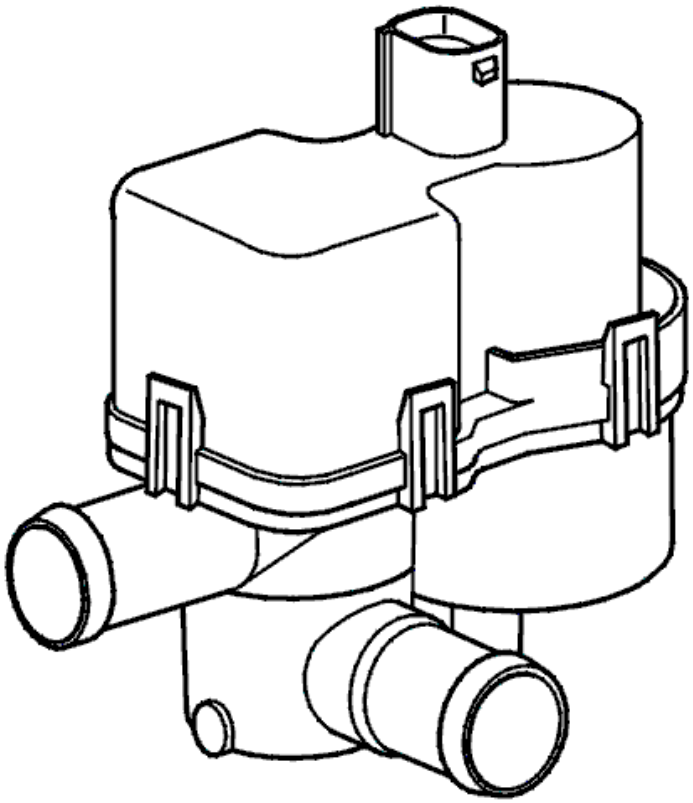

Fig. 148: Identifying Leak Diagnostic Pump
Courtesy of VOLVO CARS CORPORATION

Diagnostic trouble code (DTC) ECM-431D (signal too high or too low) is stored if the power consumption of the pump in the leak diagnostic unit is higher or lower than a particular value during the reference phase.

Diagnostic trouble code (DTC) ECM-431D (faulty signal) is stored if the power consumption for the pump in the leak diagnostic unit fluctuates too much during the reference phase.

The power consumption of the pump must drop when the leak diagnostic pump valve moves from the reference check to pressurizing the fuel tank system. Diagnostic trouble code (DTC) ECM-431D (signal missing) is stored if the value for the power consumption of the pump drops too quickly, slowly or not at all.

The diagnosis is carried out when the ignition is switched off.

For more information about the leak diagnostics, see **LEAK DIAGNOSTICS (CERTAIN MARKETS ONLY)** .

Substitute Value

The leak diagnostic is disabled.

Possible Source

Signal too high:

- Contact resistance in the terminals
- Blocked filter in the leak diagnostic unit
- Blocked hose between the filter and the leak diagnostic unit
- Defective leak diagnostic unit.

Signal too low:

- Contact resistance in the terminals
- Defective leak diagnostic unit.

Faulty signal:

- Contact resistance in the terminals
- Defective leak diagnostic unit
- Defective control of the heater element (This fault is detected by the central electronic module).

Signal missing:

- Contact resistance in the terminals
- Blocked hose between the leak diagnostic pump and the EVAP canister
- Defective leak diagnostic unit.

Fault symptom[s]

- Malfunction indicator lamp (MIL) lit.

FAULT-TRACING

CHECKING SOFTWARE

HINT: For vehicles of model year 2003-2005, the software in engine control module (ECM) should be checked before fault tracing of the fault relating to the leak from the tank system is carried out.

Fig. 149: Identifying Ignition On Position
Courtesy of VOLVO CARS CORPORATION

- Ignition on.

Use the VCT2000 (or appropriate scan tool) to read out and check the software version in the Engine control module (ECM).

NOTE: More instructions follow together with the read out.

Fig. 150: Identifying VCT2000 Diagnostic Tool Symbol In VIDA
Courtesy of VOLVO CARS CORPORATION

Has the latest software been downloaded to the control module?

- **YES**

  Refer to **PERFORM QUICK-TEST TANK SYSTEM**

PERFORM QUICK-TEST TANK SYSTEM

Fig. 151: Identifying Ignition On Position
Courtesy of VOLVO CARS CORPORATION

- Activate the test using the VCT2000.
- Read off initial parameters and check them according to start conditions for performing the test.
- Check that the test has started. Parameters run status shall go to "In progress" and the test phase shall go to "Reference".

NOTE: If the test does not start, check that the start conditions are fulfilled.

When the reference phase is finished, check of the tank system starts. The pressure in the tank starts to increase, see graph. Within 15 minutes the Engine control module makes a decision as to whether there is leakage in the tank system or not. The test is finished.

- Check parameters for test result and follow relevant instructions below.

NOTE: In the event of a the results from the estimated leakage must be entered in

NOTE: **Estimated leakage shall be used to get an idea of the proximity to the diagnostic trouble code limit. If the estimated leakage is very near the diagnostic trouble code limit (greater than 0.3mm), troubleshooting should probably be performed despite the Tank system, test result shows "No leakage found", especially if a diagnostic trouble code for leakage has been stored earlier.**

NOTE: **Use diagnostic trouble code counter to, see the frequency of the problem. Also use frozen values to get an idea if external conditions may have affected the result. Compare with current conditions in the workshop.**

Conditions for starting the quick test of the fuel tank system

- No DTCs related to EVAP purge valve or ambient air pressure sensor set.
- Battery voltage 11-15 V.
- Atmospheric pressure higher than 750 hPa, approx. 2500 m (8200 ft).
- Fuel level 0-85 %.
- Ambient air temperature 4-35 °C.

NOTE: **The battery voltage must be correct throughout the entire test. The test can take up to 15 minutes, depending on the quantity of fuel in the fuel tank. It is highly recommended to use the constant voltage charger, Midtronics PSC-550, during the test. For more information, see 30-04 (USA/CDN).**

Other information

- see **DESCRIPTION OF PARAMETERS, QUICK TEST OF THE FUEL TANK SYSTEM**
- see **TEST PHASES, QUICK TEST FUEL TANK SYSTEM**
- see **CONNECTING THE BREAKOUT BOX**
- see **SIGNAL DESCRIPTION**
- see **LEAK DIAGNOSTIC PUMP, REPLACING**

Select alternative according to relevant test results:

1. DMTL, test result = "Problem found"

   Refer to **DMTL, TEST RESULT = "PROBLEM FOUND"**

2. Tank system, test result = "No leakage found"

   Refer to **TANK SYSTEM, TEST RESULT = "NO LEAKAGE FOUND"**

3. Tank system, test result = "Major leakage found" or "Minor leakage found"

Refer to **TANK SYSTEM, TEST RESULT = "MAJOR LEAKAGE FOUND" OR "MINOR LEAKAGE FOUND"**

4. DMTL, test result and Tank system, test result = "Unknown"

   Refer to **DMTL, TEST RESULT AND TANK SYSTEM, TEST RESULT = "UNKNOWN"**

5. Cancel fault-tracing.

   FAULT NOT FOUND: Troubleshooting has been completed.

Fig. 152: Identifying VCT2000 Diagnostic Tool Symbol In VIDA
Courtesy of VOLVO CARS CORPORATION

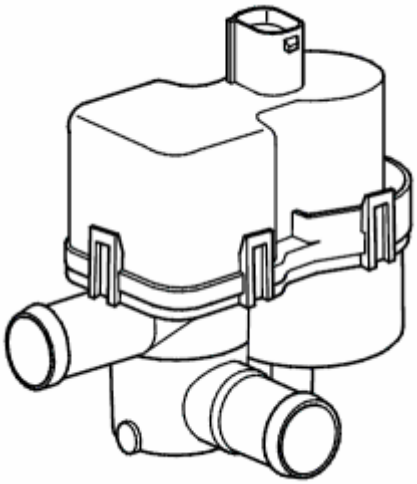

Fig. 153: Identifying Leak Diagnostic Pump
Courtesy of VOLVO CARS CORPORATION

DMTL, TEST RESULT = "PROBLEM FOUND"

Check the leak diagnostic unit connectors. Check for contact resistance and oxidation.

Check the hose between the leak diagnostic unit and the EVAP canister. Check for blockages.

Try a new leak diagnostic unit if no fault is found during the above fault-tracing.

- Perform "Quick-test tank system" again to verify that the problem has been solved.

NOTE: The tank system's status is unknown since the test was interrupted.

- **Continue**

  Refer to **PERFORM QUICK-TEST TANK SYSTEM**

TANK SYSTEM, TEST RESULT = "NO LEAKAGE FOUND"

Diagnostic trouble code limit (minor leakage):Estimated leakage = 0.40 mm

No problem has been detected on leakage diagnostics unit and fuel tank system is OK. The vehicle is ready to be delivered back to customer.

NOTE: The parameter estimated leakage does not necessarily have to show 0 mm for a sealed system.

TANK SYSTEM, TEST RESULT = "MAJOR LEAKAGE FOUND" OR "MINOR LEAKAGE FOUND"

If a leakage is detected during this test, it indicates that the problem with the leakage diagnostics unit (DMTL) is solved. Now the Engine control module (ECM) has the possibility to check the fuel tank system. A leakage has been found.

- Cancel troubleshooting for this problem.
- Read off diagnostic trouble codes again and start troubleshooting for the new diagnostic trouble code.

DMTL, TEST RESULT AND TANK SYSTEM, TEST RESULT = "UNKNOWN"

Engine control module (ECM) cannot perform check of tank system. This may be due to the conditions for start of the quick-test not being fulfilled, that they have changed during the course of the test, or that a problem has occurred during troubleshooting.

- Check that all conditions for start of the quick-test are fulfilled.
- Visually check hoses and connections on leakage diagnostics unit, canister, EVAP-valve, and filler pipe. Check for damage or incorrect/loose installation.
- Remedy as necessary.
- Restart the test.

- **Continue**

  Refer to **PERFORM QUICK-TEST TANK SYSTEM**

ECM-431D: LEAK DIAGNOSTIC UNIT. FAULTY SIGNAL (B6294T; 2003-2004)

DIAGNOSTIC TROUBLE CODE (DTC) INFORMATION

see **DIAGNOSTIC TROUBLE CODE (DTC) INFORMATION**

FAULT-TRACING

CHECKING SOFTWARE

HINT: For vehicles of model year 2003-2005, the software in engine control module (ECM) should be checked before fault tracing of the fault relating to the leak from the tank system is carried out.

Fig. 154: Identifying Ignition On Position
Courtesy of VOLVO CARS CORPORATION

- Ignition on.

  Use the VCT2000 (or appropriate scan tool) to read out and check the software version in the Engine control module (ECM).

  NOTE: More instructions follow together with the read out.

Fig. 155: Identifying VCT2000 Diagnostic Tool Symbol In VIDA
Courtesy of VOLVO CARS CORPORATION

Has the latest software been downloaded to the control module?

- **YES**

  Refer to **PERFORM QUICK-TEST TANK SYSTEM**

PERFORM QUICK-TEST TANK SYSTEM

Fig. 156: Identifying Ignition On Position
Courtesy of VOLVO CARS CORPORATION

- Activate the test using the VCT2000.
- Read off initial parameters and check them according to start conditions for performing the test.
- Check that the test has started. Parameters run status shall go to "In progress" and the test phase shall go to "Reference".

NOTE: If the test does not start, check that the start conditions are fulfilled.

When the reference phase is finished, check of the tank system starts. The pressure in the tank starts to increase, see graph. Within 15 minutes the Engine control module makes a decision as to whether there is leakage in the tank system or not. The test is finished.

- Check parameters for test result and follow relevant instructions below.

NOTE: In the event of a the results from the estimated leakage must be entered in

NOTE: Estimated leakage shall be used to get an idea of the proximity to the diagnostic trouble code limit. If the estimated leakage is very near the diagnostic trouble code limit (greater than 0.3mm), troubleshooting should probably be performed despite the Tank system, test result shows "No leakage found", especially if a diagnostic trouble code for leakage has been stored earlier.

NOTE: Use diagnostic trouble code counter to, see the frequency of the problem. Also use frozen values to get an idea if external conditions may have affected the result. Compare with current conditions in the workshop.

Conditions for starting the quick test of the fuel tank system

- No DTCs related to EVAP purge valve or ambient air pressure sensor set.
- Battery voltage 11-15 V.
- Atmospheric pressure higher than 750 hPa, approx.. 2500 m (8200 ft).
- Fuel level 0-85 %.
- Ambient air temperature 4-35 °C.

NOTE: The battery voltage must be correct throughout the entire test. The test can take up to 15 minutes, depending on the quantity of fuel in the fuel tank. It is highly recommended to use the constant voltage charger, Midtronics PSC-550, during the test. For more information, see 30-04 (USA/CDN).

Other information

- see **DESCRIPTION OF PARAMETERS, QUICK TEST OF THE FUEL TANK SYSTEM**
- see **TEST PHASES, QUICK TEST FUEL TANK SYSTEM**

- see **CONNECTING THE BREAKOUT BOX**
- see **SIGNAL SPECIFICATION**
- see **LEAK DIAGNOSTIC PUMP, REPLACING**

Select alternative according to relevant test results:

1. DMTL, test result = "Problem found"

   Refer to **DMTL, TEST RESULT = "PROBLEM FOUND"**

2. Tank system, test result = "No leakage found"

   Refer to **TANK SYSTEM, TEST RESULT = "NO LEAKAGE FOUND"**

3. Tank system, test result = "Major leakage found" or "Minor leakage found"

   Refer to **TANK SYSTEM, TEST RESULT = "MAJOR LEAKAGE FOUND" OR "MINOR LEAKAGE FOUND"**

4. DMTL, test result and Tank system, test result = "Unknown"

   Refer to **DMTL, TEST RESULT AND TANK SYSTEM, TEST RESULT = "UNKNOWN"**

5. Cancel fault-tracing.

   FAULT NOT FOUND: Troubleshooting has been completed.

Fig. 157: Identifying VCT2000 Diagnostic Tool Symbol In VIDA
Courtesy of VOLVO CARS CORPORATION

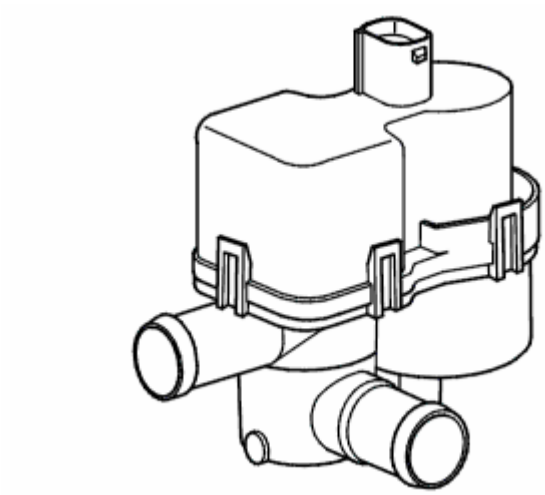

Fig. 158: Identifying Leak Diagnostic Pump
Courtesy of VOLVO CARS CORPORATION

DMTL, TEST RESULT = "PROBLEM FOUND"

Check the leak diagnostic unit connectors. Check for contact resistance and oxidation.

Check the hose between the leak diagnostic unit and the EVAP canister. Check for blockages.

Try a new leak diagnostic unit if no fault is found during the above fault-tracing.

- Perform "Quick-test tank system" again to verify that the problem has been solved.

  NOTE: The tank system's status is unknown since the test was interrupted.

- **Continue**

  Refer to **PERFORM QUICK-TEST TANK SYSTEM**

TANK SYSTEM, TEST RESULT = "NO LEAKAGE FOUND"

Diagnostic trouble code limit (minor leakage):Estimated leakage = 0.40 mm

No problem has been detected on leakage diagnostics unit and fuel tank system is OK. The vehicle is ready to be delivered back to customer.

NOTE: The parameter estimated leakage does not necessarily have to show 0 mm for a sealed system.

TANK SYSTEM, TEST RESULT = "MAJOR LEAKAGE FOUND" OR "MINOR LEAKAGE FOUND"

If a leakage is detected during this test, it indicates that the problem with the leakage diagnostics unit (DMTL) is solved. Now the Engine control module (ECM) has the possibility to check the fuel tank system. A leakage

has been found.

- Cancel troubleshooting for this problem.
- Read off diagnostic trouble codes again and start troubleshooting for the new diagnostic trouble code.

DMTL, TEST RESULT AND TANK SYSTEM, TEST RESULT = "UNKNOWN"

Engine control module (ECM) cannot perform check of tank system. This may be due to the conditions for start of the quick-test not being fulfilled, that they have changed during the course of the test, or that a problem has occurred during troubleshooting.

- Check that all conditions for start of the quick-test are fulfilled.
- Visually check hoses and connections on leakage diagnostics unit, canister, EVAP-valve, and filler pipe. Check for damage or incorrect/loose installation.
- Remedy as necessary.
- Restart the test.

- **Continue**

  Refer to **PERFORM QUICK-TEST TANK SYSTEM**

ECM-432B: LEAK DIAGNOSTIC UNIT, VALVE. SIGNAL MISSING (B5254T2; 2005-2007)

DIAGNOSTIC TROUBLE CODE (DTC) INFORMATION ECM-432B

Condition

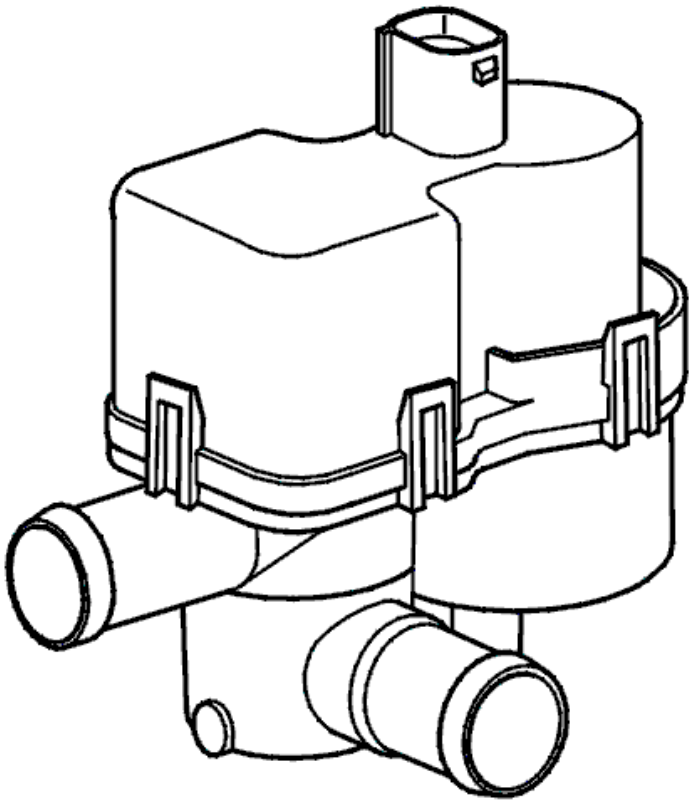

Fig. 159: Identifying Leak Diagnostic Pump
Courtesy of VOLVO CARS CORPORATION

The diagnostic trouble code (DTC) is stored if the engine control module (ECM) registers that there is no signal from the valve in the pump for the leak diagnostic when the valve is activated.

The diagnostic trouble code (DTC) can be diagnosed when the leak diagnostic system is run.

Substitute Value

- The leak diagnostic is disabled.

Possible Source

- Contact resistance in the terminals
- Open-circuit in the signal cable
- Open-circuit in the power cable
- Damaged valve.

Fault symptom[s]

- Malfunction indicator lamp (MIL) lit.

SIGNAL MISSING

see **SIGNAL MISSING**

ECM-432B: LEAK DIAGNOSTIC UNIT, VALVE. SIGNAL MISSING (B6294T; 2005-2006)

DIAGNOSTIC TROUBLE CODE (DTC) INFORMATION ECM-432B

see **DIAGNOSTIC TROUBLE CODE (DTC) INFORMATION ECM-432B**

SIGNAL MISSING

see **SIGNAL MISSING**

ECM-432C: LEAK DIAGNOSTIC UNIT, PREHEATING. SIGNAL TOO HIGH (B5254T2; 2005-2007)

DIAGNOSTIC TROUBLE CODE (DTC) INFORMATION ECM-432C

Condition

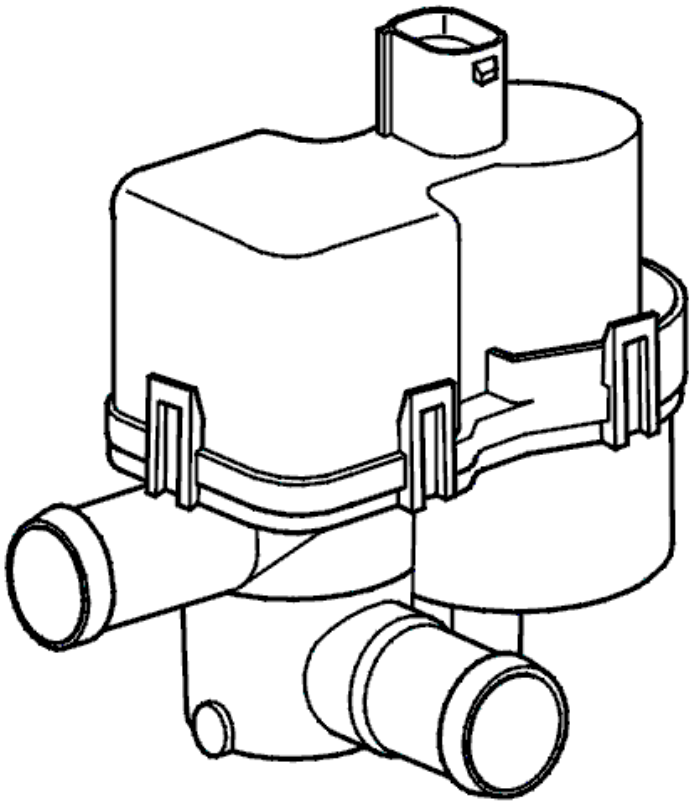

Fig. 160: Identifying Leak Diagnostic Pump

Courtesy of VOLVO CARS CORPORATION

The diagnostic trouble code (DTC) is stored if the engine control module (ECM) registers that the signal from the valve in the pump for the leak diagnostic is too high when the valve is activated.

The diagnostic trouble code (DTC) can be diagnosed when the leak diagnostic system is run.

Substitute Value

- The leak diagnostic is disabled.

Possible Source

- Short-circuit to supply voltage in the signal cable
- Damaged valve.

Fault symptom[s]

- Malfunction indicator lamp (MIL) lit.

SIGNAL TOO HIGH

see **SIGNAL TOO HIGH**

ECM-432C: LEAK DIAGNOSTIC UNIT, PREHEATING. SIGNAL TOO HIGH (B6294T; 2005-2006)

DIAGNOSTIC TROUBLE CODE (DTC) INFORMATION ECM-432C

see **DIAGNOSTIC TROUBLE CODE (DTC) INFORMATION ECM-432C**

SIGNAL TOO HIGH

see **SIGNAL TOO HIGH**

ECM-432D: LEAK DIAGNOSTIC UNIT, PREHEATING. SIGNAL TOO LOW (B5254T2; 2005-2007)

DIAGNOSTIC TROUBLE CODE (DTC) INFORMATION ECM-432D

Condition

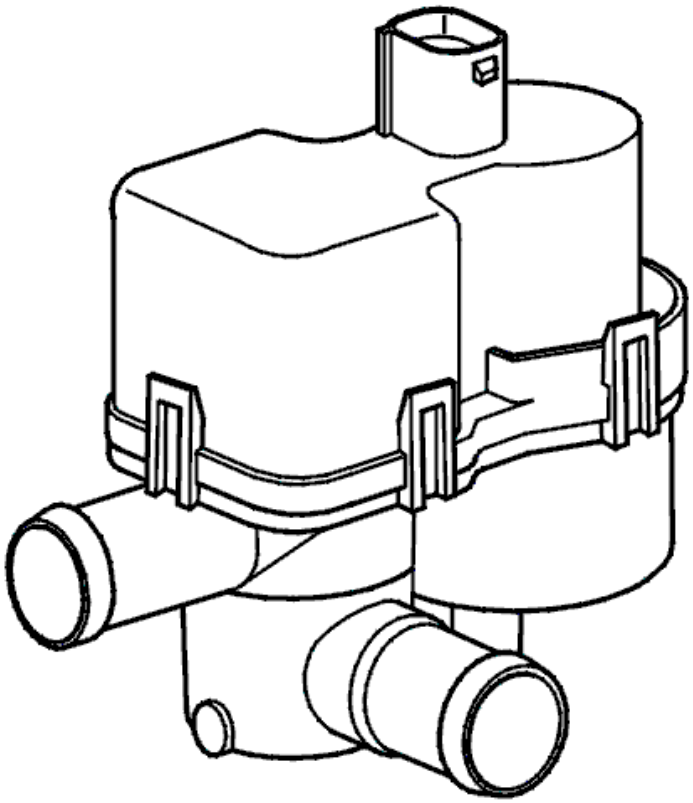

Fig. 161: Identifying Leak Diagnostic Pump
Courtesy of VOLVO CARS CORPORATION

The diagnostic trouble code (DTC) is stored if the engine control module (ECM) registers that the signal from the valve in the pump for the leak diagnostic is too low when the valve is activated.

The diagnostic trouble code (DTC) can be diagnosed when the leak diagnostic system is run.

Substitute Value

- The leak diagnostic is disabled.

Possible Source

- Short-circuit to ground in the signal cable.

Fault symptom[s]

- Malfunction indicator lamp (MIL) lit.

SIGNAL TOO LOW

CHECKING THE STATUS

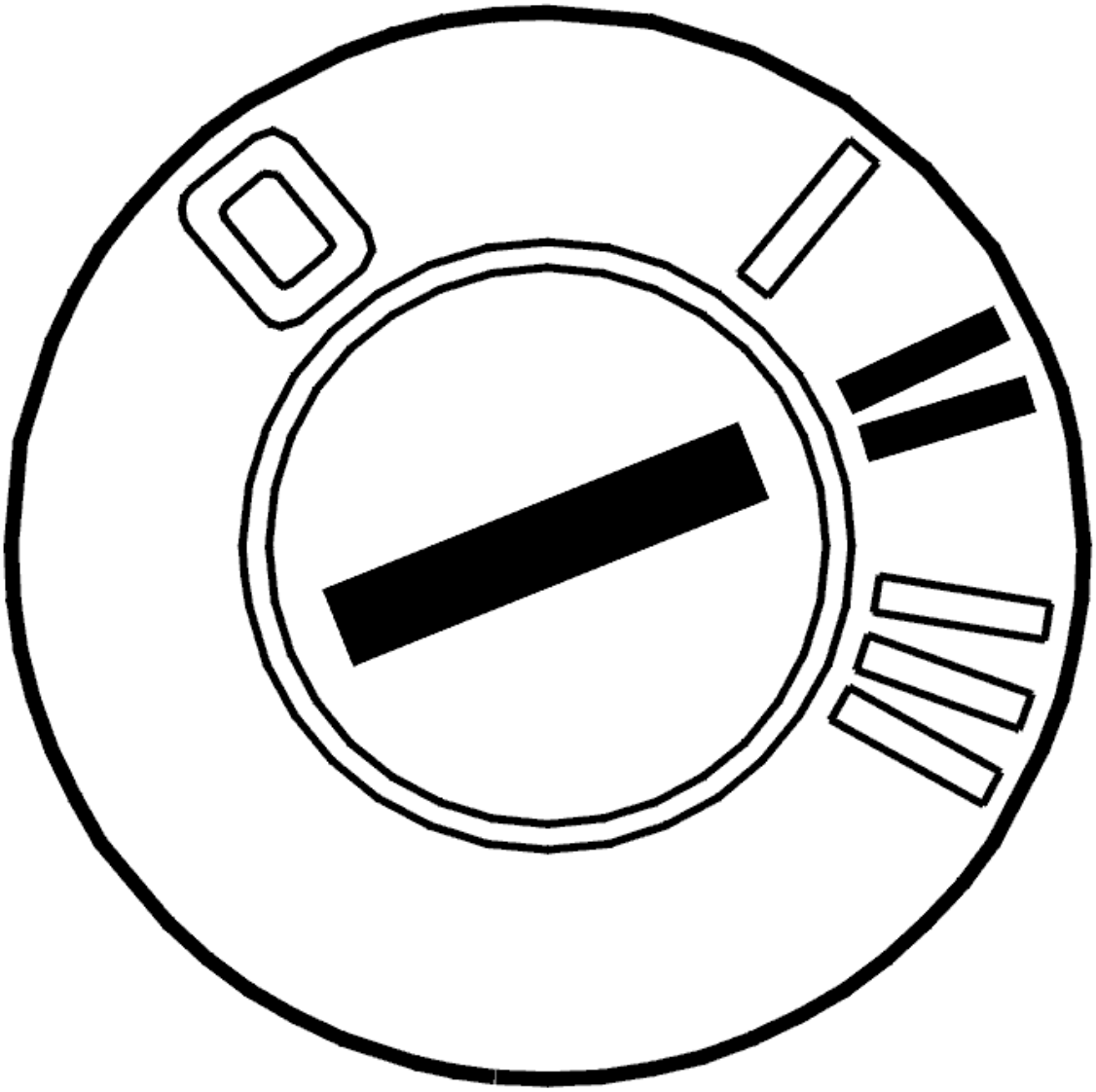

Fig. 162: Identifying Ignition ON
Courtesy of VOLVO CARS CORPORATION

- Ignition on.

  Activate the valve in the leak diagnostic unit to check whether the fault is permanent or intermittent.

  The valve clicks when it is activated.

  The fault is permanent if the valve does not activate.

  The fault is intermittent if the valve activates.

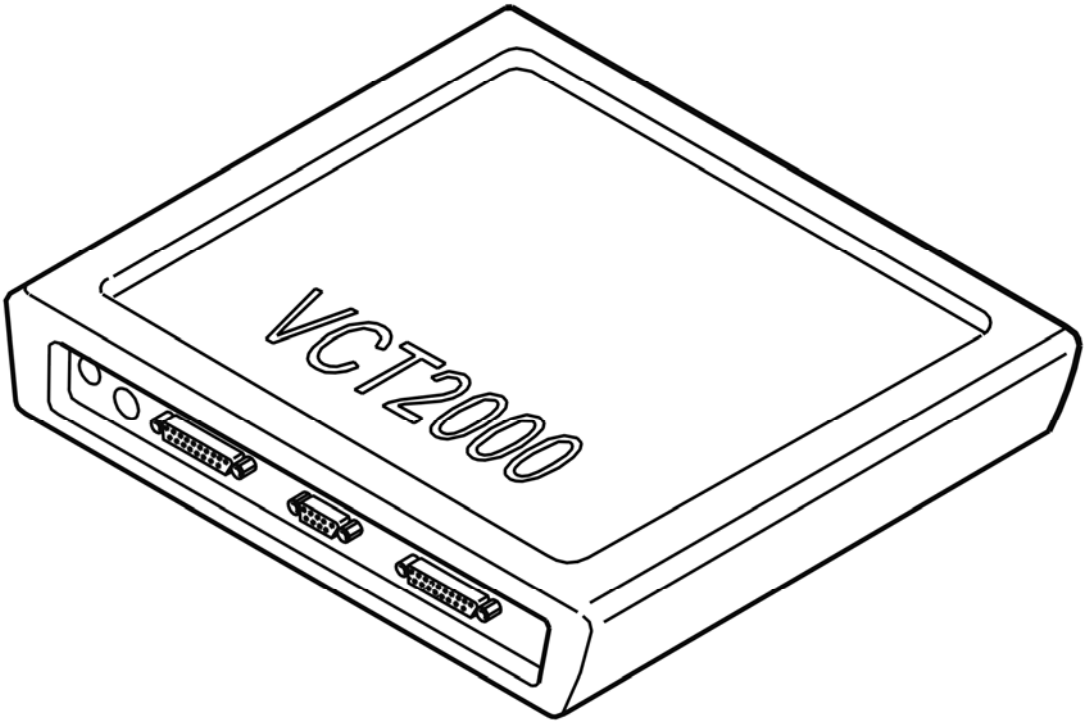

Fig. 163: Identifying VCT2000 Diagnostic Tool Symbol In VIDA
Courtesy of VOLVO CARS CORPORATION

- **Continue**

  Refer to **CHECKING COMPONENTS AND WIRING**

CHECKING COMPONENTS AND WIRING

Check the resistance of the valve between the leak diagnostic unit connector terminals #3 and #4 (leak diagnostic pump side).

Check the signal cable between engine control module (ECM) terminal #B40 (#B50) and leak diagnostic unit terminal #3. Check for a short-circuit to supply voltage.

Try a new leak diagnostic unit if no fault is found during the above fault-tracing.

Remedy as necessary.

Other information:

- see **CONNECTING THE BREAKOUT BOX**
- For 5 cylinder turbocharged engines 2005-, see **SIGNAL SPECIFICATION** .

- For 6 cylinder engines 2005-, see **SIGNAL SPECIFICATION** .
- For resistance values: **COMPONENT SPECIFICATIONS**
- see **LEAK DIAGNOSTIC PUMP, REPLACING**
- see **CHECKING WIRING AND TERMINALS**

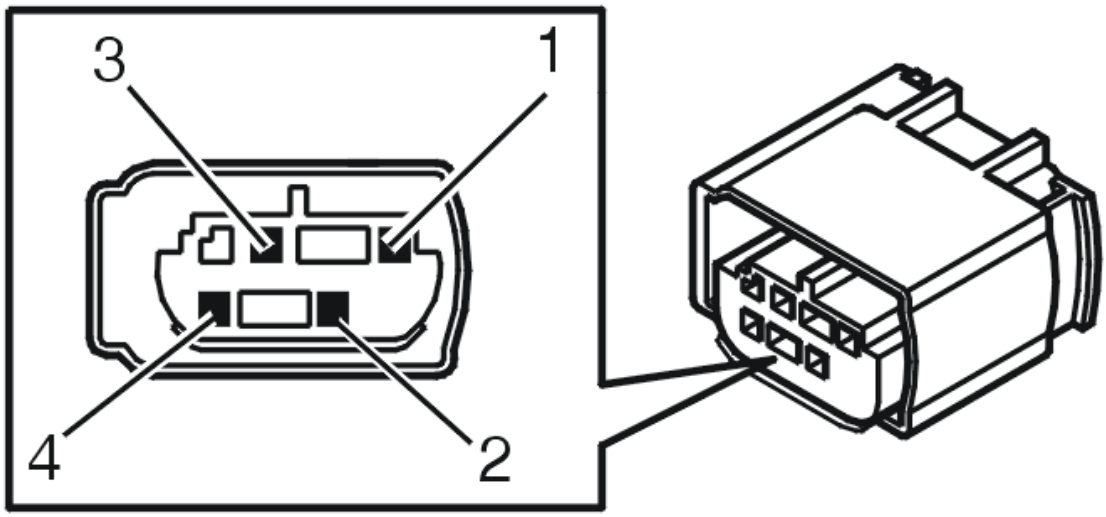

Fig. 164: Identifying Leak Diagnostic Unit Connector Terminals
Courtesy of VOLVO CARS CORPORATION

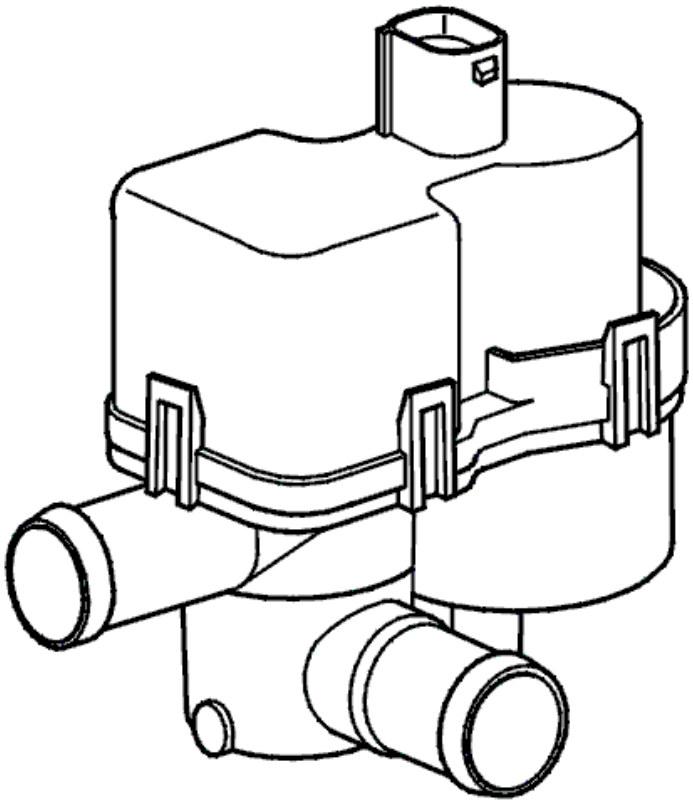

Fig. 165: Identifying Leak Diagnostic Pump
Courtesy of VOLVO CARS CORPORATION

- **Continue**

  Refer to **VERIFICATION**

VERIFICATION

VERIFICATION

HINT: After carrying out the repair, check that the fault has been remedied.

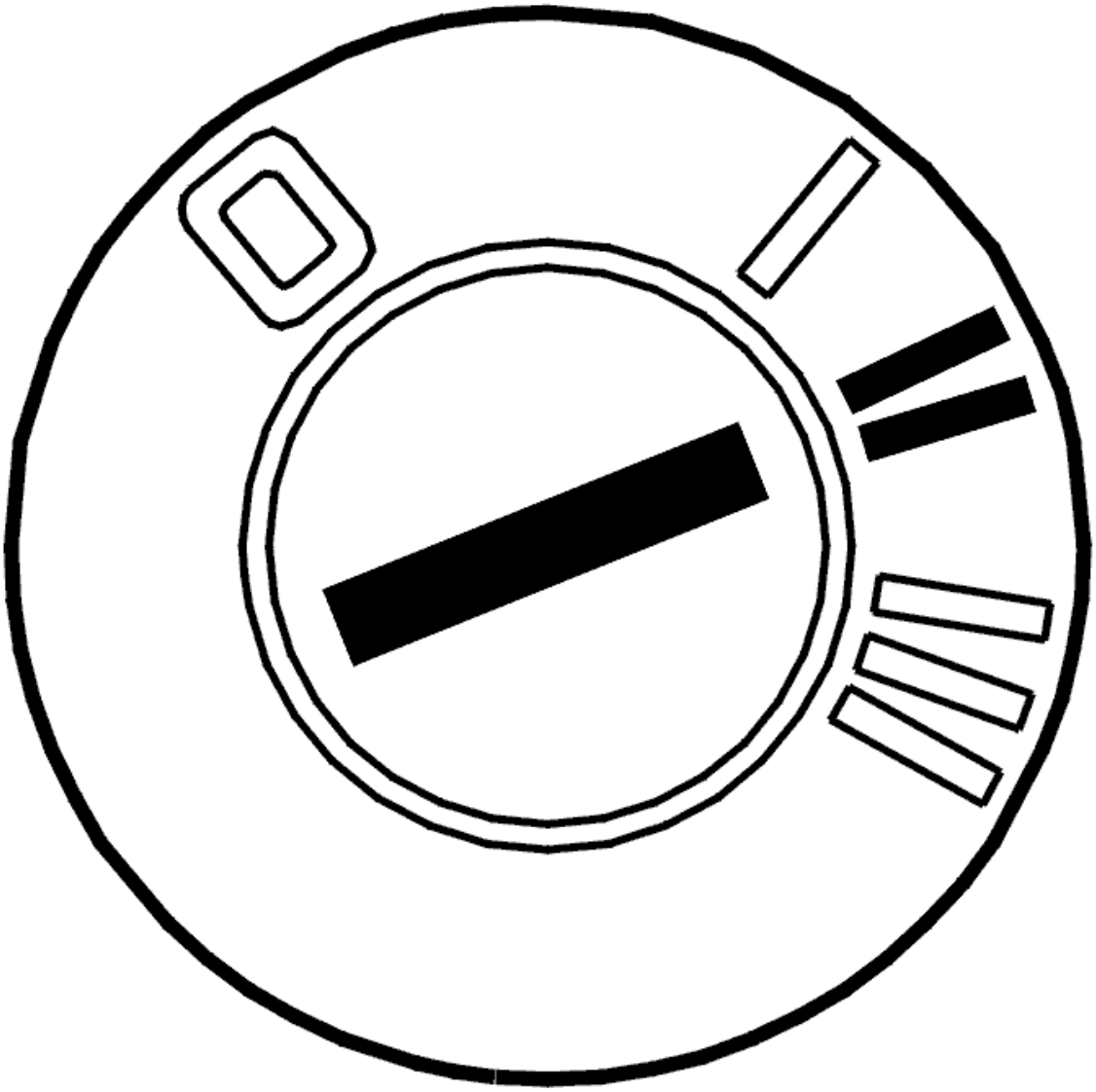

Fig. 166: Identifying Ignition ON
Courtesy of VOLVO CARS CORPORATION

- Ignition on
- Activate the valve in the leak diagnostic unit.

  The valve should click.

  Check that the function is OK.

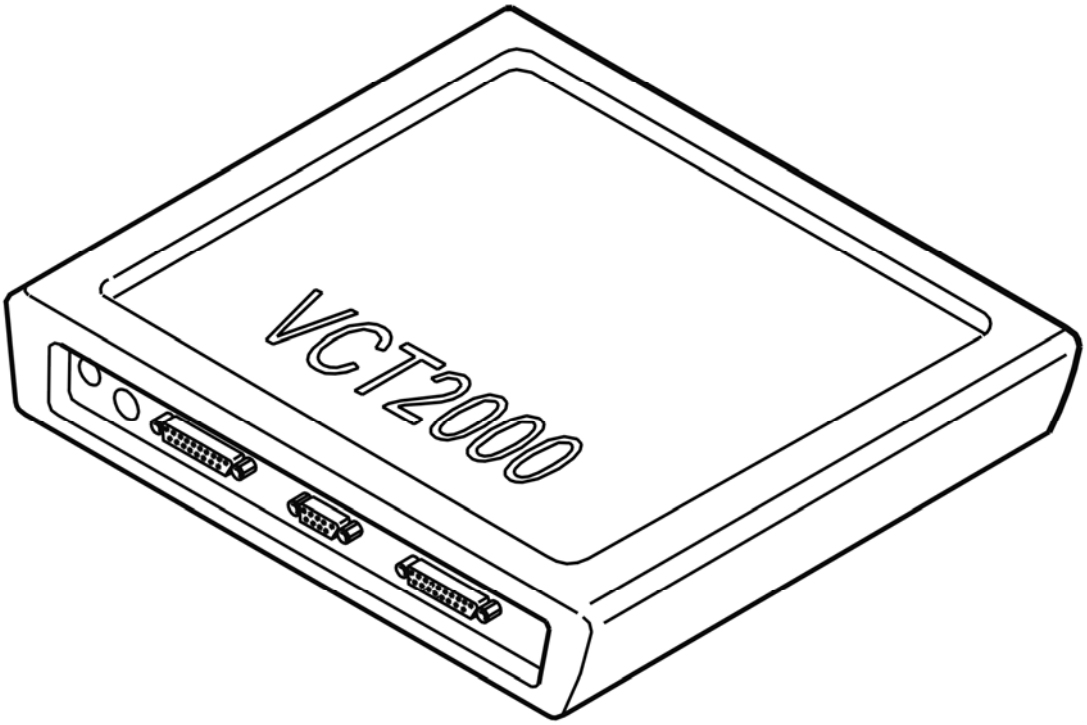

Fig. 167: Identifying VCT2000 Diagnostic Tool Symbol In VIDA
Courtesy of VOLVO CARS CORPORATION

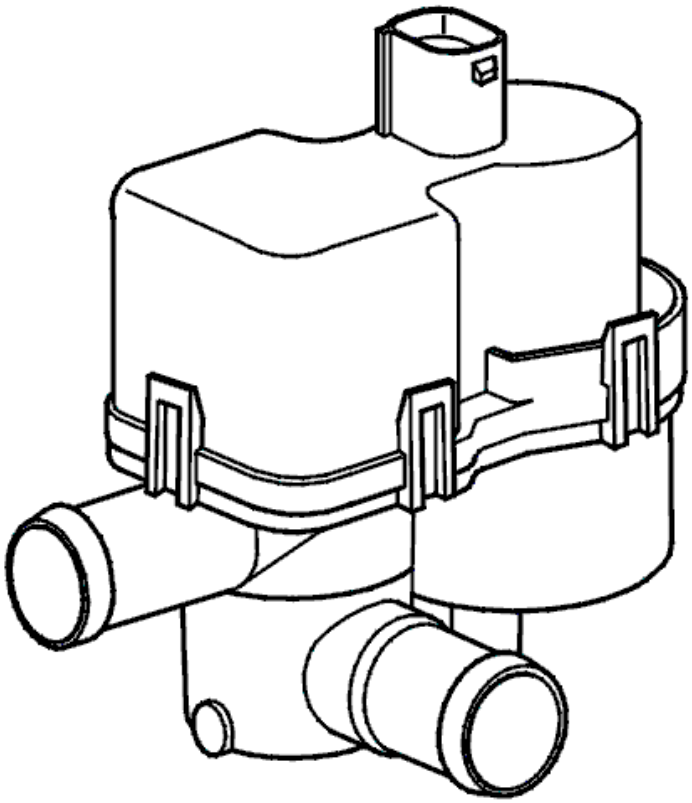

Fig. 168: Identifying Leak Diagnostic Pump
Courtesy of VOLVO CARS CORPORATION

Is the function OK?

- **YES**

  VERIFIED: Troubleshooting has been completed.

- **NO**

  Refer to **INFORMATION**

INFORMATION

FAULT-TRACING INFORMATION

The fault should have been detected and remedied. As this is not the case fault-tracing has failed.

Exit fault-tracing for this diagnostic trouble code (DTC) or make another attempt.

ECM-432D: LEAK DIAGNOSTIC UNIT, PREHEATING. SIGNAL TOO LOW (B6294T; 2005-2006)

DIAGNOSTIC TROUBLE CODE (DTC) INFORMATION ECM-432D

see **DIAGNOSTIC TROUBLE CODE (DTC) INFORMATION ECM-432D**

SIGNAL TOO LOW

see **SIGNAL TOO LOW**

ECM-4338: FUEL TANK FILLER CAP MISSING (B5254T2; B6294T; 2003-2004)

DIAGNOSTIC TROUBLE CODE (DTC) INFORMATION

Condition

If no fault is detected in the leak diagnostic unit, the control module runs a leak diagnostic of the fuel tank system. If the control module detects a leakage that is 1 mm or larger after refueling, the control module interprets this as the fuel tank filler cap missing or loosely installed. Diagnostic trouble code (DTC) ECM-4338 is then stored. For more information about the leak diagnostics, see **LEAK DIAGNOSTICS (CERTAIN MARKETS ONLY)** .

Substitute Value

None.

Possible Source

Fuel tank filler cap missing:

- Fuel tank filler cap missing or not tightened
- Leakage that is 1 mm or greater in the fuel tank, fuel filler pipe, fuel tank filler cap, evaporative emission system (EVAP) canister, EVAP canister purge valve, or in the hoses between these components
- The fuel gauge does not function (This fault is detected by the rear electrical module).

Fault symptom[s]

- Malfunction indicator lamp (MIL) lit.

FAULT-TRACING INFORMATION

see **FAULT-TRACING INFORMATION**

ECM-433B: LEAK DIAGNOSTIC UNIT, PUMP. SIGNAL MISSING (B5254T2; 2005-2007)

DIAGNOSTIC TROUBLE CODE (DTC) INFORMATION ECM-433B

Condition

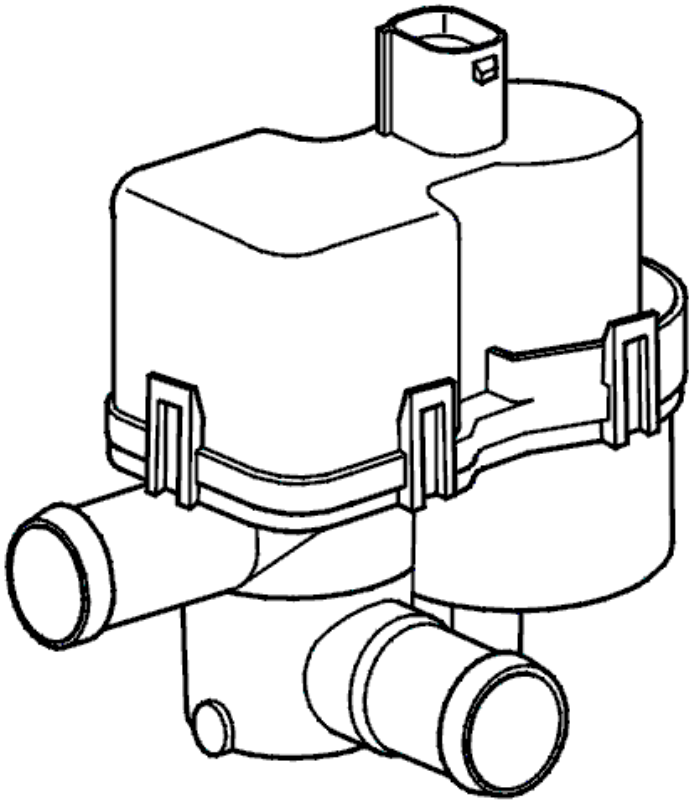

Fig. 169: Identifying Leak Diagnostic Pump
Courtesy of VOLVO CARS CORPORATION

The diagnostic trouble code (DTC) is stored if the engine control module (ECM) detects that there is no signal from the leak diagnostic pump.

The diagnostic trouble code (DTC) can be diagnosed when leak diagnostics is run.

Substitute Value

- The leak diagnostic is disabled.

Possible Source

- Contact resistance in the terminals
- Open-circuit in the signal cable
- Open-circuit in the power cable
- Damaged pump.

Fault symptom[s]

- Malfunction indicator lamp (MIL) lit.

SIGNAL MISSING

see **SIGNAL MISSING**

ECM-433B: LEAK DIAGNOSTIC UNIT, PUMP. SIGNAL MISSING (B6294T; 2005-2006)

DIAGNOSTIC TROUBLE CODE (DTC) INFORMATION ECM-433B

see **DIAGNOSTIC TROUBLE CODE (DTC) INFORMATION ECM-433B**

SIGNAL MISSING

see **SIGNAL MISSING**

ECM-433C: LEAK DIAGNOSTIC UNIT, PUMP. SIGNAL TOO HIGH (B5254T2; 2005-2007)

DIAGNOSTIC TROUBLE CODE (DTC) INFORMATION ECM-433C

Condition

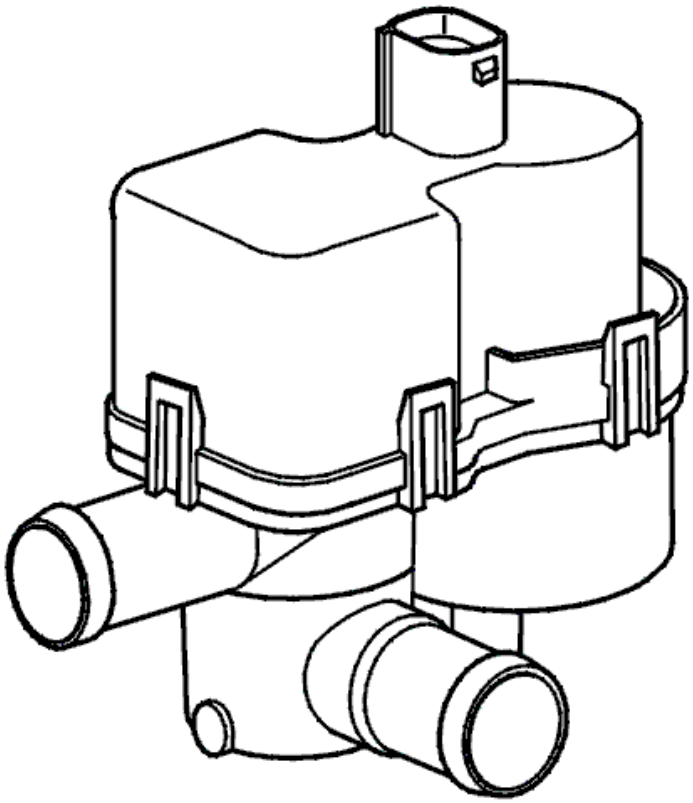

Fig. 170: Identifying Leak Diagnostic Pump
Courtesy of VOLVO CARS CORPORATION

The diagnostic trouble code (DTC) is stored if the engine control module (ECM) registers that the signal from the pump for the leak diagnostic unit is too high.

The diagnostic trouble code (DTC) can be diagnosed when leak diagnostics is run.

Substitute Value

- The leak diagnostic is disabled.

Possible Source

- Short-circuit to supply voltage in the signal cable
- Damaged pump.

Fault symptom[s]

- Malfunction indicator lamp (MIL) lit.

SIGNAL TOO HIGH

see **SIGNAL TOO HIGH**

ECM-433C: LEAK DIAGNOSTIC UNIT, PUMP. SIGNAL TOO HIGH (B6294T; 2005-2006)

DIAGNOSTIC TROUBLE CODE (DTC) INFORMATION ECM-433C

see **DIAGNOSTIC TROUBLE CODE (DTC) INFORMATION ECM-433C**

SIGNAL TOO HIGH

see **SIGNAL TOO HIGH**

ECM-433D: LEAK DIAGNOSTIC UNIT, PUMP. SIGNAL TOO LOW (B5254T2; 2005-2007)

DIAGNOSTIC TROUBLE CODE (DTC) INFORMATION ECM-433D

Condition

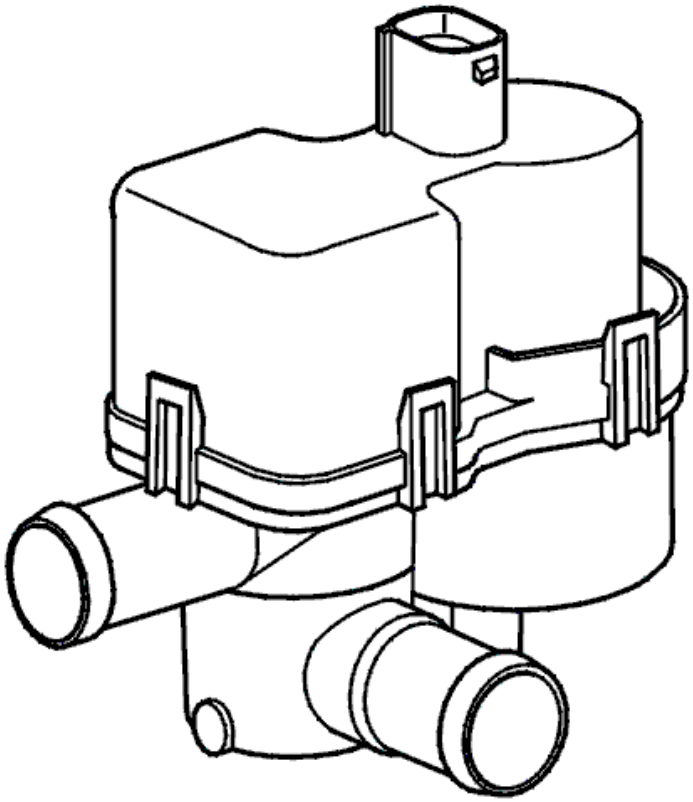

Fig. 171: Identifying Leak Diagnostic Pump
Courtesy of VOLVO CARS CORPORATION

The diagnostic trouble code (DTC) is stored if the engine control module (ECM) registers that the signal from the pump for the leak diagnostic unit is too low.

The diagnostic trouble code (DTC) can be diagnosed when leak diagnostics is run.

Substitute Value

- The leak diagnostic is disabled.

Possible Source

- Short-circuit to ground in the signal cable.

Fault symptom[s]

- Malfunction indicator lamp (MIL) lit.

SIGNAL TOO LOW

see **SIGNAL TOO LOW**

ECM-433D: LEAK DIAGNOSTIC UNIT, PUMP. SIGNAL TOO LOW (B6294T; 2005-2006)

DIAGNOSTIC TROUBLE CODE (DTC) INFORMATION ECM-433D

see **DIAGNOSTIC TROUBLE CODE (DTC) INFORMATION ECM-433D**

SIGNAL TOO LOW

see **SIGNAL TOO LOW**

ECM-434C: FUEL TANK SYSTEM, LEAKAGE. MINOR LEAK (B5254T2; 2005-2007)

DIAGNOSTIC TROUBLE CODE (DTC) INFORMATION ECM-434C

Condition

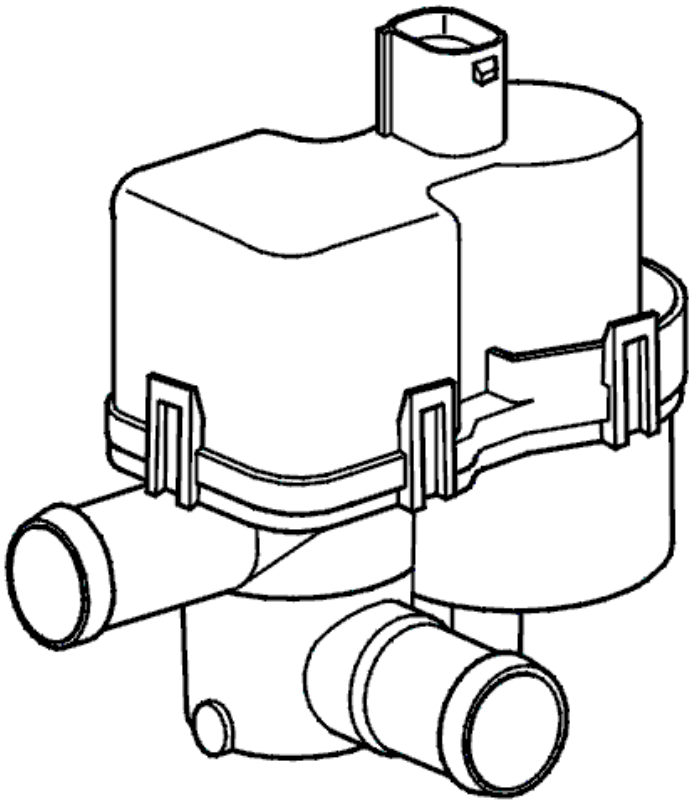

Fig. 172: Identifying Leak Diagnostic Pump
Courtesy of VOLVO CARS CORPORATION

If no fault has been detected in the leak diagnostic unit, the engine control module (ECM) carries out a leak diagnostic of the fuel tank system. The diagnostic trouble code (DTC) is stored if the engine control module (ECM) detects a leak which is 0.5-1.0 mm.

Substitute Value

None.

Possible Source

- A leak that is 0.5-1.0 mm or smaller in the fuel tank, fuel filler pipe, fuel tank filler cap, EVAP canister, evaporative emission system (EVAP) valve, or in the hoses between these components.

Fault symptom[s]

- Malfunction indicator lamp (MIL) lit.

LEAKAGE

CHECKING SOFTWARE

HINT: For vehicles of model year 2003-2008, the software in engine control module (ECM) should be checked before fault tracing of the fault relating to the leak from the tank system is carried out.

Fig. 173: Identifying Ignition On Position
Courtesy of VOLVO CARS CORPORATION

- Ignition on.

  Use the VCT2000 (or appropriate scan tool) to read out and check the software version in the Engine control module (ECM).

  NOTE: More instructions follow together with the read out.

Fig. 174: Identifying VCT2000 Diagnostic Tool Symbol In VIDA
Courtesy of VOLVO CARS CORPORATION

Has the latest software been downloaded to the control module?

- **YES**

  Refer to **PERFORM QUICK-TEST TANK SYSTEM**

PERFORM QUICK-TEST TANK SYSTEM

Fig. 175: Identifying Ignition On Position
Courtesy of VOLVO CARS CORPORATION

- Activate the test using the VCT2000.
- Read off initial parameters and check them according to start conditions for performing the test.

- Check that the test has started. Parameters run status shall go to "In progress" and the test phase shall go to "Reference".

NOTE: If the test does not start, check that the start conditions are fulfilled.

When the reference phase is finished, check of the tank system starts. The pressure in the tank starts to increase, see graph. Within 15 minutes the Engine control module makes a decision as to whether there is leakage in the tank system or not. The test is finished.

- Check parameters for test result and follow relevant instructions below.

NOTE: In the event of a the results from the estimated leakage must be entered in

NOTE: Estimated leakage shall be used to get an idea of the proximity to the diagnostic trouble code limit. If the estimated leakage is very near the diagnostic trouble code limit (greater than 0.3mm), troubleshooting should probably be performed despite the Tank system, test result shows "No leakage found", especially if a diagnostic trouble code for leakage has been stored earlier.

NOTE: Use diagnostic trouble code counter to, see the frequency of the problem. Also use frozen values to get an idea if external conditions may have affected the result. Compare with current conditions in the workshop.

Conditions for starting the quick test of the fuel tank system

- No DTCs related to EVAP purge valve or ambient air pressure sensor set.
- Battery voltage 11-15 V.
- Atmospheric pressure higher than 750 hPa, approx. 2500 m (8200 ft).
- Fuel level 0-85 %.
- Ambient air temperature 4-35 °C.

NOTE: The battery voltage must be correct throughout the entire test. The test can take up to 15 minutes, depending on the quantity of fuel in the fuel tank. It is highly recommended to use the constant voltage charger, Midtronics PSC-550, during the test. For more information, see 30-04 (USA/CDN).

Other information

- see **DESCRIPTION OF PARAMETERS, QUICK TEST OF THE FUEL TANK SYSTEM**
- see **TEST PHASES, QUICK TEST FUEL TANK SYSTEM**
- see **LOCATION OF COMPONENTS, ENGINE COMPARTMENT**
- see **FUEL TANK SYSTEM, CHECK**

- see **TEST PRESSURIZING THE TANK SYSTEM**

Select alternative according to relevant test results:

1. DMTL, test result = "Problem found"

   Refer to **DMTL, TEST RESULT = "PROBLEM FOUND"**

2. Tank system, test result = "No leakage found"

   Refer to **TANK SYSTEM, TEST RESULT = "NO LEAKAGE FOUND"**

3. Tank system, test result = "Minor leakage found"

   Refer to **TANK SYSTEM, TEST RESULT = "MINOR LEAKAGE FOUND"**

4. Tank system, test result = "Major leakage found"

   Refer to **TANK SYSTEM, TEST RESULT = "MAJOR LEAKAGE FOUND"**

5. DMTL, test result and Tank system, test result = "Unknown"

   Refer to **DMTL, TEST RESULT AND TANK SYSTEM, TEST RESULT = "UNKNOWN"**

6. Cancel fault-tracing.

   FAULT NOT FOUND: Troubleshooting has been completed.

Fig. 176: Identifying VCT2000 Diagnostic Tool Symbol In VIDA
Courtesy of VOLVO CARS CORPORATION

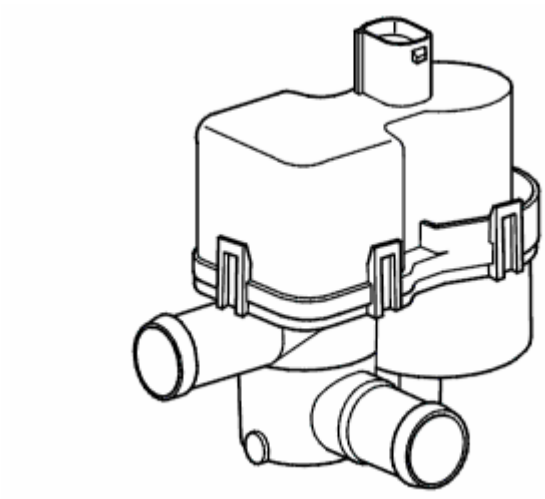

Fig. 177: Identifying Leak Diagnostic Pump
Courtesy of VOLVO CARS CORPORATION

DMTL, TEST RESULT = "PROBLEM FOUND"

If a problem is detected on the leakage diagnostics unit (DMTL), this may have been caused during the test itself. Checks on DMTL are normal electric checks of leakage diagnostics unit and cabling and is no indication of if there is leakage or not.

- Cancel troubleshooting for this problem.
- Read off diagnostic trouble codes again and start troubleshooting for the new diagnostic trouble code.

NOTE: The tank system's status is unknown since the test was interrupted.

TANK SYSTEM, TEST RESULT = "NO LEAKAGE FOUND"

Diagnostic trouble code limit (minor leakage):Estimated leakage = 0.40 mm

If no leakage was found, the Engine control module (ECM) has detected leakage in the tank system earlier, but the problem is not active at this time. The fault could be caused by leakage in the tank, filler pipe, fuel tank filler cap, canister, EVAP valve, leakage diagnosis unit or hoses between these components.

NOTE: Problems caused by a loose tank cap or loose hose connections may be difficult to find. If no leakage was found in the quick-test of the tank system after completed checks and actions according to the above, the problem has likely been repaired.

NOTE: The parameter estimated leakage does not necessarily have to show 0 mm for a sealed system.

TANK SYSTEM, TEST RESULT = "MINOR LEAKAGE FOUND"

Diagnostic trouble code limit:Estimated leakage = 0.40 mm

- Check that the tank cap is properly fitted and that its seal is undamaged.
- Check the hoses and connections on the leak diagnostic unit, the canister, EVAP-valve and the fuel filler pipe visually. Check for damage or incorrect/loose installation.
- Remedy as necessary.
- Restart the test.

NOTE: **Problems caused by a loose tank cap or loose hose connections may be difficult to find. If no leakage was found in the quick-test of the tank system after completed checks and actions according to the above, the problem has likely been repaired.**

NOTE: **By blocking the hose between canister and EVAP-valve and then repeating quick-test tank system, leakage through the EVAP-valve can be detected. If leakage was detected in a previous quick test of the fuel tank system but is not now detected when the hose between the canister and the EVAP valve is blocked, the leakage may be through the EVAP valve.**

- Disconnect the hose between the EVAP canister purge valve and the EVAP canister from the connection to the EVAP canister purge valve.
- Block the hose while running the quick test of the fuel tank system.

- **Continue**

  Refer to **PERFORM QUICK-TEST TANK SYSTEM**

DMTL, TEST RESULT AND TANK SYSTEM, TEST RESULT = "UNKNOWN"

Engine control module (ECM) cannot perform check of tank system. This may be due to the conditions for start of the quick-test not being fulfilled, that they have changed during the course of the test, or that a problem has occurred during troubleshooting.

- Check that all conditions for start of the quick-test are fulfilled.
- Visually check hoses and connections on leakage diagnostics unit, canister, EVAP-valve, and filler pipe. Check for damage or incorrect/loose installation.
- Remedy as necessary.
- Restart the test.

- **Continue**

  Refer to **PERFORM QUICK-TEST TANK SYSTEM**

TANK SYSTEM, TEST RESULT = "MAJOR LEAKAGE FOUND"

Diagnostic trouble code limit:Tank pressure lower than 1500 Pa after 450 seconds in test phase "Major leakage".

- Check that the tank cap is properly fitted and that its seal is undamaged.
- Check the hoses and connections on the leak diagnostic unit, the canister, EVAP-valve and the fuel filler pipe visually. Check for damage or incorrect/loose installation.
- Remedy as necessary.
- Restart the test.

NOTE: **Problems caused by a loose tank cap or loose hose connections may be difficult to find. If no leakage was found in the quick-test of the tank system after completed checks and actions according to the above, the problem has likely been repaired.**

- **Continue**

  Refer to **PERFORM QUICK-TEST TANK SYSTEM**

ECM-434C: FUEL TANK SYSTEM, LEAKAGE. MINOR LEAK (B6294T; 2005-2006)

DIAGNOSTIC TROUBLE CODE (DTC) INFORMATION ECM-434C

see **DIAGNOSTIC TROUBLE CODE (DTC) INFORMATION ECM-434C**

LEAKAGE

see **LEAKAGE**

ECM-4360: LEAK DIAGNOSTIC UNIT. FAULTY SIGNAL (B5254T2; 2005-2007)

DIAGNOSTIC TROUBLE CODE (DTC) INFORMATION ECM-4360

Condition

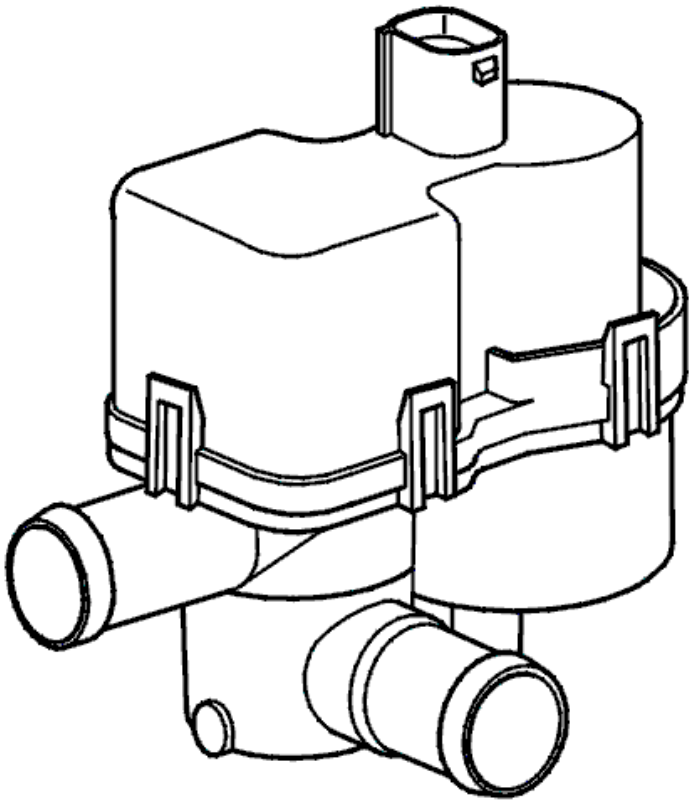

Fig. 178: Identifying Leak Diagnostic Pump
Courtesy of VOLVO CARS CORPORATION

The power consumption of the pump must drop when the leak diagnostic pump valve moves from the reference check to pressurizing the fuel tank system. Diagnostic trouble code is stored if the value for the power consumption of the pump drops too quickly, slowly or not at all.

The diagnostic trouble code (DTC) can be diagnosed when the leak diagnostic system is run.

Substitute Value

The leak diagnostic is disabled.

Possible Source

- Contact resistance in the terminals
- Damaged leak diagnostic unit
- Damaged control heater pad.

Fault symptom[s]

- Malfunction indicator lamp (MIL) lit.

FAULT-TRACING

CHECKING SOFTWARE

HINT: For vehicles of model year 2003-2008, the software in engine control module (ECM) should be checked before fault tracing of the fault relating to the leak from the tank system is carried out.

Fig. 179: Identifying Ignition On Position
Courtesy of VOLVO CARS CORPORATION

- Ignition on.

  Use the VCT2000 (or appropriate scan tool) to read out and check the software version in the Engine control module (ECM).

  NOTE: More instructions follow together with the read out.

Fig. 180: Identifying VCT2000 Diagnostic Tool Symbol In VIDA
Courtesy of VOLVO CARS CORPORATION

Has the latest software been downloaded to the control module?

- **YES**

  Refer to **PERFORM QUICK-TEST TANK SYSTEM**

PERFORM QUICK-TEST TANK SYSTEM

Fig. 181: Identifying Ignition On Position
Courtesy of VOLVO CARS CORPORATION

- Activate the test using the VCT2000.
- Read off initial parameters and check them according to start conditions for performing the test.
- Check that the test has started. Parameters run status shall go to "In progress" and the test phase shall go to "Reference".

NOTE: If the test does not start, check that the start conditions are fulfilled.

When the reference phase is finished, check of the tank system starts. The pressure in the tank starts to increase, see graph. Within 15 minutes the Engine control module makes a decision as to whether there is leakage in the tank system or not. The test is finished.

- Check parameters for test result and follow relevant instructions below.

NOTE: In the event of a the results from the estimated leakage must be entered in

NOTE: Estimated leakage shall be used to get an idea of the proximity to the diagnostic trouble code limit. If the estimated leakage is very near the diagnostic trouble code limit (greater than 0.3mm), troubleshooting should probably be performed despite the Tank system, test result shows "No leakage found", especially if a diagnostic trouble code for leakage has been stored earlier.

NOTE: Use diagnostic trouble code counter to, see the frequency of the problem. Also use frozen values to get an idea if external conditions may have affected the result. Compare with current conditions in the workshop.

Conditions for starting the quick test of the fuel tank system

- No DTCs related to EVAP purge valve or ambient air pressure sensor set.
- Battery voltage 11-15 V.
- Atmospheric pressure higher than 750 hPa, approx. 2500 m (8200 ft).
- Fuel level 0-85 %.
- Ambient air temperature 4-35 °C.

NOTE: The battery voltage must be correct throughout the entire test. The test can take up to 15 minutes, depending on the quantity of fuel in the fuel tank. It is highly recommended to use the constant voltage charger, Midtronics PSC-550, during the test. For more information, see 30-04 (USA/CDN).

Other information

- see **DESCRIPTION OF PARAMETERS, QUICK TEST OF THE FUEL TANK SYSTEM**
- see **TEST PHASES, QUICK TEST FUEL TANK SYSTEM**

- see **CONNECTING THE BREAKOUT BOX**
- see **SIGNAL SPECIFICATION**
- see **LEAK DIAGNOSTIC PUMP, REPLACING**

Select alternative according to relevant test results:

1. DMTL, test result = "Problem found"

   Refer to **DMTL, TEST RESULT = "PROBLEM FOUND"**

2. Tank system, test result = "No leakage found"

   Refer to **TANK SYSTEM, TEST RESULT = "NO LEAKAGE FOUND"**

3. Tank system, test result = "Major leakage found" or "Minor leakage found"

   Refer to **TANK SYSTEM, TEST RESULT = "MAJOR LEAKAGE FOUND" OR "MINOR LEAKAGE FOUND"**

4. DMTL, test result and Tank system, test result = "Unknown"

   Refer to **DMTL, TEST RESULT AND TANK SYSTEM, TEST RESULT = "UNKNOWN"**

5. Cancel fault-tracing.

   FAULT NOT FOUND: Troubleshooting has been completed.

Fig. 182: Identifying VCT2000 Diagnostic Tool Symbol In VIDA
Courtesy of VOLVO CARS CORPORATION

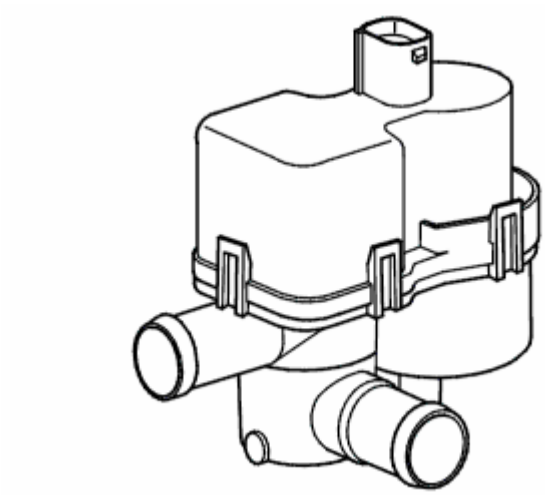

Fig. 183: Identifying Leak Diagnostic Pump
Courtesy of VOLVO CARS CORPORATION

DMTL, TEST RESULT = "PROBLEM FOUND"

Check the leak diagnostic unit connectors. Check for contact resistance and oxidation.

Check the hose between the leak diagnostic unit and the EVAP canister. Check for blockages.

Try a new leak diagnostic unit if no fault is found during the above fault-tracing.

- Perform "Quick-test tank system" again to verify that the problem has been solved.

  NOTE: The tank system's status is unknown since the test was interrupted.

- **Continue**

  Refer to **PERFORM QUICK-TEST TANK SYSTEM**

TANK SYSTEM, TEST RESULT = "NO LEAKAGE FOUND"

Diagnostic trouble code limit (minor leakage):Estimated leakage = 0.40 mm

No problem has been detected on leakage diagnostics unit and fuel tank system is OK. The vehicle is ready to be delivered back to customer.

NOTE: The parameter estimated leakage does not necessarily have to show 0 mm for a sealed system.

TANK SYSTEM, TEST RESULT = "MAJOR LEAKAGE FOUND" OR "MINOR LEAKAGE FOUND"

If a leakage is detected during this test, it indicates that the problem with the leakage diagnostics unit (DMTL) is solved. Now the Engine control module (ECM) has the possibility to check the fuel tank system. A leakage

has been found.

- Cancel troubleshooting for this problem.
- Read off diagnostic trouble codes again and start troubleshooting for the new diagnostic trouble code.

DMTL, TEST RESULT AND TANK SYSTEM, TEST RESULT = "UNKNOWN"

Engine control module (ECM) cannot perform check of tank system. This may be due to the conditions for start of the quick-test not being fulfilled, that they have changed during the course of the test, or that a problem has occurred during troubleshooting.

- Check that all conditions for start of the quick-test are fulfilled.
- Visually check hoses and connections on leakage diagnostics unit, canister, EVAP-valve, and filler pipe. Check for damage or incorrect/loose installation.
- Remedy as necessary.
- Restart the test.

- **Continue**

  Refer to **PERFORM QUICK-TEST TANK SYSTEM**

ECM-4360: LEAK DIAGNOSTIC UNIT. FAULTY SIGNAL (B6294T; 2005-2006)

DIAGNOSTIC TROUBLE CODE (DTC) INFORMATION ECM-4360

see **DIAGNOSTIC TROUBLE CODE (DTC) INFORMATION ECM-4360**

FAULT-TRACING

CHECKING SOFTWARE

HINT: For vehicles of model year 2003-2008, the software in engine control module (ECM) should be checked before fault tracing of the fault relating to the leak from the tank system is carried out.

Fig. 184: Identifying Ignition On Position
Courtesy of VOLVO CARS CORPORATION

- Ignition on.

  Use the VCT2000 (or appropriate scan tool) to read out and check the software version in the Engine

control module (ECM).

NOTE: More instructions follow together with the read out.

Fig. 185: Identifying VCT2000 Diagnostic Tool Symbol In VIDA
Courtesy of VOLVO CARS CORPORATION

Has the latest software been downloaded to the control module?

- **YES**

  Refer to **PERFORM QUICK-TEST TANK SYSTEM**

PERFORM QUICK-TEST TANK SYSTEM

Fig. 186: Identifying Ignition On Position
Courtesy of VOLVO CARS CORPORATION

- Activate the test using the VCT2000.
- Read off initial parameters and check them according to start conditions for performing the test.
- Check that the test has started. Parameters run status shall go to "In progress" and the test phase shall go to "Reference".

NOTE: If the test does not start, check that the start conditions are fulfilled.

When the reference phase is finished, check of the tank system starts. The pressure in the tank starts to increase, see graph. Within 15 minutes the Engine control module makes a decision as to whether there is leakage in the tank system or not. The test is finished.

- Check parameters for test result and follow relevant instructions below.

NOTE: In the event of a the results from the estimated leakage must be entered in

NOTE: Estimated leakage shall be used to get an idea of the proximity to the

diagnostic trouble code limit. If the estimated leakage is very near the diagnostic trouble code limit (greater than 0.3mm), troubleshooting should probably be performed despite the Tank system, test result shows "No leakage found", especially if a diagnostic trouble code for leakage has been stored earlier.

NOTE: **Use diagnostic trouble code counter to, see the frequency of the problem. Also use frozen values to get an idea if external conditions may have affected the result. Compare with current conditions in the workshop.**

Conditions for starting the quick test of the fuel tank system

- No DTCs related to EVAP purge valve or ambient air pressure sensor set.
- Battery voltage 11-15 V.
- Atmospheric pressure higher than 750 hPa, approx. 2500 m (8200 ft).
- Fuel level 0-85 %.
- Ambient air temperature 4-35 °C.

NOTE: **The battery voltage must be correct throughout the entire test. The test can take up to 15 minutes, depending on the quantity of fuel in the fuel tank. It is highly recommended to use the constant voltage charger, Midtronics PSC-550, during the test. For more information, see 30-04 (USA/CDN).**

Other information

- see **DESCRIPTION OF PARAMETERS, QUICK TEST OF THE FUEL TANK SYSTEM**
- see **TEST PHASES, QUICK TEST FUEL TANK SYSTEM**
- see **CONNECTING THE BREAKOUT BOX**
- see **SIGNAL SPECIFICATION**
- see **LEAK DIAGNOSTIC PUMP, REPLACING**

Select alternative according to relevant test results:

1. DMTL, test result = "Problem found"

   Refer to **DMTL, TEST RESULT = "PROBLEM FOUND"**

2. Tank system, test result = "No leakage found"

   Refer to **TANK SYSTEM, TEST RESULT = "NO LEAKAGE FOUND"**

3. Tank system, test result = "Major leakage found" or "Minor leakage found"

Refer to **TANK SYSTEM, TEST RESULT = "MAJOR LEAKAGE FOUND" OR "MINOR LEAKAGE FOUND"**

4. DMTL, test result and Tank system, test result = "Unknown"

   Refer to **DMTL, TEST RESULT AND TANK SYSTEM, TEST RESULT = "UNKNOWN"**

5. Cancel fault-tracing.

   FAULT NOT FOUND: Troubleshooting has been completed.

Fig. 187: Identifying VCT2000 Diagnostic Tool Symbol In VIDA
Courtesy of VOLVO CARS CORPORATION

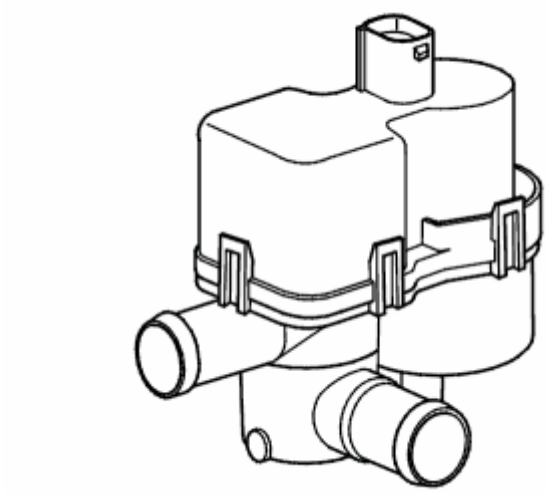

Fig. 188: Identifying Leak Diagnostic Pump
Courtesy of VOLVO CARS CORPORATION

DMTL, TEST RESULT = "PROBLEM FOUND"

Check the leak diagnostic unit connectors. Check for contact resistance and oxidation.

Check the hose between the leak diagnostic unit and the EVAP canister. Check for blockages.

Try a new leak diagnostic unit if no fault is found during the above fault-tracing.

- Perform "Quick-test tank system" again to verify that the problem has been solved.

NOTE: The tank system's status is unknown since the test was interrupted.

- **Continue**

  Refer to **PERFORM QUICK-TEST TANK SYSTEM**

TANK SYSTEM, TEST RESULT = "NO LEAKAGE FOUND"

Diagnostic trouble code limit (minor leakage):Estimated leakage = 0.40 mm

No problem has been detected on leakage diagnostics unit and fuel tank system is OK. The vehicle is ready to be delivered back to customer.

NOTE: The parameter estimated leakage does not necessarily have to show 0 mm for a sealed system.

TANK SYSTEM, TEST RESULT = "MAJOR LEAKAGE FOUND" OR "MINOR LEAKAGE FOUND"

If a leakage is detected during this test, it indicates that the problem with the leakage diagnostics unit (DMTL) is solved. Now the Engine control module (ECM) has the possibility to check the fuel tank system. A leakage has been found.

- Cancel troubleshooting for this problem.
- Read off diagnostic trouble codes again and start troubleshooting for the new diagnostic trouble code.

DMTL, TEST RESULT AND TANK SYSTEM, TEST RESULT = "UNKNOWN"

Engine control module (ECM) cannot perform check of tank system. This may be due to the conditions for start of the quick-test not being fulfilled, that they have changed during the course of the test, or that a problem has occurred during troubleshooting.

- Check that all conditions for start of the quick-test are fulfilled.
- Visually check hoses and connections on leakage diagnostics unit, canister, EVAP-valve, and filler pipe. Check for damage or incorrect/loose installation.
- Remedy as necessary.
- Restart the test.

- **Continue**

  Refer to **PERFORM QUICK-TEST TANK SYSTEM**

ECM-436B: LEAK DIAGNOSTIC UNIT. SIGNAL MISSING (B5254T2; 2005-2007)

DIAGNOSTIC TROUBLE CODE (DTC) INFORMATION ECM-436B

Condition

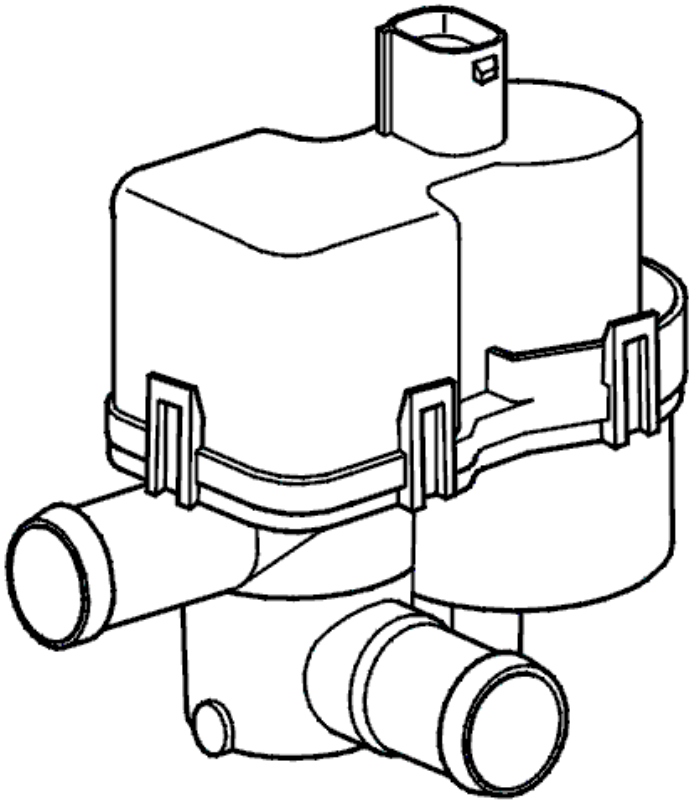

Fig. 189: Identifying Leak Diagnostic Pump
Courtesy of VOLVO CARS CORPORATION

The engine control module (ECM) checks power consumption on the leak diagnostic unit pump.

A diagnostic trouble code is stored if the current consumption of the pump in the leak diagnostic unit varies too much during the reference phase.

The diagnostic trouble code (DTC) can be diagnosed when the leak diagnostic system is run.

Substitute Value

The leak diagnostic is disabled.

Possible Source

- Contact resistance in the terminals
- Blocked hose between the filter and the leak diagnostic unit
- Damaged leak diagnostic unit.

Fault symptom[s]

- Malfunction indicator lamp (MIL) lit.

FAULT-TRACING

see **FAULT-TRACING**

ECM-436B: LEAK DIAGNOSTIC UNIT. SIGNAL MISSING (B6294T; 2005-2006)

DIAGNOSTIC TROUBLE CODE (DTC) INFORMATION ECM-436B

see **DIAGNOSTIC TROUBLE CODE (DTC) INFORMATION ECM-436B**

FAULT-TRACING

see **FAULT-TRACING**

ECM-436C: LEAK DIAGNOSTIC UNIT. SIGNAL TOO HIGH (B5254T2; 2005-2007)

DIAGNOSTIC TROUBLE CODE (DTC) INFORMATION ECM-436C

Condition

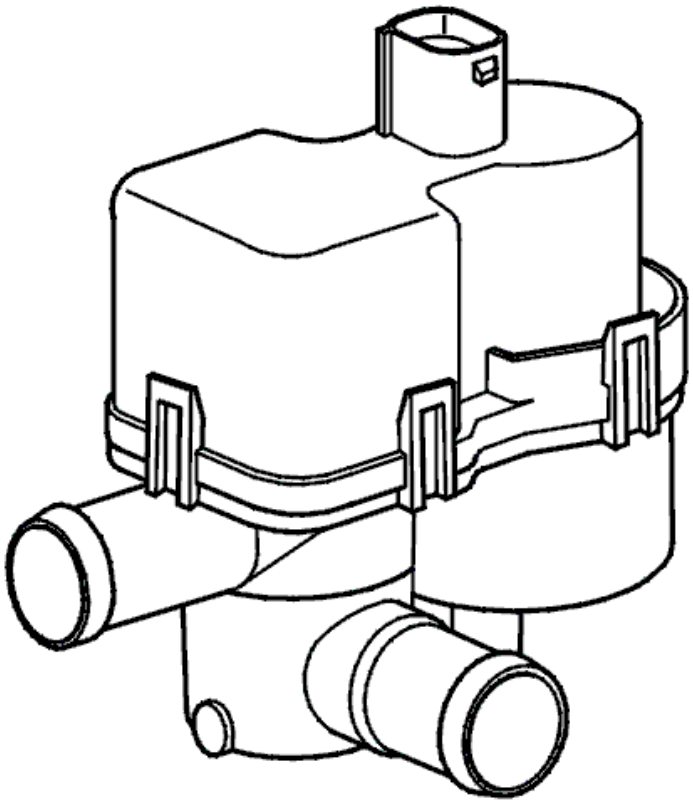

Fig. 190: Identifying Leak Diagnostic Pump
Courtesy of VOLVO CARS CORPORATION

The diagnostic trouble code (DTC) is stored if the power consumption of the pump in the leak diagnostic unit is higher than a certain value during the reference phase.

The diagnostic trouble code (DTC) can be diagnosed when the leak diagnostic system is run.

Substitute Value

The leak diagnostic is disabled.

Possible Source

- Contact resistance in the terminals
- Blocked filter in the leak diagnostic unit
- Blocked hose between the filter and the leak diagnostic unit
- Damaged leak diagnostic unit.

Fault symptom[s]

- Malfunction indicator lamp (MIL) lit.

FAULT-TRACING

see **FAULT-TRACING**

ECM-436C: LEAK DIAGNOSTIC UNIT. SIGNAL TOO HIGH (B6294T; 2005-2006)

DIAGNOSTIC TROUBLE CODE (DTC) INFORMATION ECM-436C

see **DIAGNOSTIC TROUBLE CODE (DTC) INFORMATION ECM-436C**

FAULT-TRACING

see **FAULT-TRACING**

ECM-436D: LEAK DIAGNOSTIC UNIT. SIGNAL TOO LOW (B5254T2; 2005-2007)

DIAGNOSTIC TROUBLE CODE (DTC) INFORMATION ECM-436D

Condition

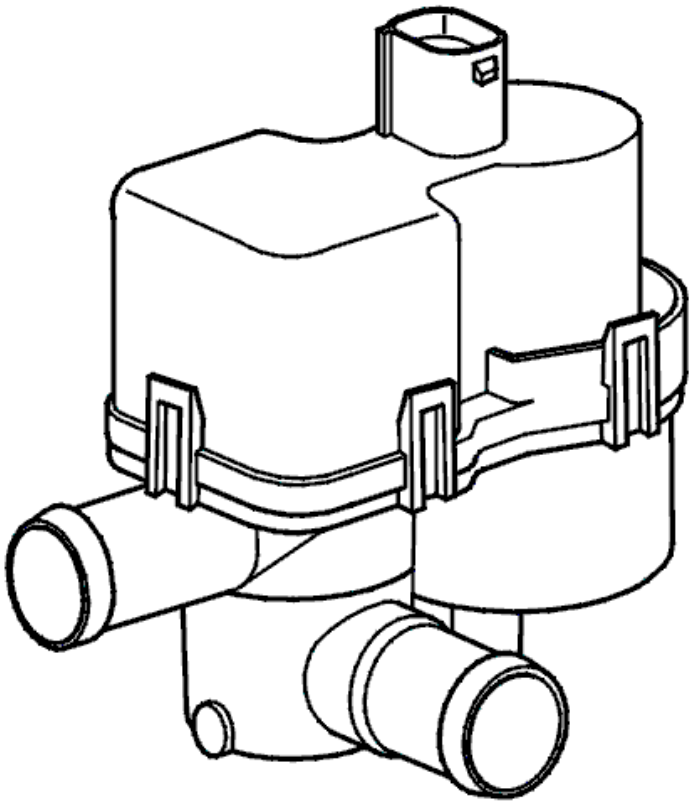

Fig. 191: Identifying Leak Diagnostic Pump

Courtesy of VOLVO CARS CORPORATION

The diagnostic trouble code (DTC) is stored if the power consumption of the pump in the leak diagnostic unit is lower than a certain value during the reference phase.

The diagnostic trouble code (DTC) can be diagnosed when the leak diagnostic system is run.

Substitute Value

The leak diagnostic is disabled.

Possible Source

- Contact resistance in the terminals
- Damaged leak diagnostic unit.

Fault symptom[s]

- Malfunction indicator lamp (MIL) lit.

FAULT-TRACING

see **FAULT-TRACING**

ECM-436D: LEAK DIAGNOSTIC UNIT. SIGNAL TOO LOW (B6294T; 2005-2006)

DIAGNOSTIC TROUBLE CODE (DTC) INFORMATION ECM-436D

see **DIAGNOSTIC TROUBLE CODE (DTC) INFORMATION ECM-436D**

FAULT-TRACING

see **FAULT-TRACING**

ECM-4380: FUEL TANK FILLER CAP. MISSING (B5254T2; 2005-2007)

DIAGNOSTIC TROUBLE CODE (DTC) INFORMATION ECM-4380

Condition

If the engine control module (ECM) registers that fuel filling has been carried out through the fuel level being changed, the position and installation of the fuel tank filler cap is checked. This is carried out by quicker leak diagnostics.

The check is carried out a few minutes after start if the vehicle speed is constant and exceeds 30 km/h and only

if no fault is detected on the leak diagnostic unit.

The diagnostic trouble code (DTC) is stored if the engine control module (ECM) detects a leak after filling. This is interpreted as fuel tank filler cap missing or loosely installed.

This diagnostic trouble code (DTC) cannot occur alone but follows another stored diagnostic trouble code (DTC) for the fuel tank filler cap. The diagnostic trouble code (DTC) only remains during one operating cycle and lights a message in the display indicating that the fuel tank filler cap is not correctly positioned.

Substitute Value

- None.

Possible Source

- The diagnostic trouble code (DTC) is caused by another diagnostic trouble code (DTC) being stored in the engine control module (ECM).

Fault symptom[s]

- Message in the display.

FAULT-TRACING INFORMATION

see **FAULT-TRACING INFORMATION**

ECM-4380: FUEL TANK FILLER CAP. MISSING (B6294T; 2005-2006)

DIAGNOSTIC TROUBLE CODE (DTC) INFORMATION ECM-4380

see **DIAGNOSTIC TROUBLE CODE (DTC) INFORMATION ECM-4380**

FAULT-TRACING INFORMATION

see **FAULT-TRACING INFORMATION**

ECM-439C: FUEL TANK SYSTEM, LEAKAGE. MAJOR LEAK (B5254T2; 2005-2007)

DIAGNOSTIC TROUBLE CODE (DTC) INFORMATION ECM-439C

Condition

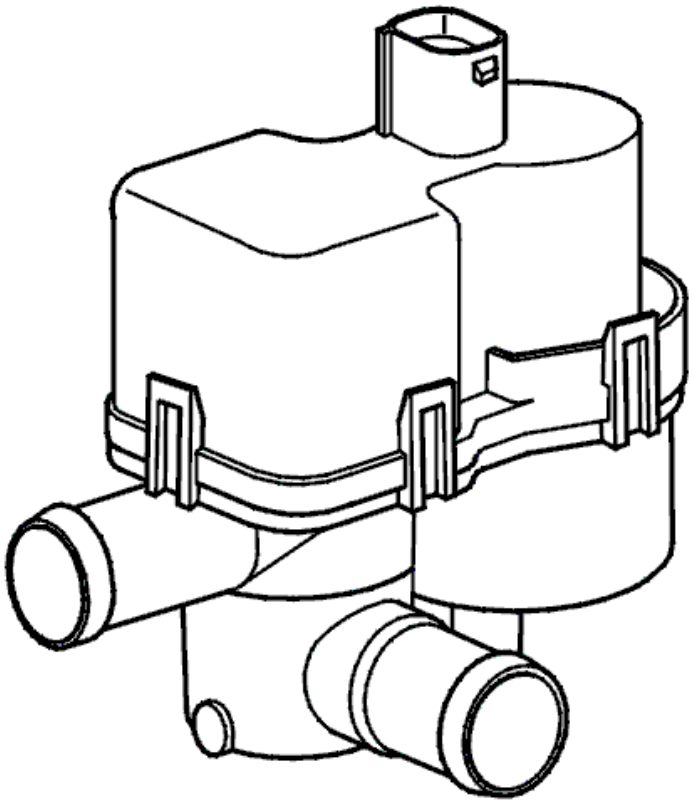

Fig. 192: Identifying Leak Diagnostic Pump
Courtesy of VOLVO CARS CORPORATION

If no fault has been detected in the leak diagnostic unit, the engine control module (ECM) carries out a leak diagnostic of the fuel tank system. The diagnostic trouble code (DTC) is stored if the engine control module (ECM) detects a leak which is larger than 1.0 mm.

Substitute Value

None.

Possible Source

- The fuel tank filler cap is missing or not properly tightened
- Leakage that is 1.0 mm or greater in the fuel tank, fuel filler pipe, fuel tank filler cap, EVAP canister, canister purge (CP) valve, or in the hoses between these components.

Fault symptom[s]

- Malfunction indicator lamp (MIL) lit.

LEAKAGE

see **LEAKAGE**

ECM-439C: FUEL TANK SYSTEM, LEAKAGE. MAJOR LEAK (B6294T; 2005-2006)

DIAGNOSTIC TROUBLE CODE (DTC) INFORMATION ECM-439C

see **DIAGNOSTIC TROUBLE CODE (DTC) INFORMATION ECM-439C**

LEAKAGE

see **LEAKAGE**

ECM-4400: FUEL LEVEL SENSOR. FAULTY SIGNAL (B5254T2; 2005-2007)

DIAGNOSTIC TROUBLE CODE (DTC) INFORMATION ECM-4400

Condition

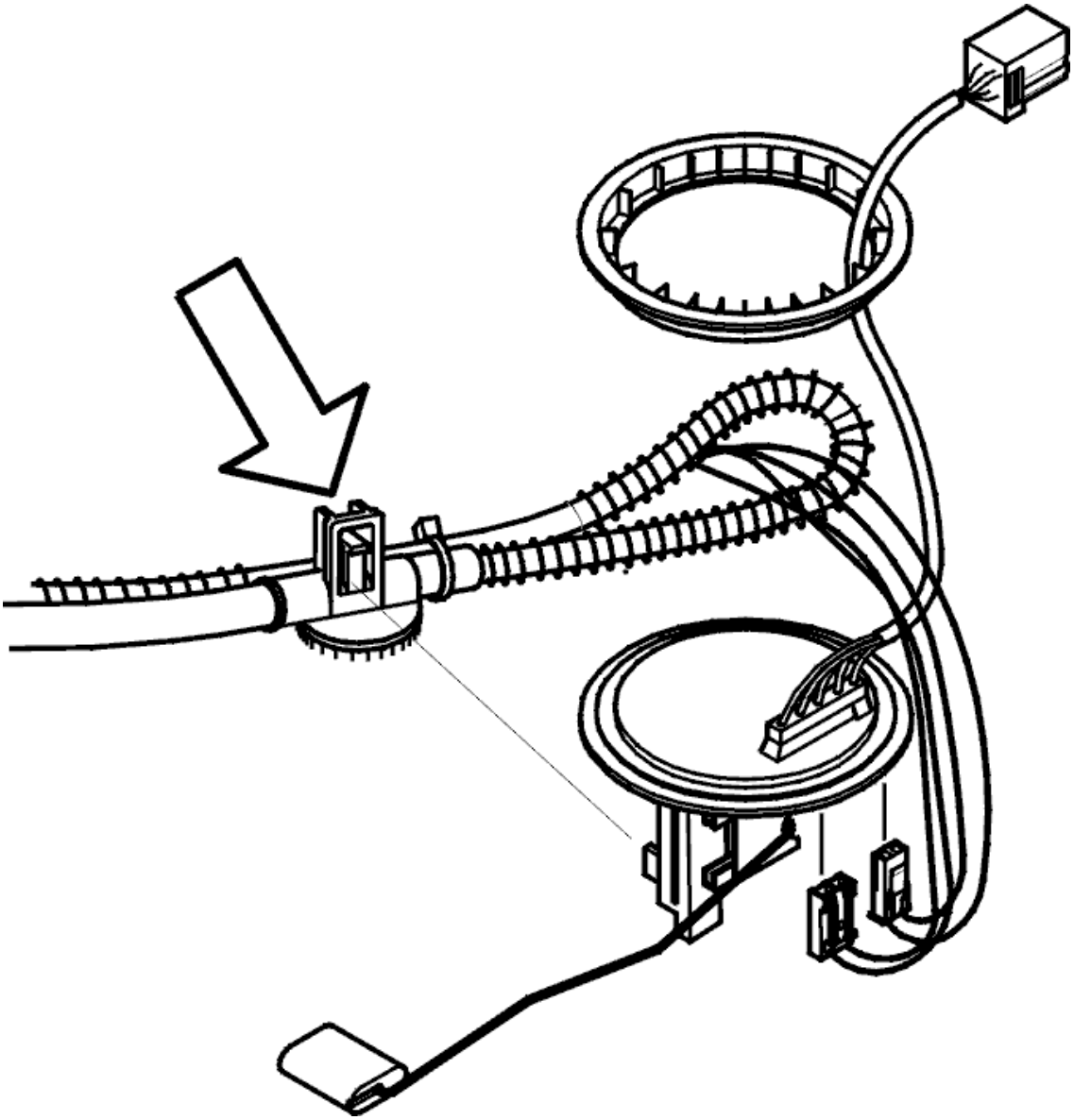

Fig. 193: Fuel Level Sensor Connector
Courtesy of VOLVO CARS CORPORATION

The rear electronic module (REM) transmits information about the fuel level and fault status of the fuel level sensor to the central electronic module (CEM). The central electronic module (CEM) then transmits this information on to the engine control module (ECM).

The engine control module (ECM) compares the engine fuel consumption with the change in fuel level over a set period of time. The diagnostic trouble code (DTC) is stored if the engine control module (ECM) registers an implausibly small reduction in the fuel level compared with calculated fuel consumption.

Substitute Value

- None.

Possible Source

- Fault trace the rear electronic module (REM)
- Damaged fuel level sensor.

Fault symptom[s]

- Gauges/Fuel level not accurate/Value too low

FAULT-TRACING INFORMATION

see **FAULT-TRACING INFORMATION**

ECM-4400: FUEL LEVEL SENSOR. FAULTY SIGNAL (B6294T; 2005-2006)

DIAGNOSTIC TROUBLE CODE (DTC) INFORMATION ECM-4400

see **DIAGNOSTIC TROUBLE CODE (DTC) INFORMATION ECM-4400**

FAULT-TRACING INFORMATION

see **FAULT-TRACING INFORMATION**

ECM-440B: FUEL LEVEL SENSOR. SIGNAL MISSING (B5254T2; 2005-2007)

DIAGNOSTIC TROUBLE CODE (DTC) INFORMATION ECM-440B

Condition

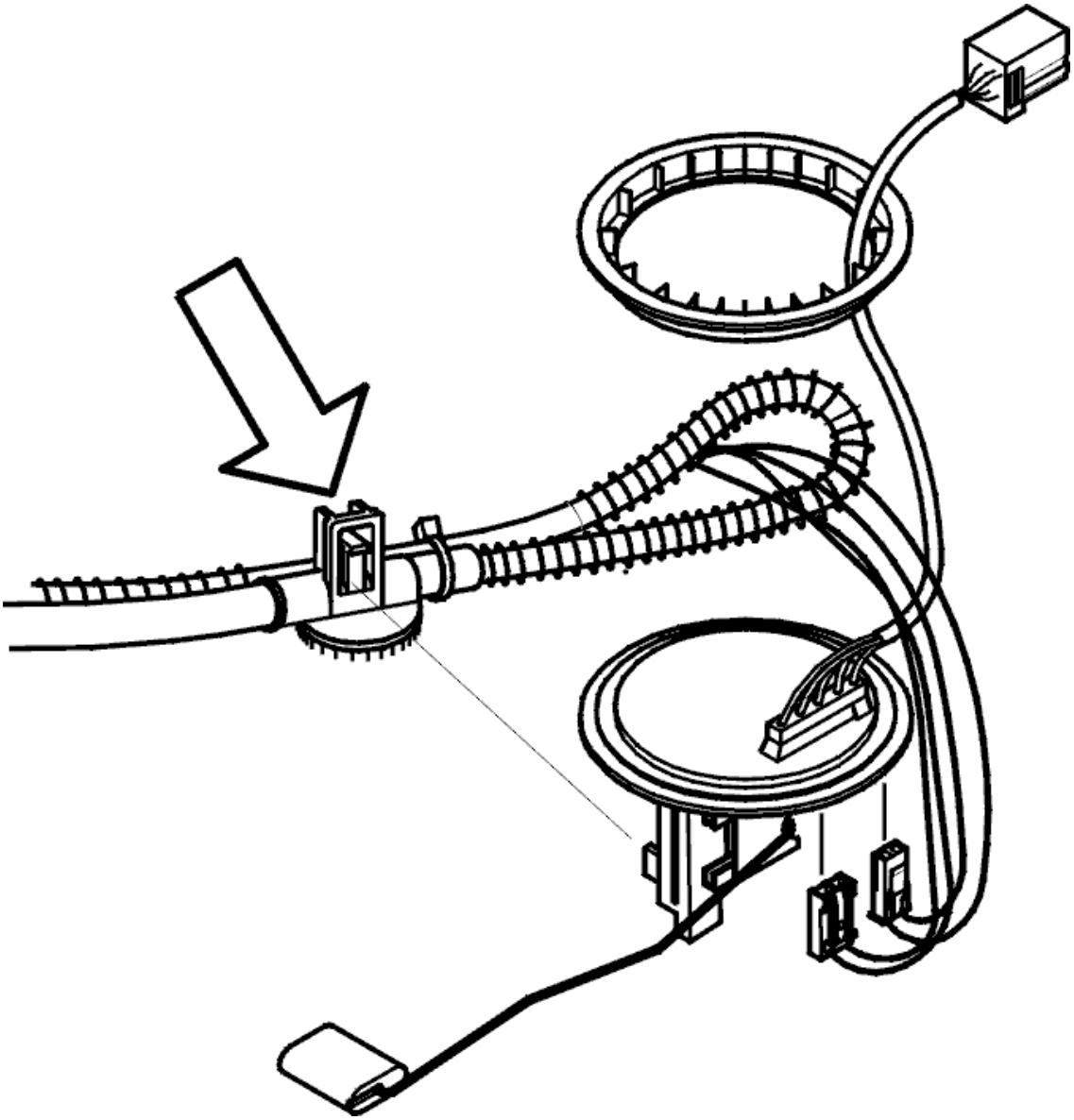

Fig. 194: Fuel Level Sensor Connector
Courtesy of VOLVO CARS CORPORATION

The rear electronic module (REM) transmits information about the fuel level and fault status of the fuel level sensor to the central electronic module (CEM). The central electronic module (CEM) then transmits this information on to the engine control module (ECM).

The diagnostic trouble code (DTC) is stored if the engine control module (ECM) registers a communication problem with the central electronic module (CEM).

The diagnostic trouble code (DTC) can be diagnosed when the ignition is switched on.

Substitute Value

- None.

Possible Source

- Open-circuit in the control area network (CAN) wiring
- Short-circuit between the control area network (CAN) wiring
- Internal fault in another control module in the same part of the control area network (CAN).

Fault symptom[s]

- Gauges/Fuel level not accurate/Value too low

FAULT-TRACING INFORMATION

INFORMATION

No fault-tracing has been developed for this diagnostic trouble code (DTC). A diagnostic trouble code for CAN communication can also be generated in the Central Electronic Module (CEM). This diagnostic trouble code shall not be cleared until the trouble code in the central electronic module (CEM) and in other affected control modules has been remedied and cleared. Therefore, first read the diagnostic trouble codes in the Central Electronic Module (CEM) and other affected control modules, perform fault tracing and remedy as necessary. This diagnostic trouble code (DTC) can then be erased. For further information on this diagnostic trouble code, see Diagnostic trouble code (DTC) information.

Other information

- see **GENERAL INFORMATION ABOUT FAULT-TRACING IN THE CAN NETWORK (2005-2012)**

GENERAL INFORMATION ABOUT FAULT-TRACING IN THE CAN NETWORK

General

The CAN network is a pure communications network and contains no fuses or sensors. The network is divided into two parts: the low speed network (LS-CAN, Low Speed CAN) and the high speed network (HS-CAN, High Speed CAN). The differences between the networks are their physical position in the car and the transfer rates. In general terms, HS-CAN is restricted to the engine compartment and LS-CAN to the passenger compartment and the cargo compartment.

Both the low speed and the high speed network house two network resistors in tow of the control modules. Each resistor has resistance of 120 ohms. If resistance between the two CAN cables is measured, a normal value is approximately 60 ohms as measured from about the center of the network. The value may vary between vehicles. Permissible values are approximately 55-65 ohms.

NOTE: Troubleshoot each CAN-net, see troubleshooting for CAN-related fault codes for Central electronic module (CEM). For example, choose one of CEM-DF01 - DF17 depending on CAN-net.

Diagnostic trouble code (DTC) types

Diagnostic trouble codes (DTCs) which can be stored by control modules connected to the controller area network (CAN) can be split into two categories:

Electrical fault

These diagnostic trouble codes (DTCs) can only be stored in the central electronic module (CEM). This type of diagnostic trouble code (DTC) is stored when the central electronic module (CEM) has detected an electrical fault in the controller area network (CAN) wiring. For example a short-circuit between the controller area network (CAN) wiring or a short-circuit between the controller area network (CAN) wiring and voltage or ground. The fault may be due to an open-circuit in the CAN-H on the network. These diagnostic trouble codes (DTCs) do not normally indicate that a fault has occurred in any control module.

Communication error, CEM

These diagnostic trouble codes (DTCs) can only be stored in the central electronic module (CEM). The diagnostic trouble code (DTC) indicates that a control module, with which the central electronic module (CEM) expects to communicate, is not responding for one reason or another. This can be due to an open-circuit on one or both the controller area network (CAN) cables to one control module or the control module not being supplied with power, for example.

Communication error, control module

These diagnostic trouble codes (DTCs) can be stored by all control modules. A control module that has stored this diagnostic trouble code (DTC) has detected that some sort of interference has occurred with communication. The diagnostic trouble code (DTC) does not point out a specific fault source. Examples of fault causes can be intermittent short-circuits between the CAN cables, intermittent short-circuits on a CAN cable to supply voltage/ground or a control module that transmits incorrect messages on the CAN network.

NOTE: **The diagnostic trouble codes (DTC) for communication errors can thus be stored in one or more control modules and stem from the same causes as the diagnostic trouble codes for electrical faults in the Central Electronic Module (CEM), that is to say "short-circuit" of one or both CAN cables to supply voltage or ground. It is only the Central Electronic Module (CEM), however, that can store a diagnostic trouble code (DTC) that is generated due to the short-circuit itself.**

Configuration fault

The diagnostic trouble code (DTC) can be stored by all control modules in both the HS-CAN and LS-CAN except the central electronic module (CEM). The diagnostic trouble code (DTC) indicates that a control module could not receive anticipated communication from the central electronic module (CEM). Examples of fault causes could be incorrect software configuration in the control module that generated the diagnostic trouble code (DTC) or an open-circuit on the CAN cables to the control module that generated the diagnostic trouble code (DTC). This diagnostic trouble code (DTC) can also be stored if there is play in the connectors or bent terminal pins in a connector on one of the CAN cables.

NOTE: **Software in one control module cannot "break". If the control module that**

generated the diagnostic trouble code once has functioned in the vehicle, the malfunction cannot be remedied by downloading new software. The only time when downloading new software to a control module is of help is if the customer or workshop has replaced a control module with a control module from another vehicle without downloading software after replacement.

Diagnostic functions in the central electronic module (CEM)

The central electronic module (CEM) acts as a hub between the two networks. This operates as an exchange and can distribute traffic between the high speed network (HS-CAN) and the low speed network (LS-CAN) and vice versa. The central electronic module (CEM) also contains diagnostic functions for monitoring the traffic on the CAN network and the voltage levels in the CAN cables.

NOTE: **The central electronic module (CEM) contains more functions for monitoring the CAN network than other control modules. For example, the central electronic module (CEM) is the only control module that can store diagnostic trouble codes (DTCs) for short-circuits between the CAN cables, between a CAN cable and ground and between a CAN cable and supply voltage. The fact that the central electronic module (CEM) can do this does not mean that the central electronic module (CEM) is the cause of all faults in the CAN network. On the other hand, other control modules can store diagnostic trouble codes (DTCs) as a result of the short-circuit. This is a small, but very important difference.**

Example:

Diagnostic trouble codes in pairs between the central electronic module (CEM) and a single control module

If central electronic module (CEM) has generated a diagnostic trouble code for open circuit in communication with a control module and this control module has generated a diagnostic trouble code configuration error, start troubleshooting at the indicated control module. An open circuit has occurred at some point somewhere between the central electronic module (CEM) and this control module.

NOTE: **If the diagnostic trouble code can be read out from the control module in question, the fault is probably intermittent. Check the junctions and connectors along the wiring harness from the central electronic module (CEM) and to the control module that generated the code. Check the connectors especially for retracting pins or oxidation.**

Individual diagnostic trouble codes in the central electronic module (CEM)

If the central electronic module (CEM) has generated diagnostic trouble code for an open circuit in communication with a control module and there is no diagnostic trouble code (DTC) stored in the corresponding control module, it indicates an suspected malfunction in the voltage supply to the indicated control module. The diagnostic trouble code (DTC) cannot be generated if the control module which could not communicate with the engine module (CEM) is not powered.

General procedure

- Check the supply voltage to the relevant control module
- Check the ground terminal for the control module
- Check the CAN cables for the control module.

Checking the power supply

A simple way to check the supply voltage and ground is to check if there is any functionality remaining in the control module. Examples of corrective action:

- Driver door module (DDM)/passenger door module (PDM): Check that the power window of each door can be operated "locally.
- Power seat module (PSM): Check whether the seat can be moved manually
- Road traffic information module (RTI): Check whether the display for the road traffic information module (RTI) can be folded up or whether a disc can be inserted and fed out
- Climate control module (CCM): Check the function. The blower fan must blow. However, the air conditioning (A/C) will not work in the event of interrupted CAN communication.

In the event of difficulty, check as follows: Measure the supply voltage and ground terminal in the connector directly adjacent to the control module that has stored the diagnostic trouble code (DTC).

NOTE: The terminals could be damaged when if readings are taken using measurement cables directly in the connector. If possible, take readings on the rear of the connector. If this is not possible, use a loose terminal strip to insert in the connector.

Diagnostic testing of main arteries in the low speed network (LS-CAN)

Measure the resistance in the connectors of the power seat module (PSM) if such is fitted (easy to access and sits in about the middle of the network). Otherwise connect a breakout box at the central electronic module (CEM). The advantage of using a breakout box is that the functionality of the entire network can be controlled without disconnecting control modules.

This resistance measurement only controls main paths in LS-CAN, not the branching paths to certain control modules. However, a resistance measurement between the two CAN-lines can show if there is a short-circuit between the two lines, even on these branching paths. A normal value, measured somewhere in the middle of the net, is between 55 ohms and 65 ohms when the net is connected (both terminating resistors connected, 120 ohms in parallel). Twist and bend the cable harness at suitable points to detect any intermittent malfunction sources.

Also measure the resistance between each CAN-lead and voltage feed and ground. Twist and bend the cable harness in suitable places to detect any intermittent fault sources. The resistance should be over 1 kohms. If resistance is less than 1 kohms, this indicates short-circuiting between the CAN-lead and ground/voltage.

HINT: Both measurements can be taken in the same connector if the CAN-cables, voltage feed, and ground are exposed. If possible, take measurements on the rear of the connector to prevent damage to the terminals in the connector. If this is not possible, use the adapter wiring or loose terminal pins to obtain a

good contact. The resistance must be over 1 kohms. If the resistance is less than 1 kohms, this indicates short-circuiting between the CAN-lead and ground/voltage.

If the main artery is OK (i. e. approximately 60 ohms measured in the power seat module (PSM), for example), measure the resistance in the CAN cables from the relevant control module.

Diagnostic testing of main arteries in the high speed network (HS-CAN)

In principle it is only possible to measure the resistance in the high speed network (HS-CAN) using adapter wiring. It is easiest to connect the adapter wiring at the engine control module (ECM). Connect the engine control module (ECM) again to the adapter wiring to obtain the correct values when taking readings. The resistance must be approximately 60 ohms.

Abbreviations and terms

- CAN. Controller Area Network
- LS-CAN (Low Speed CAN). Low speed network in the car. In practice this is restricted to the passenger compartment and the cargo compartment
- HS-CAN (High Speed CAN). High speed network in the car. In practice this is restricted to the engine compartment
- CAN-H. CAN cable with the higher voltage. The voltage oscillates between 2.5 V and approximately 4 V when there is traffic on the CAN network
- CAN-L. CAN cable with the lower voltage. The voltage oscillates between 2.5 V and approximately 1 V when there is traffic on the CAN network.

ECM-440B: FUEL LEVEL SENSOR. SIGNAL MISSING (B6294T; 2005-2006)

DIAGNOSTIC TROUBLE CODE (DTC) INFORMATION ECM-440B

see **DIAGNOSTIC TROUBLE CODE (DTC) INFORMATION ECM-440B**

FAULT-TRACING INFORMATION

see **FAULT-TRACING INFORMATION**

ECM-440C: FUEL LEVEL SENSOR. SIGNAL TOO HIGH (B5254T2; 2005-2007)

DIAGNOSTIC TROUBLE CODE (DTC) INFORMATION ECM-440C

Condition

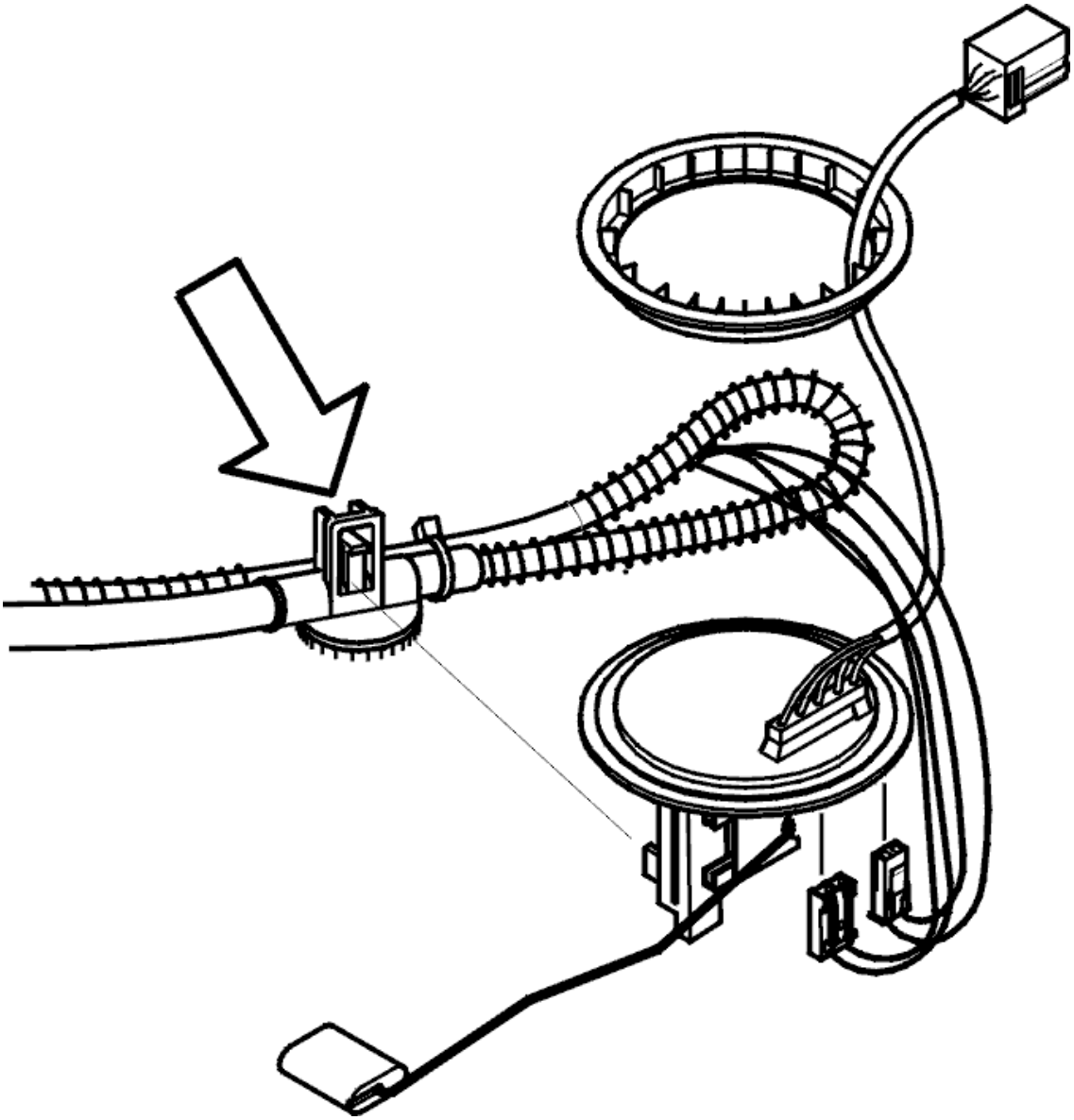

Fig. 195: Fuel Level Sensor Connector
Courtesy of VOLVO CARS CORPORATION

The rear electronic module (REM) transmits information about the fuel level and fault status of the fuel level sensor to the central electronic module (CEM). The central electronic module (CEM) then transmits this information on to the engine control module (ECM).

A diagnostic trouble code (DTC) is stored in the rear electronic module (REM) if it registers an electrical fault with the fuel level sensor. A diagnostic trouble code (DTC) will be stored in the engine control module (ECM) at the same time.

The diagnostic trouble code (DTC) can be diagnosed when the ignition is switched on.

Substitute Value

- None.

Possible Source

- Fault trace the rear electronic module (REM).

Fault symptom[s]

- Gauges/Fuel level not accurate/Value too low

FAULT-TRACING INFORMATION

see **FAULT-TRACING INFORMATION**

ECM-440C: FUEL LEVEL SENSOR. SIGNAL TOO HIGH (B6294T; 2005-2006)

DIAGNOSTIC TROUBLE CODE (DTC) INFORMATION ECM-440C

see **DIAGNOSTIC TROUBLE CODE (DTC) INFORMATION ECM-440C**

FAULT-TRACING INFORMATION

see **FAULT-TRACING INFORMATION**

ECM-440D: FUEL LEVEL SENSOR. SIGNAL TOO LOW (B5254T2; 2005-2007)

DIAGNOSTIC TROUBLE CODE (DTC) INFORMATION ECM-440D (2005, 2006)

Condition

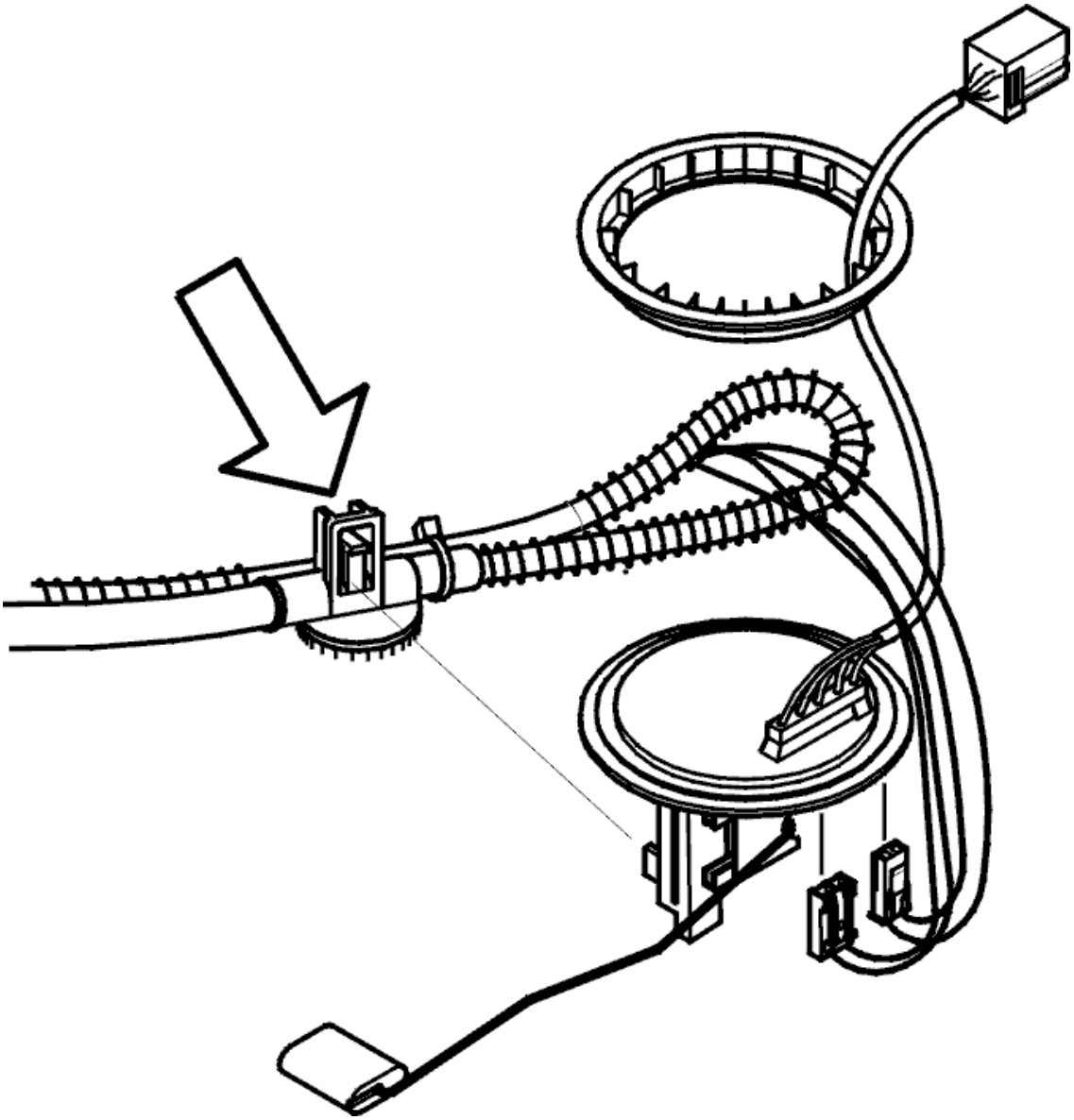

Fig. 196: Fuel Level Sensor Connector
Courtesy of VOLVO CARS CORPORATION

The rear electronic module (REM) transmits information about the fuel level and fault status of the fuel level sensor to the central electronic module (CEM). The central electronic module (CEM) then transmits this information on to the engine control module (ECM).

A diagnostic trouble code (DTC) is stored in the rear electronic module (REM) if it registers an electrical fault with the fuel level sensor. A diagnostic trouble code (DTC) will be stored in the engine control module (ECM) at the same time.

The diagnostic trouble code (DTC) can be diagnosed when the ignition is switched on.

Substitute Value

- None.

Possible Source

- Fault trace the rear electronic module (REM).

Fault symptom[s]

- Gauges/Fuel level not accurate/Value too low

FAULT-TRACING INFORMATION

see **FAULT-TRACING INFORMATION**

ECM-440D: FUEL LEVEL SENSOR. SIGNAL TOO LOW (B6294T; 2005-2006)

DIAGNOSTIC TROUBLE CODE (DTC) INFORMATION ECM-440D (2005, 2006)

see **DIAGNOSTIC TROUBLE CODE (DTC) INFORMATION ECM-440D (2005, 2006)**

FAULT-TRACING INFORMATION

see **FAULT-TRACING INFORMATION**

ECM-4420: FUEL LEVEL SENSOR. FAULTY SIGNAL (B5254T2; 2006-2007)

DIAGNOSTIC TROUBLE CODE (DTC) INFORMATION ECM-4420

Condition

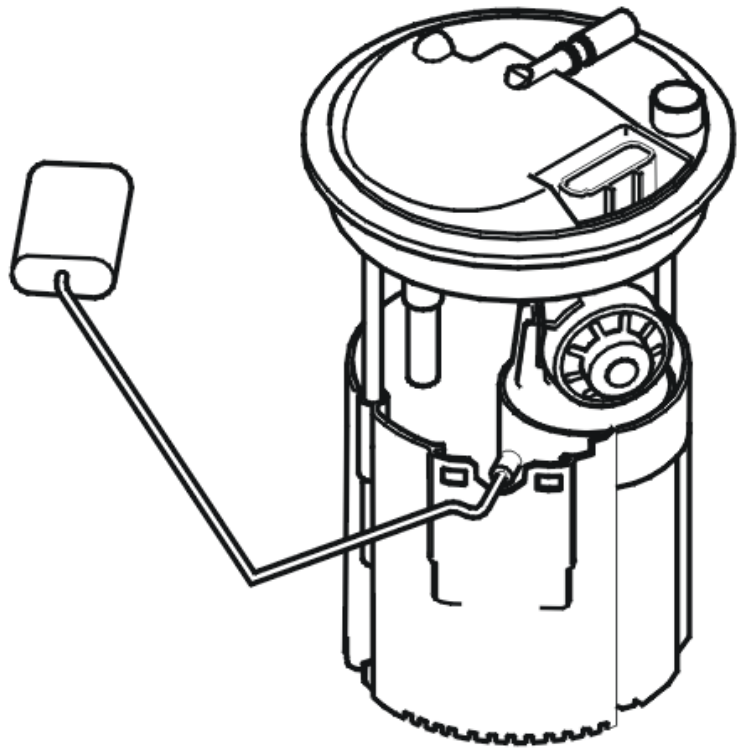

Fig. 197: Identifying Fuel Level Sensor
Courtesy of VOLVO CARS CORPORATION

The central electronic module (CEM) transmits information about the fuel level and the fault status of the fuel level sensor to the engine control module (ECM).

The engine control module (ECM) compares the engine fuel consumption with the change in fuel level over a set period of time. The diagnostic trouble code (DTC) is stored if the engine control module (ECM) registers an implausibly small reduction in the fuel level compared with calculated fuel consumption.

Substitute Value

None.

Possible Source

- Fault-trace the central electronic module (CEM).

Fault symptom[s]

- Gauges/Fuel level not accurate/Value too low

FAULT-TRACING INFORMATION

see **FAULT-TRACING INFORMATION**

ECM-443B: FUEL LEVEL SENSOR. SIGNAL TOO LOW (B5254T2; 2006-2007)

DIAGNOSTIC TROUBLE CODE (DTC) INFORMATION ECM-443B

Condition

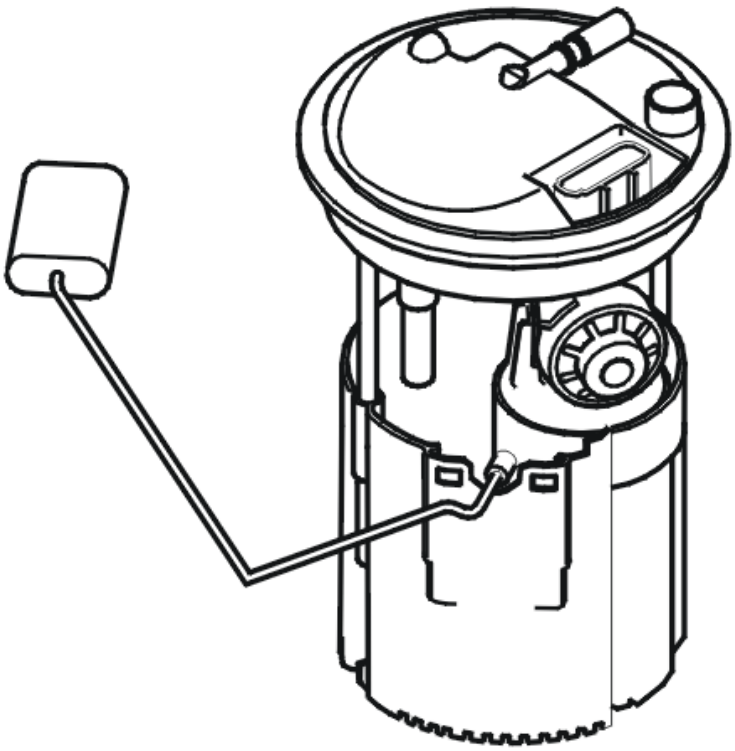

Fig. 198: Identifying Fuel Level Sensor
Courtesy of VOLVO CARS CORPORATION

The central electronic module (CEM) transmits information about the fuel level and the fault status of the fuel level sensor to the engine control module (ECM).

The diagnostic trouble code (DTC) is stored if the engine control module (ECM) registers a communication problem with the central electronic module (CEM).

Substitute Value

None.

Possible Source

- Open-circuit in the control area network (CAN) wiring
- Short-circuit between the control area network (CAN) wiring
- Internal fault in another control module in the same part of the control area network (CAN).

Fault symptom[s]

- Gauges/Fuel level not accurate/Value too low

FAULT-TRACING INFORMATION

see **FAULT-TRACING INFORMATION**

ECM-443C: FUEL LEVEL SENSOR. SIGNAL TOO HIGH (B5254T2; 2006-2007)

DIAGNOSTIC TROUBLE CODE (DTC) INFORMATION ECM-443C

Condition

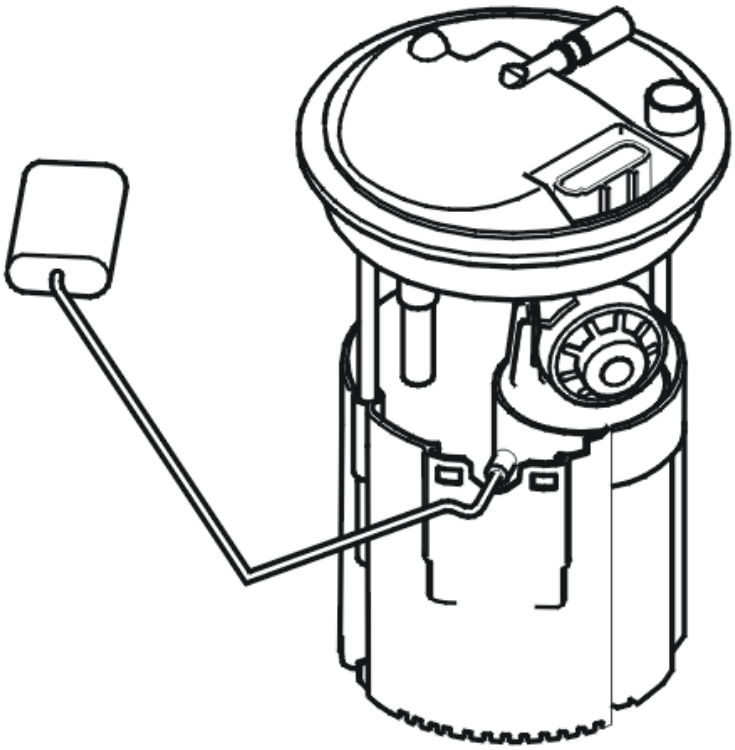

Fig. 199: Identifying Fuel Level Sensor
Courtesy of VOLVO CARS CORPORATION

The central electronic module (CEM) transmits information about the fuel level and the fault status of the fuel level sensor to the engine control module (ECM).

The diagnostic trouble code (DTC) is stored in the central electronic module (CEM) if the central electronic module (CEM) registers an electrical fault in the fuel level sensor. A diagnostic trouble code (DTC) will be stored in the engine control module (ECM) at the same time.

Substitute Value

None.

Possible Source

- Fault-trace the central electronic module (CEM).

Fault symptom[s]

- Gauges/Fuel level not accurate/Value too low

FAULT-TRACING INFORMATION

see **FAULT-TRACING INFORMATION**

ECM-443D: FUEL LEVEL SENSOR. SIGNAL MISSING (B5254T2; 2006-2007)

DIAGNOSTIC TROUBLE CODE (DTC) INFORMATION ECM-443D

Condition

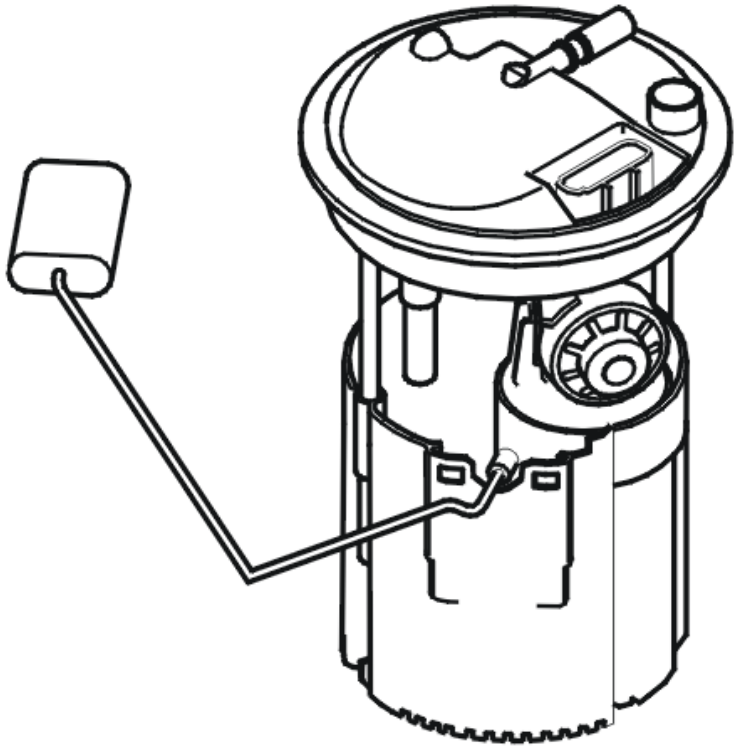

Fig. 200: Identifying Fuel Level Sensor
Courtesy of VOLVO CARS CORPORATION

The central electronic module (CEM) transmits information about the fuel level and the fault status of the fuel level sensor to the engine control module (ECM).

The diagnostic trouble code (DTC) is stored in the central electronic module (CEM) if the central electronic module (CEM) registers an electrical fault in the fuel level sensor. A diagnostic trouble code (DTC) will be stored in the engine control module (ECM) at the same time.

Substitute Value

None.

Possible Source

- Fault-trace the central electronic module (CEM).

Fault symptom[s]

- Gauges/Fuel level not accurate/Value too low

FAULT-TRACING INFORMATION

see **FAULT-TRACING INFORMATION**

ECM-4801: THREE-WAY CATALYTIC CONVERTER (TWC) EFFICIENCY, BANK 1. INTERMITTENT FAULT (B6294T; 2003-2004)

DIAGNOSTIC TROUBLE CODE (DTC) INFORMATION

Condition

The control module continuously checks three-way catalytic converter (TWC) efficiency by comparing signals from the rear heated oxygen sensor (HO2S) with the front heated oxygen sensor (HO2S). Diagnostic trouble code (DTC) ECM-4801 will be stored if the efficiency of the three-way catalytic converter (TWC) deviates too much.

Substitute Value

Rear heated oxygen sensor (HO2S) control is disabled.

Possible Source

- misfiring
- air leakage in the intake system
- air leakage in the exhaust system
- faulty fuel pressure
- uneven compression
- defective three-way catalytic converter (TWC).

Fault symptom[s]

- malfunction indicator lamp (MIL) lit.

INTERMITTENT FAULT

FAULT-TRACING INFORMATION

Control module previously registered a fault. The fault is now no longer present.

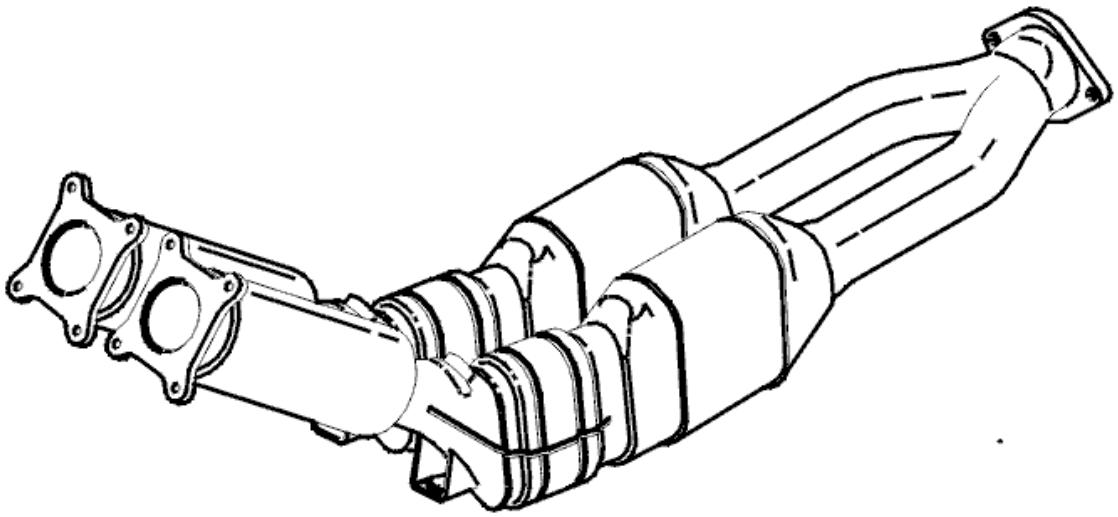

Fig. 201: Identifying Three-Way Catalytic Converter (TWC)
Courtesy of VOLVO CARS CORPORATION

- **Continue**

  Refer to **INFORMATION**

INFORMATION

FAULT-TRACING INFORMATION

If the fault is intermittent, do not verify fault-tracing if the fault does not recur.

It is possible to view the information again, or leave fault-tracing for this diagnostic trouble code (DTC).

ECM-4801: THREE-WAY CATALYTIC CONVERTER (TWC) EFFICIENCY, BANK 1. PERMANENT FAULT (B6294T; 2003-2004)

DIAGNOSTIC TROUBLE CODE (DTC) INFORMATION

see **DIAGNOSTIC TROUBLE CODE (DTC) INFORMATION**

PERMANENT FAULT

CHECKING FOR AIR LEAKAGE IN THE INTAKE SYSTEM

Check for air leakage. See **INTAKE AND EXHAUST SYSTEM - CLEANING, INSPECTION AND ADJUSTMENT** .

Remedy as necessary.

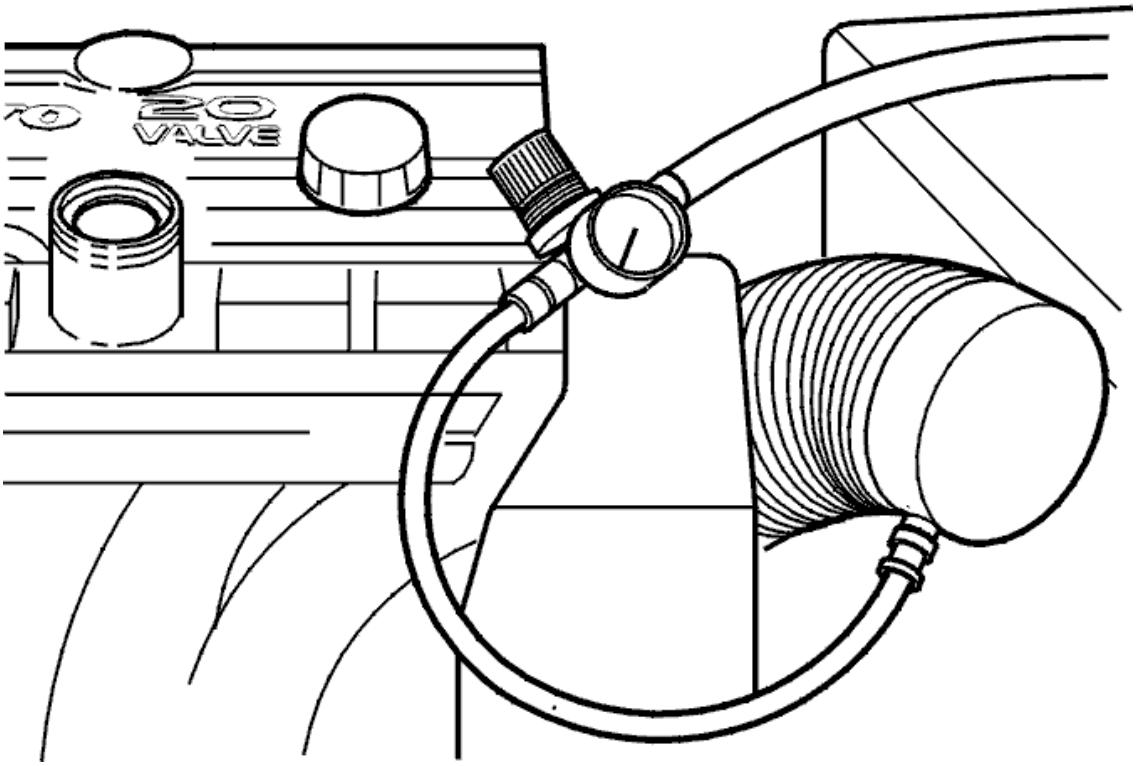

Fig. 202: Checking For Air Leakage
Courtesy of VOLVO CARS CORPORATION

Was there any air leakage?

- **YES**

  Refer to **VERIFICATION**

- **NO**

  Refer to **CHECKING FOR AIR LEAKAGE IN THE EXHAUST SYSTEM**

CHECKING FOR AIR LEAKAGE IN THE EXHAUST SYSTEM

Check for air leakage. See **CHECKING FOR AIR LEAKAGE IN THE EXHAUST SYSTEM** .

Remedy as necessary.

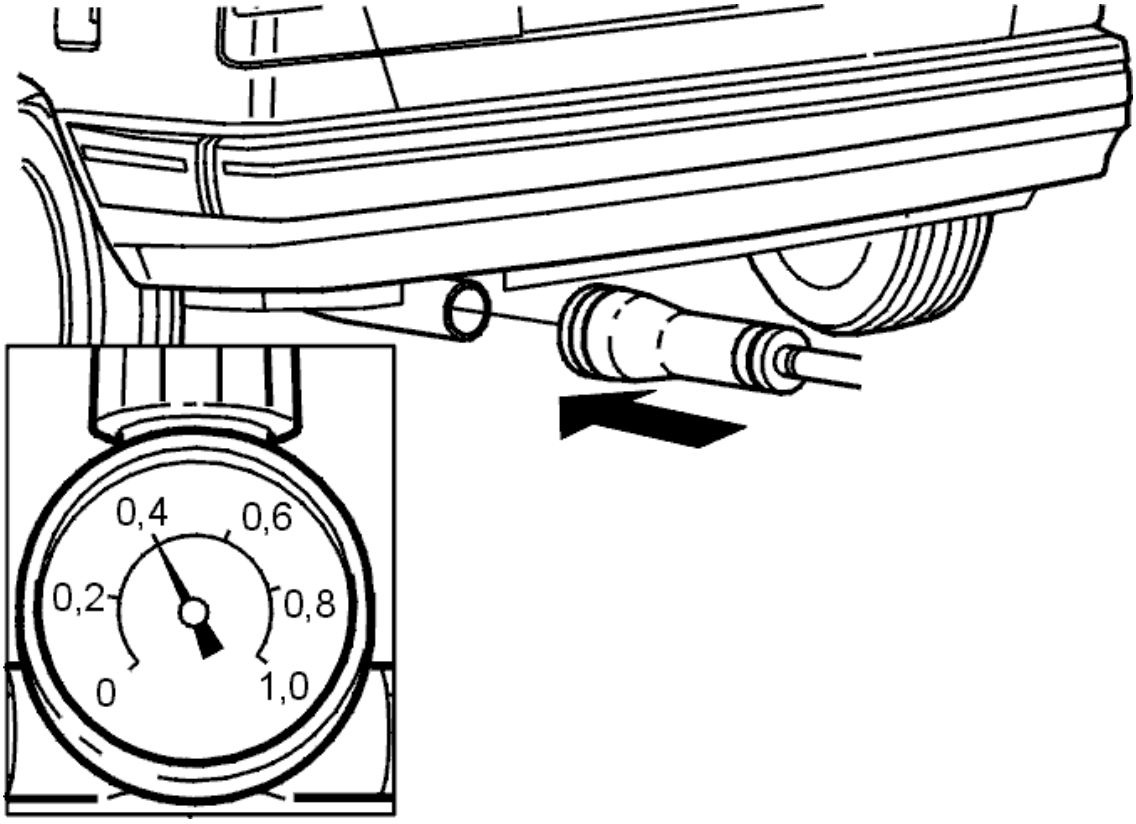

Fig. 203: Checking For Air Leakage In Exhaust System
Courtesy of VOLVO CARS CORPORATION

Was there any air leakage?

- **YES**

  Refer to **VERIFICATION**

- **NO**

  Refer to **CHECKING FUEL AND RESIDUAL PRESSURES**

CHECKING FUEL AND RESIDUAL PRESSURES

Check the fuel pressure and residual pressure. See **CHECKING FUEL AND RESIDUAL PRESSURES** .

Remedy as necessary.

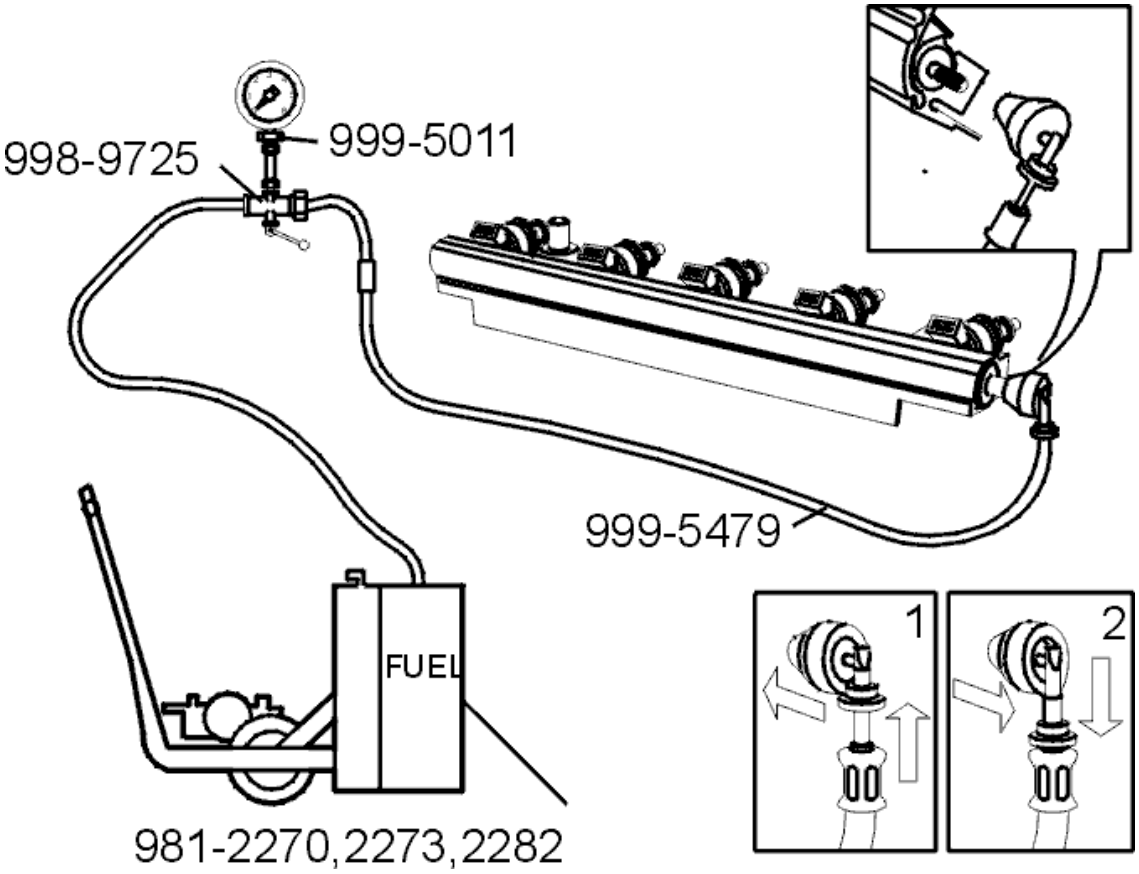

Fig. 204: Connecting Fuel Pressure Gauge
Courtesy of VOLVO CARS CORPORATION

Was the pressure OK?

- **YES**

  Refer to **CHECKING THE COMPRESSION**

- **NO**

  Refer to **VERIFICATION**

CHECKING THE COMPRESSION

Test the compression. See **COMPRESSION TEST** .

Remedy as necessary.

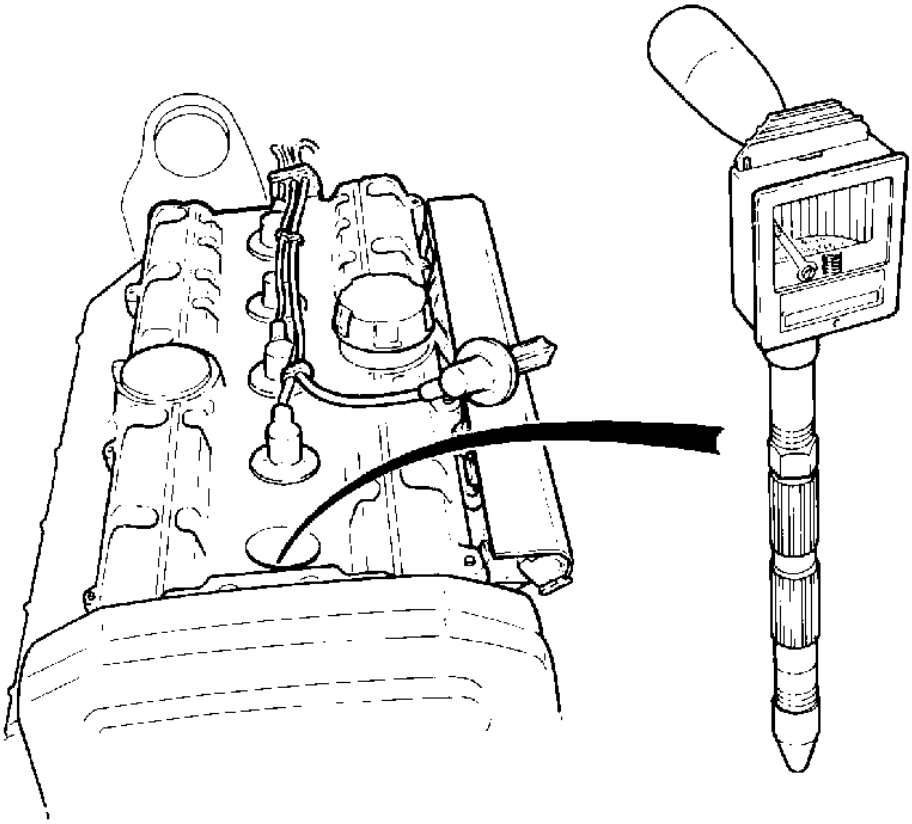

Fig. 205: Compression Testing
Courtesy of VOLVO CARS CORPORATION

Is the compression OK?

- **YES**

  Refer to **REPLACING THE COMPONENT**

- **NO**

  Refer to **VERIFICATION**

REPLACING THE COMPONENT

- Try a new three-way catalytic converter (TWC).
  - For B5xx4T, see **THREE-WAY CATALYTIC CONVERTER (TWC), REPLACING**
  - For B6xx4T, see **THREE-WAY CATALYTIC CONVERTER (TWC), REPLACING** .

- **Continue**

  Refer to **VERIFICATION**

VERIFICATION

VERIFICATION

HINT: After carrying out the repair, check that the fault has been remedied as follows:

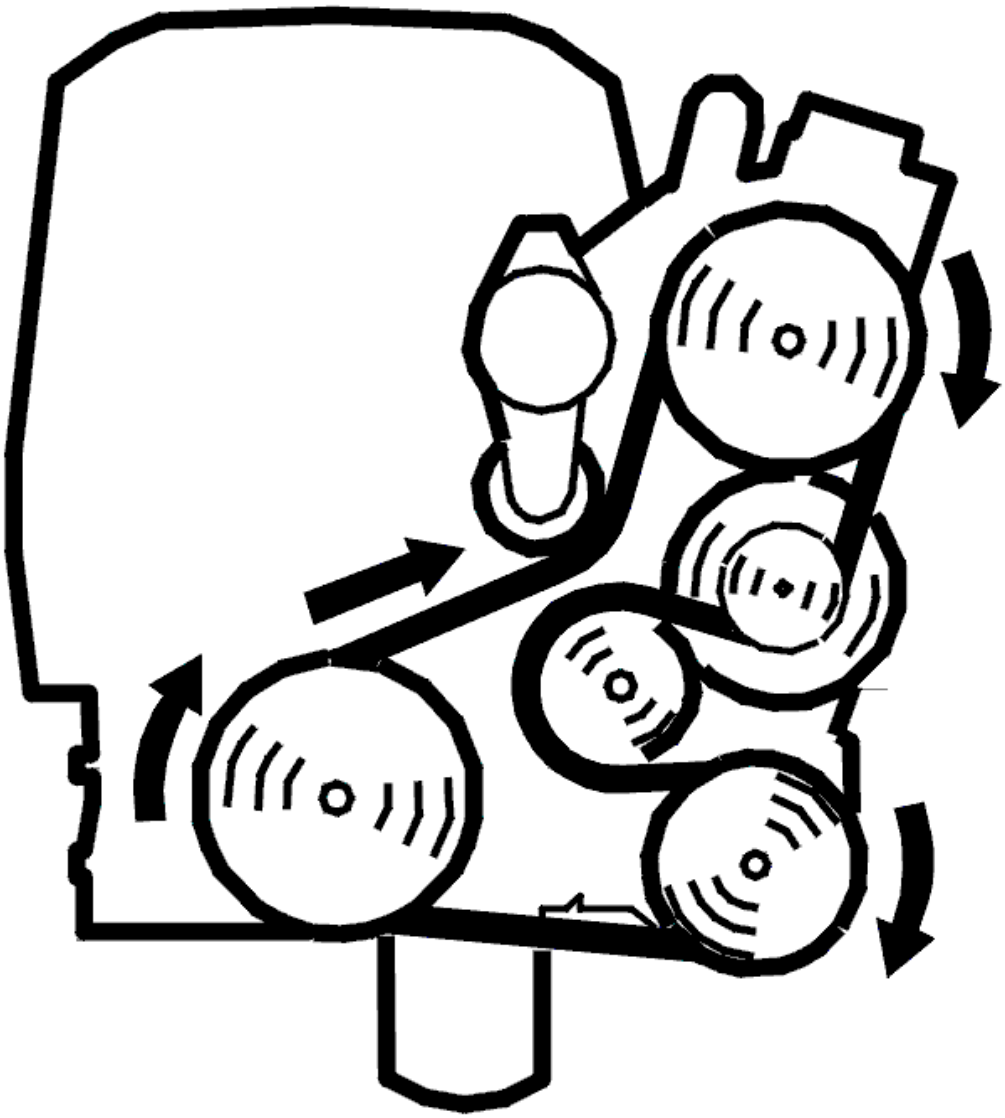

Fig. 206: Belt Routing / Engine Idling - Volvo
Courtesy of VOLVO CARS CORPORATION

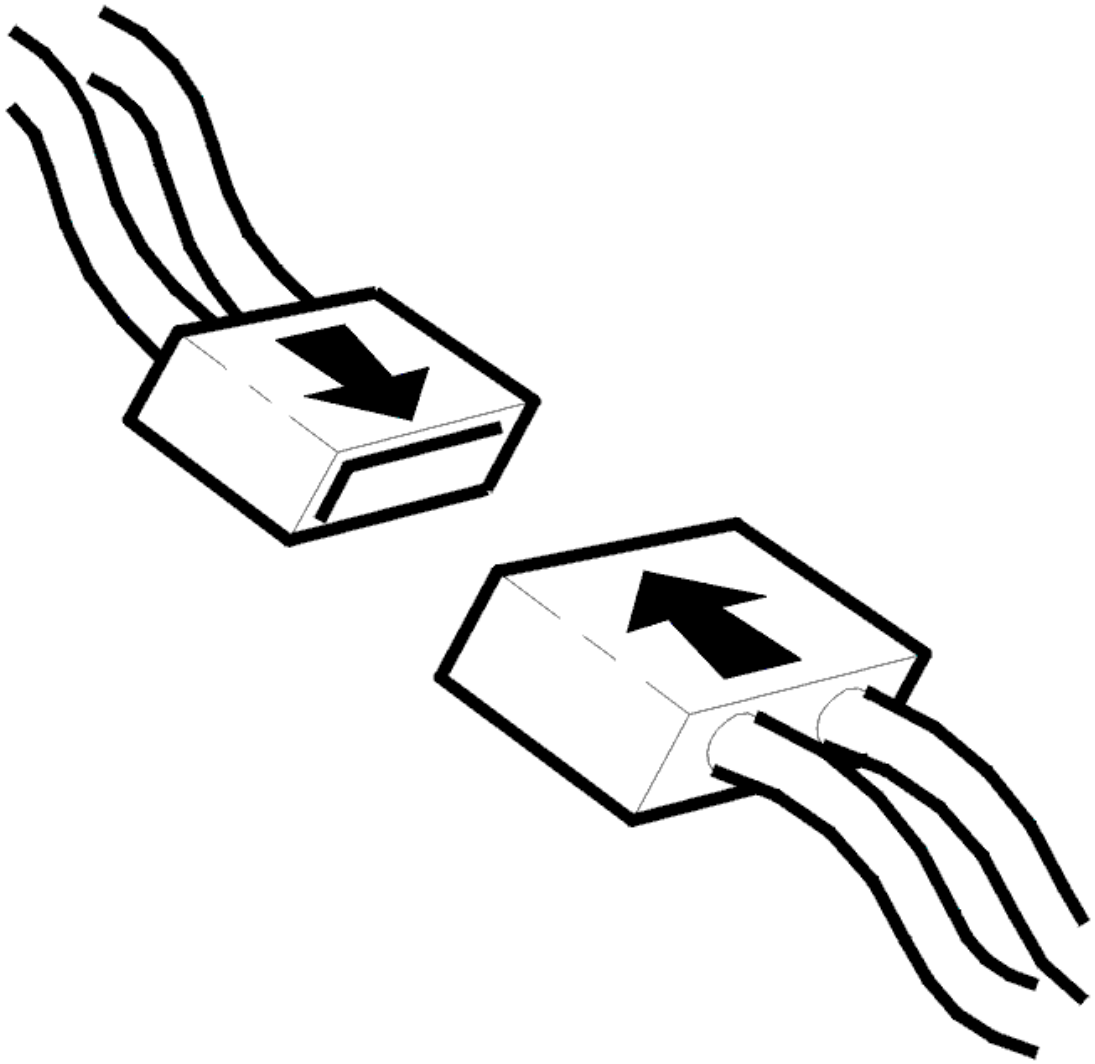

Fig. 207: Connecting Connector
Courtesy of VOLVO CARS CORPORATION

- Ignition off.
- Replace connector, components etc.
- Test drive car according to **VERIFYING REPAIRS** .

NOTE: **After test driving the engine should not be turned off. Information in the control module is erased.**

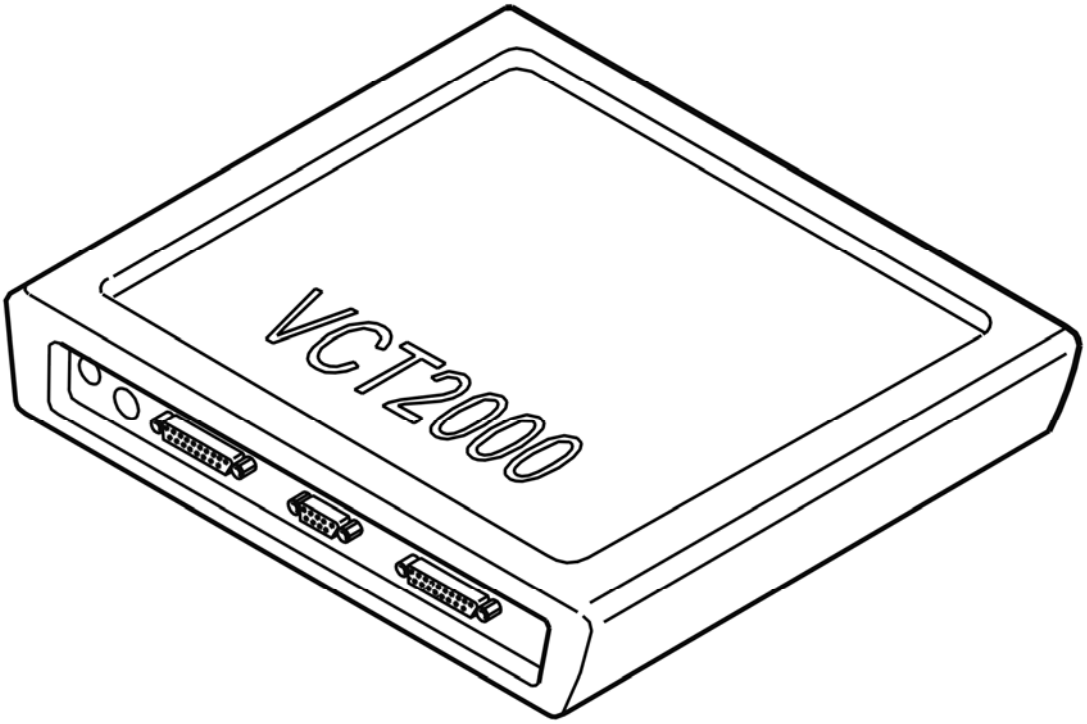

Fig. 208: Identifying VCT2000 Diagnostic Tool Symbol In VIDA
Courtesy of VOLVO CARS CORPORATION

- Connect VCT 2000 to the data link connector (DLC).
- Read off the status of the diagnostic trouble code (DTC). The text NOT READY is displayed if the diagnosis is still on-going. This indicates that the test drive was too short.

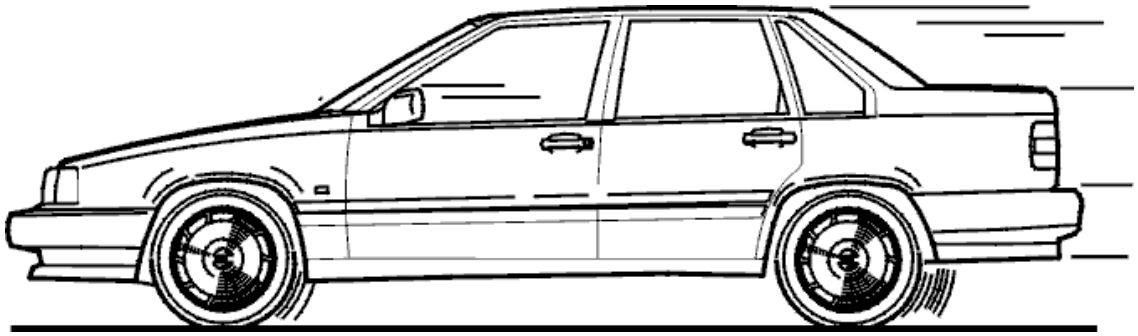

Fig. 209: Identifying Test Driving Car
Courtesy of VOLVO CARS CORPORATION

Is FAULT NOT REGISTERED displayed?

- **YES**

VERIFIED: Troubleshooting has been completed.

- **NO**

  Refer to **INFORMATION**

INFORMATION

FAULT-TRACING INFORMATION

The fault should have been detected and remedied. As this is not the case fault-tracing has failed.

Exit fault-tracing for this diagnostic trouble code (DTC) or make another attempt.

ECM-4801: THREE-WAY CATALYTIC CONVERTER (TWC) EFFICIENCY. INTERMITTENT FAULT (B5254T2; 2003-2004)

DIAGNOSTIC TROUBLE CODE (DTC) INFORMATION

see **DIAGNOSTIC TROUBLE CODE (DTC) INFORMATION**

INTERMITTENT FAULT

FAULT-TRACING INFORMATION

The control module has previously registered a fault. The fault is now no longer present.

- **Continue**

  Refer to **INFORMATION**

INFORMATION

FAULT-TRACING INFORMATION

If the fault is intermittent, do not verify fault-tracing if the fault does not recur.

It is possible to view the information again, or leave fault-tracing for this diagnostic trouble code (DTC).

ECM-4801: THREE-WAY CATALYTIC CONVERTER (TWC) EFFICIENCY. PERMANENT FAULT (B5254T2; 2003-2004)

DIAGNOSTIC TROUBLE CODE (DTC) INFORMATION

see **DIAGNOSTIC TROUBLE CODE (DTC) INFORMATION**

PERMANENT FAULT

CHECKING FOR AIR LEAKAGE IN THE INTAKE SYSTEM

Check for air leakage. See **INTAKE AND EXHAUST SYSTEM - CLEANING, INSPECTION AND ADJUSTMENT** .

Remedy as necessary.

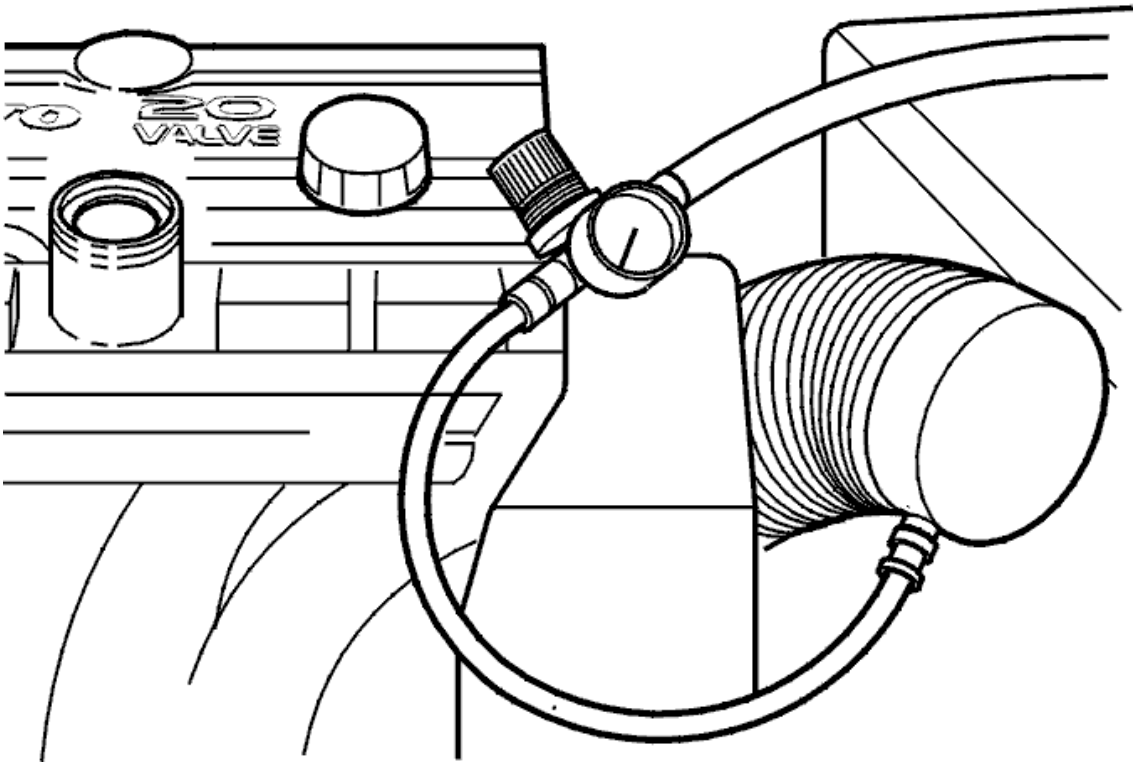

Fig. 210: Checking For Air Leakage
Courtesy of VOLVO CARS CORPORATION

Was there any air leakage?

- **YES**

  Refer to **VERIFICATION**

- **NO**

  Refer to **CHECKING FOR AIR LEAKAGE IN THE EXHAUST SYSTEM**

CHECKING FOR AIR LEAKAGE IN THE EXHAUST SYSTEM

Check for air leakage. See **CHECKING FOR AIR LEAKAGE IN THE EXHAUST SYSTEM** .

Remedy as necessary.

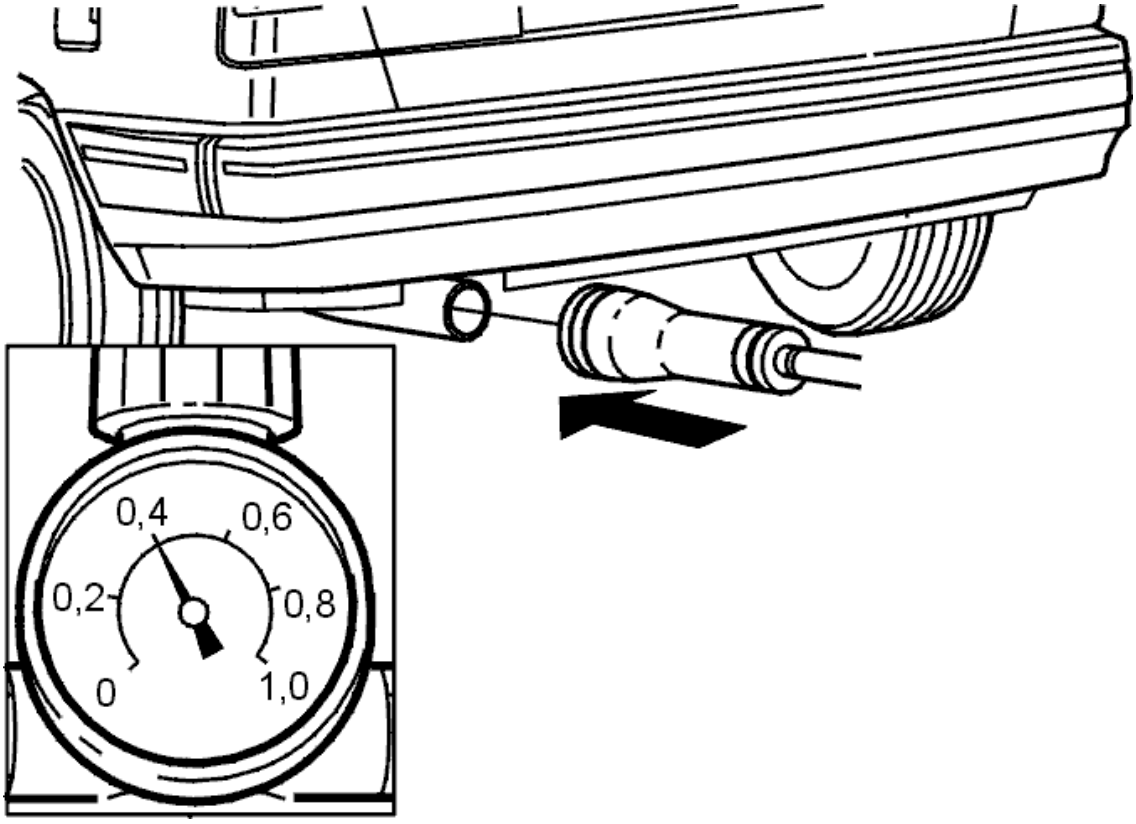

Fig. 211: Checking For Air Leakage In Exhaust System
Courtesy of VOLVO CARS CORPORATION

Was there any air leakage?

- **YES**

  Refer to **VERIFICATION**

- **NO**

  Refer to **CHECKING FUEL AND RESIDUAL PRESSURES**

CHECKING FUEL AND RESIDUAL PRESSURES

Check the fuel pressure and residual pressure. See **CHECKING FUEL AND RESIDUAL PRESSURES** .

Remedy as necessary.

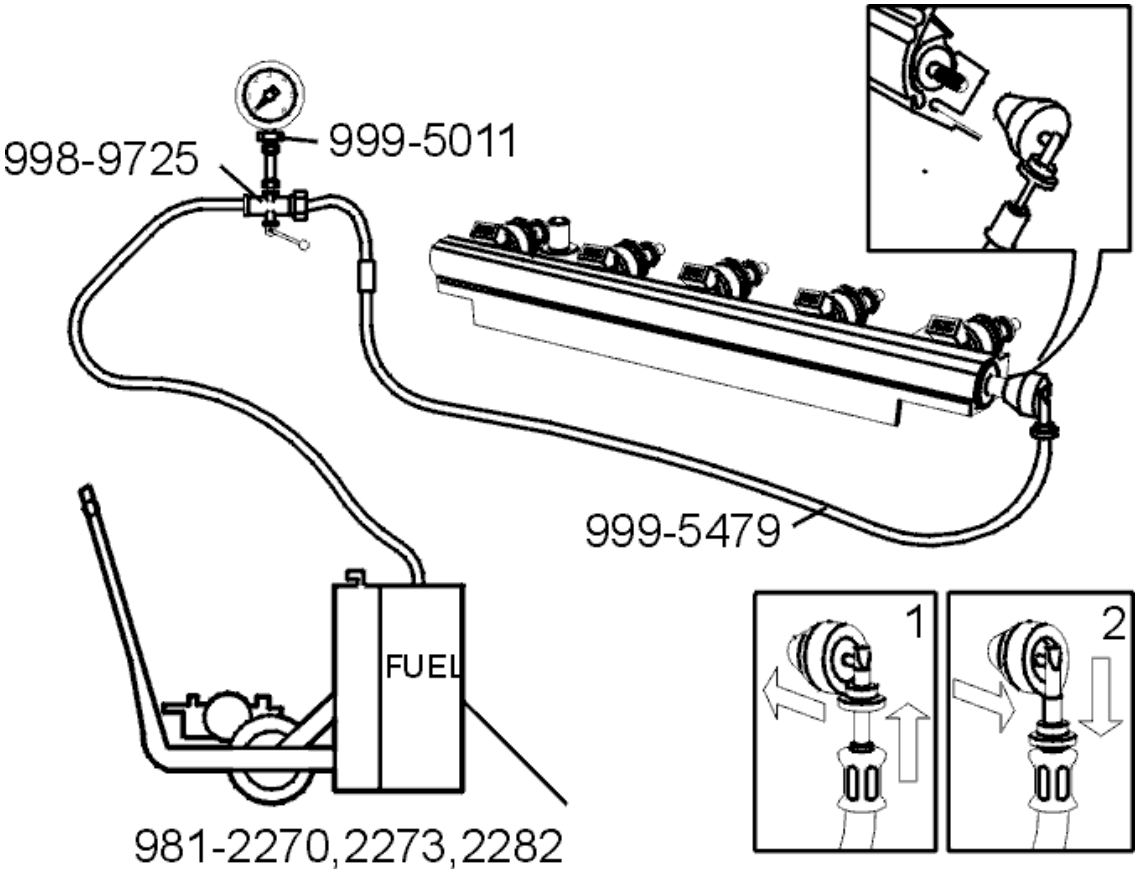

Fig. 212: Connecting Fuel Pressure Gauge
Courtesy of VOLVO CARS CORPORATION

Was the pressure OK?

- **YES**

  Refer to **CHECKING THE COMPRESSION**

- **NO**

  Refer to **VERIFICATION**

CHECKING THE COMPRESSION

Test the compression. See **COMPRESSION TEST** .

Remedy as necessary.

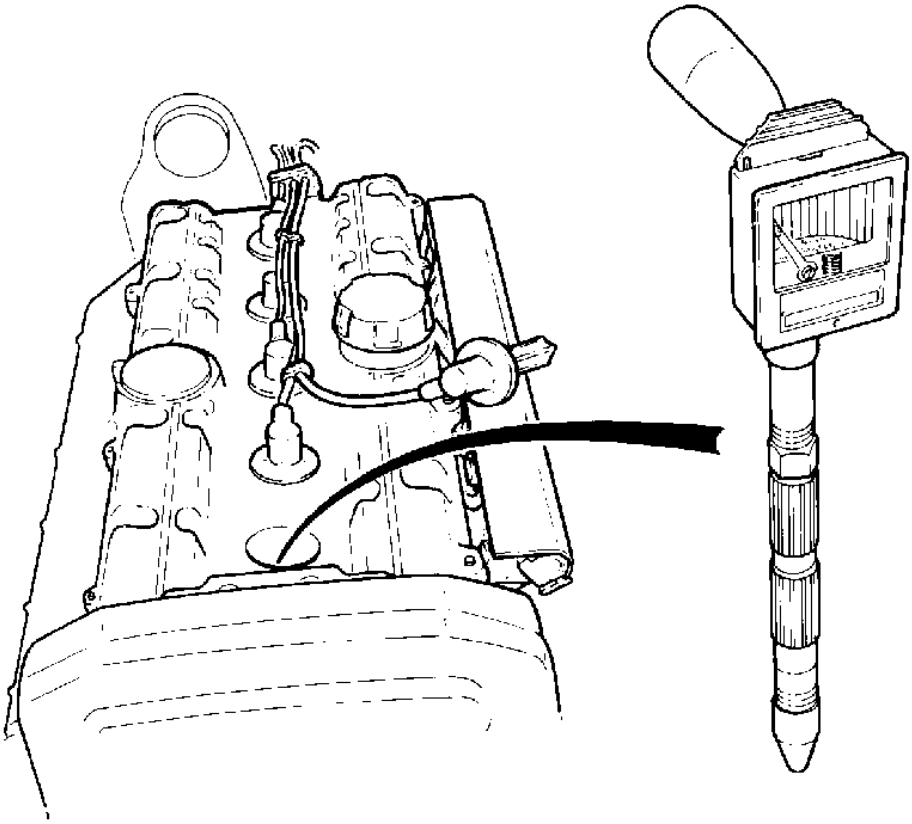

Fig. 213: Compression Testing
Courtesy of VOLVO CARS CORPORATION

Is the compression OK?

- **YES**

  Refer to **REPLACING THE COMPONENT**

- **NO**

  Refer to **VERIFICATION**

REPLACING THE COMPONENT

- Try a new three-way catalytic converter (TWC).
  - For B5xx4T, see **THREE-WAY CATALYTIC CONVERTER (TWC), REPLACING**
  - For B6xx4T, see **THREE-WAY CATALYTIC CONVERTER (TWC), REPLACING** .

- **Continue**

  Refer to **VERIFICATION**

VERIFICATION

VERIFICATION

HINT: After carrying out the repair, check that the fault has been remedied as follows:

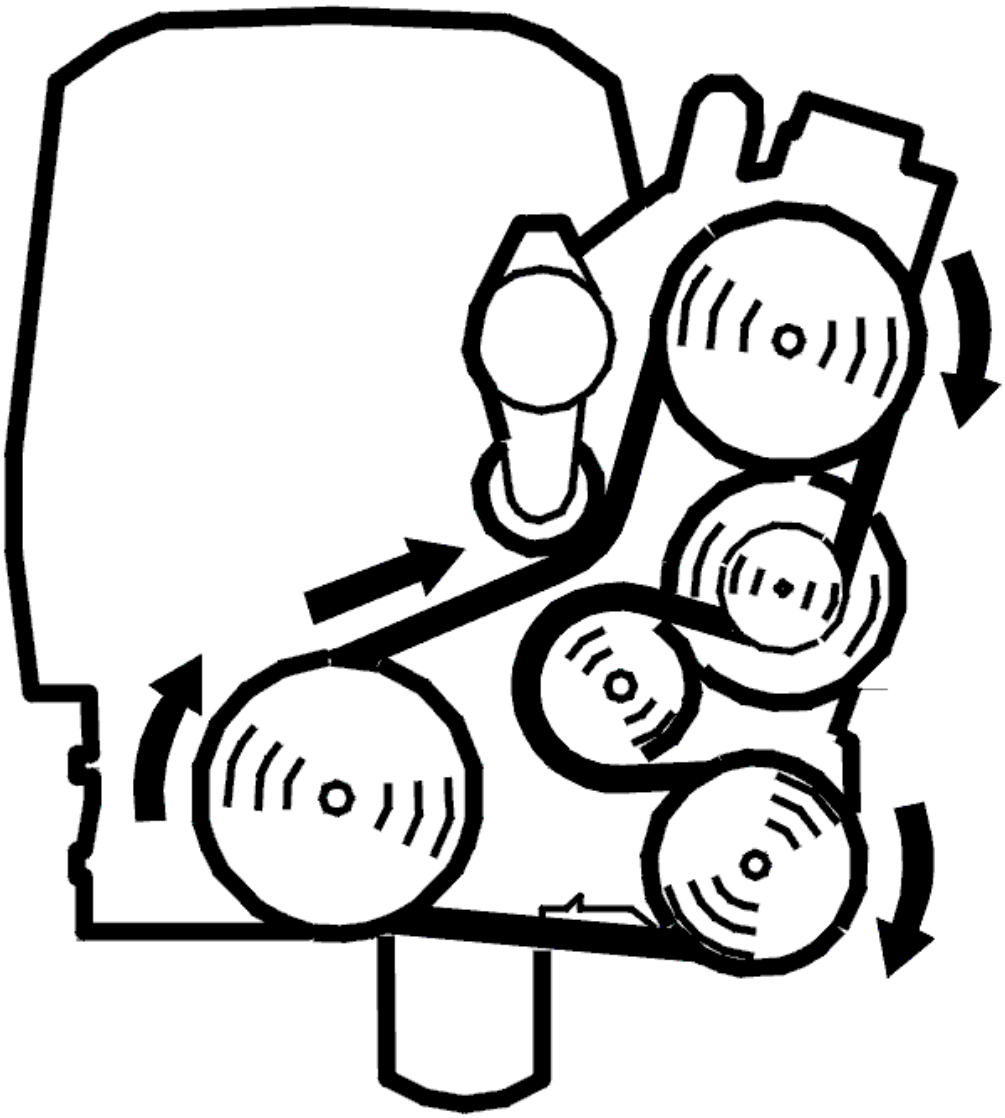

Fig. 214: Belt Routing / Engine Idling - Volvo
Courtesy of VOLVO CARS CORPORATION

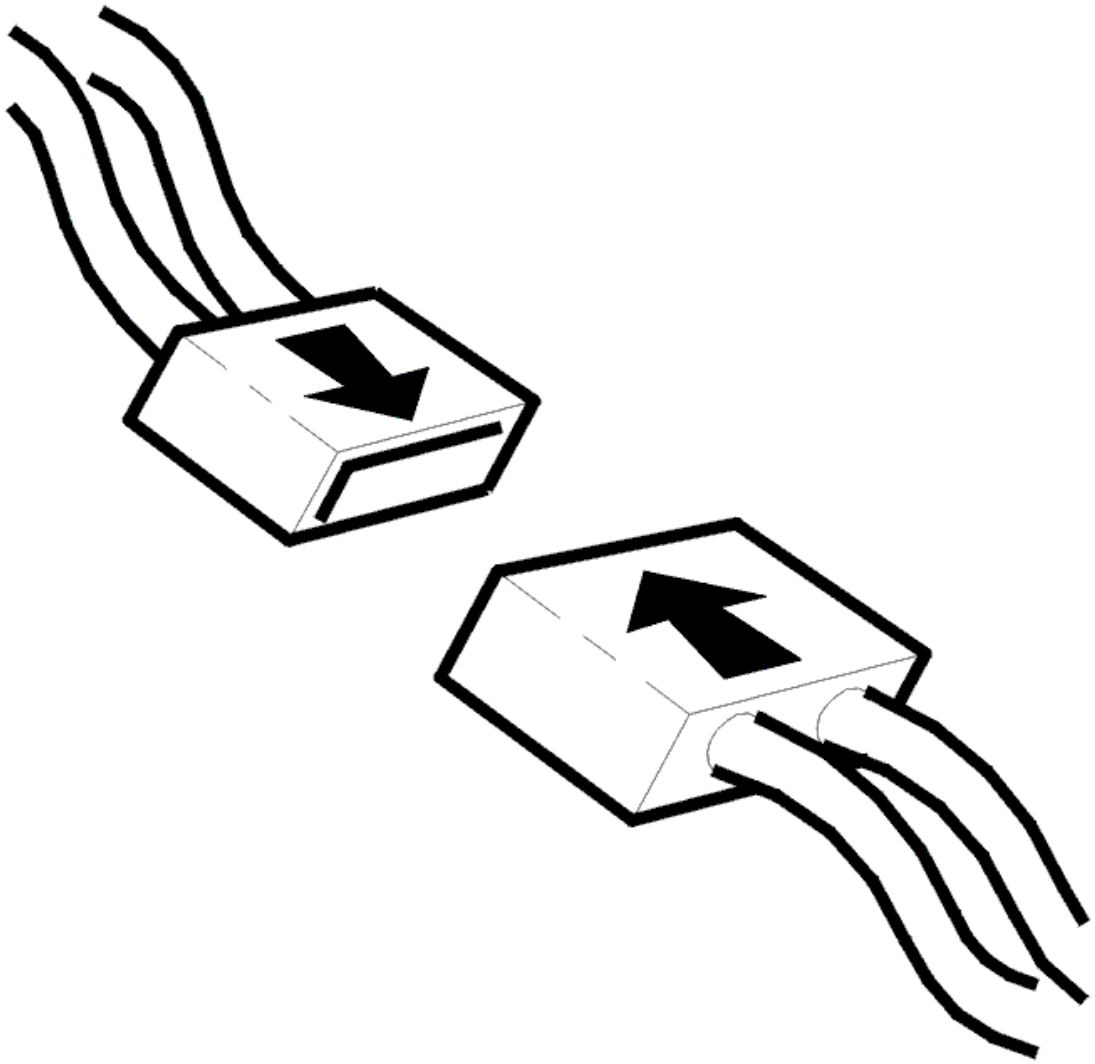

Fig. 215: Connecting Connector
Courtesy of VOLVO CARS CORPORATION

- Ignition off.
- Replace connector, components etc.
- Test drive car according to **VERIFYING REPAIRS** .

NOTE: **After test driving the engine should not be turned off. Information in the control module is erased.**

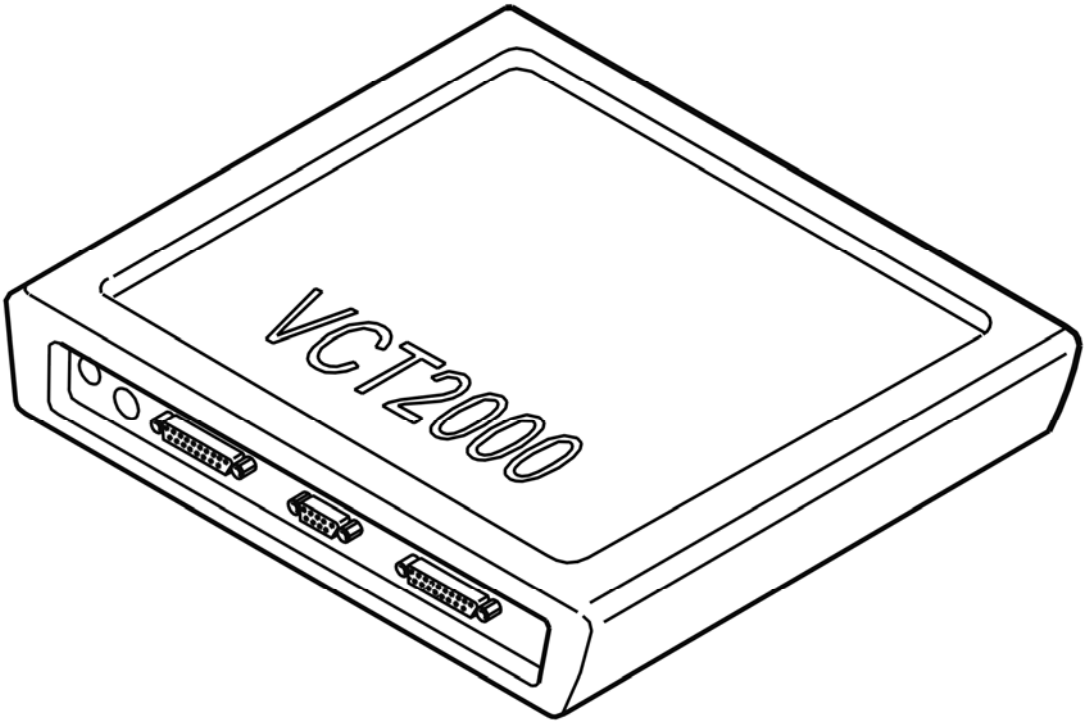

Fig. 216: Identifying VCT2000 Diagnostic Tool Symbol In VIDA
Courtesy of VOLVO CARS CORPORATION

- Connect VCT 2000 to the data link connector (DLC).
- Read off the status of the diagnostic trouble code (DTC). The text NOT READY is displayed if the diagnosis is still on-going. This indicates that the test drive was too short.

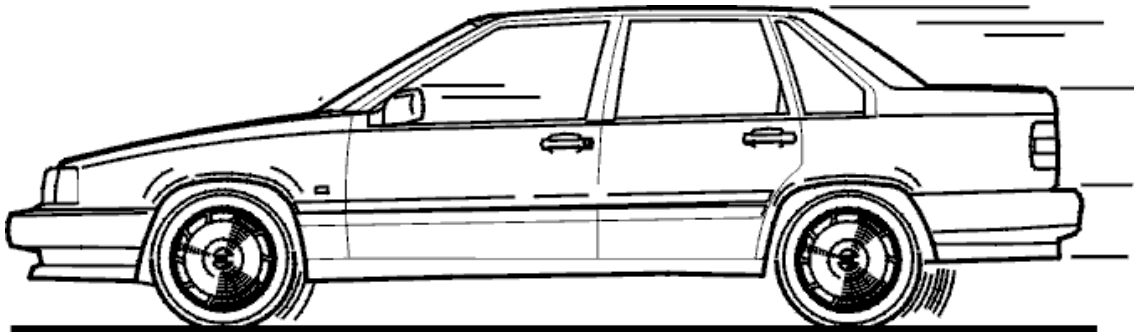

Fig. 217: Identifying Test Driving Car
Courtesy of VOLVO CARS CORPORATION

Is FAULT NOT REGISTERED displayed?

- **YES**

VERIFIED: Troubleshooting has been completed.

- **NO**

  Refer to **INFORMATION**

INFORMATION

FAULT-TRACING INFORMATION

The fault should have been detected and remedied. As this is not the case fault-tracing has failed.

Exit fault-tracing for this diagnostic trouble code (DTC) or make another attempt.

ECM-5000: AIR CONDITIONING (A/C) PRESSURE SENSOR. SIGNAL MISSING. INTERMITTENT FAULT (B5254T2; B6294T; 2003-2004)

DIAGNOSTIC TROUBLE CODE (DTC) INFORMATION

Condition

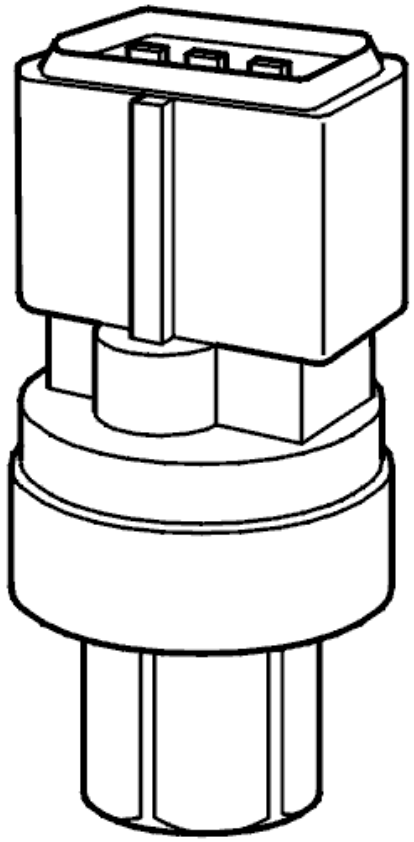

Fig. 218: Identifying A/C Pressure Sensor
Courtesy of VOLVO CARS CORPORATION

Diagnostic trouble code (DTC) ECM-5000 is stored if the engine control module (ECM) registers a fault in the signal cable from the air conditioning (A/C) pressure sensor.

Diagnostic trouble code (DTC) ECM-5000 is stored when the air conditioning (A/C) pressure is too low and it is registered by the engine control module (ECM) as a fault.

Substitute Value

none

Possible Source

Signal too high:

- short-circuit to supply voltage in the signal cable
- open-circuit in power supply
- open-circuit in ground lead
- defective air conditioning (A/C) pressure sensor

Signal too low:

- short-circuit to ground in the signal cable
- open-circuit in signal cable
- contact resistance in connectors
- defective air conditioning (A/C) pressure sensor

Signal missing:

- defective air conditioning (A/C) pressure sensor
- low pressure in the air conditioning (A/C) system
- leakage in the air conditioning (A/C) system

Fault symptom[s]

- Air conditioning (A/C) system does not work

SIGNAL MISSING. INTERMITTENT FAULT

When the fault is no longer present, no fault-tracing for an intermittent fault is required.

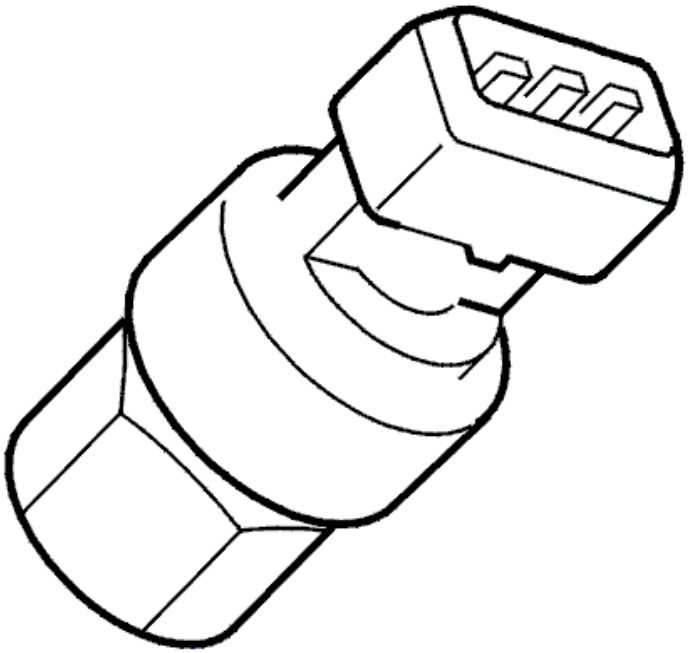

Fig. 219: Identifying A/C Pressure Sensor
Courtesy of VOLVO CARS CORPORATION

ECM-5000: AIR CONDITIONING (A/C) PRESSURE SENSOR. SIGNAL MISSING. PERMANENT FAULT (B5254T2; B6294T; 2003-2004)

DIAGNOSTIC TROUBLE CODE (DTC) INFORMATION

see **DIAGNOSTIC TROUBLE CODE (DTC) INFORMATION**

SIGNAL MISSING. PERMANENT FAULT

CHECKING COMPONENT AND WIRING

Check if there is any refrigerant in the air conditioning (A/C).

HINT: If there is refrigerant in the A/C system there is probably a fault in the A/C pressure sensor.

Check air conditioning (A/C) system for damage and leakage.

Remedy as necessary.

Other information:

- Connecting the breakout box/accessing the control module, see **CONNECTING THE BREAKOUT BOX** .
- Air conditioning (A/C) pressure sensor #2 is the signal cable, #3 is the power supply (5V) and #1 is the signal ground.
- For resistance values, see **COMPONENT SPECIFICATIONS** .
- For 5 cylinder turbocharged engines -2004, see **SIGNAL DESCRIPTION**
- For 6 cylinder engines -2004, see **SIGNAL SPECIFICATION**

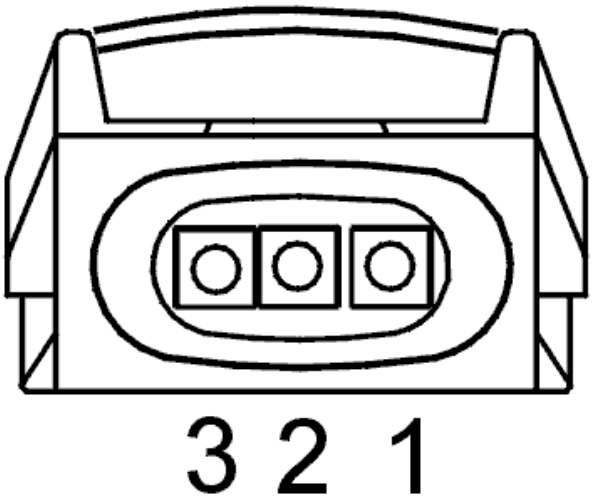

Fig. 220: Identifying Connector Terminals
Courtesy of VOLVO CARS CORPORATION

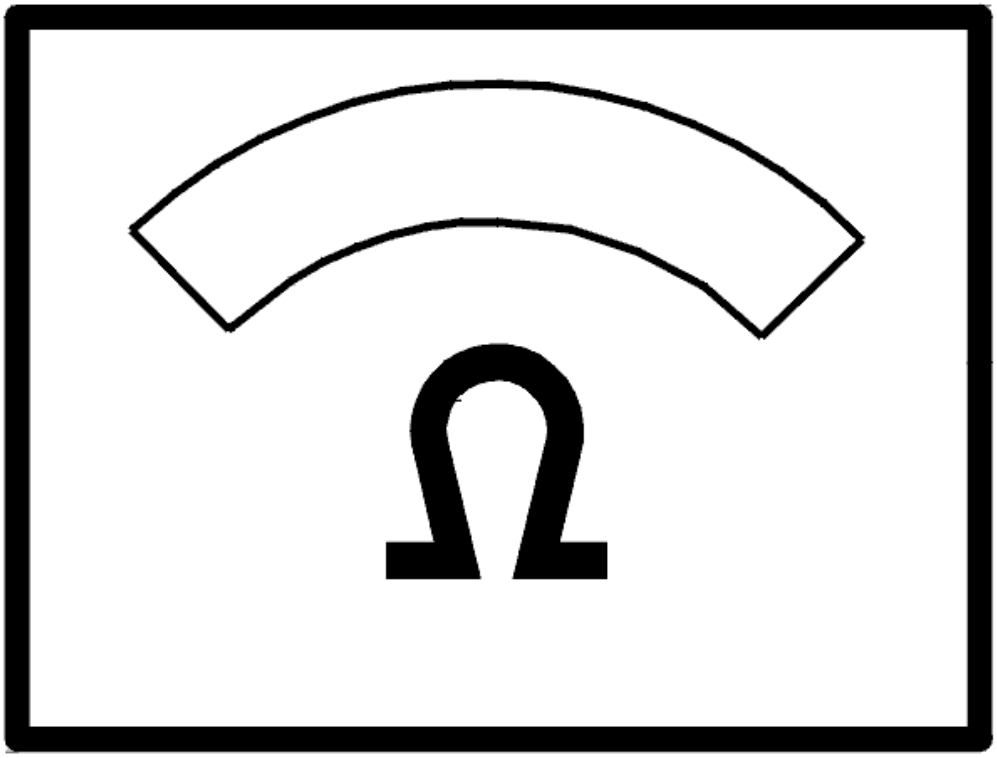

Fig. 221: Identifying Ohm Meter
Courtesy of VOLVO CARS CORPORATION

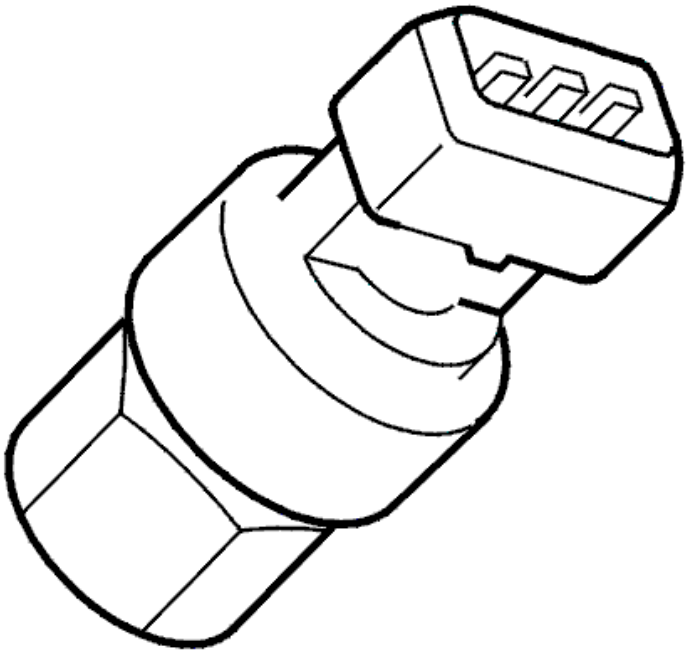

Fig. 222: Identifying A/C Pressure Sensor
Courtesy of VOLVO CARS CORPORATION

- **Continue**

  Refer to **VERIFICATION**

VERIFICATION

VERIFICATION

HINT: After carrying out the repair, check that the fault has been remedied.

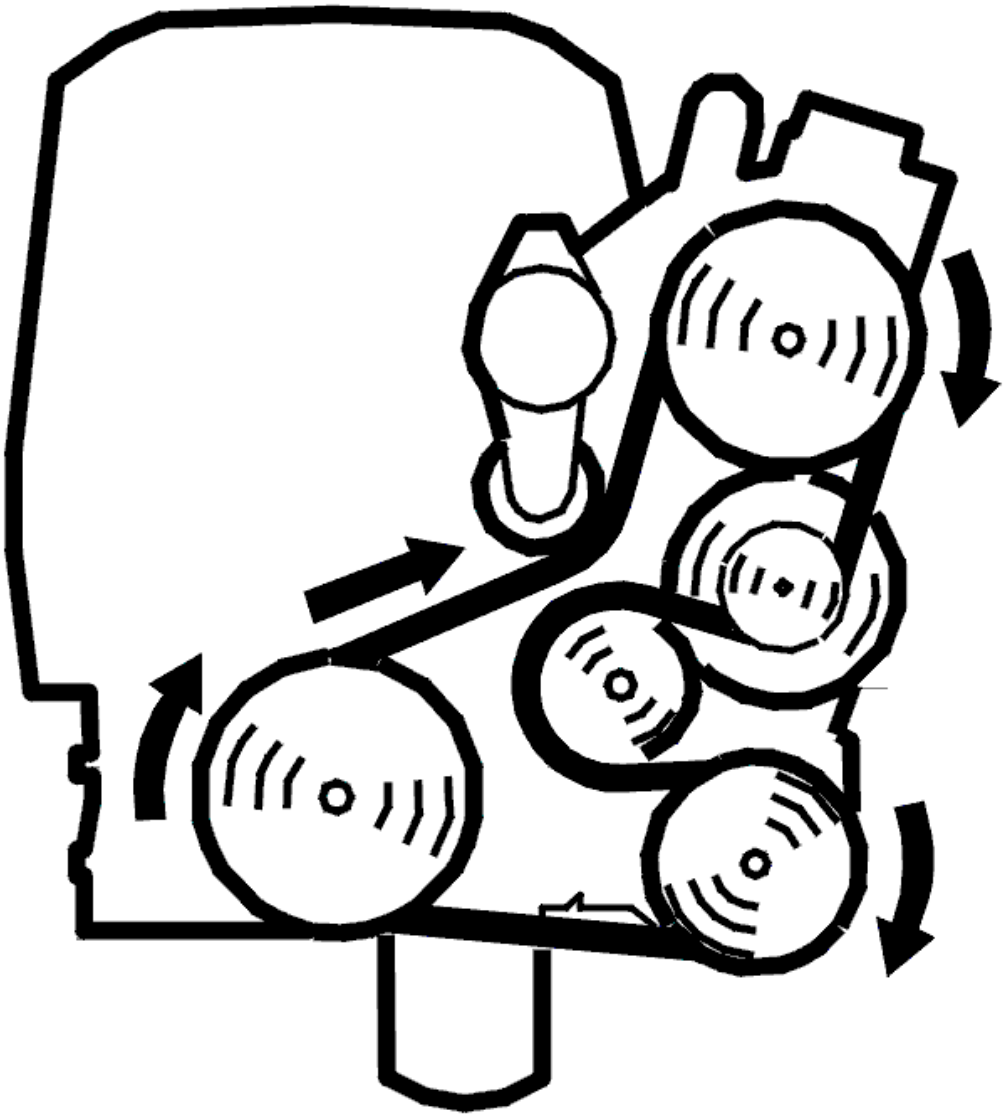

Fig. 223: Belt Routing / Engine Idling - Volvo
Courtesy of VOLVO CARS CORPORATION

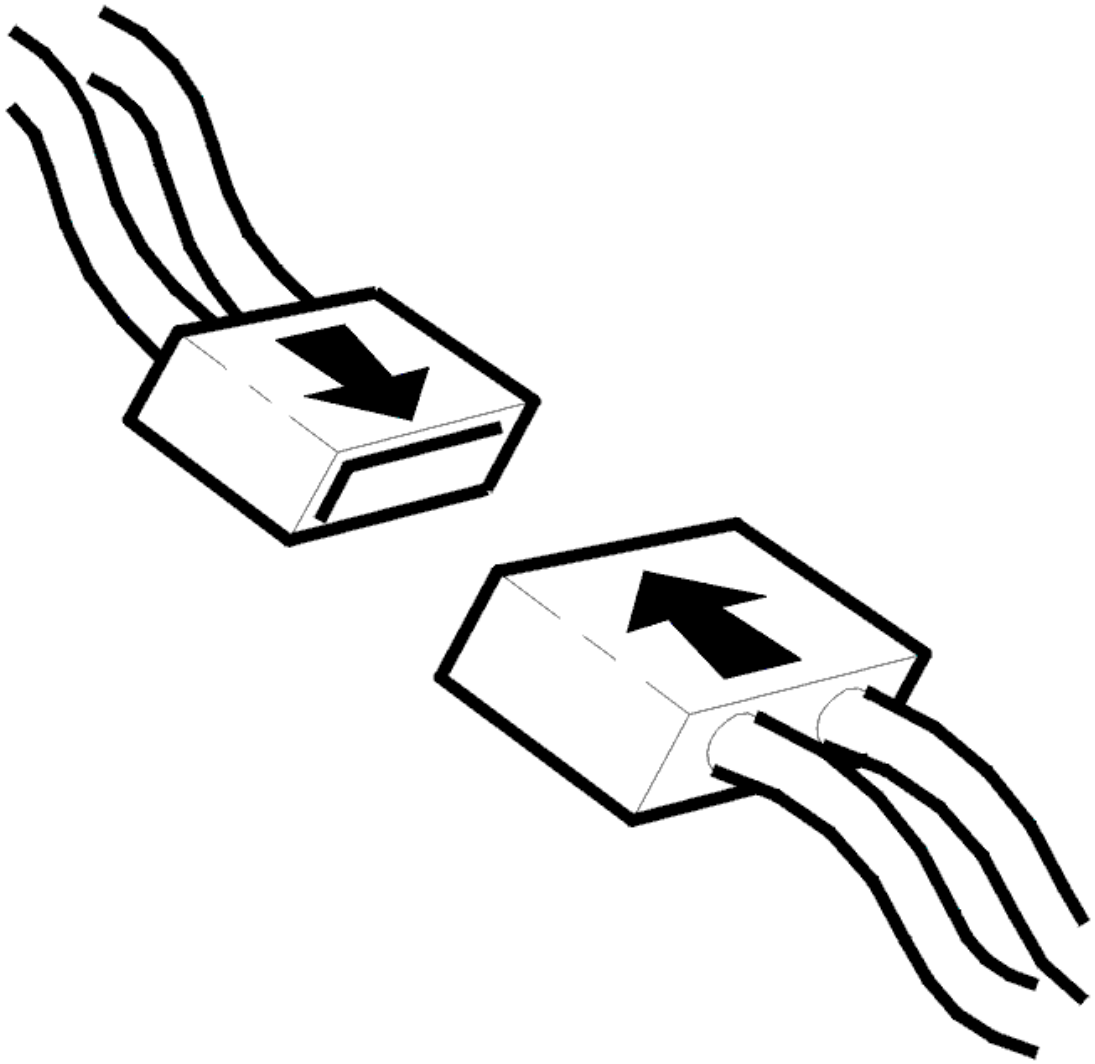

Fig. 224: Connecting Connector
Courtesy of VOLVO CARS CORPORATION

- Ignition off.
- Reinstall connectors, components etc.
- Start the engine.
- Air conditioning (A/C) switch on
- Start the blower fan

Check that the pressure increases in the air conditioning (A/C) system when the air conditioning (A/C) compressor engages.

Also check if cold air blows into the passenger compartment when at the coolest setting.

NOTE: The air conditioning (A/C) pressure is given in volts for values, see

COMPONENT SPECIFICATIONS .

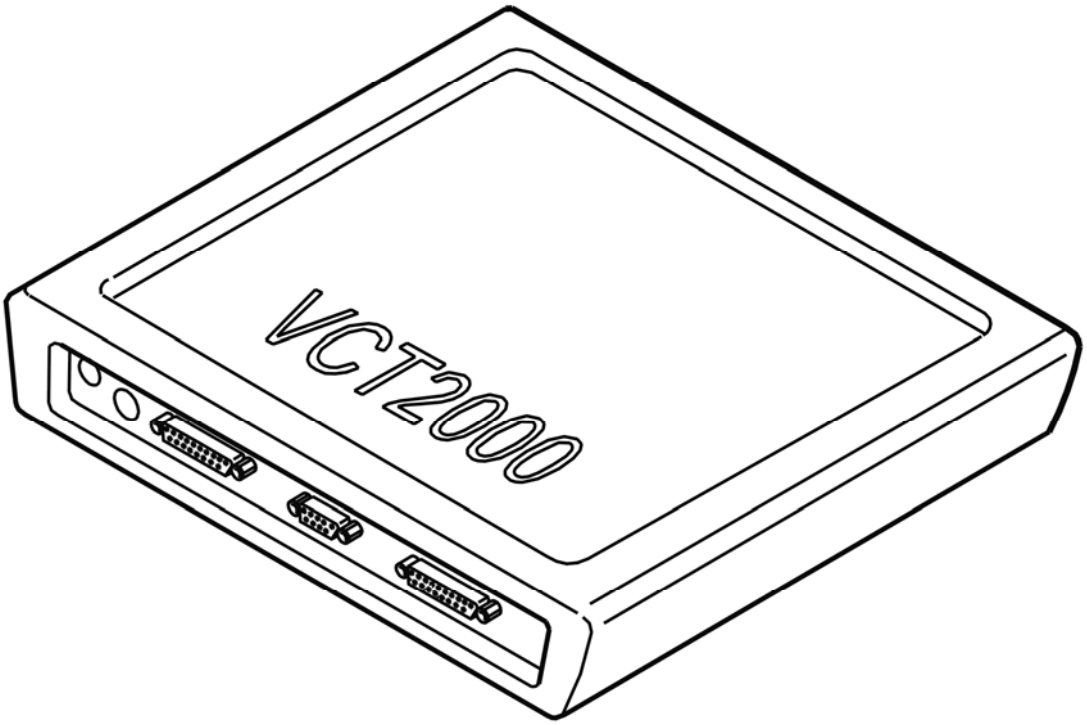

Fig. 225: Identifying VCT2000 Diagnostic Tool Symbol In VIDA
Courtesy of VOLVO CARS CORPORATION

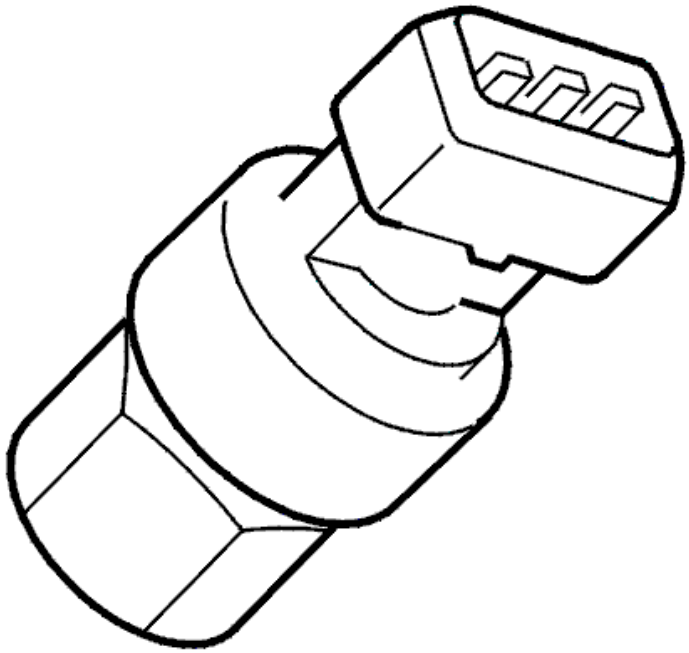

Fig. 226: Identifying A/C Pressure Sensor
Courtesy of VOLVO CARS CORPORATION

Does the pressure in air conditioning (A/C) system change?

- **YES**

  VERIFIED: Troubleshooting has been completed.

- **NO**

  Refer to **INFORMATION**

INFORMATION

FAULT-TRACING INFORMATION

The fault should have been detected and remedied. As this is not the case fault-tracing has failed.

Exit fault-tracing for this diagnostic trouble code (DTC) or make another attempt.

ECM-5000: AIR CONDITIONING (A/C) PRESSURE SENSOR. SIGNAL TOO HIGH. INTERMITTENT FAULT (B5254T2; B6294T; 2003-2004)

DIAGNOSTIC TROUBLE CODE (DTC) INFORMATION

see **DIAGNOSTIC TROUBLE CODE (DTC) INFORMATION**

SIGNAL TOO HIGH. INTERMITTENT FAULT

CHECKING COMPONENT AND WIRING

Check signal cable between engine control module (ECM) #A68 (#B8) and air conditioning (A/C) sensor #2 for an intermittent short-circuit to supply voltage according to **SHORT-CIRCUIT TO SUPPLY VOLTAGE, INTERMITTENT FAULTS**

Check power supply cable between engine control module (ECM) #A39 (#A39) and air conditioning (A/C) pressure sensor #3 for an intermittent open-circuit according to **OPEN-CIRCUIT, INTERMITTENT FAULTS**

Check power supply cable between engine control module (ECM) #A60 (#A60) and air conditioning (A/C) pressure sensor #1 for an intermittent open-circuit according to **OPEN-CIRCUIT, INTERMITTENT FAULTS**

Remedy as necessary

Other information

- Connecting the breakout box/accessing the control module, see **CONNECTING THE BREAKOUT BOX** .
- Air conditioning (A/C) pressure sensor #2 is the signal cable, #3 is the power supply (5V) and #1 is the signal ground.
- For 5 cylinder turbocharged engines -2004, see **SIGNAL DESCRIPTION**
- For 6 cylinder engines -2004, see **SIGNAL SPECIFICATION**

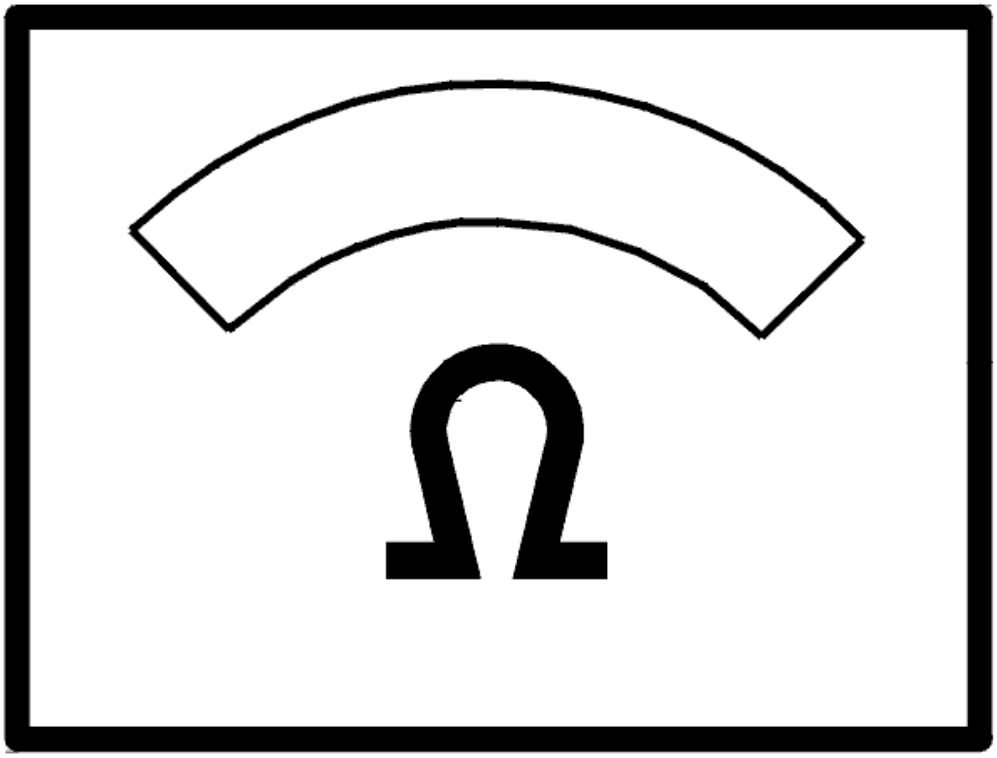

Fig. 227: Identifying Ohm Meter
Courtesy of VOLVO CARS CORPORATION

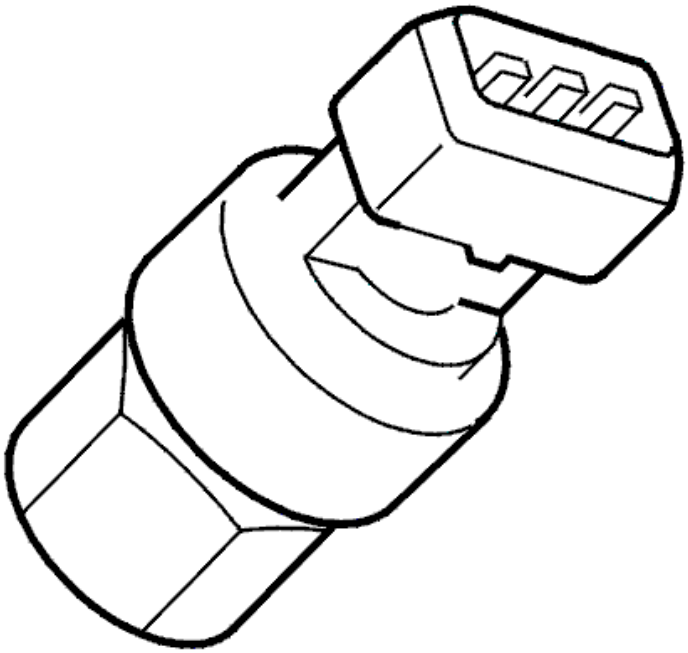

Fig. 228: Identifying A/C Pressure Sensor
Courtesy of VOLVO CARS CORPORATION

- **Continue**

  Refer to **INFORMATION**

INFORMATION

FAULT-TRACING INFORMATION

If the fault is intermittent, do not verify fault-tracing if the fault does not recur.

It is possible to view the information again, or leave fault-tracing for this diagnostic trouble code (DTC).

ECM-5000: AIR CONDITIONING (A/C) PRESSURE SENSOR. SIGNAL TOO HIGH. PERMANENT FAULT (B5254T2; B6294T; 2003-2004)

DIAGNOSTIC TROUBLE CODE (DTC) INFORMATION

see **DIAGNOSTIC TROUBLE CODE (DTC) INFORMATION**

SIGNAL TOO HIGH. PERMANENT FAULT

CHECKING COMPONENT AND WIRING

Check signal cable between engine control module (ECM) #A68 (#B8) and air conditioning (A/C) pressure sensor #2 for a short-circuit to supply voltage according to **SHORT-CIRCUIT TO SUPPLY VOLTAGE. PERMANENT FAULTS** .

Check power supply cable between engine control module (ECM) #A39 (#A39) and air conditioning (A/C) pressure sensor #3 for an open-circuit according to **OPEN-CIRCUIT, PERMANENT FAULTS** .

Check power supply cable between engine control module (ECM) #A60 (#A60) and air conditioning (A/C) pressure sensor #1 for an open-circuit according to **OPEN-CIRCUIT, PERMANENT FAULTS** .

Remedy as necessary.

Other information:

- Connecting the breakout box/accessing the control module, see **CONNECTING THE BREAKOUT BOX** .
- Air conditioning (A/C) pressure sensor #2 is the signal cable, #3 is the power supply (5V) and #1 is the signal ground.
- For 5 cylinder turbocharged engines -2004, see **SIGNAL DESCRIPTION**
- For 6 cylinder engines -2004, see **SIGNAL SPECIFICATION**

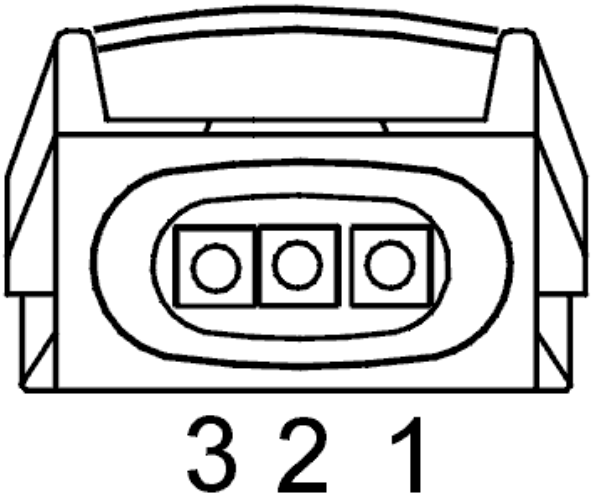

Fig. 229: Identifying Connector Terminals
Courtesy of VOLVO CARS CORPORATION

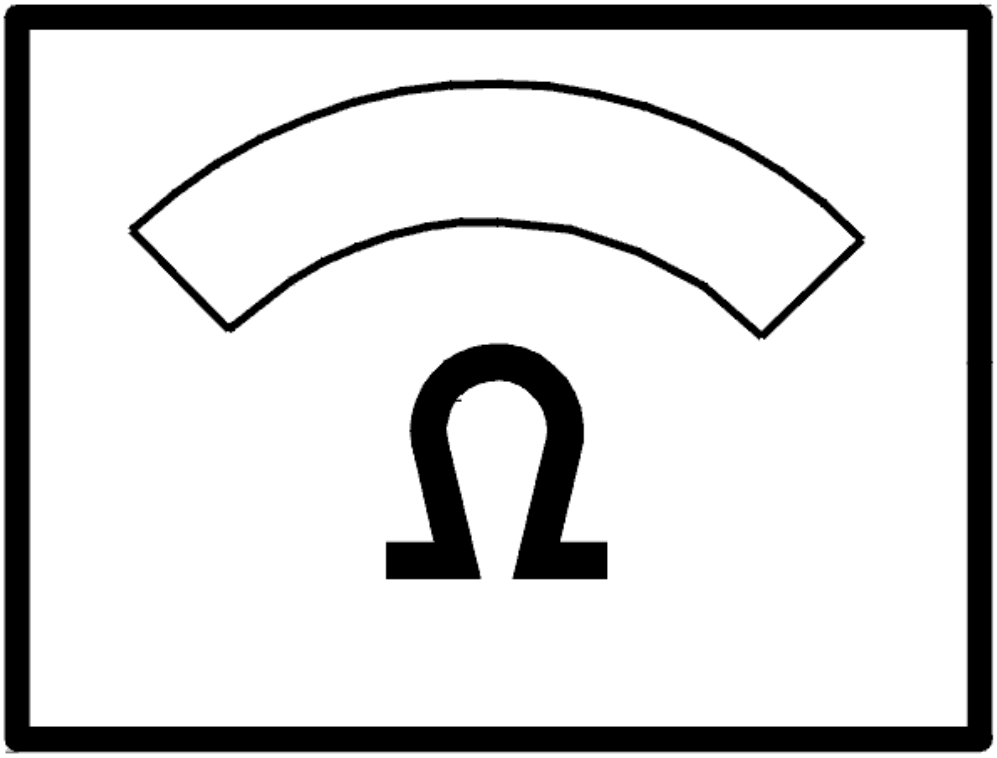

Fig. 230: Identifying Ohm Meter
Courtesy of VOLVO CARS CORPORATION

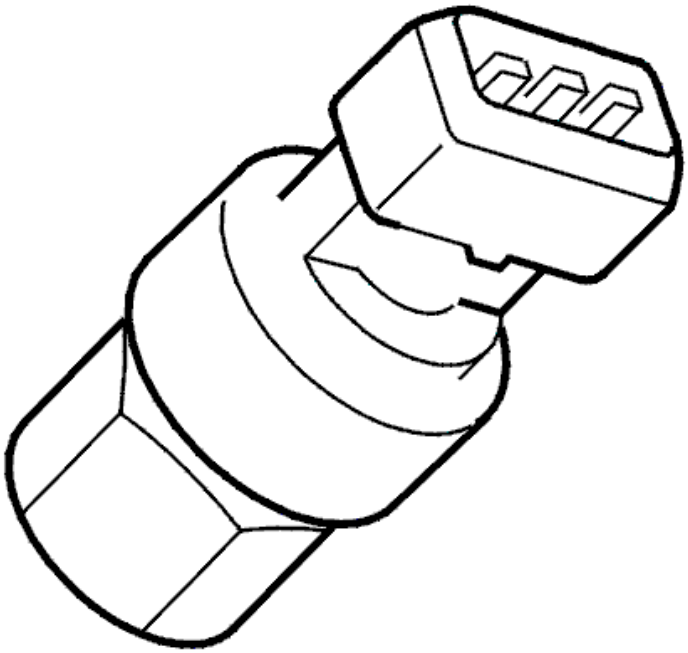

Fig. 231: Identifying A/C Pressure Sensor
Courtesy of VOLVO CARS CORPORATION

- **Continue**

  Refer to **VERIFICATION**

VERIFICATION

VERIFICATION

HINT: After carrying out the repair, check that the fault has been remedied.

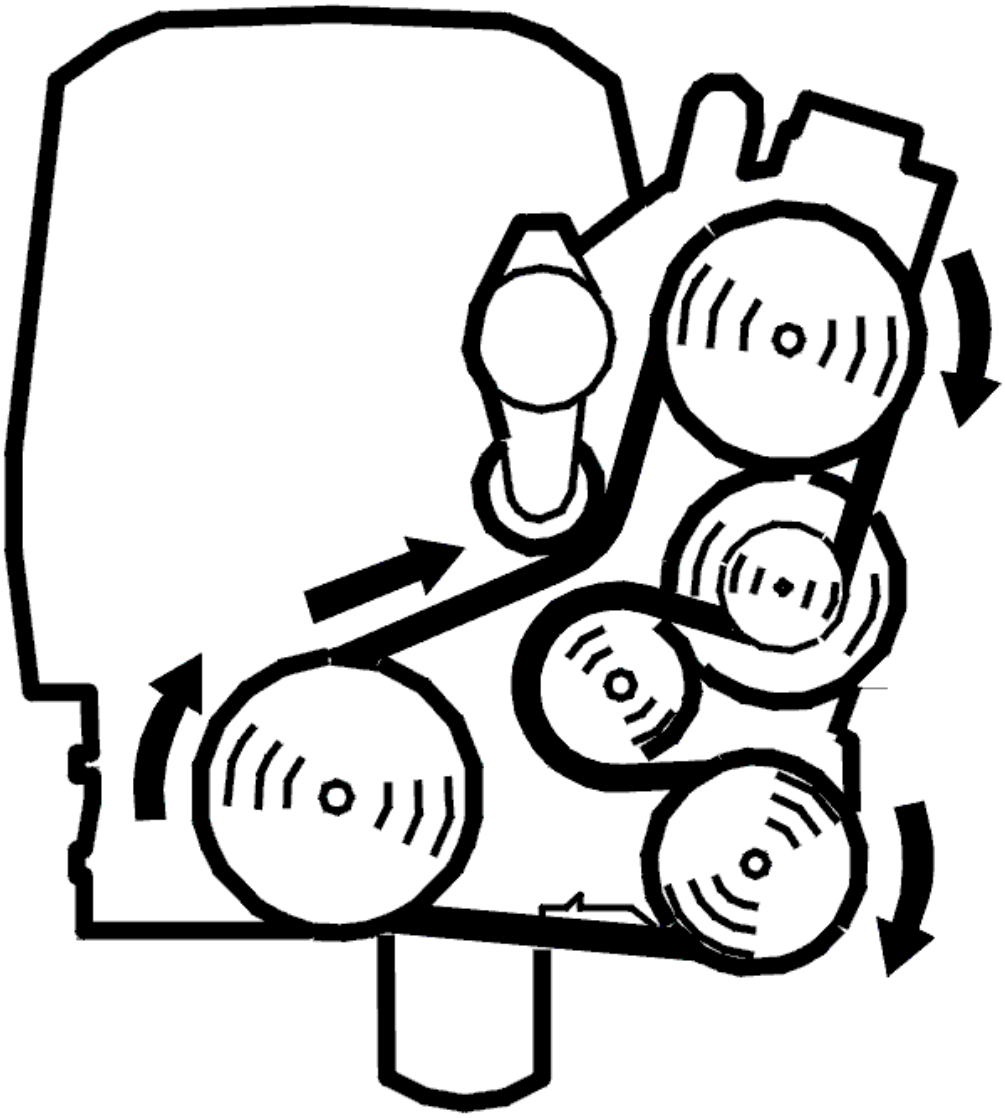

Fig. 232: Belt Routing / Engine Idling - Volvo
Courtesy of VOLVO CARS CORPORATION

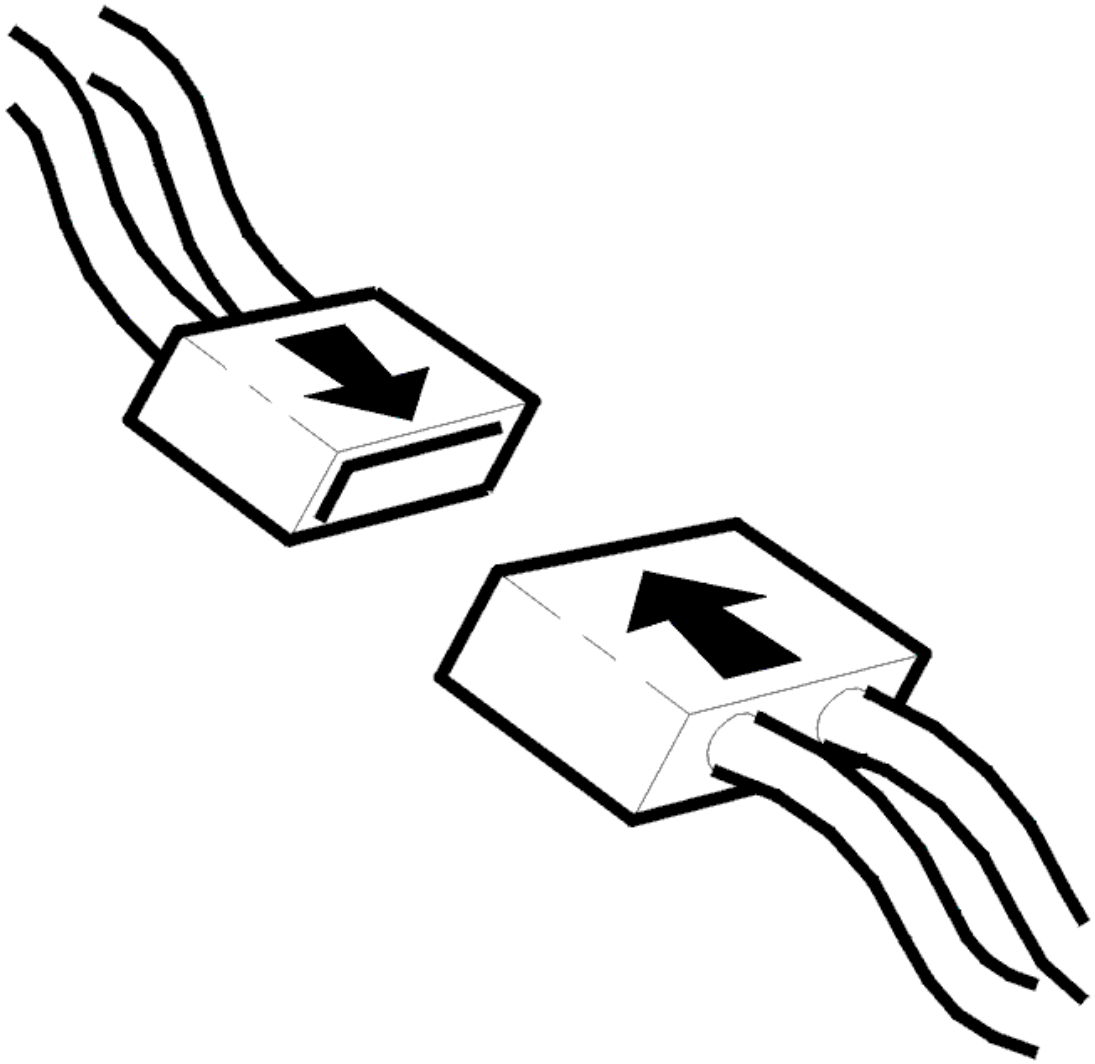

Fig. 233: Connecting Connector
Courtesy of VOLVO CARS CORPORATION

- Ignition off.
- Reinstall connectors, components etc.
- Start the engine.
- Air conditioning (A/C) switch on
- Start the blower fan

Check that the pressure increases in the air conditioning (A/C) system when the air conditioning (A/C) compressor engages.

Also check if cold air blows into the passenger compartment when at the coolest setting.

NOTE: The air conditioning (A/C) pressure is given in volts for values, see

COMPONENT SPECIFICATIONS .

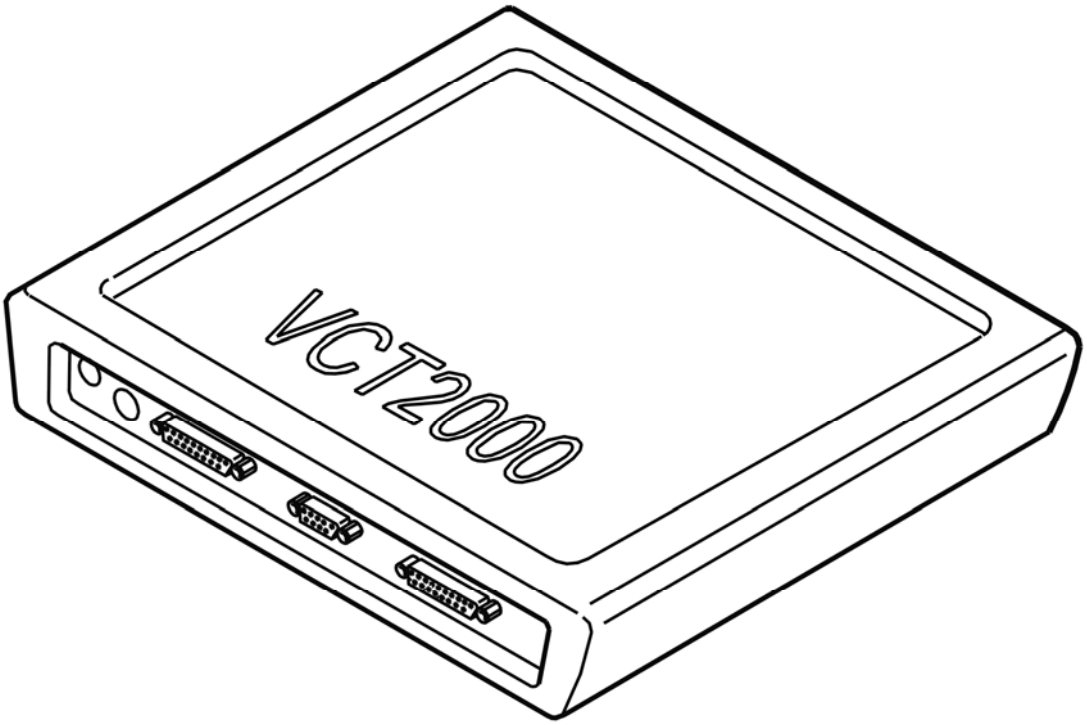

Fig. 234: Identifying VCT2000 Diagnostic Tool Symbol In VIDA
Courtesy of VOLVO CARS CORPORATION

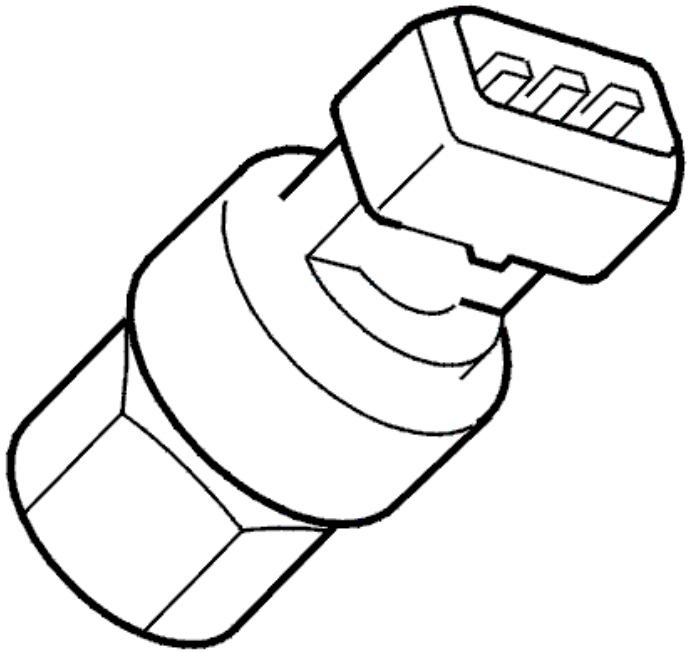

Fig. 235: Identifying A/C Pressure Sensor
Courtesy of VOLVO CARS CORPORATION

Does the pressure in air conditioning (A/C) system change?

- **YES**

  VERIFIED: Troubleshooting has been completed.

- **NO**

  Refer to **INFORMATION**

INFORMATION

FAULT-TRACING INFORMATION

The fault should have been detected and remedied. As this is not the case fault-tracing has failed.

Exit fault-tracing for this diagnostic trouble code (DTC) or make another attempt.

ECM-5000: AIR CONDITIONING (A/C) PRESSURE SENSOR. SIGNAL TOO LOW. INTERMITTENT FAULT (B5254T2; B6294T; 2003-2004)

DIAGNOSTIC TROUBLE CODE (DTC) INFORMATION

see **DIAGNOSTIC TROUBLE CODE (DTC) INFORMATION**

SIGNAL TOO LOW. INTERMITTENT FAULT

CHECKING COMPONENT AND WIRING

Check air conditioning (A/C) pressure sensor connector for intermittent contact resistance and oxidation according to **CONTACT RESISTANCE AND OXIDATION**

Check cable between engine control module (ECM) #A68 (#B8) and air conditioning (A/C) sensor #2 for an intermittent short-circuit to ground according to **SHORT-CIRCUIT TO GROUND, INTERMITTENT FAULTS**

Check signal cable between engine control module (ECM) #A68 (#B8) and air conditioning (A/C) pressure sensor #2 for an intermittent open circuit according to **OPEN-CIRCUIT, INTERMITTENT FAULTS**

Check power supply cable between engine control module (ECM) #A39 (#A39) and air conditioning (A/C) pressure sensor #3 for an intermittent open-circuit according to **OPEN-CIRCUIT, INTERMITTENT FAULTS**

Remedy as necessary

Other information

- Connecting the breakout box/accessing the control module, see **CONNECTING THE BREAKOUT BOX** .
- Air conditioning (A/C) pressure sensor #2 is the signal cable, #3 is the power supply (5V) and #1 is the signal ground.
- For 5 cylinder turbocharged engines -2004, see **SIGNAL DESCRIPTION**
- For 6 cylinder engines -2004, see **SIGNAL SPECIFICATION**

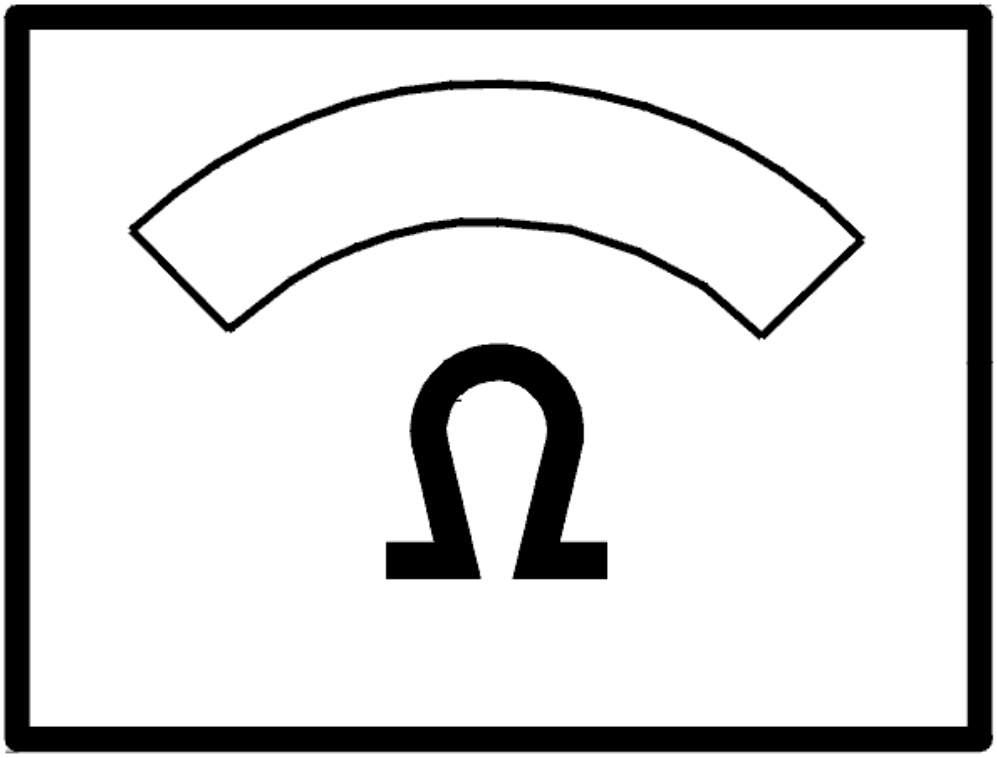

Fig. 236: Identifying Ohm Meter
Courtesy of VOLVO CARS CORPORATION

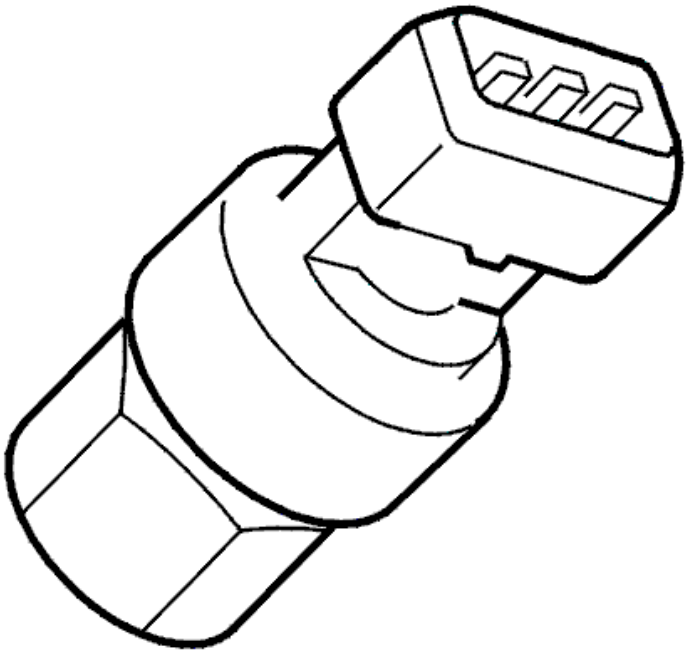

Fig. 237: Identifying A/C Pressure Sensor
Courtesy of VOLVO CARS CORPORATION

- **Continue**

  Refer to **INFORMATION**

INFORMATION

FAULT-TRACING INFORMATION

If the fault is intermittent, do not verify fault-tracing if the fault does not recur.

It is possible to view the information again, or leave fault-tracing for this diagnostic trouble code (DTC).

ECM-5000: AIR CONDITIONING (A/C) PRESSURE SENSOR. SIGNAL TOO LOW. PERMANENT FAULT (B5254T2; B6294T; 2003-2004)

DIAGNOSTIC TROUBLE CODE (DTC) INFORMATION

see **DIAGNOSTIC TROUBLE CODE (DTC) INFORMATION**

SIGNAL TOO LOW. PERMANENT FAULT

CHECKING COMPONENT AND WIRING

Check air conditioning (A/C) pressure sensor connector for contact resistance and oxidation according to **CONTACT RESISTANCE AND OXIDATION** .

Check signal cable between engine control module (ECM) #A68 (#B8) and air conditioning (A/C) pressure sensor #2 for an short-circuit to ground according to **SHORT-CIRCUIT TO GROUND, PERMANENT FAULTS** .

Check signal cable between engine control module (ECM) #A68 (#B8) and air conditioning (A/C) pressure sensor #2 for an open circuit according to **OPEN-CIRCUIT, PERMANENT FAULTS** .

Check power supply cable between engine control module (ECM) #A39 (#A39) and air conditioning (A/C) pressure sensor #3 for an open-circuit according to **OPEN-CIRCUIT, PERMANENT FAULTS** .

Remedy as necessary.

Other information:

- Connecting the breakout box/accessing the control module, see **CONNECTING THE BREAKOUT BOX** .
- Air conditioning (A/C) pressure sensor #2 is the signal cable, #3 is the power supply (5 V) and #1 is the signal ground.
- For 5 cylinder turbocharged engines -2004, see **SIGNAL DESCRIPTION**
- For 6 cylinder engines -2004, see **SIGNAL SPECIFICATION**

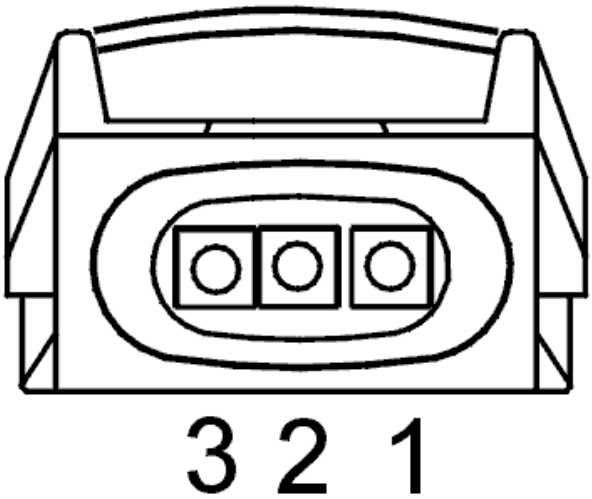

Fig. 238: Identifying Connector Terminals
Courtesy of VOLVO CARS CORPORATION

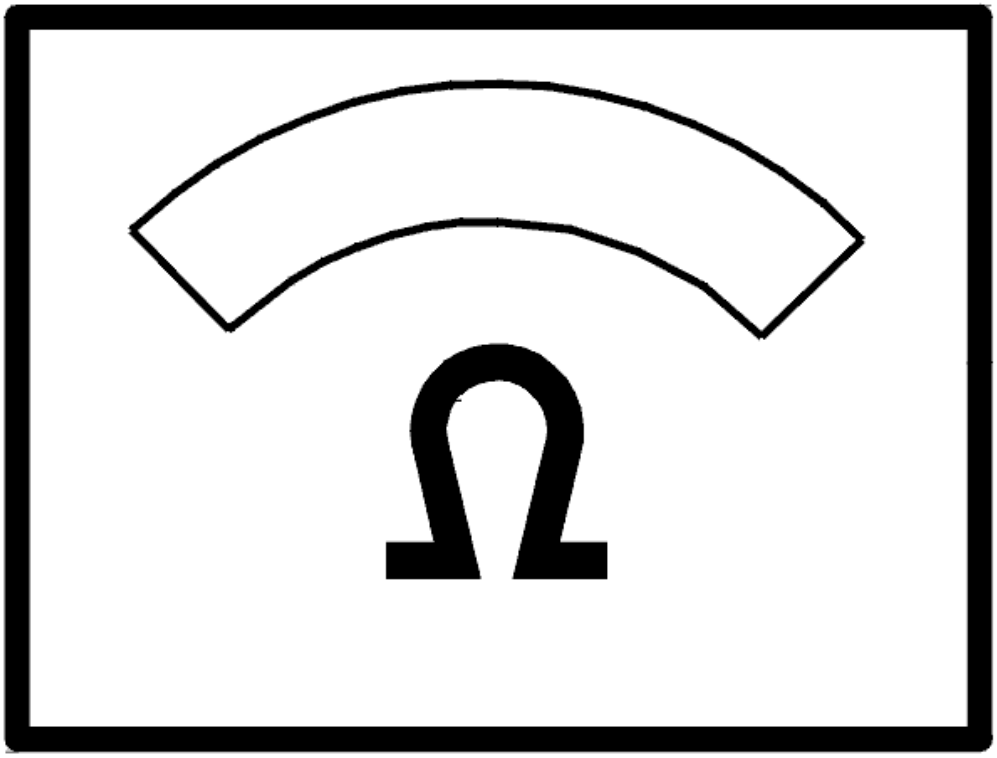

Fig. 239: Identifying Ohm Meter
Courtesy of VOLVO CARS CORPORATION

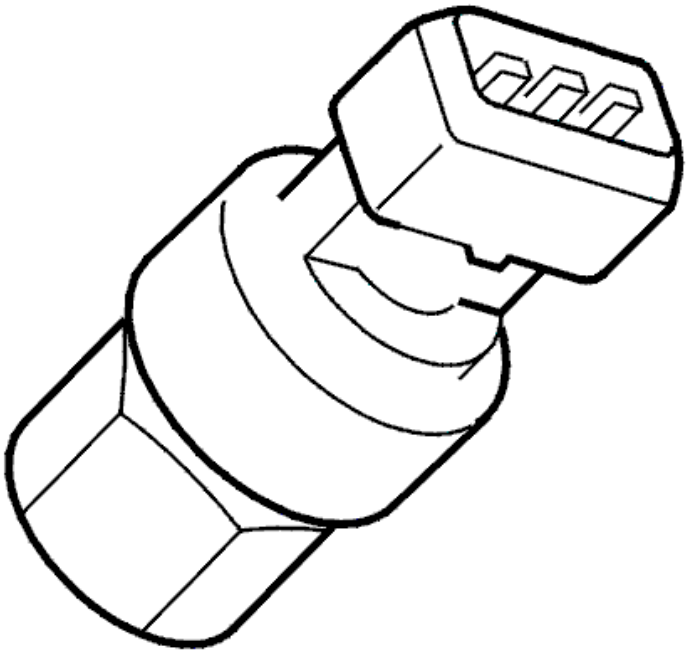

Fig. 240: Identifying A/C Pressure Sensor
Courtesy of VOLVO CARS CORPORATION

- **Continue**

  Refer to **VERIFICATION**

VERIFICATION

VERIFICATION

HINT: After carrying out the repair, check that the fault has been remedied.

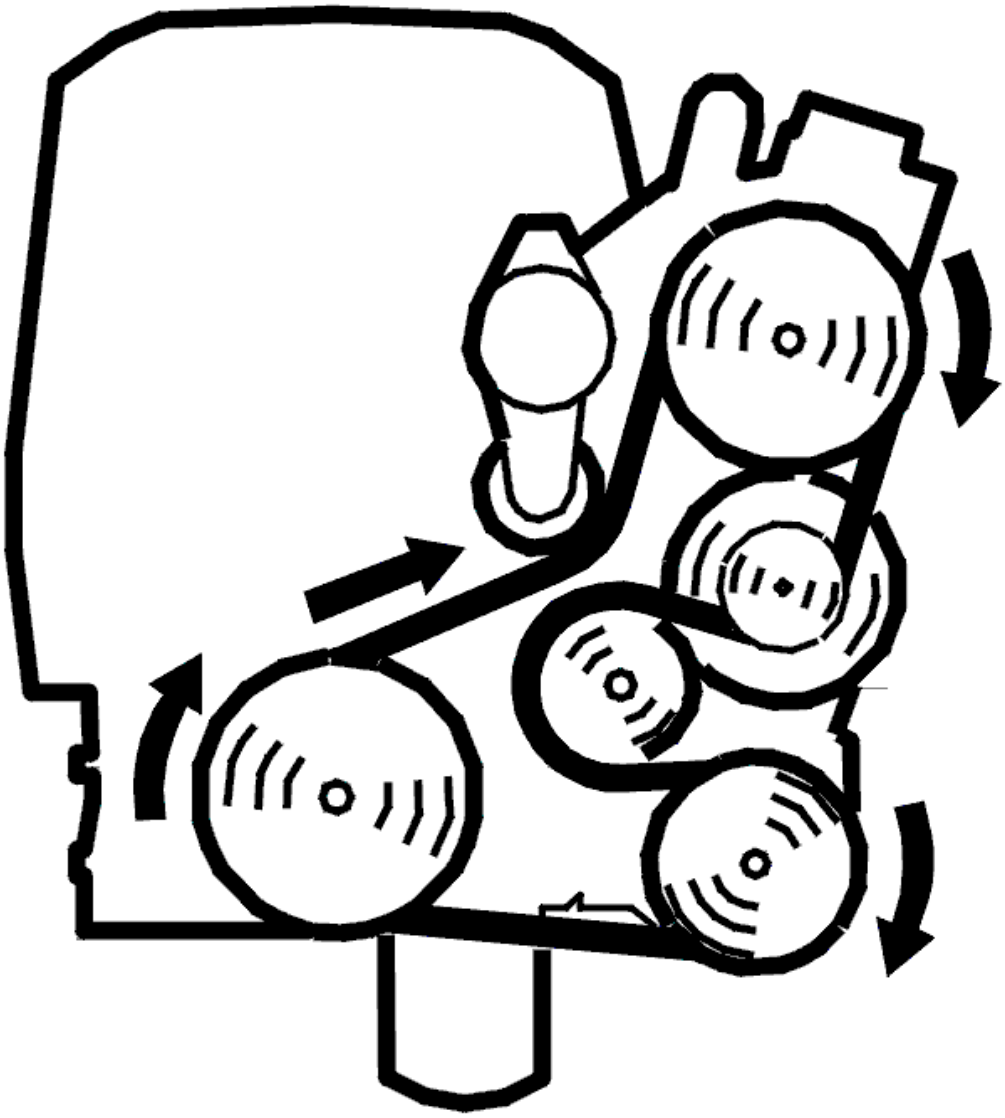

Fig. 241: Belt Routing / Engine Idling - Volvo
Courtesy of VOLVO CARS CORPORATION

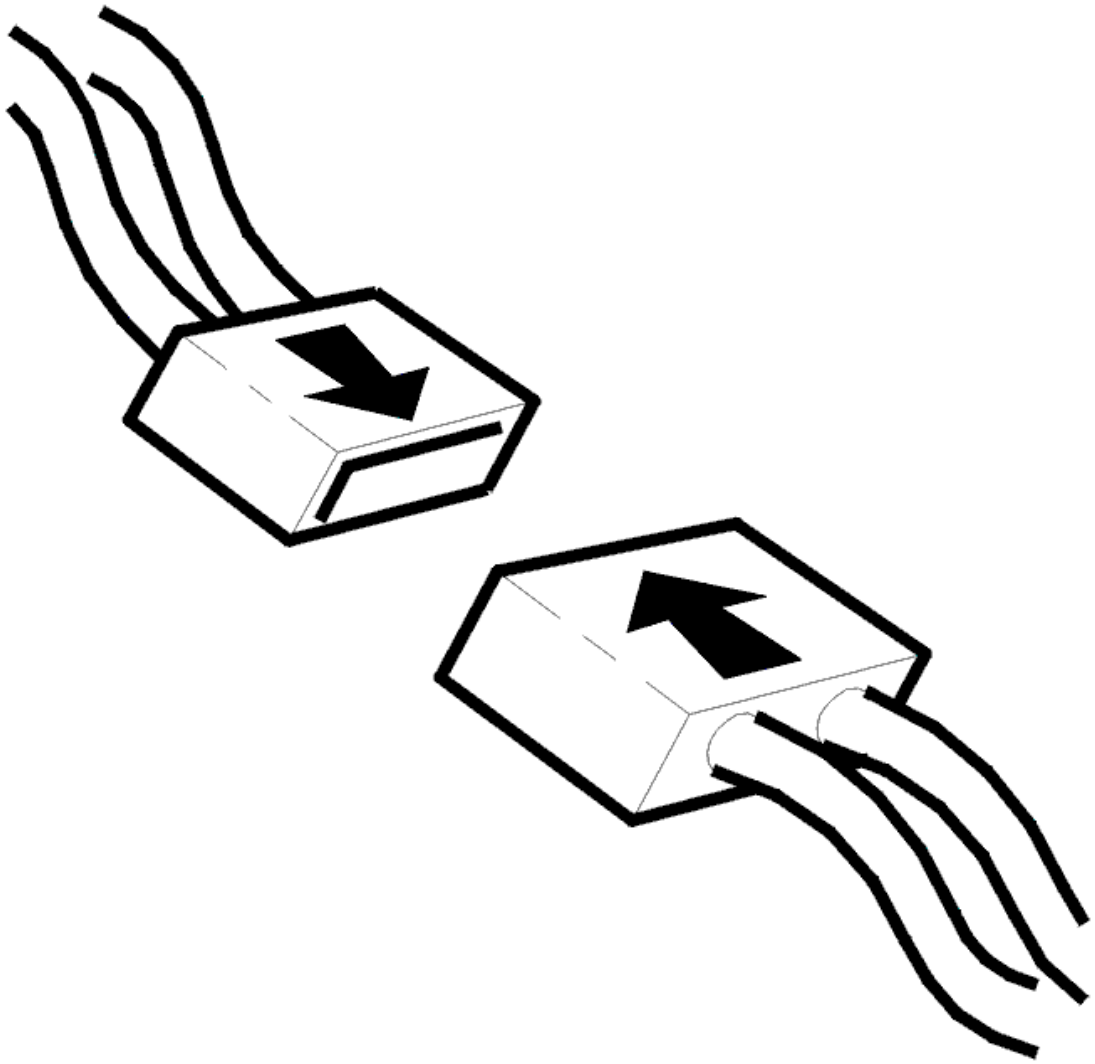

Fig. 242: Connecting Connector
Courtesy of VOLVO CARS CORPORATION

- Ignition off.
- Reinstall connectors, components etc.
- Start the engine.
- Air conditioning (A/C) switch on
- Start the blower fan

Check that the pressure increases in the air conditioning (A/C) system when the air conditioning (A/C) compressor engages.

Also check if cold air blows into the passenger compartment when at the coolest setting.

NOTE: The air conditioning (A/C) pressure is given in volts for values, see

COMPONENT SPECIFICATIONS .

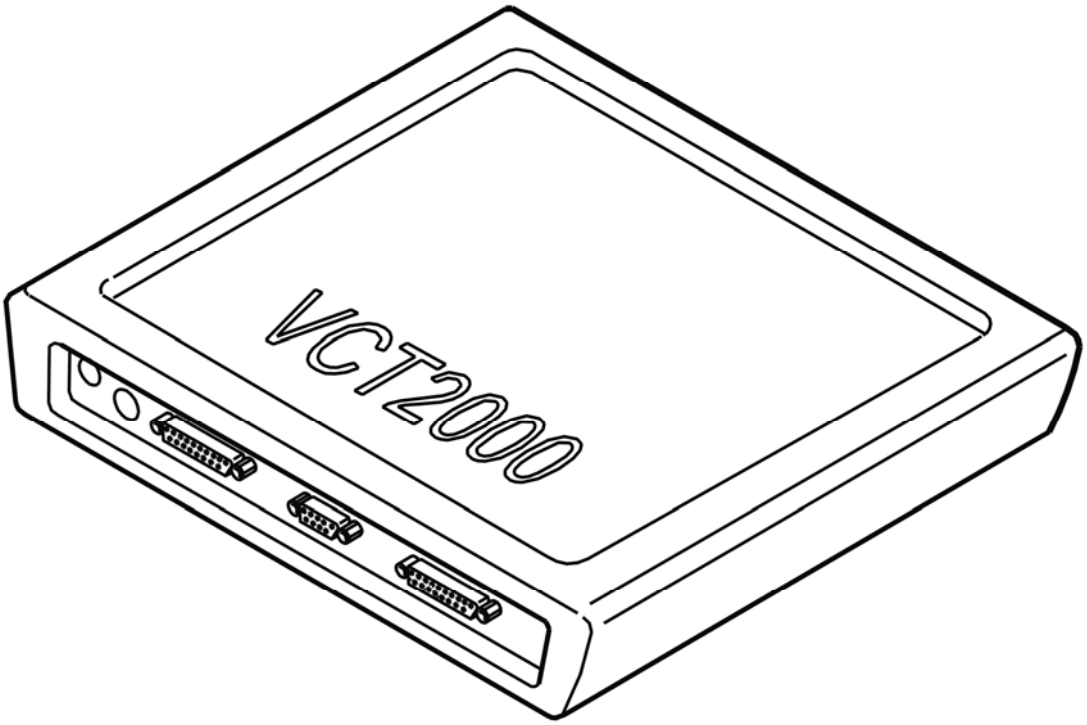

Fig. 243: Identifying VCT2000 Diagnostic Tool Symbol In VIDA
Courtesy of VOLVO CARS CORPORATION

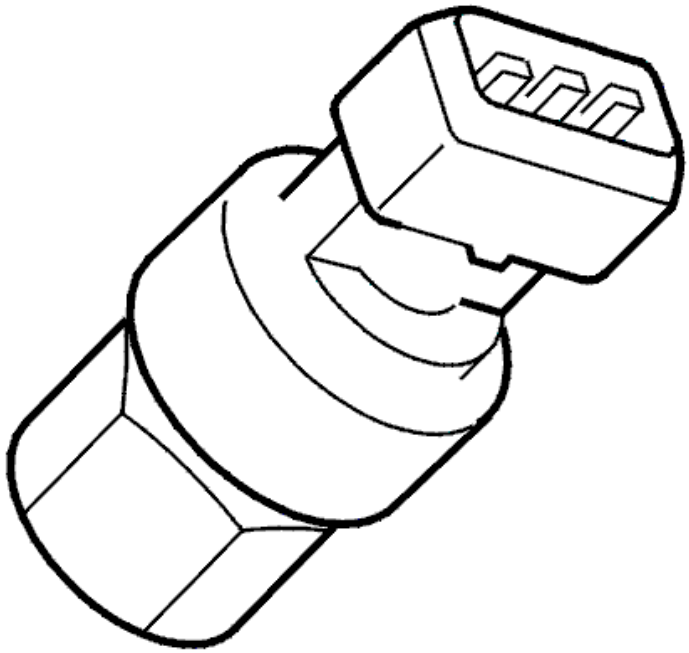

Fig. 244: Identifying A/C Pressure Sensor
Courtesy of VOLVO CARS CORPORATION

Does the pressure in air conditioning (A/C) system change?

- **YES**

  VERIFIED: Troubleshooting has been completed.

- **NO**

  Refer to **INFORMATION**

INFORMATION

FAULT-TRACING INFORMATION

The fault should have been detected and remedied. As this is not the case fault-tracing has failed.

Exit fault-tracing for this diagnostic trouble code (DTC) or make another attempt.

ECM-5000: ENGINE SPEED (RPM) SENSOR SIGNAL. FAULTY SIGNAL (B5254T2; 2005-2007)

DIAGNOSTIC TROUBLE CODE (DTC) INFORMATION ECM-5000

Condition

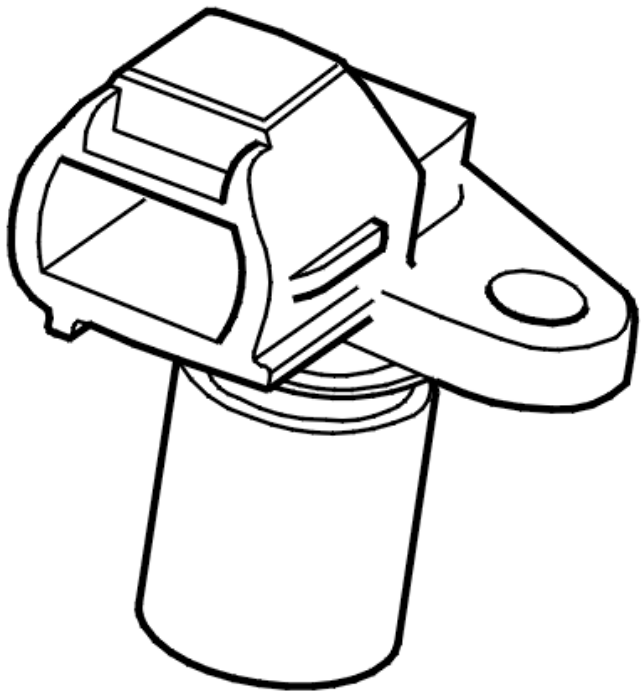

Fig. 245: Detecting The Reference Positions Of The Camshaft
Courtesy of VOLVO CARS CORPORATION

The engine control module (ECM) detects the flywheel position for TDC using the signal from the engine speed (RPM) sensor. The diagnostic trouble code (DTC) is stored if the position for TDC is missing sporadically. The diagnostic trouble code (DTC) can be diagnosed when the engine is running.

Substitute Value

- The engine control module (ECM) uses the signal from the camshaft position (CMP) sensor if the camshaft position (CMP) sensor has been adapted
- Variable valve timing control is blocked.

Possible Source

- Signal interference
- Contact resistance and oxidation
- Intermittent fault causes in the engine speed (RPM) sensor wiring.

Fault symptom[s]

- The engine is difficult to start
- Poor performance.

FAULTY SIGNAL

CHECKING COMPONENTS

Check that the engine speed (RPM) sensor is correctly installed.

Check the engine speed (RPM) sensor. Check that it is not damaged or dirty.

HINT: The diagnostic trouble code (DTC) can be caused by damage in the flywheel / carrier plate. Look for damage to the flywheel / carrier plate.

Other information

- For B5xx4T, see **REPLACING THE ENGINE SPEED (RPM) SENSOR**
- For B6xx4T, see **ENGINE SPEED (RPM) SENSOR, REPLACING** .

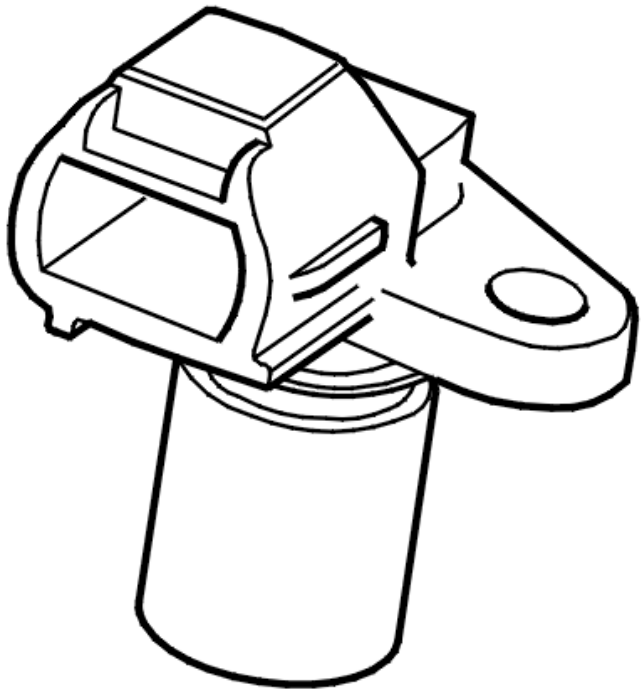

Fig. 246: Detecting The Reference Positions Of The Camshaft
Courtesy of VOLVO CARS CORPORATION

- **Continue**

  Refer to **VERIFICATION**

VERIFICATION

VERIFICATION

HINT: After carrying out the repair, check that the fault has been remedied.

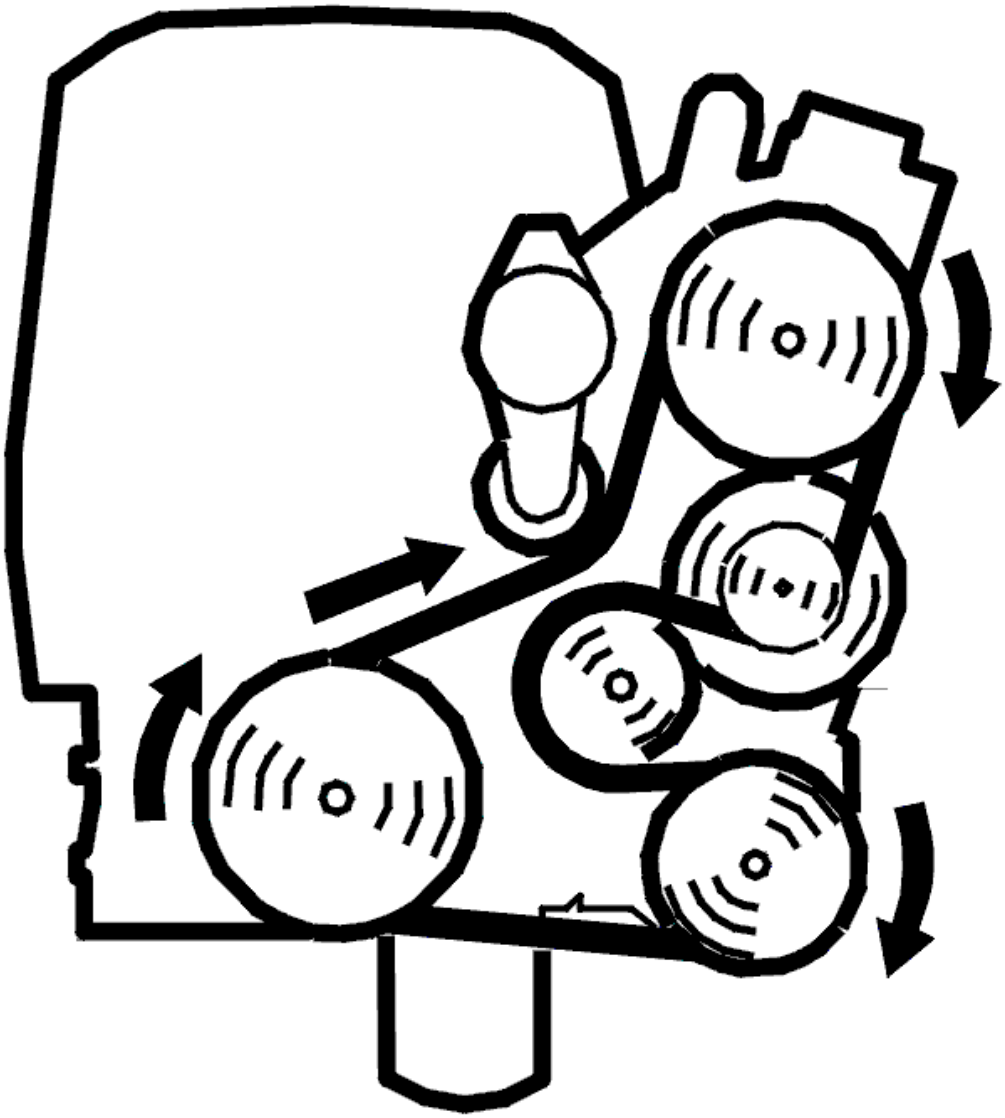

Fig. 247: Belt Routing / Engine Idling - Volvo
Courtesy of VOLVO CARS CORPORATION

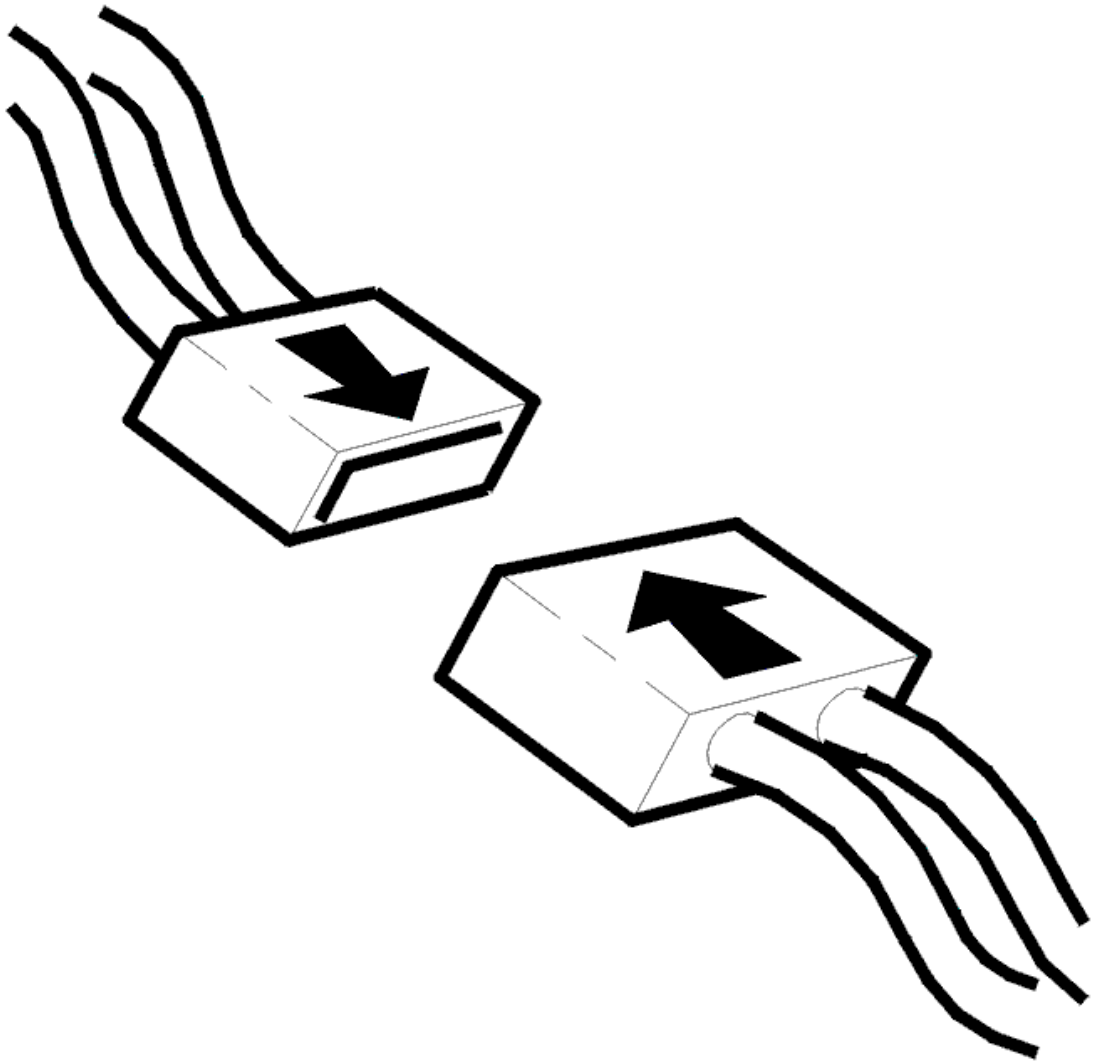

Fig. 248: Connecting Connector
Courtesy of VOLVO CARS CORPORATION

- Ignition off
- Reconnect the connectors, reinstall components etc.
- Start the engine
- Read off the diagnostic status and fault status for the diagnostic trouble code (DTC) by selecting the relevant diagnostic trouble code (DTC) from the list.

  Increase the engine speed a number of times until the diagnostic is "Complete".

  Check the fault status for the diagnostic trouble code (DTC) when the diagnostic is "Complete". If the function is correct, the fault status must be "No fault found" when the diagnostic is complete.

  HINT: In some cases several functions of the component will be diagnosed. The affects the amount

of time taken to run the diagnostic.

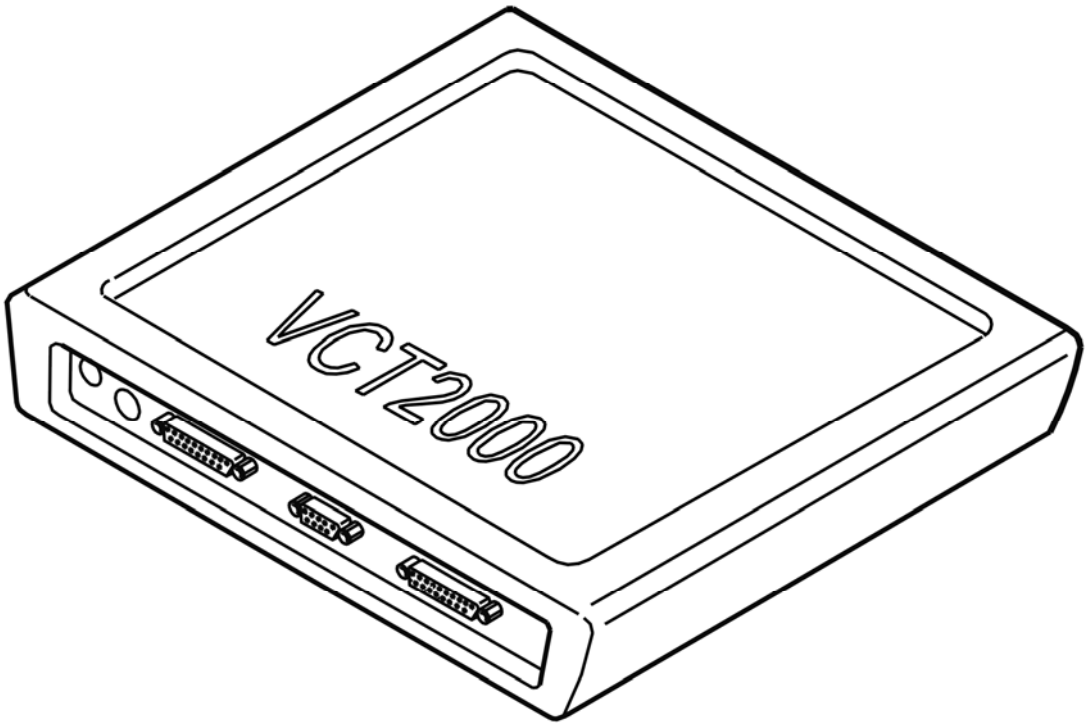

Fig. 249: Identifying VCT2000 Diagnostic Tool Symbol In VIDA
Courtesy of VOLVO CARS CORPORATION

Is the function OK?

- **YES**

  VERIFIED: Troubleshooting has been completed.

- **NO**

  Refer to **INFORMATION**

INFORMATION

FAULT-TRACING INFORMATION

The fault should have been detected and remedied. As this is not the case fault-tracing has failed.

Exit fault-tracing for this diagnostic trouble code (DTC) or make another attempt.

ECM-5000: ENGINE SPEED (RPM) SENSOR SIGNAL. FAULTY SIGNAL

(B6294T; 2005-2006)

DIAGNOSTIC TROUBLE CODE (DTC) INFORMATION ECM-5000

see **DIAGNOSTIC TROUBLE CODE (DTC) INFORMATION ECM-5000**

FAULTY SIGNAL

see **FAULTY SIGNAL**

ECM-500B: ENGINE SPEED (RPM) SENSOR SIGNAL. SIGNAL MISSING (B5254T2; 2005-2007)

DIAGNOSTIC TROUBLE CODE (DTC) INFORMATION ECM-500B

Condition

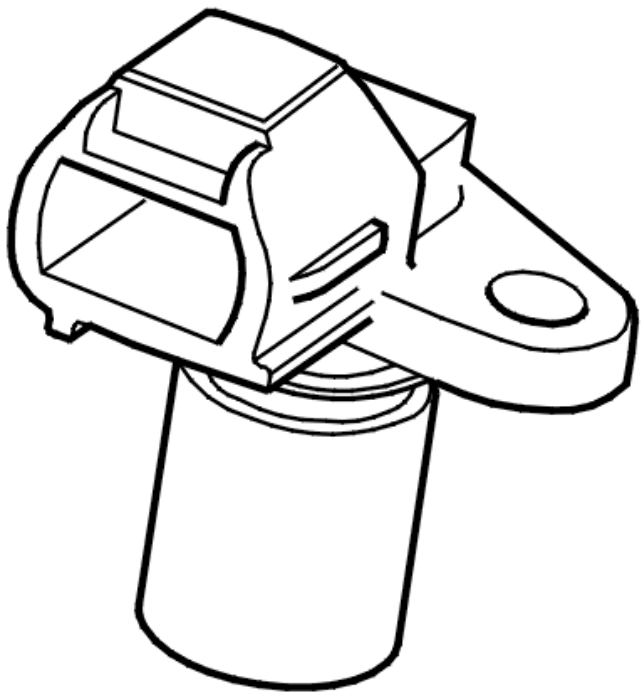

Fig. 250: Detecting The Reference Positions Of The Camshaft
Courtesy of VOLVO CARS CORPORATION

The engine control module (ECM) detects the flywheel position for TDC using the signal from the engine speed (RPM) sensor. The diagnostic trouble code (DTC) is stored if the engine control module (ECM) is unable to detect TDC at the flywheel. The diagnostic trouble code (DTC) can be diagnosed when the engine is running.

Substitute Value

- The control module uses the signal from the camshaft position (CMP) sensor if the camshaft position (CMP) sensor has been adapted
- Variable valve timing control is blocked.

Possible Source

- Signal interference
- Contact resistance in the terminals
- Incorrectly installed engine speed (RPM) sensor
- Intermittent fault causes in the engine speed (RPM) sensor wiring.

Fault symptom[s]

- The engine is difficult to start
- Poor performance.

SIGNAL MISSING

CHECKING COMPONENTS AND WIRING

Check the engine speed (RPM) sensor connector. Check for intermittent contact resistance and oxidation.

HINT: The engine speed (RPM) sensor and its wiring are sensitive to interference from surrounding cables, the starter motor cable for example, or similar high amperage cables.

Interference can cause difficulty in starting the engine, prevent the engine starting at all, or cause intermittent operation of the tachometer, etc.

Check whether any cables with high power consumption are incorrectly installed, i. e. too close to the engine speed (RPM) sensor or its wiring.

Remedy as necessary.

Other information

- For B5xx4T, see **REPLACING THE ENGINE SPEED (RPM) SENSOR**
- For B6xx4T, see **ENGINE SPEED (RPM) SENSOR, REPLACING** .

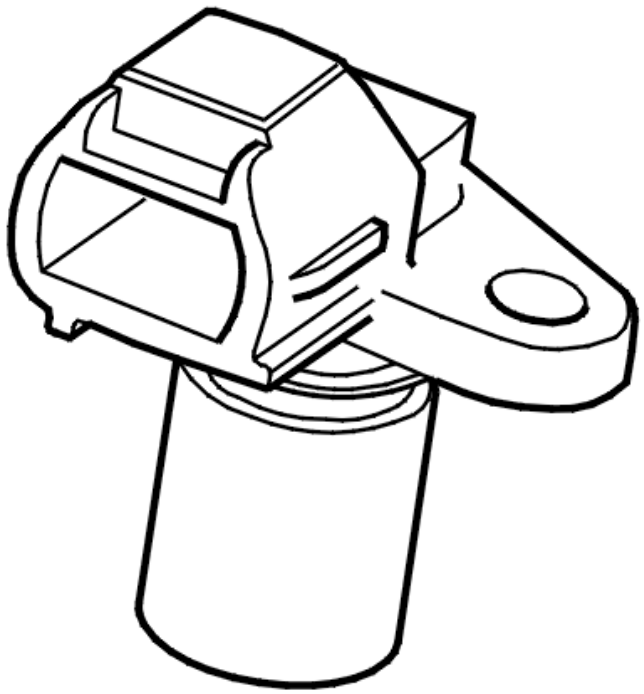

Fig. 251: Detecting The Reference Positions Of The Camshaft
Courtesy of VOLVO CARS CORPORATION

- **Continue**

  Refer to **VERIFICATION**

VERIFICATION

VERIFICATION

HINT: After carrying out the repair, check that the fault has been remedied.

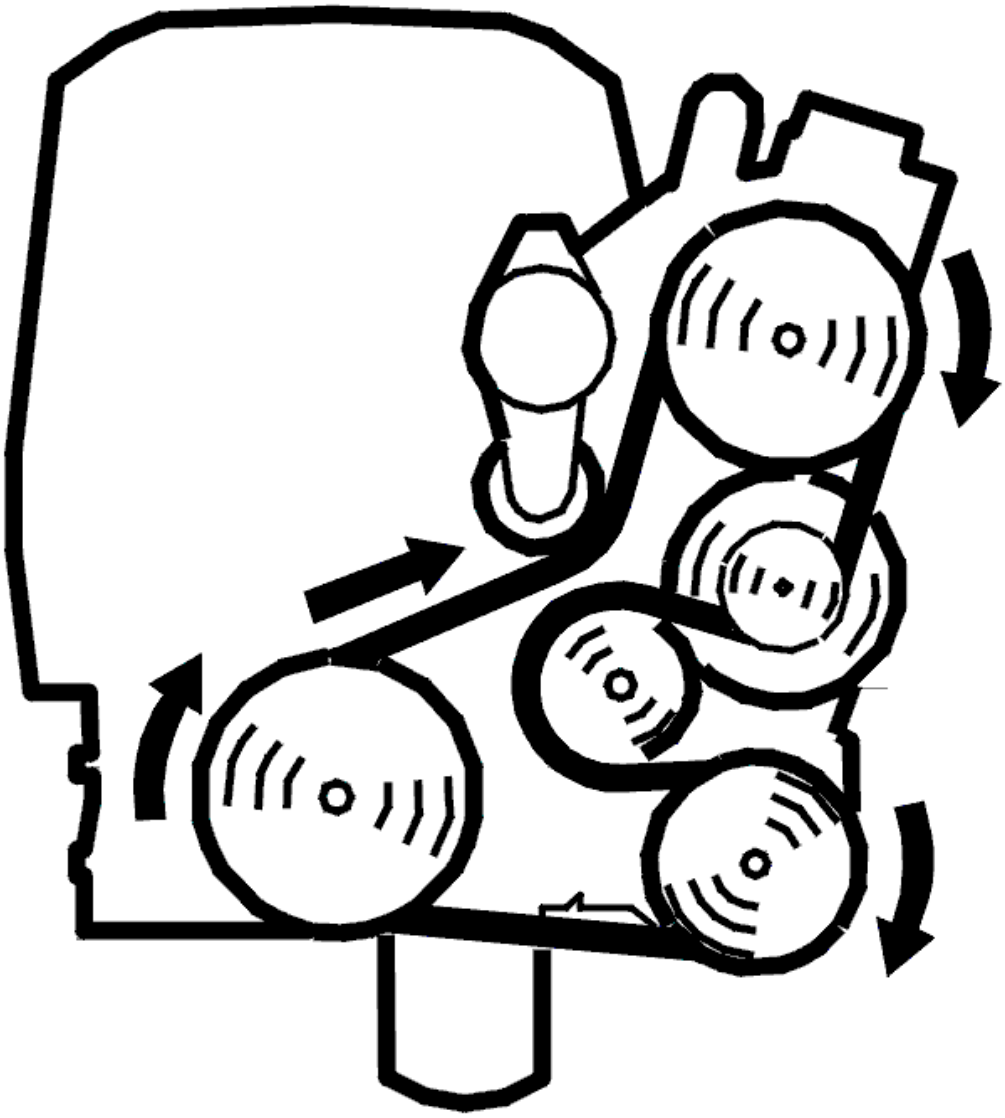

Fig. 252: Belt Routing / Engine Idling - Volvo
Courtesy of VOLVO CARS CORPORATION

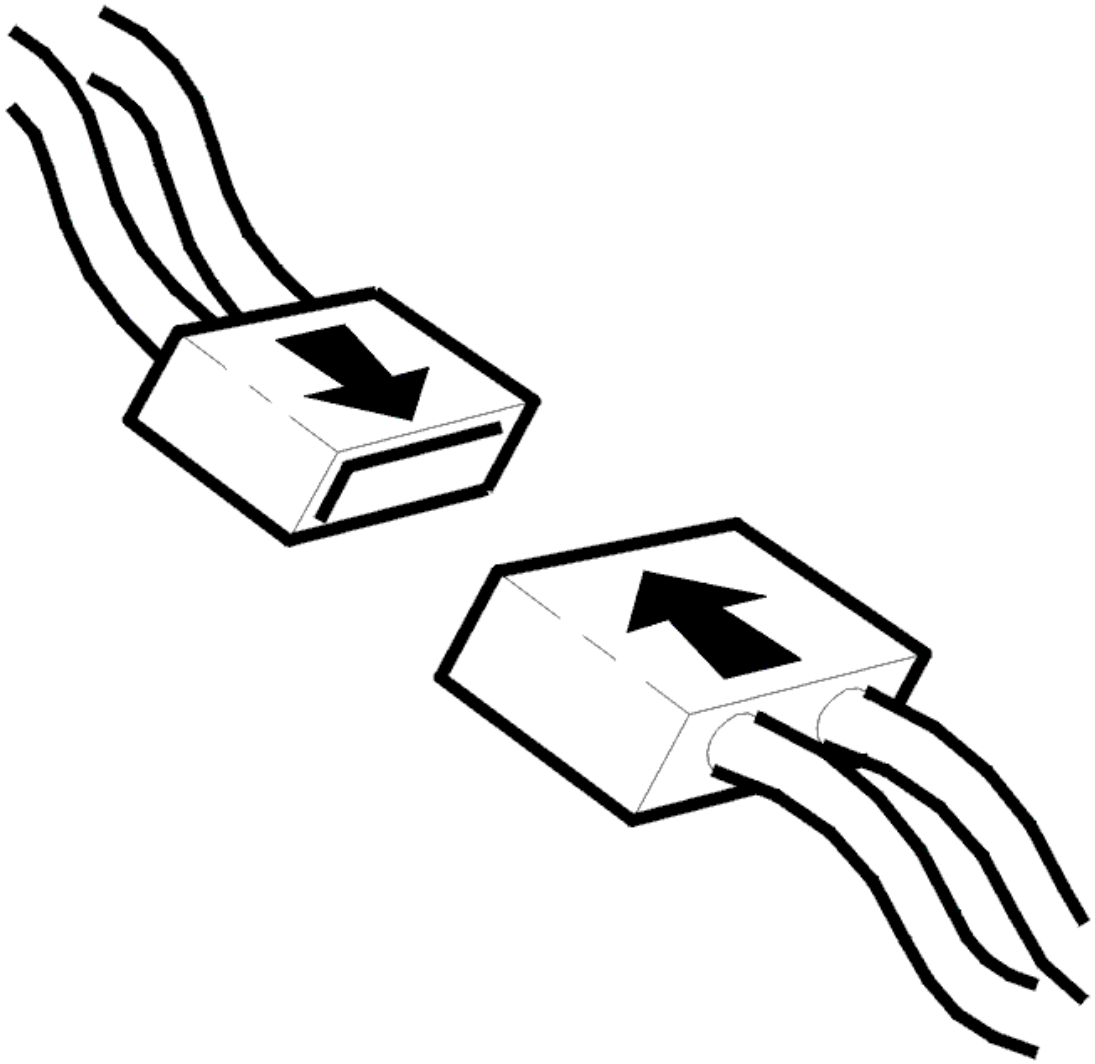

Fig. 253: Connecting Connector
Courtesy of VOLVO CARS CORPORATION

- Ignition off
- Reconnect the connectors, reinstall components etc.
- Start the engine
- Read off the diagnostic status and fault status for the diagnostic trouble code (DTC) by selecting the relevant diagnostic trouble code (DTC) from the list.

  Increase the engine speed a number of times until the diagnostic is "Complete".

  Check the fault status for the diagnostic trouble code (DTC) when the diagnostic is "Complete". If the function is correct, the fault status must be "No fault found" when the diagnostic is complete.

  HINT: In some cases several functions of the component will be diagnosed. The affects the amount

of time taken to run the diagnostic.

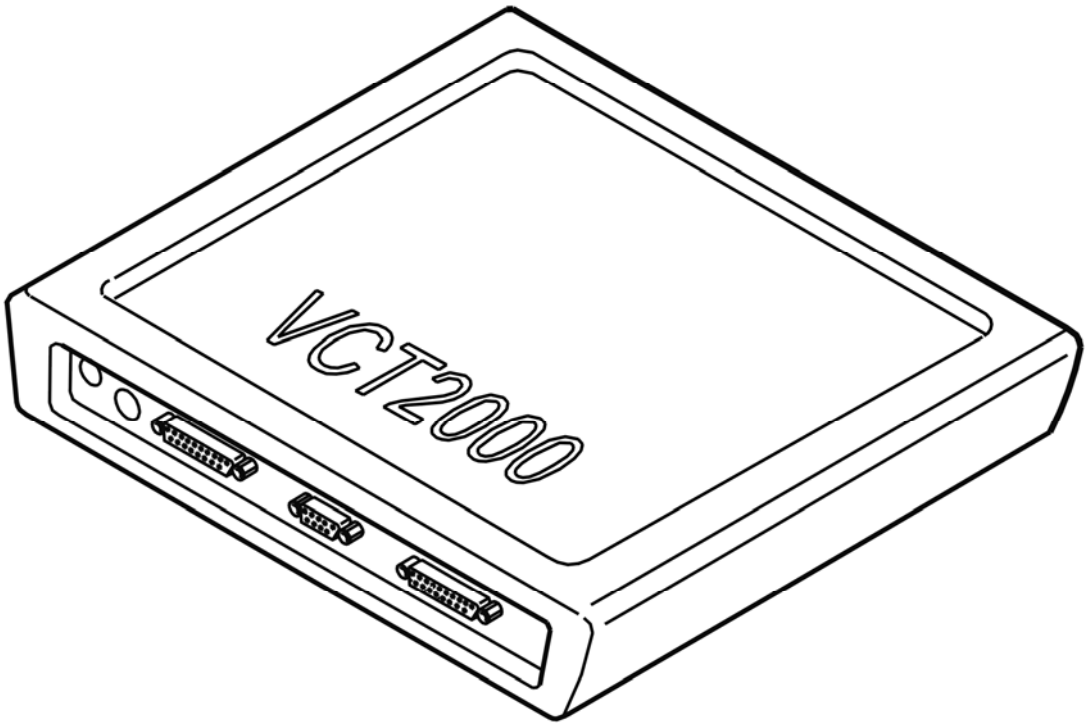

Fig. 254: Identifying VCT2000 Diagnostic Tool Symbol In VIDA
Courtesy of VOLVO CARS CORPORATION

Is the function OK?

- **YES**

  VERIFIED: Troubleshooting has been completed.

- **NO**

  Refer to **INFORMATION**

INFORMATION

FAULT-TRACING INFORMATION

The fault should have been detected and remedied. As this is not the case fault-tracing has failed.

Exit fault-tracing for this diagnostic trouble code (DTC) or make another attempt.

ECM-500B: ENGINE SPEED (RPM) SENSOR SIGNAL. SIGNAL MISSING

(B6294T; 2005-2006)

DIAGNOSTIC TROUBLE CODE (DTC) INFORMATION ECM-500B

see **DIAGNOSTIC TROUBLE CODE (DTC) INFORMATION ECM-500B**

SIGNAL MISSING

see **SIGNAL MISSING**

ECM-500C: ENGINE SPEED (RPM) SENSOR SIGNAL. SIGNAL TOO HIGH (B5254T2; 2005-2007)

DIAGNOSTIC TROUBLE CODE (DTC) INFORMATION ECM-500C

Condition

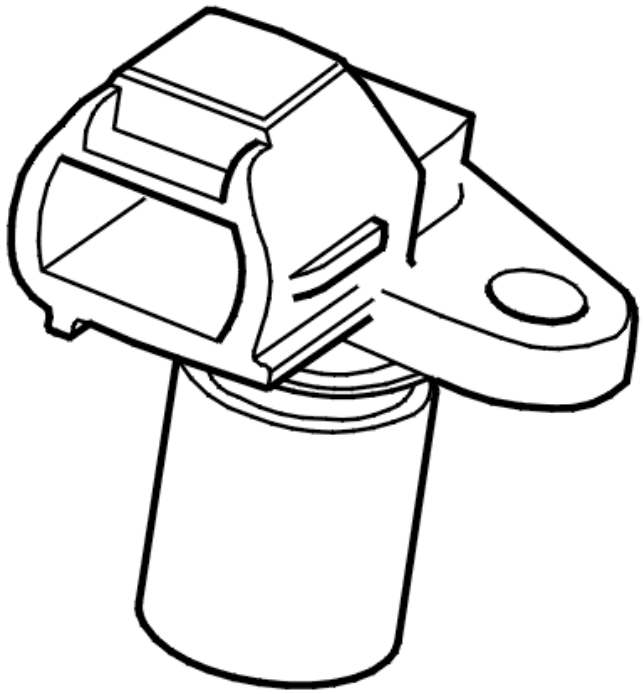

Fig. 255: Detecting The Reference Positions Of The Camshaft
Courtesy of VOLVO CARS CORPORATION

The engine control module (ECM) counts the number of teeth on the flywheel using the signal for the engine speed (RPM) sensor. The diagnostic trouble code (DTC) is stored if the engine control module (ECM) detects at least one tooth too many during a certain number of engine revolutions. The diagnostic trouble code (DTC) can

be diagnosed when the engine is running.

Substitute Value

- The engine control module (ECM) uses the signal from the camshaft position (CMP) sensor if the camshaft position (CMP) sensor has been adapted
- Variable valve timing control is blocked.

Possible Source

- Signal interference
- Damaged flywheel or ring gear.

Fault symptom[s]

- The engine is difficult to start
- Poor performance.

SIGNAL TOO HIGH

CHECKING THE COMPONENT AND WIRING

- Check the engine speed (RPM) sensor connector. Check for intermittent contact resistance and oxidation.

  HINT: The engine speed (RPM) sensor and its wiring are sensitive to interference from surrounding cables, the starter motor cable for example, or similar high amperage cables.

  Interference can cause difficulty in starting the engine, prevent the engine starting at all, or cause intermittent operation of the tachometer, etc.

  Check whether any cables with high power consumption are incorrectly installed, i. e. too close to the engine speed (RPM) sensor or its wiring.

  Remedy as necessary

  Other information

  - For B5xx4T, see **REPLACING THE ENGINE SPEED (RPM) SENSOR**
  - For B6xx4T, see **ENGINE SPEED (RPM) SENSOR, REPLACING** .

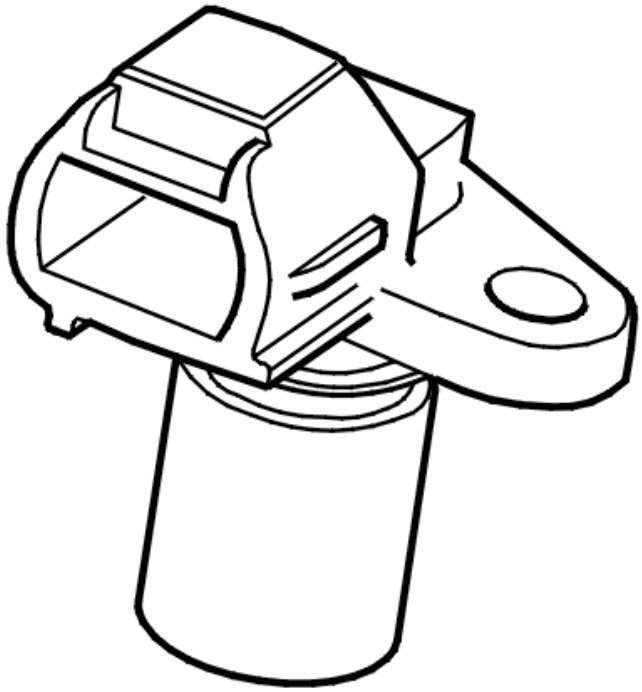

Fig. 256: Detecting The Reference Positions Of The Camshaft
Courtesy of VOLVO CARS CORPORATION

- **Continue**

  Refer to **VERIFICATION**

VERIFICATION

VERIFICATION

HINT: After carrying out the repair, check that the fault has been remedied.

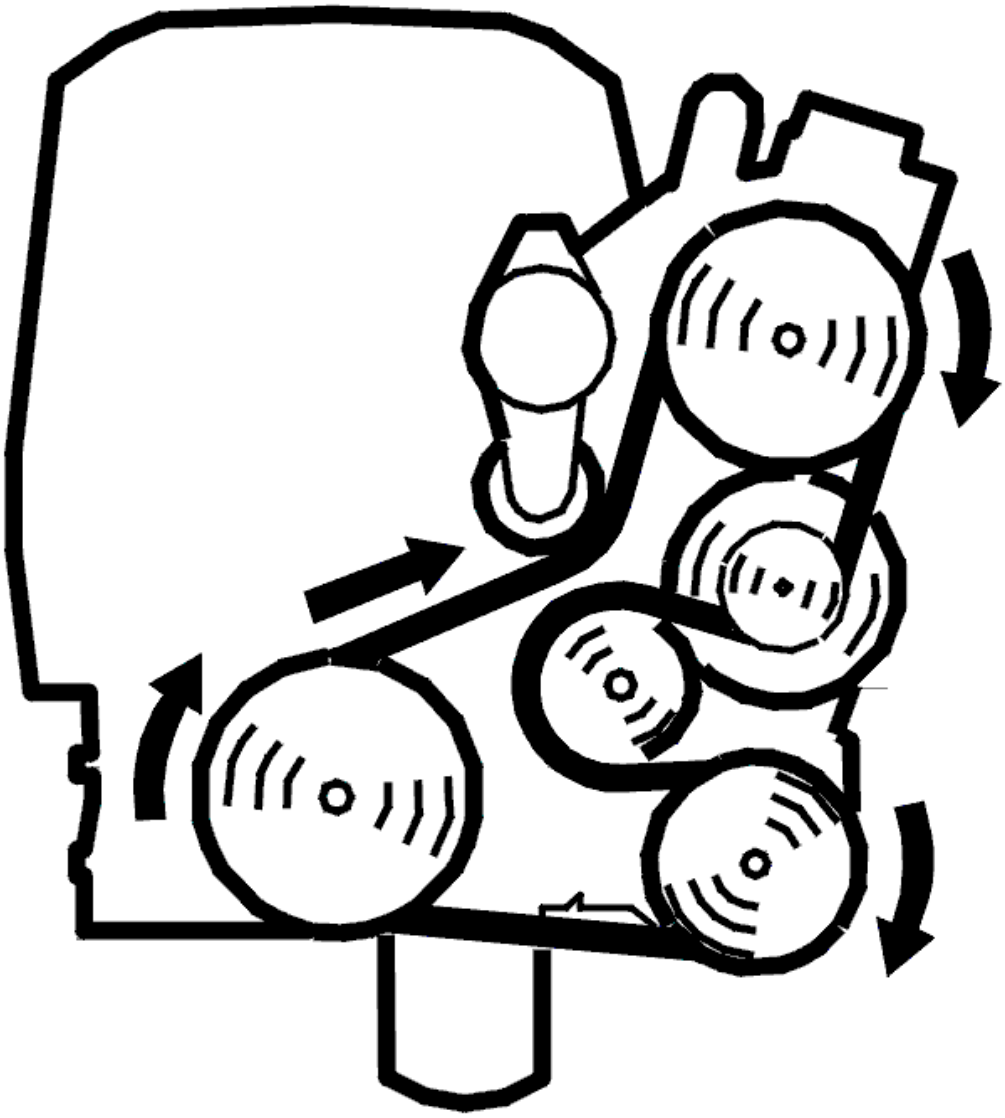

Fig. 257: Belt Routing / Engine Idling - Volvo
Courtesy of VOLVO CARS CORPORATION

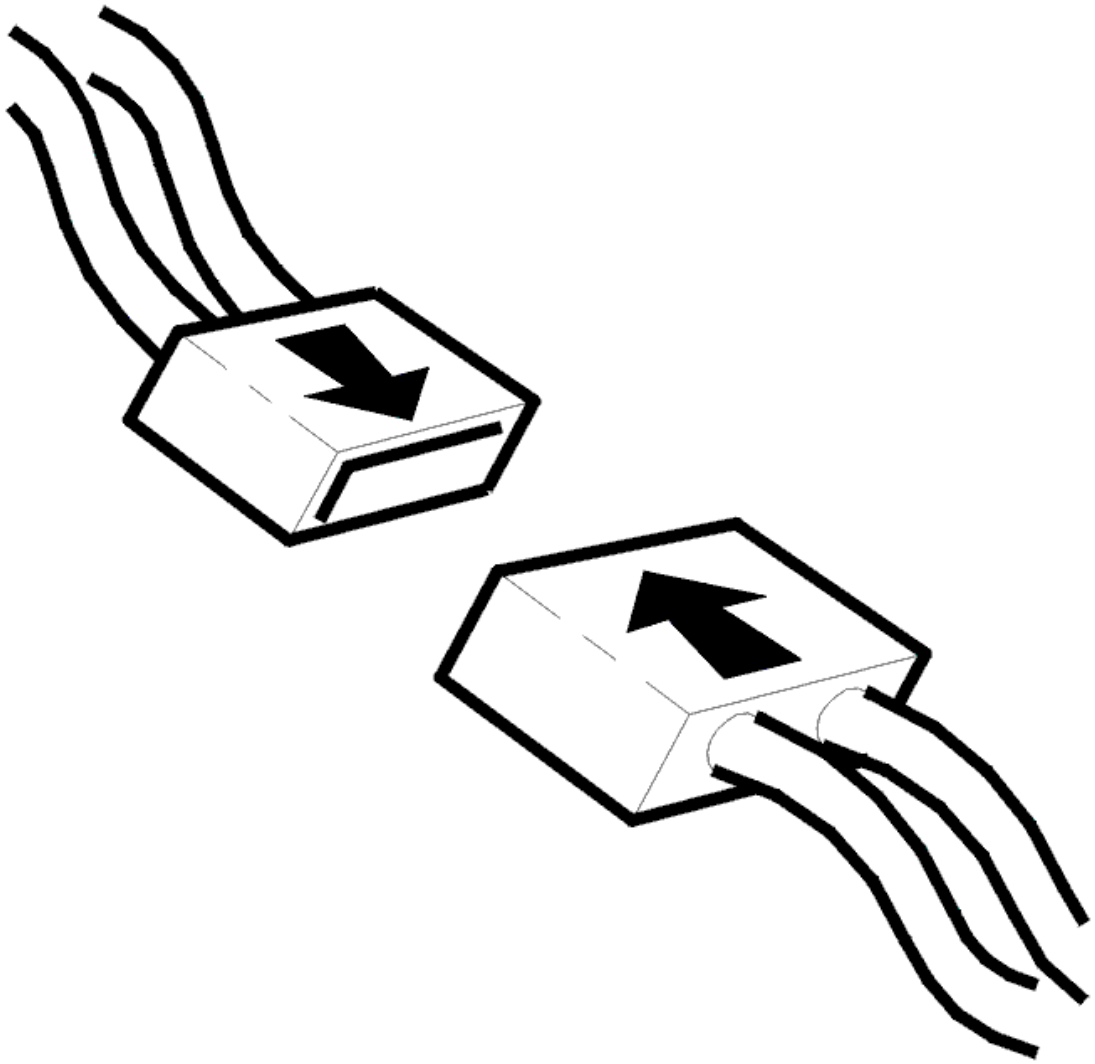

Fig. 258: Connecting Connector
Courtesy of VOLVO CARS CORPORATION

- Ignition off
- Reconnect the connectors, reinstall components etc.
- Start the engine
- Read off the diagnostic status and fault status for the diagnostic trouble code (DTC) by selecting the relevant diagnostic trouble code (DTC) from the list.

  Increase the engine speed a number of times until the diagnostic is "Complete".

  Check the fault status for the diagnostic trouble code (DTC) when the diagnostic is "Complete". If the function is correct, the fault status must be "No fault found" when the diagnostic is complete.

  HINT: In some cases several functions of the component will be diagnosed. The affects the amount

of time taken to run the diagnostic.

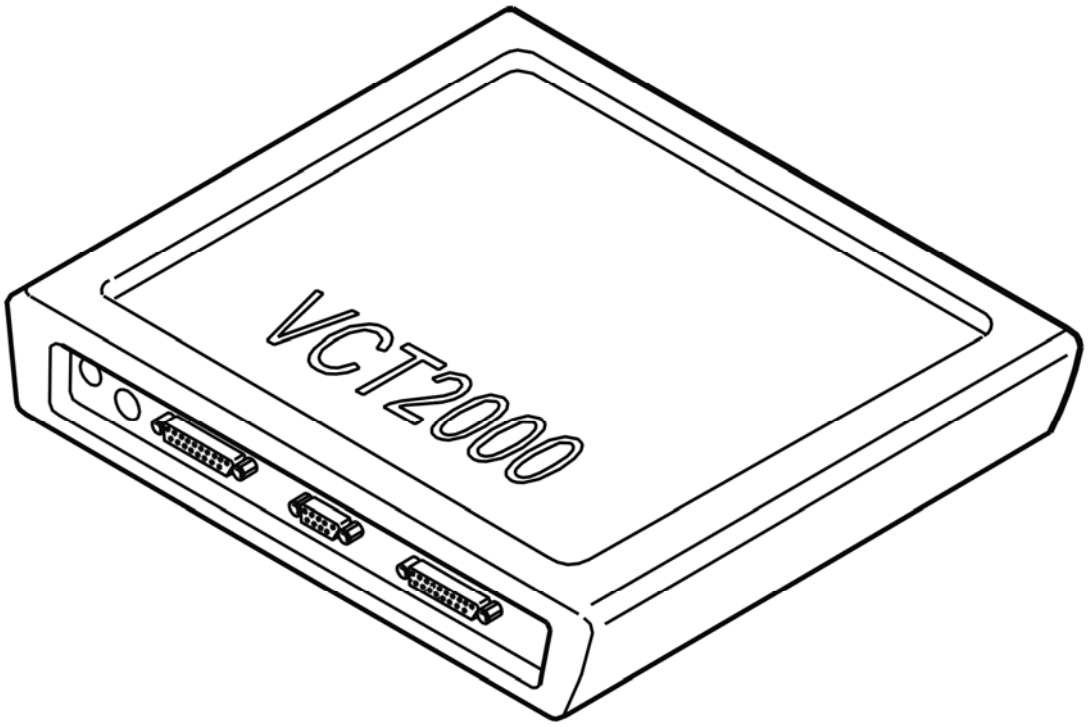

Fig. 259: Identifying VCT2000 Diagnostic Tool Symbol In VIDA
Courtesy of VOLVO CARS CORPORATION

Is the function OK?

- **YES**

  VERIFIED: Troubleshooting has been completed.

- **NO**

  Refer to **INFORMATION**

INFORMATION

FAULT-TRACING INFORMATION

The fault should have been detected and remedied. As this is not the case fault-tracing has failed.

Exit fault-tracing for this diagnostic trouble code (DTC) or make another attempt.

ECM-500C: ENGINE SPEED (RPM) SENSOR SIGNAL. SIGNAL TOO HIGH

(B6294T; 2005-2006)

DIAGNOSTIC TROUBLE CODE (DTC) INFORMATION ECM-500C

see **DIAGNOSTIC TROUBLE CODE (DTC) INFORMATION ECM-500C**

SIGNAL TOO HIGH

see **SIGNAL TOO HIGH**

ECM-500D: ENGINE SPEED (RPM) SENSOR SIGNAL. SIGNAL TOO LOW (B5254T2; 2005-2007)

DIAGNOSTIC TROUBLE CODE (DTC) INFORMATION ECM-500D

Condition

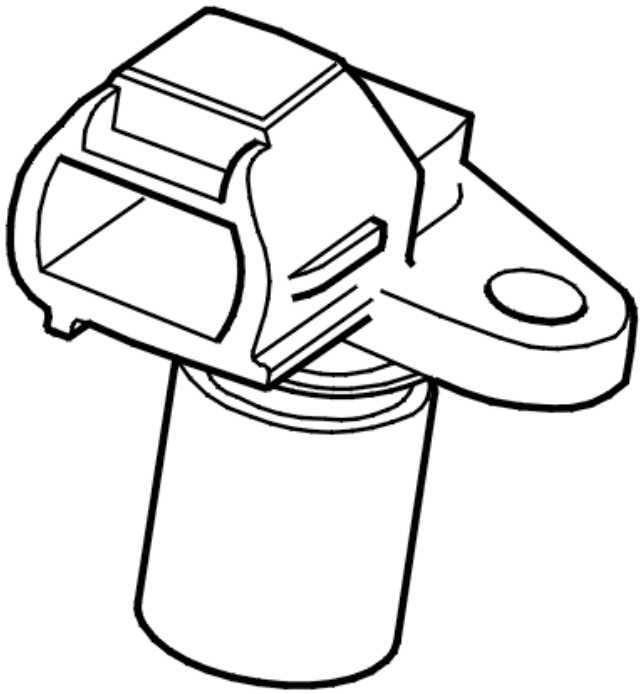

Fig. 260: Detecting The Reference Positions Of The Camshaft
Courtesy of VOLVO CARS CORPORATION

The engine control module (ECM) counts the number of teeth on the flywheel using the signal for the engine speed (RPM) sensor. The diagnostic trouble code (DTC) is stored if the engine control module (ECM) detects at least one tooth too few during a certain number of engine revolutions. The diagnostic trouble code (DTC) can

be diagnosed when the engine is running.

Substitute Value

- The control module uses the signal from the camshaft position (CMP) sensor if the camshaft position (CMP) sensor has been adapted
- Variable valve timing control is blocked.

Possible Source

- Signal interference
- Incorrectly installed engine speed (RPM) sensor
- Damaged flywheel or ring gear.

Fault symptom[s]

- The engine is difficult to start
- Poor performance.

SIGNAL TOO LOW

CHECKING COMPONENTS

Check that the engine speed (RPM) sensor is correctly installed.

Check the engine speed (RPM) sensor connector. Check for intermittent contact resistance and oxidation.

HINT: The engine speed (RPM) sensor and its wiring are sensitive to interference from surrounding cables, the starter motor cable for example, or similar high amperage cables.

Interference can cause difficulty in starting the engine, prevent the engine from starting at all or cause the tachometer to flicker during start attempts etc.

Causes of interference can be:

- nearby cables, such as an incorrectly routed cable for the starter motor
- incorrectly tightened bolted joints securing the transmission to the engine.

Checking power cable

Check for incorrectly routed cables (routed too close to the engine speed (RPM) sensor).

Checking bolted joints

When removing and installing the transmission it is important that all the bolts for the engine are correctly tightened. Incorrectly tightened bolts can cause poor ground connection and interfere with the engine speed

(RPM) sensor. Check that all the bolts from the transmission to the engine are correctly tightened.

Checking the wiring

Check the signal cable between the engine speed (RPM) sensor terminal #1 and engine control module (ECM) terminal #A48 (#A48) and between the engine speed (RPM) sensor terminal #2 and engine control module (ECM) terminal #A66 (#B6). Check for an intermittent short-circuit to supply voltage. Check for an intermittent short-circuit to ground. Check for an intermittent open-circuit.

Other information:

- see **CHECKING WIRING AND TERMINALS**
- For B5xx4T, see **REPLACING THE ENGINE SPEED (RPM) SENSOR**
- For B6xx4T, see **ENGINE SPEED (RPM) SENSOR, REPLACING** .

Remedy as necessary.

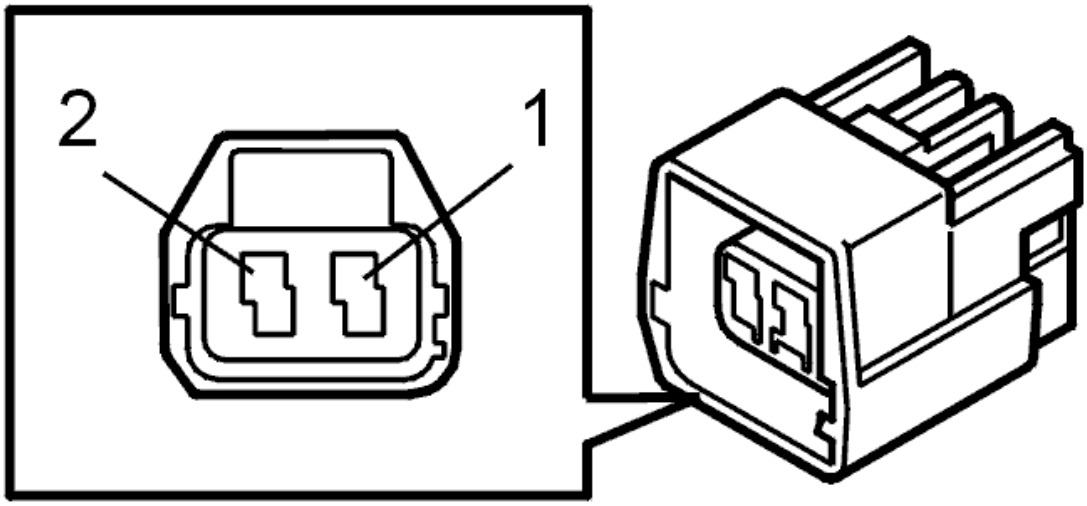

Fig. 261: Identifying Camshaft Reset Valve Connector Terminals
Courtesy of VOLVO CARS CORPORATION

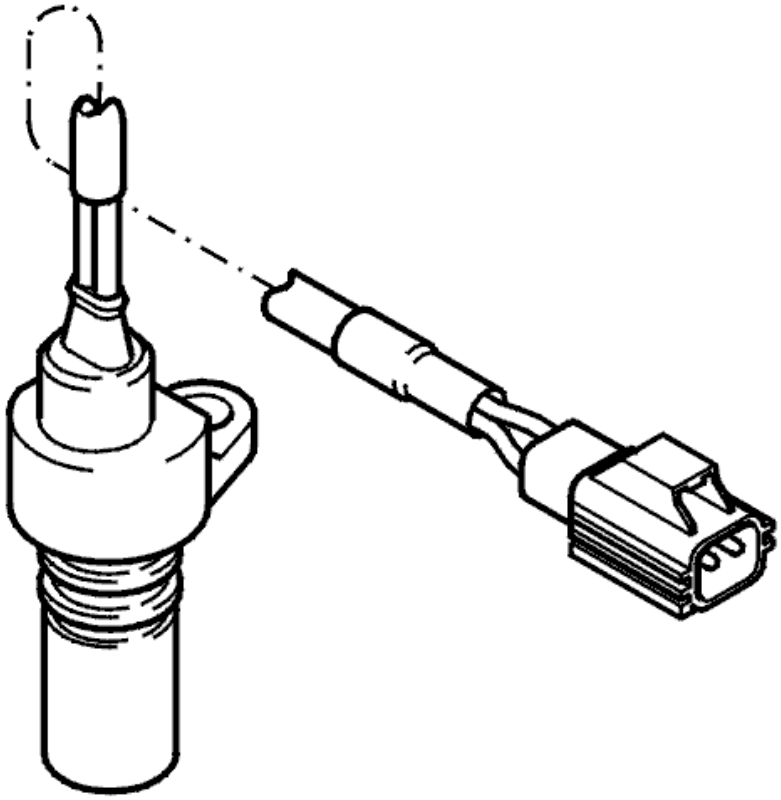

Fig. 262: Identifying Engine Speed Sensor
Courtesy of VOLVO CARS CORPORATION

- **Continue**

  Refer to **VERIFICATION**

VERIFICATION

VERIFICATION

HINT: After carrying out the repair, check that the fault has been remedied.

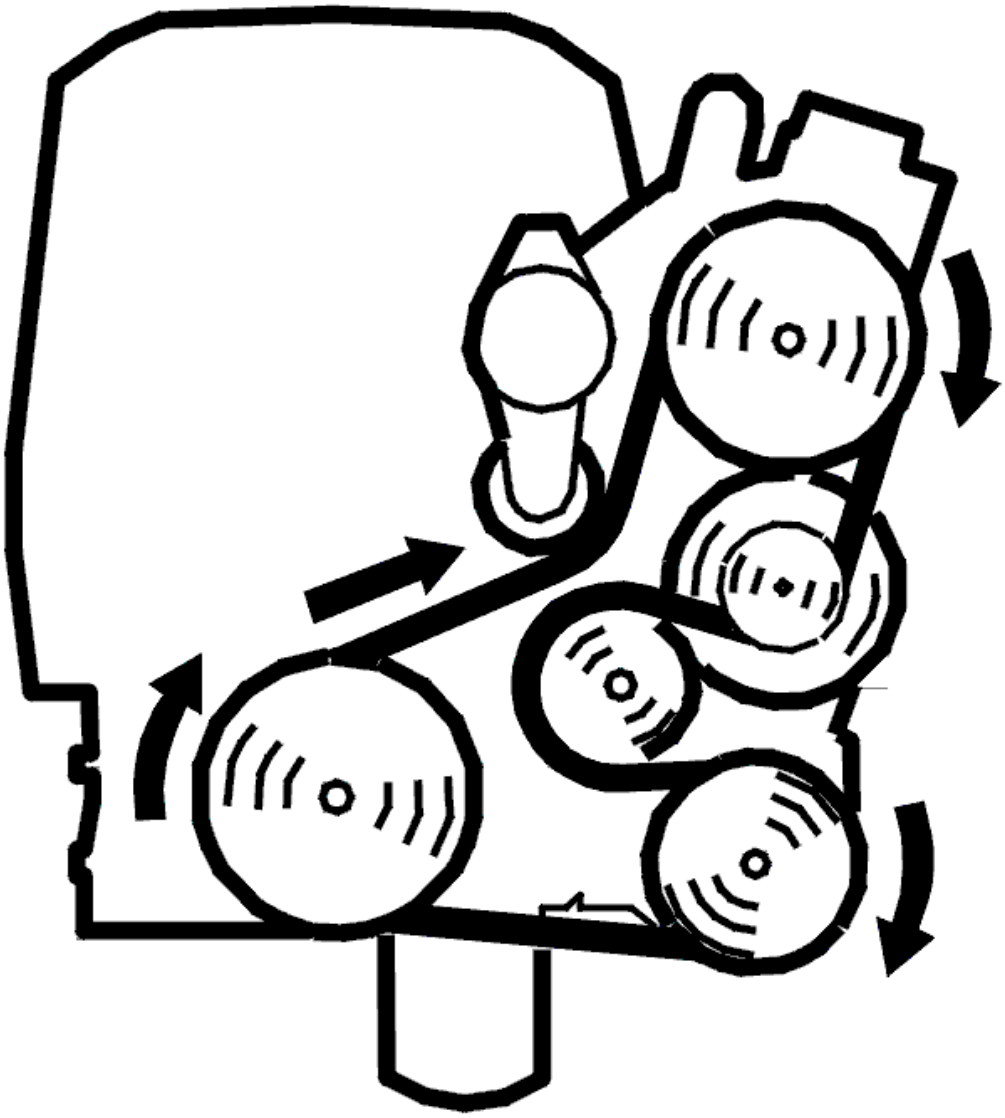

Fig. 263: Belt Routing / Engine Idling - Volvo
Courtesy of VOLVO CARS CORPORATION

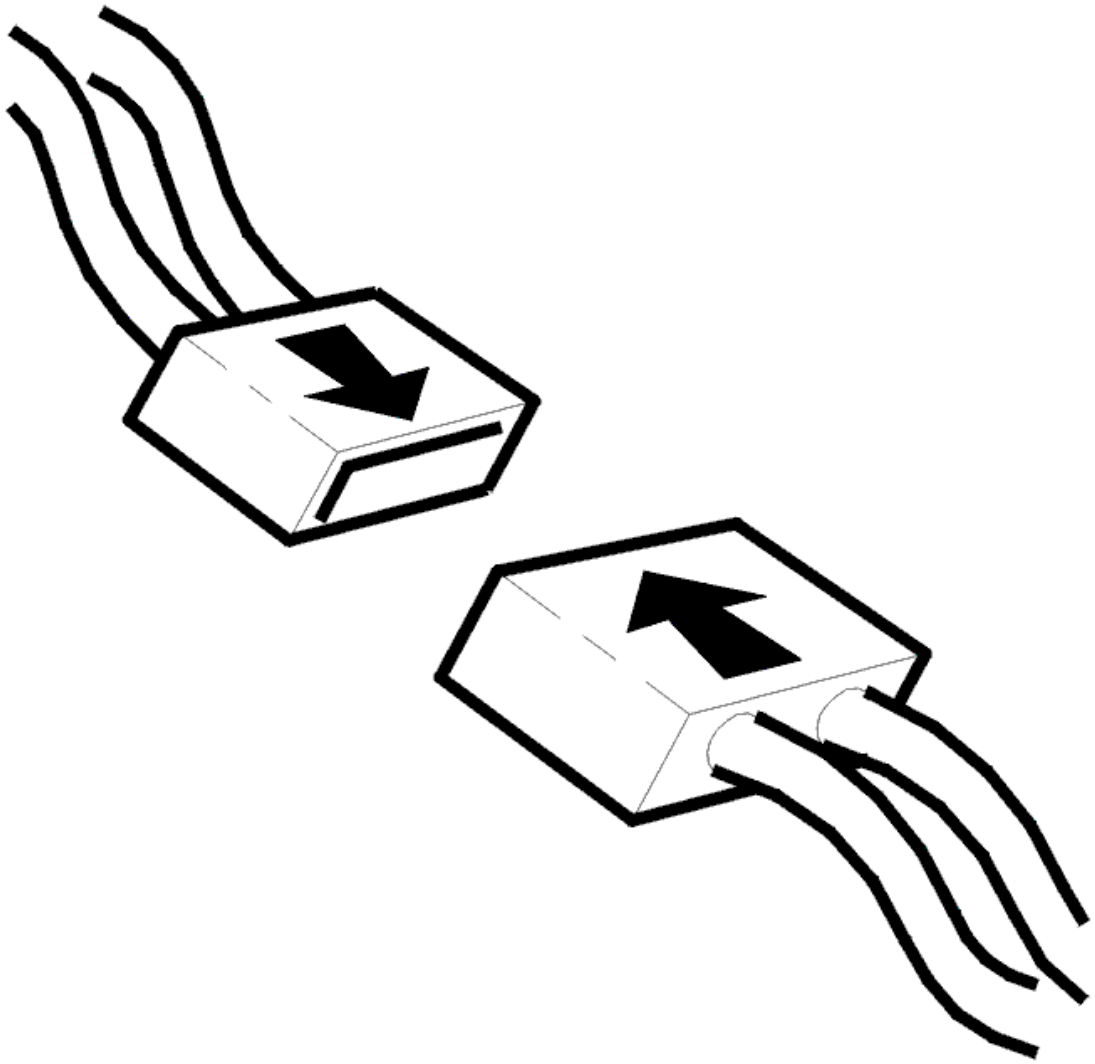

Fig. 264: Connecting Connector
Courtesy of VOLVO CARS CORPORATION

- Ignition off
- Reconnect the connectors, reinstall components etc.
- Start the engine
- Read off the diagnostic status and fault status for the diagnostic trouble code (DTC) by selecting the relevant diagnostic trouble code (DTC) from the list.

  Increase the engine speed a number of times until the diagnostic is "Complete".

  Check the fault status for the diagnostic trouble code (DTC) when the diagnostic is "Complete". If the function is correct, the fault status must be "No fault found" when the diagnostic is complete.

  HINT: In some cases several functions of the component will be diagnosed. The affects the amount

of time taken to run the diagnostic.

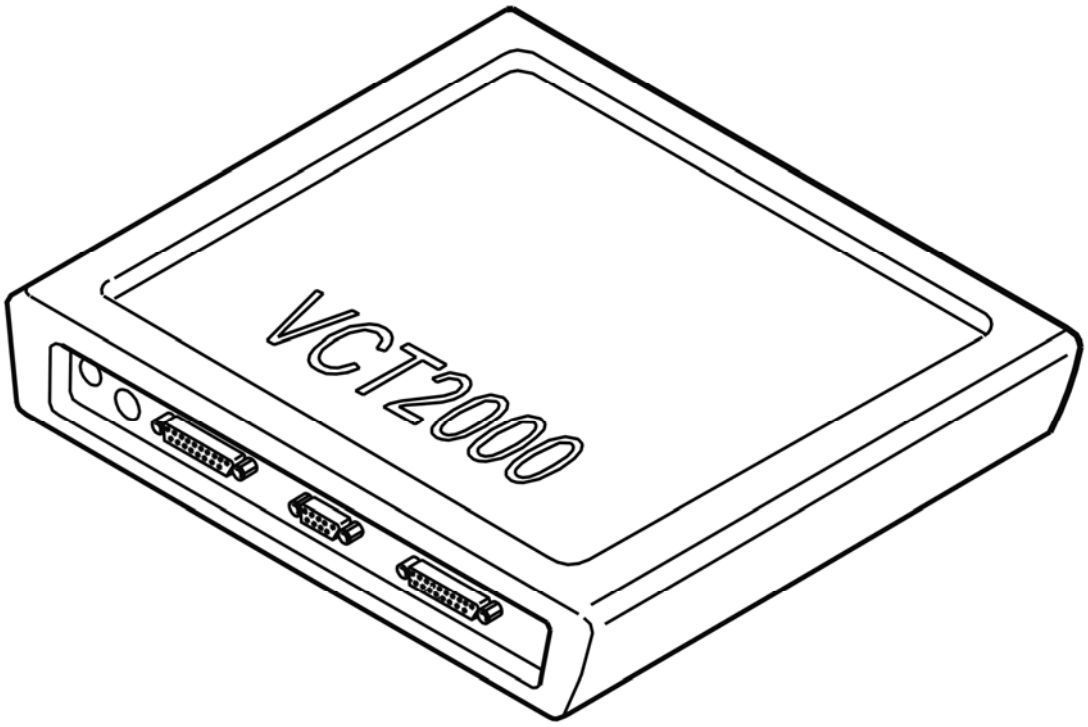

Fig. 265: Identifying VCT2000 Diagnostic Tool Symbol In VIDA
Courtesy of VOLVO CARS CORPORATION

Is the function OK?

- **YES**

  VERIFIED: Troubleshooting has been completed.

- **NO**

  Refer to **INFORMATION**

INFORMATION

FAULT-TRACING INFORMATION

The fault should have been detected and remedied. As this is not the case fault-tracing has failed.

Exit fault-tracing for this diagnostic trouble code (DTC) or make another attempt.

ECM-500D: ENGINE SPEED (RPM) SENSOR SIGNAL. SIGNAL TOO LOW

(B6294T; 2005-2006)

DIAGNOSTIC TROUBLE CODE (DTC) INFORMATION ECM-500D

see **DIAGNOSTIC TROUBLE CODE (DTC) INFORMATION ECM-500D**

SIGNAL TOO LOW

see **SIGNAL TOO LOW**

ECM-5100: MALFUNCTION INDICATOR LAMP (MIL), TCM. FAULTY SIGNAL (B5254T2; 2005-2007)

DIAGNOSTIC TROUBLE CODE (DTC) INFORMATION ECM-5100

Condition

One or more diagnostic trouble codes (DTCs) which affect emissions are stored in the transmission control module (TMC).

The diagnostic trouble code (DTC) is stored if the engine control module (ECM) registers that the transmission control module (TCM) has transmitted a request to light the malfunction indicator lamp (MIL).

The diagnostic trouble code (DTC) can be diagnosed when the ignition is switched on.

Substitute Value

- None.

Possible Source

- Fault trace the transmission control module (TCM).

Fault symptom[s]

- Malfunction indicator lamp (MIL) lit.

FAULT-TRACING INFORMATION

INFORMATION

No fault-tracing has been developed for this diagnostic trouble code (DTC). A diagnostic trouble code (DTC) for this fault is stored in the transmission control module (TCM) first and then in the engine control module (ECM). This diagnostic trouble code (DTC) can not be erased before the diagnostic trouble code (DTC) in the transmission control module (TCM) has been erased and remedied.

First read off the diagnostic trouble codes (DTCs) in the transmission control module (TCM). Fault-trace and

remedy as required. This diagnostic trouble code (DTC) can then be erased.

ECM-5100: MALFUNCTION INDICATOR LAMP (MIL), TCM. FAULTY SIGNAL (B6294T; 2005-2006)

DIAGNOSTIC TROUBLE CODE (DTC) INFORMATION ECM-5100

see **DIAGNOSTIC TROUBLE CODE (DTC) INFORMATION ECM-5100**

FAULT-TRACING INFORMATION

see **FAULT-TRACING INFORMATION**

ECM-510F: VEHICLE SPEED SIGNAL (B5254T2; B6294T; 2003-2004)

DIAGNOSTIC TROUBLE CODE (DTC) INFORMATION

Condition

Diagnostic trouble code (DTC) ECM-510F (no signal) is stored if there is no communication between the ABS/brake control module (BCM) and the engine control module (ECM) or if the communication is distorted. An error message is sent to the engine control module (ECM) and diagnostic trouble code (DTC) ECM-510F (signal too high / too low) is stored in the engine control module (ECM). Diagnostic trouble codes (DTCs) for the vehicle speed sensor (VSS) signal are stored in the ABS / brake control module (BCM).

Substitute Value

The vehicle speed signal from the ABS / brake control module (BCM) is set to 0 km/h

Possible Source

Signal too high / low:

- defective vehicle speed signal to the ABS / brake control module (BCM) A diagnostic trouble code (DTC) is stored in the ABS / brake control module (BCM).

Signal missing:

- contact resistance in the Controller area network (CAN) terminals
- open-circuit in one or both CAN cables
- one or both signal cables short-circuited to ground, voltage or each other
- defective ABS / brake control module (BCM)
- defective engine control module (ECM).

Fault symptom[s]

- Malfunction indicator lamp (MIL) lit.

FAULT-TRACING INFORMATION

see **FAULT-TRACING INFORMATION**

ECM-5110: MALFUNCTION INDICATOR LAMP (MIL), CEM. FAULTY SIGNAL (B5254T2; 2005-2007)

DIAGNOSTIC TROUBLE CODE (DTC) INFORMATION ECM-5110

Condition

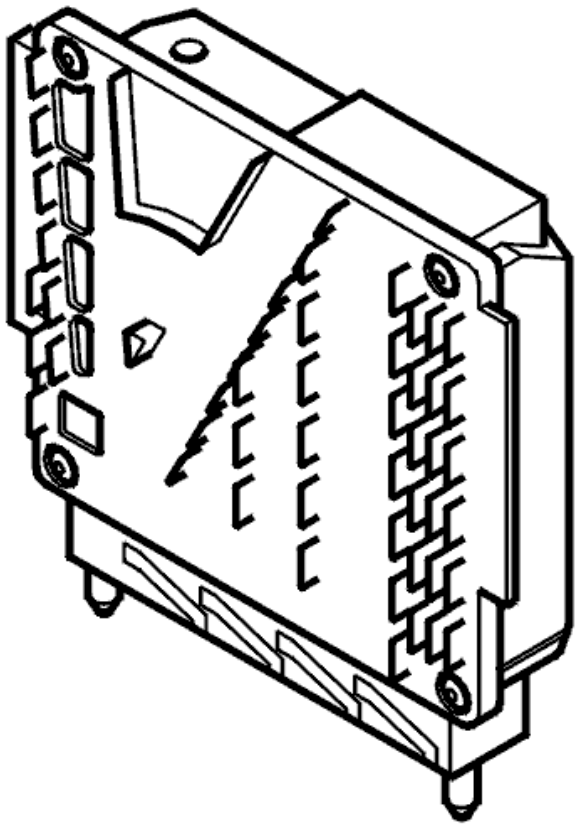

Fig. 266: Engine Control Module
Courtesy of VOLVO CARS CORPORATION

The diagnostic trouble code (DTC) is stored if the central electronic module (CEM) detects a fault in the software for the engine control module (ECM) (incorrect check sum).

Substitute Value

- None.

Possible Source

- Incorrect engine control module (ECM) for this vehicle
- Changed software in the engine control module (ECM)
- Damaged engine control module (ECM).

Fault symptom[s]

- None.

FAULT-TRACING INFORMATION

see **FAULT-TRACING INFORMATION**

ECM-5110: MALFUNCTION INDICATOR LAMP (MIL), CEM. FAULTY SIGNAL (B6294T; 2005-2006)

DIAGNOSTIC TROUBLE CODE (DTC) INFORMATION ECM-5110

see **DIAGNOSTIC TROUBLE CODE (DTC) INFORMATION ECM-5110**

FAULT-TRACING INFORMATION

see **FAULT-TRACING INFORMATION**

ECM-512B: MALFUNCTION INDICATOR LAMP (MIL) COMMUNICATION. SIGNAL MISSING (B5254T2; 2005-2007)

DIAGNOSTIC TROUBLE CODE (DTC) INFORMATION ECM-512B

Condition

The diagnostic trouble code (DTC) is stored if the engine control module (ECM) registers a fault in the CAN communication between the transmission control module (TCM) and the engine control module (ECM).

The diagnostic trouble code (DTC) is diagnosed with the engine running and with battery voltage above 10.5 V.

Substitute Value

- None.

Possible Source

- Open-circuit in the control area network (CAN) wiring
- Short-circuit between the control area network (CAN) wiring

- Internal fault in the engine control module (ECM)
- Internal fault in the transmission control module (TCM)
- Internal fault in another control module in the same part of the control area network (CAN).

Fault symptom[s]

- Malfunction indicator lamp (MIL) lit
- No accelerator pedal (AP) response.

FAULT-TRACING INFORMATION

see **FAULT-TRACING INFORMATION**

ECM-512B: MALFUNCTION INDICATOR LAMP (MIL) COMMUNICATION. SIGNAL MISSING (B6294T; 2005-2006)

DIAGNOSTIC TROUBLE CODE (DTC) INFORMATION ECM-512B

see **DIAGNOSTIC TROUBLE CODE (DTC) INFORMATION ECM-512B**

FAULT-TRACING INFORMATION

see **FAULT-TRACING INFORMATION**

ECM-5130: MALFUNCTION INDICATOR LAMP (MIL) CONTROL MODULE TRANSMISSION (TCM). FAULTY SIGNAL (B5254T2; 2005-2007)

DIAGNOSTIC TROUBLE CODE (DTC) INFORMATION ECM-5130

Condition

The diagnostic trouble code (DTC) is stored if the engine control module (ECM) registers that the transmission control module (TCM) has transmitted a request to save the frozen values.

The diagnostic trouble code (DTC) can be diagnosed when the ignition is switched on.

Substitute Value

- None.

Possible Source

- Fault trace the transmission control module (TCM).

Fault symptom[s]

- Warning lights and chimes/Malfunction Indicator Light ("Check engine" light) indication/no indication

FAULT-TRACING INFORMATION

see **FAULT-TRACING INFORMATION**

ECM-5130: MALFUNCTION INDICATOR LAMP (MIL) CONTROL MODULE TRANSMISSION (TCM). FAULTY SIGNAL (B6294T; 2005-2006)

DIAGNOSTIC TROUBLE CODE (DTC) INFORMATION ECM-5130

see **DIAGNOSTIC TROUBLE CODE (DTC) INFORMATION ECM-5130**

FAULT-TRACING INFORMATION

see **FAULT-TRACING INFORMATION**

ECM-513B: MALFUNCTION INDICATOR LAMP (MIL), TRANSMISSION CONTROL MODULE (TCM). SIGNAL MISSING (B5254T2; 2005-2007)

DIAGNOSTIC TROUBLE CODE (DTC) INFORMATION ECM-513B

Condition

The diagnostic trouble code (DTC) is stored if the engine control module (ECM) registers that the transmission control module (TCM) has transmitted a request to save the frozen values.

The diagnostic trouble code (DTC) can be diagnosed when the ignition is switched on.

Substitute Value

- None.

Possible Source

- Fault trace the transmission control module (TCM).

Fault symptom[s]

- Varies depending on the diagnostic trouble code (DTC) stored in the transmission control module (TCM).

FAULT-TRACING INFORMATION

see **FAULT-TRACING INFORMATION**

ECM-513B: MALFUNCTION INDICATOR LAMP (MIL), TRANSMISSION

CONTROL MODULE (TCM). SIGNAL MISSING (B6294T; 2005-2006)

DIAGNOSTIC TROUBLE CODE (DTC) INFORMATION ECM-513B

see **DIAGNOSTIC TROUBLE CODE (DTC) INFORMATION ECM-513B**

FAULT-TRACING INFORMATION

see **FAULT-TRACING INFORMATION**

ECM-5200: ENGINE SPEED (RPM) SENSOR. FAULTY SIGNAL (B5254T2; B6294T; 2003-2004)

DIAGNOSTIC TROUBLE CODE (DTC) INFORMATION

Condition

The control module calculates the number of teeth on the flywheel using the engine speed (RPM) sensor. Diagnostic trouble code (DTC) ECM-5200 is stored if the control module detects at least one tooth too many (Signal too high) or one tooth too few (Signal too low).

The control module detects the position of the flywheel for top dead center (TDC) using the signal from the speed sensor. Diagnostic trouble code (DTC) ECM-5200 is stored if the control module is unable to detect top dead center (TDC) on the flywheel (Faulty signal) or if the reference position for TDC is missing sporadically (Signal missing).

Substitute Value

- The control module uses the signal from the camshaft position (CMP) sensor if the camshaft position (CMP) sensor has been adapted
- Variable valve timing control is blocked
- Engine speed (RPM) is limited.

Possible Source

Signal too high:

- Signal interference.

Signal too low:

- Incorrectly installed engine speed (RPM) sensor
- Defective flywheel or ring gear.

Faulty signal:

- Signal interference
- Contact resistance in the terminals
- Incorrectly installed engine speed (RPM) sensor
- Intermittent faults in the wiring for the engine speed (RPM) sensor.

Signal missing:

- Signal interference
- Contact resistance and oxidation.

Fault symptom[s]

- Engine difficult to start
- Poor driveability.

FAULTY SIGNAL

CHECKING COMPONENTS

Check that the engine speed (RPM) sensor is correctly installed.

Check the engine speed (RPM) sensor connector. Check for intermittent contact resistance and oxidation.

The engine speed (RPM) sensor is sensitive to interference from surrounding power cables, the starter motor cable for example, or similar high amperage cables. This occurs when starting the engine for example.

Interference can cause difficulty in starting the engine, the engine does not start at all, the tachometer flickers at start attempts etc.

Causes of interference can be:

- surrounding power cables, for example an incorrectly routed starter motor cable
- incorrectly routed transmission bolted joints for the engine.

Checking the power cable

Check for incorrectly routed power cables (routed too close to the engine speed (RPM) sensor).

Checking the bolted joints

When removing and installing the transmission it is important that all the bolts for the engine are correctly tightened. Incorrectly tightened bolts can cause poor ground connection and interfere with the engine speed (RPM) sensor. Check that all the bolts from the transmission to the engine are correctly tightened.

Checking the wiring

Check the signal cable between the engine speed (RPM) sensor terminal #1 and engine control module (ECM) terminal #A48 (#A48) and between the engine speed (RPM) sensor terminal #2 and engine control module (ECM) terminal #A66 (#B6). Check for an intermittent short-circuit to supply voltage. Check for an intermittent short-circuit to ground. Check for an intermittent open-circuit.

Other information:

- see **CHECKING WIRING AND TERMINALS**
- For B5xx4T, see **REPLACING THE ENGINE SPEED (RPM) SENSOR**
- For B6xx4T, see **ENGINE SPEED (RPM) SENSOR, REPLACING** .

Remedy as necessary

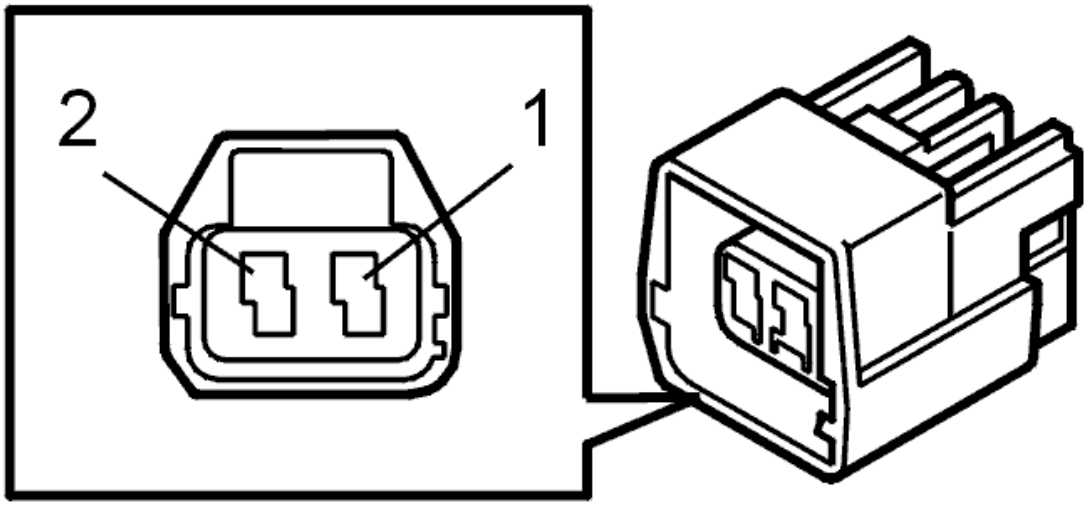

Fig. 267: Identifying Camshaft Reset Valve Connector Terminals
Courtesy of VOLVO CARS CORPORATION

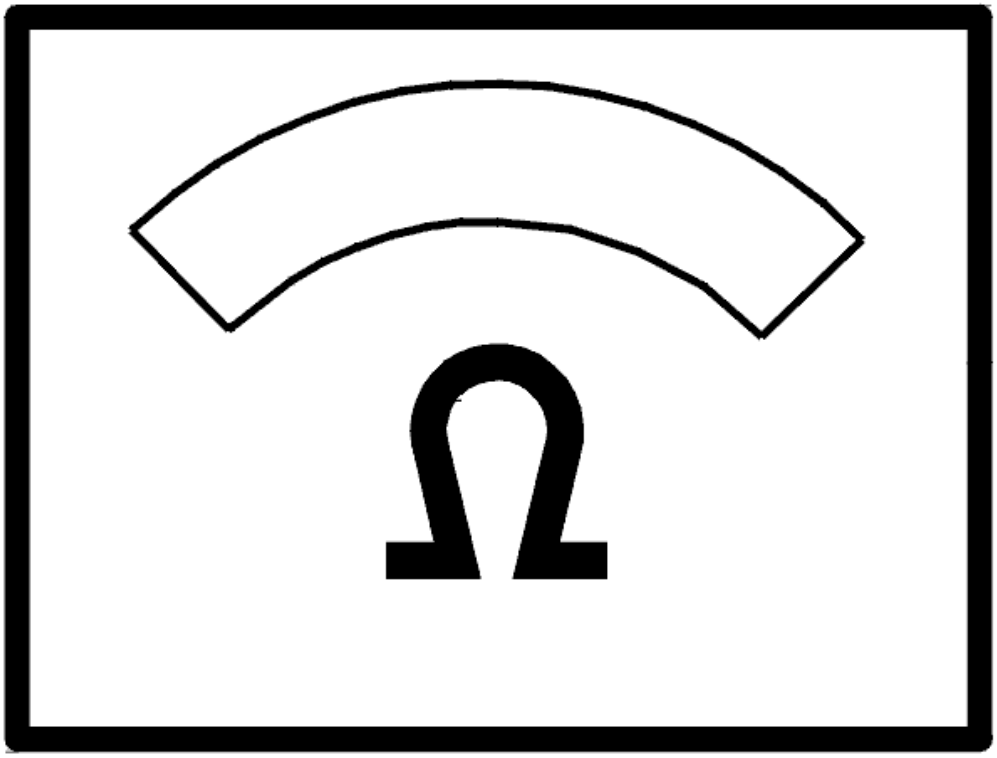

Fig. 268: Identifying Ohm Meter
Courtesy of VOLVO CARS CORPORATION

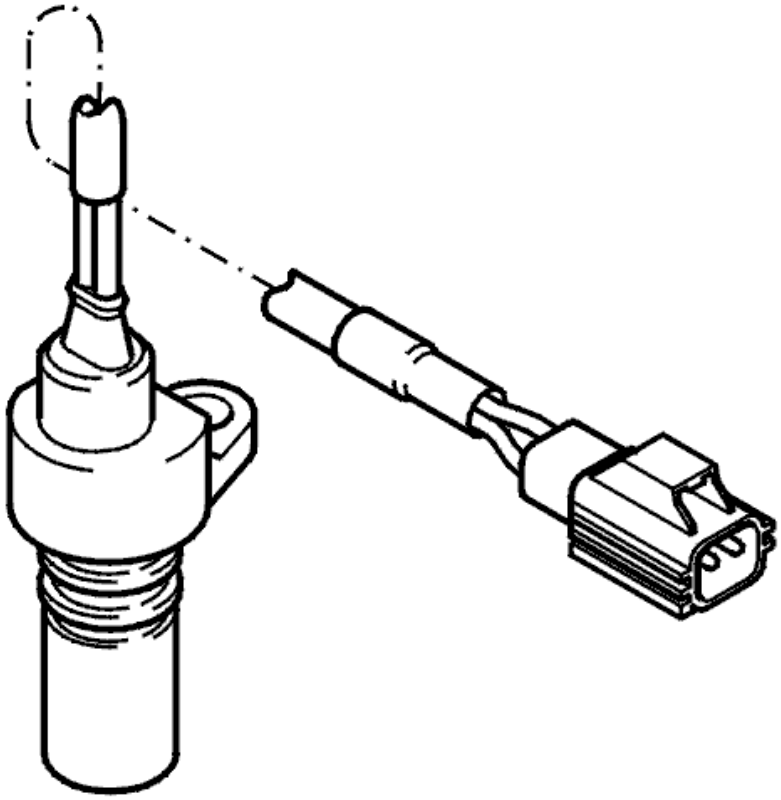

Fig. 269: Identifying Engine Speed Sensor
Courtesy of VOLVO CARS CORPORATION

- **Continue**

  Refer to **VERIFICATION**

VERIFICATION

VERIFICATION

HINT: After carrying out the repair, check that the fault has been remedied.

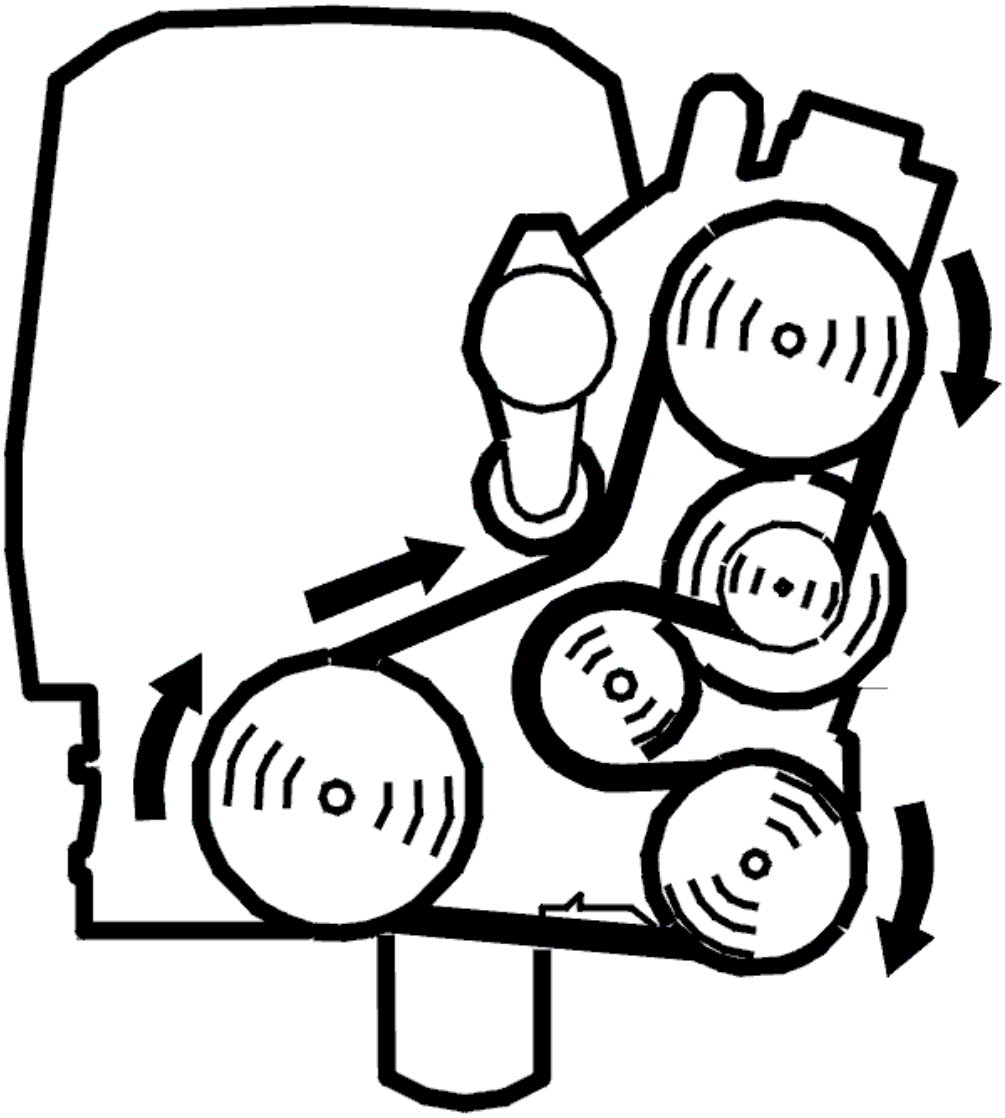

Fig. 270: Belt Routing / Engine Idling - Volvo
Courtesy of VOLVO CARS CORPORATION

- Start the engine. Allow the engine to idle. There is a fault if the engine does not start
- Read off the diagnostic status and the fault status for diagnostic trouble code (DTC) ECM-5200.

  Check that the fault status is "NO FAULT FOUND" when the diagnostic status is COMPLETED. If the fault status is "FAULT FOUND" when the diagnostic status is COMPLETED there is a fault.

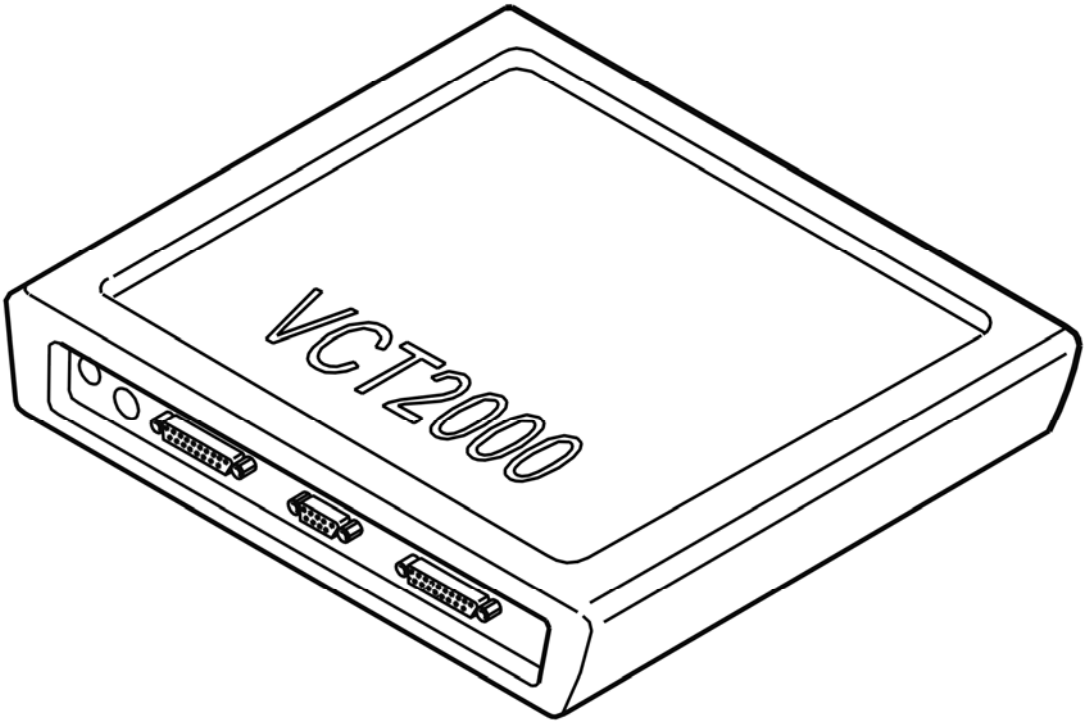

Fig. 271: Identifying VCT2000 Diagnostic Tool Symbol In VIDA
Courtesy of VOLVO CARS CORPORATION

Does the engine start and is the fault status "NO FAULT FOUND"?

- **YES**

  VERIFIED: Troubleshooting has been completed.

- **NO**

  Refer to **INFORMATION**

INFORMATION

FAULT-TRACING INFORMATION

The fault should have been detected and remedied. As this is not the case fault-tracing has failed.

Exit fault-tracing for this diagnostic trouble code (DTC) or make another attempt.

ECM-5200: ENGINE SPEED (RPM) SENSOR. SIGNAL MISSING (B5254T2; B6294T; 2003-2004)

DIAGNOSTIC TROUBLE CODE (DTC) INFORMATION

see **DIAGNOSTIC TROUBLE CODE (DTC) INFORMATION**

SIGNAL MISSING

CHECKING INTERFERENCE TO THE ENGINE SPEED (RPM) SENSOR

Check the engine speed (RPM) sensor connector. Check for contact resistance and oxidation.

The engine speed (RPM) sensor is sensitive to interference from surrounding power cables, the starter motor cable for example, or similar high amperage cables. This occurs when starting the engine for example.

Interference can cause difficulty in starting the engine, the engine does not start at all, the tachometer flickers at start attempts etc.

Causes of interference can be:

- surrounding power cables, for example an incorrectly routed starter motor cable
- incorrectly routed transmission bolted joints for the engine.

Checking the power cable

Check for incorrectly routed power cables (routed too close to the engine speed (RPM) sensor).

Checking the bolted joints

When removing and installing the transmission it is important that all the bolts for the engine are correctly tightened. Incorrectly tightened bolts can cause poor ground connection and interfere with the engine speed (RPM) sensor. Check that all the bolts from the transmission to the engine are correctly tightened.

Other information:

- see **CHECKING WIRING AND TERMINALS**
- For B5xx4T, see **REPLACING THE ENGINE SPEED (RPM) SENSOR**
- For B6xx4T, see **ENGINE SPEED (RPM) SENSOR, REPLACING** .

Remedy as necessary

- **Continue**

  Refer to **VERIFICATION**

VERIFICATION

VERIFICATION

HINT: After carrying out the repair, check that the fault has been remedied.

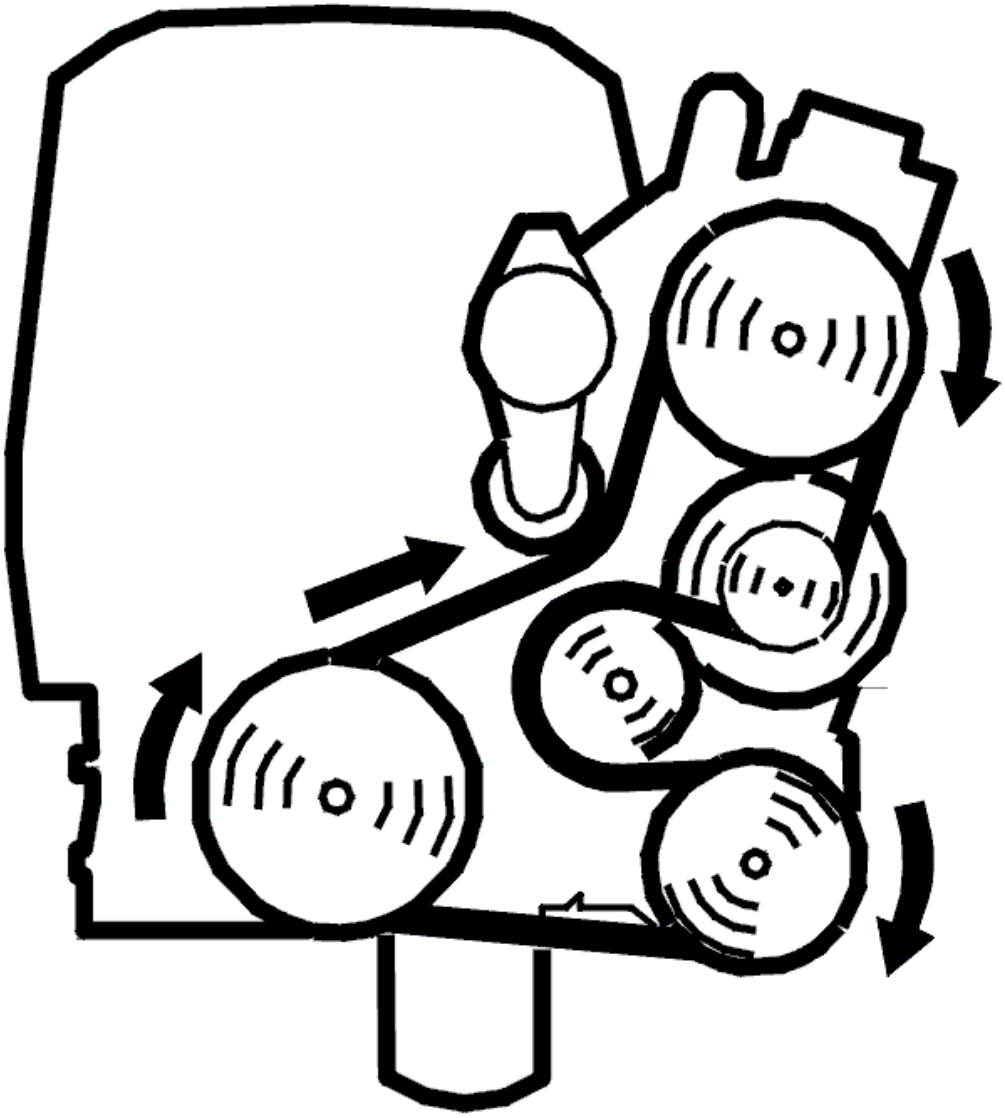

Fig. 272: Belt Routing / Engine Idling - Volvo
Courtesy of VOLVO CARS CORPORATION

- Start the engine. Allow the engine to idle. There is a fault if the engine does not start
- Read off the diagnostic status and the fault status for diagnostic trouble code (DTC) ECM-5200.

  Check that the fault status is "NO FAULT FOUND" when the diagnostic status is COMPLETED. If the fault status is "FAULT FOUND" when the diagnostic status is COMPLETED there is a fault.

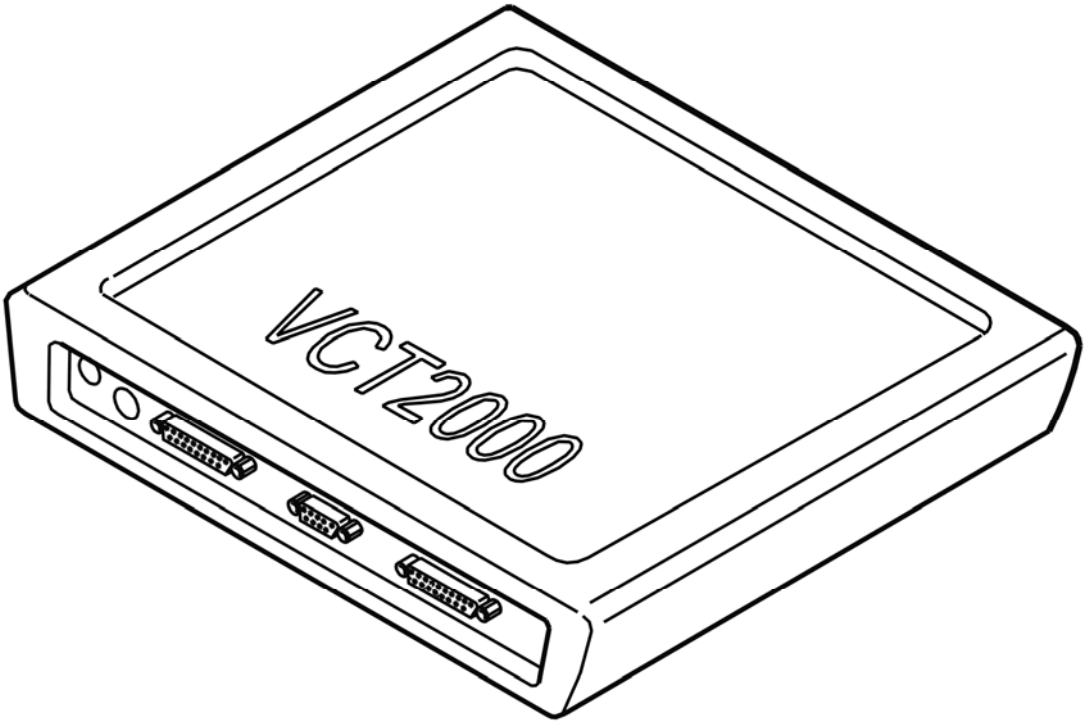

Fig. 273: Identifying VCT2000 Diagnostic Tool Symbol In VIDA
Courtesy of VOLVO CARS CORPORATION

Does the engine start and is the fault status "NO FAULT FOUND"?

- **YES**

  VERIFIED: Troubleshooting has been completed.

- **NO**

  Refer to **INFORMATION**

INFORMATION

FAULT-TRACING INFORMATION

The fault should have been detected and remedied. As this is not the case fault-tracing has failed.

Exit fault-tracing for this diagnostic trouble code (DTC) or make another attempt.

ECM-5200: ENGINE SPEED (RPM) SENSOR. SIGNAL TOO HIGH (B5254T2; B6294T; 2003-2004)

DIAGNOSTIC TROUBLE CODE (DTC) INFORMATION

see **DIAGNOSTIC TROUBLE CODE (DTC) INFORMATION**

SIGNAL TOO HIGH

CHECKING INTERFERENCE

The engine speed (RPM) sensor is sensitive to interference from surrounding power cables, the starter motor cable for example, or similar high amperage cables. This occurs when starting the engine for example.

Interference can cause difficulty in starting the engine, the engine does not start at all, the tachometer flickers at start attempts etc.

Causes of interference can be:

- surrounding power cables, for example an incorrectly routed starter motor cable
- incorrectly routed transmission bolted joints for the engine.

Checking the power cable

Check for incorrectly routed power cables (routed too close to the engine speed (RPM) sensor).

Checking the bolted joints

When removing and installing the transmission it is important that all the bolts for the engine are correctly tightened. Incorrectly tightened bolts can cause poor ground connection and interfere with the engine speed (RPM) sensor. Check that all the bolts from the transmission to the engine are correctly tightened.

Remedy as necessary

Check the engine speed (RPM) sensor connector. Check for intermittent contact resistance and oxidation.

Other information:

- For B5xx4T, see **REPLACING THE ENGINE SPEED (RPM) SENSOR**
- For B6xx4T, see **ENGINE SPEED (RPM) SENSOR, REPLACING** .

- **Continue**

  Refer to **VERIFICATION**

VERIFICATION

VERIFICATION

HINT: After carrying out the repair, check that the fault has been remedied.

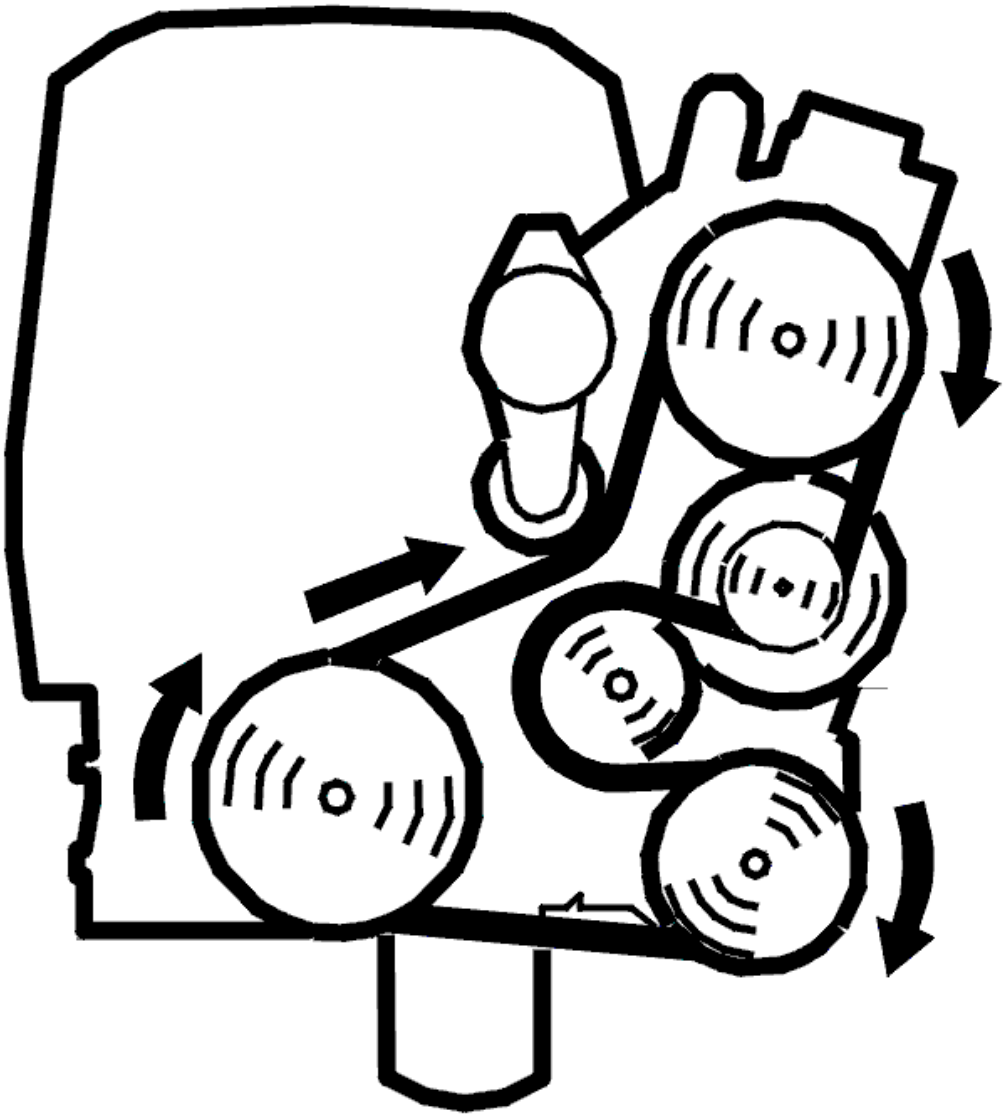

Fig. 274: Belt Routing / Engine Idling - Volvo
Courtesy of VOLVO CARS CORPORATION

- Start the engine. Allow the engine to idle. There is a fault if the engine does not start
- Read off the diagnostic status and the fault status for diagnostic trouble code (DTC) ECM-5200.

  Check that the fault status is "NO FAULT FOUND" when the diagnostic status is COMPLETED. If the fault status is "FAULT FOUND" when the diagnostic status is COMPLETED there is a fault.

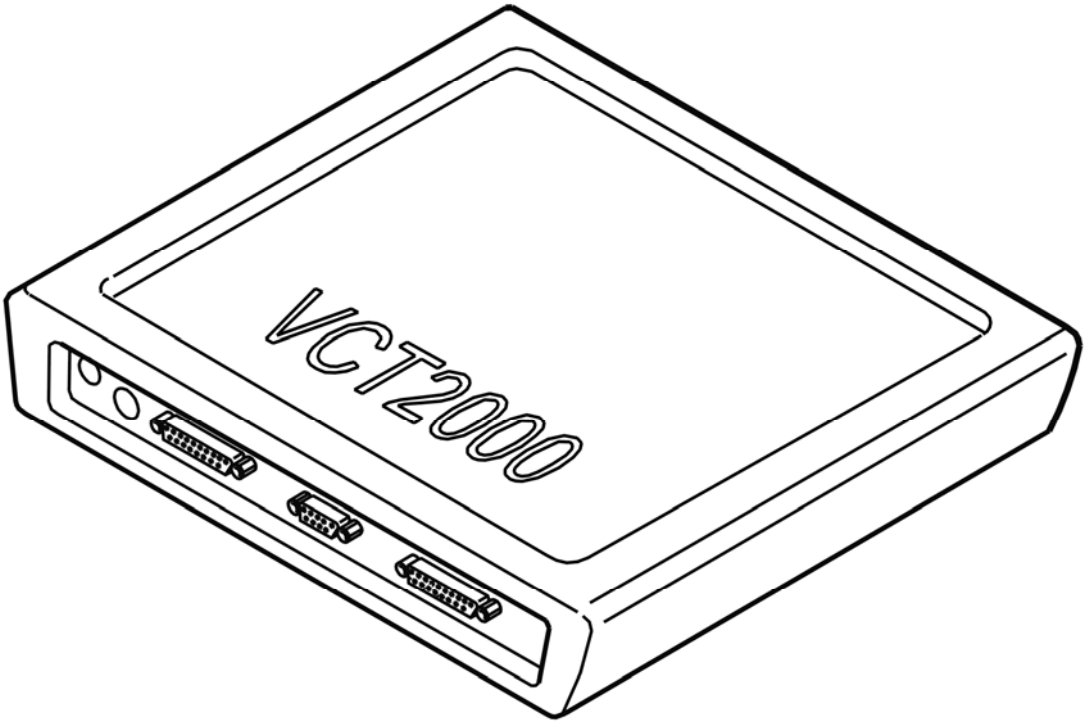

Fig. 275: Identifying VCT2000 Diagnostic Tool Symbol In VIDA
Courtesy of VOLVO CARS CORPORATION

Does the engine start and is the fault status "NO FAULT FOUND"?

- **YES**

  VERIFIED: Troubleshooting has been completed.

- **NO**

  Refer to **INFORMATION**

INFORMATION

FAULT-TRACING INFORMATION

The fault should have been detected and remedied. As this is not the case fault-tracing has failed.

Exit fault-tracing for this diagnostic trouble code (DTC) or make another attempt.

ECM-5200: ENGINE SPEED (RPM) SENSOR. SIGNAL TOO LOW (B5254T2; B6294T; 2003-2004)

DIAGNOSTIC TROUBLE CODE (DTC) INFORMATION

see **DIAGNOSTIC TROUBLE CODE (DTC) INFORMATION**

SIGNAL TOO LOW

CHECKING COMPONENTS

Check that the engine speed (RPM) sensor is correctly installed.

Check the engine speed (RPM) sensor. Check that it is not damaged or dirty.

Check the flywheel for damage.

Other information:

- For B5xx4T, see **REPLACING THE ENGINE SPEED (RPM) SENSOR**
- For B6xx4T, see **ENGINE SPEED (RPM) SENSOR, REPLACING** .

- **Continue**

  Refer to **VERIFICATION**

VERIFICATION

VERIFICATION

HINT: After carrying out the repair, check that the fault has been remedied.

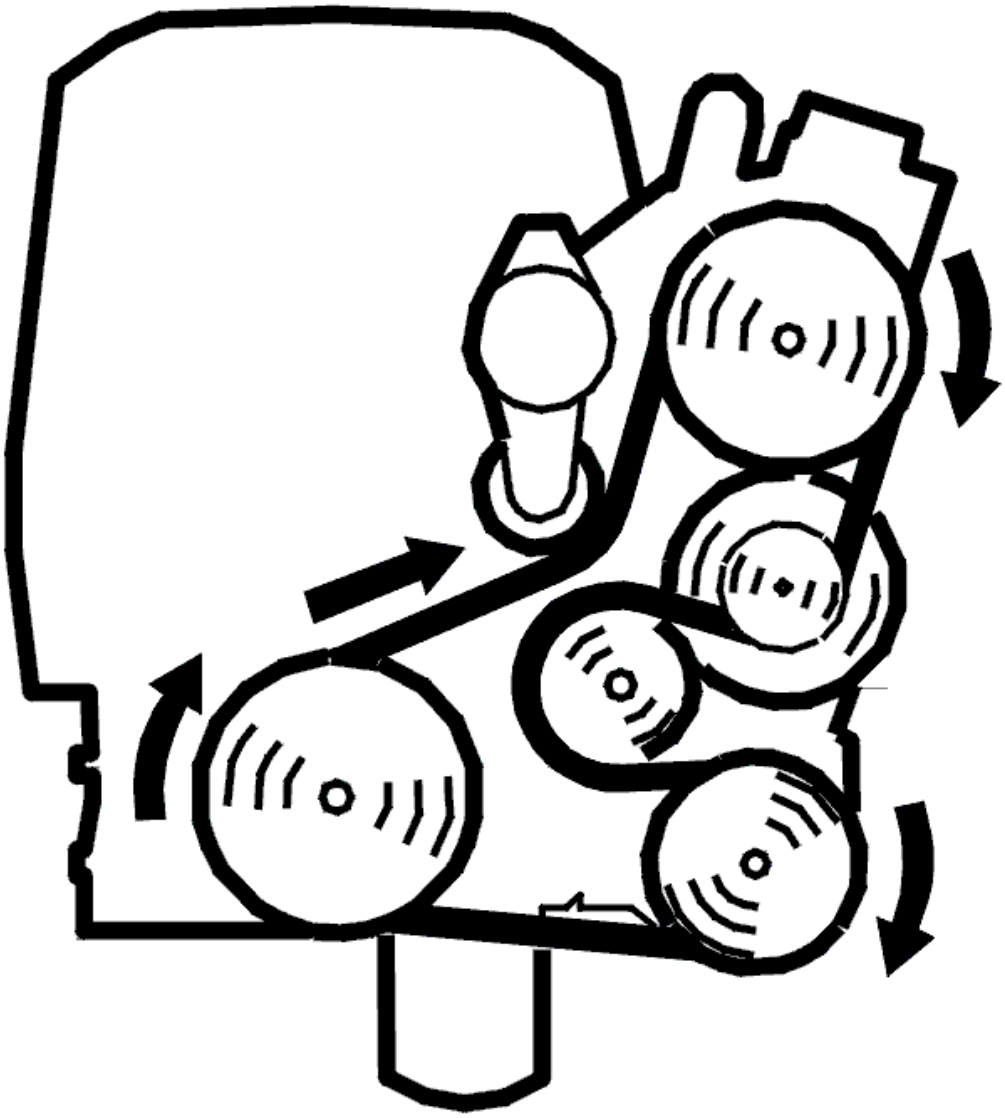

Fig. 276: Belt Routing / Engine Idling - Volvo
Courtesy of VOLVO CARS CORPORATION

- Start the engine. Allow the engine to idle. There is a fault if the engine does not start
- Read off the diagnostic status and the fault status for diagnostic trouble code (DTC) ECM-5200.

  Check that the fault status is "NO FAULT FOUND" when the diagnostic status is COMPLETED. If the fault status is "FAULT FOUND" when the diagnostic status is COMPLETED there is a fault.

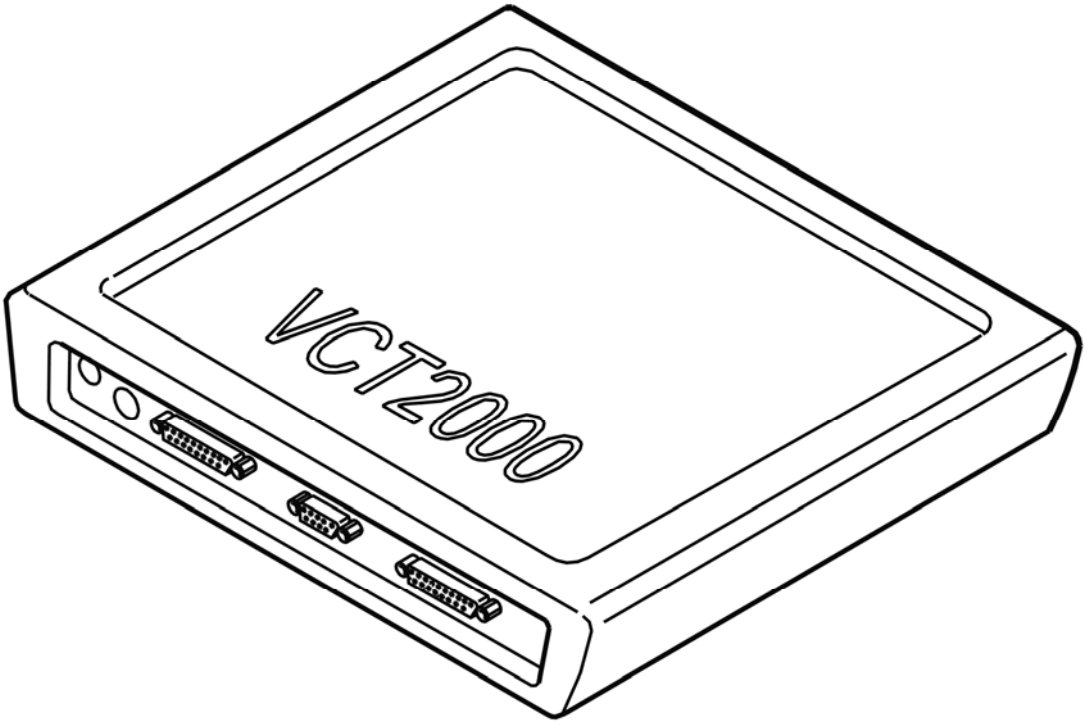

Fig. 277: Identifying VCT2000 Diagnostic Tool Symbol In VIDA
Courtesy of VOLVO CARS CORPORATION

Does the engine start and is the fault status "NO FAULT FOUND"?

- **YES**

  VERIFIED: Troubleshooting has been completed.

- **NO**

  Refer to **INFORMATION**

INFORMATION

FAULT-TRACING INFORMATION

The fault should have been detected and remedied. As this is not the case fault-tracing has failed.

Exit fault-tracing for this diagnostic trouble code (DTC) or make another attempt.

ECM-5200: AIR CONDITIONING (A/C) PRESSURE SENSOR. FAULTY SIGNAL (B5254T2; 2005-2007)

DIAGNOSTIC TROUBLE CODE (DTC) INFORMATION ECM-5200

Condition

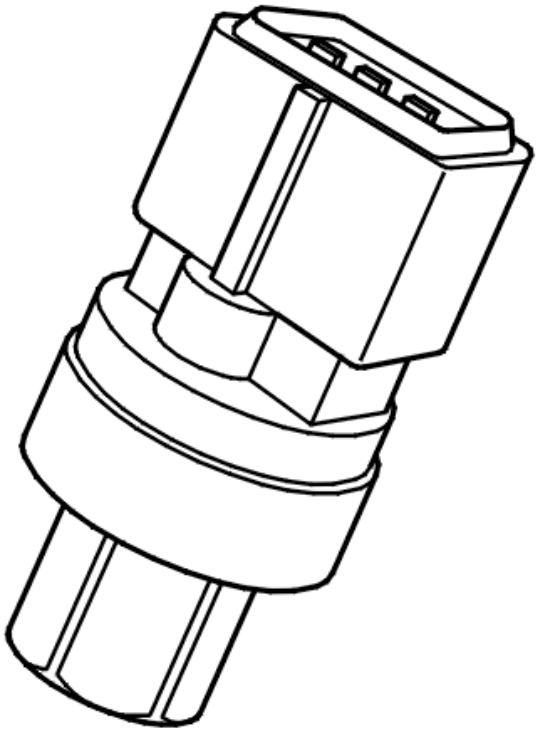

Fig. 278: Identifying Air Conditioning (A/C) Pressure Sensor
Courtesy of VOLVO CARS CORPORATION

The diagnostic trouble code (DTC) is stored if the engine control module (ECM) detects that the pressure in the air conditioning (A/C) system has not increased for a certain time following activation of the air conditioning (A/C) compressor.

The diagnostic trouble code (DTC) can be diagnosed while the engine is running and air conditioning (A/C) control is active.

Substitute Value

- None.

Possible Source

- Damaged A/C pressure sensor
- Low pressure in the air conditioning (A/C) system.

Fault symptom[s]

- The air conditioning (A/C) system does not operate.

FAULT-TRACING INFORMATION

see **FAULT-TRACING INFORMATION**

ECM-5200: AIR CONDITIONING (A/C) PRESSURE SENSOR. FAULTY SIGNAL (B6294T; 2005-2006)

DIAGNOSTIC TROUBLE CODE (DTC) INFORMATION ECM-5200

see **DIAGNOSTIC TROUBLE CODE (DTC) INFORMATION ECM-5200**

FAULT-TRACING INFORMATION

see **FAULT-TRACING INFORMATION**

ECM-520B: AIR CONDITIONING (A/C) PRESSURE SENSOR. SIGNAL MISSING (B5254T2; 2005-2007)

DIAGNOSTIC TROUBLE CODE (DTC) INFORMATION ECM-520B

Condition

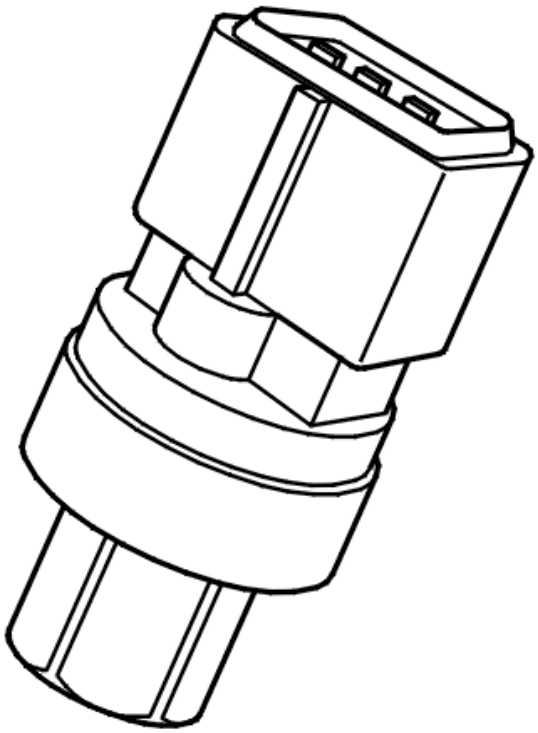

Fig. 279: Identifying Air Conditioning (A/C) Pressure Sensor
Courtesy of VOLVO CARS CORPORATION

The diagnostic trouble code (DTC) is stored if the engine control module (ECM) detects that there is no signal from the air conditioning (A/C) pressure sensor.

The diagnostic trouble code (DTC) can be diagnosed while the engine is running and while air conditioning (A/C) control is active.

Substitute Value

- Predefined value for the air conditioning pressure.

Possible Source

- Open-circuit in the signal cable
- Damaged A/C pressure sensor.

Fault symptom[s]

- The air conditioning (A/C) system does not operate.

SIGNAL MISSING. PERMANENT FAULT

see **SIGNAL MISSING. PERMANENT FAULT**

ECM-520B: AIR CONDITIONING (A/C) PRESSURE SENSOR. SIGNAL MISSING (B6294T; 2005-2006)

DIAGNOSTIC TROUBLE CODE (DTC) INFORMATION ECM-520B

see **DIAGNOSTIC TROUBLE CODE (DTC) INFORMATION ECM-520B**

SIGNAL MISSING. PERMANENT FAULT

see **SIGNAL MISSING. PERMANENT FAULT**

ECM-520C: AIR CONDITIONING (A/C) PRESSURE SENSOR. SIGNAL TOO HIGH (B5254T2; 2005-2007)

DIAGNOSTIC TROUBLE CODE (DTC) INFORMATION ECM-520C

Condition

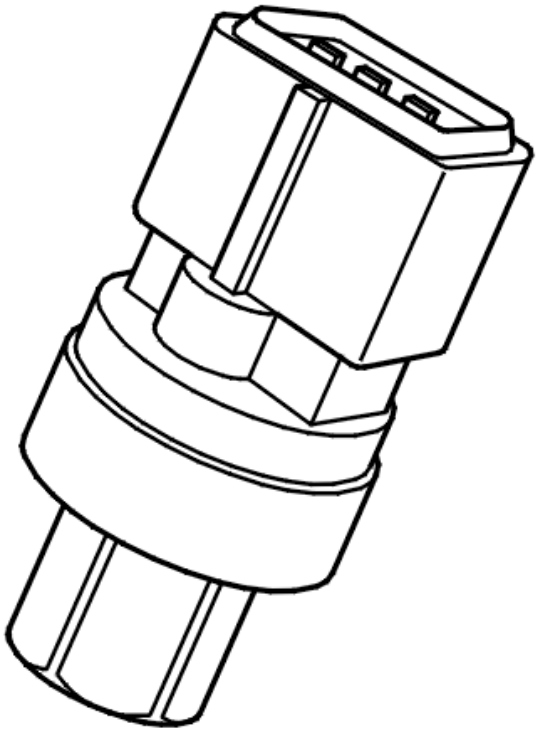

Fig. 280: Identifying Air Conditioning (A/C) Pressure Sensor
Courtesy of VOLVO CARS CORPORATION

The diagnostic trouble code (DTC) is stored if the engine control module (ECM) detects that the signal from the air conditioning (A/C) pressure sensor is higher than the normal operating range.

The diagnostic trouble code (DTC) can be diagnosed while the engine is running and while air conditioning (A/C) control is active.

Substitute Value

- None.

Possible Source

- Short-circuit to supply voltage in the signal cable
- Open-circuit in the power supply
- Open-circuit in the ground lead
- Damaged A/C pressure sensor.

Fault symptom[s]

- The air conditioning (A/C) system does not operate.

SIGNAL TOO HIGH. PERMANENT FAULT

see **SIGNAL TOO HIGH. PERMANENT FAULT**

ECM-520C: AIR CONDITIONING (A/C) PRESSURE SENSOR. SIGNAL TOO HIGH (B6294T; 2005-2006)

DIAGNOSTIC TROUBLE CODE (DTC) INFORMATION ECM-520C

see **DIAGNOSTIC TROUBLE CODE (DTC) INFORMATION ECM-520C**

SIGNAL TOO HIGH. PERMANENT FAULT

see **SIGNAL TOO HIGH. PERMANENT FAULT**

ECM-520D: AIR CONDITIONING (A/C) PRESSURE SENSOR. SIGNAL TOO LOW (B5254T2; 2005-2007)

DIAGNOSTIC TROUBLE CODE (DTC) INFORMATION ECM-520D

Condition

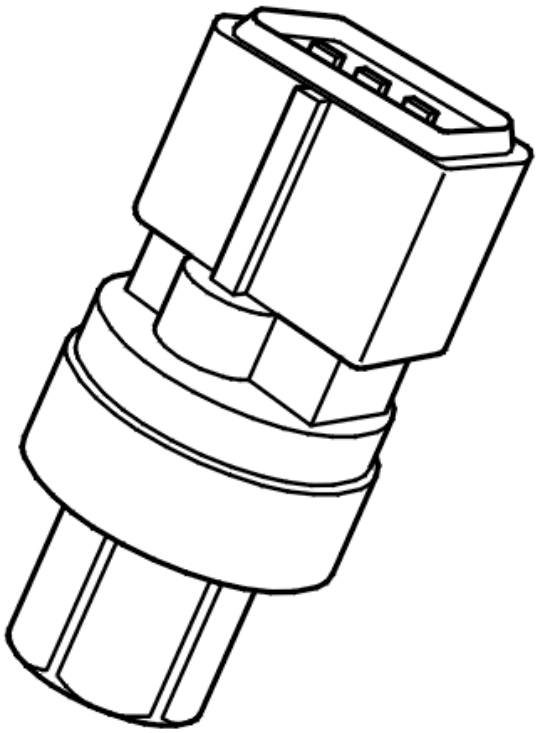

Fig. 281: Identifying Air Conditioning (A/C) Pressure Sensor
Courtesy of VOLVO CARS CORPORATION

The diagnostic trouble code (DTC) is stored if the engine control module (ECM) detects that the signal from the air conditioning (A/C) pressure sensor is lower than the normal operating range.

The diagnostic trouble code (DTC) can be diagnosed while the engine is running and while air conditioning (A/C) control is active.

Substitute Value

- None.

Possible Source

- Open-circuit in the power supply
- Open-circuit in the ground lead
- Damaged A/C pressure sensor.

Fault symptom[s]

- The air conditioning (A/C) system does not operate.

SIGNAL TOO LOW. PERMANENT FAULT

see **SIGNAL TOO LOW. PERMANENT FAULT**

ECM-520D: AIR CONDITIONING (A/C) PRESSURE SENSOR. SIGNAL TOO LOW (B6294T; 2005-2006)

DIAGNOSTIC TROUBLE CODE (DTC) INFORMATION ECM-520D

see **DIAGNOSTIC TROUBLE CODE (DTC) INFORMATION ECM-520D**

SIGNAL TOO LOW. PERMANENT FAULT

see **SIGNAL TOO LOW. PERMANENT FAULT**

ECM-5300: VEHICLE SPEED SIGNAL. FAULTY SIGNAL (B5254T2; 2005-2007)

DIAGNOSTIC TROUBLE CODE (DTC) INFORMATION ECM-5300

Condition

Internal functions in the engine control module (ECM) check important parameters.

The diagnostic trouble code (DTC) is stored if the engine control module (ECM) detects an incorrect parameter.

The diagnostic trouble code (DTC) can be diagnosed when driving under specific driving conditions.

Substitute Value

- None.

Possible Source

- Damaged engine control module (ECM).

Fault symptom[s]

- Malfunction indicator lamp (MIL) lit.

FAULTY SIGNAL

PROGRAMMING/REPLACING THE ENGINE CONTROL MODULE (ECM)

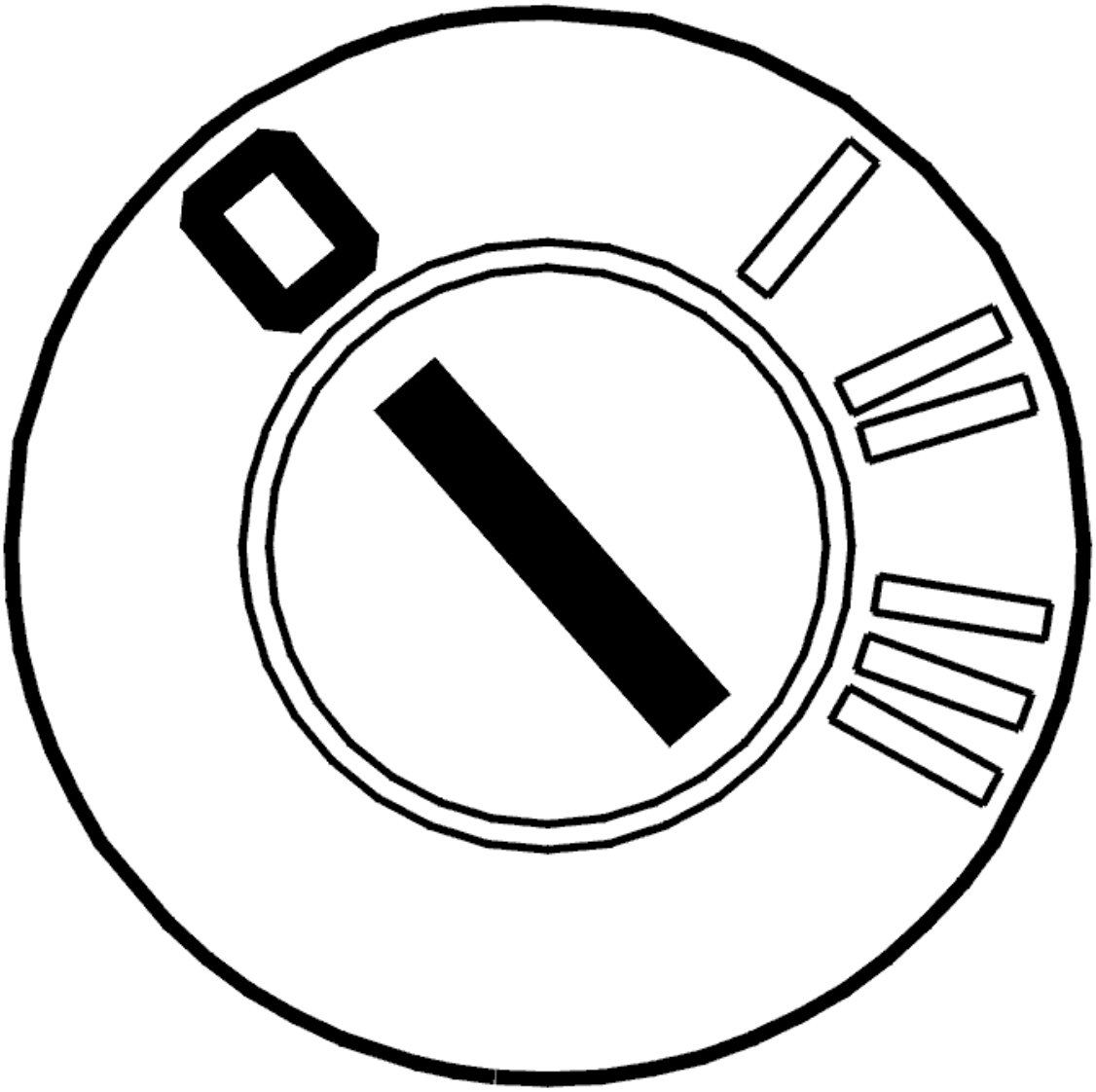

Fig. 282: Identifying Ignition OFF
Courtesy of VOLVO CARS CORPORATION

- Ignition off.

  The engine control module (ECM) has registered an internal fault or a fault in the software. Try downloading new software into the control module. To download new software or replace the engine control module (ECM).

  see **ENGINE CONTROL MODULE (ECM), REPLACING** .

  If software cannot be downloaded or new software does not solve the problem, replace the engine control module (ECM) and download the relevant software to the new control module.

  NOTE: After downloading new software or replacing the engine control module (ECM), the throttle unit must be adapted by performing "Throttle unit

adaptation" using VIDA (Volvo scan tool).

Remedy as necessary.

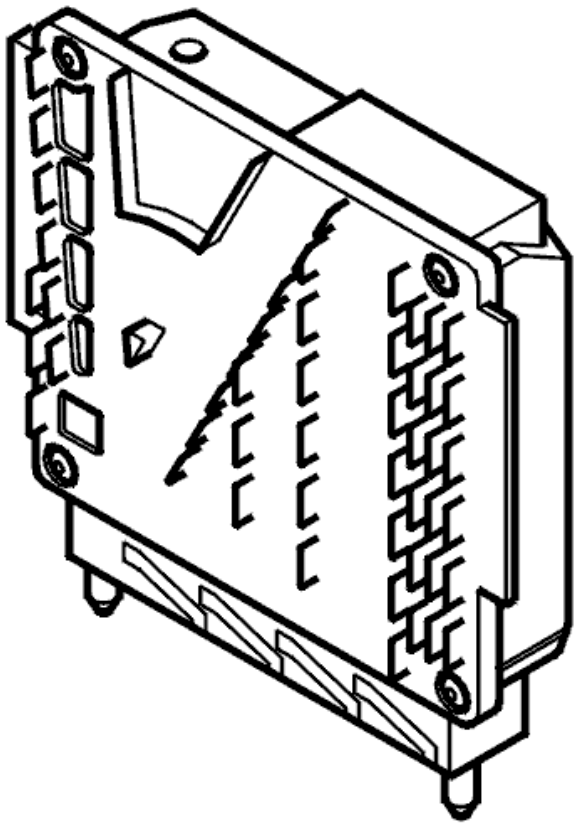

Fig. 283: Engine Control Module
Courtesy of VOLVO CARS CORPORATION

- **Continue**

  Refer to **INFORMATION**

INFORMATION

FAULT-TRACING INFORMATION

In case of this defect, troubleshooting is not followed by verification.

The information can be displayed again or the fault-tracing for this fault can be interrupted.

ECM-5300: VEHICLE SPEED SIGNAL. FAULTY SIGNAL (B6294T; 2005-2006)

DIAGNOSTIC TROUBLE CODE (DTC) INFORMATION ECM-5300

see **DIAGNOSTIC TROUBLE CODE (DTC) INFORMATION ECM-5300**

FAULTY SIGNAL

see **FAULTY SIGNAL**

ECM-530B: CONTROL MODULE COMMUNICATION (B5254T2; B6294T; 2003-2004)

DIAGNOSTIC TROUBLE CODE (DTC) INFORMATION

Condition

Diagnostic trouble code (DTC) ECM-530B is stored if a communication fault between the engine control module (ECM) and the transmission control module (TCM) is detected

Substitute Value

none

Possible Source

- communication problems in the CAN network
- defective transmission control module (TCM)
- defective engine control module (ECM).

Fault symptom[s]

- No response from the accelerator pedal (AP).

FAULT-TRACING INFORMATION

see **FAULT-TRACING INFORMATION**

ECM-530B: VEHICLE SPEED SIGNAL. SIGNAL MISSING (B5254T2; 2005-2007)

DIAGNOSTIC TROUBLE CODE (DTC) INFORMATION ECM-530B

Condition

Internal functions in the engine control module (ECM) check important parameters.

The diagnostic trouble code (DTC) is stored if the engine control module (ECM) detects an incorrect parameter.

The diagnostic trouble code (DTC) can be diagnosed when driving under specific driving conditions.

Substitute Value

- None.

Possible Source

- Damaged engine control module (ECM)
- Damaged brake control module (BCM)
- Open-circuit or short-circuit in the CAN wiring.

Fault symptom[s]

- Malfunction indicator lamp (MIL) lit.

FAULT-TRACING INFORMATION

see **FAULT-TRACING INFORMATION**

ECM-530B: VEHICLE SPEED SIGNAL. SIGNAL MISSING (B6294T; 2005-2006)

DIAGNOSTIC TROUBLE CODE (DTC) INFORMATION ECM-530B

see **DIAGNOSTIC TROUBLE CODE (DTC) INFORMATION ECM-530B**

FAULT-TRACING INFORMATION

see **FAULT-TRACING INFORMATION**

ECM-530C: SPEED SIGNAL. SIGNAL TOO HIGH (B5254T2; 2005-2007)

DIAGNOSTIC TROUBLE CODE (DTC) INFORMATION ECM-530C

Condition

Internal functions in the engine control module (ECM) check important parameters.

The diagnostic trouble code (DTC) is stored if the engine control module (ECM) detects that the speed has exceeded a maximum value.

Substitute Value

- None.

Possible Source

- Faulty speed signal from the brake control module (BCM)
- Faulty speed signal from the transmission control module (TCM).

Fault symptom[s]

- Malfunction indicator lamp (MIL) lit.

FAULT-TRACING INFORMATION

see **FAULT-TRACING INFORMATION**

ECM-530C: SPEED SIGNAL. SIGNAL TOO HIGH (B6294T; 2005-2006)

DIAGNOSTIC TROUBLE CODE (DTC) INFORMATION ECM-530C

see **DIAGNOSTIC TROUBLE CODE (DTC) INFORMATION ECM-530C**

FAULT-TRACING INFORMATION

see **FAULT-TRACING INFORMATION**

ECM-530D: DIAGNOSTIC TROUBLE CODE (DTC) IN ANOTHER CONTROL MODULE (B5254T2; B6294T; 2003-2004)

DIAGNOSTIC TROUBLE CODE (DTC) INFORMATION

Condition

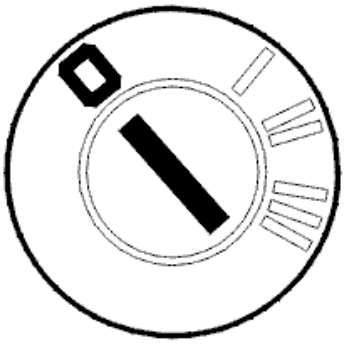

Fig. 284: Identifying Ignition In Off Position
Courtesy of VOLVO CARS CORPORATION

This diagnostic trouble code (DTC) indicates whether there are one or more emission related diagnostic trouble codes (DTCs) stored in the automatic transmission control module (TCM). Diagnostic trouble code (DTC) ECM-530D is stored if this control module requests that the engine management system lights the malfunction indicator lamp (MIL)

Substitute Value

none

Possible Source

- one or more diagnostic trouble codes (DTCs) stored in automatic transmission control module (TCM).

Fault symptom[s]

- varies depending on which diagnostic trouble code (DTC) has been stored.

FAULT-TRACING INFORMATION

see **FAULT-TRACING INFORMATION**

ECM-530D: SPEED SIGNAL. SIGNAL TOO LOW (B5254T2; 2005-2007)

DIAGNOSTIC TROUBLE CODE (DTC) INFORMATION ECM-530D

Condition

Internal functions in the engine control module (ECM) check important parameters.

The diagnostic trouble code (DTC) is stored if the engine control module (ECM) detects that the speed has not changed over a certain number of seconds.

Substitute Value

- None.

Possible Source

- Faulty speed signal from the brake control module (BCM)
- Faulty speed signal from the transmission control module (TCM).

Fault symptom[s]

- Malfunction indicator lamp (MIL) lit.

FAULT-TRACING INFORMATION

see **FAULT-TRACING INFORMATION**

ECM-530D: SPEED SIGNAL. SIGNAL TOO LOW (B6294T; 2005-2006)

DIAGNOSTIC TROUBLE CODE (DTC) INFORMATION ECM-530D

see **DIAGNOSTIC TROUBLE CODE (DTC) INFORMATION ECM-530D**

FAULT-TRACING INFORMATION

see **FAULT-TRACING INFORMATION**

ECM-531D: CONTROL MODULE, INTERNAL FAULT (B5254T2; B6294T; 2003-2004)

DIAGNOSTIC TROUBLE CODE (DTC) INFORMATION

Condition

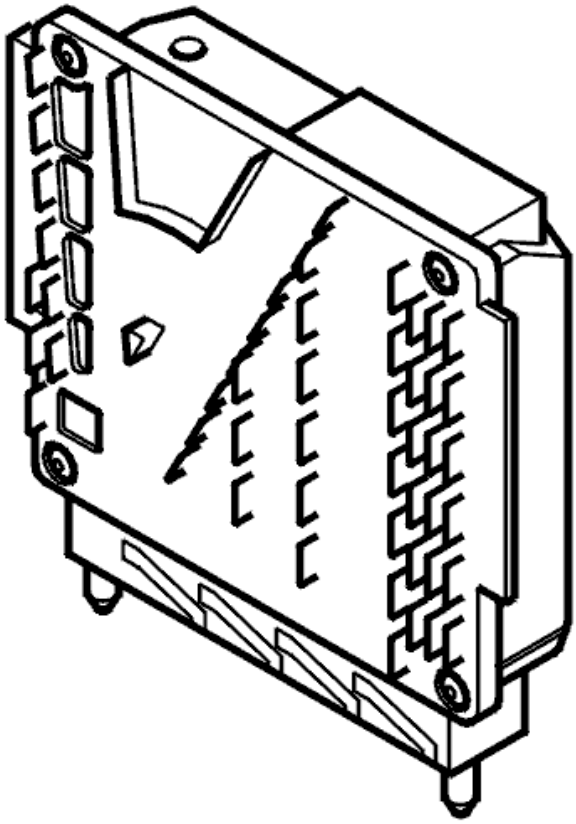

Fig. 285: Engine Control Module
Courtesy of VOLVO CARS CORPORATION

Diagnostic trouble code (DTC) ECM-531D is stored if the central electronic module (CEM) detects a fault in the engine control module (ECM) software (incorrect check sum).

Substitute Value

none

Possible Source

- fault in engine control module (ECM)
- changed software in engine control module (ECM)
- defective engine control module (ECM).

Fault symptom[s]

- varies depending on the type of fault.

FAULT-TRACING INFORMATION

see **FAULT-TRACING INFORMATION**

ECM-540B: OIL GRADE, LEVEL AND TEMPERATURE SENSOR. FAULTY SIGNAL (B5254T2; 2005-2007)

DIAGNOSTIC TROUBLE CODE (DTC) INFORMATION ECM-540B

Condition

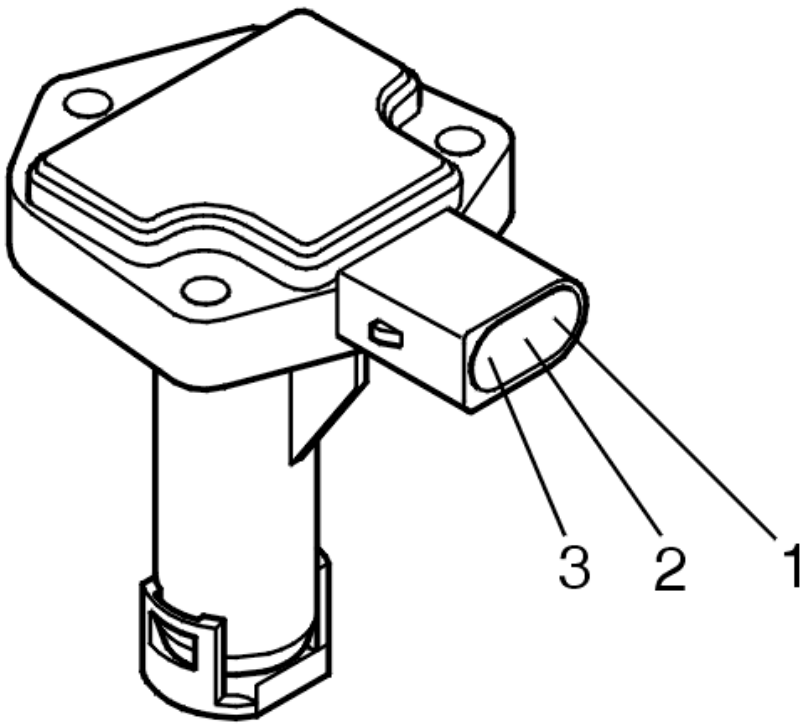

Fig. 286: Identifying Oil Level Sensor
Courtesy of VOLVO CARS CORPORATION

The engine control module (ECM) checks the signal from the oil level sensor. The diagnostic trouble code (DTC) is stored if the engine control module (ECM) detects that there is no signal from the oil level sensor.

The diagnostic trouble code (DTC) can be diagnosed when the engine is running.

Substitute Value

- None.

Possible Source

- Loose connections, contact resistance or oxidation in the terminals
- Open-circuit in the signal cable
- Open-circuit in the power supply
- Damaged oil level sensor.

Fault symptom[s]

- None.

FAULTY SIGNAL

CHECKING THE STATUS

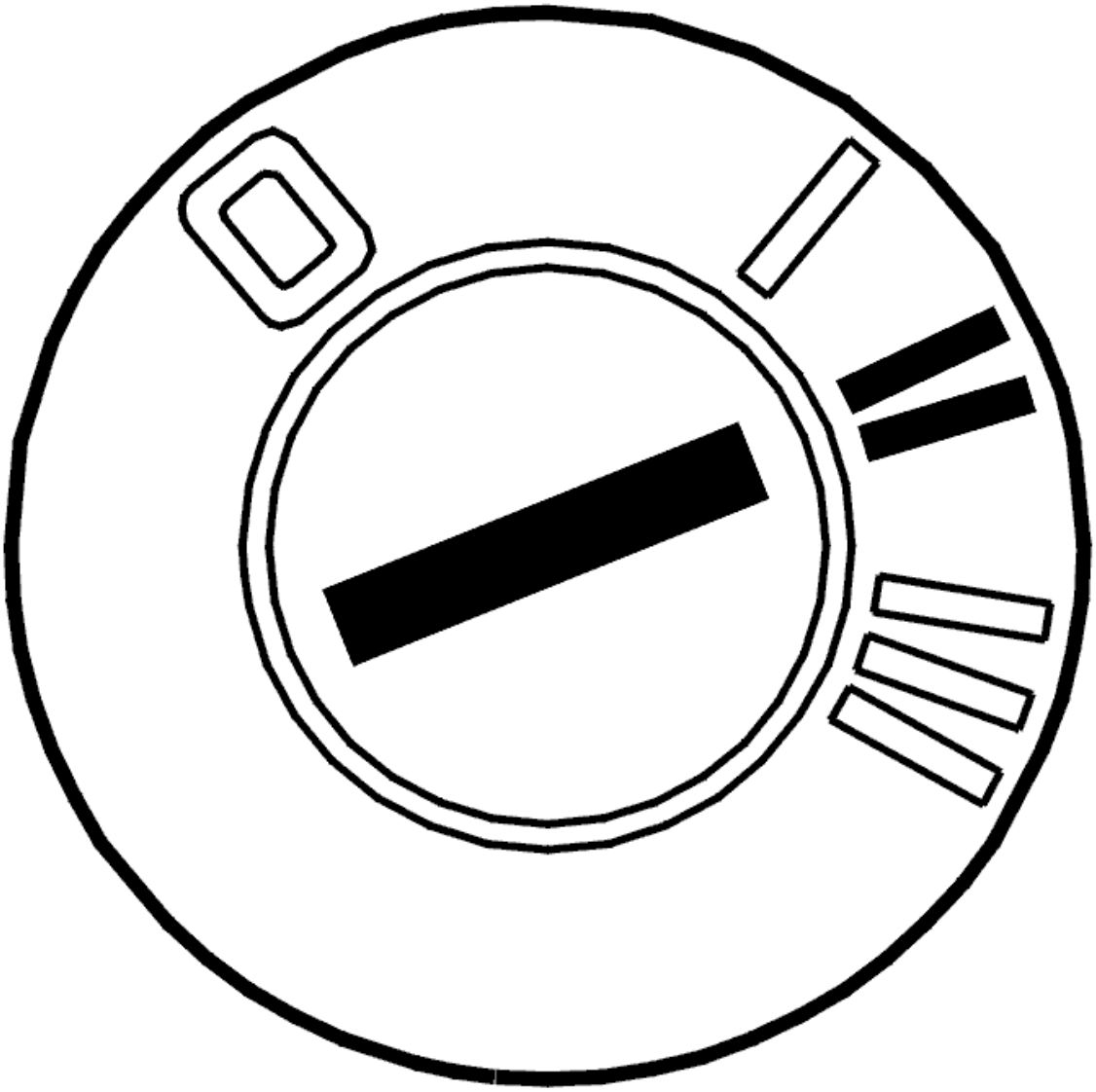

Fig. 287: Identifying Ignition ON
Courtesy of VOLVO CARS CORPORATION

- Ignition on
- Read off the oil level sensor signal.

  Check that all three values for oil level, oil temperature and oil grade are between 17-83%. The fault is intermittent at the moment if all the values are OK.

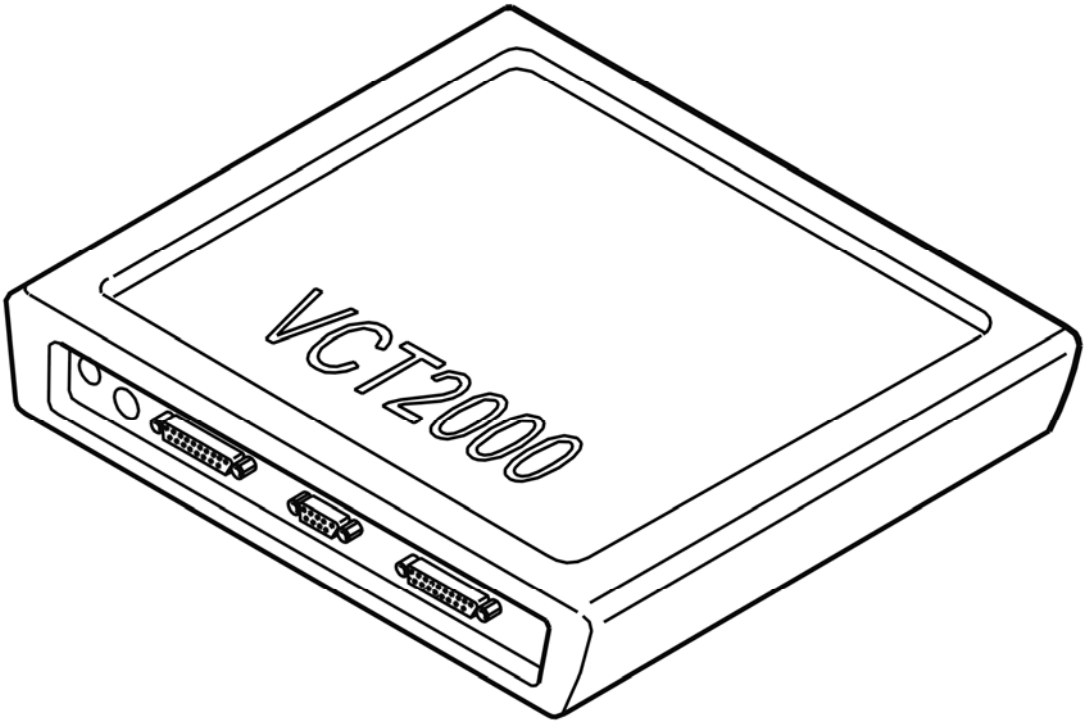

Fig. 288: Identifying VCT2000 Diagnostic Tool Symbol In VIDA
Courtesy of VOLVO CARS CORPORATION

- **Continue**

  Refer to **CHECKING CONNECTORS AND WIRING**

CHECKING CONNECTORS AND WIRING

Check the oil level sensor connector. Check for loose connections, contact resistance and oxidation.

Check the signal cable between engine control module (ECM) terminal #A40 and oil level sensor terminal #1. Check for an open-circuit.

Check the cable between engine control module (ECM) terminal #A39 and oil level sensor terminal #3. Check for an open-circuit.

Check the cable between engine control module (ECM) terminal #A60 and oil level sensor terminal #2. Check for an open-circuit.

HINT: With the ignition on, the voltage between terminals #2 and #3 must be 5 V, with the reading taken at the oil level sensor connector.

Try a new oil level sensor if no fault is found and the fault is permanent.

Remedy as necessary.

Other information:

- see **CONNECTING THE BREAKOUT BOX**
- For 5 cylinder turbocharged engines 2005-, see **SIGNAL SPECIFICATION** .
- For 6 cylinder engines 2005-, see **SIGNAL SPECIFICATION** .
- see **OIL LEVEL SENSOR, REPLACING**
- see **CHECKING WIRING AND TERMINALS**

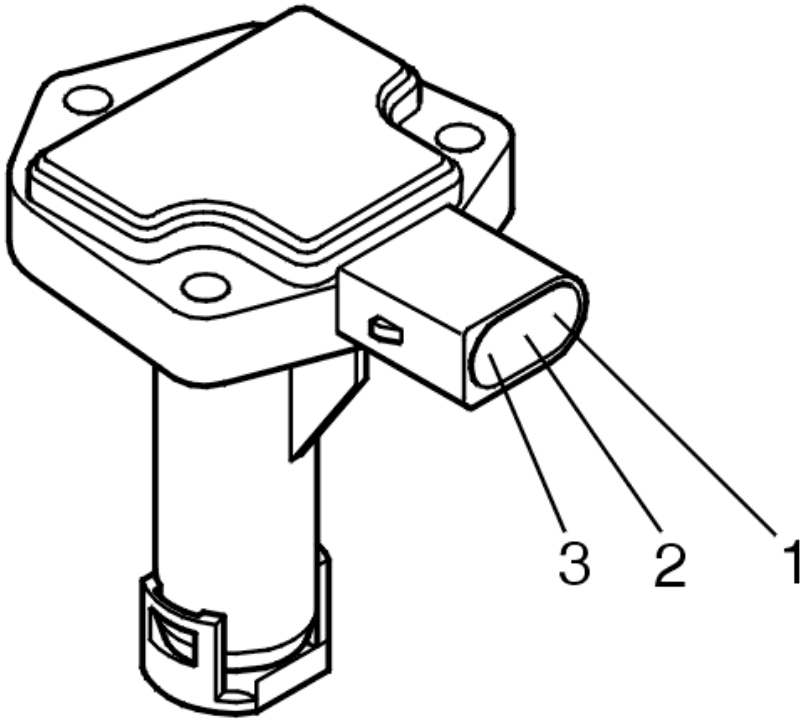

Fig. 289: Identifying Oil Level Sensor
Courtesy of VOLVO CARS CORPORATION

- **Continue**

  Refer to **VERIFICATION**

VERIFICATION

VERIFICATION

HINT: After carrying out the repair, check that the fault has been remedied.

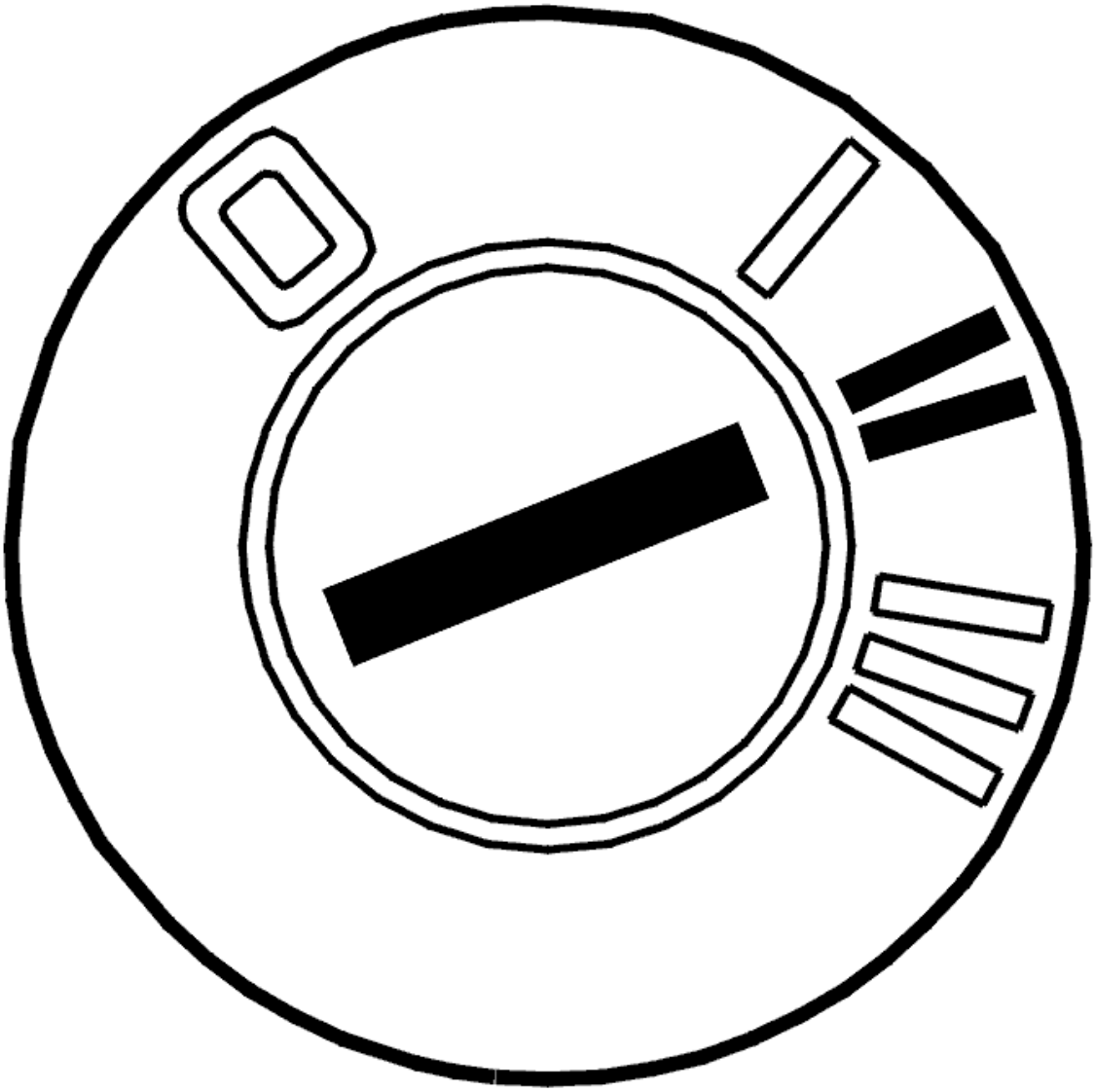

Fig. 290: Identifying Ignition ON
Courtesy of VOLVO CARS CORPORATION

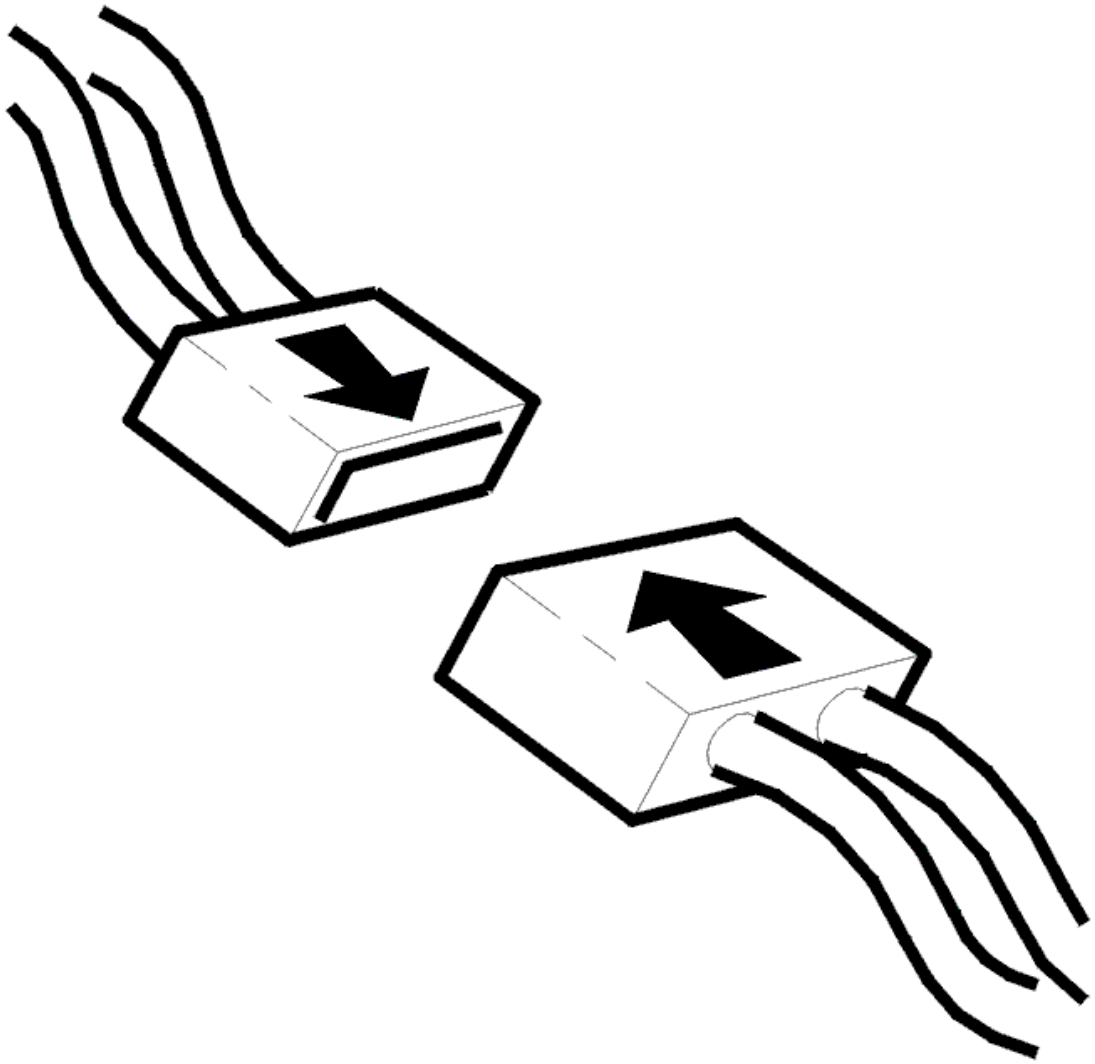

Fig. 291: Connecting Connector
Courtesy of VOLVO CARS CORPORATION

- Ignition off
- Reconnect the connectors, reinstall components etc.
- Ignition on
- Read off the oil level sensor signal.

  Check that all three values for oil level, oil temperature and oil grade are between 17-83%. The fault has been remedied if all the values are OK.

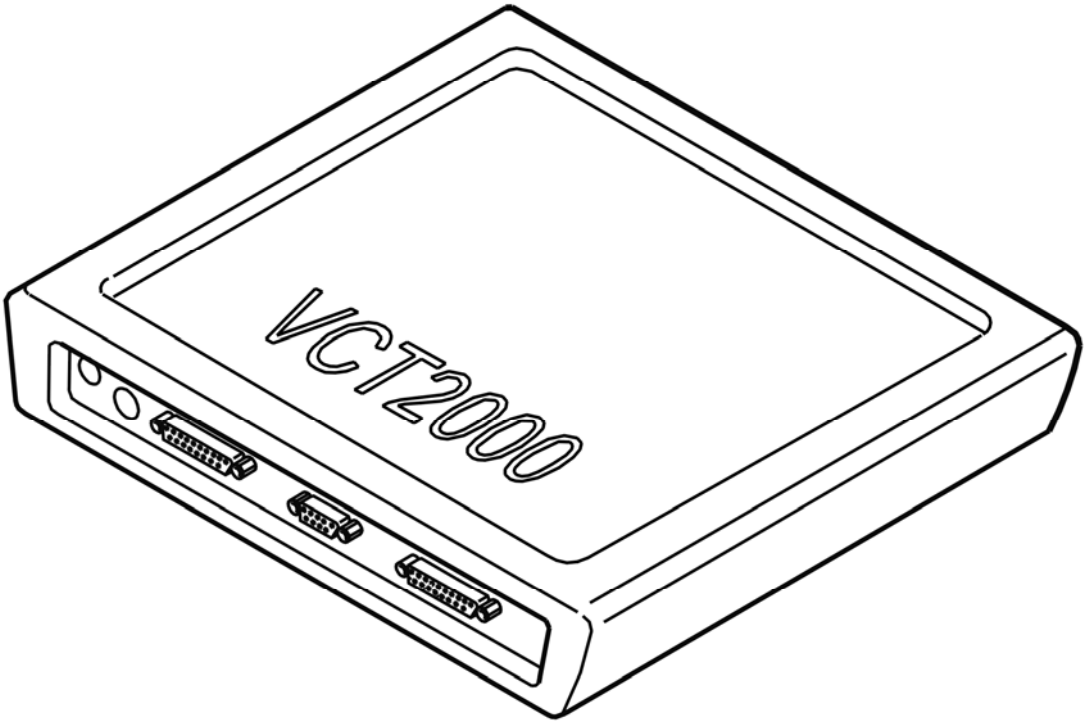

Fig. 292: Identifying VCT2000 Diagnostic Tool Symbol In VIDA
Courtesy of VOLVO CARS CORPORATION

Are these values OK?

- **YES**

  VERIFIED: Troubleshooting has been completed.

- **NO**

  Refer to **INFORMATION**

INFORMATION

FAULT-TRACING INFORMATION

The fault should have been detected and remedied. As this is not the case fault-tracing has failed.

Exit fault-tracing for this diagnostic trouble code (DTC) or make another attempt.

ECM-540B: OIL GRADE, LEVEL AND TEMPERATURE SENSOR. FAULTY SIGNAL (B6294T; 2005-2006)

DIAGNOSTIC TROUBLE CODE (DTC) INFORMATION ECM-540B

see **DIAGNOSTIC TROUBLE CODE (DTC) INFORMATION ECM-540B**

FAULTY SIGNAL

see **FAULTY SIGNAL**

ECM-540C: OIL GRADE, LEVEL AND TEMPERATURE SENSOR. SIGNAL TOO HIGH (B5254T2; 2005-2007)

DIAGNOSTIC TROUBLE CODE (DTC) INFORMATION ECM-540C

Condition

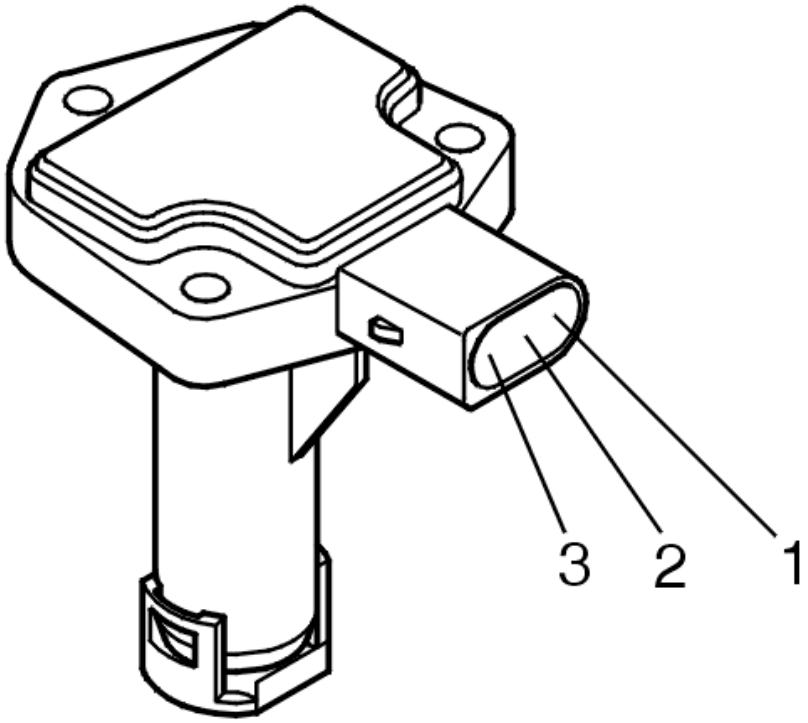

Fig. 293: Identifying Oil Level Sensor
Courtesy of VOLVO CARS CORPORATION

The engine control module (ECM) checks the signal from the oil level sensor. The diagnostic trouble code (DTC) is stored if the engine control module (ECM) registers that the signal from the oil level sensor is too high.

The diagnostic trouble code (DTC) can be diagnosed when the engine is running.

Substitute Value

- None.

Possible Source

- Short-circuit to supply voltage in the signal cable
- Damaged oil level sensor.

Fault symptom[s]

- None.

SIGNAL TOO HIGH

CHECKING THE STATUS

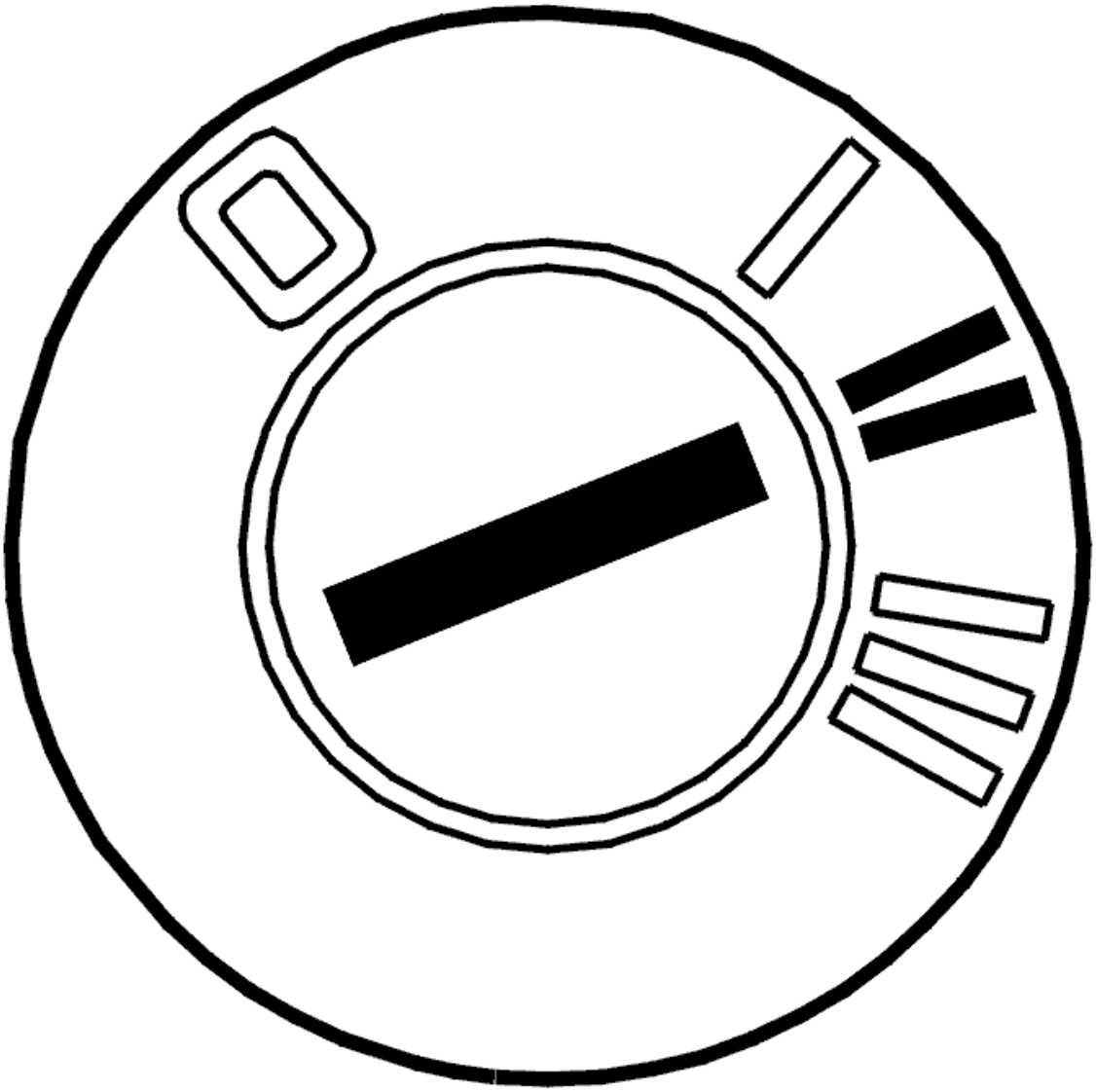

Fig. 294: Identifying Ignition ON
Courtesy of VOLVO CARS CORPORATION

- Ignition on
- Read off the oil level sensor signal.

  Check that all three values for oil level, oil temperature and oil grade are between 17-83%. The fault is intermittent at the moment if all the values are OK.

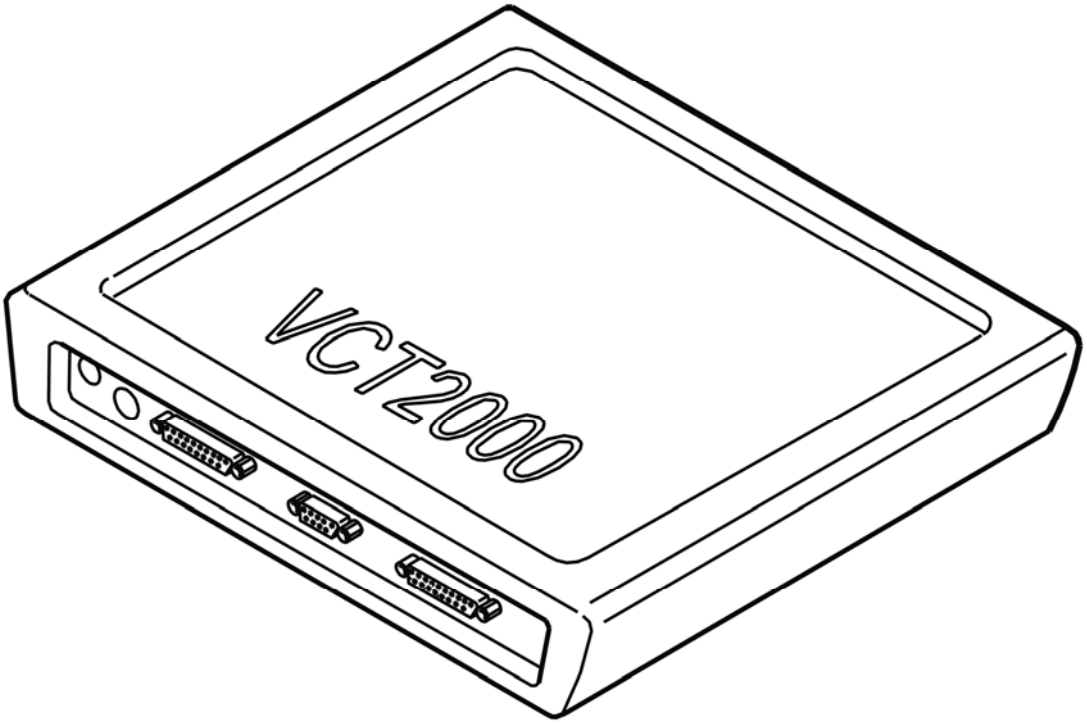

Fig. 295: Identifying VCT2000 Diagnostic Tool Symbol In VIDA
Courtesy of VOLVO CARS CORPORATION

- **Continue**

  Refer to **CHECKING THE WIRING**

CHECKING THE WIRING

Check the signal cable between engine control module (ECM) terminal #A40 and oil level sensor terminal #1. Check for a short-circuit to supply voltage.

HINT: With the ignition on, the voltage between terminals #2 and #3 must be 5 V, with the reading taken at the oil level sensor connector.

Try a new oil level sensor if no fault is found and the fault is permanent.

Remedy as necessary.

Other information:

- see **CHECKING WIRING AND TERMINALS**
- To connect the breakout box, see **CONNECTING THE BREAKOUT BOX**

- For 5 cylinder turbocharged engines 2005-, see **SIGNAL SPECIFICATION** .
- To access or replace the oil level sensor, see **OIL LEVEL SENSOR, REPLACING** .

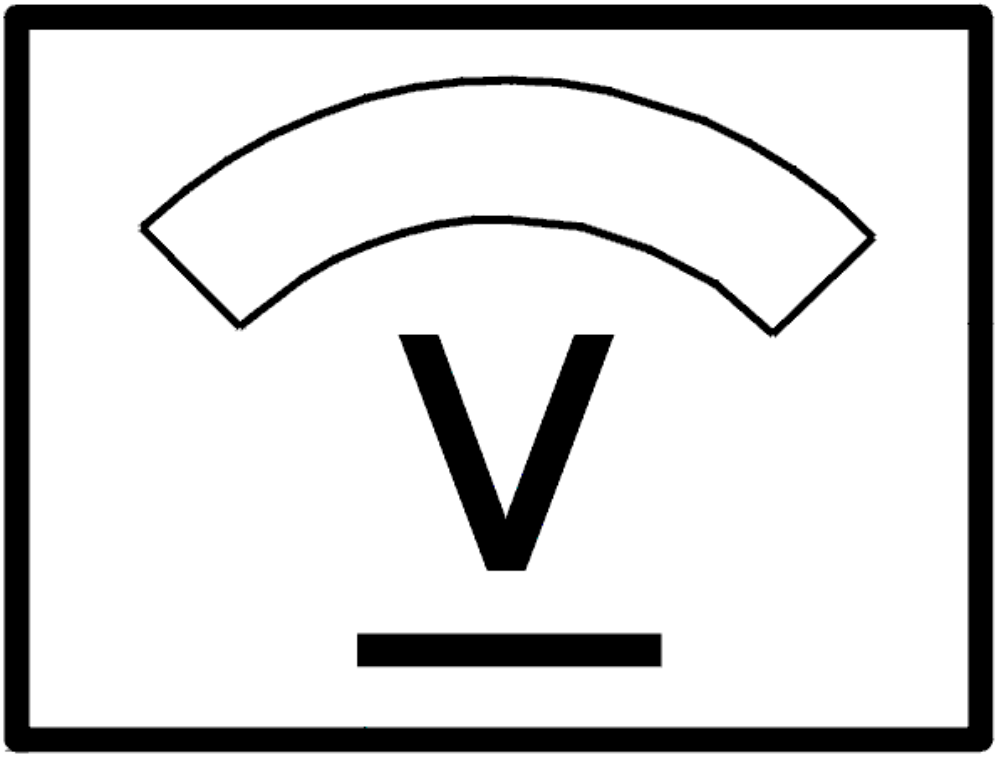

Fig. 296: Identifying Voltage Display
Courtesy of VOLVO CARS CORPORATION

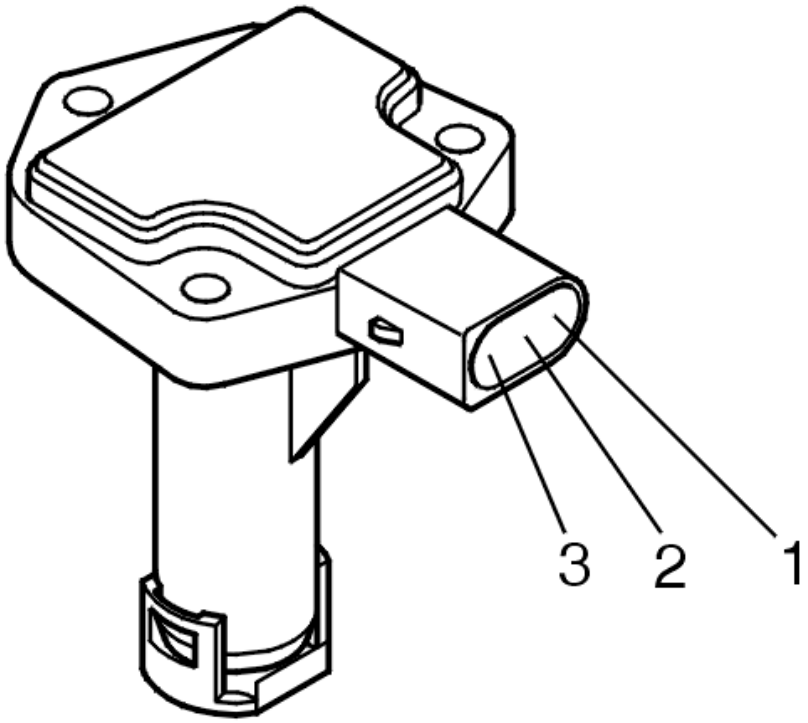

Fig. 297: Identifying Oil Level Sensor
Courtesy of VOLVO CARS CORPORATION

- **Continue**

  Refer to **VERIFICATION**

VERIFICATION

VERIFICATION

HINT: After carrying out the repair, check that the fault has been remedied.

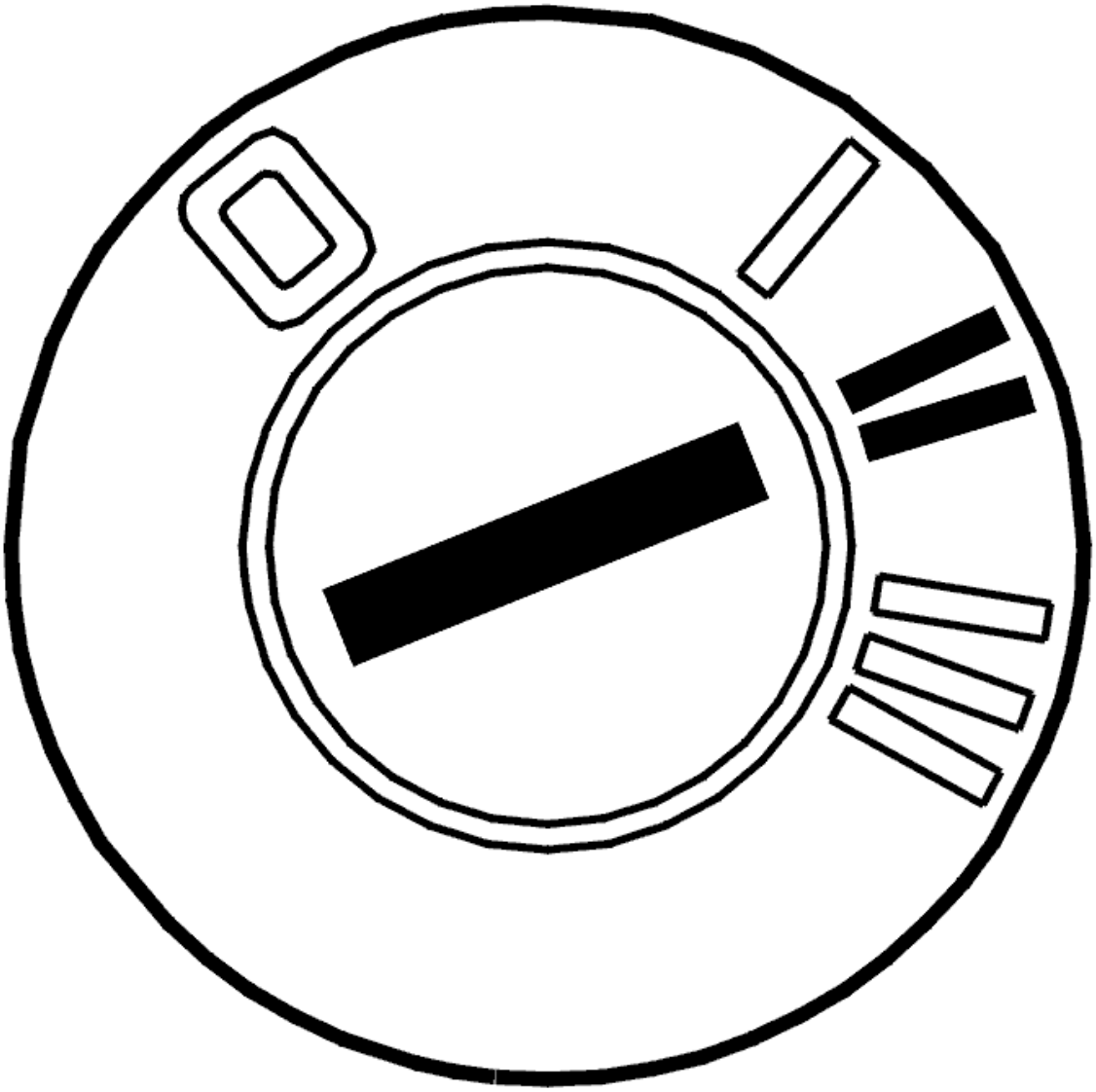

Fig. 298: Identifying Ignition ON
Courtesy of VOLVO CARS CORPORATION

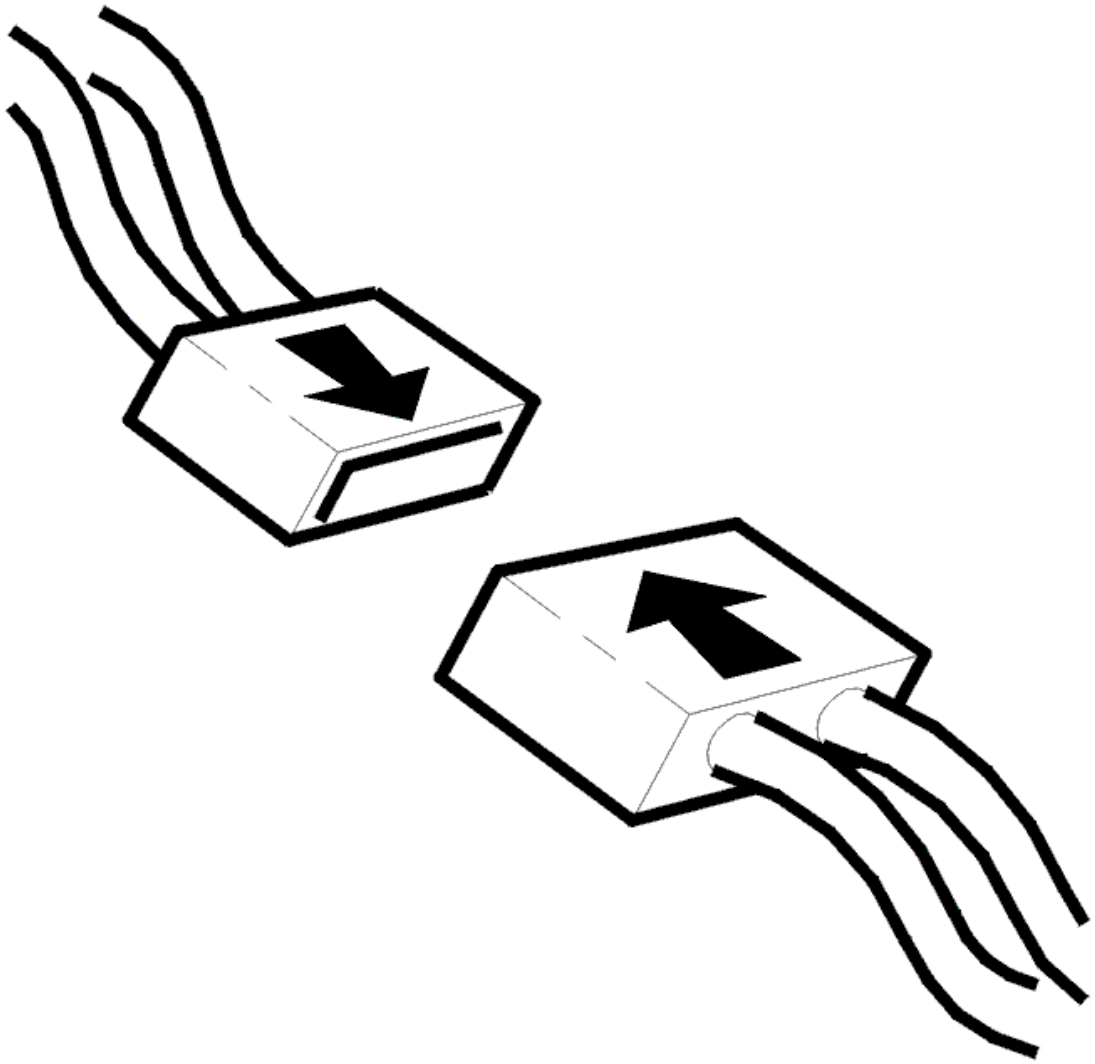

Fig. 299: Connecting Connector
Courtesy of VOLVO CARS CORPORATION

- Ignition off
- Reconnect the connectors, reinstall components etc.
- Ignition on
- Read off the oil level sensor signal.

  Check that all three values for oil level, oil temperature and oil grade are between 17-83%. The fault has been remedied if all the values are OK.

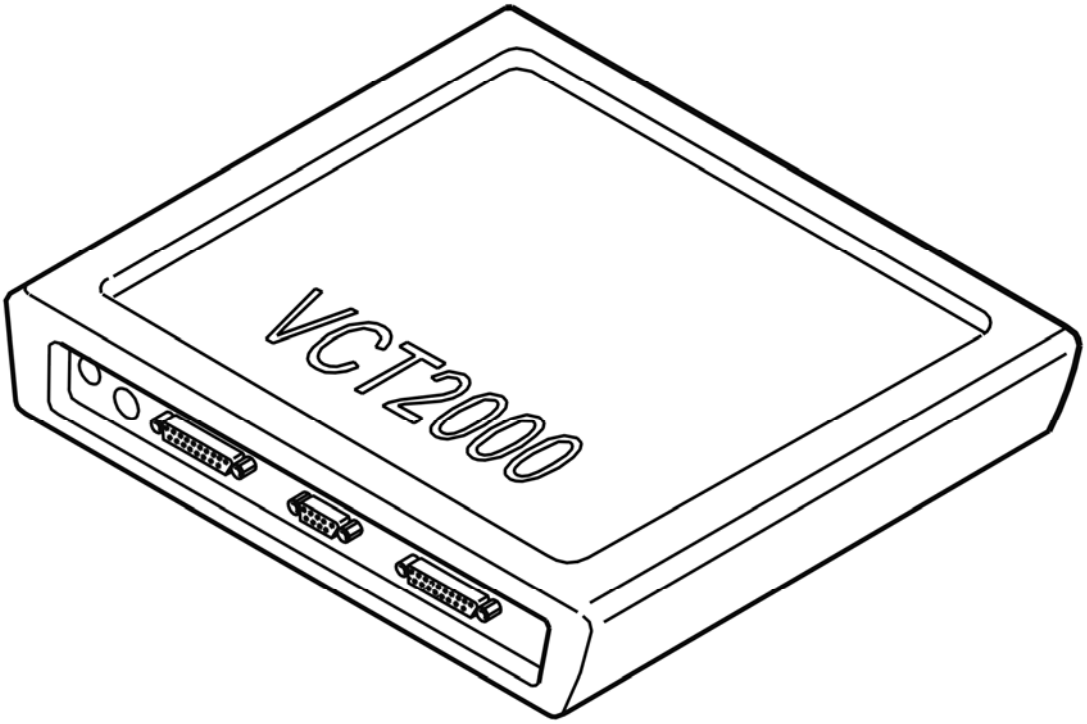

Fig. 300: Identifying VCT2000 Diagnostic Tool Symbol In VIDA
Courtesy of VOLVO CARS CORPORATION

Are these values OK?

- **YES**

  VERIFIED: Troubleshooting has been completed.

- **NO**

  Refer to **INFORMATION**

INFORMATION

FAULT-TRACING INFORMATION

The fault should have been detected and remedied. As this is not the case fault-tracing has failed.

Exit fault-tracing for this diagnostic trouble code (DTC) or make another attempt.

ECM-540C: OIL GRADE, LEVEL AND TEMPERATURE SENSOR. SIGNAL TOO HIGH (B6294T; 2005-2006)

DIAGNOSTIC TROUBLE CODE (DTC) INFORMATION ECM-540C

see **DIAGNOSTIC TROUBLE CODE (DTC) INFORMATION ECM-540C**

SIGNAL TOO HIGH

see **SIGNAL TOO HIGH**

ECM-540D: OIL GRADE, LEVEL AND TEMPERATURE SENSOR. SIGNAL TOO LOW (B5254T2; 2005-2007)

DIAGNOSTIC TROUBLE CODE (DTC) INFORMATION ECM-540D

Condition

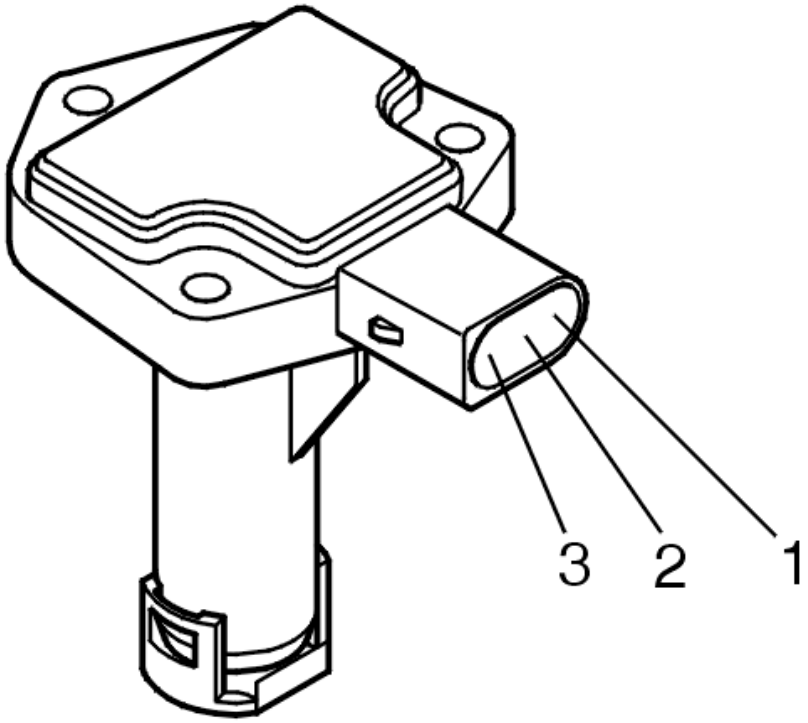

Fig. 301: Identifying Oil Level Sensor
Courtesy of VOLVO CARS CORPORATION

The engine control module (ECM) checks the signal from the oil level sensor. The diagnostic trouble code (DTC) is stored if the engine control module (ECM) registers that the signal from the oil level sensor is too low.

The diagnostic trouble code (DTC) can be diagnosed when the engine is running.

Substitute Value

- None.

Possible Source

- Short-circuit to ground in the signal cable
- Damaged oil level sensor.

Fault symptom[s]

- None.

SIGNAL TOO LOW

CHECKING THE STATUS

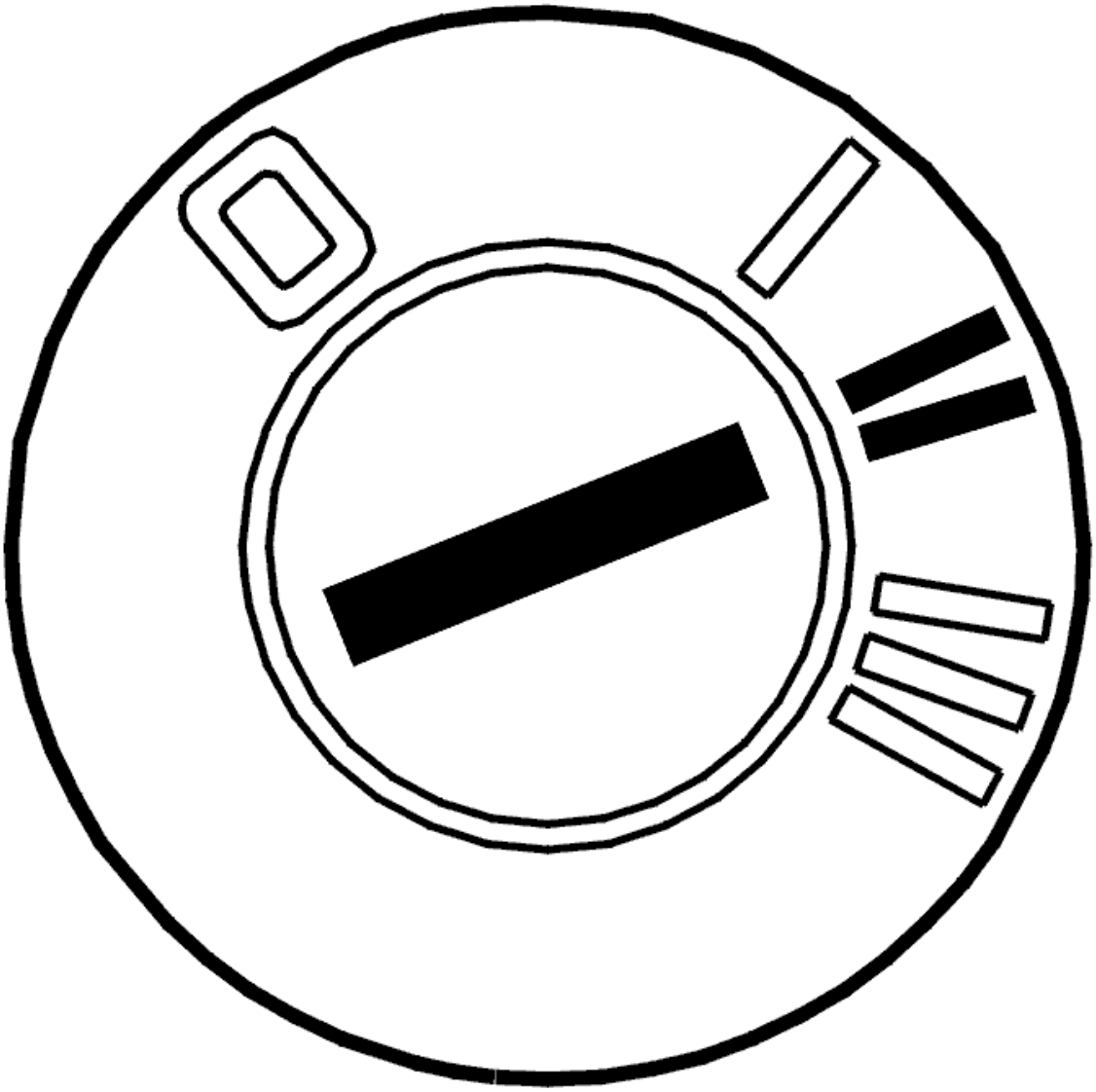

Fig. 302: Identifying Ignition ON
Courtesy of VOLVO CARS CORPORATION

- Ignition on
- Read off the oil level sensor signal.

  Check that all three values for oil level, oil temperature and oil grade are between 17-83%. The fault is intermittent at the moment if all the values are OK.

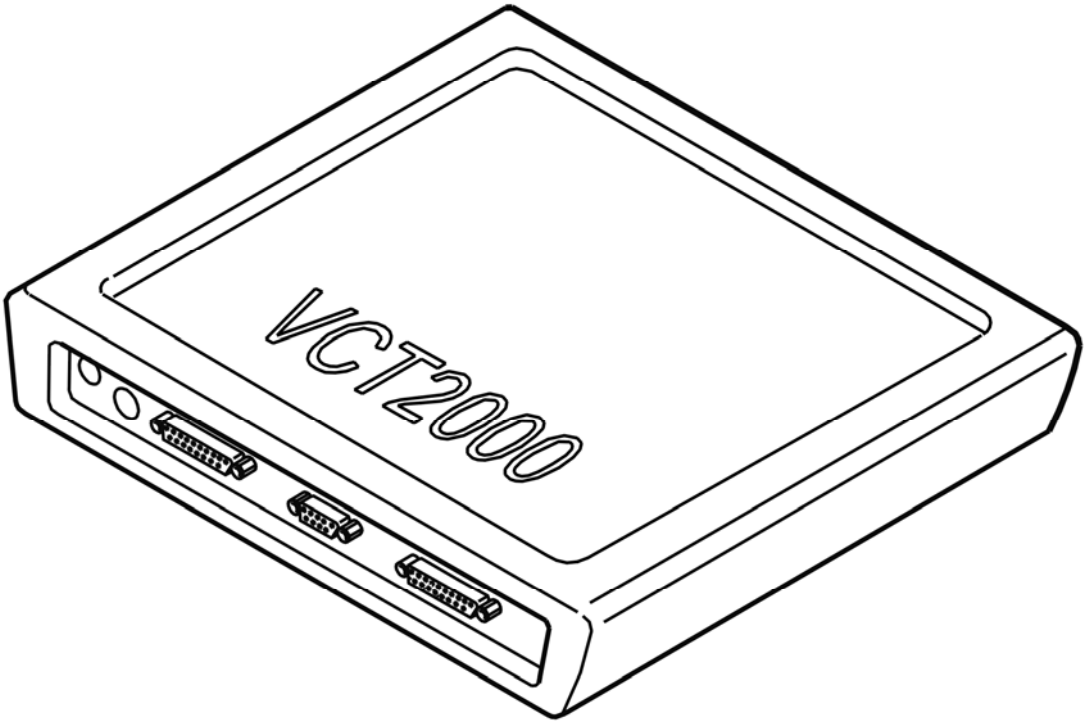

Fig. 303: Identifying VCT2000 Diagnostic Tool Symbol In VIDA
Courtesy of VOLVO CARS CORPORATION

- **Continue**

  Refer to **CHECKING THE WIRING**

CHECKING THE WIRING

Check the signal cable between engine control module (ECM) terminal #A40 and oil level sensor terminal #1. Check for a short-circuit to ground.

HINT: With the ignition on, the voltage between terminals #2 and #3 must be 5 V, with the reading taken at the oil level sensor connector.

Try a new oil level sensor if no fault is found and the fault is permanent.

Remedy as necessary.

Other information:

- see **CHECKING WIRING AND TERMINALS**
- To connect the breakout box, see **CONNECTING THE BREAKOUT BOX**

- For 5 cylinder turbocharged engines 2005-, see **SIGNAL SPECIFICATION** .
- To access or replace the oil level sensor, see **OIL LEVEL SENSOR, REPLACING** .

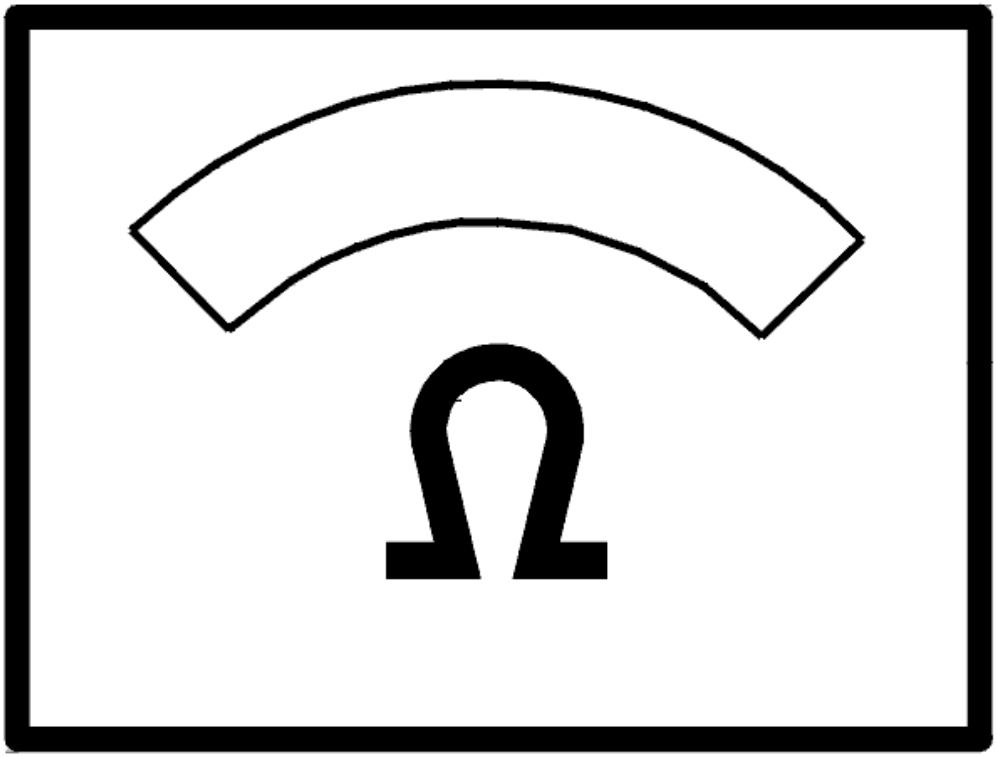

Fig. 304: Identifying Ohm Meter
Courtesy of VOLVO CARS CORPORATION

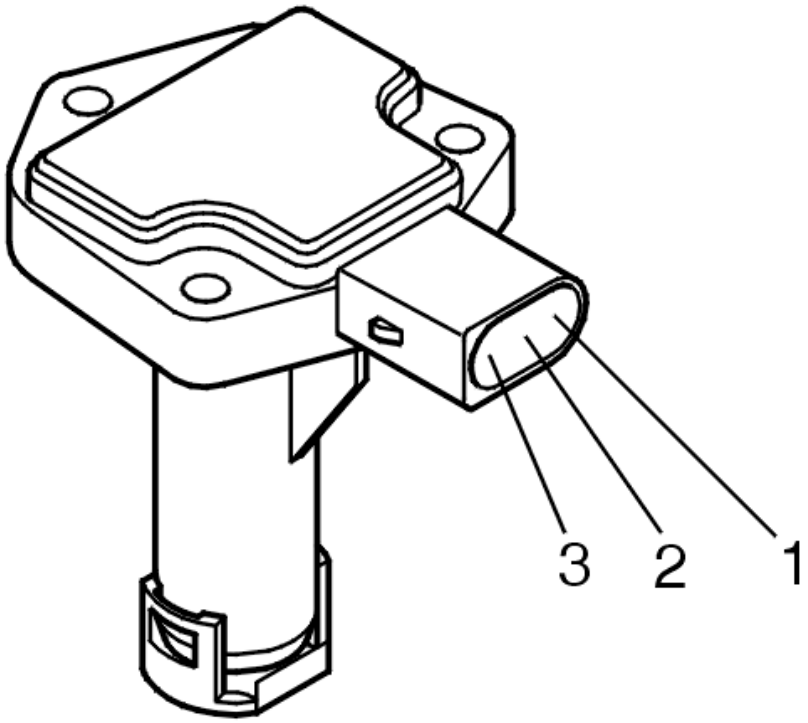

Fig. 305: Identifying Oil Level Sensor
Courtesy of VOLVO CARS CORPORATION

- **Continue**

  Refer to **VERIFICATION**

VERIFICATION

VERIFICATION

HINT: After carrying out the repair, check that the fault has been remedied.

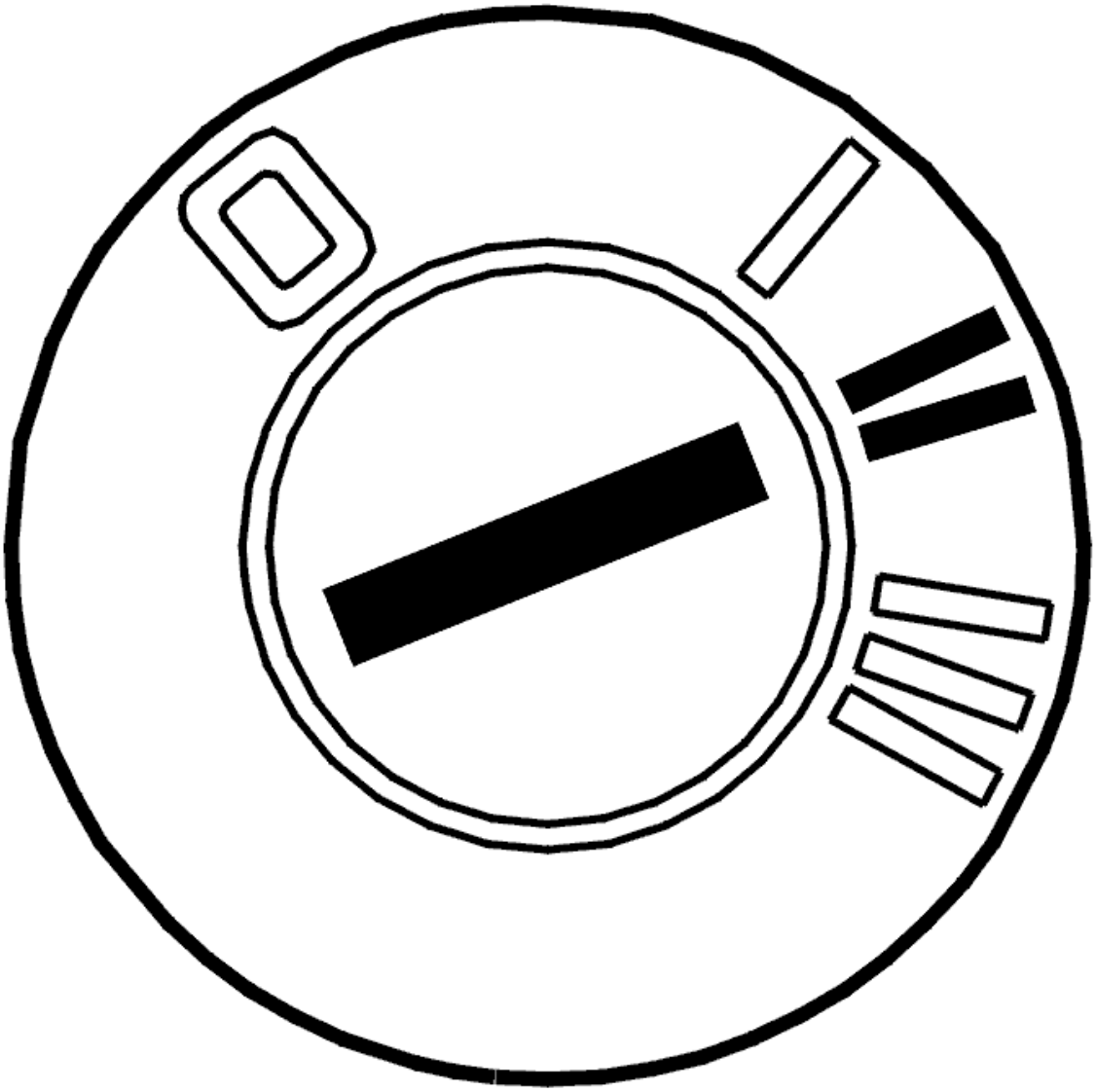

Fig. 306: Identifying Ignition ON
Courtesy of VOLVO CARS CORPORATION

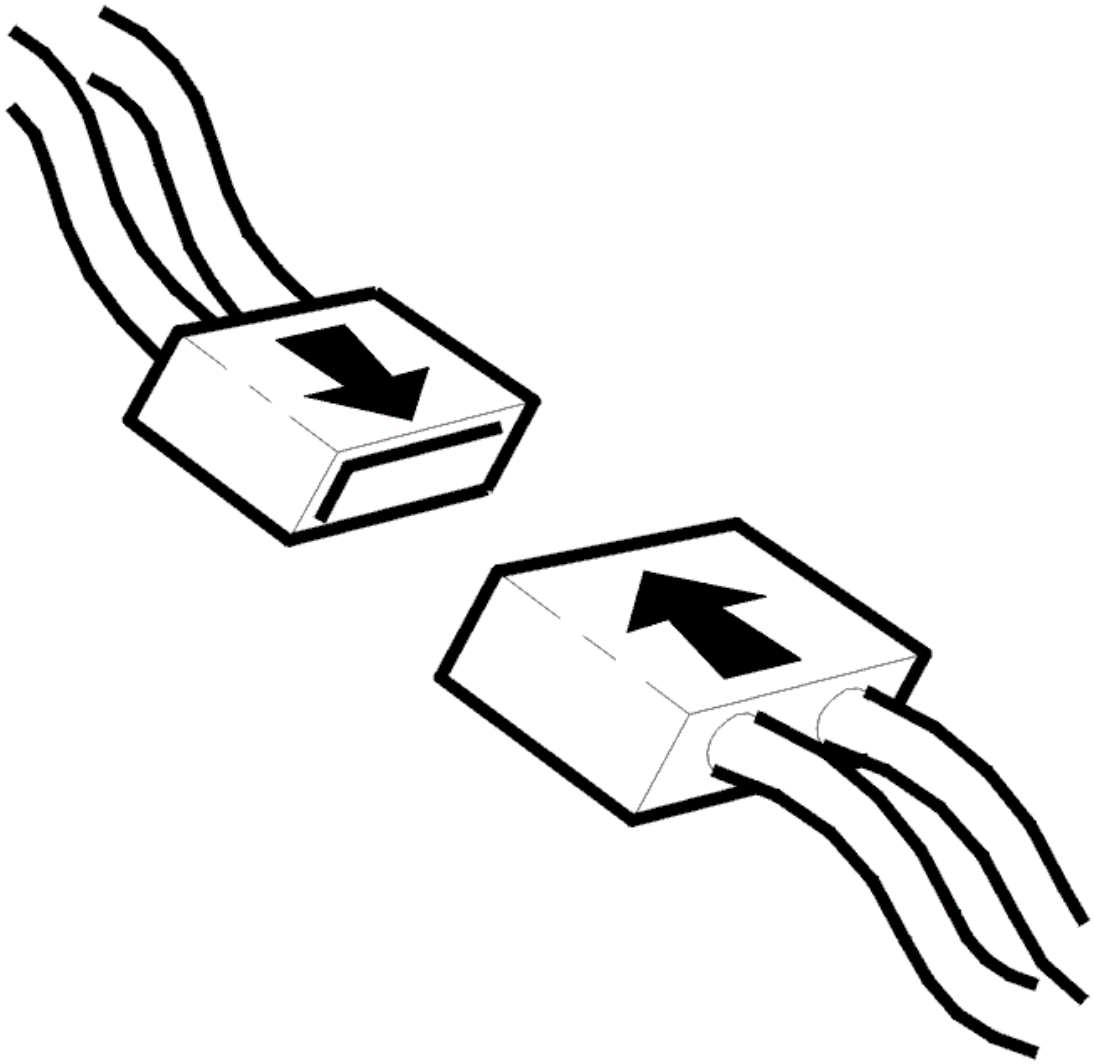

Fig. 307: Connecting Connector
Courtesy of VOLVO CARS CORPORATION

- Ignition off
- Reconnect the connectors, reinstall components etc.
- Ignition on
- Read off the oil level sensor signal.

  Check that all three values for oil level, oil temperature and oil grade are between 17-83%. The fault has been remedied if all the values are OK.

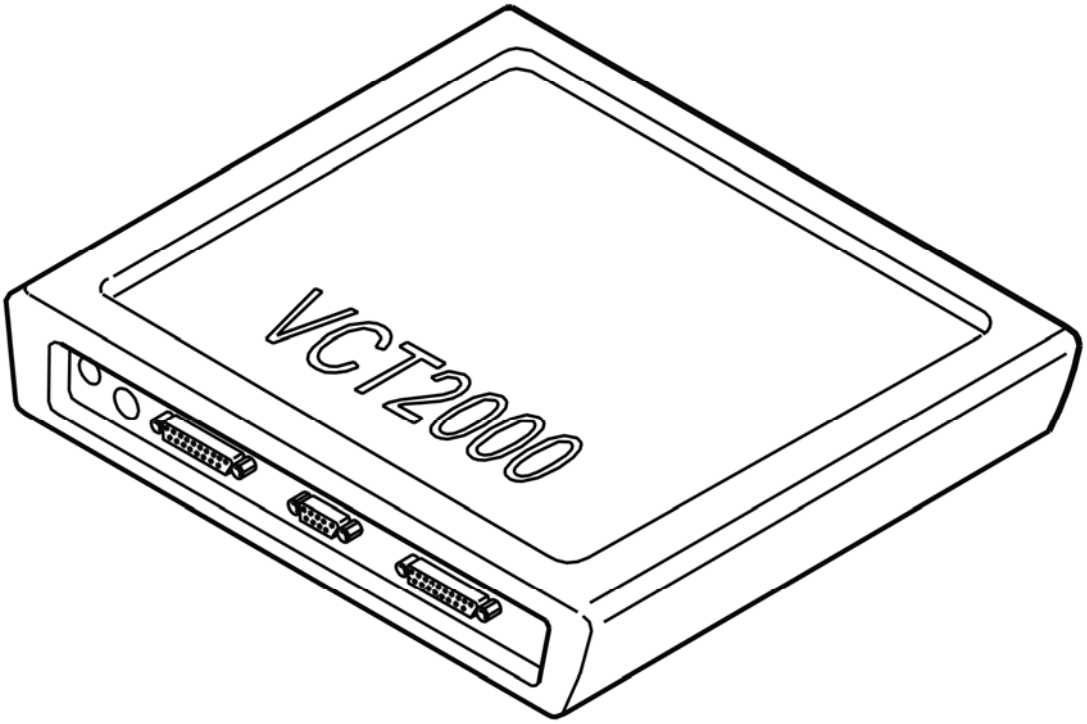

Fig. 308: Identifying VCT2000 Diagnostic Tool Symbol In VIDA
Courtesy of VOLVO CARS CORPORATION

Are these values OK?

- **YES**

  VERIFIED: Troubleshooting has been completed.

- **NO**

  Refer to **INFORMATION**

INFORMATION

FAULT-TRACING INFORMATION

The fault should have been detected and remedied. As this is not the case fault-tracing has failed.

Exit fault-tracing for this diagnostic trouble code (DTC) or make another attempt.

ECM-540D: OIL GRADE, LEVEL AND TEMPERATURE SENSOR. SIGNAL TOO LOW (B6294T; 2005-2006)

DIAGNOSTIC TROUBLE CODE (DTC) INFORMATION ECM-540D

see **DIAGNOSTIC TROUBLE CODE (DTC) INFORMATION ECM-540D**

SIGNAL TOO LOW

see **SIGNAL TOO LOW**

ECM-5500: OIL LEVEL. FAULTY SIGNAL (B5254T2; 2005-2007)

DIAGNOSTIC TROUBLE CODE (DTC) INFORMATION ECM-5500

Condition

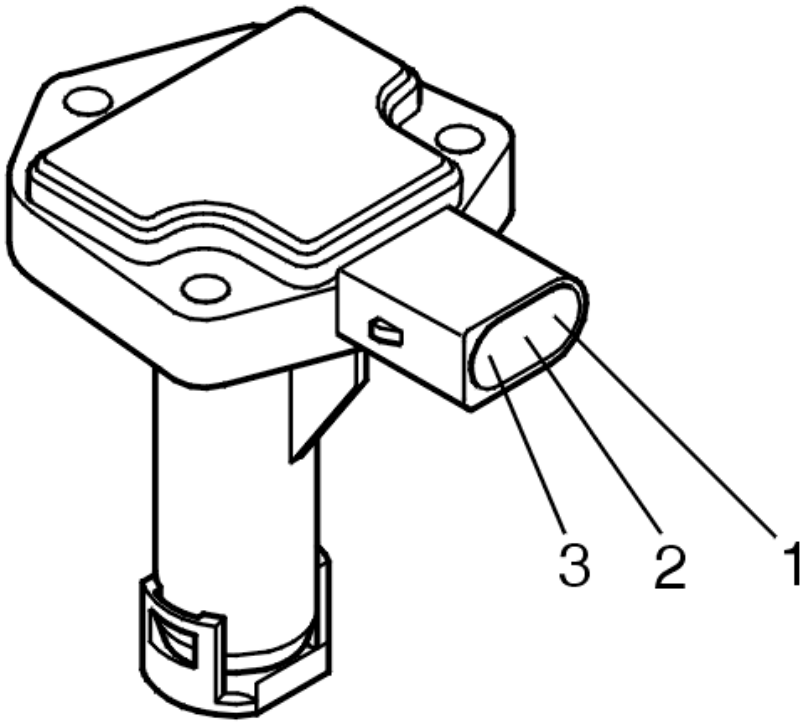

Fig. 309: Identifying Oil Level Sensor
Courtesy of VOLVO CARS CORPORATION

The engine control module (ECM) checks the signal from the oil level sensor. The diagnostic trouble code (DTC) is stored if the engine control module (ECM) registers that the signal from the oil level sensor is outside a reasonable operating range.

The diagnostic trouble code (DTC) can diagnosed after a number of different criteria (engine speed (RPM), vehicle speed, etc.) have been reached.

Substitute Value

- None.

Possible Source

- Engine oil leak
- Loose connections, contact resistance or oxidation in the terminals
- Damaged oil level sensor.

Fault symptom[s]

- Warning lights and chimes/Oil pressure indication/no indication

FAULTY SIGNAL

CHECKING FOR OIL LEAKAGE AND REPLACING THE COMPONENT

NOTE: If diagnostic trouble codes (DTCs) ECM-540X and ECM-550X are stored at the same time, codes ECM-540X must be remedied first.

- Checking the engine for oil leakage
- Also check the oil level sensor connector. Check for loose connections, contact resistance or oxidation.

  HINT: This diagnostic trouble code (DTC) may be stored if the engine oil is significantly mixed with fuel or coolant for example.

  Try a new oil level sensor if no fault is found and the fault is permanent.

  Remedy as necessary.

  Other information:

  - To connect the breakout box, see **CONNECTING THE BREAKOUT BOX**
  - For 5 cylinder turbocharged engines 2005-, see **SIGNAL SPECIFICATION** .
  - For 6 cylinder engines 2005-, see **SIGNAL SPECIFICATION** .
  - To access or replace the oil level sensor, see **OIL LEVEL SENSOR, REPLACING**
  - see **CHECKING WIRING AND TERMINALS**

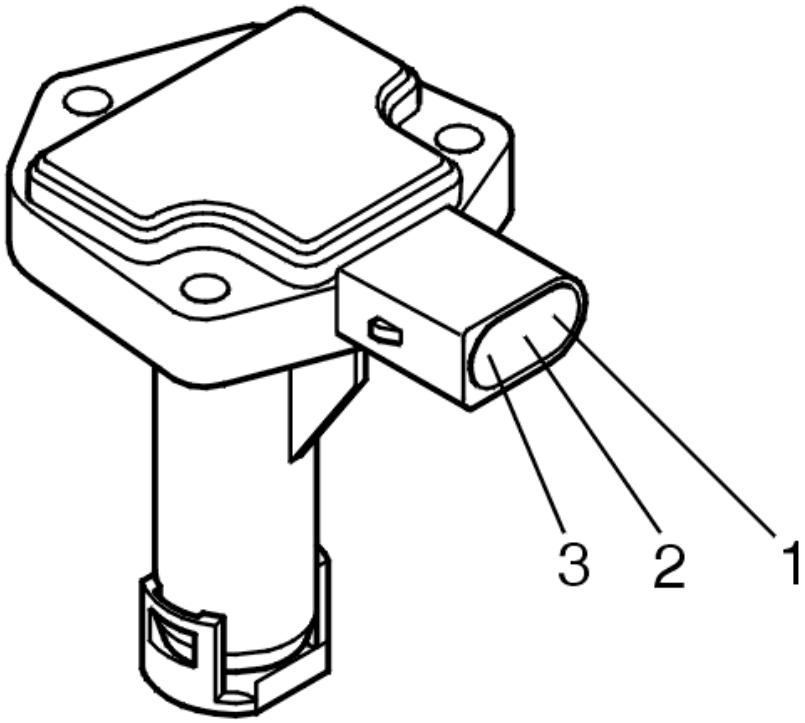

Fig. 310: Identifying Oil Level Sensor
Courtesy of VOLVO CARS CORPORATION

- **Continue**

  Refer to **VERIFICATION**

VERIFICATION

VERIFICATION

HINT: After carrying out the repair, check that the fault has been remedied.

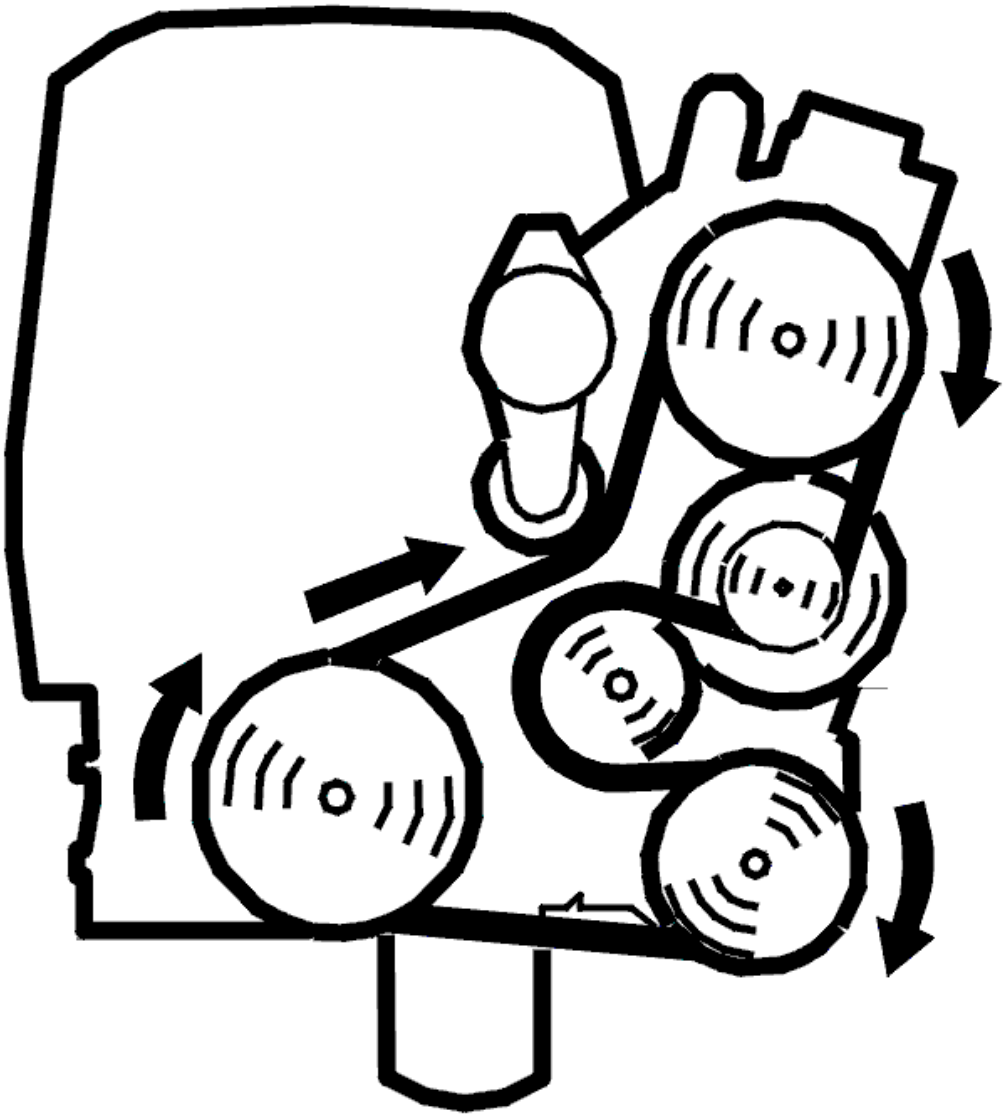

Fig. 311: Belt Routing / Engine Idling - Volvo
Courtesy of VOLVO CARS CORPORATION

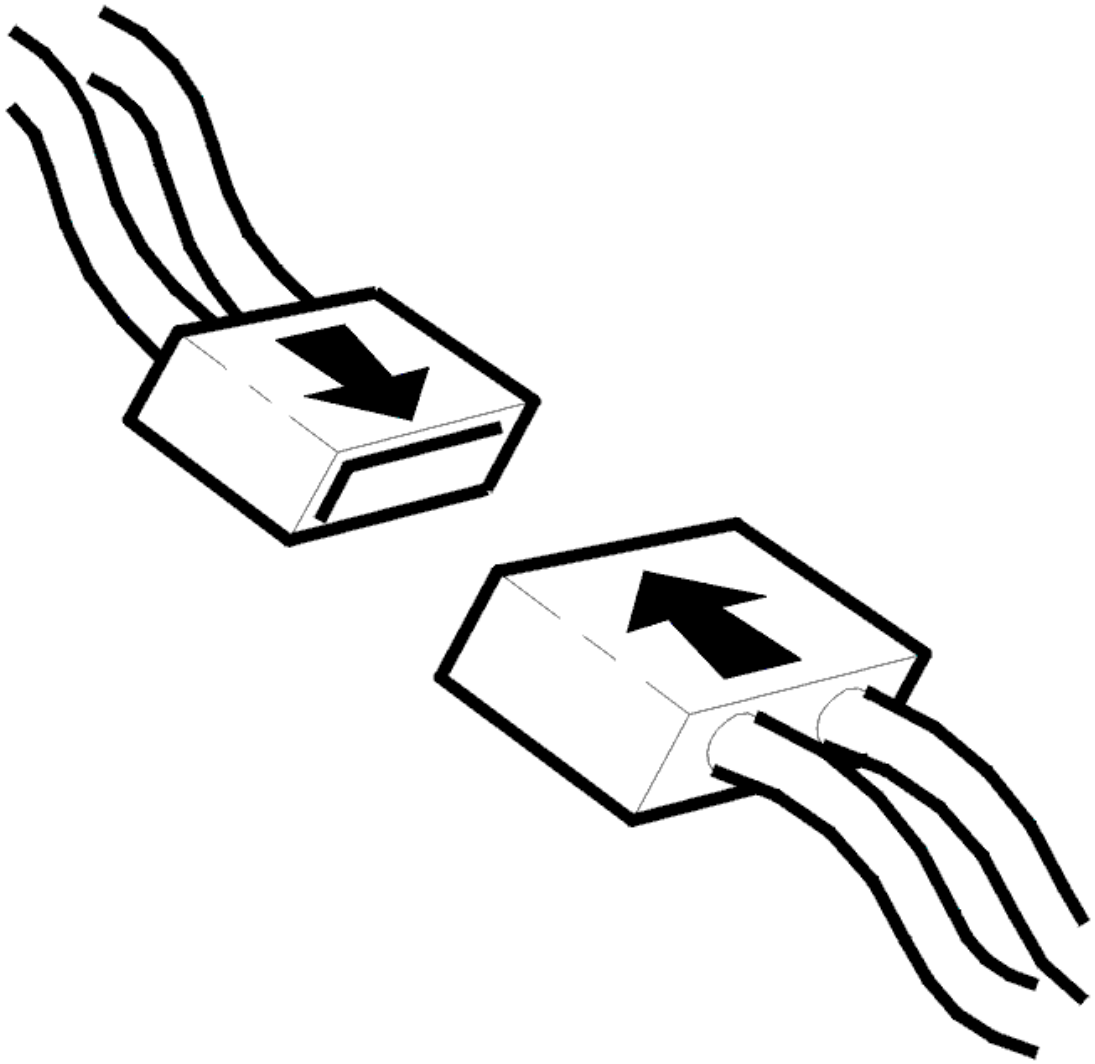

Fig. 312: Connecting Connector
Courtesy of VOLVO CARS CORPORATION

- Ignition off
- Reinstall the connectors, components etc.
- Start the engine. Allow the engine to idle for 1 minute. Increase the engine speed (RPM) to approximately 5100 RPM for at least 1 second. The car must then be driven at a speed of more than 50 km/h.

NOTE: The above instructions must be followed and carried out in the specified order.

- Read off the status of the diagnostic trouble code (DTC).

  The fault has been remedied if status of the diagnostic trouble code (DTC) is intermittent.

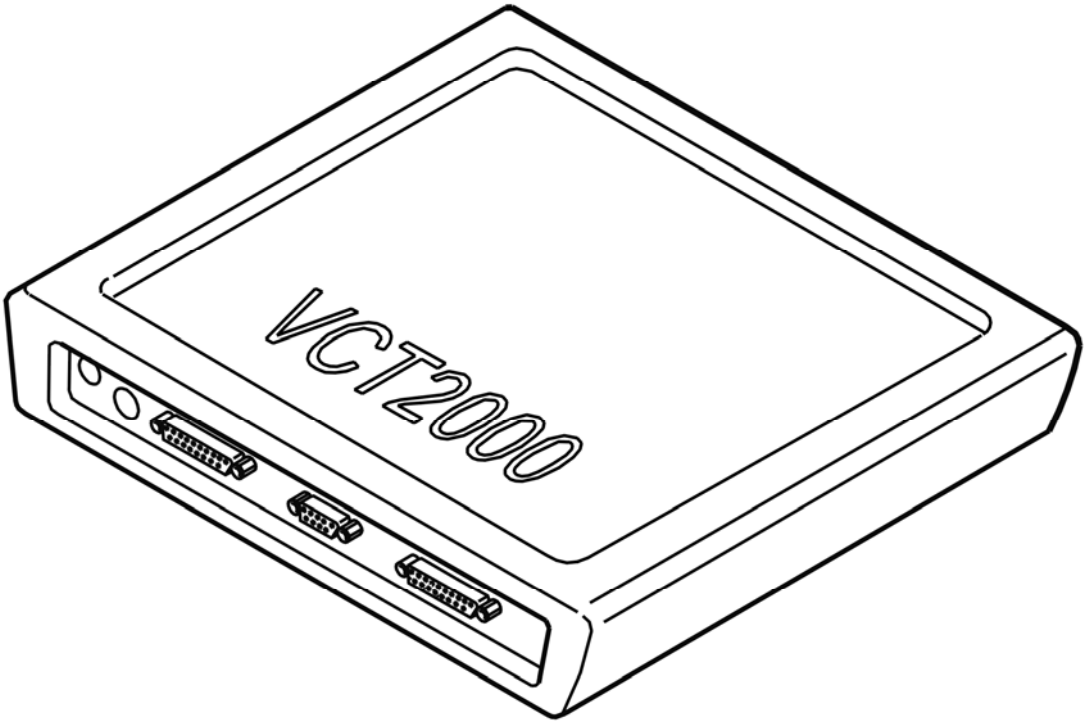

Fig. 313: Identifying VCT2000 Diagnostic Tool Symbol In VIDA
Courtesy of VOLVO CARS CORPORATION

Is the status of the diagnostic trouble code (DTC) intermittent?

- **YES**

  VERIFIED: Troubleshooting has been completed.

- **NO**

  Refer to **INFORMATION**

INFORMATION

FAULT-TRACING INFORMATION

The fault should have been detected and remedied. As this is not the case fault-tracing has failed.

Exit fault-tracing for this diagnostic trouble code (DTC) or make another attempt.

ECM-5500: OIL LEVEL. FAULTY SIGNAL (B6294T; 2005-2006)

DIAGNOSTIC TROUBLE CODE (DTC) INFORMATION ECM-5500

see **DIAGNOSTIC TROUBLE CODE (DTC) INFORMATION ECM-5500**

FAULTY SIGNAL

see **FAULTY SIGNAL**

ECM-550D: OIL LEVEL. SIGNAL TOO LOW (B5254T2; 2005-2007)

DIAGNOSTIC TROUBLE CODE (DTC) INFORMATION ECM-550D

Condition

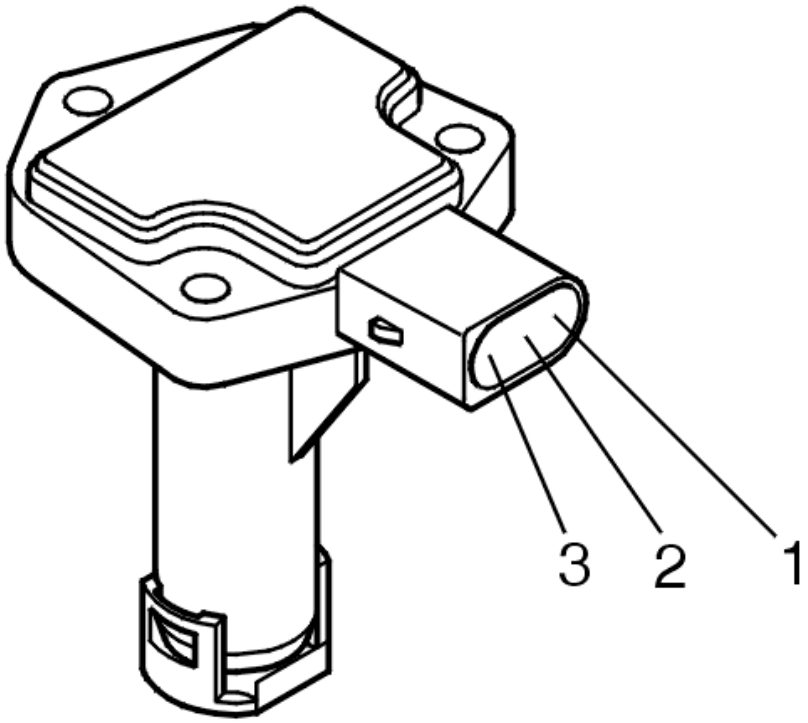

Fig. 314: Identifying Oil Level Sensor
Courtesy of VOLVO CARS CORPORATION

The engine control module (ECM) checks the signal from the oil level sensor. The diagnostic trouble code (DTC) is stored if the engine control module (ECM) registers that the signal from the oil level sensor is outside a reasonable operating range.

The diagnostic trouble code (DTC) is diagnosed when the engine is idling.

Substitute Value

- None.

Possible Source

- Extremely low oil level
- Damaged oil level sensor.

Fault symptom[s]

- Warning lights and chimes/Oil pressure indication/no indication

SIGNAL TOO LOW

CHECKING THE OIL LEVEL AND REPLACING THE COMPONENT

NOTE: If diagnostic trouble codes (DTCs) ECM-540X and ECM-550X are stored at the same time, codes ECM-540X must be remedied first.

- Check that the oil level in the engine is not too low. Ensure that the level is correct.

  HINT: This diagnostic trouble code (DTC) may be stored if the engine oil is significantly mixed with fuel or coolant for example.

  Try a new oil level sensor if no fault is found and the fault is permanent.

  Remedy as necessary.

  Other information:

  - To connect the breakout box / access the control module, see **CONNECTING THE BREAKOUT BOX**
  - For 5 cylinder turbocharged engines 2005-, see **SIGNAL SPECIFICATION** .
  - For 6 cylinder engines 2005-, see **SIGNAL SPECIFICATION** .
  - see **OIL LEVEL SENSOR, REPLACING**
  - see **CHECKING WIRING AND TERMINALS** .

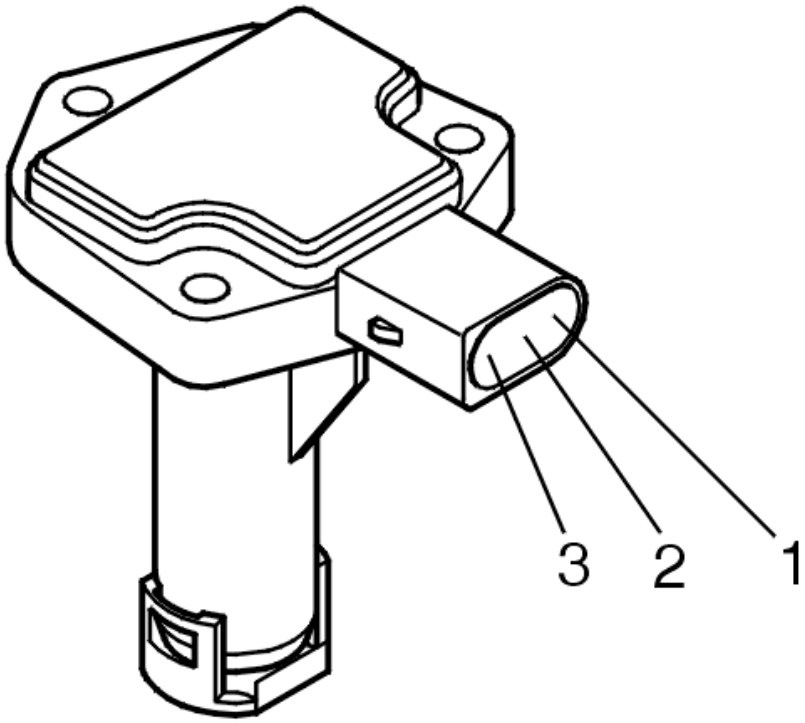

Fig. 315: Identifying Oil Level Sensor
Courtesy of VOLVO CARS CORPORATION

- **Continue**

  Refer to **VERIFICATION**

VERIFICATION

VERIFICATION

HINT: After carrying out the repair, check that the fault has been remedied.

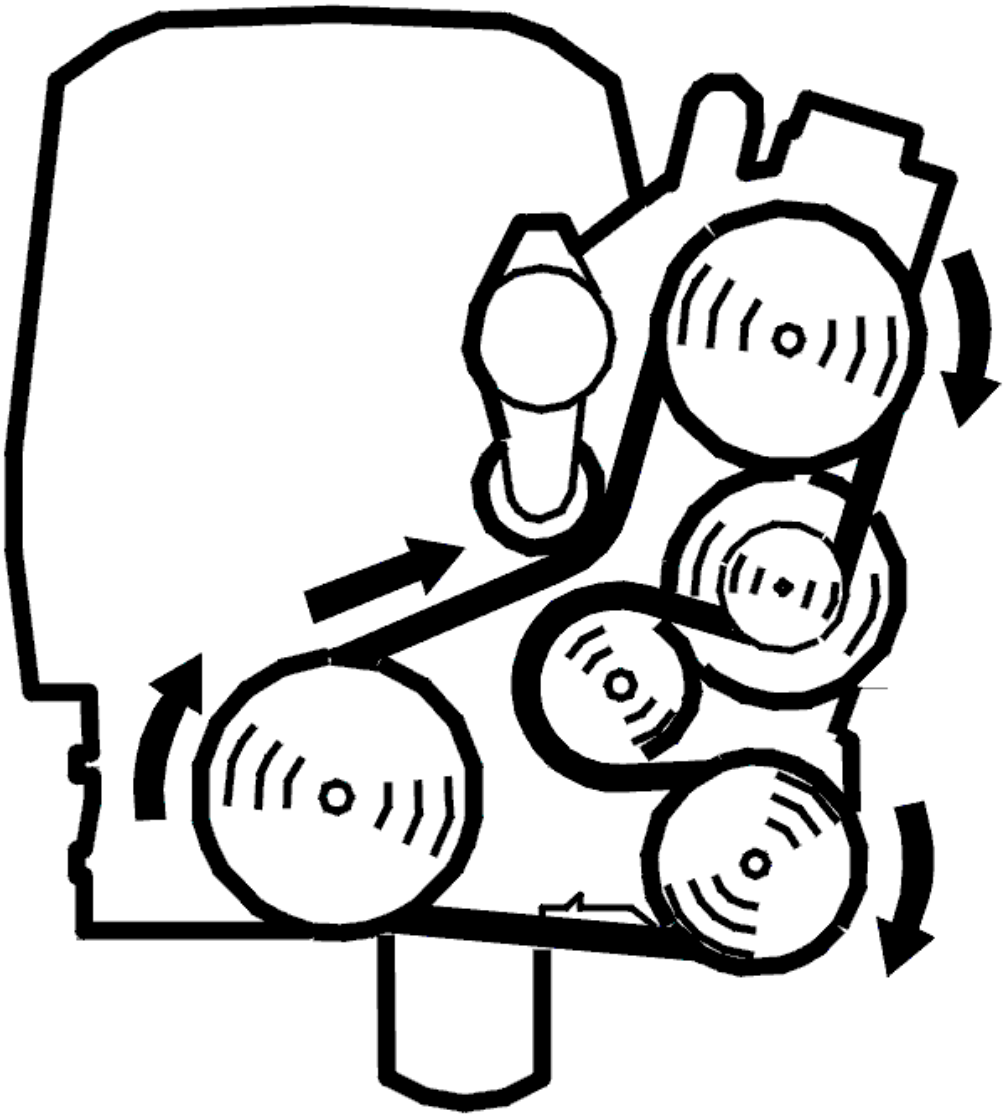

Fig. 316: Belt Routing / Engine Idling - Volvo
Courtesy of VOLVO CARS CORPORATION

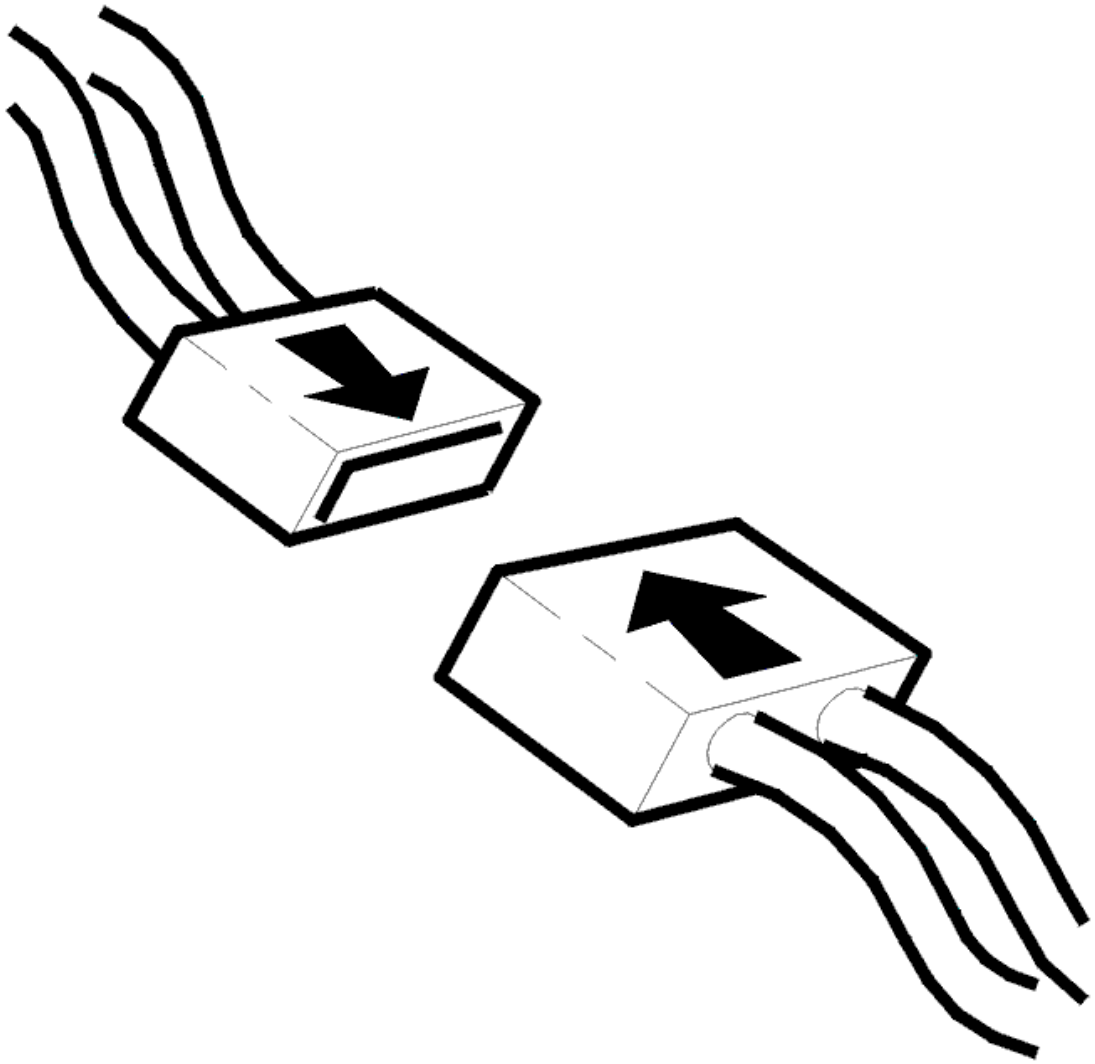

Fig. 317: Connecting Connector
Courtesy of VOLVO CARS CORPORATION

- Ignition off
- Reconnect the connectors, reinstall components etc.
- Start the engine and allow to idle for approximately 1 minute
- Read off the status of the diagnostic trouble code (DTC).

The fault has been remedied if status of the diagnostic trouble code (DTC) is intermittent.

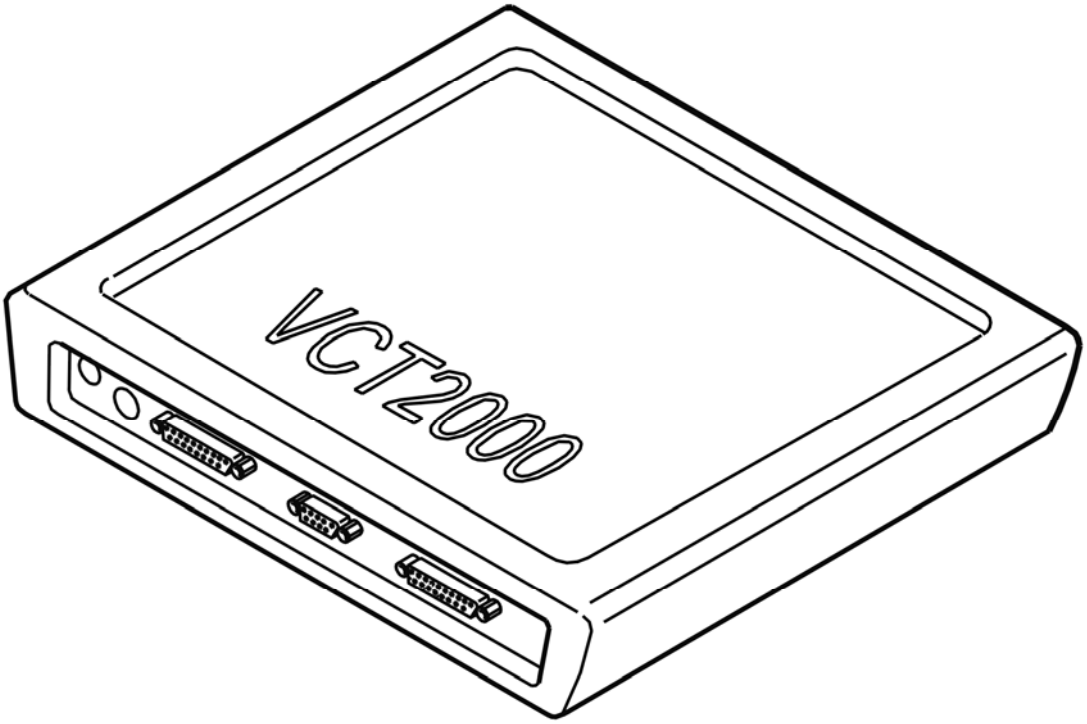

Fig. 318: Identifying VCT2000 Diagnostic Tool Symbol In VIDA
Courtesy of VOLVO CARS CORPORATION

Is the status of the diagnostic trouble code (DTC) intermittent?

- **YES**

  VERIFIED: Troubleshooting has been completed.

- **NO**

  Refer to **INFORMATION**

INFORMATION

FAULT-TRACING INFORMATION

The fault should have been detected and remedied. As this is not the case fault-tracing has failed.

Exit fault-tracing for this diagnostic trouble code (DTC) or make another attempt.

ECM-550D: OIL LEVEL. SIGNAL TOO LOW (B6294T; 2005-2006)

DIAGNOSTIC TROUBLE CODE (DTC) INFORMATION ECM-550D

see **DIAGNOSTIC TROUBLE CODE (DTC) INFORMATION ECM-550D**

SIGNAL TOO LOW

see **SIGNAL TOO LOW**

ECM-6000: AIR CONDITIONING (A/C) RELAY SIGNAL. SIGNAL MISSING. INTERMITTENT FAULT (B5254T2; B6294T; 2003-2004)

DIAGNOSTIC TROUBLE CODE (DTC) INFORMATION

Condition

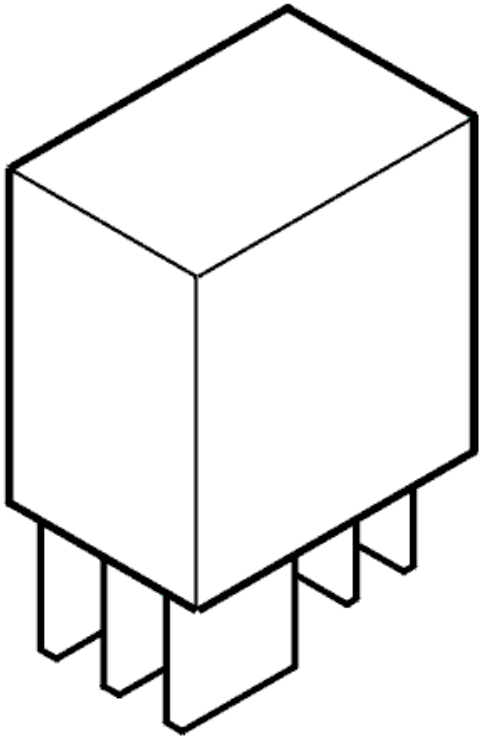

Fig. 319: Identifying A/C Relay
Courtesy of VOLVO CARS CORPORATION

- Diagnostic trouble code (DTC) ECM-6000 is stored if the signal from the A/C relay is too high, too low or missing.

Substitute Value

- None

Possible Source

Signal too high:

- short-circuit to supply voltage in the signal cable
- defective air conditioning (A/C) relay.

Signal too low:

- short-circuit to ground in the signal cable

Signal missing:

- open-circuit in signal cable
- open-circuit in air conditioning (A/C) relay supply
- defective air conditioning (A/C) relay.
- contact resistance in terminals

Fault symptom[s]

- Air conditioning (A/C) system does not operate

SIGNAL MISSING. INTERMITTENT FAULT

CHECKING WIRING AND CONNECTORS

Check the connector for the air conditioning (A/C) relay. Check for contact resistance and oxidation. Check for loose connections.

Check the signal cable between control module terminal #B44 and air conditioning (A/C) relay terminal #4. Check the power supply between system relay terminal #3 and A/C relay terminal #2. Check for an intermittent open-circuit.

Other information

- To connect the breakout box / access the control module, see **CONNECTING THE BREAKOUT BOX**
- For 5 cylinder turbocharged engines -2004, see **SIGNAL DESCRIPTION**
- For 6 cylinder engines 2005-, see **SIGNAL SPECIFICATION** .
- see **CHECKING WIRING AND TERMINALS** .

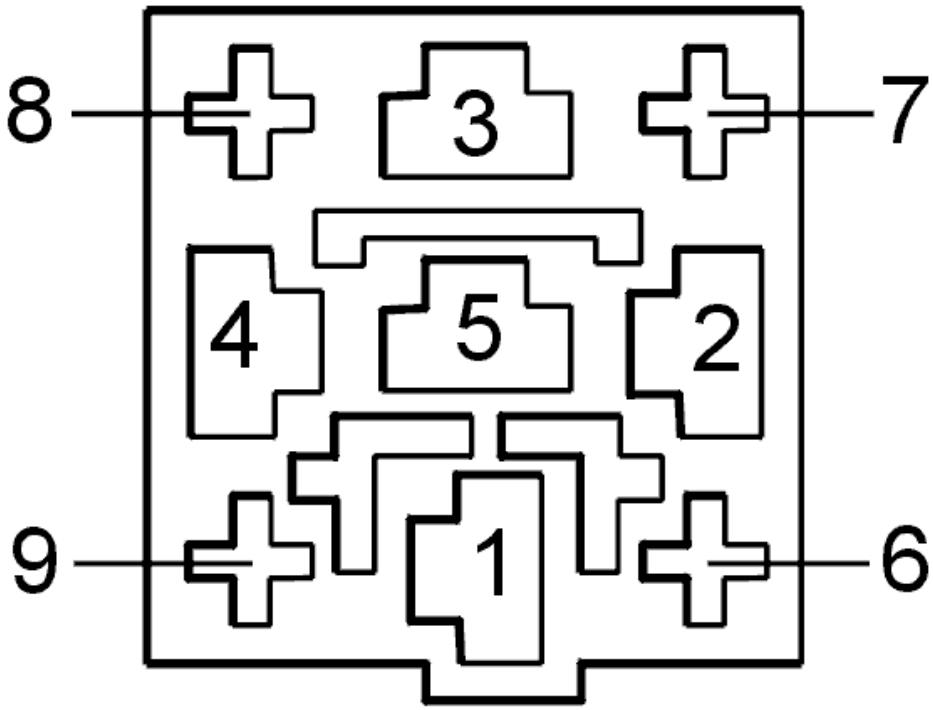

Fig. 320: Identifying Connector Terminals
Courtesy of VOLVO CARS CORPORATION

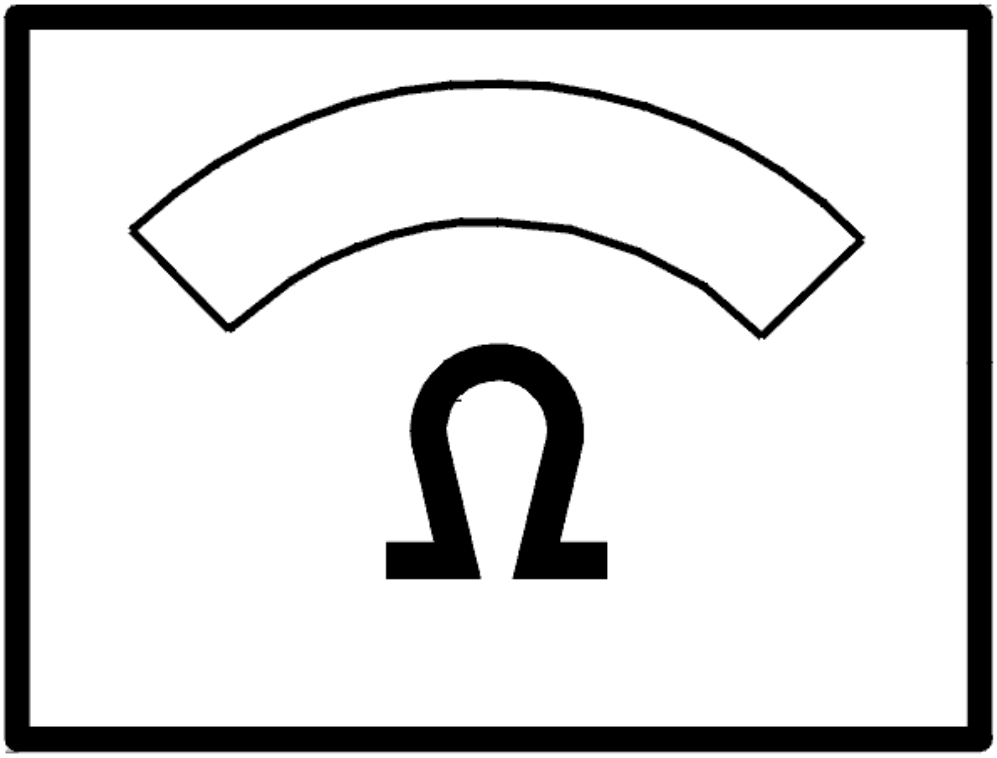

Fig. 321: Identifying Ohm Meter
Courtesy of VOLVO CARS CORPORATION

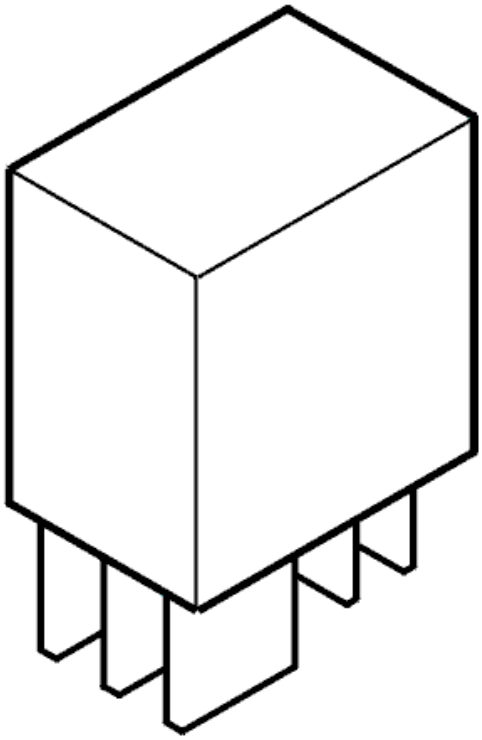

Fig. 322: Identifying A/C Relay
Courtesy of VOLVO CARS CORPORATION

- **Continue**

  Refer to **INFORMATION**

INFORMATION

FAULT-TRACING INFORMATION

If the fault is intermittent, do not verify fault-tracing if the fault does not recur.

It is possible to view the information again, or leave fault-tracing for this diagnostic trouble code (DTC).

ECM-6000: AIR CONDITIONING (A/C) RELAY SIGNAL. SIGNAL MISSING. PERMANENT FAULT (B5254T2; B6294T; 2003-2004)

DIAGNOSTIC TROUBLE CODE (DTC) INFORMATION

see **DIAGNOSTIC TROUBLE CODE (DTC) INFORMATION**

SIGNAL MISSING. PERMANENT FAULT

CHECKING THE CONNECTOR

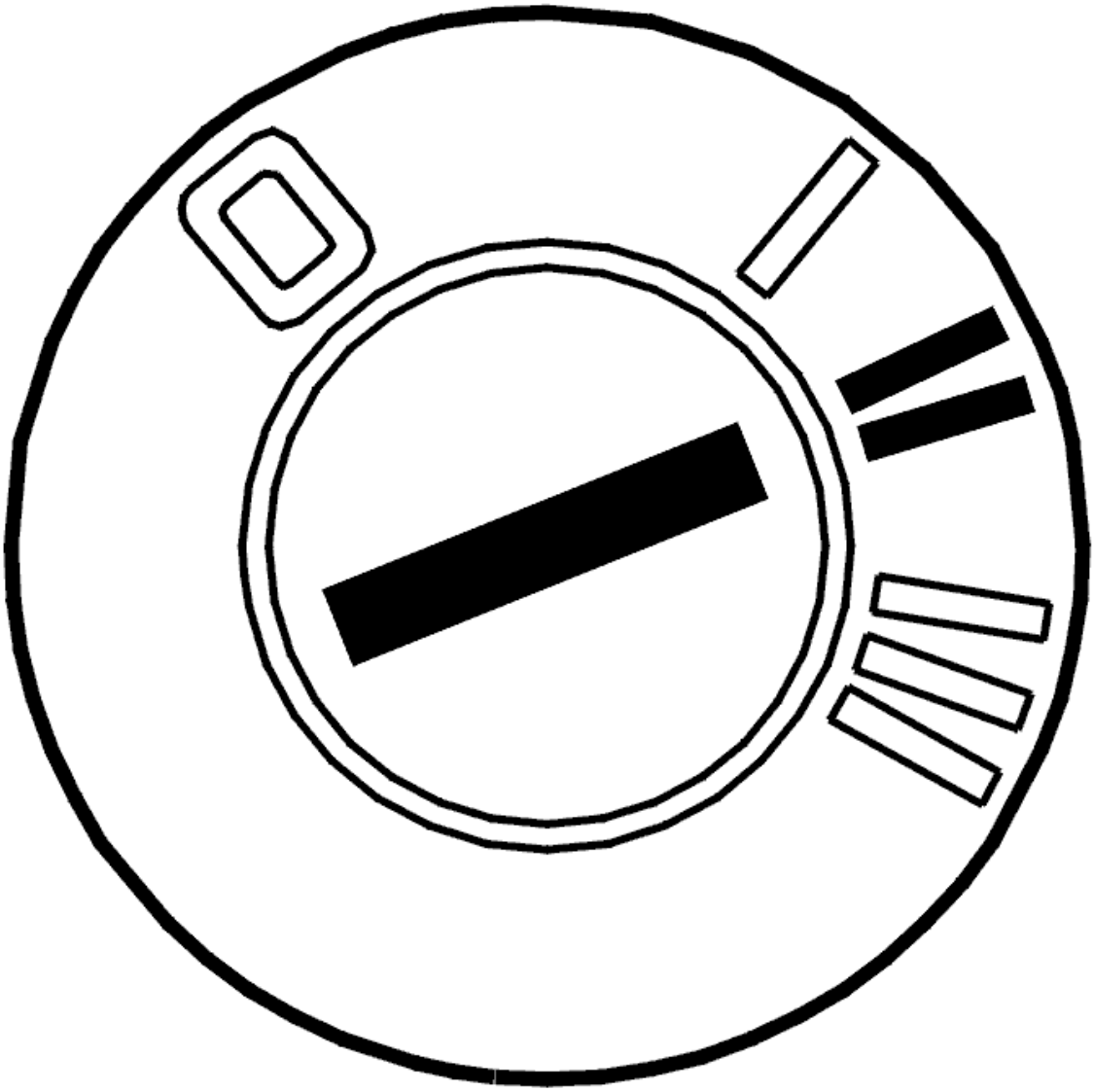

Fig. 323: Identifying Ignition ON
Courtesy of VOLVO CARS CORPORATION

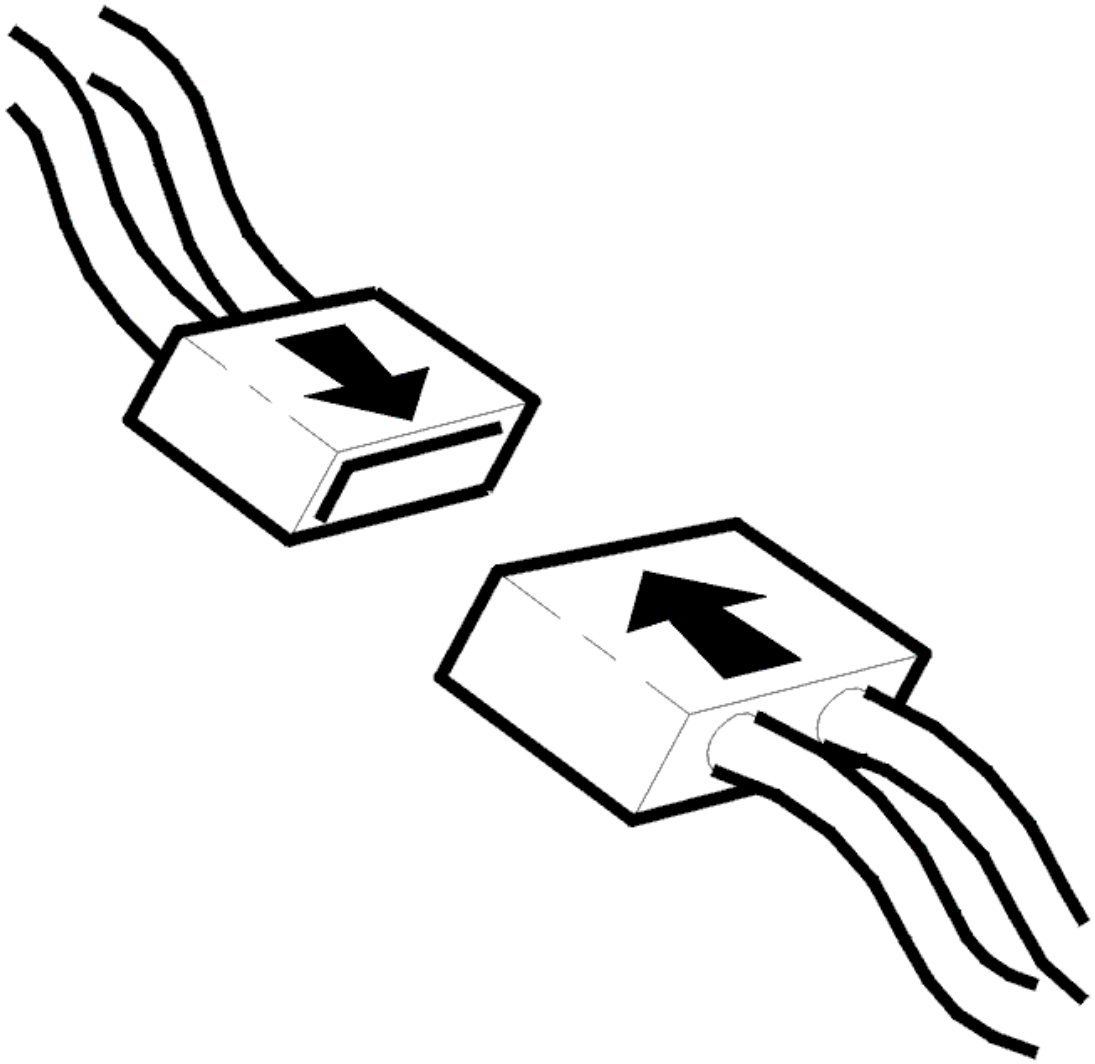

Fig. 324: Connecting Connector
Courtesy of VOLVO CARS CORPORATION

- Ignition off
- Check the air conditioning (A/C) relay connector. Check for contact resistance and oxidation
- Reinstall the components, reconnect the connectors etc.
- Ignition on
- Activate the air conditioning (A/C) relay.

  A " clicking sound" should be heard when the air conditioning (A/C) relay is activated.

  If the air conditioning (A/C) relay is now OK, the cause of the fault was loose connections in the connector.

  Other information

- For 5 cylinder turbocharged engines -2004, see **SIGNAL DESCRIPTION**
- For 6 cylinder engines -2004, see **SIGNAL SPECIFICATION**
- see **CHECKING WIRING AND TERMINALS** .

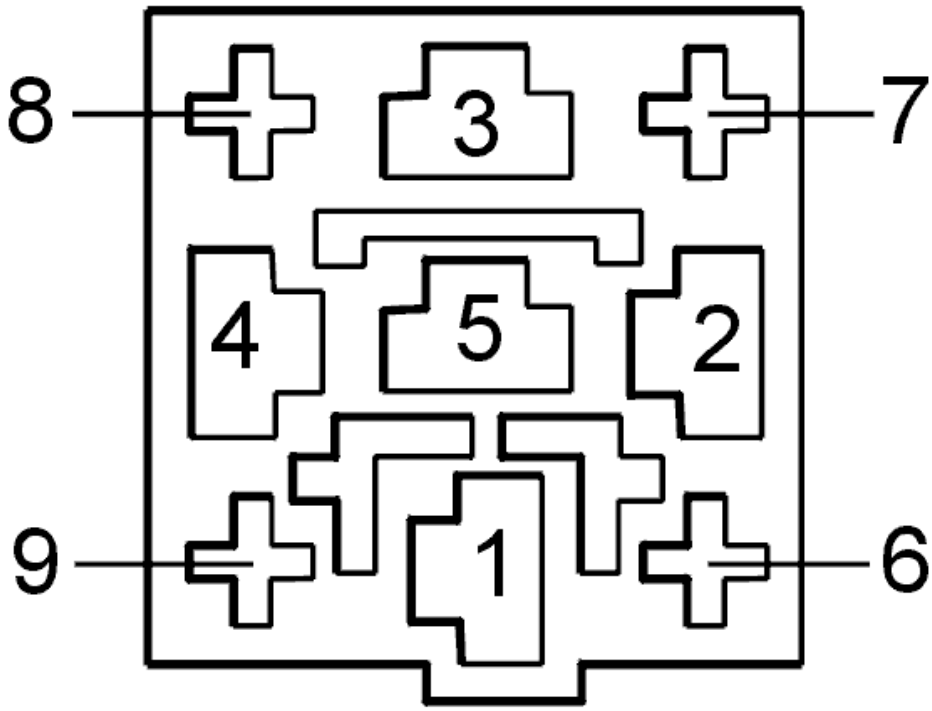

Fig. 325: Identifying Connector Terminals
Courtesy of VOLVO CARS CORPORATION

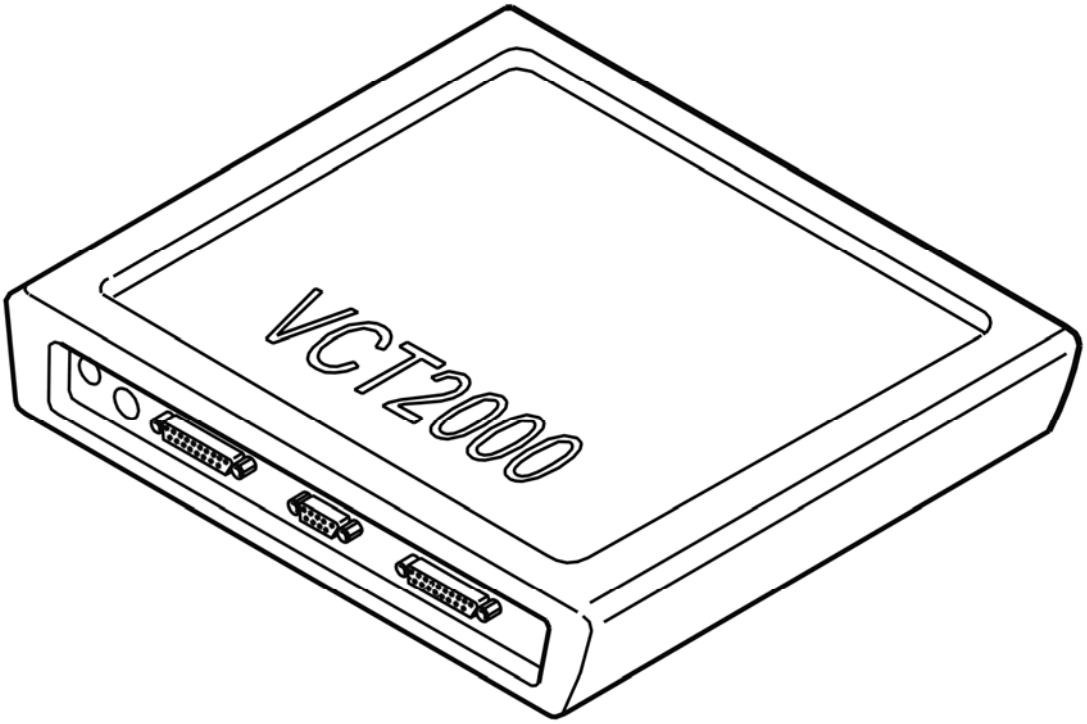

Fig. 326: Identifying VCT2000 Diagnostic Tool Symbol In VIDA
Courtesy of VOLVO CARS CORPORATION

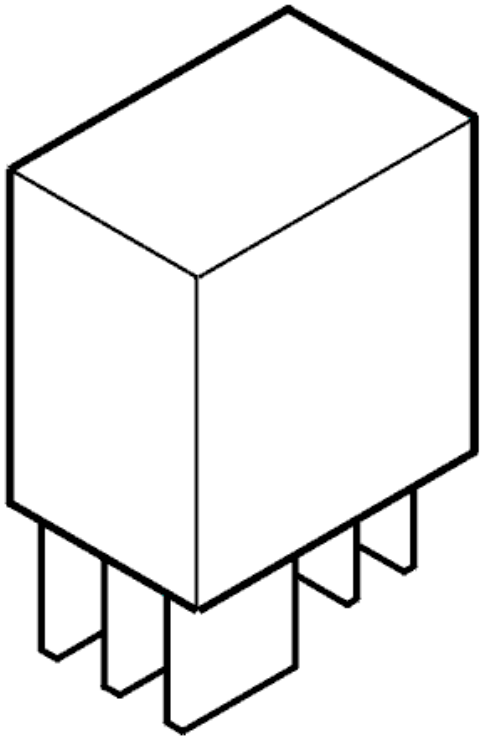

Fig. 327: Identifying A/C Relay
Courtesy of VOLVO CARS CORPORATION

Does the air conditioning (A/C) relay function?

- **YES**

  OKAY: Troubleshooting has been completed.

- **NO**

  Refer to **CHECKING COMPONENTS AND WIRING**

CHECKING COMPONENTS AND WIRING

Check the resistance of the air conditioning (A/C) relay. At +20°C the resistance must be approximately 96 ohms between terminals #2 and #4. For the resistance values, see **COMPONENT SPECIFICATIONS** .

Check the signal cable between control module terminal #B44 and air conditioning (A/C) relay terminal #4. Check the power supply between system relay terminal #3 and A/C relay terminal #2. Check for an open-circuit. Check for a short-circuit to ground.

Remedy as necessary.

Other information

- To connect the breakout box / access the control module, see **CONNECTING THE BREAKOUT BOX**
- For 5 cylinder turbocharged engines -2004, see **SIGNAL DESCRIPTION**
- For 6 cylinder engines -2004, see **SIGNAL SPECIFICATION**
- see **CHECKING WIRING AND TERMINALS** .

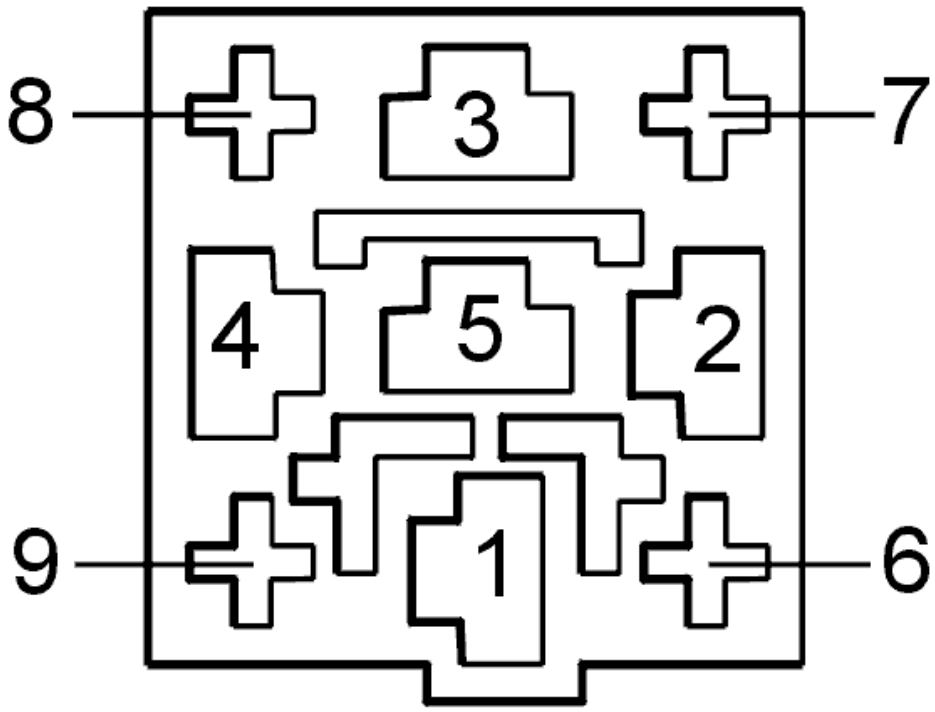

Fig. 328: Identifying Connector Terminals
Courtesy of VOLVO CARS CORPORATION

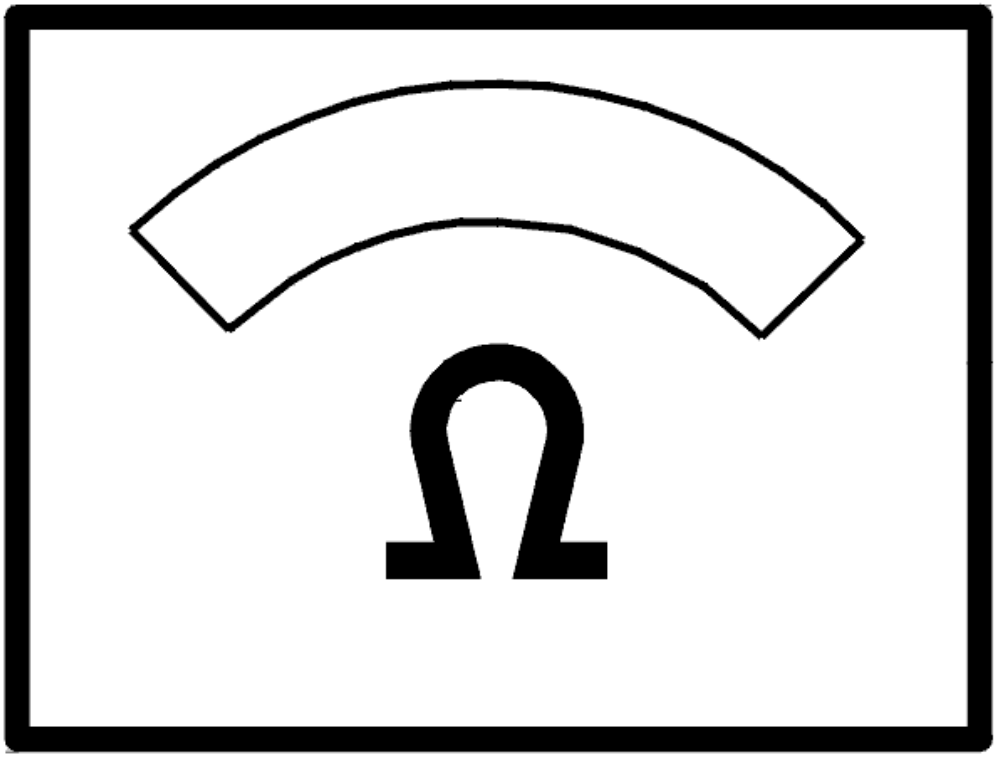

Fig. 329: Identifying Ohm Meter
Courtesy of VOLVO CARS CORPORATION

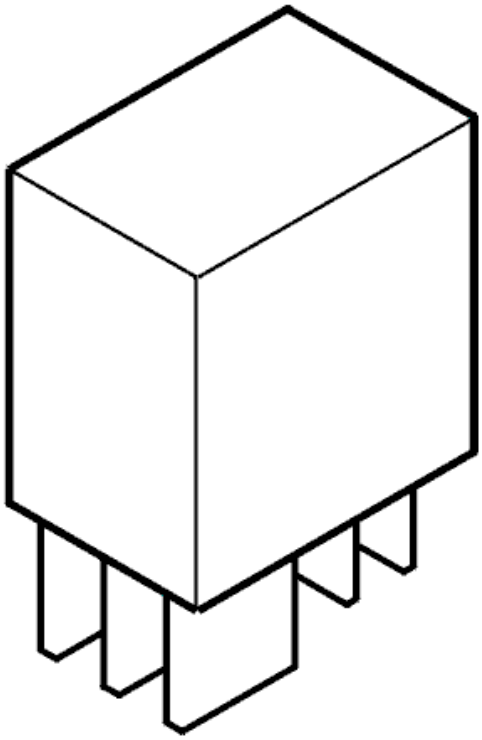

Fig. 330: Identifying A/C Relay
Courtesy of VOLVO CARS CORPORATION

- **Continue**

  Refer to **VERIFICATION**

VERIFICATION

VERIFICATION

HINT: After carrying out the repair, check that the fault has been remedied.

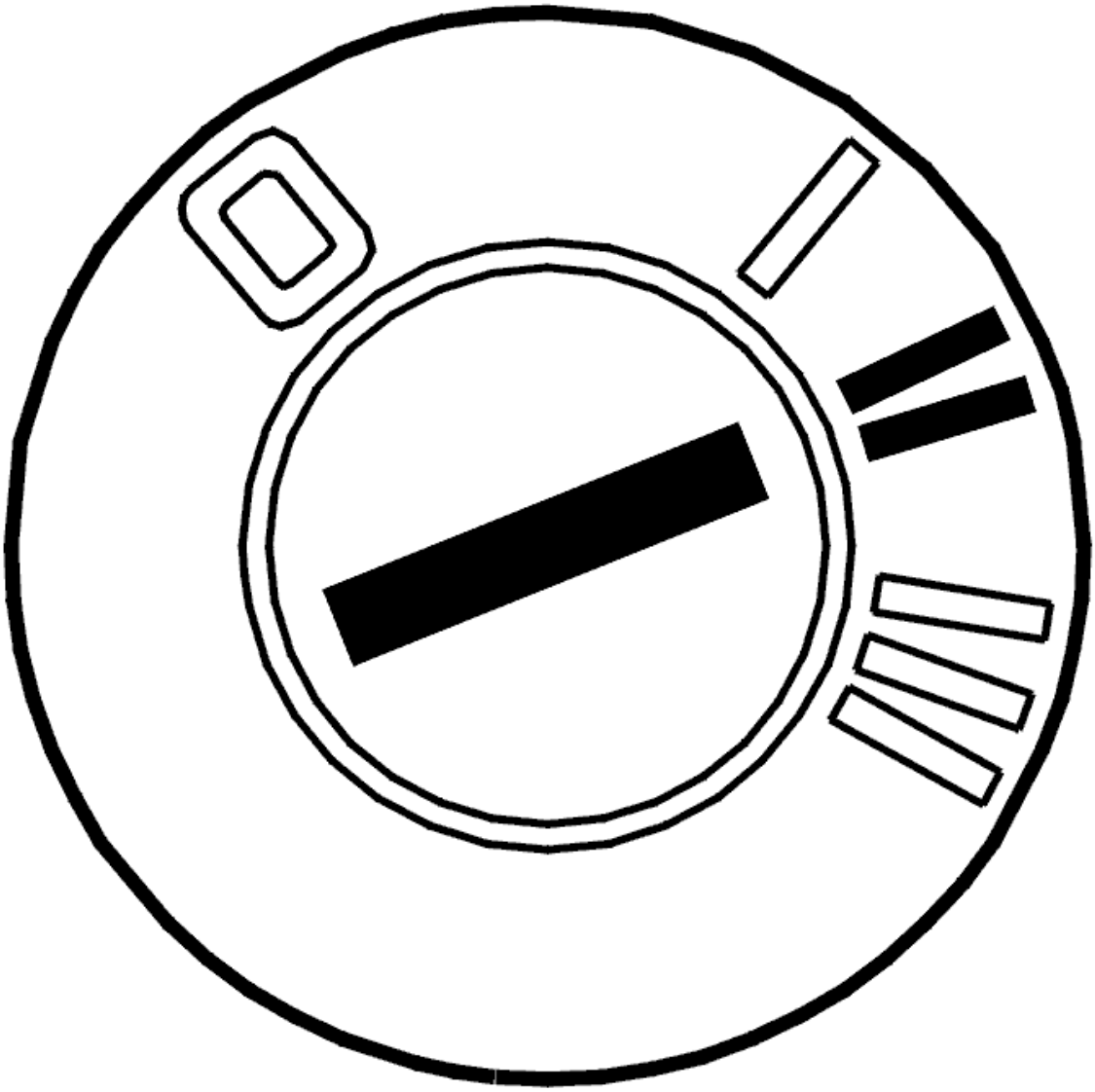

Fig. 331: Identifying Ignition ON
Courtesy of VOLVO CARS CORPORATION

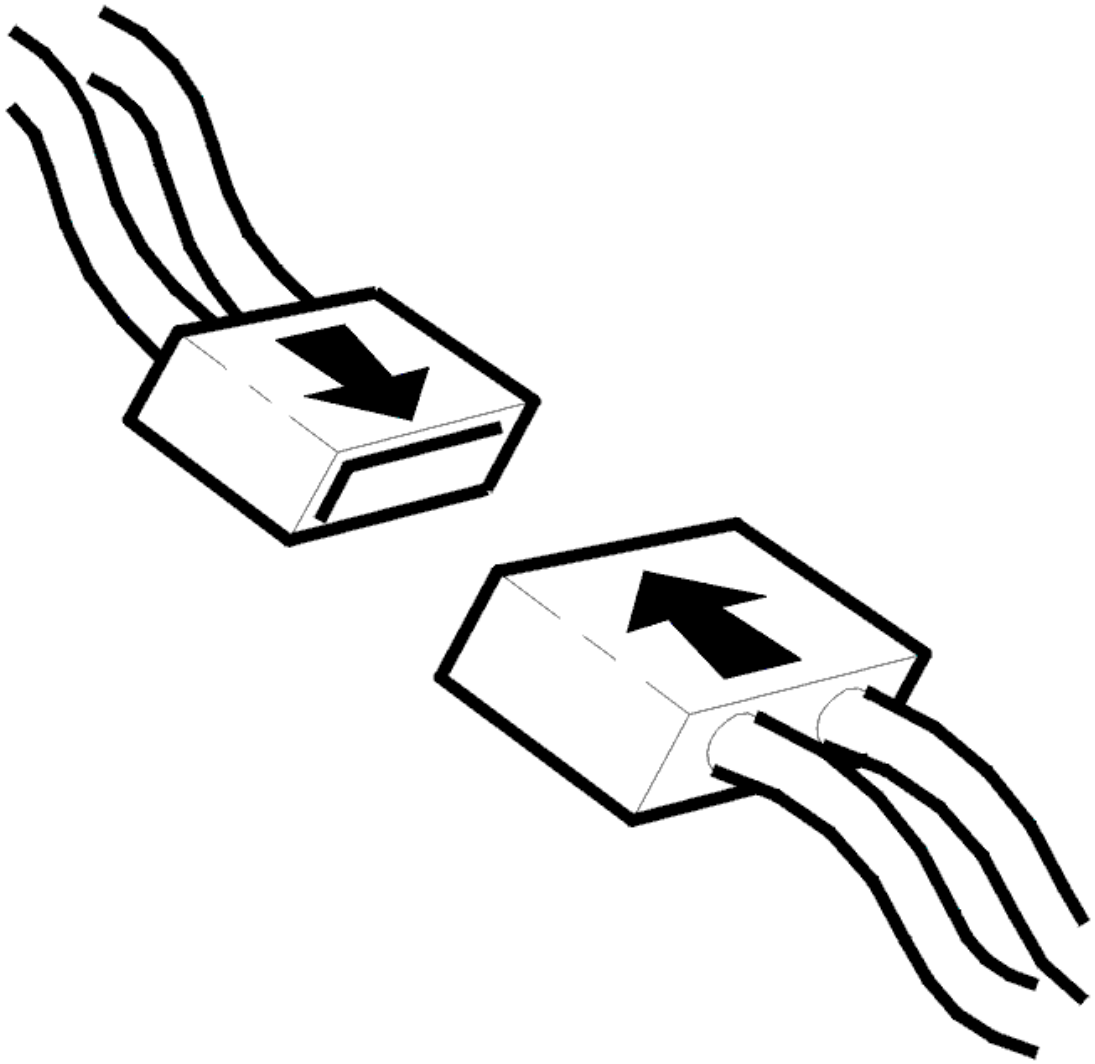

Fig. 332: Connecting Connector
Courtesy of VOLVO CARS CORPORATION

- Ignition off.
- Reconnect connectors, reinstall components
- Ignition on.
- Activate air conditioning (A/C) relay.

  An "clicking sound" should be heard from the air conditioning (A/C) relay when it is activated.

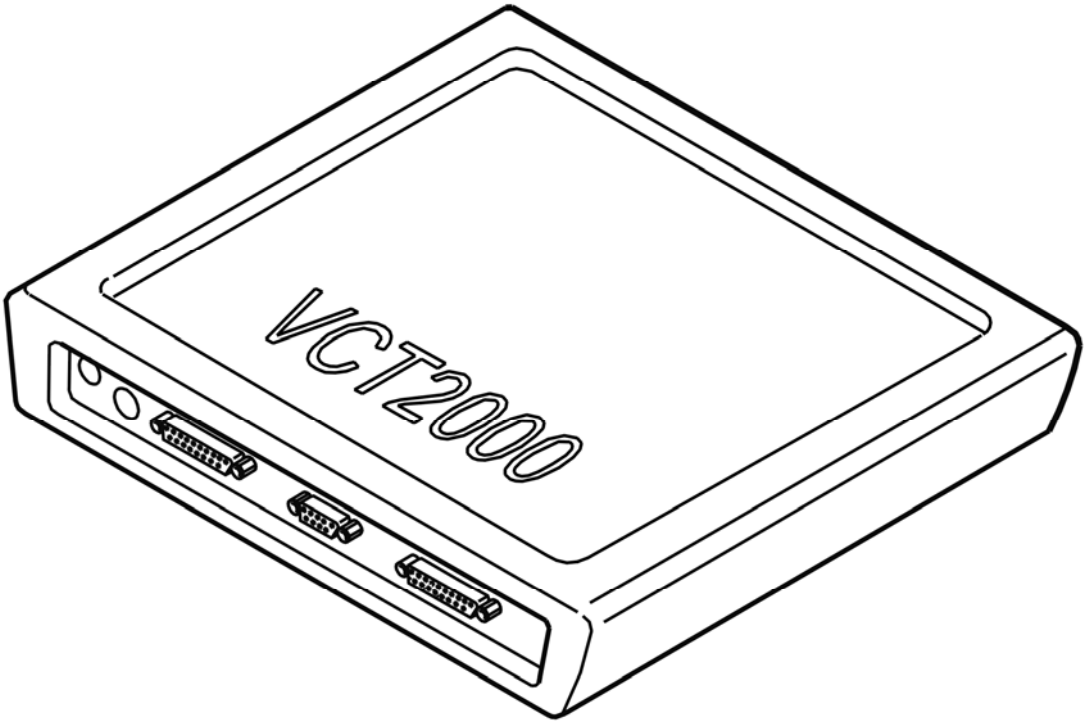

Fig. 333: Identifying VCT2000 Diagnostic Tool Symbol In VIDA
Courtesy of VOLVO CARS CORPORATION

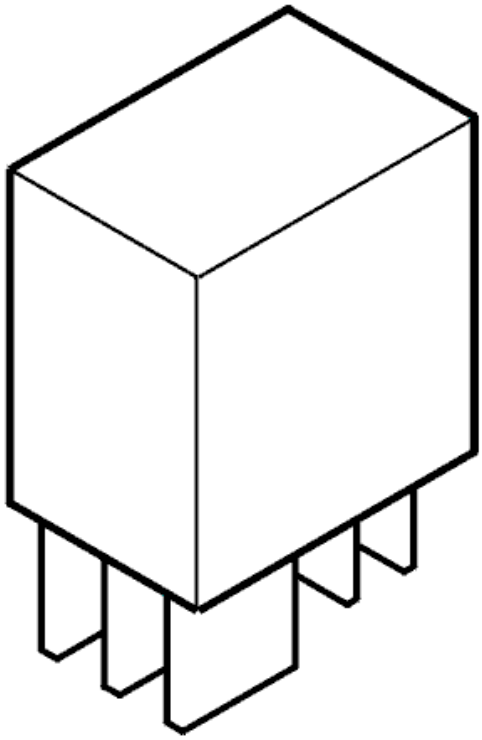

Fig. 334: Identifying A/C Relay
Courtesy of VOLVO CARS CORPORATION

Does the air conditioning (A/C) relay function?

- **YES**

  VERIFIED: Troubleshooting has been completed.

- **NO**

  Refer to **INFORMATION**

INFORMATION

FAULT-TRACING INFORMATION

The fault should have been detected and remedied. As this is not the case fault-tracing has failed.

Exit fault-tracing for this diagnostic trouble code (DTC) or make another attempt.

ECM-6000: AIR CONDITIONING (A/C) RELAY SIGNAL. SIGNAL TOO HIGH. INTERMITTENT FAULT (B5254T2; B6294T; 2003-2004)

DIAGNOSTIC TROUBLE CODE (DTC) INFORMATION

see **DIAGNOSTIC TROUBLE CODE (DTC) INFORMATION**

SIGNAL TOO HIGH. INTERMITTENT FAULT

CHECKING THE WIRING

Check the signal cable between control module terminal #B44 and air conditioning (A/C) relay terminal #4. Check for an intermittent short-circuit to supply voltage.

Other information

- To connect the breakout box / access the control module, see **CONNECTING THE BREAKOUT BOX**
- For 5 cylinder turbocharged engines -2004, see **SIGNAL DESCRIPTION**
- For 6 cylinder engines -2004, see **SIGNAL SPECIFICATION**
- see **CHECKING WIRING AND TERMINALS** .

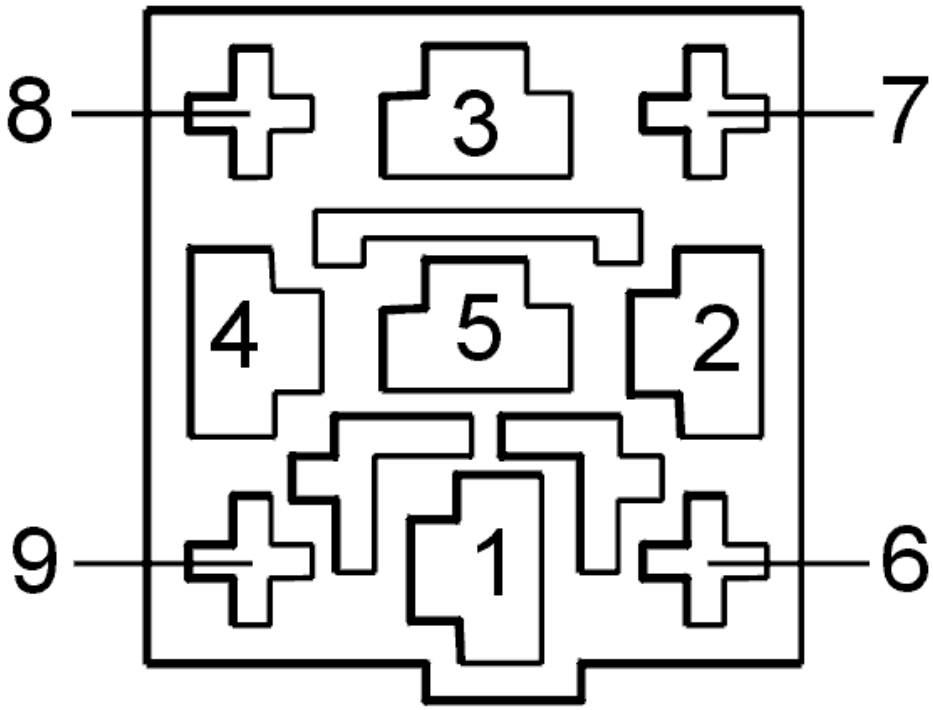

Fig. 335: Identifying Connector Terminals
Courtesy of VOLVO CARS CORPORATION

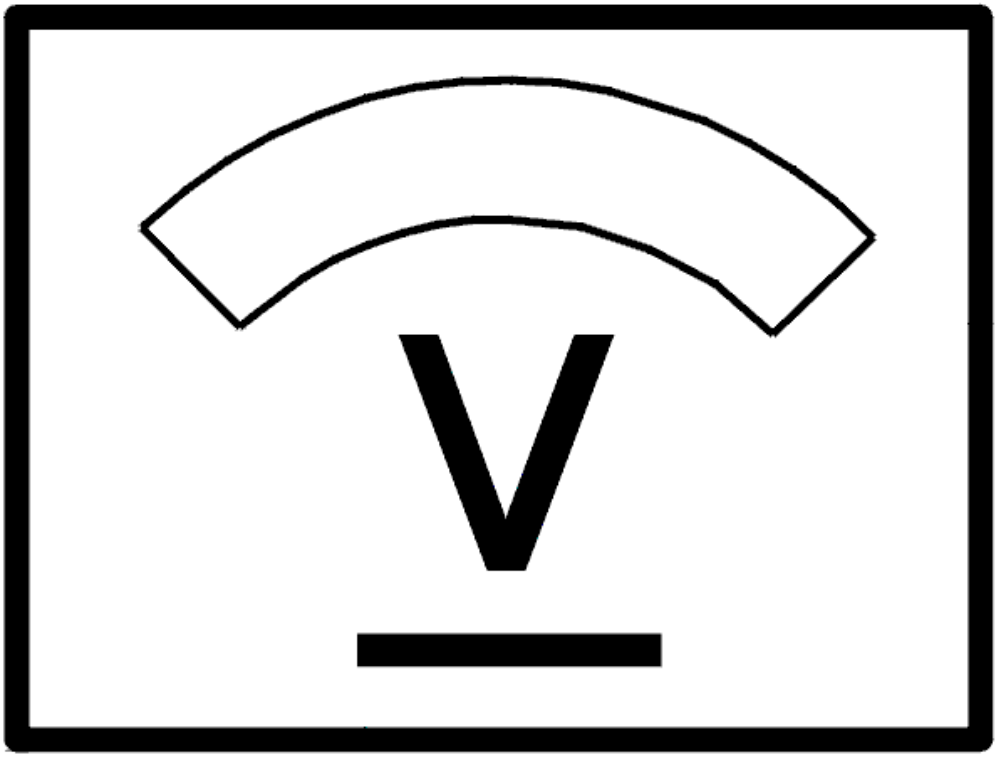

Fig. 336: Identifying Voltage Display
Courtesy of VOLVO CARS CORPORATION

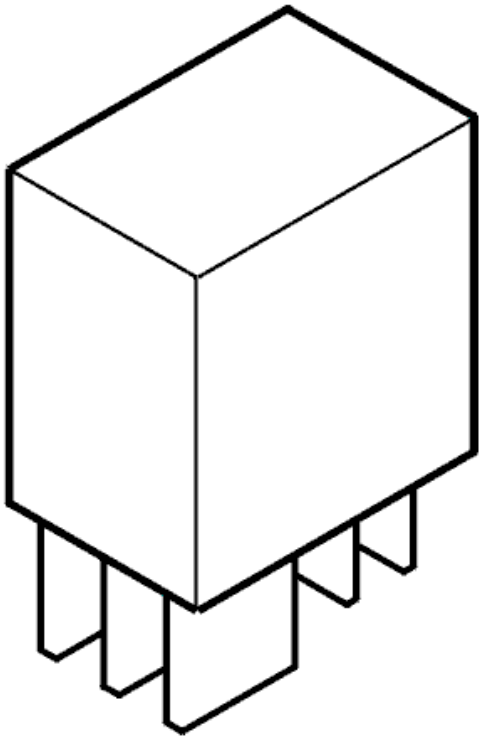

Fig. 337: Identifying A/C Relay
Courtesy of VOLVO CARS CORPORATION

- **Continue**

  Refer to **INFORMATION**

INFORMATION

FAULT-TRACING INFORMATION

If the fault is intermittent, do not verify fault-tracing if the fault does not recur.

It is possible to view the information again, or leave fault-tracing for this diagnostic trouble code (DTC).

ECM-6000: AIR CONDITIONING (A/C) RELAY SIGNAL. SIGNAL TOO HIGH. PERMANENT FAULT (B5254T2; B6294T; 2003-2004)

DIAGNOSTIC TROUBLE CODE (DTC) INFORMATION

see **DIAGNOSTIC TROUBLE CODE (DTC) INFORMATION**

SIGNAL TOO HIGH. PERMANENT FAULT

CHECKING COMPONENTS AND WIRING

Check the signal cable between control module terminal #B44 and air conditioning (A/C) relay terminal #4. Check for a short-circuit to supply voltage.

HINT: Use a test lamp with at least a 3 W bulb to determine whether the cable is short-circuited to supply voltage.

Remedy as necessary.

Other information

- To connect the breakout box / access the control module, see **CONNECTING THE BREAKOUT BOX**
- For 5 cylinder turbocharged engines -2004, see **SIGNAL DESCRIPTION**
- For 6 cylinder engines -2004, see **SIGNAL SPECIFICATION**
- see **CHECKING WIRING AND TERMINALS** .

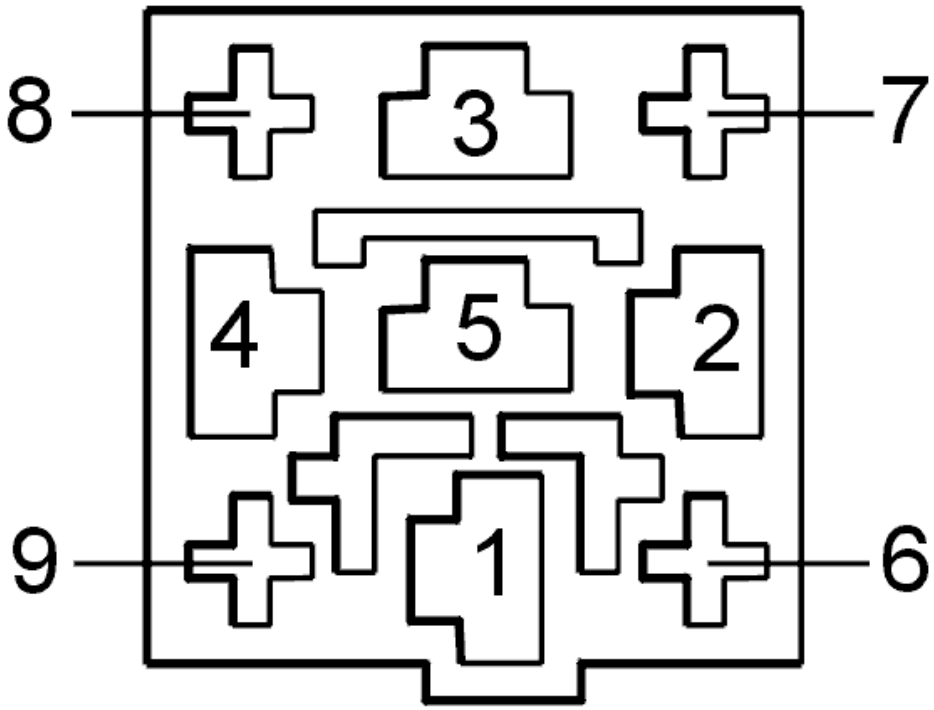

Fig. 338: Identifying Connector Terminals
Courtesy of VOLVO CARS CORPORATION

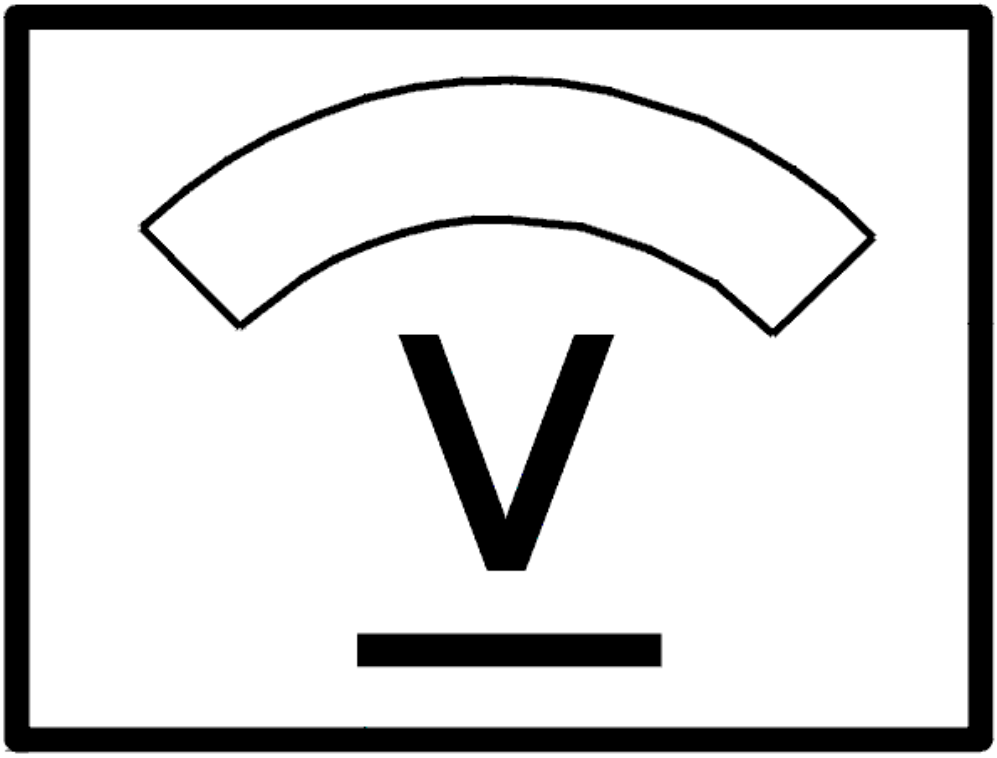

Fig. 339: Identifying Voltage Display
Courtesy of VOLVO CARS CORPORATION

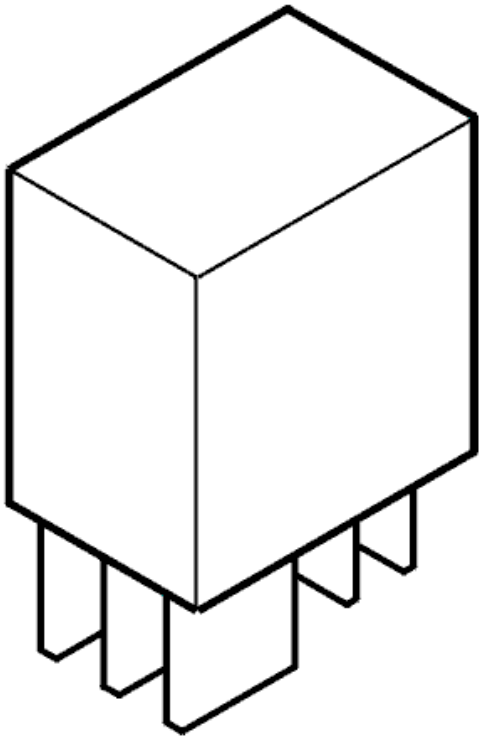

Fig. 340: Identifying A/C Relay
Courtesy of VOLVO CARS CORPORATION

- **Continue**

  Refer to **VERIFICATION**

VERIFICATION

VERIFICATION

HINT: After carrying out the repair, check that the fault has been remedied.

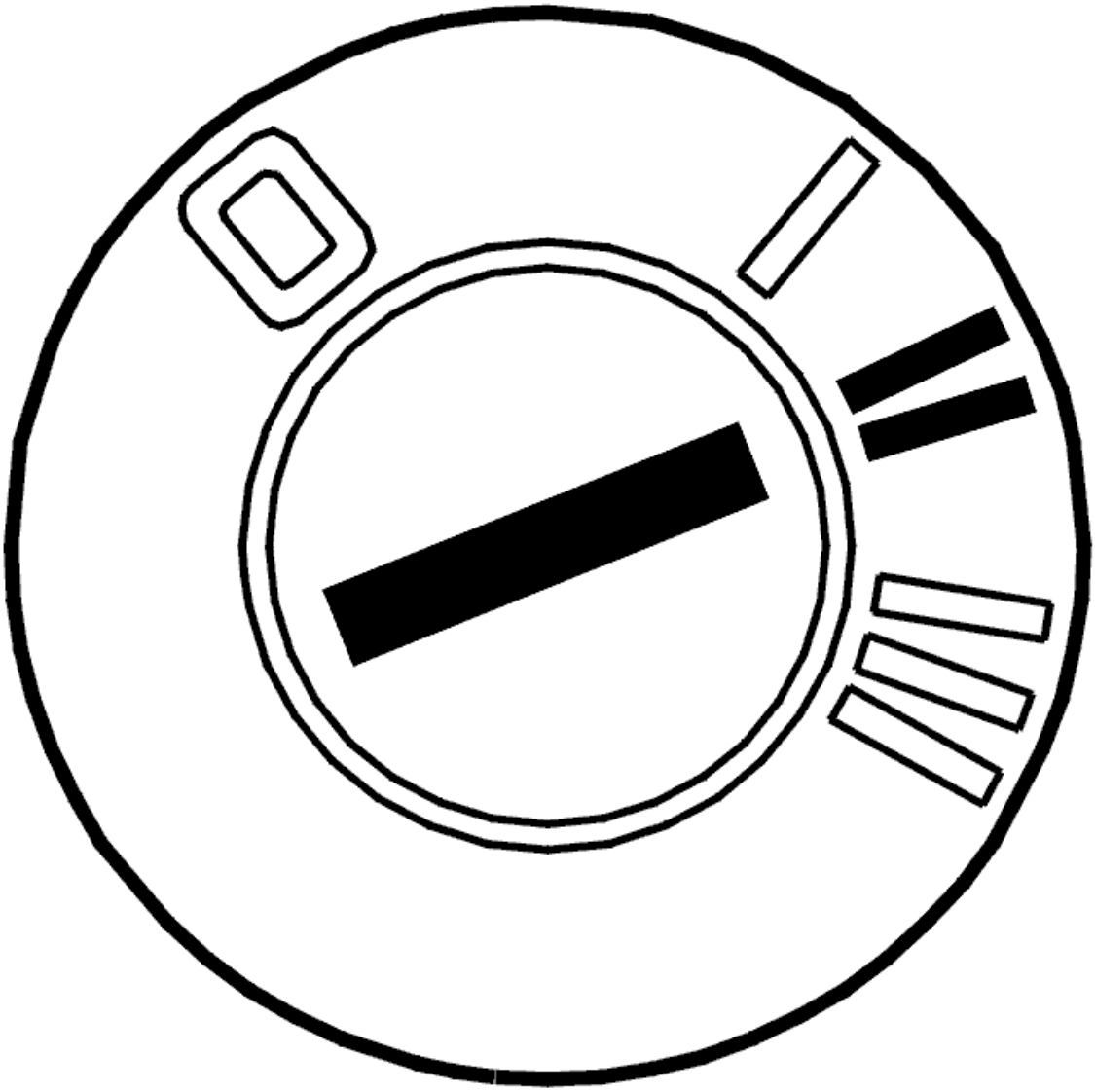

Fig. 341: Identifying Ignition ON
Courtesy of VOLVO CARS CORPORATION

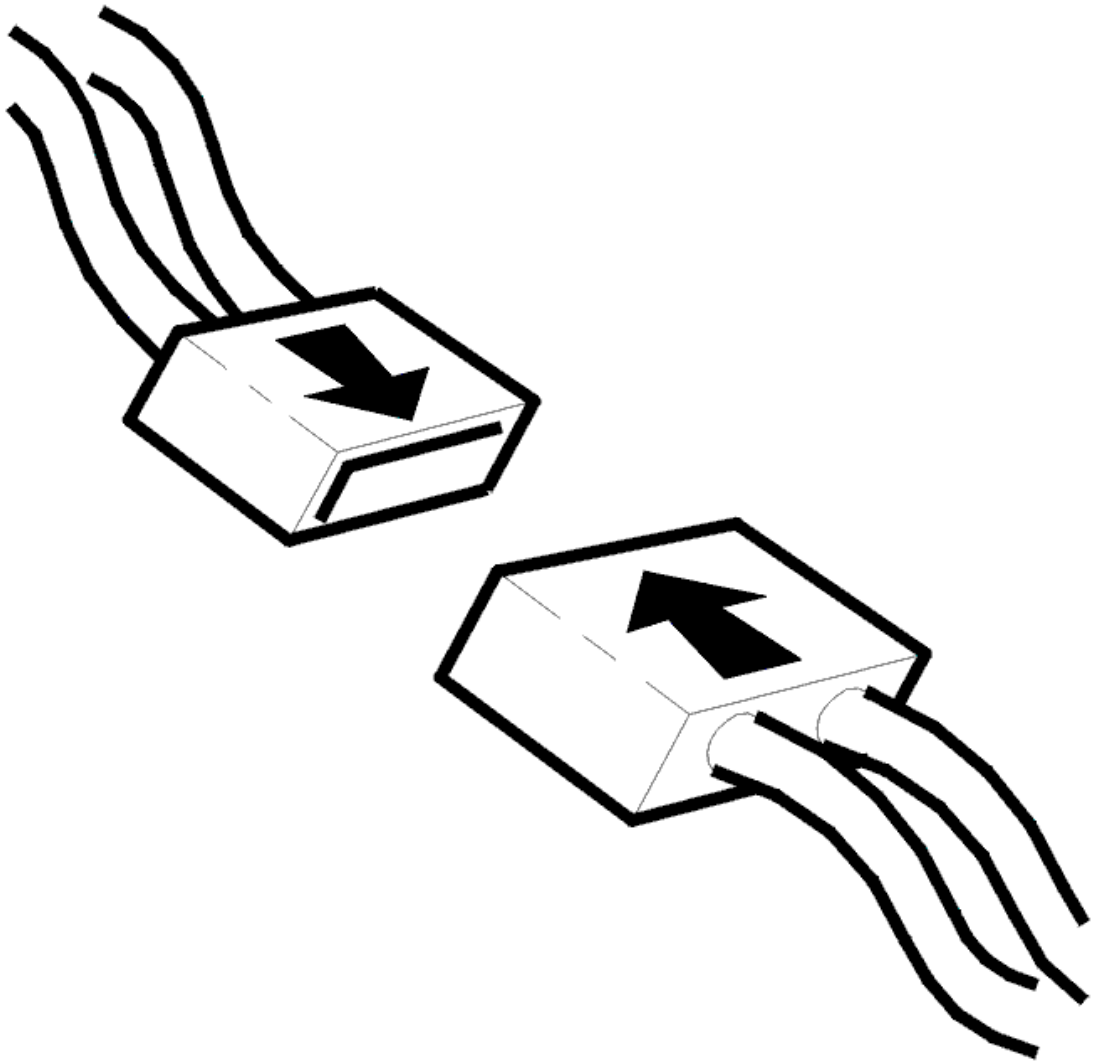

Fig. 342: Connecting Connector
Courtesy of VOLVO CARS CORPORATION

- Ignition off.
- Reconnect connectors, reinstall components
- Ignition on.
- Activate air conditioning (A/C) relay.

  An "clicking sound" should be heard from the air conditioning (A/C) relay when it is activated.

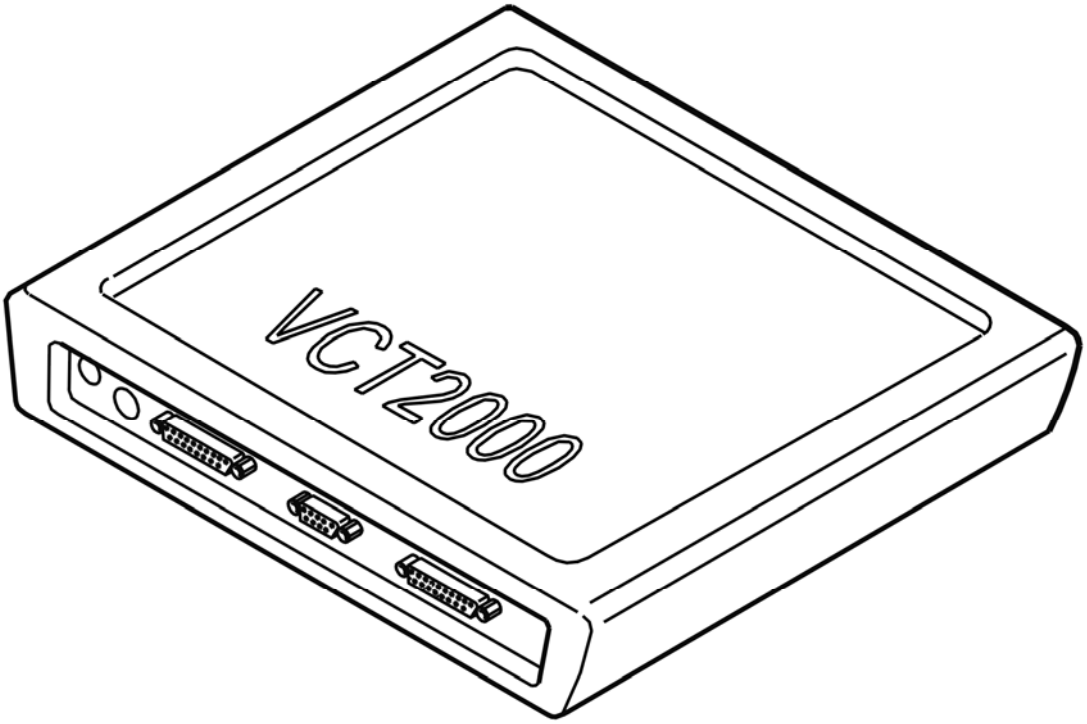

Fig. 343: Identifying VCT2000 Diagnostic Tool Symbol In VIDA
Courtesy of VOLVO CARS CORPORATION

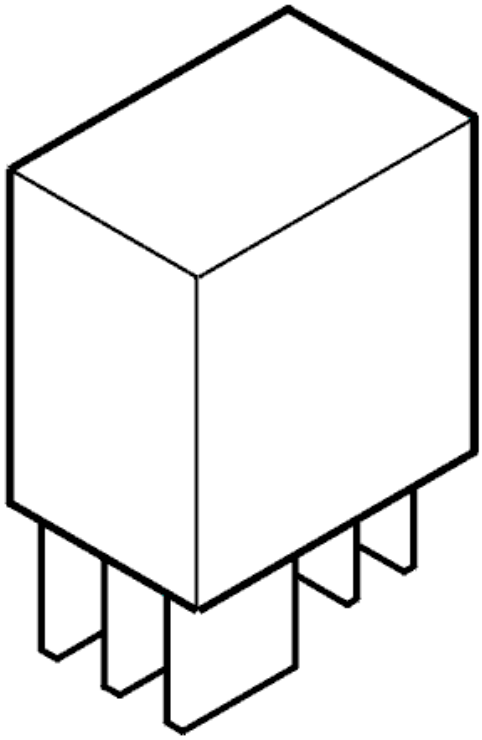

Fig. 344: Identifying A/C Relay
Courtesy of VOLVO CARS CORPORATION

Does the air conditioning (A/C) relay function?

- **YES**

  VERIFIED: Troubleshooting has been completed.

- **NO**

  Refer to **INFORMATION**

INFORMATION

FAULT-TRACING INFORMATION

The fault should have been detected and remedied. As this is not the case fault-tracing has failed.

Exit fault-tracing for this diagnostic trouble code (DTC) or make another attempt.

ECM-6000: AIR CONDITIONING (A/C) RELAY SIGNAL. SIGNAL TOO LOW. INTERMITTENT FAULT (B5254T2; B6294T; 2003-2004)

DIAGNOSTIC TROUBLE CODE (DTC) INFORMATION

see **DIAGNOSTIC TROUBLE CODE (DTC) INFORMATION**

SIGNAL TOO LOW. INTERMITTENT FAULT

CHECKING THE WIRING

Check the signal cable between control module terminal #B44 and air conditioning (A/C) relay terminal #4. Check for an intermittent short-circuit to ground.

Other information

- To connect the breakout box / access the control module, see **CONNECTING THE BREAKOUT BOX**
- For 5 cylinder turbocharged engines -2004, see **SIGNAL DESCRIPTION**
- For 5 cylinder turbocharged engines 2005-, see **SIGNAL SPECIFICATION** .
- For 6 cylinder engines -2004, see **SIGNAL SPECIFICATION**
- For 6 cylinder engines 2005-, see **SIGNAL SPECIFICATION** .
- see **CHECKING WIRING AND TERMINALS** .

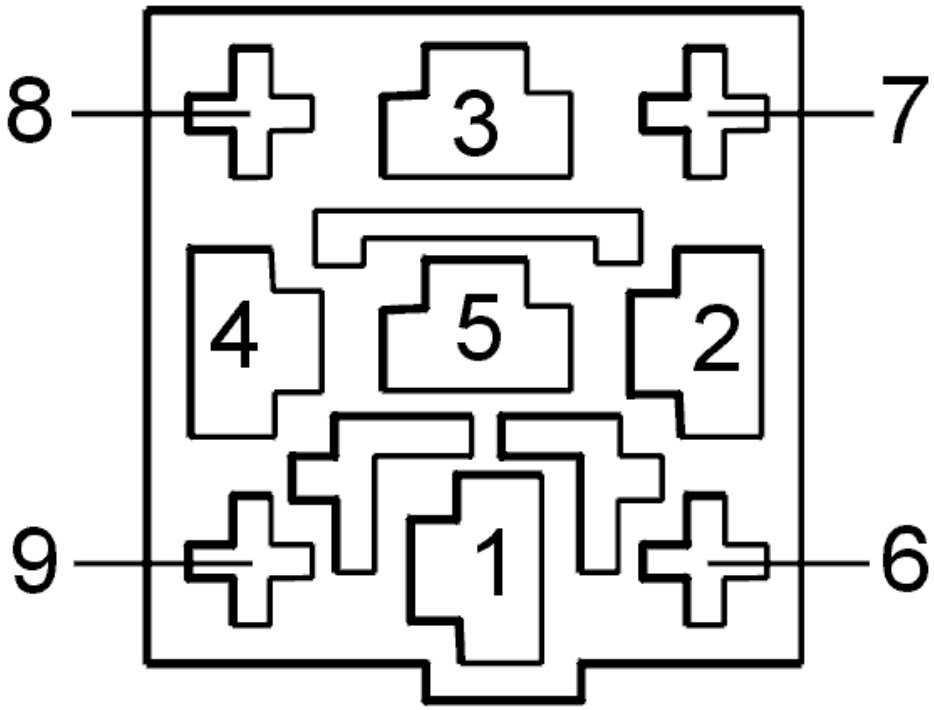

Fig. 1: Identifying Connector Terminals
Courtesy of VOLVO CARS CORPORATION

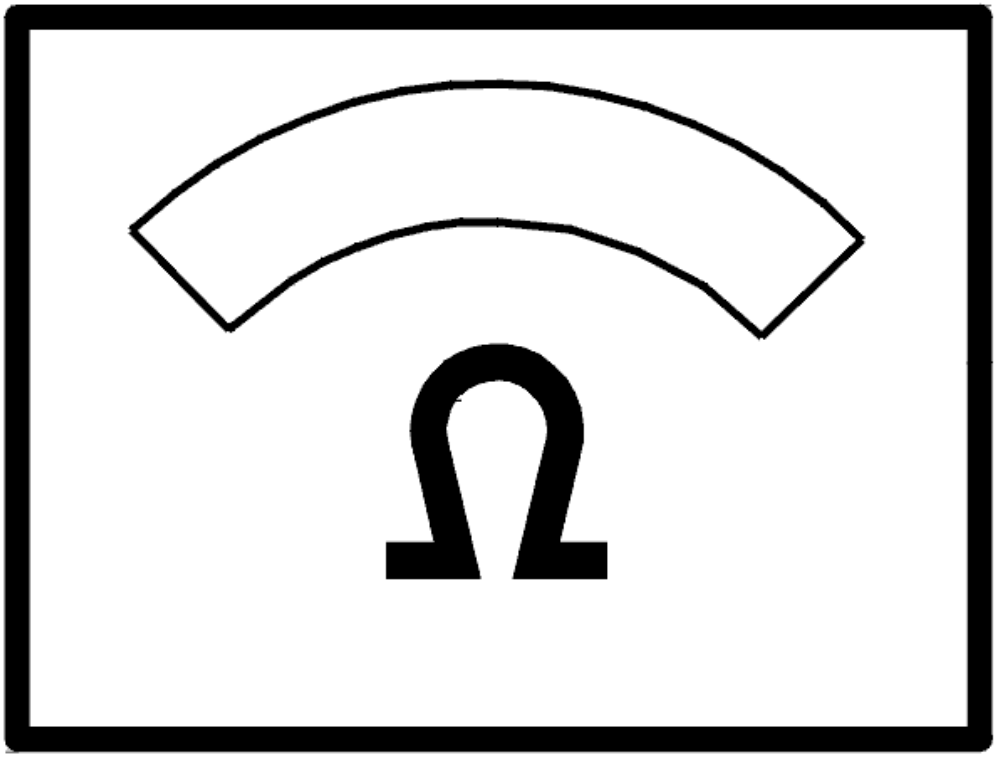

Fig. 2: Identifying Ohm Meter
Courtesy of VOLVO CARS CORPORATION

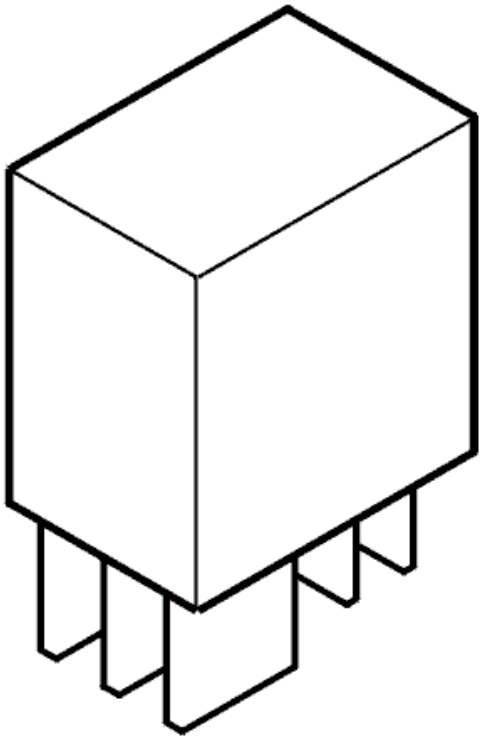

Fig. 3: Identifying A/C Relay
Courtesy of VOLVO CARS CORPORATION

- **Continue**

  Refer to **INFORMATION**

INFORMATION

FAULT-TRACING INFORMATION

If the fault is intermittent, do not verify fault-tracing if the fault does not recur.

It is possible to view the information again, or leave fault-tracing for this diagnostic trouble code (DTC).

ECM-6000: AIR CONDITIONING (A/C) RELAY SIGNAL. SIGNAL TOO LOW. PERMANENT FAULT (B5254T2; B6294T; 2003-2004)

DIAGNOSTIC TROUBLE CODE (DTC) INFORMATION

see **DIAGNOSTIC TROUBLE CODE (DTC) INFORMATION**

SIGNAL TOO LOW. PERMANENT FAULT

CHECKING COMPONENTS AND WIRING

Check the signal cable between control module terminal #B44 and air conditioning (A/C) relay terminal #4. Check for a short-circuit to ground.

Remedy as necessary.

Other information

- To connect the breakout box / access the control module, see **CONNECTING THE BREAKOUT BOX**
- For 5 cylinder turbocharged engines -2004, see **SIGNAL DESCRIPTION**
- For 5 cylinder turbocharged engines 2005-, see **SIGNAL SPECIFICATION** .
- For 6 cylinder engines -2004, see **SIGNAL SPECIFICATION**
- For 6 cylinder engines 2005-, see **SIGNAL SPECIFICATION** .
- see **CHECKING WIRING AND TERMINALS** .

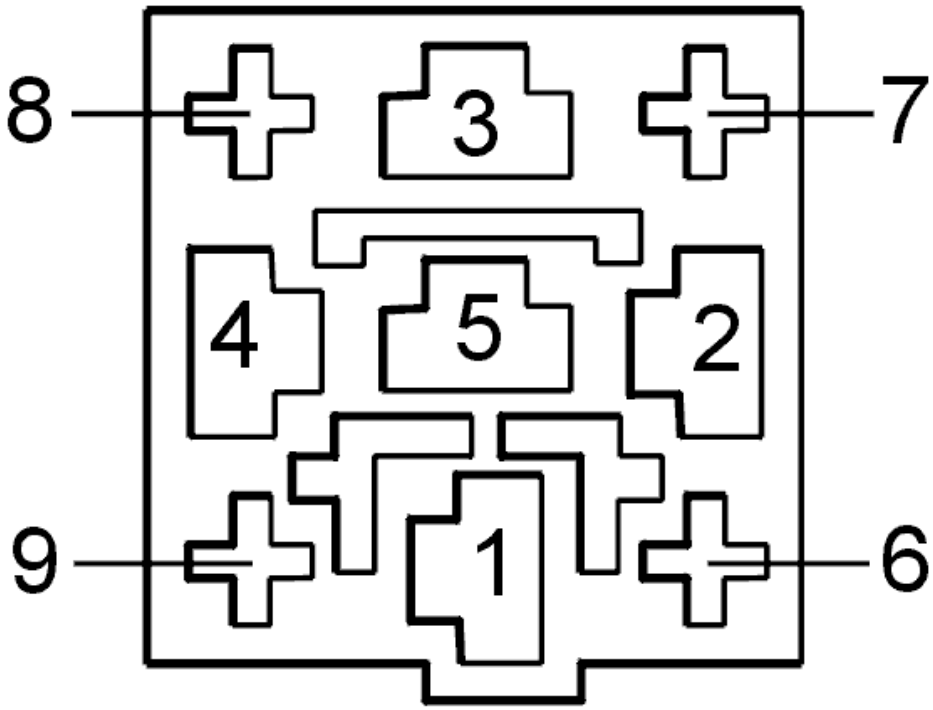

Fig. 4: Identifying Connector Terminals
Courtesy of VOLVO CARS CORPORATION

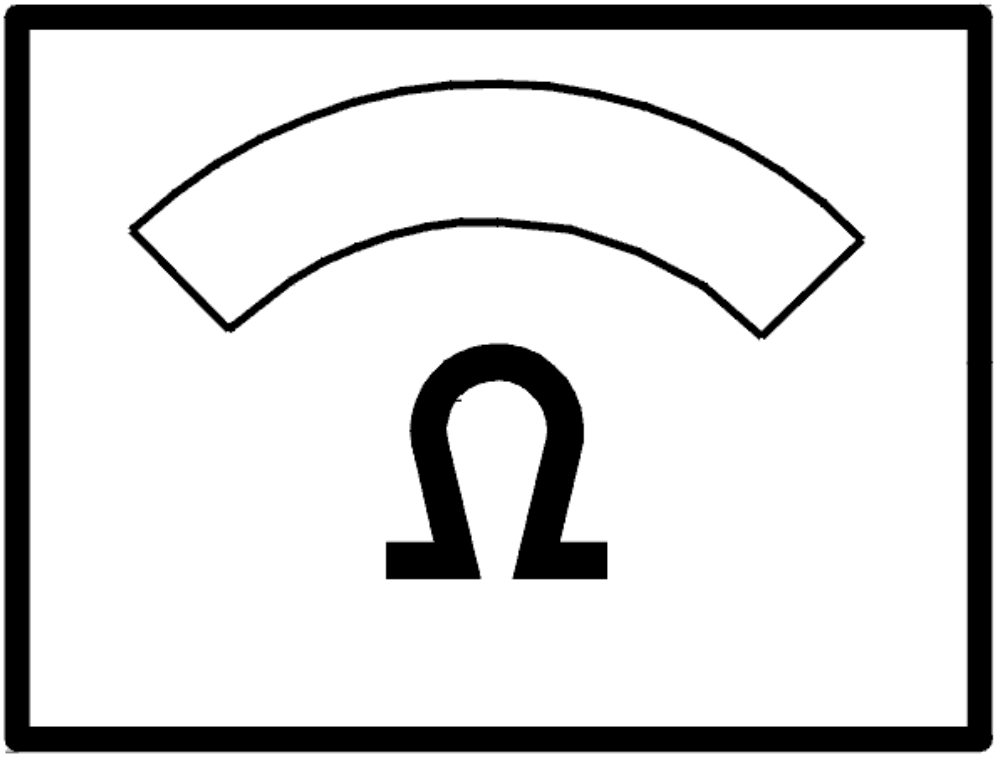

Fig. 5: Identifying Ohm Meter
Courtesy of VOLVO CARS CORPORATION

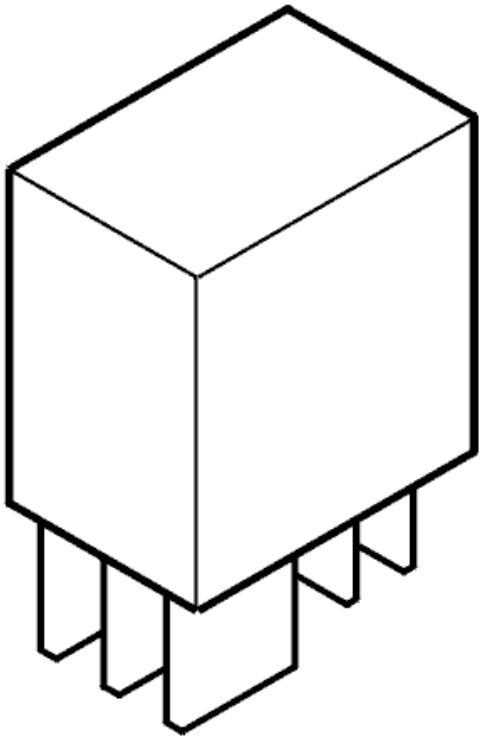

Fig. 6: Identifying A/C Relay
Courtesy of VOLVO CARS CORPORATION

- **Continue**

  Refer to **VERIFICATION**

VERIFICATION

VERIFICATION

HINT: After carrying out the repair, check that the fault has been remedied.

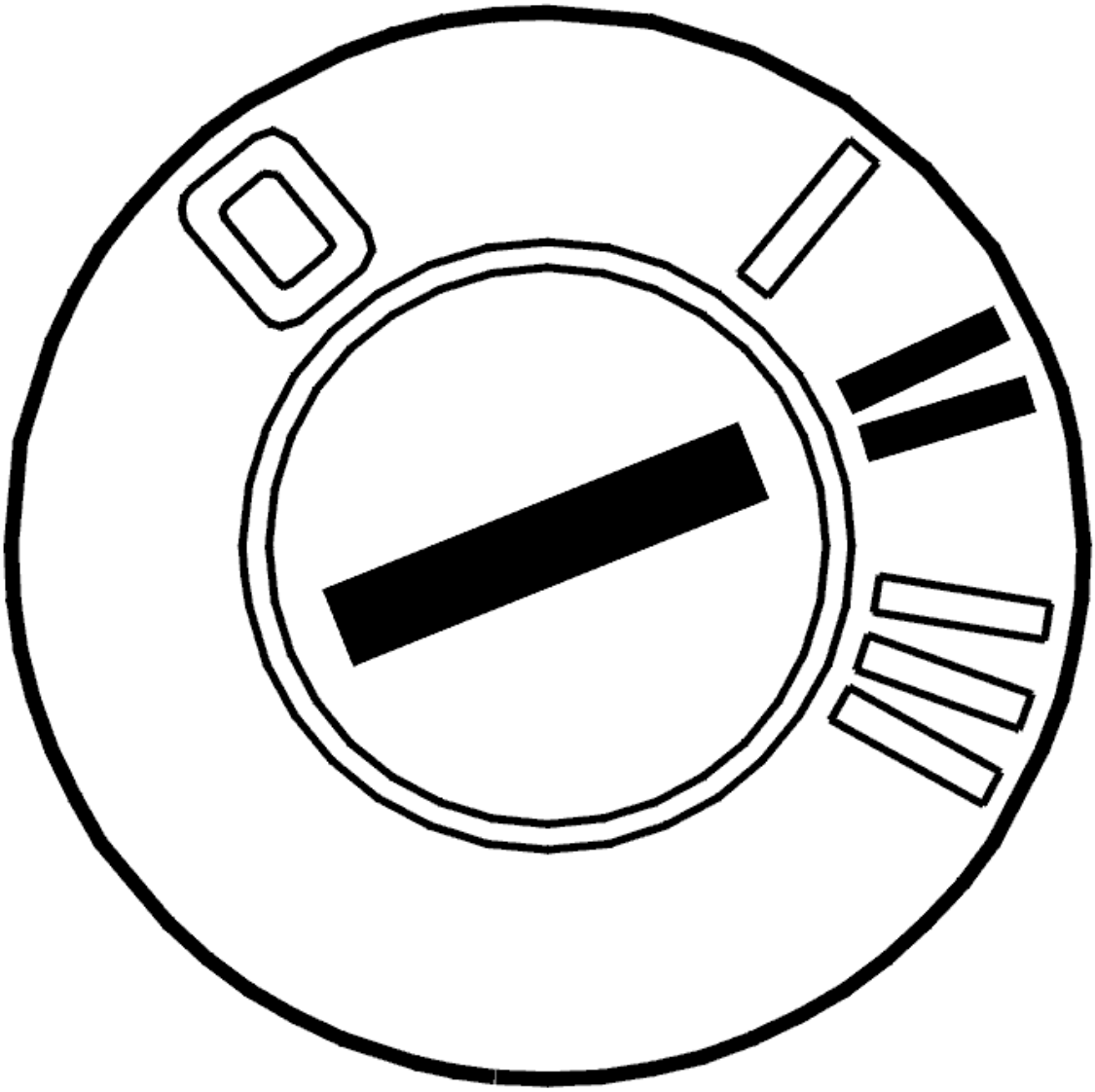

Fig. 7: Identifying Ignition ON
Courtesy of VOLVO CARS CORPORATION

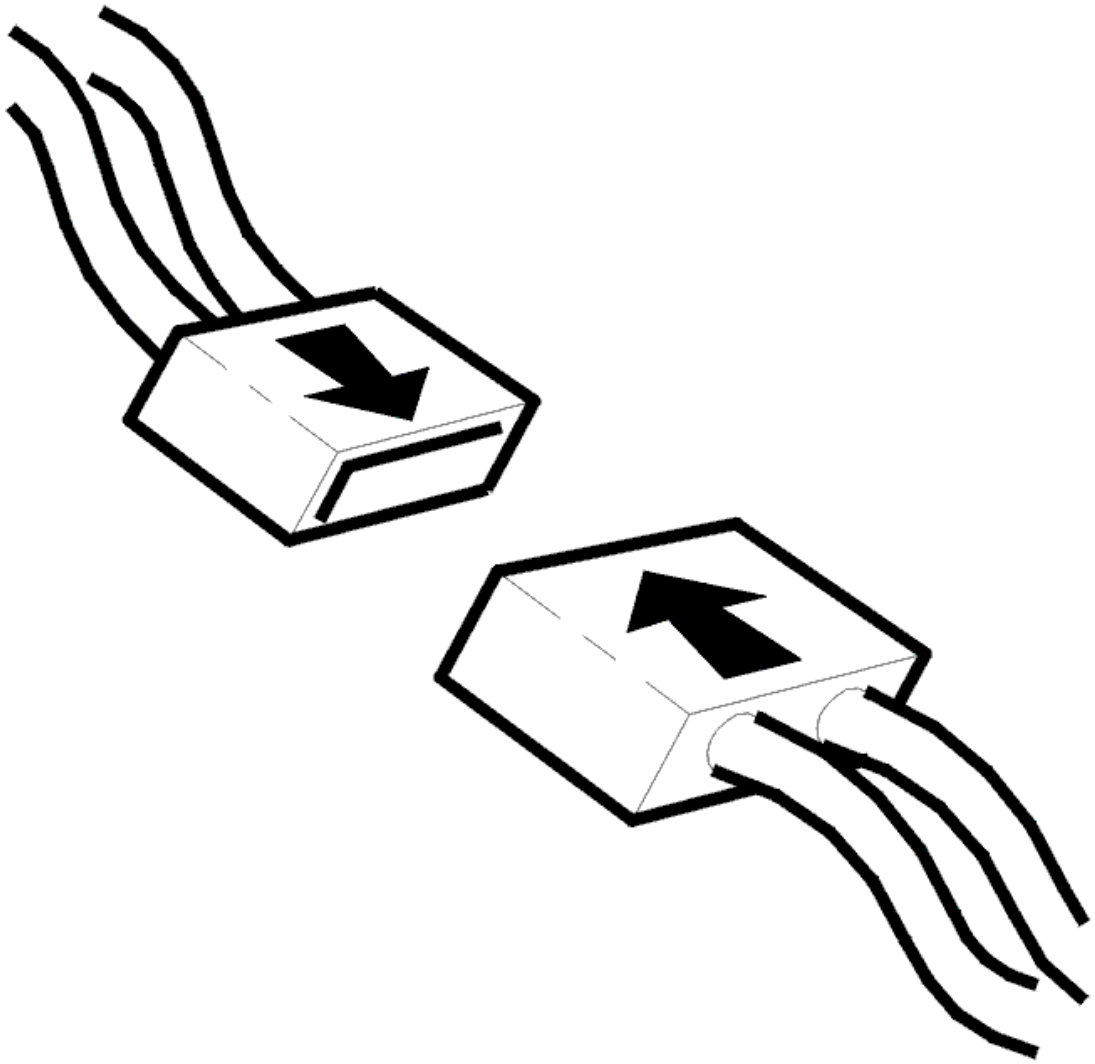

Fig. 8: Connecting Connector
Courtesy of VOLVO CARS CORPORATION

- Ignition off.
- Reconnect connectors, reinstall components
- Ignition on.
- Activate air conditioning (A/C) relay.

  An "clicking sound" should be heard from the air conditioning (A/C) relay when it is activated.

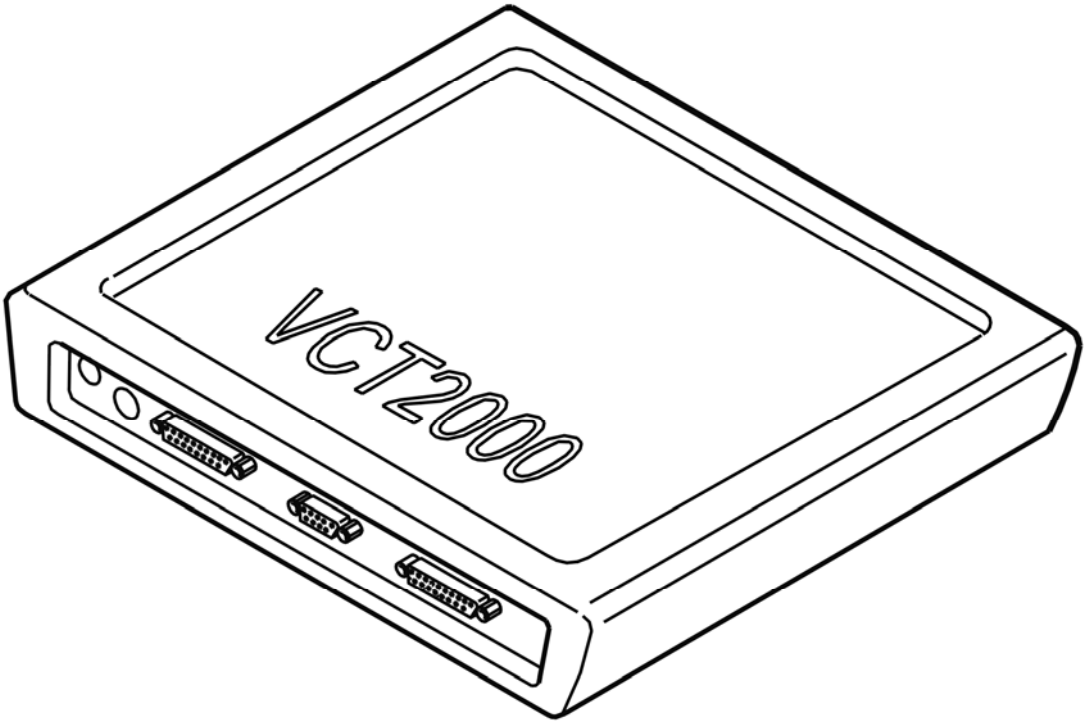

Fig. 9: Identifying VCT2000 Diagnostic Tool Symbol In VIDA
Courtesy of VOLVO CARS CORPORATION

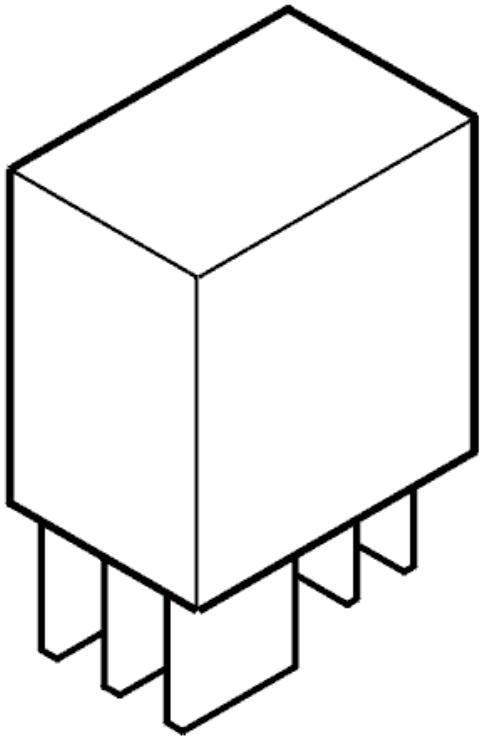

Fig. 10: Identifying A/C Relay
Courtesy of VOLVO CARS CORPORATION

Does the air conditioning (A/C) relay function?

- **YES**

  VERIFIED: Troubleshooting has been completed.

- **NO**

  Refer to **INFORMATION**

INFORMATION

FAULT-TRACING INFORMATION

The fault should have been detected and remedied. As this is not the case fault-tracing has failed.

Exit fault-tracing for this diagnostic trouble code (DTC) or make another attempt.

ECM-600B: TURBOCHARGER (TC) CONTROL VALVE. SIGNAL MISSING. INTERMITTENT FAULT (B5254T2; 2005-2007)

DIAGNOSTIC TROUBLE CODE (DTC) INFORMATION ECM-600B

Condition

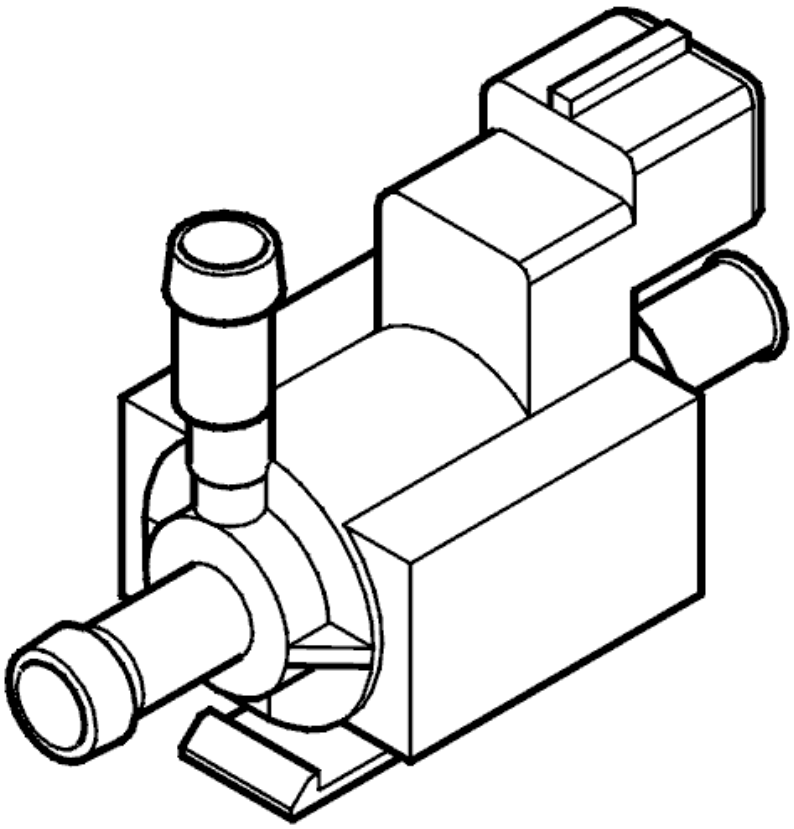

Fig. 11: Identifying Turbocharger Control Valve
Courtesy of VOLVO CARS CORPORATION

The engine control module (ECM) checks the signal cable for the turbocharger (TC) control valve.

The diagnostic trouble code (DTC) is stored if the engine control module (ECM) detects an open-circuit in the signal cable for the turbocharger (TC) control valve.

The diagnostic trouble code (DTC) can be diagnosed during control of the boost pressure.

Substitute Value

- None.

Possible Source

- Open-circuit in the signal cable
- Open-circuit in the power cable
- Damaged turbocharger (TC) control valve.

Fault symptom[s]

- Malfunction indicator lamp (MIL) lit.

SIGNAL MISSING. INTERMITTENT FAULT

CHECKING THE COMPONENT, WIRING AND CONNECTOR

Check turbocharger (TC) control valve connector for intermittent contact resistance or oxidation according to **CONTACT RESISTANCE AND OXIDATION** and intermittent loose connections according to **CONTACT RESISTANCE AND OXIDATION** .

Check signal cable between engine control module (ECM) #A38 (#A38) and turbocharger (TC) control valve #2 for an intermittent open-circuit according to **OPEN-CIRCUIT, INTERMITTENT FAULTS** .

Check power supply turbocharger (TC) control valve between turbocharger (TC) control valve #1 and system relay for an intermittent open-circuit according to **OPEN-CIRCUIT, INTERMITTENT FAULTS** .

Remedy as necessary

Other information

- To connect the breakout box, see **CONNECTING THE BREAKOUT BOX** .
- To access/replace the turbocharger (TC) control valve, see **REPLACING THE TURBOCHARGER (TC) CONTROL VALVE** .
- Turbocharger (TC) control valve #1 has power supply via the system relay.
- For 5 cylinder turbocharged engines -2004, see **SIGNAL DESCRIPTION**
- For 5 cylinder turbocharged engines 2005-, see **SIGNAL SPECIFICATION** .
- For 6 cylinder engines -2004, see **SIGNAL SPECIFICATION**
- For 6 cylinder engines 2005-, see **SIGNAL SPECIFICATION** .

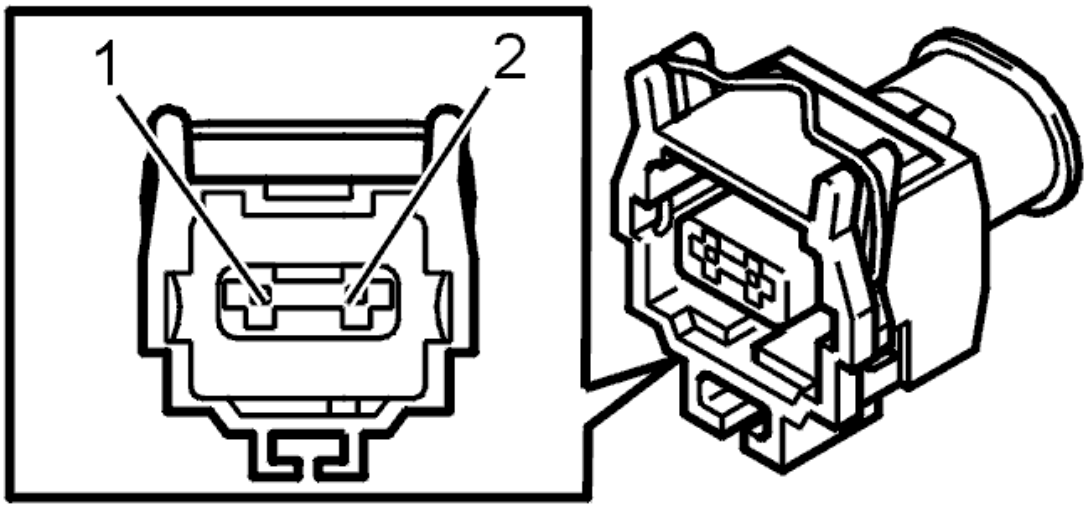

Fig. 12: Brake Pedal Position Sensor Connector Terminal Identification
Courtesy of VOLVO CARS CORPORATION

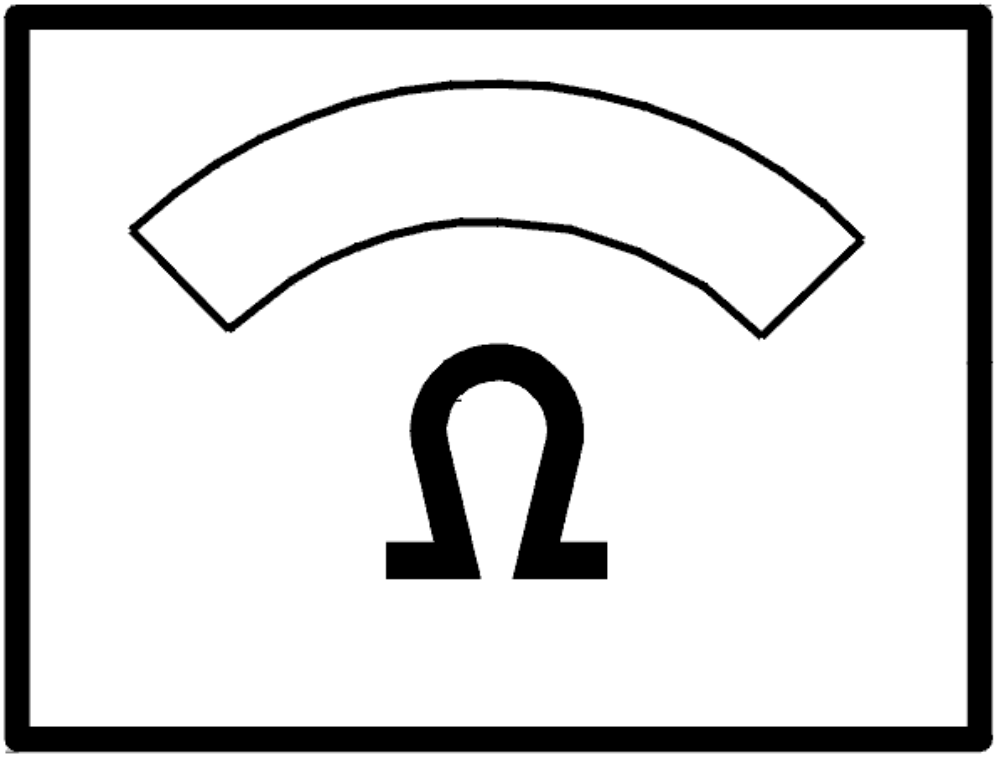

Fig. 13: Identifying Ohm Meter
Courtesy of VOLVO CARS CORPORATION

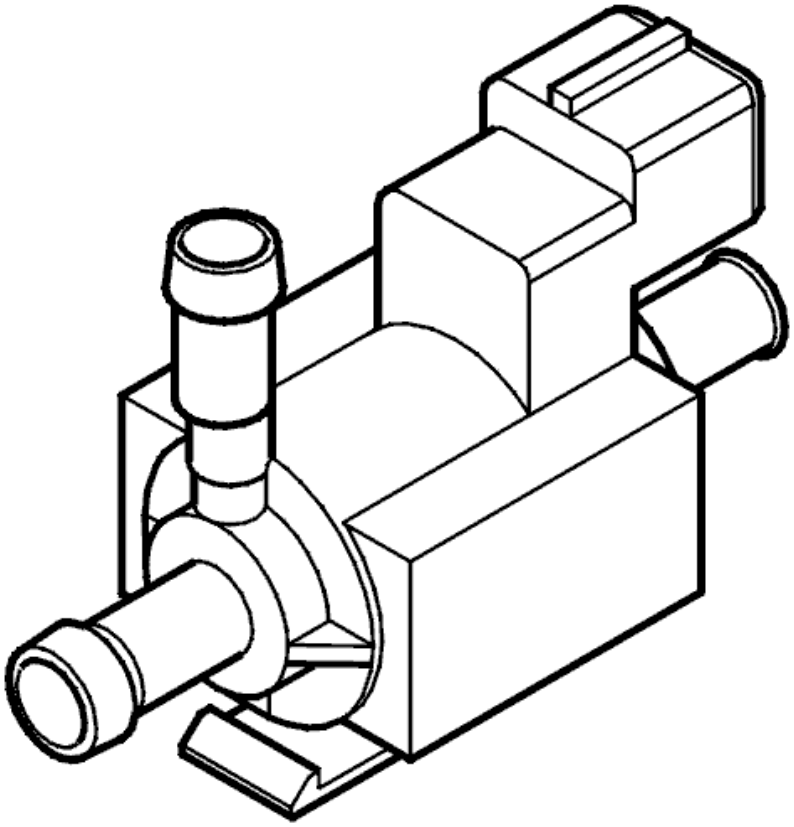

Fig. 14: Identifying Turbocharger Control Valve
Courtesy of VOLVO CARS CORPORATION

- **Continue**

  Refer to **INFORMATION**

INFORMATION

FAULT-TRACING INFORMATION

If the fault is intermittent, do not verify fault-tracing if the fault does not recur.

It is possible to view the information again, or leave fault-tracing for this diagnostic trouble code (DTC).

ECM-600B: TURBOCHARGER (TC) CONTROL VALVE. SIGNAL MISSING. INTERMITTENT FAULT (B6294T; 2005-2006)

DIAGNOSTIC TROUBLE CODE (DTC) INFORMATION ECM-600B

see **DIAGNOSTIC TROUBLE CODE (DTC) INFORMATION ECM-600B**

SIGNAL MISSING. INTERMITTENT FAULT

see **SIGNAL MISSING. INTERMITTENT FAULT**

ECM-600B: TURBOCHARGER (TC) CONTROL VALVE. SIGNAL MISSING. PERMANENT FAULT (B5254T2; 2005-2007)

DIAGNOSTIC TROUBLE CODE (DTC) INFORMATION ECM-600B

see **DIAGNOSTIC TROUBLE CODE (DTC) INFORMATION ECM-600B**

SIGNAL MISSING. PERMANENT FAULT

CHECKING CONNECTOR

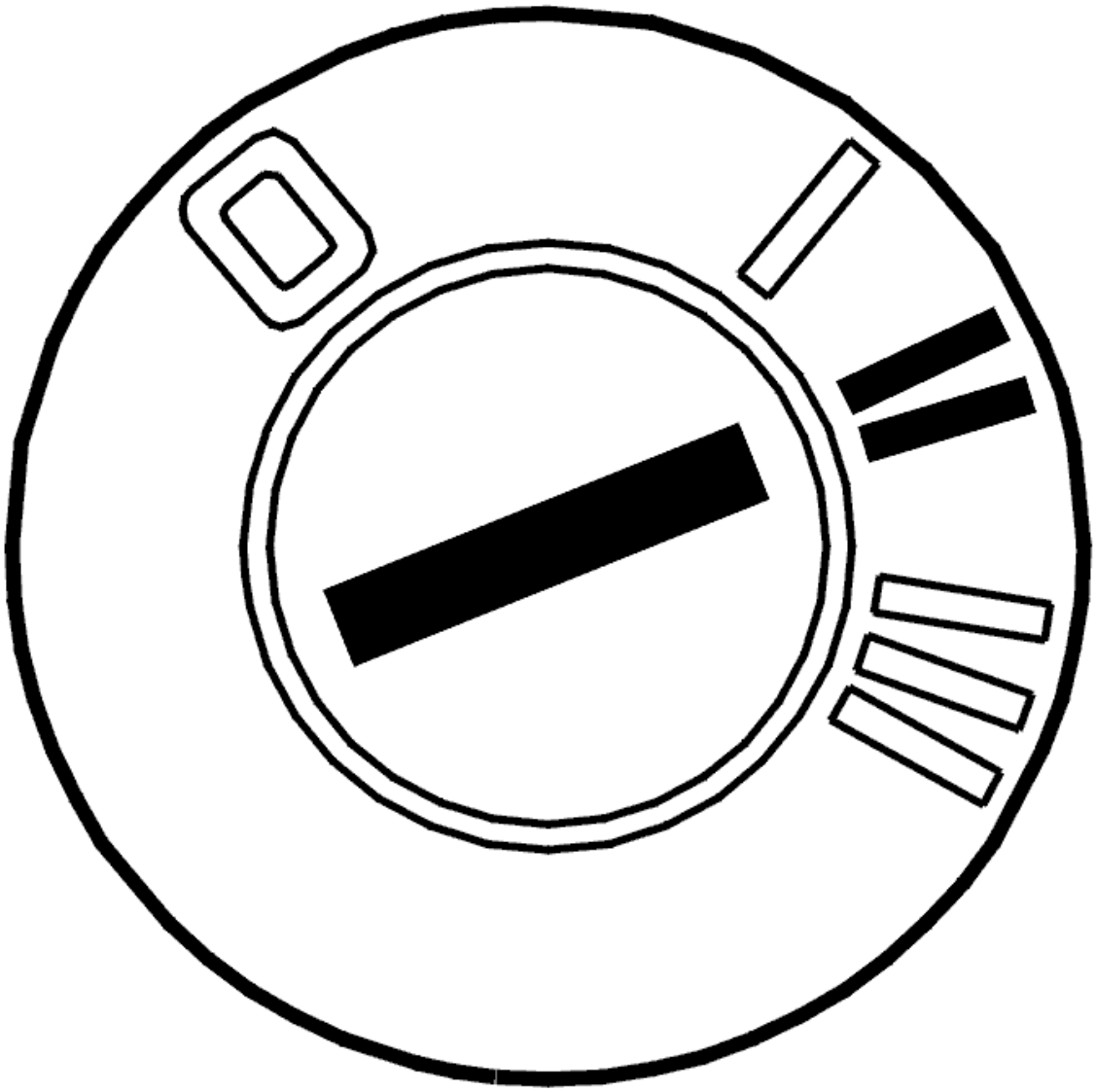

Fig. 15: Identifying Ignition ON
Courtesy of VOLVO CARS CORPORATION

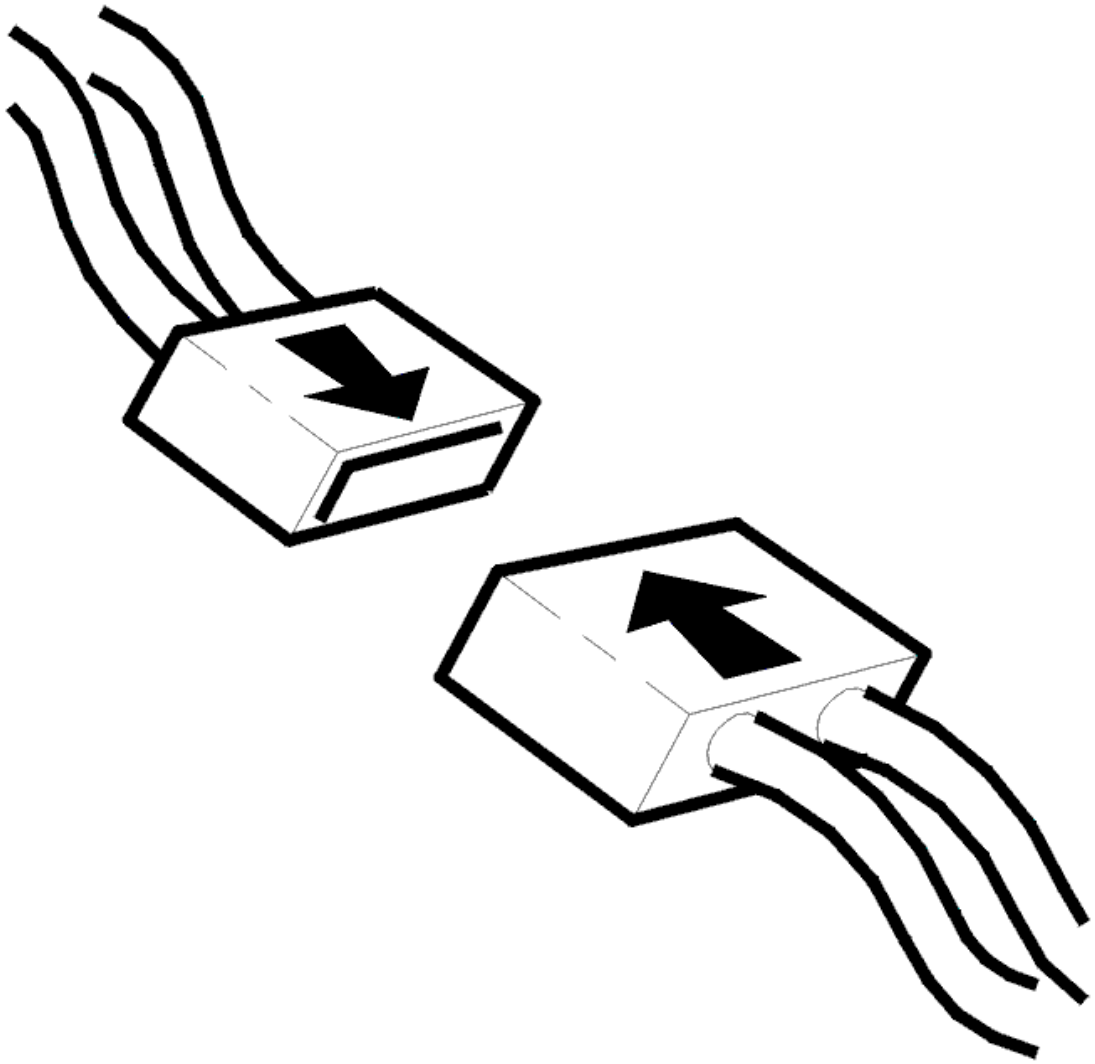

Fig. 16: Connecting Connector
Courtesy of VOLVO CARS CORPORATION

- Ignition off.
- Check turbocharger (TC) control valve connector for contact resistance and oxidation according to **CONTACT RESISTANCE AND OXIDATION** .
- Reinstall components, reconnect connectors etc.
- Ignition on.
- Activate turbocharger (TC) control valve.
- A click should be heard from the turbocharger (TC) control valve.

If the function is OK the cause of the fault was loose connections in the connector.

Other information

- To access/replace the turbocharger (TC) control valve, see **REPLACING THE TURBOCHARGER (TC) CONTROL VALVE**

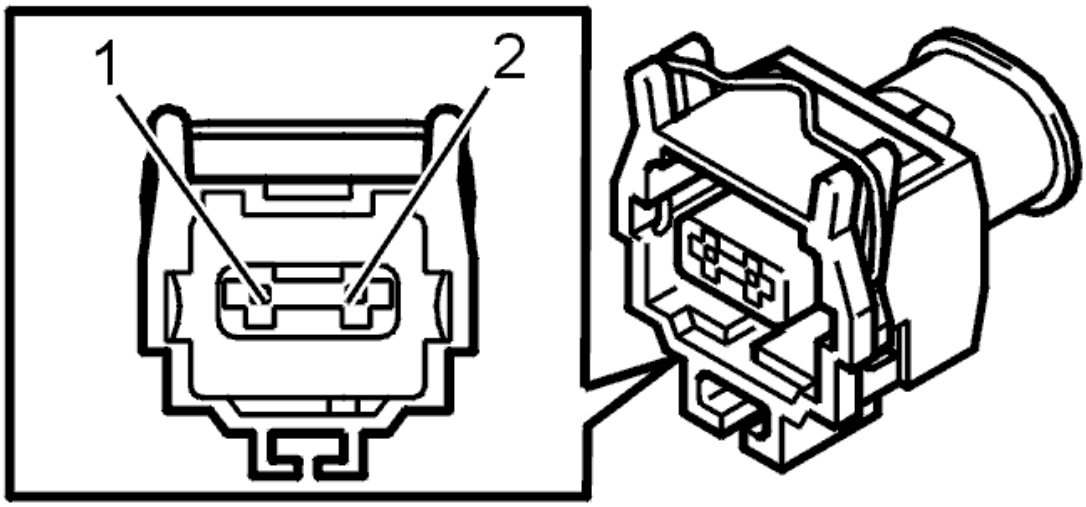

Fig. 17: Brake Pedal Position Sensor Connector Terminal Identification
Courtesy of VOLVO CARS CORPORATION

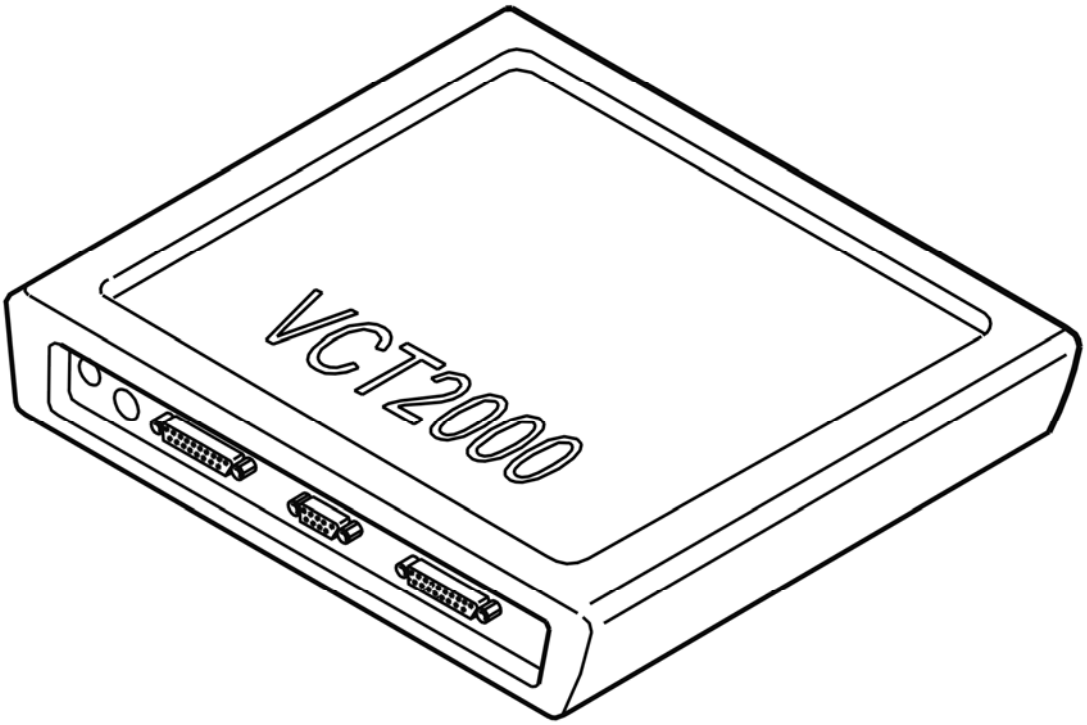

Fig. 18: Identifying VCT2000 Diagnostic Tool Symbol In VIDA
Courtesy of VOLVO CARS CORPORATION

Is the function OK?

- **YES**

  OKAY: Troubleshooting has been completed.

- **NO**

  Refer to **CHECKING COMPONENT AND WIRING**

CHECKING COMPONENT AND WIRING

Check signal cable between engine control module (ECM) #A38 (#A38) and turbocharger (TC) control valve #2 for an open-circuit according to **OPEN-CIRCUIT, PERMANENT FAULTS** .

Check power supply cable between turbo charger valve #1 and system relay for an open-circuit according to **OPEN-CIRCUIT, PERMANENT FAULTS** .

Remedy as necessary.

Other information

- To connect the breakout box, see **CONNECTING THE BREAKOUT BOX** .
- To access/replace the turbocharger (TC) control valve, see **REPLACING THE TURBOCHARGER (TC) CONTROL VALVE** .
- For 5 cylinder turbocharged engines -2004, see **SIGNAL DESCRIPTION**
- For 5 cylinder turbocharged engines 2005-, see **SIGNAL SPECIFICATION** .
- For 6 cylinder engines -2004, see **SIGNAL SPECIFICATION**
- For 6 cylinder engines 2005-, see **SIGNAL SPECIFICATION** .
- Turbocharger (TC) control valve #1 has power supply via the system relay.

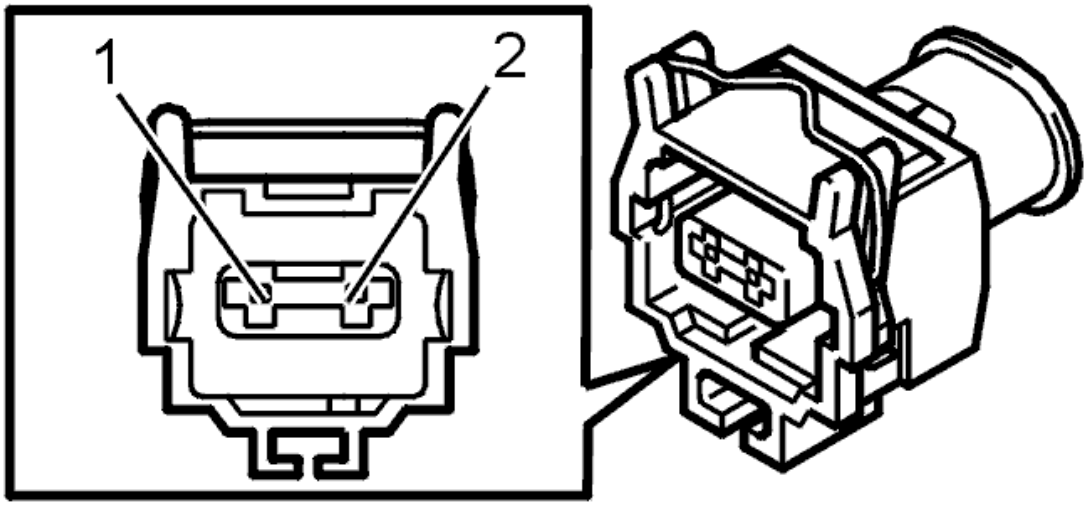

Fig. 19: Brake Pedal Position Sensor Connector Terminal Identification
Courtesy of VOLVO CARS CORPORATION

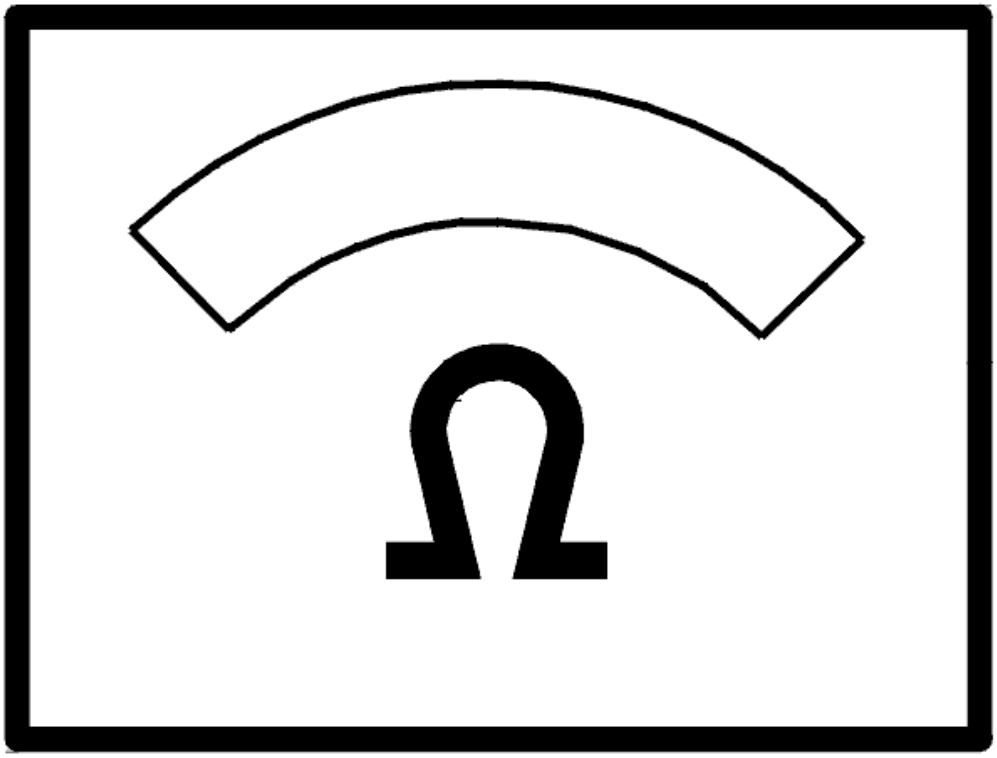

Fig. 20: Identifying Ohm Meter
Courtesy of VOLVO CARS CORPORATION

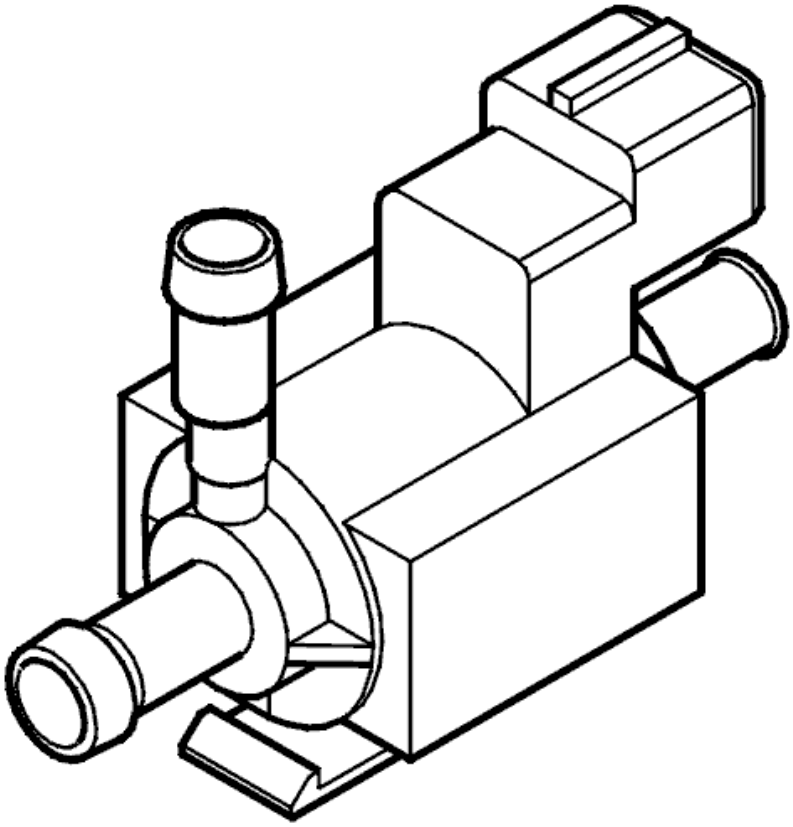

Fig. 21: Identifying Turbocharger Control Valve
Courtesy of VOLVO CARS CORPORATION

- **Continue**

  Refer to **VERIFICATION**

VERIFICATION

VERIFICATION

HINT: After carrying out the repair, check that the fault has been remedied.

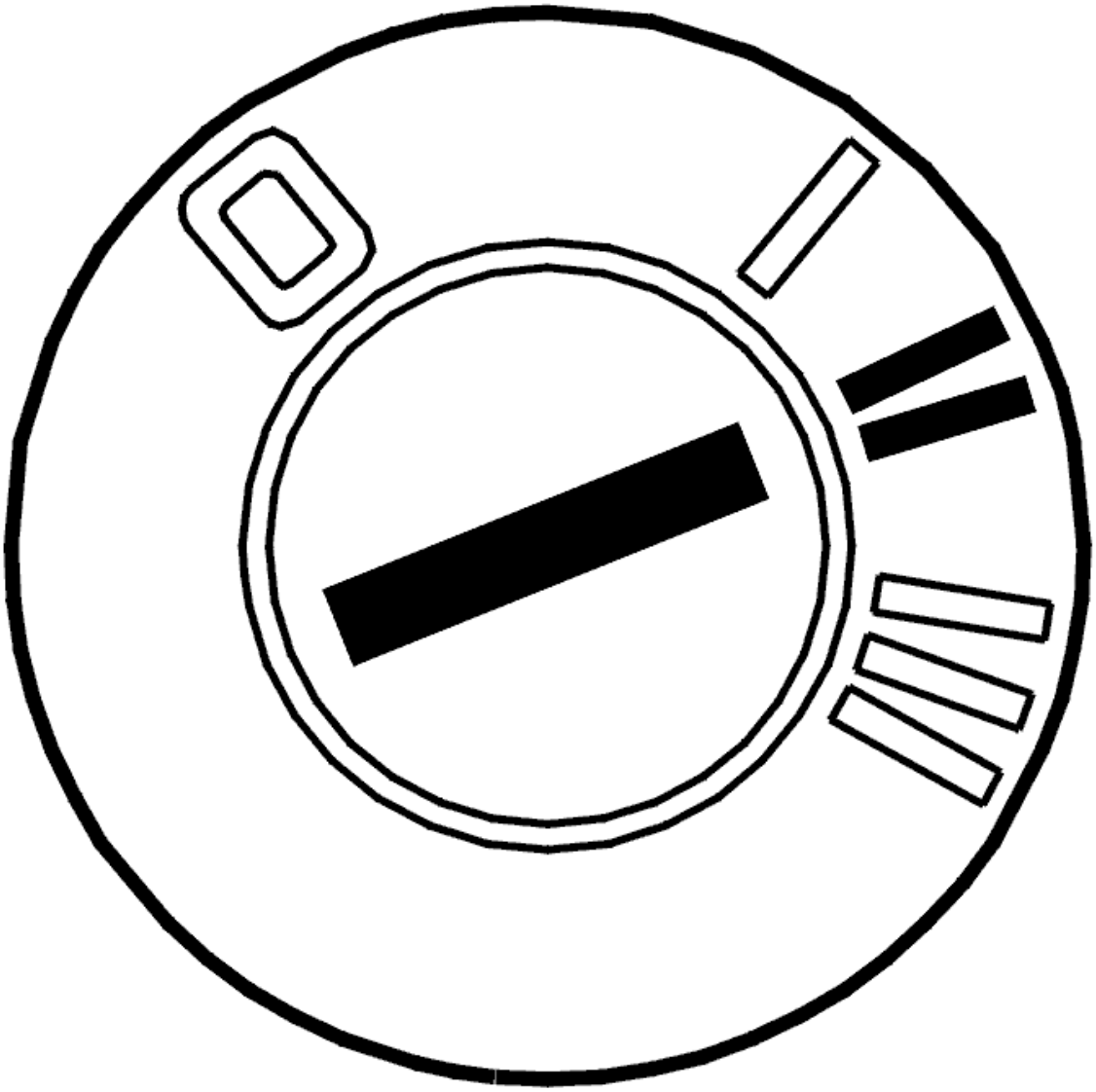

Fig. 22: Identifying Ignition ON
Courtesy of VOLVO CARS CORPORATION

- Ignition off.
- Reinstall connectors, components etc.
- Ignition on.
- Activate turbocharger (TC) control valve
- A click should be heard from the turbocharger (TC) control valve.
- Check that the function is OK.

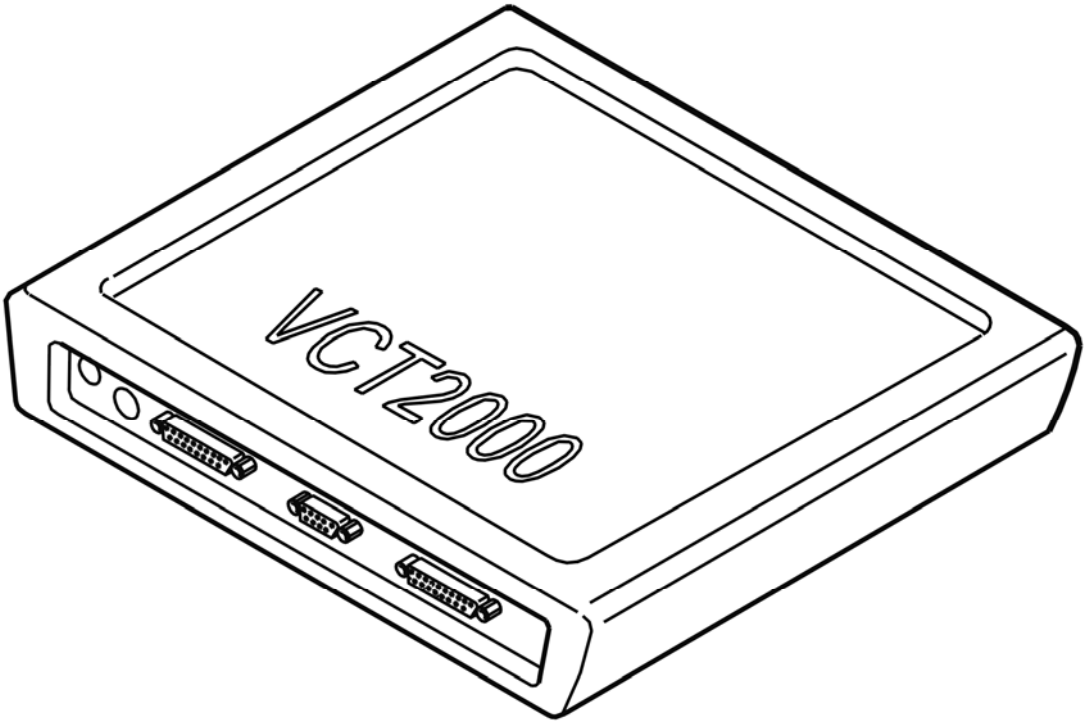

Fig. 23: Identifying VCT2000 Diagnostic Tool Symbol In VIDA
Courtesy of VOLVO CARS CORPORATION

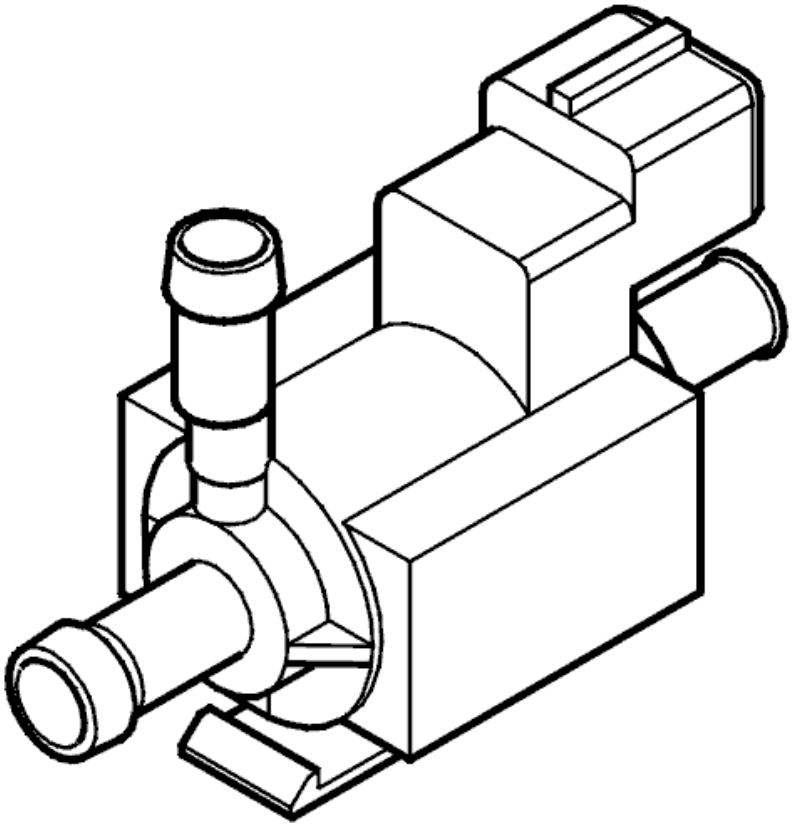

Fig. 24: Identifying Turbocharger Control Valve
Courtesy of VOLVO CARS CORPORATION

Is function OK ?

- **YES**

  VERIFIED: Troubleshooting has been completed.

- **NO**

  Refer to **INFORMATION**

INFORMATION

FAULT-TRACING INFORMATION

The fault should have been detected and remedied. As this is not the case fault-tracing has failed.

Exit fault-tracing for this diagnostic trouble code (DTC) or make another attempt.

ECM-600B: TURBOCHARGER (TC) CONTROL VALVE. SIGNAL MISSING. PERMANENT FAULT (B6294T; 2005-2006)

DIAGNOSTIC TROUBLE CODE (DTC) INFORMATION ECM-600B

see **DIAGNOSTIC TROUBLE CODE (DTC) INFORMATION ECM-600B**

SIGNAL MISSING. PERMANENT FAULT

see **SIGNAL MISSING. PERMANENT FAULT**

ECM-600C: TURBOCHARGER (TC) CONTROL VALVE. SIGNAL TOO HIGH. INTERMITTENT FAULT (B5254T2; 2005-2007)

DIAGNOSTIC TROUBLE CODE (DTC) INFORMATION ECM-600C

Condition

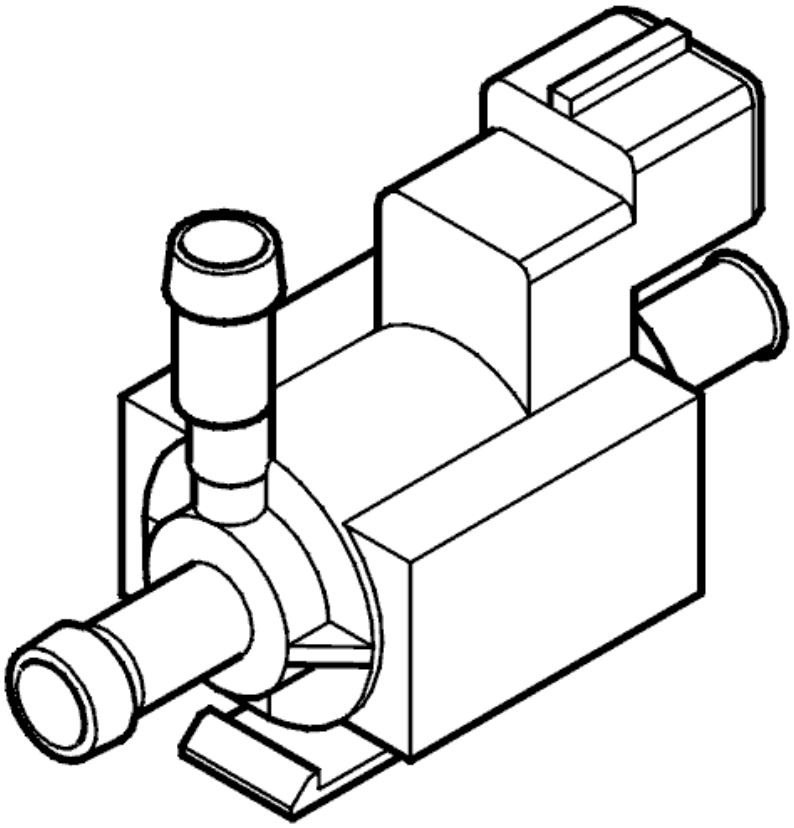

Fig. 25: Identifying Turbocharger Control Valve
Courtesy of VOLVO CARS CORPORATION

The engine control module (ECM) checks the signal cable for the turbocharger (TC) control valve.

The diagnostic trouble code (DTC) is stored if the engine control module (ECM) detects that the voltage in the signal cable from the turbocharger (TC) control valve is too high.

The diagnostic trouble code (DTC) can be diagnosed during control of the boost pressure.

Substitute Value

- None.

Possible Source

- Short-circuit to supply voltage in the signal cable
- Damaged turbocharger (TC) control valve.

Fault symptom[s]

- Malfunction indicator lamp (MIL) lit.

SIGNAL TOO HIGH. INTERMITTENT FAULT

CHECKING COMPONENT AND WIRING

Check cables between engine control module (ECM) #A38 (#A38) and turbocharger (TC) control valve #2 for an intermittent short-circuit to supply voltage according to **SHORT-CIRCUIT TO SUPPLY VOLTAGE, INTERMITTENT FAULTS** .

Remedy as necessary

Other information

- To connect the breakout box, see **CONNECTING THE BREAKOUT BOX** .
- To access/replace the turbocharger (TC) control valve, see **REPLACING THE TURBOCHARGER (TC) CONTROL VALVE** .
- For 5 cylinder turbocharged engines -2004, see **SIGNAL DESCRIPTION**
- For 5 cylinder turbocharged engines 2005-, see **SIGNAL SPECIFICATION** .
- For 6 cylinder engines -2004, see **SIGNAL SPECIFICATION**
- For 6 cylinder engines 2005-, see **SIGNAL SPECIFICATION** .
- Turbocharger (TC) control valve terminal 1 has Ubat power supply from the system relay.

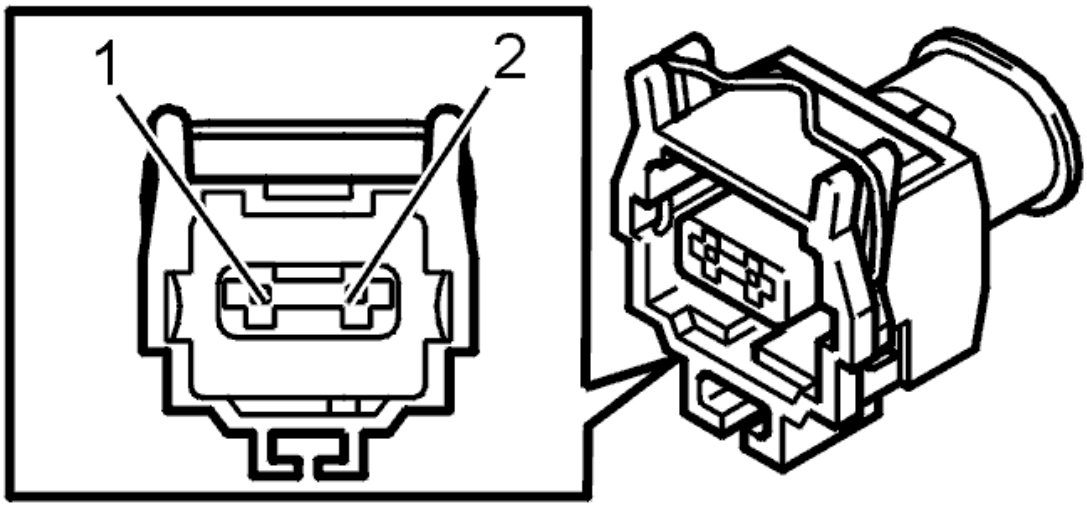

Fig. 26: Brake Pedal Position Sensor Connector Terminal Identification
Courtesy of VOLVO CARS CORPORATION

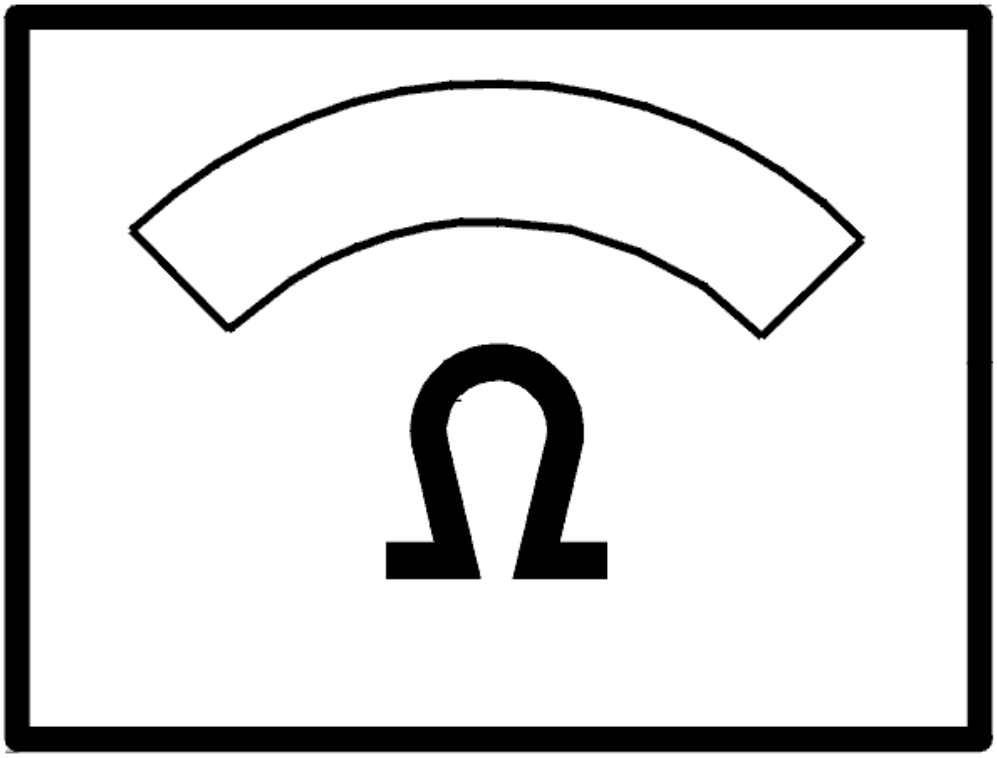

Fig. 27: Identifying Ohm Meter
Courtesy of VOLVO CARS CORPORATION

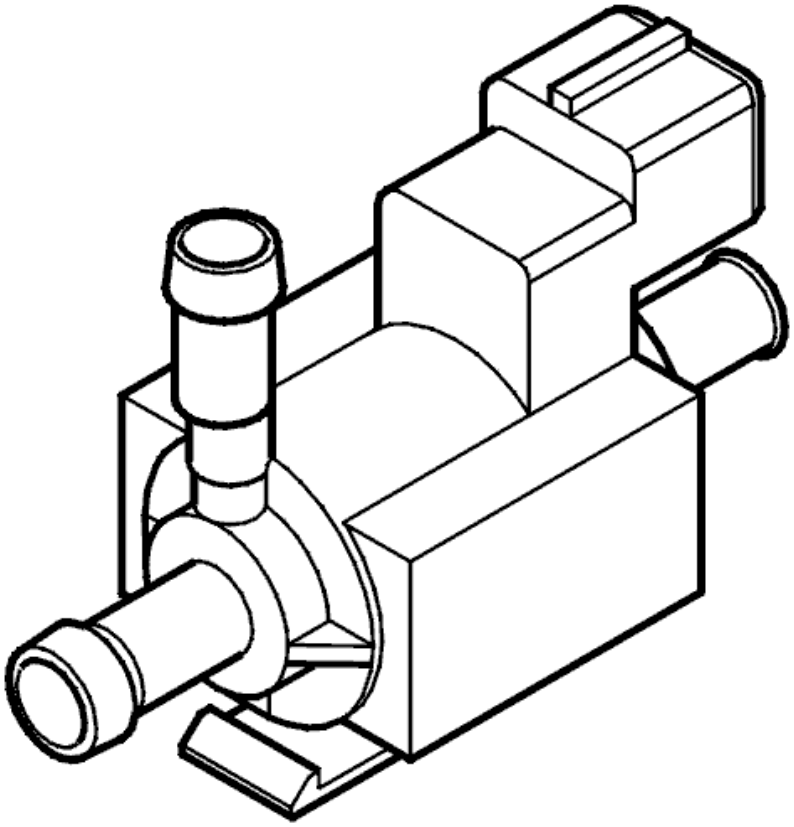

Fig. 28: Identifying Turbocharger Control Valve
Courtesy of VOLVO CARS CORPORATION

- **Continue**

  Refer to **INFORMATION**

INFORMATION

FAULT-TRACING INFORMATION

If the fault is intermittent, do not verify fault-tracing if the fault does not recur.

It is possible to view the information again, or leave fault-tracing for this diagnostic trouble code (DTC).

ECM-600C: TURBOCHARGER (TC) CONTROL VALVE. SIGNAL TOO HIGH. INTERMITTENT FAULT (B6294T; 2005-2006)

DIAGNOSTIC TROUBLE CODE (DTC) INFORMATION ECM-600C

see **DIAGNOSTIC TROUBLE CODE (DTC) INFORMATION ECM-600C**

SIGNAL TOO HIGH. INTERMITTENT FAULT

see **SIGNAL TOO HIGH. INTERMITTENT FAULT**

ECM-600C: TURBOCHARGER (TC) CONTROL VALVE. SIGNAL TOO HIGH. PERMANENT FAULT (B5254T2; 2005-2007)

DIAGNOSTIC TROUBLE CODE (DTC) INFORMATION ECM-600C

see **DIAGNOSTIC TROUBLE CODE (DTC) INFORMATION ECM-600C**

SIGNAL TOO HIGH. PERMANENT FAULT

CHECKING COMPONENT AND WIRING

Check the cable between #A38 (#A38) and turbocharger (TC) control valve #2 for a short-circuit to supply voltage according to **SHORT-CIRCUIT TO SUPPLY VOLTAGE. PERMANENT FAULTS** .

Remedy as necessary

Other information:

- To connect the breakout box, see **CONNECTING THE BREAKOUT BOX** .
- For 5 cylinder turbocharged engines -2004, see **SIGNAL DESCRIPTION**
- For 5 cylinder turbocharged engines 2005-, see **SIGNAL SPECIFICATION** .
- For 6 cylinder engines -2004, see **SIGNAL SPECIFICATION**
- For 6 cylinder engines 2005-, see **SIGNAL SPECIFICATION** .
- To access/replace the turbocharger (TC) control valve, see **REPLACING THE TURBOCHARGER (TC) CONTROL VALVE**
- Turbocharger (TC) control valve #1 has Ubat power supply from the system relay.

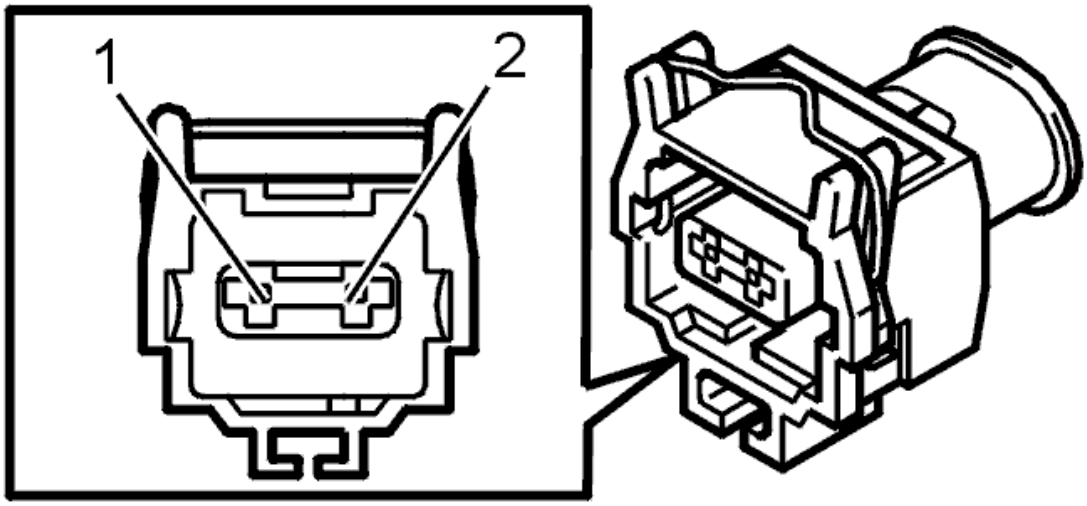

Fig. 29: Brake Pedal Position Sensor Connector Terminal Identification
Courtesy of VOLVO CARS CORPORATION

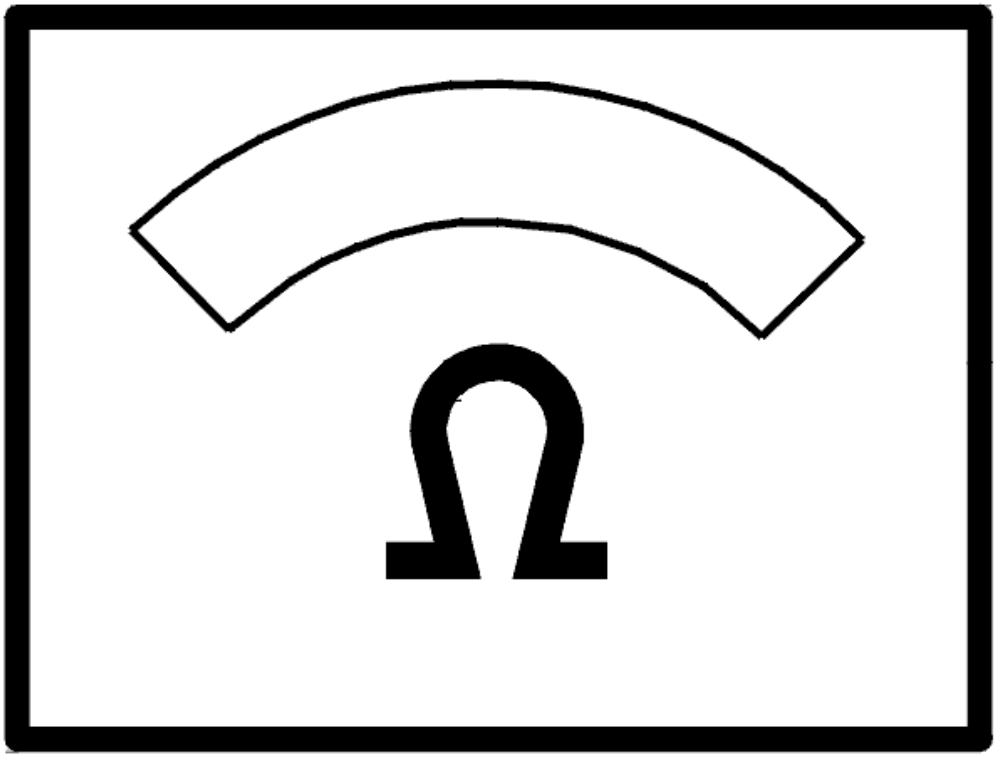

Fig. 30: Identifying Ohm Meter
Courtesy of VOLVO CARS CORPORATION

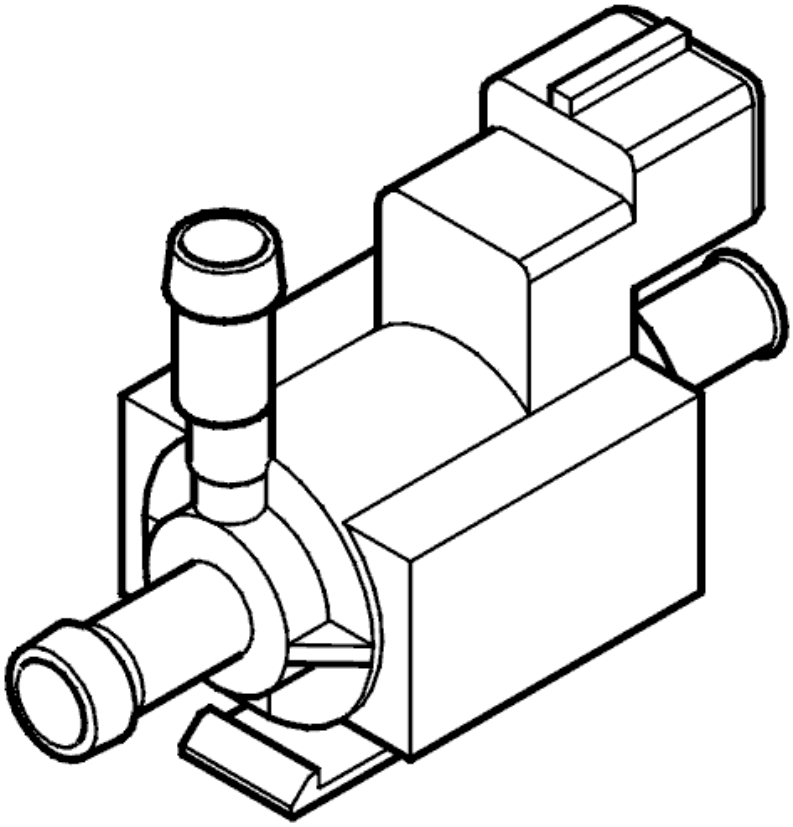

Fig. 31: Identifying Turbocharger Control Valve
Courtesy of VOLVO CARS CORPORATION

- **Continue**

  Refer to **VERIFICATION**

VERIFICATION

VERIFICATION

HINT: After carrying out the repair, check that the fault has been remedied.

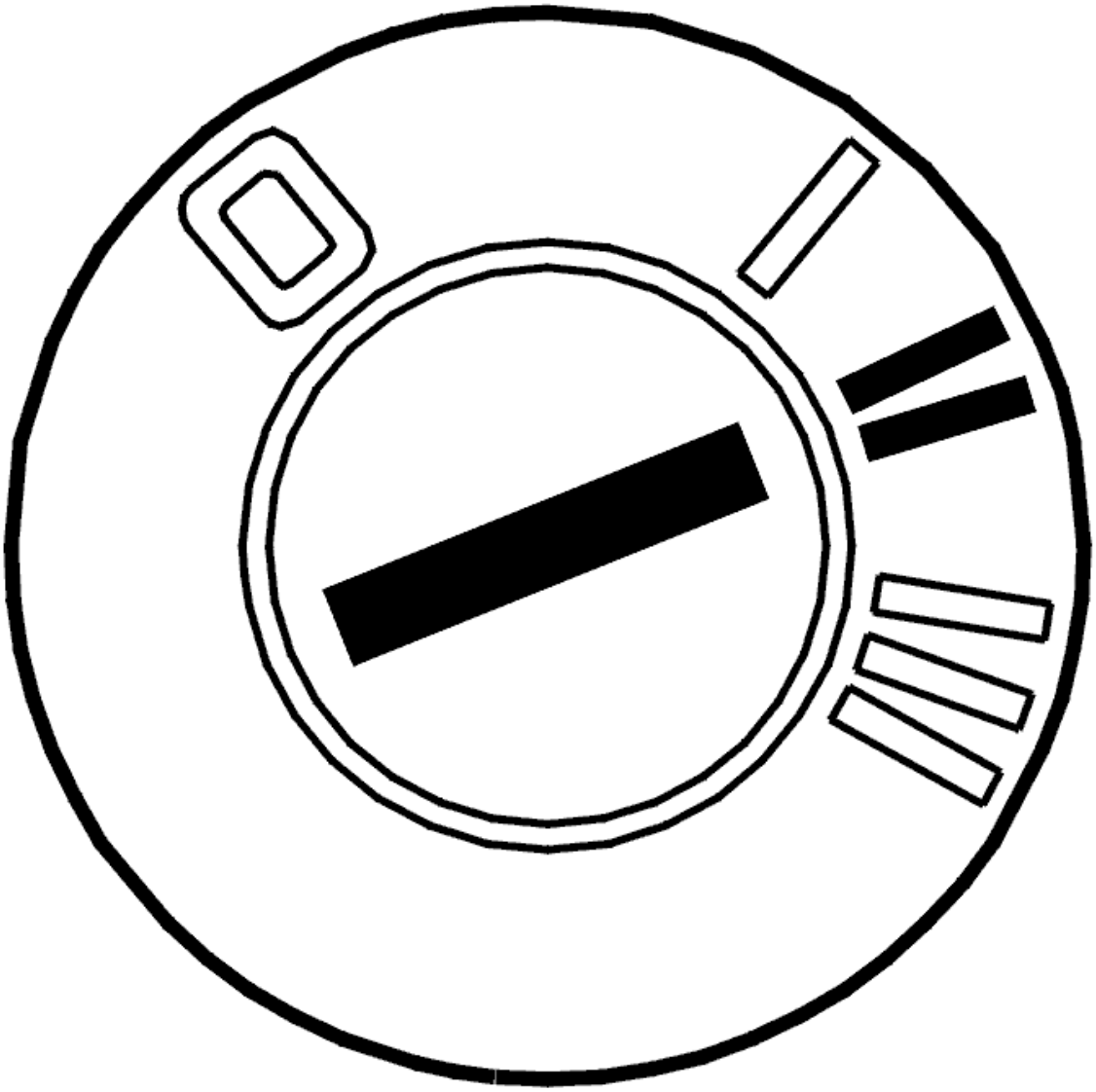

Fig. 32: Identifying Ignition ON
Courtesy of VOLVO CARS CORPORATION

- Ignition off.
- Reinstall connectors, components etc.
- Ignition on.
- Activate turbocharger (TC) control valve
- A click should be heard from the turbocharger (TC) control valve.
- Check that the function is OK.

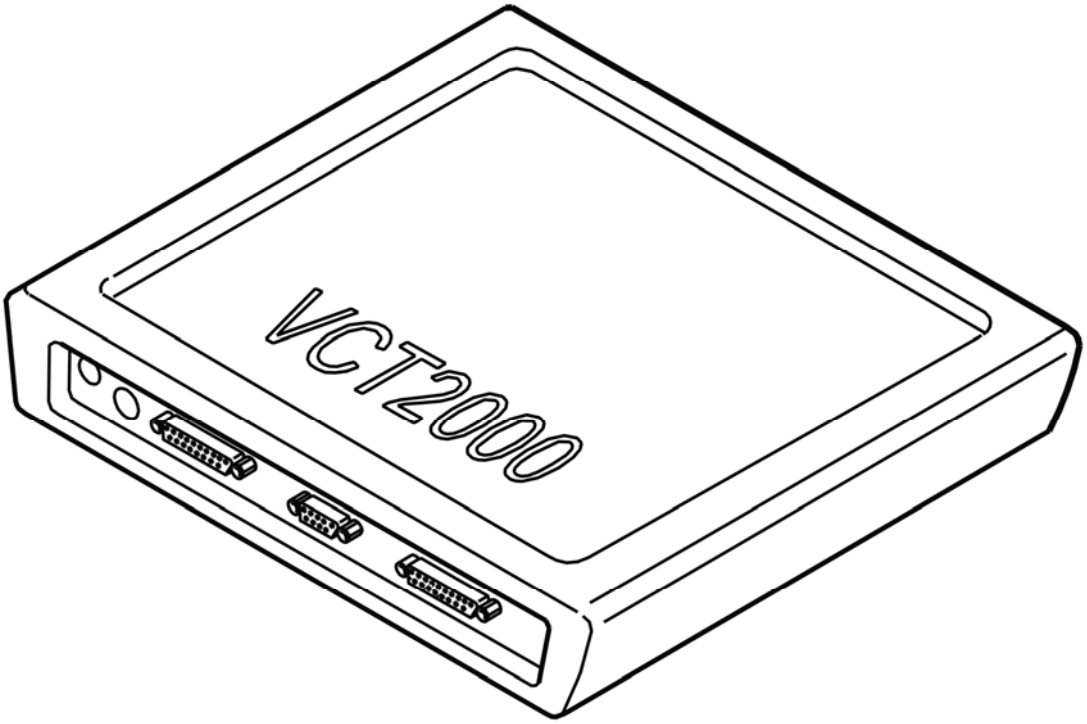

Fig. 33: Identifying VCT2000 Diagnostic Tool Symbol In VIDA
Courtesy of VOLVO CARS CORPORATION

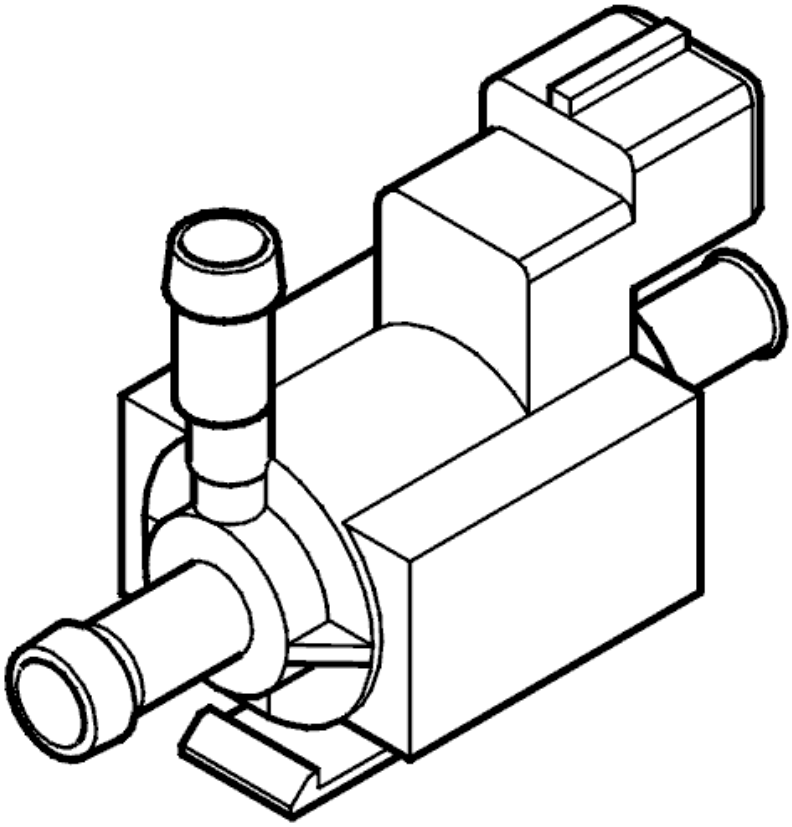

Fig. 34: Identifying Turbocharger Control Valve
Courtesy of VOLVO CARS CORPORATION

Is function OK ?

- **YES**

  VERIFIED: Troubleshooting has been completed.

- **NO**

  Refer to **INFORMATION**

INFORMATION

FAULT-TRACING INFORMATION

The fault should have been detected and remedied. As this is not the case fault-tracing has failed.

Exit fault-tracing for this diagnostic trouble code (DTC) or make another attempt.

ECM-600C: TURBOCHARGER (TC) CONTROL VALVE. SIGNAL TOO HIGH. PERMANENT FAULT (B6294T; 2005-2006)

DIAGNOSTIC TROUBLE CODE (DTC) INFORMATION ECM-600C

see **DIAGNOSTIC TROUBLE CODE (DTC) INFORMATION ECM-600C**

SIGNAL TOO HIGH. PERMANENT FAULT

see **SIGNAL TOO HIGH. PERMANENT FAULT**

ECM-600D: TURBOCHARGER (TC) CONTROL VALVE. SIGNAL TOO LOW. INTERMITTENT FAULT (B5254T2; 2005-2007)

DIAGNOSTIC TROUBLE CODE (DTC) INFORMATION ECM-600D

Condition

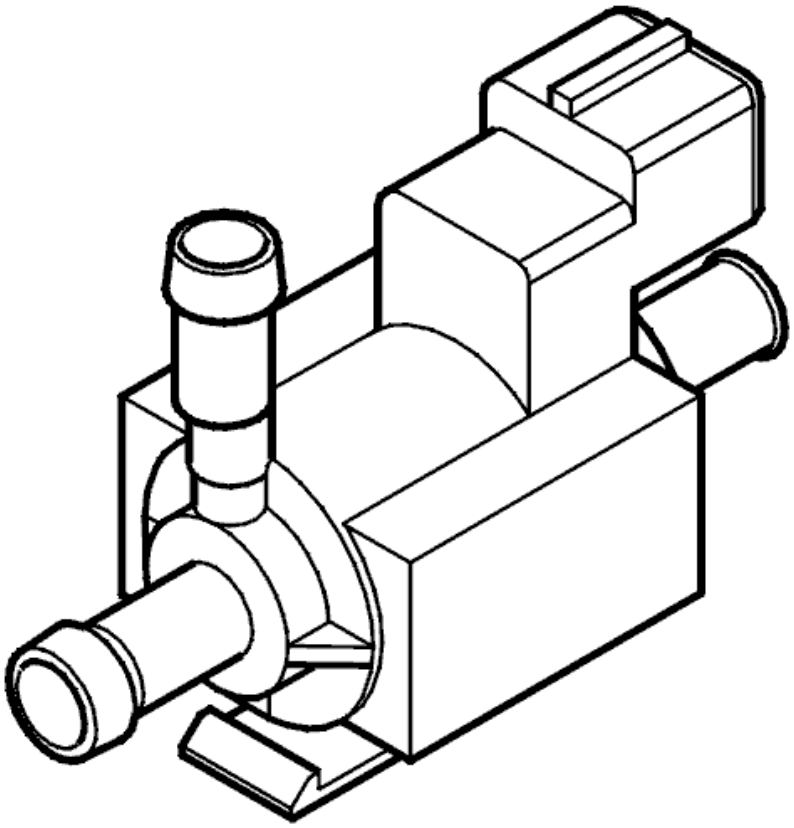

Fig. 35: Identifying Turbocharger Control Valve
Courtesy of VOLVO CARS CORPORATION

The engine control module (ECM) checks the signal cable for the turbocharger (TC) control valve.

The diagnostic trouble code (DTC) is stored if the engine control module (ECM) detects that the voltage in the signal cable from the turbocharger (TC) control valve is too low.

The diagnostic trouble code (DTC) can be diagnosed during control of the boost pressure.

Substitute Value

- None.

Possible Source

- Short-circuit to supply voltage in the signal cable
- Damaged turbocharger (TC) control valve.

Fault symptom[s]

- Malfunction indicator lamp (MIL) lit.

SIGNAL TOO LOW. INTERMITTENT FAULT

CHECKING COMPONENT AND WIRING

Check cables between engine control module (ECM) #A38 (#A38) and turbocharger (TC) control valve #2 for an intermittent short-circuit to ground according to **SHORT-CIRCUIT TO GROUND, INTERMITTENT FAULTS** .

Remedy as necessary

Other information

- To connect the breakout box, see **CONNECTING THE BREAKOUT BOX**
- To access/replace the turbocharger (TC) control valve, see **REPLACING THE TURBOCHARGER (TC) CONTROL VALVE** .
- Turbocharger (TC) control valve #1 has Ubat power supply from the system relay.
- For 5 cylinder turbocharged engines -2004, see **SIGNAL DESCRIPTION**
- For 5 cylinder turbocharged engines 2005-, see **SIGNAL SPECIFICATION** .
- For 6 cylinder engines -2004, see **SIGNAL SPECIFICATION**
- For 6 cylinder engines 2005-, see **SIGNAL SPECIFICATION** .

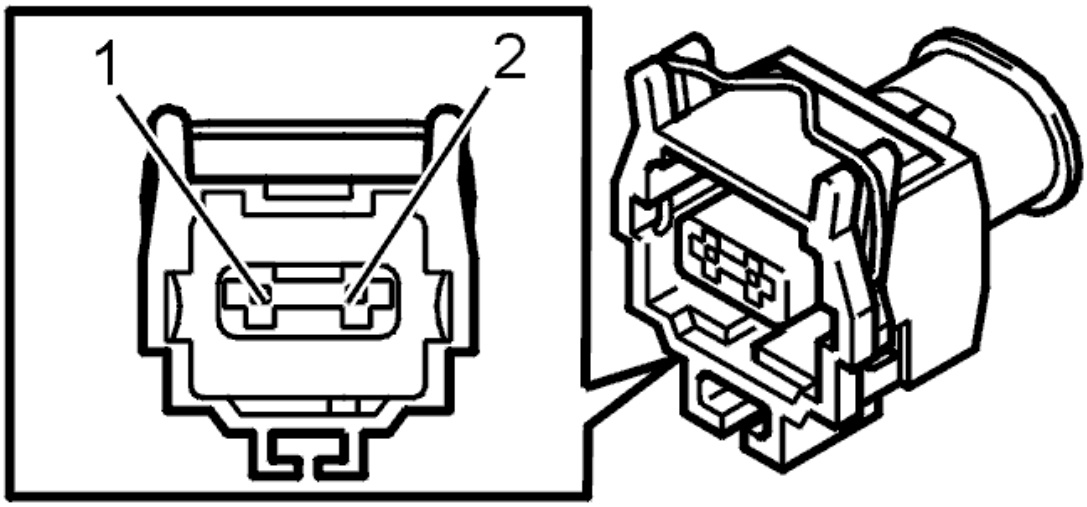

Fig. 36: Brake Pedal Position Sensor Connector Terminal Identification
Courtesy of VOLVO CARS CORPORATION

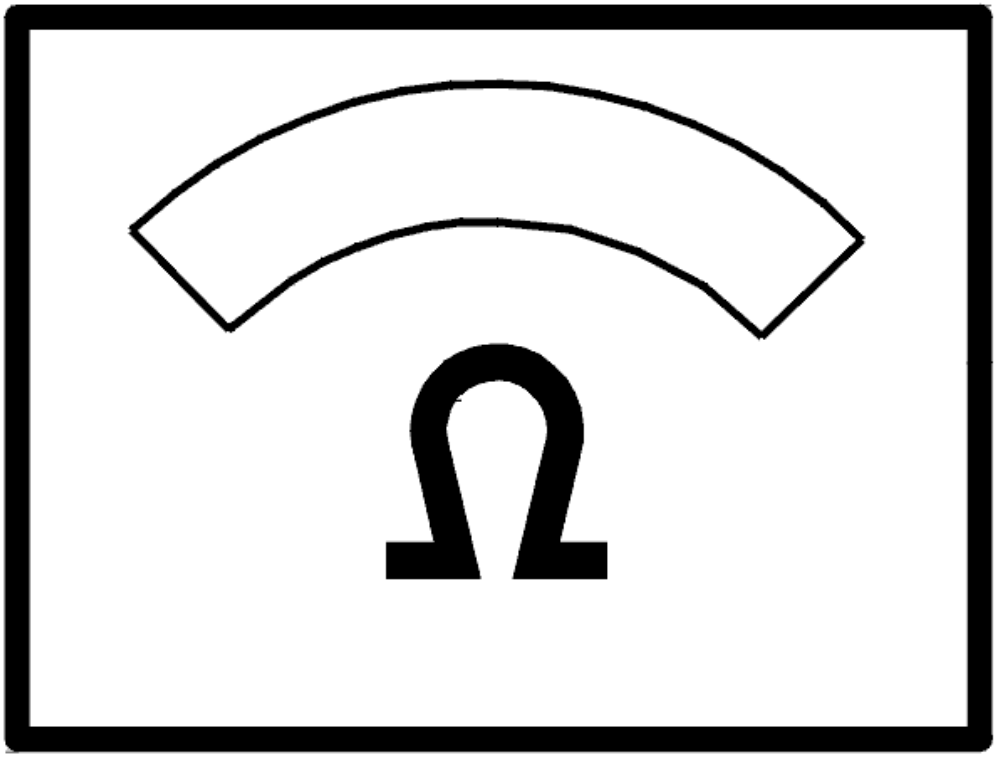

Fig. 37: Identifying Ohm Meter
Courtesy of VOLVO CARS CORPORATION

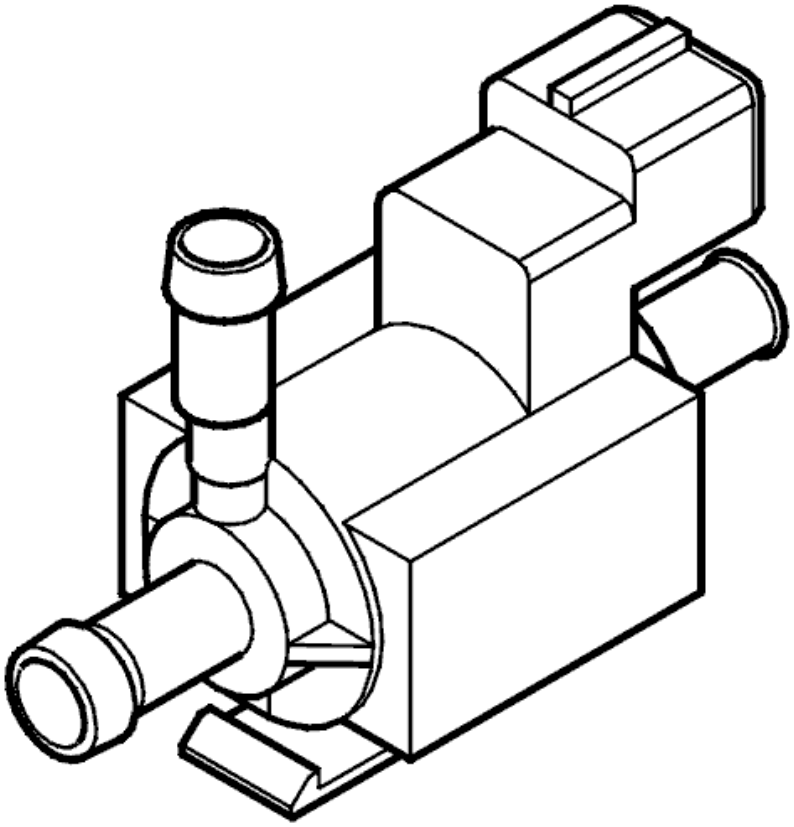

Fig. 38: Identifying Turbocharger Control Valve
Courtesy of VOLVO CARS CORPORATION

- **Continue**

  Refer to **INFORMATION**

INFORMATION

FAULT-TRACING INFORMATION

If the fault is intermittent, do not verify fault-tracing if the fault does not recur.

It is possible to view the information again, or leave fault-tracing for this diagnostic trouble code (DTC).

ECM-600D: TURBOCHARGER (TC) CONTROL VALVE. SIGNAL TOO LOW. INTERMITTENT FAULT (B6294T; 2005-2006)

DIAGNOSTIC TROUBLE CODE (DTC) INFORMATION ECM-600D

see **DIAGNOSTIC TROUBLE CODE (DTC) INFORMATION ECM-600D**

SIGNAL TOO LOW. INTERMITTENT FAULT

see **SIGNAL TOO LOW. INTERMITTENT FAULT**

ECM-600D: TURBOCHARGER (TC) CONTROL VALVE. SIGNAL TOO LOW. PERMANENT FAULT (B5254T2; 2005-2007)

DIAGNOSTIC TROUBLE CODE (DTC) INFORMATION ECM-600D

see **DIAGNOSTIC TROUBLE CODE (DTC) INFORMATION ECM-600D**

SIGNAL TOO LOW. PERMANENT FAULT

CHECKING COMPONENT AND WIRING

Check cable between engine control module (ECM) #A38 (#A38) and turbocharger (TC) control valve #2 for a short-circuit to ground according to **SHORT-CIRCUIT TO GROUND, PERMANENT FAULTS** .

Remedy as necessary

Other information:

- To connect the breakout box, see **CONNECTING THE BREAKOUT BOX** .
- To access/replace the turbocharger (TC) control valve, see **REPLACING THE TURBOCHARGER (TC) CONTROL VALVE** .
- Turbocharger (TC) control valve #1 has Ubat power supply from the system relay.
- For 5 cylinder turbocharged engines -2004, see **SIGNAL DESCRIPTION**
- For 5 cylinder turbocharged engines 2005-, see **SIGNAL SPECIFICATION** .
- For 6 cylinder engines -2004, see **SIGNAL SPECIFICATION**
- For 6 cylinder engines 2005-, see **SIGNAL SPECIFICATION** .

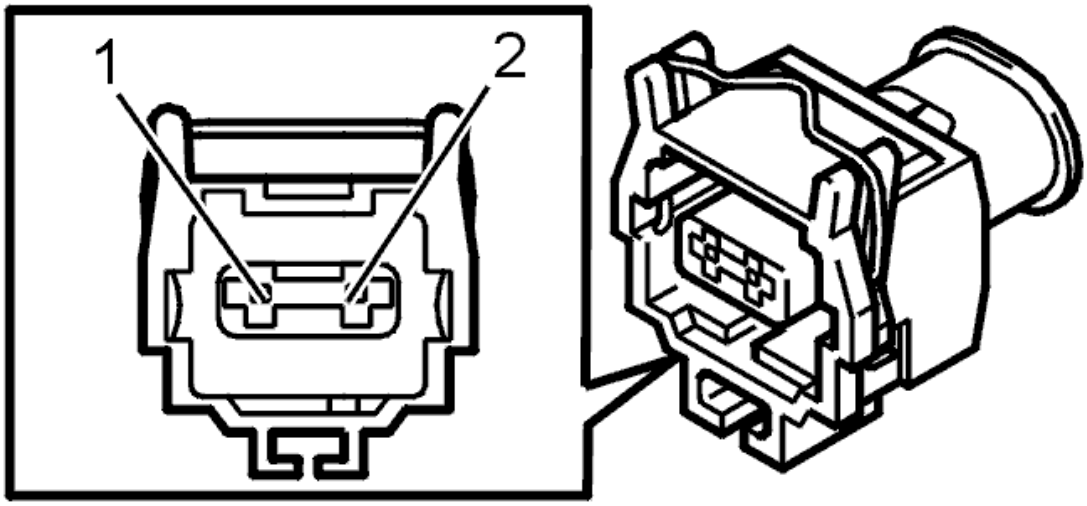

Fig. 39: Brake Pedal Position Sensor Connector Terminal Identification
Courtesy of VOLVO CARS CORPORATION

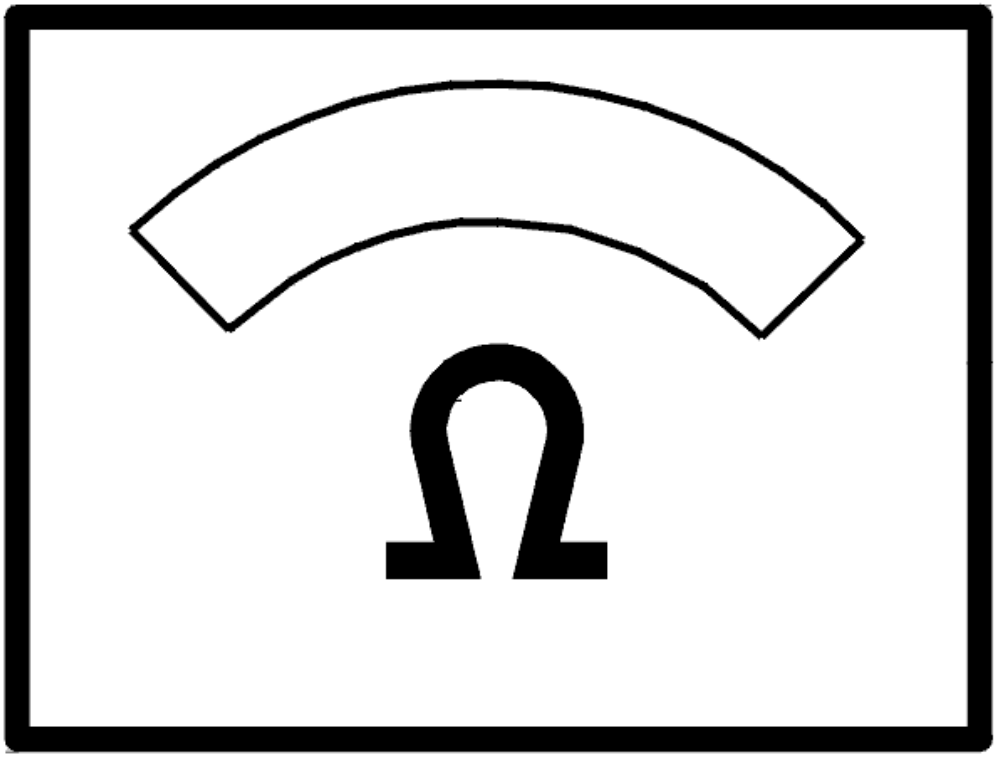

Fig. 40: Identifying Ohm Meter
Courtesy of VOLVO CARS CORPORATION

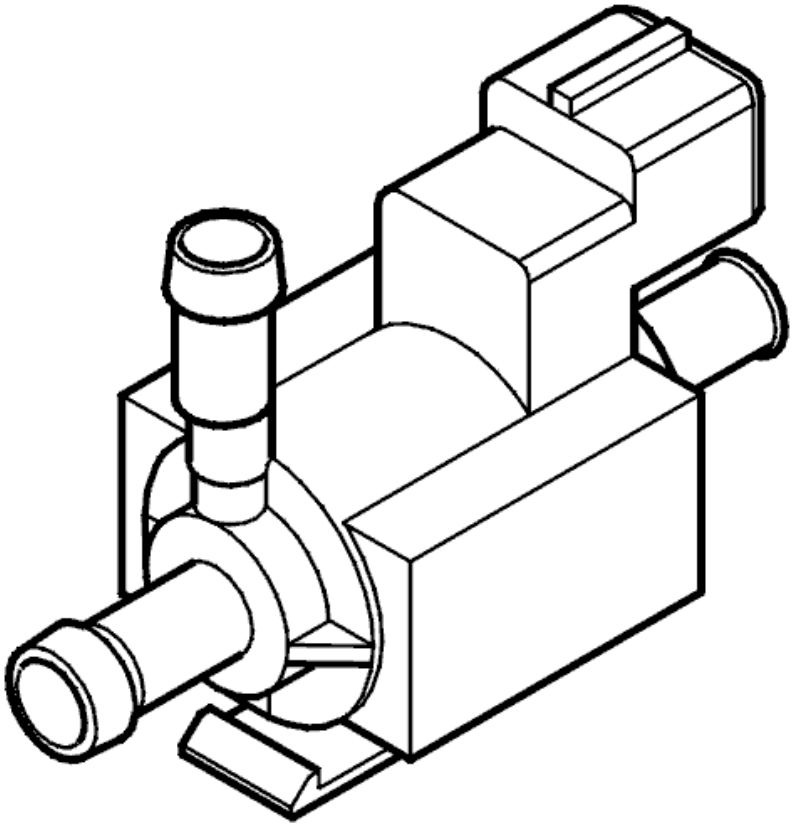

Fig. 41: Identifying Turbocharger Control Valve
Courtesy of VOLVO CARS CORPORATION

- **Continue**

  Refer to **VERIFICATION**

VERIFICATION

VERIFICATION

HINT: After carrying out the repair, check that the fault has been remedied.

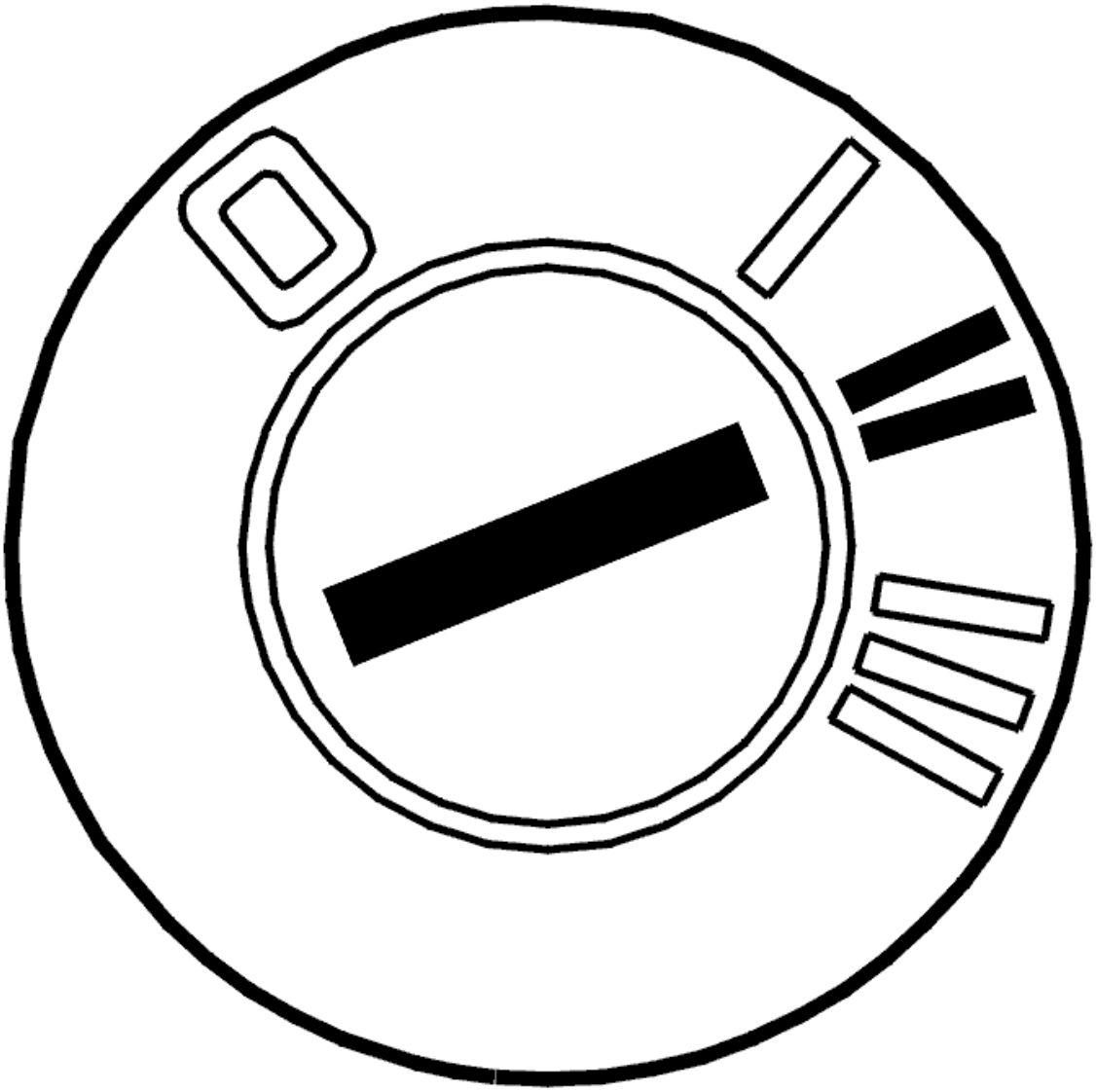

Fig. 42: Identifying Ignition ON
Courtesy of VOLVO CARS CORPORATION

- Ignition off.
- Reinstall connectors, components etc.
- Ignition on.
- Activate turbocharger (TC) control valve
- A click should be heard from the turbocharger (TC) control valve.
- Check that the function is OK.

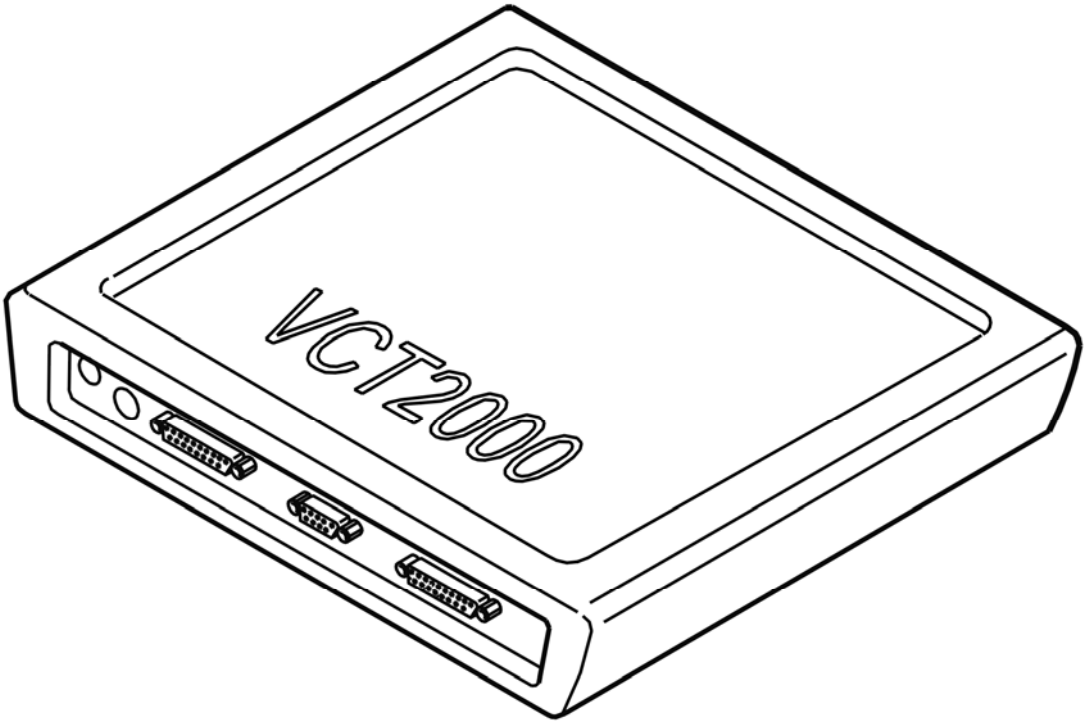

Fig. 43: Identifying VCT2000 Diagnostic Tool Symbol In VIDA
Courtesy of VOLVO CARS CORPORATION

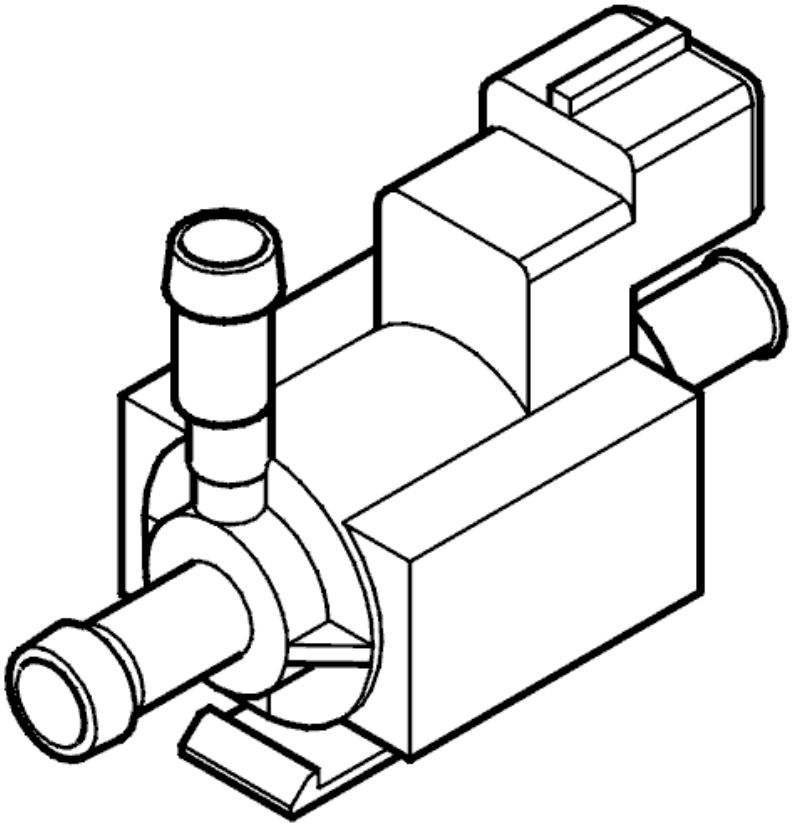

Fig. 44: Identifying Turbocharger Control Valve
Courtesy of VOLVO CARS CORPORATION

Is function OK ?

- **YES**

  VERIFIED: Troubleshooting has been completed.

- **NO**

  Refer to **INFORMATION**

INFORMATION

FAULT-TRACING INFORMATION

The fault should have been detected and remedied. As this is not the case fault-tracing has failed.

Exit fault-tracing for this diagnostic trouble code (DTC) or make another attempt.

ECM-600D: TURBOCHARGER (TC) CONTROL VALVE. SIGNAL TOO LOW. PERMANENT FAULT (B6294T; 2005-2006)

DIAGNOSTIC TROUBLE CODE (DTC) INFORMATION ECM-600D

see **DIAGNOSTIC TROUBLE CODE (DTC) INFORMATION ECM-600D**

SIGNAL TOO LOW. PERMANENT FAULT

see **SIGNAL TOO LOW. PERMANENT FAULT**

ECM-601C: TURBOCHARGER (TC) CONTROL SYSTEM, BOOST PRESSURE FAULT. SIGNAL TOO HIGH (B5254T2; 2005-2007)

DIAGNOSTIC TROUBLE CODE (DTC) INFORMATION ECM-601C

Condition

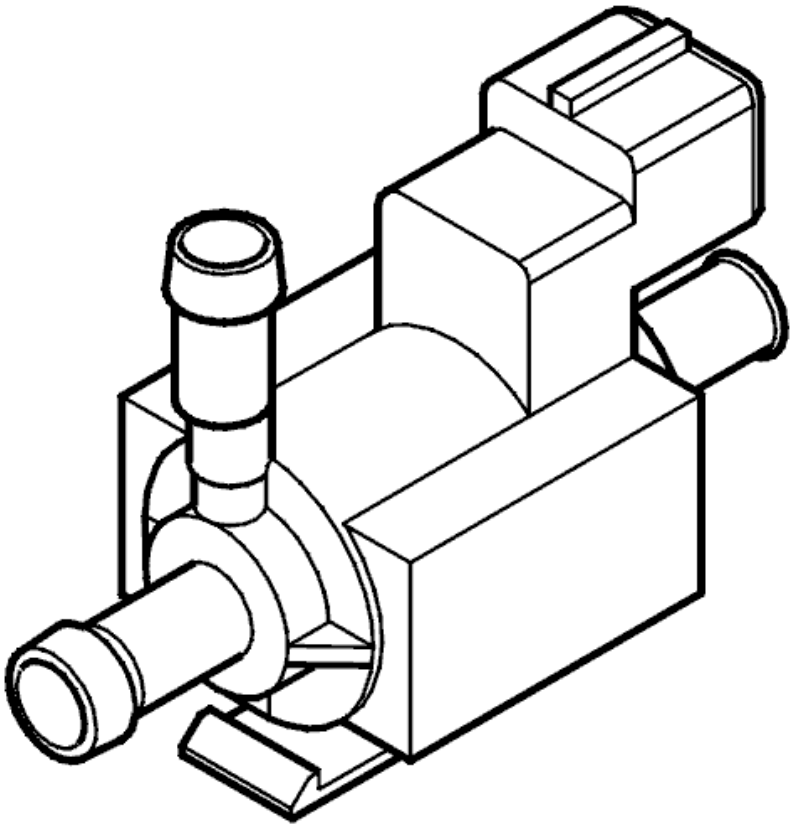

Fig. 45: Identifying Turbocharger Control Valve
Courtesy of VOLVO CARS CORPORATION

The engine control module (ECM) checks the function of the turbocharger (TC) control system.

The diagnostic trouble code (DTC) is stored if the pressure measured by the boost pressure sensor is higher than a calculated desired value. This is interpreted as a fault by the control module.

The diagnostic trouble code (DTC) can be diagnosed when the engine is running.

Substitute Value

- Reduced throttle angle.

Possible Source

- Damaged turbocharger (TC) control valve
- The hoses between the pressure servo for the boost pressure control (BPC) valve and the turbocharger (TC) control valve have come loose or are blocked or damaged
- The hoses between the turbocharger (TC) control valve and the charge air pipe (between the turbocharger (TC) and the charge air cooler (CAC)) are blocked or damaged
- Pressure servo for the boost pressure control (BPC) valve is incorrectly adjusted
- Damaged boost pressure control (BPC) valve pressure servo
- Sticking boost pressure control (BPC) valve.

Fault symptom[s]

- Poor performance.

SIGNAL TOO HIGH

CHECKING HOSES AND THE TURBOCHARGER (TC) CONTROL VALVE

Check the hoses between the pressure servo for the boost pressure control (BPC) valve and the turbocharger (TC) control valve. Check that the hoses are not trapped, blocked or damaged.

Check the hoses between the turbocharger (TC) control valve and the charge air pipe (between the turbocharger (TC) and the charge air cooler (CAC)). Check that the hoses are not trapped, blocked or damaged.

Check the turbocharger (TC) control valve by activating it. The turbocharger (TC) control valve must click when it is activated.

5 cylinder engines:

Check the setting of the pressure servo for the boost pressure control (BPC) valve. Check the boost pressure control (BPC) valve. Check that the pressure servo and the boost pressure control (BPC) valve are functioning correctly and are not sticking:

see **WASTEGATE VALVE, ADJUSTING**

6 cylinder engines:

Check the setting of the pressure servo for the boost pressure control (BPC) valve. Check the boost pressure control (BPC) valve. Check that the pressure servo and the boost pressure control (BPC) valve are functioning

correctly and are not sticking:

see **PRESSURE REGULATOR, CHECKING/ADJUSTING**

Other information:

- see **REPLACING THE TURBOCHARGER (TC) CONTROL VALVE** .

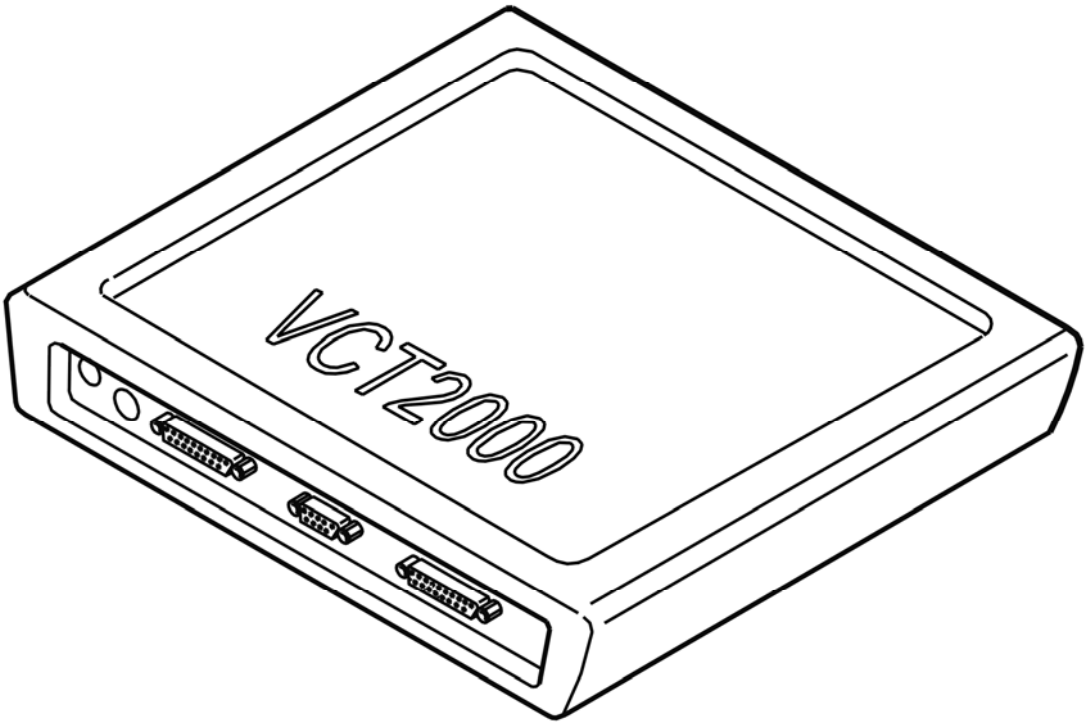

Fig. 46: Identifying VCT2000 Diagnostic Tool Symbol In VIDA
Courtesy of VOLVO CARS CORPORATION

- **Continue**

  Refer to **VERIFICATION**

VERIFICATION

VERIFICATION

HINT: After carrying out the repair, check that the fault has been remedied.

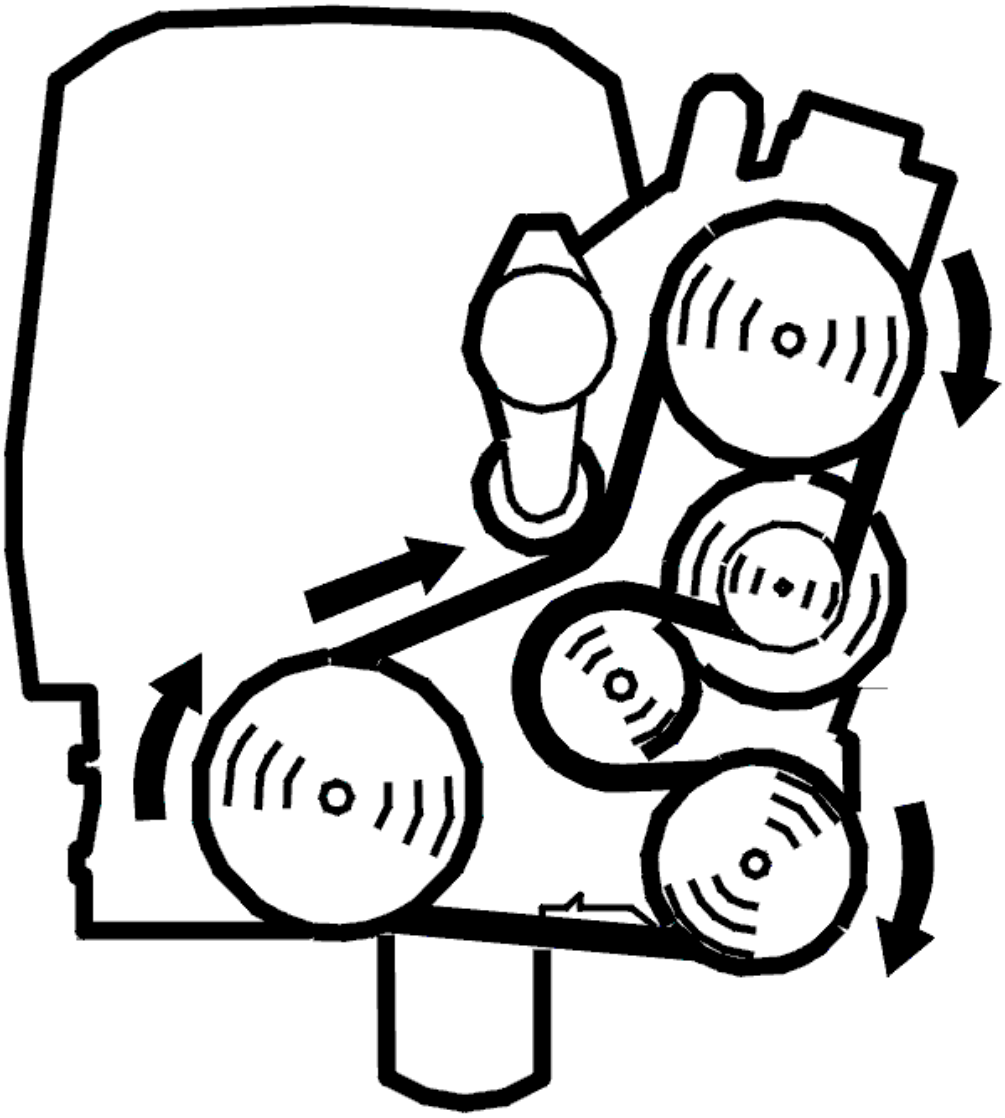

Fig. 47: Belt Routing / Engine Idling - Volvo
Courtesy of VOLVO CARS CORPORATION

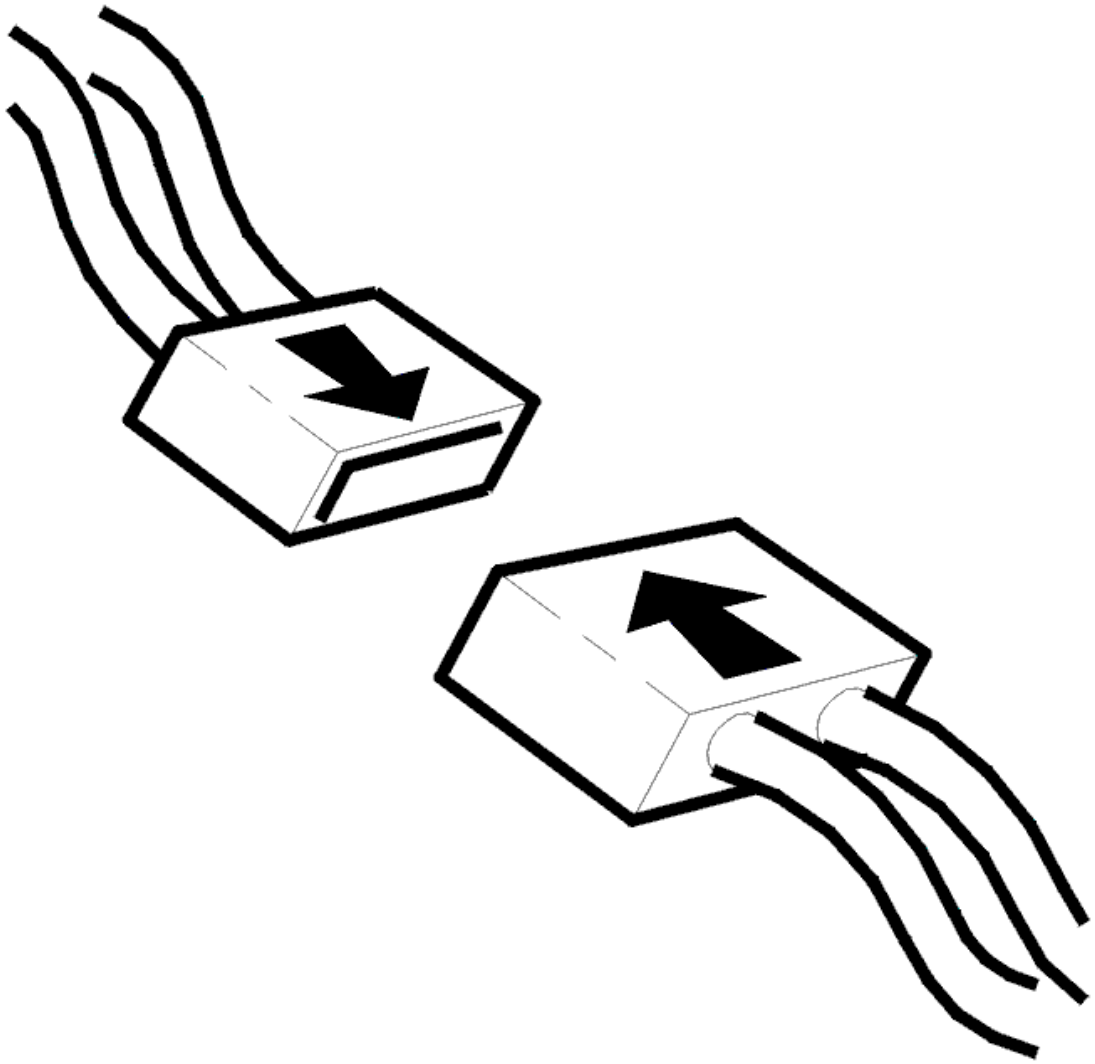

Fig. 48: Connecting Connector
Courtesy of VOLVO CARS CORPORATION

- Ignition off
- Reconnect the connectors, reinstall components etc.
- Test drive the vehicle on the road. Ensure that high boost pressure is reached (high load) so that the engine control module (ECM) can run the diagnostic
- Connect VCT2000 (or appropriate scan tool) to the data link connector (DLC) without switching off the engine.

NOTE: **If the engine is switched off, the stored fault status will be erased and the test drive will have to be repeated.**

Read off the diagnostic status and fault status for the diagnostic trouble code (DTC) by selecting the relevant diagnostic trouble code (DTC) from the list.

Check the fault status for the diagnostic trouble code (DTC) when the diagnostic is "Complete". If the function is correct, the fault status must be "No fault found" when the diagnostic is complete.

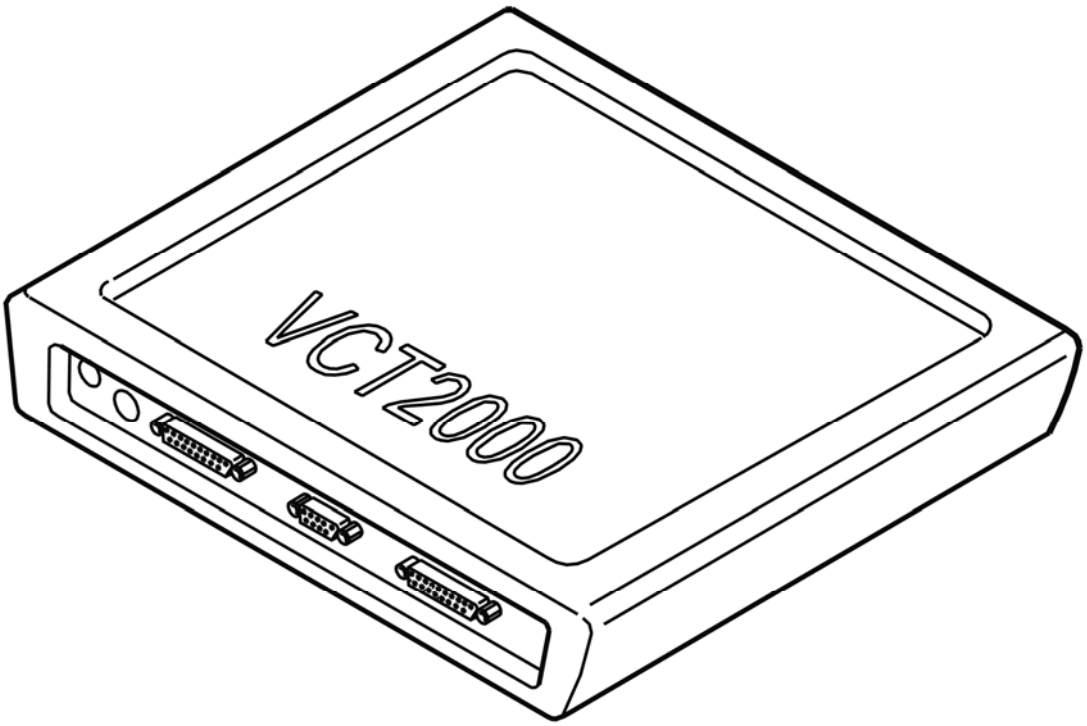

Fig. 49: Identifying VCT2000 Diagnostic Tool Symbol In VIDA
Courtesy of VOLVO CARS CORPORATION

Is the function OK?

- **YES**

  VERIFIED: Troubleshooting has been completed.

- **NO**

  Refer to **INFORMATION**

INFORMATION

FAULT-TRACING INFORMATION

The fault should have been detected and remedied. As this is not the case fault-tracing has failed.

Exit fault-tracing for this diagnostic trouble code (DTC) or make another attempt.

ECM-601C: TURBOCHARGER (TC) CONTROL SYSTEM, BOOST PRESSURE FAULT. SIGNAL TOO HIGH (B6294T; 2005-2006)

DIAGNOSTIC TROUBLE CODE (DTC) INFORMATION ECM-601C

see **DIAGNOSTIC TROUBLE CODE (DTC) INFORMATION ECM-601C**

SIGNAL TOO HIGH

see **SIGNAL TOO HIGH**

ECM-602D: TURBOCHARGER (TC) CONTROL SYSTEM, FLOW FAULT. SIGNAL TOO LOW (B5254T2; 2005-2007)

DIAGNOSTIC TROUBLE CODE (DTC) INFORMATION ECM-602D

Condition

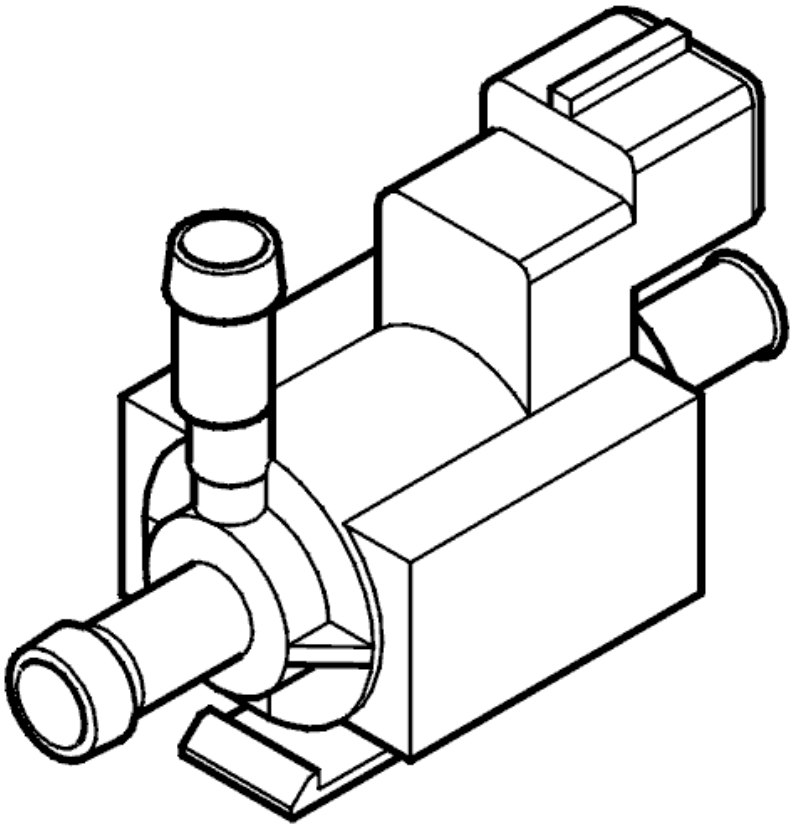

Fig. 50: Identifying Turbocharger Control Valve
Courtesy of VOLVO CARS CORPORATION

The engine control module (ECM) checks the function of the turbocharger (TC) control system.

The diagnostic trouble code (DTC) is stored if the control module deployment of the turbocharger (TC) control valve is high (the control module requests maximum boost pressure) and the measured boost pressure (from the boost pressure sensor) is lower than a calculated desired value.

The diagnostic trouble code (DTC) can be diagnosed when the engine speed (RPM) and load are above a certain value.

Substitute Value

- Reduced boost pressure.

Possible Source

- Air leakage in the intake system.
- Damaged turbocharger (TC) control valve.
- Incorrect adjustment of the pressure servo for the boost pressure control (BPC) valve
- Sticking boost pressure control (BPC) valve.
- Damaged turbo charger (TC).

Fault symptom[s]

- Poor performance.

SIGNAL TOO LOW

CHECKING FOR AIR LEAKAGE

Fig. 51: Identifying Ignition In Off Position
Courtesy of VOLVO CARS CORPORATION

- Ignition off.

Check the intake system for air leakage and loose charge-air pipe.

see **AIR LEAKAGE IN THE INTAKE SYSTEM, CHECKING**

Does the problem persist?

- **YES**

Refer to **CHECKING HOSES AND THE TURBOCHARGER (TC) CONTROL VALVE**

- **NO**

  Refer to **VERIFICATION**

CHECKING HOSES AND THE TURBOCHARGER (TC) CONTROL VALVE

Check the turbocharger (TC) control valve by activating it. The turbocharger (TC) control valve must click when it is activated.

Check the setting of the pressure servo for the boost pressure control (BPC) valve. Check the boost pressure control (BPC) valve. Check that the pressure servo and the boost pressure control (BPC) valve are functioning correctly and are not sticking: **WASTEGATE VALVE, ADJUSTING**

Other information

- see **REPLACING THE TURBOCHARGER (TC) CONTROL VALVE**
- see **QUICK CHECK, TURBOCHARGER (TC)**
- see **TURBOCHARGER (TC), REPLACING**

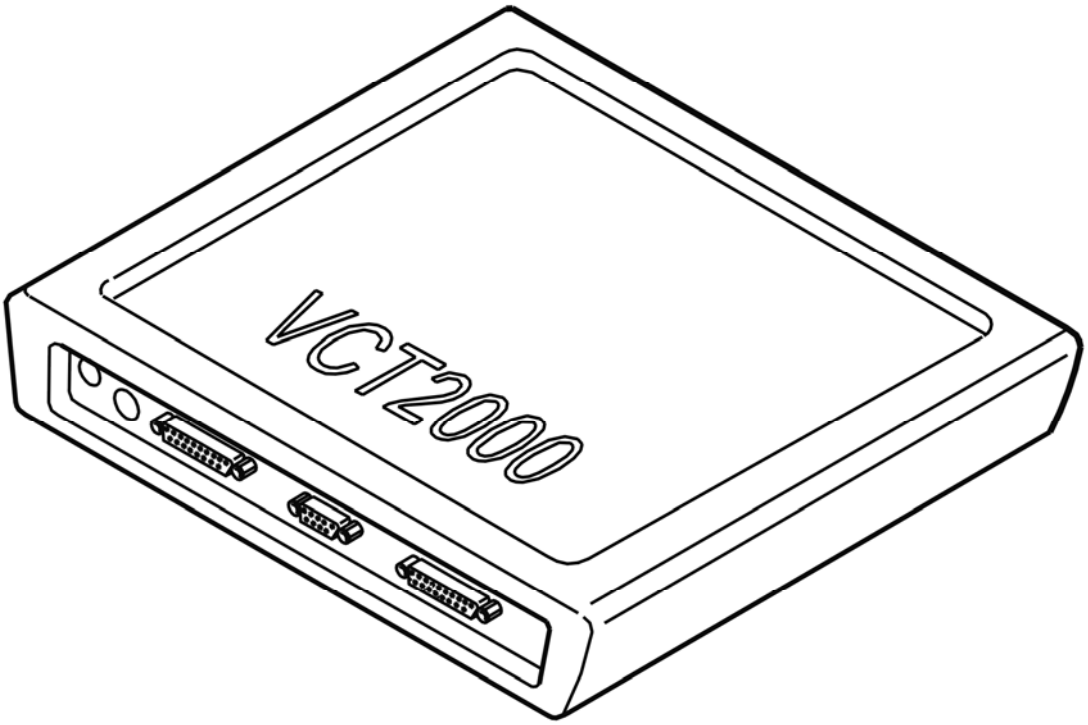

Fig. 52: Identifying VCT2000 Diagnostic Tool Symbol In VIDA
Courtesy of VOLVO CARS CORPORATION

- **Continue**

  Refer to **VERIFICATION**

VERIFICATION

VERIFICATION

HINT: After carrying out the repair, check that the fault has been remedied.

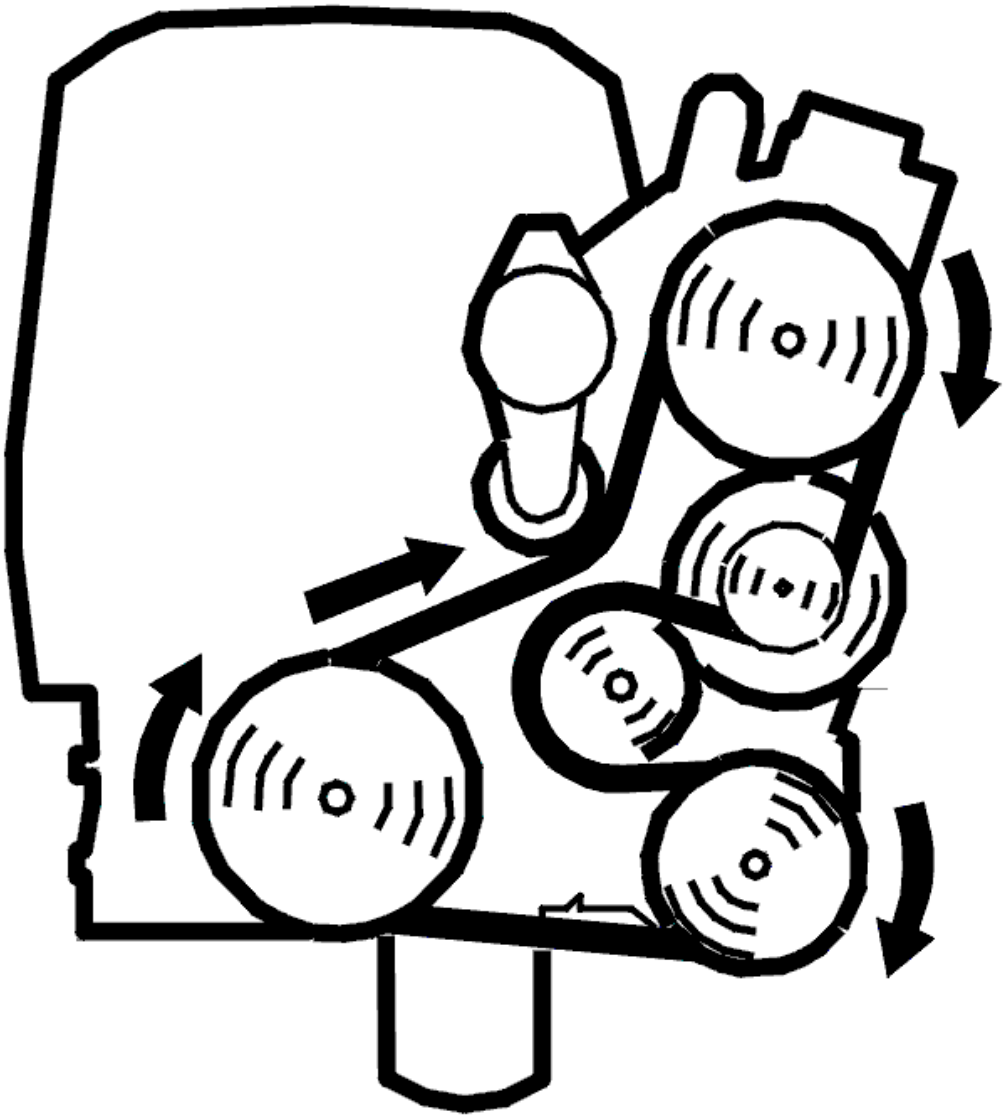

Fig. 53: Belt Routing / Engine Idling - Volvo
Courtesy of VOLVO CARS CORPORATION

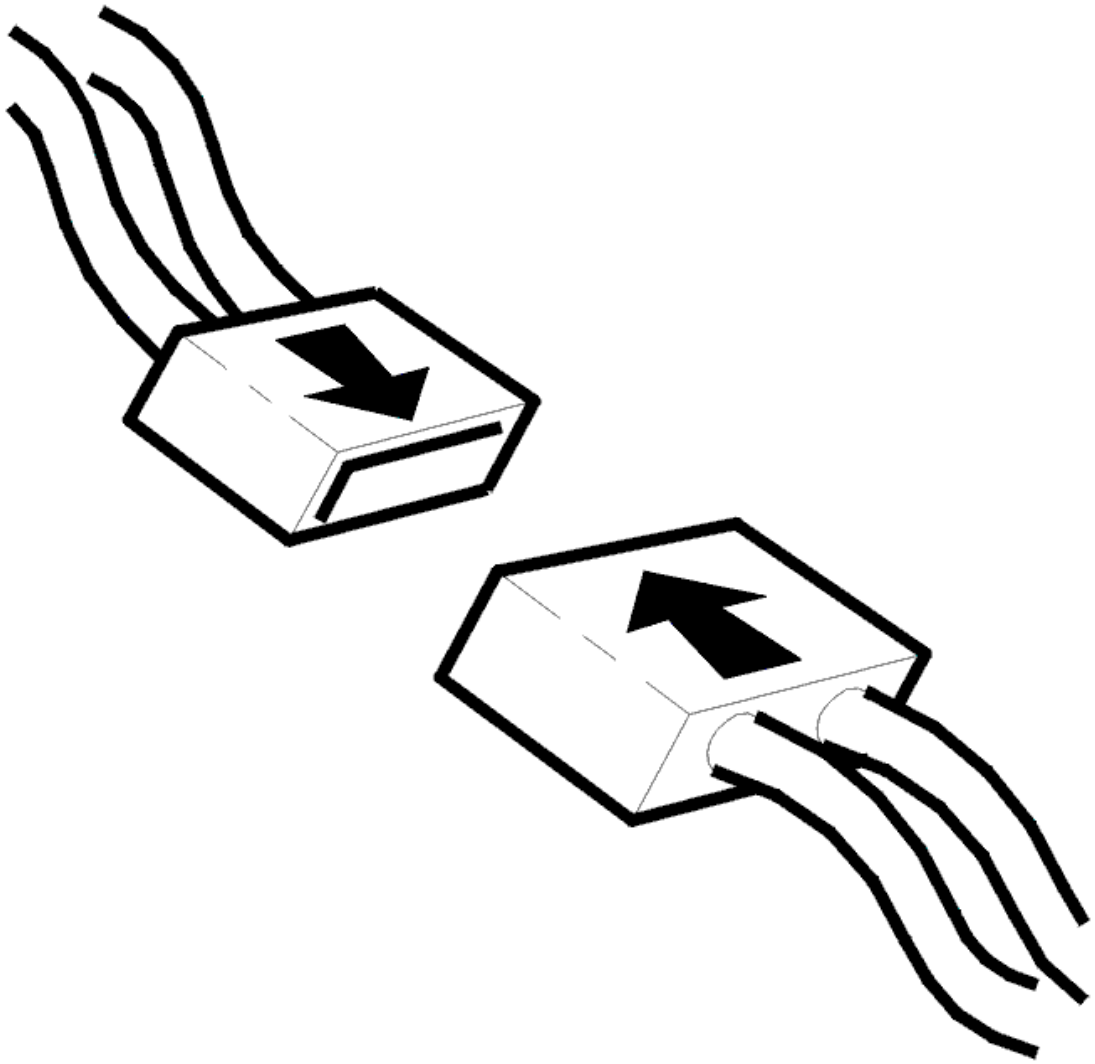

Fig. 54: Connecting Connector
Courtesy of VOLVO CARS CORPORATION

- Ignition off
- Reconnect the connectors, reinstall components etc.
- Test drive the vehicle on the road. Ensure that high boost pressure is reached (high load) so that the engine control module (ECM) can run the diagnostic
- Connect VCT2000 (or appropriate scan tool) to the data link connector (DLC) without switching off the engine.

NOTE: **If the engine is switched off, the stored fault status will be erased and the test drive will have to be repeated.**

Read off the diagnostic status and fault status for the diagnostic trouble code (DTC) by selecting the relevant diagnostic trouble code (DTC) from the list.

Check the fault status for the diagnostic trouble code (DTC) when the diagnostic is "Complete". If the function is correct, the fault status must be "No fault found" when the diagnostic is complete.

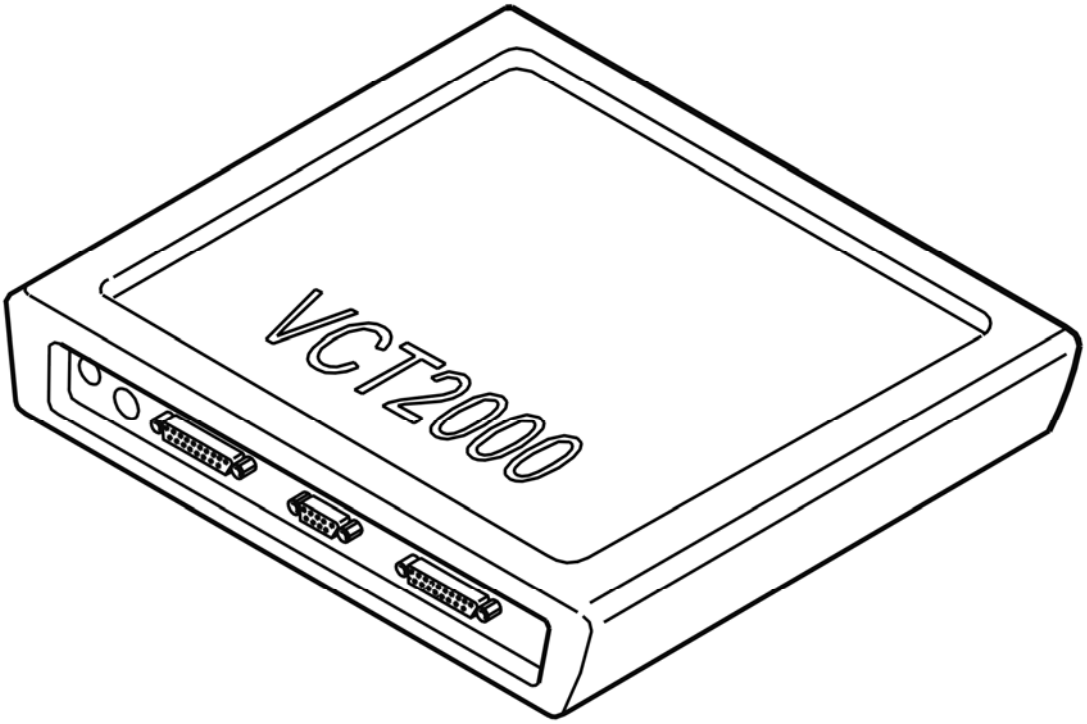

Fig. 55: Identifying VCT2000 Diagnostic Tool Symbol In VIDA
Courtesy of VOLVO CARS CORPORATION

Is the function OK?

- **YES**

  VERIFIED: Troubleshooting has been completed.

- **NO**

  Refer to **INFORMATION**

INFORMATION

FAULT-TRACING INFORMATION

The fault should have been detected and remedied. As this is not the case fault-tracing has failed.

Exit fault-tracing for this diagnostic trouble code (DTC) or make another attempt.

ECM-602D: TURBOCHARGER (TC) CONTROL SYSTEM, FLOW FAULT. SIGNAL TOO LOW (B6294T; 2005-2006)

DIAGNOSTIC TROUBLE CODE (DTC) INFORMATION ECM-602D

see **DIAGNOSTIC TROUBLE CODE (DTC) INFORMATION ECM-602D**

ECM-602D: TURBOCHARGER (TC) CONTROL SYSTEM, FLOW FAULT. SIGNAL TOO LOW (B6294T, L. H. D; 2005-2006)

SIGNAL TOO LOW

CHECKING FOR AIR LEAKAGE

Fig. 56: Identifying Ignition In Off Position
Courtesy of VOLVO CARS CORPORATION

- Ignition off.

Check the intake system for air leakage and loose charge-air pipe.

see **AIR LEAKAGE IN THE INTAKE SYSTEM, CHECKING**

Does the problem persist?

- **YES**

  Refer to **CHECKING HOSES AND THE TURBOCHARGER (TC) CONTROL VALVE**

- **NO**

  Refer to **VERIFICATION**

CHECKING HOSES AND THE TURBOCHARGER (TC) CONTROL VALVE

Check the turbocharger (TC) control valve by activating it. The turbocharger (TC) control valve must click when it is activated.

Check the setting of the pressure servo for the boost pressure control (BPC) valve. Check the boost pressure control (BPC) valve. Check that the pressure servo and the boost pressure control (BPC) valve are functioning correctly and are not sticking:

see **PRESSURE REGULATOR, CHECKING/ADJUSTING**

Other information:

- see **REPLACING THE TURBOCHARGER (TC) CONTROL VALVE** .
- see **QUICK CHECK, TURBOCHARGER (TC)**
- see **TURBOCHARGER (TC), REPLACING**

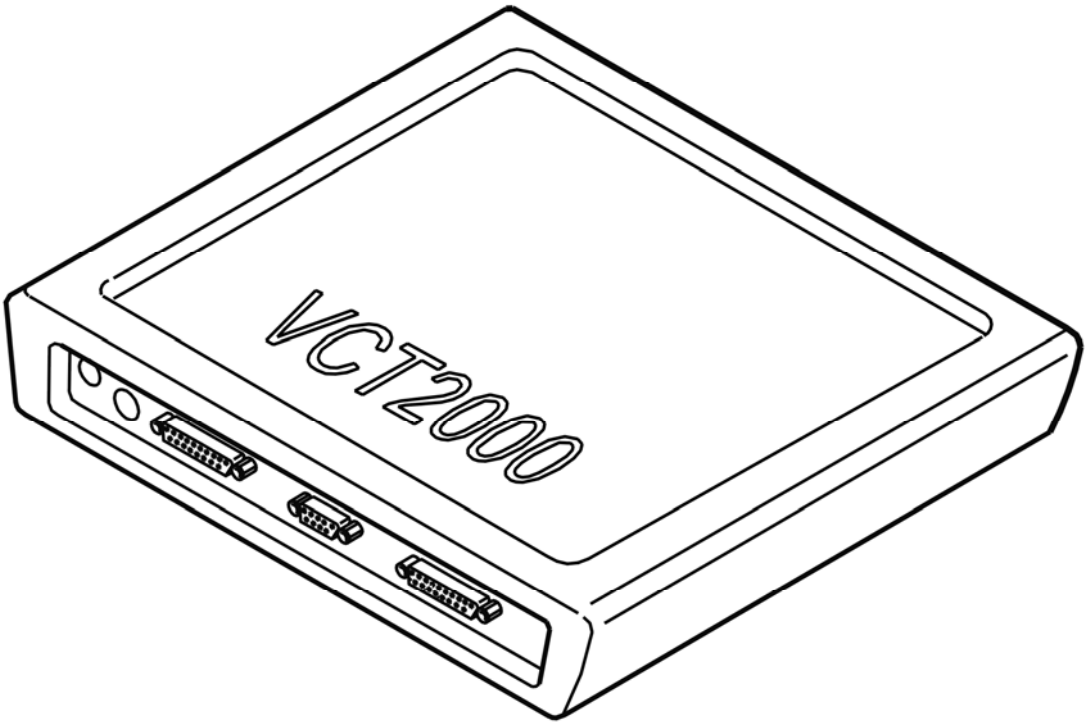

Fig. 57: Identifying VCT2000 Diagnostic Tool Symbol In VIDA
Courtesy of VOLVO CARS CORPORATION

- **Continue**

  Refer to **VERIFICATION**

VERIFICATION

VERIFICATION

HINT: After carrying out the repair, check that the fault has been remedied.

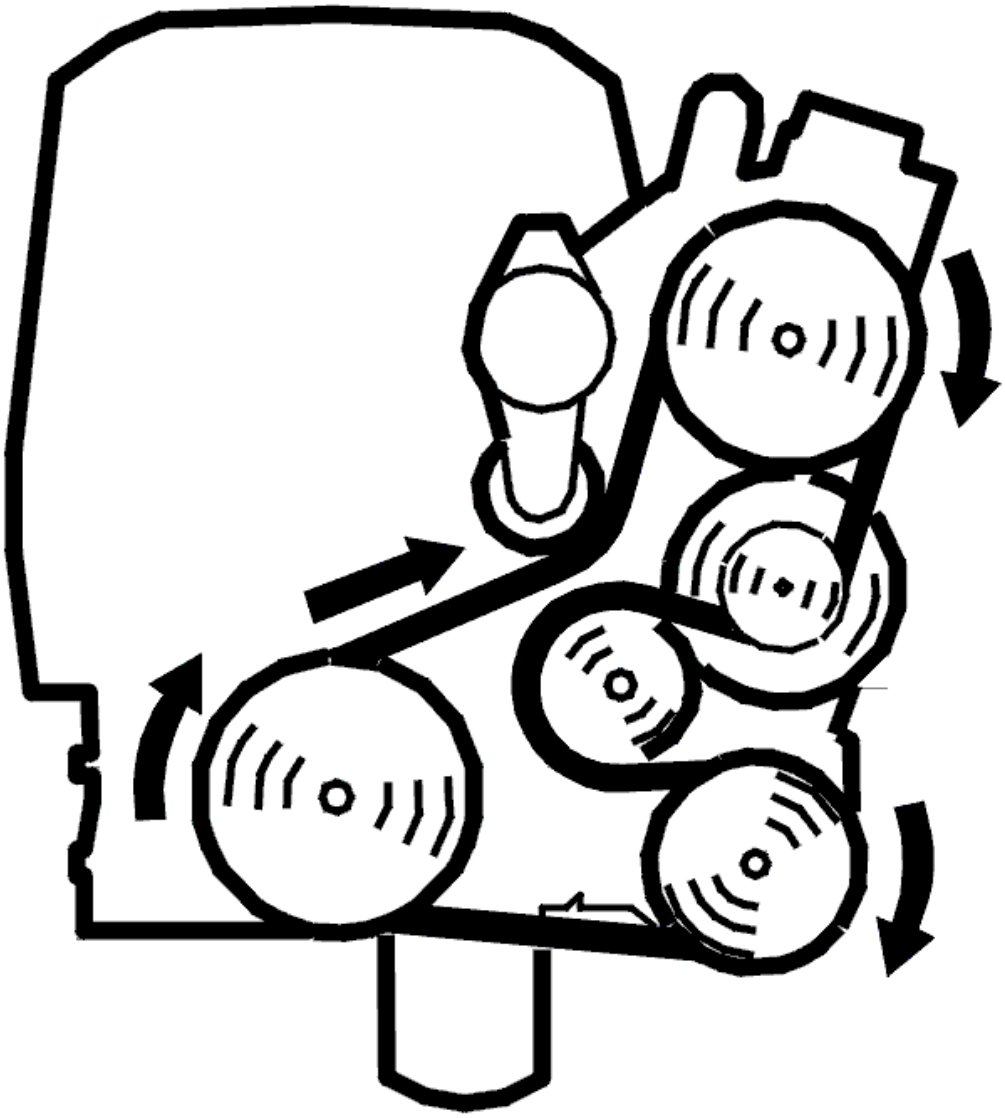

Fig. 58: Belt Routing / Engine Idling - Volvo
Courtesy of VOLVO CARS CORPORATION

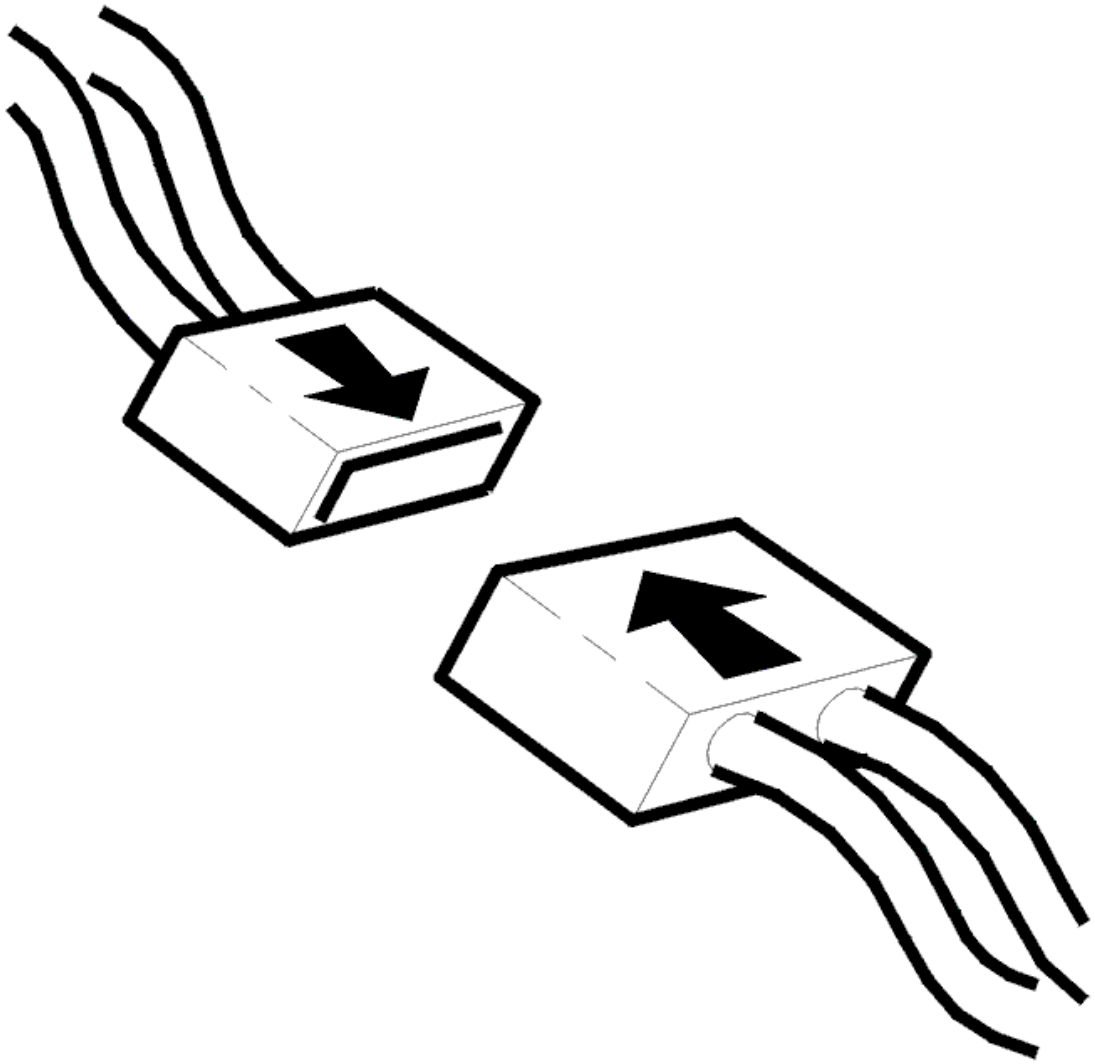

Fig. 59: Connecting Connector
Courtesy of VOLVO CARS CORPORATION

- Ignition off
- Reconnect the connectors, reinstall components etc.
- Test drive the vehicle on the road. Ensure that high boost pressure is reached (high load) so that the engine control module (ECM) can run the diagnostic
- Connect VCT2000 (or appropriate scan tool) to the data link connector (DLC) without switching off the engine.

NOTE: **If the engine is switched off, the stored fault status will be erased and the test drive will have to be repeated.**

Read off the diagnostic status and fault status for the diagnostic trouble code (DTC) by selecting the relevant diagnostic trouble code (DTC) from the list.

Check the fault status for the diagnostic trouble code (DTC) when the diagnostic is "Complete". If the function is correct, the fault status must be "No fault found" when the diagnostic is complete.

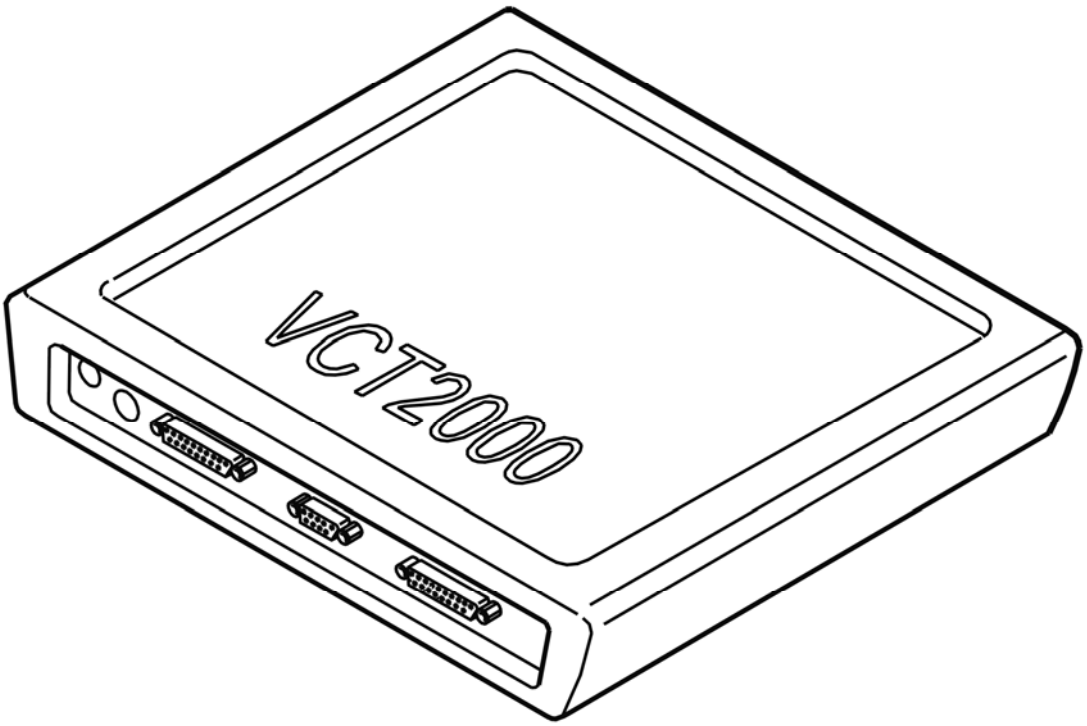

Fig. 60: Identifying VCT2000 Diagnostic Tool Symbol In VIDA
Courtesy of VOLVO CARS CORPORATION

Is the function OK?

- **YES**

  VERIFIED: Troubleshooting has been completed.

- **NO**

  Refer to **INFORMATION**

INFORMATION

FAULT-TRACING INFORMATION

The fault should have been detected and remedied. As this is not the case fault-tracing has failed.

Exit fault-tracing for this diagnostic trouble code (DTC) or make another attempt.

ECM-6100: ENGINE COOLING FAN (FC) CONTROL MODULE. FAULTY SIGNAL (B5254T2; B6294T; 2003-2004)

DIAGNOSTIC TROUBLE CODE (DTC) INFORMATION ECM-6100

Condition

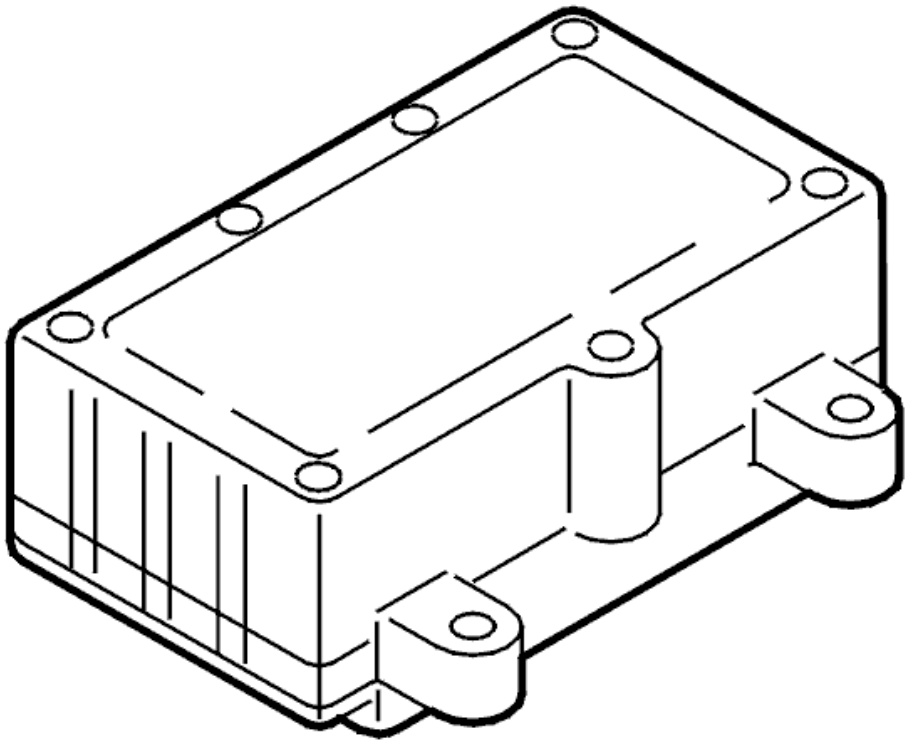

Fig. 61: Identifying Electronic Control Module
Courtesy of VOLVO CARS CORPORATION

Diagnostic Trouble Code (DTC) ECM-6100 is stored in the engine control module (ECM) if the engine cooling fan (FC) control module registers that the fan blades are obstructed or that there is no power supply. The diagnostic trouble code (DTC) is also stored if an internal fault in the engine cooling fan (FC) control module is registered. The diagnostic trouble code (DTC) is diagnosed when the engine is idling.

NOTE: **The electric cooling fan may have a post-running time of up to approx. 6 minutes after the engine has been shut off. The time for the electric cooling fan's post-running depends on the engine's temperature, temperature in the engine compartment as well as the pressure level in the AC system.**

Substitute Value

- Engine cooling fan (FC) switched off.

Possible Source

Signal too low:

- Contact resistance or oxidation in the connectors
- Supply voltage missing to the engine cooling fan (FC) control module
- Open-circuit or short-circuit to ground in the wiring
- Defective engine fan control module.

Signal too high:

- Obstructed fan blade
- Defective engine fan control module.

Signal missing:

- Defective engine fan control module.

Faulty signal:

- Defective engine fan control module.

Fault symptom[s]

- Overheating engine.
- Electric cooling fan does not operate

FAULTY SIGNAL

CHECKING THE COMPONENT

Fig. 62: Identifying Ignition On Position
Courtesy of VOLVO CARS CORPORATION

- Ignition off.
- Check that the engine cooling fan (FC) blade rotates easily. Check that nothing is obstructing the engine cooling fan (FC) blade.
- Remedy as necessary.
- Ignition on.

- Check all speeds of the engine cooling fan (FC).

  Activate the engine cooling fan (FC) using the VCT2000 (or appropriate scan tool).

Fig. 63: Identifying VCT2000 Diagnostic Tool Symbol In VIDA
Courtesy of VOLVO CARS CORPORATION

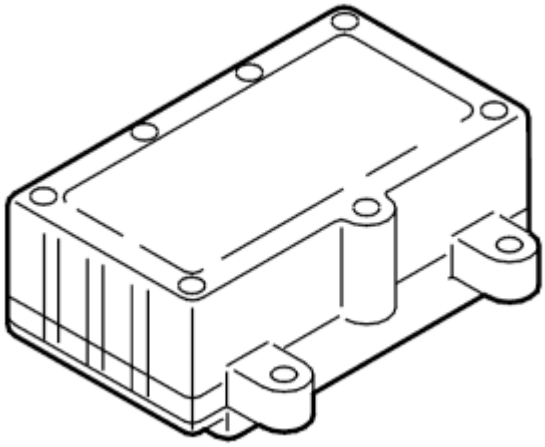

Fig. 64: Identifying Engine Fan Control Module
Courtesy of VOLVO CARS CORPORATION

- **Continue**

  Refer to **CHECKING THE COMPONENT AND WIRING**

CHECKING THE COMPONENT AND WIRING

Fig. 65: Identifying Ignition In Off Position
Courtesy of VOLVO CARS CORPORATION

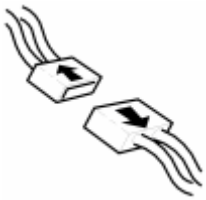

Fig. 66: Identifying Connectors
Courtesy of VOLVO CARS CORPORATION

- Ignition off.

CAUTION: Avoid touching the pins in the control module and the corresponding connector on the cable harness. There is a risk of static discharge which could damage the control module. Discharge yourself and tools to be used by holding the tool's metal part and touching a body part on the car just before starting to work.

If the engine cooling fan (FC) cannot be activated at any speed:

- Check the fuse, power supply cable and ground lead for the engine cooling fan (FC).
- Check the connector and wiring between the engine control module (ECM) and engine cooling fan (FC) module. Check for damage. Check for an open circuit. Check for a short circuit.

If the engine cooling fan (FC) can be activated at one or more speeds:

- Check the connectors to the engine cooling fan (FC) control module and Engine Control Module (ECM). Check for damage to pins and connections.
- Also check other connectors and connections that connect cables between Engine Control Module (ECM) and the control module for electric cooling fan.
- Check the wiring between the engine control module (ECM) and the engine cooling fan (FC) module. Check for damage.

Remedy as necessary.

Other information:

- see **CONNECTING THE BREAKOUT BOX**
- For 5 cylinder turbocharged engines -2004, see **SIGNAL DESCRIPTION**
- For 5 cylinder turbocharged engines 2005-, see **SIGNAL SPECIFICATION** .
- For 6 cylinder engines -2004, see **SIGNAL SPECIFICATION**
- For 6 cylinder engines 2005-, see **SIGNAL SPECIFICATION** .
- see **ELECTRIC COOLING FAN**
- see **CHECKING WIRING AND TERMINALS**

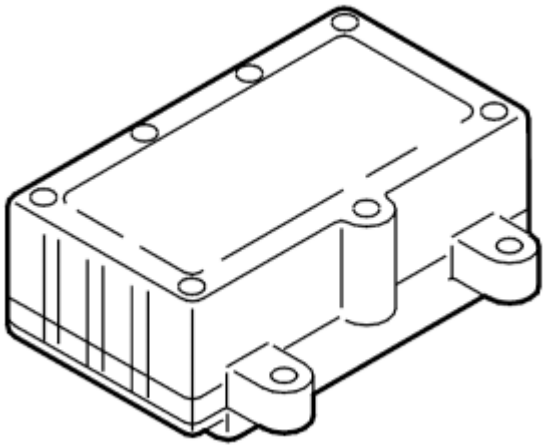

Fig. 67: Identifying Engine Fan Control Module
Courtesy of VOLVO CARS CORPORATION

Was a fault detected?

- **YES**

  Refer to **VERIFICATION**

- **NO**

  Refer to **REPLACING A COMPONENT**

REPLACING A COMPONENT

Fig. 68: Identifying Ignition In Off Position
Courtesy of VOLVO CARS CORPORATION

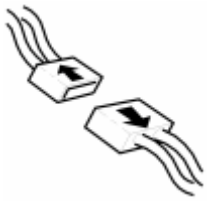

Fig. 69: Identifying Connectors
Courtesy of VOLVO CARS CORPORATION

- Ignition off.

CAUTION: Avoid touching the pins in the control module and the corresponding connector on the cable harness. There is a risk of static discharge which could damage the control module. Discharge yourself and tools to be used by holding the tool's metal part and touching a body part on the car just before starting to work.

Replace the engine cooling fan (FC) control module if the engine cooling fan (FC) cannot be activated at all speeds and no faults have been found on wiring and connections.

Remedy as necessary.

Other information:

- see **ELECTRIC COOLING FAN**

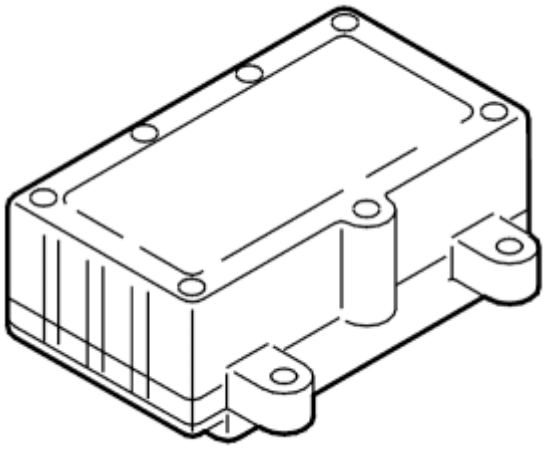

Fig. 70: Identifying Engine Fan Control Module
Courtesy of VOLVO CARS CORPORATION

- **Continue**

  Refer to **VERIFICATION**

VERIFICATION

VERIFICATION

HINT: After carrying out the repair, check that the fault has been remedied.

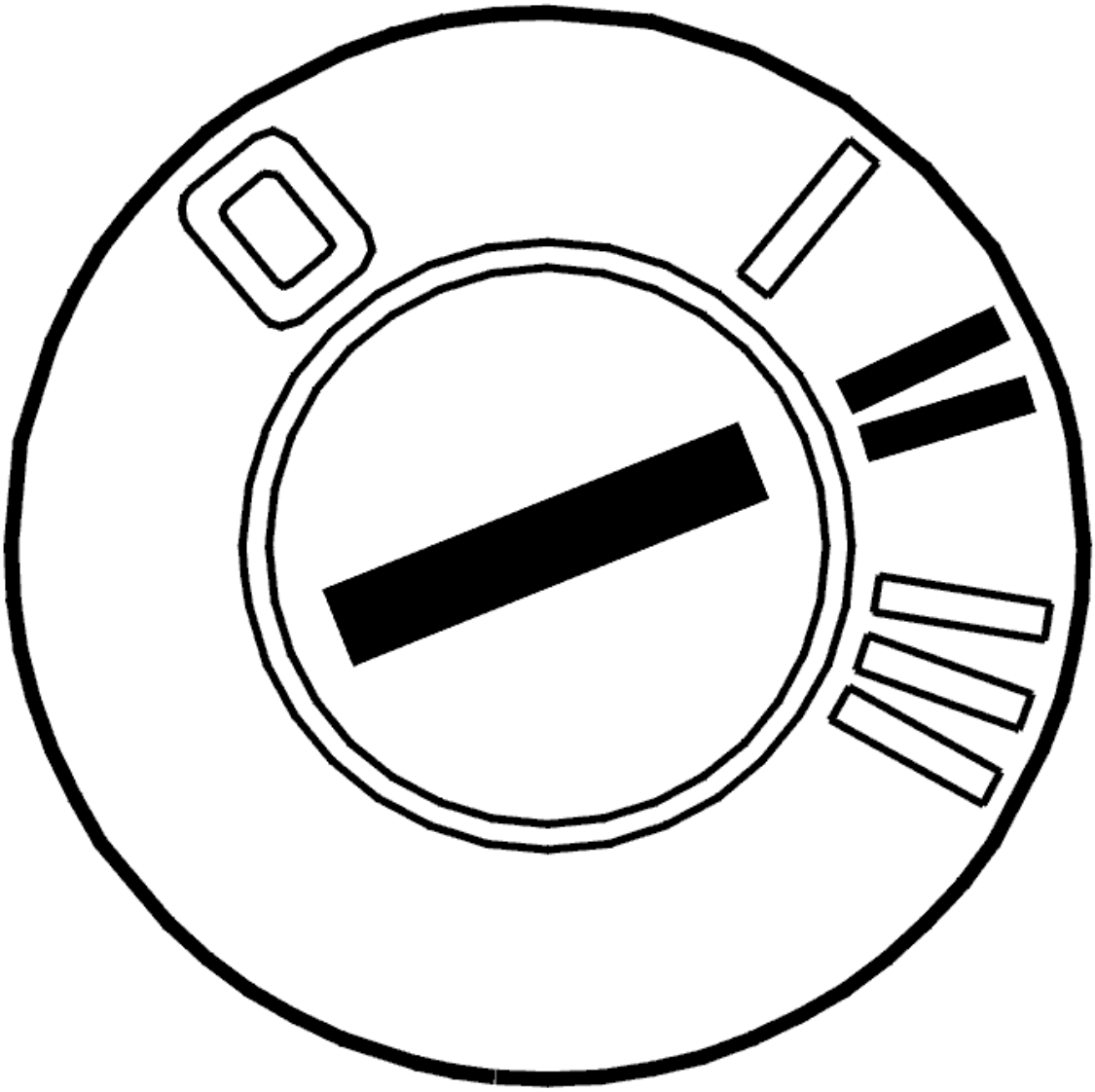

Fig. 71: Identifying Ignition ON
Courtesy of VOLVO CARS CORPORATION

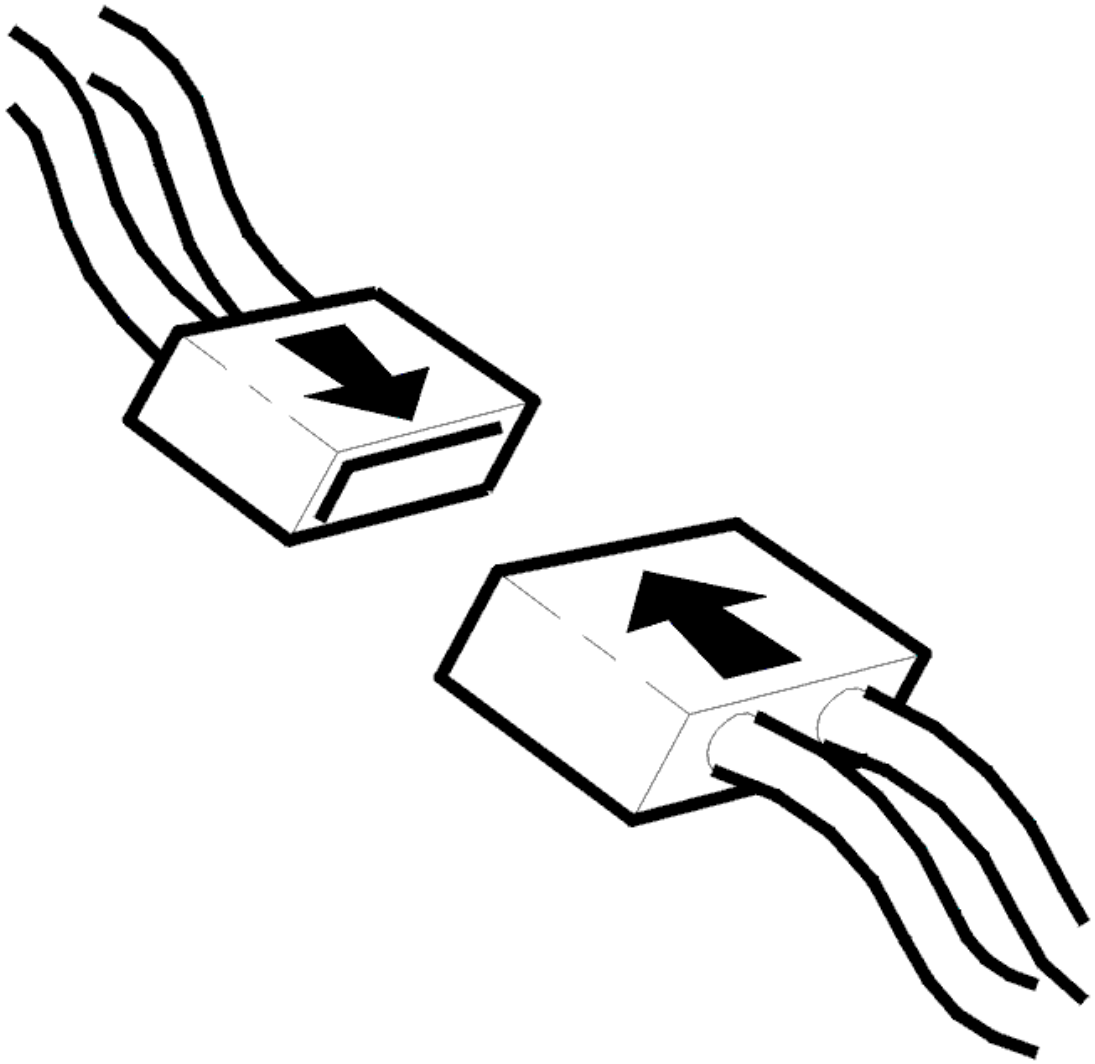

Fig. 72: Connecting Connector
Courtesy of VOLVO CARS CORPORATION

- Ignition off
- Reinstall the connectors, components etc.
- Ignition on.

Activate the engine cooling fan (FC). Check all 6 speeds of the engine cooling fan (FC).

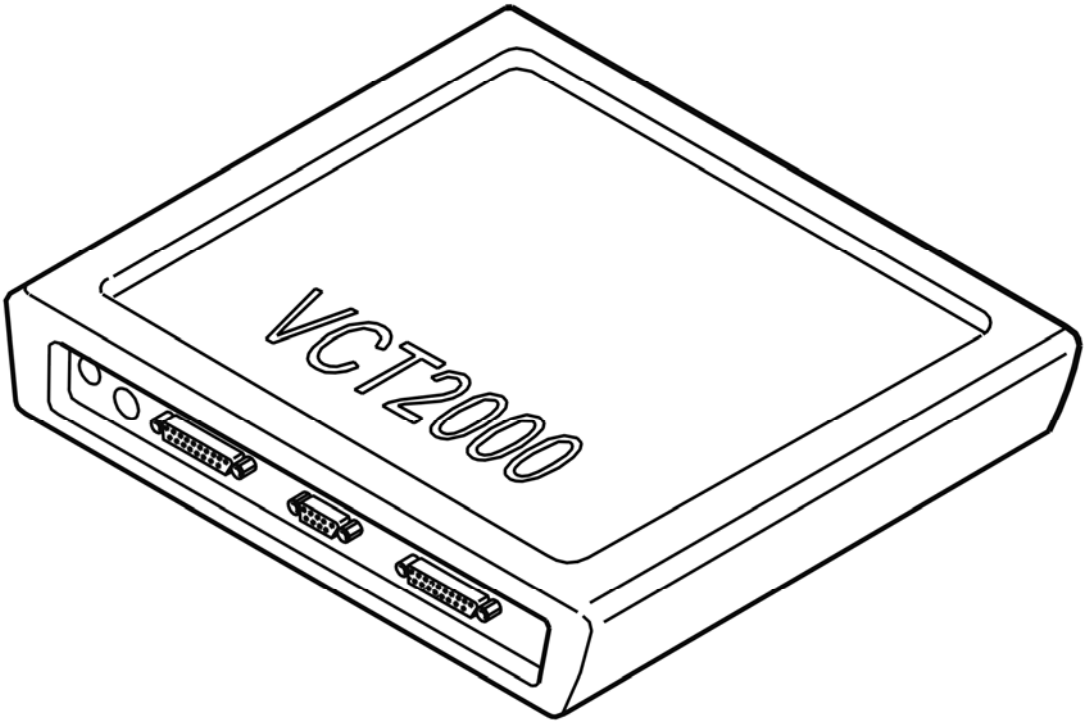

Fig. 73: Identifying VCT2000 Diagnostic Tool Symbol In VIDA
Courtesy of VOLVO CARS CORPORATION

Is the engine cooling fan (FC) working?

- **YES**

  VERIFIED: Troubleshooting has been completed.

- **NO**

  Refer to **INFORMATION**

INFORMATION

FAULT-TRACING INFORMATION

The fault should have been detected and remedied. As this is not the case fault-tracing has failed.

Exit fault-tracing for this diagnostic trouble code (DTC) or make another attempt.

ECM-6100: ENGINE COOLING FAN (FC) CONTROL MODULE. SIGNAL MISSING (B5254T2; B6294T; 2003-2004)

DIAGNOSTIC TROUBLE CODE (DTC) INFORMATION ECM-6100

see **DIAGNOSTIC TROUBLE CODE (DTC) INFORMATION ECM-6100**

SIGNAL MISSING

CHECKING THE COMPONENT

Fig. 74: Identifying Ignition On Position
Courtesy of VOLVO CARS CORPORATION

- Ignition off.
- Check that the engine cooling fan (FC) blade rotates easily. Check that nothing is obstructing the engine cooling fan (FC) blade.
- Remedy as necessary.
- Ignition on.
- Check all speeds of the engine cooling fan (FC).

  Activate the engine cooling fan (FC) using the VCT2000 (or appropriate scan tool).

Fig. 75: Identifying VCT2000 Diagnostic Tool Symbol In VIDA
Courtesy of VOLVO CARS CORPORATION

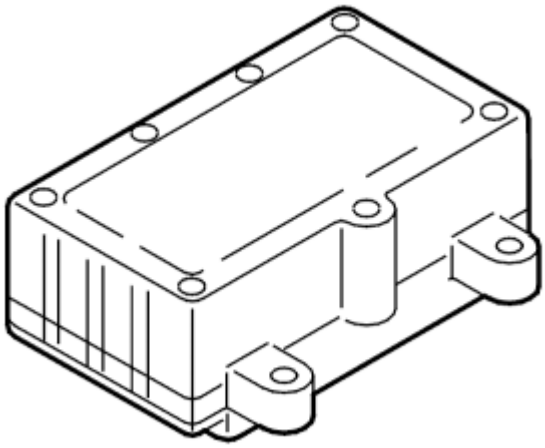

Fig. 76: Identifying Engine Fan Control Module
Courtesy of VOLVO CARS CORPORATION

- **Continue**

  Refer to **CHECKING THE COMPONENT AND WIRING**

CHECKING THE COMPONENT AND WIRING

Fig. 77: Identifying Ignition In Off Position
Courtesy of VOLVO CARS CORPORATION

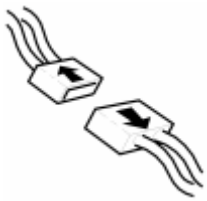

Fig. 78: Identifying Connectors
Courtesy of VOLVO CARS CORPORATION

- Ignition off.

CAUTION: Avoid touching the pins in the control module and the corresponding connector on the cable harness. There is a risk of static discharge which could damage the control module. Discharge yourself and tools to be used by holding the tool's metal part and touching a body

part on the car just before starting to work.

If the engine cooling fan (FC) cannot be activated at any speed:

- Check the fuse, power supply cable and ground lead for the engine cooling fan (FC).
- Check the connector and wiring between the engine control module (ECM) and engine cooling fan (FC) module. Check for damage. Check for an open circuit. Check for a short circuit.

If the engine cooling fan (FC) can be activated at one or more speeds:

- Check the connectors to the engine cooling fan (FC) control module and Engine Control Module (ECM). Check for damage to pins and connections.
- Also check other connectors and connections that connect cables between Engine Control Module (ECM) and the control module for electric cooling fan.
- Check the wiring between the engine control module (ECM) and the engine cooling fan (FC) module. Check for damage.

Remedy as necessary.

Other information:

- see **CONNECTING THE BREAKOUT BOX**
- For 5 cylinder turbocharged engines -2004, see **SIGNAL DESCRIPTION**
- For 5 cylinder turbocharged engines 2005-, see **SIGNAL SPECIFICATION** .
- For 6 cylinder engines -2004, see **SIGNAL SPECIFICATION**
- For 6 cylinder engines 2005-, see **SIGNAL SPECIFICATION** .
- see **ELECTRIC COOLING FAN**
- see **CHECKING WIRING AND TERMINALS**

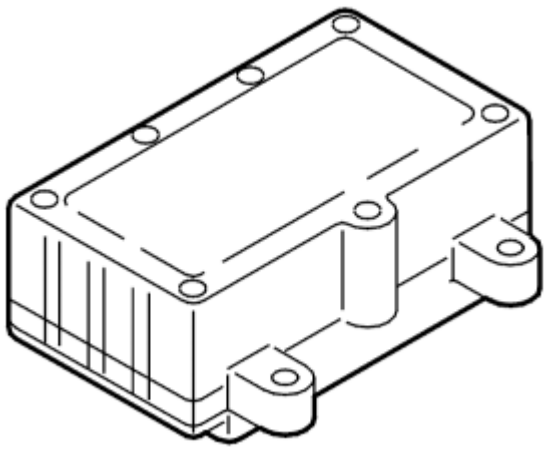

Fig. 79: Identifying Engine Fan Control Module

Courtesy of VOLVO CARS CORPORATION

Was a fault detected?

- **YES**

  Refer to **VERIFICATION**

- **NO**

  Refer to **REPLACING A COMPONENT**

REPLACING A COMPONENT

Fig. 80: Identifying Ignition In Off Position
Courtesy of VOLVO CARS CORPORATION

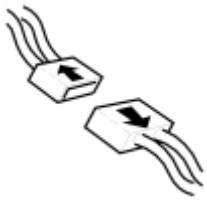

Fig. 81: Identifying Connectors
Courtesy of VOLVO CARS CORPORATION

- Ignition off.

  CAUTION: Avoid touching the pins in the control module and the corresponding connector on the cable harness. There is a risk of static discharge which could damage the control module. Discharge yourself and tools to be used by holding the tool's metal part and touching a body part on the car just before starting to work.

  Replace the engine cooling fan (FC) control module if the engine cooling fan (FC) cannot be activated at all speeds and no faults have been found on wiring and connections.

  Remedy as necessary.

  Other information:

- see **ELECTRIC COOLING FAN**

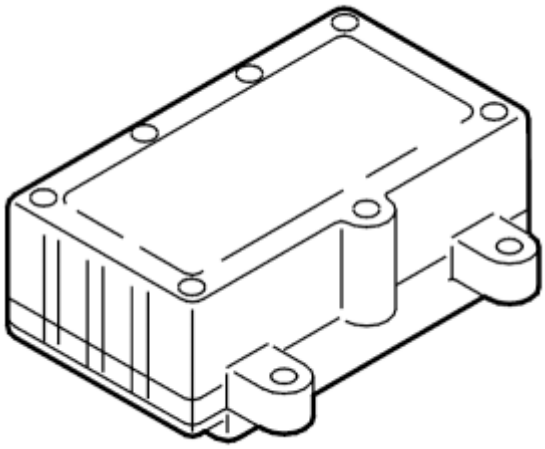

Fig. 82: Identifying Engine Fan Control Module
Courtesy of VOLVO CARS CORPORATION

- **Continue**

  Refer to **VERIFICATION**

VERIFICATION

VERIFICATION

HINT: After carrying out the repair, check that the fault has been remedied.

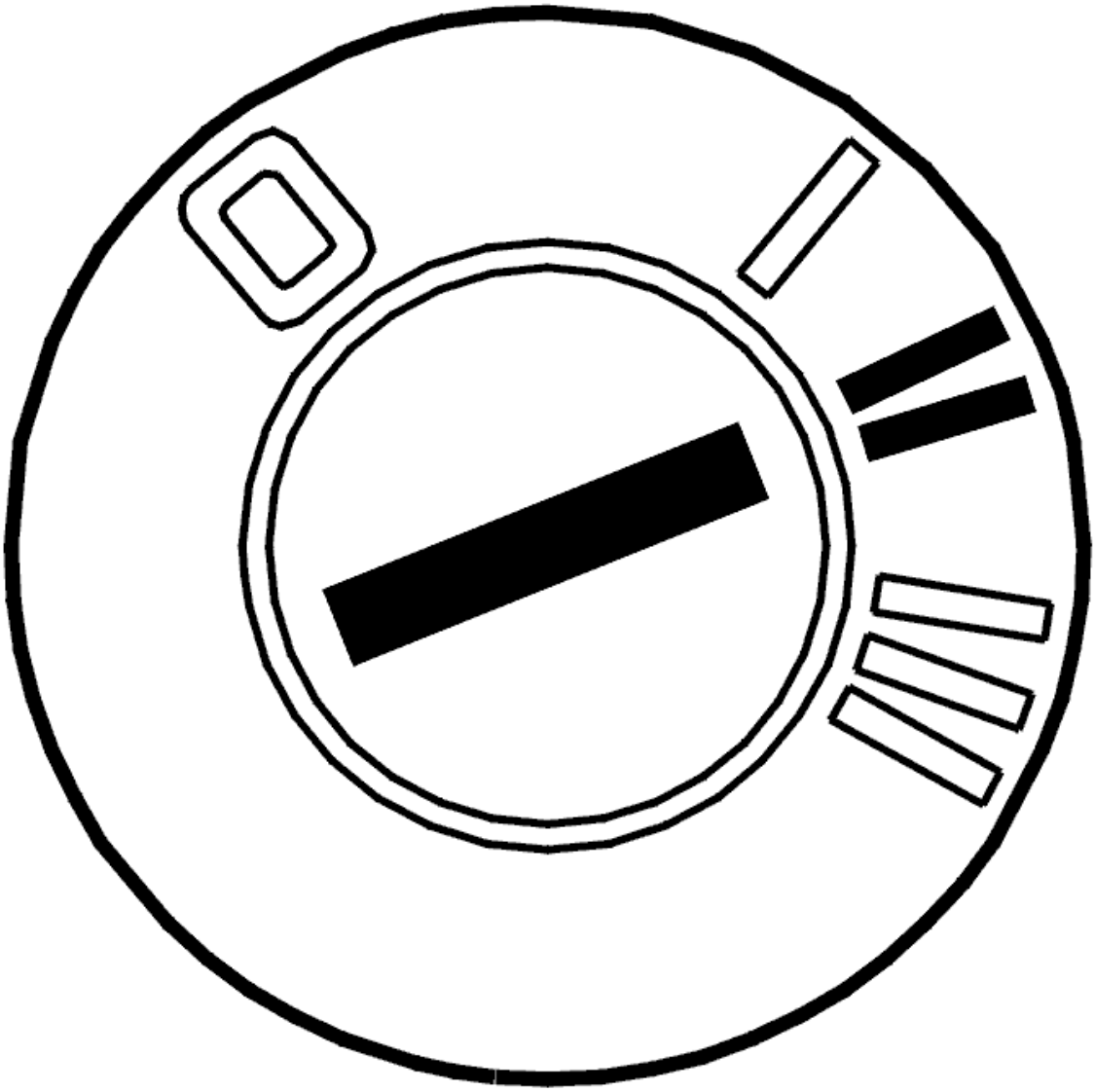

Fig. 83: Identifying Ignition ON
Courtesy of VOLVO CARS CORPORATION

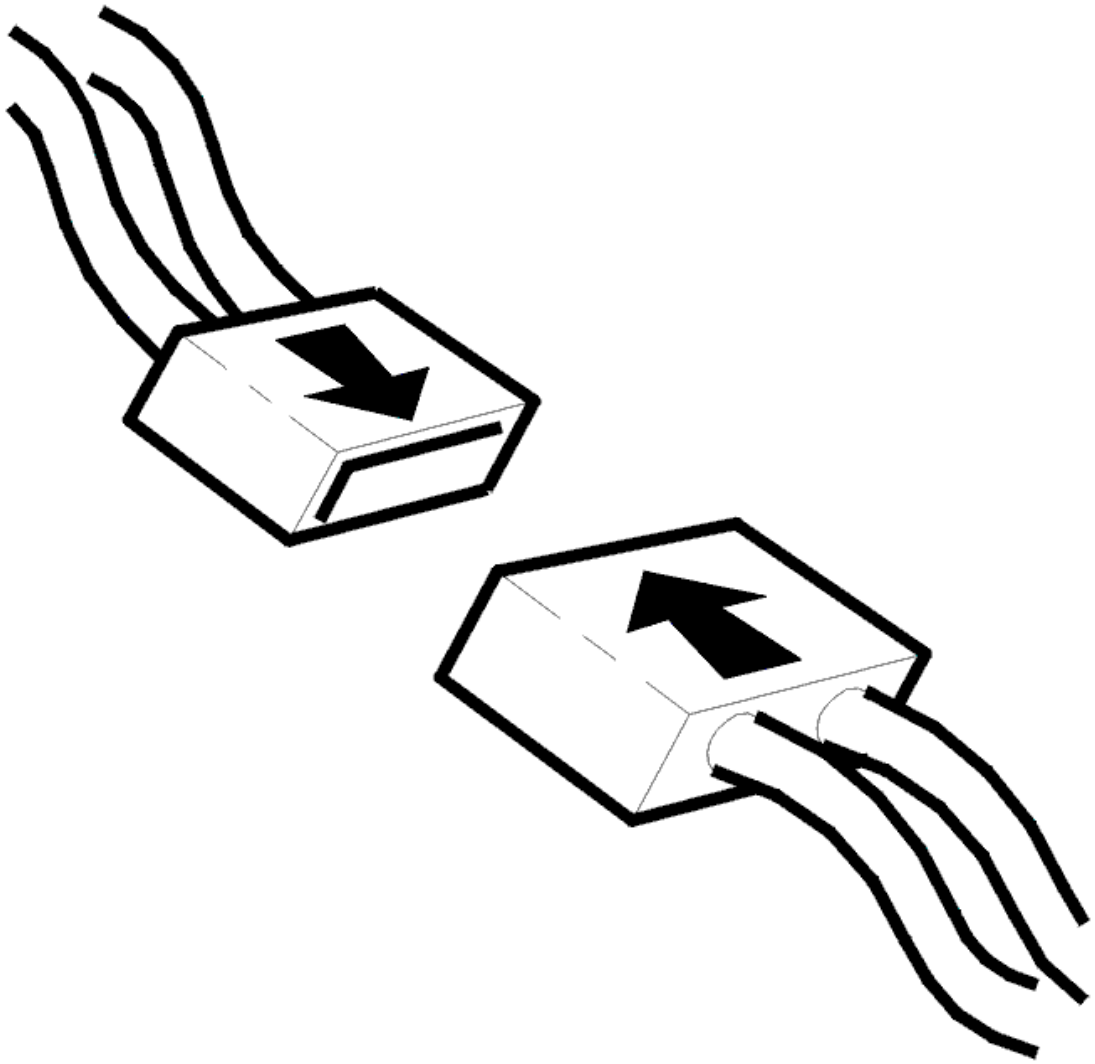

Fig. 84: Connecting Connector
Courtesy of VOLVO CARS CORPORATION

- Ignition off
- Reinstall the connectors, components etc.
- Ignition on.

Activate the engine cooling fan (FC). Check all 6 speeds of the engine cooling fan (FC).

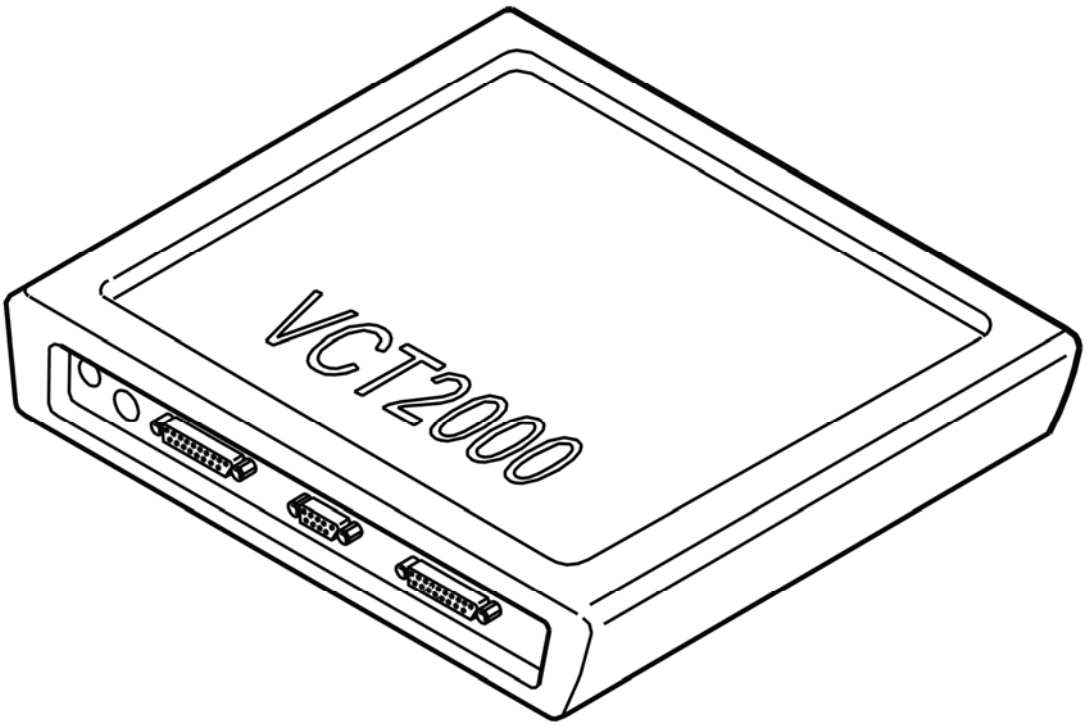

Fig. 85: Identifying VCT2000 Diagnostic Tool Symbol In VIDA
Courtesy of VOLVO CARS CORPORATION

Is the engine cooling fan (FC) working?

- **YES**

  VERIFIED: Troubleshooting has been completed.

- **NO**

  Refer to **INFORMATION**

INFORMATION

FAULT-TRACING INFORMATION

The fault should have been detected and remedied. As this is not the case fault-tracing has failed.

Exit fault-tracing for this diagnostic trouble code (DTC) or make another attempt.

ECM-6100: ENGINE COOLING FAN (FC) CONTROL MODULE. SIGNAL TOO HIGH (B5254T2; B6294T; 2003-2004)

DIAGNOSTIC TROUBLE CODE (DTC) INFORMATION ECM-6100

see **DIAGNOSTIC TROUBLE CODE (DTC) INFORMATION ECM-6100**

SIGNAL TOO HIGH

CHECKING THE COMPONENT

Fig. 86: Identifying Ignition On Position
Courtesy of VOLVO CARS CORPORATION

- Ignition off.
- Check that the fan blade rotates easily. Check that nothing is obstructing the fan
- Remedy as necessary
- Ignition on
- Check all speeds of the engine cooling fan (FC).

  Activate the engine cooling fan (FC) using the VCT2000 (or appropriate scan tool).

Fig. 87: Identifying VCT2000 Diagnostic Tool Symbol In VIDA
Courtesy of VOLVO CARS CORPORATION

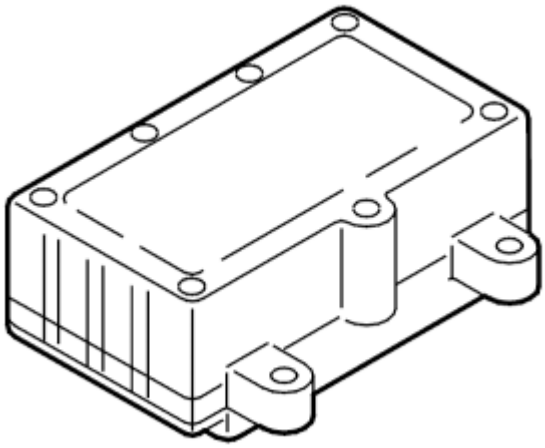

Fig. 88: Identifying Engine Fan Control Module
Courtesy of VOLVO CARS CORPORATION

- **Continue**

  Refer to **CHECKING THE COMPONENT AND WIRING**

CHECKING THE COMPONENT AND WIRING

Fig. 89: Identifying Ignition In Off Position
Courtesy of VOLVO CARS CORPORATION

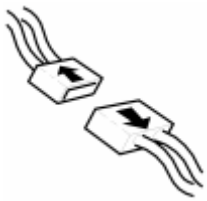

Fig. 90: Identifying Connectors
Courtesy of VOLVO CARS CORPORATION

- Ignition off.

CAUTION: Avoid touching the pins in the control module and the corresponding connector on the cable harness. There is a risk of static discharge which could damage the control module. Discharge yourself and tools to be used by holding the tool's metal part and touching a body

part on the car just before starting to work.

If the engine cooling fan (FC) cannot be activated at any speed:

- Check the fuse, power supply cable and ground lead for the engine cooling fan (FC).
- Check the connector and wiring between the engine control module (ECM) and engine cooling fan (FC) module. Check for damage. Check for an open circuit. Check for a short circuit.

If the engine cooling fan (FC) can be activated at one or more speeds:

- Check the connectors to the engine cooling fan (FC) control module and Engine Control Module (ECM). Check for damage to pins and connections.
- Also check other connectors and connections that connect cables between Engine Control Module (ECM) and the control module for electric cooling fan.
- Check the wiring between the engine control module (ECM) and the engine cooling fan (FC) module. Check for damage.

Remedy as necessary.

Other information:

- see **CONNECTING THE BREAKOUT BOX**
- For 5 cylinder turbocharged engines -2004, see **SIGNAL DESCRIPTION**
- For 5 cylinder turbocharged engines 2005-, see **SIGNAL SPECIFICATION** .
- For 6 cylinder engines -2004, see **SIGNAL SPECIFICATION**
- For 6 cylinder engines 2005-, see **SIGNAL SPECIFICATION** .
- see **ELECTRIC COOLING FAN**
- see **CHECKING WIRING AND TERMINALS**

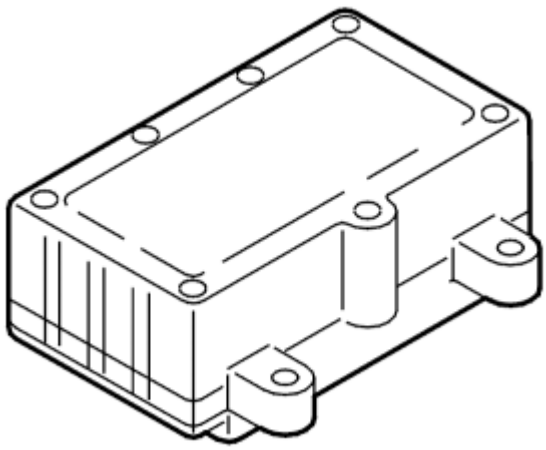

Fig. 91: Identifying Engine Fan Control Module

Courtesy of VOLVO CARS CORPORATION

Was a fault detected?

- **YES**

  Refer to **VERIFICATION**

- **NO**

  Refer to **REPLACING A COMPONENT**

REPLACING A COMPONENT

Fig. 92: Identifying Ignition In Off Position
Courtesy of VOLVO CARS CORPORATION

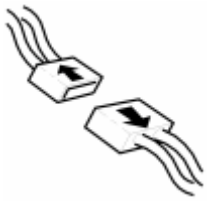

Fig. 93: Identifying Connectors
Courtesy of VOLVO CARS CORPORATION

- Ignition off.

CAUTION: Avoid touching the pins in the control module and the corresponding connector on the cable harness. There is a risk of static discharge which could damage the control module. Discharge yourself and tools to be used by holding the tool's metal part and touching a body part on the car just before starting to work.

Replace the engine cooling fan (FC) control module if the engine cooling fan (FC) cannot be activated at all speeds and no faults have been found on wiring and connections.

Remedy as necessary.

Other information:

- see **ELECTRIC COOLING FAN**

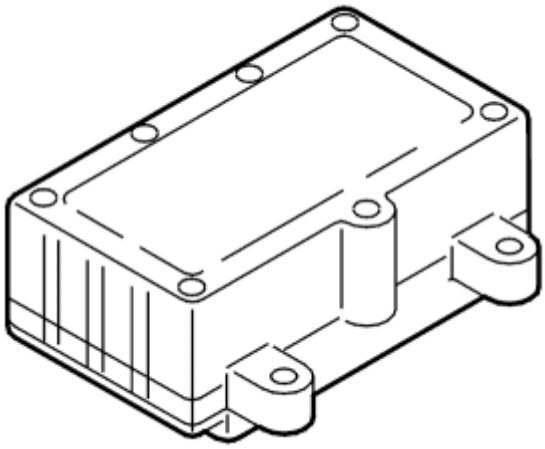

Fig. 94: Identifying Engine Fan Control Module
Courtesy of VOLVO CARS CORPORATION

- **Continue**

  Refer to **VERIFICATION**

VERIFICATION

VERIFICATION

HINT: After carrying out the repair, check that the fault has been remedied.

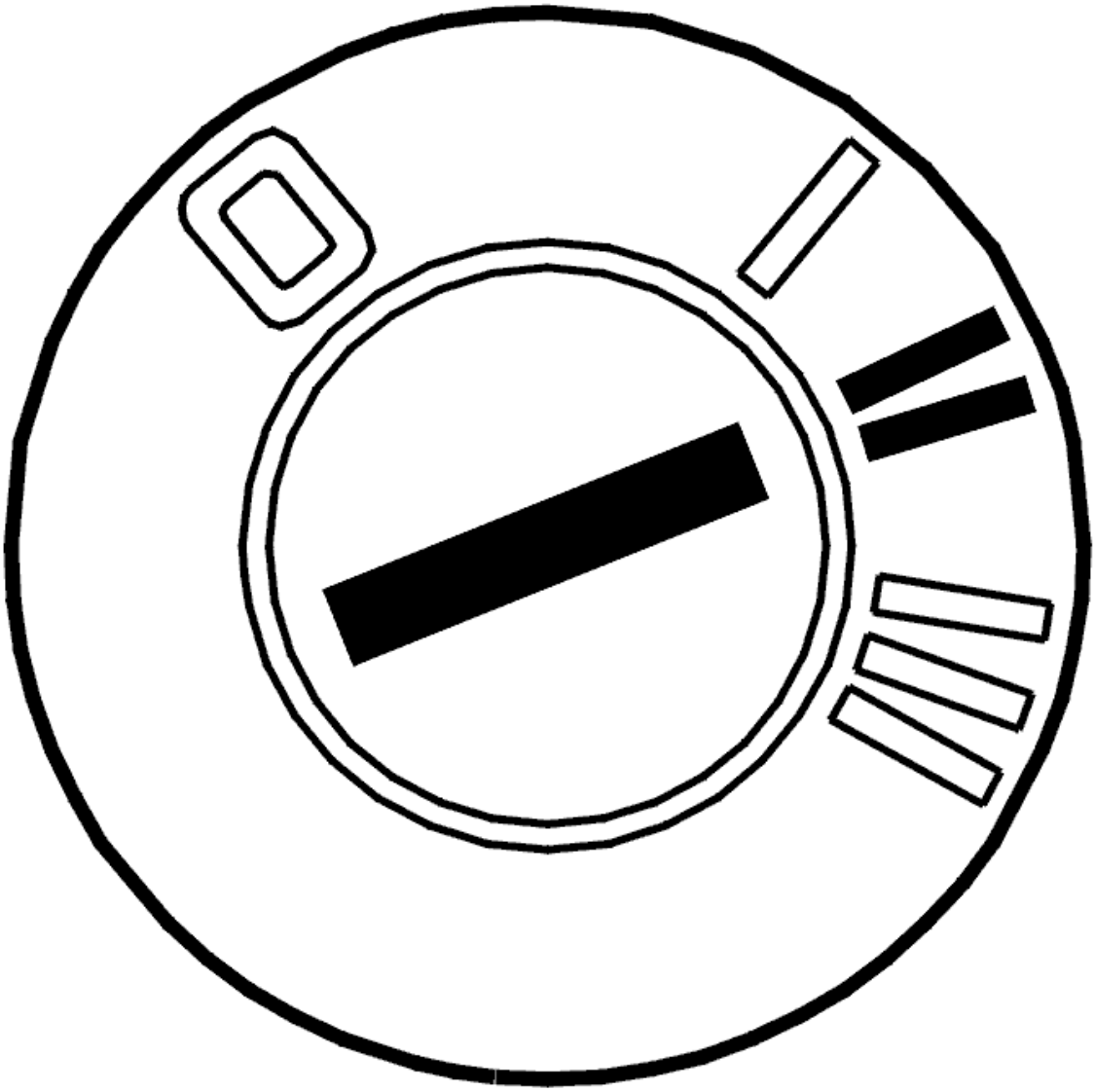

Fig. 95: Identifying Ignition ON
Courtesy of VOLVO CARS CORPORATION

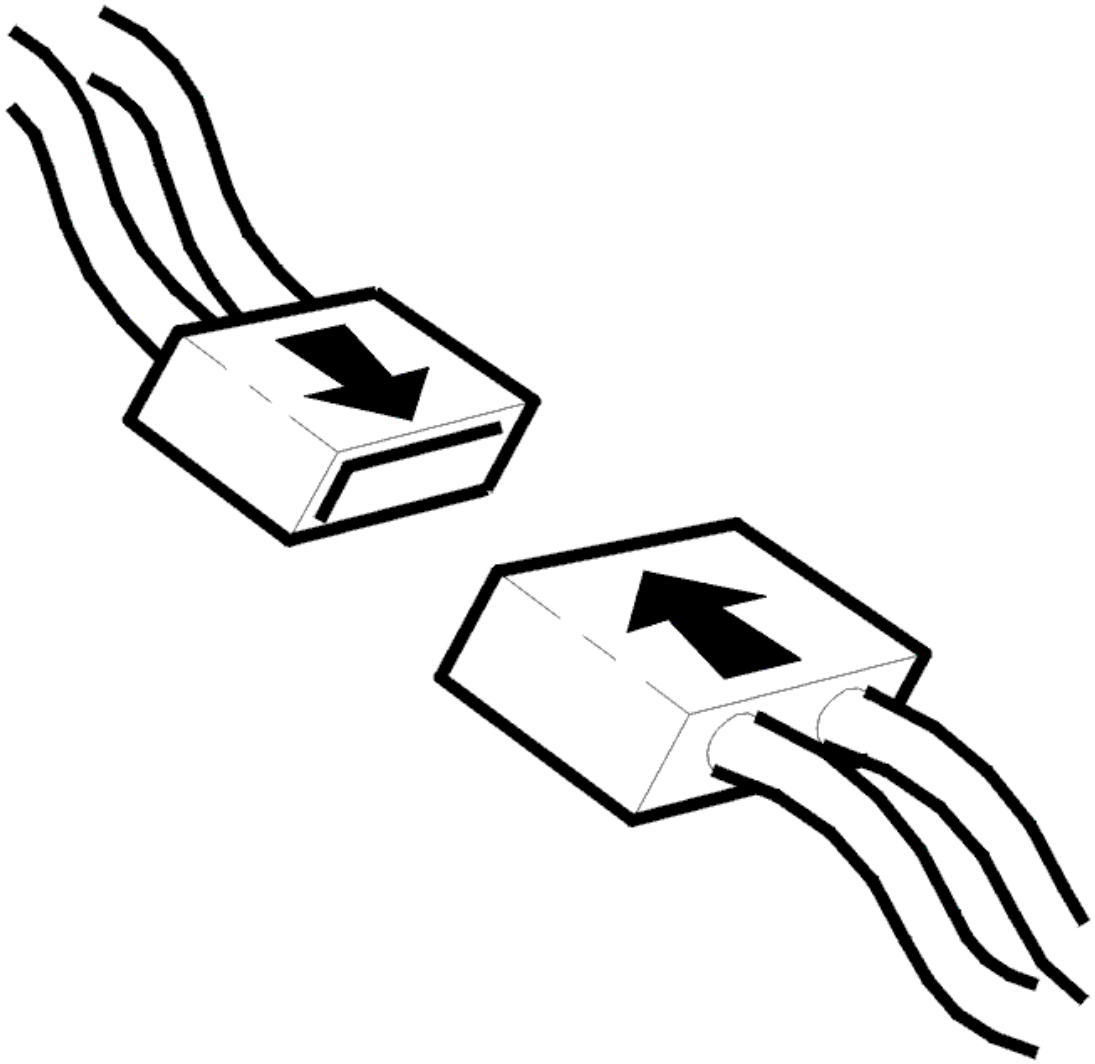

Fig. 96: Connecting Connector
Courtesy of VOLVO CARS CORPORATION

- Ignition off
- Reinstall the connectors, components etc.
- Ignition on.

Activate the engine cooling fan (FC). Check all 6 speeds of the engine cooling fan (FC).

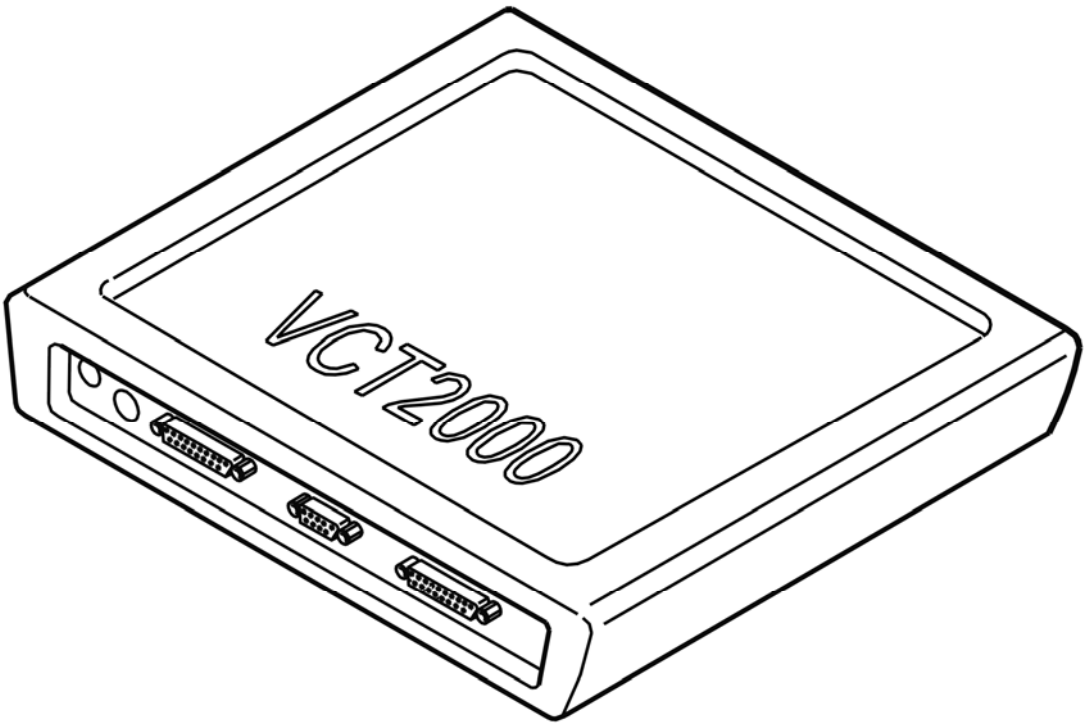

Fig. 97: Identifying VCT2000 Diagnostic Tool Symbol In VIDA
Courtesy of VOLVO CARS CORPORATION

Is the engine cooling fan (FC) working?

- **YES**

  VERIFIED: Troubleshooting has been completed.

- **NO**

  Refer to **INFORMATION**

INFORMATION

FAULT-TRACING INFORMATION

The fault should have been detected and remedied. As this is not the case fault-tracing has failed.

Exit fault-tracing for this diagnostic trouble code (DTC) or make another attempt.

ECM-6100: ENGINE COOLING FAN (FC) CONTROL MODULE. SIGNAL TOO LOW (B5254T2; B6294T; 2003-2004)

DIAGNOSTIC TROUBLE CODE (DTC) INFORMATION ECM-6100

see **DIAGNOSTIC TROUBLE CODE (DTC) INFORMATION ECM-6100**

SIGNAL TOO LOW

CHECKING THE COMPONENT

Fig. 98: Identifying Ignition On Position
Courtesy of VOLVO CARS CORPORATION

- Ignition off.
- Check that the engine cooling fan (FC) blade rotates easily. Check that nothing is obstructing the engine cooling fan (FC) blade.
- Remedy as necessary.
- Ignition on.
- Check all speeds of the engine cooling fan (FC).

  Activate the engine cooling fan (FC) using the VCT2000 (or appropriate scan tool).

Fig. 99: Identifying VCT2000 Diagnostic Tool Symbol In VIDA
Courtesy of VOLVO CARS CORPORATION

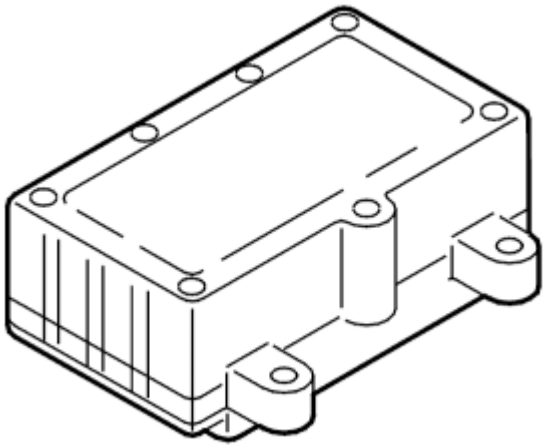

Fig. 100: Identifying Engine Fan Control Module
Courtesy of VOLVO CARS CORPORATION

- **Continue**

  Refer to **CHECKING COMPONENTS AND WIRING**

CHECKING COMPONENTS AND WIRING

Fig. 101: Identifying Ignition In Off Position
Courtesy of VOLVO CARS CORPORATION

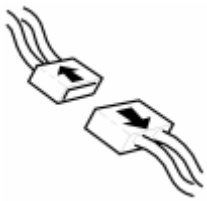

Fig. 102: Identifying Connectors
Courtesy of VOLVO CARS CORPORATION

- Ignition off

CAUTION: Avoid touching the pins in the control module and the corresponding connector on the cable harness. There is a risk of static discharge which could damage the control module. Discharge yourself and tools to be used by holding the tool's metal part and touching a body

part on the car just before starting to work.

If the engine cooling fan (FC) cannot be activated at any speed:

- Check the fuse, power supply cable and ground lead for the engine cooling fan (FC).
- Check the connector and wiring between the engine control module (ECM) and engine cooling fan (FC) module. Check for damage. Check for an open circuit. Check for a short circuit.

If the engine cooling fan (FC) can be activated at one or more speeds:

- Check the connectors to the engine cooling fan (FC) control module and Engine Control Module (ECM). Check for damage to pins and connections.
- Also check other connectors and connections that connect cables between Engine Control Module (ECM) and the control module for electric cooling fan.
- Check the wiring between the engine control module (ECM) and the engine cooling fan (FC) module. Check for damage.

Remedy as necessary.

Other information:

- see **CONNECTING THE BREAKOUT BOX**
- For 5 cylinder turbocharged engines -2004, see **SIGNAL DESCRIPTION**
- For 5 cylinder turbocharged engines 2005-, see **SIGNAL SPECIFICATION** .
- For 6 cylinder engines -2004, see **SIGNAL SPECIFICATION**
- For 6 cylinder engines 2005-, see **SIGNAL SPECIFICATION** .
- see **ELECTRIC COOLING FAN**
- see **CHECKING WIRING AND TERMINALS**

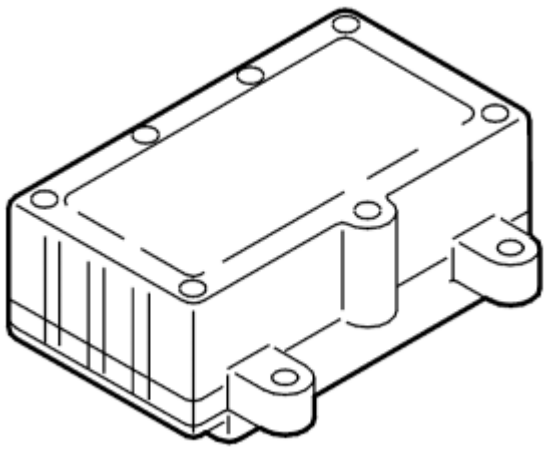

Fig. 103: Identifying Engine Fan Control Module

Courtesy of VOLVO CARS CORPORATION

Was a fault detected?

- **YES**

  Refer to **VERIFICATION**

- **NO**

  Refer to **REPLACING A COMPONENT**

REPLACING A COMPONENT

Fig. 104: Identifying Ignition In Off Position
Courtesy of VOLVO CARS CORPORATION

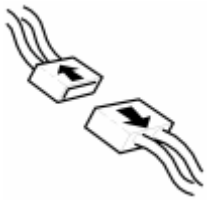

Fig. 105: Identifying Connectors
Courtesy of VOLVO CARS CORPORATION

- Ignition off.

CAUTION: Avoid touching the pins in the control module and the corresponding connector on the cable harness. There is a risk of static discharge which could damage the control module. Discharge yourself and tools to be used by holding the tool's metal part and touching a body part on the car just before starting to work.

Replace the engine cooling fan (FC) control module if the engine cooling fan (FC) cannot be activated at all speeds and no faults have been found on wiring and connections.

Remedy as necessary.

Other information:

- see **ELECTRIC COOLING FAN**

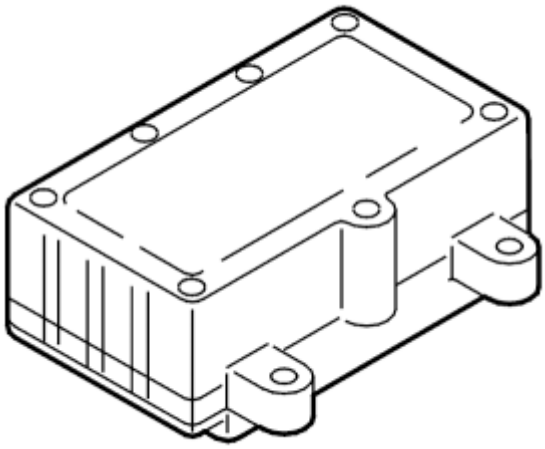

Fig. 106: Identifying Engine Fan Control Module
Courtesy of VOLVO CARS CORPORATION

- **Continue**

  Refer to **VERIFICATION**

VERIFICATION

VERIFICATION

HINT: After carrying out the repair, check that the fault has been remedied.

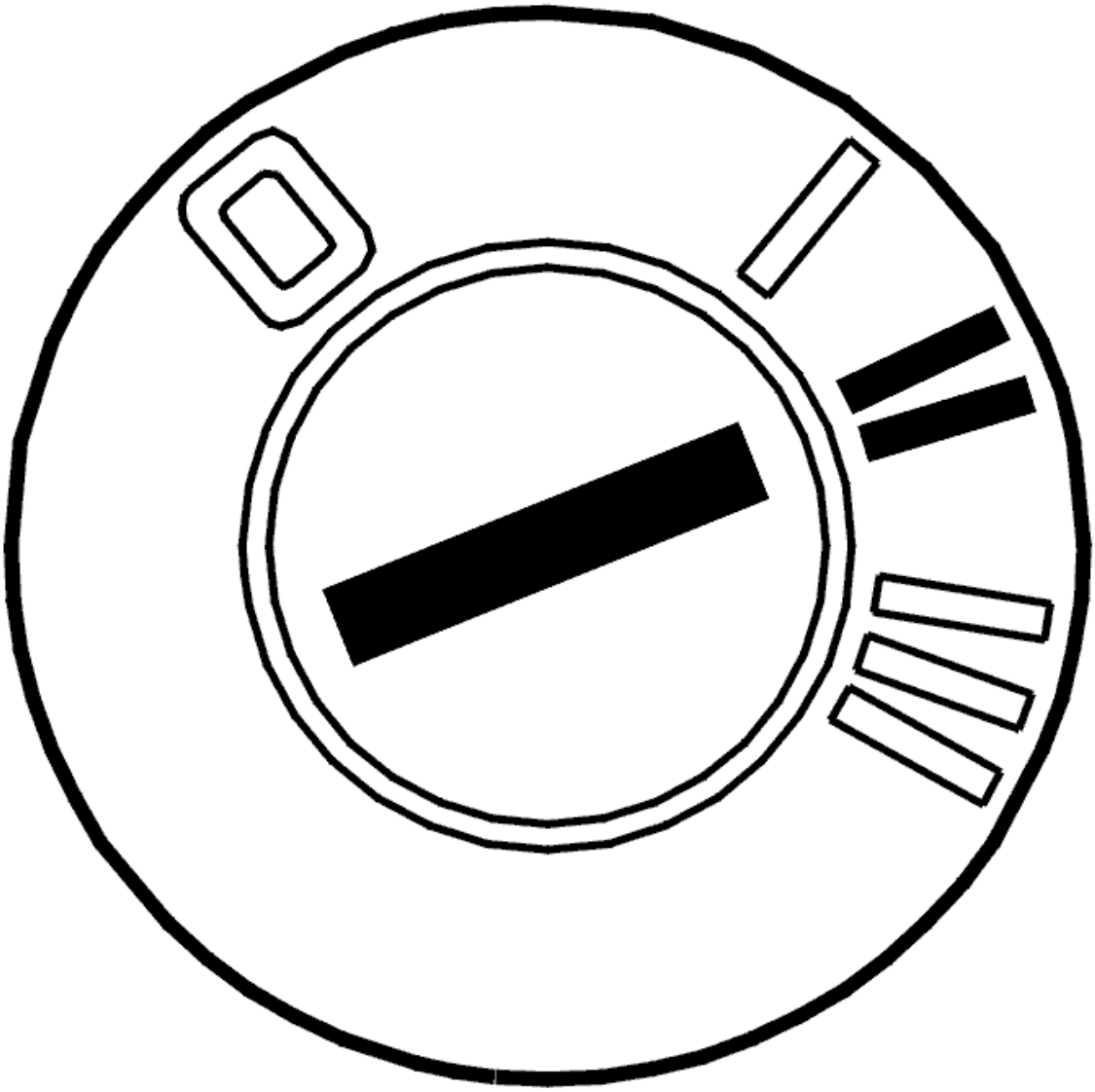

Fig. 107: Identifying Ignition ON
Courtesy of VOLVO CARS CORPORATION

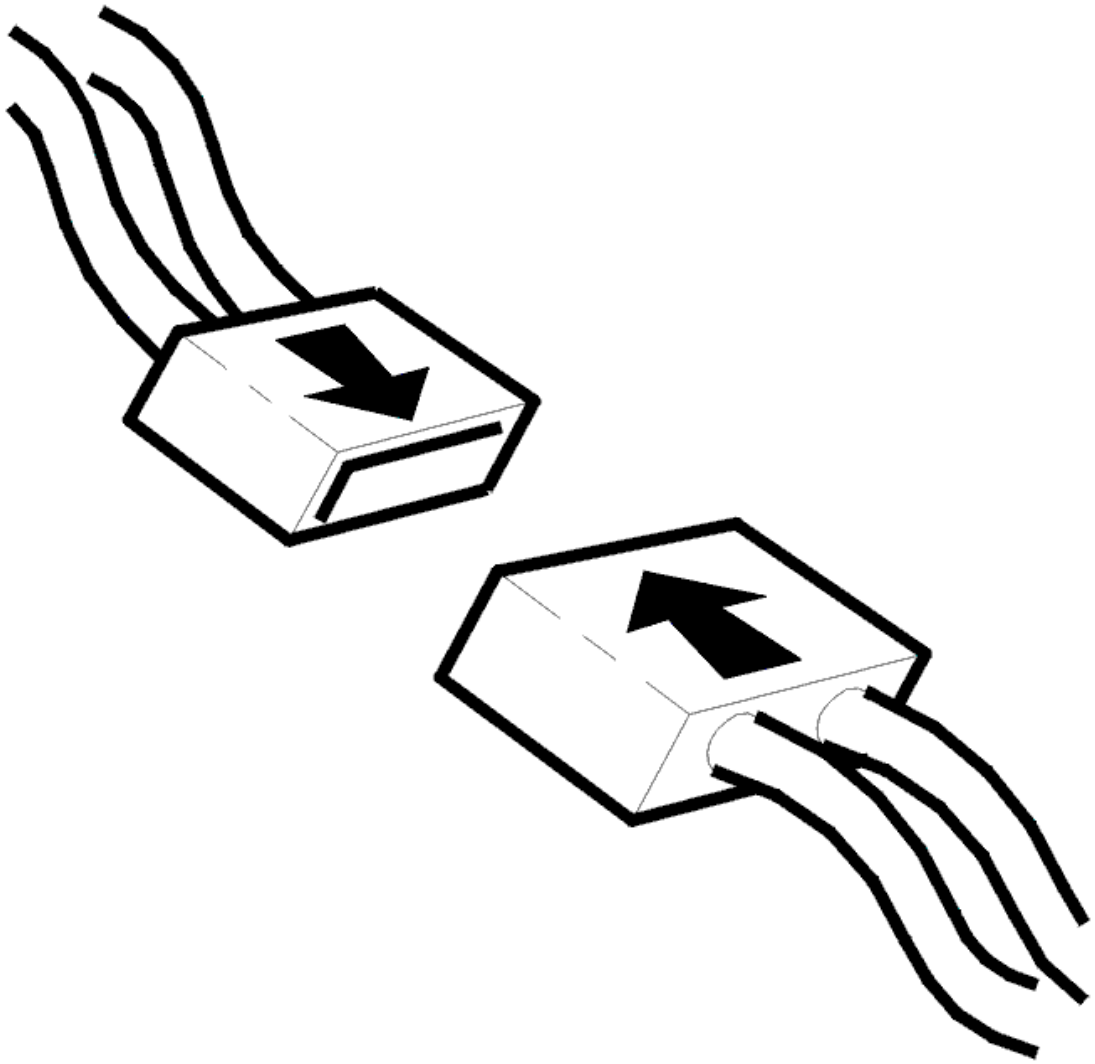

Fig. 108: Connecting Connector
Courtesy of VOLVO CARS CORPORATION

- Ignition off
- Reinstall the connectors, components etc.
- Ignition on.

Activate the engine cooling fan (FC). Check all 6 speeds of the engine cooling fan (FC).

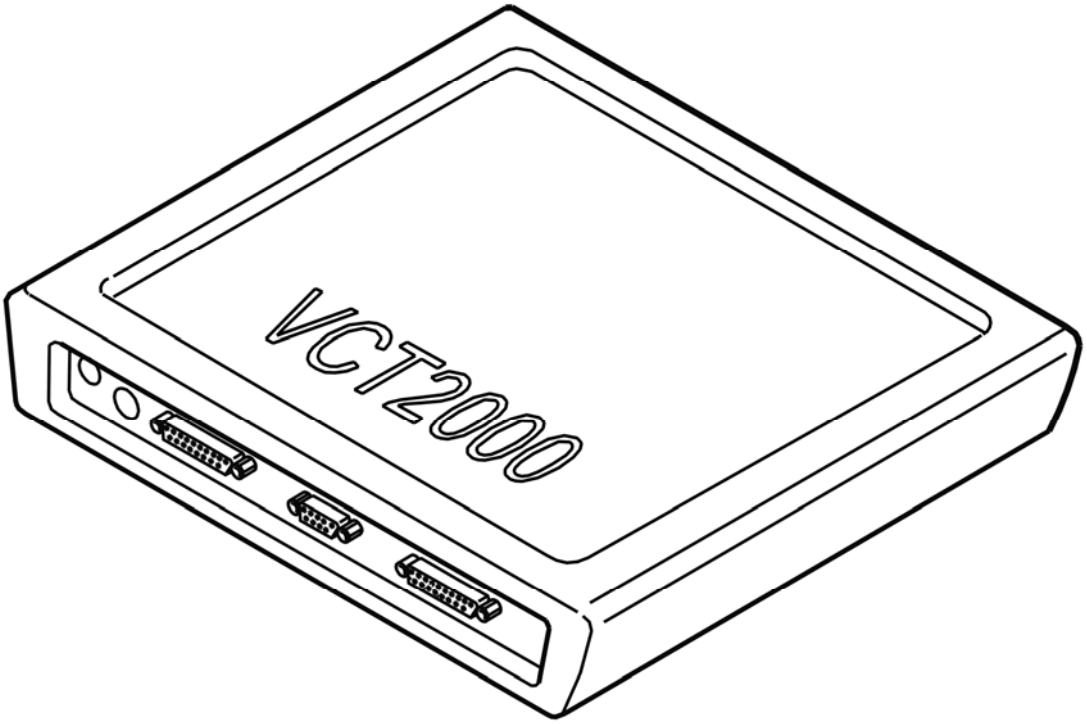

Fig. 109: Identifying VCT2000 Diagnostic Tool Symbol In VIDA
Courtesy of VOLVO CARS CORPORATION

Is the engine cooling fan (FC) working?

- **YES**

  VERIFIED: Troubleshooting has been completed.

- **NO**

  Refer to **INFORMATION**

INFORMATION

FAULT-TRACING INFORMATION

The fault should have been detected and remedied. As this is not the case fault-tracing has failed.

Exit fault-tracing for this diagnostic trouble code (DTC) or make another attempt.

ECM-6110: CAMSHAFT POSITION CONTROL, INTAKE. SLOW (B5254T2; 2005-2007)

DIAGNOSTIC TROUBLE CODE (DTC) INFORMATION ECM-6110

Condition

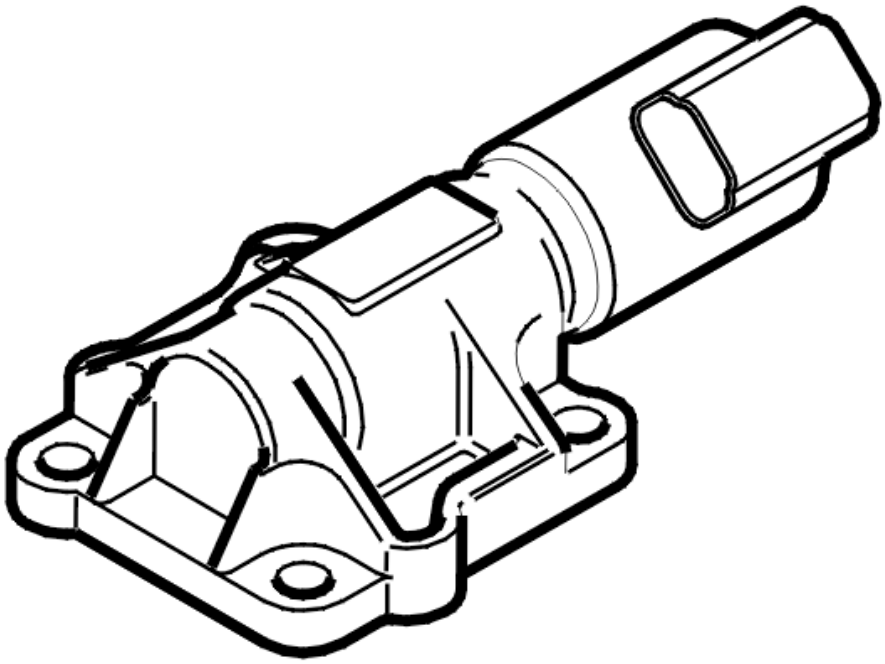

Fig. 110: Identifying Camshaft Position Control
Courtesy of VOLVO CARS CORPORATION

The engine control module (ECM) checks that control of the intake camshaft is quick enough. This means that the intake camshaft (actual value) reaches the position requested by the engine control module (ECM) quickly enough. The diagnostic trouble code (DTC) is stored if the requested position is not reached within a certain time.

The diagnostic trouble code (DTC) can be diagnosed by the engine control module (ECM) when the engine is running and the camshaft control is active.

Substitute Value

- None.

Possible Source

- Low oil pressure
- Poor oil quality

- Damaged reset valve
- Mechanical fault in the variable valve timing (VVT) unit.

Fault symptom[s]

- Malfunction indicator lamp (MIL) lit.

SLOW/FAULTY

CHECKING THE STATUS

HINT: Diagnostic trouble code (DTC) may be caused by a damaged fuse. If the engine does not start, check the fuse for the power supply to the camshaft reset valve.

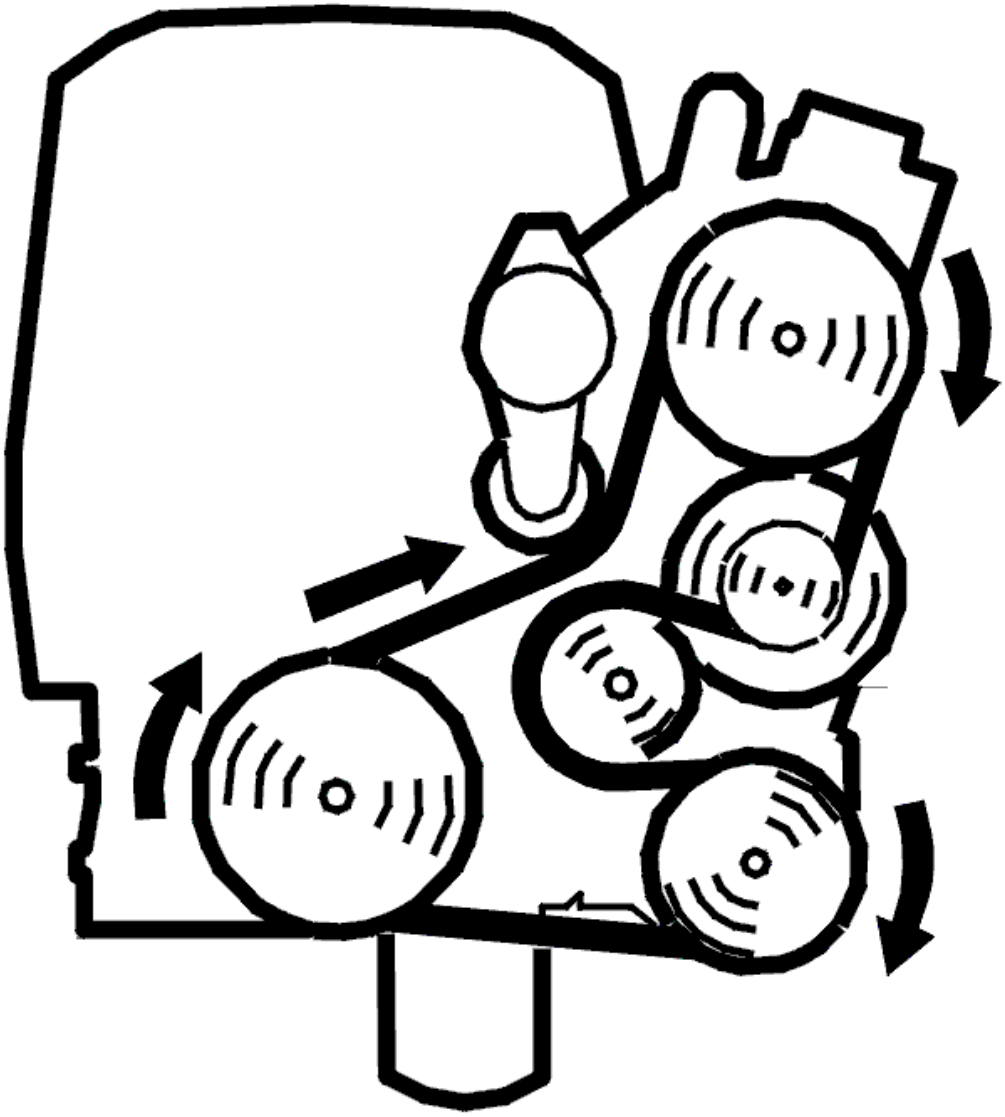

Fig. 111: Belt Routing / Engine Idling - Volvo

Courtesy of VOLVO CARS CORPORATION

- Start the engine
- Read off the value for the camshaft shift angle and the desired value for the camshaft shift angle
- Active the quick test of camshaft control by clicking the start button
- Increase the engine speed (RPM) to approximately 2500 RPM and keep the engine running at this speed.

  When the engine speed (RPM) increases, the control module will start the quick test to control the shift angle of the camshaft to the different target values. There is a fault if the control module does not operate the camshaft shift angle to the different target values.

  During the quick test, check that the shift angle of the camshaft (actual value) corresponds to the target values to an accuracy of ±10°. If the shift angle of the camshaft (target value) does not change, or if the actual value does not correspond to the target value, the function is faulty.

  Deviation between the values can be read off in the lower display.

  Carry out the check for approximately 15 seconds at an engine speed (RPM) of 2500 RPM. The test is completed when the shift angle of the camshaft returns to 0°. To restart the test, let the engine return to idle speed, then increase the engine speed to approximately 2500 RPM.

  The fault is intermittent if the function is OK.

  NOTE: The test is active until the ignition is switched off. Switch off the ignition before the vehicle is delivered to the customer.

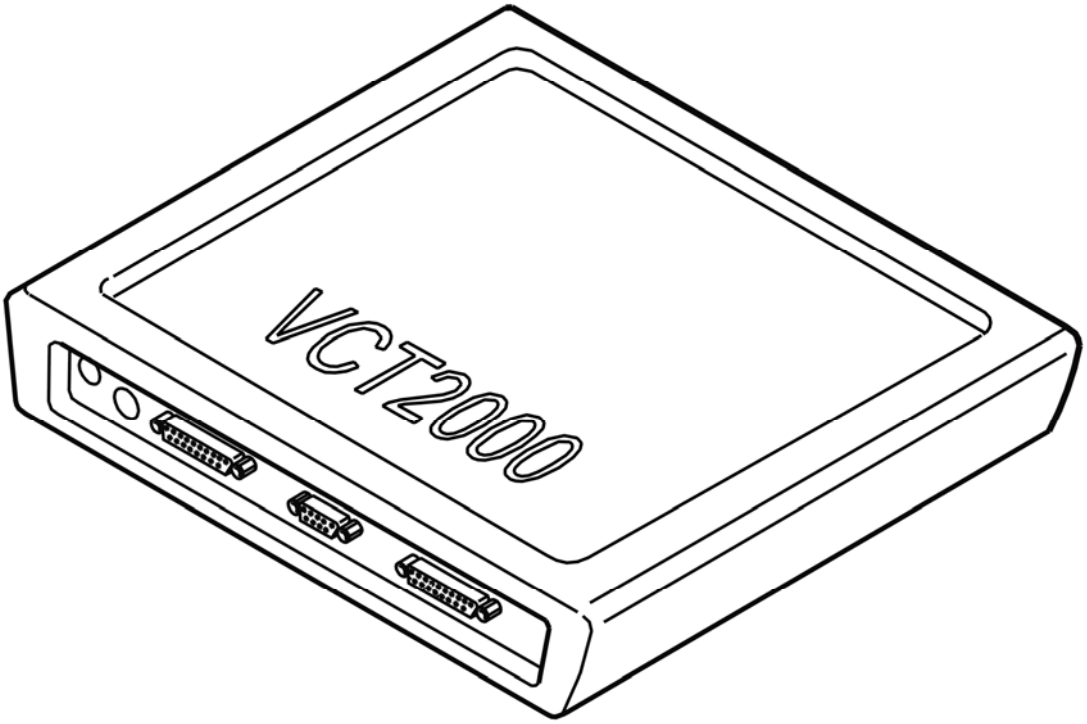

Fig. 112: Identifying VCT2000 Diagnostic Tool Symbol In VIDA
Courtesy of VOLVO CARS CORPORATION

- **Continue**

  Refer to **CHECKING COMPONENTS**

CHECKING COMPONENTS

Check the level and quality of the engine oil. Check for contaminants in particular.

Check the engine oil pressure.

Remove the camshaft reset valve. Check the oil ducts for the cylinder head for the camshaft reset valve (intake) for blockages and dirt.

HINT: The fault can be caused by contaminants in the camshaft reset valve. Try cleaning the valve.

Remedy as necessary.

Try a new intake camshaft reset valve if the above remedy does not solve the fault.

HINT: The fault may also have been caused by an internal fault in the variable valve timing unit. The variable valve timing unit may be damaged if the above fault-tracing and corrective action do not remedy

the fault.

Other information:

- see **CHECKING OIL PRESSURE**
- see **VVT SOLENOID, INSPECTION AND CLEANING**
- For B5xx4T, see **VARIABLE VALVE TIMING SOLENOID, REPLACING**
- For B6xx4T, see **REPLACING THE VARIABLE VALVE TIMING SOLENOID** .
- For B5xx4T, see **CAMSHAFT SEAL/VARIABLE VALVE TIMING (VVT) UNIT, REPLACING**
- For B6xx4T, see **CAMSHAFT SEAL/VARIABLE VALVE TIMING (VVT) UNIT, REPLACING** .

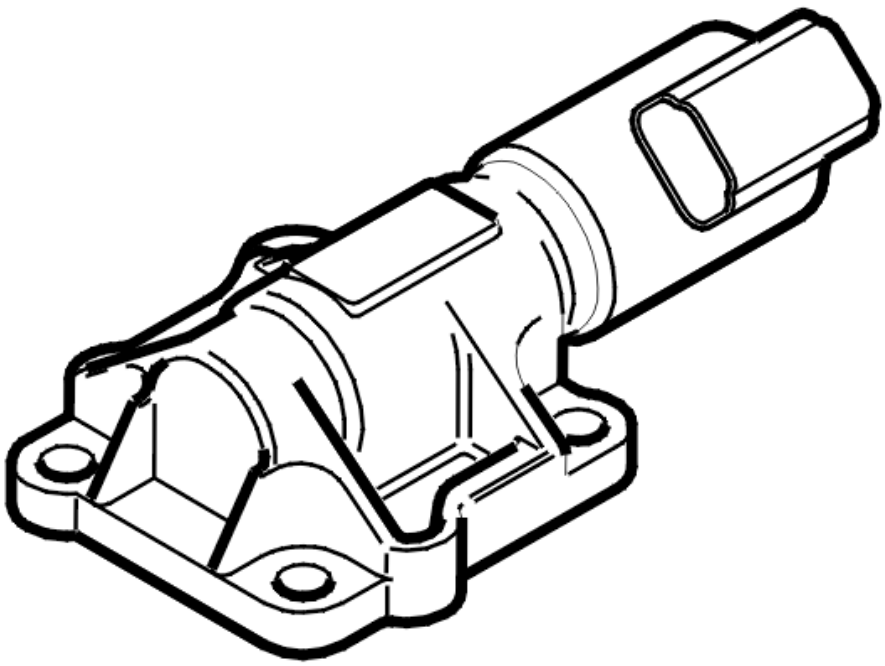

Fig. 113: Identifying Camshaft Position Control
Courtesy of VOLVO CARS CORPORATION

- **Continue**

  Refer to **VERIFICATION**

VERIFICATION

VERIFICATION

HINT: After carrying out the repair, check that the fault has been remedied.

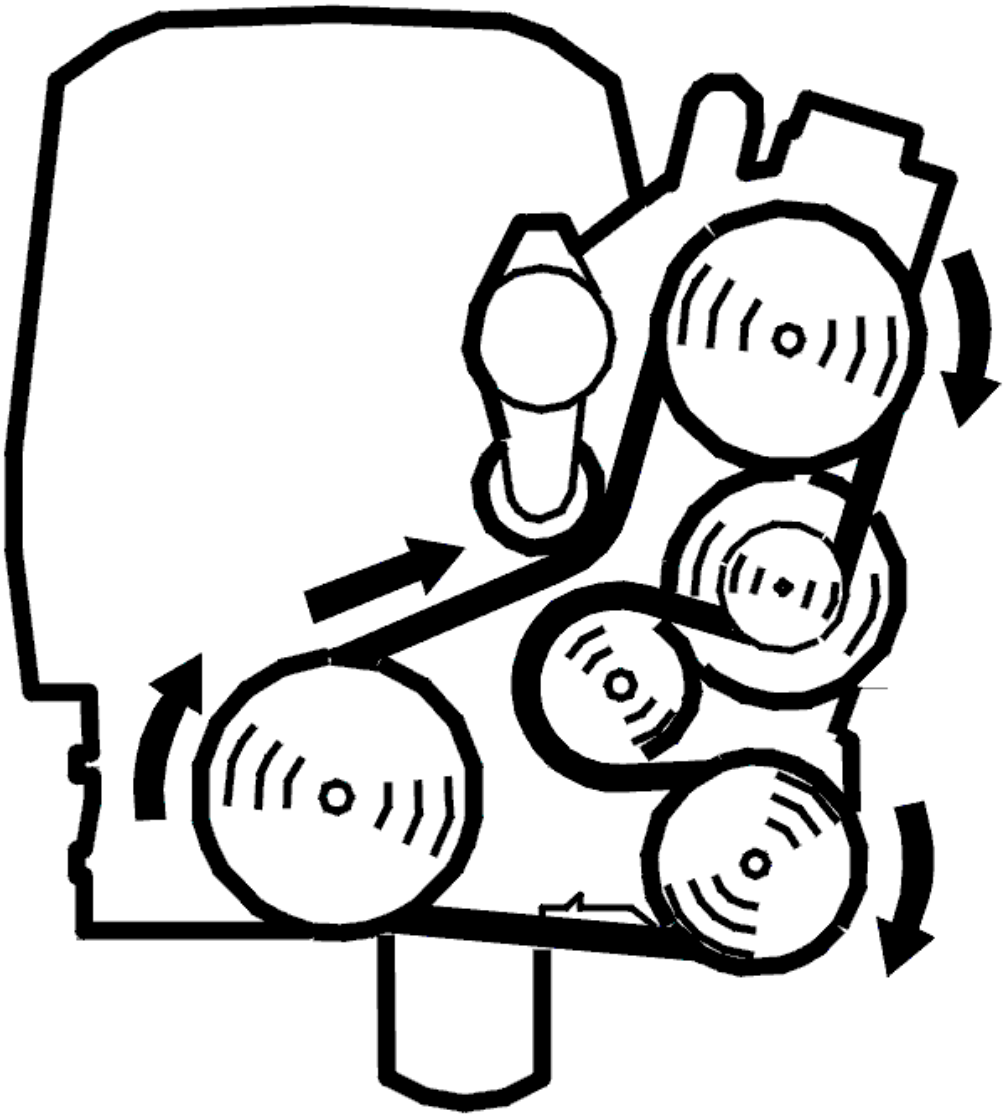

Fig. 114: Belt Routing / Engine Idling - Volvo
Courtesy of VOLVO CARS CORPORATION

- Start the engine
- Read off the value for the camshaft shift angle and the desired value for the camshaft shift angle
- Active the quick test of camshaft control by clicking the start button
- Increase the engine speed (RPM) to approximately 2500 RPM and keep the engine running at this speed.

  When the engine speed (RPM) increases, the control module will start the quick test to control the shift angle of the camshaft to the different target values. There is a fault if the control module does not operate the camshaft shift angle to the different target values.

  During the quick test, check that the shift angle of the camshaft (actual value) corresponds to the target values to an accuracy of ±10°. If the shift angle of the camshaft (target value) does not change, or if the actual value does not correspond to the target value, the function is faulty.

Deviation between the values can be read off in the lower display.

Carry out the check for approximately 15 seconds at an engine speed (RPM) of 2500 RPM. The test is completed when the shift angle of the camshaft returns to 0°. To restart the test, let the engine return to idle speed, then increase the engine speed to approximately 2500 RPM.

NOTE: The test is active until the ignition is switched off. Switch off the ignition before the car is delivered to the customer.

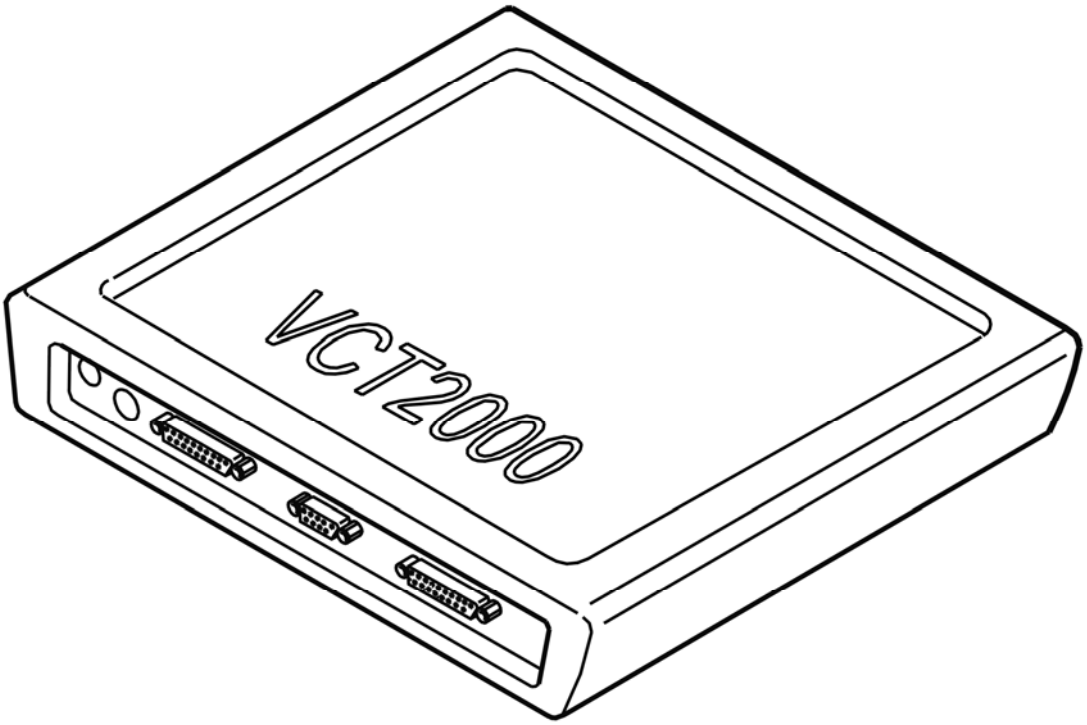

Fig. 115: Identifying VCT2000 Diagnostic Tool Symbol In VIDA
Courtesy of VOLVO CARS CORPORATION

Is the function OK?

- **YES**

  VERIFIED: Troubleshooting has been completed.

- **NO**

  Refer to **INFORMATION**

INFORMATION

FAULT-TRACING INFORMATION

The fault should have been detected and remedied. As this is not the case fault-tracing has failed.

Exit fault-tracing for this diagnostic trouble code (DTC) or make another attempt.

ECM-6110: CAMSHAFT POSITION CONTROL, INTAKE. SLOW (B6294T; 2005-2006)

DIAGNOSTIC TROUBLE CODE (DTC) INFORMATION ECM-6110

see **DIAGNOSTIC TROUBLE CODE (DTC) INFORMATION ECM-6110**

SLOW/FAULTY

see **SLOW/FAULTY**

ECM-6110: ENGINE COOLING FAN (FC) RELAY. SIGNAL MISSING (B5254T2; B6294T; 2003-2004)

DIAGNOSTIC TROUBLE CODE (DTC) INFORMATION

Condition

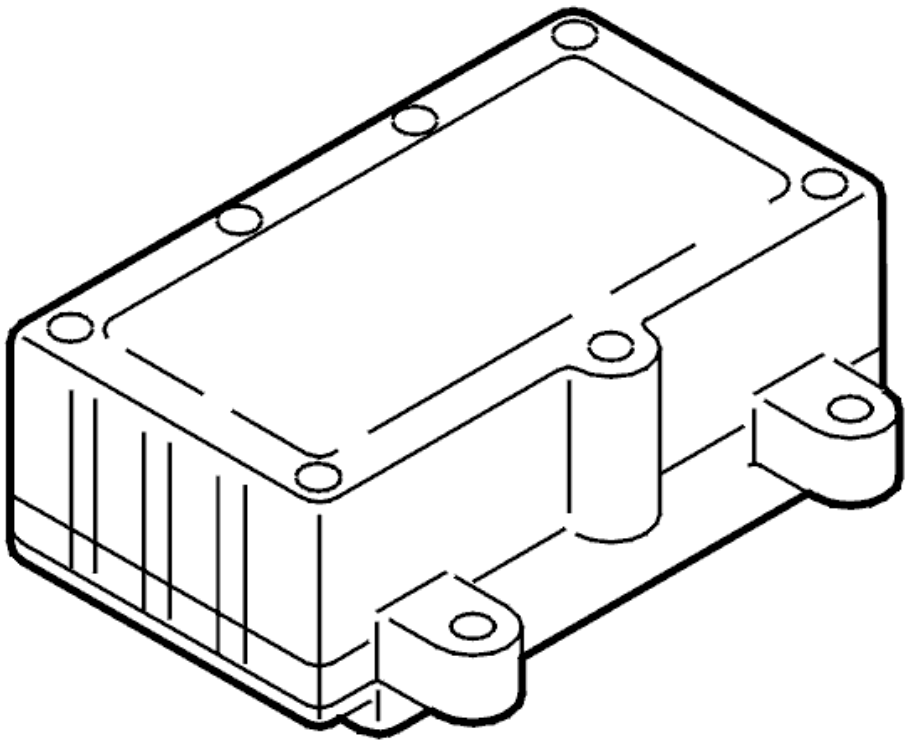

Fig. 116: Identifying Electronic Control Module
Courtesy of VOLVO CARS CORPORATION

Diagnostic trouble code (DTC) ECM-6110 is stored if the engine control module (ECM) registers a fault in the signal cable from the engine cooling fan (FC) control module.

NOTE: **The electric cooling fan may have a post-running time of up to approx. 6 minutes after the engine has been shut off. The time for the electric cooling fan's post-running depends on the engine's temperature, temperature in the engine compartment as well as the pressure level in the AC system.**

Substitute Value

- None.

Possible Source

Signal too high:

- Short-circuit to supply voltage in the signal cable
- Defective engine fan control module.

Signal too low:

- Short-circuit to ground in the signal cable
- Short-circuit to ground in the power supply cable
- Defective engine fan control module.

Signal missing:

- Contact resistance or oxidation in the connector
- Open-circuit in the signal cable
- Defective engine fan control module.

Fault symptom[s]

- Electric cooling fan does not operate
- The engine cooling fan (FC) runs continuously even when the ignition is switched off.

SIGNAL MISSING

CHECKING THE COMPONENT

Fig. 117: Identifying Ignition On Position
Courtesy of VOLVO CARS CORPORATION

- Ignition off.
- Check that the engine cooling fan (FC) blade rotates easily. Check that nothing is obstructing the engine cooling fan (FC) blade.
- Remedy as necessary.
- Ignition on.
- Check all speeds of the engine cooling fan (FC).

  Activate the engine cooling fan (FC) using the VCT2000 (or appropriate scan tool).

Fig. 118: Identifying VCT2000 Diagnostic Tool Symbol In VIDA
Courtesy of VOLVO CARS CORPORATION

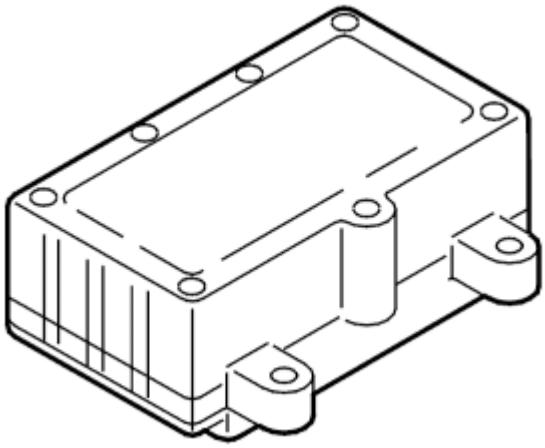

Fig. 119: Identifying Engine Fan Control Module
Courtesy of VOLVO CARS CORPORATION

- **Continue**

  Refer to **CHECKING THE COMPONENT AND WIRING**

REPLACING A COMPONENT

Fig. 120: Identifying Ignition In Off Position
Courtesy of VOLVO CARS CORPORATION

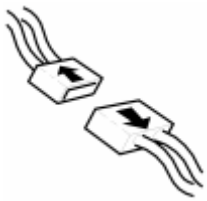

Fig. 121: Identifying Connectors
Courtesy of VOLVO CARS CORPORATION

- Ignition off.

CAUTION: Avoid touching the pins in the control module and the corresponding connector on the cable harness. There is a risk of static discharge which could damage the control module. Discharge yourself and tools to be used by holding the tool's metal part and touching a body

part on the car just before starting to work.

Replace the engine cooling fan (FC) control module if the engine cooling fan (FC) cannot be activated at all speeds and no faults have been found on wiring and connections.

Remedy as necessary.

Other information

- see **ELECTRIC COOLING FAN**

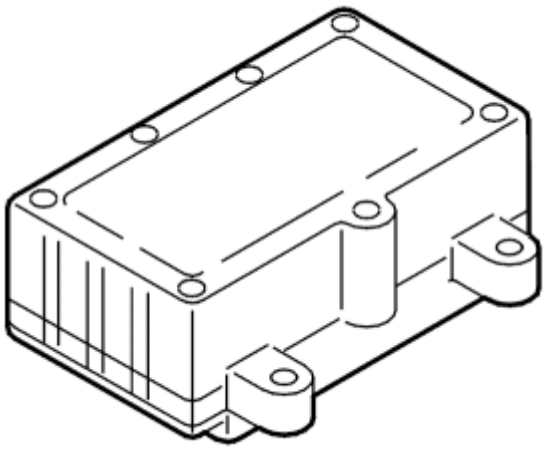

Fig. 122: Identifying Engine Fan Control Module
Courtesy of VOLVO CARS CORPORATION

- **Continue**

  Refer to **VERIFICATION**

CHECKING THE COMPONENT AND WIRING

Fig. 123: Identifying Ignition In Off Position
Courtesy of VOLVO CARS CORPORATION

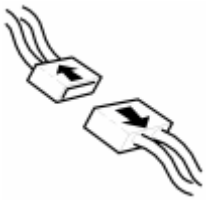

Fig. 124: Identifying Connectors
Courtesy of VOLVO CARS CORPORATION

- Ignition off.

CAUTION: Avoid touching the pins in the control module and the corresponding connector on the cable harness. There is a risk of static discharge which could damage the control module. Discharge yourself and tools to be used by holding the tool's metal part and touching a body part on the car just before starting to work.

If the engine cooling fan (FC) cannot be activated at any speed:

- Check the fuse, power supply cable and ground lead for the engine cooling fan (FC).
- Check the connector and wiring between the engine control module (ECM) and engine cooling fan (FC) module. Check for damage. Check for an open circuit. Check for a short circuit.

If the engine cooling fan (FC) can be activated at one or more speeds:

- Check the connectors to the engine cooling fan (FC) control module and Engine Control Module (ECM). Check for damage to pins and connections.
- Also check other connectors and connections that connect cables between Engine Control Module (ECM) and the control module for electric cooling fan.
- Check the wiring between the engine control module (ECM) and the engine cooling fan (FC) module. Check for damage.

Remedy as necessary.

Other information

- see **CONNECTING THE BREAKOUT BOX**
- For 5 cylinder turbocharged engines -2004, see **SIGNAL DESCRIPTION**
- For 5 cylinder turbocharged engines 2005-, see **SIGNAL SPECIFICATION** .
- For 6 cylinder engines -2004, see **SIGNAL SPECIFICATION**
- For 6 cylinder engines 2005-, see **SIGNAL SPECIFICATION** .
- see **ELECTRIC COOLING FAN**
- see **CHECKING WIRING AND TERMINALS**

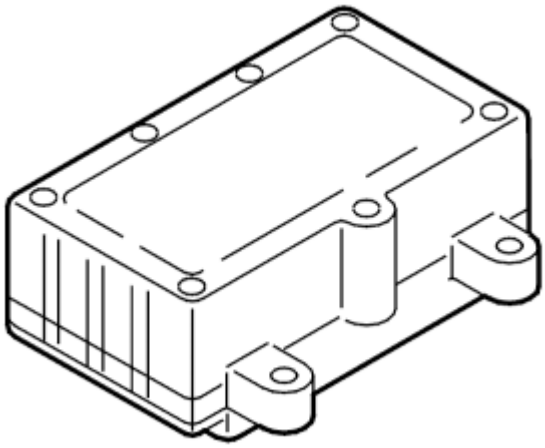

Fig. 125: Identifying Engine Fan Control Module
Courtesy of VOLVO CARS CORPORATION

Was a fault detected?

- **YES**

  Refer to **VERIFICATION**

- **NO**

  Refer to **REPLACING A COMPONENT**

VERIFICATION

VERIFICATION

HINT: After carrying out the repair, check that the fault has been remedied.

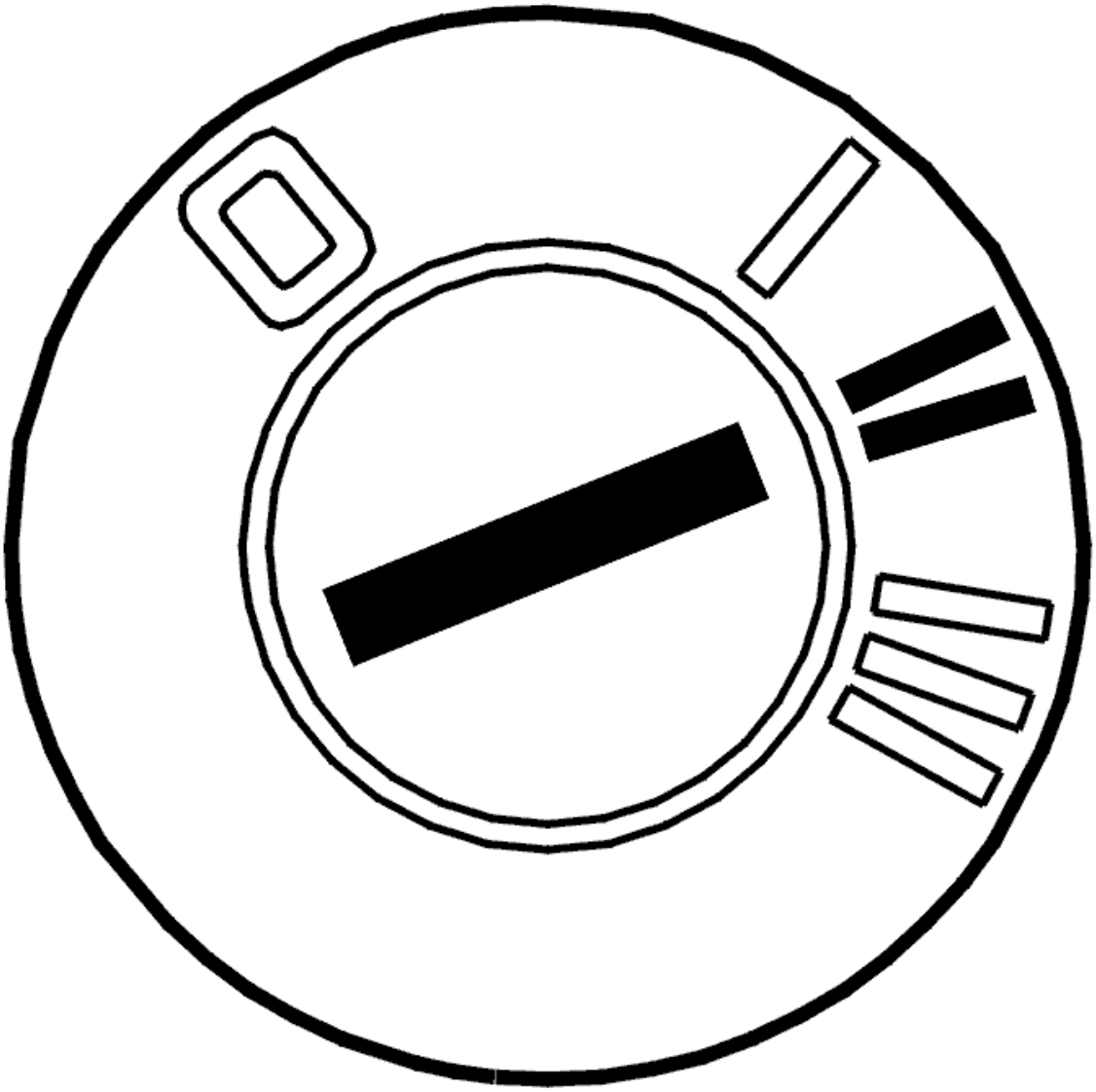

Fig. 126: Identifying Ignition ON
Courtesy of VOLVO CARS CORPORATION

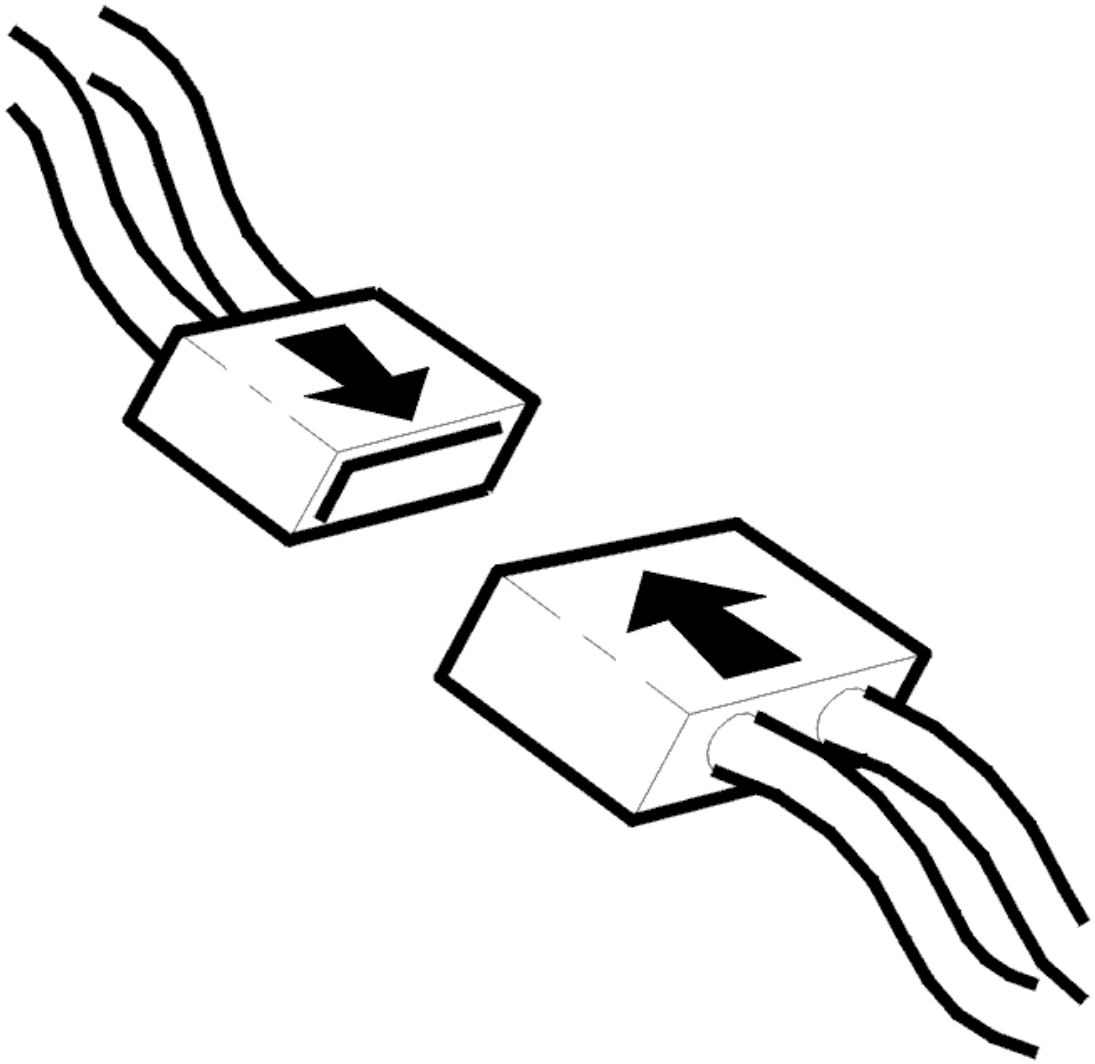

Fig. 127: Connecting Connector
Courtesy of VOLVO CARS CORPORATION

- Ignition off
- Reinstall the connectors, components etc.
- Ignition on.

Activate the engine cooling fan (FC). Check all 6 speeds of the engine cooling fan (FC).

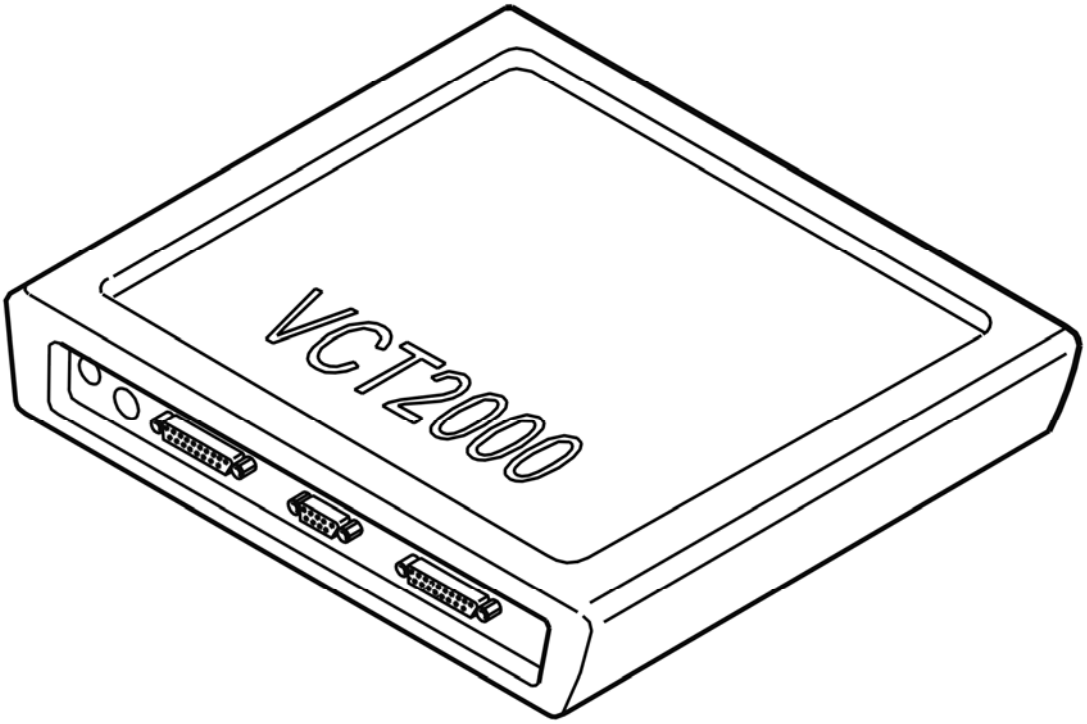

Fig. 128: Identifying VCT2000 Diagnostic Tool Symbol In VIDA
Courtesy of VOLVO CARS CORPORATION

Is the engine cooling fan (FC) working?

- **YES**

  VERIFIED: Troubleshooting has been completed.

- **NO**

  Refer to **INFORMATION**

INFORMATION

FAULT-TRACING INFORMATION

The fault should have been detected and remedied. As this is not the case fault-tracing has failed.

Exit fault-tracing for this diagnostic trouble code (DTC) or make another attempt.

ECM-6110: ENGINE COOLING FAN (FC) RELAY. SIGNAL TOO HIGH (B5254T2; B6294T; 2003-2004)

DIAGNOSTIC TROUBLE CODE (DTC) INFORMATION

see **DIAGNOSTIC TROUBLE CODE (DTC) INFORMATION**

SIGNAL TOO HIGH

CHECKING THE COMPONENT

Fig. 129: Identifying Ignition On Position
Courtesy of VOLVO CARS CORPORATION

- Ignition off.
- Check that the engine cooling fan (FC) blade rotates easily. Check that nothing is obstructing the engine cooling fan (FC) blade.
- Remedy as necessary.
- Check all speeds of the engine cooling fan (FC).

  Activate the engine cooling fan (FC) using the VCT2000 (or appropriate scan tool).

Fig. 130: Identifying VCT2000 Diagnostic Tool Symbol In VIDA
Courtesy of VOLVO CARS CORPORATION

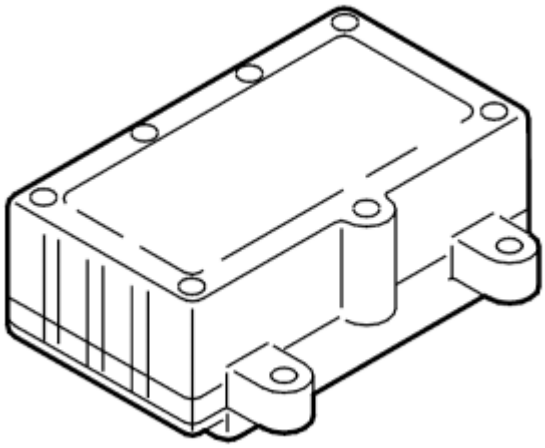

Fig. 131: Identifying Engine Fan Control Module
Courtesy of VOLVO CARS CORPORATION

- **Continue**

  Refer to **CHECKING THE COMPONENT AND WIRING**

CHECKING THE COMPONENT AND WIRING

Fig. 132: Identifying Ignition In Off Position
Courtesy of VOLVO CARS CORPORATION

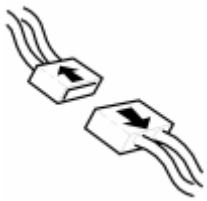

Fig. 133: Identifying Connectors
Courtesy of VOLVO CARS CORPORATION

- Ignition off.

CAUTION: Avoid touching the pins in the control module and the corresponding connector on the cable harness. There is a risk of static discharge which could damage the control module. Discharge yourself and tools to be used by holding the tool's metal part and touching a body

part on the car just before starting to work.

If the engine cooling fan (FC) cannot be activated at any speed:

- Check the fuse, power supply cable and ground lead for the engine cooling fan (FC).
- Check the connector and wiring between the engine control module (ECM) and engine cooling fan (FC) module. Check for damage. Check for an open circuit. Check for a short circuit.

If the engine cooling fan (FC) can be activated at one or more speeds:

- Check the connectors to the engine cooling fan (FC) control module and Engine Control Module (ECM). Check for damage to pins and connections.
- Also check other connectors and connections that connect cables between Engine Control Module (ECM) and the control module for electric cooling fan.
- Check the wiring between the engine control module (ECM) and the engine cooling fan (FC) module. Check for damage.

Remedy as necessary.

Other information

- see **CONNECTING THE BREAKOUT BOX**
- For 5 cylinder turbocharged engines -2004, see **SIGNAL DESCRIPTION**
- For 5 cylinder turbocharged engines 2005-, see **SIGNAL SPECIFICATION** .
- For 6 cylinder engines -2004, see **SIGNAL SPECIFICATION**
- For 6 cylinder engines 2005-, see **SIGNAL SPECIFICATION** .
- see **ELECTRIC COOLING FAN**
- see **CHECKING WIRING AND TERMINALS**

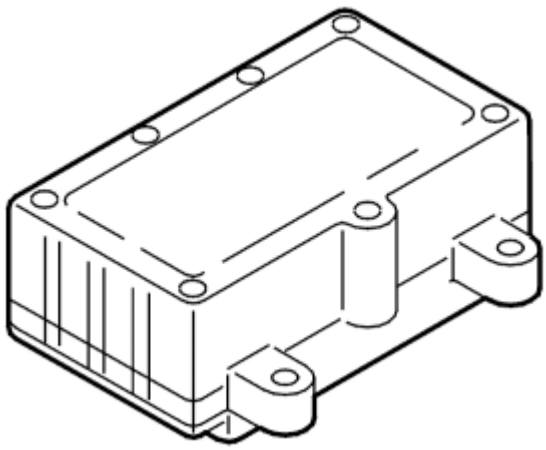

Fig. 134: Identifying Engine Fan Control Module

Courtesy of VOLVO CARS CORPORATION

Was a fault detected?

- **YES**

  Refer to **VERIFICATION**

- **NO**

  Refer to **REPLACING A COMPONENT**

REPLACING A COMPONENT

Fig. 135: Identifying Ignition In Off Position
Courtesy of VOLVO CARS CORPORATION

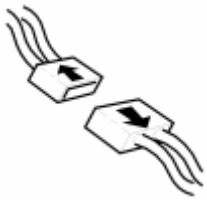

Fig. 136: Identifying Connectors
Courtesy of VOLVO CARS CORPORATION

- Ignition off.

CAUTION: Avoid touching the pins in the control module and the corresponding connector on the cable harness. There is a risk of static discharge which could damage the control module. Discharge yourself and tools to be used by holding the tool's metal part and touching a body part on the car just before starting to work.

Replace the engine cooling fan (FC) control module if the engine cooling fan (FC) cannot be activated at all speeds and no faults have been found on wiring and connections.

Remedy as necessary.

Other information

- see **ELECTRIC COOLING FAN**

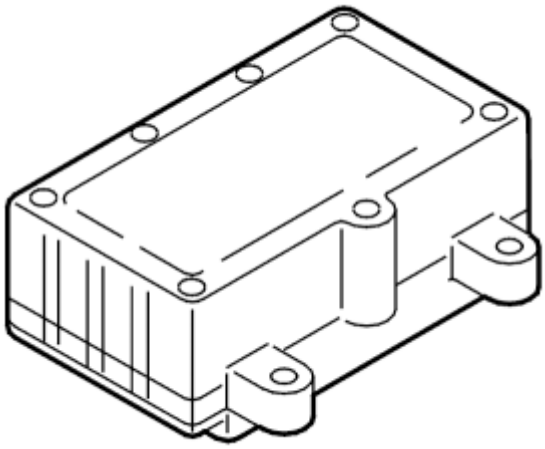

Fig. 137: Identifying Engine Fan Control Module
Courtesy of VOLVO CARS CORPORATION

- **Continue**

  Refer to **VERIFICATION**

VERIFICATION

VERIFICATION

HINT: After carrying out the repair, check that the fault has been remedied.

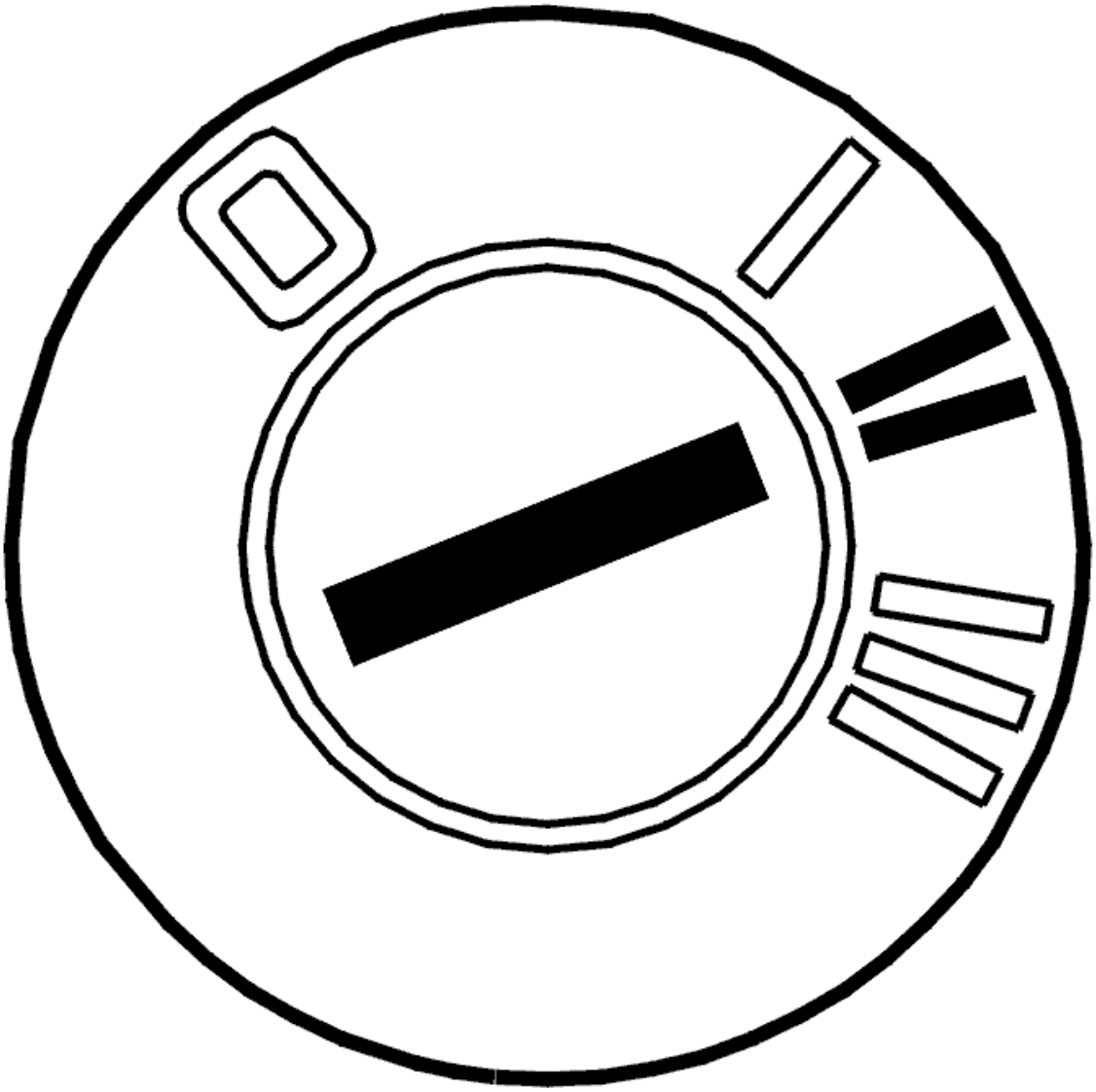

Fig. 138: Identifying Ignition ON
Courtesy of VOLVO CARS CORPORATION

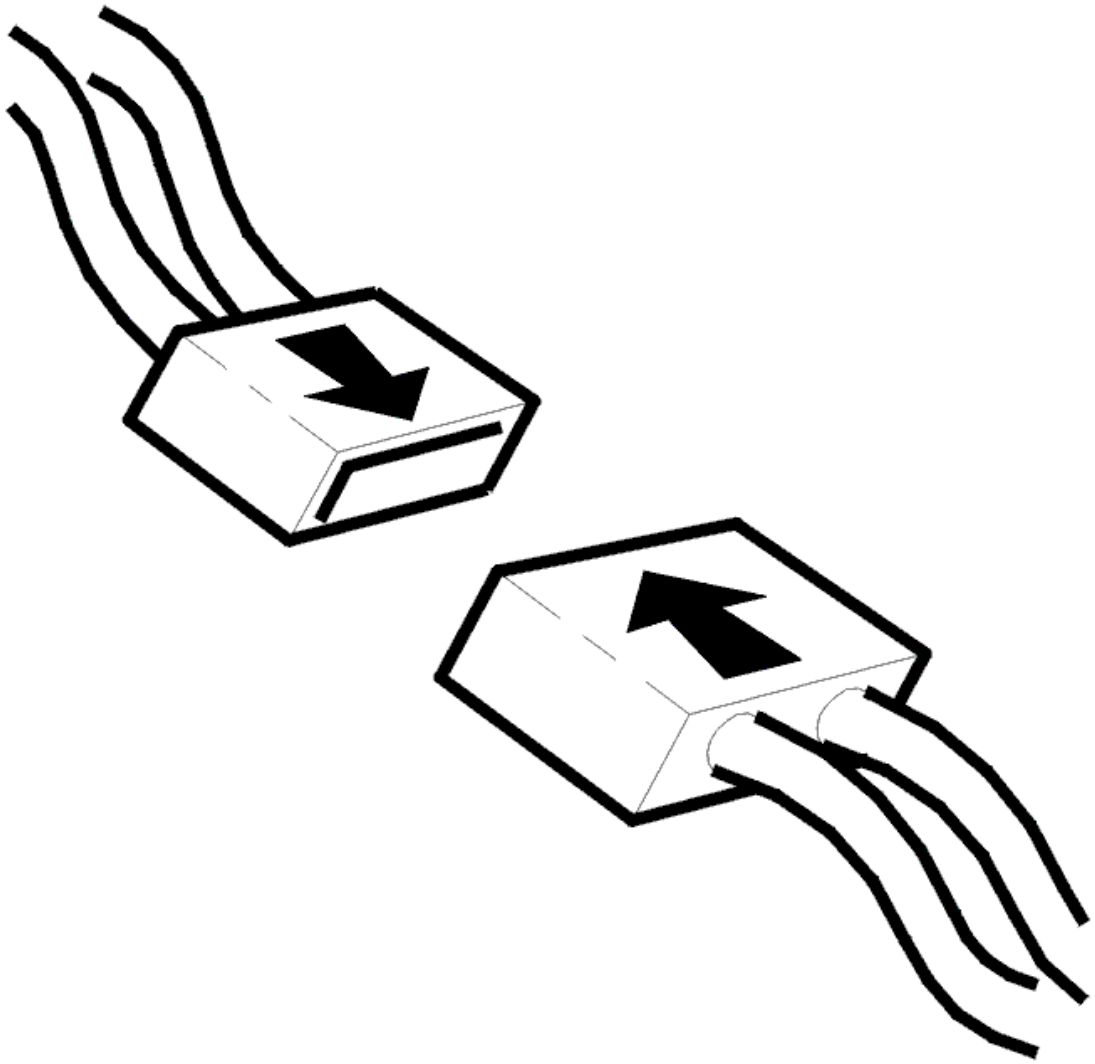

Fig. 139: Connecting Connector
Courtesy of VOLVO CARS CORPORATION

- Ignition off
- Reinstall the connectors, components etc.
- Ignition on.

Activate the engine cooling fan (FC). Check all 6 speeds of the engine cooling fan (FC).

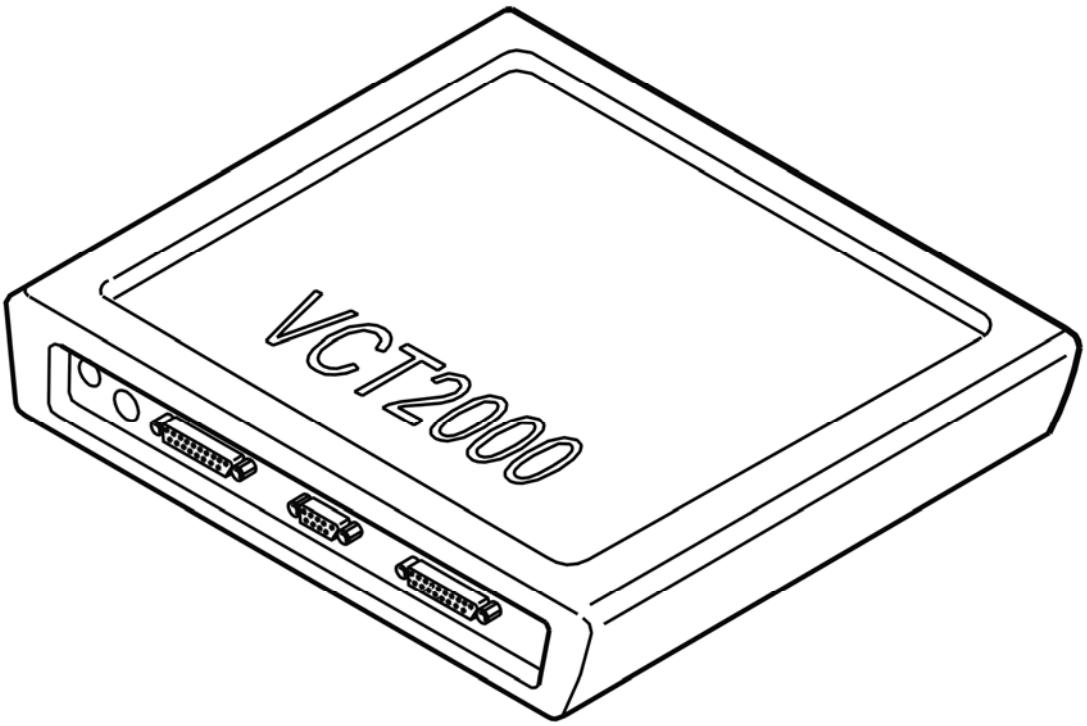

Fig. 140: Identifying VCT2000 Diagnostic Tool Symbol In VIDA
Courtesy of VOLVO CARS CORPORATION

Is the engine cooling fan (FC) working?

- **YES**

  VERIFIED: Troubleshooting has been completed.

- **NO**

  Refer to **INFORMATION**

INFORMATION

FAULT-TRACING INFORMATION

The fault should have been detected and remedied. As this is not the case fault-tracing has failed.

Exit fault-tracing for this diagnostic trouble code (DTC) or make another attempt.

ECM-6110: ENGINE COOLING FAN (FC) RELAY. SIGNAL TOO LOW (B5254T2; B6294T; 2003-2004)

DIAGNOSTIC TROUBLE CODE (DTC) INFORMATION

see **DIAGNOSTIC TROUBLE CODE (DTC) INFORMATION**

SIGNAL TOO LOW

CHECKING THE COMPONENT

Fig. 141: Identifying Ignition On Position
Courtesy of VOLVO CARS CORPORATION

- Ignition off.
- Check that the engine cooling fan (FC) blade rotates easily. Check that nothing is obstructing the engine cooling fan (FC) blade.
- Remedy as necessary.
- Ignition on.
- Check all speeds of the engine cooling fan (FC).

  Activate the engine cooling fan (FC) using the VCT2000 (or appropriate scan tool).

Fig. 142: Identifying VCT2000 Diagnostic Tool Symbol In VIDA
Courtesy of VOLVO CARS CORPORATION

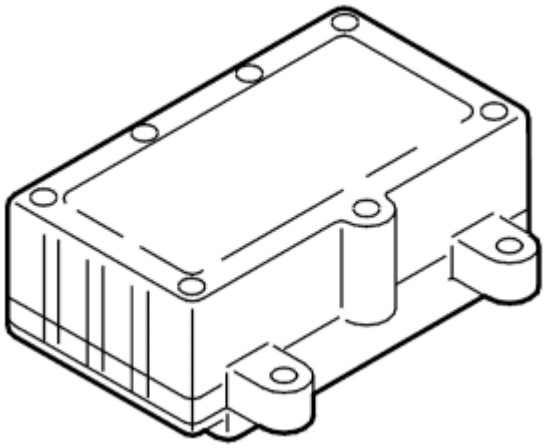

Fig. 143: Identifying Engine Fan Control Module
Courtesy of VOLVO CARS CORPORATION

- **Continue**

  Refer to **CHECKING THE COMPONENT AND WIRING**

CHECKING THE COMPONENT AND WIRING

Fig. 144: Identifying Ignition In Off Position
Courtesy of VOLVO CARS CORPORATION

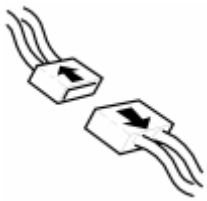

Fig. 145: Identifying Connectors
Courtesy of VOLVO CARS CORPORATION

- Ignition off.

CAUTION: Avoid touching the pins in the control module and the corresponding connector on the cable harness. There is a risk of static discharge which could damage the control module. Discharge yourself and tools to be used by holding the tool's metal part and touching a body

part on the car just before starting to work.

If the engine cooling fan (FC) cannot be activated at any speed:

- Check the fuse, power supply cable and ground lead for the engine cooling fan (FC).
- Check the connector and wiring between the engine control module (ECM) and engine cooling fan (FC) module. Check for damage. Check for an open circuit. Check for a short circuit.

If the engine cooling fan (FC) can be activated at one or more speeds:

- Check the connectors to the engine cooling fan (FC) control module and Engine Control Module (ECM). Check for damage to pins and connections.
- Also check other connectors and connections that connect cables between Engine Control Module (ECM) and the control module for electric cooling fan.
- Check the wiring between the engine control module (ECM) and the engine cooling fan (FC) module. Check for damage.

Remedy as necessary.

Other information

- see **CONNECTING THE BREAKOUT BOX**
- For 5 cylinder turbocharged engines -2004, see **SIGNAL DESCRIPTION**
- For 5 cylinder turbocharged engines 2005-, see **SIGNAL SPECIFICATION** .
- For 6 cylinder engines -2004, see **SIGNAL SPECIFICATION**
- For 6 cylinder engines 2005-, see **SIGNAL SPECIFICATION** .
- see **ELECTRIC COOLING FAN**
- see **CHECKING WIRING AND TERMINALS**

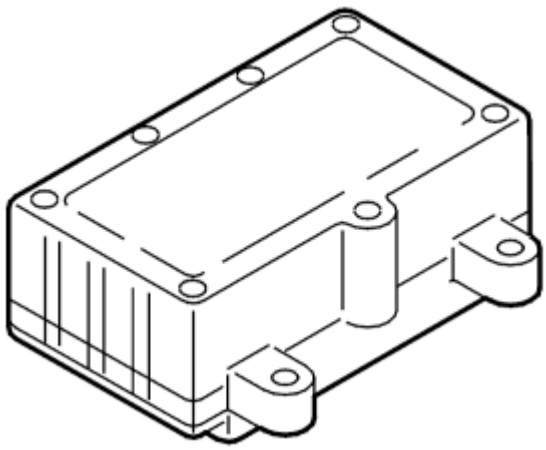

Fig. 146: Identifying Engine Fan Control Module

Courtesy of VOLVO CARS CORPORATION

Was a fault detected?

- **YES**

  Refer to **VERIFICATION**

- **NO**

  Refer to **REPLACING A COMPONENT**

REPLACING A COMPONENT

Fig. 147: Identifying Ignition In Off Position
Courtesy of VOLVO CARS CORPORATION

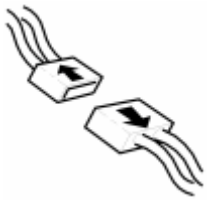

Fig. 148: Identifying Connectors
Courtesy of VOLVO CARS CORPORATION

- Ignition off.

  CAUTION: Avoid touching the pins in the control module and the corresponding connector on the cable harness. There is a risk of static discharge which could damage the control module. Discharge yourself and tools to be used by holding the tool's metal part and touching a body part on the car just before starting to work.

  Replace the engine cooling fan (FC) control module if the engine cooling fan (FC) cannot be activated at all speeds and no faults have been found on wiring and connections.

  Remedy as necessary.

  Other information

- see **ELECTRIC COOLING FAN**

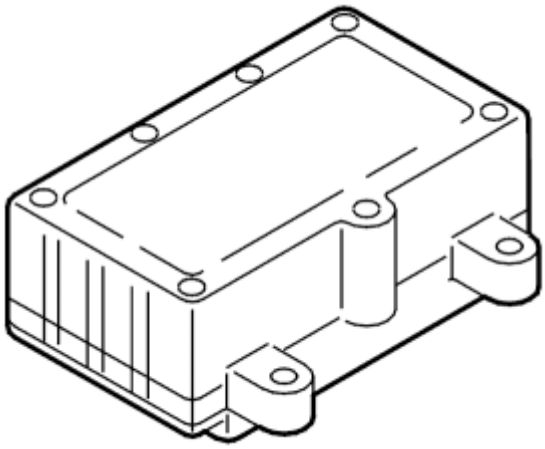

Fig. 149: Identifying Engine Fan Control Module
Courtesy of VOLVO CARS CORPORATION

- **Continue**

  Refer to **VERIFICATION**

VERIFICATION

VERIFICATION

HINT: After carrying out the repair, check that the fault has been remedied.

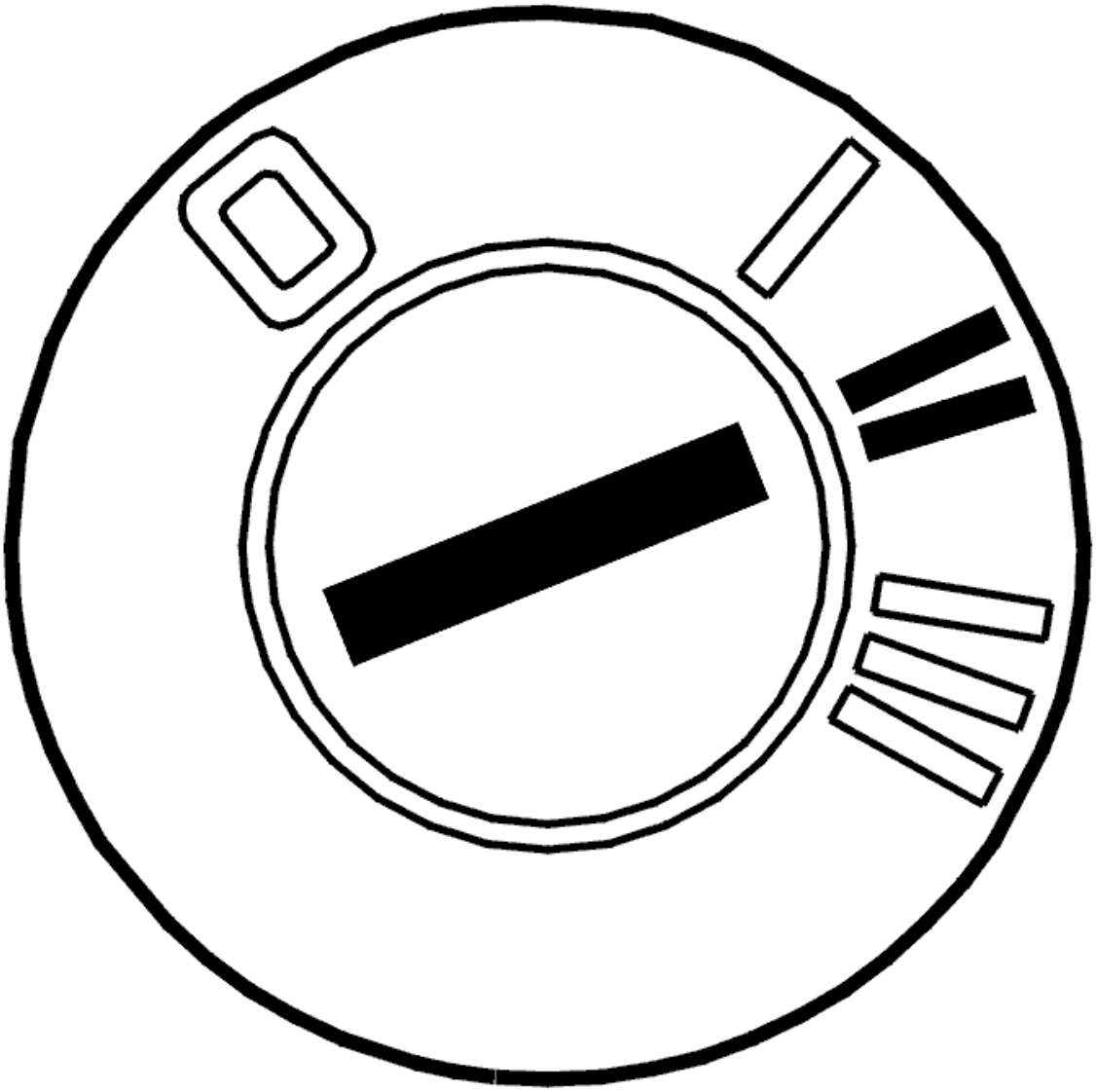

Fig. 150: Identifying Ignition ON
Courtesy of VOLVO CARS CORPORATION

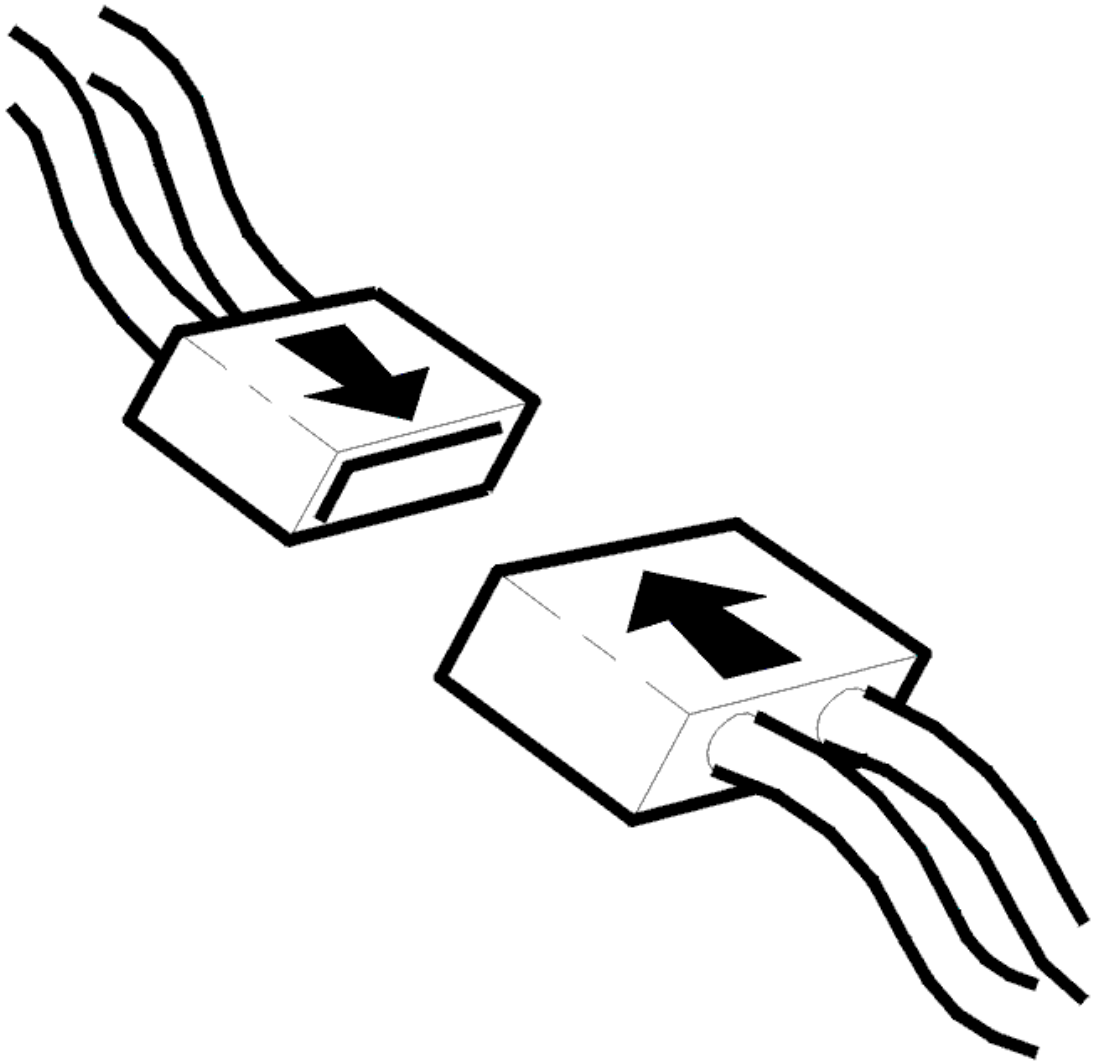

Fig. 151: Connecting Connector
Courtesy of VOLVO CARS CORPORATION

- Ignition off
- Reinstall the connectors, components etc.
- Ignition on.

Activate the engine cooling fan (FC). Check all 6 speeds of the engine cooling fan (FC).

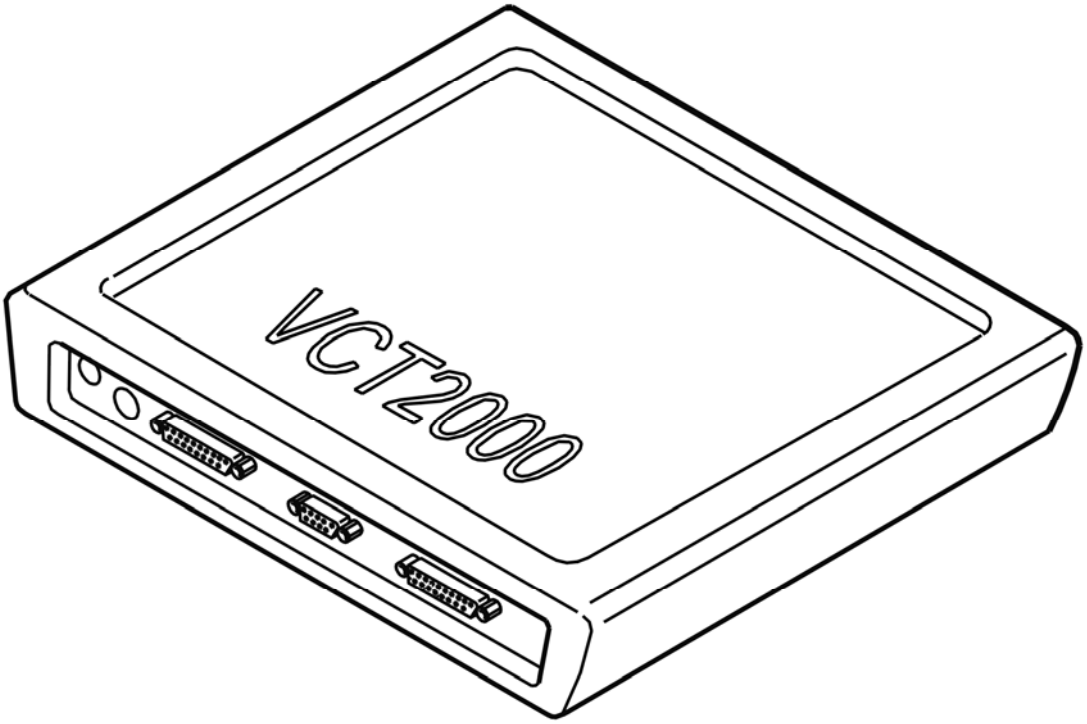

Fig. 152: Identifying VCT2000 Diagnostic Tool Symbol In VIDA
Courtesy of VOLVO CARS CORPORATION

Is the engine cooling fan (FC) working?

- **YES**

  VERIFIED: Troubleshooting has been completed.

- **NO**

  Refer to **INFORMATION**

INFORMATION

FAULT-TRACING INFORMATION

The fault should have been detected and remedied. As this is not the case fault-tracing has failed.

Exit fault-tracing for this diagnostic trouble code (DTC) or make another attempt.

ECM-611B: CAMSHAFT CONTROL, INTAKE. FAULTY (B5254T2; 2005-2007)

DIAGNOSTIC TROUBLE CODE (DTC) INFORMATION ECM-611B

Condition

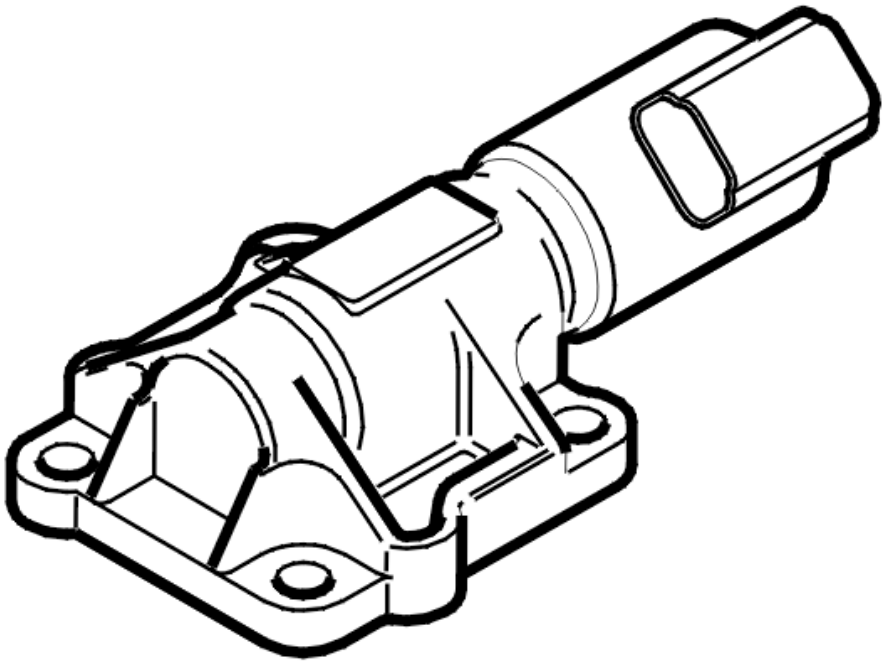

Fig. 153: Identifying Camshaft Position Control
Courtesy of VOLVO CARS CORPORATION

The engine control module (ECM) checks that the position of the intake camshaft (actual value) corresponds to the requested position (desired value).

The diagnostic trouble code (DTC) is stored if the requested position is not reached.

The diagnostic trouble code (DTC) is diagnosed by the engine control module (ECM) when the engine is running and the camshaft control is active.

Substitute Value

- None.

Possible Source

- Low oil pressure
- Poor oil quality
- Damaged reset valve
- Mechanical fault in the variable valve timing (VVT) unit.

Fault symptom[s]

- Malfunction indicator lamp (MIL) lit.

SLOW/FAULTY

see **SLOW/FAULTY**

ECM-611B: CAMSHAFT CONTROL, INTAKE. FAULTY (B6294T; 2005-2006)

DIAGNOSTIC TROUBLE CODE (DTC) INFORMATION ECM-611B

see **DIAGNOSTIC TROUBLE CODE (DTC) INFORMATION ECM-611B**

SLOW/FAULTY

see **SLOW/FAULTY**

ECM-612B: CAMSHAFT RESET VALVE, INTAKE. SIGNAL MISSING (B5254T2; 2005-2007)

DIAGNOSTIC TROUBLE CODE (DTC) INFORMATION ECM-612B

Condition

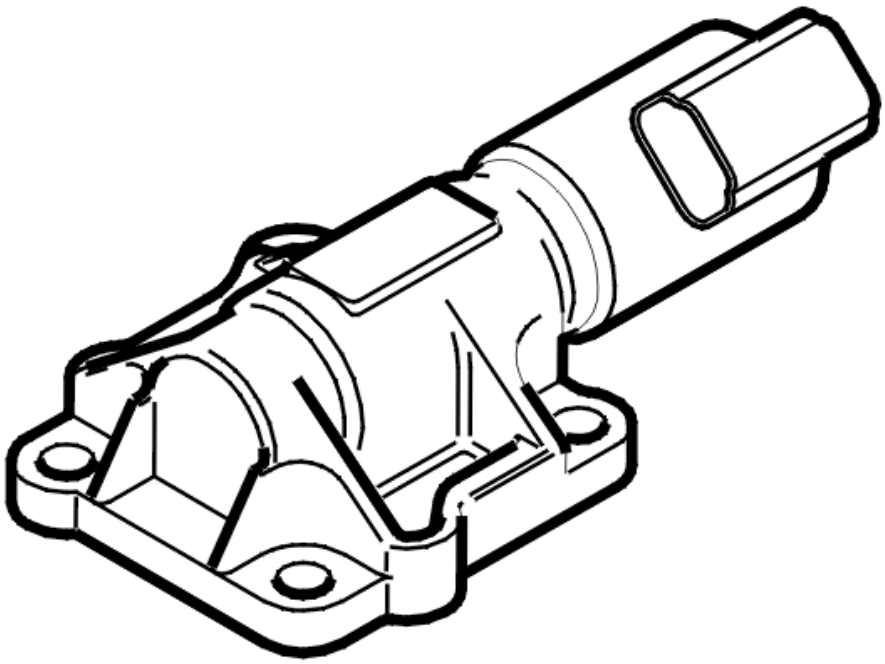

Fig. 154: Identifying Camshaft Position Control
Courtesy of VOLVO CARS CORPORATION

The engine control module (ECM) checks the signal cable for the reset valve for the intake camshaft.

The diagnostic trouble code (DTC) is stored if the engine control module (ECM) detects an open-circuit in the signal cable for the reset valve.

The diagnostic trouble code (DTC) can be diagnosed at ignition on and with the engine running.

Substitute Value

- None.

Possible Source

- Open-circuit in the signal cable
- Open-circuit in the power cable
- Damaged camshaft reset valve.

Fault symptom[s]

- Malfunction indicator lamp (MIL) lit.

SIGNAL TOO LOW OR SIGNAL MISSING

CHECKING THE STATUS

HINT: The diagnostic trouble code (DTC) may be caused by a defective fuse. If the engine does not start, check the fuse for the power supply to the camshaft reset valve.

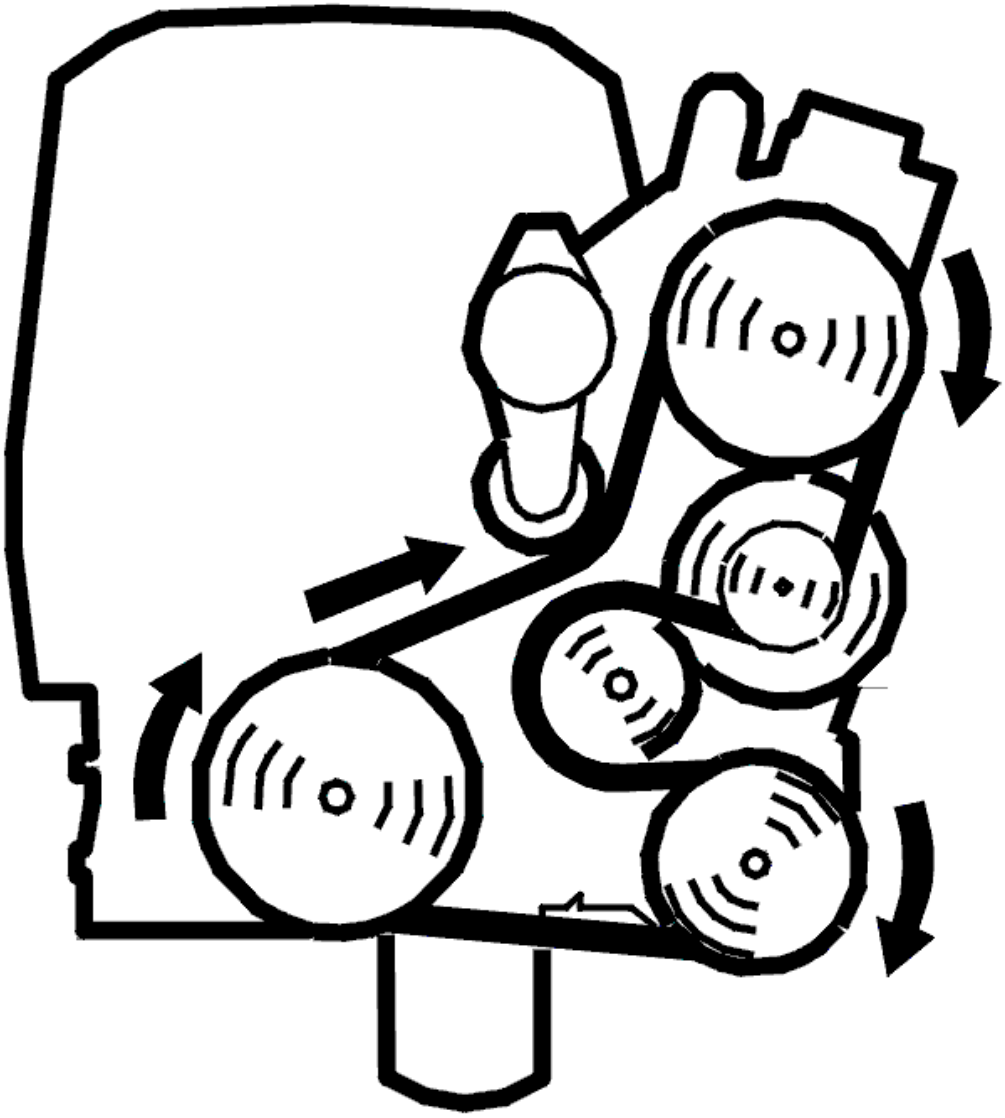

Fig. 155: Belt Routing / Engine Idling - Volvo
Courtesy of VOLVO CARS CORPORATION

- Start the engine
- Read off the value for the camshaft shift angle and the desired value for the camshaft shift angle
- Active the quick test of camshaft control by clicking the start button
- Increase the engine speed (RPM) to approximately 2500 RPM and keep the engine running at this speed.

When the engine speed (RPM) increases, the control module will start the quick test to control the shift angle of the camshaft to the different target values. There is a fault if the control module does not operate the camshaft shift angle to the different target values.

During the quick test, check that the shift angle of the camshaft (actual value) corresponds to the target values to an accuracy of ±10°. If the shift angle of the camshaft (target value) does not change, or if the actual value does not correspond to the target value, the function is faulty.

Deviation between the values can be read off in the lower display.

Carry out the check for approximately 15 seconds at an engine speed (RPM) of 2500 RPM. The test is completed when the shift angle of the camshaft returns to 0°. To restart the test, let the engine return to idle speed, then increase the engine speed to approximately 2500 RPM.

The fault is intermittent if the function is OK.

NOTE: **The test is active until the ignition is switched off. Switch off the ignition before the car is delivered to the customer.**

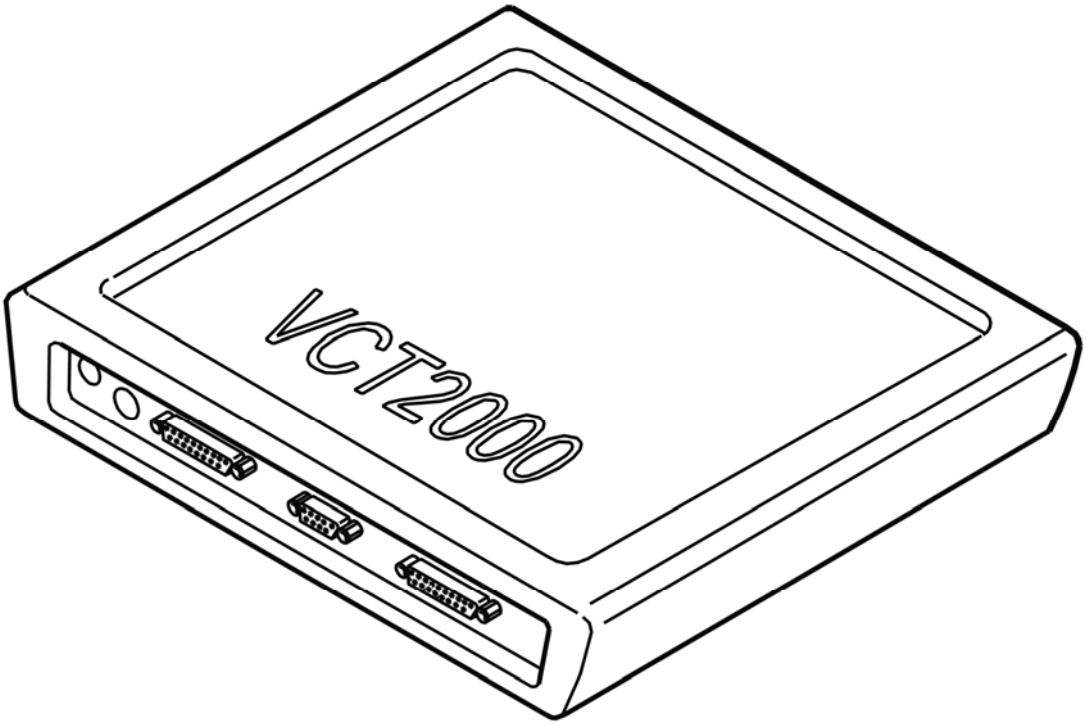

Fig. 156: Identifying VCT2000 Diagnostic Tool Symbol In VIDA
Courtesy of VOLVO CARS CORPORATION

- **Continue**

Refer to **CHECKING THE WIRING**

CHECKING THE WIRING

Check the fuse before the circuit. If the fuse is blown, check the circuit for a short-circuit to ground.

Check the resistance of the camshaft reset valve between terminals #1 and #2.

The resistance must be approximately 3.7 ohms.

Check the signal cable between engine control module (ECM) terminal #A13 (#A13) and camshaft reset valve terminal #2. Check for an open-circuit. Check for a short-circuit to ground.

Check the power supply cable between system relay terminal #5 and camshaft reset valve terminal #1. Check for an open-circuit.

HINT: With the ignition on and the reset valve and camshaft connector disconnected, the voltage at connector terminal #1 must be approximately $U_{bat.}$

Remedy as necessary.

Other information:

- To connect the breakout box, see **CONNECTING THE BREAKOUT BOX**
- For B5xx4T, see **VARIABLE VALVE TIMING SOLENOID, REPLACING**
- For B6xx4T, see **REPLACING THE VARIABLE VALVE TIMING SOLENOID** .
- For 5 cylinder turbocharged engines -2004, see **SIGNAL DESCRIPTION**
- For 5 cylinder turbocharged engines 2005-, see **SIGNAL SPECIFICATION** .
- For 6 cylinder engines -2004, see **SIGNAL SPECIFICATION**
- For 6 cylinder engines 2005-, see **SIGNAL SPECIFICATION** .
- see **CHECKING WIRING AND TERMINALS** .

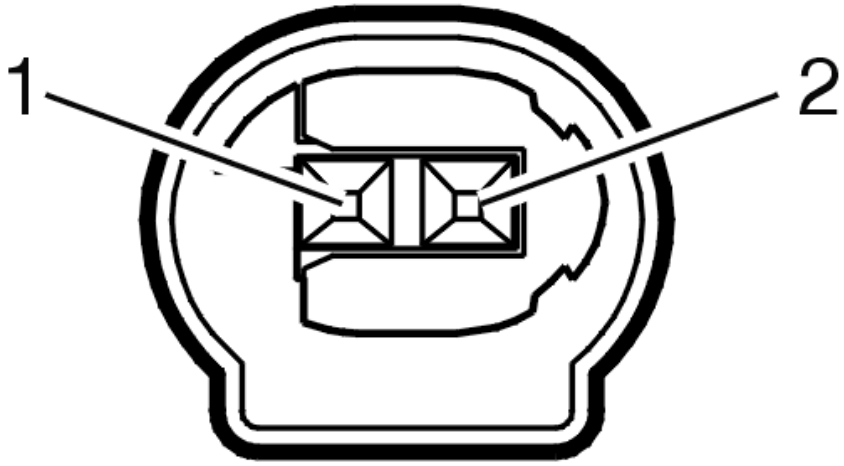

Fig. 157: Identifying Camshaft Reset Valve Terminal 1& 2
Courtesy of VOLVO CARS CORPORATION

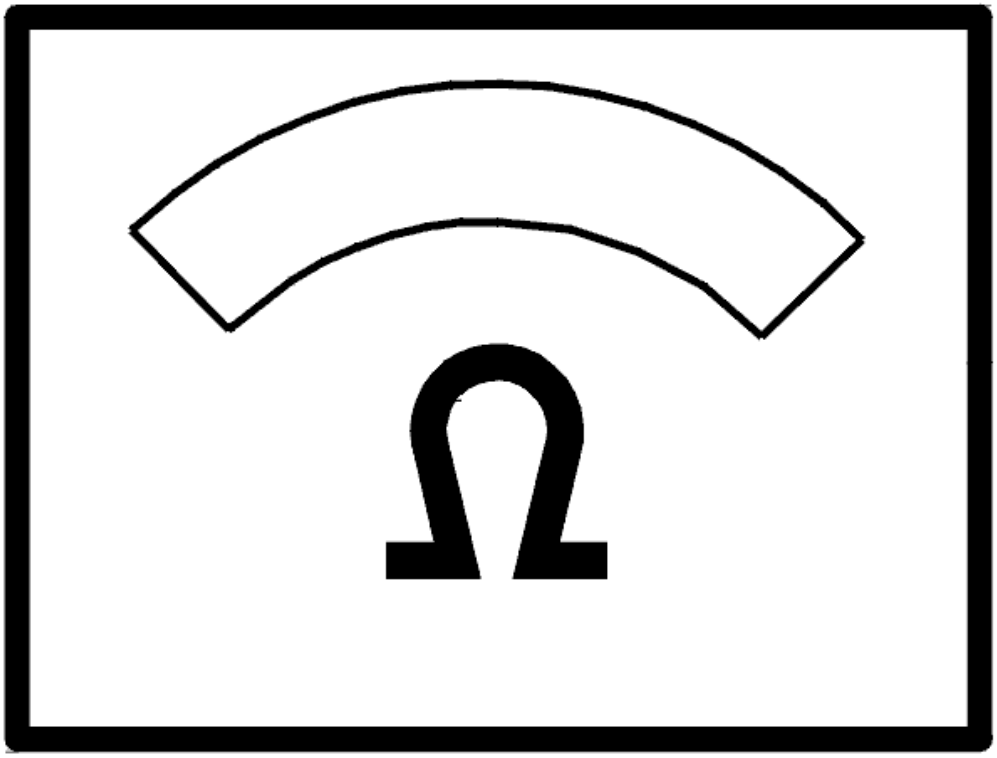

Fig. 158: Identifying Ohm Meter
Courtesy of VOLVO CARS CORPORATION

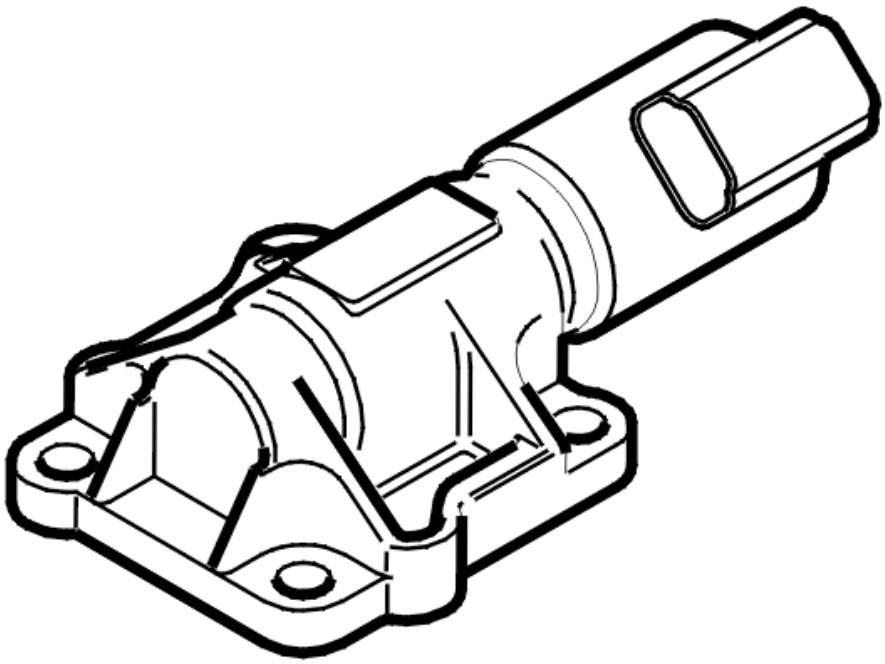

Fig. 159: Identifying Camshaft Position Control
Courtesy of VOLVO CARS CORPORATION

- **Continue**

  Refer to **VERIFICATION**

VERIFICATION

VERIFICATION

HINT: After carrying out the repair, check that the fault has been remedied.

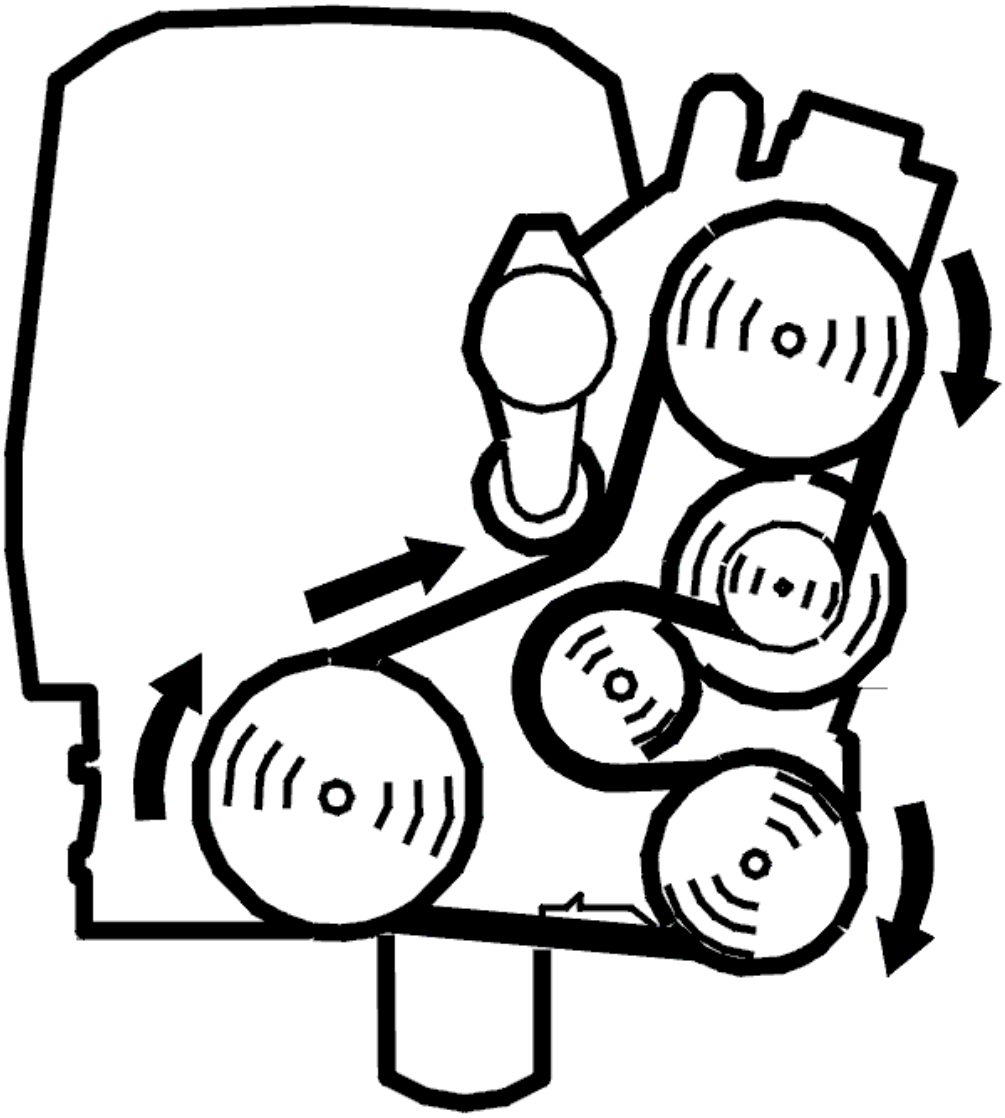

Fig. 160: Belt Routing / Engine Idling - Volvo
Courtesy of VOLVO CARS CORPORATION

- Start the engine
- Read off the value for the camshaft shift angle and the desired value for the camshaft shift angle
- Active the quick test of camshaft control by clicking the start button
- Increase the engine speed (RPM) to approximately 2500 RPM and keep the engine running at this speed.

  When the engine speed (RPM) increases, the control module will start the quick test to control the shift angle of the camshaft to the different target values. There is a fault if the control module does not operate the camshaft shift angle to the different target values.

  During the quick test, check that the shift angle of the camshaft (actual value) corresponds to the target values to an accuracy of ±10°. If the shift angle of the camshaft (target value) does not change, or if the actual value does not correspond to the target value, the function is faulty.

Deviation between the values can be read off in the lower display.

Carry out the check for approximately 15 seconds at an engine speed (RPM) of 2500 RPM. The test is completed when the shift angle of the camshaft returns to 0°. To restart the test, let the engine return to idle speed, then increase the engine speed to approximately 2500 RPM.

NOTE: **The test is active until the ignition is switched off. Switch off the ignition before the car is delivered to the customer.**

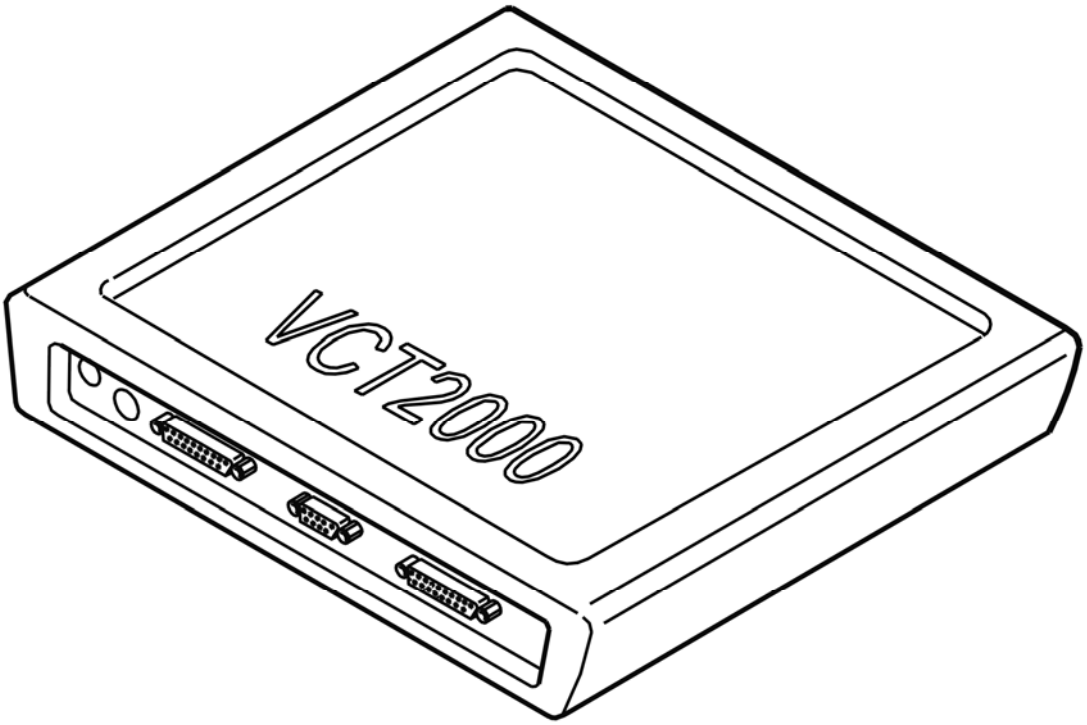

Fig. 161: Identifying VCT2000 Diagnostic Tool Symbol In VIDA
Courtesy of VOLVO CARS CORPORATION

Is the function OK?

- **YES**

  VERIFIED: Troubleshooting has been completed.

- **NO**

  Refer to **INFORMATION**

INFORMATION

FAULT-TRACING INFORMATION

The fault should have been detected and remedied. As this is not the case fault-tracing has failed.

Exit fault-tracing for this diagnostic trouble code (DTC) or make another attempt.

ECM-612B: CAMSHAFT RESET VALVE, INTAKE. SIGNAL MISSING (B6294T; 2005-2006)

DIAGNOSTIC TROUBLE CODE (DTC) INFORMATION ECM-612B

see **DIAGNOSTIC TROUBLE CODE (DTC) INFORMATION ECM-612B**

SIGNAL TOO LOW OR SIGNAL MISSING

see **SIGNAL TOO LOW OR SIGNAL MISSING**

ECM-612C: CAMSHAFT RESET VALVE, INTAKE. SIGNAL TOO HIGH (B5254T2; 2005-2007)

DIAGNOSTIC TROUBLE CODE (DTC) INFORMATION ECM-612C

Condition

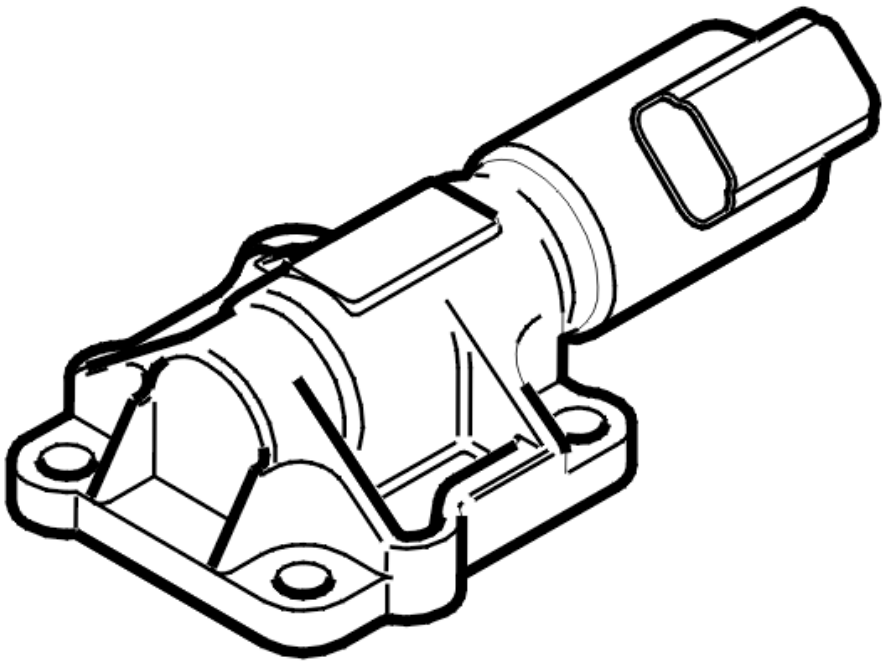

Fig. 162: Identifying Camshaft Position Control
Courtesy of VOLVO CARS CORPORATION

The engine control module (ECM) checks the signal cable for the reset valve for the intake camshaft.

The diagnostic trouble code (DTC) is stored if the engine control module (ECM) detects that the signal from the signal cable for the reset valve is too high.

The diagnostic trouble code (DTC) can be diagnosed at ignition on and with the engine running.

Substitute Value

- None.

Possible Source

- Short-circuit to supply voltage in the signal cable
- Open-circuit in the power supply
- Damaged camshaft reset valve.

Fault symptom[s]

- Malfunction indicator lamp (MIL) lit.

SIGNAL TOO HIGH

CHECKING THE STATUS

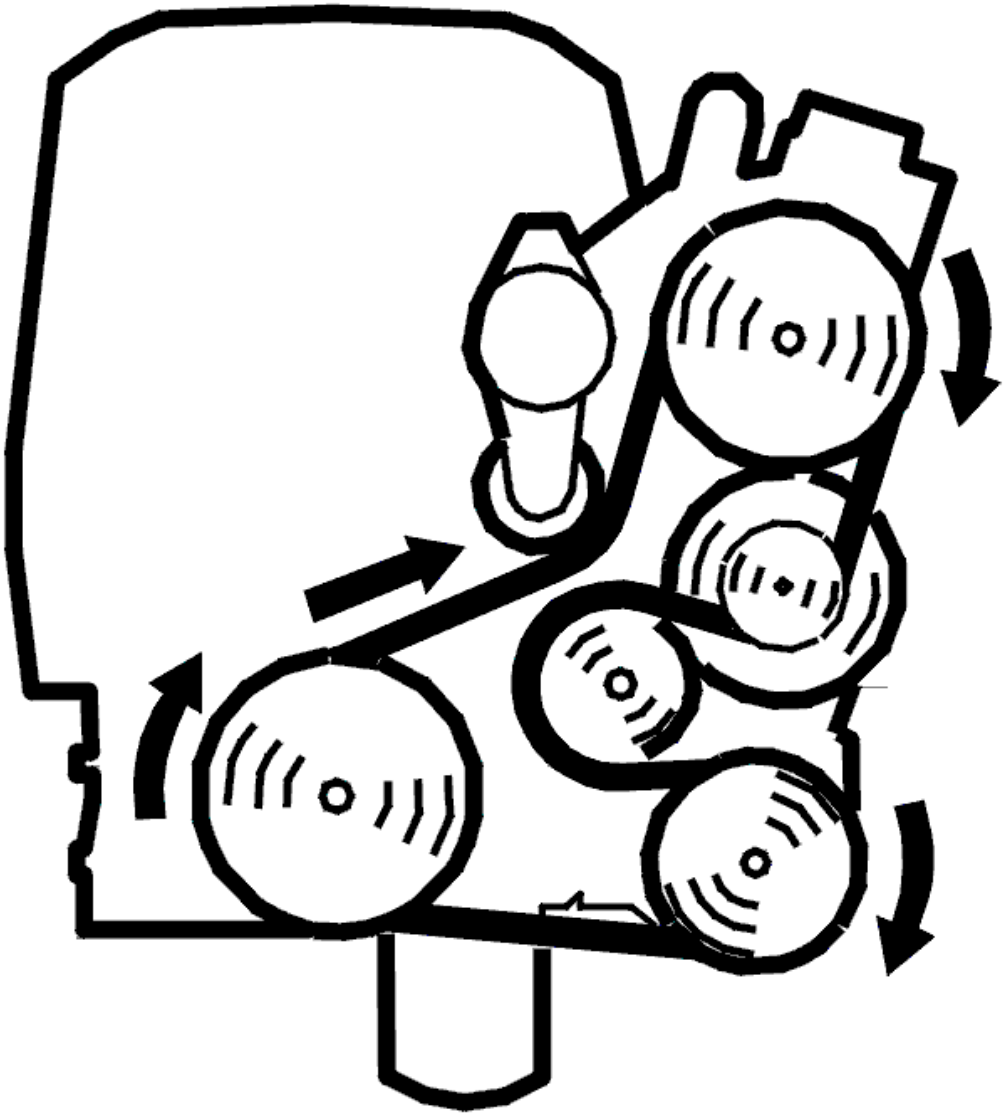

Fig. 163: Belt Routing / Engine Idling - Volvo
Courtesy of VOLVO CARS CORPORATION

- Start the engine
- Read off the value for the camshaft shift angle and the desired value for the camshaft shift angle
- Active the quick test of camshaft control by clicking the start button
- Increase the engine speed (RPM) to approximately 2500 RPM and keep the engine running at this speed.

  When the engine speed (RPM) increases, the control module will start the quick test to control the shift angle of the camshaft to the different target values. There is a fault if the control module does not operate the camshaft shift angle to the different target values.

During the quick test, check that the shift angle of the camshaft (actual value) corresponds to the target values to an accuracy of ±10°. If the shift angle of the camshaft (target value) does not change, or if the actual value does not correspond to the target value, the function is faulty.

Deviation between the values can be read off in the lower display.

Carry out the check for approximately 15 seconds at an engine speed (RPM) of 2500 RPM. The test is completed when the shift angle of the camshaft returns to 0°. To restart the test, let the engine return to idle speed, then increase the engine speed to approximately 2500 RPM.

The fault is intermittent if the function is OK.

NOTE: The test is active until the ignition is switched off. Switch off the ignition before the car is delivered to the customer.

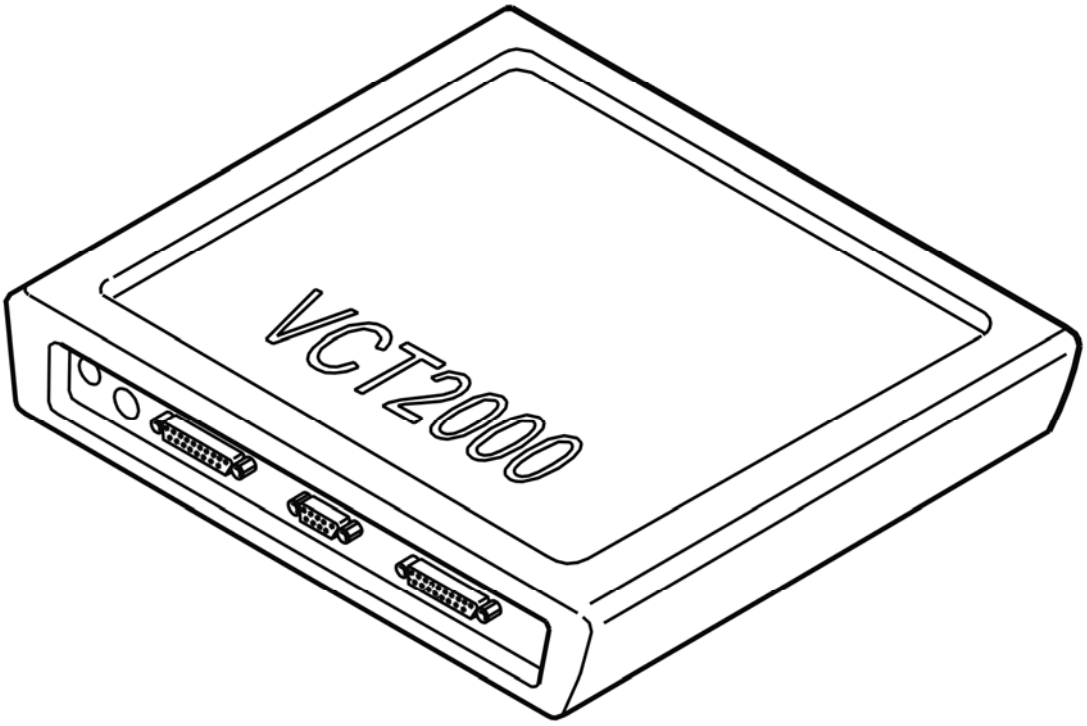

Fig. 164: Identifying VCT2000 Diagnostic Tool Symbol In VIDA
Courtesy of VOLVO CARS CORPORATION

- **Continue**

Refer to **CHECKING THE WIRING**

CHECKING THE WIRING

Check the resistance of the camshaft reset valve between terminals #1 and #2.

The resistance must be approximately 3.7 ohms.

Check the signal cable between engine control module (ECM) terminal #A13 (#A13) and camshaft reset valve terminal #2. Check for a short-circuit to supply voltage.

Remedy as necessary.

Other information:

- To connect the breakout box, see **CONNECTING THE BREAKOUT BOX**
- For B5xx4T, see **VARIABLE VALVE TIMING SOLENOID, REPLACING**
- For B6xx4T, see **REPLACING THE VARIABLE VALVE TIMING SOLENOID** .
- For 5 cylinder turbocharged engines -2004, see **SIGNAL DESCRIPTION**
- For 5 cylinder turbocharged engines 2005-, see **SIGNAL SPECIFICATION** .
- For 6 cylinder engines -2004, see **SIGNAL SPECIFICATION**
- For 6 cylinder engines 2005-, see **SIGNAL SPECIFICATION** .
- see **CHECKING WIRING AND TERMINALS** .

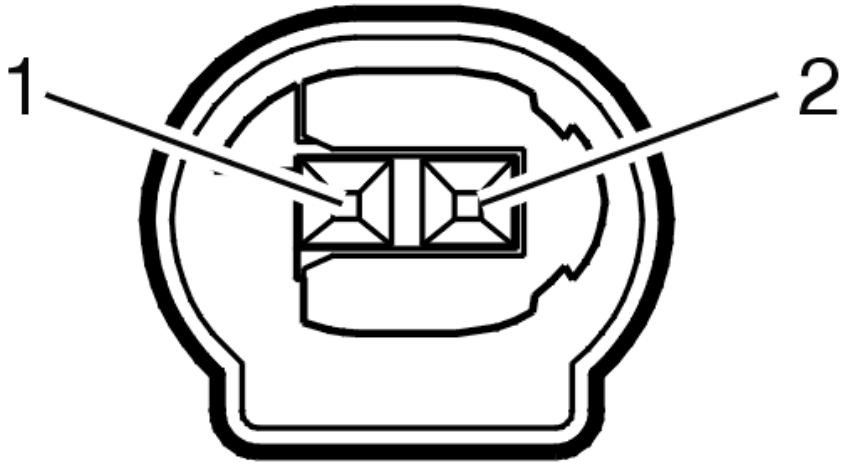

Fig. 165: Identifying Camshaft Reset Valve Terminal 1& 2
Courtesy of VOLVO CARS CORPORATION

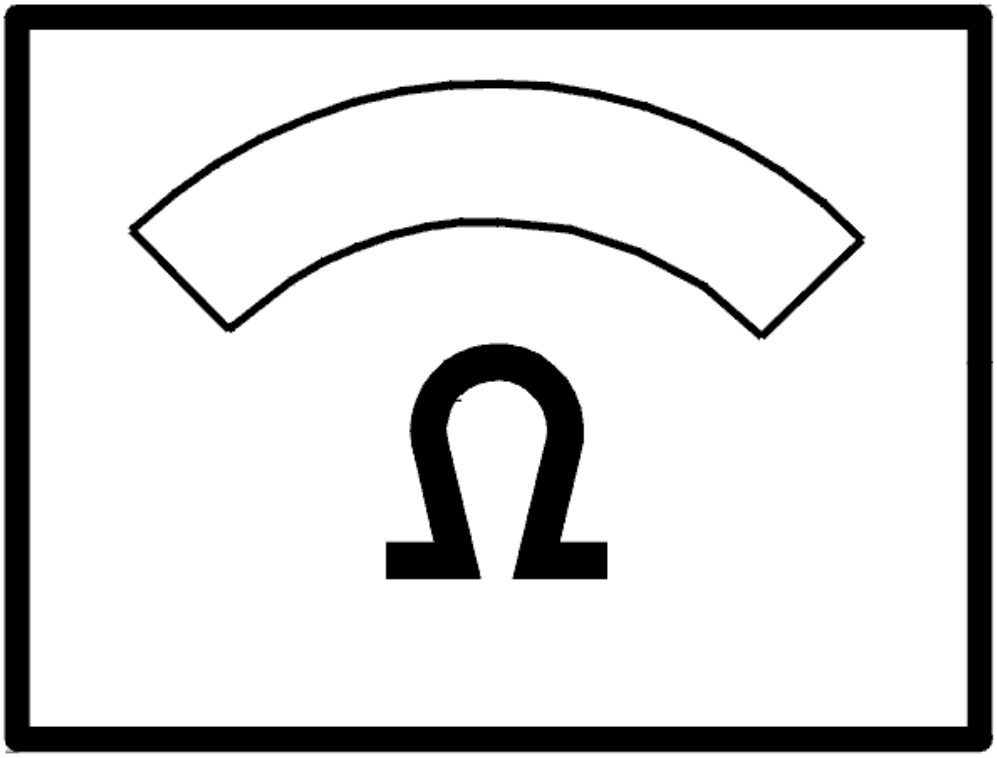

Fig. 166: Identifying Ohm Meter
Courtesy of VOLVO CARS CORPORATION

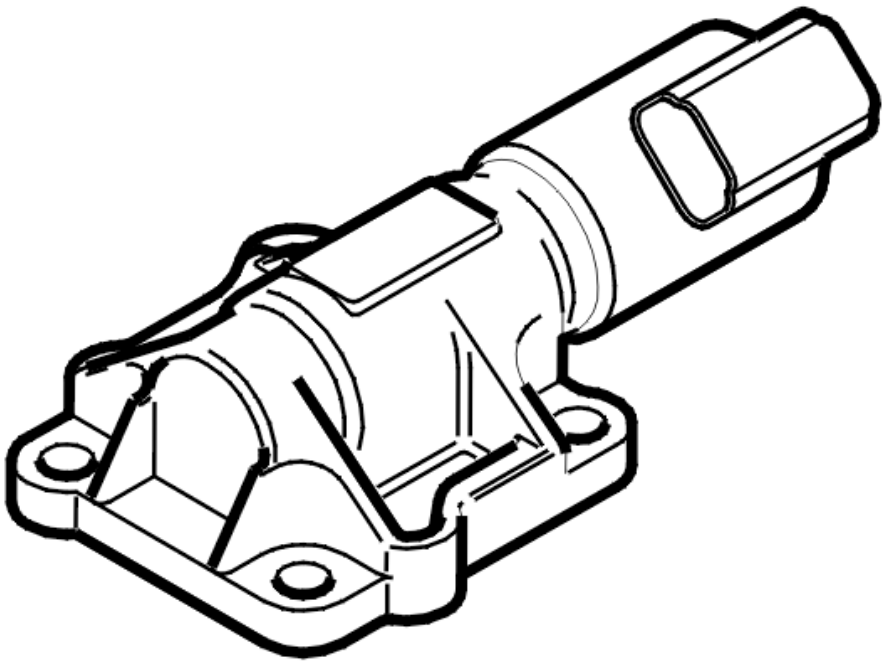

Fig. 167: Identifying Camshaft Position Control
Courtesy of VOLVO CARS CORPORATION

- **Continue**

  Refer to **VERIFICATION**

VERIFICATION

VERIFICATION

HINT: After carrying out the repair, check that the fault has been remedied.

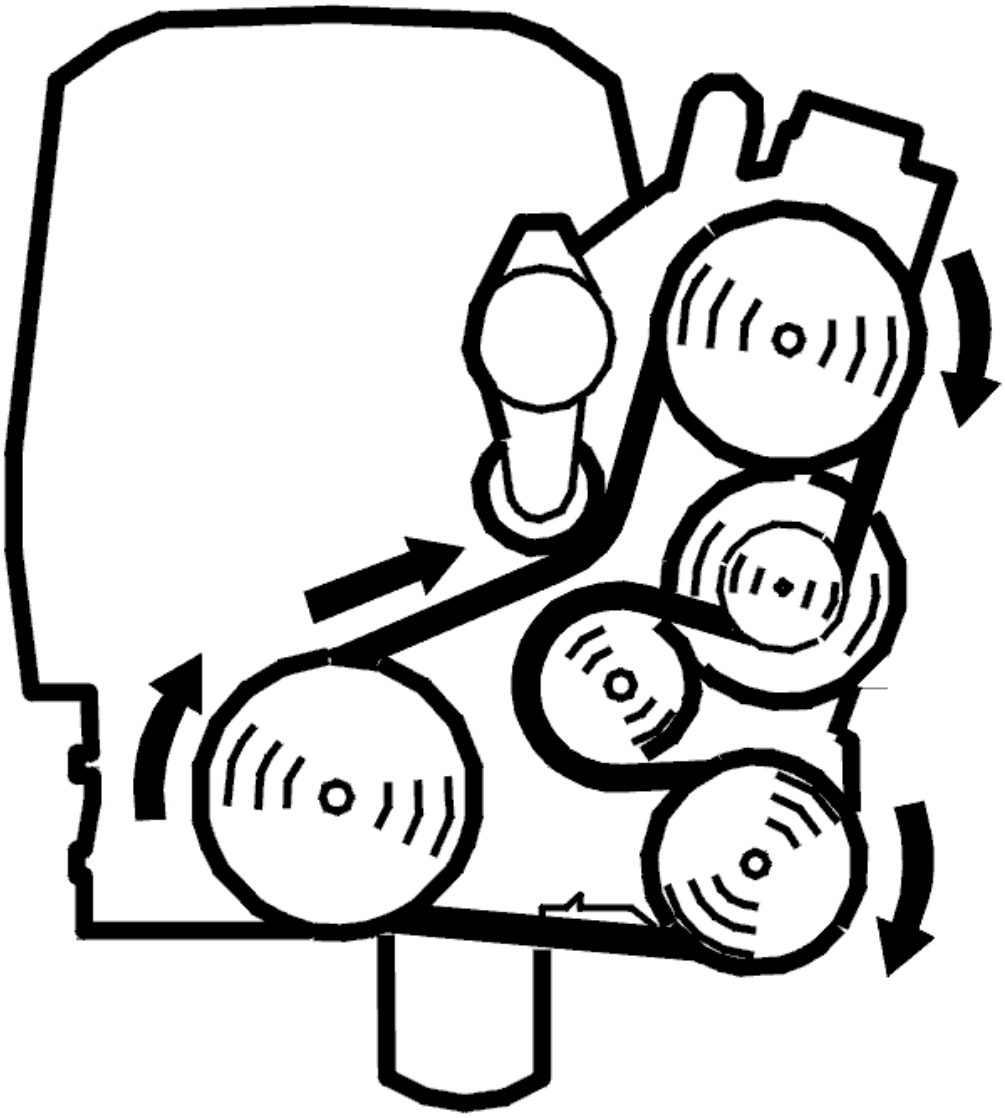

Fig. 168: Belt Routing / Engine Idling - Volvo
Courtesy of VOLVO CARS CORPORATION

- Start the engine
- Read off the value for the camshaft shift angle and the desired value for the camshaft shift angle
- Active the quick test of camshaft control by clicking the start button
- Increase the engine speed (RPM) to approximately 2500 RPM and keep the engine running at this speed.

  When the engine speed (RPM) increases, the control module will start the quick test to control the shift angle of the camshaft to the different target values. There is a fault if the control module does not operate the camshaft shift angle to the different target values.

  During the quick test, check that the shift angle of the camshaft (actual value) corresponds to the target values to an accuracy of ±10°. If the shift angle of the camshaft (target value) does not change, or if the actual value does not correspond to the target value, the function is faulty.

Deviation between the values can be read off in the lower display.

Carry out the check for approximately 15 seconds at an engine speed (RPM) of 2500 RPM. The test is completed when the shift angle of the camshaft returns to 0°. To restart the test, let the engine return to idle speed, then increase the engine speed to approximately 2500 RPM.

NOTE: The test is active until the ignition is switched off. Switch off the ignition before the car is delivered to the customer.

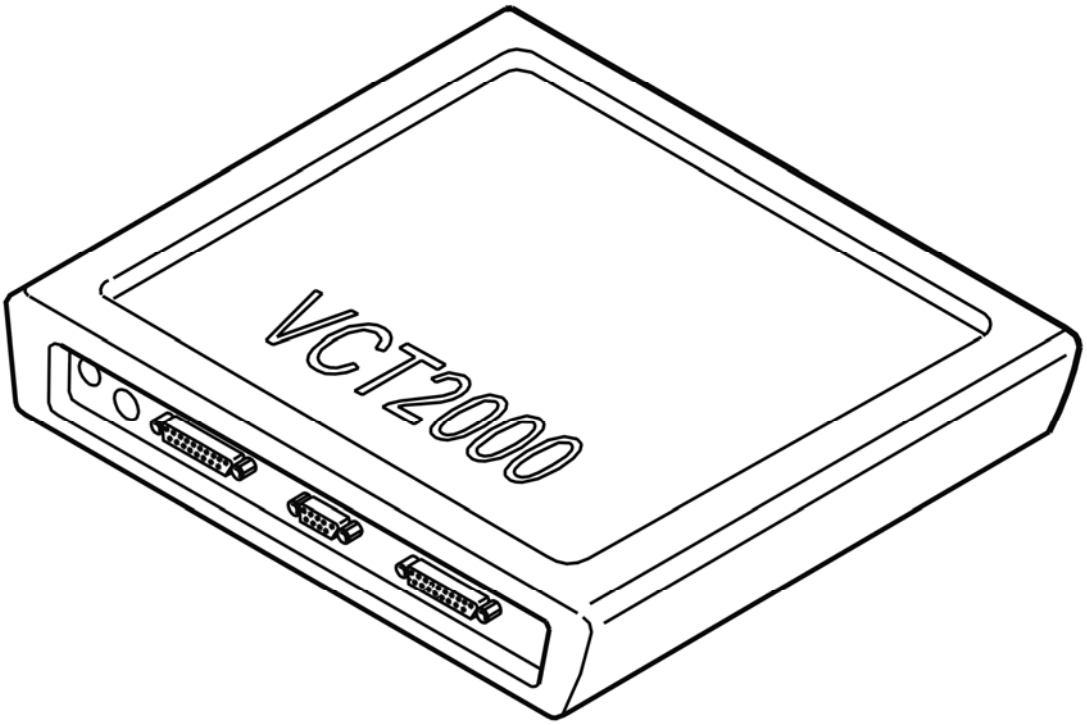

Fig. 169: Identifying VCT2000 Diagnostic Tool Symbol In VIDA
Courtesy of VOLVO CARS CORPORATION

Is the function OK?

- **YES**

  VERIFIED: Troubleshooting has been completed.

- **NO**

  Refer to **INFORMATION**

INFORMATION

FAULT-TRACING INFORMATION

The fault should have been detected and remedied. As this is not the case fault-tracing has failed.

Exit fault-tracing for this diagnostic trouble code (DTC) or make another attempt.

ECM-612C: CAMSHAFT RESET VALVE, INTAKE. SIGNAL TOO HIGH (B6294T; 2005-2006)

DIAGNOSTIC TROUBLE CODE (DTC) INFORMATION ECM-612C

see **DIAGNOSTIC TROUBLE CODE (DTC) INFORMATION ECM-612C**

SIGNAL TOO HIGH

see **SIGNAL TOO HIGH**

ECM-612D: CAMSHAFT RESET VALVE, INTAKE. SIGNAL TOO LOW (B5254T2; 2005-2007)

DIAGNOSTIC TROUBLE CODE (DTC) INFORMATION ECM-612D

Condition

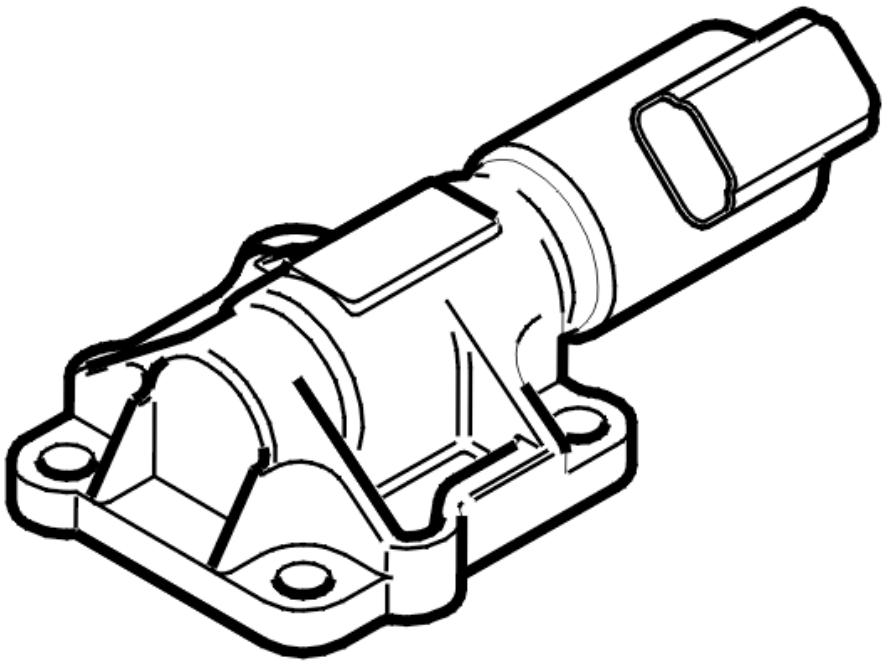

Fig. 170: Identifying Camshaft Position Control
Courtesy of VOLVO CARS CORPORATION

The engine control module (ECM) checks the signal cable for the reset valve for the intake camshaft.

The diagnostic trouble code (DTC) is stored if the engine control module (ECM) detects that the signal from the signal cable for the reset valve is too low.

The diagnostic trouble code (DTC) can be diagnosed at ignition on and with the engine running.

Substitute Value

- None.

Possible Source

- Contact resistance in the terminals
- Short-circuit to ground in the signal cable
- Damaged camshaft reset valve.

Fault symptom[s]

- Malfunction indicator lamp (MIL) lit.

SIGNAL TOO LOW OR SIGNAL MISSING

see **SIGNAL TOO LOW OR SIGNAL MISSING**

ECM-612D: CAMSHAFT RESET VALVE, INTAKE. SIGNAL TOO LOW (B6294T; 2005-2006)

DIAGNOSTIC TROUBLE CODE (DTC) INFORMATION ECM-612D

see **DIAGNOSTIC TROUBLE CODE (DTC) INFORMATION ECM-612D**

SIGNAL TOO LOW OR SIGNAL MISSING

see **SIGNAL TOO LOW OR SIGNAL MISSING**

ECM-6140: CAMSHAFT CONTROL, EXHAUST. SLOW (B5254T2; 2005-2007)

DIAGNOSTIC TROUBLE CODE (DTC) INFORMATION ECM-6140

Condition

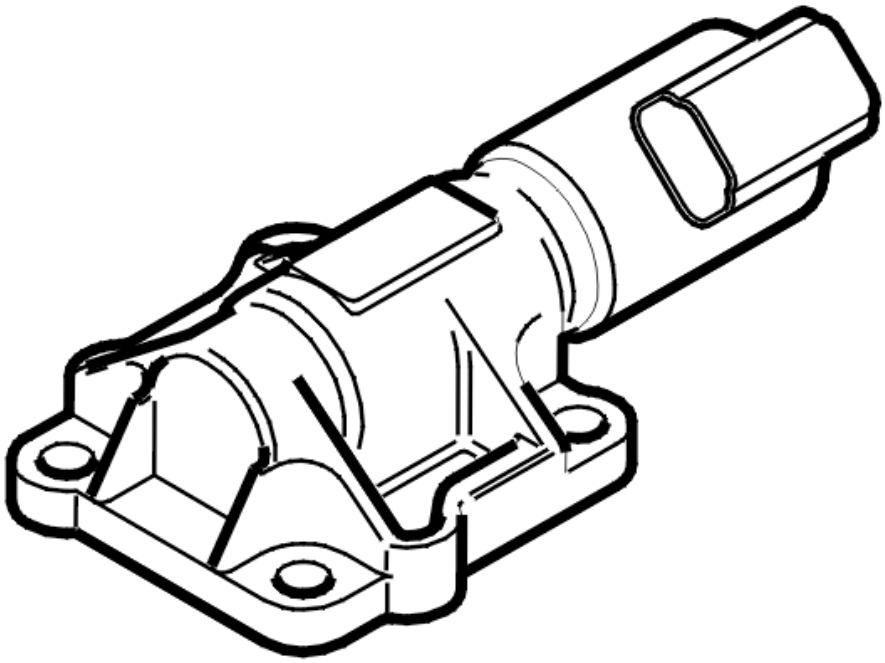

Fig. 171: Identifying Camshaft Position Control
Courtesy of VOLVO CARS CORPORATION

The engine control module (ECM) checks that control of the exhaust camshaft is quick enough. This means that the exhaust camshaft (actual value) reaches the position requested by the engine control module (ECM) quickly enough. The diagnostic trouble code (DTC) is stored if the requested position is not reached within a certain time.

The diagnostic trouble code (DTC) can be diagnosed while the engine is running and while camshaft control is active.

Substitute Value

- None.

Possible Source

- Low oil pressure
- Poor oil quality
- Damaged reset valve
- Mechanical fault in the variable valve timing (VVT) unit.

Fault symptom[s]

- Malfunction indicator lamp (MIL) lit.

SLOW/FAULTY

CHECKING THE STATUS

HINT: Diagnostic trouble code (DTC) may be caused by a damaged fuse. If the engine does not start, check the fuse for the power supply to the camshaft reset valve.

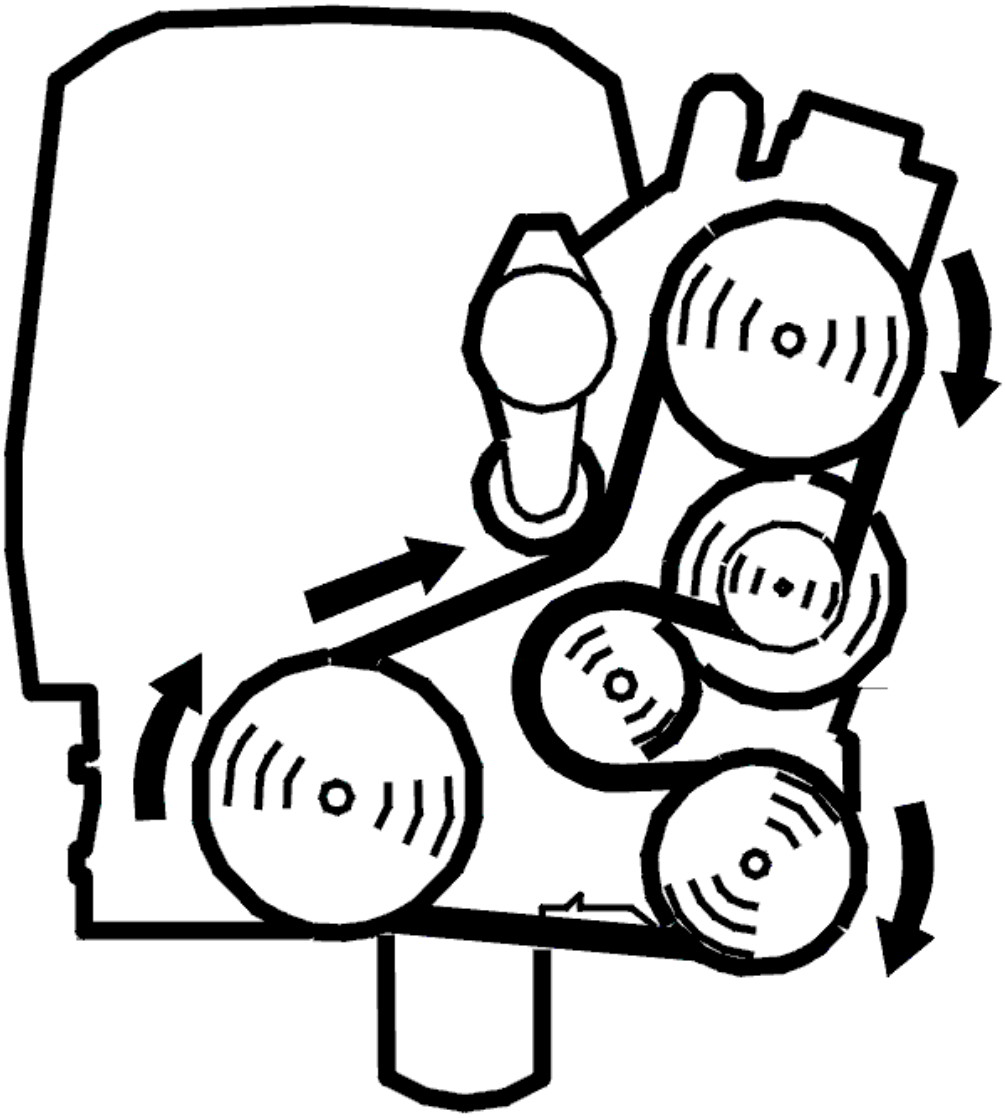

Fig. 172: Belt Routing / Engine Idling - Volvo
Courtesy of VOLVO CARS CORPORATION

- Start the engine
- Read off the value for the camshaft shift angle and the desired value for the camshaft shift angle
- Active the quick test of camshaft control by clicking the start button
- Increase the engine speed (RPM) to approximately 2500 RPM and keep the engine running at this speed.

  When the engine speed (RPM) increases, the control module will start the quick test to control the shift angle of the camshaft to the different target values. There is a fault if the control module does not operate the camshaft shift angle to the different target values.

  During the quick test, check that the shift angle of the camshaft (actual value) corresponds to the target values to an accuracy of ±10°. If the shift angle of the camshaft (target value) does not change, or if the actual value does not correspond to the target value, the function is faulty.

Deviation between the values can be read off in the lower display.

Carry out the check for approximately 15 seconds at an engine speed (RPM) of 2500 RPM. The test is completed when the shift angle of the camshaft returns to 0°. Let the engine return to idle speed to start the test again. Then increase the engine speed to approximately 2500 RPM.

The fault is intermittent if the function is OK.

NOTE: The test is active until the ignition is switched off. Switch off the ignition before the vehicle is delivered to the customer.

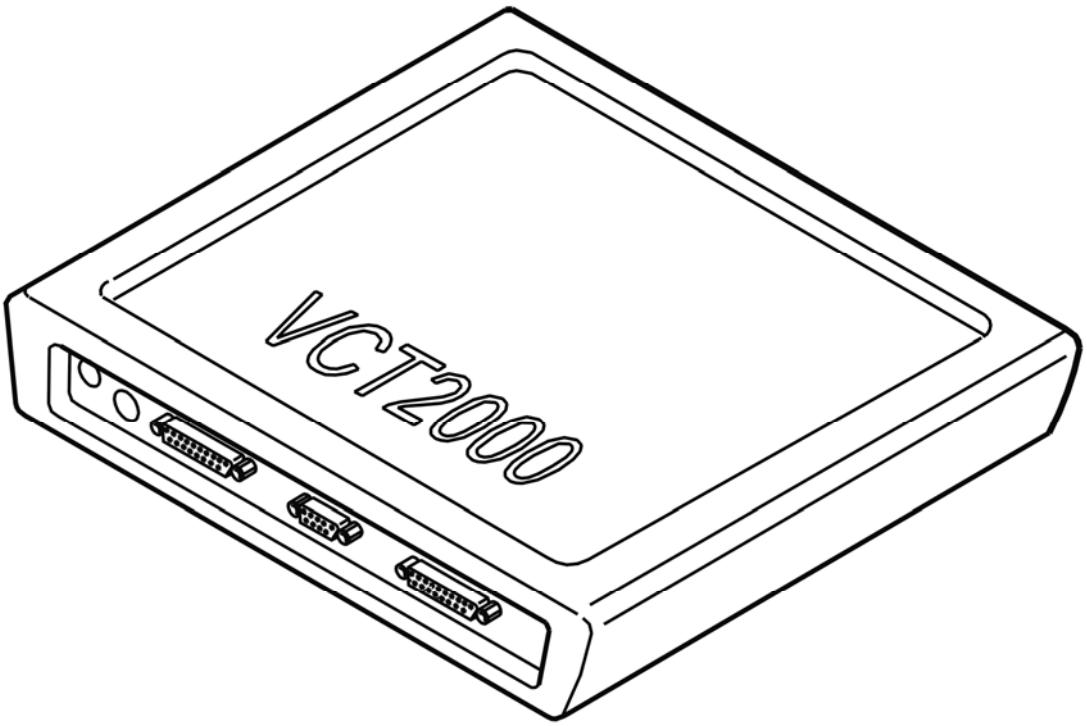

Fig. 173: Identifying VCT2000 Diagnostic Tool Symbol In VIDA
Courtesy of VOLVO CARS CORPORATION

- **Continue**

Refer to **CHECKING COMPONENTS**

CHECKING COMPONENTS

Check the level and quality of the engine oil. Check for contaminants in particular.

Check the engine oil pressure.

Remove the camshaft reset valve. Check the oil ducts for the cylinder head for the camshaft reset valve (exhaust) for blockages and dirt.

HINT: The fault can be caused by contaminants in the camshaft reset valve. Try cleaning the valve.

Remedy as necessary.

Try a new intake camshaft reset valve if the above remedy does not solve the fault.

HINT: The fault may also have been caused by an internal fault in the variable valve timing unit. The variable valve timing unit may be damaged if the above fault-tracing and corrective action do not remedy the fault.

Other information:

- see **CHECKING OIL PRESSURE**
- see **VVT SOLENOID, INSPECTION AND CLEANING**
- For B5xx4T, see **VARIABLE VALVE TIMING SOLENOID, REPLACING**
- For B6xx4T, see **REPLACING THE VARIABLE VALVE TIMING SOLENOID** .
- For B5xx4T, see **CAMSHAFT SEAL/VARIABLE VALVE TIMING (VVT) UNIT, REPLACING**
- For B6xx4T, see **CAMSHAFT SEAL/VARIABLE VALVE TIMING (VVT) UNIT, REPLACING** .

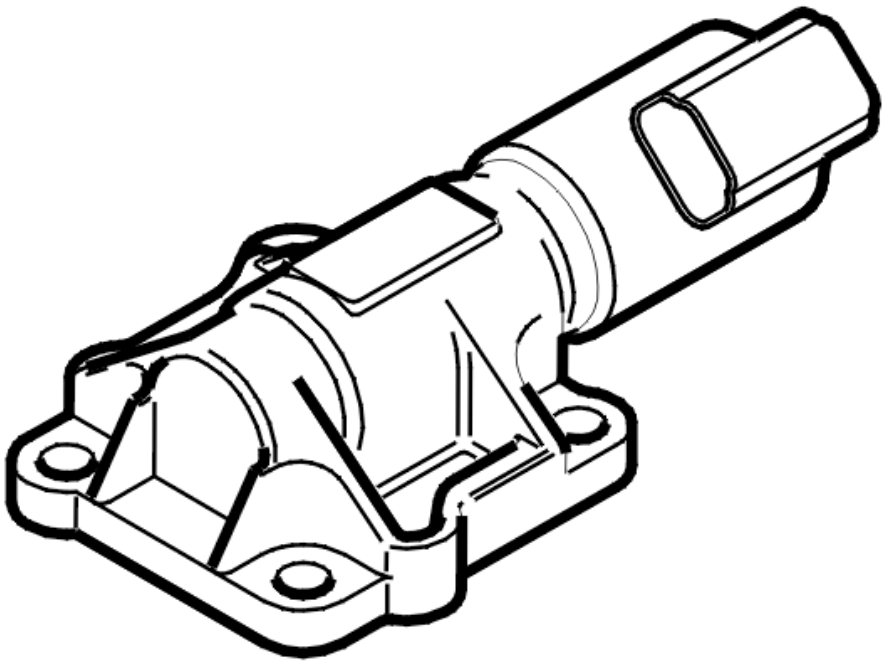

Fig. 174: Identifying Camshaft Position Control
Courtesy of VOLVO CARS CORPORATION

- **Continue**

  Refer to **VERIFICATION**

VERIFICATION

VERIFICATION

HINT: After carrying out the repair, check that the fault has been remedied.

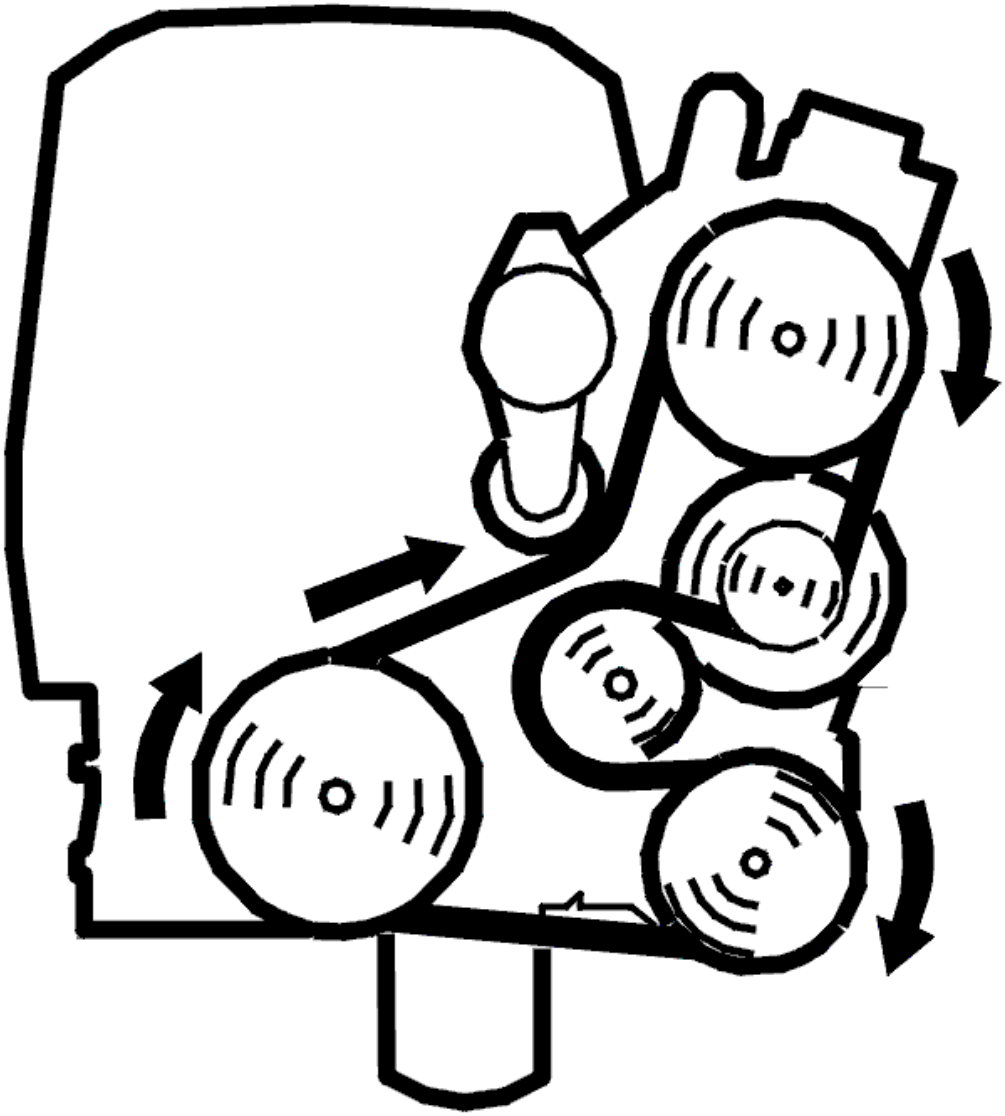

Fig. 175: Belt Routing / Engine Idling - Volvo
Courtesy of VOLVO CARS CORPORATION

- Start the engine
- Read off the value for the camshaft shift angle and the desired value for the camshaft shift angle
- Active the quick test of camshaft control by clicking the start button
- Increase the engine speed (RPM) to approximately 2500 RPM and keep the engine running at this speed.

When the engine speed (RPM) increases, the control module will start the quick test to control the shift angle of the camshaft to the different target values. There is a fault if the control module does not operate the camshaft shift angle to the different target values.

During the quick test, check that the shift angle of the camshaft (actual value) corresponds to the target values to an accuracy of ±10°. If the shift angle of the camshaft (target value) does not change, or if the actual value does not correspond to the target value, the function is faulty.

Deviation between the values can be read off in the lower display.

Carry out the check for approximately 15 seconds at an engine speed (RPM) of 2500 RPM. The test is completed when the shift angle of the camshaft returns to 0°. To restart the test, let the engine return to idle speed, then increase the engine speed to approximately 2500 RPM.

NOTE: **The test is active until the ignition is switched off. Switch off the ignition before the car is delivered to the customer.**

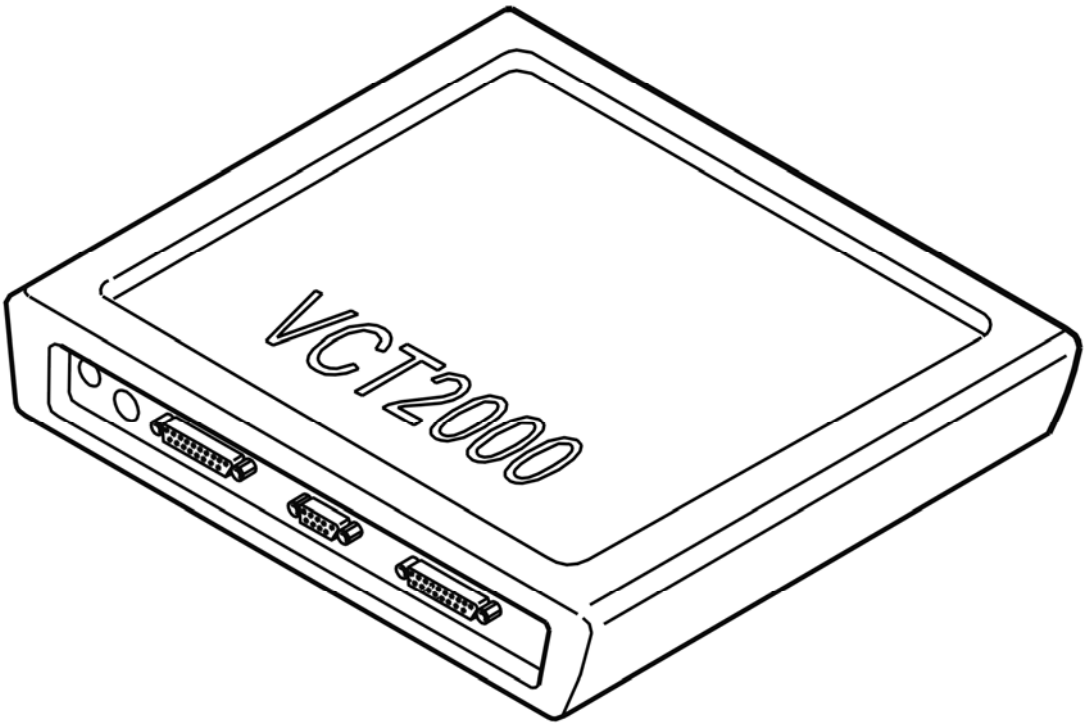

Fig. 176: Identifying VCT2000 Diagnostic Tool Symbol In VIDA
Courtesy of VOLVO CARS CORPORATION

Is the function OK?

- **YES**

  VERIFIED: Troubleshooting has been completed.

- **NO**

  Refer to **INFORMATION**

INFORMATION

FAULT-TRACING INFORMATION

The fault should have been detected and remedied. As this is not the case fault-tracing has failed.

Exit fault-tracing for this diagnostic trouble code (DTC) or make another attempt.

ECM-6140: CAMSHAFT CONTROL, EXHAUST. SLOW (B6294T; 2005-2006)

DIAGNOSTIC TROUBLE CODE (DTC) INFORMATION ECM-6140

see **DIAGNOSTIC TROUBLE CODE (DTC) INFORMATION ECM-6140**

SLOW/FAULTY

see **SLOW/FAULTY**

ECM-614B: CAMSHAFT CONTROL, EXHAUST. FAULTY (B5254T2; 2005-2007)

DIAGNOSTIC TROUBLE CODE (DTC) INFORMATION ECM-614B

Condition

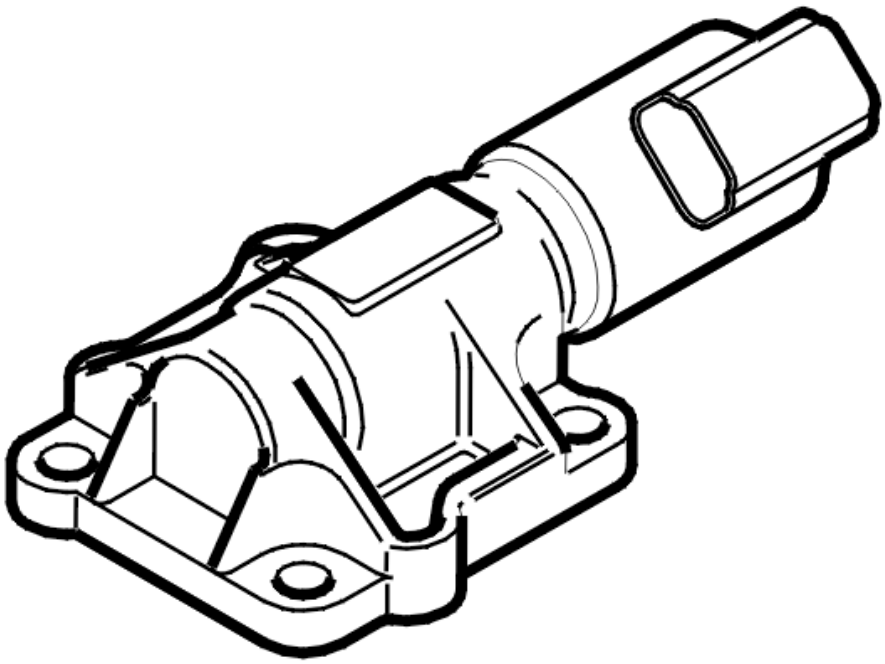

Fig. 177: Identifying Camshaft Position Control
Courtesy of VOLVO CARS CORPORATION

The engine control module (ECM) checks that the position of the exhaust camshaft (actual value) corresponds to the requested position (desired value).

The diagnostic trouble code (DTC) is stored if the requested position is not reached.

The diagnostic trouble code (DTC) is diagnosed by the engine control module (ECM) when the engine is running and the camshaft control is active.

Substitute Value

- None.

Possible Source

- Low oil pressure
- Poor oil quality
- Damaged reset valve
- Mechanical fault in the variable valve timing (VVT) unit.

Fault symptom[s]

- Malfunction indicator lamp (MIL) lit.

SLOW/FAULTY

see **SLOW/FAULTY**

ECM-614B: CAMSHAFT CONTROL, EXHAUST. FAULTY (B6294T; 2005-2006)

DIAGNOSTIC TROUBLE CODE (DTC) INFORMATION ECM-614B

see **DIAGNOSTIC TROUBLE CODE (DTC) INFORMATION ECM-614B**

SLOW/FAULTY

see **SLOW/FAULTY**

ECM-616B: CAMSHAFT RESET VALVE, EXHAUST. SIGNAL MISSING (B5254T2; 2005-2007)

DIAGNOSTIC TROUBLE CODE (DTC) INFORMATION ECM-616B

Condition

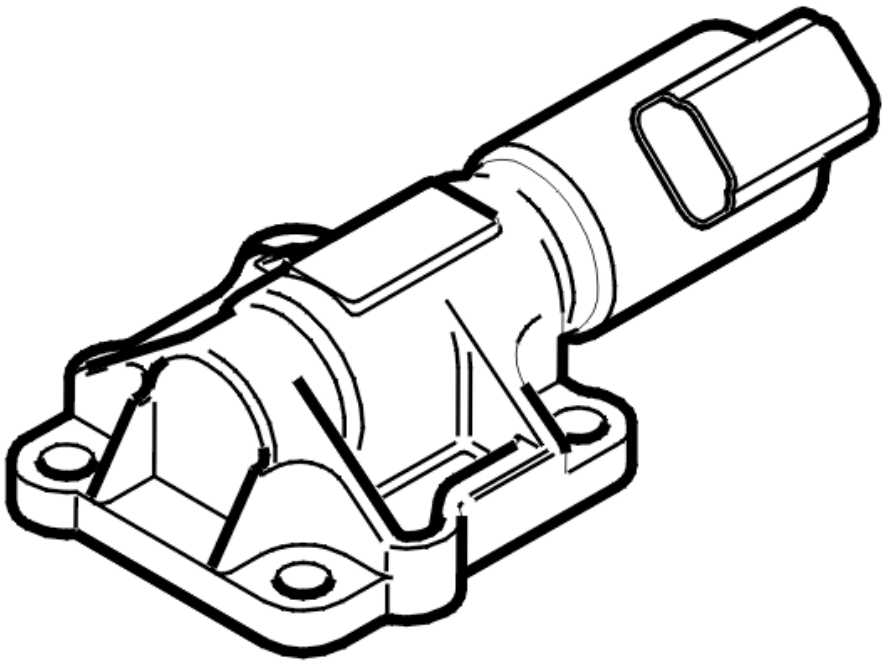

Fig. 178: Identifying Camshaft Position Control
Courtesy of VOLVO CARS CORPORATION

The engine control module (ECM) checks the signal cable for the reset valve for the exhaust camshaft.

The diagnostic trouble code (DTC) is stored if the engine control module (ECM) detects an open-circuit in the signal cable for the reset valve.

The diagnostic trouble code (DTC) can be diagnosed at ignition on and with the engine running.

Substitute Value

- None.

Possible Source

- Open-circuit in the signal cable
- Open-circuit in the power cable
- Damaged camshaft reset valve.

Fault symptom[s]

- Malfunction indicator lamp (MIL) lit.

SIGNAL TOO LOW OR SIGNAL MISSING

CHECKING THE STATUS

HINT: The diagnostic trouble code (DTC) may be caused by a defective fuse. If the engine does not start, check the fuse for the power supply to the camshaft reset valve.

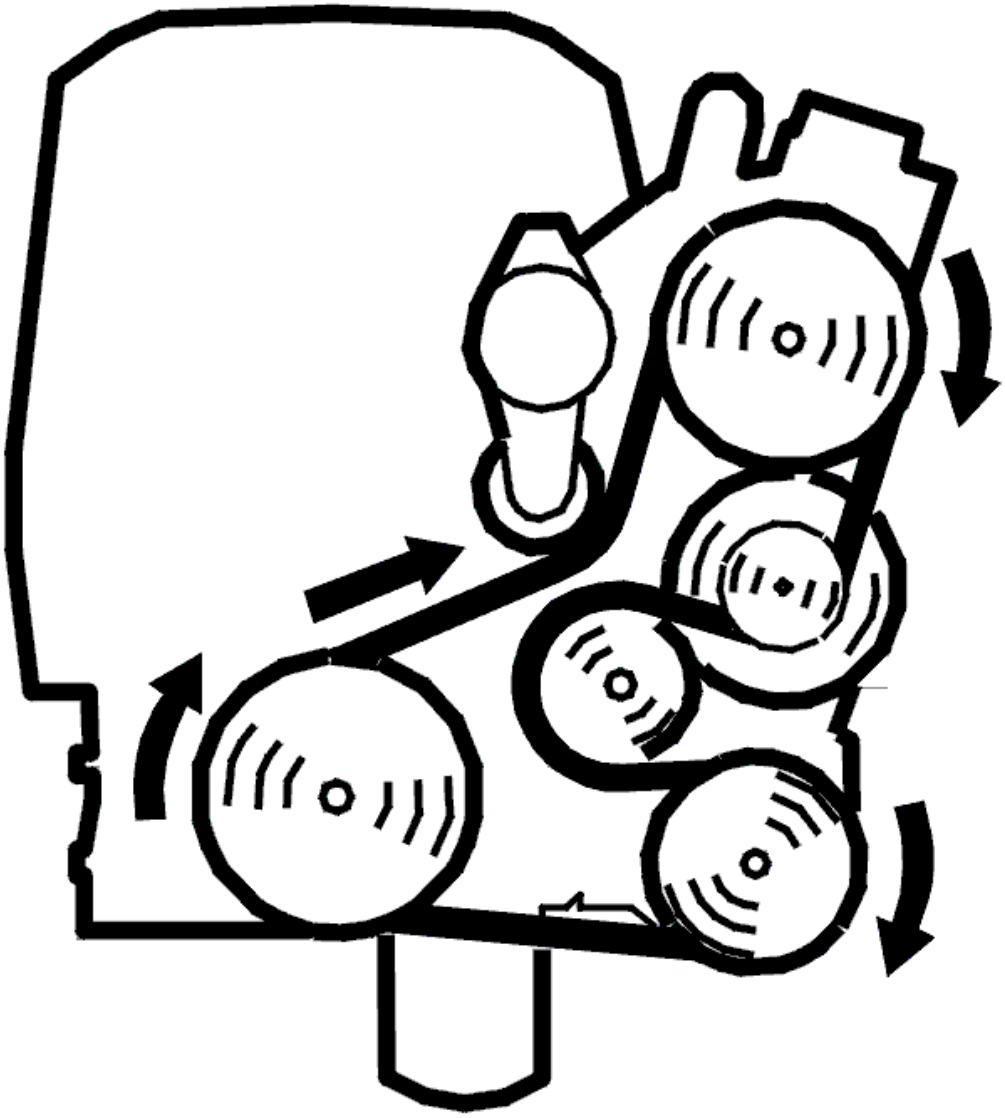

Fig. 179: Belt Routing / Engine Idling - Volvo
Courtesy of VOLVO CARS CORPORATION

- Start the engine
- Read off the value for the camshaft shift angle and the desired value for the camshaft shift angle
- Active the quick test of camshaft control by clicking the start button
- Increase the engine speed (RPM) to approximately 2500 RPM and keep the engine running at this speed.

When the engine speed (RPM) increases, the control module will start the quick test to control the shift angle of the camshaft to the different target values. There is a fault if the control module does not operate the camshaft shift angle to the different target values.

During the quick test, check that the shift angle of the camshaft (actual value) corresponds to the target values to an accuracy of ±10°. If the shift angle of the camshaft (target value) does not change, or if the actual value does not correspond to the target value, the function is faulty.

Deviation between the values can be read off in the lower display.

Carry out the check for approximately 15 seconds at an engine speed (RPM) of 2500 RPM. The test is completed when the shift angle of the camshaft returns to 0°. To restart the test, let the engine return to idle speed, then increase the engine speed to approximately 2500 RPM.

The fault is intermittent if the function is OK.

NOTE: **The test is active until the ignition is switched off. Switch off the ignition before the car is delivered to the customer.**

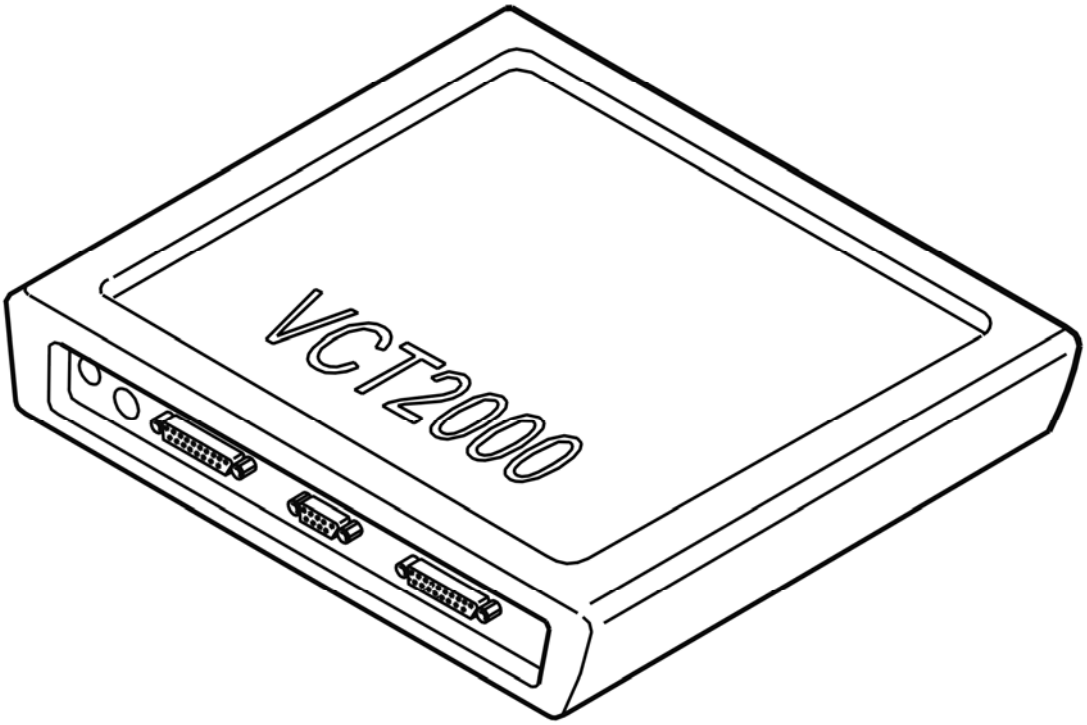

Fig. 180: Identifying VCT2000 Diagnostic Tool Symbol In VIDA
Courtesy of VOLVO CARS CORPORATION

- **Continue**

Refer to **CHECKING THE WIRING**

CHECKING THE WIRING

Check the fuse before the circuit. If the fuse is blown, check the circuit for a short-circuit to ground.

Check the resistance of the camshaft reset valve between terminals #1 and #2.

The resistance must be approximately 3.7 ohms.

Check the signal cable between engine control module (ECM) terminal #A21 (#A21) and camshaft reset valve terminal #2. Check for an open-circuit. Check for a short-circuit to ground.

Check the power supply cable between system relay terminal #5 and camshaft reset valve terminal #1. Check for an open-circuit.

HINT: With the ignition on and the reset valve and camshaft connector disconnected, the voltage at connector terminal #1 must be approximately $U_{bat.}$

Remedy as necessary.

Other information:

- To connect the breakout box, see **CONNECTING THE BREAKOUT BOX**
- For B5xx4T, see **VARIABLE VALVE TIMING SOLENOID, REPLACING**
- For B6xx4T, see **REPLACING THE VARIABLE VALVE TIMING SOLENOID** .
- For 5 cylinder turbocharged engines -2004, see **SIGNAL DESCRIPTION**
- For 5 cylinder turbocharged engines 2005-, see **SIGNAL SPECIFICATION** .
- For 6 cylinder engines -2004, see **SIGNAL SPECIFICATION**
- For 6 cylinder engines 2005-, see **SIGNAL SPECIFICATION** .
- see **CHECKING WIRING AND TERMINALS** .

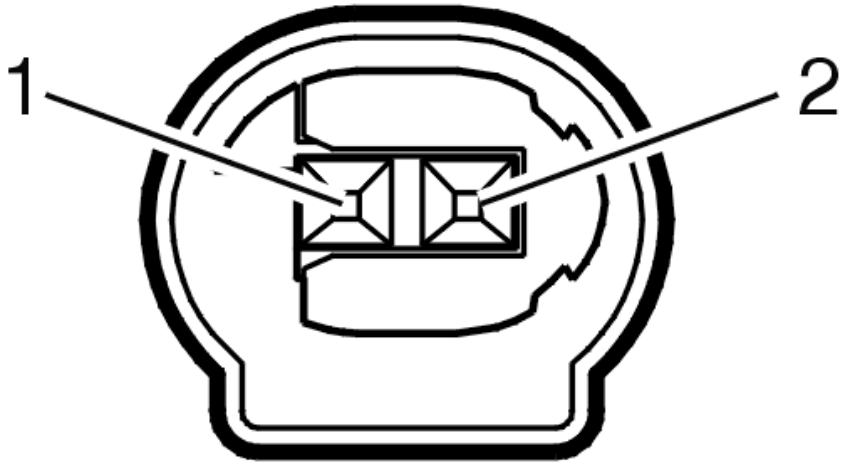

Fig. 181: Identifying Camshaft Reset Valve Terminal 1& 2
Courtesy of VOLVO CARS CORPORATION

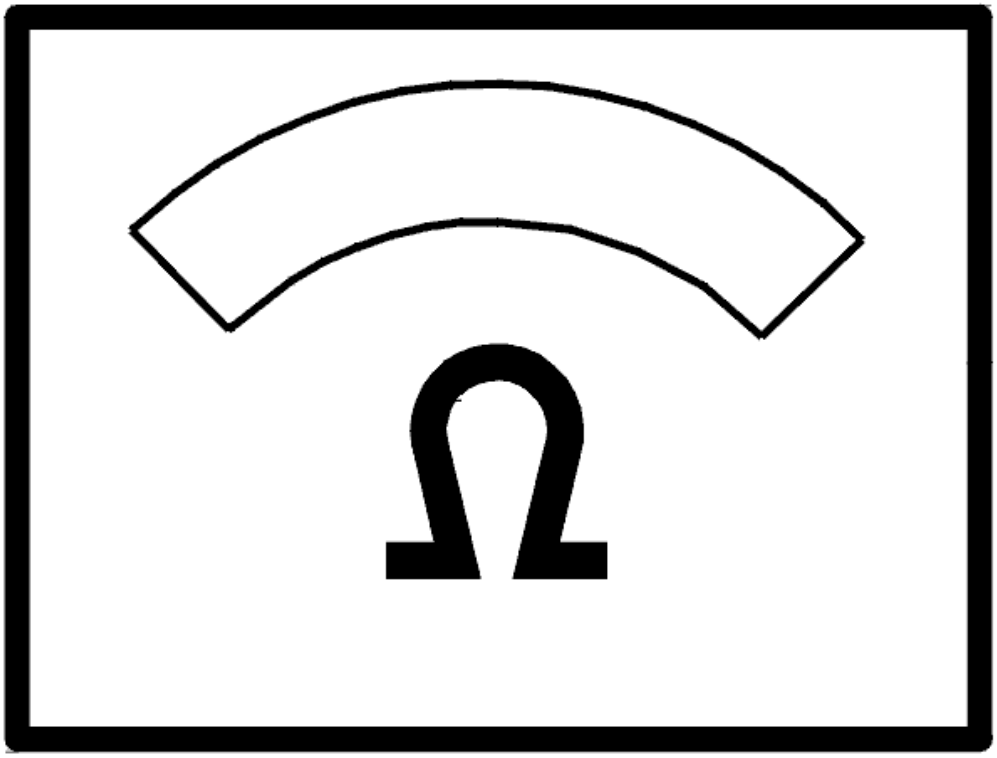

Fig. 182: Identifying Ohm Meter
Courtesy of VOLVO CARS CORPORATION

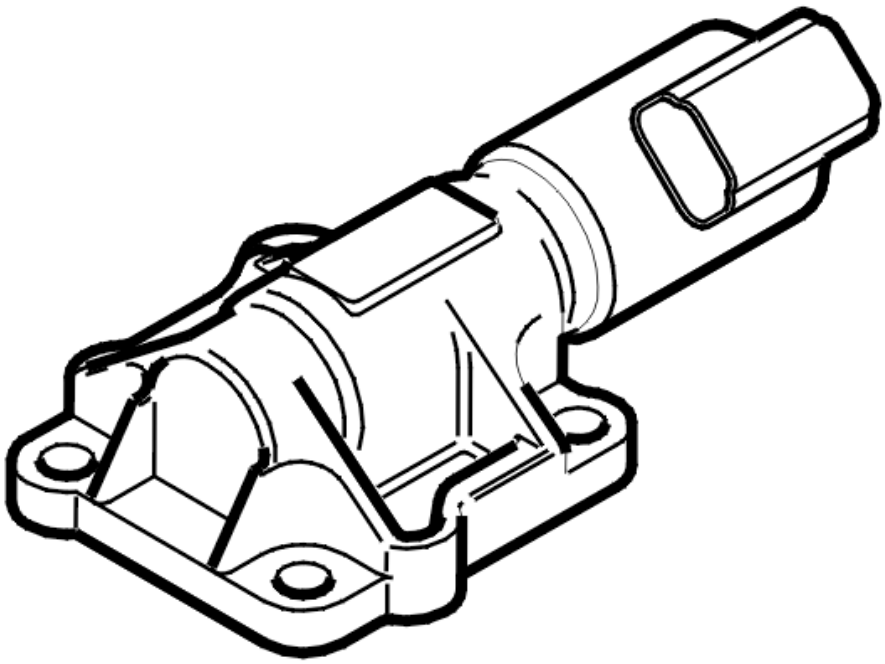

Fig. 183: Identifying Camshaft Position Control
Courtesy of VOLVO CARS CORPORATION

- **Continue**

  Refer to **VERIFICATION**

VERIFICATION

VERIFICATION

HINT: After carrying out the repair, check that the fault has been remedied.

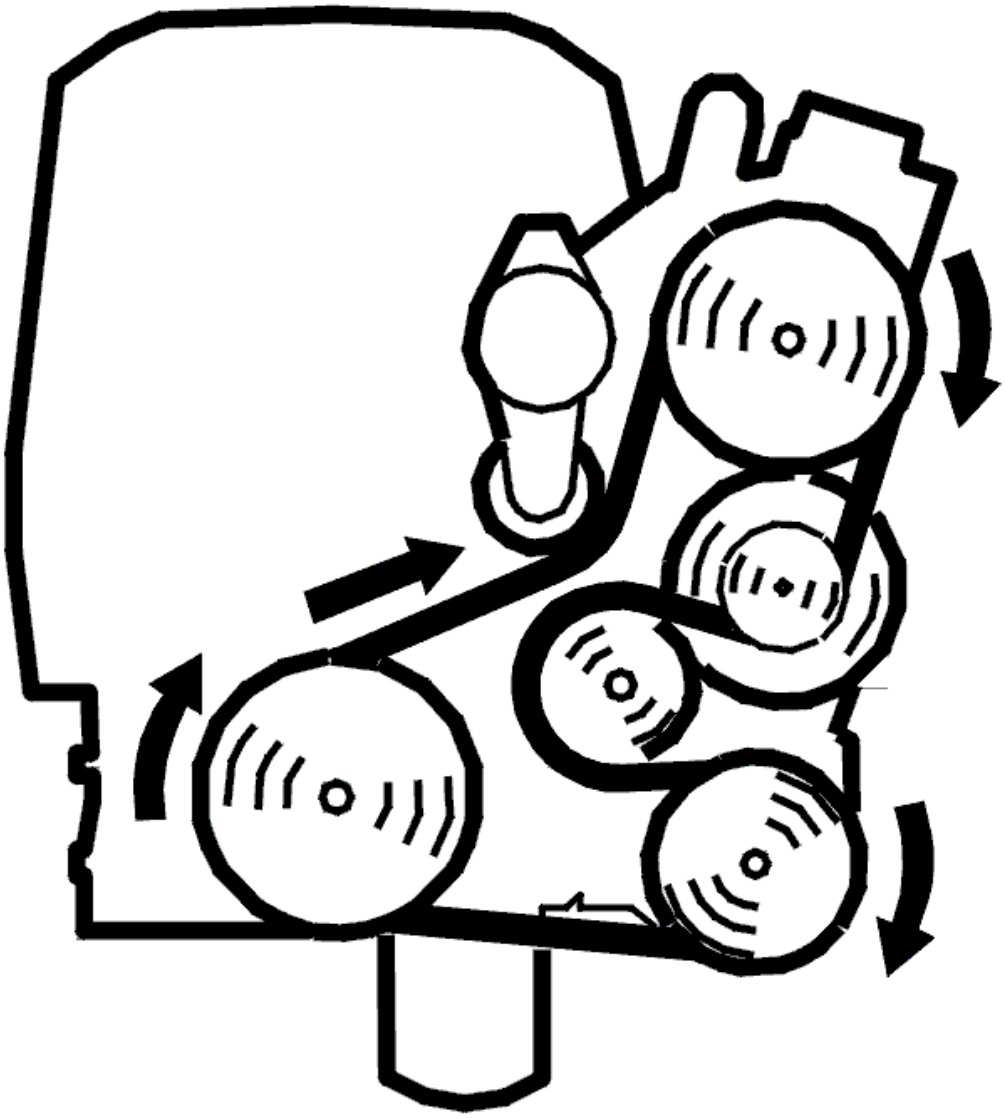

Fig. 184: Belt Routing / Engine Idling - Volvo
Courtesy of VOLVO CARS CORPORATION

- Start the engine
- Read off the value for the camshaft shift angle and the desired value for the camshaft shift angle
- Active the quick test of camshaft control by clicking the start button
- Increase the engine speed (RPM) to approximately 2500 RPM and keep the engine running at this speed.

  When the engine speed (RPM) increases, the control module will start the quick test to control the shift angle of the camshaft to the different target values. There is a fault if the control module does not operate the camshaft shift angle to the different target values.

  During the quick test, check that the shift angle of the camshaft (actual value) corresponds to the target values to an accuracy of ±10°. If the shift angle of the camshaft (target value) does not change, or if the actual value does not correspond to the target value, the function is faulty.

Deviation between the values can be read off in the lower display.

Carry out the check for approximately 15 seconds at an engine speed (RPM) of 2500 RPM. The test is completed when the shift angle of the camshaft returns to 0°. To restart the test, let the engine return to idle speed, then increase the engine speed to approximately 2500 RPM.

NOTE: The test is active until the ignition is switched off. Switch off the ignition before the car is delivered to the customer.

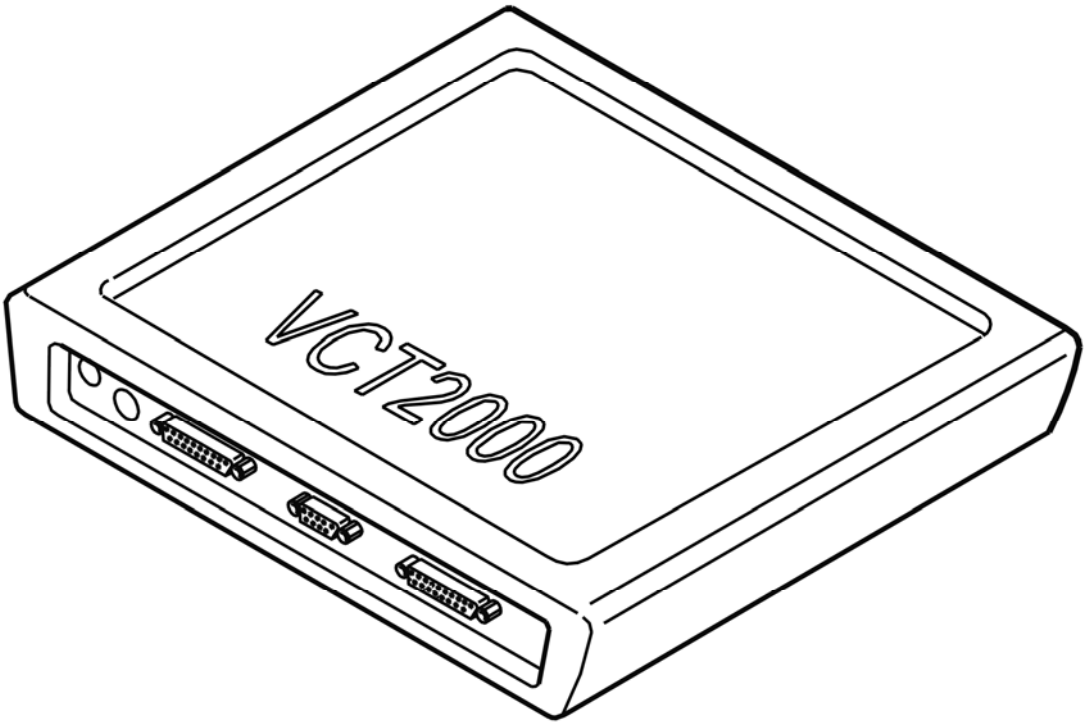

Fig. 185: Identifying VCT2000 Diagnostic Tool Symbol In VIDA
Courtesy of VOLVO CARS CORPORATION

Is the function OK?

- **YES**

  VERIFIED: Troubleshooting has been completed.

- **NO**

  Refer to **INFORMATION**

INFORMATION

FAULT-TRACING INFORMATION

The fault should have been detected and remedied. As this is not the case fault-tracing has failed.

Exit fault-tracing for this diagnostic trouble code (DTC) or make another attempt.

ECM-616B: CAMSHAFT RESET VALVE, EXHAUST. SIGNAL MISSING (B6294T; 2005-2006)

DIAGNOSTIC TROUBLE CODE (DTC) INFORMATION ECM-616B

see **DIAGNOSTIC TROUBLE CODE (DTC) INFORMATION ECM-616B**

SIGNAL TOO LOW OR SIGNAL MISSING

see **SIGNAL TOO LOW OR SIGNAL MISSING**

ECM-616C: CAMSHAFT RESET VALVE, EXHAUST. SIGNAL TOO HIGH (B5254T2; 2005-2007)

DIAGNOSTIC TROUBLE CODE (DTC) INFORMATION ECM-616C

Condition

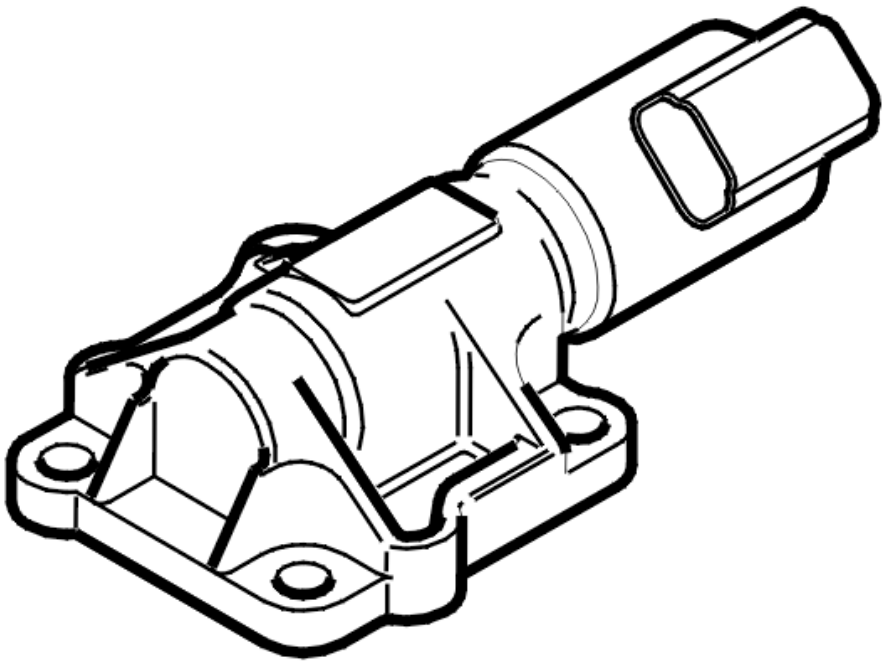

Fig. 186: Identifying Camshaft Position Control
Courtesy of VOLVO CARS CORPORATION

The engine control module (ECM) checks the signal cable for the reset valve for the exhaust camshaft.

The diagnostic trouble code (DTC) is stored if the engine control module (ECM) detects that the signal from the signal cable for the reset valve is too high.

The diagnostic trouble code (DTC) can be diagnosed at ignition on and with the engine running.

Substitute Value

- None.

Possible Source

- Short-circuit to supply voltage in the signal cable
- Open-circuit in the power supply
- Damaged camshaft reset valve.

Fault symptom[s]

- Malfunction indicator lamp (MIL) lit.

SIGNAL TOO HIGH

CHECKING THE STATUS

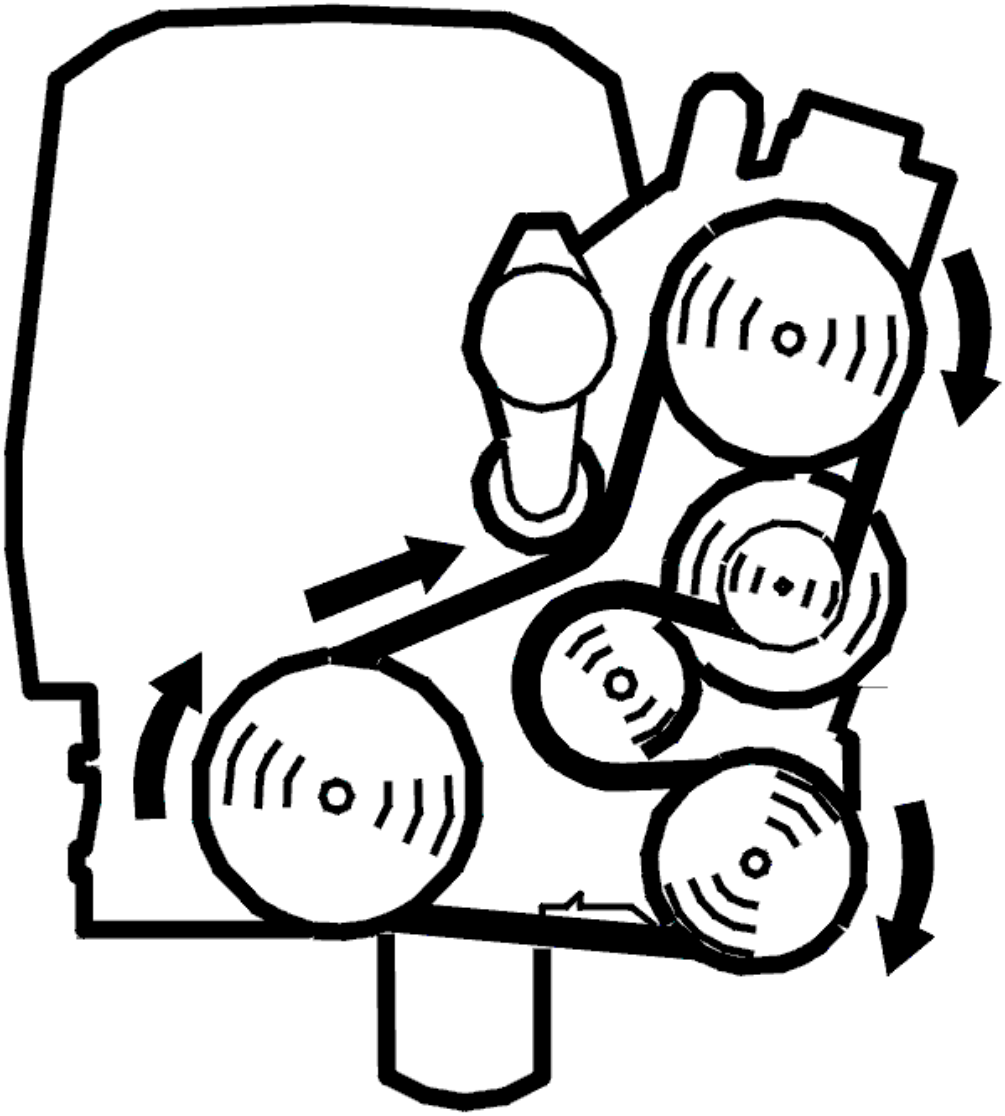

Fig. 187: Belt Routing / Engine Idling - Volvo
Courtesy of VOLVO CARS CORPORATION

- Start the engine
- Read off the value for the camshaft shift angle and the desired value for the camshaft shift angle
- Active the quick test of camshaft control by clicking the start button
- Increase the engine speed (RPM) to approximately 2500 RPM and keep the engine running at this speed.

  When the engine speed (RPM) increases, the control module will start the quick test to control the shift angle of the camshaft to the different target values. There is a fault if the control module does not operate the camshaft shift angle to the different target values.

During the quick test, check that the shift angle of the camshaft (actual value) corresponds to the target values to an accuracy of ±10°. If the shift angle of the camshaft (target value) does not change, or if the actual value does not correspond to the target value, the function is faulty.

Deviation between the values can be read off in the lower display.

Carry out the check for approximately 15 seconds at an engine speed (RPM) of 2500 RPM. The test is completed when the shift angle of the camshaft returns to 0°. To restart the test, let the engine return to idle speed, then increase the engine speed to approximately 2500 RPM.

The fault is intermittent if the function is OK.

NOTE: The test is active until the ignition is switched off. Switch off the ignition before the car is delivered to the customer.

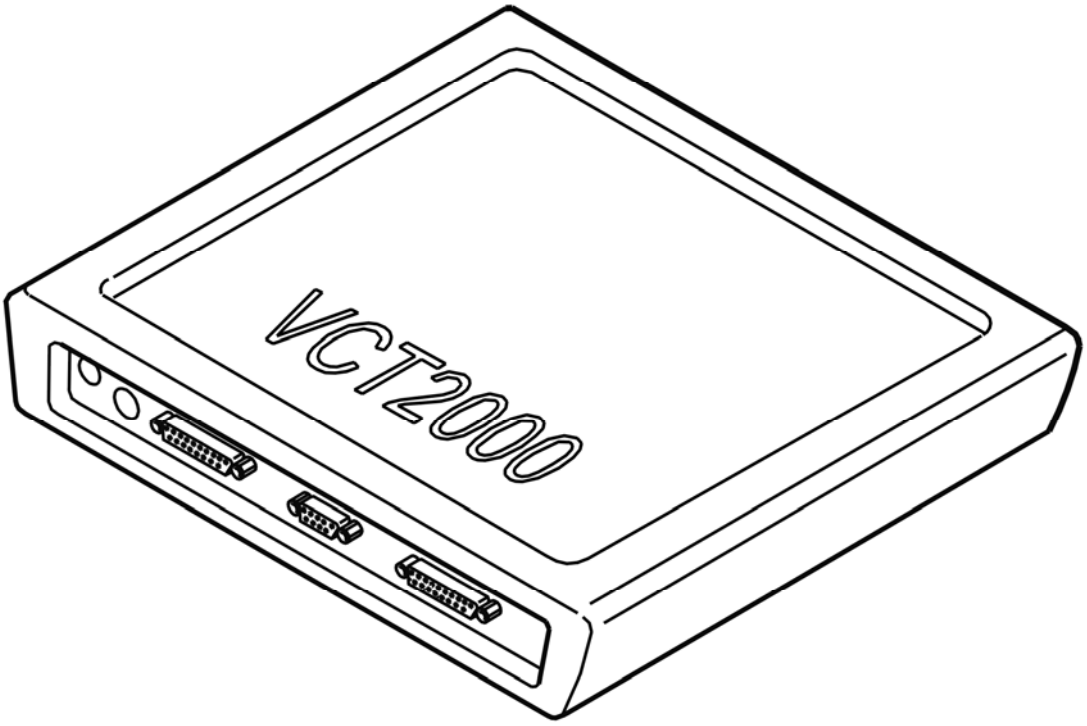

Fig. 188: Identifying VCT2000 Diagnostic Tool Symbol In VIDA
Courtesy of VOLVO CARS CORPORATION

- **Continue**

Refer to **CHECKING THE WIRING**

CHECKING THE WIRING

Check the resistance of the camshaft reset valve between terminals #1 and #2.

The resistance must be approximately 3.7 ohms.

Check the signal cable between engine control module (ECM) terminal #A21 (#A21) and camshaft reset valve terminal #2. Check for a short-circuit to supply voltage.

Remedy as necessary.

Other information:

- To connect the breakout box, see **CONNECTING THE BREAKOUT BOX**
- For B5xx4T, see **VARIABLE VALVE TIMING SOLENOID, REPLACING**
- For B6xx4T, see **REPLACING THE VARIABLE VALVE TIMING SOLENOID** .
- For 5 cylinder turbocharged engines -2004, see **SIGNAL DESCRIPTION**
- For 5 cylinder turbocharged engines 2005-, see **SIGNAL SPECIFICATION** .
- For 6 cylinder engines -2004, see **SIGNAL SPECIFICATION**
- For 6 cylinder engines 2005-, see **SIGNAL SPECIFICATION** .
- see **CHECKING WIRING AND TERMINALS** .

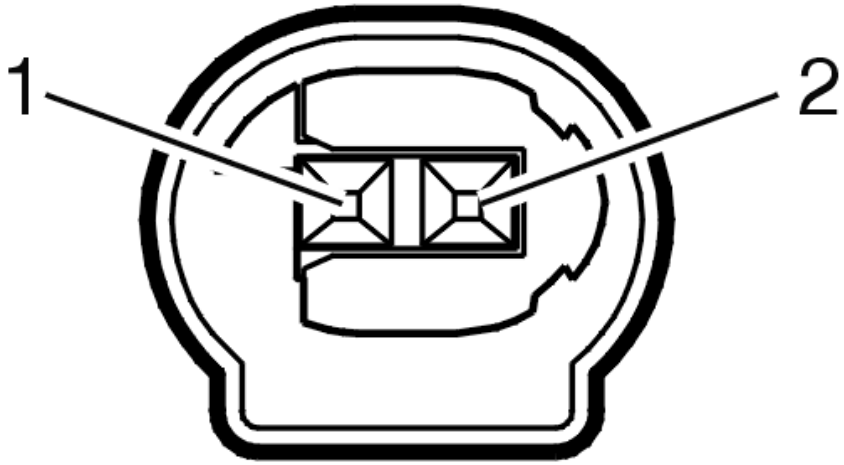

Fig. 189: Identifying Camshaft Reset Valve Terminal 1& 2
Courtesy of VOLVO CARS CORPORATION

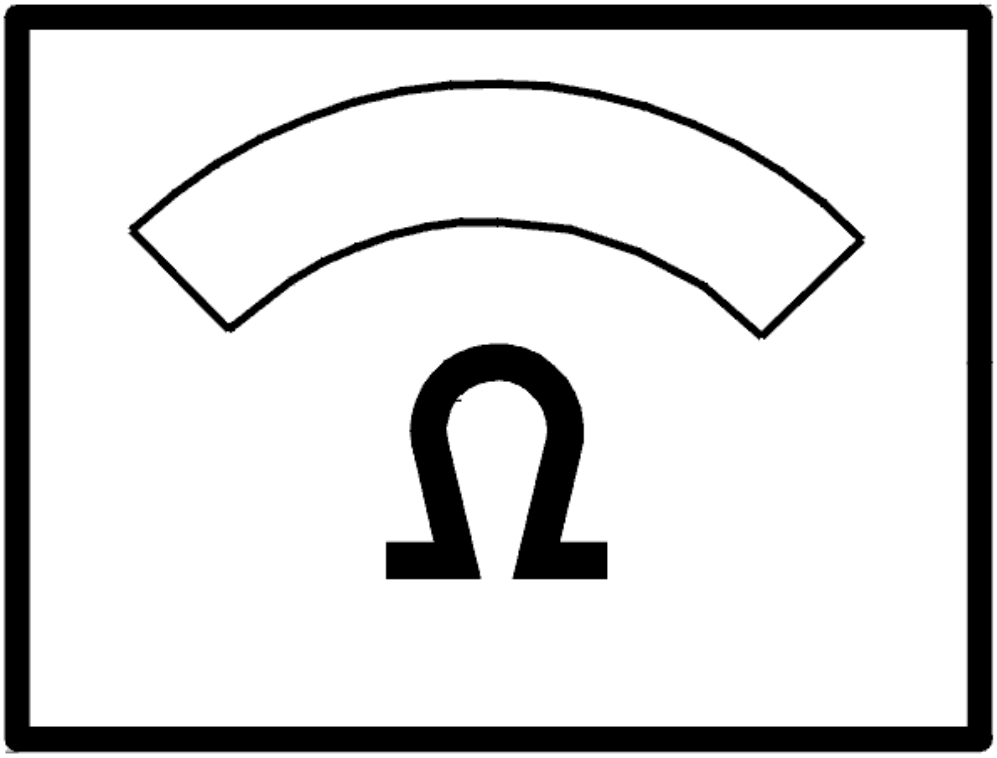

Fig. 190: Identifying Ohm Meter
Courtesy of VOLVO CARS CORPORATION

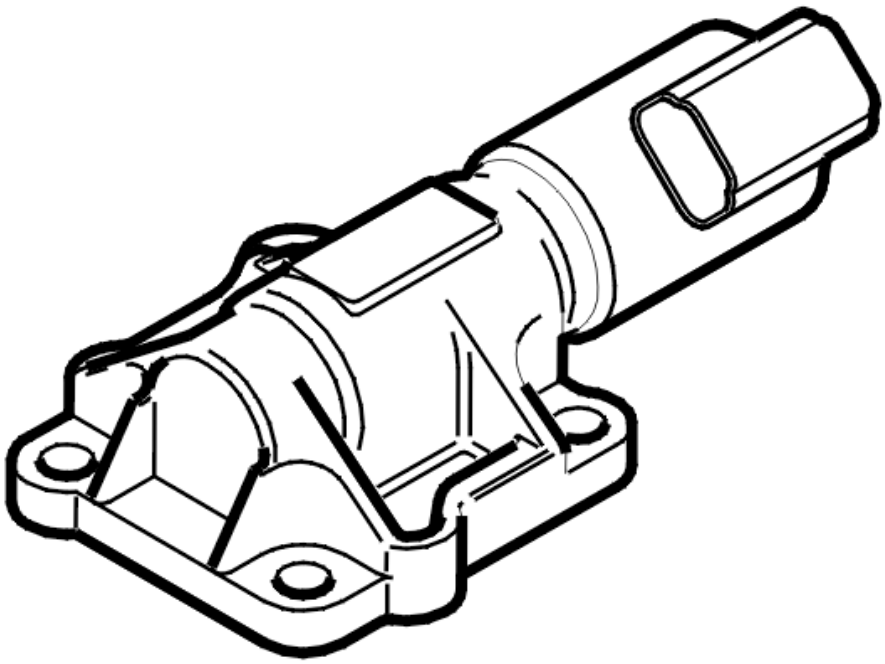

Fig. 191: Identifying Camshaft Position Control
Courtesy of VOLVO CARS CORPORATION

- **Continue**

  Refer to **VERIFICATION**

VERIFICATION

VERIFICATION

HINT: After carrying out the repair, check that the fault has been remedied.

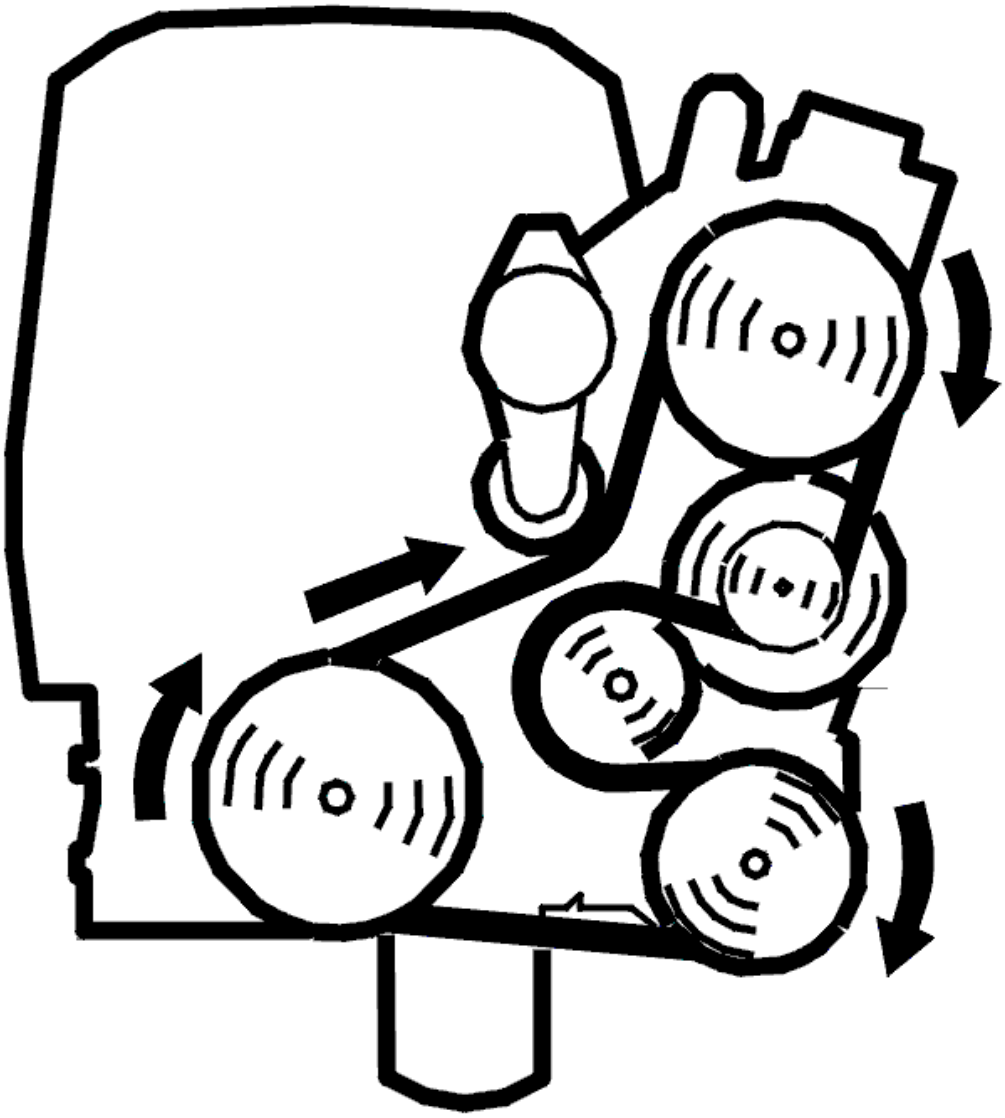

Fig. 192: Belt Routing / Engine Idling - Volvo
Courtesy of VOLVO CARS CORPORATION

- Start the engine
- Read off the value for the camshaft shift angle and the desired value for the camshaft shift angle
- Active the quick test of camshaft control by clicking the start button
- Increase the engine speed (RPM) to approximately 2500 RPM and keep the engine running at this speed.

  When the engine speed (RPM) increases, the control module will start the quick test to control the shift angle of the camshaft to the different target values. There is a fault if the control module does not operate the camshaft shift angle to the different target values.

  During the quick test, check that the shift angle of the camshaft (actual value) corresponds to the target values to an accuracy of ±10°. If the shift angle of the camshaft (target value) does not change, or if the actual value does not correspond to the target value, the function is faulty.

Deviation between the values can be read off in the lower display.

Carry out the check for approximately 15 seconds at an engine speed (RPM) of 2500 RPM. The test is completed when the shift angle of the camshaft returns to 0°. To restart the test, let the engine return to idle speed, then increase the engine speed to approximately 2500 RPM.

NOTE: The test is active until the ignition is switched off. Switch off the ignition before the car is delivered to the customer.

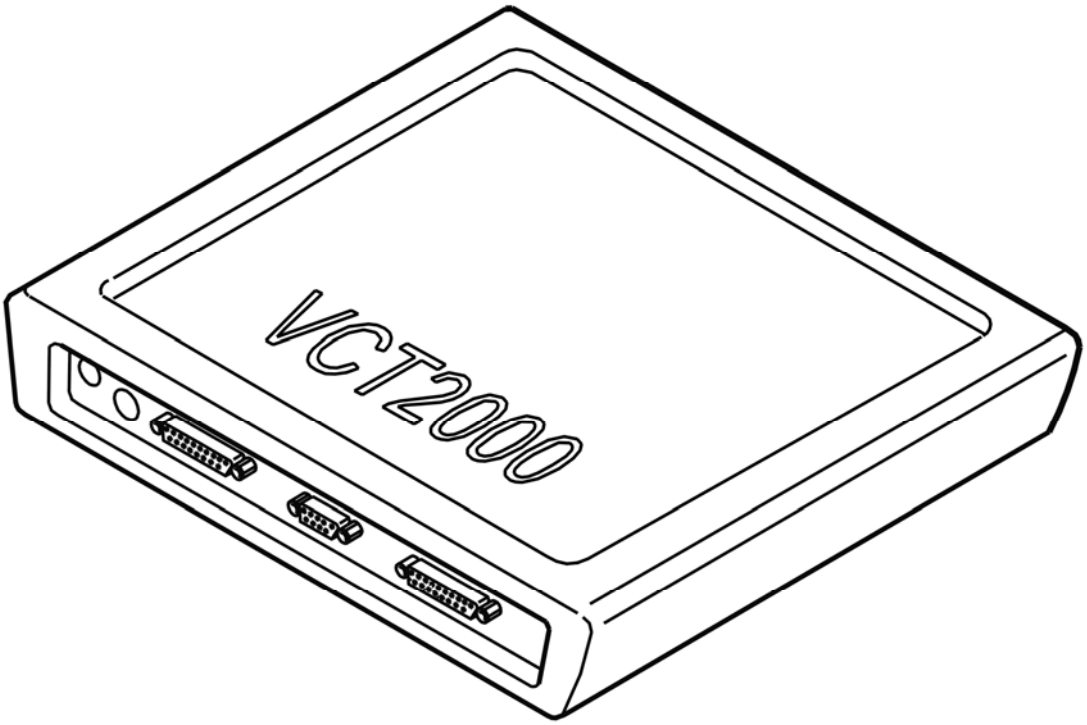

Fig. 193: Identifying VCT2000 Diagnostic Tool Symbol In VIDA
Courtesy of VOLVO CARS CORPORATION

Is the function OK?

- **YES**

  VERIFIED: Troubleshooting has been completed.

- **NO**

  Refer to **INFORMATION**

INFORMATION

FAULT-TRACING INFORMATION

The fault should have been detected and remedied. As this is not the case fault-tracing has failed.

Exit fault-tracing for this diagnostic trouble code (DTC) or make another attempt.

ECM-616C: CAMSHAFT RESET VALVE, EXHAUST. SIGNAL TOO HIGH (B6294T; 2005-2006)

DIAGNOSTIC TROUBLE CODE (DTC) INFORMATION ECM-616C

see **DIAGNOSTIC TROUBLE CODE (DTC) INFORMATION ECM-616C**

SIGNAL TOO HIGH

see **SIGNAL TOO HIGH**

ECM-616D: CAMSHAFT RESET VALVE, EXHAUST. SIGNAL TOO LOW (B5254T2; 2005-2007)

DIAGNOSTIC TROUBLE CODE (DTC) INFORMATION ECM-616D

Condition

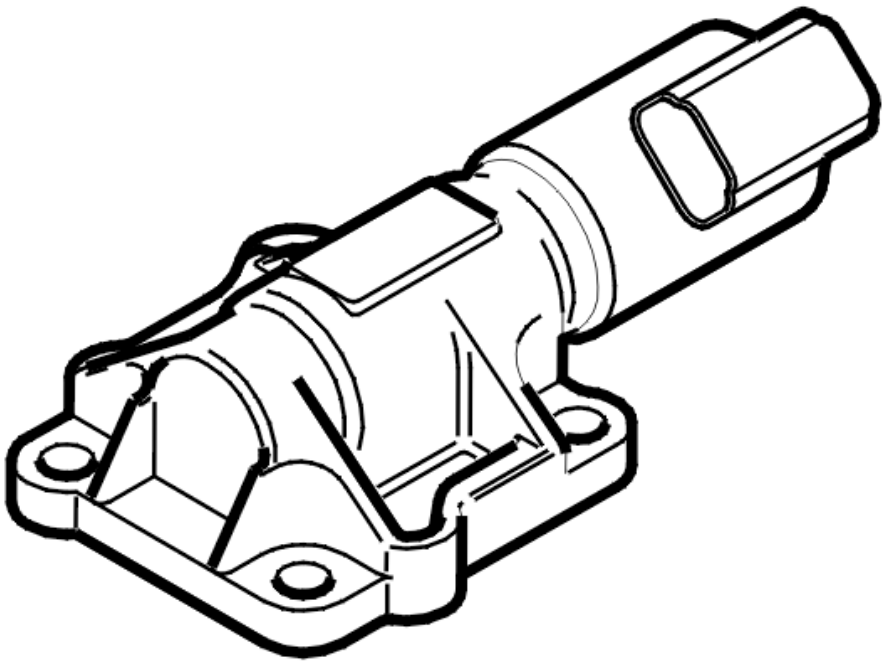

Fig. 194: Identifying Camshaft Position Control
Courtesy of VOLVO CARS CORPORATION

The engine control module (ECM) checks the signal cable for the reset valve for the exhaust camshaft.

The diagnostic trouble code (DTC) is stored if the engine control module (ECM) detects that the signal from the signal cable for the reset valve is too low.

The diagnostic trouble code (DTC) can be diagnosed at ignition on and with the engine running.

Substitute Value

- None.

Possible Source

- Contact resistance in the terminals
- Short-circuit to ground in the signal cable
- Damaged camshaft reset valve.

Fault symptom[s]

- Malfunction indicator lamp (MIL) lit.

SIGNAL TOO LOW OR SIGNAL MISSING

see **SIGNAL TOO LOW OR SIGNAL MISSING**

ECM-616D: CAMSHAFT RESET VALVE, EXHAUST. SIGNAL TOO LOW (B6294T; 2005-2006)

DIAGNOSTIC TROUBLE CODE (DTC) INFORMATION ECM-616D

see **DIAGNOSTIC TROUBLE CODE (DTC) INFORMATION ECM-616D**

SIGNAL TOO LOW OR SIGNAL MISSING

see **SIGNAL TOO LOW OR SIGNAL MISSING**

ECM-6200: ENGINE COOLING FAN (FC) CONTROL MODULE. FAULTY SIGNAL (B5254T2; 2005-2007)

DIAGNOSTIC TROUBLE CODE (DTC) INFORMATION ECM-6200

Condition

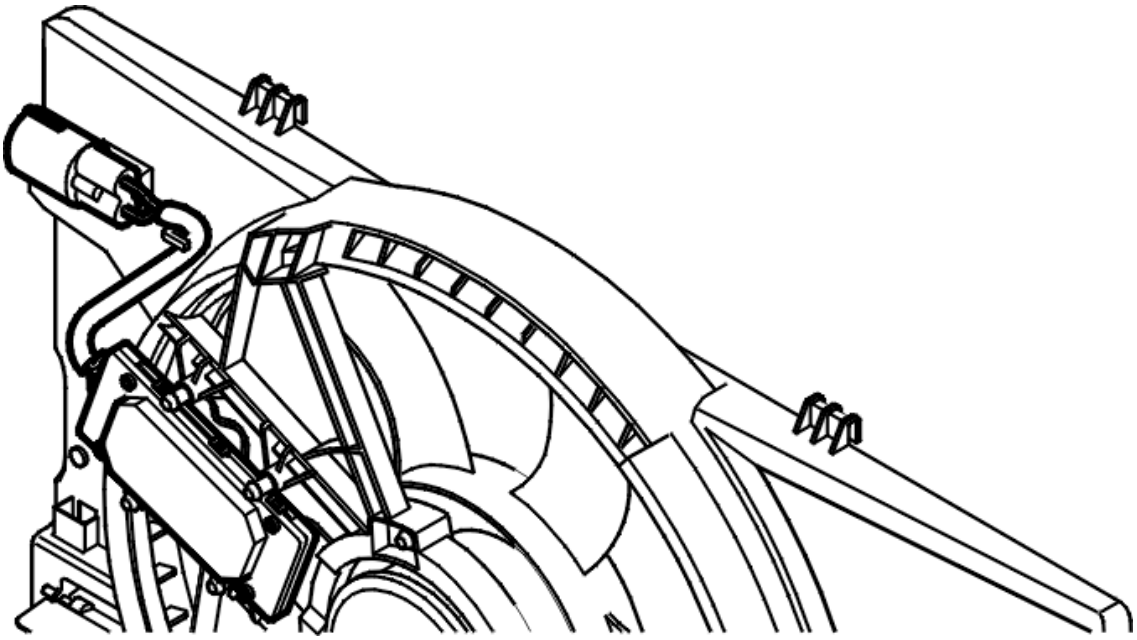

Fig. 195: Engine Cooling Fan And Control Module
Courtesy of VOLVO CARS CORPORATION

The engine control module (ECM) checks the function of the engine cooling fan (FC). The diagnostic trouble code (DTC) is stored if an internal fault in the engine cooling fan (FC) is registered.

The diagnostic trouble code (DTC) can be diagnosed at ignition on or when the engine is running.

NOTE: **The electric cooling fan may have a post-running time of up to approx. 6 minutes after the engine has been shut off. The time for the electric cooling fan's post-running depends on the engine's temperature, temperature in the engine compartment as well as the pressure level in the AC system.**

Substitute Value

- Engine cooling fan (FC) switched off.

Possible Source

- Damaged engine cooling fan (FC).

Fault symptom[s]

- The engine cooling fan (FC) does not function.

FAULT-TRACING INFORMATION

see **FAULT-TRACING INFORMATION**

ECM-6200: ENGINE COOLING FAN (FC) CONTROL MODULE. FAULTY SIGNAL (B6294T; 2005-2006)

DIAGNOSTIC TROUBLE CODE (DTC) INFORMATION ECM-6200

see **DIAGNOSTIC TROUBLE CODE (DTC) INFORMATION ECM-6200**

FAULT-TRACING INFORMATION

see **FAULT-TRACING INFORMATION**

ECM-620B: ENGINE COOLING FAN CONTROL MODULE. SIGNAL TOO LOW (B5254T2; 2005-2007)

DIAGNOSTIC TROUBLE CODE (DTC) INFORMATION ECM-620B

Condition

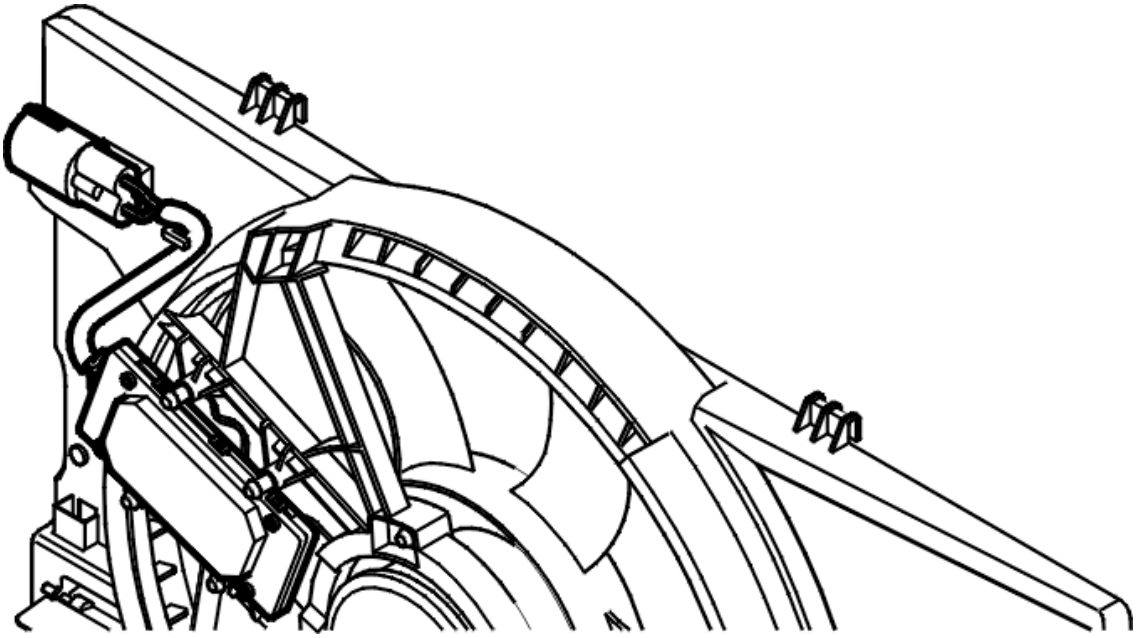

Fig. 196: Engine Cooling Fan And Control Module
Courtesy of VOLVO CARS CORPORATION

The engine control module (ECM) checks the function of the engine cooling fan (FC). The diagnostic trouble code (DTC) is stored if an internal fault in the engine cooling fan (FC) is registered.

The diagnostic trouble code (DTC) can be diagnosed at ignition on or when the engine is running.

NOTE: **The electric cooling fan may have a post-running time of up to approx. 6 minutes after the engine has been shut off. The time for the electric cooling fan's post-running depends on the engine's temperature, temperature in the engine compartment as well as the pressure level in the AC system.**

Substitute Value

- Engine cooling fan (FC) switched off.

Possible Source

- Damaged engine cooling fan (FC).

Fault symptom[s]

- The engine cooling fan (FC) does not function.

FAULT-TRACING INFORMATION

see **FAULT-TRACING INFORMATION**

ECM-620B: ENGINE COOLING FAN CONTROL MODULE. SIGNAL TOO LOW (B6294T; 2005-2006)

DIAGNOSTIC TROUBLE CODE (DTC) INFORMATION ECM-620B

see **DIAGNOSTIC TROUBLE CODE (DTC) INFORMATION ECM-620B**

FAULT-TRACING INFORMATION

see **FAULT-TRACING INFORMATION**

ECM-620C: ENGINE COOLING FAN (FC) CONTROL MODULE. SIGNAL TOO HIGH (B5254T2; 2005-2007)

DIAGNOSTIC TROUBLE CODE (DTC) INFORMATION ECM-620C

Condition

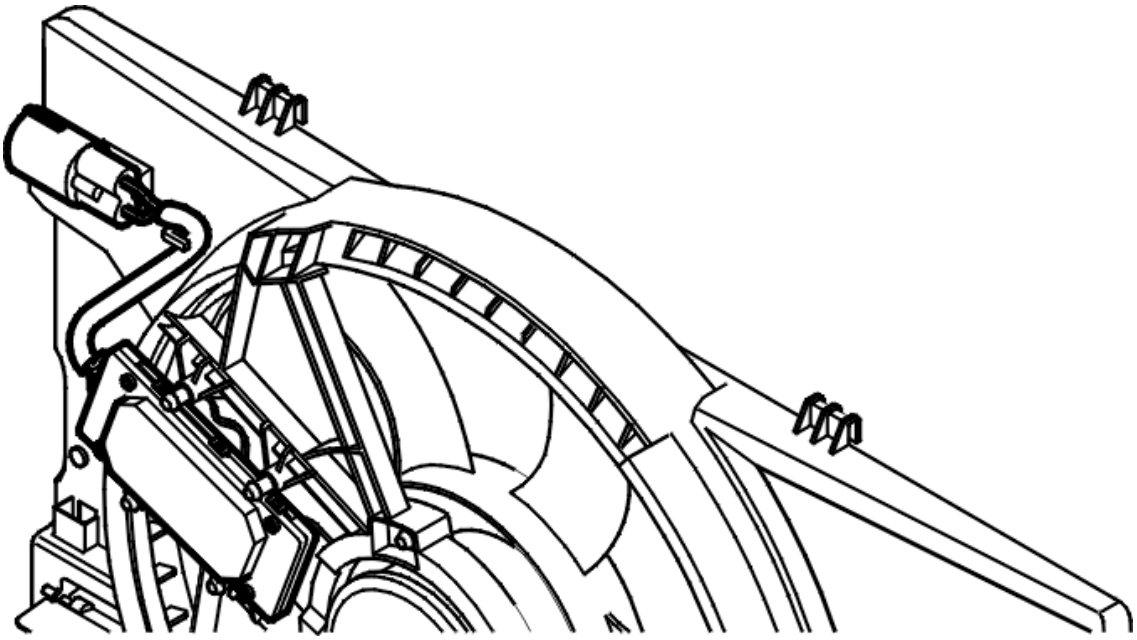

Fig. 197: Engine Cooling Fan And Control Module
Courtesy of VOLVO CARS CORPORATION

The engine control module (ECM) checks the function of the engine cooling fan (FC). The diagnostic trouble code (DTC) is stored if an internal fault in the engine cooling fan (FC) is registered or if the fan is blocked.

The diagnostic trouble code (DTC) can be diagnosed at ignition on or when the engine is running.

NOTE: **The electric cooling fan may have a post-running time of up to approx. 6 minutes after the engine has been shut off. The time for the electric cooling**

fan's post-running depends on the engine's temperature, temperature in the engine compartment as well as the pressure level in the AC system.

Substitute Value

- Engine cooling fan (FC) switched off.

Possible Source

- Blocked engine cooling fan (FC)
- Damaged engine cooling fan (FC).

Fault symptom[s]

- The engine cooling fan (FC) does not function.

SIGNAL TOO HIGH

see **SIGNAL TOO HIGH**

ECM-620C: ENGINE COOLING FAN (FC) CONTROL MODULE. SIGNAL TOO HIGH (B6294T; 2005-2006)

DIAGNOSTIC TROUBLE CODE (DTC) INFORMATION ECM-620C

see **DIAGNOSTIC TROUBLE CODE (DTC) INFORMATION ECM-620C**

SIGNAL TOO HIGH

see **SIGNAL TOO HIGH**

ECM-620D: ENGINE COOLING FAN (FC) CONTROL MODULE. SIGNAL TOO LOW (B5254T2; 2005-2007)

DIAGNOSTIC TROUBLE CODE (DTC) INFORMATION ECM-620D

Condition

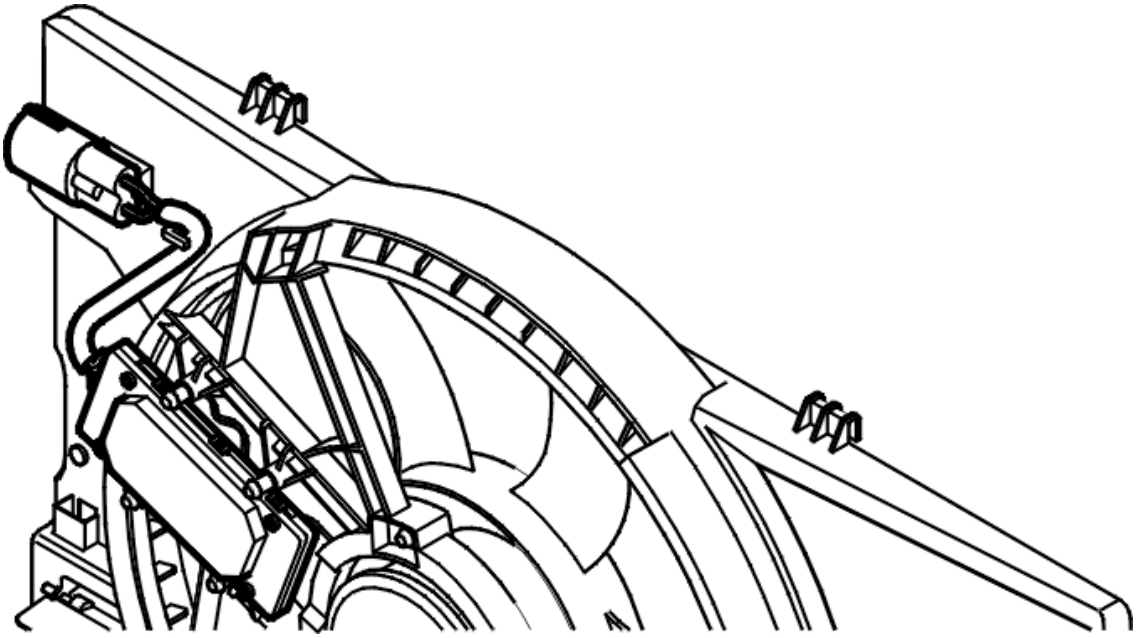

Fig. 198: Engine Cooling Fan And Control Module
Courtesy of VOLVO CARS CORPORATION

The engine control module (ECM) checks the function of the engine cooling fan (FC). The diagnostic trouble code (DTC) is stored if an internal fault in the engine cooling fan (FC) is registered.

The diagnostic trouble code (DTC) can be diagnosed at ignition on or when the engine is running.

NOTE: **The electric cooling fan may have a post-running time of up to approx. 6 minutes after the engine has been shut off. The time for the electric cooling fan's post-running depends on the engine's temperature, temperature in the engine compartment as well as the pressure level in the AC system.**

Substitute Value

- Engine cooling fan (FC) switched off.

Possible Source

- Contact resistance or oxidation in the connectors
- No supply voltage to the engine cooling fan (FC) control module
- Open-circuit or short-circuit to ground in the wiring
- Damaged engine cooling fan (FC).

Fault symptom[s]

- The engine cooling fan (FC) does not function.

SIGNAL TOO LOW

see **SIGNAL TOO LOW**

ECM-620D: ENGINE COOLING FAN (FC) CONTROL MODULE. SIGNAL TOO LOW (B6294T; 2005-2006)

DIAGNOSTIC TROUBLE CODE (DTC) INFORMATION ECM-620D

see **DIAGNOSTIC TROUBLE CODE (DTC) INFORMATION ECM-620D**

SIGNAL TOO LOW

see **SIGNAL TOO LOW**

ECM-6220: ECU-BOX COOLING FAN. SIGNAL MISSING (B5254T2; B6294T; 2003-2004)

DIAGNOSTIC TROUBLE CODE (DTC) INFORMATION

Condition

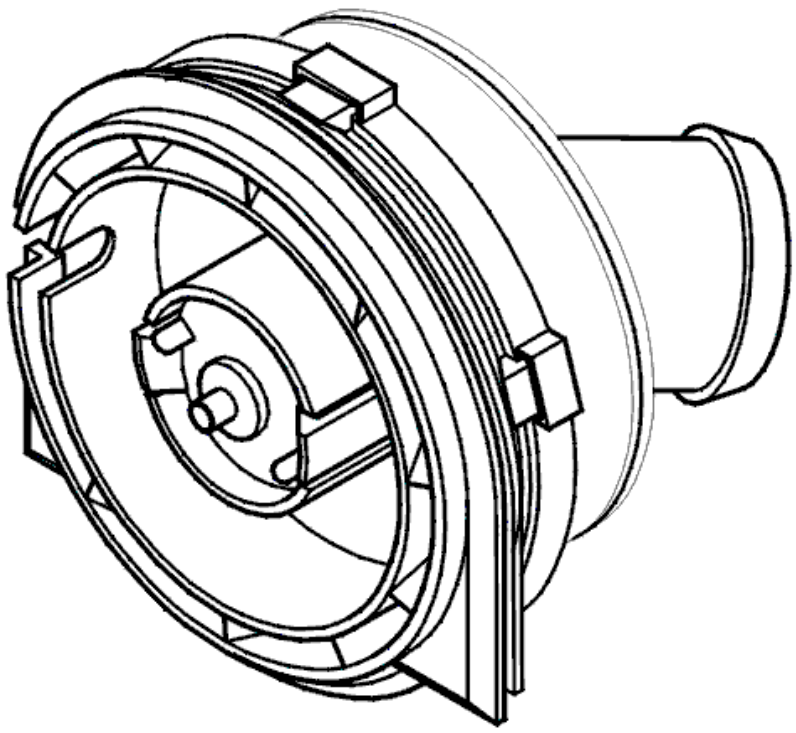

Fig. 199: Identifying Engine Cooling Fan (FC) Control Modules
Courtesy of VOLVO CARS CORPORATION

The diagnostic trouble code (DTC) is stored if the control module detects a fault on the signal to the cooling fan motor for the control modules.

The signal is diagnosed at ignition on or engine running.

Substitute Value

None.

Possible Source

Signal too high:

- Short-circuit to supply voltage in the signal cable
- Damaged control module cooling fan.

Signal too low:

- Short-circuit to ground in the signal cable
- Damaged control module cooling fan.

Signal missing:

- Contact resistance in the terminals
- Open-circuit in the signal cable
- Open-circuit in the power cable
- Damaged control module cooling fan.

Fault symptom[s]

- Malfunction indicator lamp (MIL) lit.

SIGNAL MISSING

CHECKING THE WIRING

Check the fuse before the circuit. If the fuse is blown, check the circuit for a short-circuit to ground.

Check the power cable between the fuse of the circuit and terminal #1 of the control module cooling fan for open circuit.

Check the signal cable with regard to open circuit.

Take readings between:

- Engine Control Module (ECM) terminal #B48 (#B58) and terminal #2 of control module cooling fan.

If no faults are found via the aforementioned fault tracing, replace the control module cooling fan.

Remedy as necessary.

Other information:

- To connect the breakout box, see **CONNECTING THE BREAKOUT BOX**
- For 5 cylinder turbocharged engines -2004, see **SIGNAL DESCRIPTION**
- For 5 cylinder turbocharged engines 2005-, see **SIGNAL SPECIFICATION** .
- For 6 cylinder engines -2004, see **SIGNAL SPECIFICATION**
- For 6 cylinder engines 2005-, see **SIGNAL SPECIFICATION** .
- see **CHECKING WIRING AND TERMINALS** .

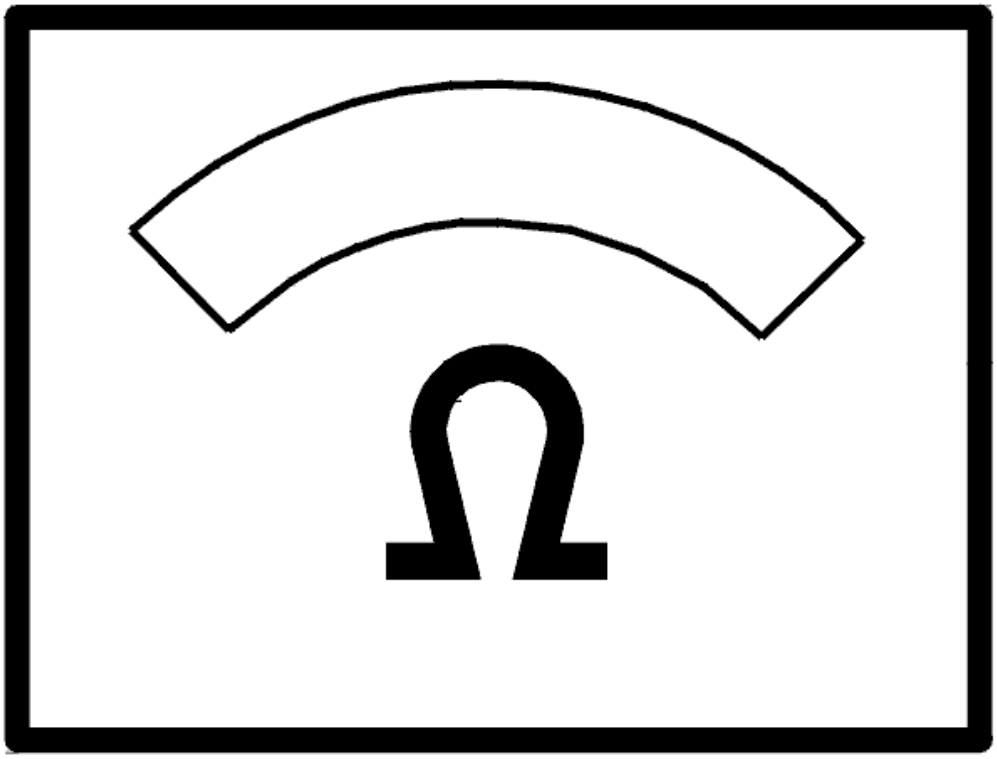

Fig. 200: Identifying Ohm Meter
Courtesy of VOLVO CARS CORPORATION

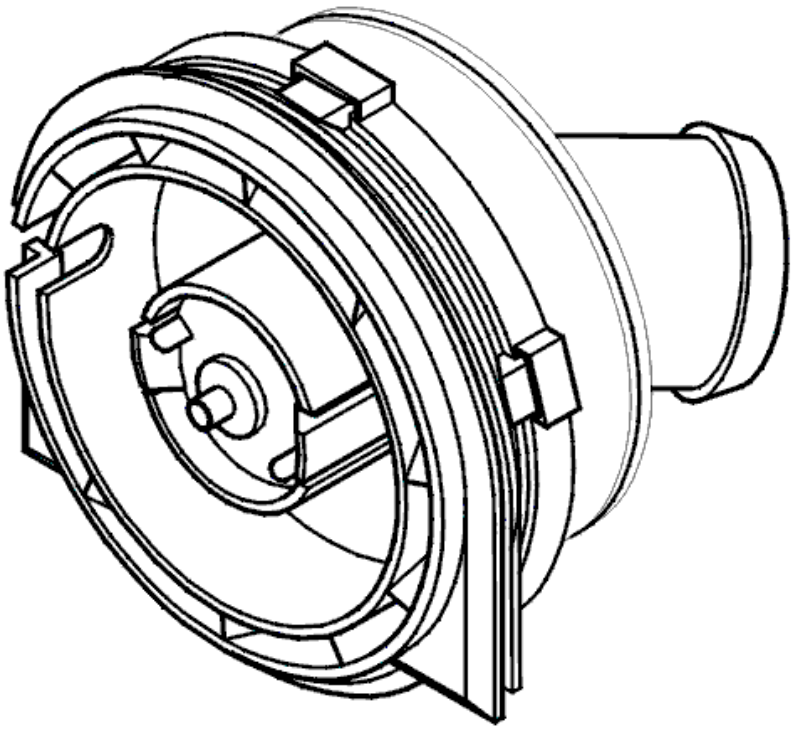

Fig. 201: Identifying Engine Cooling Fan (FC) Control Modules
Courtesy of VOLVO CARS CORPORATION

- **Continue**

  Refer to **INFORMATION**

INFORMATION

FAULT-TRACING INFORMATION

In case of this defect, troubleshooting is not followed by verification.

The information can be displayed again or the fault-tracing for this fault can be interrupted.

ECM-6220: ECU-BOX COOLING FAN. SIGNAL TOO HIGH (B5254T2; B6294T; 2003-2004)

DIAGNOSTIC TROUBLE CODE (DTC) INFORMATION

see **DIAGNOSTIC TROUBLE CODE (DTC) INFORMATION**

SIGNAL TOO HIGH

CHECKING THE WIRING

Check signal cable for an open-circuit and short-circuit to supply voltage.

Take readings between:

- Engine Control Module (ECM) terminal #B48 (#B58) and terminal #2 of control module cooling fan.

If no faults are found via the aforementioned fault tracing, replace the control module cooling fan.

Remedy as necessary.

Other information:

- To connect the breakout box, see **CONNECTING THE BREAKOUT BOX**
- For 5 cylinder turbocharged engines -2004, see **SIGNAL DESCRIPTION**
- For 5 cylinder turbocharged engines 2005-, see **SIGNAL SPECIFICATION** .
- For 6 cylinder engines -2004, see **SIGNAL SPECIFICATION**
- For 6 cylinder engines 2005-, see **SIGNAL SPECIFICATION** .
- see **CHECKING WIRING AND TERMINALS** .

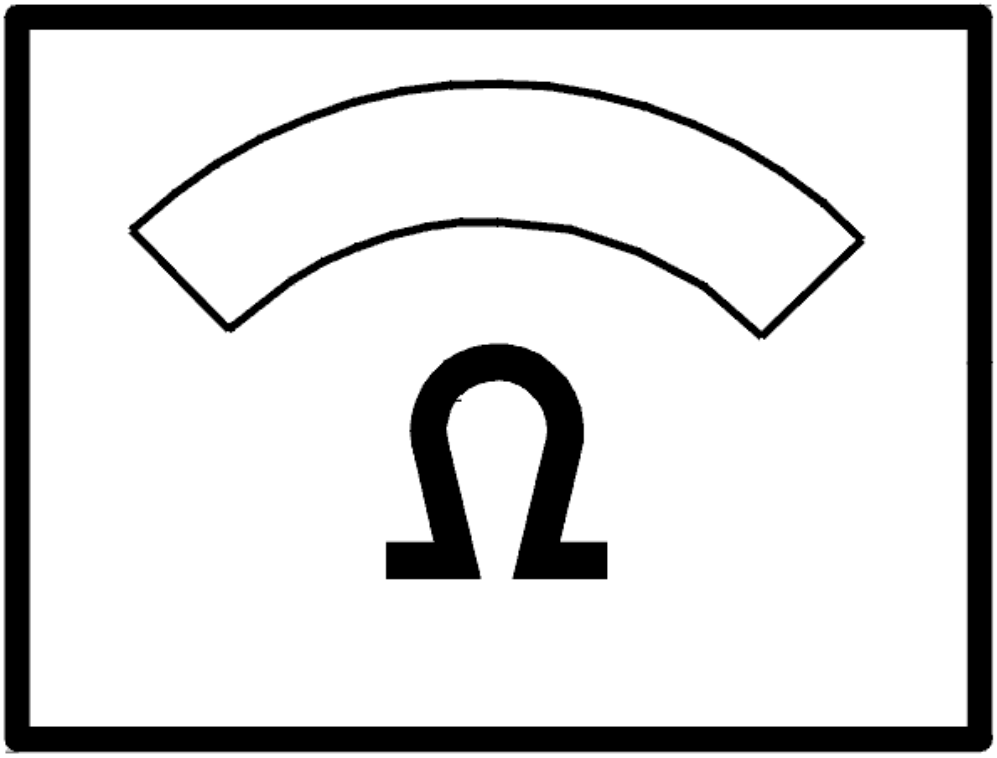

Fig. 202: Identifying Ohm Meter
Courtesy of VOLVO CARS CORPORATION

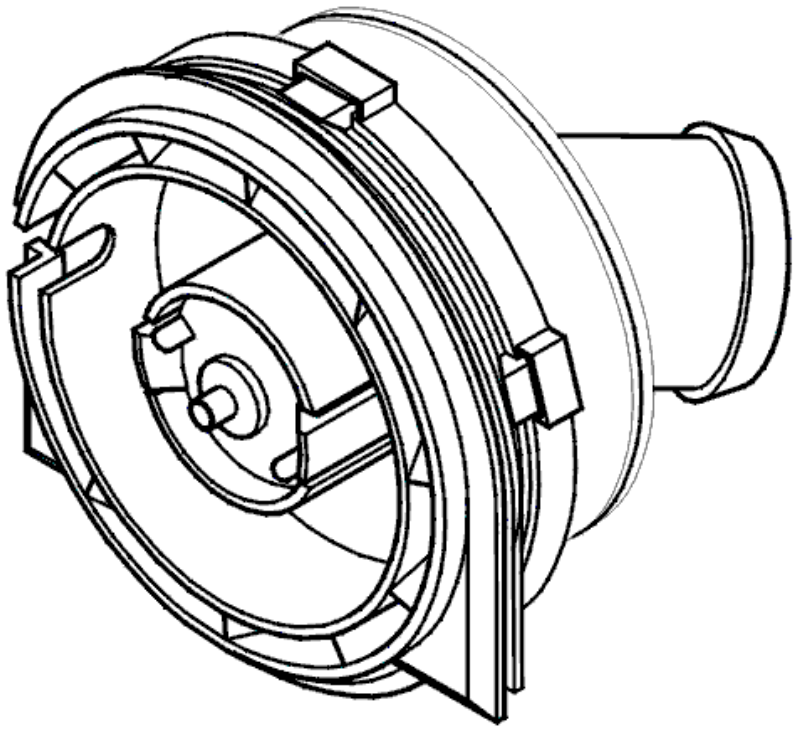

Fig. 203: Identifying Engine Cooling Fan (FC) Control Modules
Courtesy of VOLVO CARS CORPORATION

- **Continue**

  Refer to **INFORMATION**

INFORMATION

FAULT-TRACING INFORMATION

In case of this defect, troubleshooting is not followed by verification.

The information can be displayed again or the fault-tracing for this fault can be interrupted.

ECM-6220: ECU-BOX COOLING FAN. SIGNAL TOO LOW (B5254T2; B6294T; 2003-2004)

DIAGNOSTIC TROUBLE CODE (DTC) INFORMATION

see **DIAGNOSTIC TROUBLE CODE (DTC) INFORMATION**

SIGNAL TOO LOW

CHECKING THE WIRING

Check the signal cable. Check for a short-circuit to ground.

Take readings between:

- Engine Control Module (ECM) terminal #B48 (#B58) and terminal #2 of control module cooling fan.

If no faults are found via the aforementioned fault tracing, replace the control module cooling fan.

Remedy as necessary.

Other information:

- To connect the breakout box, see **CONNECTING THE BREAKOUT BOX**
- For 5 cylinder turbocharged engines -2004, see **SIGNAL DESCRIPTION**
- For 5 cylinder turbocharged engines 2005-, see **SIGNAL SPECIFICATION** .
- For 6 cylinder engines -2004, see **SIGNAL SPECIFICATION**
- For 6 cylinder engines 2005-, see **SIGNAL SPECIFICATION** .
- see **CHECKING WIRING AND TERMINALS** .

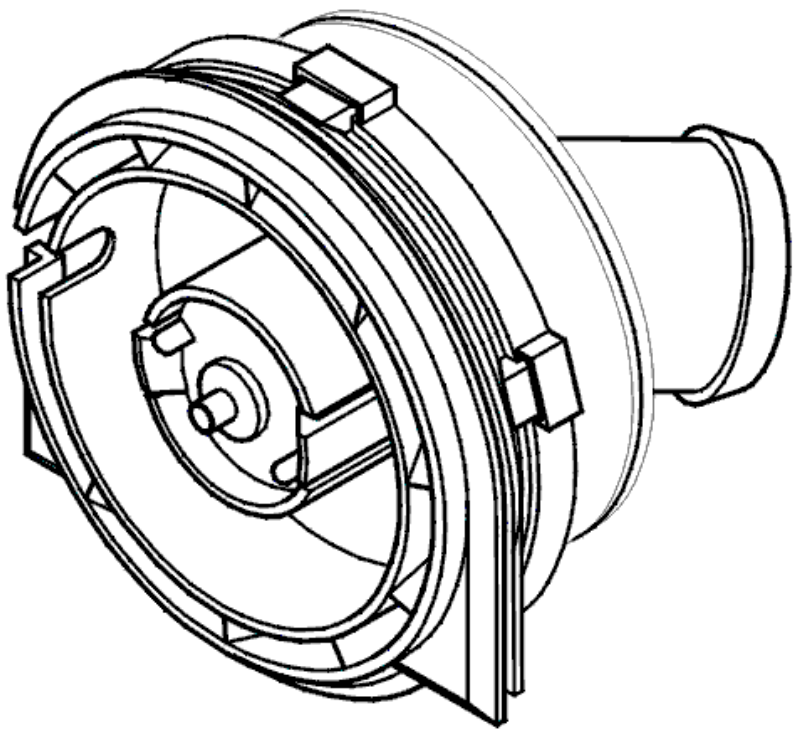

Fig. 204: Identifying Engine Cooling Fan (FC) Control Modules

Courtesy of VOLVO CARS CORPORATION

- **Continue**

  Refer to **INFORMATION**

INFORMATION

FAULT-TRACING INFORMATION

In case of this defect, troubleshooting is not followed by verification.

The information can be displayed again or the fault-tracing for this fault can be interrupted.

ECM-6220: ENGINE COOLING FAN (FC). FAULTY SIGNAL (B5254T2; 2006)

DIAGNOSTIC TROUBLE CODE (DTC) INFORMATION ECM-6220

Condition

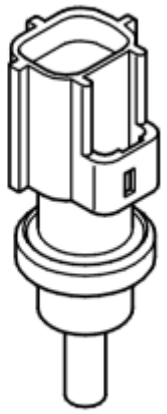

Fig. 205: Identifying Engine Coolant Temperature (ECT) Sensor
Courtesy of VOLVO CARS CORPORATION

The engine control module (ECM) monitors the engine temperature under different running conditions. If the signal from the engine temperature sensor corresponds to a temperature that is higher than a specific limit value despite a low engine load and speed, the control module interprets this as a fault and the diagnostic trouble code is stored.

The diagnostic trouble code (DTC) can be diagnosed when the engine is running.

Substitute Value

- None.

Possible Source

- Insufficient coolant in cooling system.
- Clogged radiator.
- Damaged engine cooling fan (FC) control module.
- Contact resistance or oxidation in the connectors.
- Damaged engine coolant temperature (ECT) sensor.

Fault symptom[s]

- Malfunction indicator light (MIL), on
- Engine is difficult to start

FAULTY SIGNAL

INFORMATION

The diagnostic trouble code (DTC) may for example be stored when:

- Insufficient coolant in cooling system.
- Clogged radiator.

These should therefore be checked and rectified first.

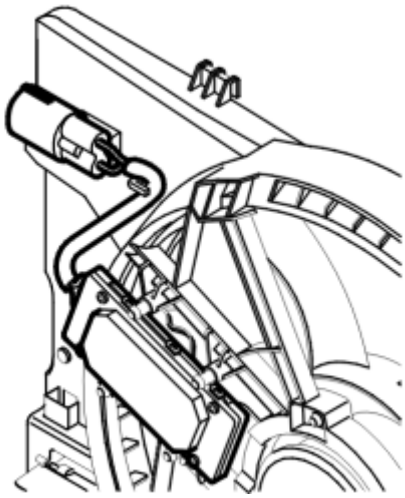

Fig. 206: Identifying Engine Cooling Fan (FC)
Courtesy of VOLVO CARS CORPORATION

- **Continue**

  Refer to **CHECKING THE FUNCTION**

CHECKING THE FUNCTION

Fig. 207: Identifying Ignition On Position
Courtesy of VOLVO CARS CORPORATION

- Ignition on.

  Activate the engine cooling fan (FC). Check that it starts and runs normally.

  Try by activating different speeds on the electric cooling fan.

  Remedy as necessary.

  Other information

  - see **ELECTRIC COOLING FAN**

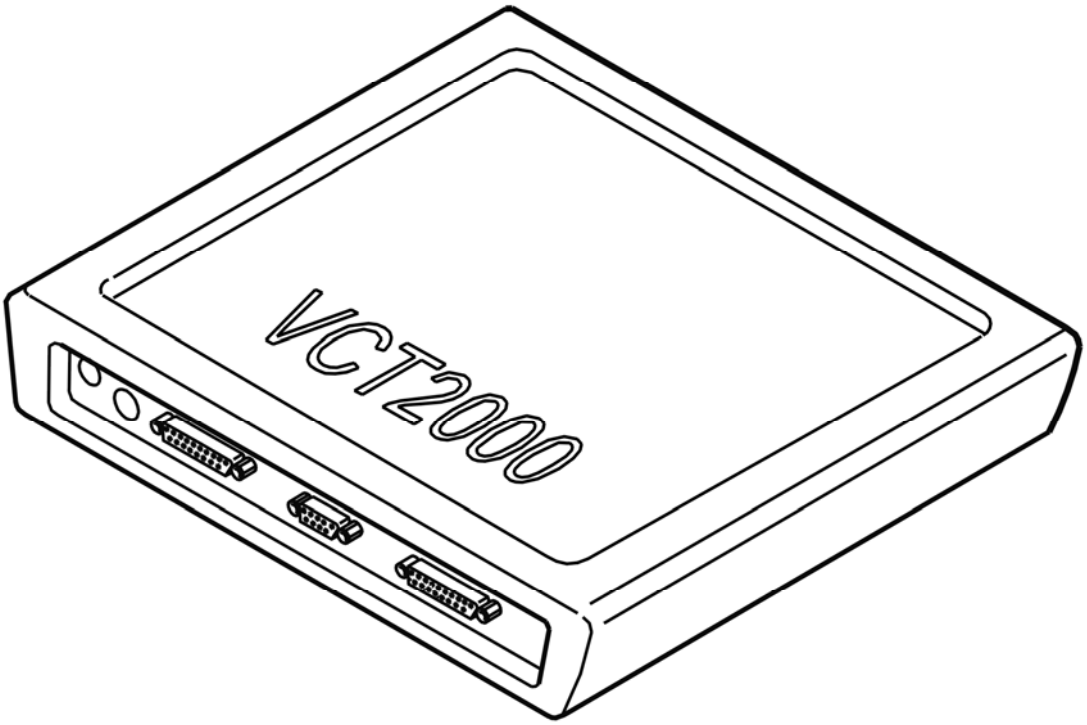

Fig. 208: Identifying VCT2000 Diagnostic Tool Symbol In VIDA
Courtesy of VOLVO CARS CORPORATION

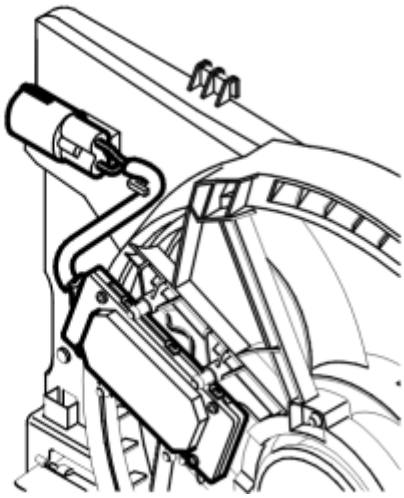

Fig. 209: Identifying Engine Cooling Fan (FC)
Courtesy of VOLVO CARS CORPORATION

- **Continue**

  Refer to **CHECKING THE COMPONENT AND WIRING**

CHECKING THE COMPONENT AND WIRING

Fig. 210: Identifying Ignition In Off Position
Courtesy of VOLVO CARS CORPORATION

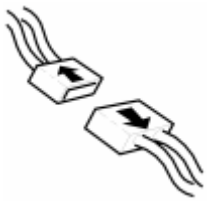

Fig. 211: Identifying Connectors
Courtesy of VOLVO CARS CORPORATION

- Ignition off.
- Unplug the engine temperature sensor connectors.

  Check the connectors. Check for loose connections. Check for contact resistance. Check for oxidation.

  Check the resistance of the sensor between #1 and #2 (to the sensor).

Remedy as necessary.

Other information

- see **CONNECTING THE BREAKOUT BOX**
- For 5 cylinder turbocharged engines -2004, see **SIGNAL DESCRIPTION**
- For 5 cylinder turbocharged engines 2005-, see **SIGNAL SPECIFICATION** .
- see **COMPONENT SPECIFICATIONS**
- For B5xx4T, see **REPLACING THE THERMOSTAT AND/OR ENGINE COOLANT TEMPERATURE SENSOR**
- For B6xx4T, see **ENGINE COOLANT TEMPERATURE (ECT) SENSOR, REPLACING** .
- see **CHECKING WIRING AND TERMINALS**

Fig. 212: Identifying 2-Bit Connector
Courtesy of VOLVO CARS CORPORATION

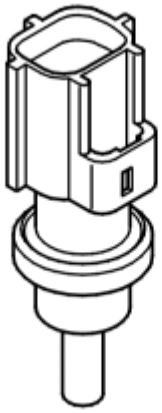

Fig. 213: Identifying Engine Coolant Temperature (ECT) Sensor
Courtesy of VOLVO CARS CORPORATION

- **Continue**

Refer to **VERIFICATION**

VERIFICATION

VERIFICATION

HINT: After carrying out the repair, check that the fault has been remedied.

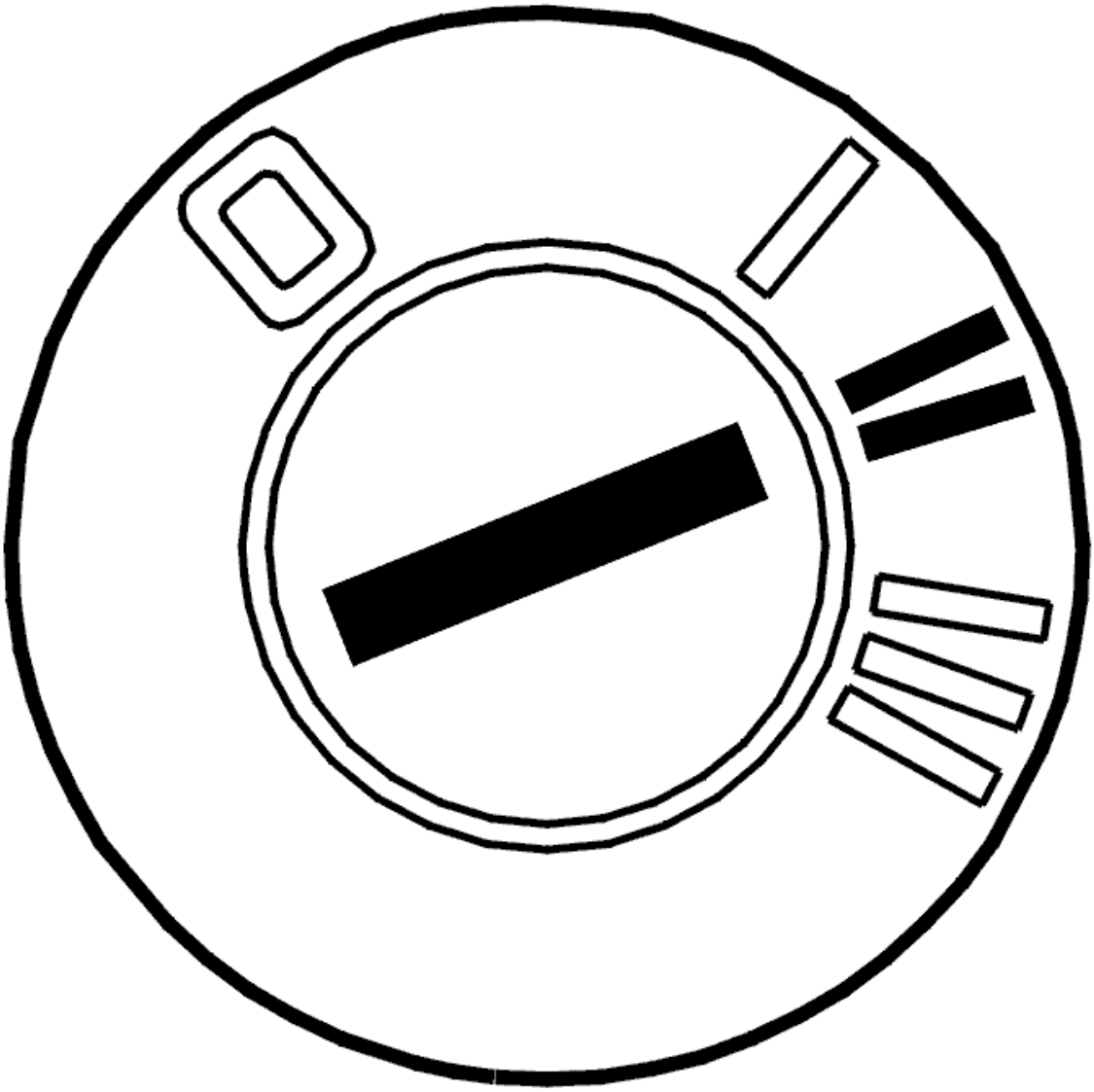

Fig. 214: Identifying Ignition ON
Courtesy of VOLVO CARS CORPORATION

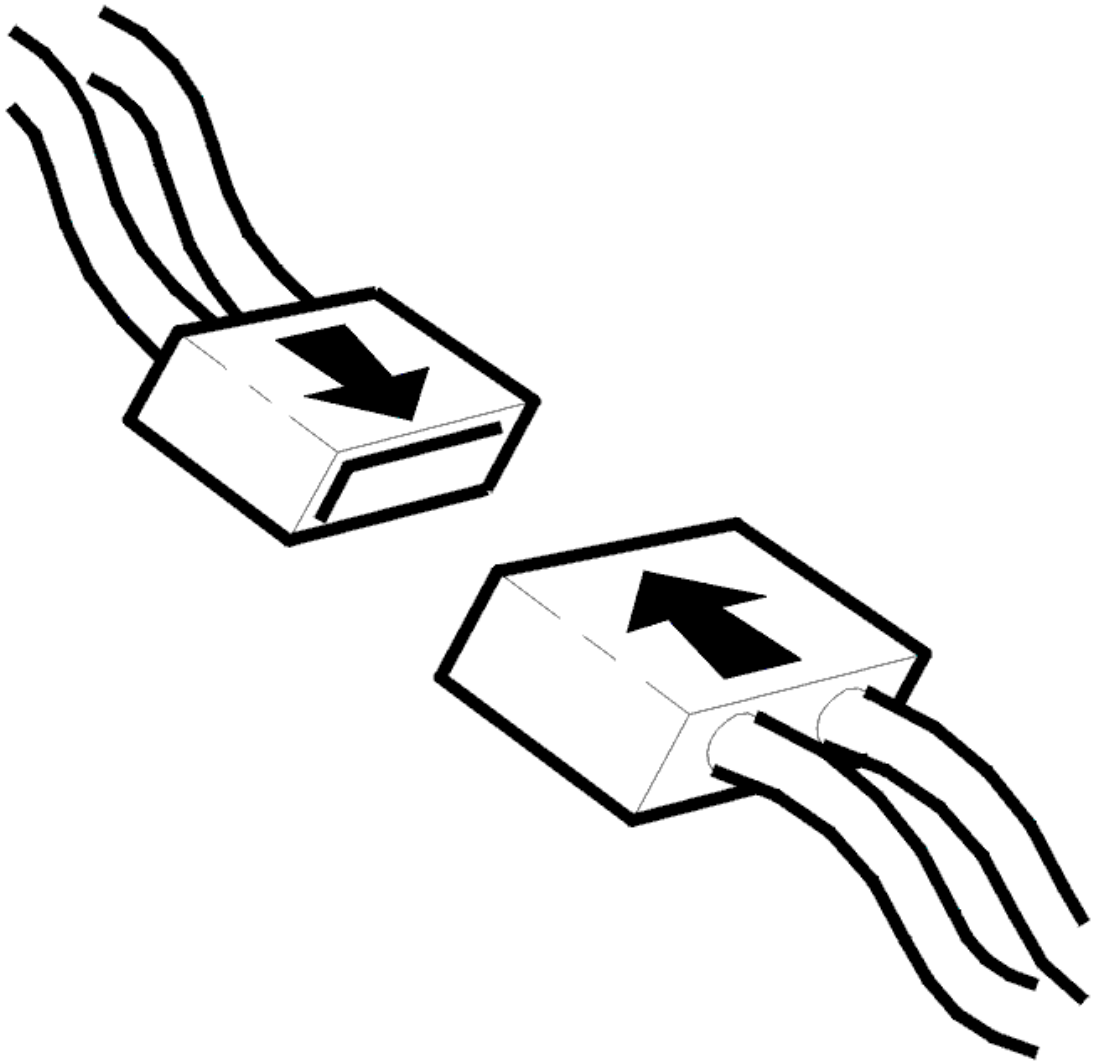

Fig. 215: Connecting Connector
Courtesy of VOLVO CARS CORPORATION

- Verification should begin with a cold engine (+20 °C) so that the engine coolant temperature (ECT) sensor can be tested over as wide a temperature range as possible
- Ignition off
- Reconnect the connectors, reinstall components etc.
- Start the engine.

  Read off the engine coolant temperature (ECT) sensor signal.

  Check that the engine coolant temperature (ECT) is within its permitted range and corresponds with the engine warming up.

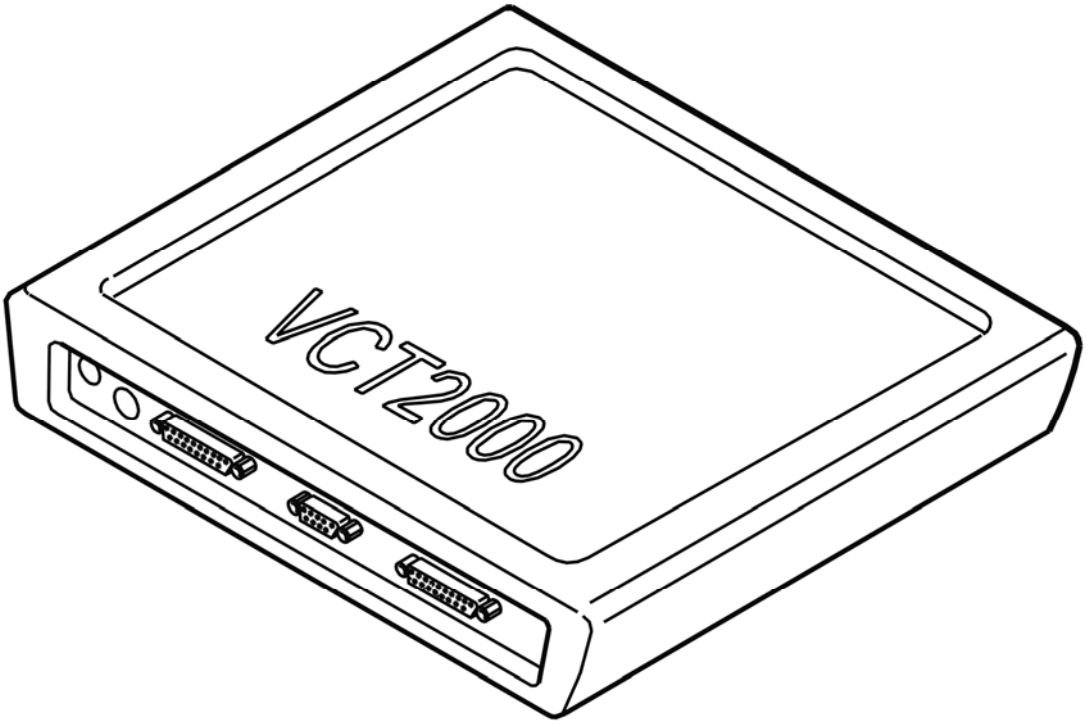

Fig. 216: Identifying VCT2000 Diagnostic Tool Symbol In VIDA
Courtesy of VOLVO CARS CORPORATION

Is the temperature within its permitted range?

- **YES**

  VERIFIED: Troubleshooting has been completed.

- **NO**

  Refer to **INFORMATION**

INFORMATION

FAULT-TRACING INFORMATION

The fault should have been detected and remedied. As this is not the case fault-tracing has failed.

Exit fault-tracing for this diagnostic trouble code (DTC) or make another attempt.

ECM-630B: A/C RELAY. SIGNAL MISSING. INTERMITTENT FAULT (B5254T2; 2005-2007)

DIAGNOSTIC TROUBLE CODE (DTC) INFORMATION ECM-630B

Condition

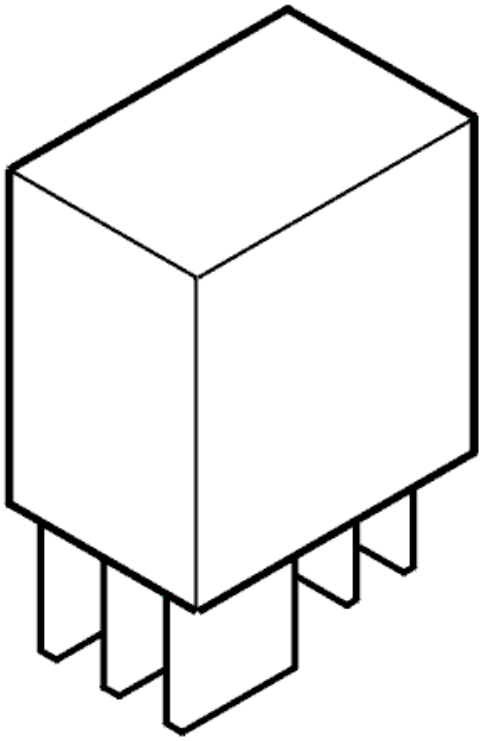

Fig. 217: Identifying A/C Relay
Courtesy of VOLVO CARS CORPORATION

The engine control module (ECM) checks the signal cable for controlling the air conditioning (A/C) relay.

The diagnostic trouble code (DTC) is stored if the engine control module (ECM) detects an open-circuit in the signal cable for the air conditioning (A/C) relay.

The diagnostic trouble code (DTC) can be diagnosed at ignition on and with the engine running.

Substitute Value

- None.

Possible Source

- Open-circuit in the signal cable
- Open-circuit in the power cable
- Damaged air conditioning (A/C) relay.

Fault symptom[s]

- The air conditioning (A/C) system does not operate.

SIGNAL MISSING. INTERMITTENT FAULT

see **SIGNAL MISSING. INTERMITTENT FAULT**

ECM-630B: A/C RELAY. SIGNAL MISSING. INTERMITTENT FAULT (B6294T; 2005-2006)

DIAGNOSTIC TROUBLE CODE (DTC) INFORMATION ECM-630B

see **DIAGNOSTIC TROUBLE CODE (DTC) INFORMATION ECM-630B**

SIGNAL MISSING. INTERMITTENT FAULT

see **SIGNAL MISSING. INTERMITTENT FAULT**

ECM-630B: A/C RELAY. SIGNAL MISSING. PERMANENT FAULT (B5254T2; 2005-2007)

DIAGNOSTIC TROUBLE CODE (DTC) INFORMATION ECM-630B

see **DIAGNOSTIC TROUBLE CODE (DTC) INFORMATION ECM-630B**

SIGNAL MISSING. PERMANENT FAULT

see **SIGNAL MISSING. PERMANENT FAULT**

ECM-630B: A/C RELAY. SIGNAL MISSING. PERMANENT FAULT (B6294T; 2005-2006)

DIAGNOSTIC TROUBLE CODE (DTC) INFORMATION ECM-630B

see **DIAGNOSTIC TROUBLE CODE (DTC) INFORMATION ECM-630B**

SIGNAL MISSING. PERMANENT FAULT

see **SIGNAL MISSING. PERMANENT FAULT**

ECM-630C: A/C RELAY. SIGNAL TOO HIGH. INTERMITTENT FAULT (B5254T2; 2005-2007)

DIAGNOSTIC TROUBLE CODE (DTC) INFORMATION ECM-630C

Condition

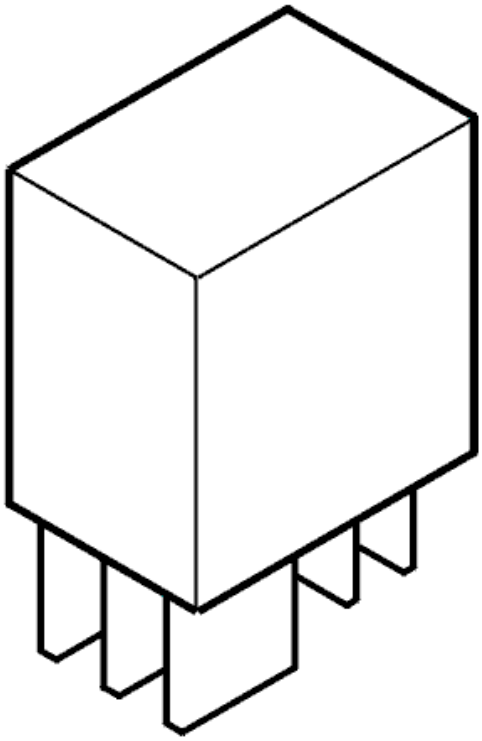

Fig. 218: Identifying A/C Relay
Courtesy of VOLVO CARS CORPORATION

The engine control module (ECM) checks the signal cable for controlling the air conditioning (A/C) relay.

The diagnostic trouble code (DTC) is stored if the engine control module (ECM) detects that the signal from the signal cable for the air conditioning (A/C) relay is too high.

The diagnostic trouble code (DTC) can be diagnosed at ignition on and with the engine running.

Substitute Value

- None.

Possible Source

- Short-circuit to supply voltage in the signal cable
- Open-circuit in the power supply
- Damaged air conditioning (A/C) relay.

Fault symptom[s]

- The air conditioning (A/C) system does not operate.

SIGNAL TOO HIGH. INTERMITTENT FAULT

see **SIGNAL TOO HIGH. INTERMITTENT FAULT**

ECM-630C: A/C RELAY. SIGNAL TOO HIGH. INTERMITTENT FAULT (B6294T; 2005-2006)

DIAGNOSTIC TROUBLE CODE (DTC) INFORMATION ECM-630C

see **DIAGNOSTIC TROUBLE CODE (DTC) INFORMATION ECM-630C**

SIGNAL TOO HIGH. INTERMITTENT FAULT

see **SIGNAL TOO HIGH. INTERMITTENT FAULT**

ECM-630C: A/C RELAY. SIGNAL TOO HIGH. PERMANENT FAULT (B5254T2; 2005-2007)

DIAGNOSTIC TROUBLE CODE (DTC) INFORMATION ECM-630C

see **DIAGNOSTIC TROUBLE CODE (DTC) INFORMATION ECM-630C**

SIGNAL TOO HIGH. PERMANENT FAULT

see **SIGNAL TOO HIGH. PERMANENT FAULT**

ECM-630C: A/C RELAY. SIGNAL TOO HIGH. PERMANENT FAULT (B6294T; 2005-2006)

DIAGNOSTIC TROUBLE CODE (DTC) INFORMATION ECM-630C

see **DIAGNOSTIC TROUBLE CODE (DTC) INFORMATION ECM-630C**

SIGNAL TOO HIGH. PERMANENT FAULT

see **SIGNAL TOO HIGH. PERMANENT FAULT**

ECM-630D: A/C RELAY. SIGNAL TOO LOW. INTERMITTENT FAULT (B5254T2; 2005-2007)

DIAGNOSTIC TROUBLE CODE (DTC) INFORMATION ECM-630D

Condition

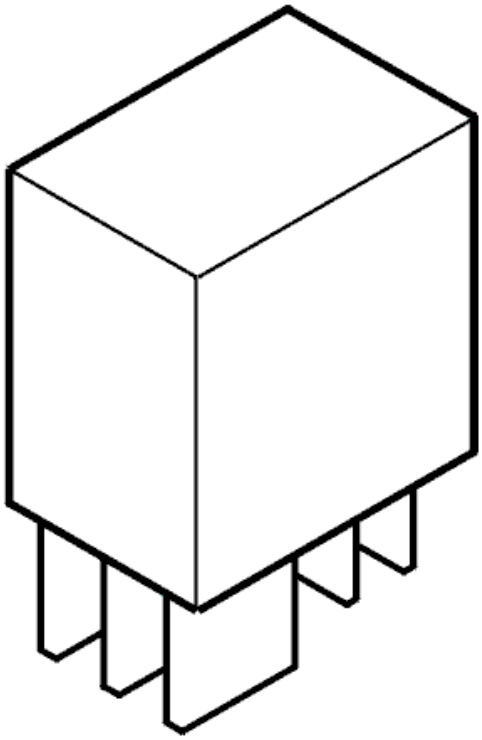

Fig. 219: Identifying A/C Relay
Courtesy of VOLVO CARS CORPORATION

The engine control module (ECM) checks the signal cable for controlling the air conditioning (A/C) relay.

The diagnostic trouble code (DTC) is stored if the engine control module (ECM) detects that the signal from the signal cable for the air conditioning (A/C) relay is too low.

The diagnostic trouble code (DTC) can be diagnosed at ignition on and with the engine running.

Substitute Value

- None.

Possible Source

- Contact resistance in the terminals
- Short-circuit to ground in the signal cable
- Damaged air conditioning (A/C) relay.

Fault symptom[s]

- The air conditioning (A/C) system does not operate.

SIGNAL TOO LOW. INTERMITTENT FAULT

see **SIGNAL TOO LOW. INTERMITTENT FAULT**

ECM-630D: A/C RELAY. SIGNAL TOO LOW. INTERMITTENT FAULT (B6294T; 2005-2006)

DIAGNOSTIC TROUBLE CODE (DTC) INFORMATION ECM-630D

see **DIAGNOSTIC TROUBLE CODE (DTC) INFORMATION ECM-630D**

SIGNAL TOO LOW. INTERMITTENT FAULT

see **SIGNAL TOO LOW. INTERMITTENT FAULT**

ECM-630D: A/C RELAY. SIGNAL TOO LOW. PERMANENT FAULT (B5254T2; 2005-2007)

DIAGNOSTIC TROUBLE CODE (DTC) INFORMATION ECM-630D

see **DIAGNOSTIC TROUBLE CODE (DTC) INFORMATION ECM-630D**

SIGNAL TOO LOW. PERMANENT FAULT

see **SIGNAL TOO LOW. PERMANENT FAULT**

ECM-630D: A/C RELAY. SIGNAL TOO LOW. PERMANENT FAULT (B6294T; 2005-2006)

DIAGNOSTIC TROUBLE CODE (DTC) INFORMATION ECM-630D

see **DIAGNOSTIC TROUBLE CODE (DTC) INFORMATION ECM-630D**

SIGNAL TOO LOW. PERMANENT FAULT

see **SIGNAL TOO LOW. PERMANENT FAULT**

ECM-630B: A/C RELAY. SIGNAL MISSING. INTERMITTENT FAULT (B5254T2; 2005-2007)

DIAGNOSTIC TROUBLE CODE (DTC) INFORMATION ECM-630B

Condition

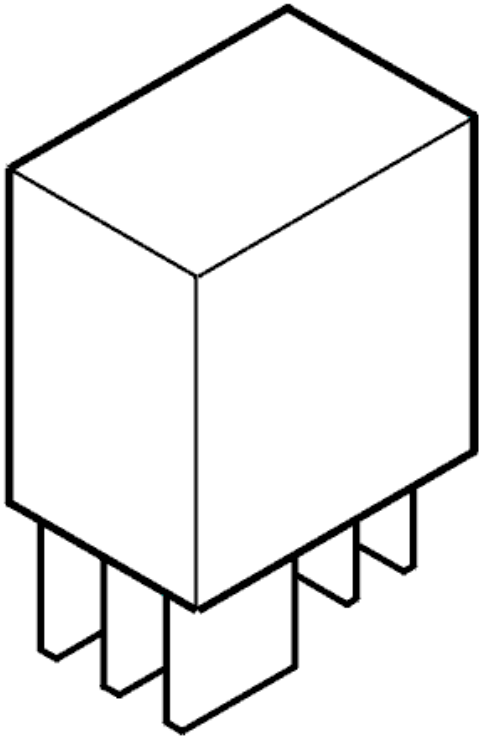

Fig. 217: Identifying A/C Relay
Courtesy of VOLVO CARS CORPORATION

The engine control module (ECM) checks the signal cable for controlling the air conditioning (A/C) relay.

The diagnostic trouble code (DTC) is stored if the engine control module (ECM) detects an open-circuit in the signal cable for the air conditioning (A/C) relay.

The diagnostic trouble code (DTC) can be diagnosed at ignition on and with the engine running.

Substitute Value

- None.

Possible Source

- Open-circuit in the signal cable
- Open-circuit in the power cable
- Damaged air conditioning (A/C) relay.

Fault symptom[s]

- The air conditioning (A/C) system does not operate.

SIGNAL MISSING. INTERMITTENT FAULT

see **SIGNAL MISSING. INTERMITTENT FAULT**

ECM-630B: A/C RELAY. SIGNAL MISSING. INTERMITTENT FAULT (B6294T; 2005-2006)

DIAGNOSTIC TROUBLE CODE (DTC) INFORMATION ECM-630B

see **DIAGNOSTIC TROUBLE CODE (DTC) INFORMATION ECM-630B**

SIGNAL MISSING. INTERMITTENT FAULT

see **SIGNAL MISSING. INTERMITTENT FAULT**

ECM-630B: A/C RELAY. SIGNAL MISSING. PERMANENT FAULT (B5254T2; 2005-2007)

DIAGNOSTIC TROUBLE CODE (DTC) INFORMATION ECM-630B

see **DIAGNOSTIC TROUBLE CODE (DTC) INFORMATION ECM-630B**

SIGNAL MISSING. PERMANENT FAULT

see **SIGNAL MISSING. PERMANENT FAULT**

ECM-630B: A/C RELAY. SIGNAL MISSING. PERMANENT FAULT (B6294T; 2005-2006)

DIAGNOSTIC TROUBLE CODE (DTC) INFORMATION ECM-630B

see **DIAGNOSTIC TROUBLE CODE (DTC) INFORMATION ECM-630B**

SIGNAL MISSING. PERMANENT FAULT

see **SIGNAL MISSING. PERMANENT FAULT**

ECM-630C: A/C RELAY. SIGNAL TOO HIGH. INTERMITTENT FAULT (B5254T2; 2005-2007)

DIAGNOSTIC TROUBLE CODE (DTC) INFORMATION ECM-630C

Condition

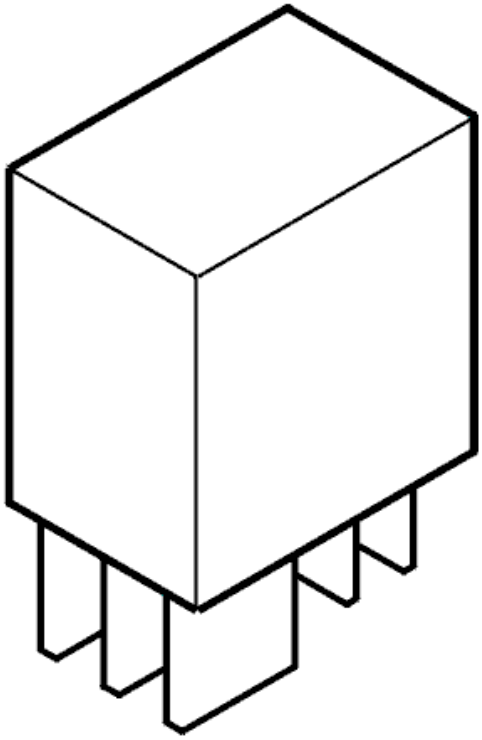

Fig. 218: Identifying A/C Relay
Courtesy of VOLVO CARS CORPORATION

The engine control module (ECM) checks the signal cable for controlling the air conditioning (A/C) relay.

The diagnostic trouble code (DTC) is stored if the engine control module (ECM) detects that the signal from the signal cable for the air conditioning (A/C) relay is too high.

The diagnostic trouble code (DTC) can be diagnosed at ignition on and with the engine running.

Substitute Value

- None.

Possible Source

- Short-circuit to supply voltage in the signal cable
- Open-circuit in the power supply
- Damaged air conditioning (A/C) relay.

Fault symptom[s]

- The air conditioning (A/C) system does not operate.

SIGNAL TOO HIGH. INTERMITTENT FAULT

see **SIGNAL TOO HIGH. INTERMITTENT FAULT**

ECM-630C: A/C RELAY. SIGNAL TOO HIGH. INTERMITTENT FAULT (B6294T; 2005-2006)

DIAGNOSTIC TROUBLE CODE (DTC) INFORMATION ECM-630C

see **DIAGNOSTIC TROUBLE CODE (DTC) INFORMATION ECM-630C**

SIGNAL TOO HIGH. INTERMITTENT FAULT

see **SIGNAL TOO HIGH. INTERMITTENT FAULT**

ECM-630C: A/C RELAY. SIGNAL TOO HIGH. PERMANENT FAULT (B5254T2; 2005-2007)

DIAGNOSTIC TROUBLE CODE (DTC) INFORMATION ECM-630C

see **DIAGNOSTIC TROUBLE CODE (DTC) INFORMATION ECM-630C**

SIGNAL TOO HIGH. PERMANENT FAULT

see **SIGNAL TOO HIGH. PERMANENT FAULT**

ECM-630C: A/C RELAY. SIGNAL TOO HIGH. PERMANENT FAULT (B6294T; 2005-2006)

DIAGNOSTIC TROUBLE CODE (DTC) INFORMATION ECM-630C

see **DIAGNOSTIC TROUBLE CODE (DTC) INFORMATION ECM-630C**

SIGNAL TOO HIGH. PERMANENT FAULT

see **SIGNAL TOO HIGH. PERMANENT FAULT**

ECM-630D: A/C RELAY. SIGNAL TOO LOW. INTERMITTENT FAULT (B5254T2; 2005-2007)

DIAGNOSTIC TROUBLE CODE (DTC) INFORMATION ECM-630D

Condition

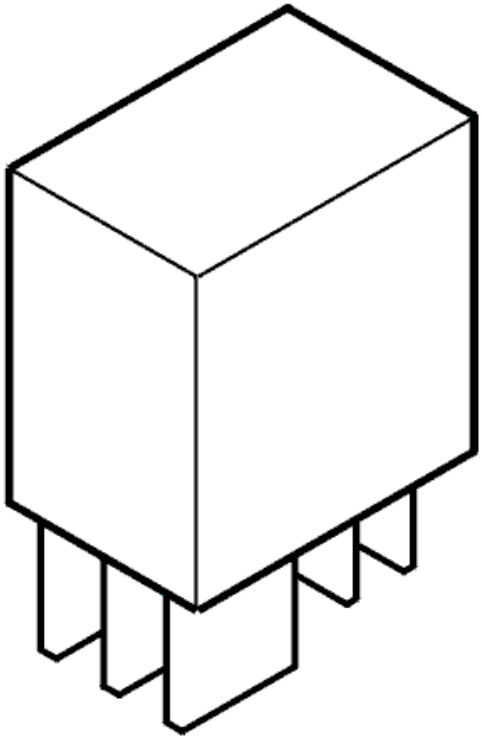

Fig. 219: Identifying A/C Relay
Courtesy of VOLVO CARS CORPORATION

The engine control module (ECM) checks the signal cable for controlling the air conditioning (A/C) relay.

The diagnostic trouble code (DTC) is stored if the engine control module (ECM) detects that the signal from the signal cable for the air conditioning (A/C) relay is too low.

The diagnostic trouble code (DTC) can be diagnosed at ignition on and with the engine running.

Substitute Value

- None.

Possible Source

- Contact resistance in the terminals
- Short-circuit to ground in the signal cable
- Damaged air conditioning (A/C) relay.

Fault symptom[s]

- The air conditioning (A/C) system does not operate.

SIGNAL TOO LOW. INTERMITTENT FAULT

see **SIGNAL TOO LOW. INTERMITTENT FAULT**

ECM-630D: A/C RELAY. SIGNAL TOO LOW. INTERMITTENT FAULT (B6294T; 2005-2006)

DIAGNOSTIC TROUBLE CODE (DTC) INFORMATION ECM-630D

see **DIAGNOSTIC TROUBLE CODE (DTC) INFORMATION ECM-630D**

SIGNAL TOO LOW. INTERMITTENT FAULT

see **SIGNAL TOO LOW. INTERMITTENT FAULT**

ECM-630D: A/C RELAY. SIGNAL TOO LOW. PERMANENT FAULT (B5254T2; 2005-2007)

DIAGNOSTIC TROUBLE CODE (DTC) INFORMATION ECM-630D

see **DIAGNOSTIC TROUBLE CODE (DTC) INFORMATION ECM-630D**

SIGNAL TOO LOW. PERMANENT FAULT

see **SIGNAL TOO LOW. PERMANENT FAULT**

ECM-630D: A/C RELAY. SIGNAL TOO LOW. PERMANENT FAULT (B6294T; 2005-2006)

DIAGNOSTIC TROUBLE CODE (DTC) INFORMATION ECM-630D

see **DIAGNOSTIC TROUBLE CODE (DTC) INFORMATION ECM-630D**

SIGNAL TOO LOW. PERMANENT FAULT

see **SIGNAL TOO LOW. PERMANENT FAULT**

ECM-6400: CAMSHAFT RESET VALVE, INTAKE SIGNAL TOO HIGH (B5254T2; B6294T; 2003-2004)

DIAGNOSTIC TROUBLE CODE (DTC) INFORMATION

Condition

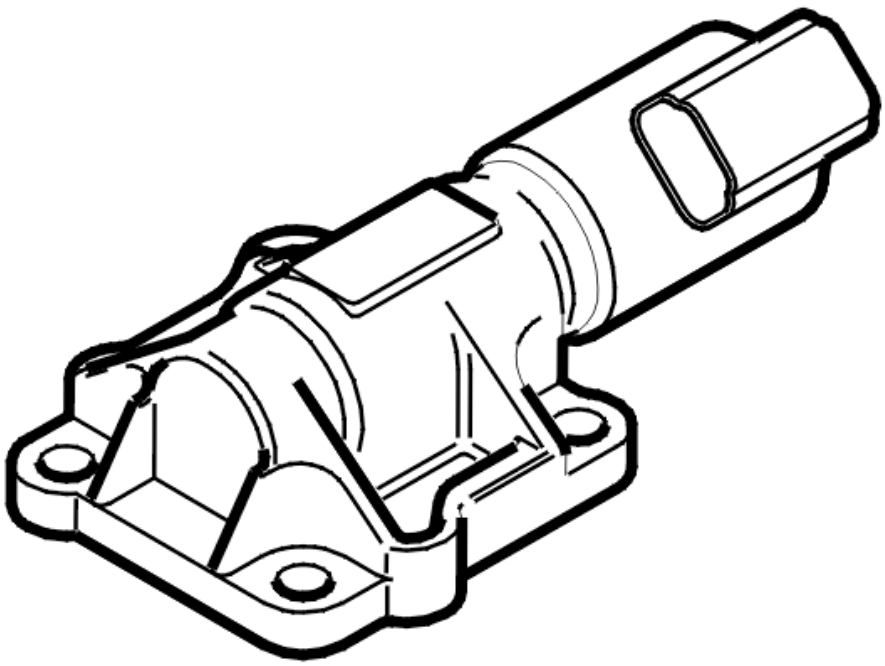

Fig. 220: Identifying Camshaft Position Control
Courtesy of VOLVO CARS CORPORATION

Diagnostic trouble code (DTC) ECM-6400 (camshaft intake) or ECM-6410 (camshaft exhaust) is stored if the engine control module (ECM) registers that the signal from the camshaft reset valve is too low or missing or is too high.

Substitute Value

- Shutting off the variable camshaft.

Possible Source

Signal too high

- Short-circuit to supply voltage in the signal cable

- Defective camshaft reset valve.

Signal too low or signal missing

- Contact resistance in the terminals
- Open-circuit in the signal cable
- Short-circuit to ground in the signal cable
- Open-circuit in the voltage supply cable
- Defective camshaft reset valve.

Fault symptom[s]

- Malfunction indicator lamp (MIL) lit
- The engine does not start.

SIGNAL TOO HIGH

see **SIGNAL TOO HIGH**

ECM-6400: CAMSHAFT RESET VALVE, INTAKE SIGNAL TOO LOW OR SIGNAL MISSING (B5254T2; B6294T; 2003-2004)

DIAGNOSTIC TROUBLE CODE (DTC) INFORMATION

see **DIAGNOSTIC TROUBLE CODE (DTC) INFORMATION**

SIGNAL TOO LOW OR SIGNAL MISSING

see **SIGNAL TOO LOW OR SIGNAL MISSING**

ECM-640A: CAMSHAFT CONTROL, INTAKE. FAULTY SIGNAL (B5254T2; B6294T; 2003-2004)

DIAGNOSTIC TROUBLE CODE (DTC) INFORMATION

Condition

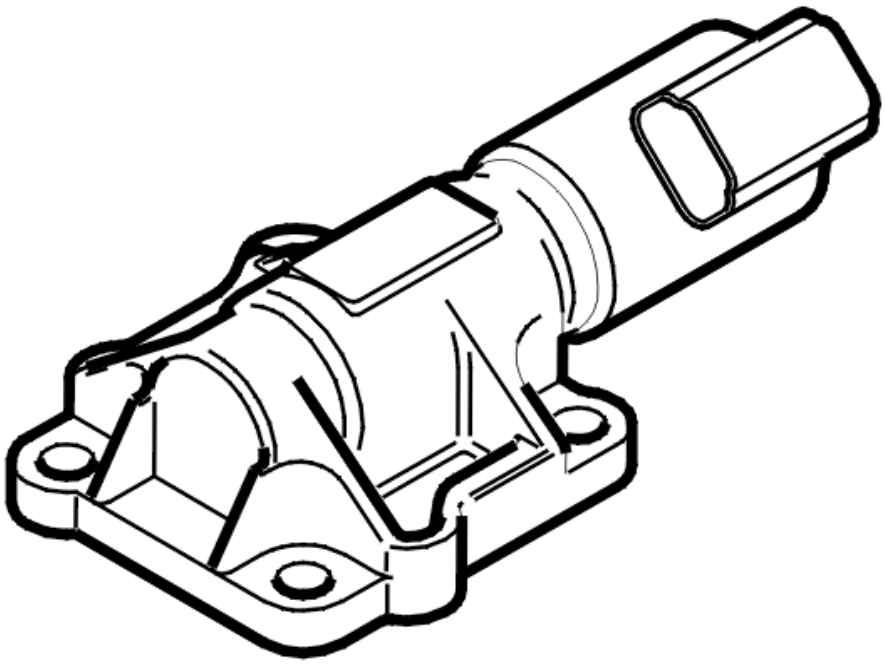

Fig. 221: Identifying Camshaft Position Control
Courtesy of VOLVO CARS CORPORATION

When camshaft control is active, the control module checks the position of the camshaft in relation to the position of the crankshaft.

Diagnostic trouble code (DTC) ECM-640A (camshaft intake) or ECM-641A (camshaft exhaust) is stored if the position of the camshaft deviates from the requested position in relation to the crankshaft over a certain amount of time.

Substitute Value

None.

Possible Source

Faulty control:

- Low oil pressure
- Poor oil quality
- Defective reset valve
- Mechanical fault in the variable valve timing (VVT) unit.

Fault symptom[s]

- Malfunction indicator lamp (MIL) lit.

FAULTY SIGNAL

CHECKING THE STATUS

HINT: The diagnostic trouble code (DTC) may be caused by a defective fuse. If the engine does not start, check the fuse for the power supply to the camshaft reset valve.

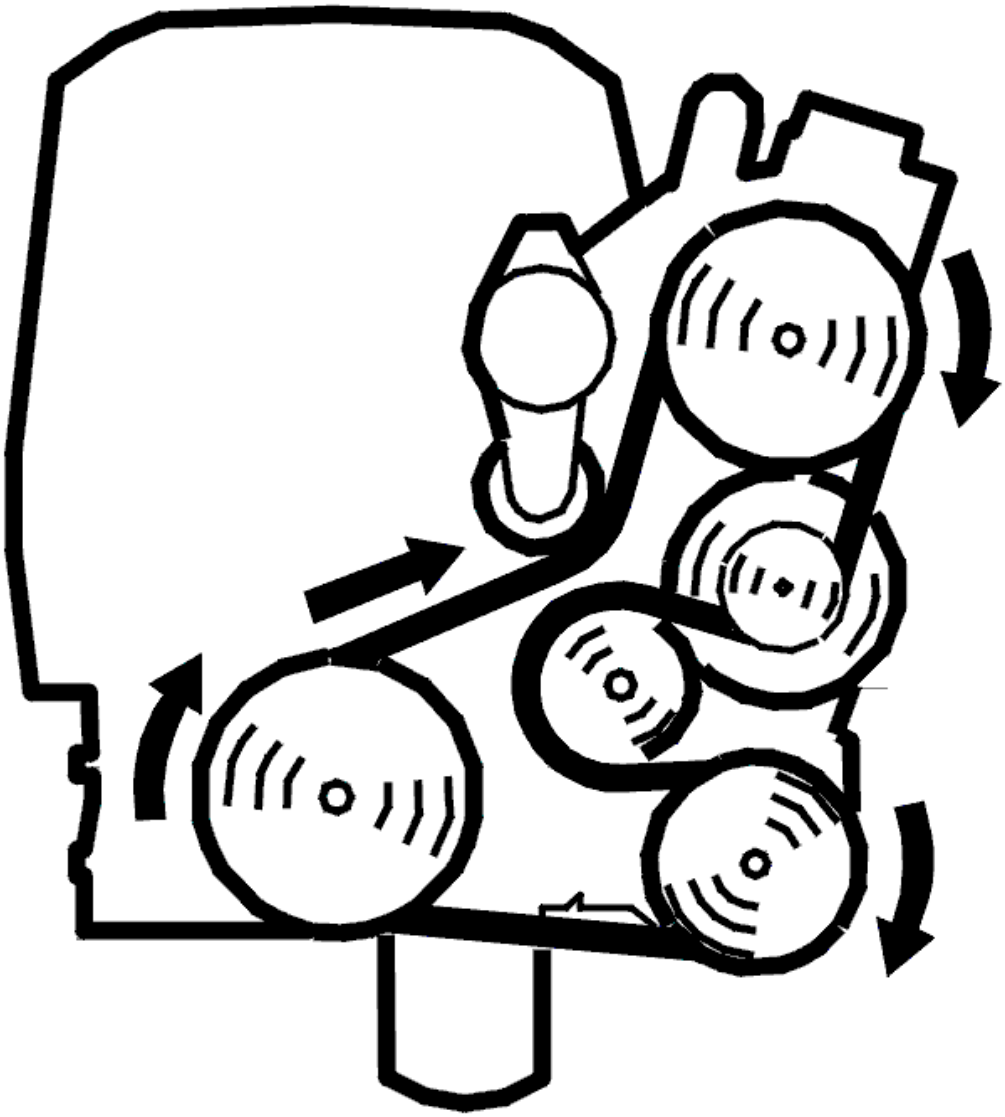

Fig. 222: Belt Routing / Engine Idling - Volvo
Courtesy of VOLVO CARS CORPORATION

- Start the engine
- Read off the value for the camshaft shift angle and the desired value for the camshaft shift angle

- Active the quick test of camshaft control by clicking the start button
- Increase the engine speed (RPM) to approximately 2500 RPM and keep the engine running at this speed.

When the engine speed (RPM) increases, the control module will start the quick test to control the shift angle of the camshaft to the different target values. There is a fault if the control module does not operate the camshaft shift angle to the different target values.

During the quick test, check that the shift angle of the camshaft (actual value) corresponds to the target values to an accuracy of ±10°. If the shift angle of the camshaft (target value) does not change, or if the actual value does not correspond to the target value, the function is faulty.

Deviation between the values can be read off in the lower display.

Carry out the check for approximately 15 seconds at an engine speed (RPM) of 2500 RPM. The test is completed when the shift angle of the camshaft returns to 0°. To restart the test, let the engine return to idle speed, then increase the engine speed to approximately 2500 RPM.

The fault is intermittent if the function is OK.

NOTE: **The test is active until the ignition is switched off. Switch off the ignition before the car is delivered to the customer.**

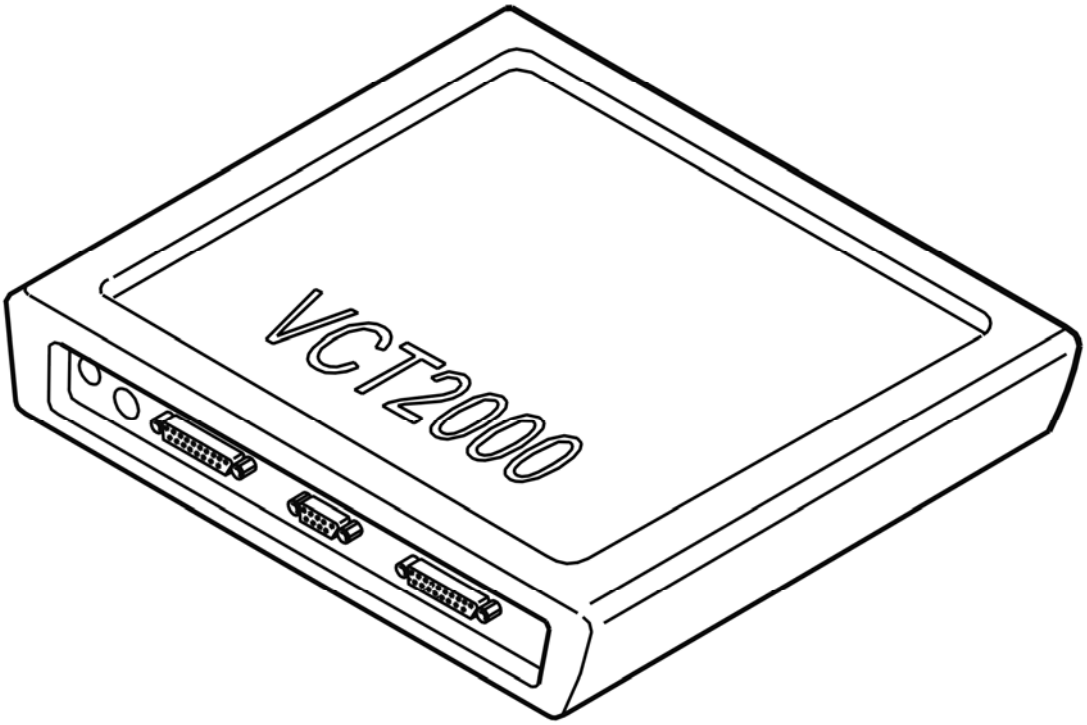

Fig. 223: Identifying VCT2000 Diagnostic Tool Symbol In VIDA

Courtesy of VOLVO CARS CORPORATION

- **Continue**

  Refer to **CHECKING COMPONENTS**

CHECKING COMPONENTS

Check the engine oil level and quality. Check for contaminants in particular.

Check the engine oil pressure.

Remove the camshaft reset valve. Check the oil ducts for the cylinder head for the camshaft reset valve (intake) for blockages and dirt.

HINT: Faults may result from dirt in the camshaft reset valve. Try cleaning the valve.

Remedy as necessary.

Try a new intake camshaft reset valve if the above remedy does not solve the fault.

HINT: The fault may also have been caused by an internal fault in the variable valve timing unit. The variable valve timing unit may be defective if the above fault tracing and corrective action does not remedy the fault.

Other information:

- To check the oil pressure, see **CHECKING OIL PRESSURE**
- To clean the camshaft reset valve, see **VVT SOLENOID, INSPECTION AND CLEANING**
- For B5xx4T, see **VARIABLE VALVE TIMING SOLENOID, REPLACING**
- For B6xx4T, see **REPLACING THE VARIABLE VALVE TIMING SOLENOID** .
- For B5xx4T, see **CAMSHAFT SEAL/VARIABLE VALVE TIMING (VVT) UNIT, REPLACING**
- For B6xx4T, see **CAMSHAFT SEAL/VARIABLE VALVE TIMING (VVT) UNIT, REPLACING** .

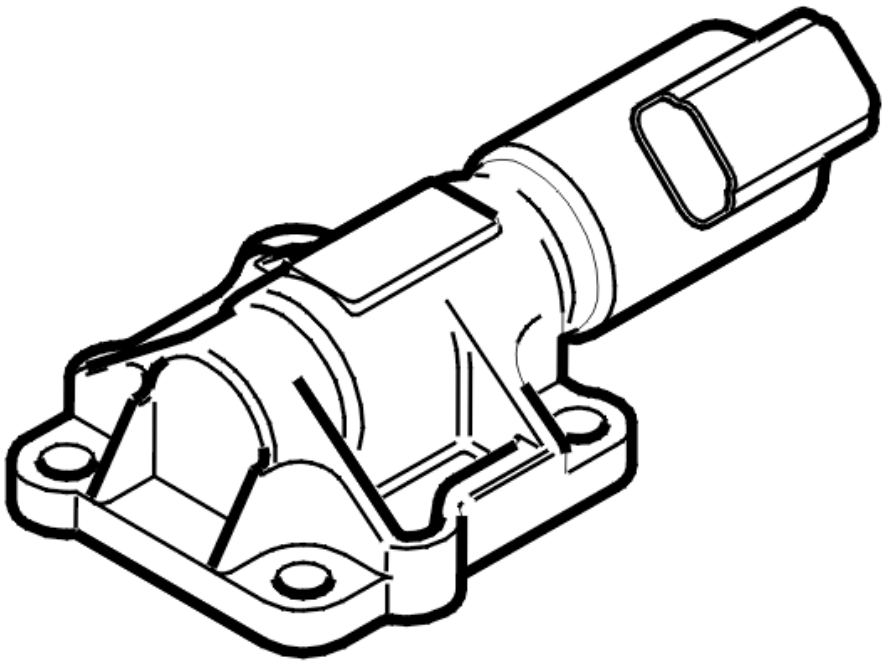

Fig. 224: Identifying Camshaft Position Control
Courtesy of VOLVO CARS CORPORATION

- **Continue**

  Refer to **VERIFICATION**

VERIFICATION

VERIFICATION

HINT: After carrying out the repair, check that the fault has been remedied.

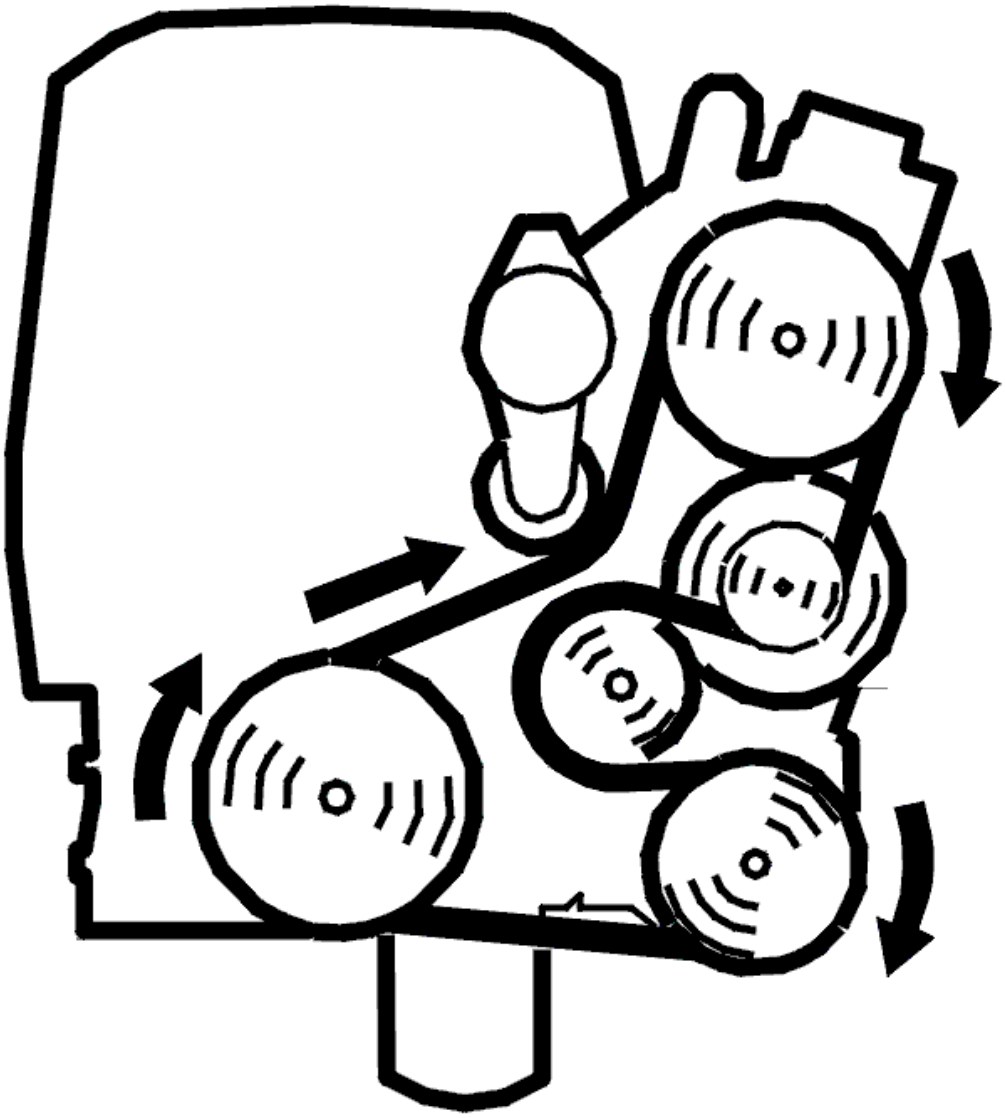

Fig. 225: Belt Routing / Engine Idling - Volvo
Courtesy of VOLVO CARS CORPORATION

- Start the engine
- Read off the value for the camshaft shift angle and the desired value for the camshaft shift angle
- Active the quick test of camshaft control by clicking the start button
- Increase the engine speed (RPM) to approximately 2500 RPM and keep the engine running at this speed.

  When the engine speed (RPM) increases, the control module will start the quick test to control the shift angle of the camshaft to the different target values. There is a fault if the control module does not operate the camshaft shift angle to the different target values.

  During the quick test, check that the shift angle of the camshaft (actual value) corresponds to the target values to an accuracy of ±10°. If the shift angle of the camshaft (target value) does not change, or if the actual value does not correspond to the target value, the function is faulty.

Deviation between the values can be read off in the lower display.

Carry out the check for approximately 15 seconds at an engine speed (RPM) of 2500 RPM. The test is completed when the shift angle of the camshaft returns to 0°. To restart the test, let the engine return to idle speed, then increase the engine speed to approximately 2500 RPM.

NOTE: The test is active until the ignition is switched off. Switch off the ignition before the car is delivered to the customer.

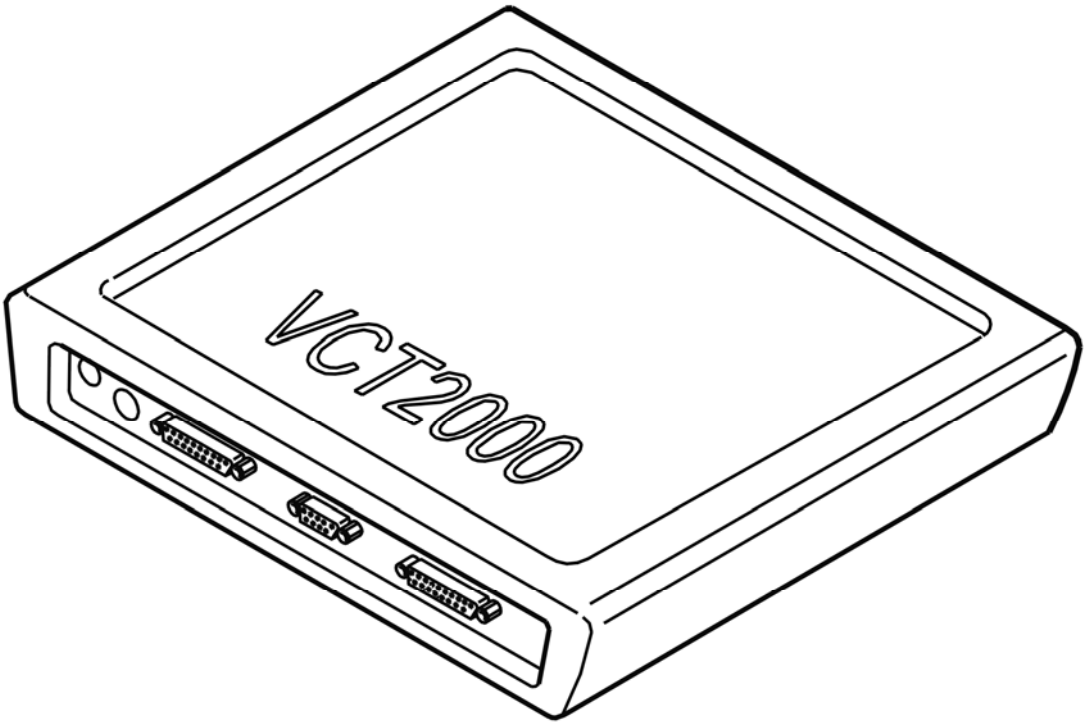

Fig. 226: Identifying VCT2000 Diagnostic Tool Symbol In VIDA
Courtesy of VOLVO CARS CORPORATION

Is the function OK?

- **YES**

  VERIFIED: Troubleshooting has been completed.

- **NO**

  Refer to **INFORMATION**

INFORMATION

FAULT-TRACING INFORMATION

The fault should have been detected and remedied. As this is not the case fault-tracing has failed.

Exit fault-tracing for this diagnostic trouble code (DTC) or make another attempt.

ECM-640C: TURBOCHARGER (TC) CONTROL SYSTEM. SIGNAL TOO HIGH (B5254T2; 2003-2007)

DIAGNOSTIC TROUBLE CODE (DTC) INFORMATION ECM-640C

Condition

The engine control module (ECM) checks the boost pressure.

The diagnostic trouble code (DTC) is stored if the ratio between the measured boost pressure (measured value from the boost pressure sensor before the throttle) and the calculated boost pressure (calculated value after the throttle) is incorrect.

The diagnostic trouble code (DTC) can be diagnosed when the engine is running.

Substitute Value

- Reduced boost pressure.

Possible Source

- Damaged boost pressure sensor
- Loose boost pressure sensor (the engine control module (ECM) measures the atmospheric pressure)
- Air leakage downstream of the turbocharger (TC) (between the turbocharger (TC) and the electronic throttle unit)
- Large air leak at the intake manifold (after the electronic throttle unit).

Fault symptom[s]

- Poor performance.

SIGNAL TOO HIGH / SIGNAL TOO LOW

CHECKING HOSES AND THE TURBOCHARGER (TC) CONTROL VALVE

Check particularly that the boost pressure sensor is correctly installed and has not come loose.

Check the intake system for air leakage. Check in particular the hose between the turbocharger (TC) and the throttle unit.

The boost pressure sensor is damaged if no fault is found in the above fault-tracing.

Other information:

- see **INTAKE AND EXHAUST SYSTEM - CLEANING, INSPECTION AND ADJUSTMENT**
- For B5xx4T, see **TEMPERATURE AND PRESSURE SENSORS, REPLACING**
- For B6xx4T, see **TEMPERATURE AND PRESSURE SENSORS, REPLACING**

- **Continue**

  Refer to **VERIFICATION**

VERIFICATION

VERIFICATION

HINT: After carrying out the repair, check that the fault has been remedied.

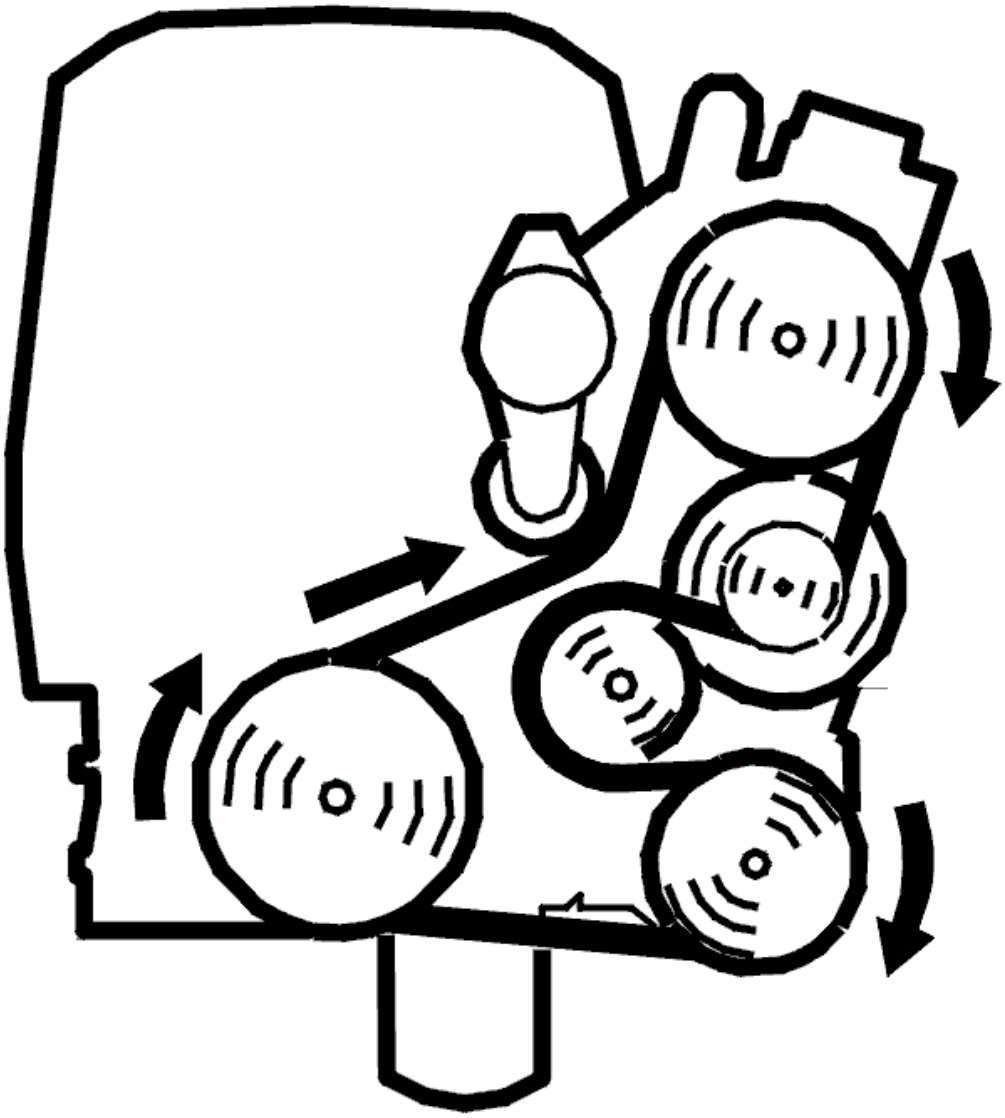

Fig. 227: Belt Routing / Engine Idling - Volvo
Courtesy of VOLVO CARS CORPORATION

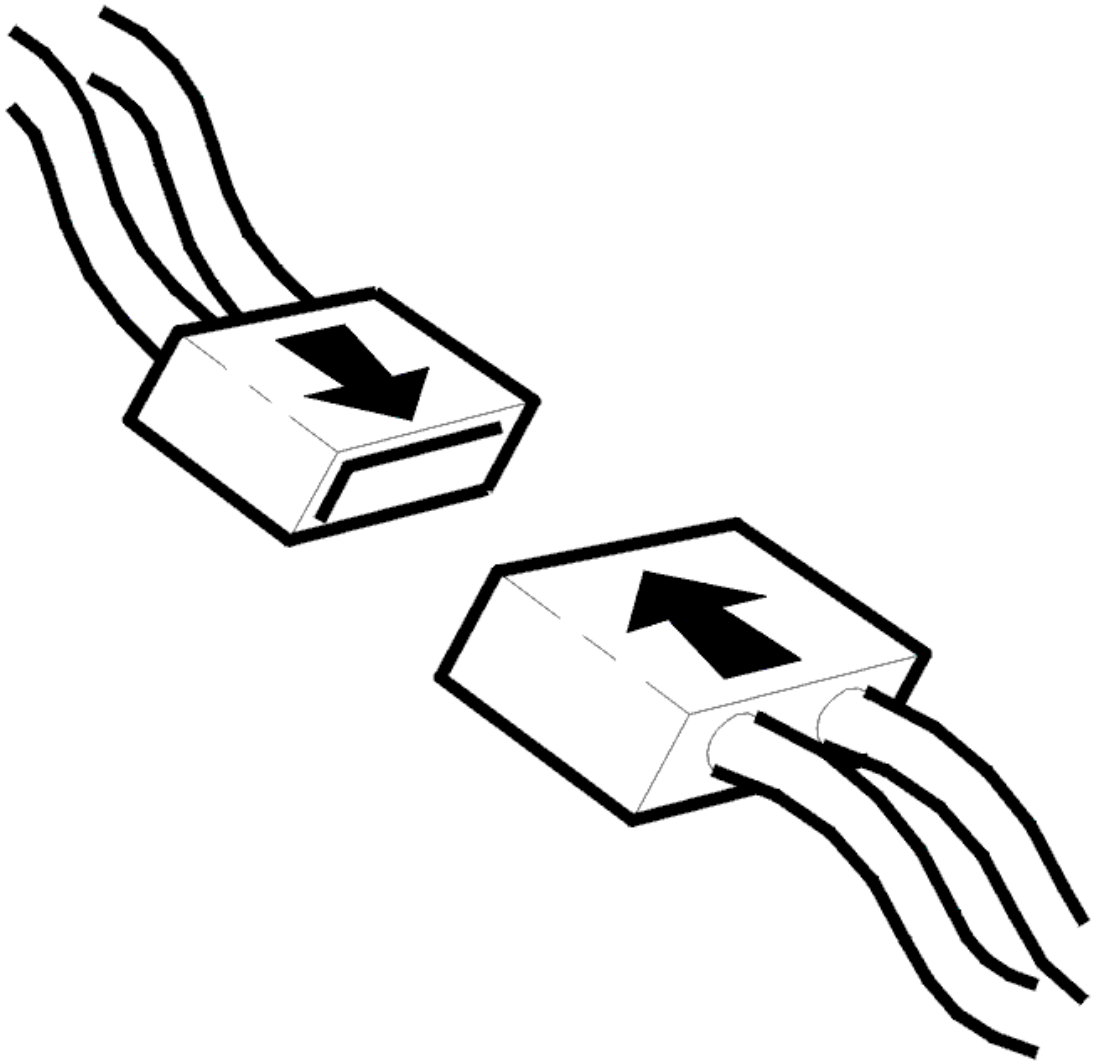

Fig. 228: Connecting Connector
Courtesy of VOLVO CARS CORPORATION

- Ignition off
- Reconnect the connectors, reinstall components etc.
- Test drive the vehicle on the road. Ensure that high boost pressure is reached (high load) so that the engine control module (ECM) can run the diagnostic
- Connect VCT2000 (or appropriate scan tool) to the data link connector (DLC) without switching off the engine.

NOTE: **If the engine is switched off, the stored fault status will be erased and the test drive will have to be repeated.**

Read off the diagnostic status and fault status for the diagnostic trouble code (DTC) by selecting the relevant diagnostic trouble code (DTC) from the list.

Check the fault status for the diagnostic trouble code (DTC) when the diagnostic is "Complete". If the function is correct, the fault status must be "No fault found" when the diagnostic is complete.

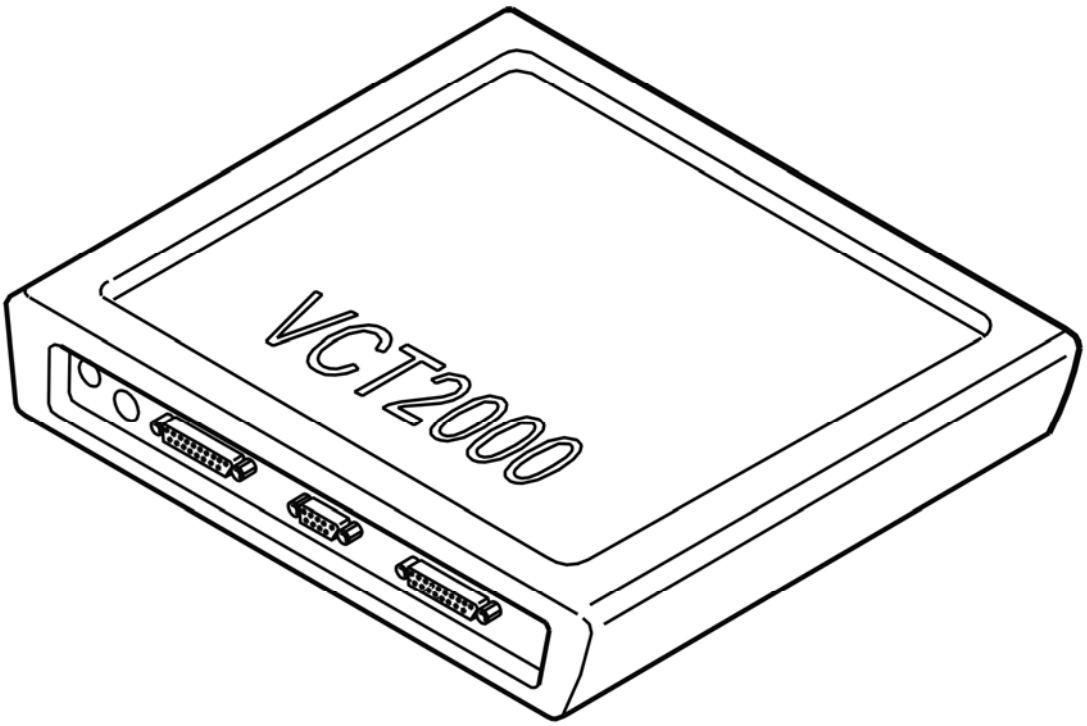

Fig. 229: Identifying VCT2000 Diagnostic Tool Symbol In VIDA
Courtesy of VOLVO CARS CORPORATION

Is the function OK?

- **YES**

  VERIFIED: Troubleshooting has been completed.

- **NO**

  Refer to **INFORMATION**

INFORMATION

FAULT-TRACING INFORMATION

The fault should have been detected and remedied. As this is not the case fault-tracing has failed.

Exit fault-tracing for this diagnostic trouble code (DTC) or make another attempt.

ECM-640C: TURBOCHARGER (TC) CONTROL SYSTEM. SIGNAL TOO HIGH (B6294T; 2005-2006)

DIAGNOSTIC TROUBLE CODE (DTC) INFORMATION ECM-640C

see **DIAGNOSTIC TROUBLE CODE (DTC) INFORMATION ECM-640C**

SIGNAL TOO HIGH / SIGNAL TOO LOW

see **SIGNAL TOO HIGH / SIGNAL TOO LOW**

ECM-640D: TURBOCHARGER (TC) CONTROL SYSTEM. SIGNAL TOO LOW (B5254T2; 2003-2007)

DIAGNOSTIC TROUBLE CODE (DTC) INFORMATION ECM-640D

Condition

The engine control module (ECM) checks the boost pressure. The diagnostic trouble code (DTC) is stored if the ratio between the measured boost pressure (measured value from the boost pressure sensor before the throttle) and the calculated boost pressure (calculated value after the throttle) is incorrect.

The diagnostic trouble code (DTC) can be diagnosed when the turbocharger (TC) control system is active.

Substitute Value

- Reduced boost pressure.

Possible Source

- Damaged boost pressure sensor
- Loose boost pressure sensor (the engine control module (ECM) measures the atmospheric pressure)
- Air leakage downstream of the turbocharger (TC) (between the turbocharger (TC) and the electronic throttle unit)
- Large air leak at the intake manifold (after the electronic throttle unit).

Fault symptom[s]

- Poor performance.

SIGNAL TOO HIGH / SIGNAL TOO LOW

see **SIGNAL TOO HIGH / SIGNAL TOO LOW**

ECM-640D: TURBOCHARGER (TC) CONTROL SYSTEM. SIGNAL TOO LOW

(B6294T; 2005-2006)

DIAGNOSTIC TROUBLE CODE (DTC) INFORMATION ECM-640D

see **DIAGNOSTIC TROUBLE CODE (DTC) INFORMATION ECM-640D**

SIGNAL TOO HIGH / SIGNAL TOO LOW

see **SIGNAL TOO HIGH / SIGNAL TOO LOW**

ECM-6410: CAMSHAFT RESET VALVE, EXHAUST. SIGNAL TOO HIGH (B5254T2; B6294T; 2003-2004)

DIAGNOSTIC TROUBLE CODE (DTC) INFORMATION

see **DIAGNOSTIC TROUBLE CODE (DTC) INFORMATION**

SIGNAL TOO HIGH

see **SIGNAL TOO HIGH**

ECM-6410: CAMSHAFT RESET VALVE, EXHAUST. SIGNAL TOO LOW OR SIGNAL MISSING (B5254T2; B6294T; 2003-2004)

DIAGNOSTIC TROUBLE CODE (DTC) INFORMATION

see **DIAGNOSTIC TROUBLE CODE (DTC) INFORMATION**

SIGNAL TOO LOW OR SIGNAL MISSING

see **SIGNAL TOO LOW OR SIGNAL MISSING**

ECM-641A: CAMSHAFT CONTROL, EXHAUST. FAULTY SIGNAL (B5254T2; B6294T; 2003-2004)

DIAGNOSTIC TROUBLE CODE (DTC) INFORMATION

see **DIAGNOSTIC TROUBLE CODE (DTC) INFORMATION**

FAULTY SIGNAL

CHECKING THE STATUS

HINT: The diagnostic trouble code (DTC) may be caused by a defective fuse. If the engine does not start, check the fuse for the power supply to the camshaft reset valve.

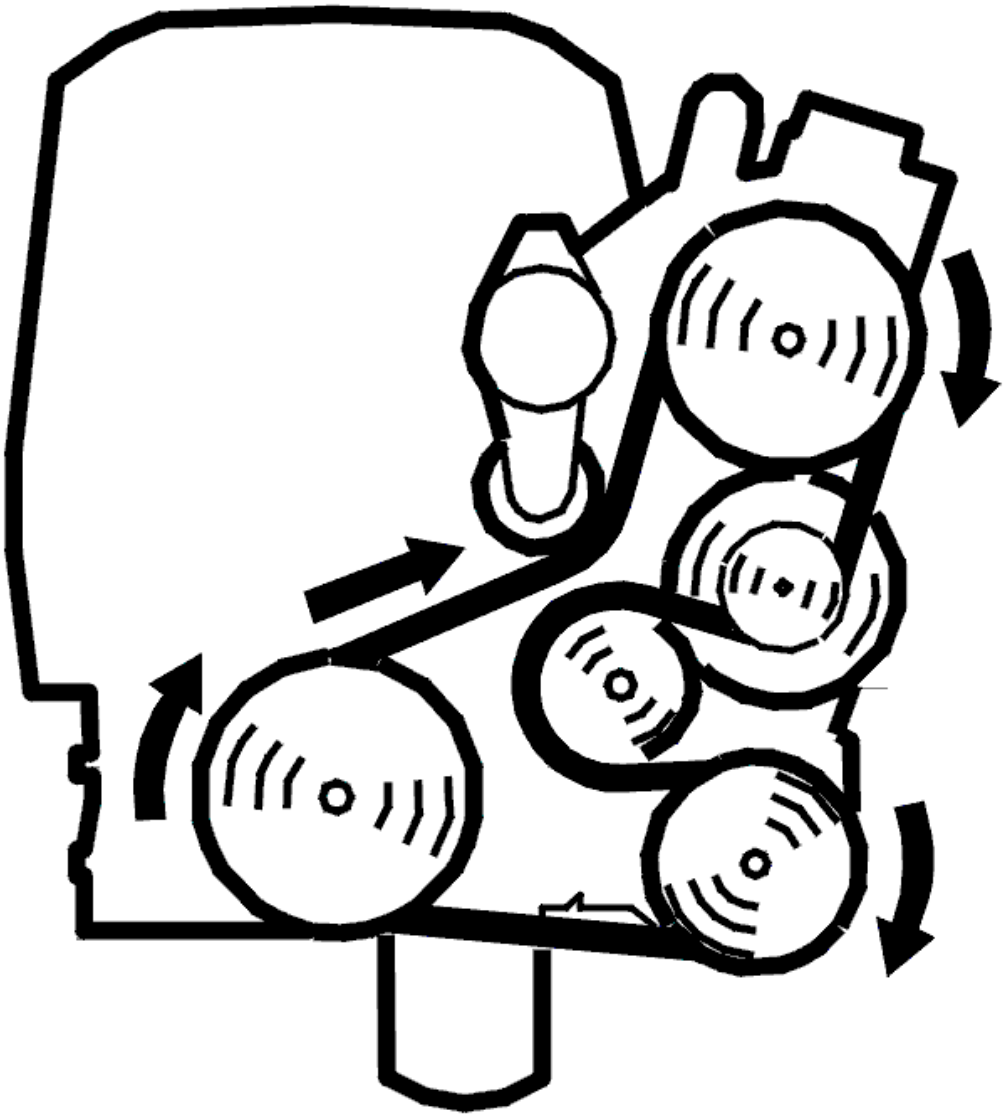

Fig. 230: Belt Routing / Engine Idling - Volvo
Courtesy of VOLVO CARS CORPORATION

- Start the engine
- Read off the value for the camshaft shift angle and the desired value for the camshaft shift angle
- Active the quick test of camshaft control by clicking the start button
- Increase the engine speed (RPM) to approximately 2500 RPM and keep the engine running at this speed.

  When the engine speed (RPM) increases, the control module will start the quick test to control the shift angle of the camshaft to the different target values. There is a fault if the control module does not operate the camshaft shift angle to the different target values.

  During the quick test, check that the shift angle of the camshaft (actual value) corresponds to the target values to an accuracy of ±10°. If the shift angle of the camshaft (target value) does not change, or if the actual value does not correspond to the target value, the function is faulty.

Deviation between the values can be read off in the lower display.

Carry out the check for approximately 15 seconds at an engine speed (RPM) of 2500 RPM. The test is completed when the shift angle of the camshaft returns to 0°. To restart the test, let the engine return to idle speed, then increase the engine speed to approximately 2500 RPM.

The fault is intermittent if the function is OK.

NOTE: The test is active until the ignition is switched off. Switch off the ignition before the car is delivered to the customer.

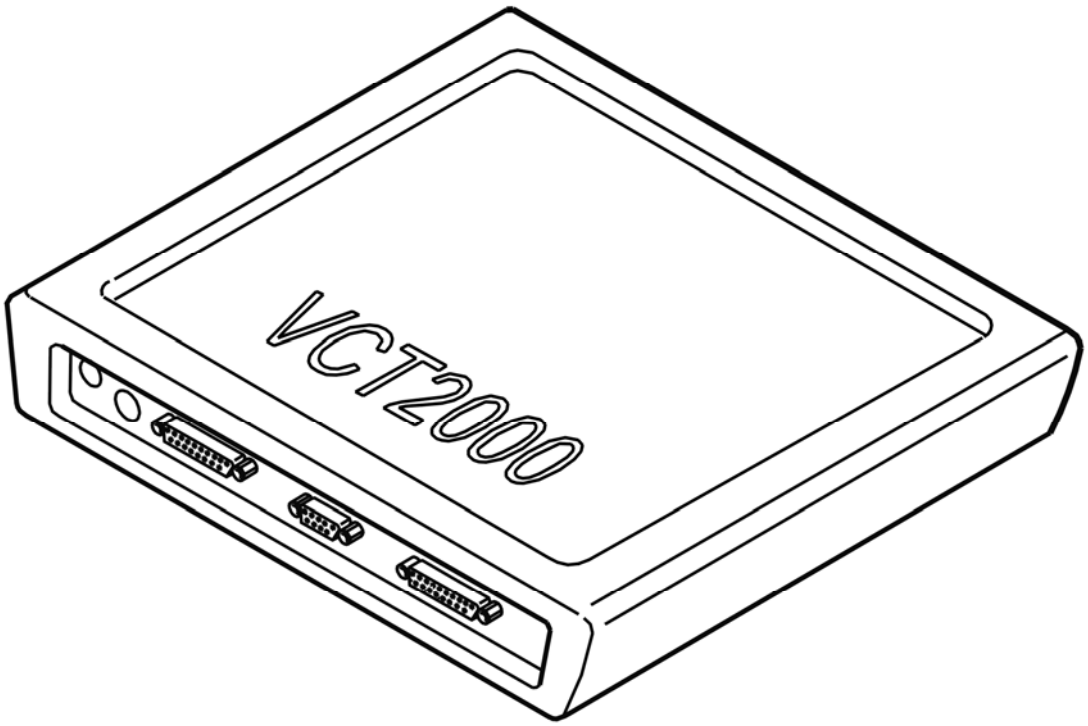

Fig. 231: Identifying VCT2000 Diagnostic Tool Symbol In VIDA
Courtesy of VOLVO CARS CORPORATION

- **Continue**

Refer to **CHECKING COMPONENTS**

CHECKING COMPONENTS

Check the engine oil level and quality. Check for contaminants in particular.

Check the engine oil pressure.

Remove the camshaft reset valve. Check the oil ducts for the cylinder head for the camshaft reset valve (exhaust) for blockages and dirt.

HINT: Faults may result from dirt in the camshaft reset valve. Try cleaning the valve.

Remedy as necessary.

Try a new intake camshaft reset valve if the above remedy does not solve the fault.

HINT: The fault may also have been caused by an internal fault in the variable valve timing unit. The variable valve timing unit may be defective if the above fault tracing and corrective action does not remedy the fault.

Other information:

- To check the oil pressure, see **CHECKING OIL PRESSURE**
- To clean the camshaft reset valve, see **VVT SOLENOID, INSPECTION AND CLEANING**
- For B5xx4T, see **VARIABLE VALVE TIMING SOLENOID, REPLACING**
- For B6xx4T, see **REPLACING THE VARIABLE VALVE TIMING SOLENOID** .
- For B5xx4T, see **CAMSHAFT SEAL/VARIABLE VALVE TIMING (VVT) UNIT, REPLACING**
- For B6xx4T, see **CAMSHAFT SEAL/VARIABLE VALVE TIMING (VVT) UNIT, REPLACING** .

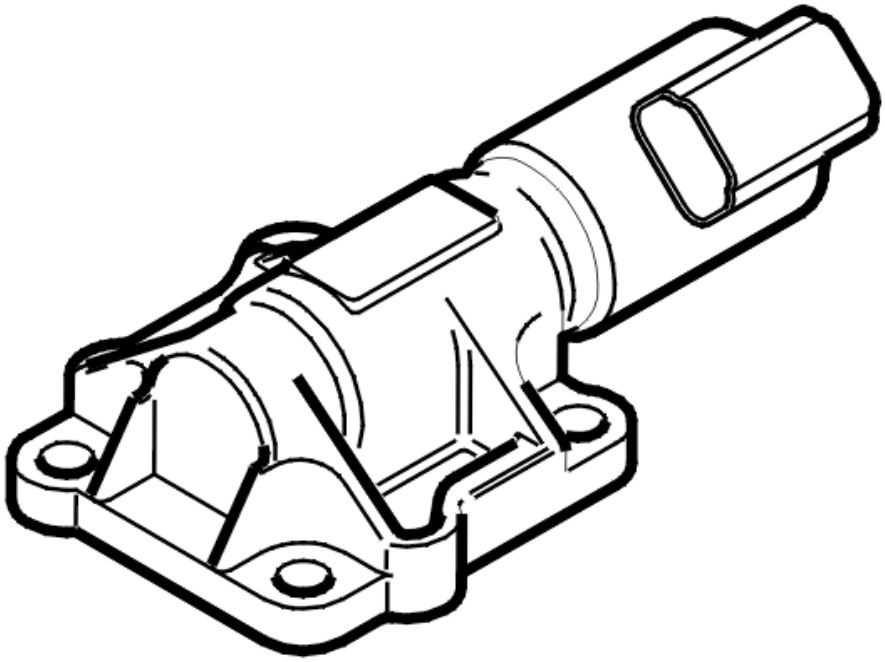

Fig. 232: Identifying Camshaft Position Control
Courtesy of VOLVO CARS CORPORATION

- **Continue**

  Refer to **VERIFICATION**

VERIFICATION

VERIFICATION

HINT: After carrying out the repair, check that the fault has been remedied.

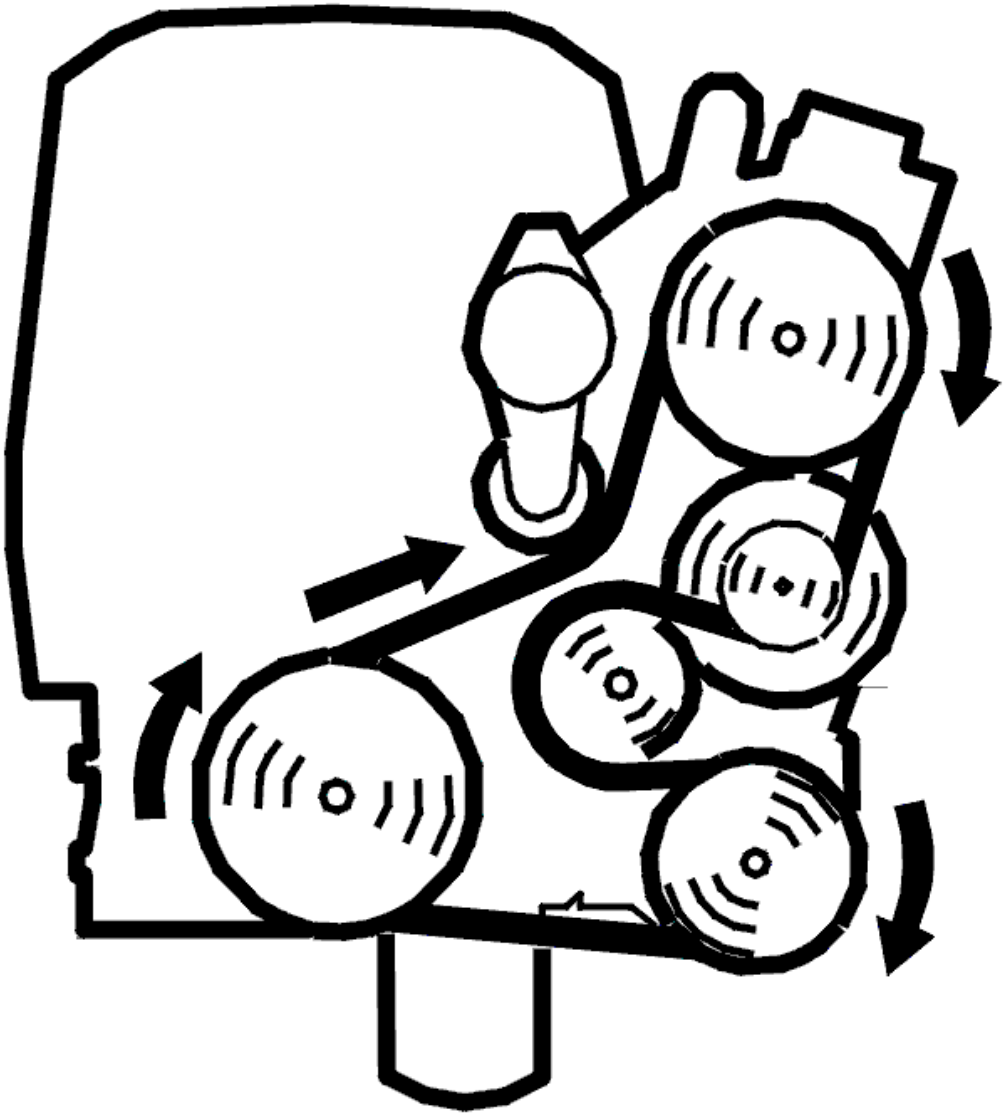

Fig. 233: Belt Routing / Engine Idling - Volvo
Courtesy of VOLVO CARS CORPORATION

- Start the engine
- Read off the value for the camshaft shift angle and the desired value for the camshaft shift angle
- Active the quick test of camshaft control by clicking the start button
- Increase the engine speed (RPM) to approximately 2500 RPM and keep the engine running at this speed.

When the engine speed (RPM) increases, the control module will start the quick test to control the shift angle of the camshaft to the different target values. There is a fault if the control module does not operate the camshaft shift angle to the different target values.

During the quick test, check that the shift angle of the camshaft (actual value) corresponds to the target values to an accuracy of ±10°. If the shift angle of the camshaft (target value) does not change, or if the actual value does not correspond to the target value, the function is faulty.

Deviation between the values can be read off in the lower display.

Carry out the check for approximately 15 seconds at an engine speed (RPM) of 2500 RPM. The test is completed when the shift angle of the camshaft returns to 0°. To restart the test, let the engine return to idle speed, then increase the engine speed to approximately 2500 RPM.

NOTE: **The test is active until the ignition is switched off. Switch off the ignition before the car is delivered to the customer.**

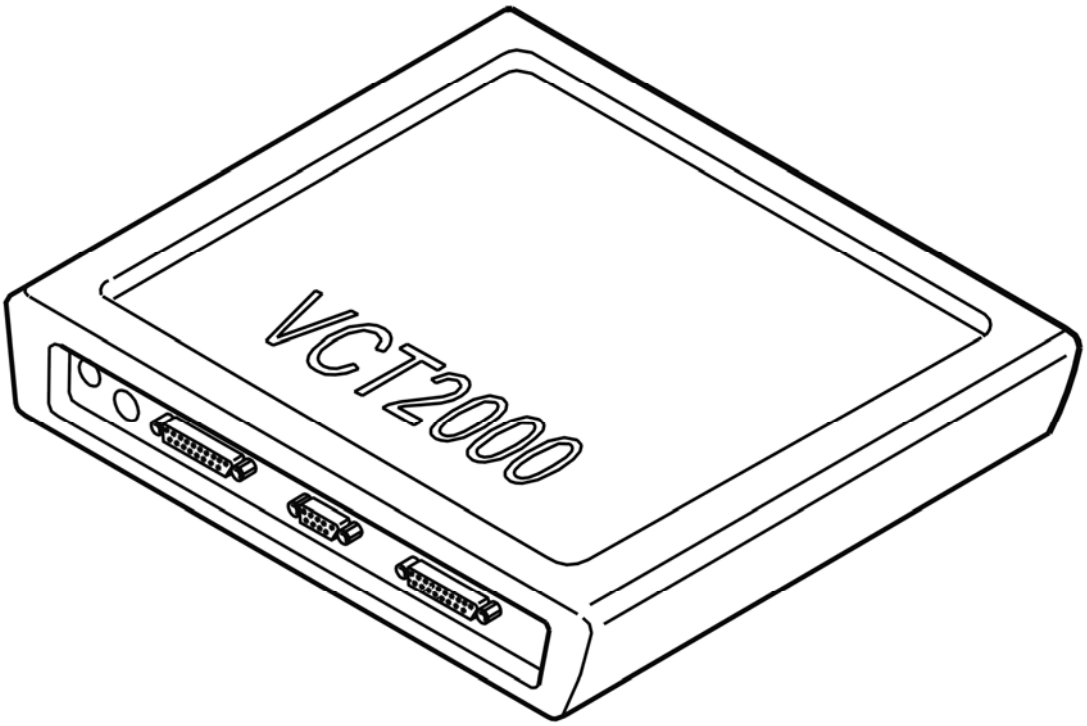

Fig. 234: Identifying VCT2000 Diagnostic Tool Symbol In VIDA
Courtesy of VOLVO CARS CORPORATION

Is the function OK?

- **YES**

  VERIFIED: Troubleshooting has been completed.

- **NO**

  Refer to **INFORMATION**

INFORMATION

FAULT-TRACING INFORMATION

The fault should have been detected and remedied. As this is not the case fault-tracing has failed.

Exit fault-tracing for this diagnostic trouble code (DTC) or make another attempt.

ECM-643A: CAMSHAFT POSITION, INTAKE. SIGNAL TOO HIGH (B5254T2; B6294T; 2003-2004)

DIAGNOSTIC TROUBLE CODE (DTC) INFORMATION

Condition

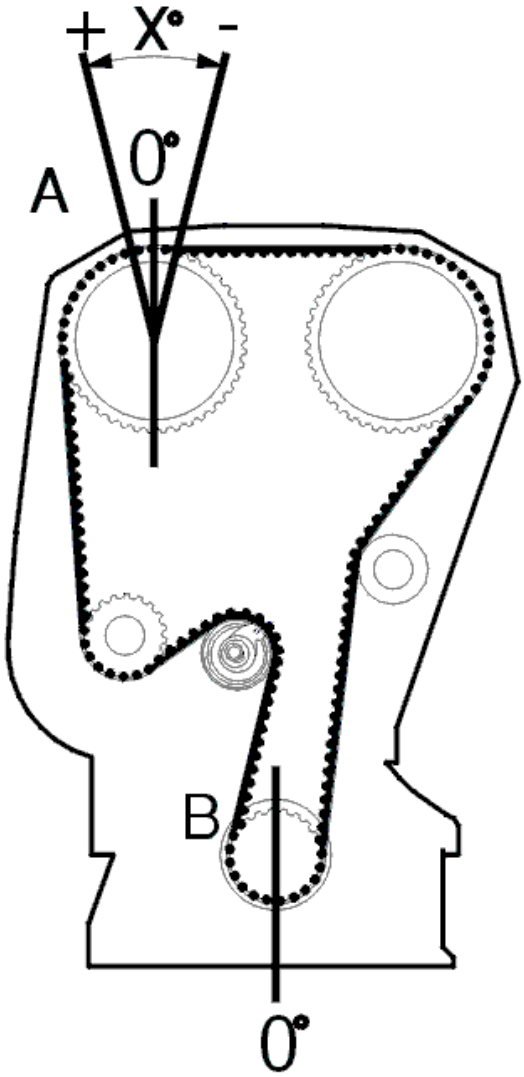

Fig. 235: Identifying Camshaft Position Angle
Courtesy of VOLVO CARS CORPORATION

The control module checks that the camshaft is in the correct position in relation to the position of the crankshaft. If the position of the camshaft is incorrect, the control module will adjust the adaptation for the camshaft. Diagnostic trouble code (DTC) ECM-643A or ECM-644A is stored if the adaptation becomes too great.

Substitute Value

None.

Possible Source

Signal too high

- Poor oil quality
- Incorrectly adjusted camshafts
- The timing gear belt has jumped off the cogs
- Defective reset valve
- Mechanical fault in the variable valve timing (VVT) unit.

Signal too low

- Poor oil quality
- Incorrectly adjusted camshafts
- The timing gear belt has jumped off the cogs.

Fault symptom[s]

- Malfunction indicator lamp (MIL) lit.

SIGNAL TOO HIGH

CHECKING THE STATUS

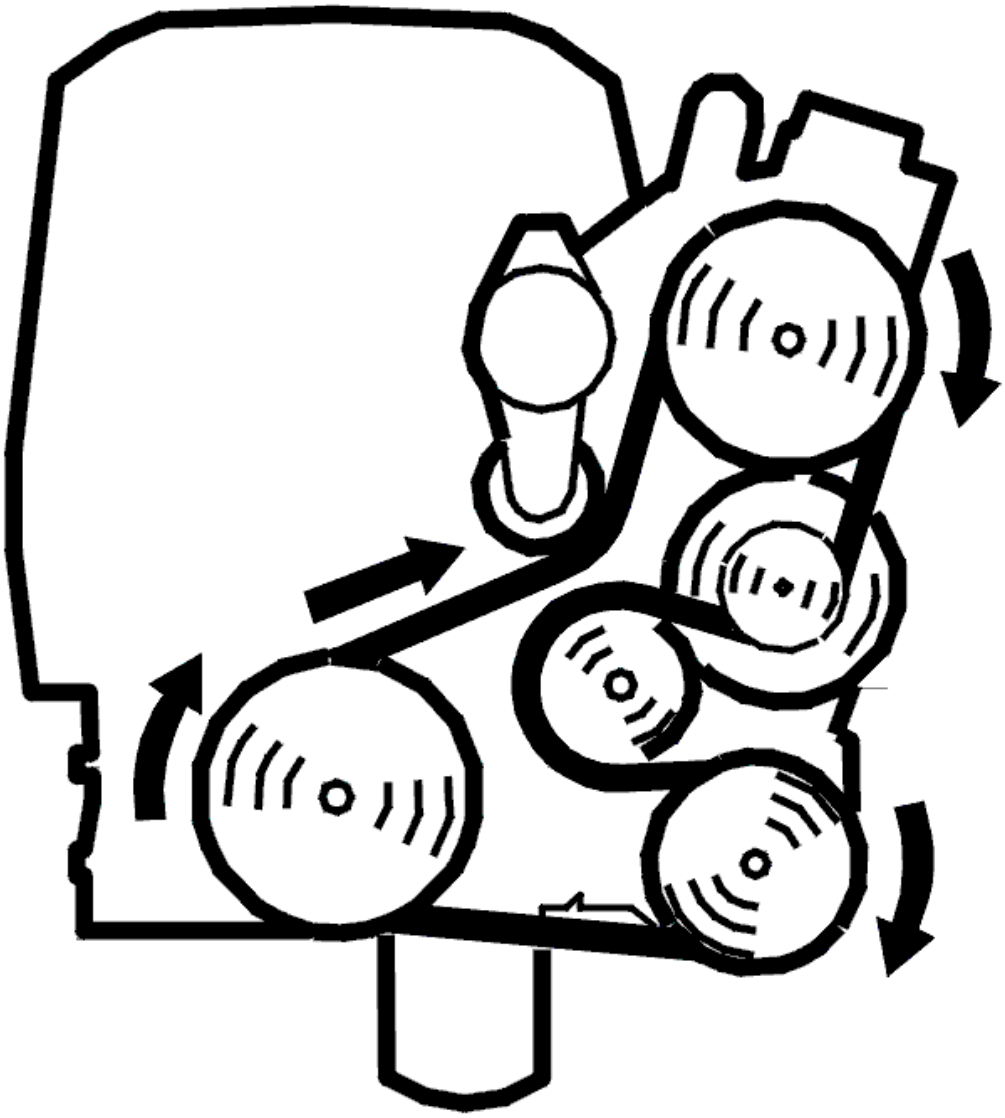

Fig. 236: Belt Routing / Engine Idling - Volvo
Courtesy of VOLVO CARS CORPORATION

- Start the engine and run it to normal operating temperature
- Read off and note the adaptation value for the camshaft at idle speed. The value must be between -8° and +8°.

  If the adaptation value is correct (between -8° and +8°) the fault is intermittent. If the adaptation value is incorrect (lower than -8° or higher than +8°), the fault is permanent.

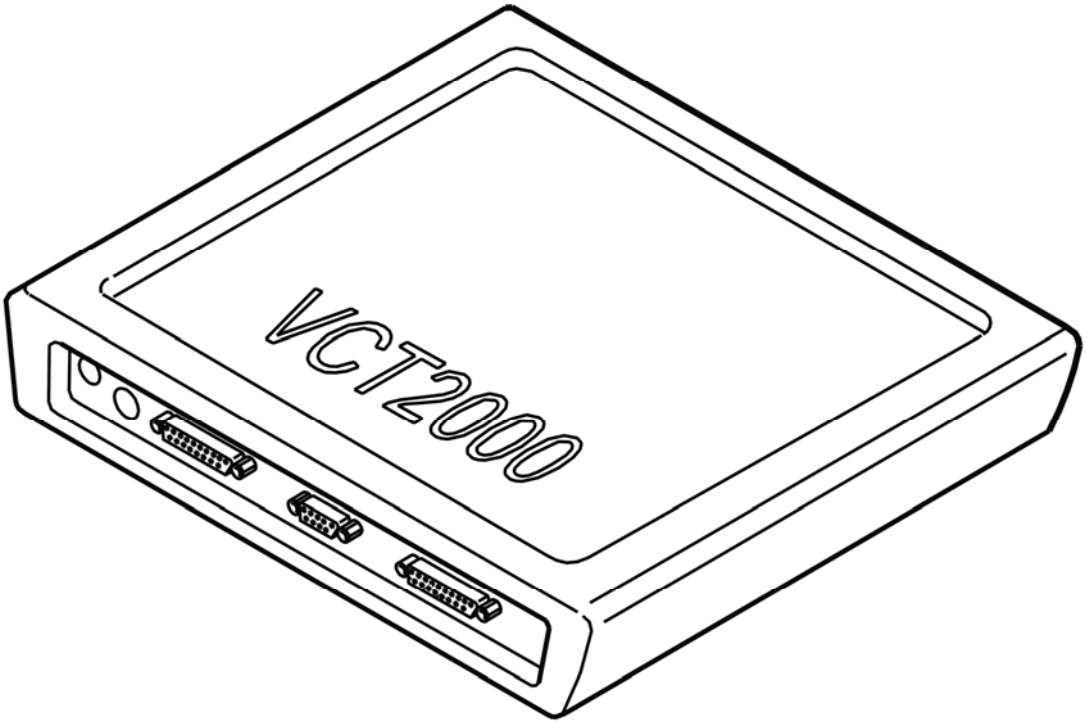

Fig. 237: Identifying VCT2000 Diagnostic Tool Symbol In VIDA
Courtesy of VOLVO CARS CORPORATION

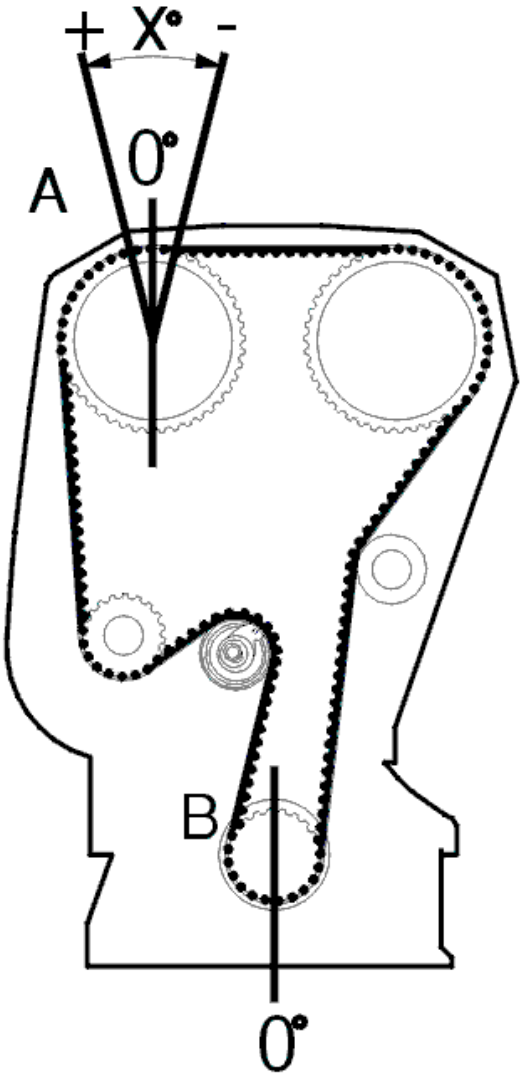

Fig. 238: Identifying Camshaft Position Angle
Courtesy of VOLVO CARS CORPORATION

Is the adaptation value correct?

- **YES**

  Refer to **INTERMITTENT FAULT**

- **NO**

  Refer to **CHECKING COMPONENTS**

CHECKING COMPONENTS

For variable valve timing control to operate correctly the engine oil must be at the correct level, of the correct

quality and not contaminated.

Check the engine oil level and quality. Check for contaminants in particular.

If the adaptation value is too high (higher than +8°) when the engine is at operating temperature, the cause of the fault is probably one of the following:

- the timing belt is incorrectly seated
- incorrect base setting of the timing belt
- faulty camshaft reset valve (the slide in the valve has stuck).

HINT: First try adjusting the basic set up of the camshaft. Then read off the adaptation value for the camshaft at idle speed with the engine at operating temperature. The value must be between -8° and +8°. If the adaptation value is incorrect when the basic setting of the camshaft is correct, try cleaning the camshaft reset valve.

NOTE: The camshafts must be adjusted using the adjustment tool for the camshafts and crankshaft in the prescribed manner.

Try a new camshaft reset valve if the above fault-tracing does not solve the fault.

Remedy as necessary.

HINT: The fault can also be caused by a defective variable valve timing unit. The variable valve timing unit may be defective if the above fault tracing and corrective action does not remedy the fault.

Other information:

- To clean the camshaft reset valve, see **VVT SOLENOID, INSPECTION AND CLEANING**
- For B5xx4T, see **CAMSHAFT SEAL/VARIABLE VALVE TIMING (VVT) UNIT, REPLACING**
- For B6xx4T, see **CAMSHAFT SEAL/VARIABLE VALVE TIMING (VVT) UNIT, REPLACING** .
- For B5xx4T, see **VARIABLE VALVE TIMING SOLENOID, REPLACING**
- For B6xx4T, see **REPLACING THE VARIABLE VALVE TIMING SOLENOID** .

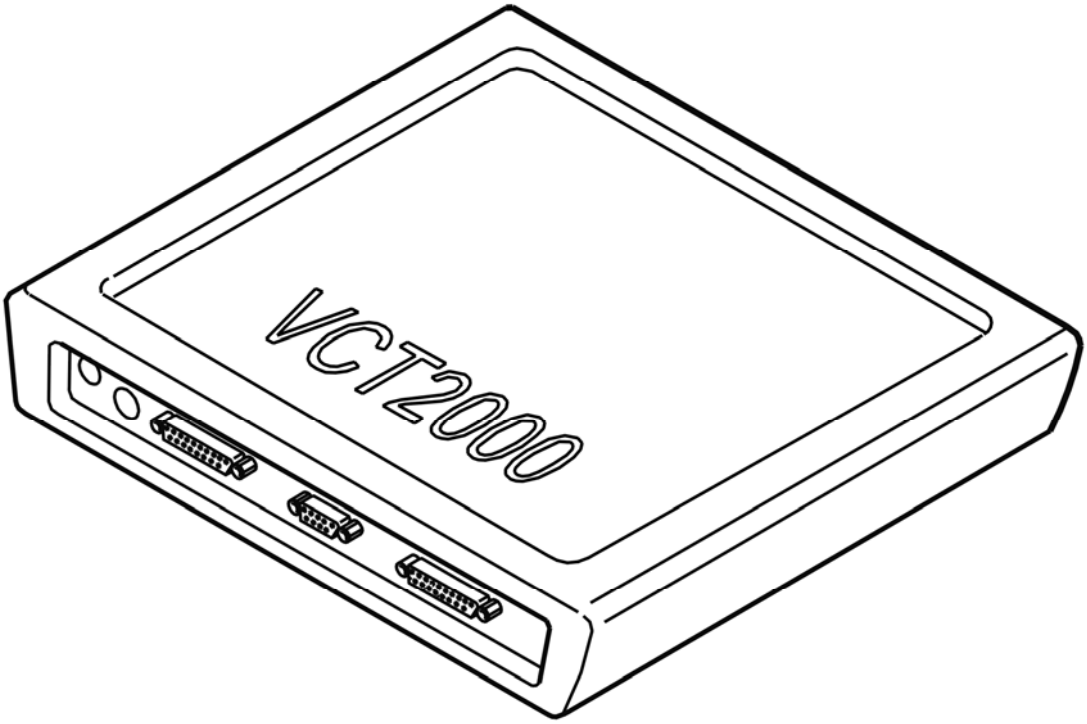

Fig. 239: Identifying VCT2000 Diagnostic Tool Symbol In VIDA
Courtesy of VOLVO CARS CORPORATION

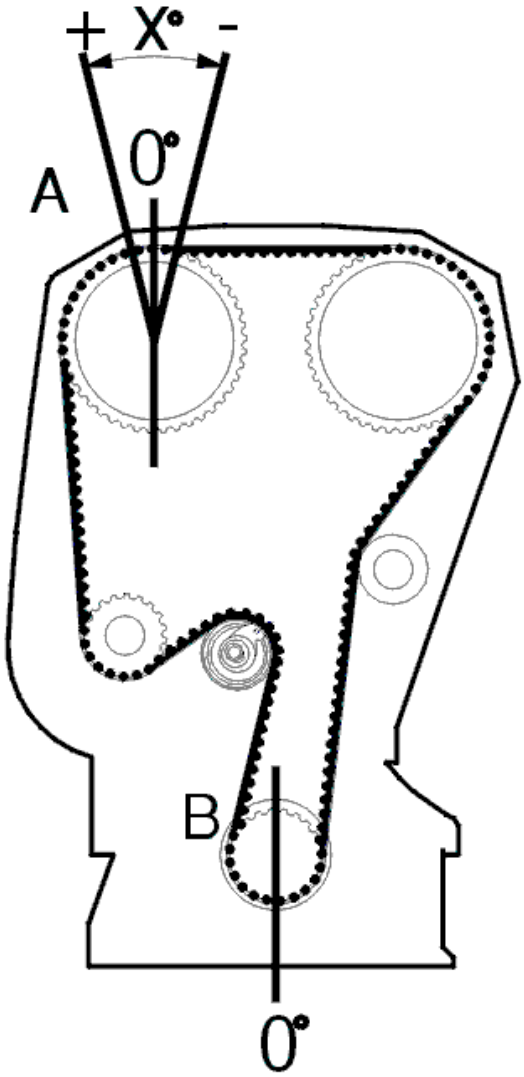

Fig. 240: Identifying Camshaft Position Angle
Courtesy of VOLVO CARS CORPORATION

- **Continue**

  Refer to **VERIFICATION**

INTERMITTENT FAULT

If the diagnostic trouble code (DTC) for this fault is stored but the adaptation value is correct, the fault is intermittent. The cause of the intermittent fault is probably a defective camshaft reset valve.

HINT: Faults may result from dirt in the camshaft reset valve. Try cleaning the valve.

Other information:

- To clean the camshaft reset valve, see **VVT SOLENOID, INSPECTION AND CLEANING**
- For B5xx4T, see **VARIABLE VALVE TIMING SOLENOID, REPLACING**
- For B6xx4T, see **REPLACING THE VARIABLE VALVE TIMING SOLENOID** .
- For B5xx4T, see **CAMSHAFT SEAL/VARIABLE VALVE TIMING (VVT) UNIT, REPLACING**
- For B6xx4T, see **CAMSHAFT SEAL/VARIABLE VALVE TIMING (VVT) UNIT, REPLACING** .

- **Continue**

  Refer to **VERIFICATION**

VERIFICATION

VERIFICATION

HINT: After carrying out the repair, check that the fault has been remedied.

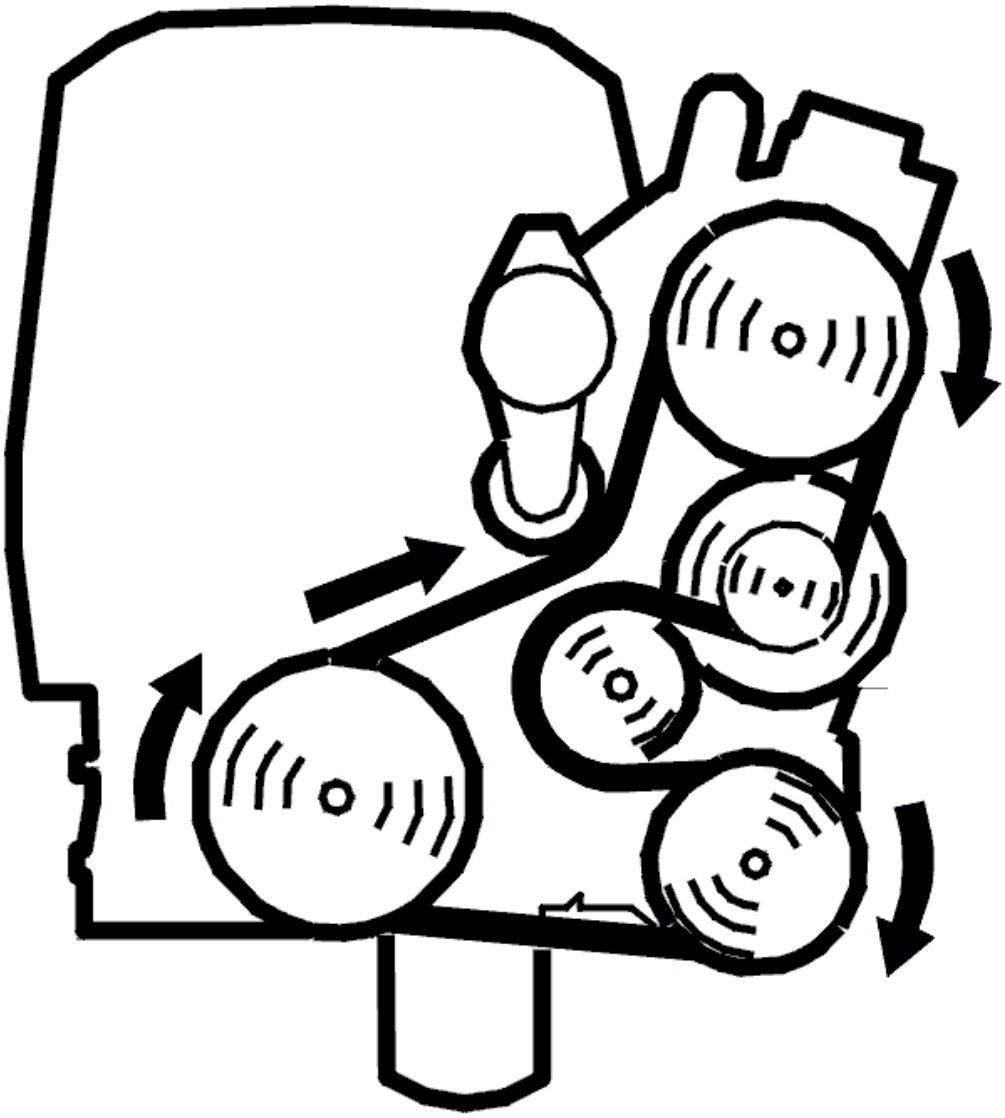

Fig. 241: Belt Routing / Engine Idling - Volvo
Courtesy of VOLVO CARS CORPORATION

- Start the engine and run it to normal operating temperature
- Read off the camshaft adaptation at idle speed.

  The adaptation value must be between -8° and +8.

  The function is OK if the adaptation value is correct.

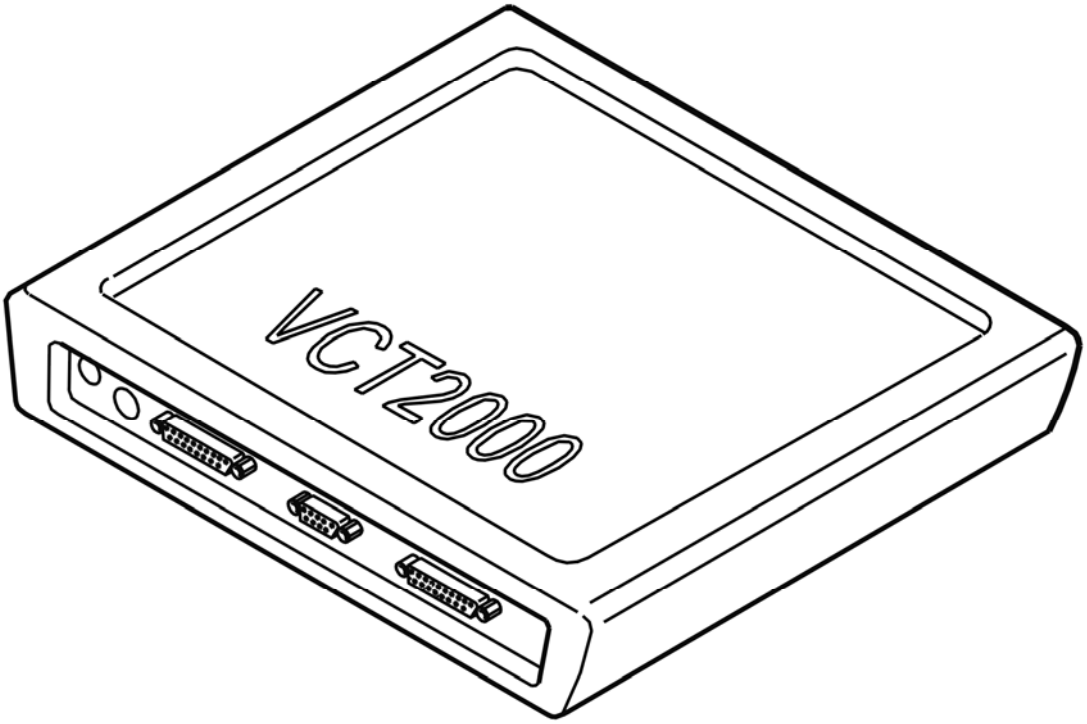

Fig. 242: Identifying VCT2000 Diagnostic Tool Symbol In VIDA
Courtesy of VOLVO CARS CORPORATION

Is the function OK?

- **YES**

  VERIFIED: Troubleshooting has been completed.

- **NO**

  Refer to **INFORMATION**

INFORMATION

FAULT-TRACING INFORMATION

The fault should have been detected and remedied. As this is not the case fault-tracing has failed.

Exit fault-tracing for this diagnostic trouble code (DTC) or make another attempt.

ECM-643A: CAMSHAFT POSITION, INTAKE. SIGNAL TOO LOW (B5254T2; B6294T; 2003-2004)

DIAGNOSTIC TROUBLE CODE (DTC) INFORMATION

see **DIAGNOSTIC TROUBLE CODE (DTC) INFORMATION**

SIGNAL TOO LOW

CHECKING THE STATUS

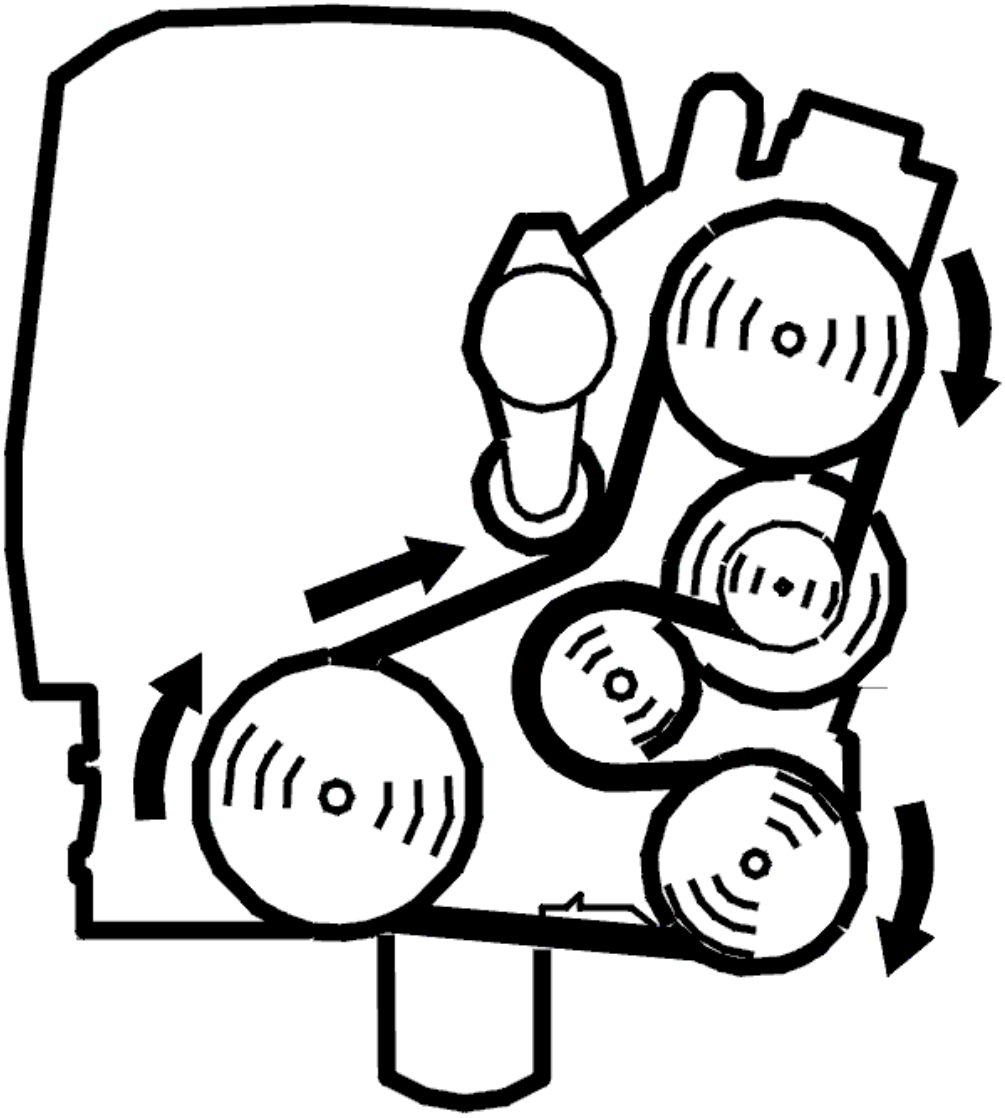

Fig. 243: Belt Routing / Engine Idling - Volvo
Courtesy of VOLVO CARS CORPORATION

- Start the engine and run it to normal operating temperature
- Read off and note the adaptation value for the camshaft at idle speed. The value must be between -8° and +8°.

  If the adaptation value is correct (between -8° and +8°) the fault is intermittent. If the adaptation value is

incorrect (lower than -8° or higher than +8°), the fault is permanent.

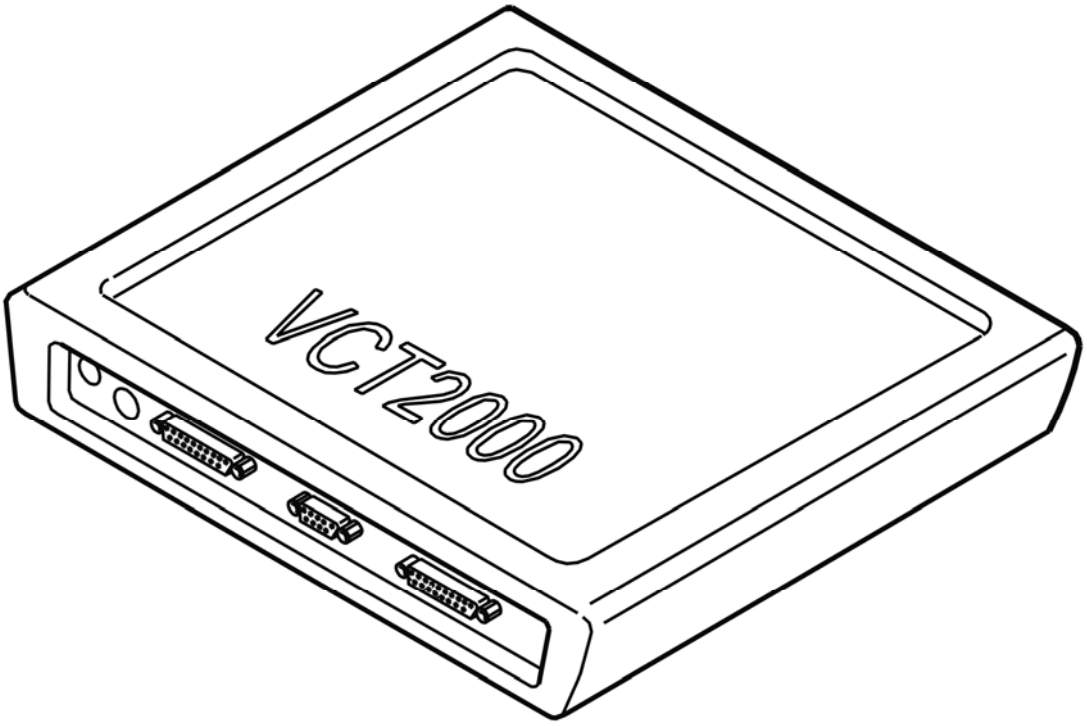

Fig. 244: Identifying VCT2000 Diagnostic Tool Symbol In VIDA
Courtesy of VOLVO CARS CORPORATION

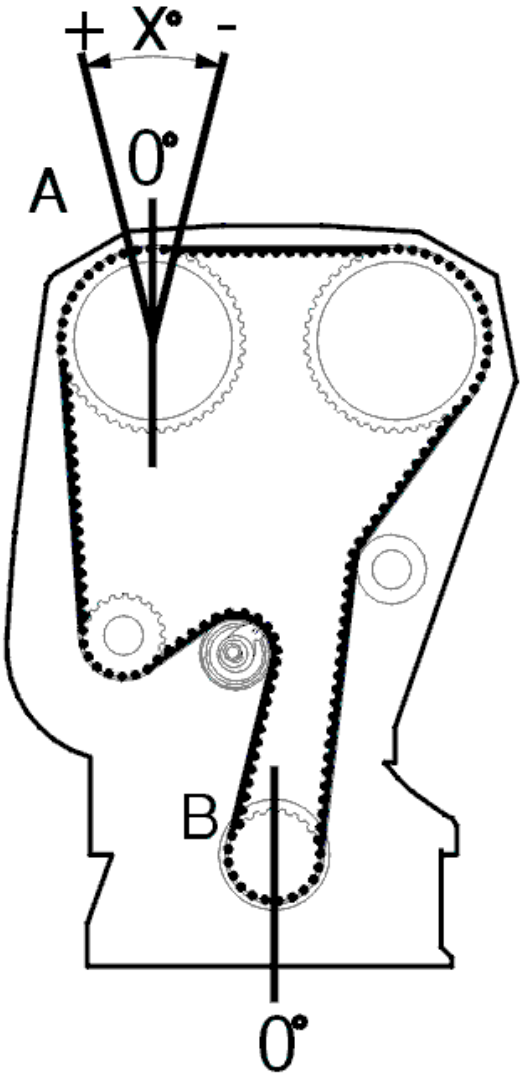

Fig. 245: Identifying Camshaft Position Angle
Courtesy of VOLVO CARS CORPORATION

- **Continue**

  Refer to **CHECKING COMPONENTS**

CHECKING COMPONENTS

For variable valve timing control to operate correctly the engine oil must be at the correct level, of the correct quality and not contaminated.

Check the engine oil level and quality. Check for contaminants in particular.

Adjust the camshaft settings.

NOTE: **The camshafts must be adjusted using the adjustment tool for the camshafts and crankshaft in the prescribed manner.**

Other information:

- For B5xx4T, see **CAMSHAFT SEAL/VARIABLE VALVE TIMING (VVT) UNIT, REPLACING**
- For B6xx4T, see **CAMSHAFT SEAL/VARIABLE VALVE TIMING (VVT) UNIT, REPLACING** .

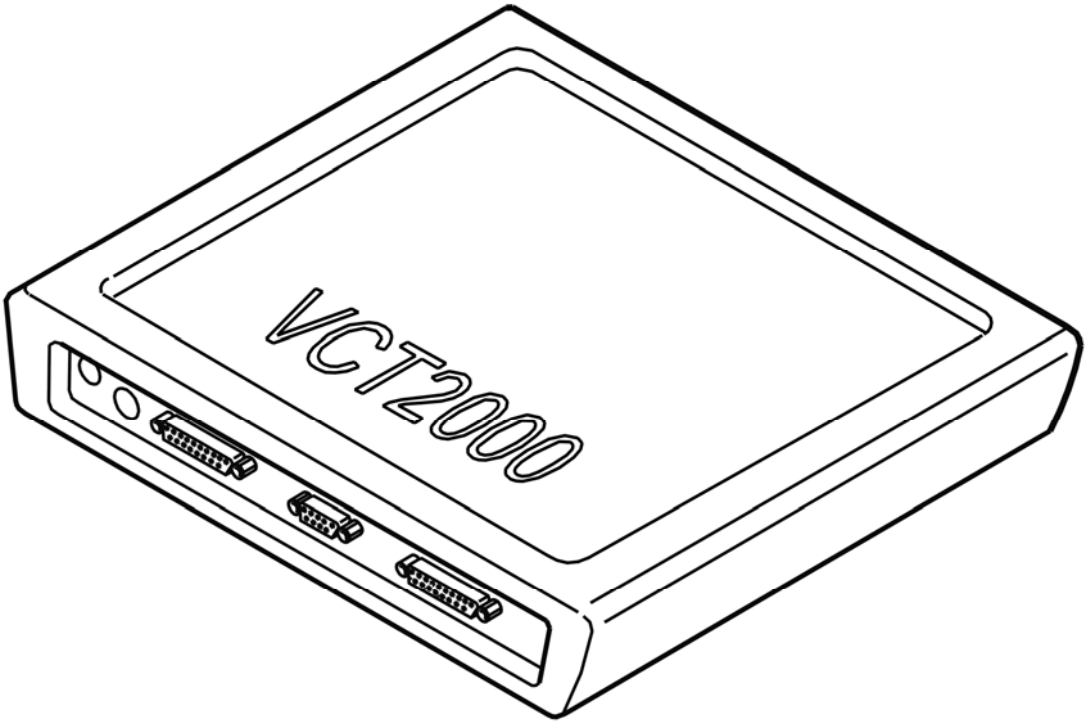

Fig. 246: Identifying VCT2000 Diagnostic Tool Symbol In VIDA
Courtesy of VOLVO CARS CORPORATION

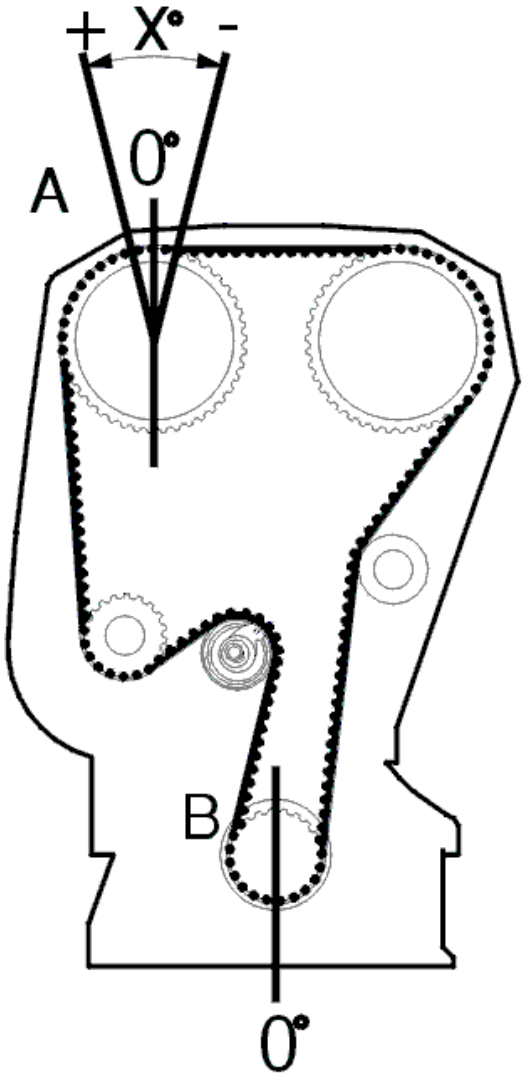

Fig. 247: Identifying Camshaft Position Angle
Courtesy of VOLVO CARS CORPORATION

- **Continue**

  Refer to **VERIFICATION**

VERIFICATION

VERIFICATION

HINT: After carrying out the repair, check that the fault has been remedied.

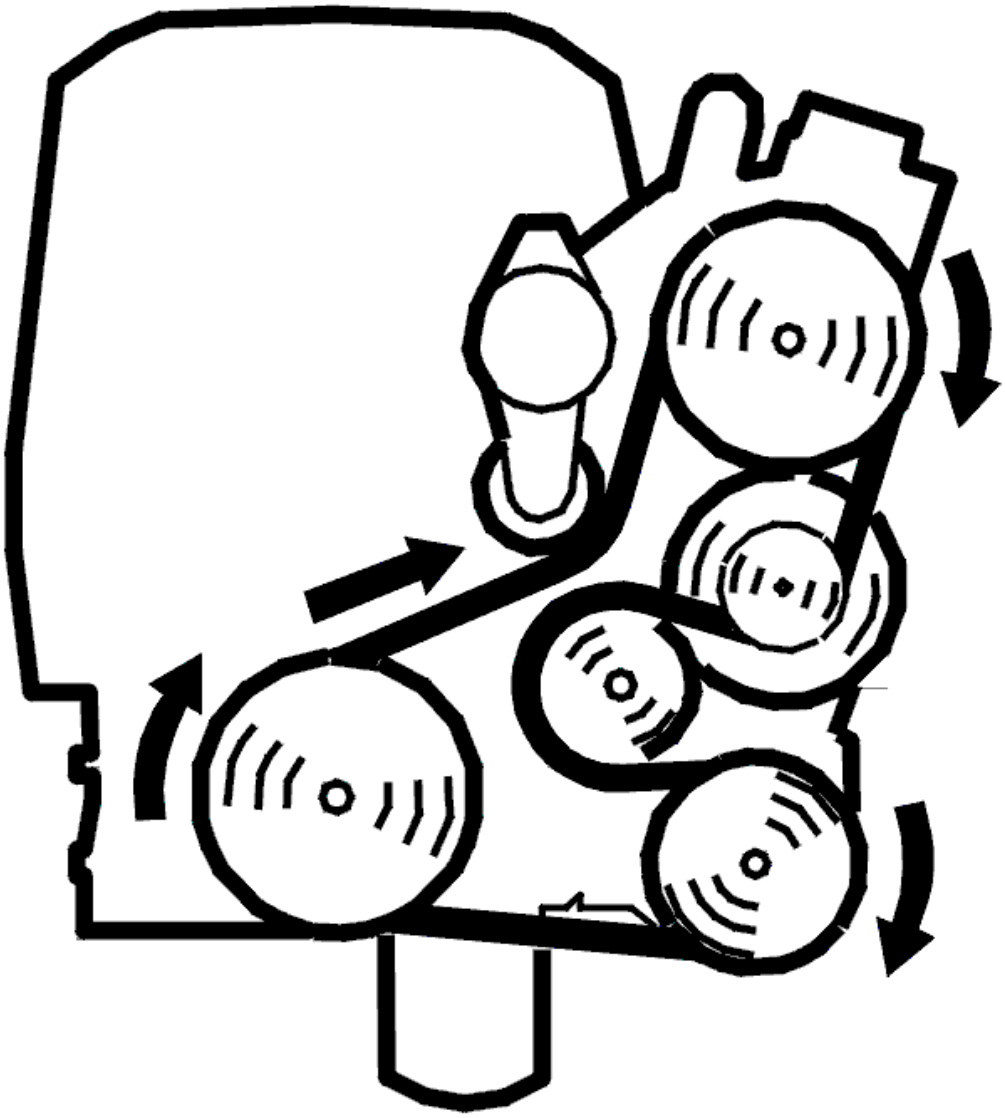

Fig. 248: Belt Routing / Engine Idling - Volvo
Courtesy of VOLVO CARS CORPORATION

- Start the engine and run it to normal operating temperature
- Read off the camshaft adaptation at idle speed.

  The adaptation value must be between -8° and +8.

  The function is OK if the adaptation value is correct.

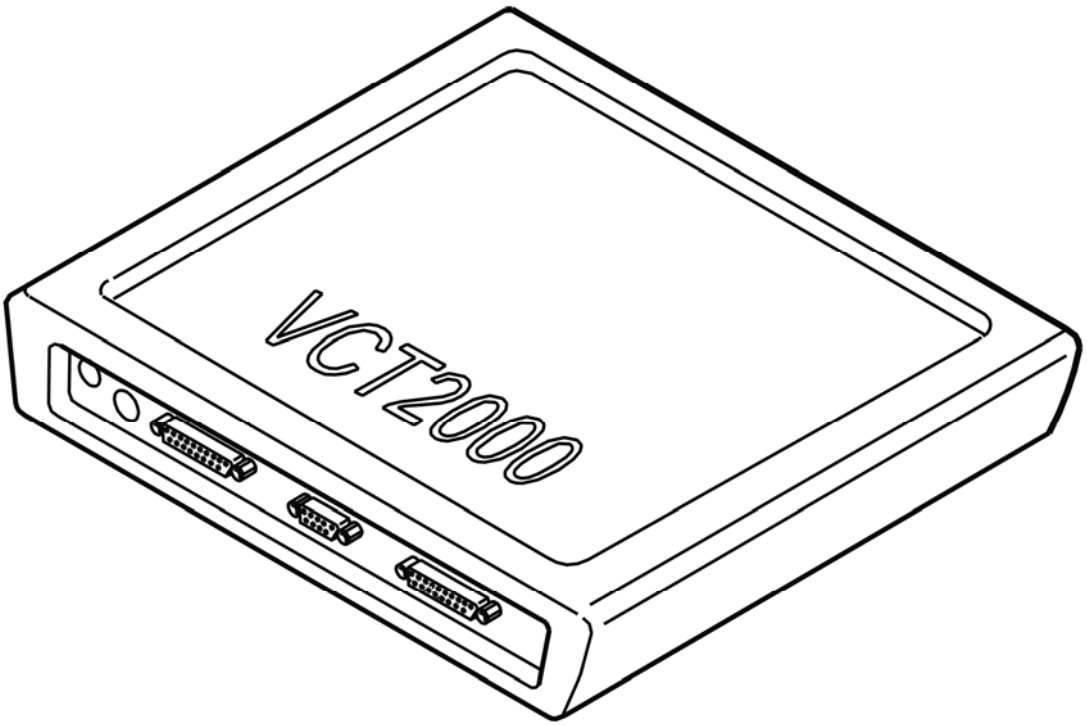

Fig. 249: Identifying VCT2000 Diagnostic Tool Symbol In VIDA
Courtesy of VOLVO CARS CORPORATION

Is the function OK?

- **YES**

  VERIFIED: Troubleshooting has been completed.

- **NO**

  Refer to **INFORMATION**

INFORMATION

FAULT-TRACING INFORMATION

The fault should have been detected and remedied. As this is not the case fault-tracing has failed.

Exit fault-tracing for this diagnostic trouble code (DTC) or make another attempt.

ECM-644A: CAMSHAFT POSITION, EXHAUST. SIGNAL TOO HIGH (B5254T2; B6294T; 2003-2004)

DIAGNOSTIC TROUBLE CODE (DTC) INFORMATION

see **DIAGNOSTIC TROUBLE CODE (DTC) INFORMATION**

SIGNAL TOO HIGH

CHECKING THE STATUS

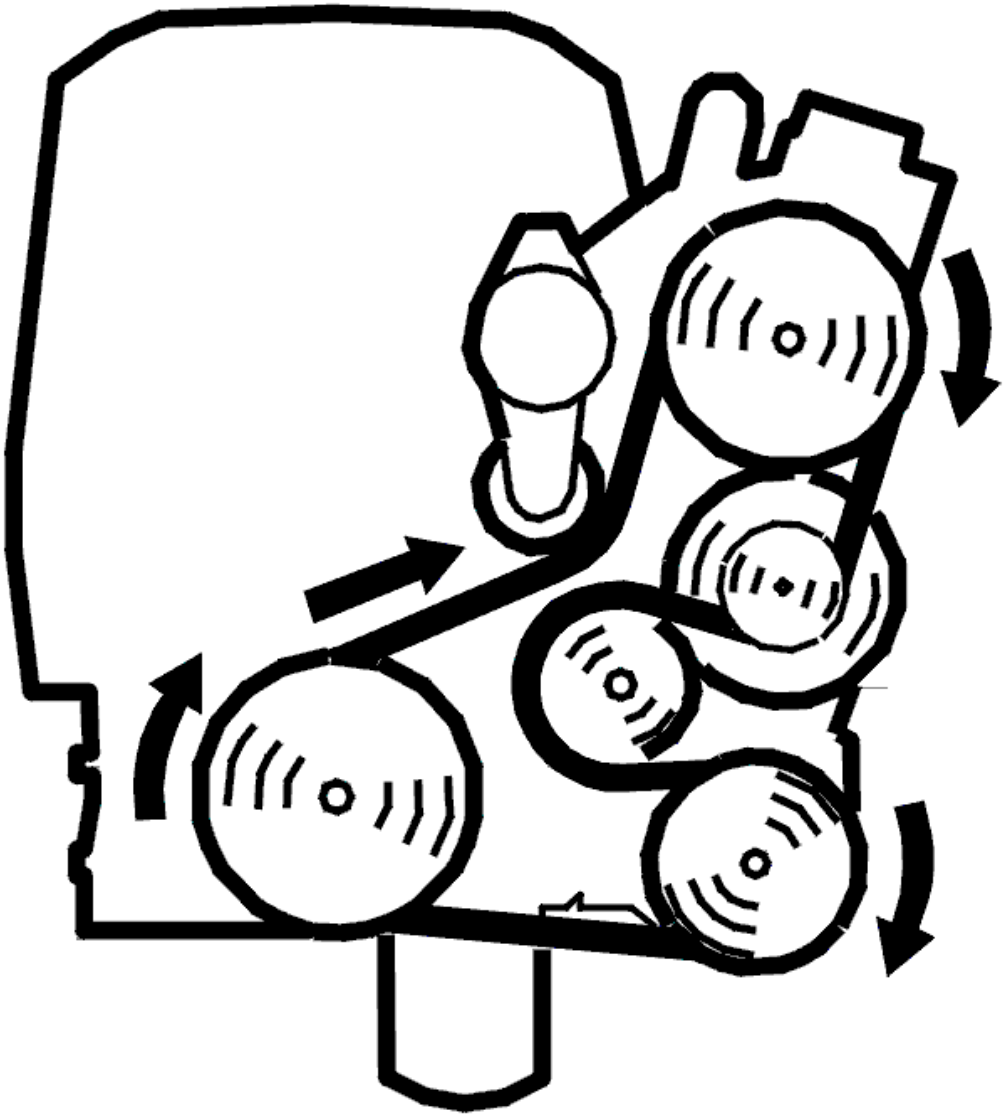

Fig. 250: Belt Routing / Engine Idling - Volvo
Courtesy of VOLVO CARS CORPORATION

- Start the engine and run it to normal operating temperature
- Read off and note the adaptation value for the camshaft at idle speed. The value must be between -8° and +8°.

  If the adaptation value is correct (between -8° and +8°) the fault is intermittent. If the adaptation value is

incorrect (lower than -8° or higher than +8°), the fault is permanent.

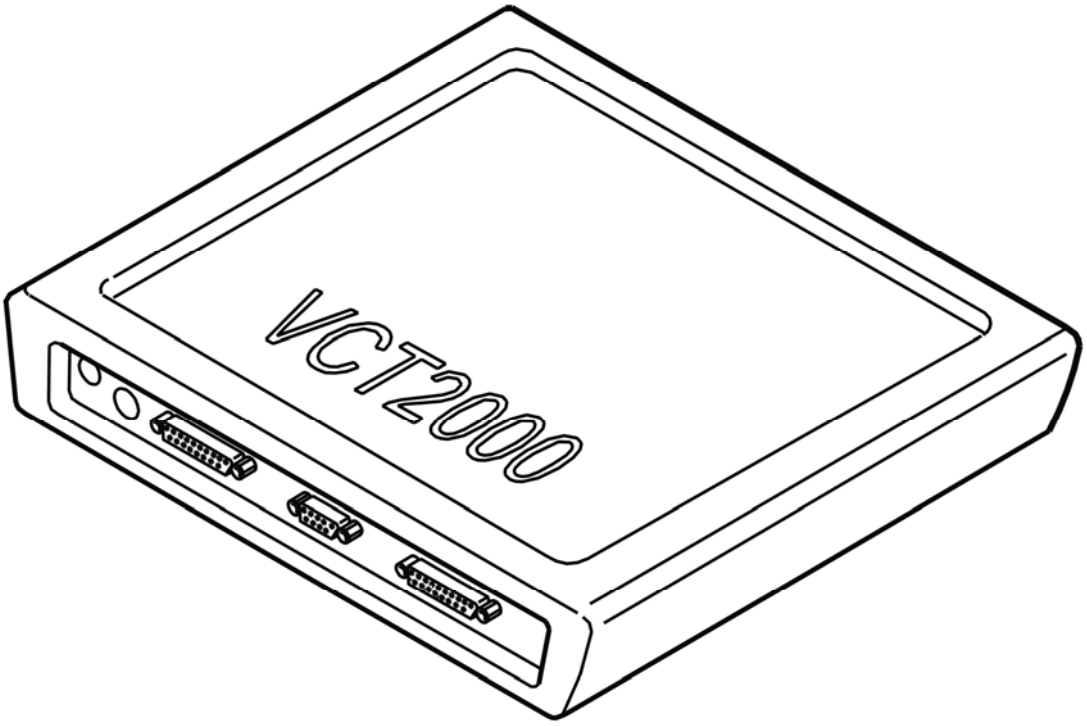

Fig. 251: Identifying VCT2000 Diagnostic Tool Symbol In VIDA
Courtesy of VOLVO CARS CORPORATION

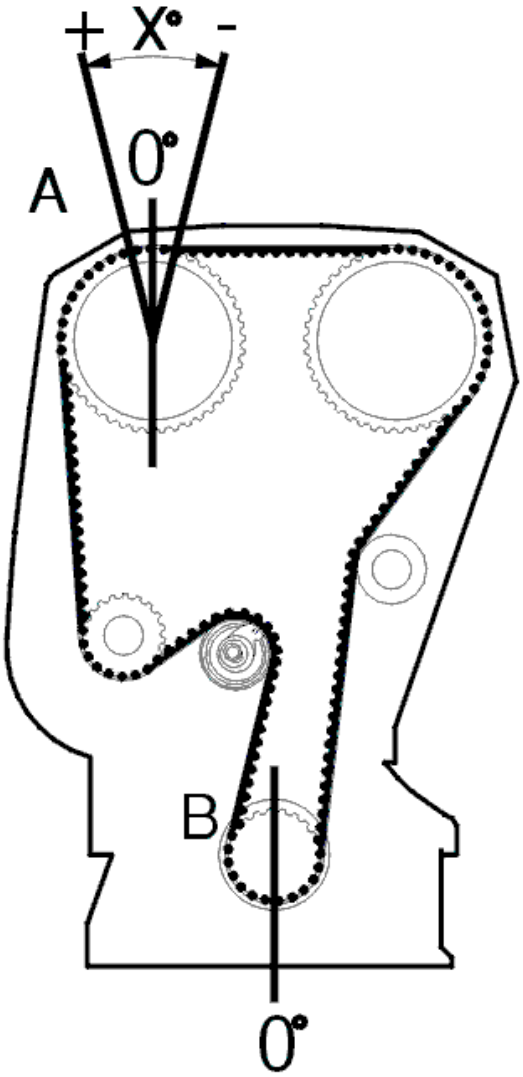

Fig. 252: Identifying Camshaft Position Angle
Courtesy of VOLVO CARS CORPORATION

Is the adaptation value correct?

- **YES**

  Refer to **INTERMITTENT FAULT**

- **NO**

  Refer to **CHECKING COMPONENTS**

CHECKING COMPONENTS

For variable valve timing control to operate correctly the engine oil must be at the correct level, of the correct

quality and not contaminated.

Check the engine oil level and quality. Check for contaminants in particular.

If the adaptation value is too high (higher than +8°) when the engine is at operating temperature, the cause of the fault is probably one of the following:

- the timing belt is incorrectly seated
- the basic setting of the camshaft is incorrect
- faulty camshaft reset valve (the slide in the valve has stuck).

HINT: First try adjusting the basic set up of the camshaft. Then read off the adaptation value for the camshaft at idle speed with the engine at operating temperature. The value must be between -8° and +8°. If the adaptation value is incorrect when the basic setting of the camshaft is correct, try cleaning the camshaft reset valve.

NOTE: The camshafts must be adjusted using the adjustment tool for the camshafts and crankshaft in the prescribed manner.

Try a new camshaft reset valve if the above fault-tracing does not solve the fault.

Remedy as necessary.

HINT: The fault can also be caused by a defective variable valve timing unit. The variable valve timing unit may be defective if the above fault tracing and corrective action does not remedy the fault.

Other information:

- To clean the camshaft reset valve, see **VVT SOLENOID, INSPECTION AND CLEANING**
- For B5xx4T, see **CAMSHAFT SEAL/VARIABLE VALVE TIMING (VVT) UNIT, REPLACING**
- For B6xx4T, see **CAMSHAFT SEAL/VARIABLE VALVE TIMING (VVT) UNIT, REPLACING** .
- For B5xx4T, see **VARIABLE VALVE TIMING SOLENOID, REPLACING**
- For B6xx4T, see **REPLACING THE VARIABLE VALVE TIMING SOLENOID** .

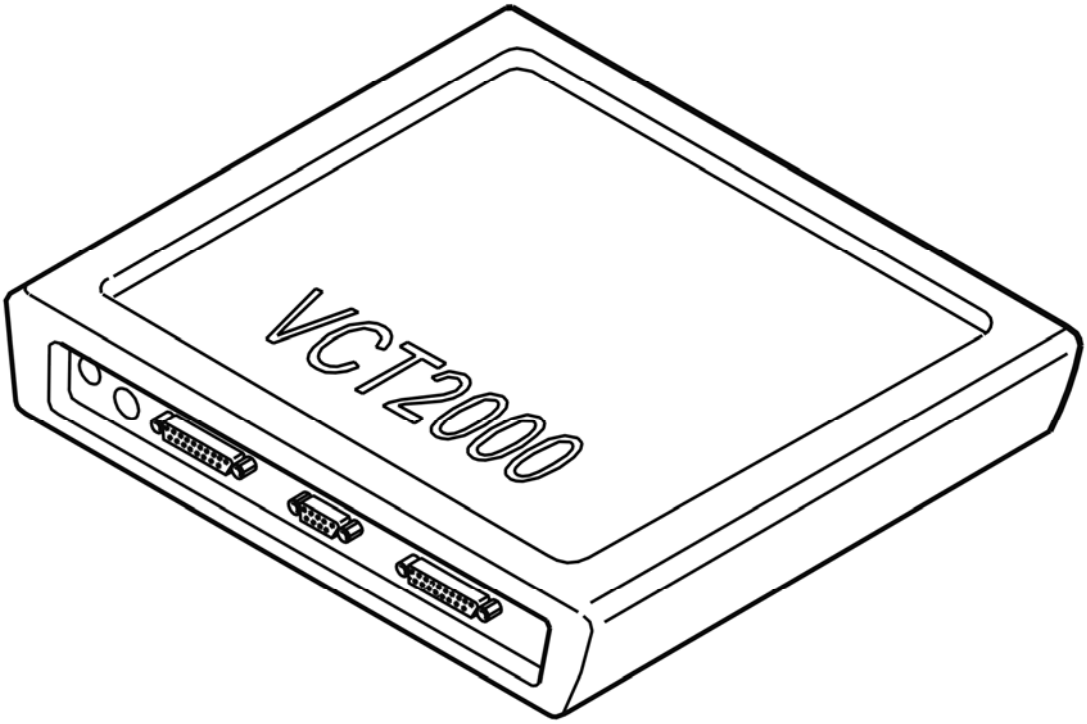

Fig. 253: Identifying VCT2000 Diagnostic Tool Symbol In VIDA
Courtesy of VOLVO CARS CORPORATION

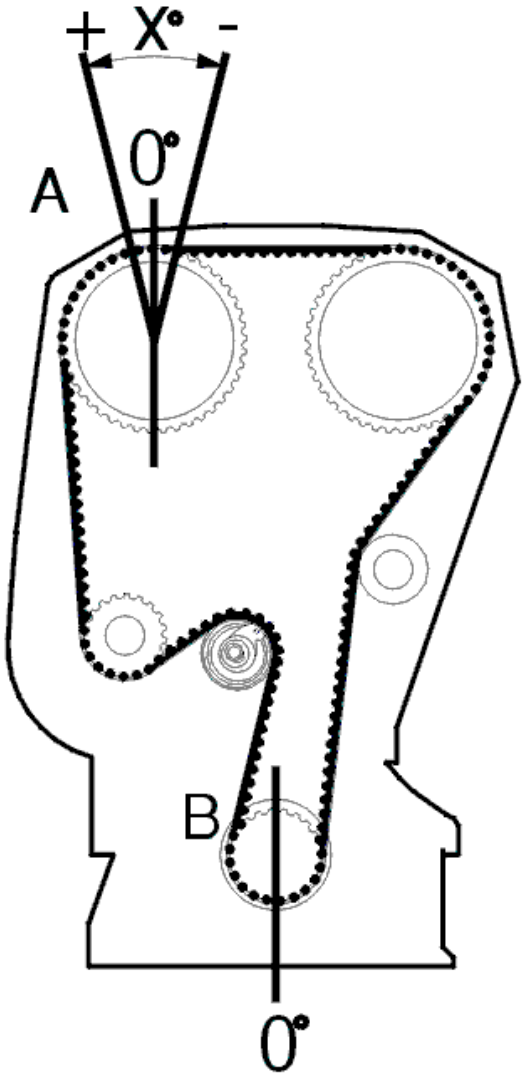

Fig. 254: Identifying Camshaft Position Angle
Courtesy of VOLVO CARS CORPORATION

- **Continue**

  Refer to **VERIFICATION**

INTERMITTENT FAULT

If the diagnostic trouble code (DTC) for this fault is stored but the adaptation value is correct, the fault is intermittent. The cause of the intermittent fault is probably a defective camshaft reset valve.

HINT: Faults may result from dirt in the camshaft reset valve. Try cleaning the valve.

Other information:

- To clean the camshaft reset valve, see **VVT SOLENOID, INSPECTION AND CLEANING**
- For B5xx4T, see **VARIABLE VALVE TIMING SOLENOID, REPLACING**
- For B6xx4T, see **REPLACING THE VARIABLE VALVE TIMING SOLENOID** .
- For B5xx4T, see **CAMSHAFT SEAL/VARIABLE VALVE TIMING (VVT) UNIT, REPLACING**
- For B6xx4T, see **CAMSHAFT SEAL/VARIABLE VALVE TIMING (VVT) UNIT, REPLACING** .

- **Continue**

  Refer to **VERIFICATION**

VERIFICATION

VERIFICATION

HINT: After carrying out the repair, check that the fault has been remedied.

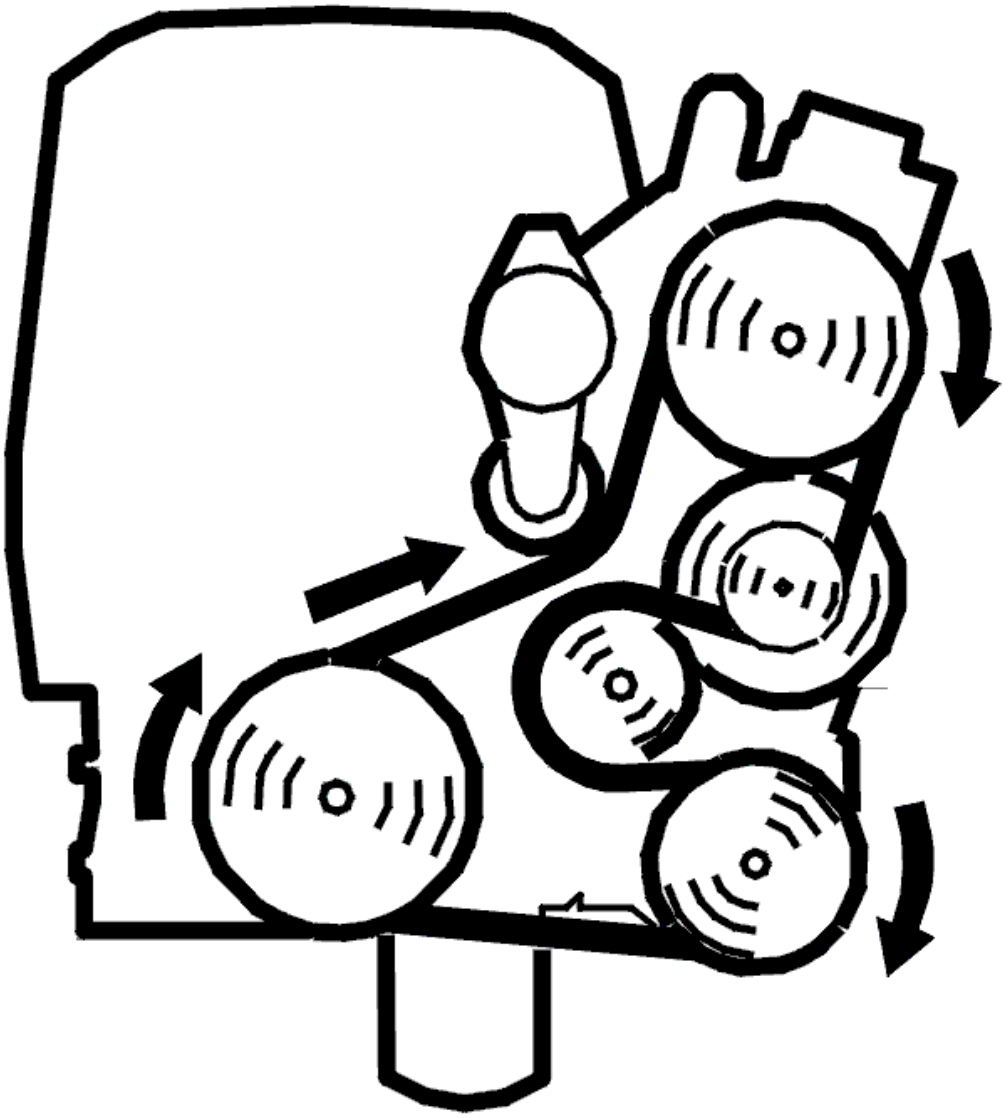

Fig. 255: Belt Routing / Engine Idling - Volvo
Courtesy of VOLVO CARS CORPORATION

- Start the engine and run it to normal operating temperature
- Read off the camshaft adaptation at idle speed.

  The adaptation value must be between -8° and +8.

  The function is OK if the adaptation value is correct.

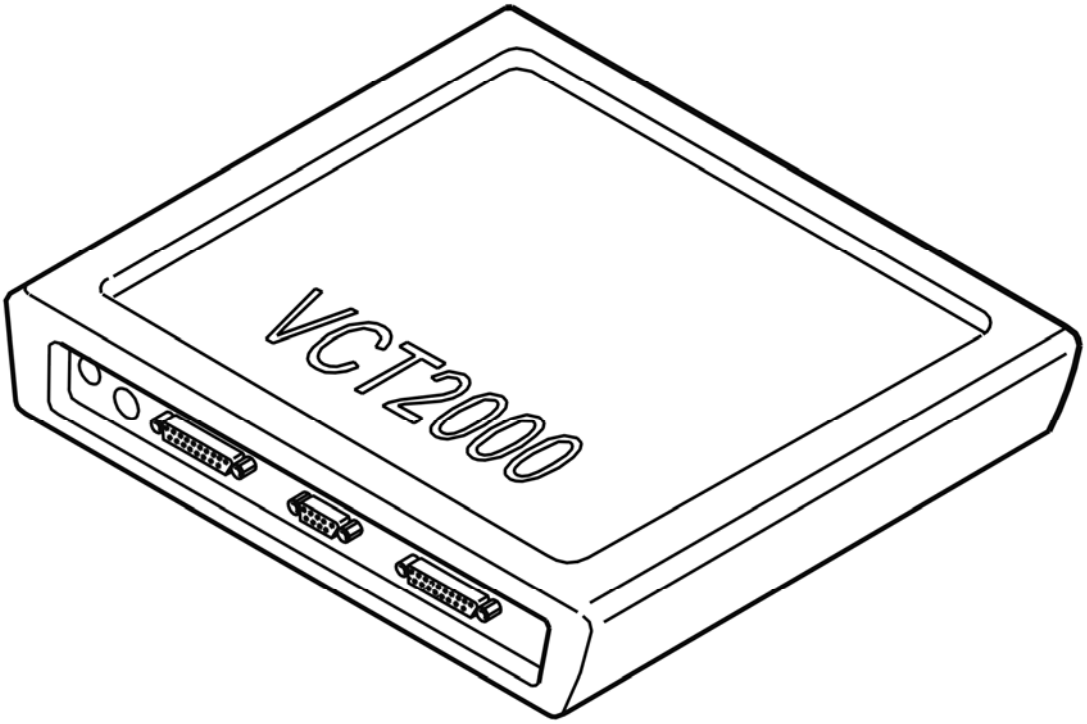

Fig. 256: Identifying VCT2000 Diagnostic Tool Symbol In VIDA
Courtesy of VOLVO CARS CORPORATION

Is the function OK?

- **YES**

  VERIFIED: Troubleshooting has been completed.

- **NO**

  Refer to **INFORMATION**

INFORMATION

FAULT-TRACING INFORMATION

The fault should have been detected and remedied. As this is not the case fault-tracing has failed.

Exit fault-tracing for this diagnostic trouble code (DTC) or make another attempt.

ECM-644A: CAMSHAFT POSITION, EXHAUST. SIGNAL TOO LOW (B5254T2; B6294T; 2003-2004)

DIAGNOSTIC TROUBLE CODE (DTC) INFORMATION

see **DIAGNOSTIC TROUBLE CODE (DTC) INFORMATION**

SIGNAL TOO LOW

CHECKING THE STATUS

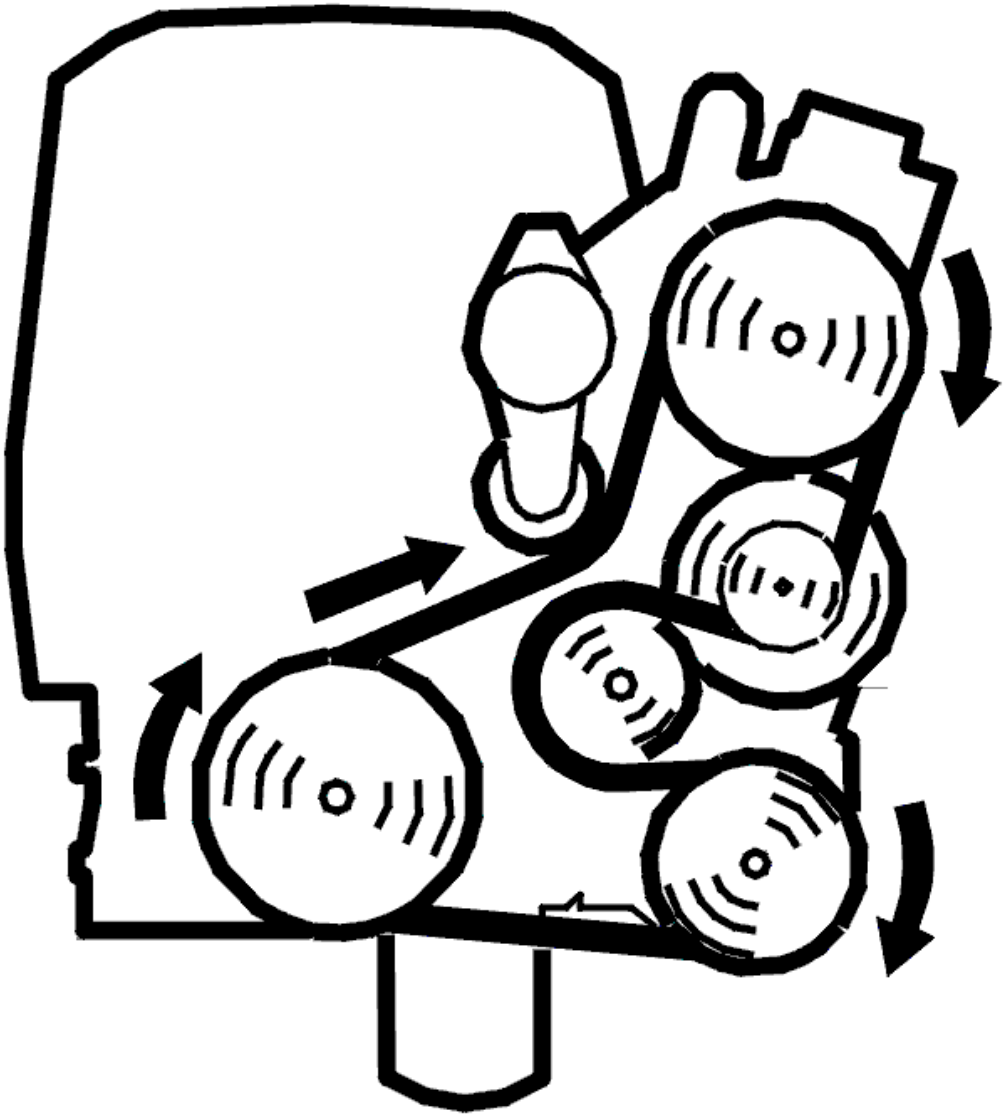

Fig. 257: Belt Routing / Engine Idling - Volvo
Courtesy of VOLVO CARS CORPORATION

- Start the engine and run it to normal operating temperature
- Read off and note the adaptation value for the camshaft at idle speed. The value must be between -8° and +8°.

  If the adaptation value is correct (between -8° and +8°) the fault is intermittent. If the adaptation value is

incorrect (lower than -8° or higher than +8°), the fault is permanent.

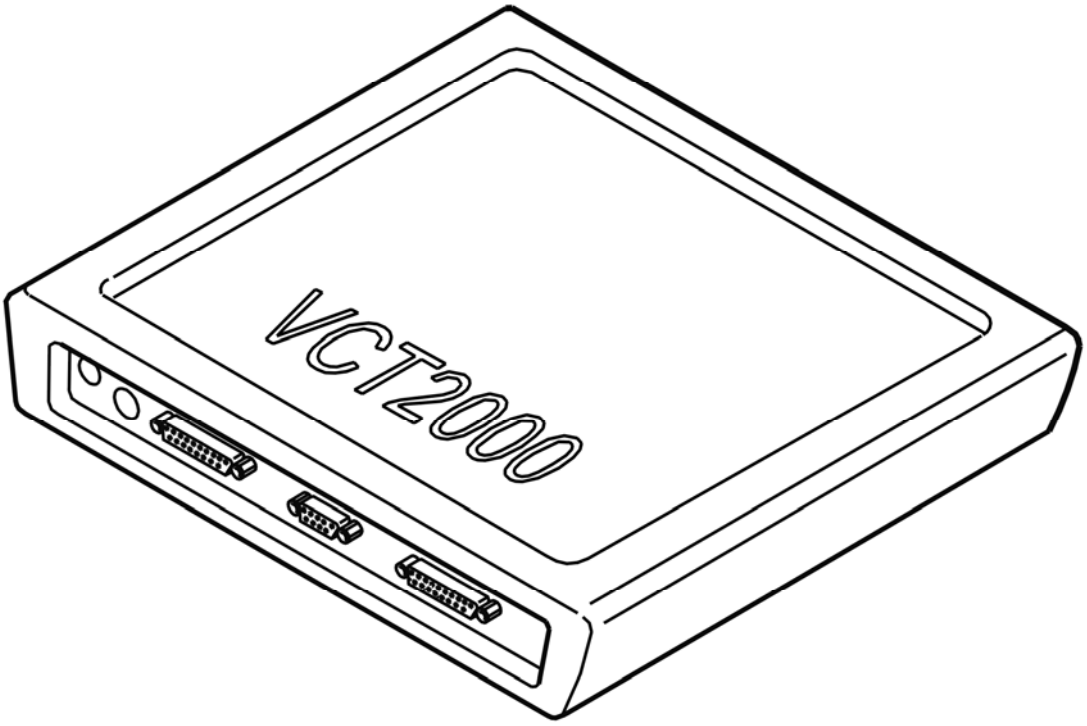

Fig. 258: Identifying VCT2000 Diagnostic Tool Symbol In VIDA
Courtesy of VOLVO CARS CORPORATION

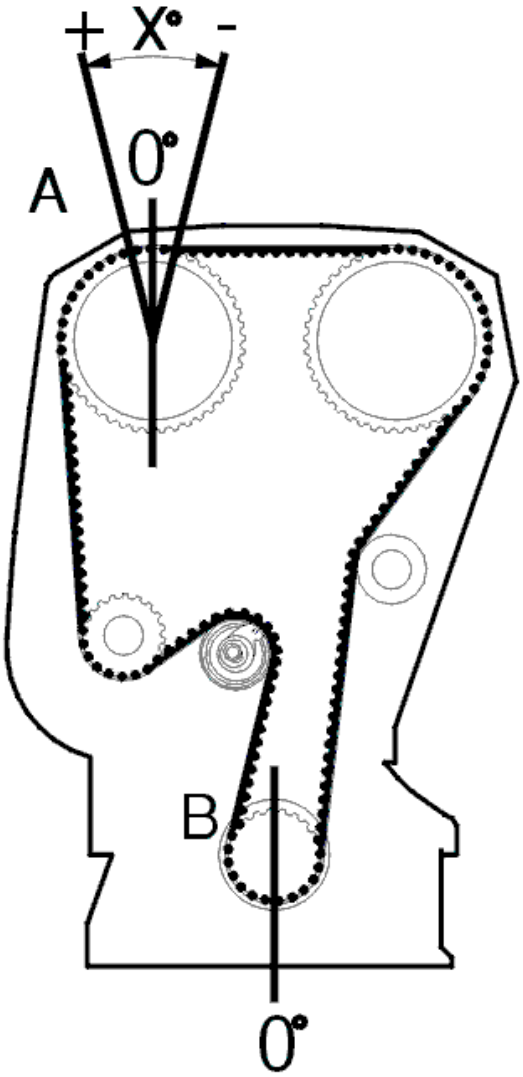

Fig. 259: Identifying Camshaft Position Angle
Courtesy of VOLVO CARS CORPORATION

Is the adaptation value correct?

- **YES**

  Refer to **INTERMITTENT FAULT**

- **NO**

  Refer to **CHECKING COMPONENTS**

CHECKING COMPONENTS

In order for the variable valve timing control to function correctly, the correct grade of engine oil must be used.

The oil must be clean and the oil pressure must be correct.

Check the engine oil level and quality. Check for contaminants in particular.

Check the engine oil pressure.

Remedy as necessary.

If no fault is found in the above fault tracing and the adaptation value is too low (lower than -8°) when the engine is at operating temperature, the cause of the fault is probably one of the following:

- the timing belt is incorrectly seated
- incorrect base setting of the timing belt
- faulty camshaft reset valve (the slide in the valve has stuck).

HINT: If no fault is found in the above fault tracing, first try adjusting the basic set up of the camshaft. Then read off the adaptation value for the camshaft at idle speed with the engine at operating temperature. The value must be between -8° and +8°. If the adaptation value is incorrect when the basic setting of the camshaft is correct, try cleaning the camshaft reset valve.

NOTE: The camshafts must be adjusted using the adjustment tool for the camshafts and crankshaft in the prescribed manner.

Try a new camshaft reset valve if the above fault-tracing does not solve the fault.

Remedy as necessary.

HINT: The fault may also be caused by a defective variable valve timing unit. The variable valve timing unit may be defective if the above fault tracing and corrective action does not remedy the fault.

Other information:

- To clean the camshaft reset valve, see **VVT SOLENOID, INSPECTION AND CLEANING**
- To check the engine oil pressure, see **CHECKING OIL PRESSURE**
- For B5xx4T, see **VARIABLE VALVE TIMING SOLENOID, REPLACING**
- For B6xx4T, see **REPLACING THE VARIABLE VALVE TIMING SOLENOID** .
- For B5xx4T, see **CAMSHAFT SEAL/VARIABLE VALVE TIMING (VVT) UNIT, REPLACING**
- For B6xx4T, see **CAMSHAFT SEAL/VARIABLE VALVE TIMING (VVT) UNIT, REPLACING** .

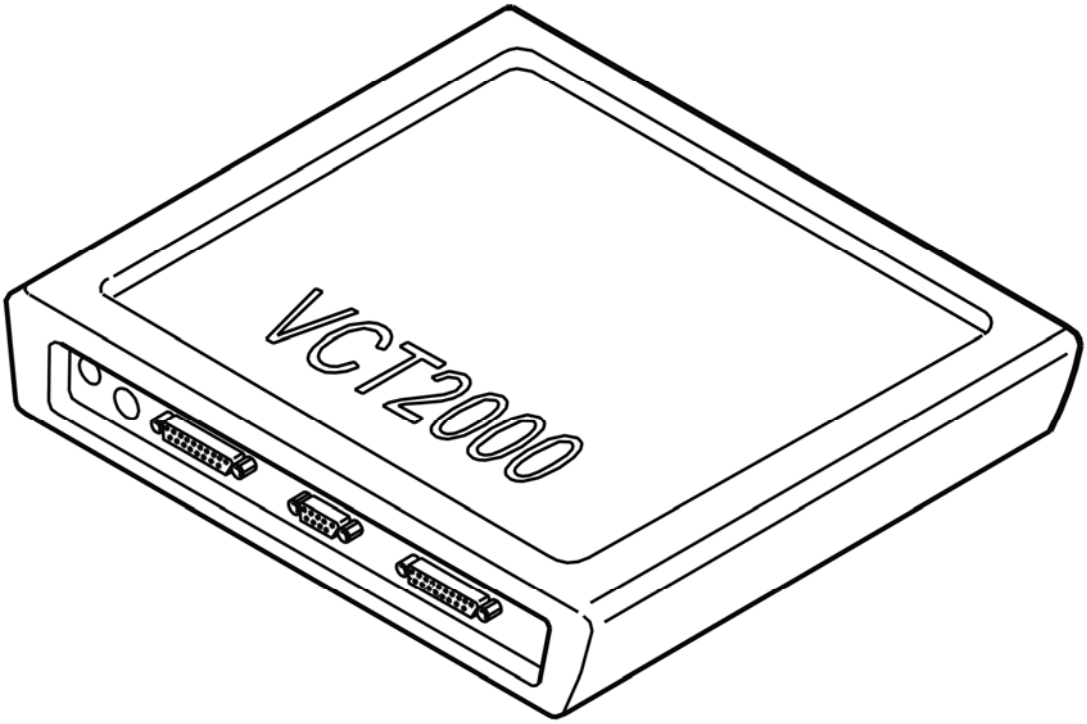

Fig. 260: Identifying VCT2000 Diagnostic Tool Symbol In VIDA
Courtesy of VOLVO CARS CORPORATION

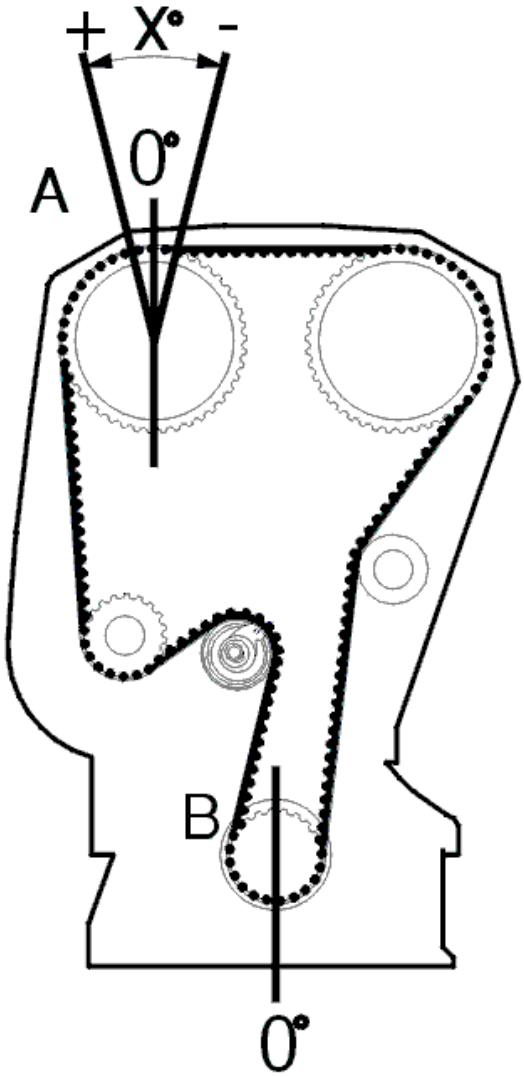

Fig. 261: Identifying Camshaft Position Angle
Courtesy of VOLVO CARS CORPORATION

- **Continue**

  Refer to **VERIFICATION**

INTERMITTENT FAULT

If the diagnostic trouble code (DTC) for this fault is stored but the adaptation value is correct, the fault is intermittent. The cause of the intermittent fault is probably a defective camshaft reset valve.

HINT: Faults may result from dirt in the camshaft reset valve. Try cleaning the valve.

Other information:

- To clean the camshaft reset valve, see **VVT SOLENOID, INSPECTION AND CLEANING**
- For B5xx4T, see **VARIABLE VALVE TIMING SOLENOID, REPLACING**
- For B6xx4T, see **REPLACING THE VARIABLE VALVE TIMING SOLENOID** .
- For B5xx4T, see **CAMSHAFT SEAL/VARIABLE VALVE TIMING (VVT) UNIT, REPLACING**
- For B6xx4T, see **CAMSHAFT SEAL/VARIABLE VALVE TIMING (VVT) UNIT, REPLACING** .

- **Continue**

  Refer to **VERIFICATION**

VERIFICATION

VERIFICATION

HINT: After carrying out the repair, check that the fault has been remedied.

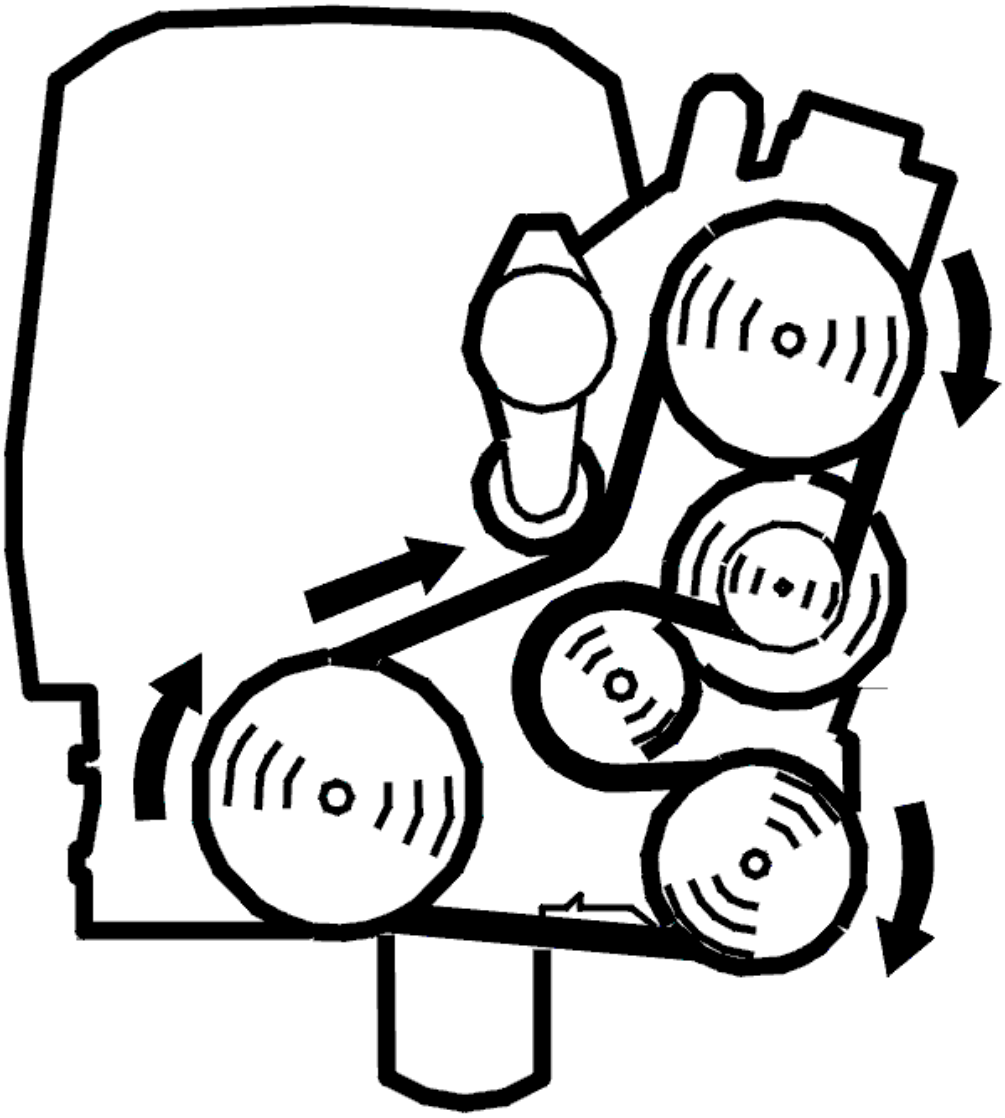

Fig. 262: Belt Routing / Engine Idling - Volvo
Courtesy of VOLVO CARS CORPORATION

- Start the engine and run it to normal operating temperature
- Read off the camshaft adaptation at idle speed.

  The adaptation value must be between -8° and +8.

  The function is OK if the adaptation value is correct.

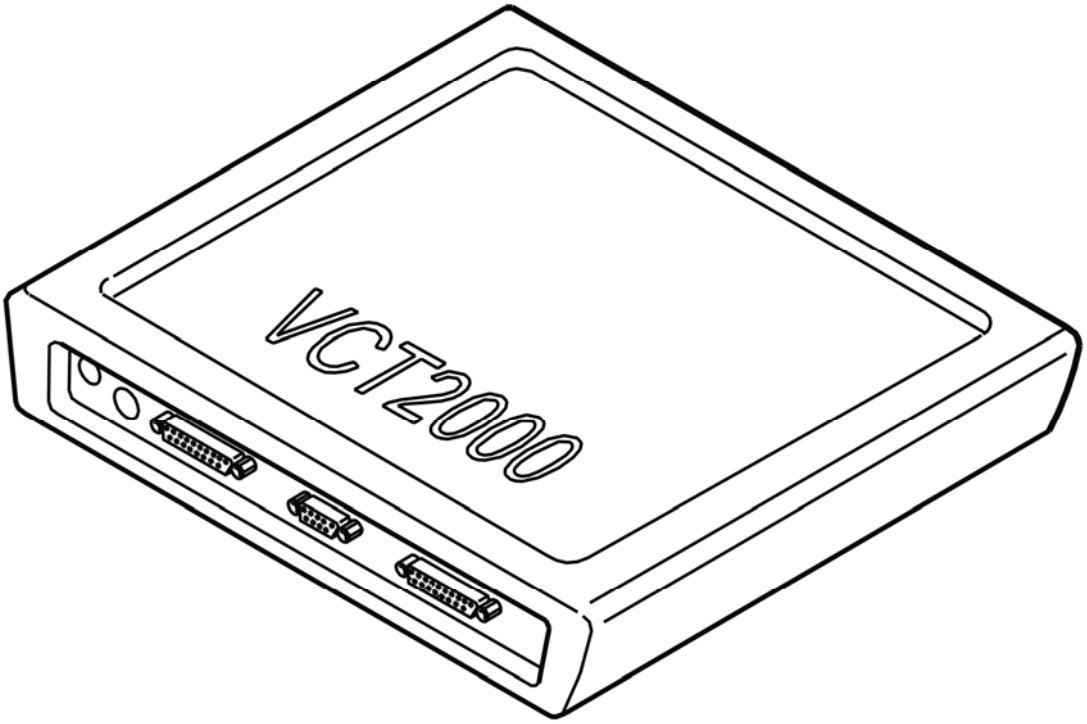

Fig. 263: Identifying VCT2000 Diagnostic Tool Symbol In VIDA
Courtesy of VOLVO CARS CORPORATION

Is the function OK?

- **YES**

  VERIFIED: Troubleshooting has been completed.

- **NO**

  Refer to **INFORMATION**

INFORMATION

FAULT-TRACING INFORMATION

The fault should have been detected and remedied. As this is not the case fault-tracing has failed.

Exit fault-tracing for this diagnostic trouble code (DTC) or make another attempt.

ECM-650B: ENGINE COOLING FAN (FC). SIGNAL MISSING (B5254T2; 2005-2007)

DIAGNOSTIC TROUBLE CODE (DTC) INFORMATION ECM-650B

Condition

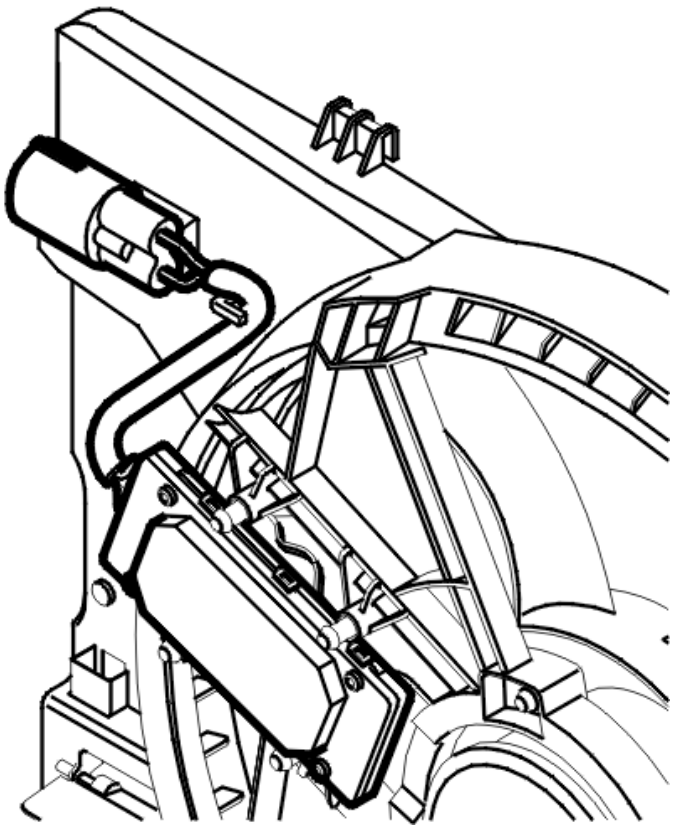

Fig. 264: Identifying Engine Cooling Fan (FC) Control Module
Courtesy of VOLVO CARS CORPORATION

The engine control module (ECM) checks the signal cable for the engine cooling fan (FC).

The diagnostic trouble code (DTC) is stored if the engine control module (ECM) detects that the signal for the engine cooling fan (FC) is missing.

The diagnostic trouble code (DTC) can be diagnosed at ignition on or when the engine is running.

NOTE: **The electric cooling fan may have a post-running time of up to approx. 6 minutes after the engine has been shut off. The time for the electric cooling fan's post-running depends on the engine's temperature, temperature in the engine compartment as well as the pressure level in the AC system.**

Substitute Value

- None.

Possible Source

- Open-circuit in the signal cable
- Damaged engine cooling fan (FC).

Fault symptom[s]

- Electric cooling fan does not operate
- The engine cooling fan (FC) operates constantly.

SIGNAL MISSING

see **SIGNAL MISSING**

ECM-650B: ENGINE COOLING FAN (FC). SIGNAL MISSING (B6294T; 2005-2006)

DIAGNOSTIC TROUBLE CODE (DTC) INFORMATION ECM-650B

see **DIAGNOSTIC TROUBLE CODE (DTC) INFORMATION ECM-650B**

SIGNAL MISSING

see **SIGNAL MISSING**

ECM-650C: ENGINE COOLING FAN (FC). SIGNAL TOO HIGH (B5254T2; 2005-2007)

DIAGNOSTIC TROUBLE CODE (DTC) INFORMATION ECM-650C

Condition

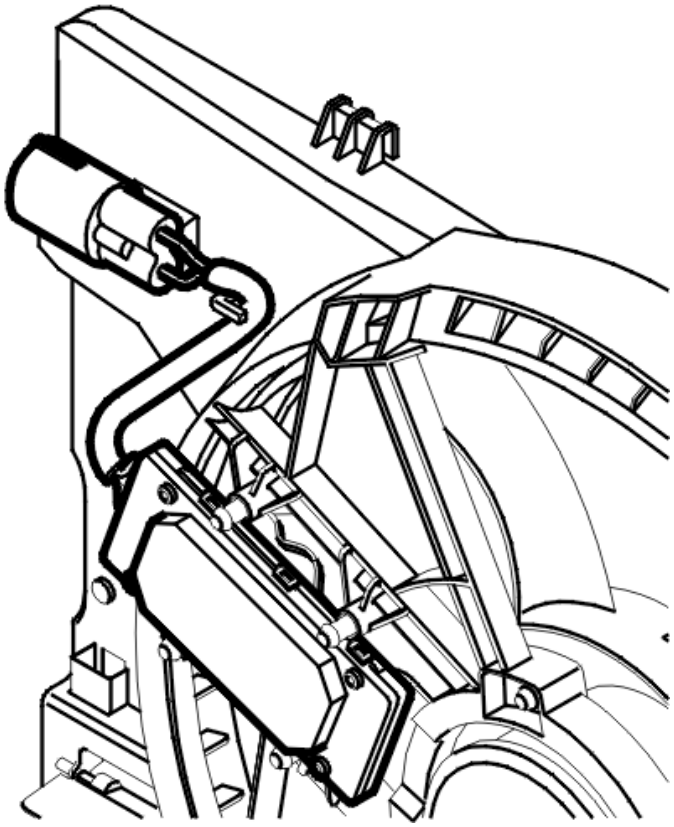

Fig. 265: Identifying Engine Cooling Fan (FC) Control Module
Courtesy of VOLVO CARS CORPORATION

The engine control module (ECM) checks the signal cable for the engine cooling fan (FC).

The diagnostic trouble code (DTC) is stored if the engine control module (ECM) detects that the signal for the engine cooling fan (FC) is too high.

The diagnostic trouble code (DTC) can be diagnosed at ignition on or when the engine is running.

NOTE: **The electric cooling fan may have a post-running time of up to approx. 6 minutes after the engine has been shut off. The time for the electric cooling fan's post-running depends on the engine's temperature, temperature in the engine compartment as well as the pressure level in the AC system.**

Substitute Value

- None.

Possible Source

- Short-circuit to supply voltage in the signal cable
- Damaged engine cooling fan (FC).

Fault symptom[s]

- Electric cooling fan does not operate
- The engine cooling fan (FC) operates constantly.

SIGNAL TOO HIGH

see **SIGNAL TOO HIGH**

ECM-650C: ENGINE COOLING FAN (FC). SIGNAL TOO HIGH (B6294T; 2005-2006)

DIAGNOSTIC TROUBLE CODE (DTC) INFORMATION ECM-650C

see **DIAGNOSTIC TROUBLE CODE (DTC) INFORMATION ECM-650C**

SIGNAL TOO HIGH

see **SIGNAL TOO HIGH**

ECM-650D: ENGINE COOLING FAN (FC). SIGNAL TOO LOW (B5254T2; 2005-2007)

DIAGNOSTIC TROUBLE CODE (DTC) INFORMATION ECM-650D

Condition

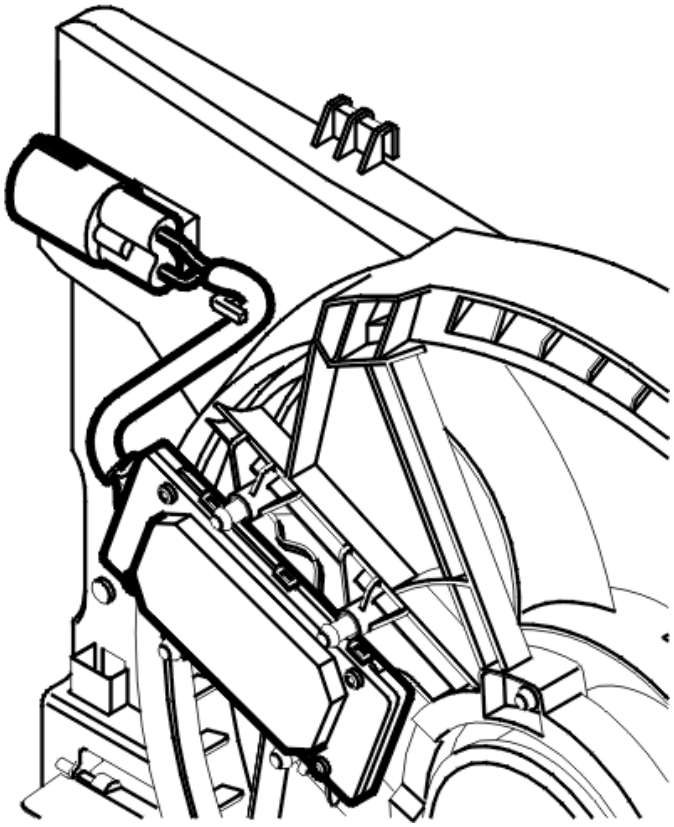

Fig. 266: Identifying Engine Cooling Fan (FC) Control Module
Courtesy of VOLVO CARS CORPORATION

The engine control module (ECM) checks the signal cable for the engine cooling fan (FC).

The diagnostic trouble code (DTC) is stored if the engine control module (ECM) detects that the signal for the engine cooling fan (FC) is too low.

The diagnostic trouble code (DTC) can be diagnosed at ignition on or when the engine is running.

NOTE: **The electric cooling fan may have a post-running time of up to approx. 6 minutes after the engine has been shut off. The time for the electric cooling fan's post-running depends on the engine's temperature, temperature in the engine compartment as well as the pressure level in the AC system.**

Substitute Value

- None.

Possible Source

- Short-circuit to supply voltage in the signal cable
- Damaged engine cooling fan (FC).

Fault symptom[s]

- Electric cooling fan does not operate
- The engine cooling fan (FC) operates constantly.

SIGNAL TOO LOW

see **SIGNAL TOO LOW**

ECM-650D: ENGINE COOLING FAN (FC). SIGNAL TOO LOW (B6294T; 2005-2006)

DIAGNOSTIC TROUBLE CODE (DTC) INFORMATION ECM-650D

see **DIAGNOSTIC TROUBLE CODE (DTC) INFORMATION ECM-650D**

SIGNAL TOO LOW

see **SIGNAL TOO LOW**

ECM-660B: MALFUNCTION INDICATOR LAMP (MIL). SIGNAL MISSING (B5254T2; 2005-2007)

DIAGNOSTIC TROUBLE CODE (DTC) INFORMATION ECM-660B

Condition

If there is an open-circuit in the circuit controlling the malfunction indicator lamp (MIL) the engine control module (ECM) interprets this as a fault and the diagnostic trouble code (DTC) is stored.

Substitute Value

- None.

Possible Source

- Open-circuit in the signal cable
- Open-circuit in the power cable.

Fault symptom[s]

- Malfunction indicator lamp (MIL) lit.

SIGNAL MISSING. PERMANENT FAULT

CHECKING THE COMPONENT AND WIRING

Check the cable between Engine control module (ECM) #B46 and Driver information module (DIM) #2 for open circuit according to:**CHECKING WIRING AND TERMINALS. PERMANENT FAULT**

Remedy as necessary.

Other information

- To connect the breakout box to the Engine control module (ECM), see:**CONNECTING THE BREAKOUT BOX**
- To connect the breakout box to the driver information module (DIM), see:**CONNECTING THE BREAKOUT BOX**
- see **DRIVER INFORMATION MODULE (DIM), REPLACING**
- For 5 cylinder turbocharged engines -2004, see **SIGNAL DESCRIPTION**
- For 5 cylinder turbocharged engines 2005-, see **SIGNAL SPECIFICATION** .
- Signal description Driver information module (DIM):**SIGNAL SPECIFICATION**

- **Continue**

  Refer to **VERIFICATION**

VERIFICATION

VERIFICATION

HINT: After carrying out the repair, check that the fault has been remedied.

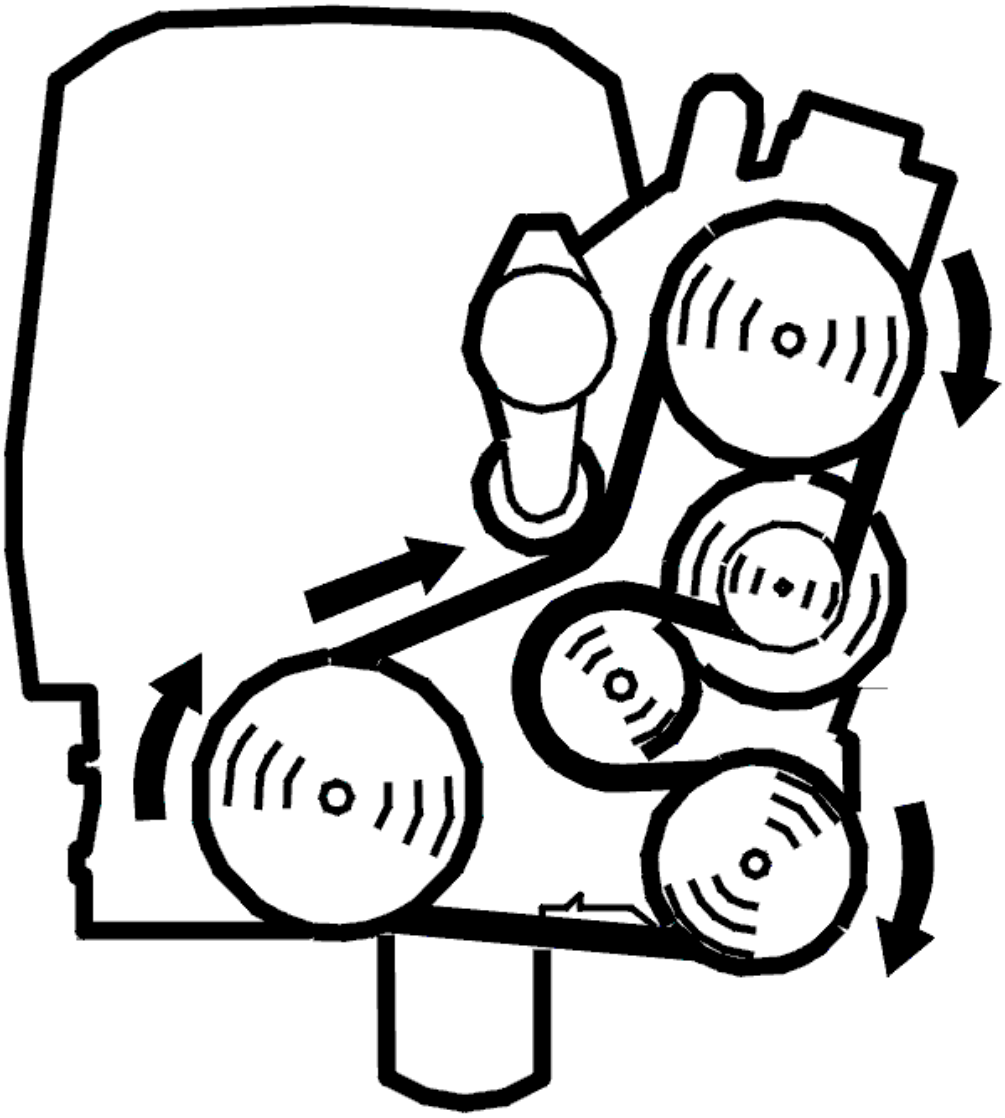

Fig. 267: Belt Routing / Engine Idling - Volvo
Courtesy of VOLVO CARS CORPORATION

- Ignition off
- Reinstall the connectors, components etc.
- Start the engine and let it run at idle speed
- Activate the malfunction indicator lamp (MIL)
- Check that the function is OK.

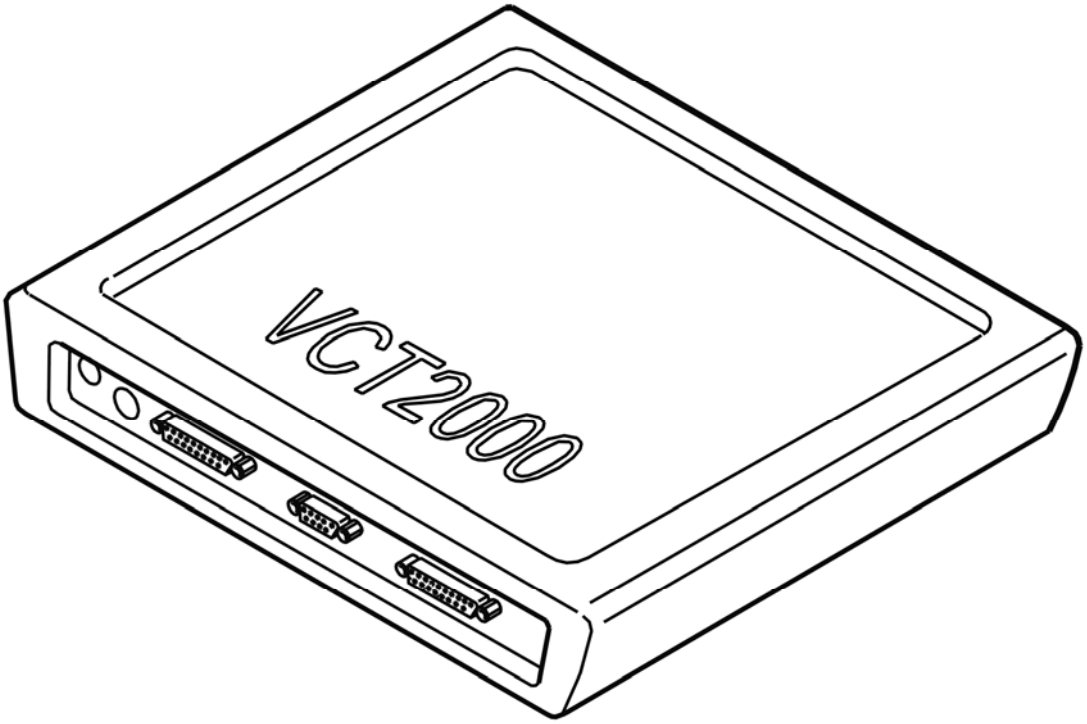

Fig. 268: Identifying VCT2000 Diagnostic Tool Symbol In VIDA
Courtesy of VOLVO CARS CORPORATION

Is function OK?

- **YES**

  VERIFIED: Troubleshooting has been completed.

- **NO**

  Refer to **INFORMATION**

INFORMATION

FAULT-TRACING INFORMATION

The fault should have been detected and remedied. As this is not the case fault-tracing has failed.

Exit fault-tracing for this diagnostic trouble code (DTC) or make another attempt.

ECM-660B: MALFUNCTION INDICATOR LAMP (MIL). SIGNAL MISSING (B6294T; 2005-2006)

SIGNAL MISSING. PERMANENT FAULT

CHECKING THE COMPONENT AND WIRING

Check the cable between Engine control module (ECM) #B46 and Driver information module (DIM) #2 for open circuit according to:**CHECKING WIRING AND TERMINALS. PERMANENT FAULT**

Remedy as necessary.

Other information

- To connect the breakout box to the Engine control module (ECM), see:**CONNECTING THE BREAKOUT BOX**
- To connect the breakout box to the driver information module (DIM), see:**CONNECTING THE BREAKOUT BOX**
- see **DRIVER INFORMATION MODULE (DIM), REPLACING**
- For 6 cylinder engines -2004, see **SIGNAL SPECIFICATION**
- For 6 cylinder engines 2005-, see **SIGNAL SPECIFICATION** .
- Signal description Driver information module (DIM):**SIGNAL SPECIFICATION**

- **Continue**

  Refer to **VERIFICATION**

VERIFICATION

VERIFICATION

HINT: After carrying out the repair, check that the fault has been remedied.

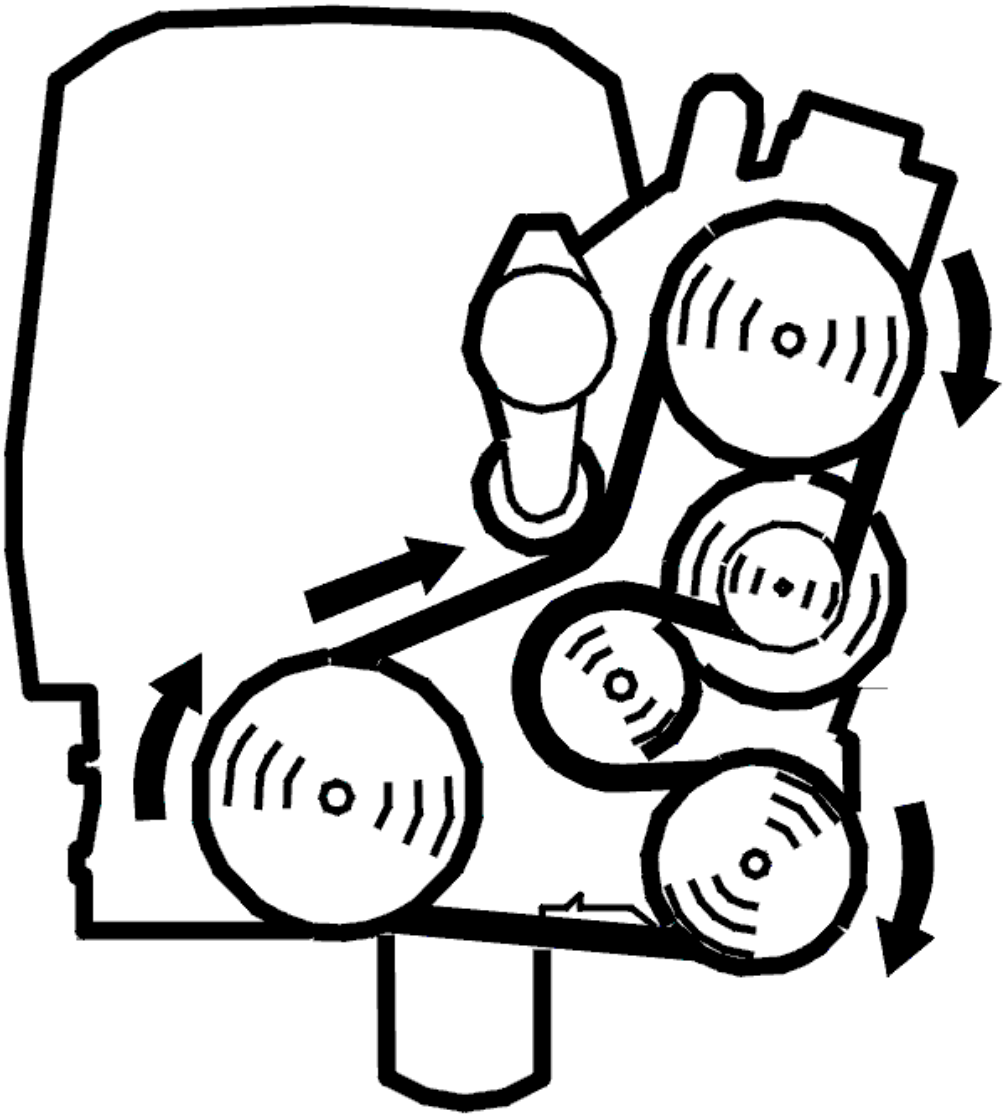

Fig. 269: Belt Routing / Engine Idling - Volvo
Courtesy of VOLVO CARS CORPORATION

- Ignition off
- Reinstall the connectors, components etc.
- Start the engine and let it run at idle speed
- Activate the malfunction indicator lamp (MIL)
- Check that the function is OK.

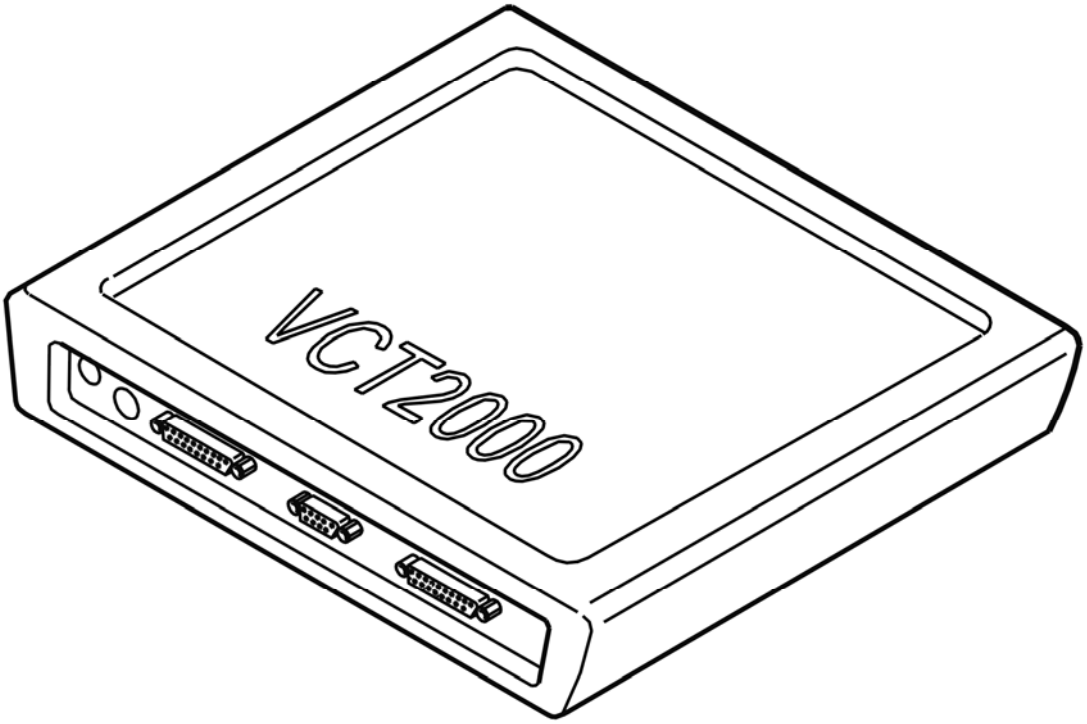

Fig. 270: Identifying VCT2000 Diagnostic Tool Symbol In VIDA
Courtesy of VOLVO CARS CORPORATION

Is function OK?

- **YES**

  VERIFIED: Troubleshooting has been completed.

- **NO**

  Refer to **INFORMATION**

INFORMATION

FAULT-TRACING INFORMATION

The fault should have been detected and remedied. As this is not the case fault-tracing has failed.

Exit fault-tracing for this diagnostic trouble code (DTC) or make another attempt.

DIAGNOSTIC TROUBLE CODE (DTC) INFORMATION ECM-660B

see **DIAGNOSTIC TROUBLE CODE (DTC) INFORMATION ECM-660B**

ECM-660C: MALFUNCTION INDICATOR LAMP (MIL). SIGNAL TOO HIGH (B5254T2; 2005-2007)

DIAGNOSTIC TROUBLE CODE (DTC) INFORMATION ECM-660C

Condition

If there is a short-circuit to supply voltage in the circuit for the malfunction indicator lamp (MIL) the engine control module (ECM) interprets this as a fault and the diagnostic trouble code (DTC) is stored.

Substitute Value

- None.

Possible Source

- Open-circuit in the ground lead.

Fault symptom[s]

- Malfunction indicator lamp (MIL) lit.

SIGNAL TOO HIGH. PERMANENT FAULT

CHECKING COMPONENT AND WIRING

Check the cable between Engine control module (ECM) #B46 and Driver information module (DIM) #2 for short-circuiting according to:**CHECKING WIRING AND TERMINALS. PERMANENT FAULT**

Remedy as necessary.

Other information:

- For connection of engine control module (ECM) breakout box, see **CONNECTING THE BREAKOUT BOX** .
- To connect the breakout box to the Driver information module (DIM), see:**CONNECTING THE BREAKOUT BOX**
- To access/replace the combined instrument panel, see **DRIVER INFORMATION MODULE (DIM), REPLACING**
- For 5 cylinder turbocharged engines -2004, see **SIGNAL DESCRIPTION**
- For 5 cylinder turbocharged engines 2005-, see **SIGNAL SPECIFICATION** .
- For 6 cylinder engines -2004, see **SIGNAL SPECIFICATION**
- For 6 cylinder engines 2005-, see **SIGNAL SPECIFICATION** .
- Signal description Driver information module (DIM):**SIGNAL SPECIFICATION**

- **Continue**

  Refer to **VERIFICATION**

VERIFICATION

VERIFICATION

HINT: After carrying out the repair, check that the fault has been remedied.

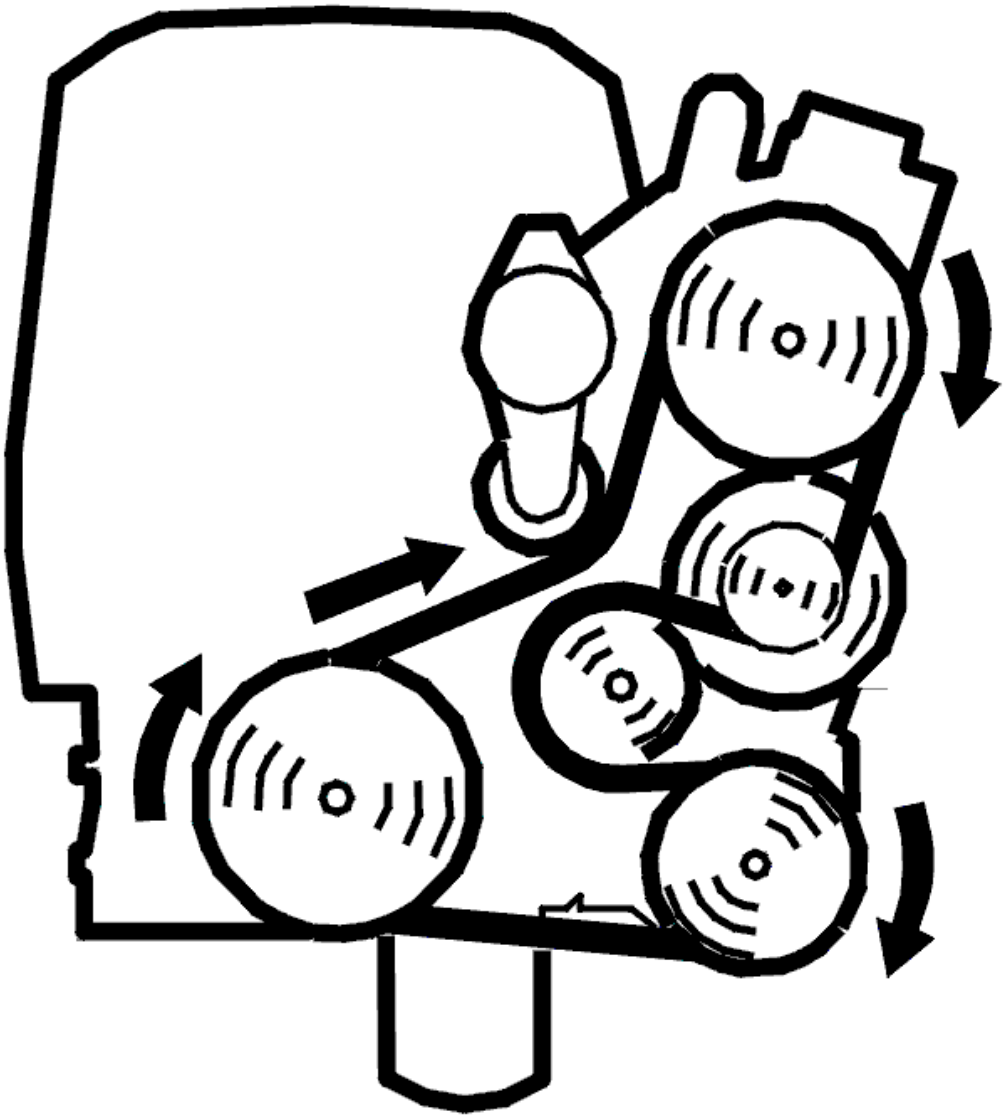

Fig. 271: Belt Routing / Engine Idling - Volvo
Courtesy of VOLVO CARS CORPORATION

- Ignition off
- Reinstall the connectors, components etc.

- Start the engine and let it run at idle speed
- Activate the malfunction indicator lamp (MIL)
- Check that the function is OK.

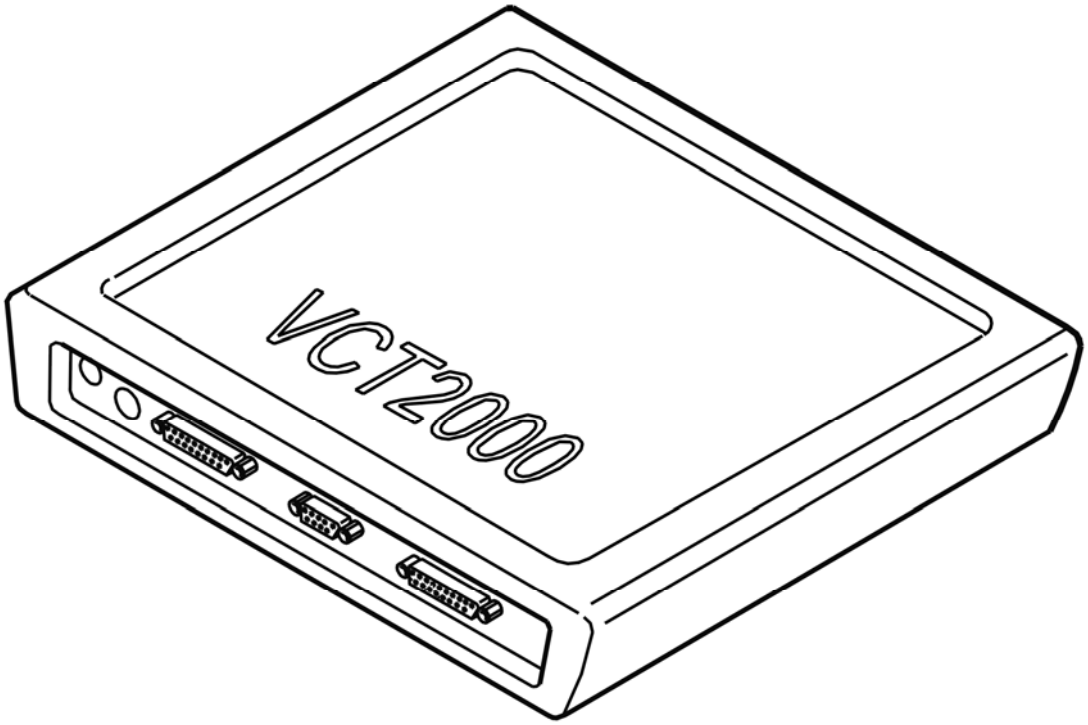

Fig. 272: Identifying VCT2000 Diagnostic Tool Symbol In VIDA
Courtesy of VOLVO CARS CORPORATION

Is function OK?

- **YES**

  VERIFIED: Troubleshooting has been completed.

- **NO**

  Refer to **INFORMATION**

INFORMATION

FAULT-TRACING INFORMATION

The fault should have been detected and remedied. As this is not the case fault-tracing has failed.

Exit fault-tracing for this diagnostic trouble code (DTC) or make another attempt.

ECM-660C: MALFUNCTION INDICATOR LAMP (MIL). SIGNAL TOO HIGH (B6294T; 2005-2006)

DIAGNOSTIC TROUBLE CODE (DTC) INFORMATION ECM-660C

see **DIAGNOSTIC TROUBLE CODE (DTC) INFORMATION ECM-660C**

SIGNAL TOO HIGH. PERMANENT FAULT

see **SIGNAL TOO HIGH. PERMANENT FAULT**

ECM-660D: MALFUNCTION INDICATOR LAMP (MIL). SIGNAL TOO LOW (B5254T2; 2005-2007)

DIAGNOSTIC TROUBLE CODE (DTC) INFORMATION ECM-660D

Condition

If there is a short-circuit to ground in the circuit for the malfunction indicator lamp (MIL) the engine control module (ECM) interprets this as a fault and the diagnostic trouble code (DTC) is stored.

Substitute Value

- None.

Possible Source

- Short-circuit to ground in the signal cable.

Fault symptom[s]

- Malfunction indicator lamp (MIL) lit.

SIGNAL TOO LOW. PERMANENT FAULT

CHECKING COMPONENT AND WIRING

Check the cable between Engine control module (ECM) #B46 and Driver information module (DIM) #2 for short-circuiting to ground according to:**CHECKING WIRING AND TERMINALS. PERMANENT FAULT**

Remedy as necessary.

Other information:

- For connection of engine control module (ECM) breakout box, see **CONNECTING THE BREAKOUT BOX** .
- To connect the breakout box to the Driver information module (DIM), see:**CONNECTING THE BREAKOUT BOX**
- To access/replace the combined instrument panel, see **DRIVER INFORMATION MODULE (DIM), REPLACING**
- For 5 cylinder turbocharged engines -2004, see **SIGNAL DESCRIPTION**
- For 5 cylinder turbocharged engines 2005-, see **SIGNAL SPECIFICATION** .
- For 6 cylinder engines -2004, see **SIGNAL SPECIFICATION**
- For 6 cylinder engines 2005-, see **SIGNAL SPECIFICATION** .
- Signal description Driver information module (DIM):**SIGNAL SPECIFICATION**

- **Continue**

  Refer to **VERIFICATION**

VERIFICATION

VERIFICATION

HINT: After carrying out the repair, check that the fault has been remedied.

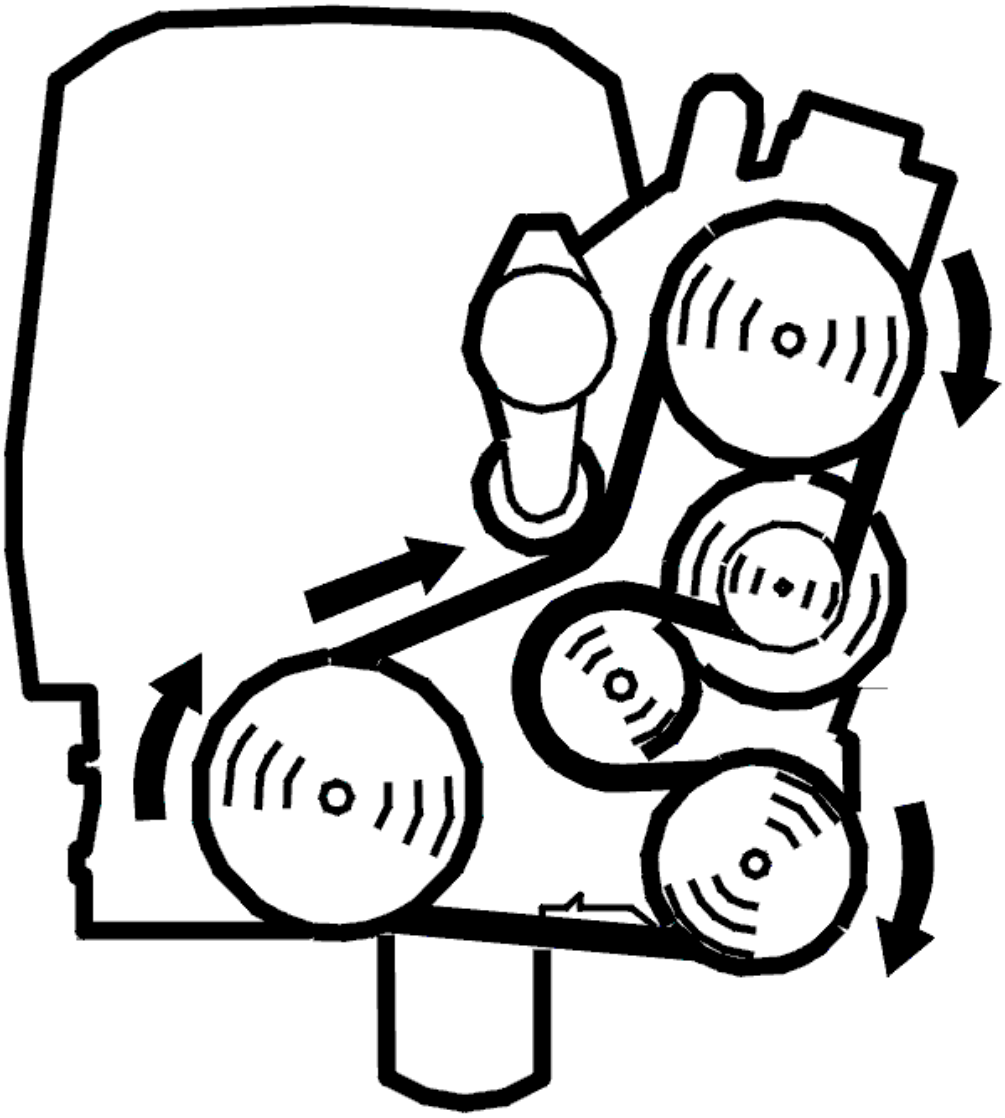

Fig. 273: Belt Routing / Engine Idling - Volvo
Courtesy of VOLVO CARS CORPORATION

- Ignition off
- Reinstall the connectors, components etc.
- Start the engine and let it run at idle speed
- Activate the malfunction indicator lamp (MIL)
- Check that the function is OK.

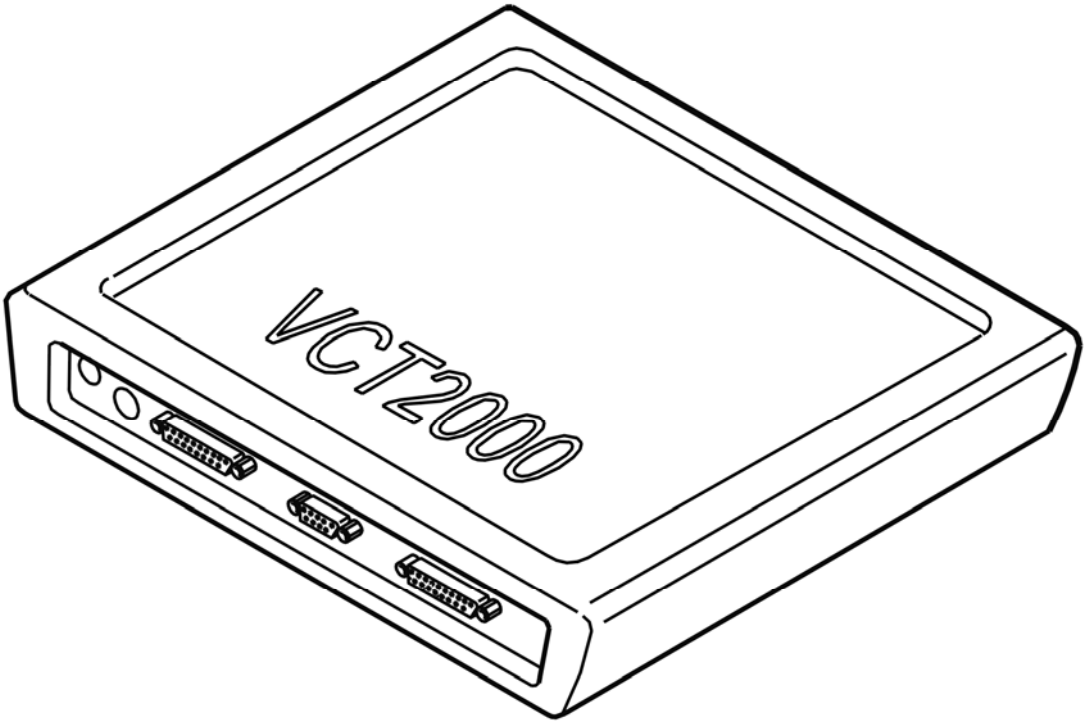

Fig. 274: Identifying VCT2000 Diagnostic Tool Symbol In VIDA
Courtesy of VOLVO CARS CORPORATION

Is function OK?

- **YES**

  VERIFIED: Troubleshooting has been completed.

- **NO**

  Refer to **INFORMATION**

INFORMATION

FAULT-TRACING INFORMATION

The fault should have been detected and remedied. As this is not the case fault-tracing has failed.

Exit fault-tracing for this diagnostic trouble code (DTC) or make another attempt.

ECM-660D: MALFUNCTION INDICATOR LAMP (MIL). SIGNAL TOO LOW (B6294T; 2005-2006)

DIAGNOSTIC TROUBLE CODE (DTC) INFORMATION ECM-660D

see **DIAGNOSTIC TROUBLE CODE (DTC) INFORMATION ECM-660D**

SIGNAL TOO LOW. PERMANENT FAULT

see **SIGNAL TOO LOW. PERMANENT FAULT**

ECM-6700: CAMSHAFT POSITION, INLET. FAULTY SIGNAL (B5254T2; 2005-2007)

DIAGNOSTIC TROUBLE CODE (DTC) INFORMATION ECM-6700

Condition

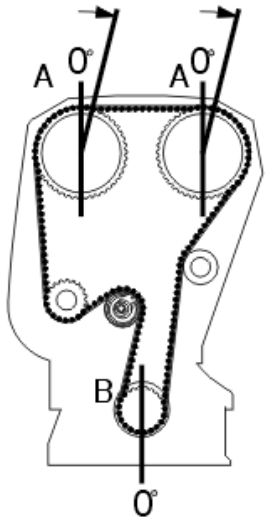

Fig. 275: Identifying Camshaft Control (CVVT)
Courtesy of VOLVO CARS CORPORATION

The engine control module (ECM) checks the angle of the camshaft (its position in relation to the crankshaft).

If the Engine control module (ECM) detects that the intake camshaft's angle position changes dramatically when idling, the Engine control module (ECM) interprets this as a fault and stores a DTC.

The diagnostic trouble code (DTC) can be diagnosed when the engine is hot and the camshaft is in position 0.

Substitute Value

- The Engine control module (ECM) switches off camshaft control.

Possible Source

- Incorrectly adjusted camshafts
- The timing gear belt has jumped off the cogs
- Damaged camshaft reset valve
- Mechanical fault in the variable valve timing (VVT) unit.

Fault symptom[s]

- Malfunction indicator lamp (MIL) lit.

FAULT-TRACING

CHECKING THE STATUS

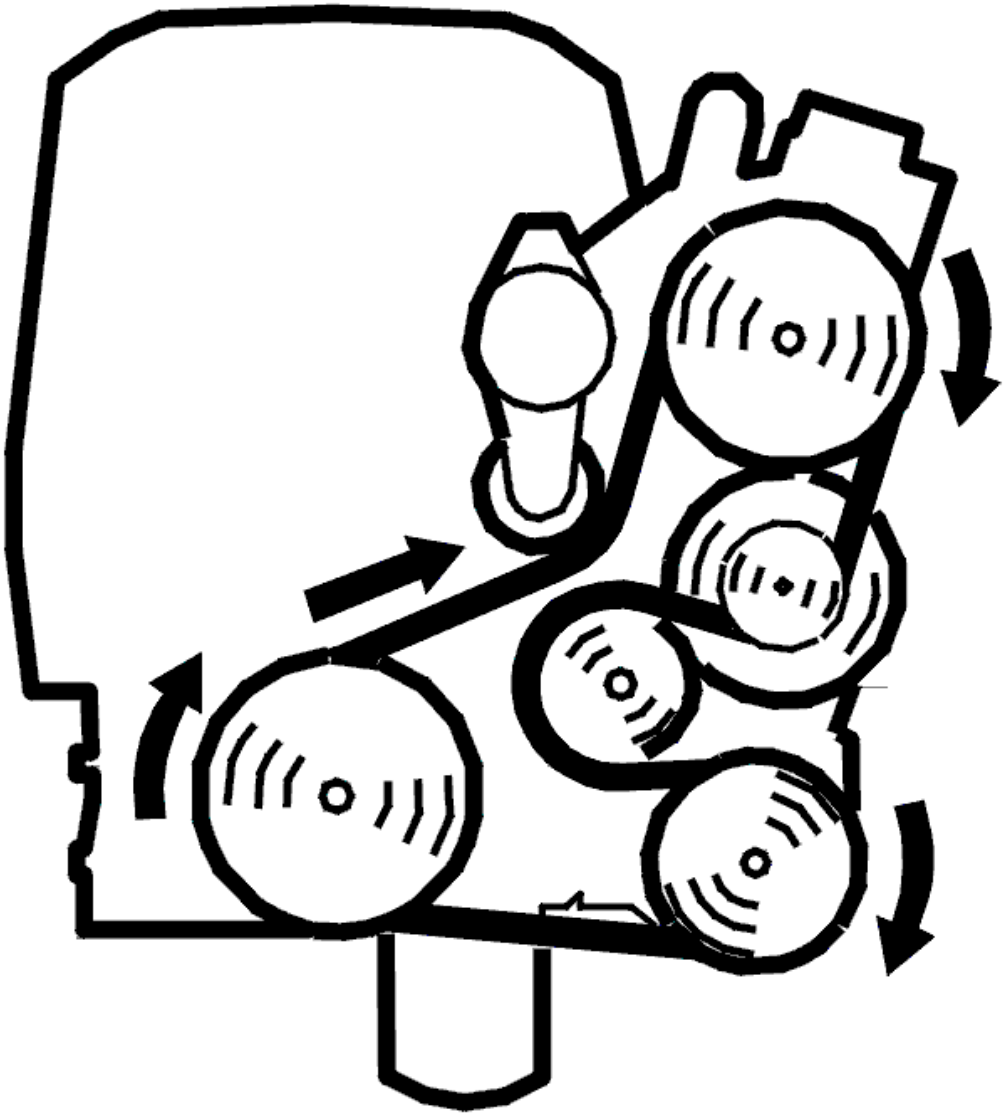

Fig. 276: Belt Routing / Engine Idling - Volvo
Courtesy of VOLVO CARS CORPORATION

- Start the engine and run it to normal operating temperature
- Read off and note the adaptation value for the camshaft at idle speed. The value must be between -8° and +8°.

  The fault is intermittent if the adaptation value is between -8° and +8°. The fault is permanent if the adaptation value is lower than -8° or higher than +8°.

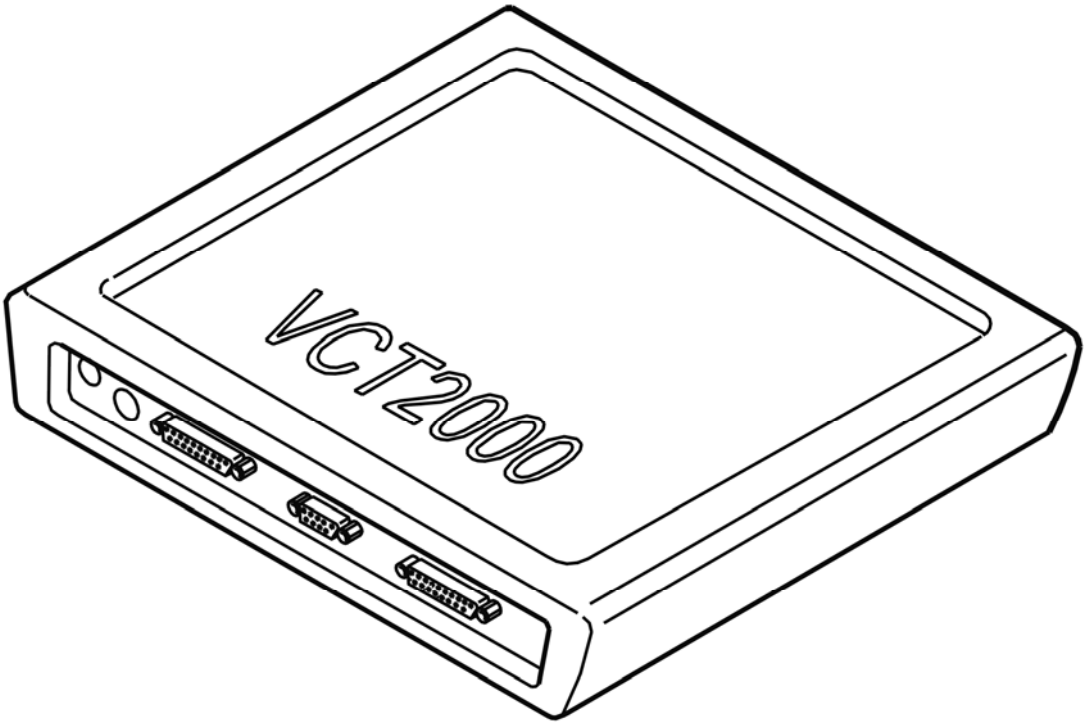

Fig. 277: Identifying VCT2000 Diagnostic Tool Symbol In VIDA
Courtesy of VOLVO CARS CORPORATION

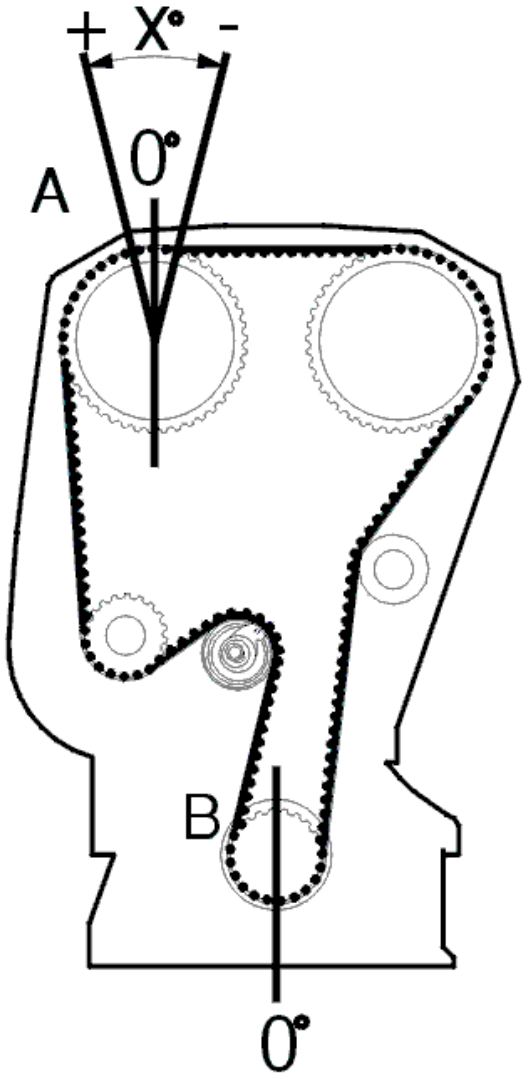

Fig. 278: Identifying Camshaft Position Angle
Courtesy of VOLVO CARS CORPORATION

Is the adaptation value correct?

- **YES**

  Refer to **INTERMITTENT FAULT**

- **NO**

  Refer to **CHECKING COMPONENTS**

CHECKING COMPONENTS

For the variable valve timing control to work, the engine oil must be at the correct level, of the correct grade

and free of contaminants.

Check the level and quality of the engine oil. Check for contaminants in particular.

If the adaptation value is too high (higher than +8°) when the engine is at operating temperature, the cause of the fault is probably one of the following:

- Camshaft belt incorrectly seated
- Incorrect basic setting of the timing belt
- Faulty camshaft reset valve (the slide in the valve has stuck).

Try to adjust the basic setting of the camshaft. Then read off the adaptation value for the camshaft with the engine idling and at operating temperature. The value must be between -8° and +8°. If the adaptation value is incorrect when the basic setting of the camshaft is correct, try cleaning the camshaft reset valve.

NOTE: The camshafts must be adjusted using the adjustment tool for the camshafts and crankshaft in the prescribed manner.

Try a new camshaft reset valve if the above fault-tracing does not solve the fault.

Remedy as necessary.

HINT: The fault can also be caused by a damaged variable valve timing unit. The variable valve timing unit may be damaged if the above fault-tracing and corrective action do not remedy the fault.

Other information:

- see **VVT SOLENOID, INSPECTION AND CLEANING**
- For B5xx4T, see **CAMSHAFT SEAL/VARIABLE VALVE TIMING (VVT) UNIT, REPLACING**
- For B6xx4T, see **CAMSHAFT SEAL/VARIABLE VALVE TIMING (VVT) UNIT, REPLACING** .
- For B5xx4T, see **VARIABLE VALVE TIMING SOLENOID, REPLACING**
- For B6xx4T, see **REPLACING THE VARIABLE VALVE TIMING SOLENOID** .

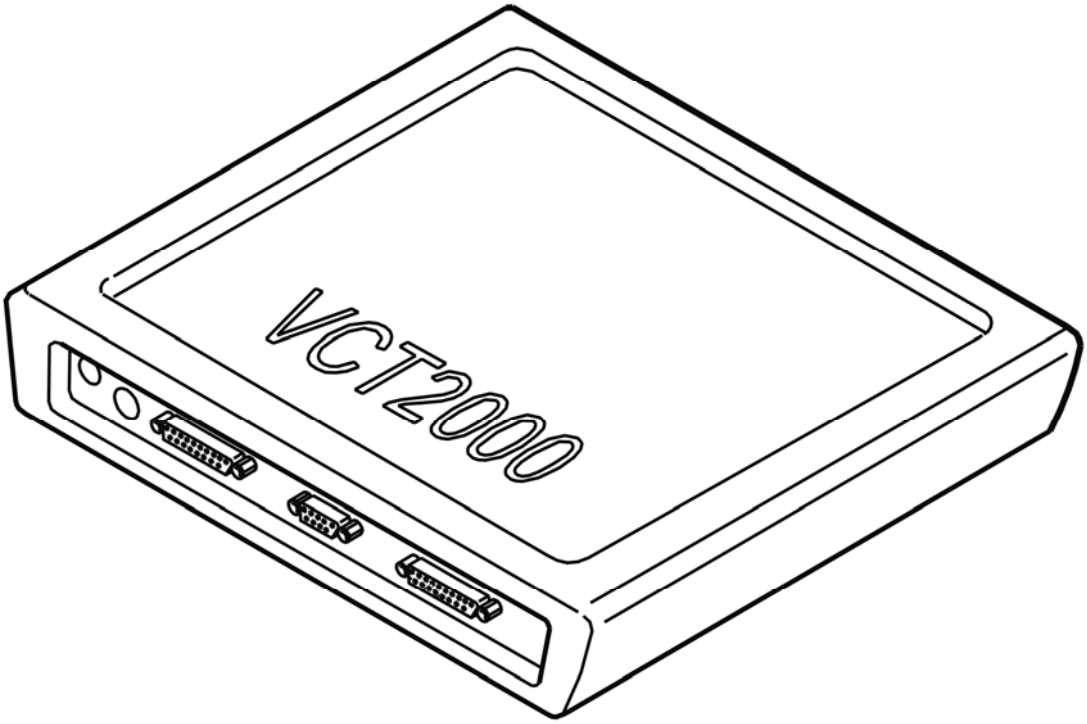

Fig. 279: Identifying VCT2000 Diagnostic Tool Symbol In VIDA
Courtesy of VOLVO CARS CORPORATION

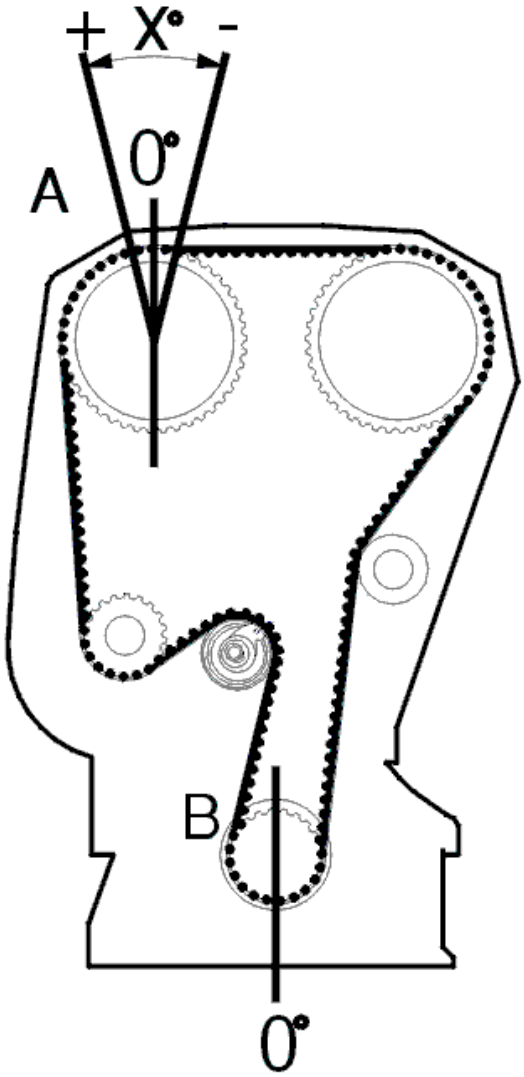

Fig. 280: Identifying Camshaft Position Angle
Courtesy of VOLVO CARS CORPORATION

- **Continue**

  Refer to **VERIFICATION**

INTERMITTENT FAULT

If the diagnostic trouble code (DTC) for this fault is stored but the adaptation value is correct, the fault is intermittent. Cause of the intermittent fault is probably a damaged camshaft reset valve.

HINT: The fault can be caused by contaminants in the camshaft reset valve. Try cleaning the valve.

Other information:

- see **VVT SOLENOID, INSPECTION AND CLEANING**
- For B5xx4T, see **VARIABLE VALVE TIMING SOLENOID, REPLACING**
- For B6xx4T, see **REPLACING THE VARIABLE VALVE TIMING SOLENOID** .
- For B5xx4T, see **CAMSHAFT SEAL/VARIABLE VALVE TIMING (VVT) UNIT, REPLACING**
- For B6xx4T, see **CAMSHAFT SEAL/VARIABLE VALVE TIMING (VVT) UNIT, REPLACING** .

- **Continue**

  Refer to **VERIFICATION**

VERIFICATION

VERIFICATION

HINT: After carrying out the repair, check that the fault has been remedied.

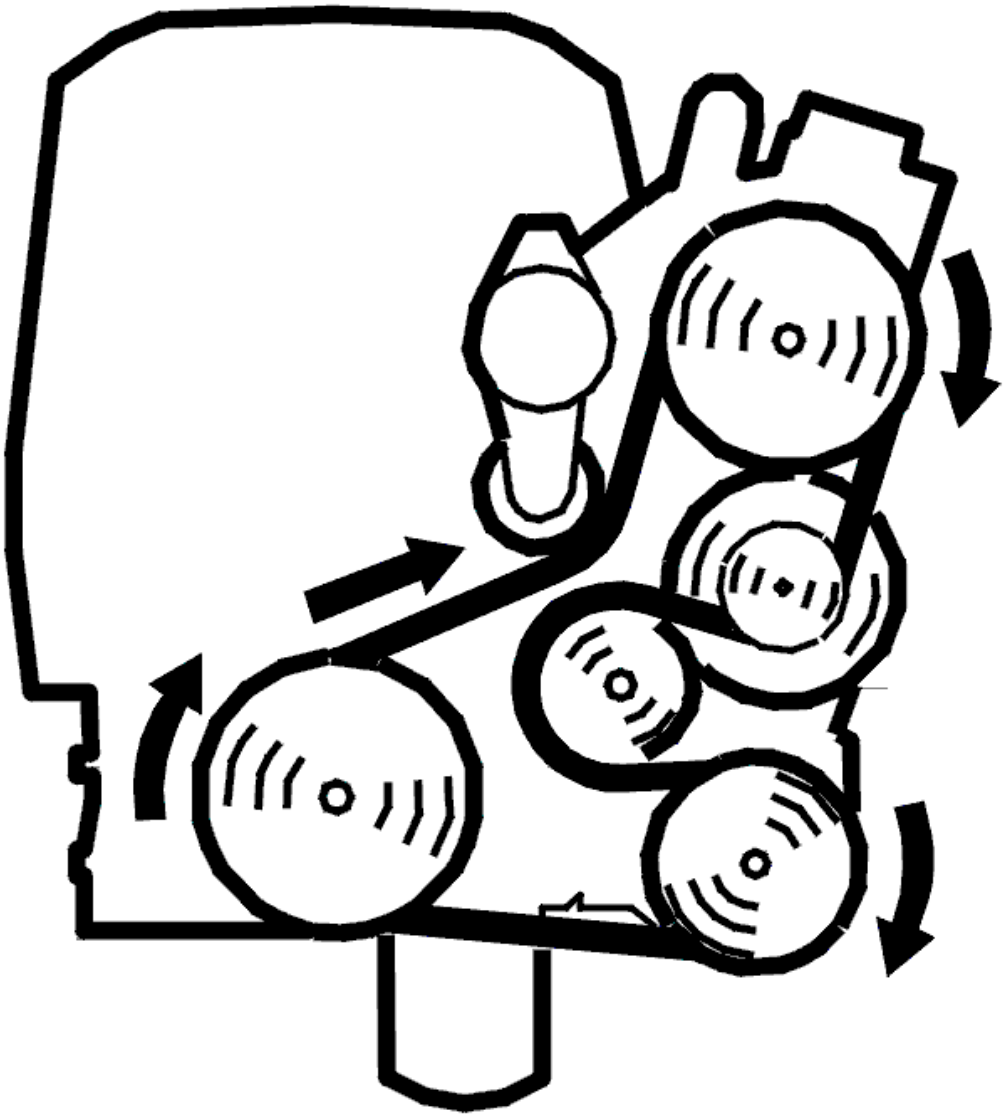

Fig. 281: Belt Routing / Engine Idling - Volvo
Courtesy of VOLVO CARS CORPORATION

- Start the engine and run it to normal operating temperature
- Read off the camshaft adaptation at idle speed.

  The adaptation value must be between -8° and +8.

  The function is OK if the adaptation value is correct.

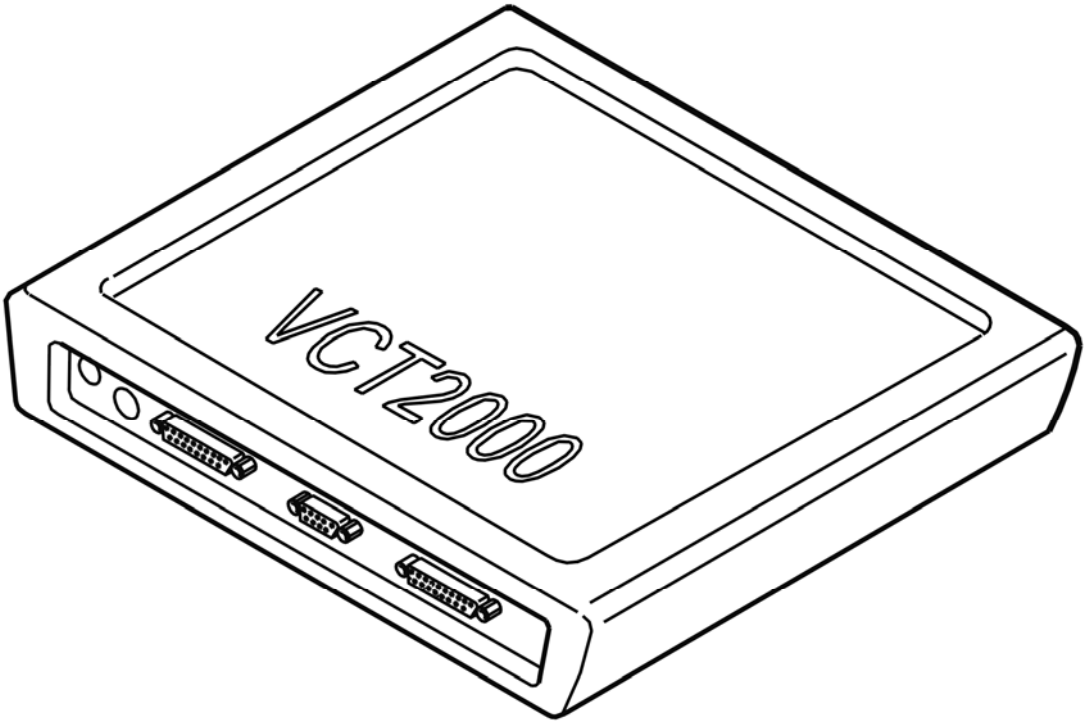

Fig. 282: Identifying VCT2000 Diagnostic Tool Symbol In VIDA
Courtesy of VOLVO CARS CORPORATION

Is the function OK?

- **YES**

  VERIFIED: Troubleshooting has been completed.

- **NO**

  Refer to **INFORMATION**

INFORMATION

FAULT-TRACING INFORMATION

The fault should have been detected and remedied. As this is not the case fault-tracing has failed.

Exit fault-tracing for this diagnostic trouble code (DTC) or make another attempt.

ECM-6700: CAMSHAFT POSITION, INLET. FAULTY SIGNAL (B6294T; 2005-2006)

DIAGNOSTIC TROUBLE CODE (DTC) INFORMATION ECM-6700

see **DIAGNOSTIC TROUBLE CODE (DTC) INFORMATION ECM-6700**

FAULT-TRACING

see **FAULT-TRACING**

ECM-670C: CAMSHAFT POSITION, INTAKE. HIGH (B5254T2; 2005-2007)

DIAGNOSTIC TROUBLE CODE (DTC) INFORMATION ECM-670C

Condition

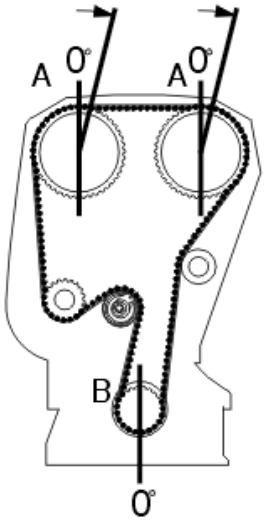

Fig. 283: Identifying Camshaft Control (CVVT)
Courtesy of VOLVO CARS CORPORATION

The engine control module (ECM) checks the angle of the camshaft (its position in relation to the crankshaft).

If the inlet camshaft's angle position deviates and is too high during adaption (camshaft is ahead of crankshaft), the Engine control module (ECM) will interpret this as a failure and store a diagnostic trouble code.

The diagnostic trouble code (DTC) can be diagnosed when the engine is hot and the camshaft is in position 0.

Substitute Value

- The Engine control module (ECM) switches off camshaft control.

Possible Source

- Poor engine oil quality

- Incorrectly adjusted camshafts
- The timing gear belt has jumped off the cogs
- Damaged camshaft reset valve
- Mechanical fault in the variable valve timing (VVT) unit.

Fault symptom[s]

- Malfunction indicator lamp (MIL) lit.

HIGH

CHECKING THE STATUS

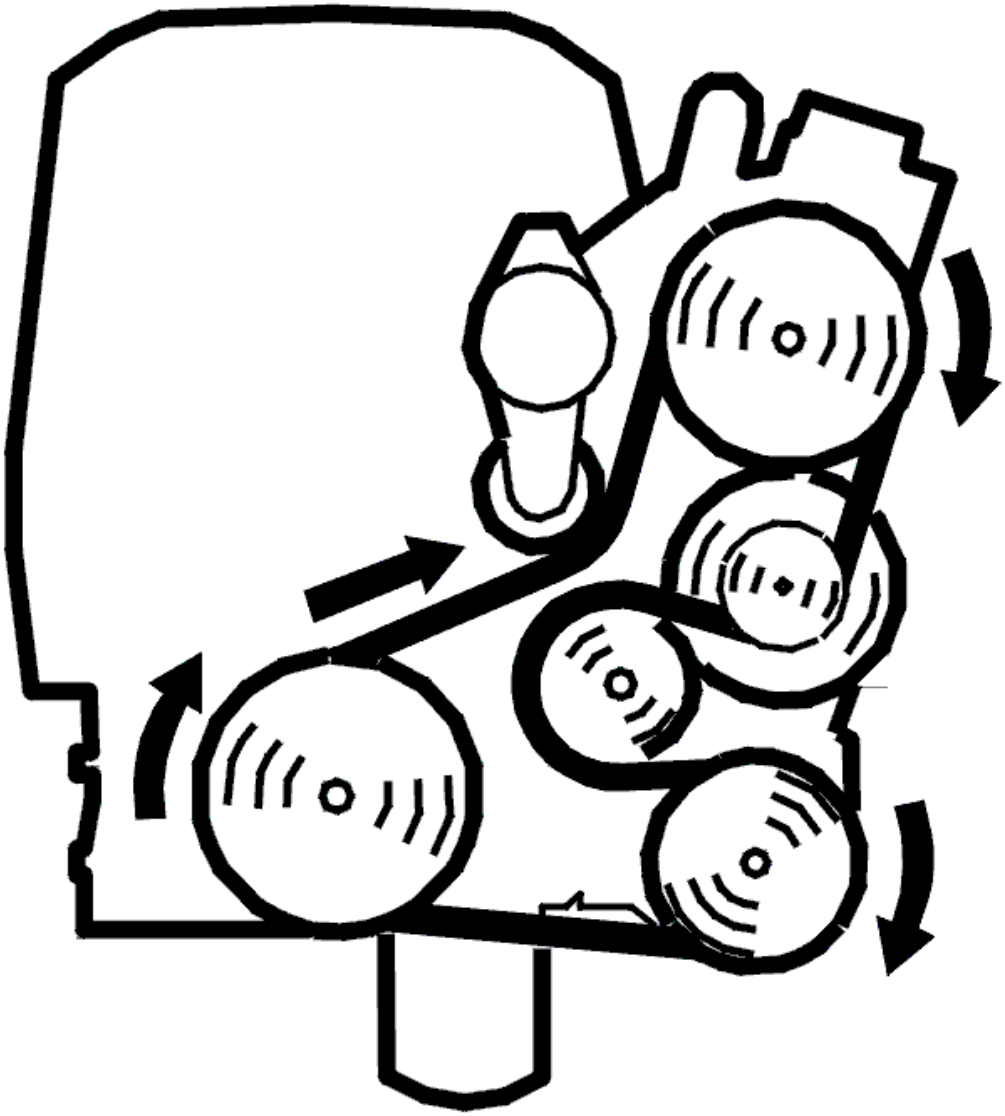

Fig. 284: Belt Routing / Engine Idling - Volvo
Courtesy of VOLVO CARS CORPORATION

- Start the engine and run it to normal operating temperature
- Read off and note the adaptation value for the camshaft at idle speed. The value must be between -8° and +8°.

  The fault is intermittent if the adaptation value is between -8° and +8°. The fault is permanent if the adaptation value is lower than -8° or higher than +8°.

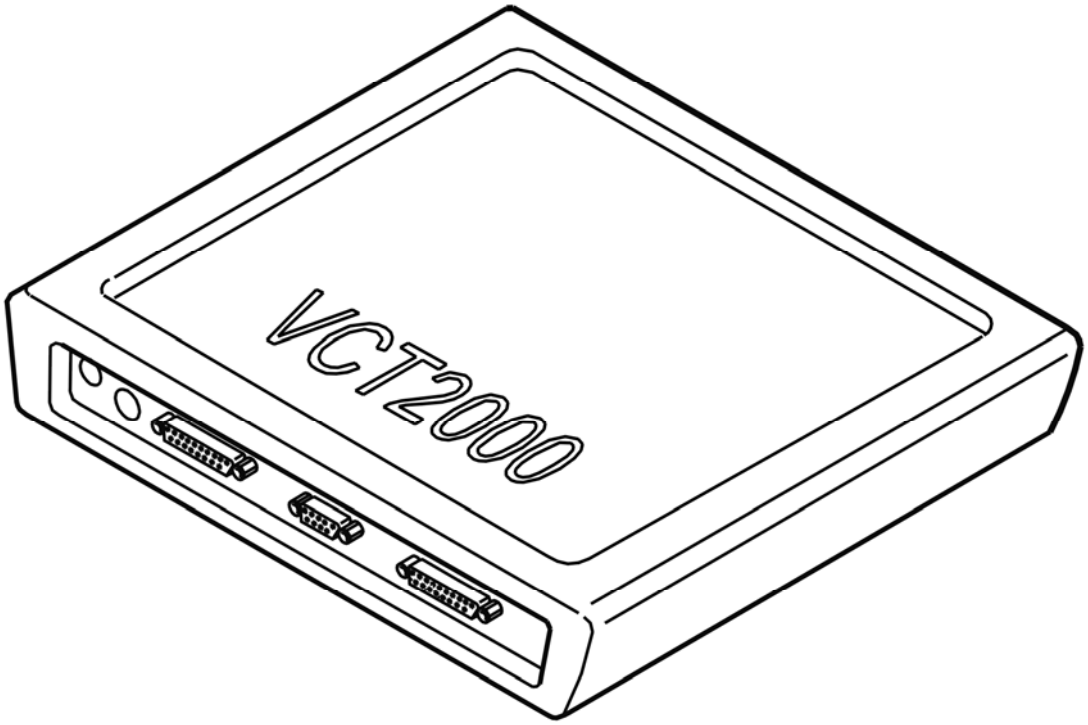

Fig. 285: Identifying VCT2000 Diagnostic Tool Symbol In VIDA
Courtesy of VOLVO CARS CORPORATION

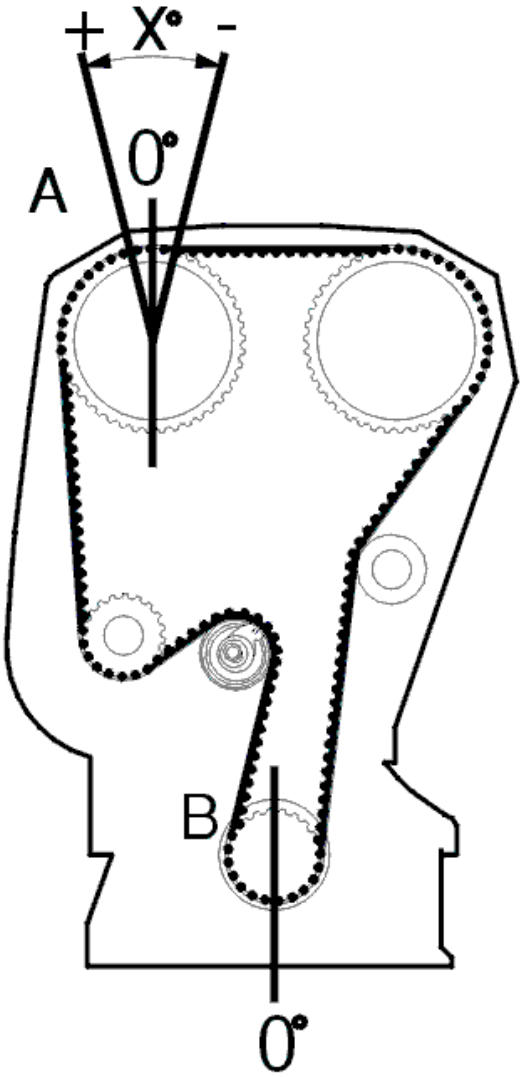

Fig. 286: Identifying Camshaft Position Angle
Courtesy of VOLVO CARS CORPORATION

Is the adaptation value correct?

- **YES**

  Refer to **INTERMITTENT FAULT**

- **NO**

  Refer to **CHECKING COMPONENTS**

CHECKING COMPONENTS

For the variable valve timing control to work, the engine oil must be at the correct level, of the correct grade

and free of contaminants.

Check the level and quality of the engine oil. Check for contaminants in particular.

If the adaptation value is too high (higher than +8°) when the engine is at operating temperature, the cause of the fault is probably one of the following:

- Camshaft belt incorrectly seated
- Incorrect basic setting of the timing belt
- Faulty camshaft reset valve (the slide in the valve has stuck).

Try to adjust the basic setting of the camshaft. Then read off the adaptation value for the camshaft with the engine idling and at operating temperature. The value must be between -8° and +8°. If the adaptation value is incorrect when the basic setting of the camshaft is correct, try cleaning the camshaft reset valve.

NOTE: The camshafts must be adjusted using the adjustment tool for the camshafts and crankshaft in the prescribed manner.

Try a new camshaft reset valve if the above fault-tracing does not solve the fault.

Remedy as necessary.

HINT: The fault can also be caused by a damaged variable valve timing unit. The variable valve timing unit may be damaged if the above fault-tracing and corrective action do not remedy the fault.

Other information:

- see **VVT SOLENOID, INSPECTION AND CLEANING**
- For B5xx4T, see **CAMSHAFT SEAL/VARIABLE VALVE TIMING (VVT) UNIT, REPLACING**
- For B6xx4T, see **CAMSHAFT SEAL/VARIABLE VALVE TIMING (VVT) UNIT, REPLACING** .
- For B5xx4T, see **VARIABLE VALVE TIMING SOLENOID, REPLACING**
- For B6xx4T, see **REPLACING THE VARIABLE VALVE TIMING SOLENOID** .

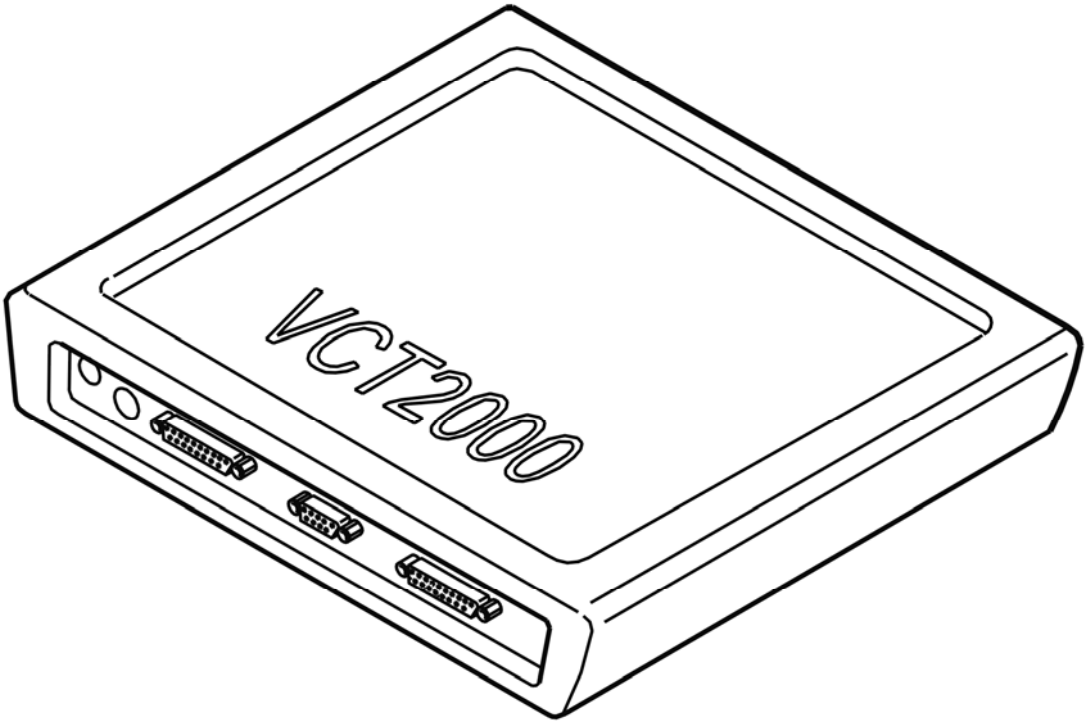

Fig. 287: Identifying VCT2000 Diagnostic Tool Symbol In VIDA
Courtesy of VOLVO CARS CORPORATION

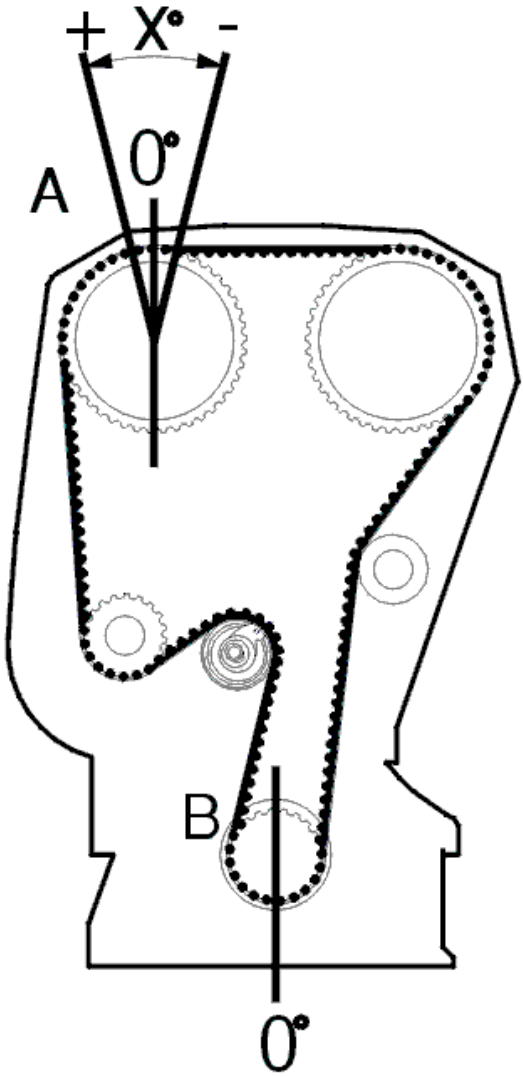

Fig. 288: Identifying Camshaft Position Angle
Courtesy of VOLVO CARS CORPORATION

- **Continue**

  Refer to **VERIFICATION**

INTERMITTENT FAULT

If the diagnostic trouble code (DTC) for this fault is stored but the adaptation value is correct, the fault is intermittent. Cause of the intermittent fault is probably a damaged camshaft reset valve.

HINT: The fault can be caused by contaminants in the camshaft reset valve. Try cleaning the valve.

Other information:

- see **VVT SOLENOID, INSPECTION AND CLEANING**
- For B5xx4T, see **VARIABLE VALVE TIMING SOLENOID, REPLACING**
- For B6xx4T, see **REPLACING THE VARIABLE VALVE TIMING SOLENOID** .
- For B5xx4T, see **CAMSHAFT SEAL/VARIABLE VALVE TIMING (VVT) UNIT, REPLACING**
- For B6xx4T, see **CAMSHAFT SEAL/VARIABLE VALVE TIMING (VVT) UNIT, REPLACING** .

- **Continue**

  Refer to **VERIFICATION**

VERIFICATION

VERIFICATION

HINT: After carrying out the repair, check that the fault has been remedied.

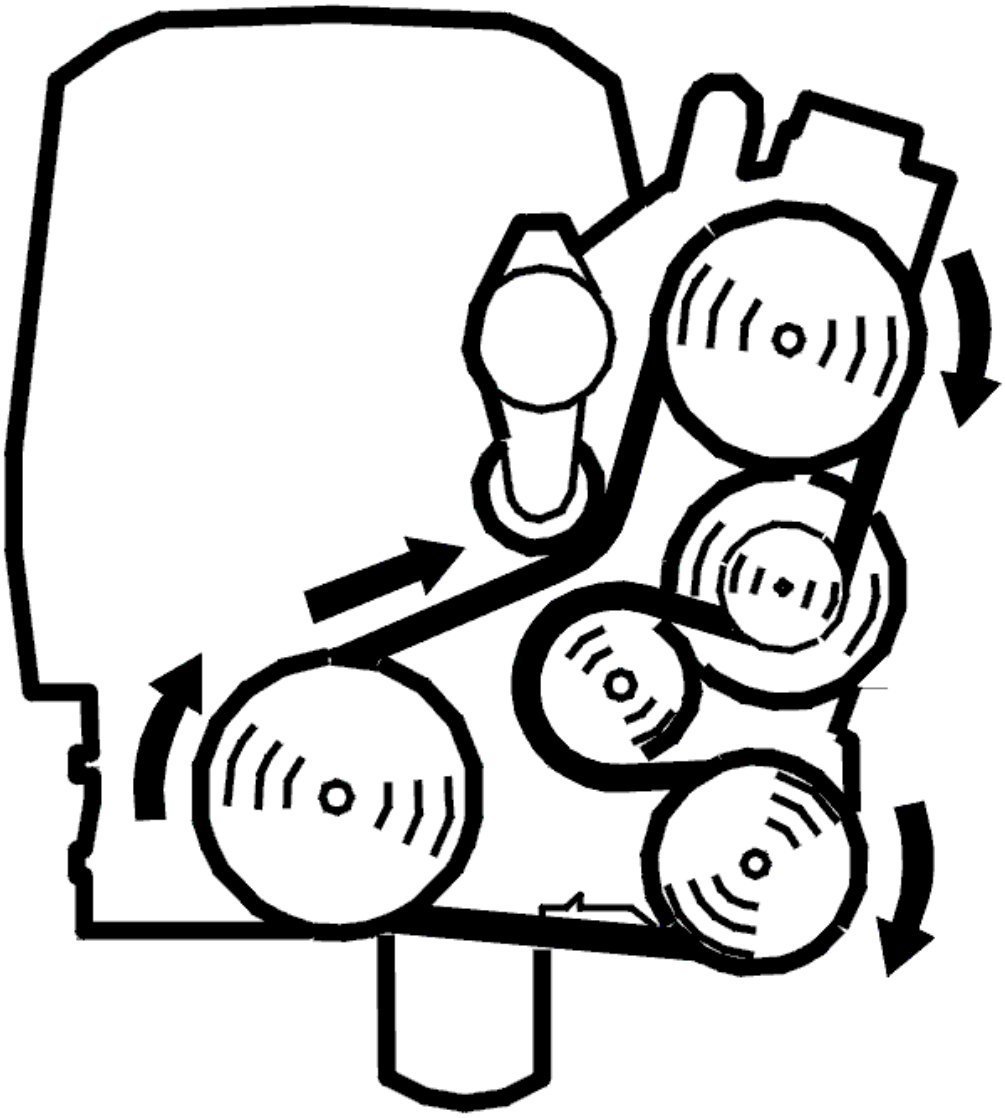

Fig. 289: Belt Routing / Engine Idling - Volvo
Courtesy of VOLVO CARS CORPORATION

- Start the engine and run it to normal operating temperature
- Read off the camshaft adaptation at idle speed.

  The adaptation value must be between -8° and +8.

  The function is OK if the adaptation value is correct.

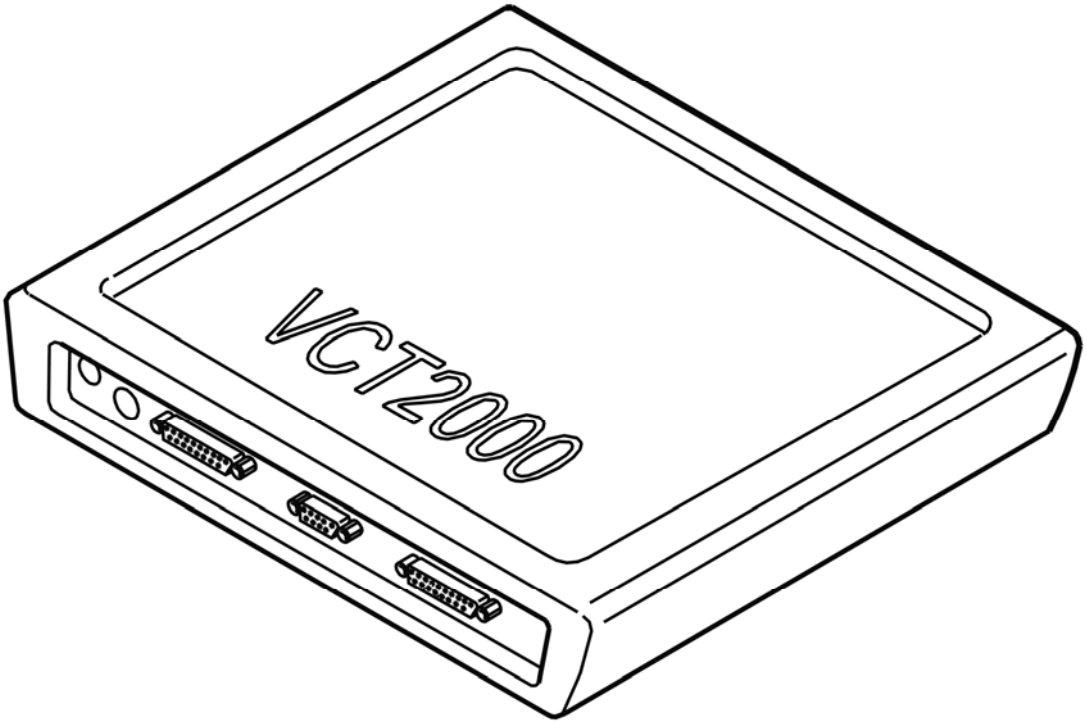

Fig. 290: Identifying VCT2000 Diagnostic Tool Symbol In VIDA
Courtesy of VOLVO CARS CORPORATION

Is the function OK?

- **YES**

  VERIFIED: Troubleshooting has been completed.

- **NO**

  Refer to **INFORMATION**

INFORMATION

FAULT-TRACING INFORMATION

The fault should have been detected and remedied. As this is not the case fault-tracing has failed.

Exit fault-tracing for this diagnostic trouble code (DTC) or make another attempt.

ECM-670C: CAMSHAFT POSITION, INTAKE. HIGH (B6294T; 2005-2006)

DIAGNOSTIC TROUBLE CODE (DTC) INFORMATION ECM-670C

see **DIAGNOSTIC TROUBLE CODE (DTC) INFORMATION ECM-670C**

HIGH

see **HIGH**

ECM-670D: CAMSHAFT POSITION, INTAKE. LOW (B5254T2; 2005-2007)

DIAGNOSTIC TROUBLE CODE (DTC) INFORMATION ECM-670D

Condition

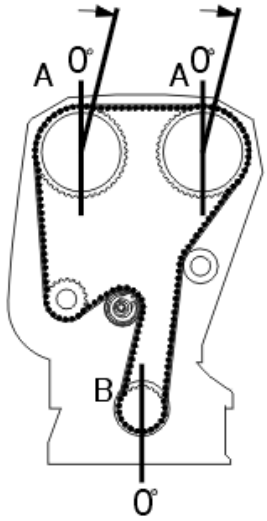

Fig. 291: Identifying Camshaft Control (CVVT)
Courtesy of VOLVO CARS CORPORATION

The engine control module (ECM) checks the angle of the camshaft (its position in relation to the crankshaft).

If the intake camshaft's angle position deviates and is too low (the camshaft is "after" the crankshaft) during fuel trim, the Engine control module (ECM) interprets this as a fault and stores a DTC.

The diagnostic trouble code (DTC) can be diagnosed when the engine is hot and the camshaft is in position 0.

Substitute Value

- None. The Engine control module (ECM) switches off camshaft control.

Possible Source

- Poor engine oil quality
- Incorrectly adjusted camshafts
- The timing gear belt has jumped off the cogs.

- Air conditioning (A/C) compressor. Damaged camshaft reset valve.
- Mechanical fault in the variable valve timing (VVT) unit.

Fault symptom[s]

- Malfunction indicator lamp (MIL) lit.

LOW

CHECKING THE STATUS

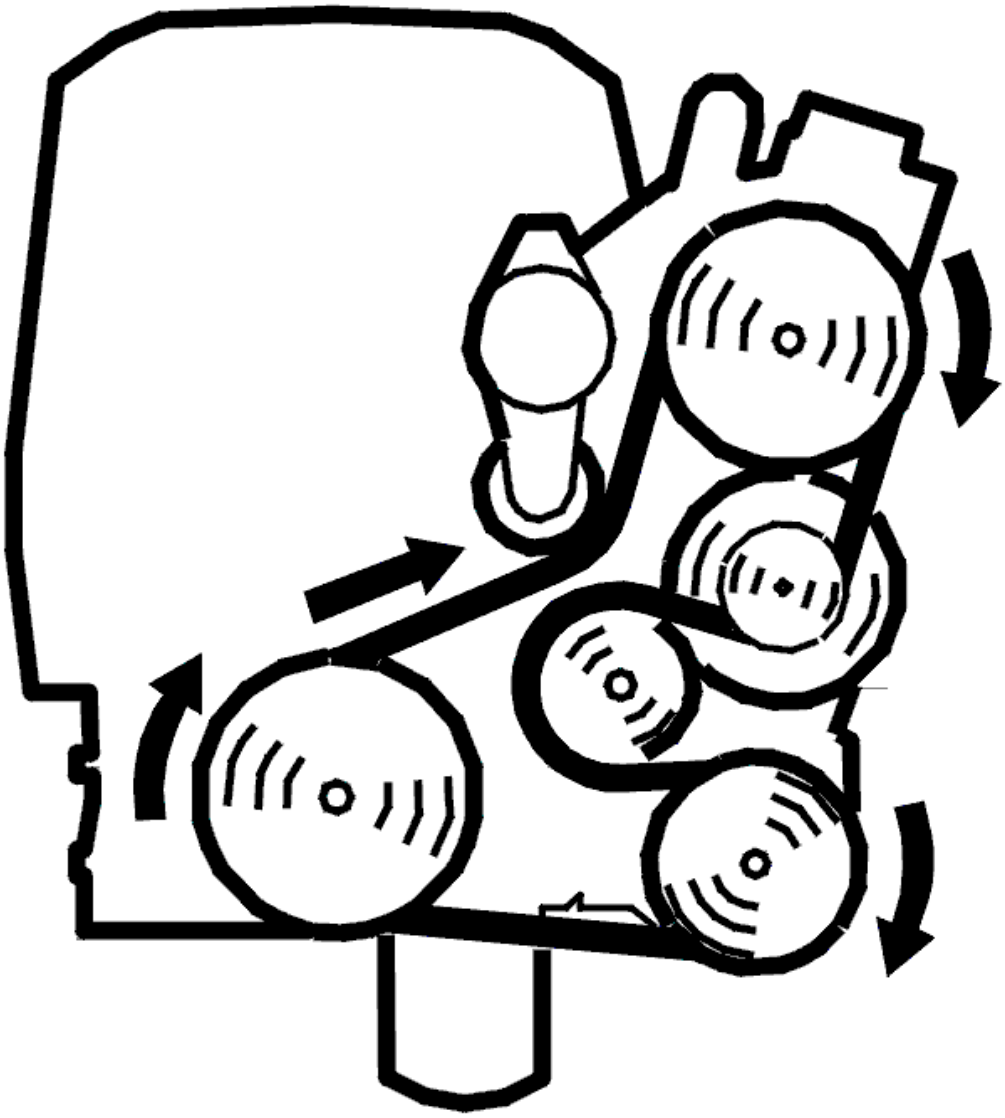

Fig. 292: Belt Routing / Engine Idling - Volvo
Courtesy of VOLVO CARS CORPORATION

- Start the engine and run it to normal operating temperature

- Read off and note the adaptation value for the camshaft at idle speed. The value must be between -8° and +8°.

  The fault is intermittent if the adaptation value is between -8° and +8°. The fault is permanent if the adaptation value is lower than -8° or higher than +8°.

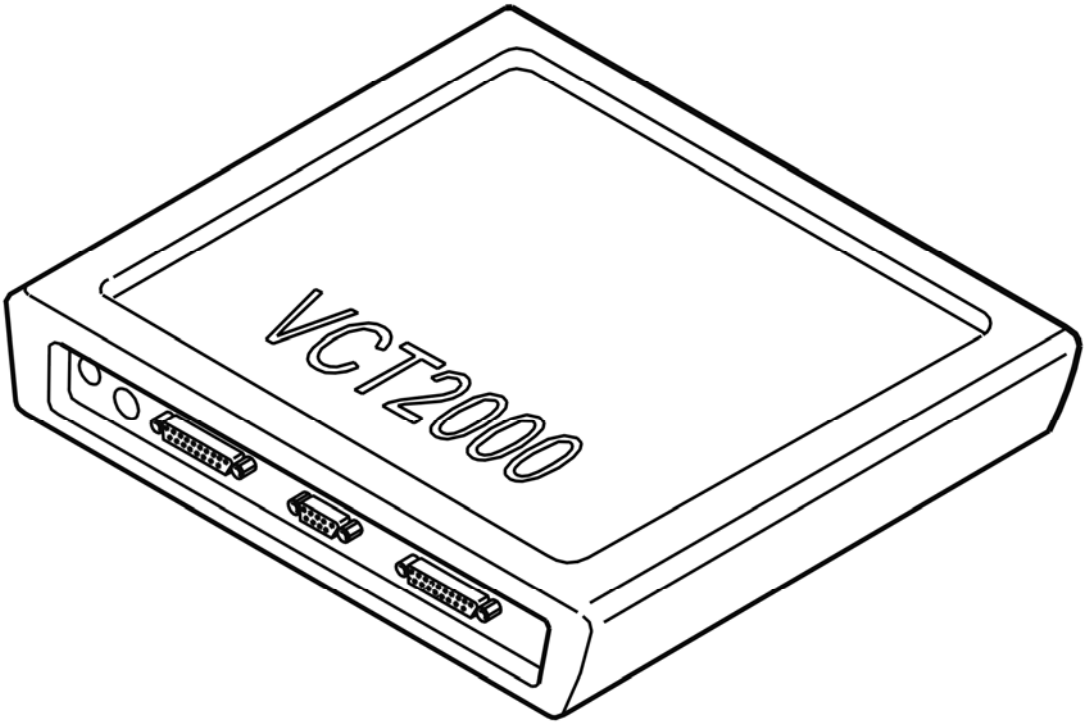

Fig. 293: Identifying VCT2000 Diagnostic Tool Symbol In VIDA
Courtesy of VOLVO CARS CORPORATION

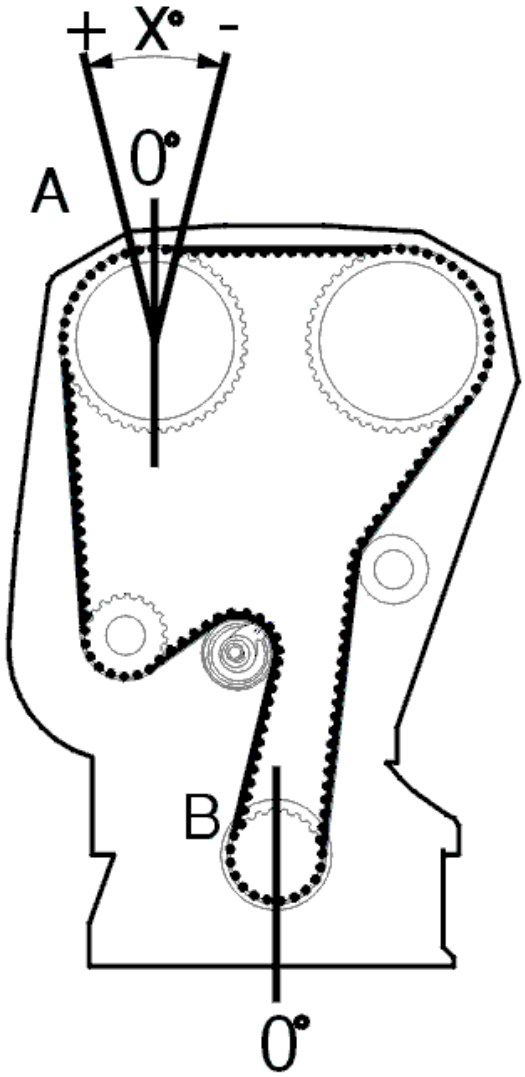

Fig. 294: Identifying Camshaft Position Angle
Courtesy of VOLVO CARS CORPORATION

- **Continue**

  Refer to **CHECKING COMPONENTS**

CHECKING COMPONENTS

For the variable valve timing control to work, the engine oil must be at the correct level, of the correct grade and free of contaminants.

Check the level and quality of the engine oil. Check for contaminants in particular.

Adjust the camshaft settings.

NOTE: **The camshafts must be adjusted using the adjustment tool for the camshafts and crankshaft in the prescribed manner.**

Other information:

- For B5xx4T, see **CAMSHAFT SEAL/VARIABLE VALVE TIMING (VVT) UNIT, REPLACING**
- For B6xx4T, see **CAMSHAFT SEAL/VARIABLE VALVE TIMING (VVT) UNIT, REPLACING** .

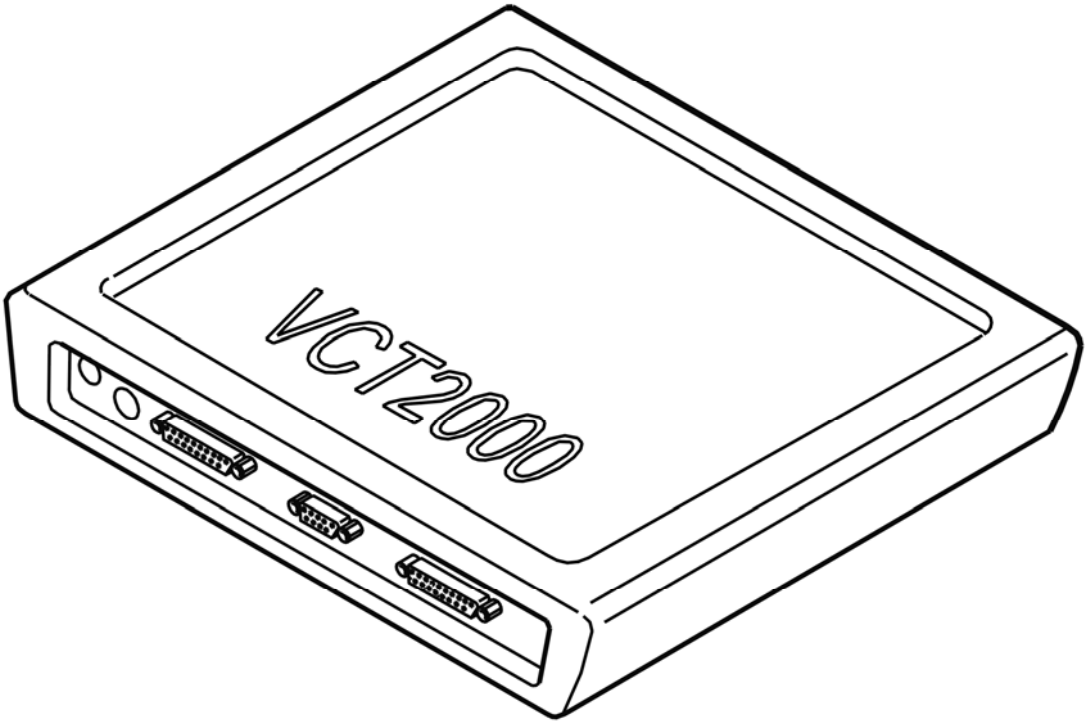

Fig. 295: Identifying VCT2000 Diagnostic Tool Symbol In VIDA
Courtesy of VOLVO CARS CORPORATION

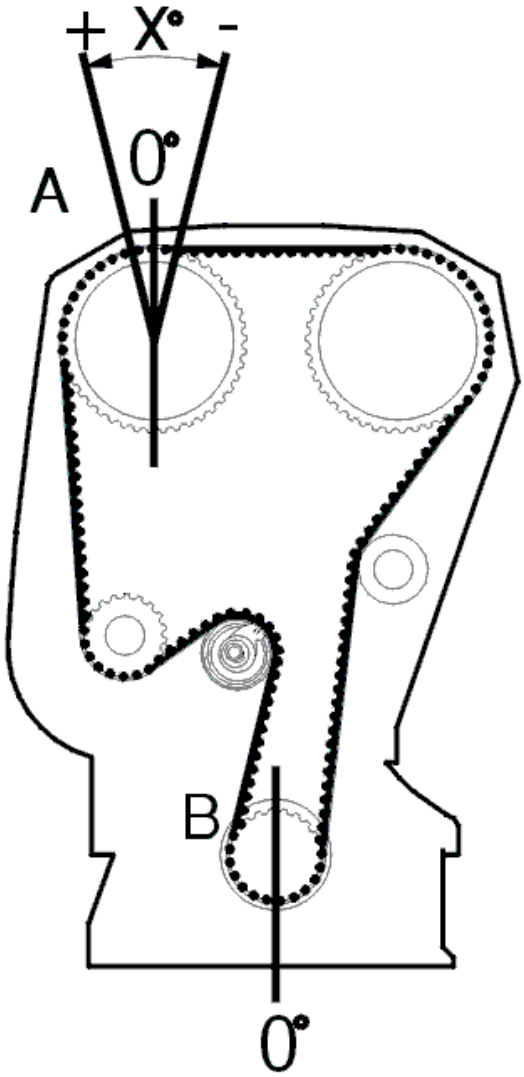

Fig. 296: Identifying Camshaft Position Angle
Courtesy of VOLVO CARS CORPORATION

- **Continue**

  Refer to **VERIFICATION**

VERIFICATION

VERIFICATION

HINT: After carrying out the repair, check that the fault has been remedied.

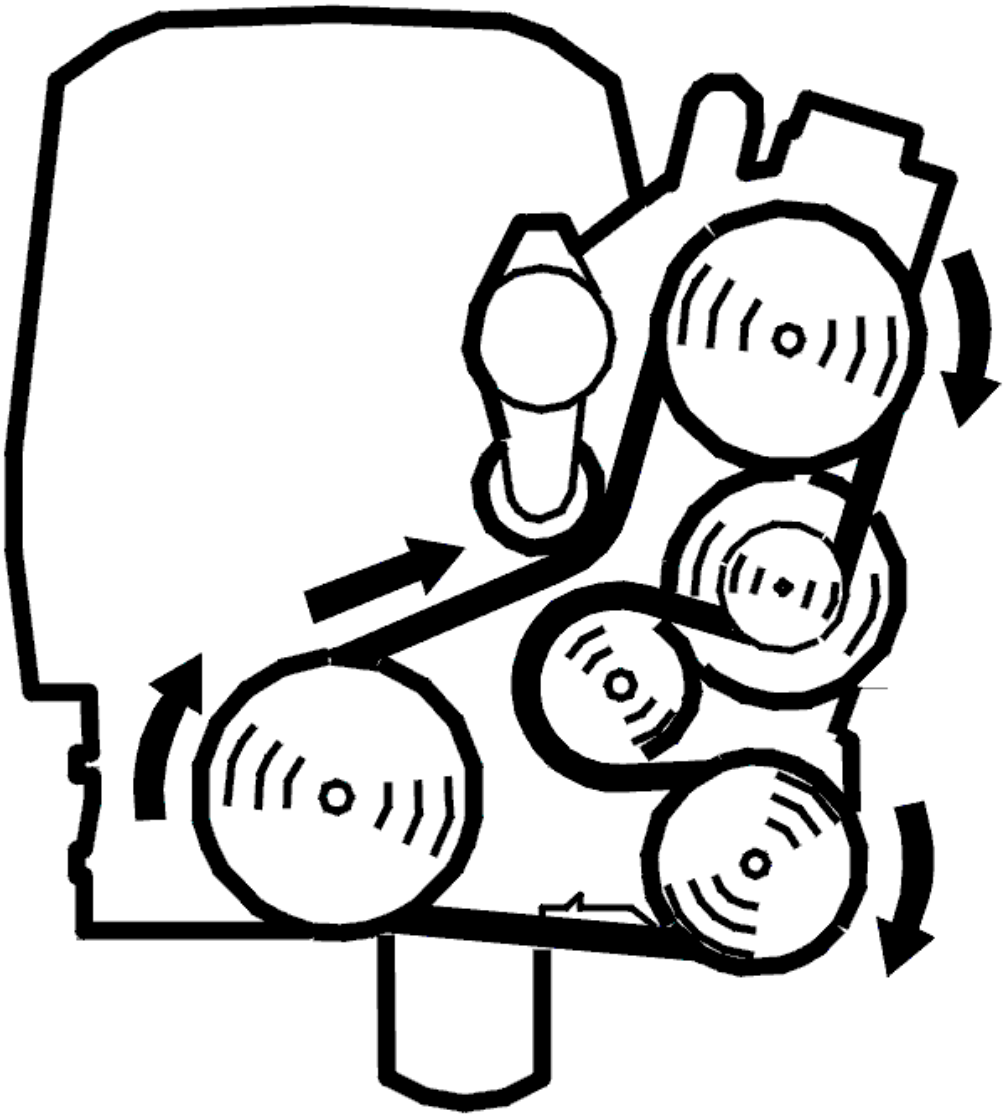

Fig. 297: Belt Routing / Engine Idling - Volvo
Courtesy of VOLVO CARS CORPORATION

- Start the engine and run it to normal operating temperature
- Read off the camshaft adaptation at idle speed.

  The adaptation value must be between -8° and +8.

  The function is OK if the adaptation value is correct.

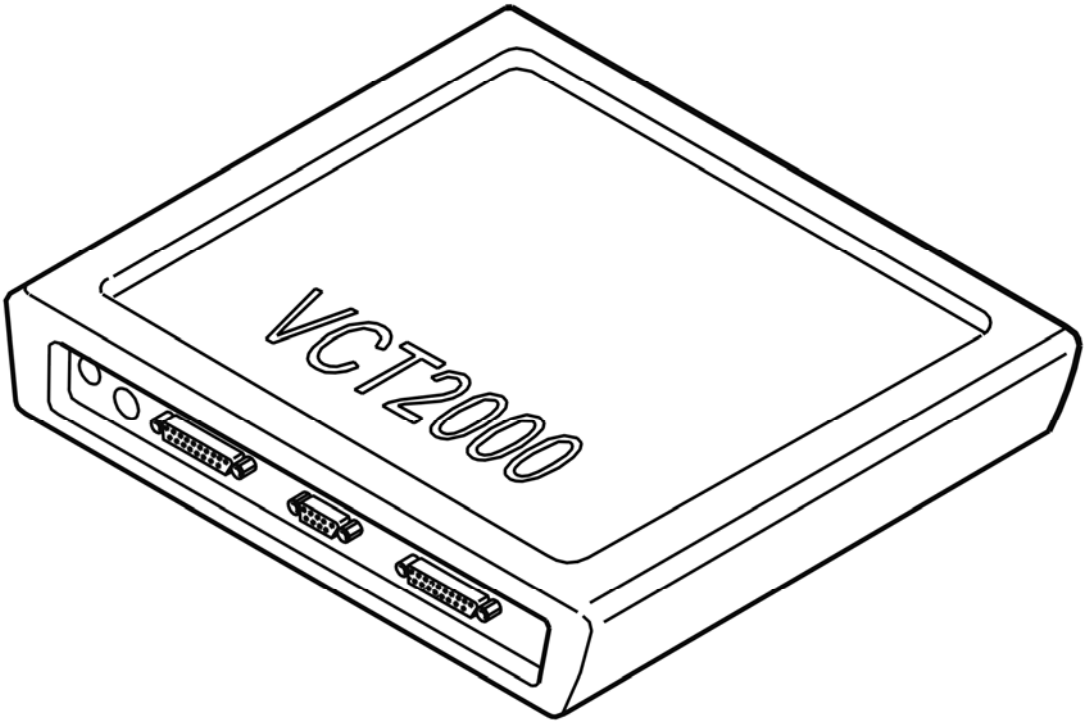

Fig. 298: Identifying VCT2000 Diagnostic Tool Symbol In VIDA
Courtesy of VOLVO CARS CORPORATION

Is the function OK?

- **YES**

  VERIFIED: Troubleshooting has been completed.

- **NO**

  Refer to **INFORMATION**

INFORMATION

FAULT-TRACING INFORMATION

The fault should have been detected and remedied. As this is not the case fault-tracing has failed.

Exit fault-tracing for this diagnostic trouble code (DTC) or make another attempt.

ECM-670D: CAMSHAFT POSITION, INTAKE. LOW (B6294T; 2005-2006)

DIAGNOSTIC TROUBLE CODE (DTC) INFORMATION ECM-670D

see **DIAGNOSTIC TROUBLE CODE (DTC) INFORMATION ECM-670D**

LOW

see **LOW**

ECM-6710: CAMSHAFT POSITION, EXHAUST. FAULTY SIGNAL (B5254T2; 2005-2007)

DIAGNOSTIC TROUBLE CODE (DTC) INFORMATION ECM-6710

Condition

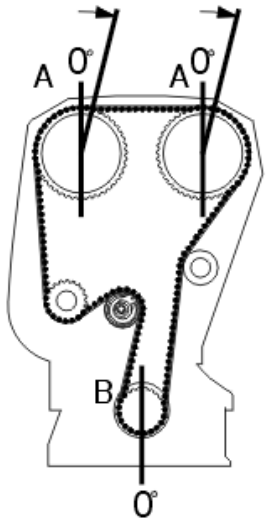

Fig. 299: Identifying Camshaft Control (CVVT)
Courtesy of VOLVO CARS CORPORATION

The engine control module (ECM) checks the angle of the camshaft (its position in relation to the crankshaft).

If Engine control module (ECM) detects that the exhaust camshaft's angle position changes dramatically during running, then Engine control module will interpret this as a failure and store a diagnostic trouble code.

The diagnostic trouble code (DTC) can be diagnosed when the engine is hot and the camshaft is in position 0.

Substitute Value

- The Engine control module (ECM) switches off camshaft control.

Possible Source

- Incorrectly adjusted camshafts
- The timing gear belt has jumped off the cogs

- Damaged camshaft reset valve
- Mechanical fault in the variable valve timing (VVT) unit.

Fault symptom[s]

- Malfunction indicator lamp (MIL) lit.

FAULT-TRACING

CHECKING THE STATUS

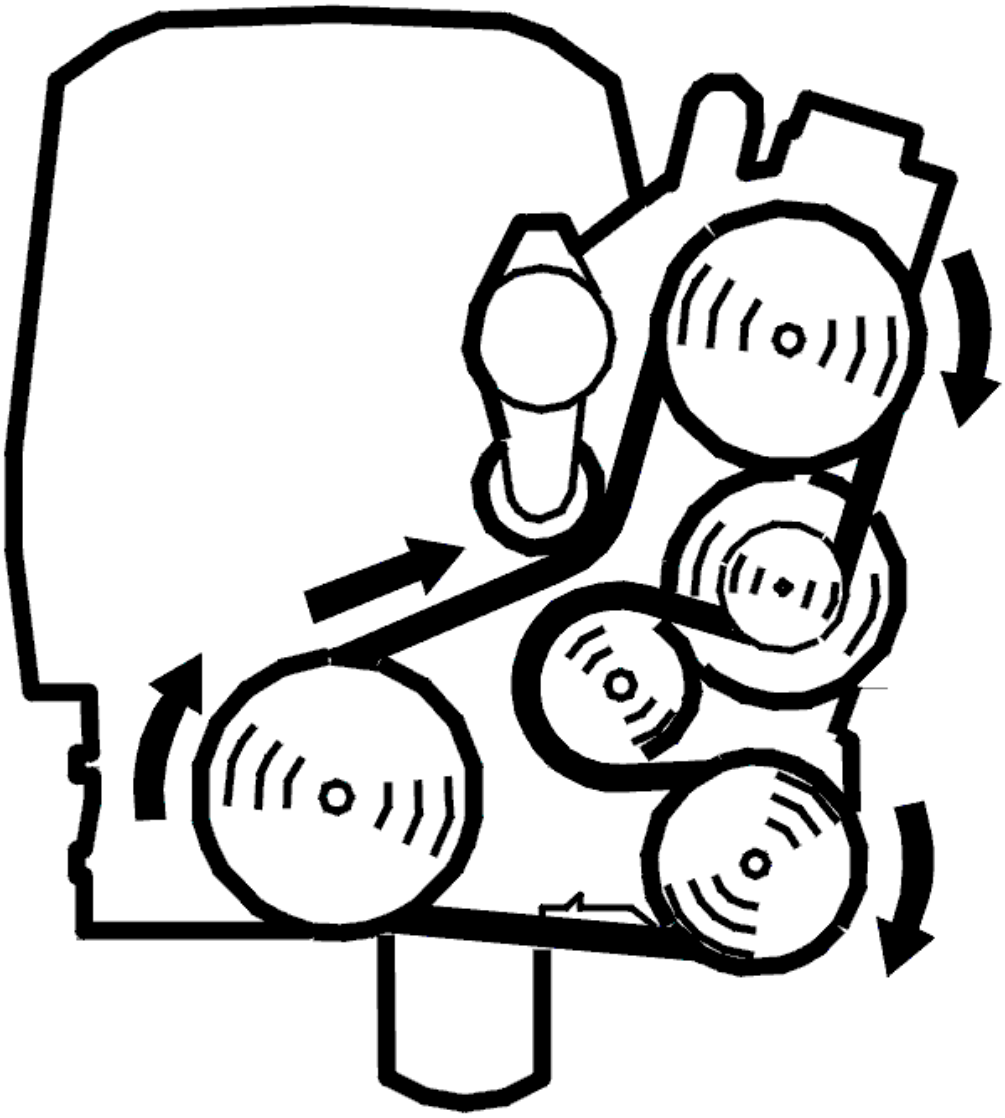

Fig. 300: Belt Routing / Engine Idling - Volvo
Courtesy of VOLVO CARS CORPORATION

- Start the engine and run it to normal operating temperature

- Read off and note the adaptation value for the camshaft at idle speed. The value must be between -8° and +8°.

  The fault is intermittent if the adaptation value is between -8° and +8°. The fault is permanent if the adaptation value is lower than -8° or higher than +8°.

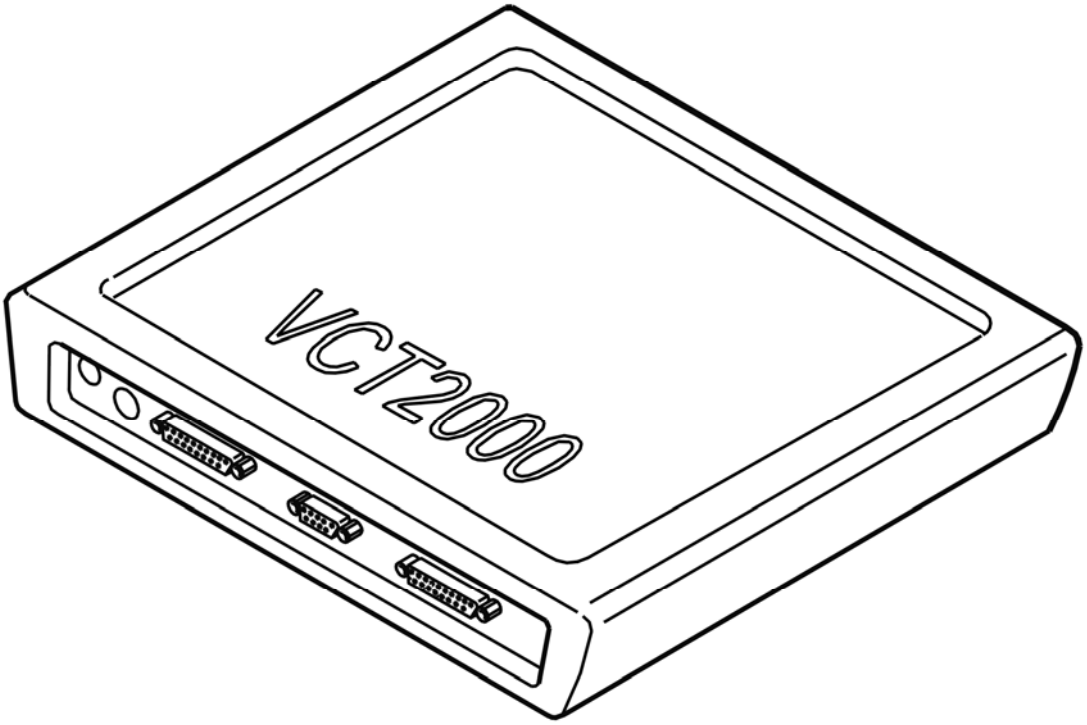

Fig. 301: Identifying VCT2000 Diagnostic Tool Symbol In VIDA
Courtesy of VOLVO CARS CORPORATION

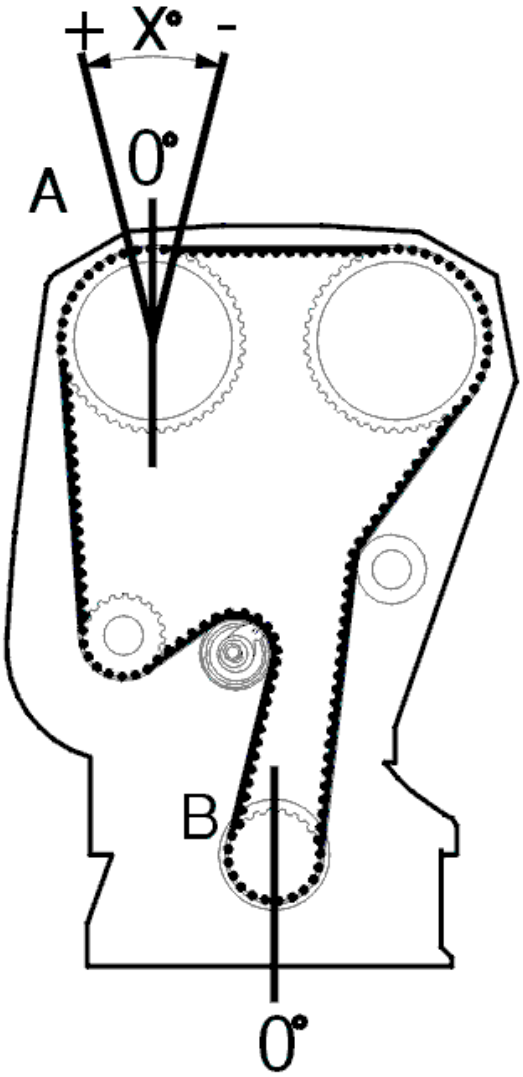

Fig. 302: Identifying Camshaft Position Angle
Courtesy of VOLVO CARS CORPORATION

Is the adaptation value correct?

- **YES**

  Refer to **INTERMITTENT FAULT**

- **NO**

  Refer to **CHECKING COMPONENTS**

CHECKING COMPONENTS

For the variable valve timing control to work, the engine oil must be at the correct level, of the correct grade

and free of contaminants.

Check the level and quality of the engine oil. Check for contaminants in particular.

If the adaptation value is too high (higher than +8°) when the engine is at operating temperature, the cause of the fault is probably one of the following:

- Camshaft belt incorrectly seated
- Incorrect basic setting of the timing belt
- Faulty camshaft reset valve (the slide in the valve has stuck).

HINT: Try to adjust the basic setting of the camshaft. Then read off the adaptation value for the camshaft with the engine idling and at operating temperature. The value must be between -8° and +8°. If the adaptation value is incorrect when the basic setting of the camshaft is correct, try cleaning the camshaft reset valve.

NOTE: The camshafts must be adjusted using the adjustment tool for the camshafts and crankshaft in the prescribed manner.

Try a new camshaft reset valve if the above fault-tracing does not solve the fault.

Remedy as necessary.

HINT: The fault can also be caused by a damaged variable valve timing unit. The variable valve timing unit may be damaged if the above fault-tracing and corrective action do not remedy the fault.

Other information:

- see **VVT SOLENOID, INSPECTION AND CLEANING**
- For B5xx4T, see **CAMSHAFT SEAL/VARIABLE VALVE TIMING (VVT) UNIT, REPLACING**
- For B6xx4T, see **CAMSHAFT SEAL/VARIABLE VALVE TIMING (VVT) UNIT, REPLACING** .
- For B5xx4T, see **VARIABLE VALVE TIMING SOLENOID, REPLACING**
- For B6xx4T, see **REPLACING THE VARIABLE VALVE TIMING SOLENOID** .

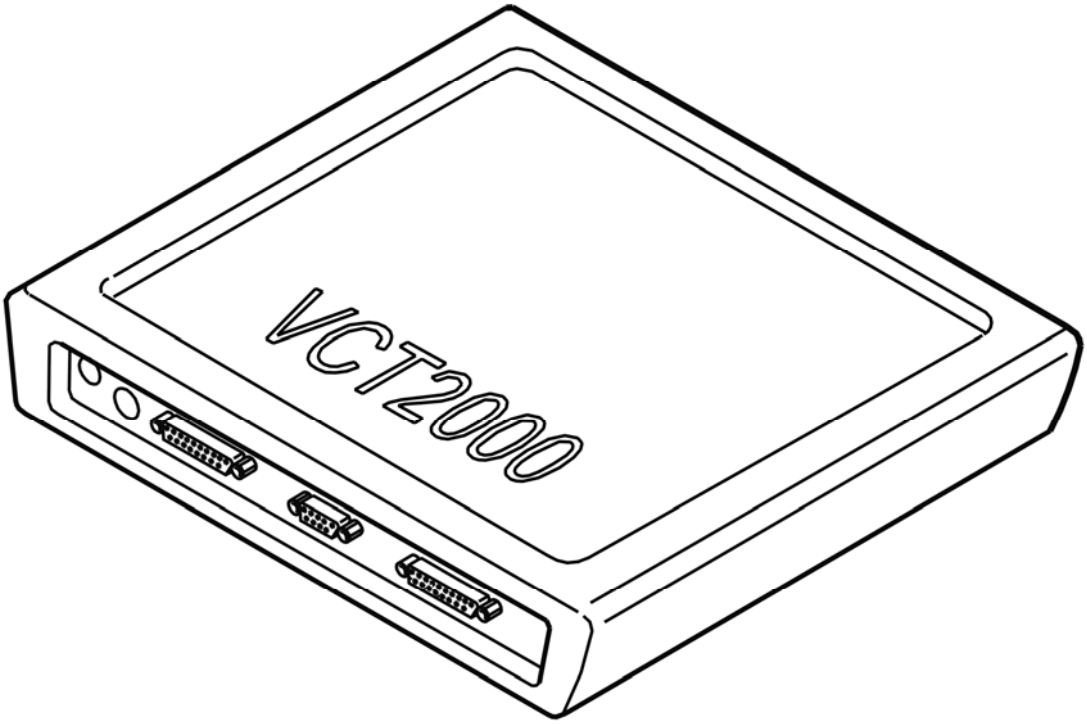

Fig. 303: Identifying VCT2000 Diagnostic Tool Symbol In VIDA
Courtesy of VOLVO CARS CORPORATION

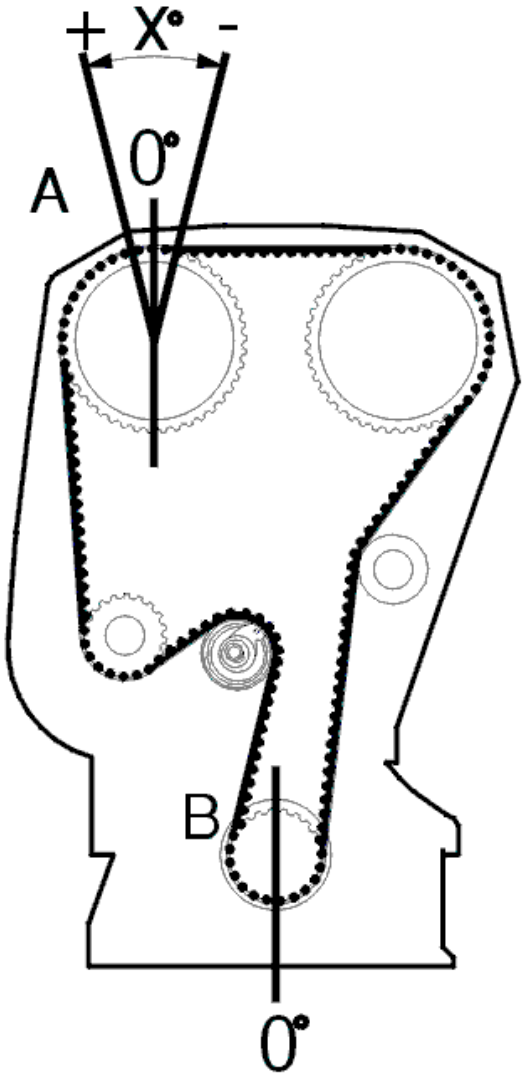

Fig. 304: Identifying Camshaft Position Angle
Courtesy of VOLVO CARS CORPORATION

- **Continue**

  Refer to **VERIFICATION**

INTERMITTENT FAULT

If the diagnostic trouble code (DTC) for this fault is stored but the adaptation value is correct, the fault is intermittent. Cause of the intermittent fault is probably a damaged camshaft reset valve.

HINT: The fault can be caused by contaminants in the camshaft reset valve. Try cleaning the valve.

Other information:

- see **VVT SOLENOID, INSPECTION AND CLEANING**
- For B5xx4T, see **VARIABLE VALVE TIMING SOLENOID, REPLACING**
- For B6xx4T, see **REPLACING THE VARIABLE VALVE TIMING SOLENOID** .
- For B5xx4T, see **CAMSHAFT SEAL/VARIABLE VALVE TIMING (VVT) UNIT, REPLACING**
- For B6xx4T, see **CAMSHAFT SEAL/VARIABLE VALVE TIMING (VVT) UNIT, REPLACING** .

- **Continue**

  Refer to **VERIFICATION**

VERIFICATION

VERIFICATION

HINT: After carrying out the repair, check that the fault has been remedied.

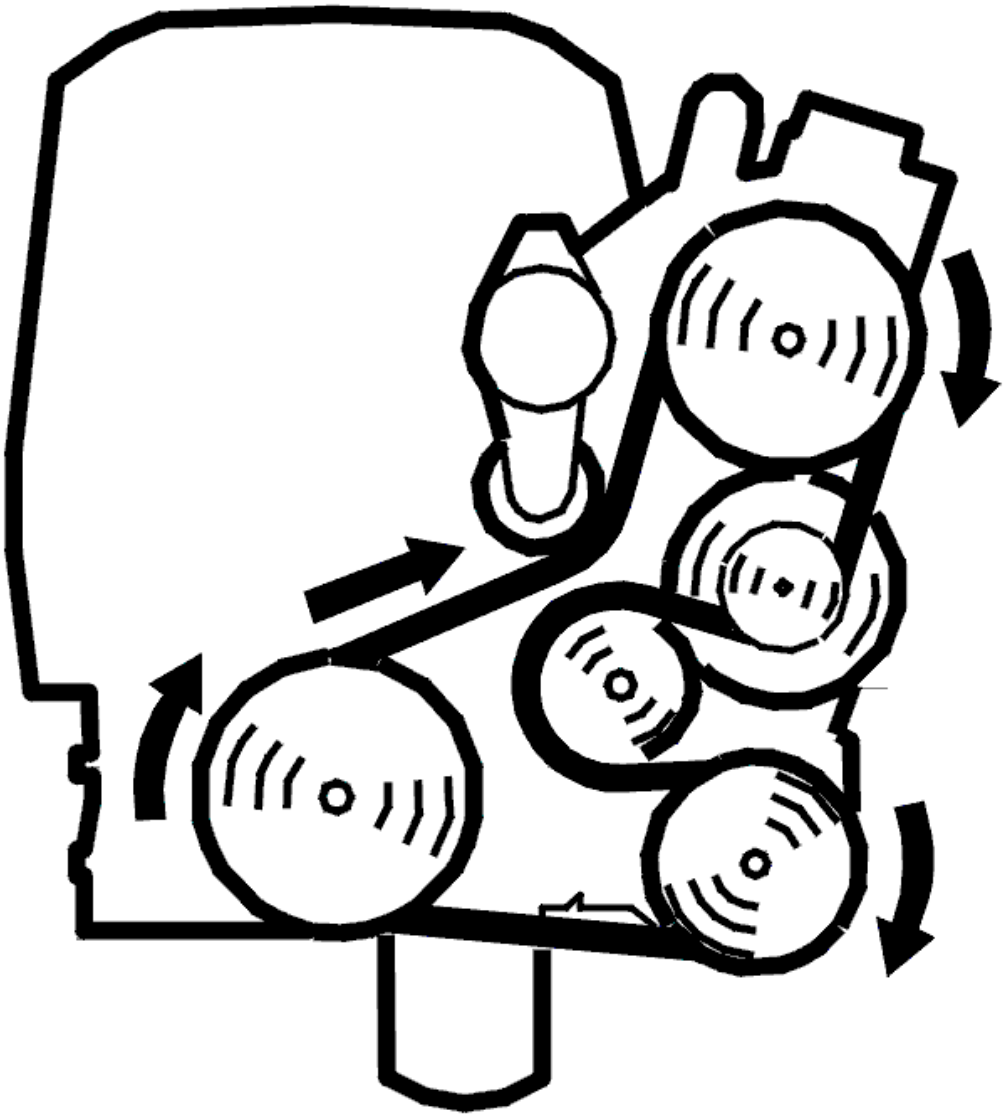

Fig. 305: Belt Routing / Engine Idling - Volvo
Courtesy of VOLVO CARS CORPORATION

- Start the engine and run it to normal operating temperature
- Read off the camshaft adaptation at idle speed.

  The adaptation value must be between -8° and +8.

  The function is OK if the adaptation value is correct.

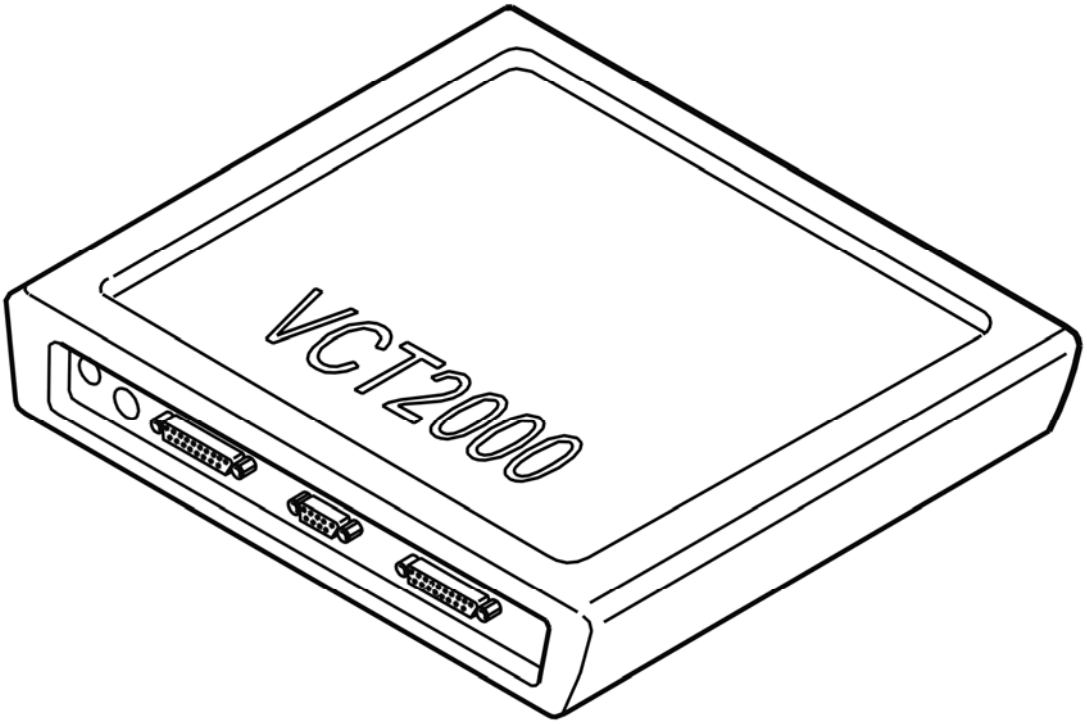

Fig. 306: Identifying VCT2000 Diagnostic Tool Symbol In VIDA
Courtesy of VOLVO CARS CORPORATION

Is the function OK?

- **YES**

  VERIFIED: Troubleshooting has been completed.

- **NO**

  Refer to **INFORMATION**

INFORMATION

FAULT-TRACING INFORMATION

The fault should have been detected and remedied. As this is not the case fault-tracing has failed.

Exit fault-tracing for this diagnostic trouble code (DTC) or make another attempt.

ECM-6710: CAMSHAFT POSITION, EXHAUST. FAULTY SIGNAL (B6294T; 2005-2006)

DIAGNOSTIC TROUBLE CODE (DTC) INFORMATION ECM-6710

see **DIAGNOSTIC TROUBLE CODE (DTC) INFORMATION ECM-6710**

FAULT-TRACING

see **FAULT-TRACING**

ECM-671C: CAMSHAFT POSITION, EXHAUST. HIGH (B5254T2; 2005-2007)

DIAGNOSTIC TROUBLE CODE (DTC) INFORMATION ECM-671C

Condition

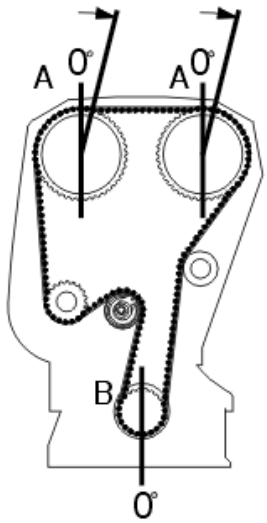

Fig. 307: Identifying Camshaft Control (CVVT)
Courtesy of VOLVO CARS CORPORATION

The engine control module (ECM) checks the angle of the camshaft (its position in relation to the crankshaft).

If the exhaust camshaft's angle position deviates and is too high during adaption (camshaft is ahead of crankshaft), the Engine control module (ECM) will interpret this as a failure and store a diagnostic trouble code.

The diagnostic trouble code (DTC) can be diagnosed when the engine is hot and the camshaft is in position 0.

Substitute Value

- The Engine control module (ECM) switches off camshaft control.

Possible Source

- Poor engine oil quality

- Incorrectly adjusted camshafts
- The timing gear belt has jumped off the cogs
- Damaged camshaft reset valve
- Mechanical fault in the variable valve timing (VVT) unit.

Fault symptom[s]

- Malfunction indicator lamp (MIL) lit.

HIGH

CHECKING THE STATUS

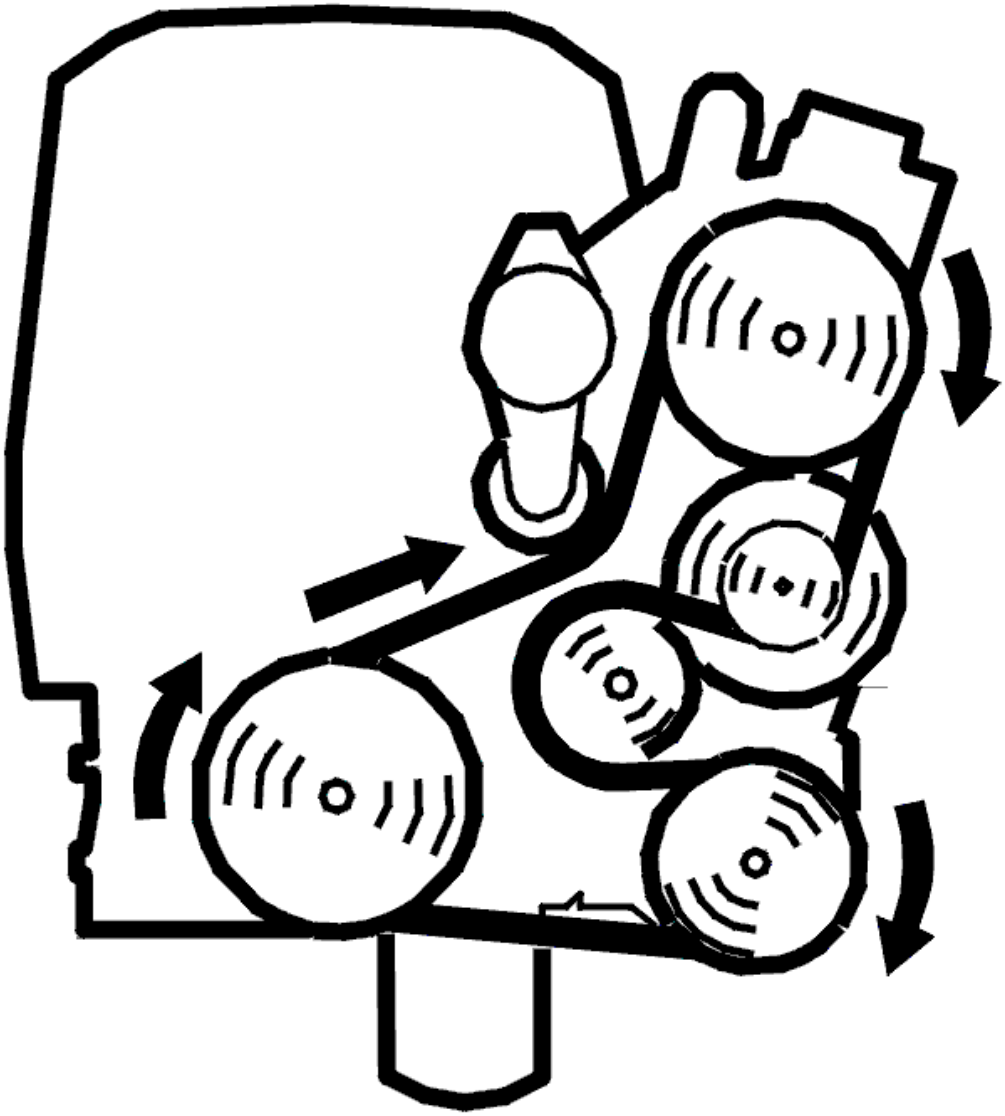

Fig. 308: Belt Routing / Engine Idling - Volvo
Courtesy of VOLVO CARS CORPORATION

- Start the engine and run it to normal operating temperature
- Read off and note the adaptation value for the camshaft at idle speed. The value must be between -8° and +8°.

  The fault is intermittent if the adaptation value is between -8° and +8°. The fault is permanent if the adaptation value is lower than -8° or higher than +8°.

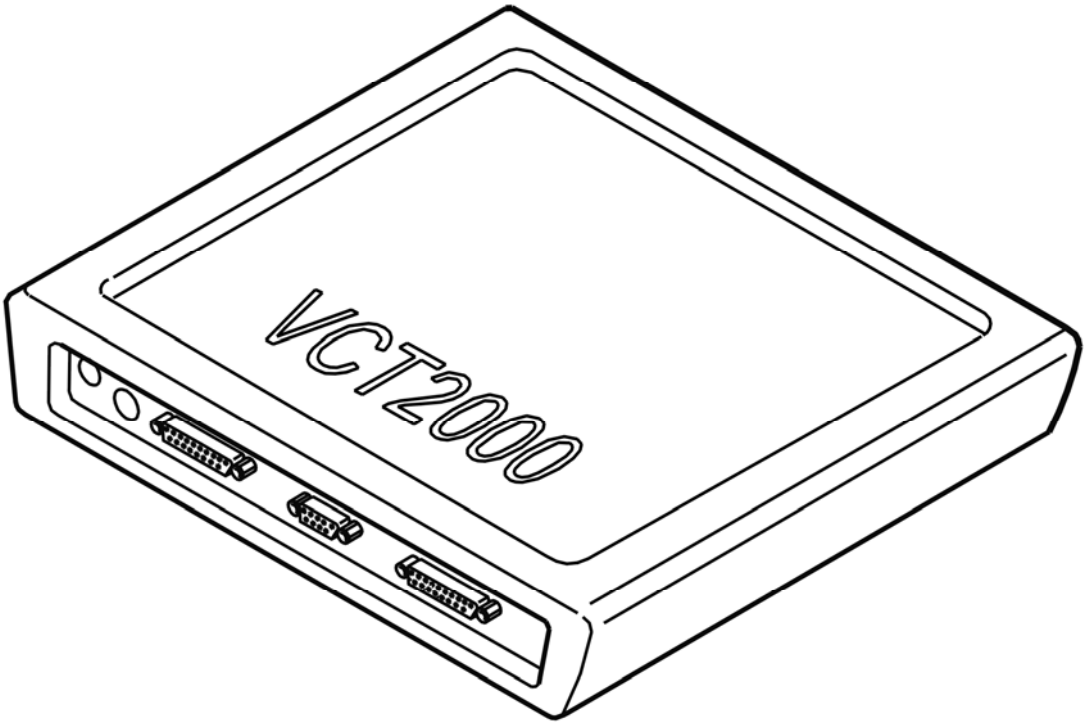

Fig. 309: Identifying VCT2000 Diagnostic Tool Symbol In VIDA
Courtesy of VOLVO CARS CORPORATION

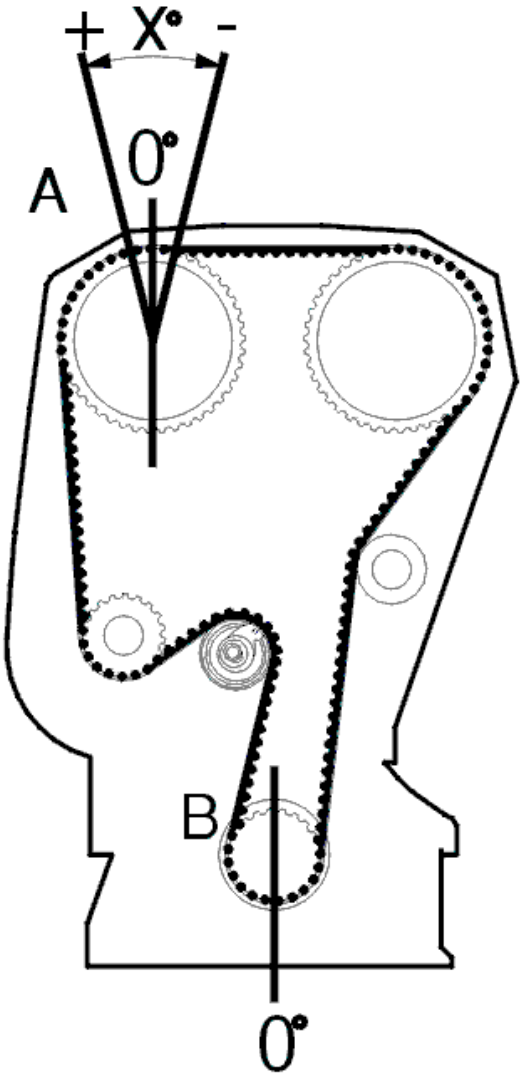

Fig. 310: Identifying Camshaft Position Angle
Courtesy of VOLVO CARS CORPORATION

Is the adaptation value correct?

- **YES**

  Refer to **INTERMITTENT FAULT**

- **NO**

  Refer to **CHECKING COMPONENTS**

CHECKING COMPONENTS

For the variable valve timing control to work, the engine oil must be at the correct level, of the correct grade

and free of contaminants.

Check the level and quality of the engine oil. Check for contaminants in particular.

If the adaptation value is too high (higher than +8°) when the engine is at operating temperature, the cause of the fault is probably one of the following:

- Camshaft belt incorrectly seated
- Incorrect basic setting of the timing belt
- Faulty camshaft reset valve (the slide in the valve has stuck).

HINT: Try to adjust the basic setting of the camshaft. Then read off the adaptation value for the camshaft with the engine idling and at operating temperature. The value must be between -8° and +8°. If the adaptation value is incorrect when the basic setting of the camshaft is correct, try cleaning the camshaft reset valve.

NOTE: The camshafts must be adjusted using the adjustment tool for the camshafts and crankshaft in the prescribed manner.

Try a new camshaft reset valve if the above fault-tracing does not solve the fault.

Remedy as necessary.

HINT: The fault can also be caused by a damaged variable valve timing unit. The variable valve timing unit may be damaged if the above fault-tracing and corrective action do not remedy the fault.

Other information:

- see **VVT SOLENOID, INSPECTION AND CLEANING**
- For B5xx4T, see **CAMSHAFT SEAL/VARIABLE VALVE TIMING (VVT) UNIT, REPLACING**
- For B6xx4T, see **CAMSHAFT SEAL/VARIABLE VALVE TIMING (VVT) UNIT, REPLACING** .
- For B5xx4T, see **VARIABLE VALVE TIMING SOLENOID, REPLACING**
- For B6xx4T, see **REPLACING THE VARIABLE VALVE TIMING SOLENOID** .

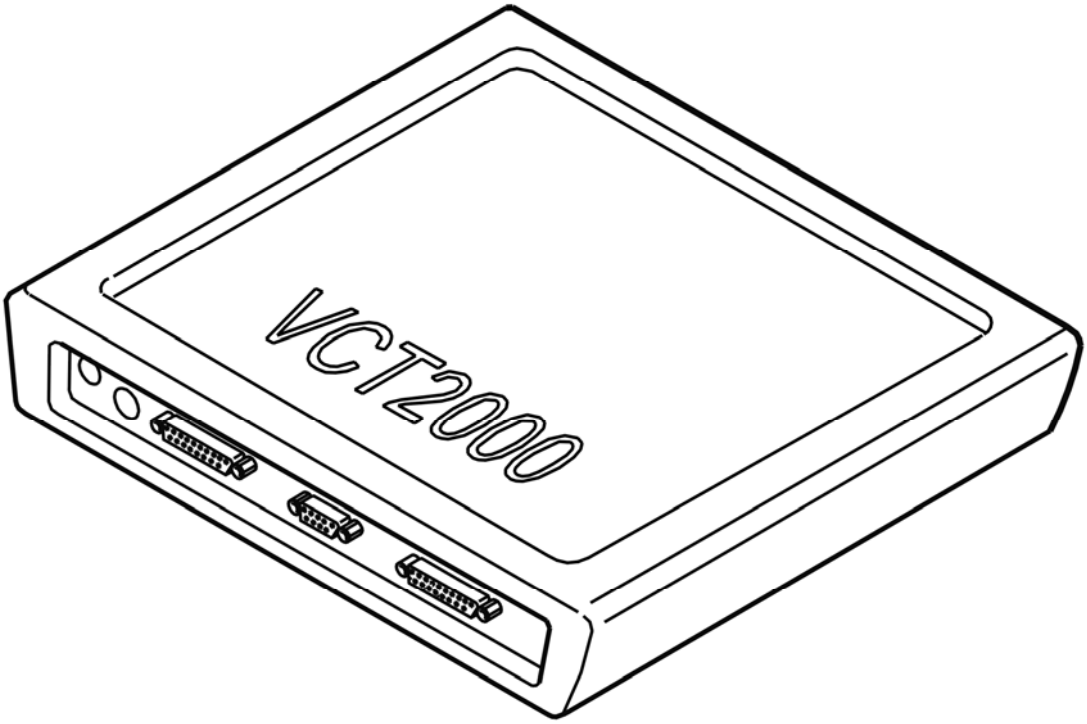

Fig. 311: Identifying VCT2000 Diagnostic Tool Symbol In VIDA
Courtesy of VOLVO CARS CORPORATION

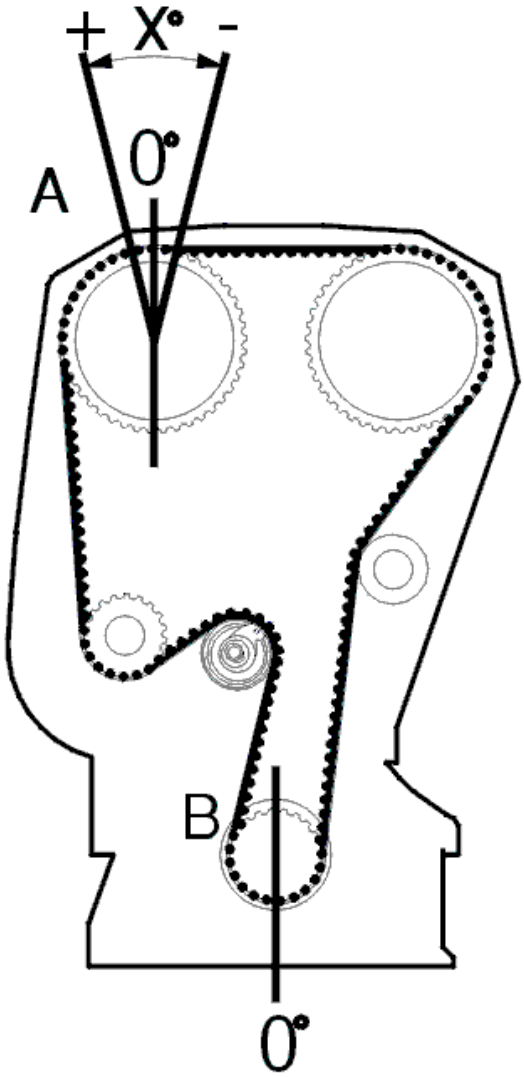

Fig. 312: Identifying Camshaft Position Angle
Courtesy of VOLVO CARS CORPORATION

- **Continue**

  Refer to **VERIFICATION**

INTERMITTENT FAULT

If the diagnostic trouble code (DTC) for this fault is stored but the adaptation value is correct, the fault is intermittent. Cause of the intermittent fault is probably a damaged camshaft reset valve.

HINT: The fault can be caused by contaminants in the camshaft reset valve. Try cleaning the valve.

Other information:

- see **VVT SOLENOID, INSPECTION AND CLEANING**
- For B5xx4T, see **VARIABLE VALVE TIMING SOLENOID, REPLACING**
- For B6xx4T, see **REPLACING THE VARIABLE VALVE TIMING SOLENOID** .
- For B5xx4T, see **CAMSHAFT SEAL/VARIABLE VALVE TIMING (VVT) UNIT, REPLACING**
- For B6xx4T, see **CAMSHAFT SEAL/VARIABLE VALVE TIMING (VVT) UNIT, REPLACING** .

- **Continue**

  Refer to **VERIFICATION**

VERIFICATION

VERIFICATION

HINT: After carrying out the repair, check that the fault has been remedied.

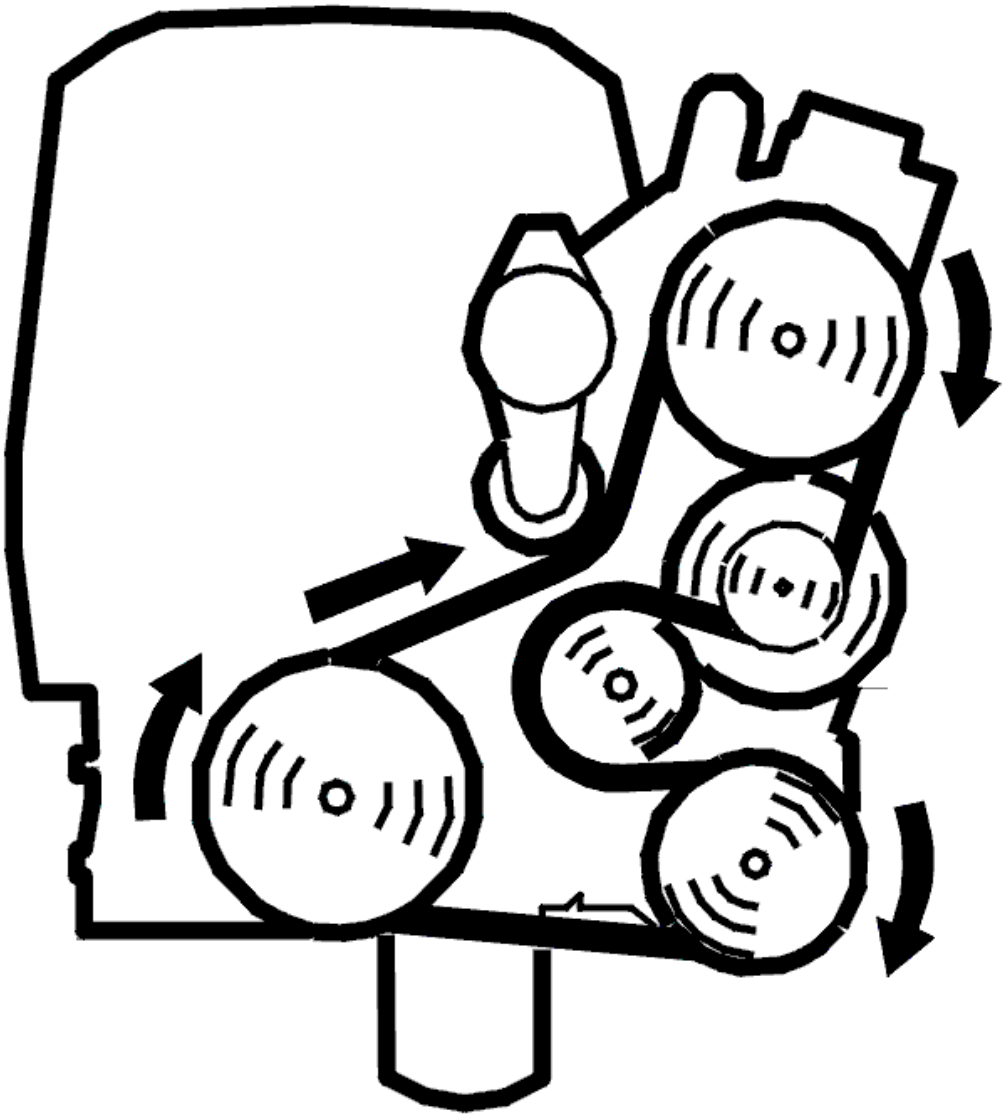

Fig. 313: Belt Routing / Engine Idling - Volvo
Courtesy of VOLVO CARS CORPORATION

- Start the engine and run it to normal operating temperature
- Read off the camshaft adaptation at idle speed.

  The adaptation value must be between -8° and +8.

  The function is OK if the adaptation value is correct.

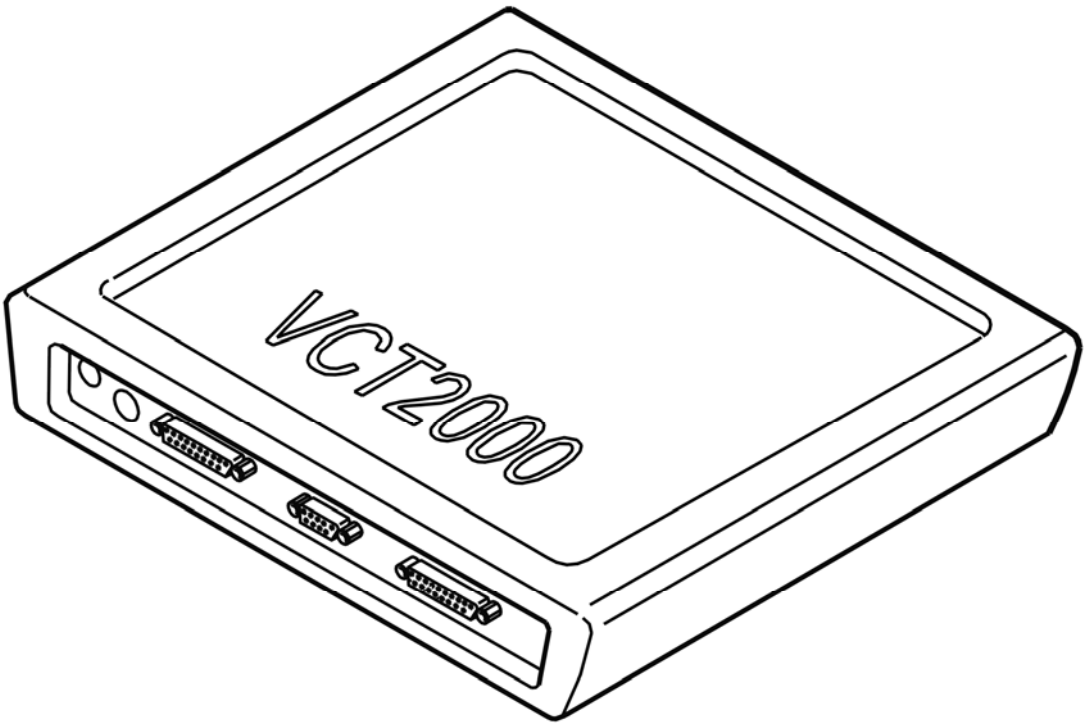

Fig. 314: Identifying VCT2000 Diagnostic Tool Symbol In VIDA
Courtesy of VOLVO CARS CORPORATION

Is the function OK?

- **YES**

  VERIFIED: Troubleshooting has been completed.

- **NO**

  Refer to **INFORMATION**

INFORMATION

FAULT-TRACING INFORMATION

The fault should have been detected and remedied. As this is not the case fault-tracing has failed.

Exit fault-tracing for this diagnostic trouble code (DTC) or make another attempt.

ECM-671C: CAMSHAFT POSITION, EXHAUST. HIGH (B6294T; 2005-2006)

DIAGNOSTIC TROUBLE CODE (DTC) INFORMATION ECM-671C

see **DIAGNOSTIC TROUBLE CODE (DTC) INFORMATION ECM-671C**

HIGH

see **HIGH**

ECM-671D: CAMSHAFT POSITION, EXHAUST. LOW (B5254T2; 2005-2007)

DIAGNOSTIC TROUBLE CODE (DTC) INFORMATION ECM-671D

Condition

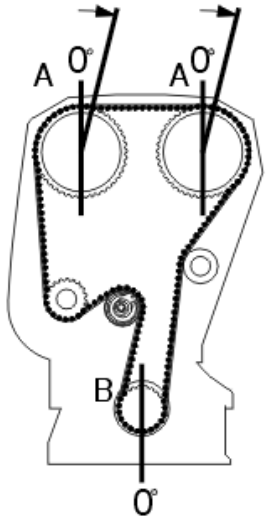

Fig. 315: Identifying Camshaft Control (CVVT)
Courtesy of VOLVO CARS CORPORATION

The engine control module (ECM) checks the angle of the camshaft (its position in relation to the crankshaft).

If the exhaust camshaft's angle position deviates and is too low during adaption (camshaft is behind of crankshaft), the Engine control module (ECM) will interpret this as a failure and store a diagnostic trouble code.

The diagnostic trouble code (DTC) can be diagnosed when the engine is hot and the camshaft is in position 0.

Substitute Value

- The Engine control module (ECM) switches off camshaft control.

Possible Source

- Poor engine oil quality
- Incorrectly adjusted camshafts
- The timing gear belt has jumped off the cogs.

- Damaged camshaft reset valve.
- Mechanical fault in the variable valve timing (VVT) unit.

Fault symptom[s]

- Malfunction indicator lamp (MIL) lit.

LOW

CHECKING THE STATUS

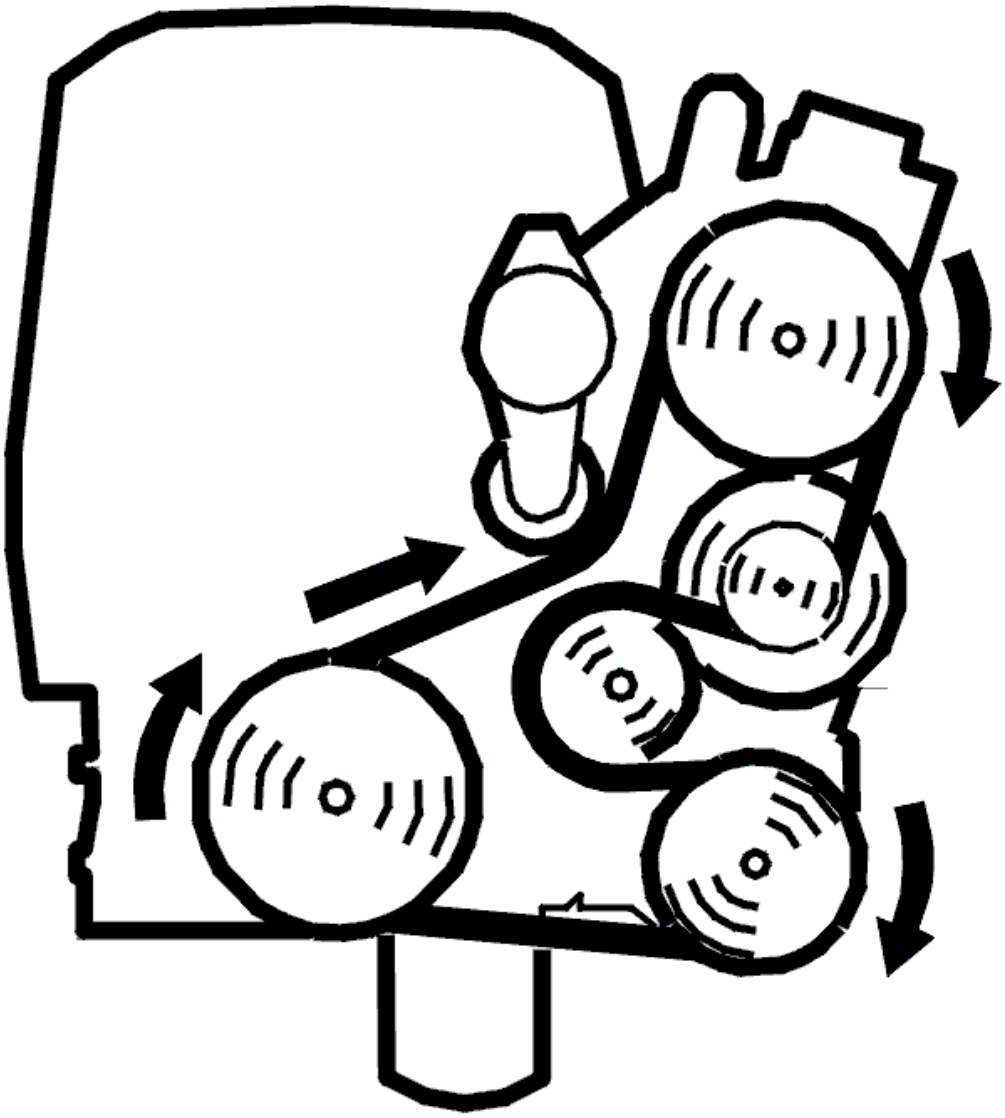

Fig. 316: Belt Routing / Engine Idling - Volvo
Courtesy of VOLVO CARS CORPORATION

- Start the engine and run it to normal operating temperature

- Read off and note the adaptation value for the camshaft at idle speed. The value must be between -8° and +8°.

  The fault is intermittent if the adaptation value is between -8° and +8°. The fault is permanent if the adaptation value is lower than -8° or higher than +8°.

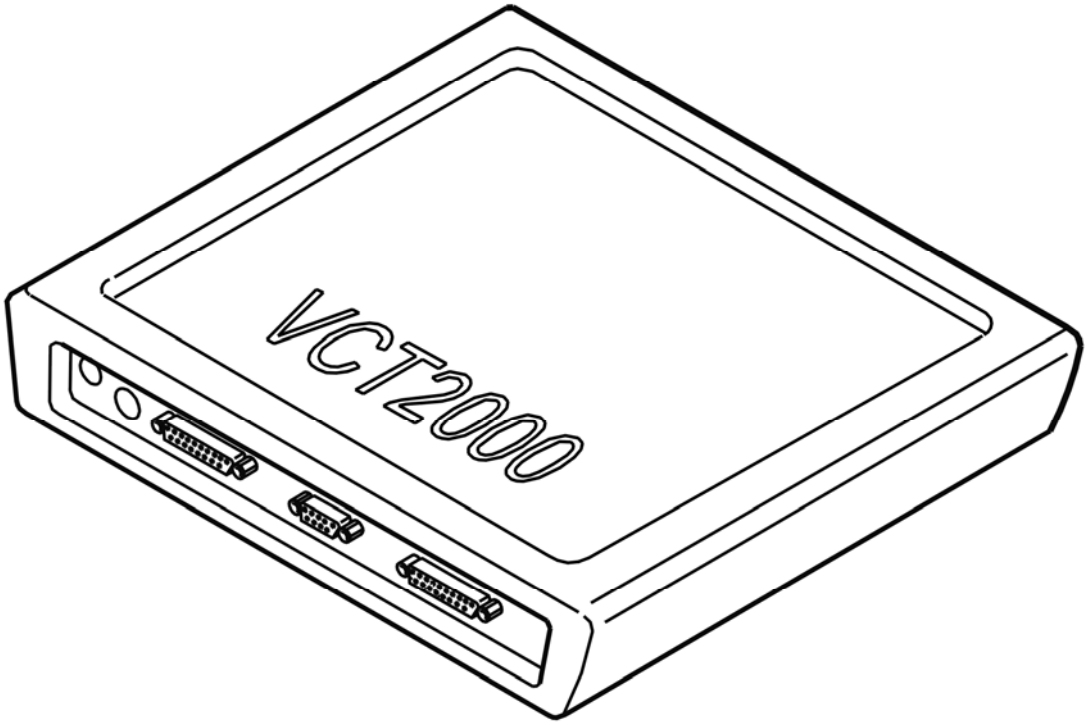

Fig. 317: Identifying VCT2000 Diagnostic Tool Symbol In VIDA
Courtesy of VOLVO CARS CORPORATION

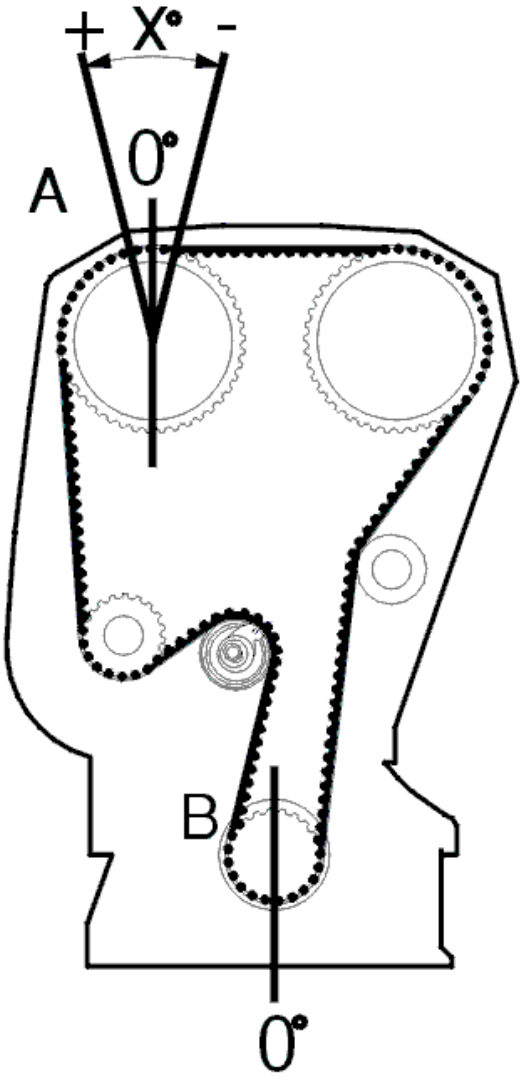

Fig. 318: Identifying Camshaft Position Angle
Courtesy of VOLVO CARS CORPORATION

Is the adaptation value correct?

- **YES**

  Refer to **INTERMITTENT FAULT**

- **NO**

  Refer to **CHECKING COMPONENTS**

CHECKING COMPONENTS

In order for the variable valve timing control to function correctly, the correct grade of engine oil must be used.

The oil must be clean and the oil pressure must be correct.

Check the level and quality of the engine oil. Check for contaminants in particular.

Check the engine oil pressure.

Remedy as necessary.

If no fault is found in the above fault tracing and the adaptation value is too low (lower than -8°) when the engine is at operating temperature, the cause of the fault is probably one of the following:

- Camshaft belt incorrectly seated
- Incorrect basic setting of the timing belt
- Faulty camshaft reset valve (the slide in the valve has stuck).

HINT: Try adjusting the basic setting of the camshaft if no fault is found during the above fault-tracing. Then read off the adaptation value for the camshaft with the engine idling and at operating temperature. The value must be between -8° and +8°. If the adaptation value is incorrect when the basic setting of the camshaft is correct, try cleaning the camshaft reset valve.

NOTE: The camshafts must be adjusted using the adjustment tool for the camshafts and crankshaft in the prescribed manner.

Try a new camshaft reset valve if the above fault-tracing does not solve the fault.

Remedy as necessary.

HINT: The fault may also be caused by a defective variable valve timing unit. The variable valve timing unit may be damaged if the above fault-tracing and corrective action do not remedy the fault.

Other information:

- see **VVT SOLENOID, INSPECTION AND CLEANING**
- see **CHECKING OIL PRESSURE**
- For B5xx4T, see **VARIABLE VALVE TIMING SOLENOID, REPLACING**
- For B6xx4T, see **REPLACING THE VARIABLE VALVE TIMING SOLENOID** .
- For B5xx4T, see **CAMSHAFT SEAL/VARIABLE VALVE TIMING (VVT) UNIT, REPLACING**
- For B6xx4T, see **CAMSHAFT SEAL/VARIABLE VALVE TIMING (VVT) UNIT, REPLACING** .

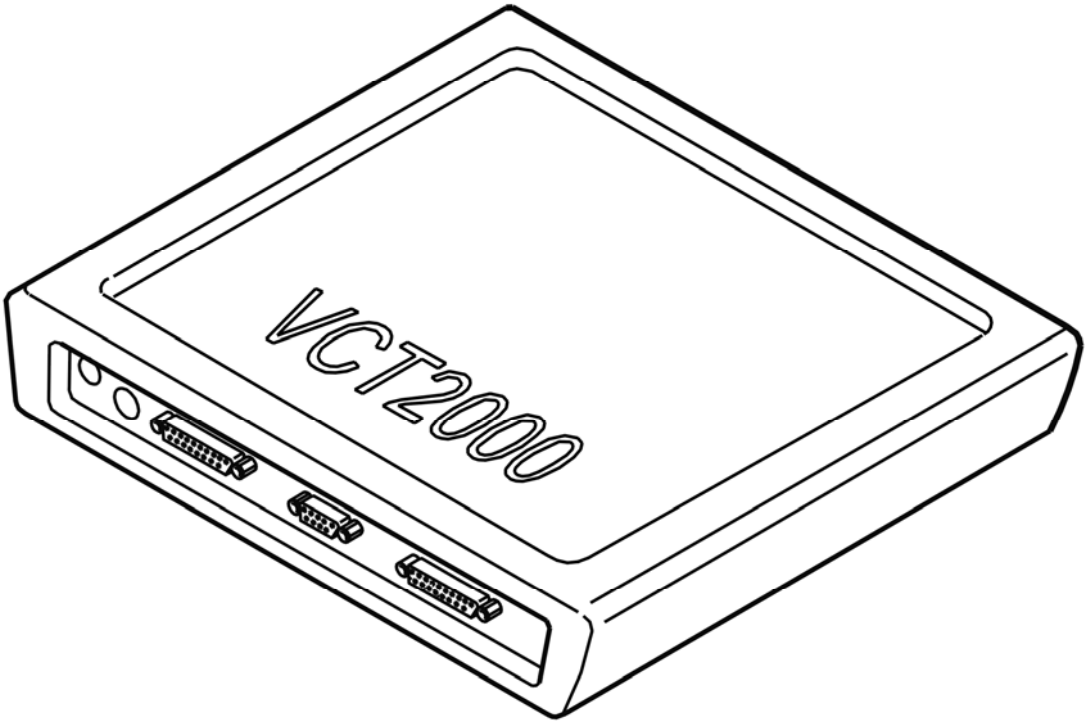

Fig. 319: Identifying VCT2000 Diagnostic Tool Symbol In VIDA
Courtesy of VOLVO CARS CORPORATION

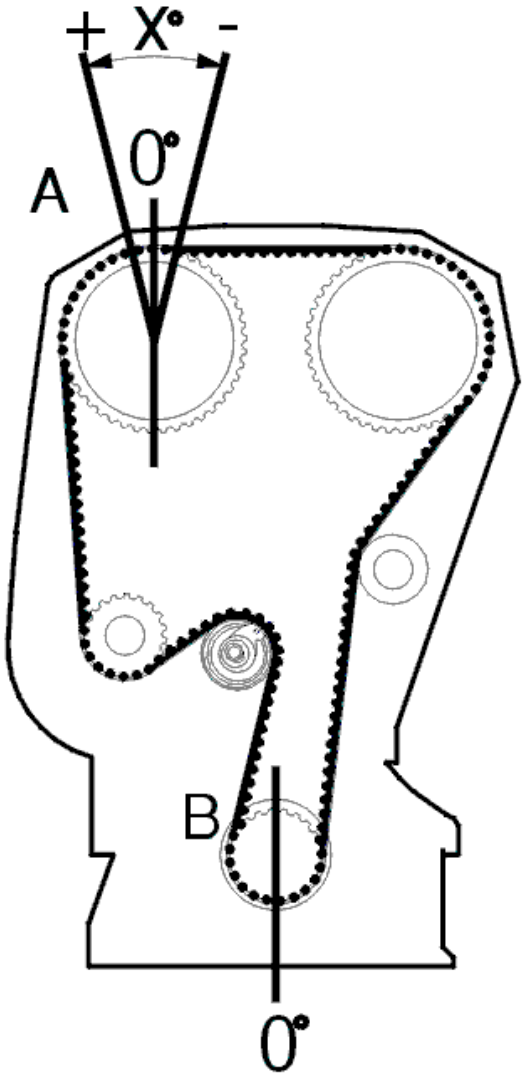

Fig. 320: Identifying Camshaft Position Angle
Courtesy of VOLVO CARS CORPORATION

- **Continue**

  Refer to **VERIFICATION**

INTERMITTENT FAULT

The fault is intermittent if the diagnostic trouble code (DTC) for this fault is stored but the adaptation value is correct. Cause of the intermittent fault is probably a damaged camshaft reset valve.

HINT: The fault can be caused by contaminants in the camshaft reset valve. Try cleaning the valve.

Other information:

- see **VVT SOLENOID, INSPECTION AND CLEANING**
- For B5xx4T, see **VARIABLE VALVE TIMING SOLENOID, REPLACING**
- For B6xx4T, see **REPLACING THE VARIABLE VALVE TIMING SOLENOID** .
- For B5xx4T, see **CAMSHAFT SEAL/VARIABLE VALVE TIMING (VVT) UNIT, REPLACING**
- For B6xx4T, see **CAMSHAFT SEAL/VARIABLE VALVE TIMING (VVT) UNIT, REPLACING** .

- **Continue**

  Refer to **VERIFICATION**

VERIFICATION

VERIFICATION

HINT: After carrying out the repair, check that the fault has been remedied.

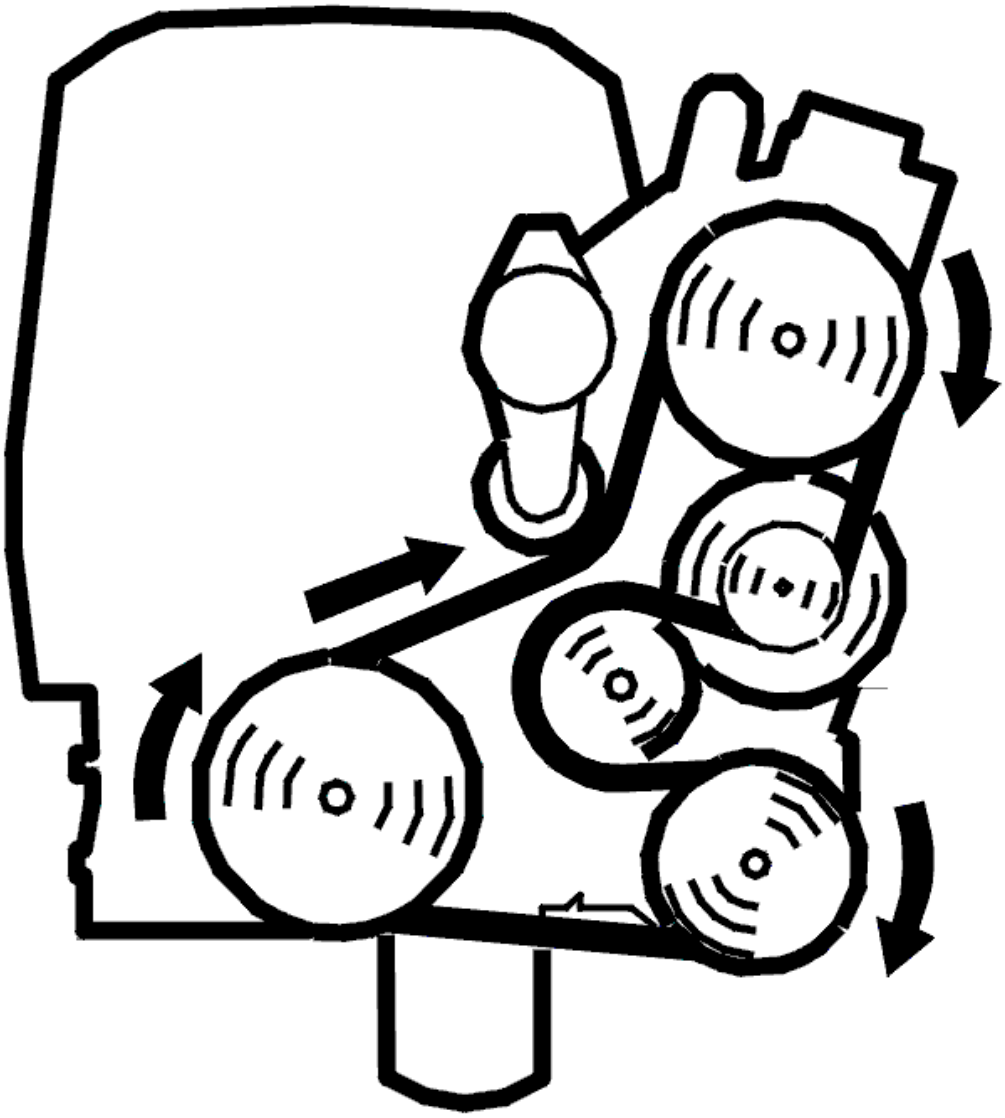

Fig. 321: Belt Routing / Engine Idling - Volvo
Courtesy of VOLVO CARS CORPORATION

- Start the engine and run it to normal operating temperature
- Read off the camshaft adaptation at idle speed.

  The adaptation value must be between -8° and +8.

  The function is OK if the adaptation value is correct.

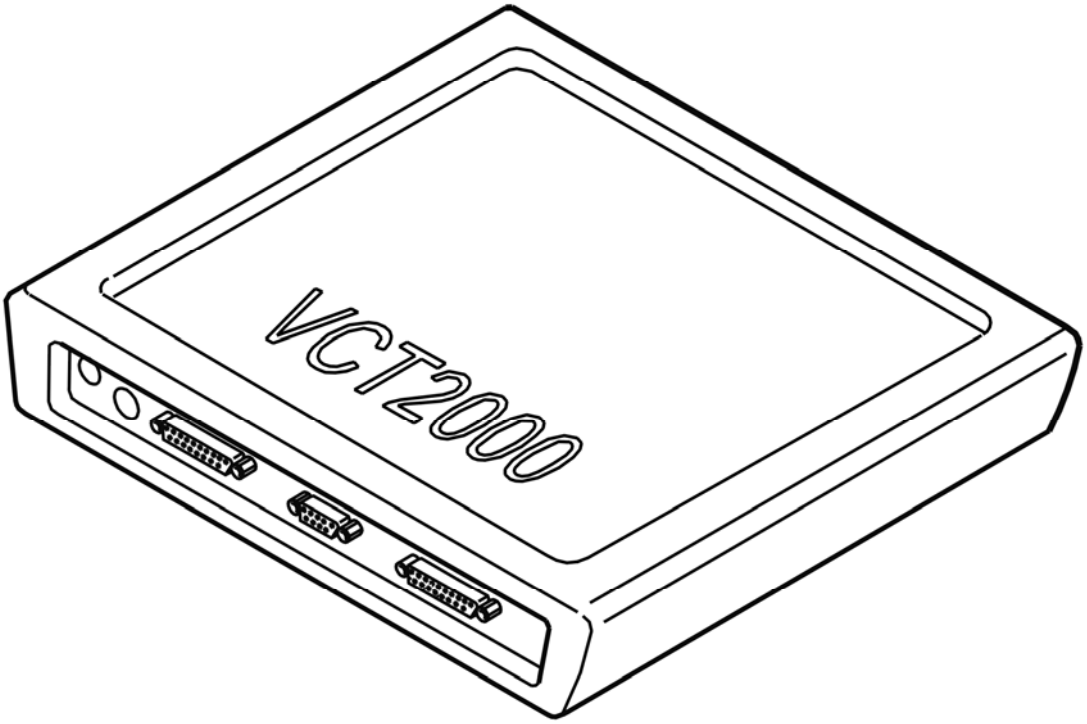

Fig. 322: Identifying VCT2000 Diagnostic Tool Symbol In VIDA
Courtesy of VOLVO CARS CORPORATION

Is the function OK?

- **YES**

  VERIFIED: Troubleshooting has been completed.

- **NO**

  Refer to **INFORMATION**

INFORMATION

FAULT-TRACING INFORMATION

The fault should have been detected and remedied. As this is not the case fault-tracing has failed.

Exit fault-tracing for this diagnostic trouble code (DTC) or make another attempt.

ECM-671D: CAMSHAFT POSITION, EXHAUST. LOW (B6294T; 2005-2006)

DIAGNOSTIC TROUBLE CODE (DTC) INFORMATION ECM-671D

see **DIAGNOSTIC TROUBLE CODE (DTC) INFORMATION ECM-671D**

LOW

see **LOW**

ECM-6800: TURBOCHARGER (TC) CONTROL VALVE. SIGNAL MISSING. INTERMITTENT FAULT (B5254T2; B6294T; 2003-2004)

DIAGNOSTIC TROUBLE CODE (DTC) INFORMATION

Condition

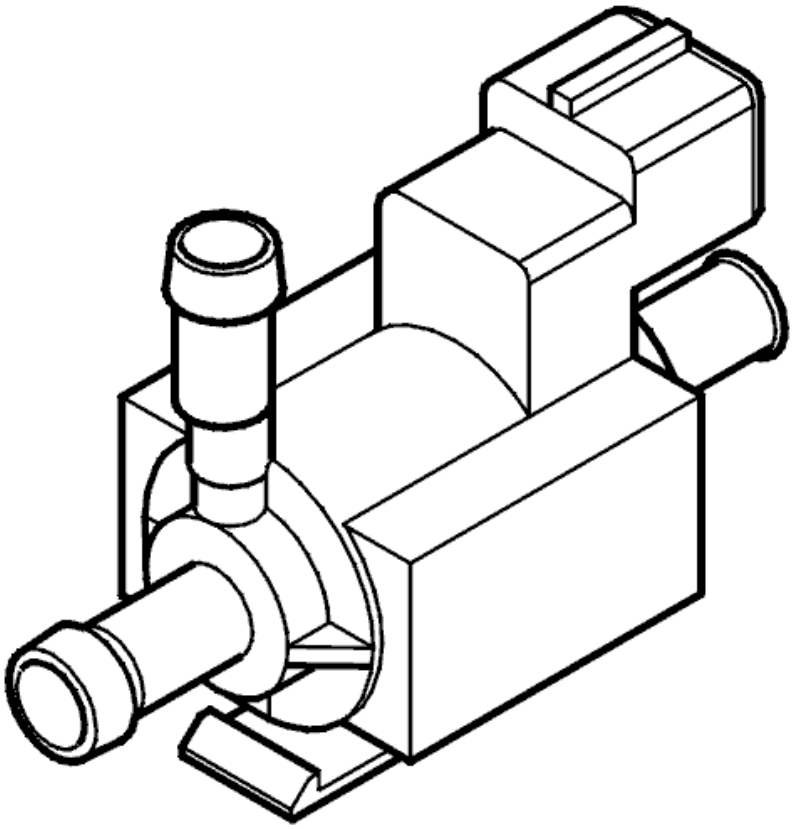

Fig. 323: Identifying Turbocharger Control Valve
Courtesy of VOLVO CARS CORPORATION

If the turbocharger (TC) control valve circuit has a short-circuit to ground or an open-circuit the control module interprets it as a fault and ECM-6800 is stored.

Substitute Value

Possible Source

Signal too high:

- short-circuit to supply voltage in the signal cable
- defective turbocharger (TC) control valve

Signal too low:

- short-circuit to ground in the signal cable

Signal missing:

- open-circuit in signal cable
- open-circuit in power cable
- defective turbocharger (TC) control valve

Fault symptom[s]

- malfunction indicator lamp (MIL) lit

SIGNAL MISSING. INTERMITTENT FAULT

see **SIGNAL MISSING. INTERMITTENT FAULT**

ECM-6800: TURBOCHARGER (TC) CONTROL VALVE. SIGNAL MISSING. PERMANENT FAULT (B5254T2; B6294T; 2003-2004)

DIAGNOSTIC TROUBLE CODE (DTC) INFORMATION

see **DIAGNOSTIC TROUBLE CODE (DTC) INFORMATION**

SIGNAL MISSING. PERMANENT FAULT

see **SIGNAL MISSING. PERMANENT FAULT**

ECM-6800: TURBOCHARGER (TC) CONTROL VALVE. SIGNAL TOO HIGH. INTERMITTENT FAULT (B5254T2; B6294T; 2003-2004)

DIAGNOSTIC TROUBLE CODE (DTC) INFORMATION

see **DIAGNOSTIC TROUBLE CODE (DTC) INFORMATION**

SIGNAL TOO HIGH. INTERMITTENT FAULT

see **SIGNAL TOO HIGH. INTERMITTENT FAULT**

ECM-6800: TURBOCHARGER (TC) CONTROL VALVE. SIGNAL TOO HIGH. PERMANENT FAULT (B5254T2; B6294T; 2003-2004)

DIAGNOSTIC TROUBLE CODE (DTC) INFORMATION

see **DIAGNOSTIC TROUBLE CODE (DTC) INFORMATION**

SIGNAL TOO HIGH. PERMANENT FAULT

see **SIGNAL TOO HIGH. PERMANENT FAULT**

ECM-6800: TURBOCHARGER (TC) CONTROL VALVE. SIGNAL TOO LOW. INTERMITTENT FAULT (B5254T2; B6294T; 2003-2004)

DIAGNOSTIC TROUBLE CODE (DTC) INFORMATION

see **DIAGNOSTIC TROUBLE CODE (DTC) INFORMATION**

SIGNAL TOO LOW. INTERMITTENT FAULT

see **SIGNAL TOO LOW. INTERMITTENT FAULT**

ECM-6800: TURBOCHARGER (TC) CONTROL VALVE. SIGNAL TOO LOW. PERMANENT FAULT (B5254T2; B6294T; 2003-2004)

DIAGNOSTIC TROUBLE CODE (DTC) INFORMATION

see **DIAGNOSTIC TROUBLE CODE (DTC) INFORMATION**

SIGNAL TOO LOW. PERMANENT FAULT

see **SIGNAL TOO LOW. PERMANENT FAULT**

ECM-6805: TURBOCHARGER (TC) CONTROL VALVE, BOOST PRESSURE FAULT. PRESSURE TOO HIGH (B5254T2; 2003-2004)

DIAGNOSTIC TROUBLE CODE (DTC) INFORMATION

Condition

Diagnostic trouble code (DTC) ECM-6805 is stored if the pressure measured by the boost pressure sensor is higher than a calculated desired value. This is interpreted as a fault by the control module. The fault is diagnosed by the control module at high engine loads.

Substitute Value

Reduced throttle angle.

Possible Source

- The hoses between the pressure servo for the boost pressure control (BPC) valve and the turbocharger (TC) control valve have come loose or are blocked or damaged
- The hoses between the turbocharger (TC) control valve and the charge air pipe (between the turbocharger (TC) and the charge air cooler (CAC)) are blocked or damaged
- The pressure servo for the boost pressure control (BPC) valve is incorrectly adjusted
- Faulty pressure servo for the boost pressure control (BPC) valve
- Sticking boost pressure control (BPC) valve
- Faulty turbocharger (TC) control valve.

Fault symptom[s]

- Poor performance.

PRESSURE TOO HIGH

CHECKING THE HOSES AND THE TURBOCHARGER (TC) CONTROL VALVE

Check that the hoses between the pressure servo for the boost pressure control (BPC) valve and the turbocharger (TC) control valve are not trapped, blocked or damaged.

Check that the hoses between the turbocharger (TC) control valve and the charge air pipe (between the turbocharger (TC) and the charge air cooler (CAC)) are not trapped, blocked or damaged.

Check the turbocharger (TC) control valve by activating it. The turbocharger (TC) control valve must click when it is activated.

Check the setting of the waste gate valve's pressure servo as well as the waste gate valve. Check the function and check for jamming according to:**WASTEGATE VALVE, ADJUSTING**

Other information:

- To access the turbocharger (TC) control valve, see **REPLACING THE TURBOCHARGER (TC) CONTROL VALVE** .

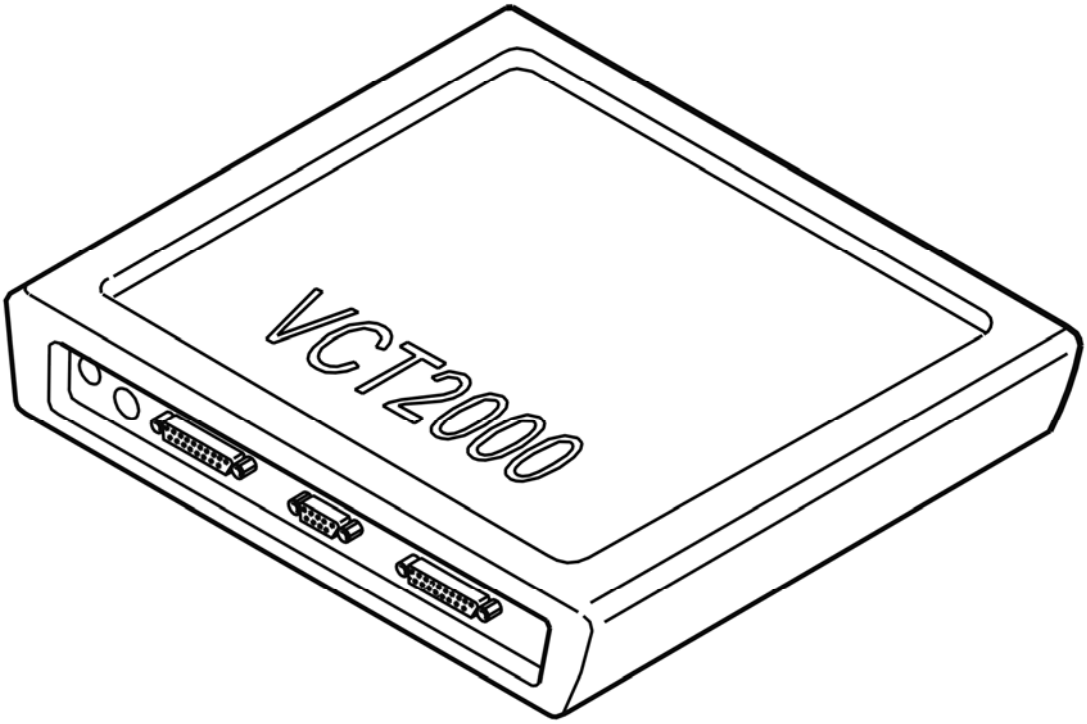

Fig. 324: Identifying VCT2000 Diagnostic Tool Symbol In VIDA
Courtesy of VOLVO CARS CORPORATION

- **Continue**

  Refer to **VERIFICATION**

VERIFICATION

VERIFICATION

HINT: After carrying out the repair, check that the fault has been remedied.

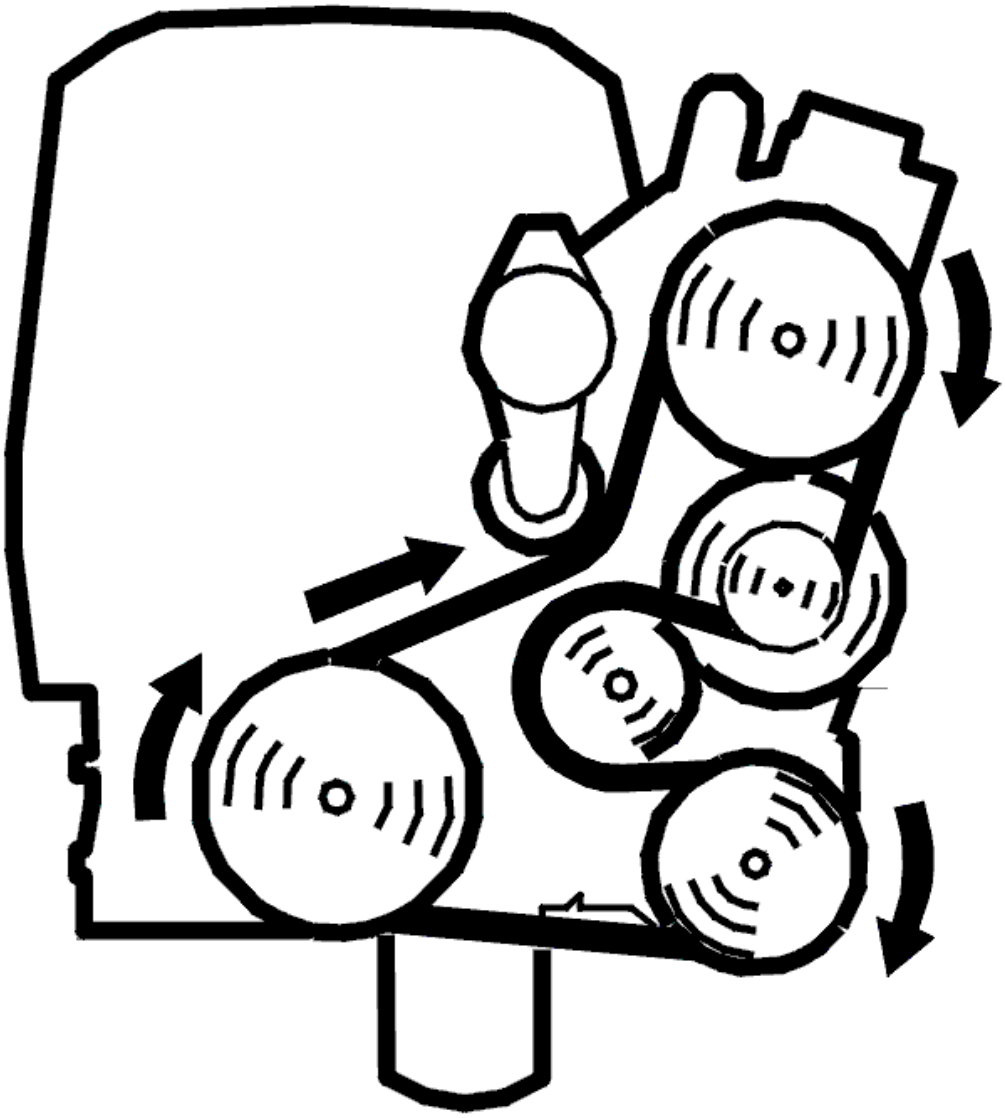

Fig. 325: Belt Routing / Engine Idling - Volvo
Courtesy of VOLVO CARS CORPORATION

- Ignition off.
- Reinstall connectors, components etc.
- Disconnect the VCT 2000 from the data link connector (DLC).
- Test drive the car and check that high boost pressure is obtained.
- Connect the VCT 2000 to the data link connector (DLC).

NOTE: **Do not switch off the ignition before the VCT 2000 has been connected and the boost pressure has been tested with the smart tool.**

Read off the boost pressure fault status

When the boost pressure has been tested the display should show that the diagnostic is complete.

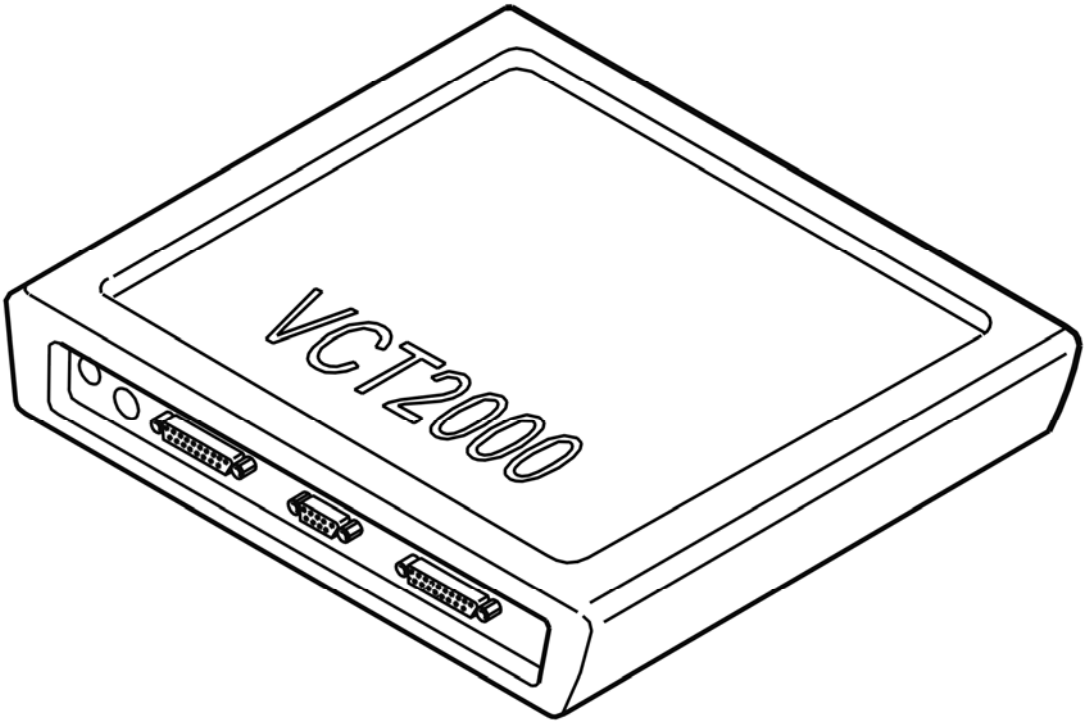

Fig. 326: Identifying VCT2000 Diagnostic Tool Symbol In VIDA
Courtesy of VOLVO CARS CORPORATION

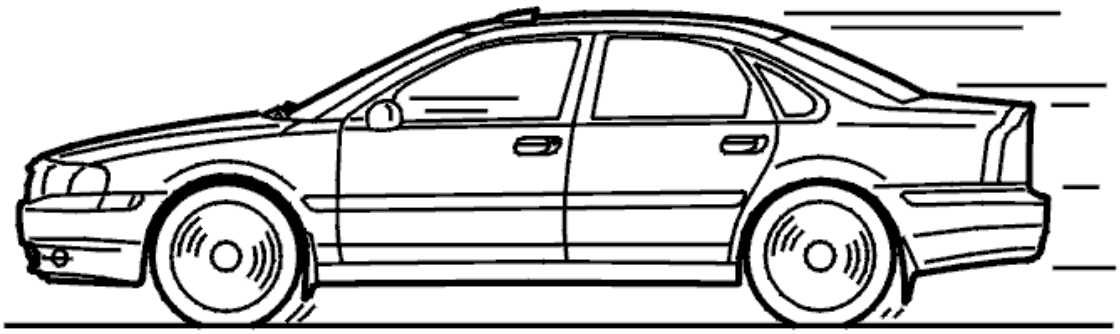

Fig. 327: Identifying Test Drive
Courtesy of VOLVO CARS CORPORATION

Is the fault status display as not found ?

- **YES**

  VERIFIED: Troubleshooting has been completed.

- **NO**

  Refer to **INFORMATION**

INFORMATION

FAULT-TRACING INFORMATION

The fault should have been detected and remedied. As this is not the case fault-tracing has failed.

Exit fault-tracing for this diagnostic trouble code (DTC) or make another attempt.

ECM-6805: TURBOCHARGER (TC) CONTROL VALVE, BOOST PRESSURE FAULT. PRESSURE TOO HIGH (B6294T; 2003-2004)

DIAGNOSTIC TROUBLE CODE (DTC) INFORMATION

see **DIAGNOSTIC TROUBLE CODE (DTC) INFORMATION**

PRESSURE TOO HIGH

CHECKING THE HOSES AND THE TURBOCHARGER (TC) CONTROL VALVE

Check that the hoses between the pressure servo for the boost pressure control (BPC) valve and the turbocharger (TC) control valve are not trapped, blocked or damaged.

Check that the hoses between the turbocharger (TC) control valve and the charge air pipe (between the turbocharger (TC) and the charge air cooler (CAC)) are not trapped, blocked or damaged.

Check the turbocharger (TC) control valve by activating it. The turbocharger (TC) control valve must click when it is activated.

Check the setting of the waste gate valve's pressure servo as well as the waste gate valve. Check the function and check for jamming according to:**PRESSURE REGULATOR, CHECKING/ADJUSTING**

Other information:

- To access the turbocharger (TC) control valve, see **REPLACING THE TURBOCHARGER (TC) CONTROL VALVE** .

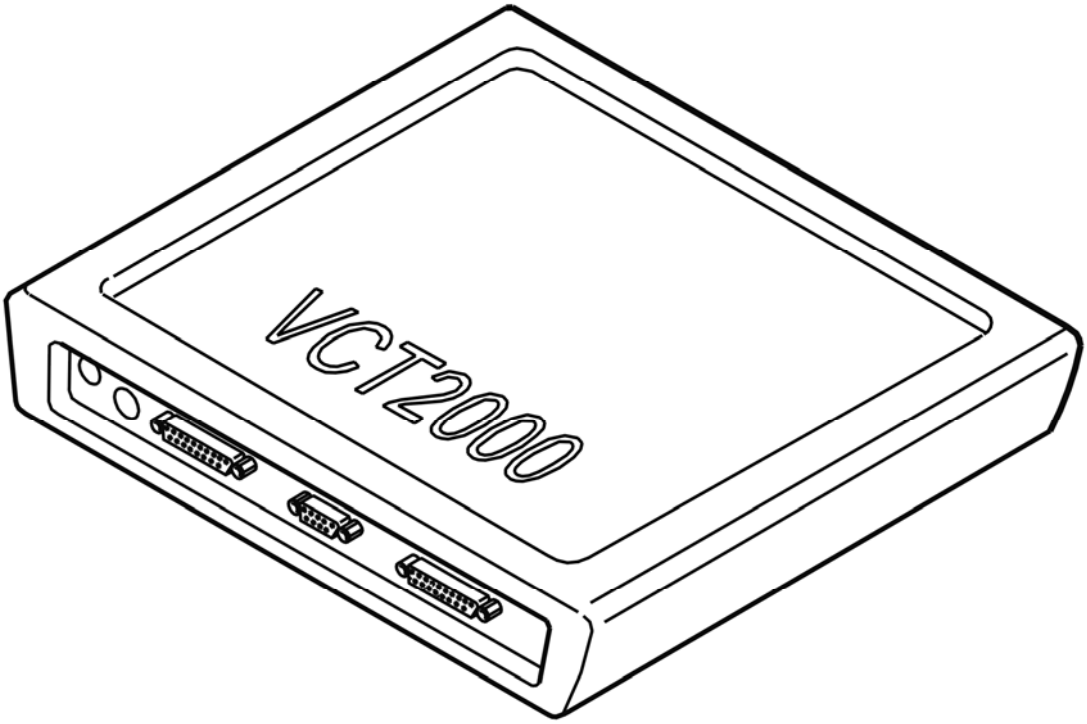

Fig. 328: Identifying VCT2000 Diagnostic Tool Symbol In VIDA
Courtesy of VOLVO CARS CORPORATION

- **Continue**

  Refer to **VERIFICATION**

VERIFICATION

VERIFICATION

HINT: After carrying out the repair, check that the fault has been remedied.

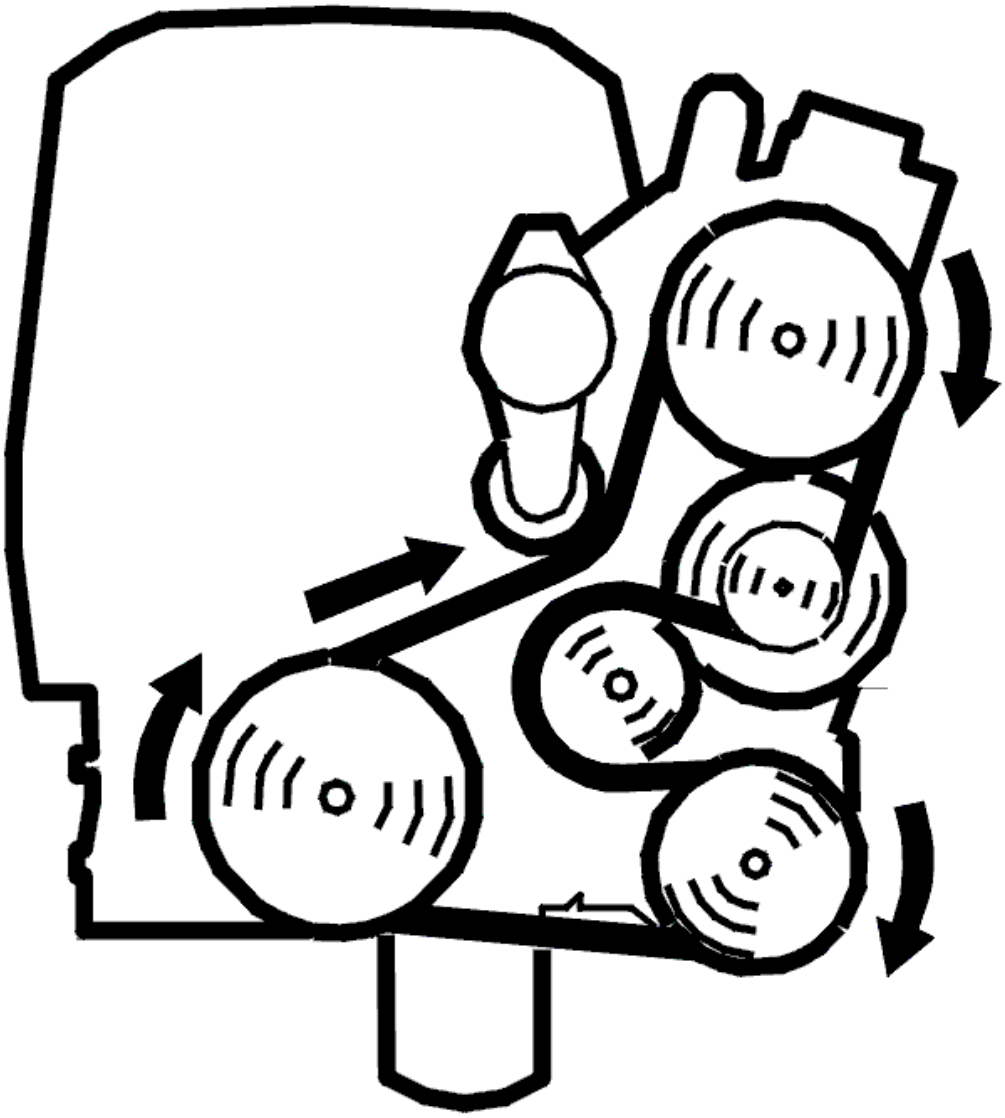

Fig. 329: Belt Routing / Engine Idling - Volvo
Courtesy of VOLVO CARS CORPORATION

- Ignition off.
- Reinstall connectors, components etc.
- Disconnect the VCT 2000 from the data link connector (DLC).
- Test drive the car and check that high boost pressure is obtained.
- Connect the VCT 2000 to the data link connector (DLC).

NOTE: **Do not switch off the ignition before the VCT 2000 has been connected and the boost pressure has been tested with the smart tool.**

Read off the boost pressure fault status

When the boost pressure has been tested the display should show that the diagnostic is complete.

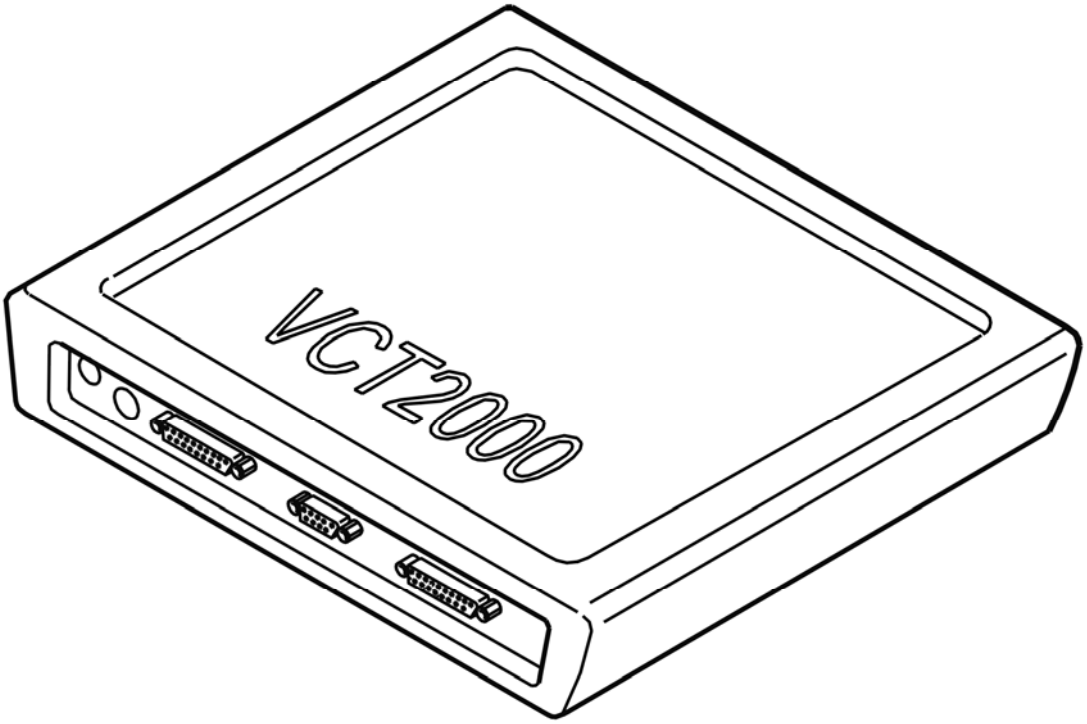

Fig. 330: Identifying VCT2000 Diagnostic Tool Symbol In VIDA
Courtesy of VOLVO CARS CORPORATION

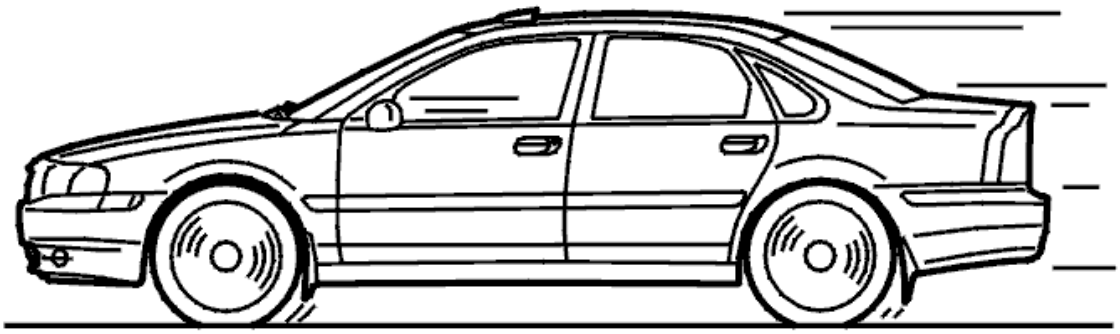

Fig. 331: Identifying Test Drive
Courtesy of VOLVO CARS CORPORATION

Is the fault status display as not found ?

- **YES**

  VERIFIED: Troubleshooting has been completed.

- **NO**

  Refer to **INFORMATION**

INFORMATION

FAULT-TRACING INFORMATION

The fault should have been detected and remedied. As this is not the case fault-tracing has failed.

Exit fault-tracing for this diagnostic trouble code (DTC) or make another attempt.

ECM-6806: TURBOCHARGER (TC) CONTROL VALVE, FLOW FAULT. PRESSURE TOO LOW (B5254T2; 2003-2004)

DIAGNOSTIC TROUBLE CODE (DTC) INFORMATION

Condition

Diagnostic trouble code (DTC) ECM-6806 is stored if the control module deployment of the turbocharger (TC) control valve is 100 % (the control module request maximum pressure) and the measured boost pressure (from the boost pressure sensor) is lower that a calculated desired value. The fault is diagnosed by the control module when the engine speed (RPM) and load are above a certain value.

Substitute Value

Reduced boost pressure.

Possible Source

- Air leakage in the intake system.
- Pressure servo for the boost pressure control (BPC) valve is incorrectly adjusted.
- Sticking boost pressure control (BPC) valve
- Faulty turbocharger (TC) control valve.
- Damaged turbo charger (TC).

Fault symptom[s]

- Poor performance.

ECM-6806: TURBOCHARGER (TC) CONTROL VALVE, FLOW FAULT. PRESSURE TOO LOW (B5254T2, AW50/51 AWD; 2003-2004)

PRESSURE TOO LOW

CHECKING FOR AIR LEAKAGE

Fig. 332: Identifying Ignition In Off Position
Courtesy of VOLVO CARS CORPORATION

- Ignition off.

Check the intake system for air leakage and loose charge-air pipe.

see **AIR LEAKAGE IN THE INTAKE SYSTEM, CHECKING**

Does the problem persist?

- **YES**

  Refer to **CHECKING TURBO SYSTEM**

- **NO**

  Refer to **VERIFICATION**

CHECKING TURBO SYSTEM

Check the turbocharger (TC) control valve by activating it. The turbocharger (TC) control valve must click when it is activated.

Check the setting of the waste gate valve's pressure servo as well as the waste gate valve. Check the function and check for jamming according to:**WASTEGATE VALVE, ADJUSTING**

Other information:

- see **REPLACING THE TURBOCHARGER (TC) CONTROL VALVE**
- see **QUICK CHECK, TURBOCHARGER (TC)**
- see **TURBOCHARGER, REPLACING**

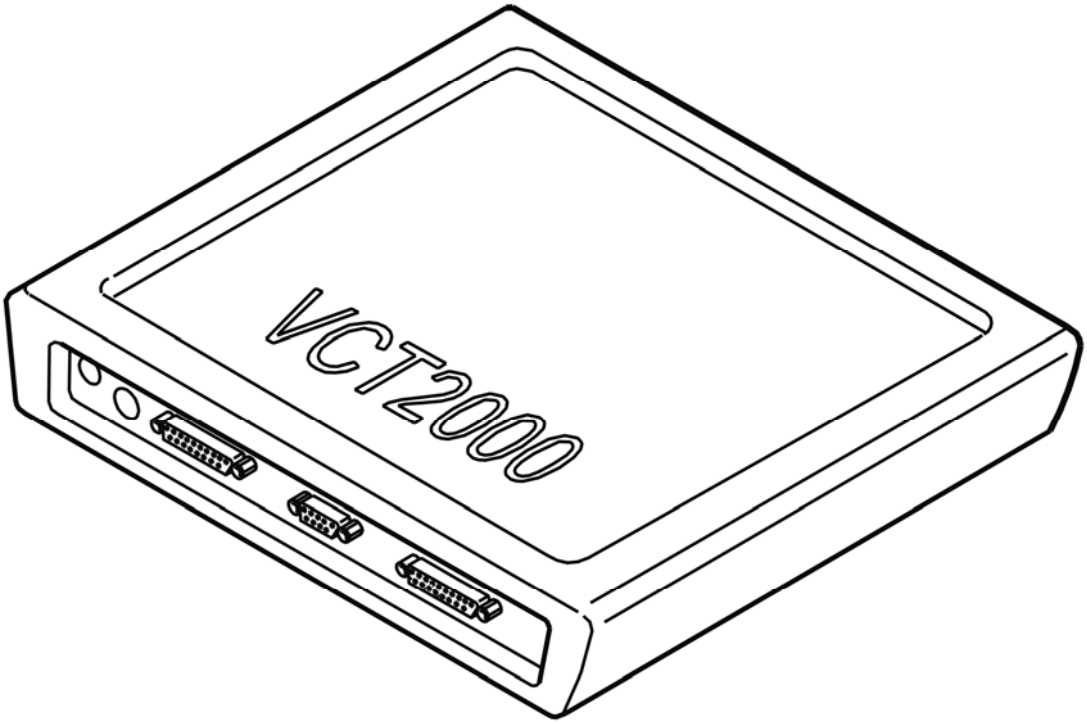

Fig. 333: Identifying VCT2000 Diagnostic Tool Symbol In VIDA
Courtesy of VOLVO CARS CORPORATION

- **Continue**

  Refer to **VERIFICATION**

VERIFICATION

VERIFICATION

HINT: After carrying out the repair, check that the fault has been remedied.

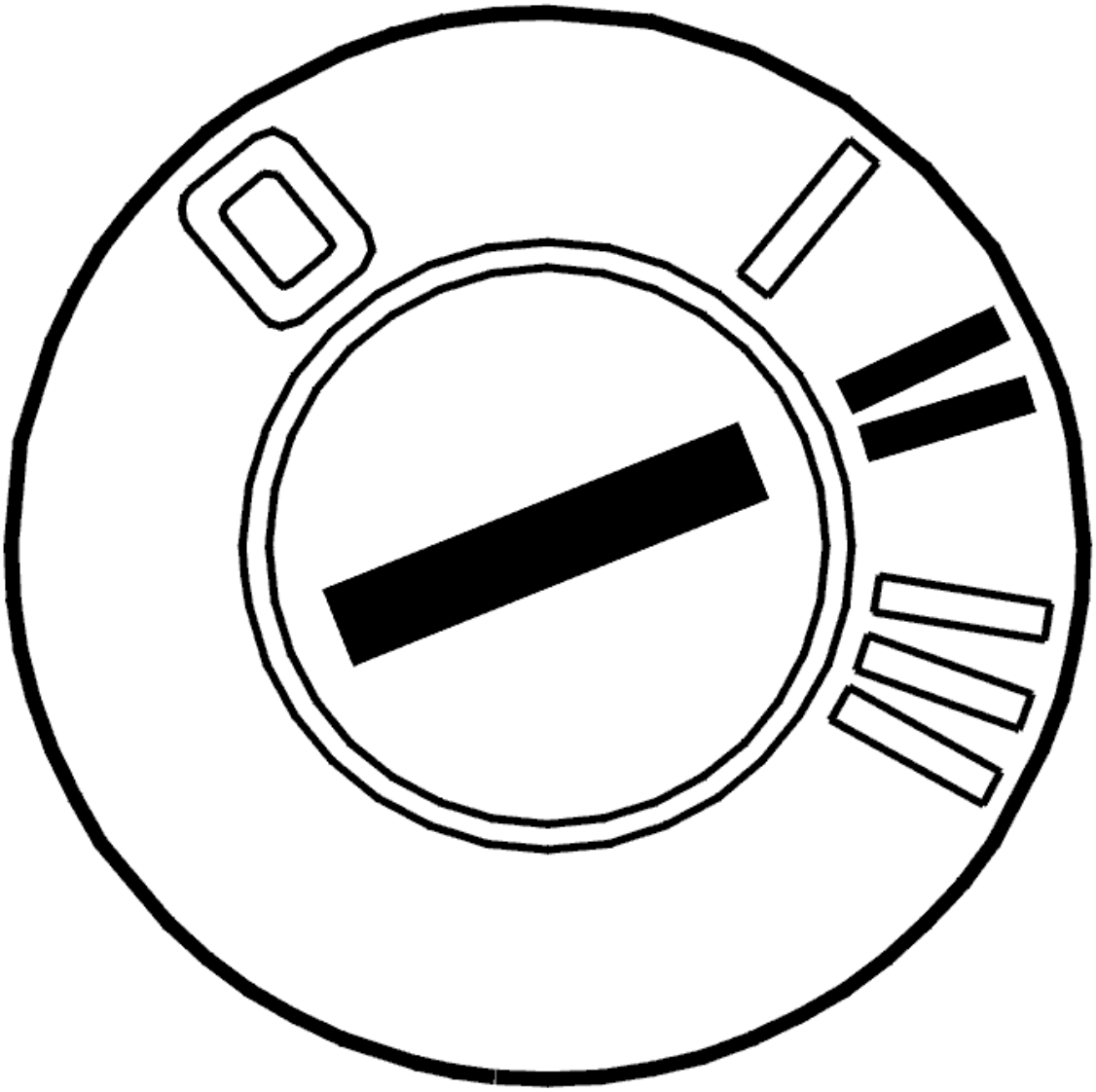

Fig. 334: Identifying Ignition ON
Courtesy of VOLVO CARS CORPORATION

- Ignition off.
- Reinstall connectors, components etc.
- Disconnect the VCT 2000 from the data link connector (DLC).
- Test drive the car and check that high boost pressure is obtained.
- Connect the VCT 2000 to the data link connector (DLC).

NOTE: **Do not switch off the ignition before the VCT 2000 has been connected and the boost pressure has been tested with the smart tool.**

Read off the boost pressure fault status.

When the boost pressure has been tested the display should show that the diagnostic is complete.

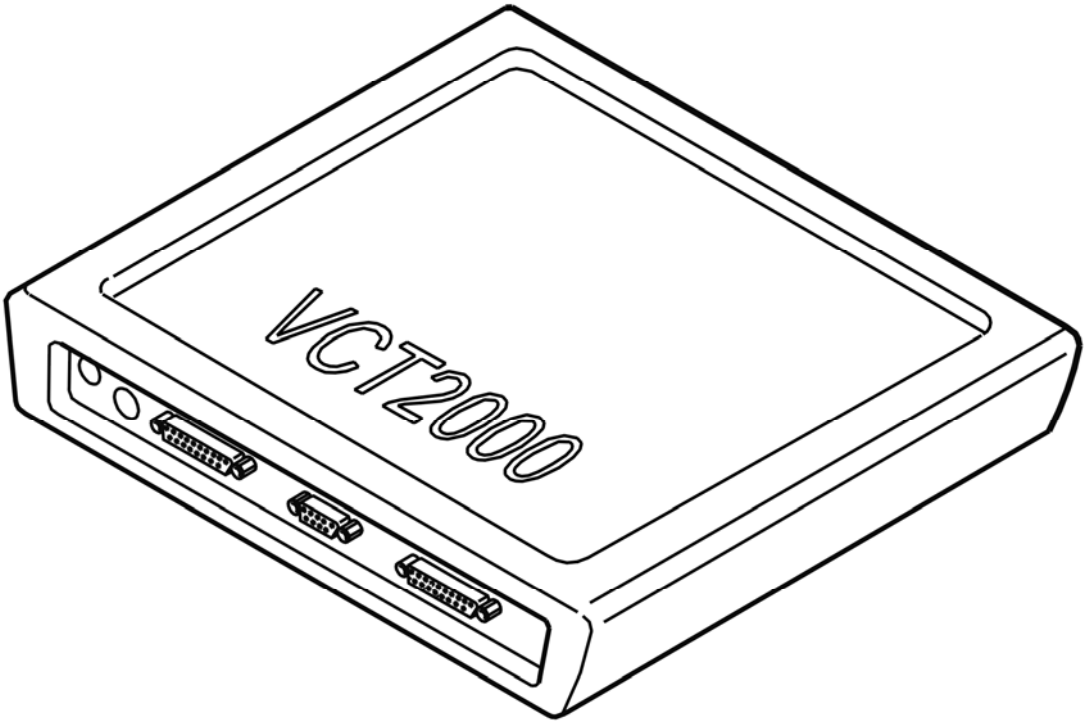

Fig. 335: Identifying VCT2000 Diagnostic Tool Symbol In VIDA
Courtesy of VOLVO CARS CORPORATION

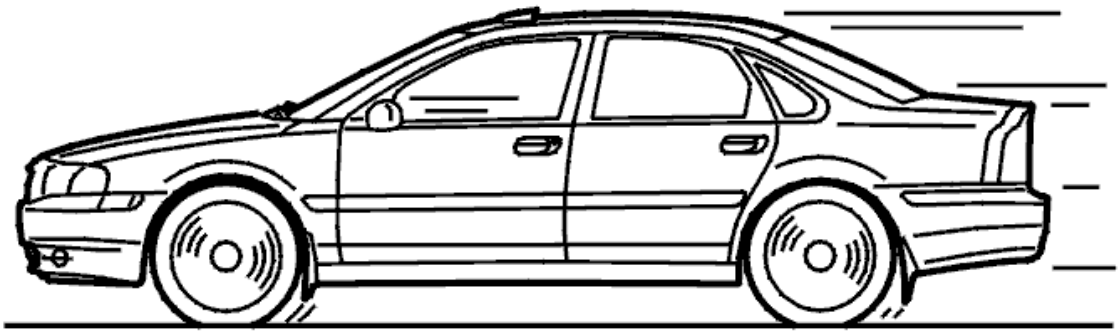

Fig. 336: Identifying Test Drive
Courtesy of VOLVO CARS CORPORATION

Is the fault status displayed as "Ready, no fault"?

- **YES**

  VERIFIED: Troubleshooting has been completed.

- **NO**

  Refer to **INFORMATION**

INFORMATION

FAULT-TRACING INFORMATION

The fault should have been detected and remedied. As this is not the case fault-tracing has failed.

Exit fault-tracing for this diagnostic trouble code (DTC) or make another attempt.

ECM-6806: TURBOCHARGER (TC) CONTROL VALVE, FLOW FAULT. PRESSURE TOO LOW (B5254T2, AW55-50/51SN; 2003)

PRESSURE TOO LOW

CHECKING FOR AIR LEAKAGE

Fig. 337: Identifying Ignition In Off Position
Courtesy of VOLVO CARS CORPORATION

- Ignition off.

Check the intake system for air leakage and loose charge-air pipe.

see **AIR LEAKAGE IN THE INTAKE SYSTEM, CHECKING**

Does the problem persist?

- **YES**

  Refer to **CHECKING TURBO SYSTEM**

- **NO**

  Refer to **VERIFICATION**

CHECKING TURBO SYSTEM

Check the turbocharger (TC) control valve by activating it. The turbocharger (TC) control valve must click when it is activated.

Check the setting of the waste gate valve's pressure servo as well as the waste gate valve. Check the function and check for jamming according to:**WASTEGATE VALVE, ADJUSTING**

Other information:

- see **REPLACING THE TURBOCHARGER (TC) CONTROL VALVE**
- see **QUICK CHECK, TURBOCHARGER (TC)**
- see **TURBOCHARGER (TC)**

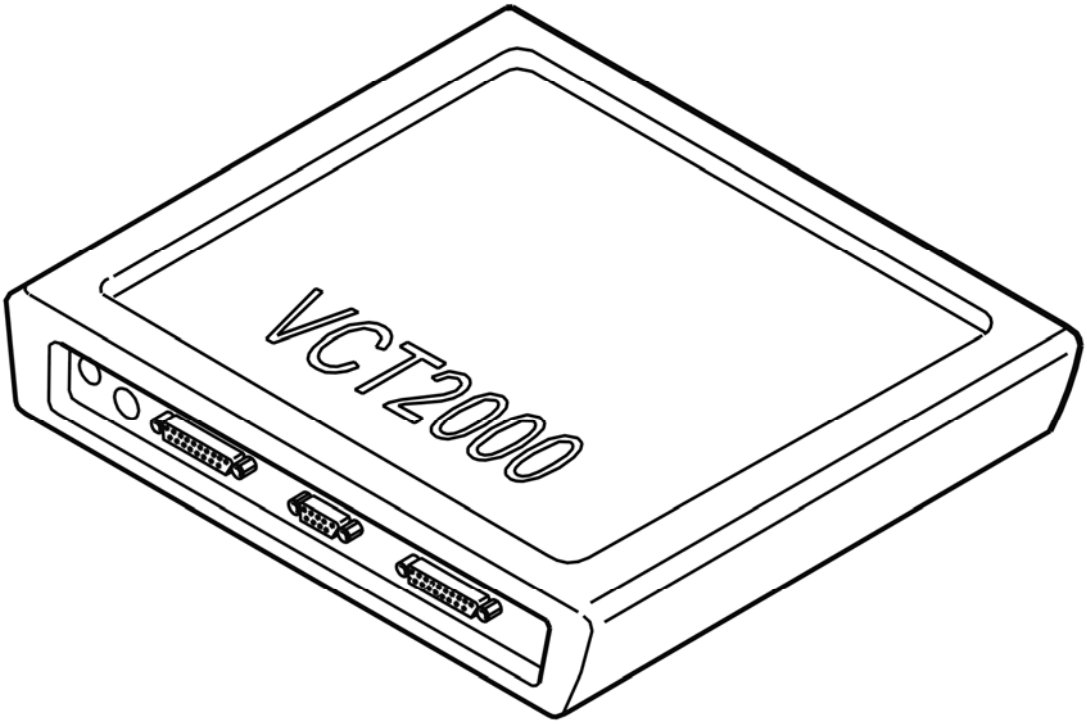

Fig. 338: Identifying VCT2000 Diagnostic Tool Symbol In VIDA
Courtesy of VOLVO CARS CORPORATION

- **Continue**

  Refer to **VERIFICATION**

VERIFICATION

VERIFICATION

HINT: After carrying out the repair, check that the fault has been remedied.

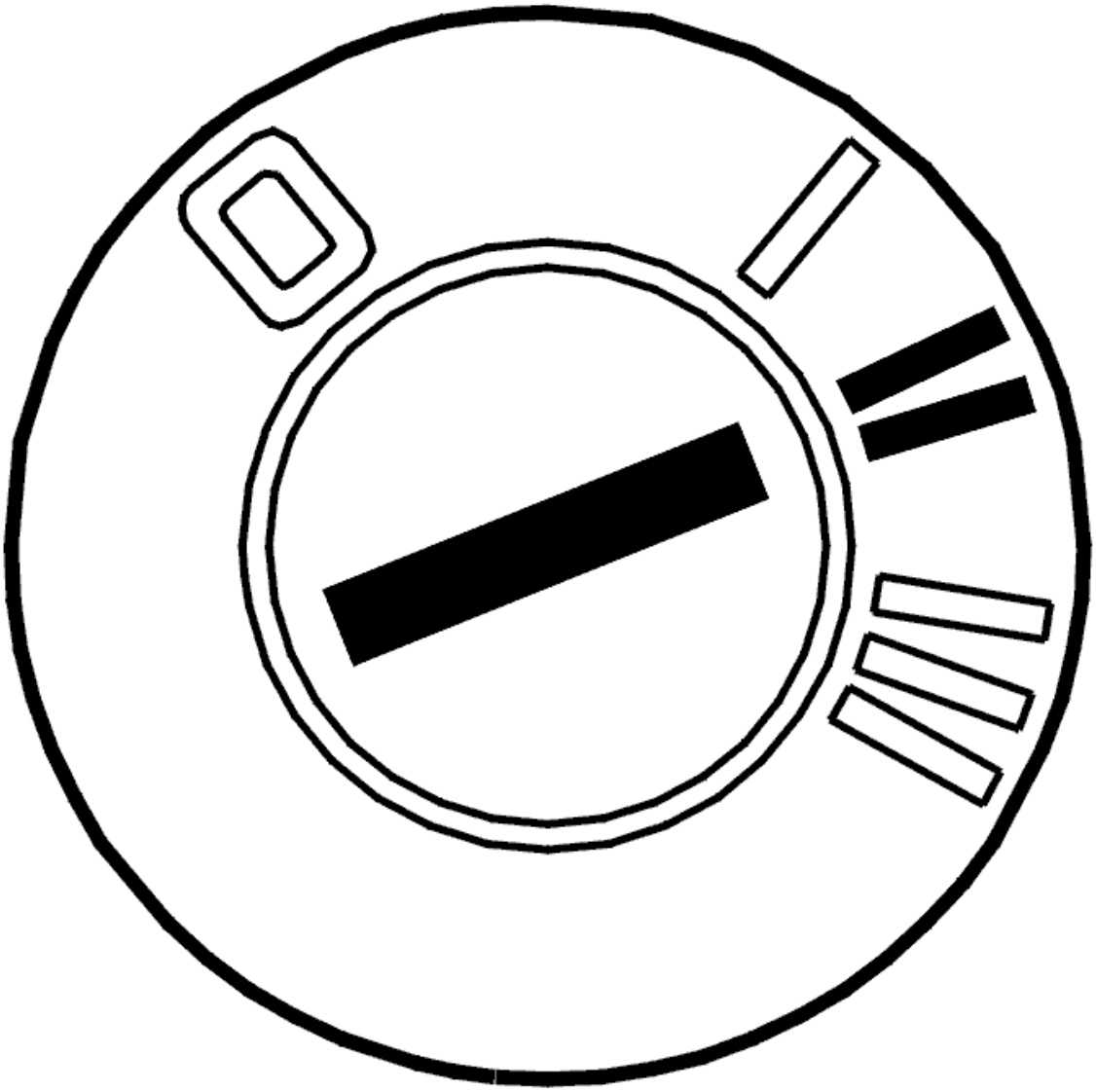

Fig. 339: Identifying Ignition ON
Courtesy of VOLVO CARS CORPORATION

- Ignition off.
- Reinstall connectors, components etc.
- Disconnect the VCT 2000 from the data link connector (DLC).
- Test drive the car and check that high boost pressure is obtained.
- Connect the VCT 2000 to the data link connector (DLC).

NOTE: **Do not switch off the ignition before the VCT 2000 has been connected and the boost pressure has been tested with the smart tool.**

Read off the boost pressure fault status.

When the boost pressure has been tested the display should show that the diagnostic is complete.

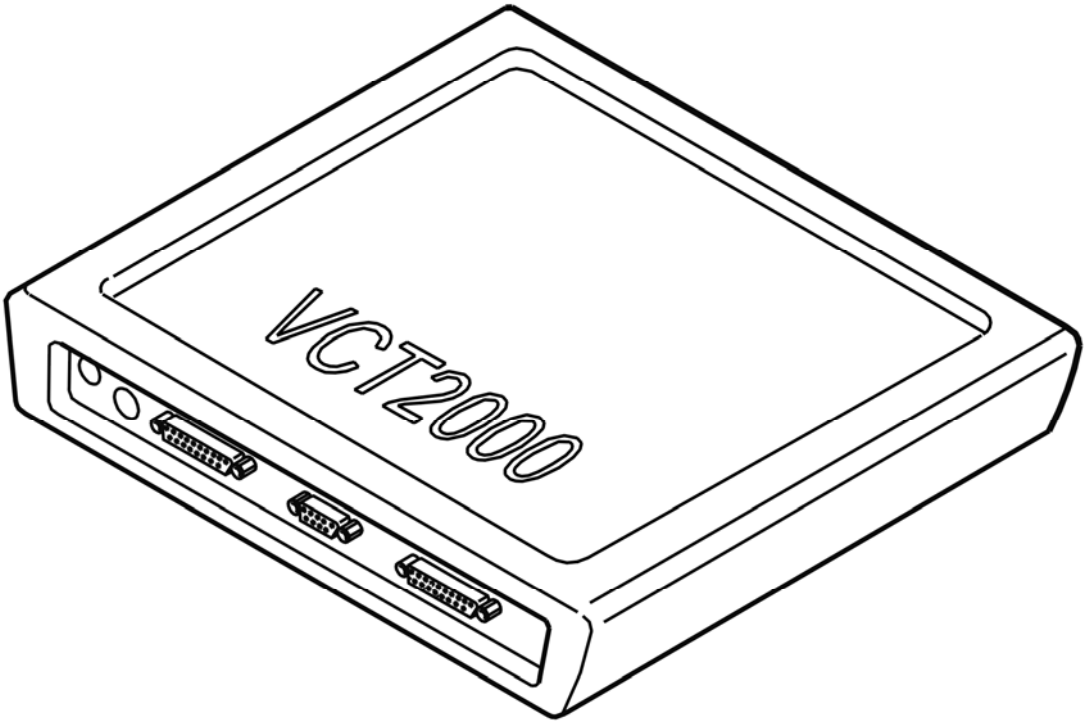

Fig. 340: Identifying VCT2000 Diagnostic Tool Symbol In VIDA
Courtesy of VOLVO CARS CORPORATION

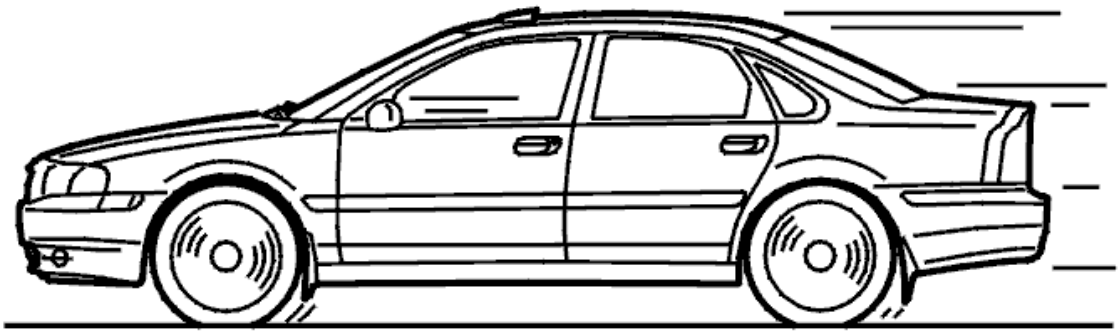

Fig. 341: Identifying Test Drive
Courtesy of VOLVO CARS CORPORATION

Is the fault status displayed as "Ready, no fault"?

- **YES**

  VERIFIED: Troubleshooting has been completed.

- **NO**

  Refer to **INFORMATION**

INFORMATION

FAULT-TRACING INFORMATION

The fault should have been detected and remedied. As this is not the case fault-tracing has failed.

Exit fault-tracing for this diagnostic trouble code (DTC) or make another attempt.

ECM-6806: TURBOCHARGER (TC) CONTROL VALVE, FLOW FAULT. PRESSURE TOO LOW (B6294T, L. H. D; 2003-2004)

PRESSURE TOO LOW

CHECKING FOR AIR LEAKAGE

Fig. 342: Identifying Ignition In Off Position
Courtesy of VOLVO CARS CORPORATION

- Ignition off.

Check the intake system for air leakage and loose charge-air pipe.

see **AIR LEAKAGE IN THE INTAKE SYSTEM, CHECKING**

Does the problem persist?

- **YES**

  Refer to **CHECKING TURBO SYSTEM**

- **NO**

  Refer to **VERIFICATION**

CHECKING TURBO SYSTEM

Check the turbocharger (TC) control valve by activating it. The turbocharger (TC) control valve must click when it is activated.

Check the setting of the waste gate valve's pressure servo as well as the waste gate valve. Check the function and check for jamming according to:**PRESSURE REGULATOR, CHECKING/ADJUSTING**

Other information:

- see **REPLACING THE TURBOCHARGER (TC) CONTROL VALVE**
- see **QUICK CHECK, TURBOCHARGER (TC)**
- see **TURBOCHARGER (TC), REPLACING**

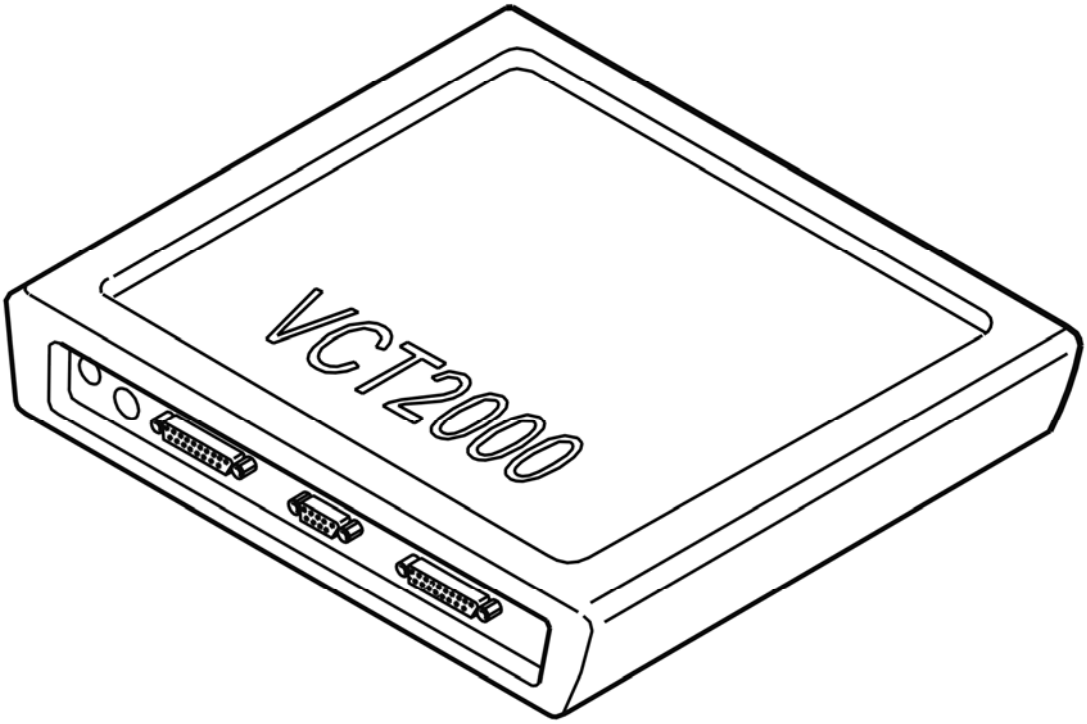

Fig. 343: Identifying VCT2000 Diagnostic Tool Symbol In VIDA
Courtesy of VOLVO CARS CORPORATION

- **Continue**

  Refer to **VERIFICATION**

VERIFICATION

VERIFICATION

HINT: After carrying out the repair, check that the fault has been remedied.

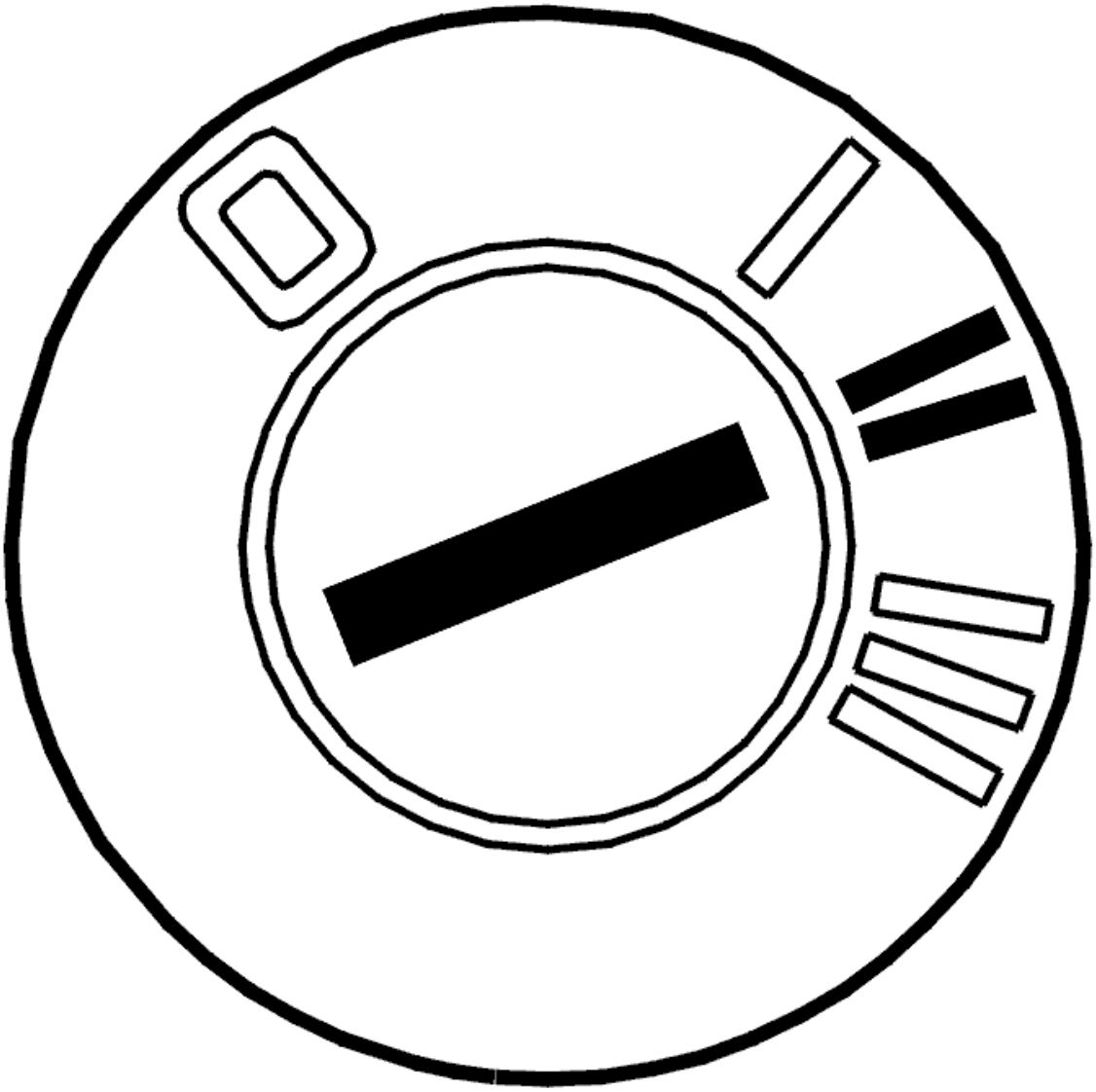

Fig. 344: Identifying Ignition ON
Courtesy of VOLVO CARS CORPORATION

- Ignition off.
- Reinstall connectors, components etc.
- Disconnect the VCT 2000 from the data link connector (DLC).
- Test drive the car and check that high boost pressure is obtained.
- Connect the VCT 2000 to the data link connector (DLC).

NOTE: **Do not switch off the ignition before the VCT 2000 has been connected and the boost pressure has been tested with the smart tool.**

Read off the boost pressure fault status.

When the boost pressure has been tested the display should show that the diagnostic is complete.

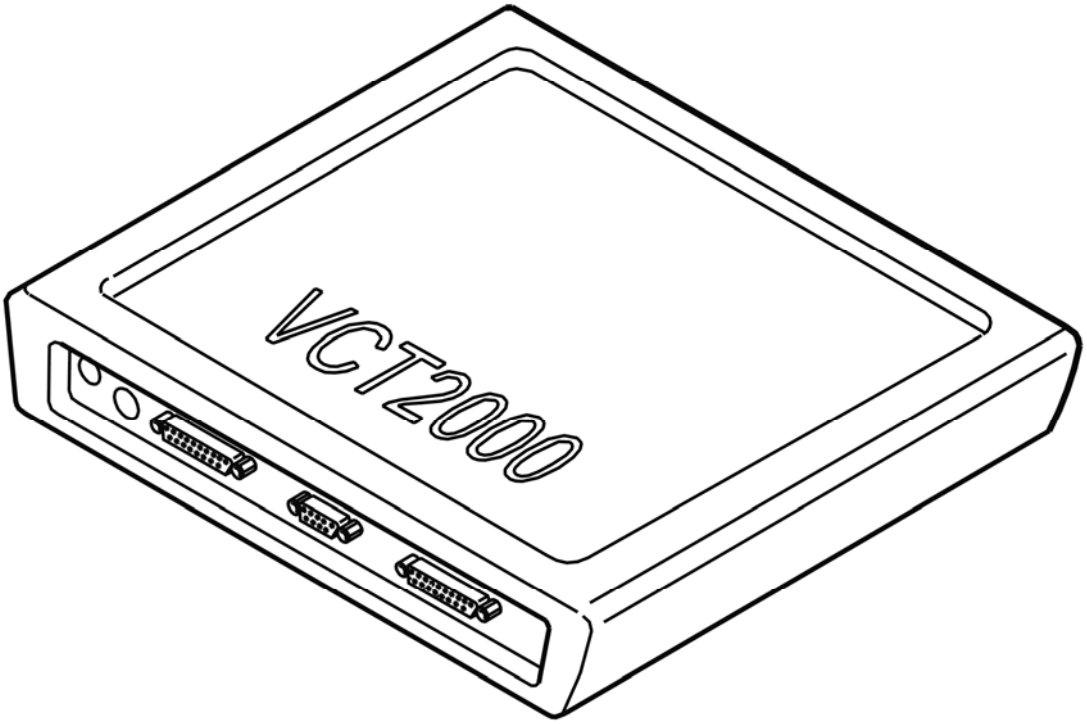

Fig. 345: Identifying VCT2000 Diagnostic Tool Symbol In VIDA
Courtesy of VOLVO CARS CORPORATION

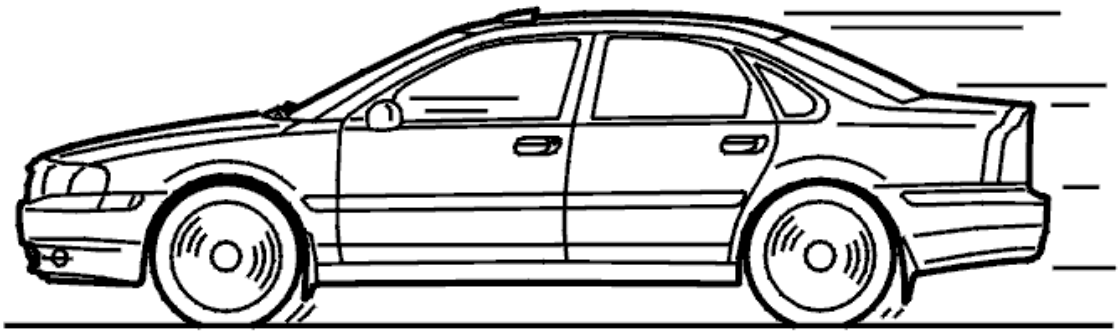

Fig. 346: Identifying Test Drive
Courtesy of VOLVO CARS CORPORATION

Is the fault status displayed as "Ready, no fault"?

- **YES**

  VERIFIED: Troubleshooting has been completed.

- **NO**

  Refer to **INFORMATION**

INFORMATION

FAULT-TRACING INFORMATION

The fault should have been detected and remedied. As this is not the case fault-tracing has failed.

Exit fault-tracing for this diagnostic trouble code (DTC) or make another attempt.

ECM-680B: ENGINE COOLING FAN (FC) CONTROL MODULES. SIGNAL MISSING (B5254T2; 2005-2007)

DIAGNOSTIC TROUBLE CODE (DTC) INFORMATION ECM-680B

Condition

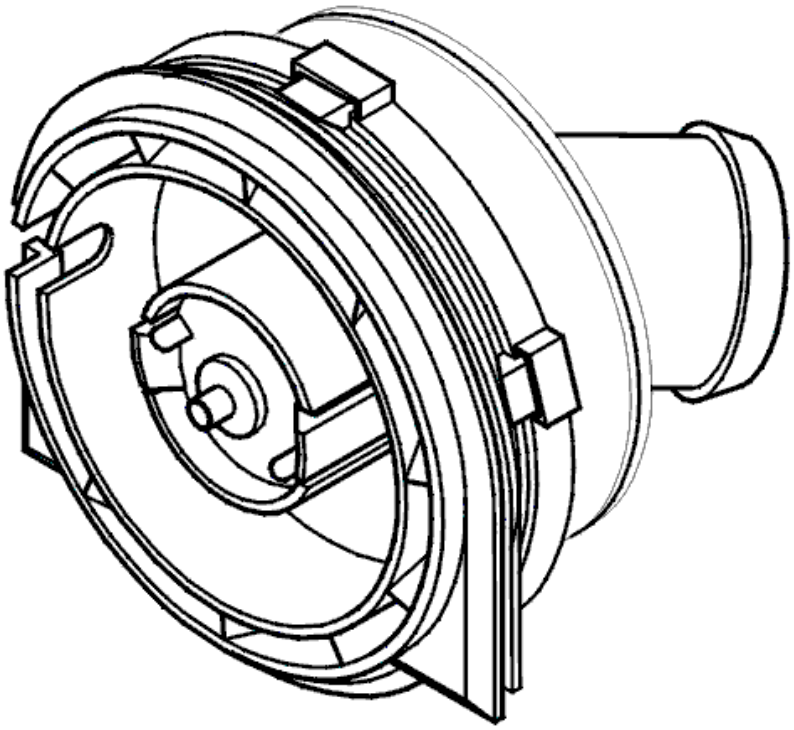

Fig. 347: Identifying Engine Cooling Fan (FC) Control Modules
Courtesy of VOLVO CARS CORPORATION

The engine control module (ECM) checks the circuit from the engine cooling fan (FC) to the control module box.

The diagnostic trouble code (DTC) is stored if the engine control module (ECM) detects that the signal for the engine cooling fan (FC) to the control module box is missing.

The diagnostic trouble code (DTC) can be diagnosed at ignition on or when the engine is running.

Substitute Value

- None.

Possible Source

- Contact resistance in the terminals
- Open-circuit in the signal cable

- Open-circuit in the power supply to the engine cooling fan (FC)
- Damaged engine cooling fan (FC).

Fault symptom[s]

- Malfunction indicator lamp (MIL) lit.

SIGNAL MISSING

see **SIGNAL MISSING**

ECM-680B: ENGINE COOLING FAN (FC) CONTROL MODULES. SIGNAL MISSING (B6294T; 2005-2006)

DIAGNOSTIC TROUBLE CODE (DTC) INFORMATION ECM-680B

see **DIAGNOSTIC TROUBLE CODE (DTC) INFORMATION ECM-680B**

SIGNAL MISSING

see **SIGNAL MISSING**

ECM-680C: ENGINE COOLING FAN (FC) CONTROL MODULES. SIGNAL TOO HIGH (B5254T2; 2005-2007)

DIAGNOSTIC TROUBLE CODE (DTC) INFORMATION ECM-680C

Condition

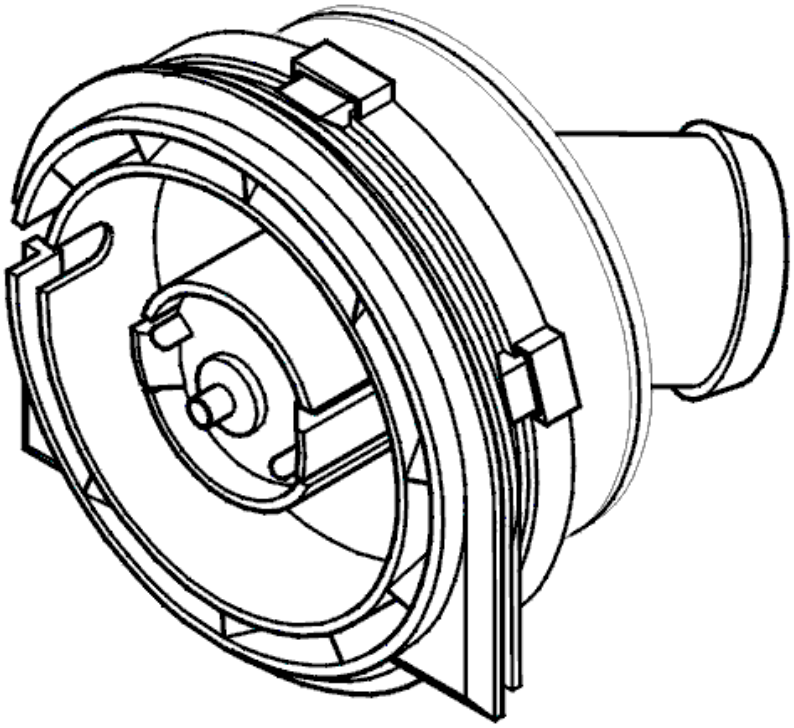

Fig. 348: Identifying Engine Cooling Fan (FC) Control Modules
Courtesy of VOLVO CARS CORPORATION

The engine control module (ECM) checks the circuit from the engine cooling fan (FC) to the control module box.

The diagnostic trouble code (DTC) is stored if the engine control module (ECM) detects that the signal for the engine cooling fan (FC) to the control module box is too high.

The diagnostic trouble code (DTC) can be diagnosed at ignition on or when the engine is running.

Substitute Value

- None.

Possible Source

- Short-circuit to supply voltage in the signal cable
- Damaged engine cooling fan (FC).

Fault symptom[s]

- Malfunction indicator lamp (MIL) lit.

SIGNAL TOO HIGH

see **SIGNAL TOO HIGH**

ECM-680C: ENGINE COOLING FAN (FC) CONTROL MODULES. SIGNAL TOO HIGH (B6294T; 2005-2006)

DIAGNOSTIC TROUBLE CODE (DTC) INFORMATION ECM-680C

see **DIAGNOSTIC TROUBLE CODE (DTC) INFORMATION ECM-680C**

SIGNAL TOO HIGH

see **SIGNAL TOO HIGH**

ECM-680D: ENGINE COOLING FAN (FC) CONTROL MODULES. SIGNAL TOO LOW (B5254T2; 2005-2007)

DIAGNOSTIC TROUBLE CODE (DTC) INFORMATION ECM-680D

Condition

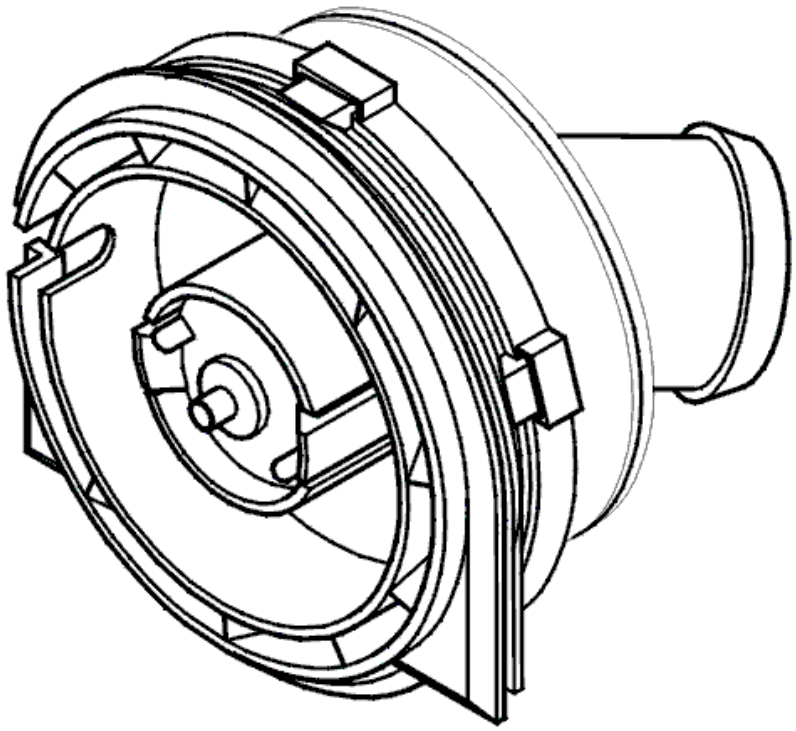

Fig. 349: Identifying Engine Cooling Fan (FC) Control Modules

Courtesy of VOLVO CARS CORPORATION

The engine control module (ECM) checks the circuit from the engine cooling fan (FC) to the control module box.

The diagnostic trouble code (DTC) is stored if the engine control module (ECM) detects that the signal for the engine cooling fan (FC) to the control module box is too low.

The diagnostic trouble code (DTC) can be diagnosed at ignition on or when the engine is running.

Substitute Value

- None.

Possible Source

- Short-circuit to ground in the signal cable
- Damaged engine cooling fan (FC).

Fault symptom[s]

- Malfunction indicator lamp (MIL) lit.

SIGNAL TOO LOW

see **SIGNAL TOO LOW**

ECM-680D: ENGINE COOLING FAN (FC) CONTROL MODULES. SIGNAL TOO LOW (B6294T; 2005-2006)

DIAGNOSTIC TROUBLE CODE (DTC) INFORMATION ECM-680D

see **DIAGNOSTIC TROUBLE CODE (DTC) INFORMATION ECM-680D**

SIGNAL TOO LOW

see **SIGNAL TOO LOW**

ECM-6814: TURBOCHARGER (TC) CONTROL. SIGNAL TOO HIGH (B5254T2; B6294T; 2003-2004)

DIAGNOSTIC TROUBLE CODE (DTC) INFORMATION

Condition

Diagnostic trouble code (DTC) ECM-6814 is stored if the relationship between the measured pressure (from the

boost pressure sensor) and the calculated boost pressure is greater than a certain value. The fault is diagnosed by the control module when turbocharger (TC) control is active.

Substitute Value

Reduced boost pressure.

Possible Source

- Air leakage downstream of the turbocharger (TC) (between the turbocharger (TC) and the throttle unit)
- The boost pressure sensor has come loose (measures the atmospheric pressure)
- Defective boost pressure sensor.

Fault symptom[s]

- Poor performance.

SIGNAL TOO HIGH

CHECKING THE HOSES AND THE TURBOCHARGER (TC) CONTROL VALVE

Check that the boost pressure sensor is correctly installed and has not come loose.

Check the intake system for air leakage. Check in particular the hose between the turbocharger (TC) and the throttle unit.

The boost pressure sensor is defective if no fault is found in the above fault-tracing.

Other information:

- To check the intake system for air leakage, see **INTAKE AND EXHAUST SYSTEM - CLEANING, INSPECTION AND ADJUSTMENT**
- For B5xx4T, see **TEMPERATURE AND PRESSURE SENSORS, REPLACING**
- For B6xx4T, see **TEMPERATURE AND PRESSURE SENSORS, REPLACING**

- **Continue**

  Refer to **VERIFICATION**

VERIFICATION

VERIFICATION

HINT: After carrying out the repair, check that the fault has been remedied.

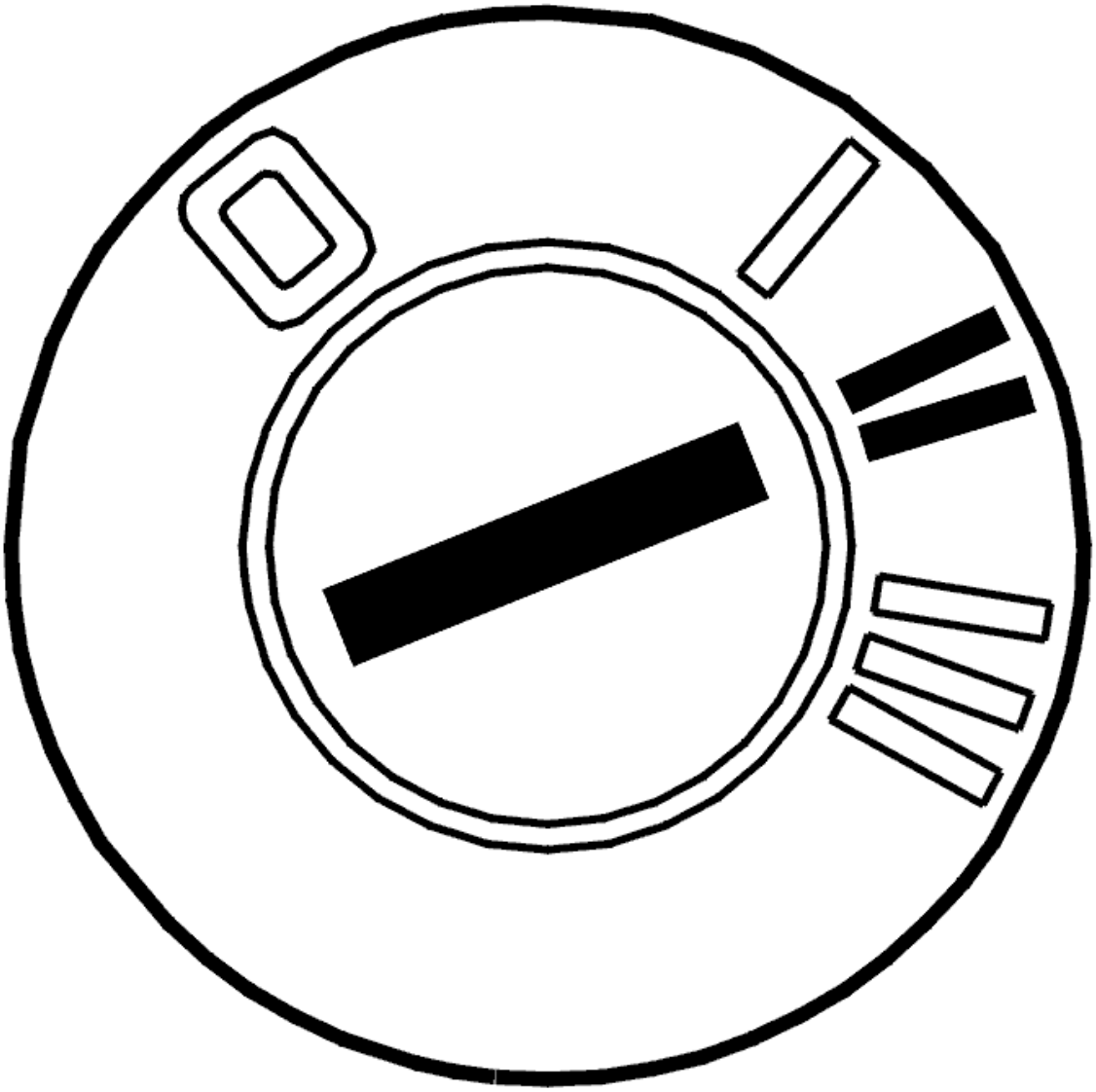

Fig. 350: Identifying Ignition ON
Courtesy of VOLVO CARS CORPORATION

- Ignition off.
- Reinstall connectors, components etc.
- Disconnect the VCT 2000 from the data link connector (DLC).
- Test drive the car and check that high boost pressure is obtained.
- Connect the VCT 2000 to the data link connector (DLC).

NOTE: **Do not switch off the ignition before the VCT 2000 has been connected and the boost pressure has been tested with the smart tool.**

Read off the boost pressure fault status.

When the boost pressure has been tested the display should show that the diagnostic is complete.

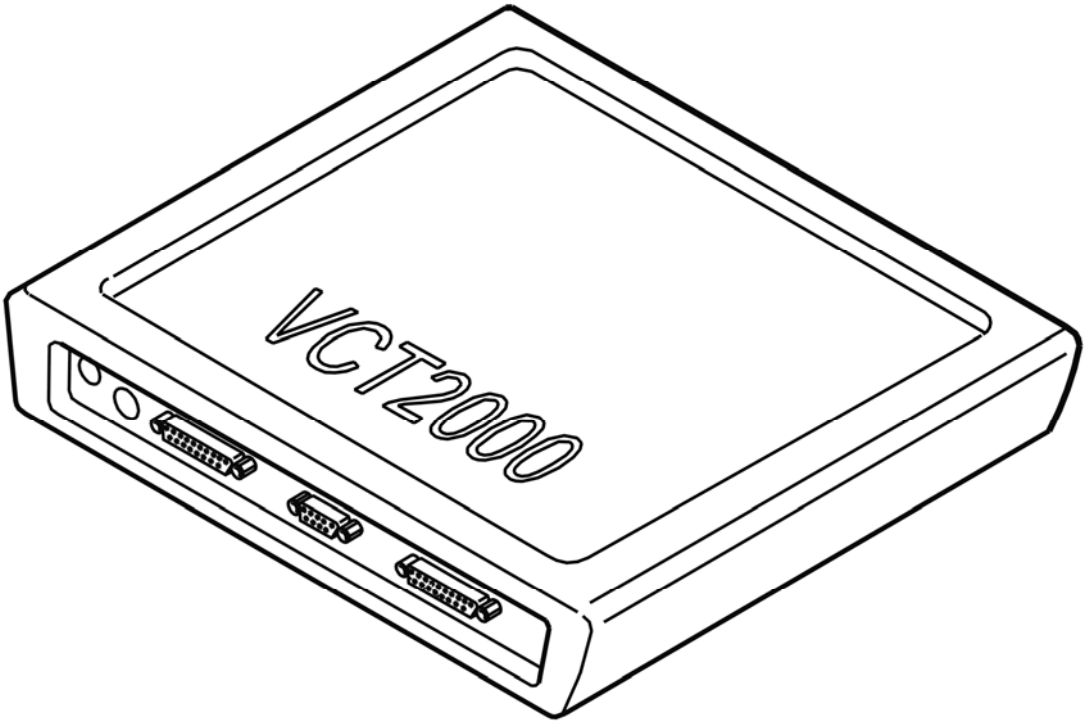

Fig. 351: Identifying VCT2000 Diagnostic Tool Symbol In VIDA
Courtesy of VOLVO CARS CORPORATION

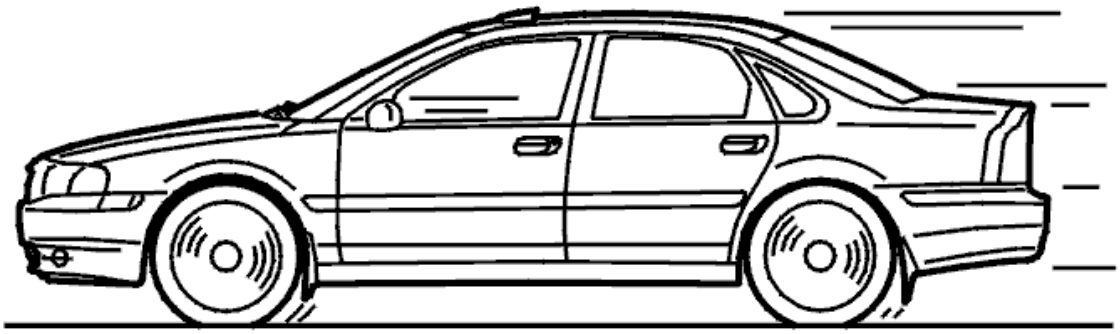

Fig. 352: Identifying Test Drive
Courtesy of VOLVO CARS CORPORATION

Is the fault status displayed as "Ready, no fault"?

- **YES**

  VERIFIED: Troubleshooting has been completed.

- **NO**

  Refer to **INFORMATION**

INFORMATION

FAULT-TRACING INFORMATION

The fault should have been detected and remedied. As this is not the case fault-tracing has failed.

Exit fault-tracing for this diagnostic trouble code (DTC) or make another attempt.

ECM-6B00: MALFUNCTION INDICATOR LAMP (MIL) SIGNAL. SIGNAL MISSING. INTERMITTENT FAULT (B5254T2; B6294T; 2003-2004)

DIAGNOSTIC TROUBLE CODE (DTC) INFORMATION

Condition

If the malfunction indicator lamp (MIL) circuit has a short-circuit to ground/voltage or an open-circuit the control module interprets it as a fault and ECM-6B00 is stored.

Substitute Value

none

Possible Source

Signal too high:

- open-circuit in the ground lead

Signal too low:

- short-circuit to ground in signal cable

Signal missing:

- open-circuit in signal cable
- open-circuit in power cable

Fault symptom[s]

- malfunction indicator lamp (MIL) lit

SIGNAL MISSING. INTERMITTENT FAULT

CHECKING COMPONENT AND WIRING

Check cable between engine control module (ECM) #B46 and combined instrument panel #4 for an intermittent open-circuit according to **OPEN-CIRCUIT, INTERMITTENT FAULTS** .

Remedy as necessary.

Other information

- To connect the engine control module (ECM) breakout box, see **CONNECTING THE BREAKOUT BOX**
- To connect the combined instrument panel breakout box, see **CONNECTING THE DRIVER INFORMATION MODULE (DIM) TEST BOX**
- For 5 cylinder turbocharged engines -2004, see **SIGNAL DESCRIPTION**

- For 5 cylinder turbocharged engines 2005-, see **SIGNAL SPECIFICATION** .
- For 6 cylinder engines -2004, see **SIGNAL SPECIFICATION**
- For 6 cylinder engines 2005-, see **SIGNAL SPECIFICATION** .
- For information about the combined instrument panel connector, see **DRIVER INFORMATION MODULE (DIM) SIGNAL DESCRIPTION** .

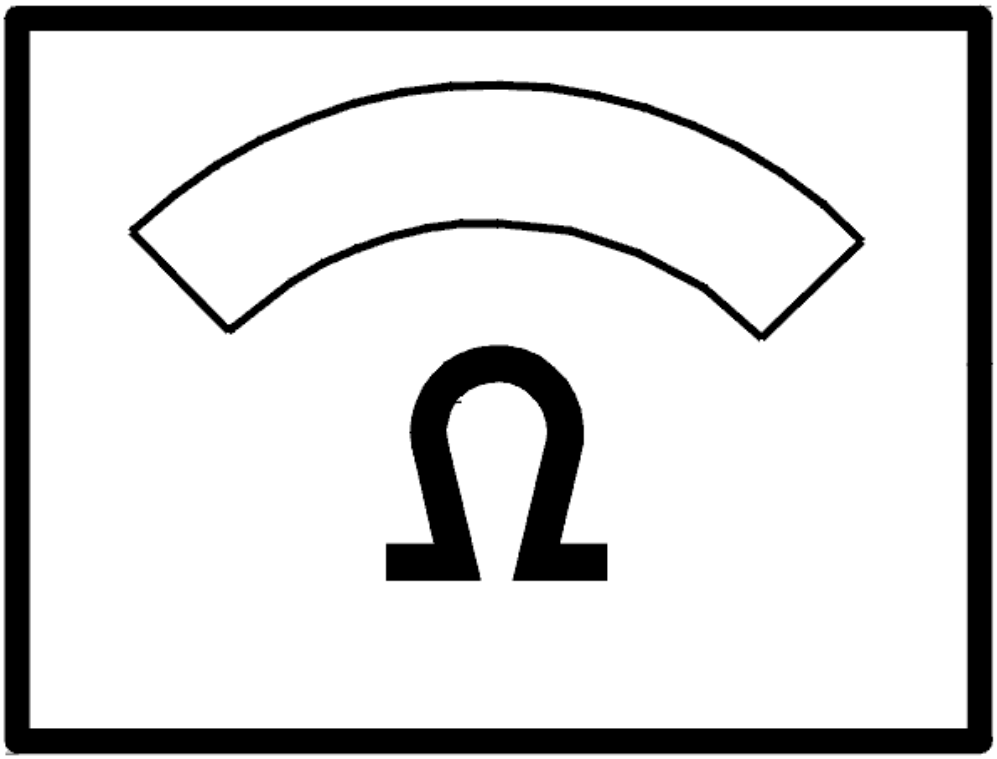

Fig. 353: Identifying Ohm Meter
Courtesy of VOLVO CARS CORPORATION

- **Continue**

  Refer to **INFORMATION**

INFORMATION

FAULT-TRACING INFORMATION

If the fault is intermittent, do not verify fault-tracing if the fault does not recur.

It is possible to view the information again, or leave fault-tracing for this diagnostic trouble code (DTC).

ECM-6B00: MALFUNCTION INDICATOR LAMP (MIL) SIGNAL. SIGNAL MISSING. PERMANENT FAULT (B5254T2; 2003-2004)

SIGNAL MISSING. PERMANENT FAULT

CHECKING THE COMPONENT AND WIRING

Check the cable between Engine control module (ECM) #B46 and Driver information module (DIM) #4 for open circuit according to:**CHECKING WIRING AND TERMINALS. PERMANENT FAULT**

Remedy as necessary.

Other information

- To connect the breakout box to the Engine control module (ECM), see:**CONNECTING THE BREAKOUT BOX**
- To connect the breakout box to the driver information module (DIM), see:**CONNECTING THE DRIVER INFORMATION MODULE (DIM) TEST BOX**
- see **DRIVER INFORMATION MODULE (DIM), REPLACING**
- For 5 cylinder turbocharged engines -2004, see **SIGNAL DESCRIPTION**
- For 5 cylinder turbocharged engines 2005-, see **SIGNAL SPECIFICATION** .
- Signal description Driver information module (DIM):**DRIVER INFORMATION MODULE (DIM) SIGNAL DESCRIPTION**

- **Continue**

  Refer to **VERIFICATION**

VERIFICATION

VERIFICATION

HINT: After carrying out the repair, check that the fault has been remedied.

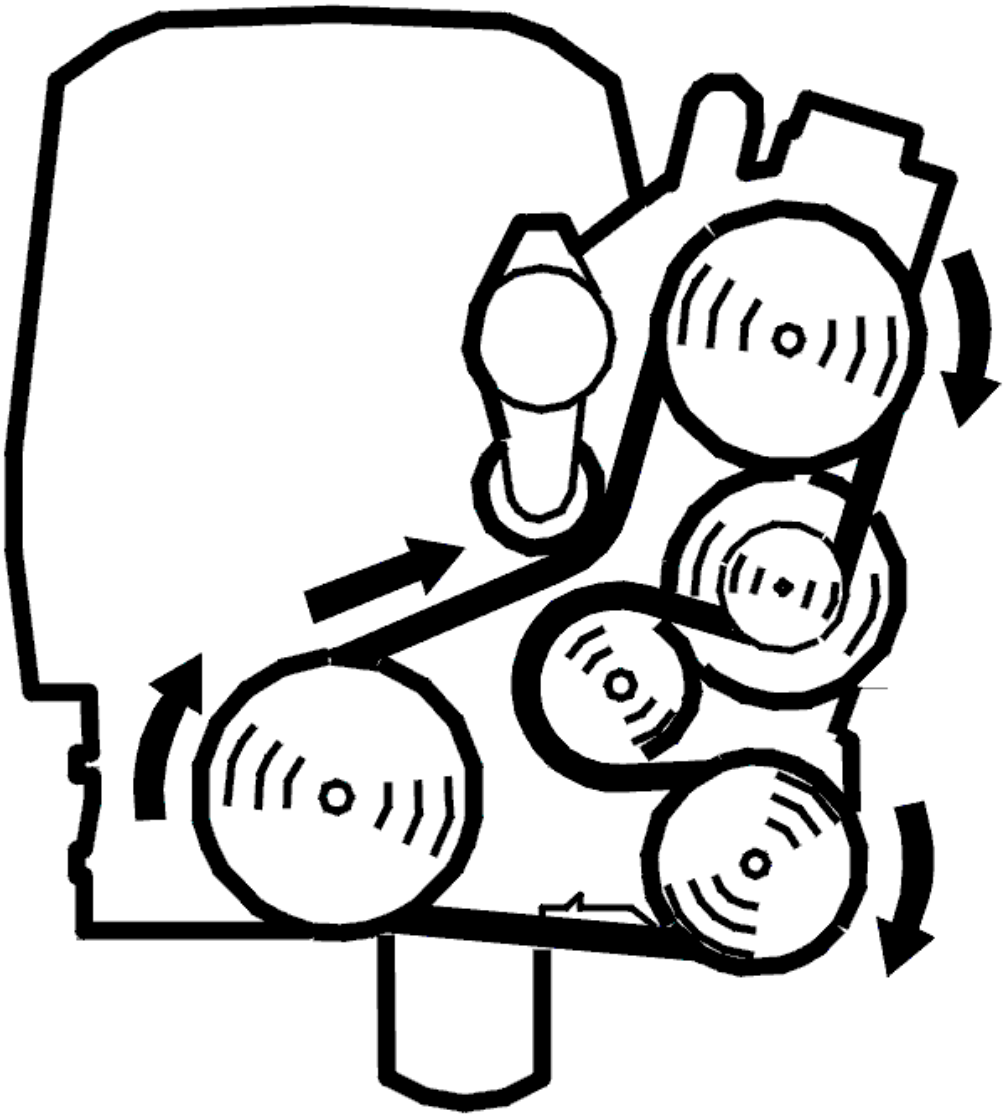

Fig. 354: Belt Routing / Engine Idling - Volvo
Courtesy of VOLVO CARS CORPORATION

- Ignition off
- Reinstall the connectors, components etc.
- Start the engine and let it run at idle speed
- Activate the malfunction indicator lamp (MIL)
- Check that the function is OK.

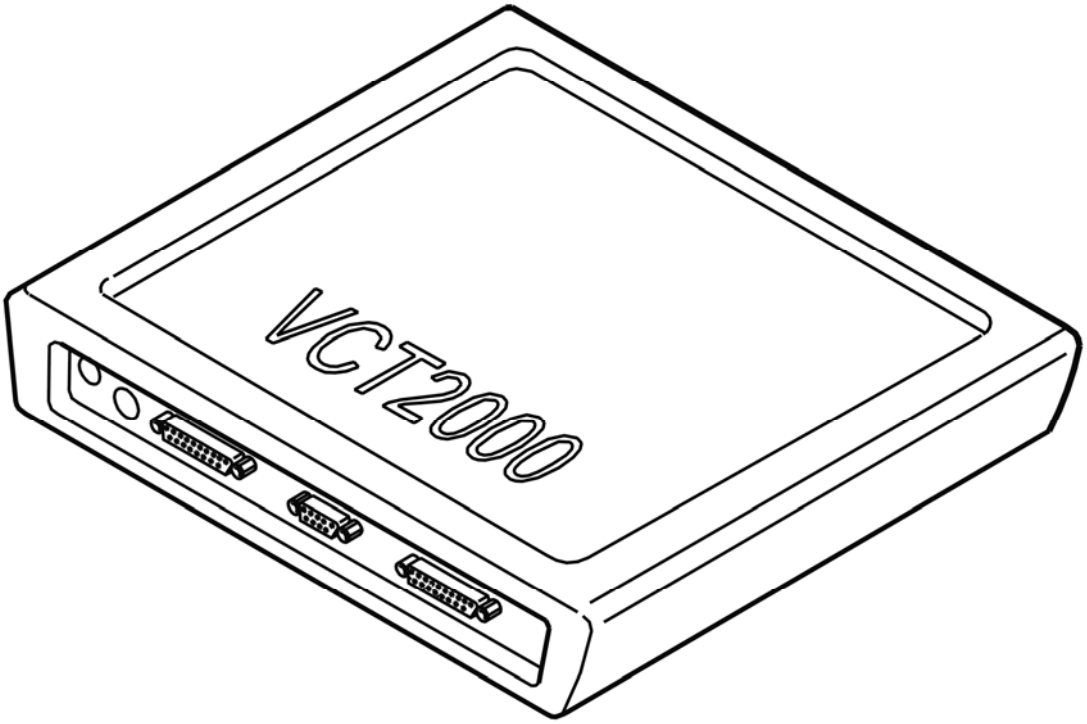

Fig. 355: Identifying VCT2000 Diagnostic Tool Symbol In VIDA
Courtesy of VOLVO CARS CORPORATION

Is function OK?

- **YES**

  VERIFIED: Troubleshooting has been completed.

- **NO**

  Refer to **INFORMATION**

INFORMATION

FAULT-TRACING INFORMATION

The fault should have been detected and remedied. As this is not the case fault-tracing has failed.

Exit fault-tracing for this diagnostic trouble code (DTC) or make another attempt.

DIAGNOSTIC TROUBLE CODE (DTC) INFORMATION

see **DIAGNOSTIC TROUBLE CODE (DTC) INFORMATION**

ECM-6B00: MALFUNCTION INDICATOR LAMP (MIL) SIGNAL. SIGNAL MISSING. PERMANENT FAULT (B6294T; 2003-2004)

SIGNAL MISSING. PERMANENT FAULT

CHECKING THE COMPONENT AND WIRING

Check the cable between Engine control module (ECM) #B46 and Driver information module (DIM) #4 for open circuit according to:**CHECKING WIRING AND TERMINALS. PERMANENT FAULT**

Remedy as necessary.

Other information

- To connect the breakout box to the Engine control module (ECM), see:**CONNECTING THE BREAKOUT BOX**
- To connect the breakout box to the driver information module (DIM), see:**CONNECTING THE DRIVER INFORMATION MODULE (DIM) TEST BOX**
- see **DRIVER INFORMATION MODULE (DIM), REPLACING**
- For 6 cylinder engines -2004, see **SIGNAL SPECIFICATION**
- For 6 cylinder engines 2005-, see **SIGNAL SPECIFICATION** .
- Signal description Driver information module (DIM):**DRIVER INFORMATION MODULE (DIM) SIGNAL DESCRIPTION**

- **Continue**

  Refer to **VERIFICATION**

VERIFICATION

VERIFICATION

HINT: After carrying out the repair, check that the fault has been remedied.

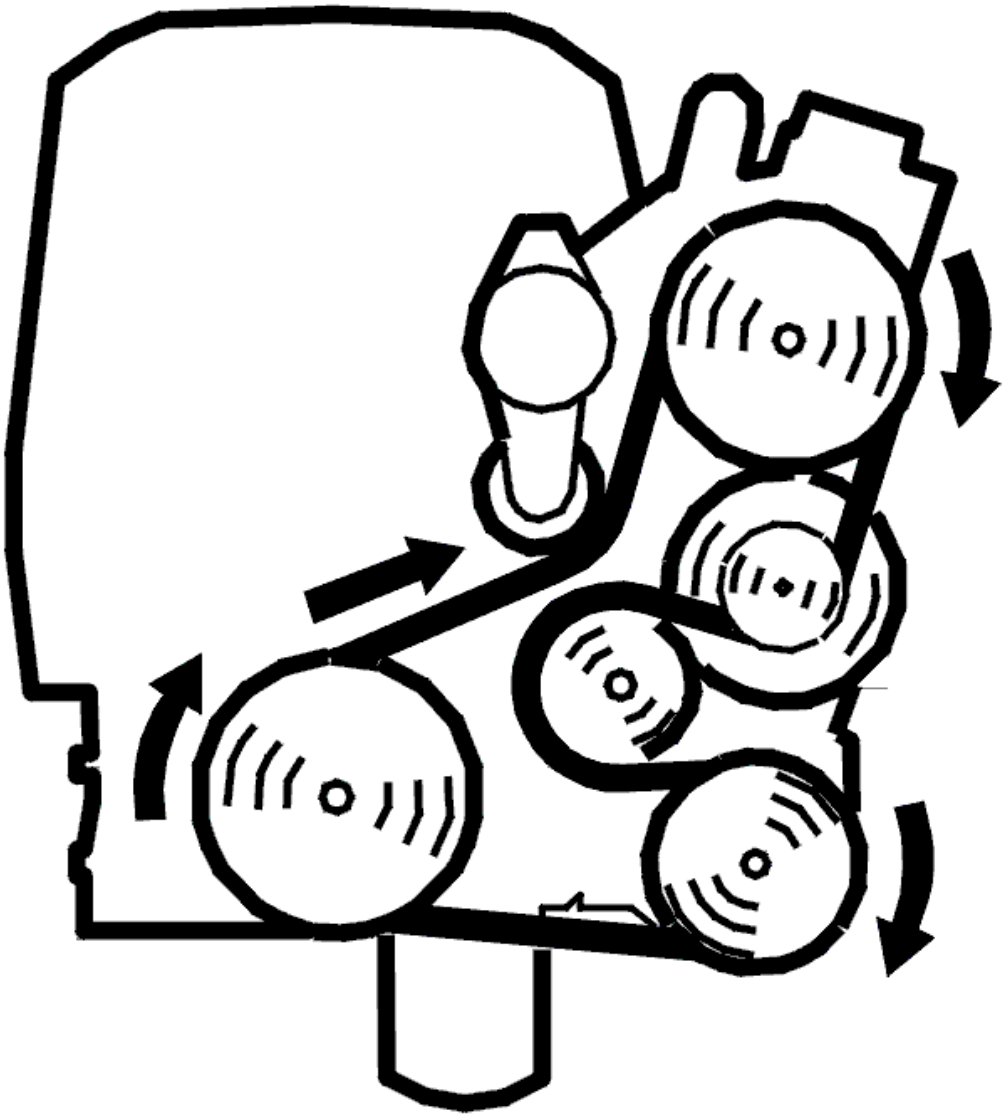

Fig. 356: Belt Routing / Engine Idling - Volvo
Courtesy of VOLVO CARS CORPORATION

- Ignition off
- Reinstall the connectors, components etc.
- Start the engine and let it run at idle speed
- Activate the malfunction indicator lamp (MIL)
- Check that the function is OK.

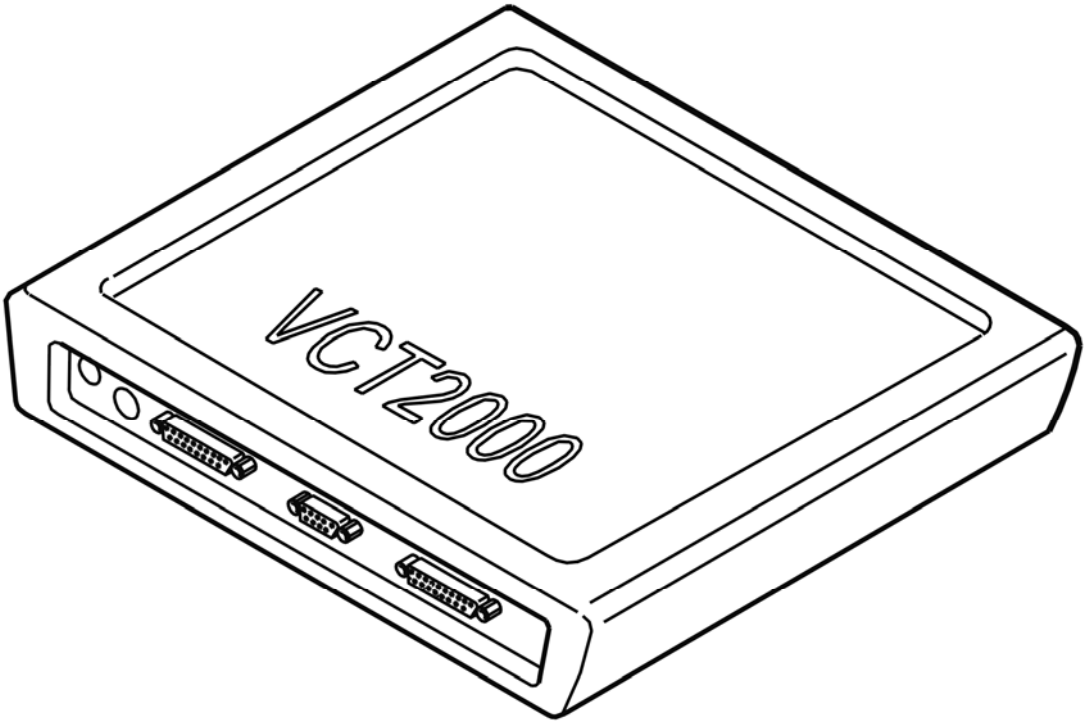

Fig. 357: Identifying VCT2000 Diagnostic Tool Symbol In VIDA
Courtesy of VOLVO CARS CORPORATION

Is function OK?

- **YES**

  VERIFIED: Troubleshooting has been completed.

- **NO**

  Refer to **INFORMATION**

INFORMATION

FAULT-TRACING INFORMATION

The fault should have been detected and remedied. As this is not the case fault-tracing has failed.

Exit fault-tracing for this diagnostic trouble code (DTC) or make another attempt.

DIAGNOSTIC TROUBLE CODE (DTC) INFORMATION

see **DIAGNOSTIC TROUBLE CODE (DTC) INFORMATION**

ECM-6B00: MALFUNCTION INDICATOR LAMP (MIL) SIGNAL. SIGNAL TOO HIGH. INTERMITTENT FAULT (B5254T2; B6294T; 2003-2004)

DIAGNOSTIC TROUBLE CODE (DTC) INFORMATION

see **DIAGNOSTIC TROUBLE CODE (DTC) INFORMATION**

SIGNAL TOO HIGH. INTERMITTENT FAULT

CHECKING COMPONENT AND WIRING

Check the cable between engine control module (ECM) #B46 and combined instrument panel #4 for an intermittent short-circuit to supply voltage according to **SHORT-CIRCUIT TO SUPPLY VOLTAGE, INTERMITTENT FAULTS** .

Remedy as necessary.

Other information

- To connect the engine control module (ECM) breakout box, see **CONNECTING THE BREAKOUT BOX**
- To connect the combined instrument panel breakout box, see **CONNECTING THE DRIVER INFORMATION MODULE (DIM) TEST BOX**
- For 5 cylinder turbocharged engines -2004, see **SIGNAL DESCRIPTION**
- For 5 cylinder turbocharged engines 2005-, see **SIGNAL SPECIFICATION** .
- For 6 cylinder engines -2004, see **SIGNAL SPECIFICATION**
- For 6 cylinder engines 2005-, see **SIGNAL SPECIFICATION** .
- For information about the combined instrument panel connector, see **DRIVER INFORMATION MODULE (DIM) SIGNAL DESCRIPTION** .

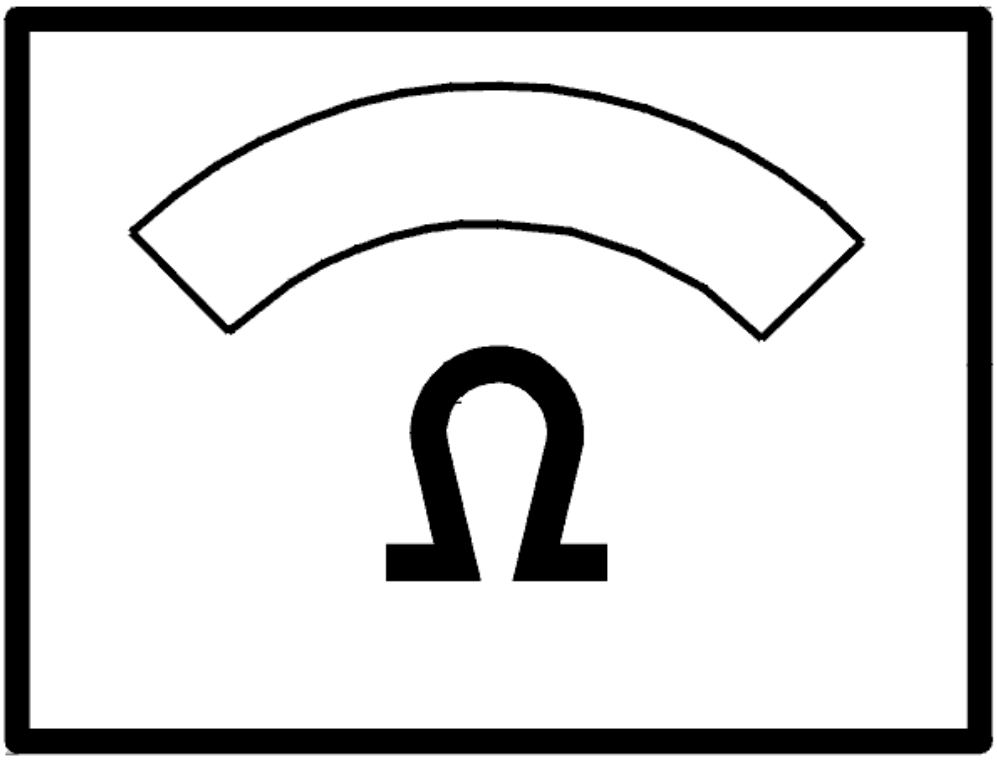

Fig. 358: Identifying Ohm Meter
Courtesy of VOLVO CARS CORPORATION

- **Continue**

  Refer to **INFORMATION**

INFORMATION

FAULT-TRACING INFORMATION

If the fault is intermittent, do not verify fault-tracing if the fault does not recur.

It is possible to view the information again, or leave fault-tracing for this diagnostic trouble code (DTC).

ECM-6B00: MALFUNCTION INDICATOR LAMP (MIL) SIGNAL. SIGNAL TOO

HIGH. PERMANENT FAULT (B5254T2; B6294T; 2003-2004)

DIAGNOSTIC TROUBLE CODE (DTC) INFORMATION

see **DIAGNOSTIC TROUBLE CODE (DTC) INFORMATION**

SIGNAL TOO HIGH. PERMANENT FAULT

CHECKING COMPONENT AND WIRING

Check cable between engine control module (ECM) #B46 and combined instrument panel #4 for a short-circuit to supply voltage according to **SHORT-CIRCUIT TO SUPPLY VOLTAGE. PERMANENT FAULTS** .

Remedy as necessary.

Other information:

- For connection of engine control module (ECM) breakout box, see **CONNECTING THE BREAKOUT BOX** .
- To connect the combined instrument panel breakout box, see **CONNECTING THE DRIVER INFORMATION MODULE (DIM) TEST BOX**
- To access/replace the combined instrument panel, see **DRIVER INFORMATION MODULE (DIM), REPLACING**
- For 5 cylinder turbocharged engines -2004, see **SIGNAL DESCRIPTION**
- For 5 cylinder turbocharged engines 2005-, see **SIGNAL SPECIFICATION** .
- For 6 cylinder engines -2004, see **SIGNAL SPECIFICATION**
- For 6 cylinder engines 2005-, see **SIGNAL SPECIFICATION** .
- For information about the combined instrument panel connector, see **DRIVER INFORMATION MODULE (DIM) SIGNAL DESCRIPTION** .

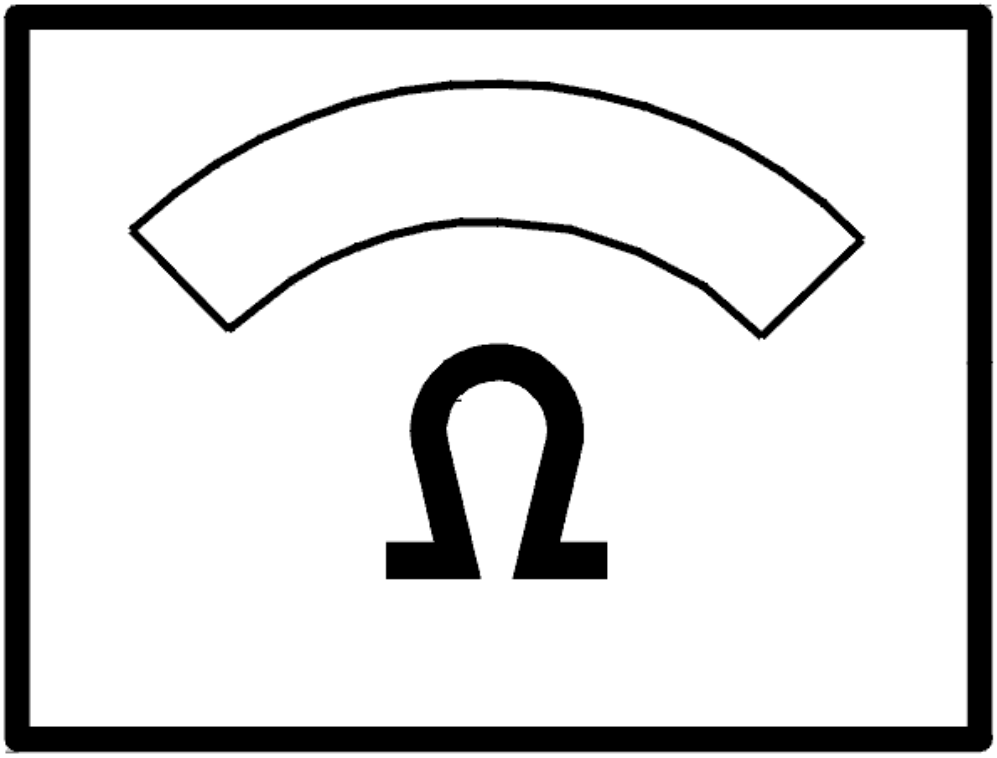

Fig. 359: Identifying Ohm Meter
Courtesy of VOLVO CARS CORPORATION

- **Continue**

  Refer to **VERIFICATION**

VERIFICATION

VERIFICATION

HINT: After carrying out the repair, check that the fault has been remedied.

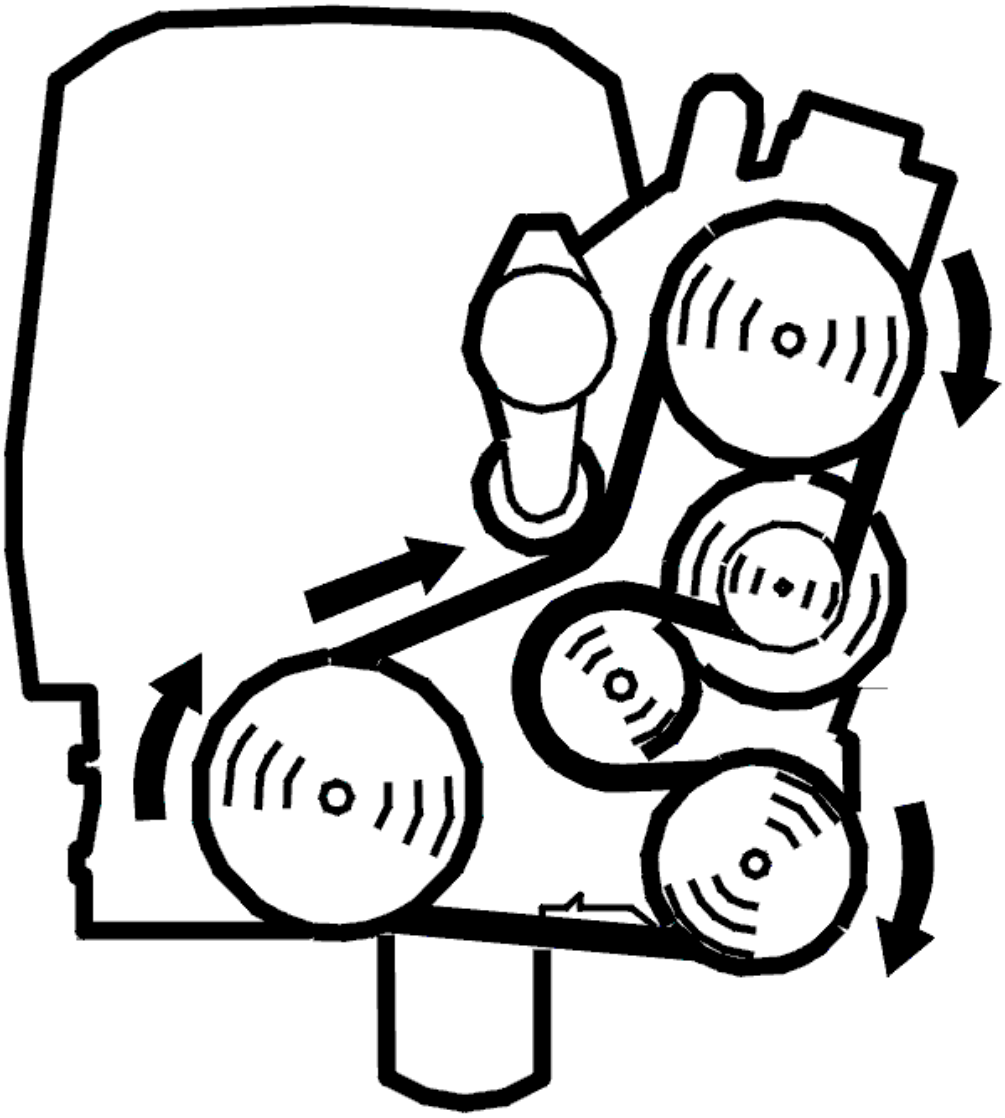

Fig. 360: Belt Routing / Engine Idling - Volvo
Courtesy of VOLVO CARS CORPORATION

- Ignition off
- Reinstall the connectors, components etc.
- Start the engine and let it run at idle speed
- Activate the malfunction indicator lamp (MIL)
- Check that the function is OK.

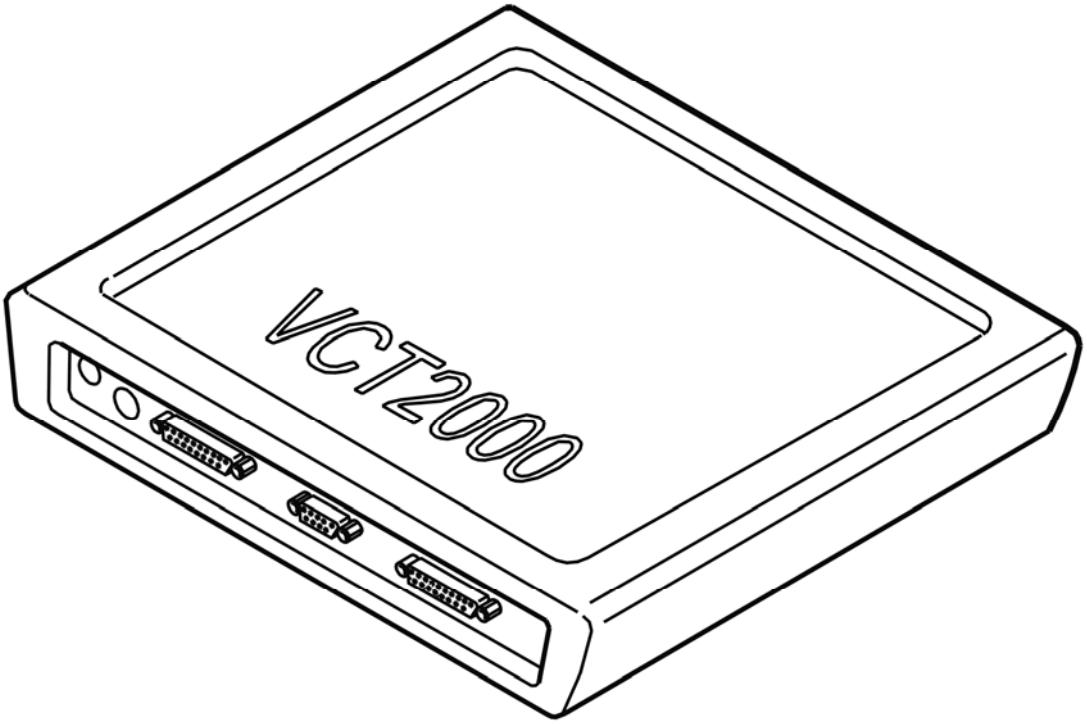

Fig. 361: Identifying VCT2000 Diagnostic Tool Symbol In VIDA
Courtesy of VOLVO CARS CORPORATION

Is function OK?

- **YES**

  VERIFIED: Troubleshooting has been completed.

- **NO**

  Refer to **INFORMATION**

INFORMATION

FAULT-TRACING INFORMATION

The fault should have been detected and remedied. As this is not the case fault-tracing has failed.

Exit fault-tracing for this diagnostic trouble code (DTC) or make another attempt.

ECM-6B00: MALFUNCTION INDICATOR LAMP (MIL) SIGNAL. SIGNAL TOO LOW. INTERMITTENT FAULT (B5254T2; B6294T; 2003-2004)

DIAGNOSTIC TROUBLE CODE (DTC) INFORMATION

see **DIAGNOSTIC TROUBLE CODE (DTC) INFORMATION**

SIGNAL TOO LOW. INTERMITTENT FAULT

CHECKING COMPONENT AND WIRING

Check the cable between engine control module (ECM) #B46 and combined instrument panel #4 for an intermittent short-circuit to ground according to **SHORT-CIRCUIT TO GROUND, INTERMITTENT FAULTS** .

Remedy as necessary.

Other information

- To connect the engine control module (ECM) breakout box, see **CONNECTING THE BREAKOUT BOX**
- To connect the combined instrument panel breakout box, see **CONNECTING THE DRIVER INFORMATION MODULE (DIM) TEST BOX**
- For 5 cylinder turbocharged engines -2004, see **SIGNAL DESCRIPTION**
- For 5 cylinder turbocharged engines 2005-, see **SIGNAL SPECIFICATION** .
- For 6 cylinder engines -2004, see **SIGNAL SPECIFICATION**
- For 6 cylinder engines 2005-, see **SIGNAL SPECIFICATION** .
- For information about the combined instrument panel connector, see **DRIVER INFORMATION MODULE (DIM) SIGNAL DESCRIPTION** .

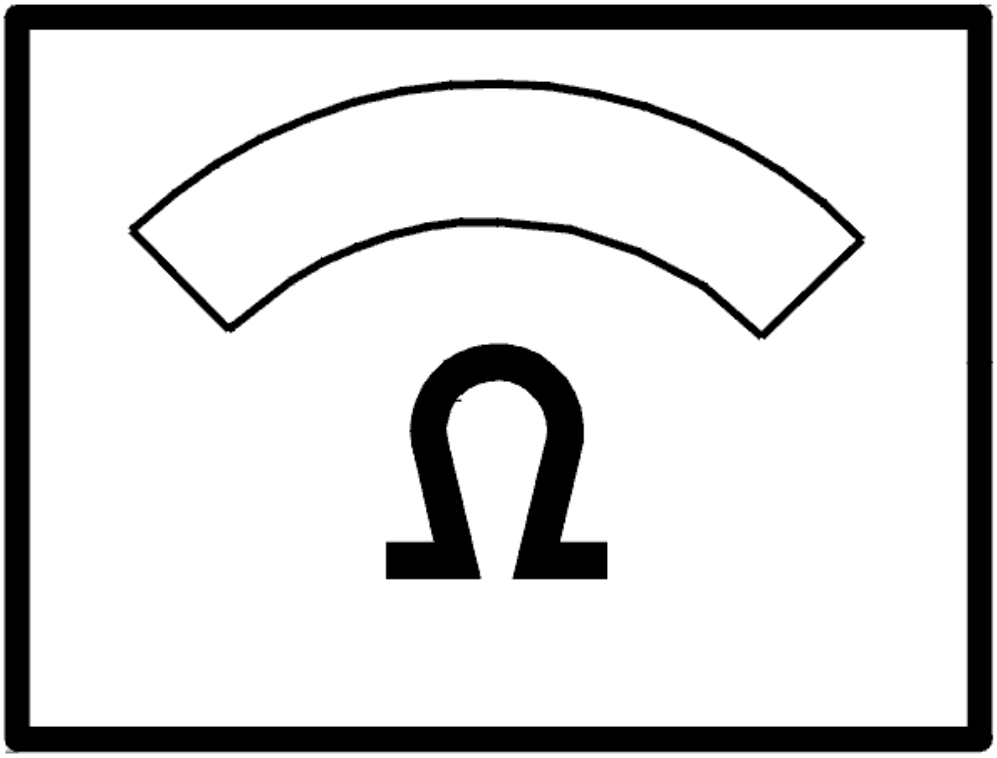

Fig. 362: Identifying Ohm Meter
Courtesy of VOLVO CARS CORPORATION

- **Continue**

  Refer to **INFORMATION**

INFORMATION

FAULT-TRACING INFORMATION

If the fault is intermittent, do not verify fault-tracing if the fault does not recur.

It is possible to view the information again, or leave fault-tracing for this diagnostic trouble code (DTC).

ECM-6B00: MALFUNCTION INDICATOR LAMP (MIL) SIGNAL. SIGNAL TOO LOW. PERMANENT FAULT (B5254T2; B6294T; 2003-2004)

DIAGNOSTIC TROUBLE CODE (DTC) INFORMATION

see **DIAGNOSTIC TROUBLE CODE (DTC) INFORMATION**

SIGNAL TOO LOW. PERMANENT FAULT

CHECKING COMPONENT AND WIRING

Check the cable between engine control module (ECM) #B46 and combined instrument panel #4 for a short-circuit to ground according to **SHORT-CIRCUIT TO GROUND, PERMANENT FAULTS** .

Remedy as necessary.

Other information:

- For connection of engine control module (ECM) breakout box, see **CONNECTING THE BREAKOUT BOX** .
- To connect the combined instrument panel breakout box, see **CONNECTING THE DRIVER INFORMATION MODULE (DIM) TEST BOX**
- To access/replace the combined instrument panel, see **DRIVER INFORMATION MODULE (DIM), REPLACING**
- For 5 cylinder turbocharged engines -2004, see **SIGNAL DESCRIPTION**
- For 5 cylinder turbocharged engines 2005-, see **SIGNAL SPECIFICATION** .
- For 6 cylinder engines -2004, see **SIGNAL SPECIFICATION**
- For 6 cylinder engines 2005-, see **SIGNAL SPECIFICATION** .
- For information about the combined instrument panel connector, see **DRIVER INFORMATION MODULE (DIM) SIGNAL DESCRIPTION** .

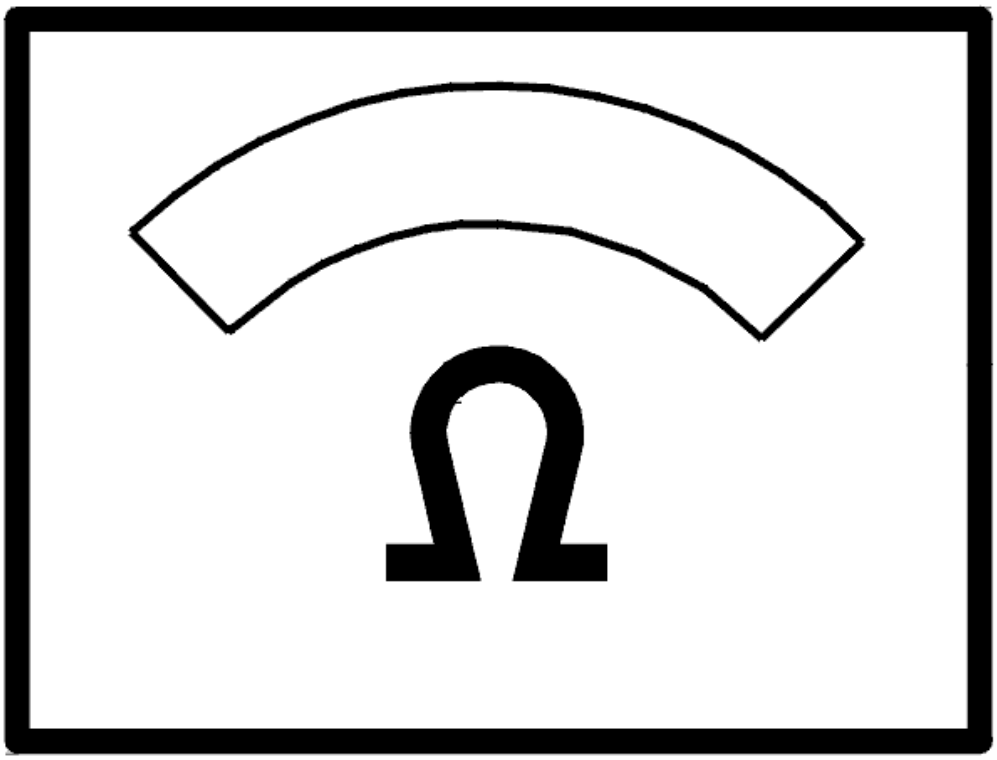

Fig. 1: Identifying Ohm Meter
Courtesy of VOLVO CARS CORPORATION

- **Continue**

  Refer to **VERIFICATION**

VERIFICATION

VERIFICATION

HINT: After carrying out the repair, check that the fault has been remedied.

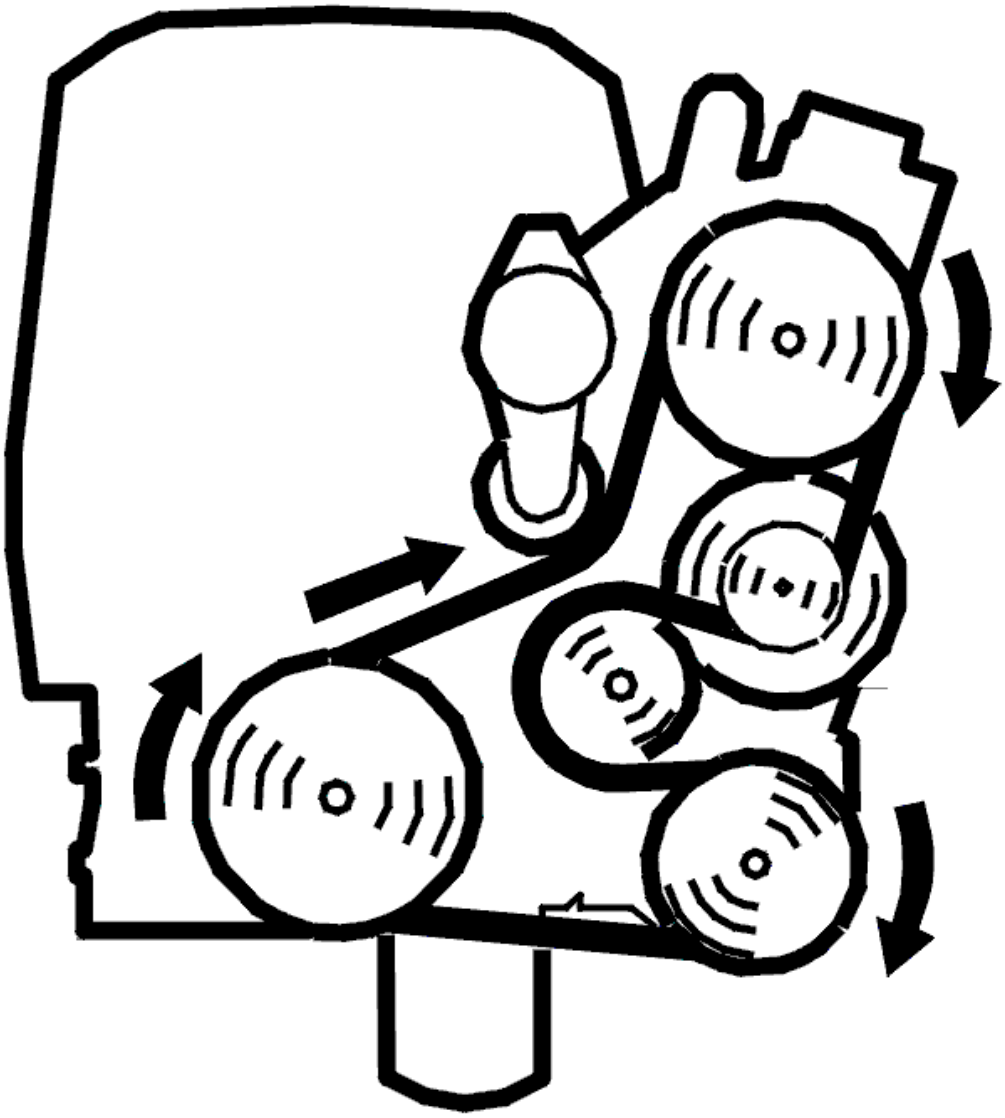

Fig. 2: Belt Routing / Engine Idling - Volvo
Courtesy of VOLVO CARS CORPORATION

- Ignition off
- Reinstall the connectors, components etc.
- Start the engine and let it run at idle speed
- Activate the malfunction indicator lamp (MIL)
- Check that the function is OK.

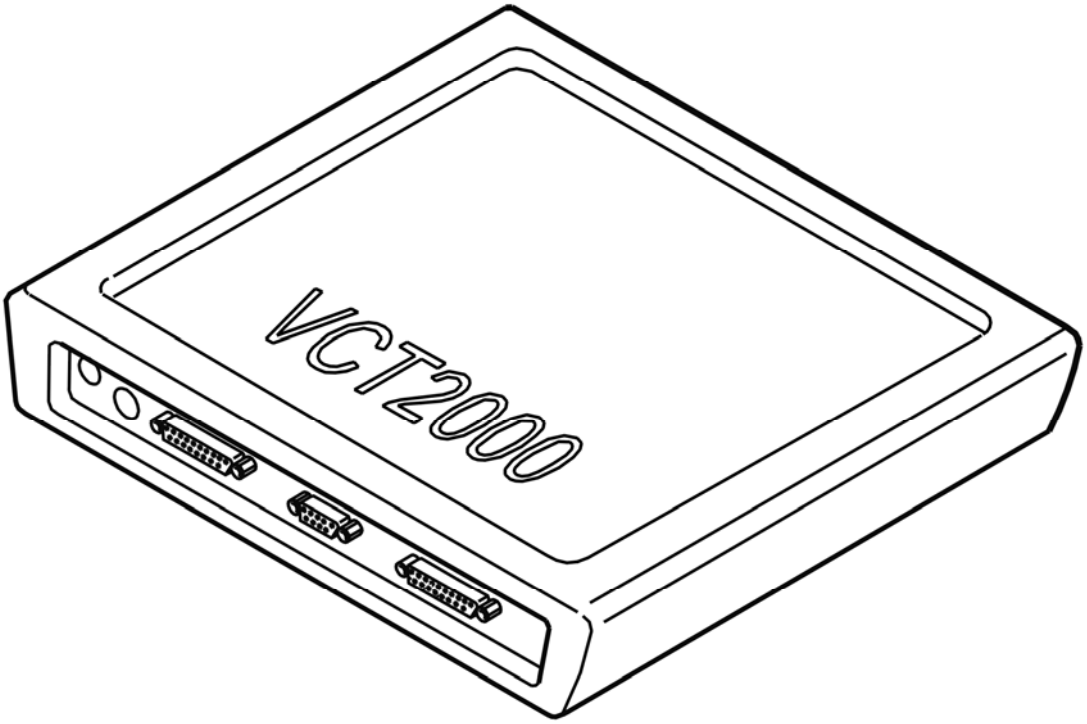

Fig. 3: Identifying VCT2000 Diagnostic Tool Symbol In VIDA
Courtesy of VOLVO CARS CORPORATION

Is function OK?

- **YES**

  VERIFIED: Troubleshooting has been completed.

- **NO**

  Refer to **INFORMATION**

INFORMATION

FAULT-TRACING INFORMATION

The fault should have been detected and remedied. As this is not the case fault-tracing has failed.

Exit fault-tracing for this diagnostic trouble code (DTC) or make another attempt.

ECM-700C: ENGINE CONTROL MODULE (ECM), INTERNAL FAULT. SIGNAL TOO HIGH (B5254T2; 2005-2007)

DIAGNOSTIC TROUBLE CODE (DTC) INFORMATION

Condition

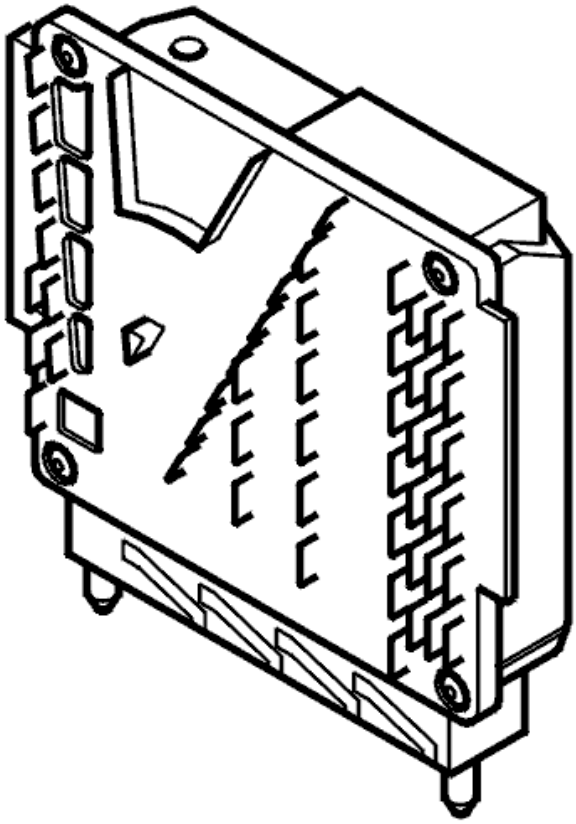

Fig. 4: Engine Control Module
Courtesy of VOLVO CARS CORPORATION

The diagnostic trouble code (DTC) is stored if the engine control module (ECM) detects a fault in the circuit for the internal temperature sensor in the control module. The diagnostic trouble code (DTC) can be diagnosed when the ignition is switched on.

Substitute Value

- None.

Possible Source

- Damaged engine control module (ECM).

Fault symptom[s]

- None.

INTERNAL FAULT

see **INTERNAL FAULT**

ECM-700C: ENGINE CONTROL MODULE (ECM), INTERNAL FAULT. SIGNAL TOO HIGH (B6294T; 2005-2006)

DIAGNOSTIC TROUBLE CODE (DTC) INFORMATION

see **DIAGNOSTIC TROUBLE CODE (DTC) INFORMATION**

INTERNAL FAULT

see **INTERNAL FAULT**

ECM-7010: ENGINE CONTROL MODULE (ECM), HIGH TEMPERATURE. FAULTY SIGNAL (B5254T2; 2005-2007)

DIAGNOSTIC TROUBLE CODE (DTC) INFORMATION ECM-7010

Condition

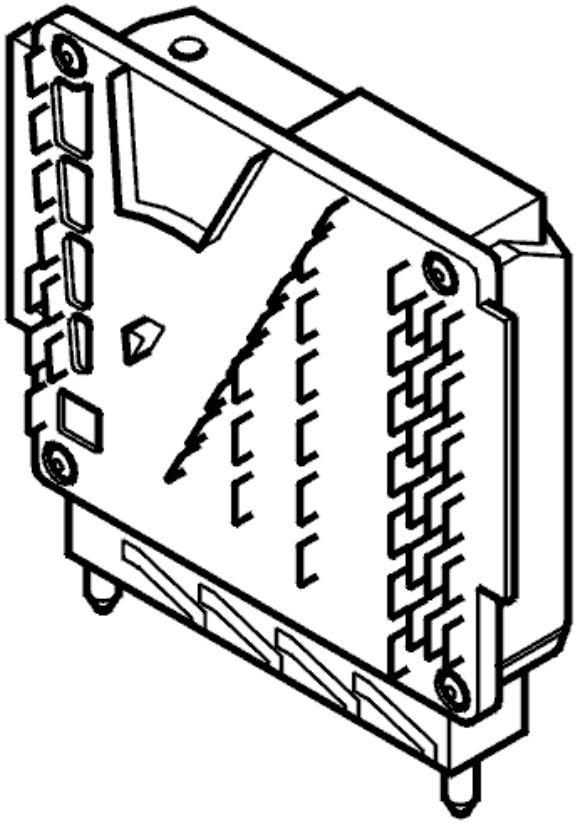

Fig. 5: Engine Control Module
Courtesy of VOLVO CARS CORPORATION

The diagnostic trouble code (DTC) is stored if the temperature in the engine control module (ECM) exceeds 95 °C.

The diagnostic trouble code (DTC) can be diagnosed when the ignition is switched on.

Substitute Value

- The engine cooling fan (FC) runs at low-speed.

Possible Source

- Air supply is blocked.

Fault symptom[s]

- None.

FAULTY SIGNAL

CHECKING THE COMPONENT

HINT: The diagnostic trouble code (DTC) may due to a damaged cooling fan for the control module boxes. If diagnostic trouble code (DTC) ECM-680X is stored it must be remedied first.

Activate the cooling fan for the control module box. Check the function. There must be a buzzing noise from the cooling fan when the fan for the control module box is activated.

Check that the air ducts for the control module box are not blocked.

Remedy as necessary.

Other information

- For the location of components, see **LOCATION OF COMPONENTS, ENGINE COMPARTMENT** .

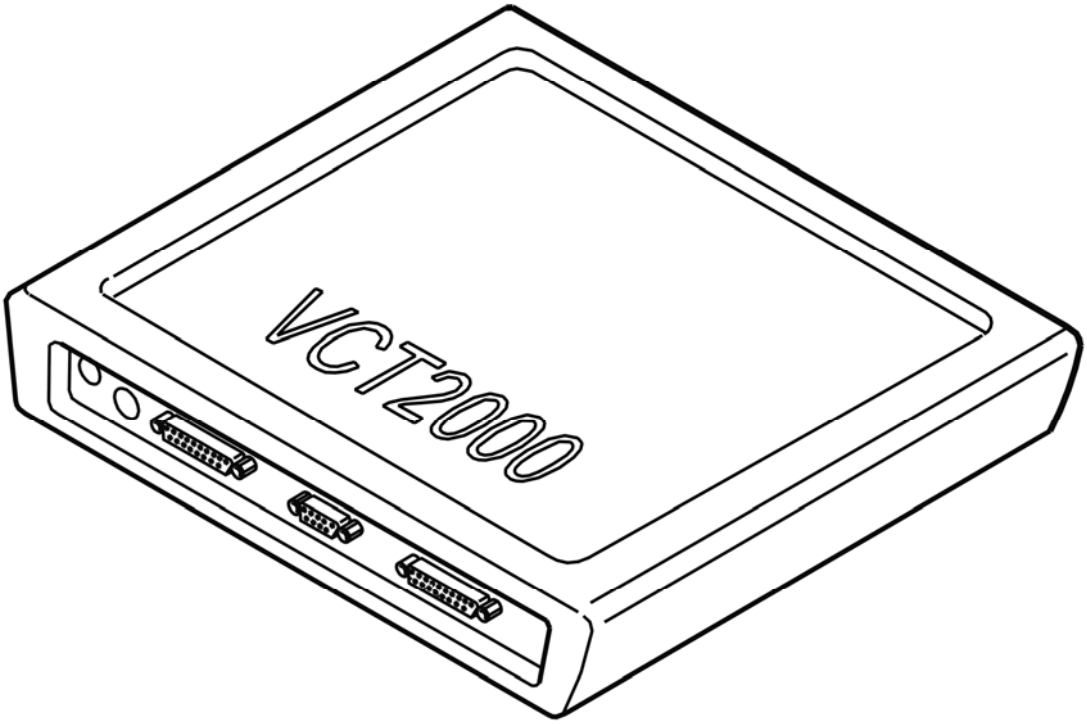

Fig. 6: Identifying VCT2000 Diagnostic Tool Symbol In VIDA
Courtesy of VOLVO CARS CORPORATION

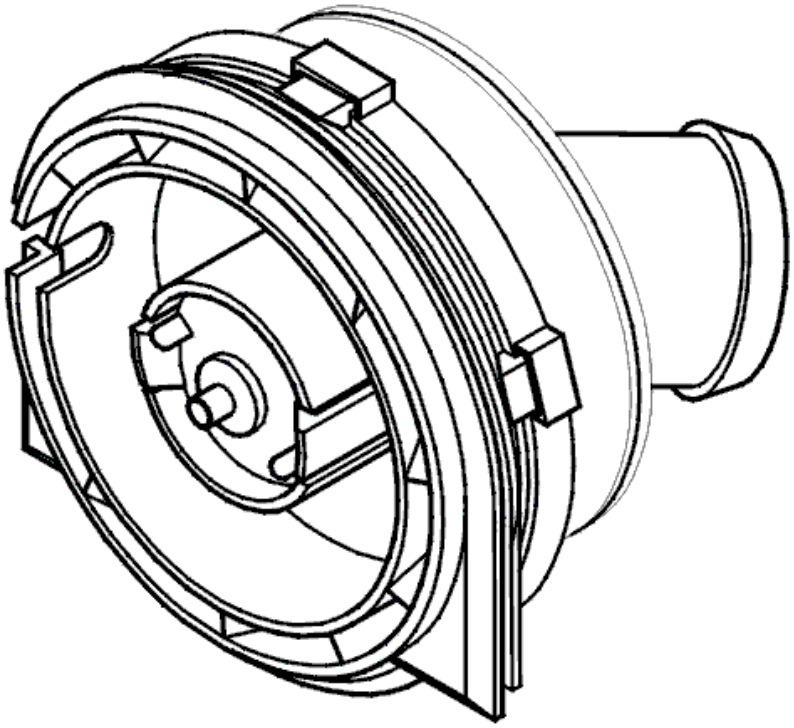

Fig. 7: Identifying Engine Cooling Fan (FC) Control Modules
Courtesy of VOLVO CARS CORPORATION

- **Continue**

  Refer to **INFORMATION**

INFORMATION

FAULT-TRACING INFORMATION

In case of this defect, troubleshooting is not followed by verification.

The information can be displayed again or the fault-tracing for this fault can be interrupted.

ECM-7010: ENGINE CONTROL MODULE (ECM), HIGH TEMPERATURE. FAULTY SIGNAL (B6294T; 2005-2006)

DIAGNOSTIC TROUBLE CODE (DTC) INFORMATION ECM-7010

see **DIAGNOSTIC TROUBLE CODE (DTC) INFORMATION ECM-7010**

FAULTY SIGNAL

see **FAULTY SIGNAL**

ECM-7020: ENGINE CONTROL MODULE (ECM), HIGH TEMPERATURE. FAULTY SIGNAL (B5254T2; 2005-2007)

DIAGNOSTIC TROUBLE CODE (DTC) INFORMATION ECM-7020

Condition

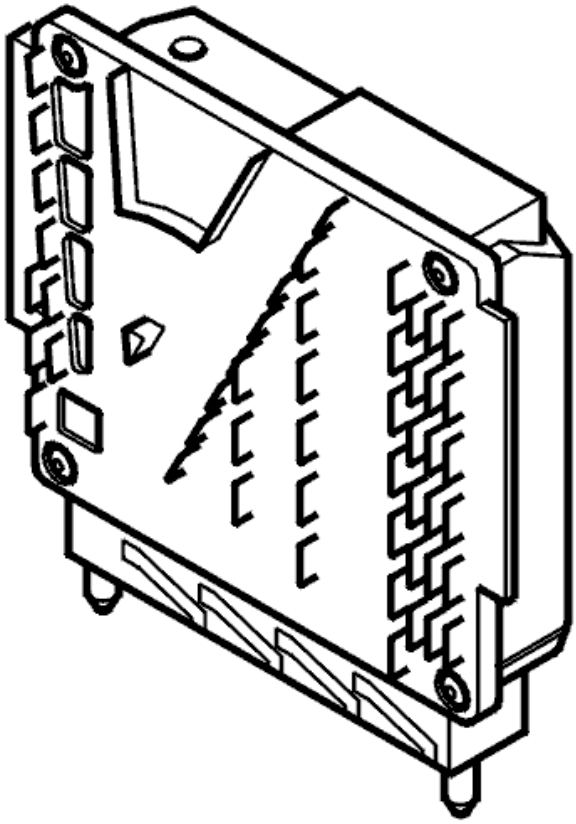

Fig. 8: Engine Control Module
Courtesy of VOLVO CARS CORPORATION

The diagnostic trouble code (DTC) is stored if the temperature in the engine control module (ECM) exceeds 105 °C.

The diagnostic trouble code (DTC) can be diagnosed when the ignition is switched on.

Substitute Value

- The engine cooling fan (FC) runs at low-speed.

Possible Source

- Air supply is blocked.

Fault symptom[s]

- None.

FAULTY SIGNAL

see **FAULTY SIGNAL**

ECM-7020: ENGINE CONTROL MODULE (ECM), HIGH TEMPERATURE. FAULTY SIGNAL (B6294T; 2005-2006)

DIAGNOSTIC TROUBLE CODE (DTC) INFORMATION ECM-7020

see **DIAGNOSTIC TROUBLE CODE (DTC) INFORMATION ECM-7020**

FAULTY SIGNAL

see **FAULTY SIGNAL**

ECM-7100: IMMOBILIZER COMMUNICATION. FAULTY SIGNAL (B5254T2; 2005-2007)

DIAGNOSTIC TROUBLE CODE (DTC) INFORMATION ECM-7100

Condition

The engine control module (ECM) contains a code for the immobilizer which is unique to each car. Before the engine can be started, the immobilizer code is checked to ensure that it corresponds to both the central electronic module (CEM) and the engine control module (ECM). The diagnostic trouble code (DTC) is stored if the immobilizer code does not correspond.

The diagnostic trouble code (DTC) can be diagnosed when the ignition is switched on.

Substitute Value

None

Possible Source

- The engine control module (ECM) is not programmed and has no immobilizer code
- The immobilizer code in the engine control module (ECM) is incorrect
- The immobilizer code in the central electronic module (CEM) is incorrect
- The central electronic module (CEM) is not programmed and has no immobilizer code

- Damaged central electronic module (CEM)
- Damaged engine control module (ECM).

Fault symptom[s]

- The engine does not start.

FAULTY SIGNAL. PERMANENT FAULT

INFORMATION

This diagnostic trouble code (DTC) indicates that the immobilizer code does not match between the engine control module (ECM) and the central electronic module (CEM). This may be because:

- the immobilizer code in the engine control module (ECM) is incorrect i. e. the code does not correspond to the code stored in the central electronic module (CEM)
- the engine control module (ECM) is not programmed and has no immobilizer code
- the immobilizer code in the central electronic module (CEM) is incorrect
- the central electronic module (CEM) is not programmed and has no immobilizer code
- the engine control module (ECM) is damaged
- the central electronic module (CEM) is damaged.

NOTE: A programmed engine control module (ECM) or central electronic module (CEM) cannot be moved from one vehicle to another.

HINT: Read off the diagnostic trouble codes (DTCs) for the central electronic module (CEM).

Other information:

- To access and replace the engine control module (ECM), see **ENGINE CONTROL MODULE (ECM), REPLACING**
- For -2004, see: **CENTRAL ELECTRONIC MODULE (CEM), REPLACING**
- For 2005-, see: **CENTRAL ELECTRONIC MODULE (CEM), REPLACING** .
- For 5 cylinder turbocharged engines -2004, see **SIGNAL DESCRIPTION**
- For 5 cylinder turbocharged engines 2005-, see **SIGNAL SPECIFICATION** .
- For 6 cylinder engines -2004, see **SIGNAL SPECIFICATION**
- For 6 cylinder engines 2005-, see **SIGNAL SPECIFICATION** .

- **Continue**

  Refer to **VERIFICATION**

VERIFICATION

HINT: After carrying out the repair, check that the fault has been remedied.

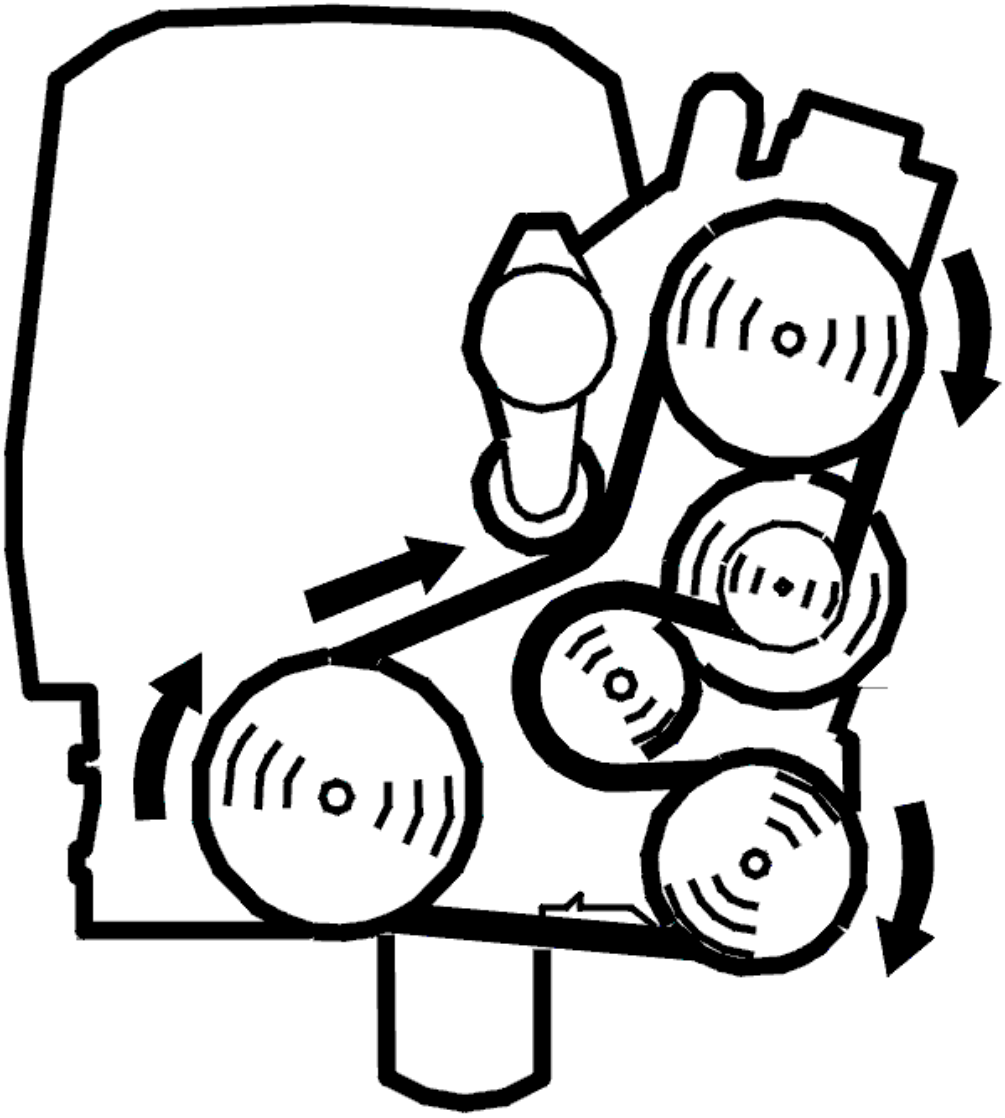

Fig. 9: Belt Routing / Engine Idling - Volvo
Courtesy of VOLVO CARS CORPORATION

- Ignition off
- Reinstall connectors, components etc.
- Start the engine.

Did the engine start?

- **YES**

  OKAY: Troubleshooting has been completed.

- **NO**

  Refer to **INFORMATION**

INFORMATION

FAULT-TRACING INFORMATION

The fault should have been detected and remedied. As this is not the case fault-tracing has failed.

Exit fault-tracing for this diagnostic trouble code (DTC) or make another attempt.

ECM-7100: IMMOBILIZER COMMUNICATION. FAULTY SIGNAL (B6294T; 2005-2006)

DIAGNOSTIC TROUBLE CODE (DTC) INFORMATION ECM-7100

see **DIAGNOSTIC TROUBLE CODE (DTC) INFORMATION ECM-7100**

FAULTY SIGNAL. PERMANENT FAULT

see **FAULTY SIGNAL. PERMANENT FAULT**

ECM-710B: IMMOBILIZER COMMUNICATION. SIGNAL MISSING (B5254T2; 2005-2007)

DIAGNOSTIC TROUBLE CODE (DTC) INFORMATION ECM-710B

Condition

The engine control module (ECM) contains a code for the immobilizer which is unique to each car. Before the engine can be started, the immobilizer code is checked to ensure that it corresponds to both the central electronic module (CEM) and the engine control module (ECM).

The diagnostic trouble code (DTC) will be stored if there is no communication between the central electronic module (CEM) and the engine control module (ECM) so that the immobilizer code cannot be checked.

The diagnostic trouble code (DTC) can be diagnosed when the ignition is switched on.

Substitute Value

None

Possible Source

- Open-circuit in the communication between the central electronic module (CEM) and the engine control

module (ECM).

Fault symptom[s]

- The engine does not start.

SIGNAL MISSING. PERMANENT FAULT

CHECKING THE COMPONENT

The immobilizer function is integrated in the central electronic module (CEM).

This diagnostic trouble code (DTC) can be caused by missing CAN communication. If there is a diagnostic trouble code (DTC) stored in the central electronic module (CEM) fault trace accordingly.

If no diagnostic trouble codes (DTCs) are stored in the central electronic module (CEM), try a new central electronic module (CEM).

Other information:

- For -2004, see: **CENTRAL ELECTRONIC MODULE (CEM), REPLACING**
- For 2005-, see: **CENTRAL ELECTRONIC MODULE (CEM), REPLACING** .
- To access and replace the engine control module (ECM), see **ENGINE CONTROL MODULE (ECM), REPLACING**
- -2004: **SIGNAL SPECIFICATION**
- 2005-: **SIGNAL SPECIFICATION**
- For 5 cylinder turbocharged engines -2004, see **SIGNAL DESCRIPTION**
- For 5 cylinder turbocharged engines 2005-, see **SIGNAL SPECIFICATION** .
- For 6 cylinder engines -2004, see **SIGNAL SPECIFICATION**
- For 6 cylinder engines 2005-, see **SIGNAL SPECIFICATION** .

- **Continue**

  Refer to **INFORMATION**

INFORMATION

FAULT-TRACING INFORMATION

In case of this defect, troubleshooting is not followed by verification.

The information can be displayed again or the fault-tracing for this fault can be interrupted.

ECM-710B: IMMOBILIZER COMMUNICATION. SIGNAL MISSING (B6294T; 2005-2006)

DIAGNOSTIC TROUBLE CODE (DTC) INFORMATION ECM-710B

see **DIAGNOSTIC TROUBLE CODE (DTC) INFORMATION ECM-710B**

SIGNAL MISSING. PERMANENT FAULT

see **SIGNAL MISSING. PERMANENT FAULT**

ECM-711A: ENGINE CONTROL MODULE (ECM), INTERNAL FAULT. SIGNAL TOO HIGH / SIGNAL TOO LOW. INTERMITTENT FAULT (B5254T2; B6294T; 2003-2004)

DIAGNOSTIC TROUBLE CODE (DTC) INFORMATION

Condition

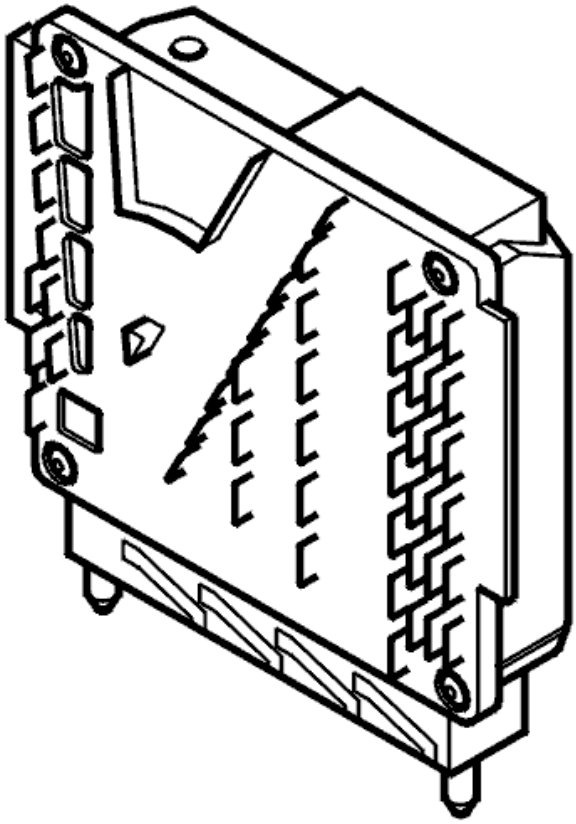

Fig. 10: Engine Control Module
Courtesy of VOLVO CARS CORPORATION

Diagnostic trouble code (DTC) ECM-711A is stored if the engine control module (ECM) registers a fault in the internal circuit for the timer in the control module.

Substitute Value

- None.

Possible Source

Faulty signal:

- Defective control module.

Fault symptom[s]

- The malfunction indicator lamp (MIL) lights.

SIGNAL TOO HIGH/SIGNAL TOO LOW. INTERMITTENT FAULT

see **SIGNAL TOO HIGH/SIGNAL TOO LOW. INTERMITTENT FAULT**

ECM-711A: ENGINE CONTROL MODULE (ECM), INTERNAL FAULT. SIGNAL TOO HIGH / SIGNAL TOO LOW. PERMANENT FAULT (B5254T2; B6294T; 2003-2004)

DIAGNOSTIC TROUBLE CODE (DTC) INFORMATION

see **DIAGNOSTIC TROUBLE CODE (DTC) INFORMATION**

SIGNAL TOO HIGH/SIGNAL TOO LOW. PERMANENT FAULT

see **SIGNAL TOO HIGH/SIGNAL TOO LOW. PERMANENT FAULT**

ECM-715D: ENGINE CONTROL MODULE (ECM), TEMPERATURE TOO HIGH (B5254T2; B6294T; 2003-2004)

DIAGNOSTIC TROUBLE CODE (DTC) INFORMATION

Condition

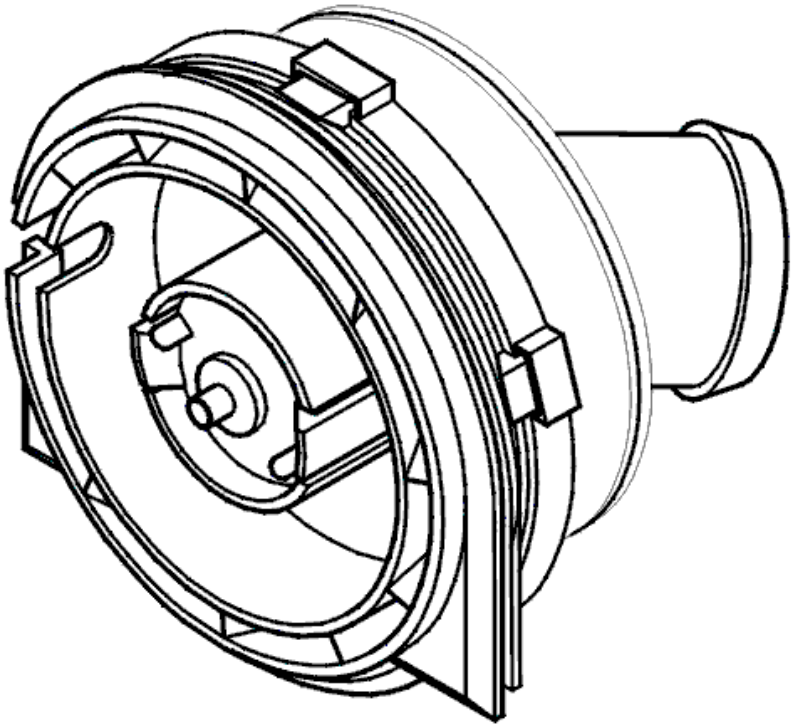

Fig. 11: Identifying Engine Cooling Fan (FC) Control Modules
Courtesy of VOLVO CARS CORPORATION

Diagnostic trouble code (DTC) ECM-715D is stored if the temperature in the control module exceeds 95°C.

Substitute Value

The cooling fan runs at low-speed.

Possible Source

- The air supply is blocked
- Defective control module cooling fan.

Fault symptom[s]

- None.

FAULTY SIGNAL

CHECKING THE COMPONENT

HINT: The fault may be due to a defective cooling fan for the control modules. If diagnostic trouble code

(DTC) ECM-6220 is stored it must be remedied first.

Activate the cooling fan for the control modules. Check the function. There must be a buzzing noise from the cooling fan when the fan for the control modules is activated.

Check that the air ducts for the control module box are not blocked.

Remedy as necessary.

Other information

- For the location of components:
  - see **LOCATION OF COMPONENTS, ENGINE COMPARTMENT** .

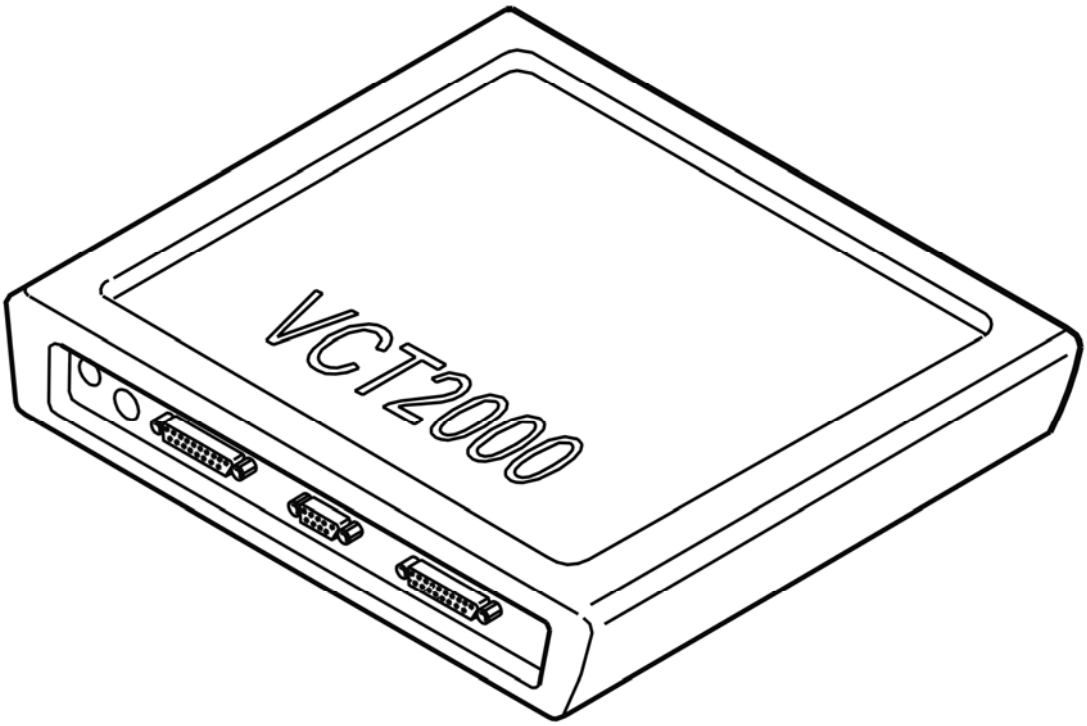

Fig. 12: Identifying VCT2000 Diagnostic Tool Symbol In VIDA
Courtesy of VOLVO CARS CORPORATION

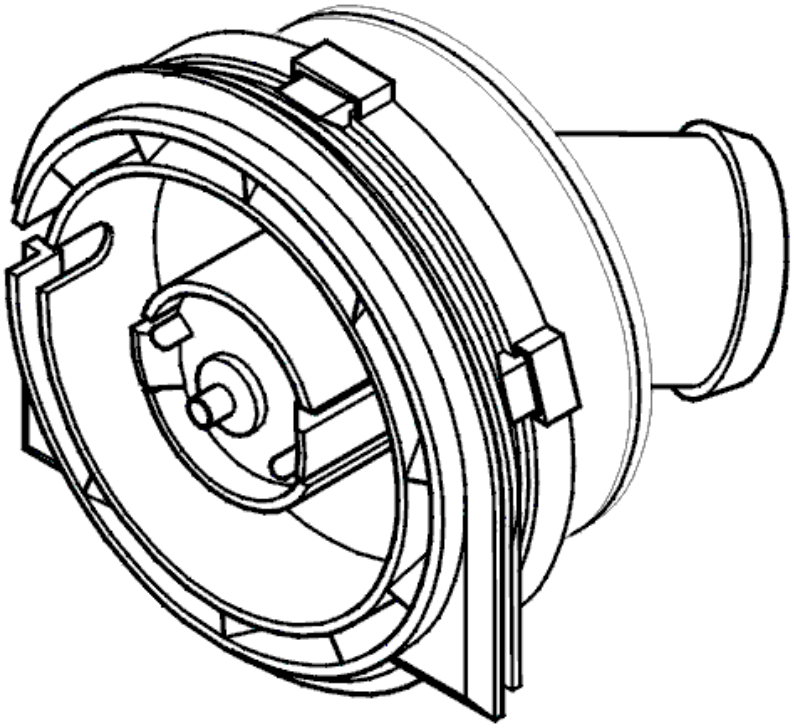

Fig. 13: Identifying Engine Cooling Fan (FC) Control Modules
Courtesy of VOLVO CARS CORPORATION

- **Continue**

  Refer to **INFORMATION**

INFORMATION

FAULT-TRACING INFORMATION

In case of this defect, troubleshooting is not followed by verification.

The information can be displayed again or the fault-tracing for this fault can be interrupted.

ECM-716D: ENGINE CONTROL MODULE (ECM), TEMPERATURE TOO HIGH (B5254T2; B6294T; 2003-2004)

DIAGNOSTIC TROUBLE CODE (DTC) INFORMATION

Condition

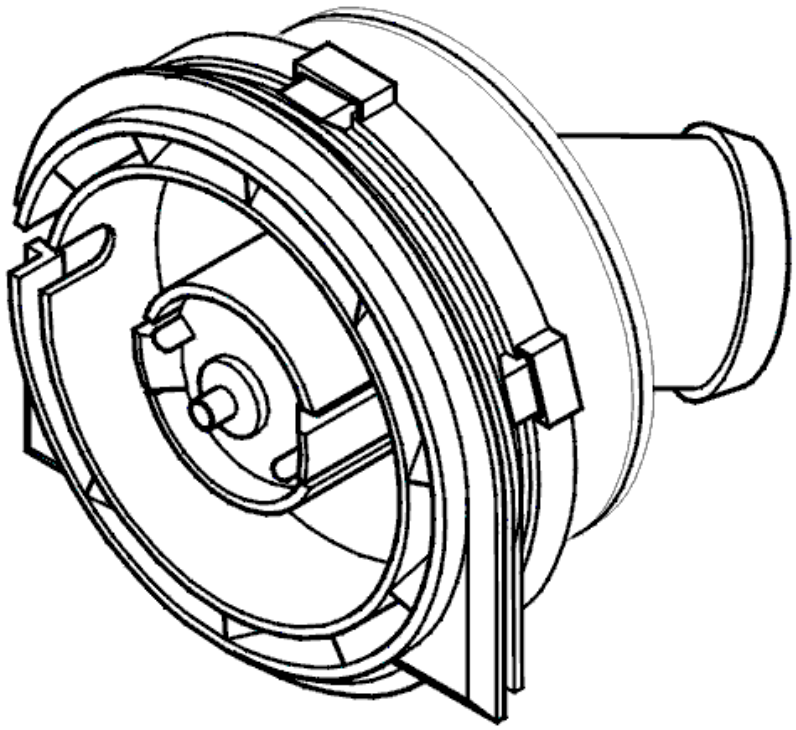

Fig. 14: Identifying Engine Cooling Fan (FC) Control Modules
Courtesy of VOLVO CARS CORPORATION

Diagnostic trouble code (DTC) ECM-715D is stored if the temperature in the control module exceeds 105°C.

Substitute Value

The cooling fan runs at low-speed

Possible Source

- The air supply is blocked
- Defective cooling fan for the control module.

Fault symptom[s]

- None.

FAULTY SIGNAL

see **FAULTY SIGNAL**

ECM-7180: TEMPERATURE SENSOR CONTROL MODULE. SIGNAL TOO

HIGH/SIGNAL TOO LOW. INTERMITTENT FAULT (B5254T2; B6294T; 2003-2004)

DIAGNOSTIC TROUBLE CODE (DTC) INFORMATION

Condition

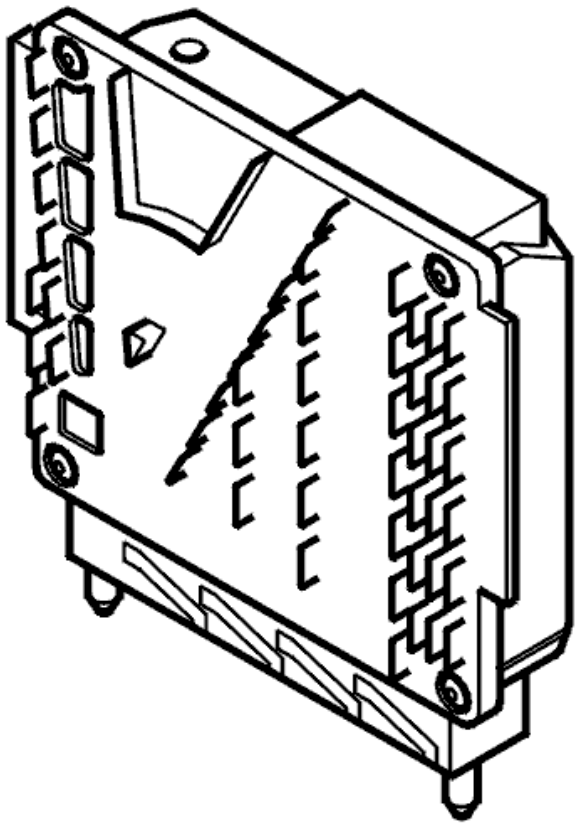

Fig. 15: Engine Control Module
Courtesy of VOLVO CARS CORPORATION

Diagnostic trouble code (DTC) ECM-7180 is stored if the control module detects a fault in the circuit for control module internal temperature sensor.

Substitute Value

engine cooling fan (FC) runs at low-speed

Possible Source

- fault in the control module temperature sensor circuit

Fault symptom[s]

- malfunction indicator lamp (MIL) lit

SIGNAL TOO HIGH/SIGNAL TOO LOW. INTERMITTENT FAULT

see **SIGNAL TOO HIGH/SIGNAL TOO LOW. INTERMITTENT FAULT**

ECM-7180: TEMPERATURE SENSOR CONTROL MODULE. SIGNAL TOO HIGH/SIGNAL TOO LOW. PERMANENT FAULT (B5254T2; B6294T; 2003-2004)

DIAGNOSTIC TROUBLE CODE (DTC) INFORMATION

see **DIAGNOSTIC TROUBLE CODE (DTC) INFORMATION**

SIGNAL TOO HIGH/SIGNAL TOO LOW. PERMANENT FAULT

see **SIGNAL TOO HIGH/SIGNAL TOO LOW. PERMANENT FAULT**

ECM-720A: IMMOBILIZER COMMUNICATION. FAULTY SIGNAL. INTERMITTENT FAULT (B5254T2; B6294T; 2003-2004)

DIAGNOSTIC TROUBLE CODE (DTC) INFORMATION

Condition

The engine control module (ECM) contains a code for the immobilizer which is unique to each car. Before the engine can be started, the immobilizer code is checked to ensure that it corresponds to the central electronic module (CEM) and the engine control module (ECM). Diagnostic trouble code (DTC) ECM-720A, faulty signal, will be stored if the code for the immobilizer does not match.

Diagnostic trouble code (DTC) ECM-720A, signal missing, will be stored if there is no communication between the central electronic module (CEM) and the engine control module (ECM) so that the immobilizer code cannot be checked.

The fault is diagnosed by the engine control module (ECM) when the ignition is switched on.

Substitute Value

none

Possible Source

Faulty signal:

- the engine control module (ECM) is not programmed and has no immobilizer code

- the immobilizer code in the engine control module (ECM) is incorrect
- the immobilizer code in the central electronic module (CEM) is incorrect
- the central electronic module (CEM) is not programmed and has no immobilizer code
- the central electronic module (CEM) is defective
- the engine control module (ECM) is defective.

Signal missing:

- open-circuit in the communication between the central electronic module (CEM) and the engine control module (ECM).

Fault symptom[s]

- the engine does not start.

FAULTY SIGNAL. INTERMITTENT FAULT

CHECKING COMPONENTS AND WIRING

The immobilizer function is integrated in the central electronic module (CEM).

The engine control module (ECM) has previously registered a fault in the communication between the immobilizer and the engine control module (ECM), but has detected that this fault is no longer active.

- **Continue**

  Refer to **INFORMATION**

INFORMATION

FAULT-TRACING INFORMATION

If the fault is intermittent, do not verify fault-tracing if the fault does not recur.

It is possible to view the information again, or leave fault-tracing for this diagnostic trouble code (DTC).

ECM-720A: IMMOBILIZER COMMUNICATION. FAULTY SIGNAL. PERMANENT FAULT (B5254T2; B6294T; 2003-2004)

DIAGNOSTIC TROUBLE CODE (DTC) INFORMATION

see **DIAGNOSTIC TROUBLE CODE (DTC) INFORMATION**

FAULTY SIGNAL. PERMANENT FAULT

see **FAULTY SIGNAL. PERMANENT FAULT**

ECM-720A: IMMOBILIZER COMMUNICATION. SIGNAL MISSING. INTERMITTENT FAULT (B5254T2; B6294T; 2003-2004)

DIAGNOSTIC TROUBLE CODE (DTC) INFORMATION

see **DIAGNOSTIC TROUBLE CODE (DTC) INFORMATION**

SIGNAL MISSING. INTERMITTENT FAULT

CHECKING THE COMPONENT

The immobilizer function is integrated in the central electronic module (CEM).

The engine control module (ECM) has previously registered a fault in communication with the central electronic module (CEM), but detects that the fault no longer exists.

- **Continue**

  Refer to **INFORMATION**

INFORMATION

FAULT-TRACING INFORMATION

If the fault is intermittent, do not verify fault-tracing if the fault does not recur.

It is possible to view the information again, or leave fault-tracing for this diagnostic trouble code (DTC).

ECM-720A: IMMOBILIZER COMMUNICATION. SIGNAL MISSING. PERMANENT FAULT (B5254T2; B6294T; 2003-2004)

DIAGNOSTIC TROUBLE CODE (DTC) INFORMATION

see **DIAGNOSTIC TROUBLE CODE (DTC) INFORMATION**

SIGNAL MISSING. PERMANENT FAULT

see **SIGNAL MISSING. PERMANENT FAULT**

ECM-720B: ENGINE CONTROL MODULE (ECM) INTERNAL FAULT. SIGNAL MISSING (B5254T2; 2005-2007)

DIAGNOSTIC TROUBLE CODE (DTC) INFORMATION ECM-720B

Condition

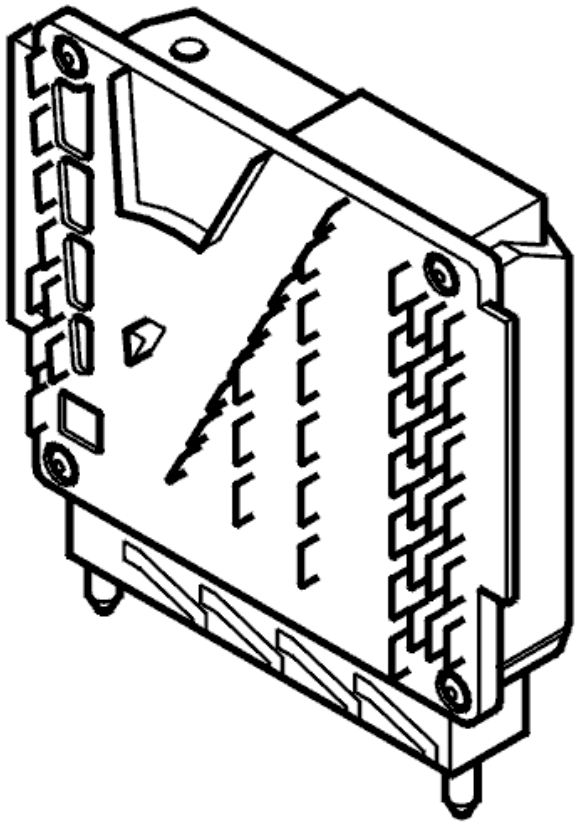

Fig. 16: Engine Control Module
Courtesy of VOLVO CARS CORPORATION

The diagnostic trouble code (DTC) is stored if the engine control module (ECM) registers a fault in the circuit for the timer functions.

Substitute Value

- None.

Possible Source

- Damaged engine control module (ECM).

Fault symptom[s]

- Malfunction indicator lamp (MIL) lit.

INTERNAL FAULT

see **INTERNAL FAULT**

ECM-720B: ENGINE CONTROL MODULE (ECM) INTERNAL FAULT. SIGNAL

MISSING (B6294T; 2005-2006)

DIAGNOSTIC TROUBLE CODE (DTC) INFORMATION ECM-720B

see **DIAGNOSTIC TROUBLE CODE (DTC) INFORMATION ECM-720B**

INTERNAL FAULT

see **INTERNAL FAULT**

ECM-7300: GEAR POSITION SENSOR. FAULTY SIGNAL (B5254T2; 2005-2007)

DIAGNOSTIC TROUBLE CODE (DTC) INFORMATION ECM-7300

Condition

The engine control module (ECM) checks the signal from the gear-shift position sensor via CAN communication.

Diagnostic trouble code (DTC) is stored if the engine control module (ECM) detects that the information about the selected gear position from the transmission control module (TCM) is outside its permitted range compared with the speed of the vehicle.

The diagnostic trouble code (DTC) can be diagnosed when the engine is running.

Substitute Value

- None.

Possible Source

- Fault-trace the transmission control module (TCM)
- Fault-trace the brake control module (BCM).

Fault symptom[s]

- Malfunction indicator lamp (MIL) lit.

FAULT-TRACING INFORMATION

see **FAULT-TRACING INFORMATION**

ECM-7300: GEAR POSITION SENSOR. FAULTY SIGNAL (B6294T; 2005-2006)

DIAGNOSTIC TROUBLE CODE (DTC) INFORMATION ECM-7300

see **DIAGNOSTIC TROUBLE CODE (DTC) INFORMATION ECM-7300**

FAULT-TRACING INFORMATION

see **FAULT-TRACING INFORMATION**

ECM-800B: SYSTEM RELAY. SIGNAL TOO LOW (B5254T2; 2005-2007)

DIAGNOSTIC TROUBLE CODE (DTC) INFORMATION ECM-800B

Condition

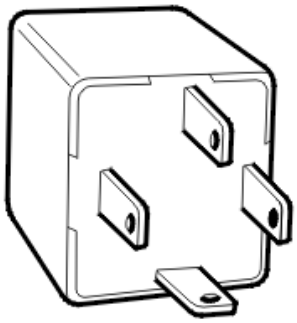

Fig. 17: Identifying Main Relay
Courtesy of VOLVO CARS CORPORATION

The engine control module (ECM) checks the function of the system relay. The diagnostic trouble code (DTC) is stored if the engine control module (ECM) registers that the voltage from the system relay is too low when the relay is activated.

The diagnostic trouble code (DTC) can be diagnosed when the ignition is switched on.

Substitute Value

- None.

Possible Source

- Contact resistance in the terminals
- Open-circuit in the signal cable for the system relay
- Damaged system relay.

Fault symptom[s]

- The engine does not start.

SIGNAL TOO LOW

CHECKING CONNECTORS AND COMPONENTS

Check the engine control module (ECM) and the system relay connectors. Check for contact resistance. Check for oxidation.

Check the cable between system relay terminal #5 and the engine control module (ECM). Check for an open-circuit.

Remedy as necessary.

Try a new system relay if no fault is found during the above fault-tracing.

HINT: Read off the voltage from the system relay to the engine control module (ECM) using the VCT2000 (or appropriate scan tool).

Other information

- For information about signals for 5 cylinder engines: **SIGNAL SPECIFICATION**
- For information about signals for 6 cylinder engines: **SIGNAL SPECIFICATION**
- see **CHECKING WIRING AND TERMINALS**

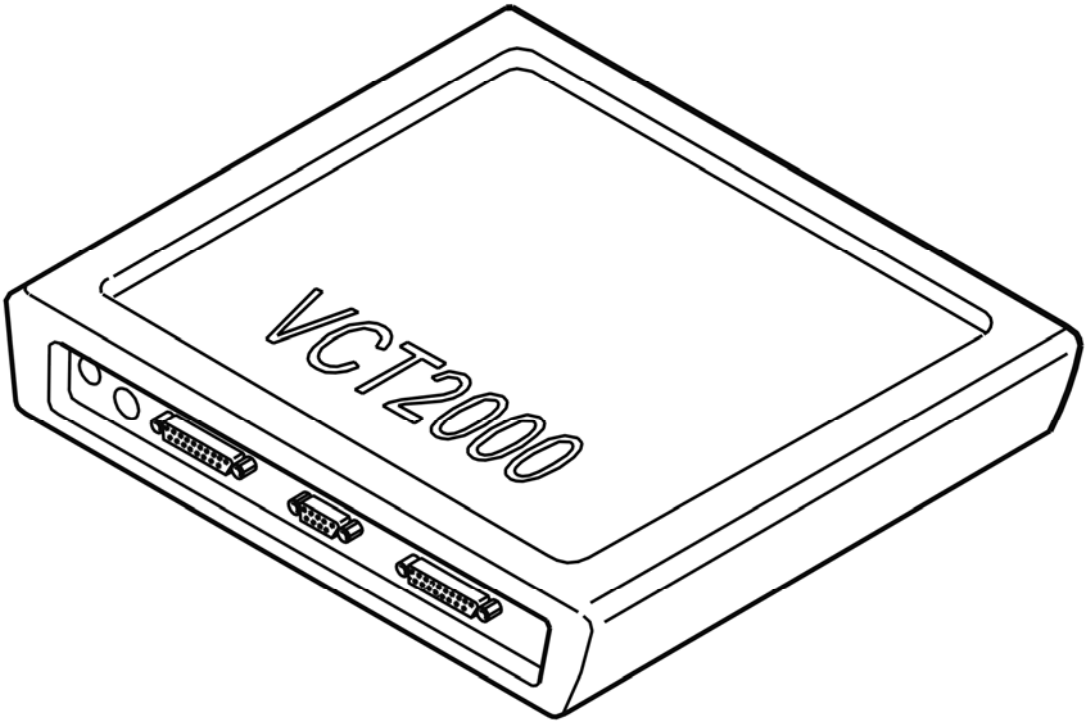

Fig. 18: Identifying VCT2000 Diagnostic Tool Symbol In VIDA
Courtesy of VOLVO CARS CORPORATION

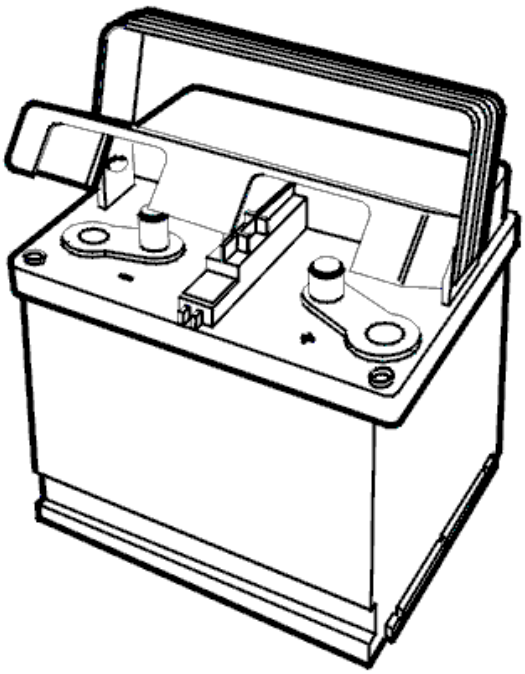

Fig. 19: Identifying Battery

Courtesy of VOLVO CARS CORPORATION

- **Continue**

  Refer to **VERIFICATION**

VERIFICATION

VERIFICATION

HINT: After carrying out the repair, check that the fault has been remedied.

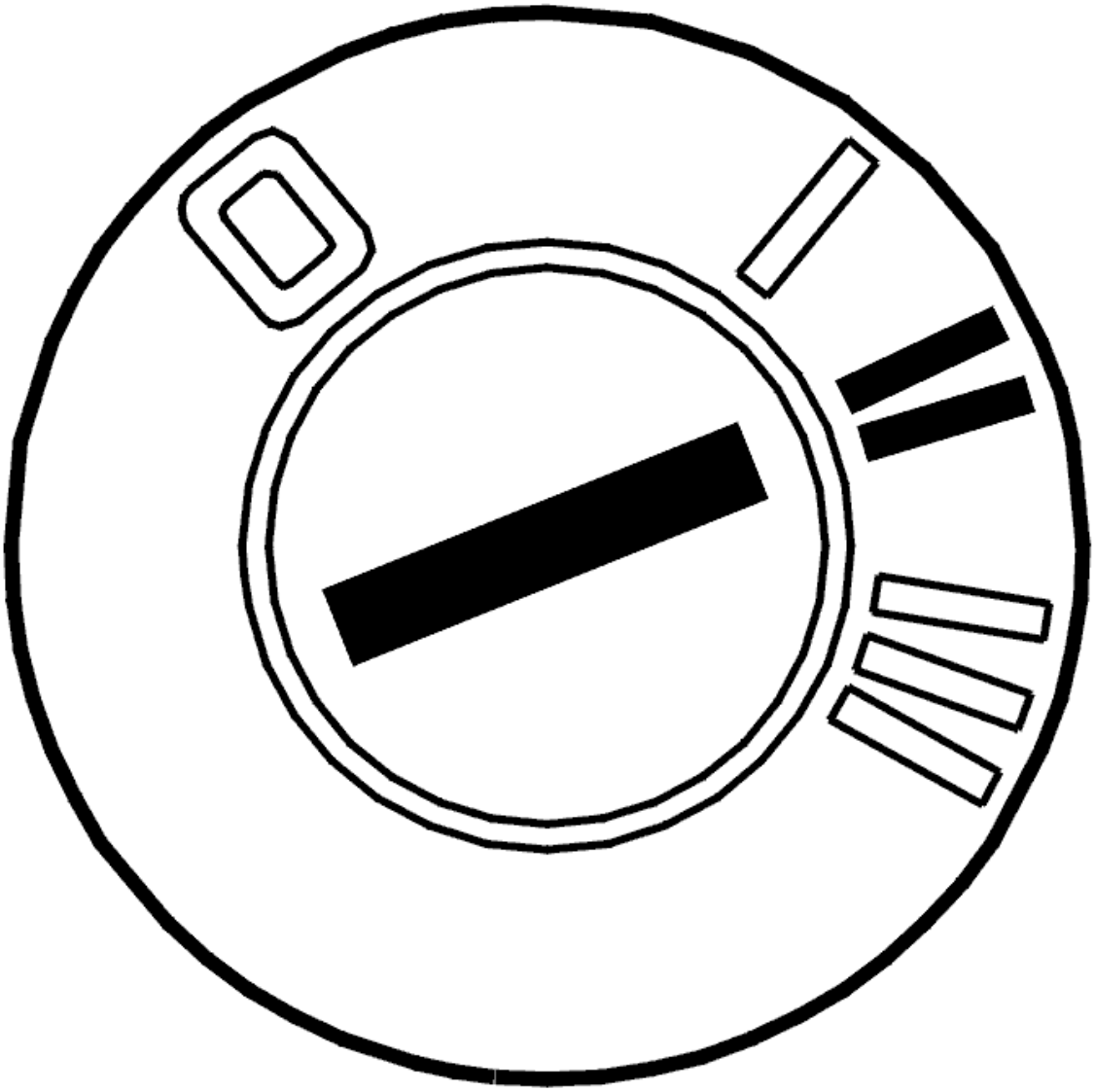

Fig. 20: Identifying Ignition ON
Courtesy of VOLVO CARS CORPORATION

- Ignition on

- Read off the voltage from the system relay to the engine control module (ECM).

  Check that the voltage is correct. The voltage must be approximately 12 V.

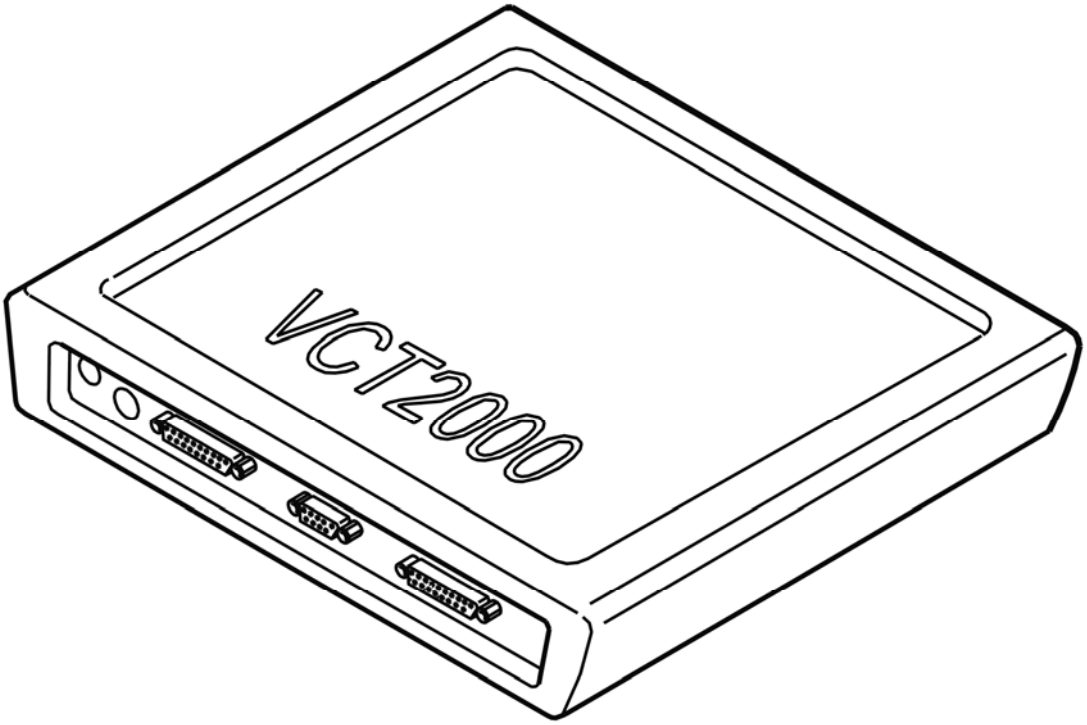

Fig. 21: Identifying VCT2000 Diagnostic Tool Symbol In VIDA
Courtesy of VOLVO CARS CORPORATION

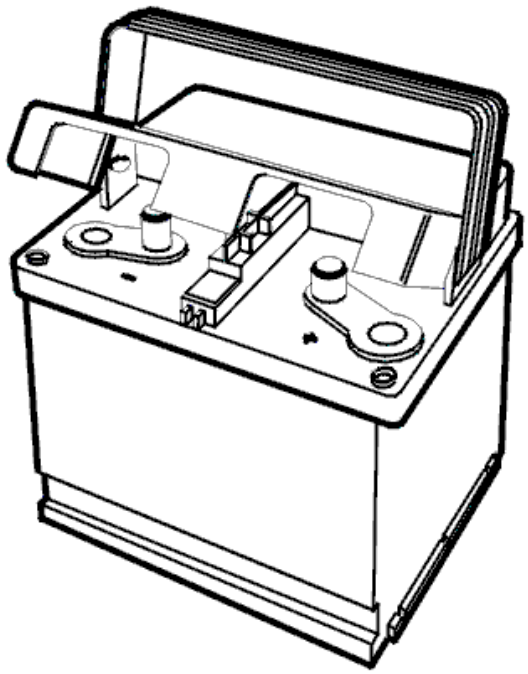

Fig. 22: Identifying Battery
Courtesy of VOLVO CARS CORPORATION

Is the voltage correct?

- **YES**

  VERIFIED: Troubleshooting has been completed.

- **NO**

  Refer to **INFORMATION**

INFORMATION

FAULT-TRACING INFORMATION

The fault should have been detected and remedied. As this is not the case fault-tracing has failed.

Exit fault-tracing for this diagnostic trouble code (DTC) or make another attempt.

ECM-800B: SYSTEM RELAY. SIGNAL TOO LOW (B6294T; 2005-2006)

DIAGNOSTIC TROUBLE CODE (DTC) INFORMATION ECM-800B

see **DIAGNOSTIC TROUBLE CODE (DTC) INFORMATION ECM-800B**

SIGNAL TOO LOW

see **SIGNAL TOO LOW**

ECM-8010: BATTERY VOLTAGE. FAULTY SIGNAL (B5254T2; B6294T; 2003-2004)

DIAGNOSTIC TROUBLE CODE (DTC) INFORMATION

Condition

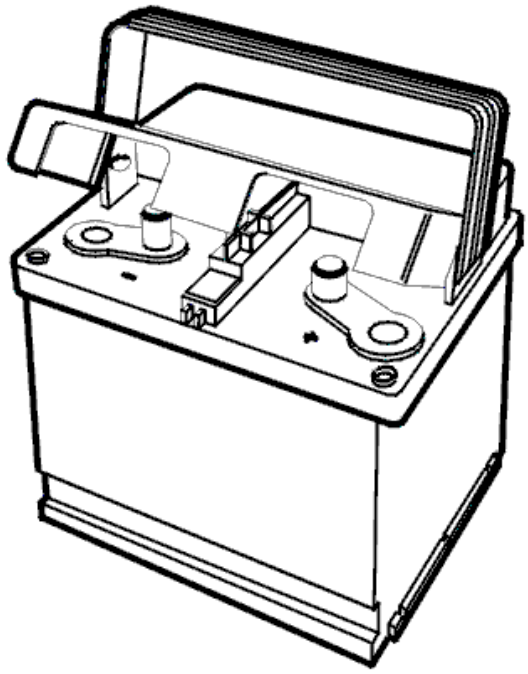

Fig. 23: Identifying Battery
Courtesy of VOLVO CARS CORPORATION

The diagnostic trouble code (DTC) ECM-8010 is stored if the voltage from the system relay exceeds 16.5 V (high signal) under 9 V (low signal) or is less than 2.5 V (faulty signal) and that 3 minutes has passed since the engine was started and that the car has a speed.

Substitute Value

13.4 V for a faulty signal, other fault none

Possible Source

Signal too high:

- faulty charging system

Signal too low:

- faulty charging system
- poor battery
- contact resistance in terminals

Faulty signal:

- faulty system relay
- open-circuit in power cable from system relay
- system relay power cable short-circuited to ground

Fault symptom[s]

- engine cuts out
- engine does not start

FAULTY SIGNAL

CHECKING THE CONNECTORS AND COMPONENTS

Check the battery voltage.

Check the charging function of the generator (GEN).

Check the engine control module (ECM) and system relay connectors. Check for contact resistance and oxidation.

Check the cable between system relay terminal #5 and control module terminal #A17 (#A17). Check for an open-circuit. Check for a short-circuit to ground.

Remedy as necessary.

Try a new system relay if no fault is found during the above fault-tracing.

HINT: Read off the voltage from the system relay to the engine control module (ECM) using the VCT2000 (or appropriate scan tool).

Other information

- To fault-trace the charging system, see **FAULT-TRACING AND TESTING THE VOLTAGE SUPPLY SYSTEM**
- To connect the breakout box and access the control module, see **CONNECTING THE BREAKOUT BOX**
- For 5 cylinder turbocharged engines -2004, see **SIGNAL DESCRIPTION**
- For 5 cylinder turbocharged engines 2005-, see **SIGNAL SPECIFICATION** .
- For 6 cylinder engines -2004, see **SIGNAL SPECIFICATION**

- For 6 cylinder engines 2005-, see **SIGNAL SPECIFICATION** .
- see **CHECKING WIRING AND TERMINALS** .

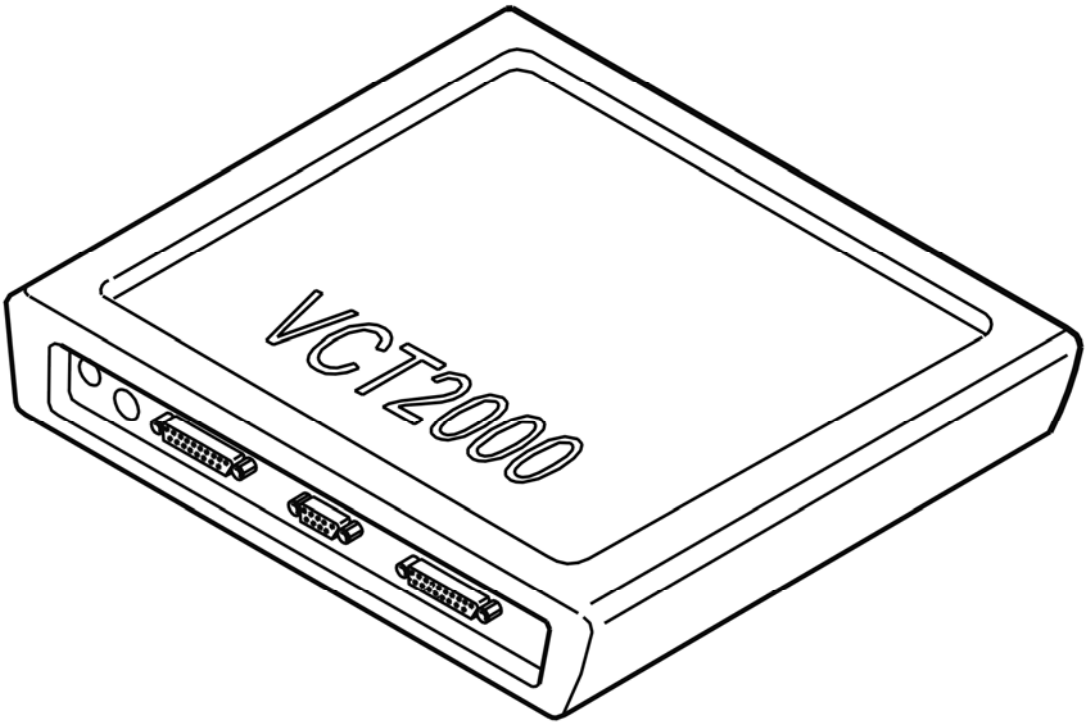

Fig. 24: Identifying VCT2000 Diagnostic Tool Symbol In VIDA
Courtesy of VOLVO CARS CORPORATION

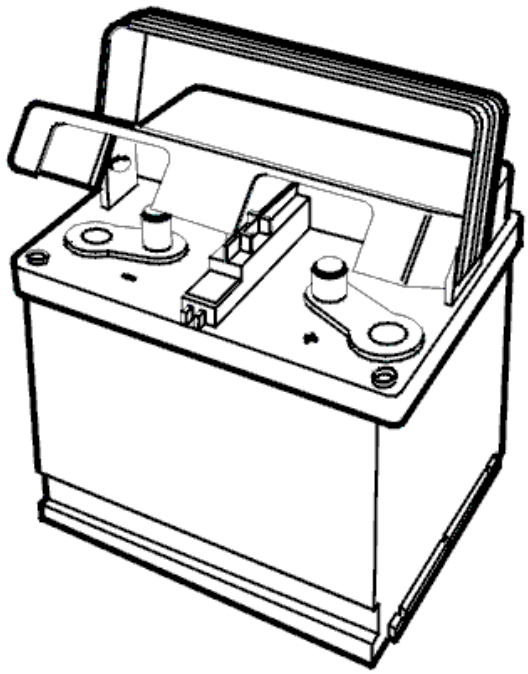

Fig. 25: Identifying Battery
Courtesy of VOLVO CARS CORPORATION

- **Continue**

  Refer to **VERIFICATION**

VERIFICATION

VERIFICATION

HINT: After carrying out the repair, check that the fault has been remedied.

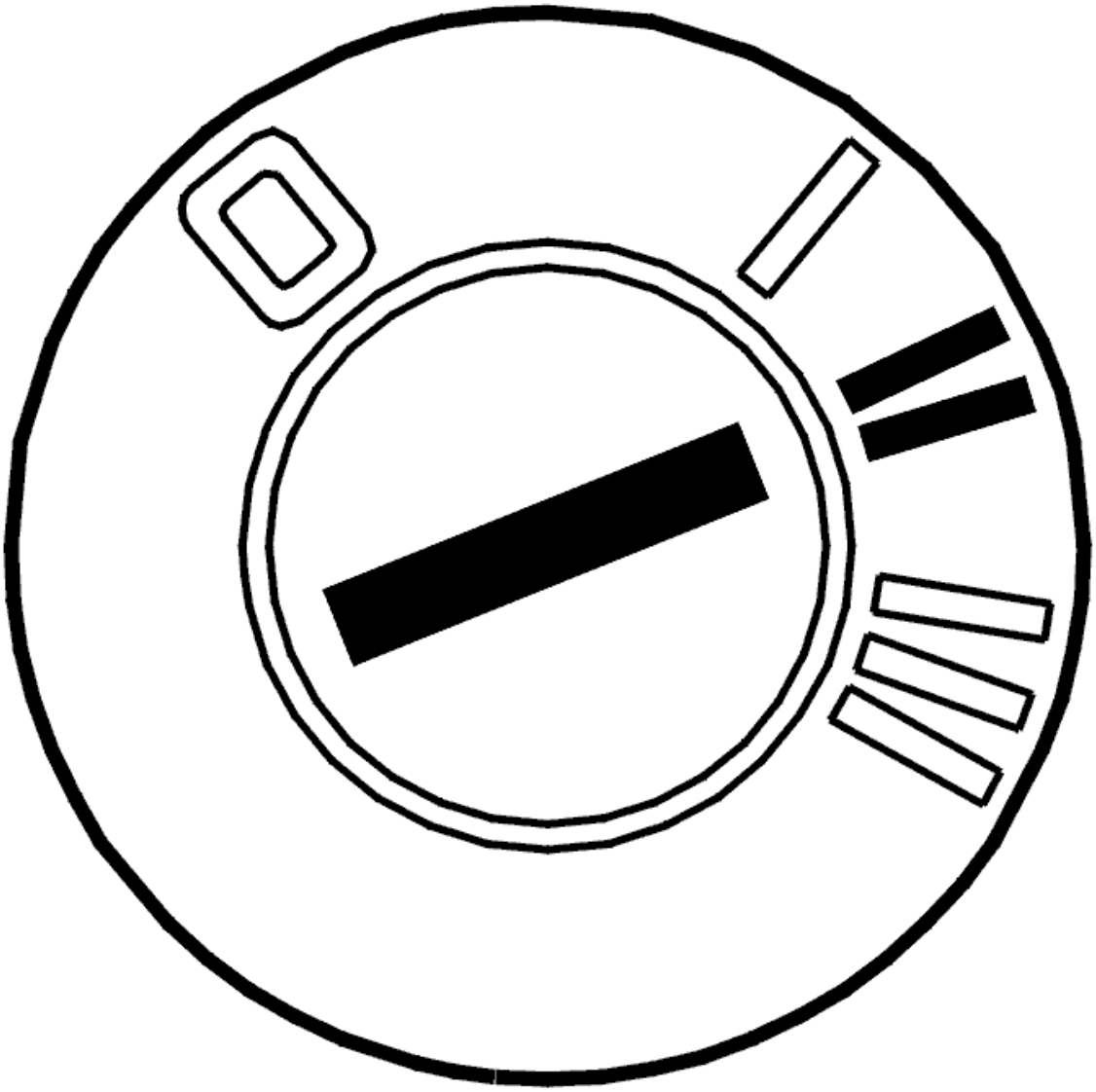

Fig. 26: Identifying Ignition ON
Courtesy of VOLVO CARS CORPORATION

- Ignition on
- Read off the voltage from the system relay to the engine control module (ECM).

  Check that the voltage is correct. The voltage must be approximately 12 V.

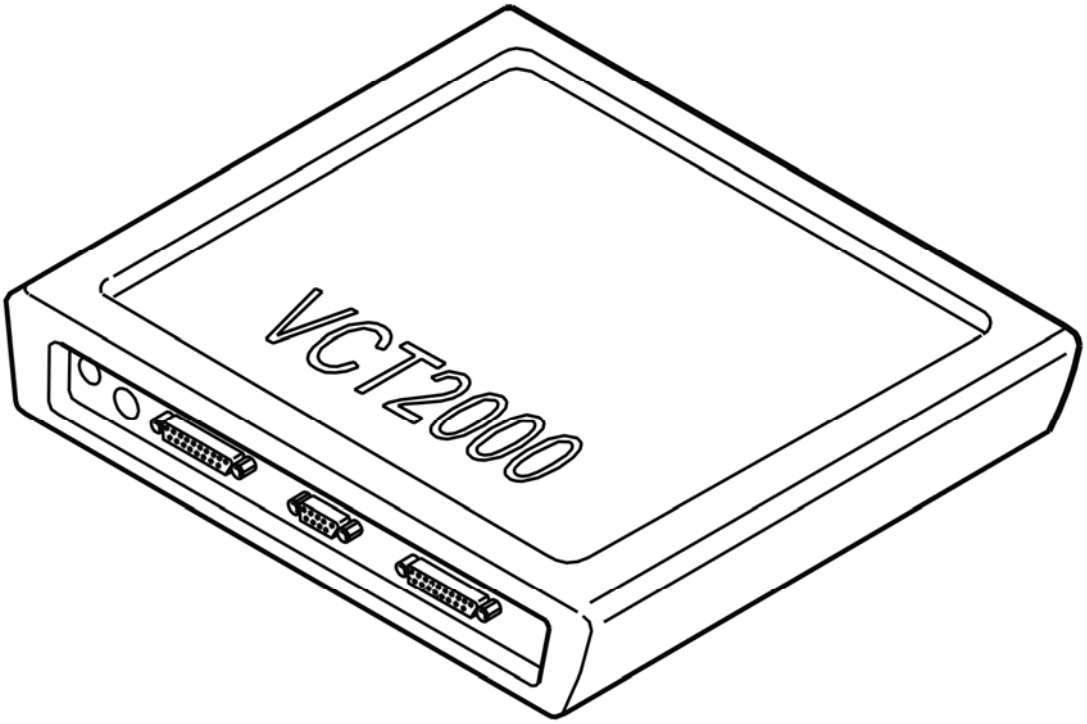

Fig. 27: Identifying VCT2000 Diagnostic Tool Symbol In VIDA
Courtesy of VOLVO CARS CORPORATION

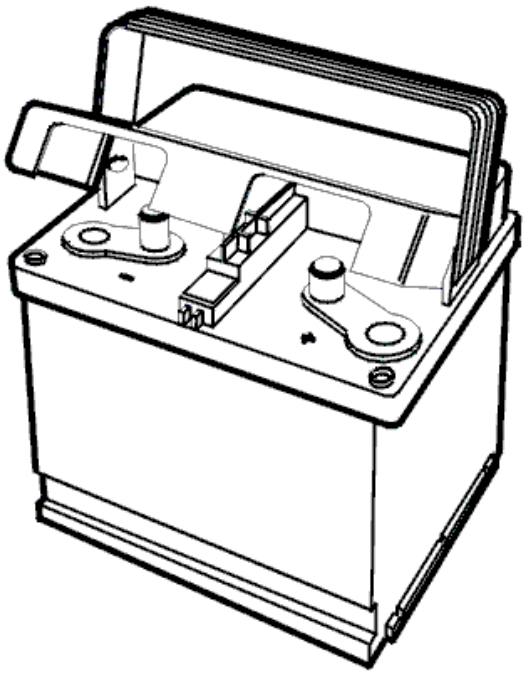

Fig. 28: Identifying Battery

Courtesy of VOLVO CARS CORPORATION

Is the voltage correct?

- **YES**

  VERIFIED: Troubleshooting has been completed.

- **NO**

  Refer to **INFORMATION**

INFORMATION

FAULT-TRACING INFORMATION

The fault should have been detected and remedied. As this is not the case fault-tracing has failed.

Exit fault-tracing for this diagnostic trouble code (DTC) or make another attempt.

ECM-8010: BATTERY VOLTAGE. SIGNAL TOO HIGH (B5254T2; B6294T; 2003-2004)

DIAGNOSTIC TROUBLE CODE (DTC) INFORMATION

see **DIAGNOSTIC TROUBLE CODE (DTC) INFORMATION**

SIGNAL TOO HIGH

CHECKING THE CONNECTORS AND COMPONENTS

Check the charging function of the generator (GEN). Check for high charging voltage.

Remedy as necessary.

Other information

- To fault-trace the charging system, see **FAULT-TRACING AND TESTING THE VOLTAGE SUPPLY SYSTEM** .

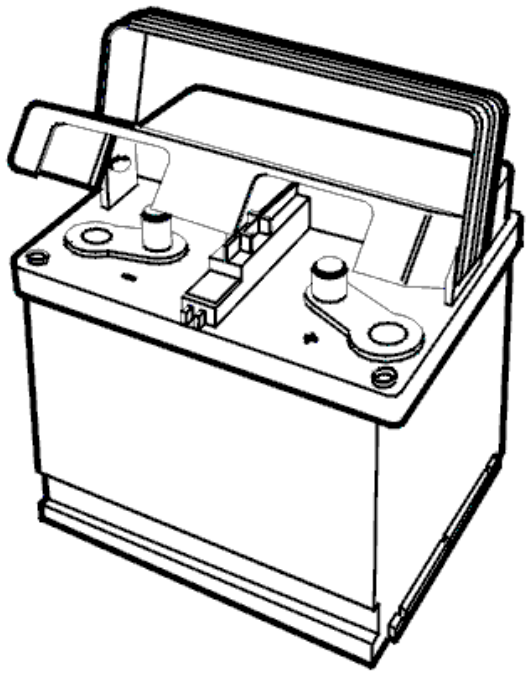

Fig. 29: Identifying Battery
Courtesy of VOLVO CARS CORPORATION

- **Continue**

  Refer to **VERIFICATION**

VERIFICATION

VERIFICATION

HINT: After carrying out the repair, check that the fault has been remedied.

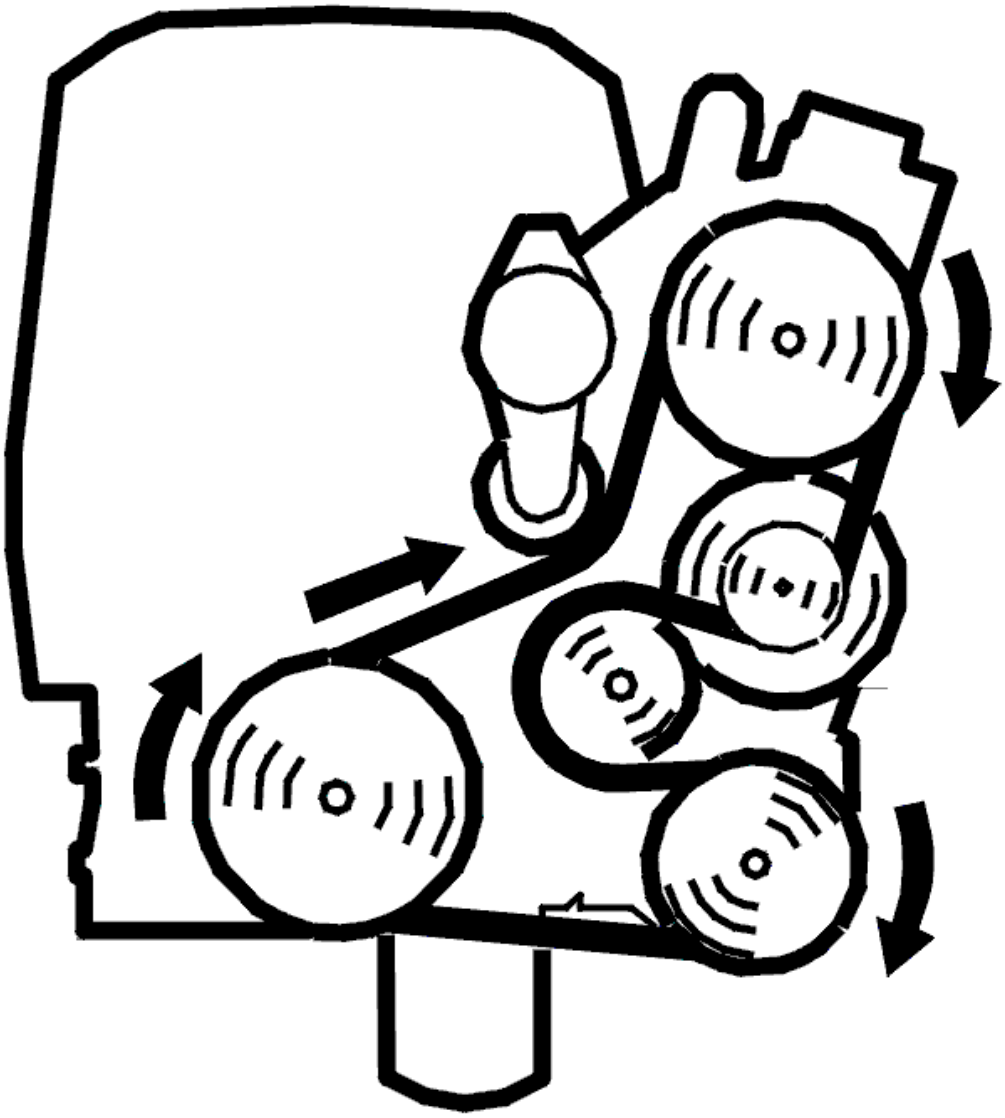

Fig. 30: Belt Routing / Engine Idling - Volvo
Courtesy of VOLVO CARS CORPORATION

- Start the engine
- Read off the voltage from the system relay to the engine control module (ECM).

  Check that the voltage is correct. The voltage must be approximately 12 V.

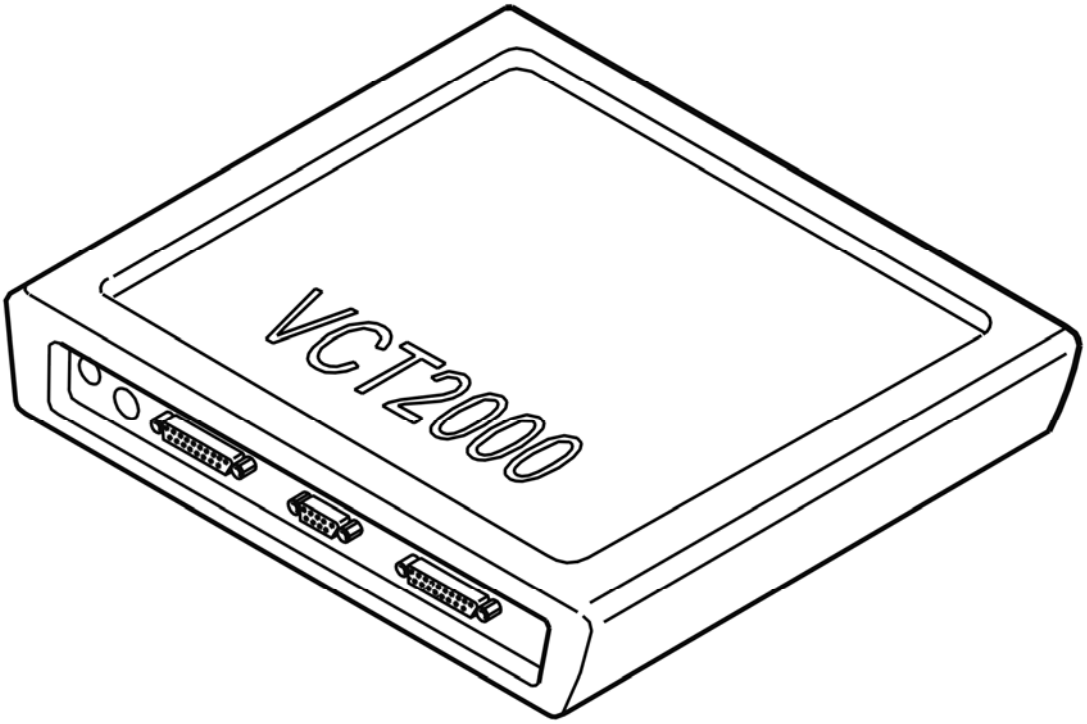

Fig. 31: Identifying VCT2000 Diagnostic Tool Symbol In VIDA
Courtesy of VOLVO CARS CORPORATION

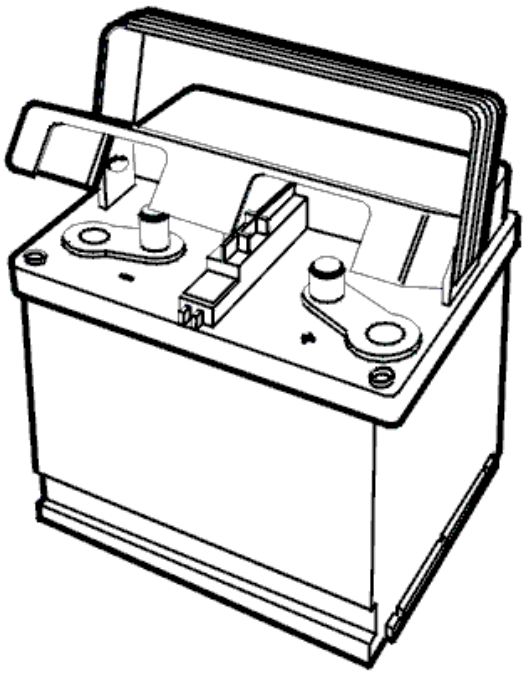

Fig. 32: Identifying Battery

Courtesy of VOLVO CARS CORPORATION

Is the voltage correct?

- **YES**

  VERIFIED: Troubleshooting has been completed.

- **NO**

  Refer to **INFORMATION**

INFORMATION

FAULT-TRACING INFORMATION

The fault should have been detected and remedied. As this is not the case fault-tracing has failed.

Exit fault-tracing for this diagnostic trouble code (DTC) or make another attempt.

ECM-8010: BATTERY VOLTAGE. SIGNAL TOO LOW (B5254T2; B6294T; 2003-2004)

DIAGNOSTIC TROUBLE CODE (DTC) INFORMATION

see **DIAGNOSTIC TROUBLE CODE (DTC) INFORMATION**

SIGNAL TOO LOW

CHECKING THE CONNECTORS AND COMPONENTS

Check the battery voltage.

Check the charging function of the generator (GEN).

Check the engine control module (ECM) and system relay connectors. Check for contact resistance and oxidation.

Check the cable between system relay terminal #5 and control module terminal #A17 (#A17). Check for contact resistance and oxidation.

Remedy as necessary.

Try a new system relay if no fault is found during the above fault-tracing.

HINT: Read off the voltage from the system relay to the engine control module (ECM) using the VCT2000 (or appropriate scan tool).

Other information

- To fault-trace the charging system, see **FAULT-TRACING AND TESTING THE VOLTAGE SUPPLY SYSTEM**
- To connect the breakout box / access the control module, see **CONNECTING THE BREAKOUT BOX**
- For 5 cylinder turbocharged engines -2004, see **SIGNAL DESCRIPTION**
- For 5 cylinder turbocharged engines 2005-, see **SIGNAL SPECIFICATION** .
- For 6 cylinder engines -2004, see **SIGNAL SPECIFICATION**
- For 6 cylinder engines 2005-, see **SIGNAL SPECIFICATION** .
- see **CHECKING WIRING AND TERMINALS**

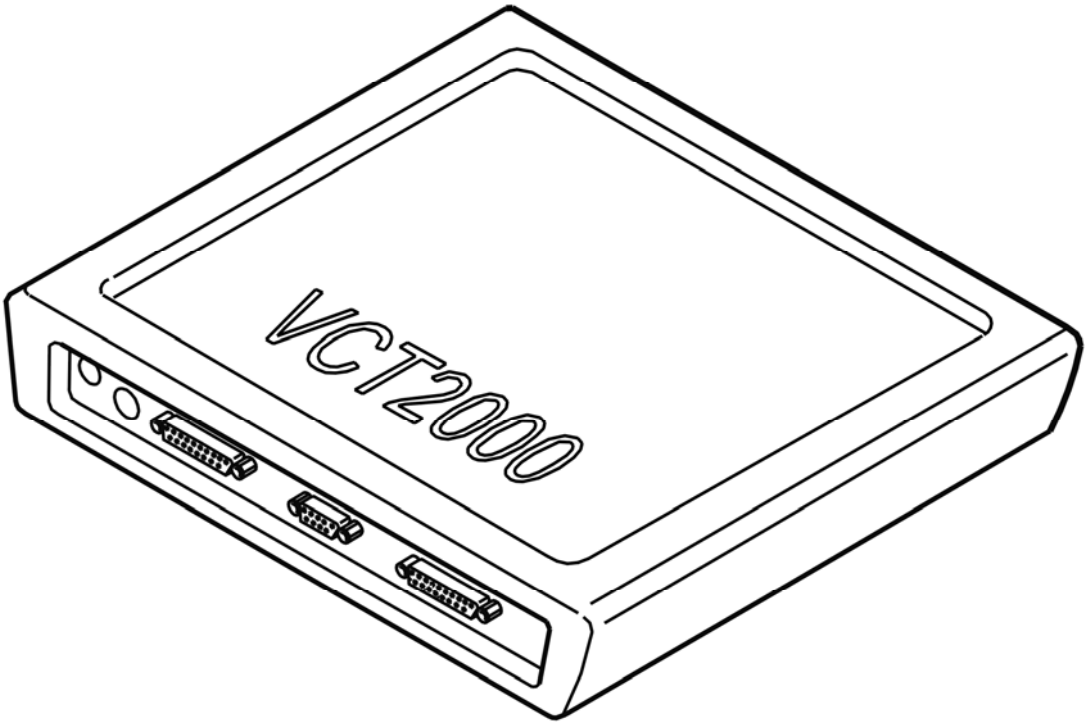

Fig. 33: Identifying VCT2000 Diagnostic Tool Symbol In VIDA
Courtesy of VOLVO CARS CORPORATION

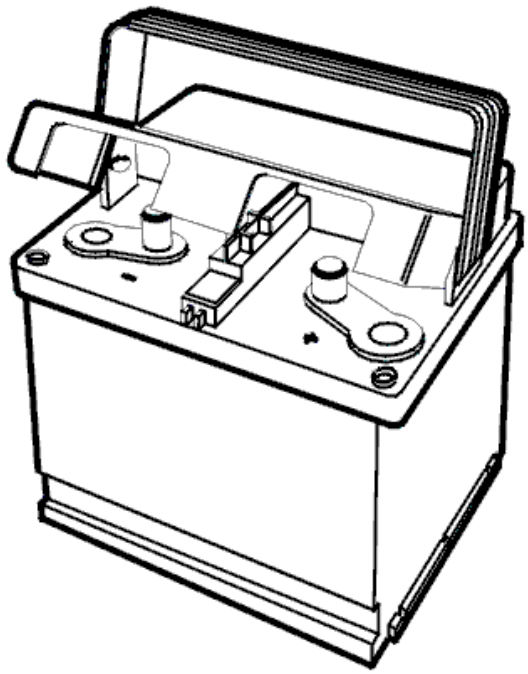

Fig. 34: Identifying Battery
Courtesy of VOLVO CARS CORPORATION

- **Continue**

  Refer to **VERIFICATION**

VERIFICATION

VERIFICATION

HINT: After carrying out the repair, check that the fault has been remedied.

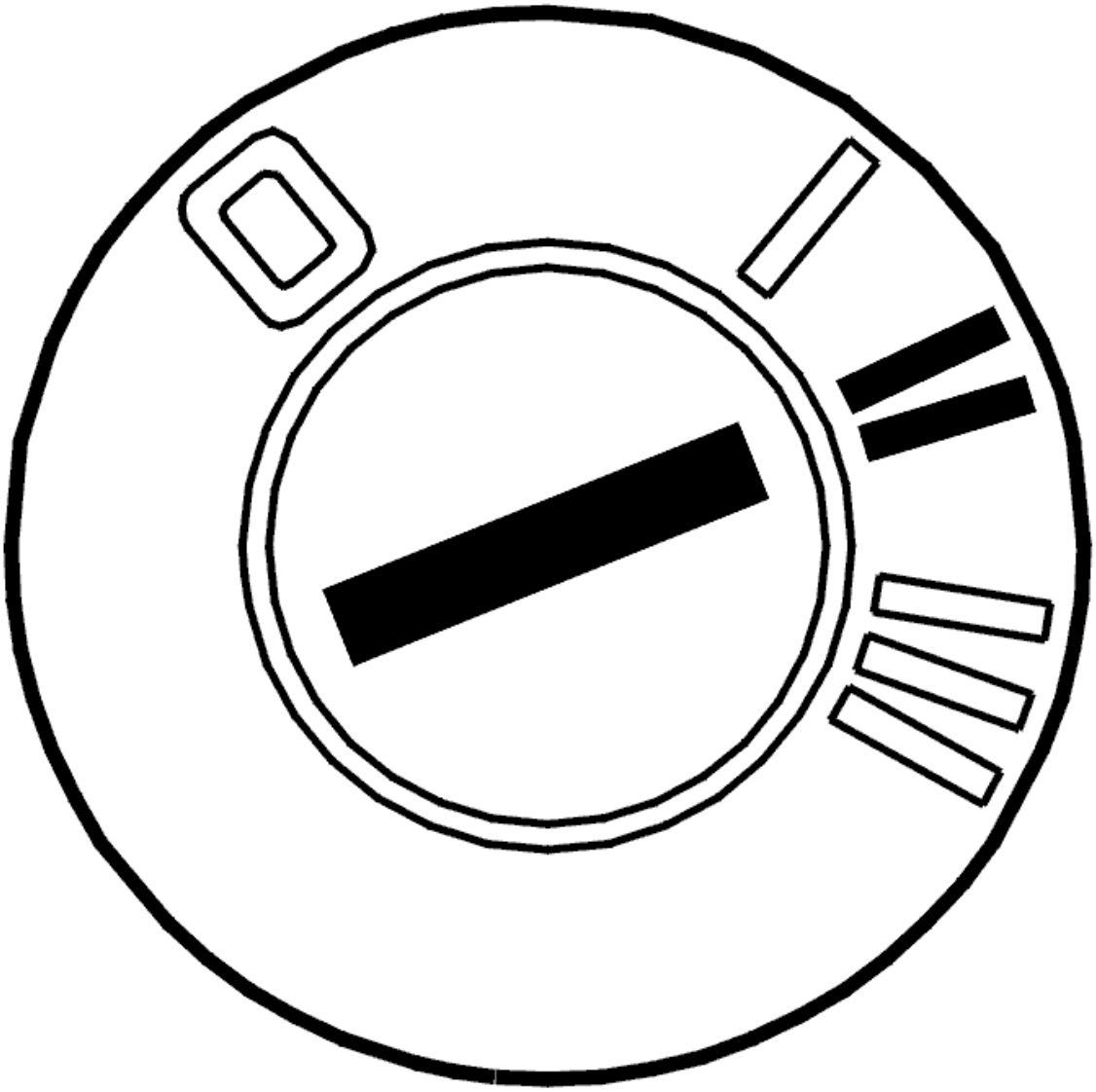

Fig. 35: Identifying Ignition ON
Courtesy of VOLVO CARS CORPORATION

- Ignition on
- Read off the voltage from the system relay to the engine control module (ECM).

  Check that the voltage is correct. The voltage must be approximately 12 V.

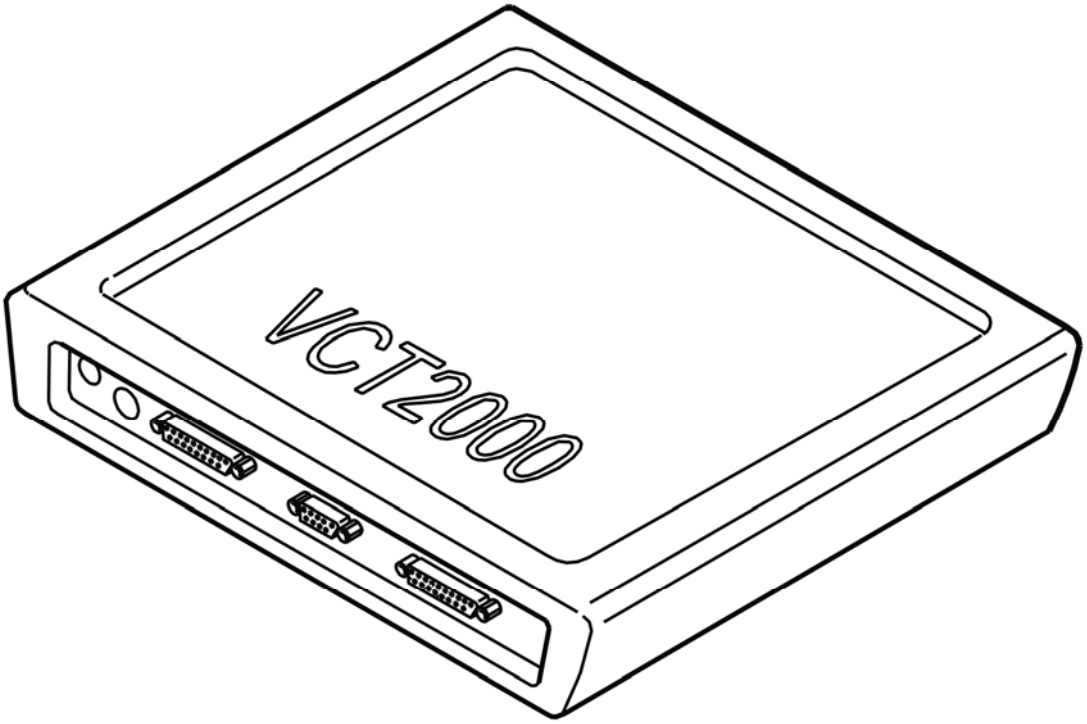

Fig. 36: Identifying VCT2000 Diagnostic Tool Symbol In VIDA
Courtesy of VOLVO CARS CORPORATION

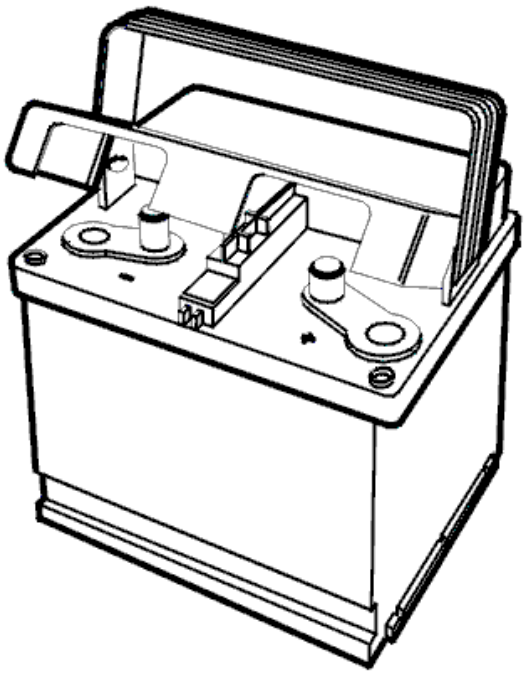

Fig. 37: Identifying Battery

Courtesy of VOLVO CARS CORPORATION

Is the voltage correct?

- **YES**

  VERIFIED: Troubleshooting has been completed.

- **NO**

  Refer to **INFORMATION**

INFORMATION

FAULT-TRACING INFORMATION

The fault should have been detected and remedied. As this is not the case fault-tracing has failed.

Exit fault-tracing for this diagnostic trouble code (DTC) or make another attempt.

ECM-801A: SYSTEM RELAY. FAULTY SIGNAL OR SIGNAL MISSING (B5254T2; B6294T; 2003-2004)

DIAGNOSTIC TROUBLE CODE (DTC) INFORMATION

Condition

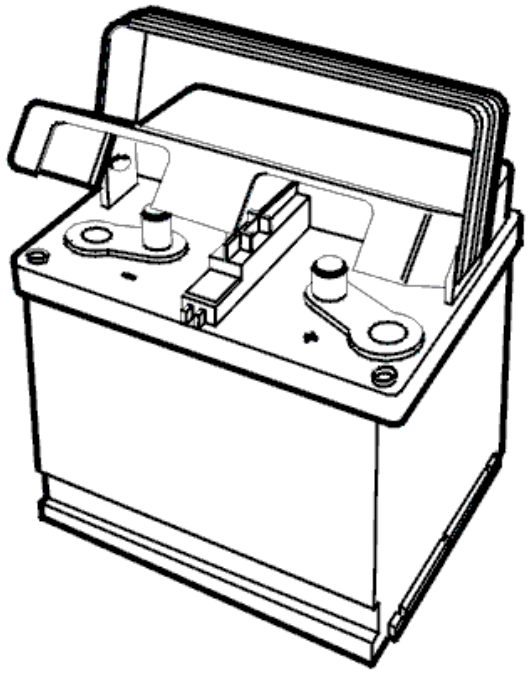

Fig. 38: Identifying Battery
Courtesy of VOLVO CARS CORPORATION

Diagnostic trouble code (DTC) ECM-801A is stored if the voltage from the system relay to the control module is greater than 2.5 V but lower than 3 V (signal missing) or if the power supply for the control module to the electronic throttle module is lower than 8 V (faulty signal). The fault is diagnosed when the ignition is on.

Substitute Value

None.

Possible Source

Signal missing

- Faulty charging system
- Contact resistance in the terminals
- Open-circuit in the signal cable for the system relay
- Faulty system relay.

Faulty signal

- Faulty charging system
- Contact resistance in the terminals
- Faulty system relay.

Fault symptom[s]

- The engine fails to start
- The engine runs poorly.

FAULTY SIGNAL OR SIGNAL MISSING

CHECKING THE CONNECTORS AND COMPONENTS

Check the battery voltage.

Check the charging function of the generator (GEN).

Check the fuse before the circuit. If the fuse is blown, check the circuit. Check for a short-circuit to ground.

Check the cable between system relay terminal #5 and control module terminal #A17 (#A17). Check for an open-circuit.

Check the engine control module (ECM) and system relay connectors. Check for contact resistance and oxidation.

Remedy as necessary.

Try a new system relay if no fault is found during the above fault-tracing.

HINT: Read off the voltage from the system relay to the engine control module (ECM).

Other information

- To fault-trace the charging system, see **FAULT-TRACING AND TESTING THE VOLTAGE SUPPLY SYSTEM**
- To connect the breakout box and access the control module, see **CONNECTING THE BREAKOUT BOX**
- For 5 cylinder turbocharged engines -2004, see **SIGNAL DESCRIPTION**
- For 5 cylinder turbocharged engines 2005-, see **SIGNAL SPECIFICATION** .
- For 6 cylinder engines -2004, see **SIGNAL SPECIFICATION**
- For 6 cylinder engines 2005-, see **SIGNAL SPECIFICATION** .
- see **CHECKING WIRING AND TERMINALS**

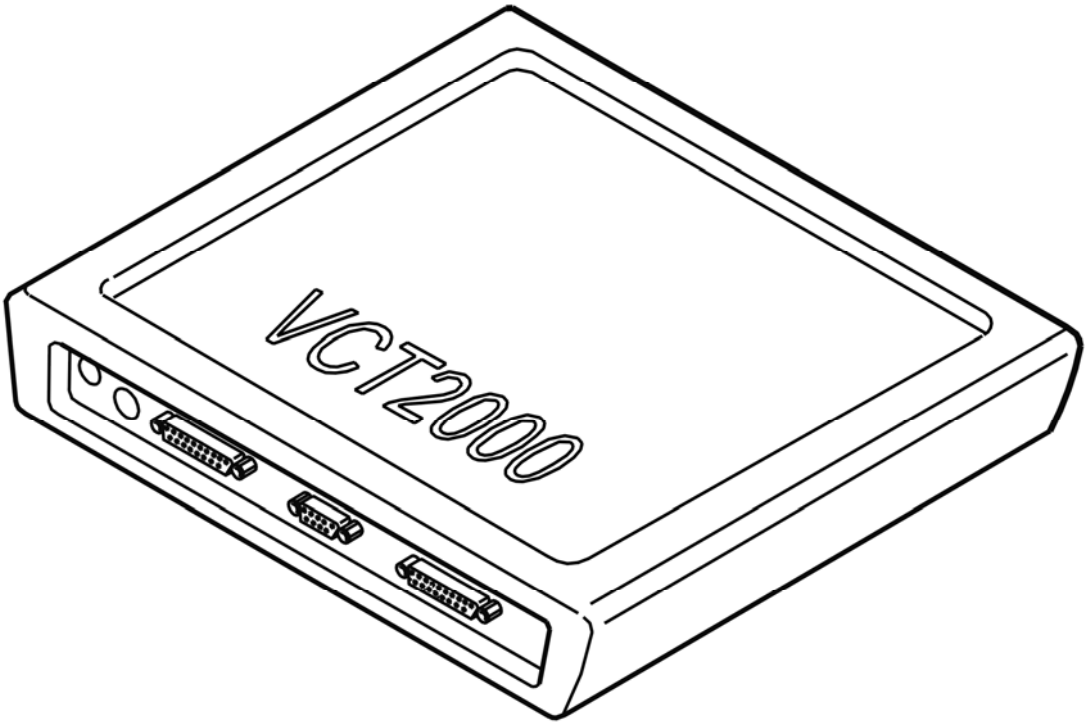

Fig. 39: Identifying VCT2000 Diagnostic Tool Symbol In VIDA
Courtesy of VOLVO CARS CORPORATION

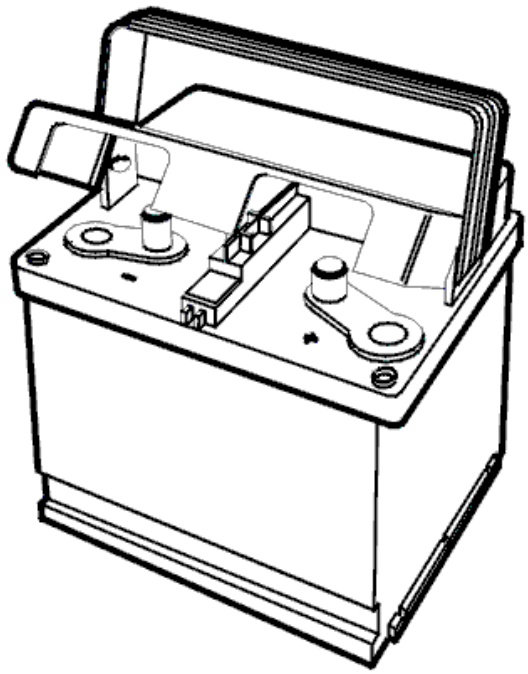

Fig. 40: Identifying Battery
Courtesy of VOLVO CARS CORPORATION

- **Continue**

  Refer to **VERIFICATION**

VERIFICATION

VERIFICATION

HINT: After carrying out the repair, check that the fault has been remedied.

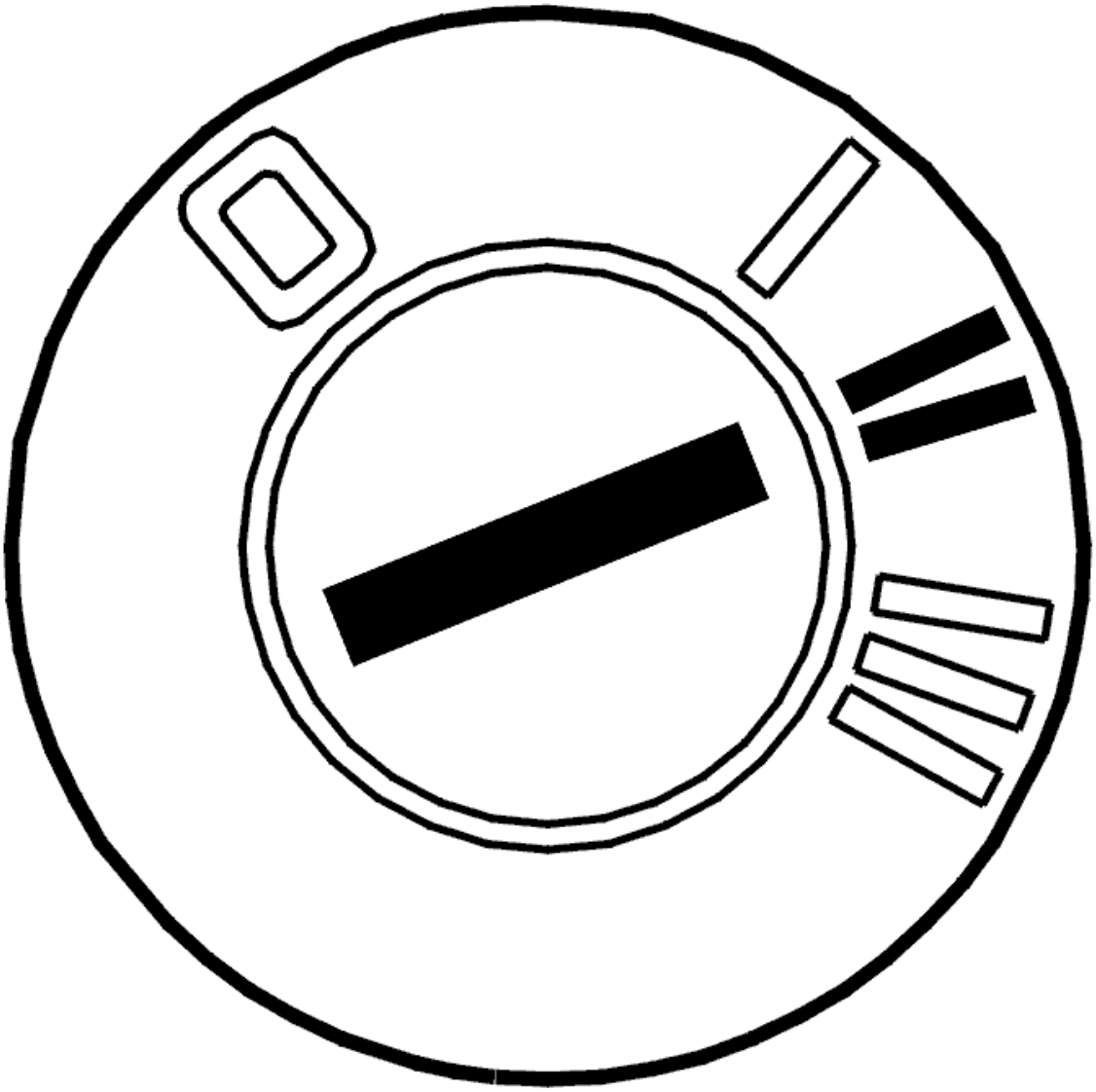

Fig. 41: Identifying Ignition ON
Courtesy of VOLVO CARS CORPORATION

- Ignition on
- Read off the voltage from the system relay to the engine control module (ECM).

  The voltage must be approximately 12 V.

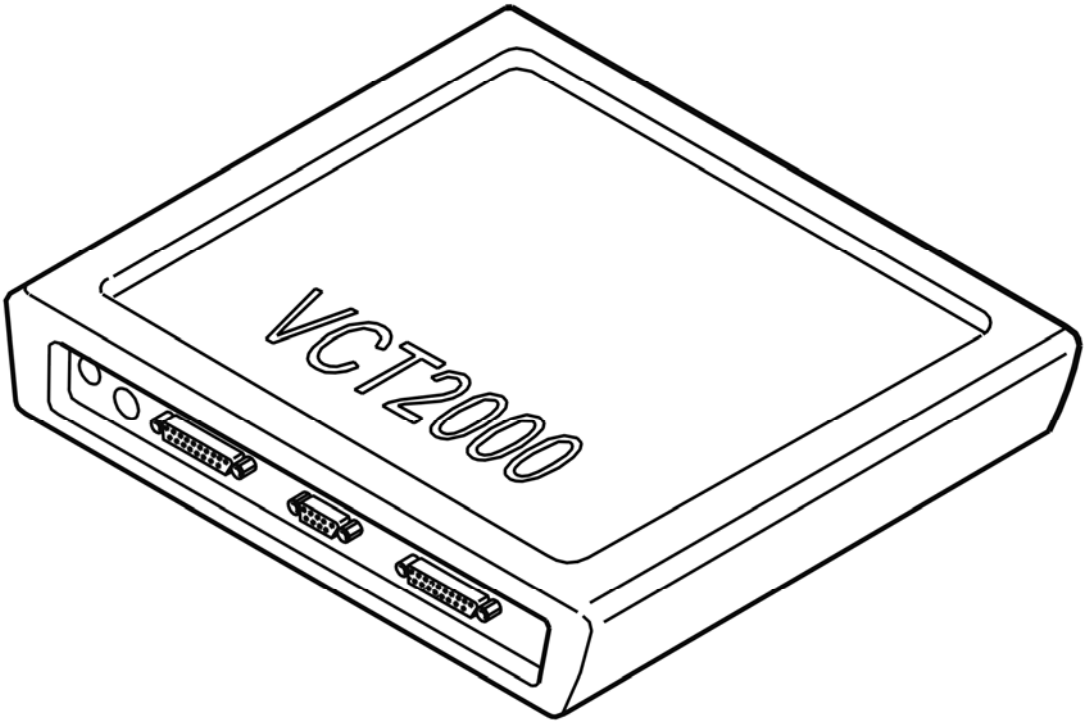

Fig. 42: Identifying VCT2000 Diagnostic Tool Symbol In VIDA
Courtesy of VOLVO CARS CORPORATION

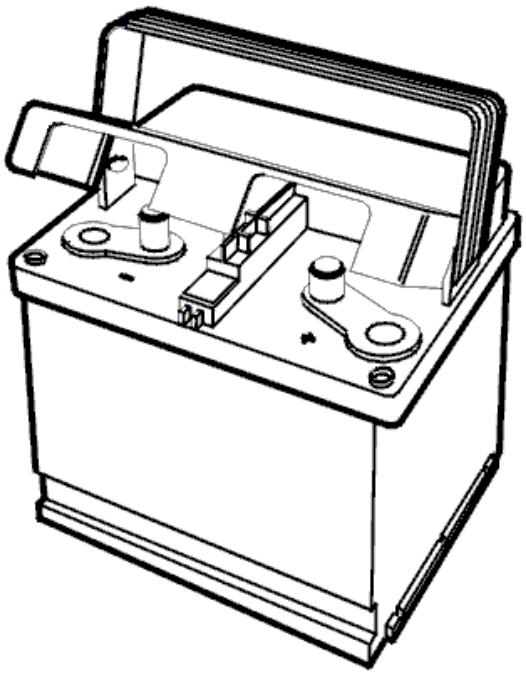

Fig. 43: Identifying Battery

Courtesy of VOLVO CARS CORPORATION

Is the voltage correct?

- **YES**

  VERIFIED: Troubleshooting has been completed.

- **NO**

  Refer to **INFORMATION**

INFORMATION

FAULT-TRACING INFORMATION

The fault should have been detected and remedied. As this is not the case fault-tracing has failed.

Exit fault-tracing for this diagnostic trouble code (DTC) or make another attempt.

ECM-810C: 5 VOLT POWER SUPPLY. SIGNAL TOO HIGH (B5254T2; 2005-2007)

DIAGNOSTIC TROUBLE CODE (DTC) INFORMATION ECM-810C

Condition

The engine control module (ECM) checks the 5 volt cable which supplies components with power. The diagnostic trouble code (DTC) is stored if the voltage at the 5 volt cable is higher than a certain value.

The diagnostic trouble code (DTC) can be diagnosed when the ignition is switched on.

Substitute Value

- None.

Possible Source

- short-circuit to battery voltage in the 5 volt supply cable
- Damaged sensor connected to the 5 volt supply cable.

Fault symptom[s]

- Poor performance.

FAULT-TRACING INFORMATION

see **FAULT-TRACING INFORMATION**

ECM-810C: 5 VOLT POWER SUPPLY. SIGNAL TOO HIGH (B6294T; 2005-2006)

DIAGNOSTIC TROUBLE CODE (DTC) INFORMATION ECM-810C

see **DIAGNOSTIC TROUBLE CODE (DTC) INFORMATION ECM-810C**

FAULT-TRACING INFORMATION

see **FAULT-TRACING INFORMATION**

ECM-810D: 5 VOLT POWER SUPPLY. SIGNAL TOO LOW (B5254T2; 2005-2007)

DIAGNOSTIC TROUBLE CODE (DTC) INFORMATION ECM-810D

Condition

The engine control module (ECM) checks the 5 volt cable which supplies components with power. If the voltage at the 5 volt cable is lower than a certain value, the engine control module (ECM) interprets this as a fault and a diagnostic trouble code (DTC) is stored.

The diagnostic trouble code (DTC) can be diagnosed when the ignition is switched on.

Substitute Value

- None.

Possible Source

- Short-circuit to ground in 5-volt supply cable
- Damaged sensor connected to the 5 volt supply cable.

Fault symptom[s]

- Poor performance.

SIGNAL TOO LOW

see **SIGNAL TOO LOW**

ECM-810D: 5 VOLT POWER SUPPLY. SIGNAL TOO LOW (B6294T; 2005-2006)

DIAGNOSTIC TROUBLE CODE (DTC) INFORMATION ECM-810D

see **DIAGNOSTIC TROUBLE CODE (DTC) INFORMATION ECM-810D**

SIGNAL TOO LOW

see **SIGNAL TOO LOW**

ECM-8200: BATTERY VOLTAGE. FAULTY SIGNAL (B5254T2; 2005-2007)

DIAGNOSTIC TROUBLE CODE (DTC) INFORMATION ECM-8200

Condition

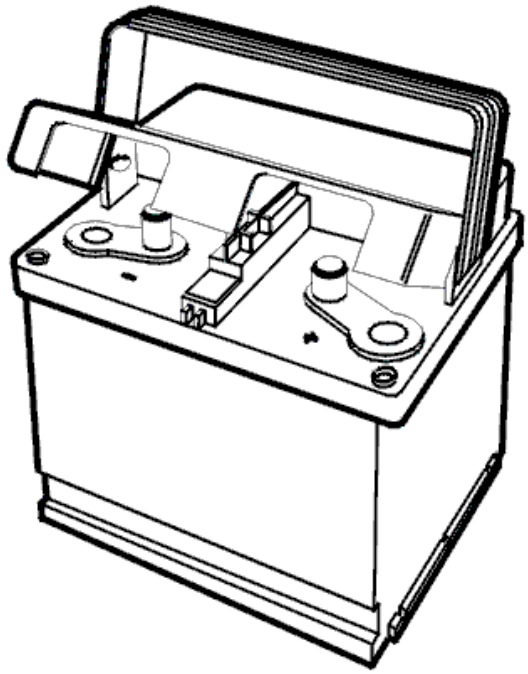

Fig. 44: Identifying Battery
Courtesy of VOLVO CARS CORPORATION

The engine control module (ECM) checks the power supply from the system relay.

The diagnostic trouble code (DTC) is stored if the engine control module (ECM) detects that the voltage from the system relay is below 2.5 V.

The diagnostic trouble code (DTC) can be diagnosed at ignition on or when the engine is running.

Substitute Value

- The engine control module (ECM) assumes a voltage of 13.4 V.

Possible Source

- Damaged engine control module (ECM).

Fault symptom[s]

- The engine cuts out
- The engine does not start.

INTERNAL FAULT

see **INTERNAL FAULT**

ECM-8200: BATTERY VOLTAGE. FAULTY SIGNAL (B6294T; 2005-2006)

DIAGNOSTIC TROUBLE CODE (DTC) INFORMATION ECM-8200

see **DIAGNOSTIC TROUBLE CODE (DTC) INFORMATION ECM-8200**

INTERNAL FAULT

see **INTERNAL FAULT**

ECM-820C: BATTERY VOLTAGE. SIGNAL TOO HIGH (B5254T2; 2005-2007)

DIAGNOSTIC TROUBLE CODE (DTC) INFORMATION ECM-820C

Condition

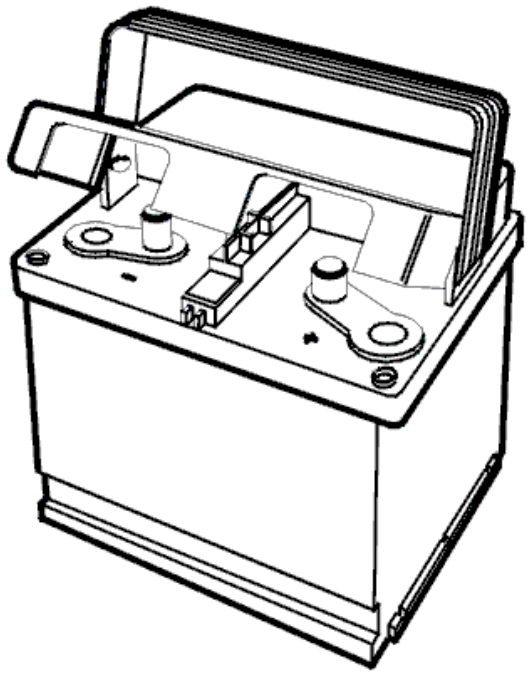

Fig. 45: Identifying Battery
Courtesy of VOLVO CARS CORPORATION

The engine control module (ECM) checks the power supply from the system relay.

The diagnostic trouble code (DTC) is stored if the engine control module (ECM) detects that the voltage from the system relay is higher than a certain value.

The diagnostic trouble code (DTC) can be diagnosed at ignition on or when the engine is running.

Substitute Value

- None.

Possible Source

- Defective charging system.

Fault symptom[s]

- Starting/Engine does not start/Unsure when/at all times

SIGNAL TOO HIGH

see **SIGNAL TOO HIGH**

ECM-820C: BATTERY VOLTAGE. SIGNAL TOO HIGH (B6294T; 2005-2006)

DIAGNOSTIC TROUBLE CODE (DTC) INFORMATION ECM-820C

see **DIAGNOSTIC TROUBLE CODE (DTC) INFORMATION ECM-820C**

SIGNAL TOO HIGH

see **SIGNAL TOO HIGH**

ECM-820D: BATTERY VOLTAGE. SIGNAL TOO LOW (B5254T2; 2005-2007)

DIAGNOSTIC TROUBLE CODE (DTC) INFORMATION ECM-820D

Condition

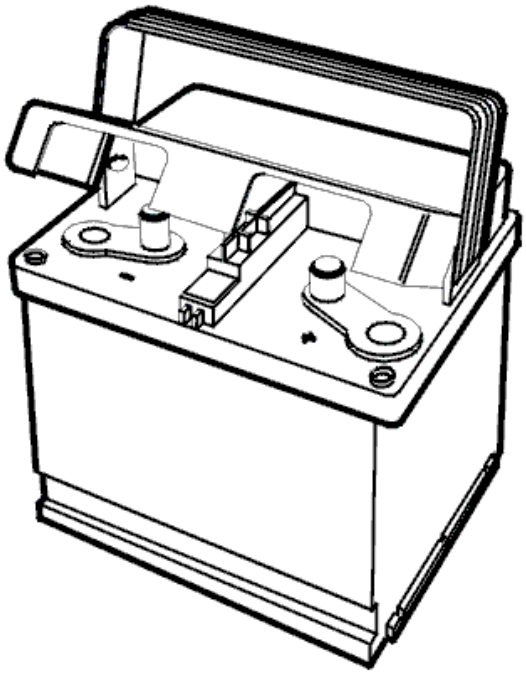

Fig. 46: Identifying Battery
Courtesy of VOLVO CARS CORPORATION

The engine control module (ECM) checks the power supply from the system relay.

The diagnostic trouble code (DTC) is stored if the engine control module (ECM) detects that the voltage from the system relay is lower than a certain value.

The diagnostic trouble code (DTC) can be diagnosed at ignition on or when the engine is running.

Substitute Value

- None.

Possible Source

- Faulty charging system
- Damaged battery.

Fault symptom[s]

- Starting/Engine does not start/Unsure when/at all times

SIGNAL TOO LOW

see **SIGNAL TOO LOW**

ECM-820D: BATTERY VOLTAGE. SIGNAL TOO LOW (B6294T; 2005-2006)

DIAGNOSTIC TROUBLE CODE (DTC) INFORMATION ECM-820D

see **DIAGNOSTIC TROUBLE CODE (DTC) INFORMATION ECM-820D**

SIGNAL TOO LOW

see **SIGNAL TOO LOW**

ECM-8210: SYSTEM RELAY. FAULTY SIGNAL (B5254T2; 2005-2007)

DIAGNOSTIC TROUBLE CODE (DTC) INFORMATION ECM-8210

Condition

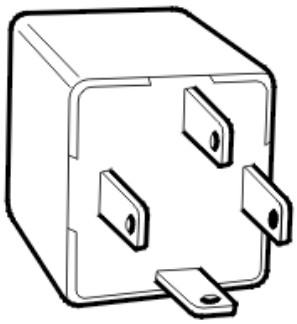

Fig. 47: Identifying Main Relay
Courtesy of VOLVO CARS CORPORATION

The engine control module (ECM) checks the power supply from the system relay.

The diagnostic trouble code (DTC) is stored if the engine control module (ECM) detects that the power supply from the engine control module (ECM) to the throttle unit is lower than 8 V.

The diagnostic trouble code (DTC) can be diagnosed when the ignition is switched on.

Substitute Value

- The injectors are shut off.

Possible Source

- Faulty charging system
- Contact resistance in the terminals
- Damaged system relay.

Fault symptom[s]

- The starter motor turns but the engine does not start.

FAULTY SIGNAL OR SIGNAL MISSING

see **FAULTY SIGNAL OR SIGNAL MISSING**

ECM-8210: SYSTEM RELAY. FAULTY SIGNAL (B6294T; 2005-2006)

DIAGNOSTIC TROUBLE CODE (DTC) INFORMATION ECM-8210

see **DIAGNOSTIC TROUBLE CODE (DTC) INFORMATION ECM-8210**

FAULTY SIGNAL OR SIGNAL MISSING

see **FAULTY SIGNAL OR SIGNAL MISSING**

ECM-821B: SYSTEM RELAY. SIGNAL MISSING (B5254T2; 2005-2007)

DIAGNOSTIC TROUBLE CODE (DTC) INFORMATION ECM-821B

Condition

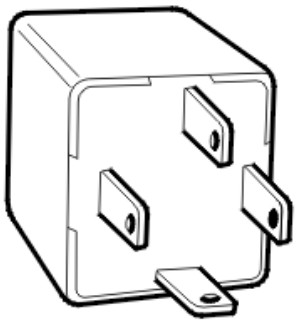

Fig. 48: Identifying Main Relay
Courtesy of VOLVO CARS CORPORATION

The engine control module (ECM) checks the power supply from the system relay.

The diagnostic trouble code (DTC) is stored if the engine control module (ECM) detects that the power supply from the system relay is lower than a certain value.

The diagnostic trouble code (DTC) can be diagnosed when the ignition is switched on.

Substitute Value

- None.

Possible Source

- Faulty charging system
- Contact resistance in the terminals
- Open-circuit in the signal cable for the system relay
- Damaged system relay.

Fault symptom[s]

- The starter motor turns but the engine does not start.

FAULTY SIGNAL OR SIGNAL MISSING

see **FAULTY SIGNAL OR SIGNAL MISSING**

ECM-821B: SYSTEM RELAY. SIGNAL MISSING (B6294T; 2005-2006)

DIAGNOSTIC TROUBLE CODE (DTC) INFORMATION ECM-821B

see **DIAGNOSTIC TROUBLE CODE (DTC) INFORMATION ECM-821B**

FAULTY SIGNAL OR SIGNAL MISSING

see **FAULTY SIGNAL OR SIGNAL MISSING**

ECM-8410: 5 VOLT POWER SUPPLY. SIGNAL TOO HIGH (B5254T2; B6294T; 2003-2004)

DIAGNOSTIC TROUBLE CODE (DTC) INFORMATION ECM-8410

Condition

If the 5 volt supply circuit for the mass air flow (MAF) sensor, boost pressure sensor, air conditioning (A/C) pressure sensor and fuel tank pressure sensor has a voltage higher than 6 V (high signal) or lower than 4 V (low signal) the control module interprets it as a fault and ECM-8410 is stored.

Substitute Value

- None.

Possible Source

Signal too high:

- short-circuit to battery voltage in the 5 volt supply cable
- Defective mass air flow (MAF) sensor
- Defective boost pressure sensor
- Defective air conditioning (A/C) pressure sensor.

Signal too low:

- short-circuit to ground in the 5 volt supply cable
- Defective mass air flow (MAF) sensor
- Defective boost pressure sensor
- Defective air conditioning (A/C) pressure sensor.

Fault symptom[s]

- Driving/Poor performance/lacks power
- Driving/Engine stalls/Unsure when/at all times

SIGNAL TOO HIGH

CHECKING THE WIRING

Check the power supply cable between control module terminal #A39 (#A39) and mass air flow (MAF) sensor

terminal #4. Check for a short-circuit to supply voltage.

Check the power supply cable between control module terminal #A39 (#A39) and boost pressure sensor terminal #3. Check for a short-circuit to supply voltage.

Check the power supply cable between control module terminal #A39 (#A39) and air conditioning (A/C) pressure sensor terminal #3. Check for a short-circuit to supply voltage.

HINT: Read off the voltage on the 5 volt power supply using the VCT2000 (or appropriate scan tool).

Remedy as necessary.

Other information:

- To connect the breakout box, see **CONNECTING THE BREAKOUT BOX**
- For 5 cylinder turbocharged engines -2004, see **SIGNAL DESCRIPTION**
- For 5 cylinder turbocharged engines 2005-, see **SIGNAL SPECIFICATION** .
- For 6 cylinder engines -2004, see **SIGNAL SPECIFICATION**
- For 6 cylinder engines 2005-, see **SIGNAL SPECIFICATION** .
- For the location of components, see **LOCATION OF COMPONENTS, ENGINE COMPARTMENT** .
- For B5xx4T, see **TEMPERATURE AND PRESSURE SENSORS, REPLACING**
- For B6xx4T, see **TEMPERATURE AND PRESSURE SENSORS, REPLACING**
- see **CHECKING WIRING AND TERMINALS** .

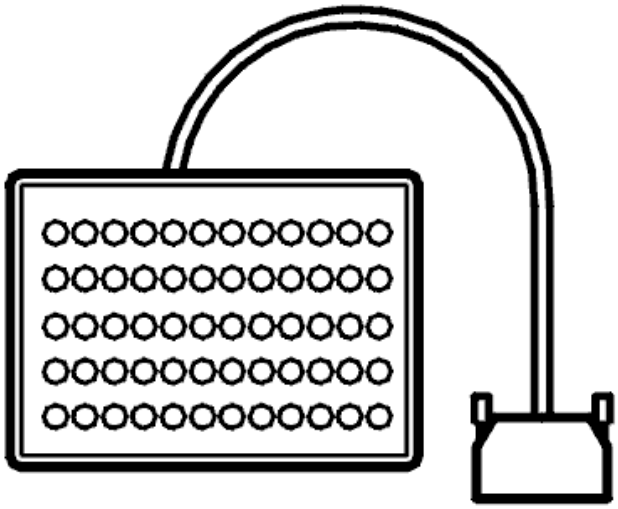

Fig. 49: Breakout Box
Courtesy of VOLVO CARS CORPORATION

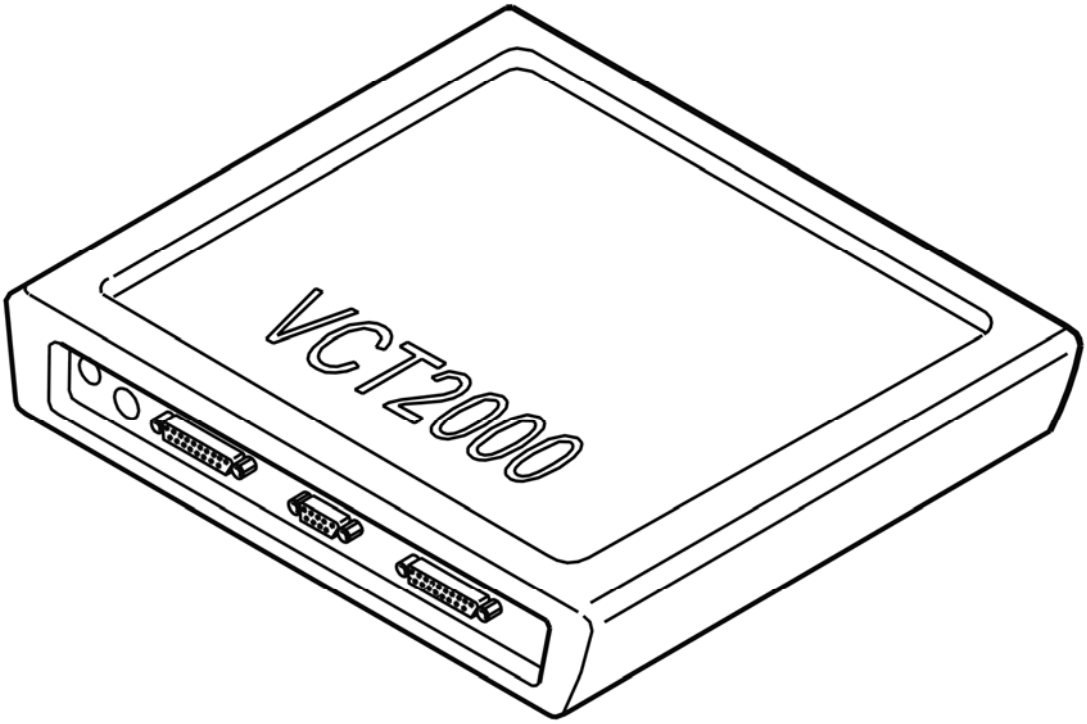

Fig. 50: Identifying VCT2000 Diagnostic Tool Symbol In VIDA
Courtesy of VOLVO CARS CORPORATION

- **Continue**

  Refer to **VERIFICATION**

VERIFICATION

VERIFICATION

HINT: After carrying out the repair, check that the fault has been remedied.

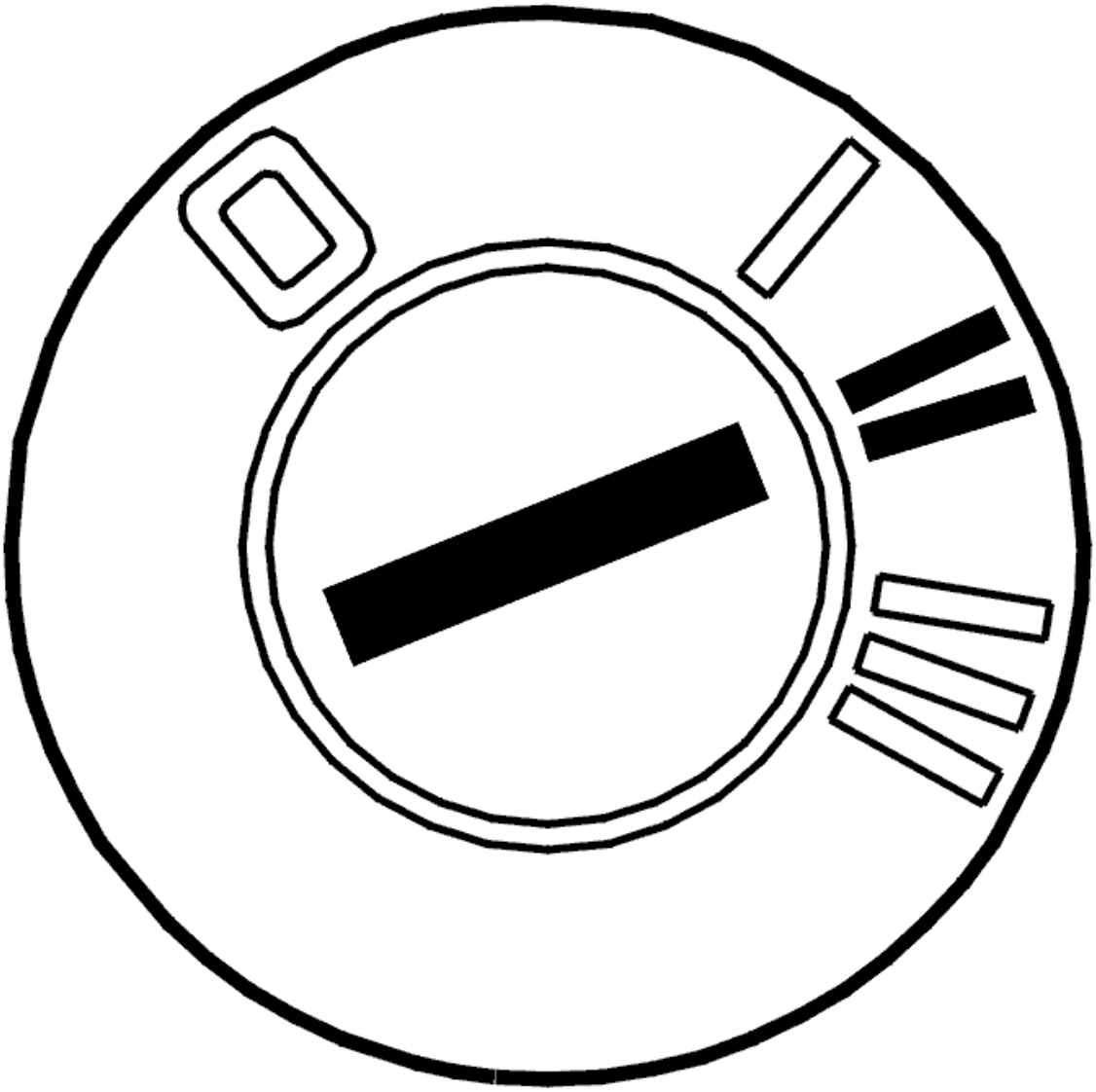

Fig. 51: Identifying Ignition ON
Courtesy of VOLVO CARS CORPORATION

- Ignition on.
- Read off the 5 volt supply.

  The value must be 5 V.

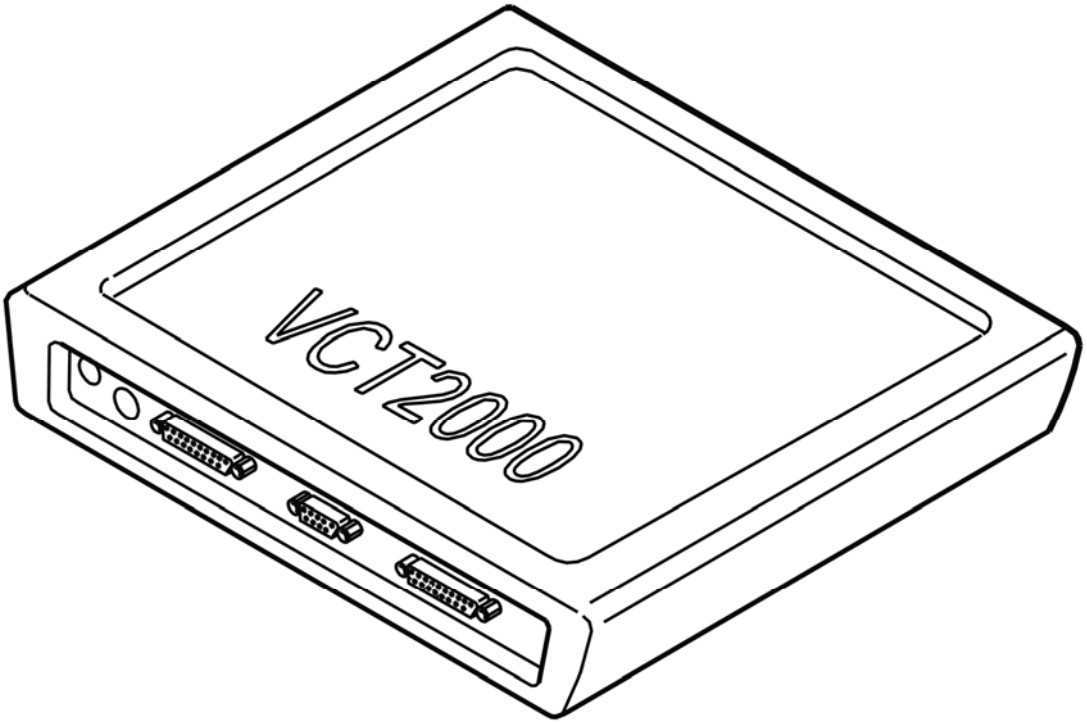

Fig. 52: Identifying VCT2000 Diagnostic Tool Symbol In VIDA
Courtesy of VOLVO CARS CORPORATION

Is the value OK?

- **YES**

  VERIFIED: Troubleshooting has been completed.

- **NO**

  Refer to **INFORMATION**

INFORMATION

FAULT-TRACING INFORMATION

The fault should have been detected and remedied. As this is not the case fault-tracing has failed.

Exit fault-tracing for this diagnostic trouble code (DTC) or make another attempt.

ECM-8410: 5 VOLT POWER SUPPLY. SIGNAL TOO LOW (B5254T2; B6294T; 2003-2004)

DIAGNOSTIC TROUBLE CODE (DTC) INFORMATION ECM-8410

see **DIAGNOSTIC TROUBLE CODE (DTC) INFORMATION ECM-8410**

SIGNAL TOO LOW

CHECKING THE WIRING

Check the power supply cable between control module terminal #A39 (#A39) and mass air flow (MAF) sensor terminal #4. Check for a short-circuit to ground.

Check the power supply cable between control module terminal #A39 (#A39) and boost pressure sensor terminal #3. Check for a short-circuit to ground.

Check the power supply cable between control module terminal #A39 (#A39) and air conditioning (A/C) pressure sensor terminal #3. Check for a short-circuit to ground.

HINT: Read off the voltage of the 5-volt power supply using the VCT2000 (or appropriate scan tool).

Remedy as necessary.

Other information:

- To connect the breakout box, see **CONNECTING THE BREAKOUT BOX**
- For 5 cylinder turbocharged engines -2004, see **SIGNAL DESCRIPTION**
- For 5 cylinder turbocharged engines 2005-, see **SIGNAL SPECIFICATION** .
- For 6 cylinder engines -2004, see **SIGNAL SPECIFICATION**
- For 6 cylinder engines 2005-, see **SIGNAL SPECIFICATION** .
- For the location of components, see **LOCATION OF COMPONENTS, ENGINE COMPARTMENT** .
- For B5xx4T, see **TEMPERATURE AND PRESSURE SENSORS, REPLACING**
- For B6xx4T, see **TEMPERATURE AND PRESSURE SENSORS, REPLACING**
- see **CHECKING WIRING AND TERMINALS** .

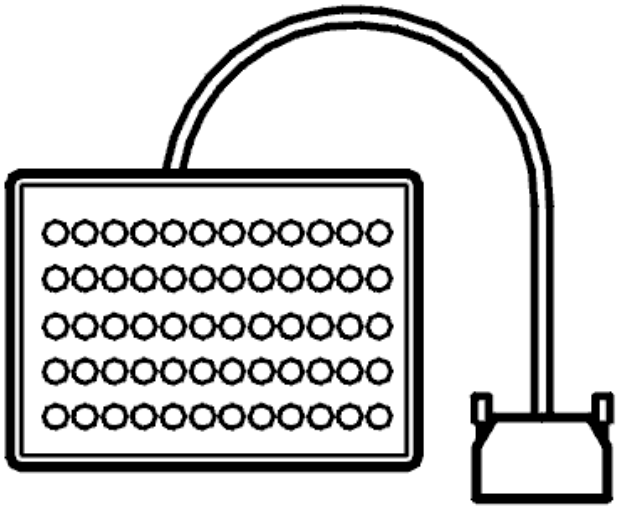

Fig. 53: Breakout Box
Courtesy of VOLVO CARS CORPORATION

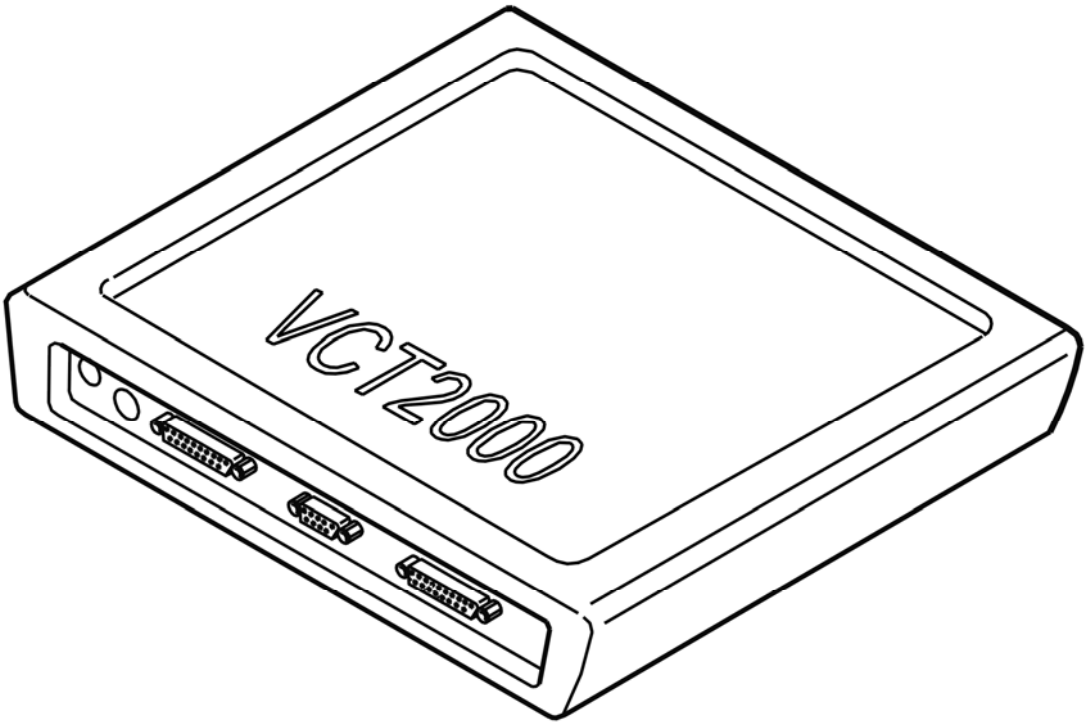

Fig. 54: Identifying VCT2000 Diagnostic Tool Symbol In VIDA
Courtesy of VOLVO CARS CORPORATION

- **Continue**

  Refer to **VERIFICATION**

VERIFICATION

VERIFICATION

HINT: After carrying out the repair, check that the fault has been remedied.

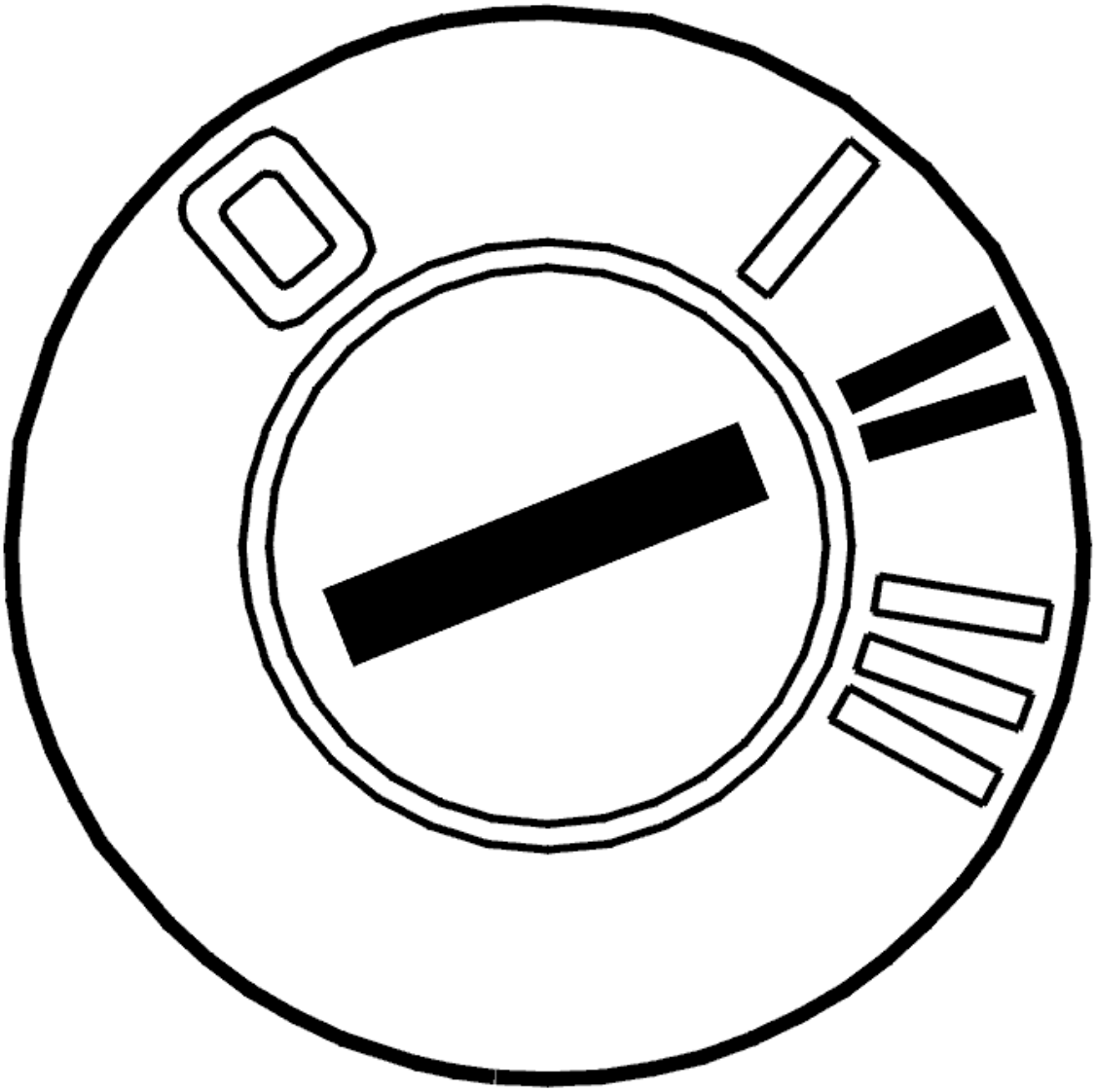

Fig. 55: Identifying Ignition ON
Courtesy of VOLVO CARS CORPORATION

- Ignition on.
- Read off the 5 volt supply.

  The value must be 5 V.

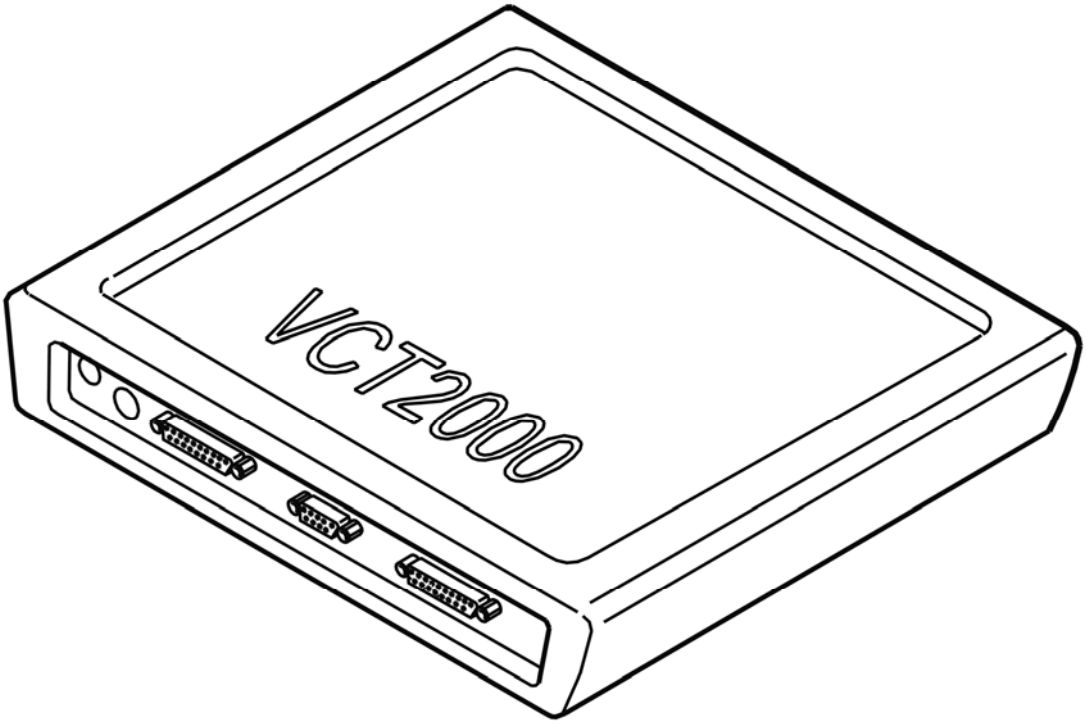

Fig. 56: Identifying VCT2000 Diagnostic Tool Symbol In VIDA
Courtesy of VOLVO CARS CORPORATION

Is the value OK?

- **YES**

  VERIFIED: Troubleshooting has been completed.

- **NO**

  Refer to **INFORMATION**

INFORMATION

FAULT-TRACING INFORMATION

The fault should have been detected and remedied. As this is not the case fault-tracing has failed.

Exit fault-tracing for this diagnostic trouble code (DTC) or make another attempt.

ECM-9000: BRAKE PEDAL SENSOR. FAULTY SIGNAL (B5254T2; 2005-2007)

DIAGNOSTIC TROUBLE CODE (DTC) INFORMATION ECM-9000

Condition

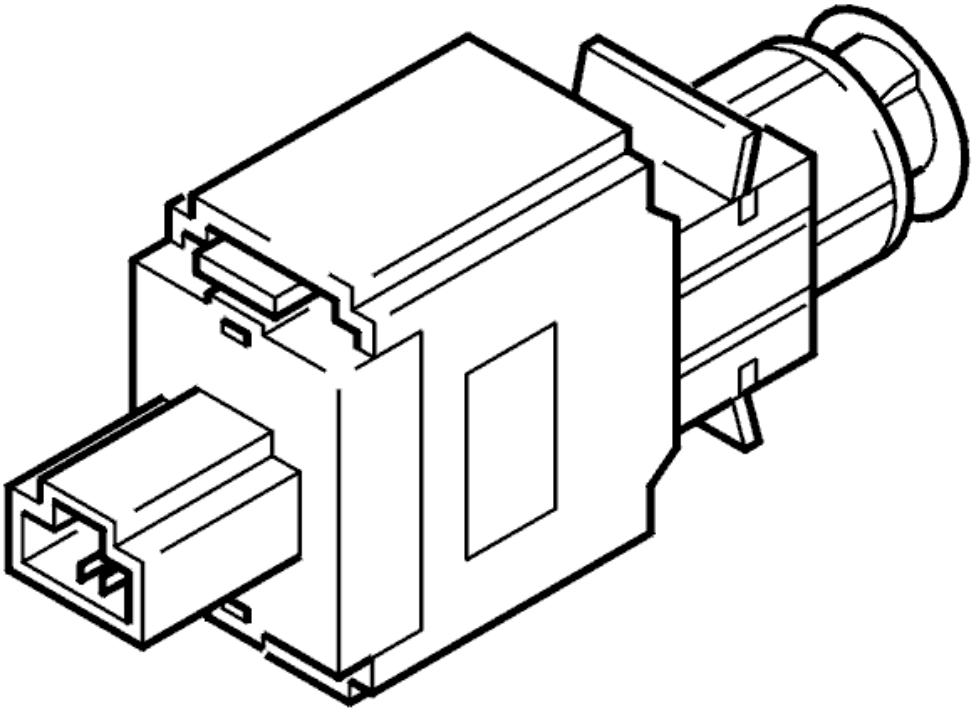

Fig. 57: Identifying Brake Pedal Position Sensor
Courtesy of VOLVO CARS CORPORATION

The diagnostic trouble code (DTC) is stored if the engine control module (ECM) registers a fault in the circuit for the brake pedal position sensor, the circuit for the stop lamp switch or in the CAN communication between the brake control module (BCM) and the engine control module (ECM).

The diagnostic trouble code (DTC) can be diagnosed when the engine is running.

Substitute Value

Cruise control switched off.

Possible Source

- Fault in the brake control module (BCM) or the central electronic module (CEM)
- Contact resistance or oxidation in the terminals between the engine control module (ECM) and the stop lamp switch
- Open-circuit in the power supply to the stop lamp switch

- Open-circuit or short-circuit to ground or supply voltage in the cable for the stop lamp switch
- Incorrectly installed stop lamp switch
- Damaged stop lamp switch.

Fault symptom[s]

- Cruise control/Does not engage
- Text window and warning symbol/Text message

SIGNAL MISSING OR FAULTY SIGNAL

CHECKING THE DIAGNOSTIC TROUBLE CODES (DTCS)

Check whether any diagnostic trouble codes (DTCs) are stored in the brake control module (BCM) or in the central electronic module (CEM).

Any diagnostic trouble codes (DTCs) stored in the brake control module (BCM) or central electronic module (CEM) must be remedied first.

Have fault causes been traced or remedied in the brake control module (BCM) and the central electronic module (CEM)?

- **YES**

  Refer to **CHECKING THE STATUS**

- **NO**

  OKAY: Troubleshooting has been completed.

CHECKING THE STATUS

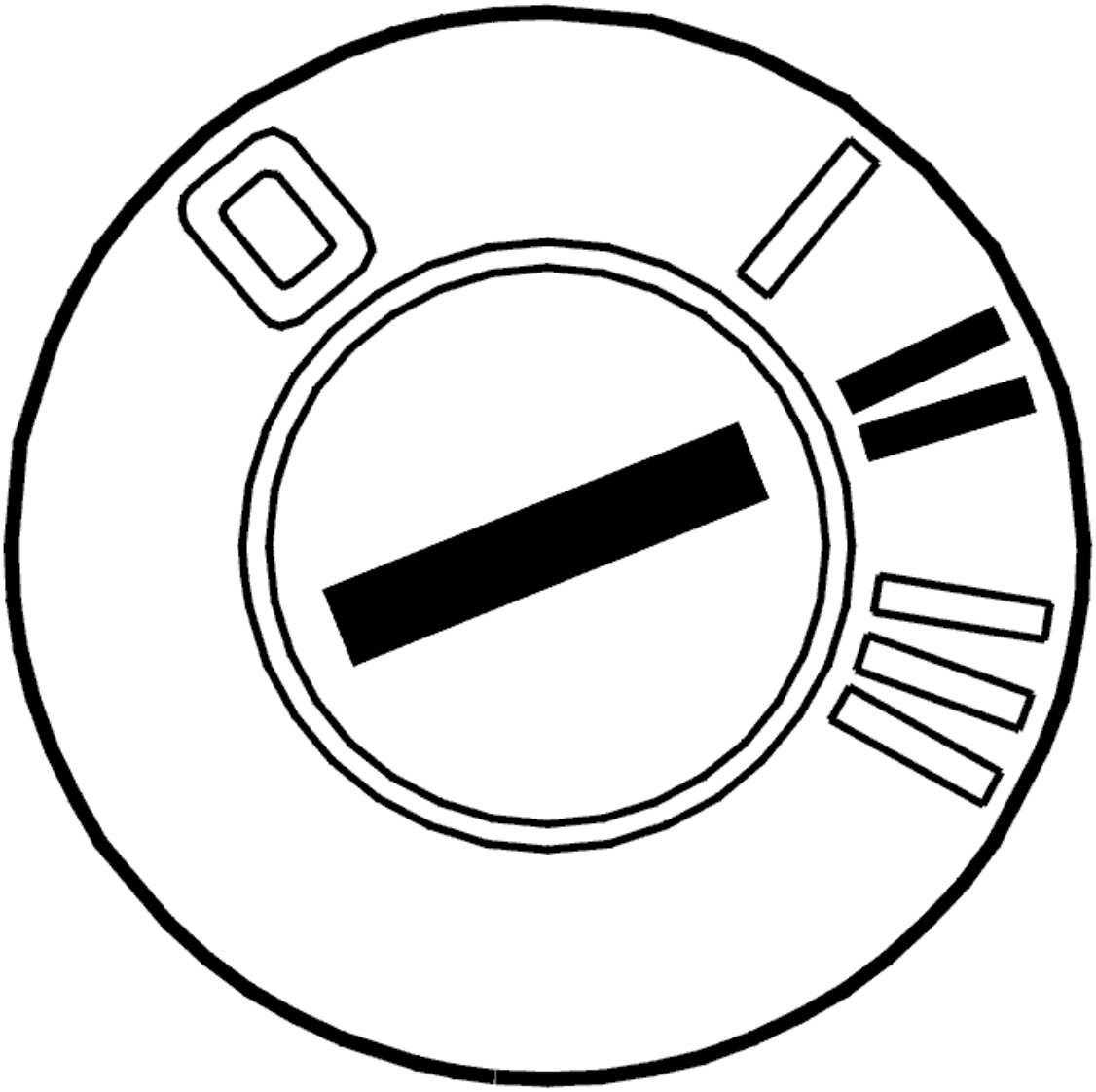

Fig. 58: Identifying Ignition ON
Courtesy of VOLVO CARS CORPORATION

- Ignition on
- Read off the status from the stop lamp switch.

  Check the function of the stop lamp switch by carefully pressing and releasing the brake pedal.

  Check that the status changes between "OFF" when the brake pedal is unaffected and "ON" when the brake pedal is depressed.

  If the status of the stop lamp switch changes as described above when the brake pedal is depressed, the fault is intermittent at the moment.

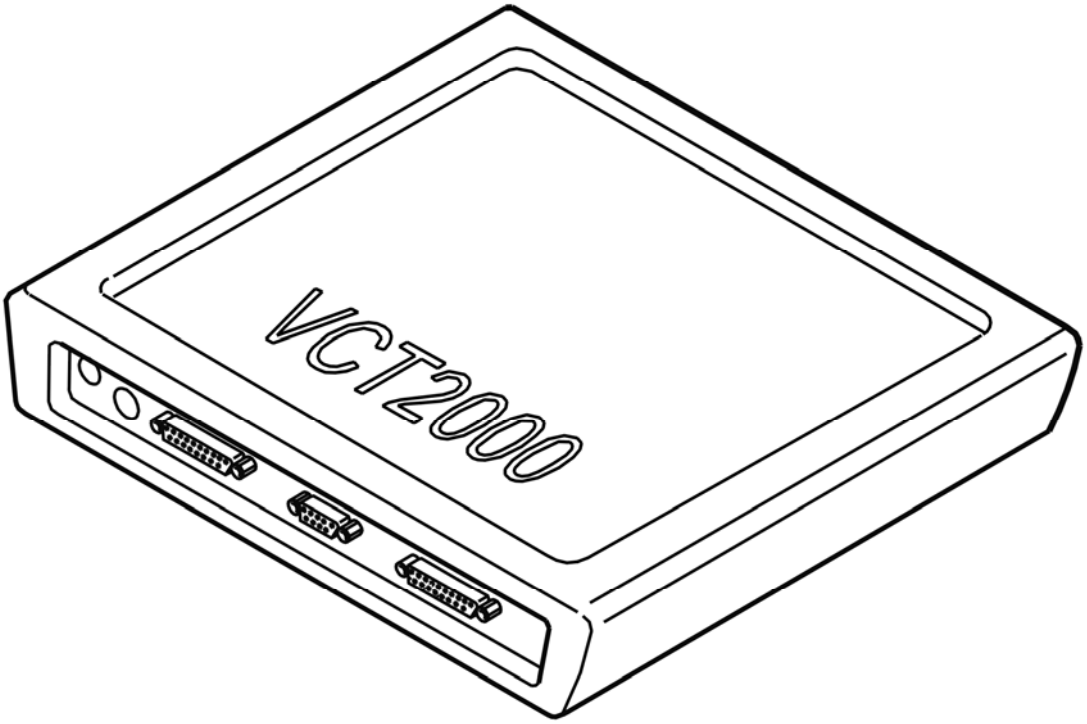

Fig. 59: Identifying VCT2000 Diagnostic Tool Symbol In VIDA
Courtesy of VOLVO CARS CORPORATION

- **Continue**

  Refer to **CHECKING THE POWER SUPPLY**

CHECKING THE POWER SUPPLY

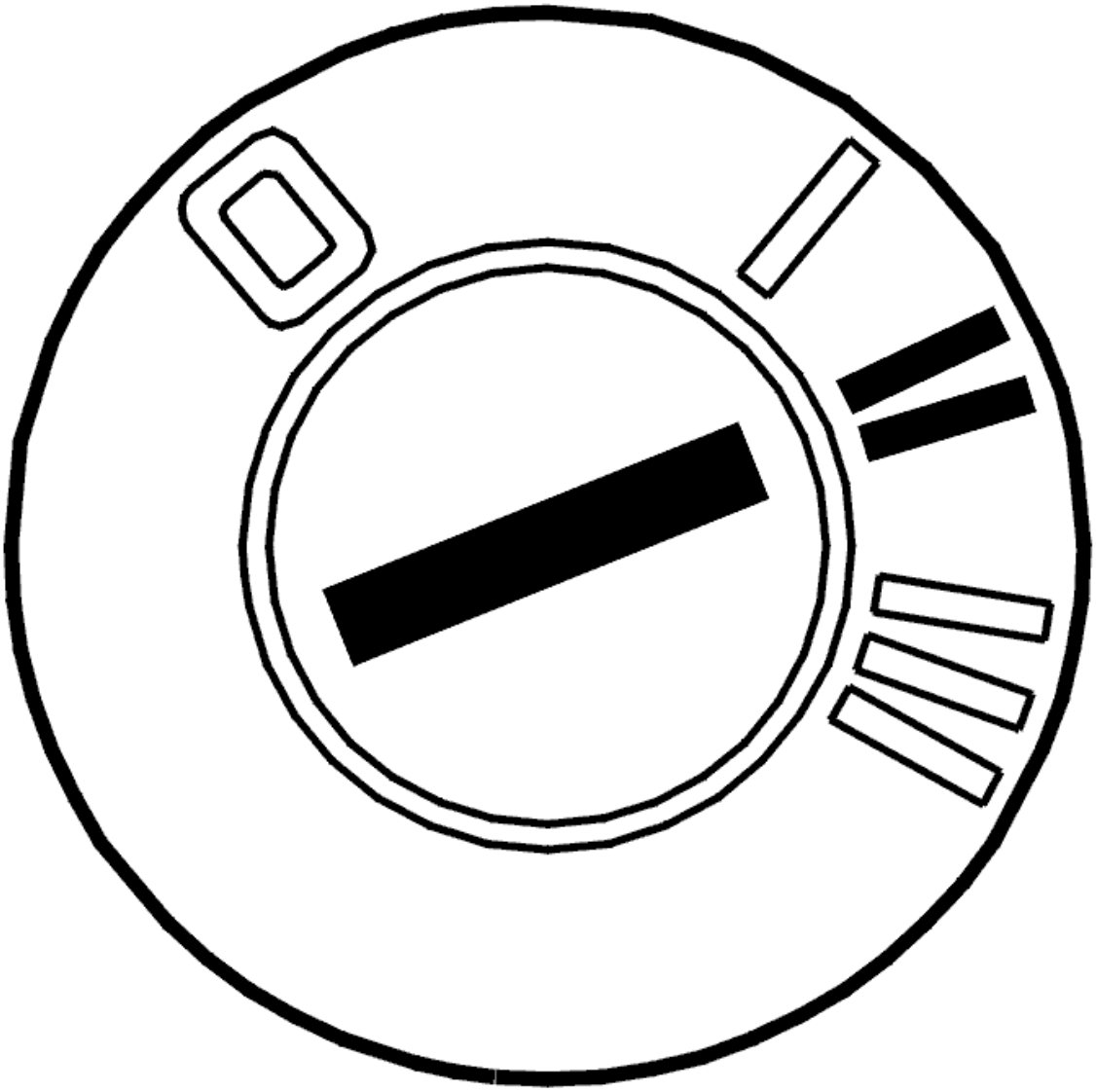

Fig. 60: Identifying Ignition ON
Courtesy of VOLVO CARS CORPORATION

- Ignition on.

  Check the power supply to the stop lamp switch. Take readings between stop lamp switch terminal #1 (cable harness side) and the ground terminal. The power supply must be approximately 12 V.

  If there is no power supply:

  Check the power supply circuit for stop lamp switch terminal #1 (cable harness side). Check for an open-circuit. Check for a short-circuit to ground. Check for a blown fuse in the circuit.

  Remedy as necessary.

  Other information:

- see **CONNECTING THE BREAKOUT BOX**
- For 5 cylinder turbocharged engines -2004, see **SIGNAL DESCRIPTION**
- For 5 cylinder turbocharged engines 2005-, see **SIGNAL SPECIFICATION** .
- For 6 cylinder engines -2004, see **SIGNAL SPECIFICATION**
- For 6 cylinder engines 2005-, see **SIGNAL SPECIFICATION** .
- see **STOP LAMP SWITCH, REPLACING**
- see **CHECKING WIRING AND TERMINALS** .

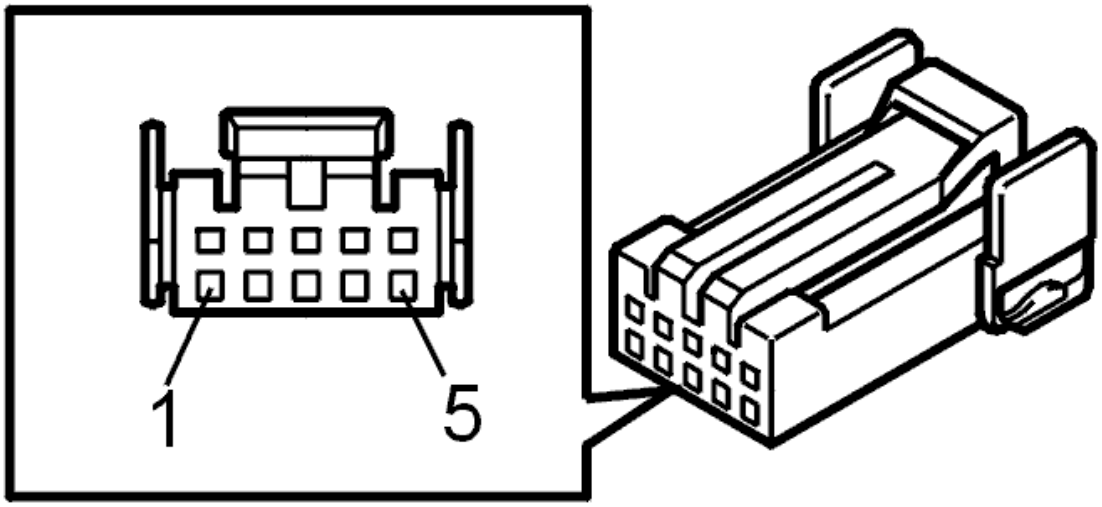

Fig. 61: Electronic Throttle Module (ETM) Connector Terminal Identification
Courtesy of VOLVO CARS CORPORATION

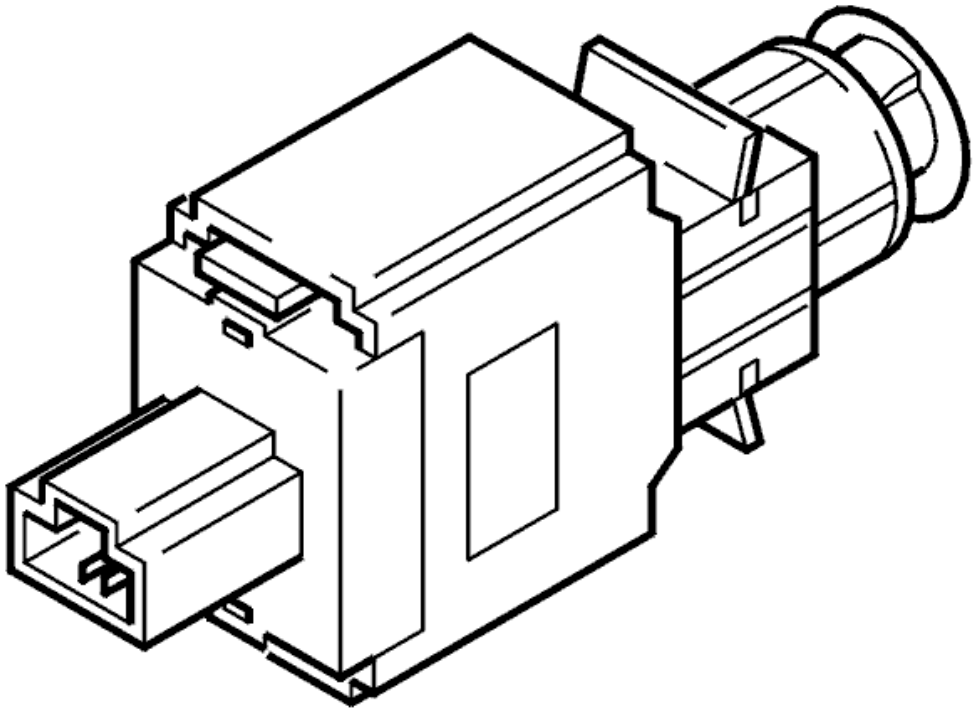

Fig. 62: Identifying Brake Pedal Position Sensor
Courtesy of VOLVO CARS CORPORATION

- **Continue**

  Refer to **CHECKING COMPONENTS AND WIRING**

CHECKING COMPONENTS AND WIRING

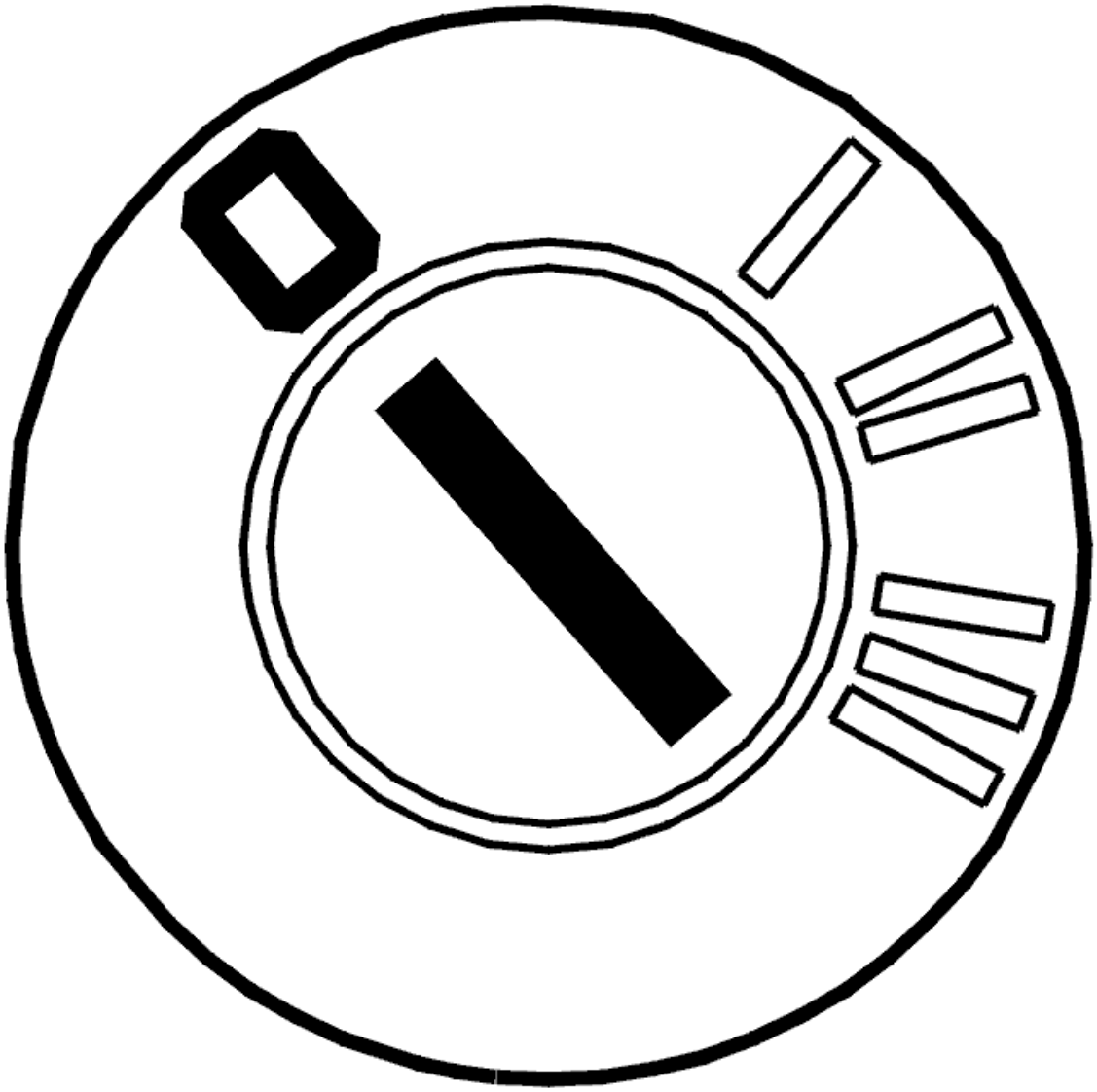

Fig. 63: Identifying Ignition OFF
Courtesy of VOLVO CARS CORPORATION

- Ignition off
- Check that the stop lamp switch is correctly installed.

  Check the resistance of the stop lamp switch with the switch pressed in and with the switch released. Take readings between terminals #1 and #5 (component side) on the stop lamp switch.

  HINT: The stop lamp switch must be closed when the brake pedal is depressed. The resistance of the stop lamp switch must be infinite when the brake pedal is unaffected.

  Check the stop lamp switch and engine control module (ECM) connectors. Check for contact resistance and oxidation.

  Check the cable between stop lamp switch terminal #5 (cable harness side) and engine control module

(ECM) terminal #B26 (#B36). Check for an open-circuit. Check for a short-circuit to ground. Check for a short-circuit to supply voltage.

Check central electronic module (CEM) connector B. Check for contact resistance and oxidation.

Check the cable between stop lamp switch terminal #5 (cable harness side) and central electronic module (CEM) terminal #4B. Check for an open-circuit. Check for a short-circuit to ground. Check for a short-circuit to supply voltage.

Remedy as necessary.

Other information:

- see **CONNECTING THE BREAKOUT BOX**
- For 5 cylinder turbocharged engines -2004, see **SIGNAL DESCRIPTION**
- For 5 cylinder turbocharged engines 2005-, see **SIGNAL SPECIFICATION** .
- For 6 cylinder engines -2004, see **SIGNAL SPECIFICATION**
- For 6 cylinder engines 2005-, see **SIGNAL SPECIFICATION** .
- For resistance values: **COMPONENT SPECIFICATIONS**
- For -2004, see: **CENTRAL ELECTRONIC MODULE (CEM), REPLACING**
- For 2005-, see: **CENTRAL ELECTRONIC MODULE (CEM), REPLACING** .
- see **CHECKING WIRING AND TERMINALS** .

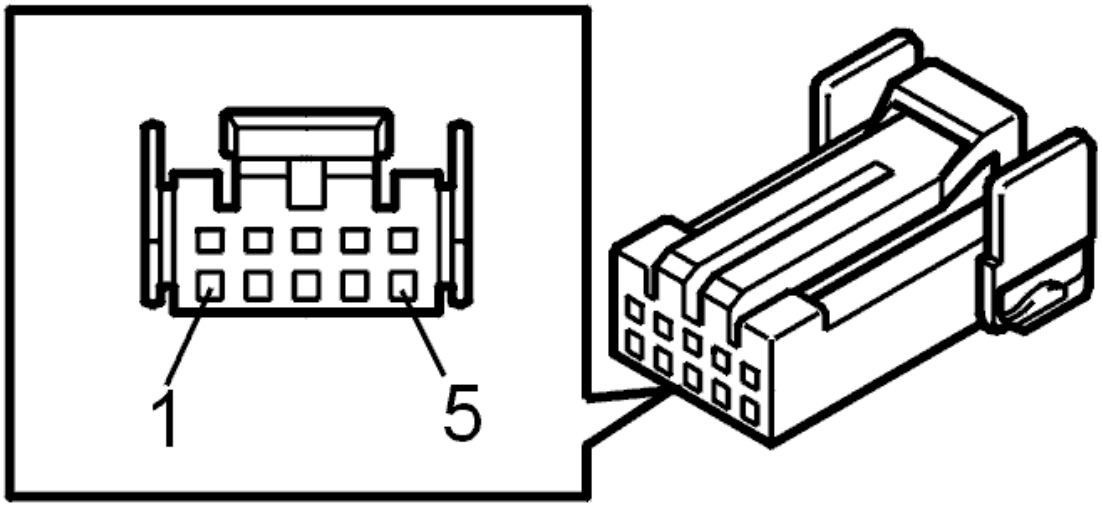

Fig. 64: Electronic Throttle Module (ETM) Connector Terminal Identification
Courtesy of VOLVO CARS CORPORATION

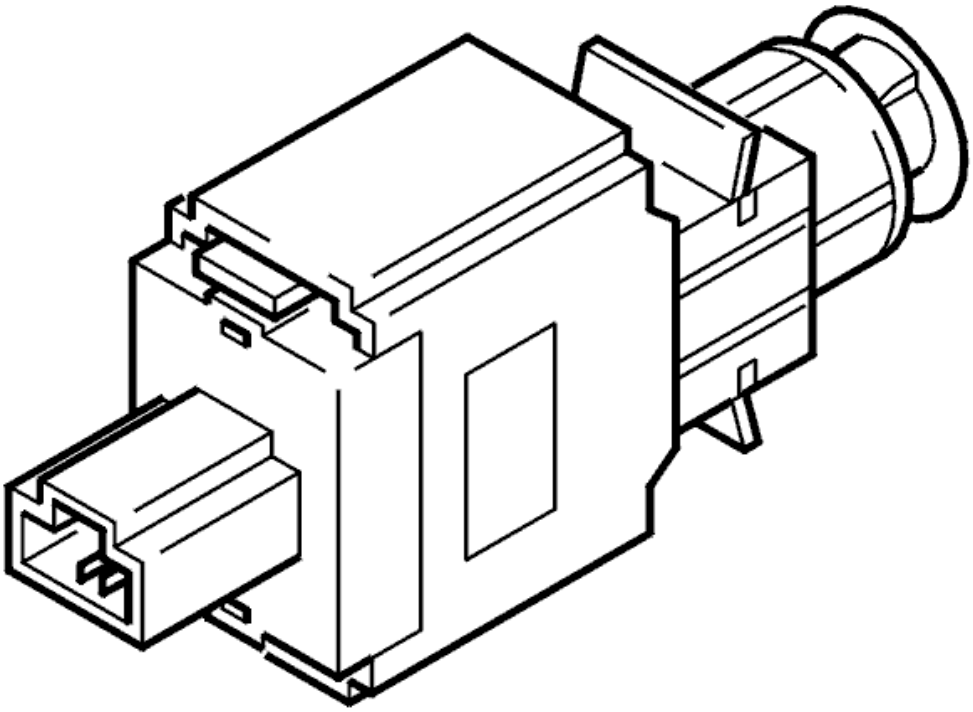

Fig. 65: Identifying Brake Pedal Position Sensor
Courtesy of VOLVO CARS CORPORATION

- **Continue**

  Refer to **VERIFICATION**

VERIFICATION

VERIFICATION

HINT: After carrying out the repair, check that the fault has been remedied.

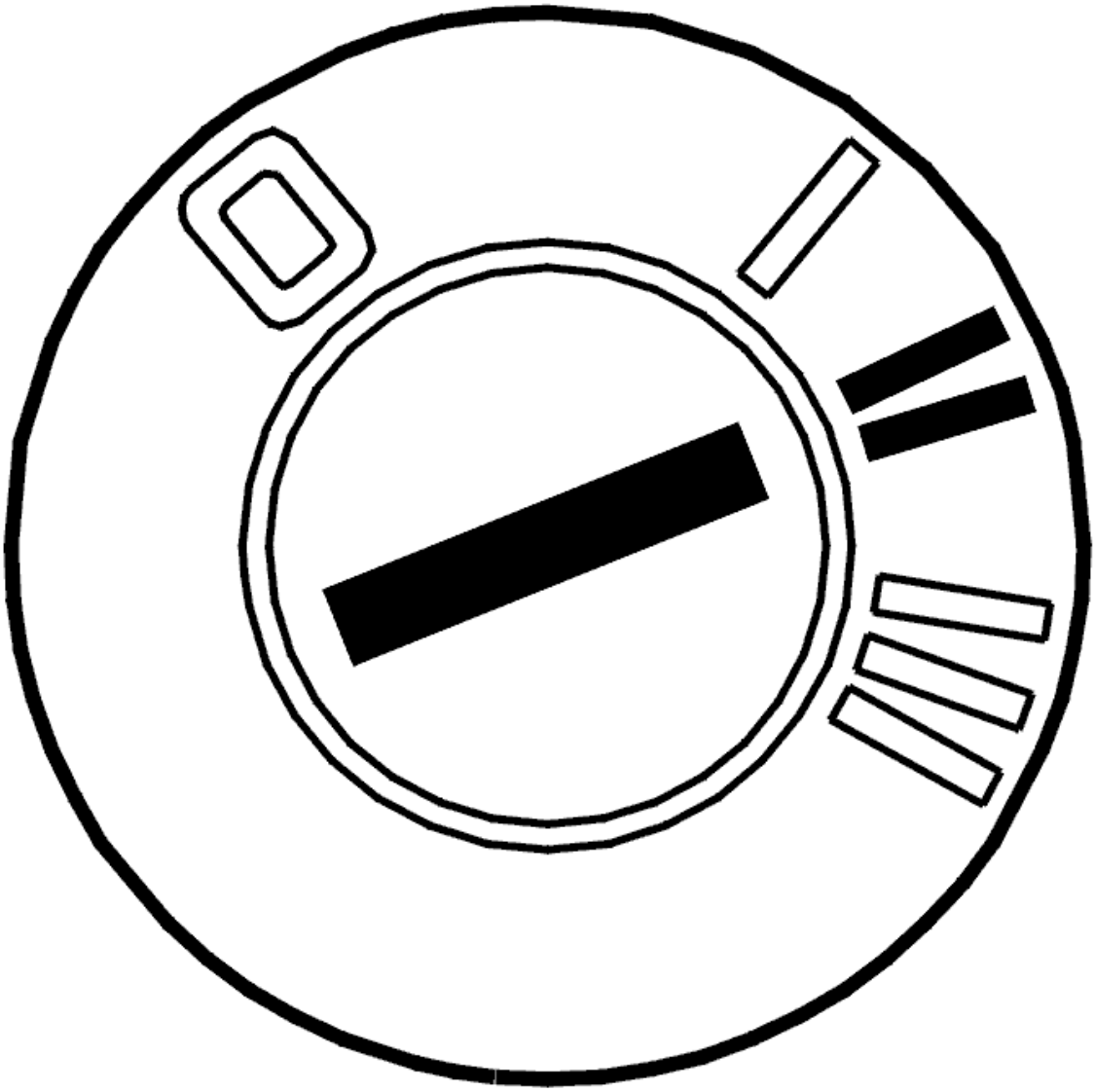

Fig. 66: Identifying Ignition ON
Courtesy of VOLVO CARS CORPORATION

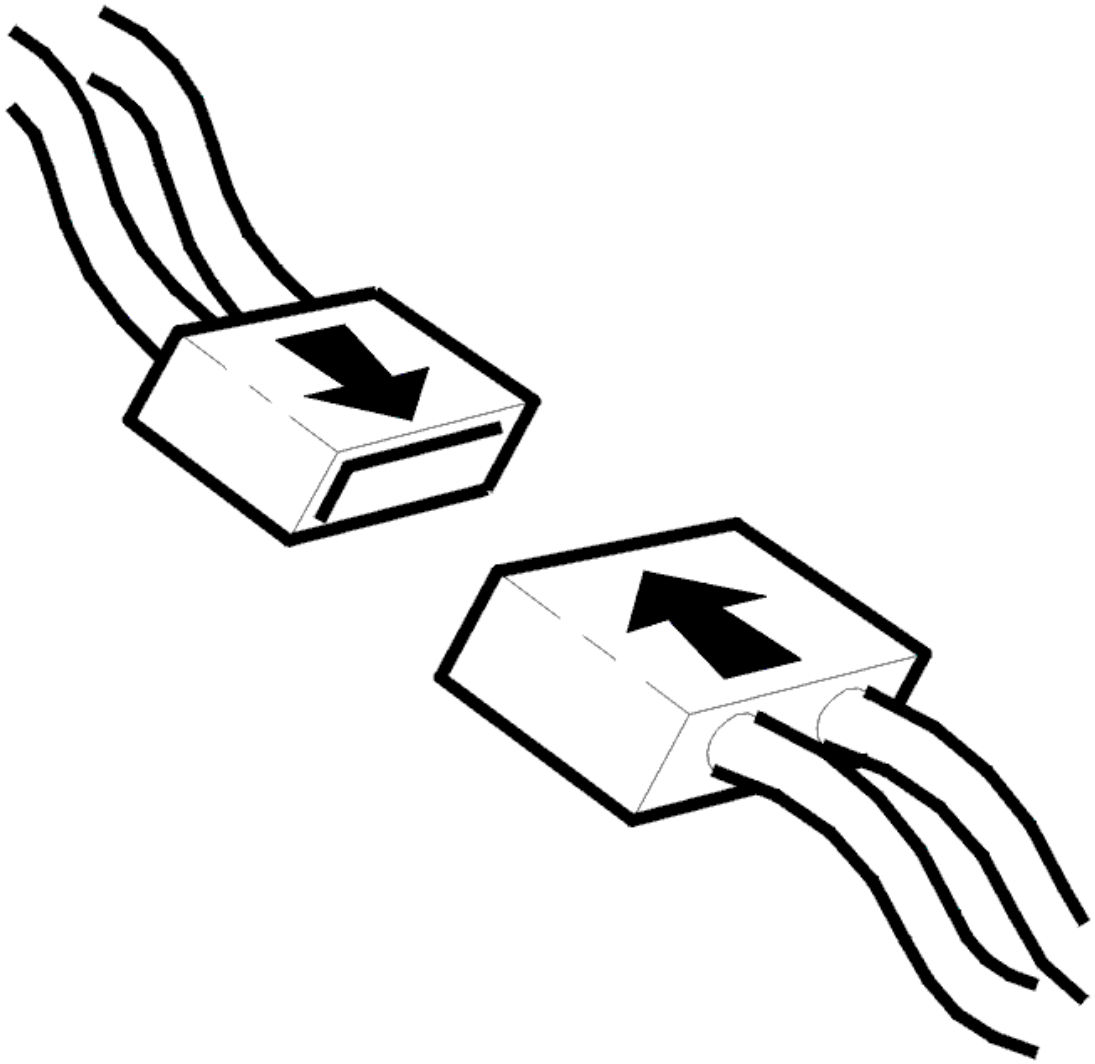

Fig. 67: Connecting Connector
Courtesy of VOLVO CARS CORPORATION

- Ignition off
- Reconnect the connectors, reinstall components etc.
- Ignition on
- Read off the status from the stop lamp switch.

  Check the function of the stop lamp switch by carefully pressing and releasing the brake pedal.

  Check that the status changes between "OFF" when the brake pedal is unaffected and "ON" when the brake pedal is depressed.

  If the status of the stop lamp switch changes as described above when the brake pedal is depressed, the fault has been remedied.

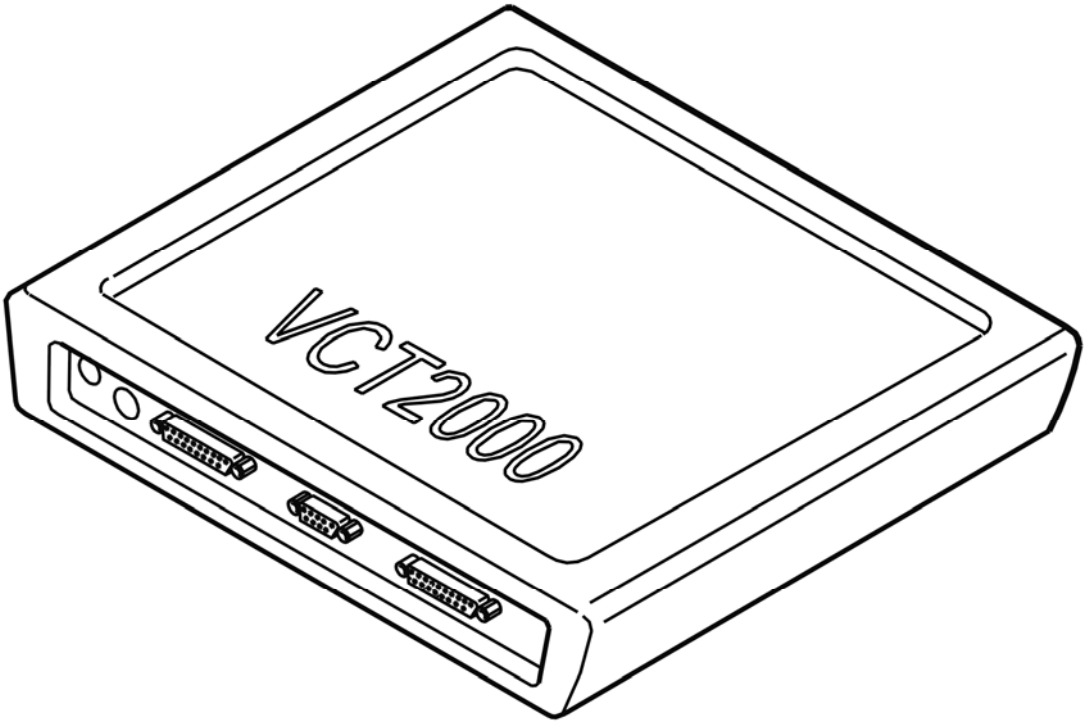

Fig. 68: Identifying VCT2000 Diagnostic Tool Symbol In VIDA
Courtesy of VOLVO CARS CORPORATION

Is the function OK?

- **YES**

  VERIFIED: Troubleshooting has been completed.

- **NO**

  Refer to **INFORMATION**

INFORMATION

FAULT-TRACING INFORMATION

The fault should have been detected and remedied. As this is not the case fault-tracing has failed.

Exit fault-tracing for this diagnostic trouble code (DTC) or make another attempt.

ECM-9000: BRAKE PEDAL SENSOR. FAULTY SIGNAL (B6294T; 2005-2006)

DIAGNOSTIC TROUBLE CODE (DTC) INFORMATION ECM-9000

see **DIAGNOSTIC TROUBLE CODE (DTC) INFORMATION ECM-9000**

SIGNAL MISSING OR FAULTY SIGNAL

see **SIGNAL MISSING OR FAULTY SIGNAL**

ECM-900B: BRAKE PEDAL SENSOR. SIGNAL MISSING (B5254T2; 2005-2007)

DIAGNOSTIC TROUBLE CODE (DTC) INFORMATION ECM-900B

Condition

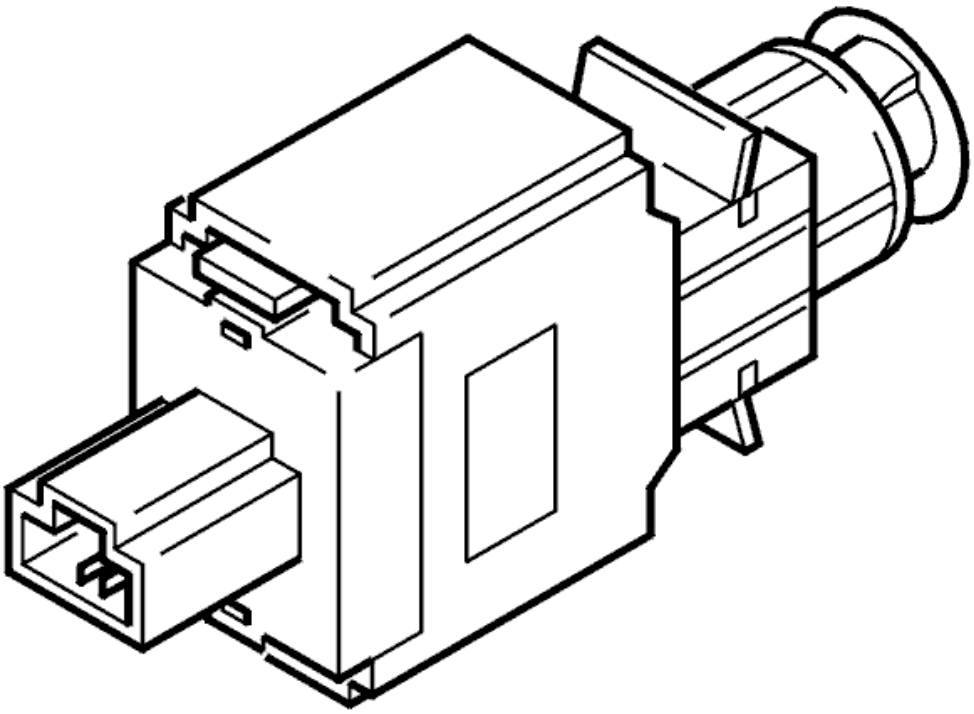

Fig. 69: Identifying Brake Pedal Position Sensor
Courtesy of VOLVO CARS CORPORATION

The diagnostic trouble code (DTC) is stored if the engine control module (ECM) registers a fault in the circuit for the brake pedal position sensor, the circuit for the stop lamp switch or in the CAN communication between the brake control module (BCM) and the engine control module (ECM).

The diagnostic trouble code (DTC) can be diagnosed when the engine is running.

Substitute Value

Cruise control switched off.

Possible Source

- Fault trace the brake control module (BCM) and the central electronic module (CEM).

Fault symptom[s]

- Cruise control does not function at all.

SIGNAL MISSING OR FAULTY SIGNAL

see **SIGNAL MISSING OR FAULTY SIGNAL**

ECM-900B: BRAKE PEDAL SENSOR. SIGNAL MISSING (B6294T; 2005-2006)

DIAGNOSTIC TROUBLE CODE (DTC) INFORMATION ECM-900B

see **DIAGNOSTIC TROUBLE CODE (DTC) INFORMATION ECM-900B**

SIGNAL MISSING OR FAULTY SIGNAL

see **SIGNAL MISSING OR FAULTY SIGNAL**

ECM-900C: BRAKE PEDAL SENSOR. SIGNAL TOO HIGH (B5254T2; 2005-2007)

DIAGNOSTIC TROUBLE CODE (DTC) INFORMATION ECM-900C

Condition

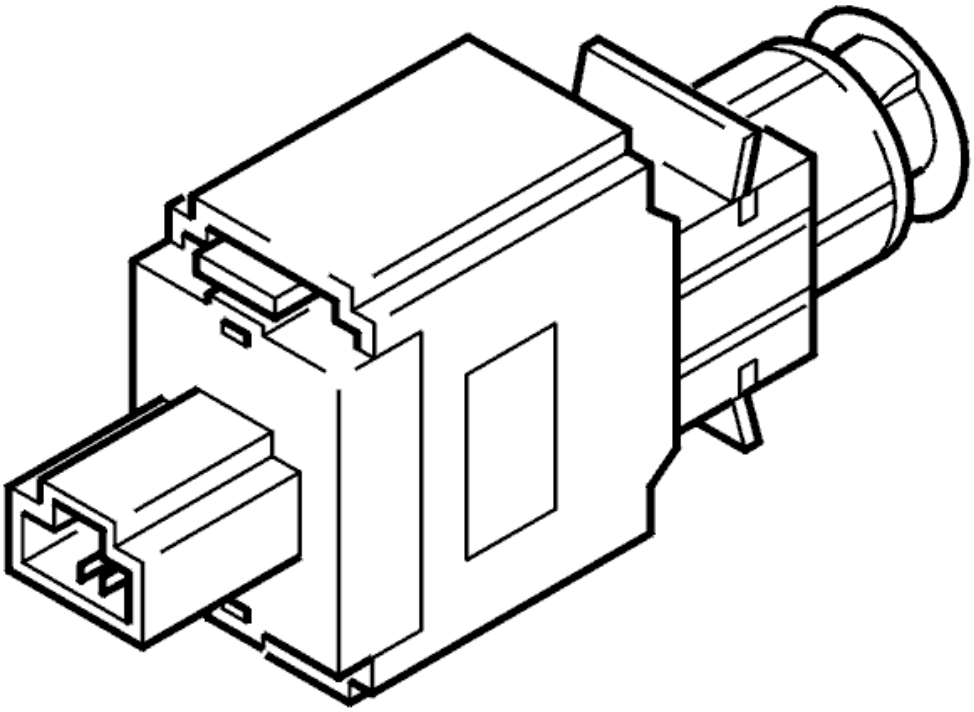

Fig. 70: Identifying Brake Pedal Position Sensor
Courtesy of VOLVO CARS CORPORATION

The diagnostic trouble code (DTC) is stored if the engine control module (ECM) registers a fault in the circuit for the brake pedal position sensor, the circuit for the stop lamp switch or in the CAN communication between the brake control module (BCM) and the engine control module (ECM).

The diagnostic trouble code (DTC) can be diagnosed when the engine is running.

Substitute Value

Cruise control switched off.

Possible Source

- Fault trace the brake control module (BCM) and the central electronic module (CEM).

Fault symptom[s]

- Cruise control/Does not engage
- Text window and warning symbol/Text message

SIGNAL TOO HIGH

CHECKING THE DIAGNOSTIC TROUBLE CODES (DTCS)

Check whether any diagnostic trouble codes (DTCs) are stored in the brake control module (BCM) in the central electronic module (CEM).

Any diagnostic trouble codes (DTCs) stored in the brake control module (BCM) or central electronic module (CEM) must be remedied first.

Have fault causes been traced or remedied in the brake control module (BCM) and central electronic module (CEM)?

- **YES**

  Refer to **CHECKING THE STATUS**

- **NO**

  OKAY: Troubleshooting has been completed.

CHECKING THE STATUS

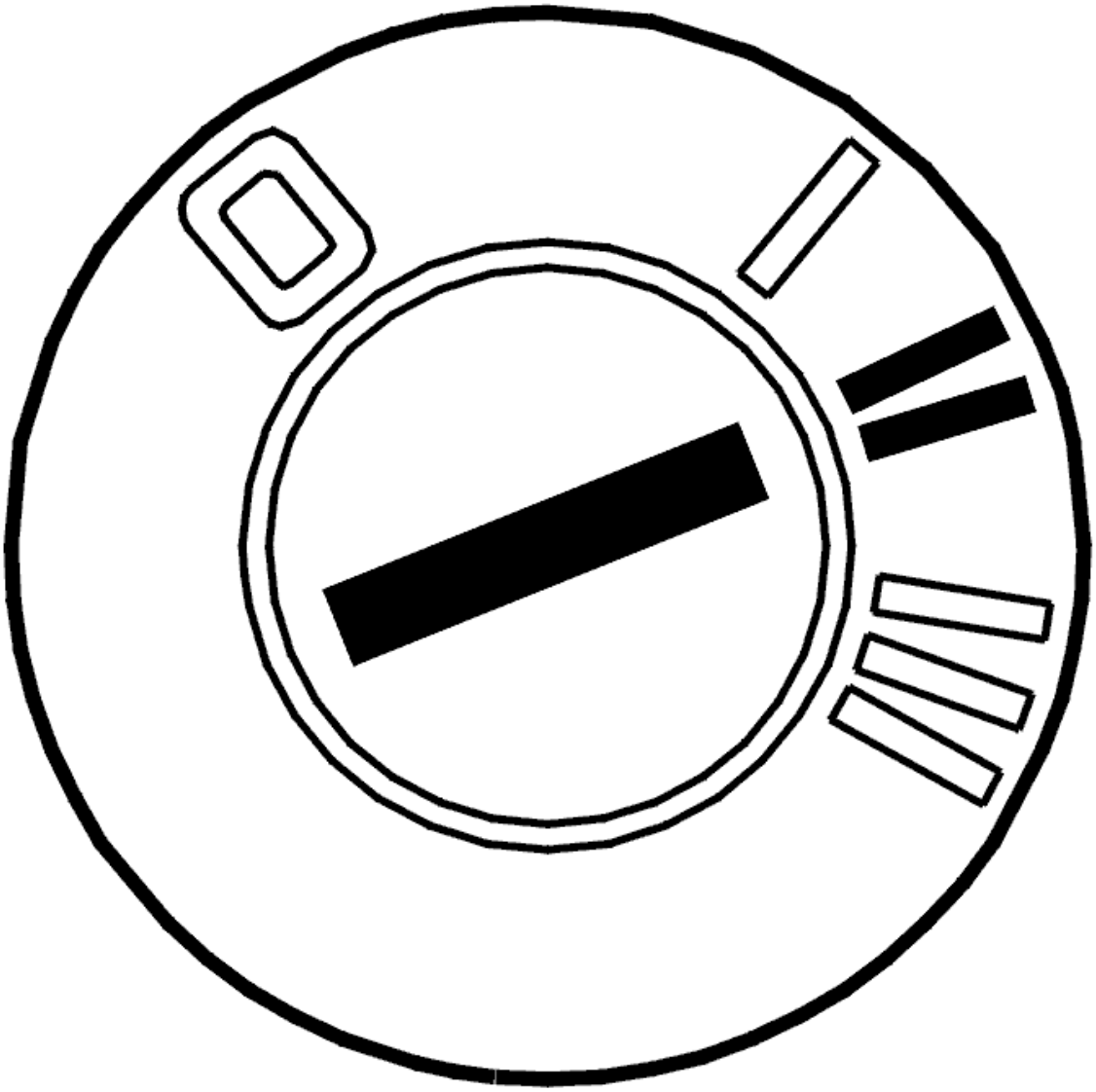

Fig. 71: Identifying Ignition ON
Courtesy of VOLVO CARS CORPORATION

- Ignition on
- Read off the status from the stop lamp switch.

  Check the function of the stop lamp switch by carefully pressing and releasing the brake pedal.

  Check that the status changes between "OFF" when the brake pedal is unaffected and "ON" when the brake pedal is depressed.

  If the status of the stop lamp switch changes as described above when the brake pedal is depressed, the fault is intermittent at the moment.

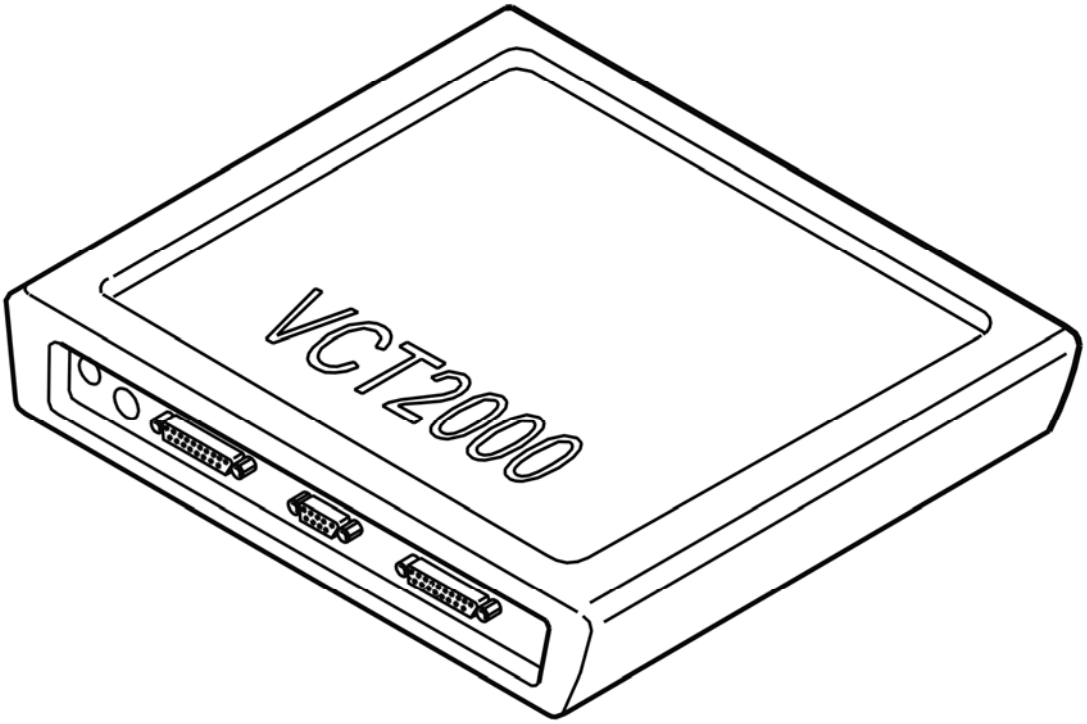

Fig. 72: Identifying VCT2000 Diagnostic Tool Symbol In VIDA
Courtesy of VOLVO CARS CORPORATION

- **Continue**

  Refer to **CHECKING THE POWER SUPPLY**

CHECKING THE POWER SUPPLY

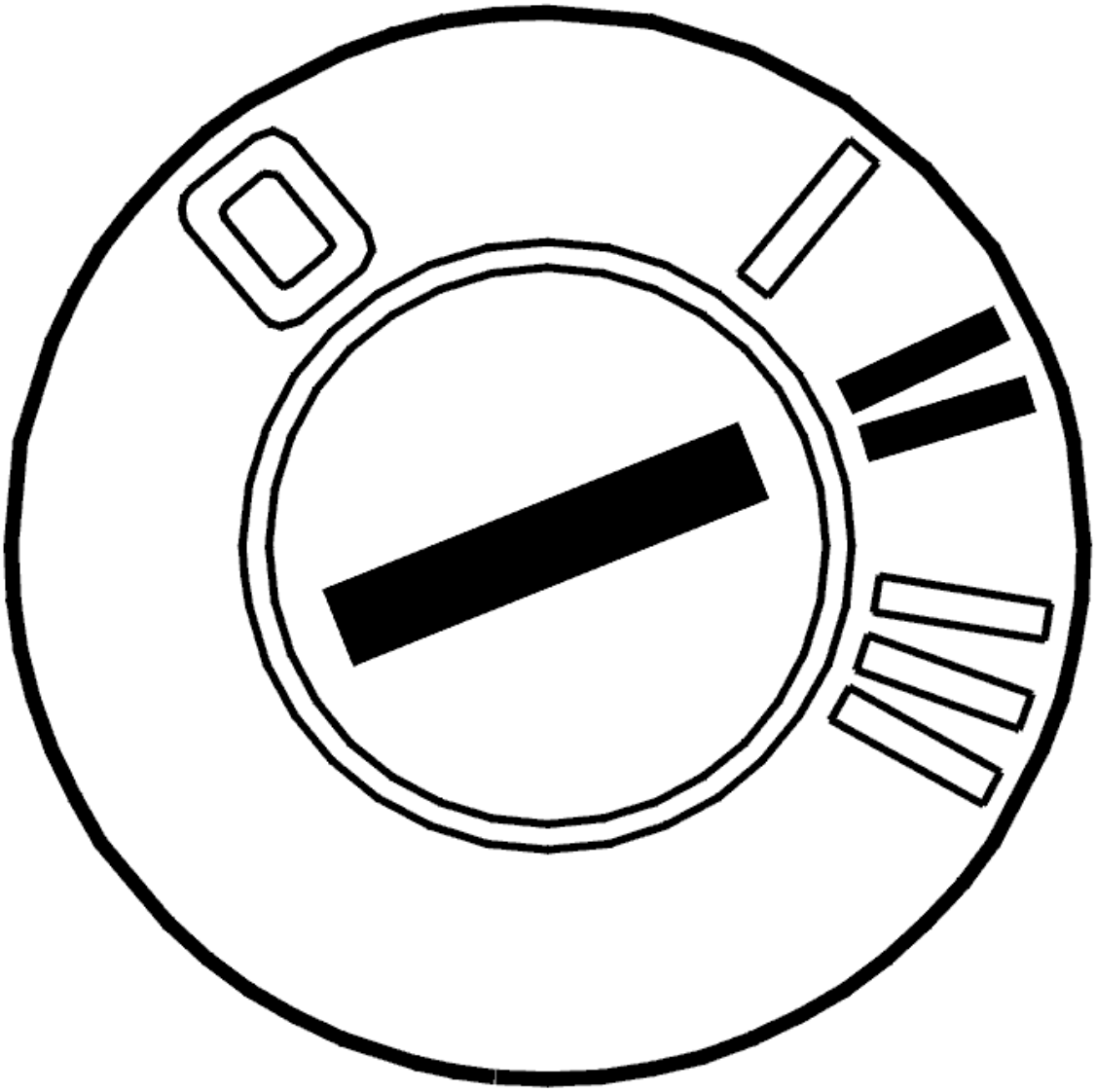

Fig. 73: Identifying Ignition ON
Courtesy of VOLVO CARS CORPORATION

- Ignition on.

  Check the power supply to the stop lamp switch. Take readings between stop lamp switch terminal #1 (cable harness side) and the ground terminal. The power supply must be approximately 12 V.

  If there is no power supply:

  Check the power supply circuit for stop lamp switch terminal #1 (cable harness side). Check for an open-circuit. Check for a short-circuit to ground. Check for a blown fuse in the circuit.

  Remedy as necessary.

  Other information:

- see **CONNECTING THE BREAKOUT BOX**
- For 5 cylinder turbocharged engines -2004, see **SIGNAL DESCRIPTION**
- For 5 cylinder turbocharged engines 2005-, see **SIGNAL SPECIFICATION** .
- For 6 cylinder engines -2004, see **SIGNAL SPECIFICATION**
- For 6 cylinder engines 2005-, see **SIGNAL SPECIFICATION** .
- see **STOP LAMP SWITCH, REPLACING**
- see **CHECKING WIRING AND TERMINALS**

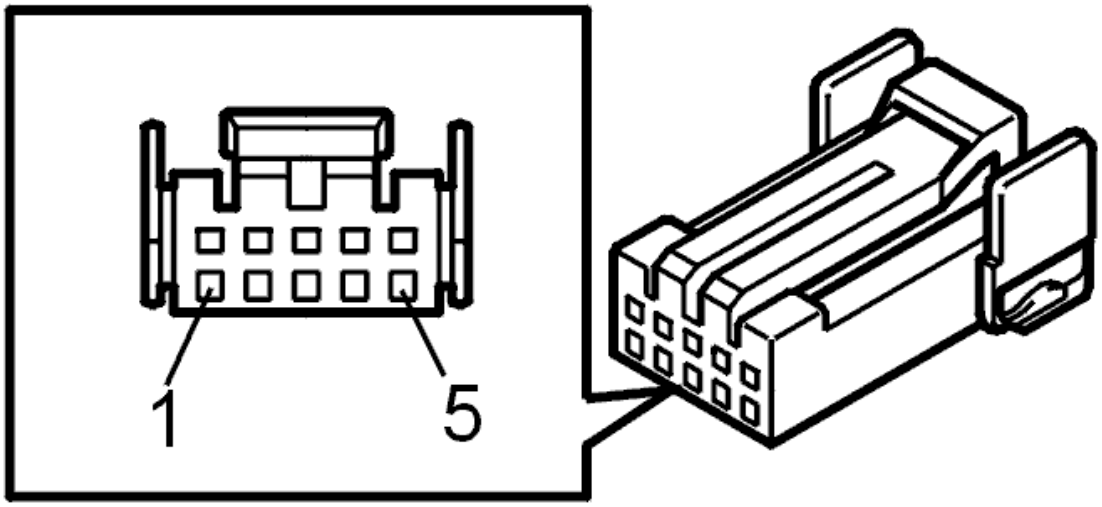

Fig. 74: Electronic Throttle Module (ETM) Connector Terminal Identification
Courtesy of VOLVO CARS CORPORATION

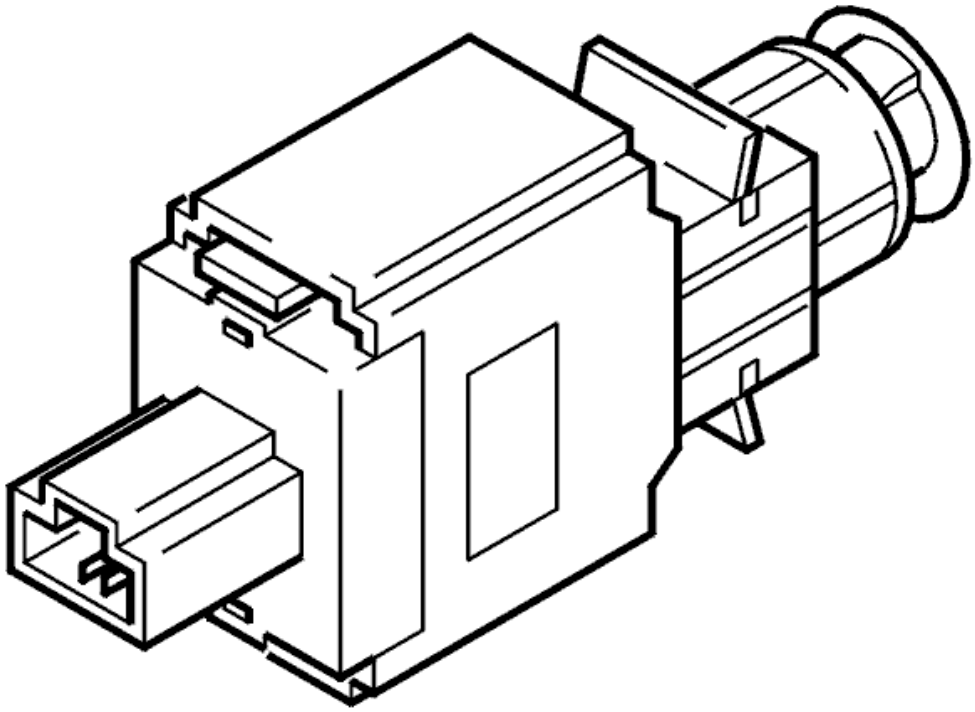

Fig. 75: Identifying Brake Pedal Position Sensor
Courtesy of VOLVO CARS CORPORATION

- **Continue**

  Refer to **CHECKING COMPONENTS AND WIRING**

CHECKING COMPONENTS AND WIRING

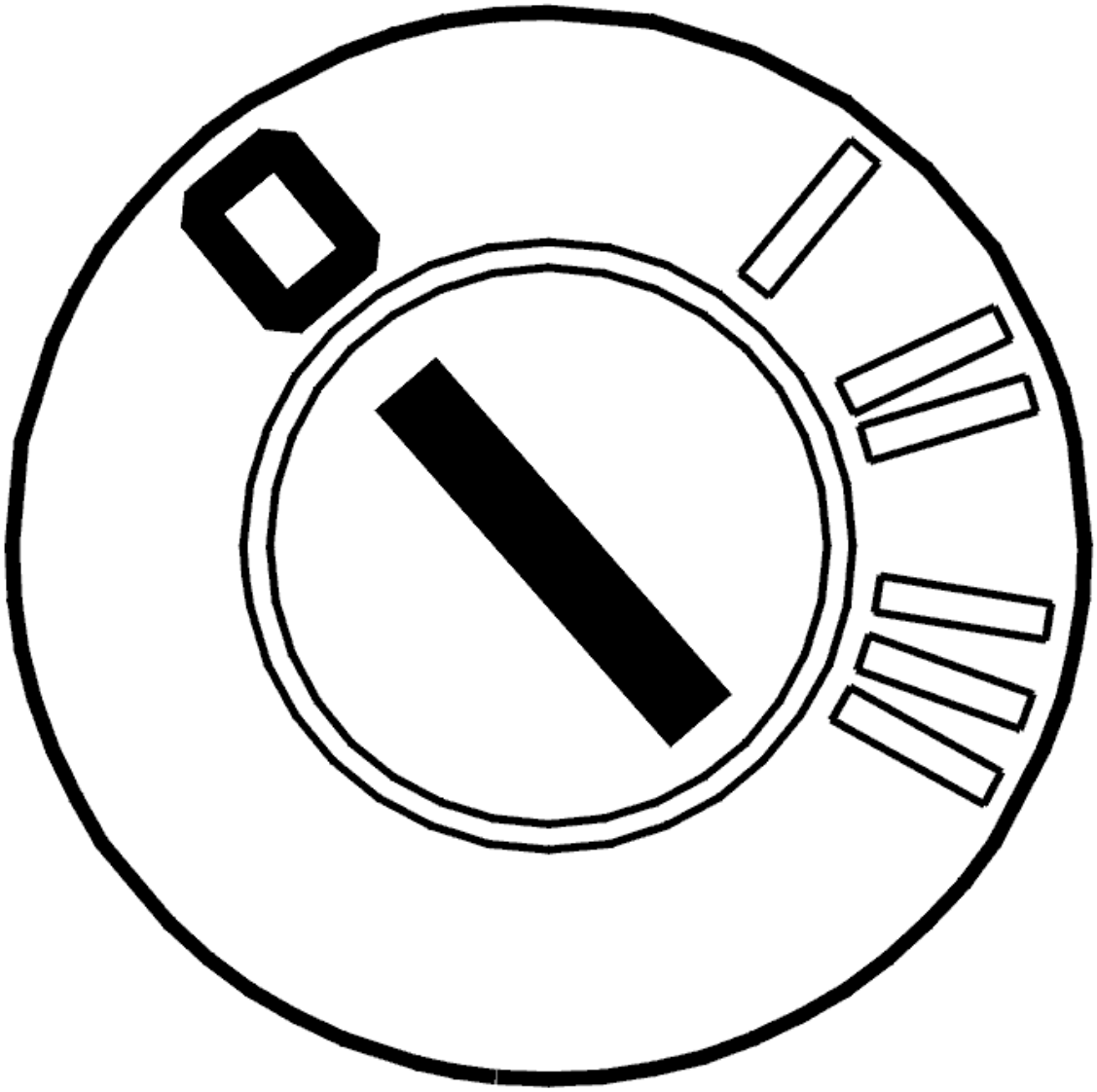

Fig. 76: Identifying Ignition OFF
Courtesy of VOLVO CARS CORPORATION

- Ignition off
- Check that the stop lamp switch is correctly installed.

  Check the resistance of the stop lamp switch with the switch pressed in and with the switch released. Take readings between terminals #1 and #5 (component side) on the stop lamp switch.

  HINT: The stop lamp switch must be closed when the brake pedal is depressed. The resistance of the stop lamp switch must be infinite when the brake pedal is unaffected.

  Check the stop lamp switch and engine control module (ECM) connectors. Check for contact resistance. Check for oxidation.

  Check the cable between stop lamp switch terminal #5 (cable harness side) and engine control module

(ECM) terminal #B26 (#B36). Check for an open-circuit. Check for a short-circuit to ground. Check for a short-circuit to supply voltage.

Check central electronic module (CEM) connector B. Check for contact resistance and oxidation.

Check the cable between stop lamp switch terminal #5 (cable harness side) and central electronic module (CEM) terminal #4B. Check for an open-circuit. Check for a short-circuit to ground. Check for a short-circuit to supply voltage.

Remedy as necessary.

Other information:

- see **CONNECTING THE BREAKOUT BOX**
- For 5 cylinder turbocharged engines -2004, see **SIGNAL DESCRIPTION**
- For 5 cylinder turbocharged engines 2005-, see **SIGNAL SPECIFICATION** .
- For 6 cylinder engines -2004, see **SIGNAL SPECIFICATION**
- For 6 cylinder engines 2005-, see **SIGNAL SPECIFICATION** .
- For resistance values: **COMPONENT SPECIFICATIONS**
- For -2004, see: **CENTRAL ELECTRONIC MODULE (CEM), REPLACING**
- For 2005-, see: **CENTRAL ELECTRONIC MODULE (CEM), REPLACING** .
- see **CHECKING WIRING AND TERMINALS**

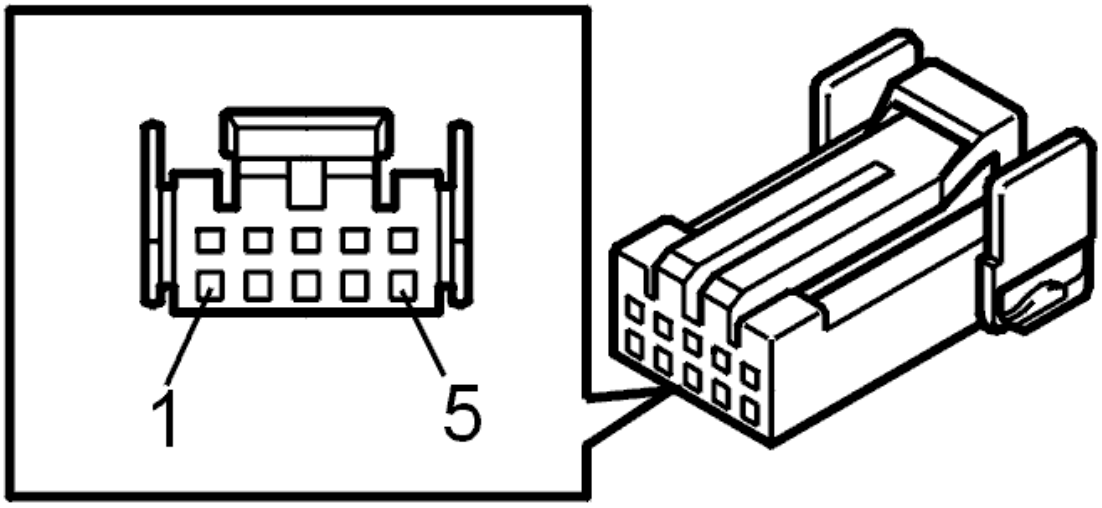

Fig. 77: Electronic Throttle Module (ETM) Connector Terminal Identification
Courtesy of VOLVO CARS CORPORATION

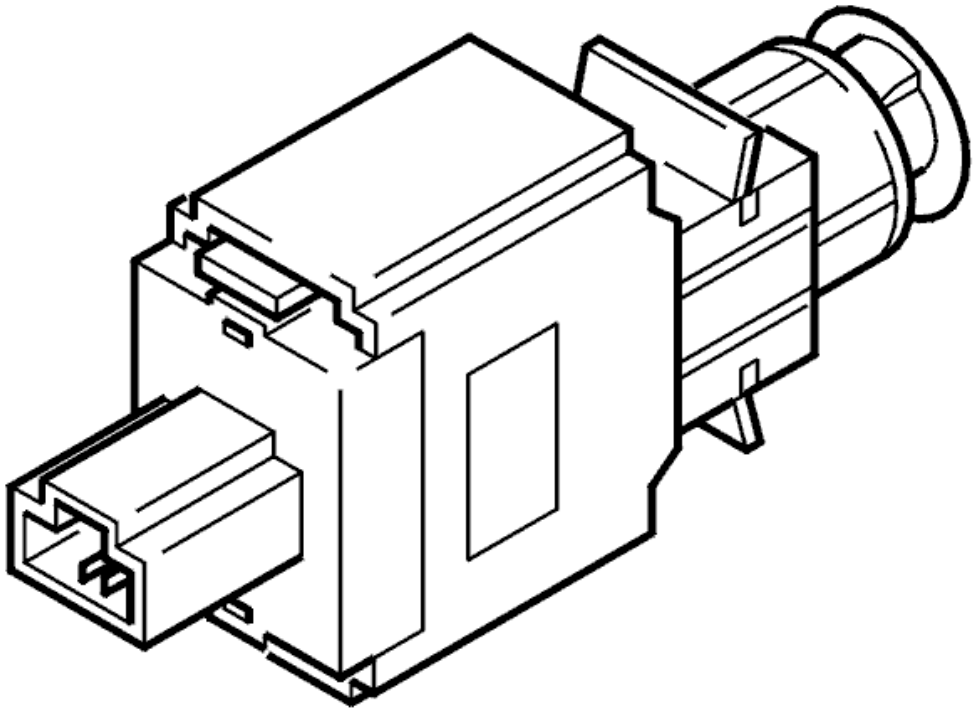

Fig. 78: Identifying Brake Pedal Position Sensor
Courtesy of VOLVO CARS CORPORATION

- **Continue**

  Refer to **VERIFICATION**

VERIFICATION

VERIFICATION

HINT: After carrying out the repair, check that the fault has been remedied.

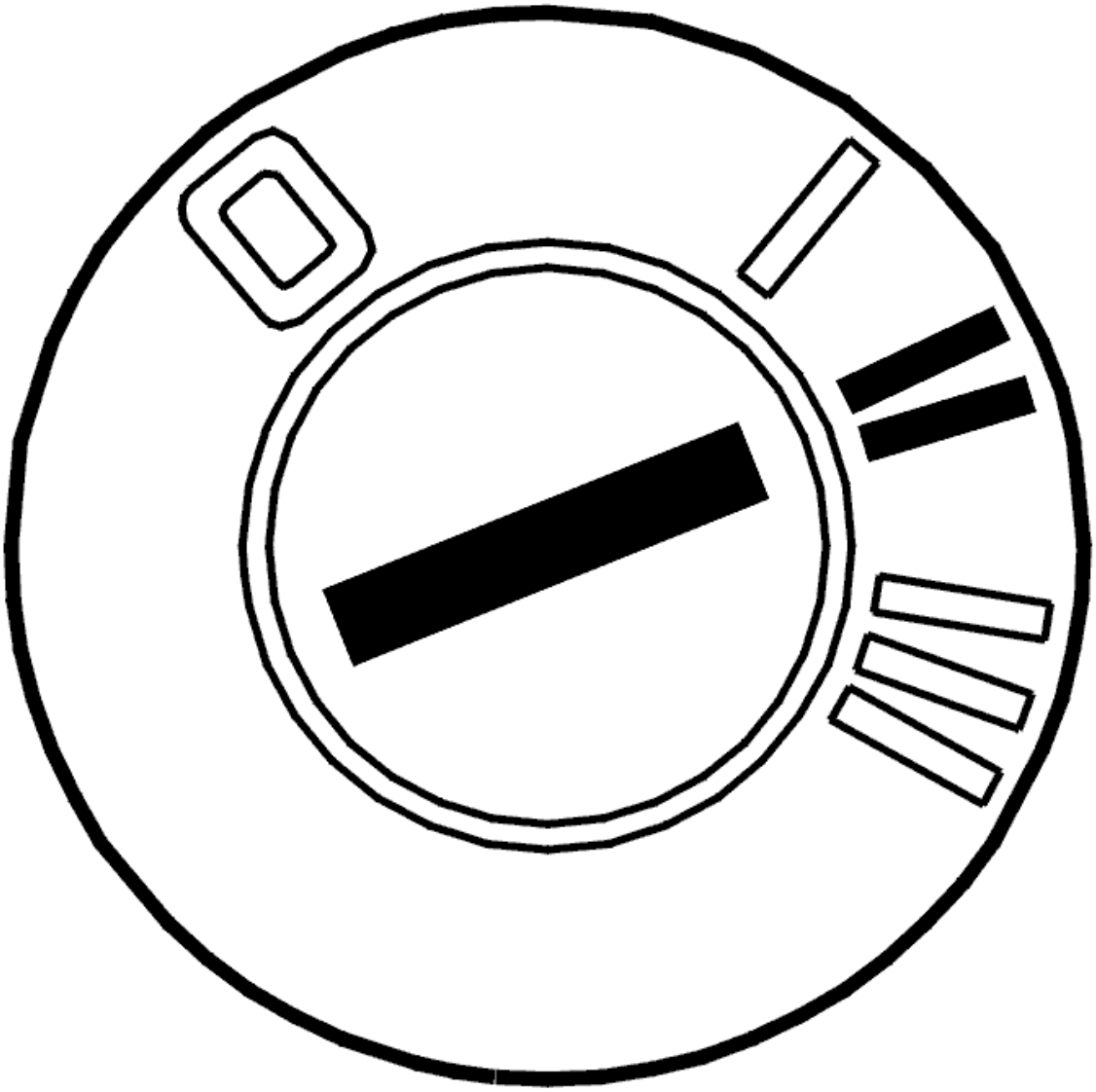

Fig. 79: Identifying Ignition ON
Courtesy of VOLVO CARS CORPORATION

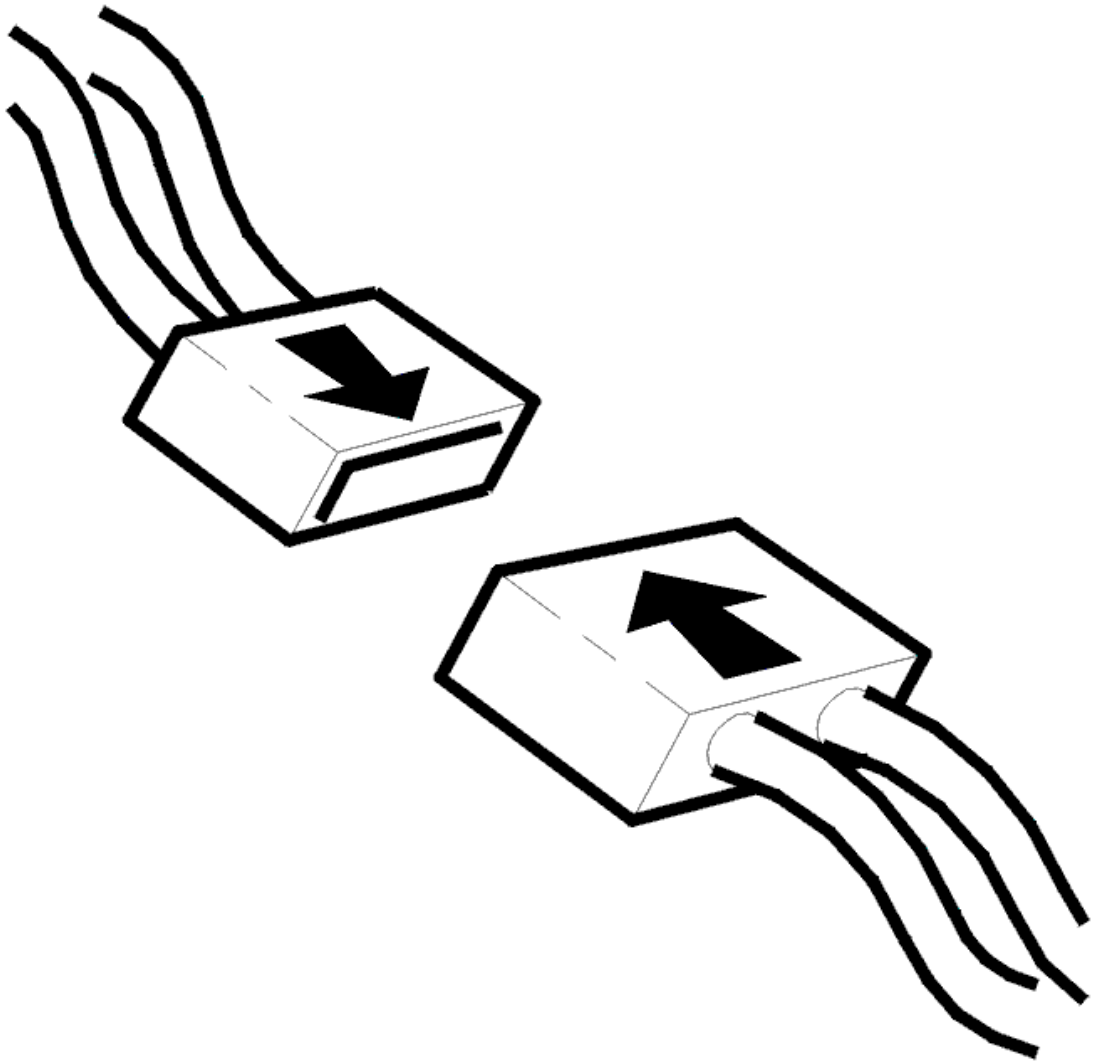

Fig. 80: Connecting Connector
Courtesy of VOLVO CARS CORPORATION

- Ignition off
- Reconnect the connectors, reinstall components etc.
- Ignition on
- Read off the status from the stop lamp switch.

  Check the function of the stop lamp switch by carefully pressing and releasing the brake pedal.

  Check that the status changes between "OFF" when the brake pedal is unaffected and "ON" when the brake pedal is depressed.

  If the status of the stop lamp switch changes as described above when the brake pedal is depressed, the fault has been remedied.

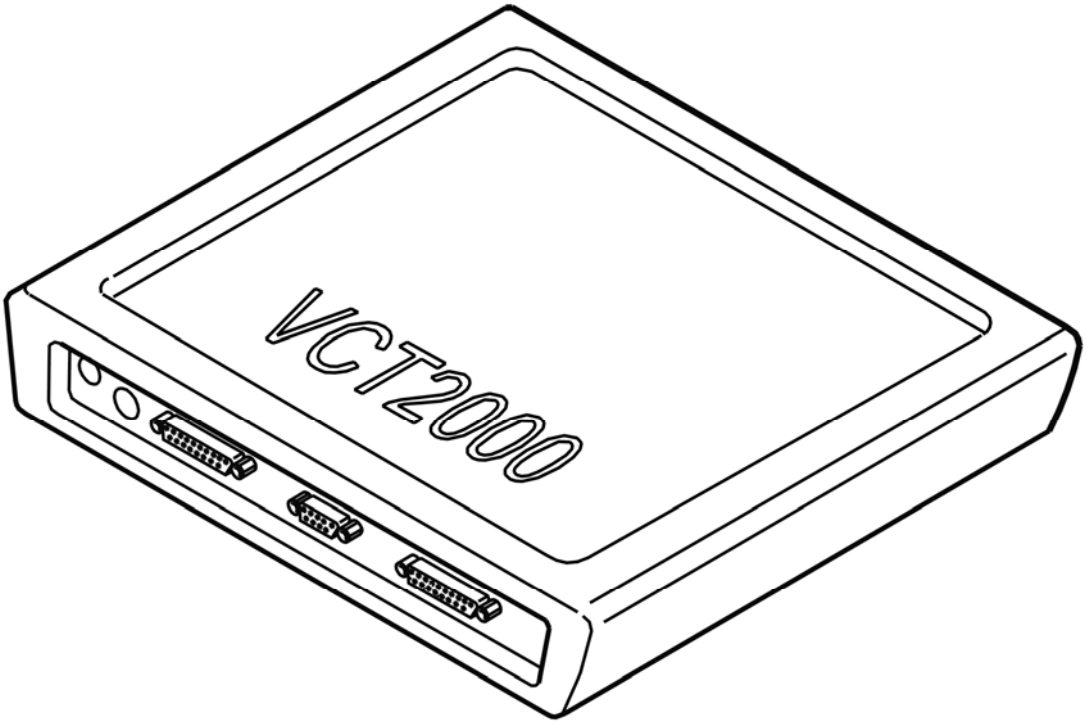

Fig. 81: Identifying VCT2000 Diagnostic Tool Symbol In VIDA
Courtesy of VOLVO CARS CORPORATION

Is the function OK?

- **YES**

  VERIFIED: Troubleshooting has been completed.

- **NO**

  Refer to **INFORMATION**

INFORMATION

FAULT-TRACING INFORMATION

The fault should have been detected and remedied. As this is not the case fault-tracing has failed.

Exit fault-tracing for this diagnostic trouble code (DTC) or make another attempt.

ECM-900C: BRAKE PEDAL SENSOR. SIGNAL TOO HIGH (B6294T; 2005-2006)

DIAGNOSTIC TROUBLE CODE (DTC) INFORMATION ECM-900C

see **DIAGNOSTIC TROUBLE CODE (DTC) INFORMATION ECM-900C**

SIGNAL TOO HIGH

see **SIGNAL TOO HIGH**

ECM-903C: THROTTLE POSITION (TP) SENSOR. FAULTY SIGNAL (B5254T2; B6294T; 2003-2004)

DIAGNOSTIC TROUBLE CODE (DTC) INFORMATION

Condition

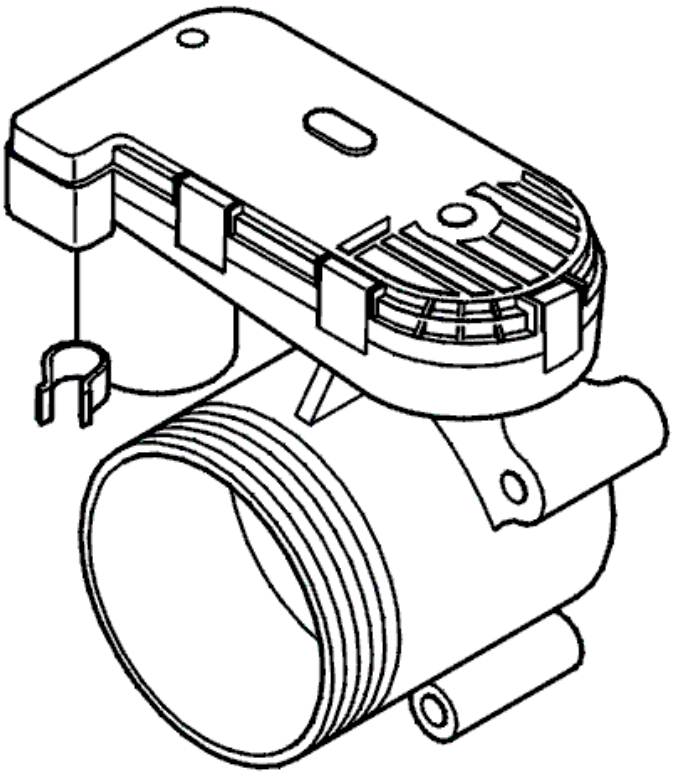

Fig. 82: Identifying Throttle Unit & Potentiometer
Courtesy of VOLVO CARS CORPORATION

This diagnostic trouble code (DTC) is never stored on its own.

Diagnostic trouble code (DTC) ECM-903C will also be stored if the engine control module (ECM) registers, when the ignition is switched on, that diagnostic trouble code (DTC) ECM-9150 and/or ECM-9160 is stored (fault in the throttle position (TP) sensor for the throttle unit).

Substitute Value

None.

Possible Source

Faulty signal:

- Fault in the throttle position (TP) sensor circuit for the throttle unit.

Fault symptom[s]

- Malfunction indicator lamp (MIL) lit.

FAULT-TRACING INFORMATION

see **FAULT-TRACING INFORMATION**

ECM-9050: MEMORY FAULT IN RAM. INTERNAL FAULT. INTERMITTENT FAULT (B5254T2; B6294T; 2003-2004)

DIAGNOSTIC TROUBLE CODE (DTC) INFORMATION

Condition

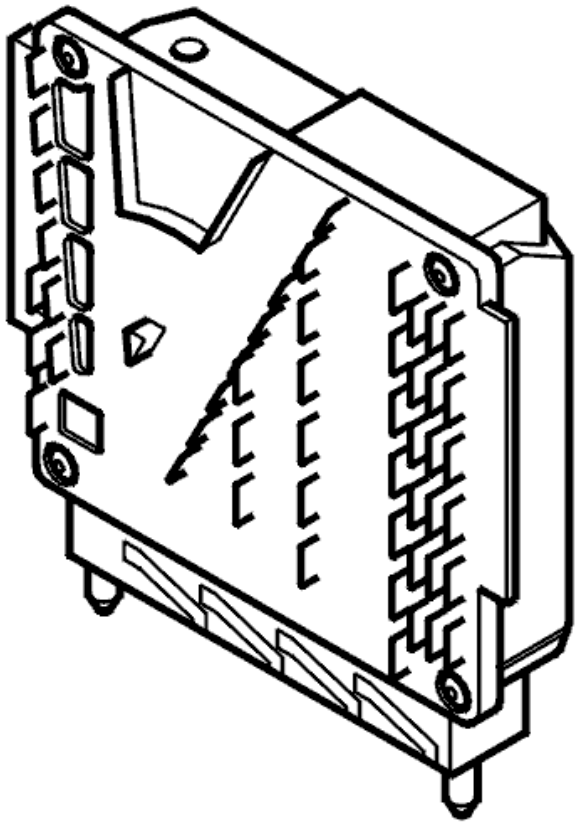

Fig. 83: Engine Control Module
Courtesy of VOLVO CARS CORPORATION

The engine control module (ECM) continuously checks the internal RAM (random access memory). Diagnostic trouble code (DTC) ECM-9050 is stored in the engine control module (ECM) in the event of a fault. If this diagnostic trouble code (DTC) is stored the engine control module (ECM) will try to restart (reset) itself.

Substitute Value

None.

Possible Source

- Faulty software in the engine control module (ECM)
- Defective engine control module (ECM).

Fault symptom[s]

- The malfunction indicator lamp (MIL) flashes
- The engine cuts out
- The engine does not start.

FAULT-TRACING INFORMATION

FAULT-TRACING INFORMATION

The engine control module (ECM) previously registered a fault but has now detected that the fault is no longer present.

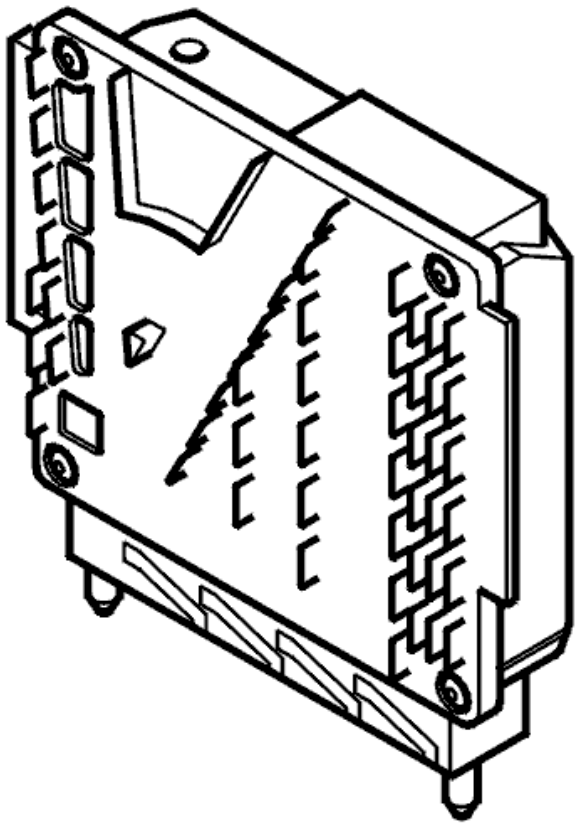

Fig. 84: Engine Control Module
Courtesy of VOLVO CARS CORPORATION

- **Continue**

  Refer to **INFORMATION**

INFORMATION

FAULT-TRACING INFORMATION

If the fault is intermittent, do not verify fault-tracing if the fault does not recur.

It is possible to view the information again, or leave fault-tracing for this diagnostic trouble code (DTC).

ECM-9050: MEMORY FAULT IN RAM. INTERNAL FAULT. PERMANENT FAULT (B5254T2; B6294T; 2003-2004)

DIAGNOSTIC TROUBLE CODE (DTC) INFORMATION

see **DIAGNOSTIC TROUBLE CODE (DTC) INFORMATION**

INTERNAL FAULT. PERMANENT FAULT

PROGRAMMING OR REPLACING THE ENGINE CONTROL MODULE (ECM)

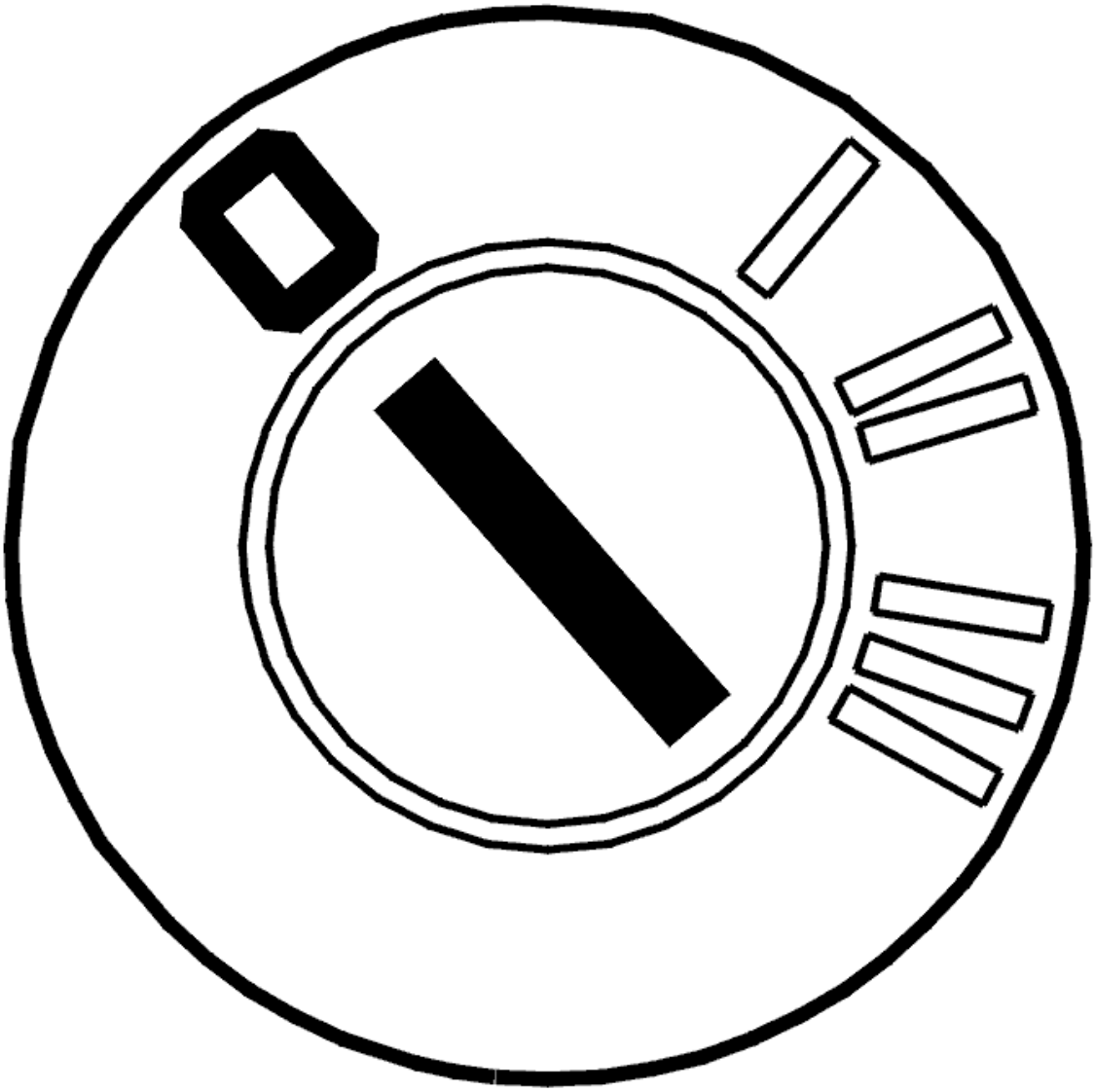

Fig. 85: Identifying Ignition OFF
Courtesy of VOLVO CARS CORPORATION

- Ignition off.

  The engine control module (ECM) has registered an internal fault or a fault in the software. Try downloading new software into the engine control module (ECM). To download new software or replace the engine control module (ECM), see **ENGINE CONTROL MODULE (ECM), REPLACING** . If software cannot be downloaded or new software does not solve the problem, replace the engine control module (ECM) and download the relevant software for the new engine control module (ECM).

NOTE: **After downloading the software or replacing the engine control module (ECM), the throttle unit must be adapted according to vehicle communication socket: "Throttle unit adaptation".**

Remedy as necessary.

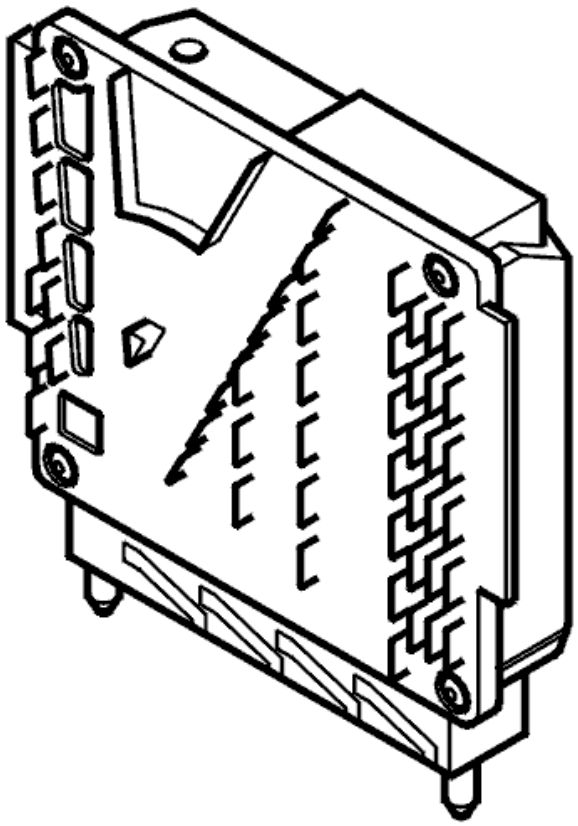

Fig. 86: Engine Control Module
Courtesy of VOLVO CARS CORPORATION

- **Continue**

Refer to **INFORMATION**

INFORMATION

FAULT-TRACING INFORMATION

In case of this defect, troubleshooting is not followed by verification.

The information can be displayed again or the fault-tracing for this fault can be interrupted.

ECM-9060: MEMORY FAULT IN ROM. INTERNAL FAULT. INTERMITTENT FAULT (B5254T2; B6294T; 2003-2004)

DIAGNOSTIC TROUBLE CODE (DTC) INFORMATION

Condition

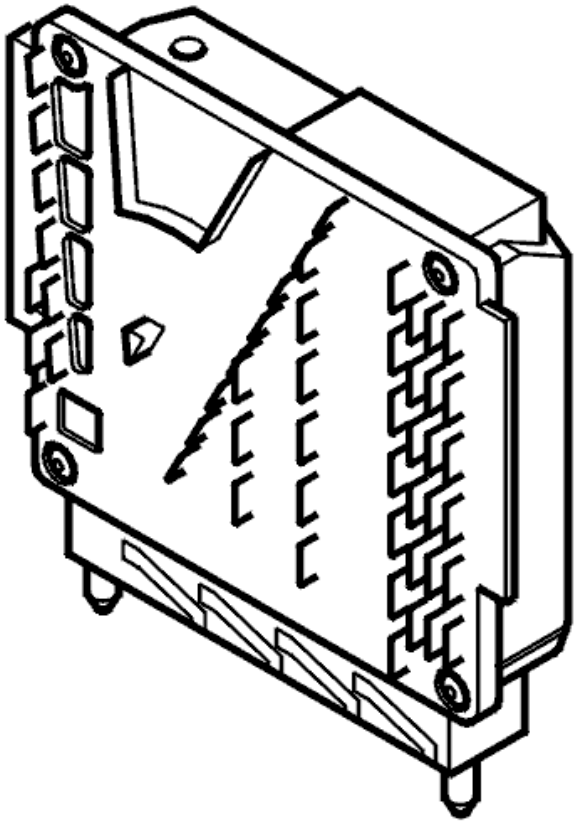

Fig. 87: Engine Control Module
Courtesy of VOLVO CARS CORPORATION

The engine control module (ECM) continuously checks the internal ROM (read-only memory). Diagnostic trouble code (DTC) ECM-9060 is stored in the engine control module (ECM) in the event of a fault. If this diagnostic trouble code (DTC) is stored the engine control module (ECM) will try to restart (reset) itself.

Substitute Value

None.

Possible Source

- Faulty software in the engine control module (ECM)
- Defective engine control module (ECM).

Fault symptom[s]

- The malfunction indicator lamp (MIL) flashes

- The engine cuts out
- The engine does not start.

FAULT-TRACING INFORMATION

see **FAULT-TRACING INFORMATION**

ECM-9060: MEMORY FAULT IN ROM. INTERNAL FAULT. PERMANENT FAULT (B5254T2; B6294T; 2003-2004)

DIAGNOSTIC TROUBLE CODE (DTC) INFORMATION

see **DIAGNOSTIC TROUBLE CODE (DTC) INFORMATION**

INTERNAL FAULT. PERMANENT FAULT

see **INTERNAL FAULT. PERMANENT FAULT**

ECM-9070: ENGINE CONTROL MODULE (ECM). INTERNAL FAULT. INTERMITTENT FAULT (B5254T2; B6294T; 2003-2004)

DIAGNOSTIC TROUBLE CODE (DTC) INFORMATION

Condition

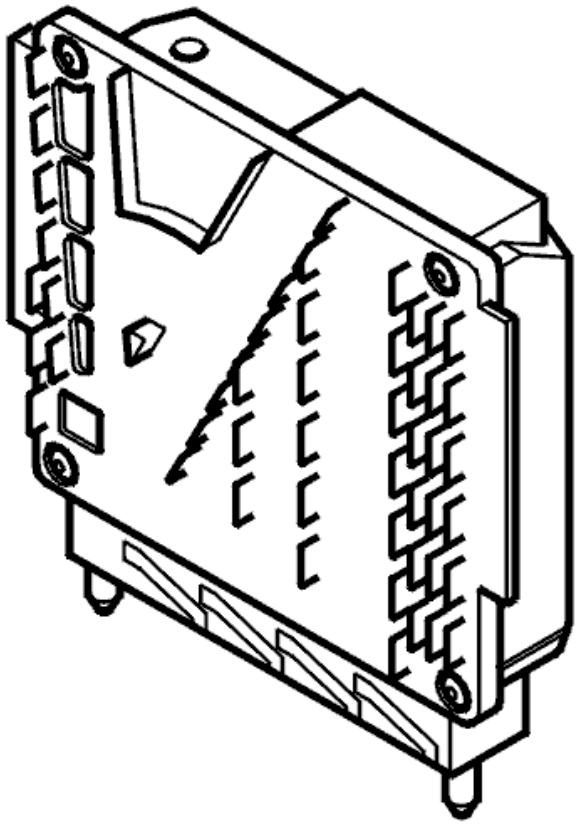

Fig. 88: Engine Control Module
Courtesy of VOLVO CARS CORPORATION

The engine control module (ECM) continuously checks the internal reset function. Diagnostic trouble code (DTC) ECM-9070 is stored in the engine control module (ECM) in the event of a fault. If this diagnostic trouble code (DTC) is stored the engine control module (ECM) will try to restart (reset) itself.

Substitute Value

None.

Possible Source

- Faulty software in the engine control module (ECM)
- Defective engine control module (ECM).

Fault symptom[s]

- The malfunction indicator lamp (MIL) flashes
- The engine cuts out
- The engine does not start.

FAULT-TRACING INFORMATION

see **FAULT-TRACING INFORMATION**

ECM-9070: ENGINE CONTROL MODULE (ECM). INTERNAL FAULT. PERMANENT FAULT (B5254T2; B6294T; 2003-2004)

DIAGNOSTIC TROUBLE CODE (DTC) INFORMATION

see **DIAGNOSTIC TROUBLE CODE (DTC) INFORMATION**

INTERNAL FAULT. PERMANENT FAULT

see **INTERNAL FAULT. PERMANENT FAULT**

ECM-9100: CLUTCH PEDAL POSITION SENSOR. FAULTY SIGNAL (B5254T2; 2005-2007)

DIAGNOSTIC TROUBLE CODE (DTC) INFORMATION ECM-9100

Condition

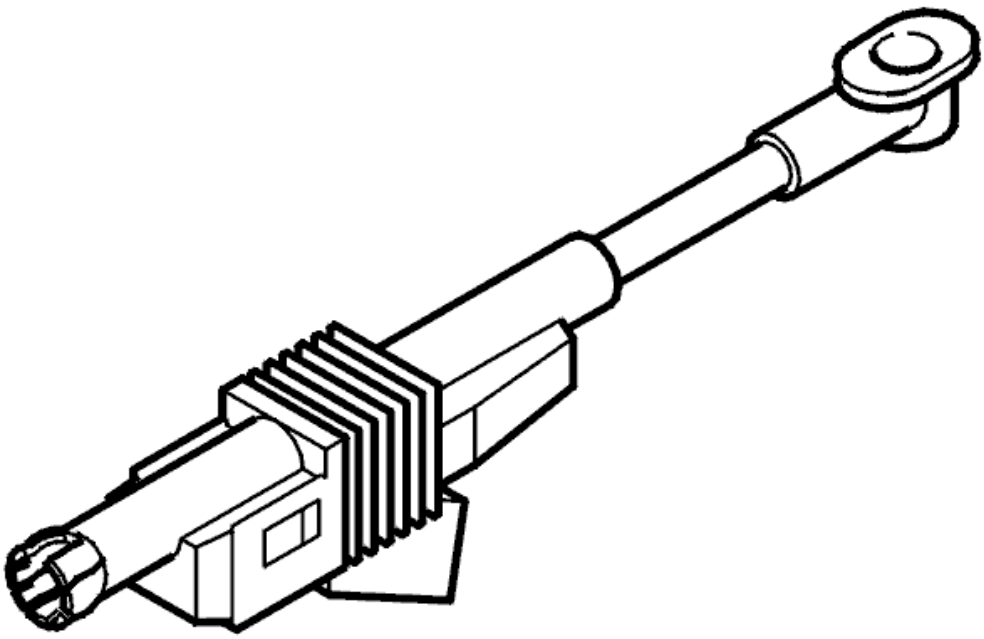

Fig. 89: Identifying Clutch Pedal Push Rod & Position Sensor
Courtesy of VOLVO CARS CORPORATION

The diagnostic trouble code (DTC) is stored if the engine control module (ECM) registers a fault in the signal from the clutch pedal position sensor.

The diagnostic trouble code (DTC) can be diagnosed when the ignition is switched on.

Substitute Value

Cruise control switched off.

Possible Source

- Open-circuit in the signal cable
- Incorrectly installed clutch pedal sensor
- Damaged clutch pedal sensor.

Fault symptom[s]

- Cruise control does not function at all.

SIGNAL MISSING OR FAULTY SIGNAL

CHECKING THE STATUS

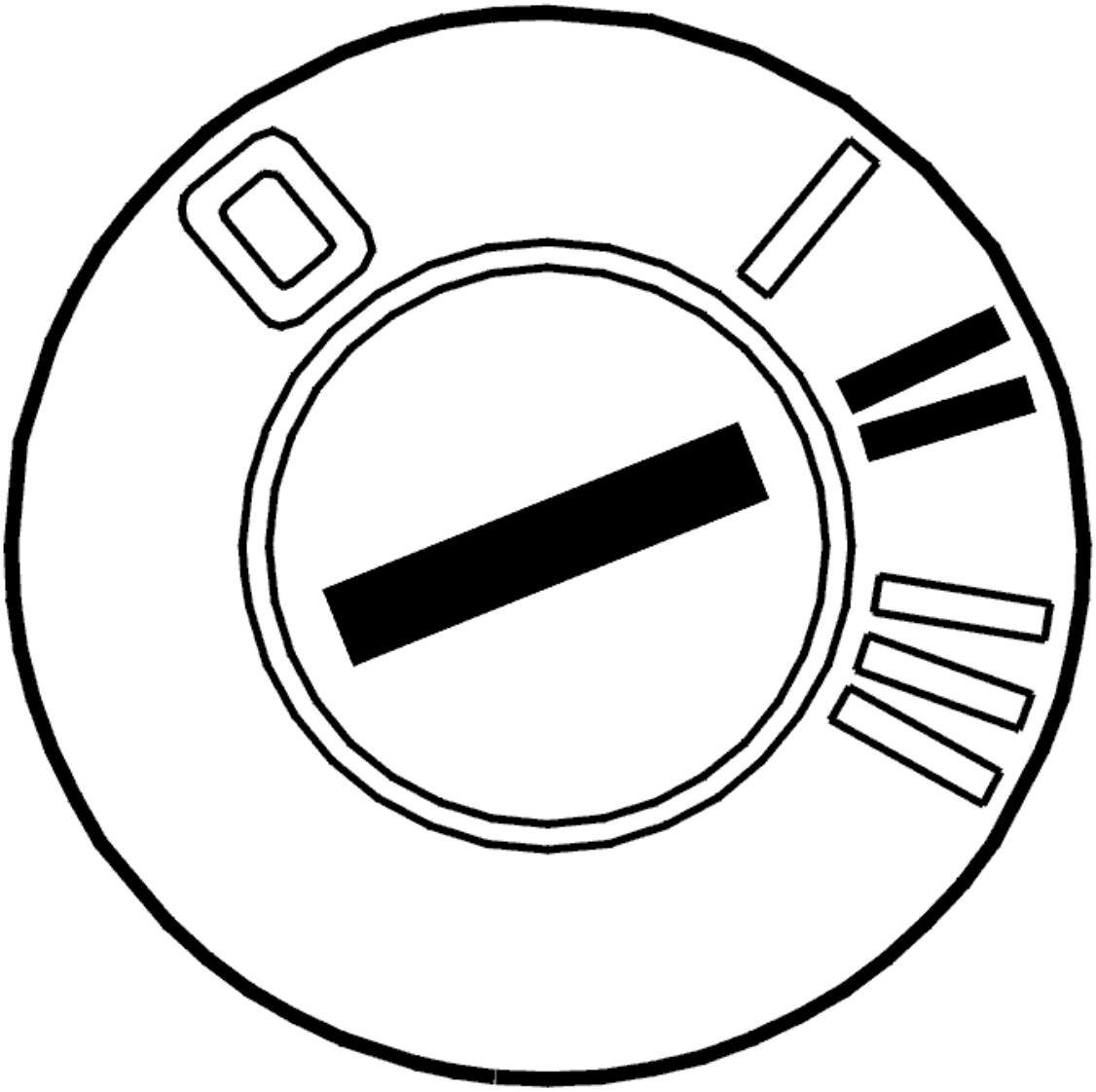

Fig. 90: Identifying Ignition ON
Courtesy of VOLVO CARS CORPORATION

- Ignition on
- Read off the clutch pedal movement by carefully pressing and releasing the clutch pedal.

  Check that the value changes with clutch pedal movement. The value must be between 60-70 % when the clutch pedal is unaffected and 10-20 % when the pedal is fully depressed.

  The fault is intermittent at the moment if the values are OK.

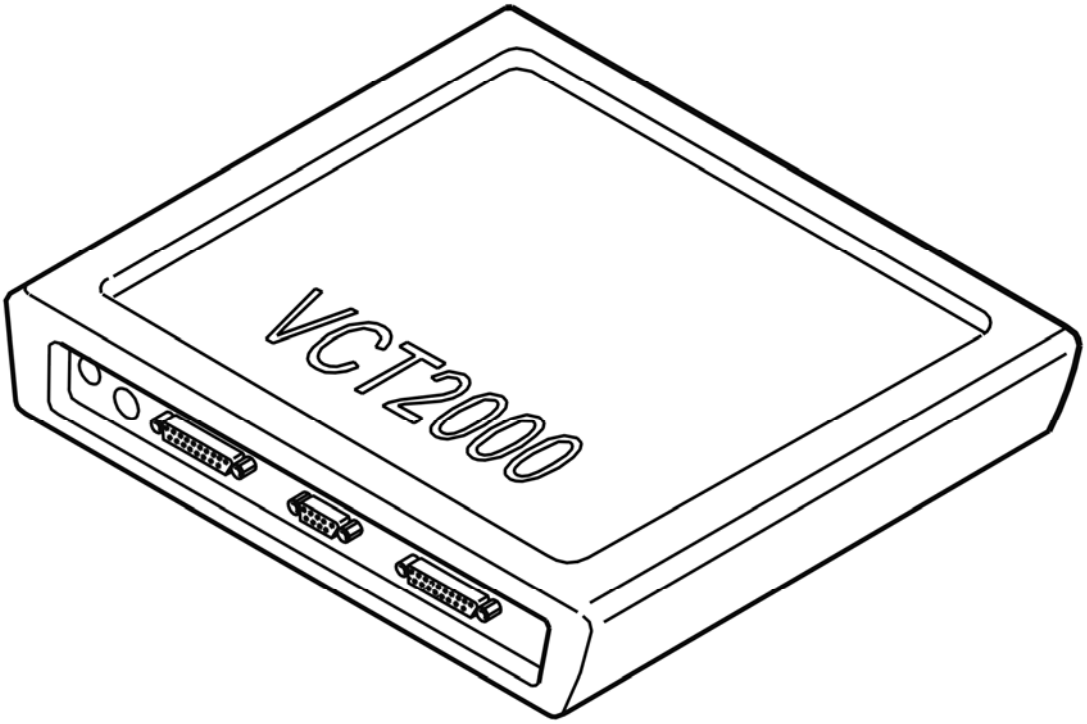

Fig. 91: Identifying VCT2000 Diagnostic Tool Symbol In VIDA
Courtesy of VOLVO CARS CORPORATION

- **Continue**

  Refer to **CHECKING COMPONENTS AND WIRING**

CHECKING COMPONENTS AND WIRING

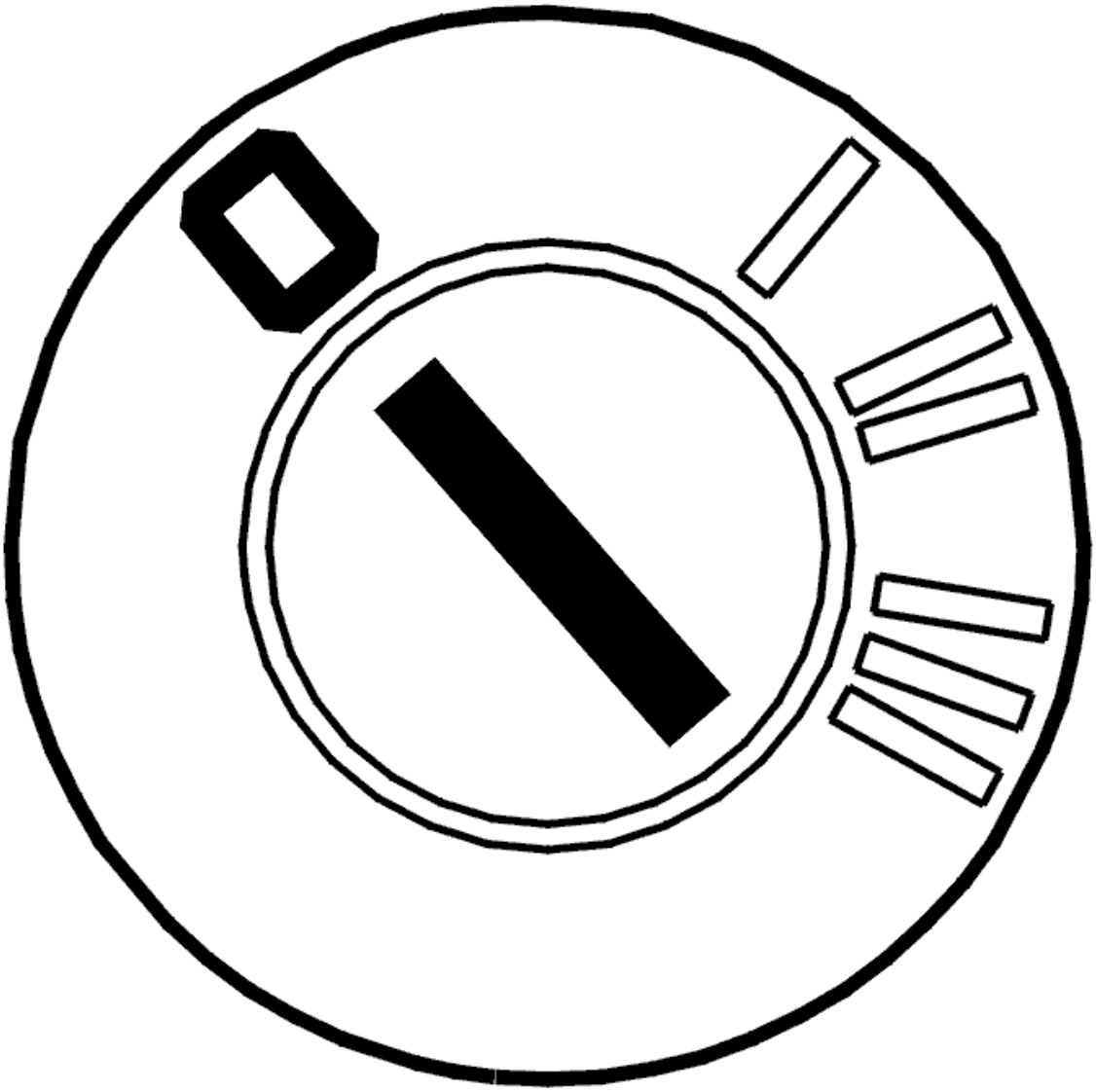

Fig. 92: Identifying Ignition OFF
Courtesy of VOLVO CARS CORPORATION

- Ignition off.

  Check the resistance of the clutch pedal sensor between terminals #2 and #4 (component side).

  Check the clutch pedal and engine control module (ECM) connectors. Check for contact resistance and oxidation.

  Check the signal cable between engine control module (ECM) terminal #B15 (#B25) and clutch pedal sensor terminal #2 (component side). Check for an open-circuit.

  Check the signal ground cable between engine control module (ECM) terminal #B4 (#B14) and clutch pedal sensor terminal #4 (cable harness side). Check for an open-circuit.

Check the clutch pedal sensor installation. Search for damage and check the connections visually.

HINT: With the ignition on, the power supply to the clutch pedal sensor must be approximately 5 V (measured with the clutch pedal sensor disconnected), measured between terminals #2 and #4 (cable harness side).

Remedy as necessary.

Other information:

- see **CONNECTING THE BREAKOUT BOX**
- For 5 cylinder turbocharged engines -2004, see **SIGNAL DESCRIPTION**
- For 5 cylinder turbocharged engines 2005-, see **SIGNAL SPECIFICATION** .
- For 6 cylinder engines -2004, see **SIGNAL SPECIFICATION**
- For 6 cylinder engines 2005-, see **SIGNAL SPECIFICATION** .
- For resistance values: **COMPONENT SPECIFICATIONS**
- see **PEDAL POSITION SENSOR CLUTCH, REPLACING**
- see **CHECKING WIRING AND TERMINALS**

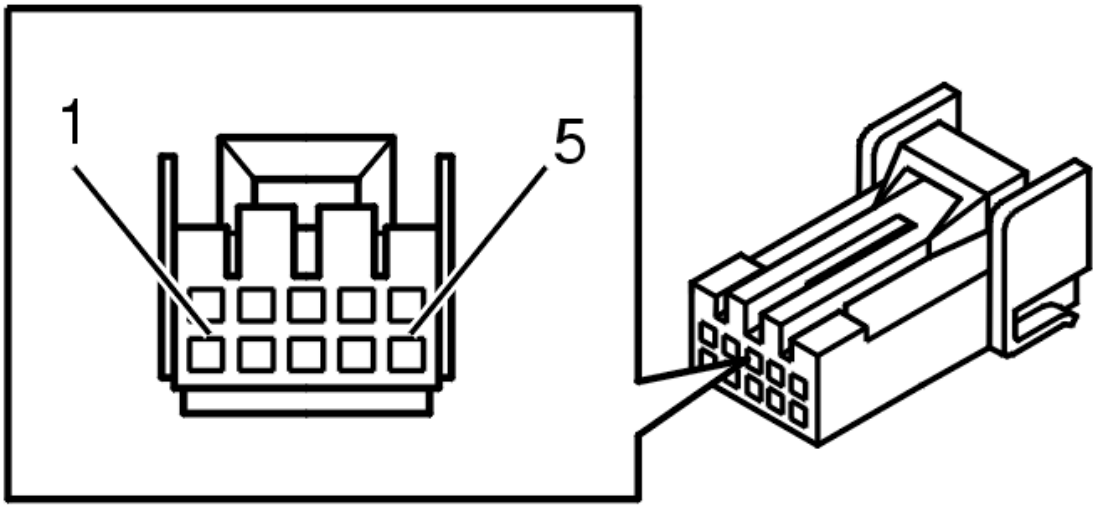

Fig. 93: 10 CD Changer Connector Terminals
Courtesy of VOLVO CARS CORPORATION

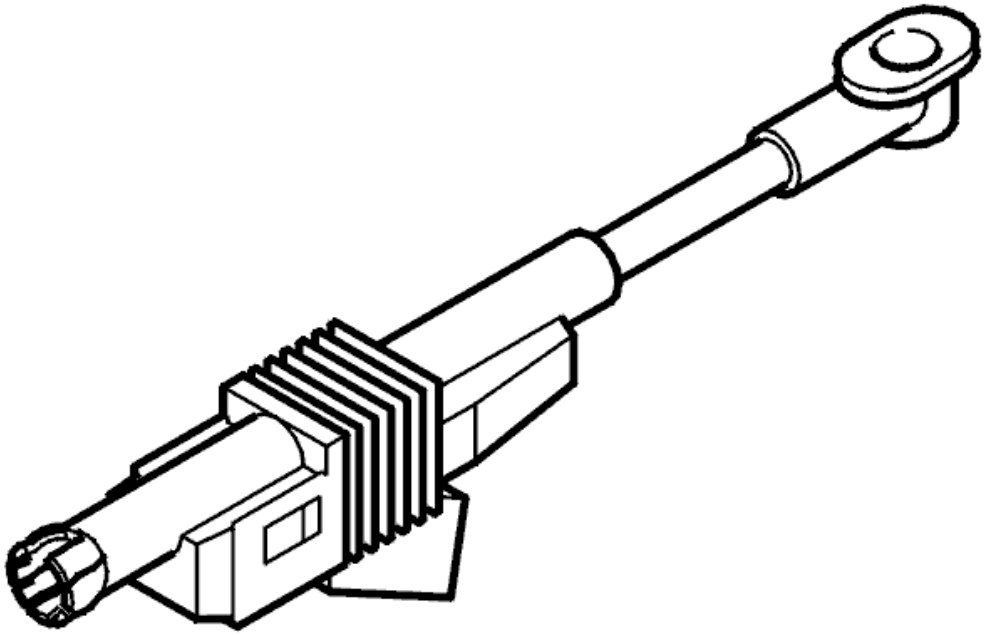

Fig. 94: Identifying Clutch Pedal Push Rod & Position Sensor
Courtesy of VOLVO CARS CORPORATION

- **Continue**

  Refer to **VERIFICATION**

VERIFICATION

VERIFICATION

HINT: After carrying out the repair, check that the fault has been remedied.

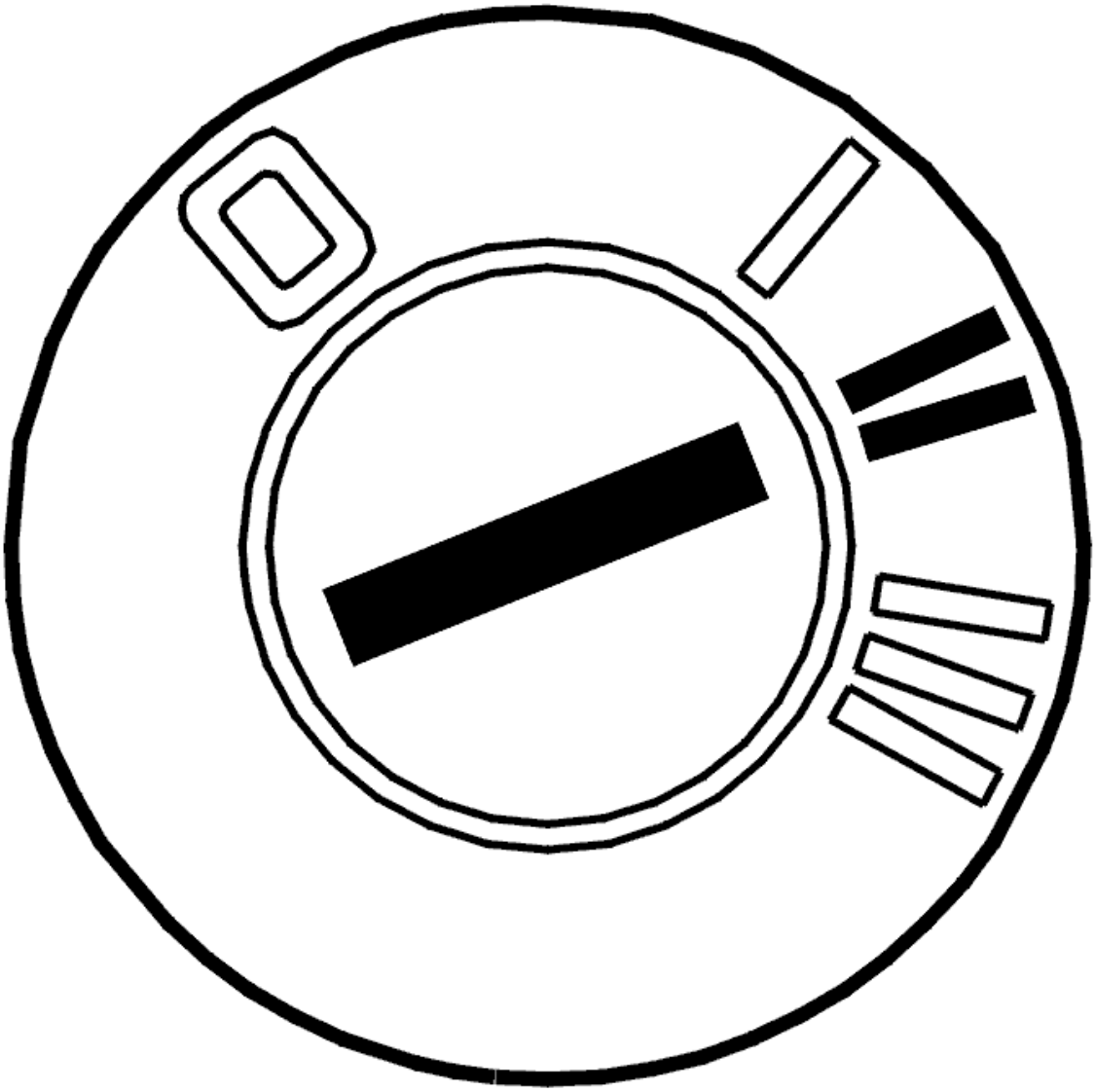

Fig. 95: Identifying Ignition ON
Courtesy of VOLVO CARS CORPORATION

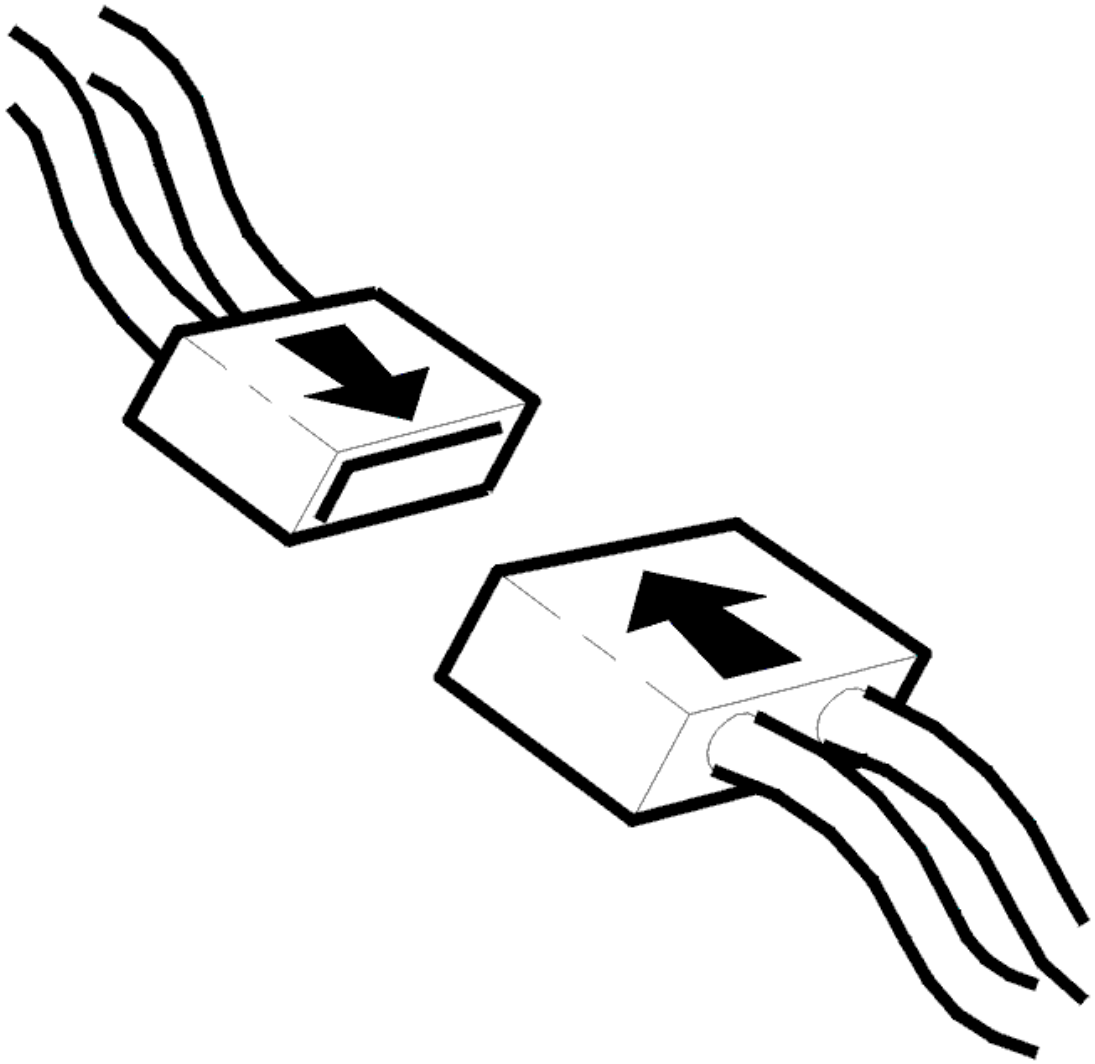

Fig. 96: Connecting Connector
Courtesy of VOLVO CARS CORPORATION

- Ignition off
- Reconnect the connectors, reinstall components etc.
- Ignition on
- Read off the clutch pedal movement by carefully pressing and releasing the clutch pedal.

  Check that the value changes with clutch pedal movement. The value must be between 60-70 % when the clutch pedal is unaffected and 10-20% when the pedal is fully depressed.

  The fault has been remedied if the values are OK.

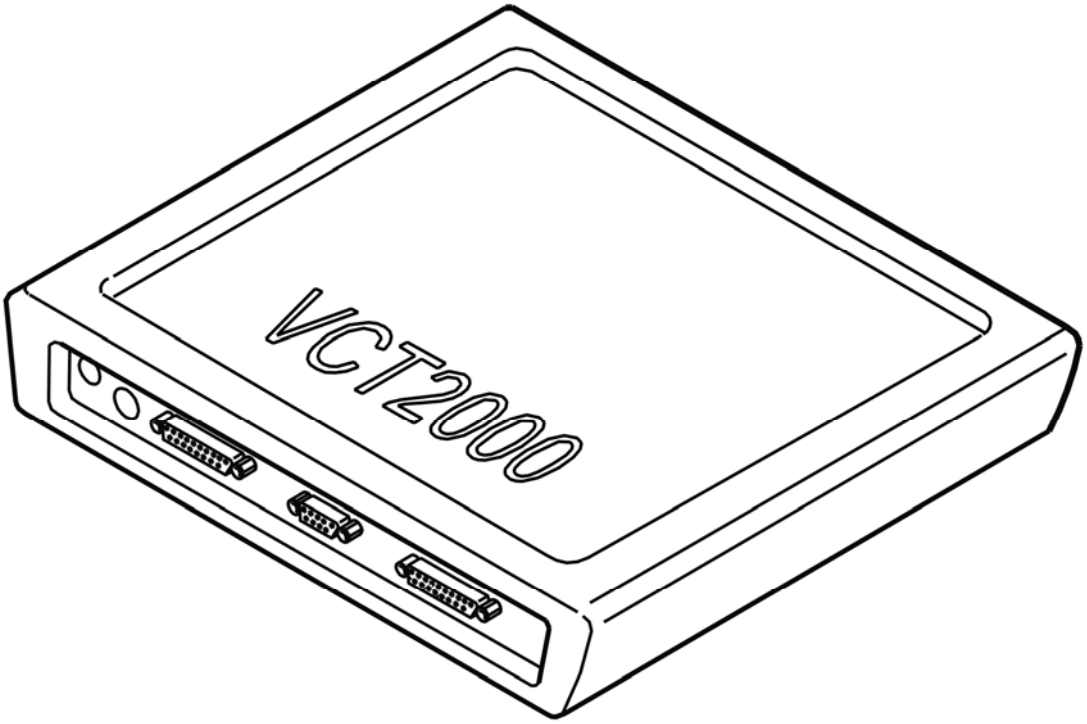

Fig. 97: Identifying VCT2000 Diagnostic Tool Symbol In VIDA
Courtesy of VOLVO CARS CORPORATION

Are these values OK?

- **YES**

  VERIFIED: Troubleshooting has been completed.

- **NO**

  Refer to **INFORMATION**

INFORMATION

FAULT-TRACING INFORMATION

The fault should have been detected and remedied. As this is not the case fault-tracing has failed.

Exit fault-tracing for this diagnostic trouble code (DTC) or make another attempt.

ECM-9100: CLUTCH PEDAL POSITION SENSOR. FAULTY SIGNAL (B6294T; 2005-2006)

DIAGNOSTIC TROUBLE CODE (DTC) INFORMATION ECM-9100

see **DIAGNOSTIC TROUBLE CODE (DTC) INFORMATION ECM-9100**

SIGNAL MISSING OR FAULTY SIGNAL

see **SIGNAL MISSING OR FAULTY SIGNAL**

ECM-9100: ENGINE CONTROL MODULE (ECM). FAULTY SIGNAL (B5254T2; B6294T; 2003-2004)

DIAGNOSTIC TROUBLE CODE (DTC) INFORMATION

Condition

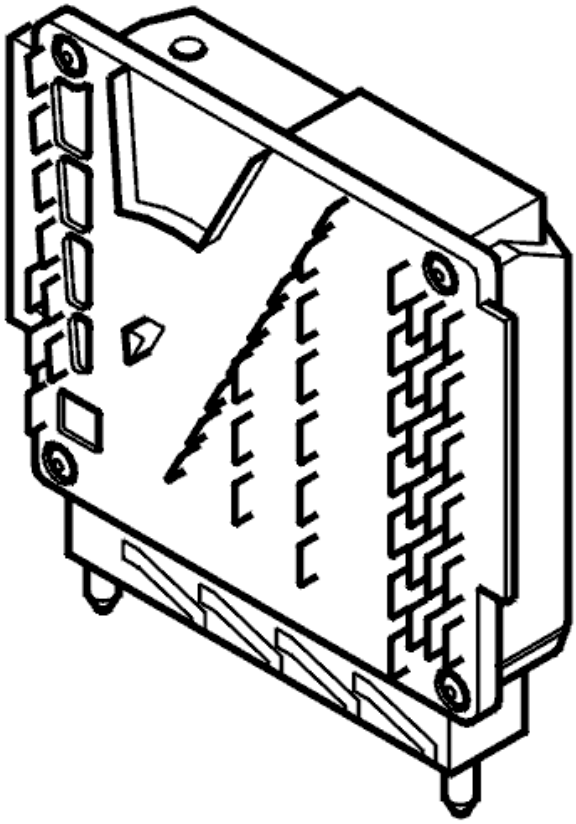

Fig. 98: Engine Control Module
Courtesy of VOLVO CARS CORPORATION

Diagnostic trouble code (DTC) ECM-9100 is stored if the engine control module (ECM) registers an internal fault or a fault in the circuit for the damper motor in the throttle unit when the ignition is switched on.

Substitute Value

The engine control module (ECM) shuts down the supply to the throttle unit damper motor. The throttle will set itself to the return position.

Possible Source

- Contact resistance or oxidation in the terminals between the engine control module (ECM) and the throttle unit
- Open-circuit, short-circuit to ground or short-circuit to supply voltage in the wiring for the damper motor in the throttle unit
- Short-circuit to each other in the wiring for the damper motor in the throttle unit
- Defective throttle unit
- Defective engine control module (ECM).

Fault symptom[s]

- Malfunction indicator lamp (MIL) lit
- Poor performance.

FAULTY SIGNAL

FAULT-TRACING INFORMATION

FAULT-TRACING INFORMATION

CAUTION: The male and female pins on the electronic throttle unit connectors are gold plated. Great care must be taken when measuring. Damage to the gold plating can result in operating difficulties.

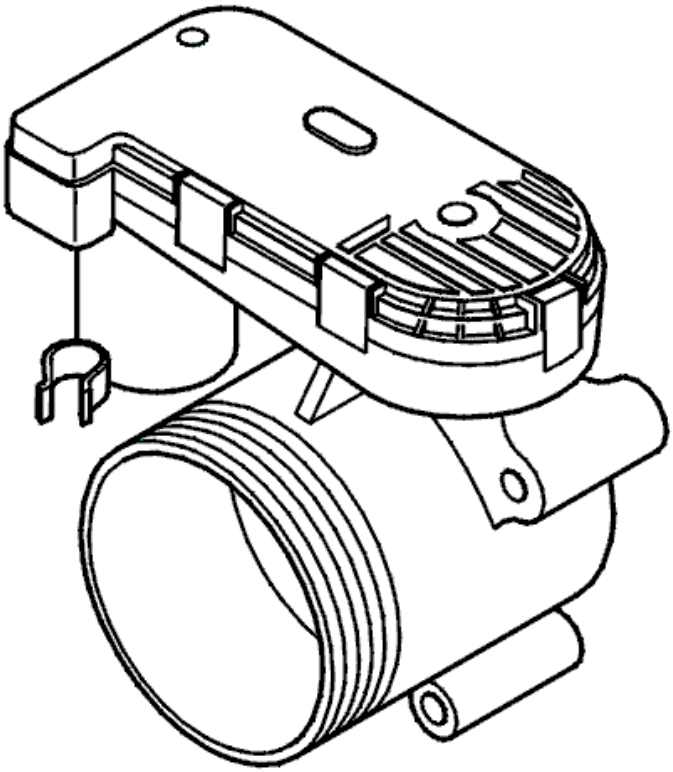

Fig. 99: Identifying Throttle Unit & Potentiometer
Courtesy of VOLVO CARS CORPORATION

- **Continue**

  Refer to **CHECKING DIAGNOSTIC TROUBLE CODES (DTCS)**

CHECKING DIAGNOSTIC TROUBLE CODES (DTCS)

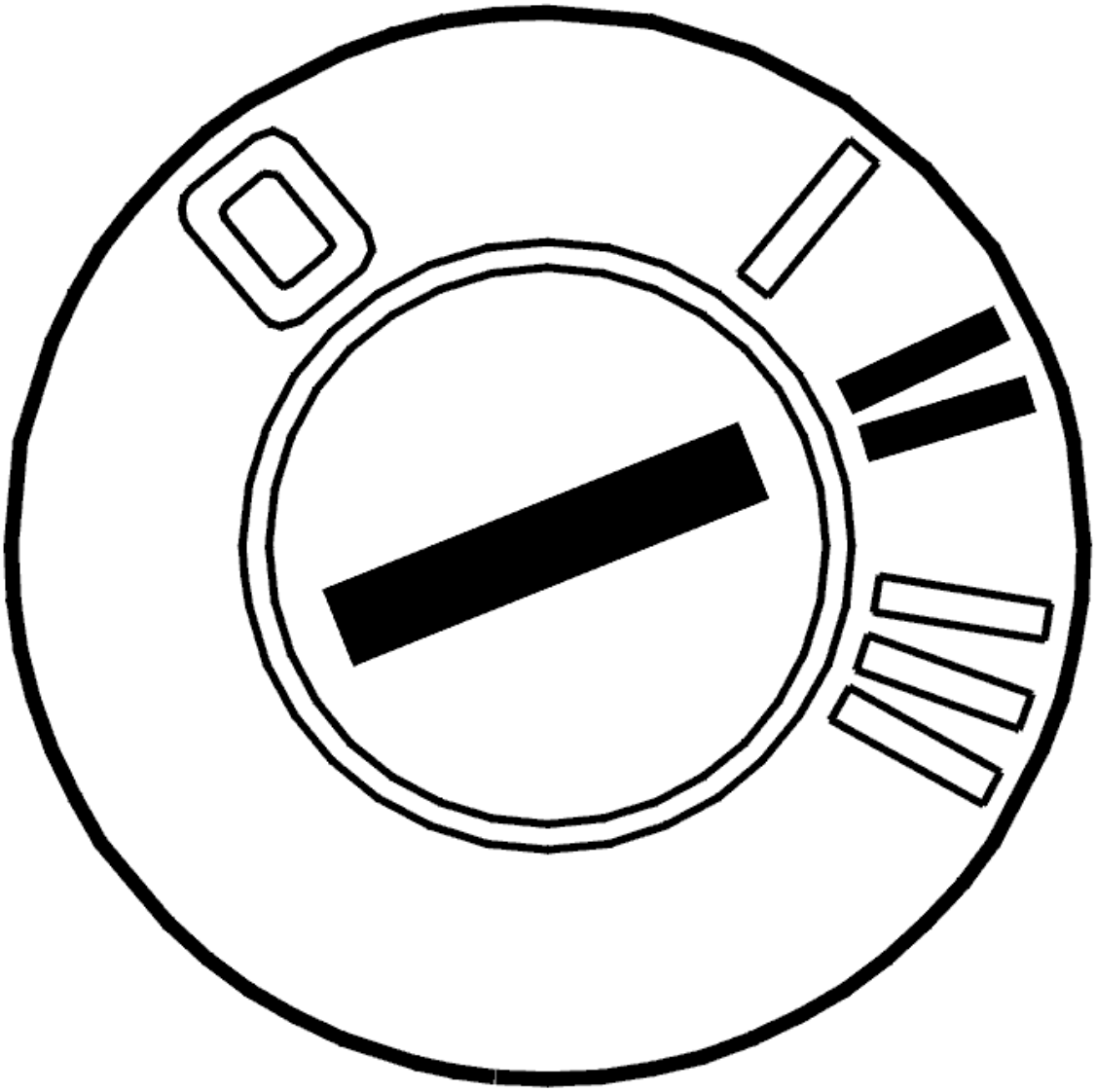

Fig. 100: Identifying Ignition ON
Courtesy of VOLVO CARS CORPORATION

- Ignition on
- Read off diagnostic trouble codes (DTCs).

  Check whether any of diagnostic trouble codes (DTCs) ECM-903C, ECM-9150, ECM-9160 or ECM-9170 are stored in the engine control module (ECM).

  If any of these diagnostic trouble codes (DTCs) are stored, these must be remedied first.

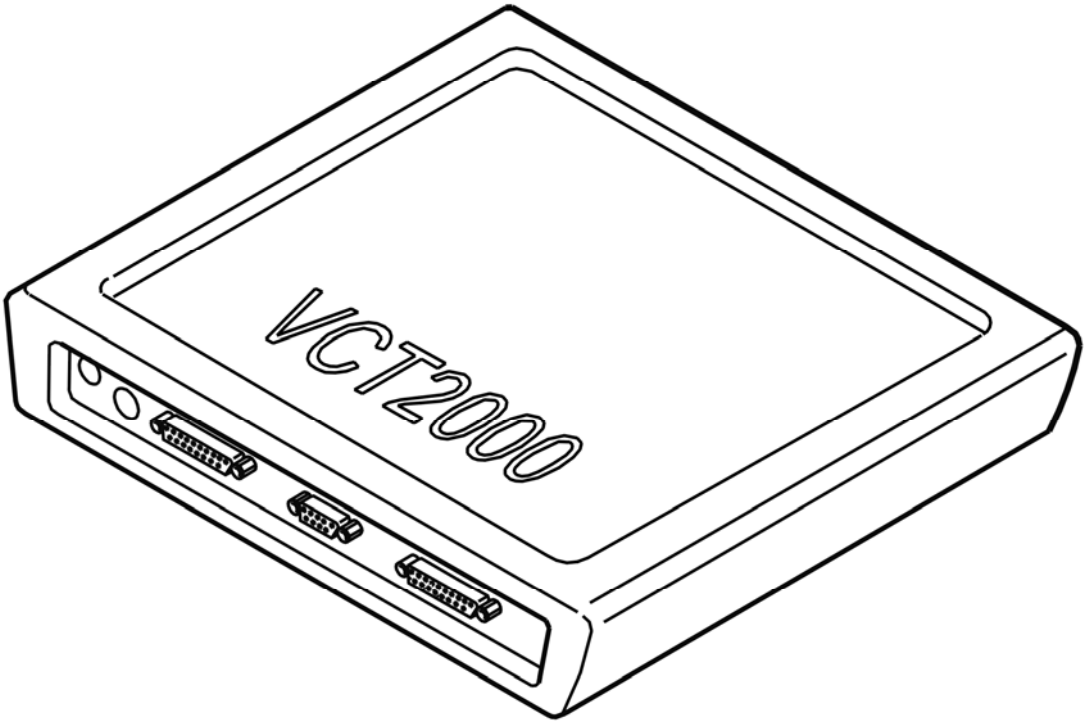

Fig. 101: Identifying VCT2000 Diagnostic Tool Symbol In VIDA
Courtesy of VOLVO CARS CORPORATION

Are any of the above diagnostic trouble codes (DTCs) stored?

- **YES**

  Refer to **FAULT-TRACING INFORMATION**

- **NO**

  Refer to **CHECKING COMPONENTS AND WIRING**

FAULT-TRACING INFORMATION

Remedy any diagnostic trouble codes (DTCs) that are stored.

Remedy as necessary.

CHECKING COMPONENTS AND WIRING

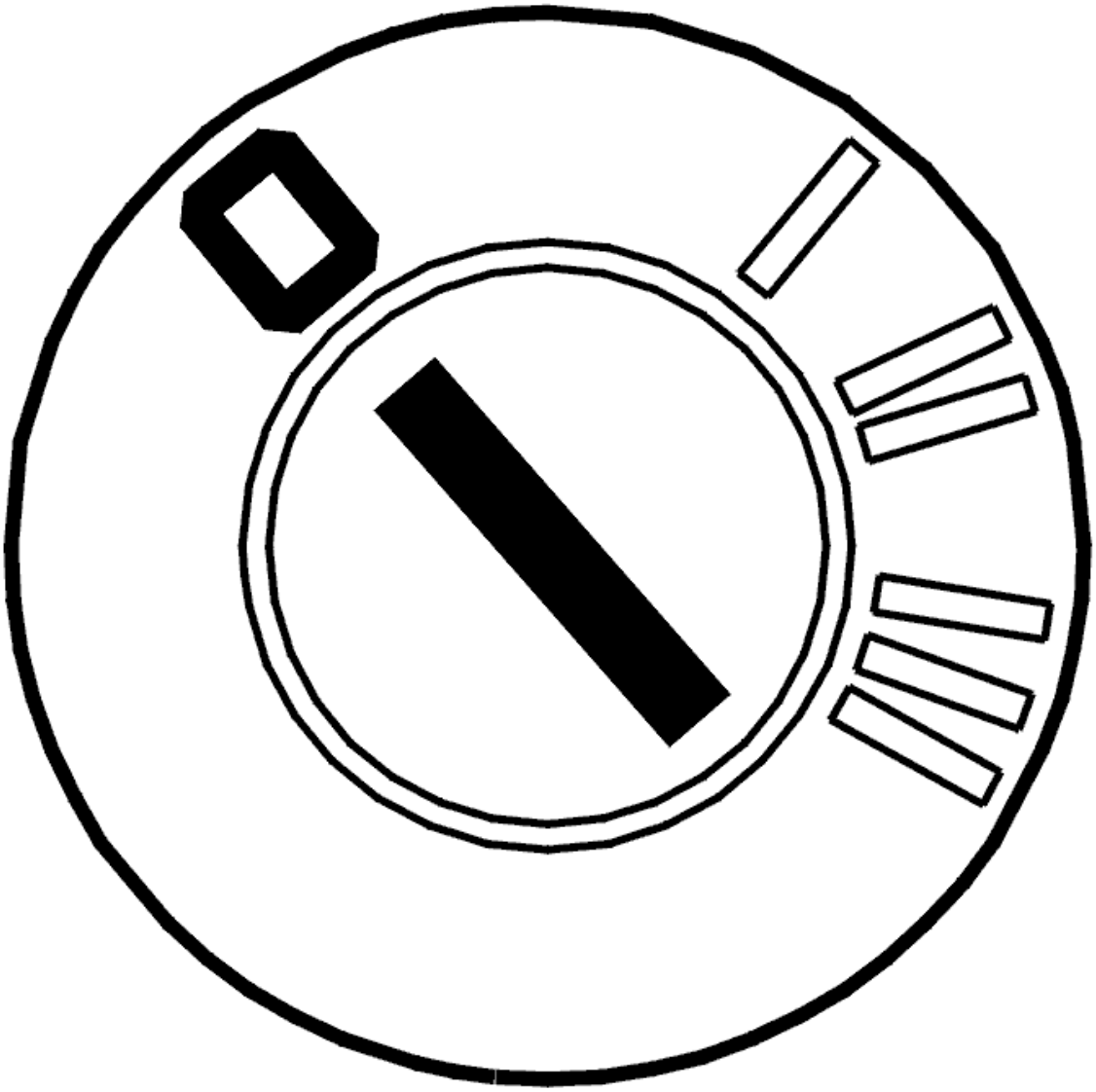

Fig. 102: Identifying Ignition OFF
Courtesy of VOLVO CARS CORPORATION

- Ignition off
- Check the throttle unit and engine control module (ECM) connectors. Check for contact resistance and oxidation.

  Check the resistance value of the damper motor winding in the throttle unit. Take readings between throttle unit terminals #1 and #4 (component side). Check for an open-circuit. Check for a short-circuit.

  NOTE: The resistance of the motor winding in the damper motor is very low.

  Replace the throttle unit if necessary.

  Check the cable (+) for the damper motor between engine control module (ECM) terminal #A35 (#A35)

and throttle unit terminal #4 (wiring side). Check for an open-circuit. Check for a short-circuit to ground. Check for a short-circuit to supply voltage.

Check the cable (-) for the damper motor between engine control module (ECM) terminal #A36 (#A36) and throttle unit terminal #1 (wiring side). Check for an open-circuit. Check for a short-circuit to ground. Check for a short-circuit to supply voltage.

Also check the damper motor cables (+) and (-). Check for a short-circuit to each other.

If no faults are found during the checks and the diagnostic trouble code (DTC) recurs, try replacing the throttle unit.

NOTE: When replacing the throttle unit or the engine control module (ECM) the throttle unit must be adapted. See "Throttle unit adaptation" in the vehicle communication socket.

Remedy as necessary.

Other information:

- see **CHECKING WIRING AND TERMINALS**
- For resistance values, see **COMPONENT SPECIFICATIONS**
- To connect the breakout box, see **CONNECTING THE BREAKOUT BOX**
- For 5 cylinder turbocharged engines -2004, see **SIGNAL DESCRIPTION**
- For 5 cylinder turbocharged engines 2005-, see **SIGNAL SPECIFICATION** .
- For 6 cylinder engines -2004, see **SIGNAL SPECIFICATION**
- For 6 cylinder engines 2005-, see **SIGNAL SPECIFICATION** .
- For B5xx4T, see **THROTTLE BODY (ELECTRONIC THROTTLE MODULE), REPLACING** .
- For B6xx4T, see **THROTTLE BODY (ELECTRONIC THROTTLE MODULE), REPLACING** .
- To access or replace the engine control module (ECM), see **ENGINE CONTROL MODULE (ECM), REPLACING** .

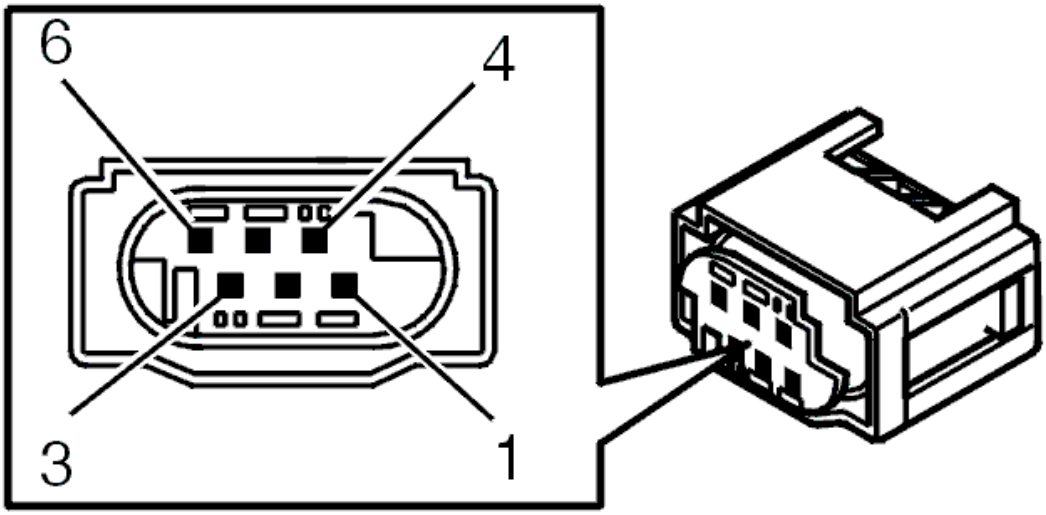

Fig. 103: Identifying Throttle Unit Connector Terminals
Courtesy of VOLVO CARS CORPORATION

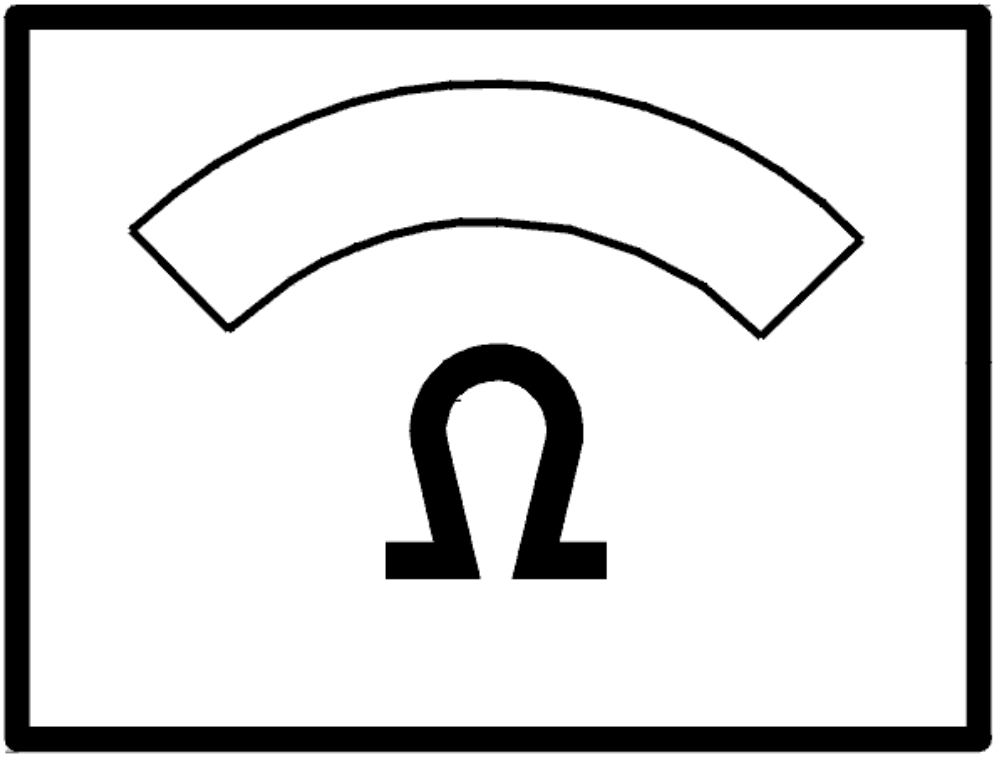

Fig. 104: Identifying Ohm Meter
Courtesy of VOLVO CARS CORPORATION

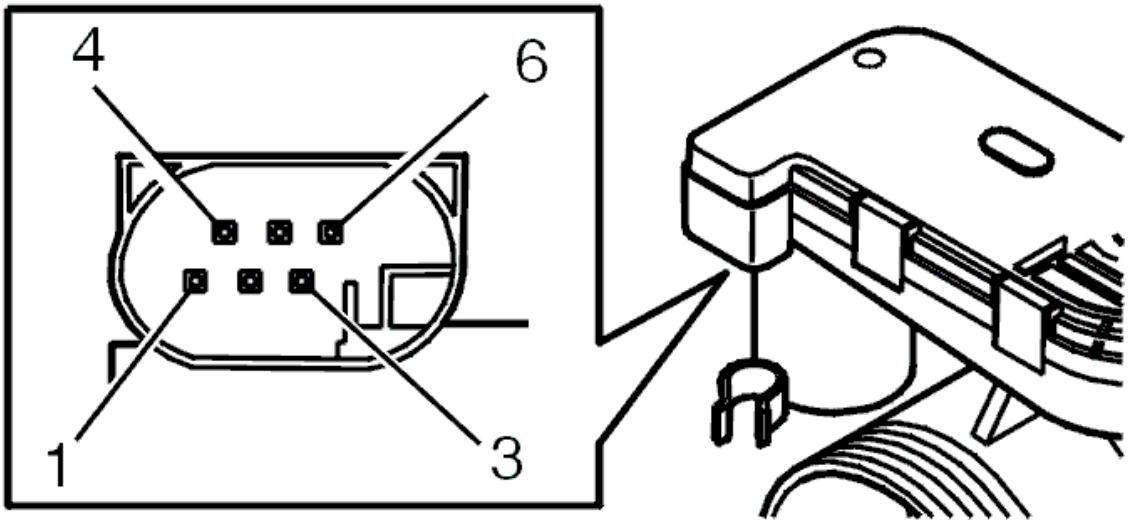

Fig. 105: Identifying Throttle Unit Connector Terminals
Courtesy of VOLVO CARS CORPORATION

- **Continue**

  Refer to **VERIFICATION**

VERIFICATION

VERIFICATION

HINT: After carrying out the repair, check that the fault has been remedied.

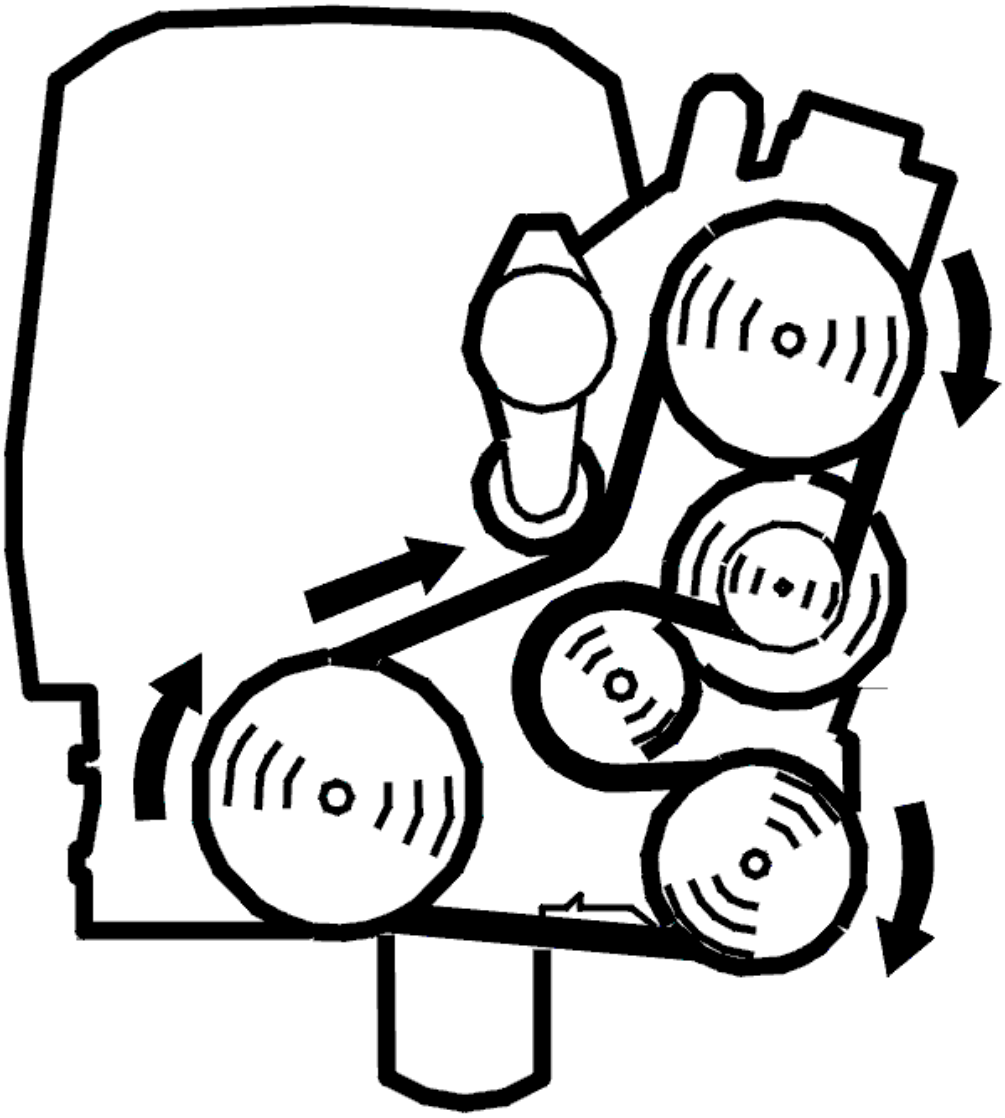

Fig. 106: Belt Routing / Engine Idling - Volvo
Courtesy of VOLVO CARS CORPORATION

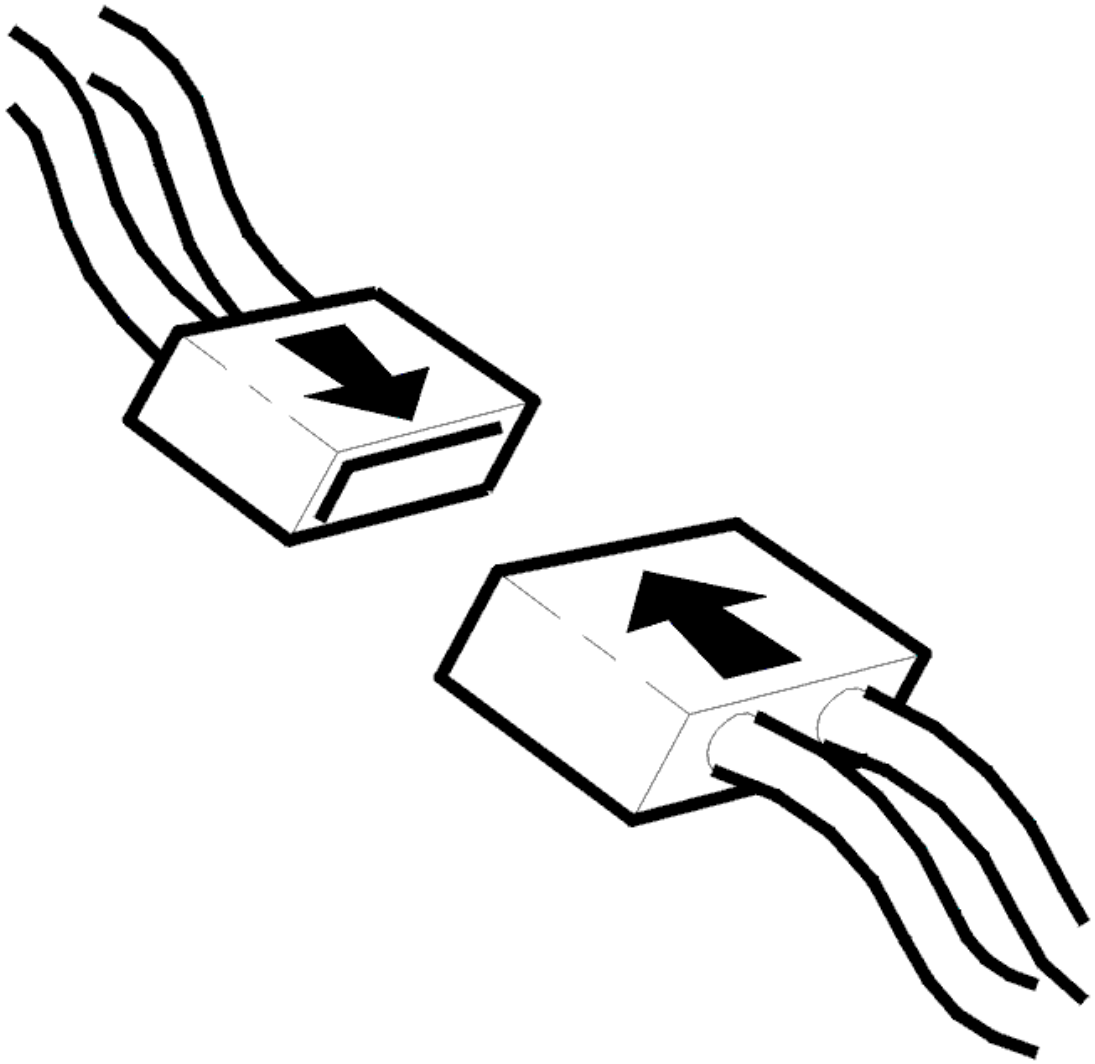

Fig. 107: Connecting Connector
Courtesy of VOLVO CARS CORPORATION

- Ignition off
- Reinstall the connectors, components etc.
- Start the engine
- Read off diagnostic trouble codes (DTCs).

The fault has been remedied if status of the diagnostic trouble code (DTC) is intermittent.

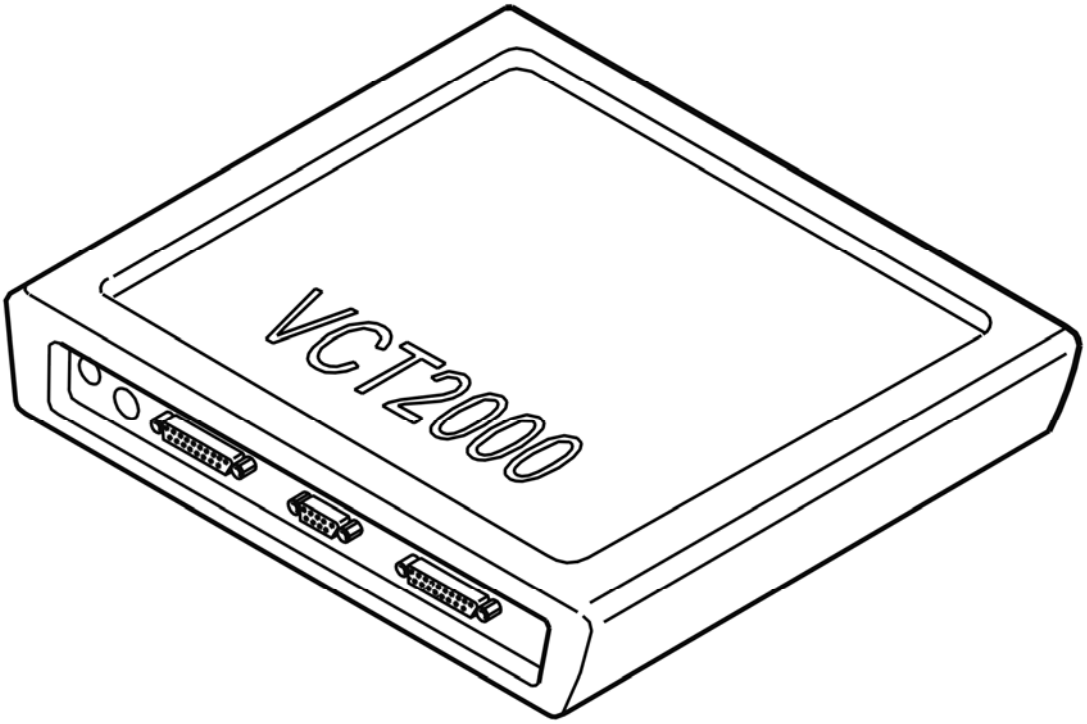

Fig. 108: Identifying VCT2000 Diagnostic Tool Symbol In VIDA
Courtesy of VOLVO CARS CORPORATION

Is the status of the diagnostic trouble code (DTC) intermittent?

- **YES**

  VERIFIED: Troubleshooting has been completed.

- **NO**

  Refer to **INFORMATION**

INFORMATION

FAULT-TRACING INFORMATION

The fault should have been detected and remedied. As this is not the case fault-tracing has failed.

Exit fault-tracing for this diagnostic trouble code (DTC) or make another attempt.

ECM-910B: CLUTCH PEDAL SENSOR. SIGNAL MISSING (B5254T2; 2005-2007)

DIAGNOSTIC TROUBLE CODE (DTC) INFORMATION ECM-910B

Condition

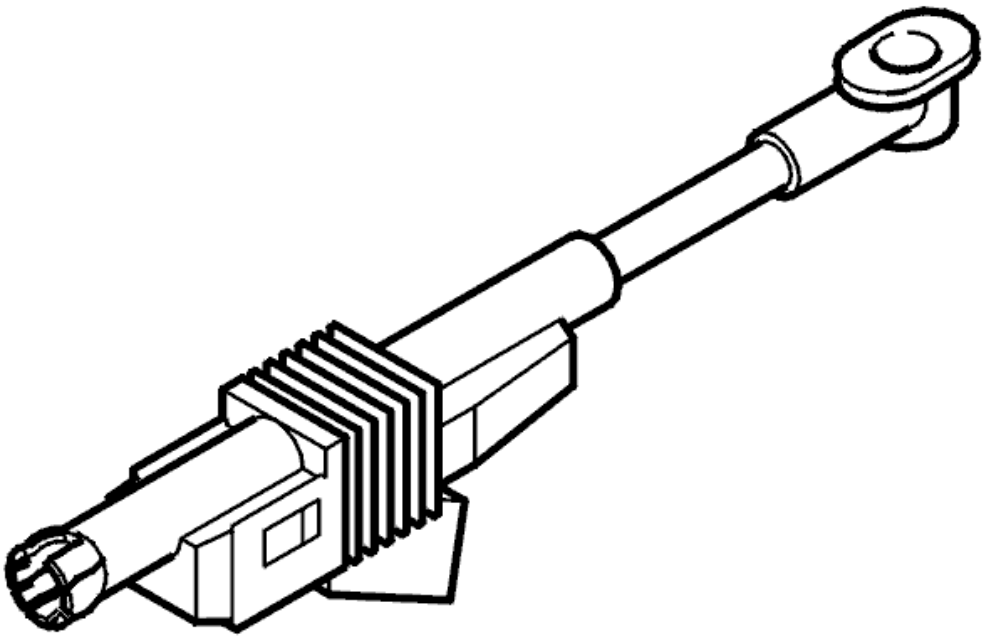

Fig. 109: Identifying Clutch Pedal Push Rod & Position Sensor
Courtesy of VOLVO CARS CORPORATION

The diagnostic trouble code (DTC) is stored if the engine control module (ECM) registers a fault in the signal from the clutch pedal position sensor.

The diagnostic trouble code (DTC) can be diagnosed when the ignition is switched on.

Substitute Value

Cruise control switched off.

Possible Source

- Open-circuit in the signal cable
- Incorrectly installed clutch pedal sensor
- Damaged clutch pedal sensor.

Fault symptom[s]

- Cruise control does not function at all.

SIGNAL MISSING OR FAULTY SIGNAL

see **SIGNAL MISSING OR FAULTY SIGNAL**

ECM-910B: CLUTCH PEDAL SENSOR. SIGNAL MISSING (B6294T; 2005-2006)

DIAGNOSTIC TROUBLE CODE (DTC) INFORMATION ECM-910B

see **DIAGNOSTIC TROUBLE CODE (DTC) INFORMATION ECM-910B**

SIGNAL MISSING OR FAULTY SIGNAL

see **SIGNAL MISSING OR FAULTY SIGNAL**

ECM-910C: CLUTCH PEDAL SENSOR. SIGNAL TOO HIGH (B5254T2; 2005-2007)

DIAGNOSTIC TROUBLE CODE (DTC) INFORMATION ECM-910C

Condition

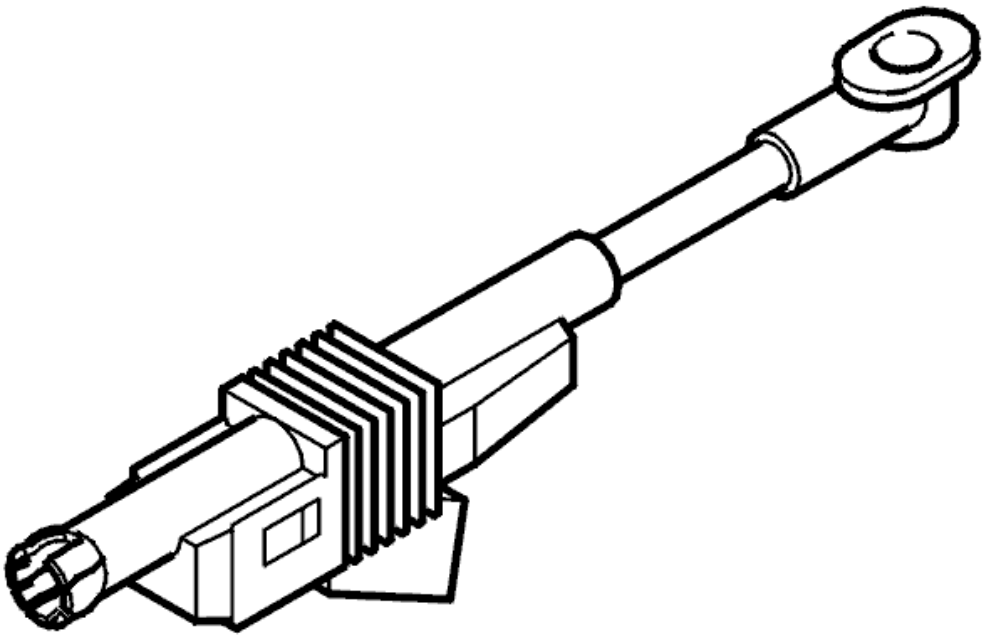

Fig. 110: Identifying Clutch Pedal Push Rod & Position Sensor
Courtesy of VOLVO CARS CORPORATION

The diagnostic trouble code (DTC) is stored if the engine control module (ECM) registers a fault in the signal from the clutch pedal position sensor.

The diagnostic trouble code (DTC) can be diagnosed when the ignition is switched on.

Substitute Value

Cruise control switched off.

Possible Source

- Short-circuit to supply voltage in the signal cable
- Damaged clutch pedal sensor.

Fault symptom[s]

- Cruise control does not function at all.

SIGNAL TOO HIGH / SIGNAL TOO LOW

CHECKING THE STATUS

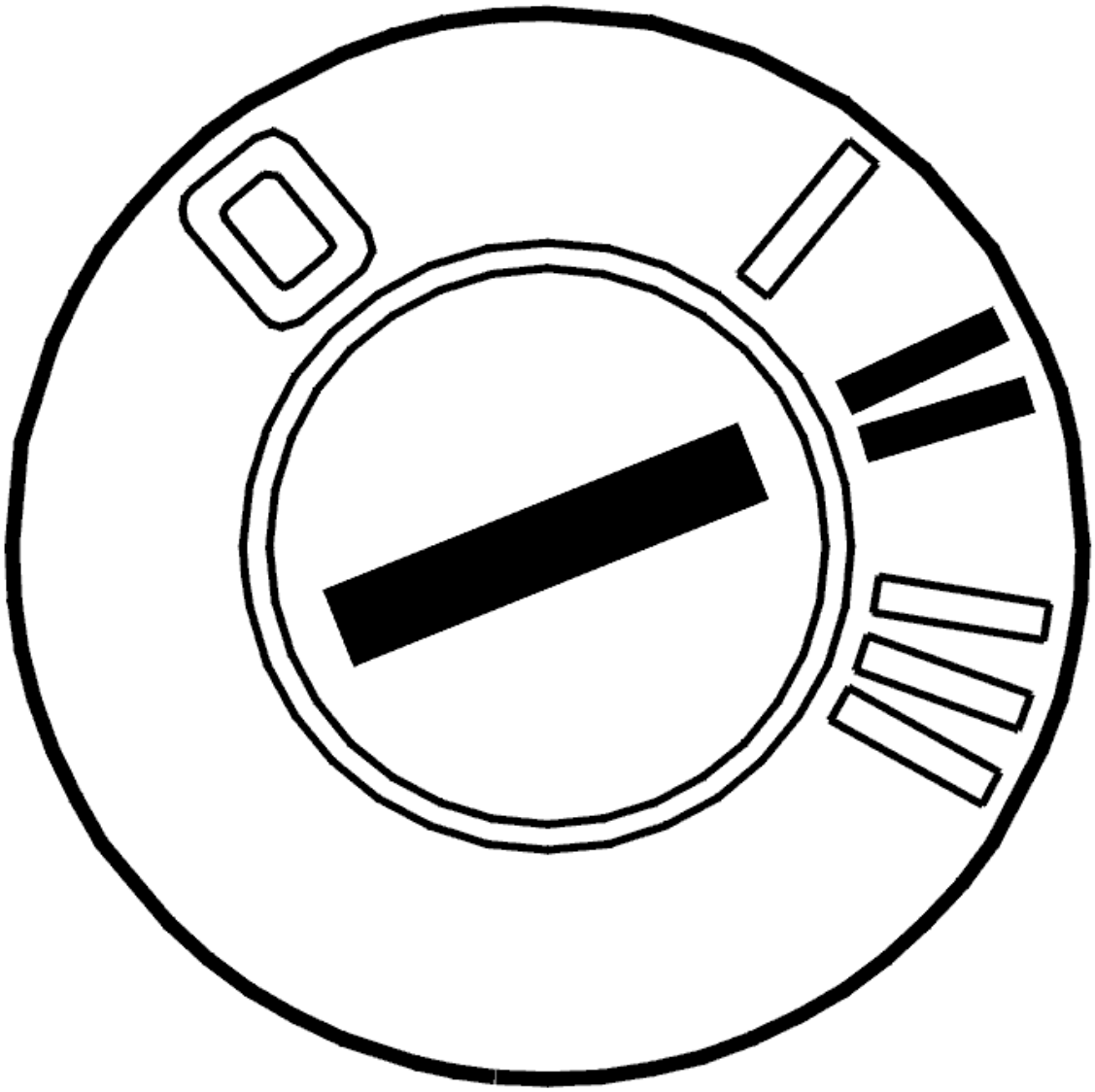

Fig. 111: Identifying Ignition ON
Courtesy of VOLVO CARS CORPORATION

- Ignition on
- Read off the clutch pedal movement by carefully pressing and releasing the clutch pedal.

  Check that the value changes with clutch pedal movement. The value must be between 60-70 % when the clutch pedal is unaffected and 10-20 % when the pedal is fully depressed.

  The fault is intermittent at the moment if the values are OK.

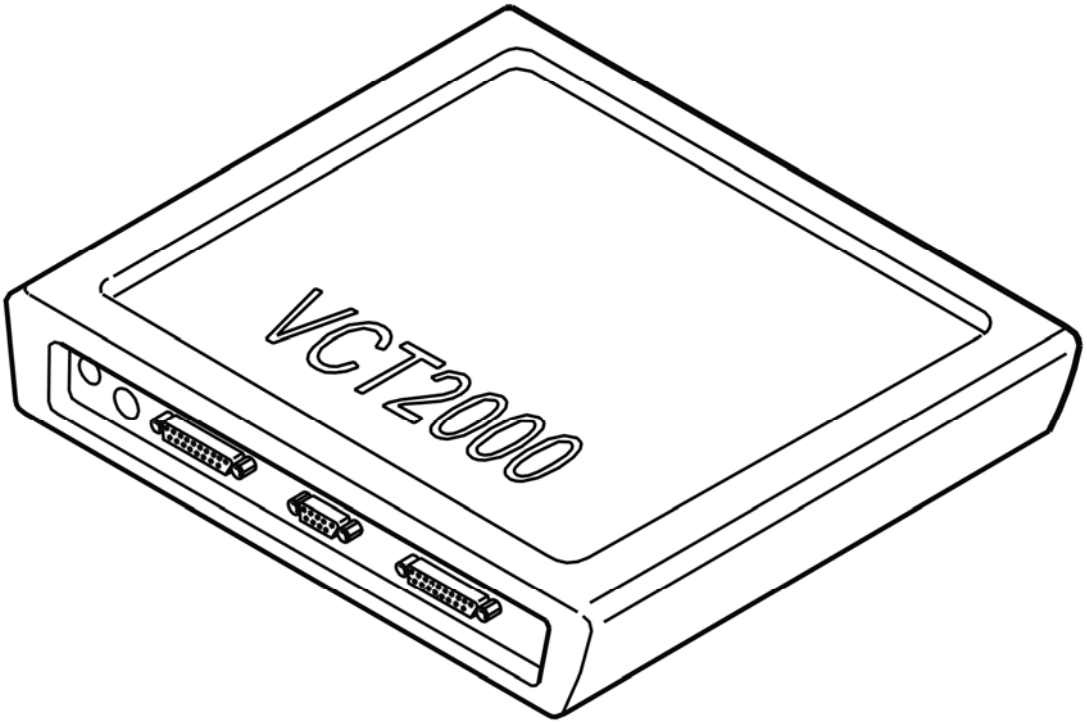

Fig. 112: Identifying VCT2000 Diagnostic Tool Symbol In VIDA
Courtesy of VOLVO CARS CORPORATION

- **Continue**

  Refer to **CHECKING COMPONENTS AND WIRING**

CHECKING COMPONENTS AND WIRING

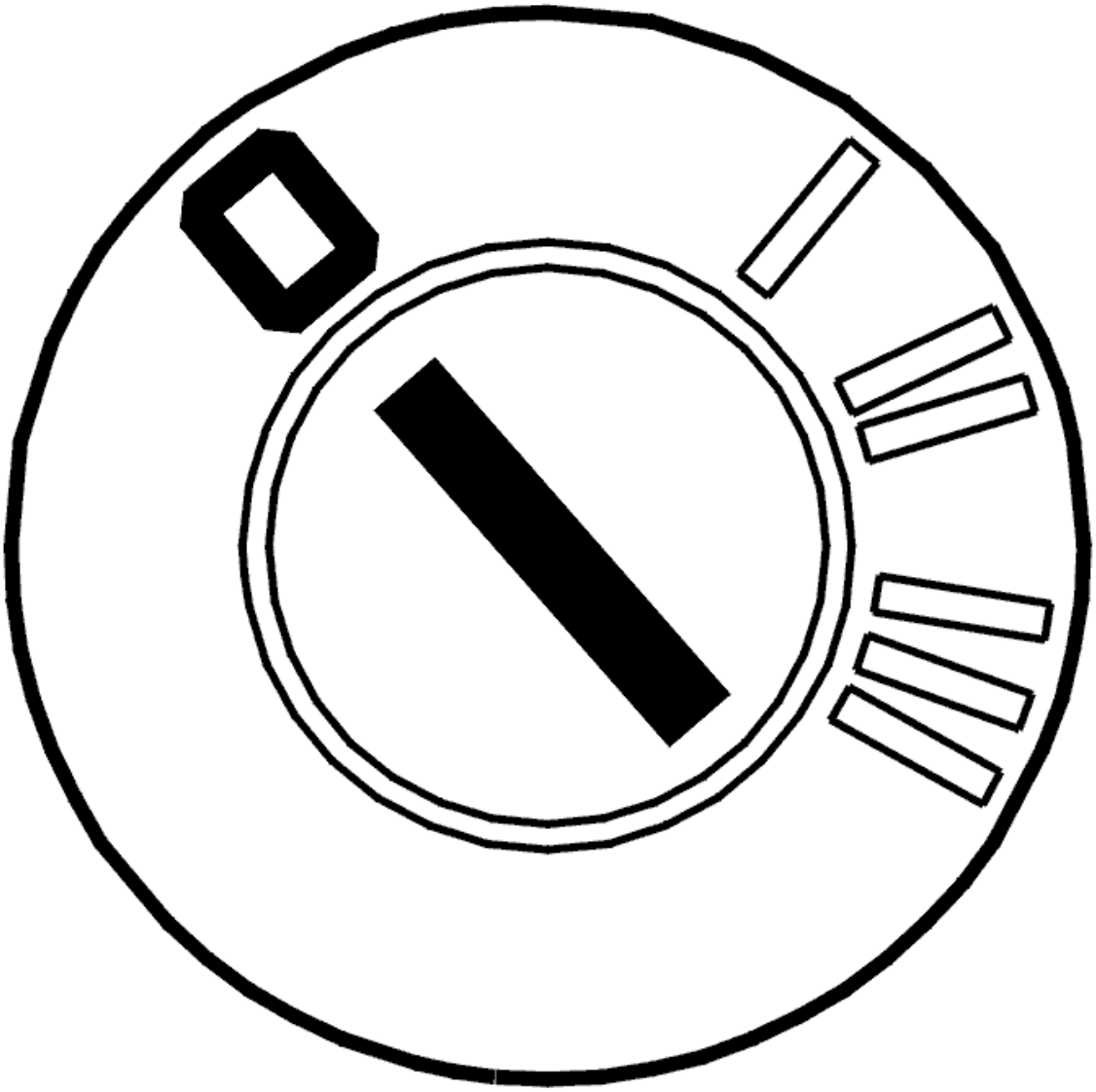

Fig. 113: Identifying Ignition OFF
Courtesy of VOLVO CARS CORPORATION

- Ignition off.

  Check the resistance of the clutch pedal sensor between terminals #2 and #4 (component side).

  Check the clutch pedal and engine control module (ECM) connectors. Check for contact resistance and oxidation.

  Check the signal cable between engine control module (ECM) terminal #B15 (#B25) and clutch pedal sensor terminal #2 (component side). Check for an open-circuit.

  Check the signal ground cable between engine control module (ECM) terminal #B4 (#B14) and clutch pedal sensor terminal #4 (cable harness side). Check for an open-circuit.

Check the clutch pedal sensor installation. Search for damage and check the connections visually.

HINT: With the ignition on, the power supply to the clutch pedal sensor must be approximately 5 V (measured with the clutch pedal sensor disconnected), measured between terminals #2 and #4 (cable harness side).

Remedy as necessary.

Other information:

- see **CONNECTING THE BREAKOUT BOX**
- For 5 cylinder turbocharged engines -2004, see **SIGNAL DESCRIPTION**
- For 5 cylinder turbocharged engines 2005-, see **SIGNAL SPECIFICATION** .
- For 6 cylinder engines -2004, see **SIGNAL SPECIFICATION**
- For 6 cylinder engines 2005-, see **SIGNAL SPECIFICATION** .
- For resistance values: **COMPONENT SPECIFICATIONS**
- see **PEDAL POSITION SENSOR CLUTCH, REPLACING**
- see **CHECKING WIRING AND TERMINALS**

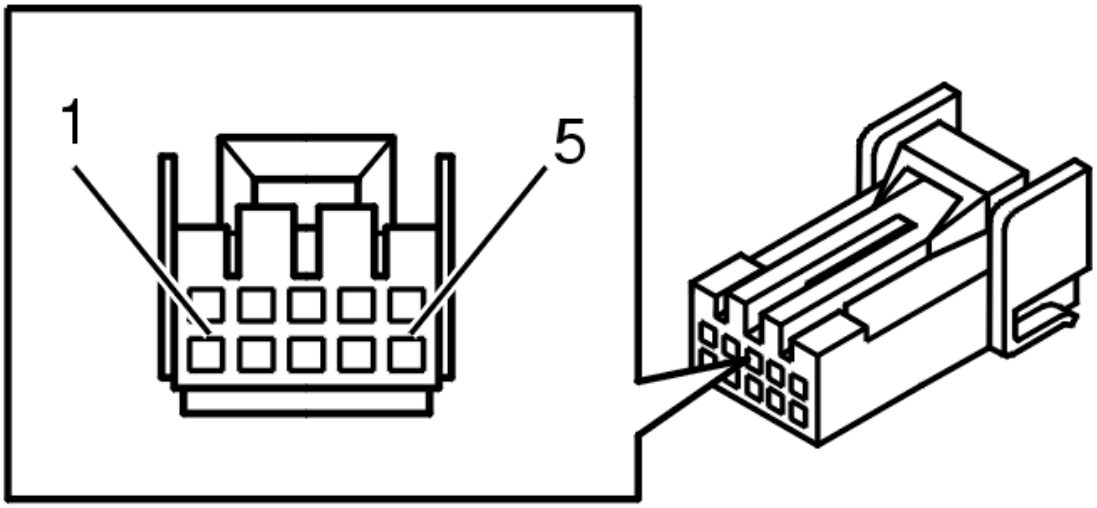

Fig. 114: 10 CD Changer Connector Terminals
Courtesy of VOLVO CARS CORPORATION

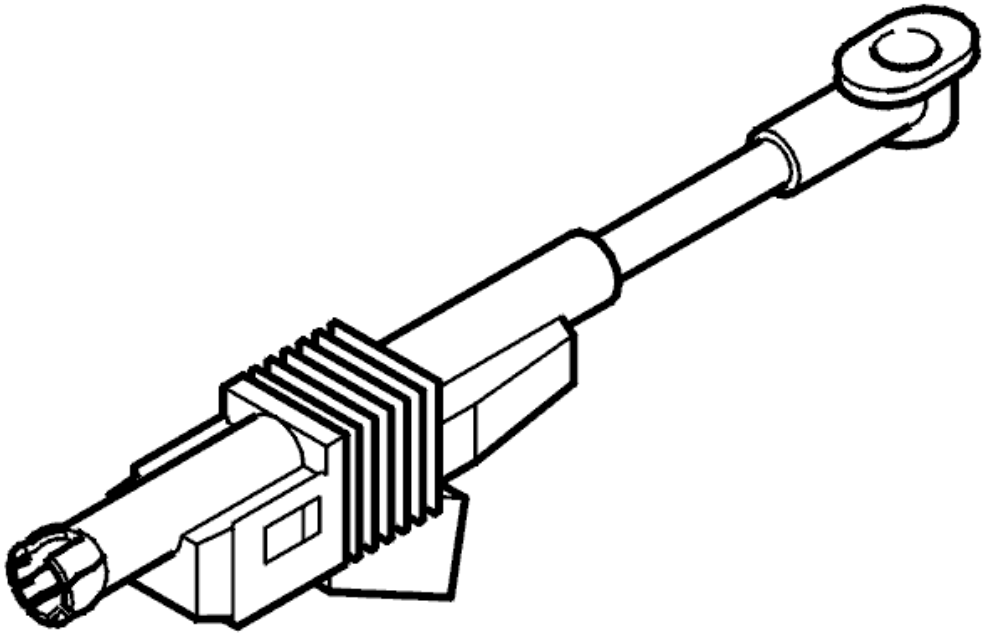

Fig. 115: Identifying Clutch Pedal Push Rod & Position Sensor
Courtesy of VOLVO CARS CORPORATION

- **Continue**

  Refer to **VERIFICATION**

VERIFICATION

VERIFICATION

HINT: After carrying out the repair, check that the fault has been remedied.

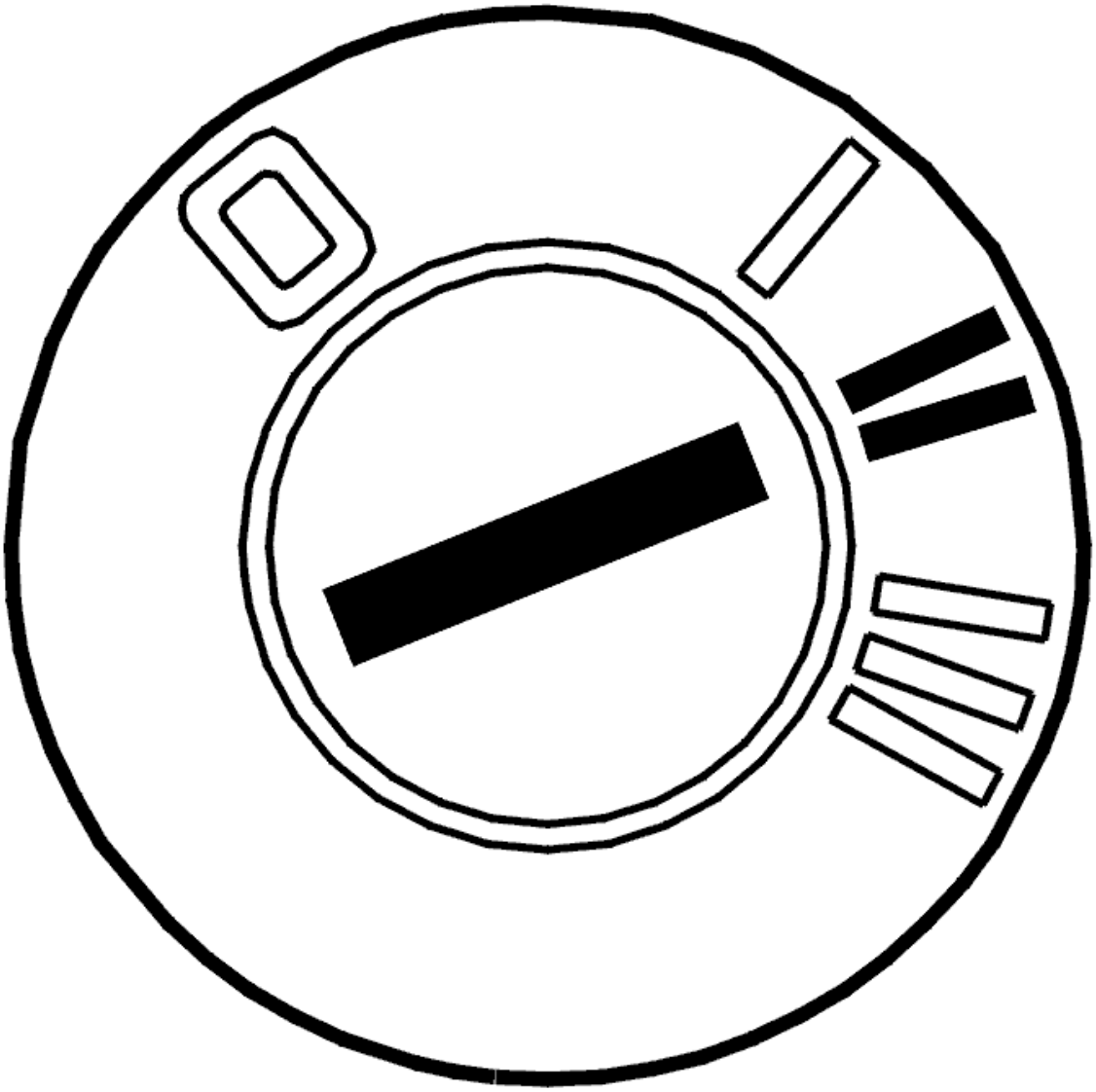

Fig. 116: Identifying Ignition ON
Courtesy of VOLVO CARS CORPORATION

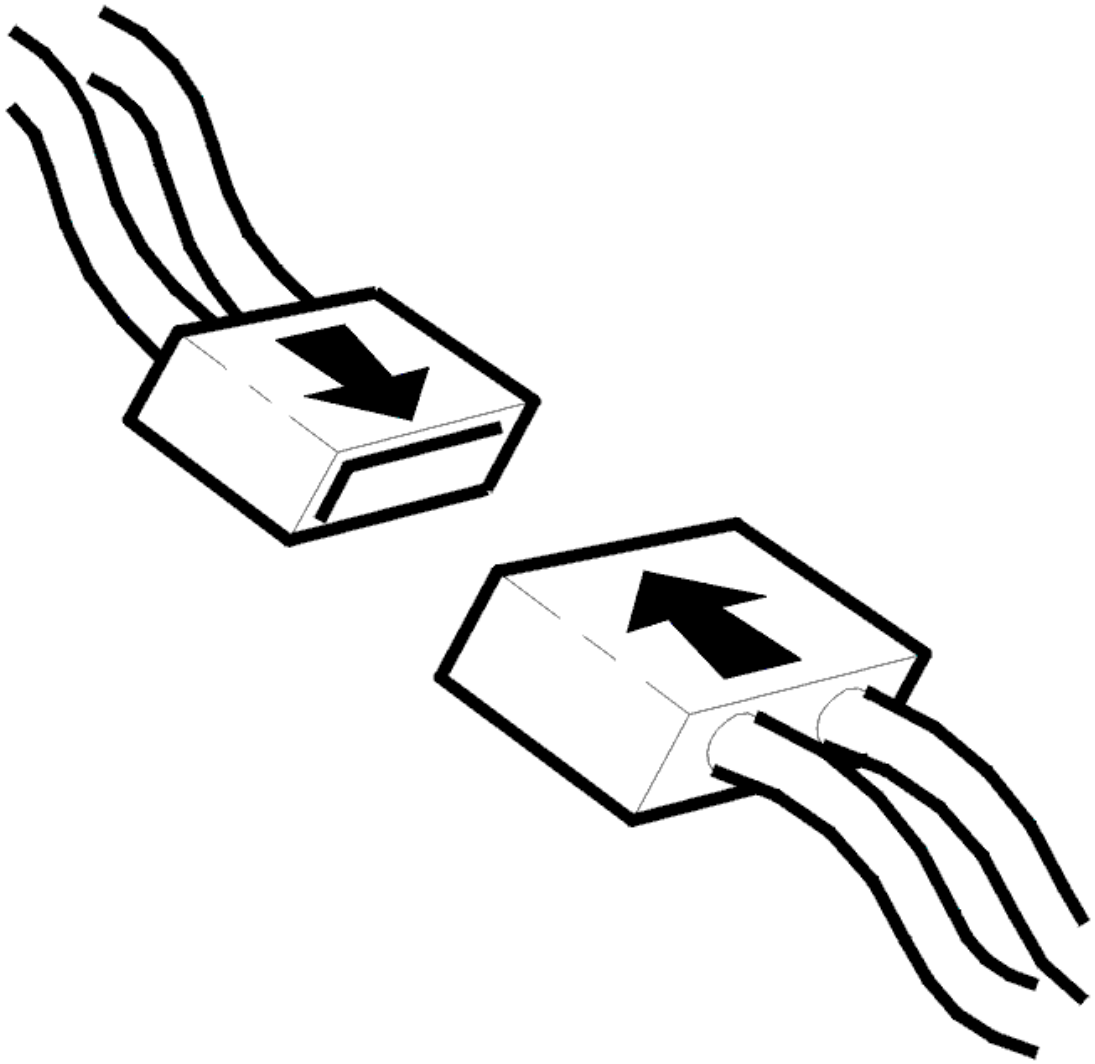

Fig. 117: Connecting Connector
Courtesy of VOLVO CARS CORPORATION

- Ignition off
- Reconnect the connectors, reinstall components etc.
- Ignition on
- Read off the clutch pedal movement by carefully pressing and releasing the clutch pedal.

  Check that the value changes with clutch pedal movement. The value must be between 60-70 % when the clutch pedal is unaffected and 10-20% when the pedal is fully depressed.

  The fault has been remedied if the values are OK.

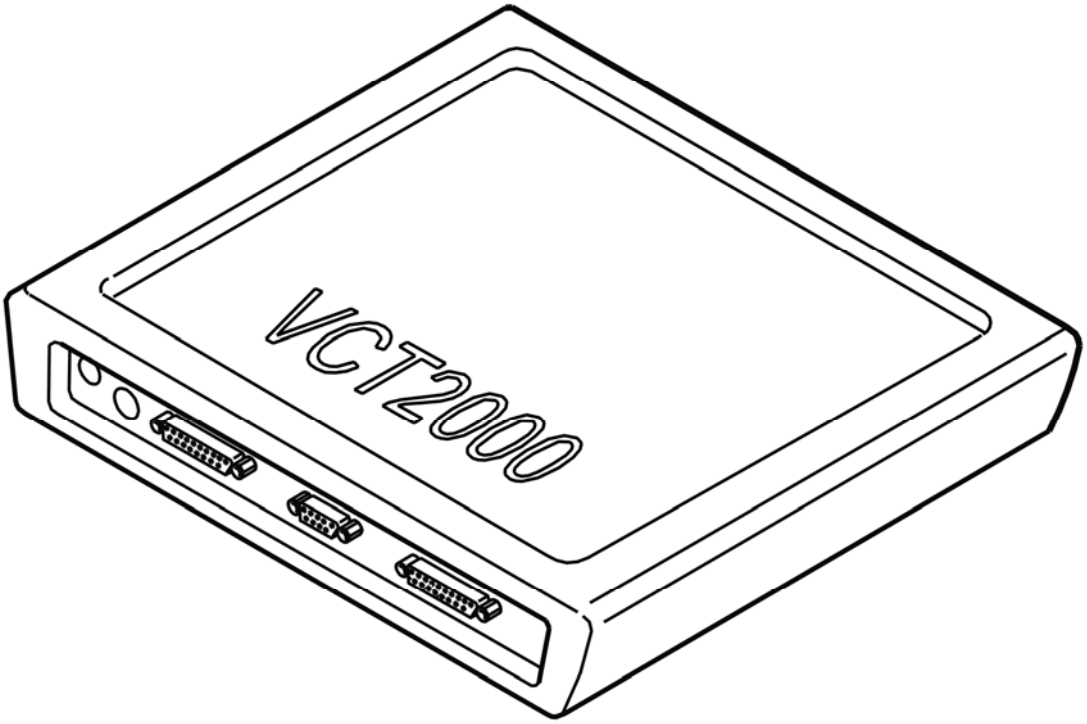

Fig. 118: Identifying VCT2000 Diagnostic Tool Symbol In VIDA
Courtesy of VOLVO CARS CORPORATION

Are these values OK?

- **YES**

  VERIFIED: Troubleshooting has been completed.

- **NO**

  Refer to **INFORMATION**

INFORMATION

FAULT-TRACING INFORMATION

The fault should have been detected and remedied. As this is not the case fault-tracing has failed.

Exit fault-tracing for this diagnostic trouble code (DTC) or make another attempt.

ECM-910C: CLUTCH PEDAL SENSOR. SIGNAL TOO HIGH (B6294T; 2005-2006)

DIAGNOSTIC TROUBLE CODE (DTC) INFORMATION ECM-910C

see **DIAGNOSTIC TROUBLE CODE (DTC) INFORMATION ECM-910C**

SIGNAL TOO HIGH / SIGNAL TOO LOW

see **SIGNAL TOO HIGH / SIGNAL TOO LOW**

ECM-910D: CLUTCH PEDAL SENSOR. SIGNAL TOO LOW (B5254T2; 2005-2007)

DIAGNOSTIC TROUBLE CODE (DTC) INFORMATION ECM-910D

Condition

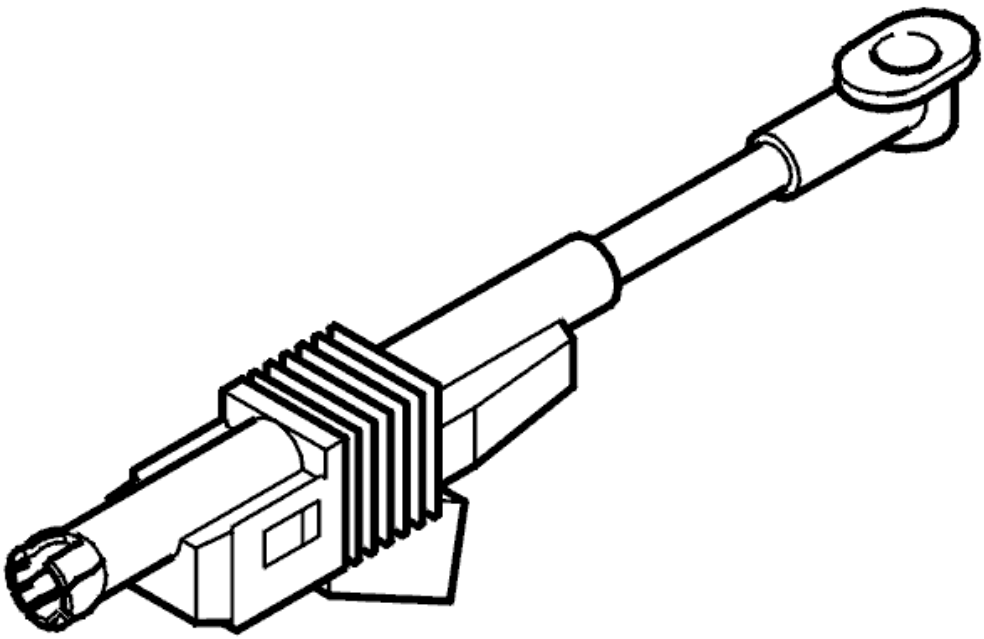

Fig. 119: Identifying Clutch Pedal Push Rod & Position Sensor
Courtesy of VOLVO CARS CORPORATION

The diagnostic trouble code (DTC) is stored if the engine control module (ECM) registers a fault in the signal from the clutch pedal position sensor.

The diagnostic trouble code (DTC) can be diagnosed when the ignition is switched on.

Substitute Value

Cruise control switched off.

Possible Source

- Short-circuit to ground in the signal cable
- Damaged clutch pedal sensor.

Fault symptom[s]

- Cruise control does not function at all.

SIGNAL TOO HIGH / SIGNAL TOO LOW

see **SIGNAL TOO HIGH / SIGNAL TOO LOW**

ECM-910D: CLUTCH PEDAL SENSOR. SIGNAL TOO LOW (B6294T; 2005-2006)

DIAGNOSTIC TROUBLE CODE (DTC) INFORMATION ECM-910D

see **DIAGNOSTIC TROUBLE CODE (DTC) INFORMATION ECM-910D**

SIGNAL TOO HIGH / SIGNAL TOO LOW

see **SIGNAL TOO HIGH / SIGNAL TOO LOW**

ECM-9117: THROTTLE UNIT. FAULTY SIGNAL (B5254T2; B6294T; 2003-2004)

DIAGNOSTIC TROUBLE CODE (DTC) INFORMATION

Condition

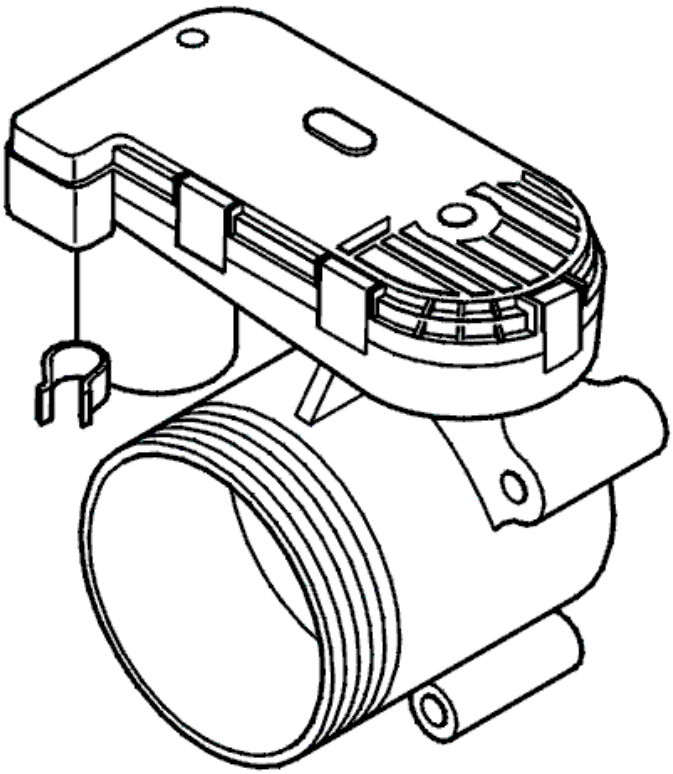

Fig. 120: Identifying Throttle Unit & Potentiometer
Courtesy of VOLVO CARS CORPORATION

Diagnostic trouble code (DTC) ECM-9117 is stored if the engine control module (ECM) registers that the throttle angle at the return limit position is outside the programmed parameter when trying to adapt the throttle unit.

Substitute Value

None.

Possible Source

Faulty signal:

- The throttle is sticking or is blocked (oil film, dust etc.)

- Contact resistance or oxidation in the terminals between the engine control module (ECM) and the throttle unit
- Defective throttle unit.

Fault symptom[s]

- Driving/Poor performance/lacks power
- Idling/Uneven idle

FAULTY SIGNAL

FAULT-TRACING INFORMATION

FAULT-TRACING INFORMATION

CAUTION: The male and female pins on the electronic throttle unit connectors are gold plated. Great care must be taken when measuring. Damage to the gold plating can result in operating difficulties.

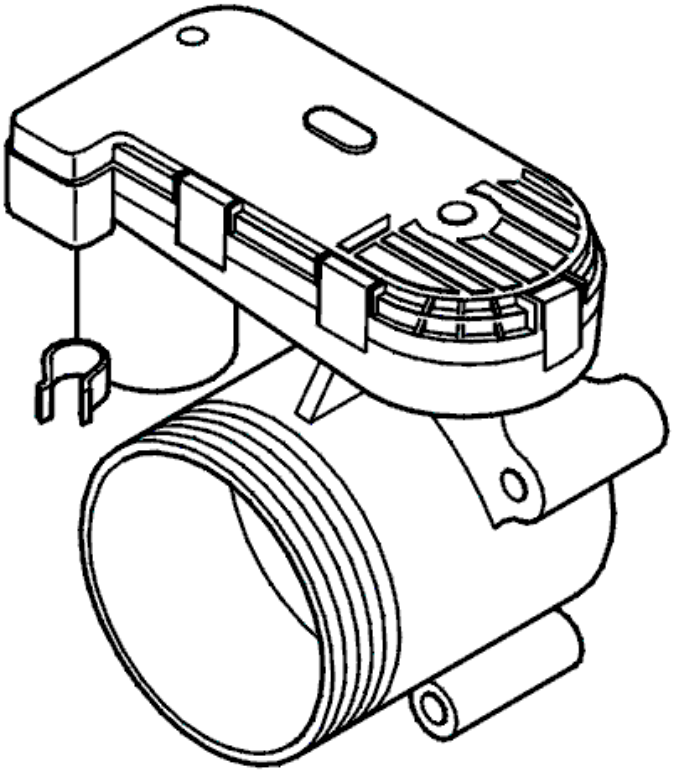

Fig. 121: Identifying Throttle Unit & Potentiometer
Courtesy of VOLVO CARS CORPORATION

- **Continue**

Refer to **CHECKING COMPONENTS AND WIRING**

CHECKING COMPONENTS AND WIRING

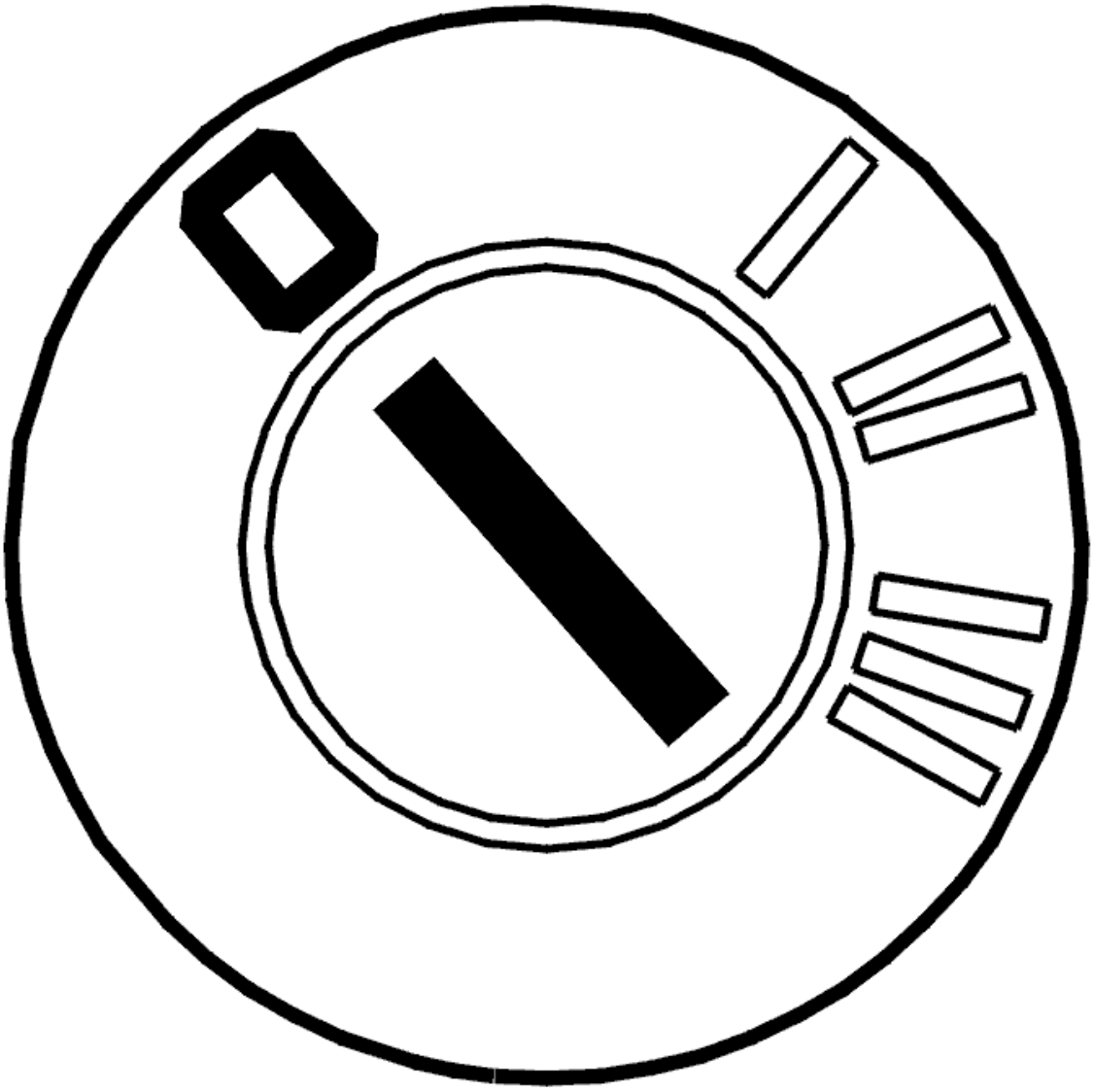

Fig. 122: Identifying Ignition OFF
Courtesy of VOLVO CARS CORPORATION

- Ignition off.

  Check the throttle unit and engine control module (ECM) connectors. Check for contact resistance and oxidation.

  Check the resistance values of the potentiometers in the throttle unit.

  Check that the shutter in the throttle unit is not blocked or sticking. Clean as necessary.

Check the function of the integrated return spring in the throttle unit by carefully manually turning the throttle to wide open position and then carefully releasing the throttle. Check that the return spring returns the shutter to its resting position.

If the return spring does not return the shutter, the throttle unit is defective.

Remedy as necessary.

Other information:

- see **CHECKING WIRING AND TERMINALS**
- For resistance values, see **COMPONENT SPECIFICATIONS**
- For 5 cylinder turbocharged engines -2004, see **SIGNAL DESCRIPTION**
- For 5 cylinder turbocharged engines 2005-, see **SIGNAL SPECIFICATION** .
- For 6 cylinder engines -2004, see **SIGNAL SPECIFICATION**
- For 6 cylinder engines 2005-, see **SIGNAL SPECIFICATION** .
- For B5xx4T, see **THROTTLE BODY (ELECTRONIC THROTTLE MODULE), REPLACING** .
- For B6xx4T, see **THROTTLE BODY (ELECTRONIC THROTTLE MODULE), REPLACING** .
- For B5xx4T, see **THROTTLE BODY (TB), CLEANING** .
- For B6xx4x, see **THROTTLE BODY (TB), CLEANING** .

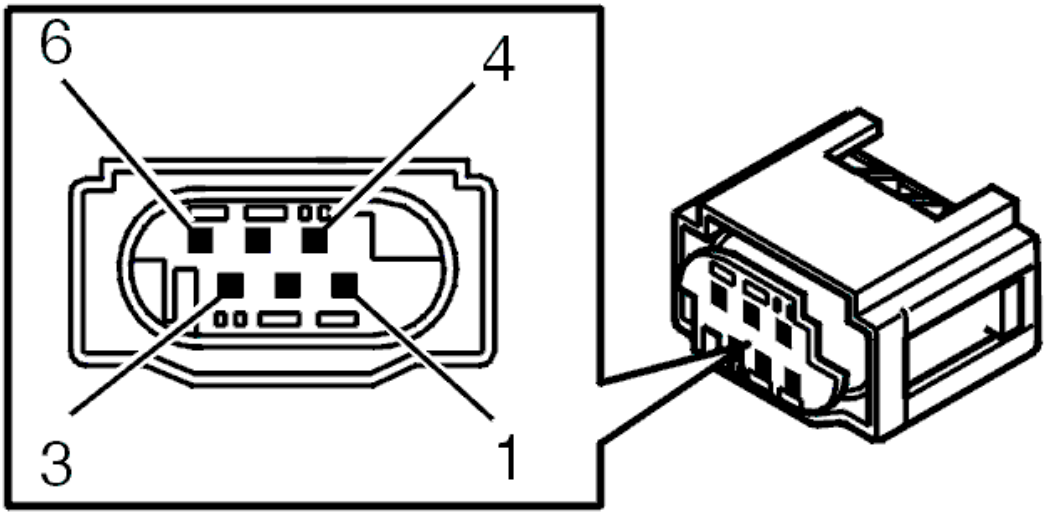

Fig. 123: Identifying Throttle Unit Connector Terminals
Courtesy of VOLVO CARS CORPORATION

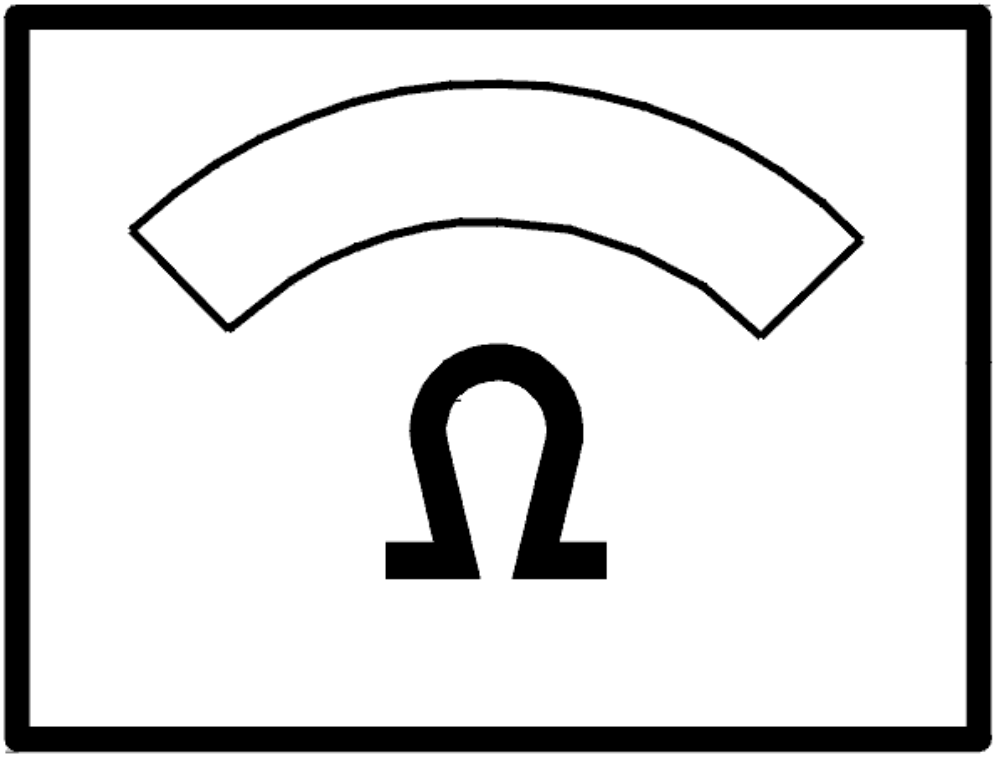

Fig. 124: Identifying Ohm Meter
Courtesy of VOLVO CARS CORPORATION

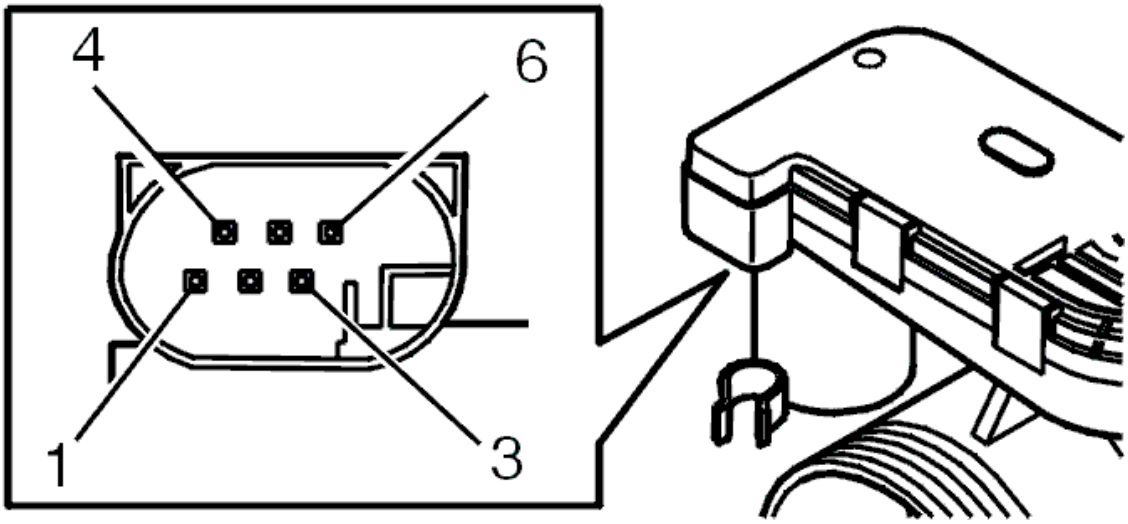

Fig. 125: Identifying Throttle Unit Connector Terminals
Courtesy of VOLVO CARS CORPORATION

- **Continue**

Refer to **ADAPTATION OF THE THROTTLE UNIT**

ADAPTATION OF THE THROTTLE UNIT

HINT: Faults which caused this diagnostic trouble code (DTC) may affect the adaptation values for the throttle unit. Carry out adaptation of the throttle unit to update the adaptation values.

NOTE: The ignition must be switched on for at least 30 seconds after the basic conditions are met in order for the adaptation to start. It takes approximately 10 seconds to run the adaptation.

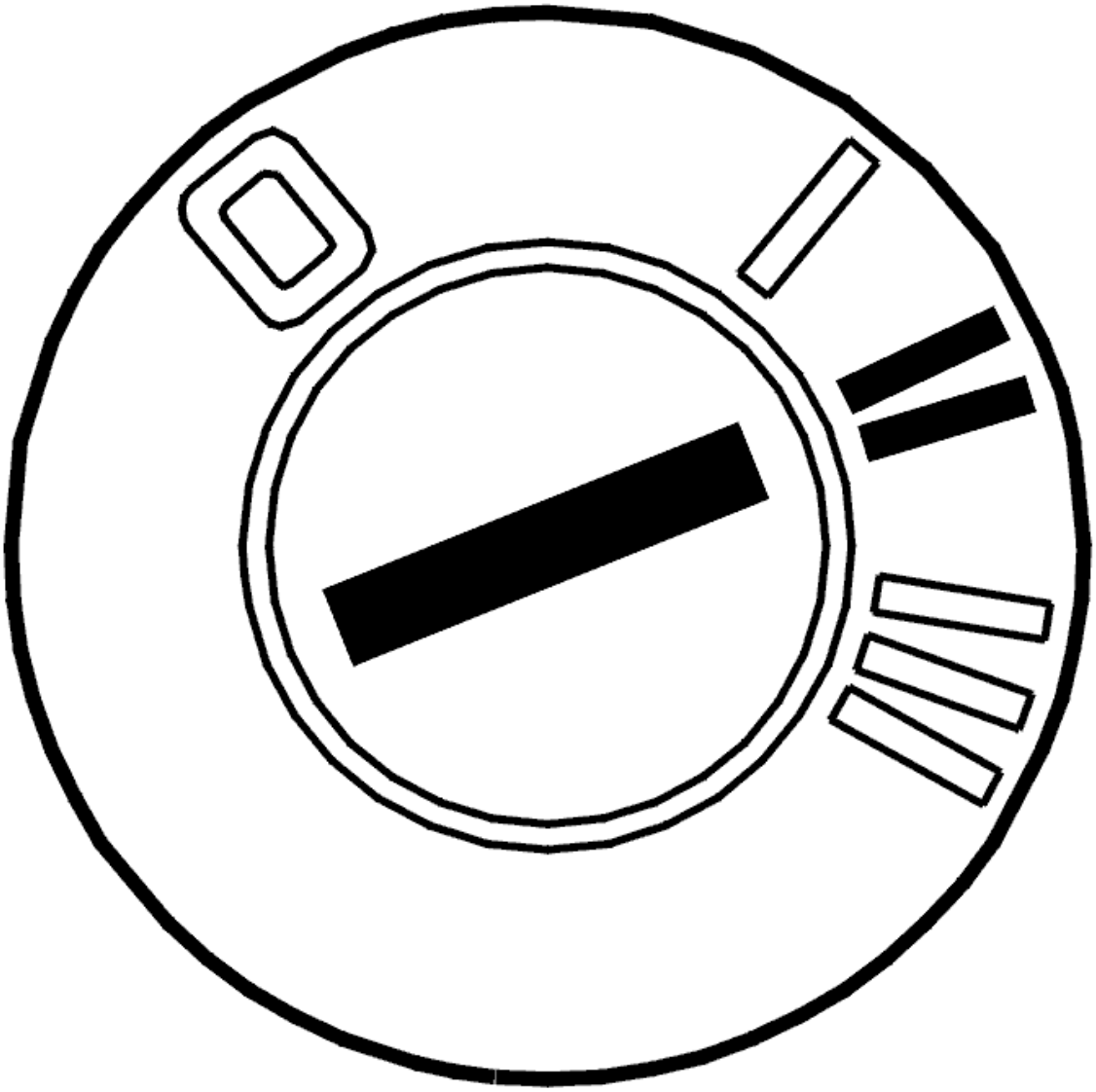

Fig. 126: Identifying Ignition ON
Courtesy of VOLVO CARS CORPORATION

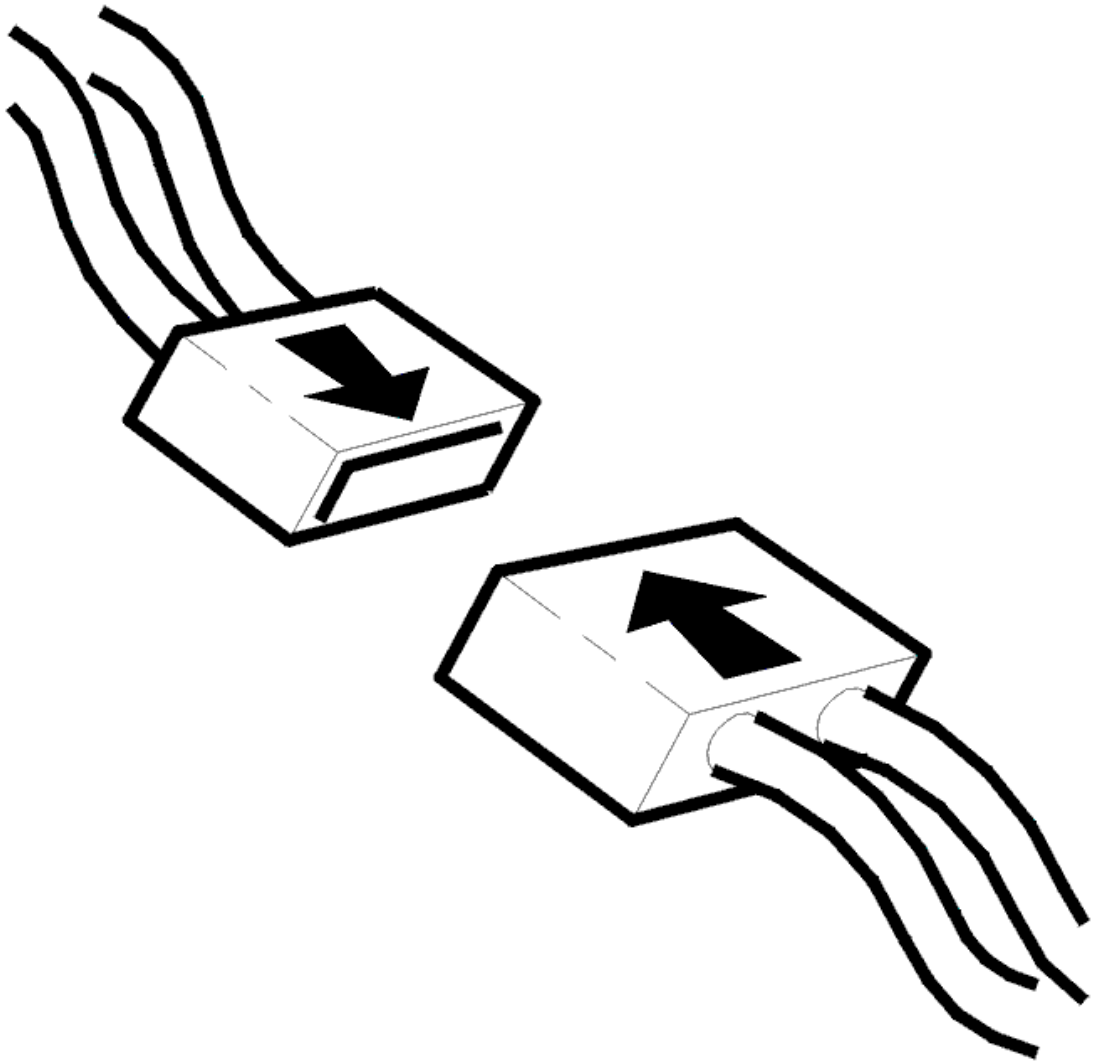

Fig. 127: Connecting Connector
Courtesy of VOLVO CARS CORPORATION

- Ignition off
- Reinstall the components and connectors etc.
- Ignition on
- Read off the parameters.

Check that the following basic conditions for adaptation of the throttle unit are met.

1. Ignition on / engine off
2. Battery voltage above 10 V
3. Accelerator pedal (AP) unaffected
4. The car must be stationary (no vehicle speed signal)

5. Engine coolant temperature (ECT) between 5-100 °C
6. Intake air temperature (IAT) above 5 °C.

Remedy as necessary.

Check that the adaptation is correctly run after the "Adaptation of the throttle unit running" parameter changes status from "YES" to "NO". When all basic conditions are met, the adaptation must be completed after approximately 40 seconds. When the adaptation is completed correctly, the following information will be displayed:

- Adaptation of the throttle unit: OK
- Adaptation of the throttle unit running: NO.

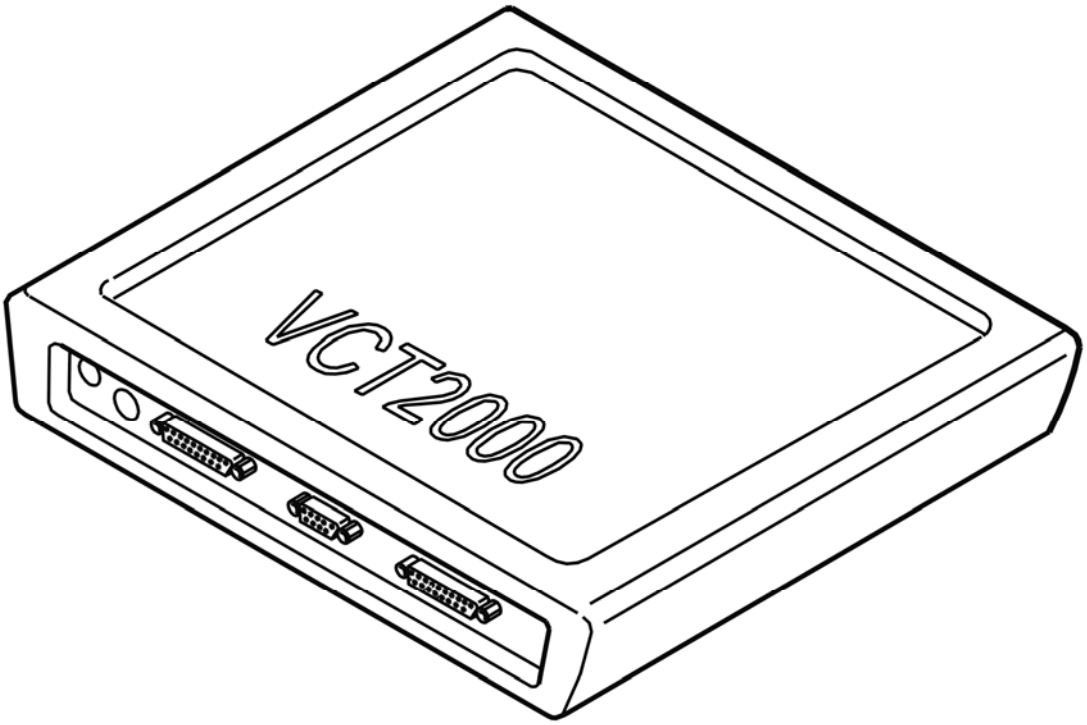

Fig. 128: Identifying VCT2000 Diagnostic Tool Symbol In VIDA
Courtesy of VOLVO CARS CORPORATION

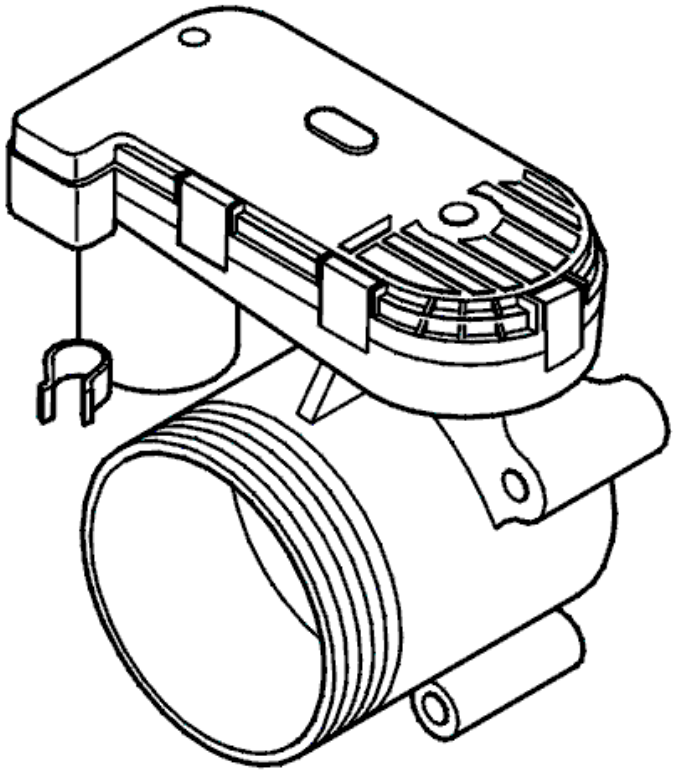

Fig. 129: Identifying Throttle Unit & Potentiometer
Courtesy of VOLVO CARS CORPORATION

- **Continue**

  Refer to **CHECKING THE FAULT STATUS**

CHECKING THE FAULT STATUS

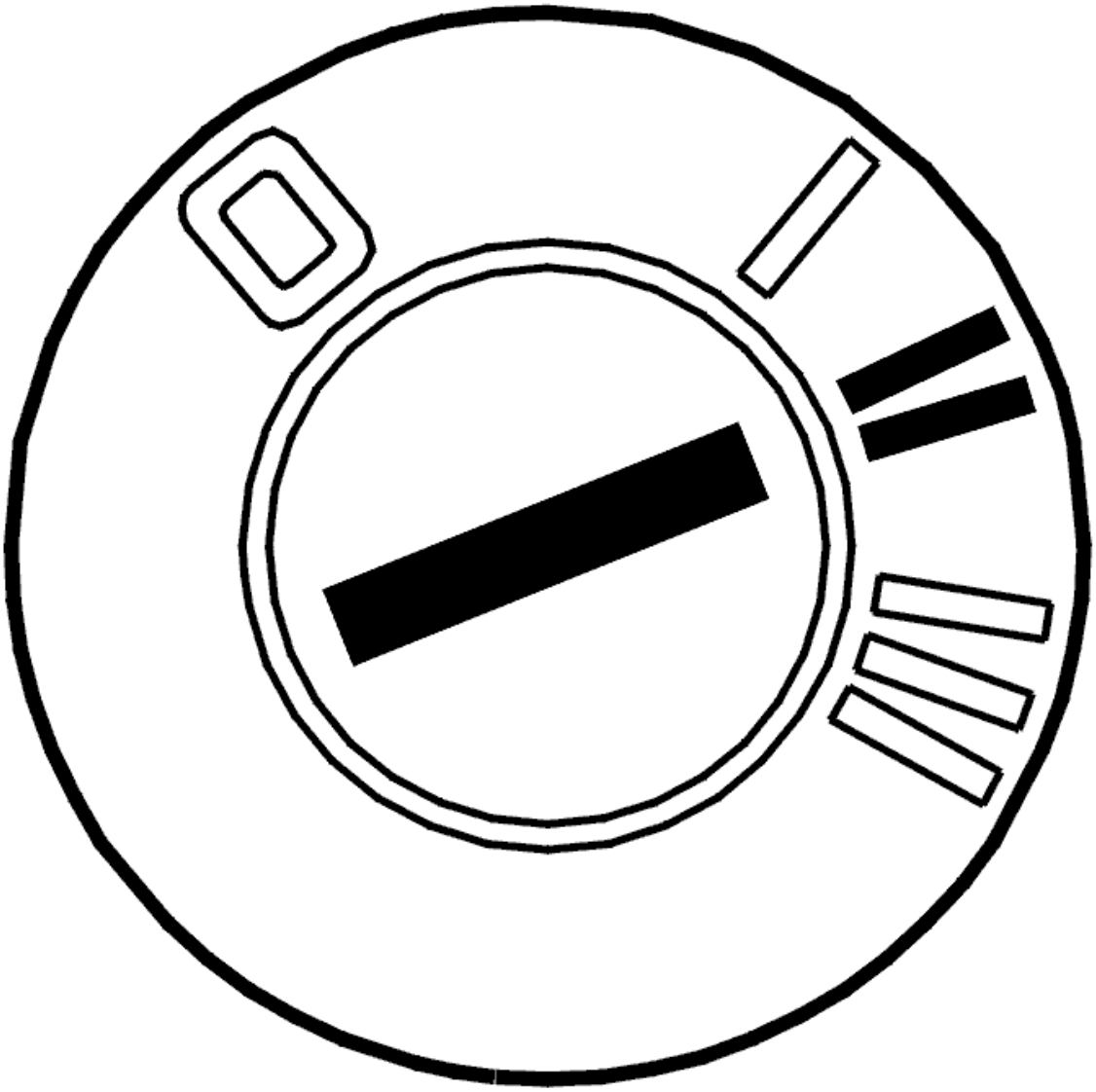

Fig. 130: Identifying Ignition ON
Courtesy of VOLVO CARS CORPORATION

- Ignition on
- Read off the diagnostic status and the fault status for diagnostic trouble code (DTC) ECM-9117.

  Check that the fault status is "NO FAULT FOUND" when the diagnostic status is COMPLETED. If the fault status is "FAULT FOUND" when the diagnostic status is COMPLETED there is a fault.

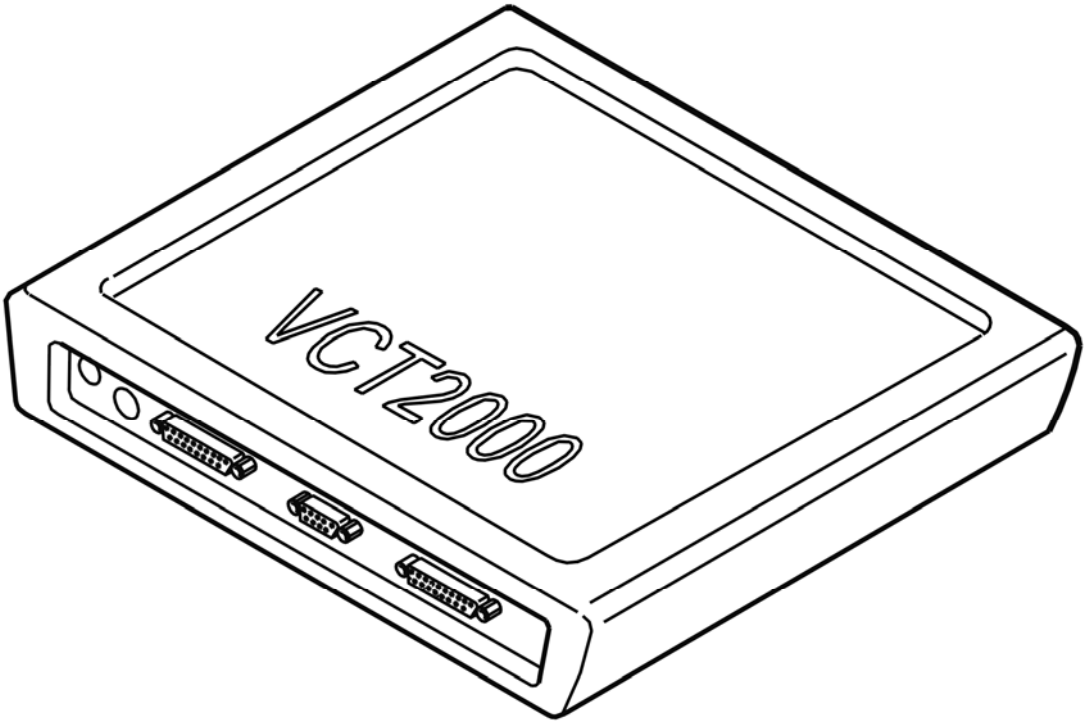

Fig. 131: Identifying VCT2000 Diagnostic Tool Symbol In VIDA
Courtesy of VOLVO CARS CORPORATION

Is the fault status "NO FAULT FOUND"?

- **YES**

  OKAY: Troubleshooting has been completed.

- **NO**

  Refer to **REPLACING THE COMPONENT**

REPLACING THE COMPONENT

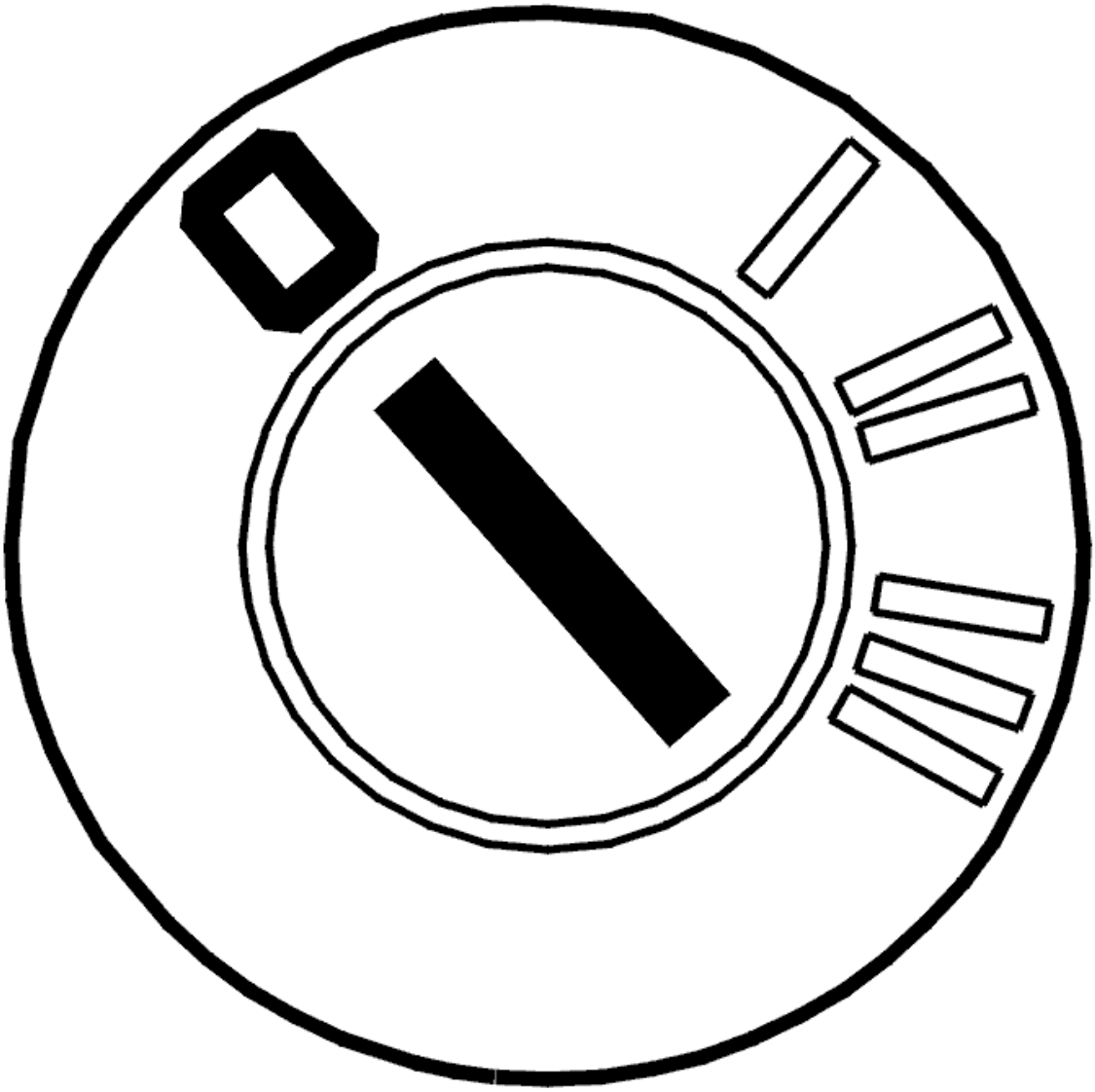

Fig. 132: Identifying Ignition OFF
Courtesy of VOLVO CARS CORPORATION

- Ignition off.

  Try a new throttle unit.
  - For B5xx4T, see **THROTTLE BODY (ELECTRONIC THROTTLE MODULE), REPLACING** .
  - For B6xx4T, see **THROTTLE BODY (ELECTRONIC THROTTLE MODULE), REPLACING** .

  .

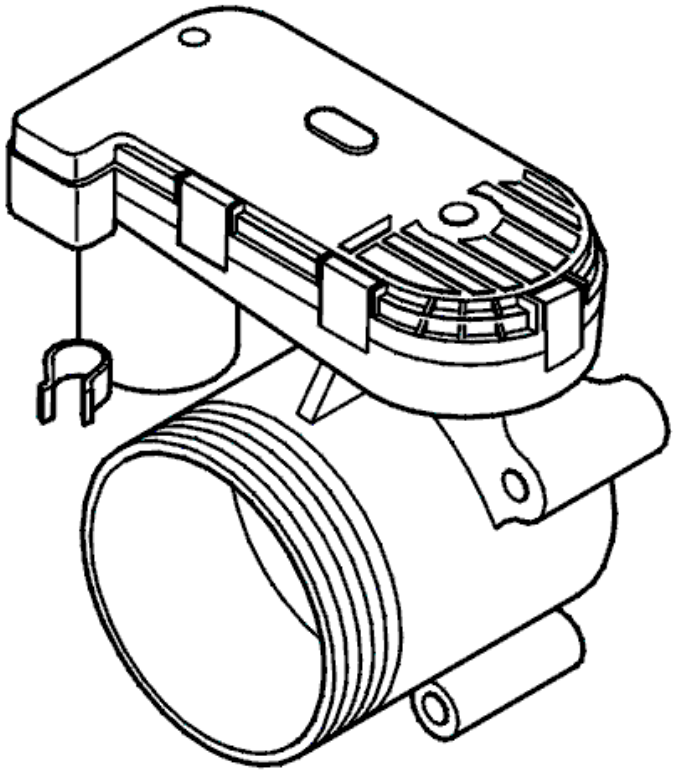

Fig. 133: Identifying Throttle Unit & Potentiometer
Courtesy of VOLVO CARS CORPORATION

- **Continue**

  Refer to **VERIFICATION**

VERIFICATION

VERIFICATION

HINT: After carrying out the repair, check that the fault has been remedied.

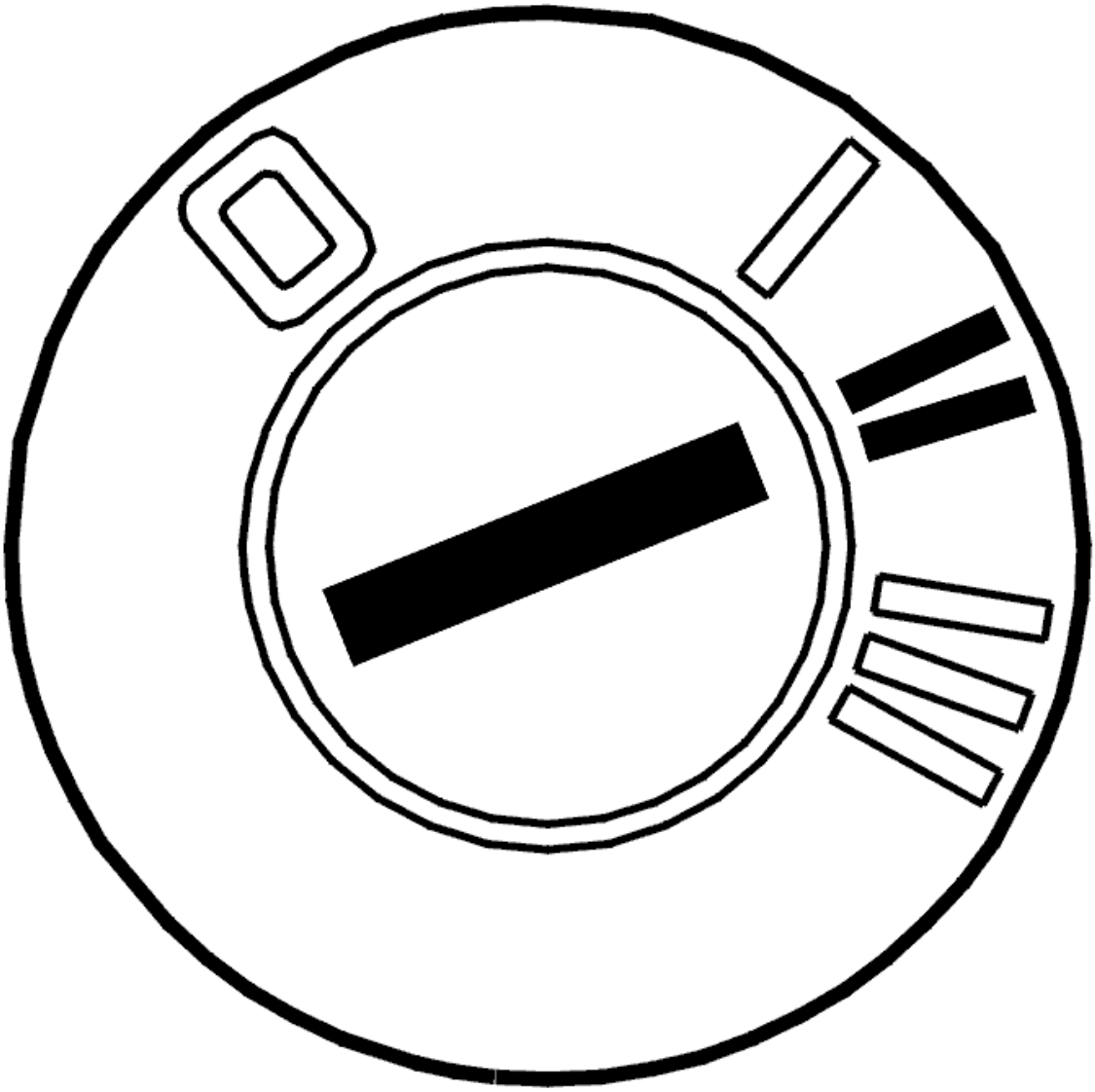

Fig. 134: Identifying Ignition ON
Courtesy of VOLVO CARS CORPORATION

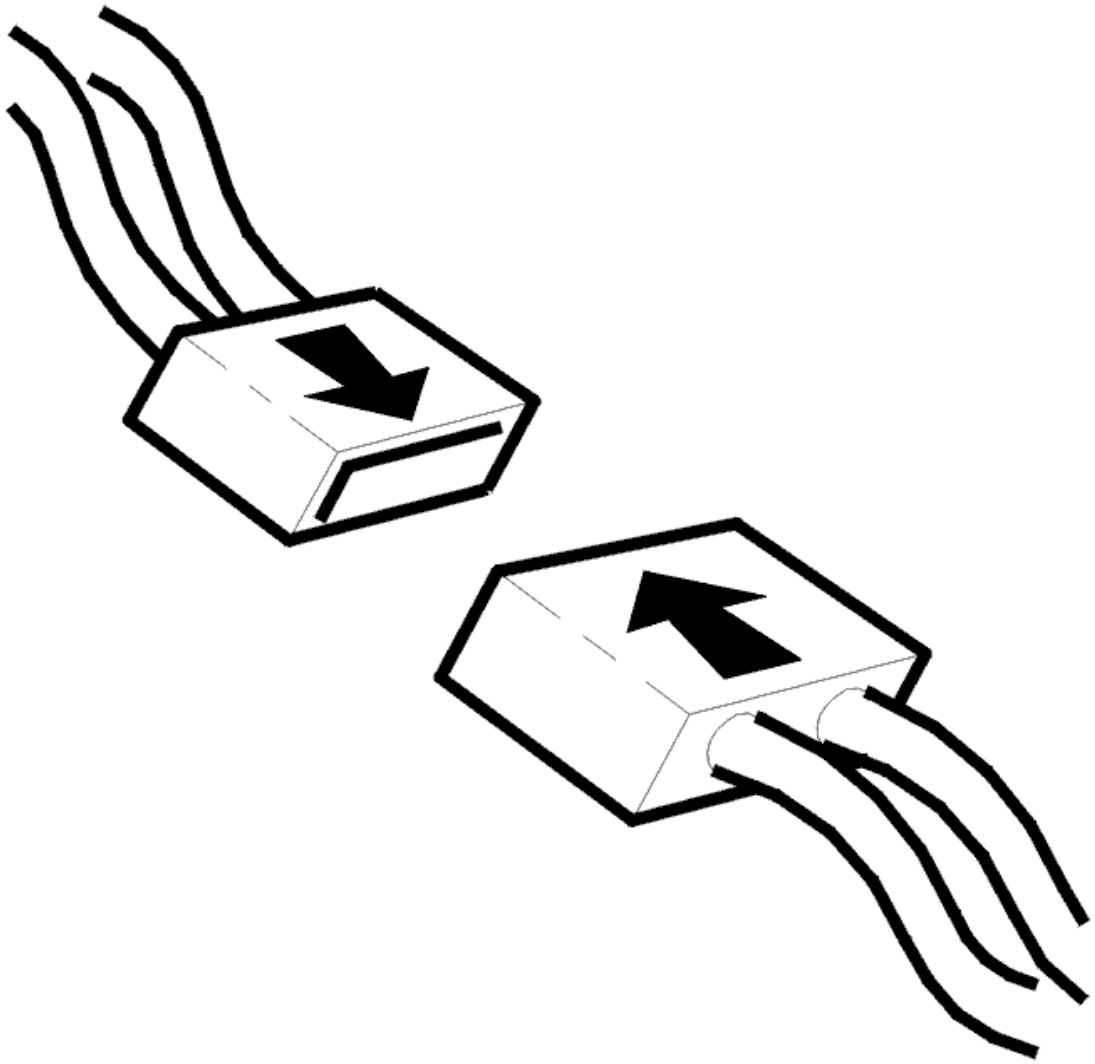

Fig. 135: Connecting Connector
Courtesy of VOLVO CARS CORPORATION

- Ignition off
- Reinstall the connectors, components etc.
- Ignition on
- Read off the parameters.

Check that the following basic conditions for adaptation of the throttle unit are met.

1. Ignition on / engine off
2. Battery voltage above 10 V
3. Accelerator pedal (AP) unaffected
4. The car must be stationary (no vehicle speed signal)

5. Engine coolant temperature (ECT) between 5-100 °C
6. Intake air temperature (IAT) above 5 °C.

Remedy as necessary.

Check that the adaptation is correctly run after the "Adaptation of the throttle unit running" parameter changes status from "YES" to "NO". When all basic conditions are met, the adaptation must be completed after approximately 40 seconds. When the adaptation is completed correctly, the following information will be displayed:

- Adaptation of the throttle unit: OK
- Adaptation of the throttle unit running: NO.

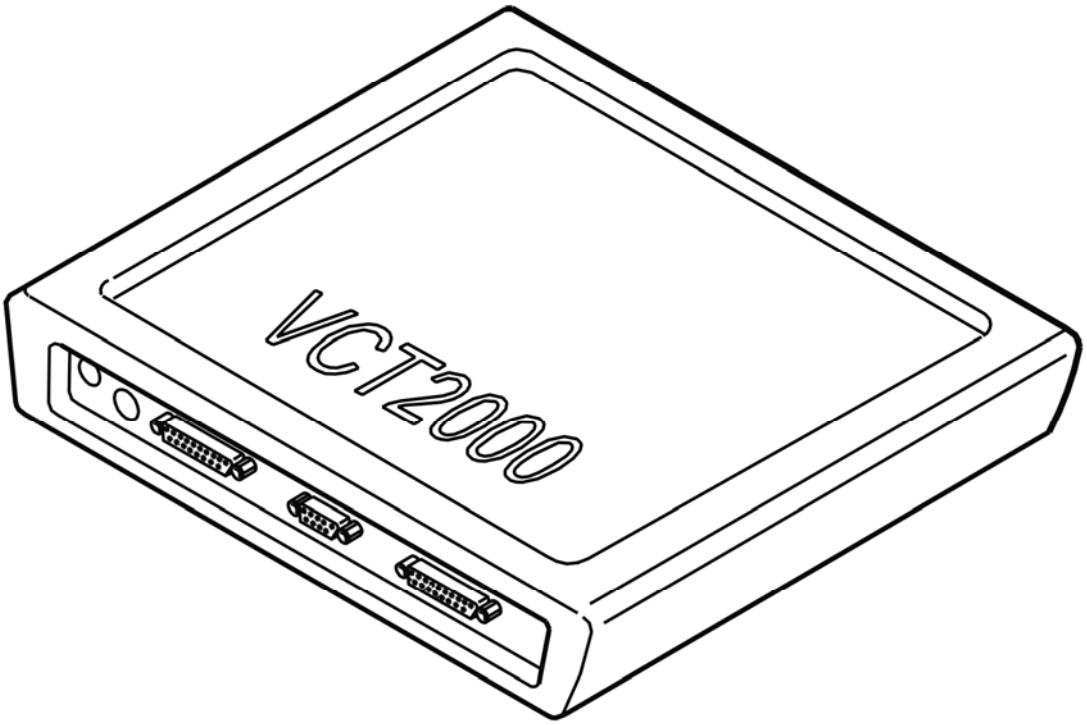

Fig. 136: Identifying VCT2000 Diagnostic Tool Symbol In VIDA
Courtesy of VOLVO CARS CORPORATION

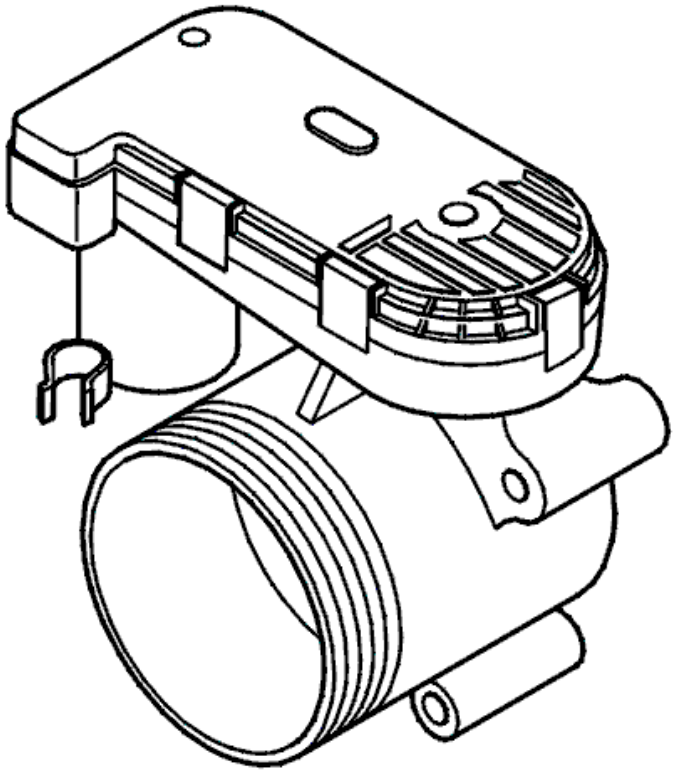

Fig. 137: Identifying Throttle Unit & Potentiometer
Courtesy of VOLVO CARS CORPORATION

- **Continue**

  Refer to **VERIFICATION, CONTINUED**

VERIFICATION, CONTINUED

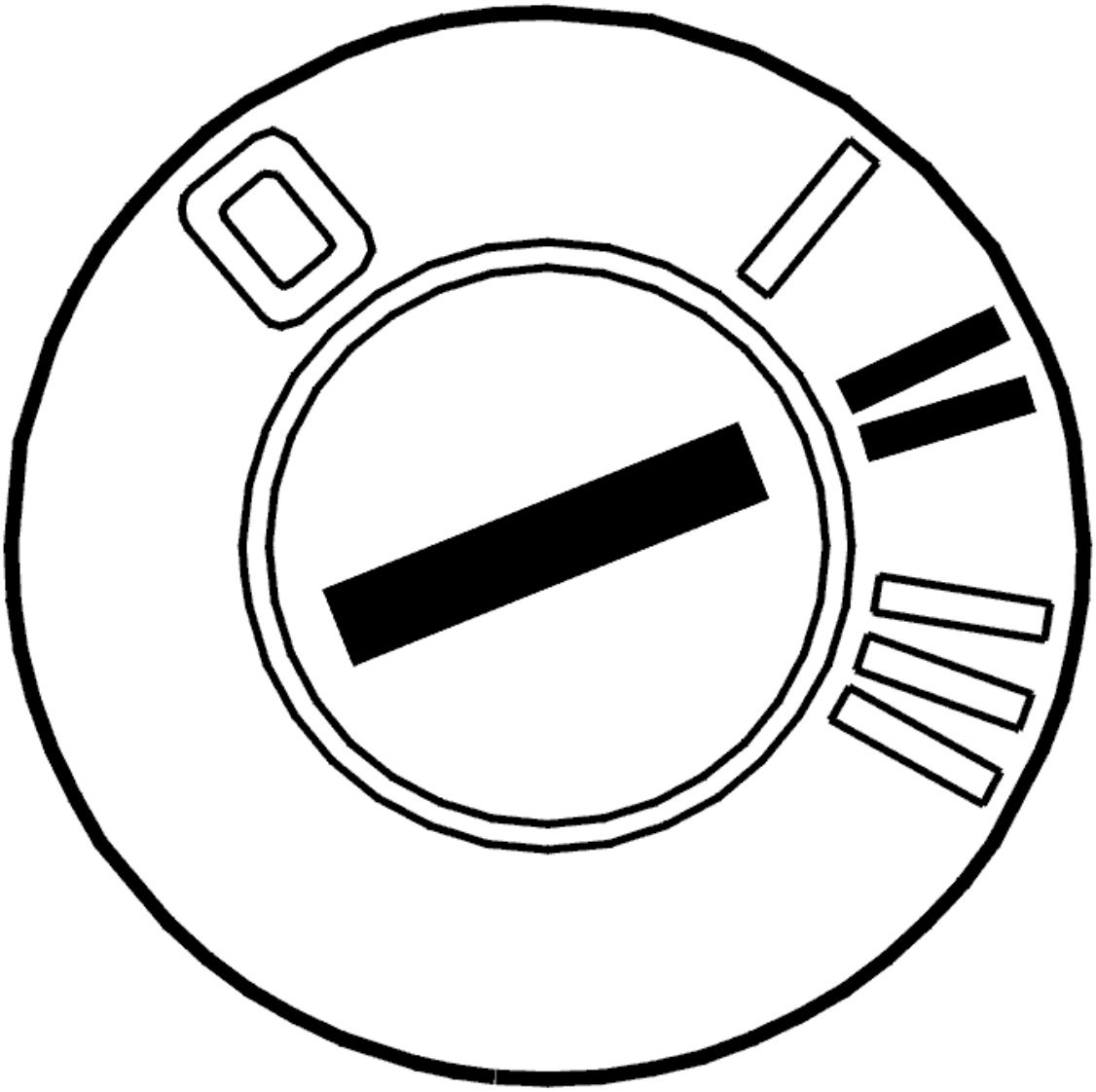

Fig. 138: Identifying Ignition ON
Courtesy of VOLVO CARS CORPORATION

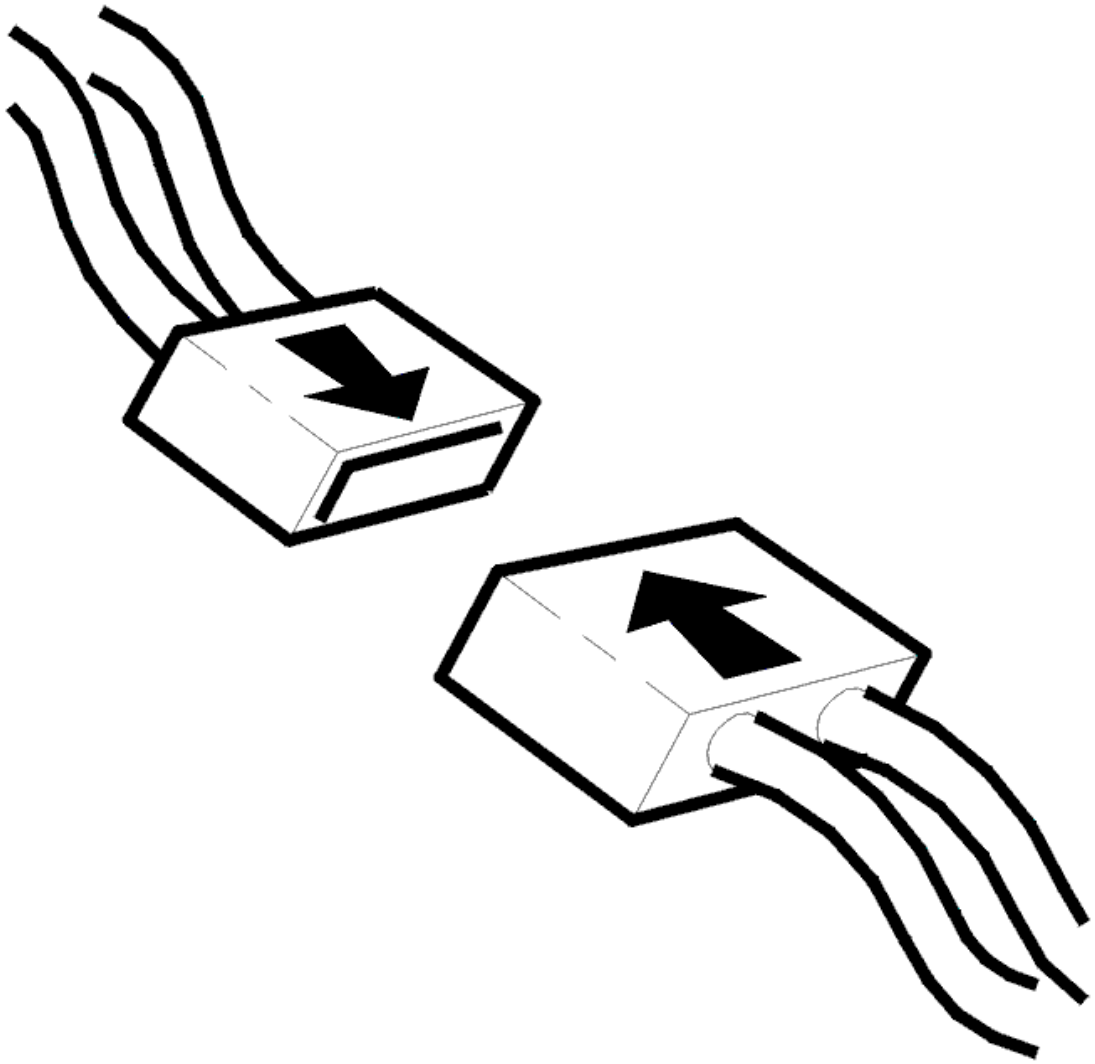

Fig. 139: Connecting Connector
Courtesy of VOLVO CARS CORPORATION

- Ignition on
- Read off the diagnostic status and the fault status for diagnostic trouble code (DTC) ECM-9117.

  Check that the fault status is "NO FAULT FOUND" when the diagnostic status is COMPLETED. If the fault status is "FAULT FOUND" when the diagnostic status is COMPLETED there fault is still present.

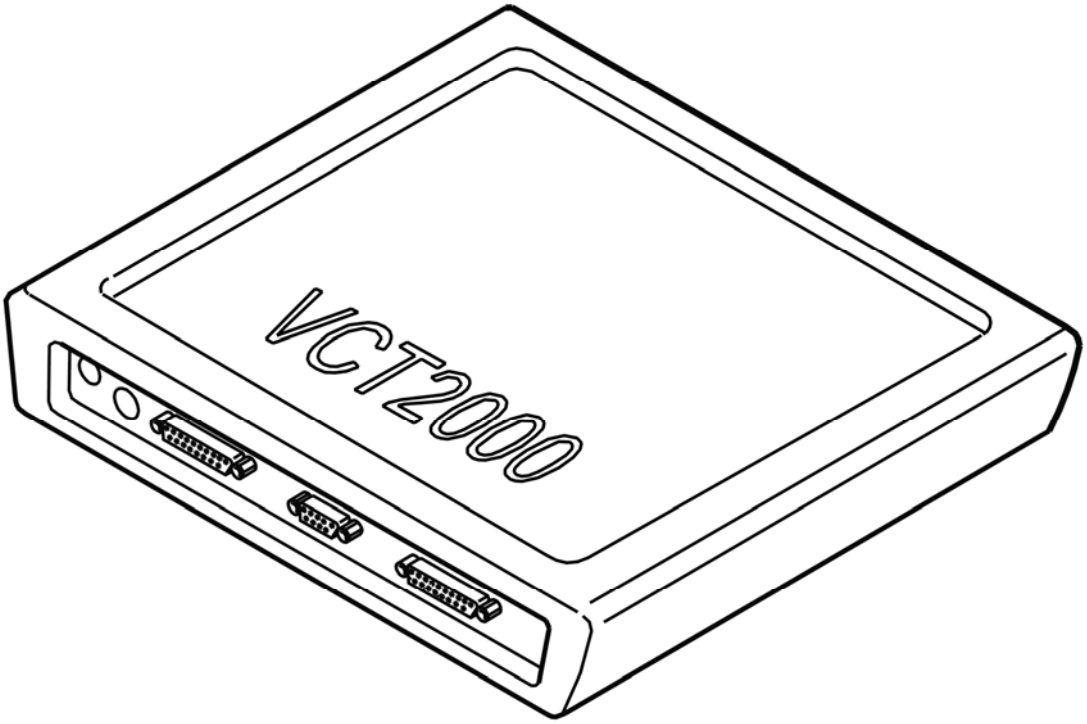

Fig. 140: Identifying VCT2000 Diagnostic Tool Symbol In VIDA
Courtesy of VOLVO CARS CORPORATION

Is the fault status "NO FAULT FOUND"?

- **YES**

  VERIFIED: Troubleshooting has been completed.

- **NO**

  Refer to **INFORMATION**

INFORMATION

FAULT-TRACING INFORMATION

The fault should have been detected and remedied. As this is not the case fault-tracing has failed.

Exit fault-tracing for this diagnostic trouble code (DTC) or make another attempt.

ECM-913C: THROTTLE UNIT. FAULTY SIGNAL (B5254T2; B6294T; 2003-2004)

DIAGNOSTIC TROUBLE CODE (DTC) INFORMATION

Condition

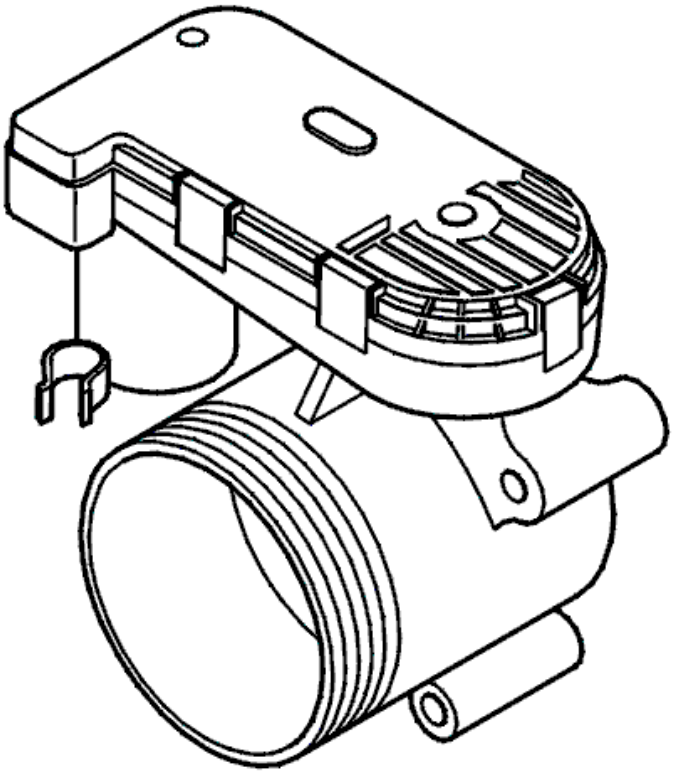

Fig. 141: Identifying Throttle Unit & Potentiometer
Courtesy of VOLVO CARS CORPORATION

Diagnostic trouble code (DTC) ECM-913C is stored if the engine control module (ECM) detects that the basic conditions for adaptation are not met when trying to adapt the throttle unit. If other diagnostic trouble codes (DTCs) are stored, these must be remedied first. These may have caused the adaptation to fail.

Substitute Value

- The adaptation is cancelled
- The engine control module (ECM) shuts down the supply to the throttle unit damper motor. The throttle will set itself to the return position.

Possible Source

- The throttle is sticking or is blocked (oil film, dust etc.)
- Contact resistance or oxidation in the terminals between the engine control module (ECM) and the throttle unit
- Defective throttle unit.

Fault symptom[s]

- Poor performance.

FAULTY SIGNAL

FAULT-TRACING INFORMATION

FAULT-TRACING INFORMATION

CAUTION: The male and female pins on the electronic throttle unit connectors are gold plated. Great care must be taken when measuring. Damage to the gold plating can result in operating difficulties.

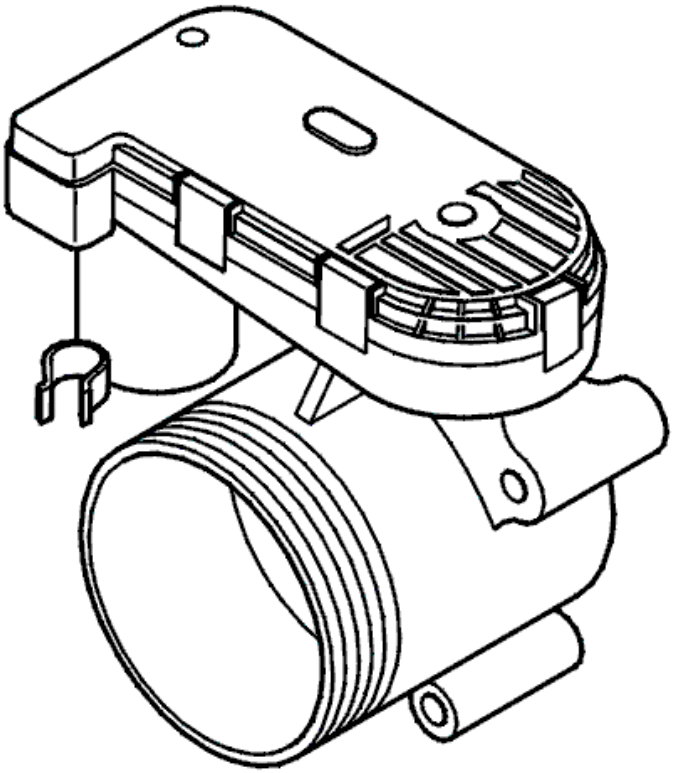

Fig. 142: Identifying Throttle Unit & Potentiometer
Courtesy of VOLVO CARS CORPORATION

- **Continue**

  Refer to **CHECKING DIAGNOSTIC TROUBLE CODES (DTCS)**

CHECKING DIAGNOSTIC TROUBLE CODES (DTCS)

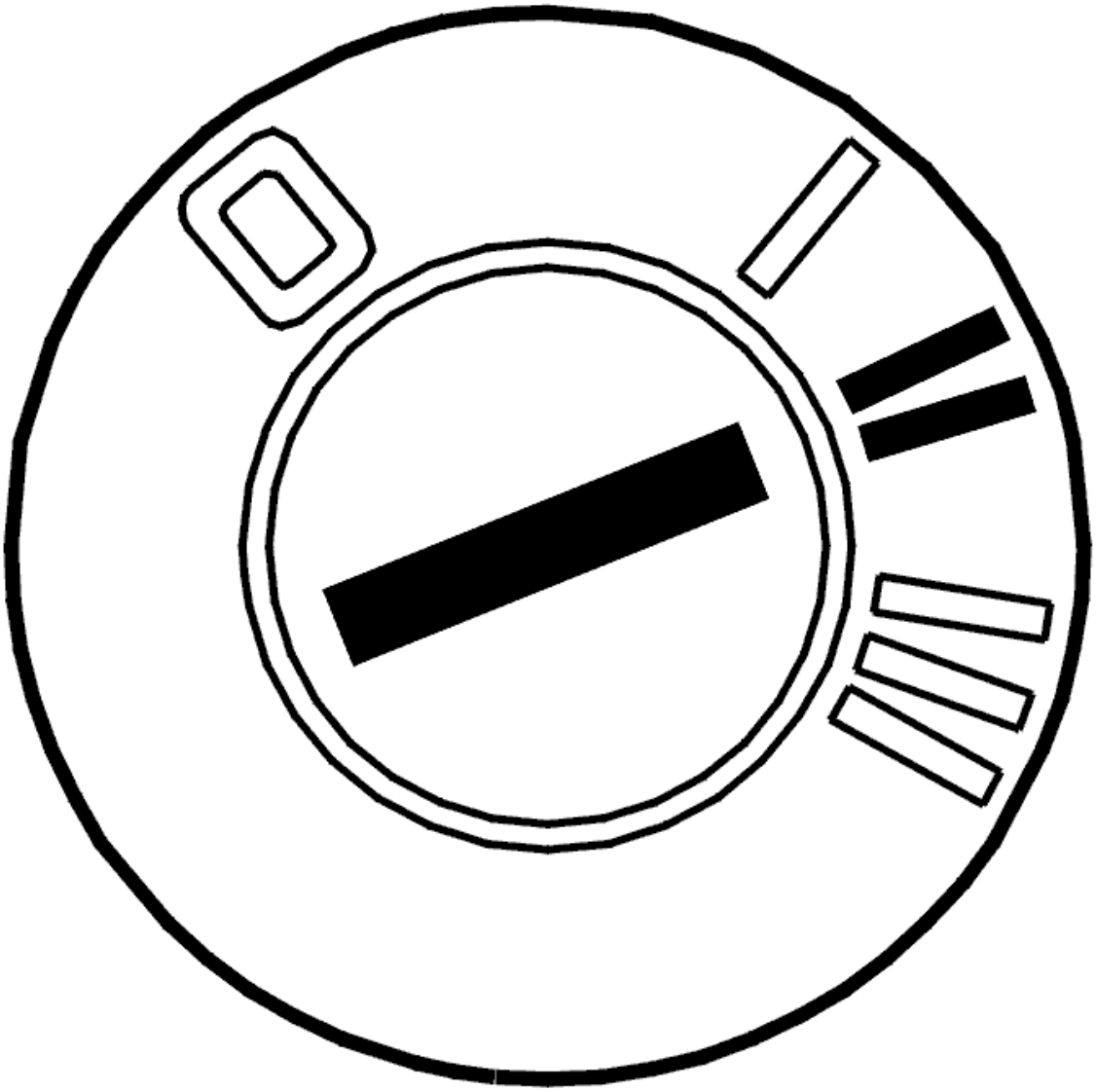

Fig. 143: Identifying Ignition ON
Courtesy of VOLVO CARS CORPORATION

- Ignition on
- Read off diagnostic trouble codes (DTCs).

  Check to, see if any other diagnostic trouble codes (DTCs) are stored. If other diagnostic trouble codes (DTCs) are stored, they may mean that it is not possible to run the adaptation of the engine control module (ECM).

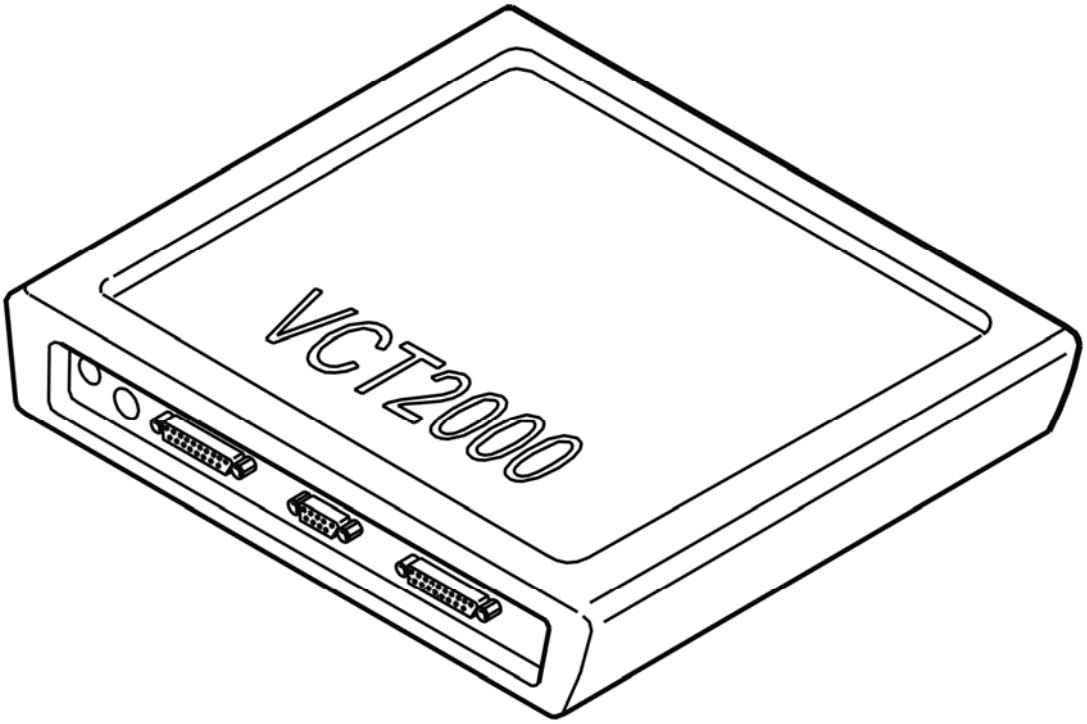

Fig. 144: Identifying VCT2000 Diagnostic Tool Symbol In VIDA
Courtesy of VOLVO CARS CORPORATION

Are any other diagnostic trouble codes (DTCs) stored?

- **YES**

  Refer to **FAULT-TRACING INFORMATION**

- **NO**

  Refer to **CHECKING THE STATUS**

CHECKING THE STATUS

NOTE: **The ignition must be switched on for at least 30 seconds after the basic conditions are met in order for the adaptation to start. It takes approximately 10 seconds to run the adaptation.**

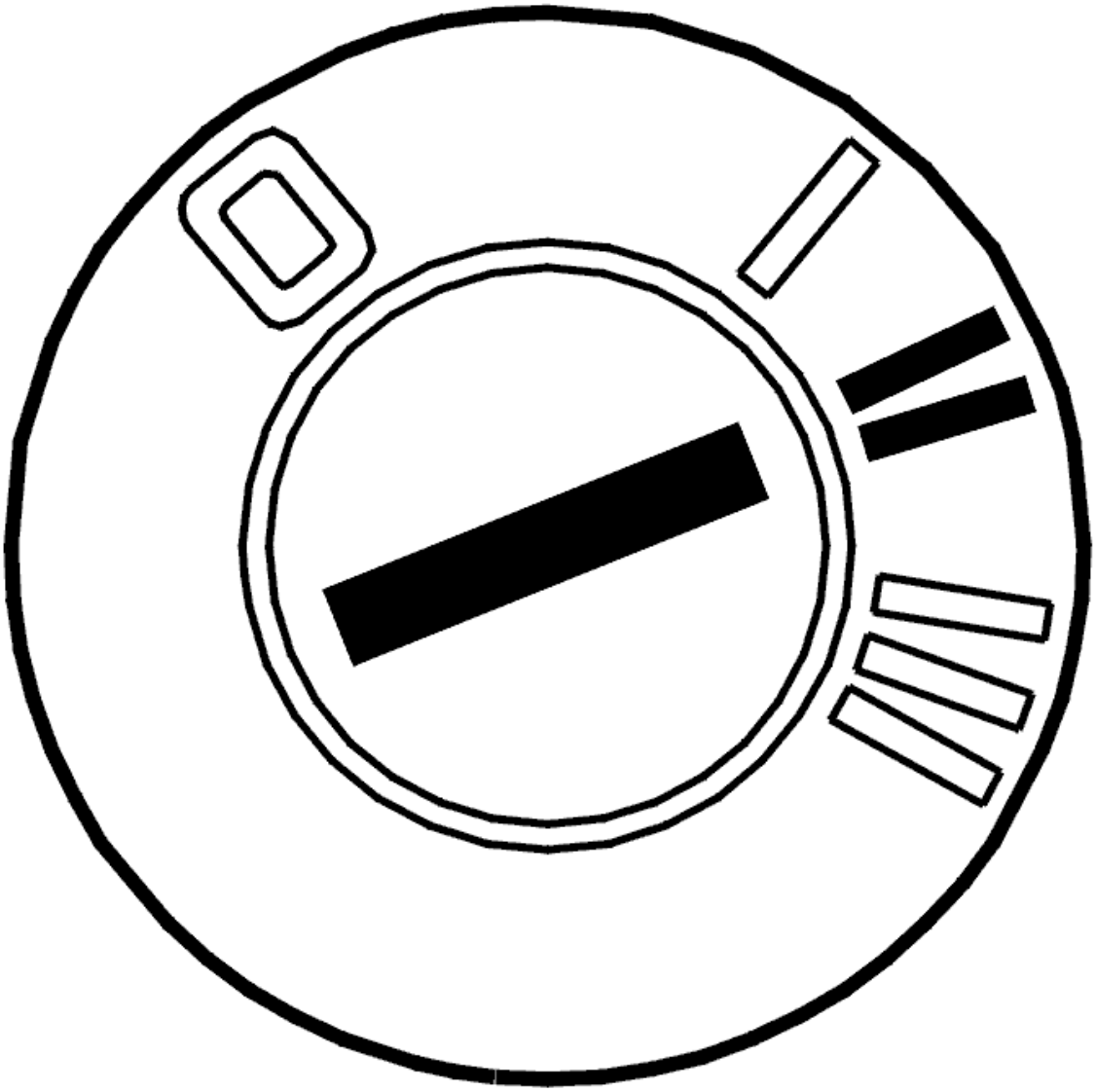

Fig. 145: Identifying Ignition ON
Courtesy of VOLVO CARS CORPORATION

- Ignition off
- Ignition on
- Read off the parameters.

Check that the following basic conditions for adaptation of the throttle unit are met.

1. Ignition on / engine off
2. Battery voltage above 10 V
3. Accelerator pedal (AP) unaffected
4. The car must be stationary (no vehicle speed signal)
5. Engine coolant temperature (ECT) between 5-100 °C

6. Intake air temperature (IAT) above 5 °C.

Remedy as necessary.

Check that the adaptation is correctly run after the "Adaptation of the throttle unit running" parameter changes status from "YES" to "NO". When all basic conditions are met, the adaptation must be completed after approximately 40 seconds. When the adaptation is completed correctly, the following information will be displayed:

- Adaptation of the throttle unit: OK
- Adaptation of the throttle unit running: NO.

The fault is intermittent at the moment if the adaptation has been completed correctly.

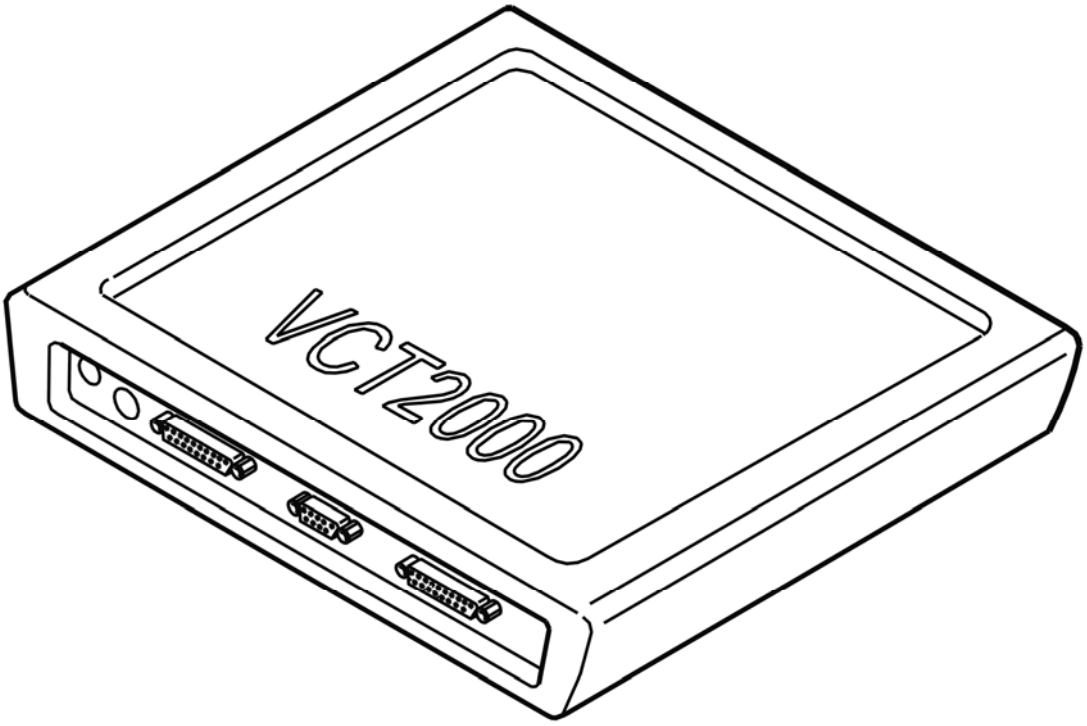

Fig. 146: Identifying VCT2000 Diagnostic Tool Symbol In VIDA
Courtesy of VOLVO CARS CORPORATION

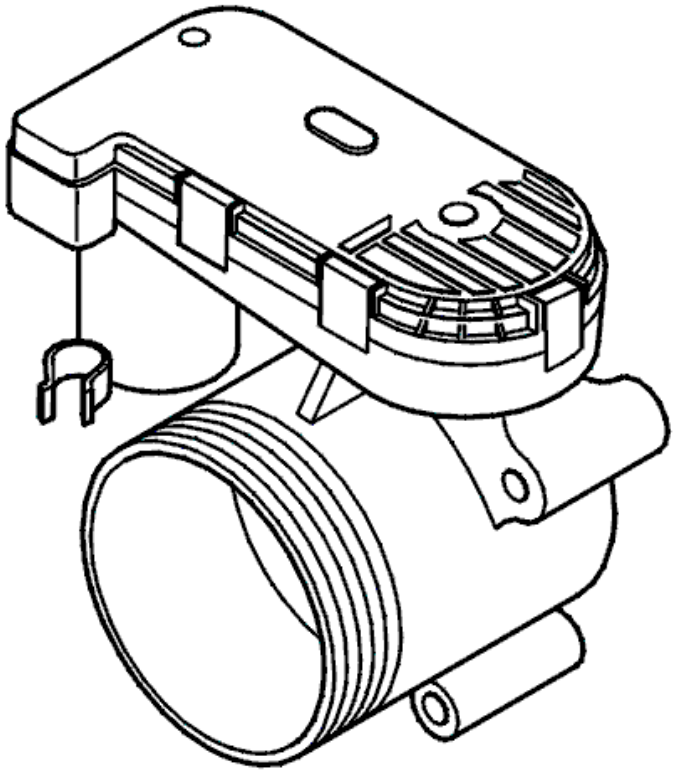

Fig. 147: Identifying Throttle Unit & Potentiometer
Courtesy of VOLVO CARS CORPORATION

- **Continue**

Refer to **CHECKING THE CONNECTORS AND COMPONENTS**

CHECKING THE CONNECTORS AND COMPONENTS

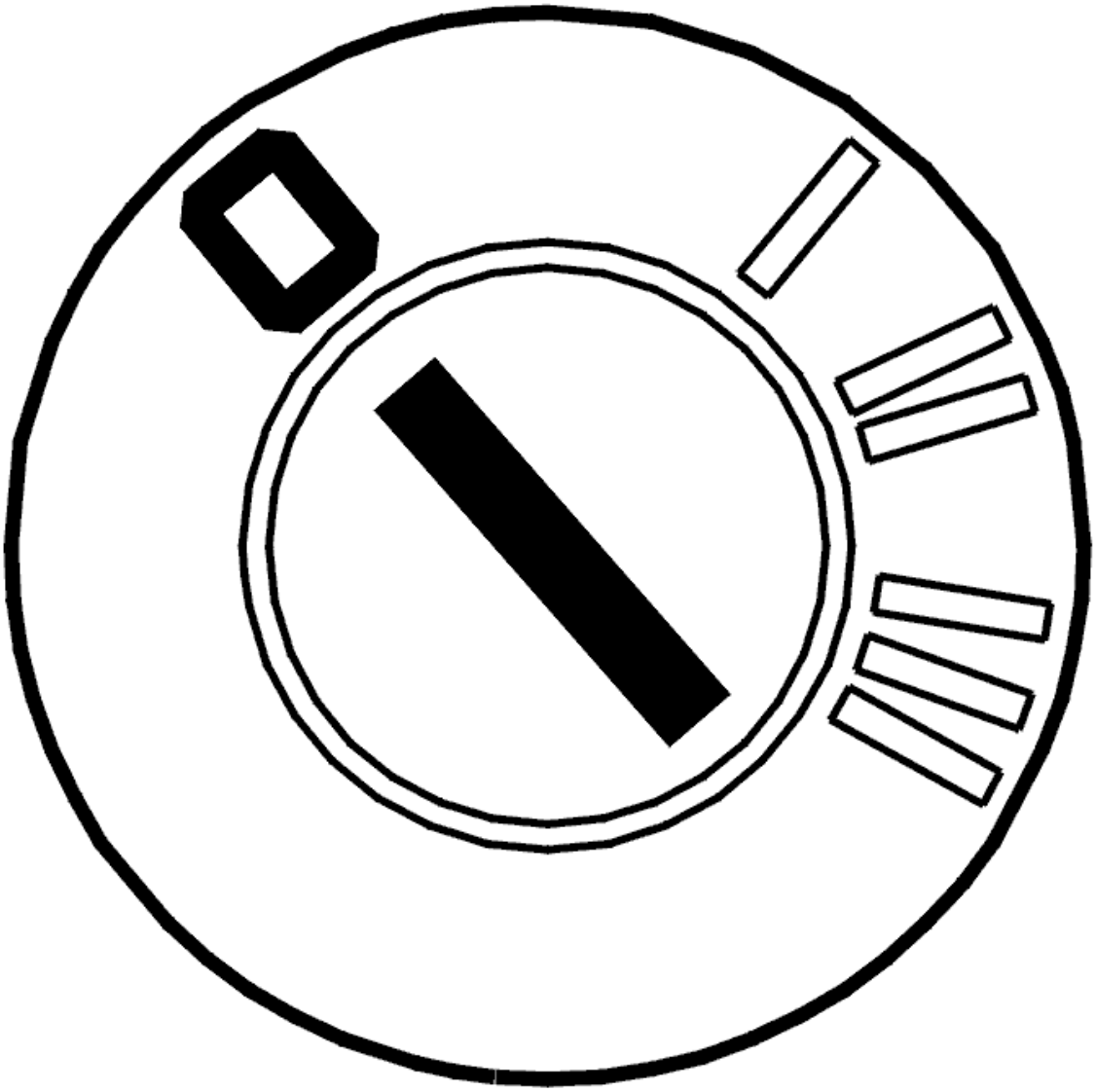

Fig. 148: Identifying Ignition OFF
Courtesy of VOLVO CARS CORPORATION

- Ignition off.

  Check the throttle unit and engine control module (ECM) connectors. Check for contact resistance and oxidation.

  Check the resistance values of the potentiometers in the throttle unit.

  Check that the shutter in the throttle unit is not blocked or sticking. Clean as necessary.

  Remedy as necessary.

  Other information:

- see **CHECKING WIRING AND TERMINALS**
- For resistance values, see **COMPONENT SPECIFICATIONS**
- For 5 cylinder turbocharged engines -2004, see **SIGNAL DESCRIPTION**
- For 5 cylinder turbocharged engines 2005-, see **SIGNAL SPECIFICATION** .
- For 6 cylinder engines -2004, see **SIGNAL SPECIFICATION**
- For 6 cylinder engines 2005-, see **SIGNAL SPECIFICATION** .
- For B5xx4T, see **THROTTLE BODY (ELECTRONIC THROTTLE MODULE), REPLACING** .
- For B6xx4T, see **THROTTLE BODY (ELECTRONIC THROTTLE MODULE), REPLACING** .
- For B5xx4T, see **THROTTLE BODY (TB), CLEANING** .
- For B6xx4x, see **THROTTLE BODY (TB), CLEANING** .

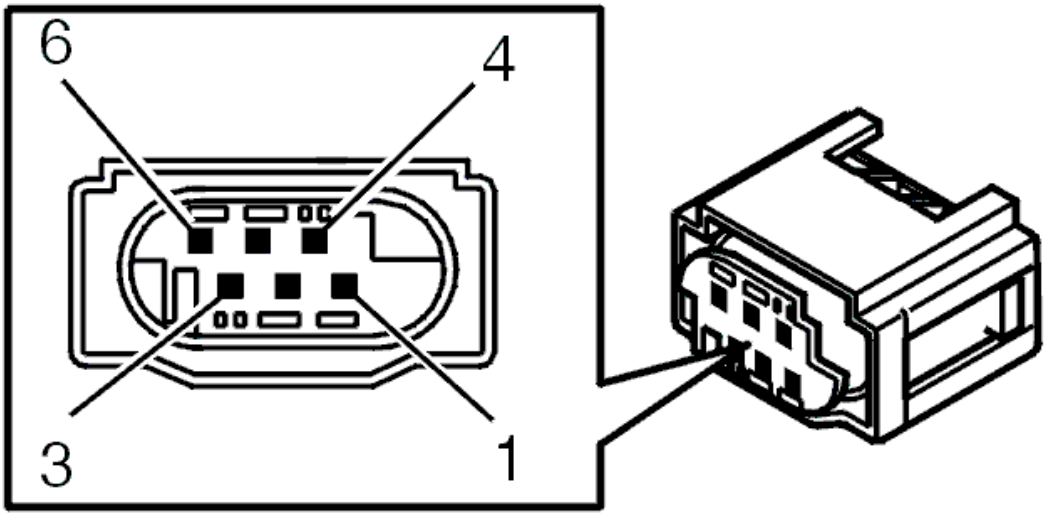

Fig. 149: Identifying Throttle Unit Connector Terminals
Courtesy of VOLVO CARS CORPORATION

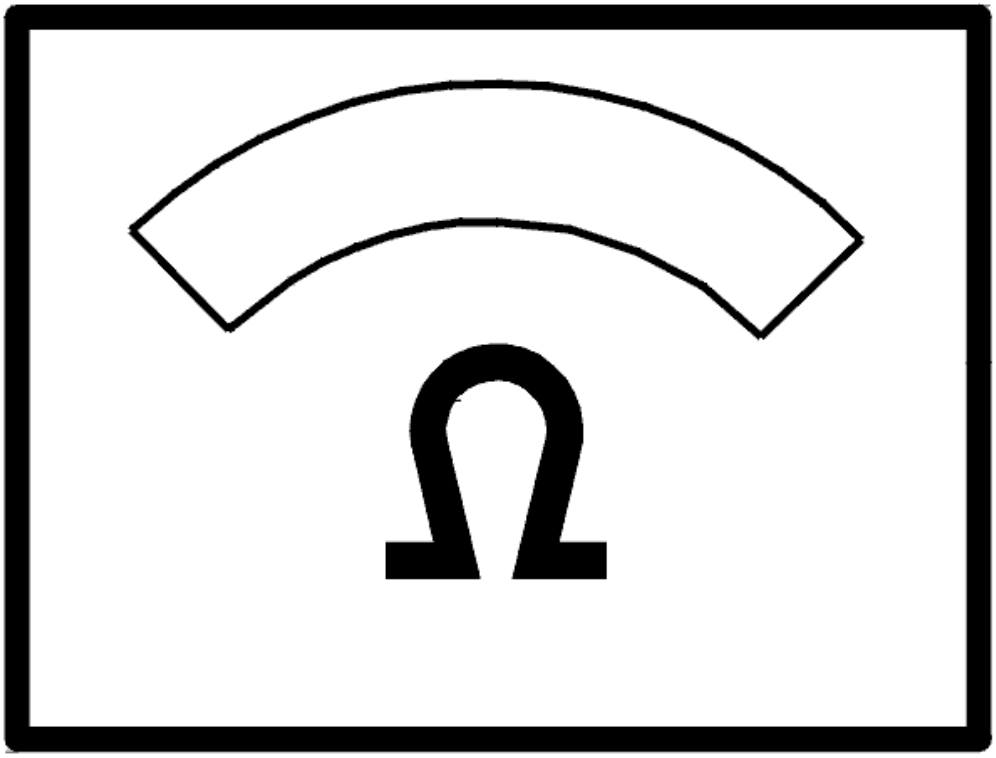

Fig. 150: Identifying Ohm Meter
Courtesy of VOLVO CARS CORPORATION

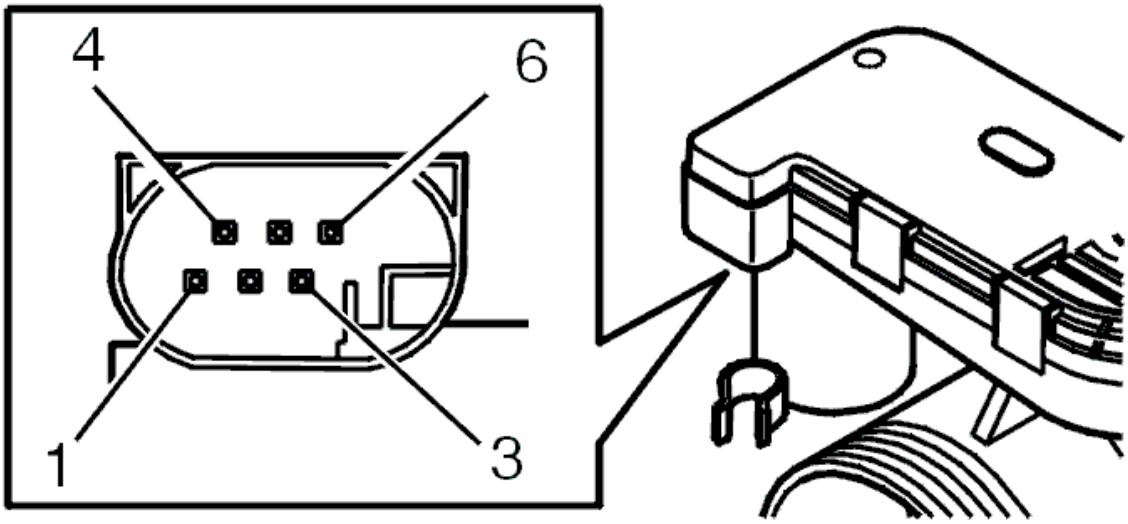

Fig. 151: Identifying Throttle Unit Connector Terminals
Courtesy of VOLVO CARS CORPORATION

- **Continue**

  Refer to **VERIFICATION**

FAULT-TRACING INFORMATION

Remedy stored diagnostic trouble code(s) (DTCs).

Remedy as necessary.

VERIFICATION

VERIFICATION

HINT: After carrying out the repair, check that the fault has been remedied.

NOTE: The ignition must be switched on for at least 30 seconds after the basic conditions are met in order for the adaptation to start. It takes approximately 10 seconds to run the adaptation.

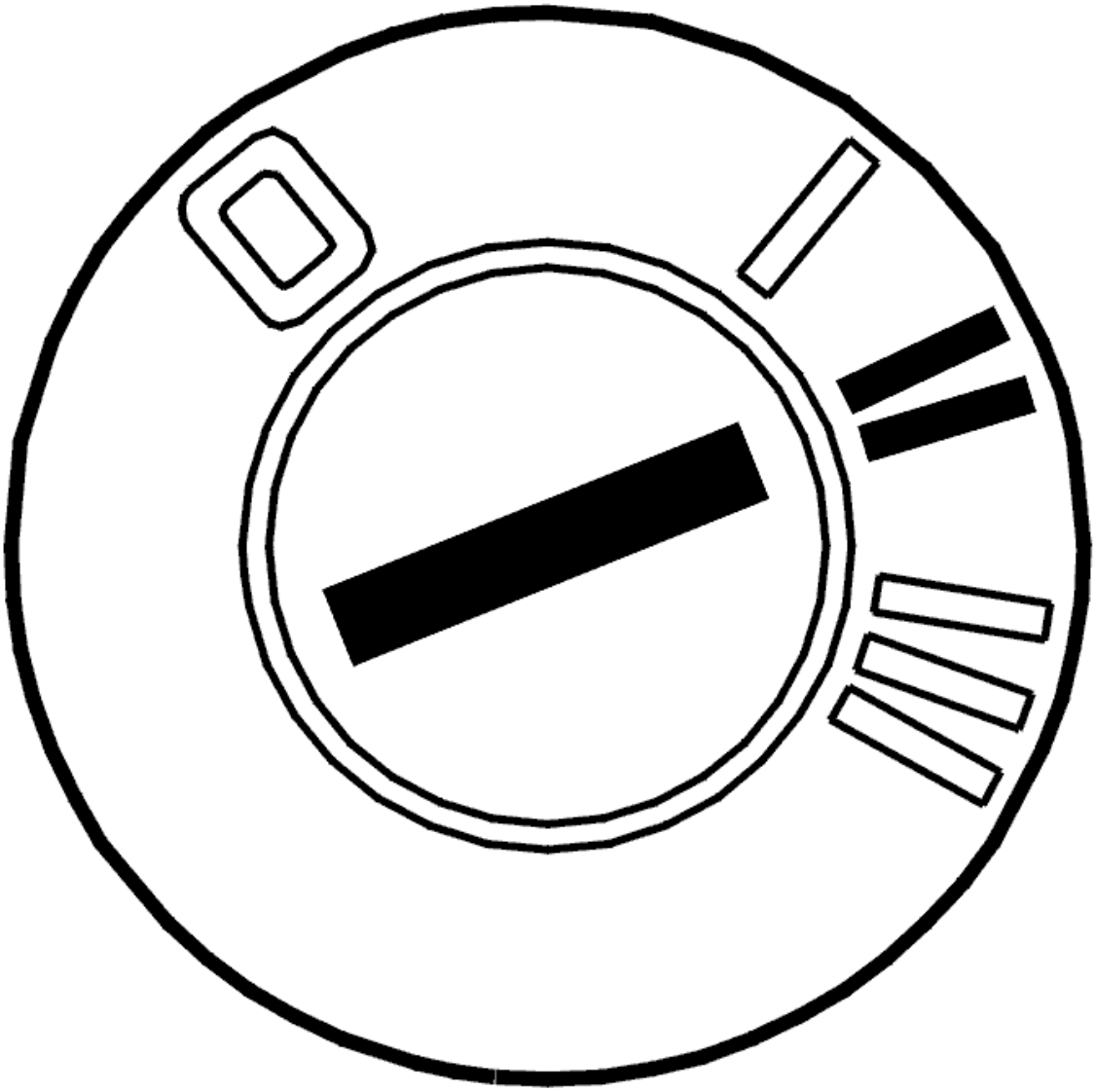

Fig. 152: Identifying Ignition ON
Courtesy of VOLVO CARS CORPORATION

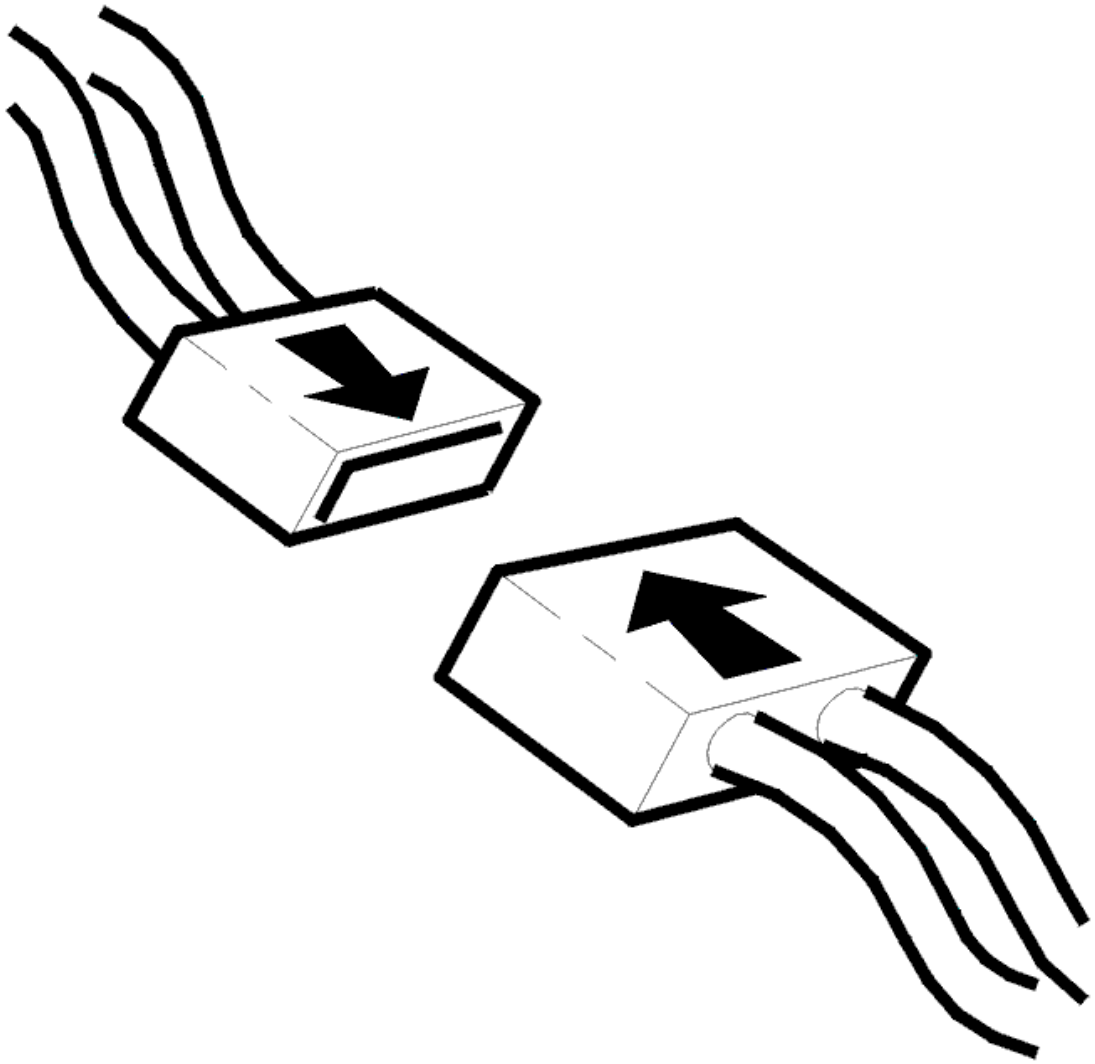

Fig. 153: Connecting Connector
Courtesy of VOLVO CARS CORPORATION

- Ignition off
- Reinstall the connectors, components etc.
- Ignition on
- Read off the parameters.

Check that the following basic conditions for adaptation of the throttle unit are met.

1. Ignition on / engine off
2. Battery voltage above 10 V
3. Accelerator pedal (AP) unaffected
4. The car must be stationary (no vehicle speed signal)

5. Engine coolant temperature (ECT) between 5-100 °C
6. Intake air temperature (IAT) above 5 °C.

Remedy as necessary.

Check that the adaptation is correctly run after the "Adaptation of the throttle unit running" parameter changes status from "YES" to "NO". When all basic conditions are met, the adaptation must be completed after approximately 40 seconds. When the adaptation is completed correctly, the following information will be displayed:

- Adaptation of the throttle unit: OK
- Adaptation of the throttle unit running: NO.

The fault has been remedied if the adaptation has been completed correctly.

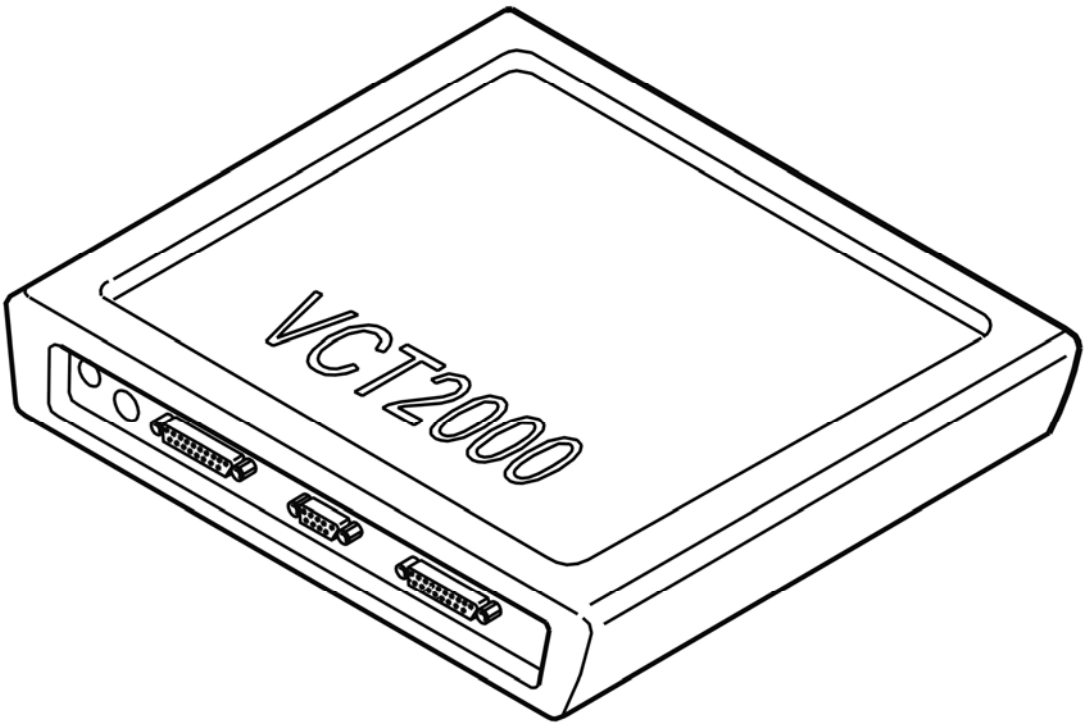

Fig. 154: Identifying VCT2000 Diagnostic Tool Symbol In VIDA
Courtesy of VOLVO CARS CORPORATION

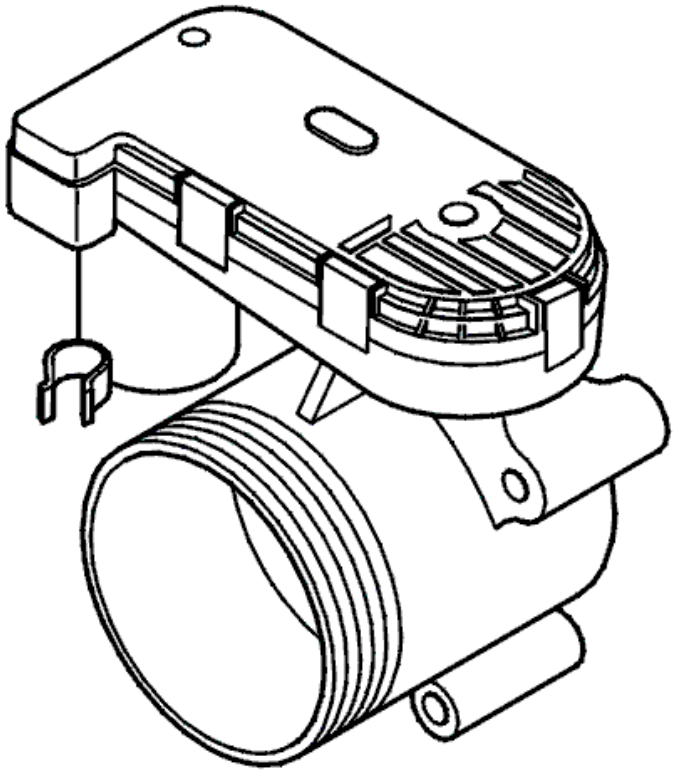

Fig. 155: Identifying Throttle Unit & Potentiometer
Courtesy of VOLVO CARS CORPORATION

Is the adaptation OK?

- **YES**

  VERIFIED: Troubleshooting has been completed.

- **NO**

  Refer to **INFORMATION**

INFORMATION

FAULT-TRACING INFORMATION

The fault should have been detected and remedied. As this is not the case fault-tracing has failed.

Exit fault-tracing for this diagnostic trouble code (DTC) or make another attempt.

ECM-913F: THROTTLE UNIT. FAULTY SIGNAL (B5254T2; B6294T; 2003-2004)

DIAGNOSTIC TROUBLE CODE (DTC) INFORMATION

Condition

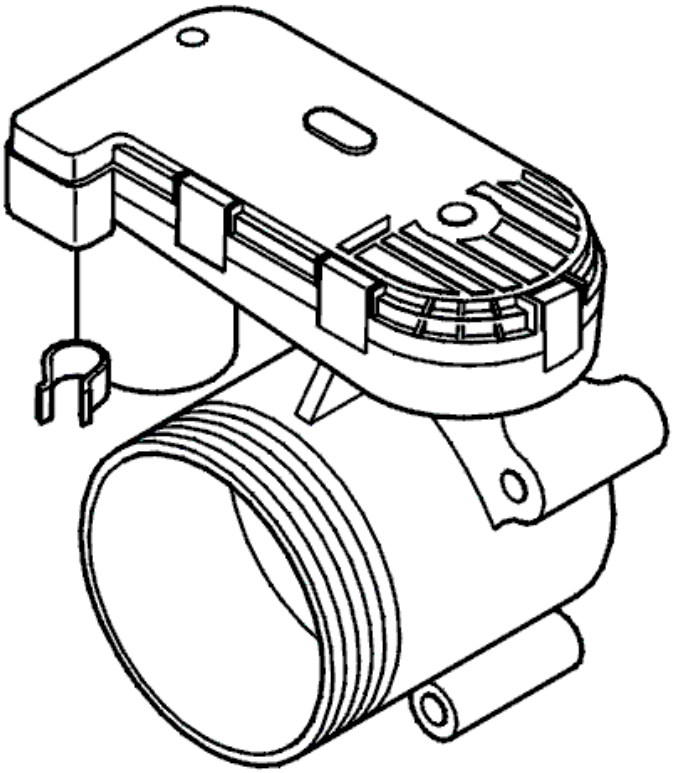

Fig. 156: Identifying Throttle Unit & Potentiometer
Courtesy of VOLVO CARS CORPORATION

Diagnostic trouble code (DTC) ECM-913F is stored if the engine control module (ECM) is unable to run its first adaptation of the throttle unit. This is because the programmed parameter for the stop position in the throttle position (TP) sensor has been exceeded. This adaptation is normally run during manufacture of the car. However the throttle unit must be adapted again if software, the engine control module (ECM) or the throttle unit is replaced. If other diagnostic trouble codes (DTCs) are stored, these must be remedied first. These may have caused the adaptation to fail.

Substitute Value

- The engine control module (ECM) uses the nominal values for the throttle unit parameters
- The engine control module (ECM) shuts down the supply to the throttle unit damper motor. The throttle will set itself to the return position.

Possible Source

Faulty signal:

- The throttle is sticking or is blocked (oil film, dust etc.)
- Contact resistance or oxidation in the terminals between the engine control module (ECM) and the throttle unit
- Defective throttle unit.

Fault symptom[s]

- Malfunction indicator lamp (MIL) lit
- Poor performance.

FAULTY SIGNAL

see **FAULTY SIGNAL**

ECM-914F: THROTTLE UNIT. FAULTY SIGNAL (B5254T2; B6294T; 2003-2004)

DIAGNOSTIC TROUBLE CODE (DTC) INFORMATION

Condition

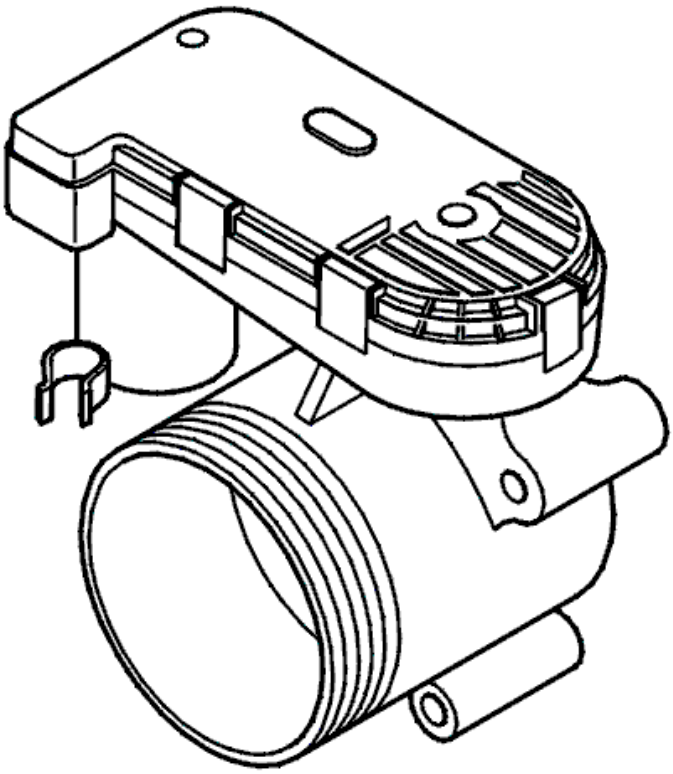

Fig. 157: Identifying Throttle Unit & Potentiometer

Courtesy of VOLVO CARS CORPORATION

Diagnostic trouble code (DTC) ECM-914F is stored if the ignition has been left on for 30 seconds and the engine control module (ECM) has been unable to adapt the throttle unit. This is because the programmed parameter for the stop position in the throttle position (TP) sensor has been exceeded. Adaptation is usually carried out to ensure that the throttle unit parameters are within the programmed values that are stored in the engine control module (ECM). If other diagnostic trouble codes (DTCs) are stored, these must be remedied first. These may have caused the adaptation to fail.

Substitute Value

- The engine control module (ECM) uses parameters from previous successful adaptations
- The engine control module (ECM) shuts down the supply to the throttle unit damper motor. The throttle will set itself to the return position.

Possible Source

Faulty signal:

- The throttle is sticking or is blocked (oil film, dust etc.)
- Contact resistance or oxidation in the terminals between the engine control module (ECM) and the throttle unit
- Defective throttle unit.

Fault symptom[s]

- Poor performance.

FAULTY SIGNAL

see **FAULTY SIGNAL**

ECM-9150: THROTTLE UNIT, POTENTIOMETER 1. FAULTY SIGNAL (B5254T2; B6294T; 2003-2004)

DIAGNOSTIC TROUBLE CODE (DTC) INFORMATION

Condition

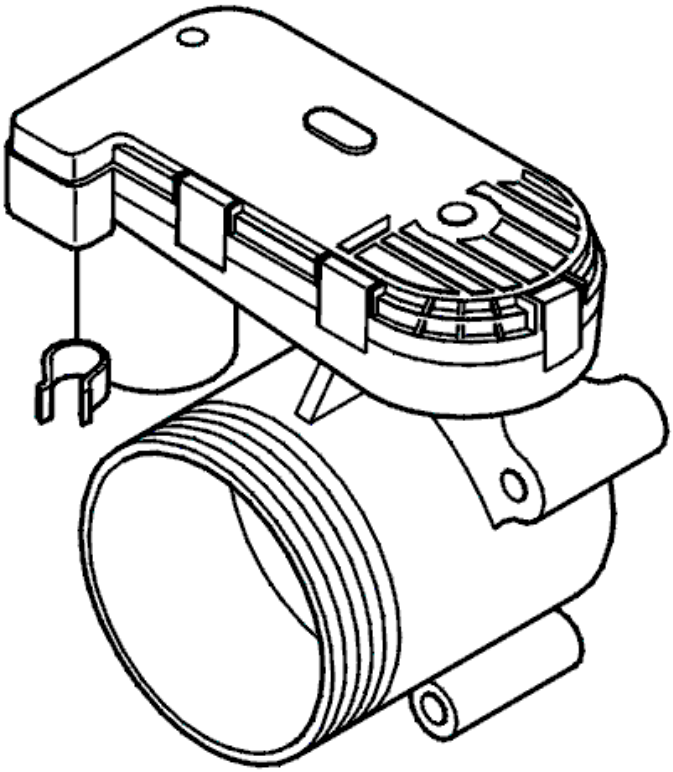

Fig. 158: Identifying Throttle Unit & Potentiometer
Courtesy of VOLVO CARS CORPORATION

Diagnostic trouble code (DTC) ECM-9150 is stored if the engine control module (ECM) registers a fault in the signal from the throttle position sensor (TP) for the throttle unit, potentiometer 1 (circuit 1) when the ignition is switched on

Substitute Value

The throttle angle is calculated using potentiometer 2 (circuit 2) in the throttle position (TP) sensor for the throttle unit. If diagnostic trouble codes (DTCs) ECM-9150 and ECM-9160 are stored at the same time, the supply to the damper motor in the throttle unit will be cut. The throttle will set itself to the return position.

Possible Source

Signal too high:

- Contact resistance or oxidation in the terminals between the engine control module (ECM) and the throttle unit
- Open-circuit or short-circuit to supply voltage in the signal cable
- Open-circuit in the signal ground cable for potentiometers 1 and 2
- Defective throttle unit.

Signal too low:

- Contact resistance or oxidation in the terminals between the engine control module (ECM) and the throttle unit
- Short-circuit to ground in the signal cable
- Open-circuit or short-circuit to ground in the power supply to potentiometers 1 and 2
- Defective throttle unit.

Faulty signal:

- Contact resistance or oxidation in the terminals between the engine control module (ECM) and the throttle unit
- The signal cables are short-circuited to each other
- Defective throttle unit.

Fault symptom[s]

- Poor performance.

FAULTY SIGNAL

FAULT-TRACING INFORMATION

FAULT-TRACING INFORMATION

CAUTION: The male and female pins on the electronic throttle unit connectors are gold plated. Great care must be taken when measuring. Damage to the gold plating can result in operating difficulties.

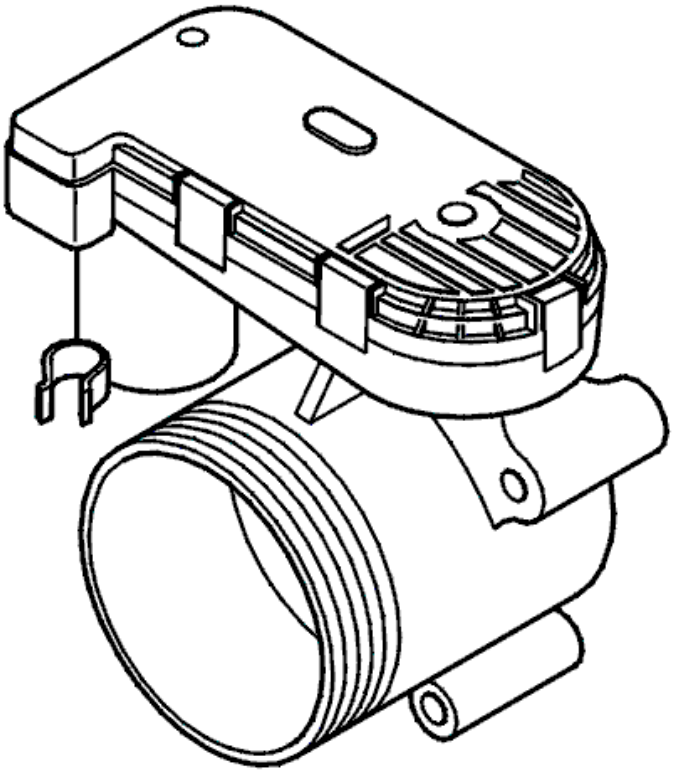

Fig. 159: Identifying Throttle Unit & Potentiometer
Courtesy of VOLVO CARS CORPORATION

- **Continue**

  Refer to **CHECKING COMPONENTS AND WIRING**

CHECKING COMPONENTS AND WIRING

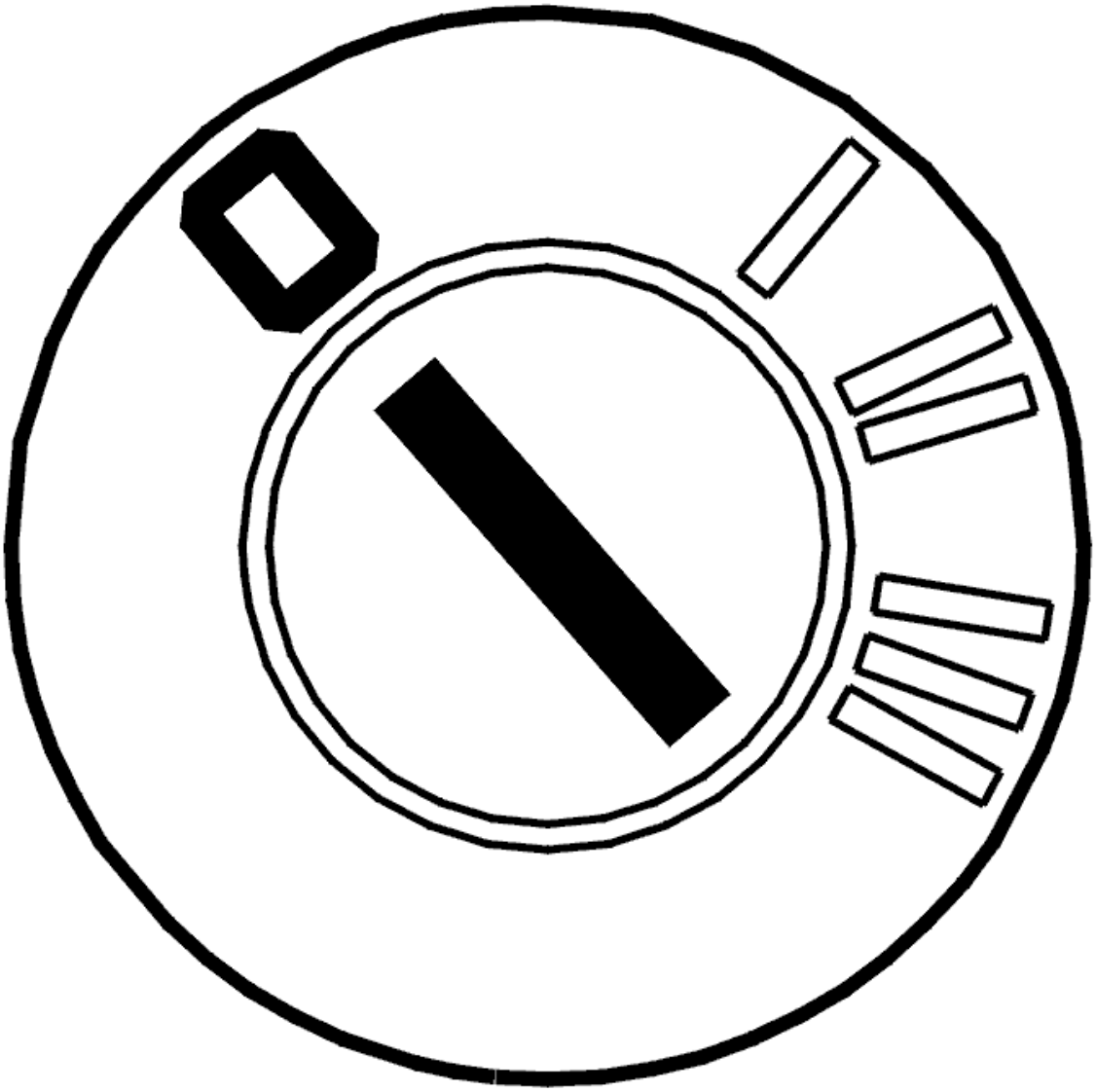

Fig. 160: Identifying Ignition OFF
Courtesy of VOLVO CARS CORPORATION

- Ignition off.

  Check the throttle unit and engine control module (ECM) connectors. Check for contact resistance and oxidation.

  Check the resistance values of the potentiometers in the throttle unit.

  Check the signal cable (potentiometer 1) between engine control module (ECM) terminal #A1 (#A1) and throttle unit terminal #6 (wiring side). Check for an open-circuit.

  Check the signal cable (potentiometer 2) between engine control module (ECM) terminal #A20 (#A20) and throttle unit terminal #5 (wiring side). Check for an open-circuit.

Check the signal cables (potentiometer 1) terminal #A1 (#A1) and (potentiometer 2) terminal #A20 (#A20). Check for a short-circuit to each other.

HINT: With the ignition on, the power supply to the throttle unit potentiometers must be approximately 5 V measured between throttle unit connector terminals #2 and #3 (wiring side).

If no faults are found during the checks and the diagnostic trouble code (DTC) recurs, try replacing the throttle unit.

NOTE: When replacing the throttle unit, the throttle unit must be adapted. See Throttle unit adaptation in the vehicle communication socket.

Remedy as necessary.

Other information:

- see **CHECKING WIRING AND TERMINALS**
- For resistance values, see **COMPONENT SPECIFICATIONS**
- To connect the breakout box, see **CONNECTING THE BREAKOUT BOX**
- For 5 cylinder turbocharged engines -2004, see **SIGNAL DESCRIPTION**
- For 5 cylinder turbocharged engines 2005-, see **SIGNAL SPECIFICATION** .
- For 6 cylinder engines -2004, see **SIGNAL SPECIFICATION**
- For 6 cylinder engines 2005-, see **SIGNAL SPECIFICATION** .
- For B5xx4T, see **THROTTLE BODY (ELECTRONIC THROTTLE MODULE), REPLACING** .
- For B6xx4T, see **THROTTLE BODY (ELECTRONIC THROTTLE MODULE), REPLACING** .

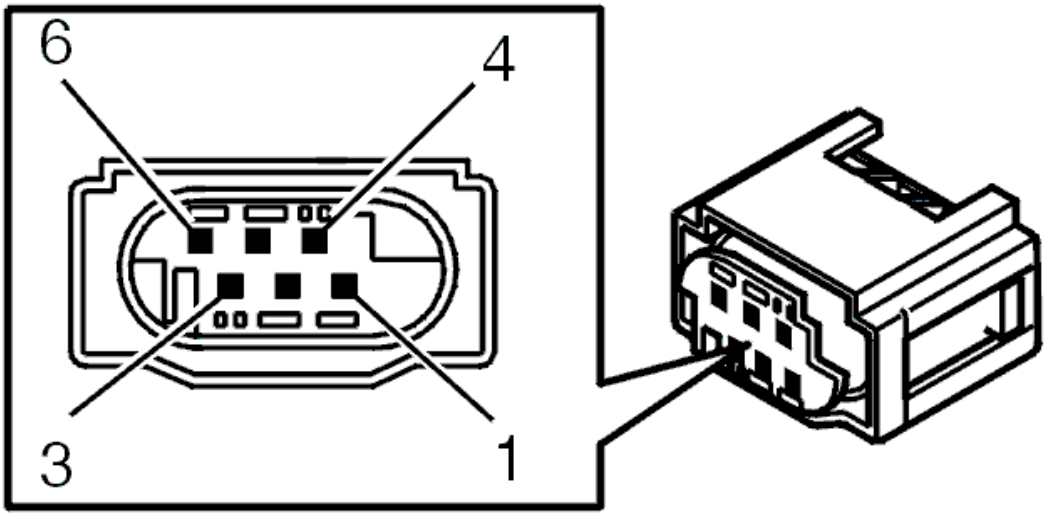

Fig. 161: Identifying Throttle Unit Connector Terminals
Courtesy of VOLVO CARS CORPORATION

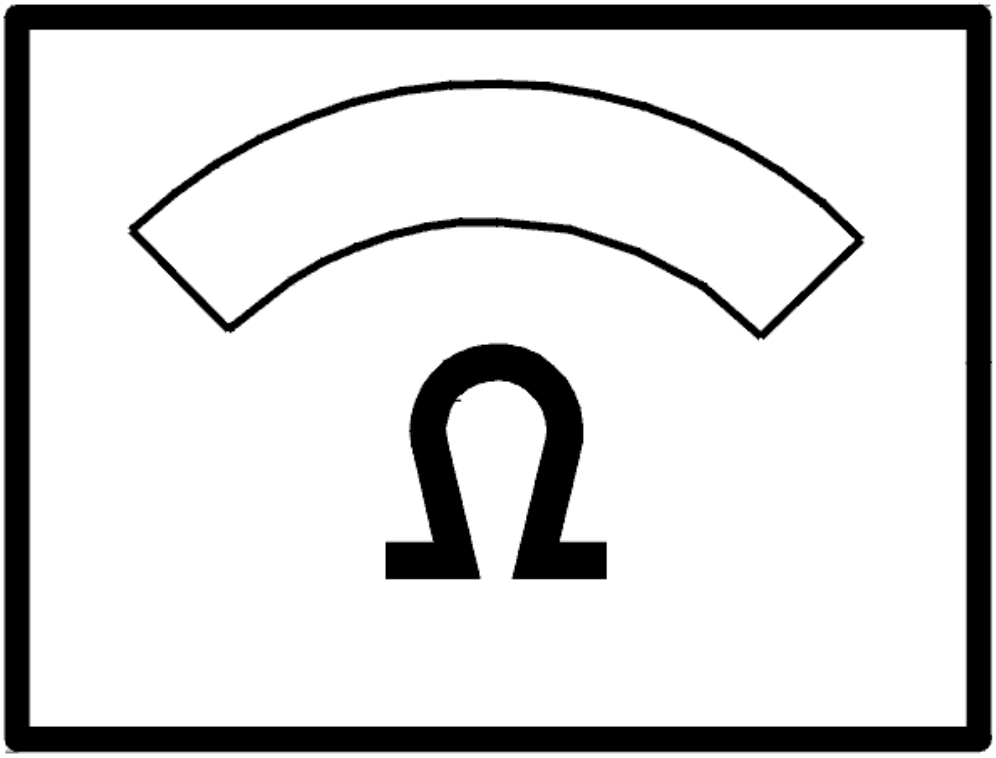

Fig. 162: Identifying Ohm Meter
Courtesy of VOLVO CARS CORPORATION

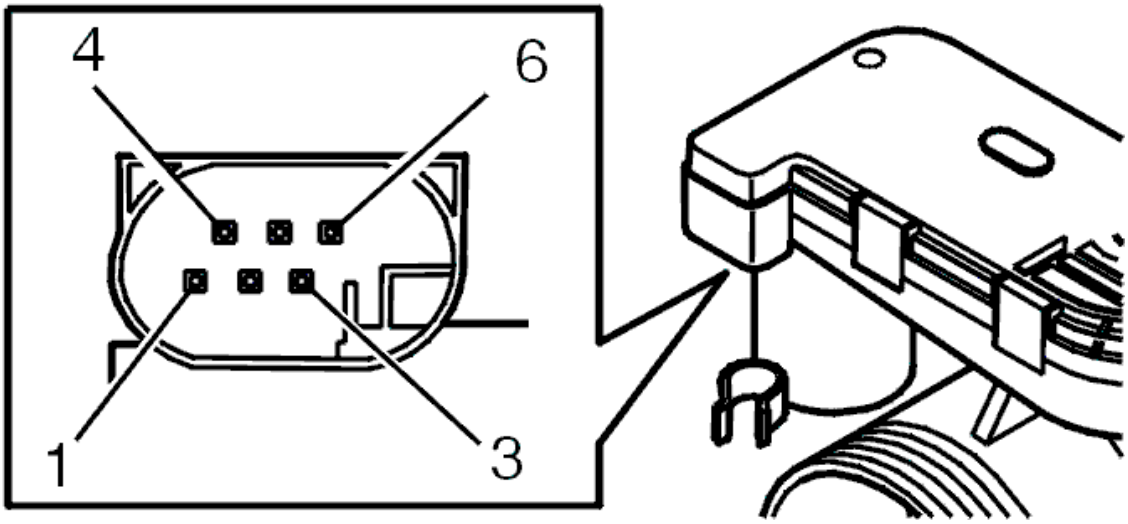

Fig. 163: Identifying Throttle Unit Connector Terminals
Courtesy of VOLVO CARS CORPORATION

- **Continue**

  Refer to **VERIFICATION**

VERIFICATION

VERIFICATION

HINT: After carrying out the repair, check that the fault has been remedied.

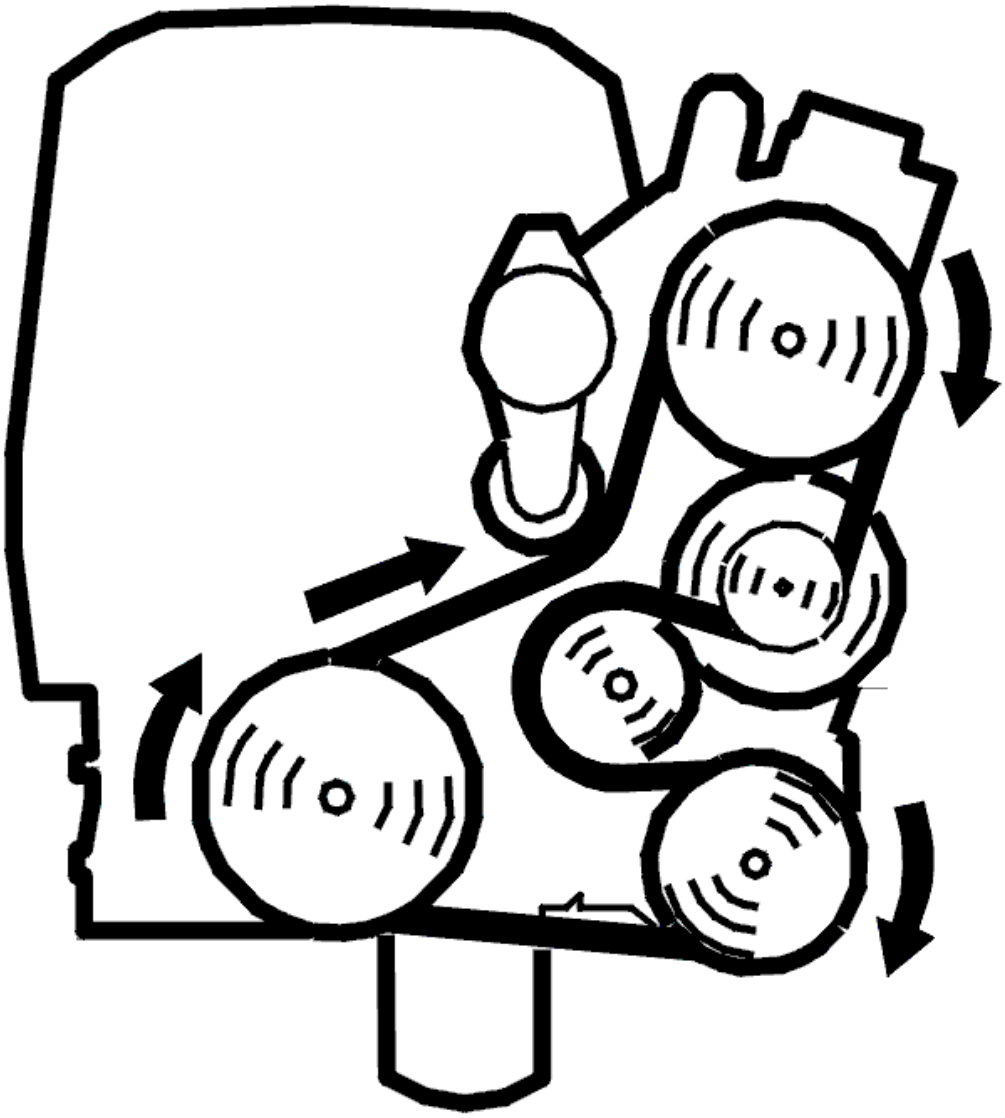

Fig. 164: Belt Routing / Engine Idling - Volvo
Courtesy of VOLVO CARS CORPORATION

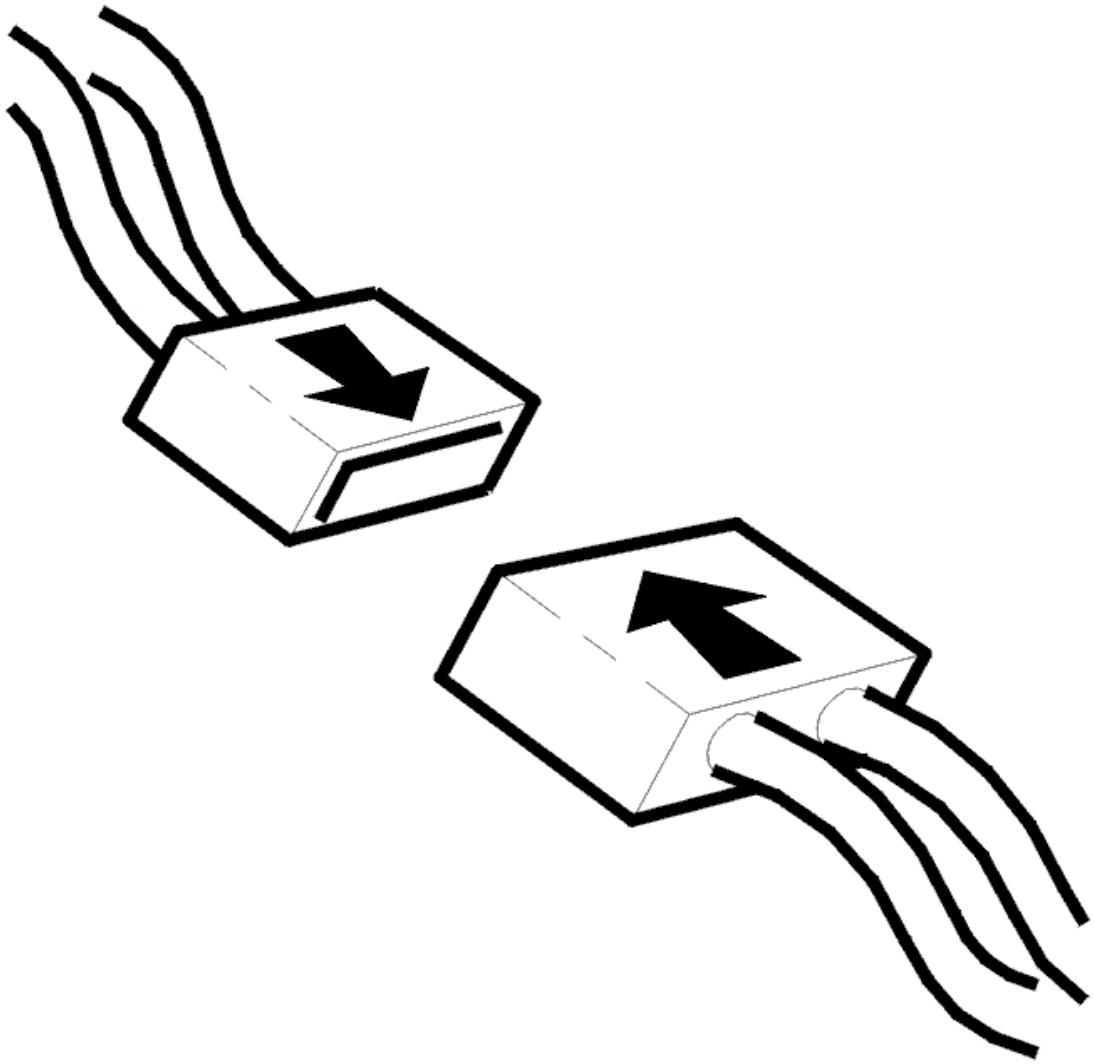

Fig. 165: Connecting Connector
Courtesy of VOLVO CARS CORPORATION

- Ignition off
- Reinstall the connectors, components etc.
- Start the engine
- Read off diagnostic trouble codes (DTCs).

The fault has been remedied if status of the diagnostic trouble code (DTC) is intermittent.

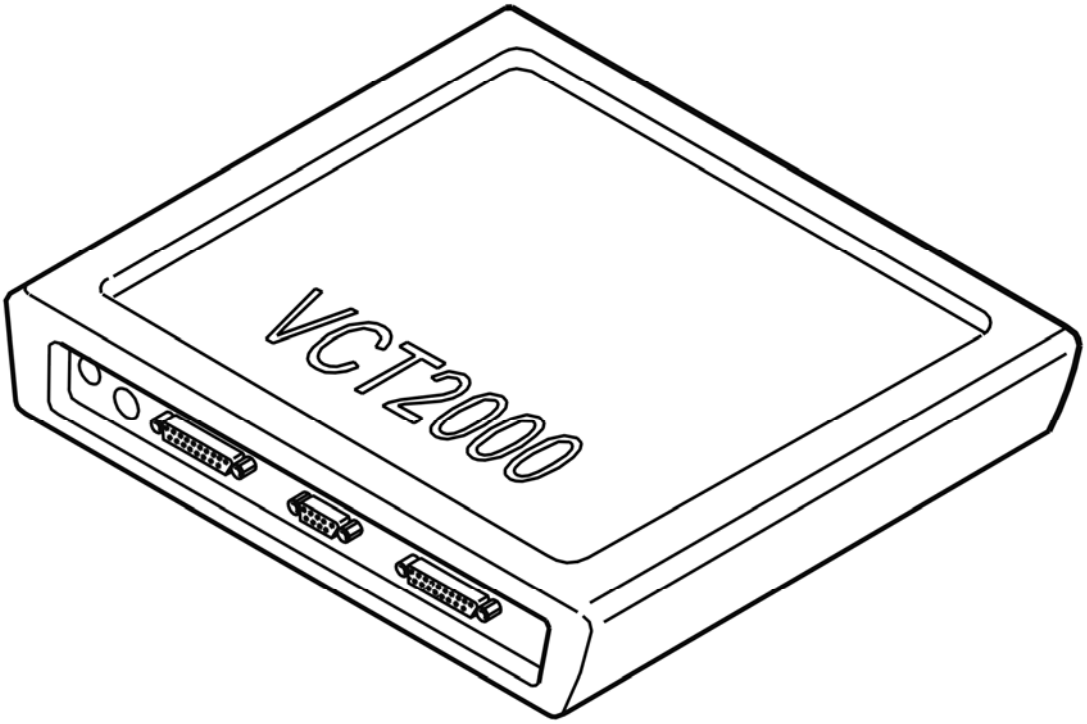

Fig. 166: Identifying VCT2000 Diagnostic Tool Symbol In VIDA
Courtesy of VOLVO CARS CORPORATION

Is the status of the diagnostic trouble code (DTC) intermittent?

- **YES**

  VERIFIED: Troubleshooting has been completed.

- **NO**

  Refer to **INFORMATION**

INFORMATION

FAULT-TRACING INFORMATION

The fault should have been detected and remedied. As this is not the case fault-tracing has failed.

Exit fault-tracing for this diagnostic trouble code (DTC) or make another attempt.

ECM-9150: THROTTLE UNIT, POTENTIOMETER 1. SIGNAL TOO HIGH (B5254T2; B6294T; 2003-2004)

DIAGNOSTIC TROUBLE CODE (DTC) INFORMATION

see **DIAGNOSTIC TROUBLE CODE (DTC) INFORMATION**

SIGNAL TOO HIGH

FAULT-TRACING INFORMATION

FAULT-TRACING INFORMATION

CAUTION: The male and female pins on the electronic throttle unit connectors are gold plated. Great care must be taken when measuring. Damage to the gold plating can result in operating difficulties.

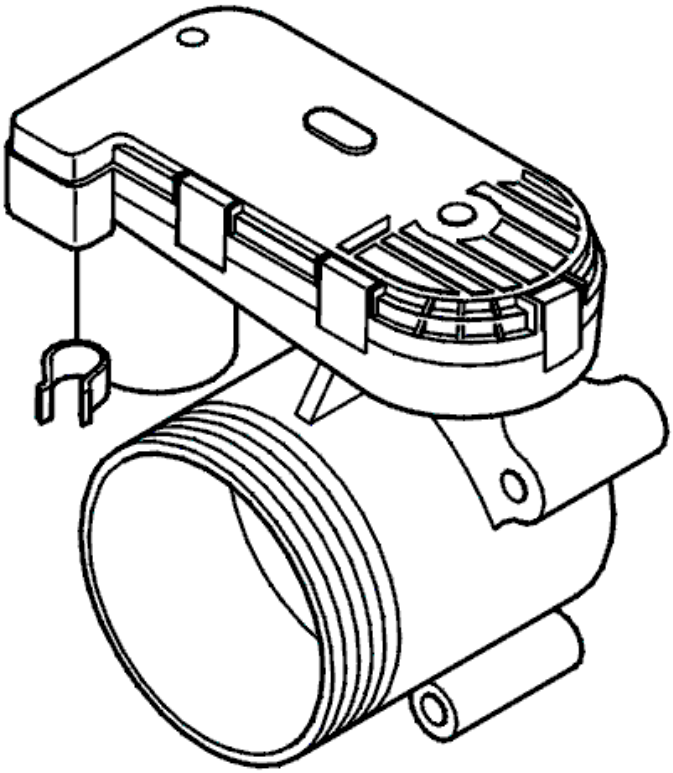

Fig. 167: Identifying Throttle Unit & Potentiometer
Courtesy of VOLVO CARS CORPORATION

- **Continue**

  Refer to **CHECKING COMPONENTS AND WIRING**

CHECKING COMPONENTS AND WIRING

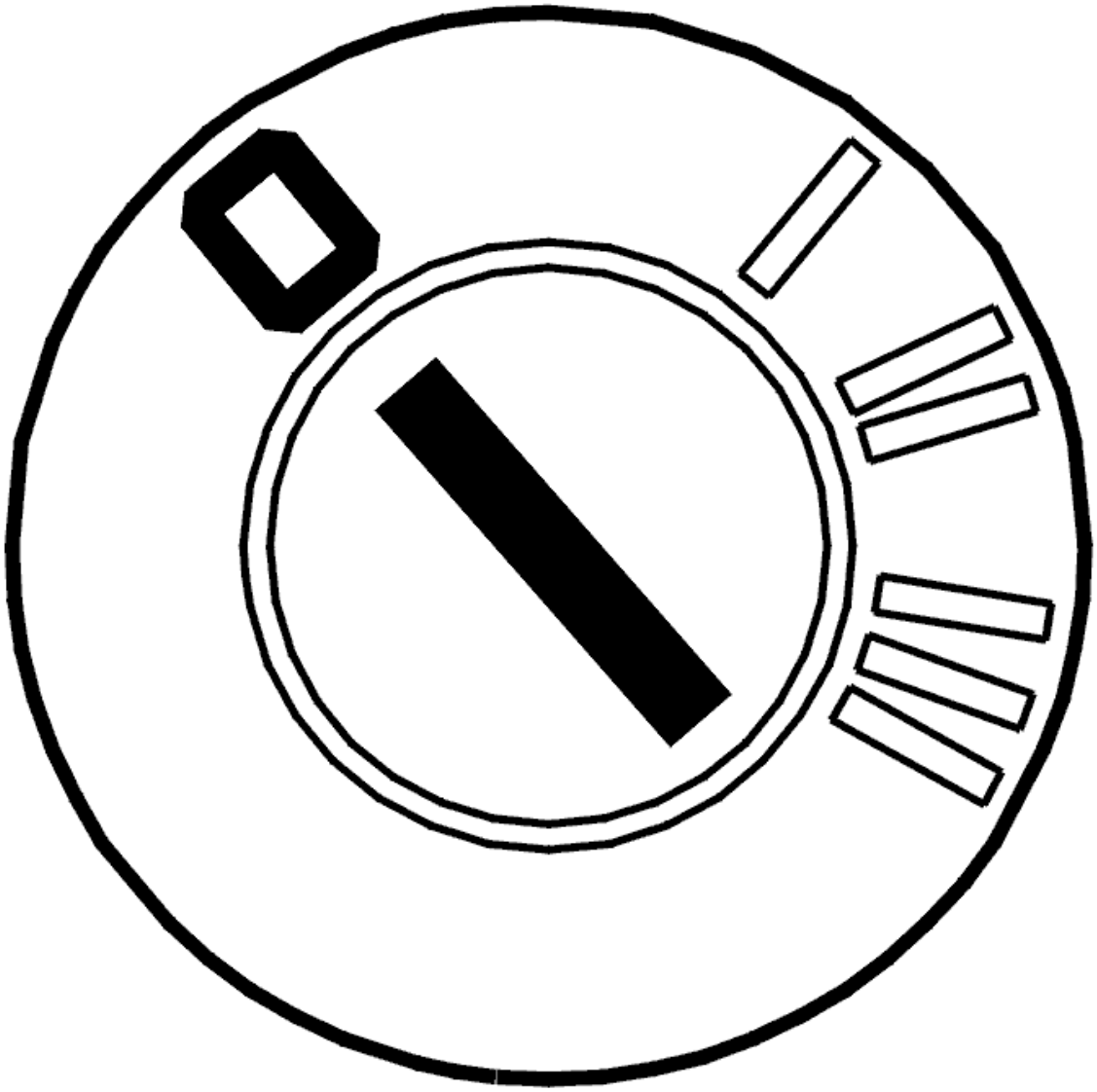

Fig. 168: Identifying Ignition OFF
Courtesy of VOLVO CARS CORPORATION

- Ignition off.

  Check the throttle unit and engine control module (ECM) connectors. Check for contact resistance and oxidation.

  Check the resistance values of the potentiometers in the throttle unit.

  Check the signal ground cable between engine control module (ECM) terminal #A19 (#A19) and throttle unit terminal #2 (wiring side). Check for an open-circuit.

  HINT: With the ignition on, the power supply to the throttle unit potentiometers must be approximately 5 V measured between throttle unit connector terminals #2 and #3 (wiring side).

Check the signal cable (potentiometer 1) between engine control module (ECM) terminal #A1 (#A1) and throttle unit terminal #6 (wiring side). Check for an open-circuit. Check for a short-circuit to supply voltage.

If no faults are found during the checks and the diagnostic trouble code (DTC) recurs, try replacing the throttle unit.

NOTE: When replacing the throttle unit, the throttle unit must be adapted. See Throttle unit adaptation in the vehicle communication socket.

Remedy as necessary.

Other information:

- see **CHECKING WIRING AND TERMINALS**
- For resistance values, see **COMPONENT SPECIFICATIONS**
- To connect the breakout box, see **CONNECTING THE BREAKOUT BOX**
- For 5 cylinder turbocharged engines -2004, see **SIGNAL DESCRIPTION**
- For 5 cylinder turbocharged engines 2005-, see **SIGNAL SPECIFICATION** .
- For 6 cylinder engines -2004, see **SIGNAL SPECIFICATION**
- For 6 cylinder engines 2005-, see **SIGNAL SPECIFICATION** .
- For B5xx4T, see **THROTTLE BODY (ELECTRONIC THROTTLE MODULE), REPLACING** .
- For B6xx4T, see **THROTTLE BODY (ELECTRONIC THROTTLE MODULE), REPLACING** .

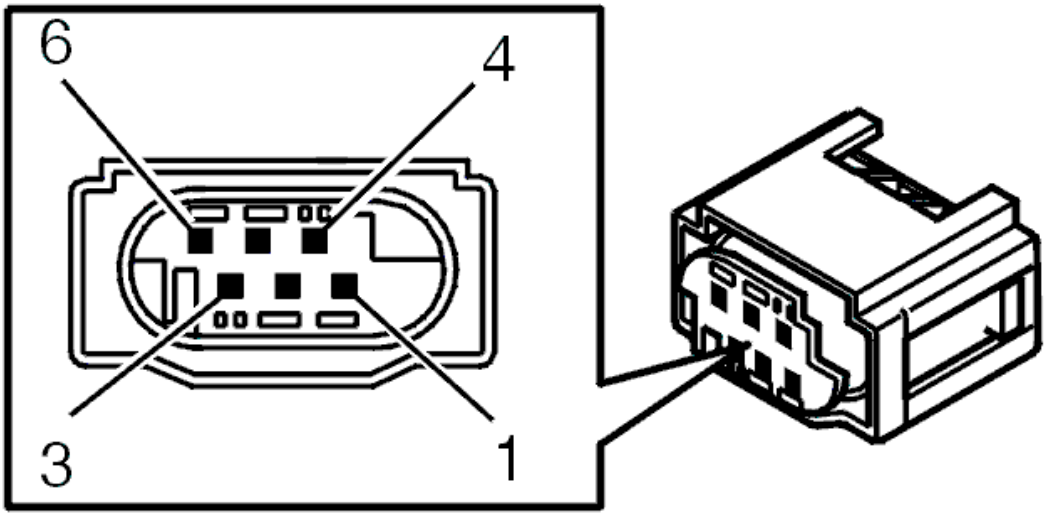

Fig. 169: Identifying Throttle Unit Connector Terminals
Courtesy of VOLVO CARS CORPORATION

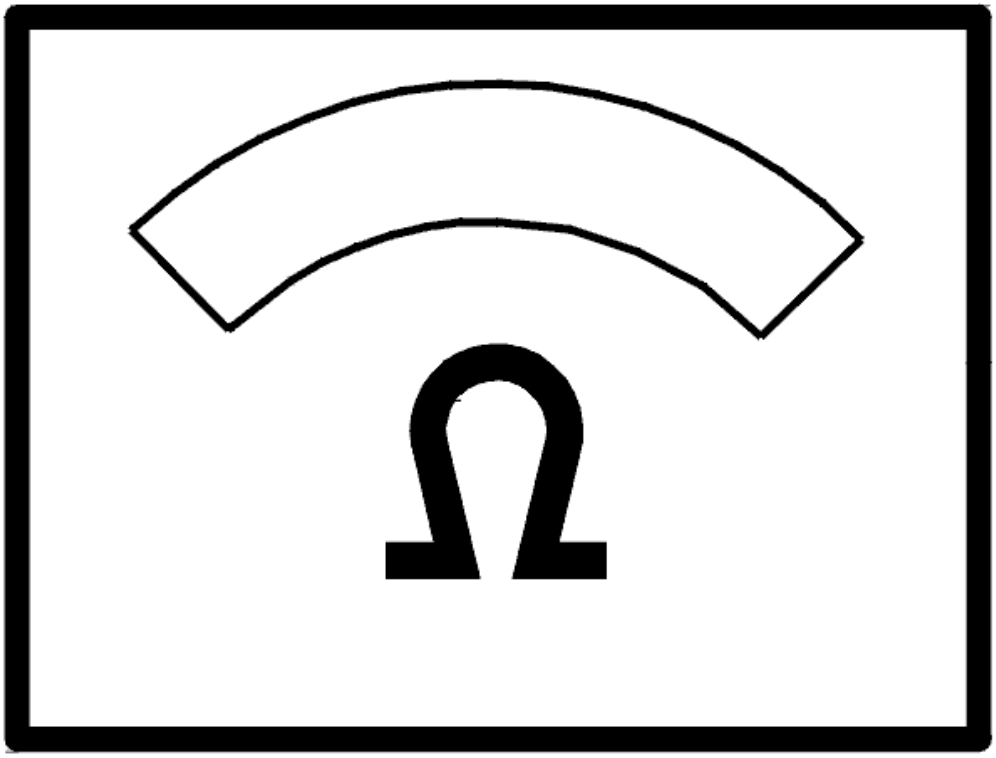

Fig. 170: Identifying Ohm Meter
Courtesy of VOLVO CARS CORPORATION

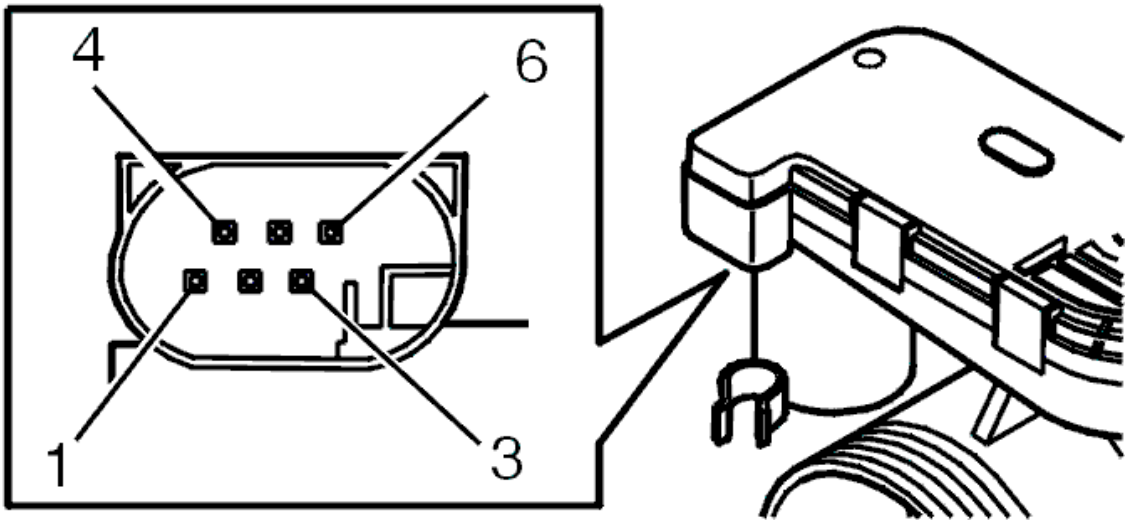

Fig. 171: Identifying Throttle Unit Connector Terminals
Courtesy of VOLVO CARS CORPORATION

- **Continue**

  Refer to **VERIFICATION**

VERIFICATION

VERIFICATION

HINT: After carrying out the repair, check that the fault has been remedied.

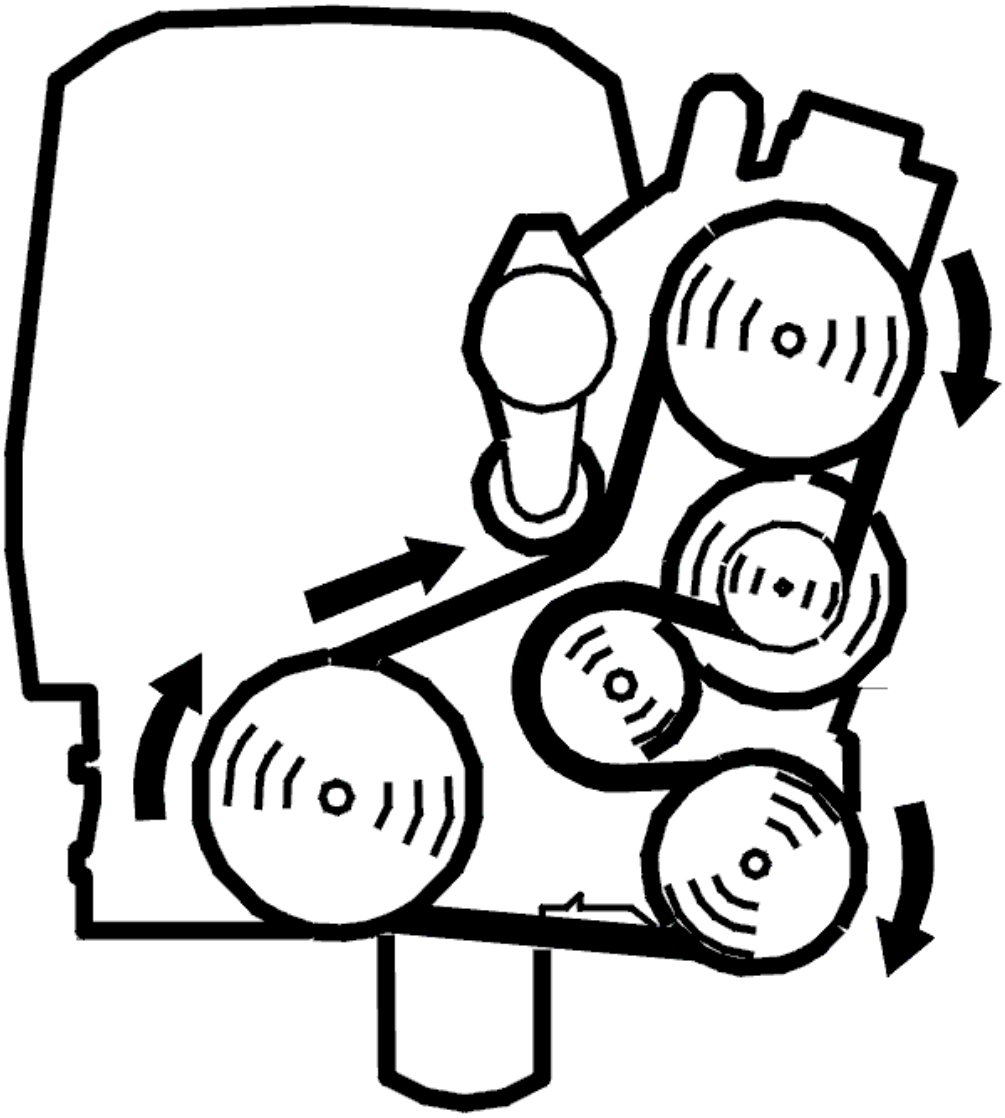

Fig. 172: Belt Routing / Engine Idling - Volvo
Courtesy of VOLVO CARS CORPORATION

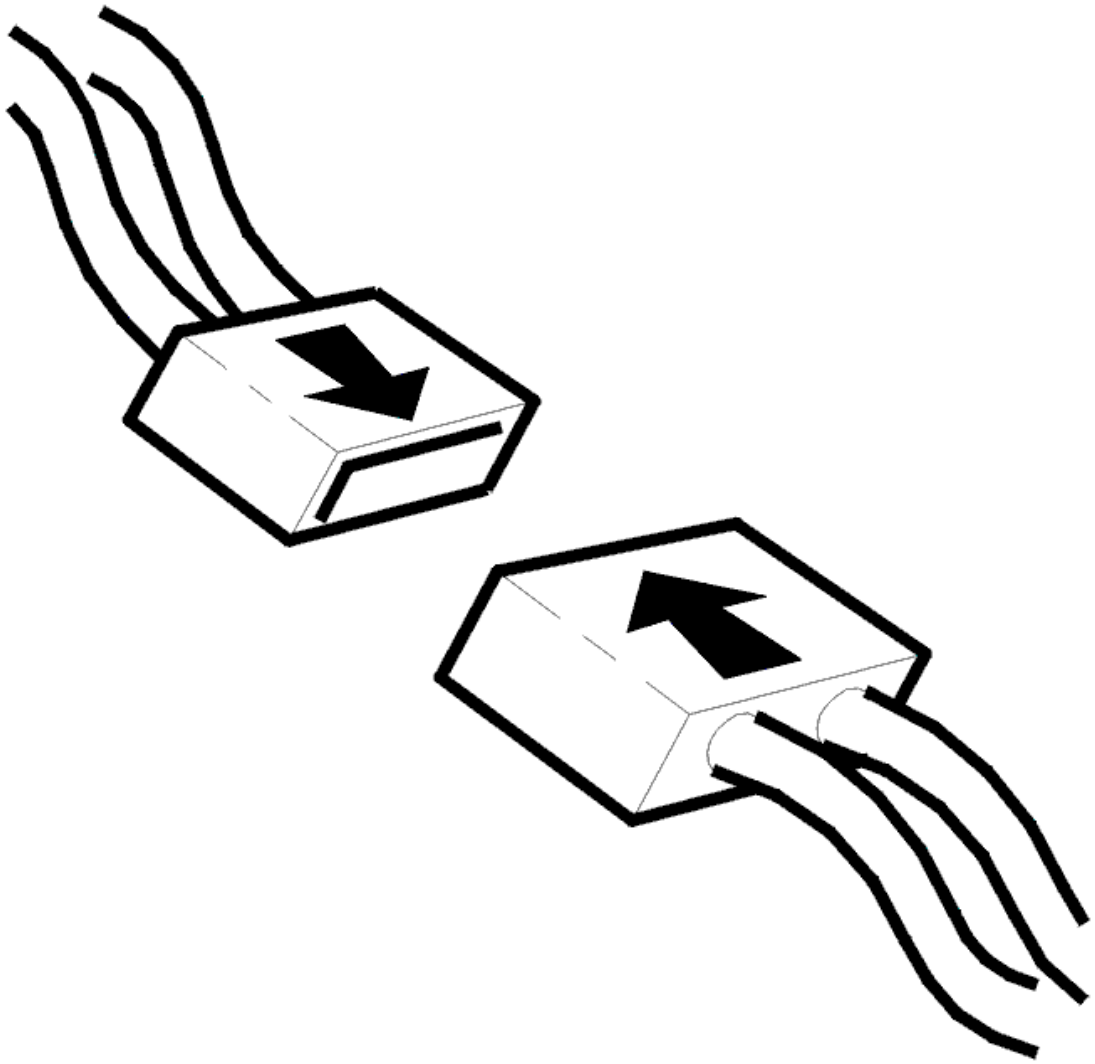

Fig. 173: Connecting Connector
Courtesy of VOLVO CARS CORPORATION

- Ignition off
- Reinstall the connectors, components etc.
- Start the engine
- Read off diagnostic trouble codes (DTCs).

The fault has been remedied if status of the diagnostic trouble code (DTC) is intermittent.

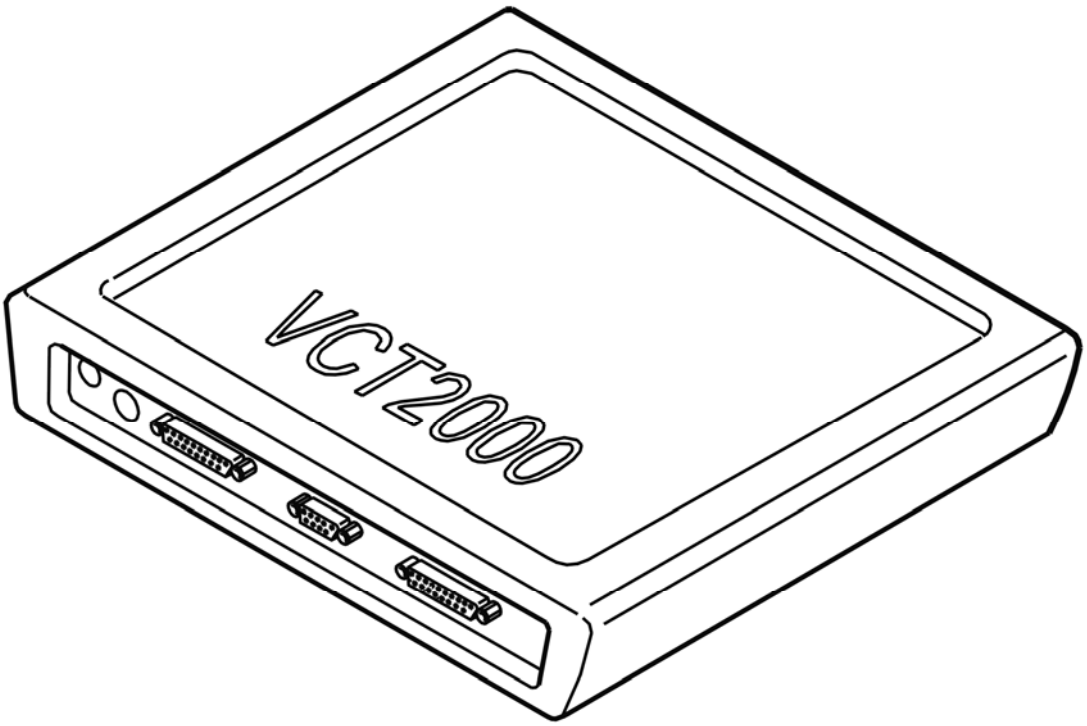

Fig. 174: Identifying VCT2000 Diagnostic Tool Symbol In VIDA
Courtesy of VOLVO CARS CORPORATION

Is the status of the diagnostic trouble code (DTC) intermittent?

- **YES**

  VERIFIED: Troubleshooting has been completed.

- **NO**

  Refer to **INFORMATION**

INFORMATION

FAULT-TRACING INFORMATION

The fault should have been detected and remedied. As this is not the case fault-tracing has failed.

Exit fault-tracing for this diagnostic trouble code (DTC) or make another attempt.

ECM-9150: THROTTLE UNIT, POTENTIOMETER 1. SIGNAL TOO LOW (B5254T2; B6294T; 2003-2004)

DIAGNOSTIC TROUBLE CODE (DTC) INFORMATION

see **DIAGNOSTIC TROUBLE CODE (DTC) INFORMATION**

SIGNAL TOO LOW

FAULT-TRACING INFORMATION

FAULT-TRACING INFORMATION

CAUTION: The male and female pins on the electronic throttle unit connectors are gold plated. Great care must be taken when measuring. Damage to the gold plating can result in operating difficulties.

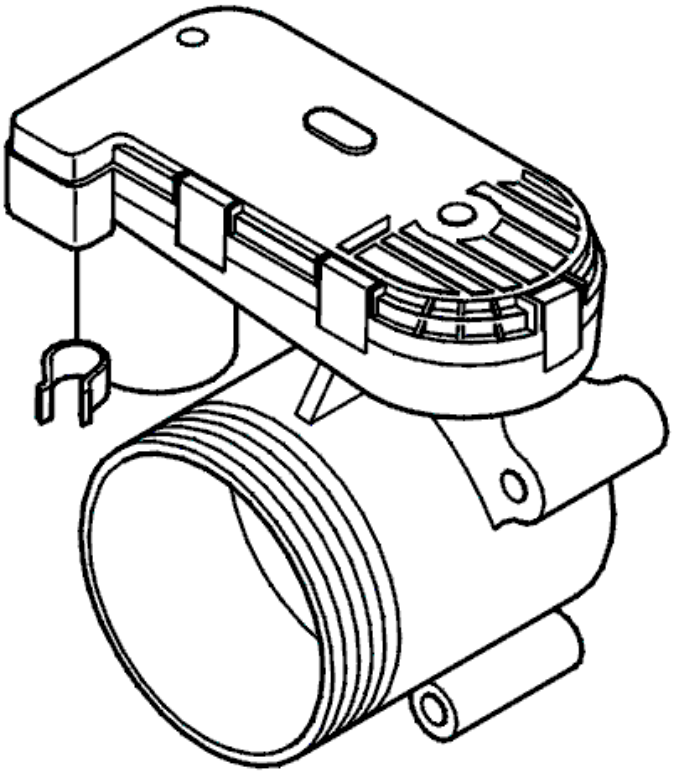

Fig. 175: Identifying Throttle Unit & Potentiometer
Courtesy of VOLVO CARS CORPORATION

- **Continue**

  Refer to **CHECKING COMPONENTS AND WIRING**

CHECKING COMPONENTS AND WIRING

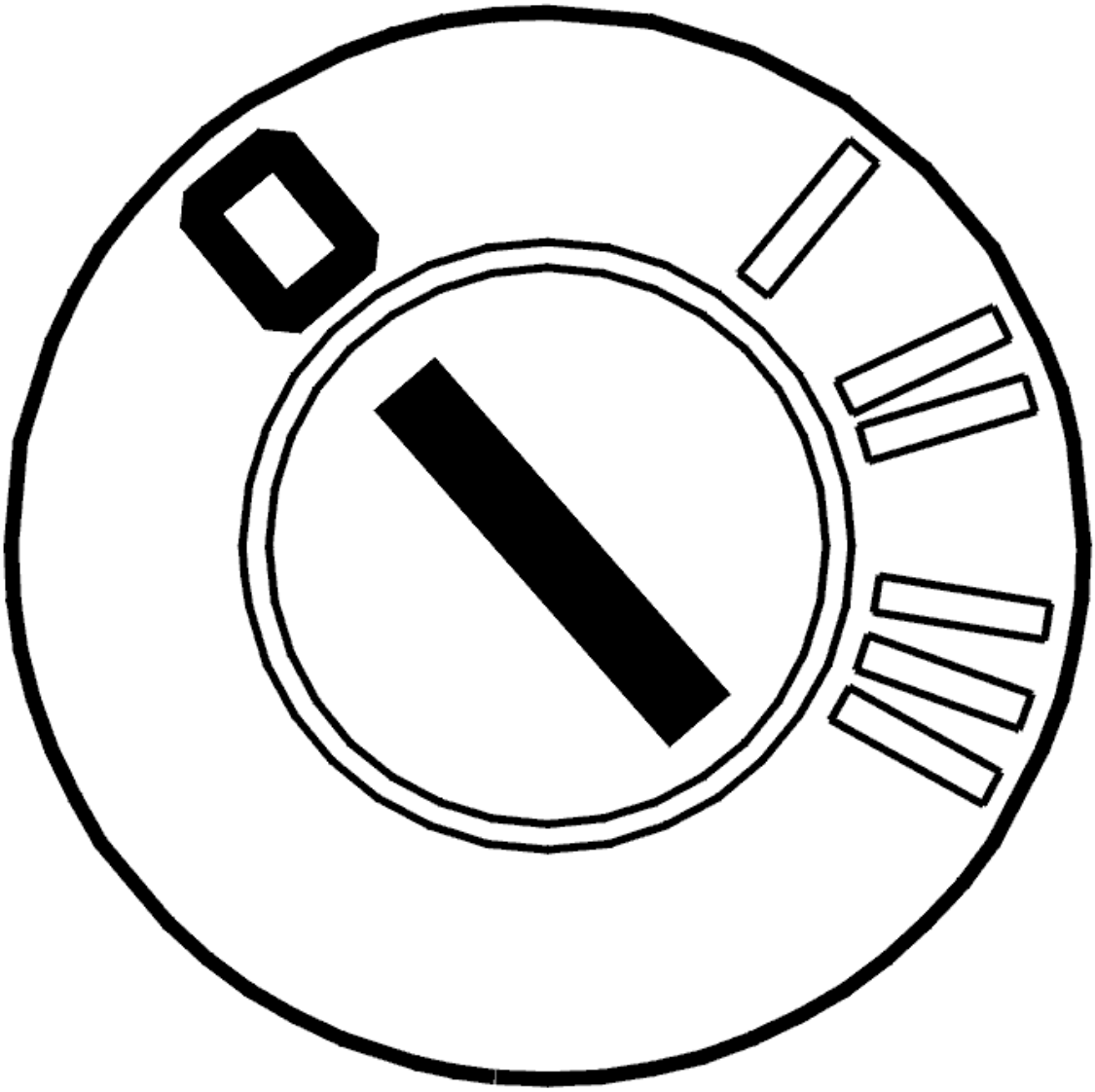

Fig. 176: Identifying Ignition OFF
Courtesy of VOLVO CARS CORPORATION

- Ignition off.

  Check the throttle unit and engine control module (ECM) connectors. Check for contact resistance and oxidation.

  Check the resistance values of the potentiometers in the throttle unit.

  Check the power supply cable (5 volts) between engine control module (ECM) terminal #A59 (#A59) and throttle unit terminal #3 (wiring side). Check for an open-circuit. Check for a short-circuit to ground.

  HINT: With the ignition on, the power supply to the throttle unit potentiometers must be approximately 5 V measured between throttle unit connector terminals #2 and #3 (wiring side).

Check the signal cable (potentiometer 1) between engine control module (ECM) terminal #A1 (#A1) and throttle unit terminal #6 (wiring side). Check for a short-circuit to ground.

If no faults are found during the checks and the diagnostic trouble code (DTC) recurs, try replacing the throttle unit.

NOTE: When replacing the throttle unit, the throttle unit must be adapted. See Throttle unit adaptation in the vehicle communication socket.

Remedy as necessary.

Other information:

- see **CHECKING WIRING AND TERMINALS**
- For resistance values, see **COMPONENT SPECIFICATIONS**
- To connect the breakout box, see **CONNECTING THE BREAKOUT BOX**
- For 5 cylinder turbocharged engines -2004, see **SIGNAL DESCRIPTION**
- For 5 cylinder turbocharged engines 2005-, see **SIGNAL SPECIFICATION** .
- For 6 cylinder engines -2004, see **SIGNAL SPECIFICATION**
- For 6 cylinder engines 2005-, see **SIGNAL SPECIFICATION** .
- For B5xx4T, see **THROTTLE BODY (ELECTRONIC THROTTLE MODULE), REPLACING** .
- For B6xx4T, see **THROTTLE BODY (ELECTRONIC THROTTLE MODULE), REPLACING** .

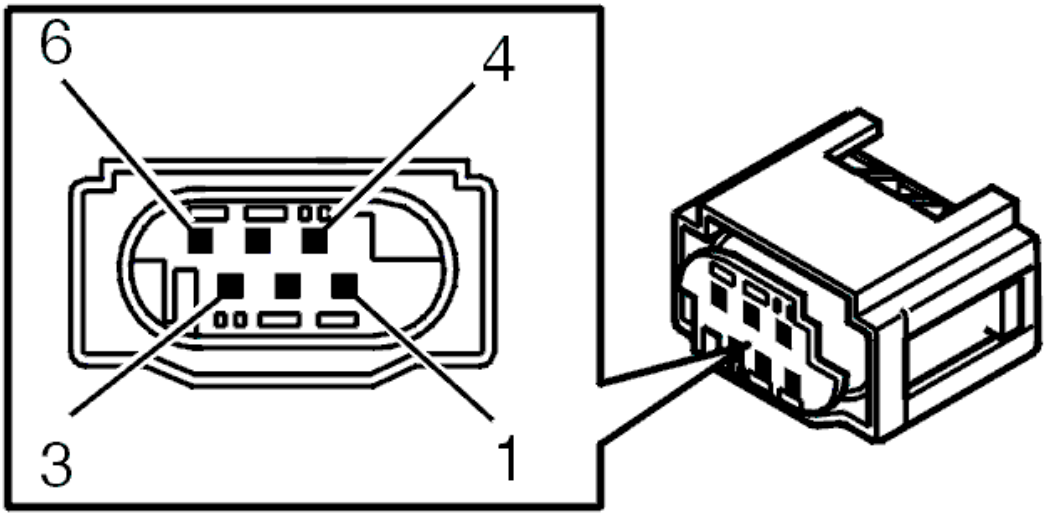

Fig. 177: Identifying Throttle Unit Connector Terminals
Courtesy of VOLVO CARS CORPORATION

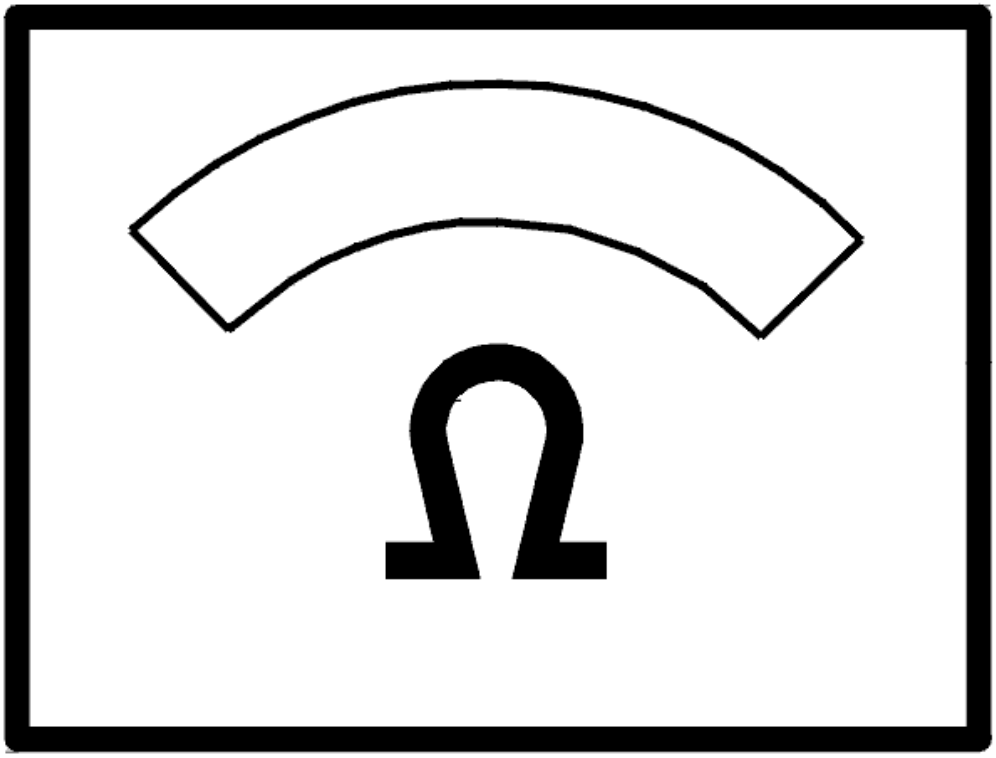

Fig. 178: Identifying Ohm Meter
Courtesy of VOLVO CARS CORPORATION

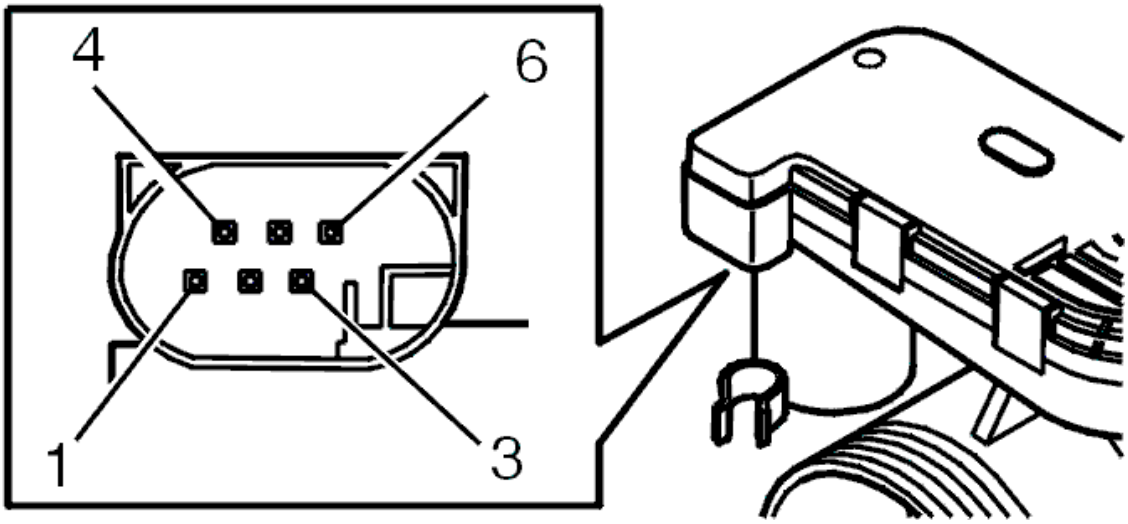

Fig. 179: Identifying Throttle Unit Connector Terminals
Courtesy of VOLVO CARS CORPORATION

- **Continue**

  Refer to **VERIFICATION**

VERIFICATION

VERIFICATION

HINT: After carrying out the repair, check that the fault has been remedied.

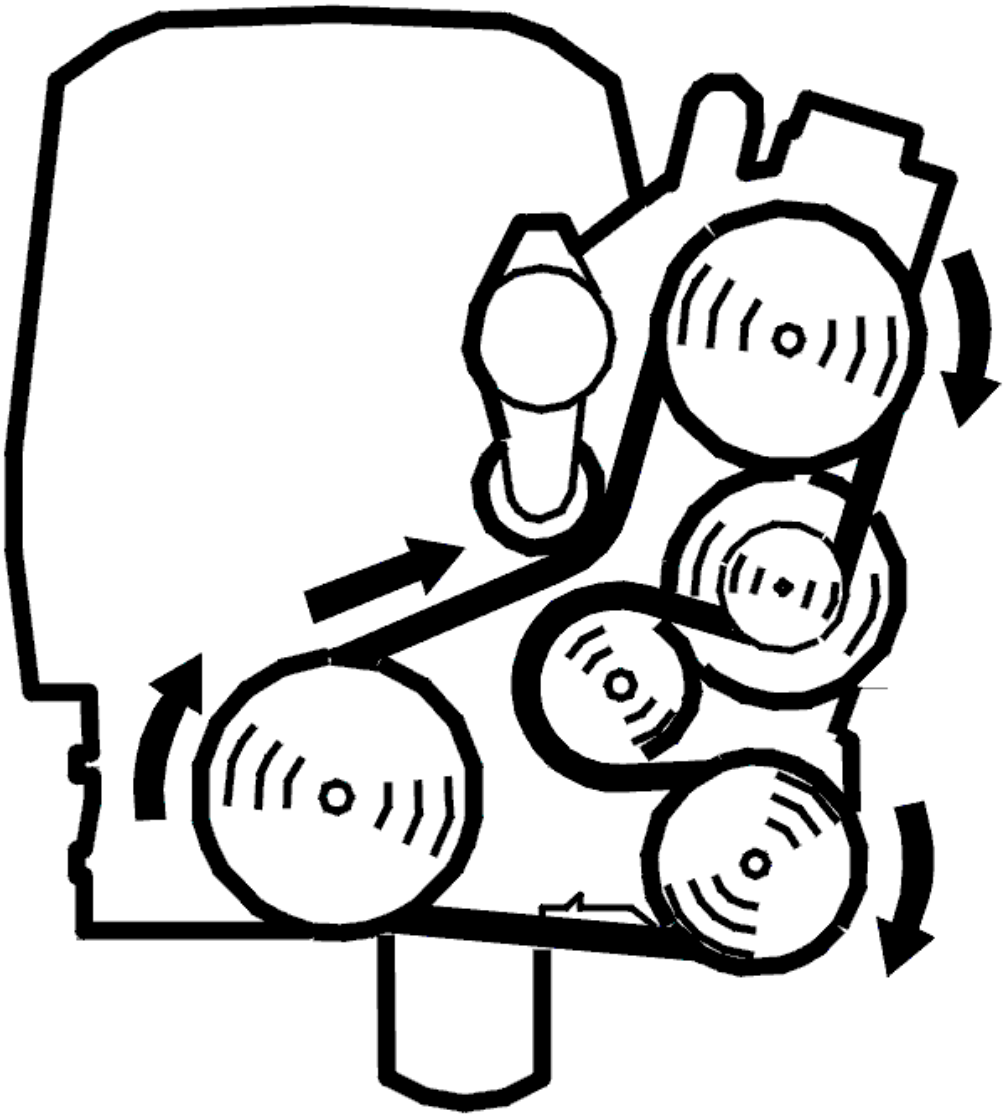

Fig. 180: Belt Routing / Engine Idling - Volvo
Courtesy of VOLVO CARS CORPORATION

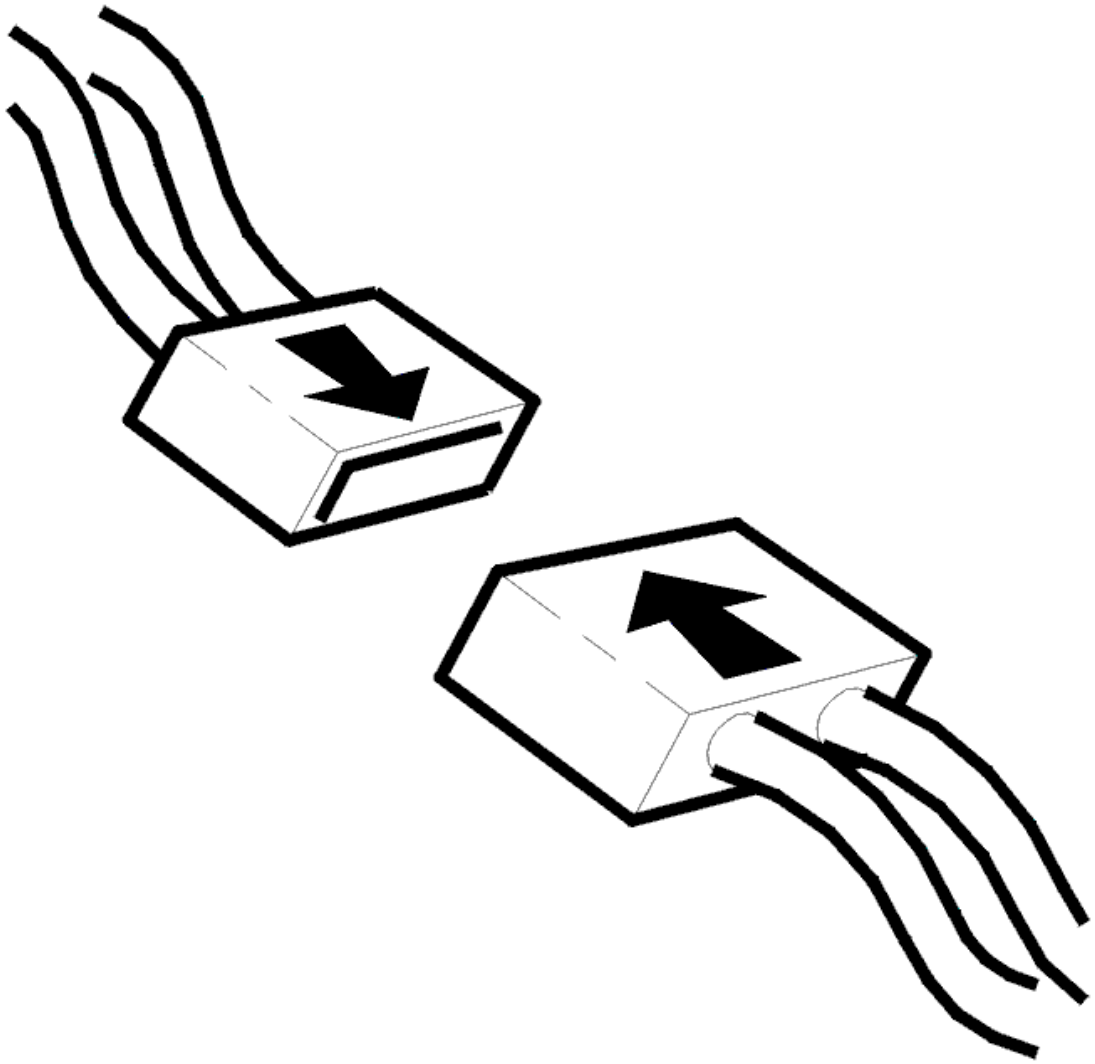

Fig. 181: Connecting Connector
Courtesy of VOLVO CARS CORPORATION

- Ignition off
- Reinstall the connectors, components etc.
- Start the engine
- Read off diagnostic trouble codes (DTCs).

The fault has been remedied if status of the diagnostic trouble code (DTC) is intermittent.

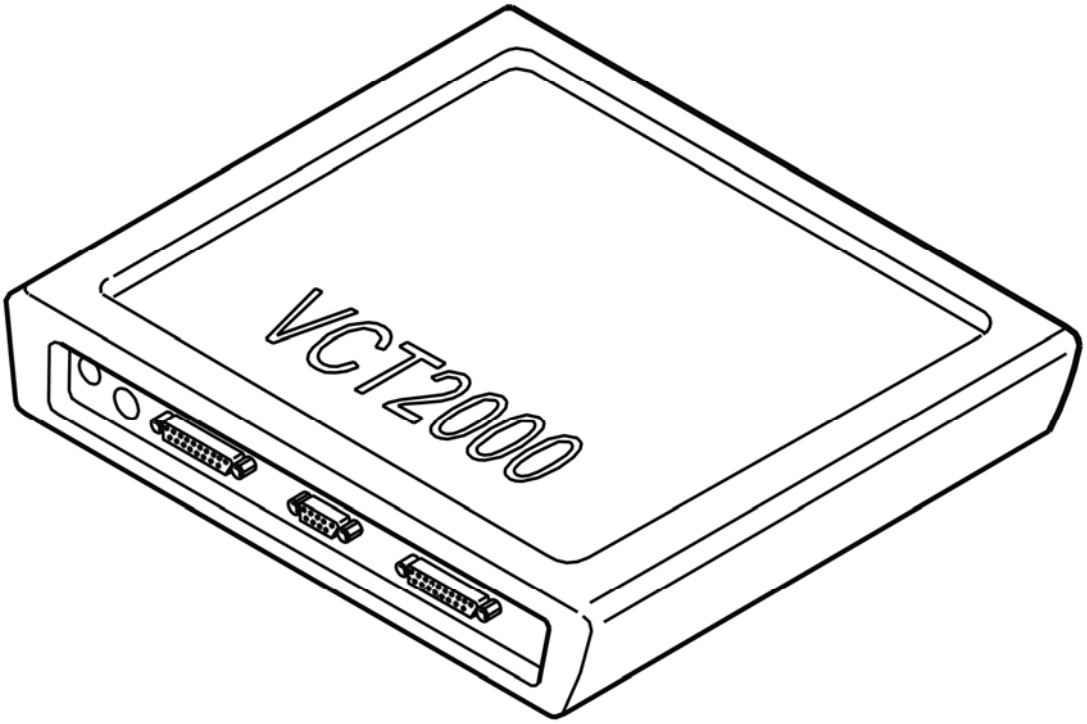

Fig. 182: Identifying VCT2000 Diagnostic Tool Symbol In VIDA
Courtesy of VOLVO CARS CORPORATION

Is the status of the diagnostic trouble code (DTC) intermittent?

- **YES**

  VERIFIED: Troubleshooting has been completed.

- **NO**

  Refer to **INFORMATION**

INFORMATION

FAULT-TRACING INFORMATION

The fault should have been detected and remedied. As this is not the case fault-tracing has failed.

Exit fault-tracing for this diagnostic trouble code (DTC) or make another attempt.

ECM-9160: THROTTLE UNIT, POTENTIOMETER 2. FAULTY SIGNAL (B5254T2; B6294T; 2003-2004)

DIAGNOSTIC TROUBLE CODE (DTC) INFORMATION

Condition

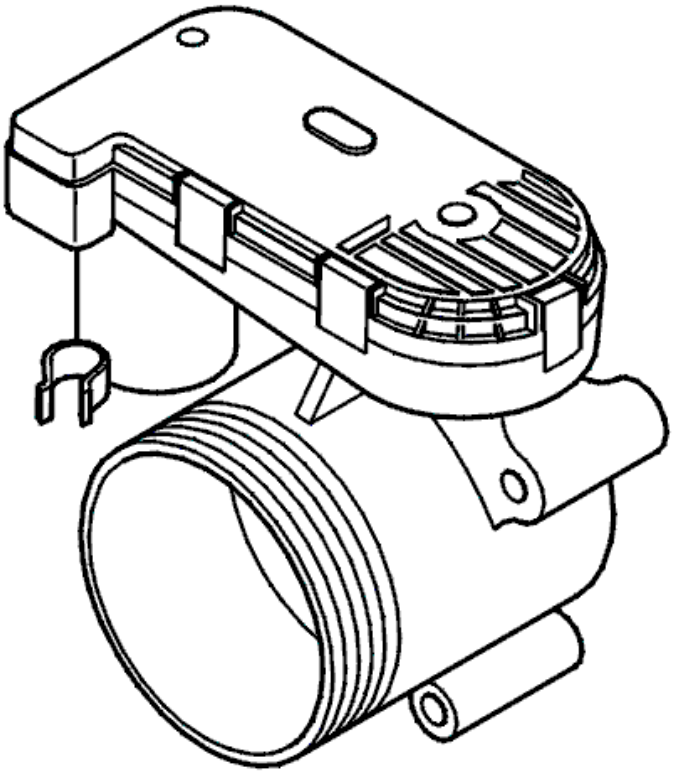

Fig. 183: Identifying Throttle Unit & Potentiometer
Courtesy of VOLVO CARS CORPORATION

Diagnostic trouble code (DTC) ECM-9160 is stored if the engine control module (ECM) registers a fault in the signal from the throttle position sensor (TP) for the throttle unit, potentiometer 2 (circuit 2) when the ignition is switched on

Substitute Value

The throttle angle is calculated using potentiometer 1 (circuit 1) in the throttle position (TP) sensor for the throttle unit. Diagnostic trouble code (DTC) ECM-9150 is also stored if the fault is also detected in potentiometer 1 (circuit 1). If both ECM-9160 and ECM-9150 are stored, the supply to the damper motor in the throttle unit will be shut off. The throttle will set itself to the return position.

Possible Source

Signal too high:

- Contact resistance or oxidation in the terminals between the engine control module (ECM) and the throttle unit

- Short-circuit to supply voltage in the signal cable
- Open-circuit in the signal ground cable for potentiometers 1 and 2
- Defective throttle unit.

Signal too low:

- Contact resistance or oxidation in the terminals between the engine control module (ECM) and the throttle unit
- Open-circuit or short-circuit to ground in the signal cable
- Open-circuit or short-circuit to ground in the power supply to potentiometers 1 and 2
- Defective throttle unit.

Faulty signal:

- Contact resistance or oxidation in the terminals between the engine control module (ECM) and the throttle unit
- The signal cables are short-circuited to each other
- Defective throttle unit.

Fault symptom[s]

- Poor performance.

FAULTY SIGNAL

see **FAULTY SIGNAL**

ECM-9160: THROTTLE UNIT, POTENTIOMETER 2. SIGNAL TOO HIGH (B5254T2; B6294T; 2003-2004)

DIAGNOSTIC TROUBLE CODE (DTC) INFORMATION

see **DIAGNOSTIC TROUBLE CODE (DTC) INFORMATION**

SIGNAL TOO HIGH

FAULT-TRACING INFORMATION

FAULT-TRACING INFORMATION

CAUTION: The male and female pins on the electronic throttle unit connectors are gold plated. Great care must be taken when measuring. Damage to the gold plating can result in operating difficulties.

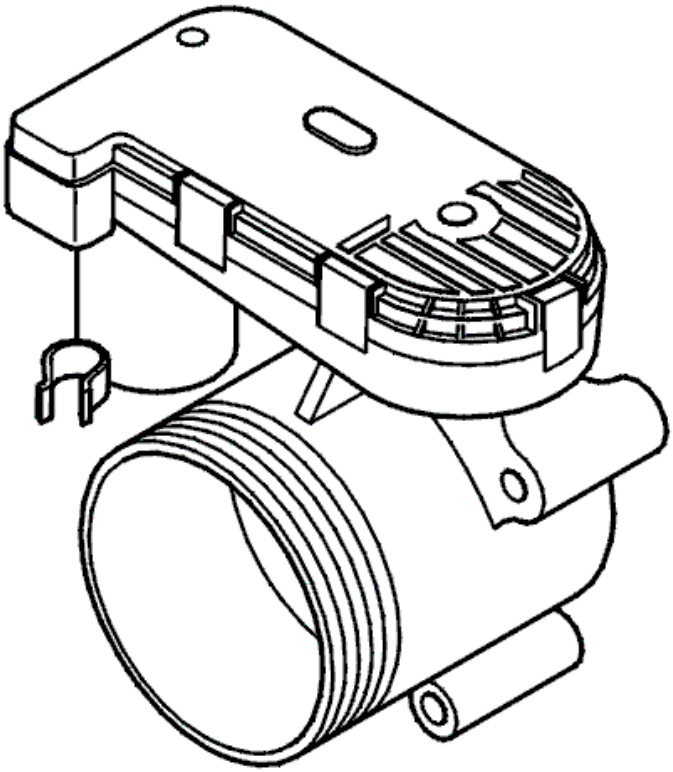

Fig. 184: Identifying Throttle Unit & Potentiometer
Courtesy of VOLVO CARS CORPORATION

- **Continue**

  Refer to **CHECKING COMPONENTS AND WIRING**

CHECKING COMPONENTS AND WIRING

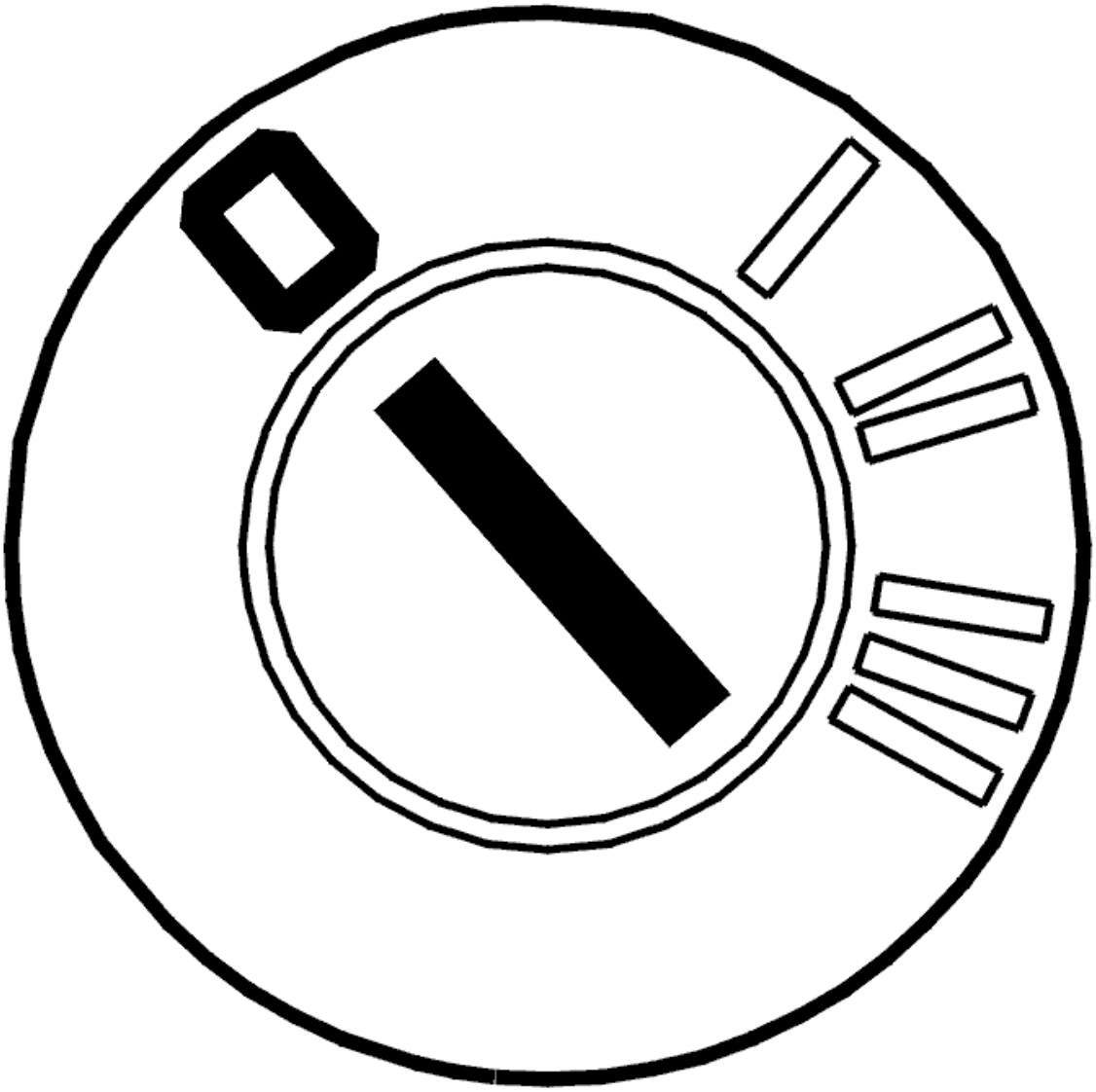

Fig. 185: Identifying Ignition OFF
Courtesy of VOLVO CARS CORPORATION

- Ignition off.

  Check the throttle unit and engine control module (ECM) connectors. Check for contact resistance and oxidation.

  Check the resistance values of the potentiometers in the throttle unit.

  Check the signal ground cable between engine control module (ECM) terminal #A19 (#A19) and throttle unit terminal #2 (wiring side). Check for an open-circuit.

  HINT: With the ignition on, the power supply to the throttle unit potentiometers must be approximately 5 V measured between throttle unit connector terminals #2 and #3 (wiring side).

Check the signal cable (potentiometer 2) between engine control module (ECM) terminal #A20 (#A20) and throttle unit terminal #5 (wiring side). Check for a short-circuit to supply voltage.

If no faults are found during the checks and the diagnostic trouble code (DTC) recurs, try replacing the throttle unit.

NOTE: When replacing the throttle unit, the throttle unit must be adapted. See Throttle unit adaptation in the vehicle communication socket.

Remedy as necessary.

Other information:

- see **CHECKING WIRING AND TERMINALS**
- For resistance values, see **COMPONENT SPECIFICATIONS**
- To connect the breakout box, see **CONNECTING THE BREAKOUT BOX**
- For 5 cylinder turbocharged engines -2004, see **SIGNAL DESCRIPTION**
- For 5 cylinder turbocharged engines 2005-, see **SIGNAL SPECIFICATION** .
- For 6 cylinder engines -2004, see **SIGNAL SPECIFICATION**
- For 6 cylinder engines 2005-, see **SIGNAL SPECIFICATION** .
- For B5xx4T, see **THROTTLE BODY (ELECTRONIC THROTTLE MODULE), REPLACING** .
- For B6xx4T, see **THROTTLE BODY (ELECTRONIC THROTTLE MODULE), REPLACING** .

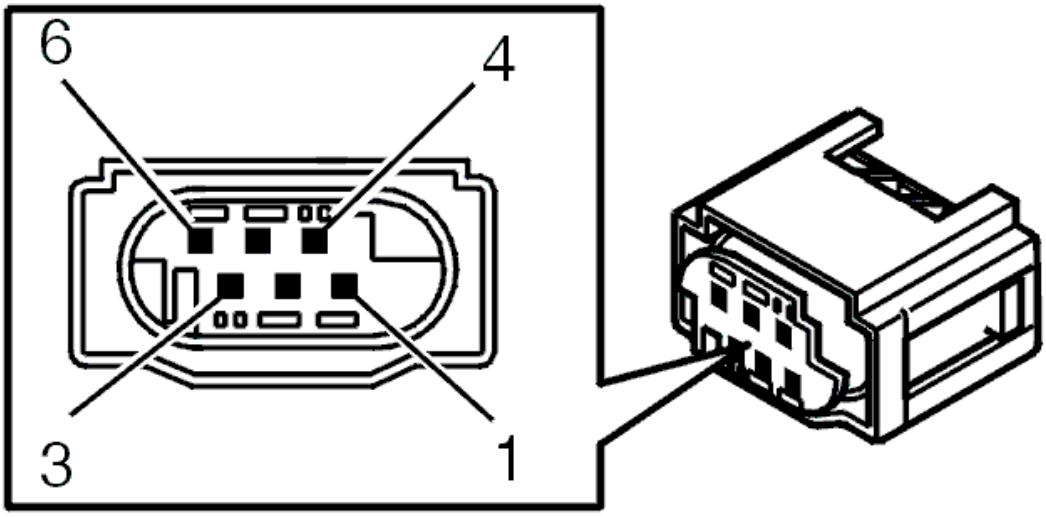

Fig. 186: Identifying Throttle Unit Connector Terminals
Courtesy of VOLVO CARS CORPORATION

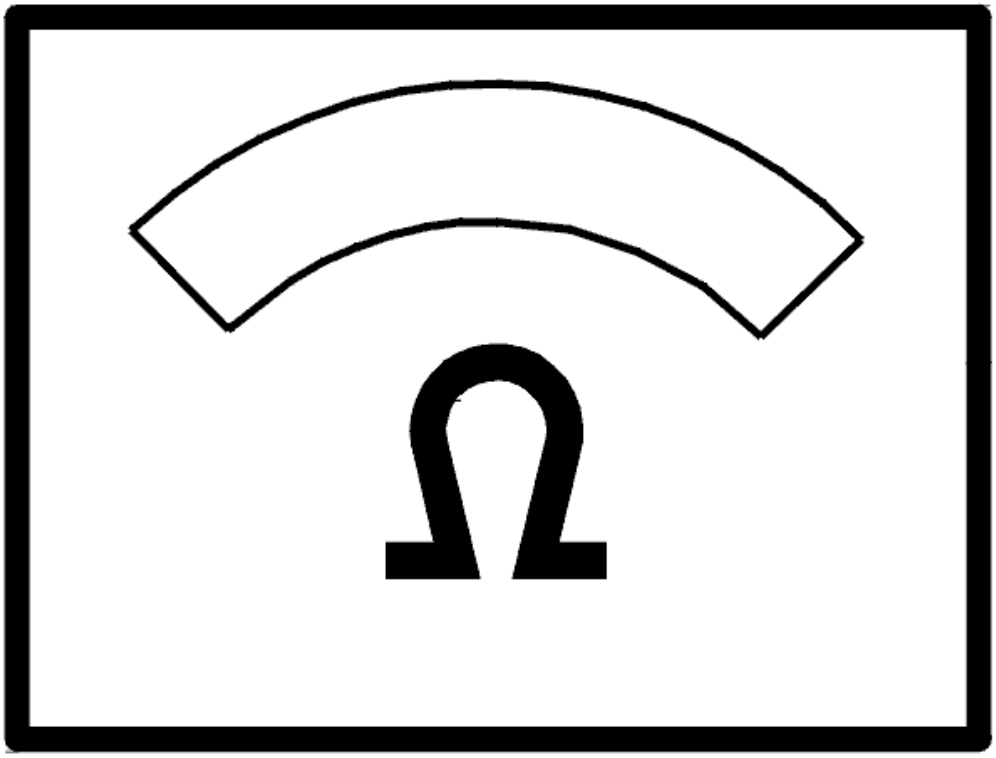

Fig. 187: Identifying Ohm Meter
Courtesy of VOLVO CARS CORPORATION

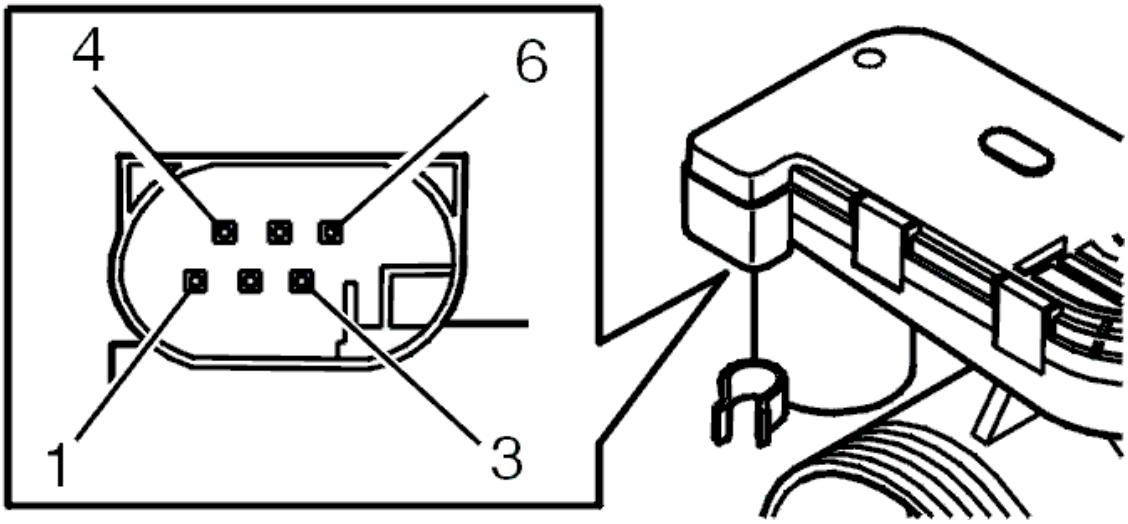

Fig. 188: Identifying Throttle Unit Connector Terminals
Courtesy of VOLVO CARS CORPORATION

- **Continue**

  Refer to **VERIFICATION**

VERIFICATION

VERIFICATION

HINT: After carrying out the repair, check that the fault has been remedied.

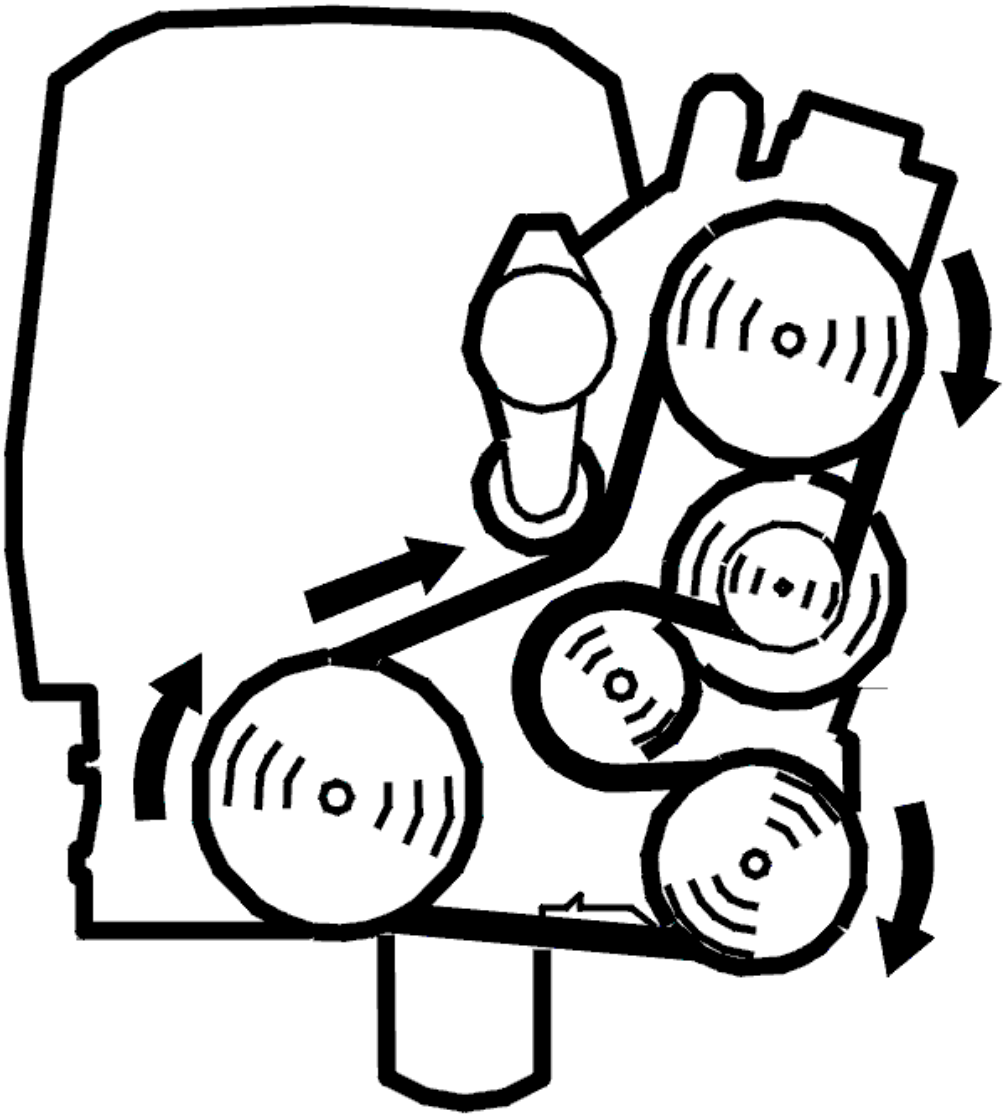

Fig. 189: Belt Routing / Engine Idling - Volvo
Courtesy of VOLVO CARS CORPORATION

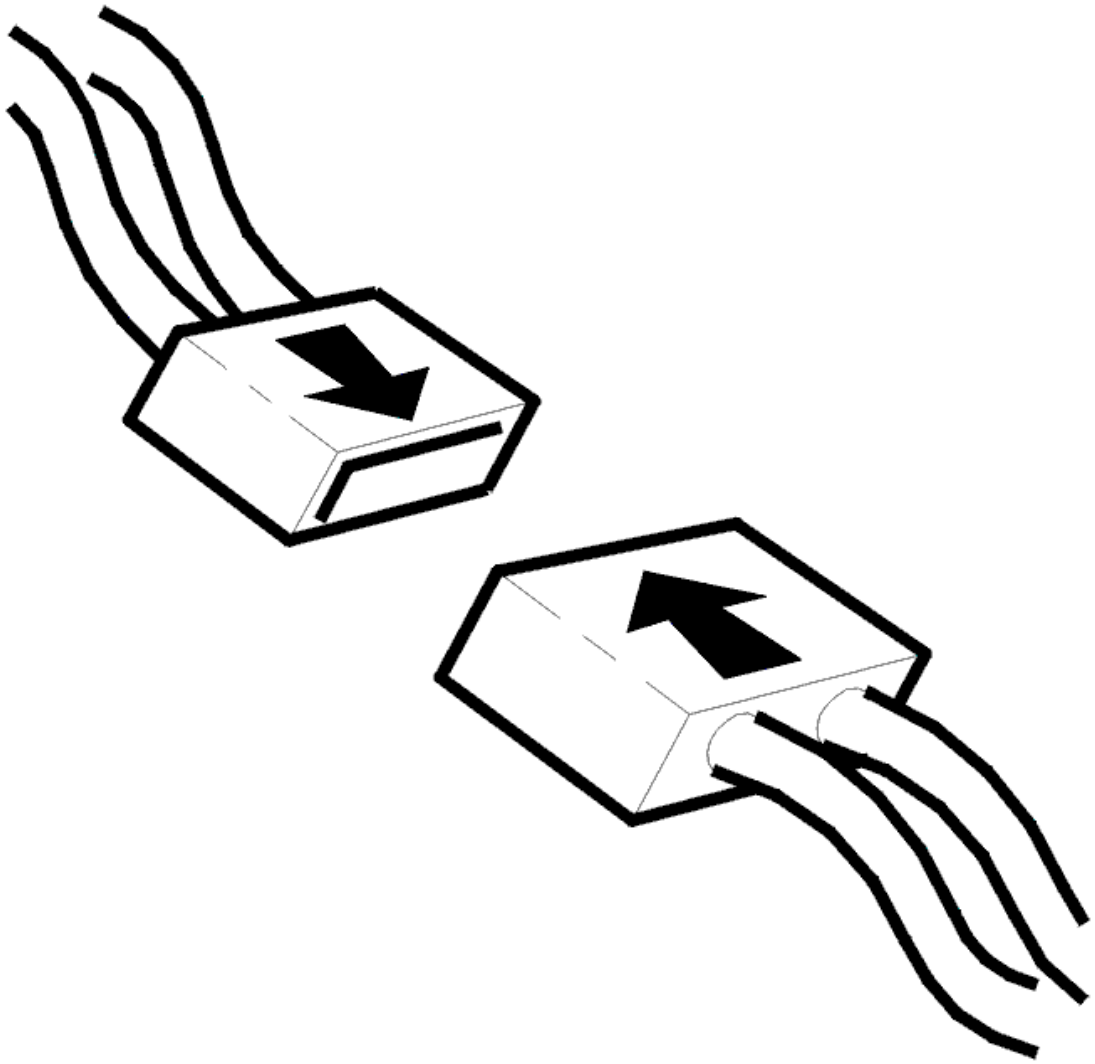

Fig. 190: Connecting Connector
Courtesy of VOLVO CARS CORPORATION

- Ignition off
- Reinstall the connectors, components etc.
- Start the engine
- Read off diagnostic trouble codes (DTCs).

The fault has been remedied if status of the diagnostic trouble code (DTC) is intermittent.

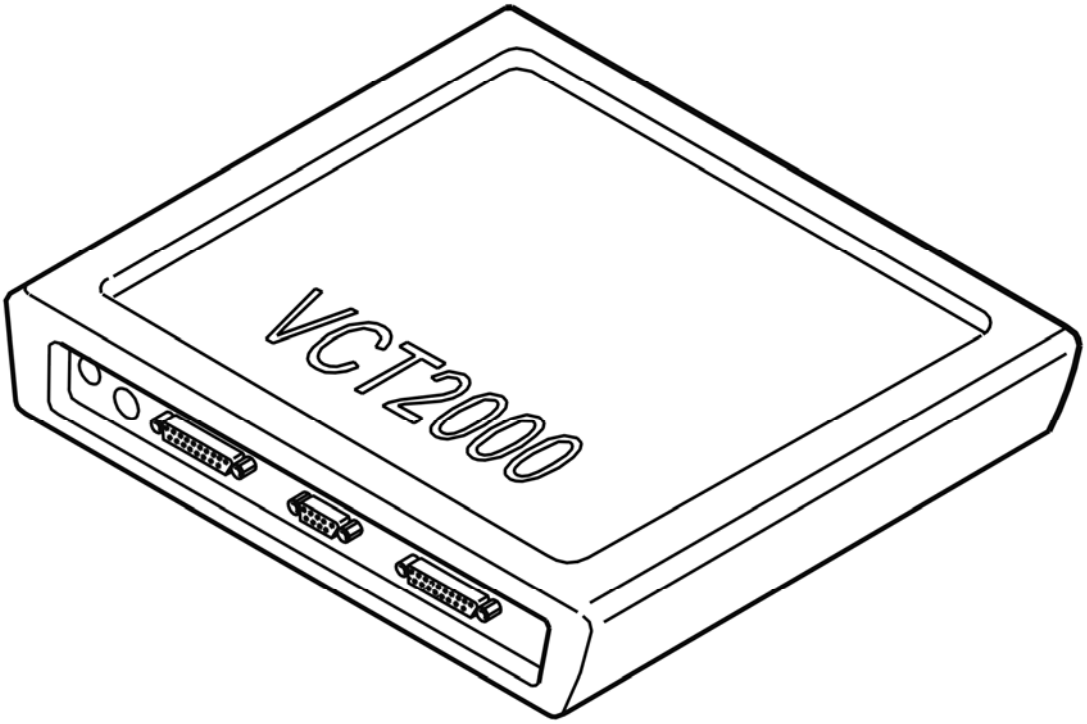

Fig. 191: Identifying VCT2000 Diagnostic Tool Symbol In VIDA
Courtesy of VOLVO CARS CORPORATION

Is the status of the diagnostic trouble code (DTC) intermittent?

- **YES**

  VERIFIED: Troubleshooting has been completed.

- **NO**

  Refer to **INFORMATION**

INFORMATION

FAULT-TRACING INFORMATION

The fault should have been detected and remedied. As this is not the case fault-tracing has failed.

Exit fault-tracing for this diagnostic trouble code (DTC) or make another attempt.

ECM-9160: THROTTLE UNIT, POTENTIOMETER 2. SIGNAL TOO LOW (B5254T2; B6294T; 2003-2004)

DIAGNOSTIC TROUBLE CODE (DTC) INFORMATION

see **DIAGNOSTIC TROUBLE CODE (DTC) INFORMATION**

SIGNAL TOO LOW

FAULT-TRACING INFORMATION

FAULT-TRACING INFORMATION

CAUTION: The male and female pins on the electronic throttle unit connectors are gold plated. Great care must be taken when measuring. Damage to the gold plating can result in operating difficulties.

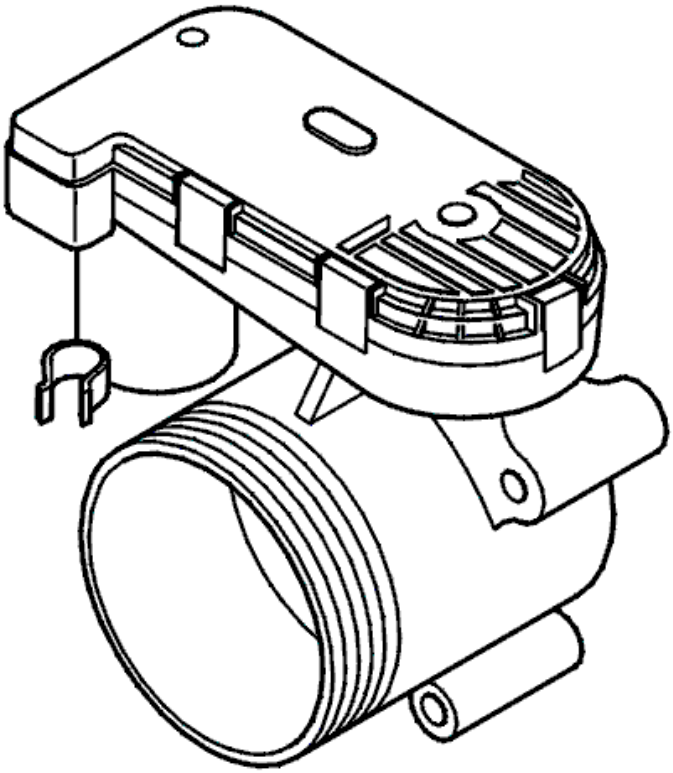

Fig. 192: Identifying Throttle Unit & Potentiometer
Courtesy of VOLVO CARS CORPORATION

- **Continue**

  Refer to **CHECKING COMPONENTS AND WIRING**

CHECKING COMPONENTS AND WIRING

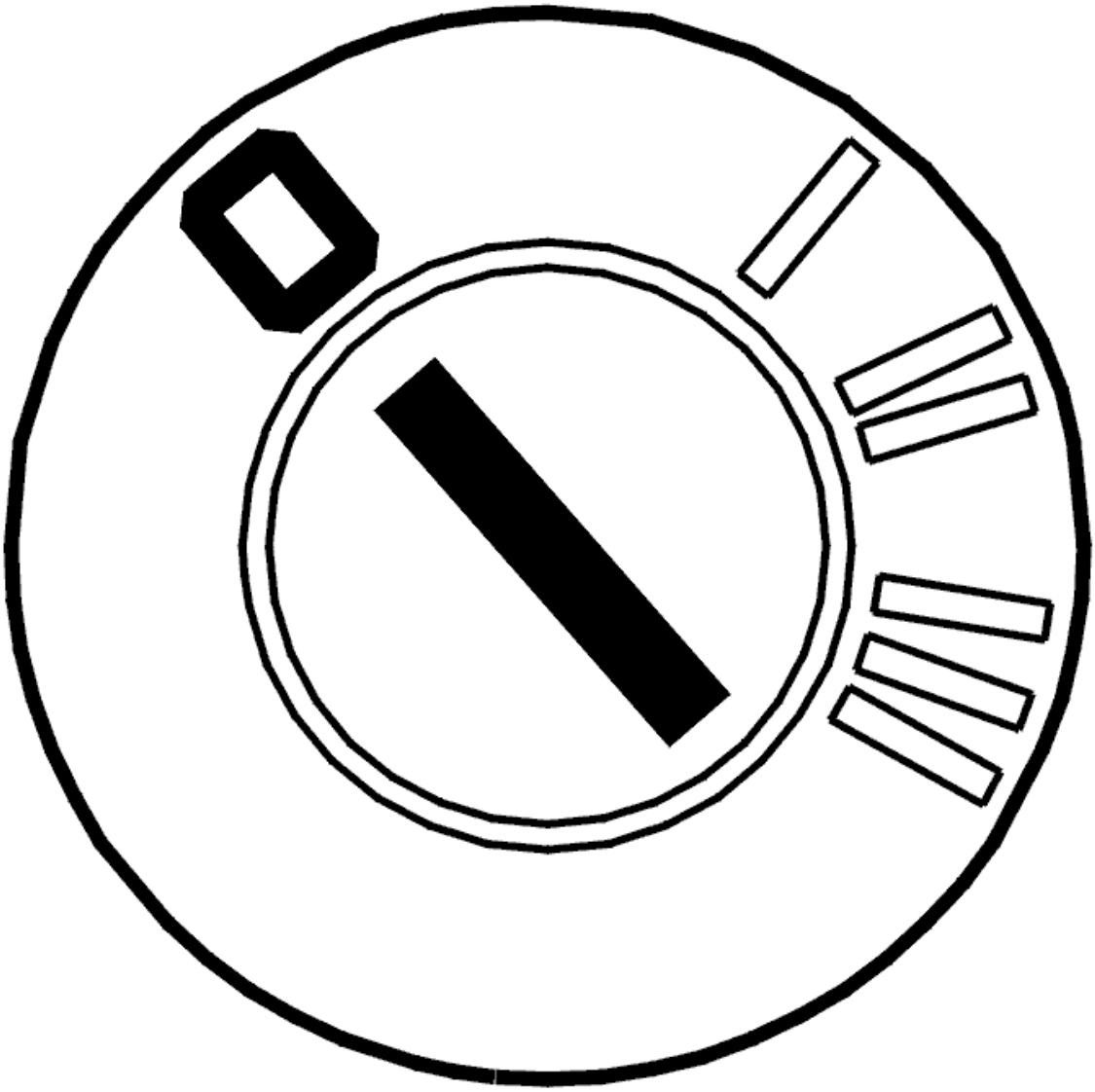

Fig. 193: Identifying Ignition OFF
Courtesy of VOLVO CARS CORPORATION

- Ignition off.

  Check the throttle unit and engine control module (ECM) connectors. Check for contact resistance and oxidation.

  Check the resistance values of the potentiometers in the throttle unit.

  Check the power supply cable (5 volts) between engine control module (ECM) terminal #A59 (#A59) and throttle unit terminal #3 (wiring side). Check for an open-circuit. Check for a short-circuit to ground.

  HINT: With the ignition on, the power supply to the throttle unit potentiometers must be approximately 5 V measured between throttle unit connector terminals #2 and #3 (wiring side).

Check the signal cable (potentiometer 2) between engine control module (ECM) terminal #A20 (#A20) and throttle unit terminal #5 (wiring side). Check for an open-circuit. Check for a short-circuit to ground.

If no faults are found during the checks and the diagnostic trouble code (DTC) recurs, try replacing the throttle unit.

NOTE: When replacing the throttle unit, the throttle unit must be adapted. See Throttle unit adaptation in the vehicle communication socket.

Remedy as necessary.

Other information:

- see **CHECKING WIRING AND TERMINALS**
- For resistance values, see **COMPONENT SPECIFICATIONS**
- To connect the breakout box, see **CONNECTING THE BREAKOUT BOX**
- For 5 cylinder turbocharged engines -2004, see **SIGNAL DESCRIPTION**
- For 5 cylinder turbocharged engines 2005-, see **SIGNAL SPECIFICATION** .
- For 6 cylinder engines -2004, see **SIGNAL SPECIFICATION**
- For 6 cylinder engines 2005-, see **SIGNAL SPECIFICATION** .
- For B5xx4T, see **THROTTLE BODY (ELECTRONIC THROTTLE MODULE), REPLACING** .
- For B6xx4T, see **THROTTLE BODY (ELECTRONIC THROTTLE MODULE), REPLACING** .

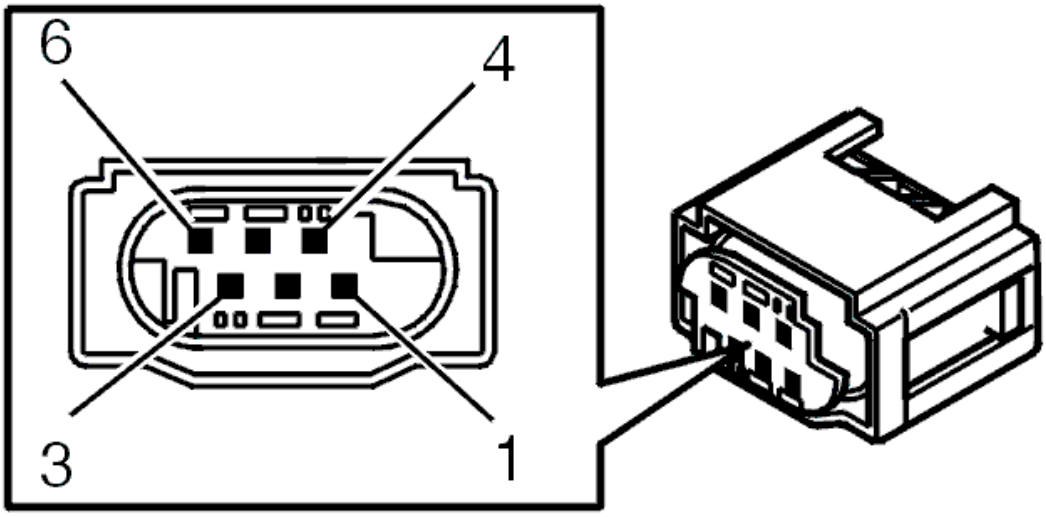

Fig. 194: Identifying Throttle Unit Connector Terminals
Courtesy of VOLVO CARS CORPORATION

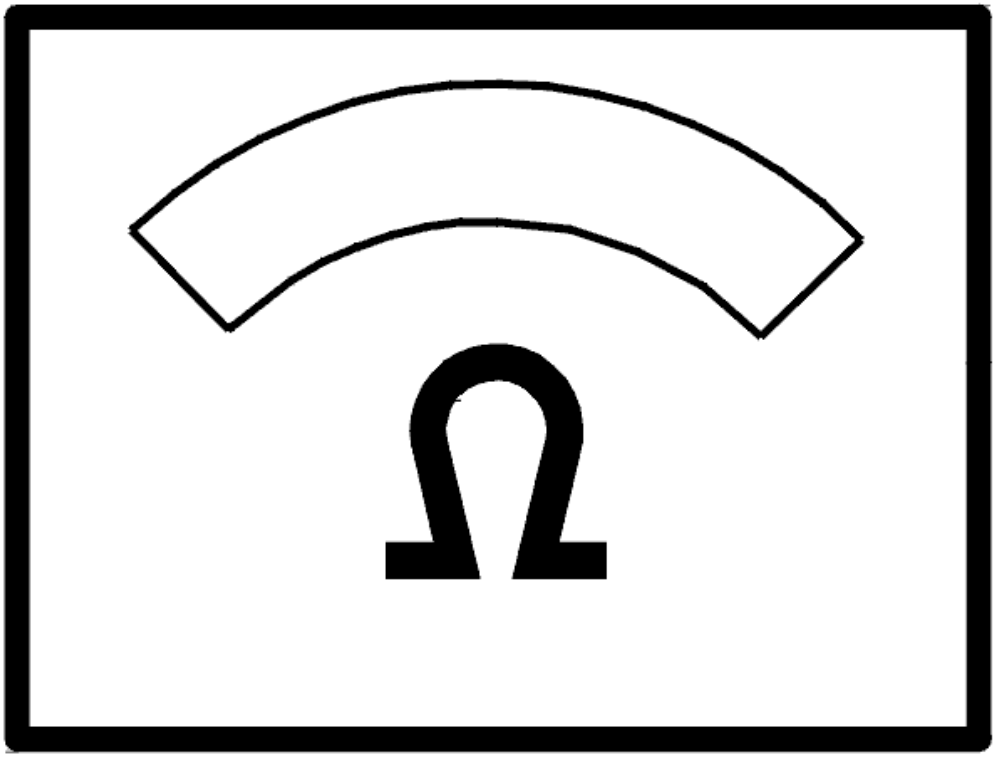

Fig. 195: Identifying Ohm Meter
Courtesy of VOLVO CARS CORPORATION

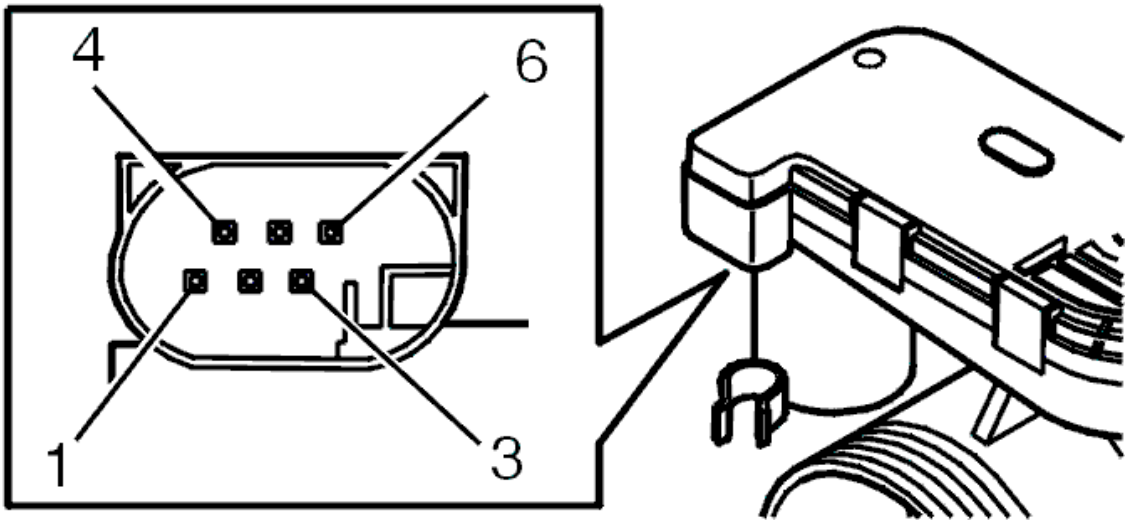

Fig. 196: Identifying Throttle Unit Connector Terminals
Courtesy of VOLVO CARS CORPORATION

- **Continue**

  Refer to **VERIFICATION**

VERIFICATION

VERIFICATION

HINT: After carrying out the repair, check that the fault has been remedied.

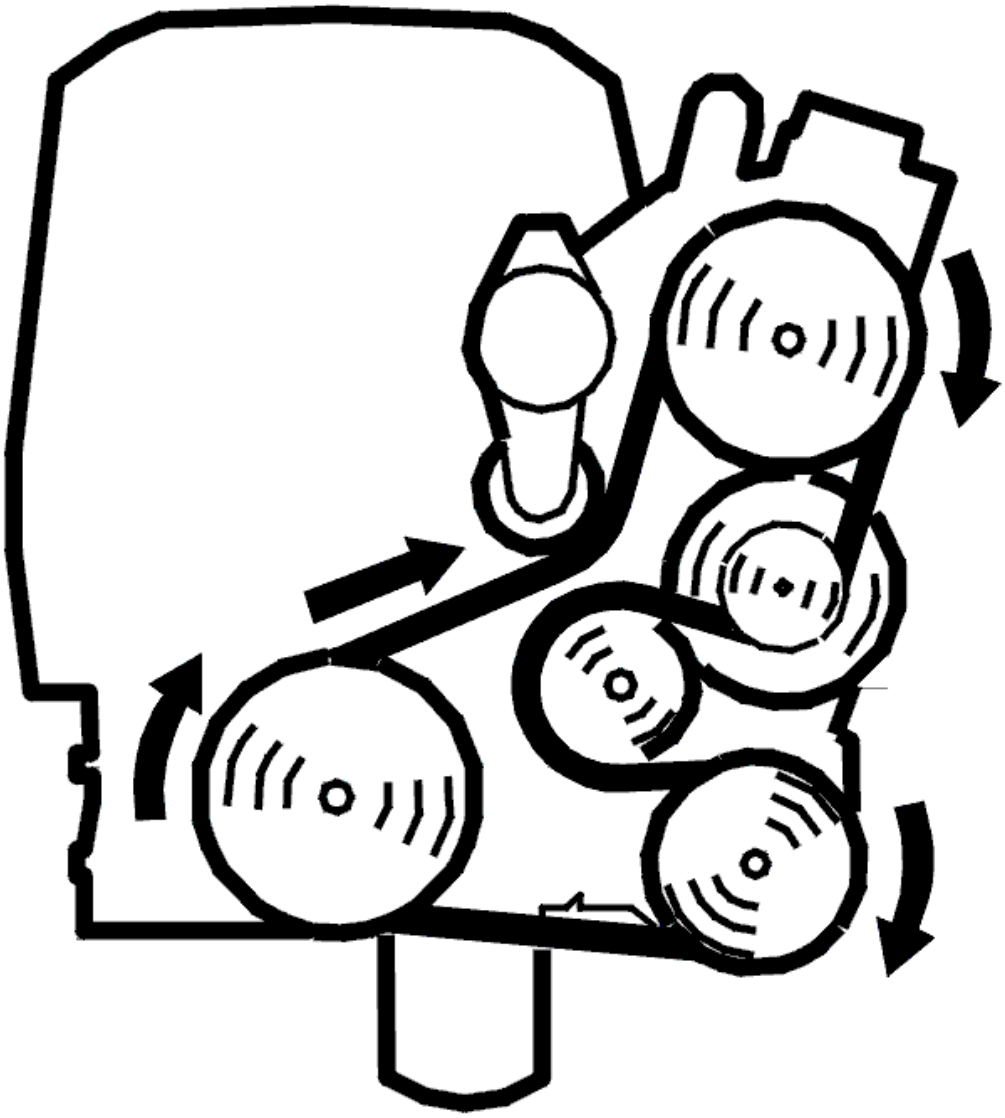

Fig. 197: Belt Routing / Engine Idling - Volvo
Courtesy of VOLVO CARS CORPORATION

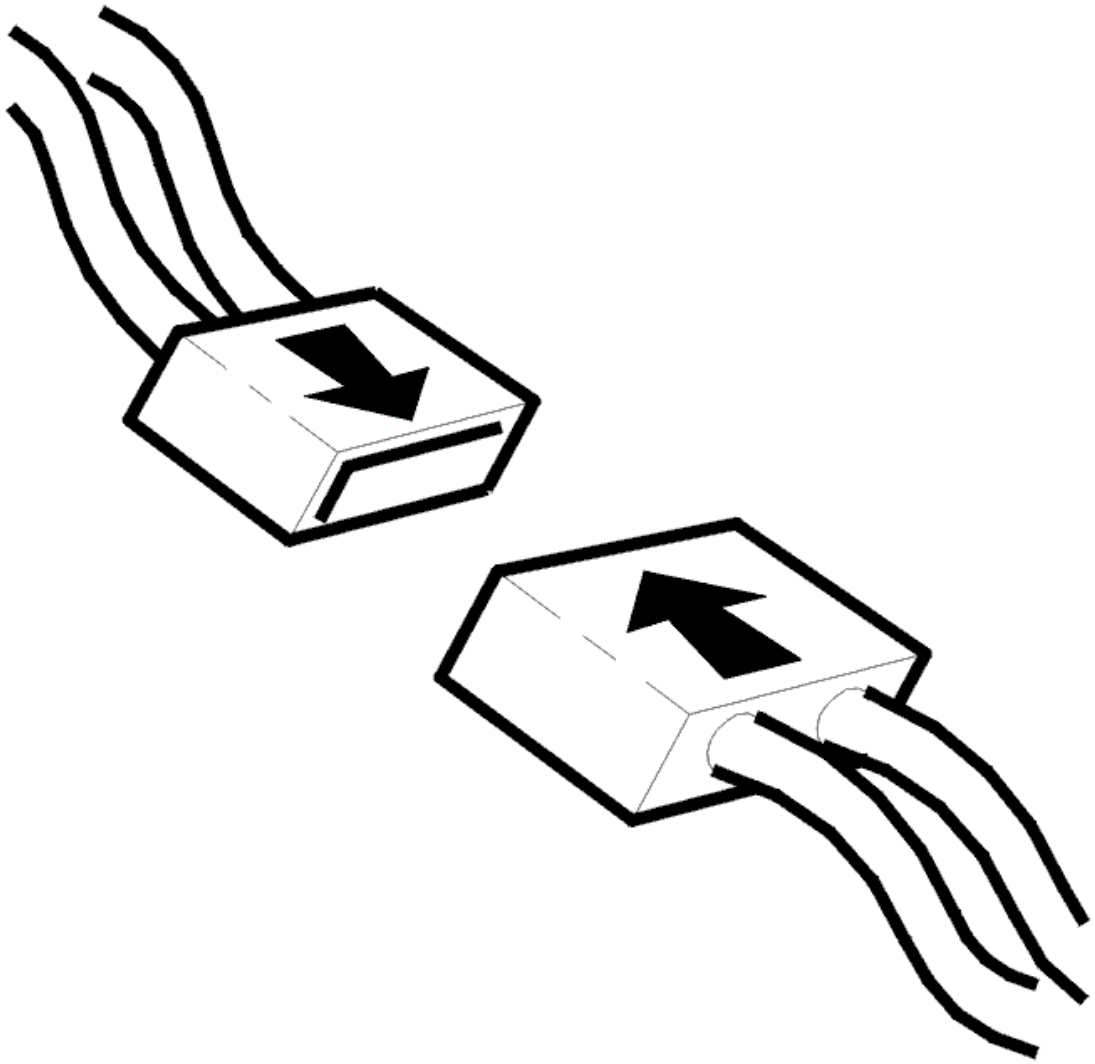

Fig. 198: Connecting Connector
Courtesy of VOLVO CARS CORPORATION

- Ignition off
- Reinstall the connectors, components etc.
- Start the engine
- Read off diagnostic trouble codes (DTCs).

The fault has been remedied if status of the diagnostic trouble code (DTC) is intermittent.

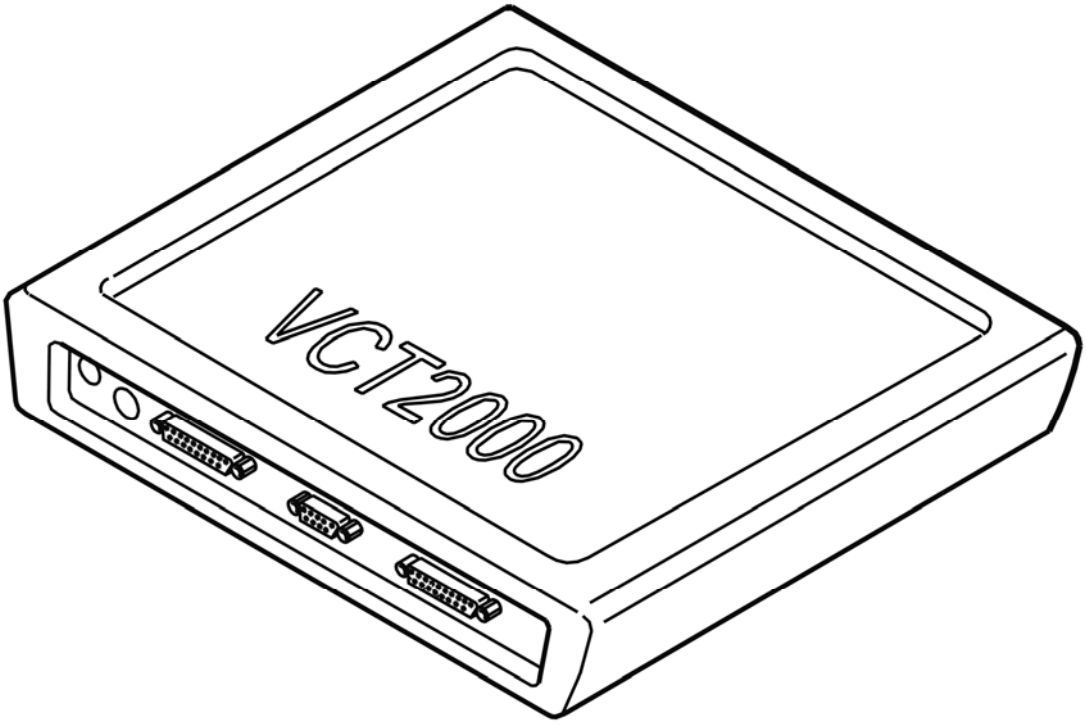

Fig. 199: Identifying VCT2000 Diagnostic Tool Symbol In VIDA
Courtesy of VOLVO CARS CORPORATION

Is the status of the diagnostic trouble code (DTC) intermittent?

- **YES**

  VERIFIED: Troubleshooting has been completed.

- **NO**

  Refer to **INFORMATION**

INFORMATION

FAULT-TRACING INFORMATION

The fault should have been detected and remedied. As this is not the case fault-tracing has failed.

Exit fault-tracing for this diagnostic trouble code (DTC) or make another attempt.

ECM-9170: THROTTLE UNIT. FAULTY SIGNAL (B5254T2; B6294T; 2003-2004)

DIAGNOSTIC TROUBLE CODE (DTC) INFORMATION

Condition

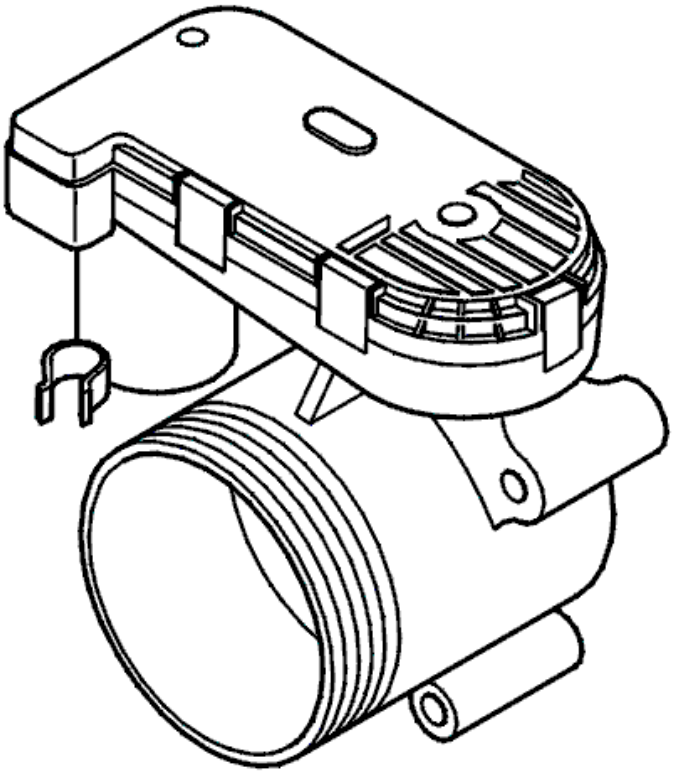

Fig. 200: Identifying Throttle Unit & Potentiometer
Courtesy of VOLVO CARS CORPORATION

This diagnostic trouble code (DTC) is never stored on its own. Diagnostic trouble code (DTC) ECM-9170 is also stored if the engine control module (ECM) registers that diagnostic trouble codes (DTC) ECM-9150 and ECM-9160 (fault in the throttle position (TP) sensor in the throttle unit, potentiometer 1 and 2) are stored.

Substitute Value

The supply to the throttle unit damper motor is shut off. The throttle will set itself to the return position.

Possible Source

Faulty signal:

- Fault in the throttle position (TP) sensor circuit for the throttle unit.

Fault symptom[s]

- Driving/Poor performance/lacks power

- Idling/Uneven idle

FAULT-TRACING INFORMATION

see **FAULT-TRACING INFORMATION**

ECM-918A: ENGINE CONTROL MODULE (ECM). INTERNAL FAULT. INTERMITTENT FAULT (B5254T2; B6294T; 2003-2004)

DIAGNOSTIC TROUBLE CODE (DTC) INFORMATION

Condition

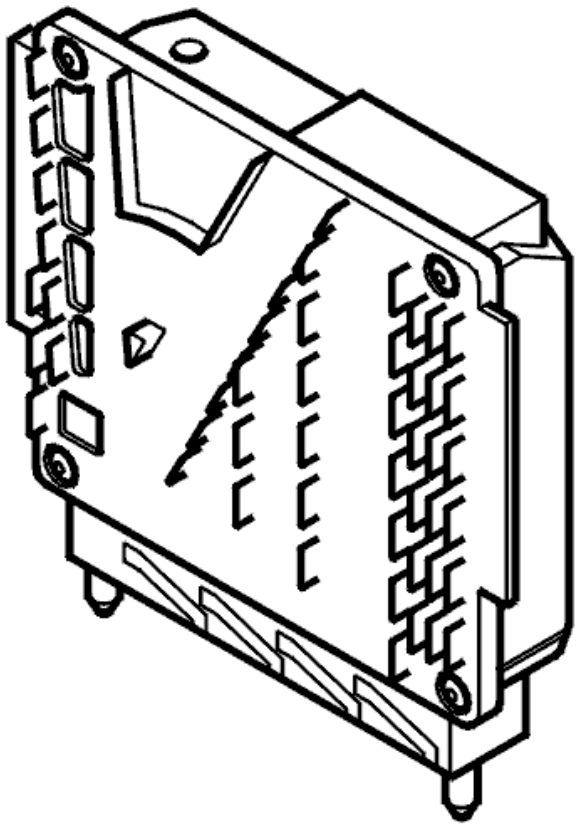

Fig. 201: Engine Control Module
Courtesy of VOLVO CARS CORPORATION

Diagnostic trouble code (DTC) ECM-918A is stored if the engine control module (ECM), when attempting to adapt the throttle unit, registers an internal fault in the integrated amplifier for the signal from potentiometer 1 in the throttle unit throttle position sensor (circuit 1).

Substitute Value

The engine control module (ECM) does not use the signal from potentiometer 1 for the throttle unit throttle

position (TP) sensor (circuit 1).

Possible Source

- Defective engine control module (ECM).

Fault symptom[s]

- None.

FAULT-TRACING INFORMATION

see **FAULT-TRACING INFORMATION**

ECM-918A: ENGINE CONTROL MODULE (ECM). INTERNAL FAULT. PERMANENT FAULT (B5254T2; B6294T; 2003-2004)

DIAGNOSTIC TROUBLE CODE (DTC) INFORMATION

see **DIAGNOSTIC TROUBLE CODE (DTC) INFORMATION**

INTERNAL FAULT. PERMANENT FAULT

PROGRAMMING OR REPLACING THE ENGINE CONTROL MODULE (ECM)

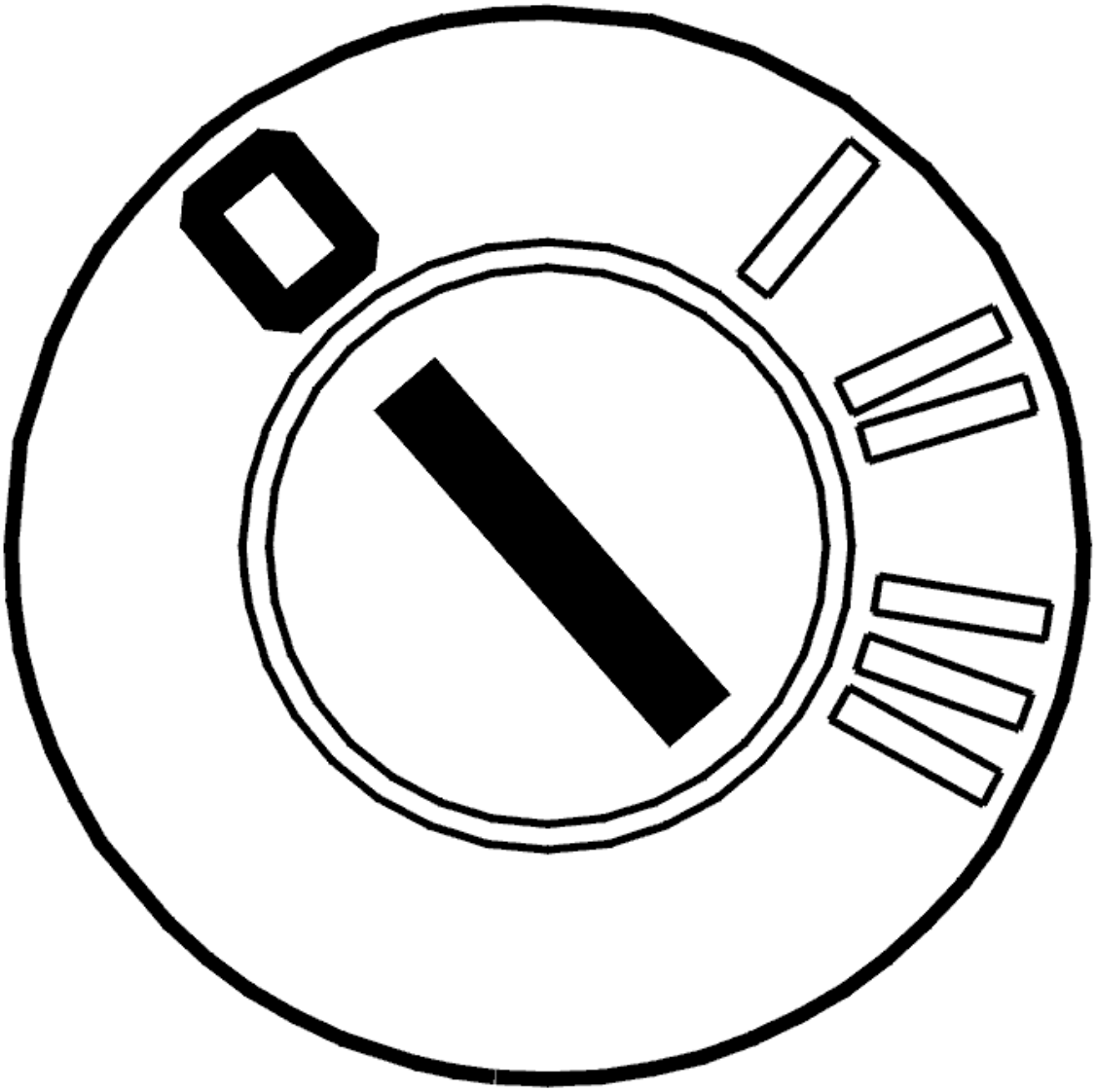

Fig. 202: Identifying Ignition OFF
Courtesy of VOLVO CARS CORPORATION

- Ignition off.

  The engine control module (ECM) has registered an internal fault. Replace the engine control module (ECM). See **ENGINE CONTROL MODULE (ECM), REPLACING** .

  NOTE: After replacing the engine control module (ECM), the throttle unit must be adapted using the vehicle communication input: "Throttle unit adaptation".

  Remedy as necessary.

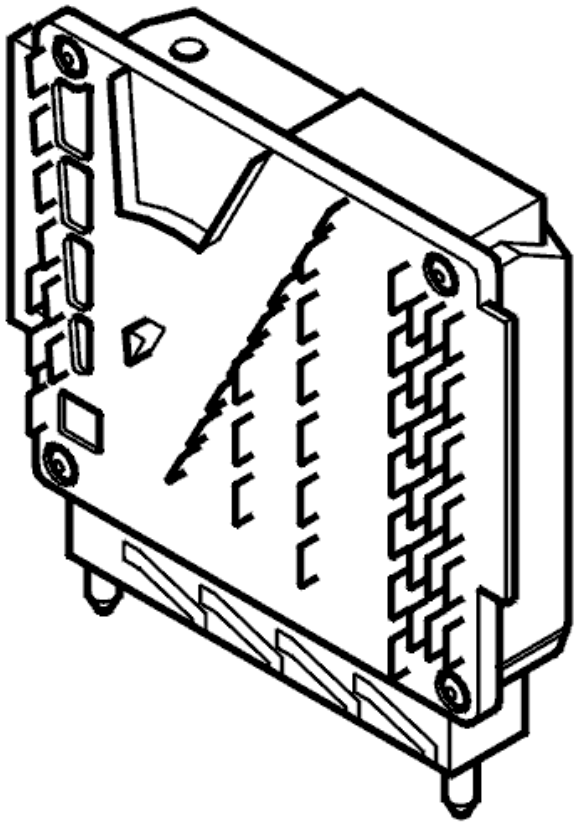

Fig. 203: Engine Control Module
Courtesy of VOLVO CARS CORPORATION

- **Continue**

  Refer to **INFORMATION**

INFORMATION

FAULT-TRACING INFORMATION

In case of this defect, troubleshooting is not followed by verification.

The information can be displayed again or the fault-tracing for this fault can be interrupted.

ECM-919A: ENGINE CONTROL MODULE (ECM). FAULTY SIGNAL (B5254T2; B6294T; 2003-2004)

DIAGNOSTIC TROUBLE CODE (DTC) INFORMATION

Condition

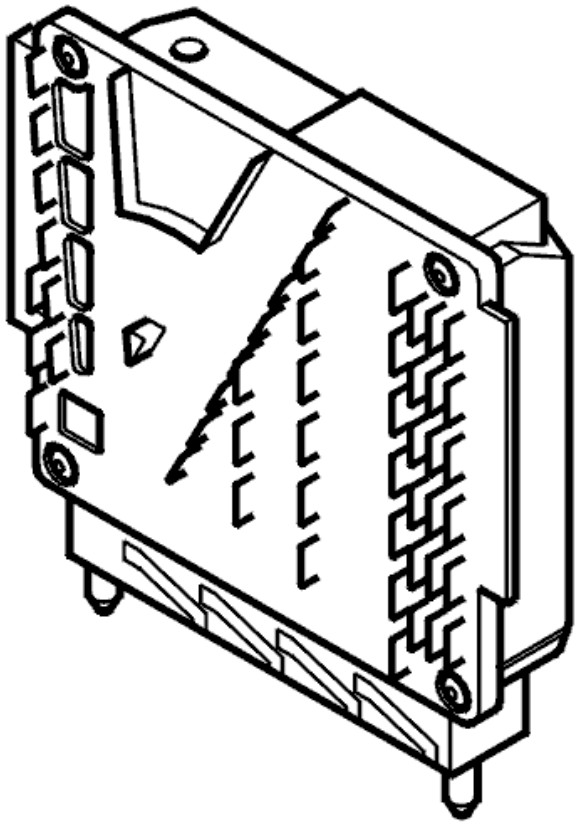

Fig. 204: Engine Control Module
Courtesy of VOLVO CARS CORPORATION

Diagnostic trouble code (DTC) ECM-919A is stored if the engine control module (ECM), when the engine is running, registers that the internal governor for control of the throttle angle in the throttle unit is defective or that the control signal for the governor is too low when controlling the throttle.

Substitute Value

The engine control module (ECM) shuts down the supply to the throttle unit damper motor. The throttle will set itself to the return position.

Possible Source

Faulty signal:

- The throttle is sticking or is blocked (oil film, dust etc.)
- Contact resistance or oxidation in the terminals between the engine control module (ECM) and the throttle unit
- Open-circuit, short-circuit to ground or short-circuit to supply voltage in the wiring for the damper motor in the throttle unit
- Short-circuit to each other in the wiring for the damper motor in the throttle unit
- Defective throttle unit

- Faulty software in the engine control module (ECM).

Fault symptom[s]

- Malfunction indicator lamp (MIL) lit
- Poor performance.

FAULTY SIGNAL

FAULT-TRACING INFORMATION

FAULT-TRACING INFORMATION

CAUTION: The male and female pins on the electronic throttle unit connectors are gold plated. Great care must be taken when measuring. Damage to the gold plating can result in operating difficulties.

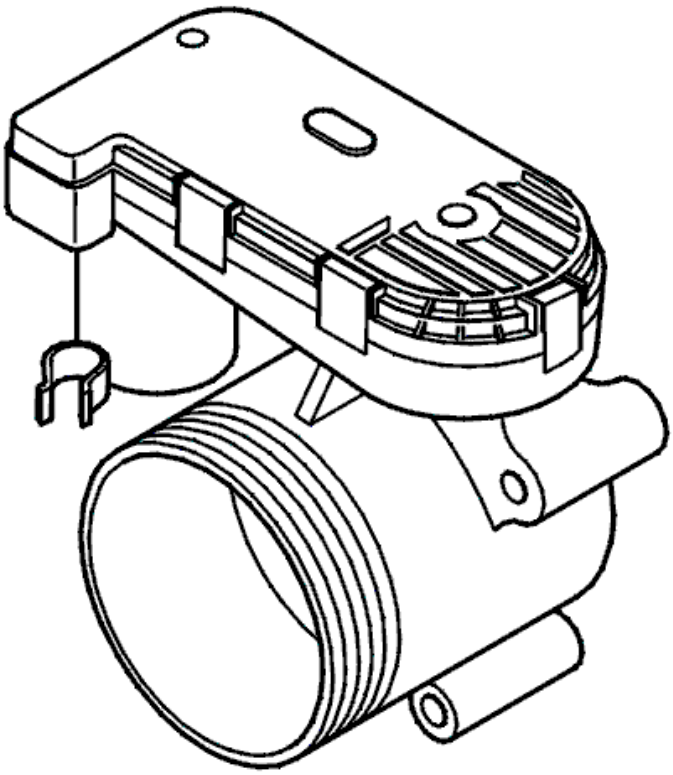

Fig. 205: Identifying Throttle Unit & Potentiometer
Courtesy of VOLVO CARS CORPORATION

- **Continue**

  Refer to **CHECKING THE FAULT STATUS**

CHECKING THE FAULT STATUS

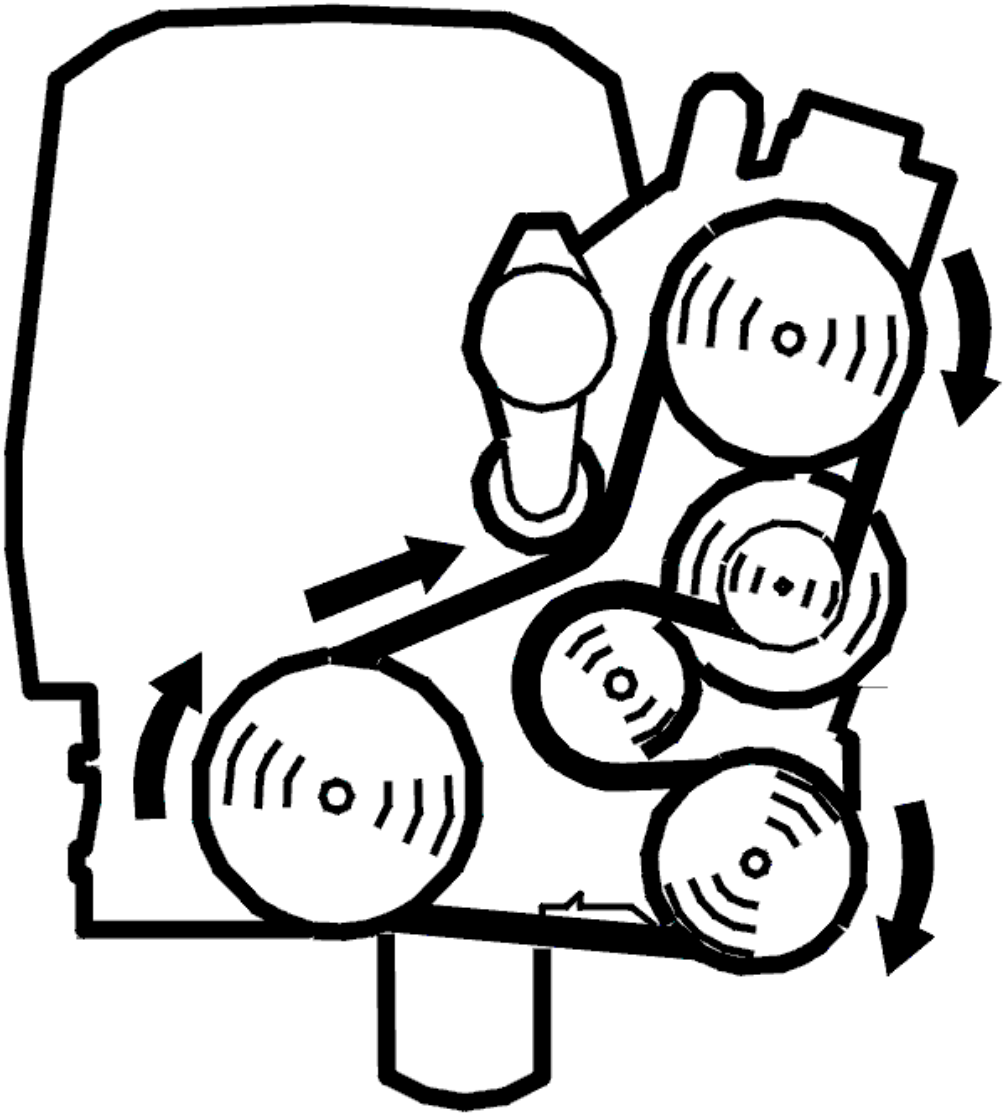

Fig. 206: Belt Routing / Engine Idling - Volvo
Courtesy of VOLVO CARS CORPORATION

- Ignition off
- Start the engine
- Read off the diagnostic status and the fault status for diagnostic trouble code (DTC) ECM-919A.

  Check the fault status when the status of the diagnostic is COMPLETED.

  If the fault status is "NO FAULT FOUND" when the diagnostic status is COMPLETED the fault is intermittent at the moment.

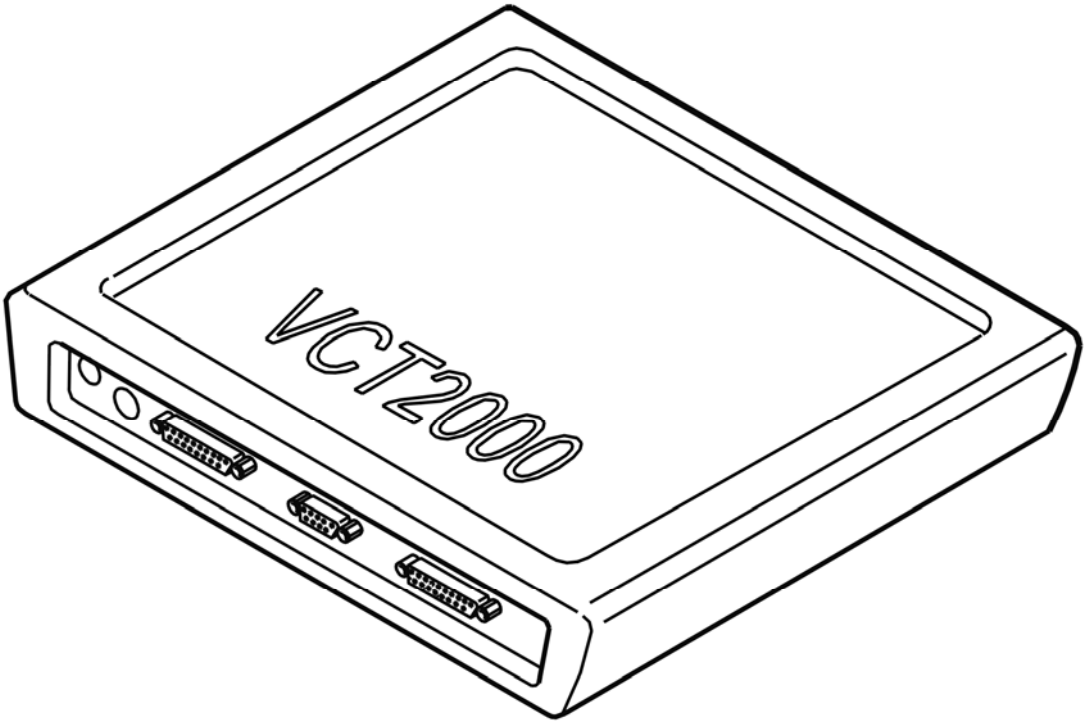

Fig. 207: Identifying VCT2000 Diagnostic Tool Symbol In VIDA
Courtesy of VOLVO CARS CORPORATION

- **Continue**

  Refer to **CHECKING COMPONENTS AND WIRING**

CHECKING COMPONENTS AND WIRING

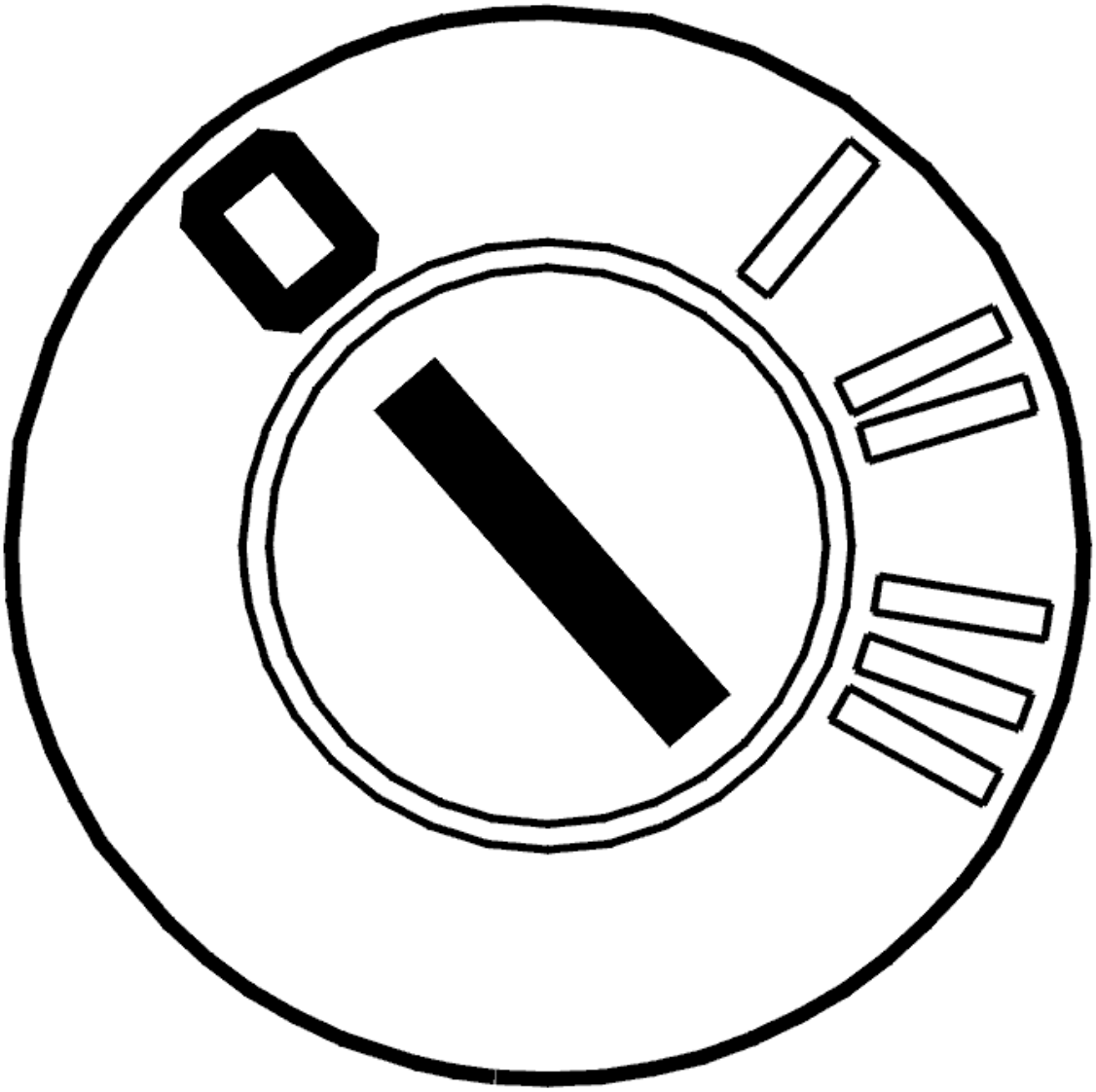

Fig. 208: Identifying Ignition OFF
Courtesy of VOLVO CARS CORPORATION

- Ignition off
- Check the throttle unit and engine control module (ECM) connectors. Check for contact resistance and oxidation.

  Check the resistance value of the damper motor winding in the throttle unit. Take readings between throttle unit terminals #1 and #4 (component side). Check for an open-circuit. Check for a short-circuit.

  NOTE: The resistance of the motor winding in the damper motor is very low.

  Check the cable (+) for the damper motor between engine control module (ECM) terminal #A35 (#A35) and throttle unit terminal #4 (wiring side). Check for an open-circuit. Check for a short-circuit to ground. Check for a short-circuit to supply voltage.

Check the cable (-) for the damper motor between engine control module (ECM) terminal #A36 (#A36) and throttle unit terminal #1 (wiring side). Check for an open-circuit. Check for a short-circuit to ground. Check for a short-circuit to supply voltage.

Also check the damper motor cables (+) and (-). Check for a short-circuit to each other.

Check that the shutter in the throttle unit is not blocked or sticking. Clean as necessary.

Remedy as necessary.

Other information:

- see **CHECKING WIRING AND TERMINALS**
- To connect the breakout box, see **CONNECTING THE BREAKOUT BOX**
- For resistance values, see **COMPONENT SPECIFICATIONS**
- For 5 cylinder turbocharged engines -2004, see **SIGNAL DESCRIPTION**
- For 5 cylinder turbocharged engines 2005-, see **SIGNAL SPECIFICATION** .
- For 6 cylinder engines -2004, see **SIGNAL SPECIFICATION**
- For 6 cylinder engines 2005-, see **SIGNAL SPECIFICATION** .
- For B5xx4T, see **THROTTLE BODY (ELECTRONIC THROTTLE MODULE), REPLACING** .
- For B6xx4T, see **THROTTLE BODY (ELECTRONIC THROTTLE MODULE), REPLACING** .
- For B5xx4T, see **THROTTLE BODY (TB), CLEANING** .
- For B6xx4x, see **THROTTLE BODY (TB), CLEANING** .
- To access or replace the engine control module (ECM), see **ENGINE CONTROL MODULE (ECM), REPLACING** .

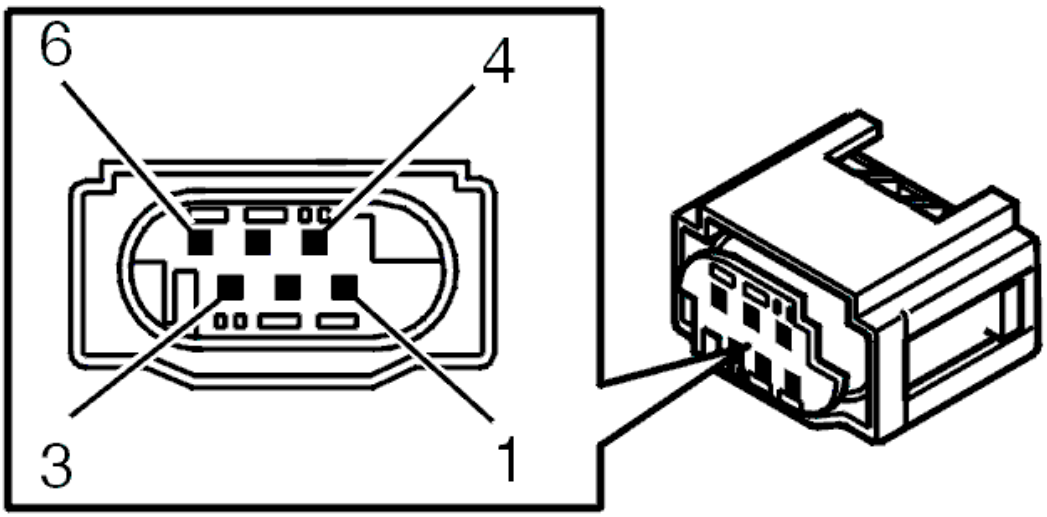

Fig. 209: Identifying Throttle Unit Connector Terminals
Courtesy of VOLVO CARS CORPORATION

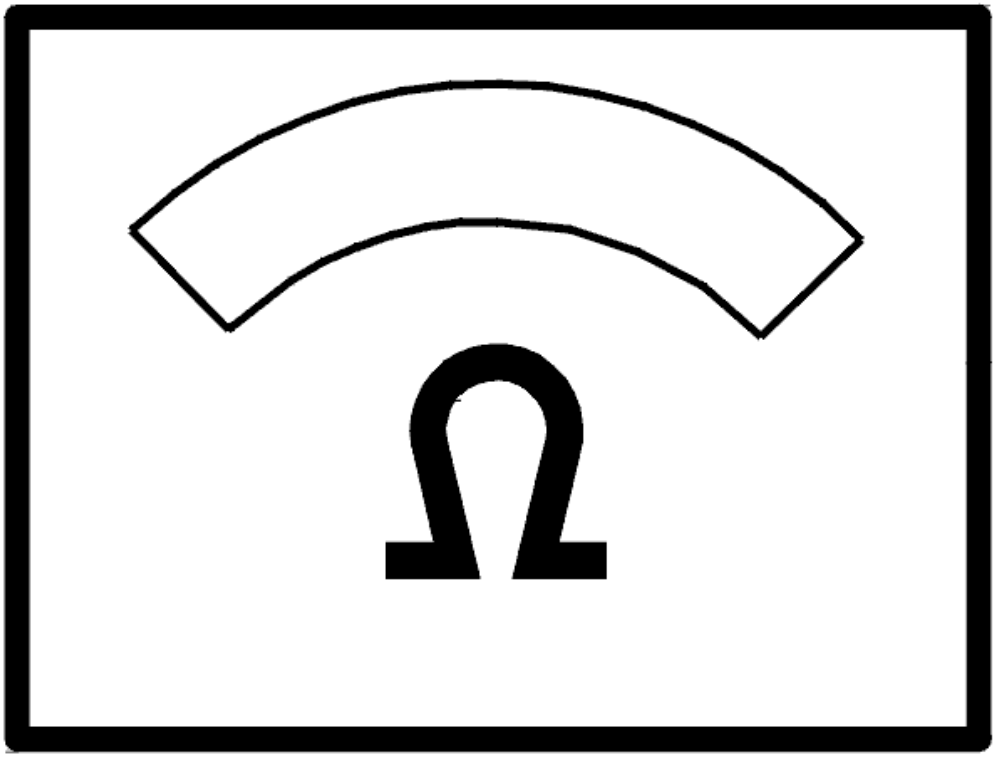

Fig. 210: Identifying Ohm Meter
Courtesy of VOLVO CARS CORPORATION

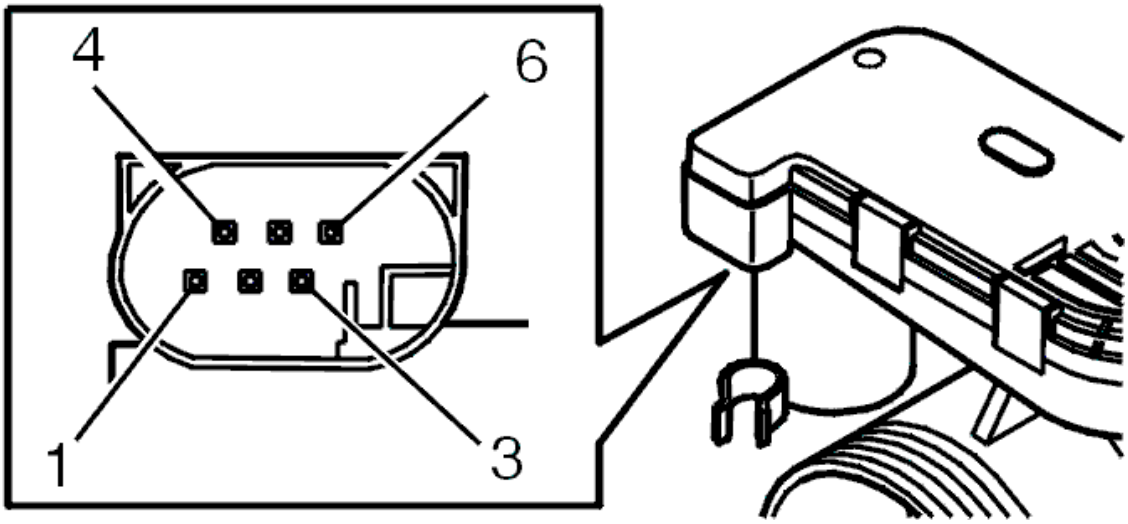

Fig. 211: Identifying Throttle Unit Connector Terminals
Courtesy of VOLVO CARS CORPORATION

- **Continue**

Refer to **ADAPTATION OF THE THROTTLE UNIT**

ADAPTATION OF THE THROTTLE UNIT

NOTE: **The ignition must be switched on for at least 30 seconds after the basic conditions are met in order for the adaptation to start. It takes approximately 10 seconds to run the adaptation.**

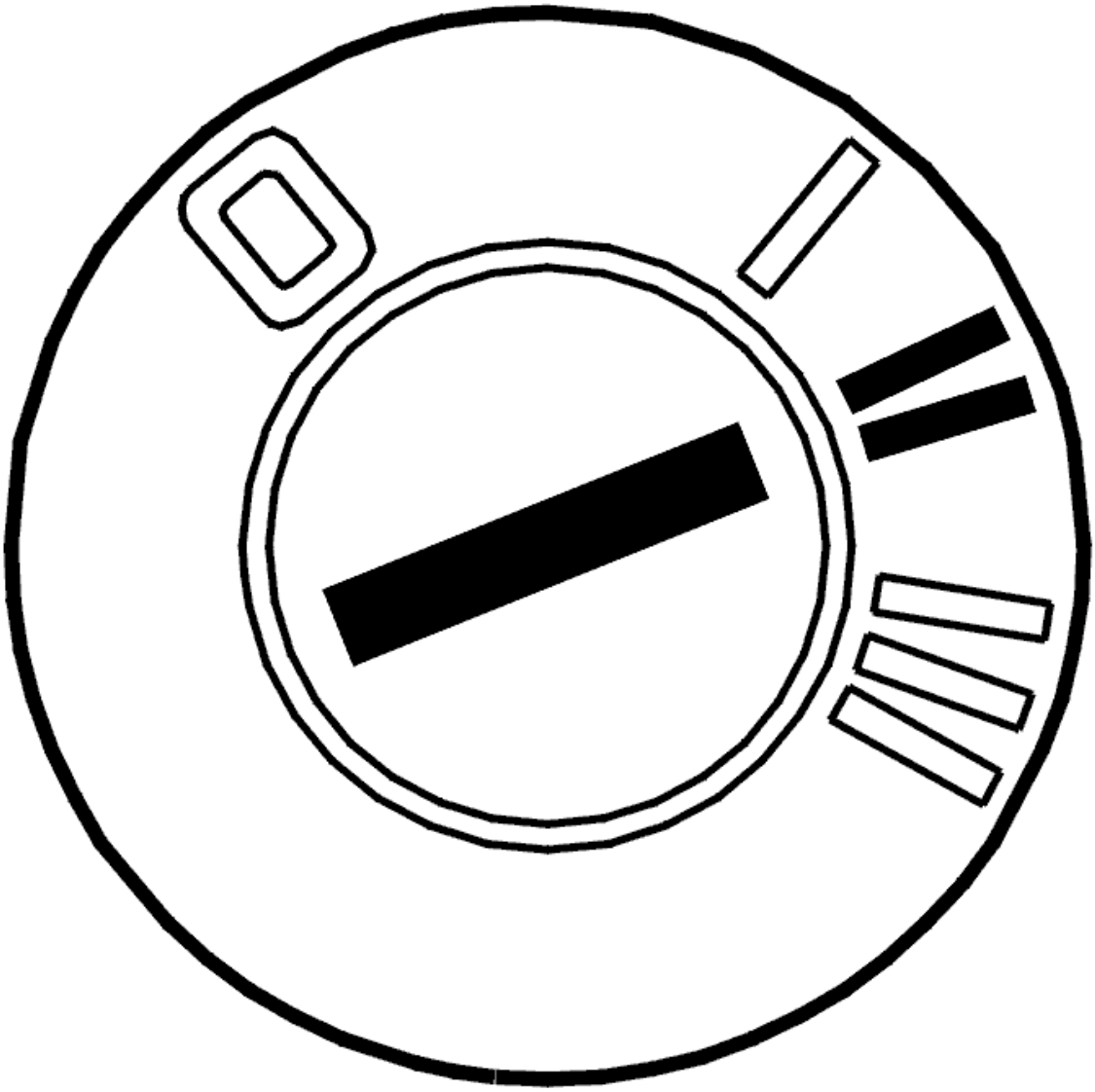

Fig. 212: Identifying Ignition ON
Courtesy of VOLVO CARS CORPORATION

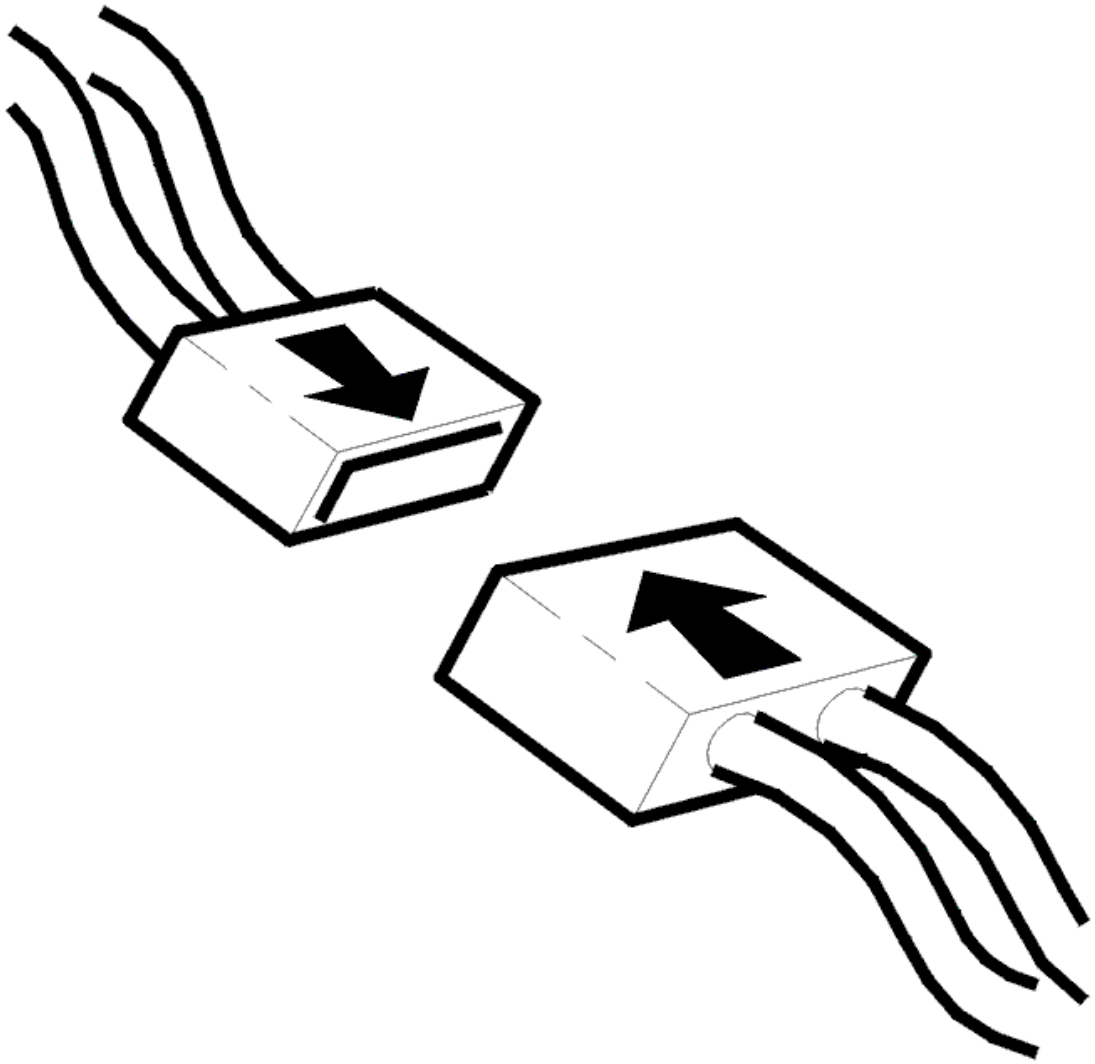

Fig. 213: Connecting Connector
Courtesy of VOLVO CARS CORPORATION

- Ignition off
- Reinstall the connectors, components etc.
- Ignition on
- Read off the parameters.

Check that the following basic conditions for adaptation of the throttle unit are met.

1. Ignition on / engine off
2. Battery voltage above 10 V
3. Accelerator pedal (AP) unaffected
4. The car must be stationary (no vehicle speed signal)

5. Engine coolant temperature (ECT) between 5-100 °C
6. Intake air temperature (IAT) above 5 °C.

Remedy as necessary.

Check that the adaptation is correctly run after the "Adaptation of the throttle unit running" parameter changes status from "YES" to "NO". When all basic conditions are met, the adaptation must be completed after approximately 40 seconds. When the adaptation is completed correctly, the following information will be displayed:

- Adaptation of the throttle unit: OK
- Adaptation of the throttle unit running: NO.

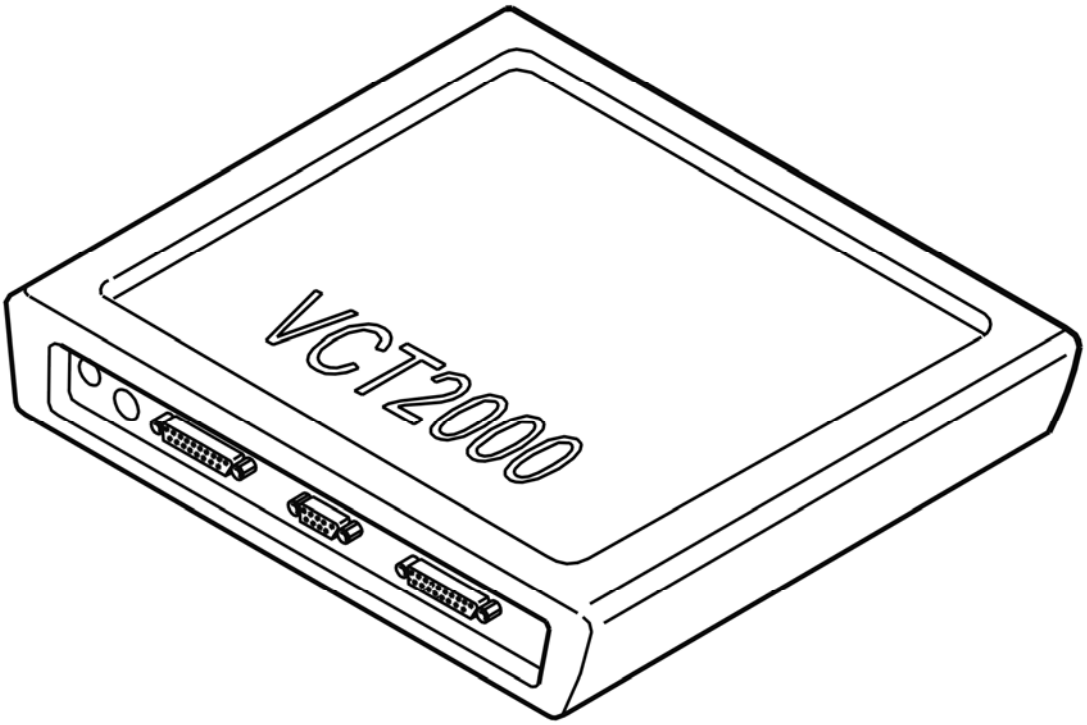

Fig. 214: Identifying VCT2000 Diagnostic Tool Symbol In VIDA
Courtesy of VOLVO CARS CORPORATION

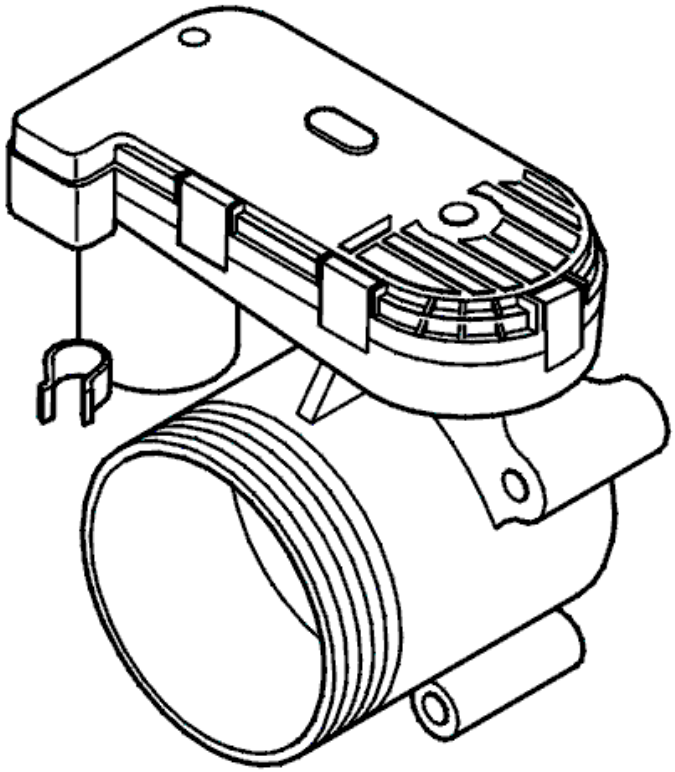

Fig. 215: Identifying Throttle Unit & Potentiometer
Courtesy of VOLVO CARS CORPORATION

- **Continue**

  Refer to **VERIFICATION**

VERIFICATION

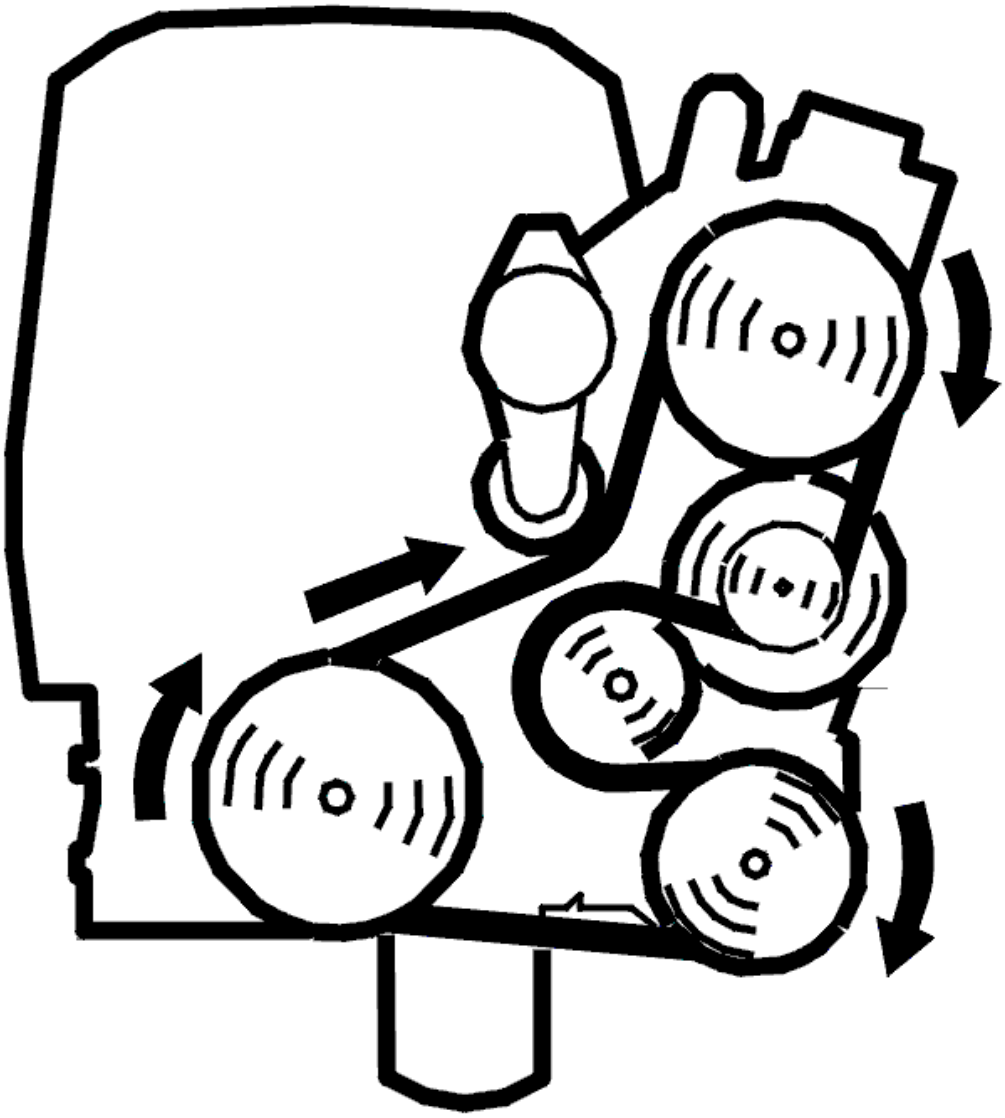

Fig. 216: Belt Routing / Engine Idling - Volvo
Courtesy of VOLVO CARS CORPORATION

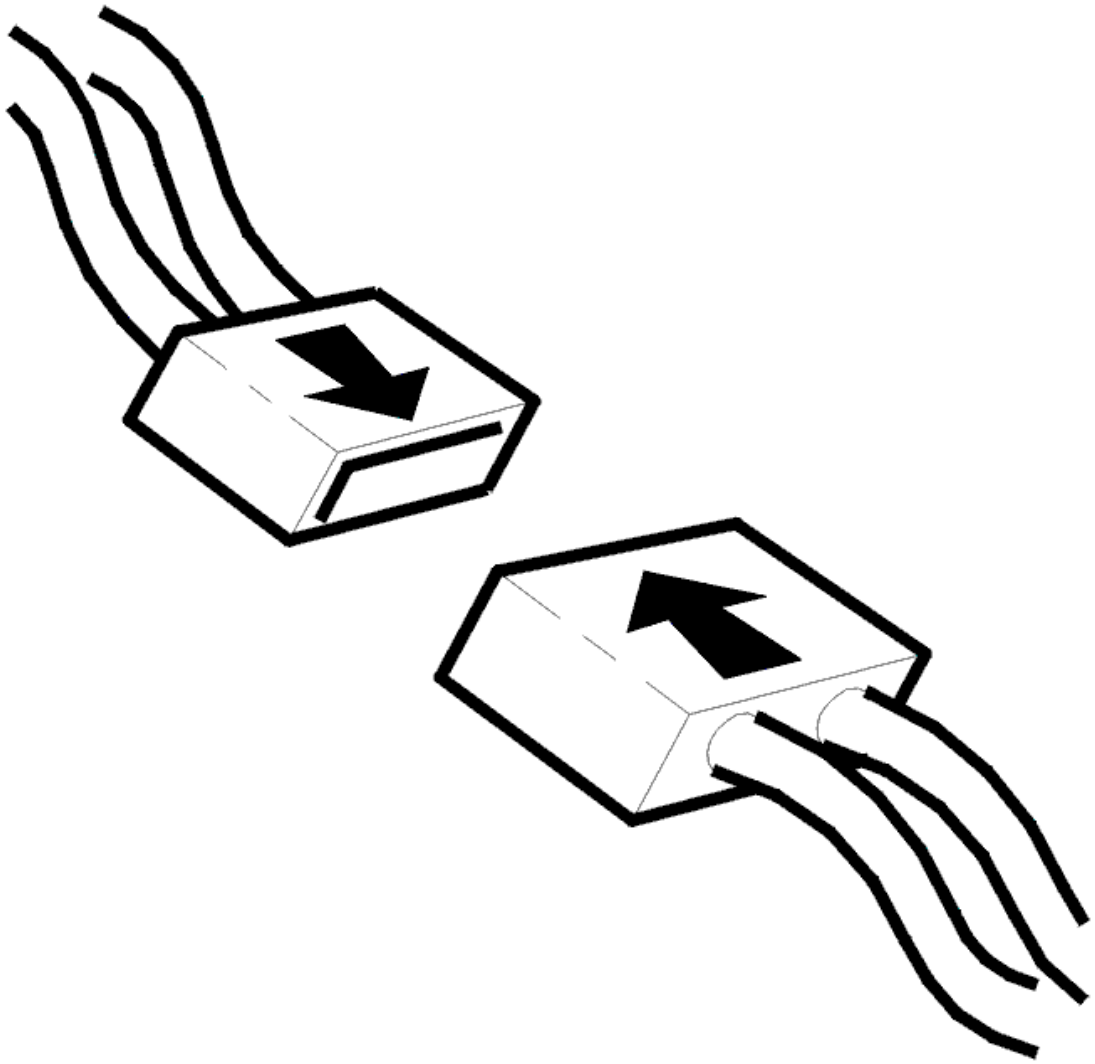

Fig. 217: Connecting Connector
Courtesy of VOLVO CARS CORPORATION

- Ignition off
- Reinstall the connectors, components etc.
- Start the engine
- Read off the diagnostic status and the fault status for diagnostic trouble code (DTC) ECM-919A.

  Check that the fault status is "NO FAULT FOUND" when the diagnostic status is COMPLETED. If the fault status is "FAULT FOUND" when the diagnostic status is COMPLETED there is a fault.

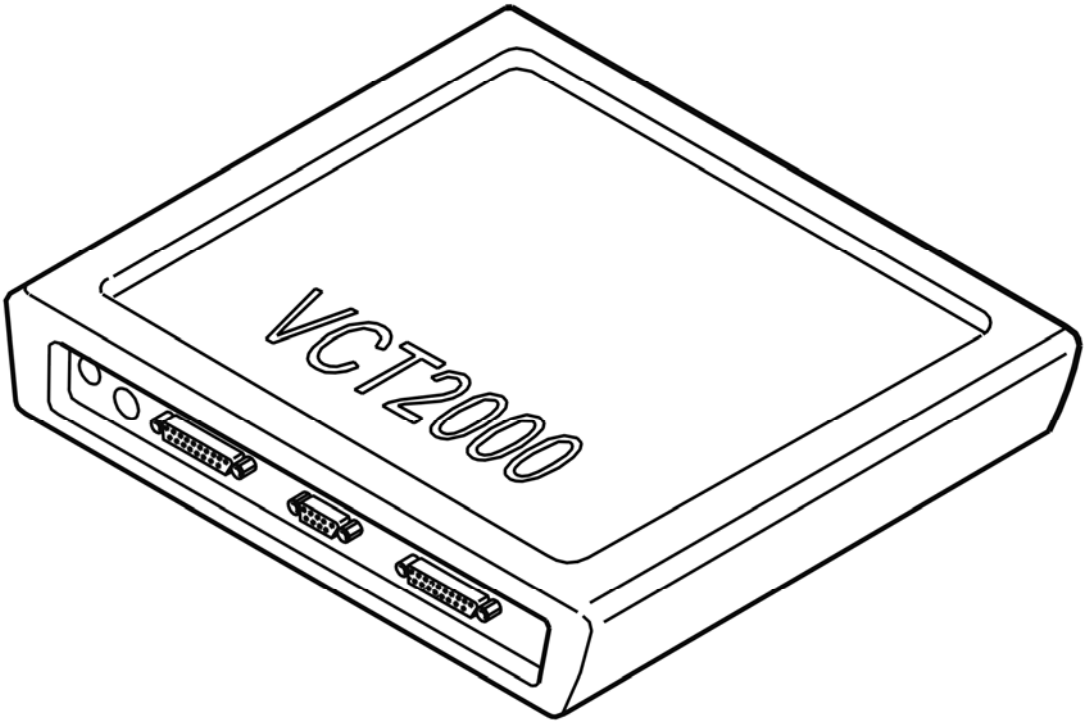

Fig. 218: Identifying VCT2000 Diagnostic Tool Symbol In VIDA
Courtesy of VOLVO CARS CORPORATION

Is the fault status "NO FAULT FOUND" when the status of the diagnostic is completed?

- **YES**

  OKAY: Troubleshooting has been completed.

- **NO**

  Refer to **PROGRAMMING THE ENGINE CONTROL MODULE (ECM)**

PROGRAMMING THE ENGINE CONTROL MODULE (ECM)

HINT: This diagnostic trouble code (DTC) may be caused by faulty software.

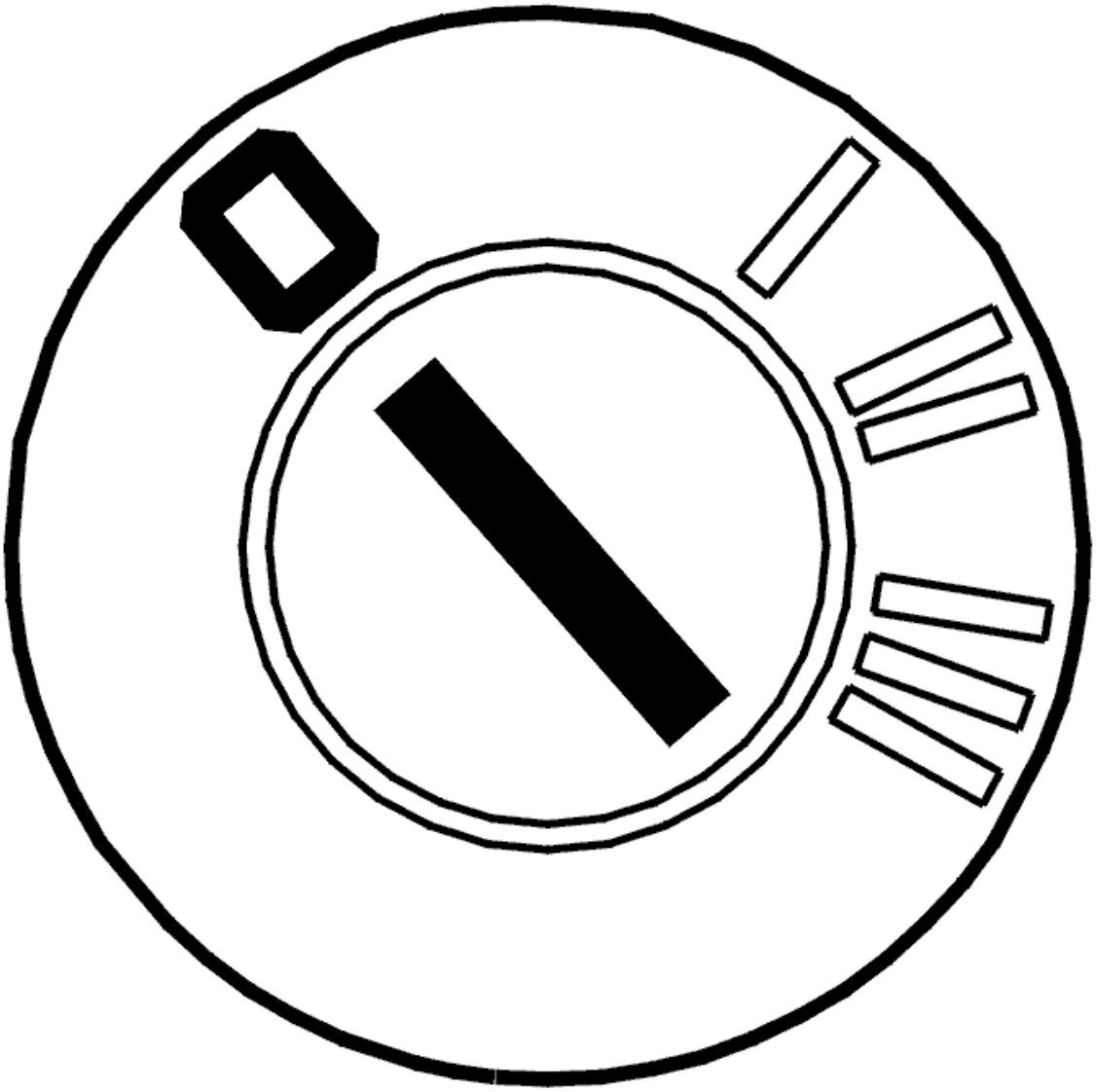

Fig. 219: Identifying Ignition OFF
Courtesy of VOLVO CARS CORPORATION

- Ignition off.

  Try downloading new software into the engine control module (ECM). To download new software, see **ENGINE CONTROL MODULE (ECM), REPLACING** .

  Remedy as necessary.

- **Continue**

  Refer to **ADAPTATION OF THE THROTTLE UNIT**

ADAPTATION OF THE THROTTLE UNIT

NOTE: **The ignition must be switched on for at least 30 seconds after the basic conditions are met in order for the adaptation to start. It takes approximately 10 seconds to run the adaptation.**

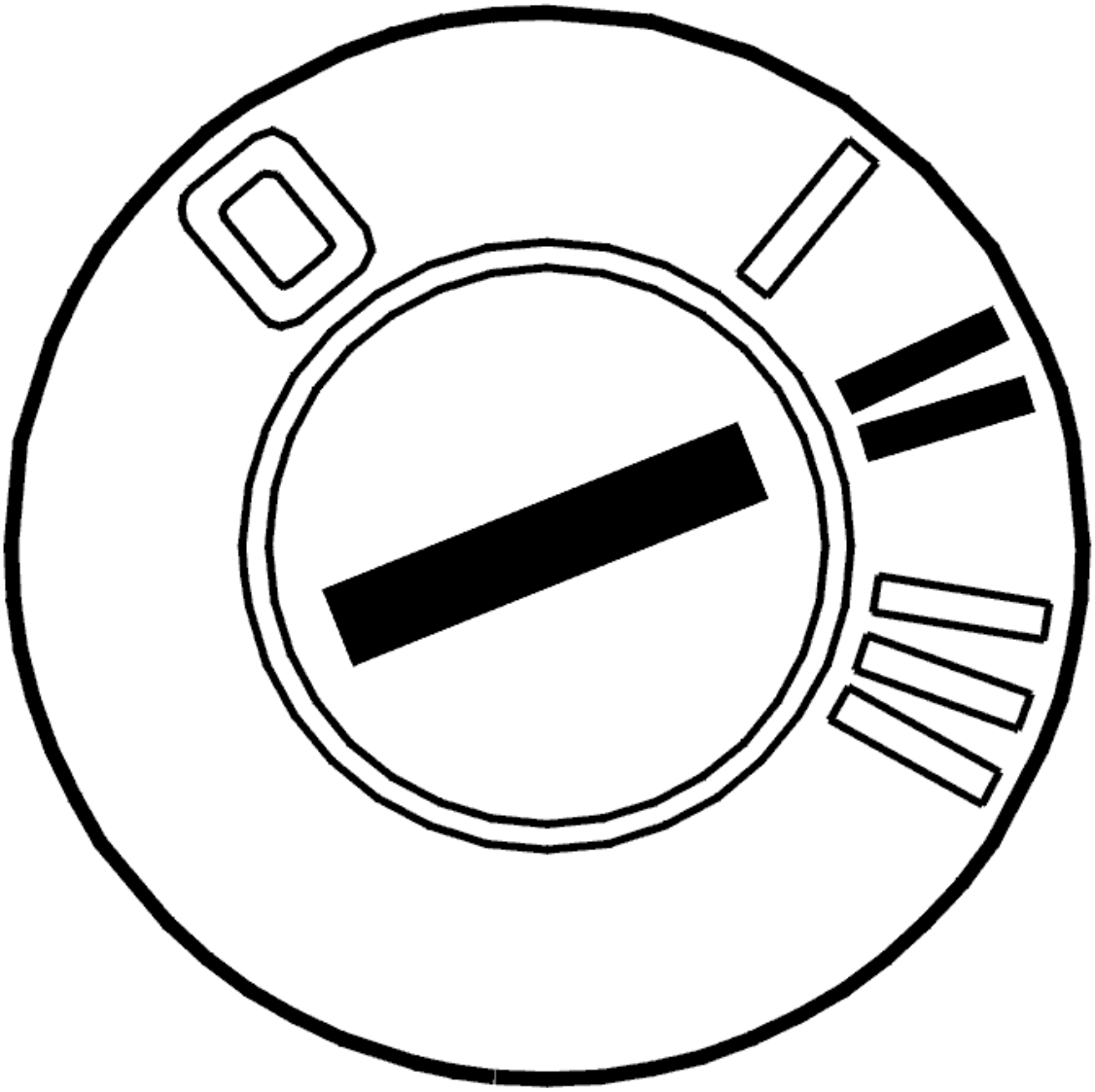

Fig. 220: Identifying Ignition ON
Courtesy of VOLVO CARS CORPORATION

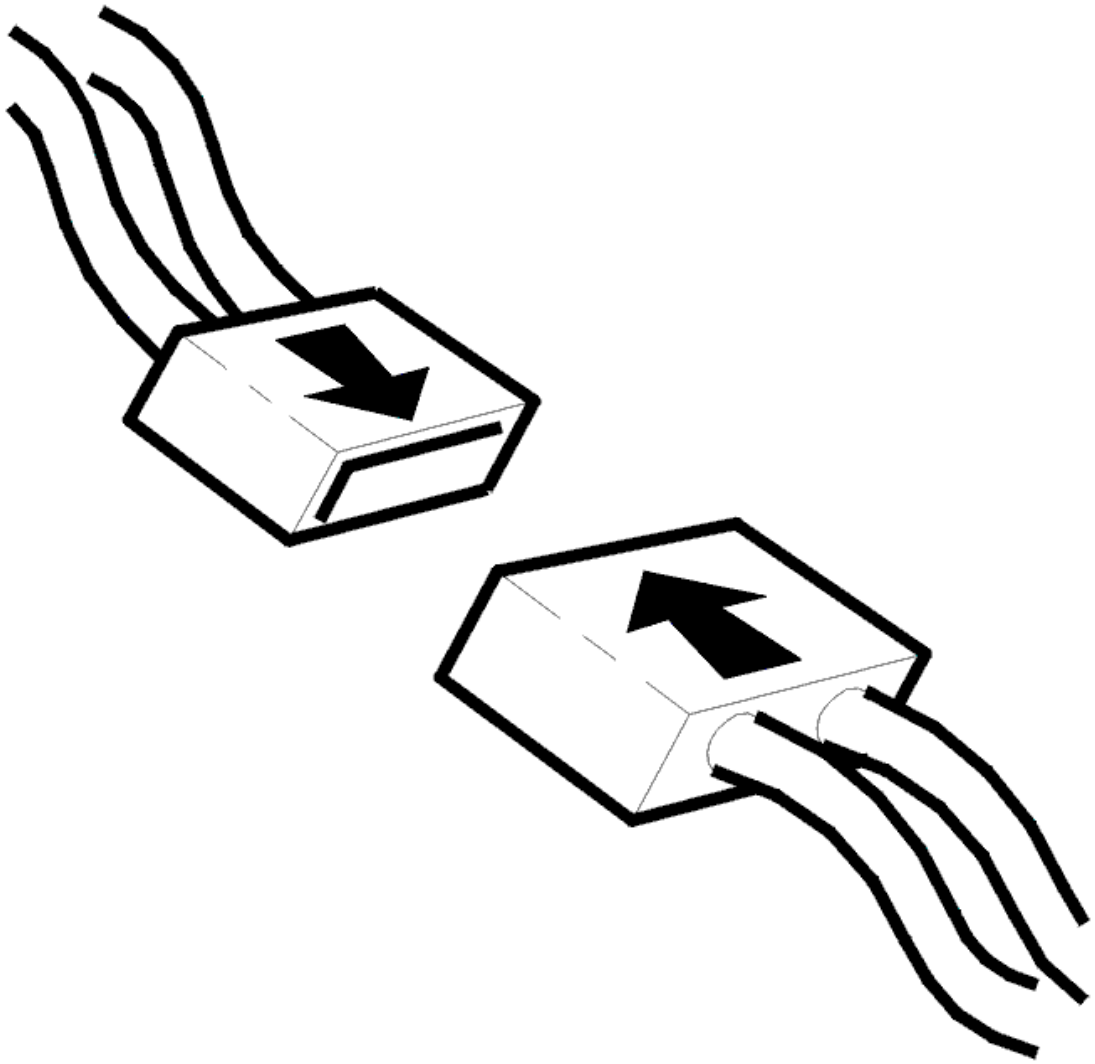

Fig. 221: Connecting Connector
Courtesy of VOLVO CARS CORPORATION

- Ignition off
- Reinstall the connectors, components etc.
- Ignition on
- Read off the parameters.

Check that the following basic conditions for adaptation of the throttle unit are met.

1. Ignition on / engine off
2. Battery voltage above 10 V
3. Accelerator pedal (AP) unaffected
4. The car must be stationary (no vehicle speed signal)

5. Engine coolant temperature (ECT) between 5-100 °C
6. Intake air temperature (IAT) above 5 °C.

Remedy as necessary.

Check that the adaptation is correctly run after the "Adaptation of the throttle unit running" parameter changes status from "YES" to "NO". When all basic conditions are met, the adaptation must be completed after approximately 40 seconds. When the adaptation is completed correctly, the following information will be displayed:

- Adaptation of the throttle unit: OK
- Adaptation of the throttle unit running: NO.

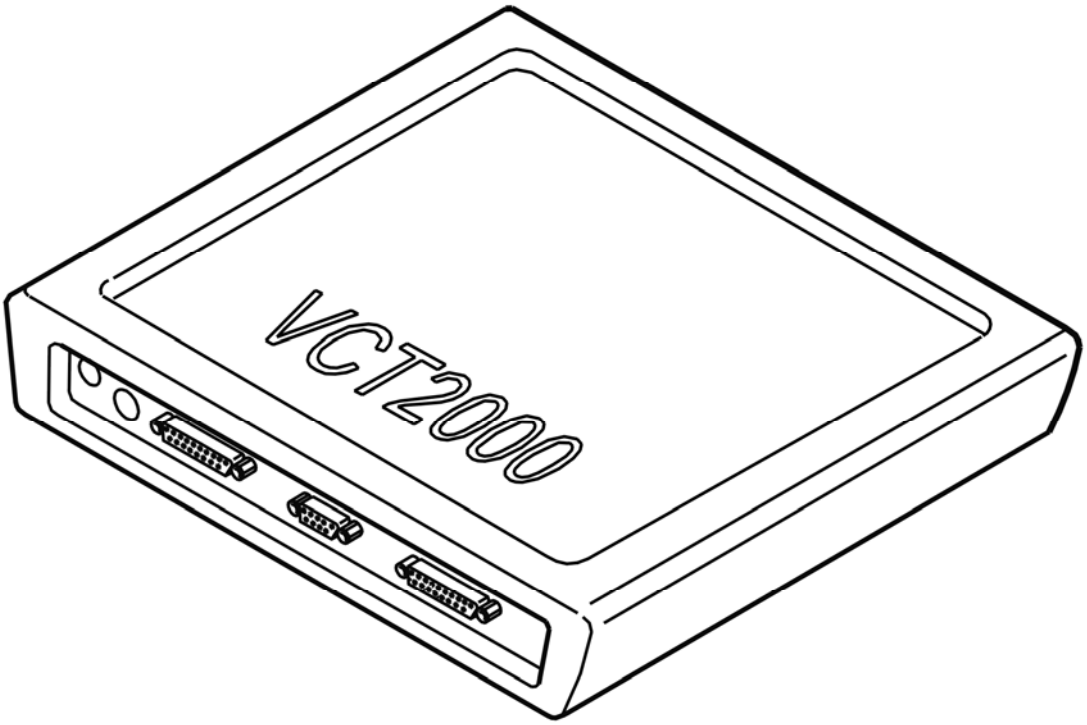

Fig. 222: Identifying VCT2000 Diagnostic Tool Symbol In VIDA
Courtesy of VOLVO CARS CORPORATION

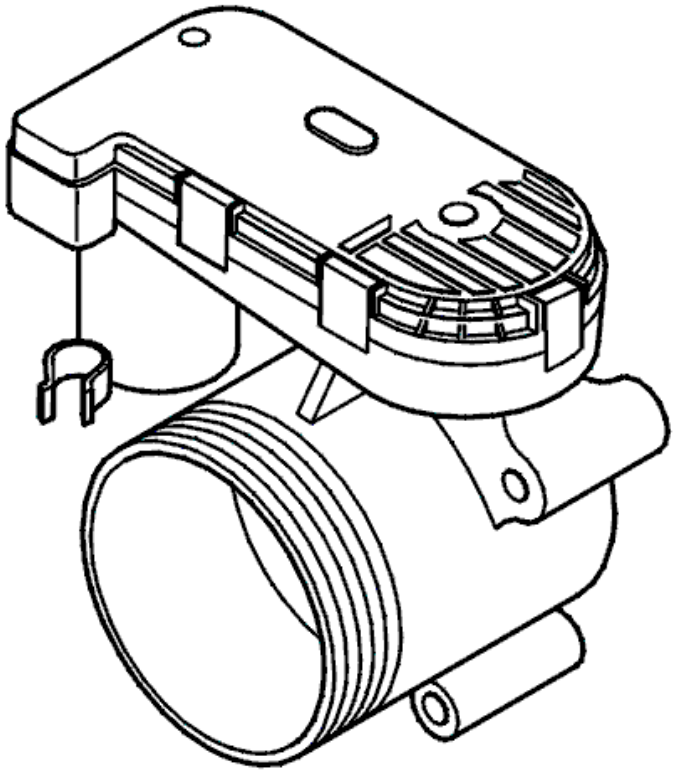

Fig. 223: Identifying Throttle Unit & Potentiometer
Courtesy of VOLVO CARS CORPORATION

- **Continue**

  Refer to **VERIFICATION**

VERIFICATION

VERIFICATION

HINT: After carrying out the repair, check that the fault has been remedied.

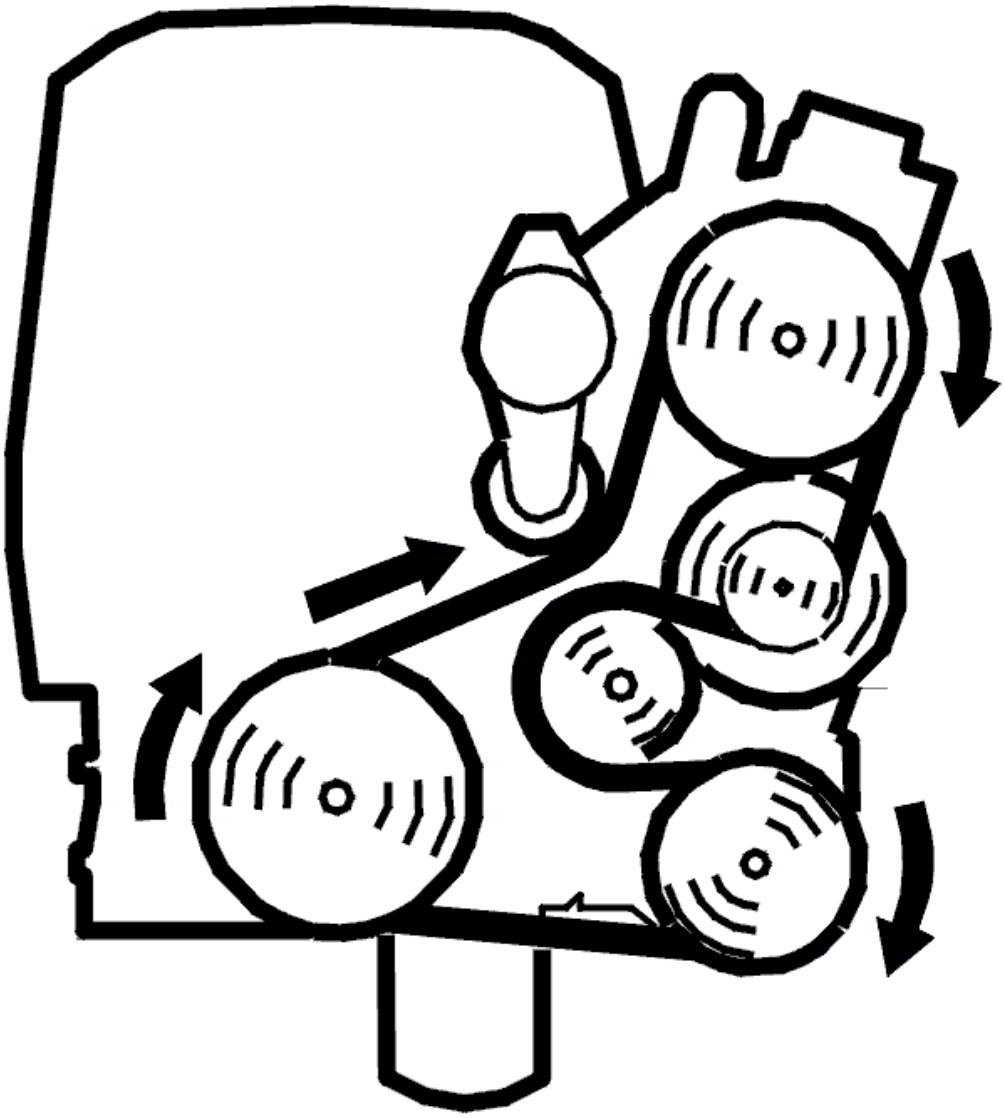

Fig. 224: Belt Routing / Engine Idling - Volvo
Courtesy of VOLVO CARS CORPORATION

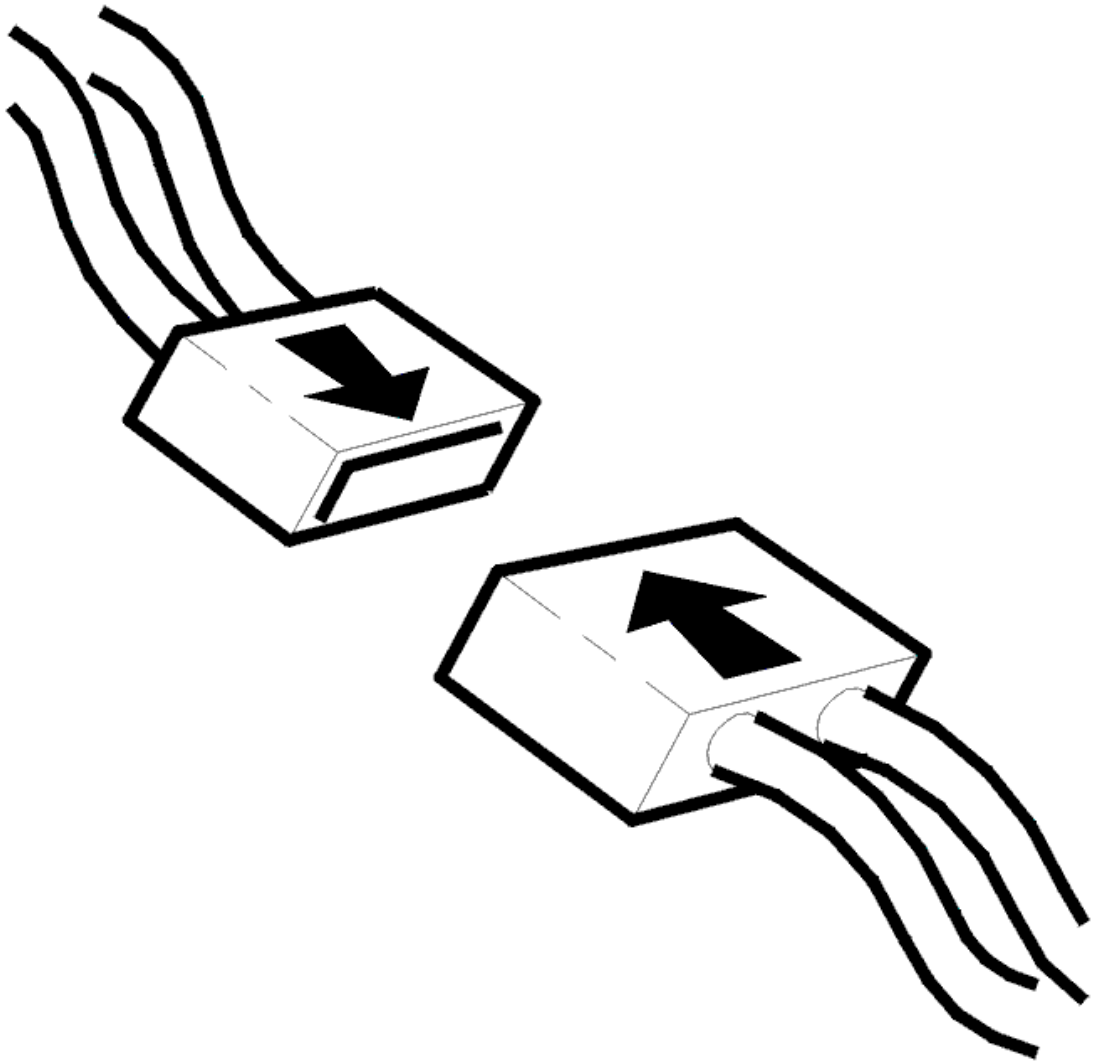

Fig. 225: Connecting Connector
Courtesy of VOLVO CARS CORPORATION

- Ignition off
- Reinstall the connectors, components etc.
- Start the engine
- Read off the diagnostic status and the fault status for diagnostic trouble code (DTC) ECM-919A.

  Check that the fault status is "NO FAULT FOUND" when the diagnostic status is COMPLETED. If the fault status is "FAULT FOUND" when the diagnostic status is COMPLETED there is a fault.

  Remedy as necessary.

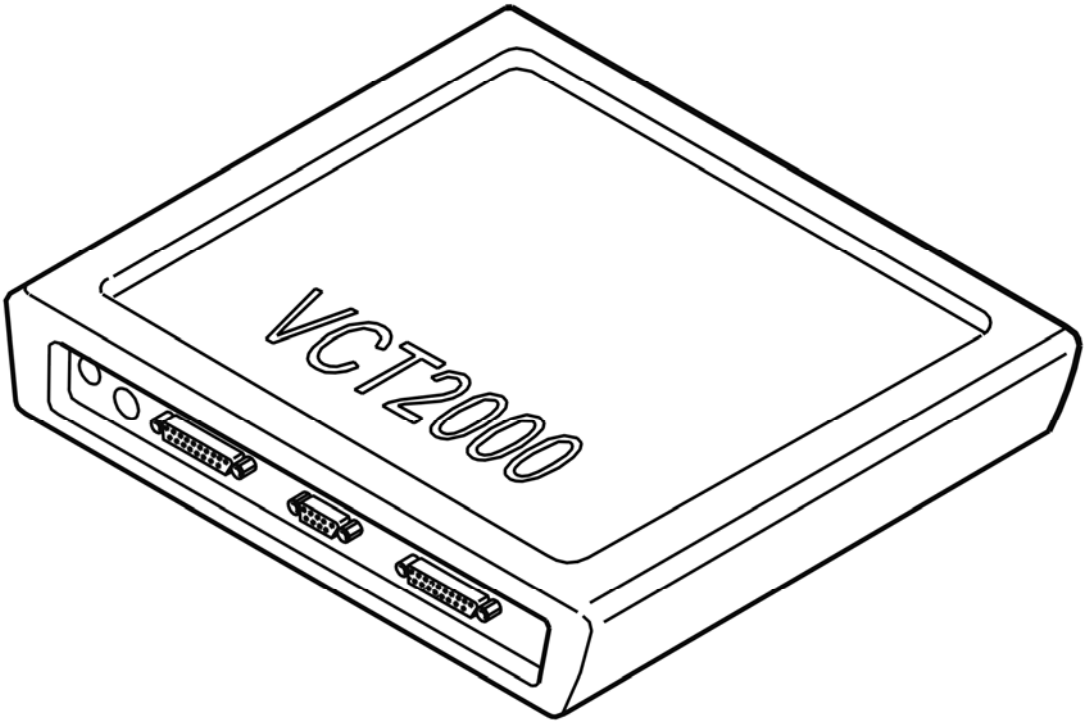

Fig. 226: Identifying VCT2000 Diagnostic Tool Symbol In VIDA
Courtesy of VOLVO CARS CORPORATION

Is the fault status is "NO FAULT FOUND"?

- **YES**

  VERIFIED: Troubleshooting has been completed.

- **NO**

  Refer to **INFORMATION**

INFORMATION

FAULT-TRACING INFORMATION

The fault should have been detected and remedied. As this is not the case fault-tracing has failed.

Exit fault-tracing for this diagnostic trouble code (DTC) or make another attempt.

ECM-91A7: THROTTLE UNIT. FAULTY SIGNAL (B5254T2; B6294T; 2003-2004)

DIAGNOSTIC TROUBLE CODE (DTC) INFORMATION

Condition

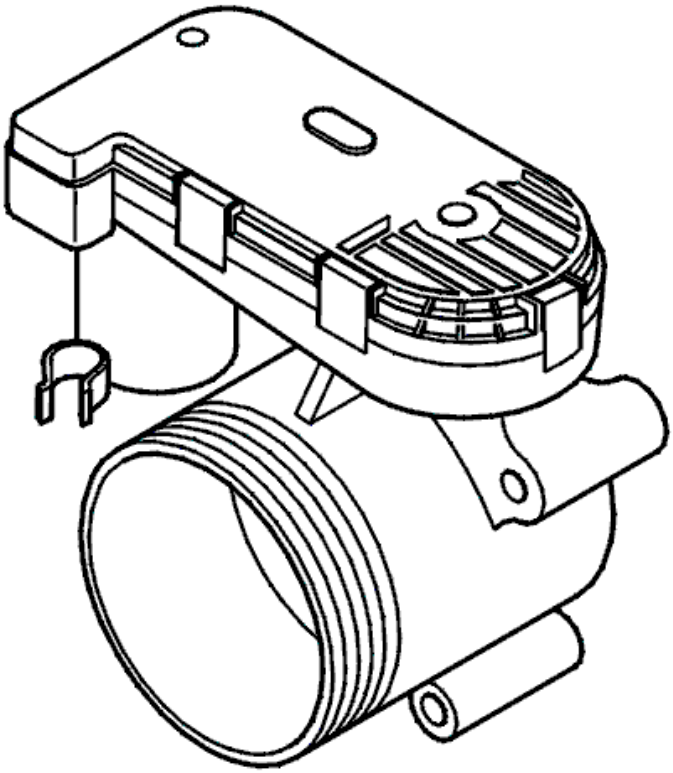

Fig. 227: Identifying Throttle Unit & Potentiometer
Courtesy of VOLVO CARS CORPORATION

Diagnostic trouble code (DTC) ECM-91A7 is stored if the engine control module (ECM) registers, when the engine is running, that the required throttle angle (desired value) does not correspond with the actual throttle angle (actual value) in the throttle unit

Substitute Value

The engine control module (ECM) shuts down the supply to the throttle unit damper motor. The throttle will set itself to the return position

Possible Source

Faulty signal:

- The throttle is sticking or is blocked (oil film, dust etc.)
- Contact resistance or oxidation in the terminals between the engine control module (ECM) and the throttle unit

- Open-circuit, short-circuit to ground or short-circuit to supply voltage in the wiring for the damper motor in the throttle unit
- Short-circuit to each other in the wiring for the damper motor in the throttle unit
- Defective throttle unit.

Fault symptom[s]

- Malfunction indicator lamp (MIL) lit
- Poor performance.

FAULTY SIGNAL

FAULT-TRACING INFORMATION

FAULT-TRACING INFORMATION

CAUTION: The male and female pins on the electronic throttle unit connectors are gold plated. Great care must be taken when measuring. Damage to the gold plating can result in operating difficulties.

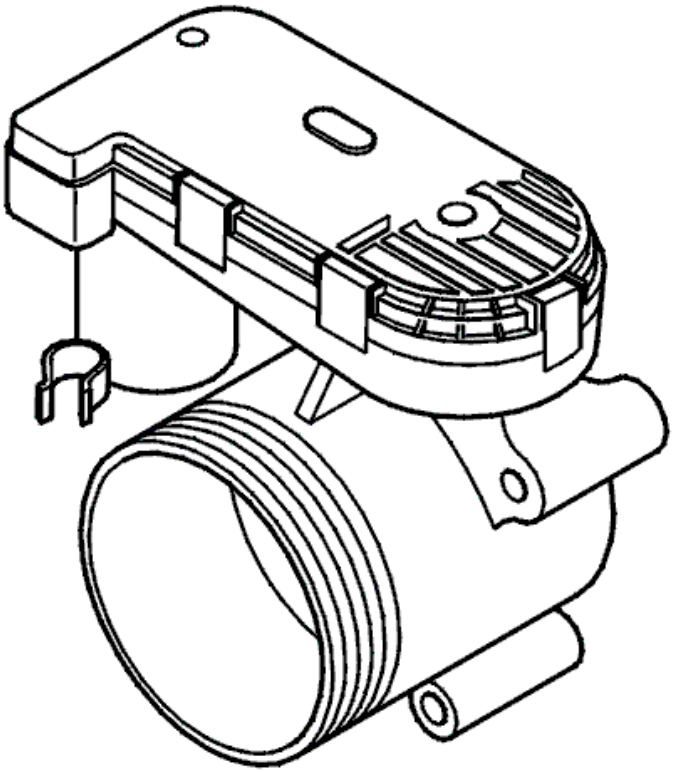

Fig. 228: Identifying Throttle Unit & Potentiometer
Courtesy of VOLVO CARS CORPORATION

- **Continue**

  Refer to **CHECKING DIAGNOSTIC TROUBLE CODES (DTCS)**

CHECKING DIAGNOSTIC TROUBLE CODES (DTCS)

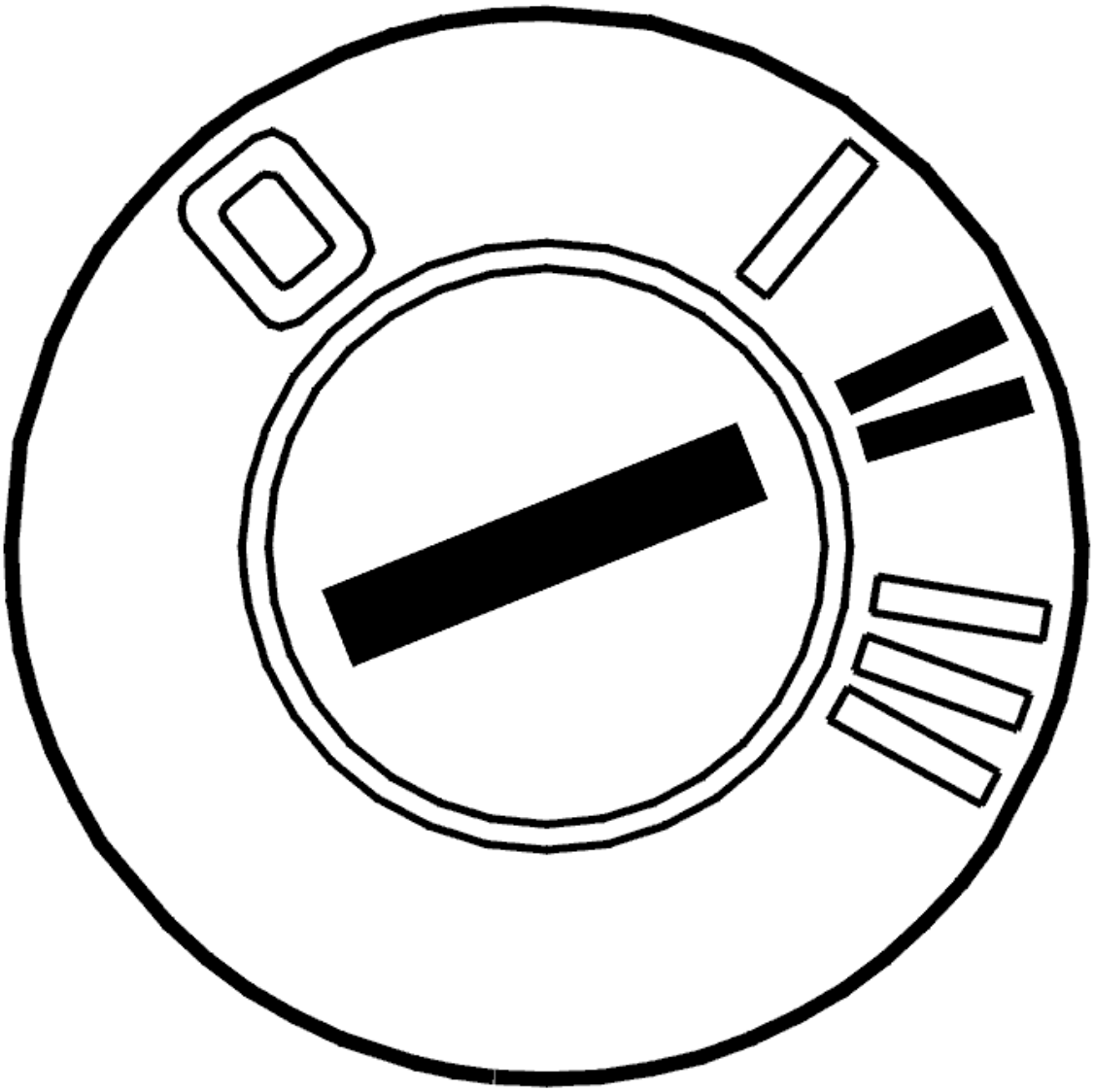

Fig. 229: Identifying Ignition ON
Courtesy of VOLVO CARS CORPORATION

- Ignition on
- Read off diagnostic trouble codes (DTCs).

  Check whether one or more of the following codes are stored: ECM-9150, ECM-9160, ECM-9170, ECM-903C or ECM-9100

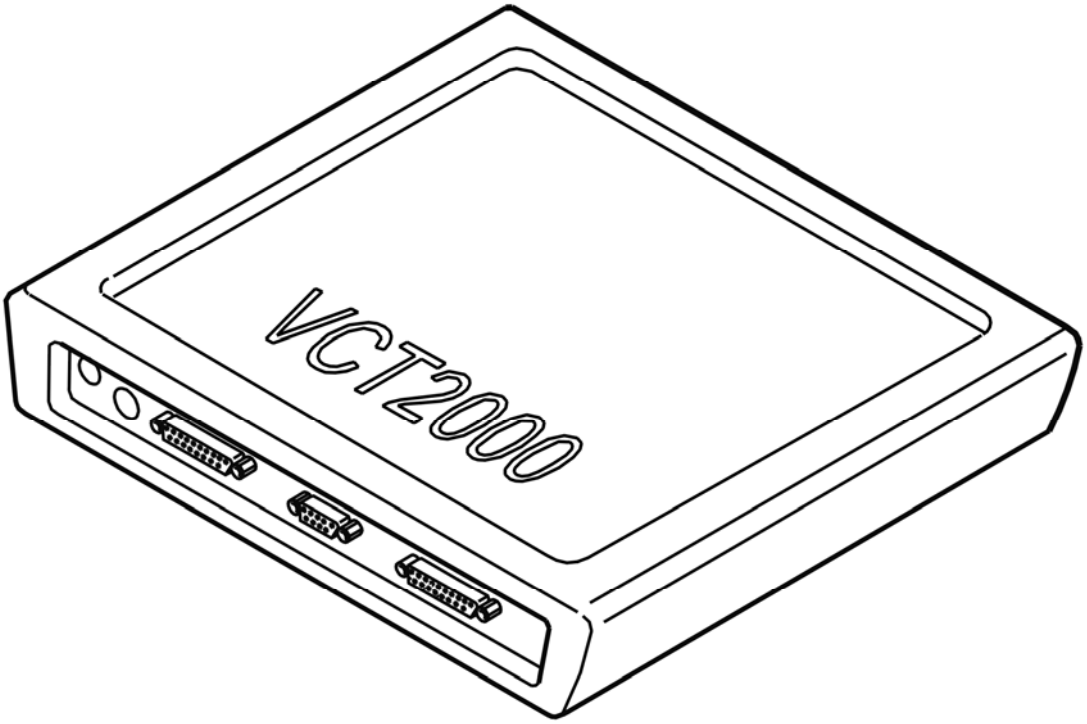

Fig. 230: Identifying VCT2000 Diagnostic Tool Symbol In VIDA
Courtesy of VOLVO CARS CORPORATION

Are any of the above diagnostic trouble codes (DTCs) stored?

- **YES**

  Refer to **FAULT-TRACING INFORMATION**

- **NO**

  Refer to **CHECKING COMPONENTS AND WIRING**

CHECKING COMPONENTS AND WIRING

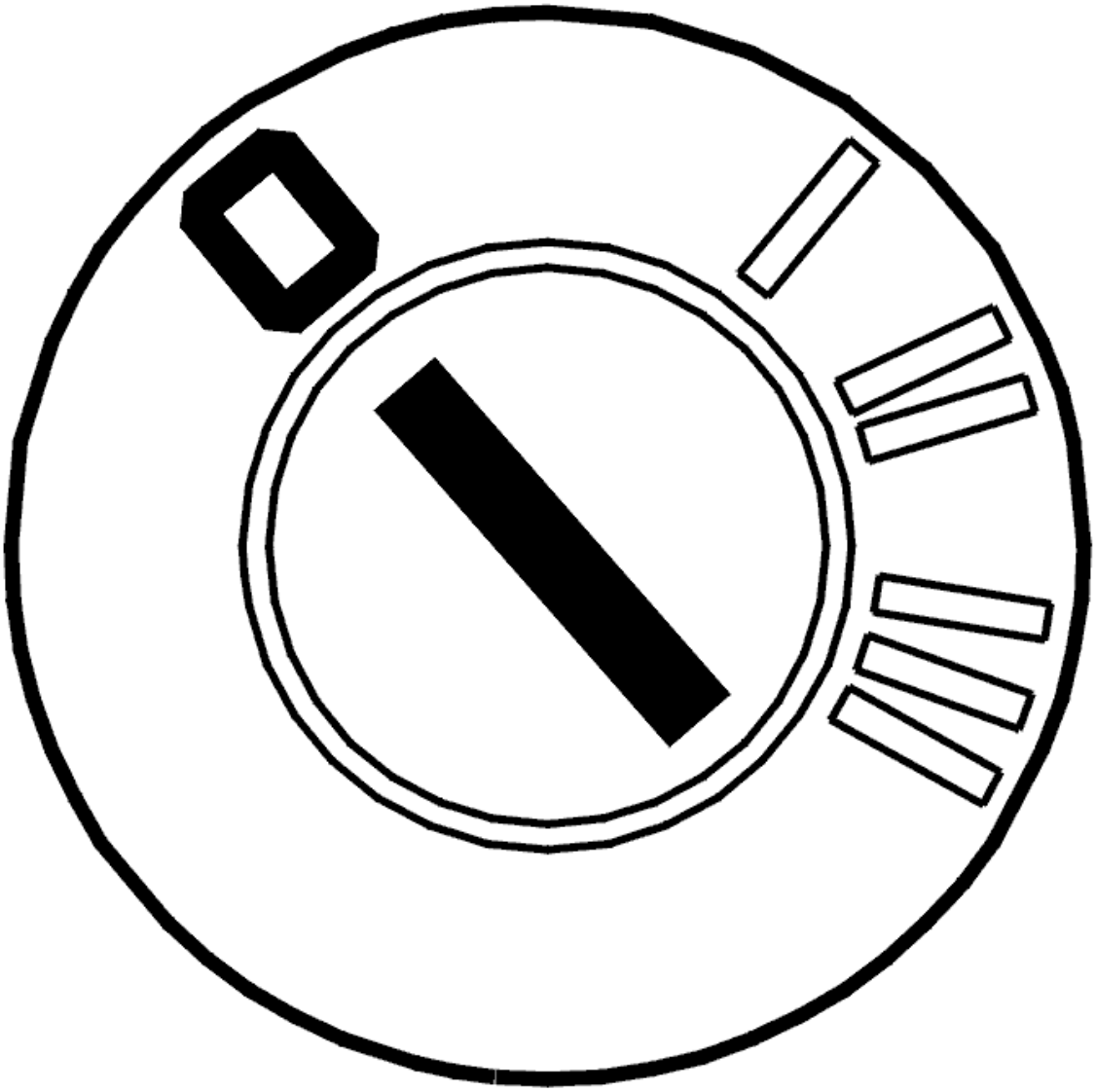

Fig. 231: Identifying Ignition OFF
Courtesy of VOLVO CARS CORPORATION

- Ignition off.

  Check the throttle unit and engine control module (ECM) connectors. Check for contact resistance and oxidation.

  Check the resistance values of the potentiometers in the throttle unit and damper motor winding.

  NOTE: The resistance of the motor winding in the damper motor is very low.

  Replace the throttle unit if necessary.

  Check the cable (+) for the damper motor between engine control module (ECM) terminal #A35 (#A35) and throttle unit terminal #4 (wiring side). Check for an open-circuit. Check for a short-circuit to ground.

Check for a short-circuit to supply voltage.

Check the cable (-) for the damper motor between engine control module (ECM) terminal #A36 (#A36) and throttle unit terminal #1 (wiring side). Check for an open-circuit. Check for a short-circuit to ground. Check for a short-circuit to supply voltage.

Also check the damper motor cables (+) and (-). Check for a short-circuit to each other.

Check that the shutter in the throttle unit is not blocked or sticking. Clean as necessary.

The throttle unit is defective if the diagnostic trouble code (DTC) recurs.

NOTE: If the throttle unit is replaced it must be adapted.

Other information:

- see **CHECKING WIRING AND TERMINALS**
- To connect the breakout box, see **CONNECTING THE BREAKOUT BOX**
- For resistance values, see **COMPONENT SPECIFICATIONS**
- For 5 cylinder turbocharged engines -2004, see **SIGNAL DESCRIPTION**
- For 5 cylinder turbocharged engines 2005-, see **SIGNAL SPECIFICATION** .
- For 6 cylinder engines -2004, see **SIGNAL SPECIFICATION**
- For 6 cylinder engines 2005-, see **SIGNAL SPECIFICATION** .
- For B5xx4T, see **THROTTLE BODY (ELECTRONIC THROTTLE MODULE), REPLACING** .
- For B6xx4T, see **THROTTLE BODY (ELECTRONIC THROTTLE MODULE), REPLACING** .
- For B5xx4T, see **THROTTLE BODY (TB), CLEANING** .
- For B6xx4x, see **THROTTLE BODY (TB), CLEANING** .

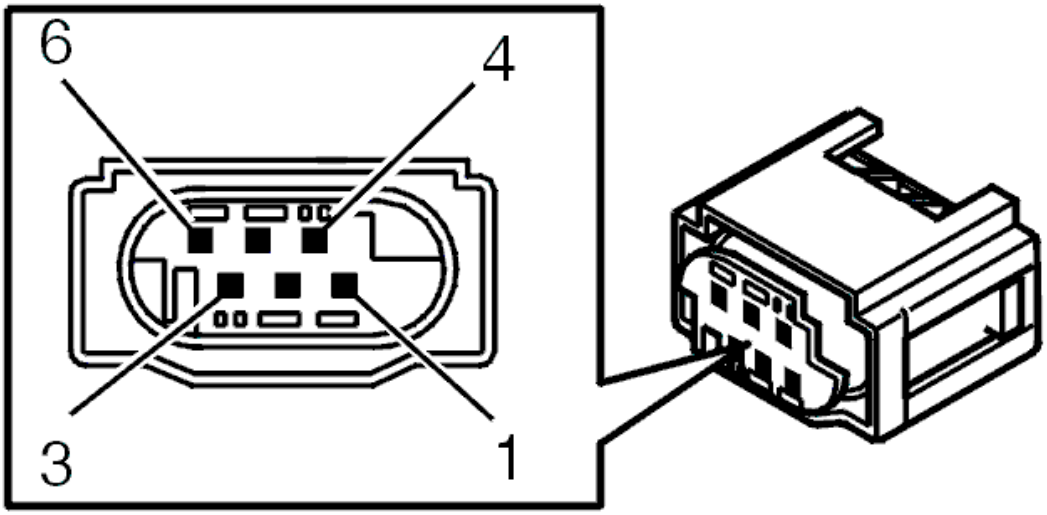

Fig. 232: Identifying Throttle Unit Connector Terminals
Courtesy of VOLVO CARS CORPORATION

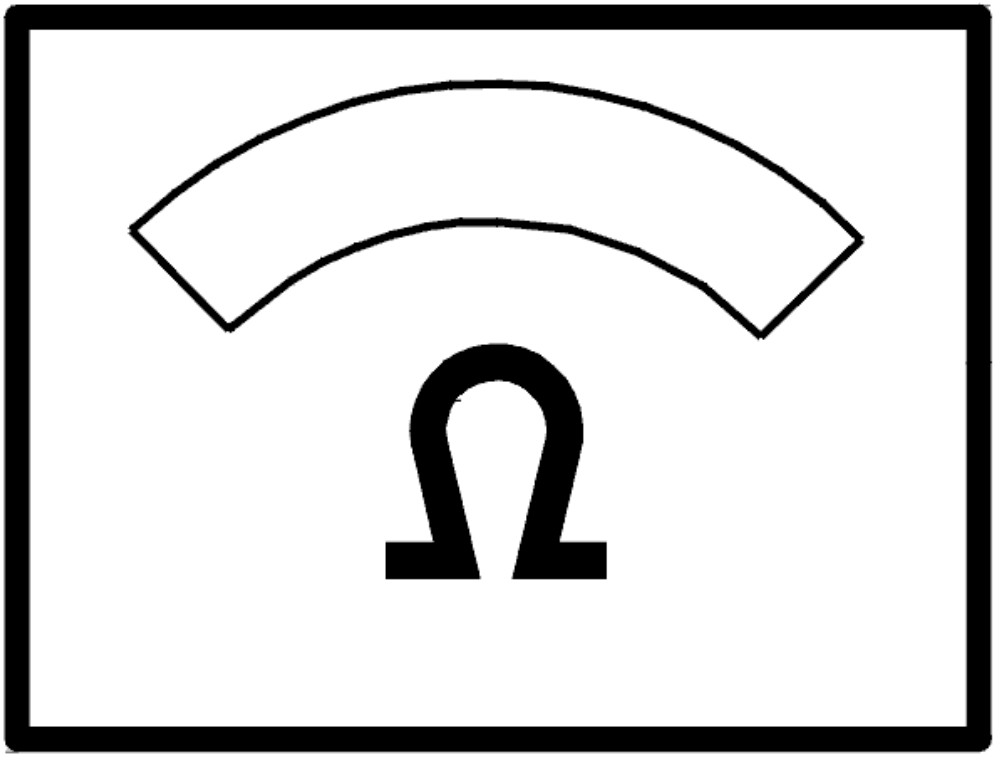

Fig. 233: Identifying Ohm Meter
Courtesy of VOLVO CARS CORPORATION

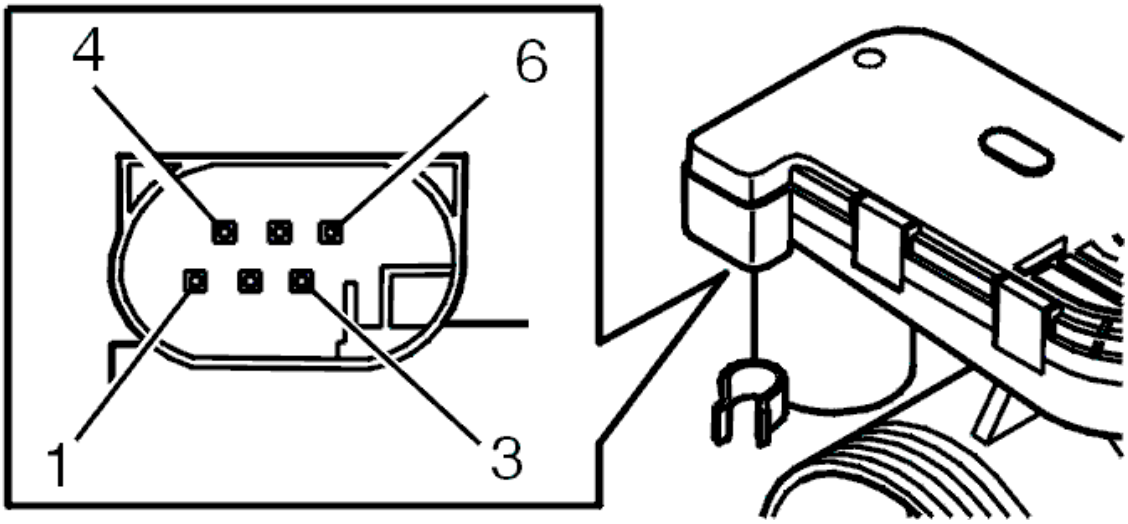

Fig. 234: Identifying Throttle Unit Connector Terminals
Courtesy of VOLVO CARS CORPORATION

- **Continue**

  Refer to **INFORMATION**

FAULT-TRACING INFORMATION

Remedy stored diagnostic trouble code(s) (DTCs).

Remedy as necessary.

INFORMATION

FAULT-TRACING INFORMATION

In case of this defect, troubleshooting is not followed by verification.

The information can be displayed again or the fault-tracing for this fault can be interrupted.

ECM-91B7: THROTTLE UNIT. FAULTY SIGNAL (B5254T2; B6294T; 2003-2004)

DIAGNOSTIC TROUBLE CODE (DTC) INFORMATION

Condition

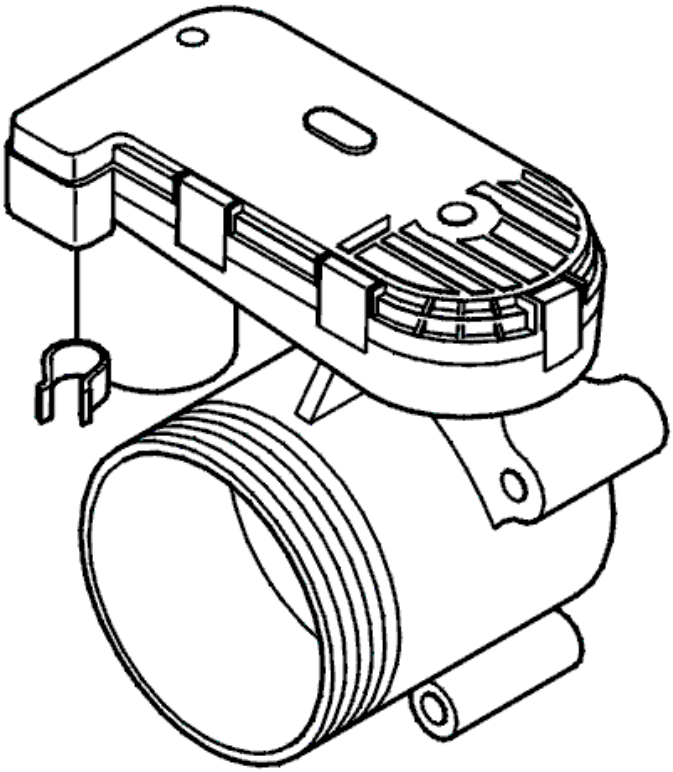

Fig. 235: Identifying Throttle Unit & Potentiometer
Courtesy of VOLVO CARS CORPORATION

Diagnostic trouble code (DTC) ECM-91B7 is stored if the engine control module (ECM), when attempting to adapt the throttle unit, registers that the movements of the throttle is impeded or that the return spring in the throttle unit is not functioning correctly.

Substitute Value

Depending on the fault, the engine control module (ECM) can cut off the supply to the damper motor in the throttle unit. The throttle will then attempt to set itself to the return position.

Possible Source

Faulty signal:

- The throttle is sticking or is blocked (oil film, dust etc.)
- Contact resistance or oxidation in the terminals between the engine control module (ECM) and the throttle unit
- Open-circuit, short-circuit to ground or short-circuit to supply voltage in the wiring for the damper motor in the throttle unit
- Short-circuit to each other in the wiring for the damper motor in the throttle unit
- Defective throttle unit.

Fault symptom[s]

- Driving/Hesitates/surges/Unsure when/at all times
- Driving/Engine stalls/During acceleration
- Driving/Engine stalls/During deceleration
- Starting/Engine does not start/Unsure when/at all times
- Driving/Engine stalls/At steady speed
- Warning lights and chimes/Malfunction Indicator Light ("Check engine" light) indication/no indication

FAULTY SIGNAL

see **FAULTY SIGNAL**

ECM-91C7: THROTTLE UNIT. FAULTY SIGNAL (B5254T2; B6294T; 2003-2004)

DIAGNOSTIC TROUBLE CODE (DTC) INFORMATION

Condition

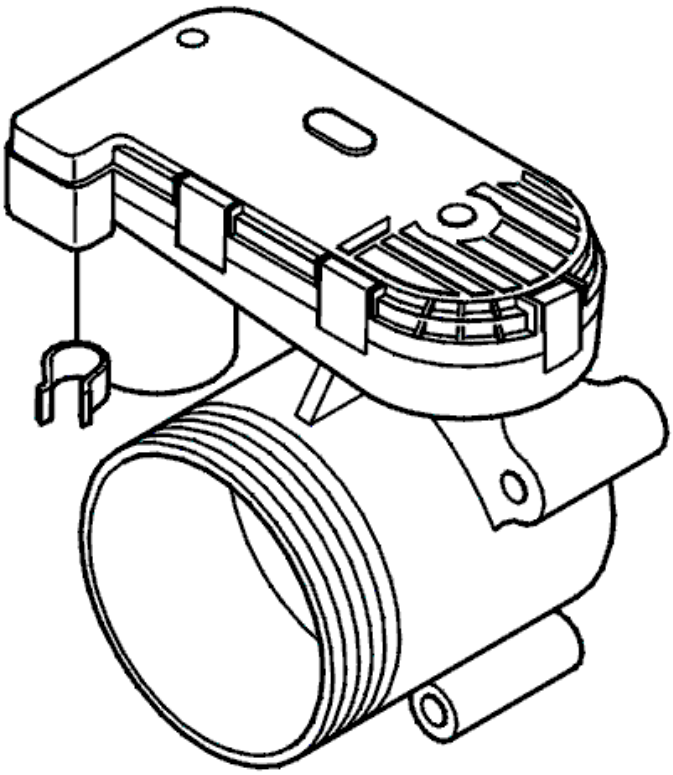

Fig. 236: Identifying Throttle Unit & Potentiometer
Courtesy of VOLVO CARS CORPORATION

Diagnostic trouble code (DTC) ECM-91C7 is stored if the engine control module (ECM), when attempting to adapt the throttle unit, registers that the movements of the throttle is impeded or that the opening spring in the throttle unit is not functioning correctly.

Substitute Value

Depending on the fault, the engine control module (ECM) can cut off the supply to the damper motor in the throttle unit. The throttle will then attempt to set itself to the return position.

Possible Source

Faulty signal:

- The throttle is sticking or is blocked (oil film, dust etc.)
- Contact resistance or oxidation in the terminals between the engine control module (ECM) and the throttle unit
- Open-circuit, short-circuit to ground or short-circuit to supply voltage in the wiring for the damper motor in the throttle unit
- Short-circuit to each other in the wiring for the damper motor in the throttle unit
- Defective throttle unit.

Fault symptom[s]

- Malfunction indicator lamp (MIL) lit
- Poor performance.

FAULTY SIGNAL

see **FAULTY SIGNAL**

ECM-9200: THROTTLE POSITION (TP) SENSOR. FAULTY SIGNAL (B5254T2; 2005-2007)

DIAGNOSTIC TROUBLE CODE (DTC) INFORMATION ECM-9200

Condition

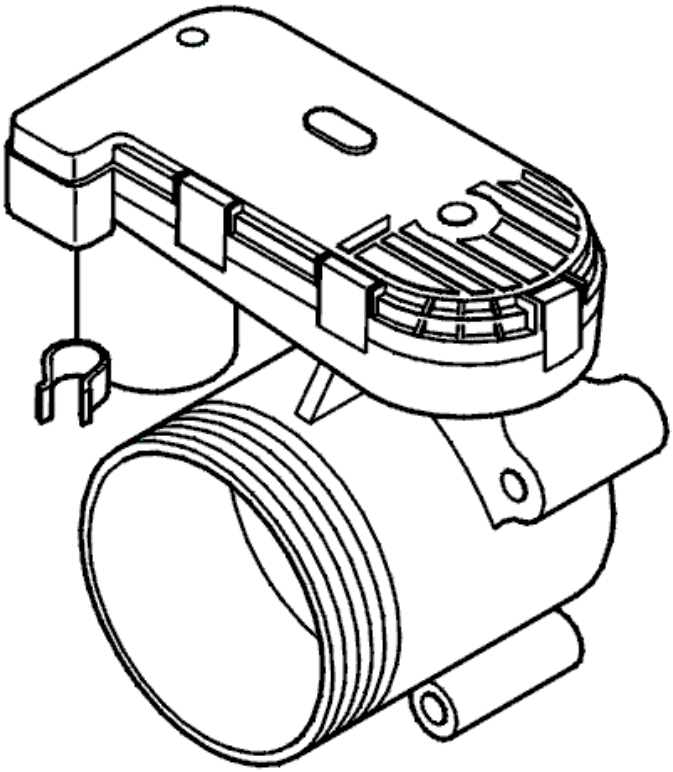

Fig. 237: Identifying Throttle Unit & Potentiometer
Courtesy of VOLVO CARS CORPORATION

This diagnostic trouble code (DTC) is never stored on its own. This diagnostic trouble code (DTC) will also be stored if the engine control module (ECM) registers that one of the diagnostic trouble codes (DTCs) for the throttle position sensor circuit is stored.

The diagnostic trouble code (DTC) can be diagnosed when the ignition is switched on.

Substitute Value

None.

Possible Source

- Fault in the throttle position (TP) sensor circuit for the electronic throttle unit.

Fault symptom[s]

- Malfunction indicator lamp (MIL) lit.

FAULT-TRACING INFORMATION

see **FAULT-TRACING INFORMATION**

ECM-9200: THROTTLE POSITION (TP) SENSOR. FAULTY SIGNAL (B6294T; 2005-2006)

DIAGNOSTIC TROUBLE CODE (DTC) INFORMATION ECM-9200

see **DIAGNOSTIC TROUBLE CODE (DTC) INFORMATION ECM-9200**

FAULT-TRACING INFORMATION

see **FAULT-TRACING INFORMATION**

ECM-9210: ELECTRONIC THROTTLE UNIT, POTENTIOMETER 1. FAULTY SIGNAL (B5254T2; 2005-2007)

DIAGNOSTIC TROUBLE CODE (DTC) INFORMATION ECM-9210

Condition

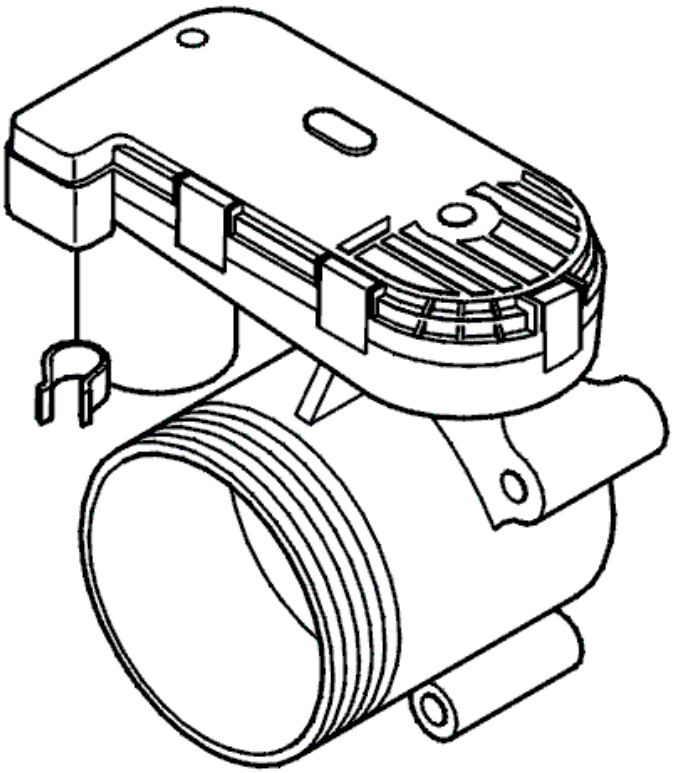

Fig. 238: Identifying Throttle Unit & Potentiometer
Courtesy of VOLVO CARS CORPORATION

The diagnostic trouble code (DTC) is stored if the engine control module (ECM) registers a fault in the signal from the throttle position (TP) sensor, potentiometer 1 (circuit 1) in the electronic throttle unit.

The diagnostic trouble code (DTC) can be diagnosed when the ignition is switched on.

Substitute Value

The throttle angle is calculated using potentiometer 2 (circuit 2) in the throttle position (TP) sensor for the throttle unit. If the diagnostic trouble codes (DTCs) for both potentiometers 1 and 2 are stored at the same time, the supply to the damper motor in the throttle unit will be disabled. The throttle will set itself to the return position.

Possible Source

- Contact resistance or oxidation in the terminals between the engine control module (ECM) and the electronic throttle unit
- The signal cables are short-circuited to each other
- Damaged throttle unit.

Fault symptom[s]

- Poor performance.

FAULTY SIGNAL

see **FAULTY SIGNAL**

ECM-9210: ELECTRONIC THROTTLE UNIT, POTENTIOMETER 1. FAULTY SIGNAL (B6294T; 2005-2006)

DIAGNOSTIC TROUBLE CODE (DTC) INFORMATION ECM-9210

see **DIAGNOSTIC TROUBLE CODE (DTC) INFORMATION ECM-9210**

FAULTY SIGNAL

see **FAULTY SIGNAL**

ECM-921C: ELECTRONIC THROTTLE UNIT, POTENTIOMETER 1. SIGNAL TOO HIGH (B5254T2; 2005-2007)

DIAGNOSTIC TROUBLE CODE (DTC) INFORMATION ECM-921C

Condition

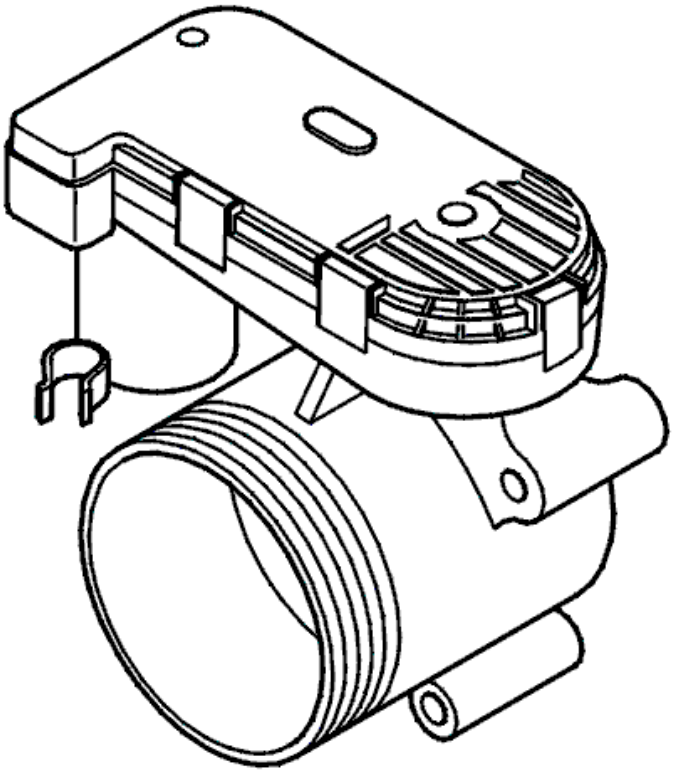

Fig. 239: Identifying Throttle Unit & Potentiometer
Courtesy of VOLVO CARS CORPORATION

The diagnostic trouble code (DTC) is stored if the engine control module (ECM) registers a fault in the signal from the throttle position (TP) sensor, potentiometer 1 (circuit 1) in the electronic throttle unit.

The diagnostic trouble code (DTC) can be diagnosed when the ignition is switched on.

Substitute Value

The throttle angle is calculated using potentiometer 2 (circuit 2) in the throttle position (TP) sensor for the throttle unit. If the diagnostic trouble codes (DTCs) for both potentiometers 1 and 2 are stored at the same time, the supply to the damper motor in the throttle unit will be disabled. The throttle will set itself to the return position.

Possible Source

- Contact resistance or oxidation in the terminals between the engine control module (ECM) and the electronic throttle unit
- Open-circuit or short-circuit to supply voltage in the signal cable
- Open-circuit in the signal ground cable for potentiometers 1 and 2
- Damaged throttle unit.

Fault symptom[s]

- Poor performance.

SIGNAL TOO HIGH

see **SIGNAL TOO HIGH**

ECM-921C: ELECTRONIC THROTTLE UNIT, POTENTIOMETER 1. SIGNAL TOO HIGH (B6294T; 2005-2006)

DIAGNOSTIC TROUBLE CODE (DTC) INFORMATION ECM-921C

see **DIAGNOSTIC TROUBLE CODE (DTC) INFORMATION ECM-921C**

SIGNAL TOO HIGH

see **SIGNAL TOO HIGH**

ECM-921D: ELECTRONIC THROTTLE UNIT, POTENTIOMETER 1. SIGNAL TOO LOW (B5254T2; 2005-2007)

DIAGNOSTIC TROUBLE CODE (DTC) INFORMATION ECM-921D

Condition

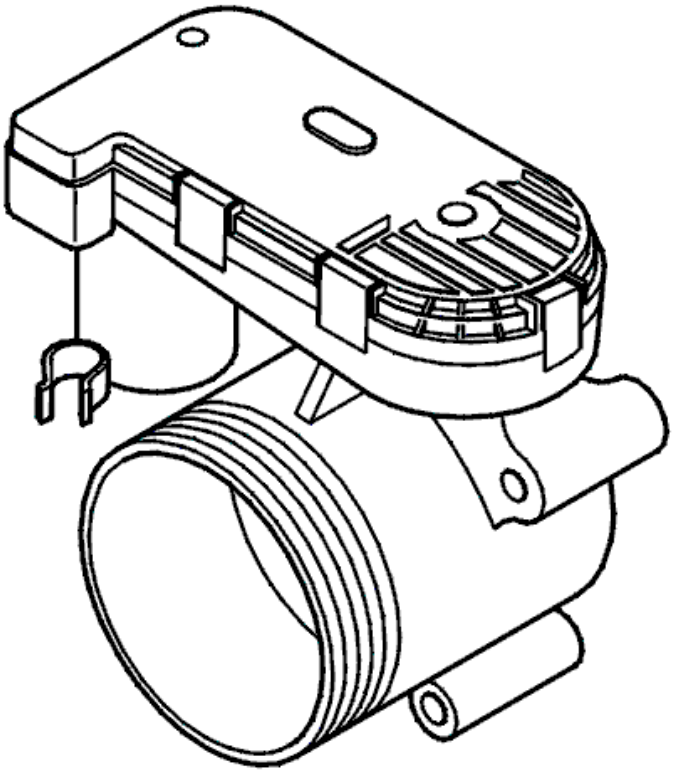

Fig. 240: Identifying Throttle Unit & Potentiometer
Courtesy of VOLVO CARS CORPORATION

The diagnostic trouble code (DTC) is stored if the engine control module (ECM) registers a fault in the signal from the throttle position (TP) sensor, potentiometer 1 (circuit 1) in the electronic throttle unit.

The diagnostic trouble code (DTC) can be diagnosed when the ignition is switched on.

Substitute Value

The throttle angle is calculated using potentiometer 2 (circuit 2) in the throttle position (TP) sensor for the throttle unit. If the diagnostic trouble codes (DTCs) for both potentiometers 1 and 2 are stored at the same time, the supply to the damper motor in the throttle unit will be disabled. The throttle will set itself to the return position.

Possible Source

- Contact resistance or oxidation in the terminals between the engine control module (ECM) and the electronic throttle unit
- Short-circuit to ground in the signal cable
- Open-circuit or short-circuit to ground in the power supply to potentiometers 1 and 2
- Damaged throttle unit.

Fault symptom[s]

- Poor performance.

SIGNAL TOO LOW

see **SIGNAL TOO LOW**

ECM-921D: ELECTRONIC THROTTLE UNIT, POTENTIOMETER 1. SIGNAL TOO LOW (B6294T; 2005-2006)

DIAGNOSTIC TROUBLE CODE (DTC) INFORMATION ECM-921D

see **DIAGNOSTIC TROUBLE CODE (DTC) INFORMATION ECM-921D**

SIGNAL TOO LOW

see **SIGNAL TOO LOW**

ECM-9220: ELECTRONIC THROTTLE UNIT, POTENTIOMETER 2. FAULTY SIGNAL (B5254T2; 2005-2007)

DIAGNOSTIC TROUBLE CODE (DTC) INFORMATION ECM-9220

Condition

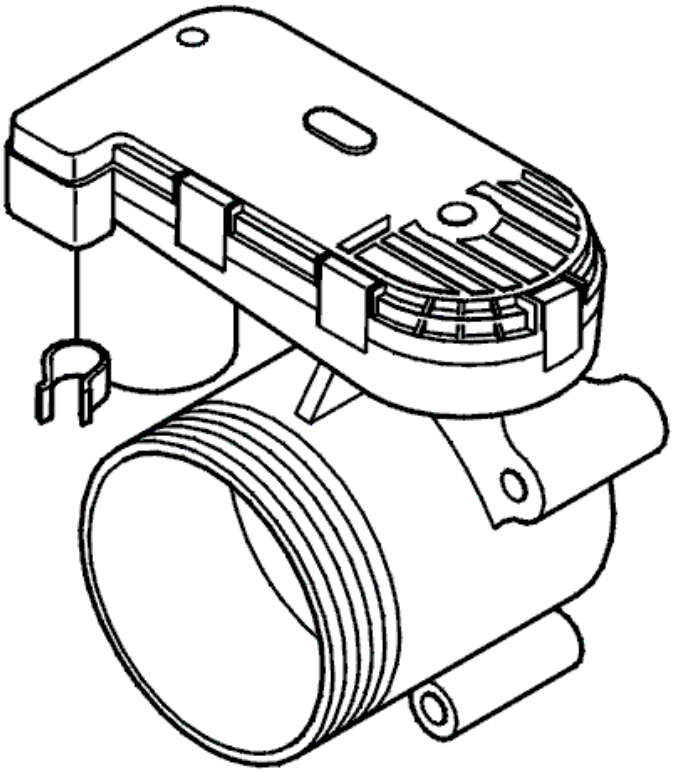

Fig. 241: Identifying Throttle Unit & Potentiometer
Courtesy of VOLVO CARS CORPORATION

The diagnostic trouble code (DTC) is stored if the engine control module (ECM) registers a fault in the signal from the throttle position (TP) sensor, potentiometer 2 (circuit 2) in the electronic throttle unit.

The diagnostic trouble code (DTC) can be diagnosed when the ignition is switched on.

Substitute Value

The throttle angle is calculated using potentiometer 1 (circuit 1) in the throttle position (TP) sensor for the throttle unit. If the diagnostic trouble codes (DTCs) for both potentiometers 1 and 2 are stored at the same time, the supply to the damper motor in the throttle unit will be disabled. The throttle will set itself to the return position.

Possible Source

- Contact resistance or oxidation in the terminals between the engine control module (ECM) and the electronic throttle unit
- The signal cables are short-circuited to each other
- Damaged throttle unit.

Fault symptom[s]

- Poor performance.

FAULTY SIGNAL

see **FAULTY SIGNAL**

ECM-9220: ELECTRONIC THROTTLE UNIT, POTENTIOMETER 2. FAULTY SIGNAL (B6294T; 2005-2006)

DIAGNOSTIC TROUBLE CODE (DTC) INFORMATION ECM-9220

see **DIAGNOSTIC TROUBLE CODE (DTC) INFORMATION ECM-9220**

FAULTY SIGNAL

see **FAULTY SIGNAL**

ECM-922C: ELECTRONIC THROTTLE UNIT, POTENTIOMETER 2. SIGNAL TOO HIGH (B5254T2; 2005-2007)

DIAGNOSTIC TROUBLE CODE (DTC) INFORMATION ECM-922C

Condition

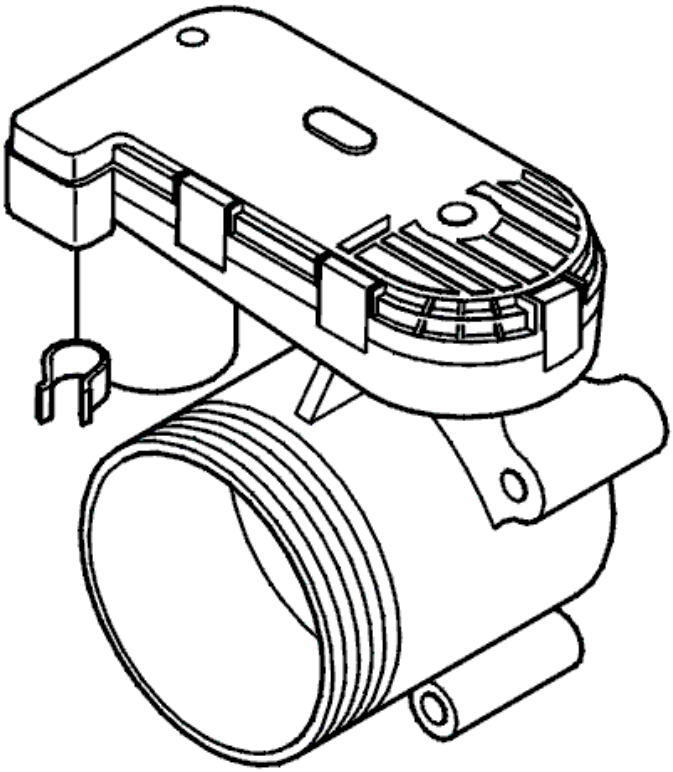

Fig. 242: Identifying Throttle Unit & Potentiometer
Courtesy of VOLVO CARS CORPORATION

The diagnostic trouble code (DTC) is stored if the engine control module (ECM) registers a fault in the signal from the throttle position (TP) sensor, potentiometer 2 (circuit 2) in the electronic throttle unit.

The diagnostic trouble code (DTC) can be diagnosed when the ignition is switched on.

Substitute Value

The throttle angle is calculated using potentiometer 1 (circuit 1) in the throttle position (TP) sensor for the throttle unit. If the diagnostic trouble codes (DTCs) for both potentiometers 1 and 2 are stored at the same time, the supply to the damper motor in the throttle unit will be disabled. The throttle will set itself to the return position.

Possible Source

- Contact resistance or oxidation in the terminals between the engine control module (ECM) and the electronic throttle unit
- Short-circuit to supply voltage in the signal cable
- Open-circuit in the signal ground cable for potentiometers 1 and 2
- Damaged throttle unit.

Fault symptom[s]

- Poor performance.

SIGNAL TOO HIGH

see **SIGNAL TOO HIGH**

ECM-922C: ELECTRONIC THROTTLE UNIT, POTENTIOMETER 2. SIGNAL TOO HIGH (B6294T; 2005-2006)

DIAGNOSTIC TROUBLE CODE (DTC) INFORMATION ECM-922C

see **DIAGNOSTIC TROUBLE CODE (DTC) INFORMATION ECM-922C**

SIGNAL TOO HIGH

see **SIGNAL TOO HIGH**

ECM-922D: ELECTRONIC THROTTLE UNIT, POTENTIOMETER 2. SIGNAL TOO LOW (B5254T2; 2005-2007)

DIAGNOSTIC TROUBLE CODE (DTC) INFORMATION ECM-922D

Condition

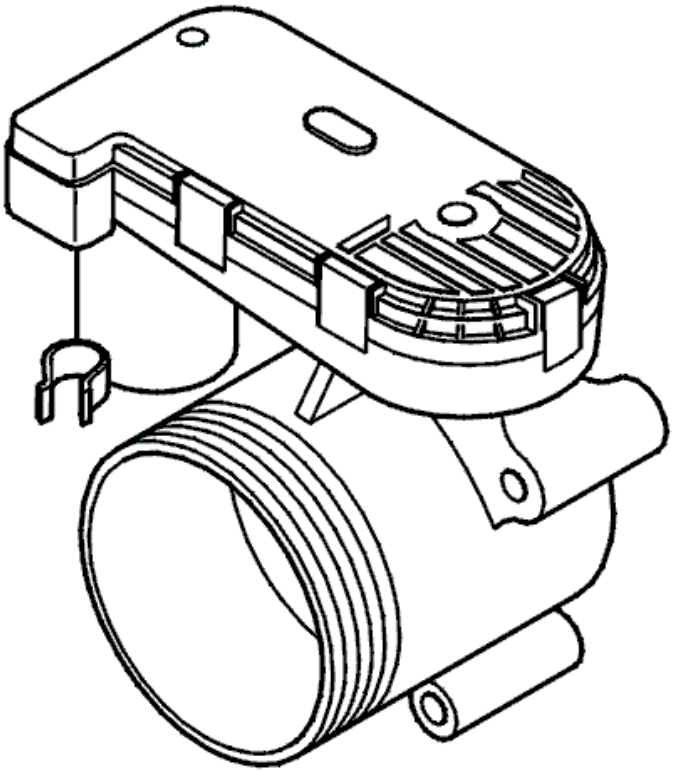

Fig. 243: Identifying Throttle Unit & Potentiometer
Courtesy of VOLVO CARS CORPORATION

The diagnostic trouble code (DTC) is stored if the engine control module (ECM) registers a fault in the signal from the throttle position (TP) sensor, potentiometer 2 (circuit 2) in the electronic throttle unit.

The diagnostic trouble code (DTC) can be diagnosed when the ignition is switched on.

Substitute Value

The throttle angle is calculated using potentiometer 1 (circuit 1) in the throttle position (TP) sensor for the throttle unit. If a fault is also detected in potentiometer 1 (circuit 1) a diagnostic trouble code (DTC) will also be stored for this. If diagnostic trouble codes (DTCs) have been stored for both potentiometers, the supply to the damper motor for the electronic throttle unit will be disabled. The throttle will set itself to the return position.

Possible Source

- Contact resistance or oxidation in the terminals between the engine control module (ECM) and the electronic throttle unit
- Open-circuit or short-circuit to ground in the signal cable
- Open-circuit or short-circuit to ground in the power supply to potentiometers 1 and 2
- Damaged throttle unit.

Fault symptom[s]

- Poor performance.

SIGNAL TOO LOW

see **SIGNAL TOO LOW**

ECM-922D: ELECTRONIC THROTTLE UNIT, POTENTIOMETER 2. SIGNAL TOO LOW (B6294T; 2005-2006)

DIAGNOSTIC TROUBLE CODE (DTC) INFORMATION ECM-922D

see **DIAGNOSTIC TROUBLE CODE (DTC) INFORMATION ECM-922D**

SIGNAL TOO LOW

see **SIGNAL TOO LOW**

ECM-9240: ENGINE CONTROL MODULE (ECM). FAULTY SIGNAL (B5254T2; 2005-2007)

DIAGNOSTIC TROUBLE CODE (DTC) INFORMATION ECM-9240

Condition

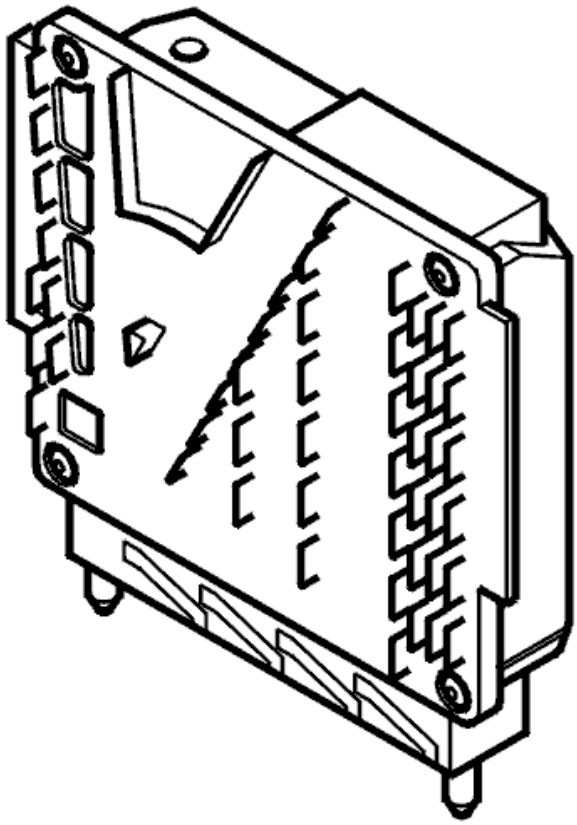

Fig. 244: Engine Control Module
Courtesy of VOLVO CARS CORPORATION

The diagnostic trouble code (DTC) is stored if the engine control module (ECM) registers an internal fault or a fault in the circuit for the throttle unit damper motor.

The diagnostic trouble code (DTC) can be diagnosed when the ignition is switched on.

Substitute Value

The engine control module (ECM) shuts down the supply to the damper motor for the electronic throttle unit. The throttle will set itself to the return position.

Possible Source

- Contact resistance or oxidation in the terminals between the engine control module (ECM) and the electronic throttle unit
- Open-circuit, short-circuit to ground or short-circuit to supply voltage in the wiring for the damper motor in the throttle unit
- Short-circuit to each other in the wiring for the damper motor in the throttle unit
- Damaged throttle unit
- Damaged engine control module (ECM).

Fault symptom[s]

- Malfunction indicator lamp (MIL) lit
- Poor performance.

FAULTY SIGNAL

FAULT-TRACING INFORMATION

FAULT-TRACING INFORMATION

CAUTION: The male and female pins on the electronic throttle unit connectors are gold plated. Great care must be taken when measuring. Damage to the gold plating can result in operating difficulties.

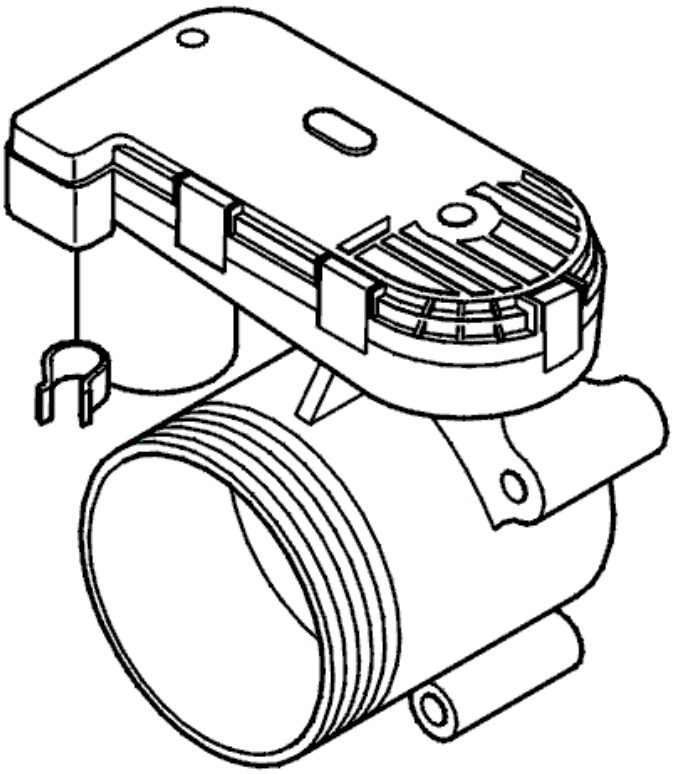

Fig. 245: Identifying Throttle Unit & Potentiometer
Courtesy of VOLVO CARS CORPORATION

- **Continue**

  Refer to **CHECKING THE DIAGNOSTIC TROUBLE CODES (DTCS)**

CHECKING THE DIAGNOSTIC TROUBLE CODES (DTCS)

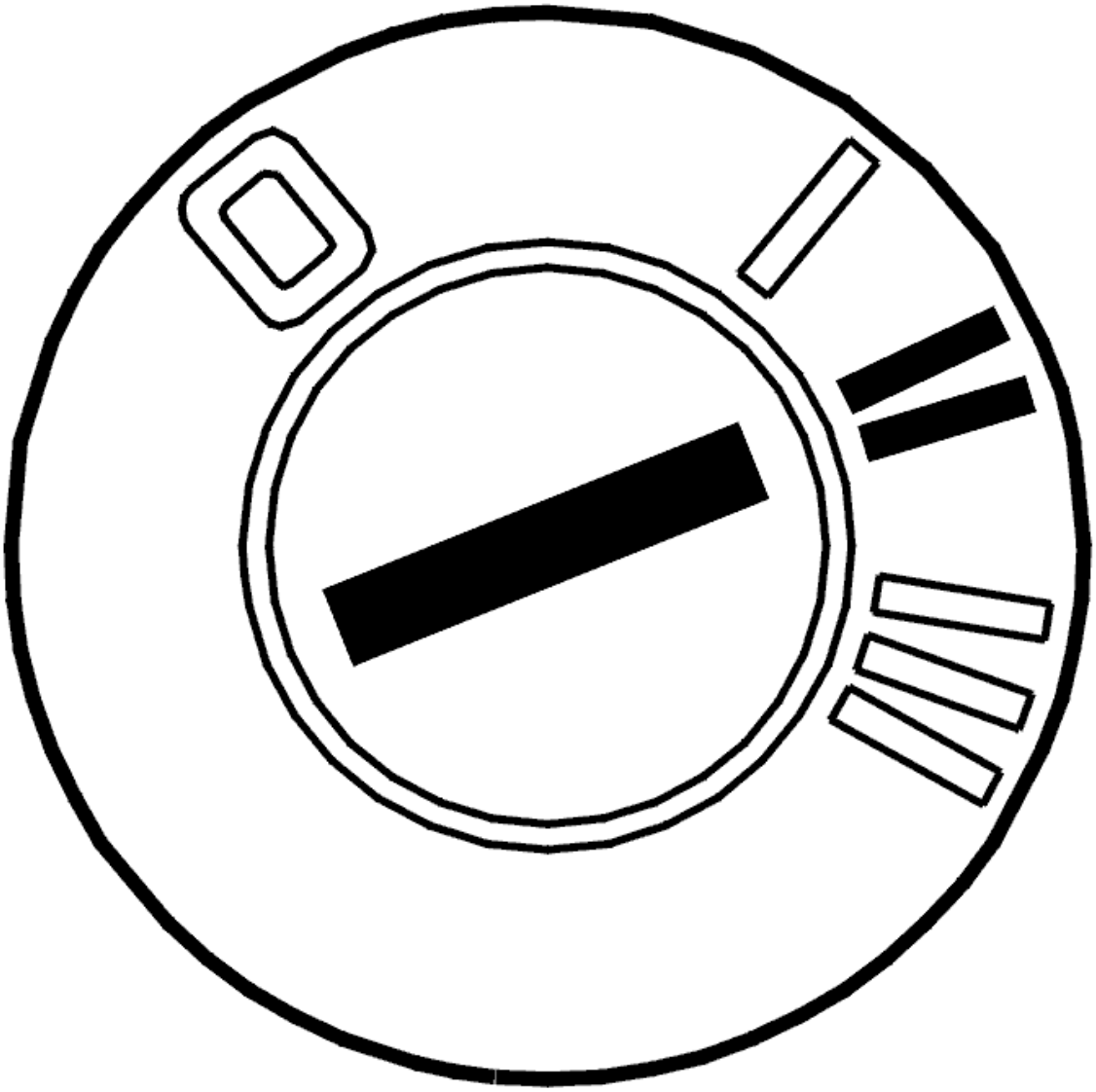

Fig. 246: Identifying Ignition ON
Courtesy of VOLVO CARS CORPORATION

- Ignition on
- Read off diagnostic trouble codes (DTCs).

  Check if any diagnostic trouble codes (DTCs) are stored for the electronic throttle unit or the throttle position (TP) sensor.

  If any of these diagnostic trouble codes (DTCs) are stored, these must be remedied first.

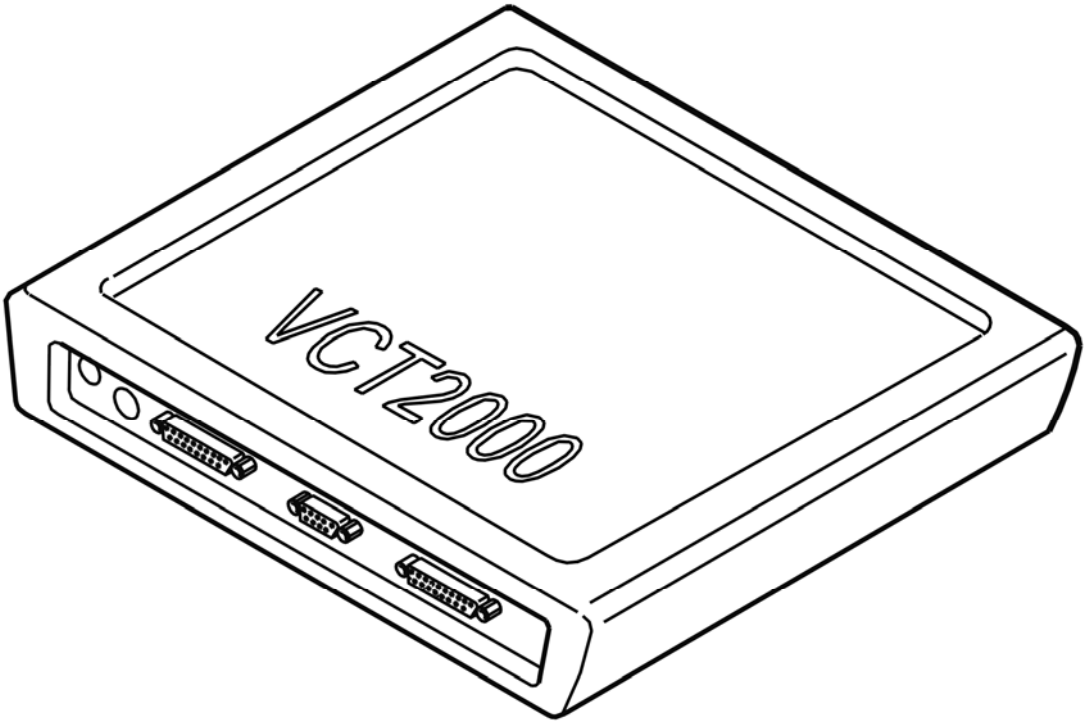

Fig. 247: Identifying VCT2000 Diagnostic Tool Symbol In VIDA
Courtesy of VOLVO CARS CORPORATION

Are any of the above diagnostic trouble codes (DTCs) stored?

- **YES**

  Refer to **FAULT-TRACING INFORMATION**

- **NO**

  Refer to **CHECKING COMPONENTS AND WIRING**

FAULT-TRACING INFORMATION

Remedy any diagnostic trouble codes (DTCs) that are stored.

Remedy as necessary.

CHECKING COMPONENTS AND WIRING

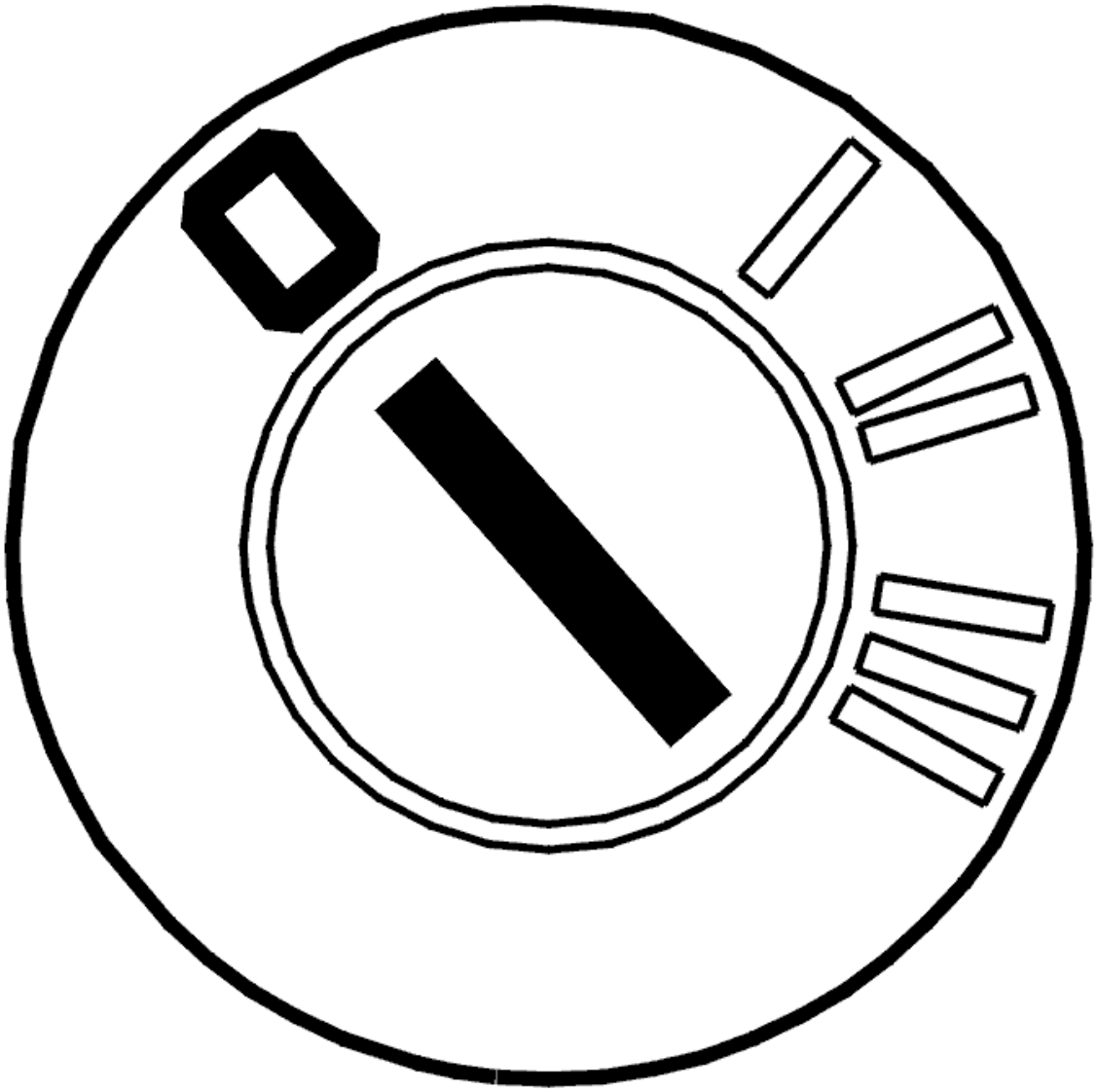

Fig. 248: Identifying Ignition OFF
Courtesy of VOLVO CARS CORPORATION

- Ignition off
- Check the throttle unit and engine control module (ECM) connectors. Check for contact resistance and oxidation.

  Check the resistance value of the damper motor winding in the throttle unit. Take readings between throttle unit terminals #1 and #4 (component side). Check for an open-circuit. Check for a short-circuit.

  NOTE: The resistance of the motor winding in the damper motor is very low.

  Replace the throttle unit if necessary.

  Check the cable (+) for the damper motor between engine control module (ECM) terminal #A35 (#A35)

and throttle unit terminal #4 (cable harness side). Check for an open-circuit. Check for a short-circuit to ground. Check for a short-circuit to supply voltage.

Check the cable (-) for the damper motor between engine control module (ECM) terminal #A36 (#A36) and throttle unit terminal #1 (cable harness side). Check for an open-circuit. Check for a short-circuit to ground. Check for a short-circuit to supply voltage.

Also check the damper motor cables (+) and (-). Check for a short-circuit to each other.

If no faults are found during the checks and the diagnostic trouble code (DTC) recurs, try replacing the throttle unit.

NOTE: When replacing the throttle unit or the engine control module (ECM) the throttle unit must be adapted. See "Throttle unit adaptation" in the vehicle communication socket.

Remedy as necessary.

Other information:

- see **CONNECTING THE BREAKOUT BOX**
- For 5 cylinder turbocharged engines -2004, see **SIGNAL DESCRIPTION**
- For 5 cylinder turbocharged engines 2005-, see **SIGNAL SPECIFICATION** .
- For 6 cylinder engines -2004, see **SIGNAL SPECIFICATION**
- For 6 cylinder engines 2005-, see **SIGNAL SPECIFICATION** .
- For resistance values: **COMPONENT SPECIFICATIONS**
- For B5xx4T, see **THROTTLE BODY (ELECTRONIC THROTTLE MODULE), REPLACING** .
- For B6xx4T, see **THROTTLE BODY (ELECTRONIC THROTTLE MODULE), REPLACING** .
- see **ENGINE CONTROL MODULE (ECM), REPLACING**
- see **CHECKING WIRING AND TERMINALS** .

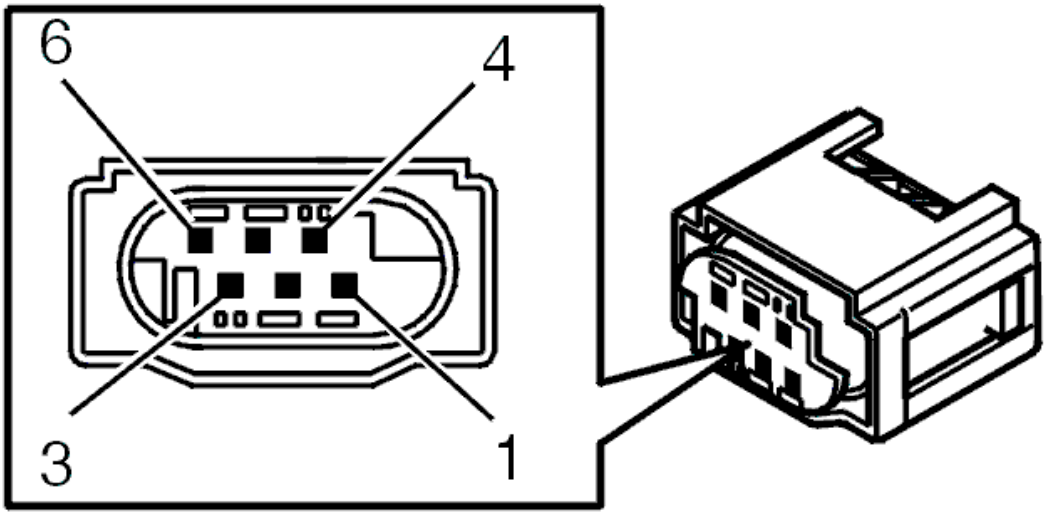

Fig. 249: Identifying Throttle Unit Connector Terminals
Courtesy of VOLVO CARS CORPORATION

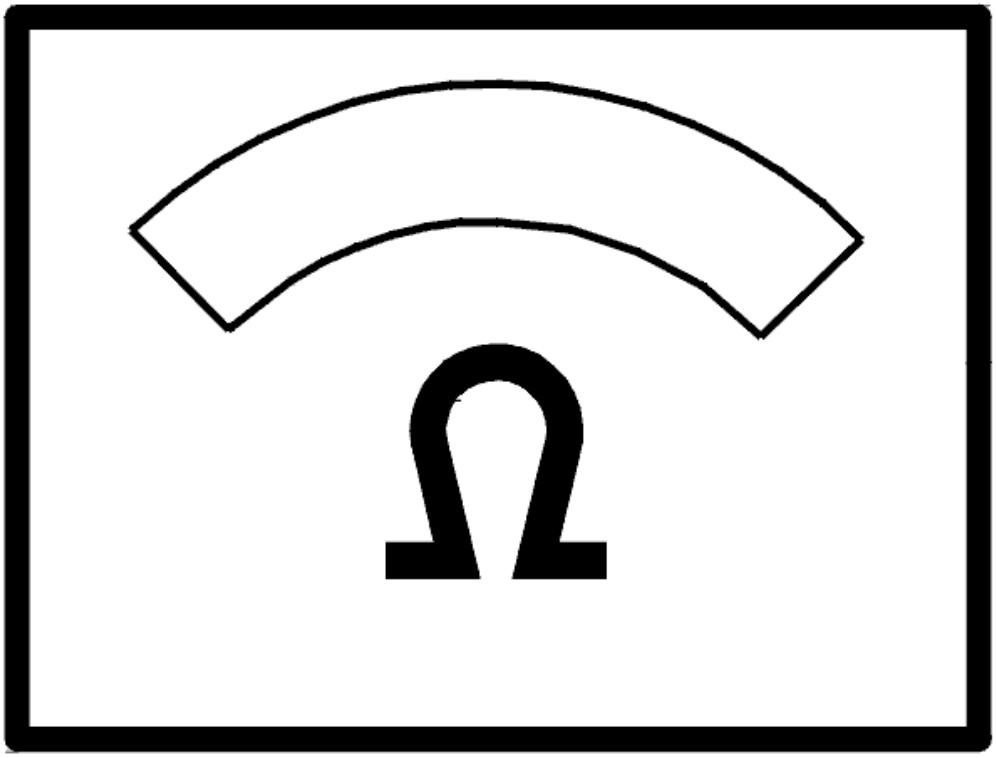

Fig. 250: Identifying Ohm Meter
Courtesy of VOLVO CARS CORPORATION

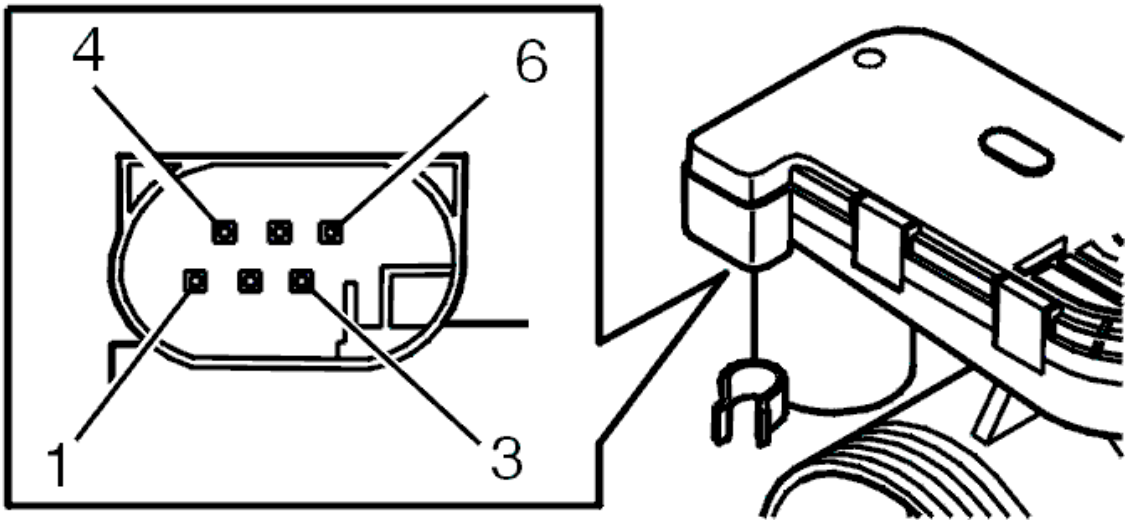

Fig. 251: Identifying Throttle Unit Connector Terminals
Courtesy of VOLVO CARS CORPORATION

- **Continue**

  Refer to **VERIFICATION**

VERIFICATION

VERIFICATION

HINT: After carrying out the repair, check that the fault has been remedied.

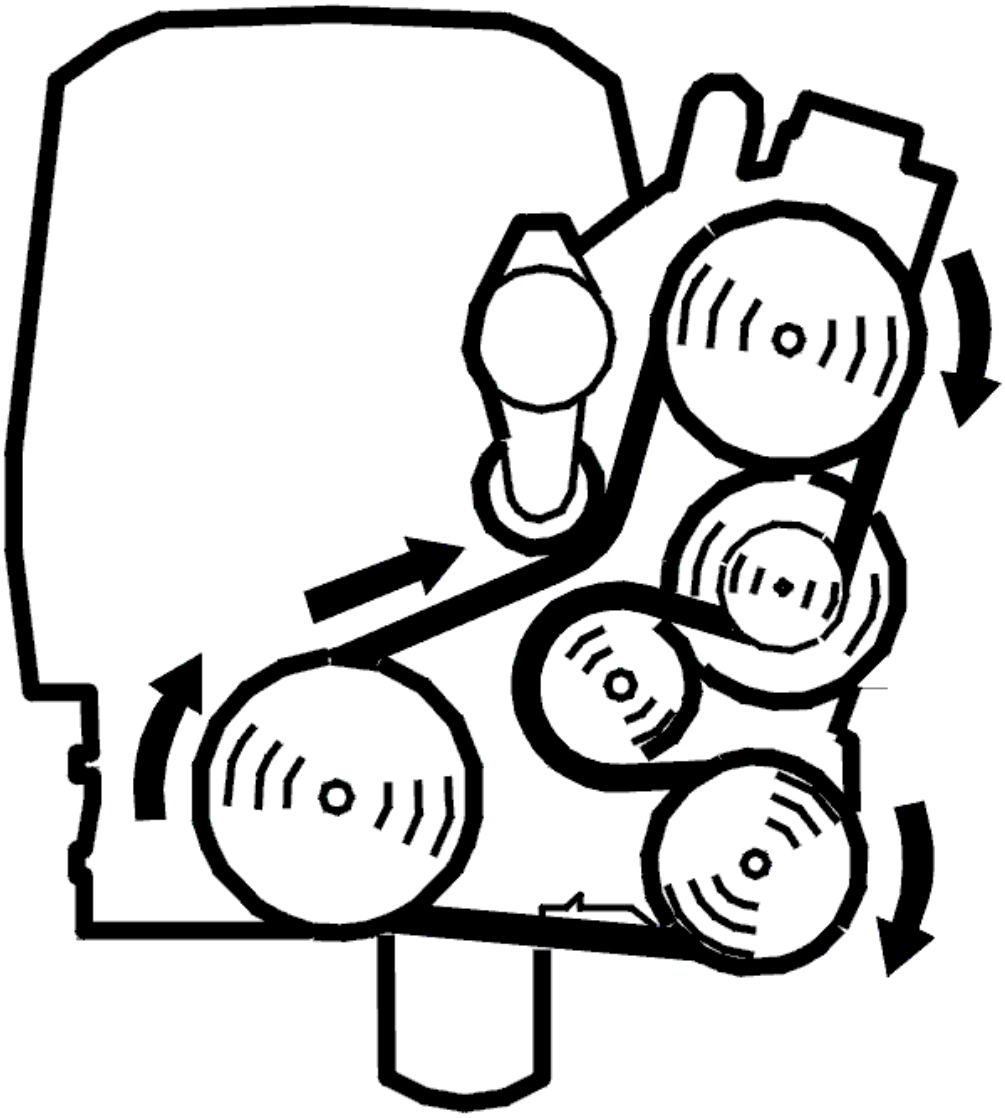

Fig. 252: Belt Routing / Engine Idling - Volvo
Courtesy of VOLVO CARS CORPORATION

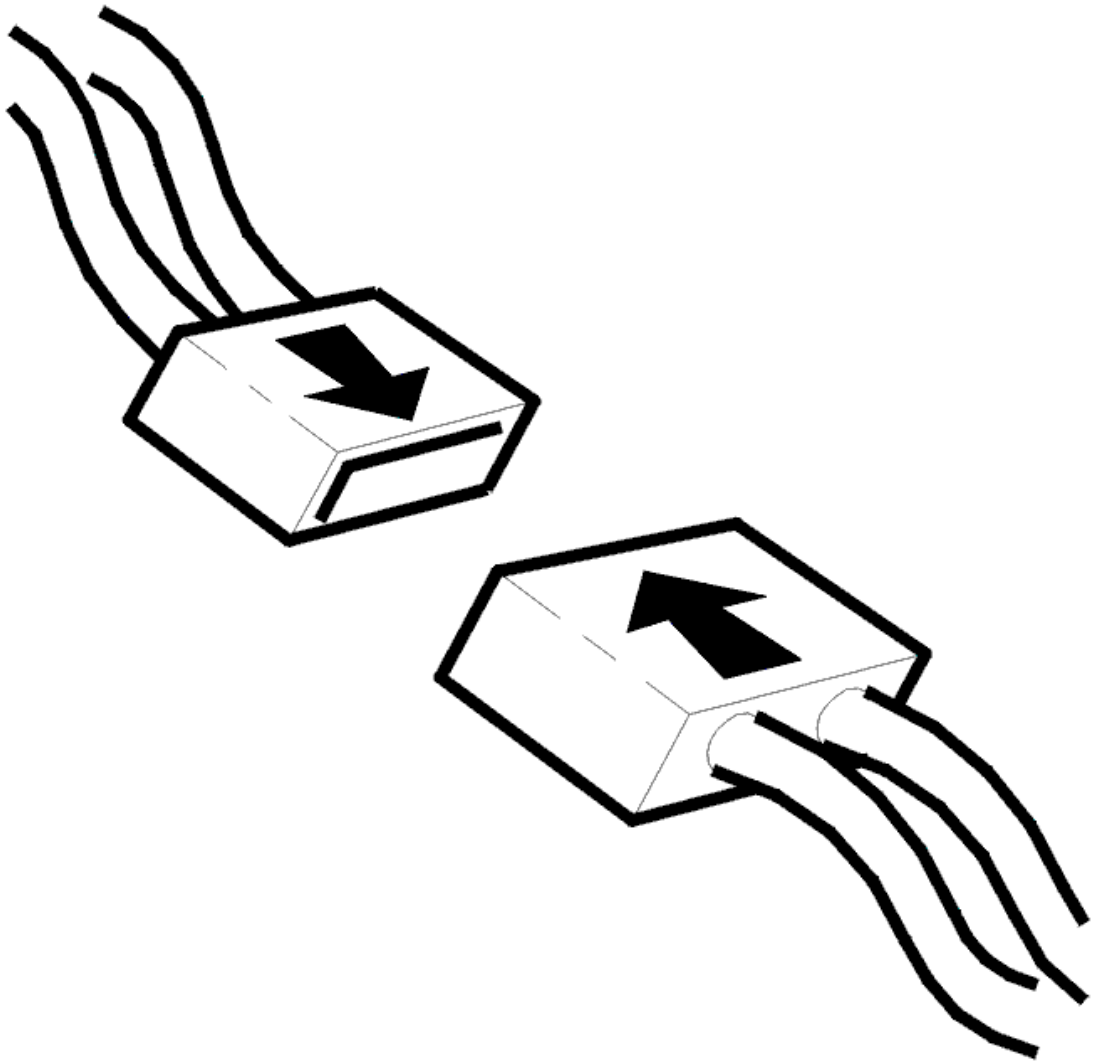

Fig. 253: Connecting Connector
Courtesy of VOLVO CARS CORPORATION

- Ignition off
- Reinstall the connectors, components etc.
- Start the engine
- Read off diagnostic trouble codes (DTCs).

The fault has been remedied if status of the diagnostic trouble code (DTC) is intermittent.

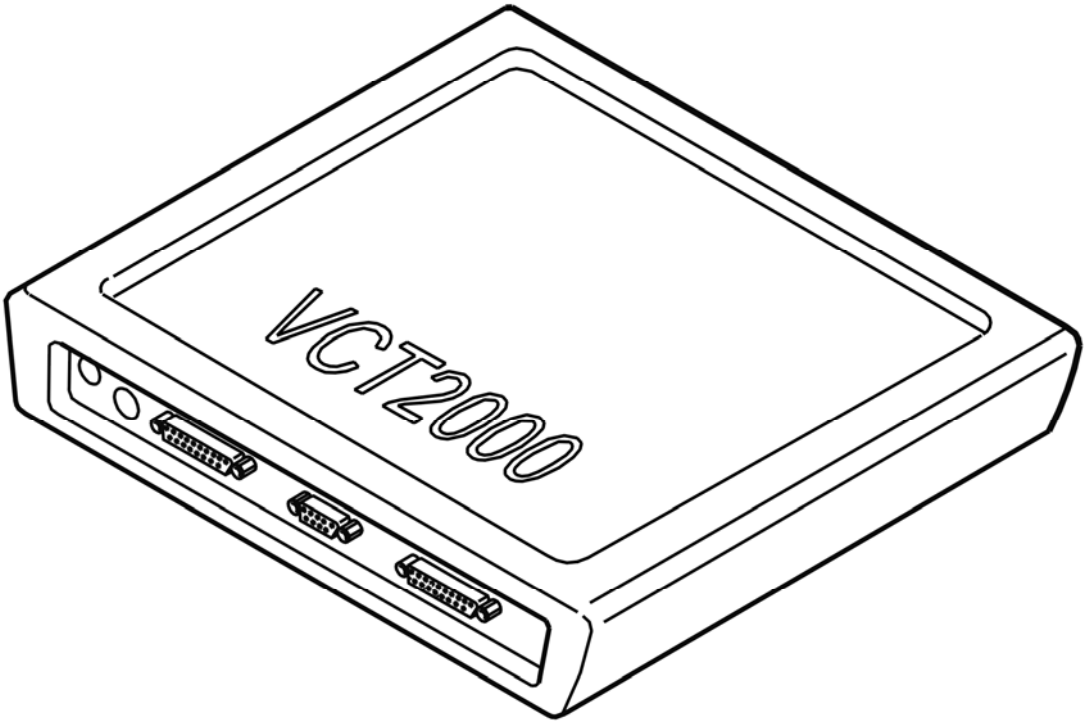

Fig. 254: Identifying VCT2000 Diagnostic Tool Symbol In VIDA
Courtesy of VOLVO CARS CORPORATION

Is the status of the diagnostic trouble code (DTC) intermittent?

- **YES**

  VERIFIED: Troubleshooting has been completed.

- **NO**

  Refer to **INFORMATION**

INFORMATION

FAULT-TRACING INFORMATION

The fault should have been detected and remedied. As this is not the case fault-tracing has failed.

Exit fault-tracing for this diagnostic trouble code (DTC) or make another attempt.

ECM-9240: ENGINE CONTROL MODULE (ECM). FAULTY SIGNAL (B6294T; 2005-2006)

DIAGNOSTIC TROUBLE CODE (DTC) INFORMATION ECM-9240

see **DIAGNOSTIC TROUBLE CODE (DTC) INFORMATION ECM-9240**

FAULTY SIGNAL

see **FAULTY SIGNAL**

ECM-925C: ELECTRONIC THROTTLE UNIT. SIGNAL TOO HIGH (B5254T2; 2005-2007)

DIAGNOSTIC TROUBLE CODE (DTC) INFORMATION ECM-925C

Condition

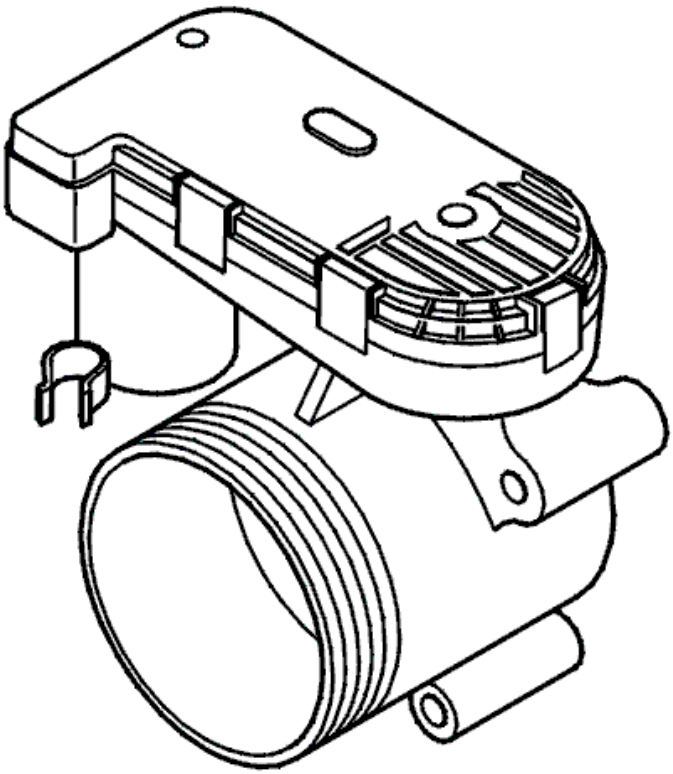

Fig. 255: Identifying Throttle Unit & Potentiometer
Courtesy of VOLVO CARS CORPORATION

The diagnostic trouble code (DTC) is stored if the engine control module (ECM) registers that the movement of the throttle is impeded, or that the return spring in the throttle unit is not functioning correctly, when attempting to adapt the electronic throttle unit.

Substitute Value

Depending on the fault, the engine control module (ECM) can cut off the supply to the damper motor in the electronic throttle unit. The throttle will then attempt to set itself to the return position.

Possible Source

- The throttle is sticking or is blocked (e. g. oil film, dust)
- Contact resistance or oxidation in the terminals between the engine control module (ECM) and the electronic throttle unit
- Open-circuit, short-circuit to ground or short-circuit to supply voltage in the wiring for the damper motor in the throttle unit
- Short-circuit to each other in the wiring for the damper motor in the electronic throttle unit
- Damaged throttle unit.

Fault symptom[s]

- Malfunction indicator lamp (MIL) lit
- Poor performance.

SIGNAL TOO HIGH

FAULT-TRACING INFORMATION

FAULT-TRACING INFORMATION

CAUTION: The male and female pins on the electronic throttle unit connectors are gold plated. Great care must be taken when measuring. Damage to the gold plating can result in operating difficulties.

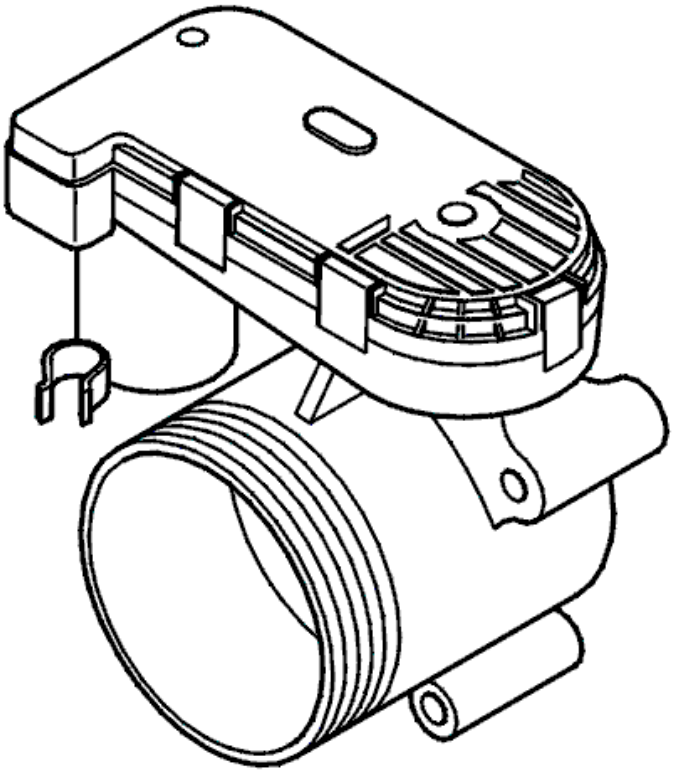

Fig. 256: Identifying Throttle Unit & Potentiometer
Courtesy of VOLVO CARS CORPORATION

- **Continue**

  Refer to **CHECKING THE DIAGNOSTIC TROUBLE CODES (DTCS)**

CHECKING THE DIAGNOSTIC TROUBLE CODES (DTCS)

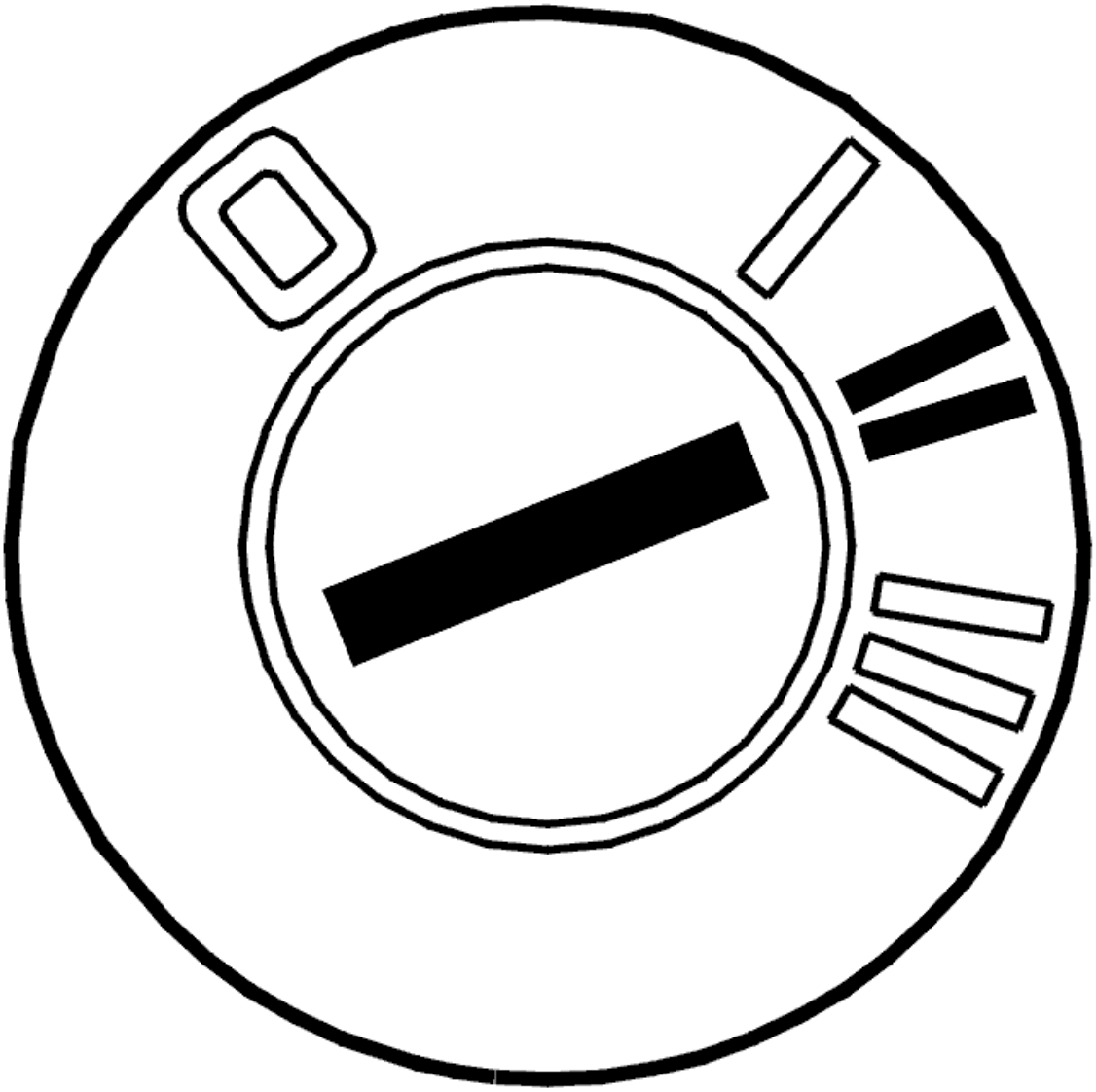

Fig. 257: Identifying Ignition ON
Courtesy of VOLVO CARS CORPORATION

- Ignition on
- Read off diagnostic trouble codes (DTCs).

  Check if any diagnostic trouble codes (DTCs) are stored for the electronic throttle unit, throttle position (TP) sensor or engine control module (ECM).

  If any of these diagnostic trouble codes (DTCs) are stored, these must be remedied first.

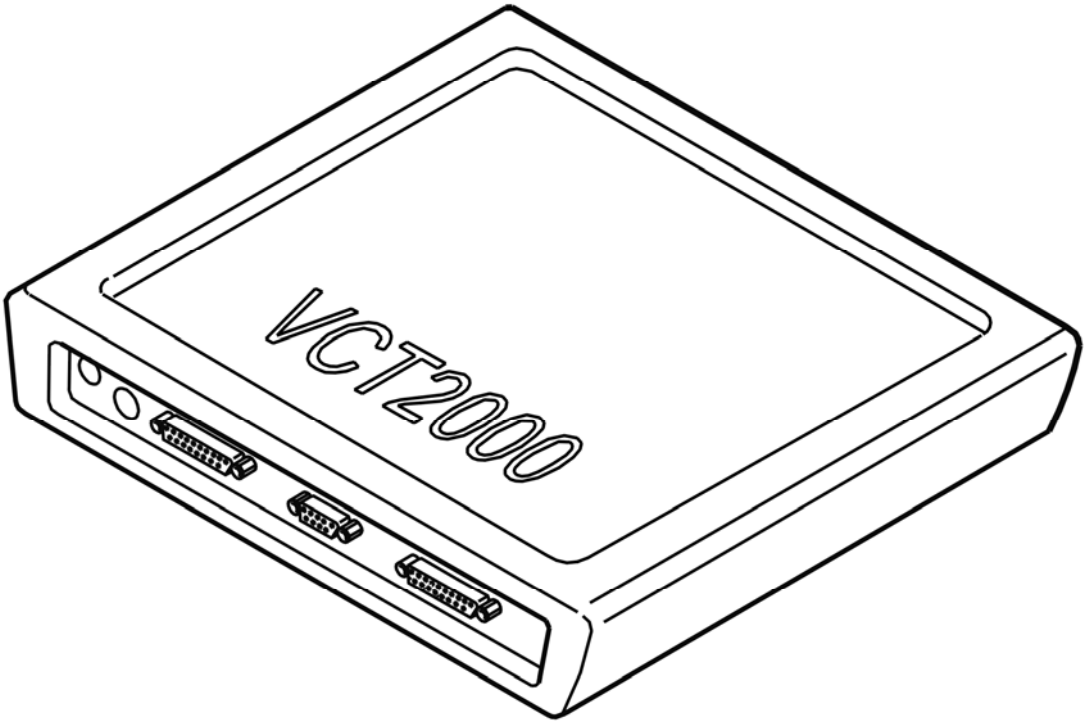

Fig. 258: Identifying VCT2000 Diagnostic Tool Symbol In VIDA
Courtesy of VOLVO CARS CORPORATION

Are any of the above diagnostic trouble codes (DTCs) stored?

- **YES**

  Refer to **FAULT-TRACING INFORMATION**

- **NO**

  Refer to **CHECKING COMPONENTS AND WIRING**

CHECKING COMPONENTS AND WIRING

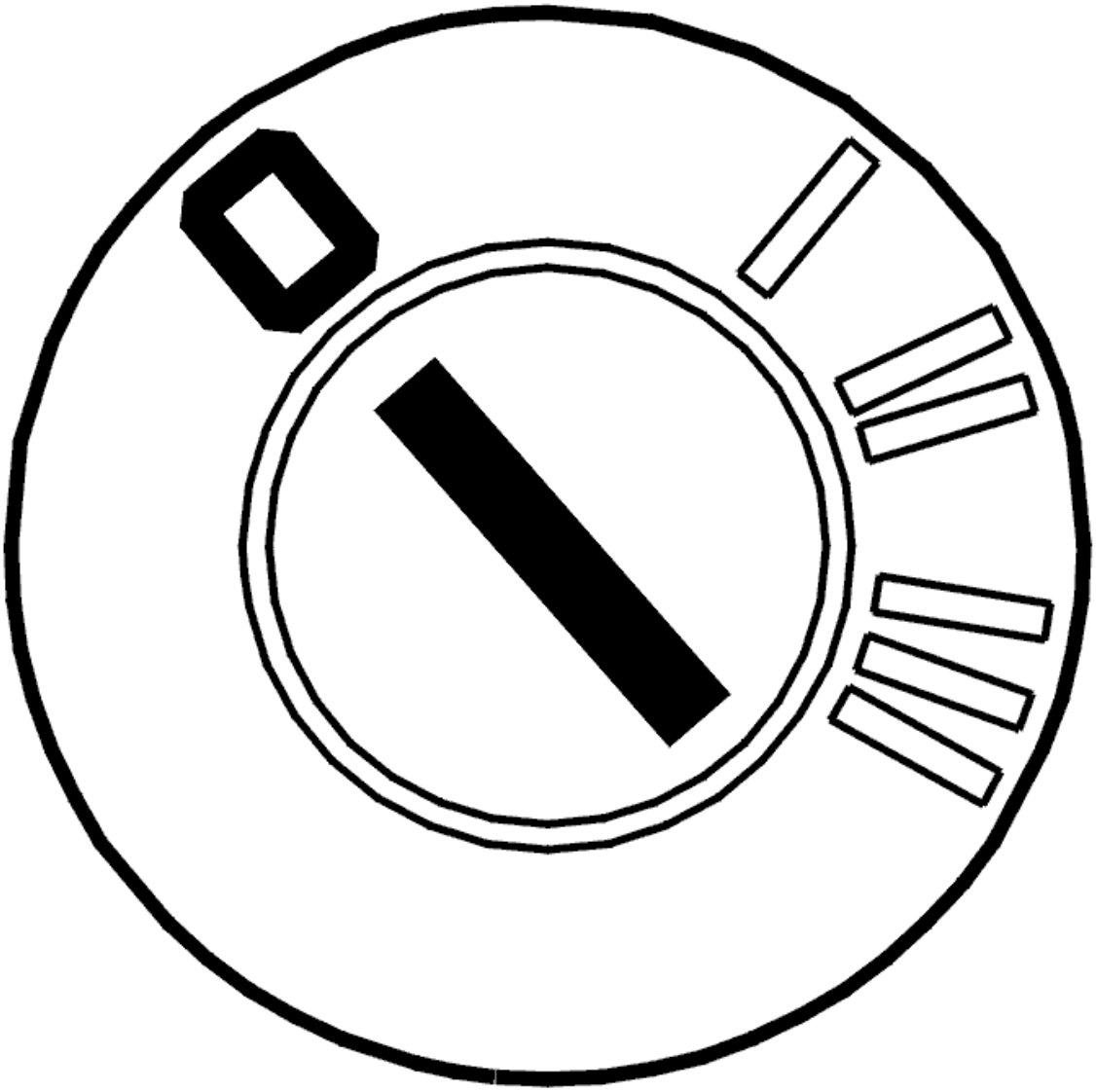

Fig. 259: Identifying Ignition OFF
Courtesy of VOLVO CARS CORPORATION

- Ignition off.

  Check the throttle unit and engine control module (ECM) connectors. Check for contact resistance and oxidation.

  Check the resistance values of the potentiometers in the throttle unit and damper motor winding.

  NOTE: The resistance of the motor winding in the damper motor is very low.

  Replace the throttle unit if necessary.

  Check the cable (+) for the damper motor between engine control module (ECM) terminal #A35 (#A35) and throttle unit terminal #4 (cable harness side). Check for an open-circuit. Check for a short-circuit to

ground. Check for a short-circuit to supply voltage.

Check the cable (-) for the damper motor between engine control module (ECM) terminal #A36 (#A36) and throttle unit terminal #1 (cable harness side). Check for an open-circuit. Check for a short-circuit to ground. Check for a short-circuit to supply voltage.

Also check the damper motor cables (+) and (-). Check for a short-circuit to each other.

Check that the shutter in the throttle unit is not blocked or sticking. Clean as necessary.

The throttle unit is damaged if the diagnostic trouble code (DTC) recurs.

NOTE: If the throttle unit is replaced it must be adapted.

Other information:

- see **CONNECTING THE BREAKOUT BOX**
- For 5 cylinder turbocharged engines -2004, see **SIGNAL DESCRIPTION**
- For 5 cylinder turbocharged engines 2005-, see **SIGNAL SPECIFICATION** .
- For 6 cylinder engines -2004, see **SIGNAL SPECIFICATION**
- For 6 cylinder engines 2005-, see **SIGNAL SPECIFICATION** .
- For resistance values: **COMPONENT SPECIFICATIONS**
- For B5xx4T, see **THROTTLE BODY (ELECTRONIC THROTTLE MODULE), REPLACING** .
- For B6xx4T, see **THROTTLE BODY (ELECTRONIC THROTTLE MODULE), REPLACING** .
- For B5xx4T, see **THROTTLE BODY (TB), CLEANING** .
- For B6xx4x, see **THROTTLE BODY (TB), CLEANING** .
- see **CHECKING WIRING AND TERMINALS** .

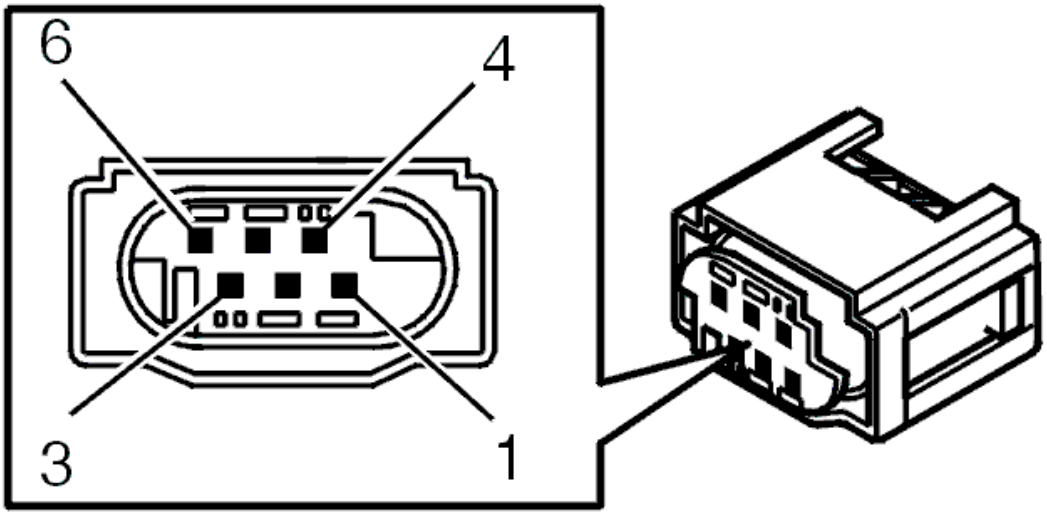

Fig. 260: Identifying Throttle Unit Connector Terminals
Courtesy of VOLVO CARS CORPORATION

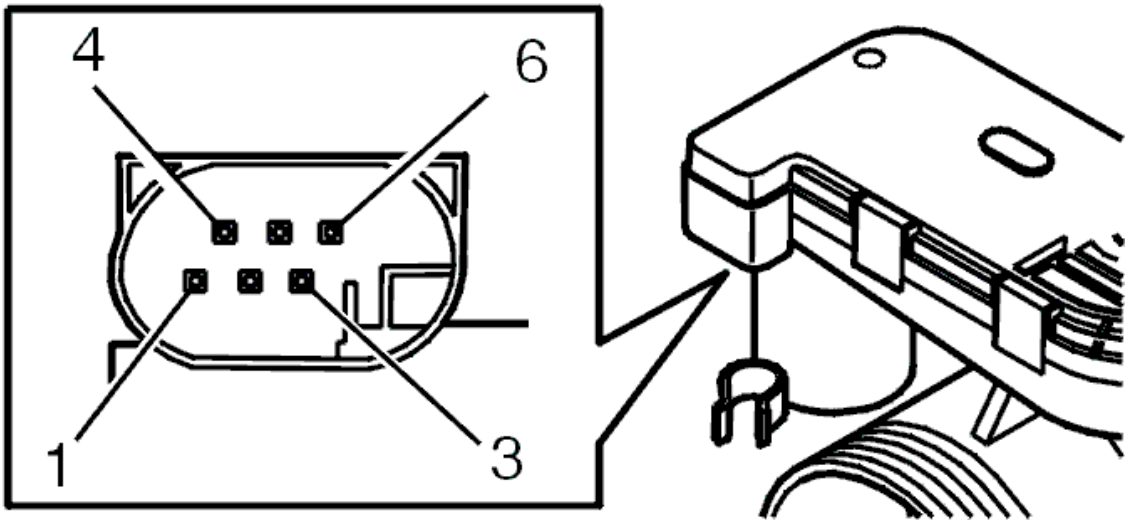

Fig. 261: Identifying Throttle Unit Connector Terminals
Courtesy of VOLVO CARS CORPORATION

- **Continue**

  Refer to **INFORMATION**

FAULT-TRACING INFORMATION

Remedy stored diagnostic trouble code(s) (DTCs).

Remedy as necessary.

INFORMATION

FAULT-TRACING INFORMATION

In case of this defect, troubleshooting is not followed by verification.

The information can be displayed again or the fault-tracing for this fault can be interrupted.

ECM-925C: ELECTRONIC THROTTLE UNIT. SIGNAL TOO HIGH (B6294T; 2005-2006)

DIAGNOSTIC TROUBLE CODE (DTC) INFORMATION ECM-925C

see **DIAGNOSTIC TROUBLE CODE (DTC) INFORMATION ECM-925C**

SIGNAL TOO HIGH

see **SIGNAL TOO HIGH**

ECM-925D: ELECTRONIC THROTTLE UNIT. SIGNAL TOO LOW (B5254T2; 2005-2007)

DIAGNOSTIC TROUBLE CODE (DTC) INFORMATION ECM-925D

Condition

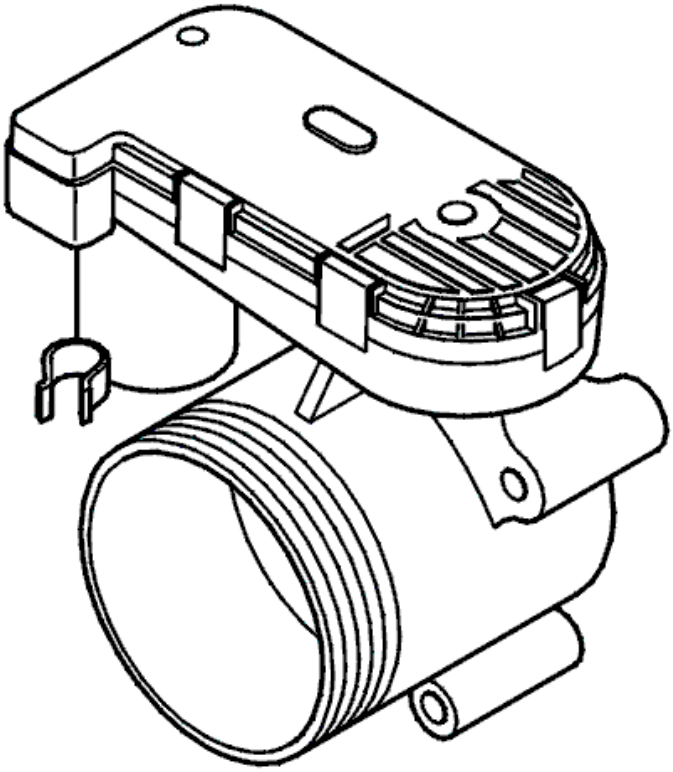

Fig. 262: Identifying Throttle Unit & Potentiometer
Courtesy of VOLVO CARS CORPORATION

The diagnostic trouble code (DTC) is stored if the engine control module (ECM) registers that the movement of the throttle is impeded, or that the return spring in the throttle unit is not functioning correctly, when attempting to adapt the electronic throttle unit.

Substitute Value

Depending on the fault, the engine control module (ECM) can cut off the supply to the damper motor in the electronic throttle unit. The throttle will then attempt to set itself to the return position.

Possible Source

- The throttle is sticking or is blocked (e. g. oil film, dust)
- Contact resistance or oxidation in the terminals between the engine control module (ECM) and the electronic throttle unit
- Open-circuit, short-circuit to ground or short-circuit to supply voltage in the wiring for the damper motor in the throttle unit
- Short-circuit to each other in the wiring for the damper motor in the throttle unit
- Damaged throttle unit.

Fault symptom[s]

- Malfunction indicator lamp (MIL) lit
- Poor performance.

SIGNAL TOO LOW

FAULT-TRACING INFORMATION

FAULT-TRACING INFORMATION

CAUTION: The male and female pins on the electronic throttle unit connectors are gold plated. Great care must be taken when measuring. Damage to the gold plating can result in operating difficulties.

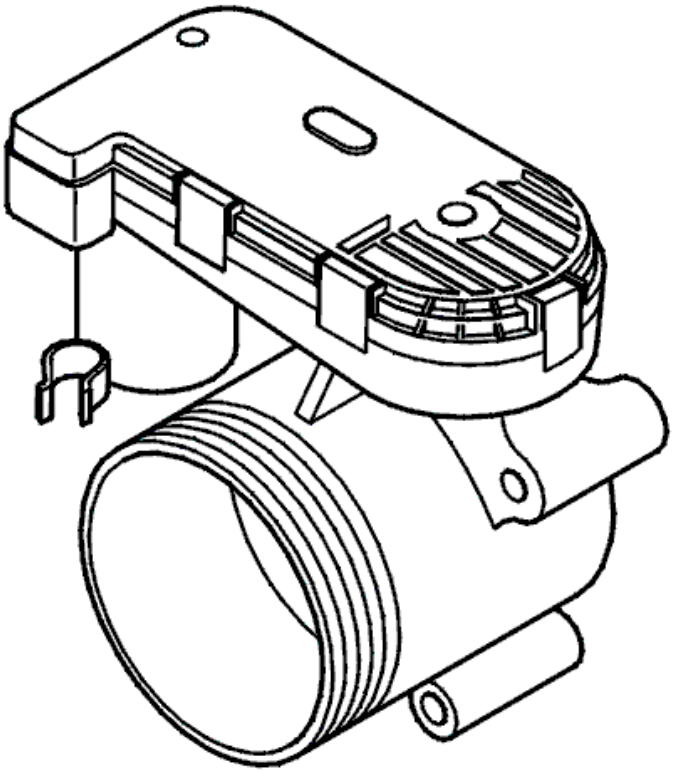

Fig. 263: Identifying Throttle Unit & Potentiometer
Courtesy of VOLVO CARS CORPORATION

- **Continue**

  Refer to **CHECKING THE DIAGNOSTIC TROUBLE CODES (DTCS)**

CHECKING THE DIAGNOSTIC TROUBLE CODES (DTCS)

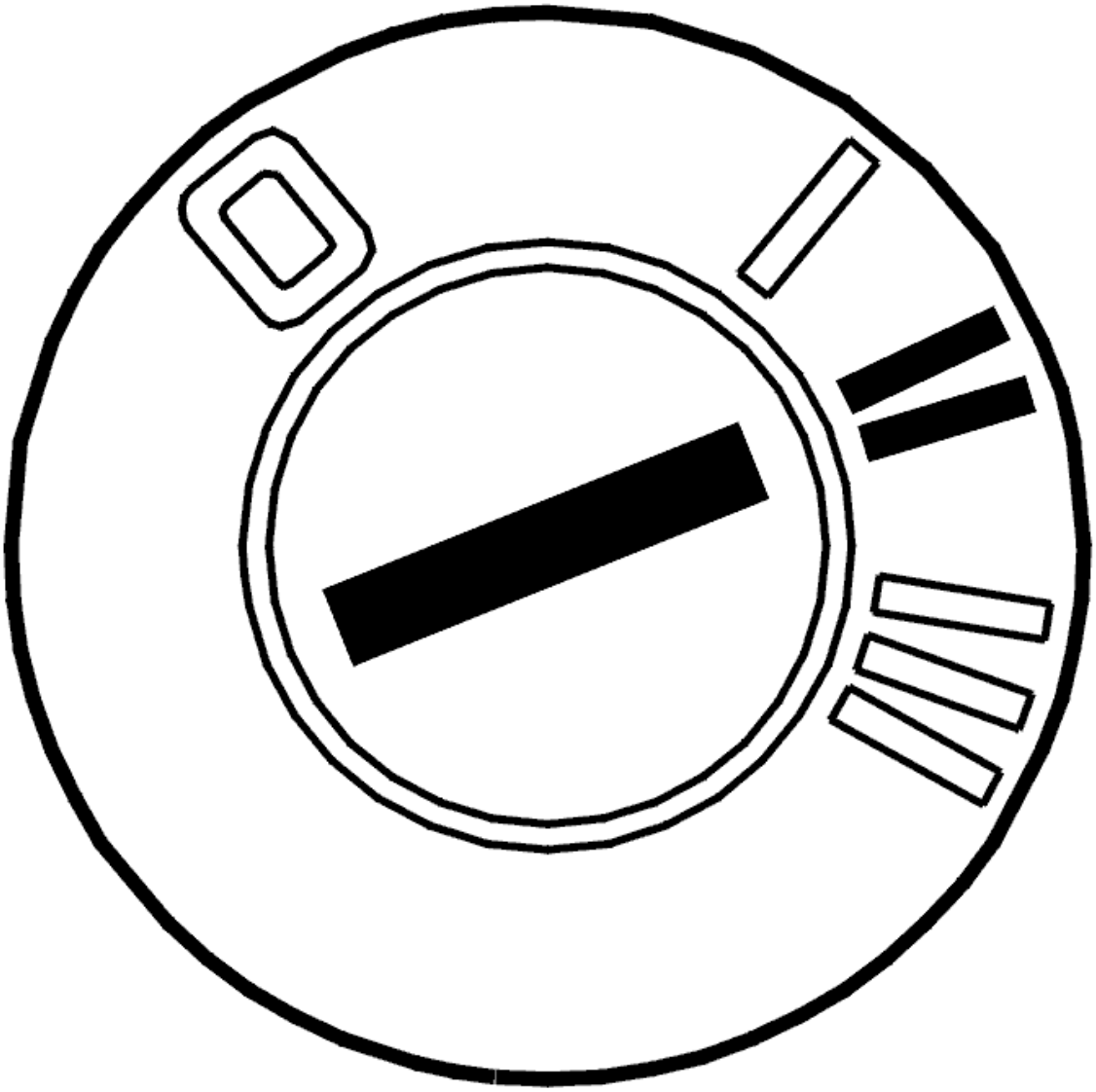

Fig. 264: Identifying Ignition ON
Courtesy of VOLVO CARS CORPORATION

- Ignition on
- Read off diagnostic trouble codes (DTCs).

  Check if any diagnostic trouble codes (DTCs) are stored for the electronic throttle unit, throttle position (TP) sensor or engine control module (ECM).

  If any of these diagnostic trouble codes (DTCs) are stored, these must be remedied first.

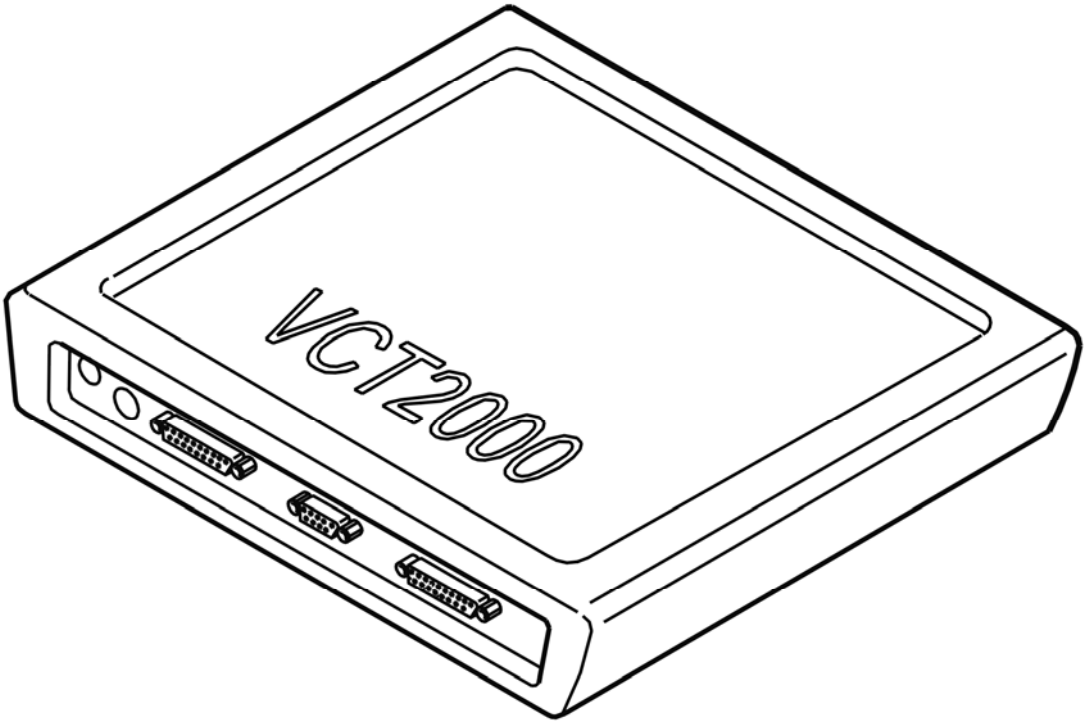

Fig. 265: Identifying VCT2000 Diagnostic Tool Symbol In VIDA
Courtesy of VOLVO CARS CORPORATION

Are any of the above diagnostic trouble codes (DTCs) stored?

- **YES**

  Refer to **FAULT-TRACING INFORMATION**

- **NO**

  Refer to **CHECKING COMPONENTS AND WIRING**

CHECKING COMPONENTS AND WIRING

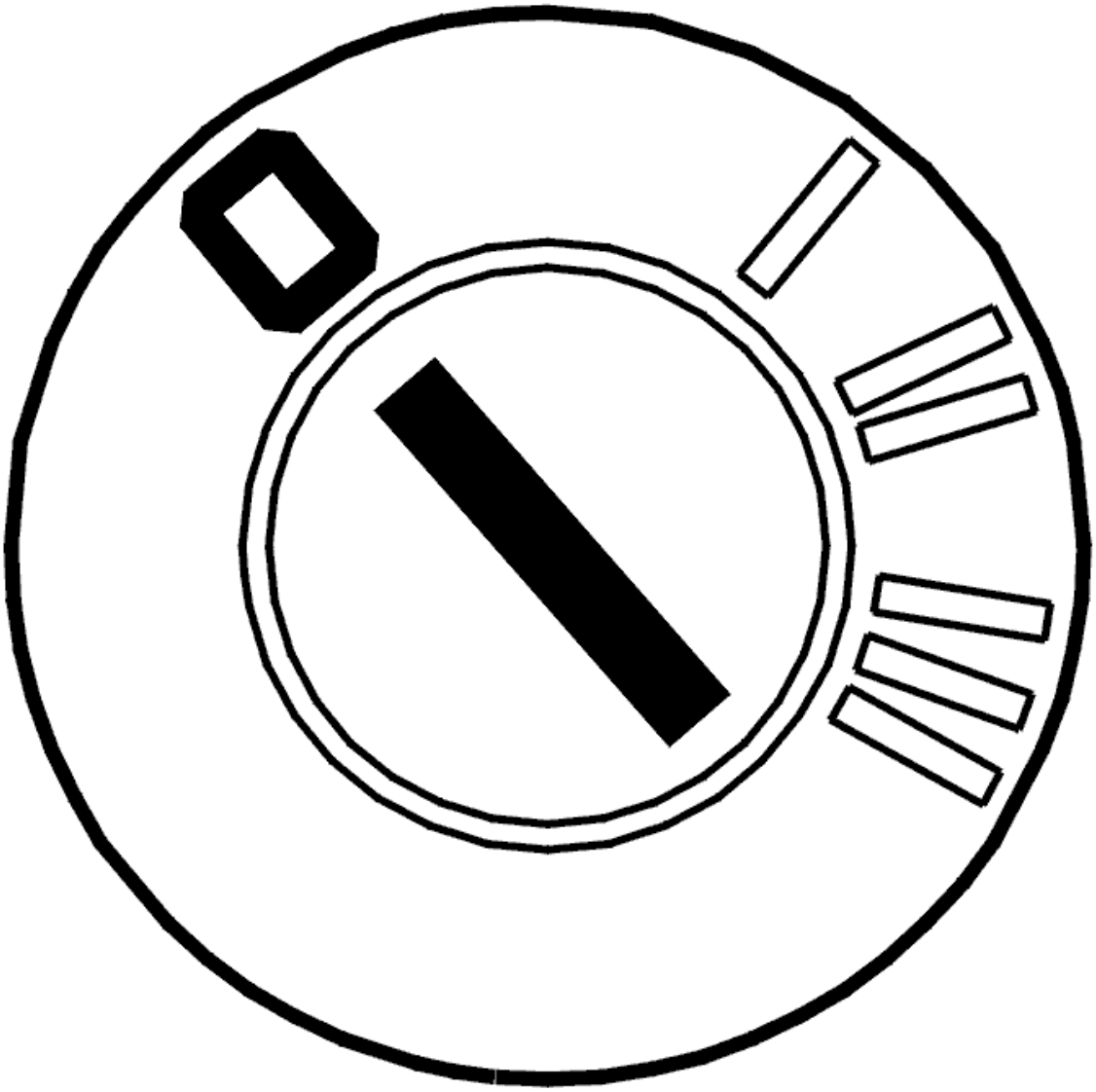

Fig. 266: Identifying Ignition OFF
Courtesy of VOLVO CARS CORPORATION

- Ignition off.

  Check the throttle unit and engine control module (ECM) connectors. Check for contact resistance and oxidation.

  Check the resistance values of the potentiometers in the throttle unit and damper motor winding.

  NOTE: The resistance of the motor winding in the damper motor is very low.

  Replace the throttle unit if necessary.

  Check the cable (+) for the damper motor between engine control module (ECM) terminal #A35 (#A35) and throttle unit terminal #4 (cable harness side). Check for an open-circuit. Check for a short-circuit to

ground. Check for a short-circuit to supply voltage.

Check the cable (-) for the damper motor between engine control module (ECM) terminal #A36 (#A36) and throttle unit terminal #1 (cable harness side). Check for an open-circuit. Check for a short-circuit to ground. Check for a short-circuit to supply voltage.

Also check the damper motor cables (+) and (-). Check for a short-circuit to each other.

Check that the shutter in the throttle unit is not blocked or sticking. Clean as necessary.

The throttle unit is damaged if the diagnostic trouble code (DTC) recurs.

NOTE: If the throttle unit is replaced it must be adapted.

Other information:

- see **CONNECTING THE BREAKOUT BOX**
- For 5 cylinder turbocharged engines -2004, see **SIGNAL DESCRIPTION**
- For 5 cylinder turbocharged engines 2005-, see **SIGNAL SPECIFICATION** .
- For 6 cylinder engines -2004, see **SIGNAL SPECIFICATION**
- For 6 cylinder engines 2005-, see **SIGNAL SPECIFICATION** .
- For resistance values: **COMPONENT SPECIFICATIONS**
- For B5xx4T, see **THROTTLE BODY (ELECTRONIC THROTTLE MODULE), REPLACING** .
- For B6xx4T, see **THROTTLE BODY (ELECTRONIC THROTTLE MODULE), REPLACING** .
- For B5xx4T, see **THROTTLE BODY (TB), CLEANING** .
- For B6xx4x, see **THROTTLE BODY (TB), CLEANING** .
- see **CHECKING WIRING AND TERMINALS** .

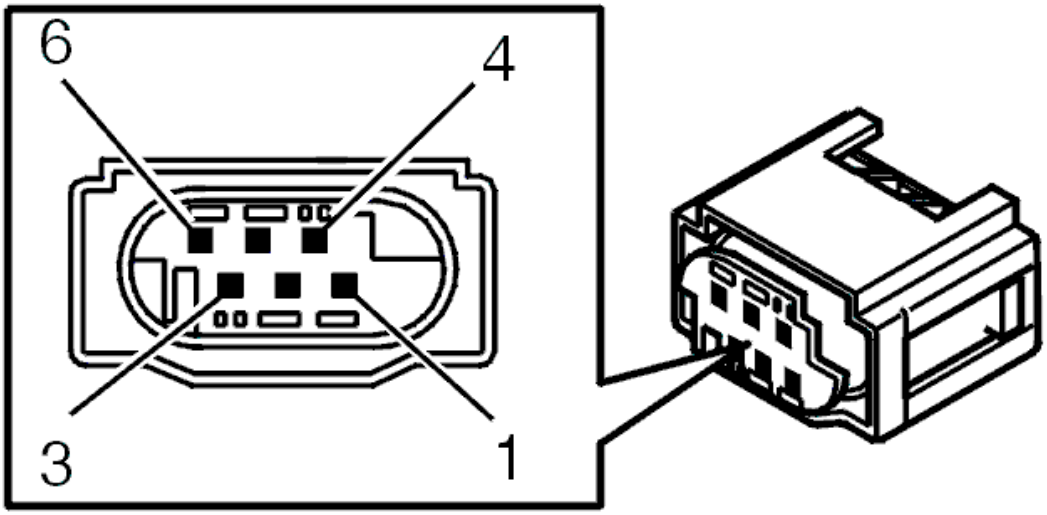

Fig. 267: Identifying Throttle Unit Connector Terminals
Courtesy of VOLVO CARS CORPORATION

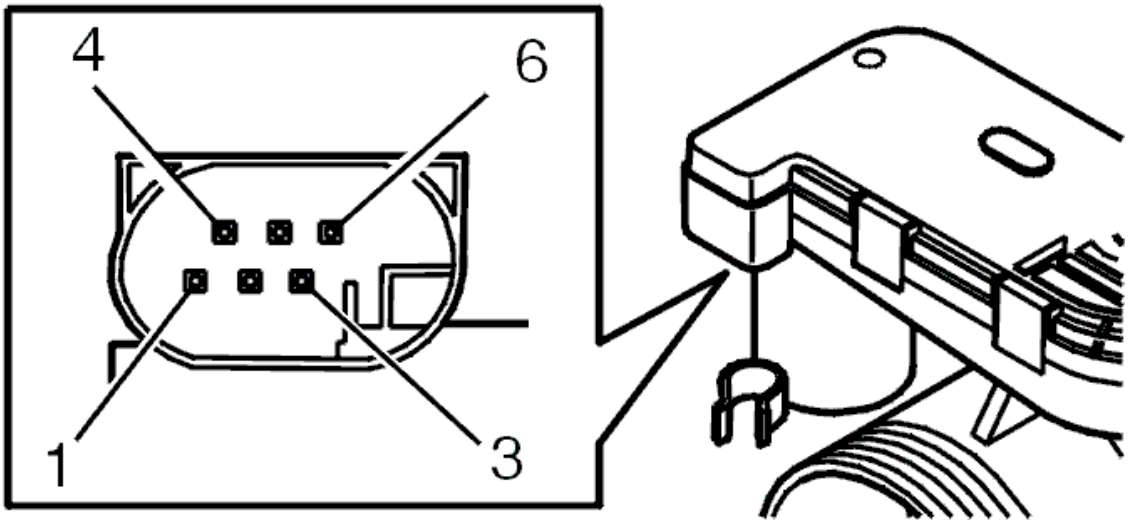

Fig. 268: Identifying Throttle Unit Connector Terminals
Courtesy of VOLVO CARS CORPORATION

- **Continue**

  Refer to **INFORMATION**

FAULT-TRACING INFORMATION

Remedy stored diagnostic trouble code(s) (DTCs).

Remedy as necessary.

INFORMATION

FAULT-TRACING INFORMATION

In case of this defect, troubleshooting is not followed by verification.

The information can be displayed again or the fault-tracing for this fault can be interrupted.

ECM-925D: ELECTRONIC THROTTLE UNIT. SIGNAL TOO LOW (B6294T; 2005-2006)

DIAGNOSTIC TROUBLE CODE (DTC) INFORMATION ECM-925D

see **DIAGNOSTIC TROUBLE CODE (DTC) INFORMATION ECM-925D**

SIGNAL TOO LOW

see **SIGNAL TOO LOW**

ECM-926C: ELECTRONIC THROTTLE UNIT. SIGNAL TOO HIGH (B5254T2; 2005-2007)

DIAGNOSTIC TROUBLE CODE (DTC) INFORMATION ECM-926C

Condition

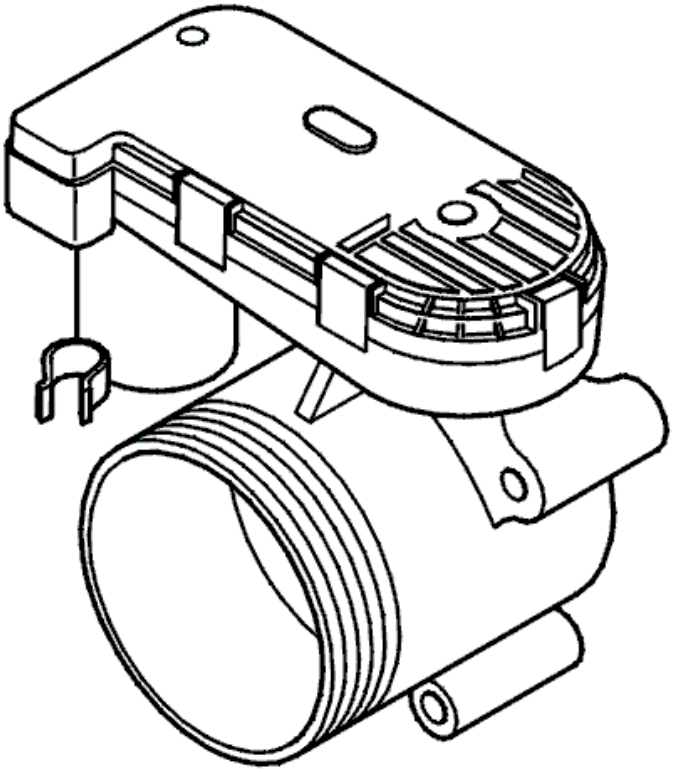

Fig. 269: Identifying Throttle Unit & Potentiometer
Courtesy of VOLVO CARS CORPORATION

The diagnostic trouble code (DTC) is stored if the engine control module (ECM), when attempting to adapt the throttle unit, registers that the movements of the throttle is impeded or that the opening spring in the electronic throttle unit is not functioning correctly.

Substitute Value

Depending on the fault, the engine control module (ECM) can cut off the supply to the damper motor in the electronic throttle unit. The throttle will then attempt to set itself to the return position.

Possible Source

- The throttle is sticking or is blocked (e. g. oil film, dust)
- Contact resistance or oxidation in the terminals between the engine control module (ECM) and the electronic throttle unit
- Open-circuit, short-circuit to ground or short-circuit to supply voltage in the wiring for the damper motor in the throttle unit
- Short-circuit to each other in the wiring for the damper motor in the electronic throttle unit
- Damaged throttle unit.

Fault symptom[s]

- Malfunction indicator lamp (MIL) lit
- Poor performance.

SIGNAL TOO HIGH

FAULT-TRACING INFORMATION

FAULT-TRACING INFORMATION

CAUTION: The male and female pins on the electronic throttle unit connectors are gold plated. Great care must be taken when measuring. Damage to the gold plating can result in operating difficulties.

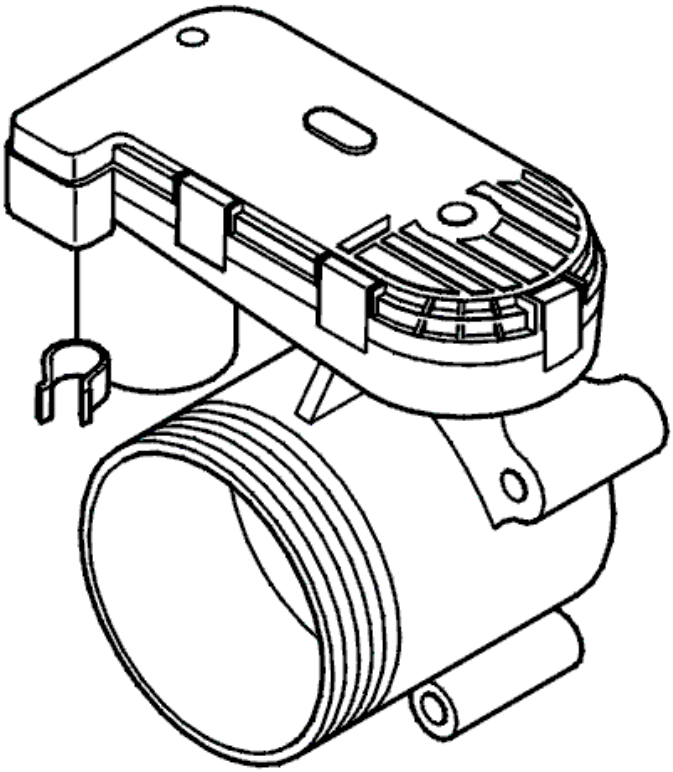

Fig. 270: Identifying Throttle Unit & Potentiometer
Courtesy of VOLVO CARS CORPORATION

- **Continue**

  Refer to **CHECKING THE DIAGNOSTIC TROUBLE CODES (DTCS)**

CHECKING THE DIAGNOSTIC TROUBLE CODES (DTCS)

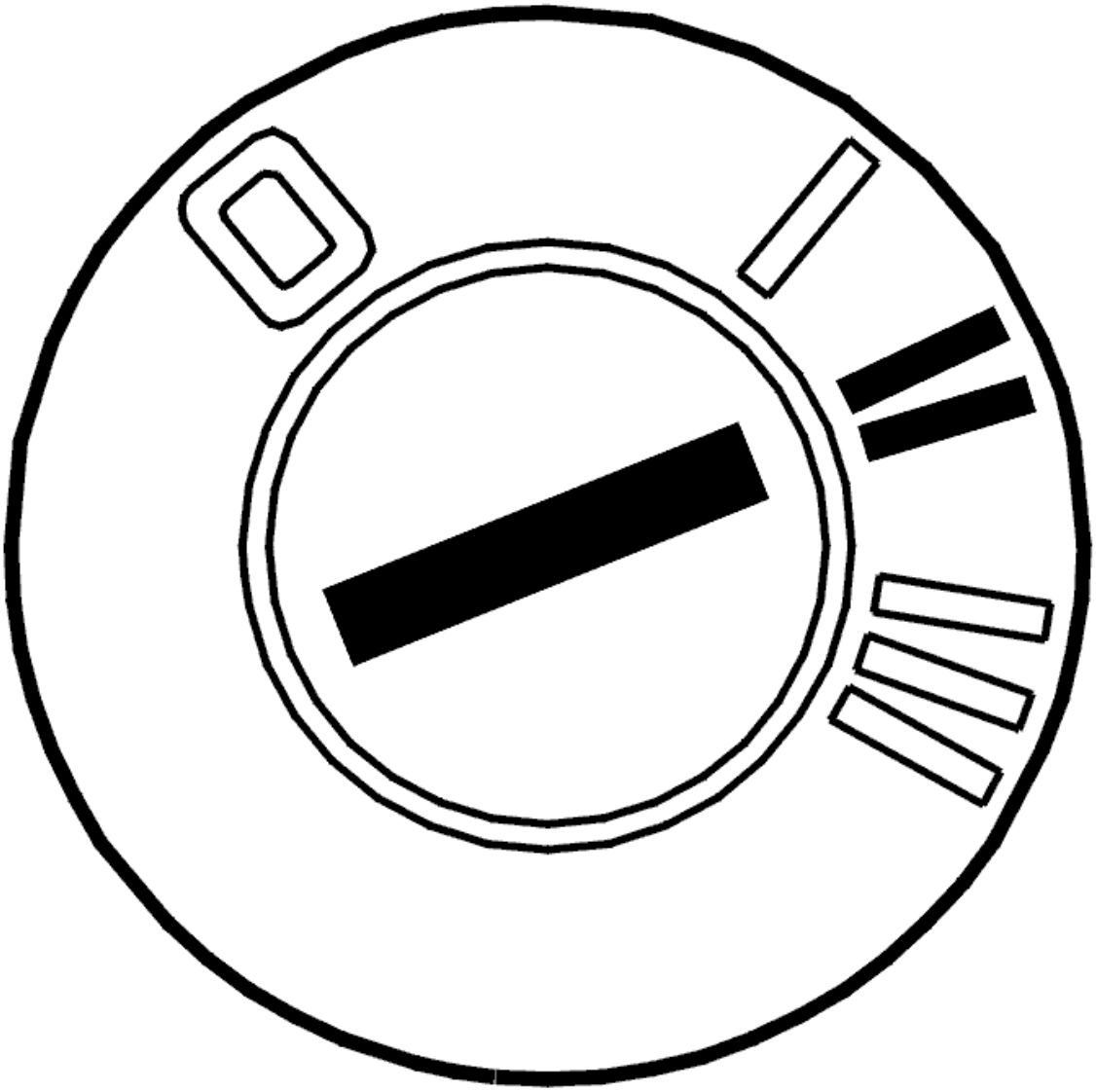

Fig. 271: Identifying Ignition ON
Courtesy of VOLVO CARS CORPORATION

- Ignition on
- Read off diagnostic trouble codes (DTCs).

  Check if any diagnostic trouble codes (DTCs) are stored for the electronic throttle unit, throttle position (TP) sensor or engine control module (ECM).

  If any of these diagnostic trouble codes (DTCs) are stored, these must be remedied first.

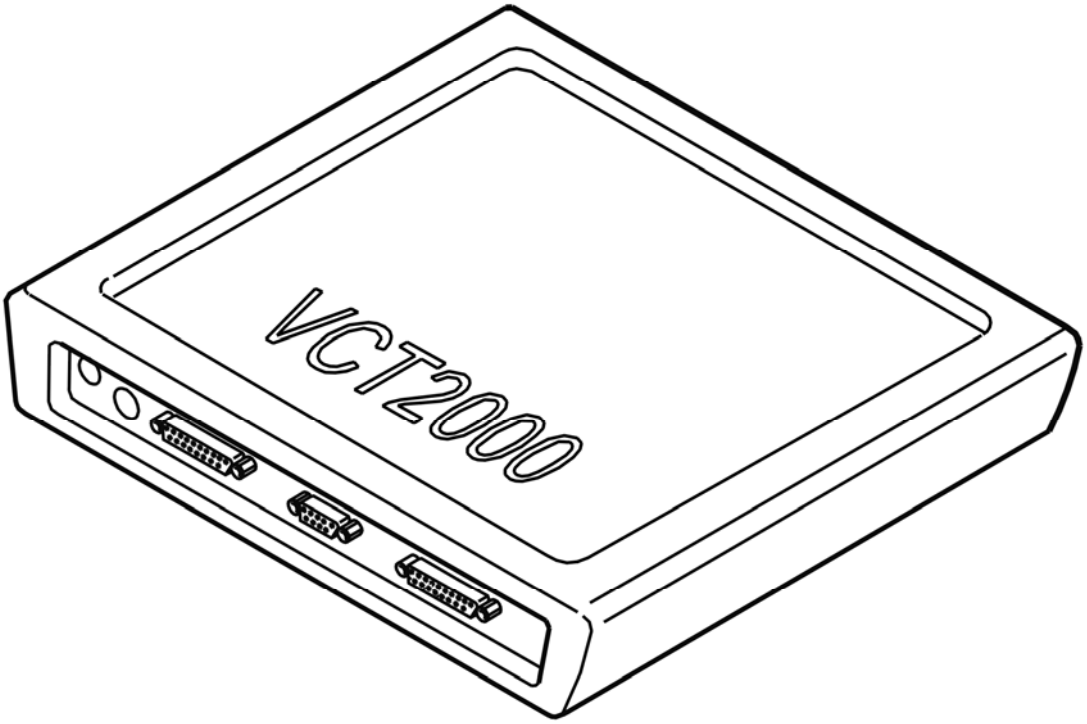

Fig. 272: Identifying VCT2000 Diagnostic Tool Symbol In VIDA
Courtesy of VOLVO CARS CORPORATION

Are any of the above diagnostic trouble codes (DTCs) stored?

- **YES**

  Refer to **FAULT-TRACING INFORMATION**

- **NO**

  Refer to **CHECKING COMPONENTS AND WIRING**

CHECKING COMPONENTS AND WIRING

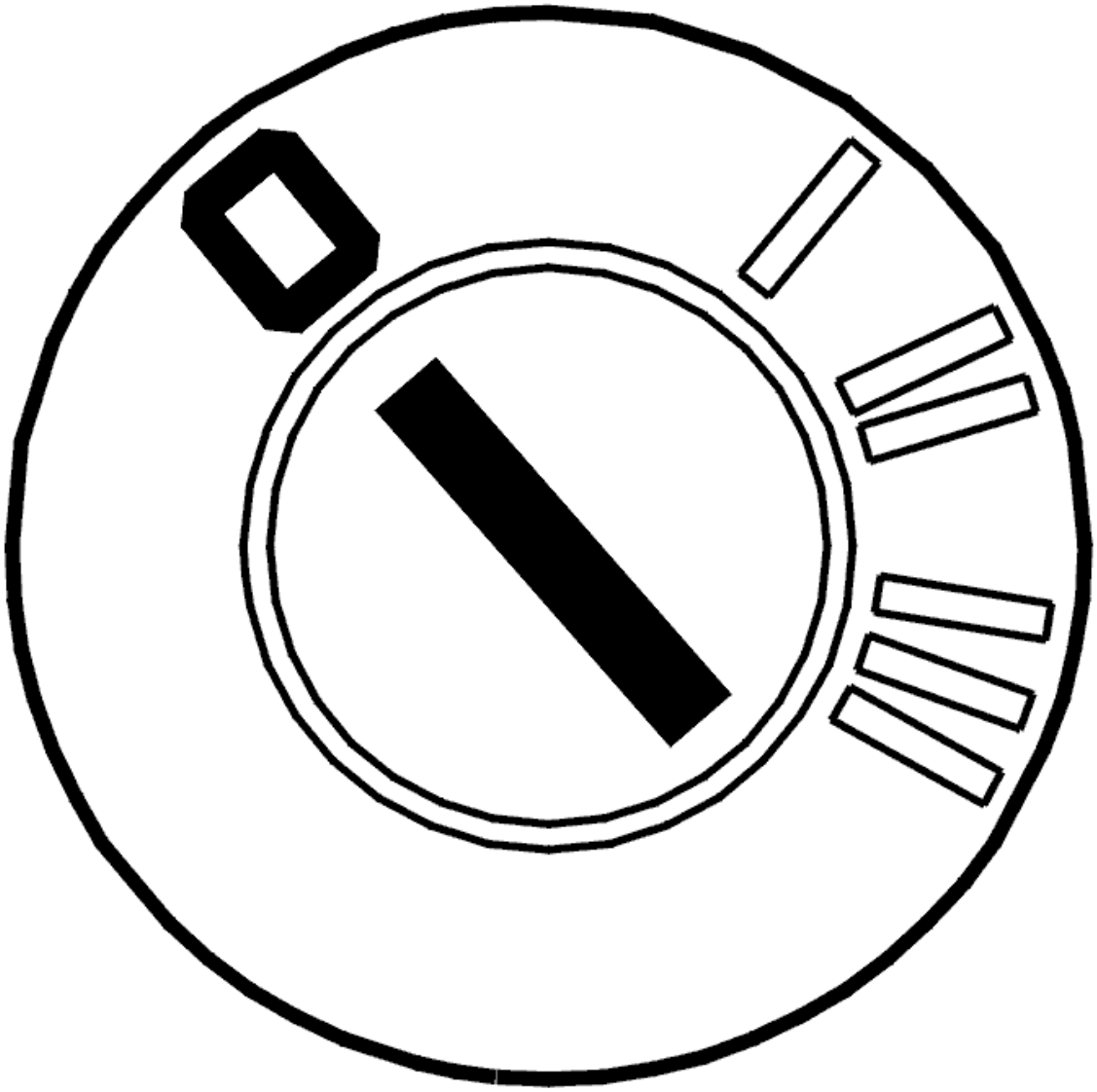

Fig. 273: Identifying Ignition OFF
Courtesy of VOLVO CARS CORPORATION

- Ignition off.

  Check the throttle unit and engine control module (ECM) connectors. Check for contact resistance and oxidation.

  Check the resistance values of the potentiometers in the throttle unit and damper motor winding.

  NOTE: The resistance of the motor winding in the damper motor is very low.

  Replace the throttle unit if necessary.

  Check the cable (+) for the damper motor between engine control module (ECM) terminal #A35 (#A35) and throttle unit terminal #4 (cable harness side). Check for an open-circuit. Check for a short-circuit to

ground. Check for a short-circuit to supply voltage.

Check the cable (-) for the damper motor between engine control module (ECM) terminal #A36 (#A36) and throttle unit terminal #1 (cable harness side). Check for an open-circuit. Check for a short-circuit to ground. Check for a short-circuit to supply voltage.

Also check the damper motor cables (+) and (-). Check for a short-circuit to each other.

Check that the shutter in the throttle unit is not blocked or sticking. Clean as necessary.

The throttle unit is damaged if the diagnostic trouble code (DTC) recurs.

NOTE: If the throttle unit is replaced it must be adapted.

Other information:

- see **CONNECTING THE BREAKOUT BOX**
- For 5 cylinder turbocharged engines -2004, see **SIGNAL DESCRIPTION**
- For 5 cylinder turbocharged engines 2005-, see **SIGNAL SPECIFICATION** .
- For 6 cylinder engines -2004, see **SIGNAL SPECIFICATION**
- For 6 cylinder engines 2005-, see **SIGNAL SPECIFICATION** .
- For resistance values: **COMPONENT SPECIFICATIONS**
- For B5xx4T, see **THROTTLE BODY (ELECTRONIC THROTTLE MODULE), REPLACING** .
- For B6xx4T, see **THROTTLE BODY (ELECTRONIC THROTTLE MODULE), REPLACING** .
- For B5xx4T, see **THROTTLE BODY (TB), CLEANING** .
- For B6xx4x, see **THROTTLE BODY (TB), CLEANING** .
- see **CHECKING WIRING AND TERMINALS** .

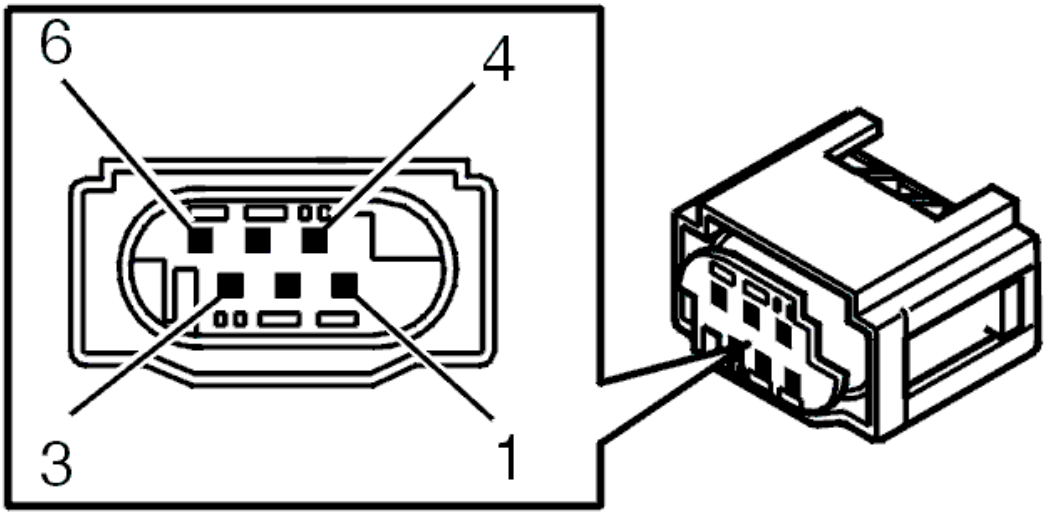

Fig. 274: Identifying Throttle Unit Connector Terminals
Courtesy of VOLVO CARS CORPORATION

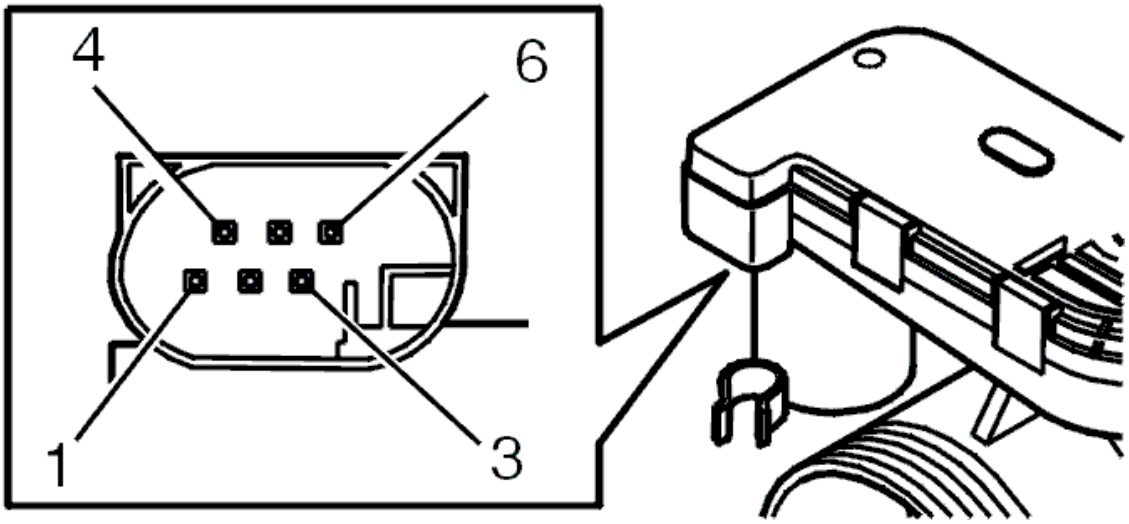

Fig. 275: Identifying Throttle Unit Connector Terminals
Courtesy of VOLVO CARS CORPORATION

- **Continue**

  Refer to **INFORMATION**

FAULT-TRACING INFORMATION

Remedy stored diagnostic trouble code(s) (DTCs).

Remedy as necessary.

INFORMATION

FAULT-TRACING INFORMATION

In case of this defect, troubleshooting is not followed by verification.

The information can be displayed again or the fault-tracing for this fault can be interrupted.

ECM-926C: ELECTRONIC THROTTLE UNIT. SIGNAL TOO HIGH (B6294T; 2005-2006)

DIAGNOSTIC TROUBLE CODE (DTC) INFORMATION ECM-926C

see **DIAGNOSTIC TROUBLE CODE (DTC) INFORMATION ECM-926C**

SIGNAL TOO HIGH

see **SIGNAL TOO HIGH**

ECM-926D: ELECTRONIC THROTTLE UNIT. SIGNAL TOO LOW (B5254T2; 2005-2007)

DIAGNOSTIC TROUBLE CODE (DTC) INFORMATION ECM-926D

Condition

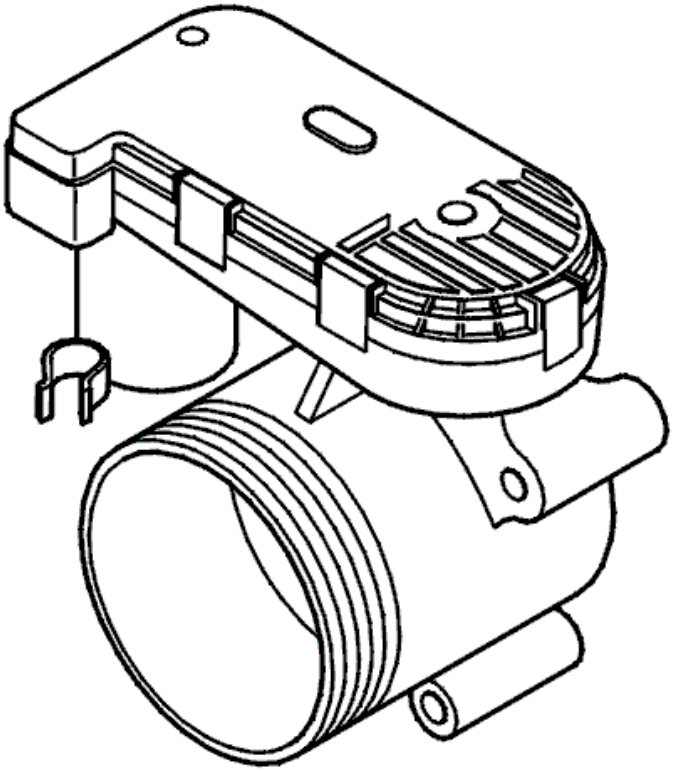

Fig. 276: Identifying Throttle Unit & Potentiometer
Courtesy of VOLVO CARS CORPORATION

The diagnostic trouble code (DTC) is stored if the engine control module (ECM), when attempting to adapt the throttle unit, registers that the movements of the throttle is impeded or that the opening spring in the electronic throttle unit is not functioning correctly.

Substitute Value

Depending on the fault, the engine control module (ECM) can cut off the supply to the damper motor in the electronic throttle unit. The throttle will then attempt to set itself to the return position.

Possible Source

- The throttle is sticking or is blocked (e. g. oil film, dust)
- Contact resistance or oxidation in the terminals between the engine control module (ECM) and the electronic throttle unit
- Open-circuit, short-circuit to ground or short-circuit to supply voltage in the wiring for the damper motor in the throttle unit
- Short-circuit to each other in the wiring for the damper motor in the throttle unit
- Damaged throttle unit.

Fault symptom[s]

- Malfunction indicator lamp (MIL) lit
- Poor performance.

SIGNAL TOO LOW

FAULT-TRACING INFORMATION

FAULT-TRACING INFORMATION

CAUTION: The male and female pins on the electronic throttle unit connectors are gold plated. Great care must be taken when measuring. Damage to the gold plating can result in operating difficulties.

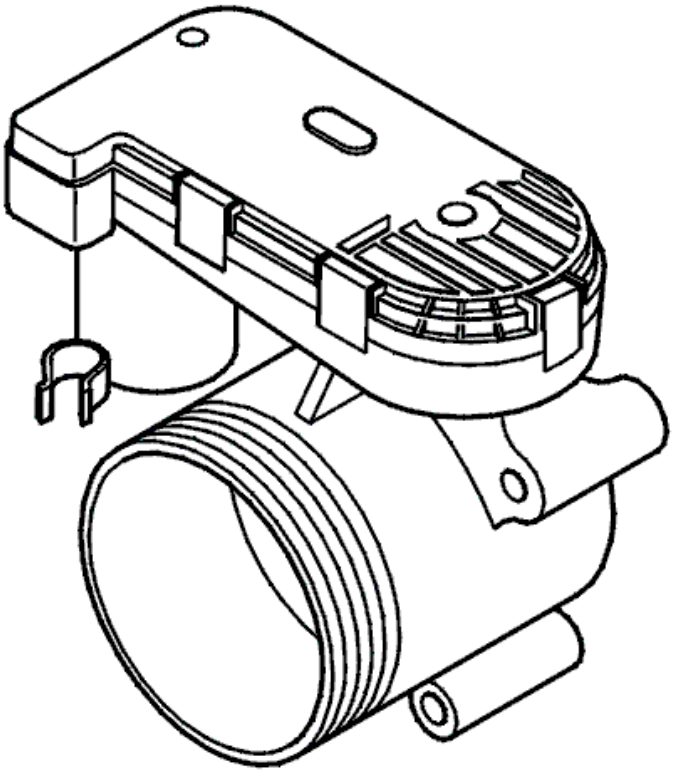

Fig. 277: Identifying Throttle Unit & Potentiometer
Courtesy of VOLVO CARS CORPORATION

- **Continue**

  Refer to **CHECKING THE DIAGNOSTIC TROUBLE CODES (DTCS)**

CHECKING THE DIAGNOSTIC TROUBLE CODES (DTCS)

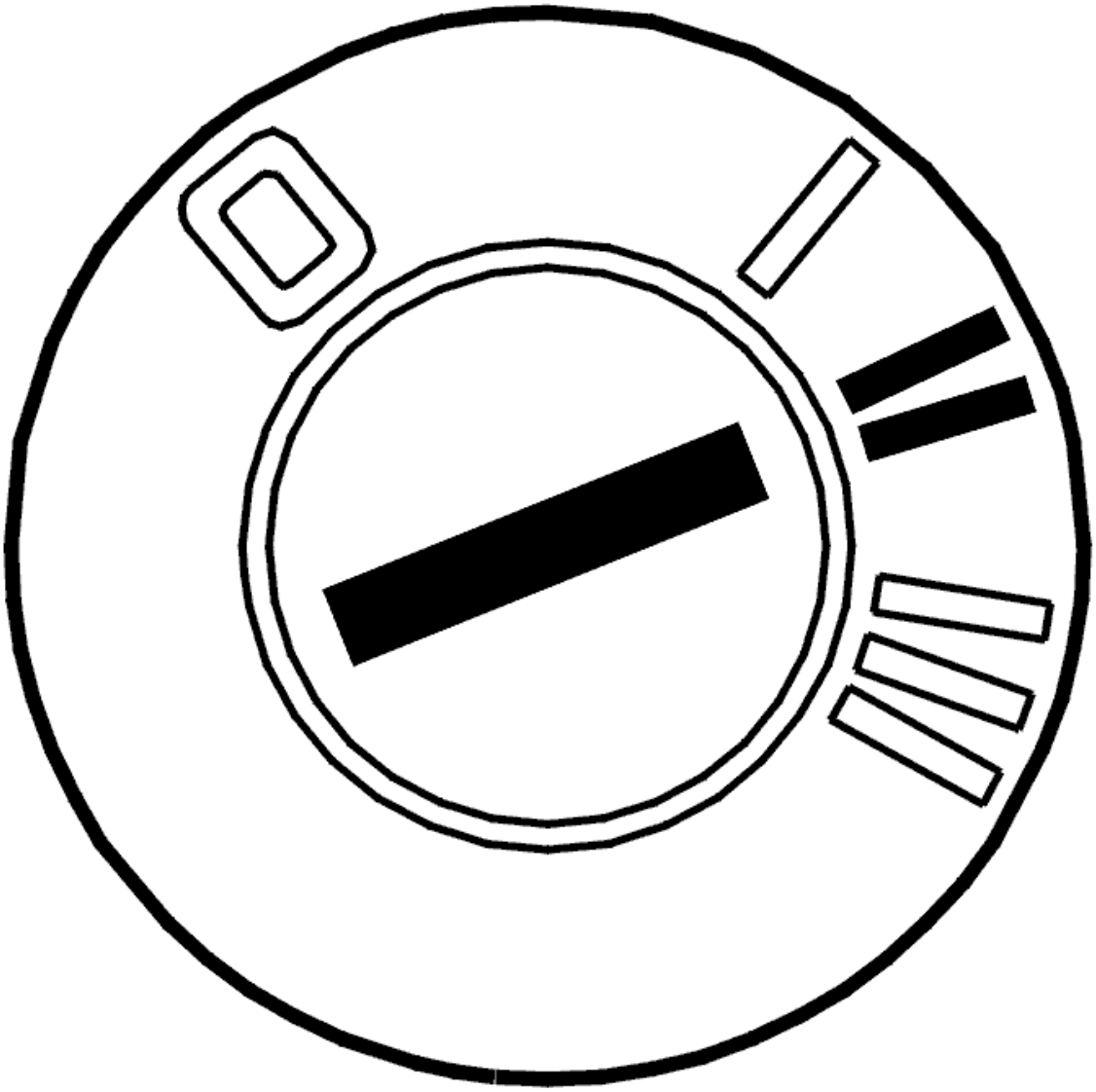

Fig. 278: Identifying Ignition ON
Courtesy of VOLVO CARS CORPORATION

- Ignition on
- Read off diagnostic trouble codes (DTCs).

  Check if any diagnostic trouble codes (DTCs) are stored for the electronic throttle unit, throttle position (TP) sensor or engine control module (ECM).

  If any of these diagnostic trouble codes (DTCs) are stored, these must be remedied first.

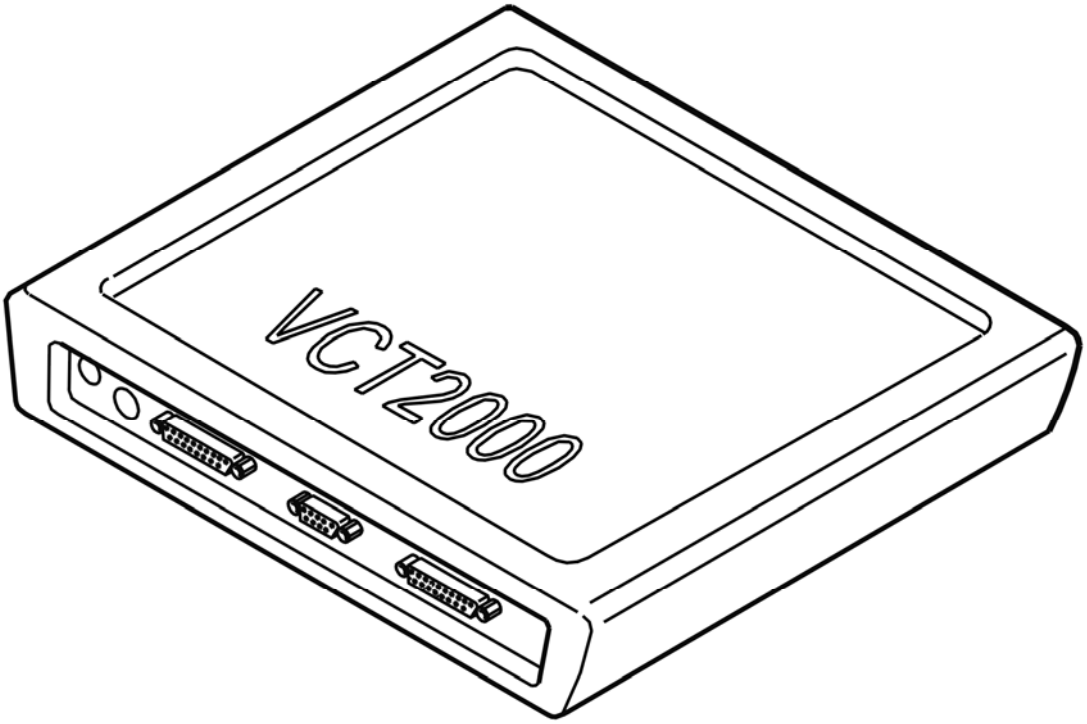

Fig. 279: Identifying VCT2000 Diagnostic Tool Symbol In VIDA
Courtesy of VOLVO CARS CORPORATION

Are any of the above diagnostic trouble codes (DTCs) stored?

- **YES**

  Refer to **FAULT-TRACING INFORMATION**

- **NO**

  Refer to **CHECKING COMPONENTS AND WIRING**

CHECKING COMPONENTS AND WIRING

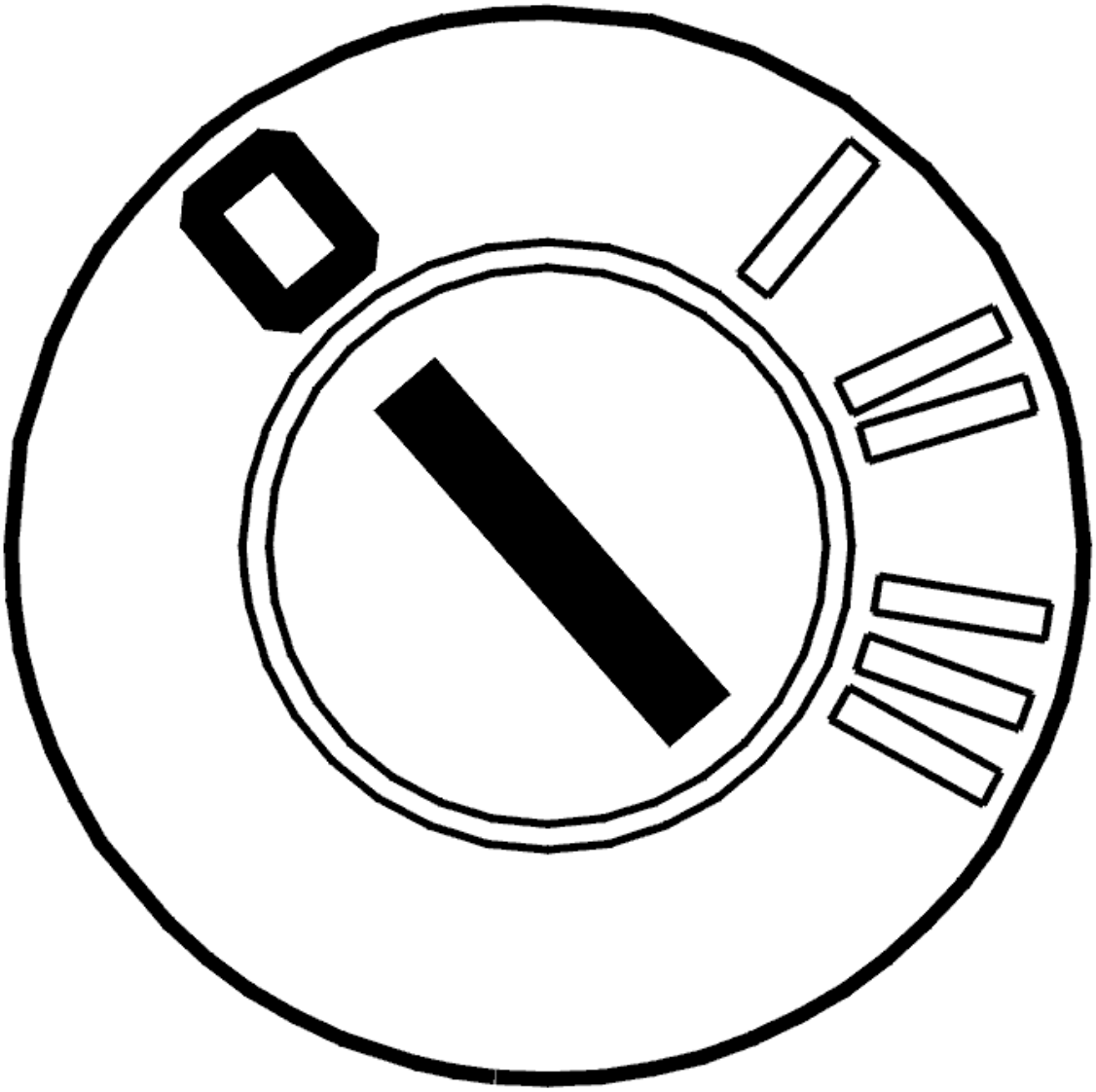

Fig. 280: Identifying Ignition OFF
Courtesy of VOLVO CARS CORPORATION

- Ignition off.

  Check the throttle unit and engine control module (ECM) connectors. Check for contact resistance and oxidation.

  Check the resistance values of the potentiometers in the throttle unit and damper motor winding.

  NOTE: The resistance of the motor winding in the damper motor is very low.

  Replace the throttle unit if necessary.

  Check the cable (+) for the damper motor between engine control module (ECM) terminal #A35 (#A35) and throttle unit terminal #4 (cable harness side). Check for an open-circuit. Check for a short-circuit to

ground. Check for a short-circuit to supply voltage.

Check the cable (-) for the damper motor between engine control module (ECM) terminal #A36 (#A36) and throttle unit terminal #1 (cable harness side). Check for an open-circuit. Check for a short-circuit to ground. Check for a short-circuit to supply voltage.

Also check the damper motor cables (+) and (-). Check for a short-circuit to each other.

Check that the shutter in the throttle unit is not blocked or sticking. Clean as necessary.

The throttle unit is damaged if the diagnostic trouble code (DTC) recurs.

NOTE: If the throttle unit is replaced it must be adapted.

Other information:

- see **CONNECTING THE BREAKOUT BOX**
- For 5 cylinder turbocharged engines -2004, see **SIGNAL DESCRIPTION**
- For 5 cylinder turbocharged engines 2005-, see **SIGNAL SPECIFICATION** .
- For 6 cylinder engines -2004, see **SIGNAL SPECIFICATION**
- For 6 cylinder engines 2005-, see **SIGNAL SPECIFICATION** .
- For resistance values: **COMPONENT SPECIFICATIONS**
- For B5xx4T, see **THROTTLE BODY (ELECTRONIC THROTTLE MODULE), REPLACING** .
- For B6xx4T, see **THROTTLE BODY (ELECTRONIC THROTTLE MODULE), REPLACING** .
- For B5xx4T, see **THROTTLE BODY (TB), CLEANING** .
- For B6xx4x, see **THROTTLE BODY (TB), CLEANING** .
- see **CHECKING WIRING AND TERMINALS** .

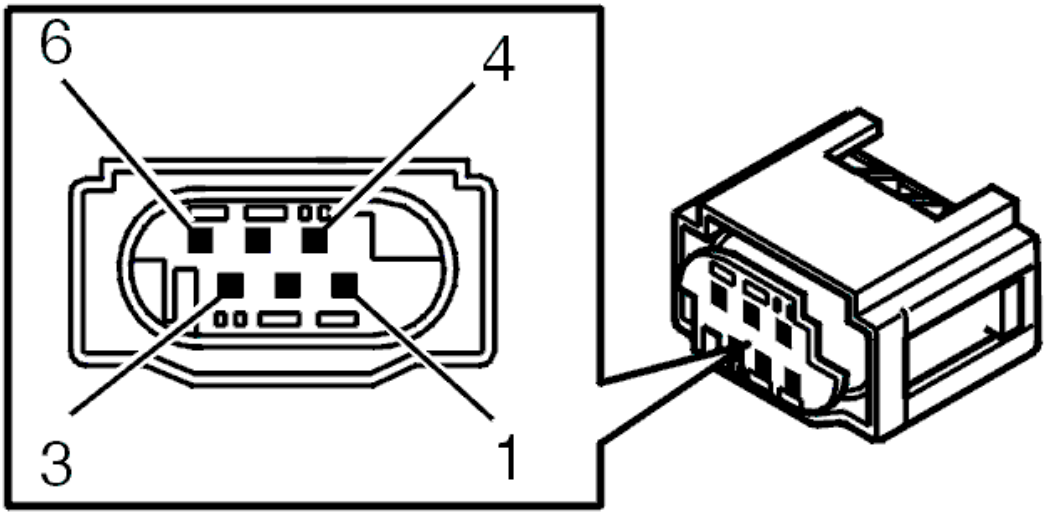

Fig. 281: Identifying Throttle Unit Connector Terminals
Courtesy of VOLVO CARS CORPORATION

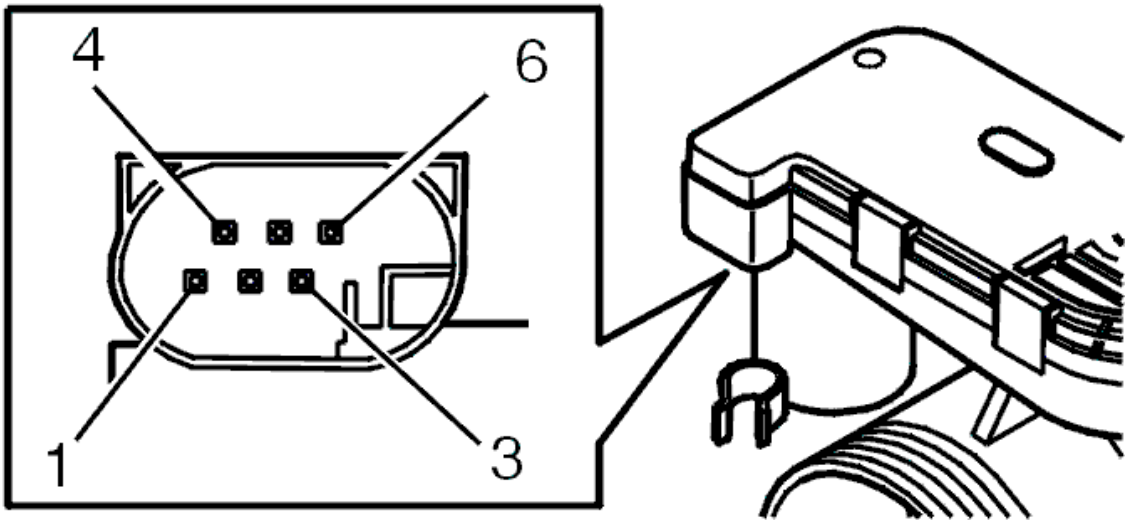

Fig. 282: Identifying Throttle Unit Connector Terminals
Courtesy of VOLVO CARS CORPORATION

- **Continue**

  Refer to **INFORMATION**

FAULT-TRACING INFORMATION

Remedy stored diagnostic trouble code(s) (DTCs).

Remedy as necessary.

INFORMATION

FAULT-TRACING INFORMATION

In case of this defect, troubleshooting is not followed by verification.

The information can be displayed again or the fault-tracing for this fault can be interrupted.

ECM-926D: ELECTRONIC THROTTLE UNIT. SIGNAL TOO LOW (B6294T; 2005-2006)

DIAGNOSTIC TROUBLE CODE (DTC) INFORMATION ECM-926D

see **DIAGNOSTIC TROUBLE CODE (DTC) INFORMATION ECM-926D**

SIGNAL TOO LOW

see **SIGNAL TOO LOW**

ECM-9270: THROTTLE UNIT. FAULTY SIGNAL (B5254T2; 2005-2007)

DIAGNOSTIC TROUBLE CODE (DTC) INFORMATION ECM-9270

Condition

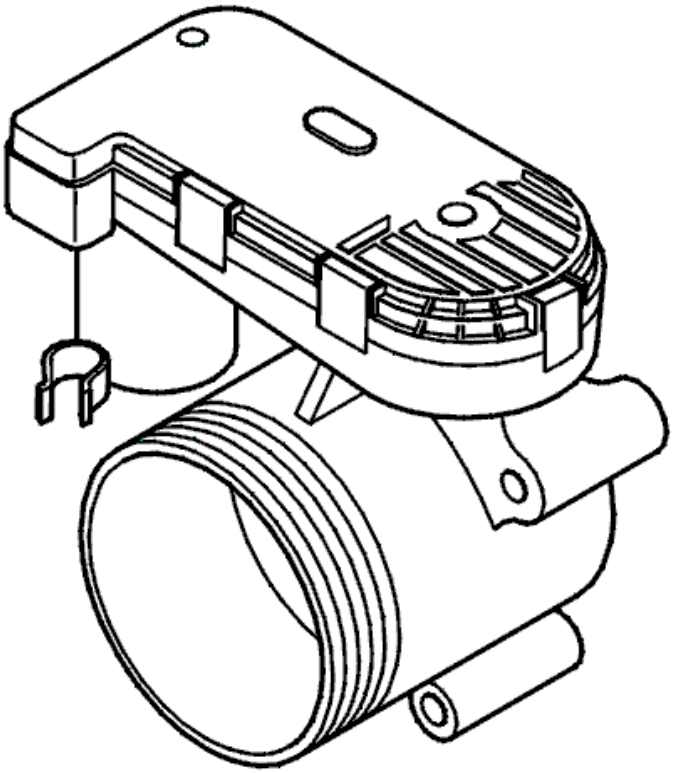

Fig. 283: Identifying Throttle Unit & Potentiometer
Courtesy of VOLVO CARS CORPORATION

The diagnostic trouble code (DTC) is stored if, when the engine is running, the engine control module (ECM) registers that the desired throttle angle (desired value) does not correspond to the actual throttle angle (actual value) in the electronic throttle unit.

Substitute Value

The engine control module (ECM) shuts down the supply to the damper motor for the electronic throttle unit. The throttle will set itself to the return position.

Possible Source

- The throttle is sticking or is blocked (e. g. oil film, dust)

- Contact resistance or oxidation in the terminals between the engine control module (ECM) and the electronic throttle unit
- Open-circuit, short-circuit to ground or short-circuit to supply voltage in the wiring for the damper motor in the throttle unit
- Short-circuit to each other in the wiring for the damper motor in the throttle unit
- Damaged throttle unit.

Fault symptom[s]

- Malfunction indicator lamp (MIL) lit
- Poor performance.

FAULTY SIGNAL

FAULT-TRACING INFORMATION

FAULT-TRACING INFORMATION

CAUTION: The male and female pins on the electronic throttle unit connectors are gold plated. Great care must be taken when measuring. Damage to the gold plating can result in operating difficulties.

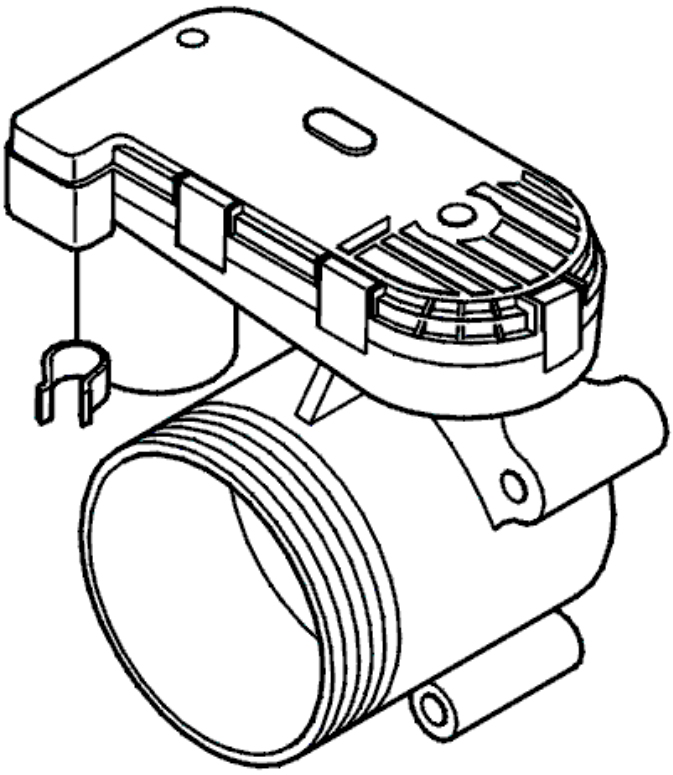

Fig. 284: Identifying Throttle Unit & Potentiometer
Courtesy of VOLVO CARS CORPORATION

- **Continue**

  Refer to **CHECKING THE DIAGNOSTIC TROUBLE CODES (DTCS)**

CHECKING THE DIAGNOSTIC TROUBLE CODES (DTCS)

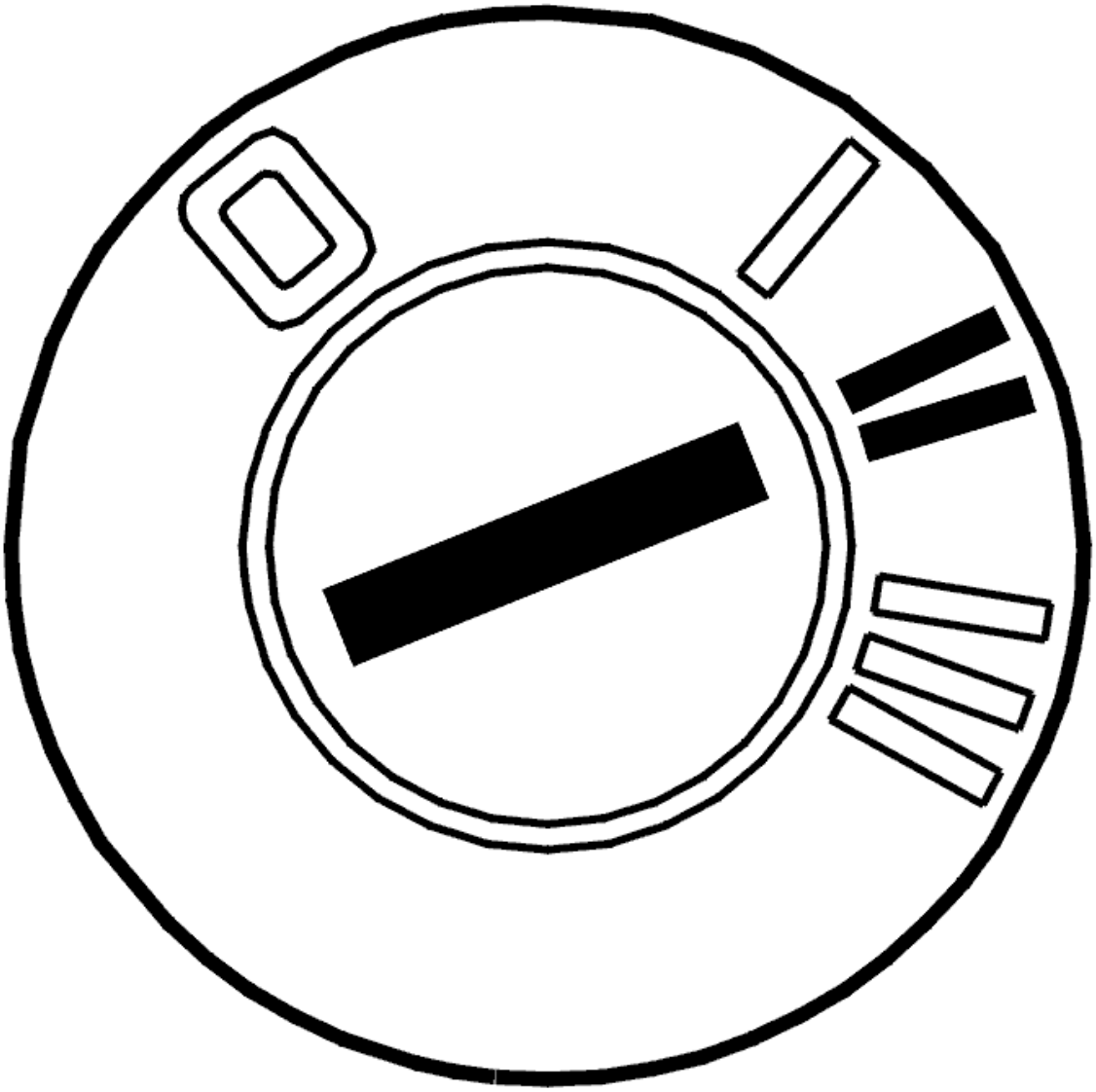

Fig. 285: Identifying Ignition ON
Courtesy of VOLVO CARS CORPORATION

- Ignition on
- Read off diagnostic trouble codes (DTCs).

  Check if any diagnostic trouble codes (DTCs) are stored for the electronic throttle unit, throttle position

(TP) sensor or engine control module (ECM).

If any of these diagnostic trouble codes (DTCs) are stored, these must be remedied first.

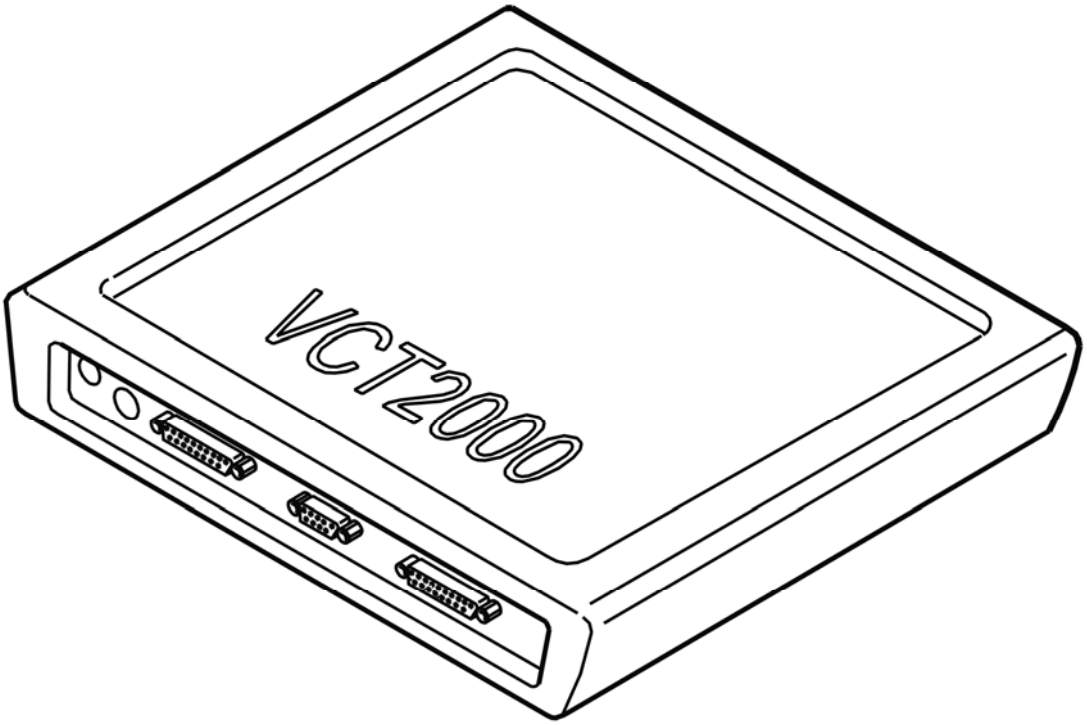

Fig. 286: Identifying VCT2000 Diagnostic Tool Symbol In VIDA
Courtesy of VOLVO CARS CORPORATION

Are any of the above diagnostic trouble codes (DTCs) stored?

- **YES**

  Refer to **FAULT-TRACING INFORMATION**

- **NO**

  Refer to **CHECKING COMPONENTS AND WIRING**

CHECKING COMPONENTS AND WIRING

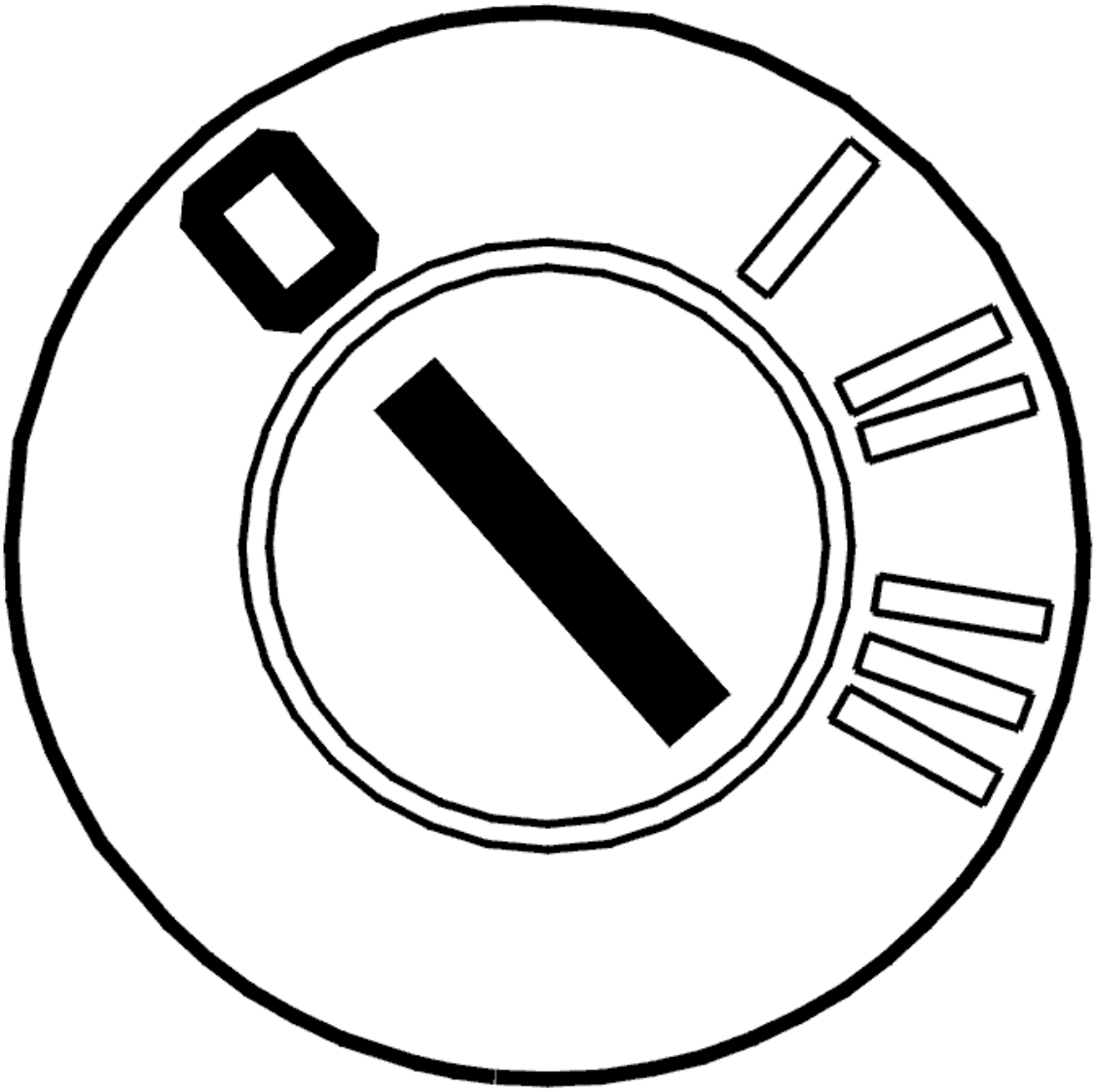

Fig. 287: Identifying Ignition OFF
Courtesy of VOLVO CARS CORPORATION

- Ignition off.

  Check the throttle unit and engine control module (ECM) connectors. Check for contact resistance and oxidation.

  Check the resistance values of the potentiometers in the throttle unit and damper motor winding.

  NOTE: The resistance of the motor winding in the damper motor is very low.

  Replace the throttle unit if necessary.

  Check the cable (+) for the damper motor between engine control module (ECM) terminal #A35 (#A35) and throttle unit terminal #4 (cable harness side). Check for an open-circuit. Check for a short-circuit to

ground. Check for a short-circuit to supply voltage.

Check the cable (-) for the damper motor between engine control module (ECM) terminal #A36 (#A36) and throttle unit terminal #1 (cable harness side). Check for an open-circuit. Check for a short-circuit to ground. Check for a short-circuit to supply voltage.

Also check the damper motor cables (+) and (-). Check for a short-circuit to each other.

Check that the shutter in the throttle unit is not blocked or sticking. Clean as necessary.

The throttle unit is damaged if the diagnostic trouble code (DTC) recurs.

NOTE: If the throttle unit is replaced it must be adapted.

Other information:

- see **CONNECTING THE BREAKOUT BOX**
- For 5 cylinder turbocharged engines -2004, see **SIGNAL DESCRIPTION**
- For 5 cylinder turbocharged engines 2005-, see **SIGNAL SPECIFICATION** .
- For 6 cylinder engines -2004, see **SIGNAL SPECIFICATION**
- For 6 cylinder engines 2005-, see **SIGNAL SPECIFICATION** .
- For resistance values: **COMPONENT SPECIFICATIONS**
- For B5xx4T, see **THROTTLE BODY (ELECTRONIC THROTTLE MODULE), REPLACING** .
- For B6xx4T, see **THROTTLE BODY (ELECTRONIC THROTTLE MODULE), REPLACING** .
- For B5xx4T, see **THROTTLE BODY (TB), CLEANING** .
- For B6xx4x, see **THROTTLE BODY (TB), CLEANING** .
- see **CHECKING WIRING AND TERMINALS** .

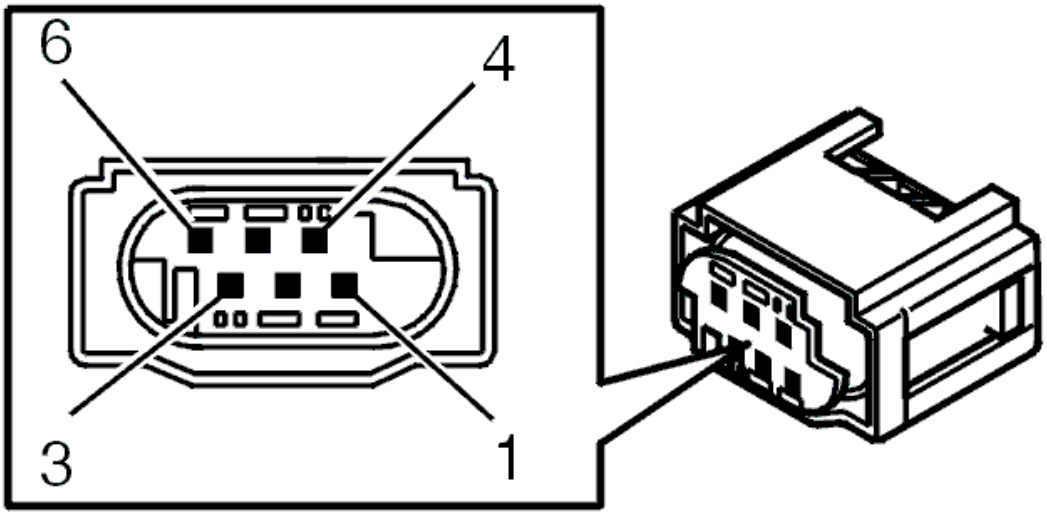

Fig. 288: Identifying Throttle Unit Connector Terminals
Courtesy of VOLVO CARS CORPORATION

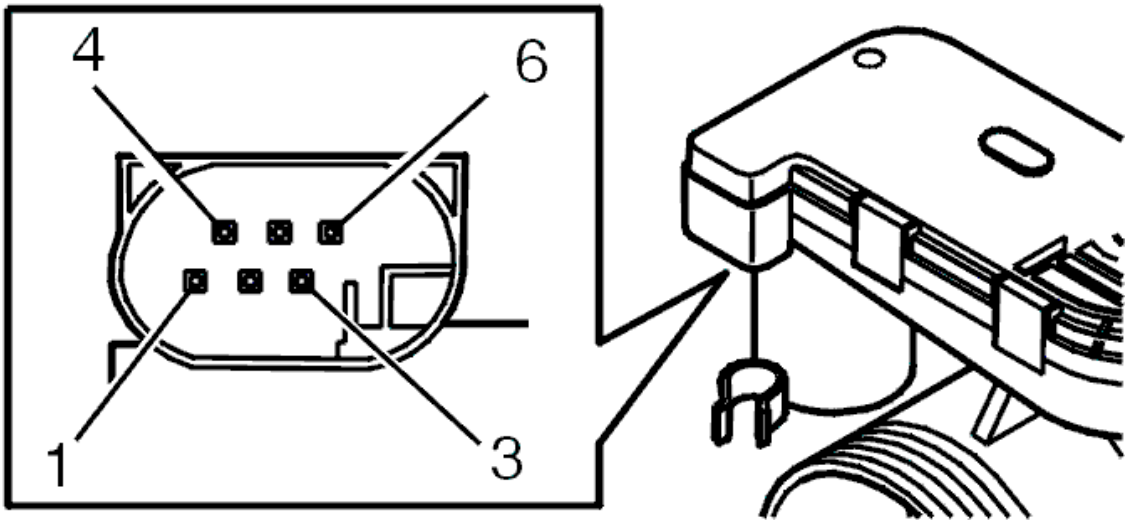

Fig. 289: Identifying Throttle Unit Connector Terminals
Courtesy of VOLVO CARS CORPORATION

- **Continue**

  Refer to **INFORMATION**

FAULT-TRACING INFORMATION

Remedy stored diagnostic trouble code(s) (DTCs).

Remedy as necessary.

INFORMATION

FAULT-TRACING INFORMATION

In case of this defect, troubleshooting is not followed by verification.

The information can be displayed again or the fault-tracing for this fault can be interrupted.

ECM-9270: THROTTLE UNIT. FAULTY SIGNAL (B6294T; 2005-2006)

DIAGNOSTIC TROUBLE CODE (DTC) INFORMATION ECM-9270

see **DIAGNOSTIC TROUBLE CODE (DTC) INFORMATION ECM-9270**

FAULTY SIGNAL

see **FAULTY SIGNAL**

ECM-9280: THROTTLE UNIT. FAULTY SIGNAL (B5254T2; 2005-2007)

DIAGNOSTIC TROUBLE CODE (DTC) INFORMATION ECM-9280

Condition

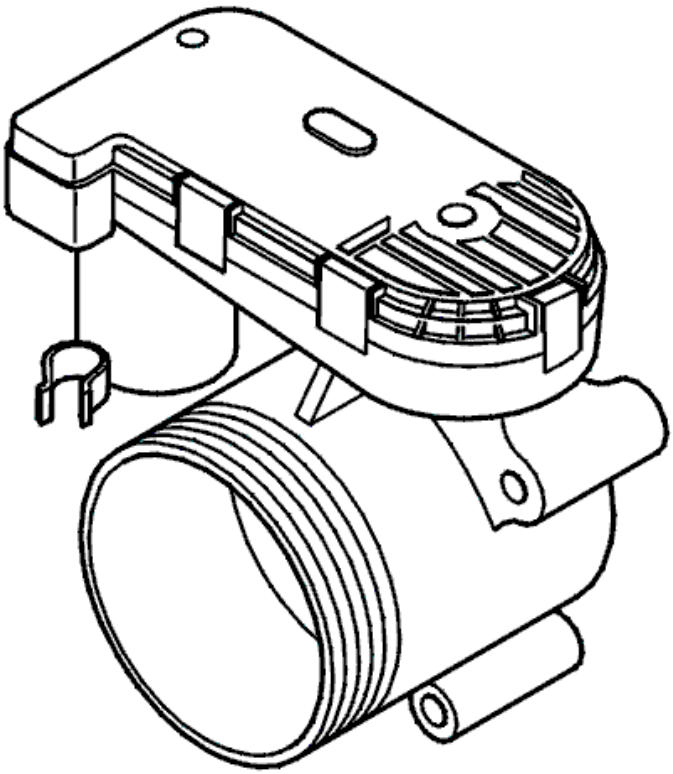

Fig. 290: Identifying Throttle Unit & Potentiometer
Courtesy of VOLVO CARS CORPORATION

The diagnostic trouble code (DTC) is stored if the engine control module (ECM) registers that the throttle angle at the return limit position is outside the programmed parameter when trying to adapt the throttle unit.

Substitute Value

None.

Possible Source

- The throttle is sticking or is blocked (e. g. oil film, dust)
- Contact resistance or oxidation in the terminals between the engine control module (ECM) and the electronic throttle unit
- Damaged throttle unit.

Fault symptom[s]

- Driving/Poor performance/lacks power
- Idling/Uneven idle

FAULTY SIGNAL

FAULT-TRACING INFORMATION

FAULT-TRACING INFORMATION

CAUTION: The male and female pins on the electronic throttle unit connectors are gold plated. Great care must be taken when measuring. Damage to the gold plating can result in operating difficulties.

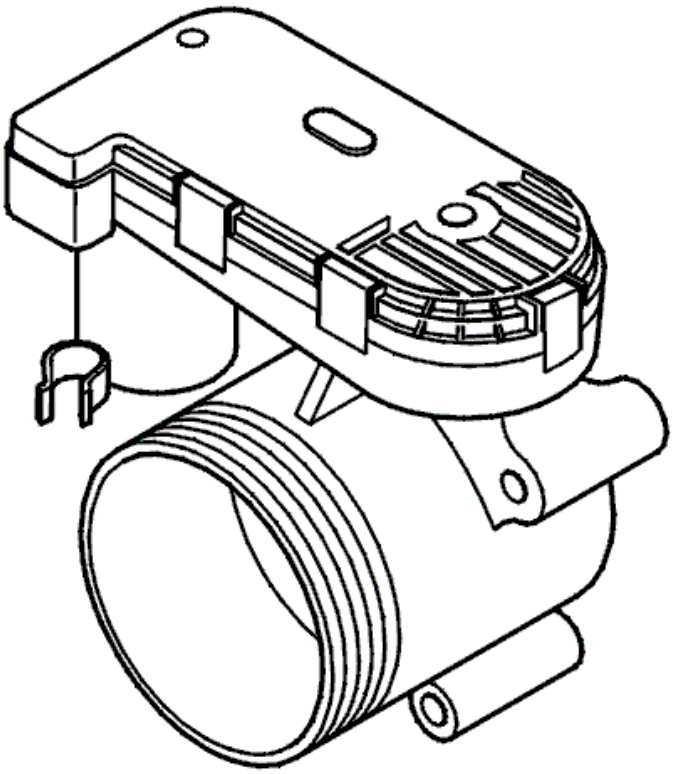

Fig. 291: Identifying Throttle Unit & Potentiometer
Courtesy of VOLVO CARS CORPORATION

- **Continue**

  Refer to **CHECKING COMPONENTS AND WIRING**

CHECKING COMPONENTS AND WIRING

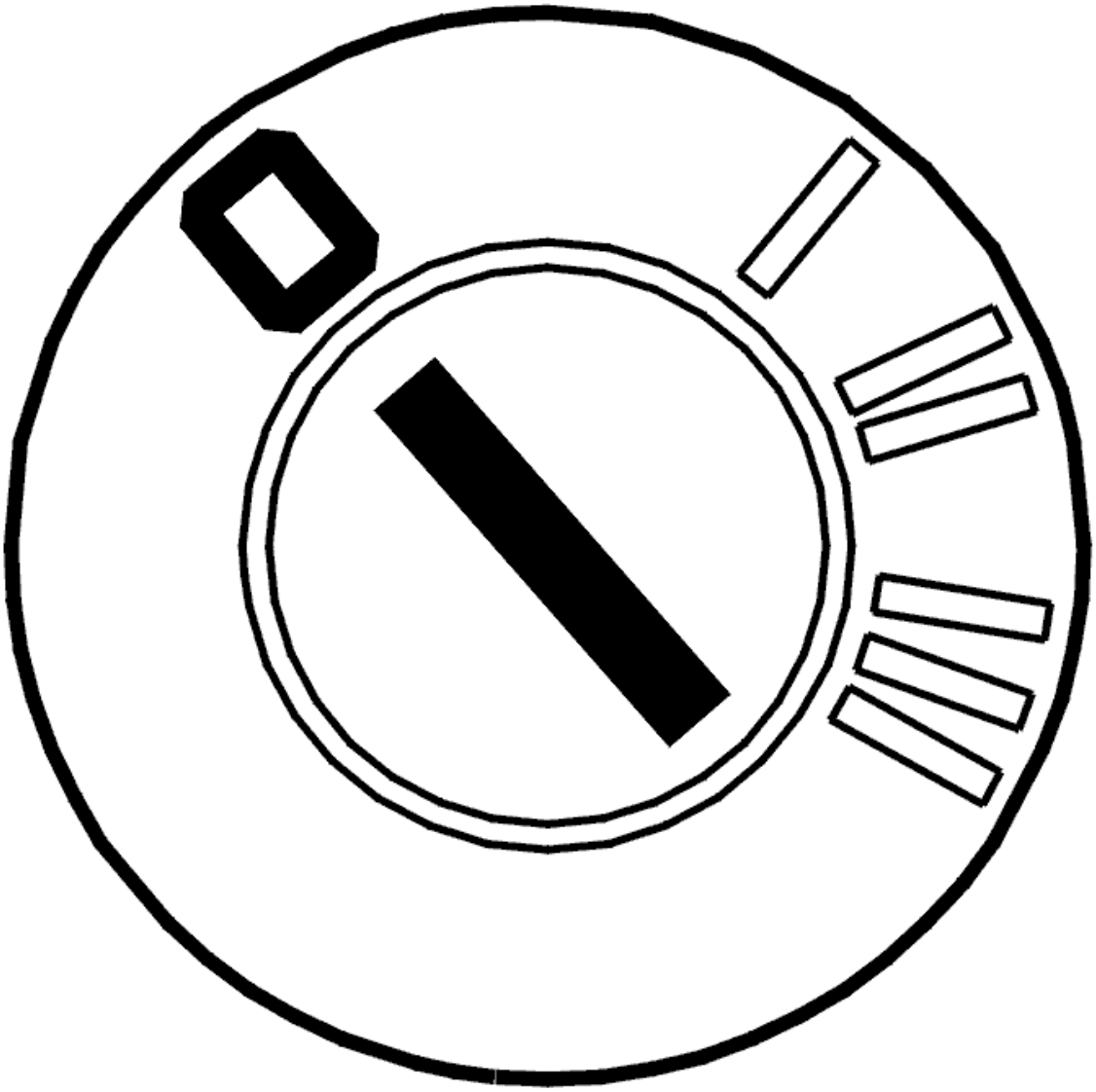

Fig. 292: Identifying Ignition OFF
Courtesy of VOLVO CARS CORPORATION

- Ignition off.

  Check the throttle unit and engine control module (ECM) connectors. Check for contact resistance and oxidation.

  Check the resistance values of the potentiometers in the throttle unit.

  Check that the shutter in the throttle unit is not blocked or sticking. Clean as necessary.

  Check the function of the integrated return spring in the throttle unit by carefully manually turning the throttle to wide open position and then carefully releasing the throttle. Check that the return spring returns the shutter to its resting position.

If the return spring does not return the shutter, the throttle unit is damaged.

Remedy as necessary.

Other information:

- For 5 cylinder turbocharged engines -2004, see **SIGNAL DESCRIPTION**
- For 5 cylinder turbocharged engines 2005-, see **SIGNAL SPECIFICATION** .
- For 6 cylinder engines -2004, see **SIGNAL SPECIFICATION**
- For 6 cylinder engines 2005-, see **SIGNAL SPECIFICATION** .
- For resistance values: **COMPONENT SPECIFICATIONS**
- For B5xx4T, see **THROTTLE BODY (ELECTRONIC THROTTLE MODULE), REPLACING** .
- For B6xx4T, see **THROTTLE BODY (ELECTRONIC THROTTLE MODULE), REPLACING** .
- For B5xx4T, see **THROTTLE BODY (TB), CLEANING** .
- For B6xx4x, see **THROTTLE BODY (TB), CLEANING** .
- see **CHECKING WIRING AND TERMINALS** .

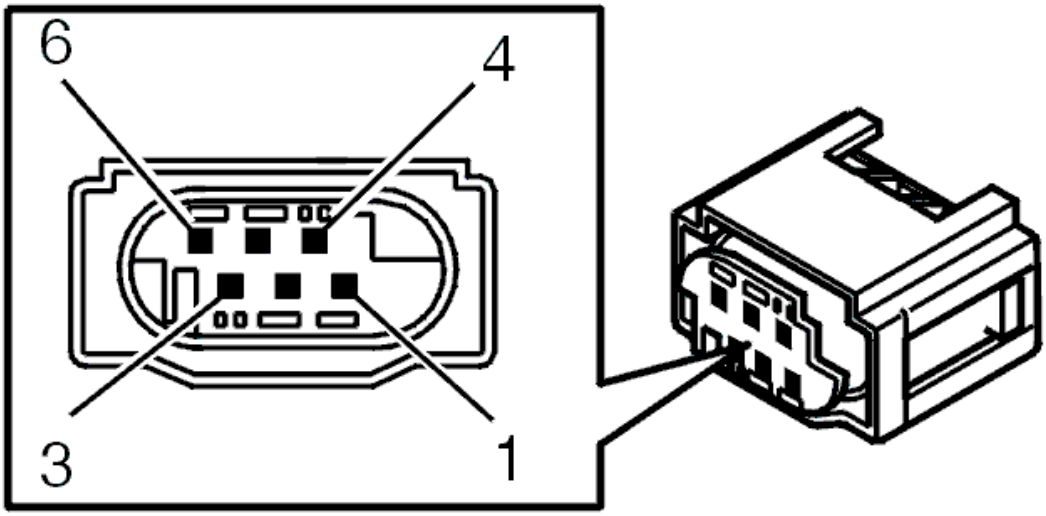

Fig. 293: Identifying Throttle Unit Connector Terminals
Courtesy of VOLVO CARS CORPORATION

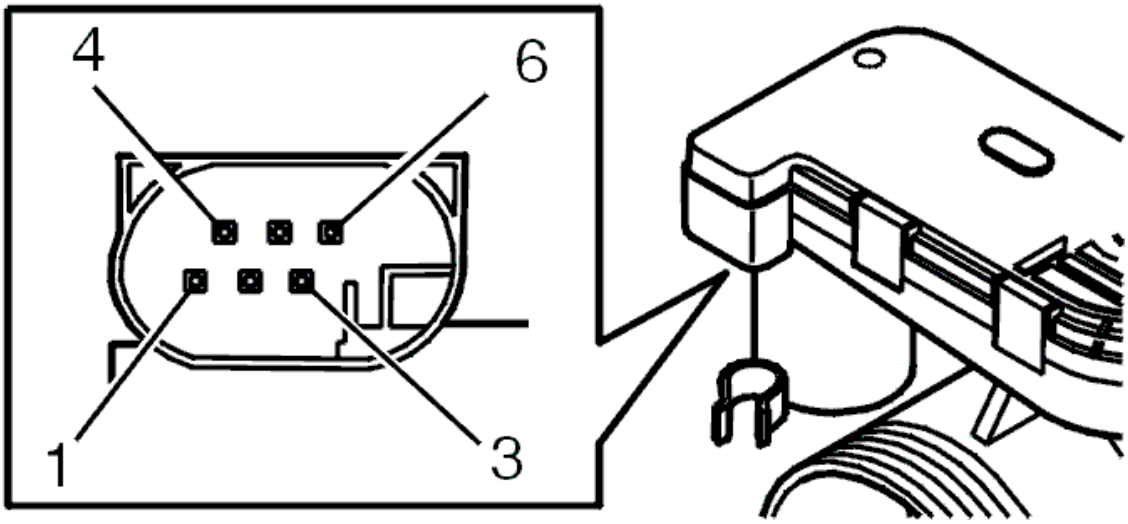

Fig. 294: Identifying Throttle Unit Connector Terminals
Courtesy of VOLVO CARS CORPORATION

- **Continue**

Refer to **ADAPTATION OF THE THROTTLE UNIT**

ADAPTATION OF THE THROTTLE UNIT

HINT: Faults which caused this diagnostic trouble code (DTC) may affect the adaptation values for the throttle unit. Carry out adaptation of the throttle unit to update the adaptation values.

NOTE: The ignition must be switched on for at least 30 seconds after the basic conditions are met in order for the adaptation to start. It takes approximately 10 seconds to run the adaptation.

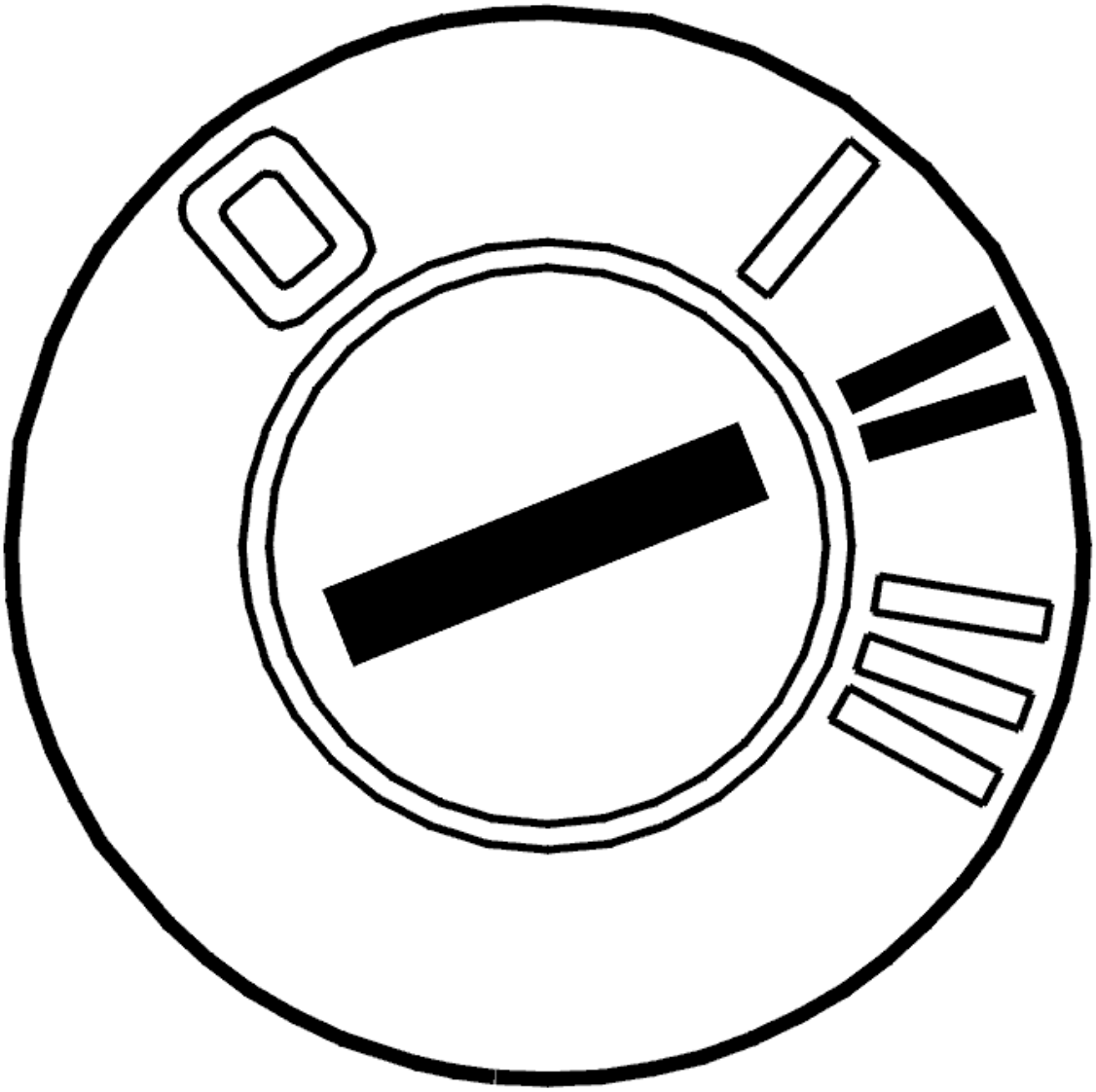

Fig. 295: Identifying Ignition ON
Courtesy of VOLVO CARS CORPORATION

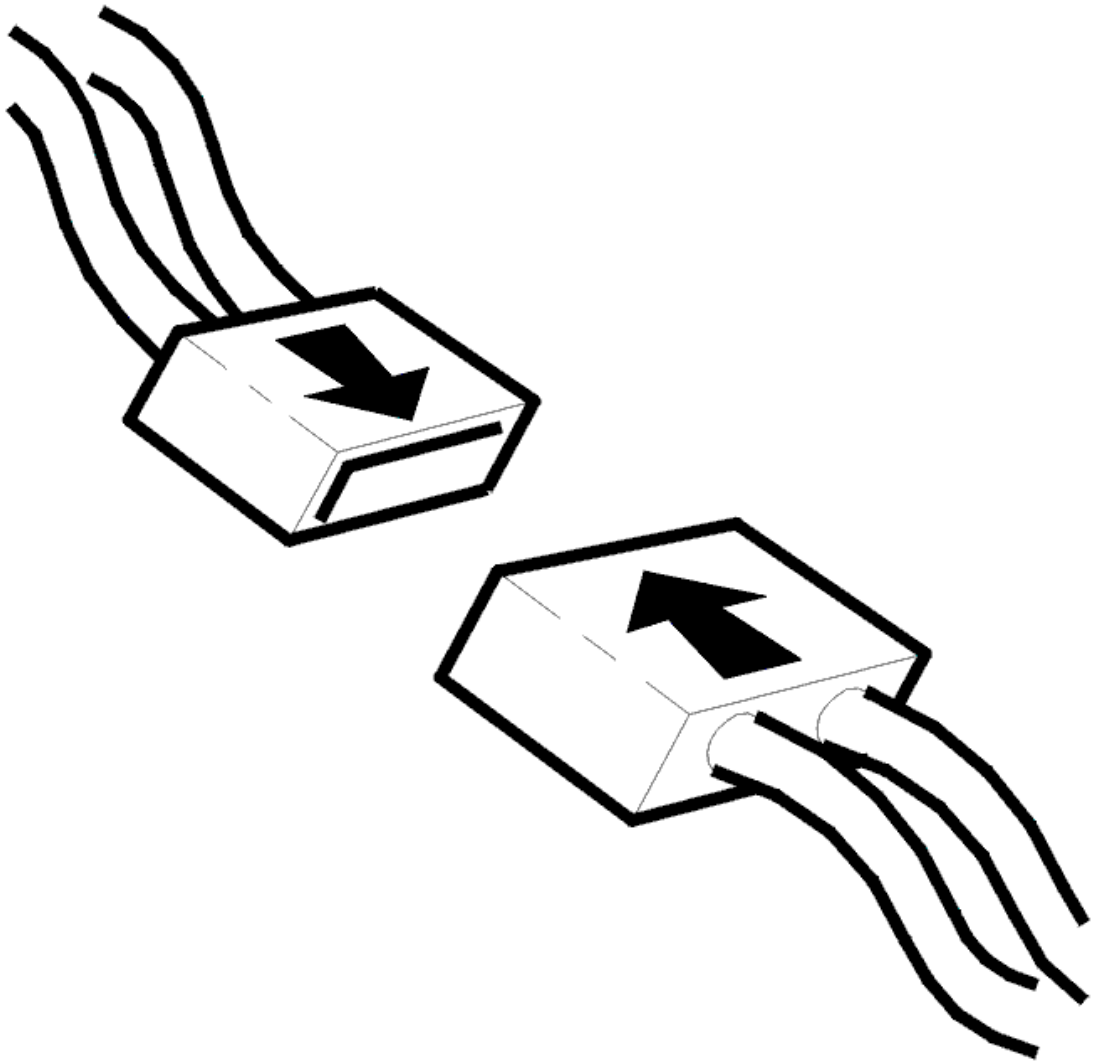

Fig. 296: Connecting Connector
Courtesy of VOLVO CARS CORPORATION

- Ignition off
- Reinstall the components and connectors etc.
- Ignition on
- Read off the parameters.

Check that the following basic conditions for adaptation of the throttle unit are met.

1. Ignition on / engine off
2. Battery voltage above 10 V
3. Accelerator pedal (AP) unaffected
4. The vehicle must be stationary (no vehicle speed signal)

5. Engine coolant temperature (ECT) between 5-100°C
6. Intake air temperature (IAT) above 5 °C.

Remedy as necessary.

Check that the adaptation is correctly run after the "Adaptation of the throttle unit running" parameter changes status from "YES" to "NO". When all basic conditions are met, the adaptation must be completed after approximately 40 seconds. When the adaptation has been run correctly, the following information will be displayed:

- Adaptation of the throttle unit: OK
- Adaptation of the throttle unit running: NO.

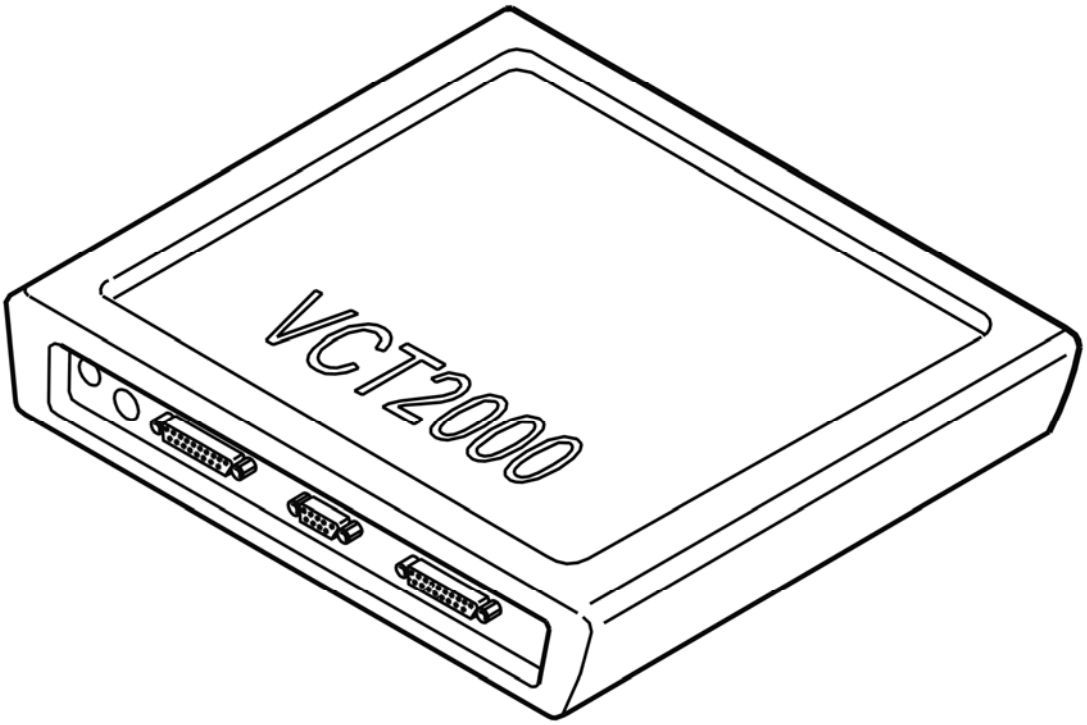

Fig. 297: Identifying VCT2000 Diagnostic Tool Symbol In VIDA
Courtesy of VOLVO CARS CORPORATION

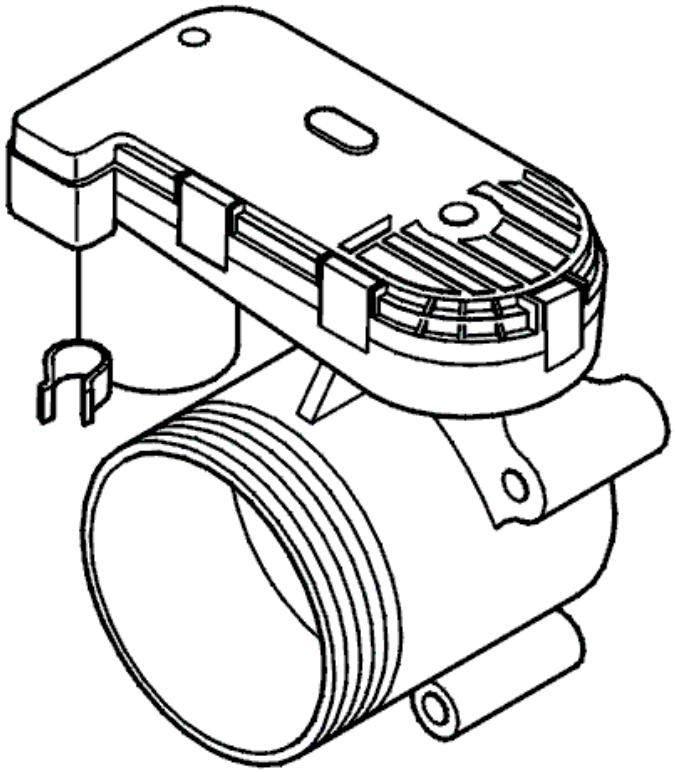

Fig. 298: Identifying Throttle Unit & Potentiometer
Courtesy of VOLVO CARS CORPORATION

- **Continue**

  Refer to **CHECKING THE FUNCTION**

CHECKING THE FUNCTION

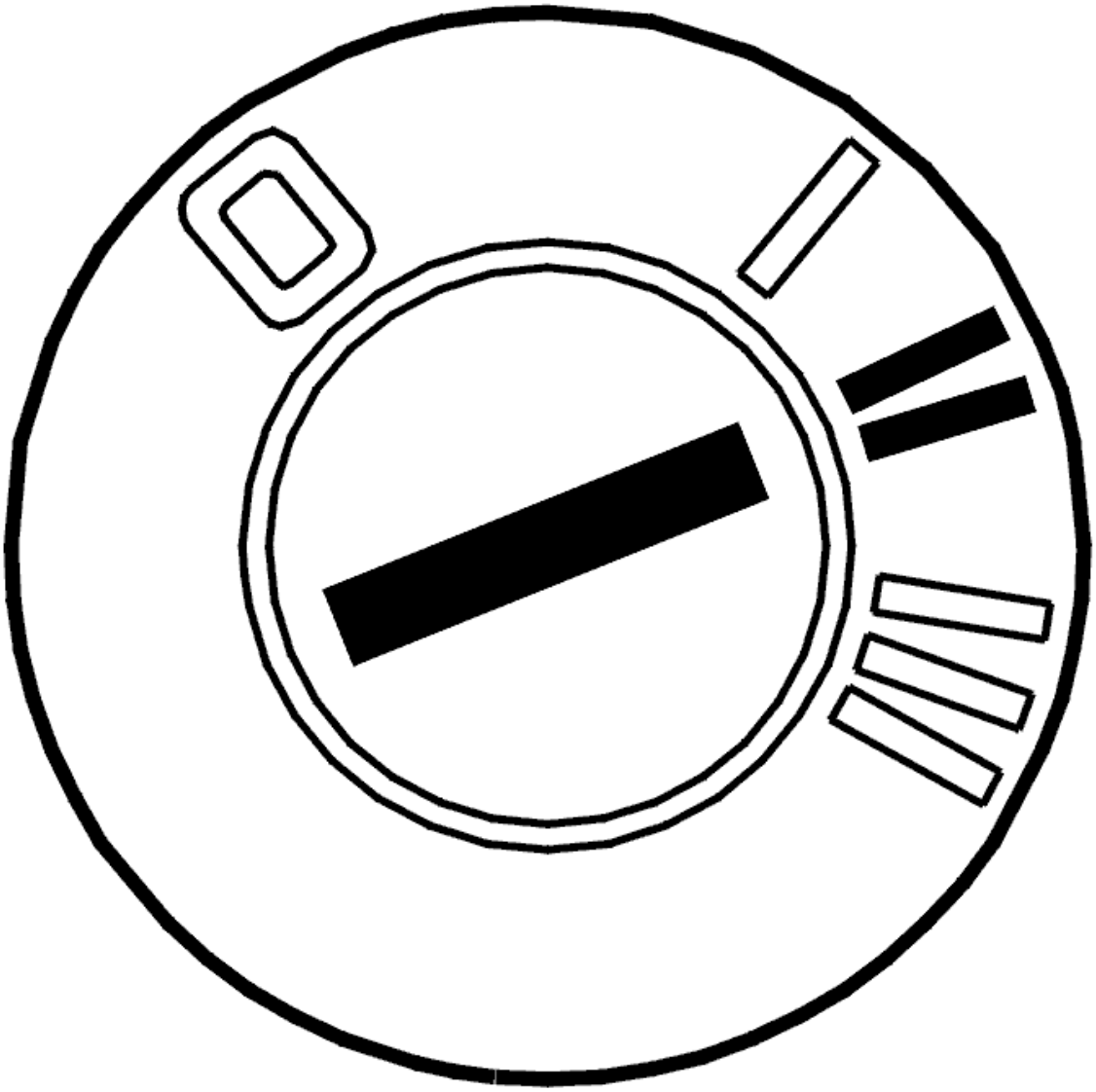

Fig. 299: Identifying Ignition ON
Courtesy of VOLVO CARS CORPORATION

- Ignition on.

  Read off the diagnostic status and fault status for the diagnostic trouble code (DTC) by selecting the relevant diagnostic trouble code (DTC) from the list.

  Check whether the fault is permanent or intermittent. Read off the diagnostic trouble code (DTC) fault status when the diagnostic status is "Completed".

  HINT: In some cases several functions of the component will be diagnosed. The affects the amount of time taken to run the diagnostic.

  The fault is permanent if the fault status is "Fault found". If the fault status is "No fault found" the fault is intermittent and not presently active.

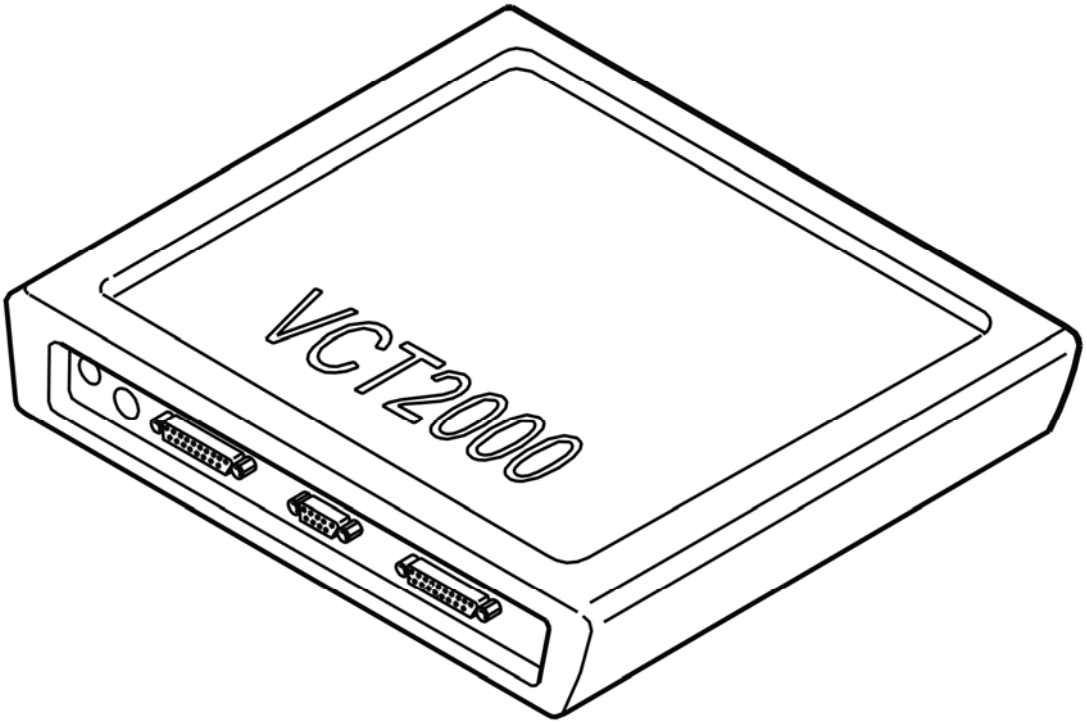

Fig. 300: Identifying VCT2000 Diagnostic Tool Symbol In VIDA
Courtesy of VOLVO CARS CORPORATION

- **Continue**

  Refer to **REPLACING THE COMPONENT**

REPLACING THE COMPONENT

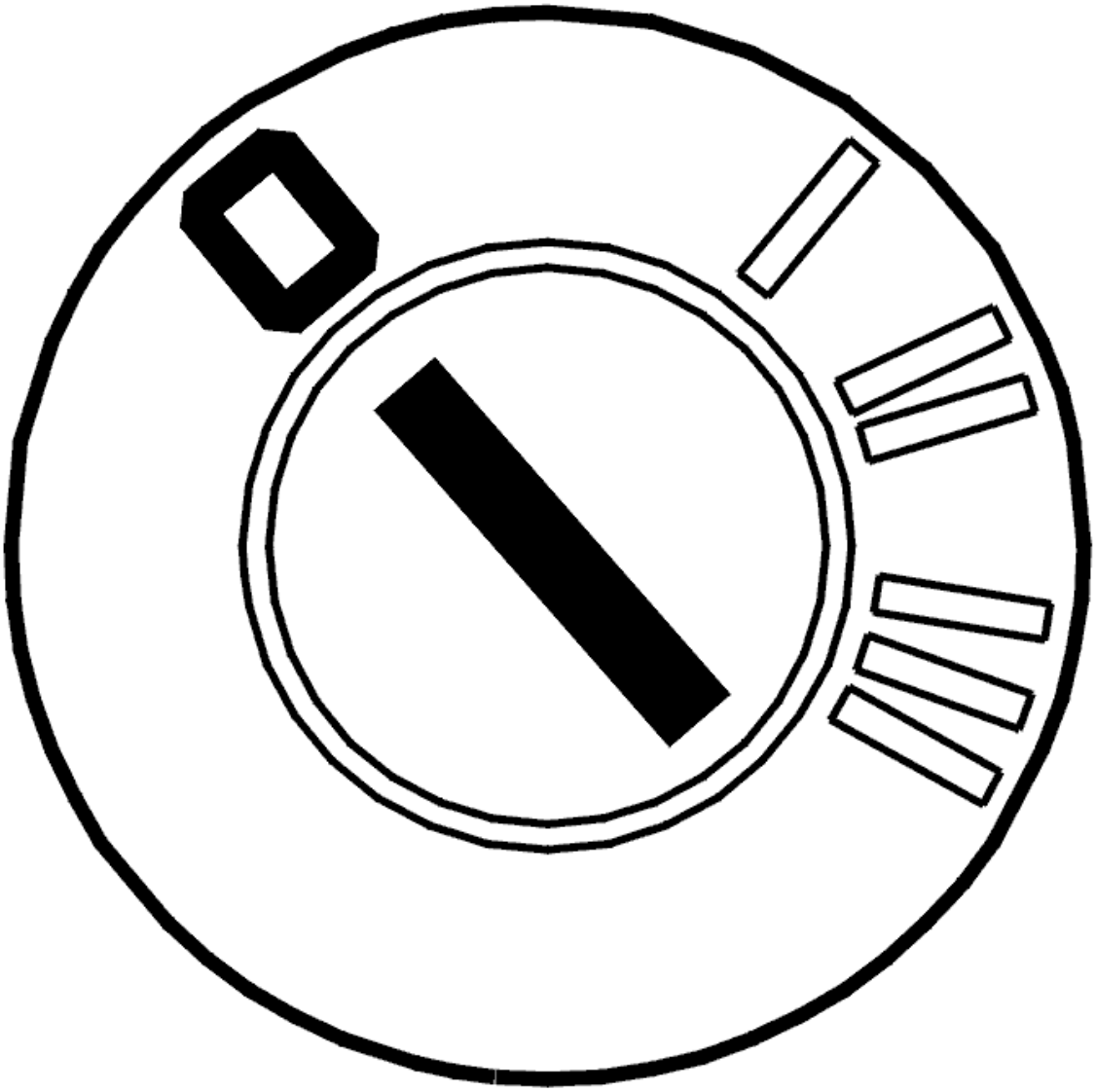

Fig. 301: Identifying Ignition OFF
Courtesy of VOLVO CARS CORPORATION

- Ignition off.
  - For B5xx4T, see **THROTTLE BODY (ELECTRONIC THROTTLE MODULE), REPLACING** .
  - For B6xx4T, see **THROTTLE BODY (ELECTRONIC THROTTLE MODULE), REPLACING** .

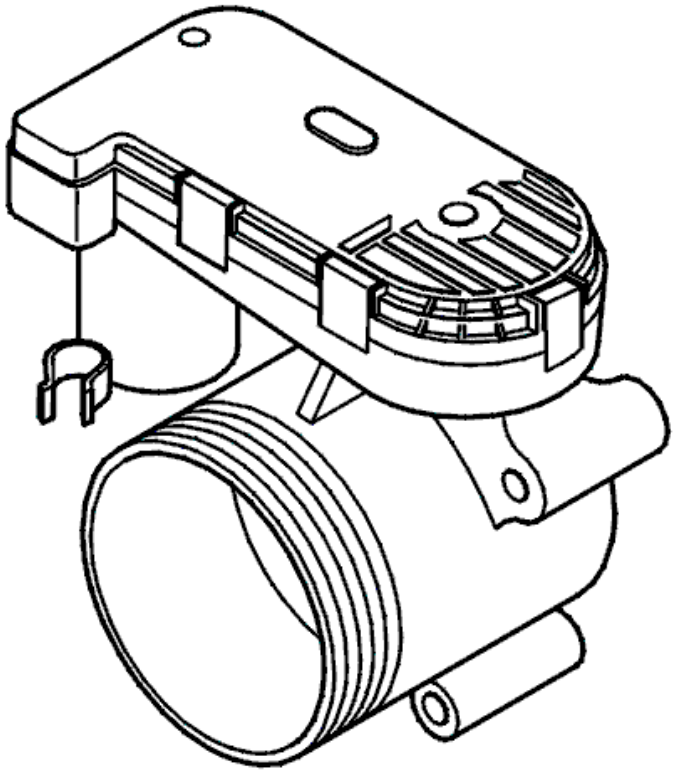

Fig. 302: Identifying Throttle Unit & Potentiometer
Courtesy of VOLVO CARS CORPORATION

- **Continue**

  Refer to **VERIFICATION**

VERIFICATION

VERIFICATION

HINT: After carrying out the repair, check that the fault has been remedied.

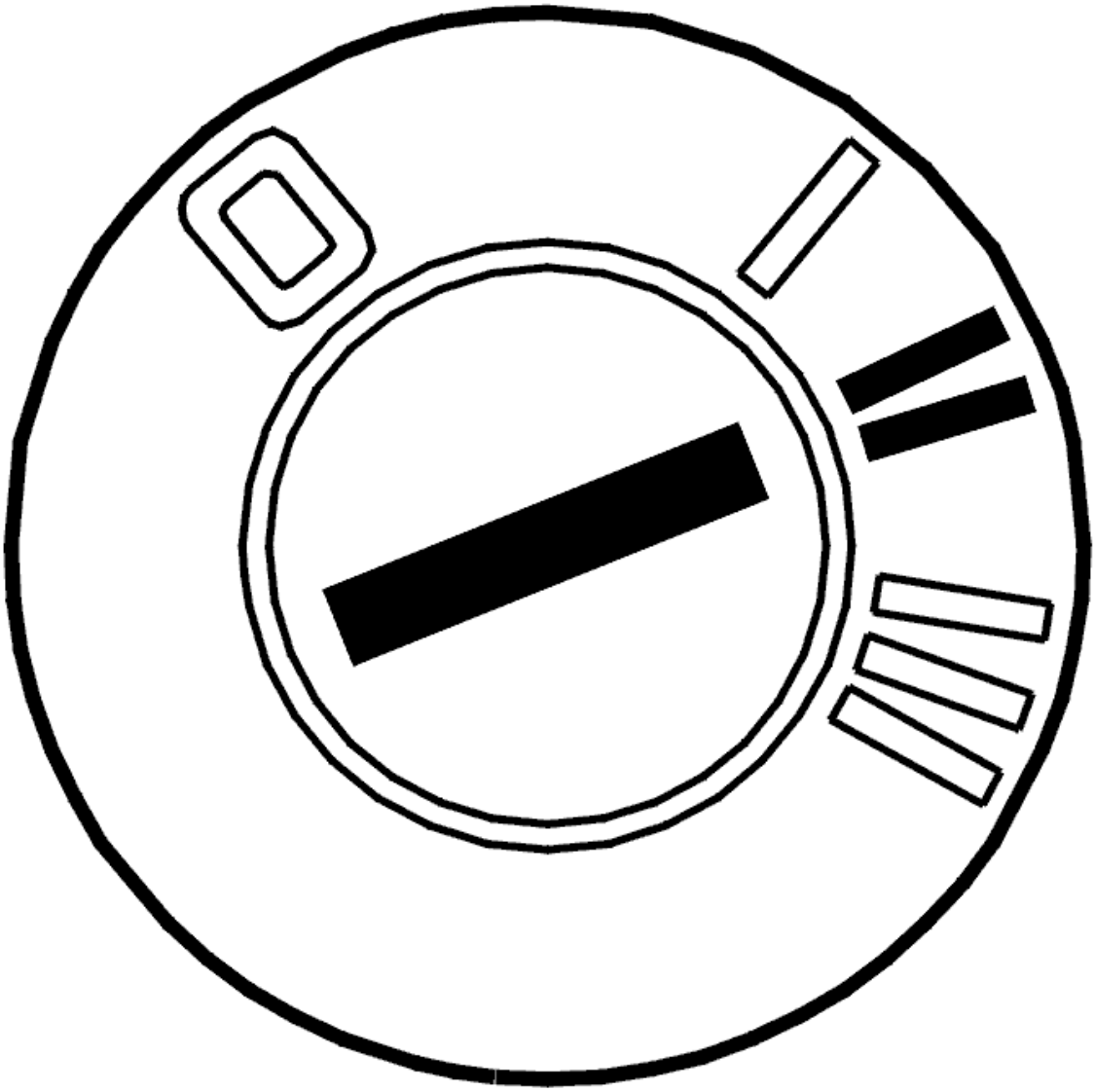

Fig. 303: Identifying Ignition ON
Courtesy of VOLVO CARS CORPORATION

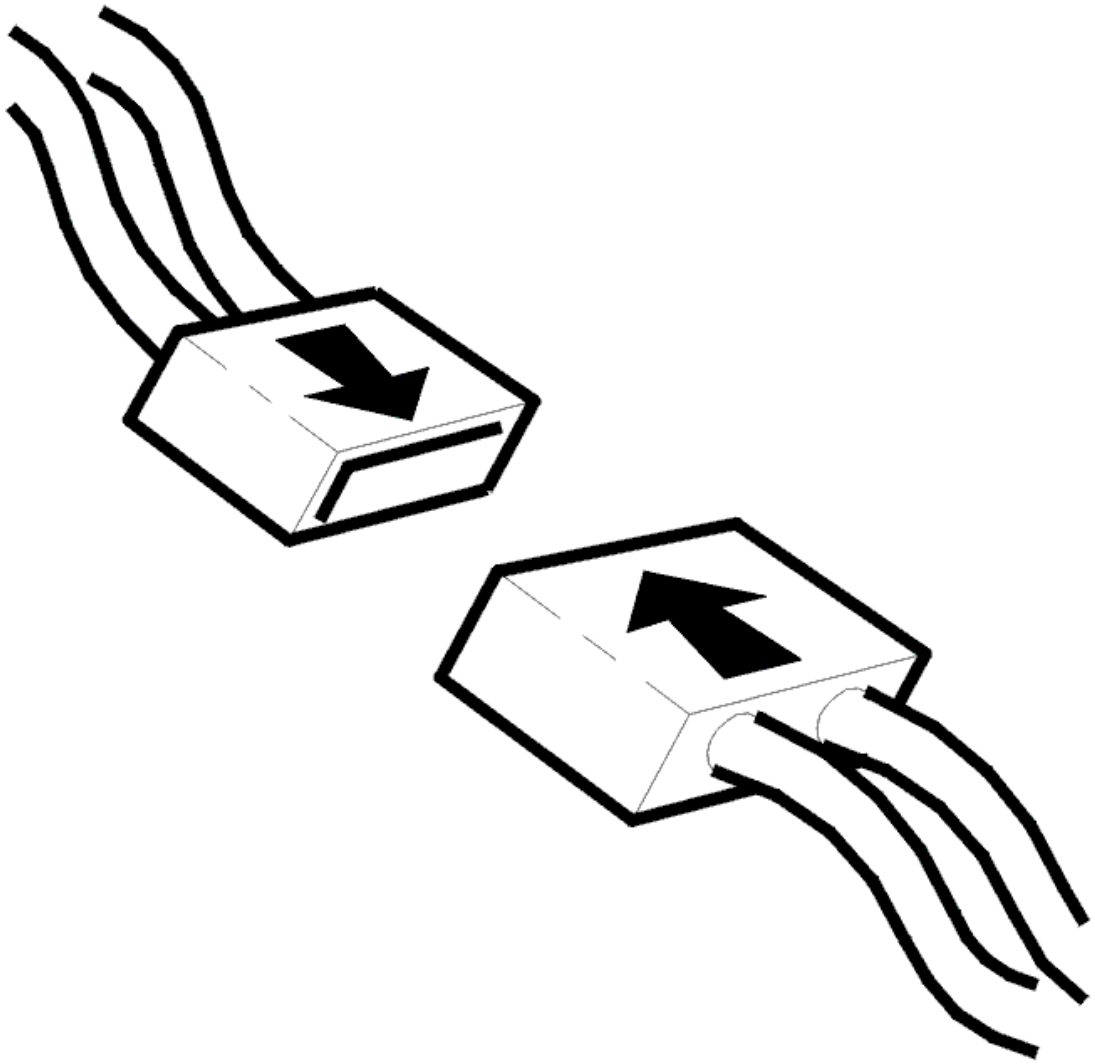

Fig. 304: Connecting Connector
Courtesy of VOLVO CARS CORPORATION

- Ignition off
- Reinstall the connectors, components etc.
- Ignition on
- Read off the parameters.

Check that the following basic conditions for adaptation of the throttle unit are met.

1. Ignition on / engine off
2. Battery voltage above 10 V
3. Accelerator pedal (AP) unaffected
4. The vehicle must be stationary (no vehicle speed signal)

5. Engine coolant temperature (ECT) between 5-100°C
6. Intake air temperature (IAT) above 5 °C.

Remedy as necessary.

Check that the adaptation is correctly run after the "Adaptation of the throttle unit running" parameter changes status from "YES" to "NO". When all basic conditions are met, the adaptation must be completed after approximately 40 seconds. When the adaptation has been run correctly, the following information will be displayed:

- Adaptation of the throttle unit: OK
- Adaptation of the throttle unit running: NO.

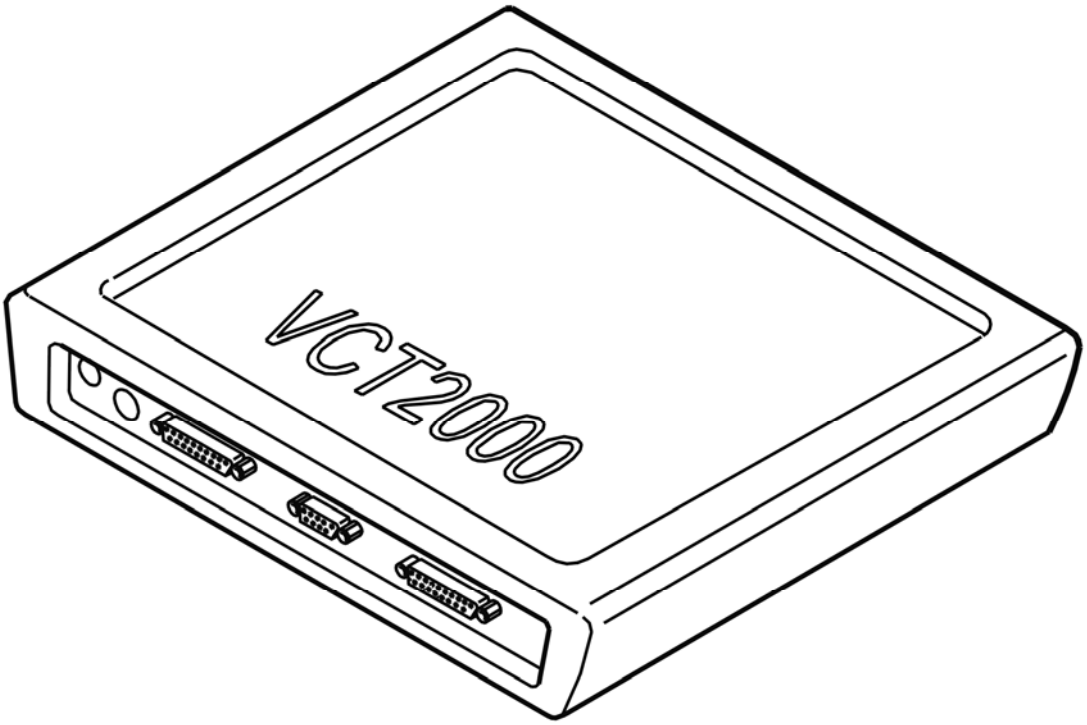

Fig. 305: Identifying VCT2000 Diagnostic Tool Symbol In VIDA
Courtesy of VOLVO CARS CORPORATION

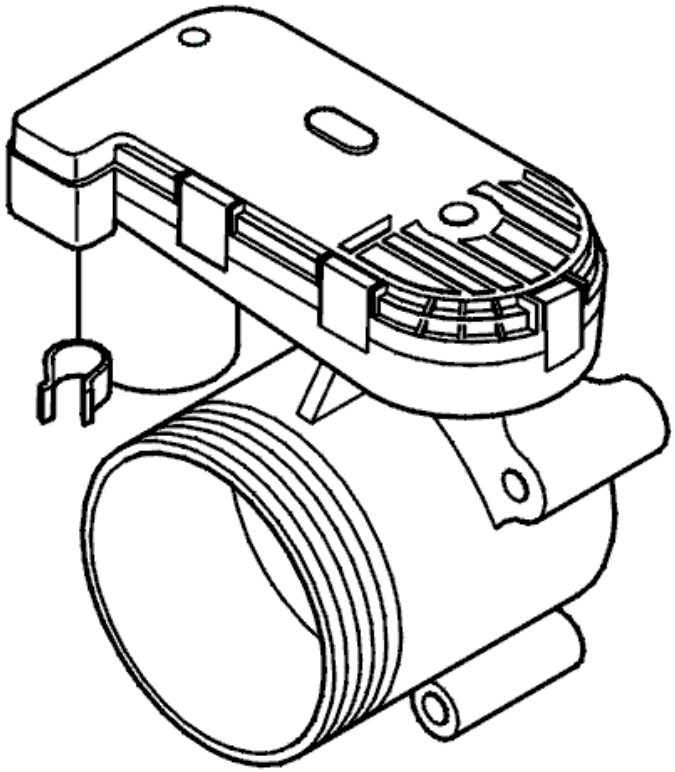

Fig. 306: Identifying Throttle Unit & Potentiometer
Courtesy of VOLVO CARS CORPORATION

- **Continue**

  Refer to **VERIFICATION, CONTINUED**

VERIFICATION, CONTINUED

HINT: After carrying out the repair, check that the fault has been remedied.

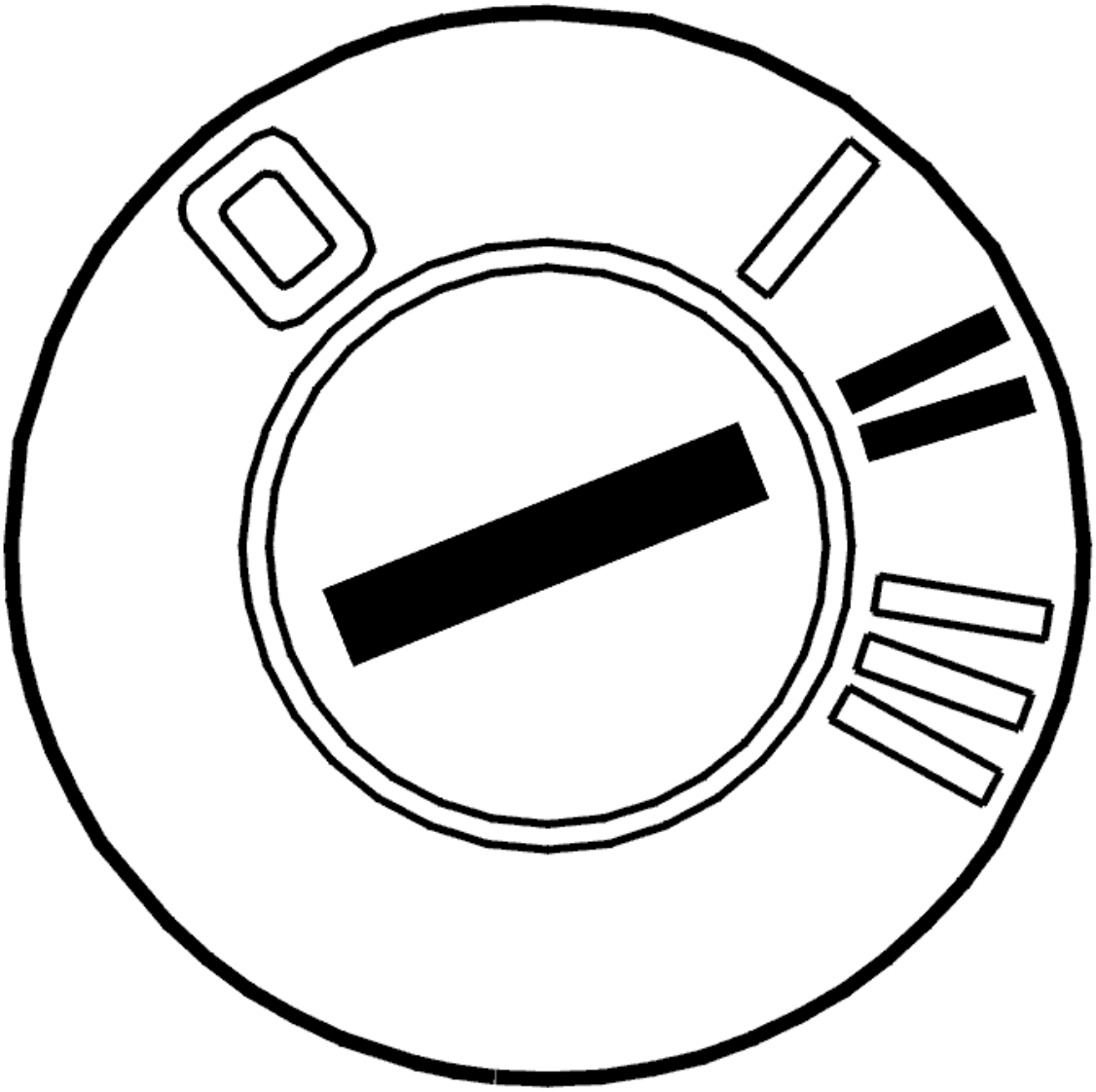

Fig. 307: Identifying Ignition ON
Courtesy of VOLVO CARS CORPORATION

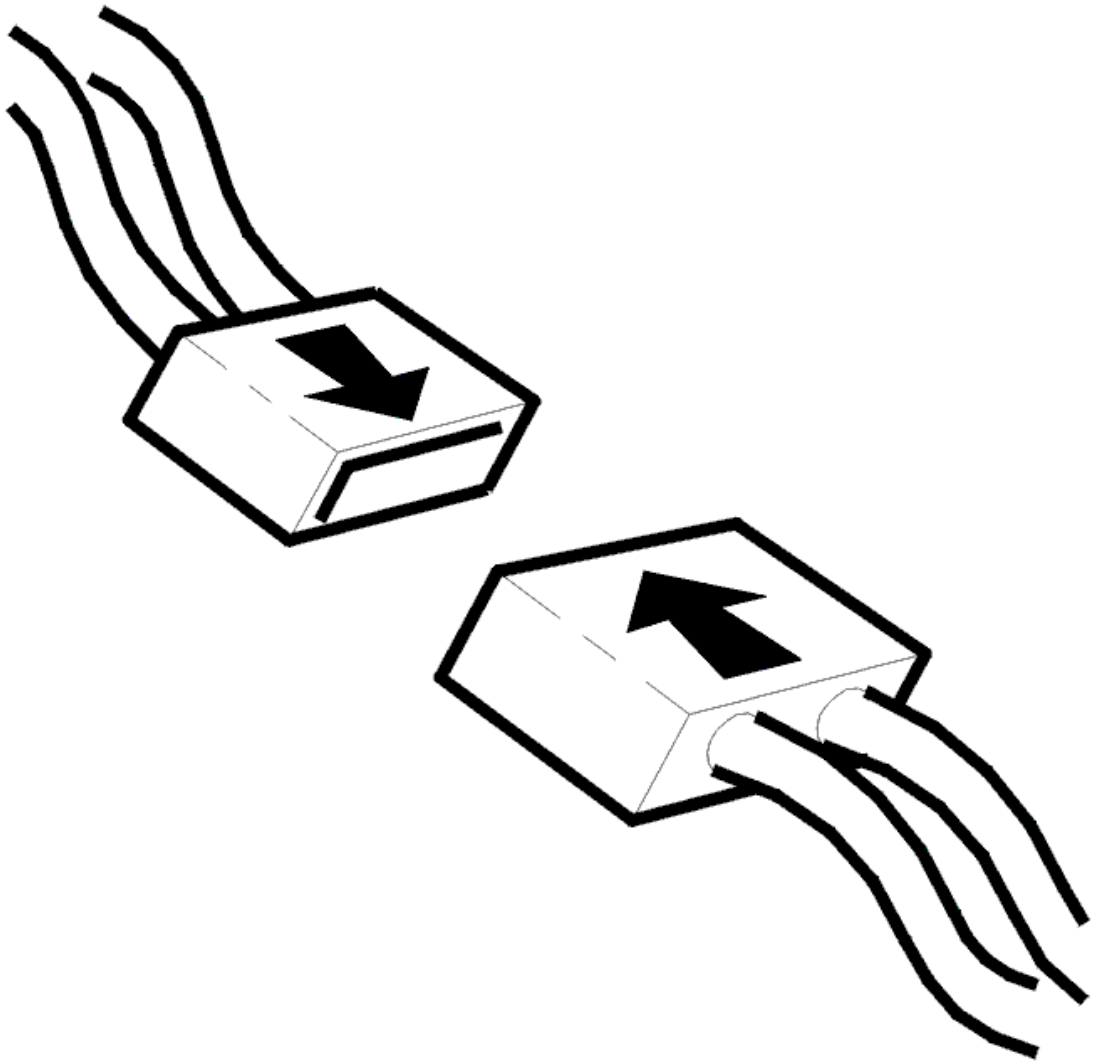

Fig. 308: Connecting Connector
Courtesy of VOLVO CARS CORPORATION

- Ignition on.

  Read off the diagnostic status and fault status for the diagnostic trouble code (DTC) by selecting the relevant diagnostic trouble code (DTC) from the list.

  Check the fault status for the diagnostic trouble code (DTC) when the diagnostic is "Complete". If the function is correct, the fault status must be "No fault found" when the diagnostic is complete.

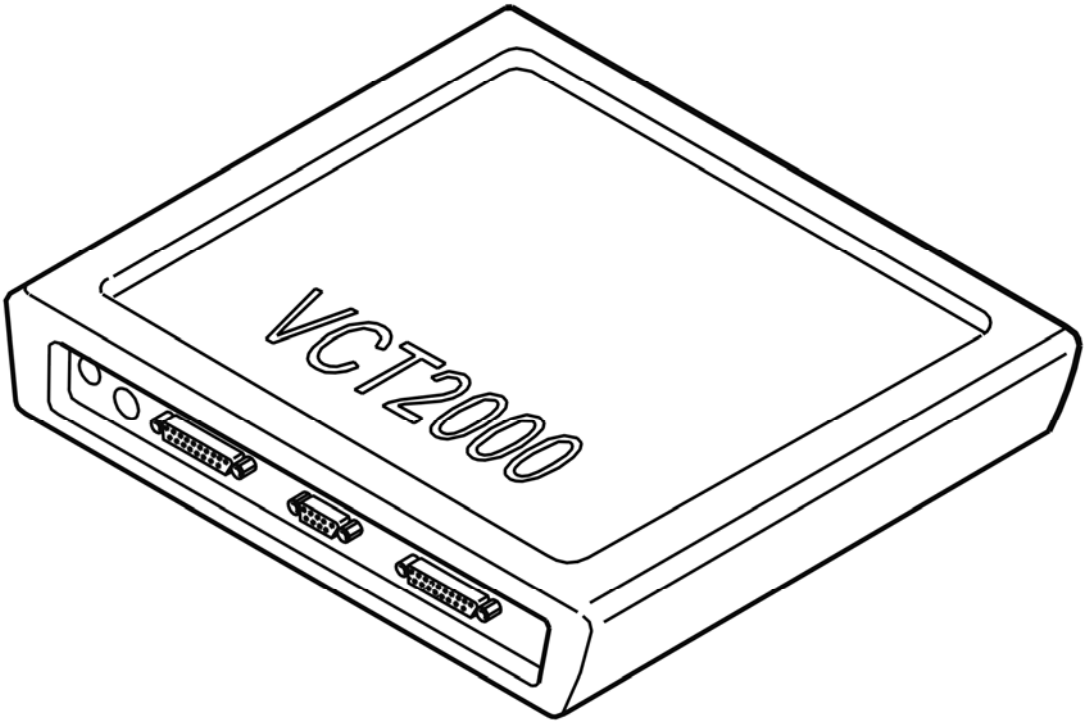

Fig. 309: Identifying VCT2000 Diagnostic Tool Symbol In VIDA
Courtesy of VOLVO CARS CORPORATION

Is the function OK?

- **YES**

  VERIFIED: Troubleshooting has been completed.

- **NO**

  Refer to **INFORMATION**

INFORMATION

FAULT-TRACING INFORMATION

The fault should have been detected and remedied. As this is not the case fault-tracing has failed.

Exit fault-tracing for this diagnostic trouble code (DTC) or make another attempt.

ECM-9280: THROTTLE UNIT. FAULTY SIGNAL (B6294T; 2005-2006)

DIAGNOSTIC TROUBLE CODE (DTC) INFORMATION ECM-9280

see **DIAGNOSTIC TROUBLE CODE (DTC) INFORMATION ECM-9280**

FAULTY SIGNAL

see **FAULTY SIGNAL**

ECM-928C: CONTROL MODULE, COMMUNICATION PROBLEMS. FAULTY SIGNAL (B5254T2; B6294T; 2003-2004)

DIAGNOSTIC TROUBLE CODE (DTC) INFORMATION

Condition

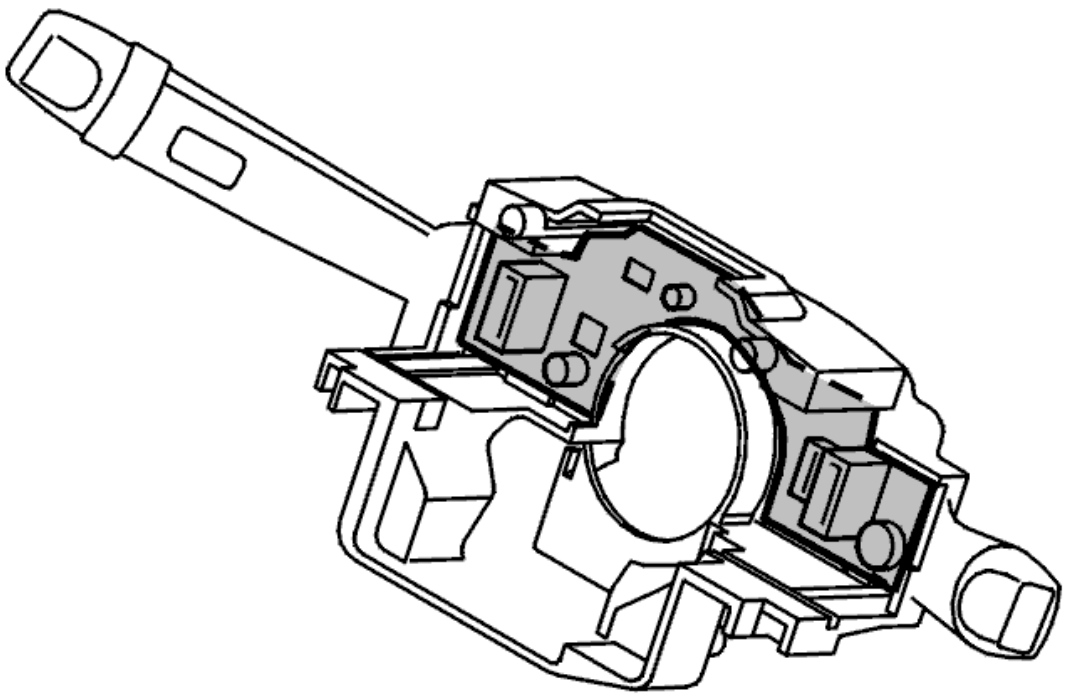

Fig. 310: Identifying Steering Wheel Module
Courtesy of VOLVO CARS CORPORATION

Diagnostic trouble code (DTC) ECM-928C is stored if the engine control module (ECM), when the ignition is switched on, registers a fault in the steering wheel module or in its Control area network (CAN) communication.

Substitute Value

Cruise control switched off.

Possible Source

Faulty signal:

- Fault trace the steering wheel module
- Fault trace the central electronic module.

Fault symptom[s]

- Cruise control does not function at all.

FAULT-TRACING INFORMATION

see **FAULT-TRACING INFORMATION**

ECM-9290: ENGINE CONTROL MODULE (ECM). FAULTY SIGNAL (B5254T2; 2005-2007)

DIAGNOSTIC TROUBLE CODE (DTC) INFORMATION ECM-9290

Condition

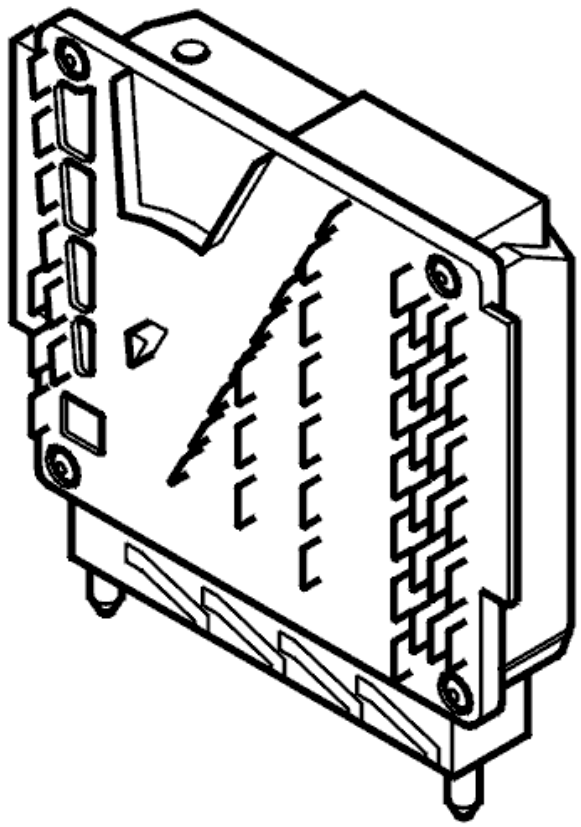

Fig. 311: Engine Control Module

Courtesy of VOLVO CARS CORPORATION

The diagnostic trouble code (DTC) is stored if the engine control module (ECM) registers that the internal governor for control of the throttle angle in the throttle unit is damaged or that the control signal for the governor is too low when controlling the throttle.

The diagnostic trouble code (DTC) can be diagnosed when the engine is running.

Substitute Value

The engine control module (ECM) shuts down the supply to the damper motor for the electronic throttle unit. The throttle will set itself to the return position.

Possible Source

- The throttle is sticking or is blocked (e. g. oil film, dust)
- Contact resistance or oxidation in the terminals between the engine control module (ECM) and the electronic throttle unit
- Open-circuit, short-circuit to ground or short-circuit to supply voltage in the wiring for the damper motor in the throttle unit
- Short-circuit to each other in the wiring for the damper motor in the throttle unit
- Damaged throttle unit
- Faulty software in the engine control module (ECM).

Fault symptom[s]

- Malfunction indicator lamp (MIL) lit
- Poor performance.

FAULTY SIGNAL

FAULT-TRACING INFORMATION

FAULT-TRACING INFORMATION

CAUTION: The male and female pins on the electronic throttle unit connectors are gold plated. Great care must be taken when measuring. Damage to the gold plating can result in operating difficulties.

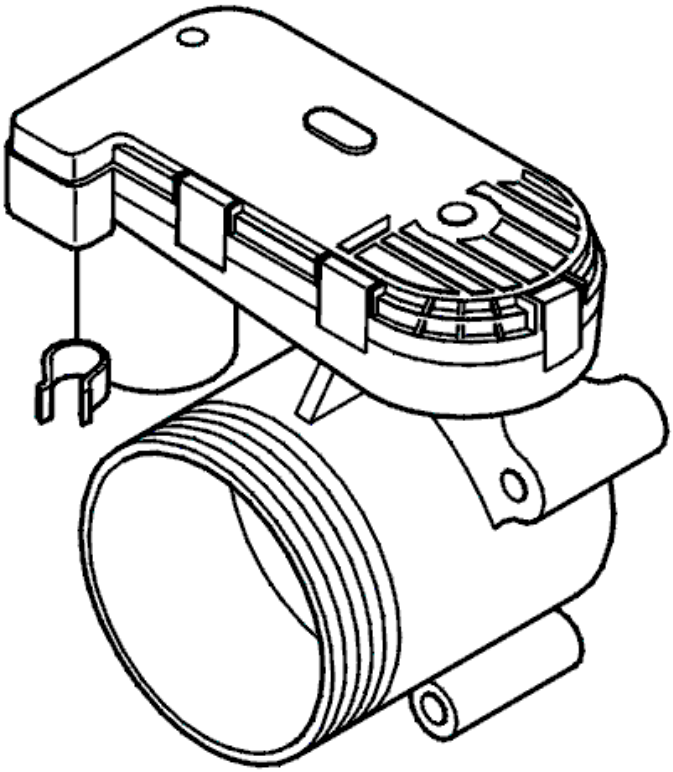

Fig. 312: Identifying Throttle Unit & Potentiometer
Courtesy of VOLVO CARS CORPORATION

- **Continue**

  Refer to **CHECKING THE FAULT STATUS**

CHECKING THE FAULT STATUS

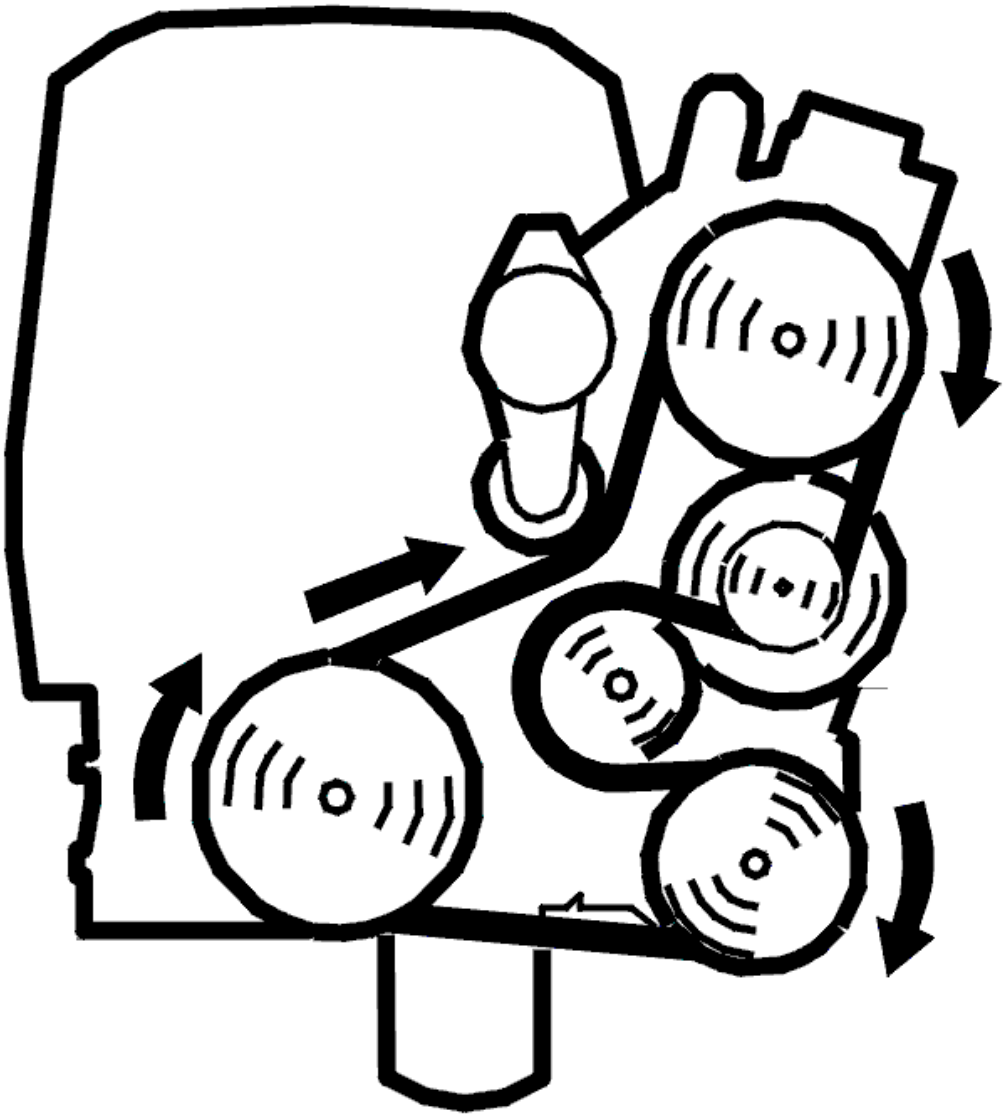

Fig. 313: Belt Routing / Engine Idling - Volvo
Courtesy of VOLVO CARS CORPORATION

- Start the engine.

  Read off the diagnostic status and fault status for the diagnostic trouble code (DTC) by selecting the relevant diagnostic trouble code (DTC) from the list.

  Check whether the fault is permanent or intermittent. Read off the diagnostic trouble code (DTC) fault status when the diagnostic status is "Completed".

  HINT: In some cases several functions of the component will be diagnosed. The affects the amount of time taken to run the diagnostic.

  The fault is permanent if the fault status is "Fault found". If the fault status is "No fault found" the fault is intermittent and not presently active.

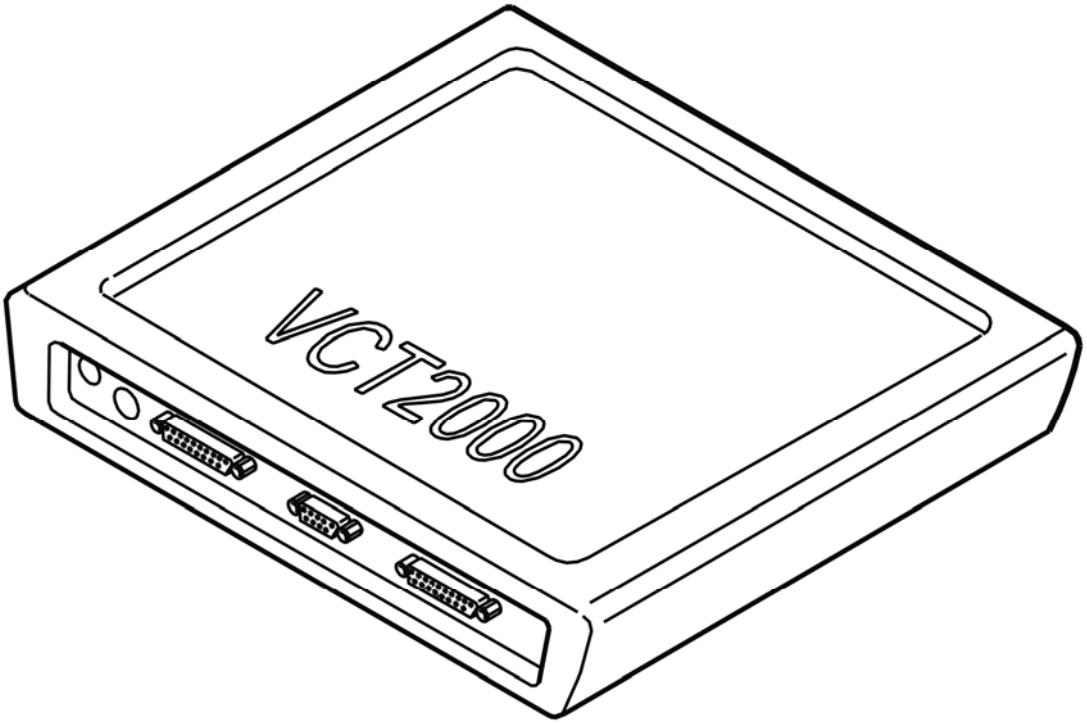

Fig. 314: Identifying VCT2000 Diagnostic Tool Symbol In VIDA
Courtesy of VOLVO CARS CORPORATION

- **Continue**

  Refer to **CHECKING COMPONENTS AND WIRING**

CHECKING COMPONENTS AND WIRING

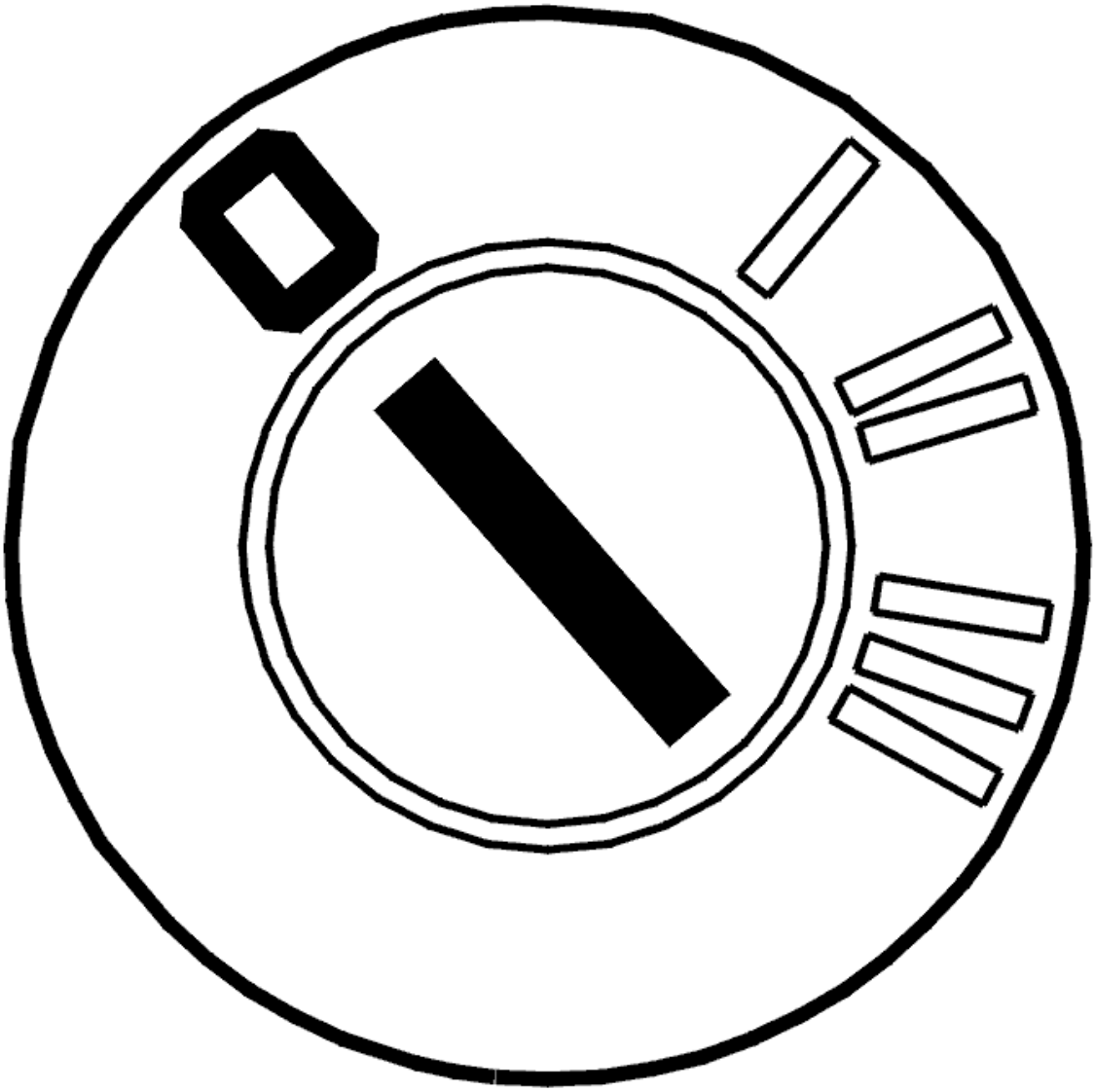

Fig. 315: Identifying Ignition OFF
Courtesy of VOLVO CARS CORPORATION

- Ignition off
- Check the throttle unit and engine control module (ECM) connectors. Check for contact resistance and oxidation.

  Check the resistance value of the damper motor winding in the throttle unit. Take readings between throttle unit terminals #1 and #4 (component side). Check for an open-circuit. Check for a short-circuit.

  NOTE: The resistance of the motor winding in the damper motor is very low.

  Check the cable (+) for the damper motor between engine control module (ECM) terminal #A35 (#A35) and throttle unit terminal #4 (cable harness side). Check for an open-circuit. Check for a short-circuit to ground. Check for a short-circuit to supply voltage.

Check the cable (-) for the damper motor between engine control module (ECM) terminal #A36 (#A36) and throttle unit terminal #1 (cable harness side). Check for an open-circuit. Check for a short-circuit to ground. Check for a short-circuit to supply voltage.

Also check the damper motor cables (+) and (-). Check for a short-circuit to each other.

Check that the shutter in the throttle unit is not blocked or sticking. Clean as necessary.

Remedy as necessary.

Other information:

- see **CONNECTING THE BREAKOUT BOX**
- For 5 cylinder turbocharged engines -2004, see **SIGNAL DESCRIPTION**
- For 5 cylinder turbocharged engines 2005-, see **SIGNAL SPECIFICATION** .
- For 6 cylinder engines -2004, see **SIGNAL SPECIFICATION**
- For 6 cylinder engines 2005-, see **SIGNAL SPECIFICATION** .
- For resistance values: **COMPONENT SPECIFICATIONS**
- For B5xx4T, see **THROTTLE BODY (ELECTRONIC THROTTLE MODULE), REPLACING** .
- For B6xx4T, see **THROTTLE BODY (ELECTRONIC THROTTLE MODULE), REPLACING** .
- For B5xx4T, see **THROTTLE BODY (TB), CLEANING** .
- For B6xx4x, see **THROTTLE BODY (TB), CLEANING** .
- see **ENGINE CONTROL MODULE (ECM), REPLACING**
- see **CHECKING WIRING AND TERMINALS**

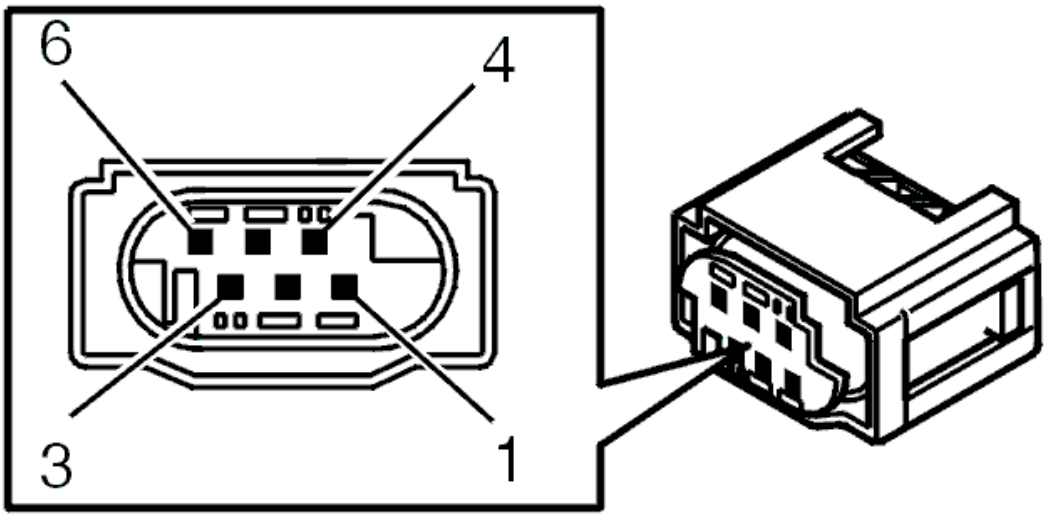

Fig. 316: Identifying Throttle Unit Connector Terminals
Courtesy of VOLVO CARS CORPORATION

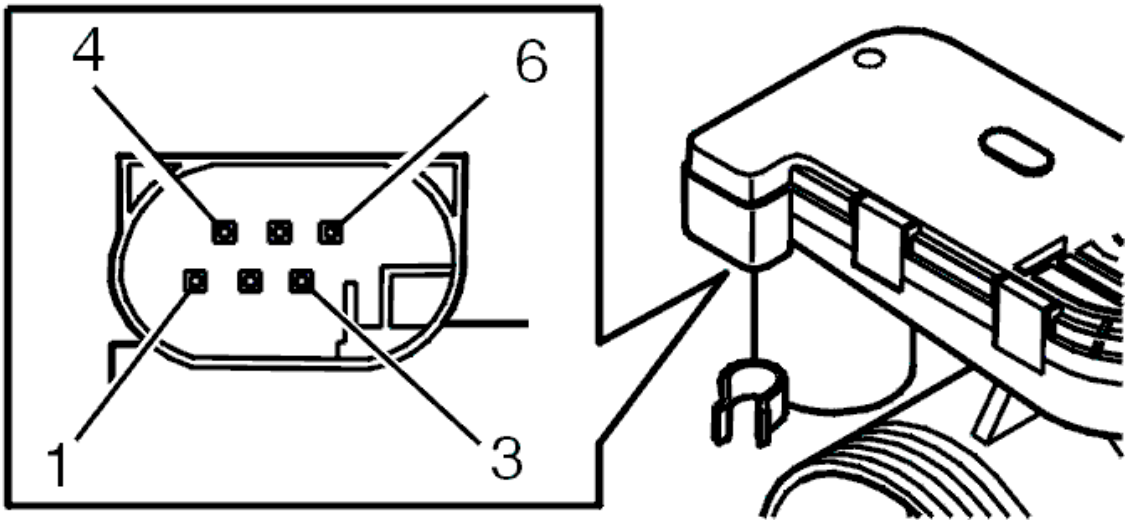

Fig. 317: Identifying Throttle Unit Connector Terminals
Courtesy of VOLVO CARS CORPORATION

- **Continue**

Refer to **ADAPTATION OF THE THROTTLE UNIT**

ADAPTATION OF THE THROTTLE UNIT

NOTE: **The ignition must be switched on for at least 30 seconds after the basic conditions are met in order for the adaptation to start. It takes approximately 10 seconds to run the adaptation.**

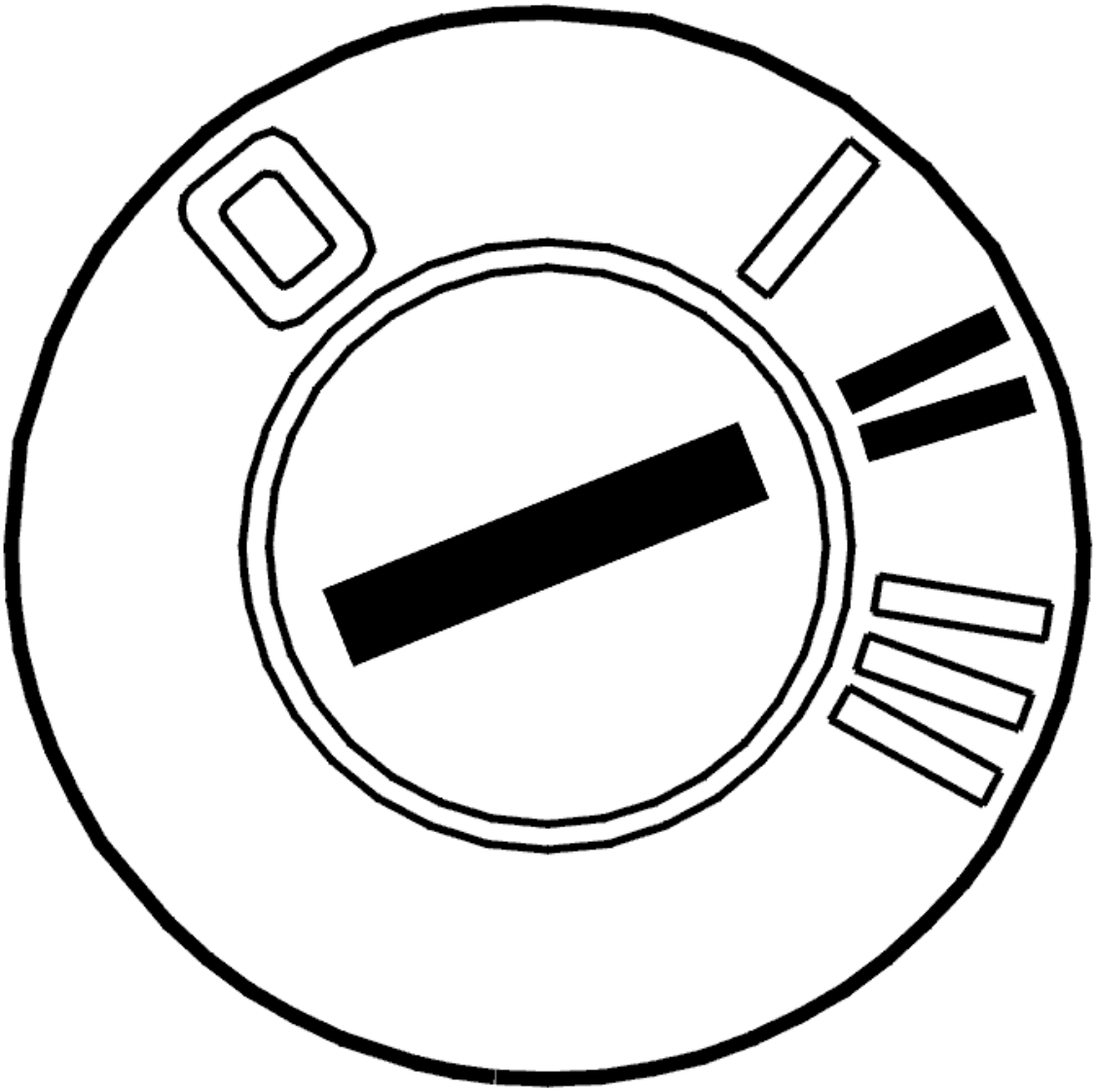

Fig. 318: Identifying Ignition ON
Courtesy of VOLVO CARS CORPORATION

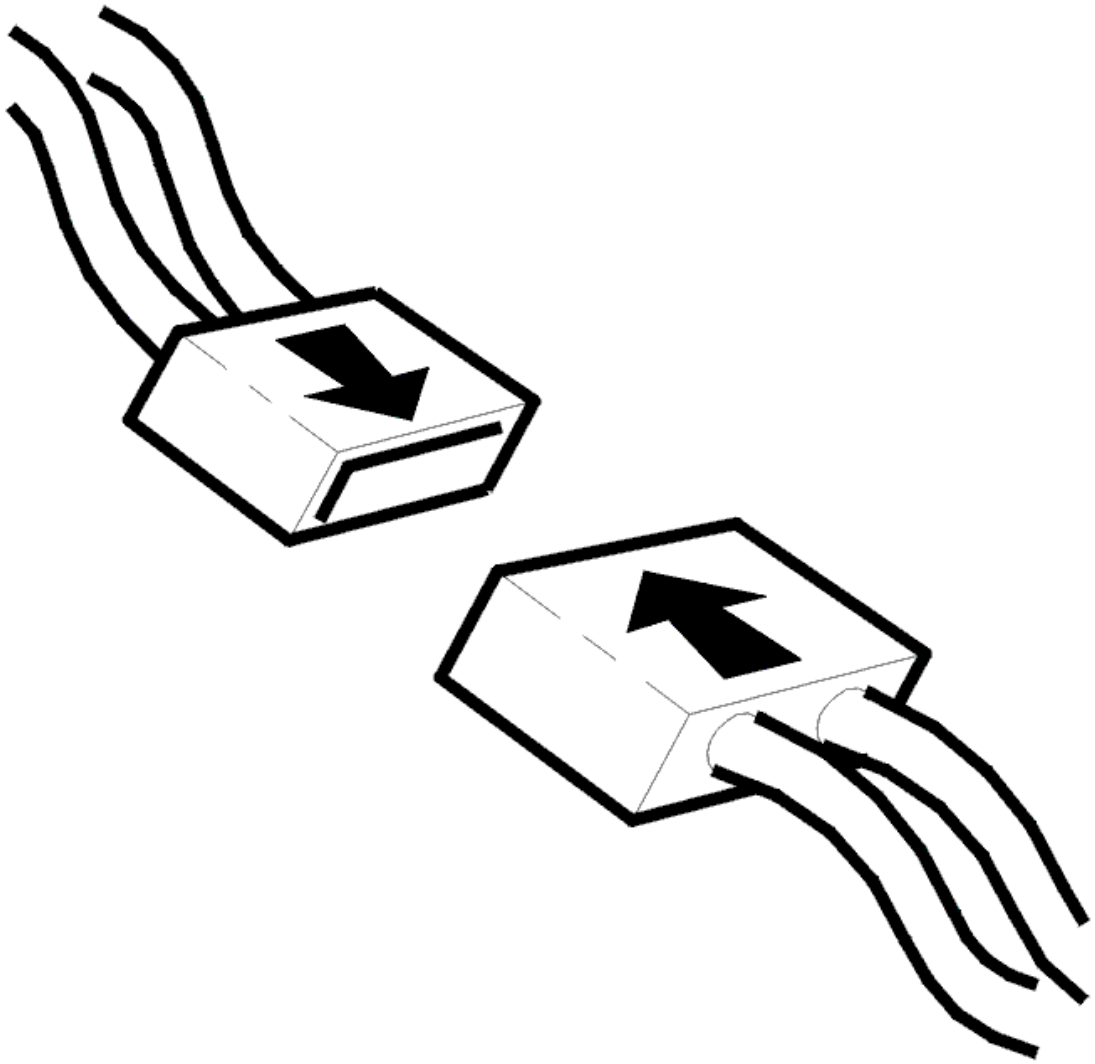

Fig. 319: Connecting Connector
Courtesy of VOLVO CARS CORPORATION

- Ignition off
- Reinstall the connectors, components etc.
- Ignition on
- Read off the parameters.

Check that the following basic conditions for adaptation of the throttle unit are met.

1. Ignition on / engine off
2. Battery voltage above 10 V
3. Accelerator pedal (AP) unaffected
4. The vehicle must be stationary (no vehicle speed signal)

5. Engine coolant temperature (ECT) between 5-100°C
6. Intake air temperature (IAT) above 5 °C.

Remedy as necessary.

Check that the adaptation is correctly run after the "Adaptation of the throttle unit running" parameter changes status from "YES" to "NO". When all basic conditions are met, the adaptation must be completed after approximately 40 seconds. When the adaptation has been run correctly, the following information will be displayed:

- Adaptation of the throttle unit: OK
- Adaptation of the throttle unit running: NO.

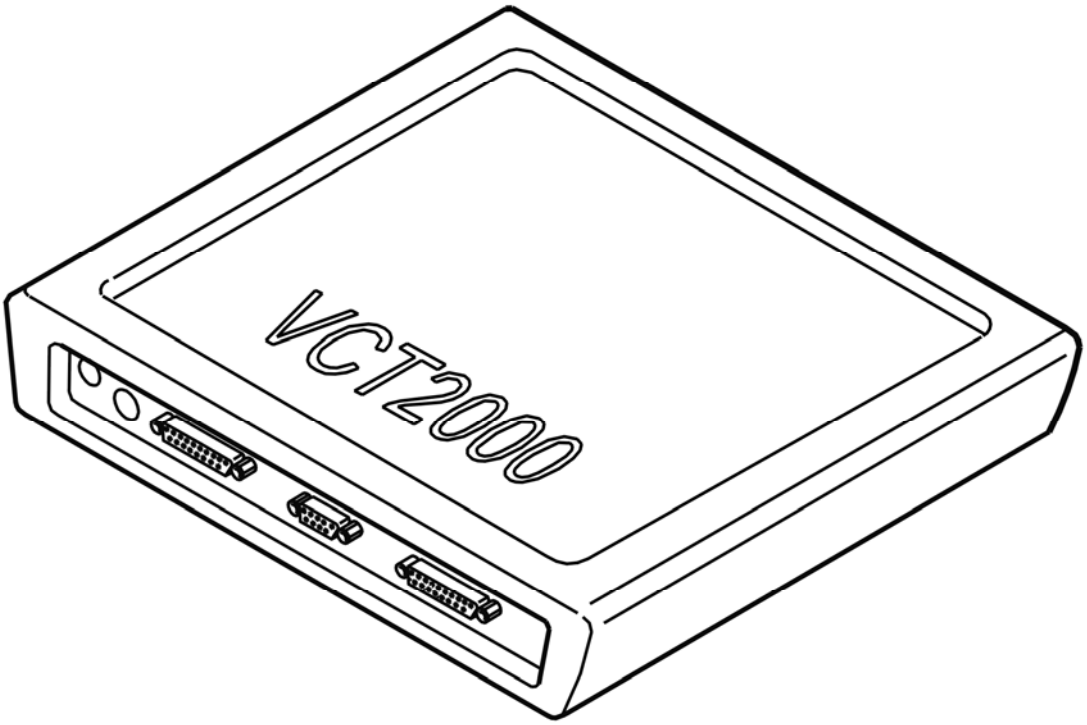

Fig. 320: Identifying VCT2000 Diagnostic Tool Symbol In VIDA
Courtesy of VOLVO CARS CORPORATION

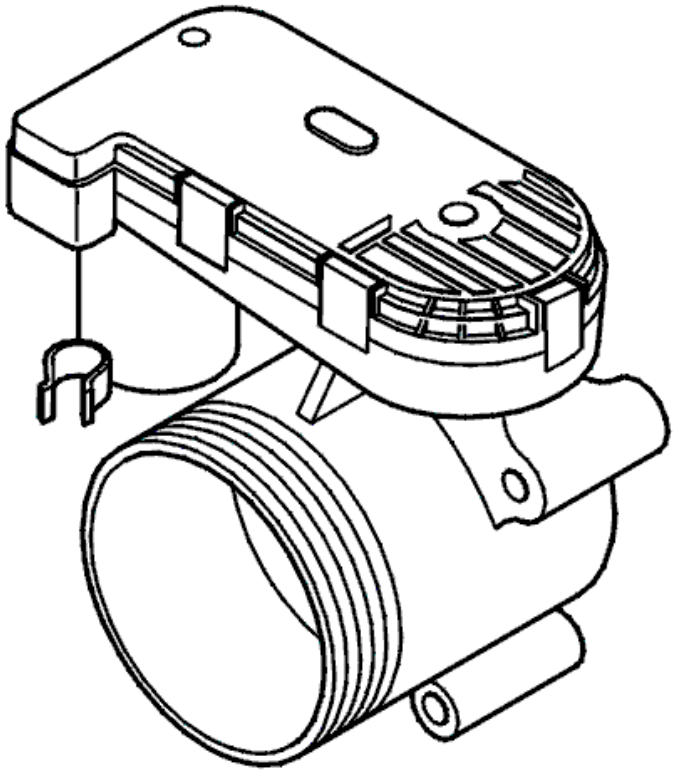

Fig. 321: Identifying Throttle Unit & Potentiometer
Courtesy of VOLVO CARS CORPORATION

- **Continue**

  Refer to **VERIFICATION**

VERIFICATION

HINT: After carrying out the repair, check that the fault has been remedied.

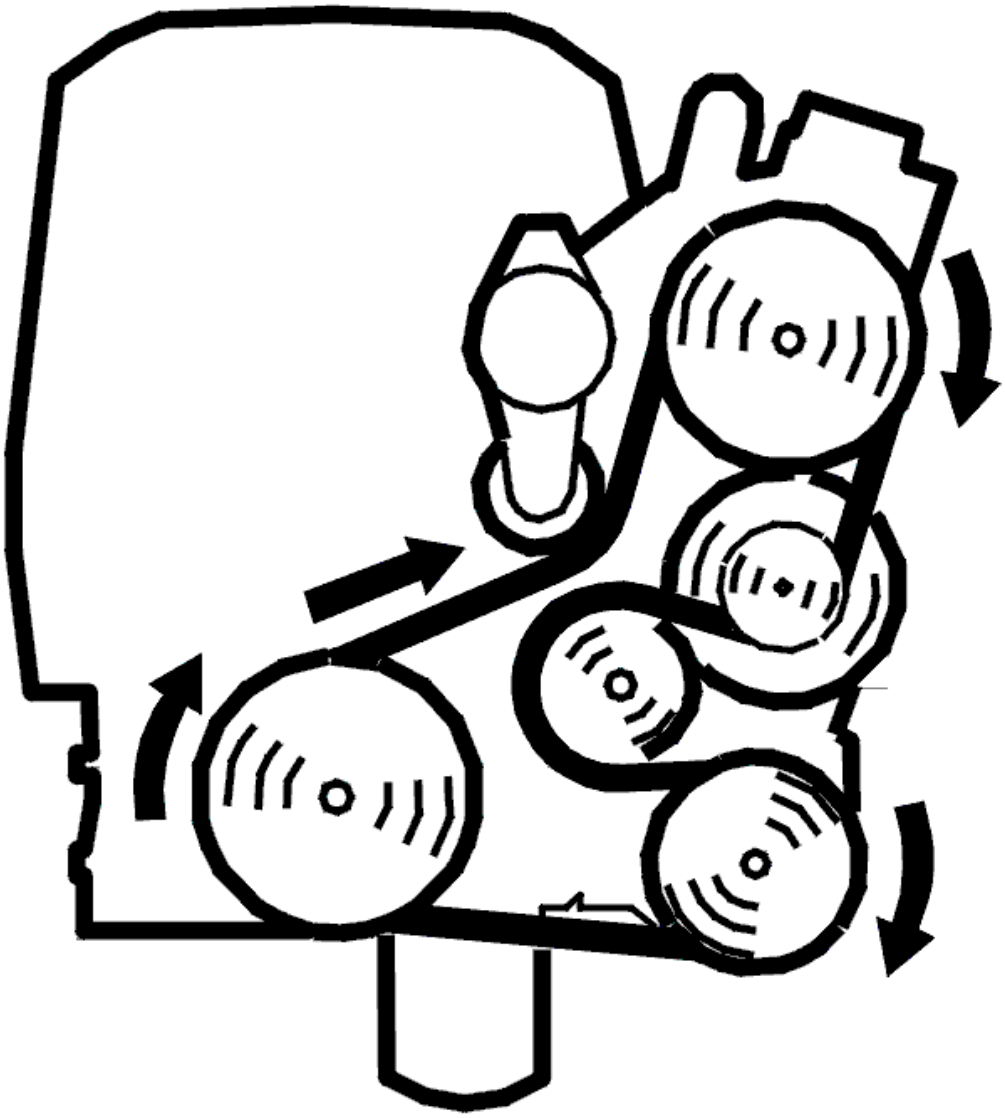

Fig. 322: Belt Routing / Engine Idling - Volvo
Courtesy of VOLVO CARS CORPORATION

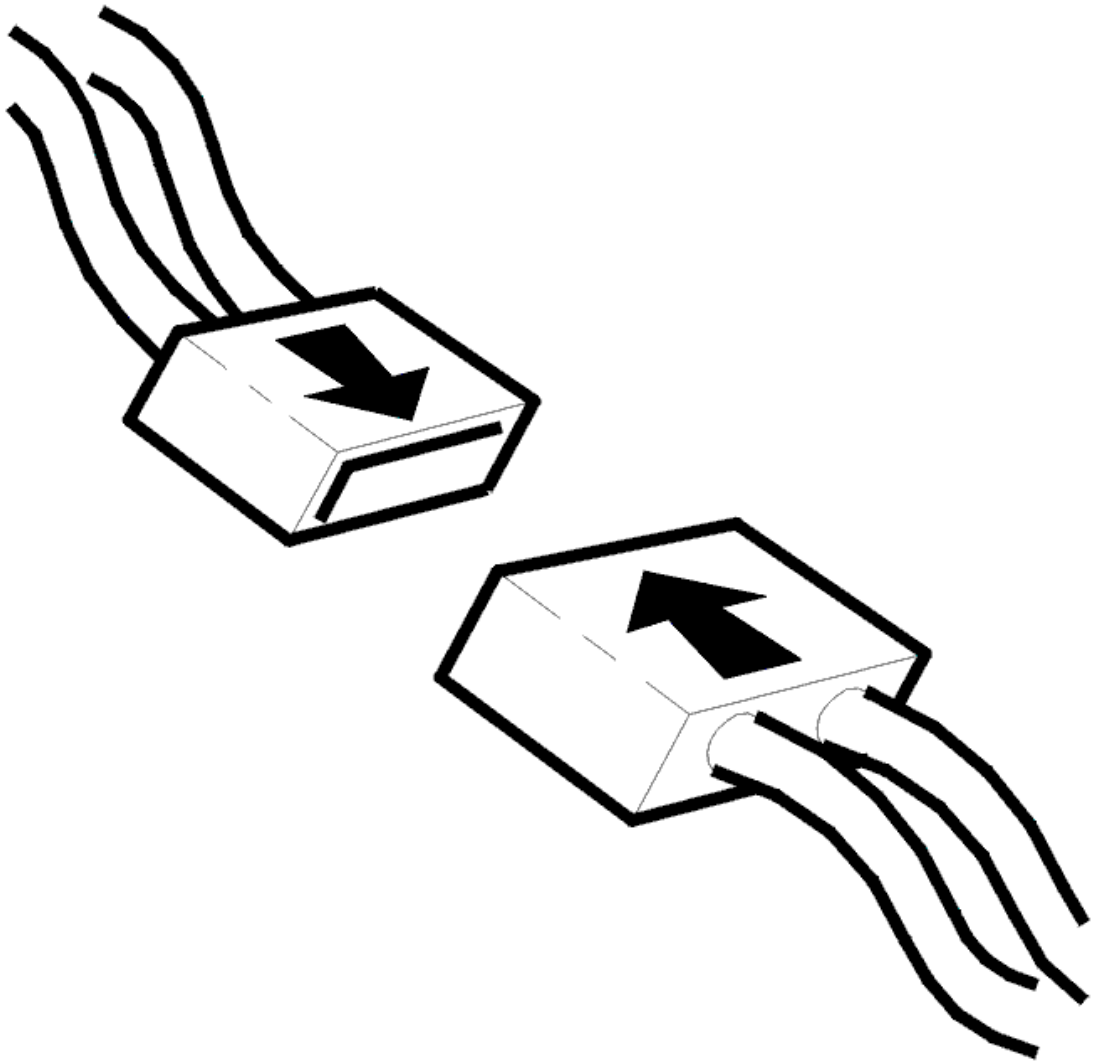

Fig. 323: Connecting Connector
Courtesy of VOLVO CARS CORPORATION

- Ignition off
- Reconnect the connectors, reinstall components etc.
- Start the engine.

  Read off the diagnostic status and fault status for the diagnostic trouble code (DTC) by selecting the relevant diagnostic trouble code (DTC) from the list.

  Check the fault status for the diagnostic trouble code (DTC) when the diagnostic is "Complete". If the function is correct, the fault status must be "No fault found" when the diagnostic is complete.

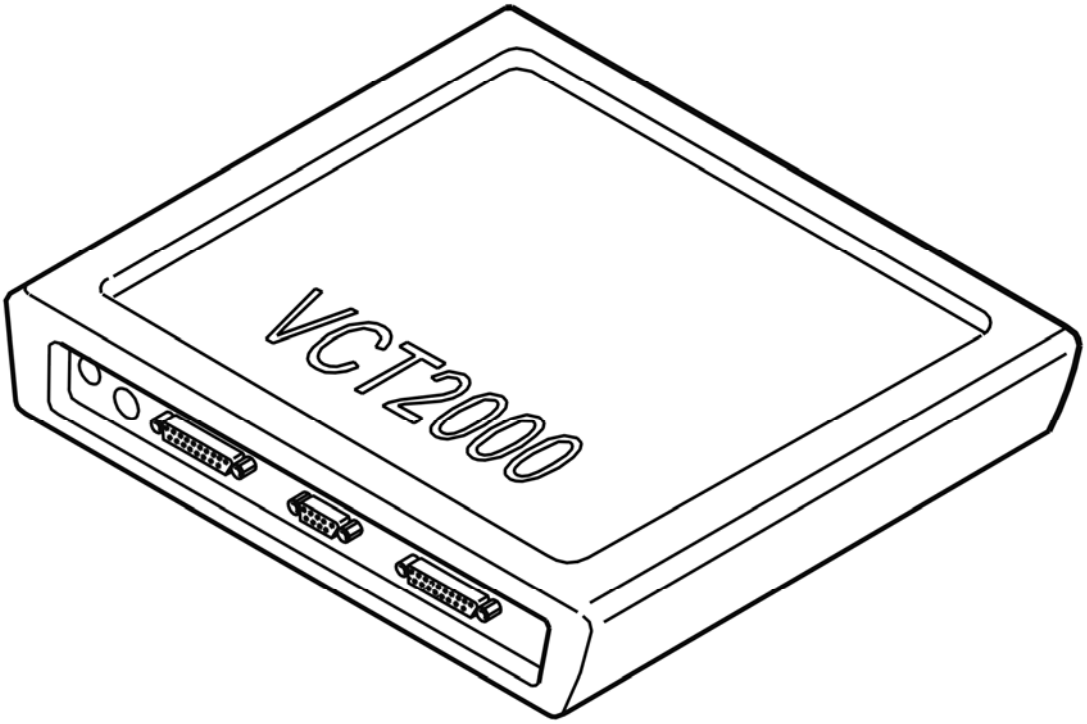

Fig. 324: Identifying VCT2000 Diagnostic Tool Symbol In VIDA
Courtesy of VOLVO CARS CORPORATION

Is the function OK?

- **YES**

  OKAY: Troubleshooting has been completed.

- **NO**

  Refer to **PROGRAMMING THE ENGINE CONTROL MODULE (ECM)**

PROGRAMMING THE ENGINE CONTROL MODULE (ECM)

HINT: This diagnostic trouble code (DTC) may be caused by faulty software.

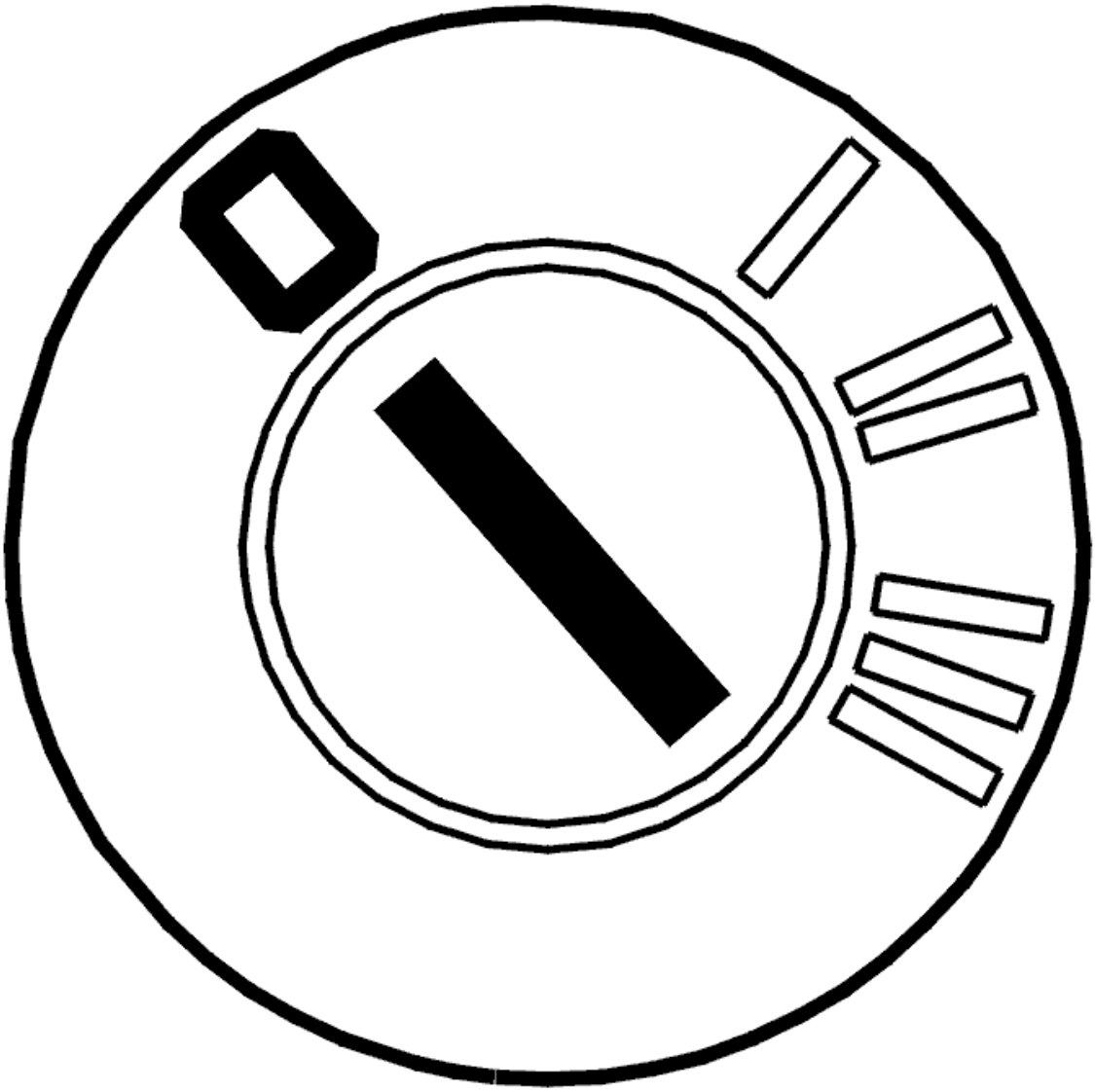

Fig. 325: Identifying Ignition OFF
Courtesy of VOLVO CARS CORPORATION

- Ignition off.

  Try downloading new software to the engine control module (ECM). To download new software, see: **ENGINE CONTROL MODULE (ECM), REPLACING**

  Remedy as necessary.

- **Continue**

  Refer to **ADAPTATION OF THE THROTTLE UNIT**

ADAPTATION OF THE THROTTLE UNIT

NOTE: **The ignition must be switched on for at least 30 seconds after the basic conditions are met in order for the adaptation to start. It takes approximately 10 seconds to run the adaptation.**

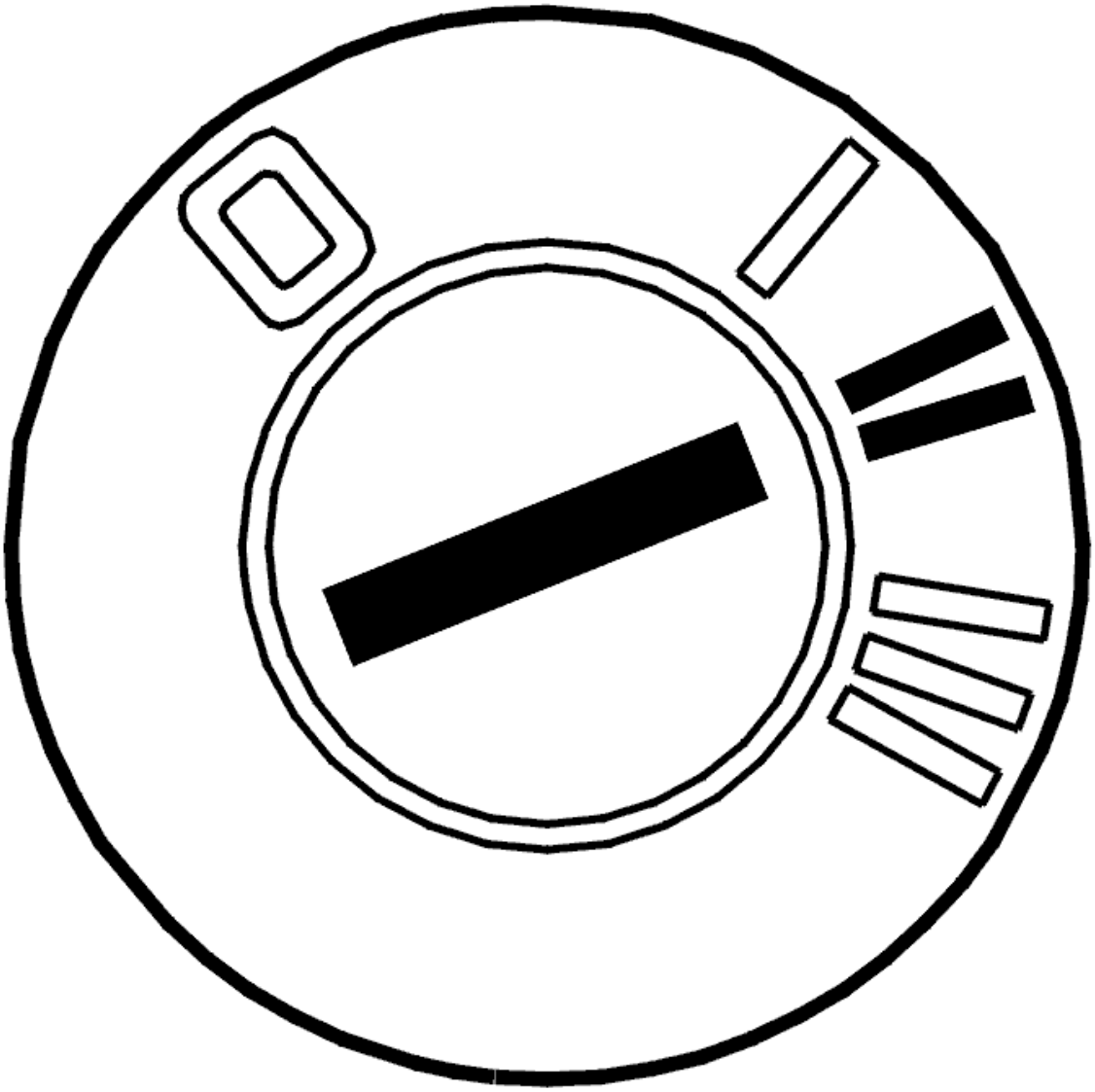

Fig. 326: Identifying Ignition ON
Courtesy of VOLVO CARS CORPORATION

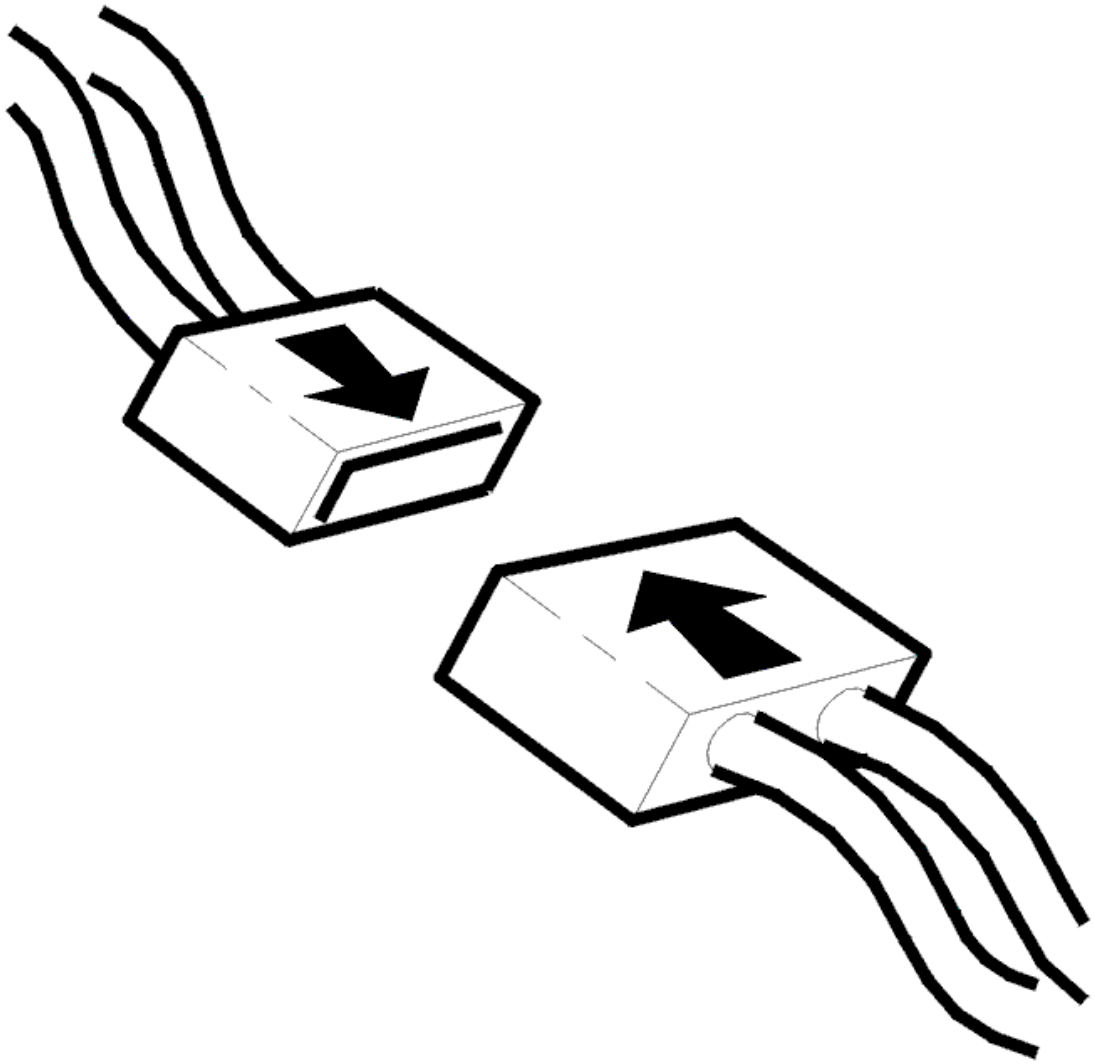

Fig. 327: Connecting Connector
Courtesy of VOLVO CARS CORPORATION

- Ignition off
- Reinstall the connectors, components etc.
- Ignition on
- Read off the parameters.

Check that the following basic conditions for adaptation of the throttle unit are met.

1. Ignition on / engine off
2. Battery voltage above 10 V
3. Accelerator pedal (AP) unaffected
4. The vehicle must be stationary (no vehicle speed signal)

5. Engine coolant temperature (ECT) between 5-100°C
6. Intake air temperature (IAT) above 5 °C.

Remedy as necessary.

Check that the adaptation is correctly run after the "Adaptation of the throttle unit running" parameter changes status from "YES" to "NO". When all basic conditions are met, the adaptation must be completed after approximately 40 seconds. When the adaptation has been run correctly, the following information will be displayed:

- Adaptation of the throttle unit: OK
- Adaptation of the throttle unit running: NO.

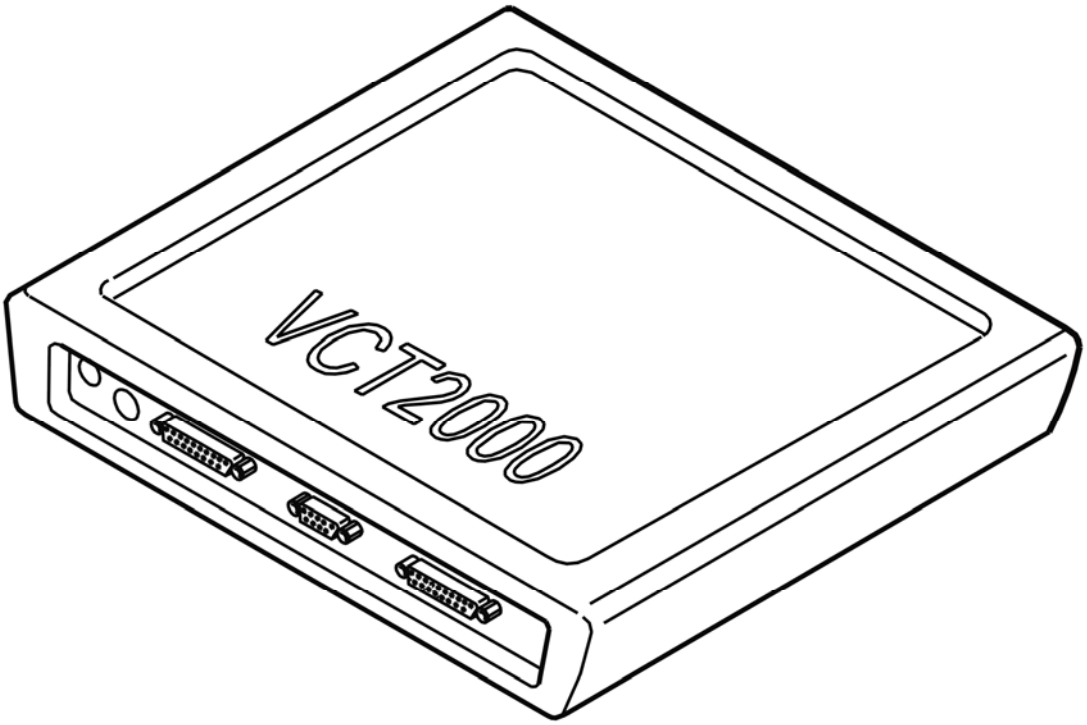

Fig. 328: Identifying VCT2000 Diagnostic Tool Symbol In VIDA
Courtesy of VOLVO CARS CORPORATION

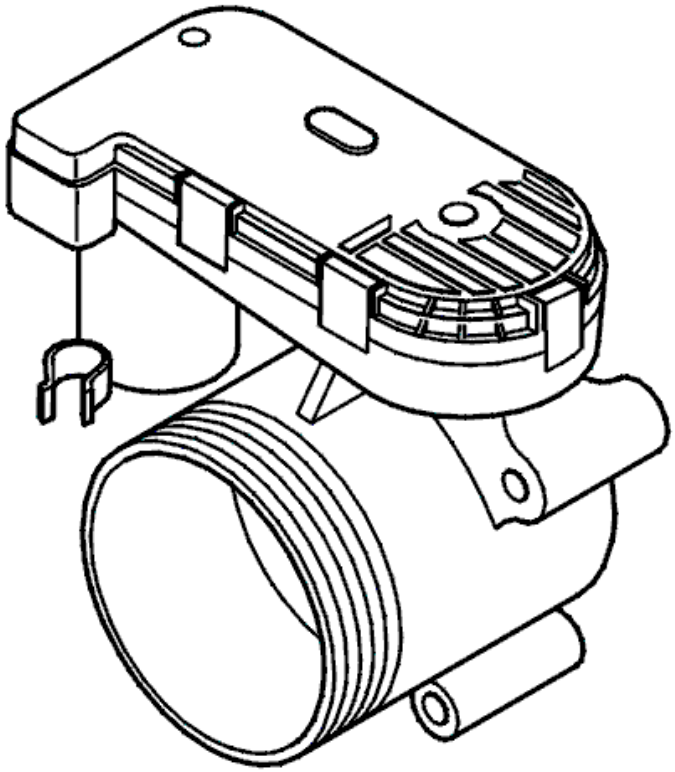

Fig. 329: Identifying Throttle Unit & Potentiometer
Courtesy of VOLVO CARS CORPORATION

- **Continue**

  Refer to **VERIFICATION**

VERIFICATION

VERIFICATION

HINT: After carrying out the repair, check that the fault has been remedied.

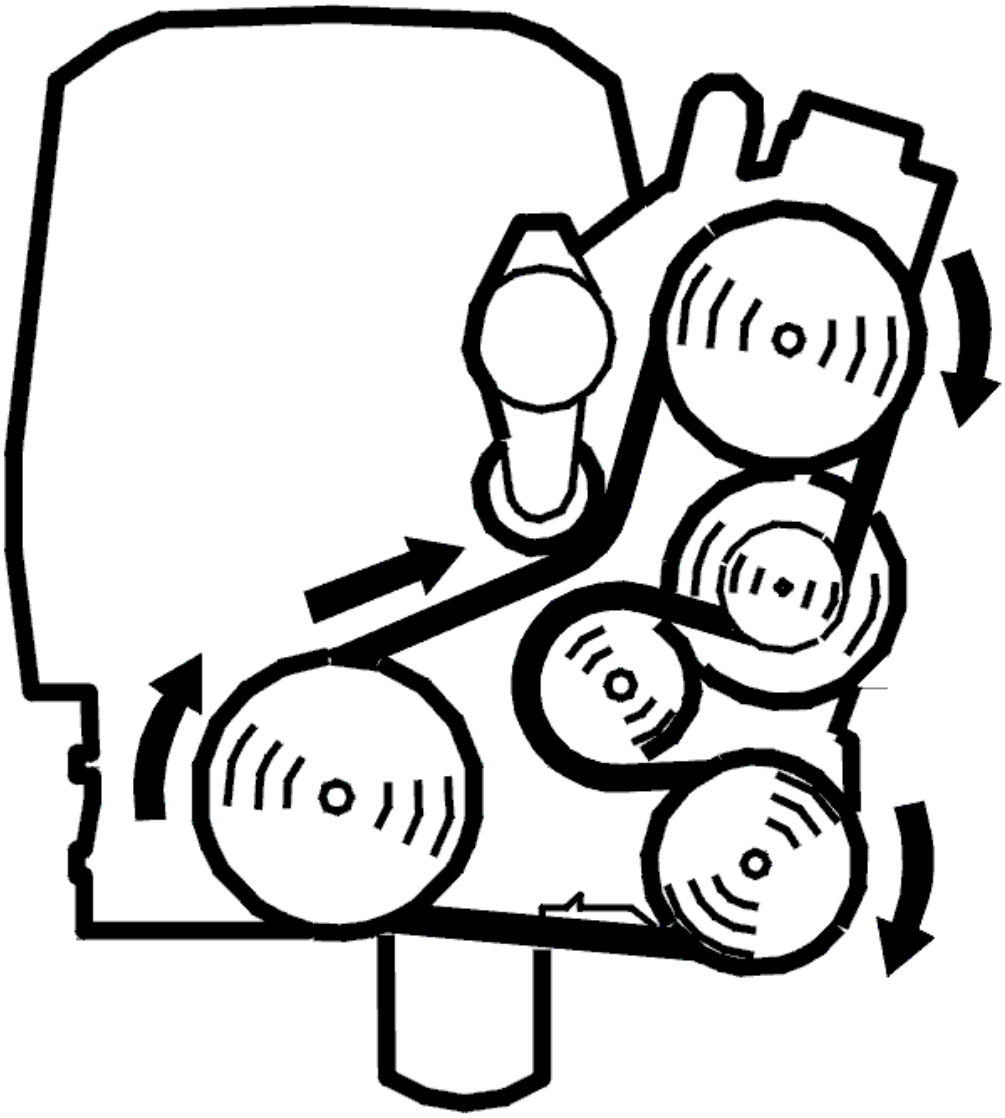

Fig. 330: Belt Routing / Engine Idling - Volvo
Courtesy of VOLVO CARS CORPORATION

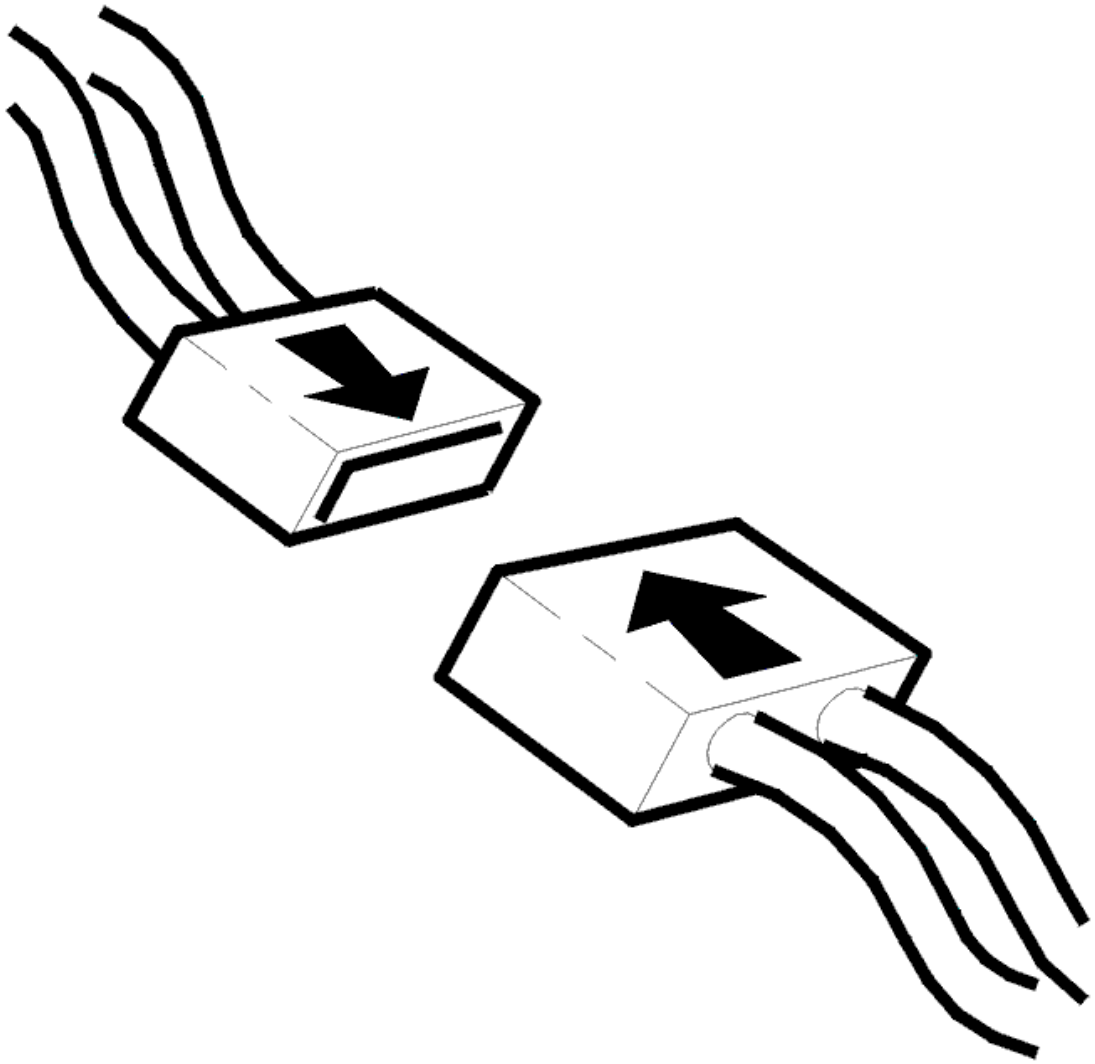

Fig. 331: Connecting Connector
Courtesy of VOLVO CARS CORPORATION

- Ignition off
- Reconnect the connectors, reinstall components etc.
- Start the engine.

  Read off the diagnostic status and fault status for the diagnostic trouble code (DTC) by selecting the relevant diagnostic trouble code (DTC) from the list.

  Check the fault status for the diagnostic trouble code (DTC) when the diagnostic is "Complete". If the function is correct, the fault status must be "No fault found" when the diagnostic is complete.

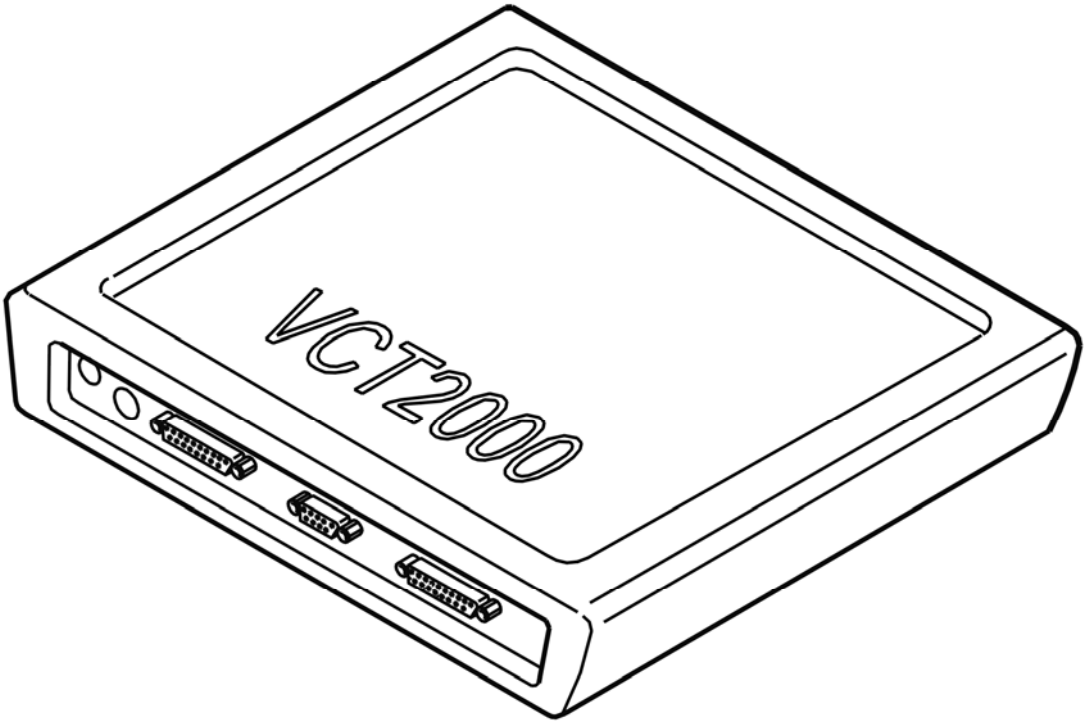

Fig. 332: Identifying VCT2000 Diagnostic Tool Symbol In VIDA
Courtesy of VOLVO CARS CORPORATION

Is the function OK?

- **YES**

  VERIFIED: Troubleshooting has been completed.

- **NO**

  Refer to **INFORMATION**

INFORMATION

FAULT-TRACING INFORMATION

The fault should have been detected and remedied. As this is not the case fault-tracing has failed.

Exit fault-tracing for this diagnostic trouble code (DTC) or make another attempt.

ECM-9290: ENGINE CONTROL MODULE (ECM). FAULTY SIGNAL (B6294T; 2005-2006)

DIAGNOSTIC TROUBLE CODE (DTC) INFORMATION ECM-9290

see **DIAGNOSTIC TROUBLE CODE (DTC) INFORMATION ECM-9290**

FAULTY SIGNAL

see **FAULTY SIGNAL**

ECM-929C: ENGINE CONTROL MODULE (ECM). SIGNAL TOO HIGH (B5254T2; 2005-2007)

DIAGNOSTIC TROUBLE CODE (DTC) INFORMATION ECM-929C

Condition

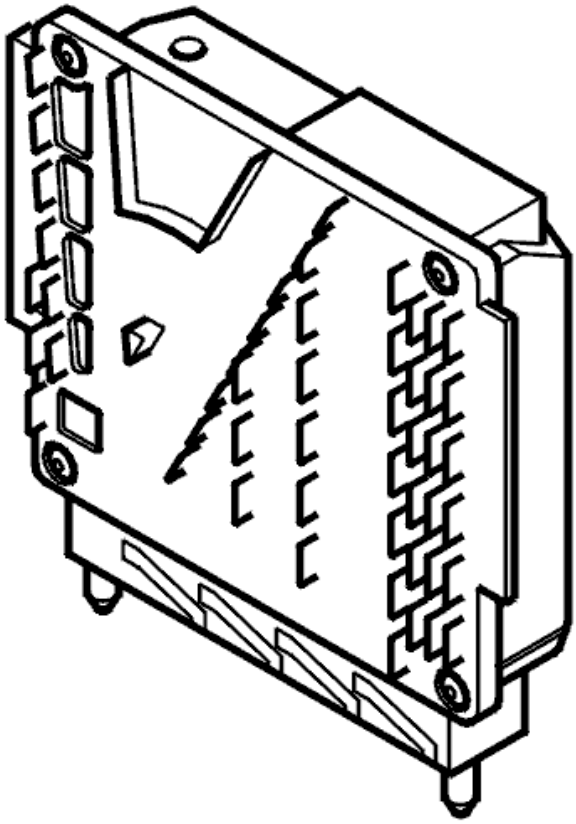

Fig. 333: Engine Control Module
Courtesy of VOLVO CARS CORPORATION

The diagnostic trouble code (DTC) is stored if the engine control module (ECM) registers that the internal governor for control of the throttle angle in the throttle unit is damaged or that the control signal for the governor is too low when controlling the throttle.

The diagnostic trouble code (DTC) can be diagnosed when the engine is running.

Substitute Value

The engine control module (ECM) shuts down the supply to the damper motor for the electronic throttle unit. The throttle will set itself to the return position.

Possible Source

- The throttle is sticking or is blocked (e. g. oil film, dust)
- Contact resistance or oxidation in the terminals between the engine control module (ECM) and the electronic throttle unit
- Open-circuit, short-circuit to ground or short-circuit to supply voltage in the wiring for the damper motor in the throttle unit
- Short-circuit to each other in the wiring for the damper motor in the throttle unit
- Damaged throttle unit
- Faulty software in the engine control module (ECM).

Fault symptom[s]

- Malfunction indicator lamp (MIL) lit
- Poor performance.

SIGNAL TOO HIGH

FAULT-TRACING INFORMATION

FAULT-TRACING INFORMATION

CAUTION: The male and female pins on the electronic throttle unit connectors are gold plated. Great care must be taken when measuring. Damage to the gold plating can result in operating difficulties.

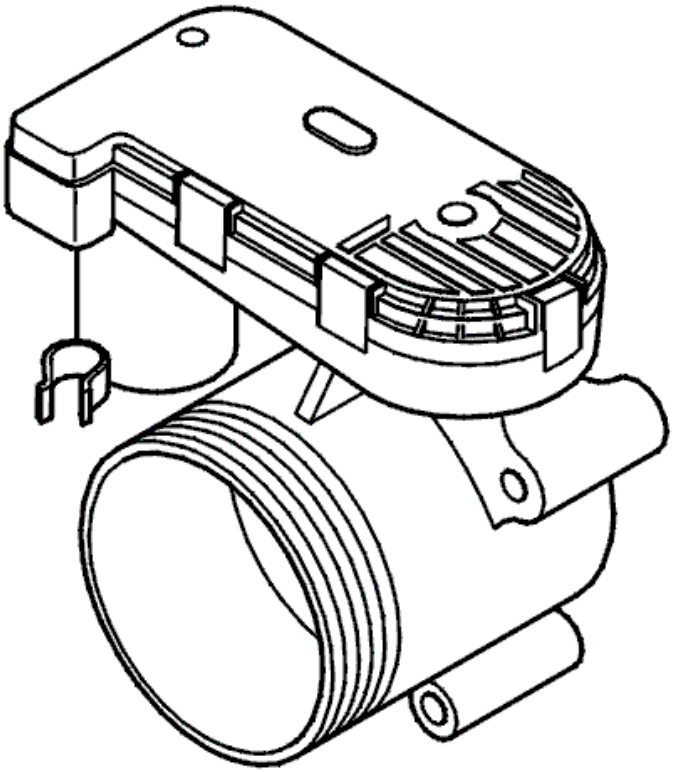

Fig. 334: Identifying Throttle Unit & Potentiometer
Courtesy of VOLVO CARS CORPORATION

- **Continue**

  Refer to **CHECKING THE FAULT STATUS**

CHECKING THE FAULT STATUS

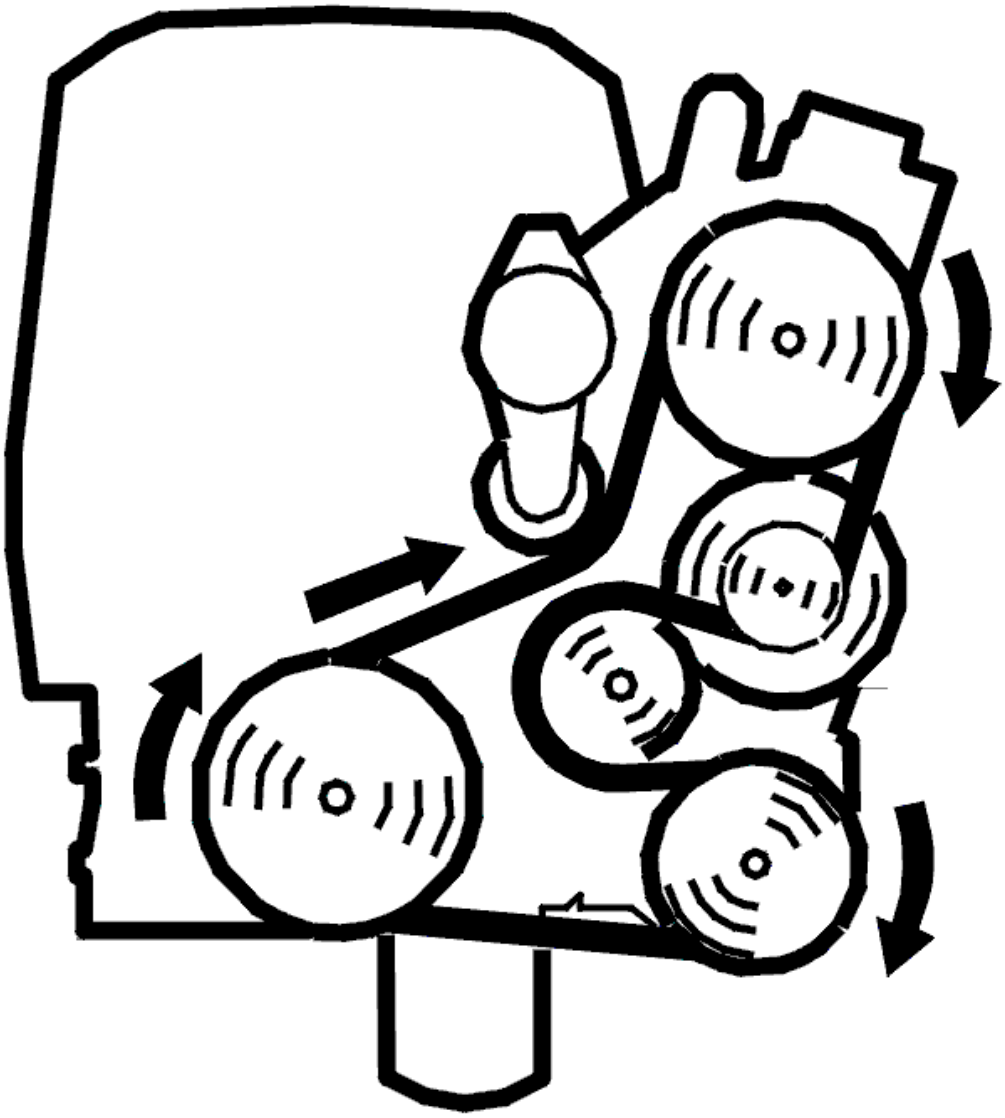

Fig. 335: Belt Routing / Engine Idling - Volvo
Courtesy of VOLVO CARS CORPORATION

- Start the engine.

  Read off the diagnostic status and fault status for the diagnostic trouble code (DTC) by selecting the relevant diagnostic trouble code (DTC) from the list.

  Check whether the fault is permanent or intermittent. Read off the diagnostic trouble code (DTC) fault status when the diagnostic status is "Completed".

  HINT: In some cases several functions of the component will be diagnosed. The affects the amount of time taken to run the diagnostic.

  The fault is permanent if the fault status is "Fault found". If the fault status is "No fault found" the fault is intermittent and not presently active.

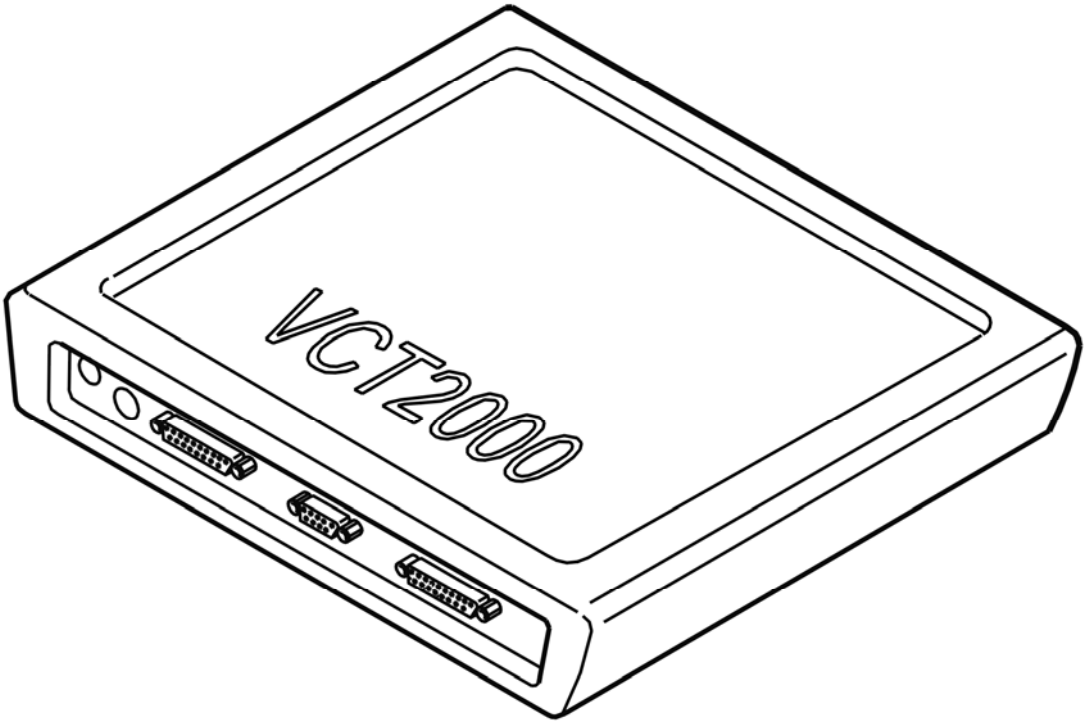

Fig. 336: Identifying VCT2000 Diagnostic Tool Symbol In VIDA
Courtesy of VOLVO CARS CORPORATION

- **Continue**

  Refer to **CHECKING COMPONENTS AND WIRING**

CHECKING COMPONENTS AND WIRING

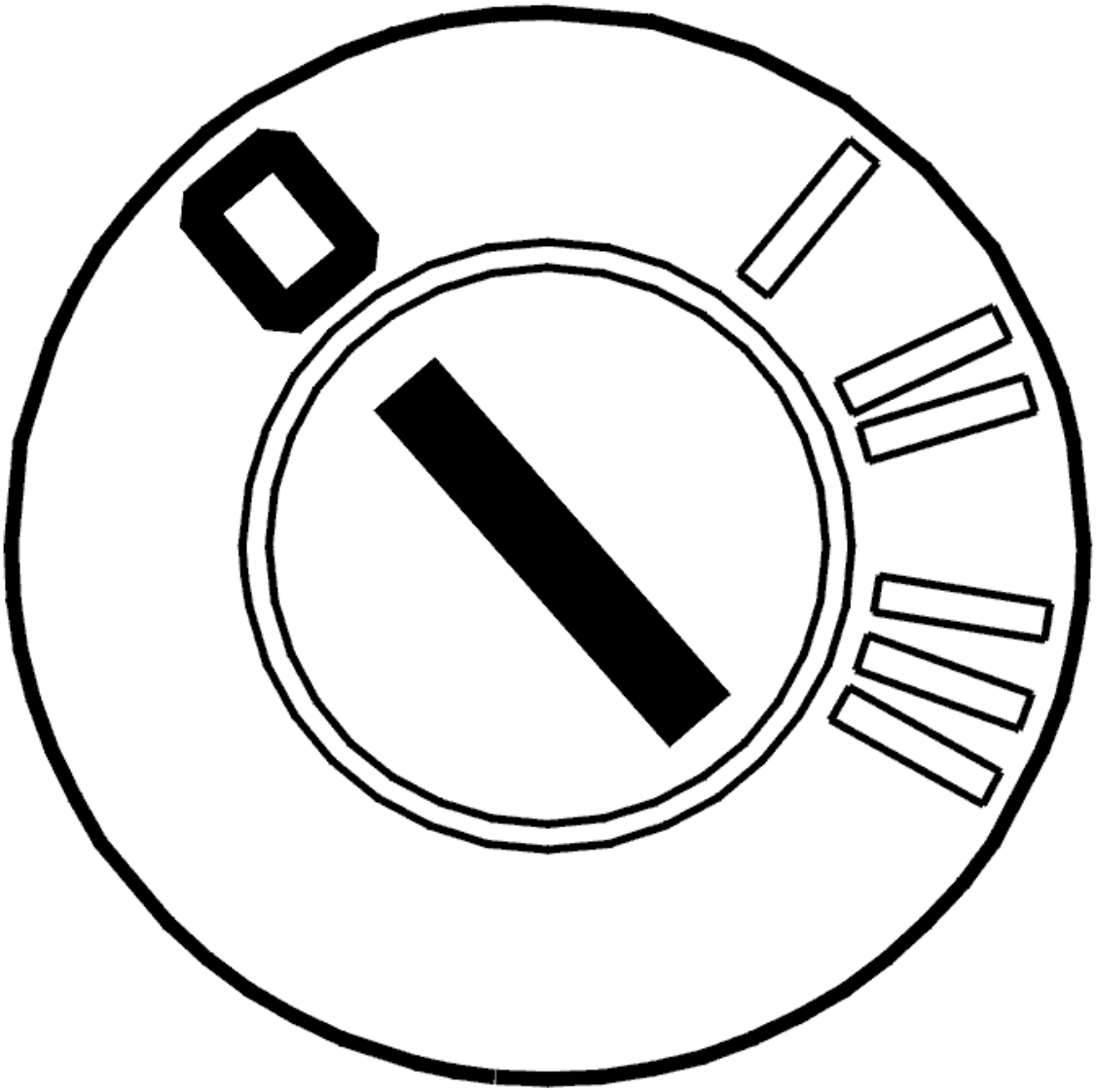

Fig. 337: Identifying Ignition OFF
Courtesy of VOLVO CARS CORPORATION

- Ignition off
- Check the throttle unit and engine control module (ECM) connectors. Check for contact resistance and oxidation.

  Check the resistance value of the damper motor winding in the throttle unit. Take readings between throttle unit terminals #1 and #4 (component side). Check for an open-circuit. Check for a short-circuit.

  NOTE: The resistance of the motor winding in the damper motor is very low.

  Check the cable (+) for the damper motor between engine control module (ECM) terminal #A35 (#A35) and throttle unit terminal #4 (cable harness side). Check for an open-circuit. Check for a short-circuit to ground. Check for a short-circuit to supply voltage.

Check the cable (-) for the damper motor between engine control module (ECM) terminal #A36 (#A36) and throttle unit terminal #1 (cable harness side). Check for an open-circuit. Check for a short-circuit to ground. Check for a short-circuit to supply voltage.

Also check the damper motor cables (+) and (-). Check for a short-circuit to each other.

Check that the shutter in the throttle unit is not blocked or sticking. Clean as necessary.

Remedy as necessary.

Other information:

- see **CONNECTING THE BREAKOUT BOX**
- For 5 cylinder turbocharged engines -2004, see **SIGNAL DESCRIPTION**
- For 5 cylinder turbocharged engines 2005-, see **SIGNAL SPECIFICATION** .
- For 6 cylinder engines -2004, see **SIGNAL SPECIFICATION**
- For 6 cylinder engines 2005-, see **SIGNAL SPECIFICATION** .
- For resistance values: **COMPONENT SPECIFICATIONS**
- For B5xx4T, see **THROTTLE BODY (ELECTRONIC THROTTLE MODULE), REPLACING** .
- For B6xx4T, see **THROTTLE BODY (ELECTRONIC THROTTLE MODULE), REPLACING** .
- For B5xx4T, see **THROTTLE BODY (TB), CLEANING** .
- For B6xx4x, see **THROTTLE BODY (TB), CLEANING** .
- see **ENGINE CONTROL MODULE (ECM), REPLACING**
- see **CHECKING WIRING AND TERMINALS** .

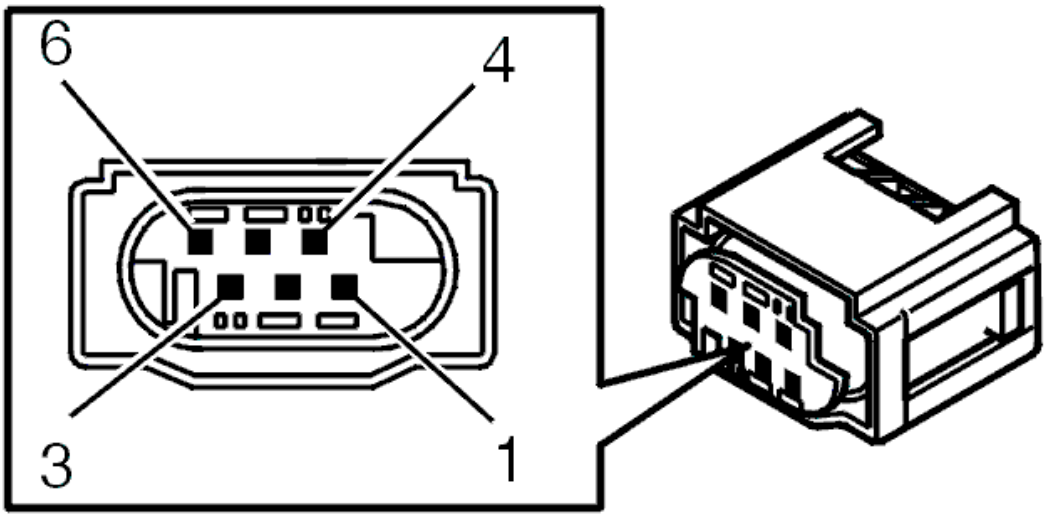

Fig. 338: Identifying Throttle Unit Connector Terminals
Courtesy of VOLVO CARS CORPORATION

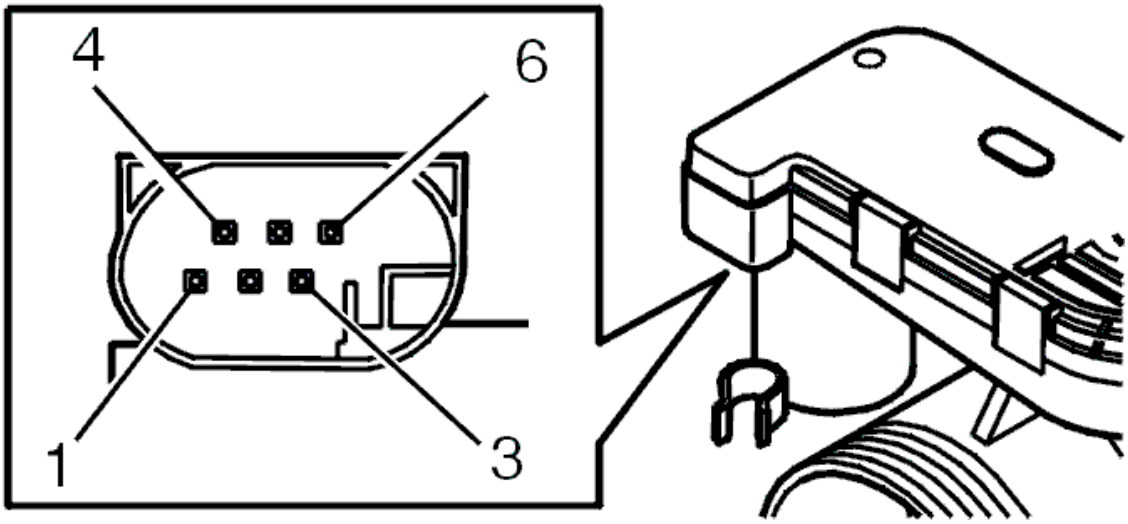

Fig. 339: Identifying Throttle Unit Connector Terminals
Courtesy of VOLVO CARS CORPORATION

- **Continue**

Refer to **ADAPTATION OF THE THROTTLE UNIT**

ADAPTATION OF THE THROTTLE UNIT

NOTE: **The ignition must be switched on for at least 30 seconds after the basic conditions are met in order for the adaptation to start. It takes approximately 10 seconds to run the adaptation.**

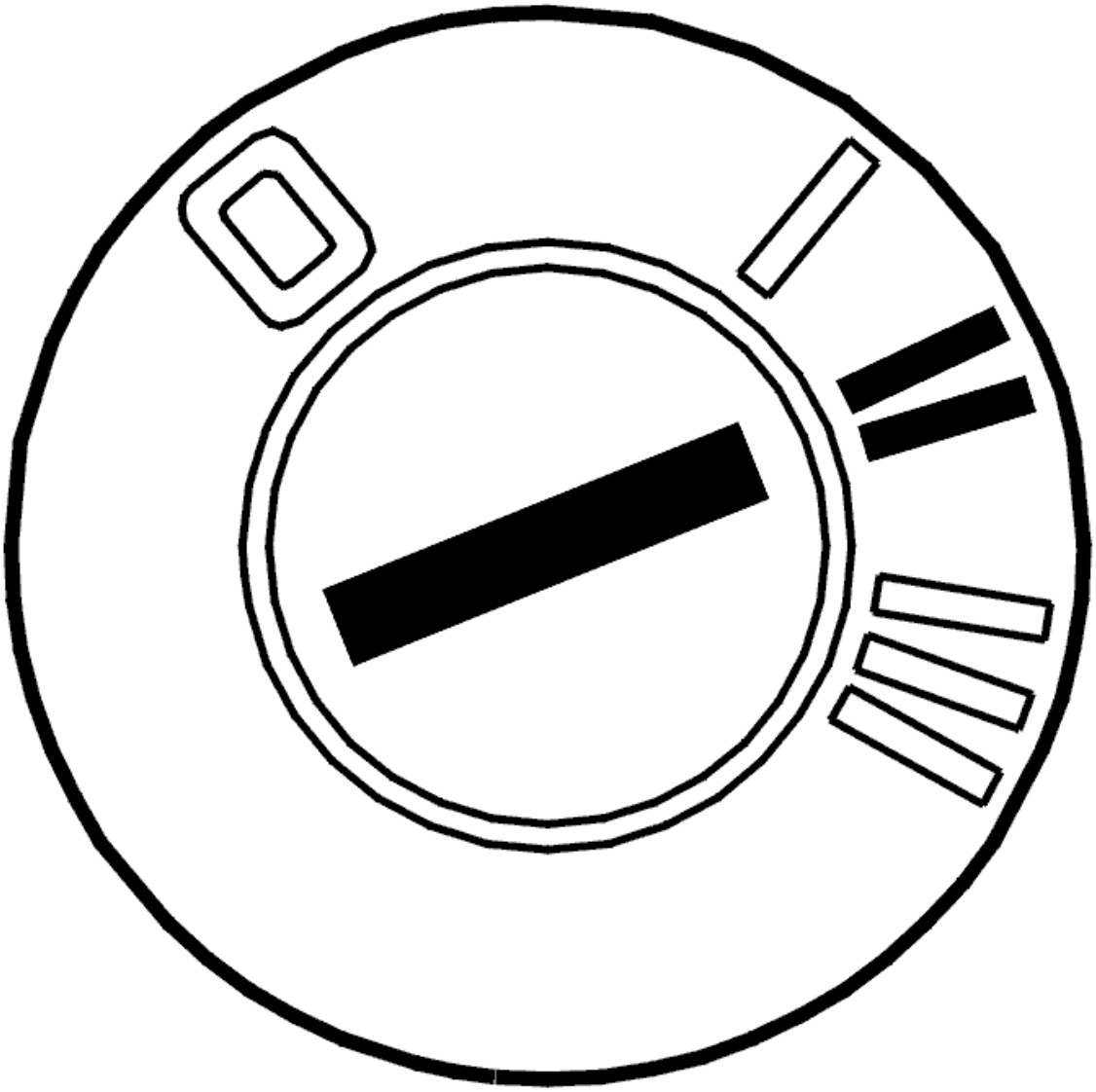

Fig. 340: Identifying Ignition ON
Courtesy of VOLVO CARS CORPORATION

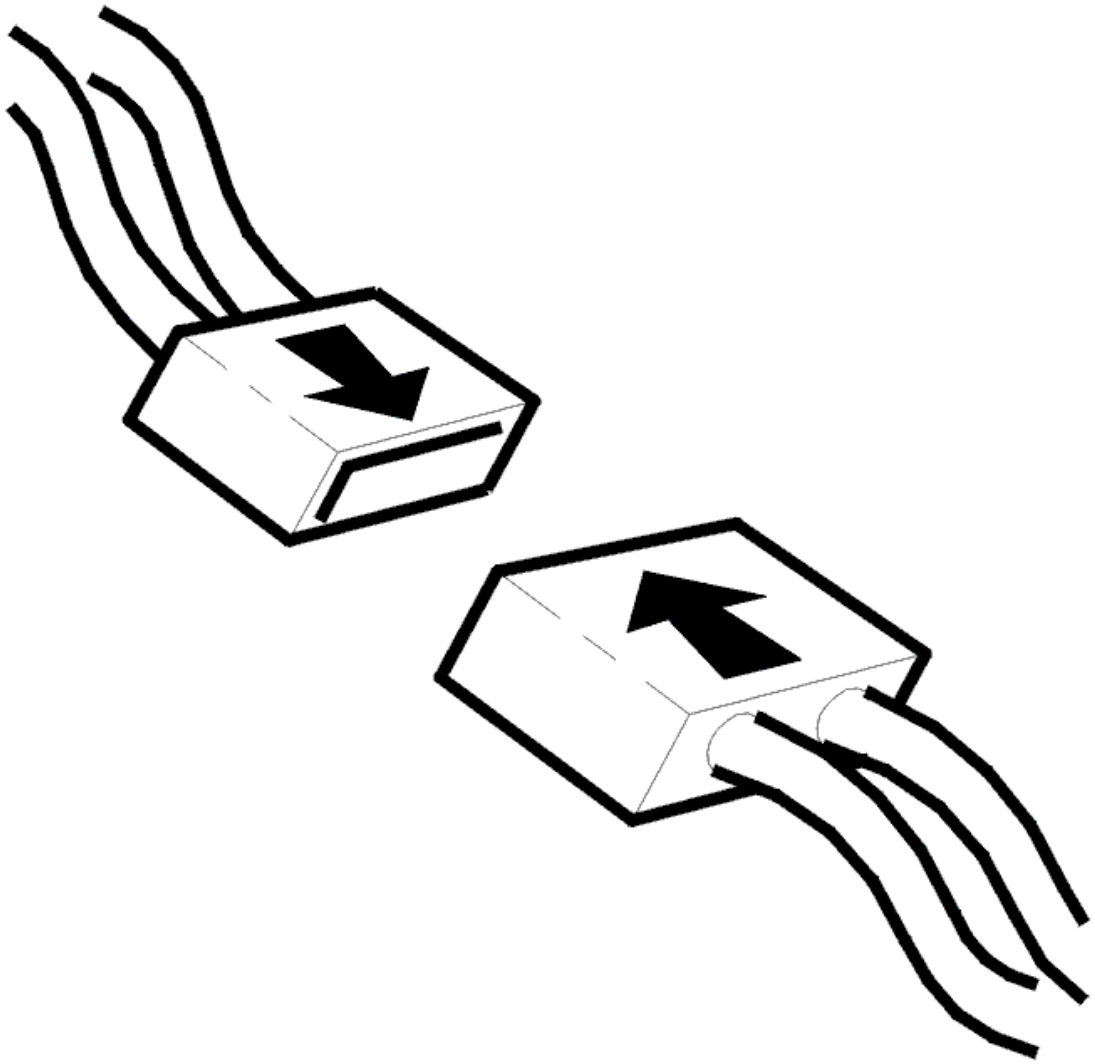

Fig. 341: Connecting Connector
Courtesy of VOLVO CARS CORPORATION

- Ignition off
- Reinstall the connectors, components etc.
- Ignition on
- Read off the parameters.

Check that the following basic conditions for adaptation of the throttle unit are met.

1. Ignition on / engine off
2. Battery voltage above 10 V
3. Accelerator pedal (AP) unaffected
4. The vehicle must be stationary (no vehicle speed signal)

5. Engine coolant temperature (ECT) between 5-100°C
6. Intake air temperature (IAT) above 5 °C.

Remedy as necessary.

Check that the adaptation is correctly run after the "Adaptation of the throttle unit running" parameter changes status from "YES" to "NO". When all basic conditions are met, the adaptation must be completed after approximately 40 seconds. When the adaptation has been run correctly, the following information will be displayed:

- Adaptation of the throttle unit: OK
- Adaptation of the throttle unit running: NO.

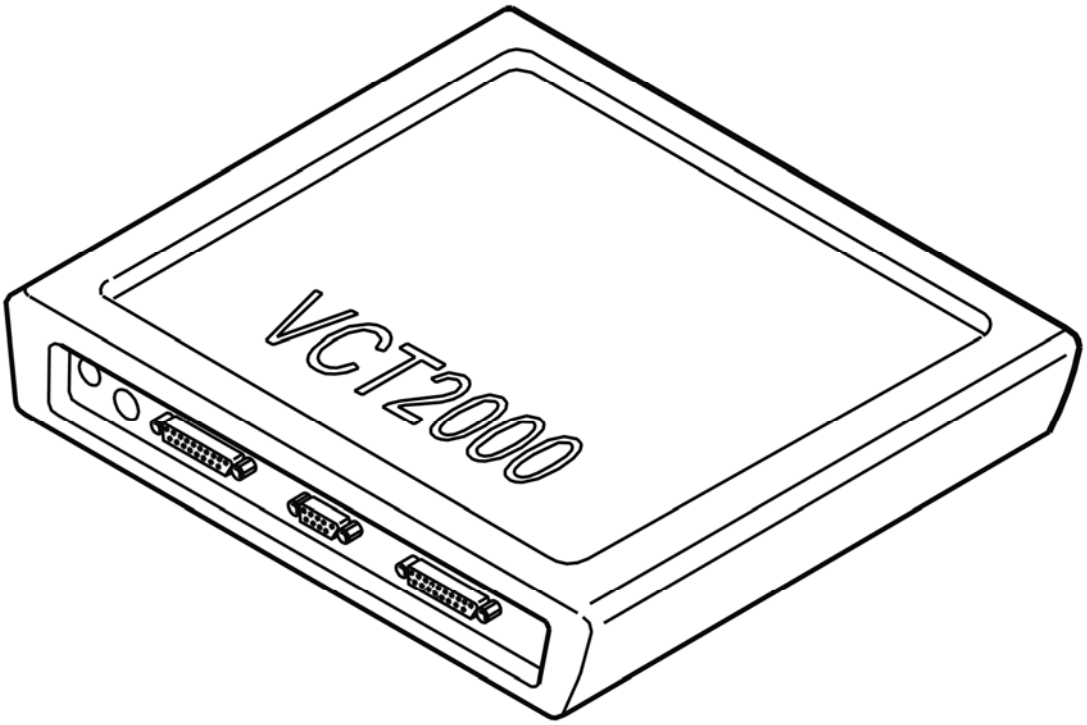

Fig. 342: Identifying VCT2000 Diagnostic Tool Symbol In VIDA
Courtesy of VOLVO CARS CORPORATION

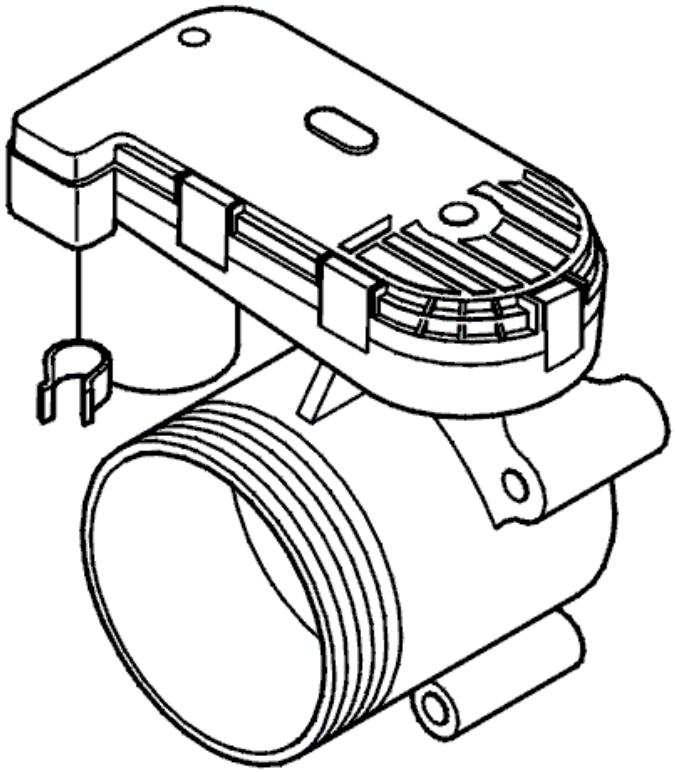

Fig. 343: Identifying Throttle Unit & Potentiometer
Courtesy of VOLVO CARS CORPORATION

- **Continue**

  Refer to **VERIFICATION**

VERIFICATION

HINT: After carrying out the repair, check that the fault has been remedied.

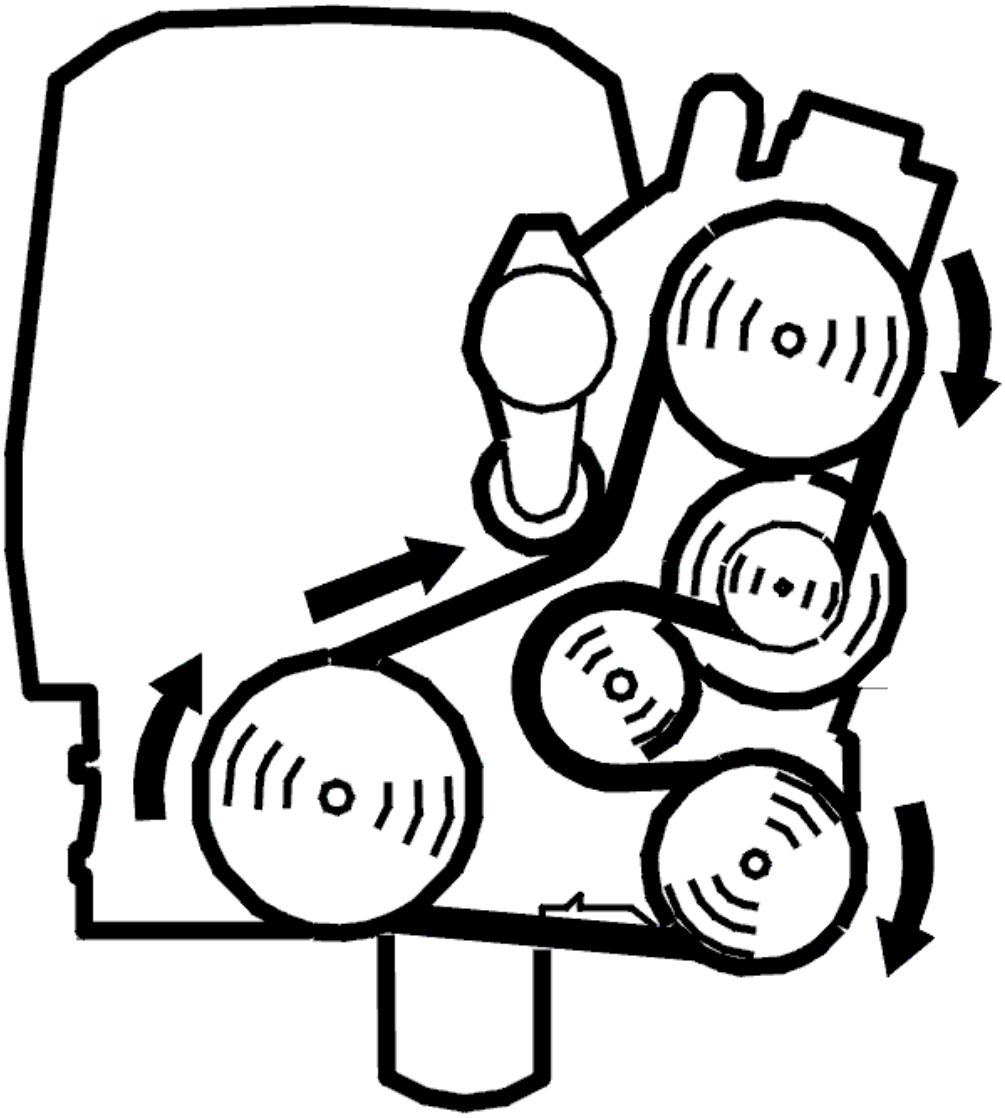

Fig. 344: Belt Routing / Engine Idling - Volvo
Courtesy of VOLVO CARS CORPORATION

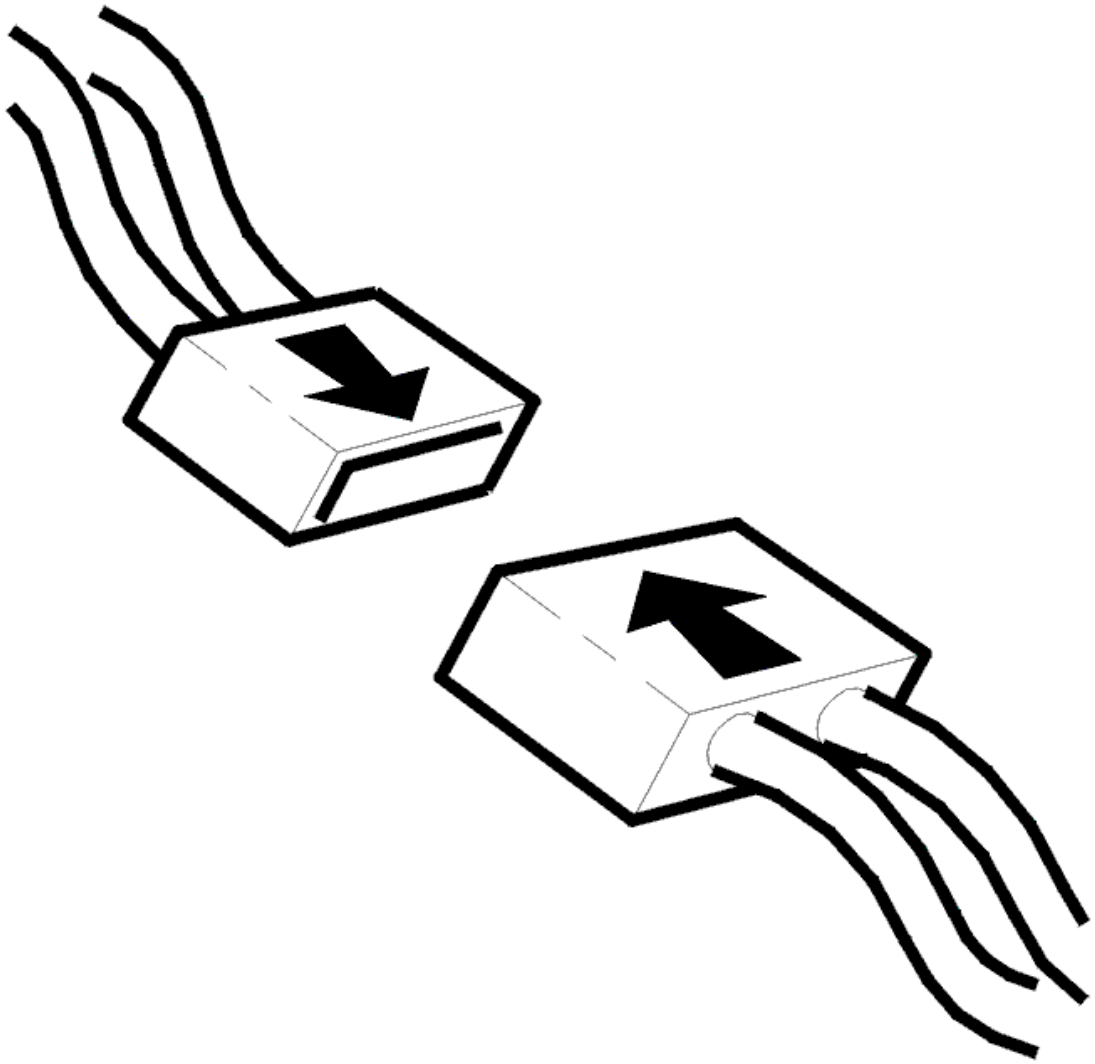

Fig. 345: Connecting Connector
Courtesy of VOLVO CARS CORPORATION

- Ignition off
- Reconnect the connectors, reinstall components etc.
- Start the engine.

  Read off the diagnostic status and fault status for the diagnostic trouble code (DTC) by selecting the relevant diagnostic trouble code (DTC) from the list.

  Check the fault status for the diagnostic trouble code (DTC) when the diagnostic is "Complete". If the function is correct, the fault status must be "No fault found" when the diagnostic is complete.

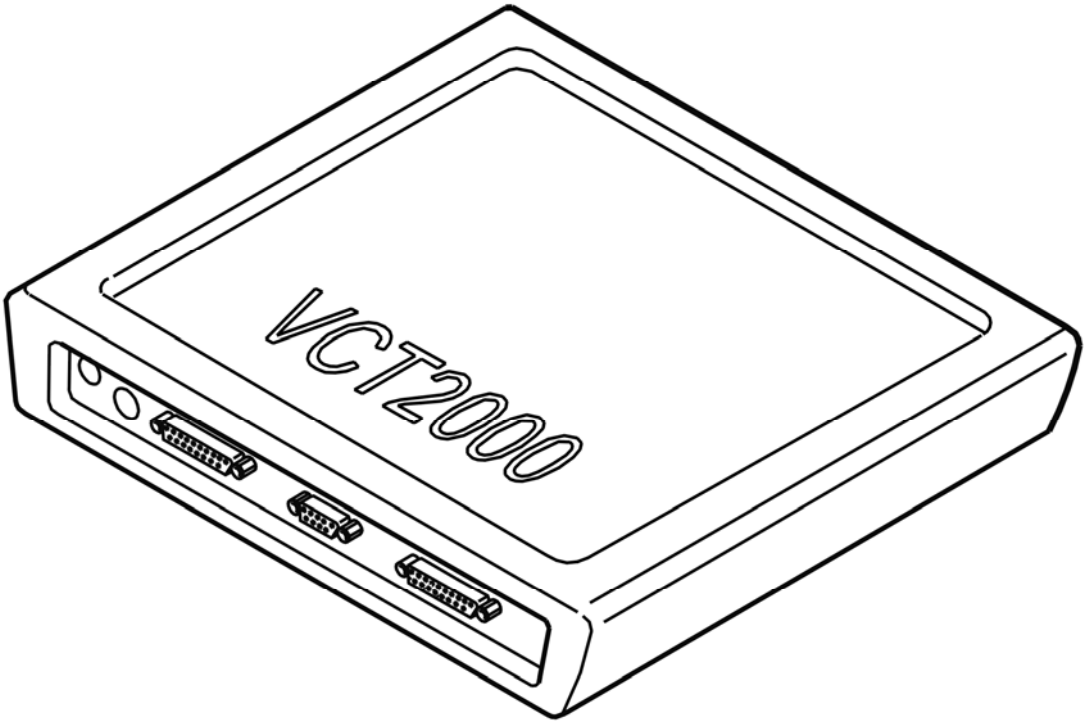

Fig. 346: Identifying VCT2000 Diagnostic Tool Symbol In VIDA
Courtesy of VOLVO CARS CORPORATION

Is the function OK?

- **YES**

  OKAY: Troubleshooting has been completed.

- **NO**

  Refer to **PROGRAMMING THE ENGINE CONTROL MODULE (ECM)**

PROGRAMMING THE ENGINE CONTROL MODULE (ECM)

HINT: This diagnostic trouble code (DTC) may be caused by faulty software.

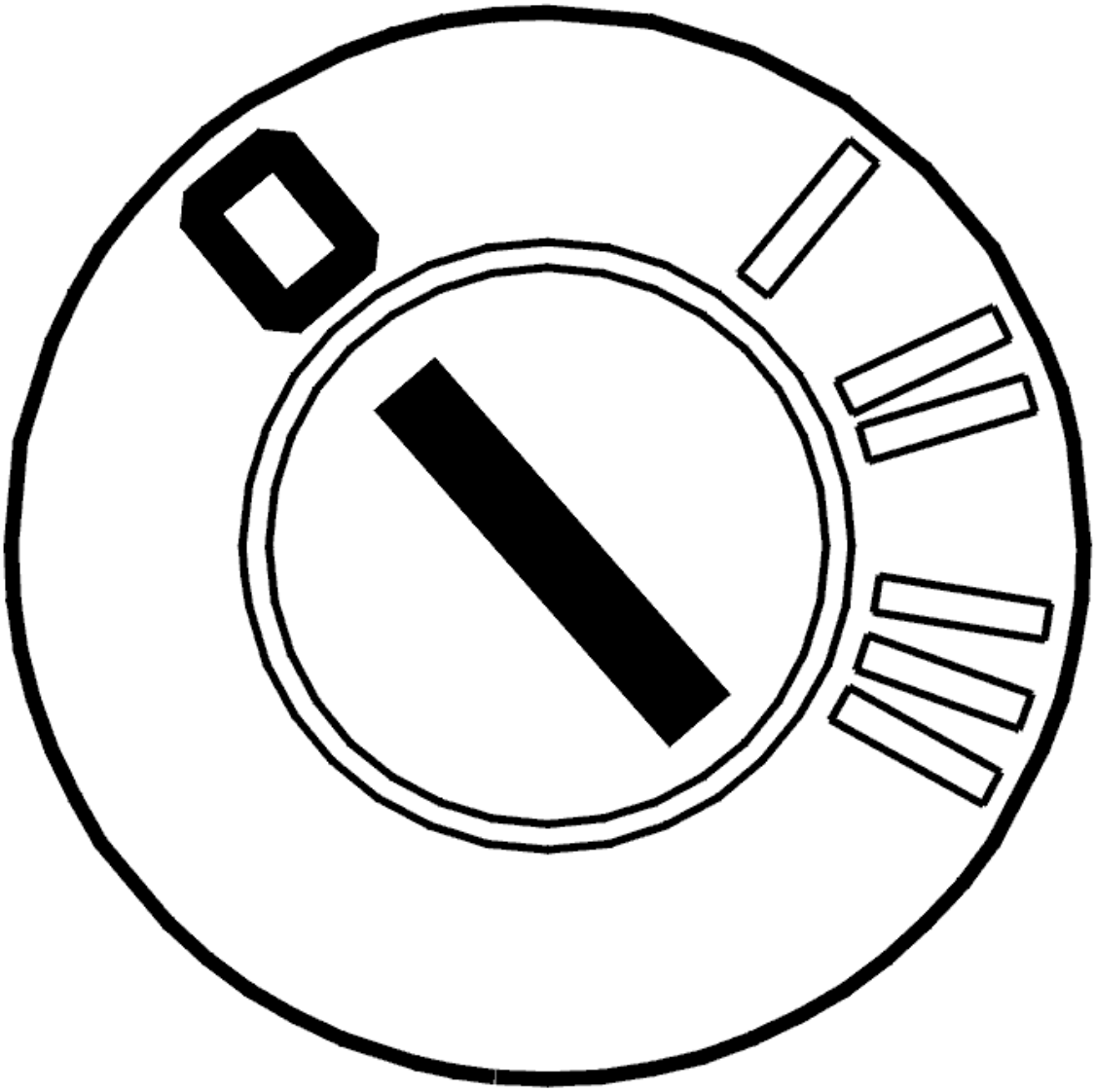

Fig. 347: Identifying Ignition OFF
Courtesy of VOLVO CARS CORPORATION

- Ignition off.

  Try downloading new software to the engine control module (ECM). To download new software, see: **ENGINE CONTROL MODULE (ECM), REPLACING**

  Remedy as necessary.

- **Continue**

  Refer to **ADAPTATION OF THE THROTTLE UNIT**

ADAPTATION OF THE THROTTLE UNIT

NOTE: **The ignition must be switched on for at least 30 seconds after the basic conditions are met in order for the adaptation to start. It takes approximately 10 seconds to run the adaptation.**

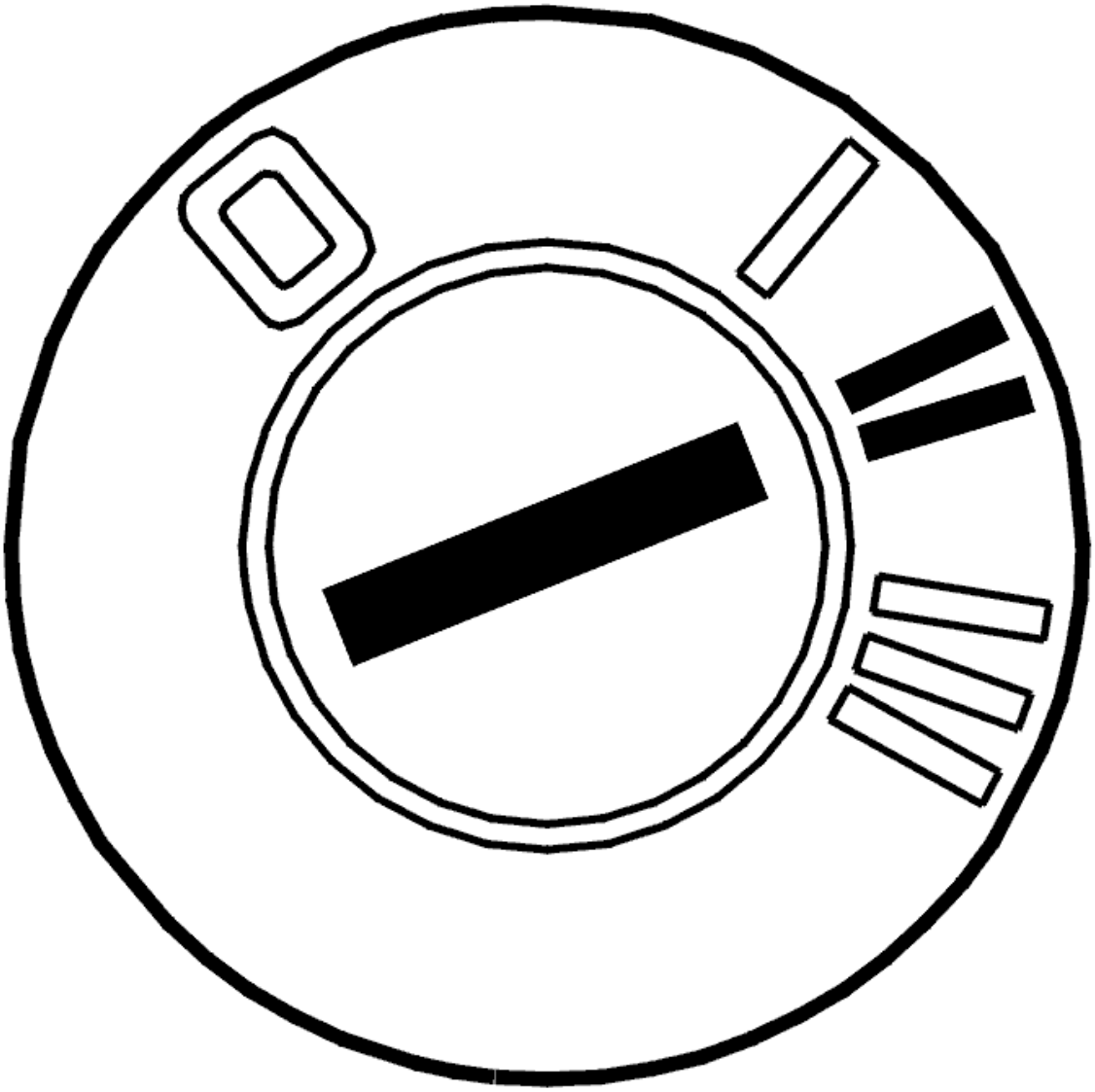

Fig. 348: Identifying Ignition ON
Courtesy of VOLVO CARS CORPORATION

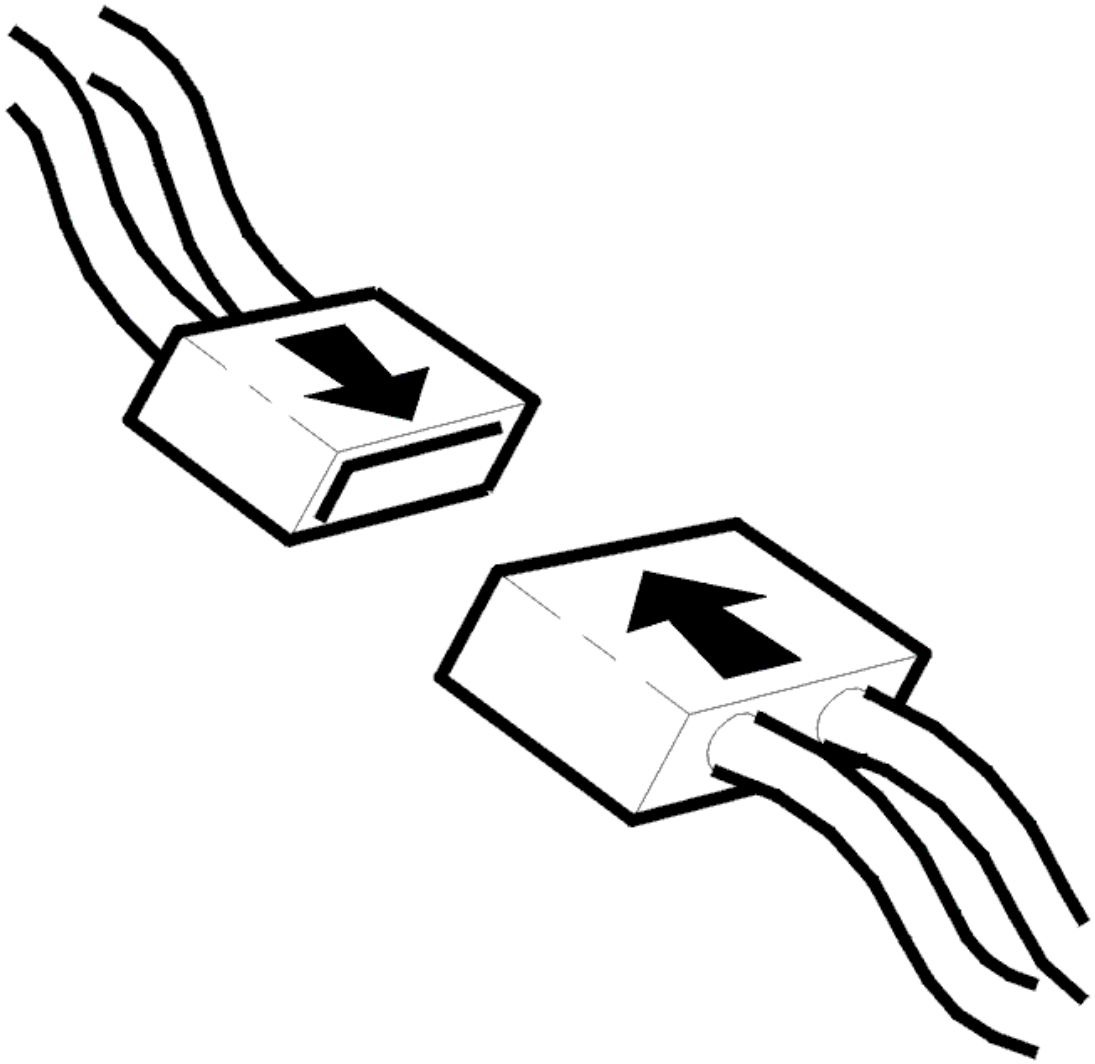

Fig. 349: Connecting Connector
Courtesy of VOLVO CARS CORPORATION

- Ignition off
- Reinstall the connectors, components etc.
- Ignition on
- Read off the parameters.

Check that the following basic conditions for adaptation of the throttle unit are met.

1. Ignition on / engine off
2. Battery voltage above 10 V
3. Accelerator pedal (AP) unaffected
4. The vehicle must be stationary (no vehicle speed signal)

5. Engine coolant temperature (ECT) between 5-100°C
6. Intake air temperature (IAT) above 5 °C.

Remedy as necessary.

Check that the adaptation is correctly run after the "Adaptation of the throttle unit running" parameter changes status from "YES" to "NO". When all basic conditions are met, the adaptation must be completed after approximately 40 seconds. When the adaptation has been run correctly, the following information will be displayed:

- Adaptation of the throttle unit: OK
- Adaptation of the throttle unit running: NO.

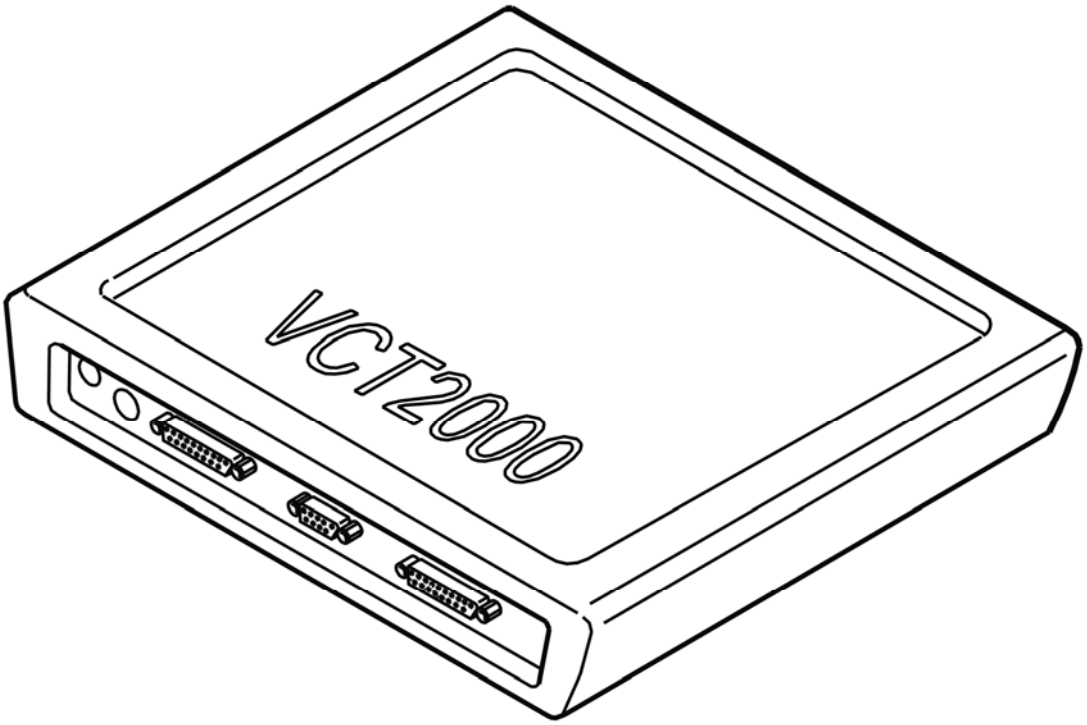

Fig. 350: Identifying VCT2000 Diagnostic Tool Symbol In VIDA
Courtesy of VOLVO CARS CORPORATION

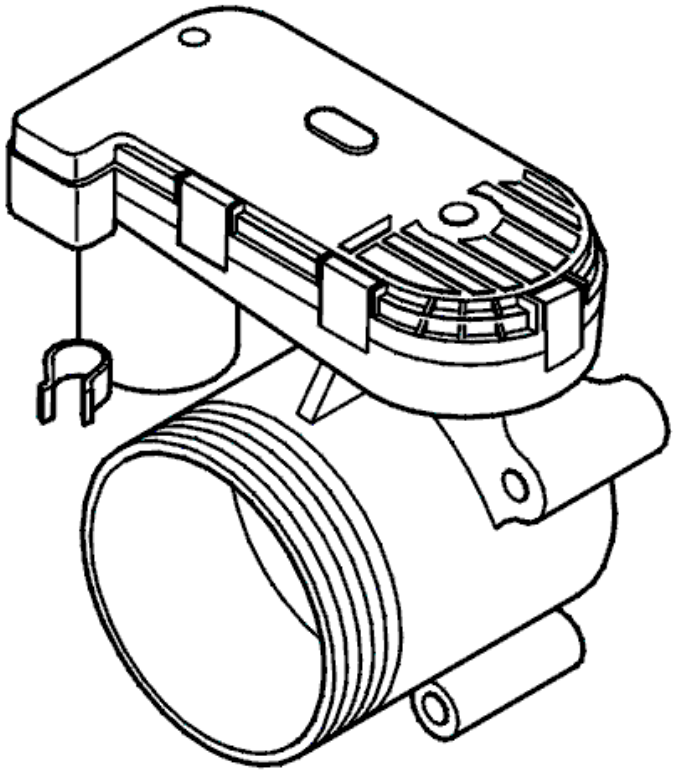

Fig. 351: Identifying Throttle Unit & Potentiometer
Courtesy of VOLVO CARS CORPORATION

- **Continue**

  Refer to **VERIFICATION**

VERIFICATION

VERIFICATION

HINT: After carrying out the repair, check that the fault has been remedied.

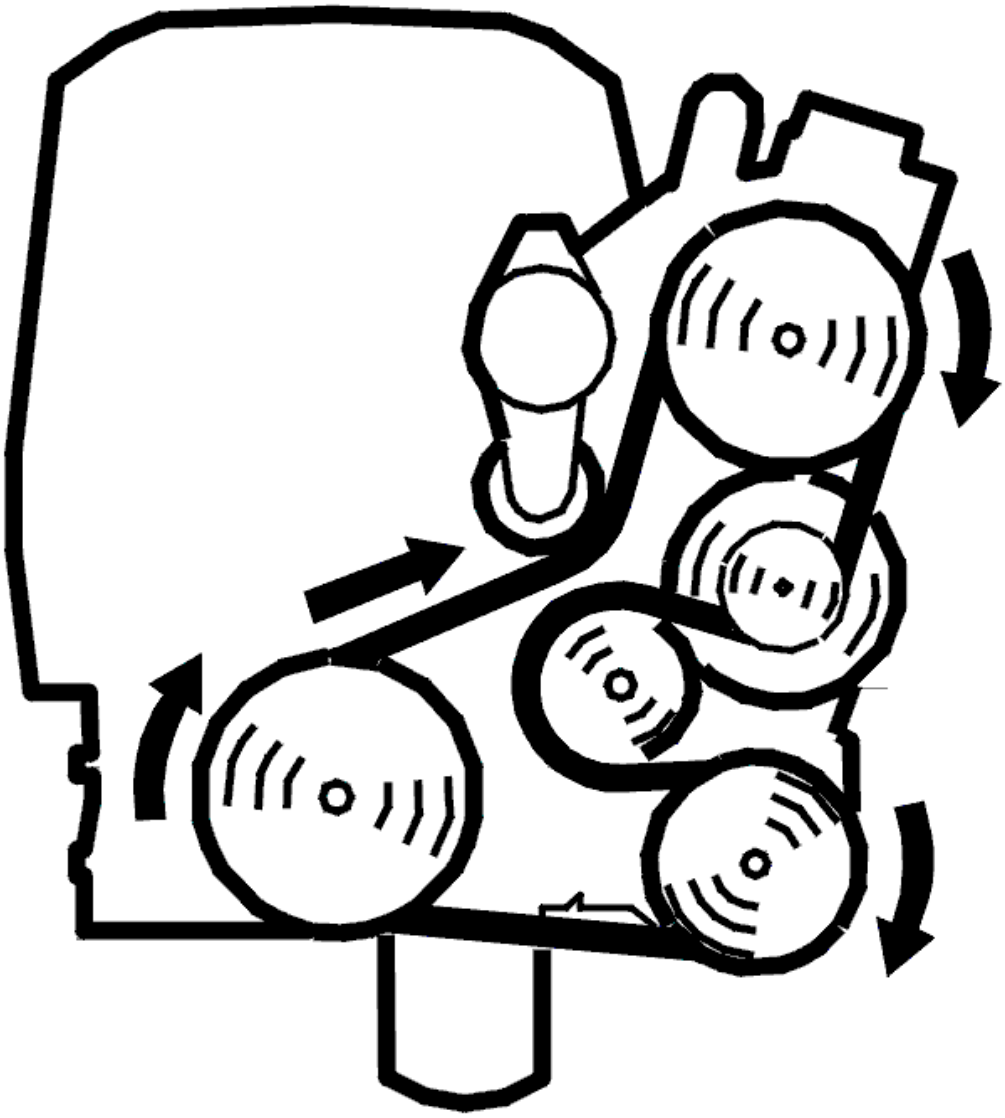

Fig. 352: Belt Routing / Engine Idling - Volvo
Courtesy of VOLVO CARS CORPORATION

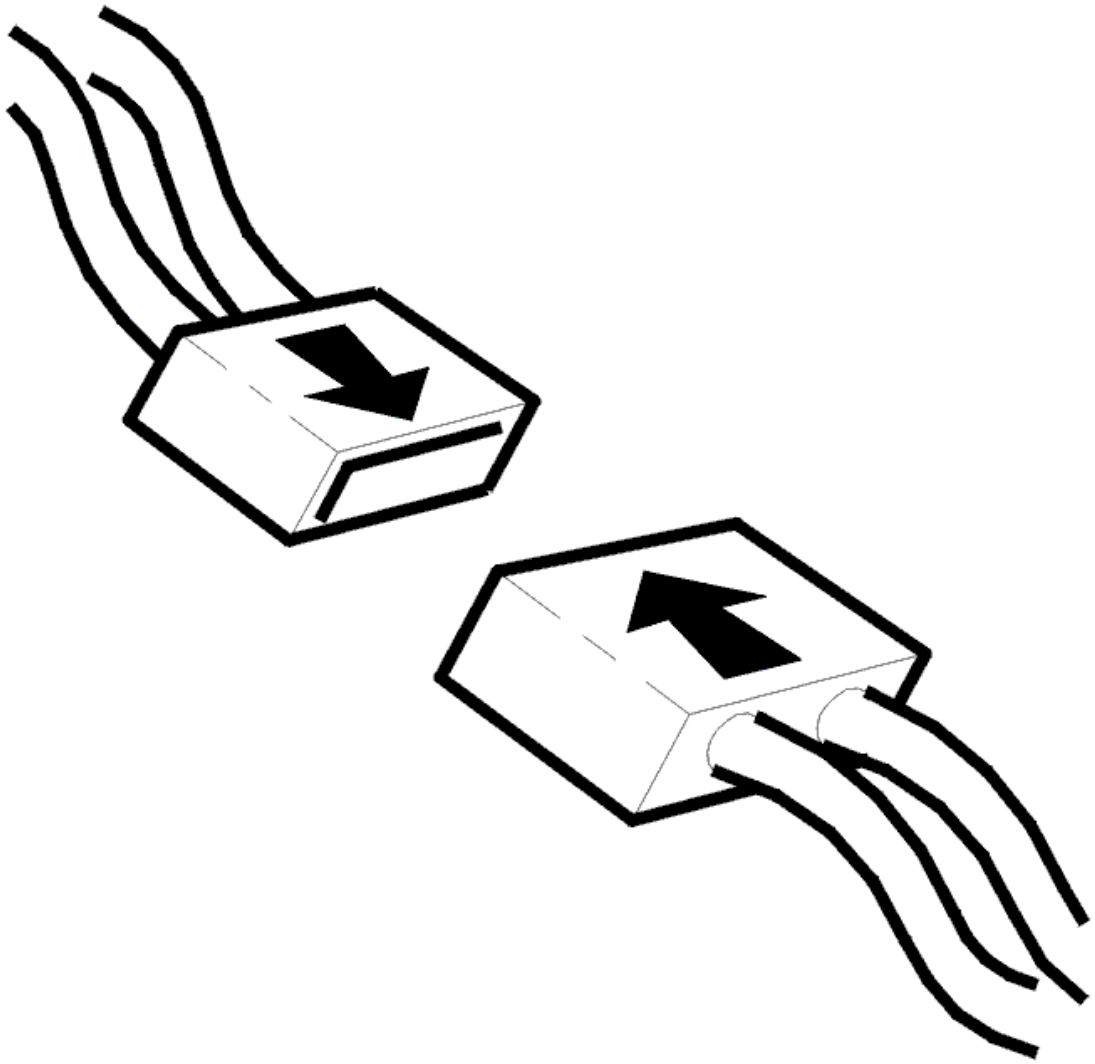

Fig. 353: Connecting Connector
Courtesy of VOLVO CARS CORPORATION

- Ignition off
- Reconnect the connectors, reinstall components etc.
- Start the engine.

  Read off the diagnostic status and fault status for the diagnostic trouble code (DTC) by selecting the relevant diagnostic trouble code (DTC) from the list.

  Check the fault status for the diagnostic trouble code (DTC) when the diagnostic is "Complete". If the function is correct, the fault status must be "No fault found" when the diagnostic is complete.

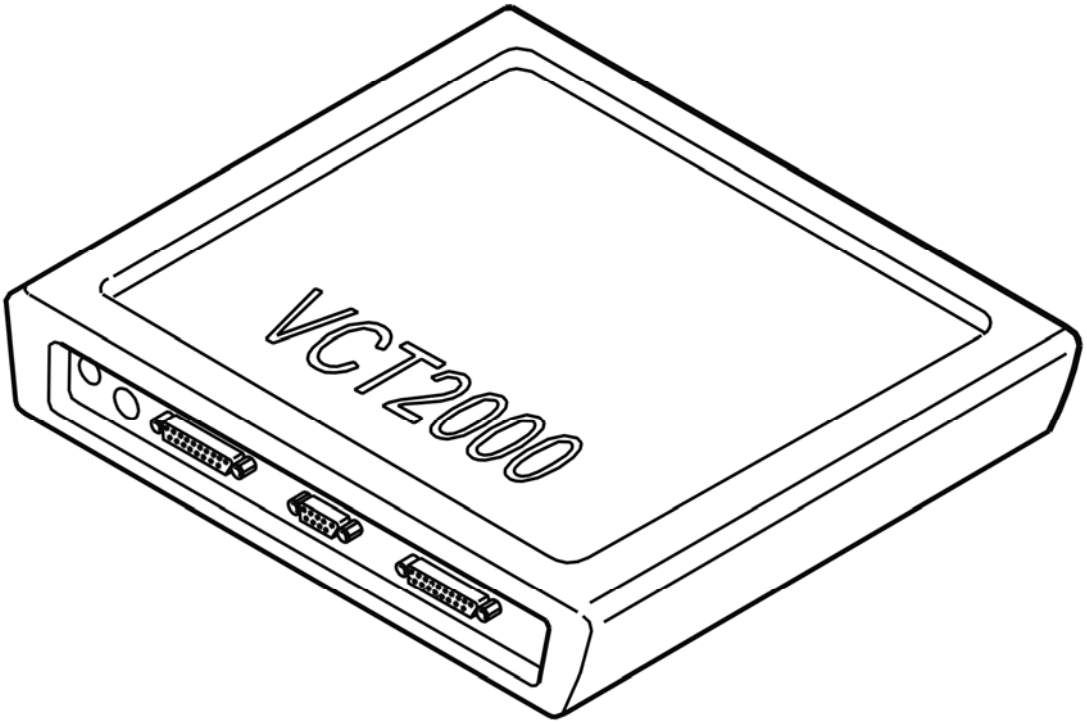

Fig. 354: Identifying VCT2000 Diagnostic Tool Symbol In VIDA
Courtesy of VOLVO CARS CORPORATION

Is the function OK?

- **YES**

  VERIFIED: Troubleshooting has been completed.

- **NO**

  Refer to **INFORMATION**

INFORMATION

FAULT-TRACING INFORMATION

The fault should have been detected and remedied. As this is not the case fault-tracing has failed.

Exit fault-tracing for this diagnostic trouble code (DTC) or make another attempt.

ECM-929C: ENGINE CONTROL MODULE (ECM). SIGNAL TOO HIGH (B6294T; 2005-2006)

DIAGNOSTIC TROUBLE CODE (DTC) INFORMATION ECM-929C

see **DIAGNOSTIC TROUBLE CODE (DTC) INFORMATION ECM-929C**

SIGNAL TOO HIGH

see **SIGNAL TOO HIGH**

ECM-929D: ENGINE CONTROL MODULE (ECM). SIGNAL TOO LOW (B5254T2; 2005-2007)

DIAGNOSTIC TROUBLE CODE (DTC) INFORMATION ECM-929D

Condition

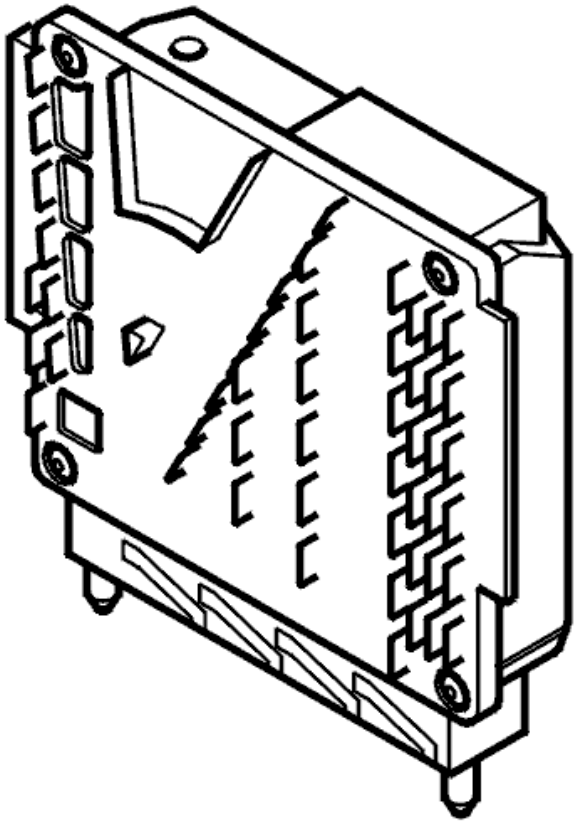

Fig. 355: Engine Control Module
Courtesy of VOLVO CARS CORPORATION

The diagnostic trouble code (DTC) is stored if the engine control module (ECM) registers that the internal governor for control of the throttle angle in the throttle unit is damaged or that the control signal for the governor is too low when controlling the throttle.

The diagnostic trouble code (DTC) can be diagnosed when the engine is running.

Substitute Value

The engine control module (ECM) shuts down the supply to the damper motor for the electronic throttle unit. The throttle will set itself to the return position.

Possible Source

- The throttle is sticking or is blocked (e. g. oil film, dust)
- Contact resistance or oxidation in the terminals between the engine control module (ECM) and the electronic throttle unit
- Open-circuit, short-circuit to ground or short-circuit to supply voltage in the wiring for the damper motor in the throttle unit
- Short-circuit to each other in the wiring for the damper motor in the throttle unit
- Damaged throttle unit
- Faulty software in the engine control module (ECM).

Fault symptom[s]

- Malfunction indicator lamp (MIL) lit
- Poor performance.

SIGNAL TOO LOW

FAULT-TRACING INFORMATION

FAULT-TRACING INFORMATION

CAUTION: The male and female pins on the electronic throttle unit connectors are gold plated. Great care must be taken when measuring. Damage to the gold plating can result in operating difficulties.

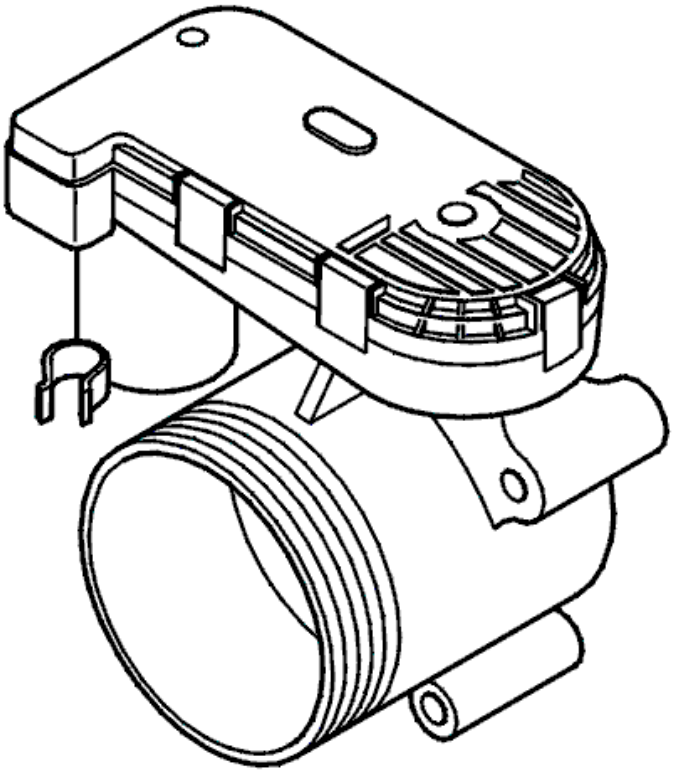

Fig. 356: Identifying Throttle Unit & Potentiometer
Courtesy of VOLVO CARS CORPORATION

- **Continue**

  Refer to **CHECKING THE FAULT STATUS**

CHECKING THE FAULT STATUS

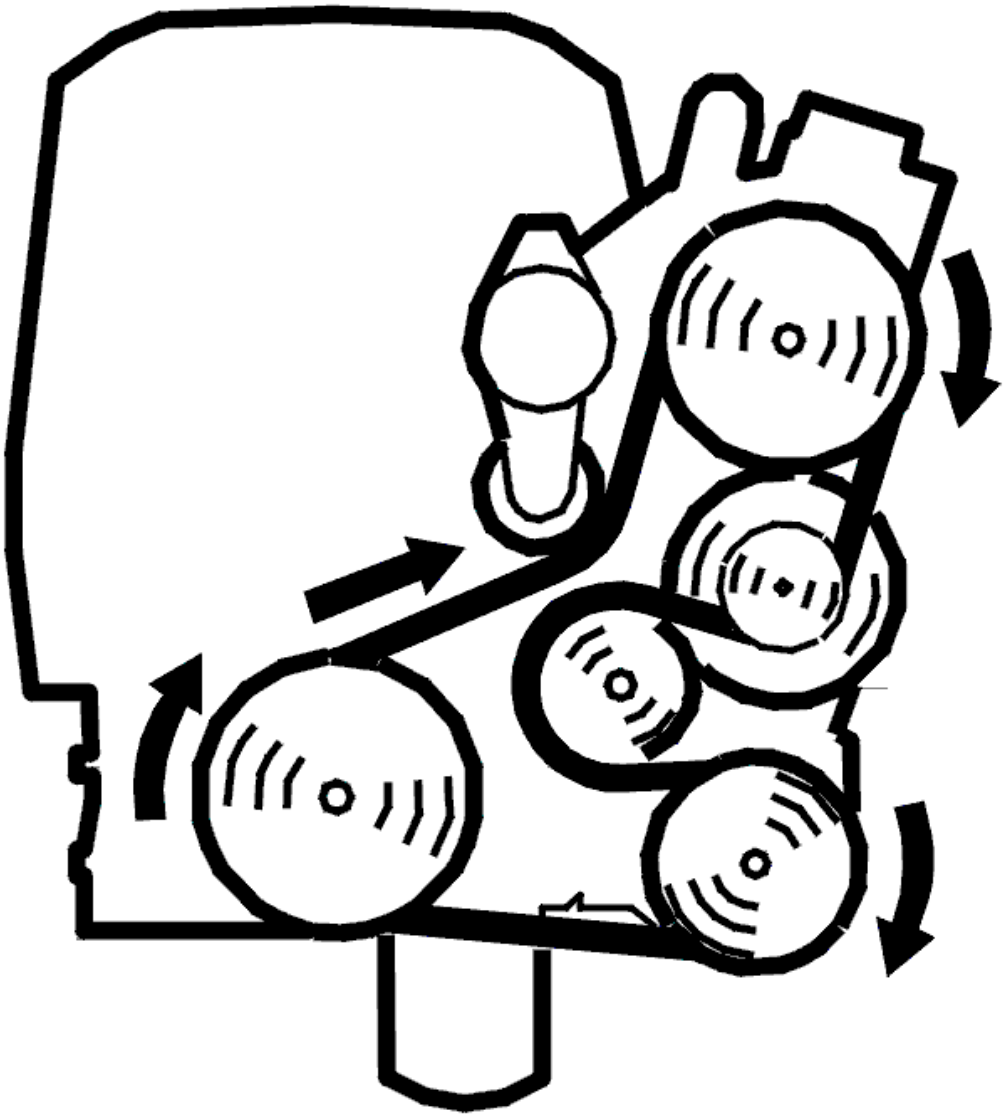

Fig. 357: Belt Routing / Engine Idling - Volvo
Courtesy of VOLVO CARS CORPORATION

- Start the engine.

  Read off the diagnostic status and fault status for the diagnostic trouble code (DTC) by selecting the relevant diagnostic trouble code (DTC) from the list.

  Check whether the fault is permanent or intermittent. Read off the diagnostic trouble code (DTC) fault status when the diagnostic status is "Completed".

  HINT: In some cases several functions of the component will be diagnosed. The affects the amount of time taken to run the diagnostic.

  The fault is permanent if the fault status is "Fault found". If the fault status is "No fault found" the fault is intermittent and not presently active.

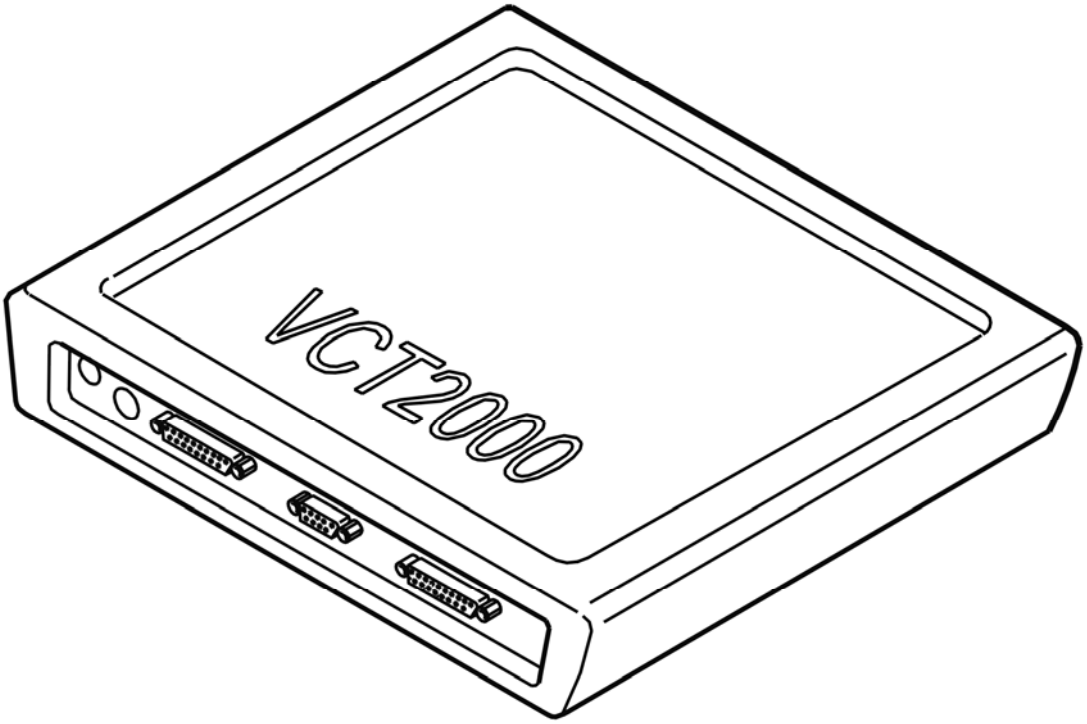

Fig. 358: Identifying VCT2000 Diagnostic Tool Symbol In VIDA
Courtesy of VOLVO CARS CORPORATION

- **Continue**

  Refer to **CHECKING COMPONENTS AND WIRING**

CHECKING COMPONENTS AND WIRING

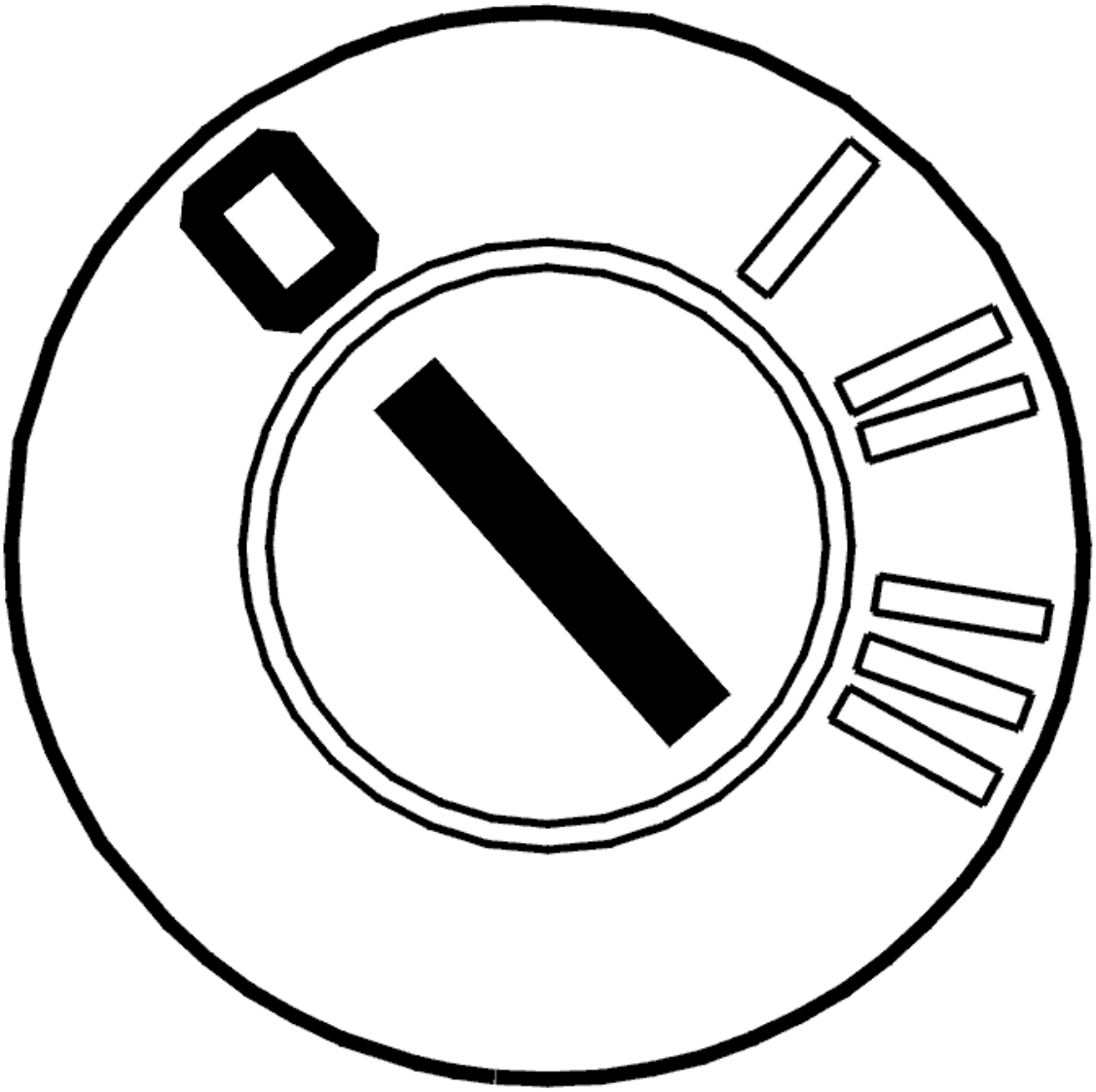

Fig. 359: Identifying Ignition OFF
Courtesy of VOLVO CARS CORPORATION

- Ignition off
- Check the throttle unit and engine control module (ECM) connectors. Check for contact resistance and oxidation.

  Check the resistance value of the damper motor winding in the throttle unit. Take readings between throttle unit terminals #1 and #4 (component side). Check for an open-circuit. Check for a short-circuit.

  NOTE: The resistance of the motor winding in the damper motor is very low.

  Check the cable (+) for the damper motor between engine control module (ECM) terminal #A35 (#A35) and throttle unit terminal #4 (cable harness side). Check for an open-circuit. Check for a short-circuit to ground. Check for a short-circuit to supply voltage.

Check the cable (-) for the damper motor between engine control module (ECM) terminal #A36 (#A36) and throttle unit terminal #1 (cable harness side). Check for an open-circuit. Check for a short-circuit to ground. Check for a short-circuit to supply voltage.

Also check the damper motor cables (+) and (-). Check for a short-circuit to each other.

Check that the shutter in the throttle unit is not blocked or sticking. Clean as necessary.

Remedy as necessary.

Other information:

- see **CONNECTING THE BREAKOUT BOX**
- For 5 cylinder turbocharged engines -2004, see **SIGNAL DESCRIPTION**
- For 5 cylinder turbocharged engines 2005-, see **SIGNAL SPECIFICATION** .
- For 6 cylinder engines -2004, see **SIGNAL SPECIFICATION**
- For 6 cylinder engines 2005-, see **SIGNAL SPECIFICATION** .
- For resistance values: **COMPONENT SPECIFICATIONS**
- For B5xx4T, see **THROTTLE BODY (ELECTRONIC THROTTLE MODULE), REPLACING** .
- For B6xx4T, see **THROTTLE BODY (ELECTRONIC THROTTLE MODULE), REPLACING** .
- For B5xx4T, see **THROTTLE BODY (TB), CLEANING** .
- For B6xx4x, see **THROTTLE BODY (TB), CLEANING** .
- see **ENGINE CONTROL MODULE (ECM), REPLACING**
- see **CHECKING WIRING AND TERMINALS** .

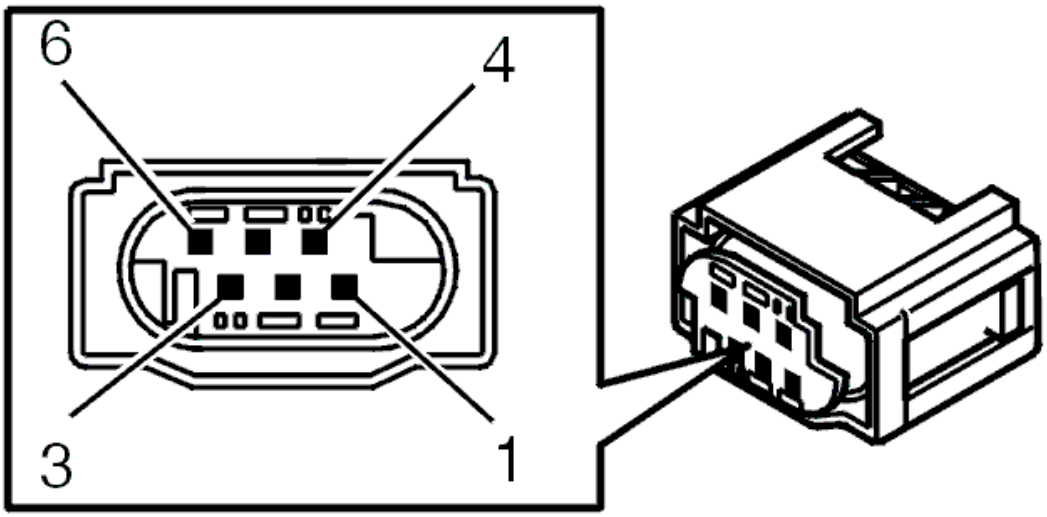

Fig. 360: Identifying Throttle Unit Connector Terminals
Courtesy of VOLVO CARS CORPORATION

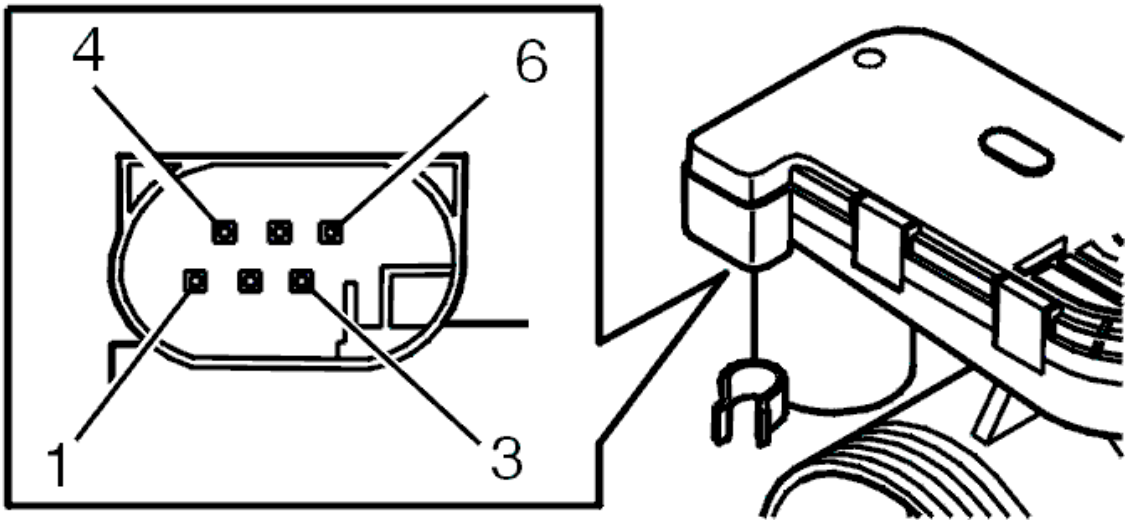

Fig. 361: Identifying Throttle Unit Connector Terminals
Courtesy of VOLVO CARS CORPORATION

- **Continue**

Refer to **ADAPTATION OF THE THROTTLE UNIT**

ADAPTATION OF THE THROTTLE UNIT

NOTE: **The ignition must be switched on for at least 30 seconds after the basic conditions are met in order for the adaptation to start. It takes approximately 10 seconds to run the adaptation.**

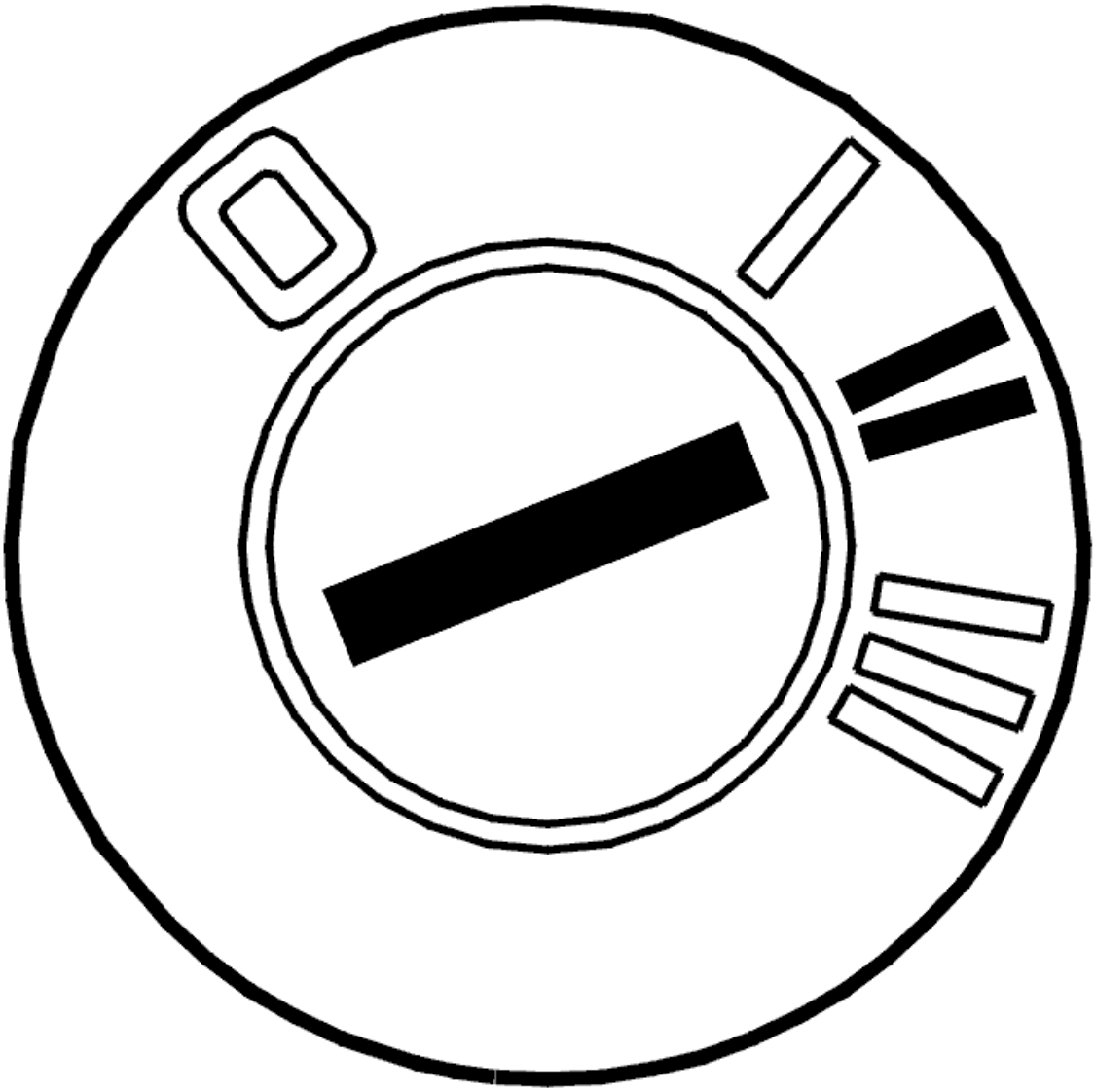

Fig. 362: Identifying Ignition ON
Courtesy of VOLVO CARS CORPORATION

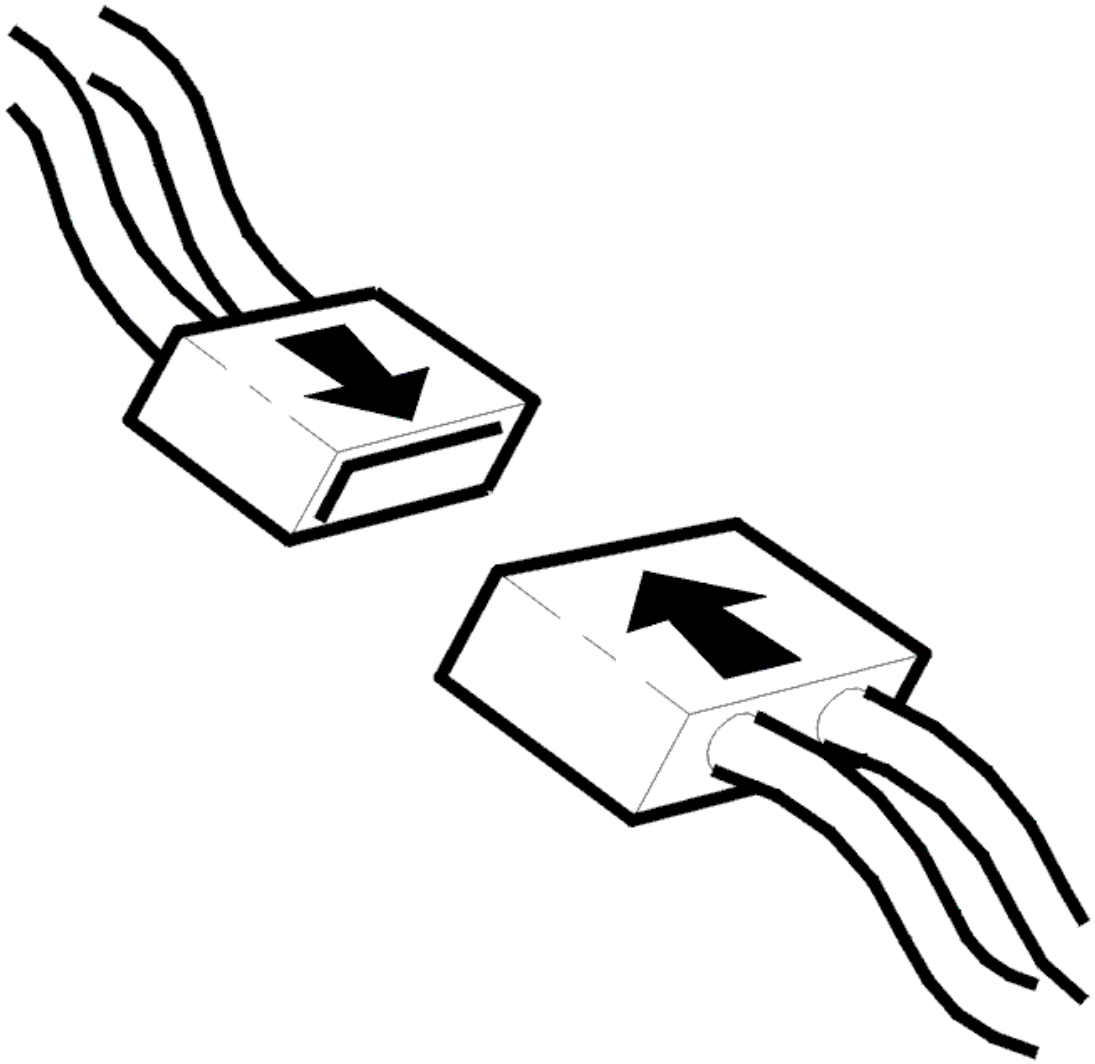

Fig. 363: Connecting Connector
Courtesy of VOLVO CARS CORPORATION

- Ignition off
- Reinstall the connectors, components etc.
- Ignition on
- Read off the parameters.

Check that the following basic conditions for adaptation of the throttle unit are met.

1. Ignition on / engine off
2. Battery voltage above 10 V
3. Accelerator pedal (AP) unaffected
4. The vehicle must be stationary (no vehicle speed signal)

5. Engine coolant temperature (ECT) between 5-100°C
6. Intake air temperature (IAT) above 5 °C.

Remedy as necessary.

Check that the adaptation is correctly run after the "Adaptation of the throttle unit running" parameter changes status from "YES" to "NO". When all basic conditions are met, the adaptation must be completed after approximately 40 seconds. When the adaptation has been run correctly, the following information will be displayed:

- Adaptation of the throttle unit: OK
- Adaptation of the throttle unit running: NO.

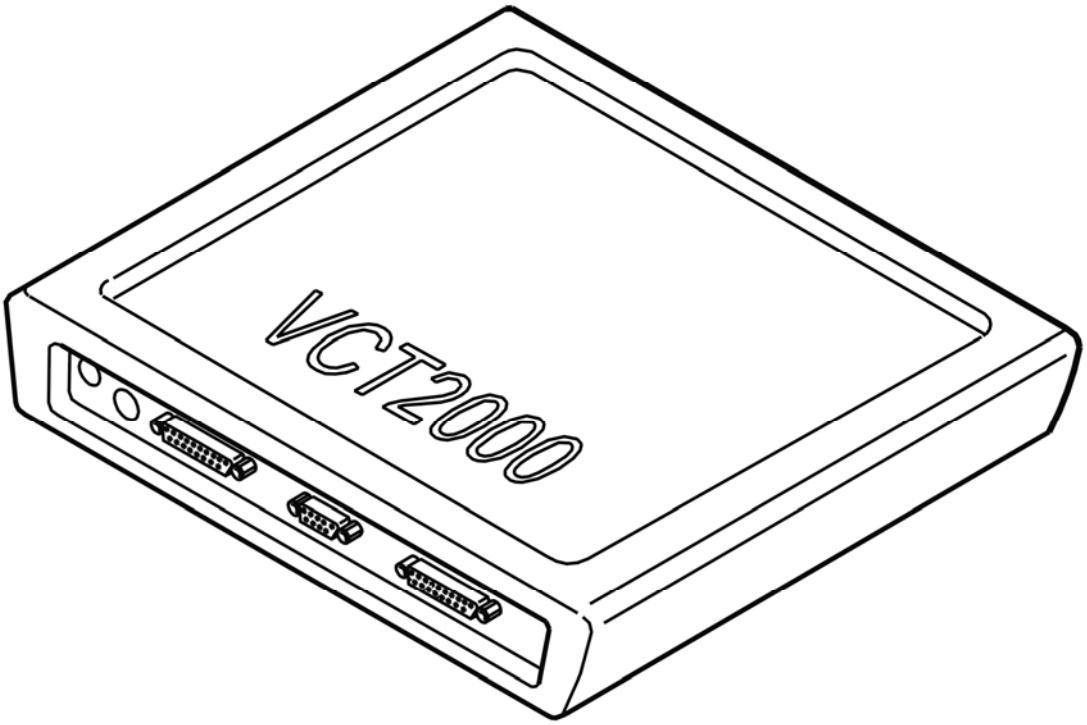

Fig. 364: Identifying VCT2000 Diagnostic Tool Symbol In VIDA
Courtesy of VOLVO CARS CORPORATION

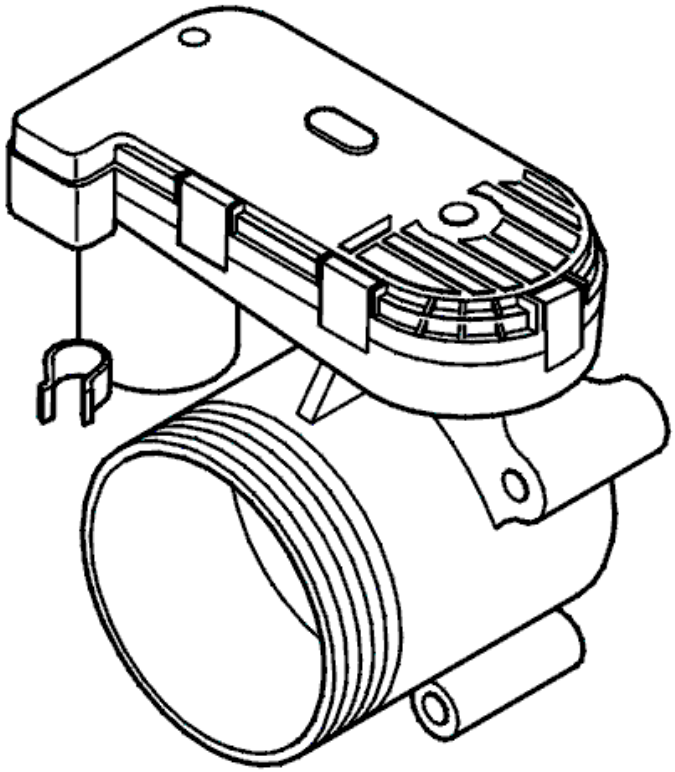

Fig. 365: Identifying Throttle Unit & Potentiometer
Courtesy of VOLVO CARS CORPORATION

- **Continue**

  Refer to **VERIFICATION**

VERIFICATION

HINT: After carrying out the repair, check that the fault has been remedied.

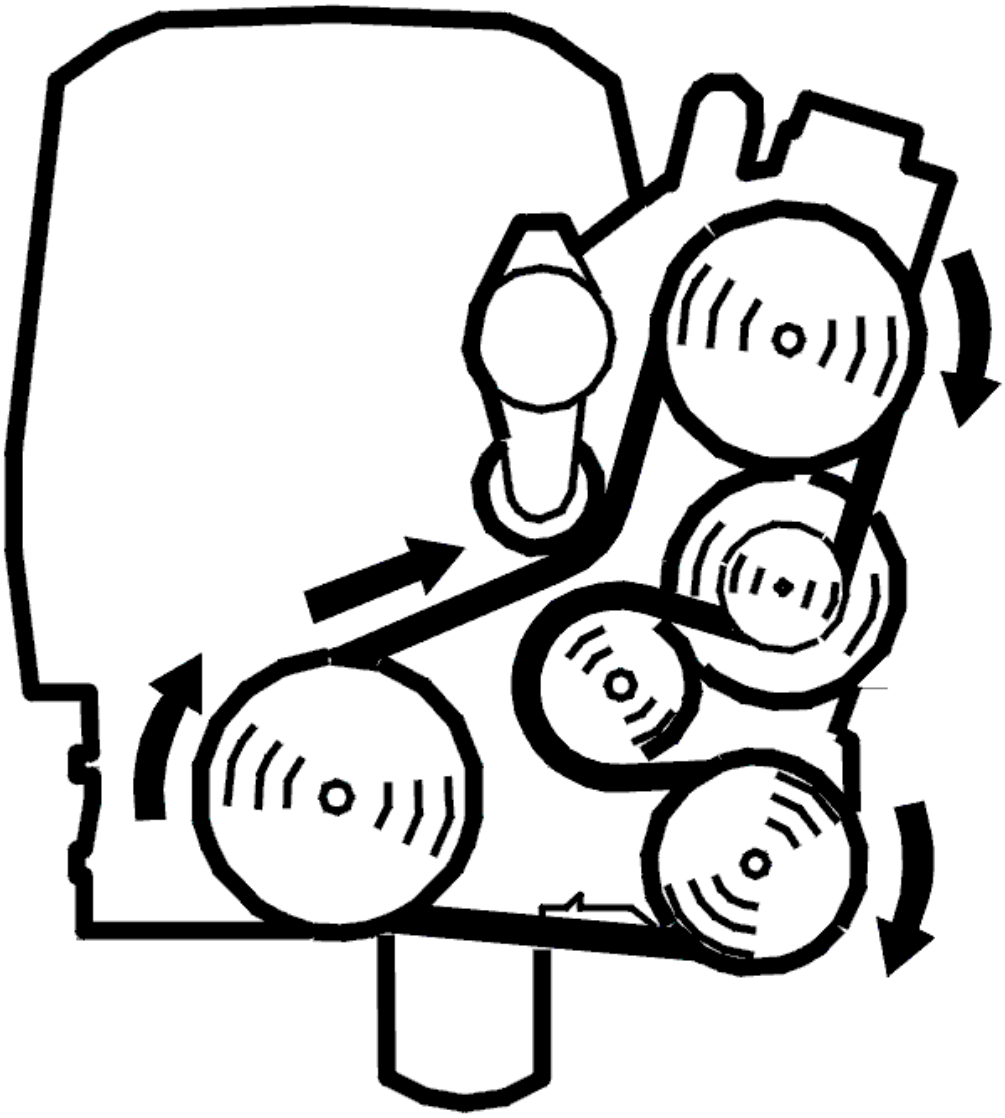

Fig. 366: Belt Routing / Engine Idling - Volvo
Courtesy of VOLVO CARS CORPORATION

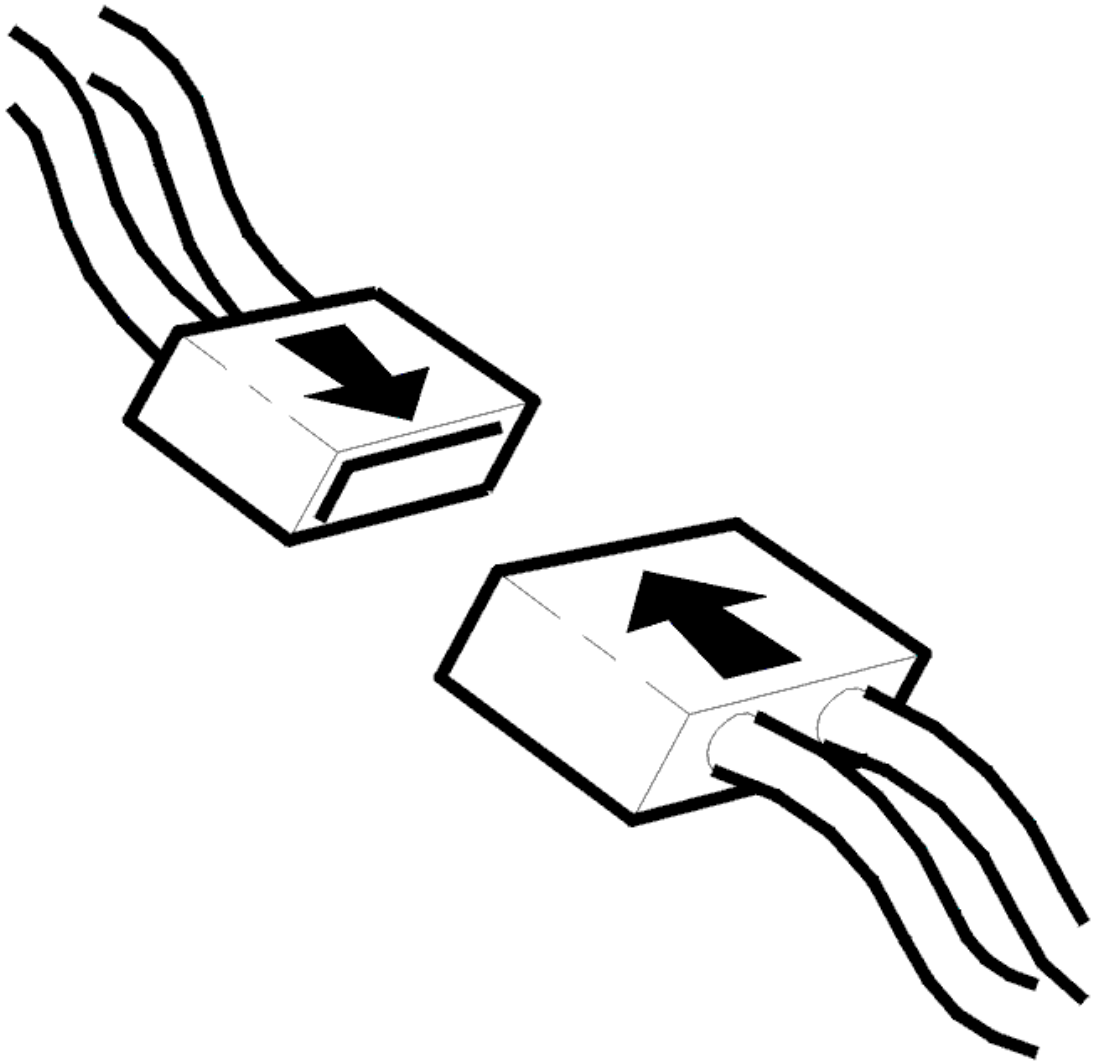

Fig. 367: Connecting Connector
Courtesy of VOLVO CARS CORPORATION

- Ignition off
- Reconnect the connectors, reinstall components etc.
- Start the engine.

  Read off the diagnostic status and fault status for the diagnostic trouble code (DTC) by selecting the relevant diagnostic trouble code (DTC) from the list.

  Check the fault status for the diagnostic trouble code (DTC) when the diagnostic is "Complete". If the function is correct, the fault status must be "No fault found" when the diagnostic is complete.

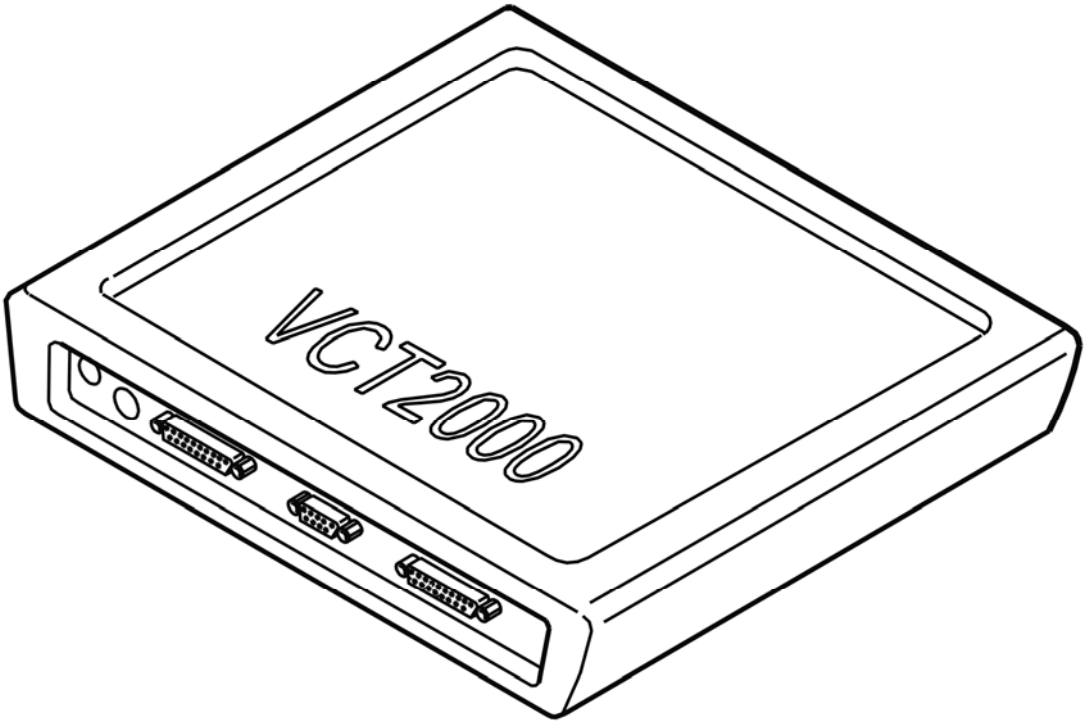

Fig. 368: Identifying VCT2000 Diagnostic Tool Symbol In VIDA
Courtesy of VOLVO CARS CORPORATION

Is the function OK?

- **YES**

  OKAY: Troubleshooting has been completed.

- **NO**

  Refer to **PROGRAMMING THE ENGINE CONTROL MODULE (ECM)**

PROGRAMMING THE ENGINE CONTROL MODULE (ECM)

HINT: This diagnostic trouble code (DTC) may be caused by faulty software.

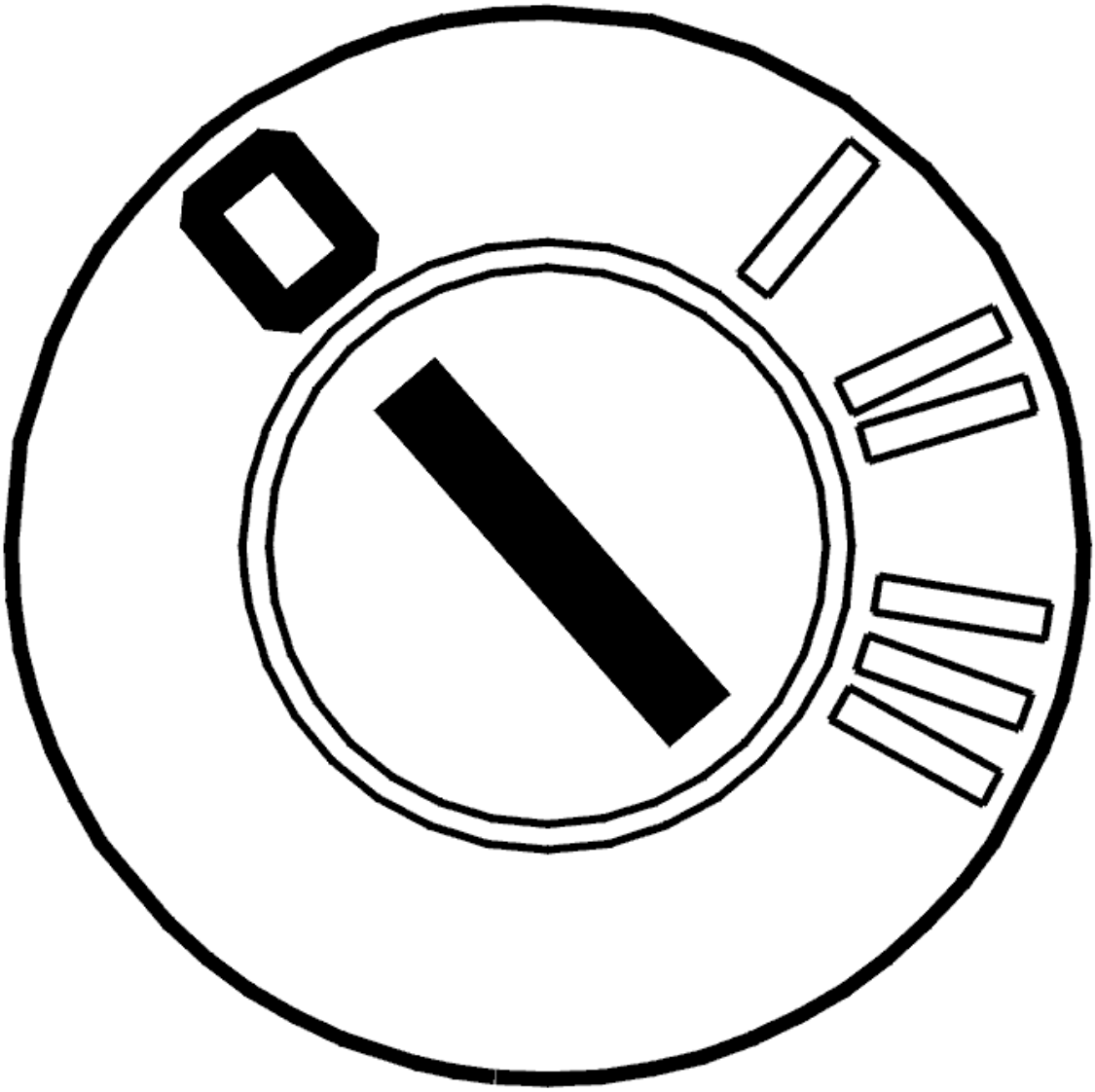

Fig. 369: Identifying Ignition OFF
Courtesy of VOLVO CARS CORPORATION

- Ignition off.

  Try downloading new software to the engine control module (ECM). To download new software, see: **ENGINE CONTROL MODULE (ECM), REPLACING**

  Remedy as necessary.

- **Continue**

  Refer to **ADAPTATION OF THE THROTTLE UNIT**

ADAPTATION OF THE THROTTLE UNIT

NOTE: **The ignition must be switched on for at least 30 seconds after the basic conditions are met in order for the adaptation to start. It takes approximately 10 seconds to run the adaptation.**

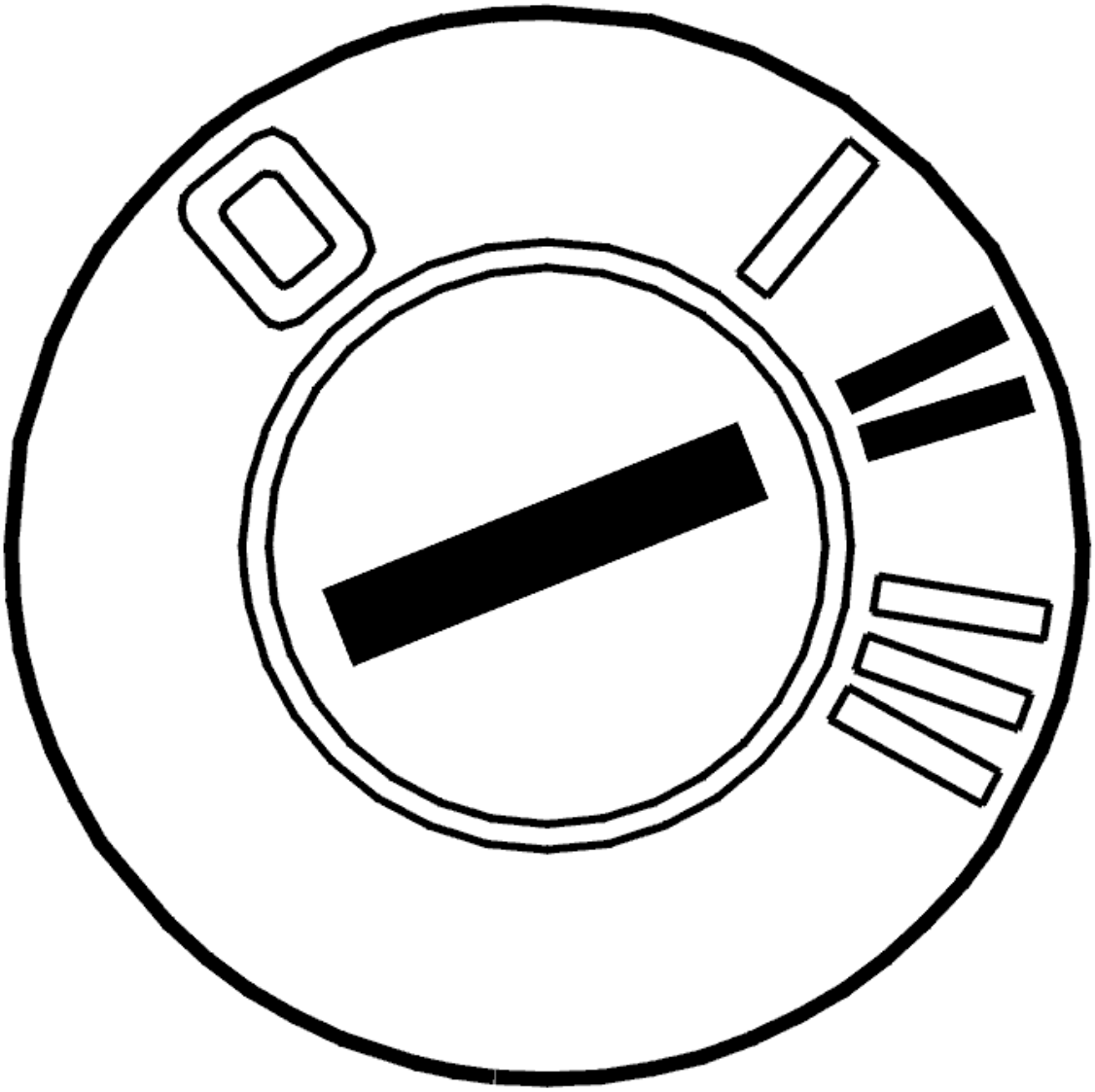

Fig. 370: Identifying Ignition ON
Courtesy of VOLVO CARS CORPORATION

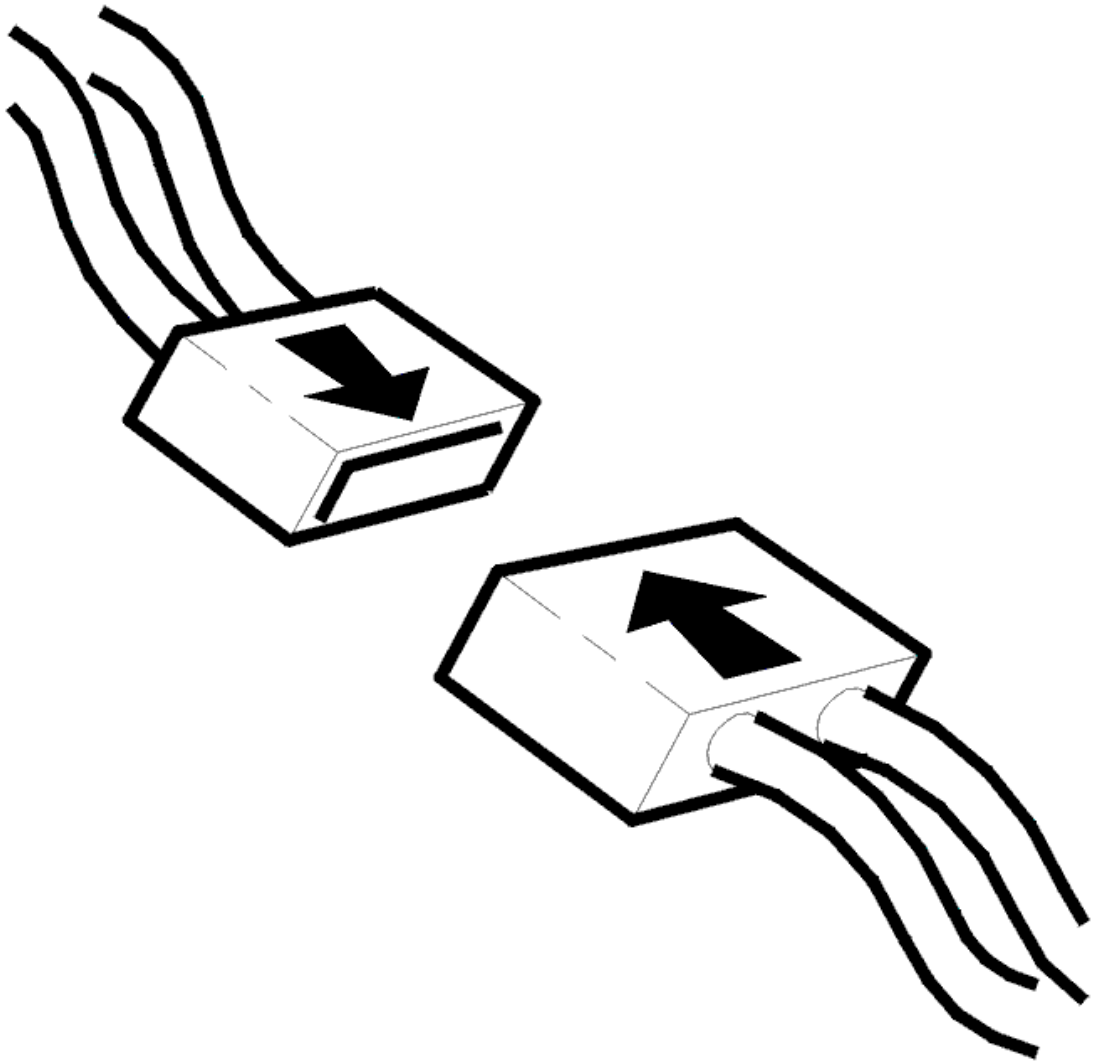

Fig. 371: Connecting Connector
Courtesy of VOLVO CARS CORPORATION

- Ignition off
- Reinstall the connectors, components etc.
- Ignition on
- Read off the parameters.

Check that the following basic conditions for adaptation of the throttle unit are met.

1. Ignition on / engine off
2. Battery voltage above 10 V
3. Accelerator pedal (AP) unaffected
4. The vehicle must be stationary (no vehicle speed signal)

5. Engine coolant temperature (ECT) between 5-100°C
6. Intake air temperature (IAT) above 5 °C.

Remedy as necessary.

Check that the adaptation is correctly run after the "Adaptation of the throttle unit running" parameter changes status from "YES" to "NO". When all basic conditions are met, the adaptation must be completed after approximately 40 seconds. When the adaptation has been run correctly, the following information will be displayed:

- Adaptation of the throttle unit: OK
- Adaptation of the throttle unit running: NO.

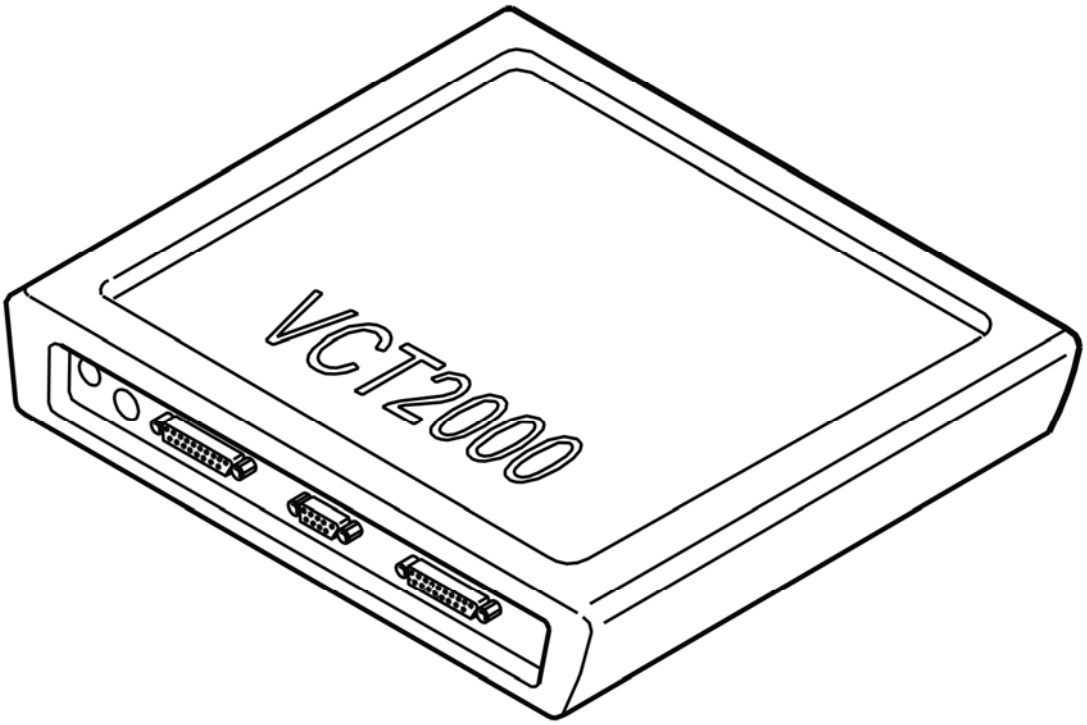

Fig. 372: Identifying VCT2000 Diagnostic Tool Symbol In VIDA
Courtesy of VOLVO CARS CORPORATION

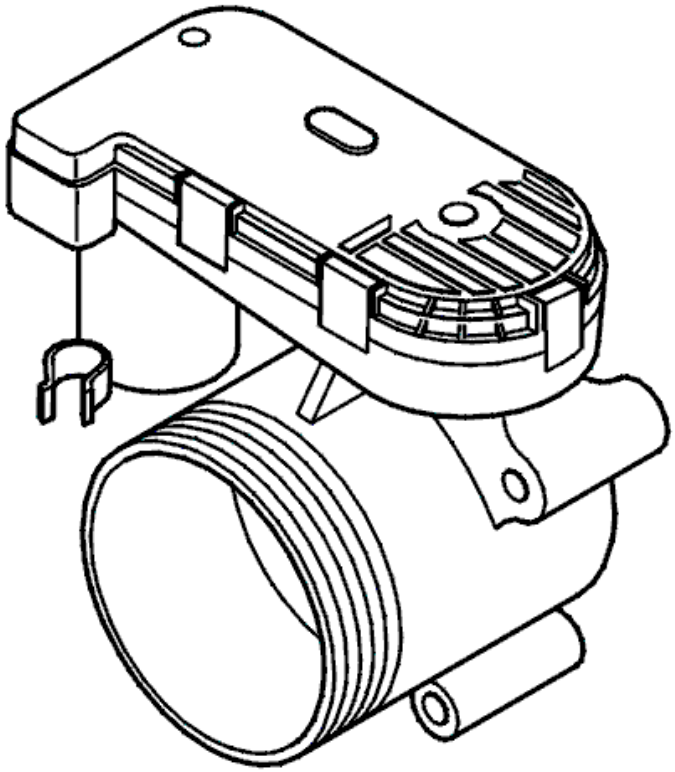

Fig. 373: Identifying Throttle Unit & Potentiometer
Courtesy of VOLVO CARS CORPORATION

- **Continue**

  Refer to **VERIFICATION**

VERIFICATION

VERIFICATION

HINT: After carrying out the repair, check that the fault has been remedied.

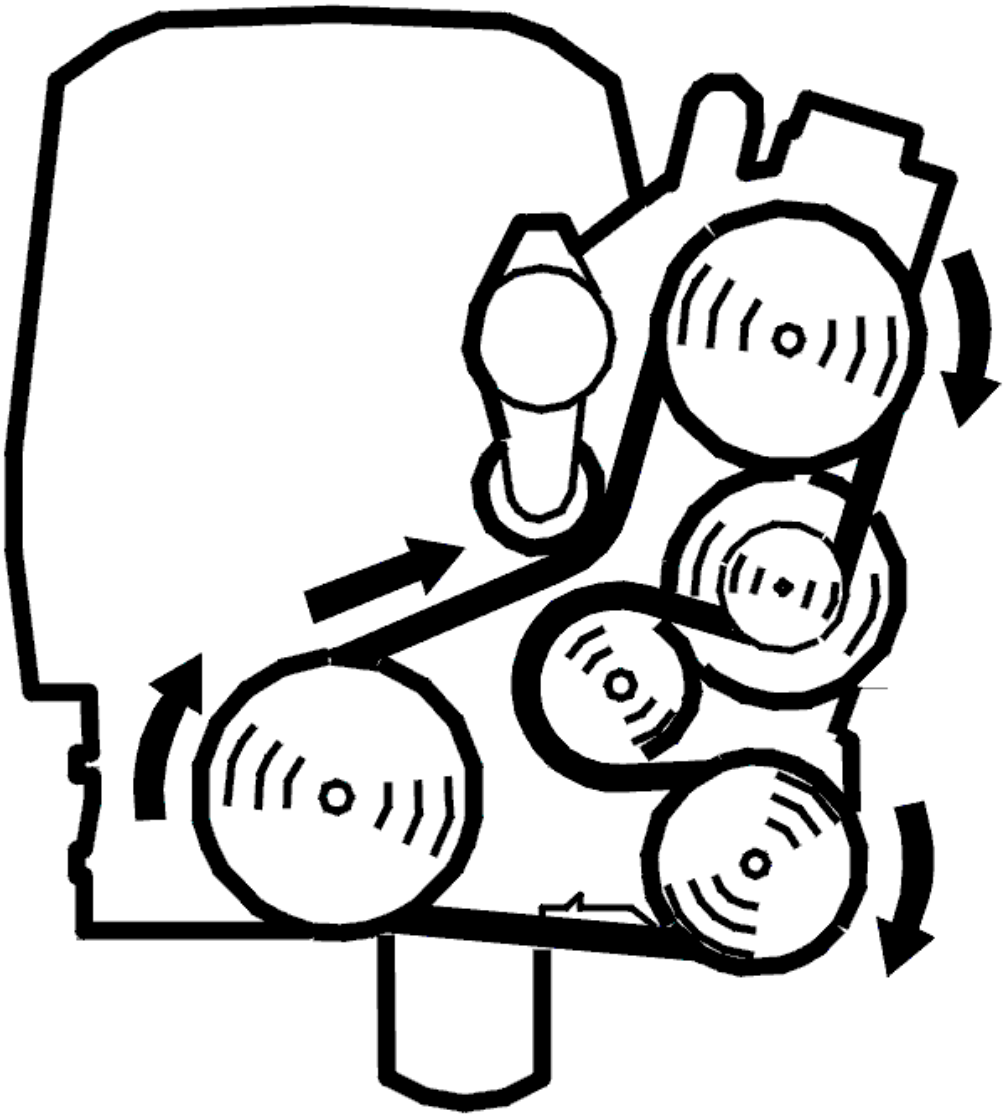

Fig. 374: Belt Routing / Engine Idling - Volvo
Courtesy of VOLVO CARS CORPORATION

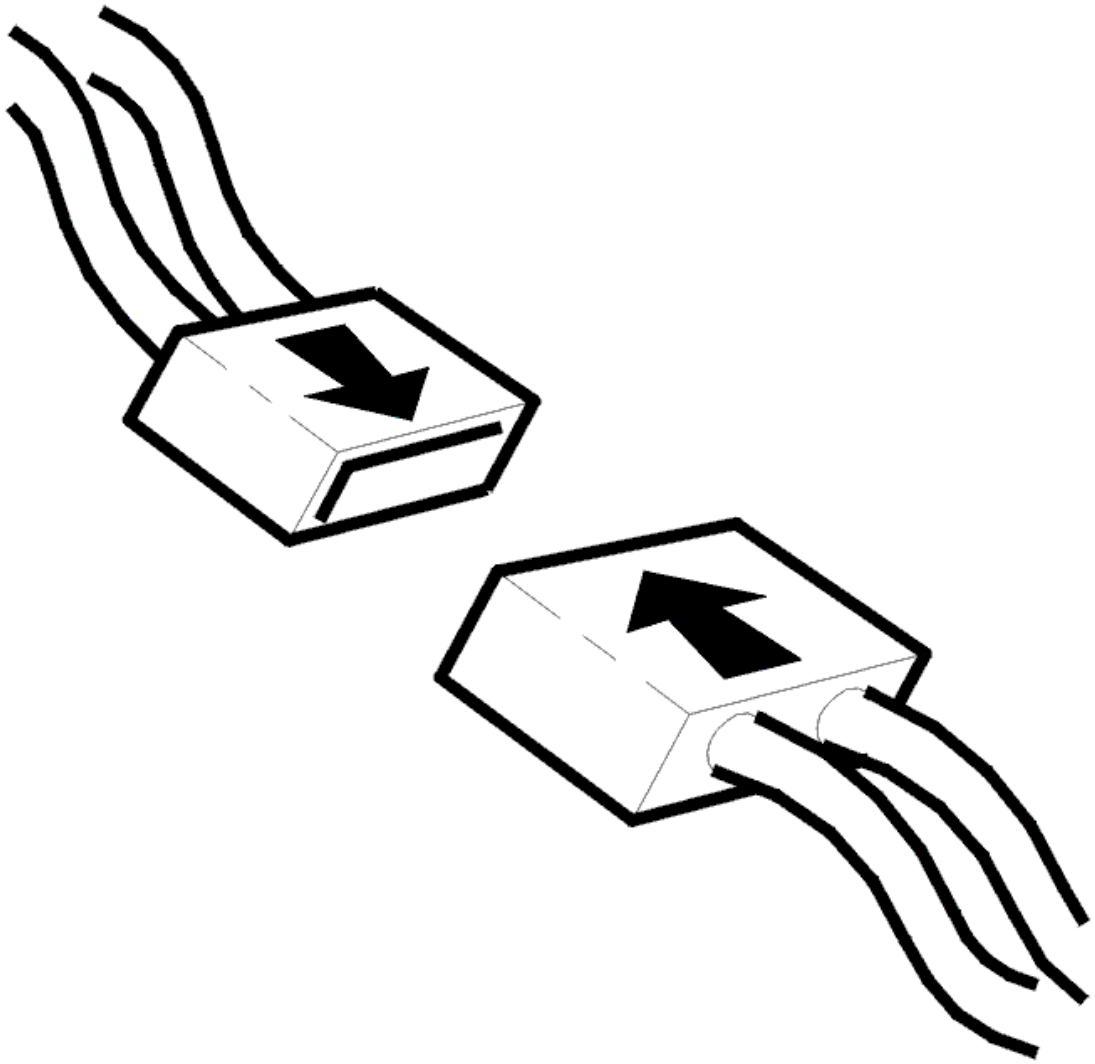

Fig. 375: Connecting Connector
Courtesy of VOLVO CARS CORPORATION

- Ignition off
- Reconnect the connectors, reinstall components etc.
- Start the engine.

  Read off the diagnostic status and fault status for the diagnostic trouble code (DTC) by selecting the relevant diagnostic trouble code (DTC) from the list.

  Check the fault status for the diagnostic trouble code (DTC) when the diagnostic is "Complete". If the function is correct, the fault status must be "No fault found" when the diagnostic is complete.

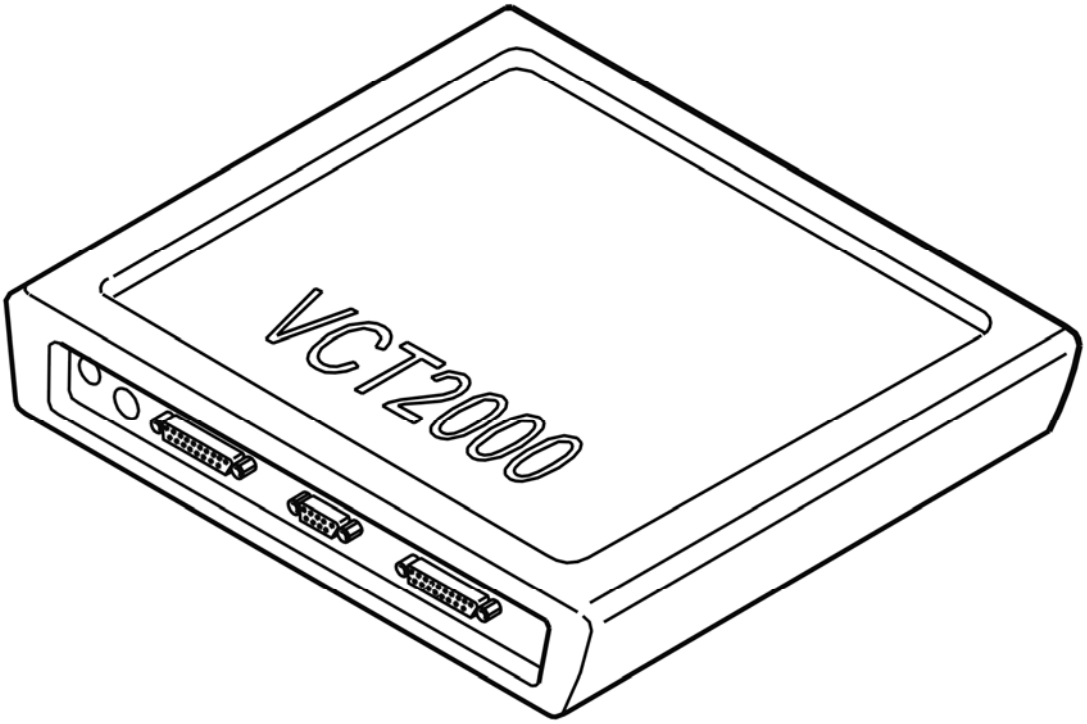

Fig. 376: Identifying VCT2000 Diagnostic Tool Symbol In VIDA
Courtesy of VOLVO CARS CORPORATION

Is the function OK?

- **YES**

  VERIFIED: Troubleshooting has been completed.

- **NO**

  Refer to **INFORMATION**

INFORMATION

FAULT-TRACING INFORMATION

The fault should have been detected and remedied. As this is not the case fault-tracing has failed.

Exit fault-tracing for this diagnostic trouble code (DTC) or make another attempt.

ECM-929D: ENGINE CONTROL MODULE (ECM). SIGNAL TOO LOW (B6294T; 2005-2006)

DIAGNOSTIC TROUBLE CODE (DTC) INFORMATION ECM-929D

see **DIAGNOSTIC TROUBLE CODE (DTC) INFORMATION ECM-929D**

SIGNAL TOO LOW

see **SIGNAL TOO LOW**

ECM-92B0: ELECTRONIC THROTTLE UNIT. FAULTY SIGNAL (B5254T2; 2005-2007)

DIAGNOSTIC TROUBLE CODE (DTC) INFORMATION ECM-92B0

Condition

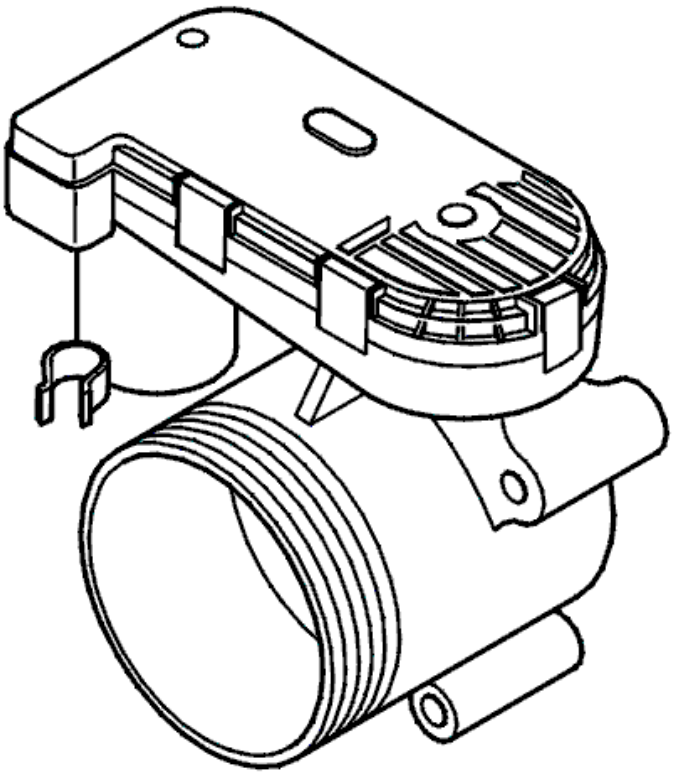

Fig. 377: Identifying Throttle Unit & Potentiometer
Courtesy of VOLVO CARS CORPORATION

The diagnostic trouble code (DTC) is stored if the engine control module (ECM) fails to carry out its first adaptation of the electronic throttle unit. This is because the programmed parameter for the stop position in the throttle position (TP) sensor has been exceeded. This adaptation is normally run during manufacture of the vehicle. However the electronic throttle unit must be adapted again if the software, the engine control module (ECM) or the throttle unit is replaced. If other diagnostic trouble codes (DTCs) are stored, these must be

remedied first. These may have caused the adaptation to fail.

Substitute Value

- The engine control module (ECM) uses nominal values for the throttle unit parameters
- The engine control module (ECM) shuts down the supply to the damper motor for the electronic throttle unit. The throttle will set itself to the return position.

Possible Source

- The throttle is sticking or is blocked (e. g. oil film, dust)
- Contact resistance or oxidation in the terminals between the engine control module (ECM) and the electronic throttle unit
- Damaged throttle unit.

Fault symptom[s]

- Malfunction indicator lamp (MIL) lit
- Poor performance.

FAULTY SIGNAL

see **FAULTY SIGNAL**

ECM-92B0: ELECTRONIC THROTTLE UNIT. FAULTY SIGNAL (B6294T; 2005-2006)

DIAGNOSTIC TROUBLE CODE (DTC) INFORMATION ECM-92B0

see **DIAGNOSTIC TROUBLE CODE (DTC) INFORMATION ECM-92B0**

FAULTY SIGNAL

see **FAULTY SIGNAL**

ECM-92CC: ELECTRONIC THROTTLE UNIT. SIGNAL TOO HIGH (B5254T2; 2005-2007)

DIAGNOSTIC TROUBLE CODE (DTC) INFORMATION ECM-92CC

Condition

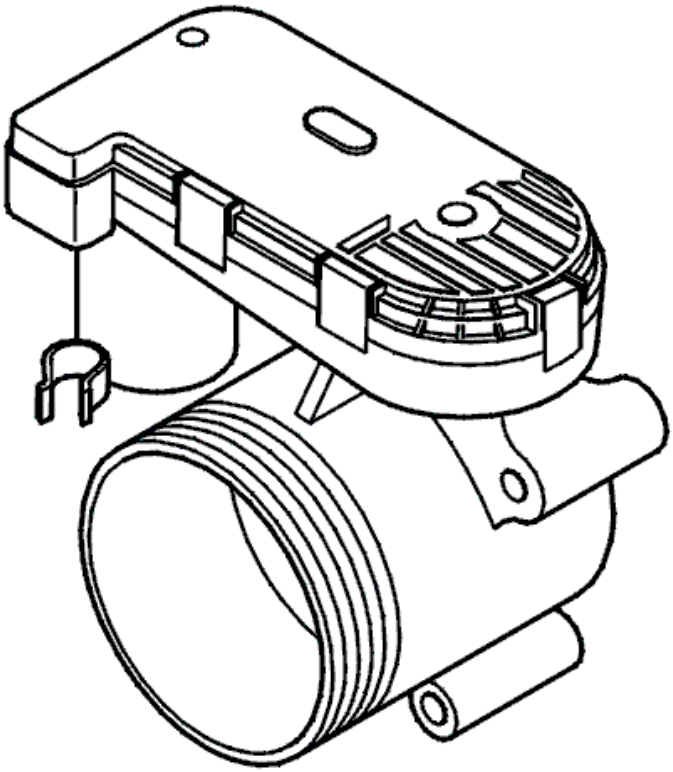

Fig. 378: Identifying Throttle Unit & Potentiometer
Courtesy of VOLVO CARS CORPORATION

The diagnostic trouble code (DTC) is stored if the engine control module (ECM) detects that the basic conditions for adaptation are not met when trying to adapt the electronic throttle unit. If other diagnostic trouble codes (DTCs) are stored, these must be remedied first. These may have caused the adaptation to fail.

Substitute Value

- The adaptation is cancelled
- The engine control module (ECM) shuts down the supply to the damper motor for the electronic throttle unit. The throttle will set itself to the return position.

Possible Source

Adaptation of the throttle unit is cancelled because one of the following basic requirements has not been met:

1. Ignition on / engine off
2. The battery voltage must be over 10 V
3. Accelerator pedal (AP) unaffected
4. The vehicle must be stationary (no vehicle speed signal)
5. Engine coolant temperature (ECT) between 5-100°C

6. Intake air temperature (IAT) above 5 °C.

- The throttle is sticking or is blocked (e. g. oil film, dust)
- Contact resistance or oxidation in the terminals between the engine control module (ECM) and the electronic throttle unit
- Damaged throttle unit.

Fault symptom[s]

- Poor performance.

SIGNAL TOO HIGH / SIGNAL TOO LOW

FAULT-TRACING INFORMATION

FAULT-TRACING INFORMATION

CAUTION: The male and female pins on the electronic throttle unit connectors are gold plated. Great care must be taken when measuring. Damage to the gold plating can result in operating difficulties.

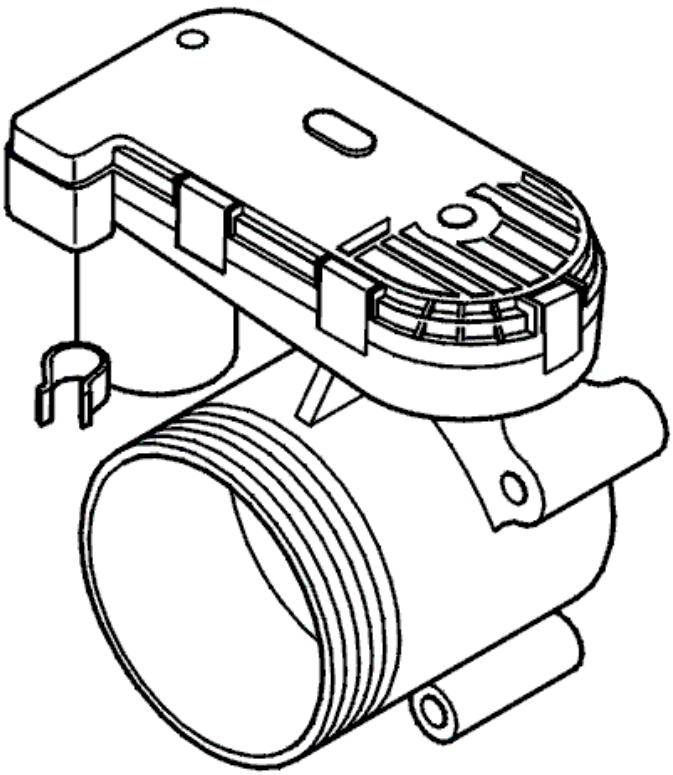

Fig. 379: Identifying Throttle Unit & Potentiometer
Courtesy of VOLVO CARS CORPORATION

- **Continue**

  Refer to **CHECKING THE DIAGNOSTIC TROUBLE CODES (DTCS)**

CHECKING THE DIAGNOSTIC TROUBLE CODES (DTCS)

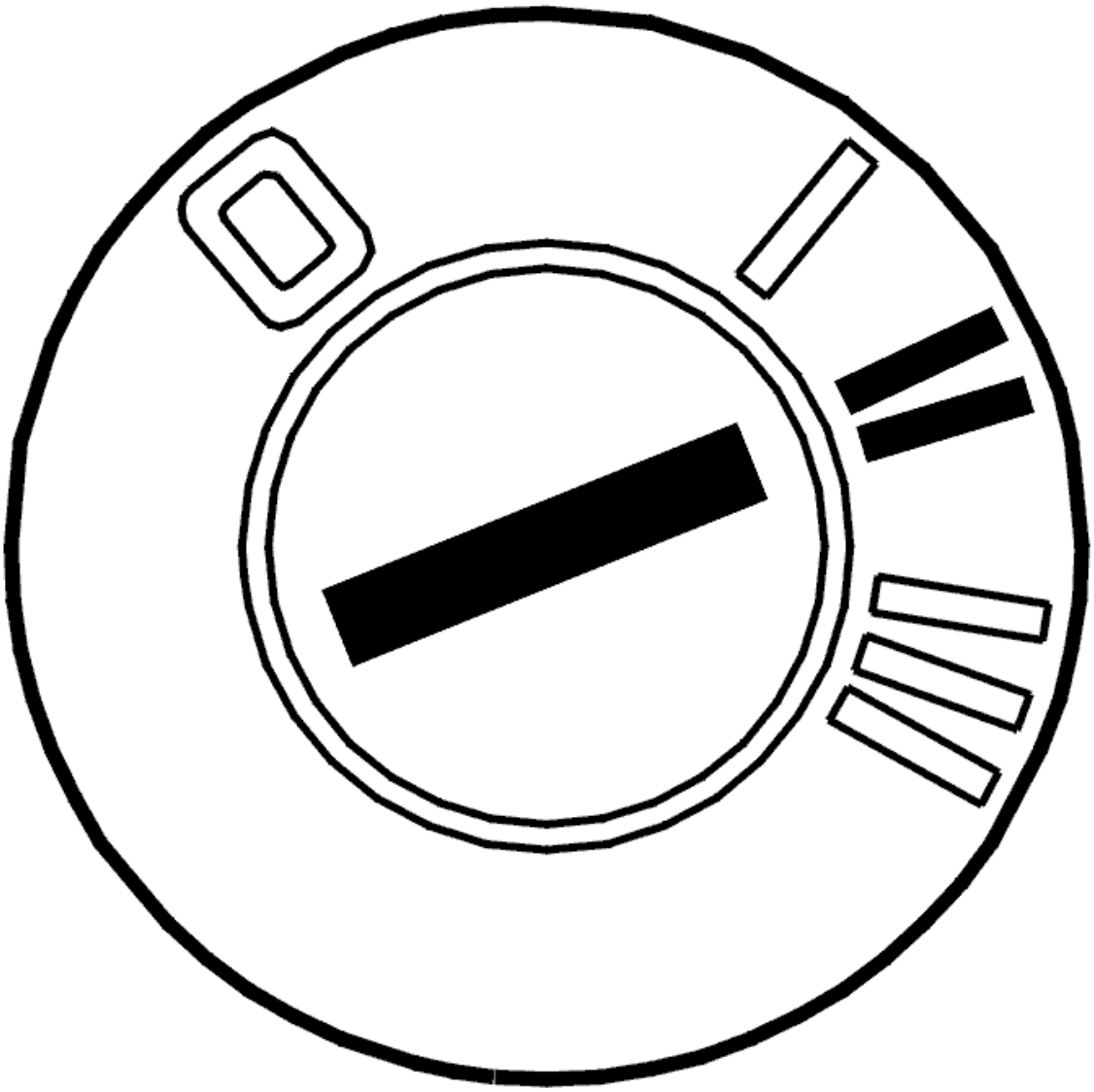

Fig. 380: Identifying Ignition ON
Courtesy of VOLVO CARS CORPORATION

- Ignition on
- Read off diagnostic trouble codes (DTCs).

  Check to, see if any other diagnostic trouble codes (DTCs) are stored. If other diagnostic trouble codes (DTCs) are stored, the engine control module (ECM) may not be able to run the adaptation.

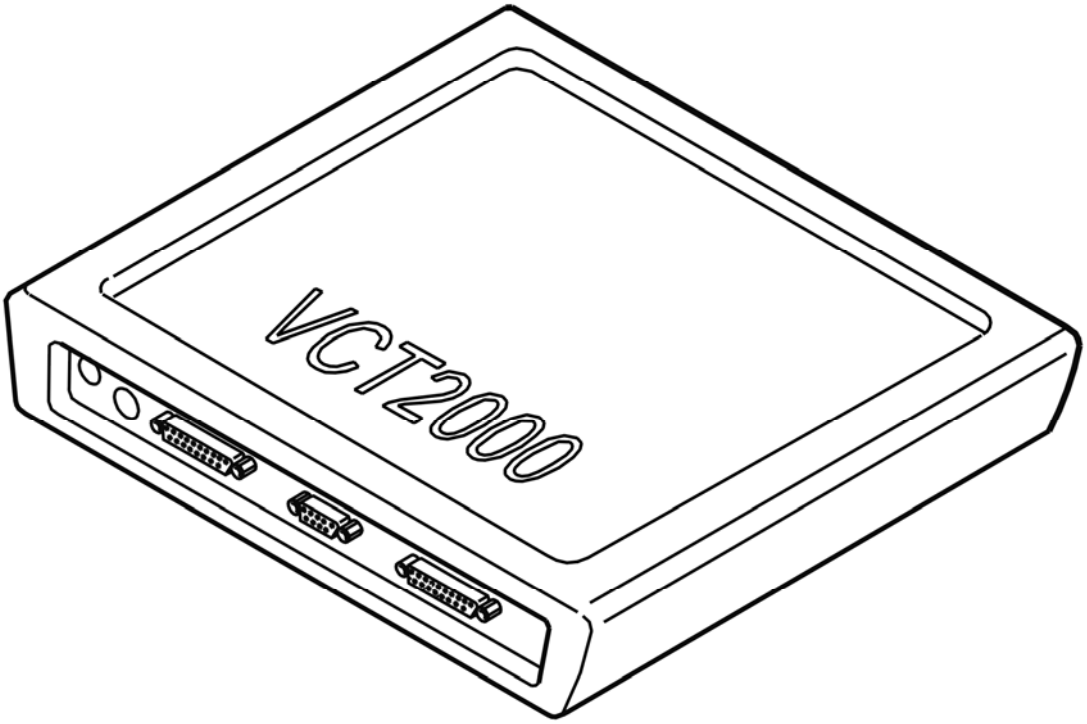

Fig. 381: Identifying VCT2000 Diagnostic Tool Symbol In VIDA
Courtesy of VOLVO CARS CORPORATION

Are any other diagnostic trouble codes (DTCs) stored?

- **YES**

  Refer to **FAULT-TRACING INFORMATION**

- **NO**

  Refer to **CHECKING THE STATUS**

CHECKING THE STATUS

NOTE: **The ignition must be switched on for at least 30 seconds after the basic conditions are met in order for the adaptation to start. It takes approximately 10 seconds to run the adaptation.**

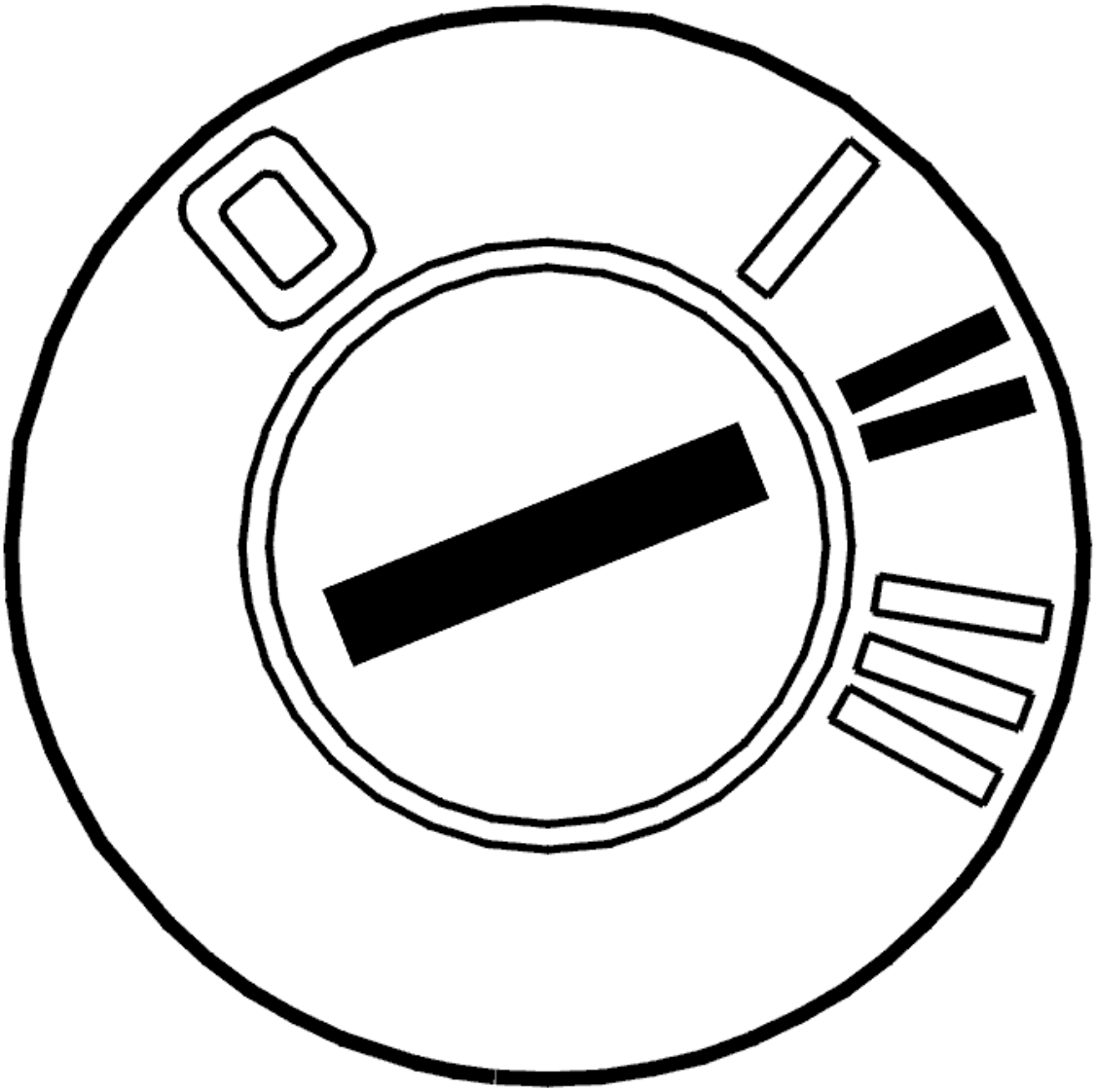

Fig. 382: Identifying Ignition ON
Courtesy of VOLVO CARS CORPORATION

- Ignition off
- Ignition on
- Read off the parameters.

Check that the following basic conditions for adaptation of the throttle unit are met.

1. Ignition on / engine off
2. Battery voltage above 10 V
3. Accelerator pedal (AP) unaffected
4. The vehicle must be stationary (no vehicle speed signal)
5. Engine coolant temperature (ECT) between 5-100°C

6. Intake air temperature (IAT) above 5 °C.

Remedy as necessary.

Check that the adaptation is correctly run after the "Adaptation of the throttle unit running" parameter changes status from "YES" to "NO". When all basic conditions are met, the adaptation must be completed after approximately 40 seconds. When the adaptation has been run correctly, the following information will be displayed:

- Adaptation of the throttle unit: OK
- Adaptation of the throttle unit running: NO.

The fault is intermittent at the moment if the adaptation has been completed correctly.

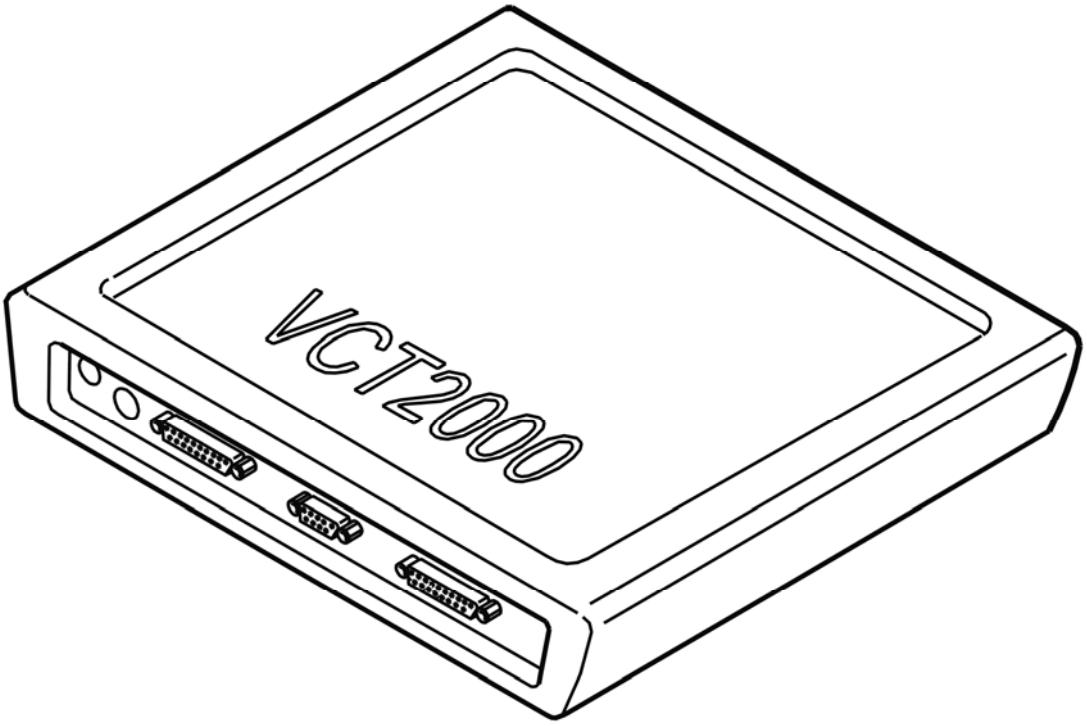

Fig. 383: Identifying VCT2000 Diagnostic Tool Symbol In VIDA
Courtesy of VOLVO CARS CORPORATION

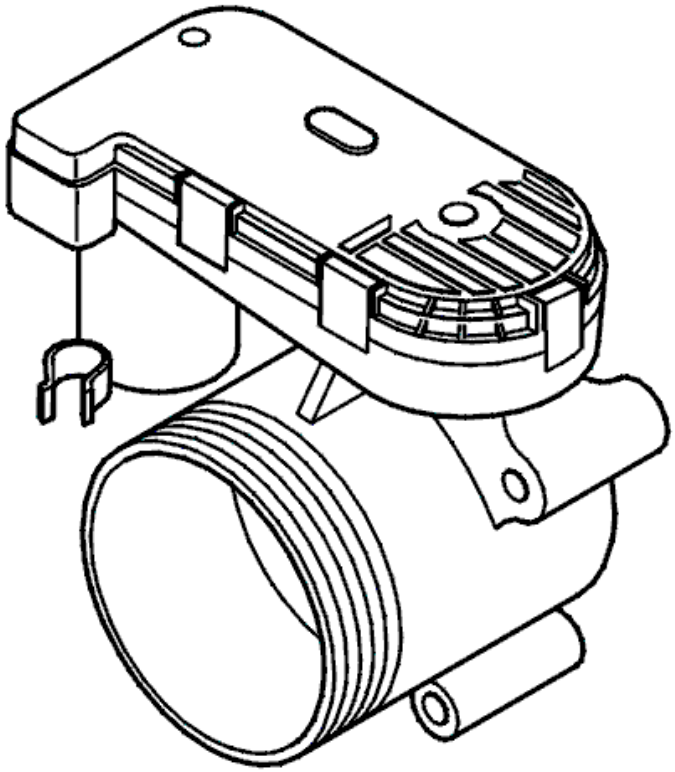

Fig. 384: Identifying Throttle Unit & Potentiometer
Courtesy of VOLVO CARS CORPORATION

- **Continue**

Refer to **CHECKING CONNECTORS AND COMPONENTS**

CHECKING CONNECTORS AND COMPONENTS

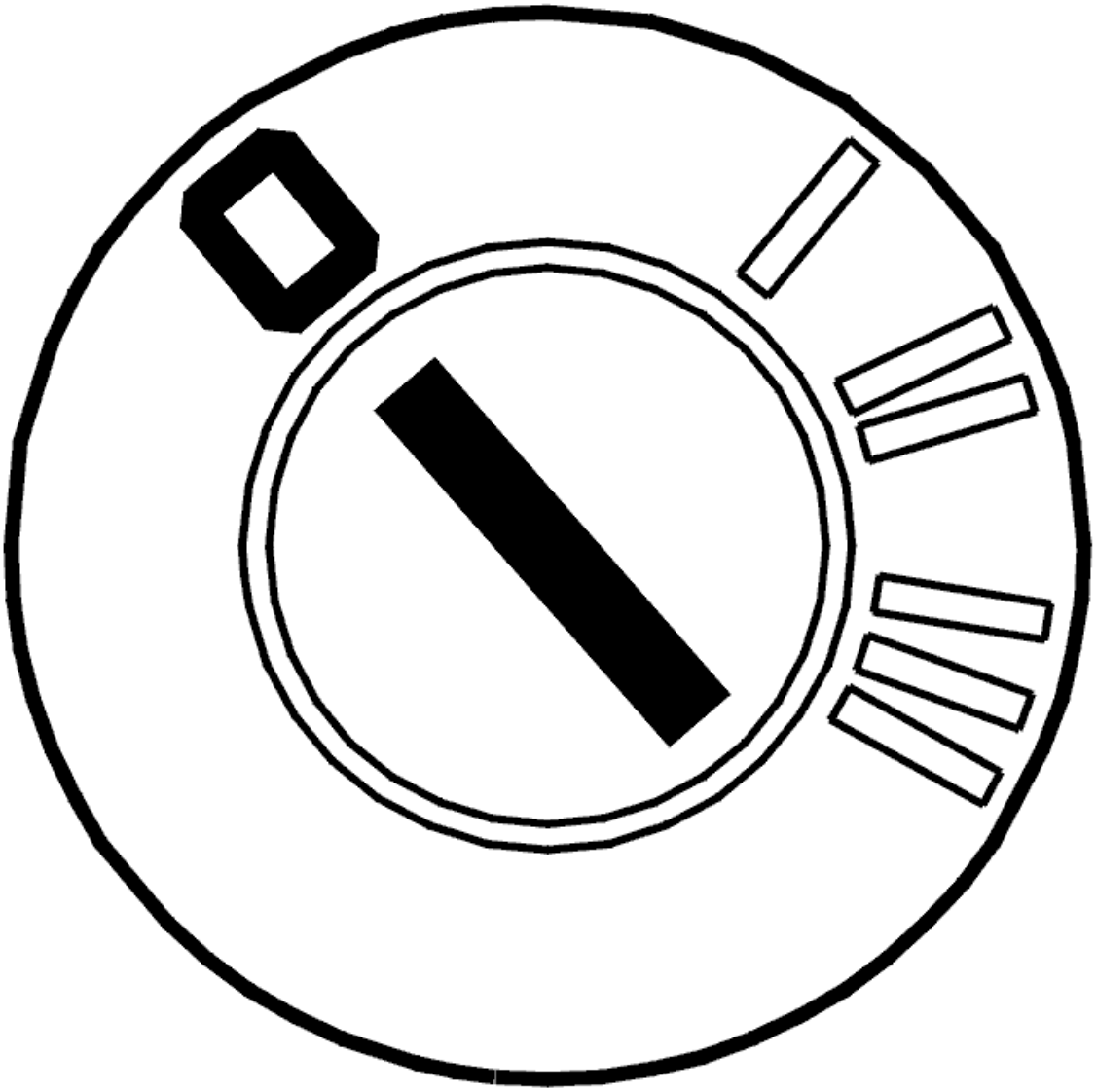

Fig. 385: Identifying Ignition OFF
Courtesy of VOLVO CARS CORPORATION

- Ignition off.

  Check the throttle unit and engine control module (ECM) connectors. Check for contact resistance and oxidation.

  Check the resistance values of the potentiometers in the throttle unit.

  Check that the shutter in the throttle unit is not blocked or sticking. Clean as necessary.

  Remedy as necessary.

  Other information:

- For 5 cylinder turbocharged engines -2004, see **SIGNAL DESCRIPTION**
- For 5 cylinder turbocharged engines 2005-, see **SIGNAL SPECIFICATION** .
- For 6 cylinder engines -2004, see **SIGNAL SPECIFICATION**
- For 6 cylinder engines 2005-, see **SIGNAL SPECIFICATION** .
- For resistance values: **COMPONENT SPECIFICATIONS**
- For B5xx4T, see **THROTTLE BODY (ELECTRONIC THROTTLE MODULE), REPLACING** .
- For B6xx4T, see **THROTTLE BODY (ELECTRONIC THROTTLE MODULE), REPLACING** .
- For B5xx4T, see **THROTTLE BODY (TB), CLEANING** .
- For B6xx4x, see **THROTTLE BODY (TB), CLEANING** .
- see **CHECKING WIRING AND TERMINALS**

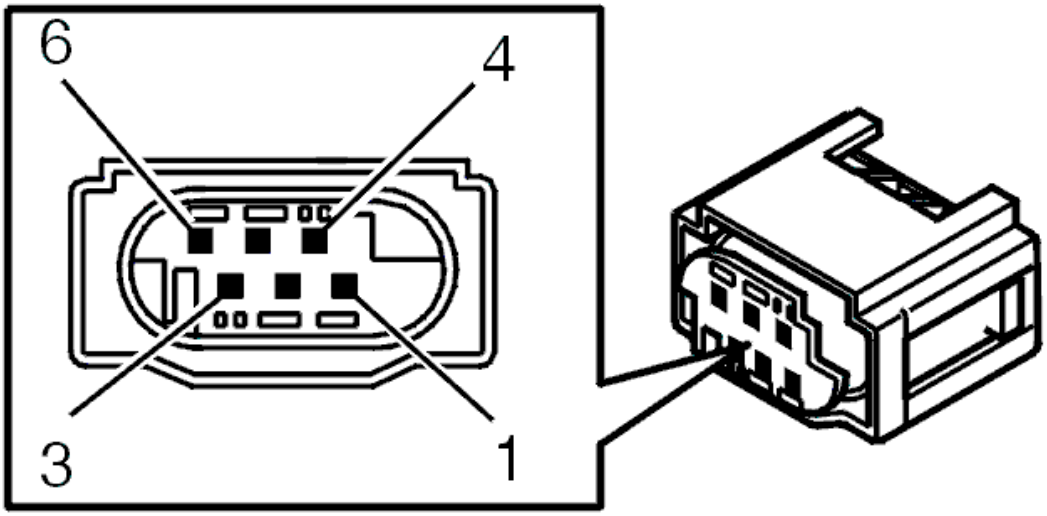

Fig. 386: Identifying Throttle Unit Connector Terminals
Courtesy of VOLVO CARS CORPORATION

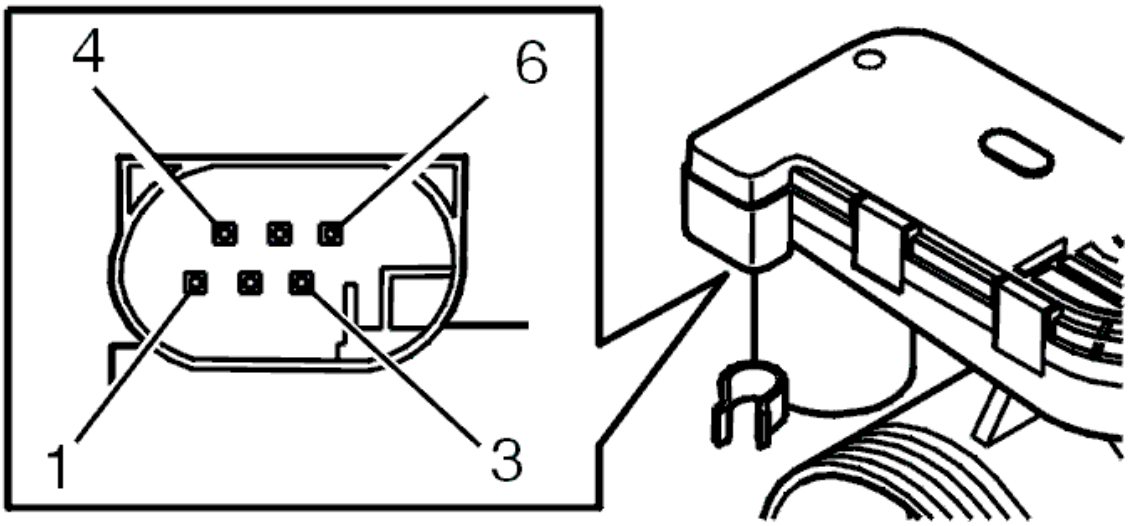

Fig. 387: Identifying Throttle Unit Connector Terminals
Courtesy of VOLVO CARS CORPORATION

- **Continue**

  Refer to **VERIFICATION**

FAULT-TRACING INFORMATION

Remedy stored diagnostic trouble code(s) (DTCs).

Remedy as necessary.

VERIFICATION

VERIFICATION

HINT: After carrying out the repair, check that the fault has been remedied.

NOTE: **The ignition must be switched on for at least 30 seconds after the basic conditions are met in order for the adaptation to start. It takes approximately 10 seconds to run the adaptation.**

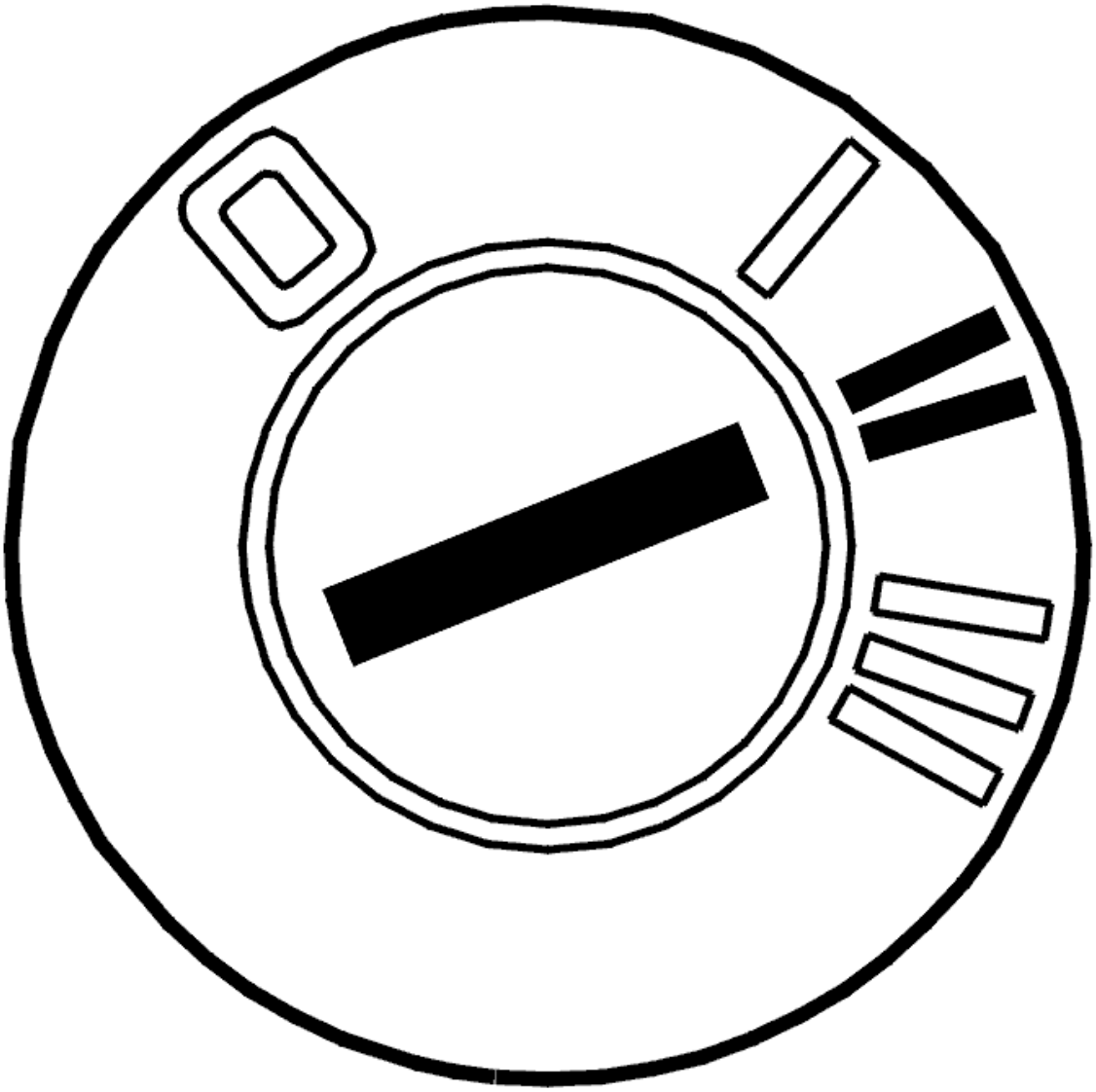

Fig. 388: Identifying Ignition ON
Courtesy of VOLVO CARS CORPORATION

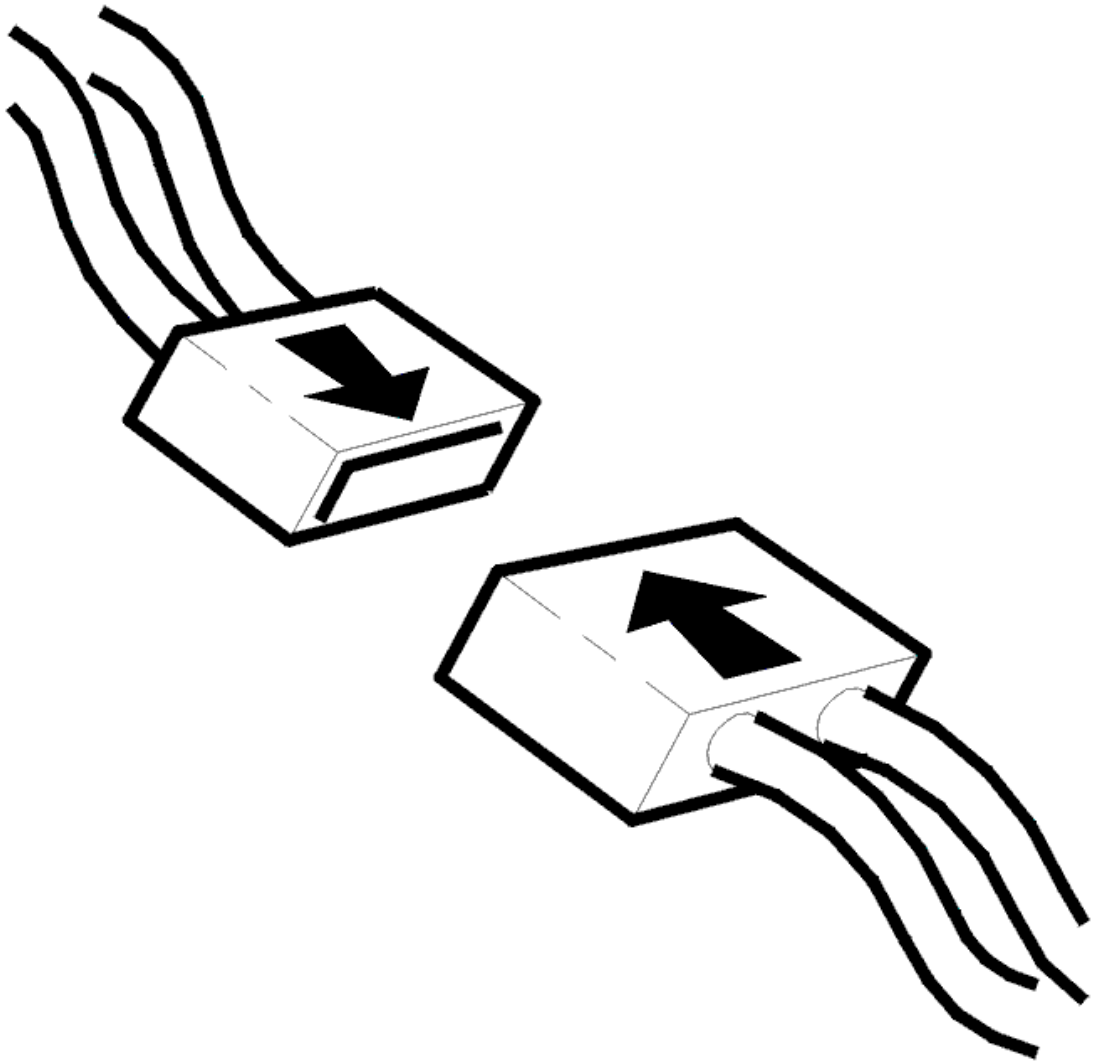

Fig. 389: Connecting Connector
Courtesy of VOLVO CARS CORPORATION

- Ignition off
- Reinstall the connectors, components etc.
- Ignition on
- Read off the parameters.

Check that the following basic conditions for adaptation of the throttle unit are met.

1. Ignition on / engine off
2. Battery voltage above 10 V
3. Accelerator pedal (AP) unaffected
4. The car must be stationary (no vehicle speed signal)

5. Engine coolant temperature (ECT) between 5-100 °C
6. Intake air temperature (IAT) above 5 °C.

Remedy as necessary.

Check that the adaptation is correctly run after the "Adaptation of the throttle unit running" parameter changes status from "YES" to "NO". When all basic conditions are met, the adaptation must be completed after approximately 40 seconds. When the adaptation is completed correctly, the following information will be displayed:

- Adaptation of the throttle unit: OK
- Adaptation of the throttle unit running: NO.

The fault has been remedied if the adaptation has been completed correctly.

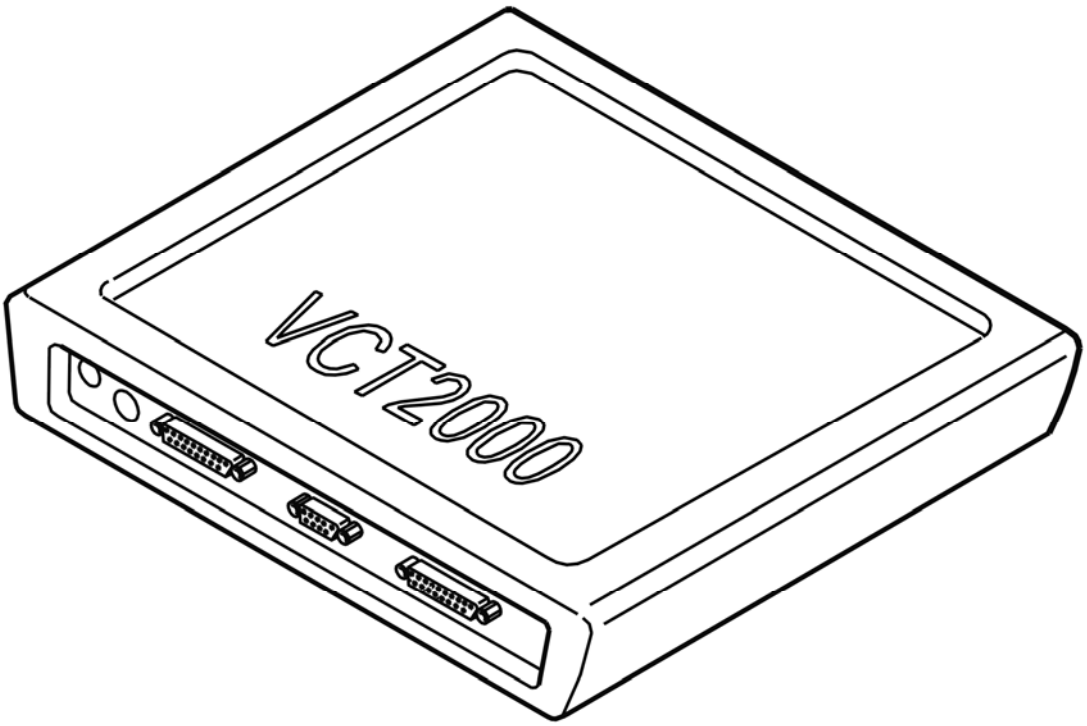

Fig. 390: Identifying VCT2000 Diagnostic Tool Symbol In VIDA
Courtesy of VOLVO CARS CORPORATION

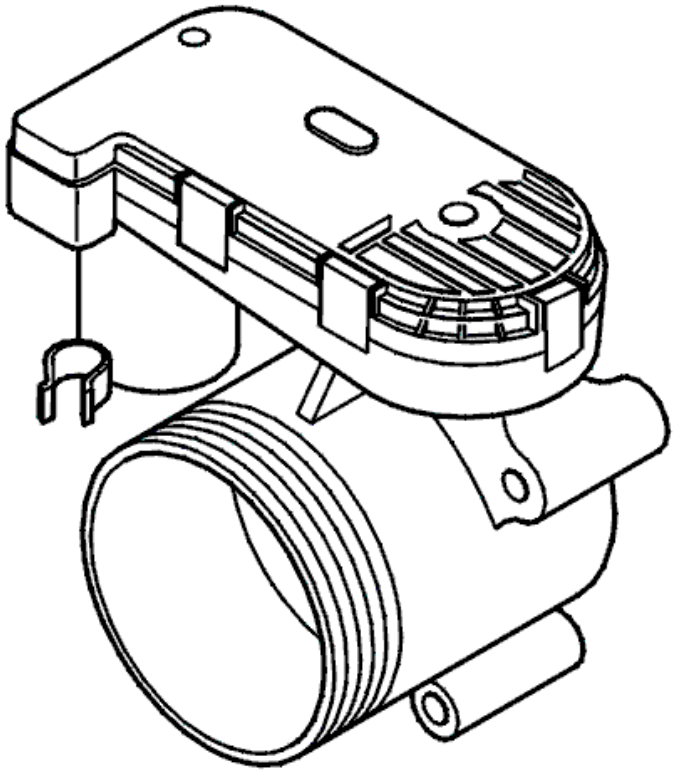

Fig. 391: Identifying Throttle Unit & Potentiometer
Courtesy of VOLVO CARS CORPORATION

Is the adaptation OK?

- **YES**

  VERIFIED: Troubleshooting has been completed.

- **NO**

  Refer to **INFORMATION**

INFORMATION

FAULT-TRACING INFORMATION

The fault should have been detected and remedied. As this is not the case fault-tracing has failed.

Exit fault-tracing for this diagnostic trouble code (DTC) or make another attempt.

ECM-92CC: ELECTRONIC THROTTLE UNIT. SIGNAL TOO HIGH (B6294T; 2005-2006)

DIAGNOSTIC TROUBLE CODE (DTC) INFORMATION ECM-92CC

see **DIAGNOSTIC TROUBLE CODE (DTC) INFORMATION ECM-92CC**

SIGNAL TOO HIGH / SIGNAL TOO LOW

see **SIGNAL TOO HIGH / SIGNAL TOO LOW**

ECM-92CD: ELECTRONIC THROTTLE UNIT. SIGNAL TOO LOW (B5254T2; 2005-2007)

DIAGNOSTIC TROUBLE CODE (DTC) INFORMATION ECM-92CD

Condition

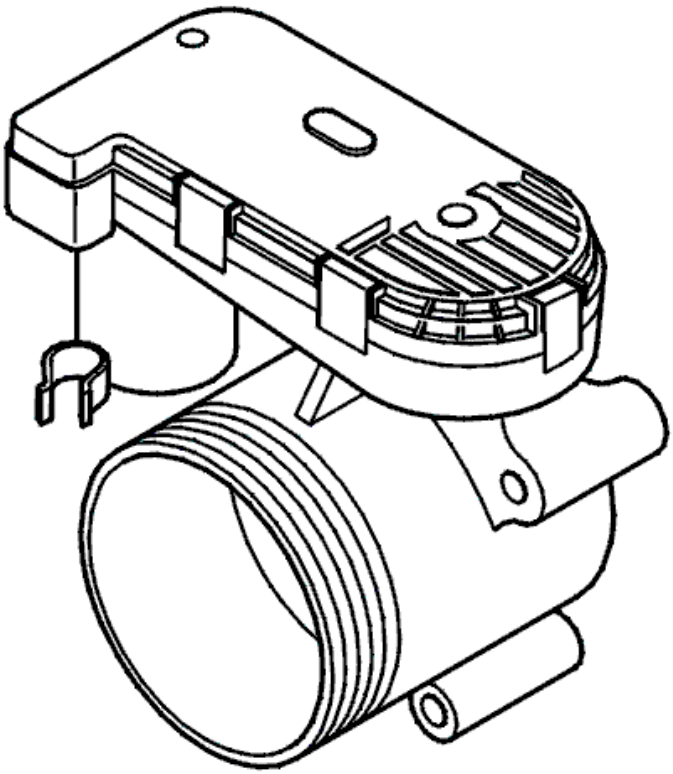

Fig. 392: Identifying Throttle Unit & Potentiometer
Courtesy of VOLVO CARS CORPORATION

The diagnostic trouble code (DTC) is stored if the engine control module (ECM) detects that the basic conditions for adaptation are not met when trying to adapt the electronic throttle unit. If other diagnostic trouble codes (DTCs) are stored, these must be remedied first. These may have caused the adaptation to fail.

Substitute Value

- The adaptation is cancelled
- The engine control module (ECM) shuts down the supply to the damper motor for the electronic throttle unit. The throttle will set itself to the return position.

Possible Source

Adaptation of the throttle unit is cancelled because one of the following basic requirements has not been met:

1. Ignition on / engine off
2. The battery voltage must be over 10 V
3. Accelerator pedal (AP) unaffected
4. The vehicle must be stationary (no vehicle speed signal)
5. Engine coolant temperature (ECT) between 5-100°C
6. Intake air temperature (IAT) above 5 °C.

- The throttle is sticking or is blocked (e. g. oil film, dust)
- Contact resistance or oxidation in the terminals between the engine control module (ECM) and the electronic throttle unit
- Damaged throttle unit.

Fault symptom[s]

- Poor performance.

SIGNAL TOO HIGH / SIGNAL TOO LOW

see **SIGNAL TOO HIGH / SIGNAL TOO LOW**

ECM-92CD: ELECTRONIC THROTTLE UNIT. SIGNAL TOO LOW (B6294T; 2005-2006)

DIAGNOSTIC TROUBLE CODE (DTC) INFORMATION ECM-92CD

see **DIAGNOSTIC TROUBLE CODE (DTC) INFORMATION ECM-92CD**

SIGNAL TOO HIGH / SIGNAL TOO LOW

see **SIGNAL TOO HIGH / SIGNAL TOO LOW**

ECM-92D0: ELECTRONIC THROTTLE UNIT. FAULTY SIGNAL (B5254T2; 2005-2007)

DIAGNOSTIC TROUBLE CODE (DTC) INFORMATION ECM-92D0

Condition

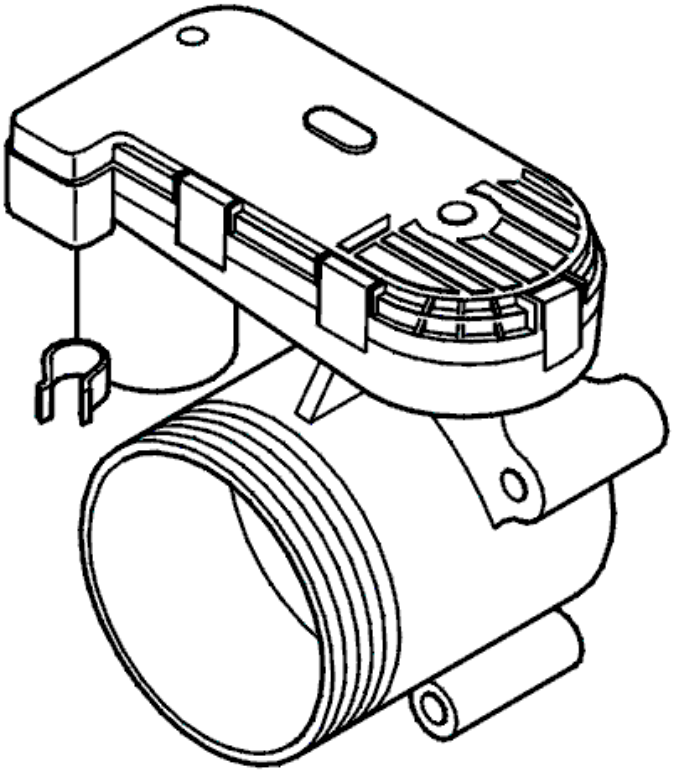

Fig. 393: Identifying Throttle Unit & Potentiometer
Courtesy of VOLVO CARS CORPORATION

The diagnostic trouble code (DTC) is stored if the ignition has been left on for 30 seconds and the engine control module (ECM) has been unable to adapt the electronic throttle unit. This is because the programmed parameter for the stop position in the throttle position (TP) sensor has been exceeded. Adaptation is usually carried out to ensure that the throttle unit parameters are within the programmed values that are stored in the engine control module (ECM). If other diagnostic trouble codes (DTCs) are stored, these must be remedied first. These may have caused the adaptation to fail.

Substitute Value

- The engine control module (ECM) uses parameters from previous successful adaptations
- The engine control module (ECM) shuts down the supply to the damper motor for the electronic throttle unit. The throttle will set itself to the return position.

Possible Source

- The throttle is sticking or is blocked (e. g. oil film, dust)
- Contact resistance or oxidation in the terminals between the engine control module (ECM) and the electronic throttle unit

- Damaged throttle unit.

Fault symptom[s]

- Poor performance.

FAULTY SIGNAL

see **FAULTY SIGNAL**

ECM-92D0: ELECTRONIC THROTTLE UNIT. FAULTY SIGNAL (B6294T; 2005-2006)

DIAGNOSTIC TROUBLE CODE (DTC) INFORMATION ECM-92D0

see **DIAGNOSTIC TROUBLE CODE (DTC) INFORMATION ECM-92D0**

FAULTY SIGNAL

see **FAULTY SIGNAL**

ECM-92E0: ENGINE CONTROL MODULE (ECM). INTERNAL FAULT (B5254T2; 2005-2007)

DIAGNOSTIC TROUBLE CODE (DTC) INFORMATION ECM-92E0

Condition

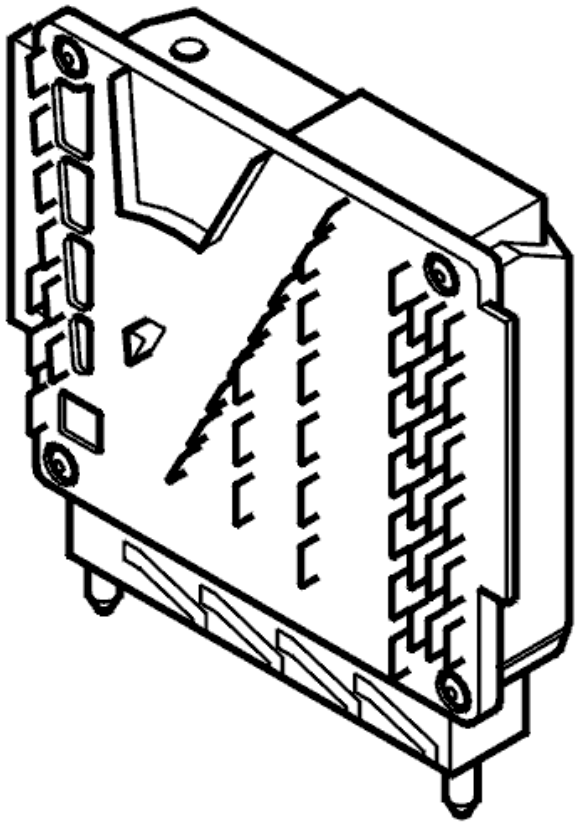

Fig. 394: Engine Control Module
Courtesy of VOLVO CARS CORPORATION

The diagnostic trouble code (DTC) is stored if the engine control module (ECM), when attempting to adapt the electronic throttle unit, registers an internal fault in the integrated amplifier for the signal from potentiometer 1 in throttle position sensor (circuit 1) in the electronic throttle unit.

Substitute Value

The engine control module (ECM) does not use the signal from potentiometer 1 for the throttle position (TP) sensor (circuit 1) in the electronic throttle unit.

Possible Source

- Damaged engine control module (ECM).

Fault symptom[s]

- None.

INTERNAL FAULT

see **INTERNAL FAULT**

ECM-92E0: ENGINE CONTROL MODULE (ECM). INTERNAL FAULT (B6294T; 2005-2006)

DIAGNOSTIC TROUBLE CODE (DTC) INFORMATION ECM-92E0

see **DIAGNOSTIC TROUBLE CODE (DTC) INFORMATION ECM-92E0**

INTERNAL FAULT

see **INTERNAL FAULT**

ECM-9300: CLUTCH PEDAL POSITION SENSOR. FAULTY SIGNAL (B5254T2; B6294T; 2003-2004)

DIAGNOSTIC TROUBLE CODE (DTC) INFORMATION

Condition

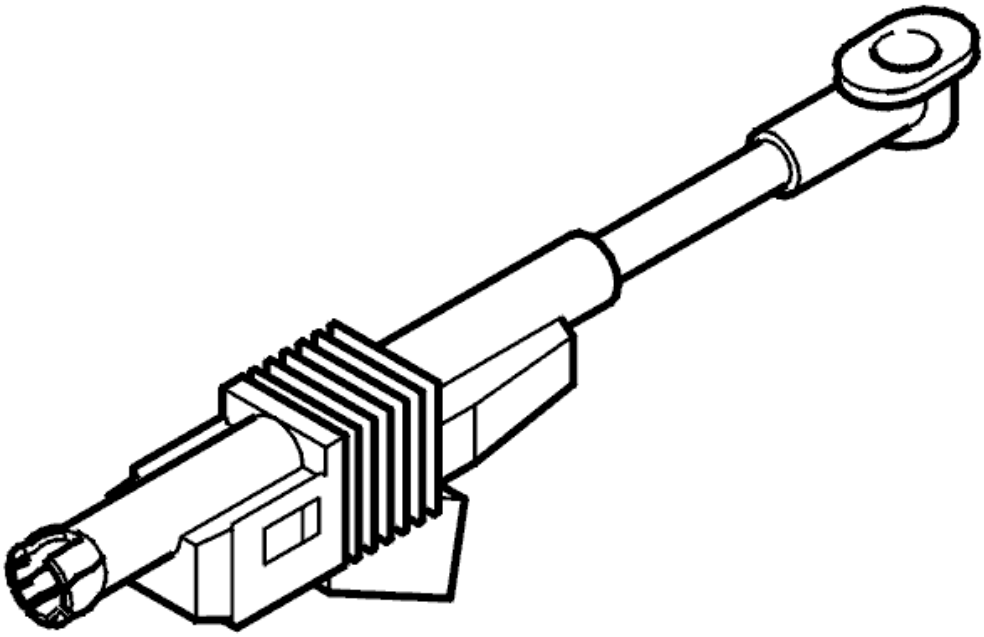

Fig. 395: Identifying Clutch Pedal Push Rod & Position Sensor
Courtesy of VOLVO CARS CORPORATION

Diagnostic trouble code (DTC) ECM-9300 is stored if the engine control module (ECM) registers a fault in the PWM signal from the clutch pedal position sensor when the ignition is switched on.

Substitute Value

Cruise control switched off.

Possible Source

Signal too high:

- Short-circuit to supply voltage in the signal cable
- Defective clutch pedal sensor.

Signal too low:

- Short-circuit to ground in the signal cable
- Defective clutch pedal sensor.

Faulty signal:

- Open-circuit in the signal cable
- Incorrectly installed clutch pedal sensor
- Defective clutch pedal sensor.

Fault symptom[s]

- Cruise control does not function at all.

FAULTY SIGNAL

CHECKING THE STATUS

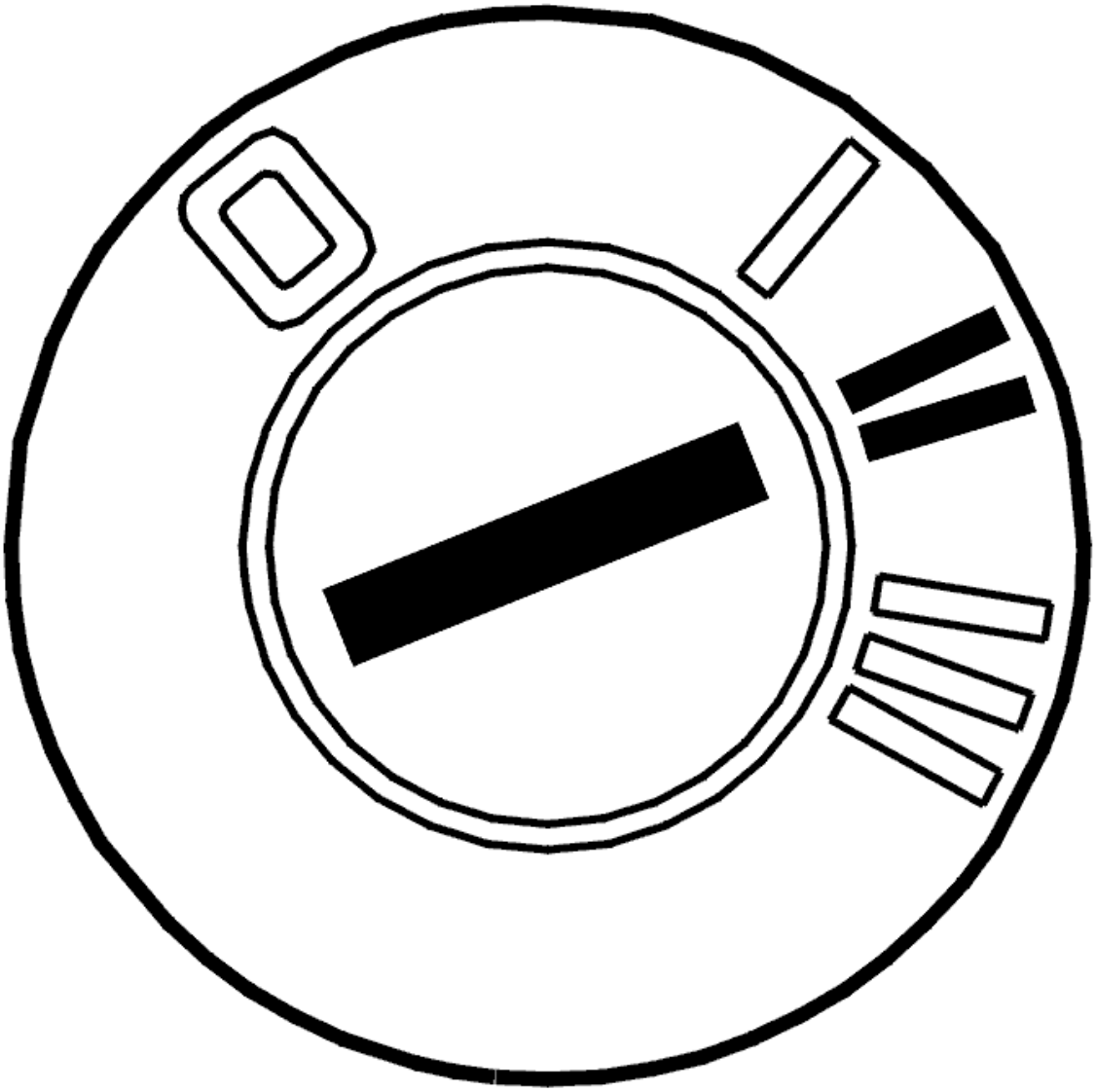

Fig. 396: Identifying Ignition ON
Courtesy of VOLVO CARS CORPORATION

- Ignition on
- Read off the clutch pedal movement by carefully pressing and releasing the clutch pedal.

  Check that the value changes with clutch pedal movement. The value must be between 60-70 % when the clutch pedal is unaffected and 10-20 % when the pedal is fully depressed.

  The fault is intermittent at the moment if the values are OK.

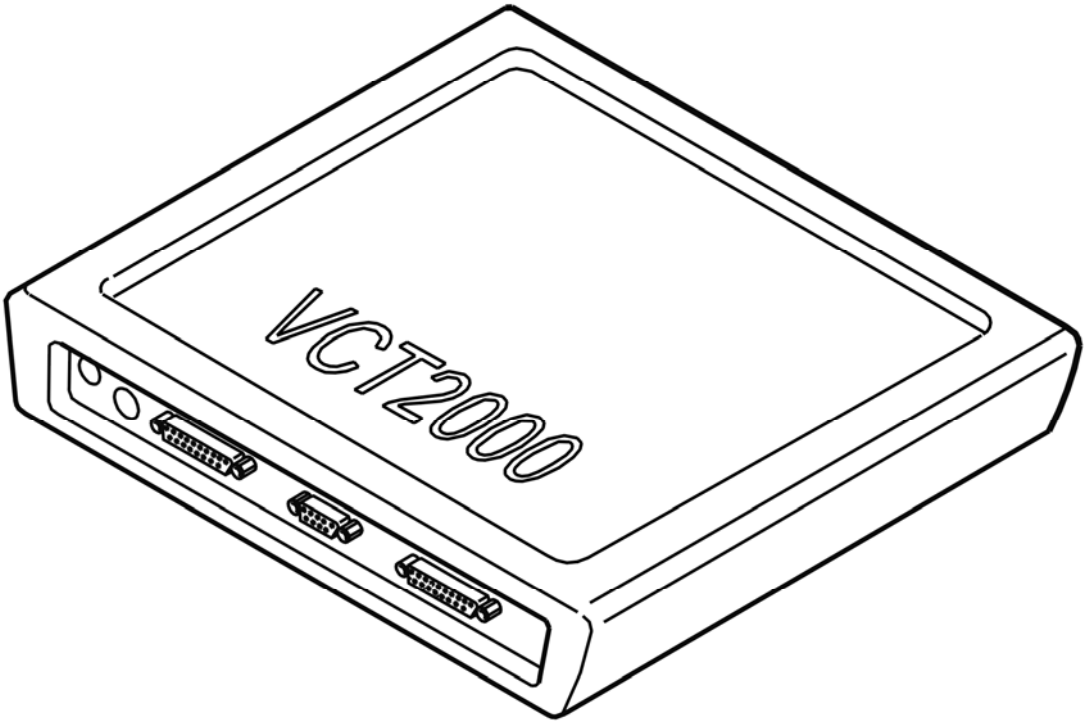

Fig. 397: Identifying VCT2000 Diagnostic Tool Symbol In VIDA
Courtesy of VOLVO CARS CORPORATION

- **Continue**

  Refer to **CHECKING COMPONENTS AND WIRING**

CHECKING COMPONENTS AND WIRING

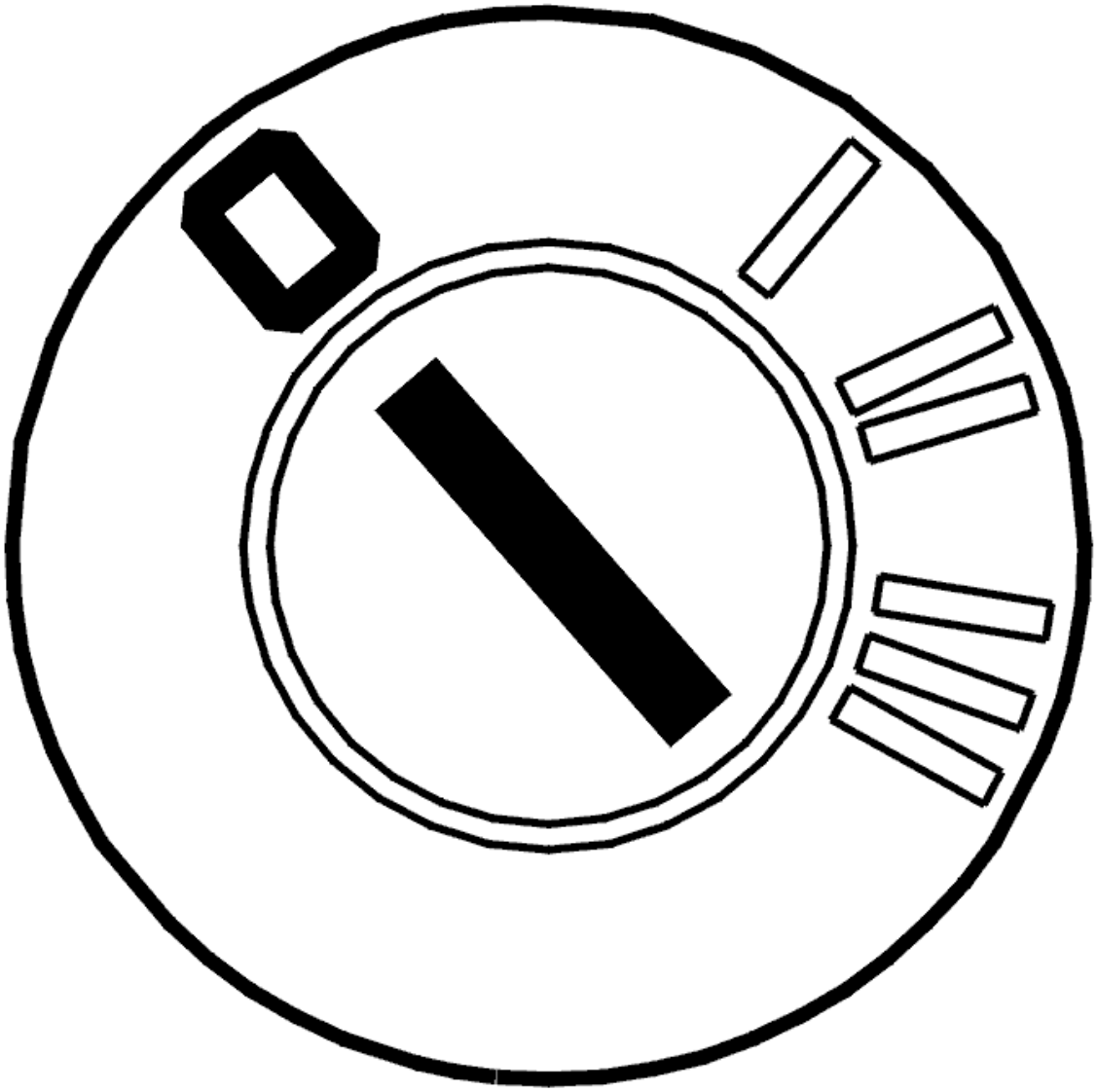

Fig. 398: Identifying Ignition OFF
Courtesy of VOLVO CARS CORPORATION

- Ignition off.

  Check the resistance of the clutch pedal sensor between terminals #2 and #4 (component side).

  Check the clutch pedal sensor and engine control module (ECM) connectors. Check for contact resistance and oxidation.

  Check the signal cable between engine control module (ECM) terminal #B15 (#B25) and clutch pedal sensor terminal #2 (component side). Check for an open-circuit.

  Check the signal ground cable between engine control module (ECM) terminal #B4 (#B14) and clutch pedal sensor terminal #4 (wiring side). Check for an open-circuit.

Check the clutch pedal sensor installation. Search for damage and check the connections visually.

HINT: With the ignition on, the power supply to the clutch pedal sensor must be approximately 5 V (measured with the clutch pedal sensor disconnected), measured between terminals #2 and #4 (wiring side).

Remedy as necessary.

Other information:

- see **CHECKING WIRING AND TERMINALS**
- To connect the breakout box, see **CONNECTING THE BREAKOUT BOX**
- To access or replace the clutch pedal sensor, see **PEDAL POSITION SENSOR CLUTCH, REPLACING**
- For resistance values, see **COMPONENT SPECIFICATIONS**
- For 5 cylinder turbocharged engines -2004, see **SIGNAL DESCRIPTION**
- For 5 cylinder turbocharged engines 2005-, see **SIGNAL SPECIFICATION** .
- For 6 cylinder engines -2004, see **SIGNAL SPECIFICATION**
- For 6 cylinder engines 2005-, see **SIGNAL SPECIFICATION** .

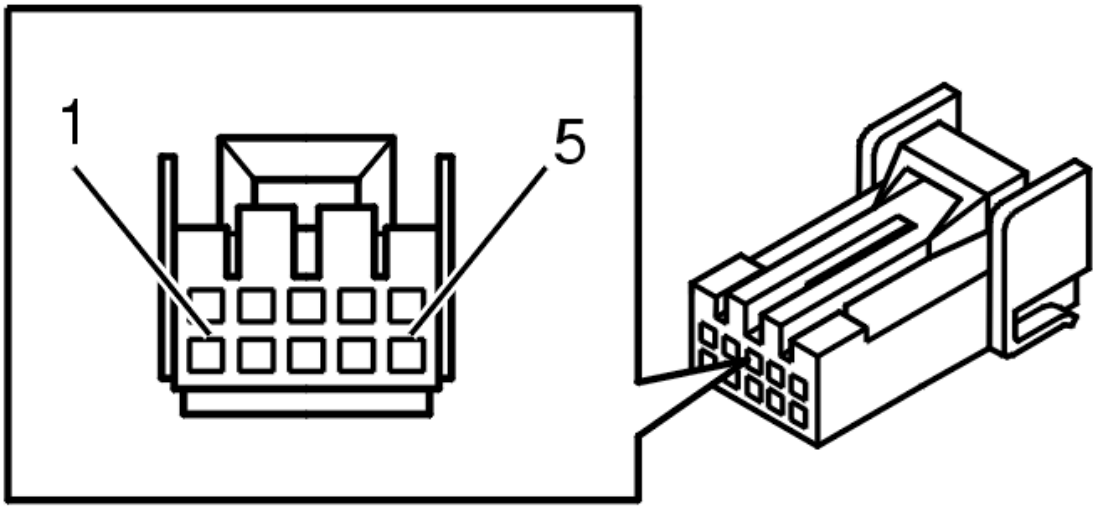

Fig. 399: 10 CD Changer Connector Terminals
Courtesy of VOLVO CARS CORPORATION

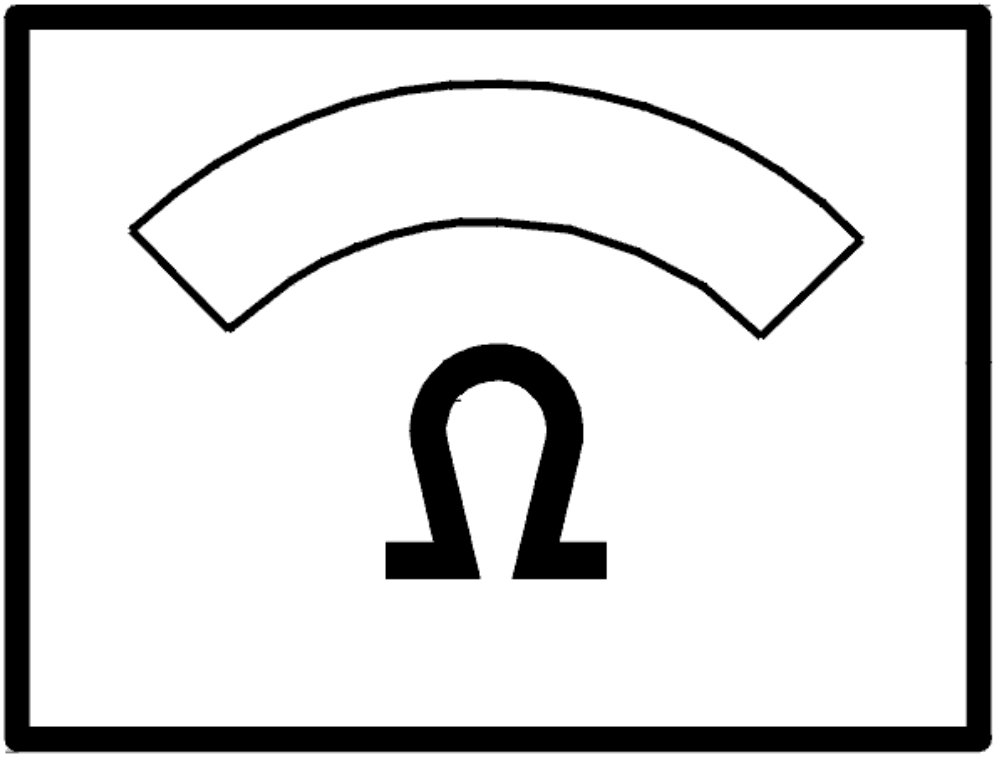

Fig. 400: Identifying Ohm Meter
Courtesy of VOLVO CARS CORPORATION

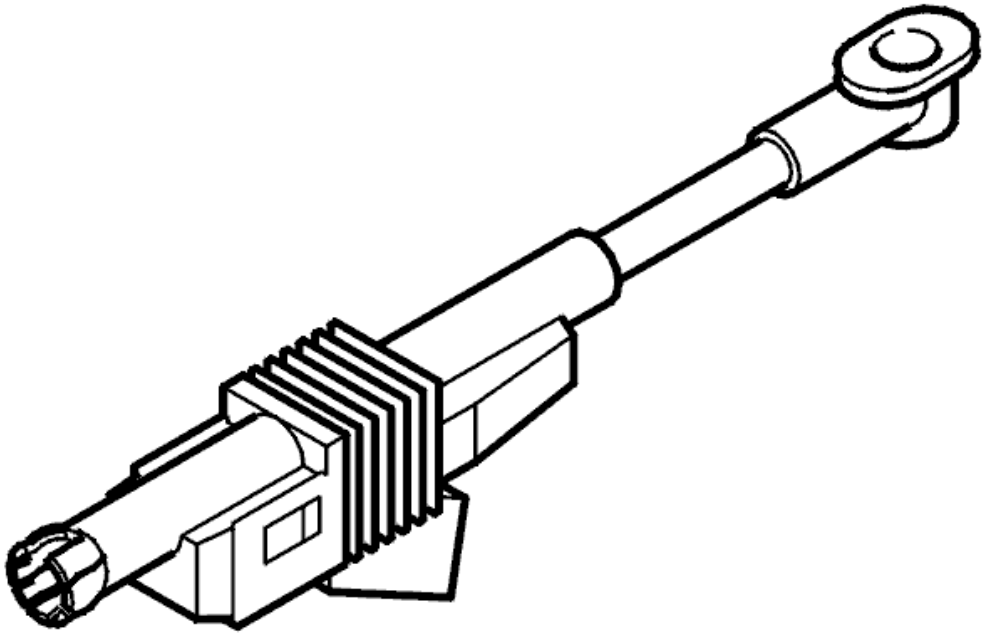

Fig. 401: Identifying Clutch Pedal Push Rod & Position Sensor
Courtesy of VOLVO CARS CORPORATION

- **Continue**

  Refer to **VERIFICATION**

VERIFICATION

VERIFICATION

HINT: After carrying out the repair, check that the fault has been remedied.

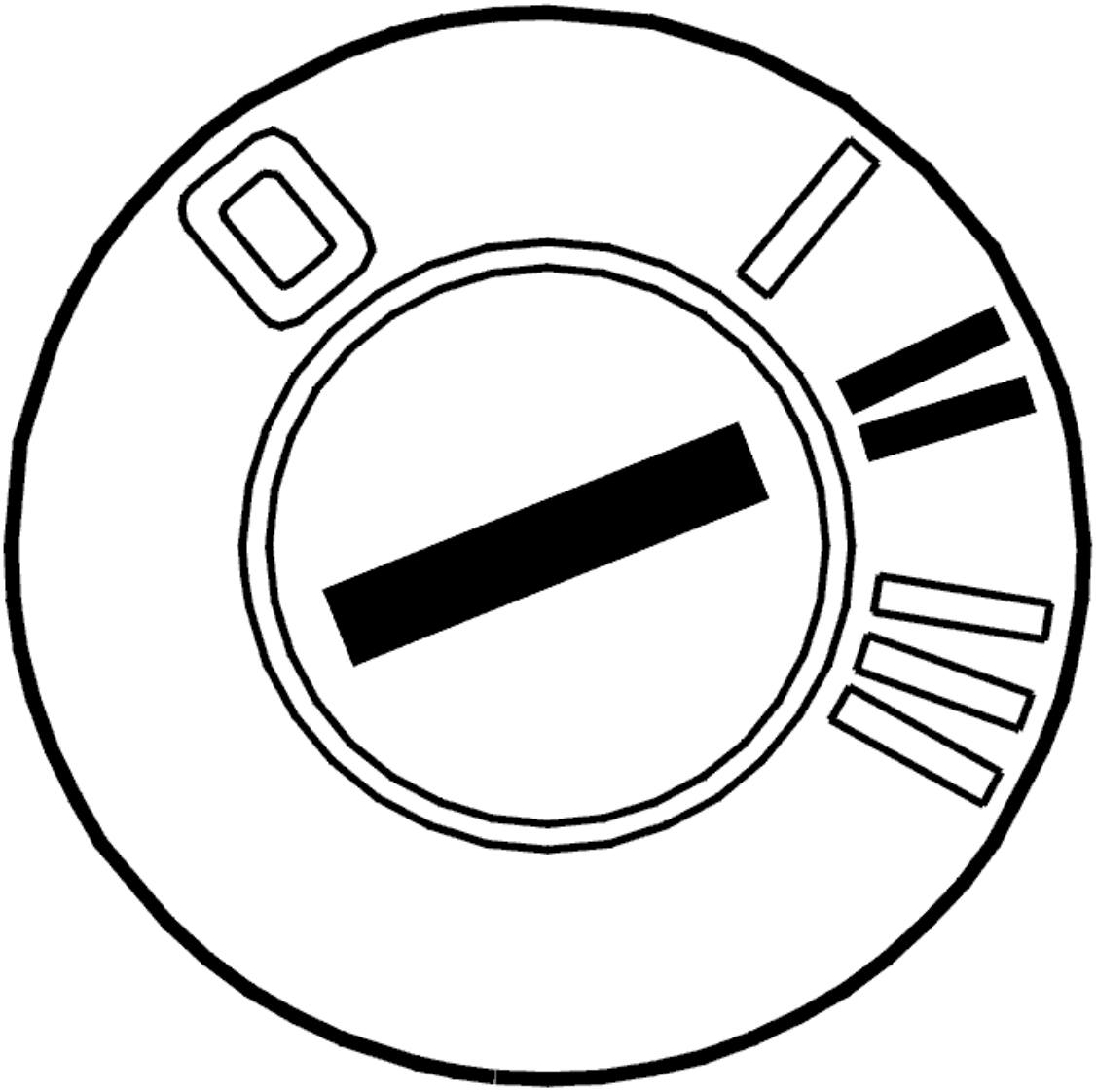

Fig. 402: Identifying Ignition ON
Courtesy of VOLVO CARS CORPORATION

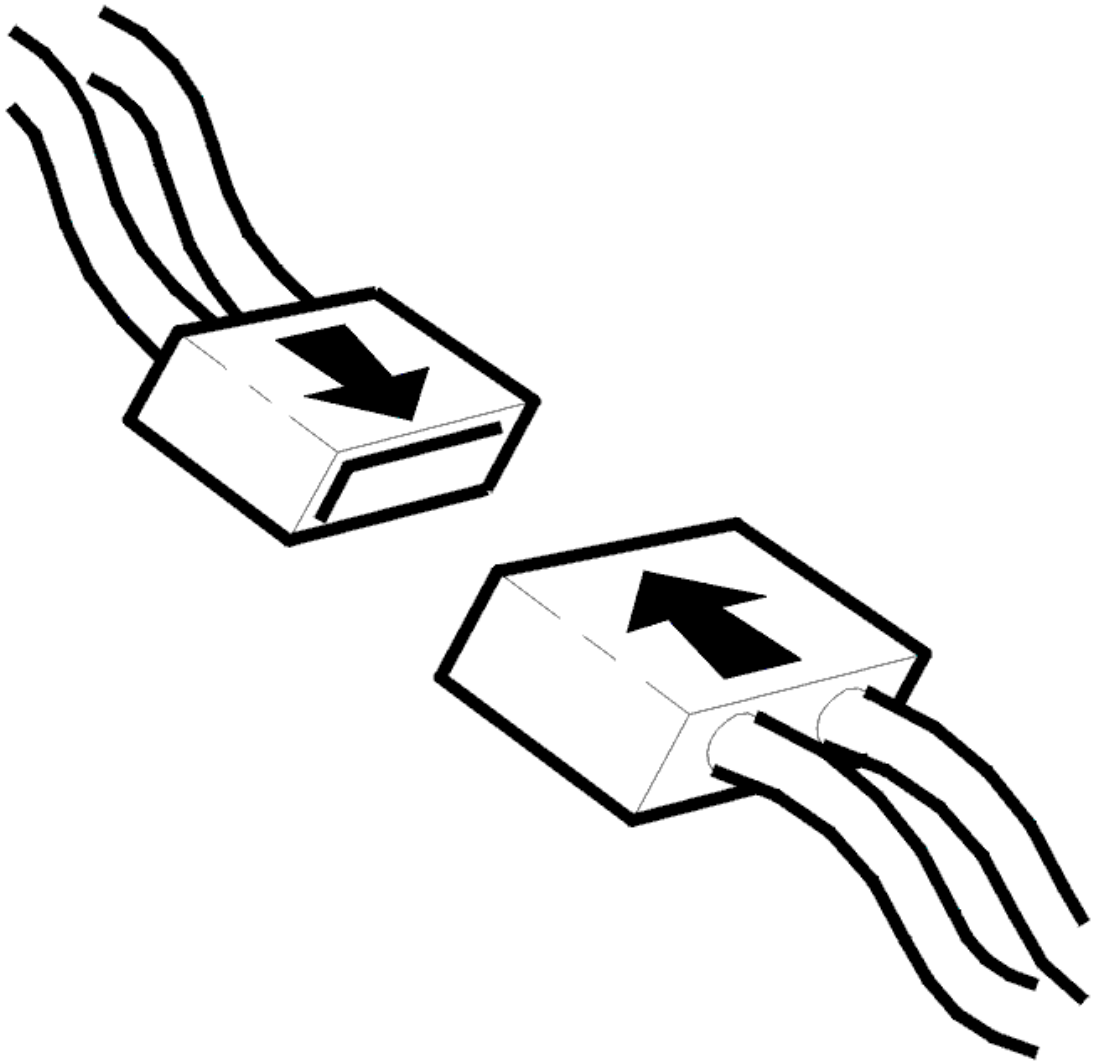

Fig. 403: Connecting Connector
Courtesy of VOLVO CARS CORPORATION

- Ignition off
- Reconnect the connectors, reinstall components etc.
- Ignition on
- Read off the clutch pedal movement by carefully pressing and releasing the clutch pedal.

  Check that the value changes with clutch pedal movement. The value must be between 60-70 % when the clutch pedal is unaffected and 10-20% when the pedal is fully depressed.

  The fault has been remedied if the values are OK.

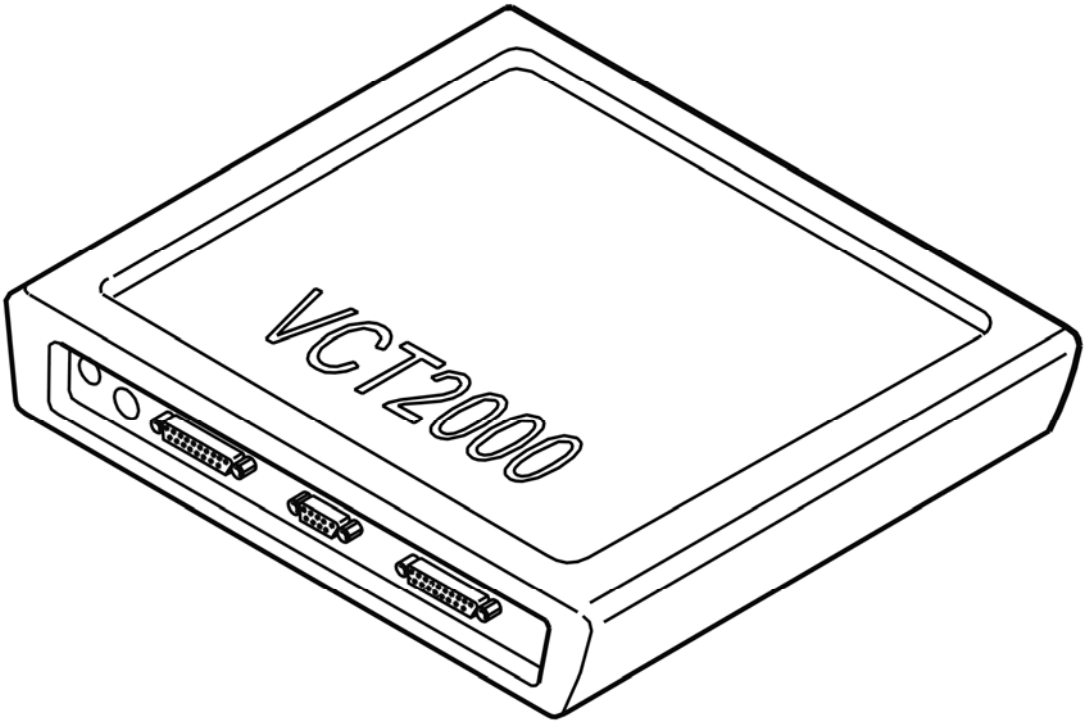

Fig. 404: Identifying VCT2000 Diagnostic Tool Symbol In VIDA
Courtesy of VOLVO CARS CORPORATION

Are these values OK?

- **YES**

  VERIFIED: Troubleshooting has been completed.

- **NO**

  Refer to **INFORMATION**

INFORMATION

FAULT-TRACING INFORMATION

The fault should have been detected and remedied. As this is not the case fault-tracing has failed.

Exit fault-tracing for this diagnostic trouble code (DTC) or make another attempt.

ECM-9300: CLUTCH PEDAL POSITION SENSOR. SIGNAL TOO HIGH (B5254T2; B6294T; 2003-2004)

DIAGNOSTIC TROUBLE CODE (DTC) INFORMATION

see **DIAGNOSTIC TROUBLE CODE (DTC) INFORMATION**

SIGNAL TOO HIGH

CHECKING THE STATUS

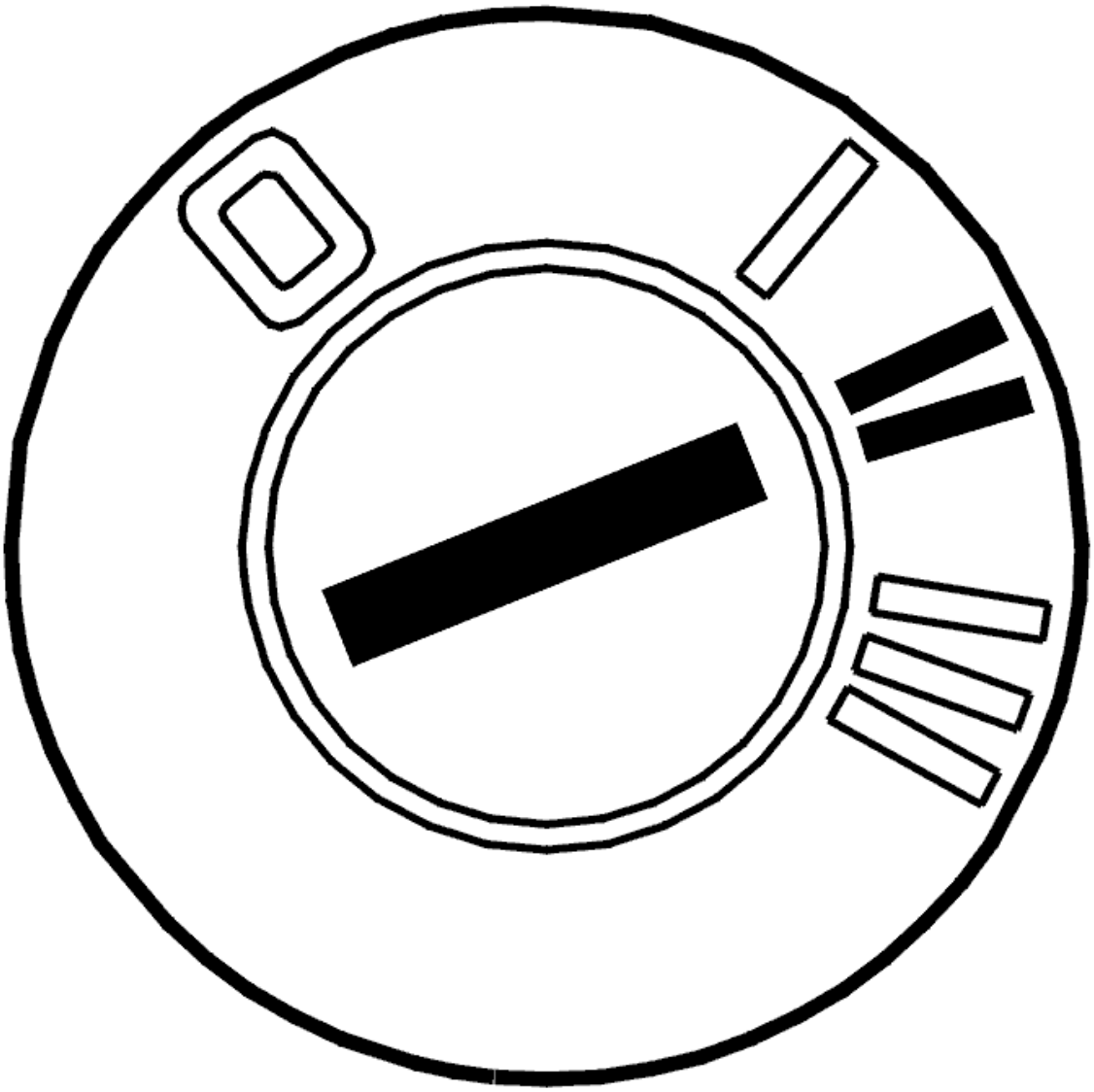

Fig. 405: Identifying Ignition ON
Courtesy of VOLVO CARS CORPORATION

- Ignition on
- Read off the clutch pedal movement by carefully pressing and releasing the clutch pedal.

  Check that the value changes with clutch pedal movement. The value must be between 60-70% when the clutch pedal is unaffected and 10-20% when the pedal is fully depressed.

The fault is intermittent at the moment if the values are OK.

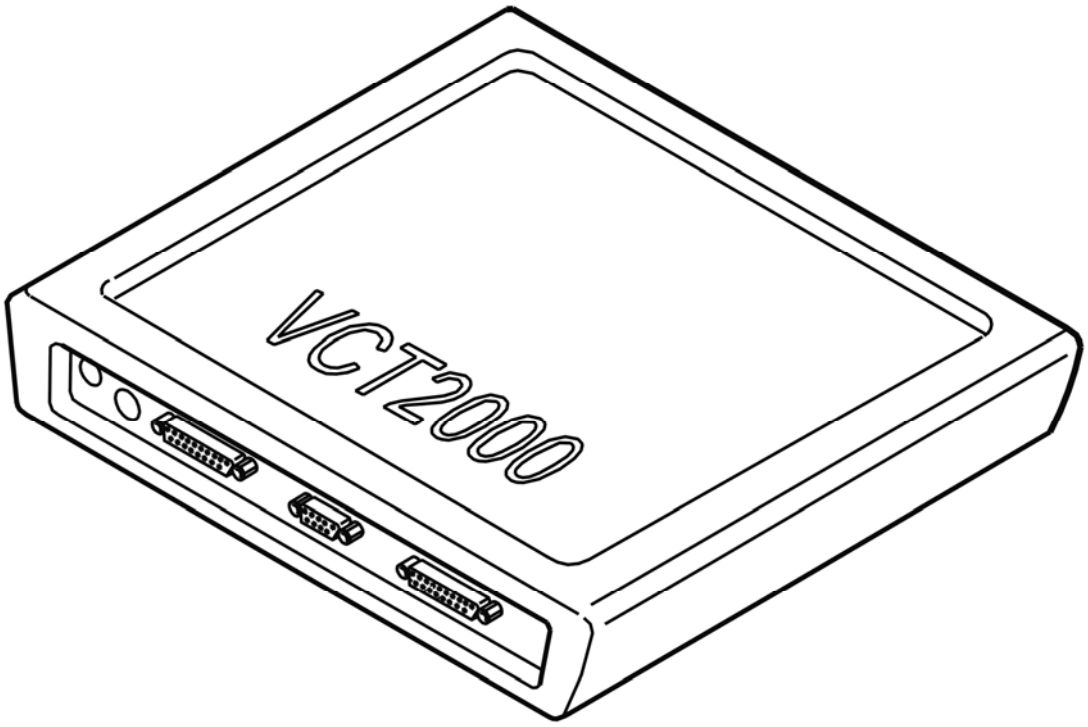

Fig. 406: Identifying VCT2000 Diagnostic Tool Symbol In VIDA
Courtesy of VOLVO CARS CORPORATION

- **Continue**

Refer to **CHECKING COMPONENTS AND WIRING**

CHECKING COMPONENTS AND WIRING

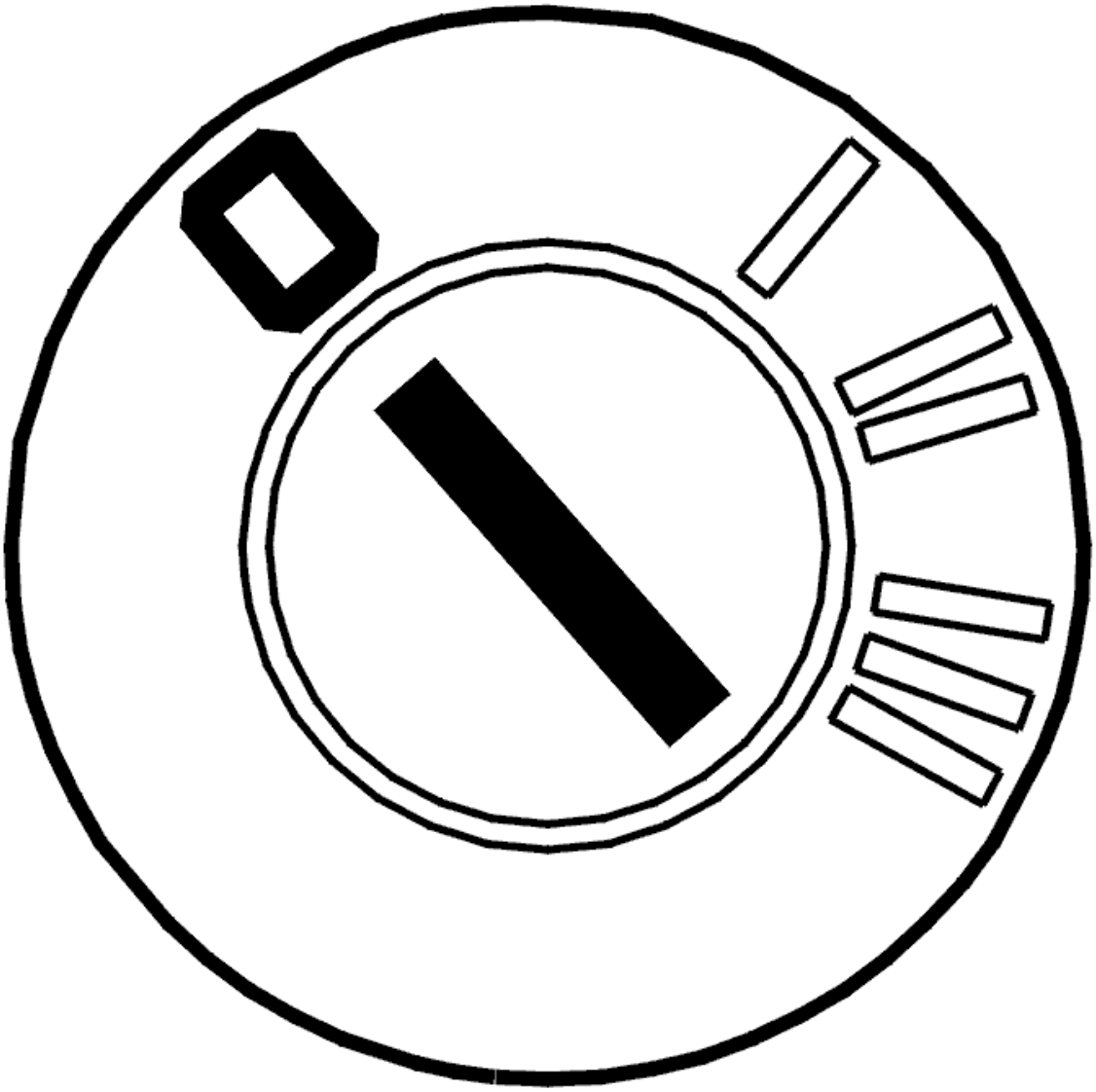

Fig. 407: Identifying Ignition OFF
Courtesy of VOLVO CARS CORPORATION

- Ignition off
- Check the resistance of the clutch pedal sensor between terminals #2 and #4 (component side).

  Check the clutch pedal sensor and engine control module (ECM) connectors. Check for contact resistance and oxidation.

  Check the signal cable between engine control module (ECM) terminal #B15 (#B25) and clutch pedal sensor terminal #2 (component side). Check for an open-circuit. Check for a short-circuit to supply voltage.

  Check the signal ground cable between engine control module (ECM) terminal #B4 (#B14) and clutch pedal sensor terminal #4 (wiring side). Check for an open-circuit.

HINT: With the ignition on, the power supply to the clutch pedal sensor must be approximately 5 V (measured with the clutch pedal sensor disconnected), measured between terminals #2 and #4 (wiring side).

Remedy as necessary

Other information:

- see **CHECKING WIRING AND TERMINALS**
- To connect the breakout box, see **CONNECTING THE BREAKOUT BOX**
- To access or replace the clutch pedal sensor, see **PEDAL POSITION SENSOR CLUTCH, REPLACING**
- For resistance values, see **COMPONENT SPECIFICATIONS**
- For 5 cylinder turbocharged engines -2004, see **SIGNAL DESCRIPTION**
- For 5 cylinder turbocharged engines 2005-, see **SIGNAL SPECIFICATION** .
- For 6 cylinder engines -2004, see **SIGNAL SPECIFICATION**
- For 6 cylinder engines 2005-, see **SIGNAL SPECIFICATION** .

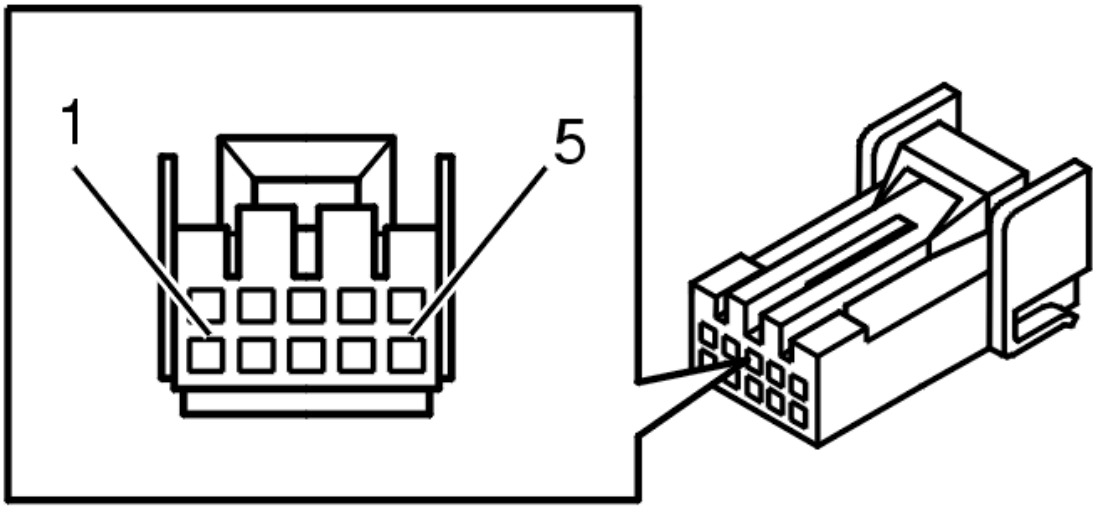

Fig. 408: 10 CD Changer Connector Terminals
Courtesy of VOLVO CARS CORPORATION

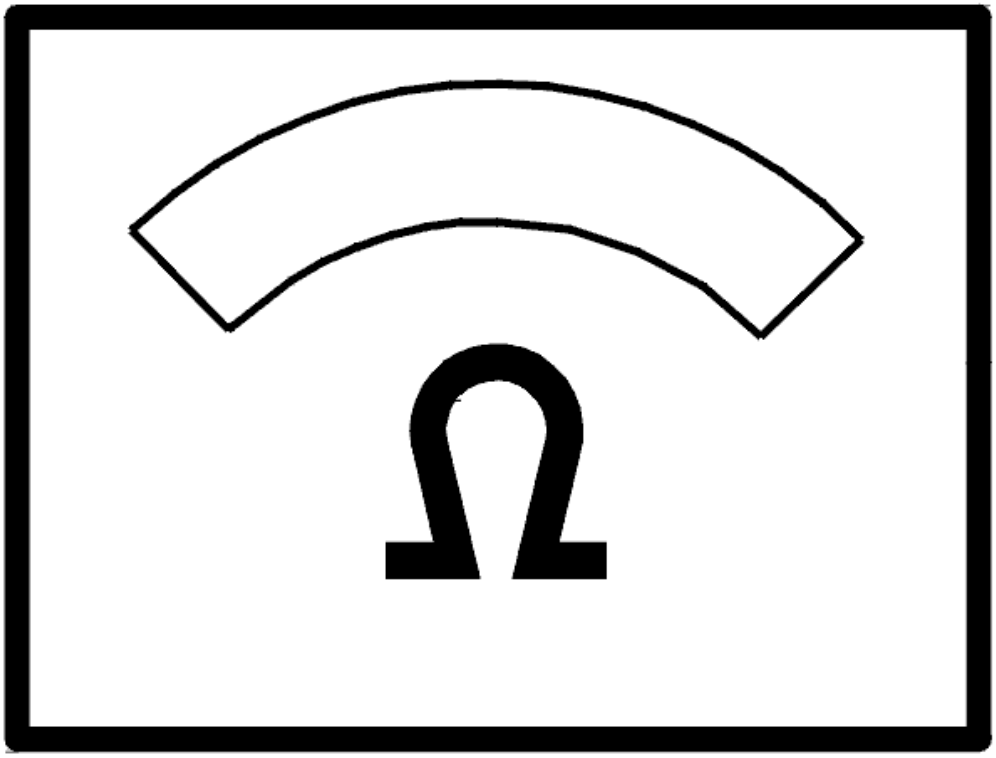

Fig. 409: Identifying Ohm Meter
Courtesy of VOLVO CARS CORPORATION

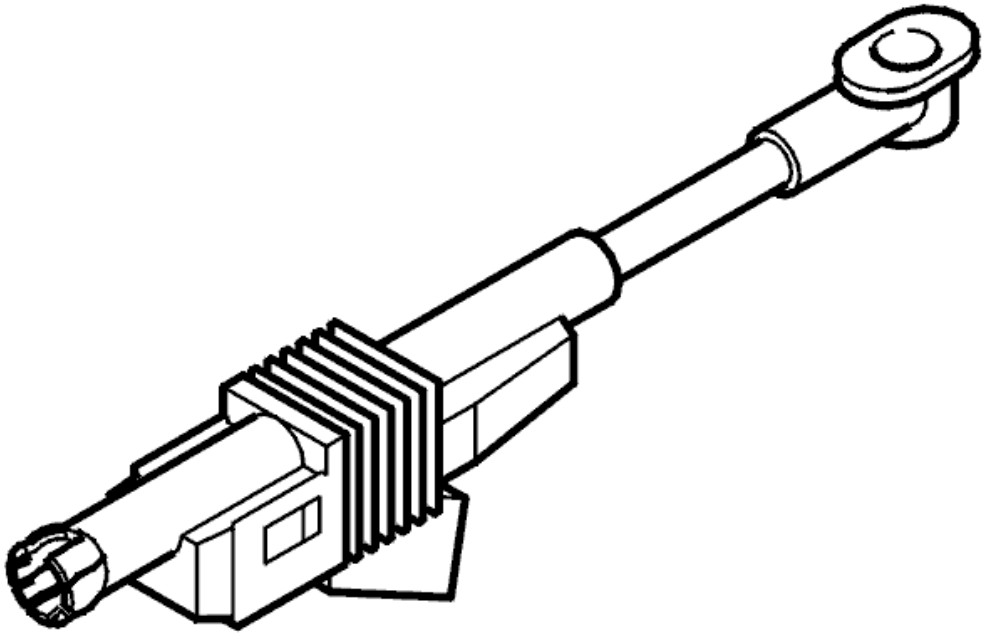

Fig. 410: Identifying Clutch Pedal Push Rod & Position Sensor
Courtesy of VOLVO CARS CORPORATION

- **Continue**

  Refer to **VERIFICATION**

VERIFICATION

VERIFICATION

HINT: After carrying out the repair, check that the fault has been remedied.

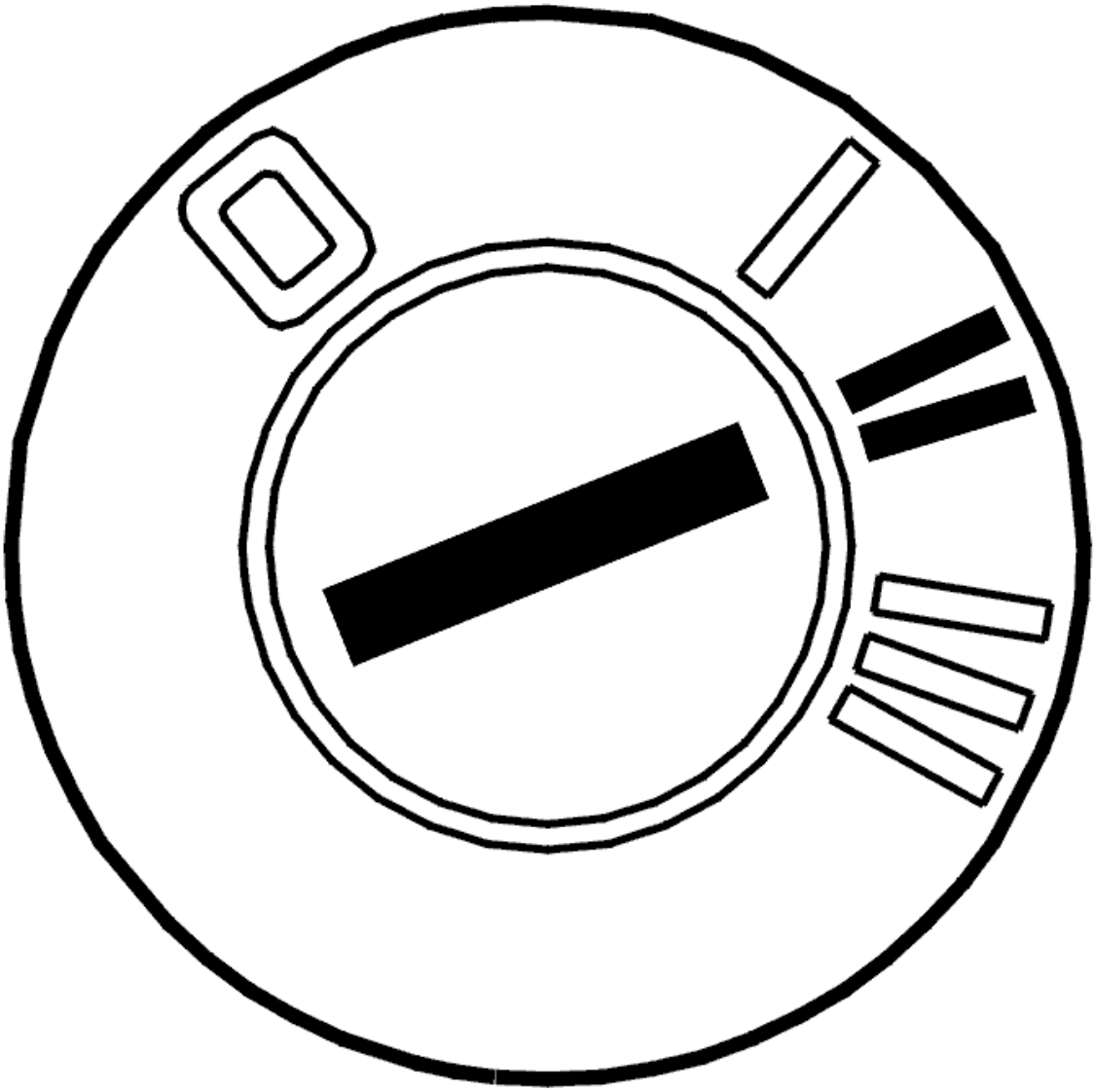

Fig. 411: Identifying Ignition ON
Courtesy of VOLVO CARS CORPORATION

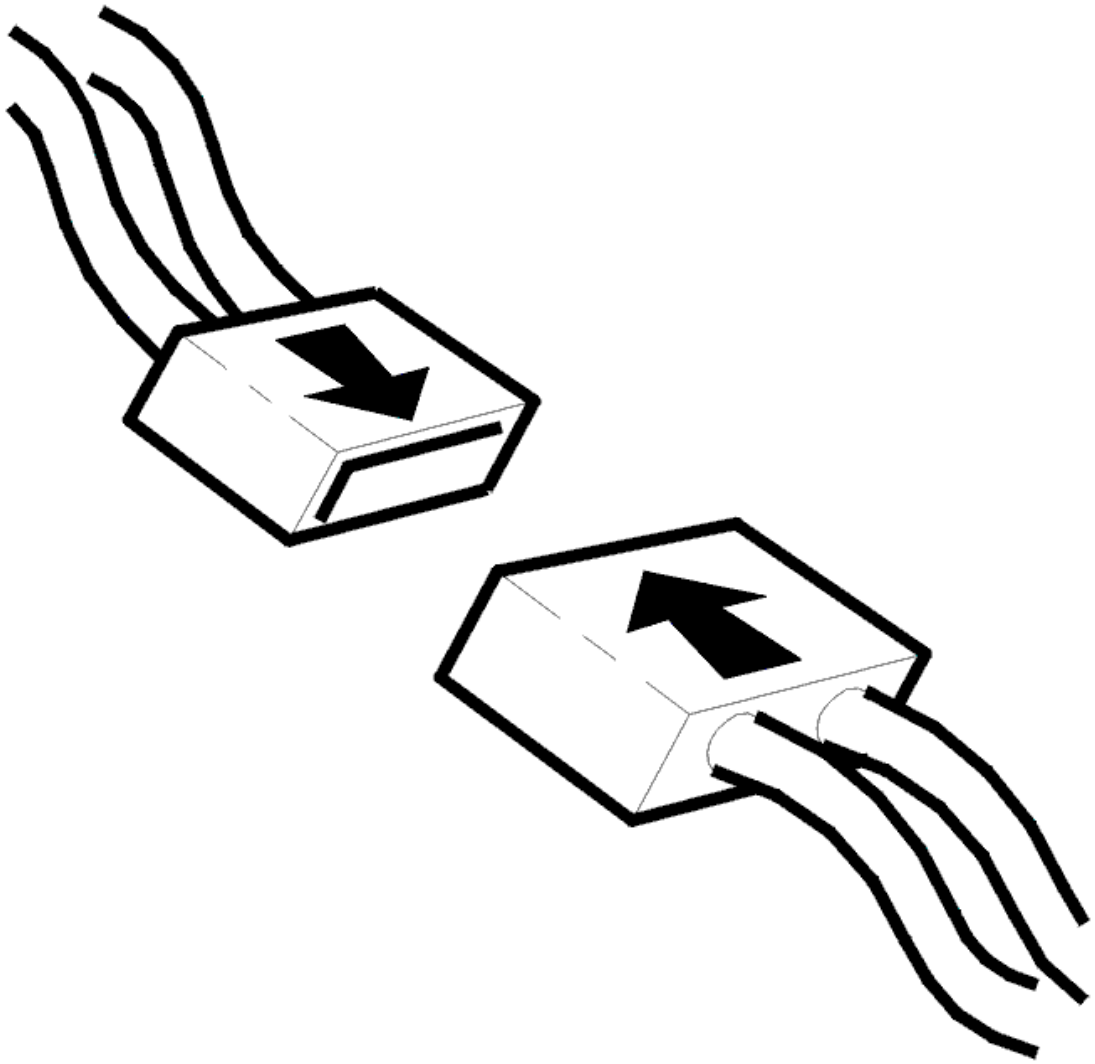

Fig. 412: Connecting Connector
Courtesy of VOLVO CARS CORPORATION

- Ignition off
- Reconnect the connectors, reinstall components etc.
- Ignition on
- Read off the clutch pedal movement by carefully pressing and releasing the clutch pedal.

  Check that the value changes with clutch pedal movement. The value must be between 60-70 % when the clutch pedal is unaffected and 10-20% when the pedal is fully depressed.

  The fault has been remedied if the values are OK.

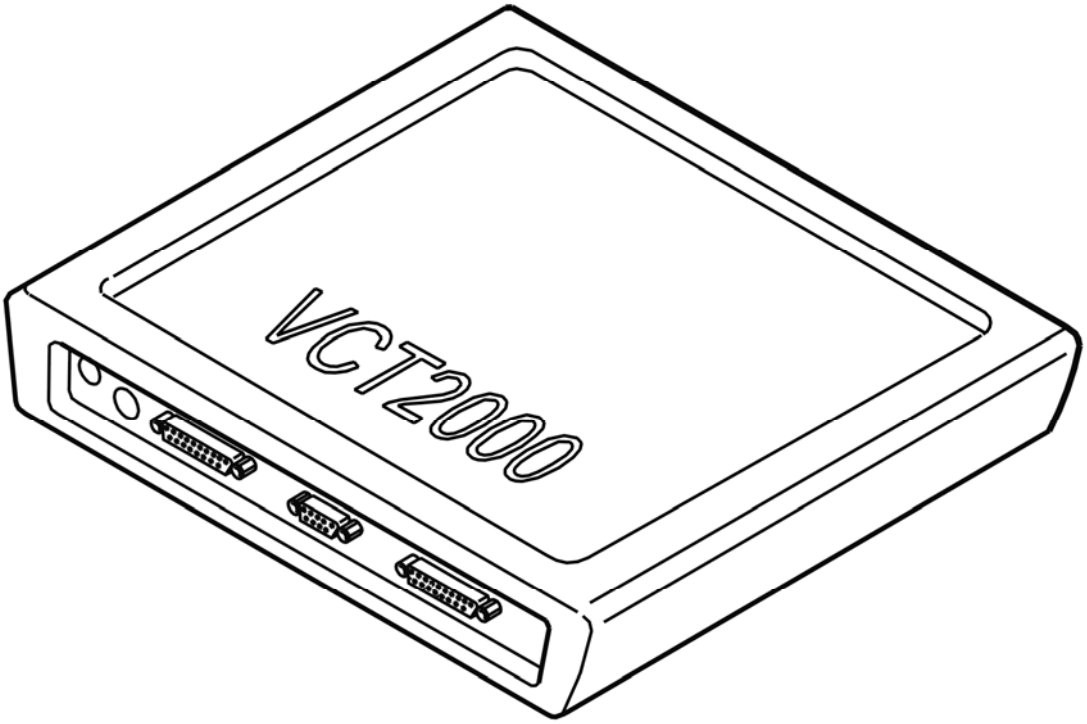

Fig. 413: Identifying VCT2000 Diagnostic Tool Symbol In VIDA
Courtesy of VOLVO CARS CORPORATION

Are these values OK?

- **YES**

  VERIFIED: Troubleshooting has been completed.

- **NO**

  Refer to **INFORMATION**

INFORMATION

FAULT-TRACING INFORMATION

The fault should have been detected and remedied. As this is not the case fault-tracing has failed.

Exit fault-tracing for this diagnostic trouble code (DTC) or make another attempt.

ECM-9300: CLUTCH PEDAL POSITION SENSOR. SIGNAL TOO LOW (B5254T2; B6294T; 2003-2004)

DIAGNOSTIC TROUBLE CODE (DTC) INFORMATION

see **DIAGNOSTIC TROUBLE CODE (DTC) INFORMATION**

SIGNAL TOO LOW

CHECKING THE STATUS

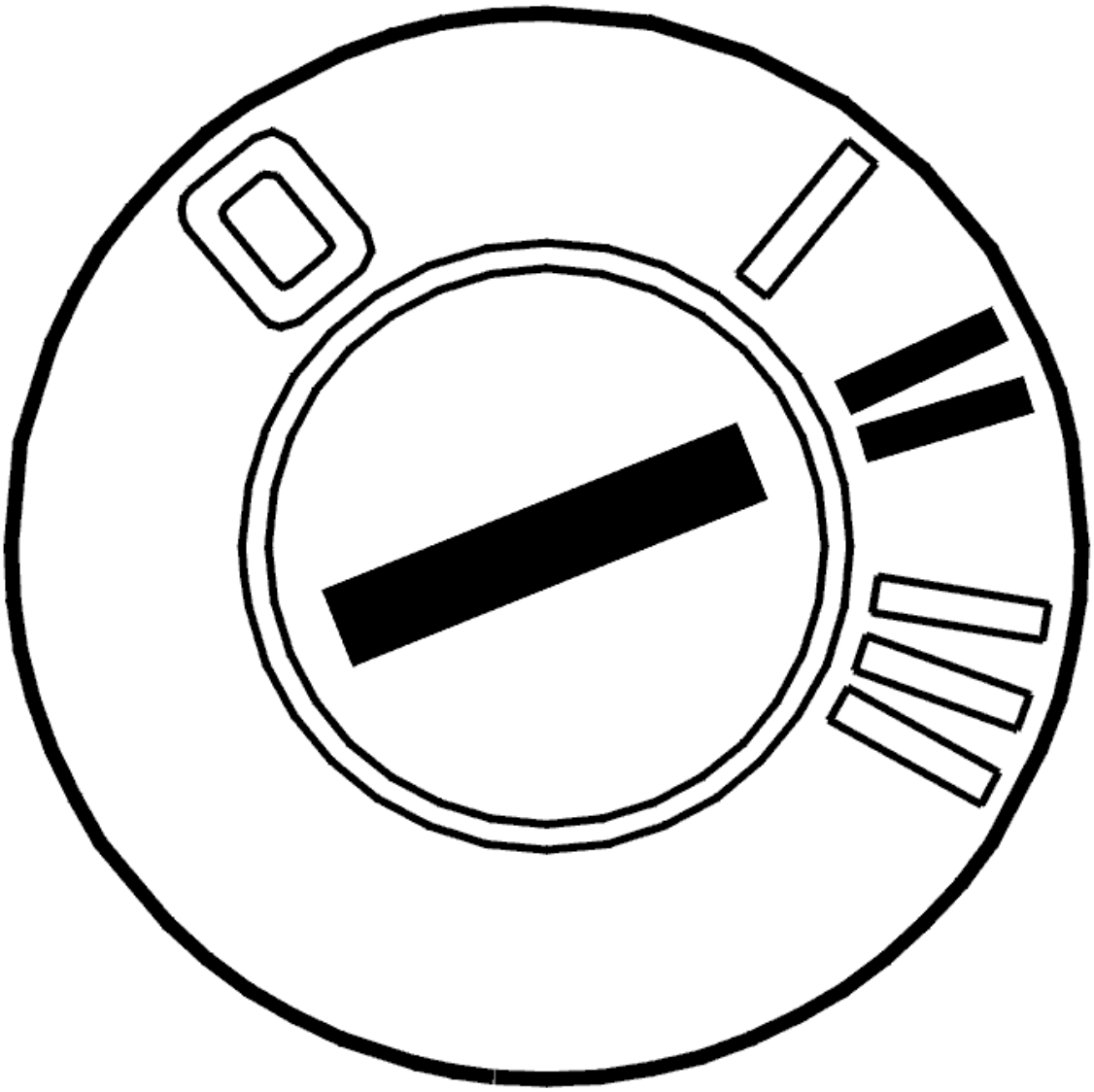

Fig. 414: Identifying Ignition ON
Courtesy of VOLVO CARS CORPORATION

- Ignition on
- Read off the clutch pedal movement by carefully pressing and releasing the clutch pedal.

  Check that the value changes with clutch pedal movement. The value must be between 60-70 % when the clutch pedal is unaffected and 10-20 % when the pedal is fully depressed.

The fault is intermittent at the moment if the values are OK.

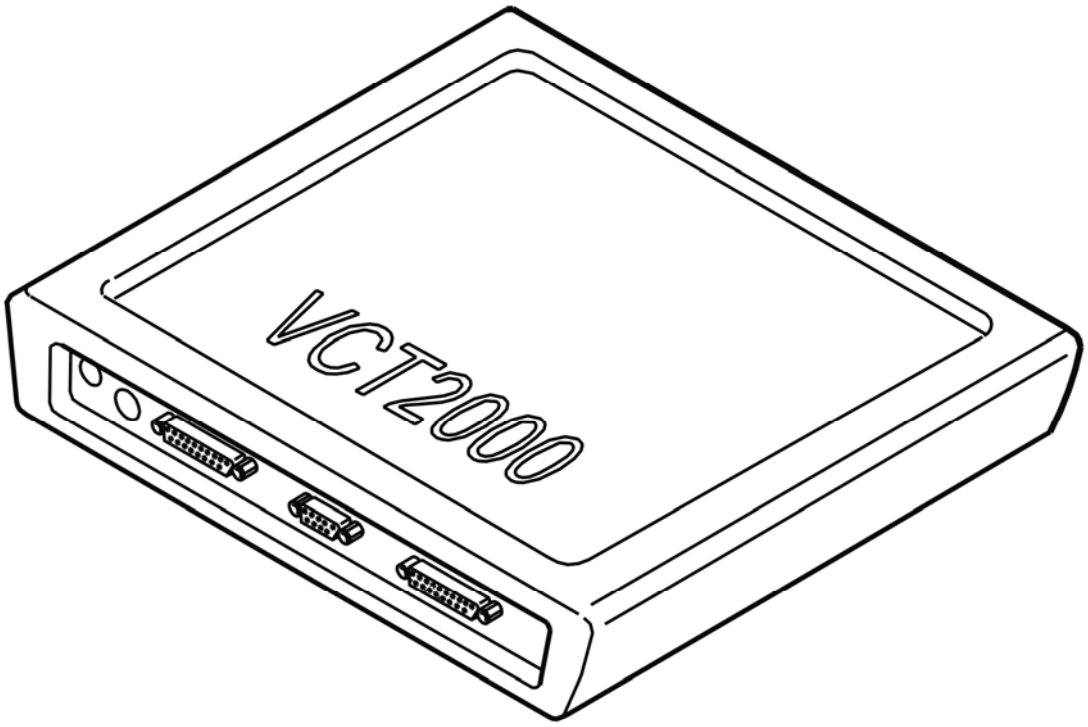

Fig. 415: Identifying VCT2000 Diagnostic Tool Symbol In VIDA
Courtesy of VOLVO CARS CORPORATION

- **Continue**

Refer to **CHECKING COMPONENTS AND WIRING**

CHECKING COMPONENTS AND WIRING

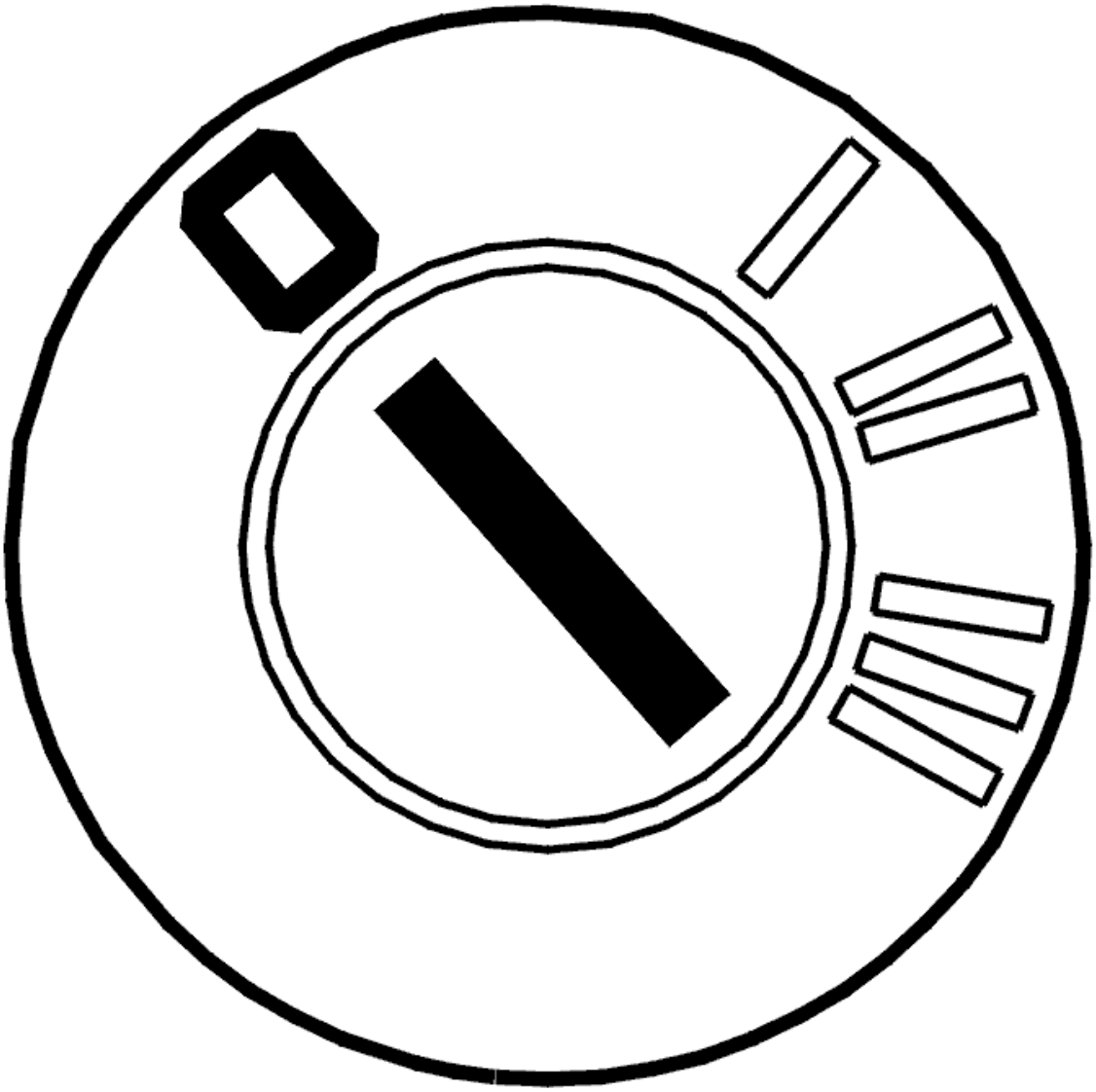

Fig. 416: Identifying Ignition OFF
Courtesy of VOLVO CARS CORPORATION

- Ignition off.

  Check the resistance of the clutch pedal sensor between terminals #2 and #4 (component side).

  Check the signal cable between engine control module (ECM) terminal #B15 (#B25) and clutch pedal sensor terminal #2 (wiring side). Check for a short-circuit to ground.

  HINT: With the ignition on, the power supply to the clutch pedal sensor must be approximately 5 V (measured with the clutch pedal sensor disconnected), measured between terminals #2 and #4 (wiring side).

  Remedy as necessary.

Other information:

- see **CHECKING WIRING AND TERMINALS**
- To connect the breakout box, see **CONNECTING THE BREAKOUT BOX**
- To access or replace the clutch pedal sensor, see **PEDAL POSITION SENSOR CLUTCH, REPLACING**
- For resistance values, see **COMPONENT SPECIFICATIONS**
- For 5 cylinder turbocharged engines -2004, see **SIGNAL DESCRIPTION**
- For 5 cylinder turbocharged engines 2005-, see **SIGNAL SPECIFICATION** .
- For 6 cylinder engines -2004, see **SIGNAL SPECIFICATION**
- For 6 cylinder engines 2005-, see **SIGNAL SPECIFICATION** .

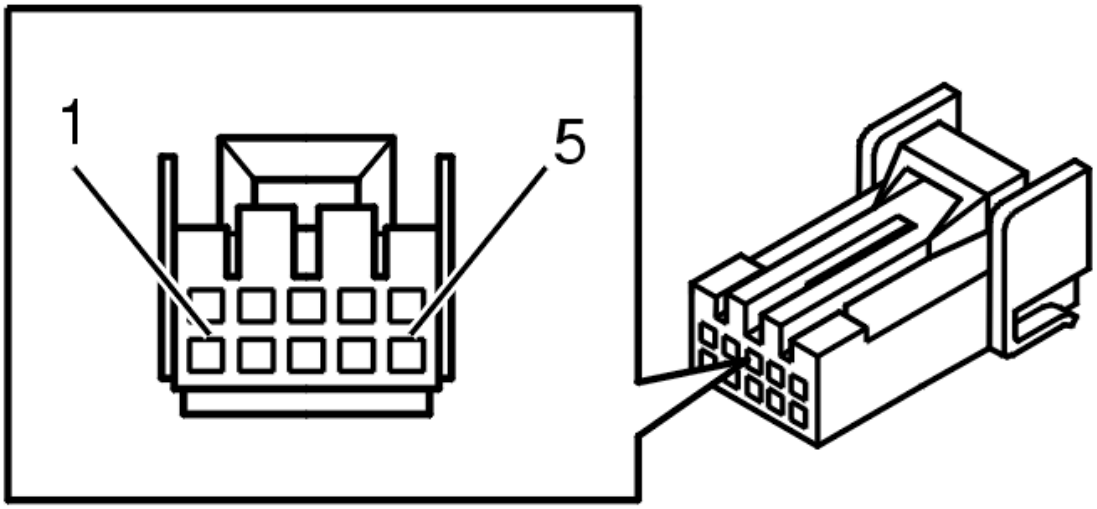

Fig. 417: 10 CD Changer Connector Terminals
Courtesy of VOLVO CARS CORPORATION

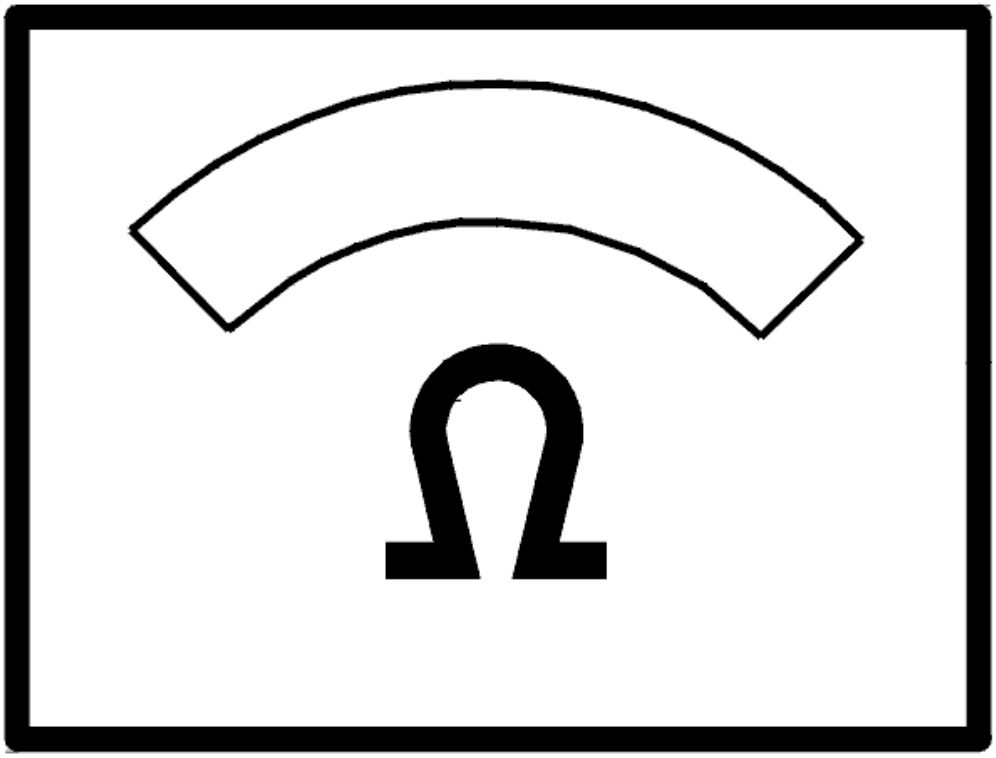

Fig. 418: Identifying Ohm Meter
Courtesy of VOLVO CARS CORPORATION

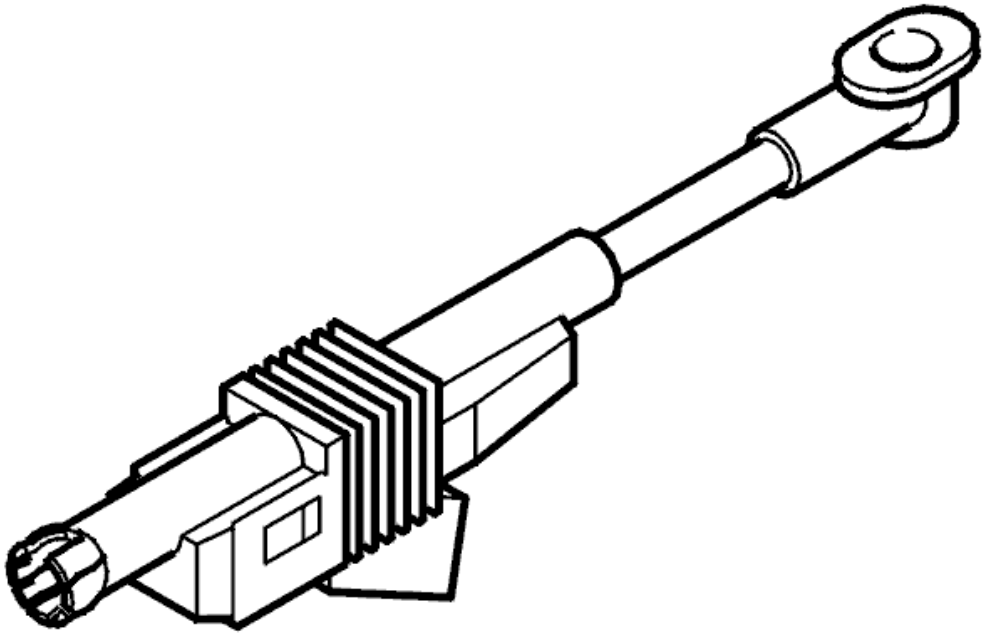

Fig. 419: Identifying Clutch Pedal Push Rod & Position Sensor
Courtesy of VOLVO CARS CORPORATION

- **Continue**

  Refer to **VERIFICATION**

VERIFICATION

VERIFICATION

HINT: After carrying out the repair, check that the fault has been remedied.

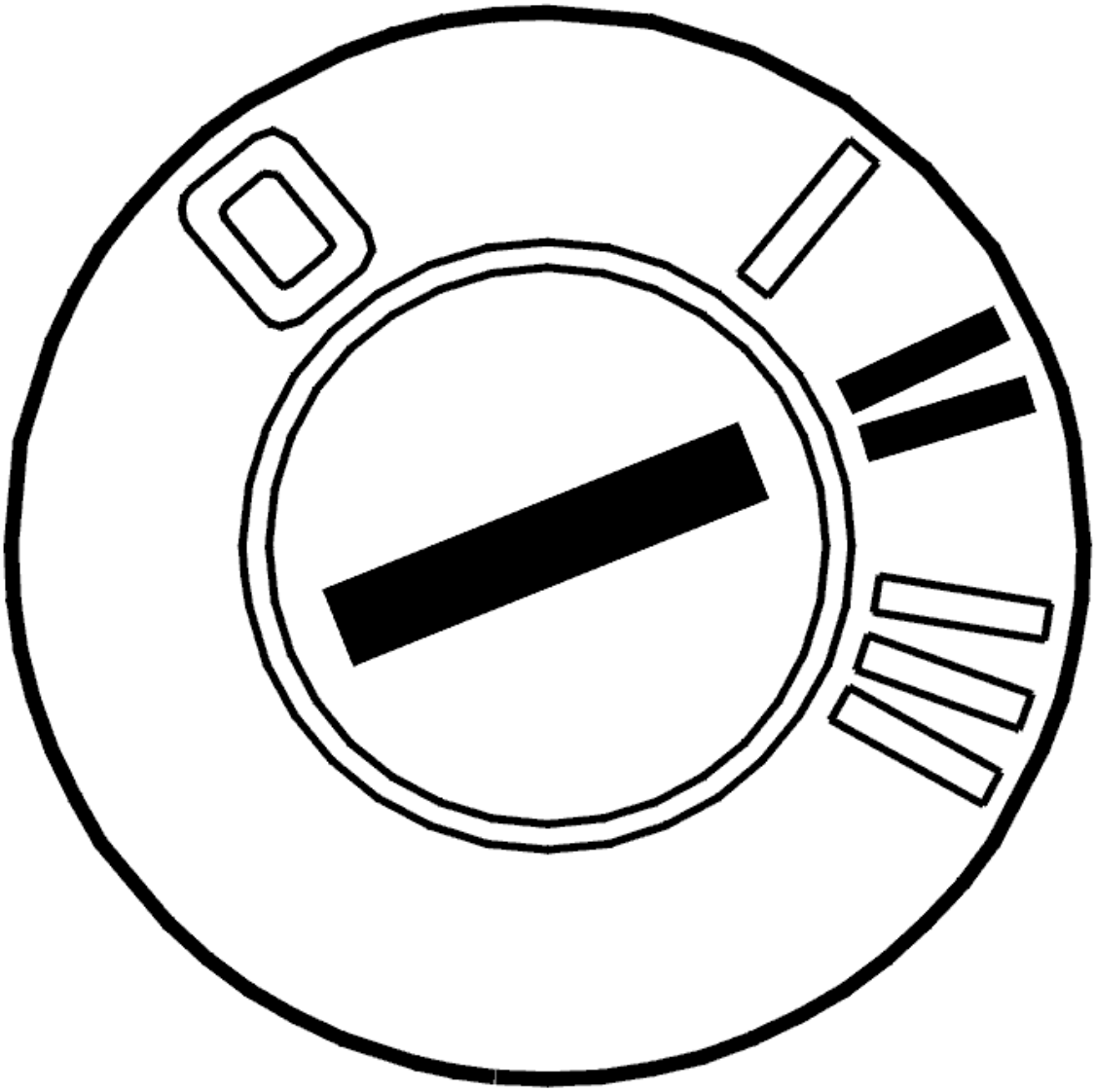

Fig. 420: Identifying Ignition ON
Courtesy of VOLVO CARS CORPORATION

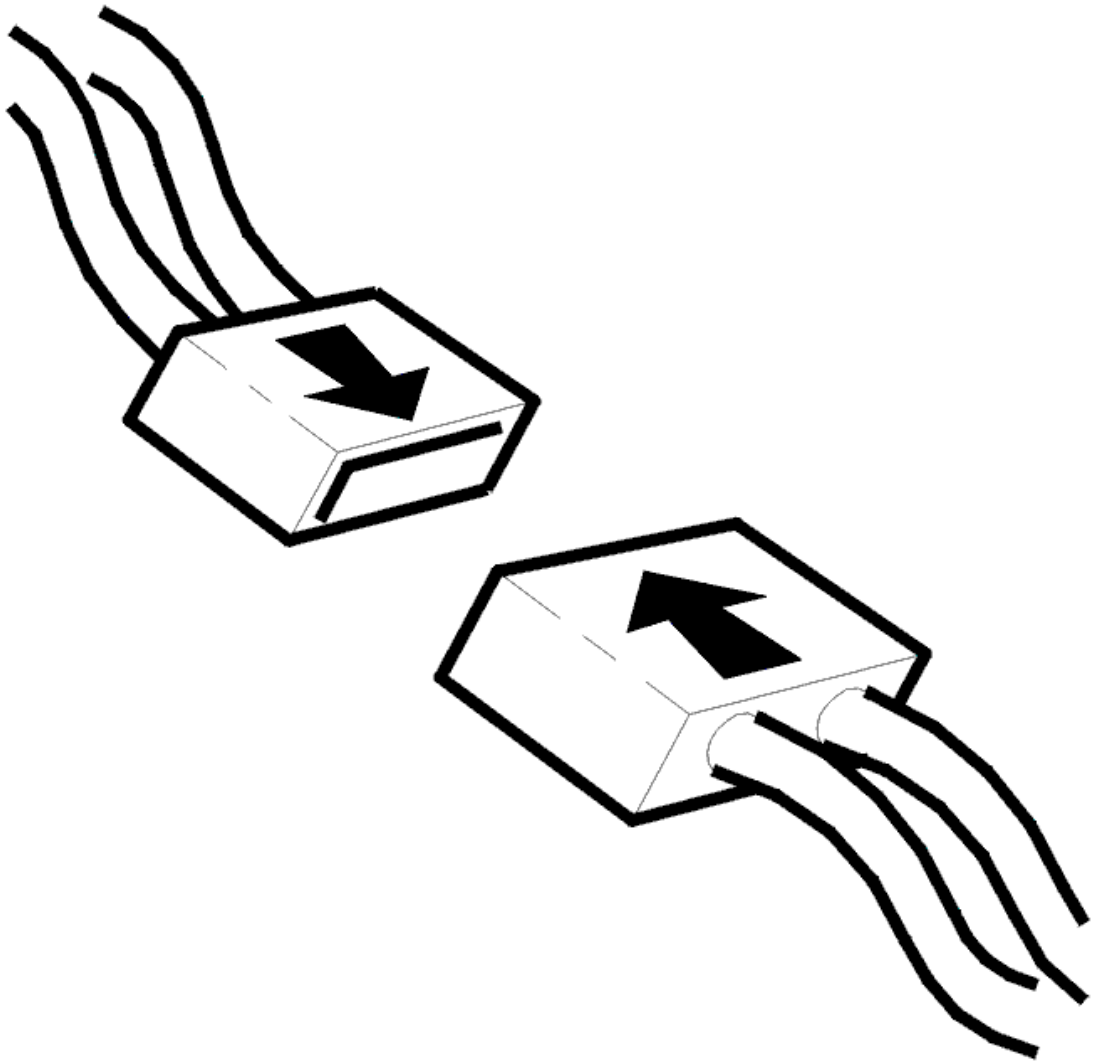

Fig. 421: Connecting Connector
Courtesy of VOLVO CARS CORPORATION

- Ignition off
- Reconnect the connectors, reinstall components etc.
- Ignition on
- Read off the clutch pedal movement by carefully pressing and releasing the clutch pedal.

  Check that the value changes with clutch pedal movement. The value must be between 60-70 % when the clutch pedal is unaffected and 10-20% when the pedal is fully depressed.

  The fault has been remedied if the values are OK.

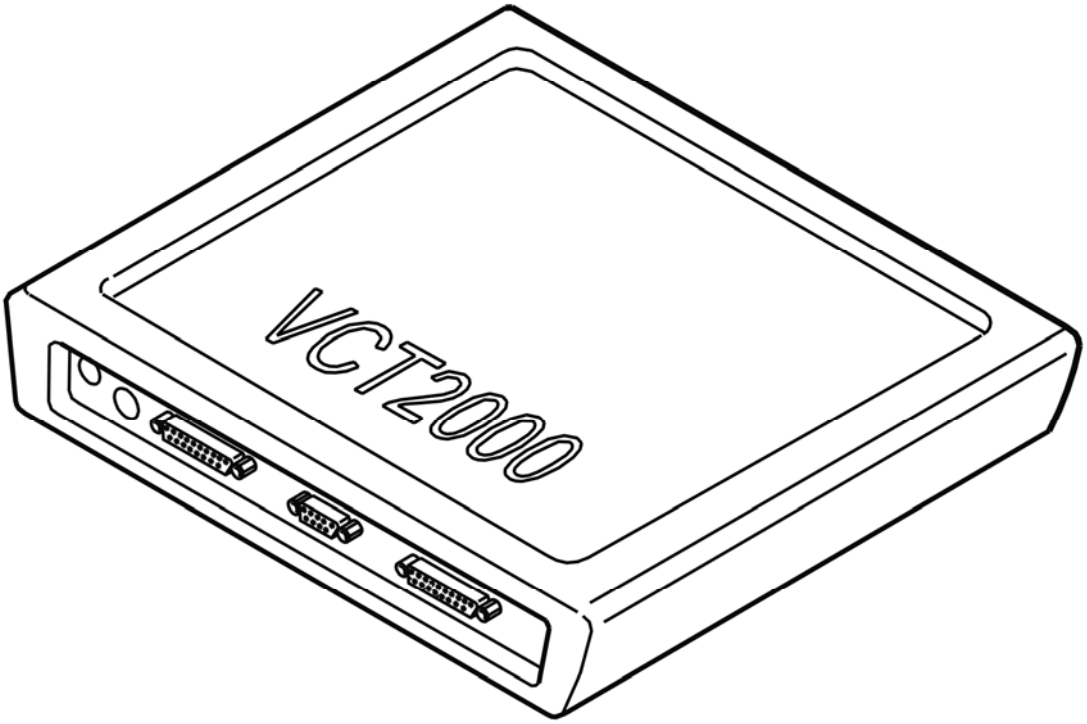

Fig. 422: Identifying VCT2000 Diagnostic Tool Symbol In VIDA
Courtesy of VOLVO CARS CORPORATION

Are these values OK?

- **YES**

  VERIFIED: Troubleshooting has been completed.

- **NO**

  Refer to **INFORMATION**

INFORMATION

FAULT-TRACING INFORMATION

The fault should have been detected and remedied. As this is not the case fault-tracing has failed.

Exit fault-tracing for this diagnostic trouble code (DTC) or make another attempt.

ECM-9300: CONTROL MODULE COMMUNICATION PROBLEMS. FAULTY SIGNAL (B5254T2; 2005-2007)

DIAGNOSTIC TROUBLE CODE (DTC) INFORMATION ECM-9300

Condition

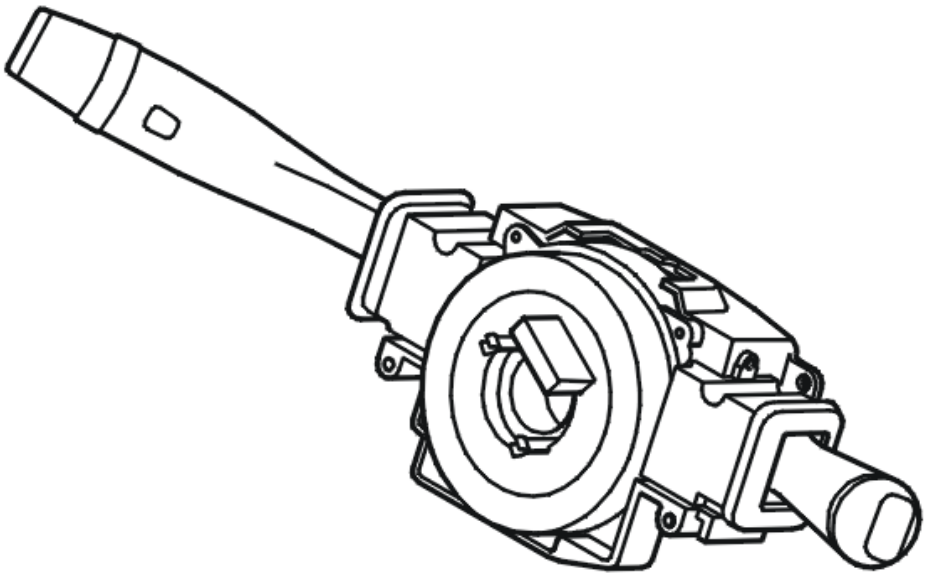

Fig. 423: Identifying Steering Wheel Control Module
Courtesy of VOLVO CARS CORPORATION

The diagnostic trouble code (DTC) is stored if the engine control module (ECM) registers a fault in the steering wheel module (SWM) or in its CAN communication.

The diagnostic trouble code (DTC) can be diagnosed when the ignition is switched on.

Substitute Value

- Cruise control switched off.

Possible Source

- Fault trace the steering wheel module (SWM)
- Fault trace the central electronic module (CEM).

Fault symptom[s]

- Cruise control does not function at all.

FAULT-TRACING INFORMATION

see **FAULT-TRACING INFORMATION**

ECM-9300: CONTROL MODULE COMMUNICATION PROBLEMS. FAULTY SIGNAL (B6294T; 2005-2006)

DIAGNOSTIC TROUBLE CODE (DTC) INFORMATION ECM-9300

see **DIAGNOSTIC TROUBLE CODE (DTC) INFORMATION ECM-9300**

FAULT-TRACING INFORMATION

see **FAULT-TRACING INFORMATION**

ECM-930B: CONTROL MODULE COMMUNICATION PROBLEMS. SIGNAL MISSING (B5254T2; 2005-2007)

DIAGNOSTIC TROUBLE CODE (DTC) INFORMATION ECM-930B

Condition

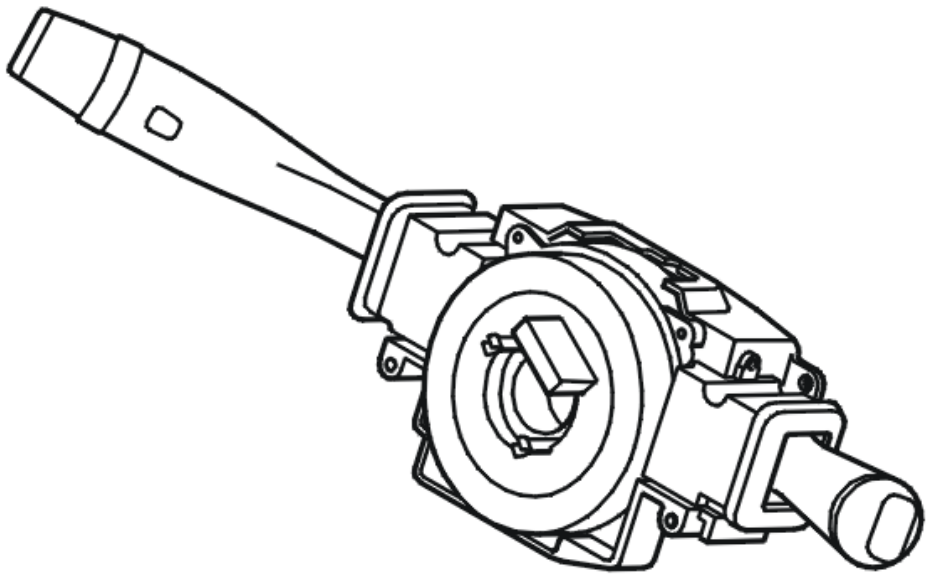

Fig. 424: Identifying Steering Wheel Control Module
Courtesy of VOLVO CARS CORPORATION

The diagnostic trouble code (DTC) is stored if the engine control module (ECM) registers a fault in the steering wheel module (SWM) or in its CAN communication.

The diagnostic trouble code (DTC) can be diagnosed when the ignition is switched on.

Substitute Value

- Cruise control switched off.

Possible Source

- Fault trace the steering wheel module (SWM)
- Fault trace the central electronic module (CEM).

Fault symptom[s]

- Cruise control does not function at all.

FAULT-TRACING INFORMATION

see **FAULT-TRACING INFORMATION**

ECM-930B: CONTROL MODULE COMMUNICATION PROBLEMS. SIGNAL MISSING (B6294T; 2005-2006)

DIAGNOSTIC TROUBLE CODE (DTC) INFORMATION ECM-930B

see **DIAGNOSTIC TROUBLE CODE (DTC) INFORMATION ECM-930B**

FAULT-TRACING INFORMATION

see **FAULT-TRACING INFORMATION**

ECM-930C: CONTROL MODULE, COMMUNICATION PROBLEMS. SIGNAL TOO HIGH (B5254T2; 2005-2007)

DIAGNOSTIC TROUBLE CODE (DTC) INFORMATION ECM-930C

Condition

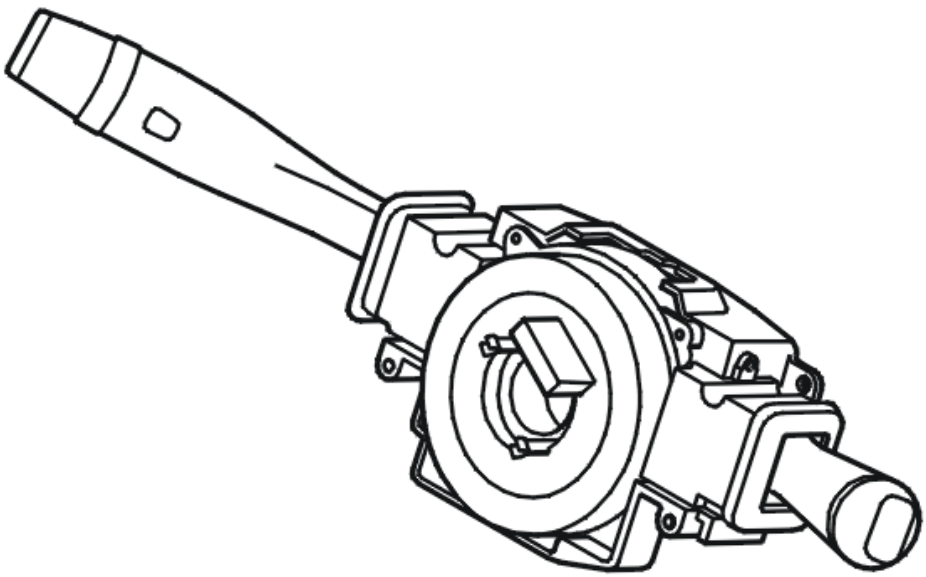

Fig. 425: Identifying Steering Wheel Control Module
Courtesy of VOLVO CARS CORPORATION

The diagnostic trouble code (DTC) is stored if the engine control module (ECM) registers a fault in the steering wheel module (SWM) or in its CAN communication.

The diagnostic trouble code (DTC) can be diagnosed when the ignition is switched on.

Substitute Value

- Cruise control switched off.

Possible Source

- Fault trace the steering wheel module (SWM)
- Fault trace the central electronic module (CEM).

Fault symptom[s]

- Cruise control does not function at all.

FAULT-TRACING INFORMATION

see **FAULT-TRACING INFORMATION**

ECM-930C: CONTROL MODULE, COMMUNICATION PROBLEMS. SIGNAL TOO HIGH (B6294T; 2005-2006)

DIAGNOSTIC TROUBLE CODE (DTC) INFORMATION ECM-930C

see **DIAGNOSTIC TROUBLE CODE (DTC) INFORMATION ECM-930C**

FAULT-TRACING INFORMATION

see **FAULT-TRACING INFORMATION**

ECM-930D: CONTROL MODULE COMMUNICATION PROBLEMS. SIGNAL TOO LOW (B5254T2; 2005-2007)

DIAGNOSTIC TROUBLE CODE (DTC) INFORMATION ECM-930D

Condition

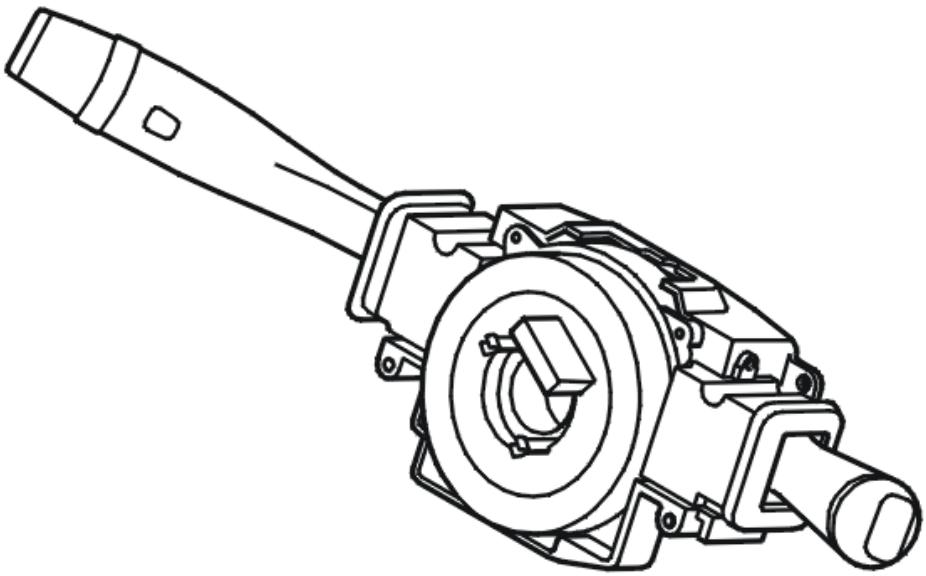

Fig. 426: Identifying Steering Wheel Control Module
Courtesy of VOLVO CARS CORPORATION

The diagnostic trouble code (DTC) is stored if the engine control module (ECM) registers a fault in the steering wheel module (SWM) or in its CAN communication.

The diagnostic trouble code (DTC) can be diagnosed when the ignition is switched on.

Substitute Value

- Cruise control switched off.

Possible Source

- Fault trace the steering wheel module (SWM)
- Fault trace the central electronic module (CEM).

Fault symptom[s]

- Cruise control does not function at all.

FAULT-TRACING INFORMATION

see **FAULT-TRACING INFORMATION**

ECM-930D: CONTROL MODULE COMMUNICATION PROBLEMS. SIGNAL TOO LOW (B6294T; 2005-2006)

DIAGNOSTIC TROUBLE CODE (DTC) INFORMATION ECM-930D

see **DIAGNOSTIC TROUBLE CODE (DTC) INFORMATION ECM-930D**

FAULT-TRACING INFORMATION

see **FAULT-TRACING INFORMATION**

ECM-9400: ACCELERATOR PEDAL (AP) POSITION SENSOR, ANALOG SIGNAL. FAULTY SIGNAL (B5254T2; 2005-2007)

DIAGNOSTIC TROUBLE CODE (DTC) INFORMATION ECM-9400

Condition

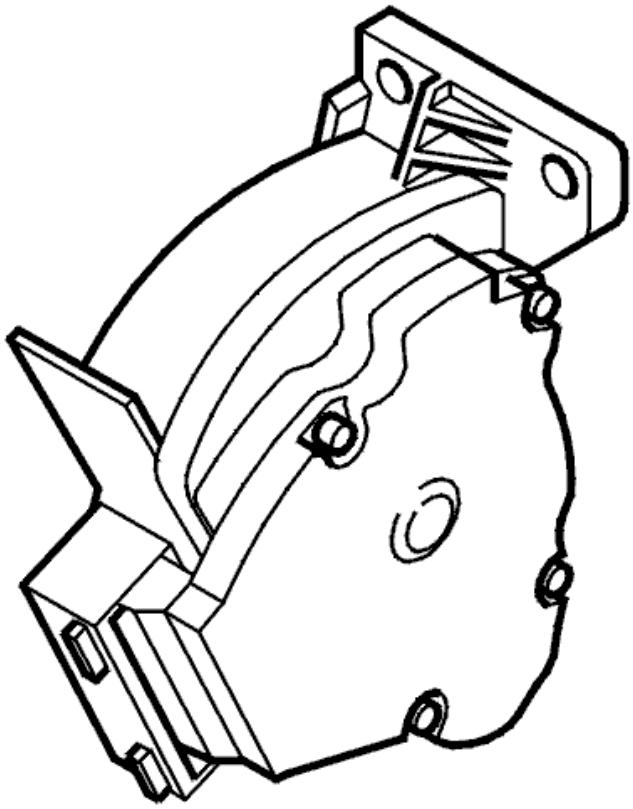

Fig. 427: Identifying Accelerator Pedal (AP) Position Sensor
Courtesy of VOLVO CARS CORPORATION

The diagnostic trouble code (DTC) is stored if the engine control module (ECM) registers a fault in the analog signal from the accelerator pedal (AP) position sensor.

The diagnostic trouble code (DTC) can be diagnosed when the ignition is switched on.

Substitute Value

- The accelerator pedal (AP) is disabled at the same time as the brake pedal is pressed.

Possible Source

- Open-circuit in the power supply (12 V) for the accelerator pedal (AP) position sensor
- Water in the connectors.
- Damaged accelerator pedal (AP) position sensor.

Fault symptom[s]

- Poor accelerator pedal (AP) response.
- Message in information display

FAULTY SIGNAL

CHECKING THE STATUS

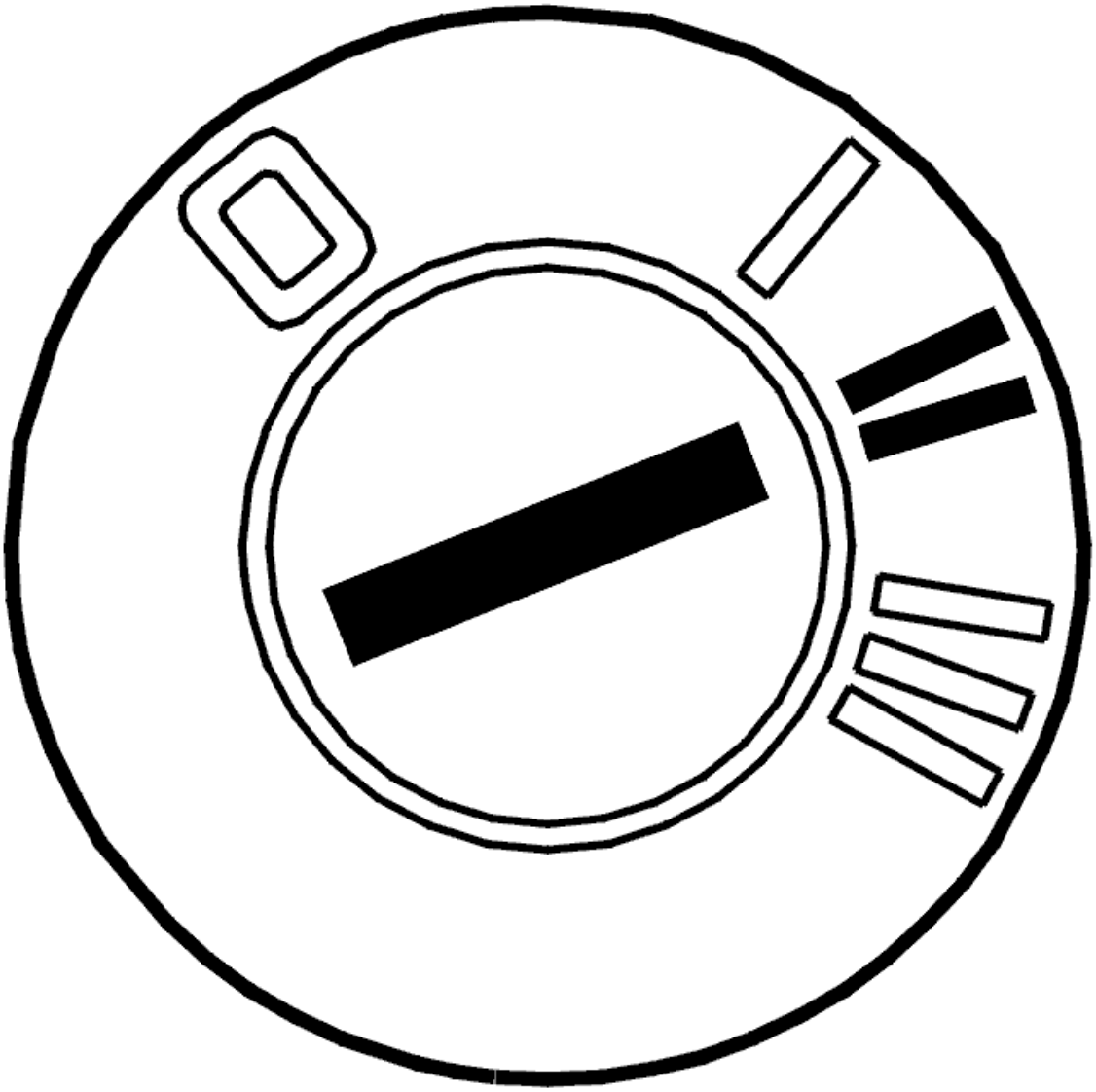

Fig. 428: Identifying Ignition ON
Courtesy of VOLVO CARS CORPORATION

- Ignition on
- Read off the movement of the accelerator pedal by carefully depressing and releasing the accelerator pedal (AP).

  Check that the value changes with accelerator pedal movement. The value must be approximately 0.4 V when the accelerator pedal (AP) is unaffected and approximately 4 V when the accelerator pedal (AP) is fully depressed.

  The fault is intermittent at the moment if the values are OK.

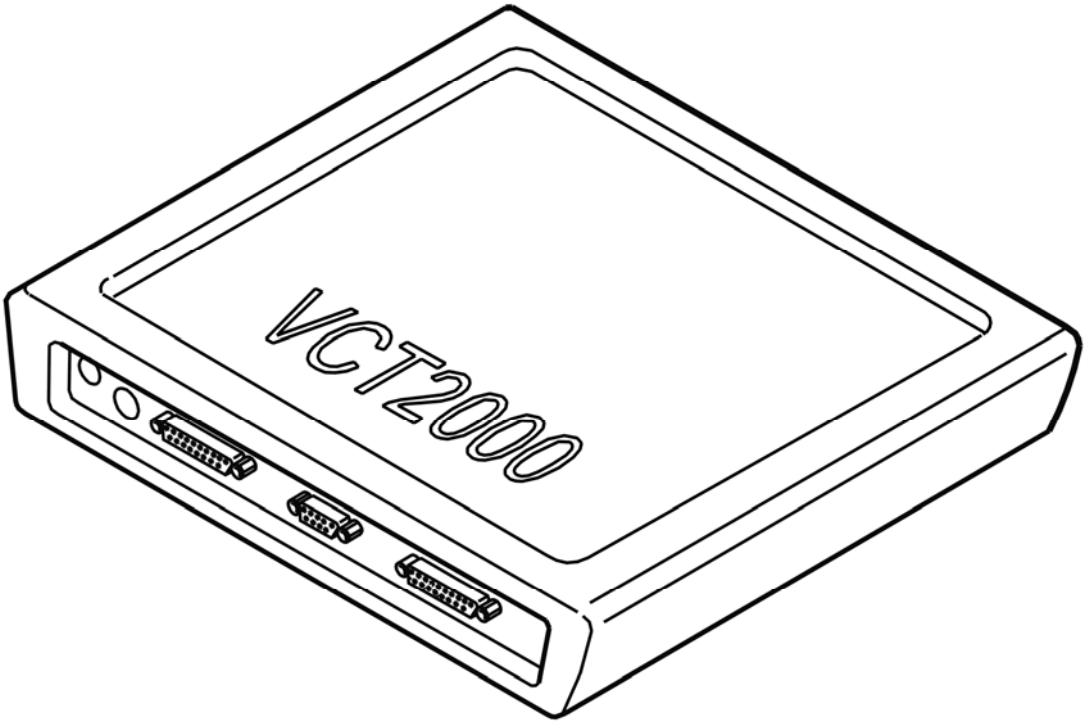

Fig. 429: Identifying VCT2000 Diagnostic Tool Symbol In VIDA
Courtesy of VOLVO CARS CORPORATION

- **Continue**

  Refer to **CHECKING THE POWER SUPPLY**

CHECKING THE POWER SUPPLY

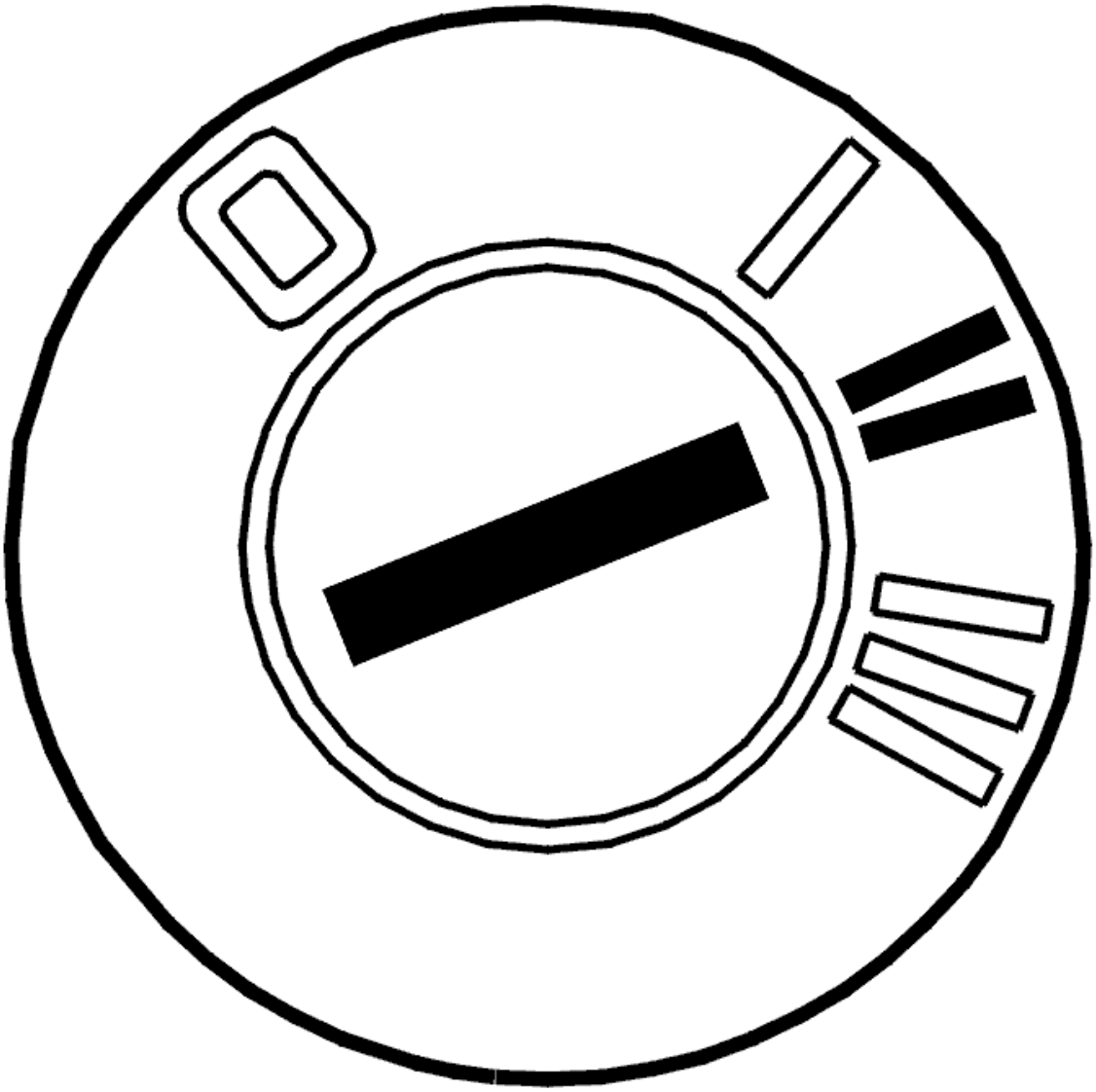

Fig. 430: Identifying Ignition ON
Courtesy of VOLVO CARS CORPORATION

- Ignition on.

  Check the connectors and terminals for water penetration.

  Check the power supply (12 V) to the accelerator pedal (AP) position sensor between accelerator pedal (AP) position sensor terminals #1 (wiring side) and #3 (wiring side).

  Check that the power supply is approximately 12 V with the ignition on.

  Remedy as necessary.

  Other information:

- see **CHECKING WIRING AND TERMINALS**
- To connect the breakout box, see **CONNECTING THE BREAKOUT BOX**
- For 5 cylinder turbocharged engines -2004, see **SIGNAL DESCRIPTION**
- For 5 cylinder turbocharged engines 2005-, see **SIGNAL SPECIFICATION** .
- For 6 cylinder engines -2004, see **SIGNAL SPECIFICATION**
- For 6 cylinder engines 2005-, see **SIGNAL SPECIFICATION** .
- To access and replace the accelerator pedal (AP) position sensor, see **ACCELERATOR PEDAL (AP), REPLACING** .

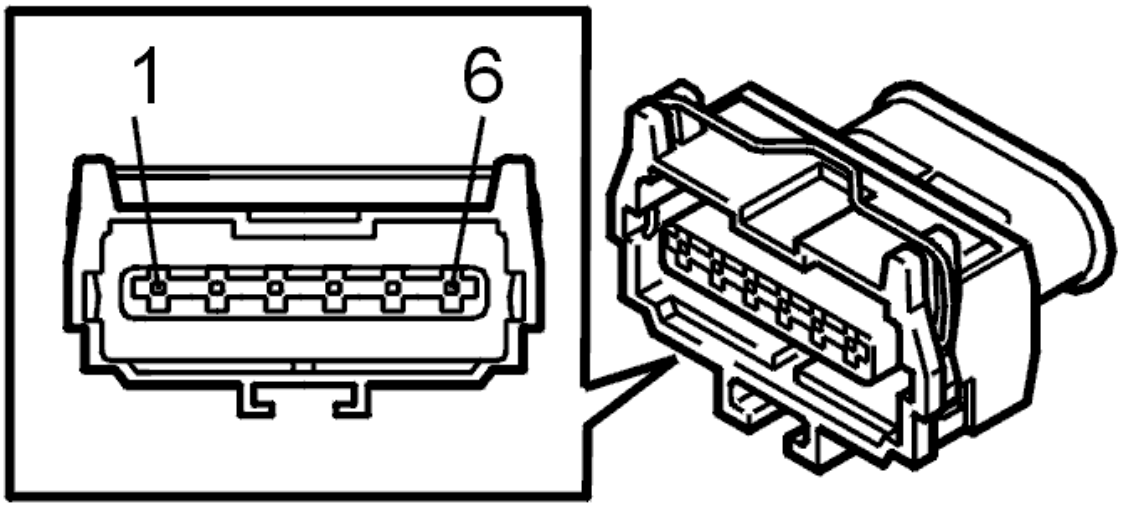

Fig. 431: Accelerator Pedal Position Sensor Connector Terminal Identification
Courtesy of VOLVO CARS CORPORATION

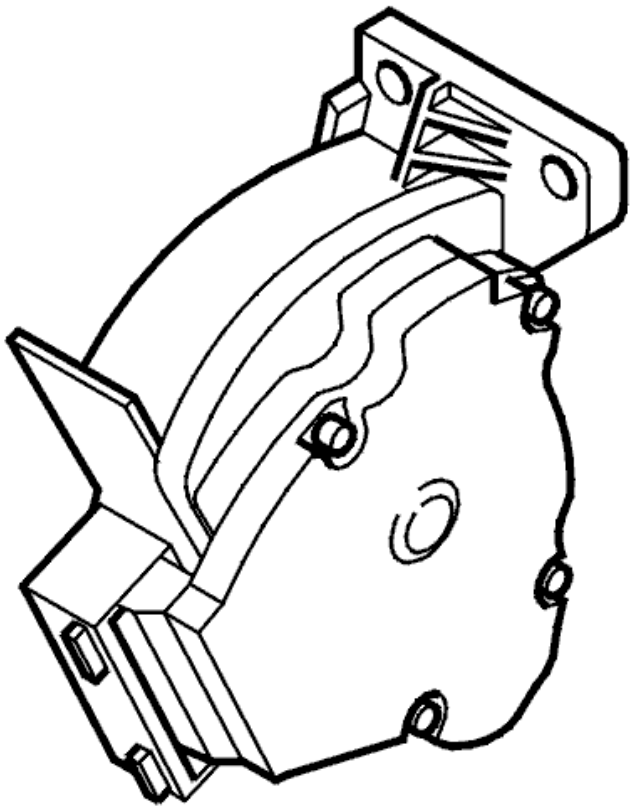

Fig. 432: Identifying Accelerator Pedal (AP) Position Sensor
Courtesy of VOLVO CARS CORPORATION

Is the power supply OK?

- **YES**

  Refer to **REPLACING THE COMPONENT**

- **NO**

  Refer to **CHECKING THE CONNECTORS AND CABLES**

REPLACING THE COMPONENT

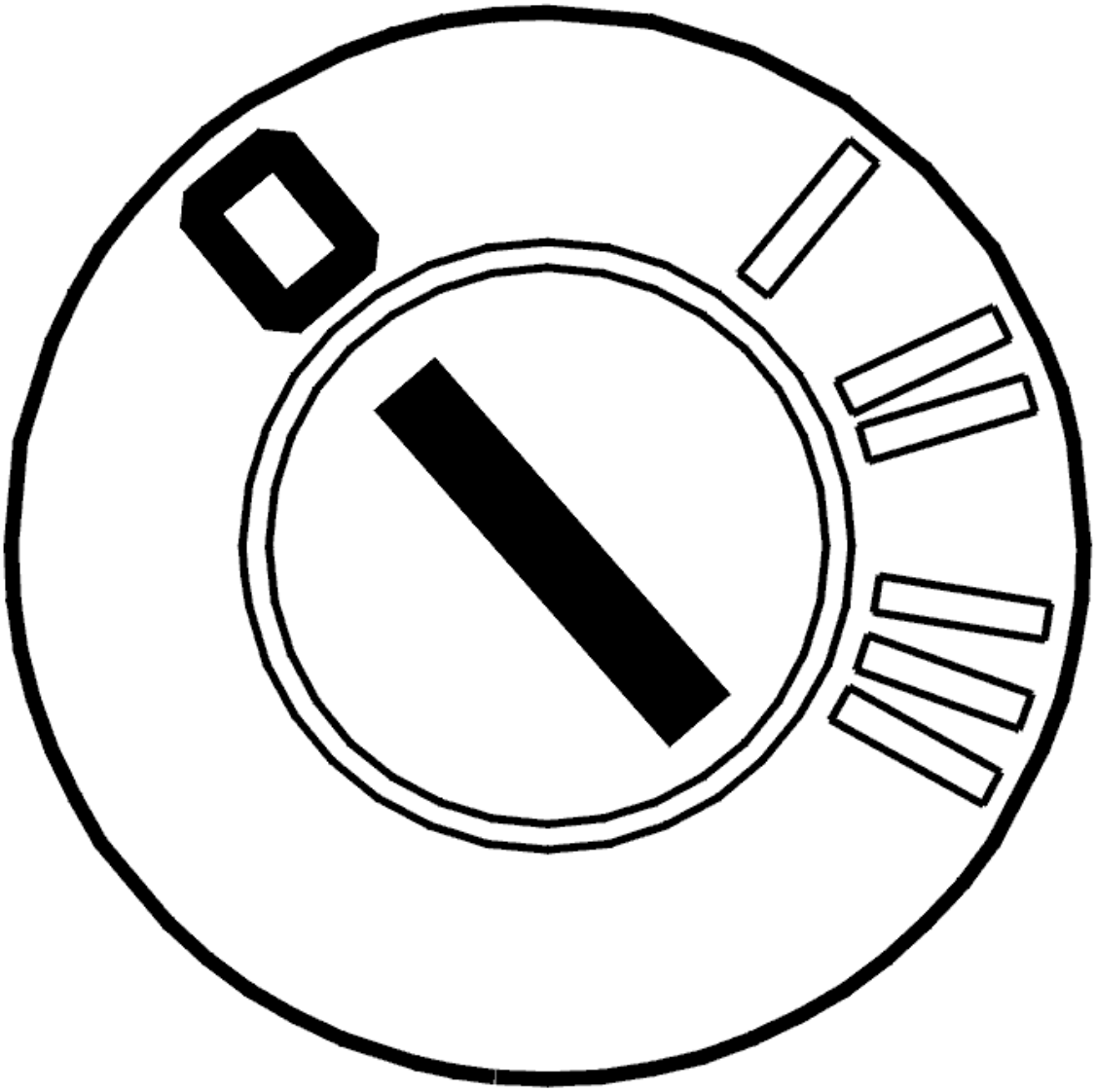

Fig. 433: Identifying Ignition OFF
Courtesy of VOLVO CARS CORPORATION

- Ignition off.

  Try a new accelerator pedal (AP) position sensor if no fault is found and the fault is permanent. See **ACCELERATOR PEDAL (AP), REPLACING** .

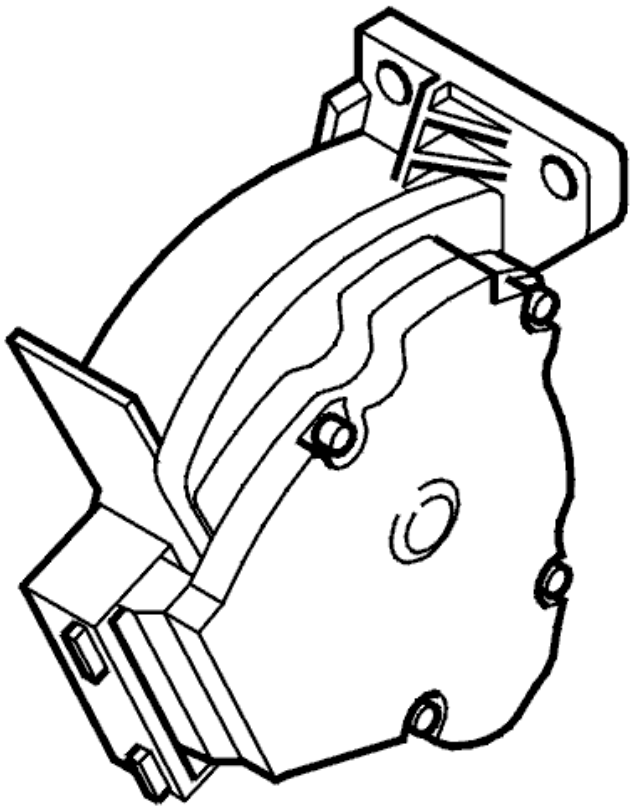

Fig. 434: Identifying Accelerator Pedal (AP) Position Sensor
Courtesy of VOLVO CARS CORPORATION

- **Continue**

  Refer to **VERIFICATION**

CHECKING THE CONNECTORS AND CABLES

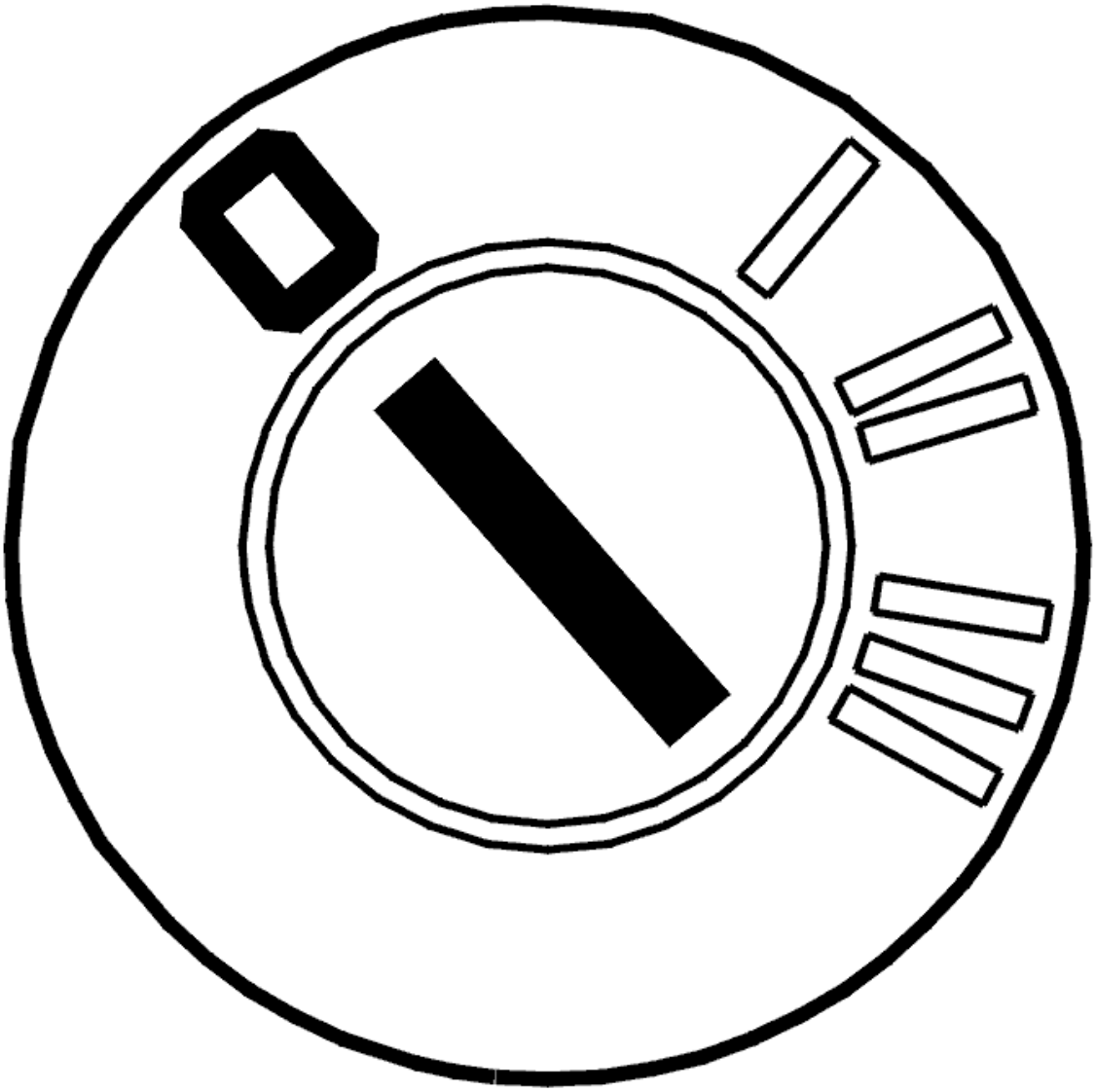

Fig. 435: Identifying Ignition OFF
Courtesy of VOLVO CARS CORPORATION

- Ignition off
- Check the accelerator pedal (AP) position sensor connector. Check for contact resistance and oxidation.

  Check the power supply cable (12 V) between accelerator pedal (AP) position sensor terminal #1 (wiring side) and the relevant fuse for the circuit. Check for a short-circuit to ground. Check for an open-circuit. Check that the fuse for the circuit has not blown.

  Check the ground lead for power supply (12 V) between accelerator pedal (AP) position sensor terminal #3 (wiring side) and the relevant ground terminal. Check for contact resistance and oxidation. Check for an open-circuit.

  HINT: With the ignition on, the power supply to the accelerator pedal (AP) position sensor must be approximately 12 V measured between accelerator pedal (AP) position sensor terminals #1 (wiring

side) and #3 (wiring side).

HINT: With the ignition on, the power supply from the engine control module (ECM) must be approximately 5 V measured between accelerator pedal (AP) position sensor terminals #6 (wiring side) and #4 (wiring side).

Remedy as necessary.

Other information:

- see **CHECKING WIRING AND TERMINALS**
- To connect the breakout box, see **CONNECTING THE BREAKOUT BOX**
- For 5 cylinder turbocharged engines -2004, see **SIGNAL DESCRIPTION**
- For 5 cylinder turbocharged engines 2005-, see **SIGNAL SPECIFICATION** .
- For 6 cylinder engines -2004, see **SIGNAL SPECIFICATION**
- For 6 cylinder engines 2005-, see **SIGNAL SPECIFICATION** .
- To access and replace the accelerator pedal (AP) position sensor, see **ACCELERATOR PEDAL (AP), REPLACING** .

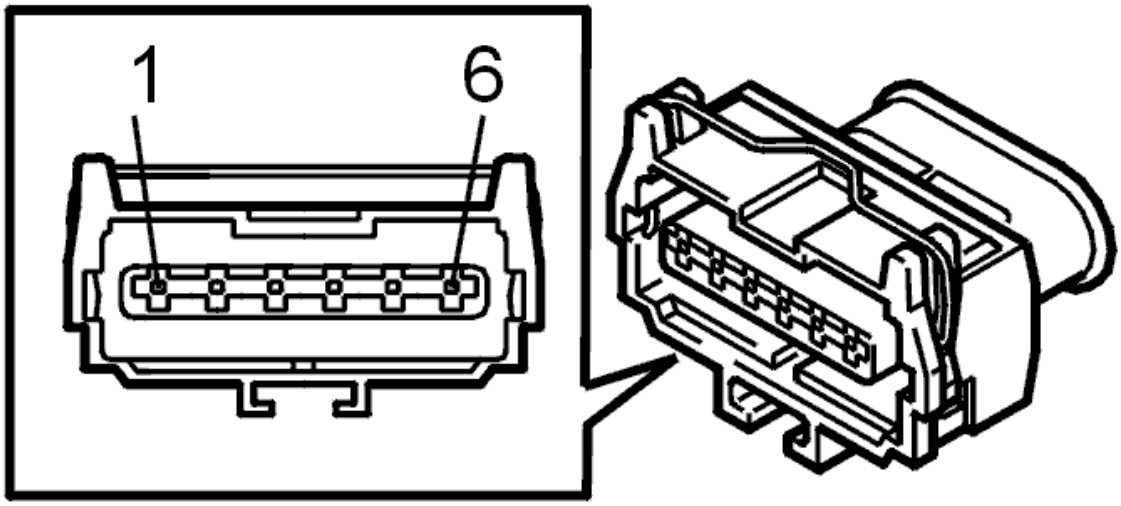

Fig. 436: Accelerator Pedal Position Sensor Connector Terminal Identification
Courtesy of VOLVO CARS CORPORATION

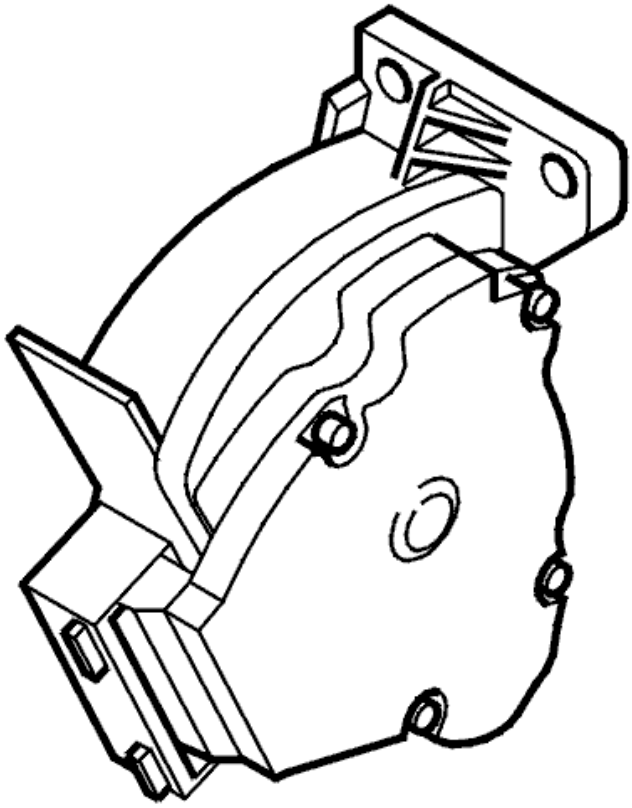

Fig. 437: Identifying Accelerator Pedal (AP) Position Sensor
Courtesy of VOLVO CARS CORPORATION

- **Continue**

  Refer to **REPLACING THE COMPONENT**

VERIFICATION

VERIFICATION

HINT: After carrying out the repair, check that the fault has been remedied.

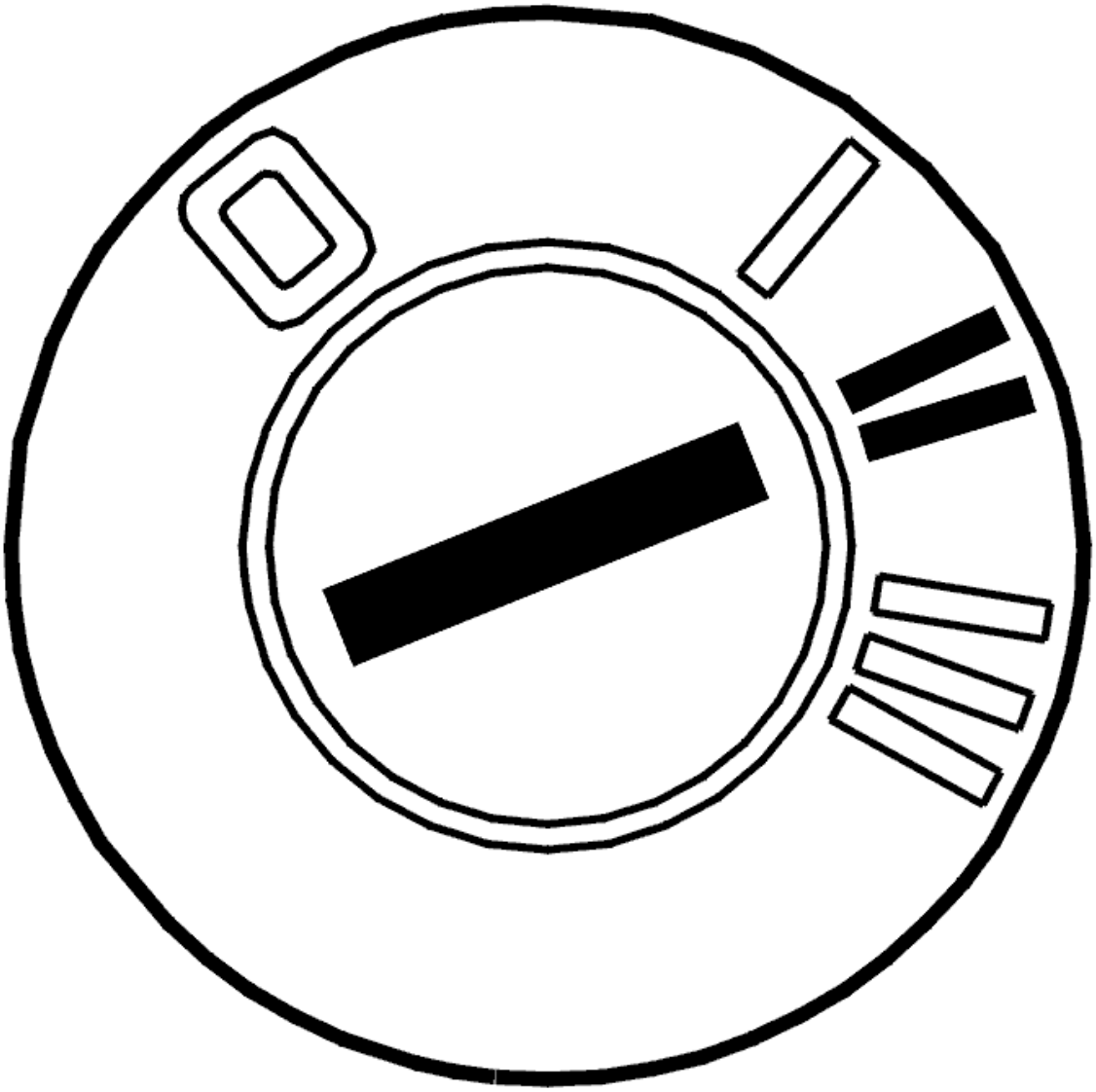

Fig. 438: Identifying Ignition ON
Courtesy of VOLVO CARS CORPORATION

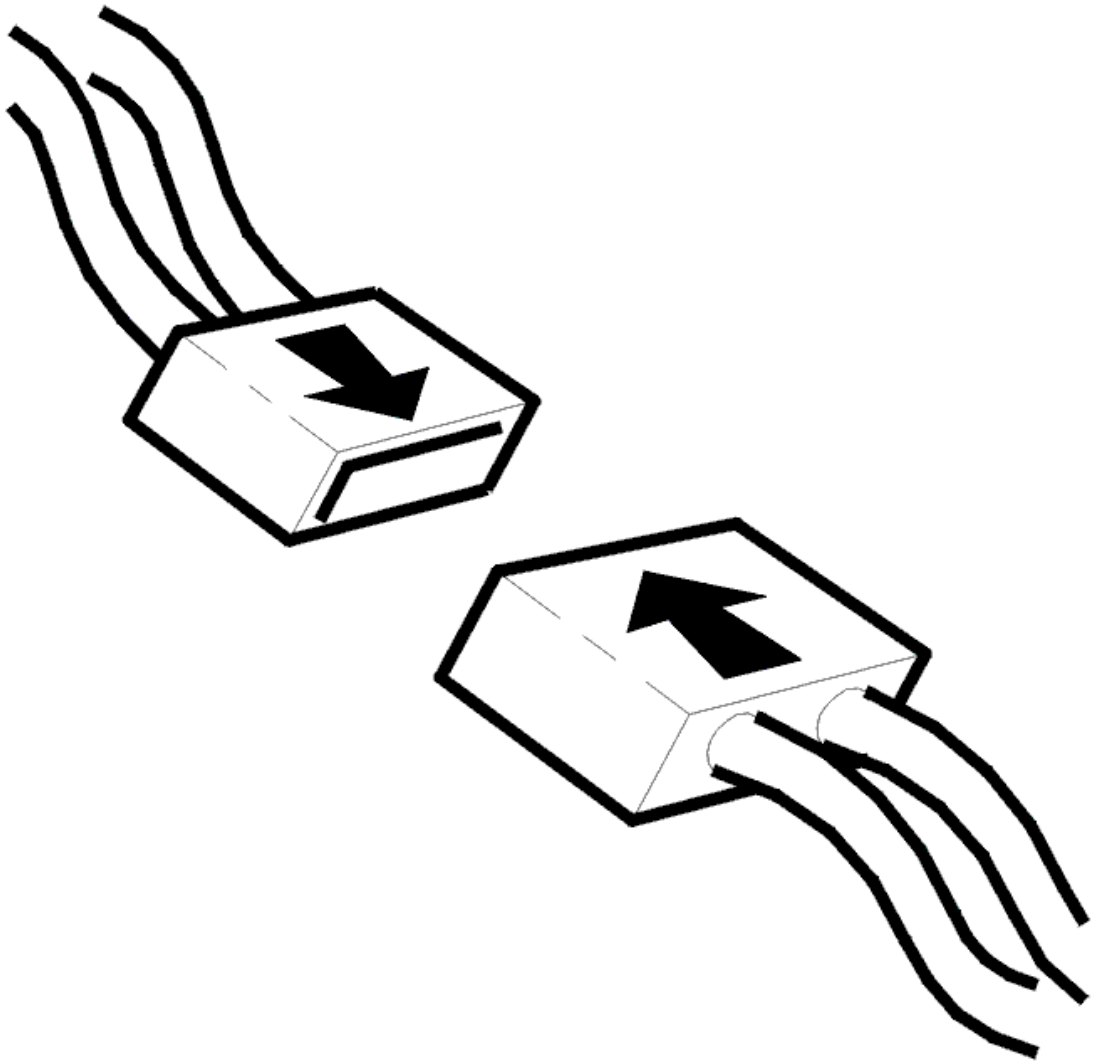

Fig. 439: Connecting Connector
Courtesy of VOLVO CARS CORPORATION

- Ignition off
- Reconnect the connectors, reinstall components etc.
- Ignition on
- Read off the movement of the accelerator pedal by carefully depressing and releasing the accelerator pedal (AP).

  Check that the value changes with accelerator pedal movement. The value must be approximately 0.4 V when the accelerator pedal (AP) is unaffected and approximately 4 V when the accelerator pedal (AP) is fully depressed.

  The fault has been remedied if the values are OK.

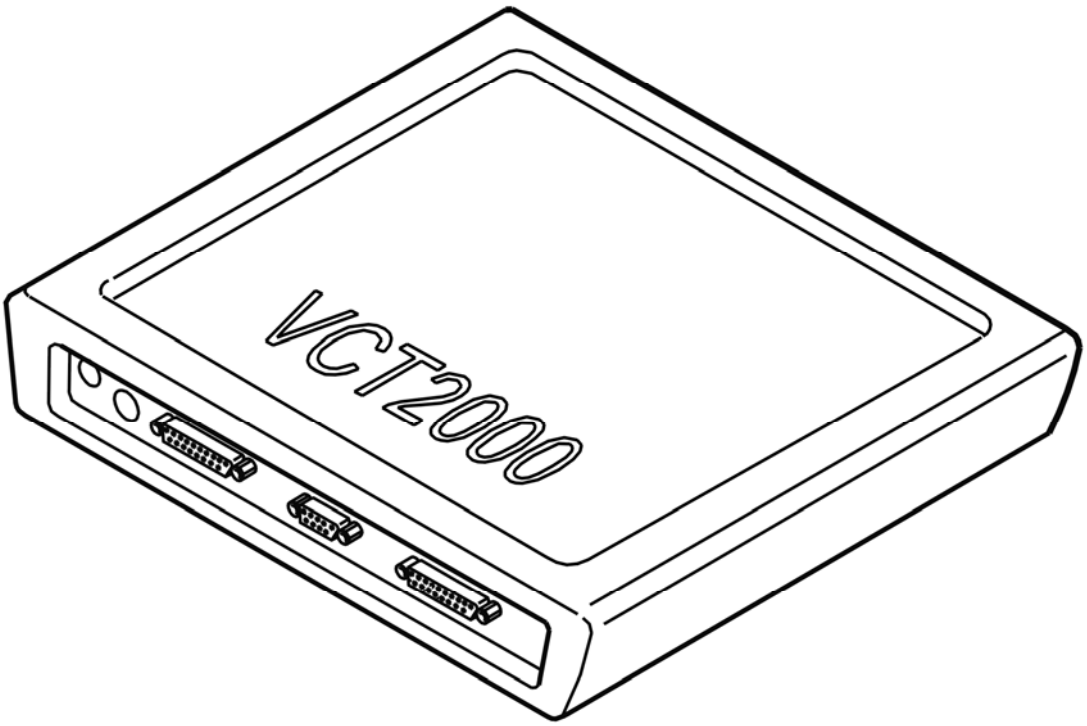

Fig. 440: Identifying VCT2000 Diagnostic Tool Symbol In VIDA
Courtesy of VOLVO CARS CORPORATION

Are these values OK?

- **YES**

  VERIFIED: Troubleshooting has been completed.

- **NO**

  Refer to **INFORMATION**

INFORMATION

FAULT-TRACING INFORMATION

The fault should have been detected and remedied. As this is not the case fault-tracing has failed.

Exit fault-tracing for this diagnostic trouble code (DTC) or make another attempt.

ECM-9400: ACCELERATOR PEDAL (AP) POSITION SENSOR, ANALOG SIGNAL. FAULTY SIGNAL (B6294T; 2005-2006)

DIAGNOSTIC TROUBLE CODE (DTC) INFORMATION ECM-9400

see **DIAGNOSTIC TROUBLE CODE (DTC) INFORMATION ECM-9400**

FAULTY SIGNAL

see **FAULTY SIGNAL**

ECM-9400: BRAKE PEDAL SENSOR. FAULTY SIGNAL (B5254T2; B6294T; 2003-2004)

DIAGNOSTIC TROUBLE CODE (DTC) INFORMATION

Condition

If the engine control module (ECM), with engine running, registers a malfunction on the brake pedal sensor's circuit, the brake light switch circuit, or on the CAN-communication between the brake control module (BCM) and the engine control module (ECM), the diagnostic trouble code is generated.

Substitute Value

Cruise control switched off.

Possible Source

Signal too high:

- Look for the cause of the malfunction in the brake control module (BCM) and in the central electronic module (CEM).

Incorrect signal:

- Malfunction in brake control module (BCM) or in central electronic module (CEM).
- Contact resistance or oxidation in the connections between the engine control module (ECM) and the brake light switch.
- Open circuit in the voltage feed to the brake light switch.
- Open circuit or short-circuit to ground or voltage in the cable for the brake light switch.
- Incorrectly installed brake light switch.
- Incorrectly adjusted brake light switch.
- Water in the connectors.
- Damaged brake light switch.

Signal missing:

- Look for the cause of the malfunction in the brake control module (BCM) and in the central electronic

module (CEM).

Fault symptom[s]

- Cruise control does not function at all.
- Brake light constantly on.
- Message in information display

INCORRECT SIGNAL

CHECKING DIAGNOSTIC TROUBLE CODES (DTCS)

Check if any diagnostic trouble codes are stored in the brake control module (BCM) or in the central electronic module (CEM).

If diagnostic trouble codes are stored in the brake control module (BCM) or in the central electronic module (CEM), these shall be taken care of first.

Have fault causes been searched for or remedied in the above control modules?

- **YES**

  Refer to **CHECKING THE STATUS**

- **NO**

  OKAY: Troubleshooting has been completed.

CHECKING THE STATUS

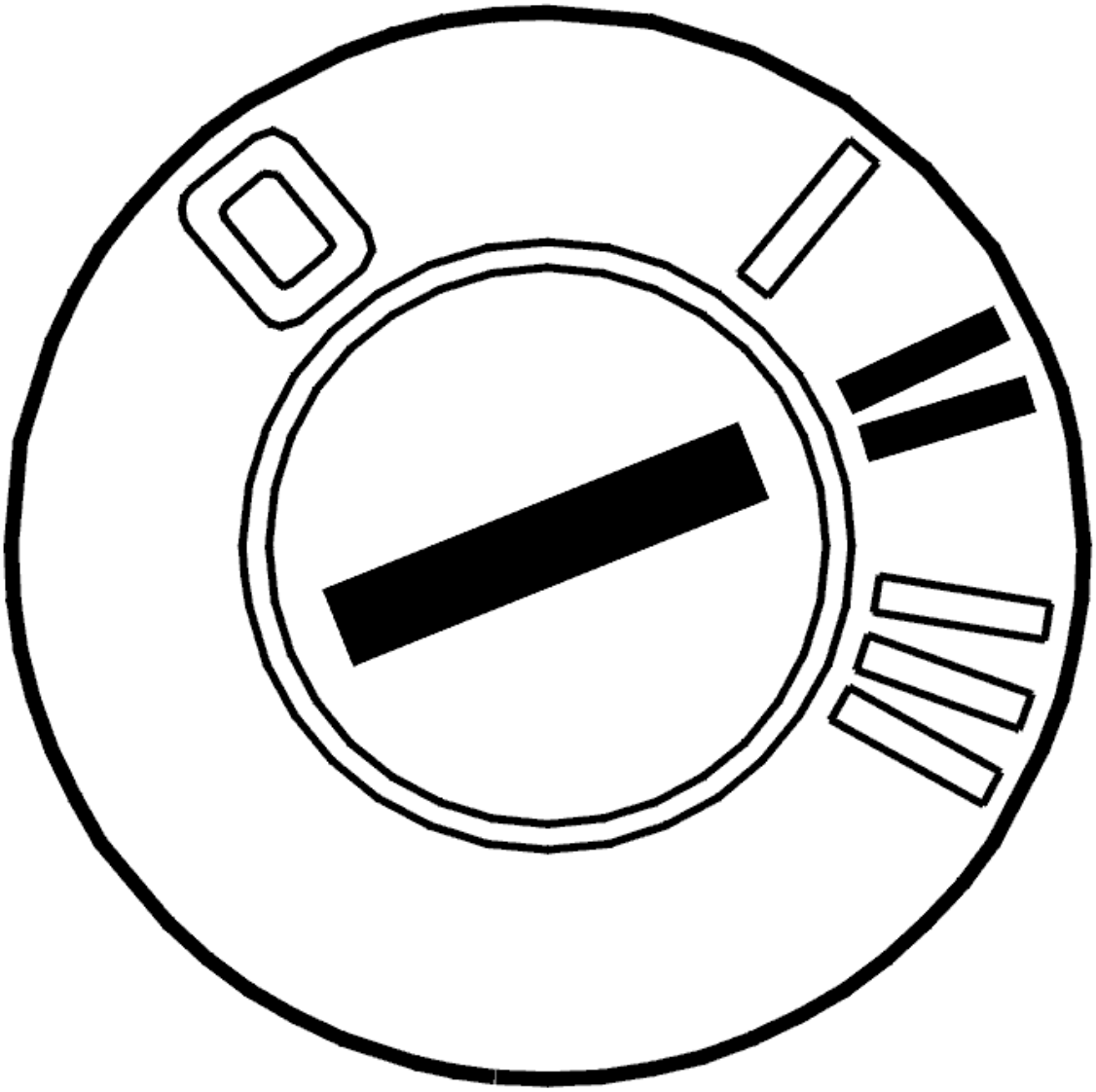

Fig. 441: Identifying Ignition ON
Courtesy of VOLVO CARS CORPORATION

- Ignition on
- Read off the status from the brake light switch.

  Check the function of the brake light switch by slowly pressing down and letting up the brake pedal.

  Check that the status changes between "OFF" when brake pedal is not pressed and "ON" when brake pedal is pressed.

  If the status from the brake light switch changes according to the above when pressing on the brake pedal, this indicates that the malfunction is intermittent at this time.

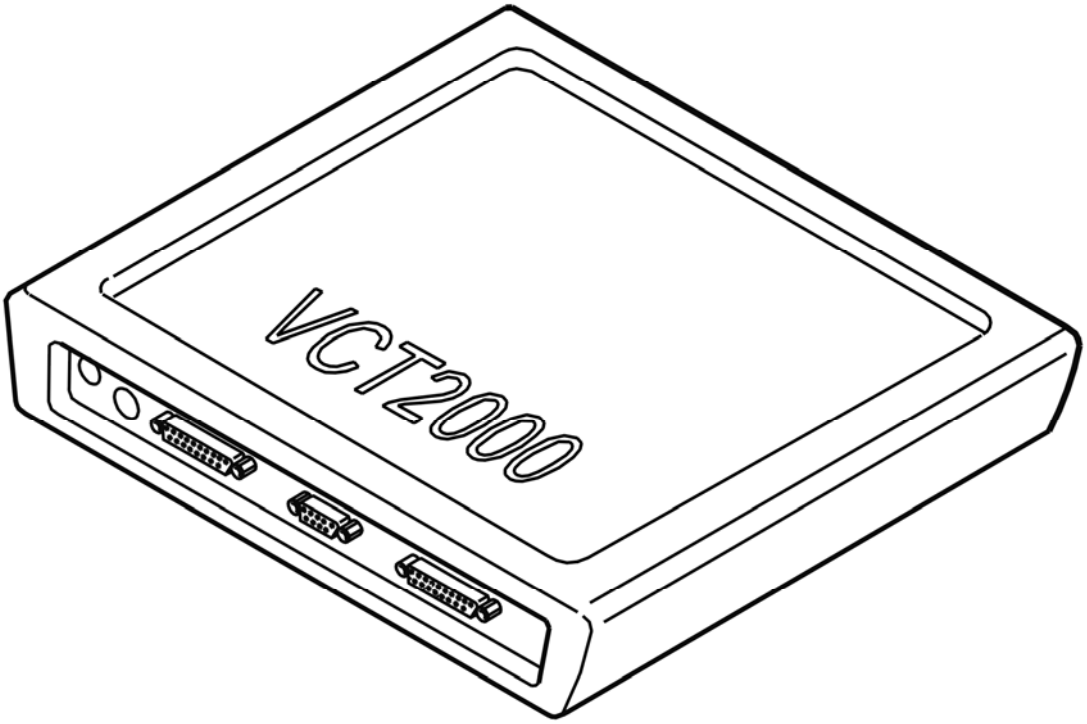

Fig. 442: Identifying VCT2000 Diagnostic Tool Symbol In VIDA
Courtesy of VOLVO CARS CORPORATION

- **Continue**

  Refer to **CHECKING VOLTAGE FEED**

CHECKING VOLTAGE FEED

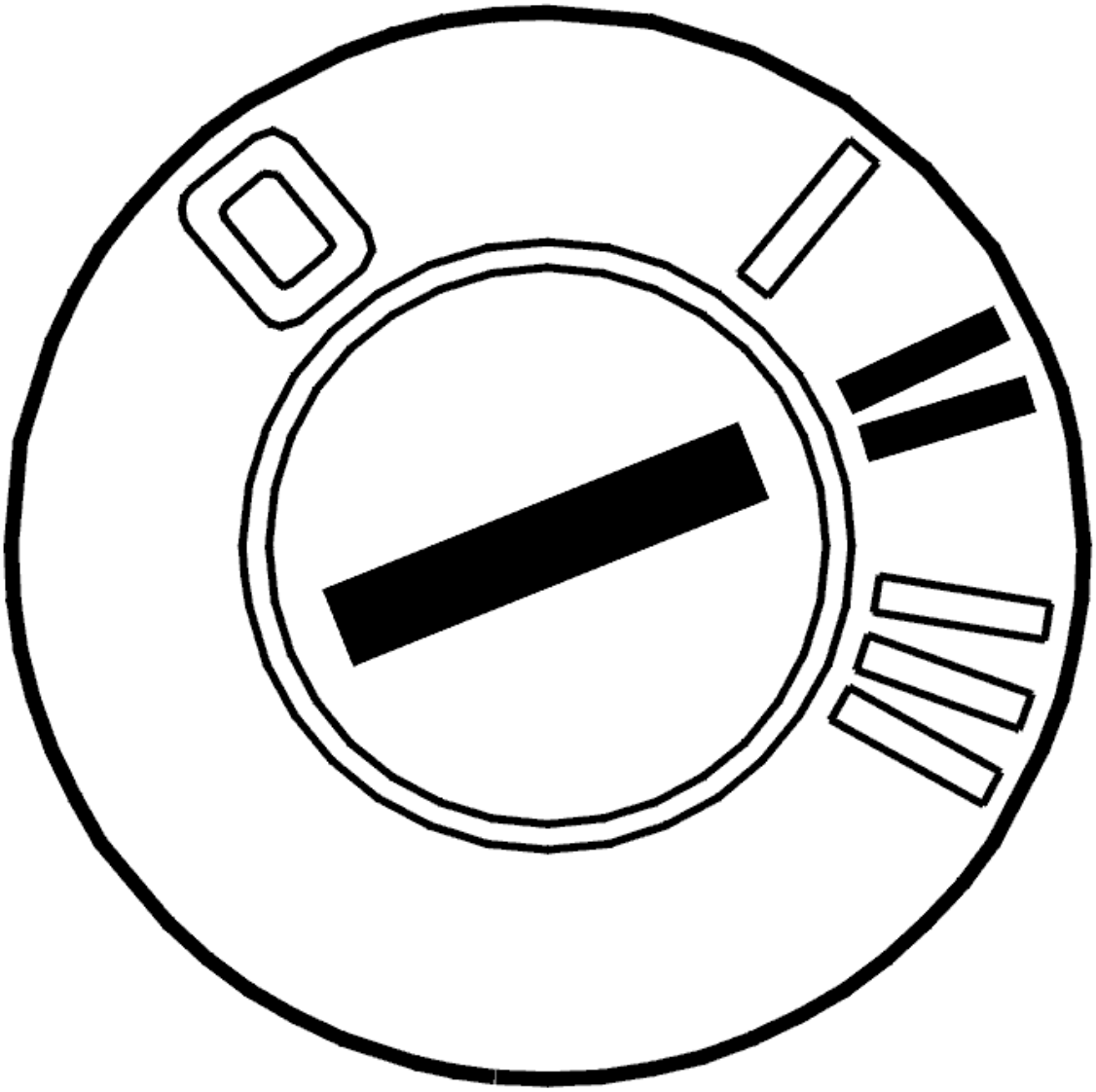

Fig. 443: Identifying Ignition ON
Courtesy of VOLVO CARS CORPORATION

- Ignition on

  Check voltage feed to the brake light switch. Measure between the brake light switch #1 (against cable harness) and ground (frame grounding point). Voltage feed shall be approx. 12 V.

  If voltage feed is missing:

  Check the circuit for voltage feed to the brake light switch #1 (against cable harness) for open circuit, short-circuit to ground and damaged fuse for the circuit.

  Remedy as necessary.

  Other information:

- see **CHECKING WIRING AND TERMINALS** .
- To connect the breakout box, see **CONNECTING THE BREAKOUT BOX** .
- For 5 cylinder turbocharged engines -2004, see **SIGNAL DESCRIPTION**
- For 5 cylinder turbocharged engines 2005-, see **SIGNAL SPECIFICATION** .
- For 6 cylinder engines -2004, see **SIGNAL SPECIFICATION**
- For 6 cylinder engines 2005-, see **SIGNAL SPECIFICATION** .
- To access/replace brake light switch, see **STOP LAMP SWITCH, REPLACING** .

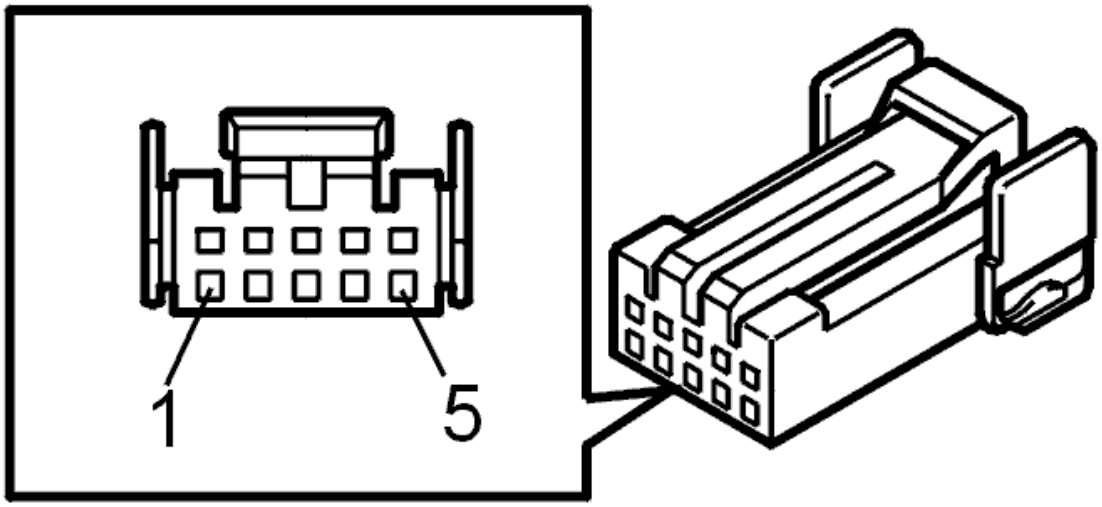

Fig. 444: Electronic Throttle Module (ETM) Connector Terminal Identification
Courtesy of VOLVO CARS CORPORATION

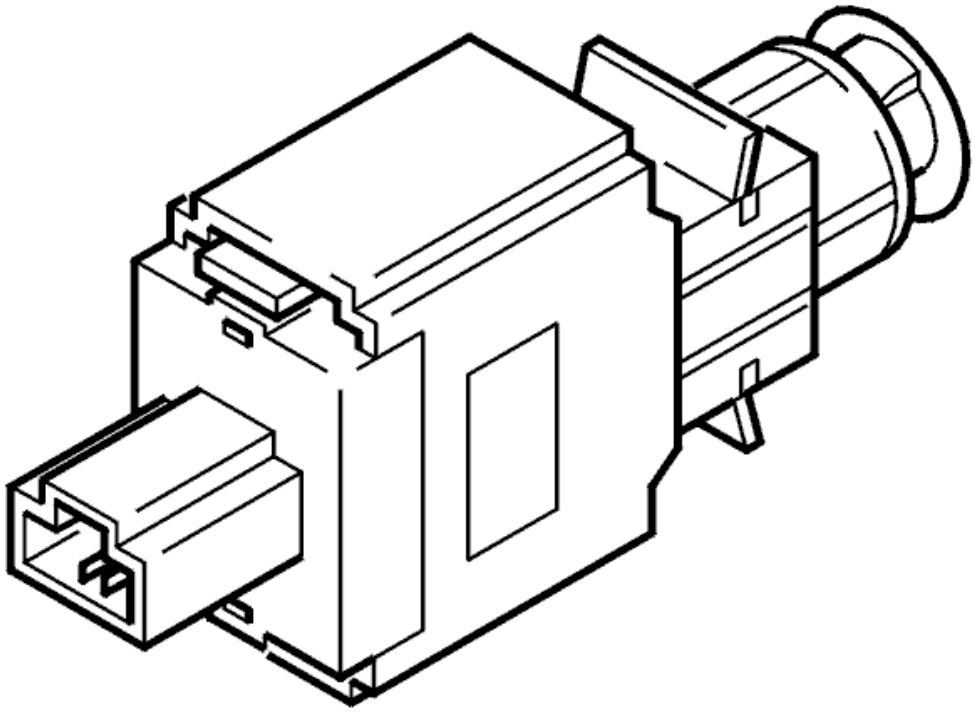

Fig. 445: Identifying Brake Pedal Position Sensor
Courtesy of VOLVO CARS CORPORATION

- **Continue**

  Refer to **CHECKING COMPONENTS AND WIRING**

CHECKING COMPONENTS AND WIRING

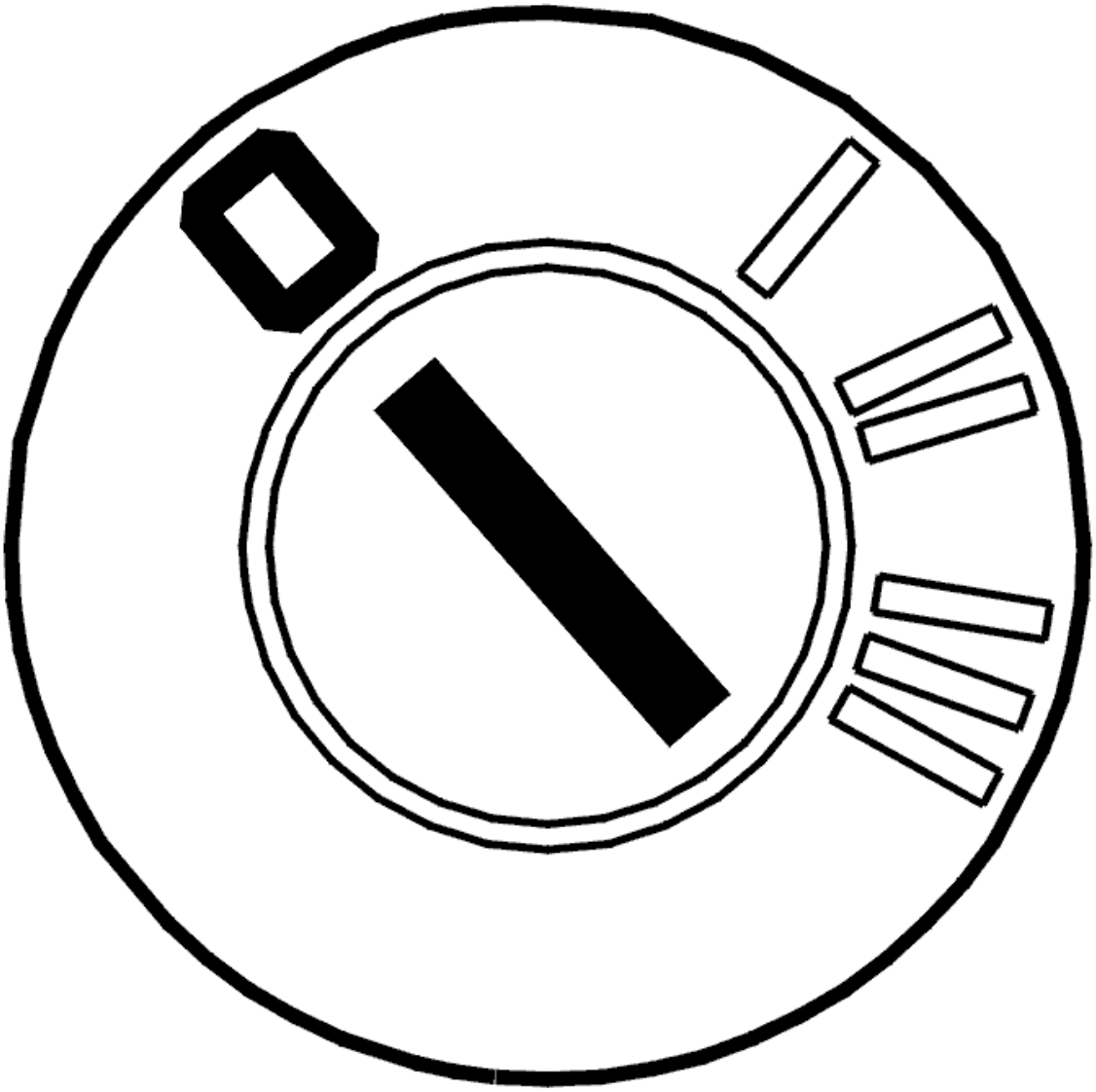

Fig. 446: Identifying Ignition OFF
Courtesy of VOLVO CARS CORPORATION

- Ignition off
- Check that the brake light switch is installed correctly and adjusted.

  Check the connectors for the brake light switch and engine control module (ECM) for contact resistance or oxidation and for damage to pins and connections.

  Check the connectors and terminals for water penetration.

  Check the cable between the brake light switch #5 (against cable harness) and engine control module (ECM) #B26 (#B36) for open circuit or short-circuit to ground or short-circuit to voltage.

  Check connector B for central electronic module (CEM) for contact resistance or oxidation.

Check the cable between the brake light switch #5 (against cable harness) and central electronic module (CEM) #4B for open circuit, short-circuit to ground or short-circuit to voltage.

Remedy as necessary.

Other information:

- see **CHECKING WIRING AND TERMINALS** .
- For resistance value, see **COMPONENT SPECIFICATIONS** .
- To connect the breakout box, see **CONNECTING THE BREAKOUT BOX** .
- For 5 cylinder turbocharged engines -2004, see **SIGNAL DESCRIPTION**
- For 5 cylinder turbocharged engines 2005-, see **SIGNAL SPECIFICATION** .
- For 6 cylinder engines -2004, see **SIGNAL SPECIFICATION**
- For 6 cylinder engines 2005-, see **SIGNAL SPECIFICATION** .
- Checking brake light switch adjustment: **CHECKING BRAKE LIGHT SWITCH ADJUSTMENT** .
- For -2004, see: **CENTRAL ELECTRONIC MODULE (CEM), REPLACING**
- For 2005-, see: **CENTRAL ELECTRONIC MODULE (CEM), REPLACING** .

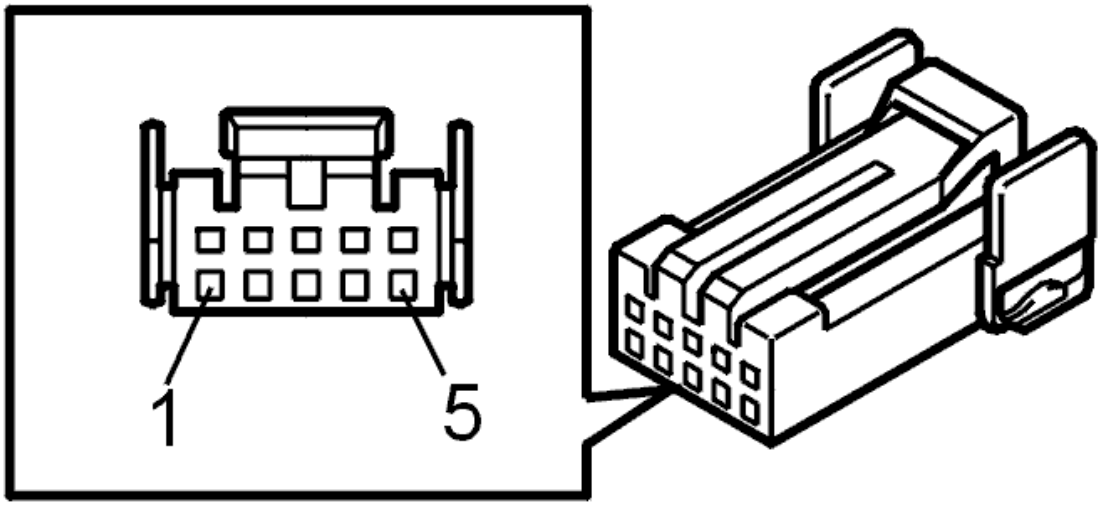

Fig. 447: Electronic Throttle Module (ETM) Connector Terminal Identification
Courtesy of VOLVO CARS CORPORATION

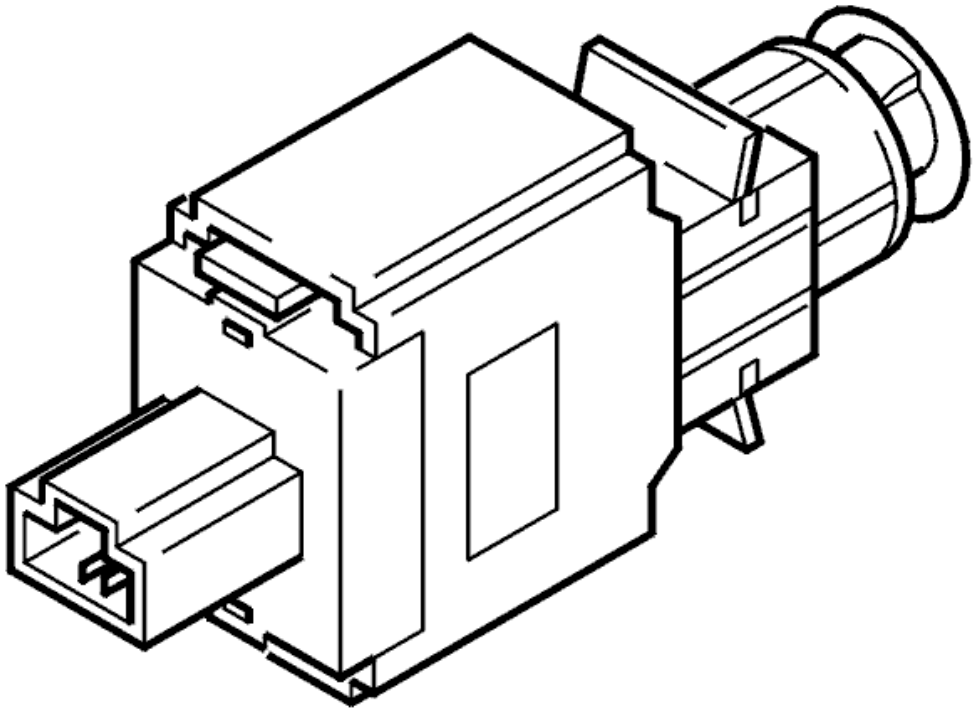

Fig. 448: Identifying Brake Pedal Position Sensor
Courtesy of VOLVO CARS CORPORATION

- **Continue**

  Refer to **VERIFICATION**

VERIFICATION

VERIFICATION

HINT: After carrying out the repair, check that the fault has been remedied.

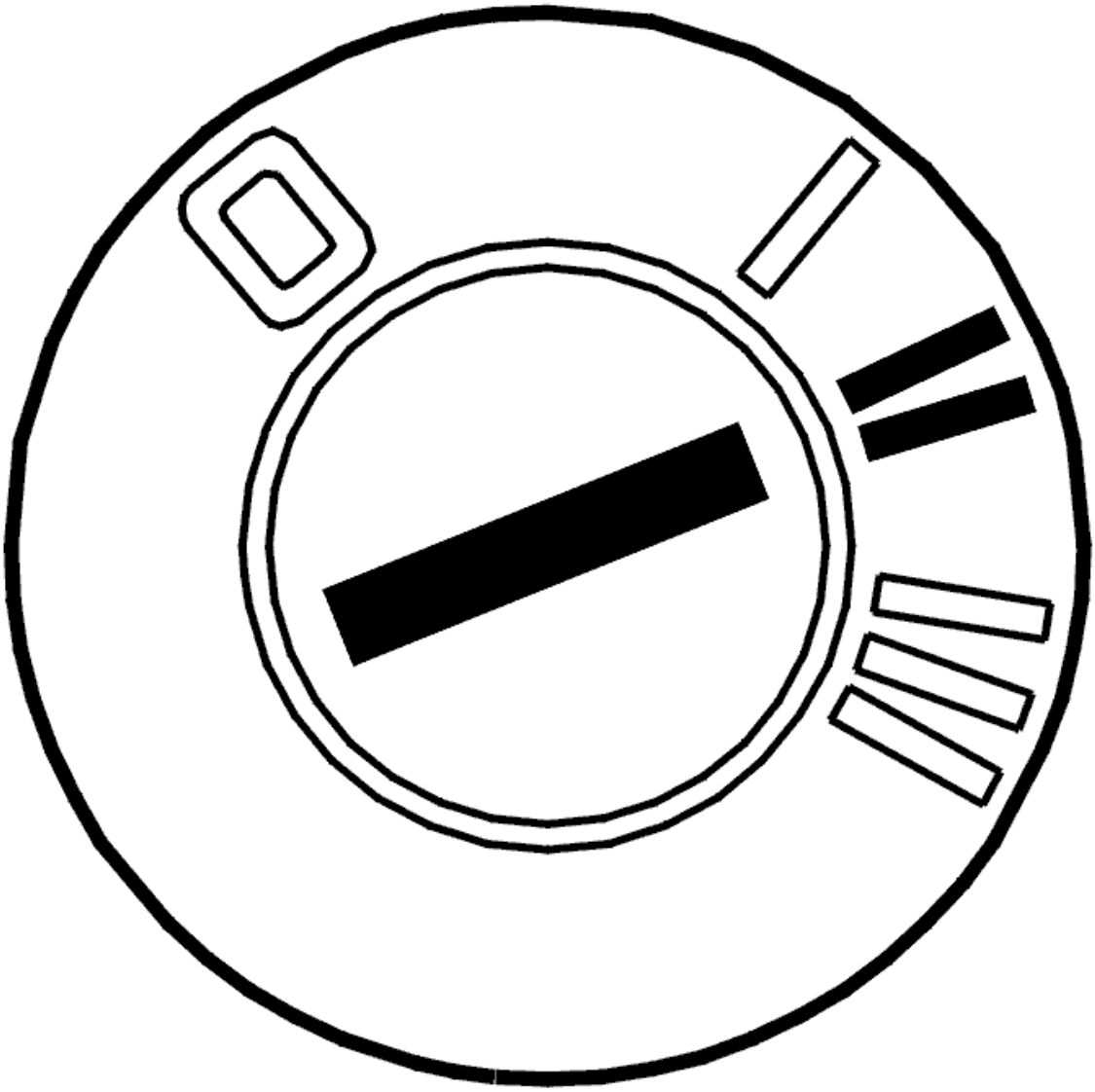

Fig. 449: Identifying Ignition ON
Courtesy of VOLVO CARS CORPORATION

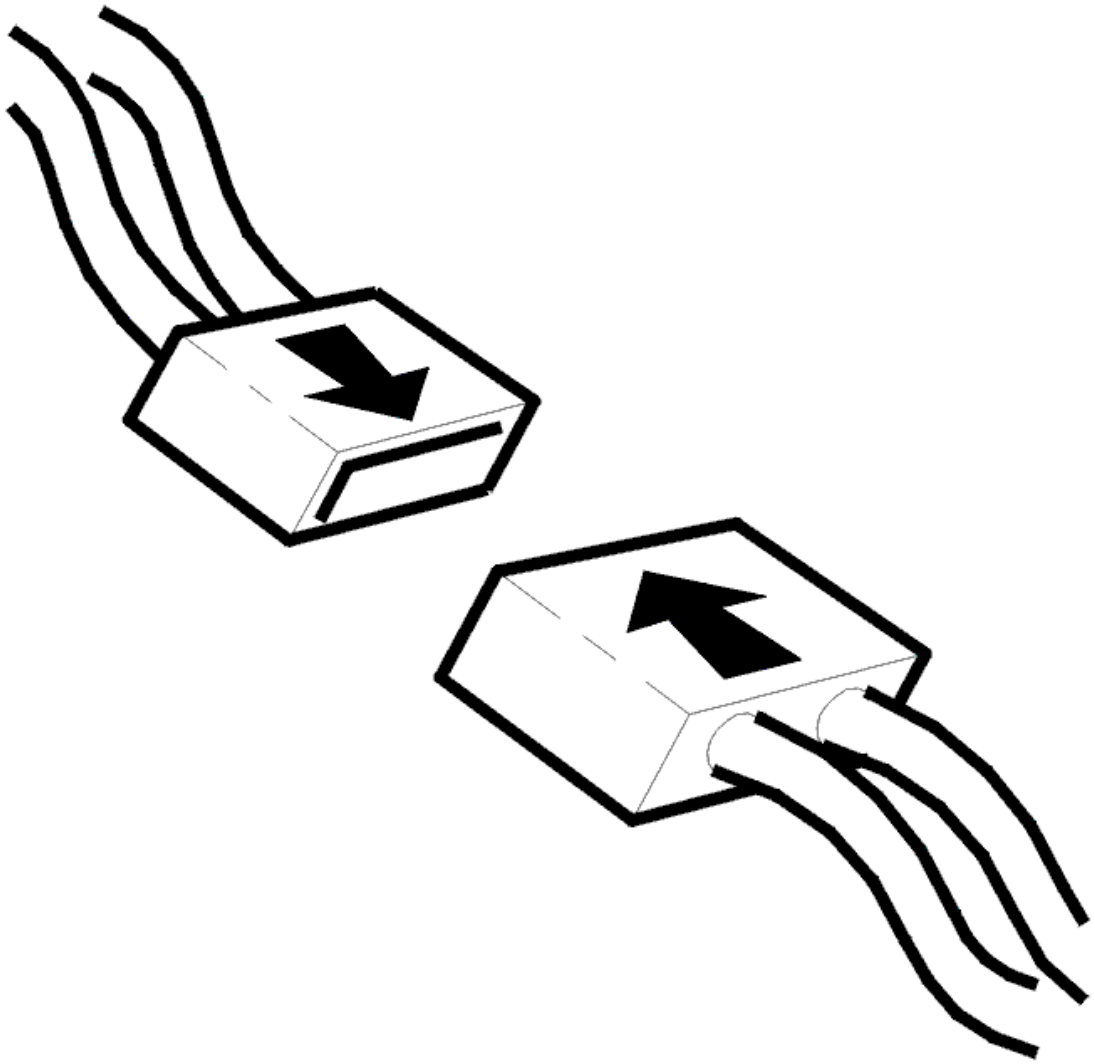

Fig. 450: Connecting Connector
Courtesy of VOLVO CARS CORPORATION

- Ignition off
- Reconnect the connectors, reinstall components etc.
- Ignition on
- Read off the status from the stop lamp switch.

  Check the function of the stop lamp switch by carefully pressing and releasing the brake pedal.

  Check that the status changes between "OFF" when the brake pedal is unaffected and "ON" when the brake pedal is depressed.

  If the status of the stop lamp switch changes as described above when the brake pedal is depressed, the fault has been remedied.

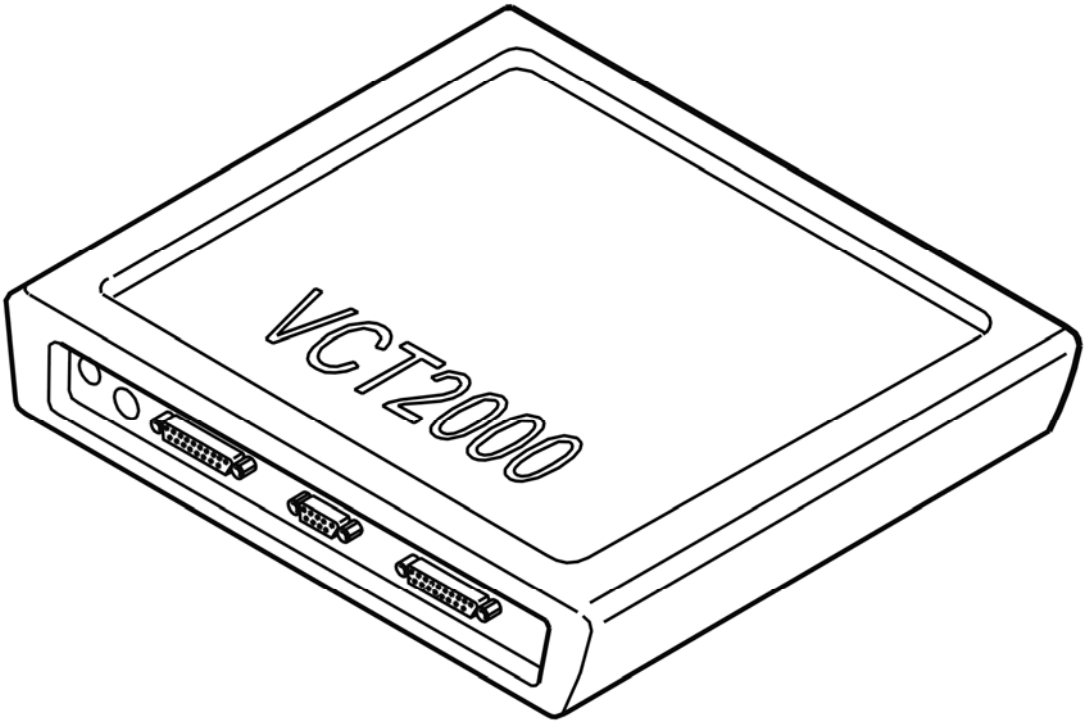

Fig. 451: Identifying VCT2000 Diagnostic Tool Symbol In VIDA
Courtesy of VOLVO CARS CORPORATION

Is the function OK?

- **YES**

  VERIFIED: Troubleshooting has been completed.

- **NO**

  Refer to **INFORMATION**

INFORMATION

FAULT-TRACING INFORMATION

The fault should have been detected and remedied. As this is not the case fault-tracing has failed.

Exit fault-tracing for this diagnostic trouble code (DTC) or make another attempt.

ECM-9400: BRAKE PEDAL SENSOR. SIGNAL MISSING (B5254T2; B6294T; 2003-2004)

DIAGNOSTIC TROUBLE CODE (DTC) INFORMATION

see **DIAGNOSTIC TROUBLE CODE (DTC) INFORMATION**

FAULT-TRACING INFORMATION

see **FAULT-TRACING INFORMATION**

ECM-940C: ACCELERATOR PEDAL (AP) POSITION SENSOR, ANALOG SIGNAL. SIGNAL TOO HIGH (B5254T2; 2005-2007)

DIAGNOSTIC TROUBLE CODE (DTC) INFORMATION ECM-940C

Condition

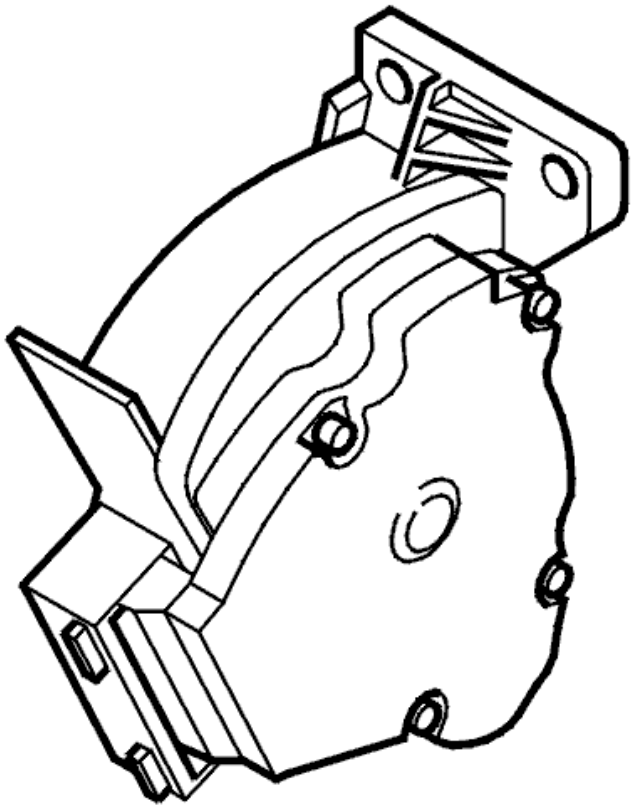

Fig. 452: Identifying Accelerator Pedal (AP) Position Sensor
Courtesy of VOLVO CARS CORPORATION

The diagnostic trouble code (DTC) is stored if the engine control module (ECM) registers a fault in the analog signal from the accelerator pedal (AP) position sensor.

The diagnostic trouble code (DTC) can be diagnosed when the ignition is switched on.

Substitute Value

- The accelerator pedal (AP) is disabled at the same time as the brake pedal is pressed.

Possible Source

- Short-circuit to supply voltage in the signal cable
- Damaged accelerator pedal (AP) position sensor.

Fault symptom[s]

- Poor accelerator pedal (AP) response.

SIGNAL TOO HIGH / SIGNAL TOO LOW

CHECKING THE STATUS

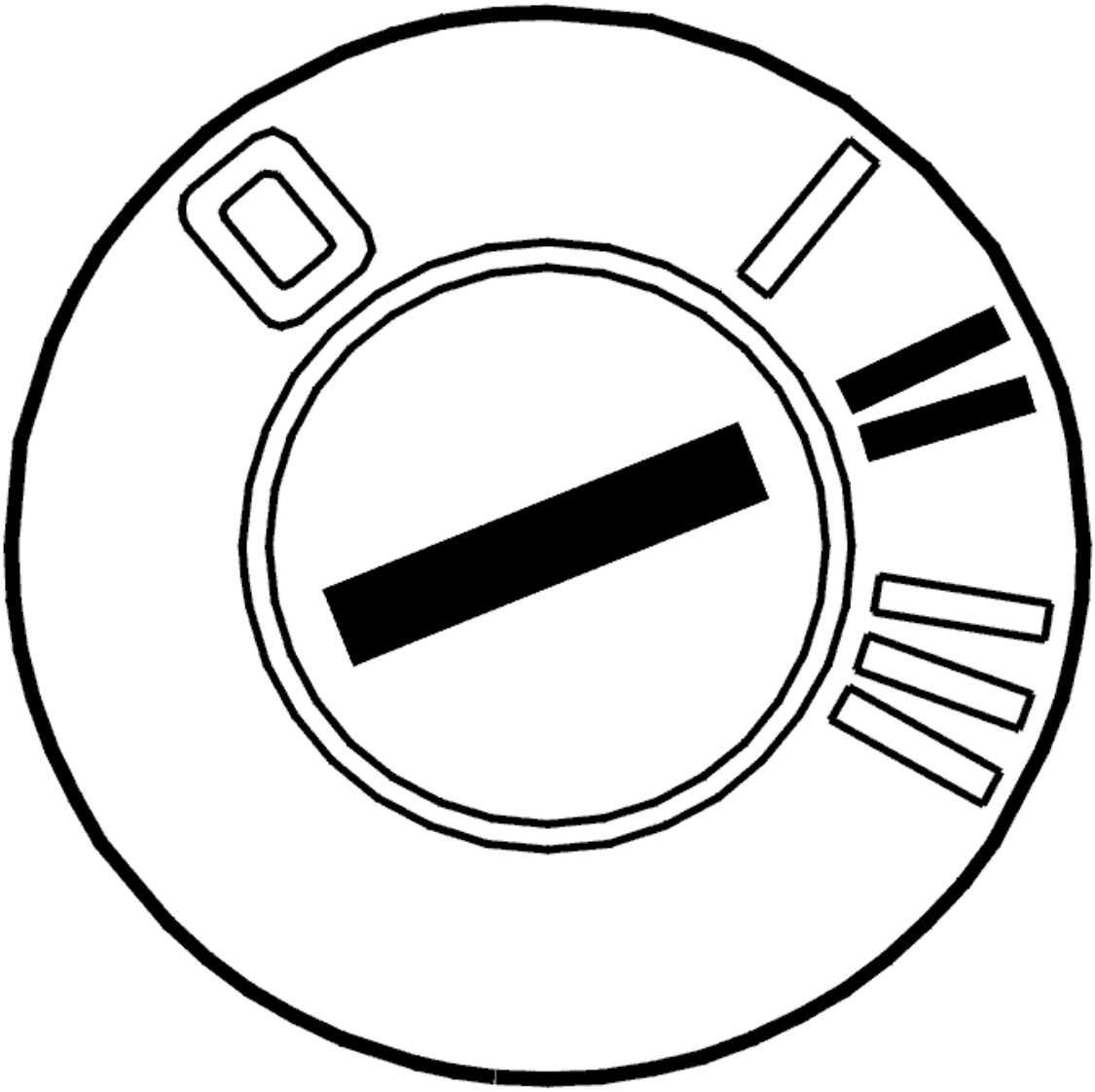

Fig. 453: Identifying Ignition ON
Courtesy of VOLVO CARS CORPORATION

- Ignition on
- Read off the movement of the accelerator pedal by carefully depressing and releasing the accelerator pedal (AP).

  Check that the value changes with accelerator pedal movement. The value must be approximately 0.4 V when the accelerator pedal (AP) is unaffected and approximately 4 V when the accelerator pedal (AP) is fully depressed.

  The fault is intermittent at the moment if the values are OK.

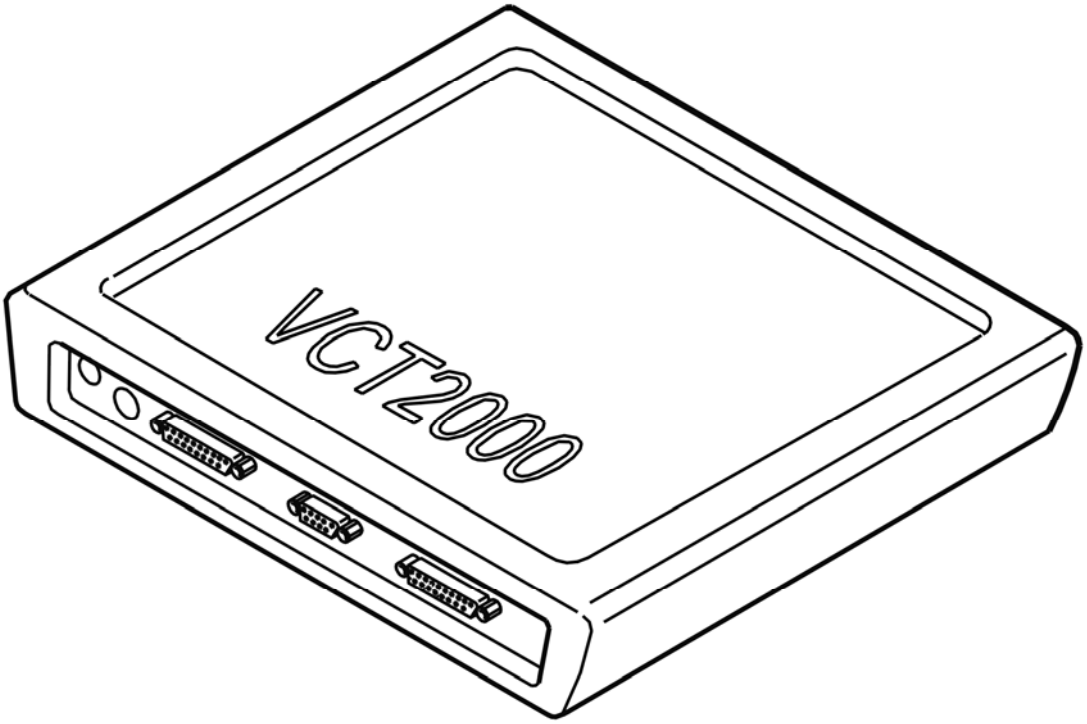

Fig. 454: Identifying VCT2000 Diagnostic Tool Symbol In VIDA
Courtesy of VOLVO CARS CORPORATION

- **Continue**

  Refer to **CHECKING THE POWER SUPPLY**

CHECKING THE POWER SUPPLY

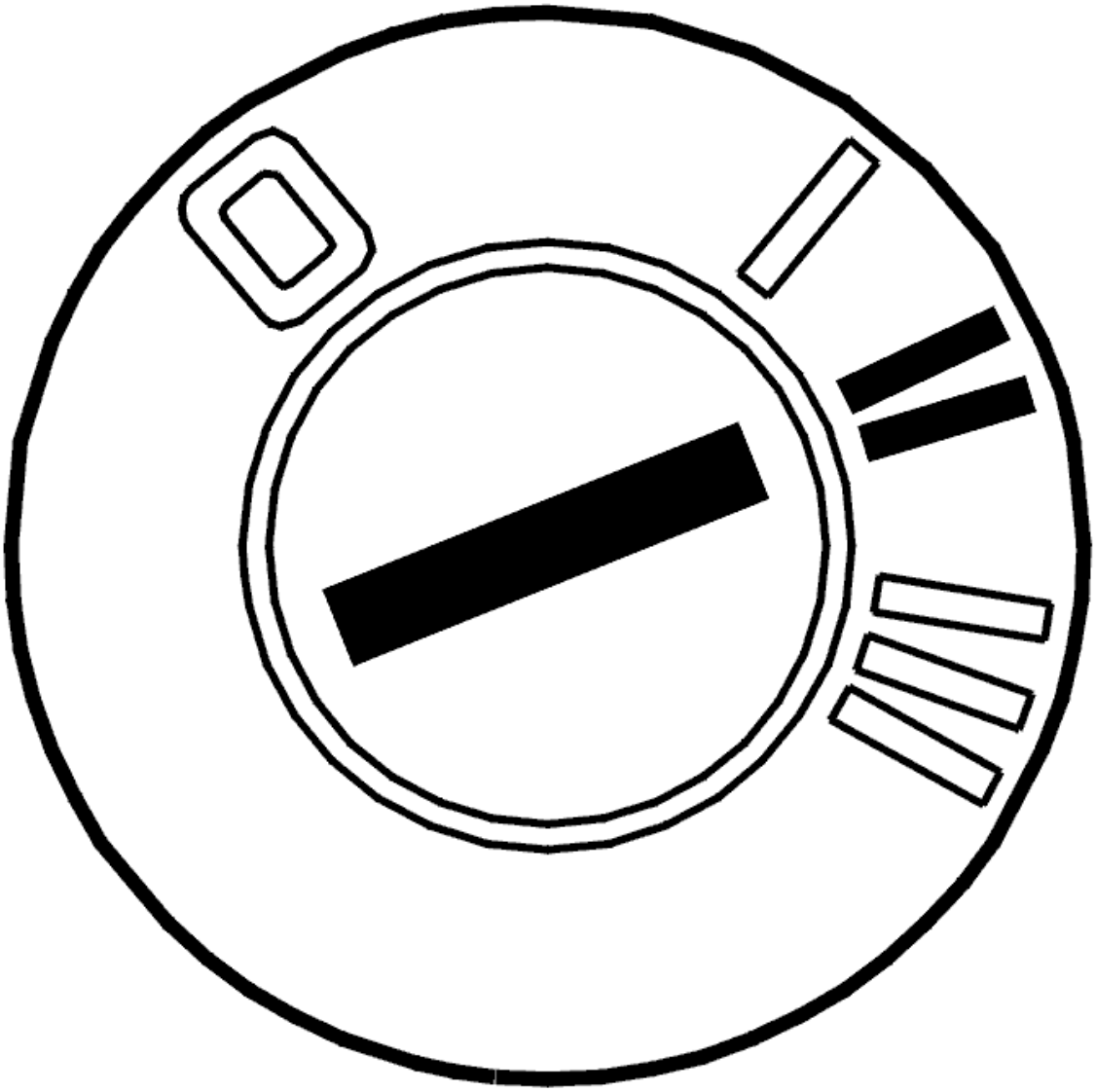

Fig. 455: Identifying Ignition ON
Courtesy of VOLVO CARS CORPORATION

- Ignition on.

  Check the power supply (12 V) to the accelerator pedal (AP) position sensor between accelerator pedal (AP) position sensor terminals #1 (cable harness side) and #3 (cable harness side).

  Check that the power supply is approximately 12 V with the ignition on.

  Remedy as necessary.

  Other information:

  - see **CONNECTING THE BREAKOUT BOX**
  - For 5 cylinder turbocharged engines -2004, see **SIGNAL DESCRIPTION**

- For 5 cylinder turbocharged engines 2005-, see **SIGNAL SPECIFICATION** .
- For 6 cylinder engines -2004, see **SIGNAL SPECIFICATION**
- For 6 cylinder engines 2005-, see **SIGNAL SPECIFICATION** .
- see **ACCELERATOR PEDAL (AP), REPLACING**
- see **CHECKING WIRING AND TERMINALS** .

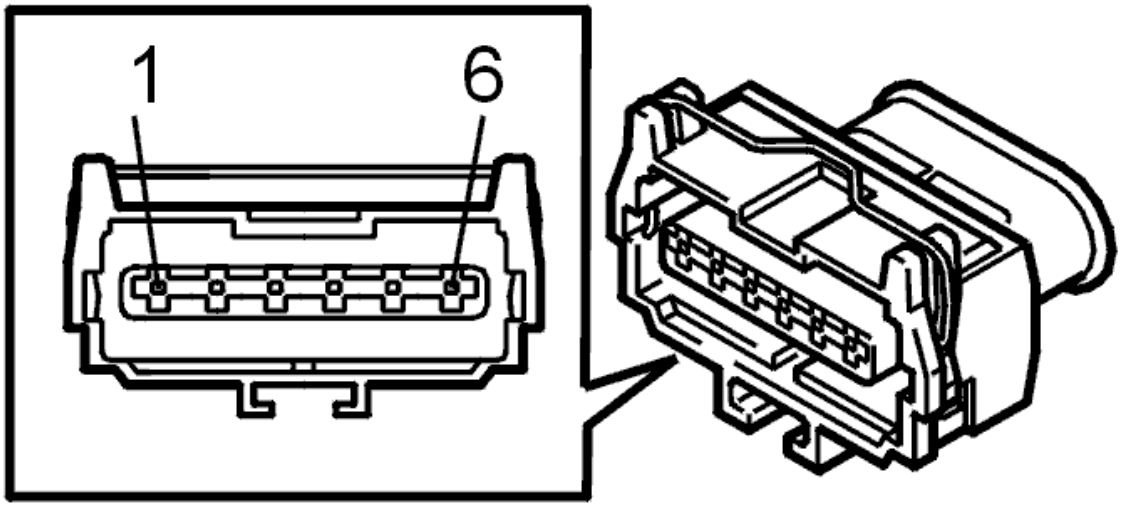

Fig. 456: Accelerator Pedal Position Sensor Connector Terminal Identification
Courtesy of VOLVO CARS CORPORATION

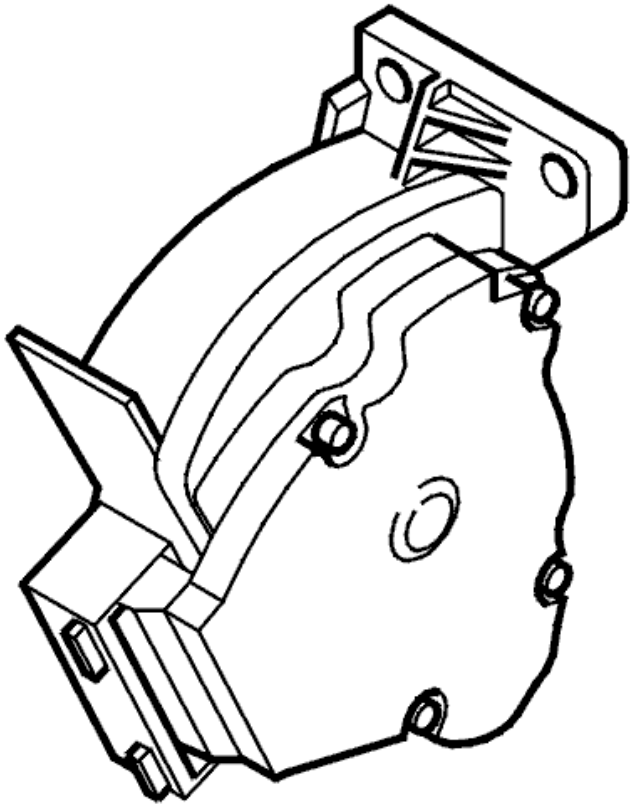

Fig. 457: Identifying Accelerator Pedal (AP) Position Sensor
Courtesy of VOLVO CARS CORPORATION

Is the power supply OK?

- **YES**

  Refer to **REPLACING THE COMPONENT**

- **NO**

  Refer to **CHECKING THE CONNECTORS AND CABLES**

REPLACING THE COMPONENT

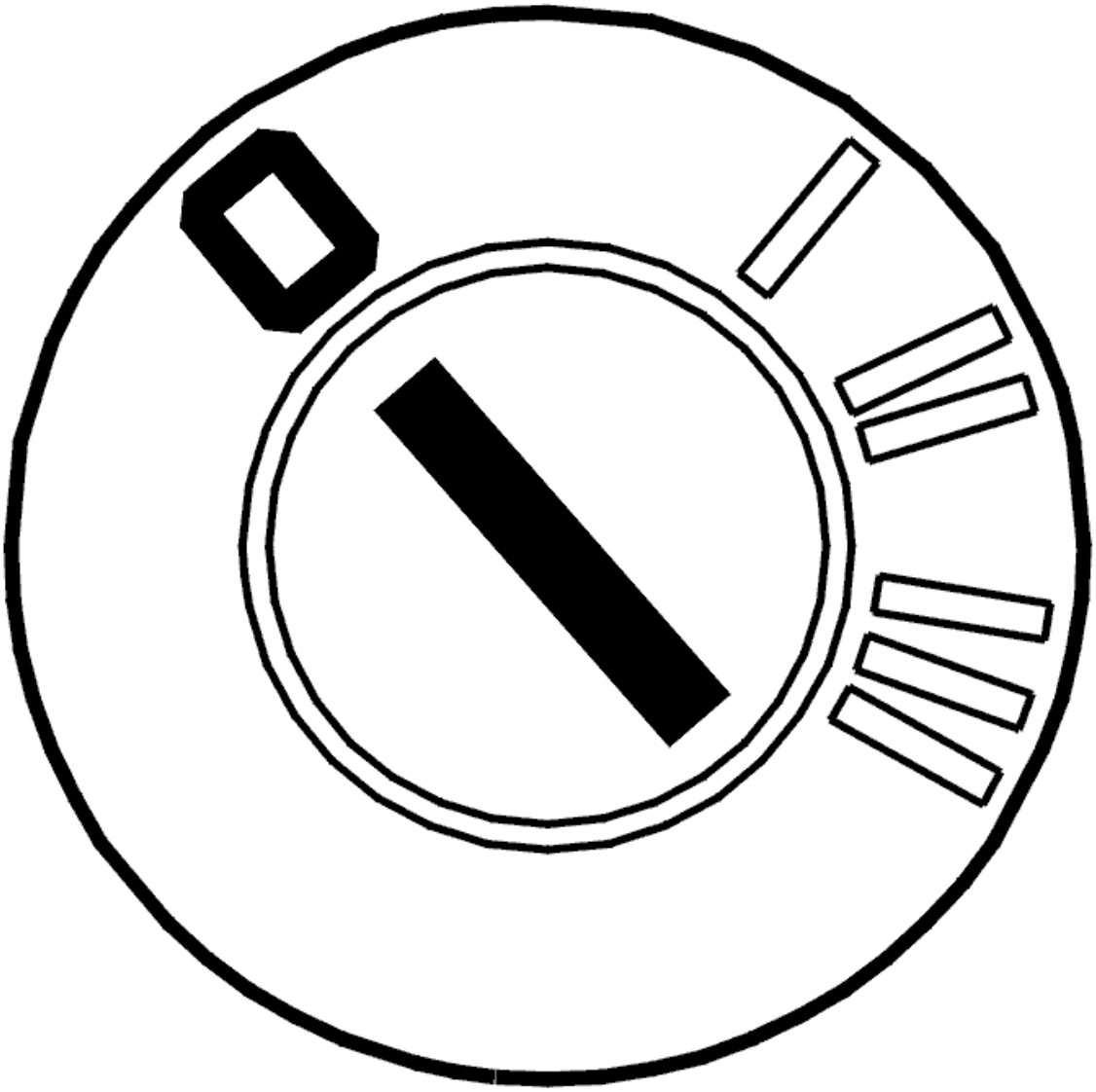

Fig. 458: Identifying Ignition OFF
Courtesy of VOLVO CARS CORPORATION

- Ignition off.

  Try a new accelerator pedal (AP) position sensor if no fault is found and the fault is permanent. See: **ACCELERATOR PEDAL (AP), REPLACING**

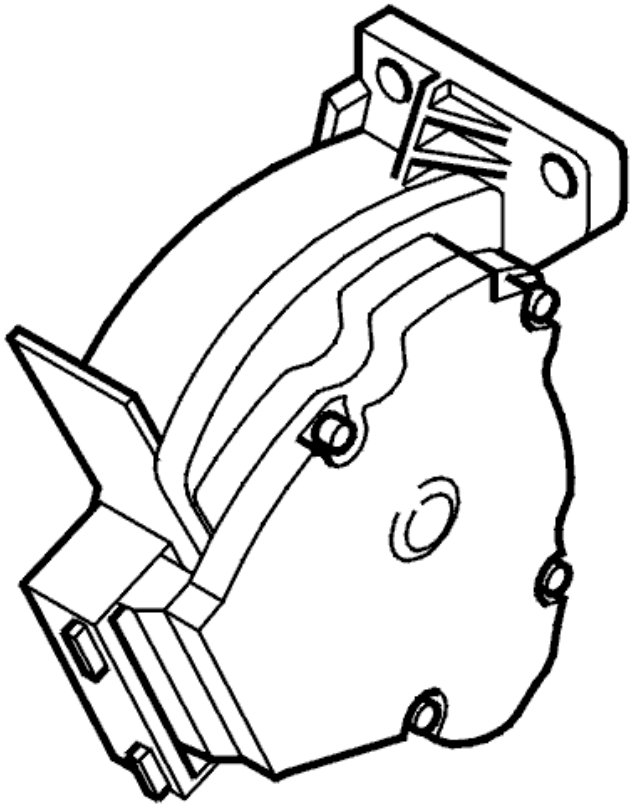

Fig. 459: Identifying Accelerator Pedal (AP) Position Sensor
Courtesy of VOLVO CARS CORPORATION

- **Continue**

  Refer to **VERIFICATION**

CHECKING THE CONNECTORS AND CABLES

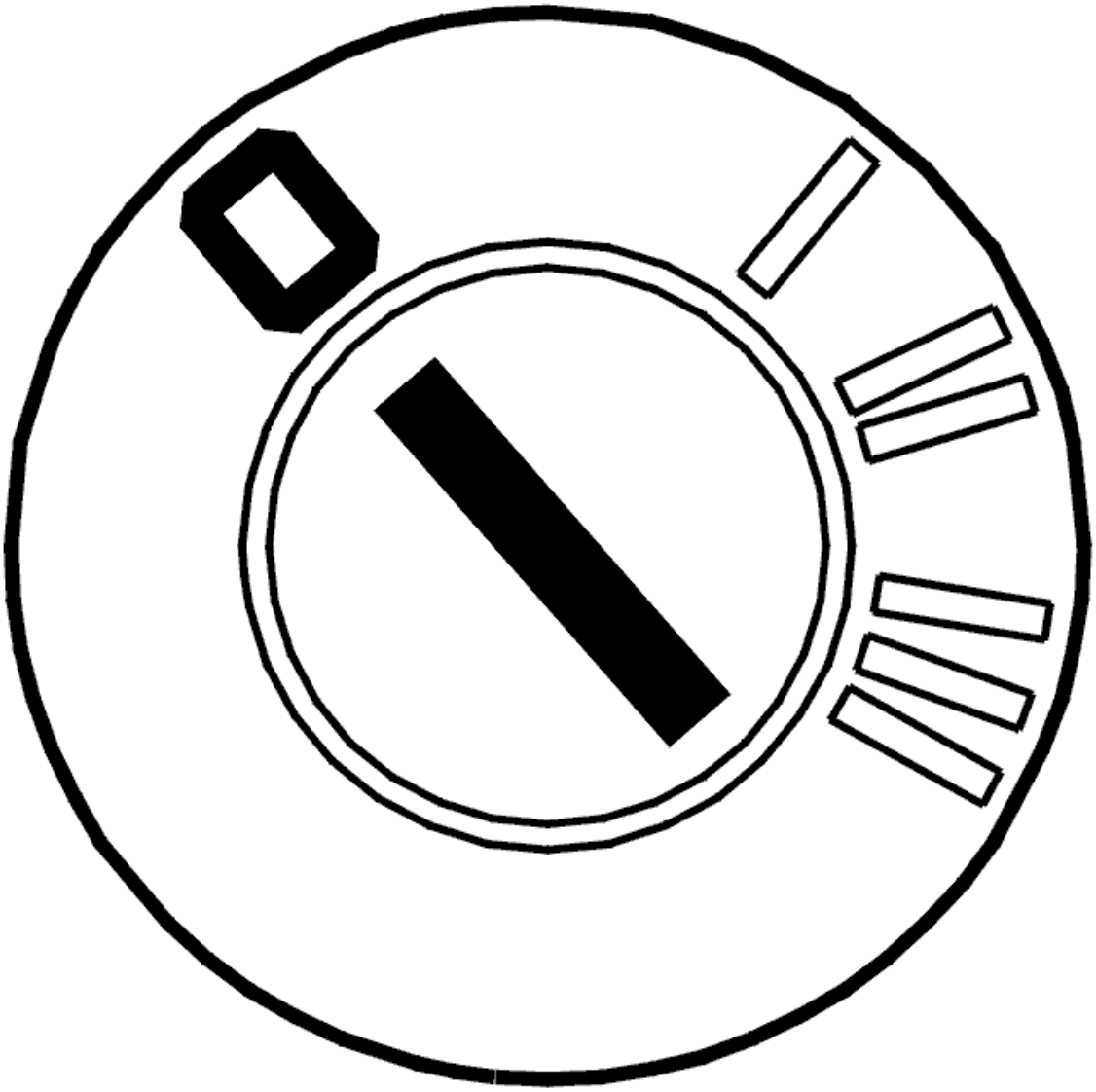

Fig. 460: Identifying Ignition OFF
Courtesy of VOLVO CARS CORPORATION

- Ignition off
- Check the accelerator pedal (AP) position sensor connector. Check for contact resistance and oxidation.

  Check the power supply cable (12 V) between accelerator pedal (AP) position sensor terminal #1 (cable harness side) and the relevant fuse for the circuit. Check for a short-circuit to ground. Check for an open-circuit. Check that the fuse for the circuit is not damaged.

  Check the ground lead for power supply (12 V) between accelerator pedal (AP) position sensor terminal #3 (cable harness side) and the relevant ground terminal. Check for contact resistance and oxidation. Check for an open-circuit.

  HINT: With the ignition on, the power supply to the accelerator pedal (AP) position sensor measured between accelerator pedal (AP) position sensor terminals #1 (cable harness side) and #3

(cable harness side) must be approximately 12 V.

HINT: With the ignition on, the power supply from the engine control module (ECM) must be approximately 5 V measured between accelerator pedal (AP) position sensor terminals #6 (cable harness side) and #4 (cable harness side).

Remedy as necessary.

Other information:

- see **CONNECTING THE BREAKOUT BOX**
- For 5 cylinder turbocharged engines -2004, see **SIGNAL DESCRIPTION**
- For 5 cylinder turbocharged engines 2005-, see **SIGNAL SPECIFICATION** .
- For 6 cylinder engines -2004, see **SIGNAL SPECIFICATION**
- For 6 cylinder engines 2005-, see **SIGNAL SPECIFICATION** .
- see **ACCELERATOR PEDAL (AP), REPLACING**
- see **CHECKING WIRING AND TERMINALS**

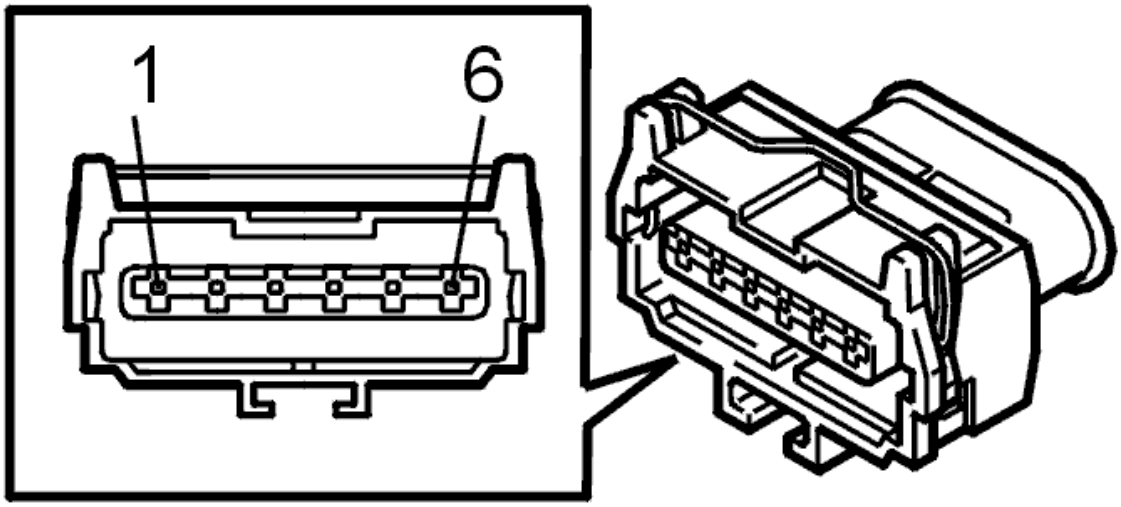

Fig. 461: Accelerator Pedal Position Sensor Connector Terminal Identification
Courtesy of VOLVO CARS CORPORATION

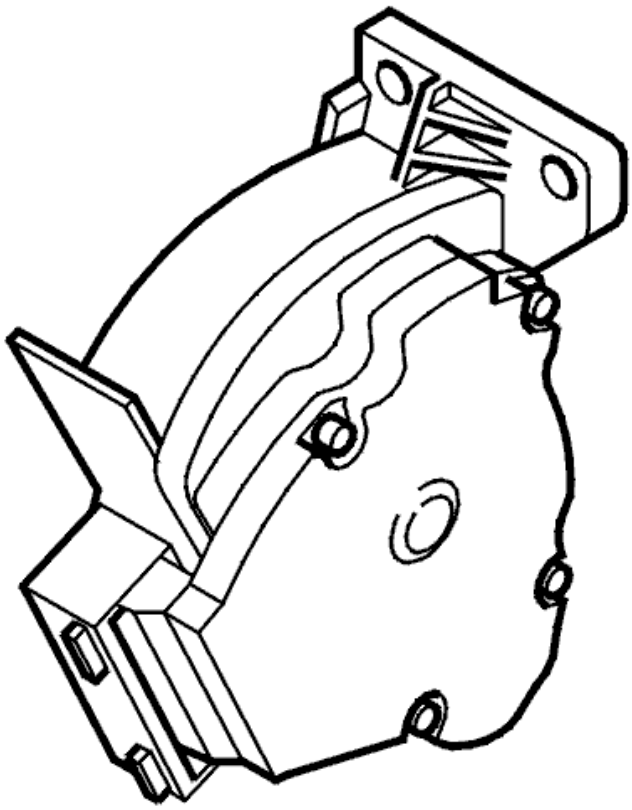

Fig. 462: Identifying Accelerator Pedal (AP) Position Sensor
Courtesy of VOLVO CARS CORPORATION

- **Continue**

  Refer to **REPLACING THE COMPONENT**

VERIFICATION

VERIFICATION

HINT: After carrying out the repair, check that the fault has been remedied.

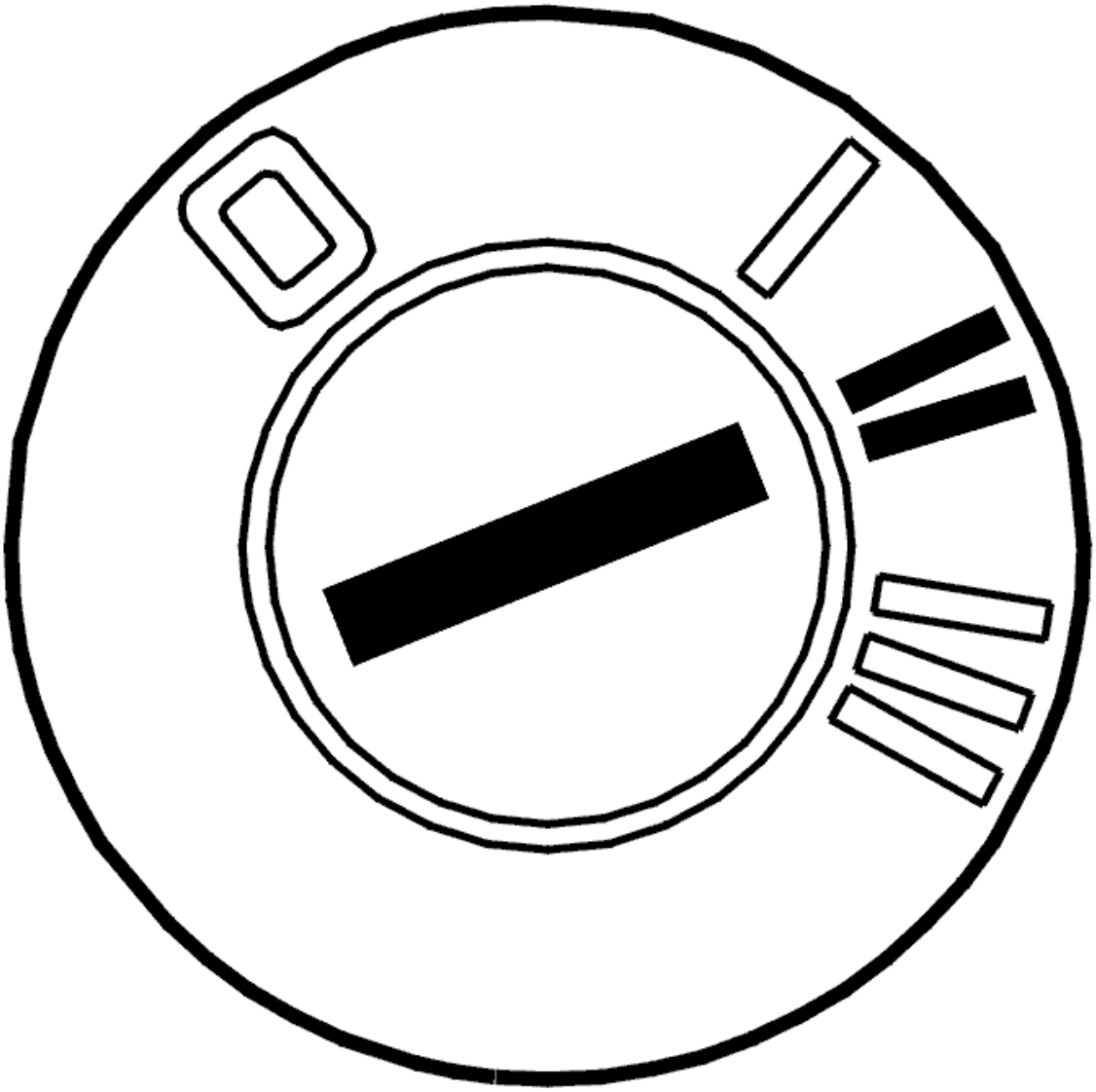

Fig. 463: Identifying Ignition ON
Courtesy of VOLVO CARS CORPORATION

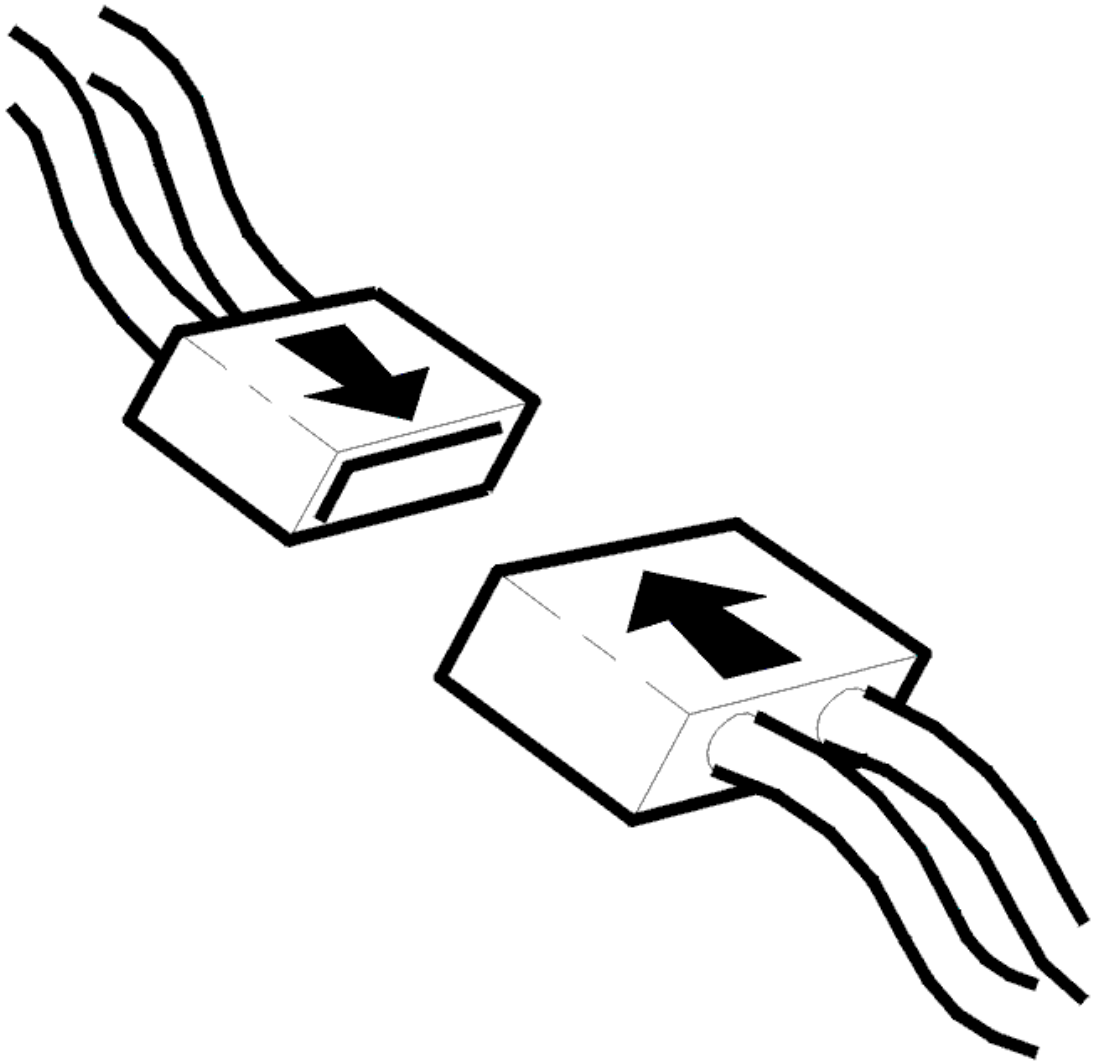

Fig. 464: Connecting Connector
Courtesy of VOLVO CARS CORPORATION

- Ignition off
- Reconnect the connectors, reinstall components etc.
- Ignition on
- Read off the movement of the accelerator pedal by carefully depressing and releasing the accelerator pedal (AP).

  Check that the value changes with accelerator pedal movement. The value must be approximately 0.4 V when the accelerator pedal (AP) is unaffected and approximately 4 V when the accelerator pedal (AP) is fully depressed.

  The fault has been remedied if the values are OK.

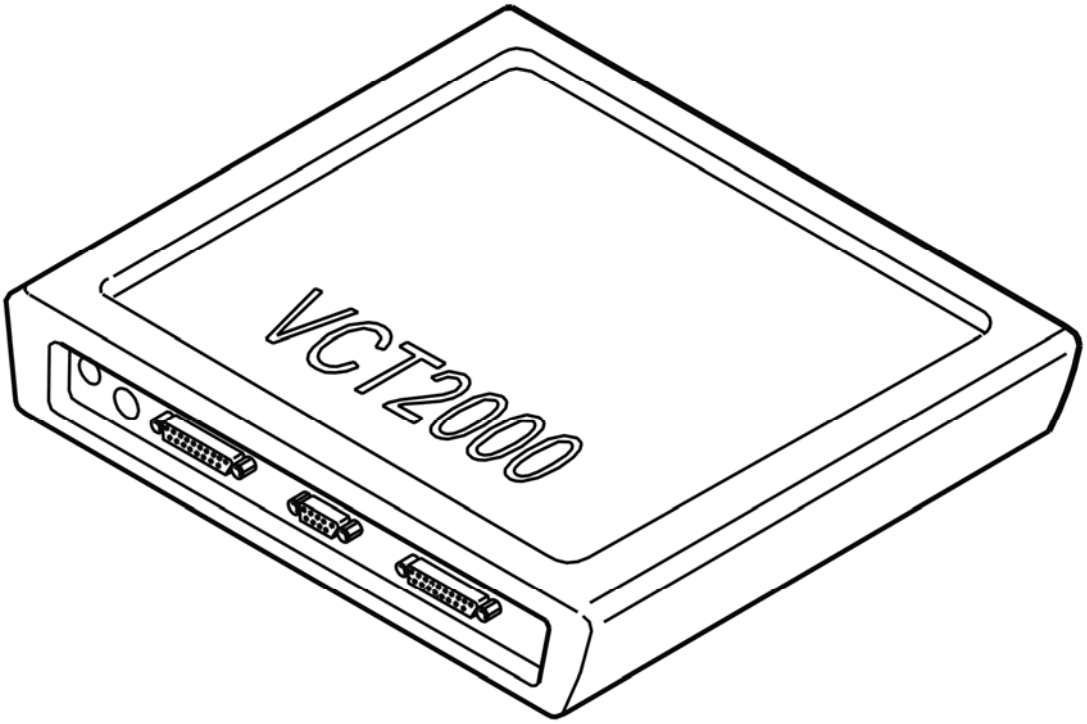

Fig. 465: Identifying VCT2000 Diagnostic Tool Symbol In VIDA
Courtesy of VOLVO CARS CORPORATION

Are these values OK?

- **YES**

  VERIFIED: Troubleshooting has been completed.

- **NO**

  Refer to **INFORMATION**

INFORMATION

FAULT-TRACING INFORMATION

The fault should have been detected and remedied. As this is not the case fault-tracing has failed.

Exit fault-tracing for this diagnostic trouble code (DTC) or make another attempt.

ECM-940C: ACCELERATOR PEDAL (AP) POSITION SENSOR, ANALOG SIGNAL. SIGNAL TOO HIGH (B6294T; 2005-2006)

DIAGNOSTIC TROUBLE CODE (DTC) INFORMATION ECM-940C

see **DIAGNOSTIC TROUBLE CODE (DTC) INFORMATION ECM-940C**

SIGNAL TOO HIGH / SIGNAL TOO LOW

see **SIGNAL TOO HIGH / SIGNAL TOO LOW**

ECM-940D: ACCELERATOR PEDAL (AP) POSITION SENSOR, ANALOG SIGNAL. SIGNAL TOO LOW (B5254T2; 2005-2007)

DIAGNOSTIC TROUBLE CODE (DTC) INFORMATION ECM-940D

Condition

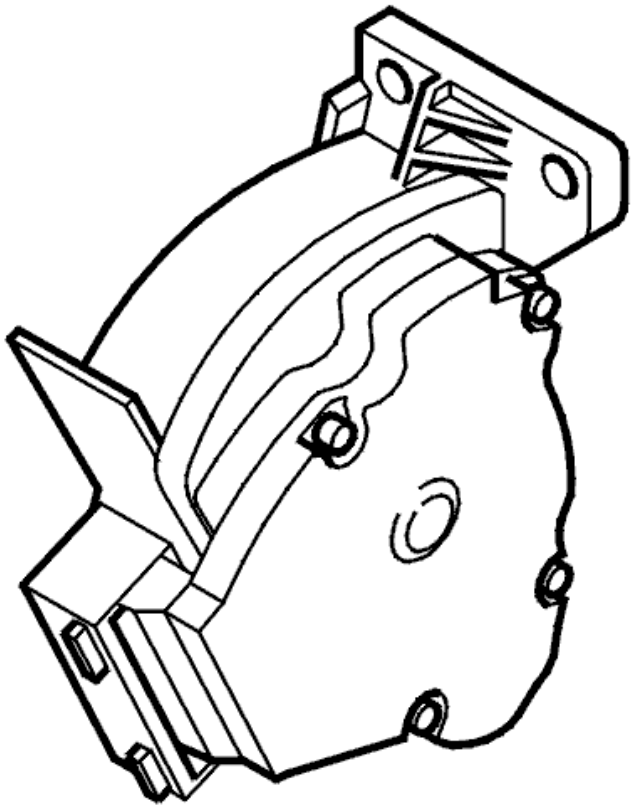

Fig. 466: Identifying Accelerator Pedal (AP) Position Sensor
Courtesy of VOLVO CARS CORPORATION

The diagnostic trouble code (DTC) is stored if the engine control module (ECM) registers a fault in the analog signal from the accelerator pedal (AP) position sensor.

The diagnostic trouble code (DTC) can be diagnosed when the ignition is switched on.

Substitute Value

- The accelerator pedal (AP) is disabled at the same time as the brake pedal is pressed.

Possible Source

- Contact resistance or oxidation in the terminals between the engine control module (ECM) and the accelerator pedal (AP) position sensor
- Open-circuit in the power supply (12 V) for the accelerator pedal (AP) position sensor
- Open-circuit in the power supply (5 V) for the analog signal
- Open-circuit in the signal ground cable for the analog signal
- Open-circuit or short-circuit to ground in the signal cable
- Damaged accelerator pedal (AP) position sensor.

Fault symptom[s]

- Poor accelerator pedal (AP) response.

SIGNAL TOO HIGH / SIGNAL TOO LOW

see **SIGNAL TOO HIGH / SIGNAL TOO LOW**

ECM-940D: ACCELERATOR PEDAL (AP) POSITION SENSOR, ANALOG SIGNAL. SIGNAL TOO LOW (B6294T; 2005-2006)

DIAGNOSTIC TROUBLE CODE (DTC) INFORMATION ECM-940D

see **DIAGNOSTIC TROUBLE CODE (DTC) INFORMATION ECM-940D**

SIGNAL TOO HIGH / SIGNAL TOO LOW

see **SIGNAL TOO HIGH / SIGNAL TOO LOW**

ECM-941C: ACCELERATOR PEDAL (AP) POSITION SENSOR, DIGITAL SIGNAL. SIGNAL TOO HIGH (B5254T2; 2005-2007)

DIAGNOSTIC TROUBLE CODE (DTC) INFORMATION ECM-941C

Condition

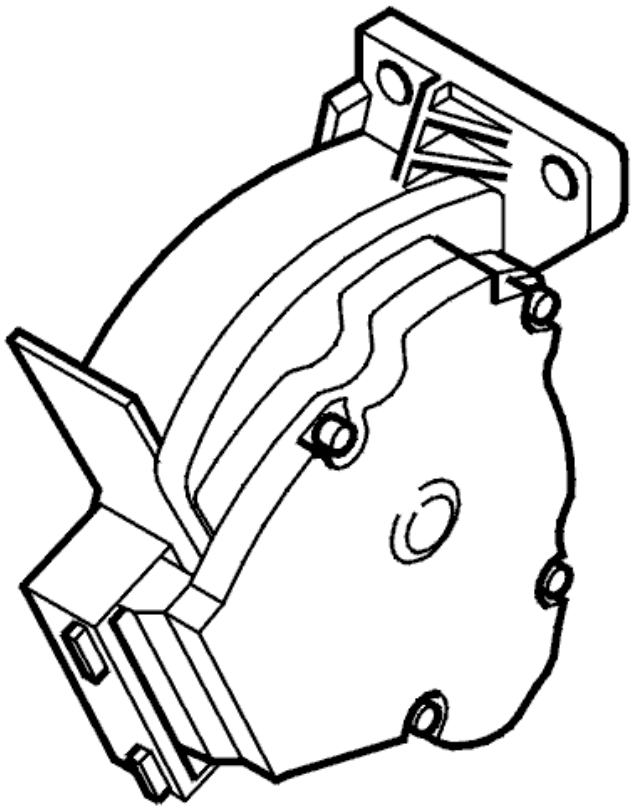

Fig. 467: Identifying Accelerator Pedal (AP) Position Sensor
Courtesy of VOLVO CARS CORPORATION

The diagnostic trouble code (DTC) is stored if the engine control module (ECM) registers a fault in the PWM-signal from the accelerator pedal (AP) position sensor.

The diagnostic trouble code (DTC) can be diagnosed when the ignition is switched on.

Substitute Value

- The accelerator pedal (AP) is disabled at the same time as the brake pedal is pressed.

Possible Source

- Short-circuit to supply voltage in the signal cable
- Damaged accelerator pedal (AP) position sensor.

Fault symptom[s]

- Poor accelerator pedal (AP) response.

SIGNAL TOO HIGH

CHECKING THE STATUS

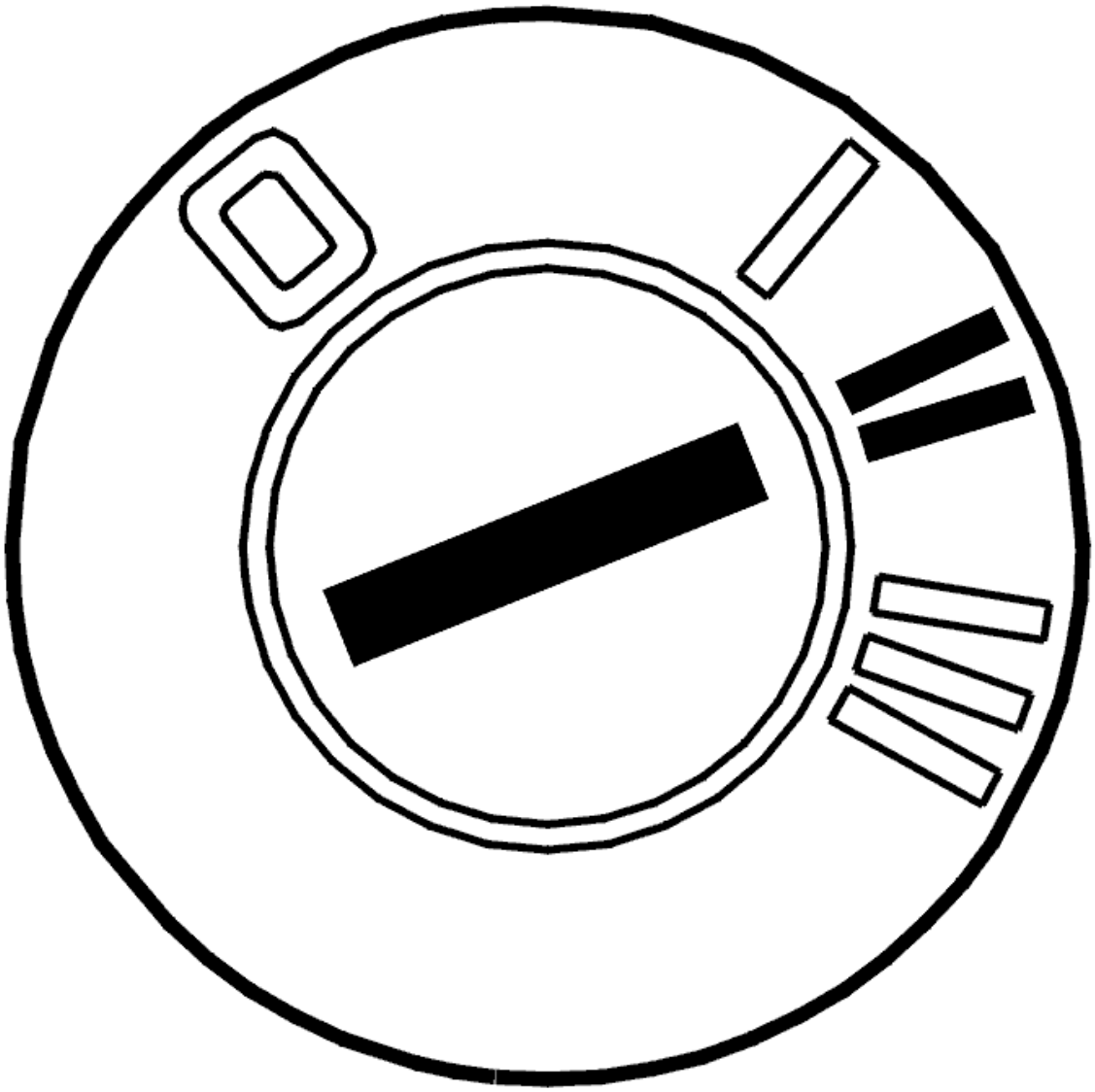

Fig. 468: Identifying Ignition ON
Courtesy of VOLVO CARS CORPORATION

- Start the engine
- Ignition off
- Ignition on
- Read off the movement of the accelerator pedal by carefully depressing and releasing the accelerator pedal (AP).

  Check that the value changes with accelerator pedal movement. The value must be between approximately 0.4 V when the accelerator pedal (AP) is unaffected and approximately 4 V when the accelerator pedal (AP) is fully depressed.

The fault is intermittent at the moment if the values are OK.

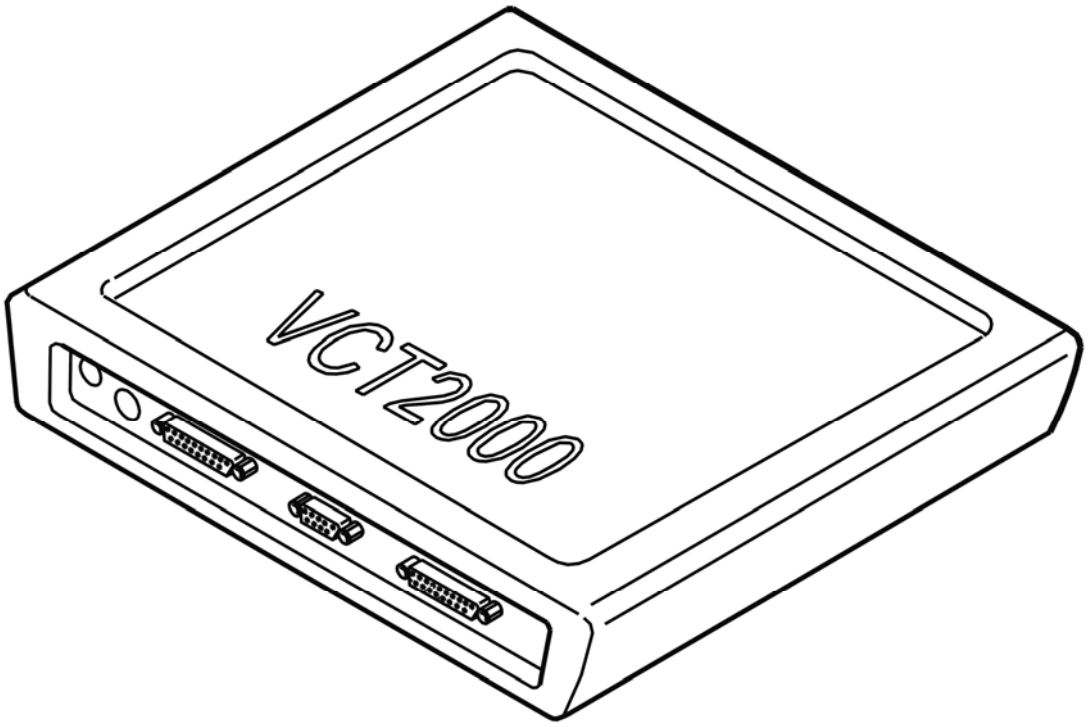

Fig. 469: Identifying VCT2000 Diagnostic Tool Symbol In VIDA
Courtesy of VOLVO CARS CORPORATION

- **Continue**

  Refer to **CHECKING THE POWER SUPPLY**

CHECKING THE POWER SUPPLY

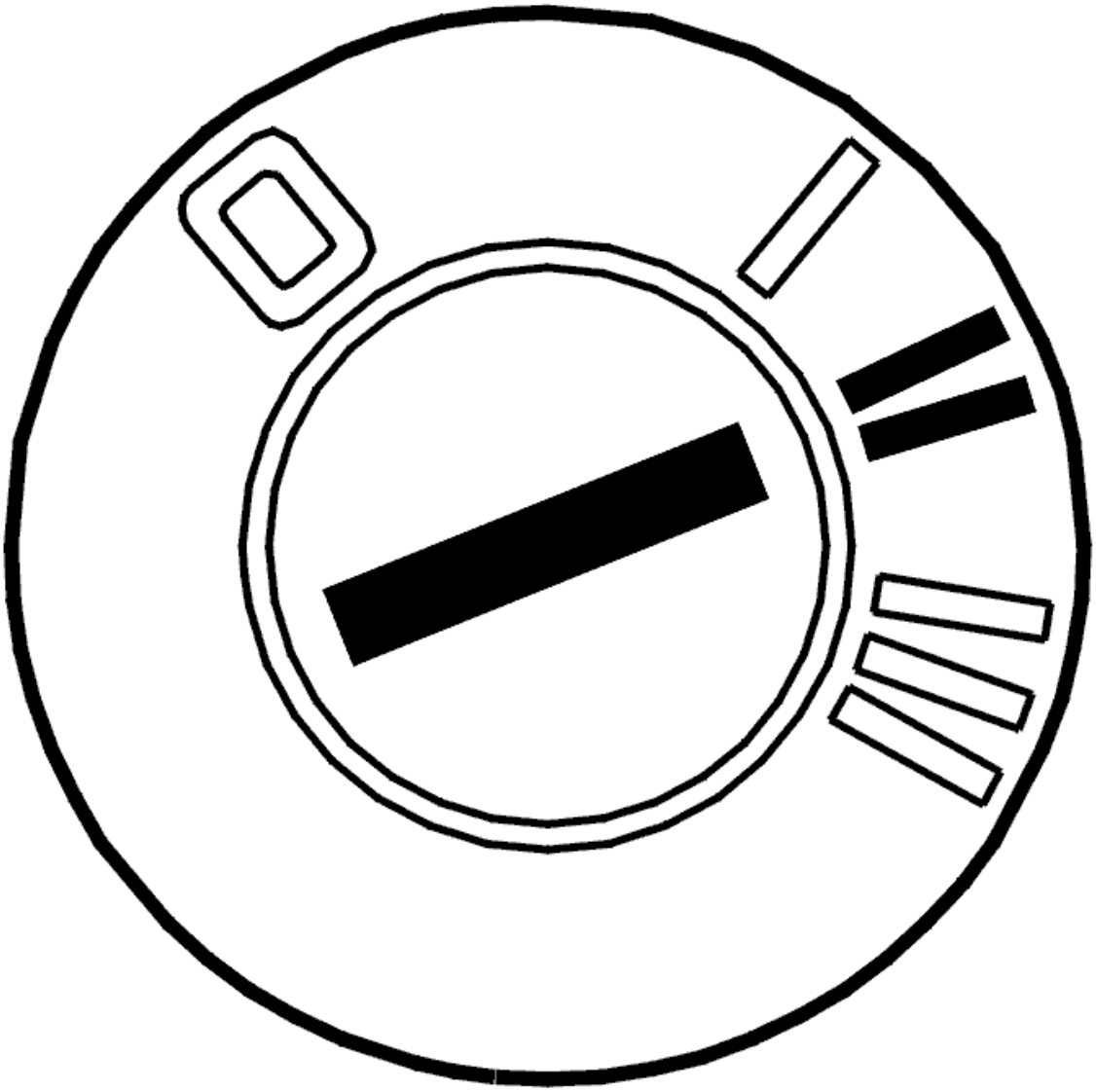

Fig. 470: Identifying Ignition ON
Courtesy of VOLVO CARS CORPORATION

- Ignition on.

  Check the power supply (12 V) to the accelerator pedal (AP) position sensor between accelerator pedal (AP) position sensor terminals #1 (wiring side) and #3 (wiring side).

  Check that the power supply is approximately 12 V with the ignition on

  Other information:

  - see **CHECKING WIRING AND TERMINALS**
  - To connect the breakout box, see **CONNECTING THE BREAKOUT BOX**
  - For 5 cylinder turbocharged engines -2004, see **SIGNAL DESCRIPTION**

- For 5 cylinder turbocharged engines 2005-, see **SIGNAL SPECIFICATION** .
- For 6 cylinder engines -2004, see **SIGNAL SPECIFICATION**
- For 6 cylinder engines 2005-, see **SIGNAL SPECIFICATION** .
- To access and replace the accelerator pedal (AP) position sensor, see **ACCELERATOR PEDAL (AP), REPLACING** .

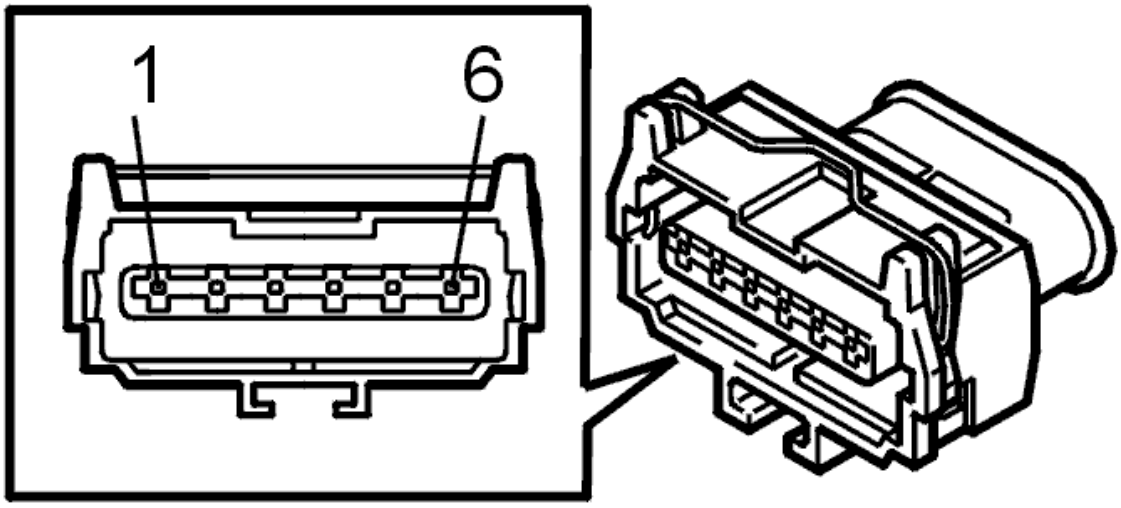

Fig. 471: Accelerator Pedal Position Sensor Connector Terminal Identification
Courtesy of VOLVO CARS CORPORATION

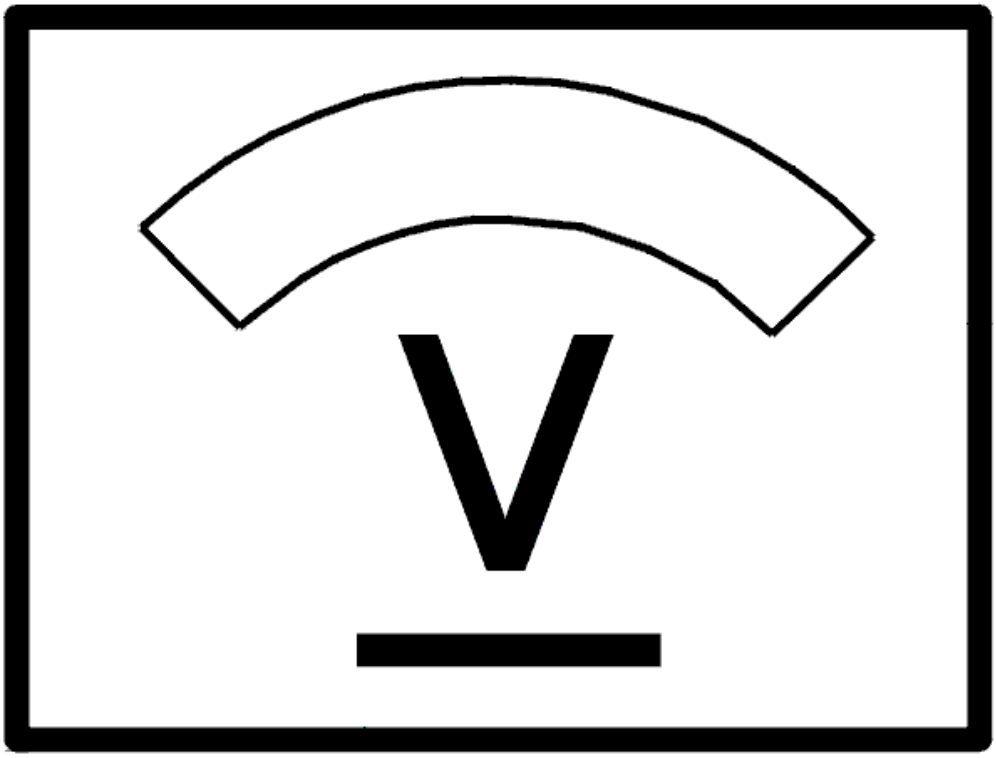

Fig. 472: Identifying Voltage Display
Courtesy of VOLVO CARS CORPORATION

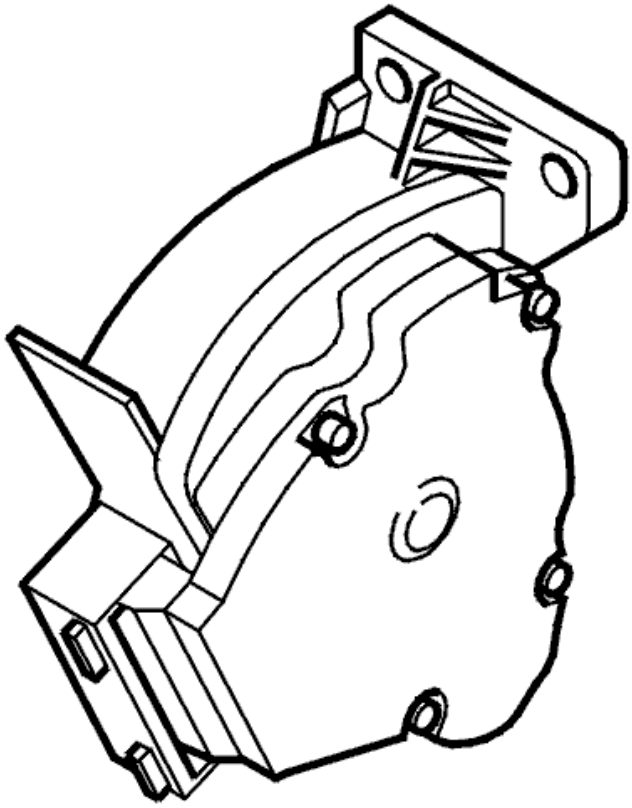

Fig. 473: Identifying Accelerator Pedal (AP) Position Sensor
Courtesy of VOLVO CARS CORPORATION

Is the power supply OK?

- **YES**

  Refer to **CHECKING THE CONNECTORS AND CABLES**

- **NO**

  Refer to **CHECKING COMPONENTS AND WIRING**

CHECKING THE CONNECTORS AND CABLES

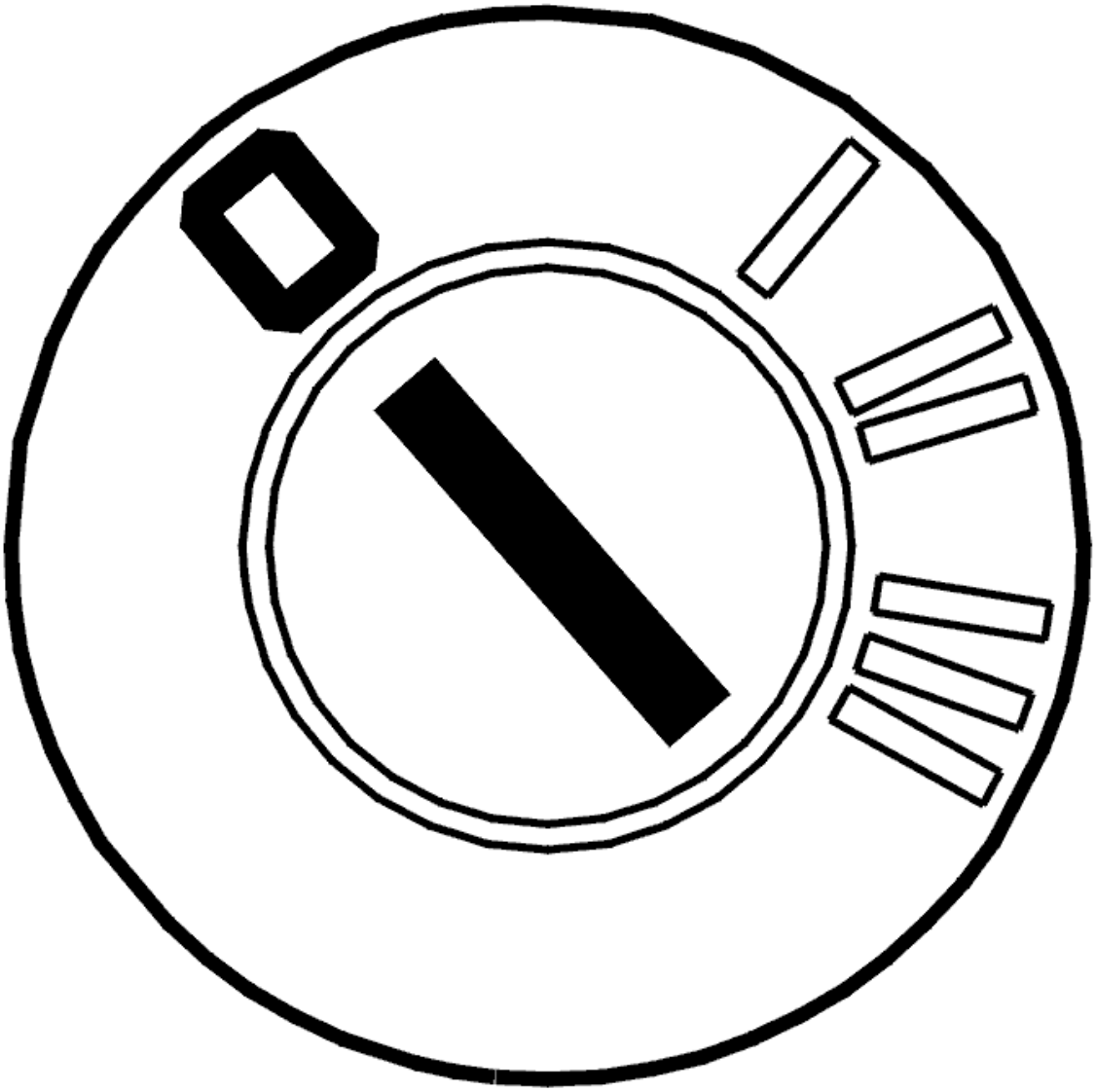

Fig. 474: Identifying Ignition OFF
Courtesy of VOLVO CARS CORPORATION

- Ignition off.

  Check the signal cable between engine control module (ECM) terminal #B25 (#B35) and accelerator pedal (AP) position sensor terminal #2. Check for a short-circuit to supply voltage.

  Try a new accelerator pedal (AP) position sensor if no fault is found and the fault is permanent.

  Remedy as necessary.

  Other information:

  - see **CHECKING WIRING AND TERMINALS**
  - To connect the breakout box, see **CONNECTING THE BREAKOUT BOX**

- For 5 cylinder turbocharged engines -2004, see **SIGNAL DESCRIPTION**
- For 5 cylinder turbocharged engines 2005-, see **SIGNAL SPECIFICATION** .
- For 6 cylinder engines -2004, see **SIGNAL SPECIFICATION**
- For 6 cylinder engines 2005-, see **SIGNAL SPECIFICATION** .
- To access and replace the accelerator pedal (AP) position sensor, see **ACCELERATOR PEDAL (AP), REPLACING** .

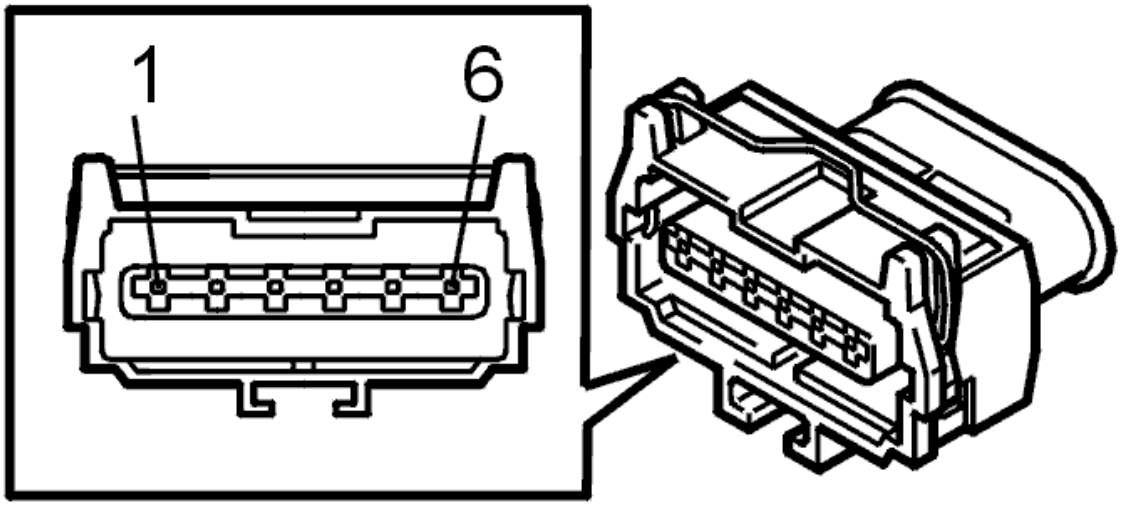

Fig. 475: Accelerator Pedal Position Sensor Connector Terminal Identification
Courtesy of VOLVO CARS CORPORATION

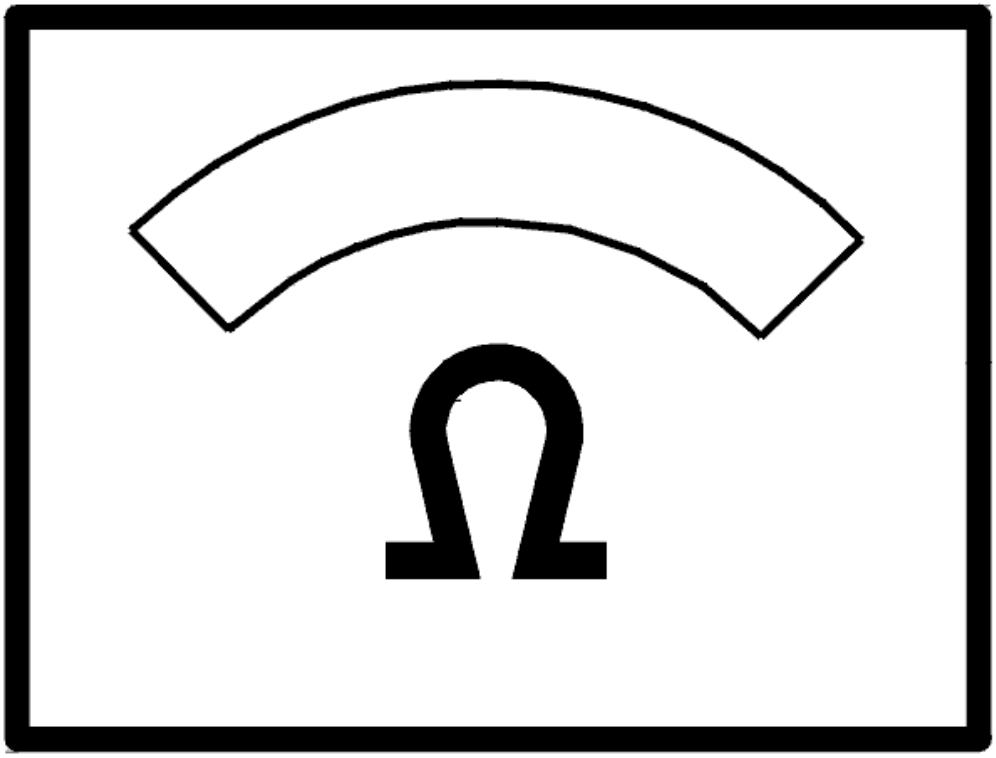

Fig. 476: Identifying Ohm Meter
Courtesy of VOLVO CARS CORPORATION

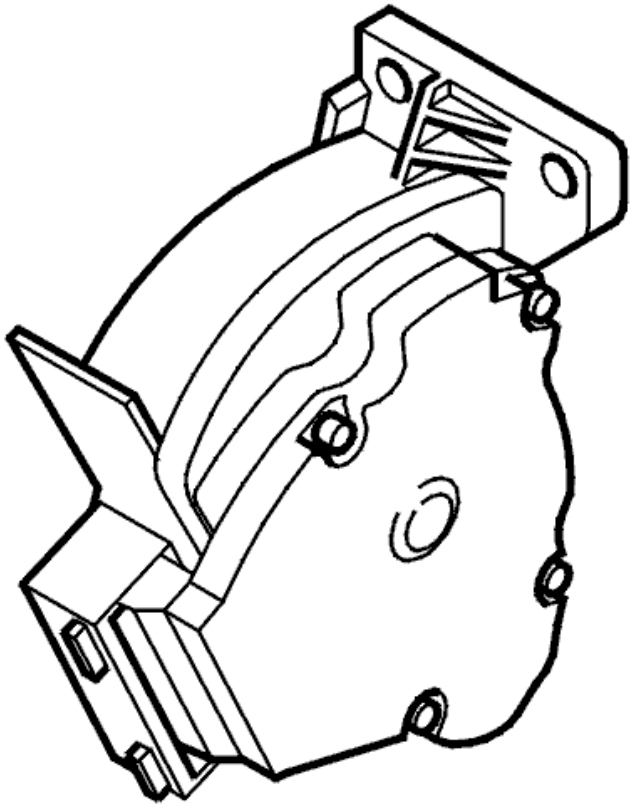

Fig. 477: Identifying Accelerator Pedal (AP) Position Sensor
Courtesy of VOLVO CARS CORPORATION

- **Continue**

  Refer to **VERIFICATION**

CHECKING COMPONENTS AND WIRING

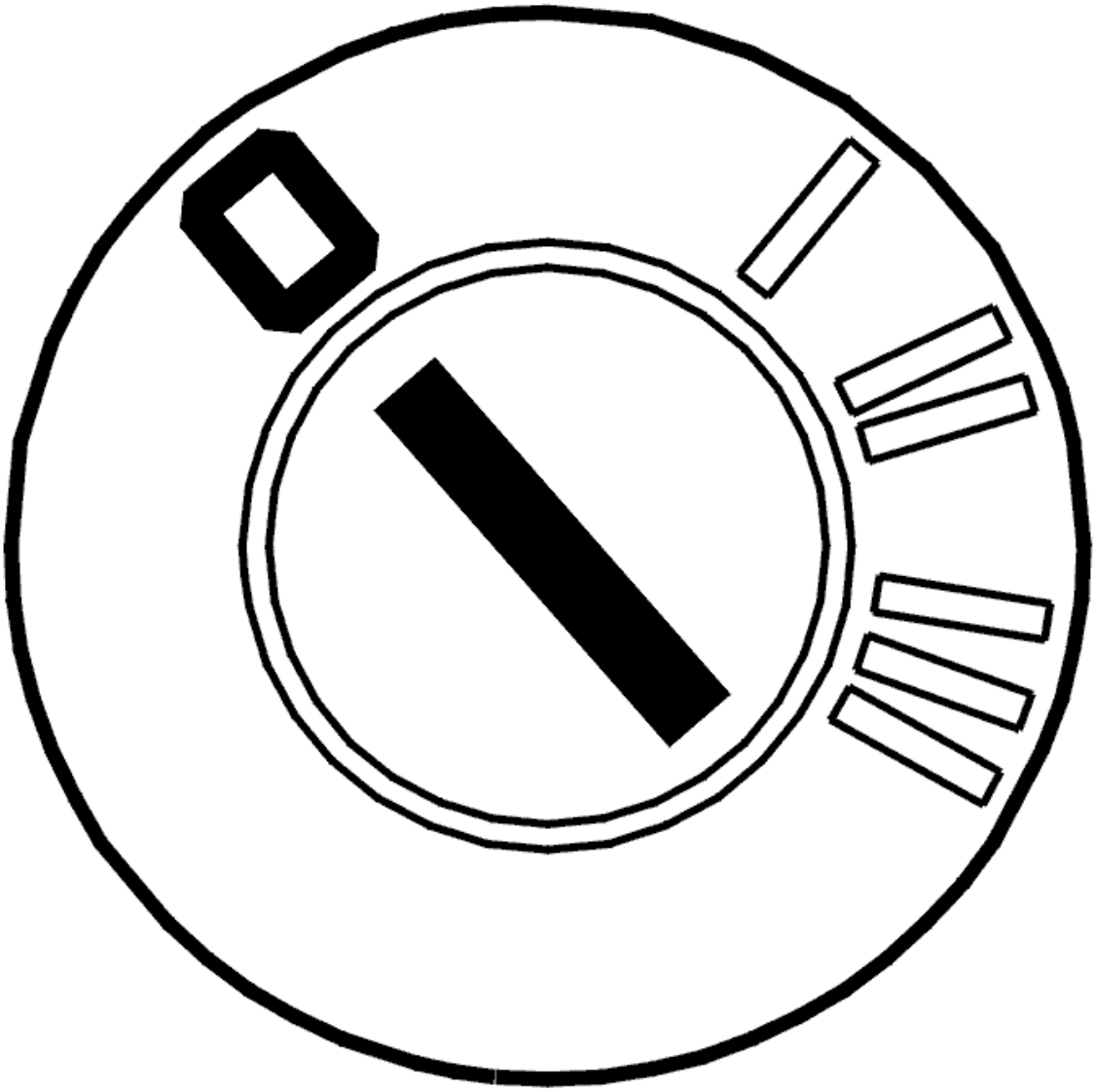

Fig. 478: Identifying Ignition OFF
Courtesy of VOLVO CARS CORPORATION

- Ignition off
- Check the accelerator pedal (AP) position sensor connector. Check for contact resistance and oxidation.

  Check the power supply cable (12 V) between accelerator pedal (AP) position sensor terminal #1 (wiring side) and the relevant fuse for the circuit. Check for a short-circuit to ground. Check for an open-circuit. Check that the fuse for the circuit has not blown.

  Check the ground lead for power supply (12 V) between accelerator pedal (AP) position sensor terminal #3 (wiring side) and the relevant ground terminal. Check for contact resistance and oxidation. Check for an open-circuit.

  HINT: With the ignition on, the power supply to the accelerator pedal (AP) position sensor must be approximately 12 V measured between accelerator pedal (AP) position sensor terminals #1 (wiring

side) and #3 (wiring side).

Remedy as necessary.

Other information:

- see **CHECKING WIRING AND TERMINALS**
- To connect the breakout box, see **CONNECTING THE BREAKOUT BOX**
- For 5 cylinder turbocharged engines -2004, see **SIGNAL DESCRIPTION**
- For 5 cylinder turbocharged engines 2005-, see **SIGNAL SPECIFICATION** .
- For 6 cylinder engines -2004, see **SIGNAL SPECIFICATION**
- For 6 cylinder engines 2005-, see **SIGNAL SPECIFICATION** .
- To access and replace the accelerator pedal (AP) position sensor, see **ACCELERATOR PEDAL (AP), REPLACING** .

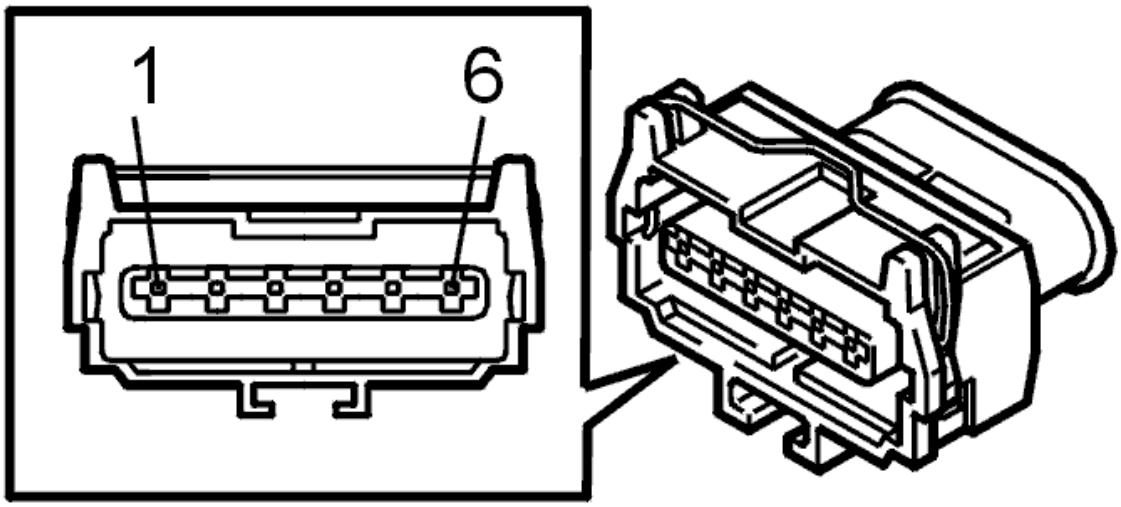

Fig. 479: Accelerator Pedal Position Sensor Connector Terminal Identification
Courtesy of VOLVO CARS CORPORATION

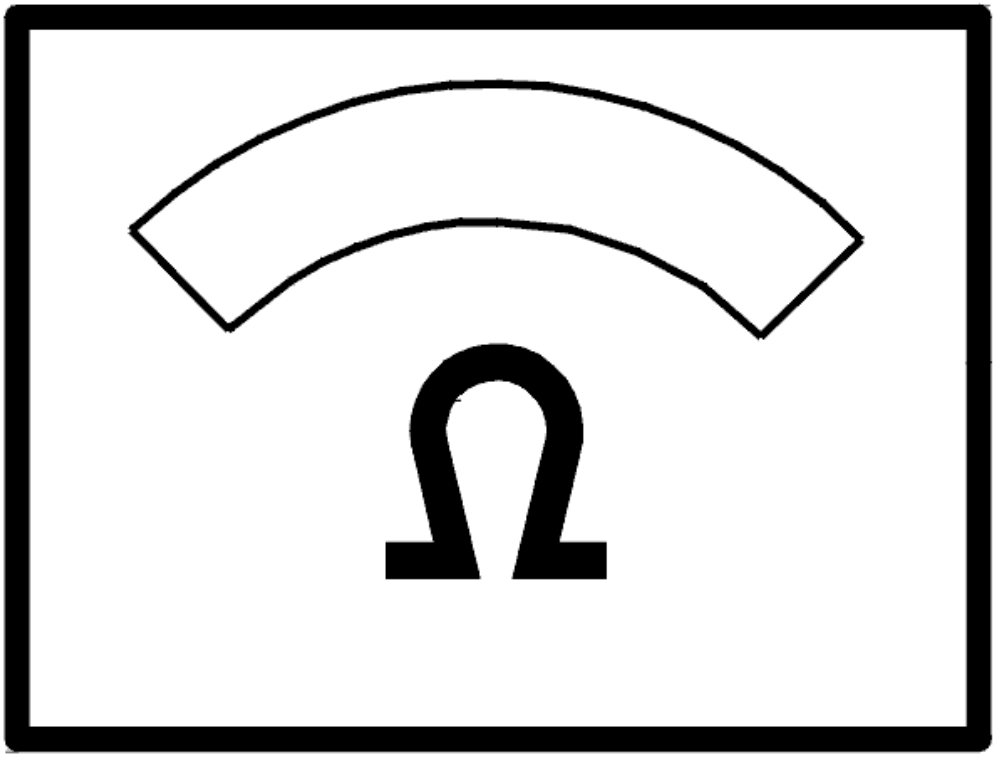

Fig. 480: Identifying Ohm Meter
Courtesy of VOLVO CARS CORPORATION

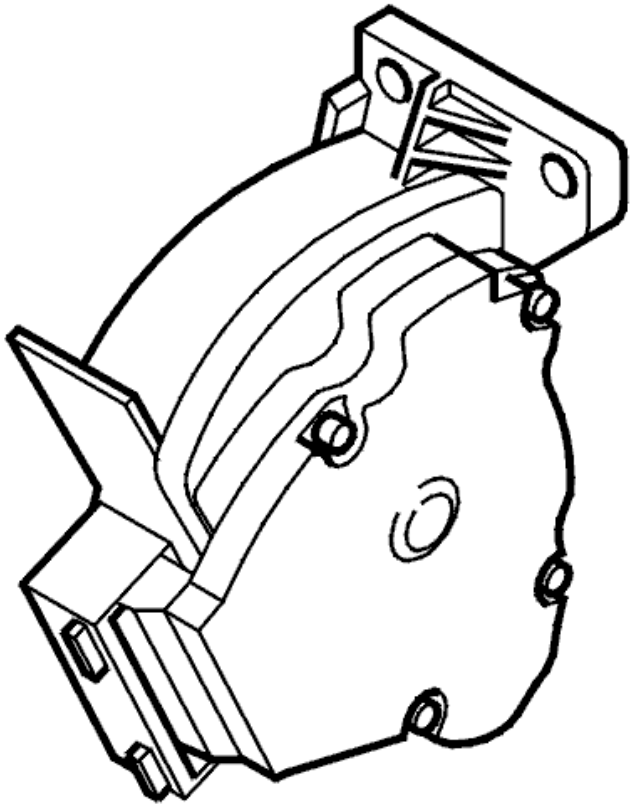

Fig. 481: Identifying Accelerator Pedal (AP) Position Sensor
Courtesy of VOLVO CARS CORPORATION

- **Continue**

  Refer to **CHECKING THE CONNECTORS AND CABLES**

VERIFICATION

VERIFICATION

HINT: After carrying out the repair, check that the fault has been remedied.

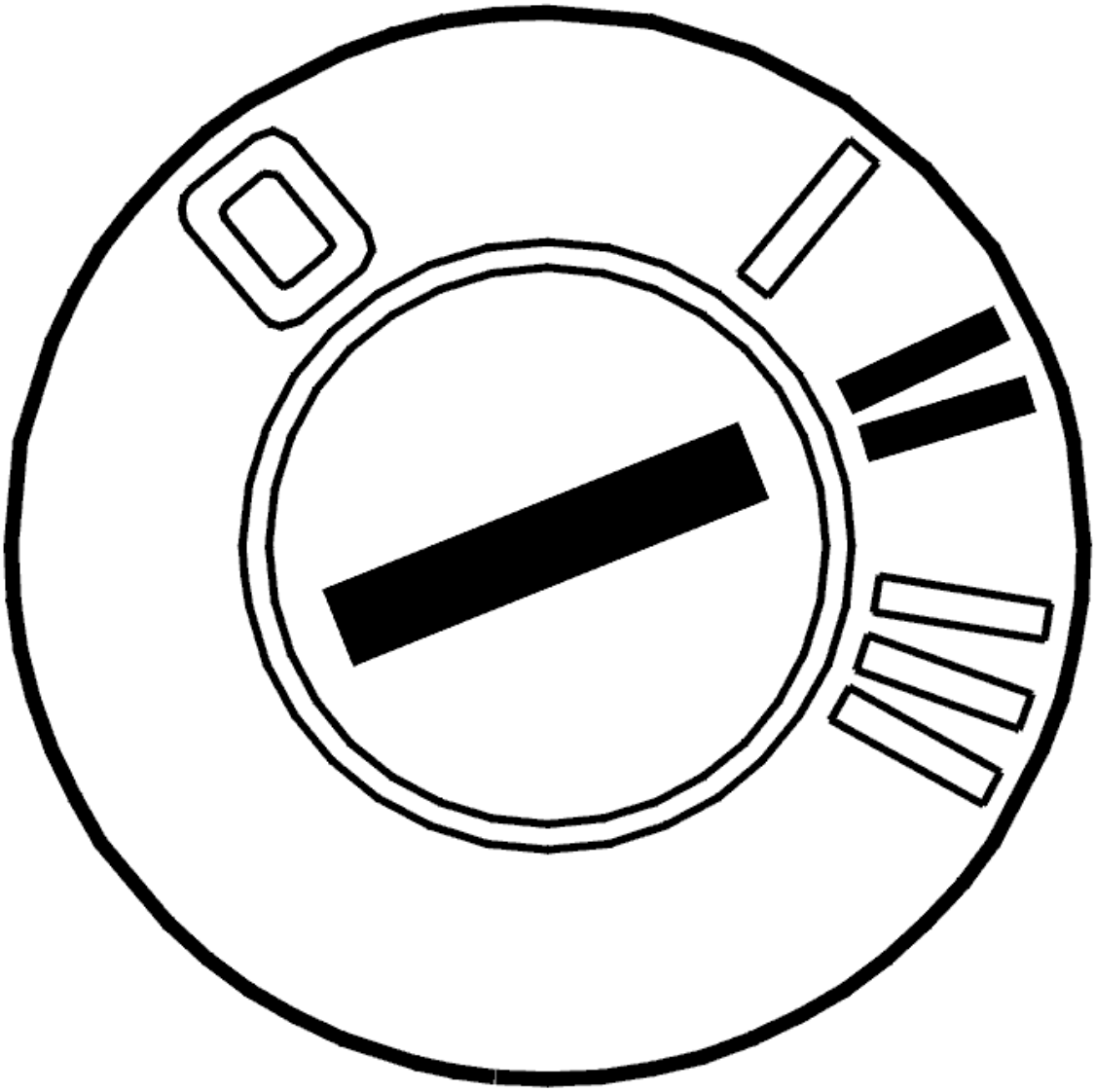

Fig. 482: Identifying Ignition ON
Courtesy of VOLVO CARS CORPORATION

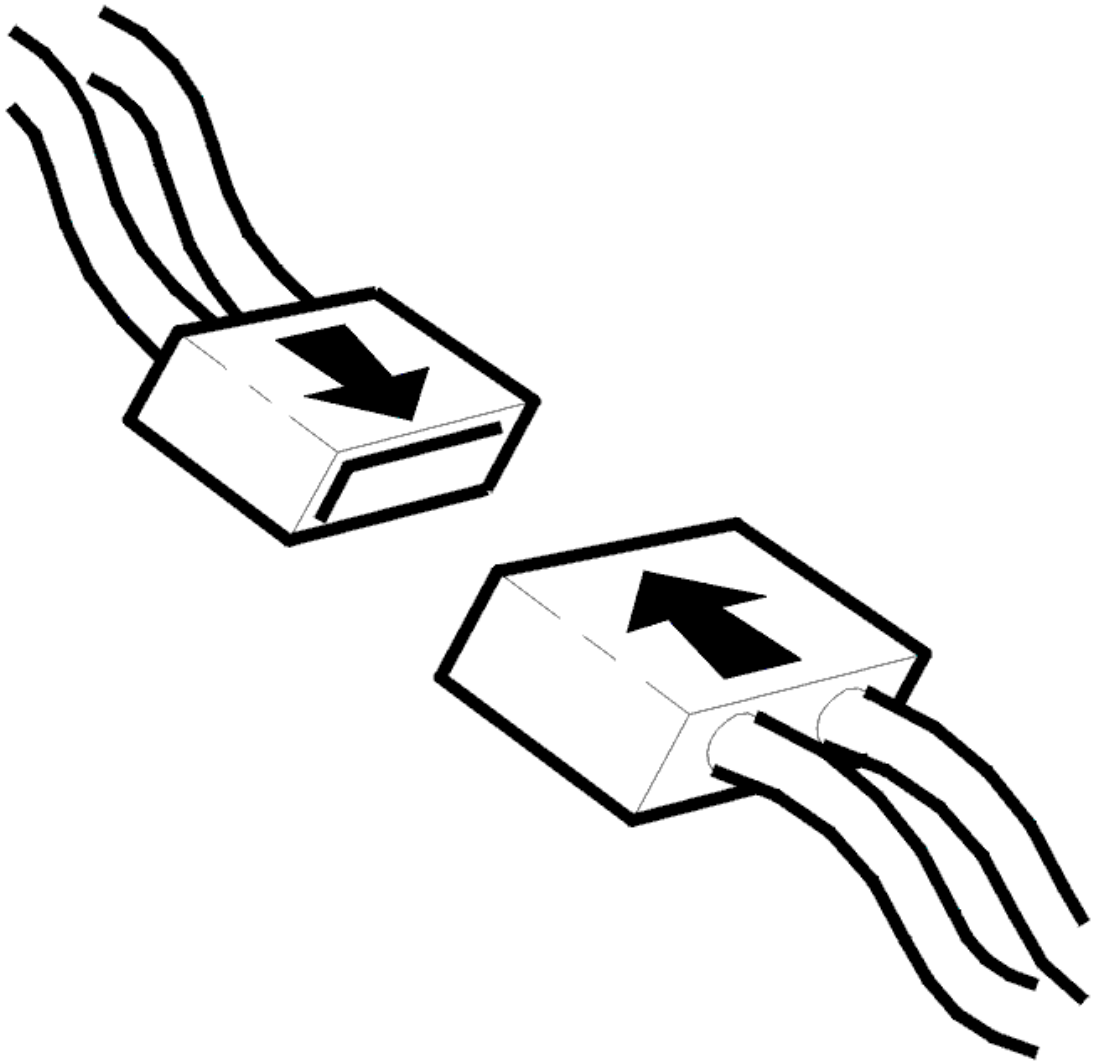

Fig. 483: Connecting Connector
Courtesy of VOLVO CARS CORPORATION

- Ignition off
- Reconnect the connectors, reinstall components etc.
- Start the engine
- Ignition off
- Ignition on
- Read off the movement of the accelerator pedal by carefully depressing and releasing the accelerator pedal (AP).

  Check that the value changes with accelerator pedal movement. The value must be between approximately 0.4 V when the accelerator pedal (AP) is unaffected and approximately 4 V when the accelerator pedal (AP) is fully depressed.

The fault has been remedied if the values are OK.

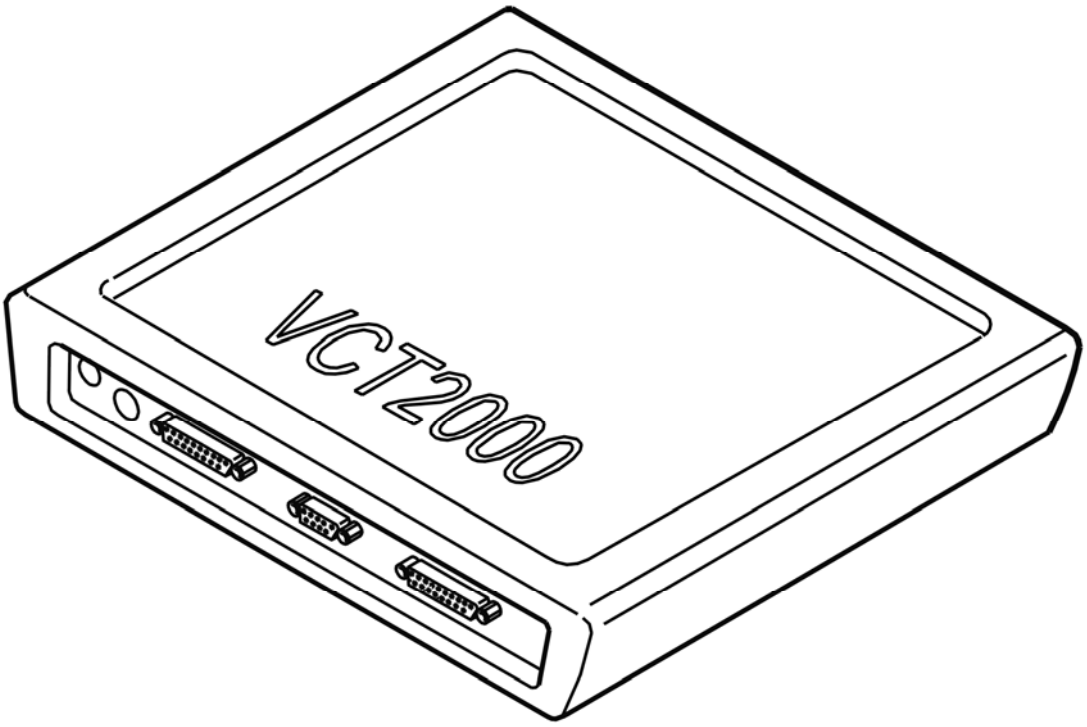

Fig. 484: Identifying VCT2000 Diagnostic Tool Symbol In VIDA
Courtesy of VOLVO CARS CORPORATION

Are these values OK?

- **YES**

  VERIFIED: Troubleshooting has been completed.

- **NO**

  Refer to **INFORMATION**

INFORMATION

FAULT-TRACING INFORMATION

The fault should have been detected and remedied. As this is not the case fault-tracing has failed.

Exit fault-tracing for this diagnostic trouble code (DTC) or make another attempt.

ECM-941C: ACCELERATOR PEDAL (AP) POSITION SENSOR, DIGITAL SIGNAL. SIGNAL TOO HIGH (B6294T; 2005-2006)

DIAGNOSTIC TROUBLE CODE (DTC) INFORMATION ECM-941C

see **DIAGNOSTIC TROUBLE CODE (DTC) INFORMATION ECM-941C**

SIGNAL TOO HIGH

see **SIGNAL TOO HIGH**

ECM-941D: ACCELERATOR PEDAL (AP) POSITION SENSOR, DIGITAL SIGNAL. SIGNAL TOO LOW (B5254T2; 2005-2007)

DIAGNOSTIC TROUBLE CODE (DTC) INFORMATION ECM-941D

Condition

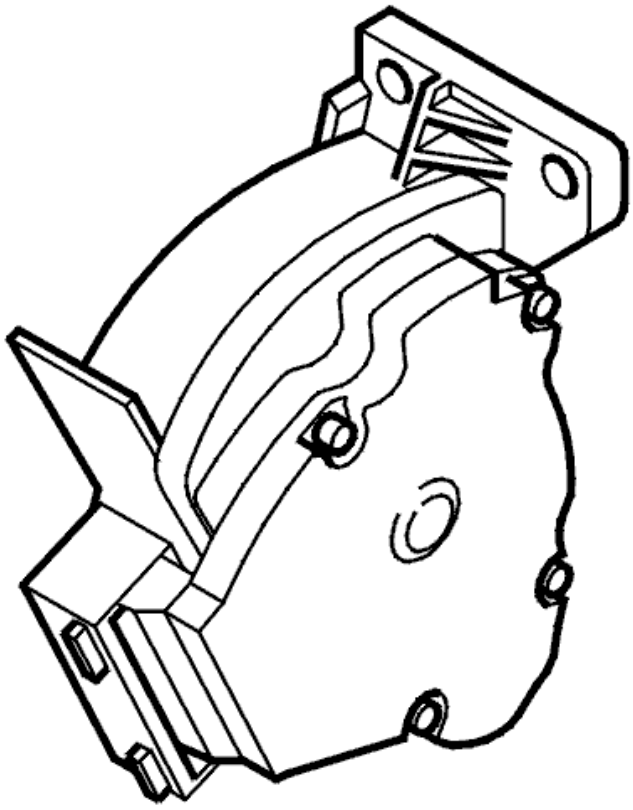

Fig. 1: Identifying Accelerator Pedal (AP) Position Sensor
Courtesy of VOLVO CARS CORPORATION

The diagnostic trouble code (DTC) is stored if the engine control module (ECM) registers a fault in the PWM-signal from the accelerator pedal (AP) position sensor.

The diagnostic trouble code (DTC) can be diagnosed when the ignition is switched on.

Substitute Value

- The accelerator pedal (AP) is disabled at the same time as the brake pedal is pressed.

Possible Source

- Contact resistance or oxidation in the terminals between the engine control module (ECM) and the accelerator pedal (AP) position sensor
- Open-circuit or short-circuit to ground in the signal cable
- Open-circuit in the power supply (12 V) for the accelerator pedal (AP) position sensor
- Damaged accelerator pedal (AP) position sensor.

Fault symptom[s]

- Poor accelerator pedal (AP) response.

SIGNAL TOO LOW

CHECKING THE STATUS

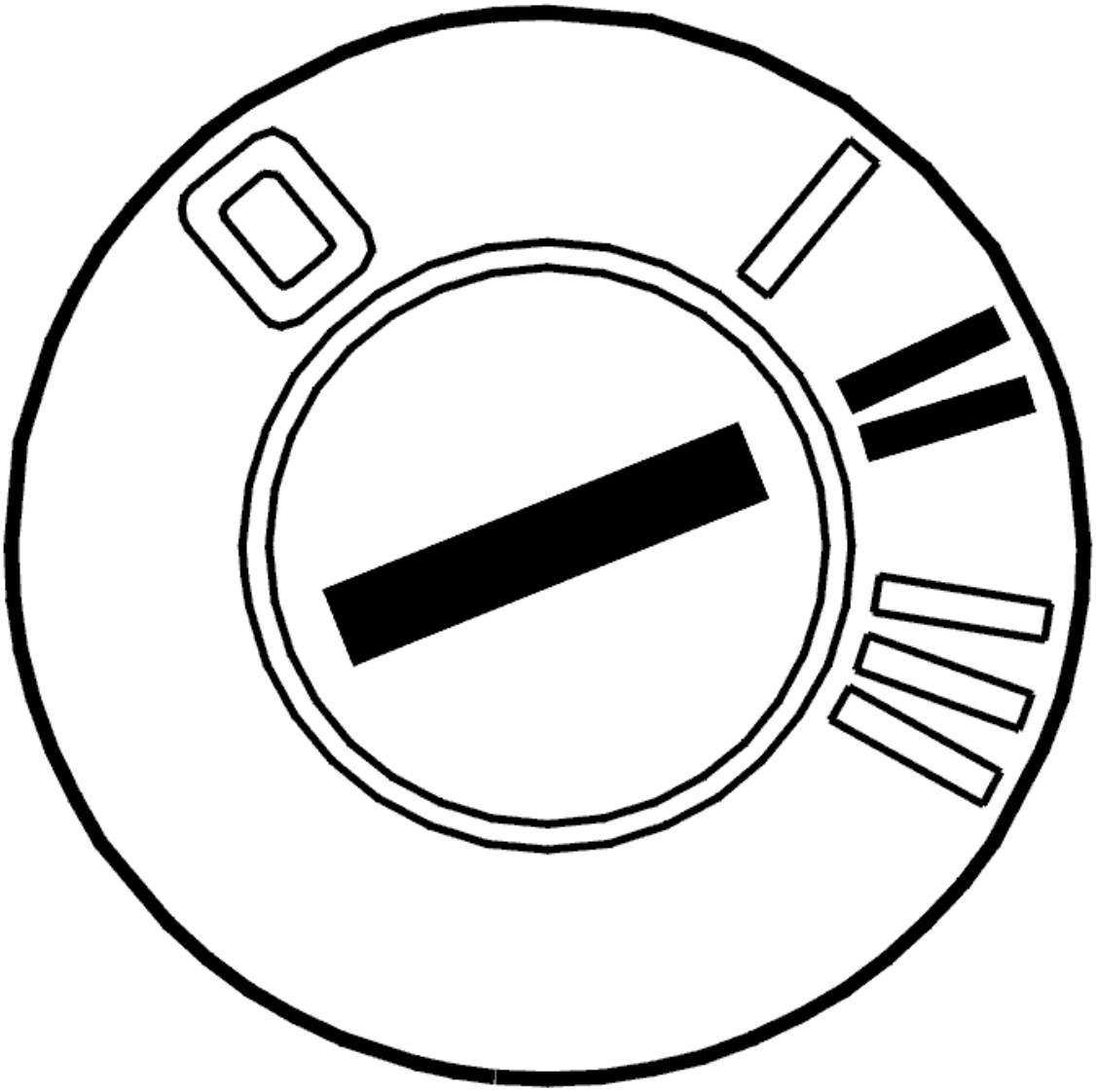

Fig. 2: Identifying Ignition ON
Courtesy of VOLVO CARS CORPORATION

- Start the engine
- Ignition off
- Ignition on
- Read off the movement of the accelerator pedal by carefully depressing and releasing the accelerator pedal (AP).

  Check that the value changes with accelerator pedal movement. The value must be between approximately 0.4 V when the accelerator pedal (AP) is unaffected and approximately 4 V when the accelerator pedal (AP) is fully depressed.

  The fault is intermittent at the moment if the values are OK.

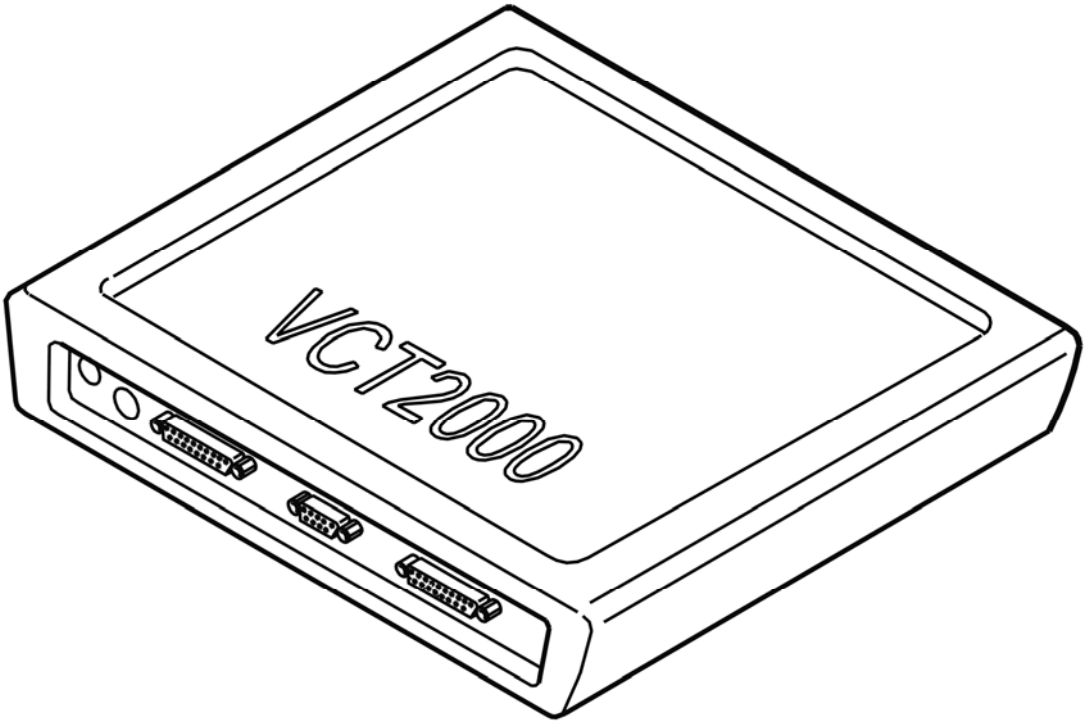

Fig. 3: Identifying VCT2000 Diagnostic Tool Symbol In VIDA
Courtesy of VOLVO CARS CORPORATION

- **Continue**

  Refer to **CHECKING THE POWER SUPPLY**

CHECKING THE POWER SUPPLY

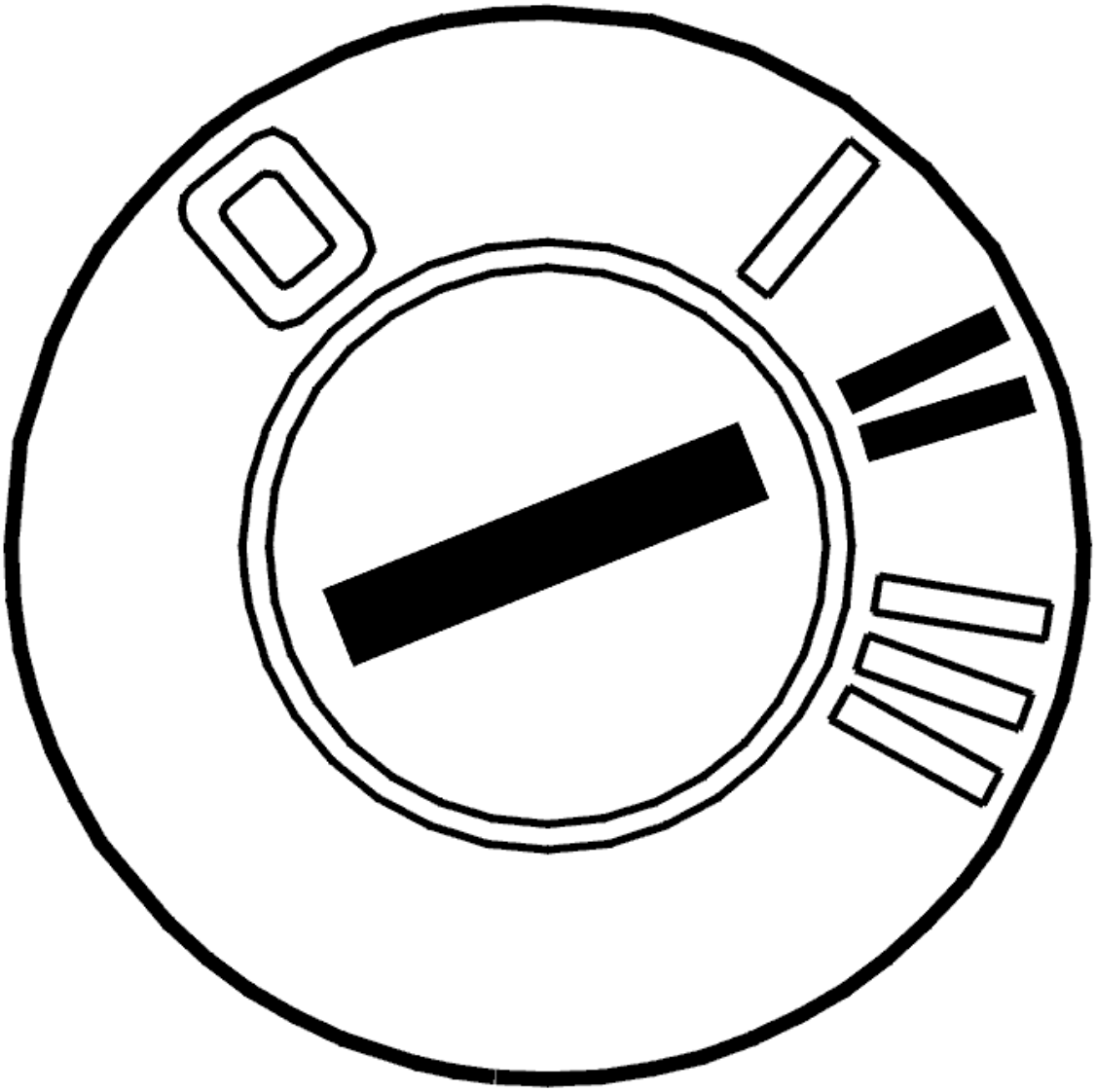

Fig. 4: Identifying Ignition ON
Courtesy of VOLVO CARS CORPORATION

- Ignition on.

  Check the power supply (12 V) to the accelerator pedal (AP) position sensor between accelerator pedal (AP) position sensor terminals #1 (wiring side) and #3 (wiring side).

  Check that the power supply is approximately 12 V with the ignition on.

  Other information:

  - see **CHECKING WIRING AND TERMINALS**
  - To connect the breakout box, see **CONNECTING THE BREAKOUT BOX**
  - For 5 cylinder turbocharged engines -2004, see **SIGNAL DESCRIPTION**

- For 5 cylinder turbocharged engines 2005-, see **SIGNAL SPECIFICATION** .
- For 6 cylinder engines -2004, see **SIGNAL SPECIFICATION**
- For 6 cylinder engines 2005-, see **SIGNAL SPECIFICATION** .
- To access and replace the accelerator pedal (AP) position sensor, see **ACCELERATOR PEDAL (AP), REPLACING** .

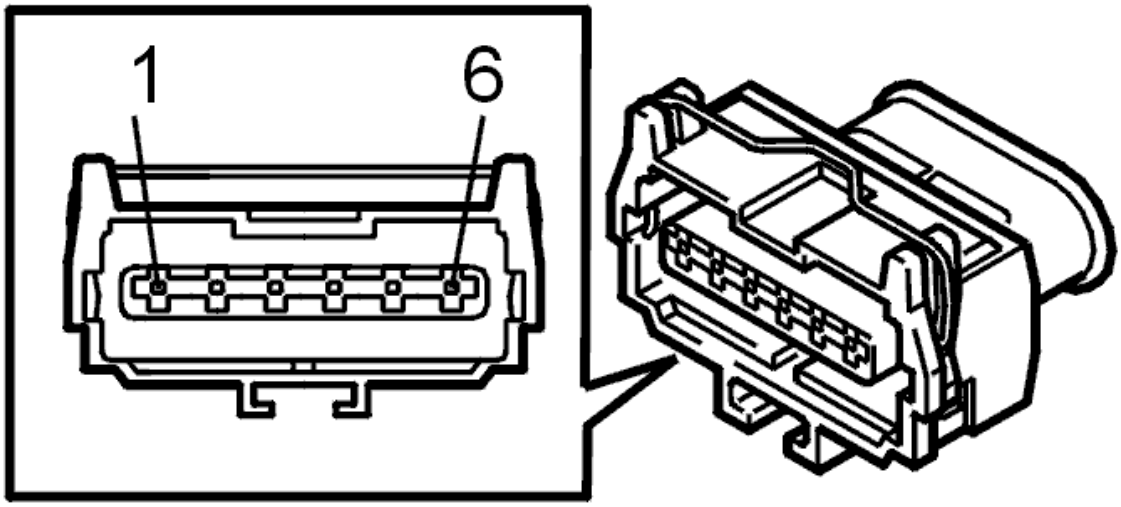

Fig. 5: Accelerator Pedal Position Sensor Connector Terminal Identification
Courtesy of VOLVO CARS CORPORATION

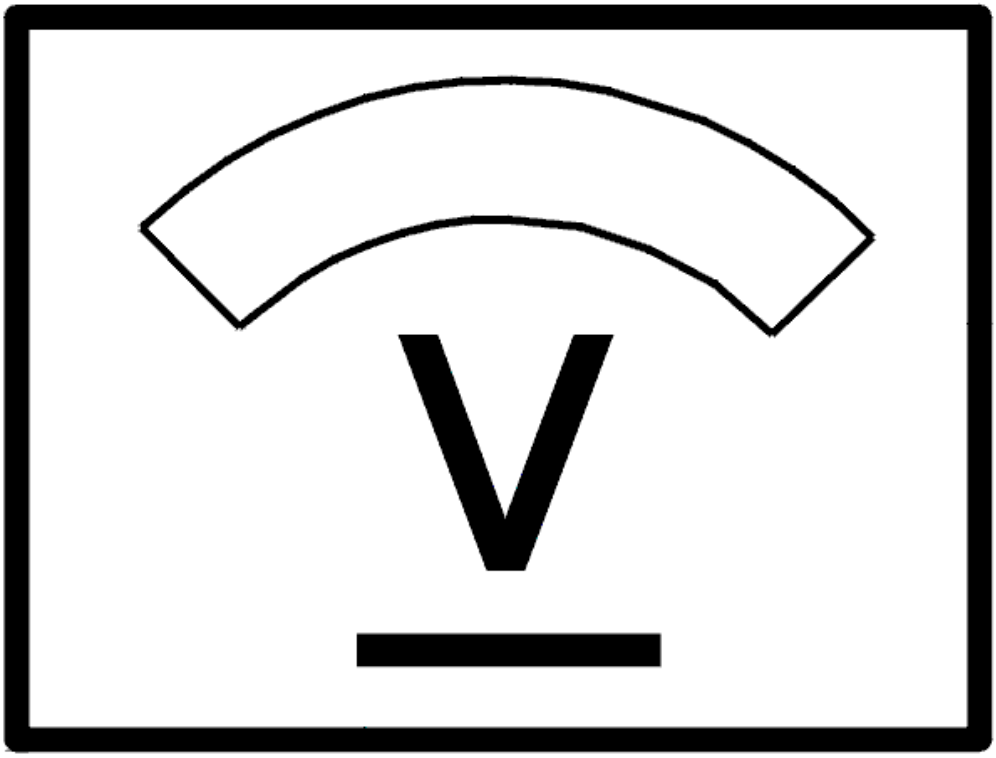

Fig. 6: Identifying Voltage Display
Courtesy of VOLVO CARS CORPORATION

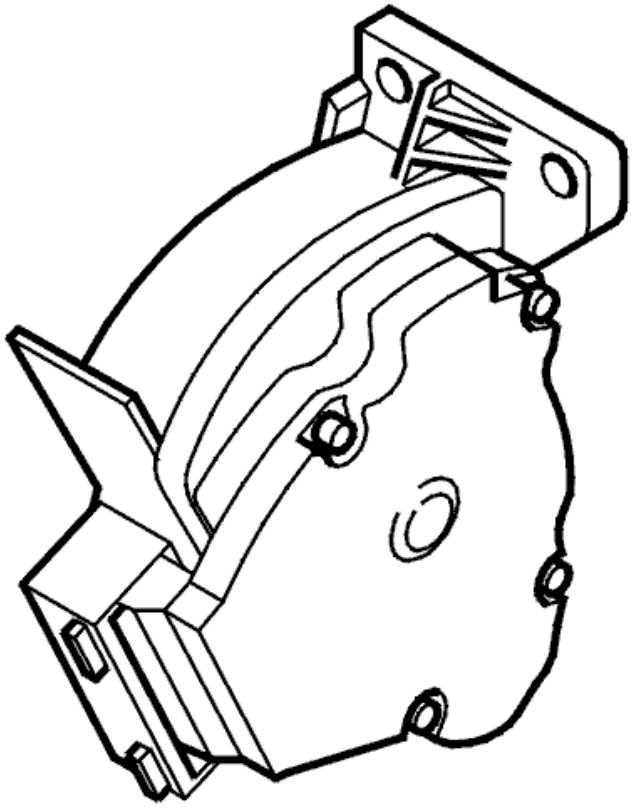

Fig. 7: Identifying Accelerator Pedal (AP) Position Sensor
Courtesy of VOLVO CARS CORPORATION

Is the power supply OK?

- **YES**

  Refer to **CHECKING THE CONNECTORS AND CABLES**

- **NO**

  Refer to **CHECKING COMPONENTS AND WIRING**

CHECKING THE CONNECTORS AND CABLES

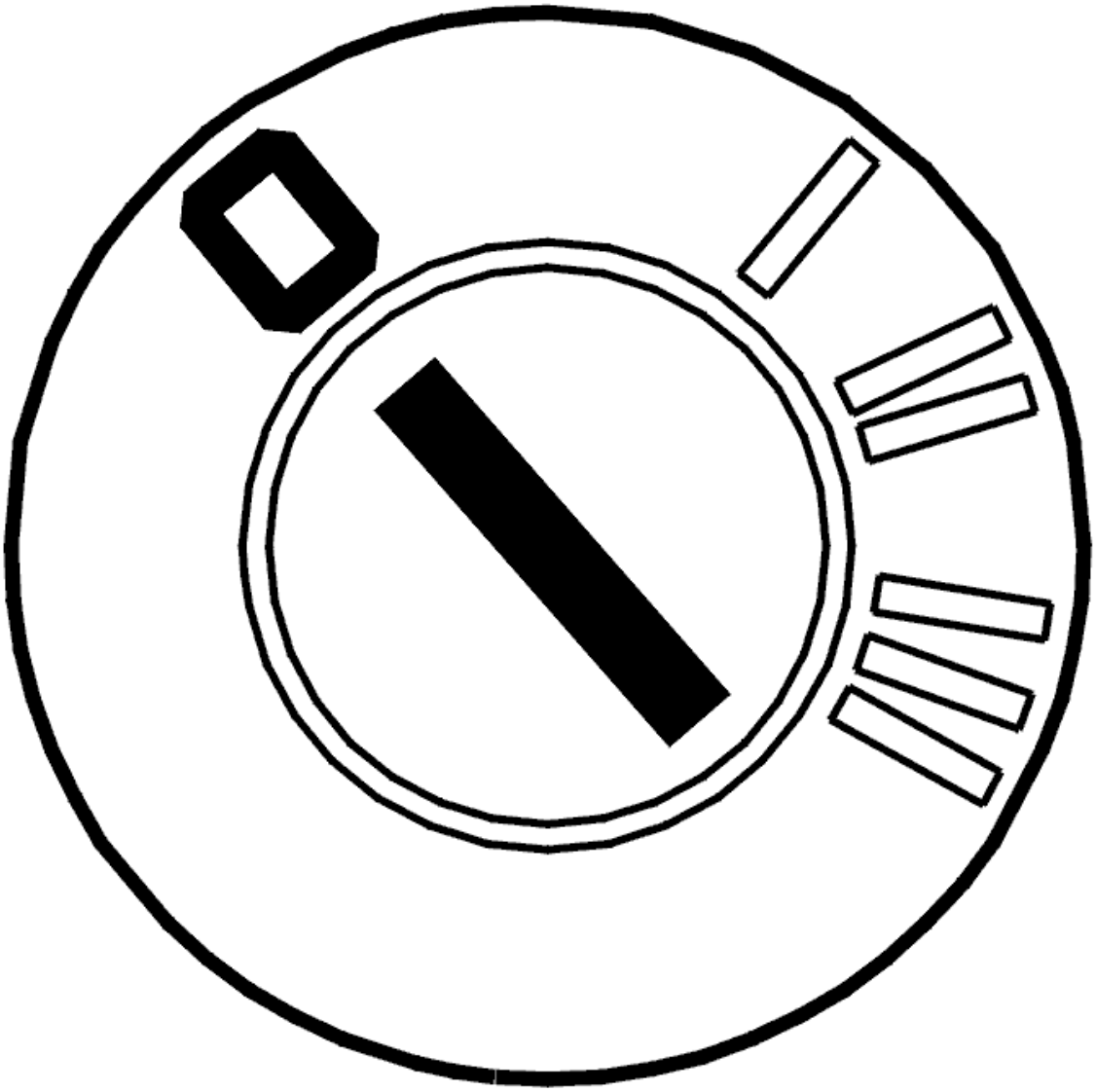

Fig. 8: Identifying Ignition OFF
Courtesy of VOLVO CARS CORPORATION

- Ignition off
- Check the accelerator pedal position sensor and engine control module (ECM) connectors. Check for contact resistance and oxidation.

  Check the signal cable between engine control module (ECM) terminal #B25 (#B35) and accelerator pedal (AP) position sensor terminal #2. Check for an open-circuit. Check for a short-circuit to ground.

  Try a new accelerator pedal (AP) position sensor if no fault is found and the fault is permanent.

  Remedy as necessary.

  Other information:

- see **CHECKING WIRING AND TERMINALS**
- To connect the breakout box, see **CONNECTING THE BREAKOUT BOX**
- For 5 cylinder turbocharged engines -2004, see **SIGNAL DESCRIPTION**
- For 5 cylinder turbocharged engines 2005-, see **SIGNAL SPECIFICATION** .
- For 6 cylinder engines -2004, see **SIGNAL SPECIFICATION**
- For 6 cylinder engines 2005-, see **SIGNAL SPECIFICATION** .
- To access and replace the accelerator pedal (AP) position sensor, see **ACCELERATOR PEDAL (AP), REPLACING** .

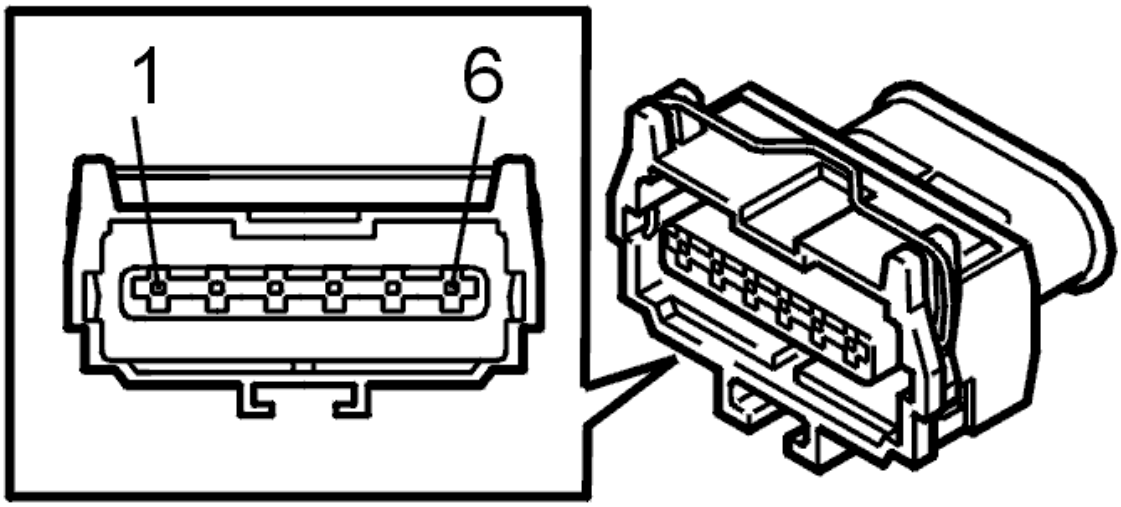

Fig. 9: Accelerator Pedal Position Sensor Connector Terminal Identification
Courtesy of VOLVO CARS CORPORATION

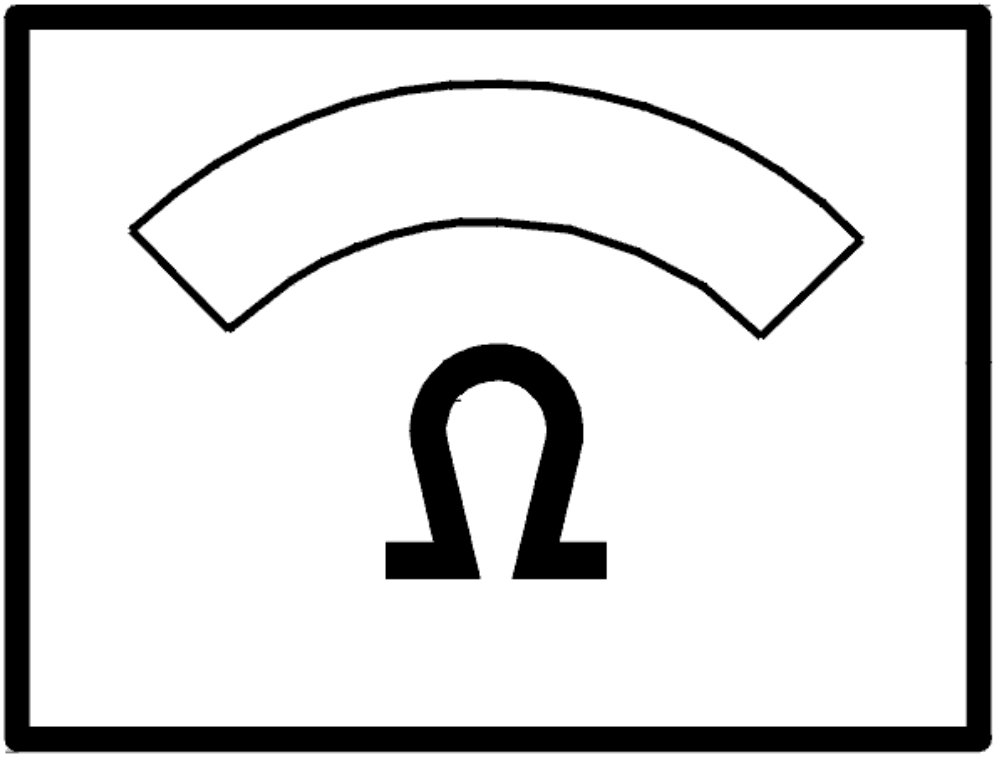

Fig. 10: Identifying Ohm Meter
Courtesy of VOLVO CARS CORPORATION

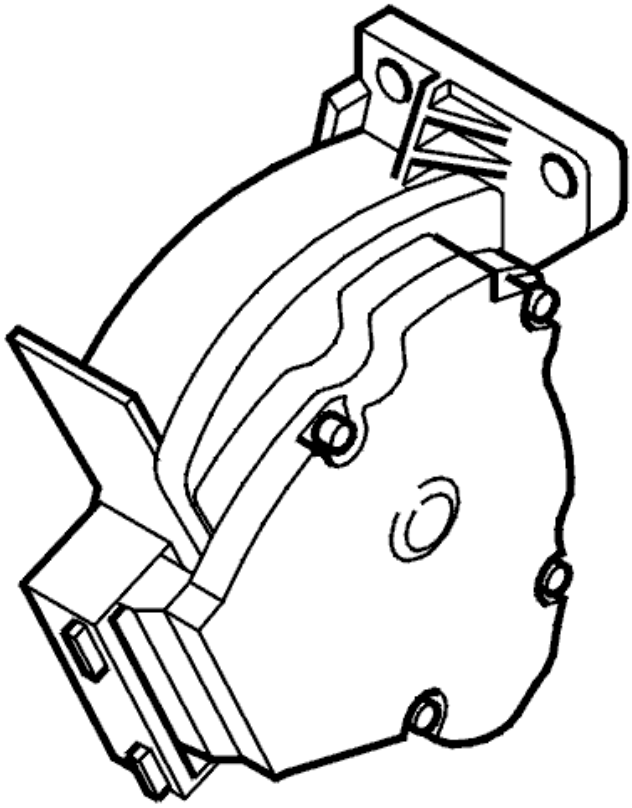

Fig. 11: Identifying Accelerator Pedal (AP) Position Sensor
Courtesy of VOLVO CARS CORPORATION

- **Continue**

  Refer to **VERIFICATION**

CHECKING COMPONENTS AND WIRING

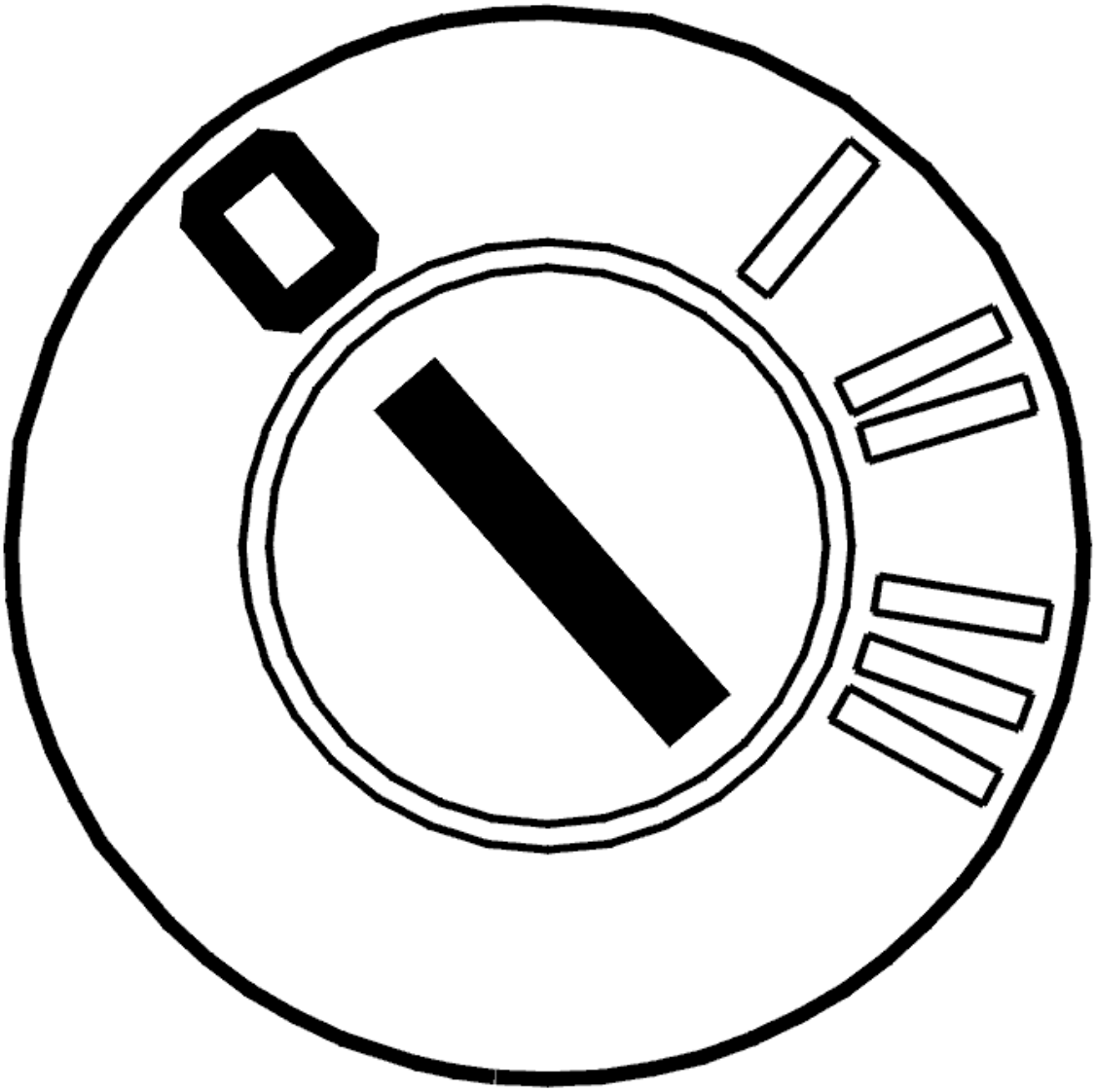

Fig. 12: Identifying Ignition OFF
Courtesy of VOLVO CARS CORPORATION

- Ignition off
- Check the accelerator pedal (AP) position sensor connector. Check for contact resistance and oxidation.

  Check the power supply cable (12 V) between accelerator pedal (AP) position sensor terminal #1 (wiring side) and the relevant fuse for the circuit. Check for a short-circuit to ground. Check for an open-circuit. Check that the fuse for the circuit has not blown.

  Check the ground lead for power supply (12 V) between accelerator pedal (AP) position sensor terminal #3 (wiring side) and the relevant ground terminal. Check for contact resistance and oxidation. Check for an open-circuit.

  HINT: With the ignition on, the power supply to the accelerator pedal (AP) position sensor must be approximately 12 V measured between accelerator pedal (AP) position sensor terminals #1 (wiring

side) and #3 (wiring side).

Remedy as necessary.

Other information:

- see **CHECKING WIRING AND TERMINALS**
- To connect the breakout box, see **CONNECTING THE BREAKOUT BOX**
- For 5 cylinder turbocharged engines -2004, see **SIGNAL DESCRIPTION**
- For 5 cylinder turbocharged engines 2005-, see **SIGNAL SPECIFICATION** .
- For 6 cylinder engines -2004, see **SIGNAL SPECIFICATION**
- For 6 cylinder engines 2005-, see **SIGNAL SPECIFICATION** .
- To access and replace the accelerator pedal (AP) position sensor, see **ACCELERATOR PEDAL (AP), REPLACING** .

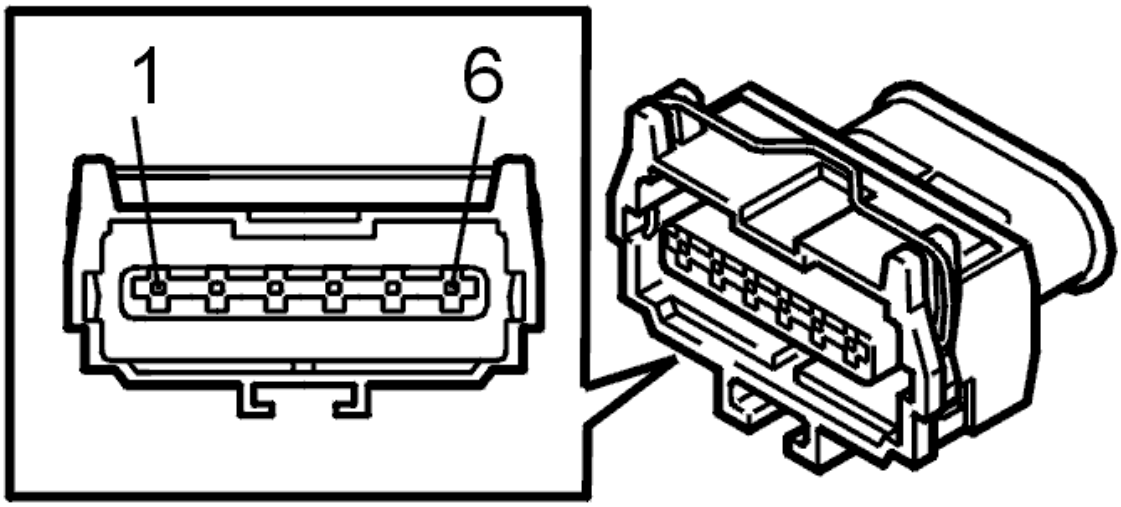

Fig. 13: Accelerator Pedal Position Sensor Connector Terminal Identification
Courtesy of VOLVO CARS CORPORATION

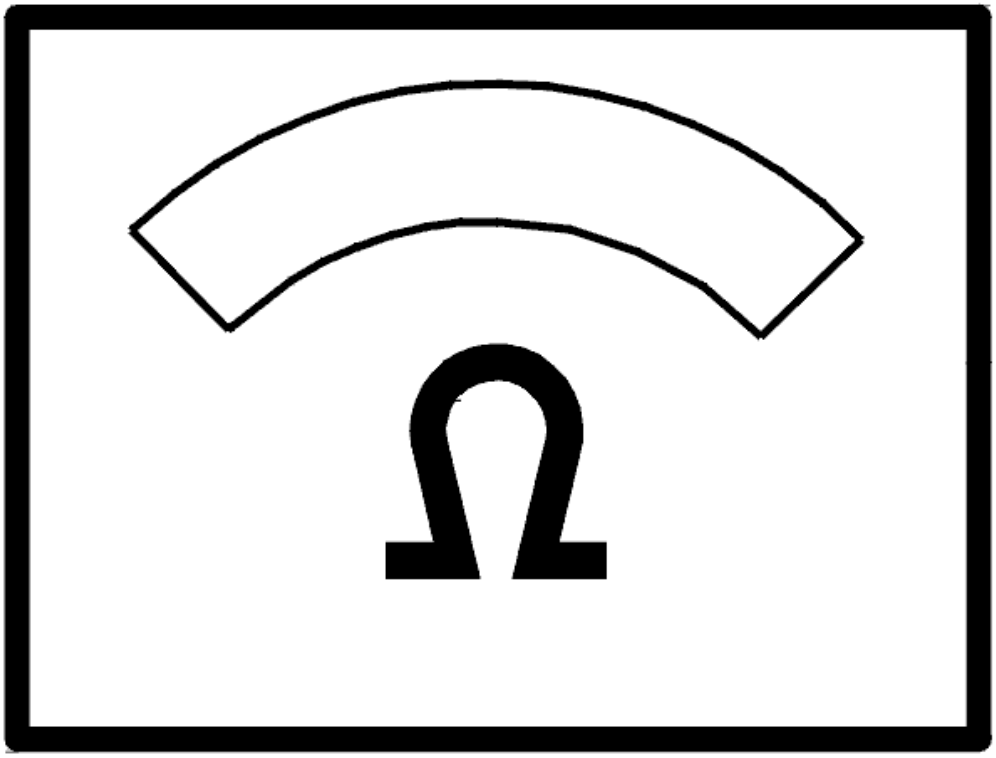

Fig. 14: Identifying Ohm Meter
Courtesy of VOLVO CARS CORPORATION

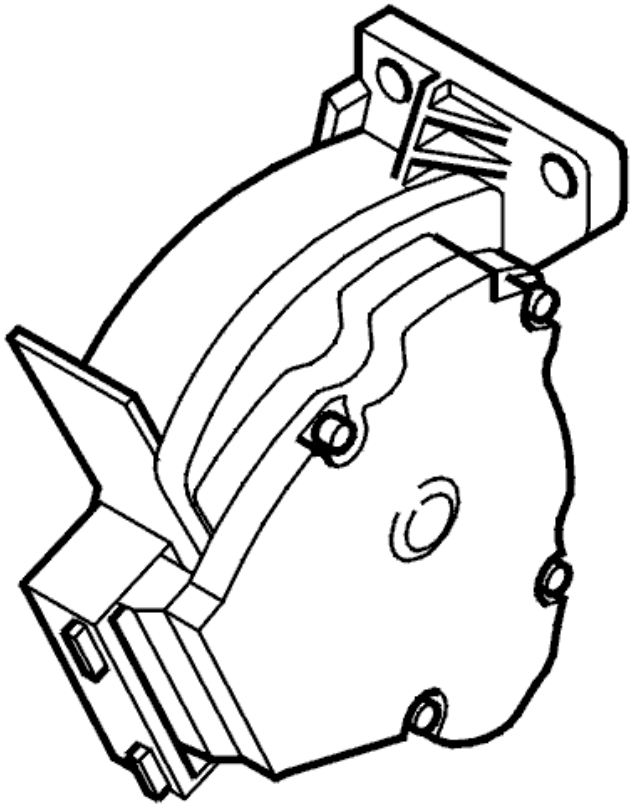

Fig. 15: Identifying Accelerator Pedal (AP) Position Sensor
Courtesy of VOLVO CARS CORPORATION

- **Continue**

  Refer to **CHECKING THE CONNECTORS AND CABLES**

VERIFICATION

VERIFICATION

HINT: After carrying out the repair, check that the fault has been remedied.

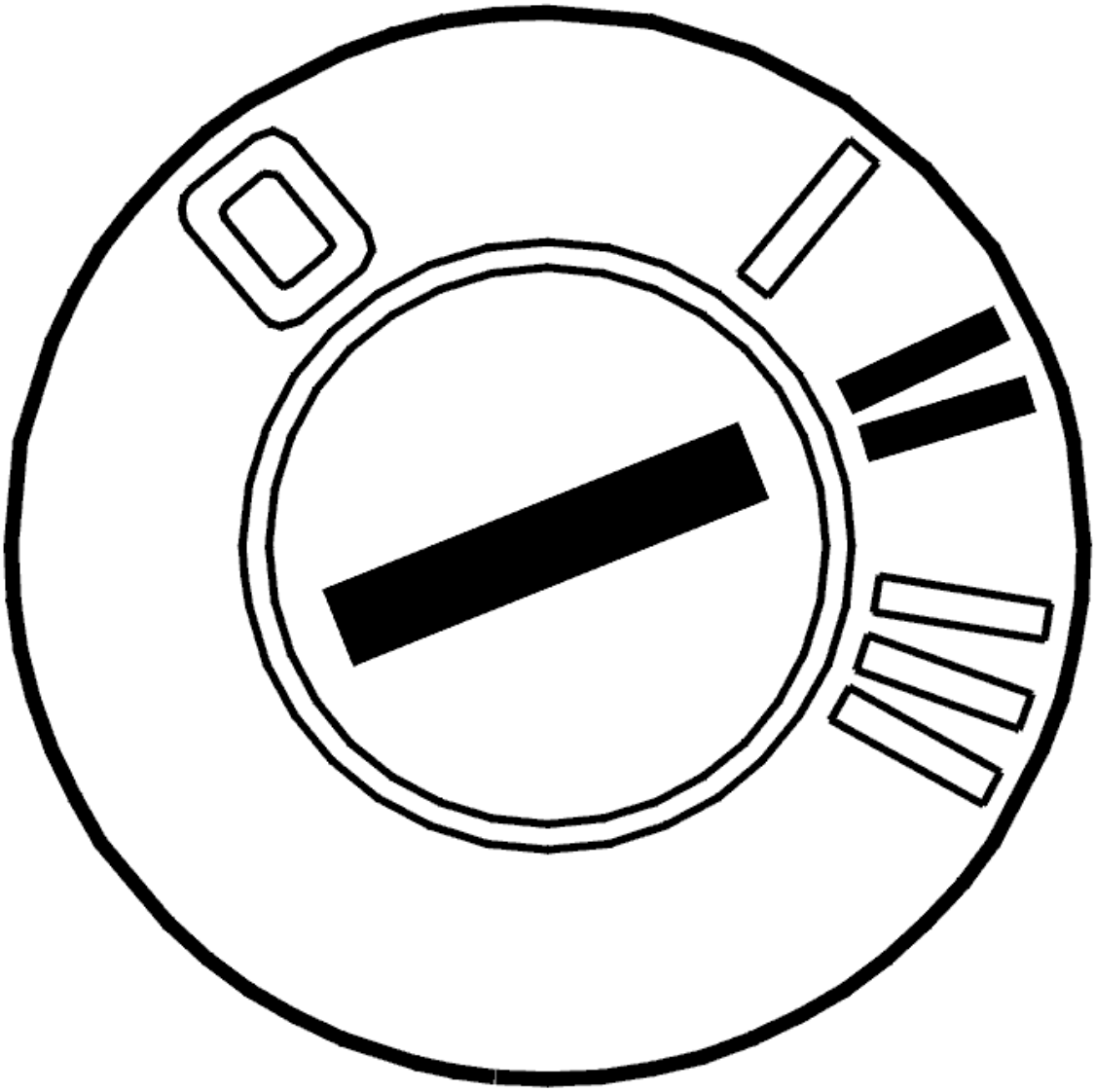

Fig. 16: Identifying Ignition ON
Courtesy of VOLVO CARS CORPORATION

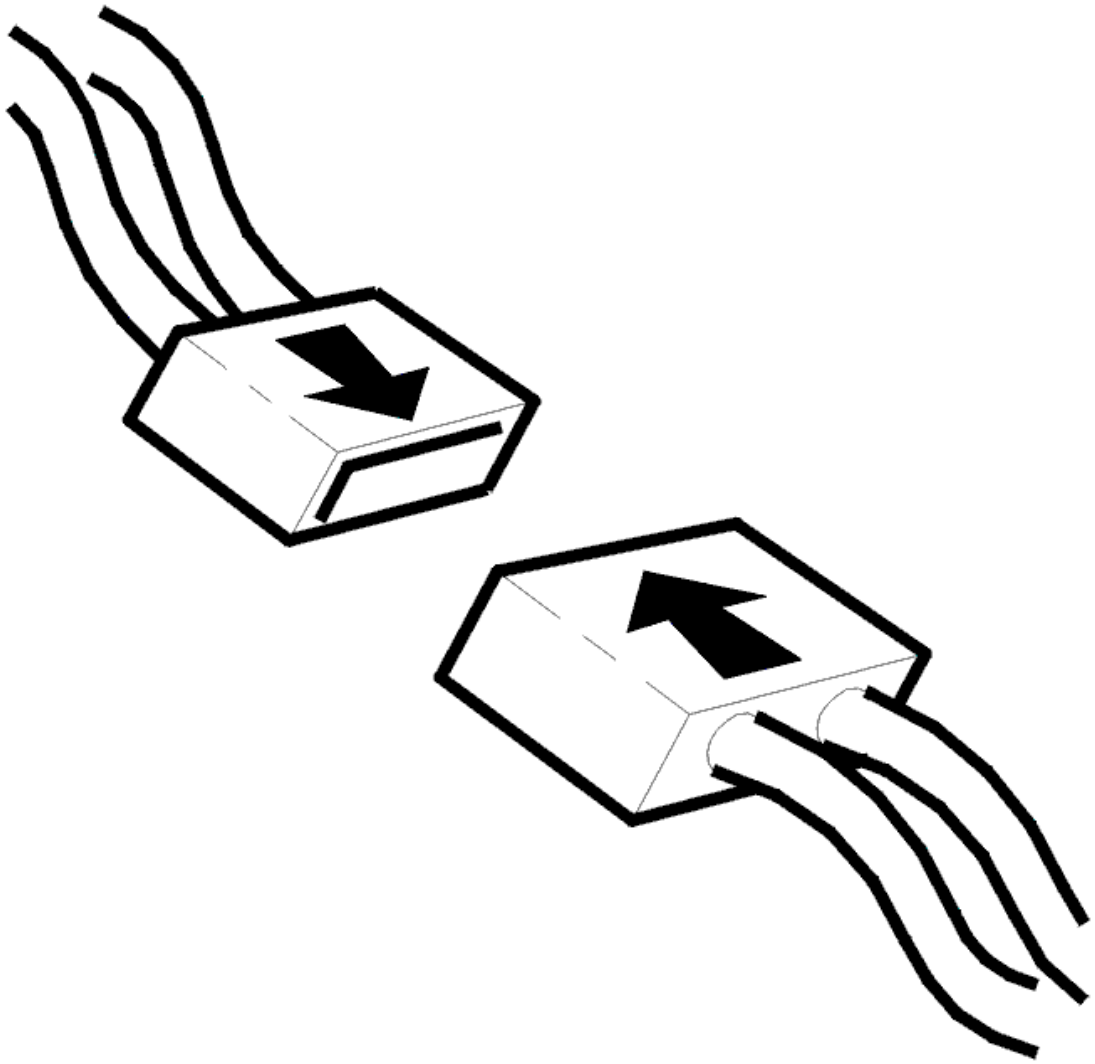

Fig. 17: Connecting Connector
Courtesy of VOLVO CARS CORPORATION

- Ignition off
- Reconnect the connectors, reinstall components etc.
- Start the engine
- Ignition off
- Ignition on
- Read off the movement of the accelerator pedal by carefully depressing and releasing the accelerator pedal (AP).

  Check that the value changes with accelerator pedal movement. The value must be between approximately 0.4 V when the accelerator pedal (AP) is unaffected and approximately 4 V when the accelerator pedal (AP) is fully depressed.

The fault has been remedied if the values are OK.

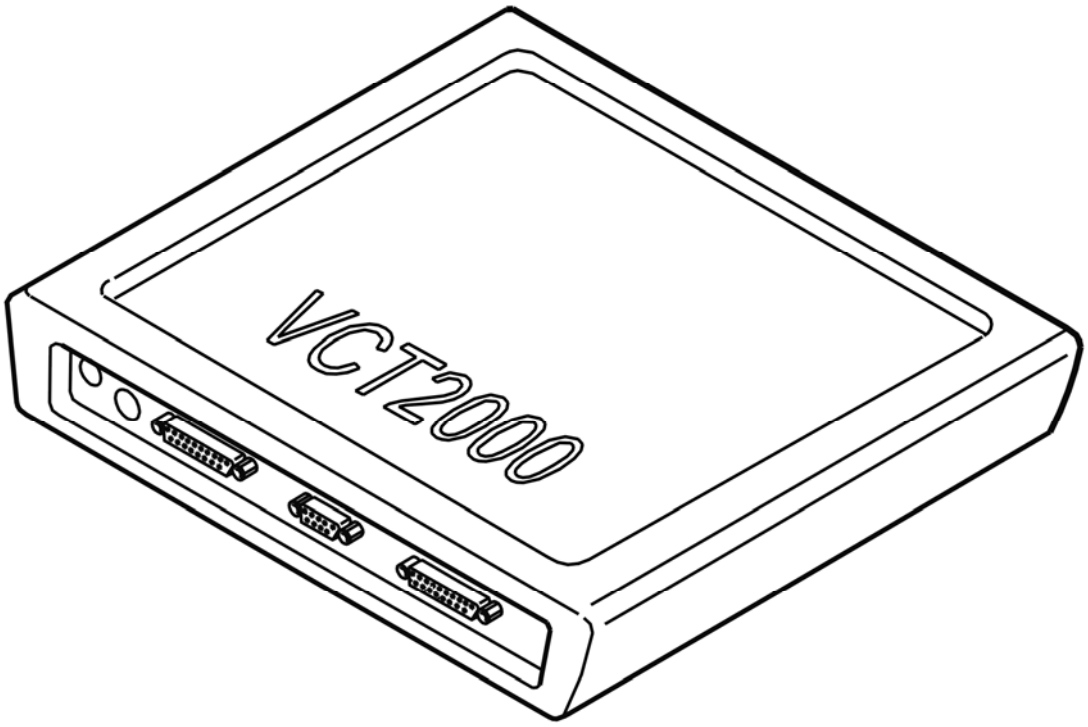

Fig. 18: Identifying VCT2000 Diagnostic Tool Symbol In VIDA
Courtesy of VOLVO CARS CORPORATION

Are these values OK?

- **YES**

  VERIFIED: Troubleshooting has been completed.

- **NO**

  Refer to **INFORMATION**

INFORMATION

FAULT-TRACING INFORMATION

The fault should have been detected and remedied. As this is not the case fault-tracing has failed.

Exit fault-tracing for this diagnostic trouble code (DTC) or make another attempt.

ECM-941D: ACCELERATOR PEDAL (AP) POSITION SENSOR, DIGITAL

SIGNAL. SIGNAL TOO LOW (B6294T; 2005-2006)

DIAGNOSTIC TROUBLE CODE (DTC) INFORMATION ECM-941D

see **DIAGNOSTIC TROUBLE CODE (DTC) INFORMATION ECM-941D**

SIGNAL TOO LOW

see **SIGNAL TOO LOW**

ECM-950C: IDLE AIR TRIM. SIGNAL TOO LOW (B5254T2; 2007)

DIAGNOSTIC TROUBLE CODE (DTC) INFORMATION

Condition

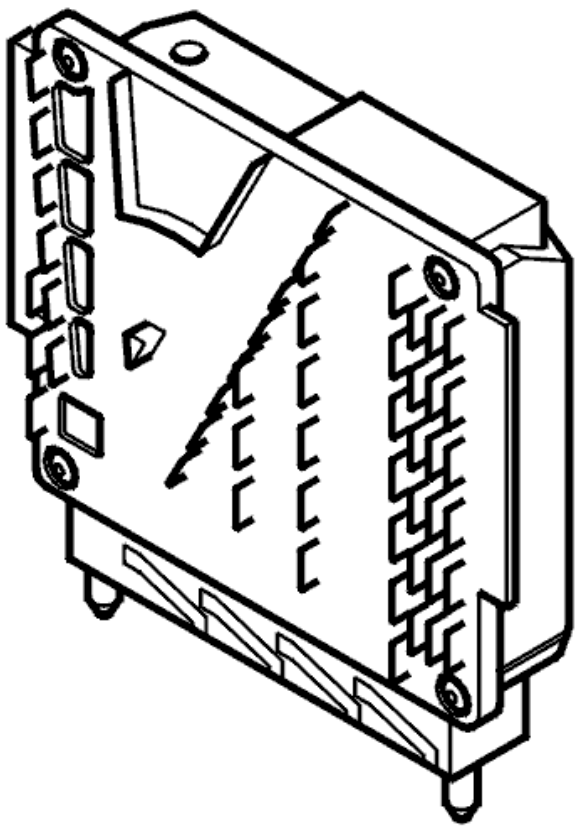

Fig. 19: Engine Control Module
Courtesy of VOLVO CARS CORPORATION

The diagnostic trouble code (DTC) is stored if the engine control module (ECM) registers that the actual idle speed deviates from the predefined parameters.

Substitute Value

- None.

Possible Source

- Search the fault cause in the air supply and fuel system (air leakage, blockages, etc.).

Fault symptom[s]

- Malfunction indicator lamp (MIL) lit
- High idling speed.

FAULT-TRACING INFORMATION

see **FAULT-TRACING INFORMATION**

ECM-950D: IDLE AIR TRIM. SIGNAL TOO HIGH (B5254T2; 2007)

DIAGNOSTIC TROUBLE CODE (DTC) INFORMATION

Condition

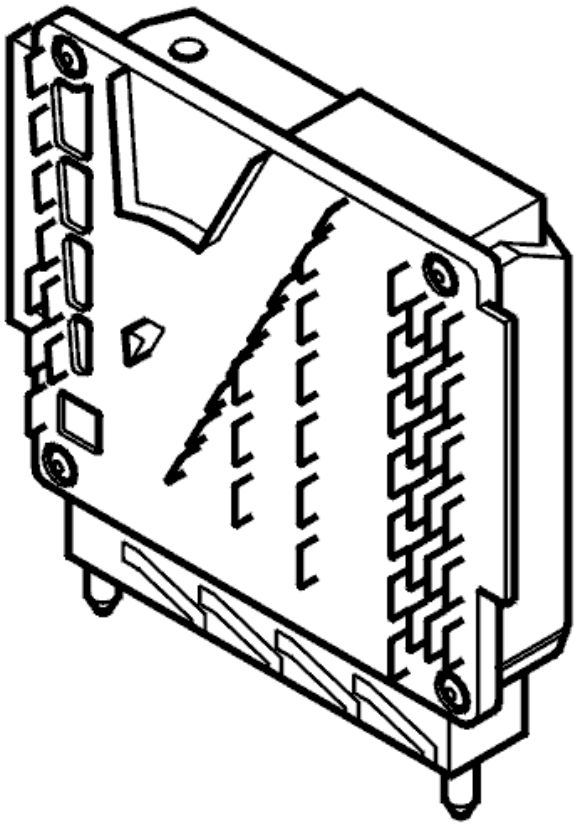

Fig. 20: Engine Control Module
Courtesy of VOLVO CARS CORPORATION

The diagnostic trouble code (DTC) is stored if the engine control module (ECM) registers that the actual idle speed deviates from the predefined parameters.

Substitute Value

- None.

Possible Source

- Search the fault cause in the air supply and fuel system (air leakage, blockages, etc.).

Fault symptom[s]

- Malfunction indicator lamp (MIL) lit
- Low idling speed.

FAULT-TRACING INFORMATION

see **FAULT-TRACING INFORMATION**

ECM-951C: ENGINE CONTROL MODULE (ECM), IDLE AIR TRIM. SIGNAL TOO HIGH (B5254T2; 2005-2007)

DIAGNOSTIC TROUBLE CODE (DTC) INFORMATION

see **DIAGNOSTIC TROUBLE CODE (DTC) INFORMATION**

FAULT-TRACING INFORMATION

see **FAULT-TRACING INFORMATION**

ECM-951C: ENGINE CONTROL MODULE (ECM), IDLE AIR TRIM. SIGNAL TOO HIGH (B6294T; 2005-2006)

DIAGNOSTIC TROUBLE CODE (DTC) INFORMATION

see **DIAGNOSTIC TROUBLE CODE (DTC) INFORMATION**

FAULT-TRACING INFORMATION

see **FAULT-TRACING INFORMATION**

ECM-951D: ENGINE CONTROL MODULE (ECM), IDLE AIR TRIM. SIGNAL TOO LOW (B5254T2; 2005-2007)

DIAGNOSTIC TROUBLE CODE (DTC) INFORMATION

see **DIAGNOSTIC TROUBLE CODE (DTC) INFORMATION**

FAULT-TRACING INFORMATION

see **FAULT-TRACING INFORMATION**

ECM-951D: ENGINE CONTROL MODULE (ECM), IDLE AIR TRIM. SIGNAL TOO LOW (B6294T; 2005-2006)

DIAGNOSTIC TROUBLE CODE (DTC) INFORMATION

see **DIAGNOSTIC TROUBLE CODE (DTC) INFORMATION**

FAULT-TRACING INFORMATION

see **FAULT-TRACING INFORMATION**

ECM-9520: ACCELERATOR PEDAL (AP) POSITION SENSOR, ANALOG SIGNAL. FAULTY SIGNAL (B5254T2; B6294T; 2003-2004)

DIAGNOSTIC TROUBLE CODE (DTC) INFORMATION

Condition

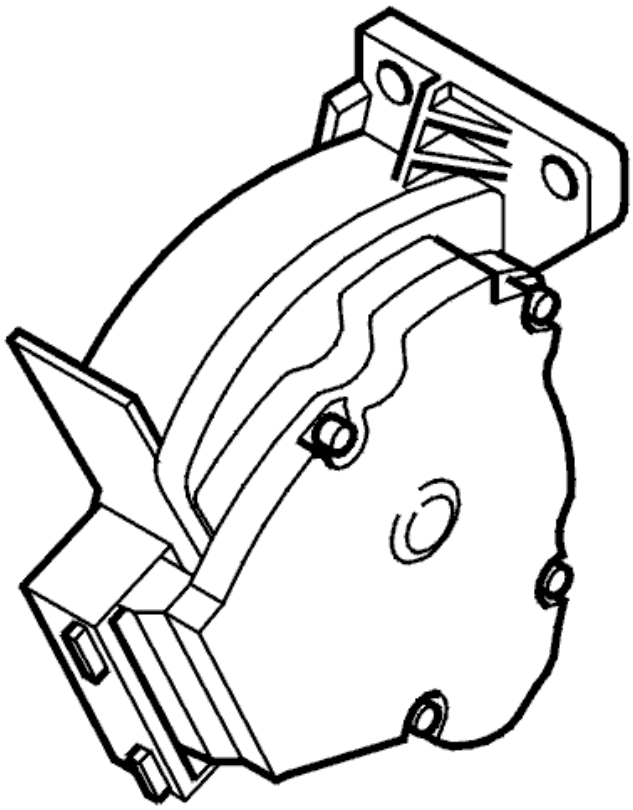

Fig. 21: Identifying Accelerator Pedal (AP) Position Sensor
Courtesy of VOLVO CARS CORPORATION

Diagnostic trouble code (DTC) ECM-9520 is stored if the engine control module (ECM) registers a fault in the analog signal from the accelerator pedal (AP) position sensor with the ignition is switched on.

Substitute Value

The accelerator pedal (AP) is not working at all at the same time as the brake pedal is pressed.

Possible Source

Signal too high:

- Short-circuit to supply voltage in the signal cable
- Defective accelerator pedal (AP) position sensor.

Signal too low:

- Contact resistance or oxidation in the terminals between the engine control module (ECM) and the accelerator pedal (AP) position sensor
- Open-circuit in the power supply (12 V) for the accelerator pedal (AP) position sensor
- Open-circuit in the power supply (5V) for the analog signal

- Open-circuit in the signal ground cable for the analog signal
- Open-circuit or short-circuit to ground in the signal cable
- Defective accelerator pedal (AP) position sensor.

Faulty signal:

- Open-circuit in the power supply (12 V) for the accelerator pedal (AP) position sensor
- Water in the connectors.
- Defective accelerator pedal (AP) position sensor.

Fault symptom[s]

- Poor accelerator pedal (AP) response.

FAULTY SIGNAL

see **FAULTY SIGNAL**

ECM-9520: ACCELERATOR PEDAL (AP) POSITION SENSOR, ANALOG SIGNAL. SIGNAL TOO HIGH (B5254T2; B6294T; 2003-2004)

DIAGNOSTIC TROUBLE CODE (DTC) INFORMATION

see **DIAGNOSTIC TROUBLE CODE (DTC) INFORMATION**

SIGNAL TOO HIGH

CHECKING THE STATUS

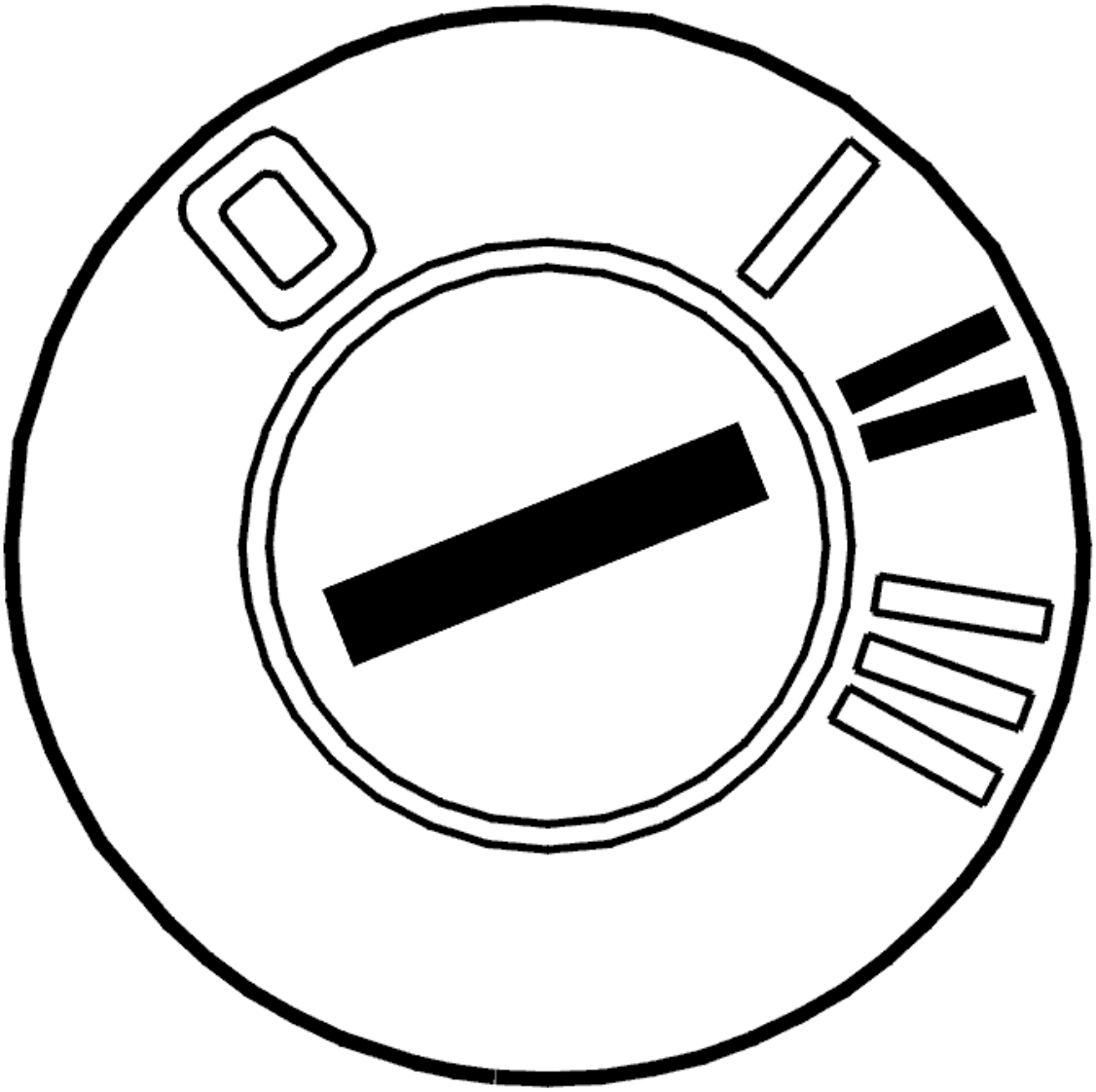

Fig. 22: Identifying Ignition ON
Courtesy of VOLVO CARS CORPORATION

- Ignition on
- Read off the movement of the accelerator pedal by carefully depressing and releasing the accelerator pedal (AP).

  Check that the value changes with accelerator pedal movement. The value must be approximately 0.4 V when the accelerator pedal (AP) is unaffected and approximately 4 V when the accelerator pedal (AP) is fully depressed.

  The fault is intermittent at the moment if the values are OK.

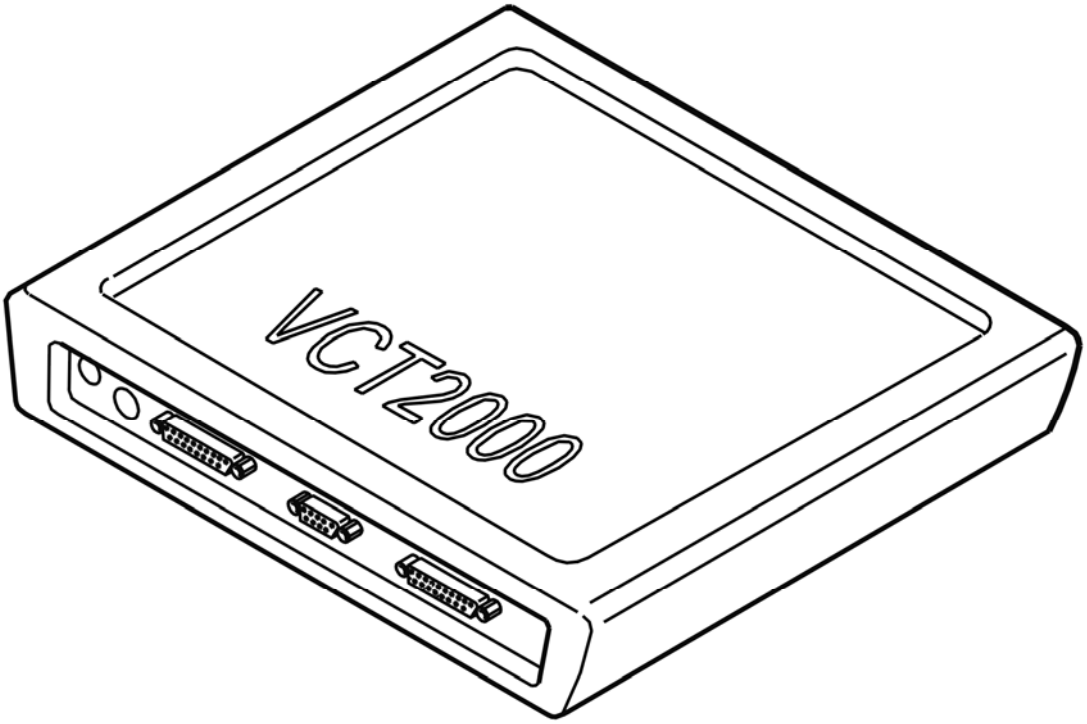

Fig. 23: Identifying VCT2000 Diagnostic Tool Symbol In VIDA
Courtesy of VOLVO CARS CORPORATION

- **Continue**

  Refer to **CHECKING THE POWER SUPPLY**

CHECKING THE POWER SUPPLY

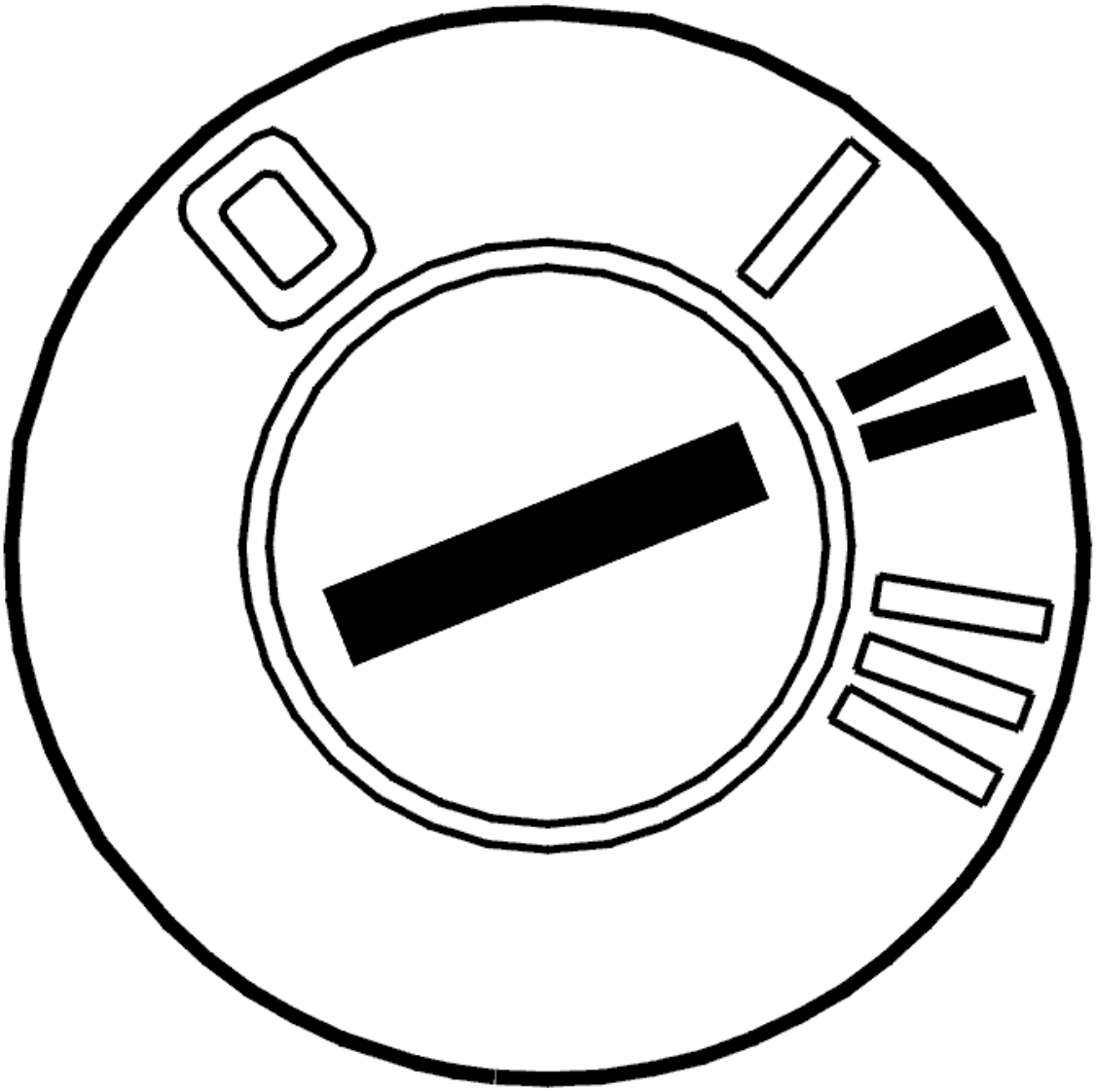

Fig. 24: Identifying Ignition ON
Courtesy of VOLVO CARS CORPORATION

- Ignition on.

  Check the power supply (12 V) to the accelerator pedal (AP) position sensor between accelerator pedal (AP) position sensor terminals #1 (wiring side) and #3 (wiring side).

  Check that the power supply is approximately 12 V with the ignition on

  Other information:

  - see **CHECKING WIRING AND TERMINALS**
  - To connect the breakout box, see **CONNECTING THE BREAKOUT BOX**
  - For 5 cylinder turbocharged engines -2004, see **SIGNAL DESCRIPTION**

- For 5 cylinder turbocharged engines 2005-, see **SIGNAL SPECIFICATION** .
- For 6 cylinder engines -2004, see **SIGNAL SPECIFICATION**
- For 6 cylinder engines 2005-, see **SIGNAL SPECIFICATION** .
- To access and replace the accelerator pedal (AP) position sensor, see **ACCELERATOR PEDAL (AP), REPLACING** .

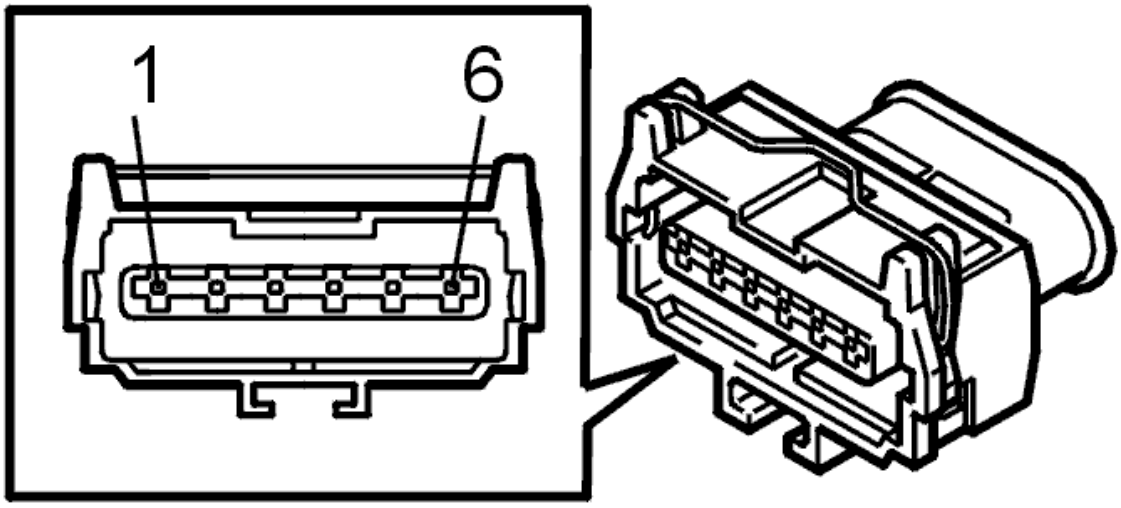

Fig. 25: Accelerator Pedal Position Sensor Connector Terminal Identification
Courtesy of VOLVO CARS CORPORATION

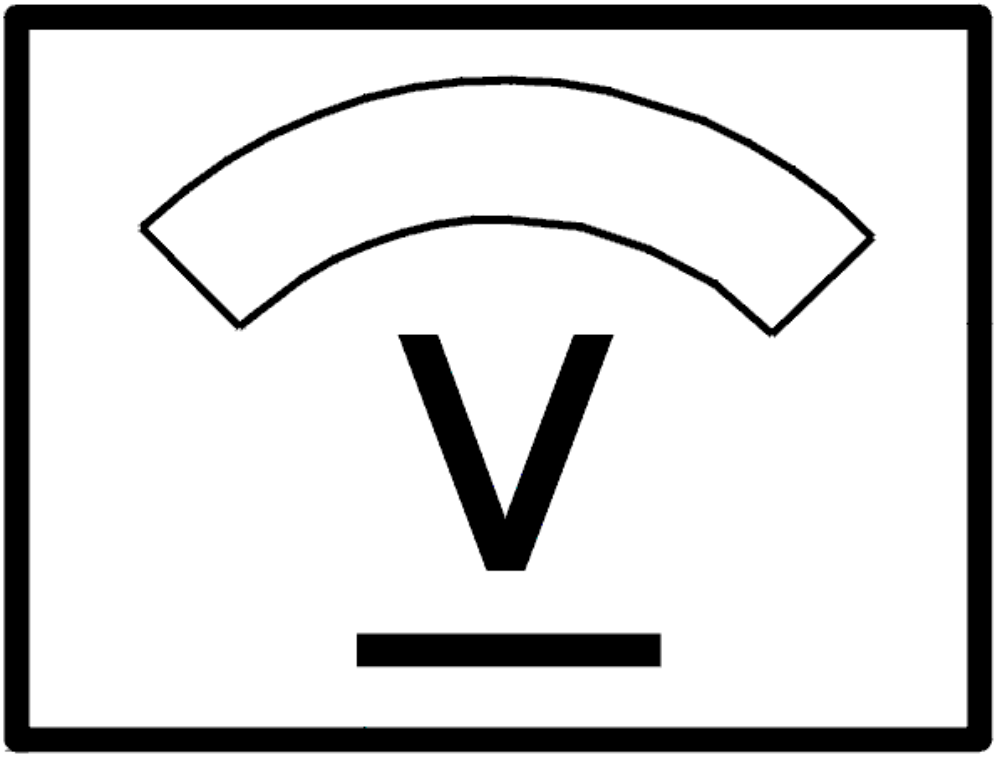

Fig. 26: Identifying Voltage Display
Courtesy of VOLVO CARS CORPORATION

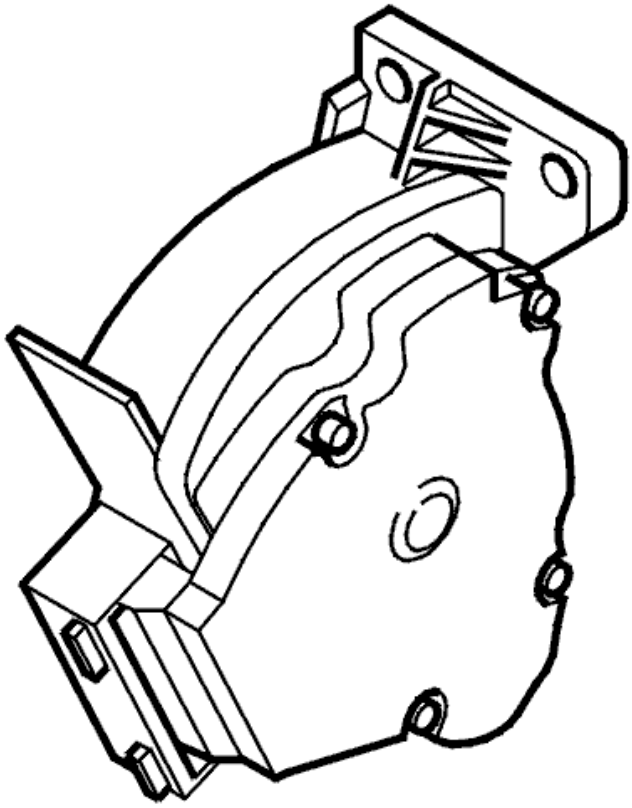

Fig. 27: Identifying Accelerator Pedal (AP) Position Sensor
Courtesy of VOLVO CARS CORPORATION

Is the power supply OK?

- **YES**

  Refer to **CHECKING THE WIRING**

- **NO**

  Refer to **CHECKING THE CONNECTORS AND CABLES**

CHECKING THE WIRING

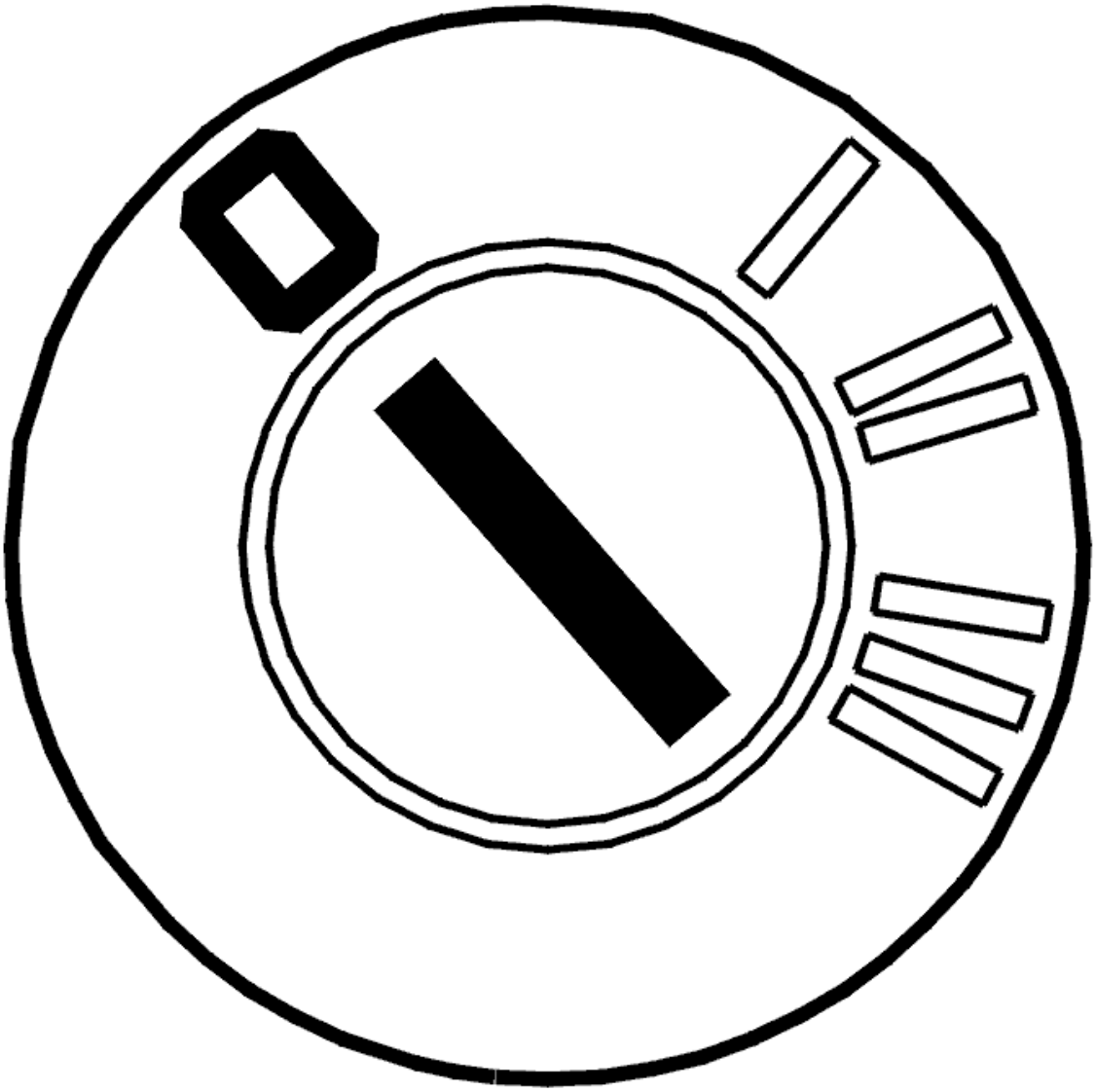

Fig. 28: Identifying Ignition OFF
Courtesy of VOLVO CARS CORPORATION

- Ignition off.

  Check the signal cable between engine control module (ECM) terminal #B17 (#B27) and accelerator pedal (AP) position sensor terminal #5. Check for a short-circuit to supply voltage.

  HINT: With the ignition on, the power supply from the engine control module (ECM) must be approximately 5 V measured between accelerator pedal (AP) position sensor terminals #6 (wiring side) and #4 (wiring side).

  Try a new accelerator pedal (AP) position sensor if no fault is found and the fault is permanent.

  Remedy as necessary.

Other information:

- see **CHECKING WIRING AND TERMINALS**
- To connect the breakout box, see **CONNECTING THE BREAKOUT BOX**
- For 5 cylinder turbocharged engines -2004, see **SIGNAL DESCRIPTION**
- For 5 cylinder turbocharged engines 2005-, see **SIGNAL SPECIFICATION** .
- For 6 cylinder engines -2004, see **SIGNAL SPECIFICATION**
- For 6 cylinder engines 2005-, see **SIGNAL SPECIFICATION** .
- To access and replace the accelerator pedal (AP) position sensor, see **ACCELERATOR PEDAL (AP), REPLACING** .

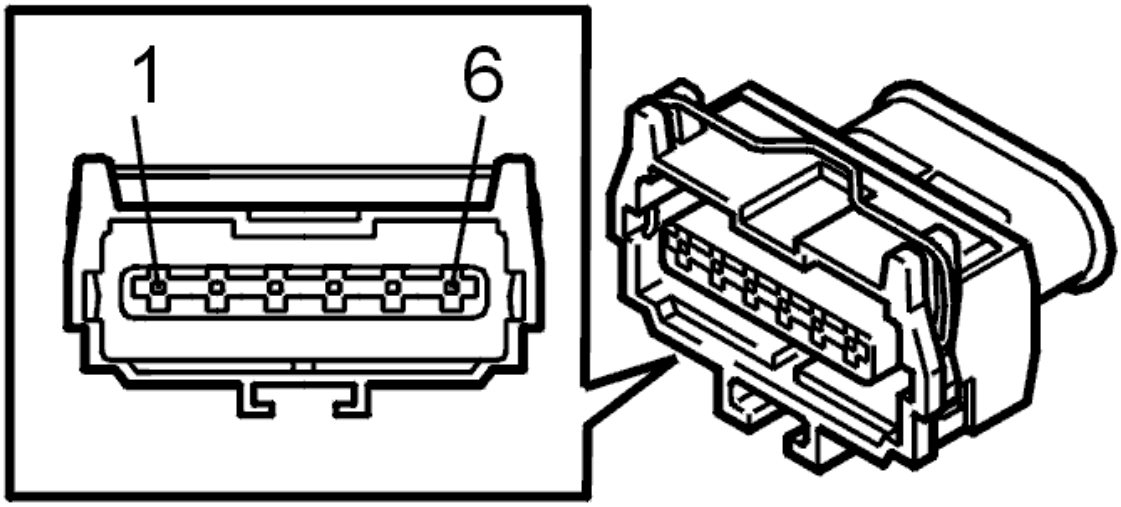

Fig. 29: Accelerator Pedal Position Sensor Connector Terminal Identification
Courtesy of VOLVO CARS CORPORATION

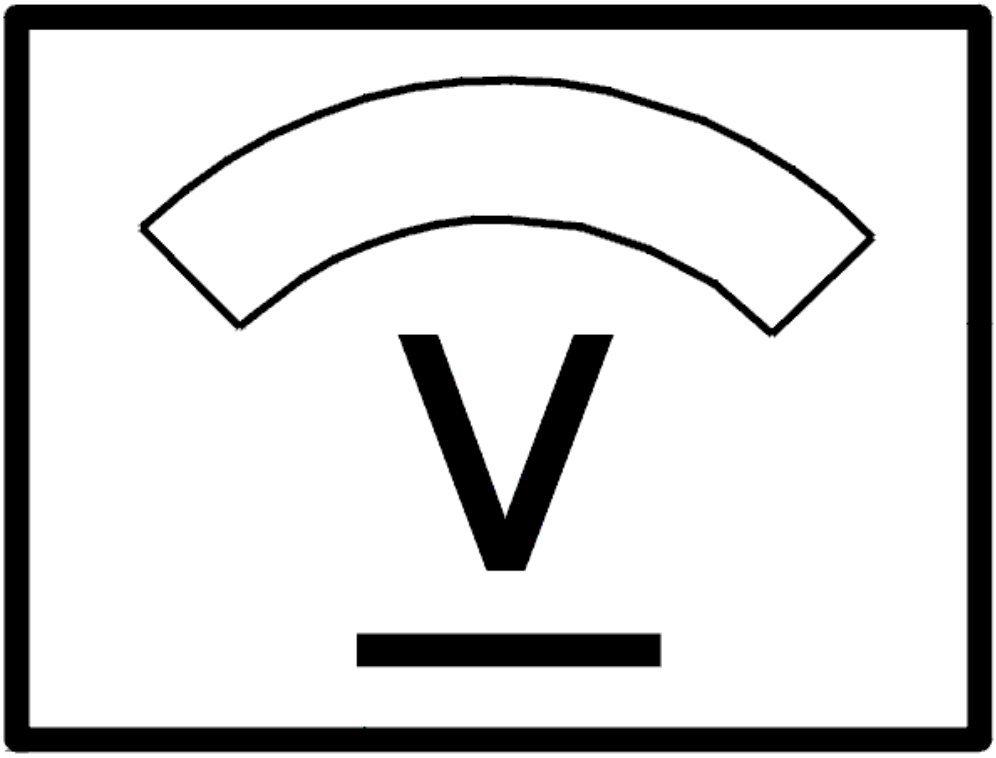

Fig. 30: Identifying Voltage Display
Courtesy of VOLVO CARS CORPORATION

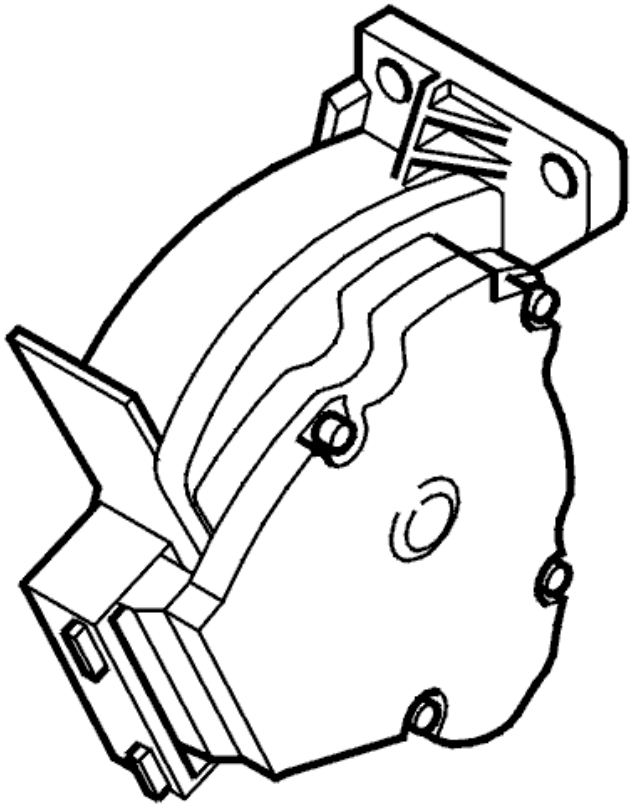

Fig. 31: Identifying Accelerator Pedal (AP) Position Sensor
Courtesy of VOLVO CARS CORPORATION

- **Continue**

  Refer to **VERIFICATION**

CHECKING THE CONNECTORS AND CABLES

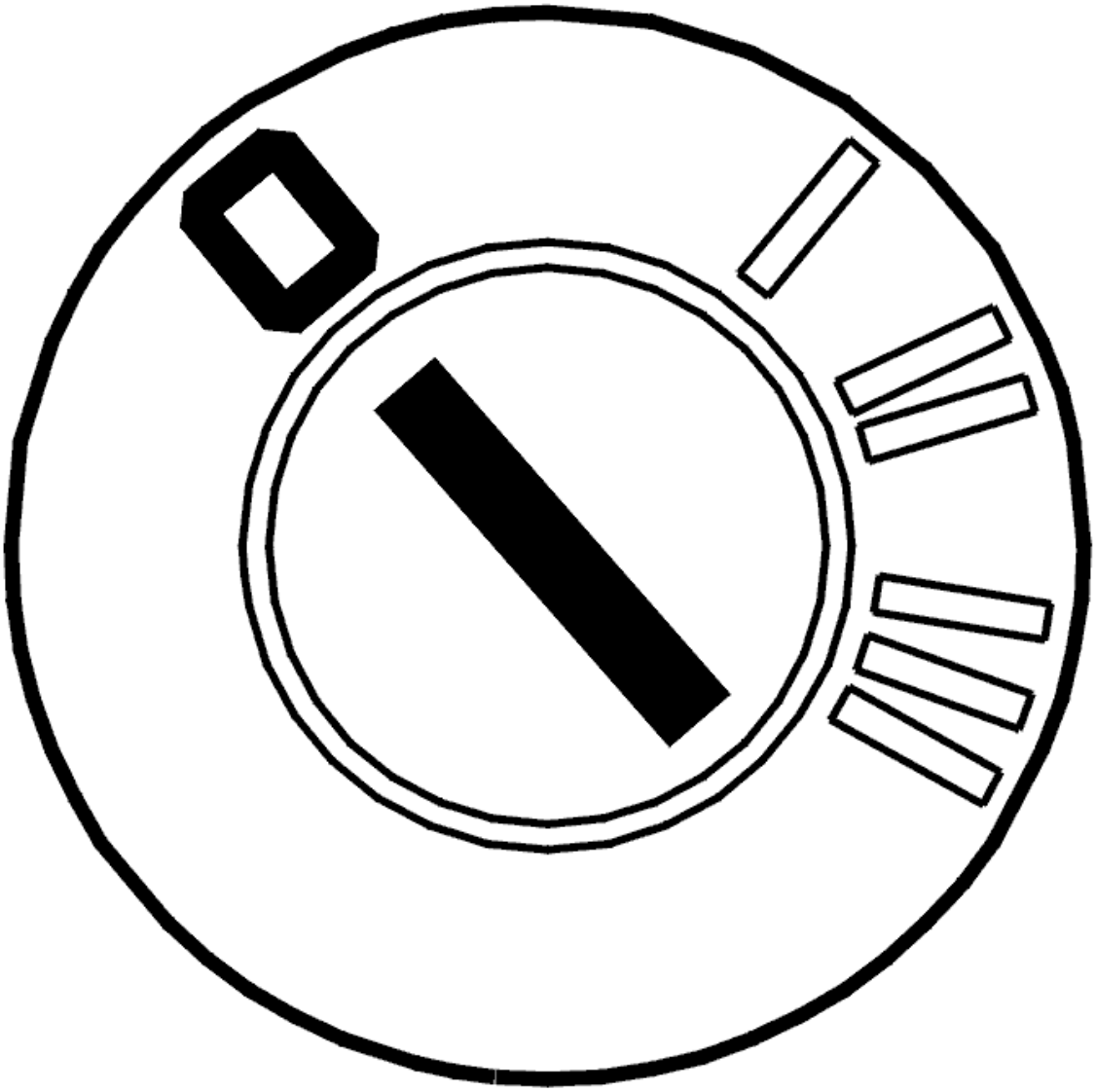

Fig. 32: Identifying Ignition OFF
Courtesy of VOLVO CARS CORPORATION

- Ignition off
- Check the accelerator pedal (AP) position sensor connector. Check for contact resistance and oxidation.

  Check the power supply cable (12 V) between accelerator pedal (AP) position sensor terminal #1 (wiring side) and the relevant fuse for the circuit. Check for a short-circuit to ground. Check for an open-circuit. Check that the fuse for the circuit has not blown.

  Check the ground lead for power supply (12 V) between accelerator pedal (AP) position sensor terminal #3 (wiring side) and the relevant ground terminal. Check for contact resistance and oxidation. Check for an open-circuit.

  HINT: With the ignition on, the power supply to the accelerator pedal (AP) position sensor must be approximately 12 V measured between accelerator pedal (AP) position sensor terminals #1 (wiring

side) and #3 (wiring side).

Remedy as necessary.

Other information:

- see **CHECKING WIRING AND TERMINALS**
- To connect the breakout box, see **CONNECTING THE BREAKOUT BOX**
- For 5 cylinder turbocharged engines -2004, see **SIGNAL DESCRIPTION**
- For 5 cylinder turbocharged engines 2005-, see **SIGNAL SPECIFICATION** .
- For 6 cylinder engines -2004, see **SIGNAL SPECIFICATION**
- For 6 cylinder engines 2005-, see **SIGNAL SPECIFICATION** .
- To access and replace the accelerator pedal (AP) position sensor, see **ACCELERATOR PEDAL (AP), REPLACING** .

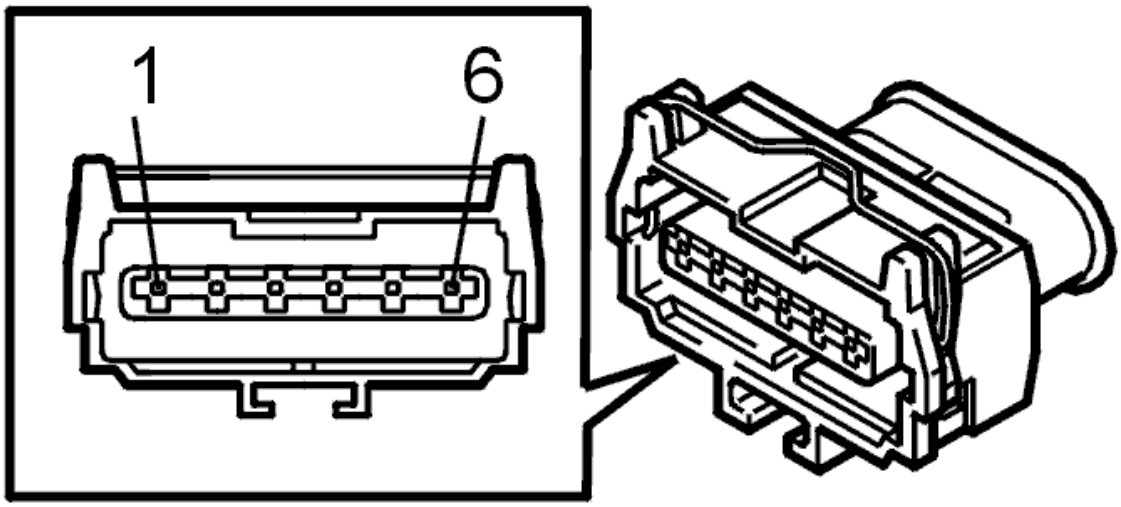

Fig. 33: Accelerator Pedal Position Sensor Connector Terminal Identification
Courtesy of VOLVO CARS CORPORATION

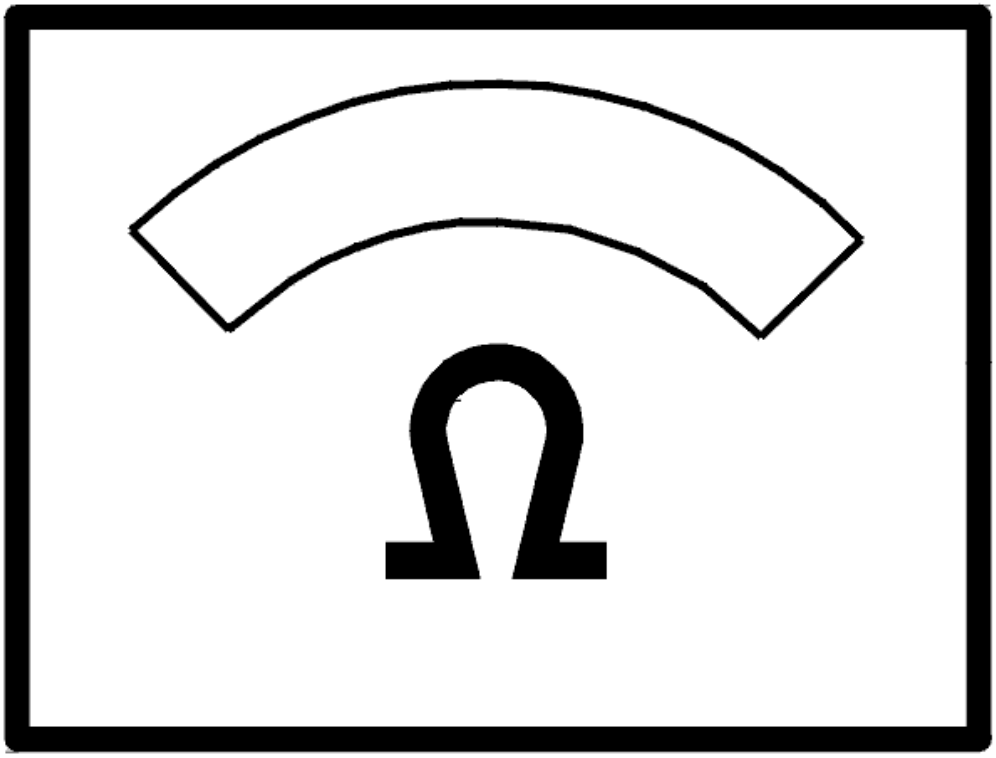

Fig. 34: Identifying Ohm Meter
Courtesy of VOLVO CARS CORPORATION

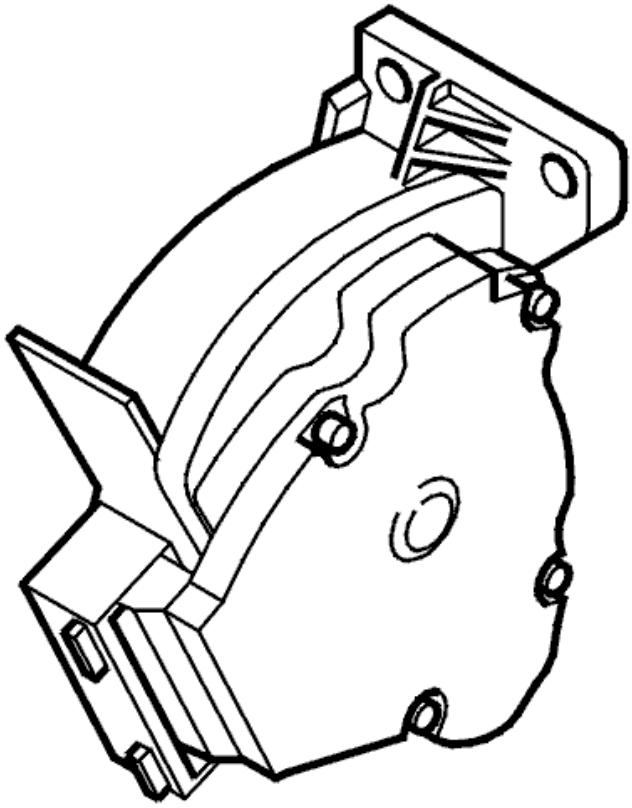

Fig. 35: Identifying Accelerator Pedal (AP) Position Sensor
Courtesy of VOLVO CARS CORPORATION

- **Continue**

  Refer to **CHECKING THE WIRING**

VERIFICATION

VERIFICATION

HINT: After carrying out the repair, check that the fault has been remedied.

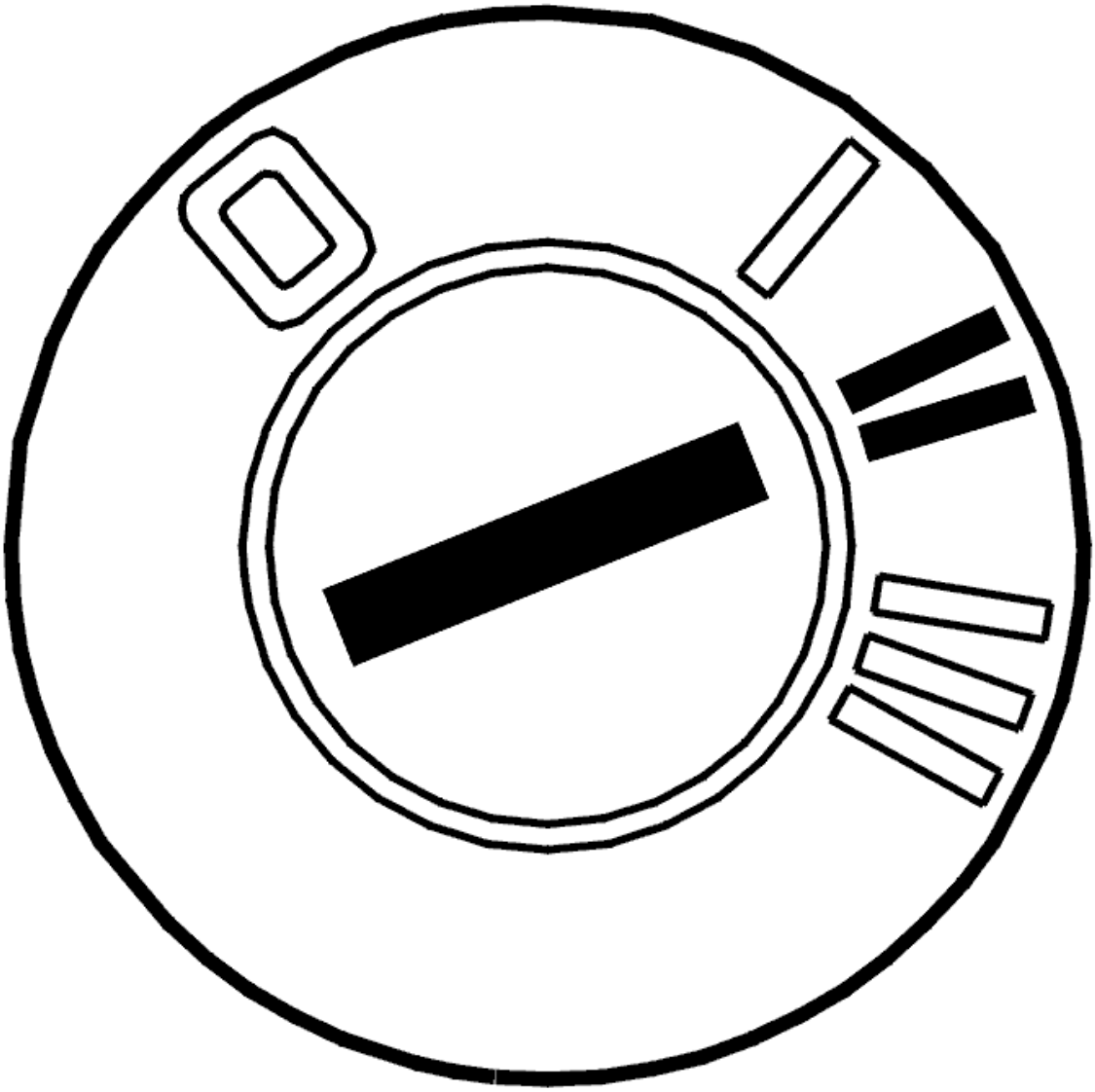

Fig. 36: Identifying Ignition ON
Courtesy of VOLVO CARS CORPORATION

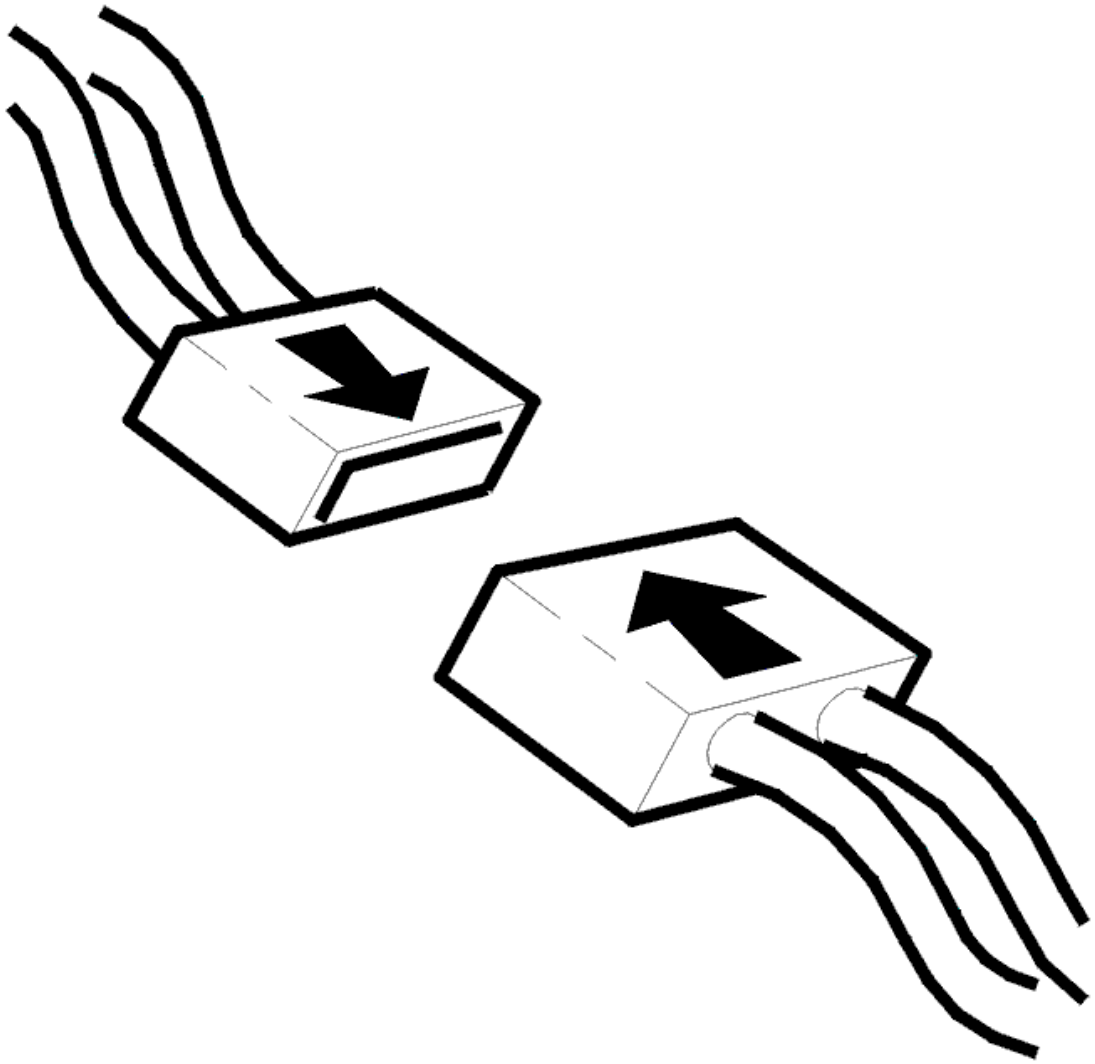

Fig. 37: Connecting Connector
Courtesy of VOLVO CARS CORPORATION

- Ignition off
- Reconnect the connectors, reinstall components etc.
- Ignition on
- Read off the movement of the accelerator pedal by carefully depressing and releasing the accelerator pedal (AP).

  Check that the value changes with accelerator pedal movement. The value must be approximately 0.4 V when the accelerator pedal (AP) is unaffected and approximately 4 V when the accelerator pedal (AP) is fully depressed.

  The fault has been remedied if the values are OK.

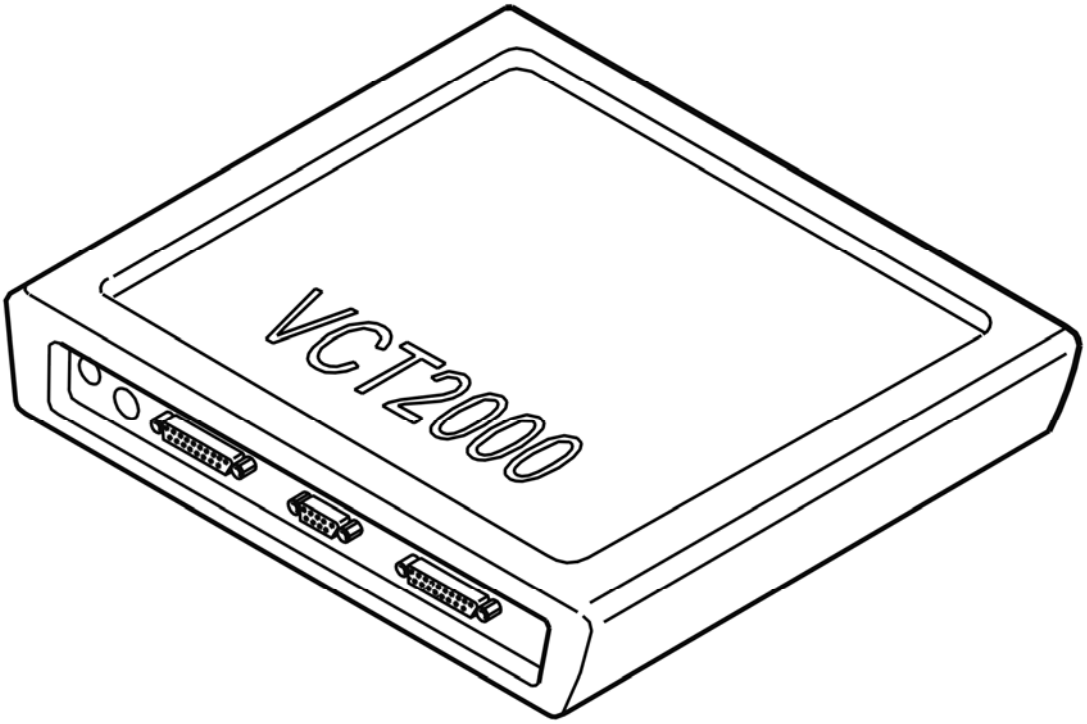

Fig. 38: Identifying VCT2000 Diagnostic Tool Symbol In VIDA
Courtesy of VOLVO CARS CORPORATION

Are these values OK?

- **YES**

  VERIFIED: Troubleshooting has been completed.

- **NO**

  Refer to **INFORMATION**

INFORMATION

FAULT-TRACING INFORMATION

The fault should have been detected and remedied. As this is not the case fault-tracing has failed.

Exit fault-tracing for this diagnostic trouble code (DTC) or make another attempt.

ECM-9520: ACCELERATOR PEDAL (AP) POSITION SENSOR, ANALOG SIGNAL. SIGNAL TOO LOW (B5254T2; B6294T; 2003-2004)

DIAGNOSTIC TROUBLE CODE (DTC) INFORMATION

see **DIAGNOSTIC TROUBLE CODE (DTC) INFORMATION**

SIGNAL TOO LOW

CHECKING THE STATUS

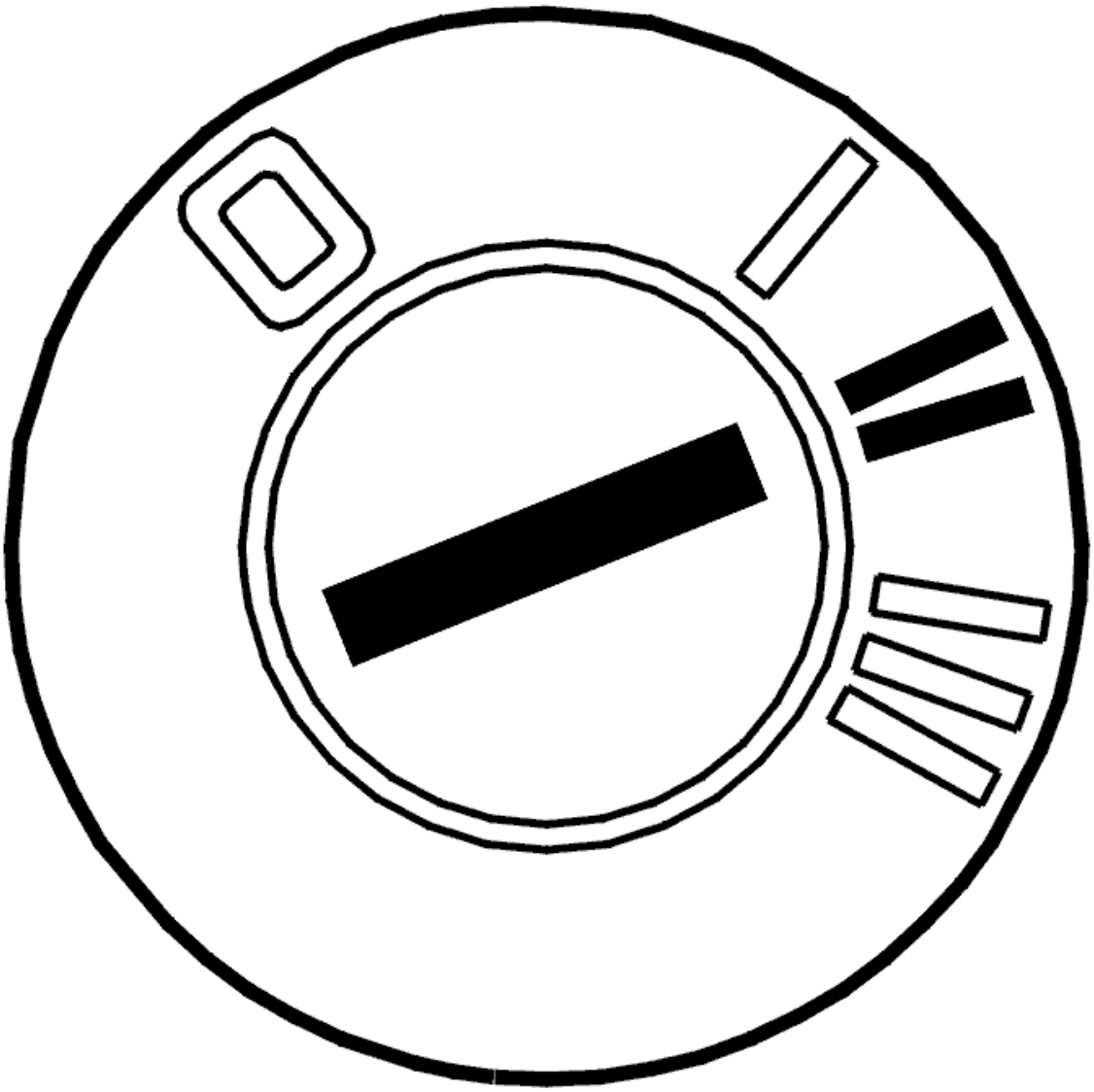

Fig. 39: Identifying Ignition ON
Courtesy of VOLVO CARS CORPORATION

- Ignition on
- Read off the movement of the accelerator pedal by carefully depressing and releasing the accelerator pedal (AP).

  Check that the value changes with accelerator pedal movement. The value must be approximately 0.4 V

when the accelerator pedal (AP) is unaffected and approximately 4 V when the accelerator pedal (AP) is fully depressed.

The fault is intermittent at the moment if the values are OK.

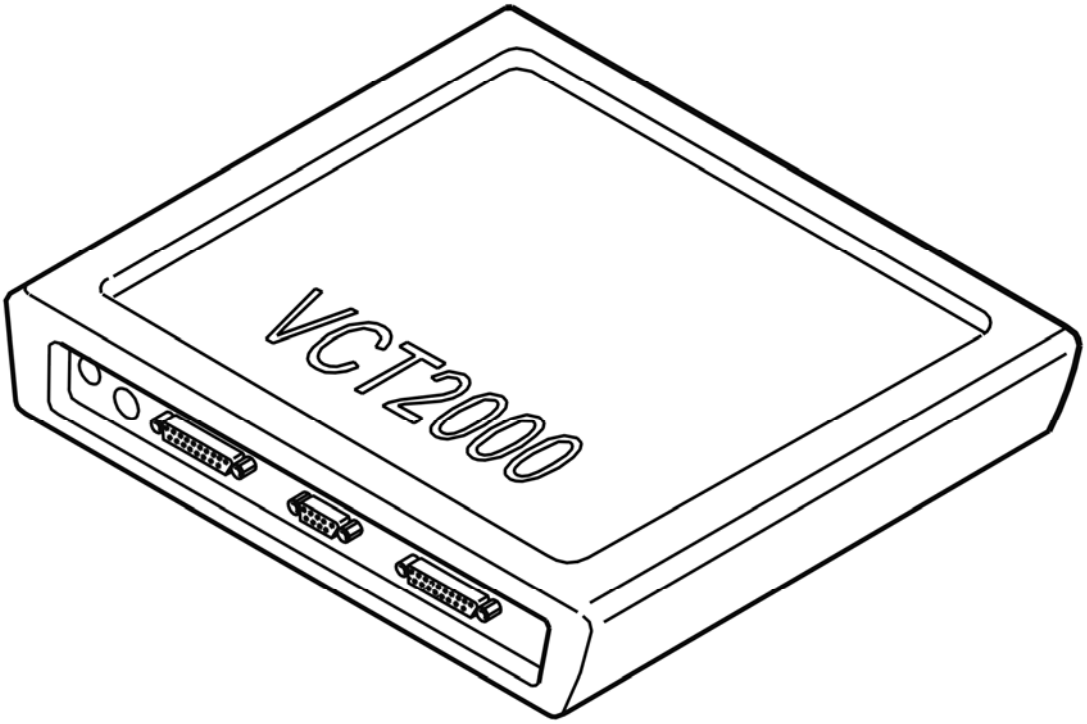

Fig. 40: Identifying VCT2000 Diagnostic Tool Symbol In VIDA
Courtesy of VOLVO CARS CORPORATION

- **Continue**

Refer to **CHECKING THE POWER SUPPLY**

CHECKING THE POWER SUPPLY

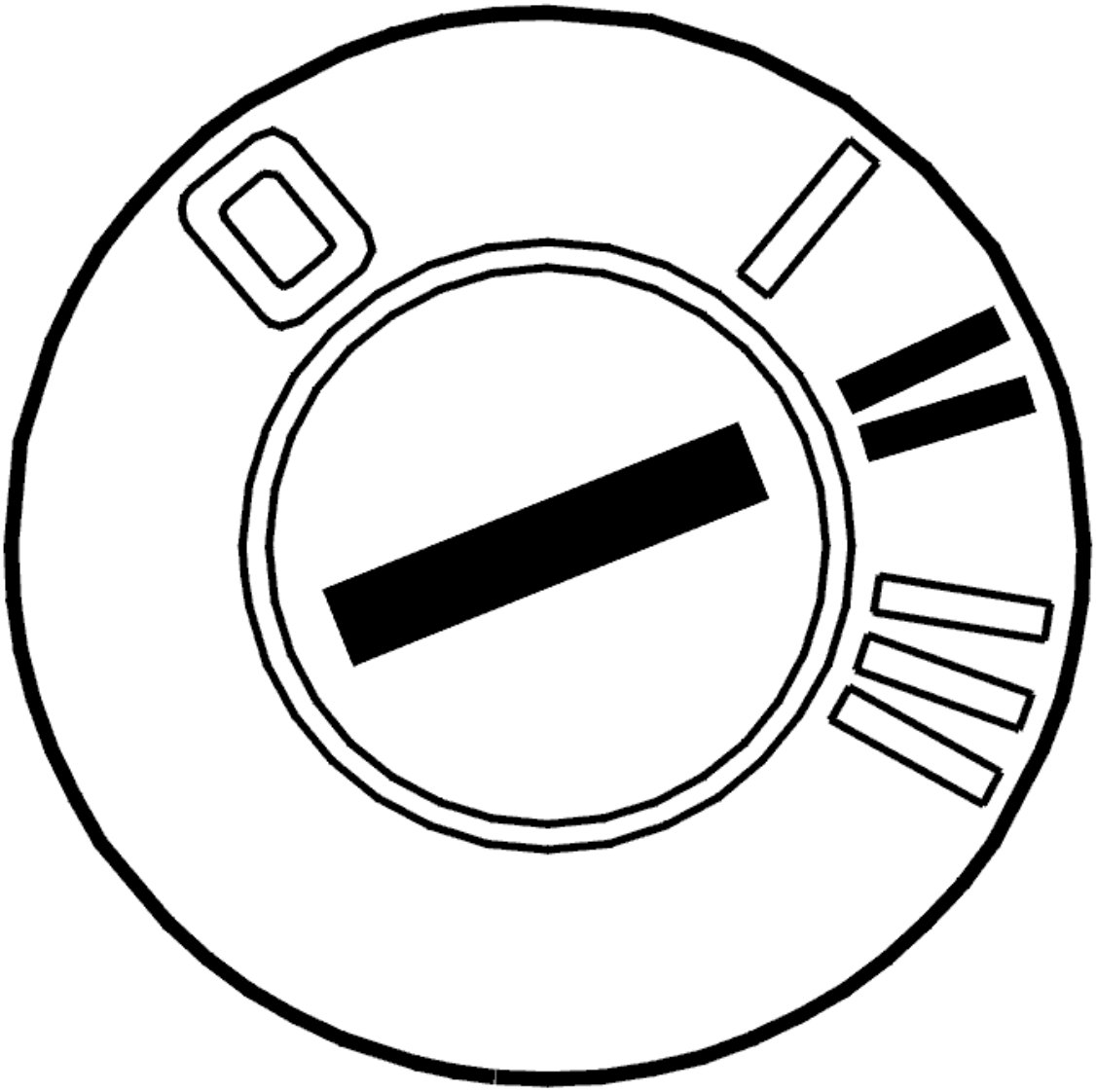

Fig. 41: Identifying Ignition ON
Courtesy of VOLVO CARS CORPORATION

- Ignition on.

  Check the power supply (12 V) to the accelerator pedal (AP) position sensor between accelerator pedal (AP) position sensor terminals #1 (wiring side) and #3 (wiring side).

  Check that the power supply is approximately 12 V with the ignition on.

  Remedy as necessary.

  Other information:

  - see **CHECKING WIRING AND TERMINALS**
  - To connect the breakout box, see **CONNECTING THE BREAKOUT BOX**

- For 5 cylinder turbocharged engines -2004, see **SIGNAL DESCRIPTION**
- For 5 cylinder turbocharged engines 2005-, see **SIGNAL SPECIFICATION** .
- For 6 cylinder engines -2004, see **SIGNAL SPECIFICATION**
- For 6 cylinder engines 2005-, see **SIGNAL SPECIFICATION** .
- To access and replace the accelerator pedal (AP) position sensor, see **ACCELERATOR PEDAL (AP), REPLACING** .

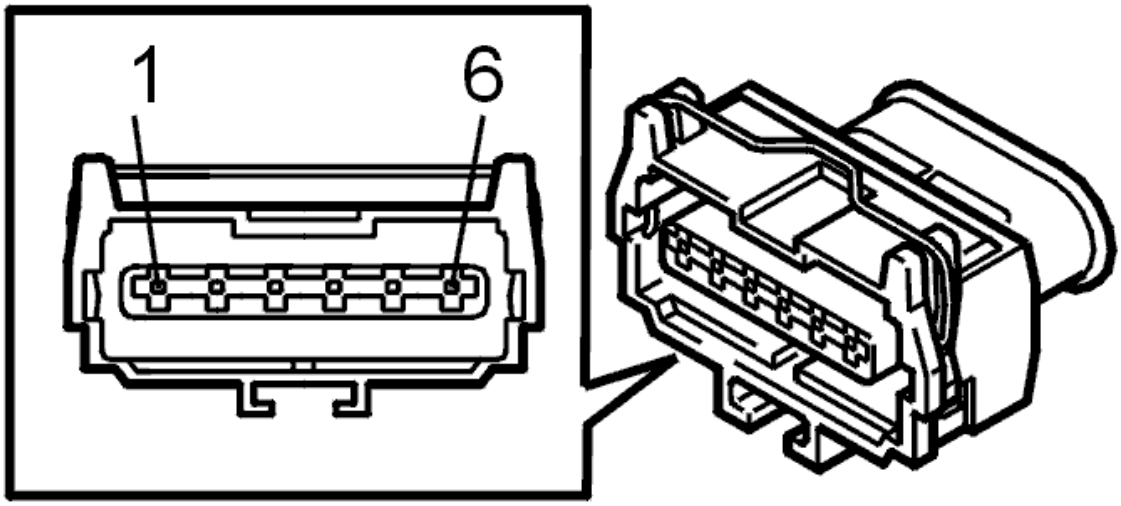

Fig. 42: Accelerator Pedal Position Sensor Connector Terminal Identification
Courtesy of VOLVO CARS CORPORATION

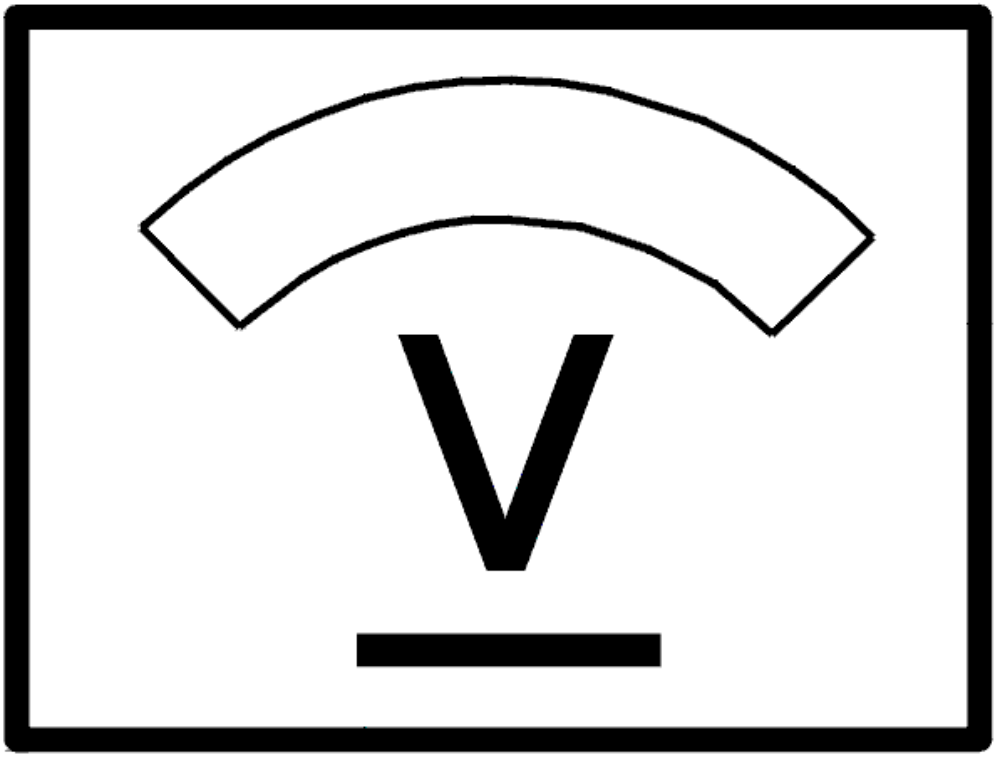

Fig. 43: Identifying Voltage Display
Courtesy of VOLVO CARS CORPORATION

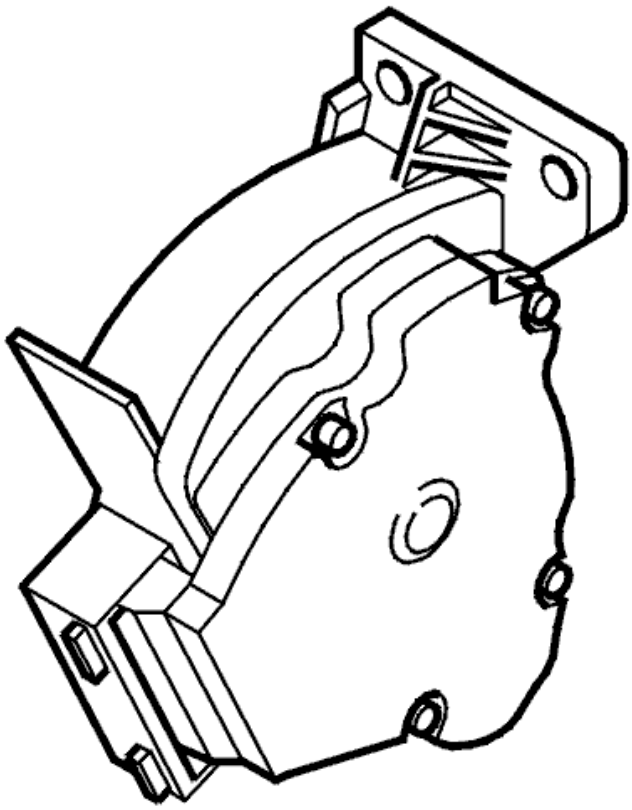

Fig. 44: Identifying Accelerator Pedal (AP) Position Sensor
Courtesy of VOLVO CARS CORPORATION

Is the power supply OK?

- **YES**

  Refer to **CHECKING COMPONENTS AND WIRING**

- **NO**

  Refer to **CHECKING THE CONNECTORS AND CABLES**

CHECKING COMPONENTS AND WIRING

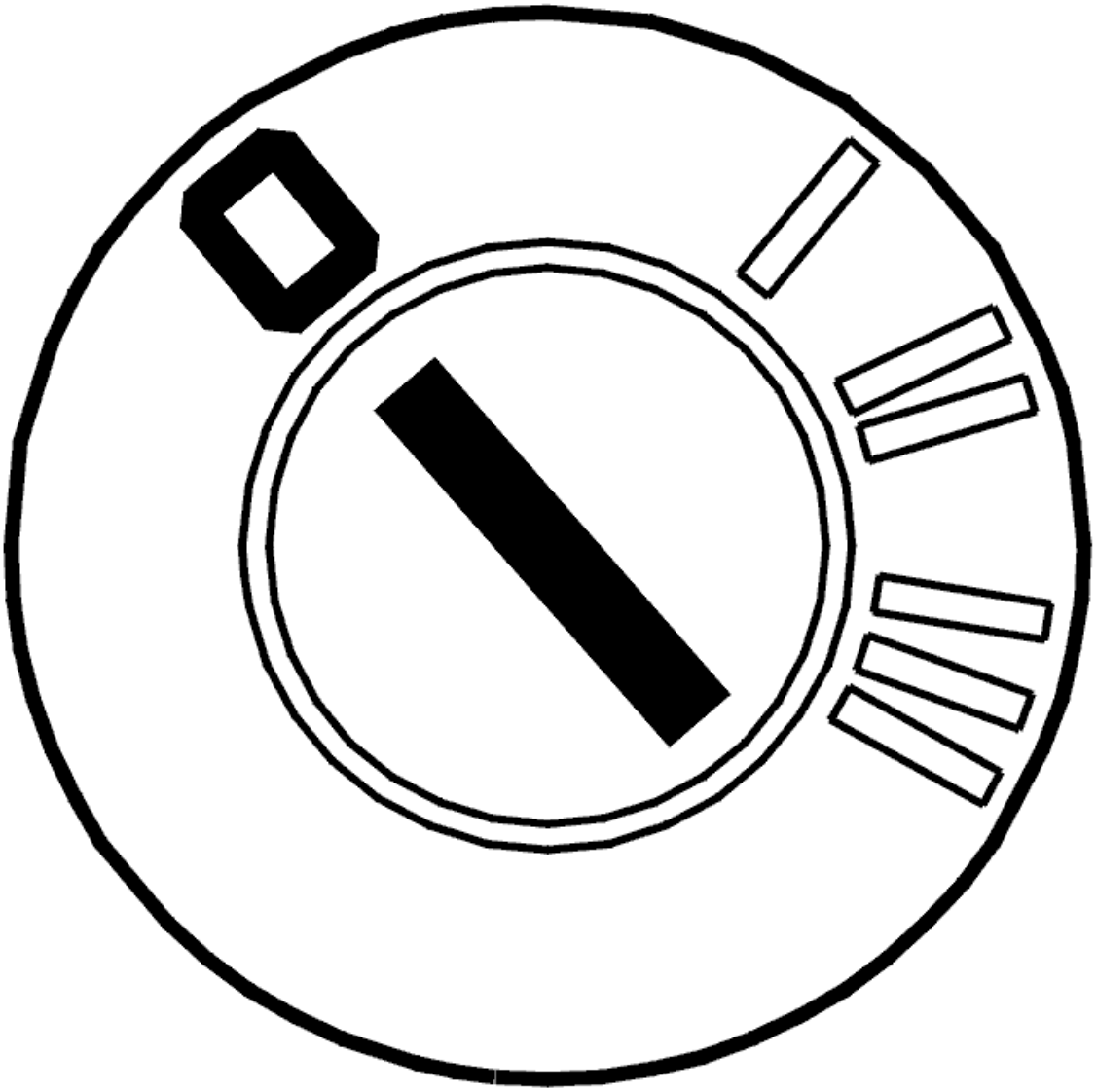

Fig. 45: Identifying Ignition OFF
Courtesy of VOLVO CARS CORPORATION

- Ignition off
- Check the accelerator pedal position sensor and engine control module (ECM) connectors. Check for contact resistance and oxidation.

  Check the power supply cable (5 volts) between engine control module (ECM) terminal #B9 (#B19) and accelerator pedal (AP) position sensor terminal #6 (wiring side). Check for an open-circuit. Check for a short-circuit to ground.

  Check the signal ground cable between engine control module (ECM) terminal #B5 (#B15) and accelerator pedal (AP) position sensor terminal #4 (wiring side). Check for an open-circuit.

  HINT: With the ignition on, the power supply from the engine control module (ECM) must be approximately 5 V measured between accelerator pedal (AP) position sensor terminals #6 (wiring

side) and #4 (wiring side).

Check the signal cable between engine control module (ECM) terminal #B17 (#B27) and accelerator pedal (AP) position sensor terminal #5. Check for an open-circuit. Check for a short-circuit to ground.

Try a new accelerator pedal (AP) position sensor if no fault is found and the fault is permanent.

Remedy as necessary.

Other information:

- see **CHECKING WIRING AND TERMINALS**
- To connect the breakout box, see **CONNECTING THE BREAKOUT BOX**
- For 5 cylinder turbocharged engines -2004, see **SIGNAL DESCRIPTION**
- For 5 cylinder turbocharged engines 2005-, see **SIGNAL SPECIFICATION** .
- For 6 cylinder engines -2004, see **SIGNAL SPECIFICATION**
- For 6 cylinder engines 2005-, see **SIGNAL SPECIFICATION** .
- To access and replace the accelerator pedal (AP) position sensor, see **ACCELERATOR PEDAL (AP), REPLACING** .

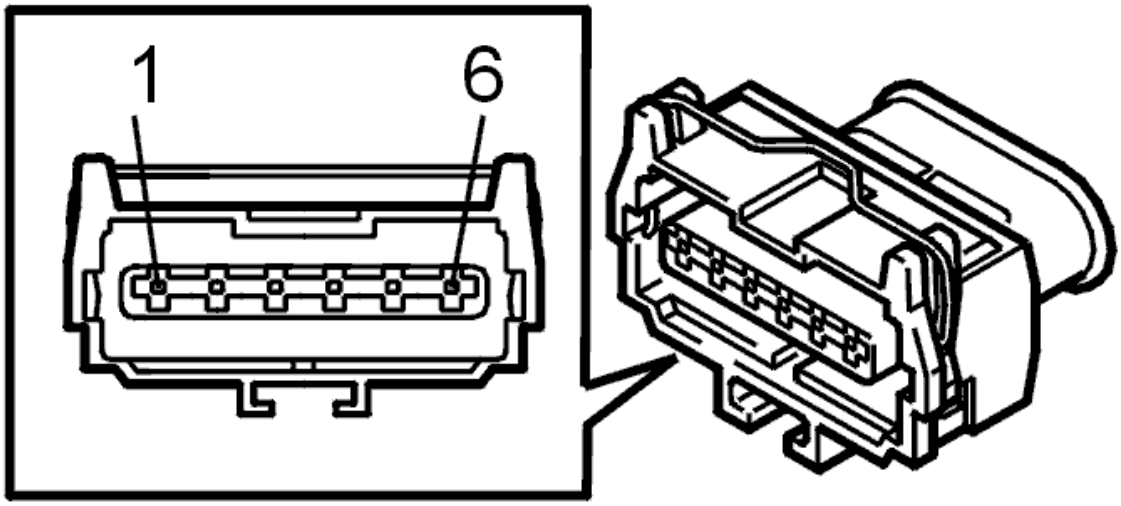

Fig. 46: Accelerator Pedal Position Sensor Connector Terminal Identification
Courtesy of VOLVO CARS CORPORATION

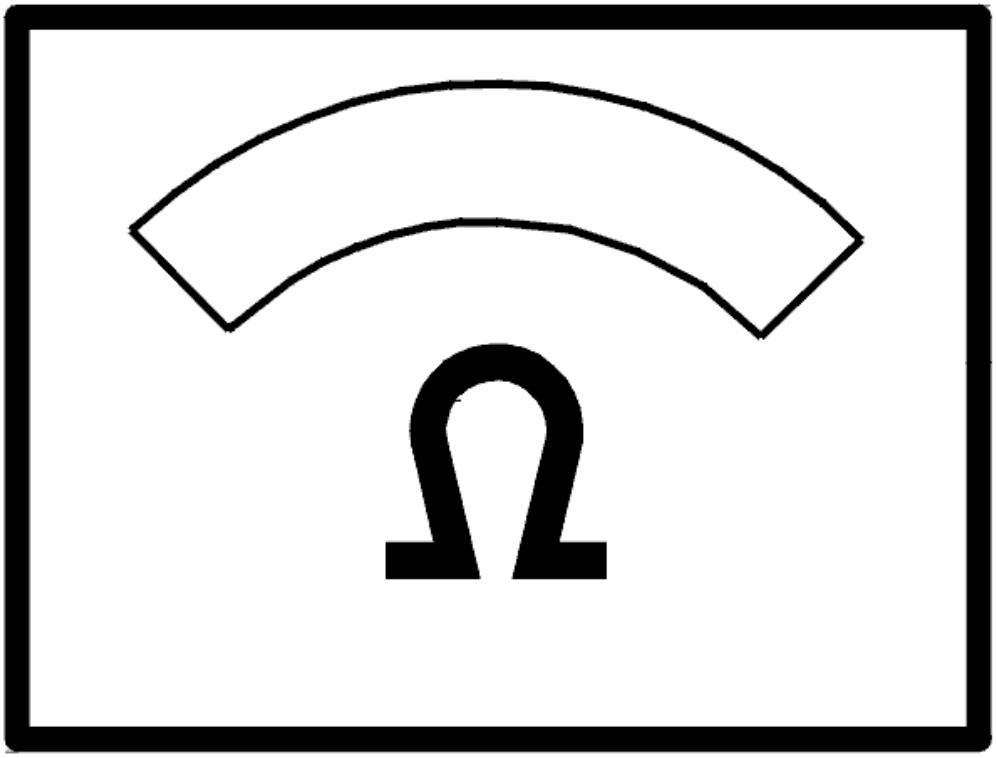

Fig. 47: Identifying Ohm Meter
Courtesy of VOLVO CARS CORPORATION

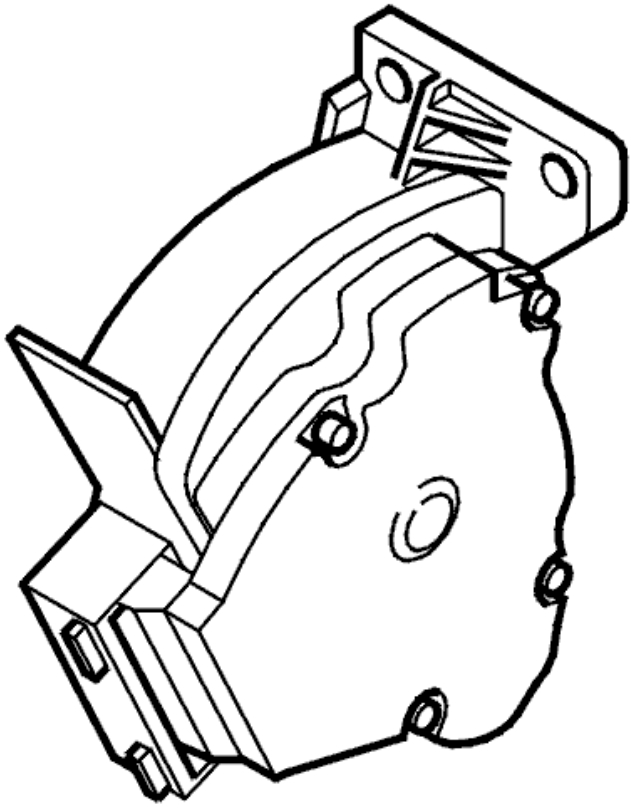

Fig. 48: Identifying Accelerator Pedal (AP) Position Sensor
Courtesy of VOLVO CARS CORPORATION

- **Continue**

  Refer to **VERIFICATION**

CHECKING THE CONNECTORS AND CABLES

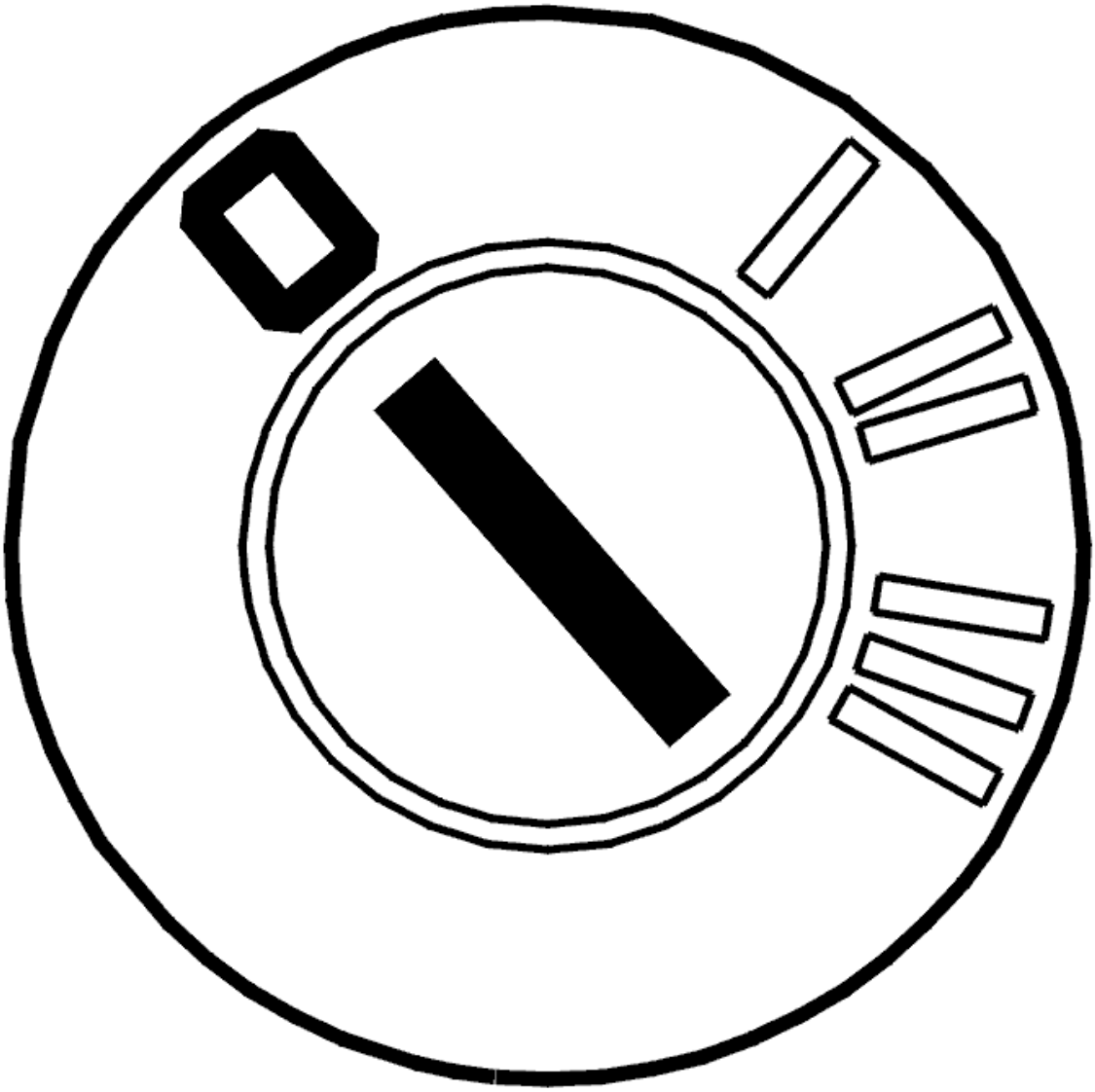

Fig. 49: Identifying Ignition OFF
Courtesy of VOLVO CARS CORPORATION

- Ignition off
- Check the accelerator pedal (AP) position sensor connector. Check for contact resistance and oxidation.

  Check the power supply cable (12 V) between accelerator pedal (AP) position sensor terminal #1 (wiring side) and the relevant fuse for the circuit. Check for a short-circuit to ground. Check for an open-circuit. Check that the fuse for the circuit has not blown.

  Check the ground lead for power supply (12 V) between accelerator pedal (AP) position sensor terminal #3 (wiring side) and the relevant ground terminal. Check for contact resistance and oxidation. Check for an open-circuit.

  HINT: With the ignition on, the power supply to the accelerator pedal (AP) position sensor must be approximately 12 V measured between accelerator pedal (AP) position sensor terminals #1 (wiring

side) and #3 (wiring side).

Remedy as necessary.

Other information:

- see **CHECKING WIRING AND TERMINALS**
- To connect the breakout box, see **CONNECTING THE BREAKOUT BOX**
- For 5 cylinder turbocharged engines -2004, see **SIGNAL DESCRIPTION**
- For 5 cylinder turbocharged engines 2005-, see **SIGNAL SPECIFICATION** .
- For 6 cylinder engines -2004, see **SIGNAL SPECIFICATION**
- For 6 cylinder engines 2005-, see **SIGNAL SPECIFICATION** .
- To access and replace the accelerator pedal (AP) position sensor, see **ACCELERATOR PEDAL (AP), REPLACING** .

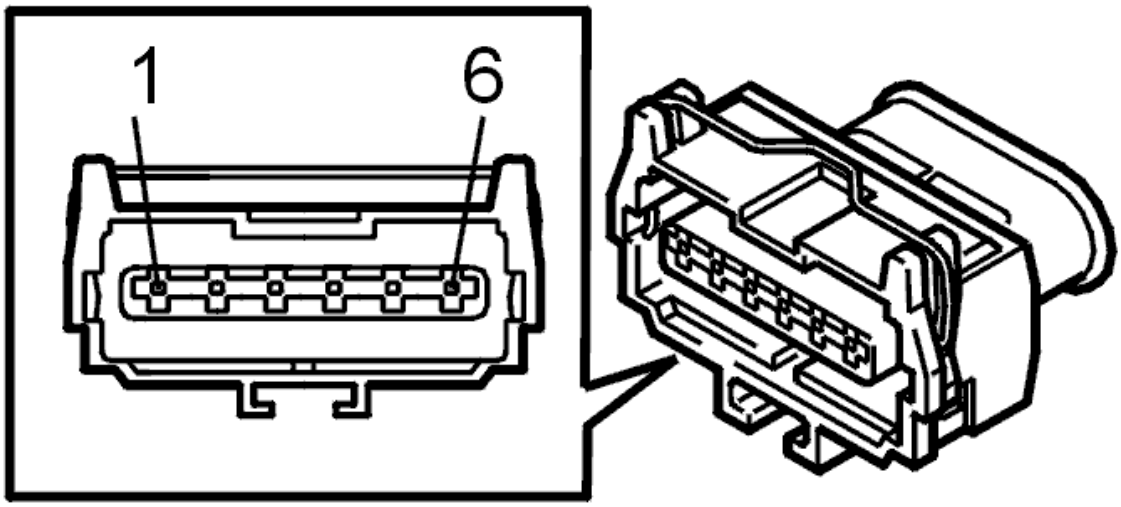

Fig. 50: Accelerator Pedal Position Sensor Connector Terminal Identification
Courtesy of VOLVO CARS CORPORATION

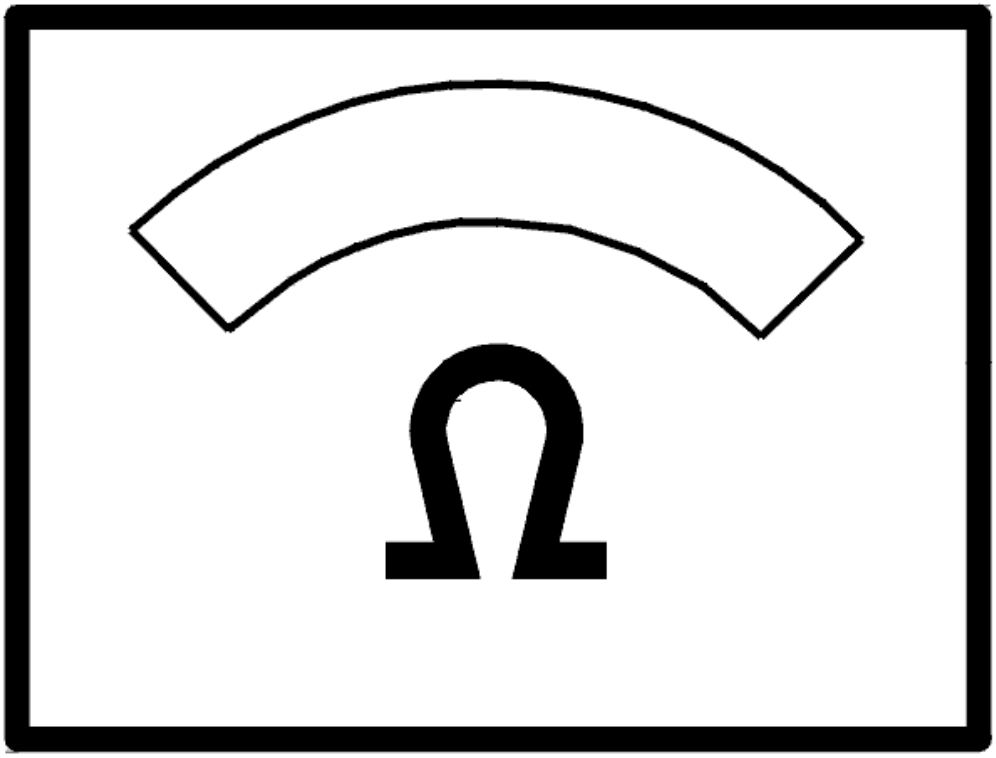

Fig. 51: Identifying Ohm Meter
Courtesy of VOLVO CARS CORPORATION

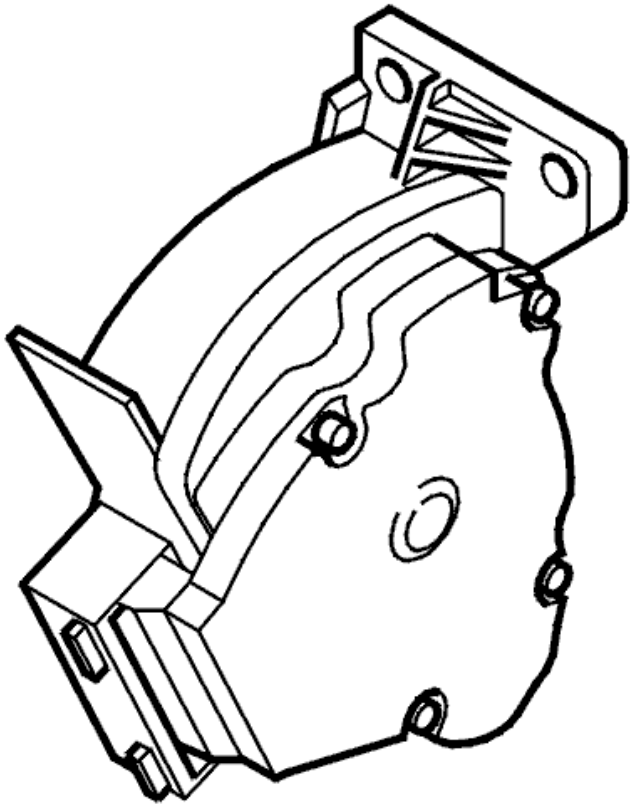

Fig. 52: Identifying Accelerator Pedal (AP) Position Sensor
Courtesy of VOLVO CARS CORPORATION

- **Continue**

  Refer to **CHECKING COMPONENTS AND WIRING**

VERIFICATION

VERIFICATION

HINT: After carrying out the repair, check that the fault has been remedied.

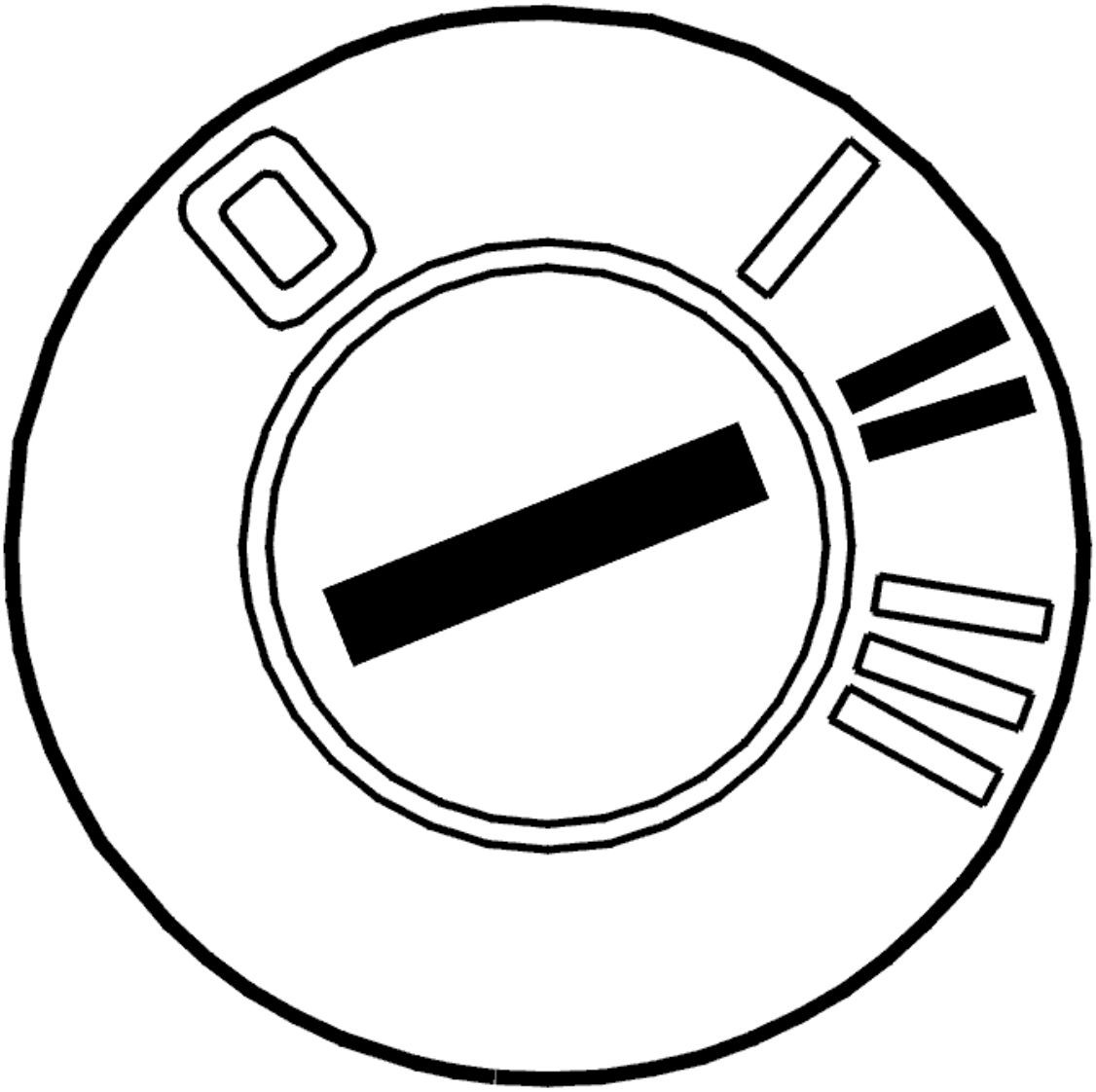

Fig. 53: Identifying Ignition ON
Courtesy of VOLVO CARS CORPORATION

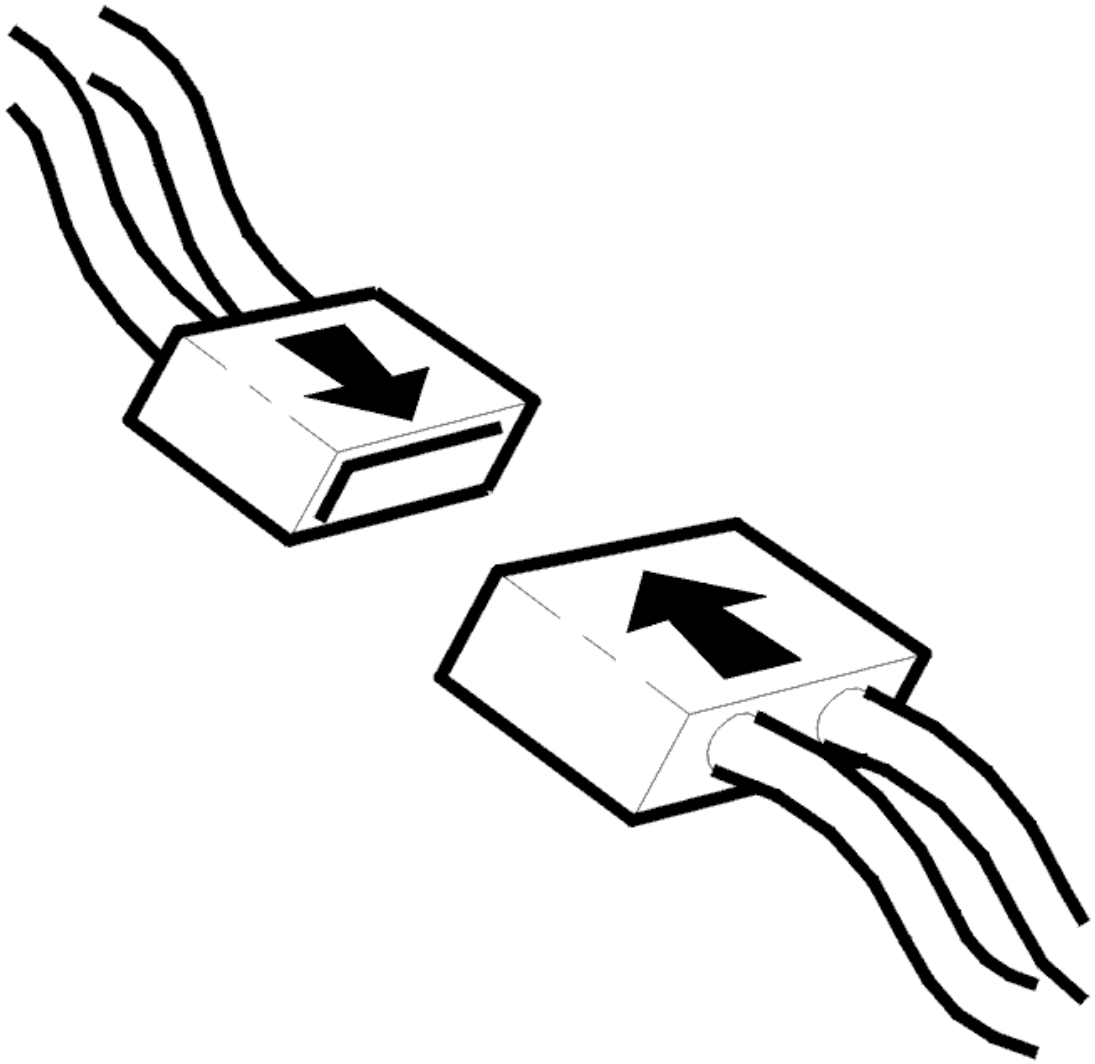

Fig. 54: Connecting Connector
Courtesy of VOLVO CARS CORPORATION

- Ignition off
- Reconnect the connectors, reinstall components etc.
- Ignition on
- Read off the movement of the accelerator pedal by carefully depressing and releasing the accelerator pedal (AP).

  Check that the value changes with accelerator pedal movement. The value must be approximately 0.4 V when the accelerator pedal (AP) is unaffected and approximately 4 V when the accelerator pedal (AP) is fully depressed.

  The fault has been remedied if the values are OK.

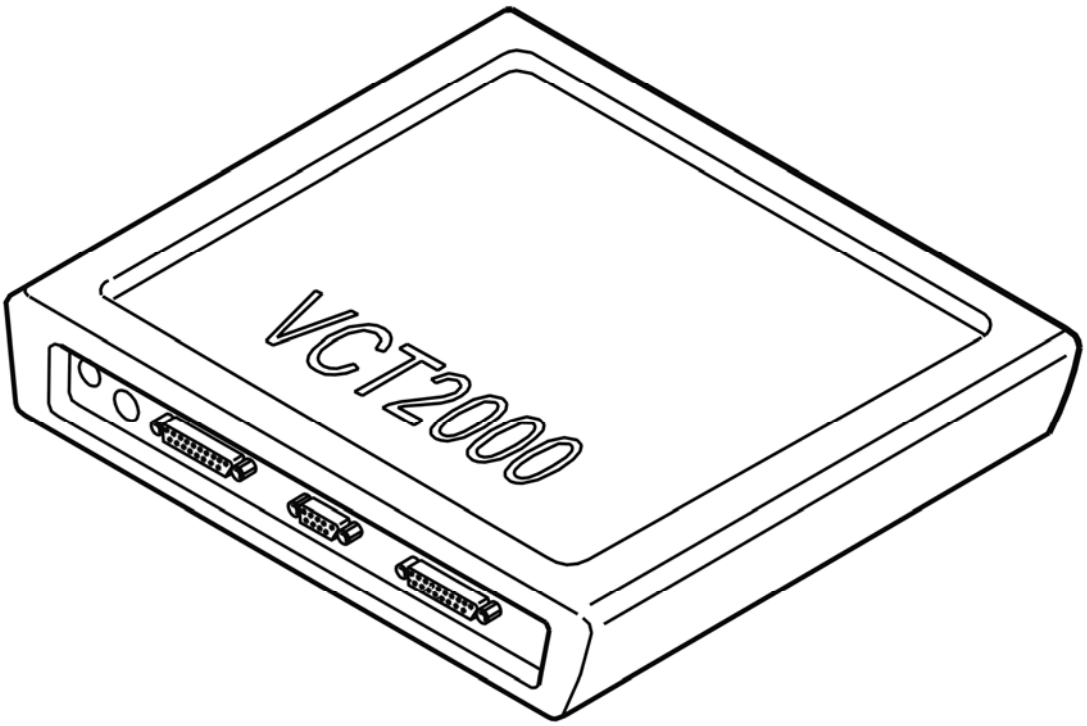

Fig. 55: Identifying VCT2000 Diagnostic Tool Symbol In VIDA
Courtesy of VOLVO CARS CORPORATION

Are these values OK?

- **YES**

  VERIFIED: Troubleshooting has been completed.

- **NO**

  Refer to **INFORMATION**

INFORMATION

FAULT-TRACING INFORMATION

The fault should have been detected and remedied. As this is not the case fault-tracing has failed.

Exit fault-tracing for this diagnostic trouble code (DTC) or make another attempt.

ECM-9530: ACCELERATOR PEDAL (AP) POSITION SENSOR, DIGITAL SIGNAL. SIGNAL TOO HIGH (B5254T2; B6294T; 2003-2004)

DIAGNOSTIC TROUBLE CODE (DTC) INFORMATION

Condition

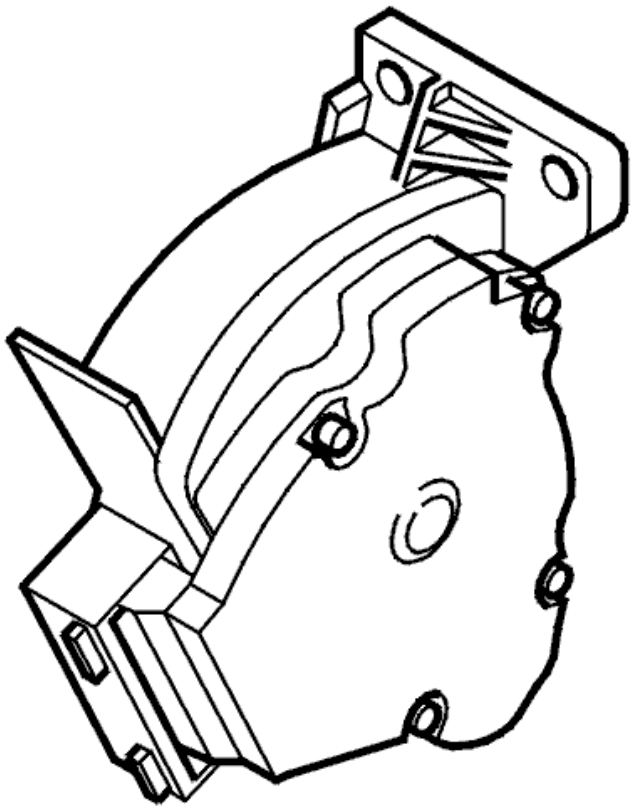

Fig. 56: Identifying Accelerator Pedal (AP) Position Sensor
Courtesy of VOLVO CARS CORPORATION

Diagnostic trouble code (DTC) ECM-9530 is stored if the engine control module (ECM) registers a fault in the PWM signal from the accelerator pedal (AP) position sensor when the ignition is switched on

Substitute Value

The accelerator pedal (AP) is not working at all at the same time as the brake pedal is pressed.

Possible Source

Signal too high:

- Short-circuit to supply voltage in the signal cable
- Defective accelerator pedal (AP) position sensor.

Signal too low:

- Contact resistance or oxidation in the terminals between the engine control module (ECM) and the accelerator pedal (AP) position sensor
- Open-circuit or short-circuit to ground in the signal cable
- Open-circuit in the power supply (12V) for the accelerator pedal (AP) position sensor
- Defective accelerator pedal (AP) position sensor.

Fault symptom[s]

- Poor accelerator pedal (AP) response.

SIGNAL TOO HIGH

see **SIGNAL TOO HIGH**

ECM-9530: ACCELERATOR PEDAL (AP) POSITION SENSOR, DIGITAL SIGNAL. SIGNAL TOO LOW (B5254T2; B6294T; 2003-2004)

DIAGNOSTIC TROUBLE CODE (DTC) INFORMATION

see **DIAGNOSTIC TROUBLE CODE (DTC) INFORMATION**

SIGNAL TOO LOW

see **SIGNAL TOO LOW**

ECM-9540: ACCELERATOR PEDAL (AP) POSITION SENSOR, DIGITAL SIGNAL. FAULTY SIGNAL (B5254T2; B6294T; 2003-2004)

DIAGNOSTIC TROUBLE CODE (DTC) INFORMATION

Condition

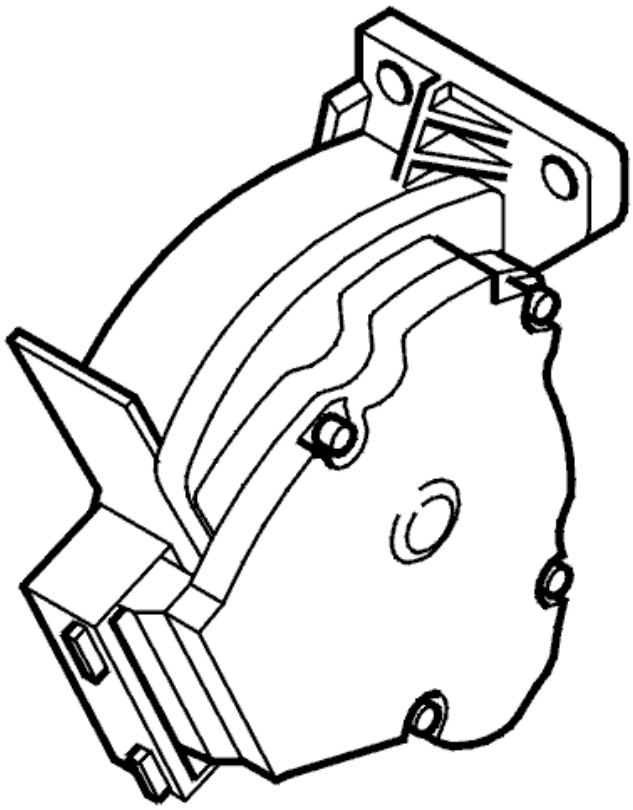

Fig. 57: Identifying Accelerator Pedal (AP) Position Sensor
Courtesy of VOLVO CARS CORPORATION

Diagnostic trouble code (DTC) ECM-9540 is stored if the engine control module (ECM), when the ignition is on, registers that the pulse width modulation (PWM) signal for the accelerator pedal (AP) position sensor deviates from the basic frequency of 200 Hz by more than ±70 Hz.

Substitute Value

None.

Possible Source

Faulty signal:

- Contact resistance or oxidation in the terminals between the engine control module (ECM) and the accelerator pedal (AP) position sensor
- Open-circuit or short-circuit to ground or supply voltage in the signal cable
- Defective accelerator pedal (AP) position sensor.

Fault symptom[s]

- None.

FAULTY SIGNAL

CHECKING THE CONNECTORS AND CABLES

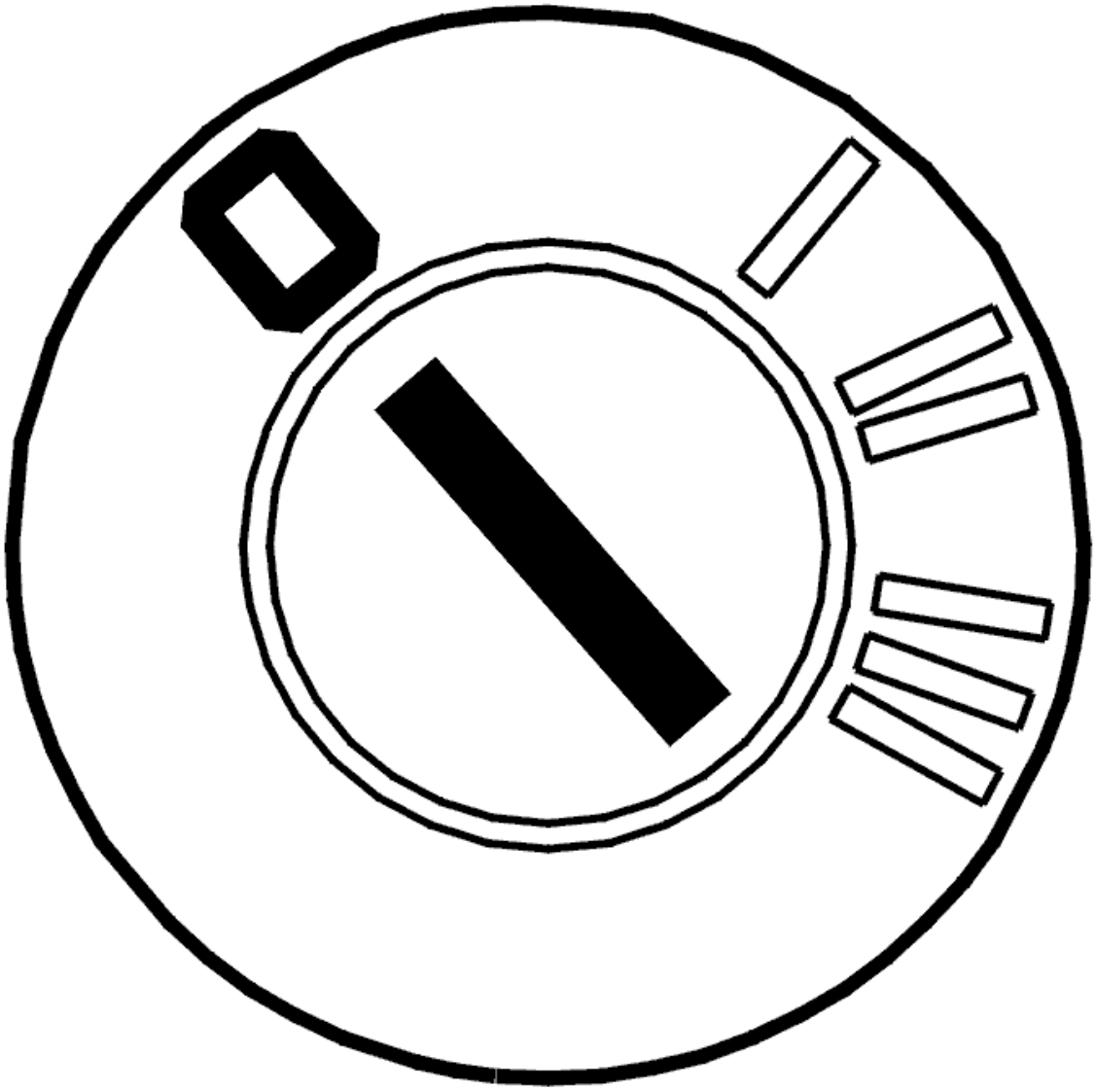

Fig. 58: Identifying Ignition OFF
Courtesy of VOLVO CARS CORPORATION

- Ignition off
- Check the accelerator pedal position sensor and engine control module (ECM) connectors. Check for contact resistance and oxidation.

  Check the signal cable between engine control module (ECM) terminal #B25 (#B35) and accelerator pedal (AP) position sensor terminal #2 (wiring side). Check for an open-circuit. Check for a short-circuit to supply voltage. Check for a short-circuit to ground.

  HINT: With the ignition on, the power supply to the accelerator pedal (AP) position sensor must be

approximately 12 V measured between accelerator pedal (AP) position sensor terminals #1 and #3 (wiring side).

Try a new accelerator pedal (AP) position sensor if no fault is found and the fault is permanent.

Remedy as necessary.

Other information:

- see **CHECKING WIRING AND TERMINALS**
- To connect the breakout box, see **CONNECTING THE BREAKOUT BOX**
- For 5 cylinder turbocharged engines -2004, see **SIGNAL DESCRIPTION**
- For 5 cylinder turbocharged engines 2005-, see **SIGNAL SPECIFICATION** .
- For 6 cylinder engines -2004, see **SIGNAL SPECIFICATION**
- For 6 cylinder engines 2005-, see **SIGNAL SPECIFICATION** .
- To access and replace the accelerator pedal (AP) position sensor, see **ACCELERATOR PEDAL (AP), REPLACING** .

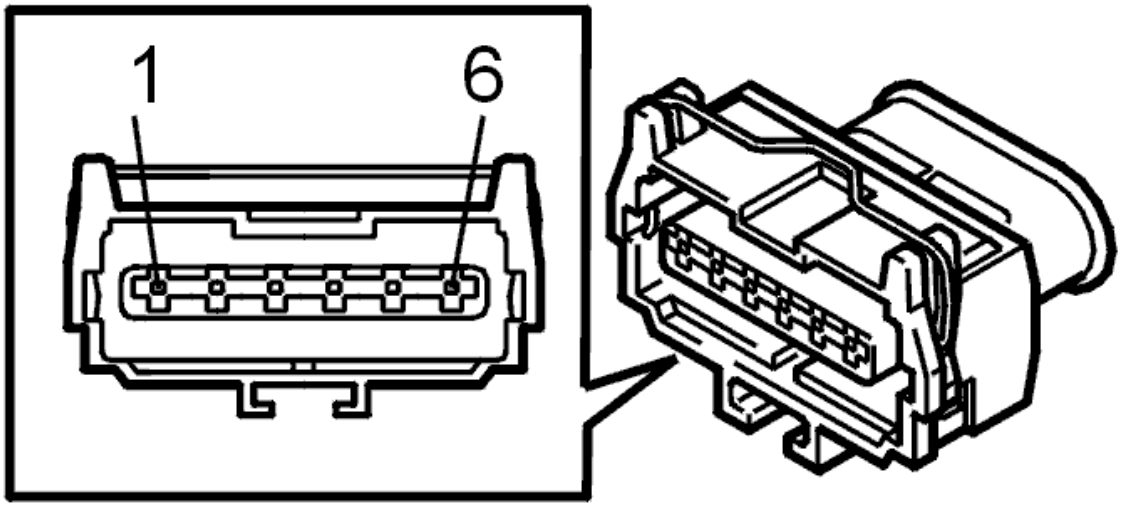

Fig. 59: Accelerator Pedal Position Sensor Connector Terminal Identification
Courtesy of VOLVO CARS CORPORATION

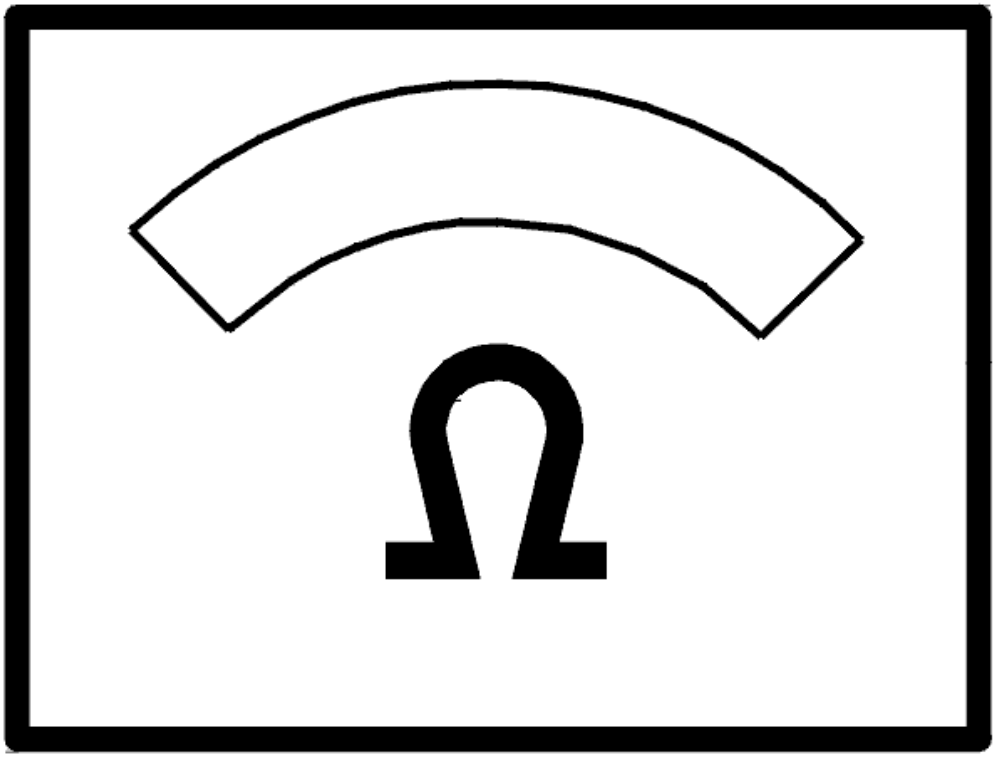

Fig. 60: Identifying Ohm Meter
Courtesy of VOLVO CARS CORPORATION

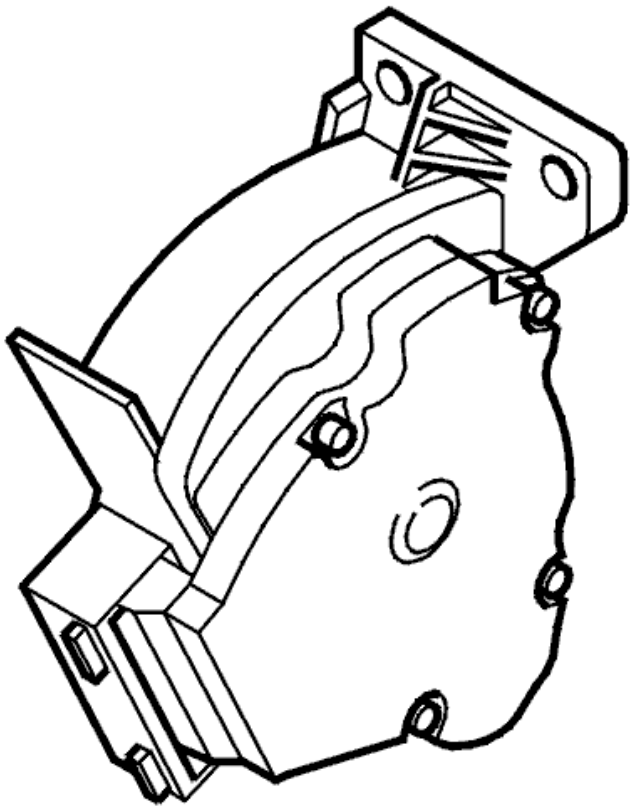

Fig. 61: Identifying Accelerator Pedal (AP) Position Sensor
Courtesy of VOLVO CARS CORPORATION

- **Continue**

  Refer to **VERIFICATION**

VERIFICATION

VERIFICATION

HINT: After carrying out the repair, check that the fault has been remedied.

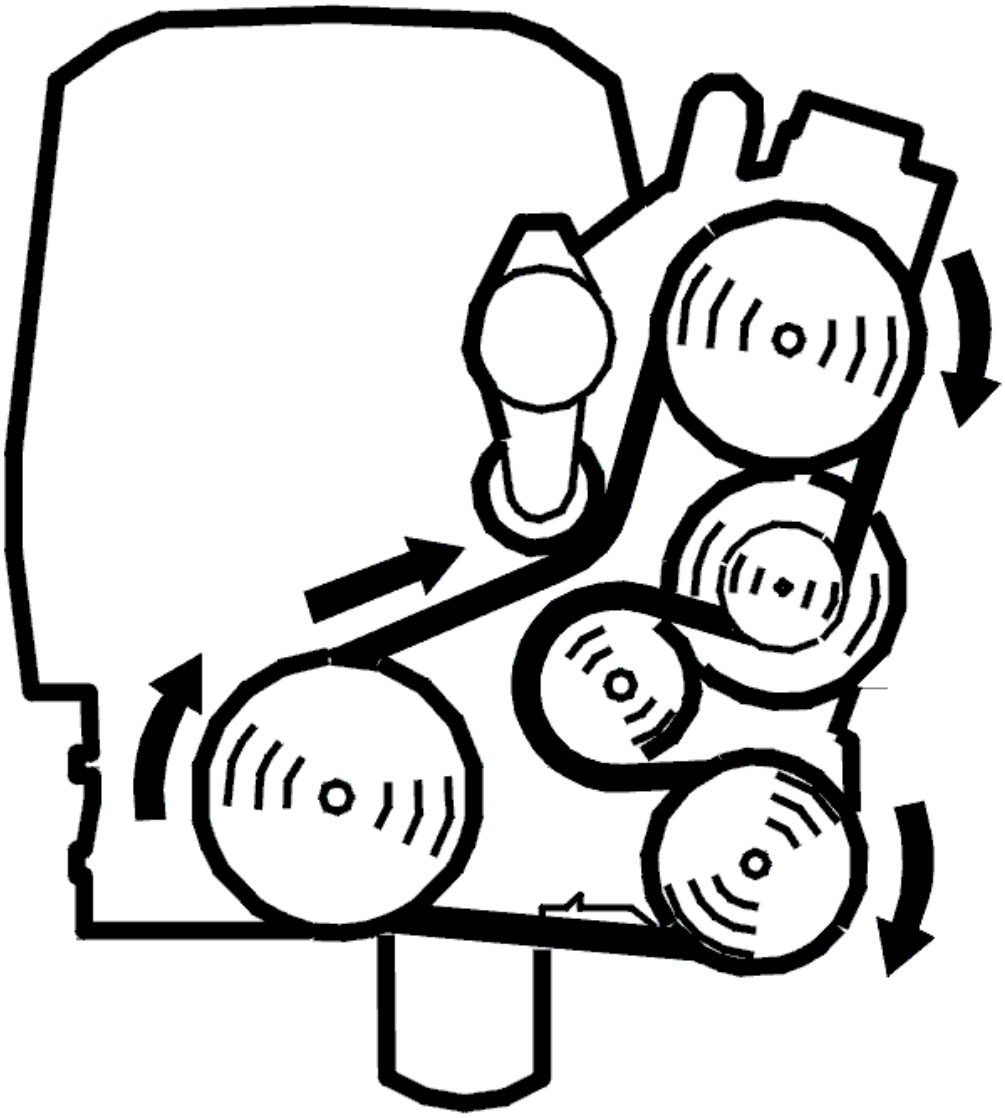

Fig. 62: Belt Routing / Engine Idling - Volvo
Courtesy of VOLVO CARS CORPORATION

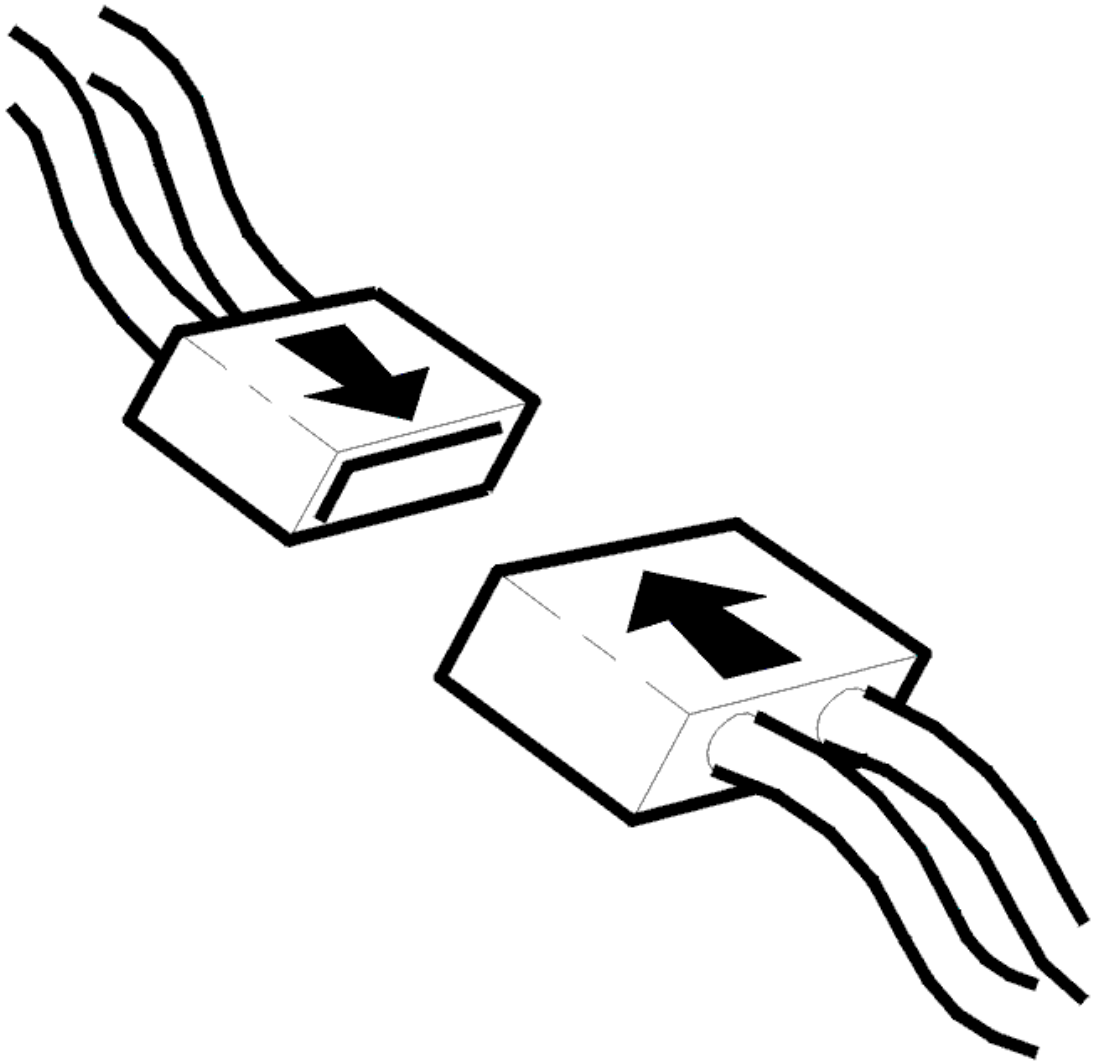

Fig. 63: Connecting Connector
Courtesy of VOLVO CARS CORPORATION

- Ignition off
- Reinstall the connectors, components etc.
- Start the engine
- Read off diagnostic trouble codes (DTCs).

The fault has been remedied if status of the diagnostic trouble code (DTC) is intermittent.

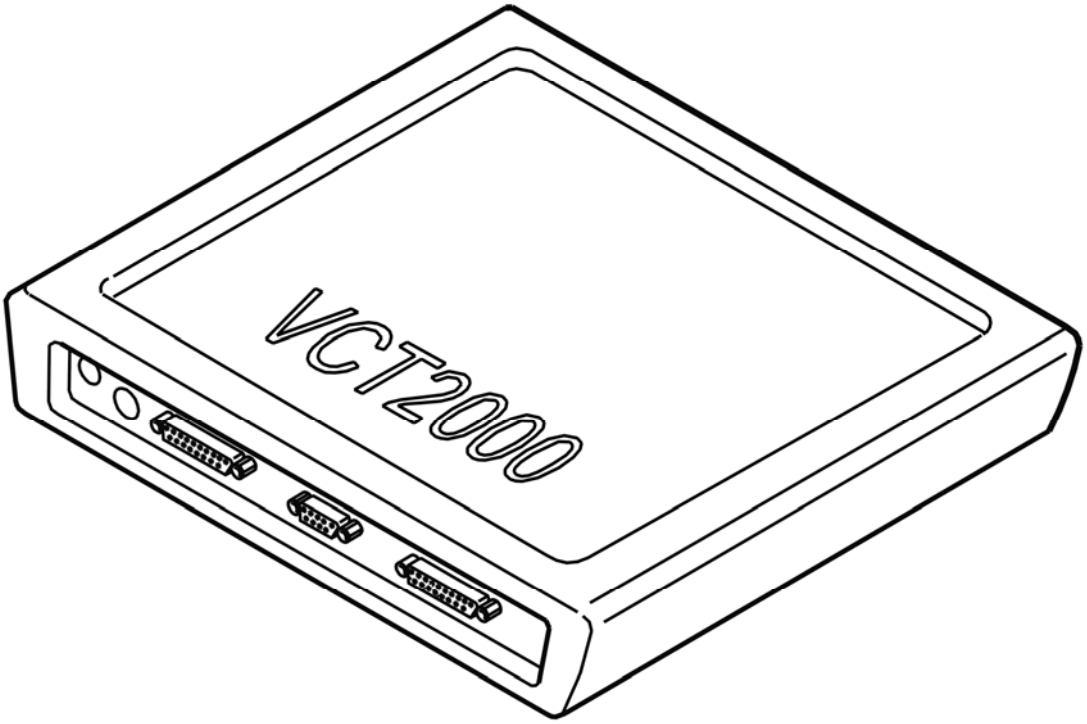

Fig. 64: Identifying VCT2000 Diagnostic Tool Symbol In VIDA
Courtesy of VOLVO CARS CORPORATION

Is the status of the diagnostic trouble code (DTC) intermittent?

- **YES**

  VERIFIED: Troubleshooting has been completed.

- **NO**

  Refer to **INFORMATION**

INFORMATION

FAULT-TRACING INFORMATION

The fault should have been detected and remedied. As this is not the case fault-tracing has failed.

Exit fault-tracing for this diagnostic trouble code (DTC) or make another attempt.

ECM-960C: ENGINE CONTROL MODULE (ECM), TORQUE SIGNAL. INTERNAL FAULT (B5254T2; 2005-2007)

DIAGNOSTIC TROUBLE CODE (DTC) INFORMATION ECM-960C

Condition

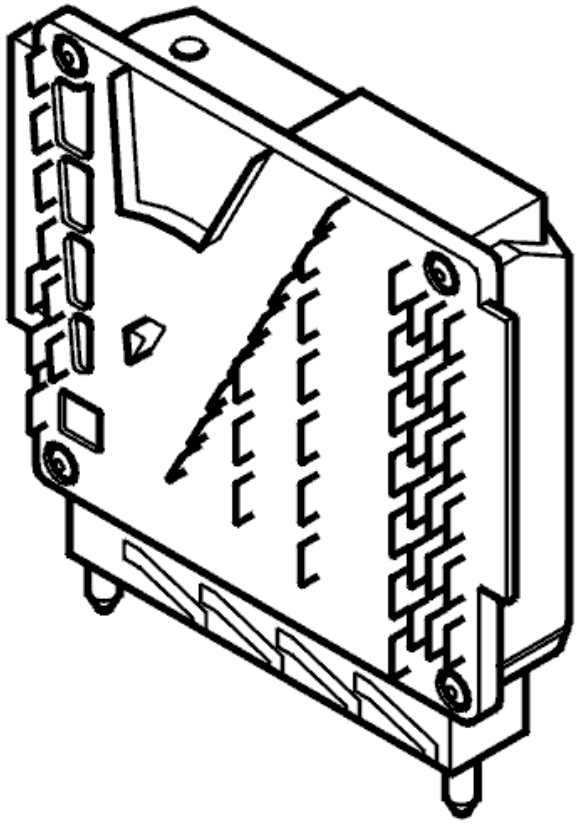

Fig. 65: Engine Control Module
Courtesy of VOLVO CARS CORPORATION

The diagnostic trouble code (DTC) is stored if the engine control module (ECM) registers an internal fault which indicates that the normal engine control functions are requesting more torque than is within the maximum permitted range.

The diagnostic trouble code (DTC) is diagnosed at ignition on or with the engine running.

Substitute Value

- Requested torque is limited to a calculated operating range.

Possible Source

- Damaged engine control module (ECM).

Fault symptom[s]

- Poor performance.

INTERNAL FAULT

see **INTERNAL FAULT**

ECM-960C: ENGINE CONTROL MODULE (ECM), TORQUE SIGNAL. INTERNAL FAULT (B6294T; 2005-2006)

DIAGNOSTIC TROUBLE CODE (DTC) INFORMATION ECM-960C

see **DIAGNOSTIC TROUBLE CODE (DTC) INFORMATION ECM-960C**

INTERNAL FAULT

see **INTERNAL FAULT**

ECM-9700: ACCELERATOR PEDAL (AP) POSITION SENSOR, DIGITAL SIGNAL. FAULTY SIGNAL (B5254T2; 2005-2007)

DIAGNOSTIC TROUBLE CODE (DTC) INFORMATION ECM-9700

Condition

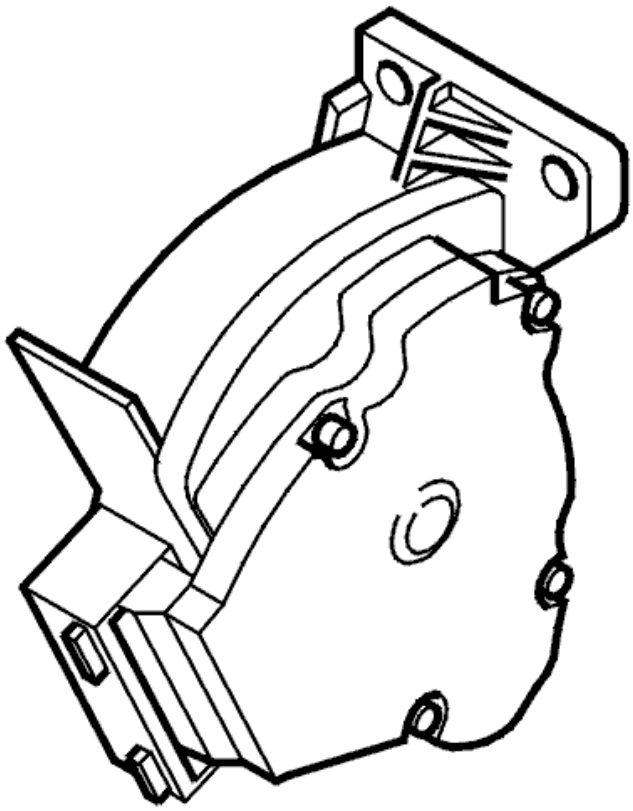

Fig. 66: Identifying Accelerator Pedal (AP) Position Sensor

Courtesy of VOLVO CARS CORPORATION

The diagnostic trouble code (DTC) is stored if the engine control module (ECM) registers that the basic frequency of the PWM signal from the accelerator pedal (AP) position sensor deviates from the predefined values.

The diagnostic trouble code (DTC) can be diagnosed when the ignition is switched on.

Substitute Value

- None.

Possible Source

- Contact resistance or oxidation in the terminals between the engine control module (ECM) and the accelerator pedal (AP) position sensor
- Open-circuit or short-circuit to ground or supply voltage in the signal cable
- Damaged accelerator pedal (AP) position sensor.

Fault symptom[s]

- None.

FAULTY SIGNAL

see **FAULTY SIGNAL**

ECM-9700: ACCELERATOR PEDAL (AP) POSITION SENSOR, DIGITAL SIGNAL. FAULTY SIGNAL (B6294T; 2005-2006)

DIAGNOSTIC TROUBLE CODE (DTC) INFORMATION ECM-9700

see **DIAGNOSTIC TROUBLE CODE (DTC) INFORMATION ECM-9700**

FAULTY SIGNAL

see **FAULTY SIGNAL**

ECM-970B: ACCELERATOR PEDAL (AP) POSITION SENSOR, DIGITAL SIGNAL. SIGNAL MISSING (B5254T2; 2005-2007)

DIAGNOSTIC TROUBLE CODE (DTC) INFORMATION ECM-970B

Condition

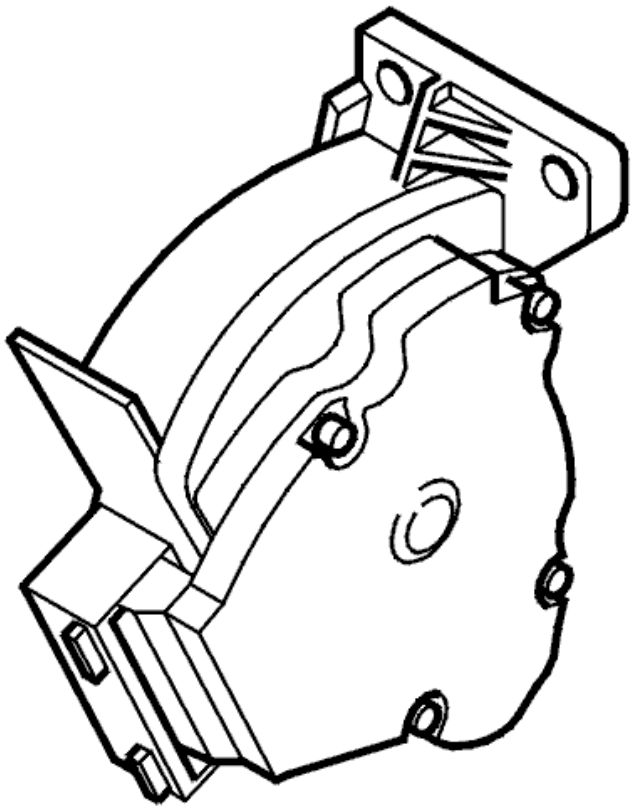

Fig. 67: Identifying Accelerator Pedal (AP) Position Sensor
Courtesy of VOLVO CARS CORPORATION

The diagnostic trouble code (DTC) is stored if the engine control module (ECM) registers that the basic frequency of the PWM signal from the accelerator pedal (AP) position sensor deviates from the predefined values.

The diagnostic trouble code (DTC) can be diagnosed when the ignition is switched on.

Substitute Value

- None.

Possible Source

- Contact resistance or oxidation in the terminals between the engine control module (ECM) and the accelerator pedal (AP) position sensor
- Open-circuit or short-circuit to ground or supply voltage in the signal cable
- Damaged accelerator pedal (AP) position sensor.

Fault symptom[s]

- None.

SIGNAL MISSING

CHECKING THE CONNECTORS AND CABLES

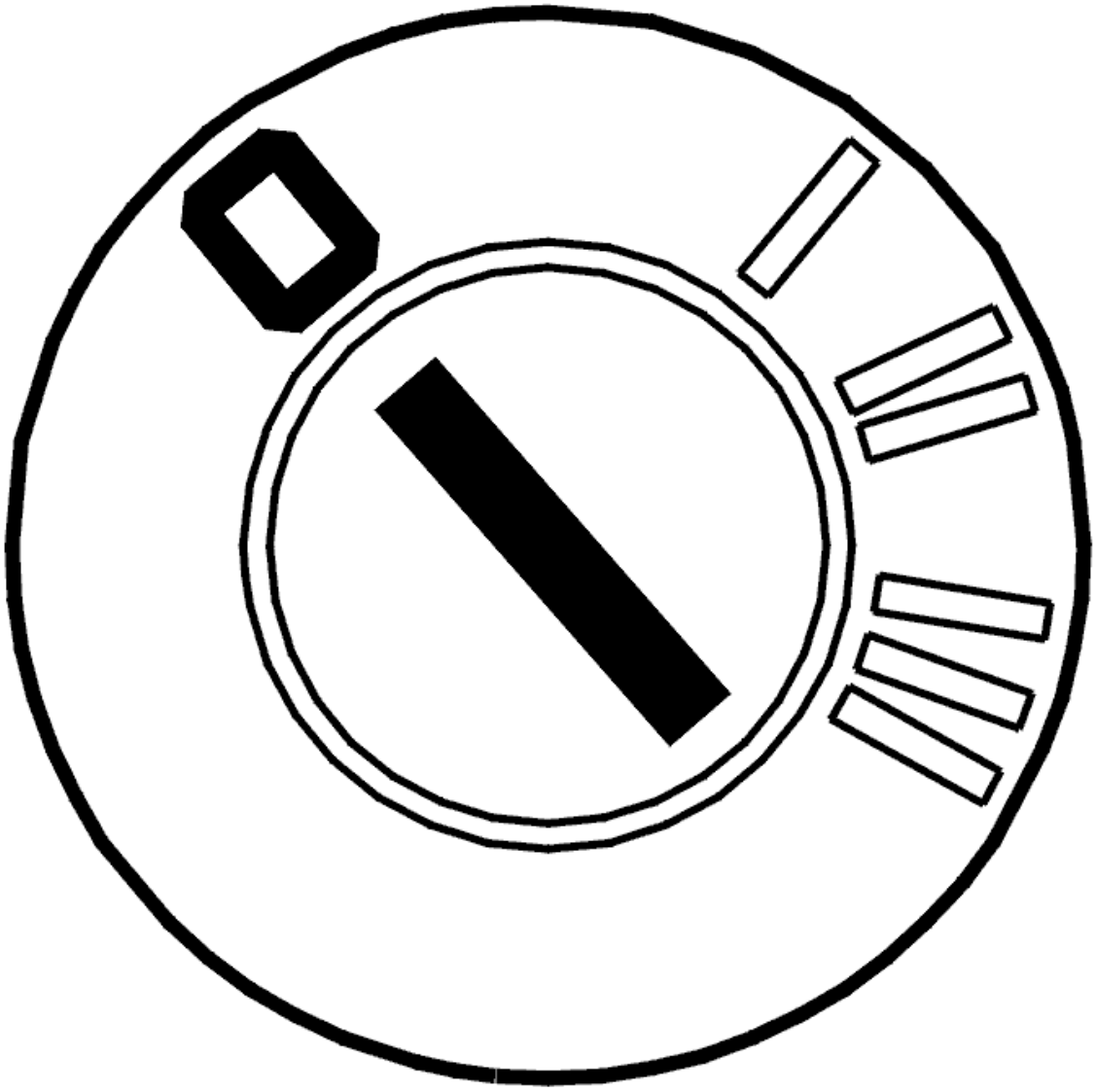

Fig. 68: Identifying Ignition OFF
Courtesy of VOLVO CARS CORPORATION

- Ignition off
- Check the accelerator pedal position sensor and engine control module (ECM) connectors. Check for contact resistance and oxidation.

  Check the signal cable between engine control module (ECM) terminal #B25 (#B35) and accelerator pedal (AP) position sensor terminal #2 (cable harness side). Check for an open-circuit. Check for a short-circuit to supply voltage. Check for a short-circuit to ground.

  HINT: With the ignition on, the power supply to the accelerator pedal (AP) position sensor must be

approximately 12 V measured between accelerator pedal (AP) position sensor terminals #1 and #3 (cable harness side).

Try a new accelerator pedal (AP) position sensor if no fault is found and the fault is permanent.

Remedy as necessary.

Other information:

- see **CONNECTING THE BREAKOUT BOX**
- For 5 cylinder turbocharged engines -2004, see **SIGNAL DESCRIPTION**
- For 5 cylinder turbocharged engines 2005-, see **SIGNAL SPECIFICATION** .
- For 6 cylinder engines -2004, see **SIGNAL SPECIFICATION**
- For 6 cylinder engines 2005-, see **SIGNAL SPECIFICATION** .
- see **ACCELERATOR PEDAL (AP), REPLACING**
- see **CHECKING WIRING AND TERMINALS**

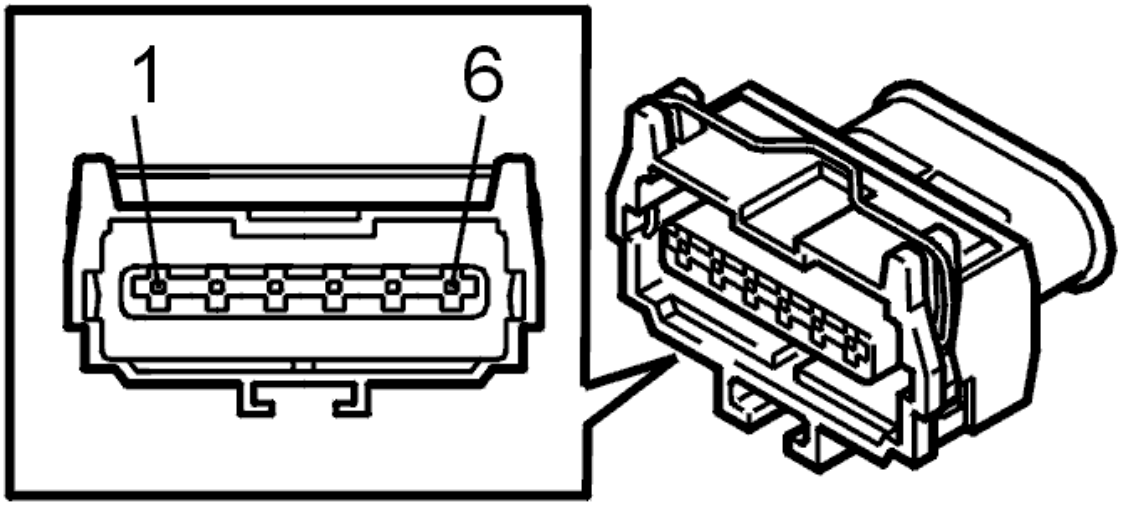

Fig. 69: Accelerator Pedal Position Sensor Connector Terminal Identification
Courtesy of VOLVO CARS CORPORATION

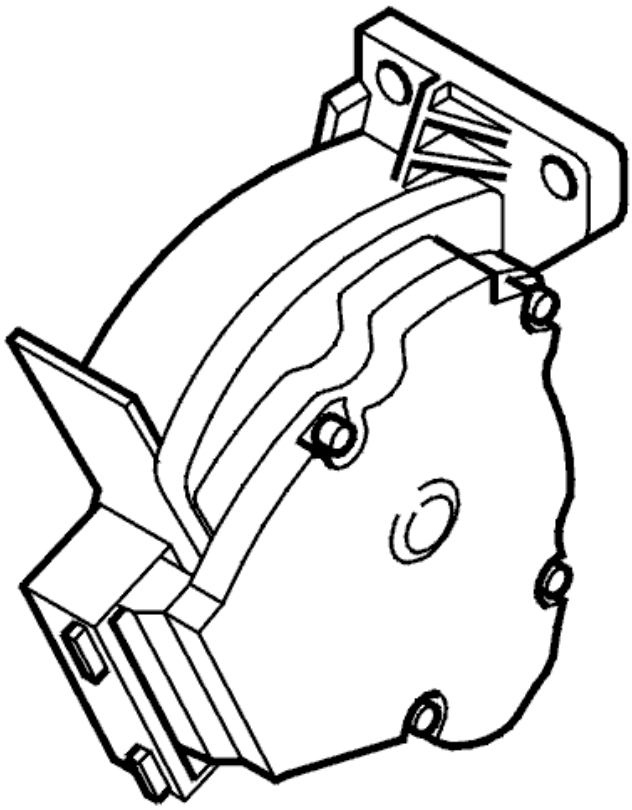

Fig. 70: Identifying Accelerator Pedal (AP) Position Sensor
Courtesy of VOLVO CARS CORPORATION

- **Continue**

  Refer to **VERIFICATION**

VERIFICATION

VERIFICATION

HINT: After carrying out the repair, check that the fault has been remedied.

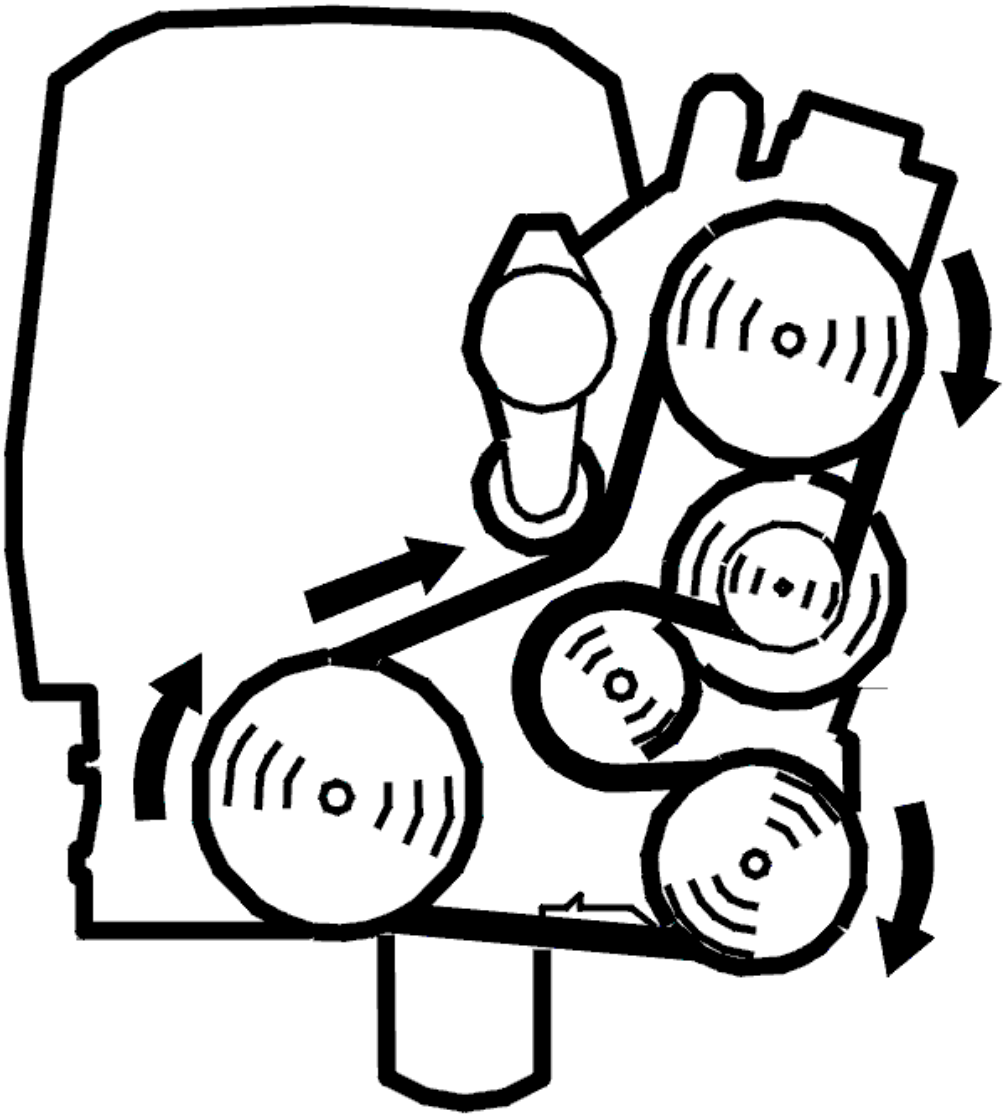

Fig. 71: Belt Routing / Engine Idling - Volvo
Courtesy of VOLVO CARS CORPORATION

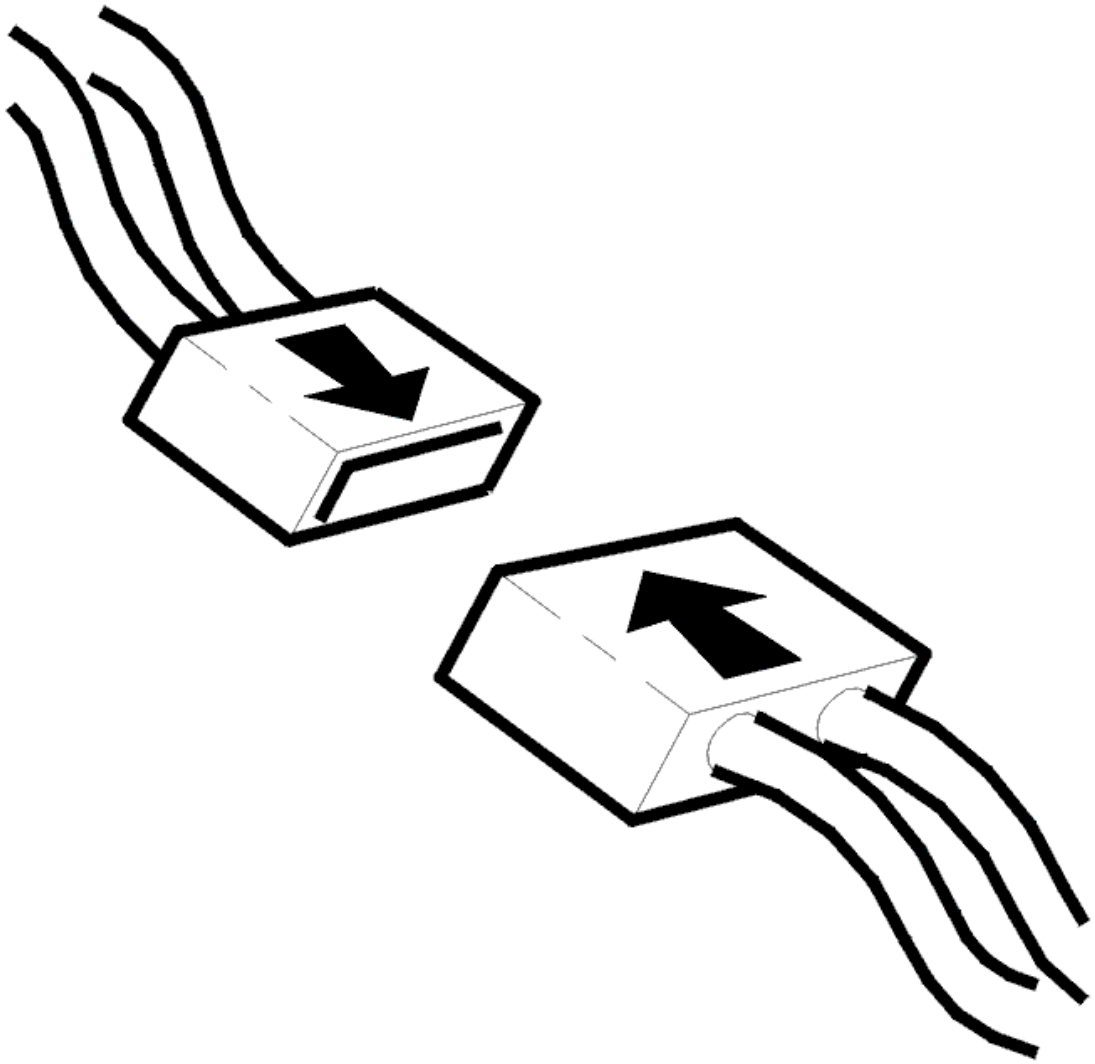

Fig. 72: Connecting Connector
Courtesy of VOLVO CARS CORPORATION

- Ignition off
- Reinstall the connectors, components etc.
- Start the engine
- Read off diagnostic trouble codes (DTCs).

The fault has been remedied if status of the diagnostic trouble code (DTC) is intermittent.

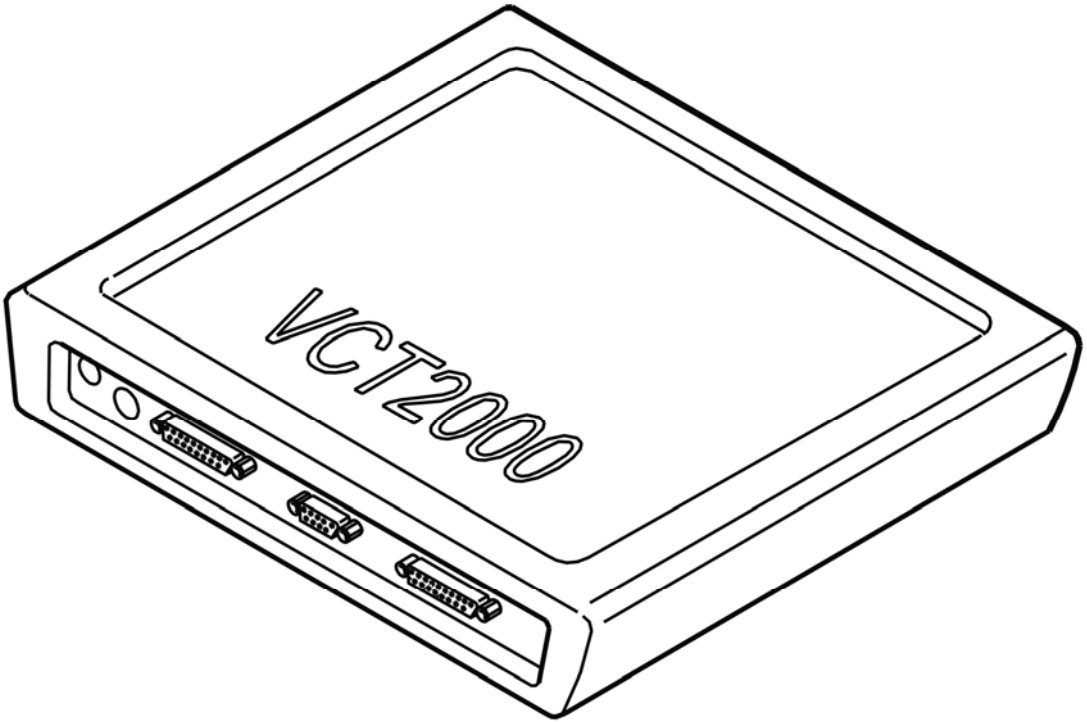

Fig. 73: Identifying VCT2000 Diagnostic Tool Symbol In VIDA
Courtesy of VOLVO CARS CORPORATION

Is the status of the diagnostic trouble code (DTC) intermittent?

- **YES**

  VERIFIED: Troubleshooting has been completed.

- **NO**

  Refer to **INFORMATION**

INFORMATION

FAULT-TRACING INFORMATION

The fault should have been detected and remedied. As this is not the case fault-tracing has failed.

Exit fault-tracing for this diagnostic trouble code (DTC) or make another attempt.

ECM-970B: ACCELERATOR PEDAL (AP) POSITION SENSOR, DIGITAL SIGNAL. SIGNAL MISSING (B6294T; 2005-2006)

DIAGNOSTIC TROUBLE CODE (DTC) INFORMATION ECM-970B

see **DIAGNOSTIC TROUBLE CODE (DTC) INFORMATION ECM-970B**

SIGNAL MISSING

see **SIGNAL MISSING**

ECM-9800: ENGINE CONTROL MODULE (ECM), TORQUE SIGNAL. INTERNAL FAULT (B5254T2; 2005-2007)

DIAGNOSTIC TROUBLE CODE (DTC) INFORMATION ECM-9800

Condition

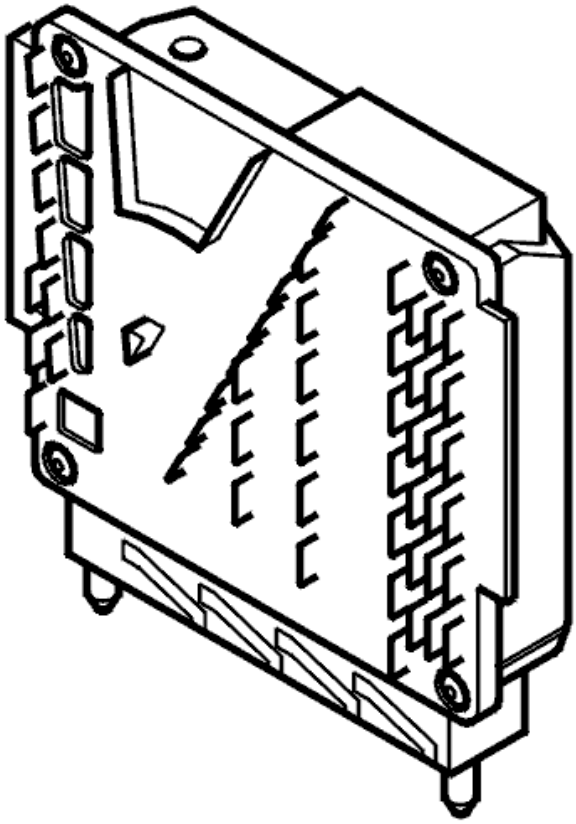

Fig. 74: Engine Control Module
Courtesy of VOLVO CARS CORPORATION

The diagnostic trouble code (DTC) is stored if the engine control module (ECM) registers an internal fault which indicates that the normal engine control functions are producing a higher torque than is within the maximum permitted range.

The diagnostic trouble code (DTC) is diagnosed at ignition on or with the engine running.

Substitute Value

- The engine speed (RPM) is restricted to approximately 2200 RPM by the fuel shut-off system
- Requested torque is limited to a calculated operating range.

Possible Source

- Damaged engine control module (ECM).

Fault symptom[s]

- Maximum engine speed (RPM) too low
- Cruise control does not work at all
- Uneven idle
- Malfunction indicator lamp (MIL) lit.

INTERNAL FAULT

REPLACING THE COMPONENT

NOTE: The diagnostic trouble code (DTC) may be stored as a consequence of other faults. Check therefore if any other diagnostic trouble codes (DTCs) are stored for the engine control module (ECM). Remedy these first.

The engine control module (ECM) has registered an internal fault.

If the fault is intermittent, it has been registered previously but is no longer present. Intermittent faults can be caused by interference at start up of the engine control module (ECM) or may be a different type of fault which occurs on different occasions. The fault is evaluated depending on how it occurs.

see **ENGINE CONTROL MODULE (ECM), REPLACING**

Remedy as necessary.

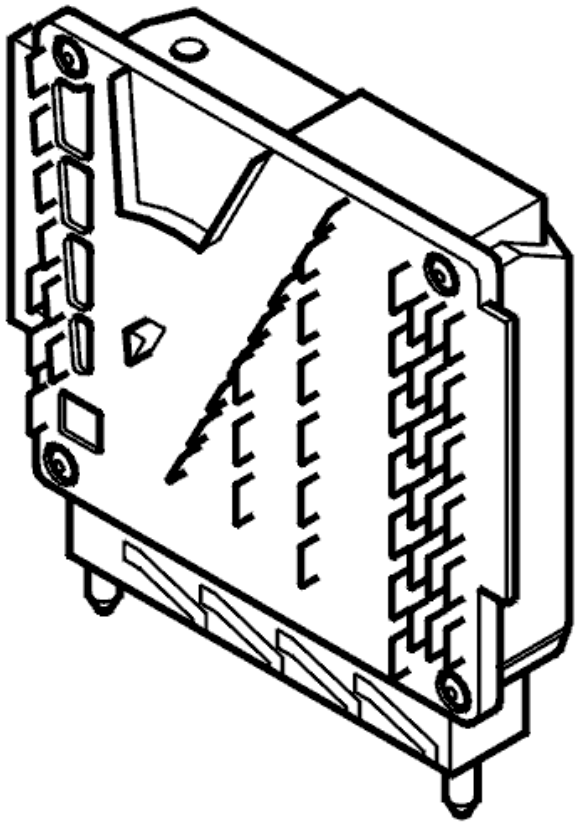

Fig. 75: Engine Control Module
Courtesy of VOLVO CARS CORPORATION

- **Continue**

  Refer to **INFORMATION**

INFORMATION

FAULT-TRACING INFORMATION

In case of this defect, troubleshooting is not followed by verification.

The information can be displayed again or the fault-tracing for this fault can be interrupted.

ECM-9800: ENGINE CONTROL MODULE (ECM), TORQUE SIGNAL. INTERNAL FAULT (B6294T; 2005-2006)

DIAGNOSTIC TROUBLE CODE (DTC) INFORMATION ECM-9800

see **DIAGNOSTIC TROUBLE CODE (DTC) INFORMATION ECM-9800**

INTERNAL FAULT

see **INTERNAL FAULT**

ECM-980A: ENGINE CONTROL MODULE (ECM). INTERNAL FAULT. INTERMITTENT FAULT (B5254T2; B6294T; 2003-2004)

DIAGNOSTIC TROUBLE CODE (DTC) INFORMATION ECM-980A

Condition

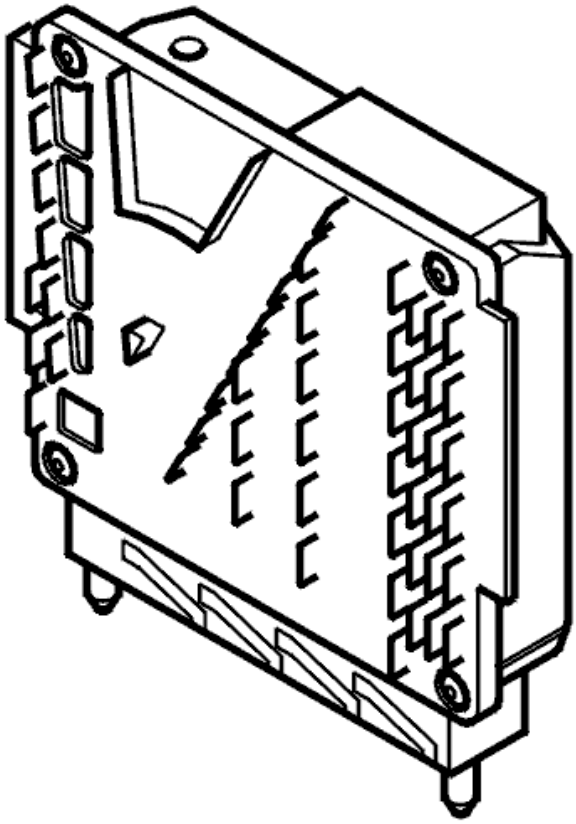

Fig. 76: Engine Control Module
Courtesy of VOLVO CARS CORPORATION

Diagnostic trouble code (DTC) ECM-980A is stored if the engine control module (ECM) registers an internal fault which indicates that the normal engine control functions are requesting more torque than is within the maximum permitted range. The diagnostic trouble code (DTC) is diagnosed at ignition on or with the engine running.

Substitute Value

The requested torque is limited to a calculated operating range.

Possible Source

- Defective engine control module (ECM).

Fault symptom[s]

- Poor performance.

FAULT-TRACING INFORMATION

see **FAULT-TRACING INFORMATION**

ECM-980A: ENGINE CONTROL MODULE (ECM). INTERNAL FAULT. PERMANENT FAULT (B5254T2; B6294T; 2003-2004)

DIAGNOSTIC TROUBLE CODE (DTC) INFORMATION ECM-980A

see **DIAGNOSTIC TROUBLE CODE (DTC) INFORMATION ECM-980A**

INTERNAL FAULT. PERMANENT FAULT

see **INTERNAL FAULT. PERMANENT FAULT**

ECM-9810: ENGINE CONTROL MODULE (ECM), ENGINE SPEED (RPM). INTERNAL FAULT (B5254T2; 2005-2007)

DIAGNOSTIC TROUBLE CODE (DTC) INFORMATION ECM-9810

Condition

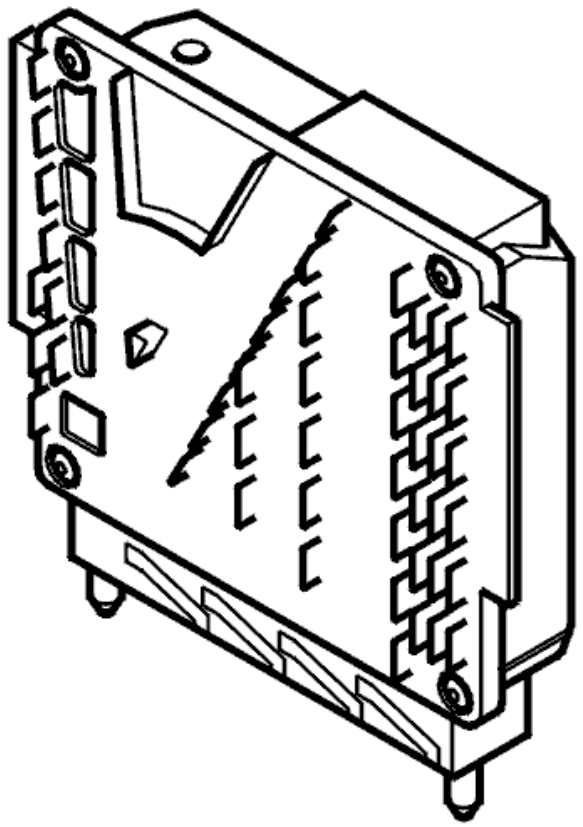

Fig. 77: Engine Control Module
Courtesy of VOLVO CARS CORPORATION

The diagnostic trouble code (DTC) is stored if the engine control module (ECM) registers an internal fault indicating that the calculated engine speed (RPM) in the internal monitoring functions differs from the normal calculated engine speed (RPM) in the engine control functions.

The diagnostic trouble code (DTC) is diagnosed with the engine running and at an engine speed (RPM) above 520 RPM.

Substitute Value

- Engine speed (RPM) and torque are limited to a calculated normal operating range.

Possible Source

- Damaged engine control module (ECM).

Fault symptom[s]

- Maximum engine speed (RPM) too low
- Cruise control does not work at all
- Uneven idle

- Malfunction indicator lamp (MIL) lit.

INTERNAL FAULT

see **INTERNAL FAULT**

ECM-9810: ENGINE CONTROL MODULE (ECM), ENGINE SPEED (RPM). INTERNAL FAULT (B6294T; 2005-2006)

DIAGNOSTIC TROUBLE CODE (DTC) INFORMATION ECM-9810

see **DIAGNOSTIC TROUBLE CODE (DTC) INFORMATION ECM-9810**

INTERNAL FAULT

see **INTERNAL FAULT**

ECM-981A: ENGINE CONTROL MODULE (ECM). INTERNAL FAULT. INTERMITTENT FAULT (B5254T2; B6294T; 2003-2004)

DIAGNOSTIC TROUBLE CODE (DTC) INFORMATION ECM-981A

Condition

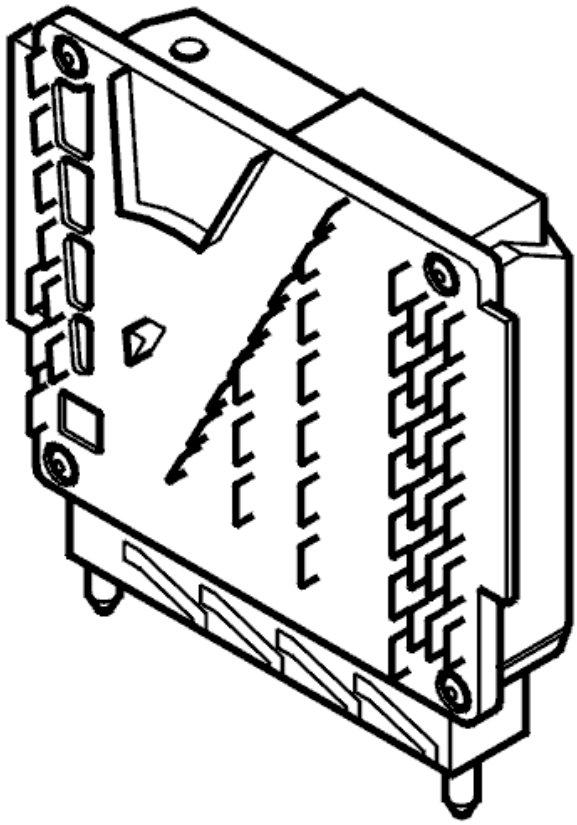

Fig. 78: Engine Control Module
Courtesy of VOLVO CARS CORPORATION

Diagnostic trouble code (DTC) ECM-981A is stored if the engine control module (ECM) registers an internal fault which indicates that the normal engine control functions are producing a higher torque than is within the maximum permitted range. The diagnostic trouble code (DTC) is diagnosed at ignition on or with the engine running.

Substitute Value

The engine speed (RPM) is restricted to approximately 2200 RPM by shutting off the fuel.

The requested torque is limited to a calculated operating range.

Possible Source

- Defective engine control module (ECM).

Fault symptom[s]

- Maximum engine speed (RPM) too low
- Cruise control does not function at all
- Uneven idle

- Malfunction indicator lamp (MIL) lit.

FAULT-TRACING INFORMATION

see **FAULT-TRACING INFORMATION**

ECM-981A: ENGINE CONTROL MODULE (ECM). INTERNAL FAULT. PERMANENT FAULT (B5254T2; B6294T; 2003-2004)

DIAGNOSTIC TROUBLE CODE (DTC) INFORMATION ECM-981A

see **DIAGNOSTIC TROUBLE CODE (DTC) INFORMATION ECM-981A**

INTERNAL FAULT. PERMANENT FAULT

see **INTERNAL FAULT. PERMANENT FAULT**

ECM-9820: ENGINE CONTROL MODULE (ECM), LOAD SIGNAL. INTERNAL FAULT (B5254T2; 2005-2007)

DIAGNOSTIC TROUBLE CODE (DTC) INFORMATION ECM-9820

Condition

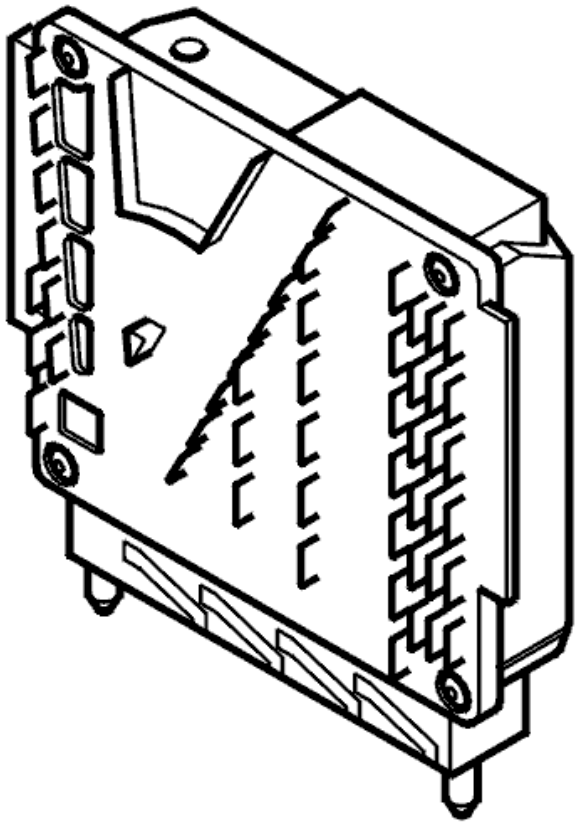

Fig. 79: Engine Control Module
Courtesy of VOLVO CARS CORPORATION

The diagnostic trouble code (DTC) is stored if the engine control module (ECM) registers a fault indicating that the calculated load signals for the normal engine control functions are lower than calculated by the internal monitoring functions.

The diagnostic trouble code (DTC) is diagnosed with the engine running and at an engine speed (RPM) of more than 1000 RPM.

Substitute Value

- Engine speed (RPM) and torque are limited to a calculated normal operating range.

Possible Source

- Dirt or contaminants in the electronic throttle unit
- Foreign objects in the intake passages
- Damaged engine control module (ECM).

Fault symptom[s]

- Maximum engine speed (RPM) too low

- Cruise control does not work at all
- Uneven idle
- Malfunction indicator lamp (MIL) lit.

INTERNAL FAULT

REPLACING THE COMPONENT

NOTE: The diagnostic trouble code (DTC) may be stored as a result of foreign objects in the intake passages or contaminants in the electronic throttle unit. Check and remedy these first.

The engine control module (ECM) has registered an internal fault.

If the fault is intermittent, it has been registered previously but is no longer present. Intermittent faults can be caused by interference at start up of the engine control module (ECM) or may be a different type of fault which occurs on different occasions. The fault is evaluated depending on how it occurs.

see **ENGINE CONTROL MODULE (ECM), REPLACING**

Remedy as necessary.

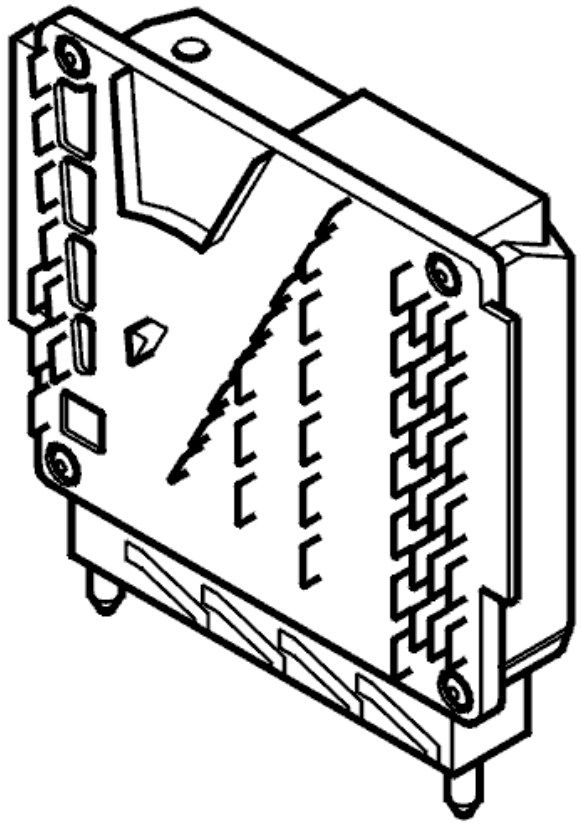

Fig. 80: Engine Control Module

Courtesy of VOLVO CARS CORPORATION

- **Continue**

  Refer to **INFORMATION**

INFORMATION

FAULT-TRACING INFORMATION

In case of this defect, troubleshooting is not followed by verification.

The information can be displayed again or the fault-tracing for this fault can be interrupted.

ECM-9820: ENGINE CONTROL MODULE (ECM), LOAD SIGNAL. INTERNAL FAULT (B6294T; 2005-2006)

DIAGNOSTIC TROUBLE CODE (DTC) INFORMATION ECM-9820

see **DIAGNOSTIC TROUBLE CODE (DTC) INFORMATION ECM-9820**

INTERNAL FAULT

see **INTERNAL FAULT**

ECM-982A: ENGINE CONTROL MODULE (ECM). INTERNAL FAULT. INTERMITTENT FAULT (B5254T2; B6294T; 2003)

DIAGNOSTIC TROUBLE CODE (DTC) INFORMATION

Condition

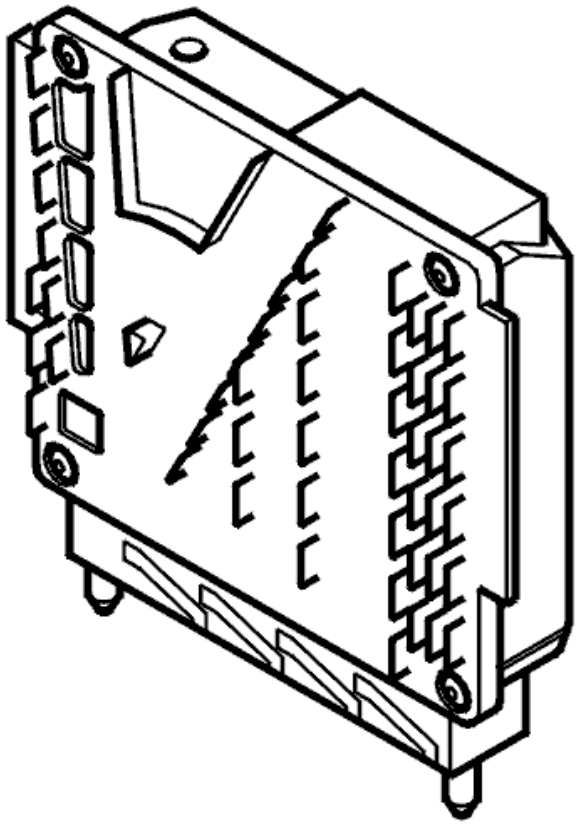

Fig. 81: Engine Control Module
Courtesy of VOLVO CARS CORPORATION

Diagnostic trouble code (DTC) ECM-982A is stored if the engine control module (ECM) registers an internal fault. If other diagnostic trouble codes (DTCs) are stored in the engine control module (ECM), these must be remedied first. These may have caused this diagnostic trouble code (DTC) to be stored.

Substitute Value

- Cruise control is shut off
- Throttle closure when braking
- Torque limiting through fuel shut-off.

Possible Source

- Other diagnostic trouble codes (DTCs) stored in the engine control module (ECM)
- Defective engine control module (ECM).

Fault symptom[s]

- Malfunction indicator lamp (MIL) lit
- Cruise control does not function at all

- The engine jerks during acceleration
- The engine judders heavily after engine braking
- Uneven idle
- Maximum engine speed (RPM) too low.

FAULT-TRACING INFORMATION

see **FAULT-TRACING INFORMATION**

ECM-982A: ENGINE CONTROL MODULE (ECM). INTERNAL FAULT. INTERMITTENT FAULT (B5254T2; B6294T; 2004)

DIAGNOSTIC TROUBLE CODE (DTC) INFORMATION ECM-982A

Condition

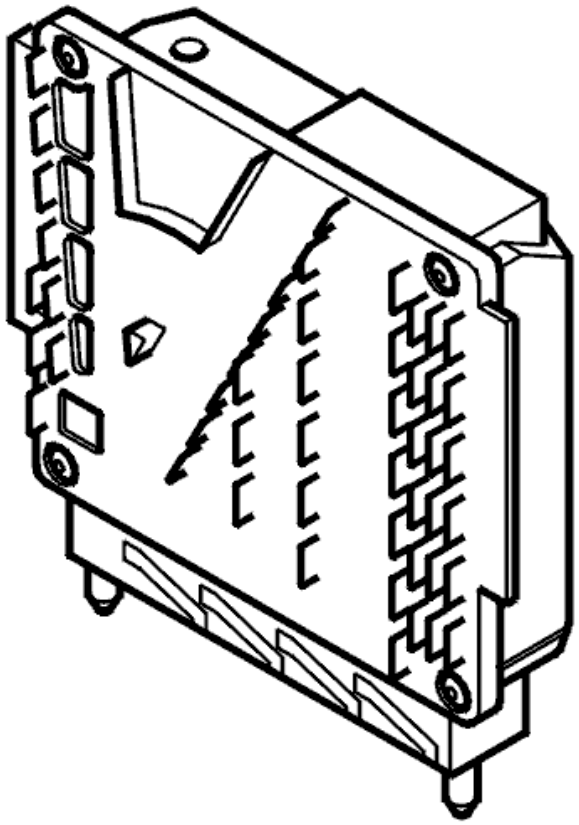

Fig. 82: Engine Control Module
Courtesy of VOLVO CARS CORPORATION

Diagnostic trouble code (DTC) ECM-982A is stored if the engine control module (ECM) registers an internal fault in one of the internal monitoring functions in the engine control module (ECM). The diagnostic trouble code (DTC) is diagnosed at ignition on or with the engine running.

This diagnostic trouble code (DTC) is normally always stored when one of diagnostic trouble codes (DTC) ECM-983A, ECM-984A, ECM-985A, ECM-986A or ECM-988A is stored in the engine control module (ECM).

Substitute Value

None.

Possible Source

- One of diagnostic trouble codes (DTC) ECM-983A, ECM-984A, ECM-985A, ECM-986A or ECM-988A is stored in the engine control module (ECM)
- Defective engine control module (ECM).

Fault symptom[s]

- Driving/Poor performance/lacks power
- Idling/Uneven idle
- Driving/Hesitates/surges/During acceleration
- Driving/Hesitates/surges/During deceleration
- Cruise control/Does not engage
- Warning lights and chimes/Electronic Throttle System (ETS) indication/no indication

FAULT-TRACING INFORMATION

see **FAULT-TRACING INFORMATION**

ECM-982A: ENGINE CONTROL MODULE (ECM). INTERNAL FAULT. PERMANENT FAULT (B5254T2; B6294T; 2003)

DIAGNOSTIC TROUBLE CODE (DTC) INFORMATION

see **DIAGNOSTIC TROUBLE CODE (DTC) INFORMATION**

INTERNAL FAULT. PERMANENT FAULT

CHECKING DIAGNOSTIC TROUBLE CODES (DTCS)

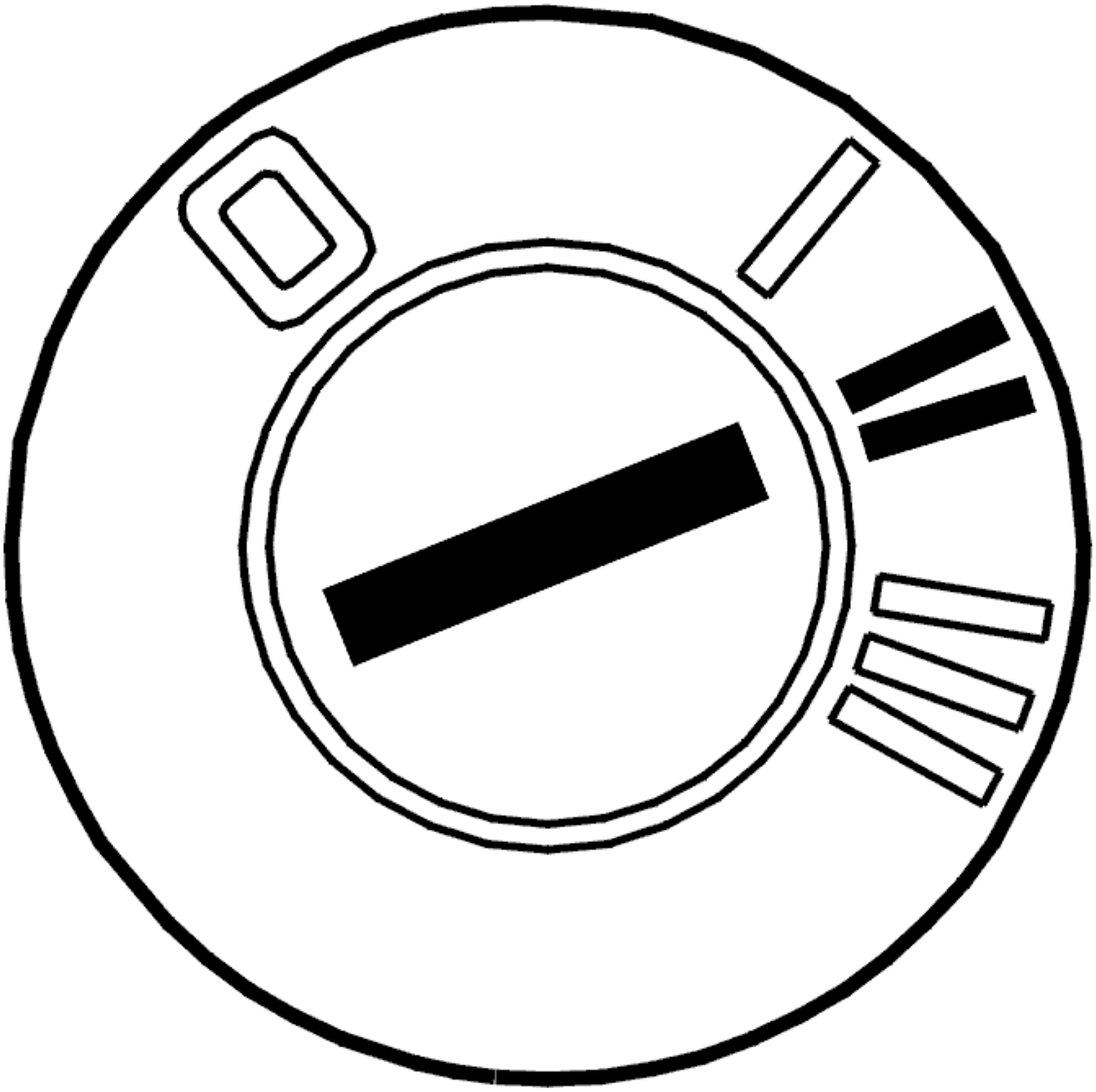

Fig. 83: Identifying Ignition ON
Courtesy of VOLVO CARS CORPORATION

- Ignition on
- Read off diagnostic trouble codes (DTCs).

  Check to, see if any other diagnostic trouble codes (DTCs) are stored.

  Any other diagnostic trouble codes (DTCs) that are stored must be remedied first.

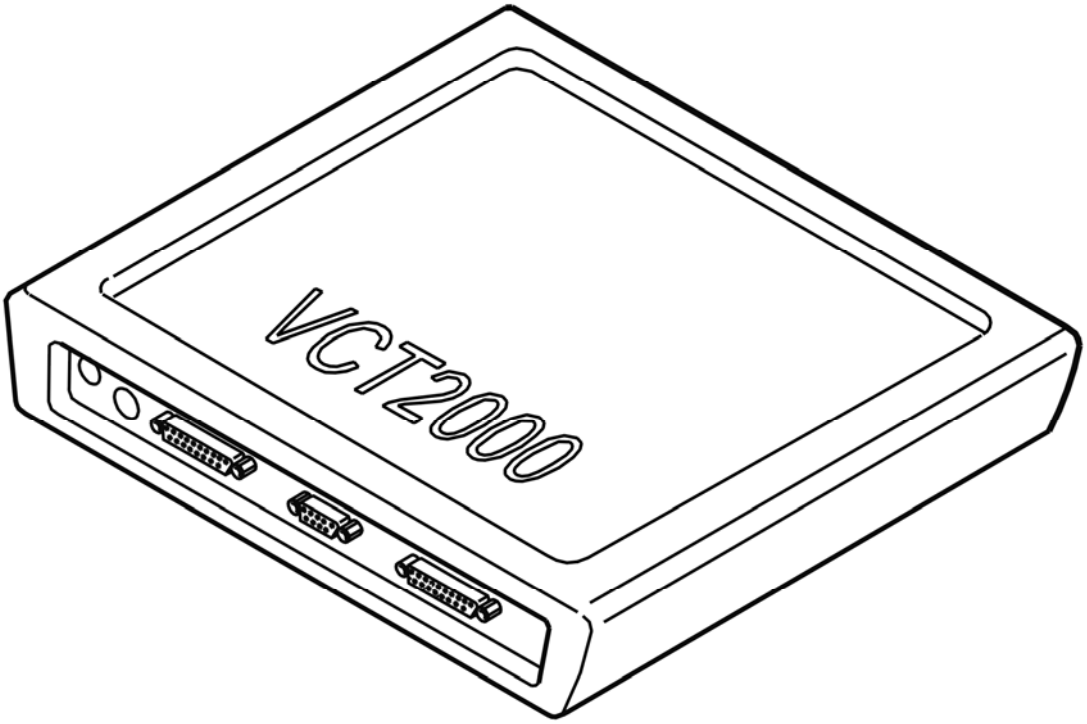

Fig. 84: Identifying VCT2000 Diagnostic Tool Symbol In VIDA
Courtesy of VOLVO CARS CORPORATION

Are any other diagnostic trouble codes (DTCs) stored?

- **YES**

  Refer to **FAULT-TRACING INFORMATION**

- **NO**

  Refer to **PROGRAMMING OR REPLACING THE ENGINE CONTROL MODULE (ECM)**

FAULT-TRACING INFORMATION

Remedy any diagnostic trouble codes (DTCs) that are stored.

Remedy as necessary.

PROGRAMMING OR REPLACING THE ENGINE CONTROL MODULE (ECM)

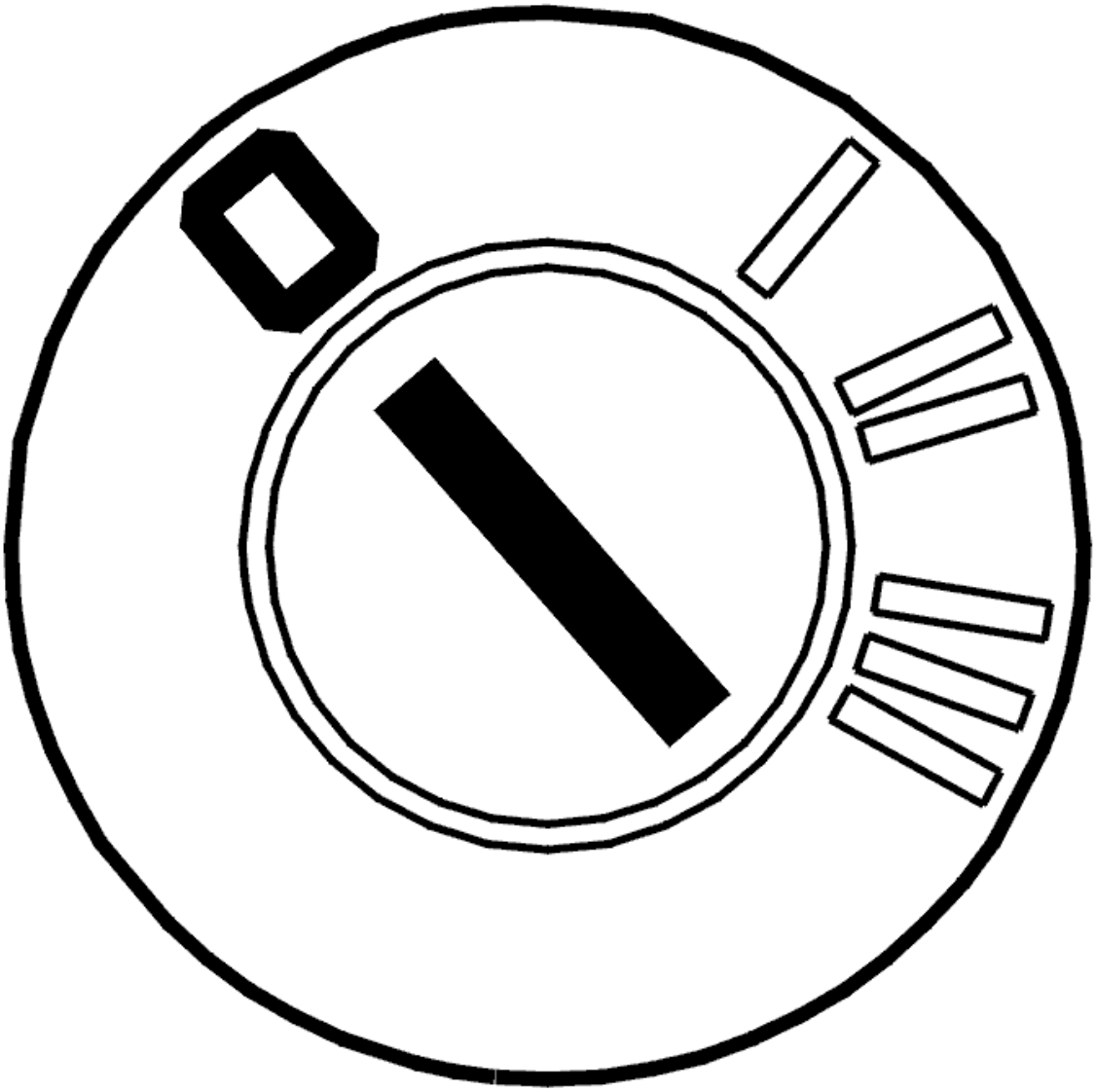

Fig. 85: Identifying Ignition OFF
Courtesy of VOLVO CARS CORPORATION

- Ignition off.

  The engine control module (ECM) has registered an internal fault. Replace the engine control module (ECM). See **ENGINE CONTROL MODULE (ECM), REPLACING** .

  NOTE: After replacing the engine control module (ECM), the throttle unit must be adapted using the vehicle communication input: "Throttle unit adaptation".

  Remedy as necessary.

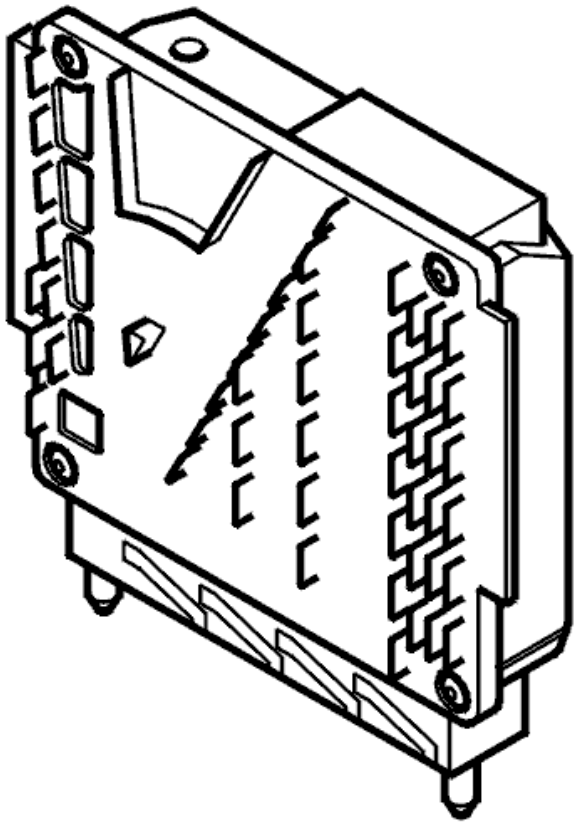

Fig. 86: Engine Control Module
Courtesy of VOLVO CARS CORPORATION

- **Continue**

  Refer to **INFORMATION**

INFORMATION

FAULT-TRACING INFORMATION

In case of this defect, troubleshooting is not followed by verification.

The information can be displayed again or the fault-tracing for this fault can be interrupted.

ECM-982A: ENGINE CONTROL MODULE (ECM). INTERNAL FAULT. PERMANENT FAULT (B5254T2; B6294T; 2004)

DIAGNOSTIC TROUBLE CODE (DTC) INFORMATION ECM-982A

see **DIAGNOSTIC TROUBLE CODE (DTC) INFORMATION ECM-982A**

INTERNAL FAULT. PERMANENT FAULT

see **INTERNAL FAULT. PERMANENT FAULT**

ECM-9830: ENGINE CONTROL MODULE (ECM). INTERNAL FAULT (B5254T2; 2007)

DIAGNOSTIC TROUBLE CODE (DTC) INFORMATION ECM-9830

Condition

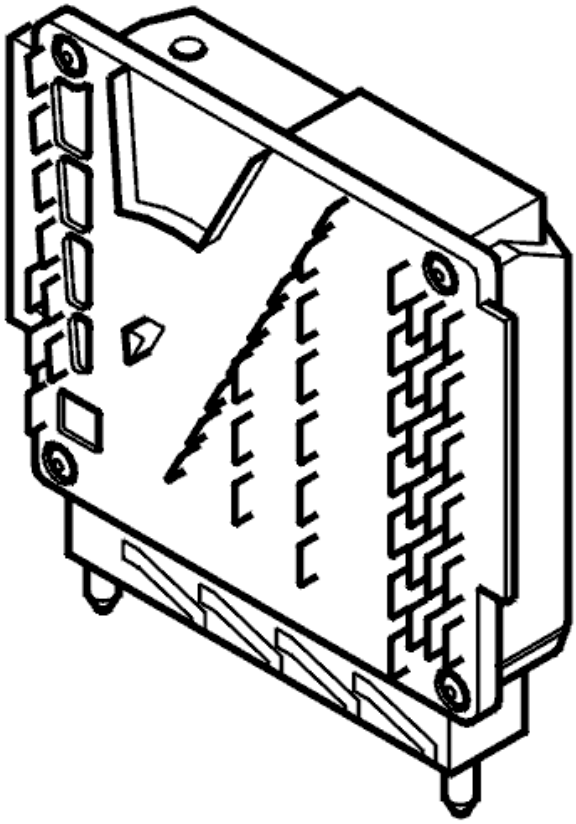

Fig. 87: Engine Control Module
Courtesy of VOLVO CARS CORPORATION

The diagnostic trouble code (DTC) is stored if the engine control module (ECM) registers a fault indicating that the internal monitoring functions have registered one or more present values that do not correspond with the complement value.

The diagnostic trouble code (DTC) is diagnosed at ignition on or with the engine running.

Substitute Value

- Engine speed (RPM) and torque are limited to a calculated normal operating range.

Possible Source

- Damaged engine control module (ECM).

Fault symptom[s]

- Maximum engine speed (RPM) too low
- Cruise control does not work at all
- Uneven idle
- Malfunction indicator lamp (MIL) lit.

INTERNAL FAULT

REPLACING THE COMPONENT

The engine control module (ECM) has registered an internal fault.

If the fault is intermittent, it has been registered previously but is no longer present. Intermittent faults can be caused by interference at start up of the engine control module (ECM) or may be a different type of fault which occurs on different occasions. The fault is evaluated depending on how it occurs. Replace the engine control module (ECM) if the fault recurs.

Replace the engine control module (ECM) in the event of a permanent fault.

Remedy as necessary.

Other information

- see **ENGINE CONTROL MODULE (ECM), REPLACING**

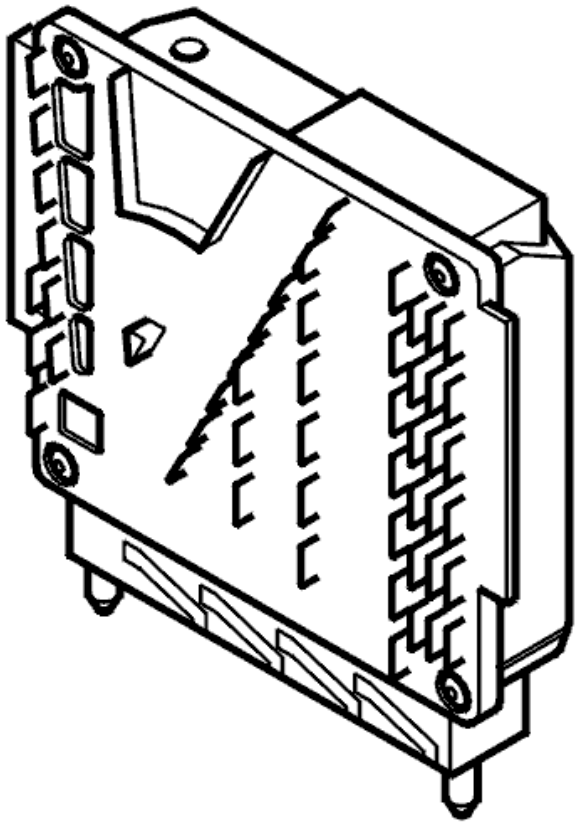

Fig. 88: Engine Control Module
Courtesy of VOLVO CARS CORPORATION

- **Continue**

  Refer to **INFORMATION**

INFORMATION

FAULT-TRACING INFORMATION

In case of this defect, troubleshooting is not followed by verification.

The information can be displayed again or the fault-tracing for this fault can be interrupted.

ECM-983A: ENGINE CONTROL MODULE (ECM). INTERNAL FAULT. INTERMITTENT FAULT (B5254T2; B6294T; 2004)

DIAGNOSTIC TROUBLE CODE (DTC) INFORMATION ECM-983A

Condition

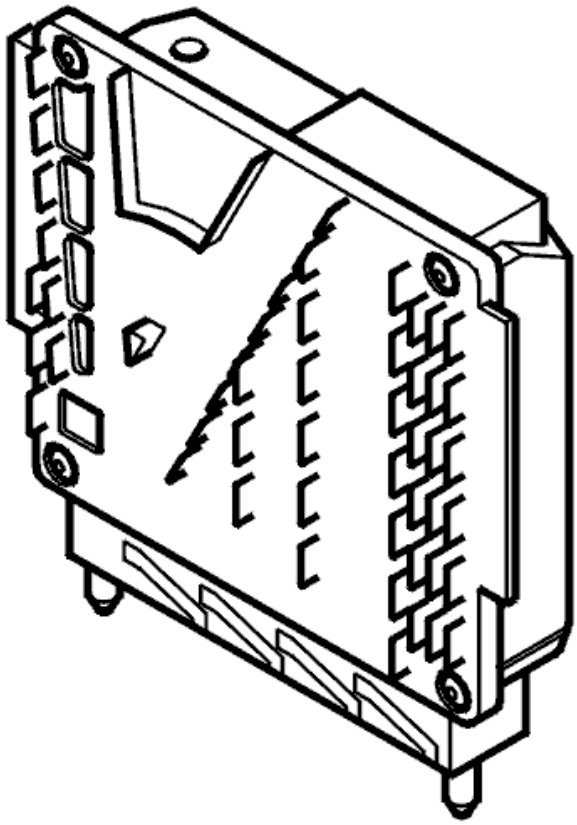

Fig. 89: Engine Control Module
Courtesy of VOLVO CARS CORPORATION

Diagnostic trouble code (DTC) ECM-983A is stored if the engine control module (ECM) registers an internal fault indicating that the calculated engine speed (RPM) in the internal monitoring functions differs from the normal calculated engine speed (RPM) in the engine control functions. The diagnostic trouble code (DTC) is diagnosed with the engine running and at an engine speed (RPM) of more than 520 RPM.

Substitute Value

The engine speed (RPM) and torque are limited to a calculated normal operating range.

Possible Source

- Defective engine control module (ECM).

Fault symptom[s]

- Maximum engine speed (RPM) too low
- Cruise control does not function at all
- Uneven idle
- Malfunction indicator lamp (MIL) lit.

FAULT-TRACING INFORMATION

see **FAULT-TRACING INFORMATION**

ECM-983A: ENGINE CONTROL MODULE (ECM). INTERNAL FAULT. PERMANENT FAULT (B5254T2; B6294T; 2004)

DIAGNOSTIC TROUBLE CODE (DTC) INFORMATION ECM-983A

see **DIAGNOSTIC TROUBLE CODE (DTC) INFORMATION ECM-983A**

INTERNAL FAULT. PERMANENT FAULT

see **INTERNAL FAULT. PERMANENT FAULT**

ECM-983B: ENGINE CONTROL MODULE (ECM). INTERNAL FAULT (B5254T2; 2005-2007)

DIAGNOSTIC TROUBLE CODE (DTC) INFORMATION ECM-983B

Condition

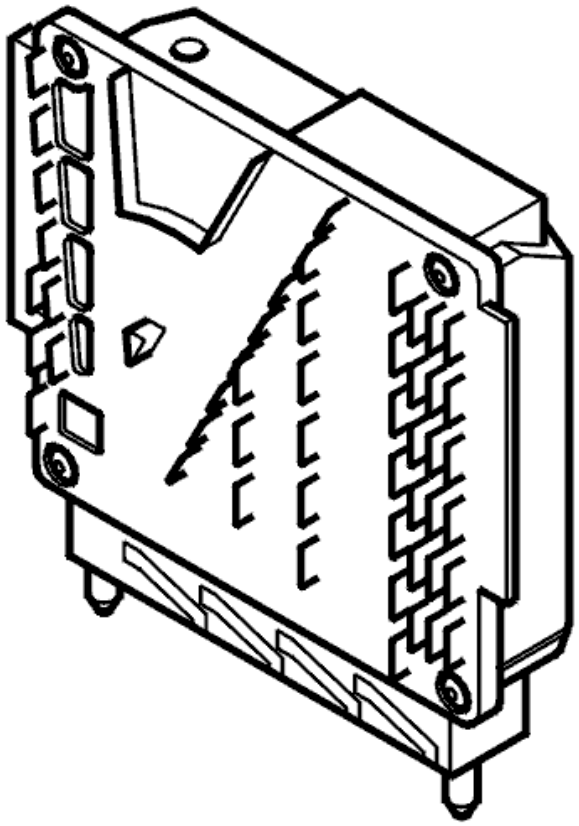

Fig. 90: Engine Control Module

Courtesy of VOLVO CARS CORPORATION

The diagnostic trouble code (DTC) is stored if the engine control module (ECM) registers a fault indicating that the internal monitoring functions have registered one or more present values that do not correspond with the complement value.

The diagnostic trouble code (DTC) is diagnosed at ignition on or with the engine running.

Substitute Value

- Engine speed (RPM) and torque are limited to a calculated normal operating range.

Possible Source

- Damaged engine control module (ECM).

Fault symptom[s]

- Maximum engine speed (RPM) too low
- Cruise control does not work at all
- Uneven idle
- Malfunction indicator lamp (MIL) lit.

INTERNAL FAULT

see **INTERNAL FAULT**

ECM-983B: ENGINE CONTROL MODULE (ECM). INTERNAL FAULT (B6294T; 2005-2006)

DIAGNOSTIC TROUBLE CODE (DTC) INFORMATION ECM-983B

see **DIAGNOSTIC TROUBLE CODE (DTC) INFORMATION ECM-983B**

INTERNAL FAULT

see **INTERNAL FAULT**

ECM-983C: ENGINE CONTROL MODULE (ECM). INTERNAL FAULT (B5254T2; 2005-2007)

DIAGNOSTIC TROUBLE CODE (DTC) INFORMATION ECM-983C

Condition

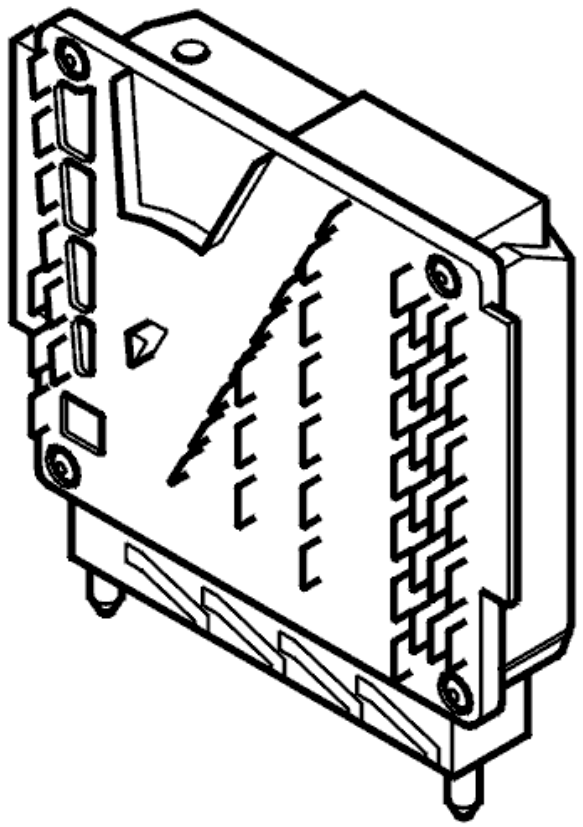

Fig. 91: Engine Control Module
Courtesy of VOLVO CARS CORPORATION

The diagnostic trouble code (DTC) is stored if the engine control module (ECM) registers a fault indicating that the internal monitoring functions have registered one or more present values that do not correspond with the complement value.

The diagnostic trouble code (DTC) is diagnosed at ignition on or with the engine running.

Substitute Value

- Engine speed (RPM) and torque are limited to a calculated normal operating range.

Possible Source

- Damaged engine control module (ECM).

Fault symptom[s]

- Maximum engine speed (RPM) too low
- Cruise control does not work at all
- Uneven idle
- Malfunction indicator lamp (MIL) lit.

INTERNAL FAULT

see **INTERNAL FAULT**

ECM-983C: ENGINE CONTROL MODULE (ECM). INTERNAL FAULT (B6294T; 2005-2006)

DIAGNOSTIC TROUBLE CODE (DTC) INFORMATION ECM-983C

see **DIAGNOSTIC TROUBLE CODE (DTC) INFORMATION ECM-983C**

INTERNAL FAULT

see **INTERNAL FAULT**

ECM-983D: ENGINE CONTROL MODULE (ECM). INTERNAL FAULT (B5254T2; 2005-2007)

DIAGNOSTIC TROUBLE CODE (DTC) INFORMATION ECM-983D

Condition

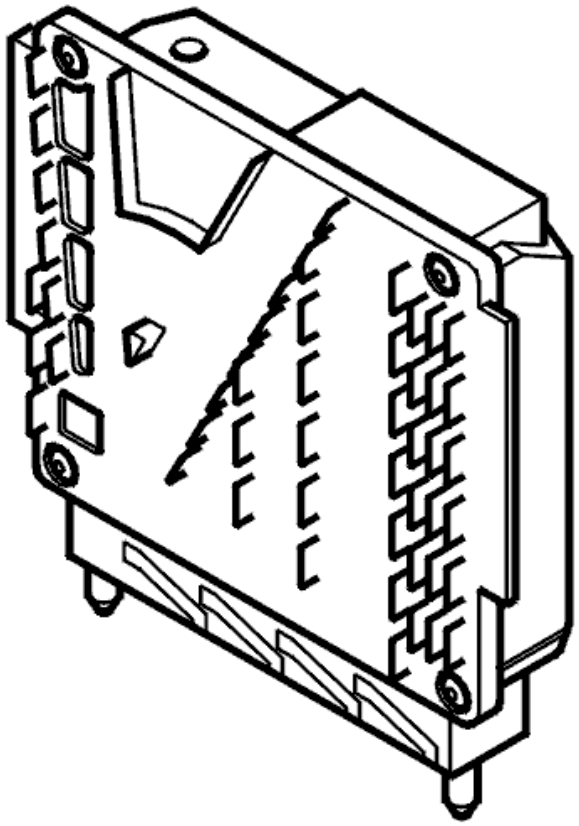

Fig. 92: Engine Control Module

Courtesy of VOLVO CARS CORPORATION

The diagnostic trouble code (DTC) is stored if the engine control module (ECM) registers a fault indicating that the internal monitoring functions have registered one or more present values that do not correspond with the complement value.

The diagnostic trouble code (DTC) is diagnosed at ignition on or with the engine running.

Substitute Value

- Engine speed (RPM) and torque are limited to a calculated normal operating range.

Possible Source

- Damaged engine control module (ECM).

Fault symptom[s]

- Maximum engine speed (RPM) too low
- Cruise control does not work at all
- Uneven idle
- Malfunction indicator lamp (MIL) lit.

INTERNAL FAULT

see **INTERNAL FAULT**

ECM-983D: ENGINE CONTROL MODULE (ECM). INTERNAL FAULT (B6294T; 2005-2006)

DIAGNOSTIC TROUBLE CODE (DTC) INFORMATION ECM-983D

see **DIAGNOSTIC TROUBLE CODE (DTC) INFORMATION ECM-983D**

INTERNAL FAULT

see **INTERNAL FAULT**

ECM-9840: ENGINE CONTROL MODULE (ECM). INTERNAL FAULT (B5254T2; 2005-2007)

DIAGNOSTIC TROUBLE CODE (DTC) INFORMATION ECM-9840

Condition

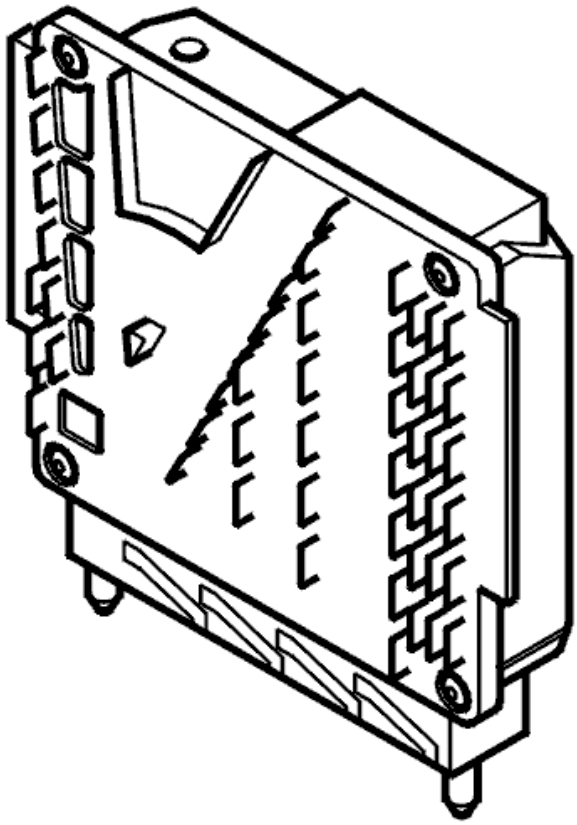

Fig. 93: Engine Control Module
Courtesy of VOLVO CARS CORPORATION

The diagnostic trouble code (DTC) stored if the engine control module (ECM) registers a fault where the input signals from the throttle unit position sensor are interpreted by the normal engine control functions as having exceeded their minimum or maximum limits, while the internal monitoring function interprets the input signals from the electronic throttle unit position sensor differently.

The diagnostic trouble code (DTC) is diagnosed at ignition on or with the engine running.

Substitute Value

- Engine speed (RPM) and torque are limited to a calculated normal operating range.

Possible Source

- Damaged engine control module (ECM).

Fault symptom[s]

- Maximum engine speed (RPM) too low
- Cruise control does not work at all
- Uneven idle

- Malfunction indicator lamp (MIL) lit.

INTERNAL FAULT

see **INTERNAL FAULT**

ECM-9840: ENGINE CONTROL MODULE (ECM). INTERNAL FAULT (B6294T; 2005-2006)

DIAGNOSTIC TROUBLE CODE (DTC) INFORMATION ECM-9840

see **DIAGNOSTIC TROUBLE CODE (DTC) INFORMATION ECM-9840**

INTERNAL FAULT

see **INTERNAL FAULT**

ECM-984A: ENGINE CONTROL MODULE (ECM), LOAD SIGNAL. INTERNAL FAULT (B5254T2; B6294T; 2004)

DIAGNOSTIC TROUBLE CODE (DTC) INFORMATION ECM-984A

Condition

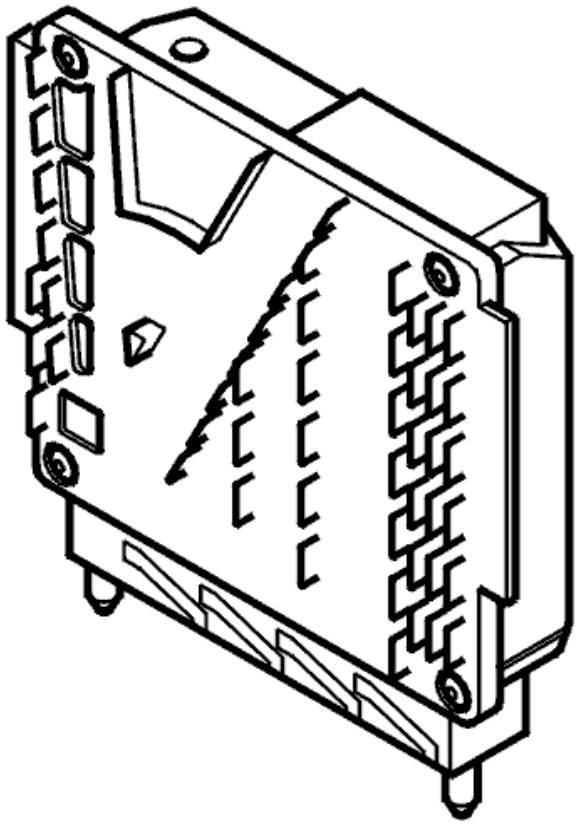

Fig. 94: Engine Control Module
Courtesy of VOLVO CARS CORPORATION

Diagnostic trouble code (DTC) ECM-984A is stored if the engine control module (ECM) registers an internal fault indicating that the calculated load signals for the normal engine control functions are lower than calculated by the internal monitoring functions. The diagnostic trouble code (DTC) is diagnosed with the engine running and at an engine speed (RPM) of more than 1000 RPM.

Substitute Value

The engine speed (RPM) and torque are limited to a calculated normal operating range.

Possible Source

- Blocked exhaust system.
- Blocked intake system.
- Air leakage in the intake system.
- Defective engine control module (ECM).

Fault symptom[s]

- Maximum engine speed (RPM) too low
- Cruise control does not function at all

- Uneven idle
- Malfunction indicator lamp (MIL) lit.

FAULT-TRACING INFORMATION

see **FAULT-TRACING INFORMATION**

ECM-984A: ENGINE CONTROL MODULE (ECM), LOAD SIGNAL. INTERNAL FAULT (B5254T2; B6294T; 2004)

DIAGNOSTIC TROUBLE CODE (DTC) INFORMATION ECM-984A

see **DIAGNOSTIC TROUBLE CODE (DTC) INFORMATION ECM-984A**

INTERNAL FAULT. PERMANENT FAULT

CHECKING THE INTAKE AND EXHAUST SYSTEM

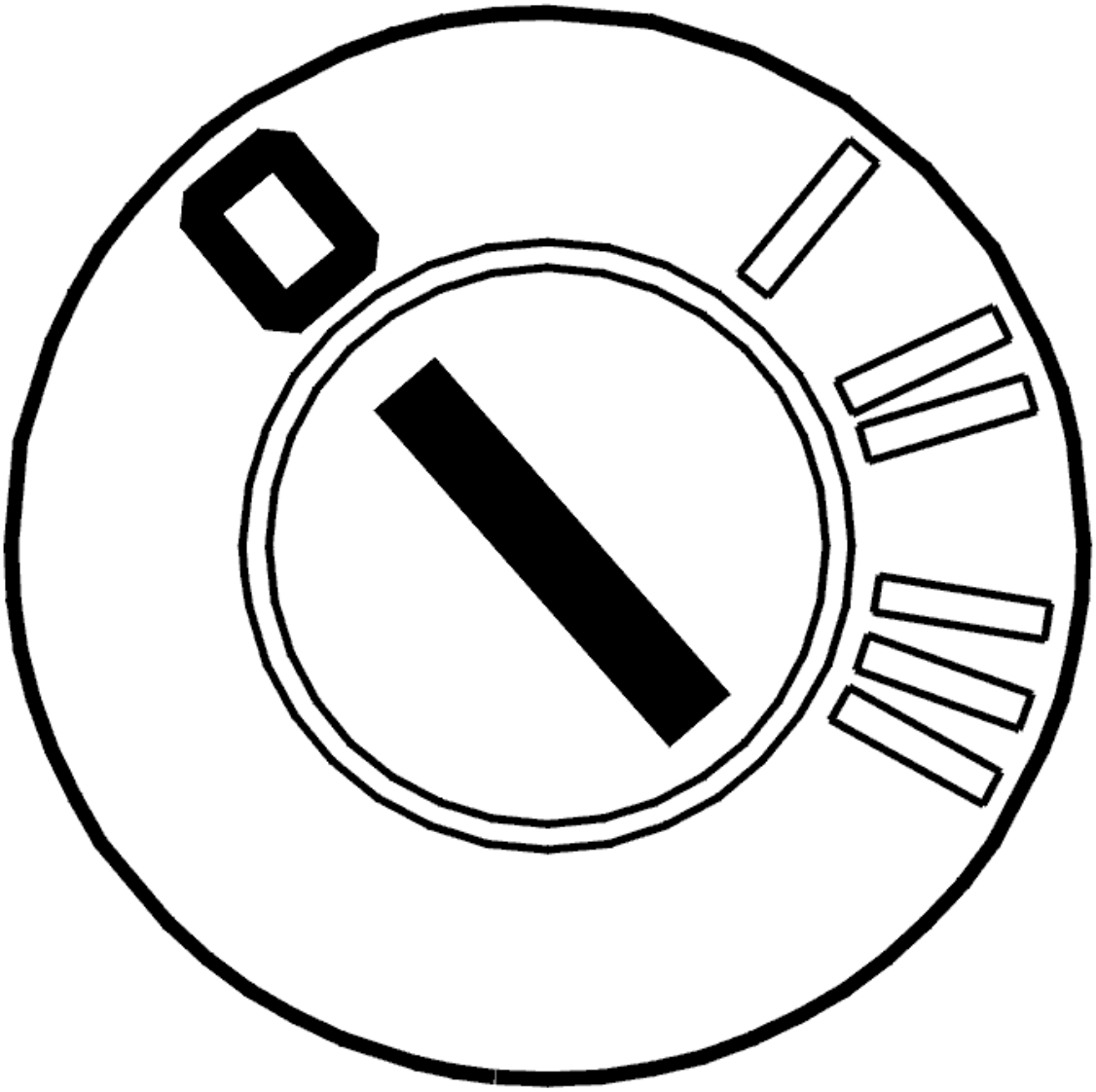

Fig. 95: Identifying Ignition OFF
Courtesy of VOLVO CARS CORPORATION

Check the intake and exhaust system. Check for blockages.

Check the intake system for leakage.

Check the inside of the throttle body (TB). Check for contamination. When the throttle body (TB) is contaminated, the air flow to the engine is impaired and diagnostic trouble code (DTCs) or fault symptoms can occur.

Remedy as necessary.

Was a fault detected?

- **YES**

Refer to **INFORMATION**

- **NO**

  Refer to **PROGRAMMING OR REPLACING THE ENGINE CONTROL MODULE (ECM)**

PROGRAMMING OR REPLACING THE ENGINE CONTROL MODULE (ECM)

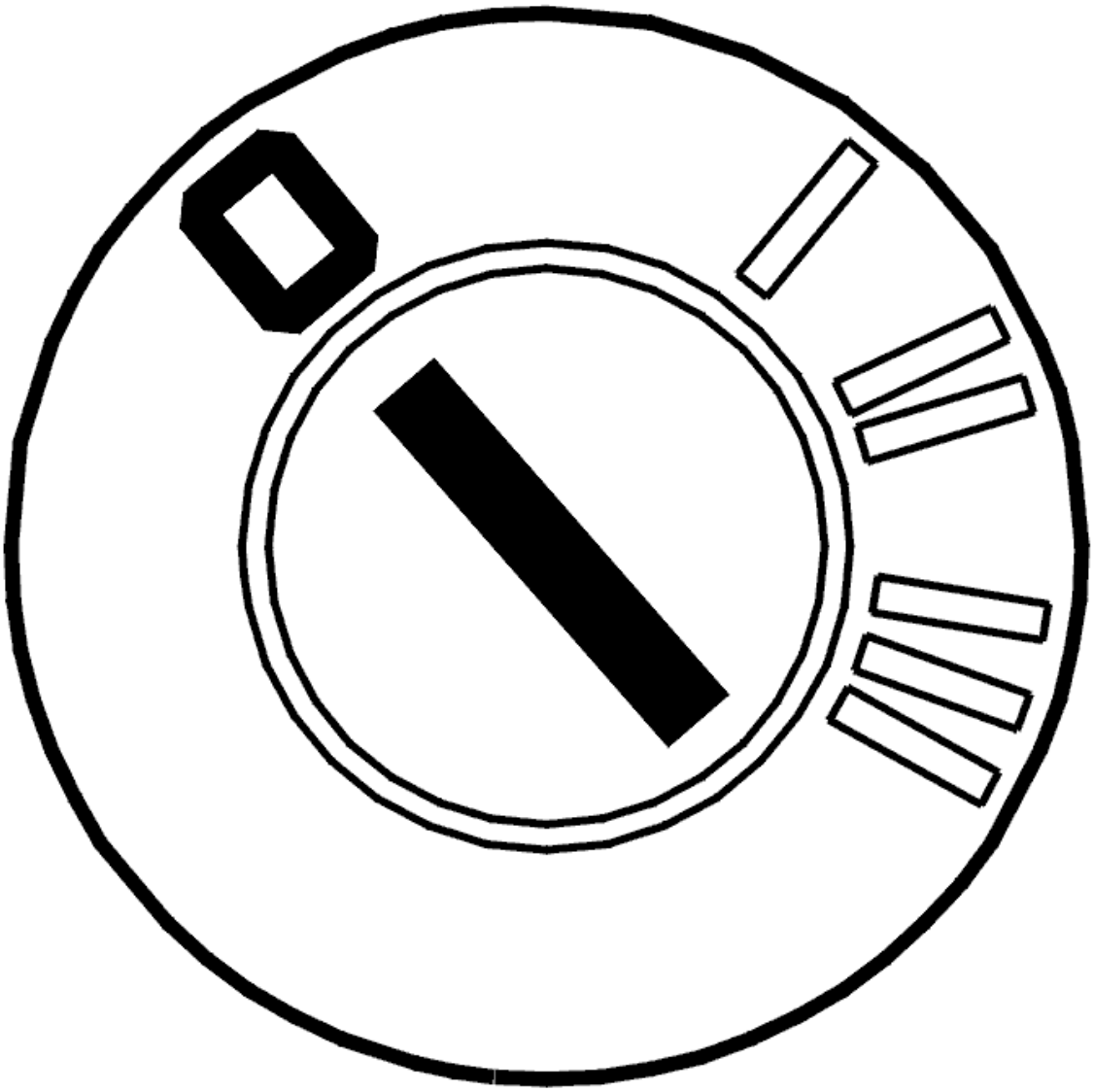

Fig. 96: Identifying Ignition OFF
Courtesy of VOLVO CARS CORPORATION

- Ignition off.

  The diagnostic trouble code may be stored because the Engine control module (ECM) is damaged.

  Remedy as necessary.

Other information

- see **ENGINE CONTROL MODULE (ECM), REPLACING**

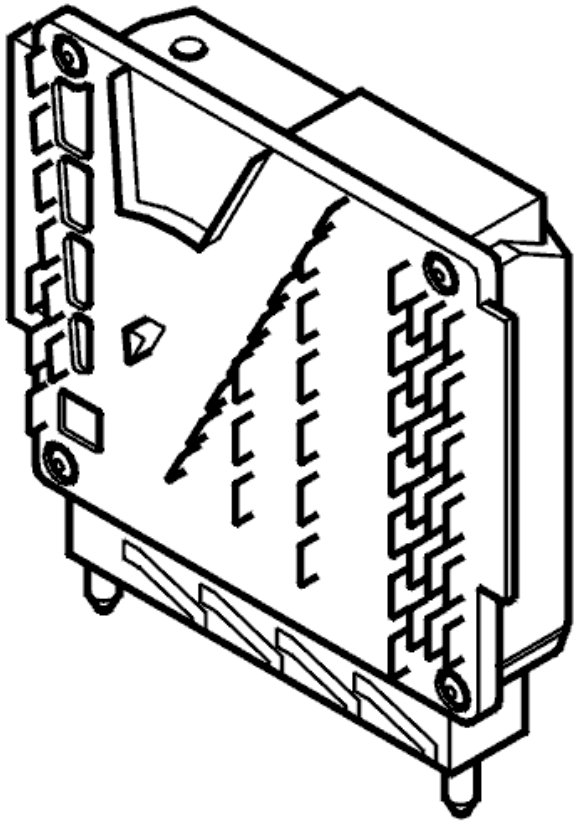

Fig. 97: Engine Control Module
Courtesy of VOLVO CARS CORPORATION

- **Continue**

  Refer to **INFORMATION**

INFORMATION

FAULT-TRACING INFORMATION

In case of this defect, troubleshooting is not followed by verification.

The information can be displayed again or the fault-tracing for this fault can be interrupted.

ECM-984B: ENGINE CONTROL MODULE (ECM). INTERNAL FAULT (B5254T2; 2005-2007)

DIAGNOSTIC TROUBLE CODE (DTC) INFORMATION ECM-984B

Condition

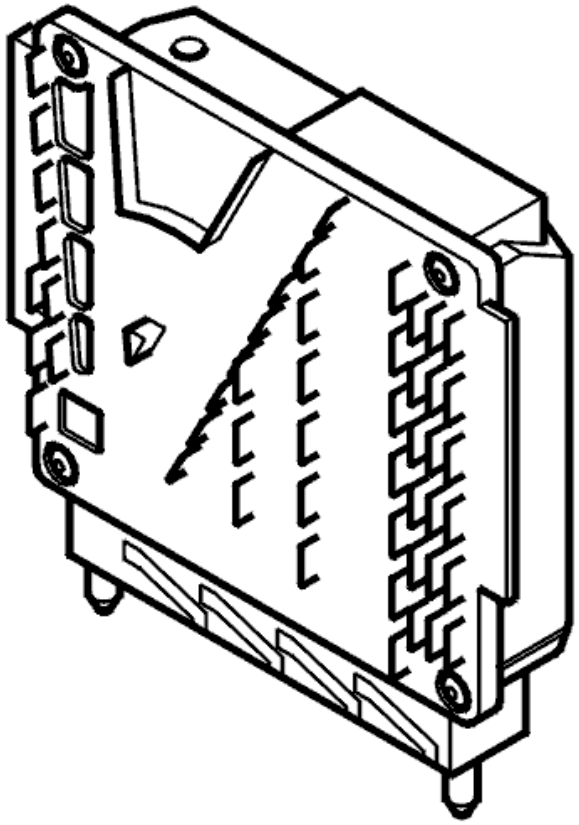

Fig. 98: Engine Control Module
Courtesy of VOLVO CARS CORPORATION

The diagnostic trouble code (DTC) stored if the engine control module (ECM) registers a fault where the input signals from the throttle unit position sensor are interpreted by the normal engine control functions as having exceeded their minimum or maximum limits, while the internal monitoring function interprets the input signals from the electronic throttle unit position sensor differently.

The diagnostic trouble code (DTC) is diagnosed at ignition on or with the engine running.

Substitute Value

- Engine speed (RPM) and torque are limited to a calculated normal operating range.

Possible Source

- Damaged engine control module (ECM).

Fault symptom[s]

- Maximum engine speed (RPM) too low

- Cruise control does not work at all
- Uneven idle
- Malfunction indicator lamp (MIL) lit.

INTERNAL FAULT

see **INTERNAL FAULT**

ECM-984B: ENGINE CONTROL MODULE (ECM). INTERNAL FAULT (B6294T; 2005-2006)

DIAGNOSTIC TROUBLE CODE (DTC) INFORMATION ECM-984B

see **DIAGNOSTIC TROUBLE CODE (DTC) INFORMATION ECM-984B**

INTERNAL FAULT

see **INTERNAL FAULT**

ECM-9850: ENGINE CONTROL MODULE (ECM). INTERNAL FAULT (B5254T2; 2005-2007)

DIAGNOSTIC TROUBLE CODE (DTC) INFORMATION ECM-9850

Condition

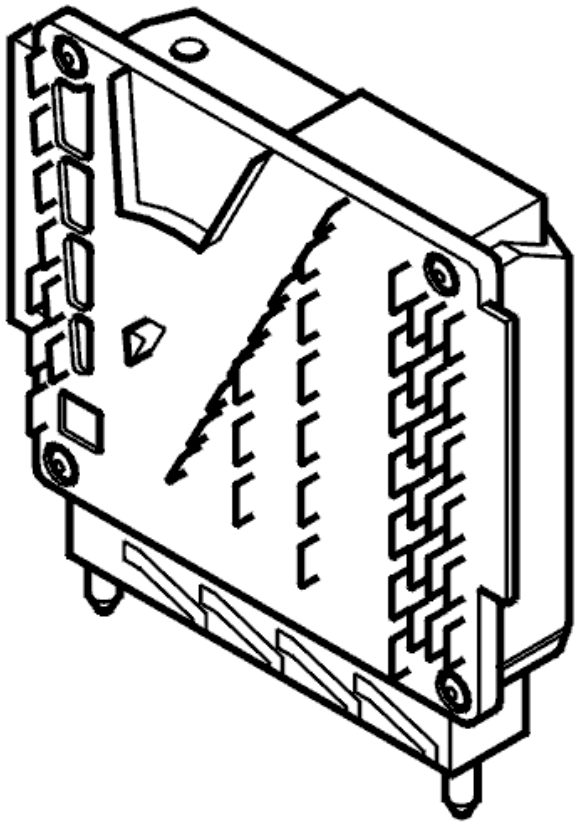

Fig. 99: Engine Control Module
Courtesy of VOLVO CARS CORPORATION

The diagnostic trouble code (DTC) is stored if the engine control module (ECM) registers an internal fault in one of the internal monitoring functions in the engine control module (ECM). This diagnostic trouble code (DTC) is normally always stored with one of the other diagnostic trouble codes (DTCs) which affect the internal monitoring functions.

The diagnostic trouble code (DTC) is diagnosed at ignition on or with the engine running.

Substitute Value

None.

Possible Source

- One of the diagnostic trouble codes (DTCs) which affect the internal monitoring functions is stored in the engine control module (ECM)
- Damaged engine control module (ECM).

Fault symptom[s]

- Driving/Poor performance/lacks power

- Idling/Uneven idle

INTERNAL FAULT

see **INTERNAL FAULT**

ECM-9850: ENGINE CONTROL MODULE (ECM). INTERNAL FAULT (B6294T; 2005-2006)

DIAGNOSTIC TROUBLE CODE (DTC) INFORMATION ECM-9850

see **DIAGNOSTIC TROUBLE CODE (DTC) INFORMATION ECM-9850**

INTERNAL FAULT

see **INTERNAL FAULT**

ECM-985A: ENGINE CONTROL MODULE (ECM). INTERNAL FAULT. INTERMITTENT FAULT (B5254T2; B6294T; 2004)

DIAGNOSTIC TROUBLE CODE (DTC) INFORMATION ECM-985A

Condition

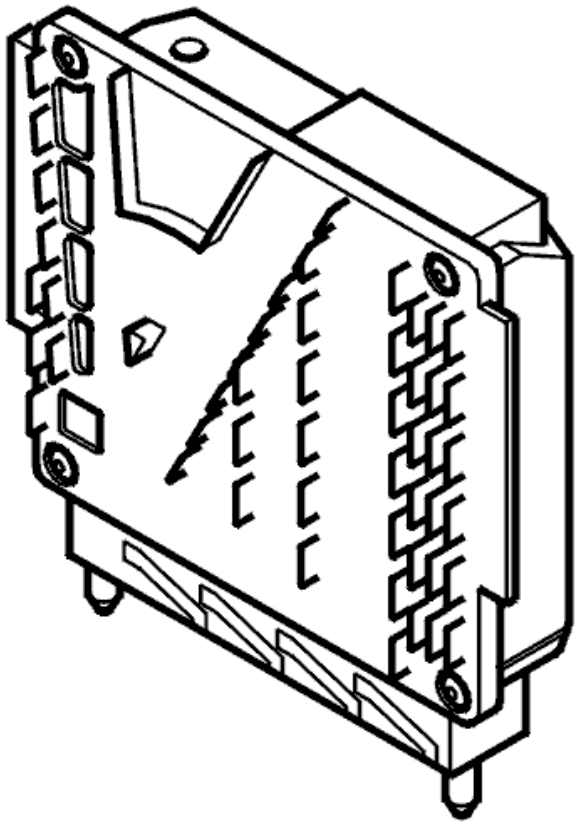

Fig. 100: Engine Control Module
Courtesy of VOLVO CARS CORPORATION

Diagnostic trouble code (DTC) ECM-985A is stored if the engine control module (ECM) registers an internal fault indicating that the internal monitoring functions in the engine control module (ECM) have registered one or more present values that do not correspond with the complement value. The diagnostic trouble code (DTC) is diagnosed at ignition on or engine running.

Substitute Value

The engine speed (RPM) and torque are limited to a calculated normal operating range.

Possible Source

- Defective engine control module (ECM).

Fault symptom[s]

- Maximum engine speed (RPM) too low
- Cruise control does not function at all
- Uneven idle
- Malfunction indicator lamp (MIL) lit.

FAULT-TRACING INFORMATION

see **FAULT-TRACING INFORMATION**

ECM-985A: ENGINE CONTROL MODULE (ECM). INTERNAL FAULT. PERMANENT FAULT (B5254T2; B6294T; 2004)

DIAGNOSTIC TROUBLE CODE (DTC) INFORMATION ECM-985A

see **DIAGNOSTIC TROUBLE CODE (DTC) INFORMATION ECM-985A**

INTERNAL FAULT. PERMANENT FAULT

see **INTERNAL FAULT. PERMANENT FAULT**

ECM-9860: ENGINE CONTROL MODULE (ECM). INTERNAL FAULT (B5254T2; 2005-2007)

DIAGNOSTIC TROUBLE CODE (DTC) INFORMATION ECM-9860

Condition

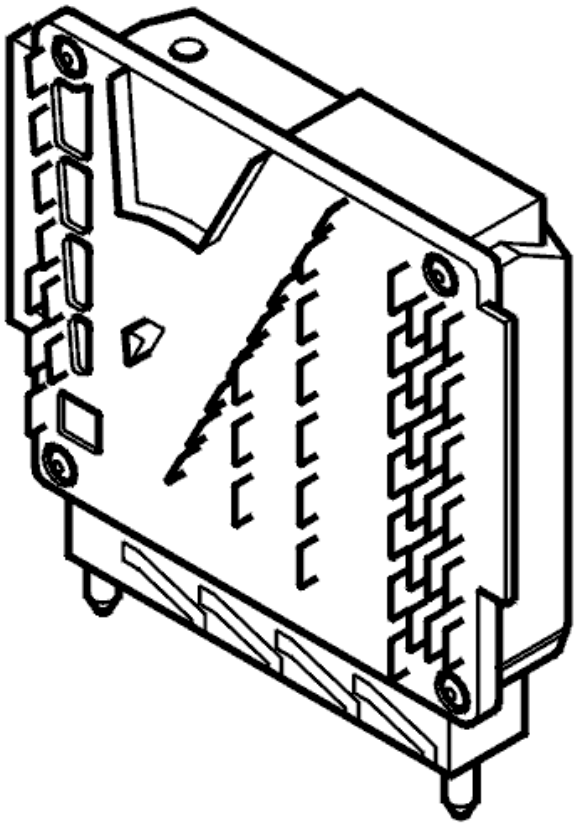

Fig. 101: Engine Control Module

Courtesy of VOLVO CARS CORPORATION

The diagnostic trouble code (DTC) is stored if the engine control module (ECM) registers a fault indicating that the normal engine control functions have not discovered a fault in the signals from the accelerator pedal (AP) position sensor, but that the internal monitoring function has detected a difference between the two signals.

The diagnostic trouble code (DTC) is diagnosed at ignition on or with the engine running.

Substitute Value

- Engine speed (RPM) and torque are limited to a calculated normal operating range.

Possible Source

- Damaged engine control module (ECM).

Fault symptom[s]

- Maximum engine speed (RPM) too low
- Cruise control does not work at all
- Uneven idle
- Malfunction indicator lamp (MIL) lit.

INTERNAL FAULT

see **INTERNAL FAULT**

ECM-9860: ENGINE CONTROL MODULE (ECM). INTERNAL FAULT (B6294T; 2005-2006)

DIAGNOSTIC TROUBLE CODE (DTC) INFORMATION ECM-9860

see **DIAGNOSTIC TROUBLE CODE (DTC) INFORMATION ECM-9860**

INTERNAL FAULT

see **INTERNAL FAULT**

ECM-986A: ENGINE CONTROL MODULE (ECM). INTERNAL FAULT. INTERMITTENT FAULT (B5254T2; B6294T; 2004)

DIAGNOSTIC TROUBLE CODE (DTC) INFORMATION ECM-986A

Condition

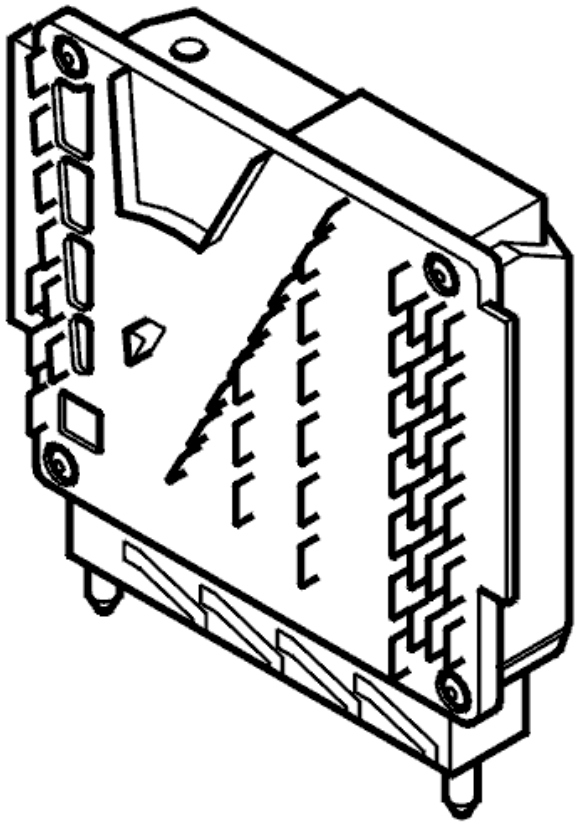

Fig. 102: Engine Control Module
Courtesy of VOLVO CARS CORPORATION

Diagnostic trouble code (DTC) ECM 986A is stored if the engine control module (ECM) registers an internal fault where the input signals from the throttle unit position sensor are interpreted by the normal engine control functions as having exceeded their minimum or maximum limits, while the internal monitoring function interprets the input signals from the electronic throttle unit position sensor differently.

Substitute Value

The engine speed (RPM) and torque are limited to a calculated normal operating range.

Possible Source

- Defective engine control module (ECM).

Fault symptom[s]

- Maximum engine speed (RPM) too low
- Cruise control does not function at all
- Uneven idle
- Malfunction indicator lamp (MIL) lit.

FAULT-TRACING INFORMATION

see **FAULT-TRACING INFORMATION**

ECM-986A: ENGINE CONTROL MODULE (ECM). INTERNAL FAULT. PERMANENT FAULT (B5254T2; B6294T; 2004)

DIAGNOSTIC TROUBLE CODE (DTC) INFORMATION ECM-986A

see **DIAGNOSTIC TROUBLE CODE (DTC) INFORMATION ECM-986A**

INTERNAL FAULT. PERMANENT FAULT

see **INTERNAL FAULT. PERMANENT FAULT**

ECM-988A: ENGINE CONTROL MODULE (ECM). INTERNAL FAULT. INTERMITTENT FAULT (B5254T2; B6294T; 2004)

DIAGNOSTIC TROUBLE CODE (DTC) INFORMATION ECM-988A

Condition

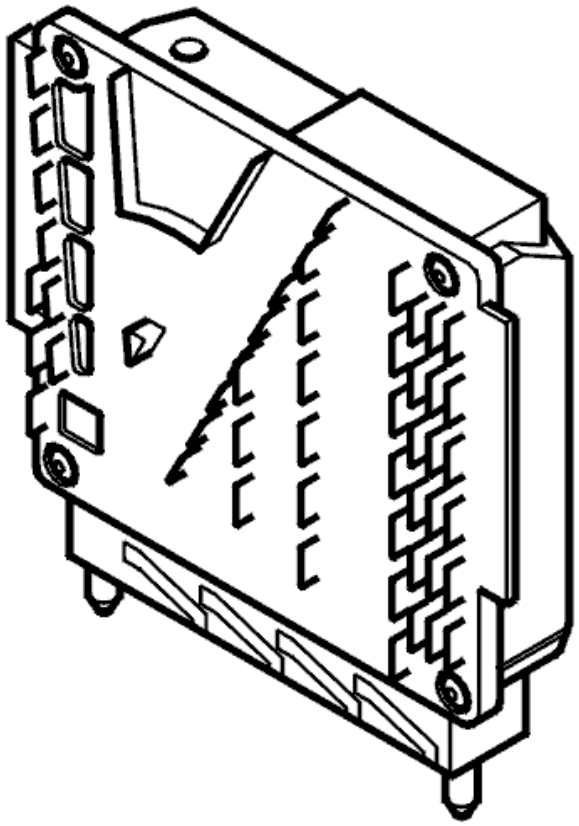

Fig. 103: Engine Control Module

Courtesy of VOLVO CARS CORPORATION

Diagnostic trouble code (DTC) ECM-988A is stored if the engine control module (ECM) registers an internal fault indicating that the normal engine control functions have not discovered a fault in the accelerator pedal (AP) position sensor signals, but that the internal monitoring function has detected a difference between the two signals. The diagnostic trouble code (DTC) is diagnosed at ignition on or with the engine running.

Substitute Value

The engine speed (RPM) and torque are limited to a calculated normal operating range.

Possible Source

- Defective engine control module (ECM).

Fault symptom[s]

- Maximum engine speed (RPM) too low
- Cruise control switched off
- Uneven idle
- Malfunction indicator lamp (MIL) lit.

FAULT-TRACING INFORMATION

see **FAULT-TRACING INFORMATION**

ECM-988A: ENGINE CONTROL MODULE (ECM). INTERNAL FAULT. PERMANENT FAULT (B5254T2; B6294T; 2004)

DIAGNOSTIC TROUBLE CODE (DTC) INFORMATION ECM-988A

see **DIAGNOSTIC TROUBLE CODE (DTC) INFORMATION ECM-988A**

INTERNAL FAULT. PERMANENT FAULT

see **INTERNAL FAULT. PERMANENT FAULT**

ECM-990A: IDLE AIR TRIM. FAULTY SIGNAL (B5254T2; B6294T; 2003-2004)

DIAGNOSTIC TROUBLE CODE (DTC) INFORMATION

Condition

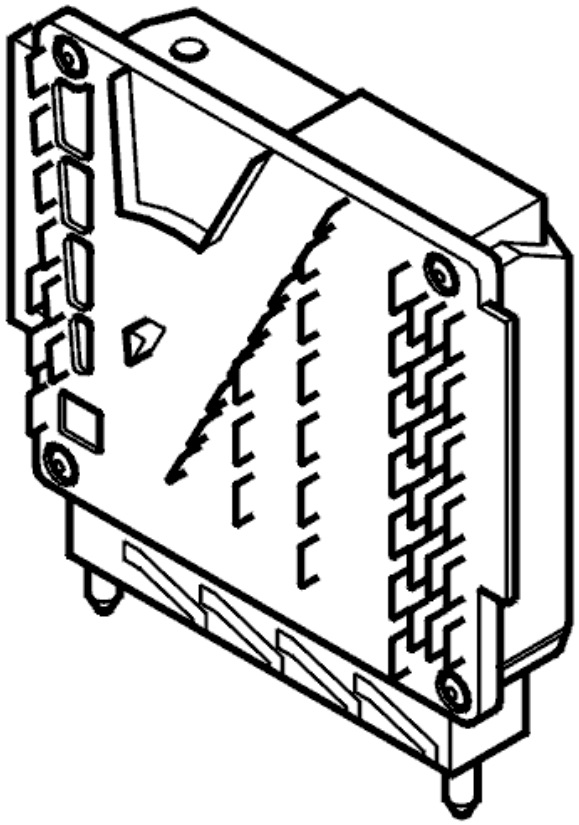

Fig. 104: Engine Control Module
Courtesy of VOLVO CARS CORPORATION

Diagnostic trouble code (DTC) ECM-990A is stored if the engine control module (ECM) registers that the nominal idle speed (engine coolant temperature (ECT) above 60°C) deviates, either in being 200 RPM over or 100 RPM below the nominal idle speed.

Substitute Value

None.

Possible Source

Faulty signal:

- Search the air and fuel supplies in the fuel system for the fault cause (air leakage, blockages etc).
- Incorrectly adapted electronic throttle unit.

Fault symptom[s]

- Malfunction indicator lamp (MIL) lit
- High idling speed
- Low idling speed

FAULT-TRACING INFORMATION

FAULT-TRACING INFORMATION

When this trouble code is stored, it indicates that Engine control module (ECM) has failed to control the idle RPM. Normally there are also trouble codes related to the air and fuel system stored together with this trouble code. Any diagnostic trouble codes that are stored should be fault traced first. If the cause is found with this troubleshooting, you can ignore this trouble code.

HINT: Incorrectly adapted throttle module may cause this trouble code to be stored alone. Carry out adaptation of the throttle unit to update the adaptation values using VIDA (Volvo scan tool)

ECM-9970: MEMORY FAULT IN RAM. FAULTY SIGNAL (B5254T2; 2005-2007)

DIAGNOSTIC TROUBLE CODE (DTC) INFORMATION ECM-9970

Condition

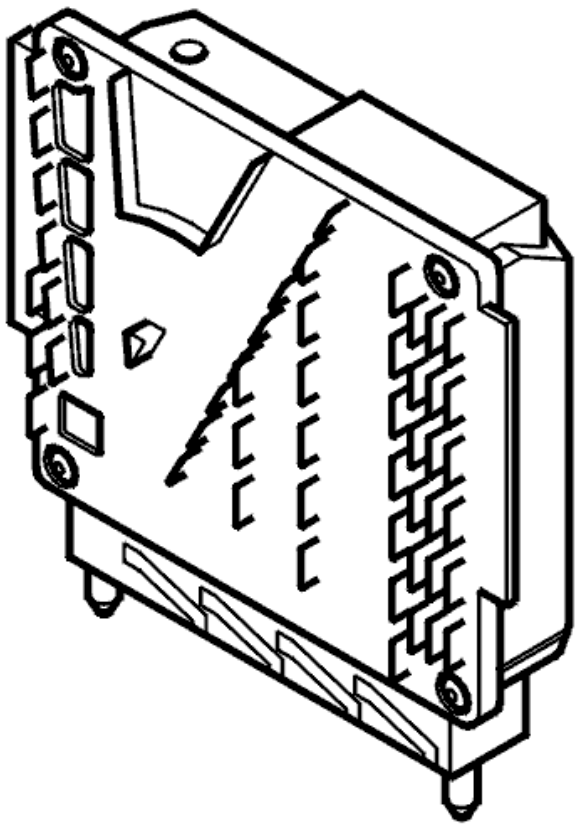

Fig. 105: Engine Control Module
Courtesy of VOLVO CARS CORPORATION

The engine control module (ECM) continuously checks the internal RAM (random access memory)

functionality. The diagnostic trouble code (DTC) is stored if there is a fault in the RAM.

The diagnostic trouble code (DTC) can be diagnosed when the ignition is switched on.

Substitute Value

- The engine control module (ECM) attempts to reset itself.

Possible Source

- Faulty software in the engine control module (ECM)
- Damaged engine control module (ECM).

Fault symptom[s]

- Malfunction indicator lamp (MIL) lit
- The malfunction indicator lamp (MIL) flashes
- The engine cuts out
- The starter motor turns but the engine does not start.

FAULTY SIGNAL

see **FAULTY SIGNAL**

ECM-9970: MEMORY FAULT IN RAM. FAULTY SIGNAL (B6294T; 2005-2006)

DIAGNOSTIC TROUBLE CODE (DTC) INFORMATION ECM-9970

see **DIAGNOSTIC TROUBLE CODE (DTC) INFORMATION ECM-9970**

FAULTY SIGNAL

see **FAULTY SIGNAL**

ECM-9980: MEMORY FAULT IN ROM. FAULTY SIGNAL (B5254T2; 2005-2007)

DIAGNOSTIC TROUBLE CODE (DTC) INFORMATION ECM-9980

Condition

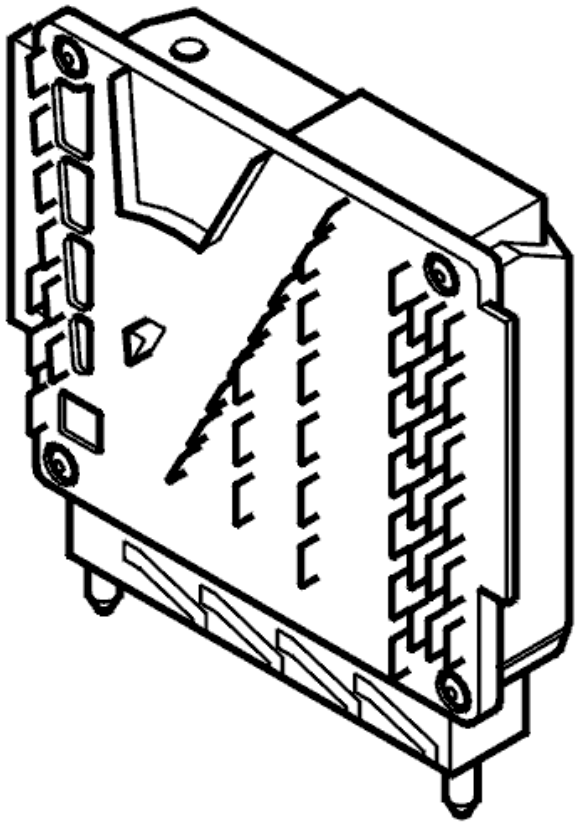

Fig. 106: Engine Control Module
Courtesy of VOLVO CARS CORPORATION

The engine control module (ECM) continuously checks the internal ROM (read only memory) functionality. The diagnostic trouble code (DTC) is stored if there is a fault in the ROM.

The diagnostic trouble code (DTC) can be diagnosed when the ignition is switched on.

Substitute Value

- The engine control module (ECM) attempts to reset itself.

Possible Source

- Faulty software in the engine control module (ECM)
- Damaged engine control module (ECM).

Fault symptom[s]

- Malfunction indicator lamp (MIL) lit
- The malfunction indicator lamp (MIL) flashes
- The engine cuts out
- The starter motor turns but the engine does not start.

FAULTY SIGNAL

see **FAULTY SIGNAL**

ECM-9980: MEMORY FAULT IN ROM. FAULTY SIGNAL (B6294T; 2005-2006)

DIAGNOSTIC TROUBLE CODE (DTC) INFORMATION ECM-9980

see **DIAGNOSTIC TROUBLE CODE (DTC) INFORMATION ECM-9980**

FAULTY SIGNAL

see **FAULTY SIGNAL**

ECM-9990: ENGINE CONTROL MODULE (ECM). FAULTY SIGNAL (B5254T2; 2005-2007)

DIAGNOSTIC TROUBLE CODE (DTC) INFORMATION ECM-9990

Condition

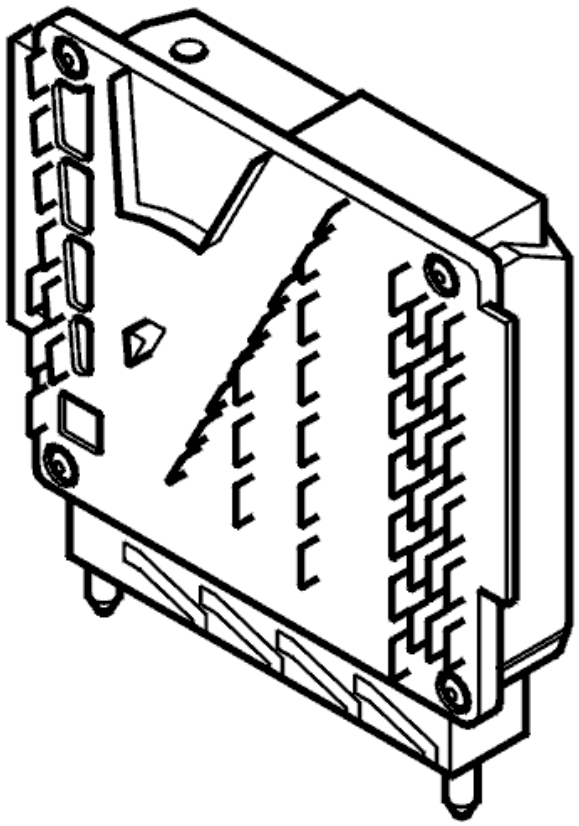

Fig. 107: Engine Control Module
Courtesy of VOLVO CARS CORPORATION

The engine control module (ECM) continuously checks its own internal reset functionality. The diagnostic trouble code (DTC) is stored if there is a fault in the reset function.

The diagnostic trouble code (DTC) can be diagnosed when the ignition is switched on.

Substitute Value

- The engine control module (ECM) attempts to reset itself.

Possible Source

- Faulty software in the engine control module (ECM)
- Damaged engine control module (ECM).

Fault symptom[s]

- Malfunction indicator lamp (MIL) lit
- The malfunction indicator lamp (MIL) flashes
- The engine cuts out
- The starter motor turns but the engine does not start.

FAULTY SIGNAL

see **FAULTY SIGNAL**

ECM-9990: ENGINE CONTROL MODULE (ECM). FAULTY SIGNAL (B6294T; 2005-2006)

DIAGNOSTIC TROUBLE CODE (DTC) INFORMATION ECM-9990

see **DIAGNOSTIC TROUBLE CODE (DTC) INFORMATION ECM-9990**

FAULTY SIGNAL

see **FAULTY SIGNAL**

ECM-A12B: SPEED SIGNAL. SIGNAL MISSING (B5254T2; 2005-2007)

DIAGNOSTIC TROUBLE CODE (DTC) INFORMATION ECM-A12B

Condition

A fault message is transmitted to the engine control module (ECM) and the diagnostic trouble code (DTC) is stored if a fault is detected in the brake control module (BCM). Diagnostic trouble codes (DTCs) for the vehicle speed sensor (VSS) signal are also stored in the brake control module (BCM).

Substitute Value

- The speed signal from the brake control module (BCM) is set at 0 km/h.

Possible Source

- Contact resistance in the control area network (CAN) terminals
- Open-circuit in one or both CAN cables
- Short-circuit to ground, voltage or each other in one or both signal cables
- Damaged brake control module (BCM)
- Damaged engine control module (ECM).

Fault symptom[s]

- Malfunction indicator lamp (MIL) lit.

FAULT-TRACING INFORMATION

see **FAULT-TRACING INFORMATION**

ECM-A12B: SPEED SIGNAL. SIGNAL MISSING (B6294T; 2005-2006)

DIAGNOSTIC TROUBLE CODE (DTC) INFORMATION ECM-A12B

see **DIAGNOSTIC TROUBLE CODE (DTC) INFORMATION ECM-A12B**

FAULT-TRACING INFORMATION

see **FAULT-TRACING INFORMATION**

ECM-A12C: SPEED SIGNAL. SIGNAL TOO HIGH (B5254T2; 2005-2007)

DIAGNOSTIC TROUBLE CODE (DTC) INFORMATION ECM-A12C

Condition

A fault message is transmitted to the engine control module (ECM) and the diagnostic trouble code (DTC) is stored if a fault is detected in the brake control module (BCM). Diagnostic trouble codes (DTCs) for the vehicle speed sensor (VSS) signal are also stored in the brake control module (BCM).

Substitute Value

- The speed signal from the brake control module (BCM) is set at 0 km/h.

Possible Source

- Faulty speed signal to the brake control module (BCM).

Fault symptom[s]

- Malfunction indicator lamp (MIL) lit.

FAULT-TRACING INFORMATION

see **FAULT-TRACING INFORMATION**

ECM-A12C: SPEED SIGNAL. SIGNAL TOO HIGH (B6294T; 2005-2006)

DIAGNOSTIC TROUBLE CODE (DTC) INFORMATION ECM-A12C

see **DIAGNOSTIC TROUBLE CODE (DTC) INFORMATION ECM-A12C**

FAULT-TRACING INFORMATION

see **FAULT-TRACING INFORMATION**

ECM-A130: CONTROL MODULE COMMUNICATION (B5254T2; 2005-2007)

DIAGNOSTIC TROUBLE CODE (DTC) INFORMATION ECM-A130

Condition

The control modules transmit and receive information via a standardized serial communication method - CAN (Control Area Network). The diagnostic trouble code (DTC) is stored if the engine control module (ECM) registers serious interference (CAN communication blocked).

NOTE: **In the event of system communication problems, it is not possible to communicate with the engine control module (ECM). Therefore it will only be possible to read off the diagnostic trouble code (DTC) if the fault is intermittent.**

Substitute Value

- The engine control module (ECM) shuts itself off "bus-off".

HINT: The engine control module (ECM) will then be shut off until the supply voltage is interrupted (15-, 30-, X supply). When the power supply is switched on, the engine control module (ECM) will make a new attempt to communicate.

Possible Source

- Contact resistance or oxidation in the terminals
- Open-circuit in the control area network (CAN) wiring

- Short-circuit between the control area network (CAN) wiring
- Internal fault in the engine control module (ECM)
- Internal fault in another control module in the same part of the control area network (CAN).

Fault symptom[s]

- General warning lamp lit
- The cruise control does not function at all
- The engine judders under acceleration
- The engine judders heavily after engine braking
- Uneven idle.

FAULTY COMMUNICATION

GENERAL INFORMATION

In order to check the control area network (CAN) cables, the resistance in the network must be measured. The resistance between the two controller area network (CAN) wiring, with the network connected 60 ohms. The resistance can differ depending on the configuration of the car. Permitted values are 55-65 ohms. This applies to both the high speed side network and the low speed side network.

HINT: Take a copy of the data communication side for each model. Note which diagnostic trouble codes (DTCs) are stored in each control module. This facilitates fault-tracing considerably.

Check if the diagnostic trouble codes (DTCs) for failed communication are stored in the central electronic module (CEM). If this is the case, first fault-trace according to these diagnostic trouble codes (DTCs).

Other information

- For general information about fault-tracing the control area network (CAN), see **GENERAL INFORMATION ABOUT FAULT-TRACING IN THE CAN NETWORK (2005-2012)**

- **Continue**

  Refer to **CHECKING THE RESISTANCE OF THE CONTROL AREA NETWORK (CAN) CABLES**

CHECKING THE RESISTANCE OF THE CONTROL AREA NETWORK (CAN) CABLES

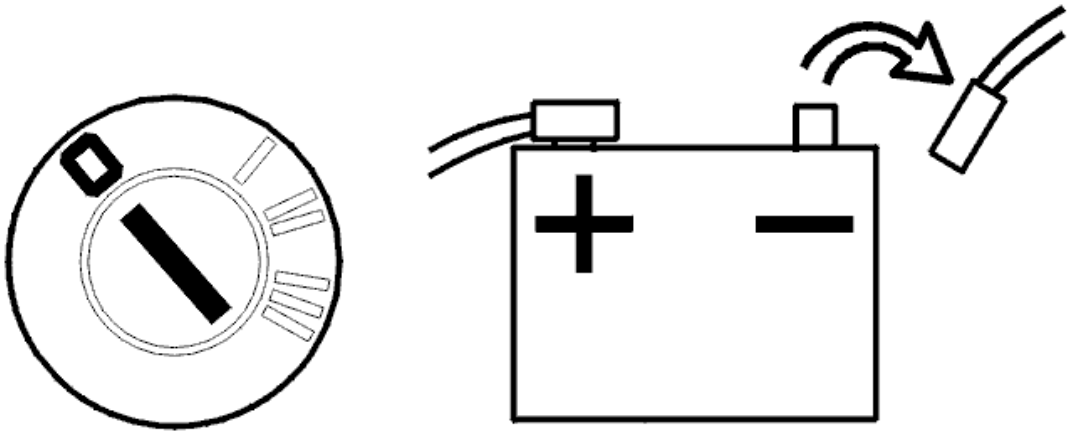

Fig. 108: Identifying Ignition In Off Position And Disconnecting Negative Cable From Battery
Courtesy of VOLVO CARS CORPORATION

- Disconnect the battery negative lead. The power to the network must be cut when taking resistance readings. The reading may otherwise be incorrect.

  NOTE: Also read: BATTERY, DISCONNECTING

- Connect the adapter wiring to the central electronic module (CEM).

  HINT: Where a breakout box cannot be used, take readings from the rear of the affected connectors if possible. This prevents terminal pins and socket housings being damaged.

  When taking readings on the low speed network

  - When taking readings on the low speed network, the adapter wiring should be connected to the central electronic module (CEM) and the readings taken from there. The readings can also be taken in the connector for the power seat module (PSM). The advantage of using the adapter wiring connected to the central electronic module (CEM) is that all control modules can be connected to the network when taking readings and there is access to both the high speed and the low speed networks.

    This resistance reading only measures main arteries in the low speed network, not the junctions for the road traffic information module (RTI), accessory electronic module (AEM), power seat module (PSM), phone module (PHM), audio module (AUM), driver's door module (DDM) and passenger door module (PDM).

  When taking readings on the high speed network

  - When taking readings on the high speed network, the readings should be taken at the engine control module (ECM) using adapter wiring. The engine control module (ECM) must be connected. This

resistance reading only takes readings from the main arteries in the high speed network.

Connect the ohmmeter to the terminals for CAN-L and CAN-H on the relevant network. Work the connectors and twist the cable harness. The resistance must be approximately 60 ohms. Permitted values are 55-65 ohms.

Other information

- see **CONNECTING THE BREAKOUT BOX**
- see **CHECKING WIRING AND TERMINALS**

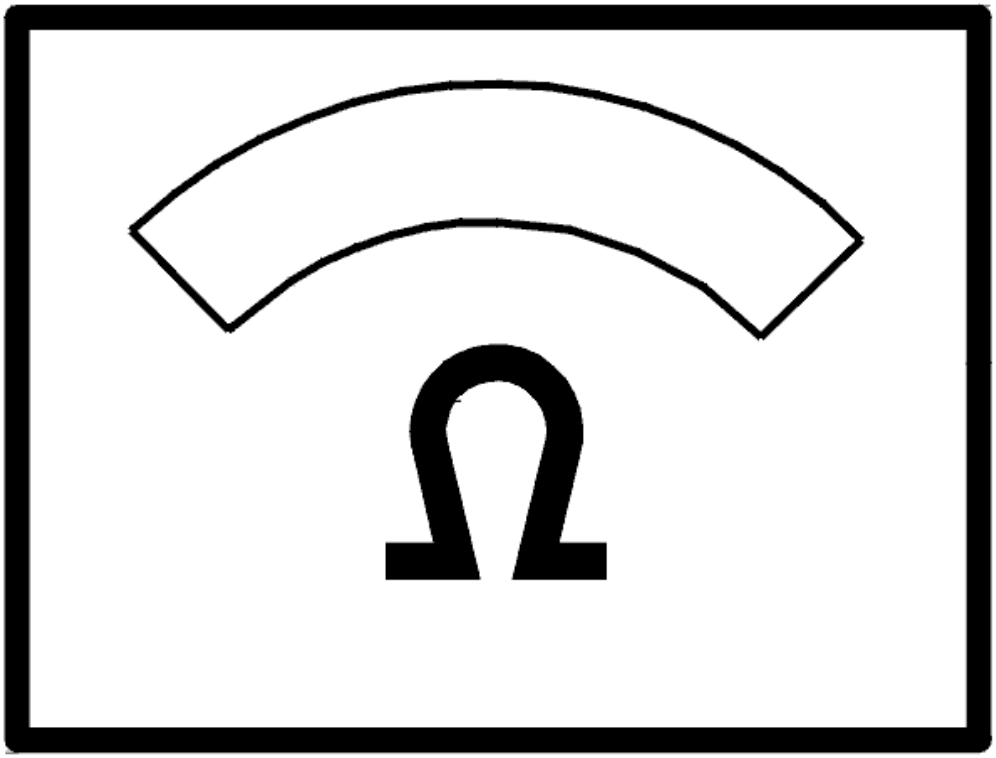

Fig. 109: Identifying Ohm Meter
Courtesy of VOLVO CARS CORPORATION

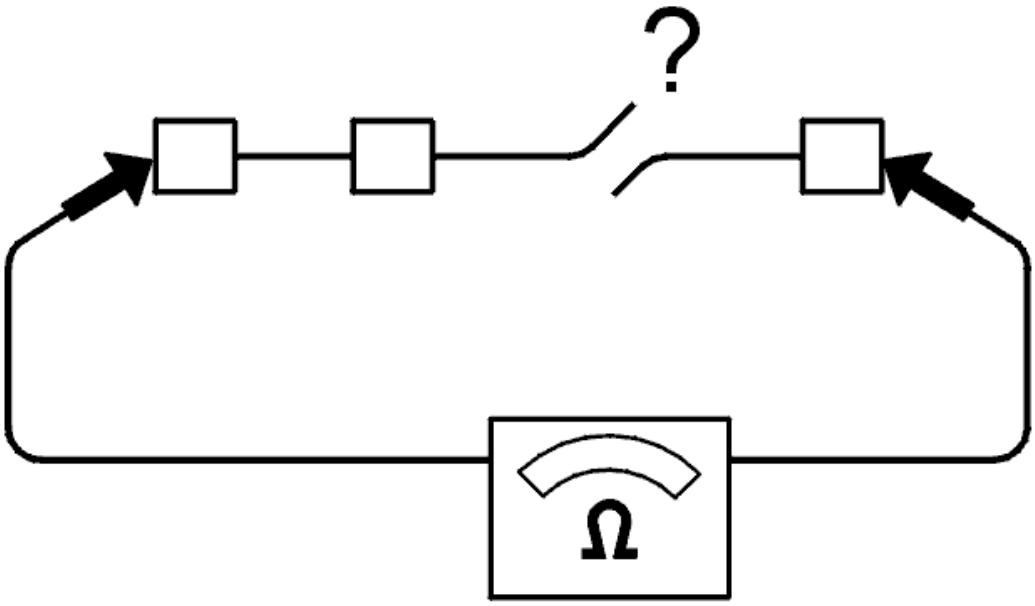

Fig. 110: Checking For Open Circuit
Courtesy of VOLVO CARS CORPORATION

Is the value OK?

- **YES**

  Refer to **CHECKING A SHORT-CIRCUIT IN CAN CABLES**

- **NO**

  Refer to **IDENTIFYING FAULT CAUSES IN THE CAN NETWORK**

CHECKING A SHORT-CIRCUIT IN CAN CABLES

Connect an ohmmeter between the relevant CAN cable (CAN-L and CAN-H) and the power supply, and between the CAN cable and ground. Twist the connectors and turn the cable harness to different positions at each reading to determine any intermittent short-circuits.

Take the following readings:

- The resistance between CAN-L and ground
- The resistance between CAN-L and voltage

- The resistance between CAN-H and ground
- The resistance between CAN-H and voltage.

The resistance must be infinite or very high in all cases (greater than 1 Mohms).

HINT: The reading can be taken from the same connector if the CAN cables, power supply and ground are exposed. If possible, take readings on the rear of the connector to prevent damage to the terminals in the connector. If this is not possible, use the adapter wiring or loose terminal pins to obtain a good contact.

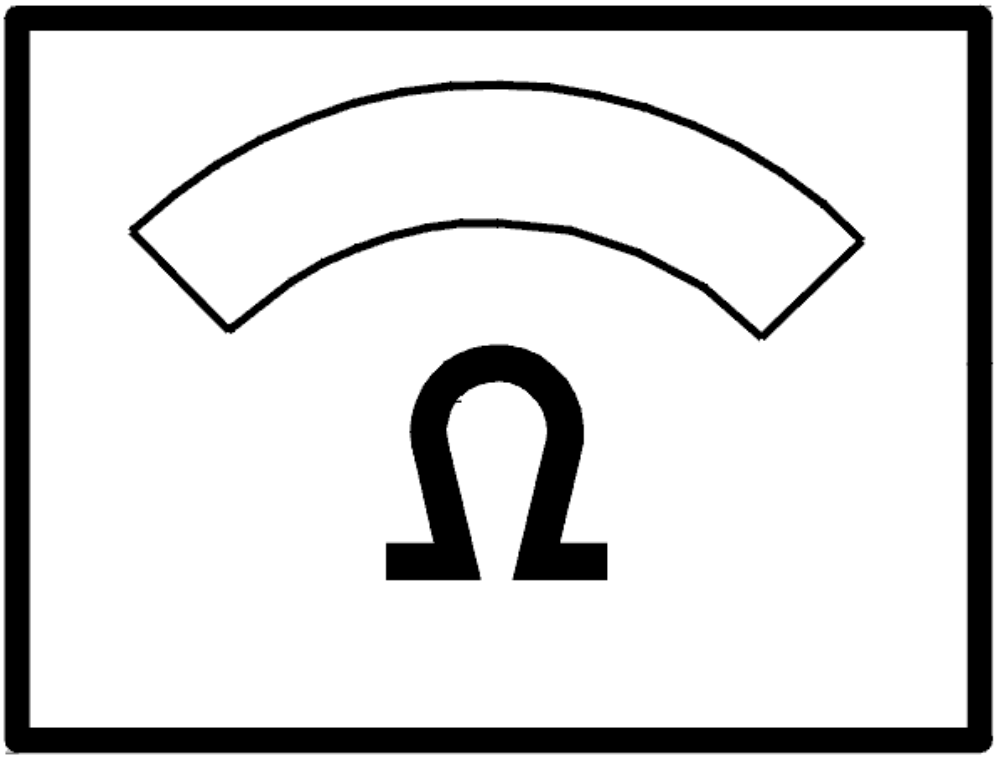

Fig. 111: Identifying Ohm Meter
Courtesy of VOLVO CARS CORPORATION

Was a fault detected?

- **YES**

  Refer to **IDENTIFYING FAULT CAUSES IN THE CAN NETWORK**

- **NO**

  Refer to **CHECKING THE TRAFFIC LOAD ON THE CAN CABLES**

CHECKING THE TRAFFIC LOAD ON THE CAN CABLES

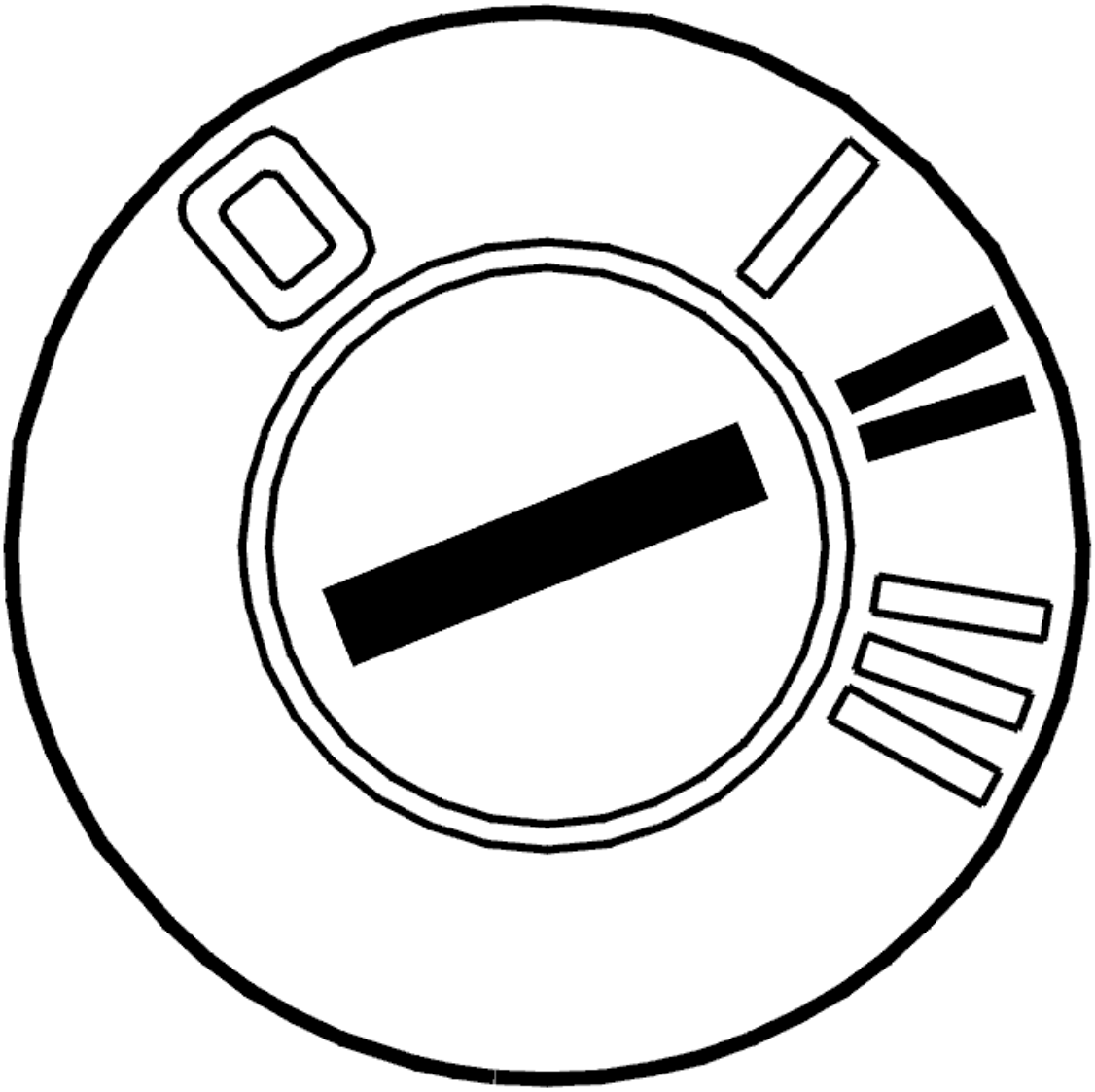

Fig. 112: Identifying Ignition ON
Courtesy of VOLVO CARS CORPORATION

- Connect the battery
- Ignition on

Also read: **BATTERY, DISCONNECTING**

Faults in the CAN network may be due to a control module sending faulty messages that disrupt "normal" communication. When messages are sent incorrectly, this results in a considerable increase in the amount of traffic on the CAN network. Check the load by measuring the average voltage value on the CAN cables in relation to ground.

Connect a voltmeter between CAN-L and ground. The voltage must be approximately 2.3 V.

Then connect a voltmeter between CAN-H and ground. The voltage must be approximately 2.8 V.

HINT: If possible measure from the rear of the affected connectors so that they are not damaged.

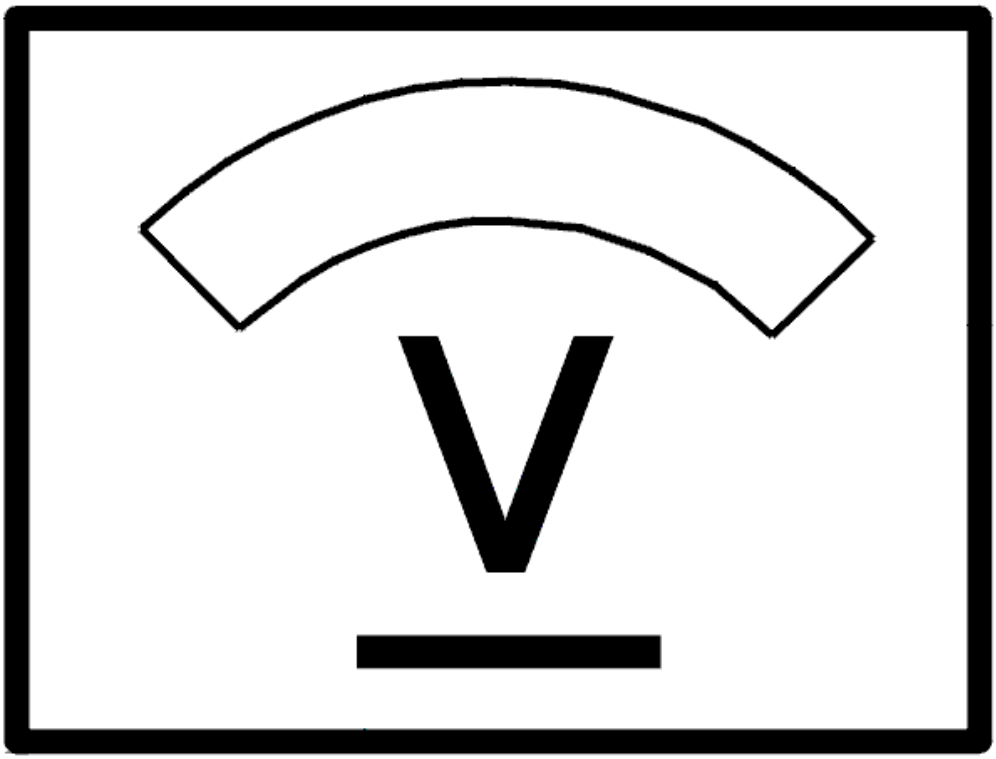

Fig. 113: Identifying Voltage Display
Courtesy of VOLVO CARS CORPORATION

Is the value OK?

- **YES**

  Refer to **INFORMATION**

- **NO**

  Refer to **IDENTIFYING A CONTROL MODULE IN THE CAN NETWORK**

IDENTIFYING FAULT CAUSES IN THE CAN NETWORK

- Disconnect a control module that disconnects the CAN network (a control module that has four terminals to the CAN network).

  HINT: For the low speed network, suitable places for disconnecting the network are at the steering wheel module (SWM), the driver information module (DIM) or the climate control module (CCM).

  In the event of a short-circuit between one of the CAN cables and voltage or ground, the fault can be located by disconnecting a control module that disconnects the CAN network. Readings can then be taken to determine on which side of the disconnected control module the fault is located.

  Connect an ohmmeter between the CAN cable and supply voltage or ground. Take readings at both ends of the CAN network where the network is disconnected. Twist and bend the cable harness to locate any intermittent short-circuits. The resistance must be infinite or very high (greater than 1Mohms).

  If a fault can be localized in one direction, disconnect the network at a point further down on the CAN network in the direction in which the fault was discovered and repeat the reading. In this way, try to identify where in the network the fault might be located.

  HINT: A short-circuit between the CAN cables and supply voltage or ground may be in either the wiring or in a control module.

  Rectify the wiring as necessary. Replace the control module if the fault has been localized to a control module.

- **Continue**

  Refer to **VERIFICATION**

IDENTIFYING A CONTROL MODULE IN THE CAN NETWORK

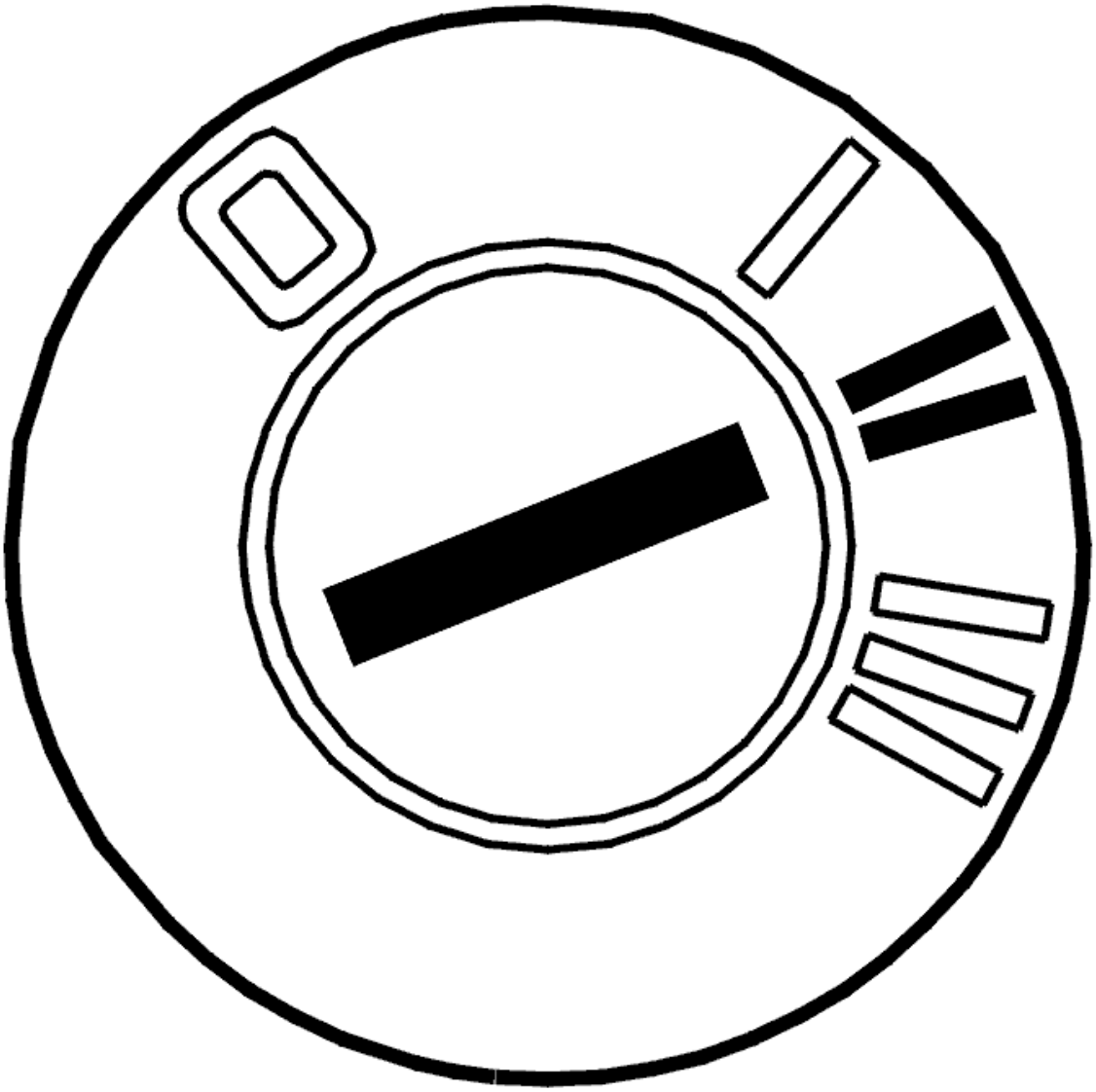

Fig. 114: Identifying Ignition ON
Courtesy of VOLVO CARS CORPORATION

- Connect the battery

  Also read: **BATTERY, DISCONNECTING**

- Ignition on

  If the load on the CAN network is too high, this may be due to a control module sending faulty messages on the CAN network (known as a disruptive control module). The fault may also be due to an intermittent short-circuit to supply voltage or ground in one of the CAN cables. This results in the control modules on the CAN network starting to send faulty messages. The faults can occur without a diagnostic trouble code (DTC) being stored by the control modules. The voltage can be measured between the CAN cables in order to check the load on the CAN network.

Connect a voltmeter between the CAN cables. If the communication on the network is correct, the average voltage value should be approximately 0.5 V (0.4 V to 0.6 V). If there is a fault in the communication, the voltage reading will be approximately 0.7 V or higher.

In order to identify from which control module the faulty communication is being transmitted, cut the supply voltage to one control module at a time and check the voltage in the CAN cables again. The easiest way to cut the supply voltage is to remove a fuse. Repeat until the voltage between the CAN cables drops to approximately 0.5 V.

HINT: When the probable faulty control module has been identified, connect and disconnect the supply voltage to the control module a number of times to verify that the fault appears and disappears.

NOTE: Do not cut the power to the central electronic module (CEM) unless it is the last control module left to check.

The control module that is communicating incorrectly must be replaced. Remedy as necessary.

NOTE: Following a fault involving "disruptive" control modules, other modules may remain in "Limp-Home mode" even after switching the ignition off and on a number of times. To remedy this, disconnect and reconnect the battery negative terminal to restore the control modules to normal function.

- **Continue**

Refer to **VERIFICATION**

IDENTIFYING FAULT CAUSES IN THE CAN NETWORK

- Disconnect a control module that disconnects the CAN network (a control module that has four terminals to the CAN network).

HINT: For the low speed network, suitable places for disconnecting the network are at the steering wheel module (SWM), the driver information module (DIM) or the climate control module (CCM).

In the event of an open-circuit or a short-circuit between the CAN cables, the fault can be localized by disconnecting a control module that disconnects the CAN network. Readings can then be taken to determine on which side of the disconnected control module the fault is located.

Connect an ohmmeter between the CAN cables. Take readings at both ends of the CAN network where the network is disconnected. Twist and bend the cable harness to locate any intermittent short-circuits. The resistance must be 120 ohm.

If a fault can be localized in one direction, disconnect the network at a point further down on the CAN network in the direction in which the fault was discovered and repeat the reading. In this way, try to identify where in the network the fault might be located.

Remedy the cables as necessary.

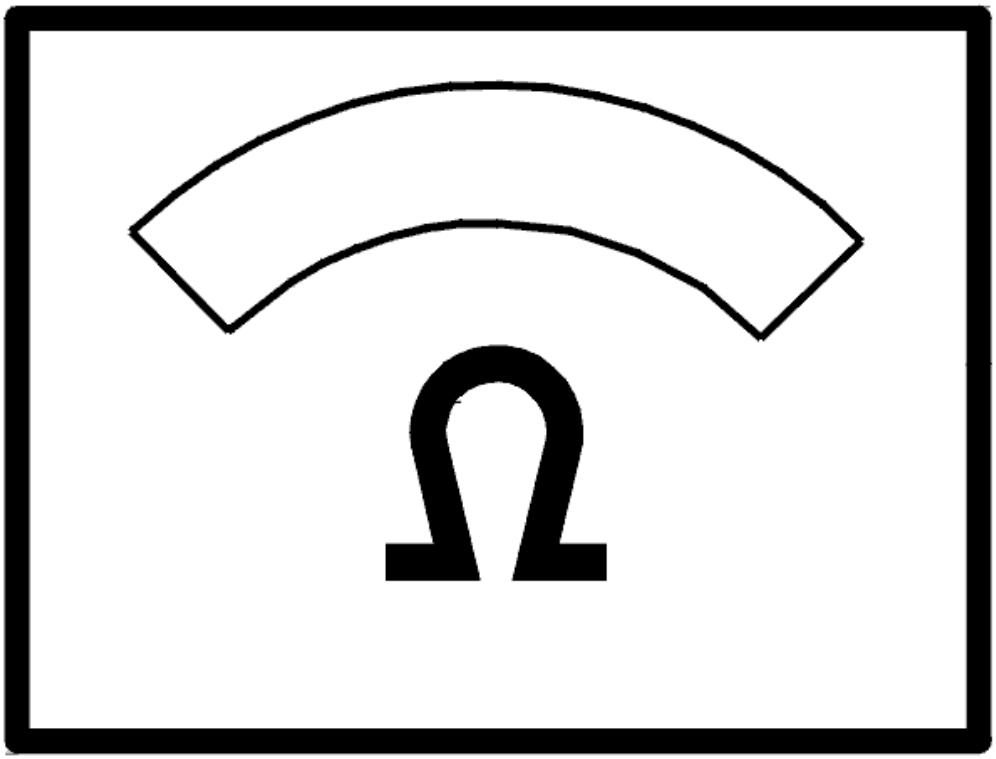

Fig. 115: Identifying Ohm Meter
Courtesy of VOLVO CARS CORPORATION

- **Continue**

  Refer to **VERIFICATION**

VERIFICATION

HINT: After carrying out the repair, check that the fault has been remedied.

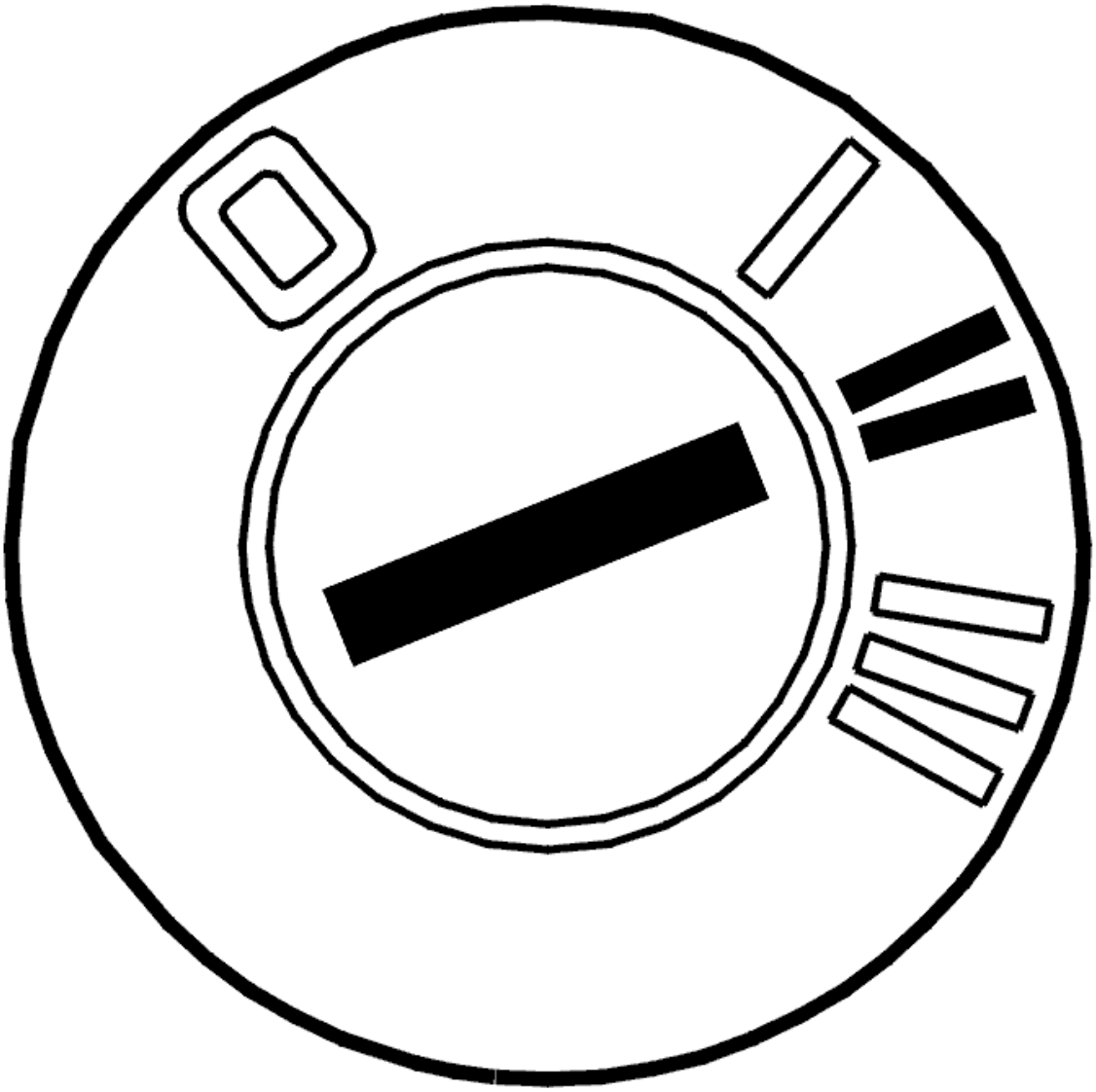

Fig. 116: Identifying Ignition ON
Courtesy of VOLVO CARS CORPORATION

- Reinstall the connectors, components, etc.
- Ignition on
- Erase diagnostic trouble codes using the VCT2000 (or appropriate scan tool)
- Start the car. Allow the car to run for 10 minutes.
- Read off diagnostic trouble codes (DTCs).

  Check if a diagnostic trouble codes (DTCs) for communication fault recurs in the central electronic module (CEM).

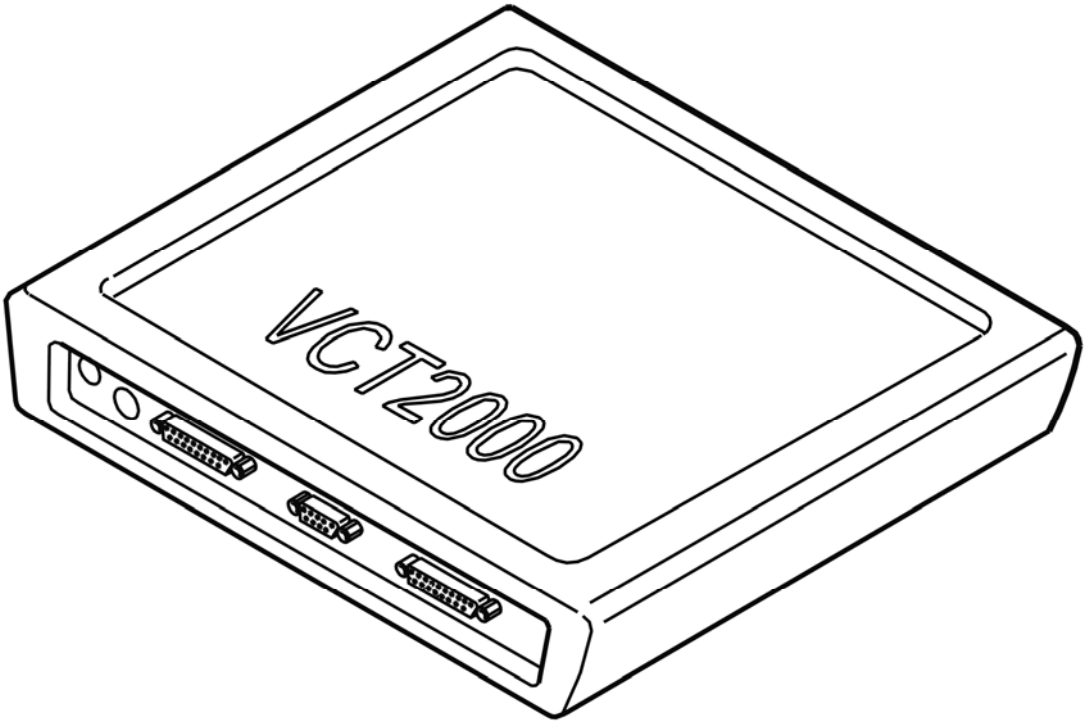

Fig. 117: Identifying VCT2000 Diagnostic Tool Symbol In VIDA
Courtesy of VOLVO CARS CORPORATION

Does the diagnostic trouble code (DTC) recur?

- **YES**

  Refer to **INFORMATION**

- **NO**

  OKAY: Troubleshooting has been completed.

INFORMATION

FAULT-TRACING INFORMATION

Verification shows that the fault is no longer present. The diagnostic trouble code (DTC) was probably caused by an intermittent fault.

Fault-tracing for this diagnostic trouble code (DTC) is not followed by a verification.

You can view the information again or exit fault-tracing for this diagnostic trouble code (DTC).

INFORMATION

FAULT-TRACING INFORMATION

The fault should have been detected and remedied. As this is not the case fault-tracing has failed.

Exit fault-tracing for this diagnostic trouble code (DTC) or make another attempt.

ECM-A130: CONTROL MODULE COMMUNICATION (B6294T; 2005-2006)

DIAGNOSTIC TROUBLE CODE (DTC) INFORMATION ECM-A130

see **DIAGNOSTIC TROUBLE CODE (DTC) INFORMATION ECM-A130**

FAULTY COMMUNICATION

see **FAULTY COMMUNICATION**

ECM-B102400: START CONTROL UNIT. GENERAL FAILURE INFORMATION. NO SUB TYPE INFORMATION (B6324S; 2007-2010)

DIAGNOSTIC TROUBLE CODE (DTC) INFORMATION ECM-B102400

Condition

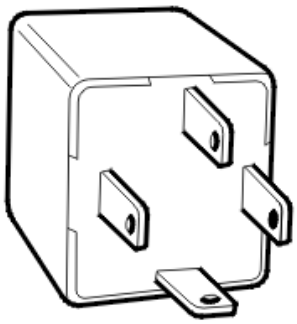

Fig. 118: Identifying Main Relay
Courtesy of VOLVO CARS CORPORATION

The engine control module (ECM) regulates the starter motor via the starter relay and checks its function. The diagnostic trouble code is generated if the control module detects that the start signal from the ignition switch is lost when engine speed exceeds a certain value and no vehicle speed has been registered or if the control module detects a start signal from the ignition switch during driving conditions when there should not be a start signal.

Substitute Value

- Nothing.

Possible Source

- The signal cable from the ignition switch is short-circuited to supply voltage.
- The signal cable from the ignition switch is short-circuited to ground.
- Open-circuit on the signal cable from the ignition switch.
- Damaged starter relay.

Fault symptom[s]

- None.

FAULT-TRACING

CHECKING COMPONENTS AND WIRING

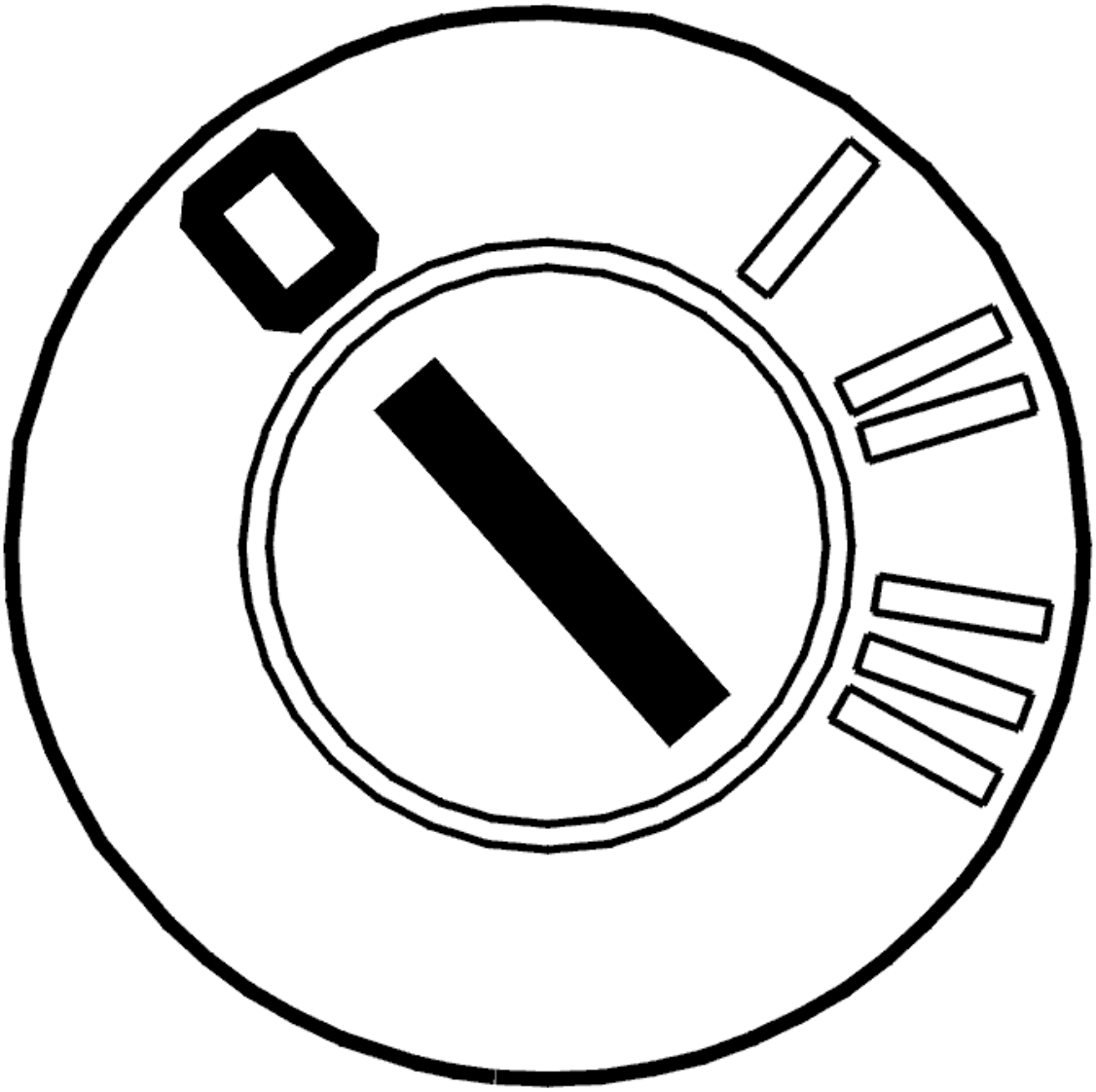

Fig. 119: Identifying Ignition OFF
Courtesy of VOLVO CARS CORPORATION

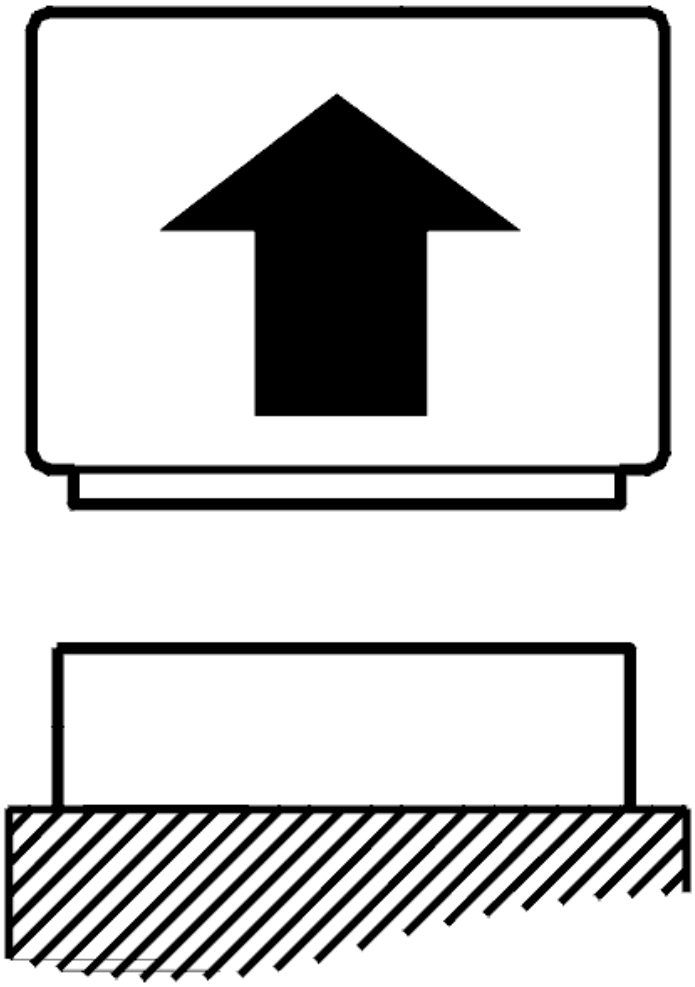

Fig. 120: Disconnecting Connector
Courtesy of VOLVO CARS CORPORATION

- Ignition off

  Check the fuse for the signal cable from the ignition lock. If the fuse has blown, check the cable. Check for a short-circuit to ground.

  Disconnect the engine control module (ECM).

  Check the signal cable from the ignition lock. Check for a short-circuit to supply. Check for an open-circuit.

  Measure between:

  - Engine control module (ECM) terminal #B17 and the central electronic module (CEM).

Remedy as necessary.

Other information

- see **CONNECTING THE BREAKOUT BOX**
- see **SIGNAL SPECIFICATION**
- see **LOCATION OF COMPONENTS**
- see **COMPONENT SPECIFICATIONS**
- see **CHECKING WIRING AND TERMINALS**

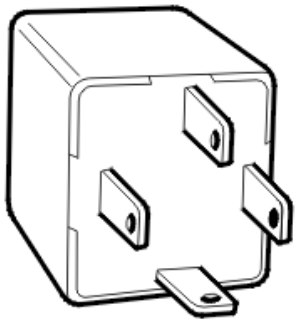

Fig. 121: Identifying Main Relay
Courtesy of VOLVO CARS CORPORATION

- **Continue**

  Refer to **VERIFICATION**

INFORMATION

FAULT-TRACING INFORMATION

The fault should have been detected and remedied. As this is not the case fault-tracing has failed.

Exit fault-tracing for this diagnostic trouble code (DTC) or make another attempt.

VERIFICATION

VERIFICATION

HINT: After carrying out the repair, check that the fault has been remedied.

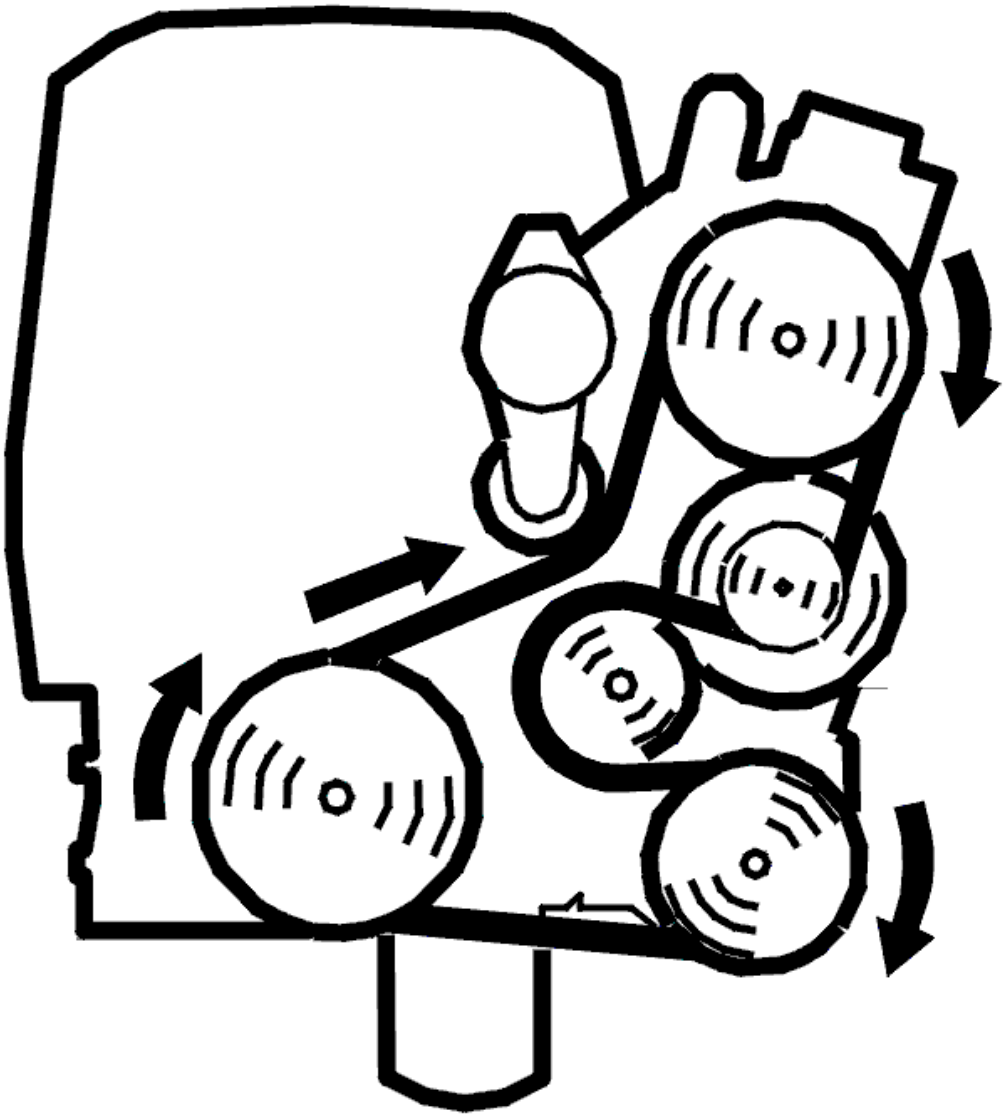

Fig. 122: Belt Routing / Engine Idling - Volvo
Courtesy of VOLVO CARS CORPORATION

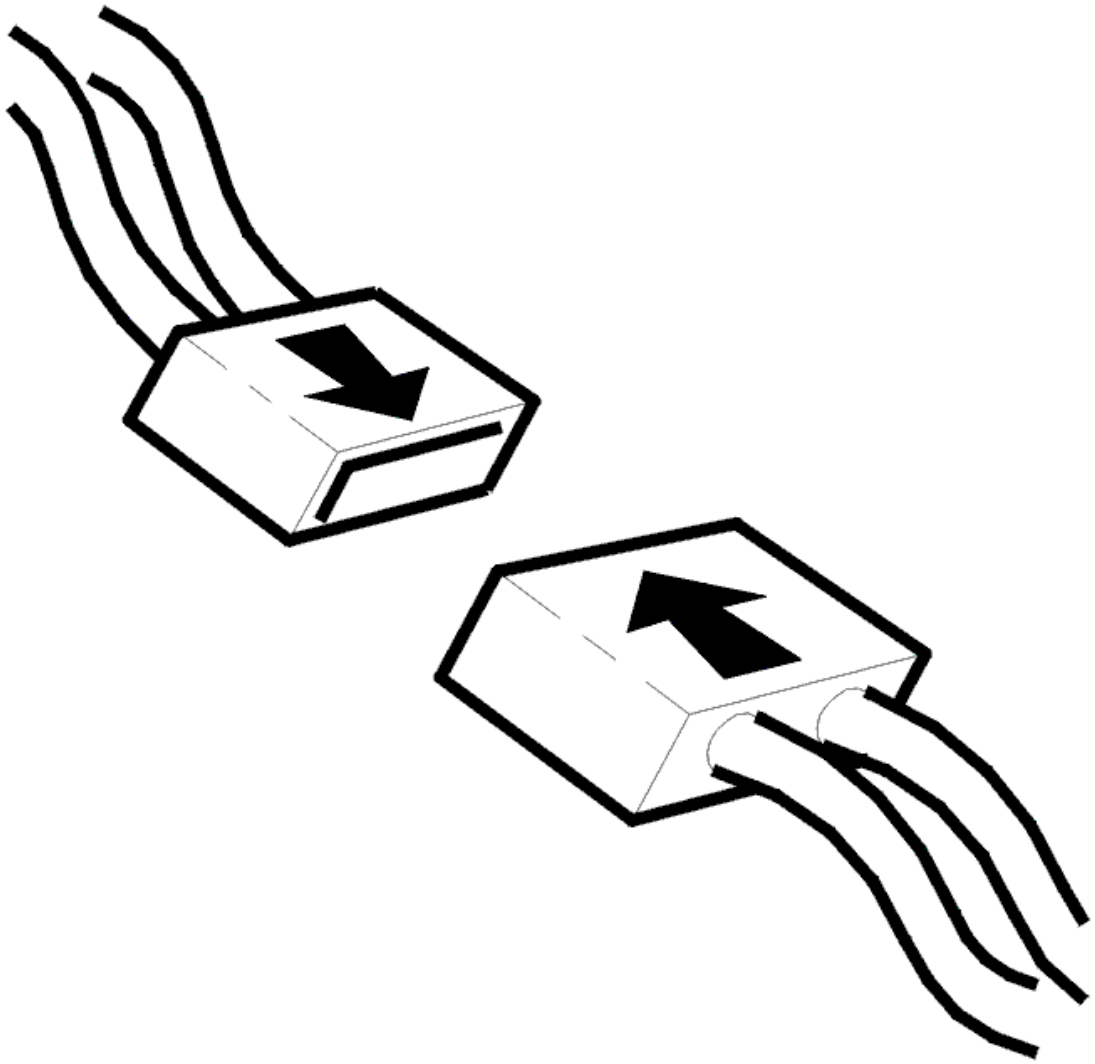

Fig. 123: Connecting Connector
Courtesy of VOLVO CARS CORPORATION

- Ignition off
- Reconnect the connectors, components, etc.
- Run the starter motor/start the engine.
- Read off the status from the ignition lock.

  Check that the read off status from the ignition lock corresponds to the actual position of the ignition lock.

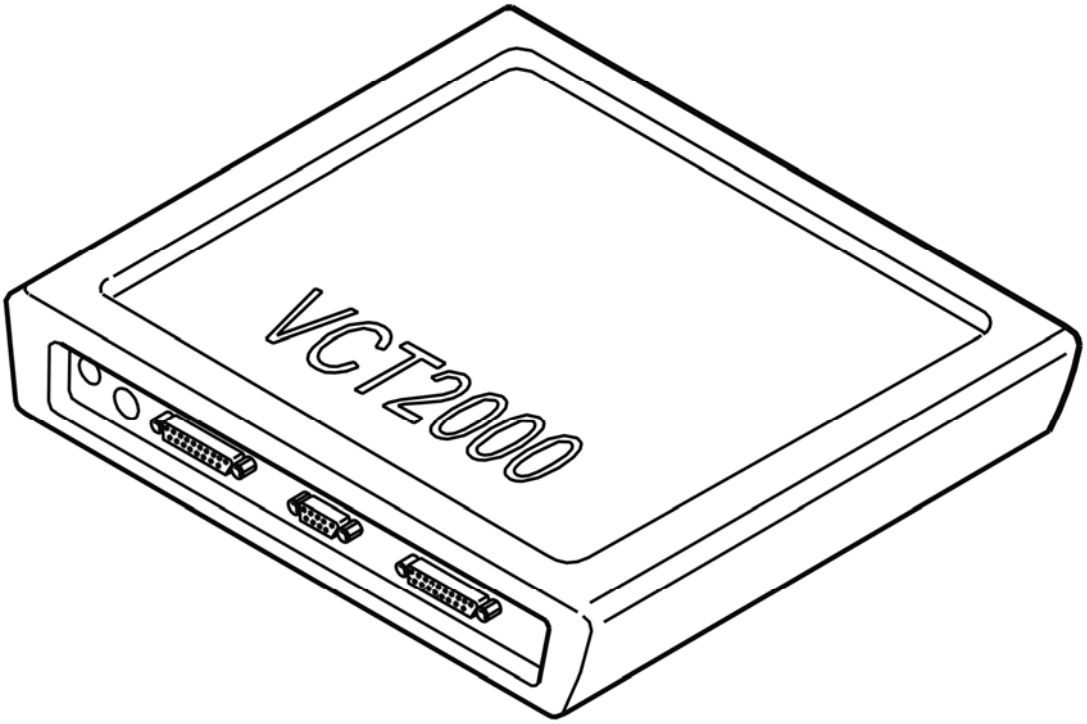

Fig. 124: Identifying VCT2000 Diagnostic Tool Symbol In VIDA
Courtesy of VOLVO CARS CORPORATION

Is the function OK?

- **YES**

  VERIFIED: Troubleshooting has been completed.

- **NO**

  Refer to **INFORMATION**

ECM-B102400: START CONTROL UNIT. GENERAL FAILURE INFORMATION. NO SUB TYPE INFORMATION (B6324S5; 2011-2012)

DIAGNOSTIC TROUBLE CODE (DTC) INFORMATION ECM-B102400

see **DIAGNOSTIC TROUBLE CODE (DTC) INFORMATION ECM-B102400**

FAULT-TRACING

see **FAULT-TRACING**

ECM-B102482: START CONTROL UNIT. BUS SIGNAL / MESSAGE FAILURES. ALIVE / SEQUENCE COUNTER INCORRECT / NOT UPDATED (B6324S; 2007-2010)

DIAGNOSTIC TROUBLE CODE (DTC) INFORMATION ECM-B102482

Condition

Engine control module (ECM) checks that the signal indicating engine start is sent (via CAN) from Central electronic module

The diagnostic trouble code (DTC) is stored if the control module detects that:

- The signal coming via CAN is missing.

The control module's test for the diagnostic trouble code (DTC) starts in the event of:

- Engine running.

NOTE: The control module can only detect the fault once the test has been started and the diagnostic trouble code (DTC) is stored when the conditions are met.

Substitute Value

- The signal on the direct-connected cable to Engine control module (ECM) is used.

Possible Source

- Open-circuit in the communication cable.
- Short-circuit to ground in the communication cable.
- Short-circuit to supply voltage in the communication cable.
- Contact resistance or oxidation in the terminals.
- Open-circuit in terminals.
- Short-circuit in connections.

Fault symptom[s]

- Autostart; No Functionality

FAULT-TRACING

GENERAL INFORMATION

The diagnostic trouble code (DTC) is stored in the event of communication faults on the high speed side of the control area network (CAN). There can be a number of causes for faults in the communication:

- Intermittent open-circuit in one or both CAN cables in part of the network
- Intermittent short-circuits between the CAN cables
- Intermittent short-circuits between one of the CAN cables and ground or supply voltage
- Fault in the communication circuit in one or more control modules
- Internal fault in a control module on the CAN network that results in the control module transmitting faulty messages on the CAN network.

In the event of a diagnostic trouble code (DTC) for a communication fault in the relevant control module, any diagnostic trouble codes (DTCs) in the central electronic module (CEM) must also be checked. The central electronic module (CEM) monitors the voltage level in the CAN cables. The central electronic module (CEM) is the only control module that can directly store a diagnostic trouble code (DTC) for a short-circuit in one of the cables for ground or supply voltage. Do not replace the central electronic module (CEM) in the event of a CAN fault unless fault-tracing has indicated that the central electronic module (CEM) has an internal fault.

In order to check the control area network (CAN) cables, the resistance in the network must be measured.

Other information

- see **GENERAL INFORMATION ABOUT FAULT-TRACING IN THE CAN NETWORK**

- **Continue**

  Refer to **TAKING READING ON CABLE IN THE CAN NETWORK (HS-CAN)**

TAKING READING ON CABLE IN THE CAN NETWORK (HS-CAN)

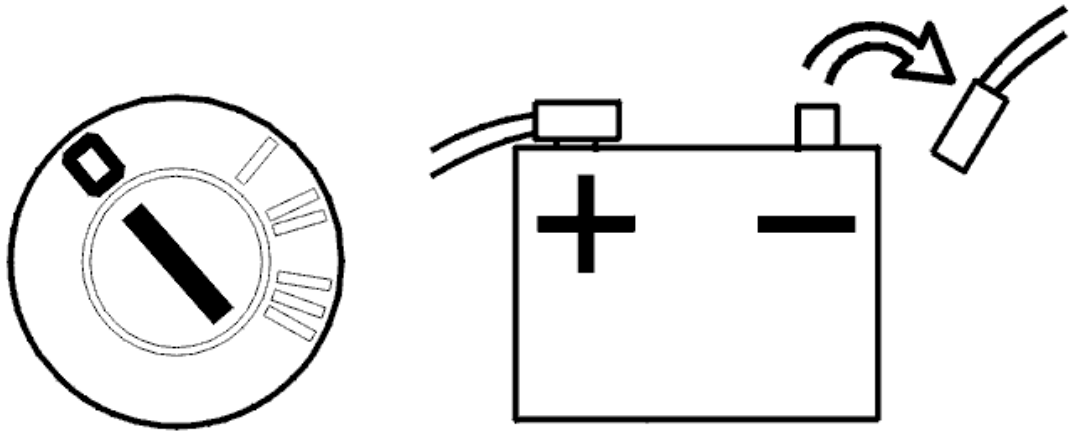

Fig. 125: Identifying Ignition In Off Position And Disconnecting Negative Cable From Battery
Courtesy of VOLVO CARS CORPORATION

- Disconnect the battery negative lead.

- Connect the breakout box with the engine control module (ECM) connected.

  HINT: Where a breakout box cannot be used, take readings from the rear of the affected connectors if possible. This prevents terminal pins and socket housings being damaged.

  Take resistance readings across the following terminals. Various readings will be obtained due to the structure of the network. Twist the cable harness and work the connectors at accessible points along the cable harness in order to check whether the resistance changes during each measurement. This method can be used to detect intermittent short-circuits or open-circuits.

  NOTE: The following resistance readings only measure the main arteries in the high speed network, not the junctions that exist for some control modules. If an open-circuit is suspected in a cable, or a short-circuit is suspected in one of its junctions, the connector at the control module for this junction must be disconnected and the reading taken from there.

  Take the following readings

  - Measure the resistance between the terminals for HS CAN on the Engine control module (ECM). Resistance must be approximately 60 ohms. Permitted values are approximately 55 - 65 ohms.

    NOTE: If there is a short-circuit somewhere in the CAN-net the resistance will be 0 ohms.

  - Also measure the resistance between each terminal and supply voltage and ground. The resistance shall be very high.

  HINT: Any short-circuit detected on the CAN-net may be on the main circuit or on any branching running out to some control modules. If a fault is found, try to disconnect the junction with the fault at a point further forward. Try to locate the fault in this way.

  Remedy as necessary.

  Other information

  - see **BATTERY, DISCONNECTING**
  - see **CONNECTING THE BREAKOUT BOX**
  - see **SIGNAL SPECIFICATION**
  - see **CHECKING WIRING AND TERMINALS**

Was a fault detected?

- **YES**

  Refer to **VERIFICATION**

- **NO**

  Refer to **CHECKING THE TRAFFIC LOAD ON THE CAN CABLES**

CHECKING THE TRAFFIC LOAD ON THE CAN CABLES

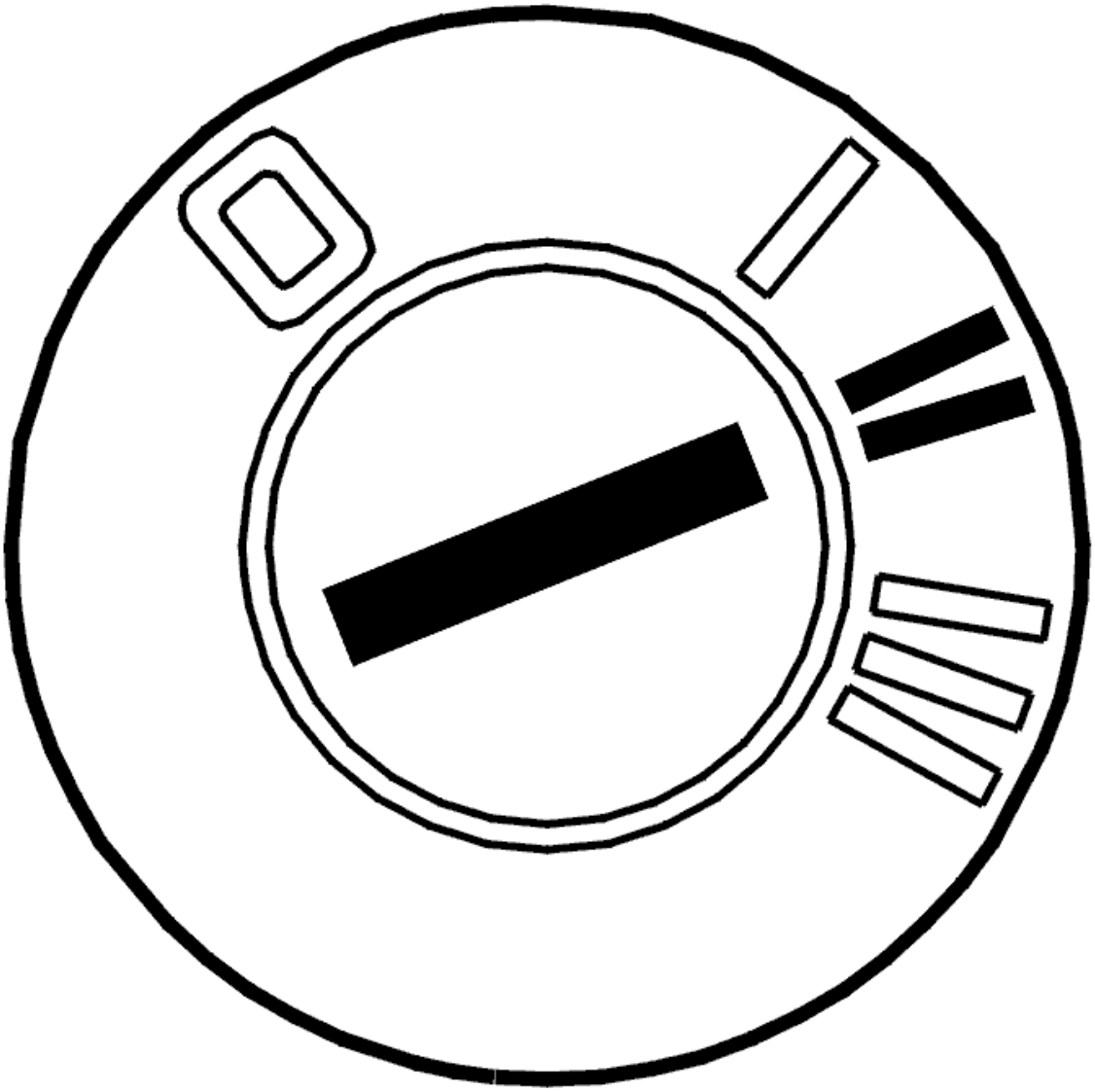

Fig. 126: Identifying Ignition ON
Courtesy of VOLVO CARS CORPORATION

- Connect the battery.
- Ignition on.

  Faults in the CAN network may be due to a control module sending faulty messages that disrupt normal communication. When messages are sent incorrectly, this results in a considerable increase in the amount of traffic on the CAN network. Check the load by measuring the average voltage value on the CAN cables in relation to ground.

Check as follows:

- Connect a voltmeter between CAN-L and ground. The voltage should be approx: V
- Connect a voltmeter between CAN-H and ground. The voltage should be approx: V

Other information

- see **BATTERY, DISCONNECTING**

Is the value OK?

- **YES**

  Refer to **INFORMATION**

- **NO**

  Refer to **IDENTIFYING A CONTROL MODULE IN THE CAN NETWORK**

IDENTIFYING A CONTROL MODULE IN THE CAN NETWORK

If the load on the CAN network is too high, this may be due to a control module sending faulty messages on the CAN network (known as a disruptive control module). The fault may also be due to an intermittent short-circuit to supply voltage or ground in one of the CAN cables. This results in the control modules on the CAN network starting to send faulty messages. The faults can occur without a diagnostic trouble code (DTC) being stored by the control modules. The voltage can be measured between the CAN cables in order to check the load on the CAN network.

Take the following readings

- Connect a voltmeter between the CAN cables. The average value of the voltage must be approximately 0.6-1.4 V. In case of a problem with communication the voltage is considerably higher.
- In order to identify which control module has faulty communication, cut the power supply to one control module at a time. Check the voltage in the CAN cables again. The easiest way to cut the power supply is to remove the fuse(s) for the relevant control module. Repeat until the voltage between the CAN wiring drops to the normal level.

NOTE: When connecting and disconnecting certain control modules, diagnostic trouble codes (DTCs) may be stored in other control modules.

HINT: When the suspected control module has been identified, connect and disconnect the supply voltage to the control module a number of times to verify that the fault appears and disappears. Ignition off between each check.

NOTE: Do not cut the power to the central electronic module (CEM) unless it is the last control module left to check.

A control module that is communicating incorrectly must be replaced. Remedy as necessary.

NOTE: **Following a fault involving control modules that disrupt communication, other control modules may operate in Limp-Home mode (i. e. they work but with limited functionality) even after switching the ignition off and on a number of times. To remedy this, disconnect and reconnect the battery negative terminal to restore the control modules to normal function.**

- **Continue**

  Refer to **VERIFICATION**

VERIFICATION

HINT: Once a fault has been repaired, conduct a verification to check that the fault has been remedied.

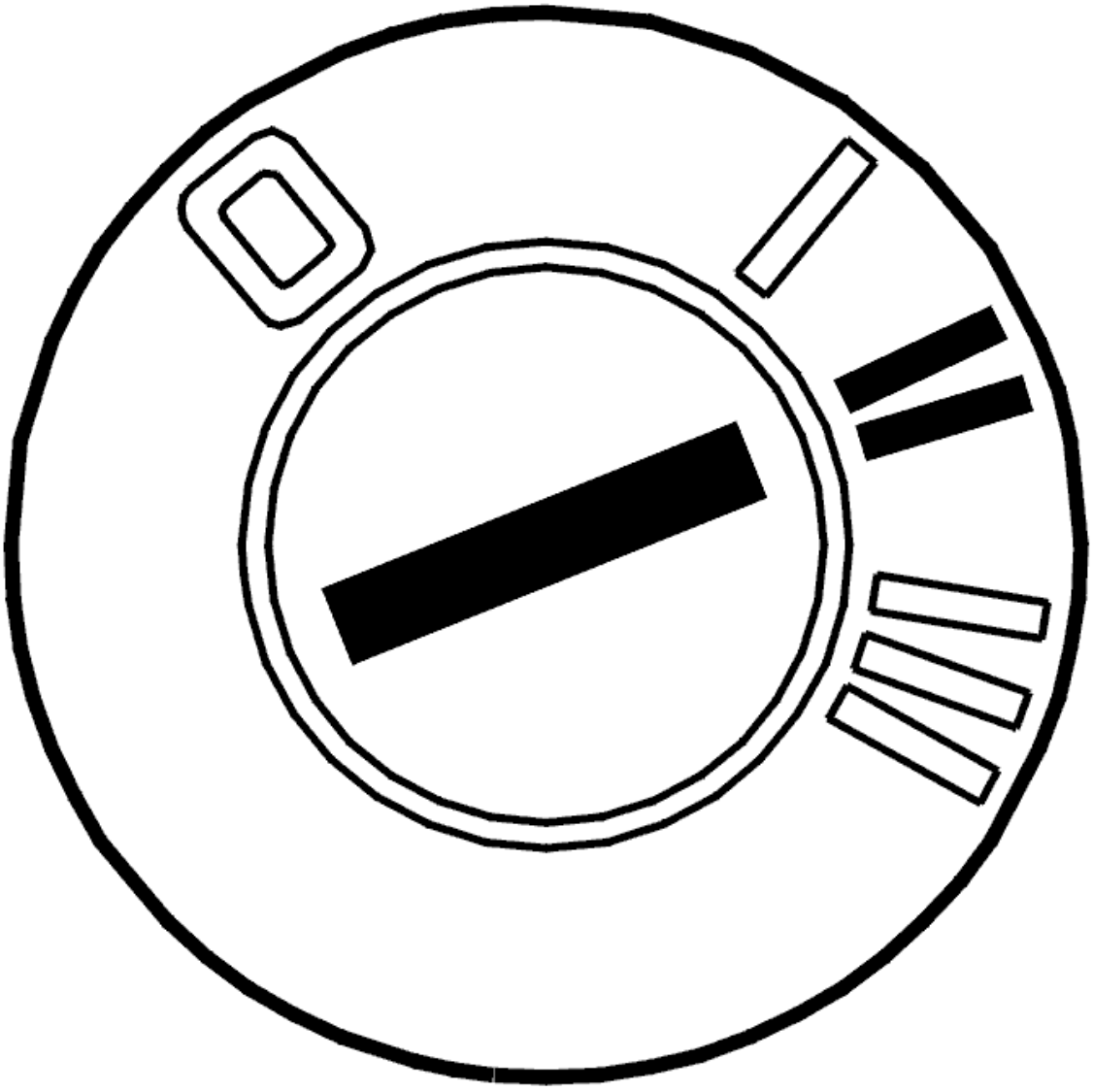

Fig. 127: Identifying Ignition ON
Courtesy of VOLVO CARS CORPORATION

- Reinstall the connectors, components etc.
- Ignition on
- Erase diagnostic trouble codes (DTCs) in all control modules
- Start the vehicle. Allow the vehicle to run for 10 minutes.

  Read out the diagnostic trouble codes in the vehicle via the DIAGNOSTICS tab.

Does the diagnostic trouble code (DTC) for faulty communication return?

- **YES**

  Refer to **INFORMATION**

- **NO**

  OKAY: Troubleshooting has been completed.

INFORMATION

FAULT-TRACING INFORMATION

The fault should have been detected and remedied. As this is not the case fault-tracing has failed.

Exit fault-tracing for this diagnostic trouble code (DTC) or make another attempt.

INFORMATION

FAULT-TRACING INFORMATION

Verification shows that the fault is no longer present. The diagnostic trouble code (DTC) was probably caused by an intermittent fault.

Fault-tracing for this diagnostic trouble code (DTC) is not followed by a verification.

You can view the information again or exit fault-tracing for this diagnostic trouble code (DTC).

ECM-B102482: START CONTROL UNIT. BUS SIGNAL / MESSAGE FAILURES. ALIVE / SEQUENCE COUNTER INCORRECT / NOT UPDATED (B6324S5; 2011-2012)

DIAGNOSTIC TROUBLE CODE (DTC) INFORMATION ECM-B102482

see **DIAGNOSTIC TROUBLE CODE (DTC) INFORMATION ECM-B102482**

FAULT-TRACING

see **FAULT-TRACING**

ECM-B102486: START CONTROL UNIT. BUS SIGNAL / MESSAGE FAILURES. SIGNAL INVALID (B6324S; 2007-2010)

DIAGNOSTIC TROUBLE CODE (DTC) INFORMATION ECM-B102486

Condition

Central electronic module (CEM) has the overall function for monitoring the signals from Start control module (SCU).

The control module checks that the direct-connected signal via LIN-communication and the signal via CAN-communication are reliable.

The diagnostic trouble code (DTC) is stored if the control module detects that:

- The quality of the signal coming via CAN is too low.

The control module's test for the diagnostic trouble code (DTC) starts in the event of:

- Start of engine.

NOTE: The control module can only detect the fault once the test has been started and the diagnostic trouble code (DTC) is stored when the conditions are met.

Substitute Value

- The signal on the direct-connected cable to Engine control module (ECM) is used.

Possible Source

- Open-circuit in the communication cable.
- Short-circuit to ground in the communication cable.
- Short-circuit to supply voltage in the communication cable.
- Contact resistance or oxidation in the terminals.
- Open-circuit in terminals.
- Short-circuit in connections.

Fault symptom[s]

- Autostart; No Functionality

FAULT-TRACING

INFORMATION

No fault-tracing has been developed for this diagnostic trouble code (DTC).

The diagnostic trouble code (DTC) for this fault is first stored in the Central electronic module (CEM), then in the Engine control module (ECM). This diagnostic trouble code (DTC) can first be erased when the root fault has been remedied and the diagnostic trouble code (DTC) for the root fault has been erased.

For further information on this diagnostic trouble code, see Diagnostic trouble code (DTC) information.

ECM-B102486: START CONTROL UNIT. BUS SIGNAL / MESSAGE FAILURES. SIGNAL INVALID (B6324S5; 2011-2012)

DIAGNOSTIC TROUBLE CODE (DTC) INFORMATION ECM-B102486

see **DIAGNOSTIC TROUBLE CODE (DTC) INFORMATION ECM-B102486**

FAULT-TRACING

see **FAULT-TRACING**

ECM-B10A268 CRASH INPUT. ALGORITHM BASED FAILURES. EVENT INFORMATION (B6324S; 2007-2010)

DIAGNOSTIC TROUBLE CODE (DTC) INFORMATION ECM-B10A268

Condition

NOTE: **This diagnostic trouble code (DTC) status is an event controlled diagnostic trouble code (DTC). An event controlled diagnostic trouble code (DTC) does not mean that there is a fault in the control module when it is active, but is designed as information.**

Engine control module (ECM) registers internally if the vehicle has been involved in a collision. If the control module detects that Central electronic module (CEM) sends internal signals that a collision has occurred, the diagnostic trouble code is generated.

The diagnostic trouble code (DTC) can be diagnosed at key position II.

Substitute Value

- Nothing.

Possible Source

- This diagnostic trouble code (DTC) is not caused by a fault that needs to be remedied.

Fault symptom[s]

- Engine is difficult to start
- Malfunction indicator light (MIL), on
- Message in information display

FAULT-TRACING INFORMATION

INFORMATION

There is no fault-tracing for this diagnostic fault code (DTC).

For further information on this diagnostic trouble code, see Diagnostic trouble code (DTC) information.

ECM-B10A268 CRASH INPUT. ALGORITHM BASED FAILURES. EVENT INFORMATION (B6324S5; 2011-2012)

DIAGNOSTIC TROUBLE CODE (DTC) INFORMATION ECM-B10A268

see **DIAGNOSTIC TROUBLE CODE (DTC) INFORMATION ECM-B10A268**

FAULT-TRACING INFORMATION

see **FAULT-TRACING INFORMATION**

ECM-B10FF68 IGNITION CONTROL. ALGORITHM BASED FAILURES. EVENT INFORMATION (B6324S; 2007-2010)

DIAGNOSTIC TROUBLE CODE (DTC) INFORMATION ECM-B10FF68

Condition

NOTE: **This diagnostic trouble code (DTC) status is an event controlled diagnostic trouble code (DTC). An event controlled diagnostic trouble code (DTC) does not mean that there is a fault in the control module when it is active, but is designed as information.**

The Engine Control Module (ECM) monitors the engine's ignition. If the control module detects that ignition is outside the limit values for a certain time when the engine is running, the diagnostic trouble code is generated.

The diagnostic trouble code (DTC) can be diagnosed when the engine is running.

Substitute Value

- Fuel shut-off in the event of an active fault.

Possible Source

- This diagnostic trouble code (DTC) is not caused by a fault that needs to be remedied.

Fault symptom[s]

- Jerky running
- Message in information display

FAULT-TRACING INFORMATION

see **FAULT-TRACING INFORMATION**

ECM-B10FF68 IGNITION CONTROL. ALGORITHM BASED FAILURES. EVENT INFORMATION (B6324S5; 2011-2012)

DIAGNOSTIC TROUBLE CODE (DTC) INFORMATION ECM-B10FF68

see **DIAGNOSTIC TROUBLE CODE (DTC) INFORMATION ECM-B10FF68**

FAULT-TRACING INFORMATION

see **FAULT-TRACING INFORMATION**

ECM-C004082: BRAKE PEDAL SWITCH "A". BUS SIGNAL / MESSAGE FAILURES. ALIVE / SEQUENCE COUNTER INCORRECT / NOT UPDATED (B6324S; 2007-2010)

DIAGNOSTIC TROUBLE CODE (DTC) INFORMATION ECM-C004082

Condition

The control module is continuously supplied with information about the position and status of the brake pedal switch from the brake control module (BCM) via CAN communication.

The control module checks the communication with the Brake control module (BCM).

The diagnostic trouble code (DTC) is stored if the control module detects that:

- No communication with the Brake control module (BCM).
- The brake light switch position and brake position switch position (via CAN) do not match.

The control module's test for the diagnostic trouble code (DTC) starts in the event of:

- Engine running.

NOTE: **The control module can only detect the fault once the test has been started and the diagnostic trouble code (DTC) is stored when the conditions are met.**

Substitute Value

- Cruise control is disengaged when the fault is active.

Possible Source

- Open-circuit in the communication cable.
- Short-circuit to ground in the communication cable.
- Short-circuit to supply voltage in the communication cable.
- Contact resistance or oxidation in the terminals.
- Open-circuit in terminals.
- Short-circuit in connections.

Fault symptom[s]

- Cruise control does not operate

FAULT-TRACING

see **FAULT-TRACING**

ECM-C004082: BRAKE PEDAL SWITCH "A". BUS SIGNAL / MESSAGE FAILURES. ALIVE / SEQUENCE COUNTER INCORRECT / NOT UPDATED (B6324S5; 2011-2012)

DIAGNOSTIC TROUBLE CODE (DTC) INFORMATION ECM-C004082

see **DIAGNOSTIC TROUBLE CODE (DTC) INFORMATION ECM-C004082**

FAULT-TRACING

see **FAULT-TRACING**

ECM-E000: CONTROL MODULE COMMUNICATION. FAULTY COMMUNICATION (B5254T2; B6294T; 2003-2004)

DIAGNOSTIC TROUBLE CODE (DTC) INFORMATION ECM-E000

Condition

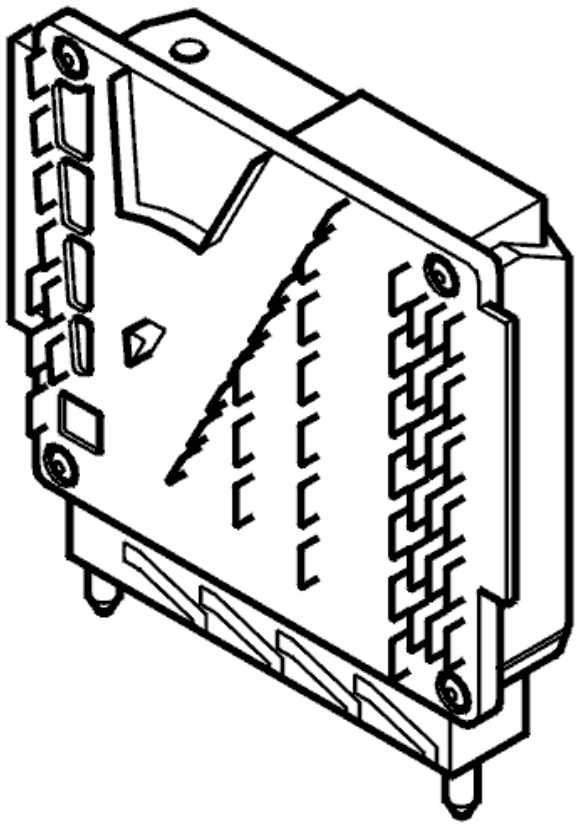

Fig. 128: Engine Control Module
Courtesy of VOLVO CARS CORPORATION

The control modules communicate with each other for exchange of information in a network via a standardized serial communication procedure - CAN (Controller Area Network). The diagnostic trouble code is stored if the engine control module (ECM) detects a malfunction in CAN communication.

Substitute Value

- CAN communication is disabled.
- Cruise control shut off.
- Fuel cut-off that follows accelerator pedal position.
- Closing of throttle during braking.

Possible Source

- Contact resistance in the terminals.
- Short-circuit between Control area network (CAN) wiring
- Open-circuit in the control area network (CAN) wiring

Fault symptom[s]

- General warning lamp lit
- ETS warning lamp lit
- The cruise control does not function at all
- The engine judders under acceleration
- The engine judders heavily after engine braking
- Uneven idle.

FAULTY COMMUNICATION

see **FAULTY COMMUNICATION**

ECM-E000: CONTROL MODULE COMMUNICATION. INTERNAL FAULT (B5254T2; 2005-2007)

DIAGNOSTIC TROUBLE CODE (DTC) INFORMATION ECM-E000

Condition

The control modules transmit and receive information via a standardized serial communication method - CAN (Control Area Network). The diagnostic trouble code (DTC) is stored if the engine control module (ECM) registers serious interference (CAN communication blocked).

NOTE: In the event of system communication problems, it is not possible to communicate with the engine control module (ECM). Therefore it will only be possible to read off the diagnostic trouble code (DTC) if the fault is intermittent.

Substitute Value

- The engine control module (ECM) shuts itself off "bus-off".

HINT: The engine control module (ECM) will then be shut off until the supply voltage is interrupted (15-, 30-, X supply). When the power supply is switched on, the engine control module (ECM) will make a new attempt to communicate.

Possible Source

- Contact resistance or oxidation in the terminals
- Open-circuit in the control area network (CAN) wiring

- Short-circuit between the control area network (CAN) wiring
- Internal fault in the engine control module (ECM)
- Internal fault in another control module in the same part of the control area network (CAN).

Fault symptom[s]

- General warning lamp lit
- The cruise control does not function at all
- The engine judders under acceleration
- The engine judders heavily after engine braking
- Uneven idle.

ECM-E000: CONTROL MODULE COMMUNICATION. INTERNAL FAULT (B6294T; 2005-2006)

DIAGNOSTIC TROUBLE CODE (DTC) INFORMATION ECM-E000

see **DIAGNOSTIC TROUBLE CODE (DTC) INFORMATION ECM-E000**

ECM-E003: CONFIGURATION FAULT. FAULTY CONFIGURATION (B5254T2; B6294T; 2003-2004)

DIAGNOSTIC TROUBLE CODE (DTC) INFORMATION

Condition

The control modules communicate with each other in a network via a standardized serial communication procedure - CAN (Controller Area Network) - for exchange of information. Diagnostic trouble code (DTC) ECM-E003 is stored if the engine control module (ECM) registers a software fault where the software does not correspond to the car's other configuration does not communicate with the engine control modules.

Substitute Value

- CAN communication is disabled
- cruise control shut off
- fuel shut-off system which follows accelerator pedal (AP) position
- throttle closure when braking.

Possible Source

- faulty software in engine control module (ECM)
- defective control module
- This diagnostic trouble code is generated in combination with other trouble codes. Information on the

possible root cause is described.

For turbo engines and 6-cylinder aspirated engines, see **INFORMATION ABOUT COMBINED DIAGNOSTIC TROUBLE CODES (DTCS)**

For 5-cyl. normally aspirated engines, see **INFORMATION ABOUT COMBINED DIAGNOSTIC TROUBLE CODES (DTCS)**

Fault symptom[s]

- General orange warning lamp lit
- cruise control does not function at all
- engine judders under acceleration
- engine judders heavily after engine braking
- uneven idle.

INFORMATION ABOUT COMBINED DIAGNOSTIC TROUBLE CODES (DTCS)

Combined diagnostic trouble codes (DTCs)

The following table is available to facilitate fault-tracing of ETM related diagnostic trouble codes (DTCs).

NOTE: Probable root diagnostic trouble codes (DTCs) are in bold and listed at the top of each cell.

Example of how to read table: If the codes 902A 903F 912A 980F are set, then **902A** is the likely root trouble code.

The diagnostic trouble codes (DTCs) can also be stored individually or together with other diagnostic trouble codes (DTCs) that do not affect ETM.

NOTE: There are two different tables, one for cars with upgraded software released during 2006 or later (see, see), and one for cars that are not upgraded with this software (see).

For more information on identifying upgraded software, see IDENTIFYING UPGRADED SOFTWARE ECM/ETM

5-CYL NON-TURBO ENGINES, FOR UPGRADED SOFTWARE RELEASED DURING 2006 OR LATER

902A 902A 903F 912A 980F	**9150** 9150 91A7 980F	**91A7** 903F 914F 91A7 980F
902A 902A 902B 903F, 951F 980F	**9150** 912A 9150	**91A7** 903F 91A7 91F0 980F
902A	**9190**	**9400**

902A 912A	903F 914F 9190 980F	9400 941F
902A 902A 912A 980F	**9190** 903F 914F 9190 91A7 91F0 980F	**950F** 950F 951F
902A 902A 902B 903F 91A7 91F0 951F 9520 980F	**9190** 903F 914F 9190 91F0 980F	**951F** 917F 951F
902B 902B 917F	**9190** 914F 9190	**9520** 918F 9520
903F, High signal 903F 913F 980F	**91A7** 91A7 980F	**9520** 918F 951F 9520
903F, High signal 903F 913F	**91A7** 91A7 91B7	**9530** 950F 9530
912A 912A 980F	**91A7** 903F 91A7 980F	**E000** 912A E000
912A 903F 912A 980F	**91A7** 91A7 91F0	**E000** 902B E000
912A 912A 9200	**91A7** 903F 914F 91A7 91F0 980F	**E000** 902A 912A 980F E000
9150 9150 980F	**91A7** 91A7 91F0 980F	**E000** 902B 912A E000
9150 9150 91A7	**91A7** 903F 91A7	**E003** 912A E003

5-CYL NON-TURBO ENGINES, FOR NON-UPGRADED SOFTWARE

903F 903F 980F	**9160** 903F 9160 91B7 980F	**9150** 9150 91B7
980F 980F 9818	**9520** 918F 9520	**9150 9160** 130A 903F 9150 9160 980F
91B7 91A7 91B7	**9150 9160** 903F 9150 9160 980F	**9150** 903F 9150 91B7 980F
911A 911A 912A	**950F** 950F 951F	**91B7** 903F 91B7 980F
9160 9160 91B7	**E003** 902B E003	**91F0** 91A7 91F0
902B 902B 903F	**130A** 130A 903F 980F	**950F** 917F 950F 951F
902B 902A 902B 903F 951F 980F	**150A** 150A 980F 9818	**130A** 130A 903F
902B 902A 902B 903F 980F	**9150 9160** 903F 9150 9160 91B7 980F	**E003** 902B 903F E003
91A7 903F 91A7 980F	**9300** 9300 930A	**902B** 902A 902B
91A7 903F 91A7	**9530** 950F 9530	**91A7** 903F 91A7 980F 9818
902B	**9150 9160**	**9200**

902A 902B 903F 951F	903F 9150 9160 91B7	9200 922A
902B 902A 902B 903F	**9520** 918F 951F 9520	**902B** 902A 902B 951F
9400 9400 941F	**91B7** 903F 91A7 91B7	**950F** 903F 917F 950F 951F
9150 9160 903F 9150 9160	**918F** 917F 918F 951F	**130A** 130A 91B7

ECM-E003: CONFIGURATION FAULT. FAULTY SIGNAL (B5254T2; 2005-2007)

DIAGNOSTIC TROUBLE CODE (DTC) INFORMATION ECM-E003

Condition

The engine control module (ECM) compares its configuration ID with the signal configuration transmitted by the central electronic module (CEM) on the control area network (CAN). If the configuration IDs do not correspond the fault code is stored. The diagnostic trouble code (DTC) is also stored if the communication between the engine control module (ECM) and the central electronic module (CEM) is interrupted.

NOTE: **In the event of an open-circuit in both the control area network (CAN) cables, it is not possible to communicate with the engine control module (ECM). Therefore it will only be possible to read off the diagnostic trouble code (DTC) if this type of fault is intermittent. When the diagnostic trouble code (DTC) is stored, the engine control module (ECM) responds to the diagnostic commands. However normal control area network (CAN) communication "Expulsion mode" does not work.**

Substitute Value

- None.

Possible Source

- Incorrect CAN configuration ID (present engine control module (ECM) is not intended for the vehicle, for example a used control module with other software/hardware)
- Open-circuit in the control area network (CAN) wiring between the engine control module (ECM) and the central electrical module (CEM).

Fault symptom[s]

- General warning lamp lit
- The cruise control does not function at all
- The engine judders under acceleration
- The engine judders heavily after engine braking

- Uneven idle.

ECM-E003: CONFIGURATION FAULT. FAULTY SIGNAL (B6294T; 2005-2006)

DIAGNOSTIC TROUBLE CODE (DTC) INFORMATION ECM-E003

see **DIAGNOSTIC TROUBLE CODE (DTC) INFORMATION ECM-E003**

ECM-P001100: INTAKE CAMSHAFT POSITION TIMING - OVER-ADVANCED (BANK 1). GENERAL FAILURE INFORMATION. NO SUB TYPE INFORMATION (B6324S; 2007-2010)

DIAGNOSTIC TROUBLE CODE (DTC) INFORMATION ECM-P001100

Condition

The Engine control module (ECM) regulates the camshaft position (angle).

If the control module detects a difference between the requested position and the actual position, the speed is measured as the camshaft moves to the requested position.

The diagnostic trouble code (DTC) is stored if the control module detects that:

- The cam shaft moves too slowly (to the late position).

The control module's test for the diagnostic trouble code (DTC) starts in the event of:

- Hot engine.
- Engine speed above 1000 RPM.
- Camshaft control is active.

NOTE: The control module can only detect the fault once the test has been started and the diagnostic trouble code (DTC) is stored when the conditions are met.

Substitute Value

- None.

Possible Source

- Dirty or damaged shift valve camshaft (VVT).
- Poor engine oil quality.
- Low oil pressure.
- Damaged camshaft reset valve.

Fault symptom[s]

- Uneven idle
- High emissions
- Engine stalls when driving

FAULT-TRACING

CHECKING COMPONENTS

NOTE: If the diagnostic trouble code (DTC) for correlation between the crankshaft position and camshaft position is stored, it must be fault-traced first.

HINT: Contaminants in the engine oil can damage components in the variable valve timing (VVT) unit which can cause function faults. In most cases the solenoid does not have to be replaced, cleaning is enough.

Check the engine oil grade. Check especially for contaminants.

Activate automatic cleaning function using the VCT2000 (or appropriate scan tool).

Remove the camshaft reset valve, check the reset valve and the oil ducts in the cylinder head. Check for contaminants and blockages.

Try a new camshaft reset valve if no fault is found or if the above remedies do not rectify the fault.

HINT: The fault can also be caused by an internal fault in the variable valve timing (VVT) unit. If the above fault-tracing/remedies do not rectify the fault, the variable valve timing (VVT) unit may be damaged.

Remedy as necessary.

Other information

- Cleaning:**VARIABLE CAMSHAFT TIMING OIL CONTROL SOLENOID**
- Removing, replacing, and installing:**VARIABLE CAMSHAFT TIMING OIL CONTROL SOLENOID**
- see **LOCATION OF COMPONENTS**

Fig. 129: Identifying VCT2000 Diagnostic Tool Symbol In VIDA

Courtesy of VOLVO CARS CORPORATION

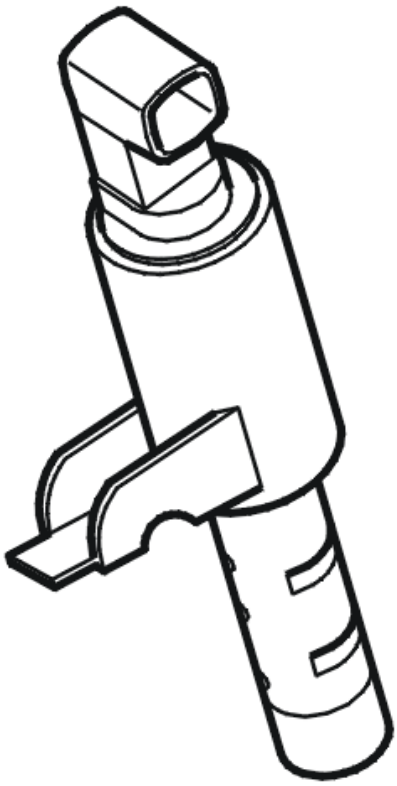

Fig. 130: Identifying Camshaft Reset Valve
Courtesy of VOLVO CARS CORPORATION

- **Continue**

  Refer to **VERIFICATION**

INFORMATION

FAULT-TRACING INFORMATION

The fault should have been detected and remedied. As this is not the case fault-tracing has failed.

Exit fault-tracing for this diagnostic trouble code (DTC) or make another attempt.

VERIFICATION

VERIFICATION, PART 1

HINT: After carrying out the repair, check that the fault has been remedied.

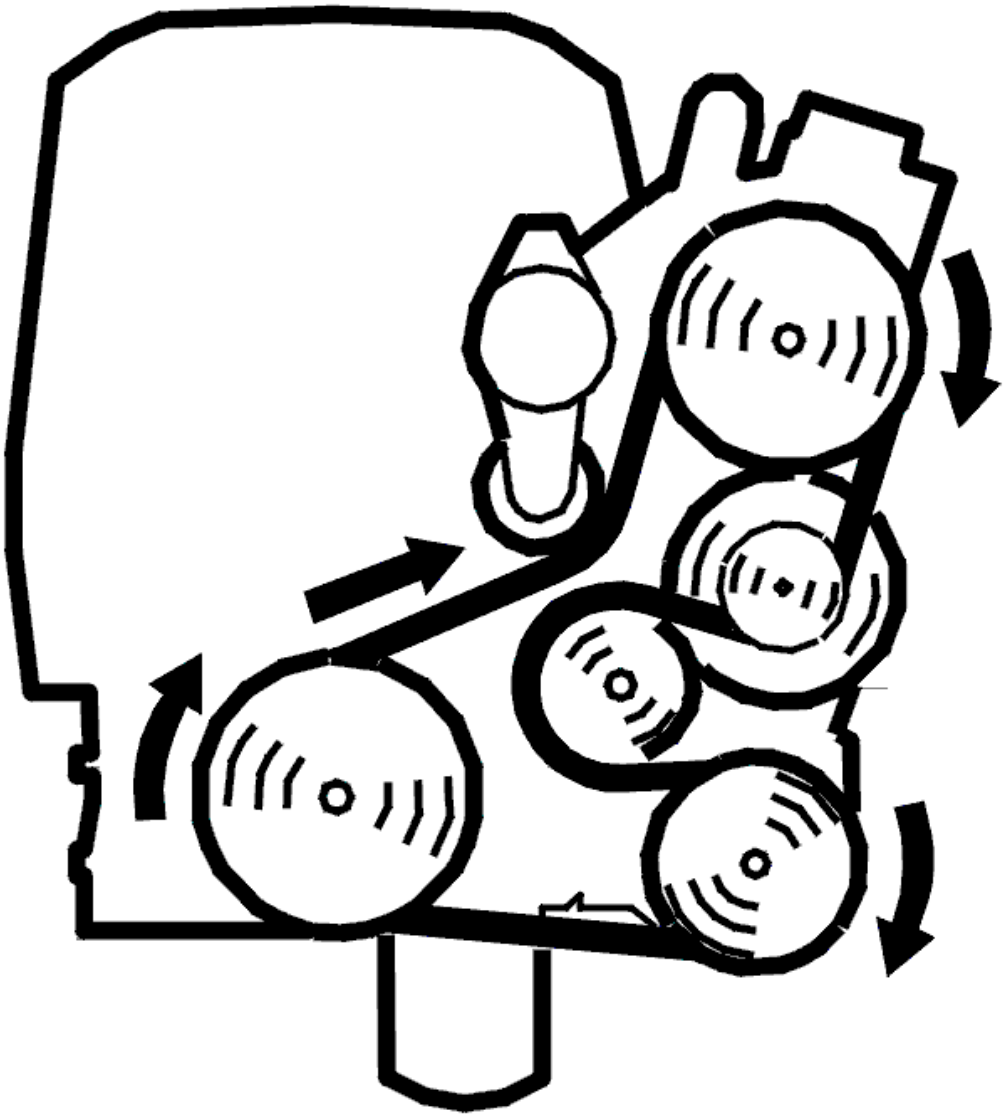

Fig. 131: Belt Routing / Engine Idling - Volvo
Courtesy of VOLVO CARS CORPORATION

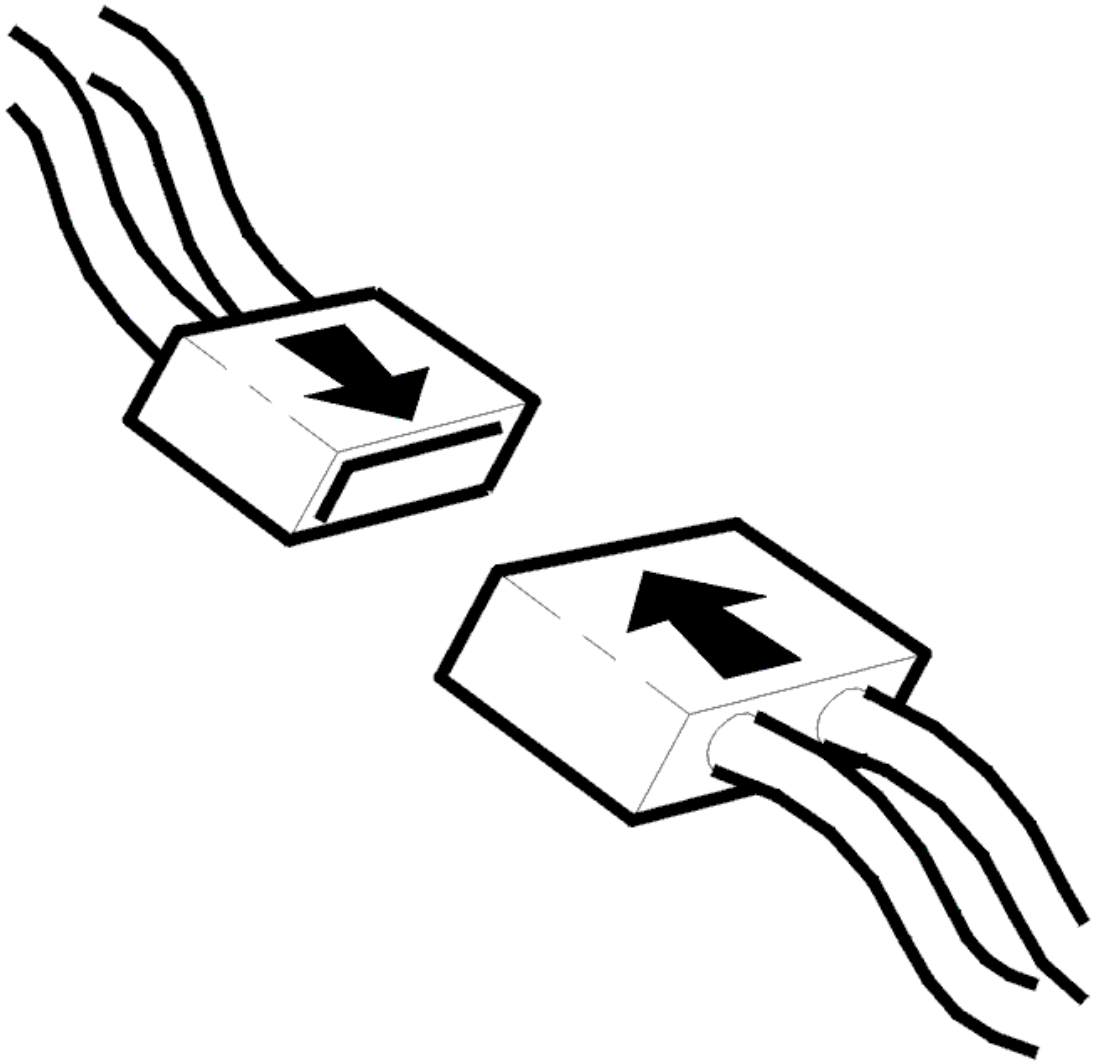

Fig. 132: Connecting Connector
Courtesy of VOLVO CARS CORPORATION

- Verification consists of 2 parts. Part 1 is carried out via a test in the workshop. Part 2 is carried out on the road.

  If the function is determined as **incorrect** in part 1, then part 2 does **not** need to be carried out. If the function is determined as being correct in part 1 and the vehicle can be tested on the road, part 2 must be carried out. This is because in certain cases the function can be difficult the check in a workshop environment.

- Ignition off
- Reconnect the connectors, components, etc.
- Start and run the engine to operating temperature.
- Read off the shift angle of the camshaft and the desired shift angle of the camshaft to check the function.

Check that the camshaft shift angle corresponds to the desired value for the camshaft shift angle with an accuracy of approximately 8° CA (camshaft angle). The difference between the values can be read off in the lower digital display.

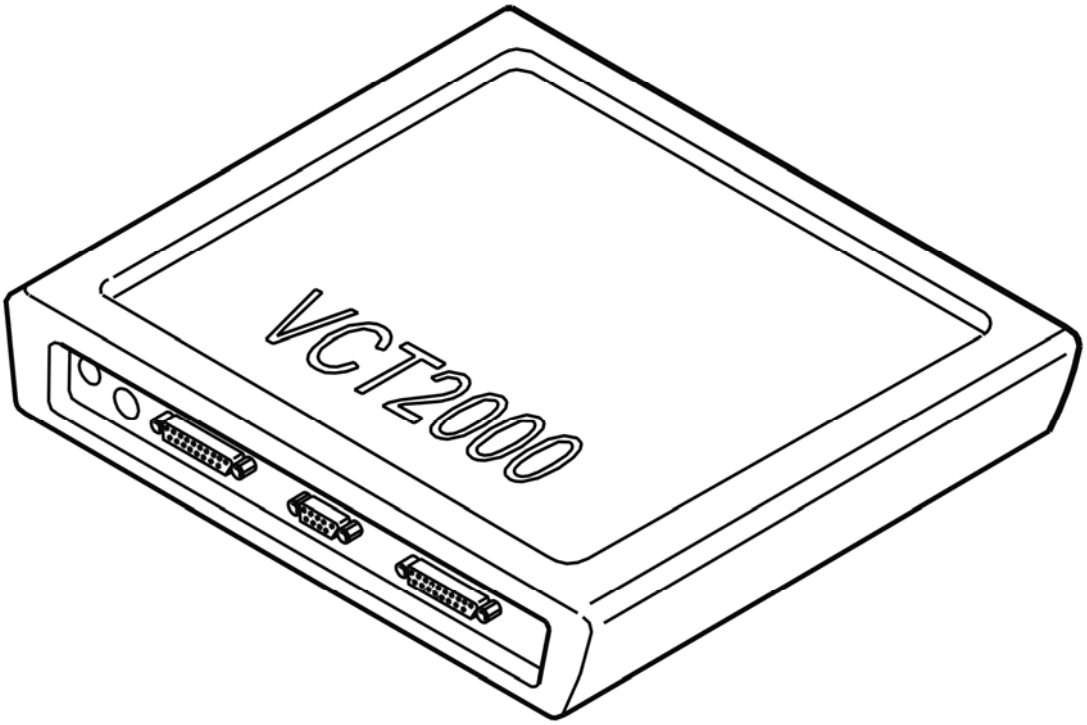

Fig. 133: Identifying VCT2000 Diagnostic Tool Symbol In VIDA
Courtesy of VOLVO CARS CORPORATION

Is the function OK?

- **YES**

  Refer to **VERIFICATION, PART 2**

- **NO**

  Refer to **INFORMATION**

VERIFICATION, PART 2

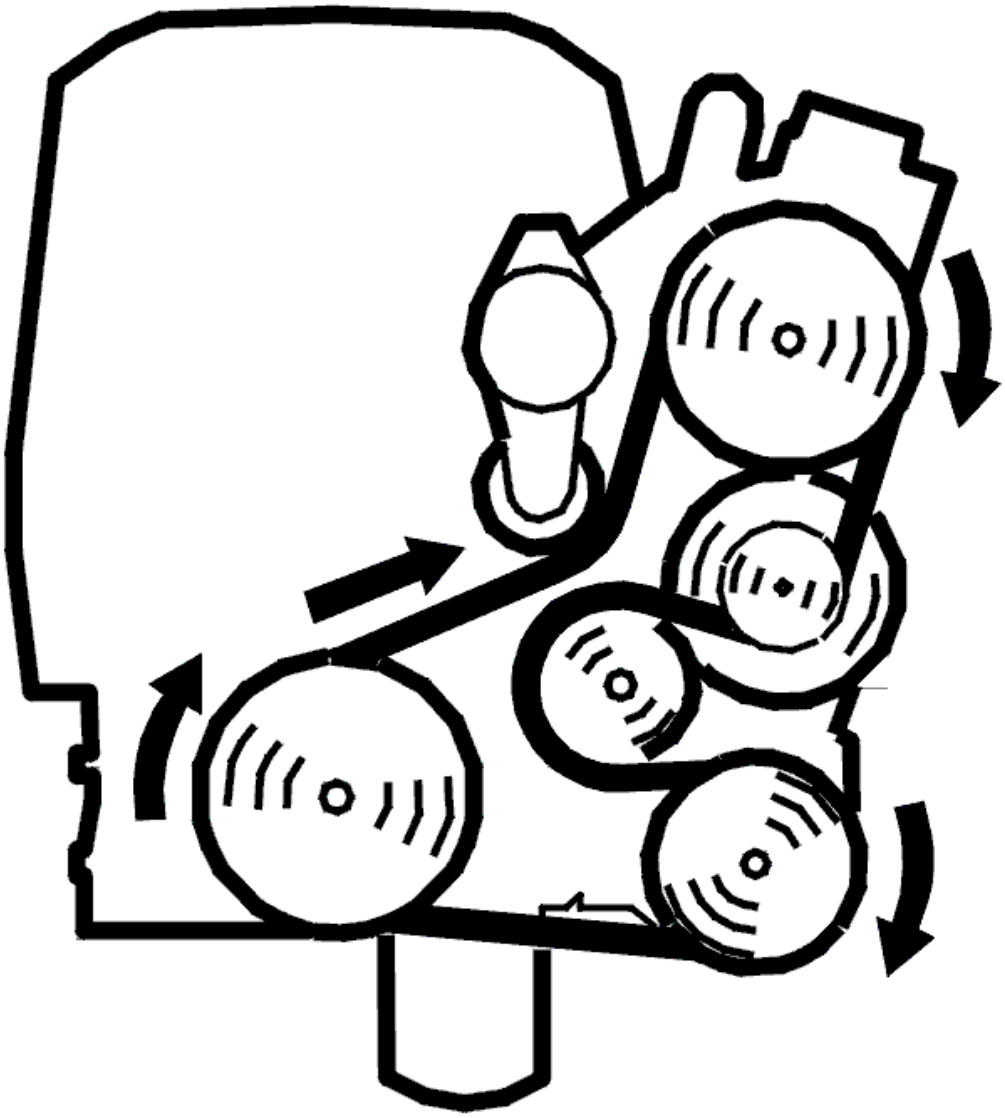

Fig. 134: Belt Routing / Engine Idling - Volvo
Courtesy of VOLVO CARS CORPORATION

- Test drive the car on the road. Use acceleration and engine braking. Repeat the procedure several times so that the camshaft control works and the engine control module (ECM) can carry out diagnostics.
- Connect VCT2000 (or appropriate scan tool) to the data link connector **without switching off the engine.**
- Read the diagnostic status and fault status for the diagnostic trouble code by selecting the diagnostic trouble code in the list.

NOTE: **If the engine is switched off, the stored fault status will be erased and the test drive will have to be repeated.**

Check the fault status for the diagnostic trouble code when the scan is "Implemented". When the function is correct the fault status should be "No fault found" when the scan is implemented.

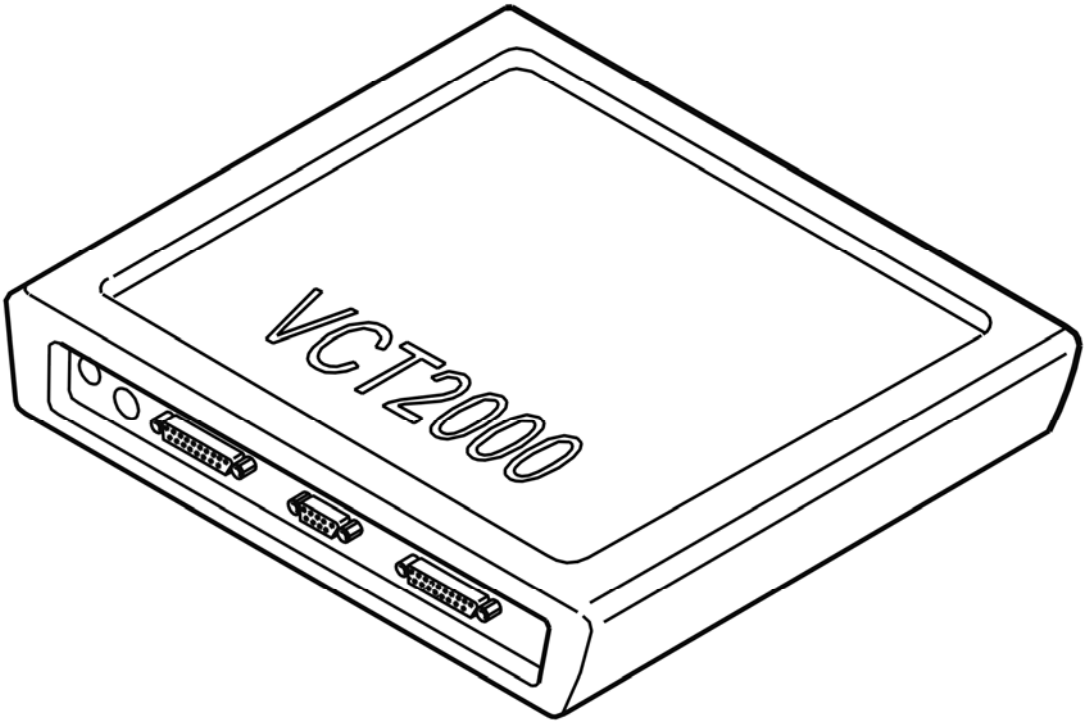

Fig. 135: Identifying VCT2000 Diagnostic Tool Symbol In VIDA
Courtesy of VOLVO CARS CORPORATION

Is the function OK?

- **YES**

  VERIFIED: Troubleshooting has been completed.

- **NO**

  Refer to **INFORMATION**

ECM-P001100: INTAKE CAMSHAFT POSITION TIMING - OVER-ADVANCED (BANK 1). GENERAL FAILURE INFORMATION. NO SUB TYPE INFORMATION (B6324S5; 2011-2012)

DIAGNOSTIC TROUBLE CODE (DTC) INFORMATION ECM-P001100

see **DIAGNOSTIC TROUBLE CODE (DTC) INFORMATION ECM-P001100**

FAULT-TRACING

see **FAULT-TRACING**

ECM-P001100: INTAKE CAMSHAFT POSITION CONTROL - EXTENDED TOO FAR - (BANK 1). GENERAL FAULT INFORMATION. TYPE OF FAULT NOT SPECIFIED. (B8444S; 2005-2011)

DIAGNOSTIC TROUBLE CODE (DTC) INFORMATION

Condition

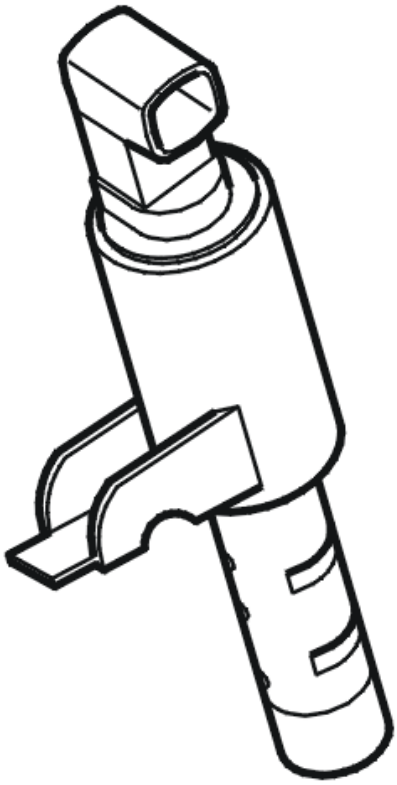

Fig. 136: Identifying Camshaft Reset Valve
Courtesy of VOLVO CARS CORPORATION

The engine control module (ECM) regulates the camshaft position (angle position) and checks that the requested position has been achieved. If the control module detects a difference between the requested position and the actual position, the time taken for regulation to achieve the requested position is measured. The length of time permitted to achieve the requested position varies depending on how much the camshaft is to be deflected at that moment. The diagnostic trouble code is generated if the control module detects that regulation is too slow during intake camshaft return.

The diagnostic trouble code can be diagnosed when the engine is at operating temperature, engine speed exceeds a certain value and camshaft regulation is active.

Substitute Value

- Nothing.

Possible Source

- Poor engine oil quality
- Damaged camshaft reset valve
- Damaged VVT unit.

Fault symptom[s]

- Uneven idle.
- Increased emissions.
- The engine stops while running.

FAULT TRACING ECM-P001100

CHECKING COMPONENTS

NOTE: If the diagnostic trouble code (DTC) for correlation between the crankshaft position and camshaft position is stored, it must be fault-traced first.

HINT: Contaminants in the engine oil can damage components in the variable valve timing (VVT) unit which can cause function faults.

Check the engine oil grade. Check especially for contaminants.

Remove the camshaft reset valve, check the reset valve and the oil ducts in the cylinder head. Check for contaminants and blockages.

Try a new camshaft reset valve if no fault is found or if the above remedies do not rectify the fault.

HINT: The fault can also be caused by an internal fault in the variable valve timing (VVT) unit. If the above fault-tracing/remedies do not rectify the fault, the variable valve timing (VVT) unit may be damaged.

Remedy as necessary.

Other information

- see **VVT UNIT, RIGHT CYLINDER HEAD**
- see **VVT UNIT, LEFT CYLINDER HEAD**
- see **LOCATION OF COMPONENTS, ENGINE COMPARTMENT**

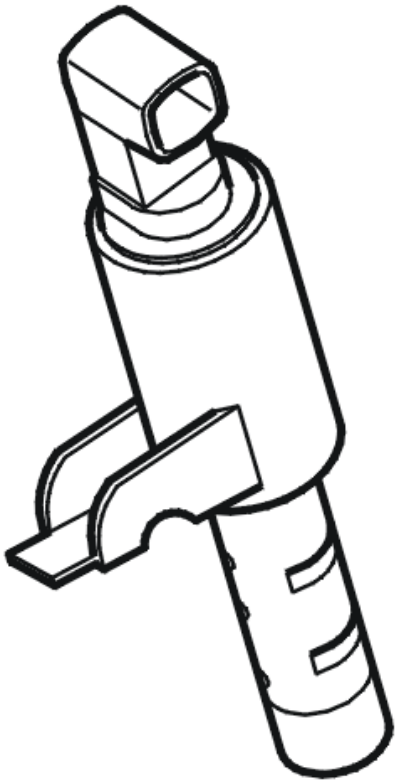

Fig. 137: Identifying Camshaft Reset Valve
Courtesy of VOLVO CARS CORPORATION

- **Continue**

  Refer to **VERIFICATION**

VERIFICATION

VERIFICATION, PART 1

HINT: After carrying out the repair, check that the fault has been remedied.

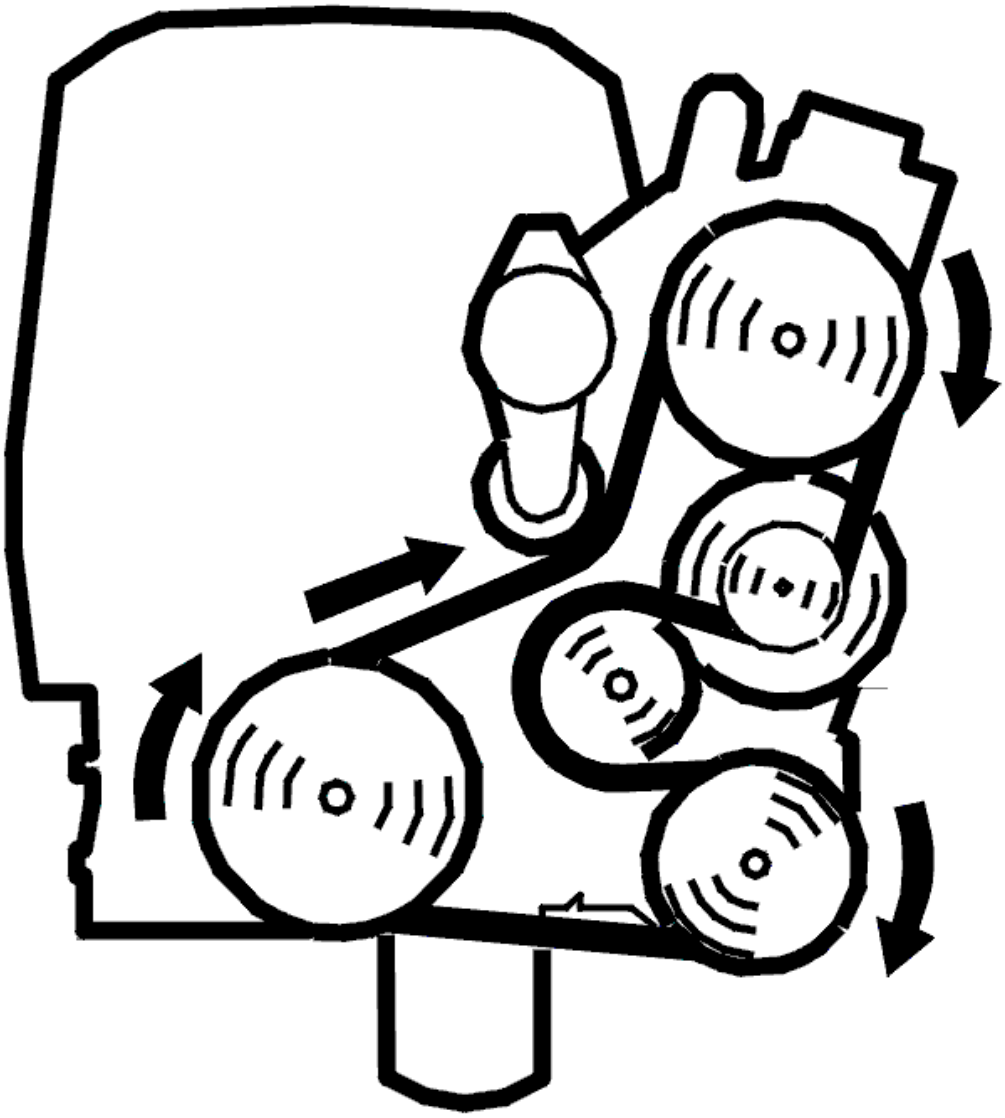

Fig. 138: Belt Routing / Engine Idling - Volvo
Courtesy of VOLVO CARS CORPORATION

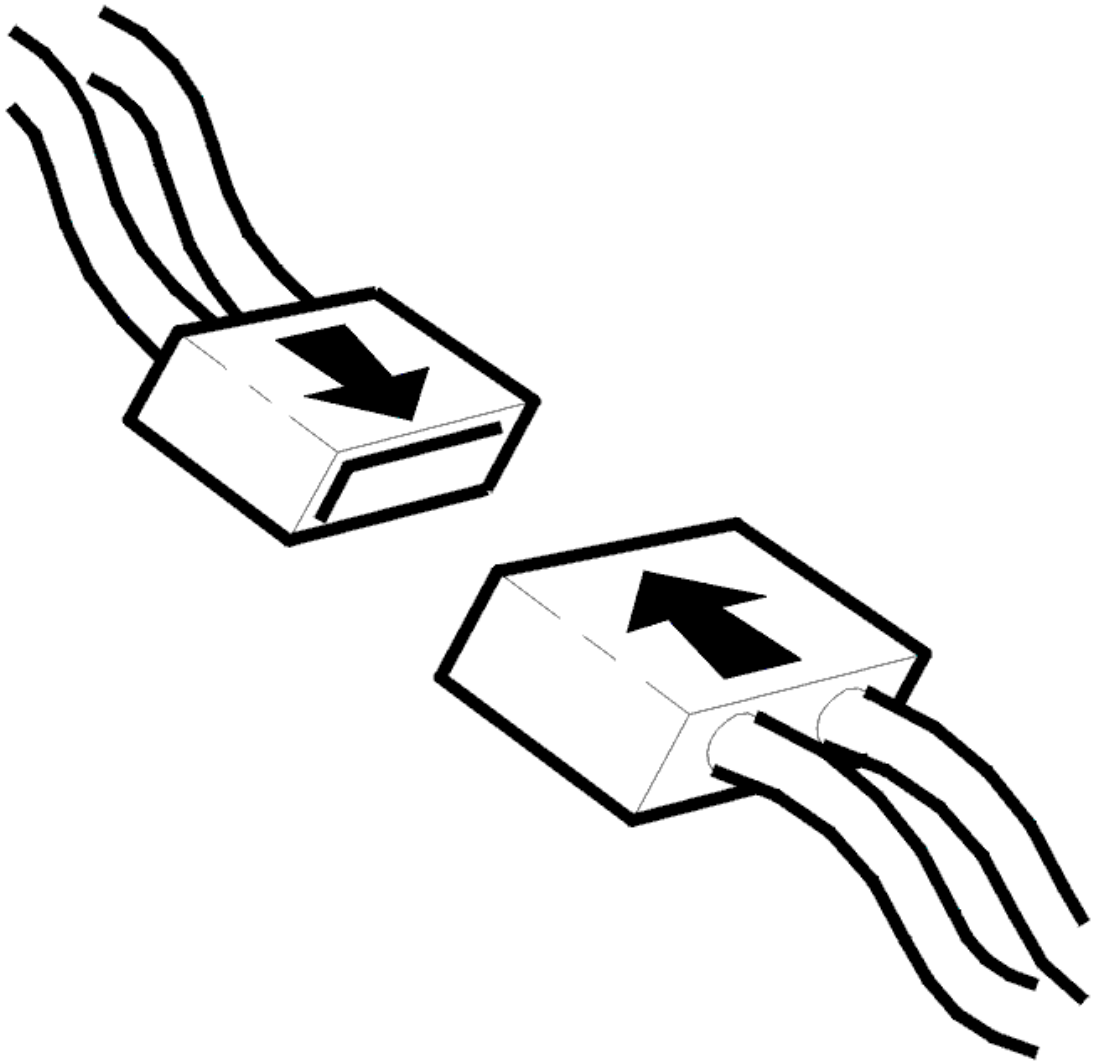

Fig. 139: Connecting Connector
Courtesy of VOLVO CARS CORPORATION

- Verification consists of 2 parts. Part 1 is carried out via a test in the workshop. Part 2 is carried out on the road.

  If the function is determined as **incorrect** in part 1, then part 2 does **not** need to be carried out. If the function is determined as being correct in part 1 and the vehicle can be tested on the road, part 2 must be carried out. This is because in certain cases the function can be difficult the check in a workshop environment.

- Ignition off
- Reconnect the connectors, components, etc.
- Start and run the engine to operating temperature.
- Read off the shift angle of the camshaft and the desired shift angle of the camshaft to check the function.

Check that the camshaft shift angle corresponds to the desired value for the camshaft shift angle with an accuracy of approximately 8° CA (camshaft angle). The difference between the values can be read off in the lower digital display.

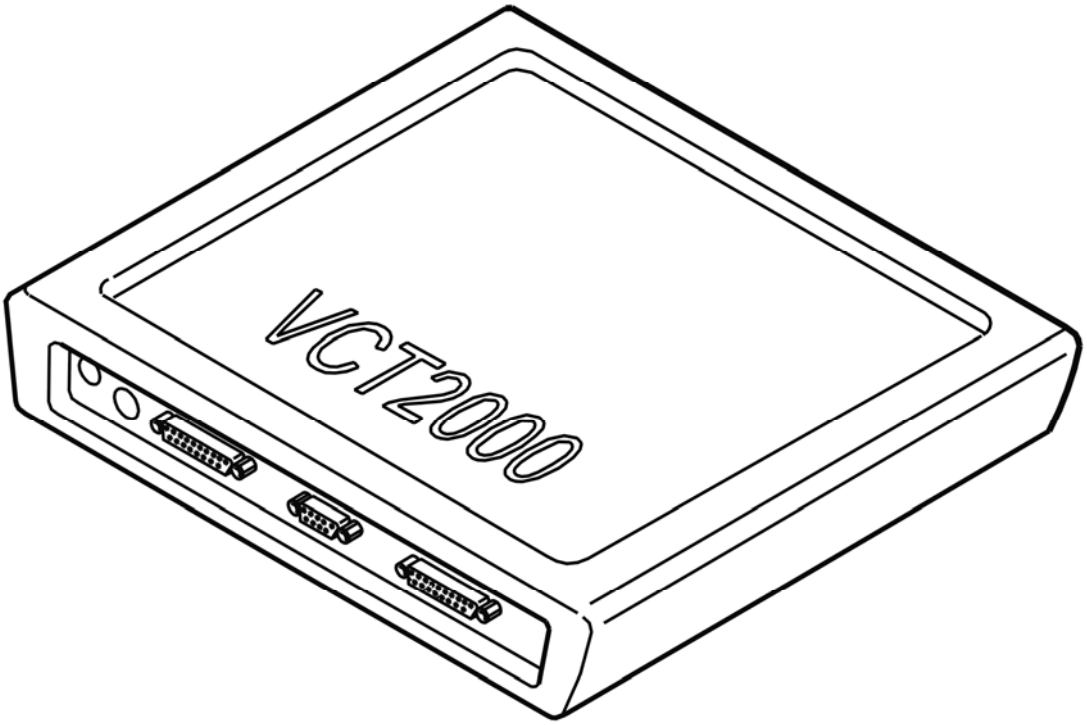

Fig. 140: Identifying VCT2000 Diagnostic Tool Symbol In VIDA
Courtesy of VOLVO CARS CORPORATION

Is the function OK?

- **YES**

  Refer to **VERIFICATION, PART 2**

- **NO**

  Refer to **INFORMATION**

VERIFICATION, PART 2

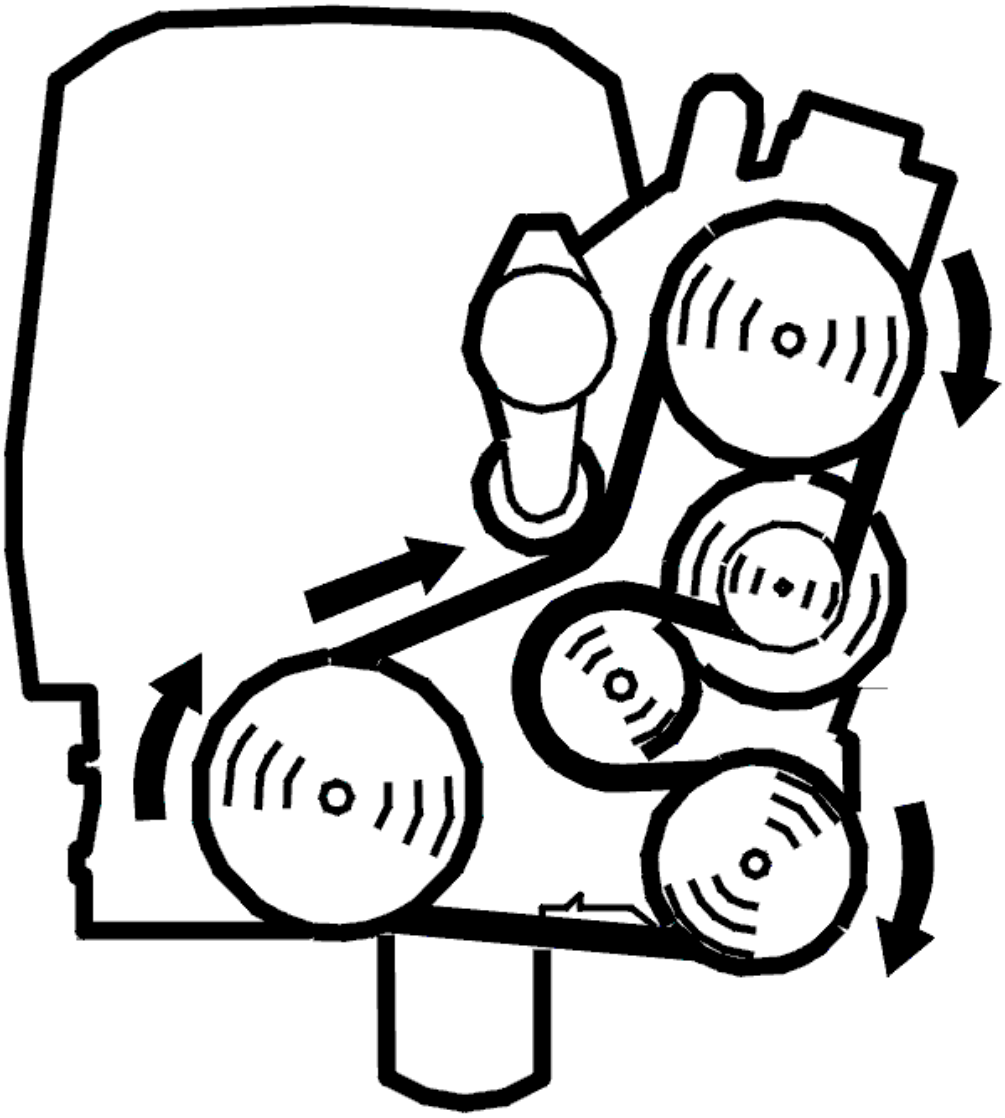

Fig. 141: Belt Routing / Engine Idling - Volvo
Courtesy of VOLVO CARS CORPORATION

- Test drive the car on the road. Use acceleration and engine braking. Repeat the procedure several times so that the camshaft control works and the engine control module (ECM) can carry out diagnostics.
- Connect VCT2000 (or appropriate scan tool) to the data link connector **without switching off the engine.**
- Read the diagnostic status and fault status for the diagnostic trouble code by selecting the diagnostic trouble code in the list.

NOTE: **If the engine is switched off, the stored fault status will be erased and the test drive will have to be repeated.**

Check the fault status for the diagnostic trouble code when the scan is "Implemented". When the function is correct the fault status should be "No fault found" when the scan is implemented.

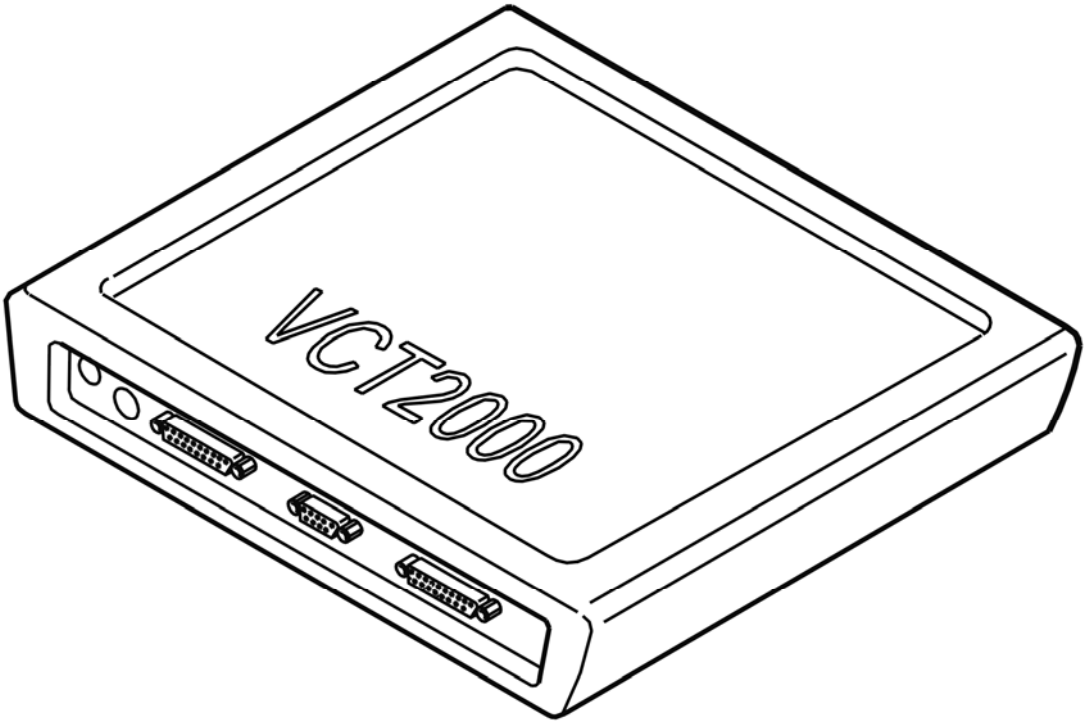

Fig. 142: Identifying VCT2000 Diagnostic Tool Symbol In VIDA
Courtesy of VOLVO CARS CORPORATION

Is the function OK?

- **YES**

  VERIFIED: Troubleshooting has been completed.

- **NO**

  Refer to **INFORMATION**

INFORMATION

FAULT-TRACING INFORMATION

The fault should have been detected and remedied. As this is not the case fault-tracing has failed.

Exit fault-tracing for this diagnostic trouble code (DTC) or make another attempt.

ECM-P001200: INTAKE CAMSHAFT POSITION TIMING - OVER-RETARDED (BANK 1). GENERAL FAILURE INFORMATION. NO SUB TYPE

INFORMATION (B6324S; 2007-2010)

DIAGNOSTIC TROUBLE CODE (DTC) INFORMATION ECM-P001200

Condition

The Engine control module (ECM) regulates the camshaft position (angle).

If the control module detects a difference between the requested position and the actual position, the speed is measured as the camshaft moves to the requested position.

The diagnostic trouble code (DTC) is stored if the control module detects that:

- The camshaft moves too slowly (to the early position).

The control module's test for the diagnostic trouble code (DTC) starts in the event of:

- Hot engine.
- Engine speed above 1000 RPM.
- Camshaft control is active.

NOTE: The control module can only detect the fault once the test has been started and the diagnostic trouble code (DTC) is stored when the conditions are met.

Substitute Value

- The camshaft is guided to its home position.

Possible Source

- Dirty or damaged shift valve camshaft (VVT).
- Poor engine oil quality.
- Low oil pressure.
- Damaged camshaft reset valve.

Fault symptom[s]

- Uneven idle
- High emissions
- Engine stalls when driving

FAULT-TRACING

CHECKING COMPONENTS

NOTE: If the diagnostic trouble code (DTC) for correlation between the crankshaft position and camshaft position is stored, it must be fault-traced first.

HINT: Incorrect oil grade can cause malfunctions in the variable valve timing (VVT) unit. Contaminants in the engine oil can cause damage to components in the variable valve timing (VVT) unit. In most cases the solenoid does not have to be replaced, cleaning is enough.

Check the engine oil grade. Check especially for contaminants.

Activate automatic cleaning function using the VCT2000 (or appropriate scan tool).

Remove the camshaft reset valve, check the reset valve and the oil ducts in the cylinder head. Check for contaminants and blockages.

Check the engine oil pressure.

Try a new camshaft reset valve if no fault is found or if the above remedies do not rectify the fault.

HINT: The fault can also be caused by an internal fault in the variable valve timing (VVT) unit. If the above fault-tracing/remedies do not rectify the fault, the variable valve timing (VVT) unit may be damaged.

Remedy as necessary.

Other information

- Cleaning:**VARIABLE CAMSHAFT TIMING OIL CONTROL SOLENOID**
- Removing, replacing, and installing:**VARIABLE CAMSHAFT TIMING OIL CONTROL SOLENOID**
- see **LOCATION OF COMPONENTS**

Fig. 143: Identifying VCT2000 Diagnostic Tool Symbol In VIDA
Courtesy of VOLVO CARS CORPORATION

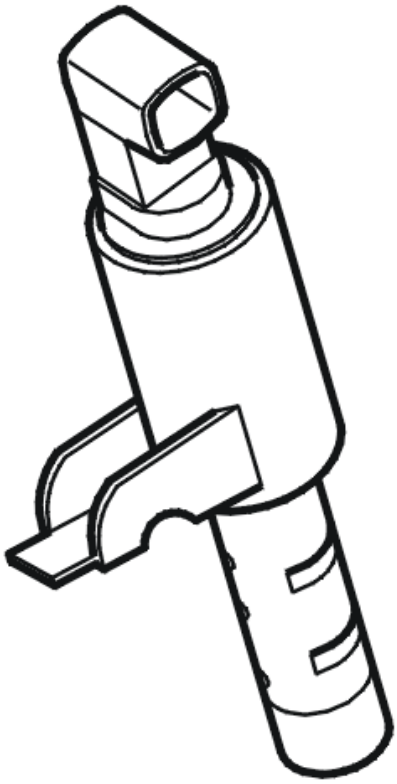

Fig. 144: Identifying Camshaft Reset Valve
Courtesy of VOLVO CARS CORPORATION

- **Continue**

  Refer to **VERIFICATION**

INFORMATION

FAULT-TRACING INFORMATION

The fault should have been detected and remedied. As this is not the case fault-tracing has failed.

Exit fault-tracing for this diagnostic trouble code (DTC) or make another attempt.

VERIFICATION

VERIFICATION, PART 1

HINT: After carrying out the repair, check that the fault has been remedied.

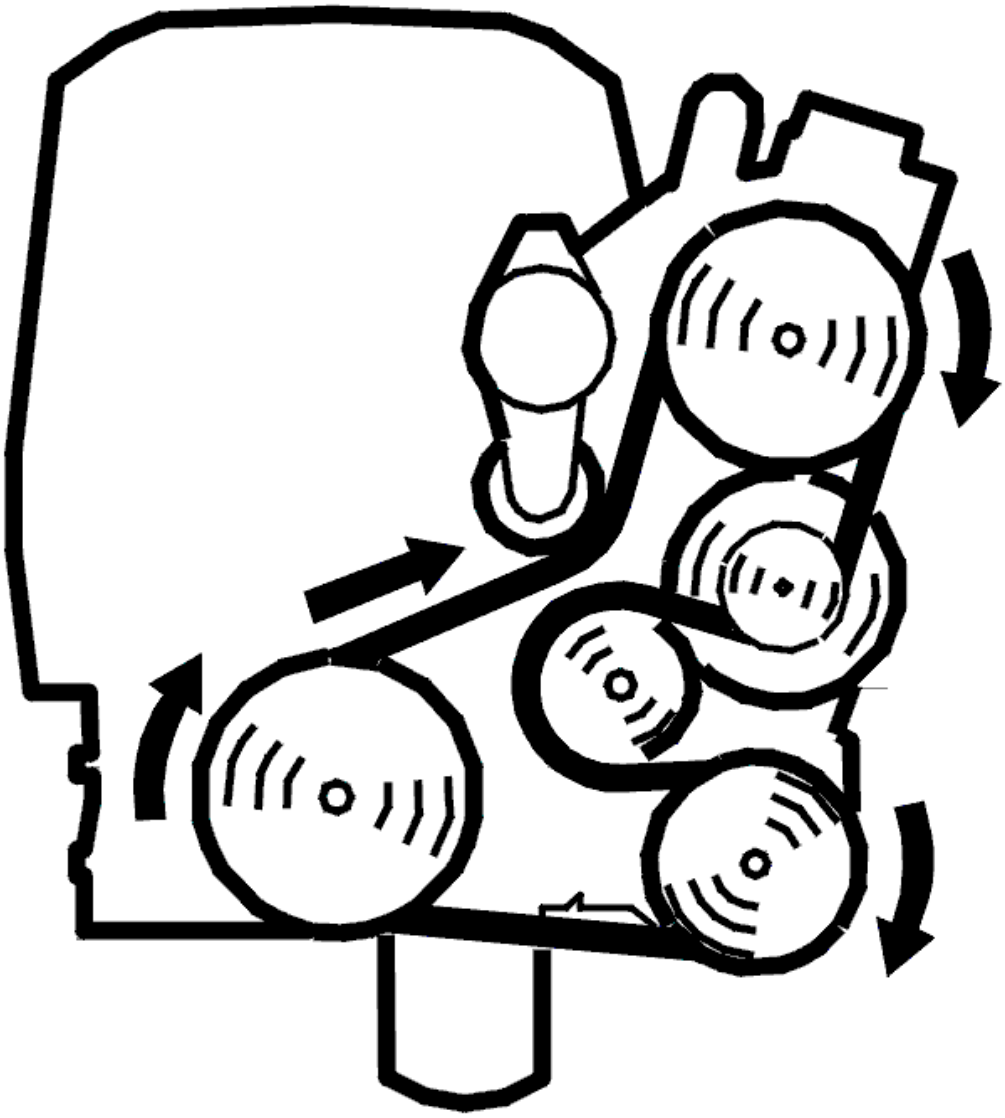

Fig. 145: Belt Routing / Engine Idling - Volvo
Courtesy of VOLVO CARS CORPORATION

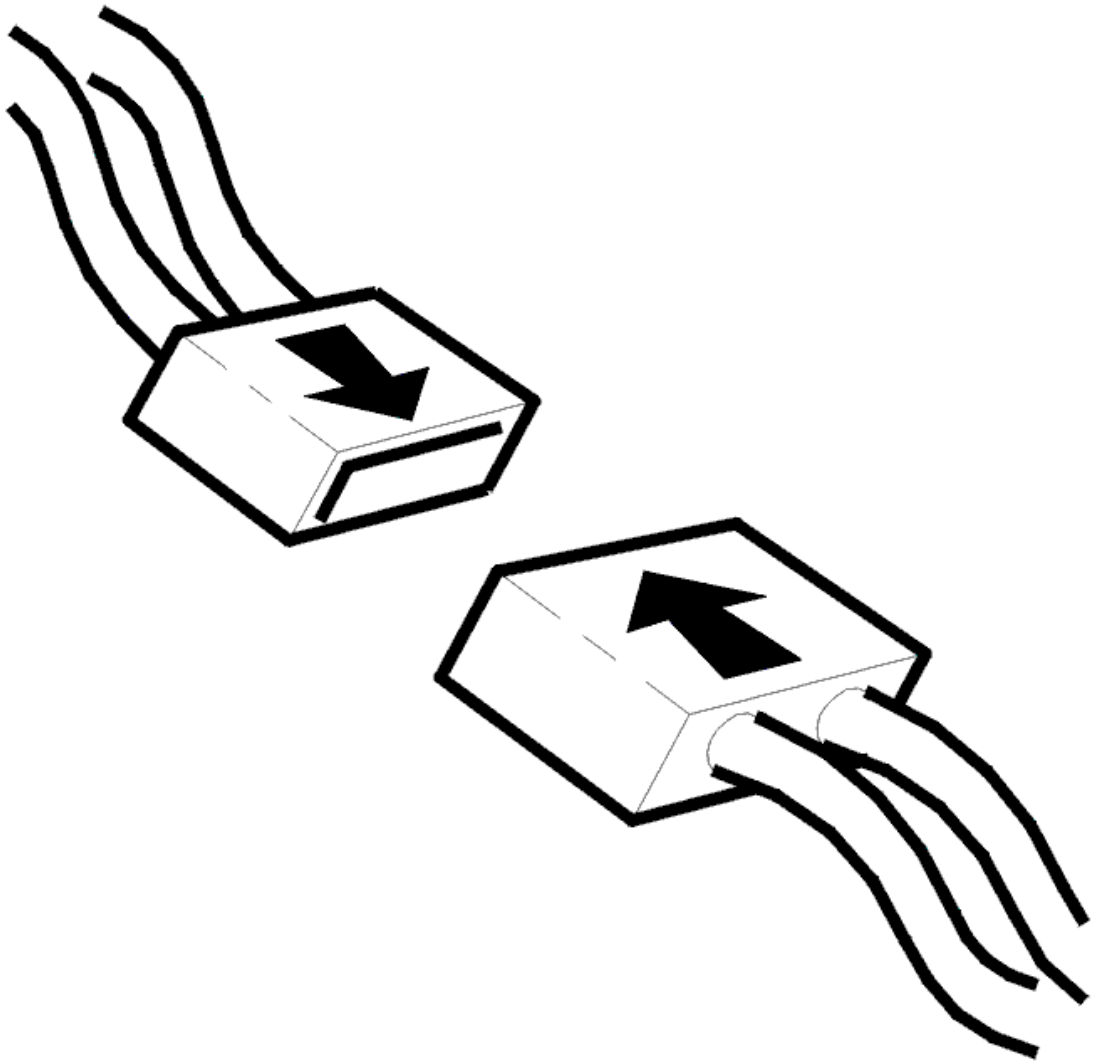

Fig. 146: Connecting Connector
Courtesy of VOLVO CARS CORPORATION

- Verification consists of 2 parts. Part 1 is carried out via a test in the workshop. Part 2 is carried out on the road.

  If the function is determined as **incorrect** in part 1, then part 2 does **not** need to be carried out. If the function is determined as being correct in part 1 and the vehicle can be tested on the road, part 2 must be carried out. This is because in certain cases the function can be difficult the check in a workshop environment.

- Ignition off
- Reconnect the connectors, components, etc.
- Start and run the engine to operating temperature.
- Read off the shift angle of the camshaft and the desired shift angle of the camshaft to check the function.

Check that the camshaft shift angle corresponds to the desired value for the camshaft shift angle with an accuracy of approximately 8° CA (camshaft angle). The difference between the values can be read off in the lower digital display.

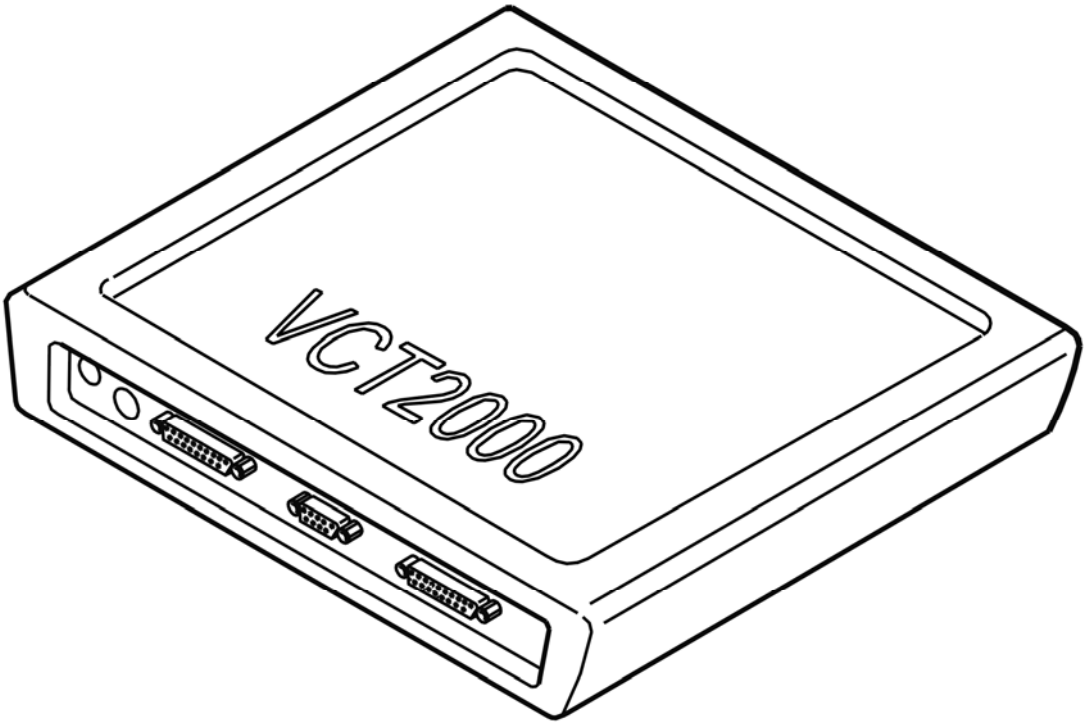

Fig. 147: Identifying VCT2000 Diagnostic Tool Symbol In VIDA
Courtesy of VOLVO CARS CORPORATION

Is the function OK?

- **YES**

  Refer to **VERIFICATION, PART 2**

- **NO**

  Refer to **INFORMATION**

VERIFICATION, PART 2

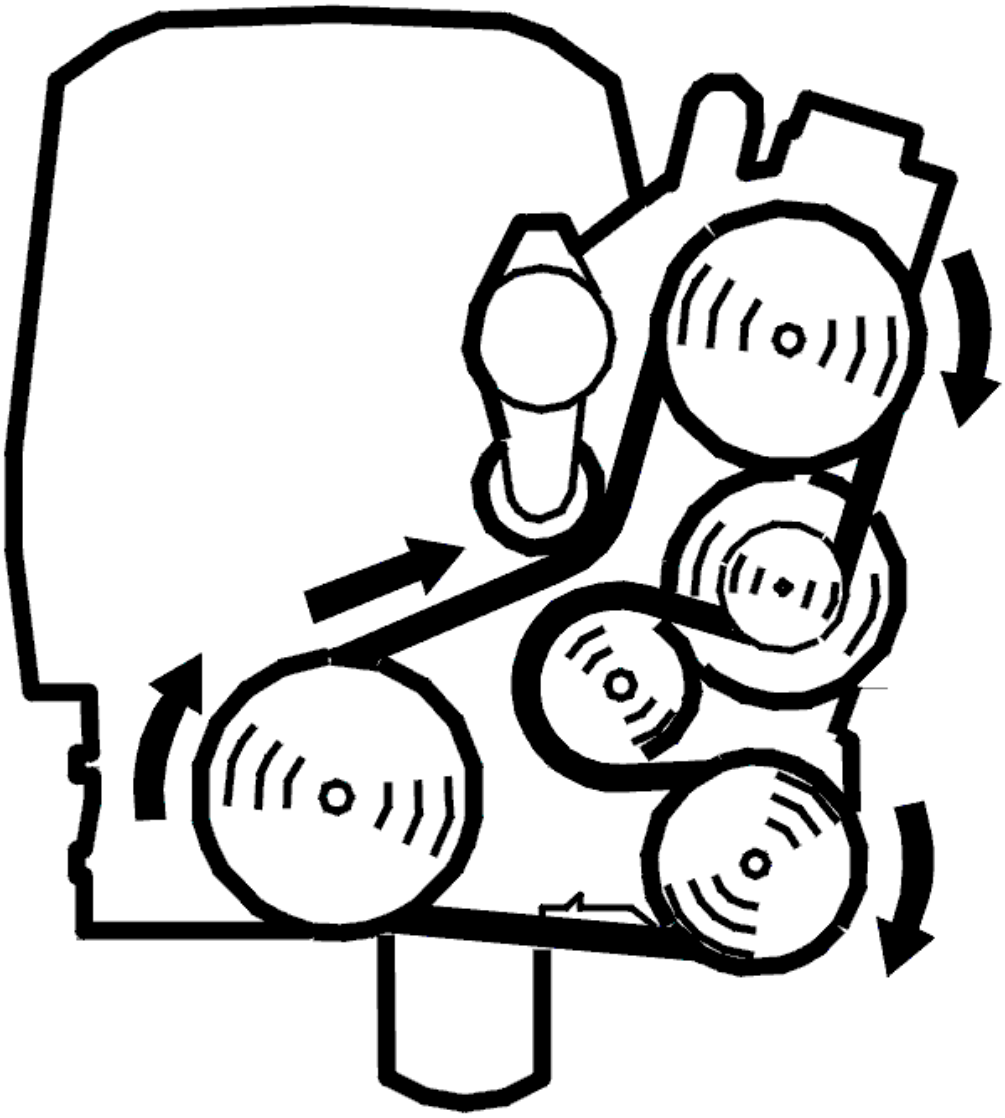

Fig. 148: Belt Routing / Engine Idling - Volvo
Courtesy of VOLVO CARS CORPORATION

- Test drive the car on the road. Use acceleration and engine braking. Repeat the procedure several times so that the camshaft control works and the engine control module (ECM) can carry out diagnostics.
- Connect VCT2000 (or appropriate scan tool) to the data link connector **without switching off the engine.**
- Read the diagnostic status and fault status for the diagnostic trouble code by selecting the diagnostic trouble code in the list.

NOTE: **If the engine is switched off, the stored fault status will be erased and the test drive will have to be repeated.**

Check the fault status for the diagnostic trouble code when the scan is "Implemented". When the function is correct the fault status should be "No fault found" when the scan is implemented.

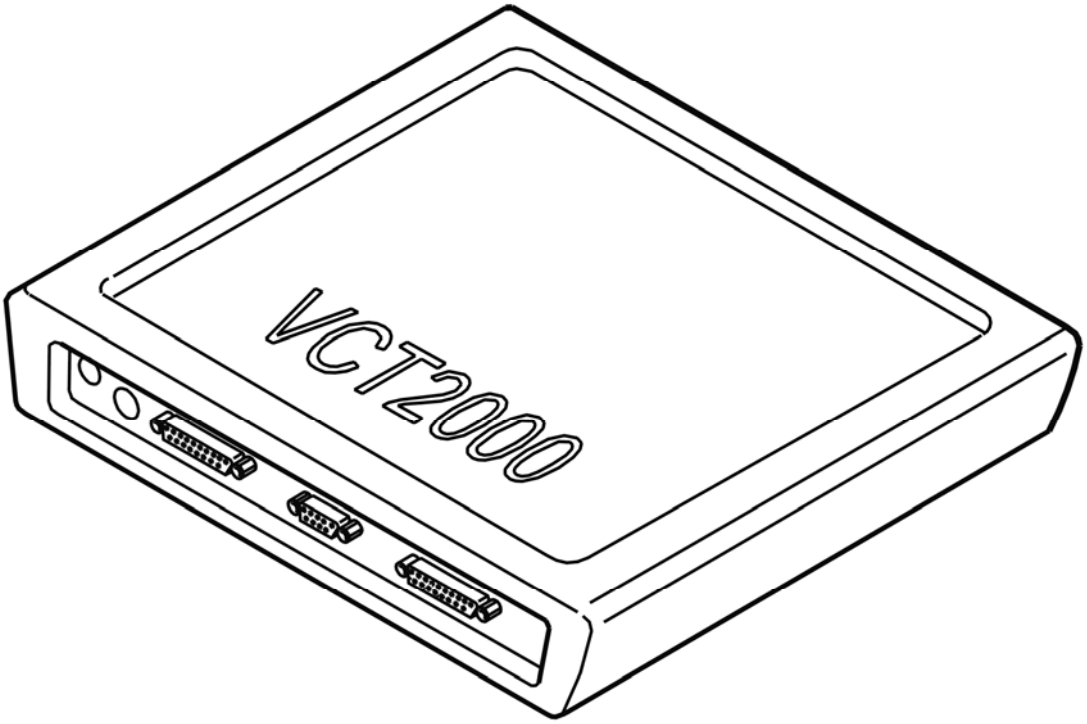

Fig. 149: Identifying VCT2000 Diagnostic Tool Symbol In VIDA
Courtesy of VOLVO CARS CORPORATION

Is the function OK?

- **YES**

  VERIFIED: Troubleshooting has been completed.

- **NO**

  Refer to **INFORMATION**

ECM-P001200: INTAKE CAMSHAFT POSITION TIMING - OVER-RETARDED (BANK 1). GENERAL FAILURE INFORMATION. NO SUB TYPE INFORMATION (B6324S5; 2011-2012)

DIAGNOSTIC TROUBLE CODE (DTC) INFORMATION ECM-P001200

see **DIAGNOSTIC TROUBLE CODE (DTC) INFORMATION ECM-P001200**

FAULT-TRACING

see **FAULT-TRACING**

ECM-P001200: INTAKE CAMSHAFT POSITION CONTROL - RETURNED TOO FAR - (BANK 1). GENERAL FAULT INFORMATION. TYPE OF FAULT NOT SPECIFIED. (B8444S; 2005-2011)

DIAGNOSTIC TROUBLE CODE (DTC) INFORMATION

Condition

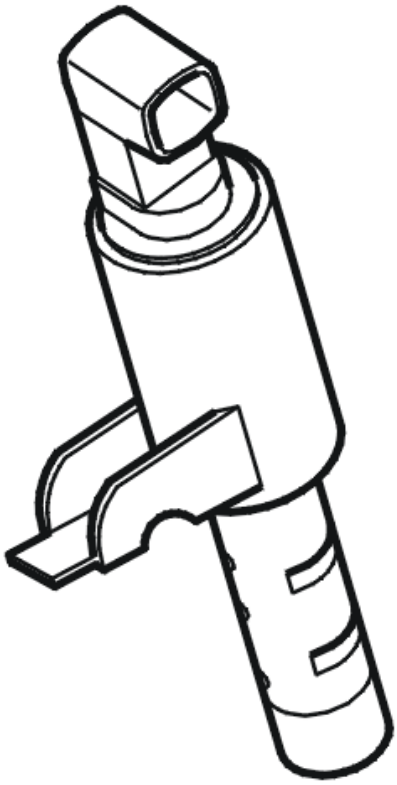

Fig. 150: Identifying Camshaft Reset Valve
Courtesy of VOLVO CARS CORPORATION

The engine control module (ECM) regulates the camshaft position (angle position) and checks that the requested position has been achieved. If the control module detects a difference between the requested position and the actual position, the time taken for regulation to achieve the requested position is measured. The length of time permitted to achieve the requested position varies depending on how much the camshaft is to be deflected at that moment. The diagnostic trouble code is generated if the control module detects that regulation is too slow during intake camshaft deflection.

The diagnostic trouble code can be diagnosed when the engine is at operating temperature, engine speed exceeds a certain value and camshaft regulation is active.

Substitute Value

- Nothing.

Possible Source

- Poor engine oil quality
- Low oil pressure
- Damaged camshaft reset valve
- Damaged VVT unit.

Fault symptom[s]

- Uneven idle.
- Increased emissions.
- The engine stops while running.

FAULT TRACING ECM-P001200

CHECKING COMPONENTS

NOTE: If the diagnostic trouble code (DTC) for correlation between the crankshaft position and camshaft position is stored, it must be fault-traced first.

HINT: Incorrect oil grade can cause malfunctions in the variable valve timing (VVT) unit. Contaminants in the engine oil can cause damage to components in the variable valve timing (VVT) unit.

Check the engine oil grade. Check especially for contaminants.

Remove the camshaft reset valve, check the reset valve and the oil ducts in the cylinder head. Check for contaminants and blockages.

Check the engine oil pressure.

Try a new camshaft reset valve if no fault is found or if the above remedies do not rectify the fault.

HINT: The fault can also be caused by an internal fault in the variable valve timing (VVT) unit. If the above fault-tracing/remedies do not rectify the fault, the variable valve timing (VVT) unit may be damaged.

Remedy as necessary.

Other information

- see **OIL PRESSURE, CHECKING**

- see **VVT UNIT, RIGHT CYLINDER HEAD**
- see **VVT UNIT, LEFT CYLINDER HEAD**
- see **LOCATION OF COMPONENTS, ENGINE COMPARTMENT**

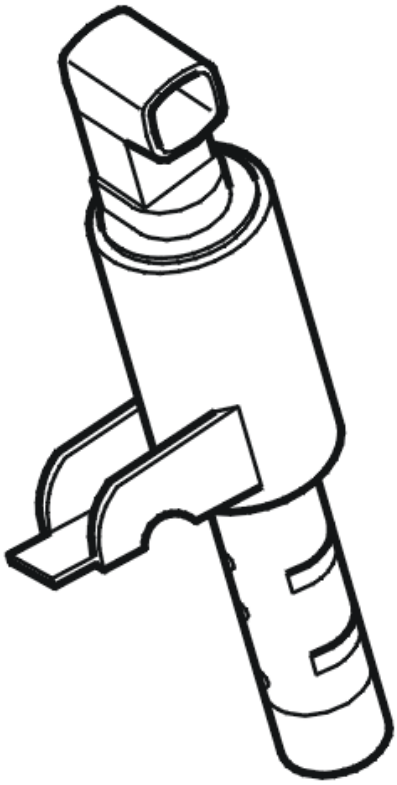

Fig. 151: Identifying Camshaft Reset Valve
Courtesy of VOLVO CARS CORPORATION

- **Continue**

  Refer to **VERIFICATION**

VERIFICATION

VERIFICATION, PART 1

HINT: After carrying out the repair, check that the fault has been remedied.

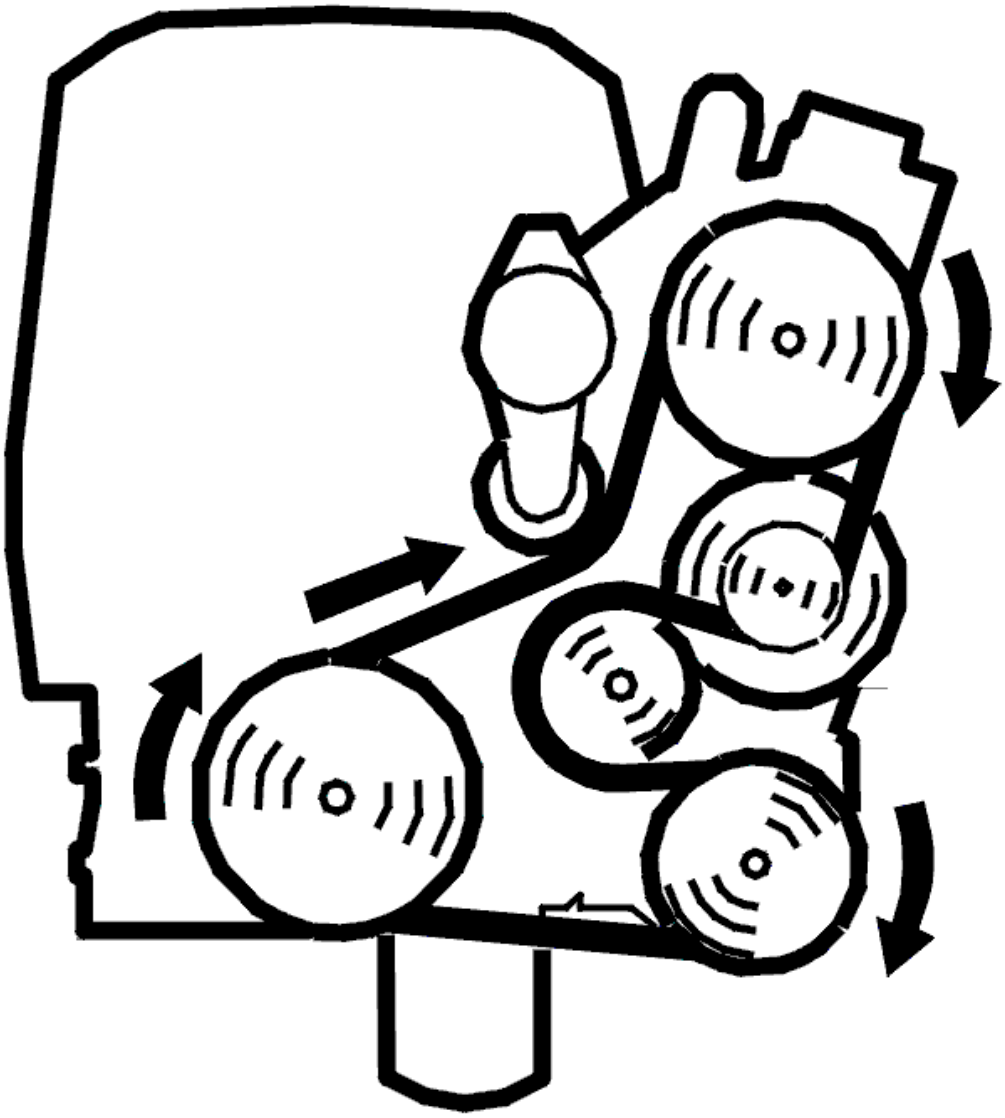

Fig. 152: Belt Routing / Engine Idling - Volvo
Courtesy of VOLVO CARS CORPORATION

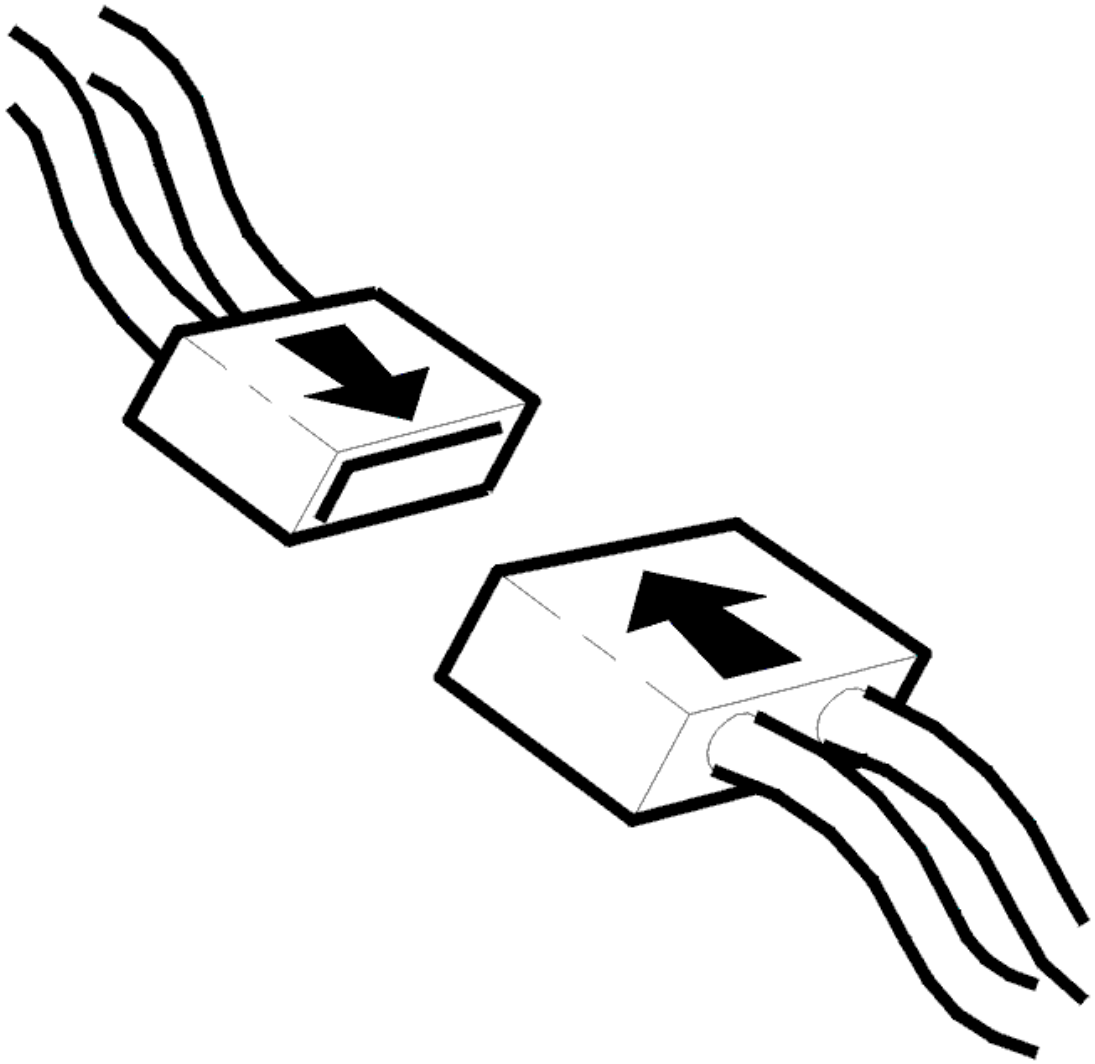

Fig. 153: Connecting Connector
Courtesy of VOLVO CARS CORPORATION

- Verification consists of 2 parts. Part 1 is carried out via a test in the workshop. Part 2 is carried out on the road.

  If the function is determined as **incorrect** in part 1, then part 2 does **not** need to be carried out. If the function is determined as being correct in part 1 and the vehicle can be tested on the road, part 2 must be carried out. This is because in certain cases the function can be difficult the check in a workshop environment.

- Ignition off
- Reconnect the connectors, components, etc.
- Start and run the engine to operating temperature.
- Read off the shift angle of the camshaft and the desired shift angle of the camshaft to check the function.

Check that the camshaft shift angle corresponds to the desired value for the camshaft shift angle with an accuracy of approximately 8° CA (camshaft angle). The difference between the values can be read off in the lower digital display.

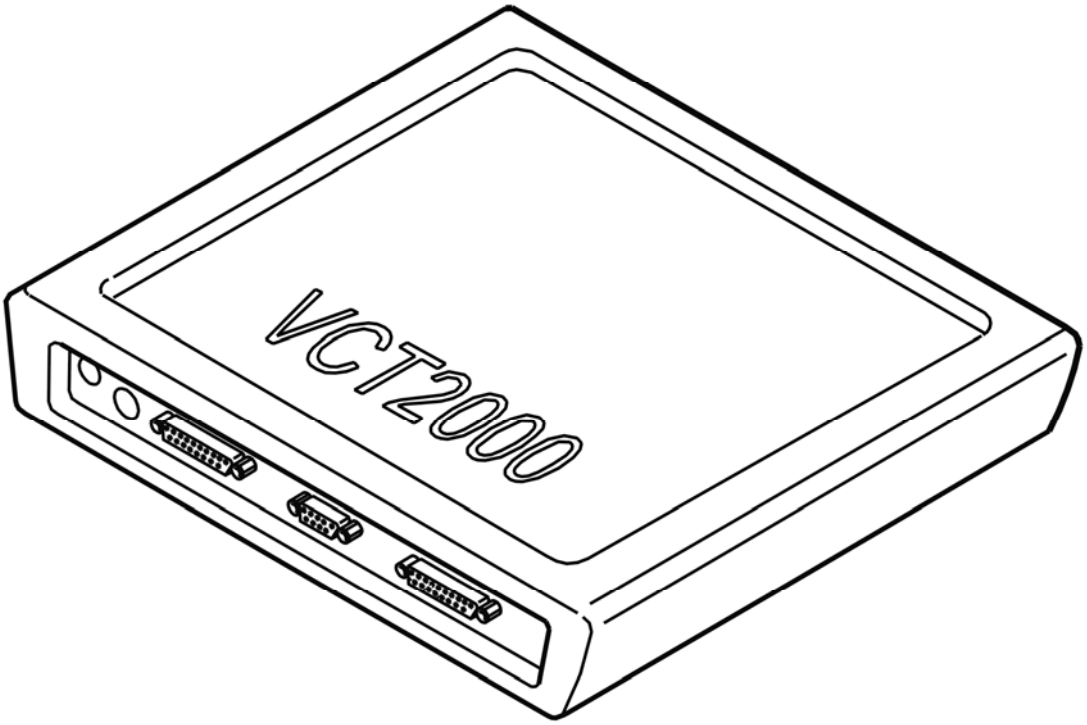

Fig. 154: Identifying VCT2000 Diagnostic Tool Symbol In VIDA
Courtesy of VOLVO CARS CORPORATION

Is the function OK?

- **YES**

  Refer to **VERIFICATION, PART 2**

- **NO**

  Refer to **INFORMATION**

VERIFICATION, PART 2

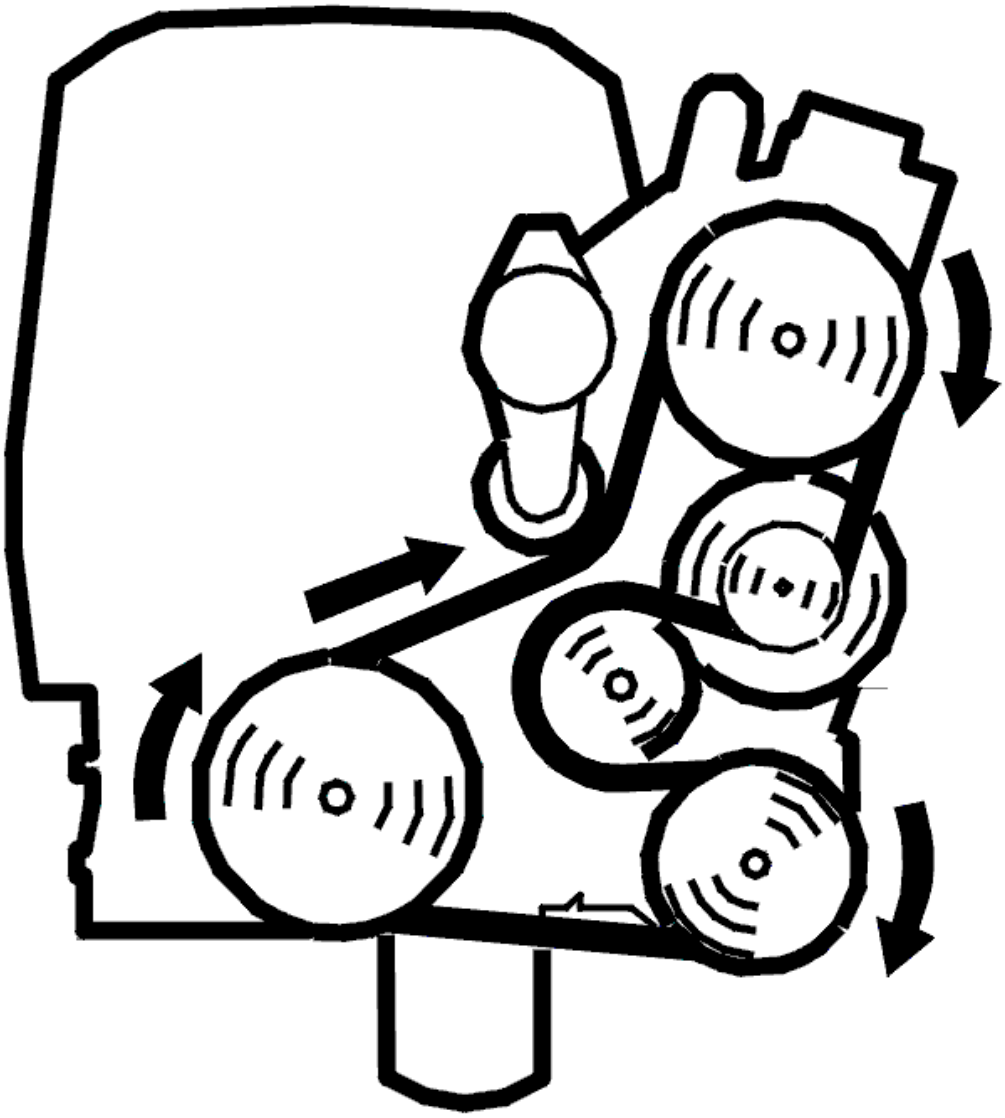

Fig. 155: Belt Routing / Engine Idling - Volvo
Courtesy of VOLVO CARS CORPORATION

- Test drive the car on the road. Use acceleration and engine braking. Repeat the procedure several times so that the camshaft control works and the engine control module (ECM) can carry out diagnostics.
- Connect VCT2000 (or appropriate scan tool) to the data link connector **without switching off the engine.**
- Read the diagnostic status and fault status for the diagnostic trouble code by selecting the diagnostic trouble code in the list.

NOTE: **If the engine is switched off, the stored fault status will be erased and the test drive will have to be repeated.**

Check the fault status for the diagnostic trouble code when the scan is "Implemented". When the function is correct the fault status should be "No fault found" when the scan is implemented.

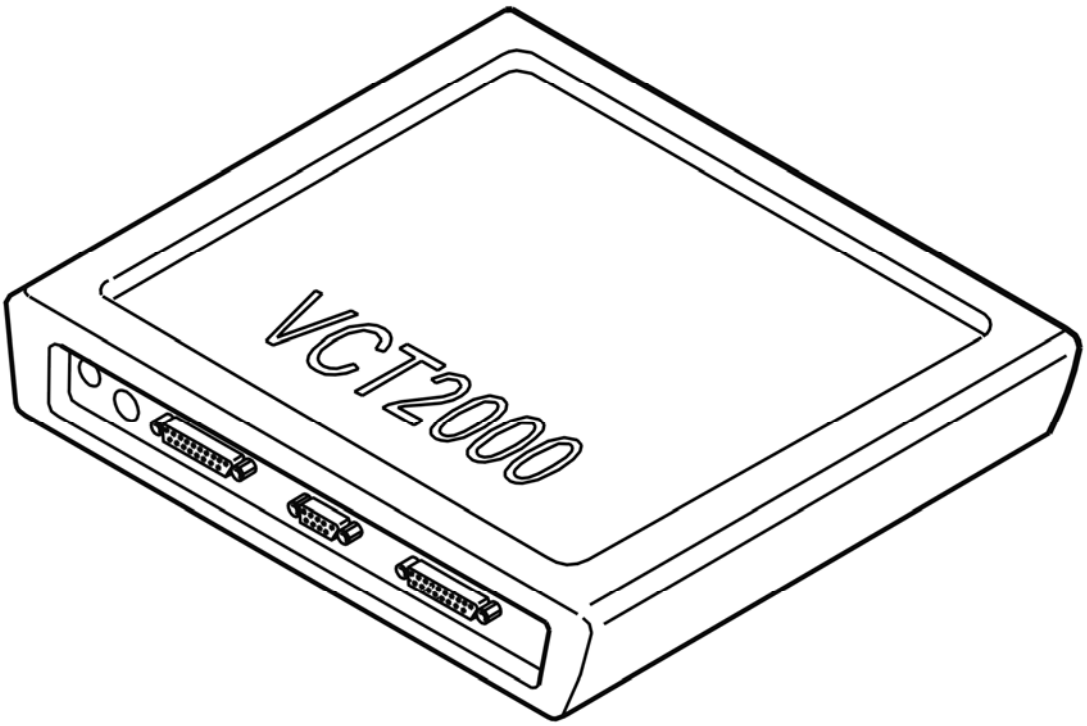

Fig. 156: Identifying VCT2000 Diagnostic Tool Symbol In VIDA
Courtesy of VOLVO CARS CORPORATION

Is the function OK?

- **YES**

  VERIFIED: Troubleshooting has been completed.

- **NO**

  Refer to **INFORMATION**

INFORMATION

FAULT-TRACING INFORMATION

The fault should have been detected and remedied. As this is not the case fault-tracing has failed.

Exit fault-tracing for this diagnostic trouble code (DTC) or make another attempt.

ECM-P001268: INTAKE CAMSHAFT POSITION TIMING - OVER-RETARDED (BANK 1). ALGORITHM BASED FAILURES. EVENT INFORMATION (B6324S;

2007-2010)

DIAGNOSTIC TROUBLE CODE (DTC) INFORMATION ECM-P001268

Condition

NOTE: **This diagnostic trouble code (DTC) status is an event controlled diagnostic trouble code (DTC). An event controlled diagnostic trouble code (DTC) does not mean that there is a fault in the control module when it is active, but is designed as information.**

Engine control module (ECM) monitors the induction side's VVT-valve (bank 1). If the control module detects that the induction side's VVT-valve is too far from desired target value for a certain time, the diagnostic trouble code is generated.

The diagnostic trouble code (DTC) can be diagnosed when the engine is running.

Substitute Value

- Nothing.

Possible Source

- This diagnostic trouble code (DTC) is not caused by a fault that needs to be remedied.

Fault symptom[s]

- None.

FAULT-TRACING INFORMATION

see **FAULT-TRACING INFORMATION**

ECM-P001268: INTAKE CAMSHAFT POSITION TIMING - OVER-RETARDED (BANK 1). ALGORITHM BASED FAILURES. EVENT INFORMATION (B6324S5; 2011-2012)

DIAGNOSTIC TROUBLE CODE (DTC) INFORMATION ECM-P001268

see **DIAGNOSTIC TROUBLE CODE (DTC) INFORMATION ECM-P001268**

FAULT-TRACING INFORMATION

see **FAULT-TRACING INFORMATION**

ECM-P001400: CONTROLLING CAMSHAFT POSITION EXHAUST- TOO

MUCH CONTROL- (BANK 1). GENERAL FAULT INFORMATION. NO INFORMATION ABOUT FAULT TYPE (B8444S; 2005-2011)

DIAGNOSTIC TROUBLE CODE (DTC) INFORMATION

Condition

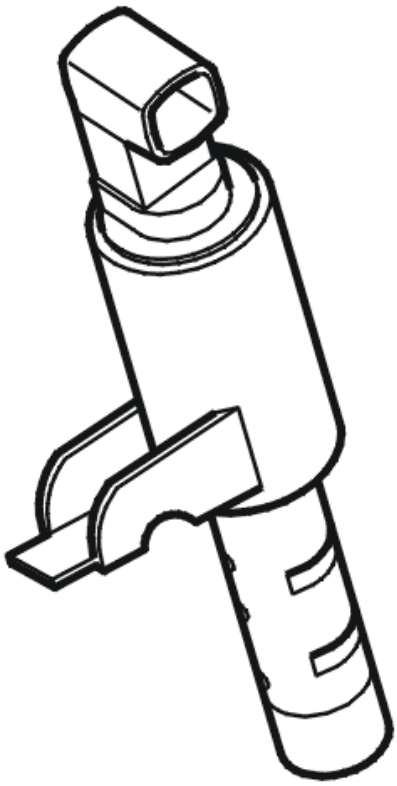

Fig. 157: Identifying Camshaft Reset Valve
Courtesy of VOLVO CARS CORPORATION

The engine control module (ECM) controls the position of the camshaft (angle). The engine control module (ECM) checks that the requested position is reached. If the control module detects a difference between the requested position and the actual position, the time taken for control to reach the requested position is measured. The maximum permitted time to reach the requested position varies depending on how much the camshaft is controlled outwards. The diagnostic trouble code (DTC) is stored if the control module detects that control is too slow during the return phase of the exhaust camshaft.

The diagnostic trouble code (DTC) can be diagnosed when the engine is at operating temperature, the engine speed (RPM) is above a certain value and when camshaft control is active.

Substitute Value

- Nothing.

Possible Source

- Poor engine oil quality
- Low oil pressure.
- Damaged camshaft reset valve
- Damaged variable valve timing (VVT) unit.

Fault symptom[s]

- Uneven idle.
- Increased emissions.
- The engines cuts out whilst driving.

FAULT TRACING ECM-P001400

CHECKING COMPONENTS

NOTE: If the diagnostic trouble code (DTC) for correlation between the crankshaft position and camshaft position is stored, it must be fault-traced first.

HINT: Incorrect oil grade can cause malfunctions in the variable valve timing (VVT) unit. Contaminants in the engine oil can cause damage to components in the variable valve timing (VVT) unit.

Check the engine oil grade. Check especially for contaminants.

HINT: The variable valve timing (VVT) unit for the exhaust camshaft has a spring which turns the camshaft at control. This means that if the oil pressure becomes too low for the continuous variable valve timing unit, the spring controls the camshaft out too much.

Remove the camshaft reset valve, check the reset valve and the oil ducts in the cylinder head. Check for contaminants and blockages.

Check the engine oil pressure.

Try a new camshaft reset valve if no fault is found or if the above remedies do not rectify the fault.

HINT: The fault can also be caused by an internal fault in the variable valve timing (VVT) unit. If the above fault-tracing/remedies do not rectify the fault, the variable valve timing (VVT) unit may be damaged.

Remedy as necessary.

Other information

- see **OIL PRESSURE, CHECKING**

- see **VVT UNIT EXHAUST CAMSHAFT, REPLACING**
- see **LOCATION OF COMPONENTS, ENGINE COMPARTMENT**

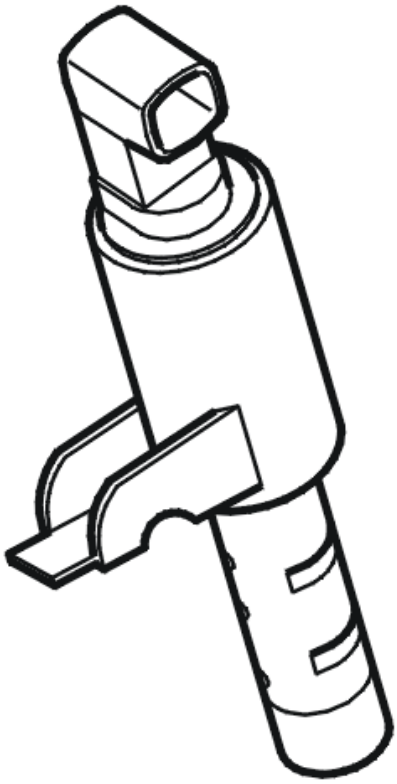

Fig. 158: Identifying Camshaft Reset Valve
Courtesy of VOLVO CARS CORPORATION

- **Continue**

  Refer to **VERIFICATION**

VERIFICATION

VERIFICATION, PART 1

HINT: After carrying out the repair, check that the fault has been remedied.

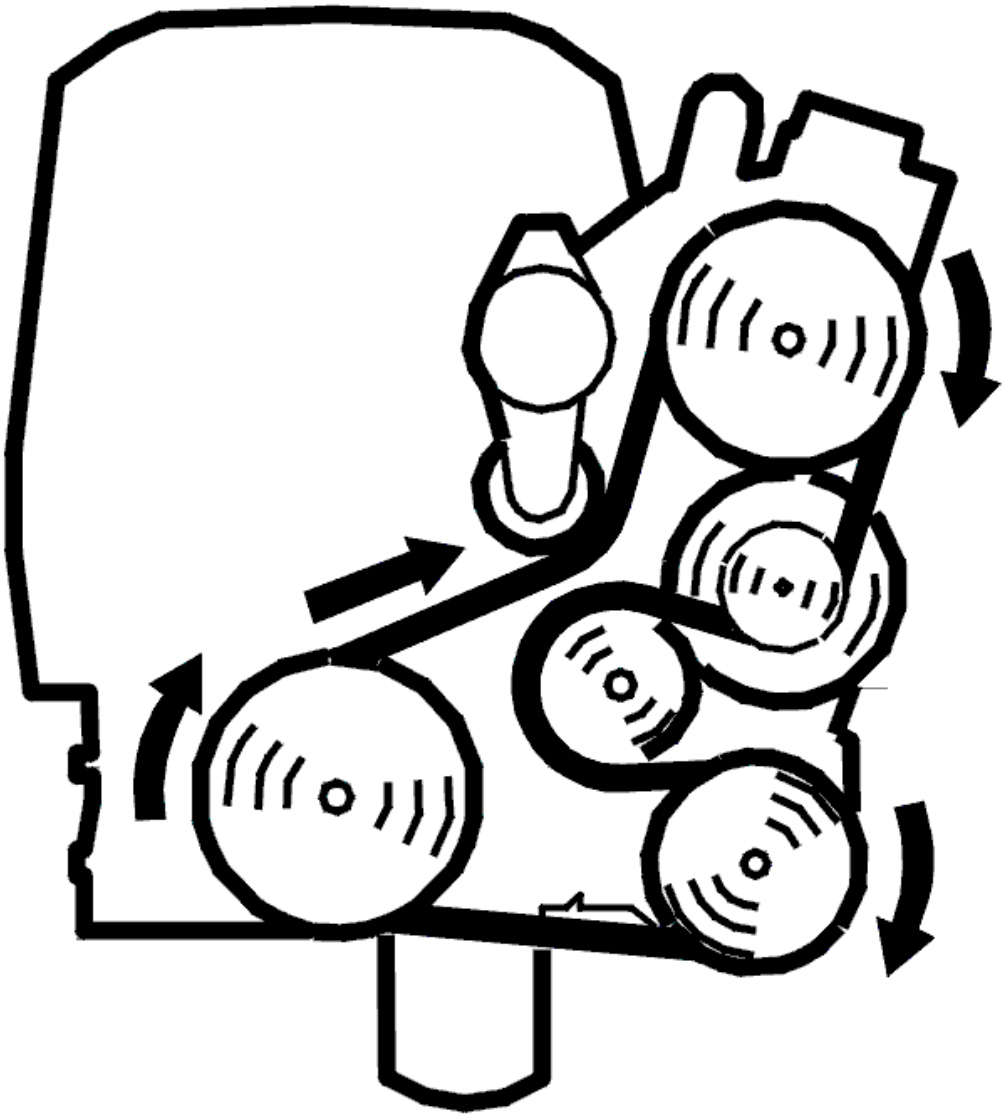

Fig. 159: Belt Routing / Engine Idling - Volvo
Courtesy of VOLVO CARS CORPORATION

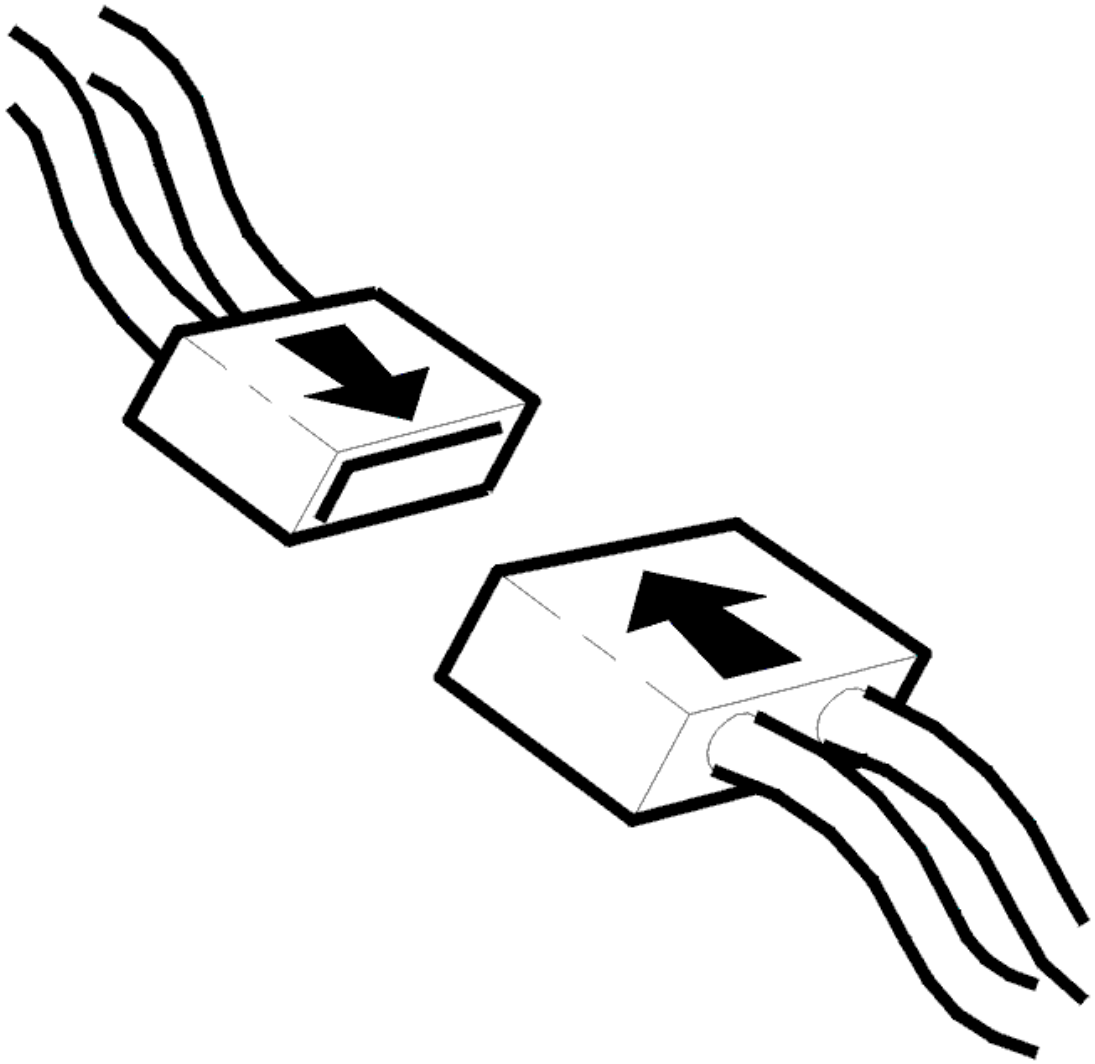

Fig. 160: Connecting Connector
Courtesy of VOLVO CARS CORPORATION

- Verification consists of 2 parts. Part 1 is carried out via a test in the workshop. Part 2 is carried out on the road.

  If the function is determined as **incorrect** in part 1, then part 2 does **not** need to be carried out. If the function is determined as being correct in part 1 and the vehicle can be tested on the road, part 2 must be carried out. This is because in certain cases the function can be difficult the check in a workshop environment.

- Ignition off
- Reconnect the connectors, components, etc.
- Start and run the engine to operating temperature.
- Read off the shift angle of the camshaft and the desired shift angle of the camshaft to check the function.

Check that the camshaft shift angle corresponds to the desired value for the camshaft shift angle with an accuracy of approximately 8° CA (camshaft angle). The difference between the values can be read off in the lower digital display.

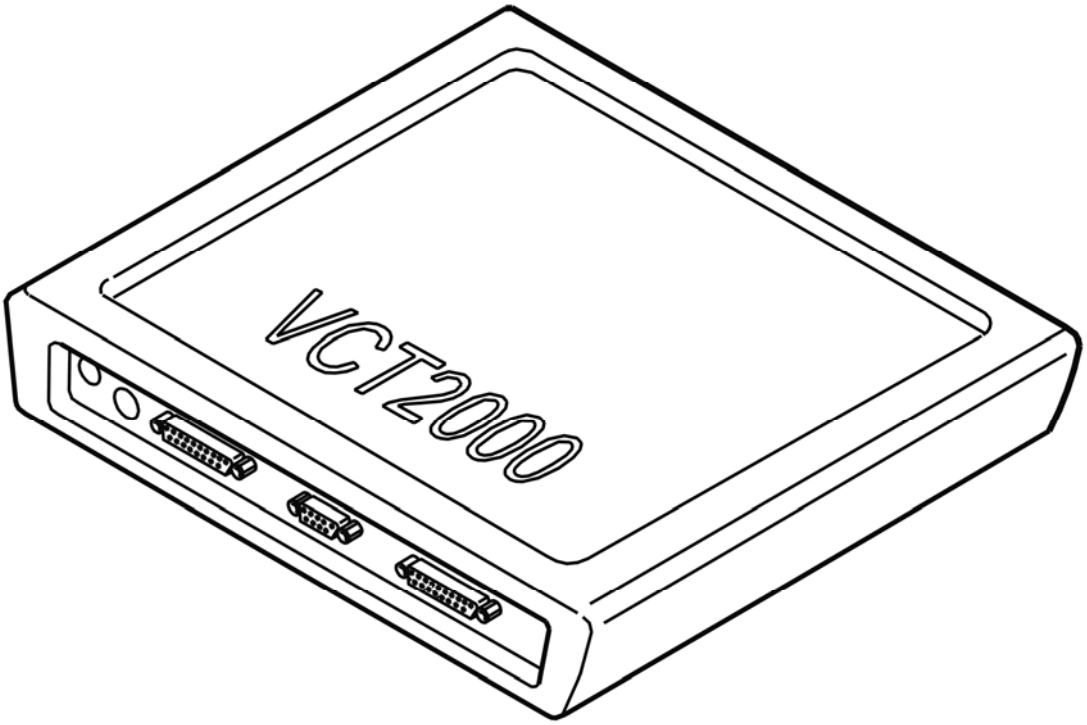

Fig. 161: Identifying VCT2000 Diagnostic Tool Symbol In VIDA
Courtesy of VOLVO CARS CORPORATION

Is the function OK?

- **YES**

  Refer to **VERIFICATION, PART 2**

- **NO**

  Refer to **INFORMATION**

VERIFICATION, PART 2

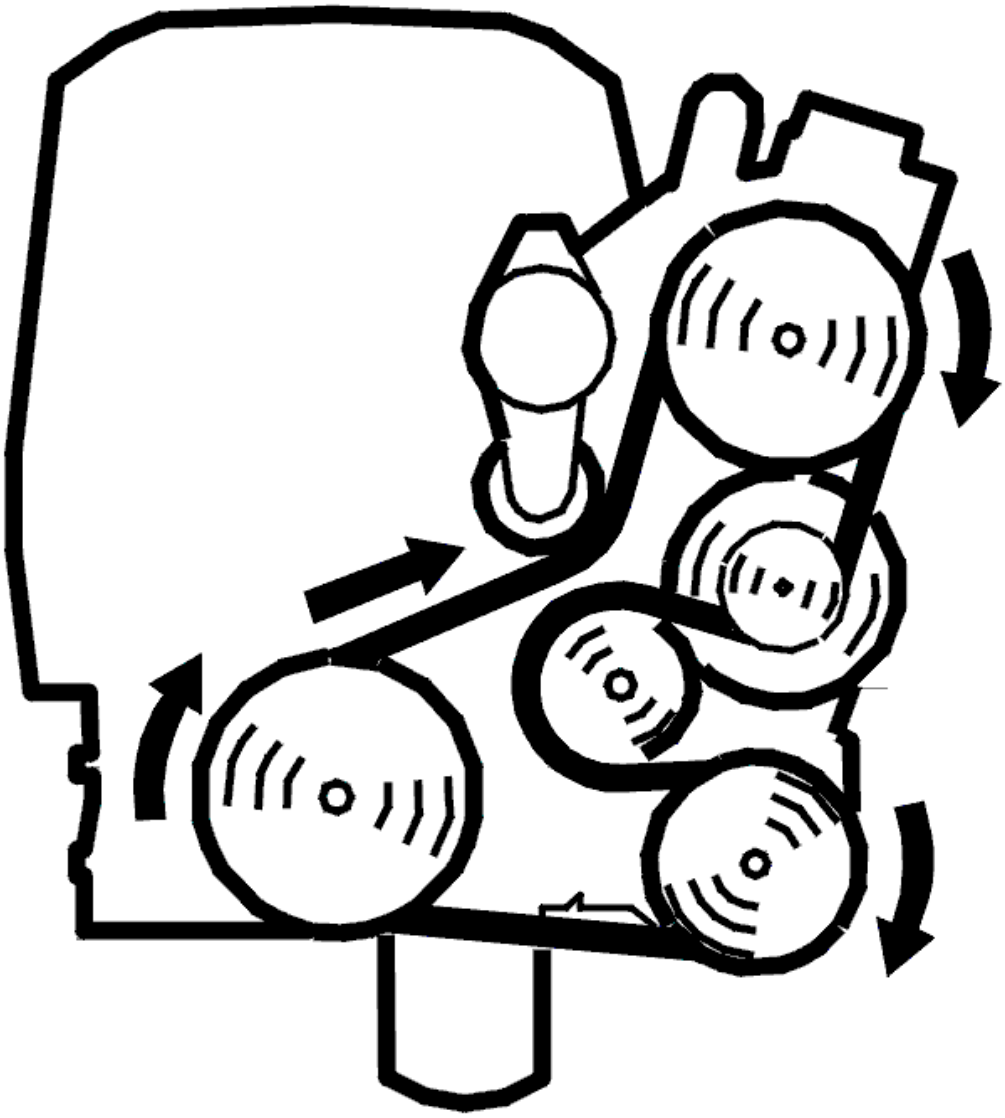

Fig. 162: Belt Routing / Engine Idling - Volvo
Courtesy of VOLVO CARS CORPORATION

- Test drive the car on the road. Use acceleration and engine braking. Repeat the procedure several times so that the camshaft control works and the engine control module (ECM) can carry out diagnostics.
- Connect VCT2000 (or appropriate scan tool) to the data link connector **without switching off the engine.**
- Read the diagnostic status and fault status for the diagnostic trouble code by selecting the diagnostic trouble code in the list.

NOTE: **If the engine is switched off, the stored fault status will be erased and the test drive will have to be repeated.**

Check the fault status for the diagnostic trouble code when the scan is "Implemented". When the function is correct the fault status should be "No fault found" when the scan is implemented.

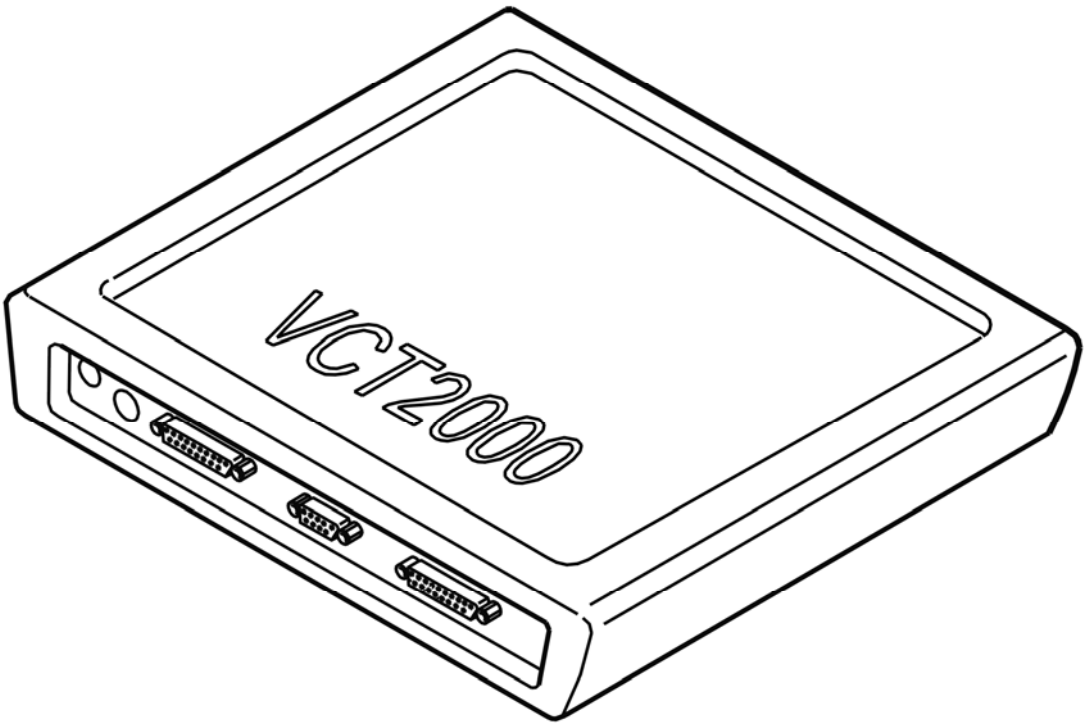

Fig. 163: Identifying VCT2000 Diagnostic Tool Symbol In VIDA
Courtesy of VOLVO CARS CORPORATION

Is the function OK?

- **YES**

  VERIFIED: Troubleshooting has been completed.

- **NO**

  Refer to **INFORMATION**

INFORMATION

FAULT-TRACING INFORMATION

The fault should have been detected and remedied. As this is not the case fault-tracing has failed.

Exit fault-tracing for this diagnostic trouble code (DTC) or make another attempt.

ECM-P001500: EXHAUST CAMSHAFT POSITION CONTROL - RETURNED TOO FAR - (BANK 1). GENERAL FAULT INFORMATION. TYPE OF FAULT

NOT SPECIFIED. (B8444S; 2005-2011)

DIAGNOSTIC TROUBLE CODE (DTC) INFORMATION

Condition

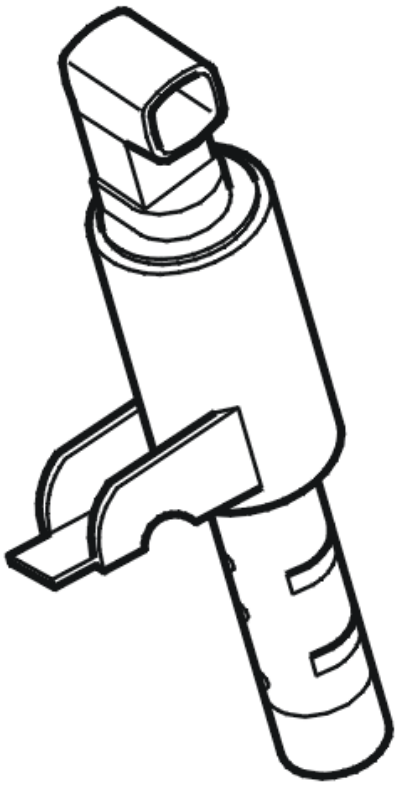

Fig. 164: Identifying Camshaft Reset Valve
Courtesy of VOLVO CARS CORPORATION

The engine control module (ECM) regulates the camshaft position (angle position) and checks that the requested position has been achieved. If the control module detects a difference between the requested position and the actual position, the time taken for regulation to achieve the requested position is measured. The length of time permitted to achieve the requested position varies depending on how much the camshaft is to be deflected at that moment. The diagnostic trouble code is generated if the control module detects that regulation is too slow during exhaust camshaft deflection.

The diagnostic trouble code can be diagnosed when the engine is at operating temperature, engine speed exceeds a certain value and camshaft regulation is active.

Substitute Value

- Nothing.

Possible Source

- Poor engine oil quality
- Damaged camshaft reset valve
- Damaged VVT unit.

Fault symptom[s]

- Uneven idle.
- Increased emissions.
- The engine stops while running.

FAULT TRACING ECM-P001500

CHECKING COMPONENTS

NOTE: If the diagnostic trouble code (DTC) for correlation between the crankshaft position and camshaft position is stored, it must be fault-traced first.

HINT: Contaminants in the engine oil can cause damage to components in the variable valve timing (VVT) unit.

Check the engine oil grade. Check especially for contaminants.

Remove the camshaft reset valve, check the reset valve and the oil ducts in the cylinder head. Check for contaminants and blockages.

Try a new camshaft reset valve if no fault is found or if the above remedies do not rectify the fault.

HINT: The fault can also be caused by an internal fault in the variable valve timing (VVT) unit. If the above fault-tracing/remedies do not rectify the fault, the variable valve timing (VVT) unit may be damaged.

Remedy as necessary.

Other information

- see **VVT UNIT EXHAUST CAMSHAFT, REPLACING**
- see **LOCATION OF COMPONENTS, ENGINE COMPARTMENT**

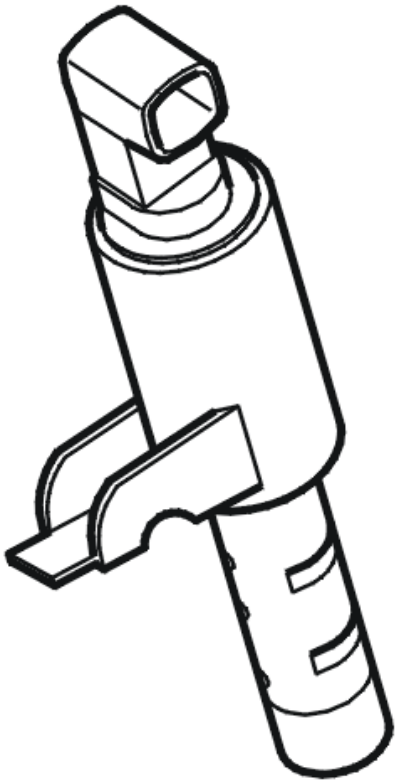

Fig. 165: Identifying Camshaft Reset Valve
Courtesy of VOLVO CARS CORPORATION

- **Continue**

  Refer to **VERIFICATION**

VERIFICATION

VERIFICATION, PART 1

HINT: After carrying out the repair, check that the fault has been remedied.

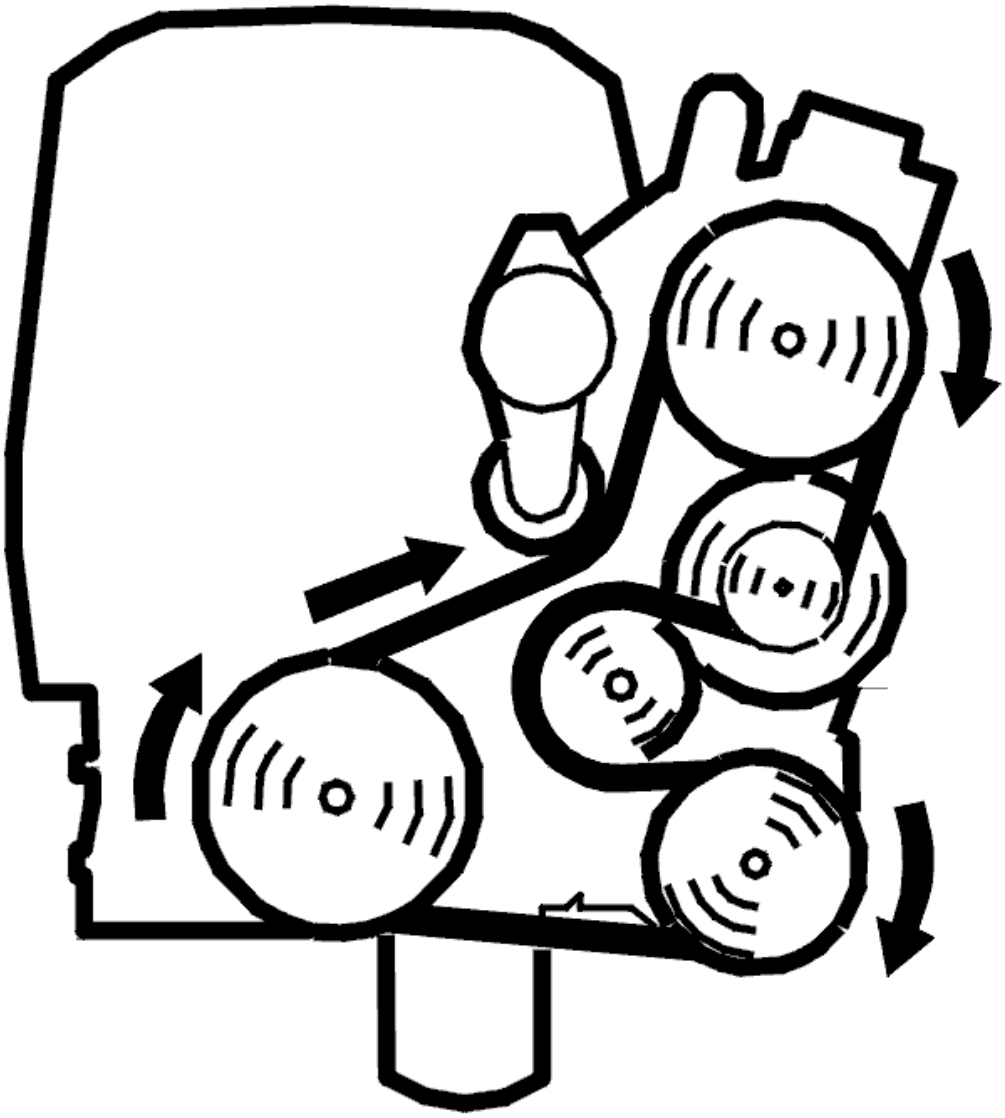

Fig. 166: Belt Routing / Engine Idling - Volvo
Courtesy of VOLVO CARS CORPORATION

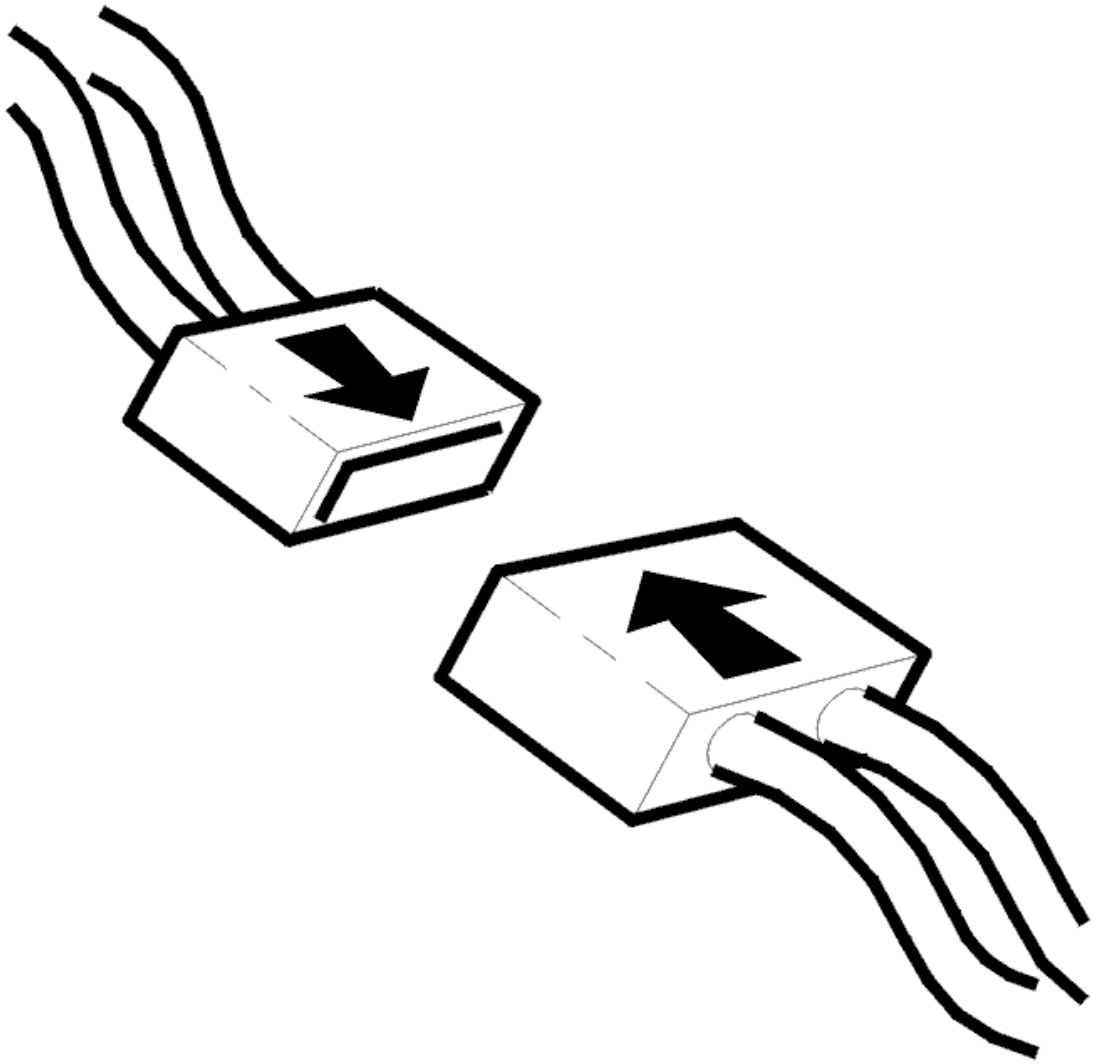

Fig. 167: Connecting Connector
Courtesy of VOLVO CARS CORPORATION

- Verification consists of 2 parts. Part 1 is carried out via a test in the workshop. Part 2 is carried out on the road.

  If the function is determined as **incorrect** in part 1, then part 2 does **not** need to be carried out. If the function is determined as being correct in part 1 and the vehicle can be tested on the road, part 2 must be carried out. This is because in certain cases the function can be difficult the check in a workshop environment.

- Ignition off
- Reconnect the connectors, components, etc.
- Start and run the engine to operating temperature.
- Read off the shift angle of the camshaft and the desired shift angle of the camshaft to check the function.

Check that the camshaft shift angle corresponds to the desired value for the camshaft shift angle with an accuracy of approximately 8° CA (camshaft angle). The difference between the values can be read off in the lower digital display.

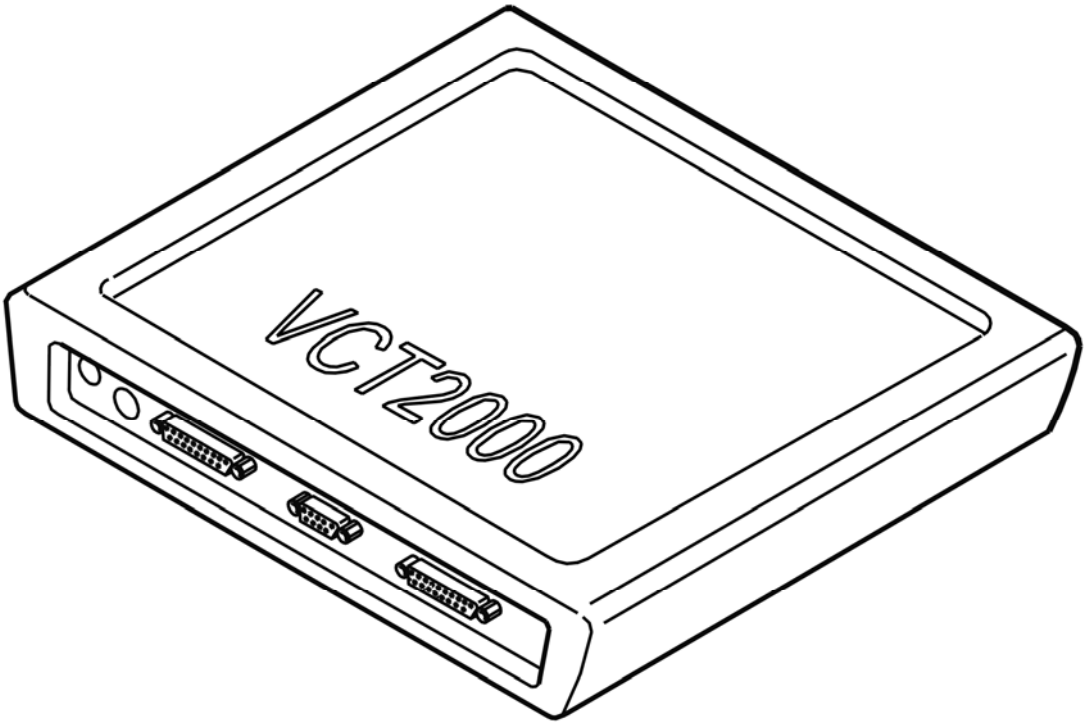

Fig. 168: Identifying VCT2000 Diagnostic Tool Symbol In VIDA
Courtesy of VOLVO CARS CORPORATION

Is the function OK?

- **YES**

  Refer to **VERIFICATION, PART 2**

- **NO**

  Refer to **INFORMATION**

VERIFICATION, PART 2

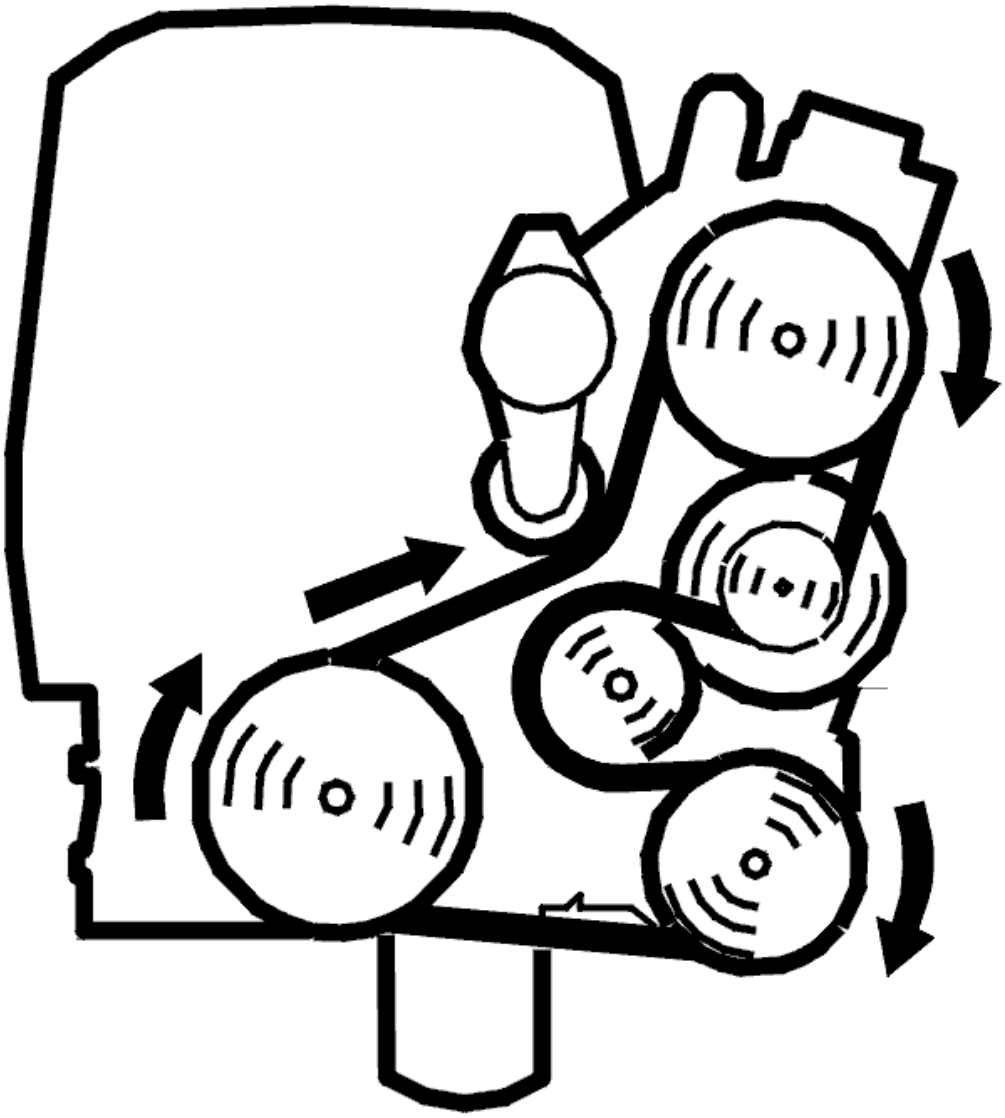

Fig. 169: Belt Routing / Engine Idling - Volvo
Courtesy of VOLVO CARS CORPORATION

- Test drive the car on the road. Use acceleration and engine braking. Repeat the procedure several times so that the camshaft control works and the engine control module (ECM) can carry out diagnostics.
- Connect VCT2000 (or appropriate scan tool) to the data link connector **without switching off the engine.**
- Read the diagnostic status and fault status for the diagnostic trouble code by selecting the diagnostic trouble code in the list.

NOTE: **If the engine is switched off, the stored fault status will be erased and the test drive will have to be repeated.**

Check the fault status for the diagnostic trouble code when the scan is "Implemented". When the function is correct the fault status should be "No fault found" when the scan is implemented.

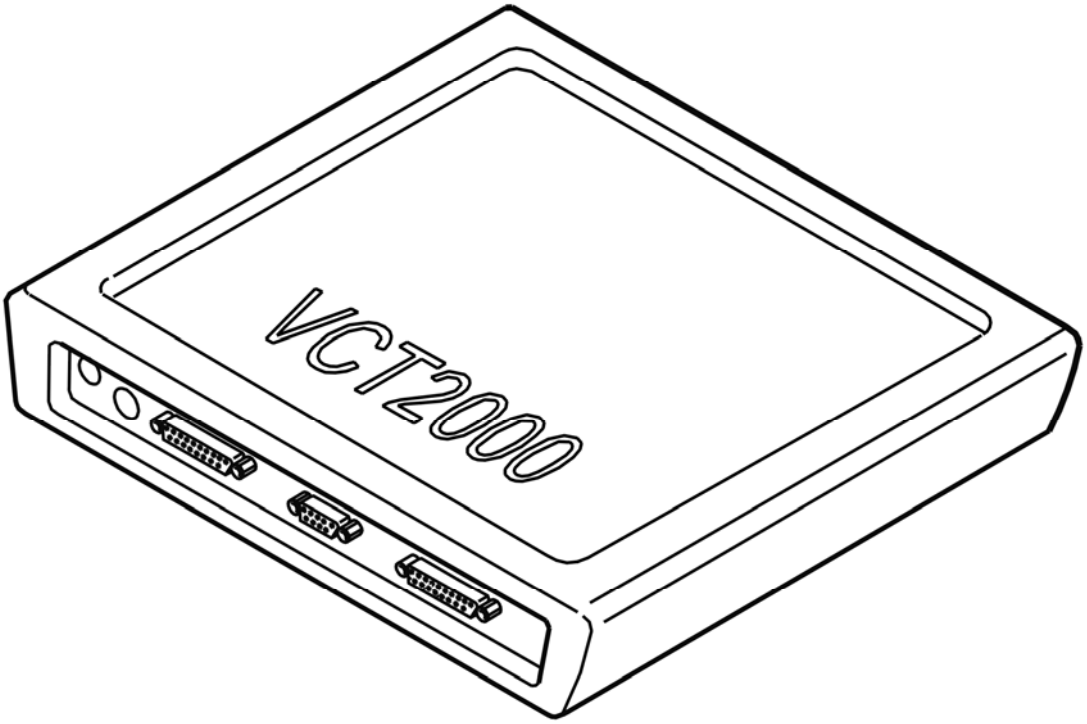

Fig. 170: Identifying VCT2000 Diagnostic Tool Symbol In VIDA
Courtesy of VOLVO CARS CORPORATION

Is the function OK?

- **YES**

  VERIFIED: Troubleshooting has been completed.

- **NO**

  Refer to **INFORMATION**

INFORMATION

FAULT-TRACING INFORMATION

The fault should have been detected and remedied. As this is not the case fault-tracing has failed.

Exit fault-tracing for this diagnostic trouble code (DTC) or make another attempt.

ECM-P001600: CRANKSHAFT POSITION - CAMSHAFT POSITION CORRELATION - BANK 1 SENSOR A. GENERAL FAILURE INFORMATION.

NO SUB TYPE INFORMATION (B6324S; 2007-2010)

DIAGNOSTIC TROUBLE CODE (DTC) INFORMATION ECM-P001600

Condition

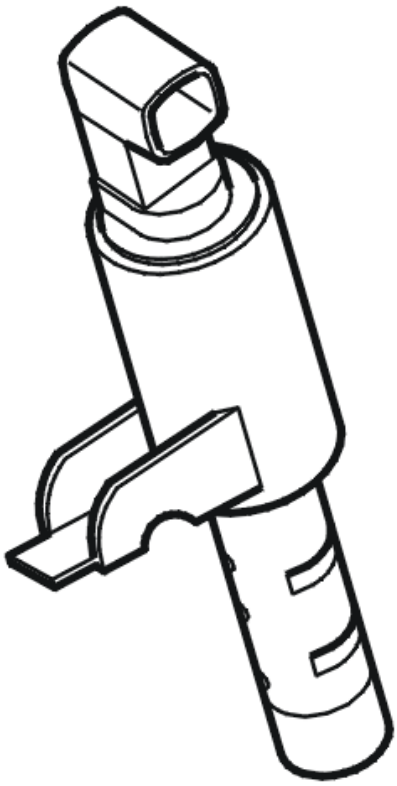

Fig. 171: Identifying Camshaft Reset Valve
Courtesy of VOLVO CARS CORPORATION

The engine control module (ECM) checks that the camshaft is in the correct position (angle) in relation to the position (angle) of the crankshaft using signals from the camshaft sensor and engine speed (RPM) sensor. If the camshaft position does not correspond to the crankshaft position, the control module adjusts the adaption for the camshaft position. The adaption value corresponds to the difference in position between the camshaft and crankshaft when the crankshaft is in its default position. The diagnostic trouble code (DTC) is stored when adaption is greater or less than a certain value.

The diagnostic trouble code (DTC) can be diagnosed when adaption of the camshaft is carried out (adaption occurs during engine braking).

Substitute Value

- Nothing.

Possible Source

- Poor engine oil quality
- Incorrectly adjusted camshafts
- Damaged camshaft reset valve
- Damaged variable valve timing (VVT) unit.
- Damaged (worn) timing chain.

Fault symptom[s]

- Uneven idle.
- High emissions
- The engines cuts out whilst driving.

FAULT-TRACING

CHECKING THE STATUS

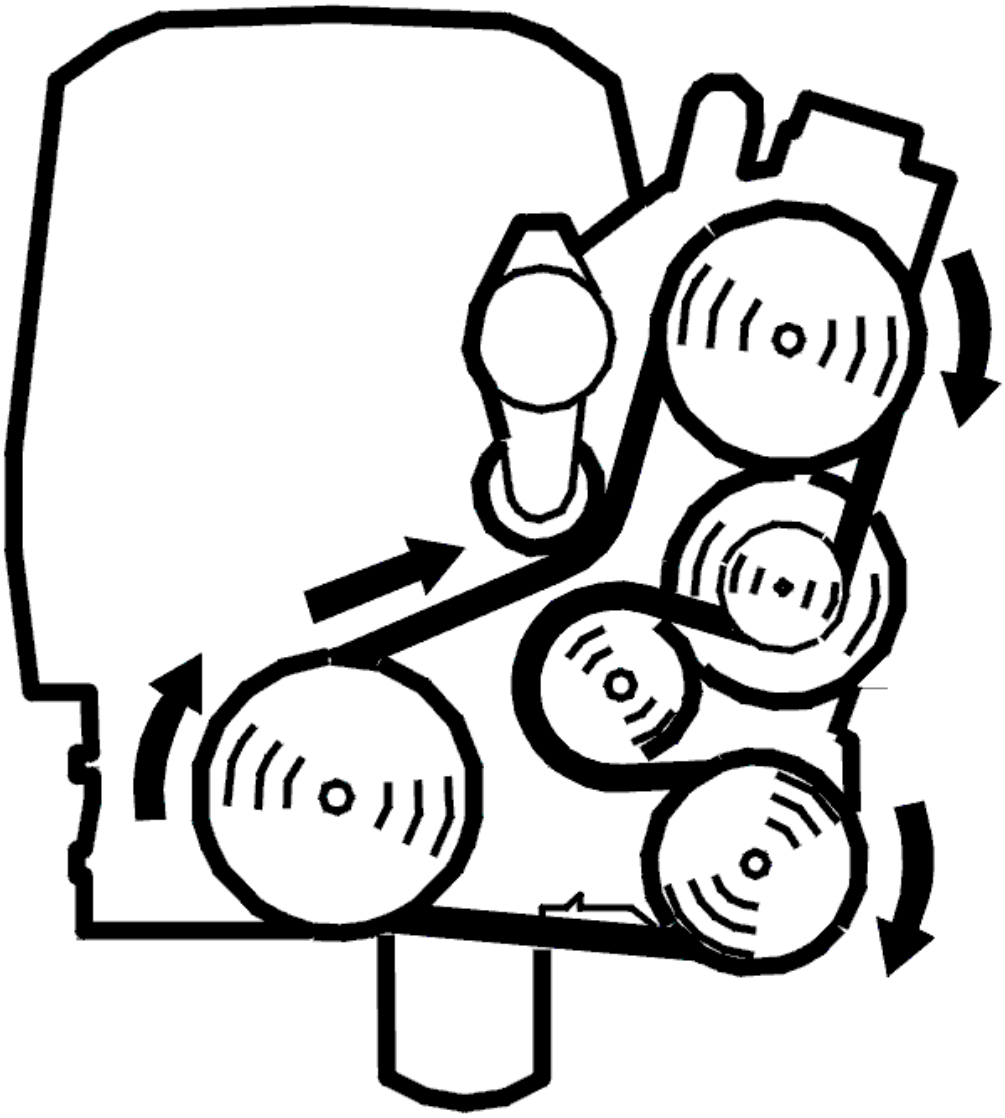

Fig. 172: Belt Routing / Engine Idling - Volvo
Courtesy of VOLVO CARS CORPORATION

- Read off the adaption for the camshaft, the camshaft shift angle and desired value for the camshaft shift angle.

  Check that the read off values correspond to the guide values below. The difference between the camshaft shift angle and the desired value for camshaft shift angle can be read off from the lower digital display. Note the read off values as a basis for continuing fault-tracing.

  Adaption camshaft

  - Intake camshaft: 75 degrees CA (camshaft angle) (+/-8 degrees CA)

  Camshaft shift angle

- The difference from the desired value of the camshaft shift angle (intake): approximately 8 degrees CA

The fault is permanent if the values are not correct. If the values are correct, this indicates that the fault is intermittent and not presently active.

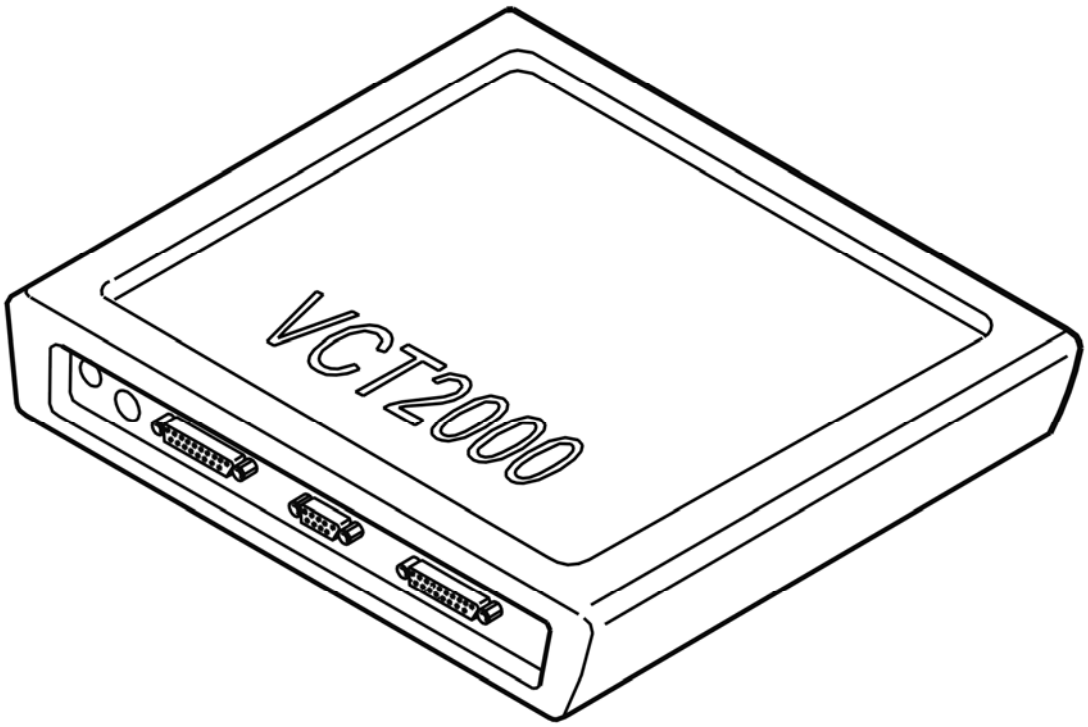

Fig. 173: Identifying VCT2000 Diagnostic Tool Symbol In VIDA
Courtesy of VOLVO CARS CORPORATION

- **Continue**

  Refer to **CHECKING COMPONENTS**

CHECKING COMPONENTS

HINT: Incorrect function on the camshaft reset valve is probably the cause of this diagnostic trouble code (DTC) if:

- The adaption value and camshaft shift angle are correct in the previous check (intermittent fault).
- The adaption value is correct but the camshaft shift angle is incorrect in the previous check.

HINT: Contaminants in the engine oil can damage components in the camshaft control which can cause function faults.

Check the engine oil grade. Check especially for contaminants.

Check the default settings of the camshafts.

Remove the camshaft reset valve, check the reset valve and the oil ducts in the cylinder head. Check for contaminants and blockages.

Try a new camshaft reset valve if no fault is found or if the above remedies do not rectify the fault.

HINT: The fault can also be caused by a damaged variable valve timing (VVT) unit.

Remedy as necessary.

Other information

- To check the camshaft settings:

  see **VVT UNIT**

- Cleaning:**VARIABLE CAMSHAFT TIMING OIL CONTROL SOLENOID**
- see **LOCATION OF COMPONENTS**

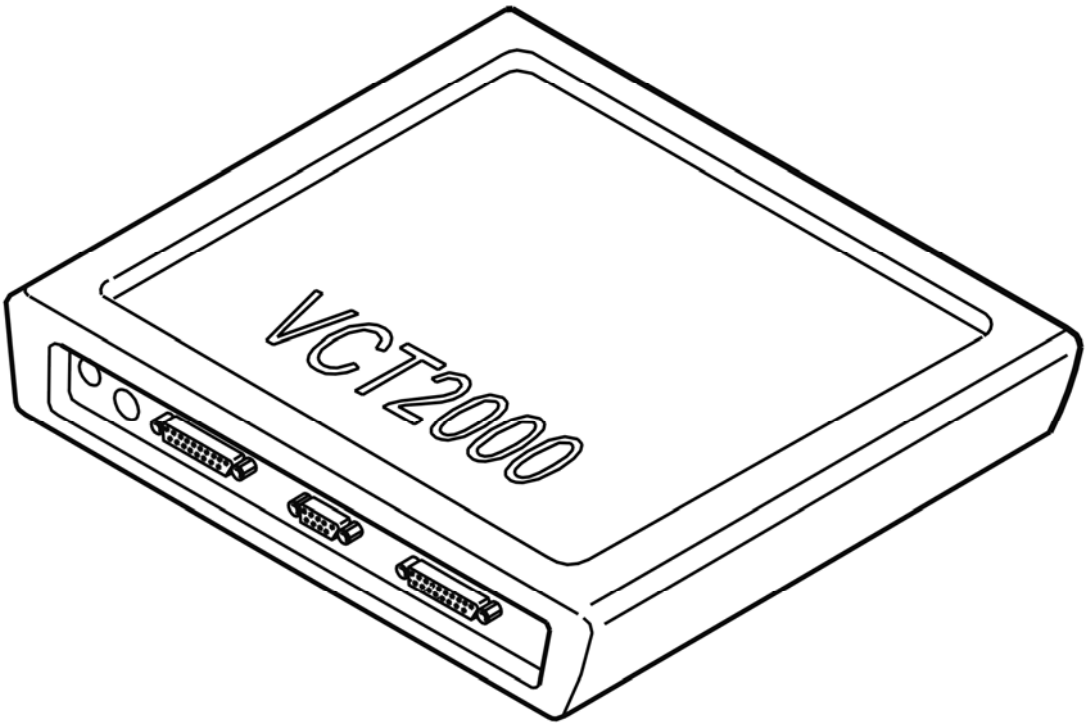

Fig. 174: Identifying VCT2000 Diagnostic Tool Symbol In VIDA

Courtesy of VOLVO CARS CORPORATION

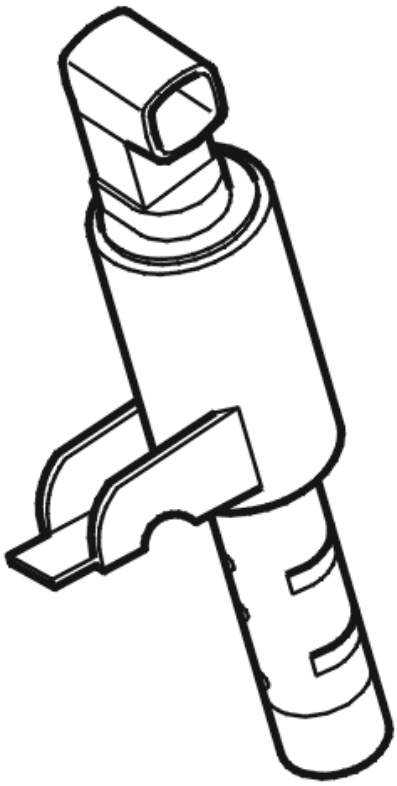

Fig. 175: Identifying Camshaft Reset Valve
Courtesy of VOLVO CARS CORPORATION

- **Continue**

  Refer to **VERIFICATION**

INFORMATION

FAULT-TRACING INFORMATION

The fault should have been detected and remedied. As this is not the case fault-tracing has failed.

Exit fault-tracing for this diagnostic trouble code (DTC) or make another attempt.

VERIFICATION

VERIFICATION, PART 1

HINT: After carrying out the repair, check that the fault has been remedied.

HINT: In order to verify this diagnostic trouble code (DTC), adaptation of the camshaft must be

completed. Adaptation of the camshaft is carried out by the engine control module (ECM) when the engine is at operating temperature, during engine braking (fuel shut-off) above 1500 RPM for at least 10 seconds.

CAUTION: Test driving on the road must be carried out on a road with minimal traffic. Follow the highway code.

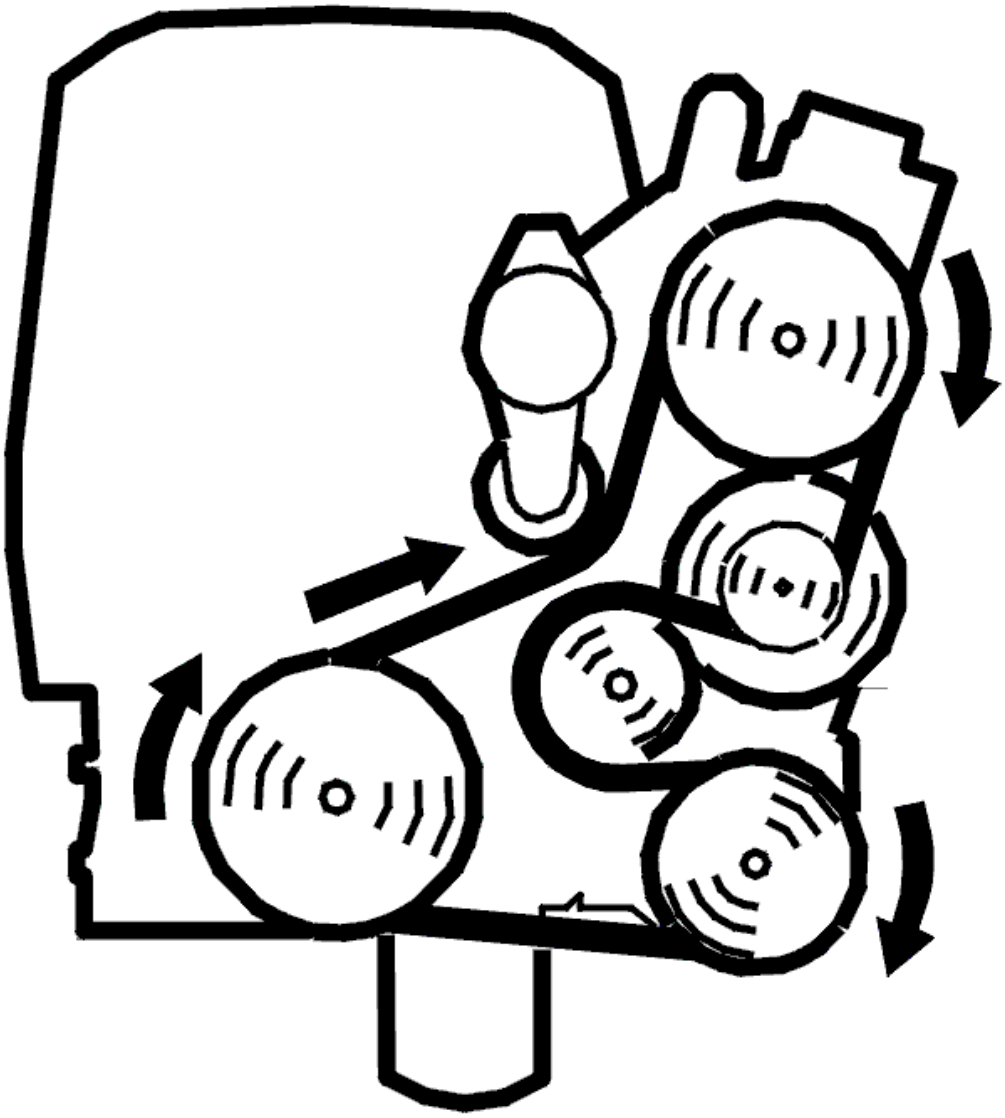

Fig. 176: Belt Routing / Engine Idling - Volvo
Courtesy of VOLVO CARS CORPORATION

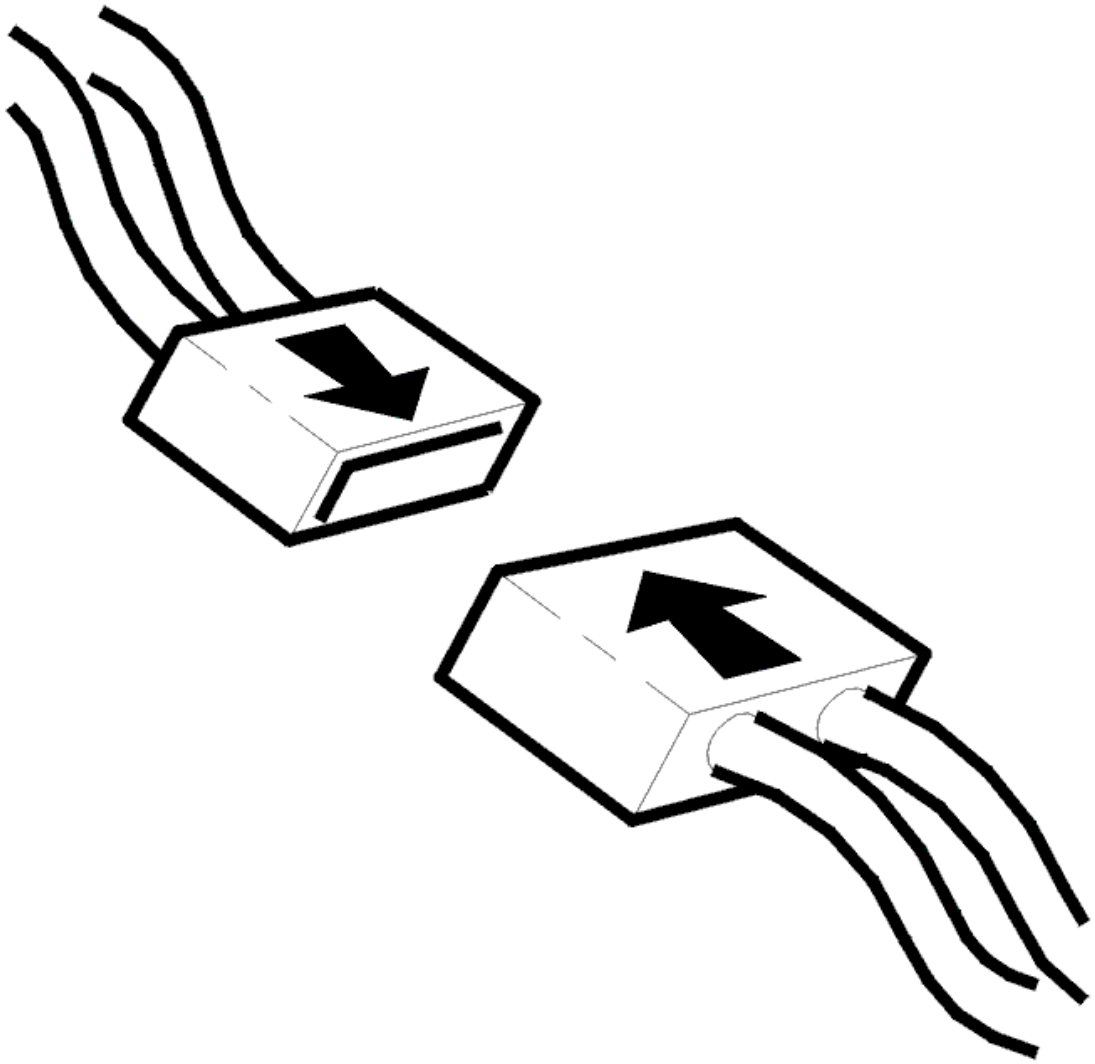

Fig. 177: Connecting Connector
Courtesy of VOLVO CARS CORPORATION

- Ignition off
- Reconnect the connectors, components, etc.
- Start and run the engine to operating temperature.
- Drive the vehicle on the road. Ensure that the conditions for camshaft adaptation are met: engine braking (fuel shut-off) above 1500 RPM for at least 10 seconds. The conditions can be satisfied for example by driving the vehicle with a high engine load (accelerating) up to approximately 90 km/h and then releasing the accelerator pedal for 10 seconds.

NOTE: **In order for the adaptation to be carried out, the accelerator pedal must not be touched during engine braking.**

- Repeat the schedule to ensure that the diagnosis and adaptation are carried out.

- Connect VCT2000 (or appropriate scan tool) to the data link connector **without switching off the engine.**
- Read the diagnostic status and fault status for the diagnostic trouble code by selecting the diagnostic trouble code in the list.

NOTE: If the engine is switched off, the stored fault status will be erased and the test drive will have to be repeated.

Check that the diagnostic status for the diagnostic trouble code (DTC) is "Completed". When the diagnostic status for the diagnostic trouble code (DTC) is "Completed", the engine control module (ECM) has carried out camshaft adaption. If the status is "Not completed" the test drive must be carried out again.

If the function is correct, the fault status must be "No fault found" when the diagnostic is complete.

Check that the value for camshaft adaption is correct when the diagnostic status for the diagnostic trouble code (DTC) is "Completed".

- Inlet camshaft: 75° CA (camshaft angle) (+/-8° CA)

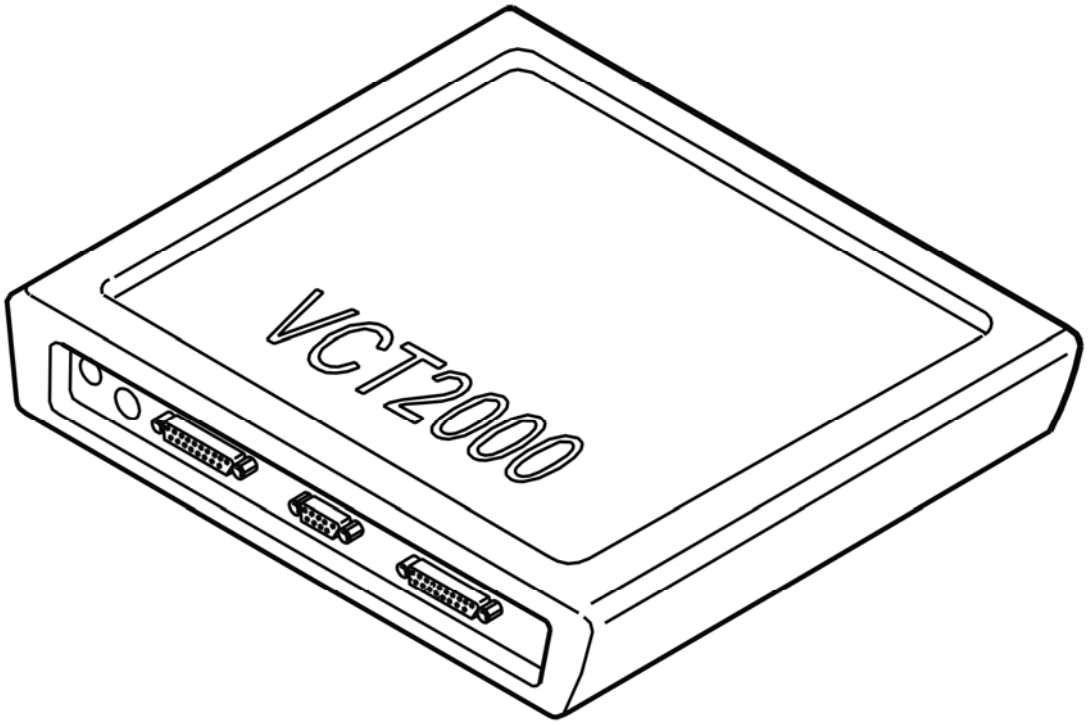

Fig. 178: Identifying VCT2000 Diagnostic Tool Symbol In VIDA
Courtesy of VOLVO CARS CORPORATION

Is the function OK?

- **YES**

  Refer to **VERIFICATION, PART 2**

- **NO**

  Refer to **INFORMATION**

VERIFICATION, PART 2

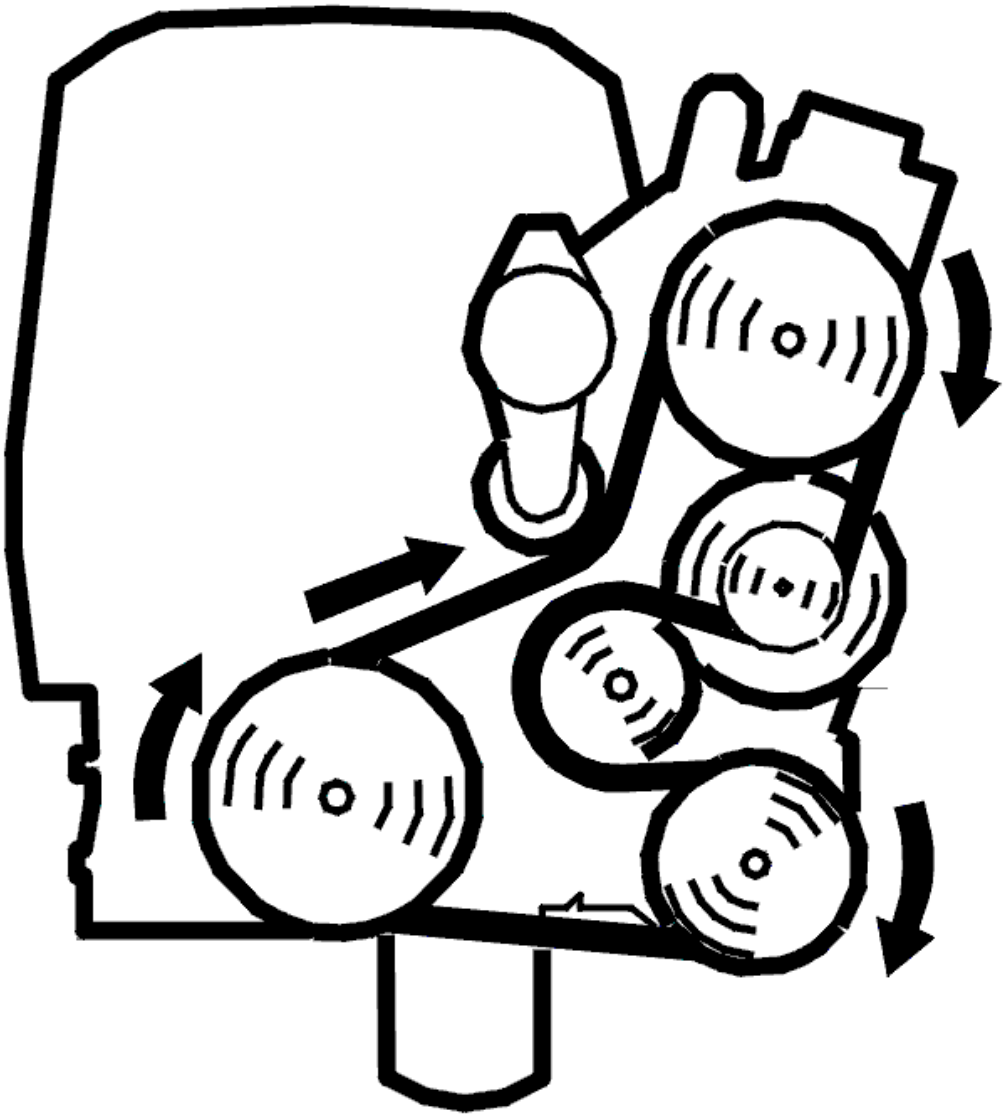

Fig. 179: Belt Routing / Engine Idling - Volvo
Courtesy of VOLVO CARS CORPORATION

- Engine running.
- Check the function. Read off the shift angle of the camshaft and the desired shift angle of the camshaft.

Check that the camshaft shift angle corresponds to the desired value for the camshaft shift angle with an accuracy of approximately 8° CA (camshaft angle). The difference between the values can be read off in the lower digital display.

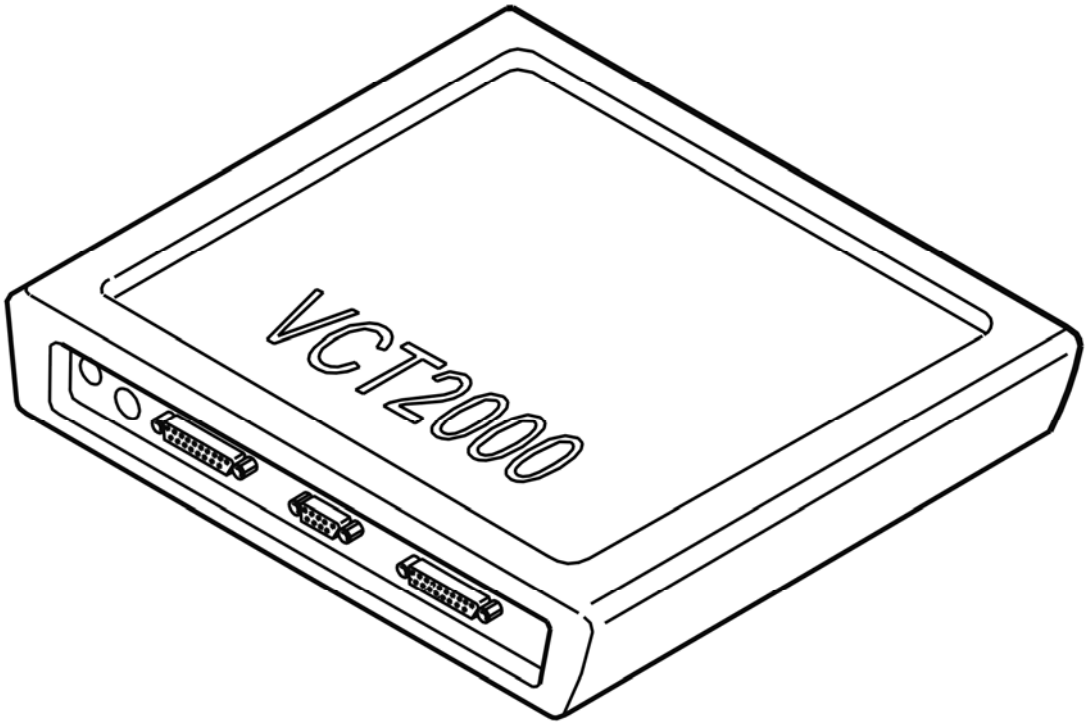

Fig. 180: Identifying VCT2000 Diagnostic Tool Symbol In VIDA
Courtesy of VOLVO CARS CORPORATION

Is the function OK?

- **YES**

  VERIFIED: Troubleshooting has been completed.

- **NO**

  Refer to **INFORMATION**

ECM-P001600: CRANKSHAFT POSITION - CAMSHAFT POSITION CORRELATION - BANK 1 SENSOR A. GENERAL FAILURE INFORMATION. NO SUB TYPE INFORMATION (B6324S5; 2011-2012)

DIAGNOSTIC TROUBLE CODE (DTC) INFORMATION ECM-P001600

see **DIAGNOSTIC TROUBLE CODE (DTC) INFORMATION ECM-P001600**

FAULT-TRACING

see **FAULT-TRACING**

ECM-P001600: CRANKSHAFT POSITION - CAMSHAFT POSITION CORRELATION - BANK 1 SENSOR A. GENERAL FAILURE INFORMATION. NO SUB TYPE INFORMATION (B8444S; 2005-2007)

DIAGNOSTIC TROUBLE CODE (DTC) INFORMATION

Condition

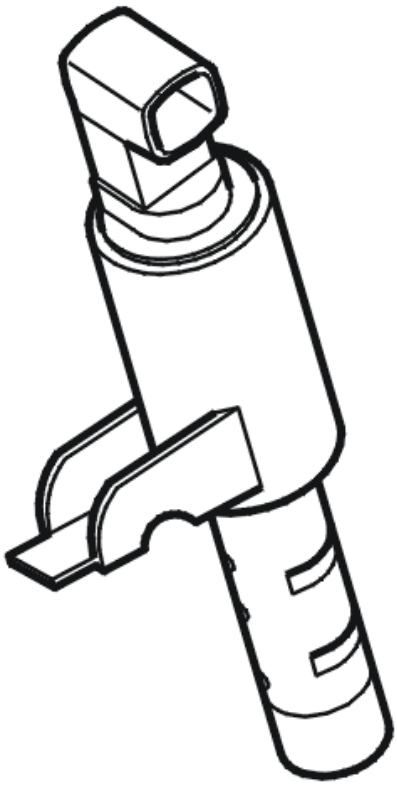

Fig. 181: Identifying Camshaft Reset Valve
Courtesy of VOLVO CARS CORPORATION

The engine control module (ECM) checks that the camshaft is in the correct position (angle) in relation to the position (angle) of the crankshaft using signals from the camshaft sensor and engine speed (RPM) sensor. If the camshaft position does not correspond to the crankshaft position, the control module adjusts the adaption for the camshaft position. The adaption value corresponds to the difference in position between the camshaft and crankshaft when the crankshaft is in its default position. The diagnostic trouble code (DTC) is stored when adaption is greater or less than a certain value.

The diagnostic trouble code (DTC) can be diagnosed when adaption of the camshaft is carried out (adaption occurs during engine braking).

ECM-P001600: Camshaft inlet, bank 1

ECM-P001700: Camshaft exhaust, bank 1

ECM-P001800: Camshaft inlet, bank 2

ECM-P001900: Camshaft exhaust, bank 2

Substitute Value

- Nothing.

Possible Source

- Poor engine oil quality
- Incorrectly adjusted camshafts
- Damaged camshaft reset valve
- Damaged variable valve timing (VVT) unit.
- Damaged (worn) timing chain.

Fault symptom[s]

- Uneven idle.
- Increased emissions.
- The engines cuts out whilst driving.

FAULT TRACING ECM-P001600

CHECKING THE STATUS

HINT: The diagnostic trouble code (DTC) specifies the relevant camshaft.

- ECM-P001600: Camshaft inlet, bank 1.
  - Bank 1 (cylinder row nearest the front): cylinders 1, 3, 5 and 7.
  - Bank 2 (cylinder row furthest to the rear, nearest the passenger compartment): cylinders 2, 4, 6, and 8.
- ECM-P001700: Camshaft exhaust, bank 1.
  - Bank 1 (cylinder row nearest the front): cylinders 1, 3, 5 and 7.
  - Bank 2 (cylinder row furthest to the rear, nearest the passenger compartment): cylinders 2, 4, 6, and 8.
- ECM-P001800: Camshaft inlet, bank 2.

  - Bank 1 (cylinder row nearest the front): cylinders 1, 3, 5 and 7.
  - Bank 2 (cylinder row furthest to the rear, nearest the passenger compartment): cylinders 2, 4, 6, and 8.
- ECM-P001900: Camshaft exhaust, bank 2.
  - Bank 1 (cylinder row nearest the front): cylinders 1, 3, 5 and 7.
  - Bank 2 (cylinder row furthest to the rear, nearest the passenger compartment): cylinders 2, 4, 6, and 8.

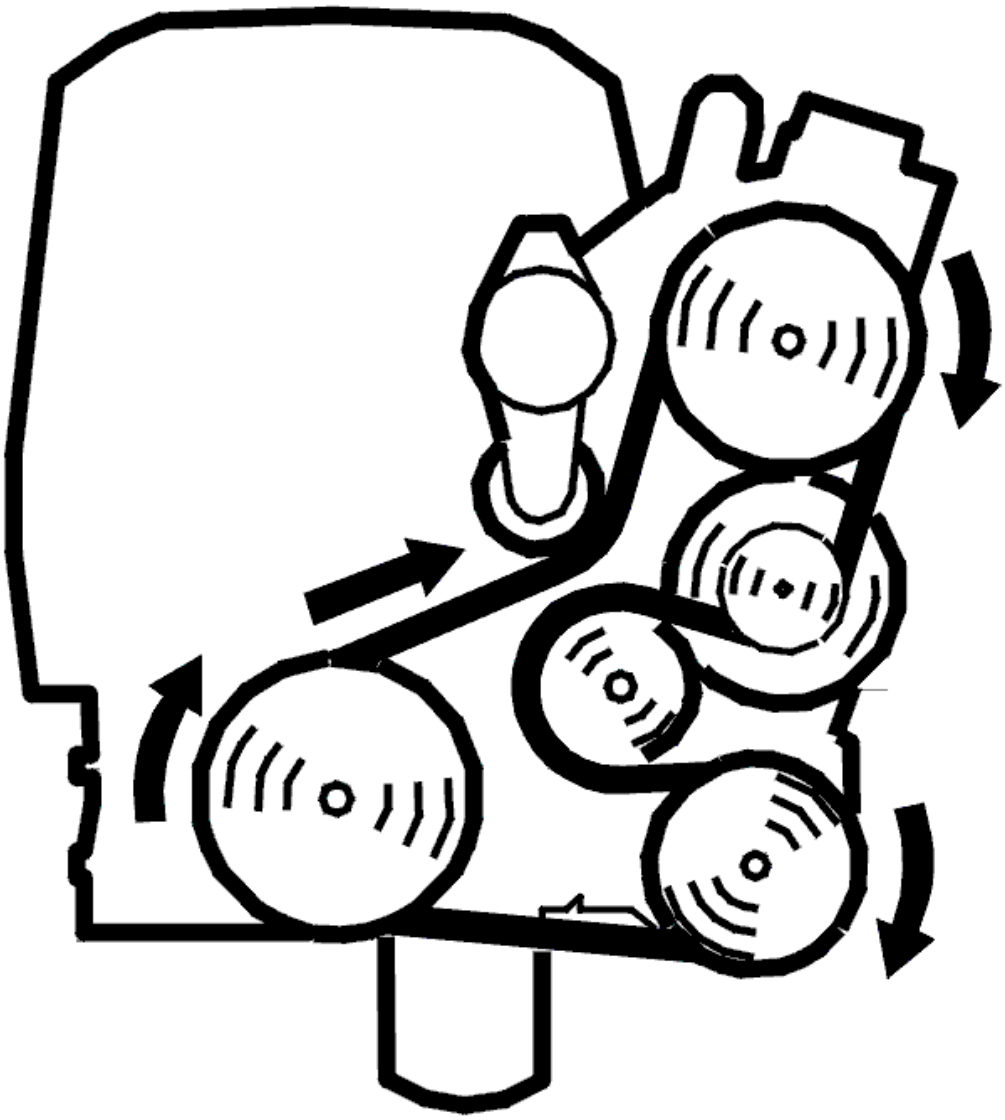

Fig. 182: Belt Routing / Engine Idling - Volvo
Courtesy of VOLVO CARS CORPORATION

- Start the engine.
- Read off the adaption for the camshaft, the camshaft shift angle and desired value for the camshaft shift angle.

Check that the read off values correspond to the guide values below. The difference between the camshaft shift angle and the desired value for camshaft shift angle can be read off from the lower digital display. Note the read off values as a basis for continuing fault-tracing.

Adaption camshaft

- Inlet camshaft: 75° CA (camshaft angle) (+/-8° CA)
- Exhaust camshaft: 120° CA (+/-8° CA)

Camshaft shift angle

- The difference from the desired value of the camshaft shift angle (inlet and exhaust): approximately 8° CA

The fault is permanent if the values are not correct. If the values are correct, this indicates that the fault is intermittent and not presently active.

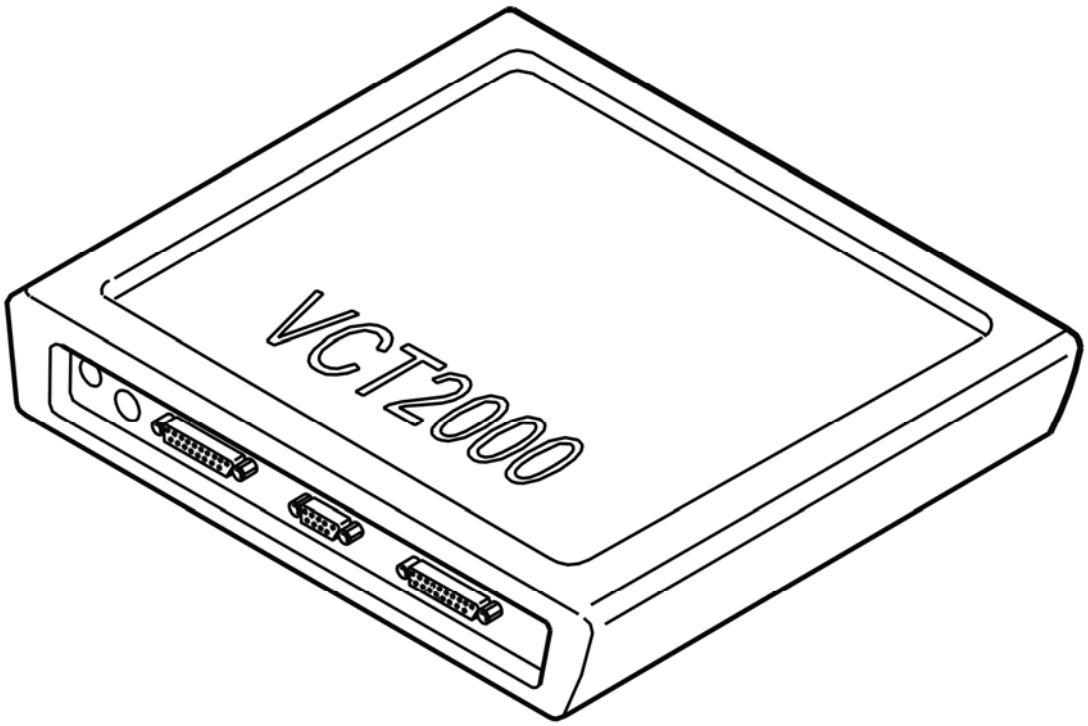

Fig. 183: Identifying VCT2000 Diagnostic Tool Symbol In VIDA
Courtesy of VOLVO CARS CORPORATION

- **Continue**

Refer to **CHECKING COMPONENTS**

CHECKING COMPONENTS

HINT: Incorrect function on the camshaft reset valve is probably the cause of this diagnostic trouble code (DTC) if:

- The adaption value and camshaft shift angle are correct in the previous check (intermittent fault).
- The adaption value is correct but the camshaft shift angle is incorrect in the previous check.

HINT: Contaminants in the engine oil can damage components in the camshaft control which can cause function faults.

Check the engine oil grade. Check especially for contaminants.

Check the default settings of the camshafts.

Remove the camshaft reset valve, check the reset valve and the oil ducts in the cylinder head. Check for contaminants and blockages.

Try a new camshaft reset valve if no fault is found or if the above remedies do not rectify the fault.

HINT: The fault can also be caused by a damaged variable valve timing (VVT) unit.

Remedy as necessary.

Other information

- see **VVT UNIT, RIGHT CYLINDER HEAD**
- see **VVT UNIT, LEFT CYLINDER HEAD**
- see **LOCATION OF COMPONENTS, ENGINE COMPARTMENT**

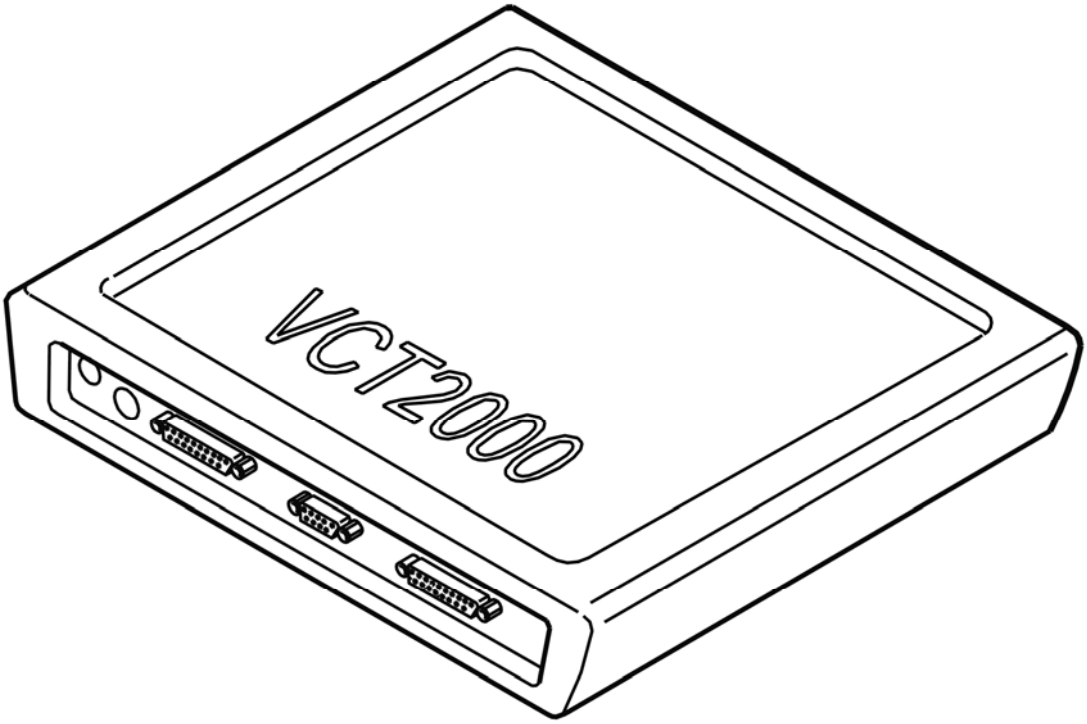

Fig. 184: Identifying VCT2000 Diagnostic Tool Symbol In VIDA
Courtesy of VOLVO CARS CORPORATION

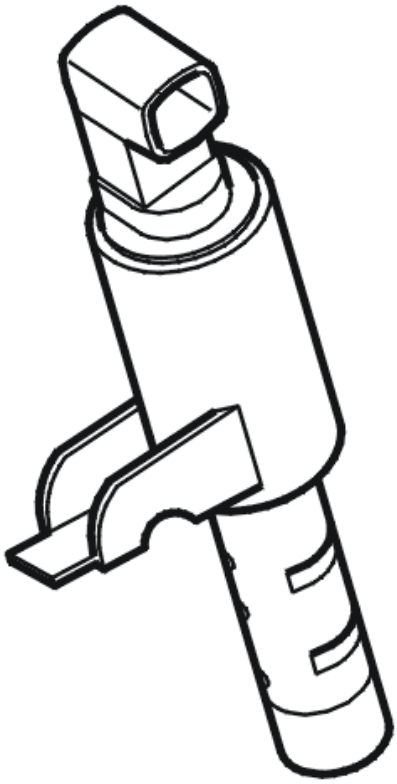

Fig. 185: Identifying Camshaft Reset Valve
Courtesy of VOLVO CARS CORPORATION

- **Continue**

  Refer to **VERIFICATION**

VERIFICATION

VERIFICATION, PART 1

HINT: After carrying out the repair, check that the fault has been remedied.

HINT: In order to verify this diagnostic trouble code (DTC), adaptation of the camshaft must be completed. Adaptation of the camshaft is carried out by the engine control module (ECM) when the engine is at operating temperature, during engine braking (fuel shut-off) above 1500 RPM for at least 10 seconds.

CAUTION: Test driving on the road must be carried out on a road with minimal traffic. Follow the highway code.

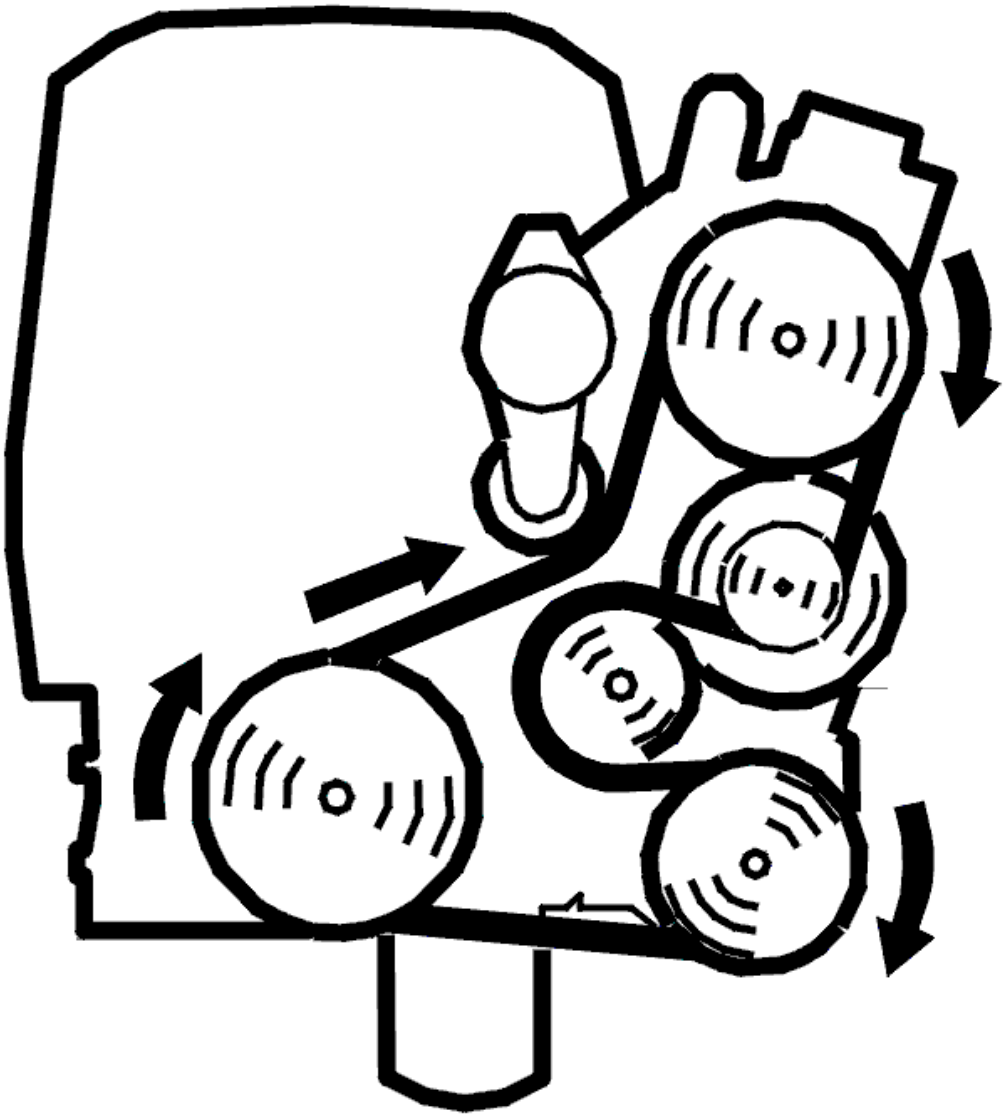

Fig. 186: Belt Routing / Engine Idling - Volvo
Courtesy of VOLVO CARS CORPORATION

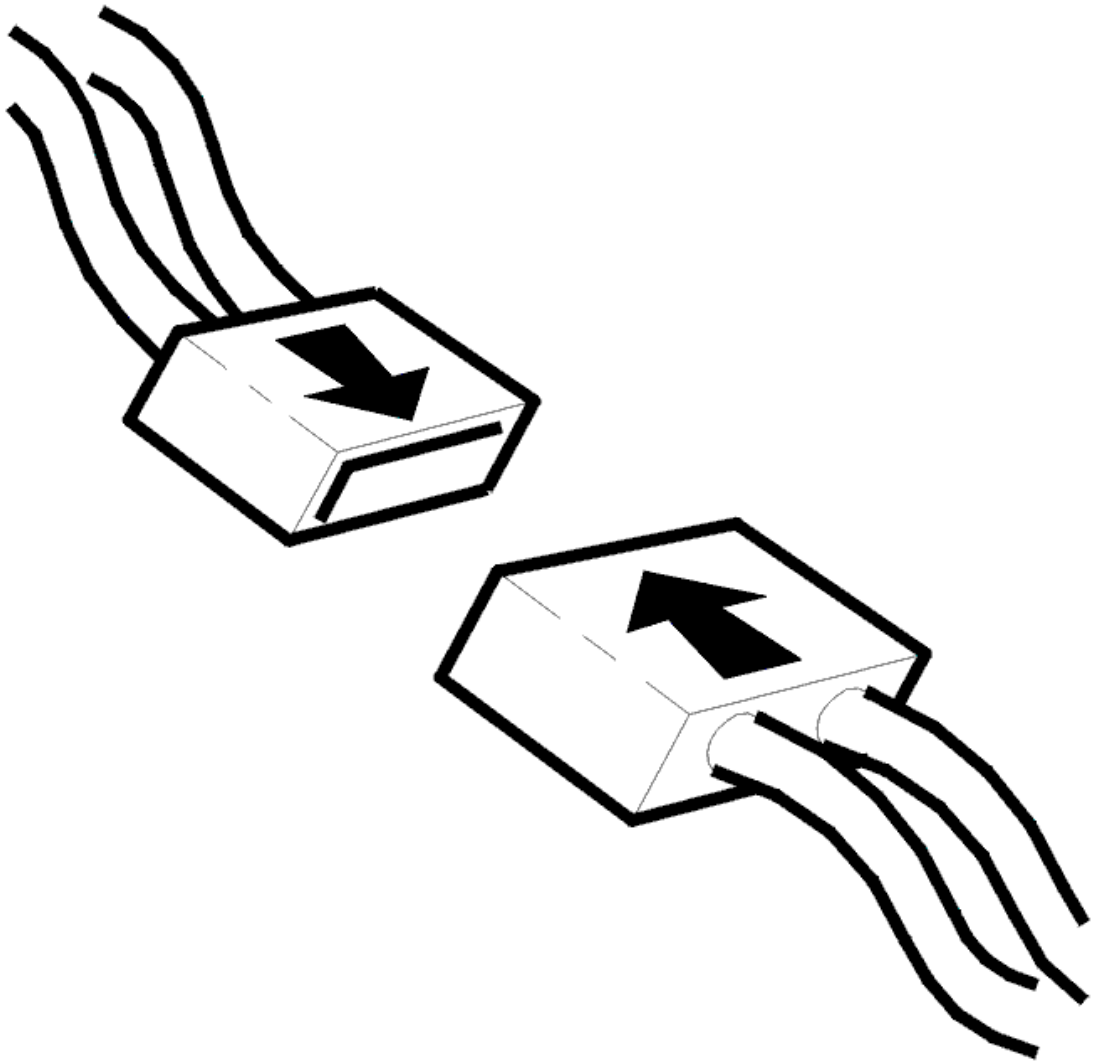

Fig. 187: Connecting Connector
Courtesy of VOLVO CARS CORPORATION

- Ignition off
- Reconnect the connectors, components, etc.
- Start and run the engine to operating temperature.
- Drive the vehicle on the road. Ensure that the conditions for camshaft adaptation are met: engine braking (fuel shut-off) above 1500 RPM for at least 10 seconds. The conditions can be satisfied for example by driving the vehicle with a high engine load (accelerating) up to approximately 90 km/h and then releasing the accelerator pedal for 10 seconds.

NOTE: **In order for the adaptation to be carried out, the accelerator pedal must not be touched during engine braking.**

- Repeat the schedule to ensure that the diagnosis and adaptation are carried out.

- Connect VCT2000 (or appropriate scan tool) to the data link connector **without switching off the engine.**
- Read the diagnostic status and fault status for the diagnostic trouble code by selecting the diagnostic trouble code in the list.

NOTE: If the engine is switched off, the stored fault status will be erased and the test drive will have to be repeated.

Check that the diagnostic status for the diagnostic trouble code (DTC) is "Completed". When the diagnostic status for the diagnostic trouble code (DTC) is "Completed", the engine control module (ECM) has carried out camshaft adaption. If the status is "Not completed" the test drive must be carried out again.

If the function is correct, the fault status must be "No fault found" when the diagnostic is complete.

Check that the value for camshaft adaption is correct when the diagnostic status for the diagnostic trouble code (DTC) is "Completed".

- Inlet camshaft: 75° CA (camshaft angle) (+/-8° CA)
- Exhaust camshaft: 120° CA (+/-8° CA)

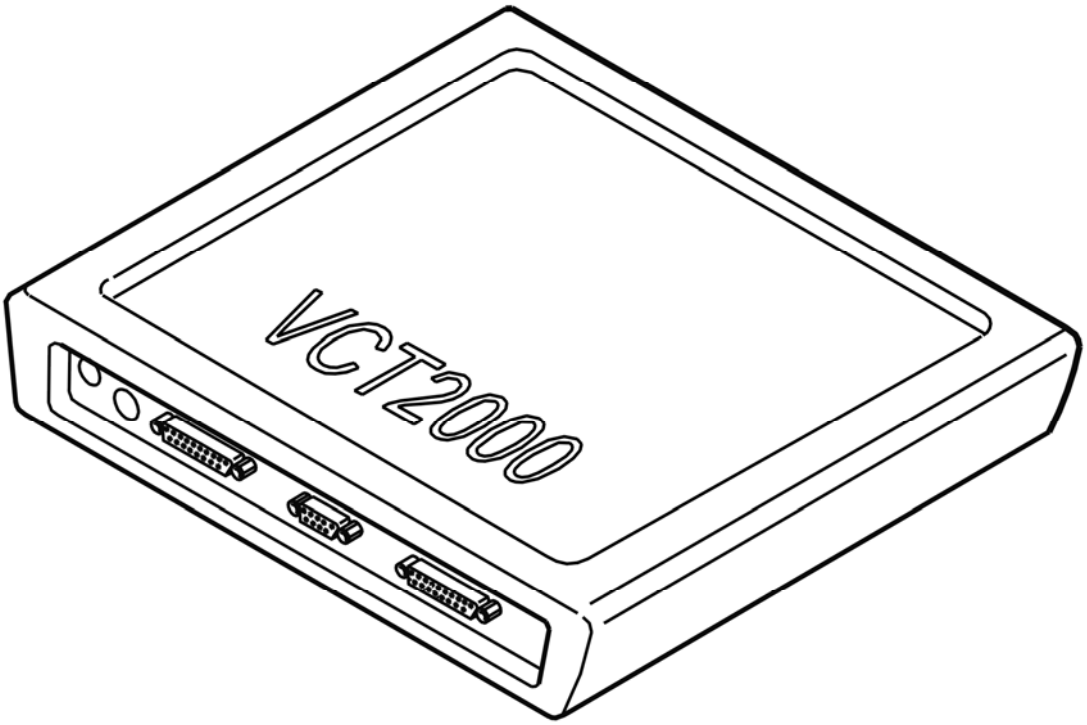

Fig. 188: Identifying VCT2000 Diagnostic Tool Symbol In VIDA
Courtesy of VOLVO CARS CORPORATION

Is the function OK?

- **YES**

  Refer to **VERIFICATION, PART 2**

- **NO**

  Refer to **INFORMATION**

VERIFICATION, PART 2

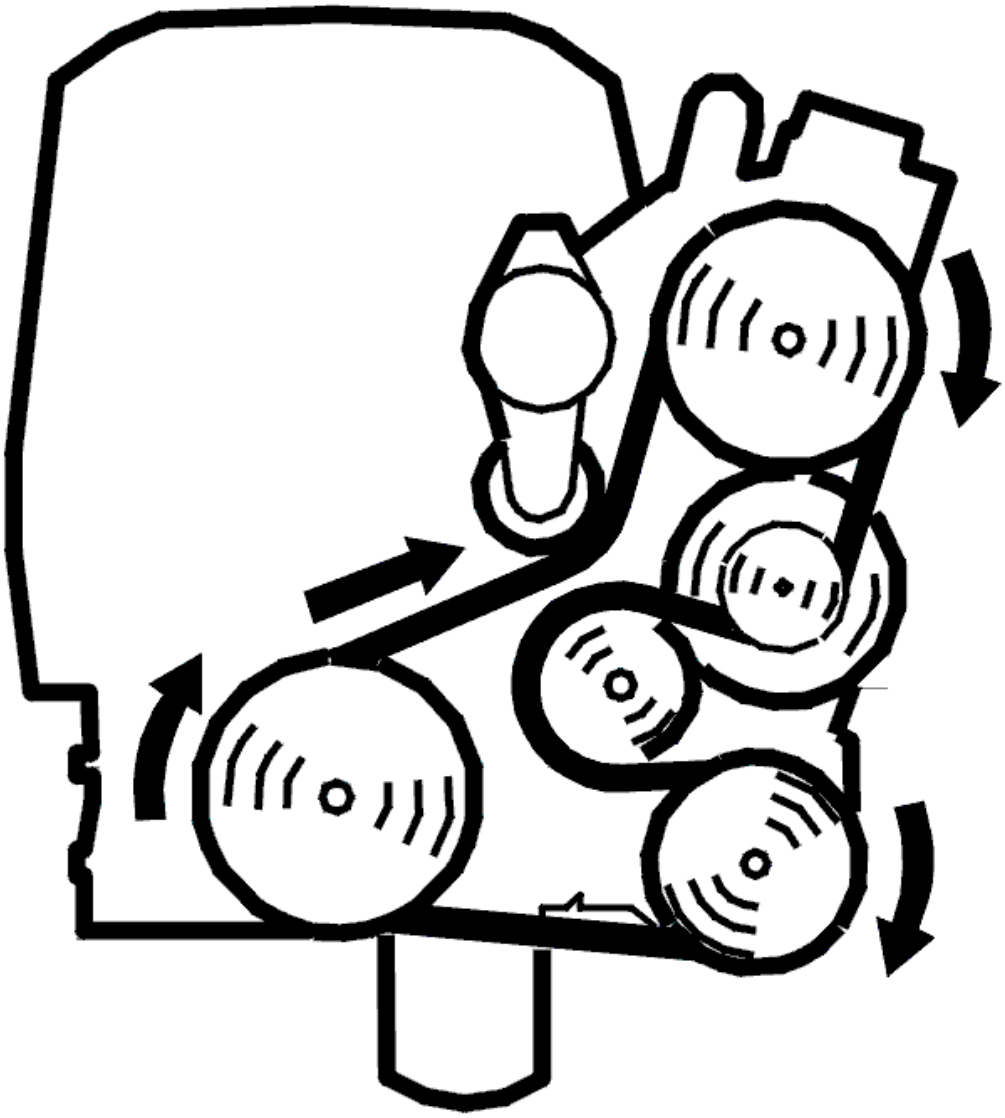

Fig. 189: Belt Routing / Engine Idling - Volvo
Courtesy of VOLVO CARS CORPORATION

- Engine running.

- Check the function. Read off the shift angle of the camshaft and the desired shift angle of the camshaft.

  Check that the camshaft shift angle corresponds to the desired value for the camshaft shift angle with an accuracy of approximately 8° CA (camshaft angle). The difference between the values can be read off in the lower digital display.

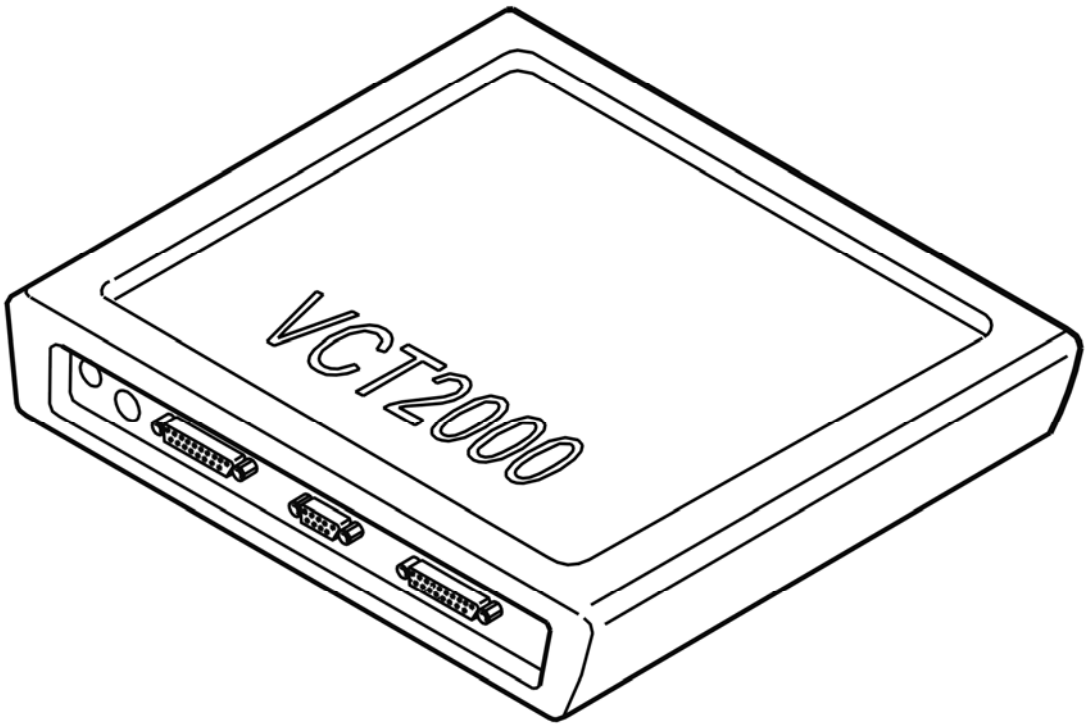

Fig. 190: Identifying VCT2000 Diagnostic Tool Symbol In VIDA
Courtesy of VOLVO CARS CORPORATION

Is the function OK?

- **YES**

  VERIFIED: Troubleshooting has been completed.

- **NO**

  Refer to **INFORMATION**

INFORMATION

FAULT-TRACING INFORMATION

The fault should have been detected and remedied. As this is not the case fault-tracing has failed.

Exit fault-tracing for this diagnostic trouble code (DTC) or make another attempt.

ECM-P001600: CRANKSHAFT POSITION - CAMSHAFT POSITION CORRELATION - BANK 1 SENSOR A. GENERAL FAILURE INFORMATION. NO SUB TYPE INFORMATION (B8444S; 2008-2011)

DIAGNOSTIC TROUBLE CODE (DTC) INFORMATION

Condition

The engine control module (ECM) checks that the camshaft is in the correct position in relation to the position of the crankshaft. If the camshaft position does not match the crankshaft position, the control module will adjust the adaptation for the camshaft position. The adaptation value corresponds to the difference between the camshaft and crankshaft.

The diagnostic trouble code (DTC) is stored if the control module detects that:

- The fuel trim value change is greater than 16 degrees.

The control module's test for the diagnostic trouble code (DTC) starts in the event of:

- Hot engine.
- During engine start-up.

NOTE: The control module can only detect the fault once the test has been started and the diagnostic trouble code (DTC) is stored when the conditions are met.

Substitute Value

- The control module assumes a fixed value for fuel trim.

Possible Source

- Incorrectly adjusted camshafts.
- Damaged VVT-unit.

Fault symptom[s]

- Uneven idle
- Engine misfires
- Engine is difficult to start
- Malfunction indicator light (MIL), on

FAULT-TRACING

CHECKING THE STATUS

HINT: Sensor A covers the intake camshaft. Sensor B covers the exhaust camshaft.

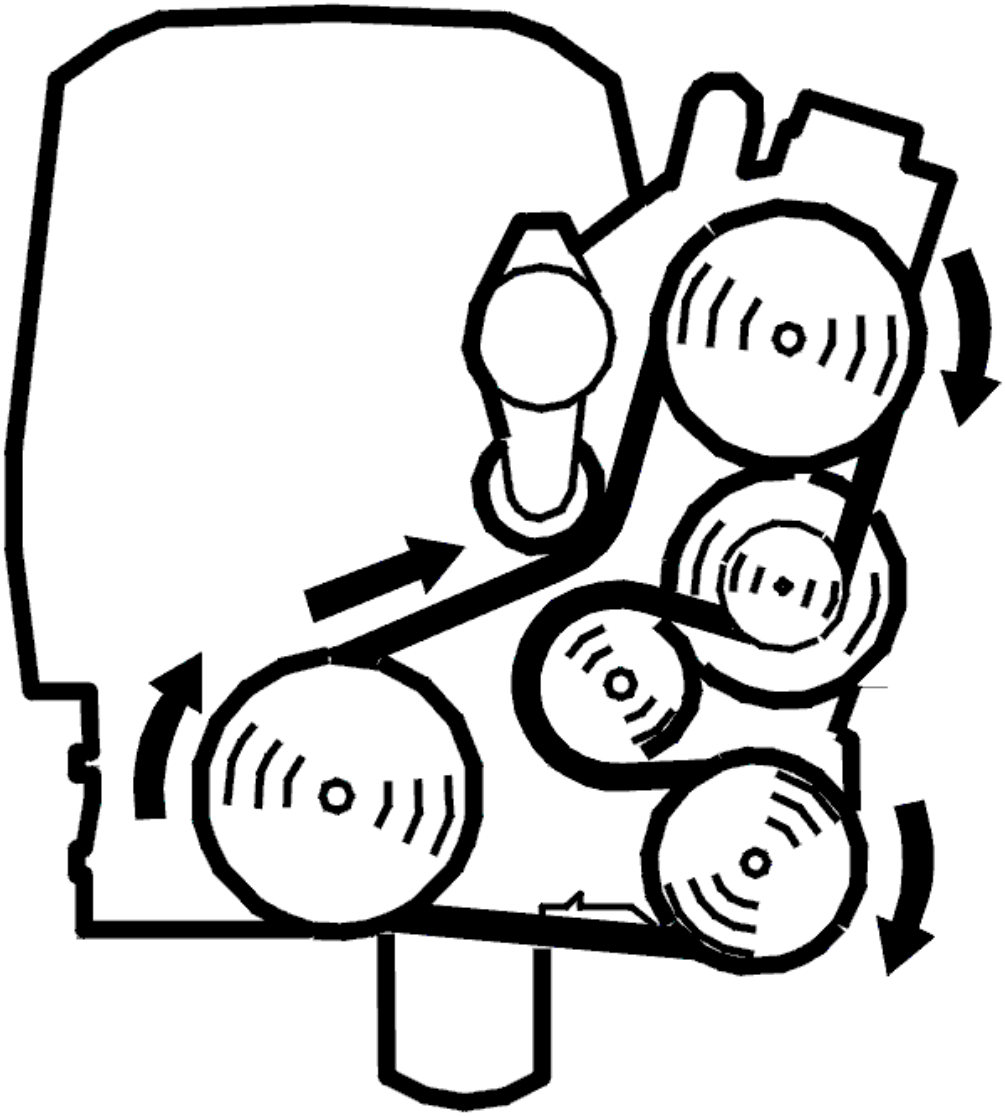

Fig. 191: Belt Routing / Engine Idling - Volvo
Courtesy of VOLVO CARS CORPORATION

- Start the engine.
- Read off the adaption for the camshaft, the camshaft shift angle and desired value for the camshaft shift angle.

  Check that the read off values correspond to the guide values below. The difference between the camshaft shift angle and the desired value for camshaft shift angle can be read off from the lower digital display. Note the read off values as a basis for continuing fault-tracing.

  Adaption camshaft

- Inlet camshaft: 75° CA (camshaft angle) (+/-8° CA)
- Exhaust camshaft: 120° CA (+/-8° CA)

Camshaft shift angle

- The difference from the desired value of the camshaft shift angle (inlet and exhaust): approximately 8° CA

The fault is permanent if the values are not correct. If the values are correct, this indicates that the fault is intermittent and not presently active.

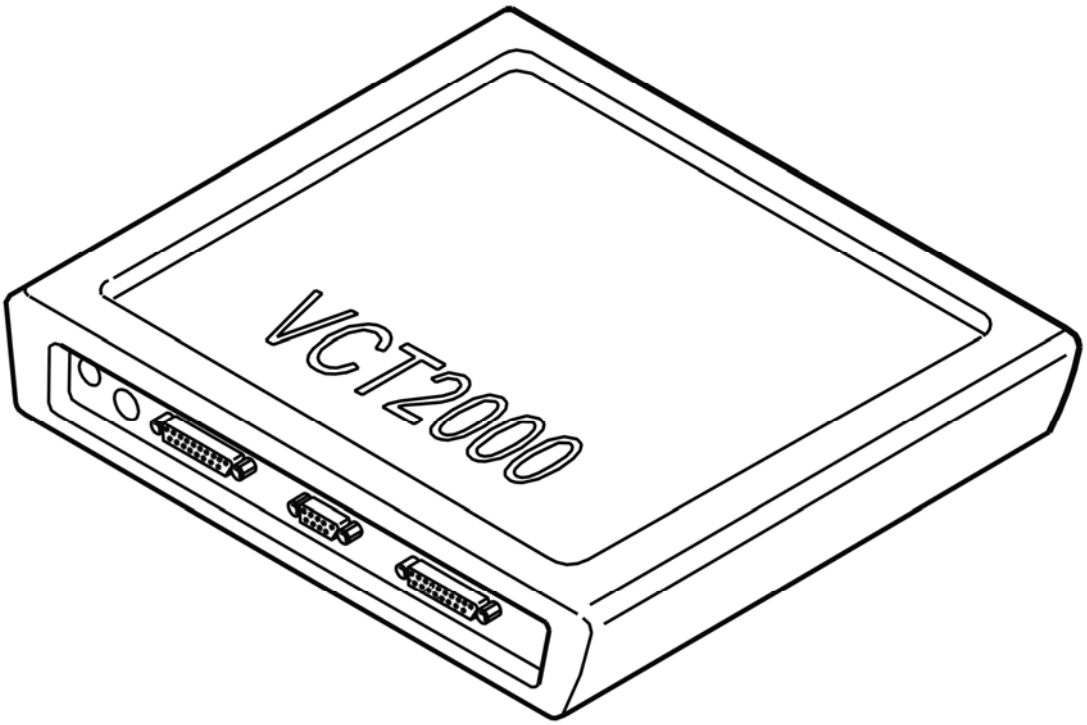

Fig. 192: Identifying VCT2000 Diagnostic Tool Symbol In VIDA
Courtesy of VOLVO CARS CORPORATION

- **Continue**

  Refer to **CHECKING COMPONENTS**

CHECKING COMPONENTS

HINT: Incorrect function on the camshaft reset valve is probably the cause of this diagnostic trouble code (DTC) if:

- The adaption value and camshaft shift angle are correct in the previous check (intermittent fault).
- The adaption value is correct but the camshaft shift angle is incorrect in the previous check.

HINT: Contaminants in the engine oil can damage components in the camshaft control which can cause function faults.

Check the engine oil grade. Check especially for contaminants.

Remove the camshaft reset valve, check the reset valve and the oil ducts in the cylinder head. Check for contaminants and blockages.

Try a new camshaft reset valve if no fault is found or if the above remedies do not rectify the fault.

HINT: The fault can also be caused by a damaged variable valve timing (VVT) unit.

Remedy as necessary.

Other information

- see **VVT UNIT, RIGHT CYLINDER HEAD**
- see **VVT UNIT, LEFT CYLINDER HEAD**
- see **LOCATION OF COMPONENTS, ENGINE COMPARTMENT**

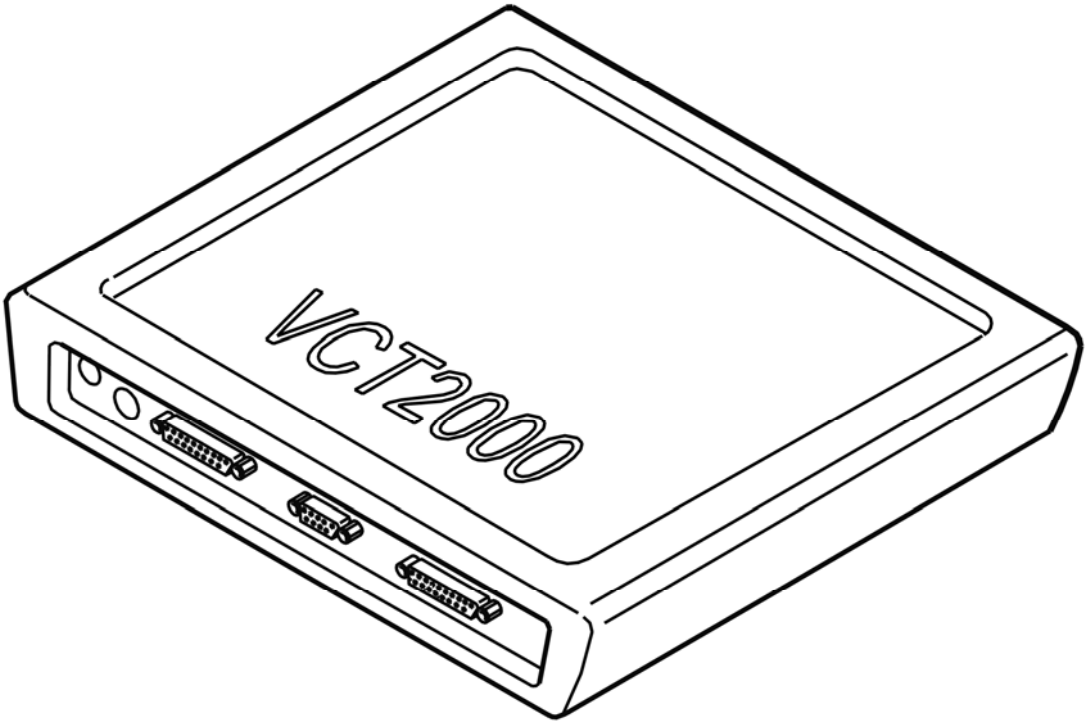

Fig. 193: Identifying VCT2000 Diagnostic Tool Symbol In VIDA
Courtesy of VOLVO CARS CORPORATION

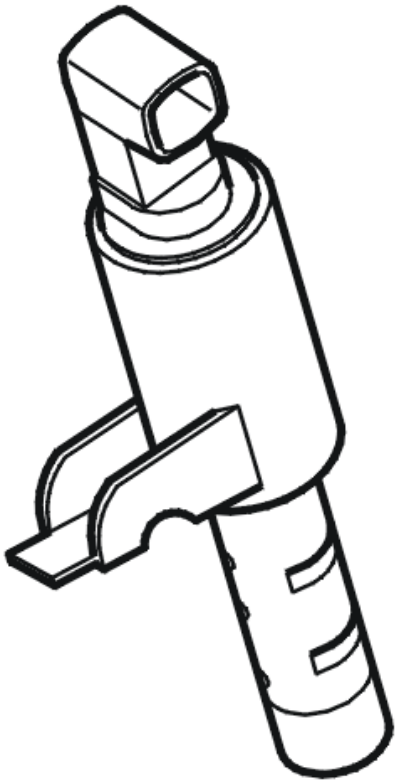

Fig. 194: Identifying Camshaft Reset Valve
Courtesy of VOLVO CARS CORPORATION

- **Continue**

  Refer to **VERIFICATION**

VERIFICATION

VERIFICATION, PART 1

HINT: After carrying out the repair, check that the fault has been remedied.

HINT: In order to verify this diagnostic trouble code (DTC), adaptation of the camshaft must be completed. Adaptation of the camshaft is carried out by the engine control module (ECM) when the engine is at operating temperature, during engine braking (fuel shut-off) above 1500 RPM for at least 10 seconds.

CAUTION: Test driving on the road must be carried out on a road with minimal traffic. Follow the highway code.

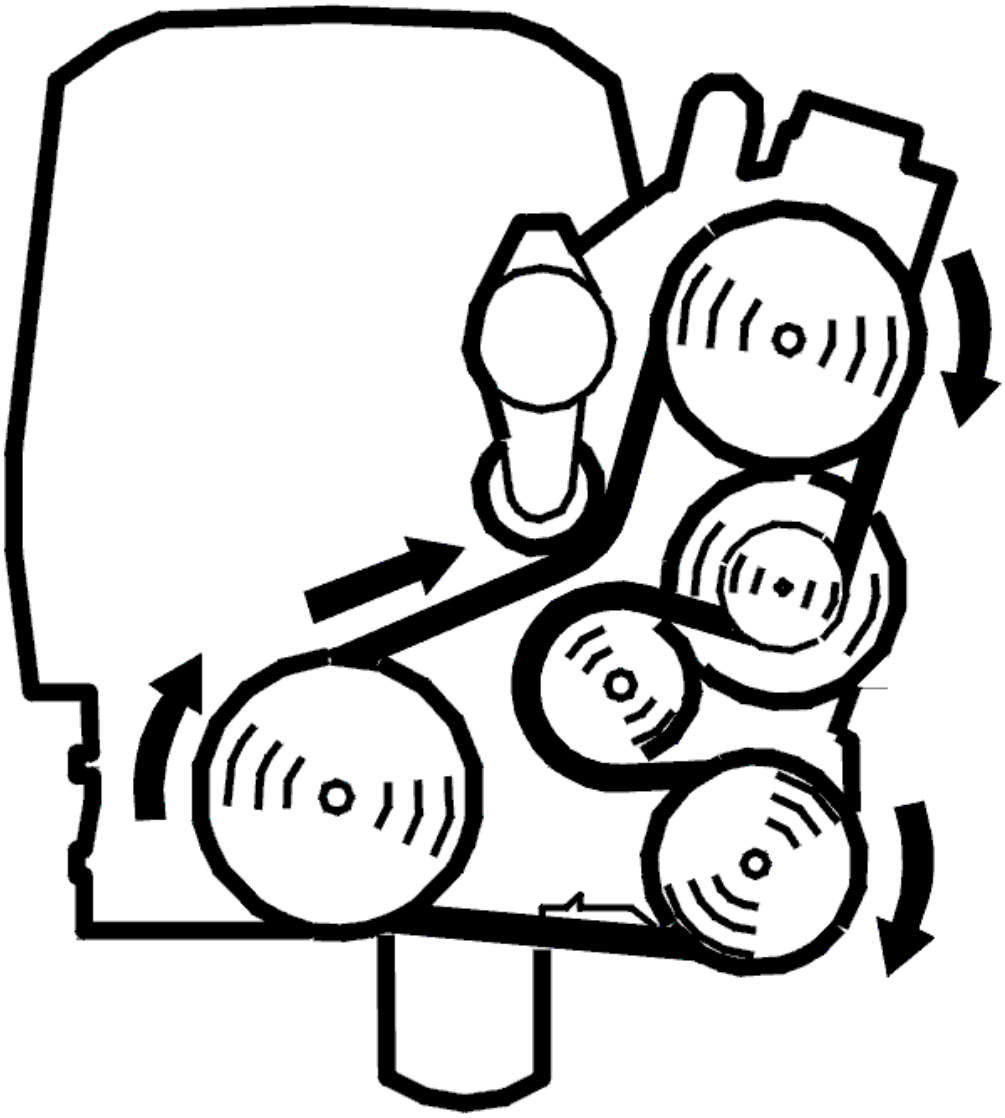

Fig. 195: Belt Routing / Engine Idling - Volvo
Courtesy of VOLVO CARS CORPORATION

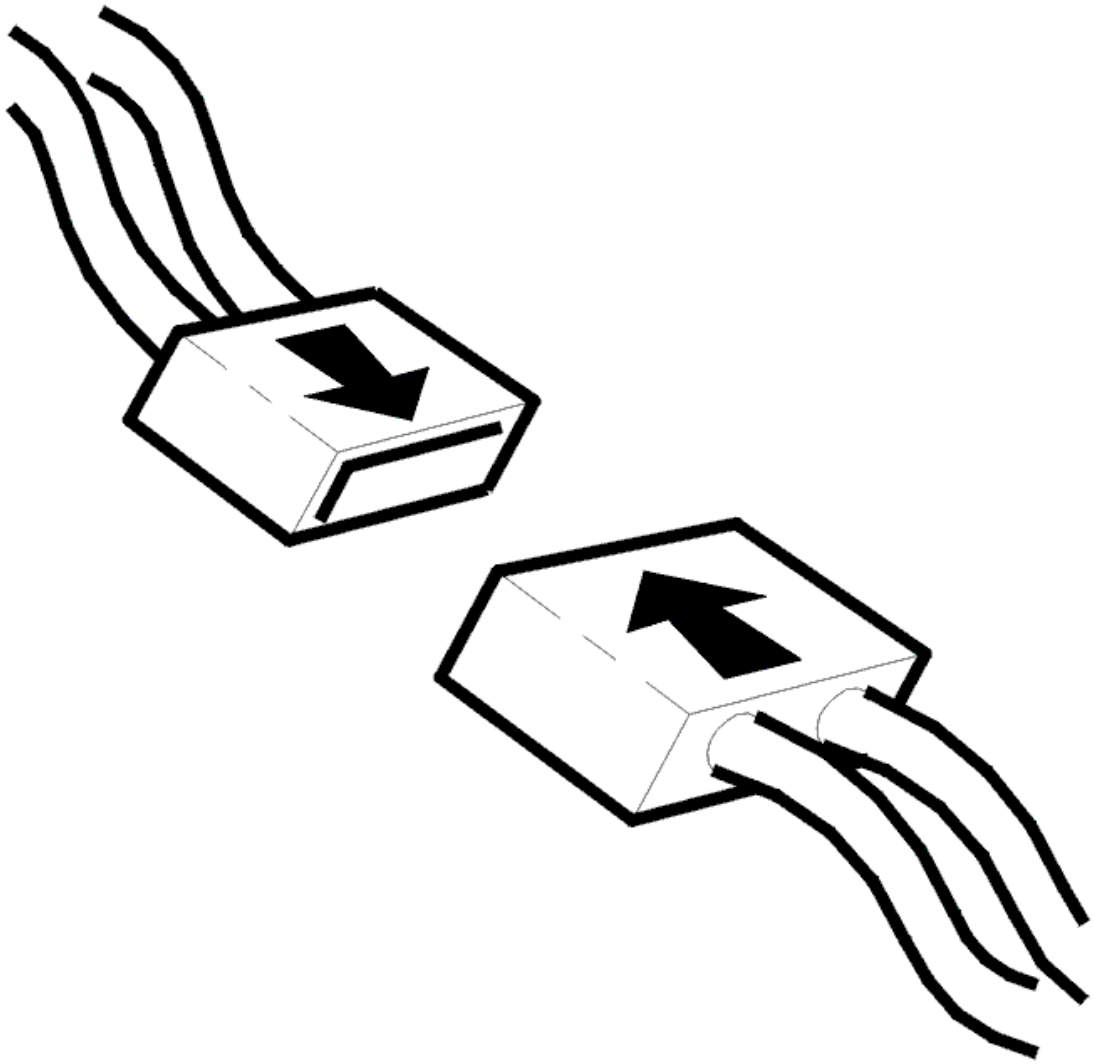

Fig. 196: Connecting Connector
Courtesy of VOLVO CARS CORPORATION

- Ignition off
- Reconnect the connectors, components, etc.
- Start and run the engine to operating temperature.
- Drive the vehicle on the road. Ensure that the conditions for camshaft adaptation are met: engine braking (fuel shut-off) above 1500 RPM for at least 10 seconds. The conditions can be satisfied for example by driving the vehicle with a high engine load (accelerating) up to approximately 90 km/h and then releasing the accelerator pedal for 10 seconds.

NOTE: **In order for the adaptation to be carried out, the accelerator pedal must not be touched during engine braking.**

- Repeat the schedule to ensure that the diagnosis and adaptation are carried out.

- Connect VCT2000 (or appropriate scan tool) to the data link connector **without switching off the engine.**
- Read the diagnostic status and fault status for the diagnostic trouble code by selecting the diagnostic trouble code in the list.

NOTE: If the engine is switched off, the stored fault status will be erased and the test drive will have to be repeated.

Check that the diagnostic status for the diagnostic trouble code (DTC) is "Completed". When the diagnostic status for the diagnostic trouble code (DTC) is "Completed", the engine control module (ECM) has carried out camshaft adaption. If the status is "Not completed" the test drive must be carried out again.

If the function is correct, the fault status must be "No fault found" when the diagnostic is complete.

Check that the value for camshaft adaption is correct when the diagnostic status for the diagnostic trouble code (DTC) is "Completed".

- Inlet camshaft: 75° CA (camshaft angle) (+/-8° CA)
- Exhaust camshaft: 120° CA (+/-8° CA)

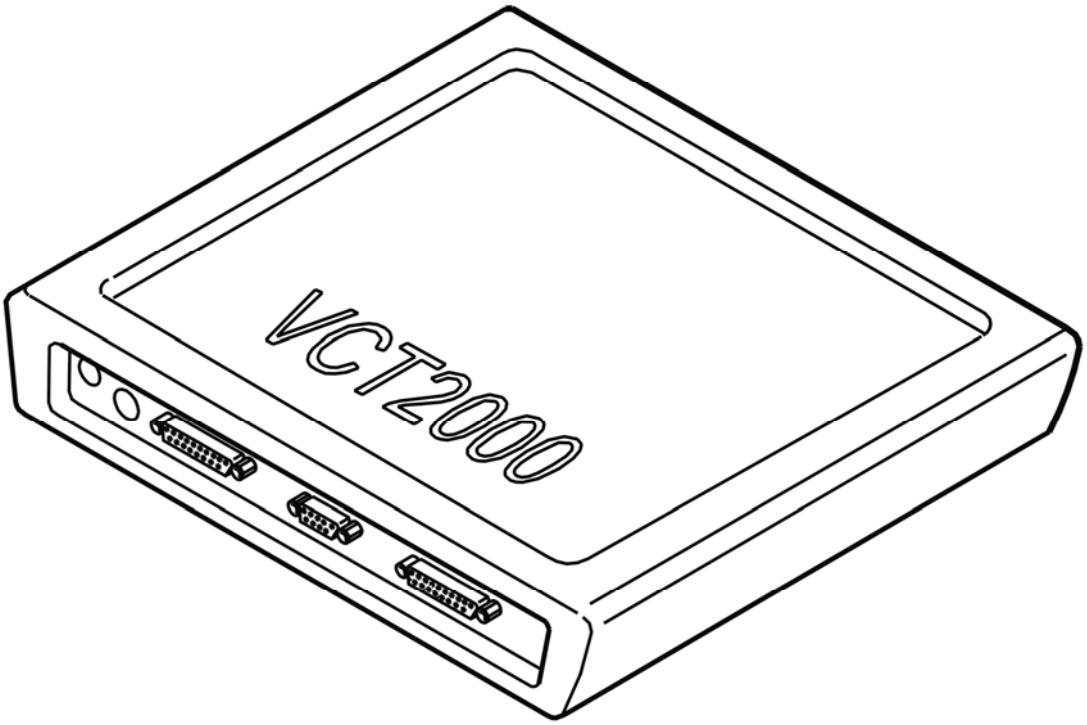

Fig. 197: Identifying VCT2000 Diagnostic Tool Symbol In VIDA
Courtesy of VOLVO CARS CORPORATION

Is the function OK?

- **YES**

  Refer to **VERIFICATION, PART 2**

- **NO**

  Refer to **INFORMATION**

VERIFICATION, PART 2

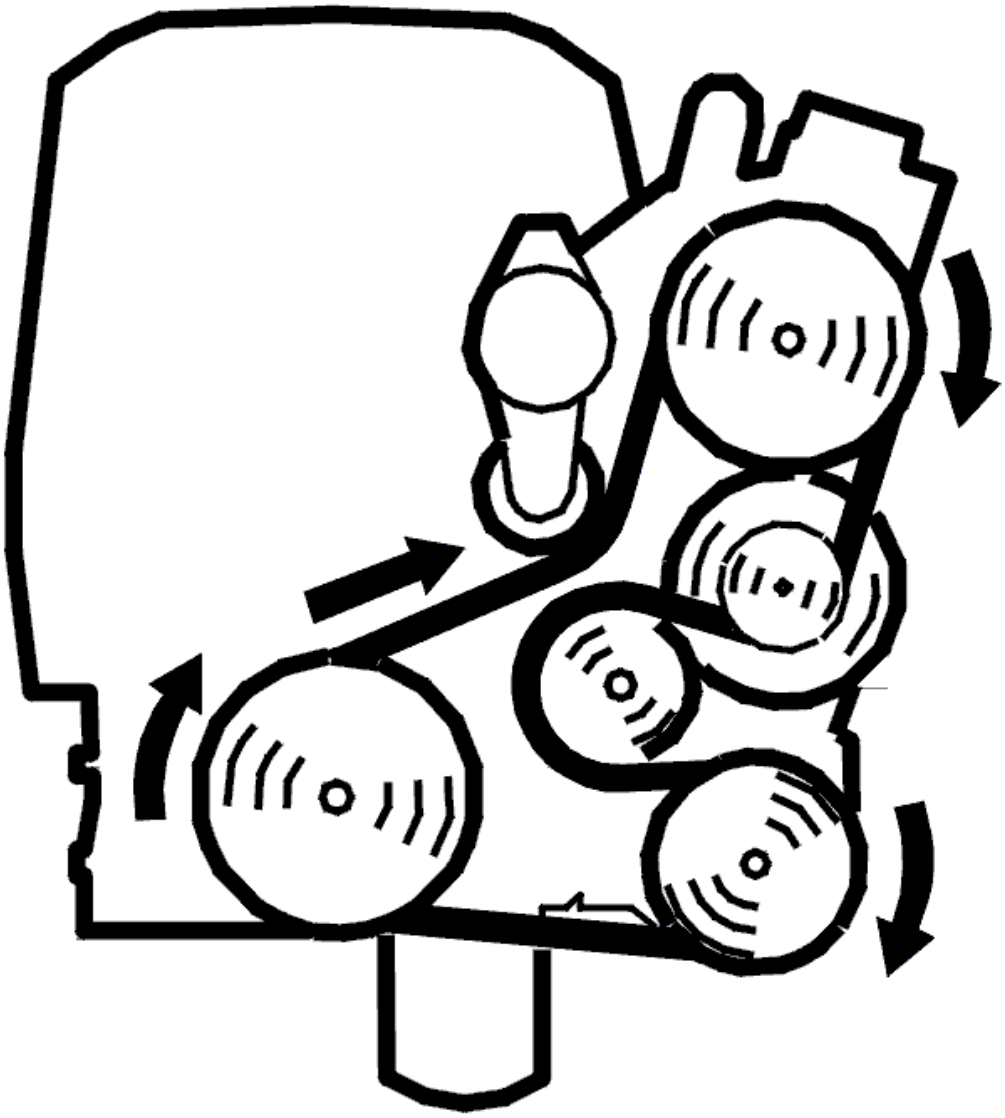

Fig. 198: Belt Routing / Engine Idling - Volvo
Courtesy of VOLVO CARS CORPORATION

- Engine running.

- Check the function. Read off the shift angle of the camshaft and the desired shift angle of the camshaft.

  Check that the camshaft shift angle corresponds to the desired value for the camshaft shift angle with an accuracy of approximately 8° CA (camshaft angle). The difference between the values can be read off in the lower digital display.

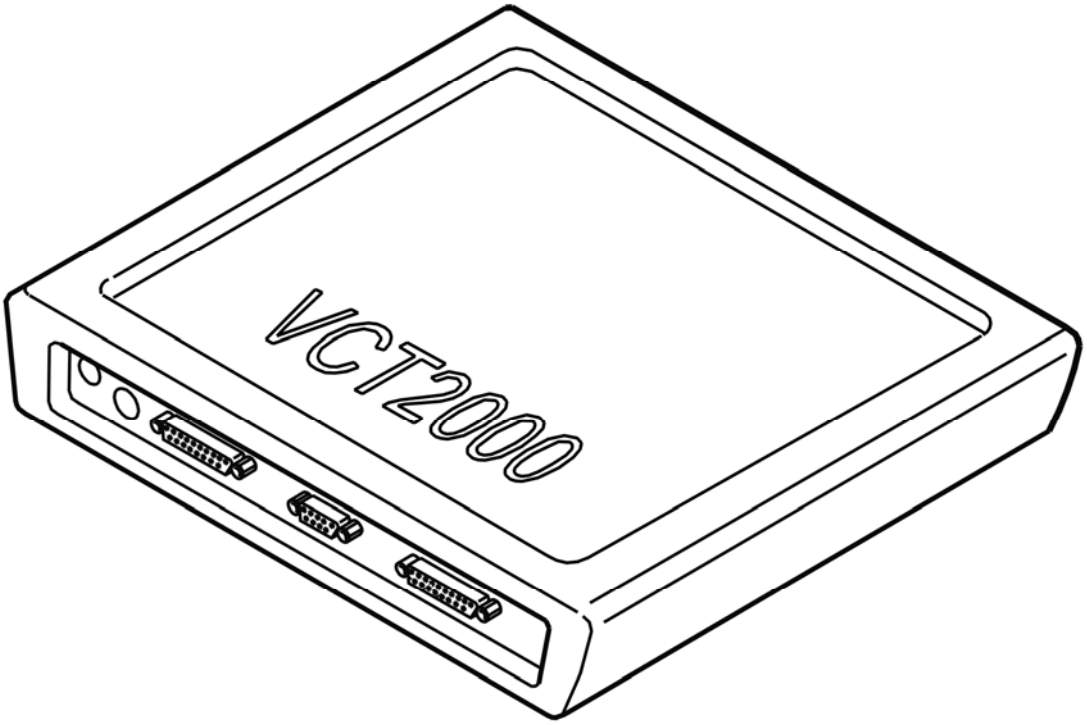

Fig. 199: Identifying VCT2000 Diagnostic Tool Symbol In VIDA
Courtesy of VOLVO CARS CORPORATION

Is the function OK?

- **YES**

  VERIFIED: Troubleshooting has been completed.

- **NO**

  Refer to **INFORMATION**

INFORMATION

FAULT-TRACING INFORMATION

The fault should have been detected and remedied. As this is not the case fault-tracing has failed.

Exit fault-tracing for this diagnostic trouble code (DTC) or make another attempt.

ECM-P001621: CRANKSHAFT POSITION - CAMSHAFT POSITION CORRELATION - BANK 1 SENSOR A. GENERAL SIGNAL FAILURES. SIGNAL TOO LOW (B6324S5; 2011-2012)

DIAGNOSTIC TROUBLE CODE (DTC) INFORMATION

Condition

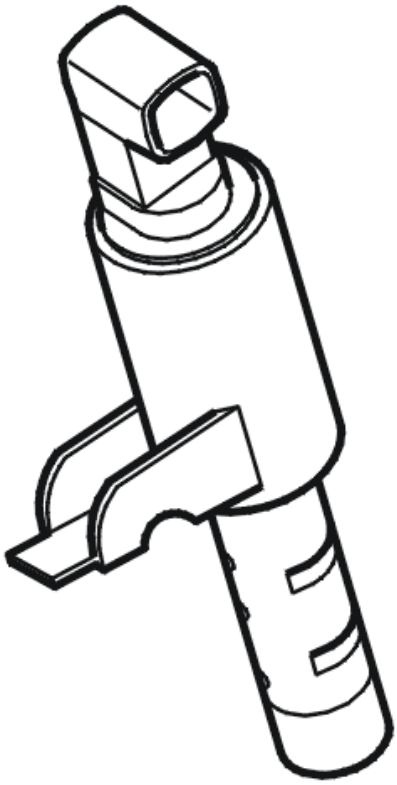

Fig. 200: Identifying Camshaft Reset Valve
Courtesy of VOLVO CARS CORPORATION

The engine control module (ECM) checks that the camshaft is in the correct position (angle) in relation to the position (angle) of the crankshaft using signals from the camshaft sensor and engine speed (RPM) sensor. If the camshaft position does not correspond to the crankshaft position, the control module adjusts the adaption for the camshaft position. The adaption value corresponds to the difference in position between the camshaft and crankshaft when the crankshaft is in its default position. The diagnostic trouble code (DTC) is stored when adaption is greater or less than a certain value.

The diagnostic trouble code (DTC) can be diagnosed when adaption of the camshaft is carried out (adaption occurs during engine braking).

Substitute Value

- Nothing.

Possible Source

- Poor engine oil quality
- Incorrectly adjusted camshafts
- Damaged camshaft reset valve
- Damaged variable valve timing (VVT) unit.
- Damaged (worn) timing chain.

Fault symptom[s]

- Driving/Poor performance/lacks power/At take off
- Driving/Poor performance/lacks power
- Starting/Engine does not start/Engine turns
- Starting/Engine hard to start/cranks slowly/Unsure when/at all times
- Idling/Uneven idle
- Driving/Hesitates/surges/Unsure when/at all times
- Driving/Hesitates/surges/During acceleration
- Driving/Hesitates/surges/During deceleration
- Driving/Engine stalls/Unsure when/at all times
- Driving/Hesitates/surges/At steady speed
- Warning lights and chimes/Malfunction Indicator Light ("Check engine" light) indication/no indication

FAULT-TRACING

see **FAULT-TRACING**

ECM-P001692: CRANKSHAFT POSITION - CAMSHAFT POSITION CORRELATION - BANK 1 SENSOR A. COMPONENT FAILURES. PERFORMANCE OR INCORRECT OPERATION (B6324S5; 2011-2012)

DIAGNOSTIC TROUBLE CODE (DTC) INFORMATION ECM-P001692

Condition

The engine control module (ECM) checks that the camshaft is in the correct position in relation to the position of the crankshaft. If the camshaft position does not match the crankshaft position, the control module will adjust the adaptation for the camshaft position. The adaptation value corresponds to the difference between the camshaft and crankshaft.

The diagnostic trouble code (DTC) is stored if the control module detects that:

- Change in the adaptation value is larger than what corresponds to a tooth.

The control module's test for the diagnostic trouble code (DTC) starts in the event of:

- Hot engine.
- During engine start-up.

NOTE: The control module can only detect the fault once the test has been started and the diagnostic trouble code (DTC) is stored when the conditions are met.

Substitute Value

- None.

Possible Source

- Incorrectly adjusted camshafts.
- Damaged VVT-unit.
- Over cogging in the camshaft transmission.

Fault symptom[s]

- Driving/Poor performance/lacks power/At take off
- Starting/Engine does not start/Engine turns
- Starting/Engine hard to start/cranks slowly/Unsure when/at all times
- Idling/Uneven idle
- Driving/Poor performance/lacks power
- Driving/Hesitates/surges/Unsure when/at all times
- Driving/Hesitates/surges/During acceleration
- Driving/Hesitates/surges/During deceleration
- Driving/Engine stalls/Unsure when/at all times
- Driving/Hesitates/surges/At steady speed
- Warning lights and chimes/Malfunction Indicator Light ("Check engine" light) indication/no indication

FAULT-TRACING

see **FAULT-TRACING**

ECM-P001700: CRANKSHAFT POSITION - CAMSHAFT POSITION CORRELATION - BANK 1 SENSOR B. GENERAL FAILURE INFORMATION. NO SUB TYPE INFORMATION (B8444S; 2008-2011)

DIAGNOSTIC TROUBLE CODE (DTC) INFORMATION

see **DIAGNOSTIC TROUBLE CODE (DTC) INFORMATION**

FAULT-TRACING

CHECKING THE STATUS

HINT: Sensor A covers the intake camshaft. Sensor B covers the exhaust camshaft.

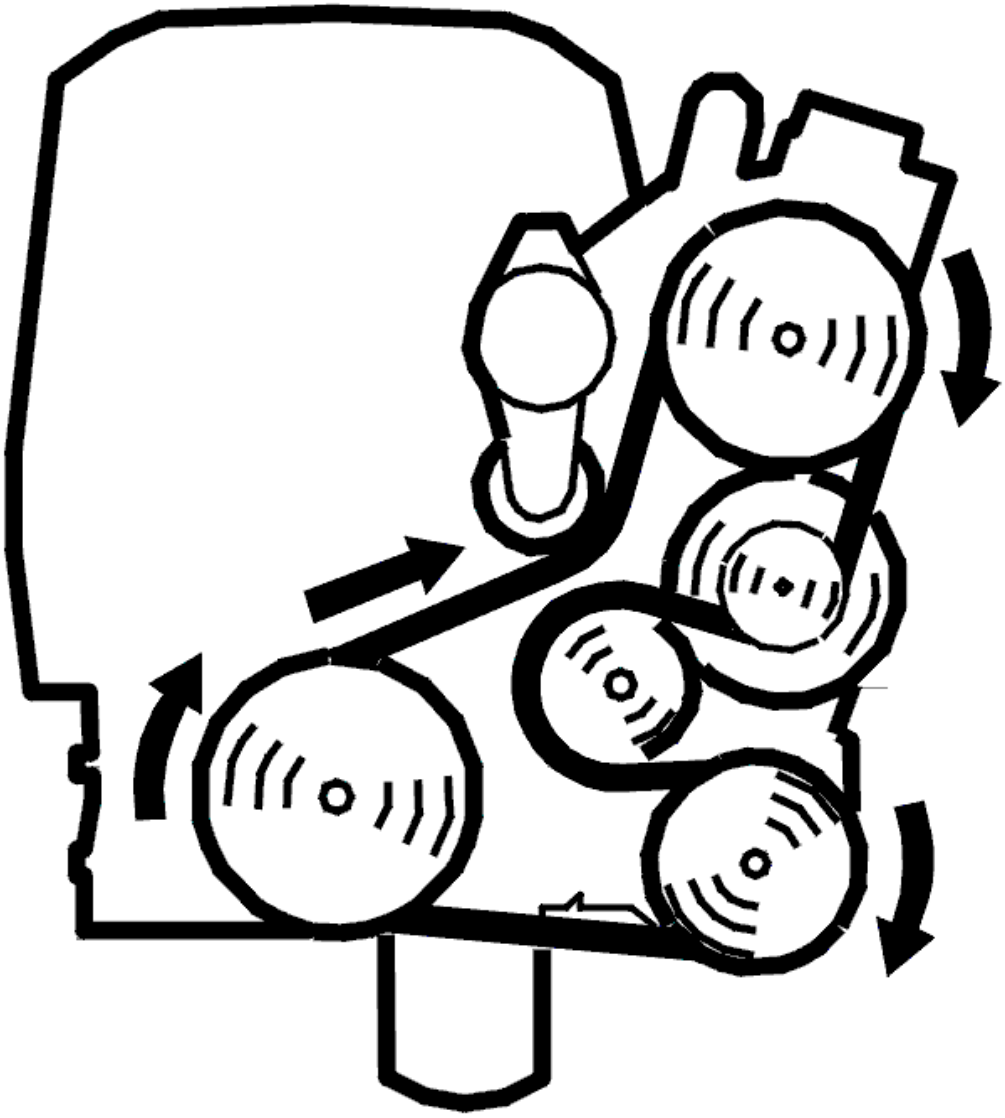

Fig. 201: Belt Routing / Engine Idling - Volvo
Courtesy of VOLVO CARS CORPORATION

- Start the engine.
- Read off the adaption for the camshaft, the camshaft shift angle and desired value for the camshaft shift angle.

Check that the read off values correspond to the guide values below. The difference between the camshaft shift angle and the desired value for camshaft shift angle can be read off from the lower digital display. Note the read off values as a basis for continuing fault-tracing.

Adaption camshaft

- Inlet camshaft: 75° CA (camshaft angle) (+/-8° CA)
- Exhaust camshaft: 120° CA (+/-8° CA)

Camshaft shift angle

- The difference from the desired value of the camshaft shift angle (inlet and exhaust): approximately 8° CA

The fault is permanent if the values are not correct. If the values are correct, this indicates that the fault is intermittent and not presently active.

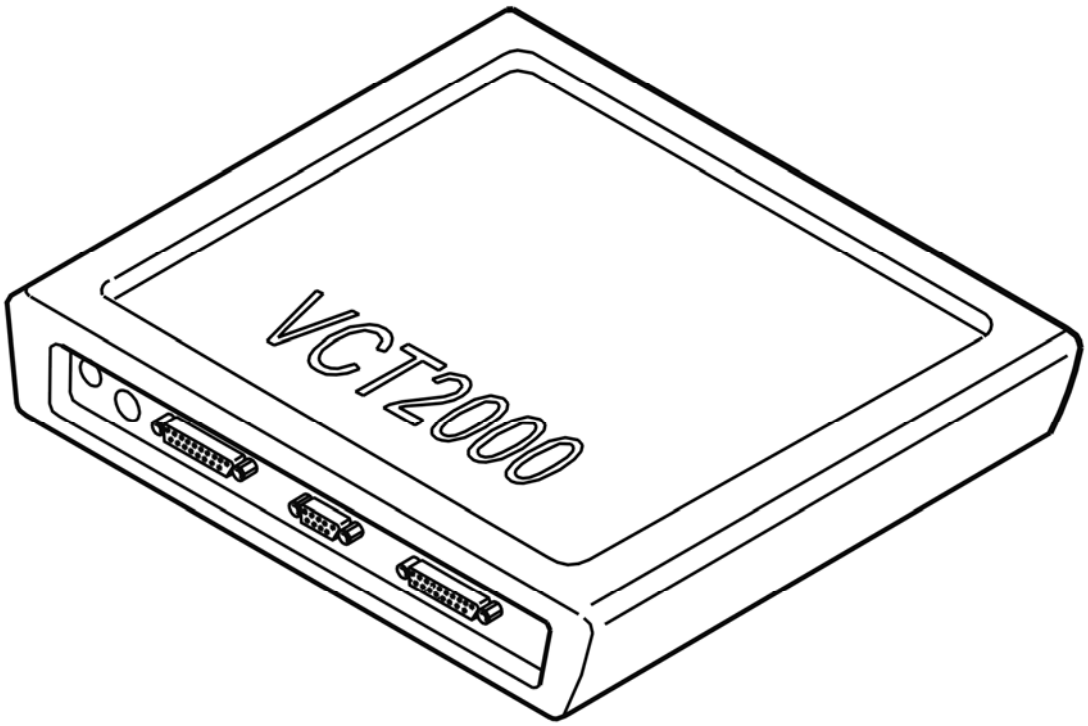

Fig. 202: Identifying VCT2000 Diagnostic Tool Symbol In VIDA
Courtesy of VOLVO CARS CORPORATION

- **Continue**

Refer to **CHECKING COMPONENTS**

CHECKING COMPONENTS

HINT: Incorrect function on the camshaft reset valve is probably the cause of this diagnostic trouble code (DTC) if:

- The adaption value and camshaft shift angle are correct in the previous check (intermittent fault).
- The adaption value is correct but the camshaft shift angle is incorrect in the previous check.

HINT: Contaminants in the engine oil can damage components in the camshaft control which can cause function faults.

Check the engine oil grade. Check especially for contaminants.

Remove the camshaft reset valve, check the reset valve and the oil ducts in the cylinder head. Check for contaminants and blockages.

Try a new camshaft reset valve if no fault is found or if the above remedies do not rectify the fault.

HINT: The fault can also be caused by a damaged variable valve timing (VVT) unit.

Remedy as necessary.

Other information

- see **VVT UNIT, RIGHT CYLINDER HEAD**
- see **VVT UNIT, LEFT CYLINDER HEAD**
- see **LOCATION OF COMPONENTS, ENGINE COMPARTMENT**

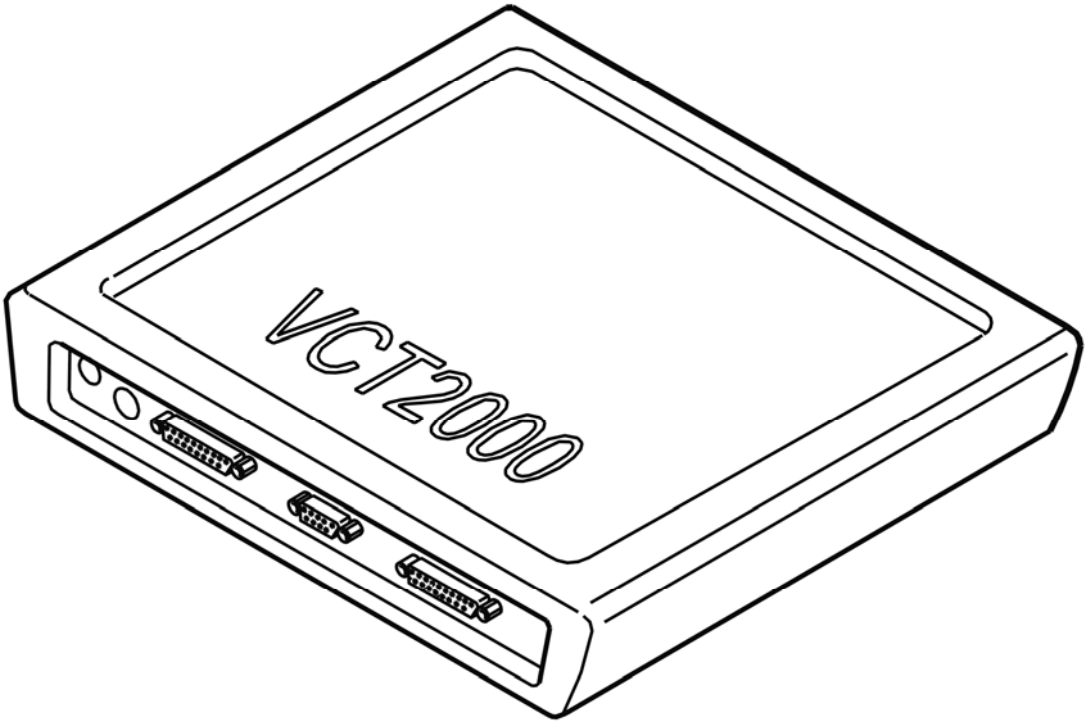

Fig. 203: Identifying VCT2000 Diagnostic Tool Symbol In VIDA
Courtesy of VOLVO CARS CORPORATION

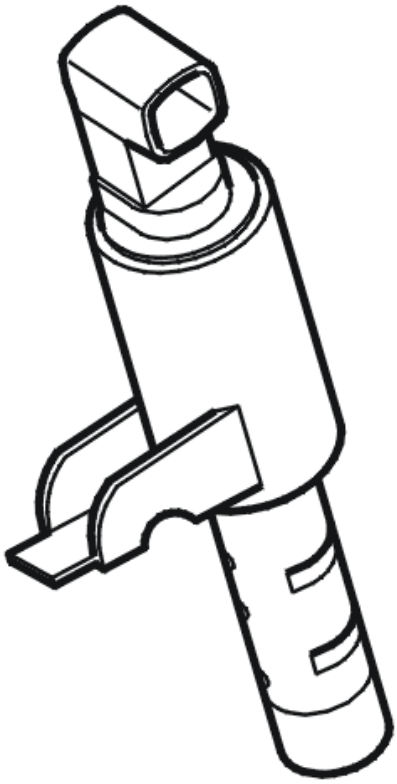

Fig. 204: Identifying Camshaft Reset Valve
Courtesy of VOLVO CARS CORPORATION

- **Continue**

  Refer to **VERIFICATION**

VERIFICATION

VERIFICATION, PART 1

HINT: After carrying out the repair, check that the fault has been remedied.

HINT: In order to verify this diagnostic trouble code (DTC), adaptation of the camshaft must be completed. Adaptation of the camshaft is carried out by the engine control module (ECM) when the engine is at operating temperature, during engine braking (fuel shut-off) above 1500 RPM for at least 10 seconds.

CAUTION: Test driving on the road must be carried out on a road with minimal traffic. Follow the highway code.

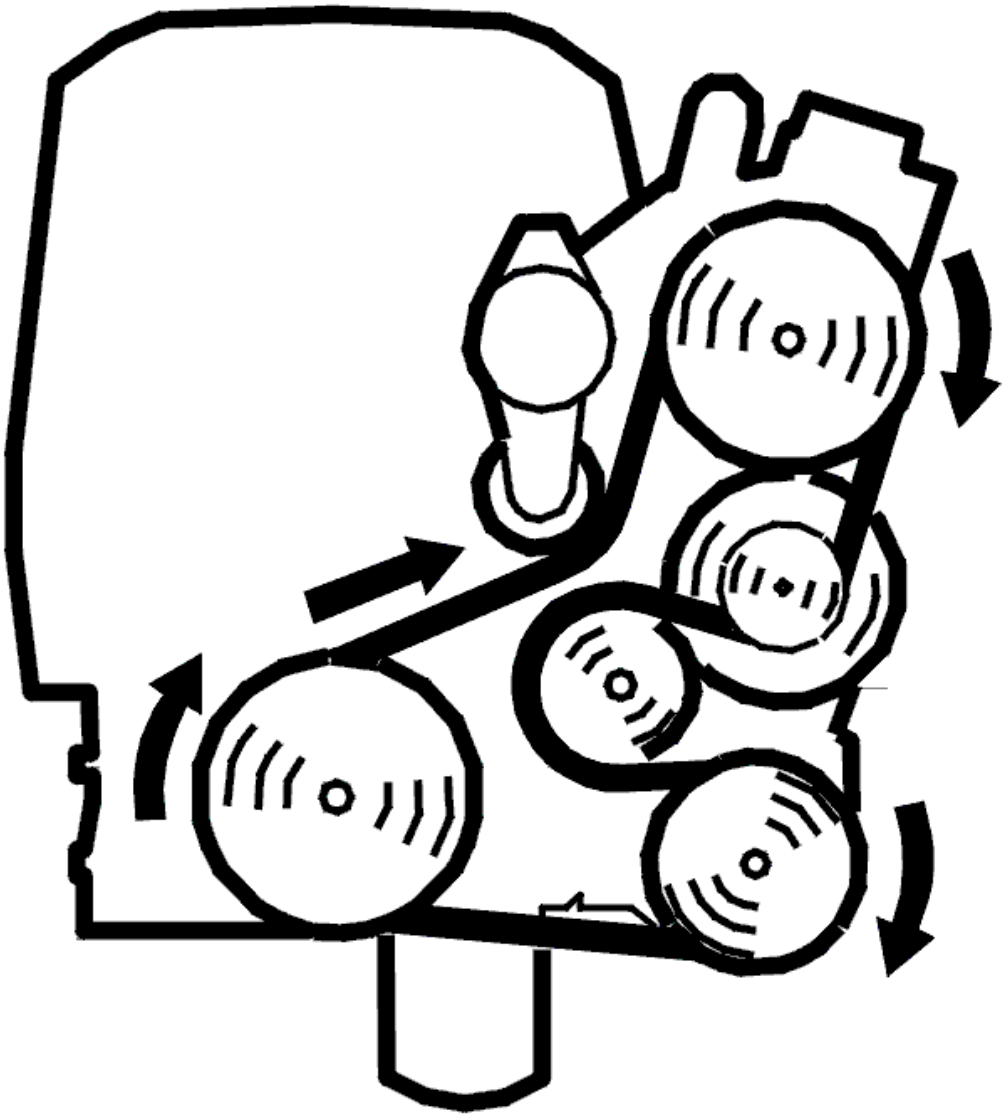

Fig. 205: Belt Routing / Engine Idling - Volvo
Courtesy of VOLVO CARS CORPORATION

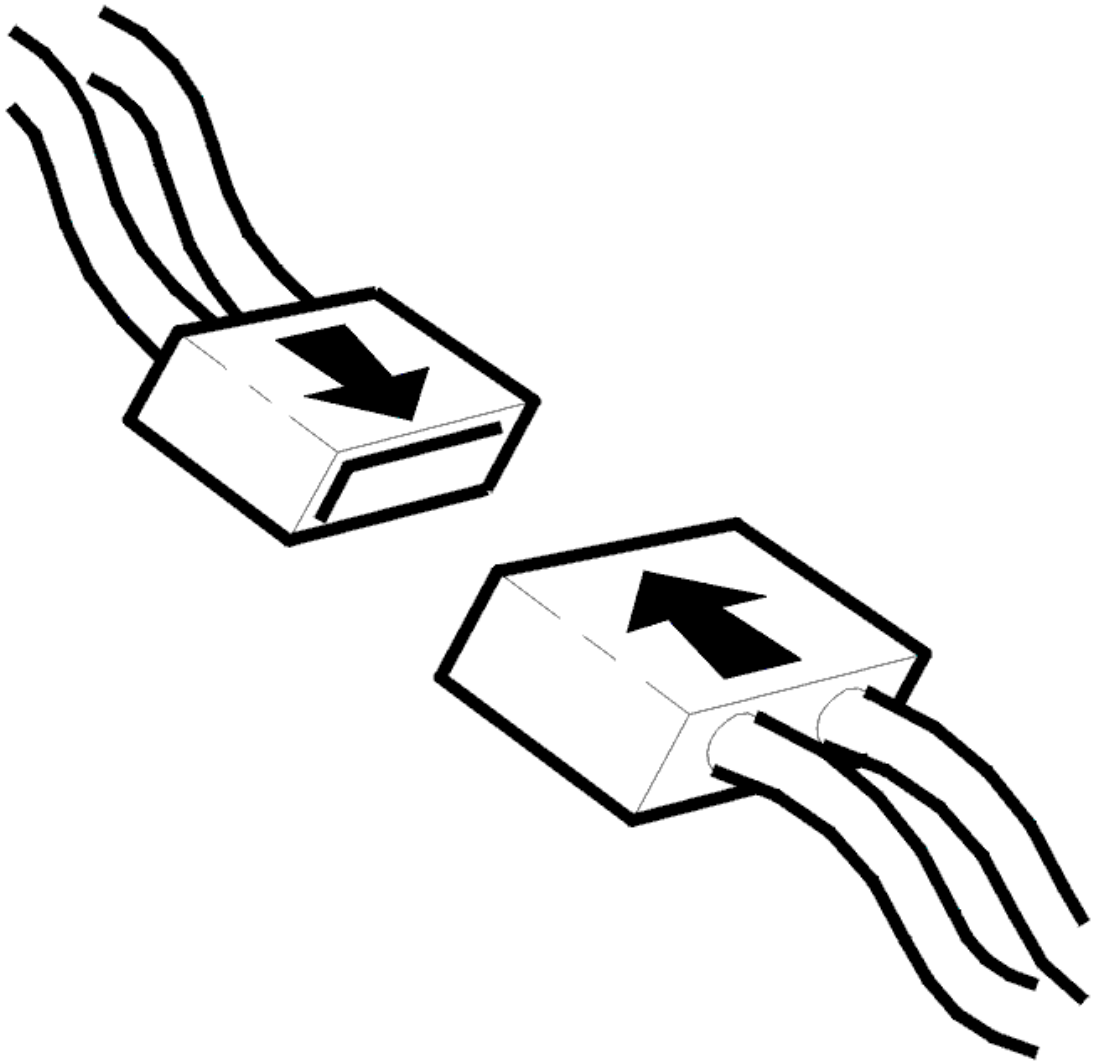

Fig. 206: Connecting Connector
Courtesy of VOLVO CARS CORPORATION

- Ignition off
- Reconnect the connectors, components, etc.
- Start and run the engine to operating temperature.
- Drive the vehicle on the road. Ensure that the conditions for camshaft adaptation are met: engine braking (fuel shut-off) above 1500 RPM for at least 10 seconds. The conditions can be satisfied for example by driving the vehicle with a high engine load (accelerating) up to approximately 90 km/h and then releasing the accelerator pedal for 10 seconds.

NOTE: **In order for the adaptation to be carried out, the accelerator pedal must not be touched during engine braking.**

- Repeat the schedule to ensure that the diagnosis and adaptation are carried out.

- Connect VCT2000 (or appropriate scan tool) to the data link connector **without switching off the engine.**
- Read the diagnostic status and fault status for the diagnostic trouble code by selecting the diagnostic trouble code in the list.

NOTE: If the engine is switched off, the stored fault status will be erased and the test drive will have to be repeated.

Check that the diagnostic status for the diagnostic trouble code (DTC) is "Completed". When the diagnostic status for the diagnostic trouble code (DTC) is "Completed", the engine control module (ECM) has carried out camshaft adaption. If the status is "Not completed" the test drive must be carried out again.

If the function is correct, the fault status must be "No fault found" when the diagnostic is complete.

Check that the value for camshaft adaption is correct when the diagnostic status for the diagnostic trouble code (DTC) is "Completed".

- Inlet camshaft: 75° CA (camshaft angle) (+/-8° CA)
- Exhaust camshaft: 120° CA (+/-8° CA)

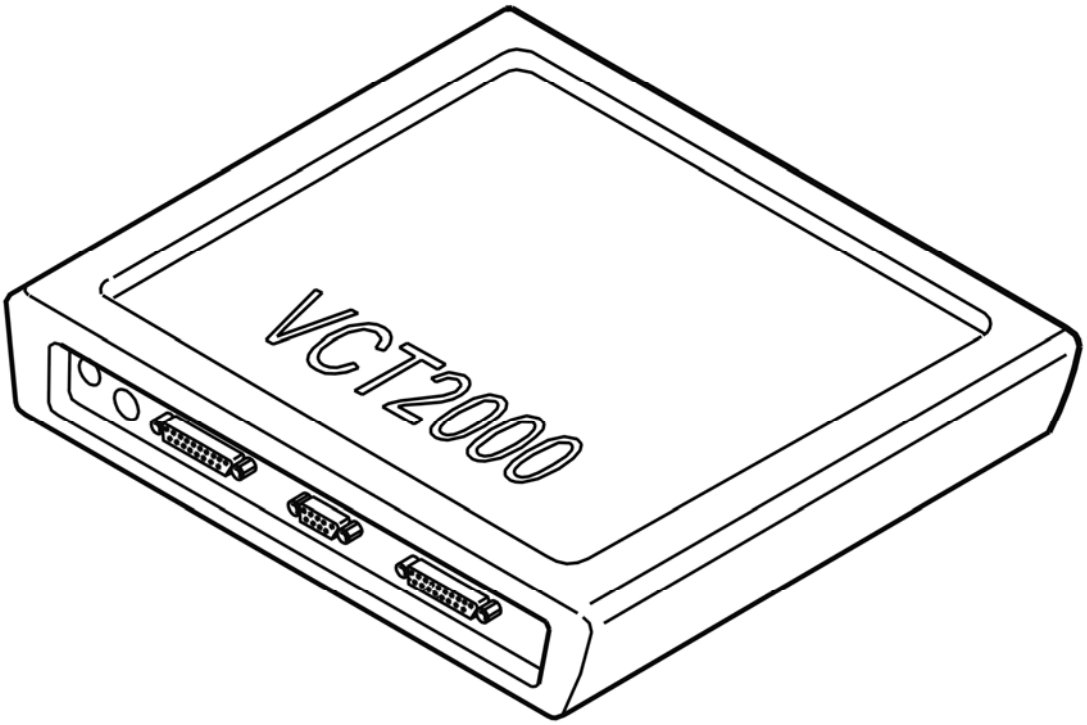

Fig. 207: Identifying VCT2000 Diagnostic Tool Symbol In VIDA
Courtesy of VOLVO CARS CORPORATION

Is the function OK?

- **YES**

  Refer to **VERIFICATION, PART 2**

- **NO**

  Refer to **INFORMATION**

VERIFICATION, PART 2

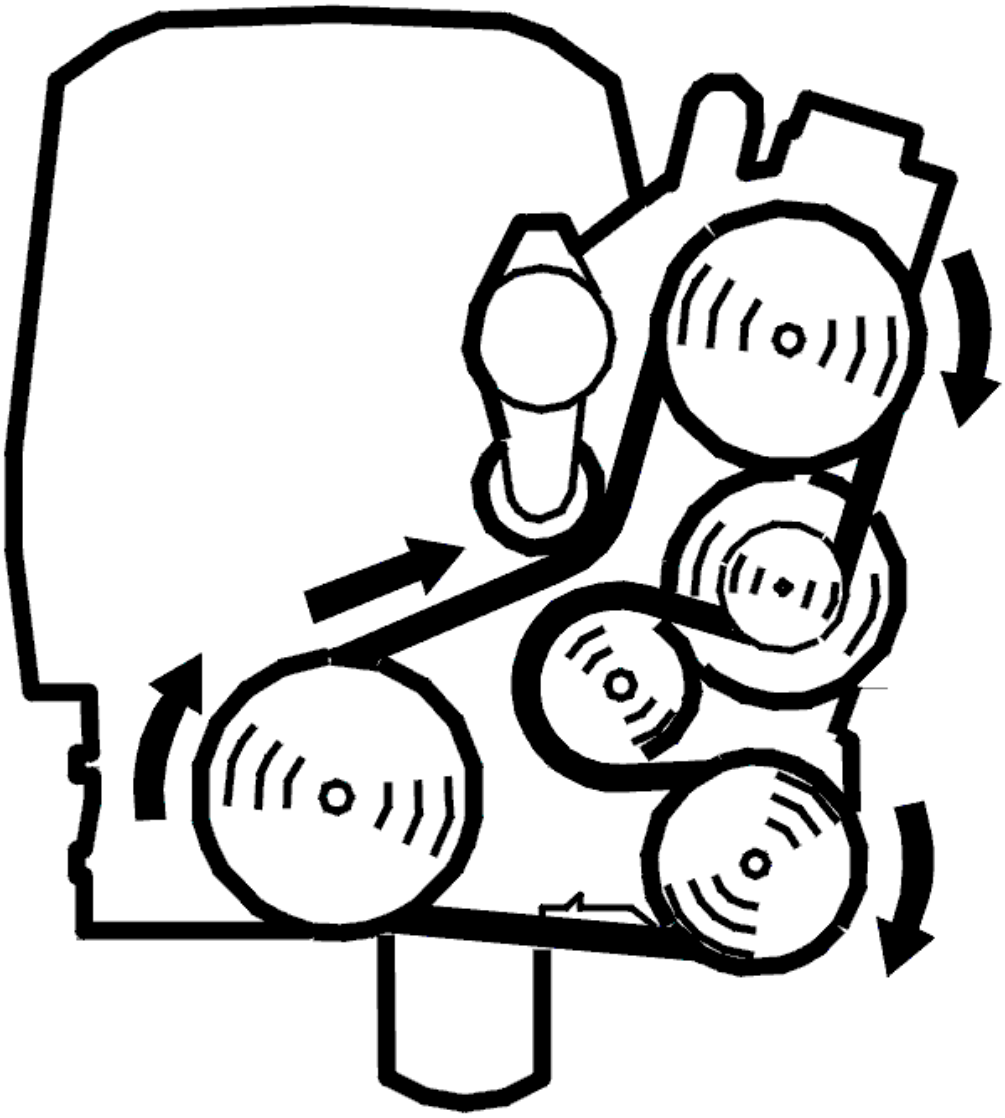

Fig. 208: Belt Routing / Engine Idling - Volvo
Courtesy of VOLVO CARS CORPORATION

- Engine running.

- Check the function. Read off the shift angle of the camshaft and the desired shift angle of the camshaft.

  Check that the camshaft shift angle corresponds to the desired value for the camshaft shift angle with an accuracy of approximately 8° CA (camshaft angle). The difference between the values can be read off in the lower digital display.

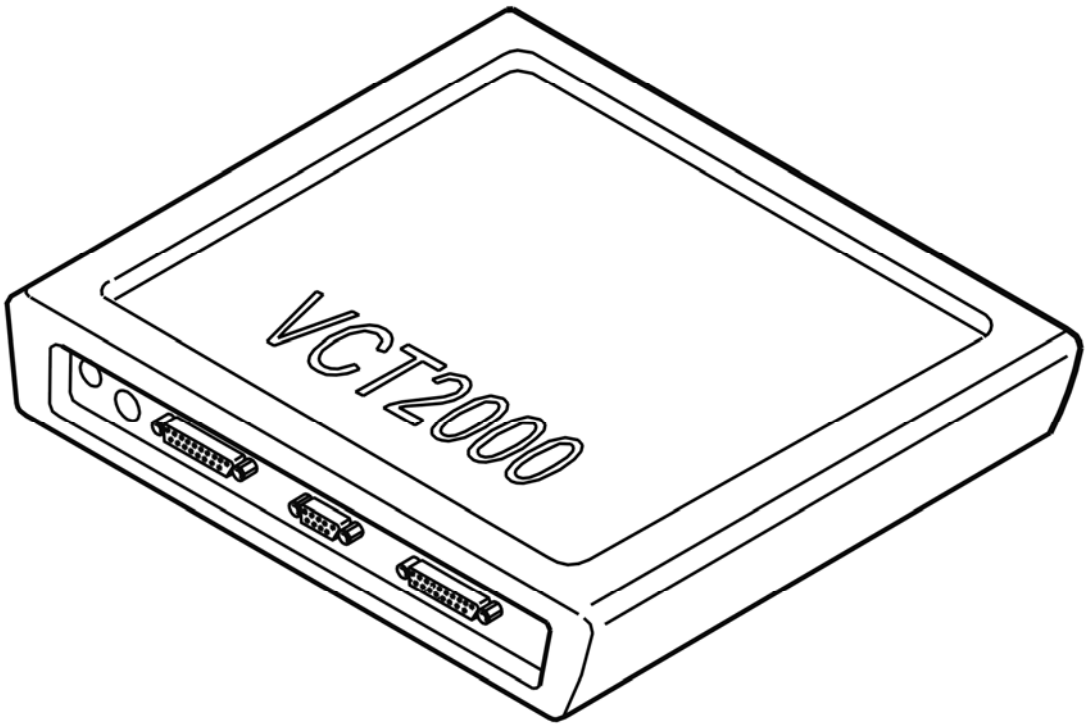

Fig. 209: Identifying VCT2000 Diagnostic Tool Symbol In VIDA
Courtesy of VOLVO CARS CORPORATION

Is the function OK?

- **YES**

  VERIFIED: Troubleshooting has been completed.

- **NO**

  Refer to **INFORMATION**

INFORMATION

FAULT-TRACING INFORMATION

The fault should have been detected and remedied. As this is not the case fault-tracing has failed.

Exit fault-tracing for this diagnostic trouble code (DTC) or make another attempt.

ECM-P001700: CRANKSHAFT POSITION - CAMSHAFT POSITION CORRELATION - BANK 1 SENSOR B. GENERAL FAULT INFORMATION. NO INFORMATION ABOUT FAULT TYPE (B8444S; 2005-2007)

DIAGNOSTIC TROUBLE CODE (DTC) INFORMATION

see **DIAGNOSTIC TROUBLE CODE (DTC) INFORMATION**

FAULT TRACING ECM-P001700

CHECKING THE STATUS

HINT: The diagnostic trouble code (DTC) specifies the relevant camshaft.

- ECM-P001600: Camshaft inlet, bank 1.
  - Bank 1 (cylinder row nearest the front): cylinders 1, 3, 5 and 7.
  - Bank 2 (cylinder row furthest to the rear, nearest the passenger compartment): cylinders 2, 4, 6, and 8.
- ECM-P001700: Camshaft exhaust, bank 1.
  - Bank 1 (cylinder row nearest the front): cylinders 1, 3, 5 and 7.
  - Bank 2 (cylinder row furthest to the rear, nearest the passenger compartment): cylinders 2, 4, 6, and 8.
- ECM-P001800: Camshaft inlet, bank 2.
  - Bank 1 (cylinder row nearest the front): cylinders 1, 3, 5 and 7.
  - Bank 2 (cylinder row furthest to the rear, nearest the passenger compartment): cylinders 2, 4, 6, and 8.
- ECM-P001900: Camshaft exhaust, bank 2.
  - Bank 1 (cylinder row nearest the front): cylinders 1, 3, 5 and 7.
  - Bank 2 (cylinder row furthest to the rear, nearest the passenger compartment): cylinders 2, 4, 6, and 8.

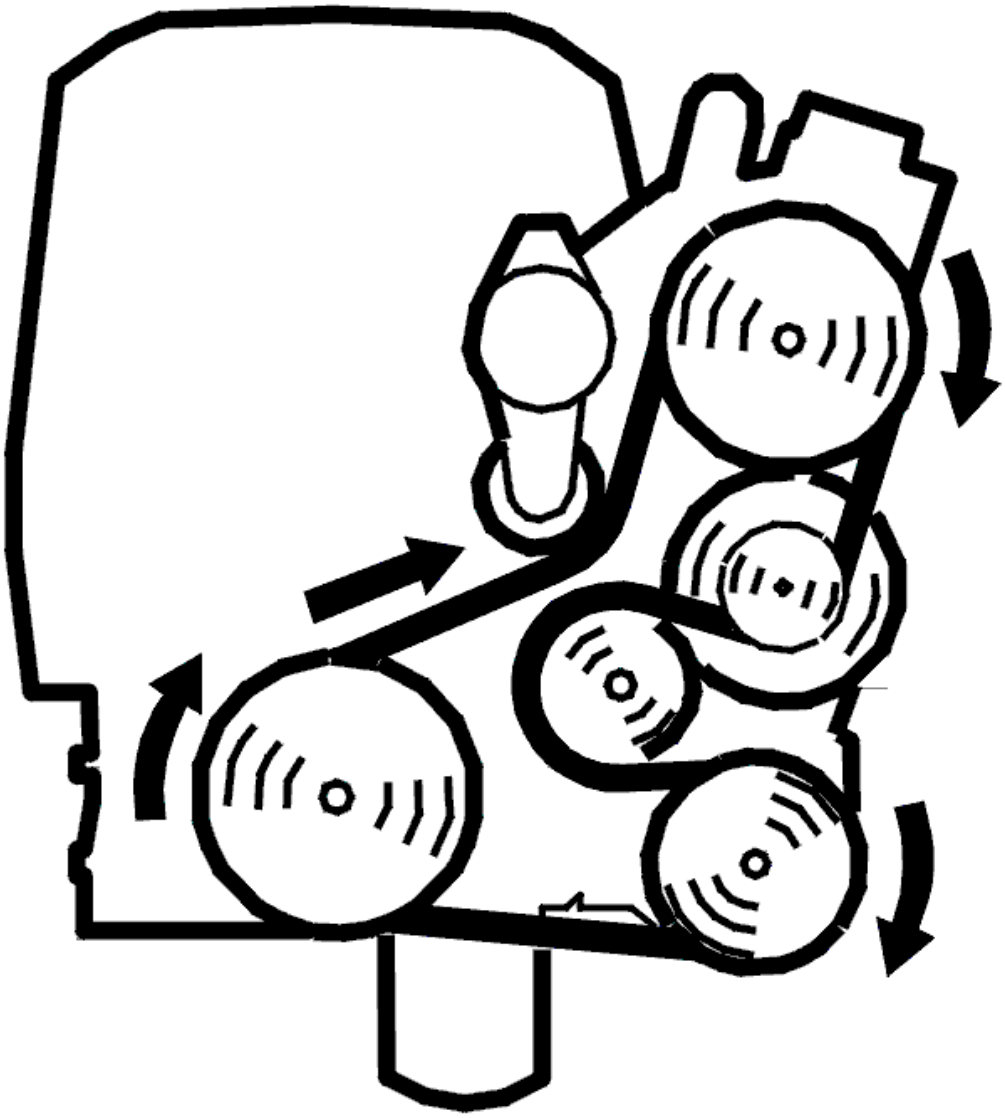

Fig. 210: Belt Routing / Engine Idling - Volvo
Courtesy of VOLVO CARS CORPORATION

- Start the engine.
- Read off the adaption for the camshaft, the camshaft shift angle and desired value for the camshaft shift angle.

  Check that the read off values correspond to the guide values below. The difference between the camshaft shift angle and the desired value for camshaft shift angle can be read off from the lower digital display. Note the read off values as a basis for continuing fault-tracing.

  Adaption camshaft

  - Inlet camshaft: 75° CA (camshaft angle) (+/-8° CA)
  - Exhaust camshaft: 120° CA (+/-8° CA)

Camshaft shift angle

- The difference from the desired value of the camshaft shift angle (inlet and exhaust): approximately 8° CA

The fault is permanent if the values are not correct. If the values are correct, this indicates that the fault is intermittent and not presently active.

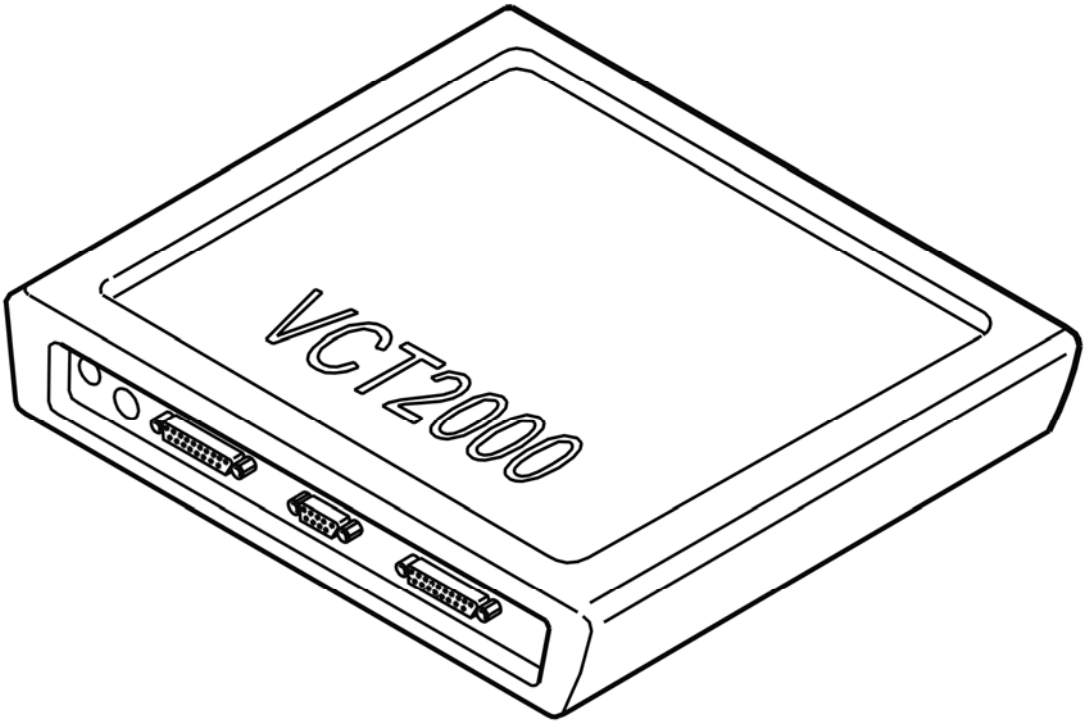

Fig. 211: Identifying VCT2000 Diagnostic Tool Symbol In VIDA
Courtesy of VOLVO CARS CORPORATION

- **Continue**

  Refer to **CHECKING COMPONENTS**

CHECKING COMPONENTS

HINT: Incorrect function on the camshaft reset valve is probably the cause of this diagnostic trouble code (DTC) if:

- The adaption value and camshaft shift angle are correct in the previous check (intermittent fault).
- The adaption value is correct but the camshaft shift angle is incorrect in the previous check.

HINT: Contaminants in the engine oil can damage components in the camshaft control which can cause

function faults.

Check the engine oil grade. Check especially for contaminants.

Check the default settings of the camshafts.

Remove the camshaft reset valve, check the reset valve and the oil ducts in the cylinder head. Check for contaminants and blockages.

Try a new camshaft reset valve if no fault is found or if the above remedies do not rectify the fault.

HINT: The fault can also be caused by a damaged variable valve timing (VVT) unit.

Remedy as necessary.

Other information

- see **VVT UNIT, RIGHT CYLINDER HEAD**
- see **VVT UNIT, LEFT CYLINDER HEAD**
- see **LOCATION OF COMPONENTS, ENGINE COMPARTMENT**

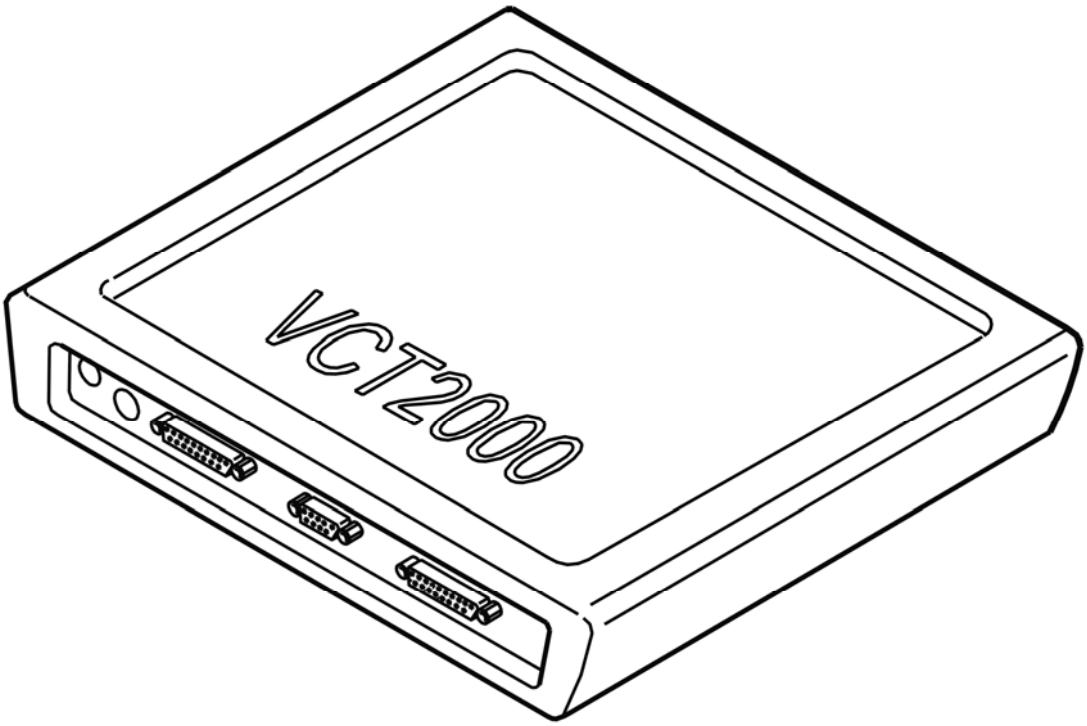

Fig. 212: Identifying VCT2000 Diagnostic Tool Symbol In VIDA
Courtesy of VOLVO CARS CORPORATION

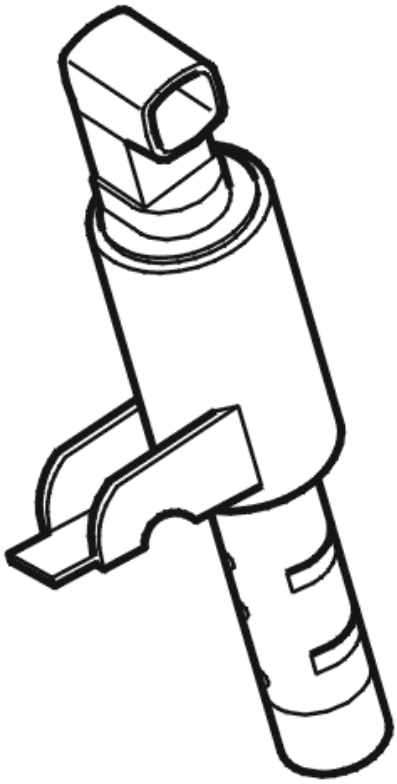

Fig. 213: Identifying Camshaft Reset Valve
Courtesy of VOLVO CARS CORPORATION

- **Continue**

  Refer to **VERIFICATION**

VERIFICATION

VERIFICATION, PART 1

HINT: After carrying out the repair, check that the fault has been remedied.

HINT: In order to verify this diagnostic trouble code (DTC), adaptation of the camshaft must be completed. Adaptation of the camshaft is carried out by the engine control module (ECM) when the engine is at operating temperature, during engine braking (fuel shut-off) above 1500 RPM for at least 10 seconds.

CAUTION: Test driving on the road must be carried out on a road with minimal traffic. Follow the highway code.

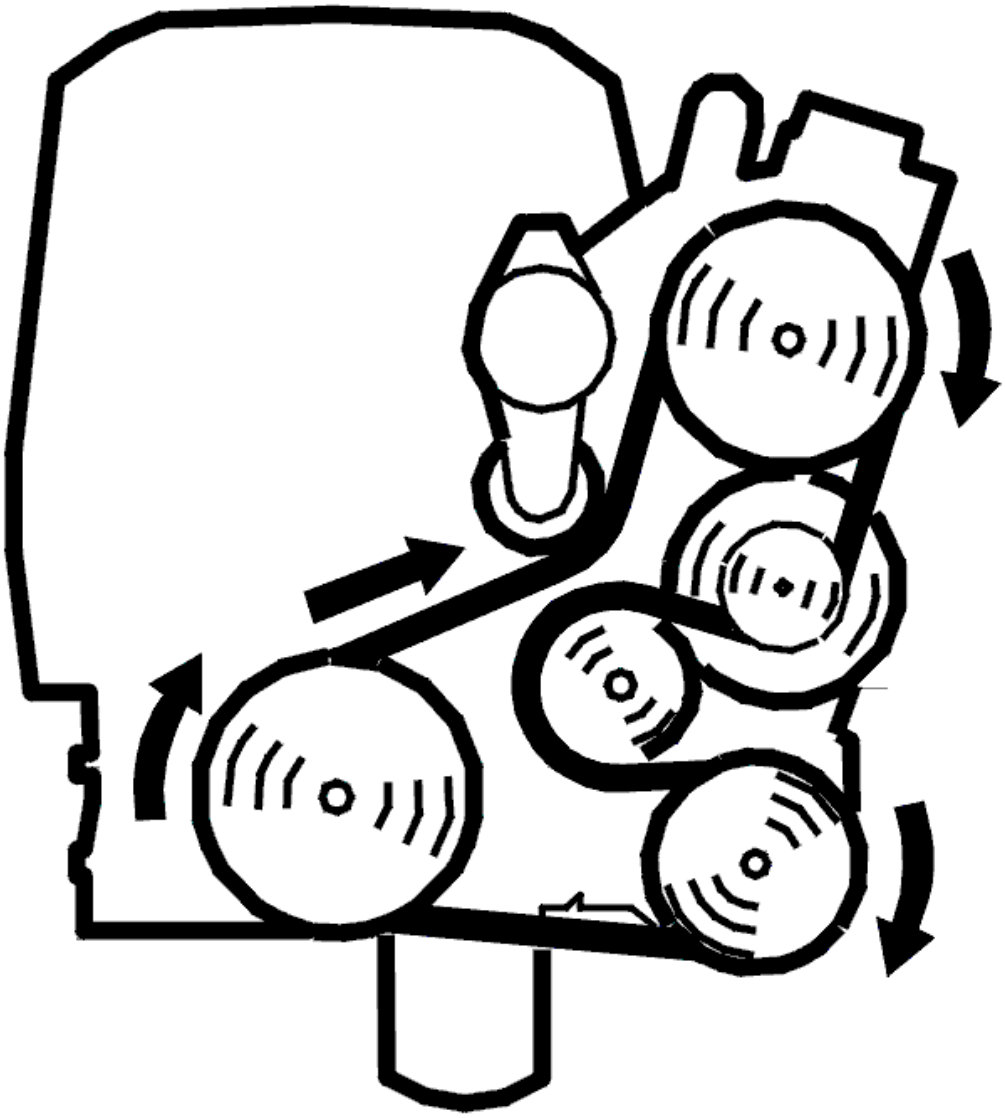

Fig. 214: Belt Routing / Engine Idling - Volvo
Courtesy of VOLVO CARS CORPORATION

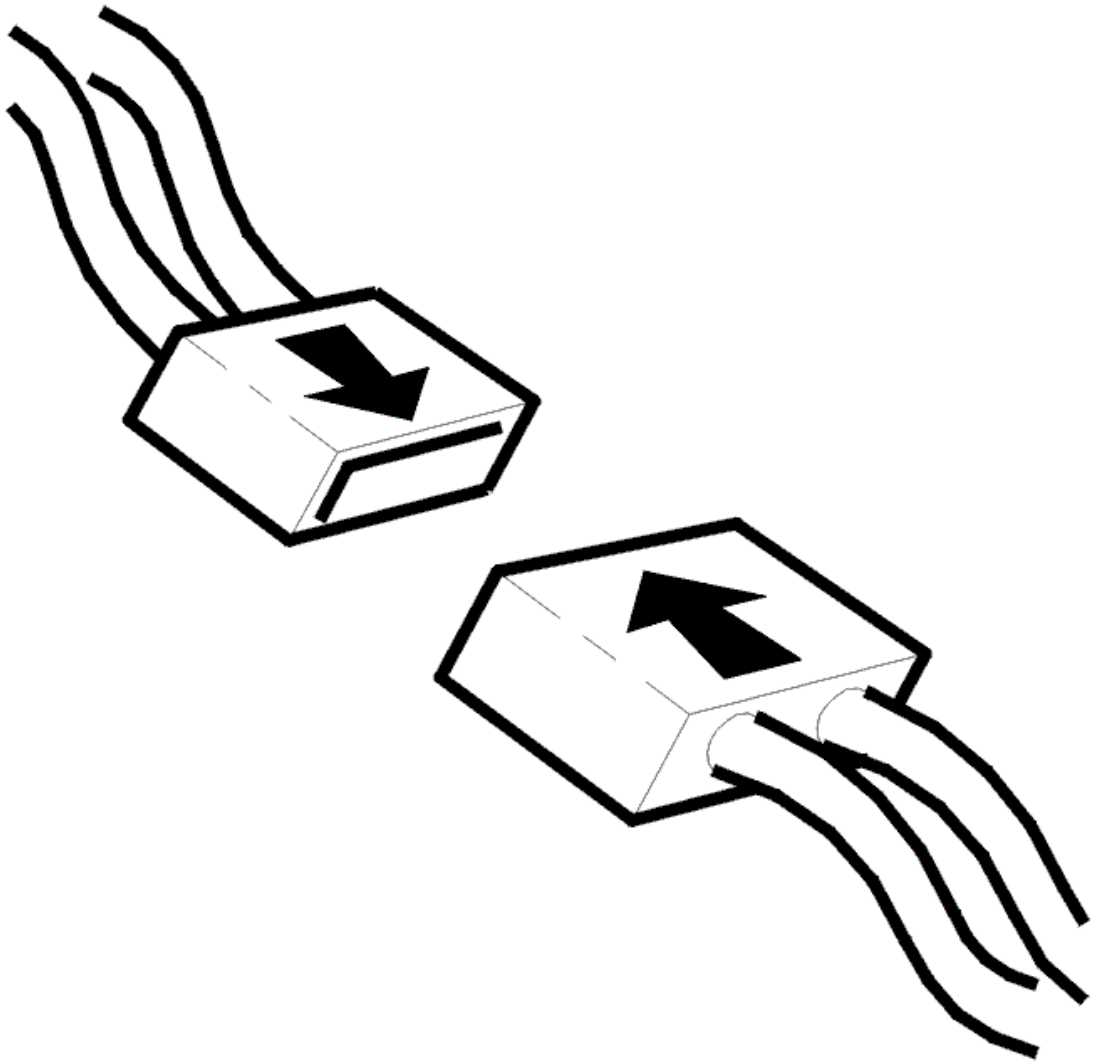

Fig. 215: Connecting Connector
Courtesy of VOLVO CARS CORPORATION

- Ignition off
- Reconnect the connectors, components, etc.
- Start and run the engine to operating temperature.
- Drive the vehicle on the road. Ensure that the conditions for camshaft adaptation are met: engine braking (fuel shut-off) above 1500 RPM for at least 10 seconds. The conditions can be satisfied for example by driving the vehicle with a high engine load (accelerating) up to approximately 90 km/h and then releasing the accelerator pedal for 10 seconds.

NOTE: **In order for the adaptation to be carried out, the accelerator pedal must not be touched during engine braking.**

- Repeat the schedule to ensure that the diagnosis and adaptation are carried out.

- Connect VCT2000 (or appropriate scan tool) to the data link connector **without switching off the engine.**
- Read the diagnostic status and fault status for the diagnostic trouble code by selecting the diagnostic trouble code in the list.

NOTE: If the engine is switched off, the stored fault status will be erased and the test drive will have to be repeated.

Check that the diagnostic status for the diagnostic trouble code (DTC) is "Completed". When the diagnostic status for the diagnostic trouble code (DTC) is "Completed", the engine control module (ECM) has carried out camshaft adaption. If the status is "Not completed" the test drive must be carried out again.

If the function is correct, the fault status must be "No fault found" when the diagnostic is complete.

Check that the value for camshaft adaption is correct when the diagnostic status for the diagnostic trouble code (DTC) is "Completed".

- Inlet camshaft: 75° CA (camshaft angle) (+/-8° CA)
- Exhaust camshaft: 120° CA (+/-8° CA)

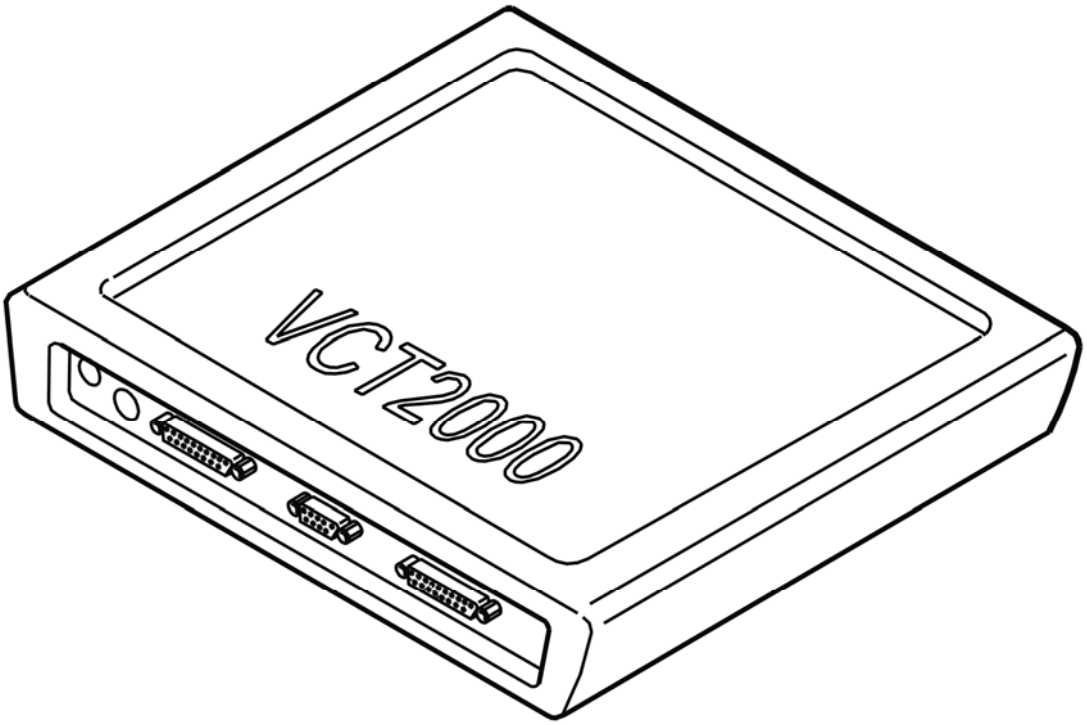

Fig. 216: Identifying VCT2000 Diagnostic Tool Symbol In VIDA
Courtesy of VOLVO CARS CORPORATION

Is the function OK?

- **YES**

  Refer to **VERIFICATION, PART 2**

- **NO**

  Refer to **INFORMATION**

VERIFICATION, PART 2

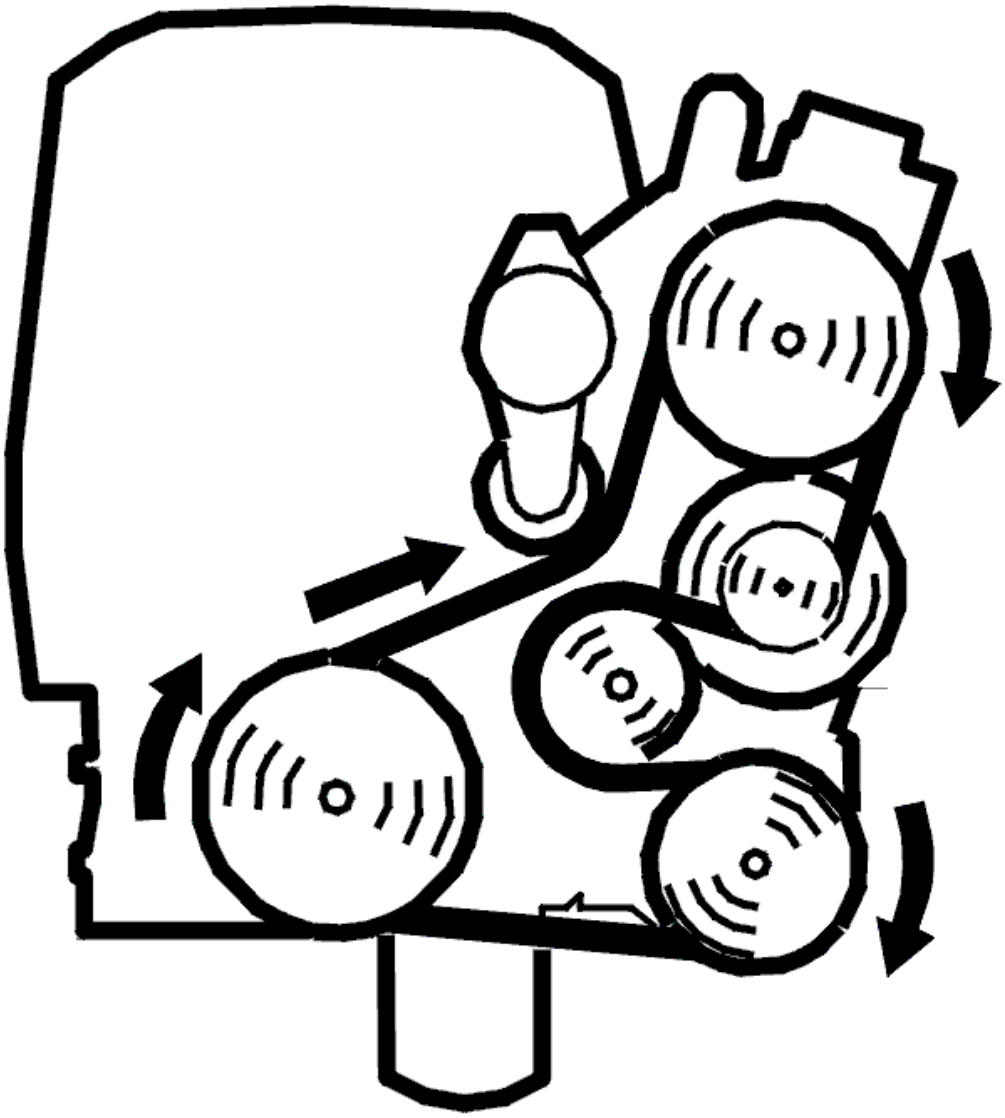

Fig. 217: Belt Routing / Engine Idling - Volvo
Courtesy of VOLVO CARS CORPORATION

- Engine running.

- Check the function. Read off the shift angle of the camshaft and the desired shift angle of the camshaft.

  Check that the camshaft shift angle corresponds to the desired value for the camshaft shift angle with an accuracy of approximately 8° CA (camshaft angle). The difference between the values can be read off in the lower digital display.

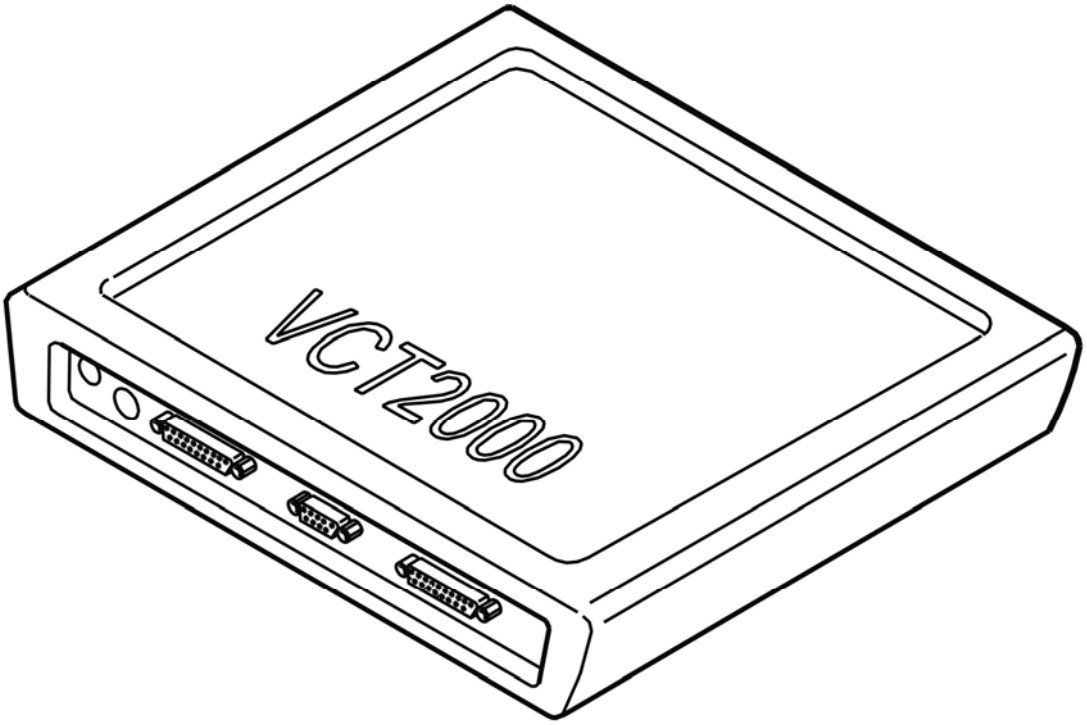

Fig. 218: Identifying VCT2000 Diagnostic Tool Symbol In VIDA
Courtesy of VOLVO CARS CORPORATION

Is the function OK?

- **YES**

  VERIFIED: Troubleshooting has been completed.

- **NO**

  Refer to **INFORMATION**

INFORMATION

FAULT-TRACING INFORMATION

The fault should have been detected and remedied. As this is not the case fault-tracing has failed.

Exit fault-tracing for this diagnostic trouble code (DTC) or make another attempt.

ECM-P001800: CRANKSHAFT POSITION - CAMSHAFT POSITION CORRELATION - BANK 2 SENSOR A. GENERAL FAILURE INFORMATION. NO SUB TYPE INFORMATION (B6324S; 2007-2010)

DIAGNOSTIC TROUBLE CODE (DTC) INFORMATION ECM-P001800

Condition

The engine control module (ECM) checks that the camshaft is in the correct position in relation to the position of the crankshaft. If the camshaft position does not match the crankshaft position, the control module will adjust the adaptation for the camshaft position. The adaptation value corresponds to the difference between the camshaft and crankshaft.

The diagnostic trouble code (DTC) is stored if the control module detects that:

- Change in the adaptation value is larger than what corresponds to a tooth.

The control module's test for the diagnostic trouble code (DTC) starts in the event of:

- Hot engine.
- During engine start-up.

NOTE: The control module can only detect the fault once the test has been started and the diagnostic trouble code (DTC) is stored when the conditions are met.

Substitute Value

- None.

Possible Source

- Incorrectly adjusted camshafts.
- Damaged VVT-unit.
- Over cogging in the camshaft transmission.

Fault symptom[s]

- Uneven idle
- Engine is difficult to start

FAULT-TRACING

CHECKING THE STATUS

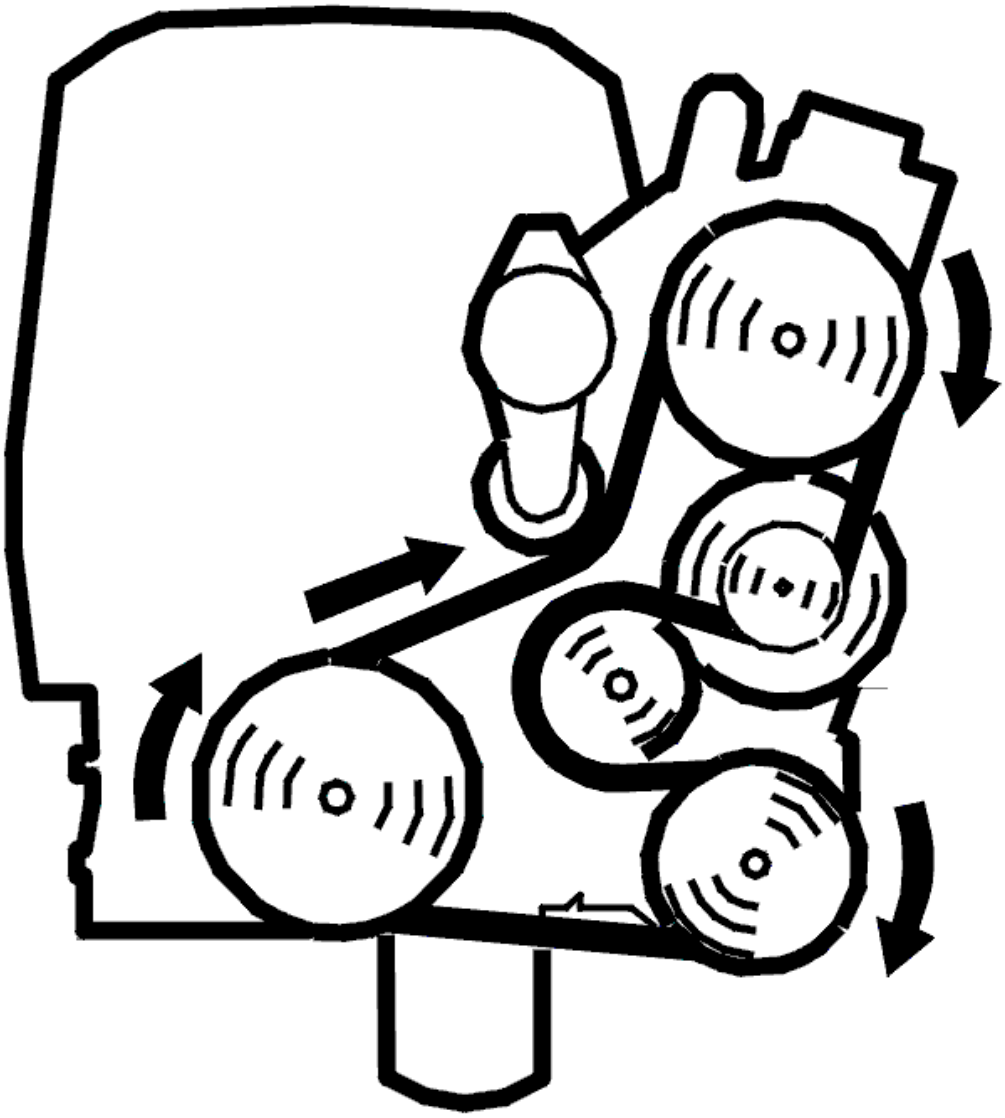

Fig. 219: Belt Routing / Engine Idling - Volvo
Courtesy of VOLVO CARS CORPORATION

- Start the engine.
- Read off the adaption for the camshaft, the camshaft shift angle and desired value for the camshaft shift angle.

  Check that the read off values correspond to the guide values below. The difference between the camshaft shift angle and the desired value for camshaft shift angle can be read off from the lower digital display. Note the read off values as a basis for continuing fault-tracing.

  Adaption camshaft

  - Intake camshaft: 75 degrees CA (camshaft angle) (+/-8 degrees CA)

  Camshaft shift angle

- The difference from the desired value of the camshaft shift angle (intake): approximately 8 degrees CA

The fault is permanent if the values are not correct. If the values are correct, this indicates that the fault is intermittent and not presently active.

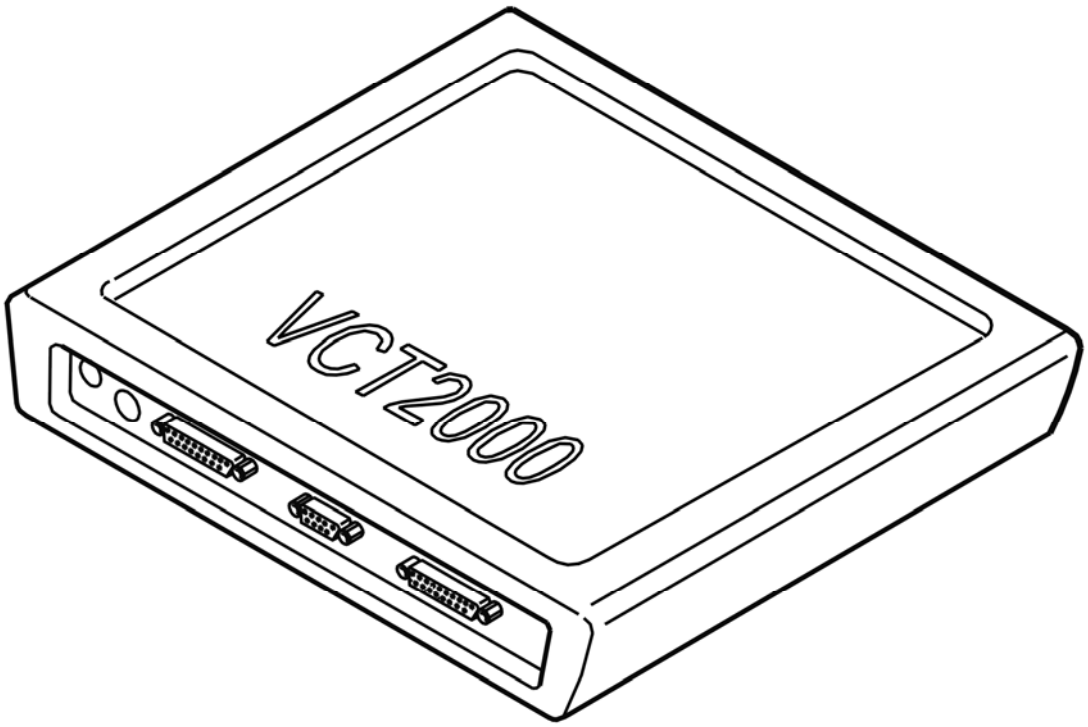

Fig. 220: Identifying VCT2000 Diagnostic Tool Symbol In VIDA
Courtesy of VOLVO CARS CORPORATION

- **Continue**

  Refer to **CHECKING COMPONENTS**

CHECKING COMPONENTS

HINT: Incorrect function on the camshaft reset valve is probably the cause of this diagnostic trouble code (DTC) if:

- The adaption value and camshaft shift angle are correct in the previous check (intermittent fault).
- The adaption value is correct but the camshaft shift angle is incorrect in the previous check.

HINT: Contaminants in the engine oil can damage components in the camshaft control which can cause function faults.

Check the engine oil grade. Check especially for contaminants.

Check the default settings of the camshafts.

Remove the camshaft reset valve, check the reset valve and the oil ducts in the cylinder head. Check for contaminants and blockages.

Try a new camshaft reset valve if no fault is found or if the above remedies do not rectify the fault.

HINT: The fault could be caused by a damaged VVT unit or over meshing of the camshaft transmission.

Remedy as necessary.

Other information

- To check the camshaft settings:

  see **VVT UNIT**

- Cleaning:**VARIABLE CAMSHAFT TIMING OIL CONTROL SOLENOID**
- see **LOCATION OF COMPONENTS**

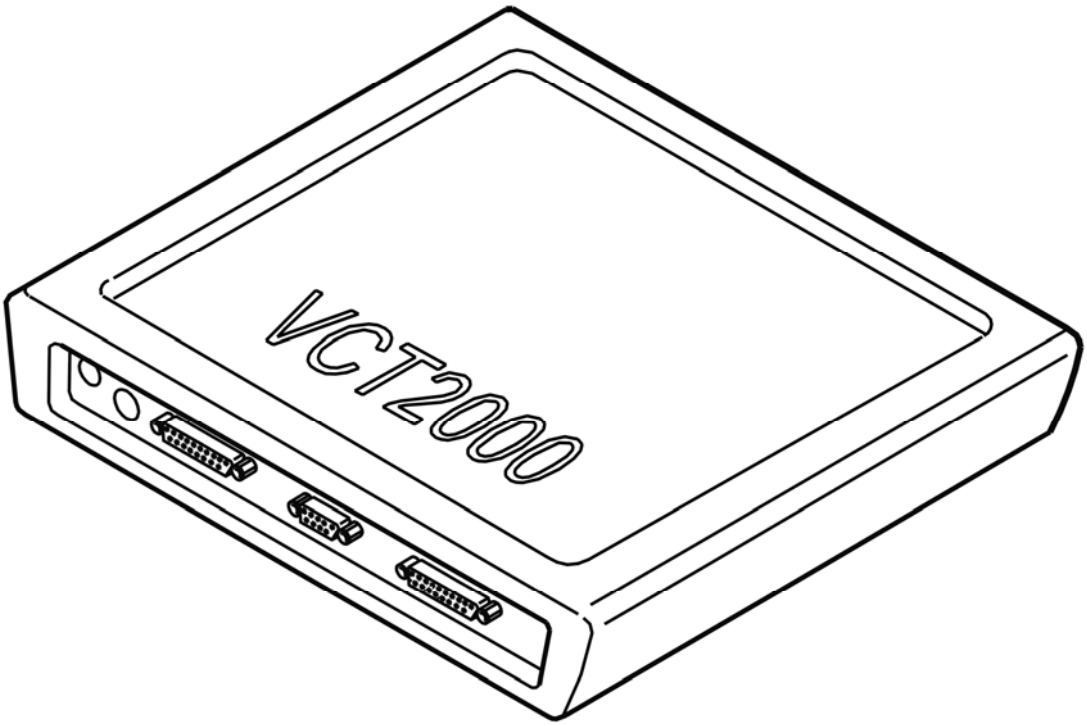

Fig. 221: Identifying VCT2000 Diagnostic Tool Symbol In VIDA

Courtesy of VOLVO CARS CORPORATION

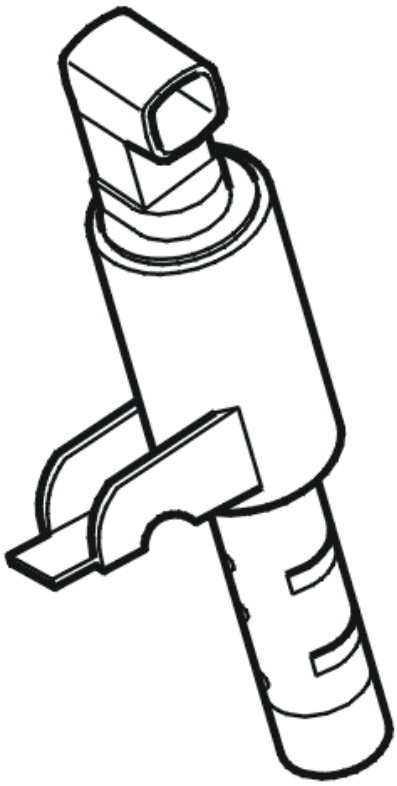

Fig. 222: Identifying Camshaft Reset Valve
Courtesy of VOLVO CARS CORPORATION

- **Continue**

  Refer to **VERIFICATION**

INFORMATION

FAULT-TRACING INFORMATION

The fault should have been detected and remedied. As this is not the case fault-tracing has failed.

Exit fault-tracing for this diagnostic trouble code (DTC) or make another attempt.

VERIFICATION

VERIFICATION, PART 1

HINT: After carrying out the repair, check that the fault has been remedied.

HINT: In order to verify this diagnostic trouble code (DTC), adaptation of the camshaft must be

completed. Adaptation of the camshaft is carried out by the engine control module (ECM) when the engine is at operating temperature, during engine braking (fuel shut-off) above 1500 RPM for at least 10 seconds.

CAUTION: Test driving on the road must be carried out on a road with minimal traffic. Follow the highway code.

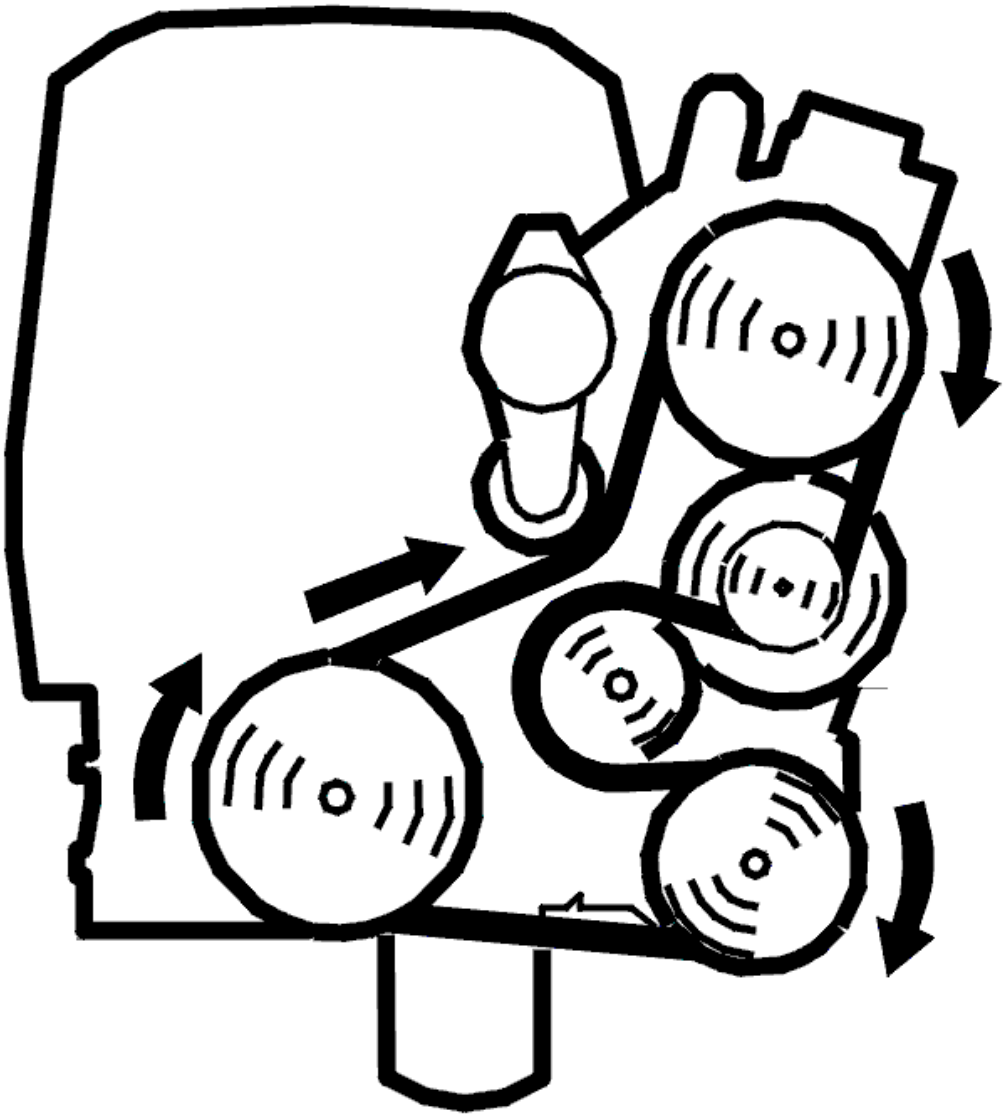

Fig. 223: Belt Routing / Engine Idling - Volvo
Courtesy of VOLVO CARS CORPORATION

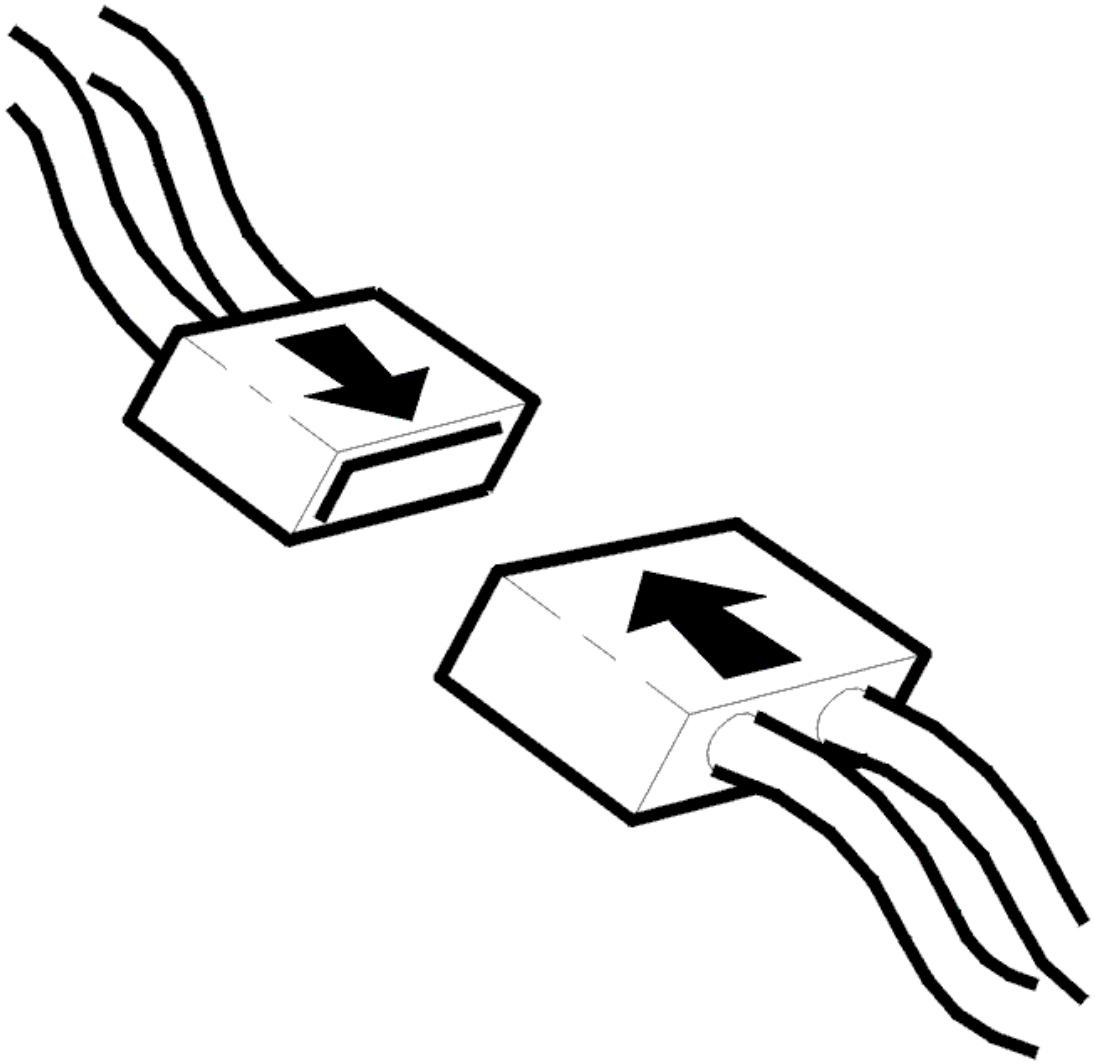

Fig. 224: Connecting Connector
Courtesy of VOLVO CARS CORPORATION

- Ignition off
- Reconnect the connectors, components, etc.
- Start and run the engine to operating temperature.
- Drive the vehicle on the road. Ensure that the conditions for camshaft adaptation are met: engine braking (fuel shut-off) above 1500 RPM for at least 10 seconds. The conditions can be satisfied for example by driving the vehicle with a high engine load (accelerating) up to approximately 90 km/h and then releasing the accelerator pedal for 10 seconds.

NOTE: **In order for the adaptation to be carried out, the accelerator pedal must not be touched during engine braking.**

- Repeat the schedule to ensure that the diagnosis and adaptation are carried out.

- Connect VCT2000 (or appropriate scan tool) to the data link connector **without switching off the engine.**
- Read the diagnostic status and fault status for the diagnostic trouble code by selecting the diagnostic trouble code in the list.

NOTE: If the engine is switched off, the stored fault status will be erased and the test drive will have to be repeated.

Check that the diagnostic status for the diagnostic trouble code (DTC) is "Completed". When the diagnostic status for the diagnostic trouble code (DTC) is "Completed", the engine control module (ECM) has carried out camshaft adaption. If the status is "Not completed" the test drive must be carried out again.

If the function is correct, the fault status must be "No fault found" when the diagnostic is complete.

Check that the value for camshaft adaption is correct when the diagnostic status for the diagnostic trouble code (DTC) is "Completed".

- Inlet camshaft: 75° CA (camshaft angle) (+/-8° CA)

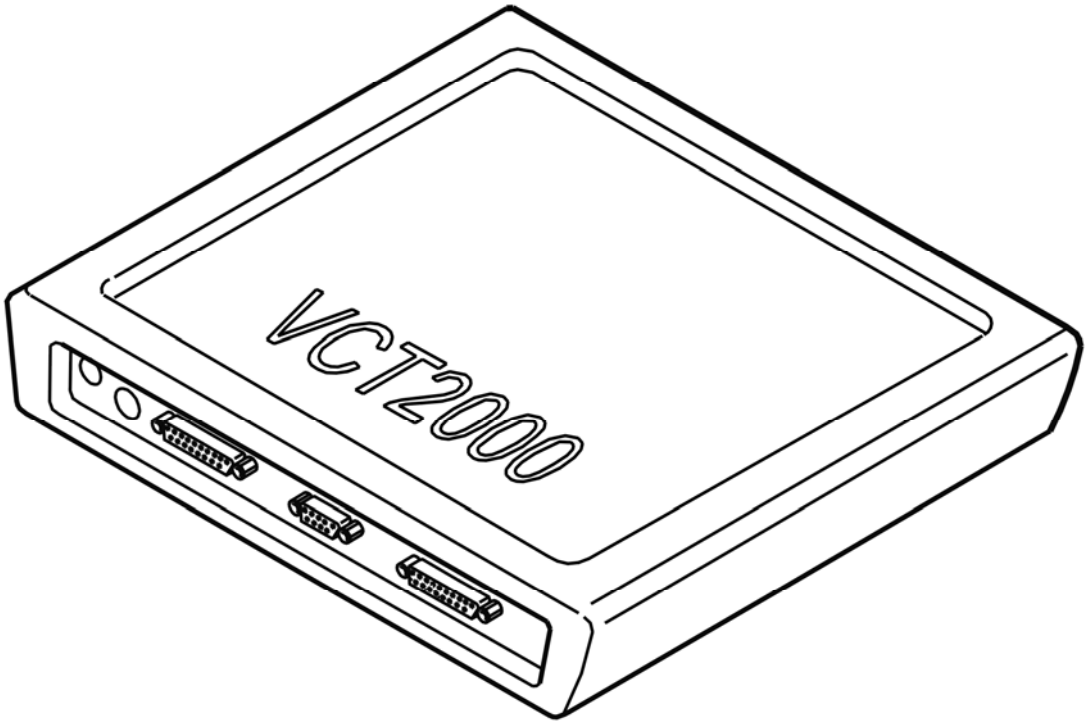

Fig. 225: Identifying VCT2000 Diagnostic Tool Symbol In VIDA
Courtesy of VOLVO CARS CORPORATION

Is the function OK?

- **YES**

  Refer to **VERIFICATION, PART 2**

- **NO**

  Refer to **INFORMATION**

VERIFICATION, PART 2

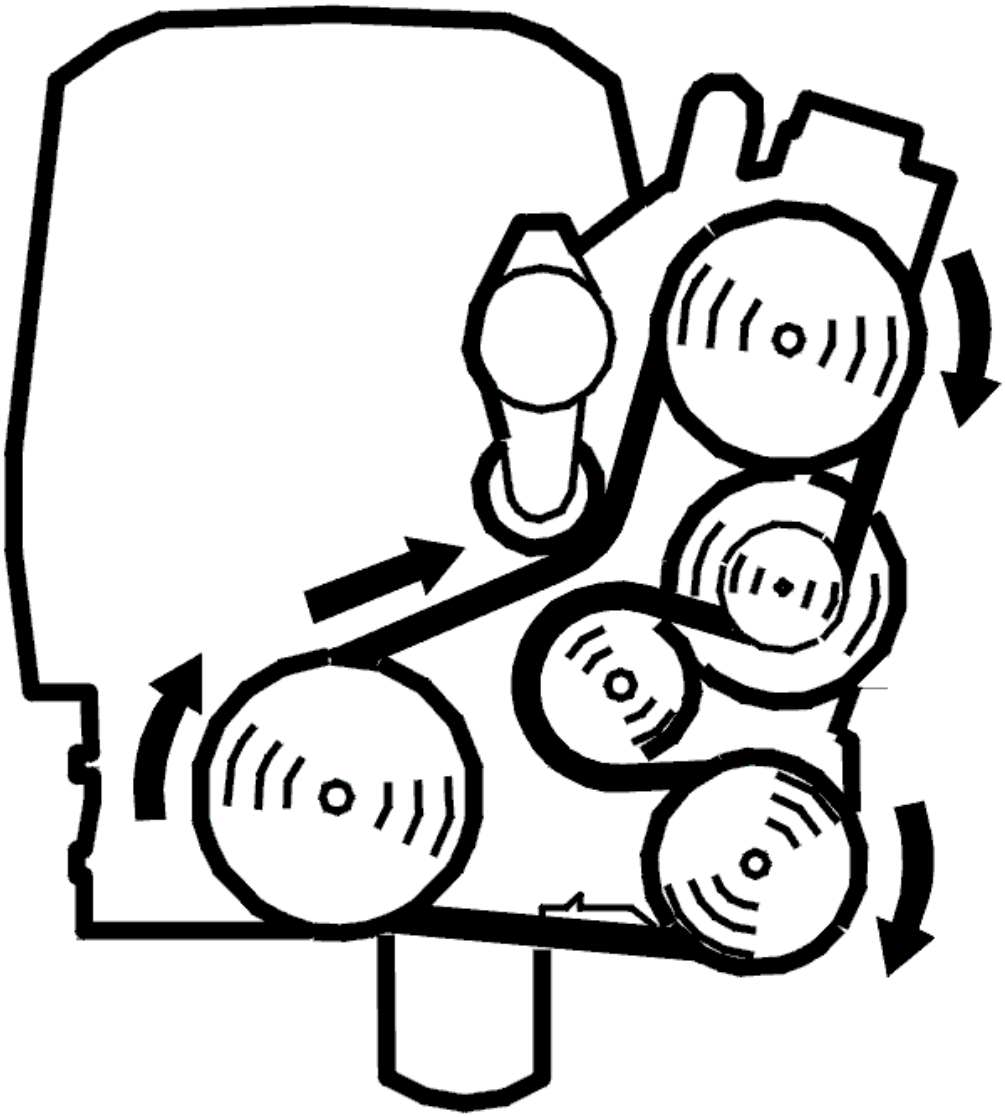

Fig. 226: Belt Routing / Engine Idling - Volvo
Courtesy of VOLVO CARS CORPORATION

- Engine running.
- Check the function. Read off the shift angle of the camshaft and the desired shift angle of the camshaft.

Check that the camshaft shift angle corresponds to the desired value for the camshaft shift angle with an accuracy of approximately 8° CA (camshaft angle). The difference between the values can be read off in the lower digital display.

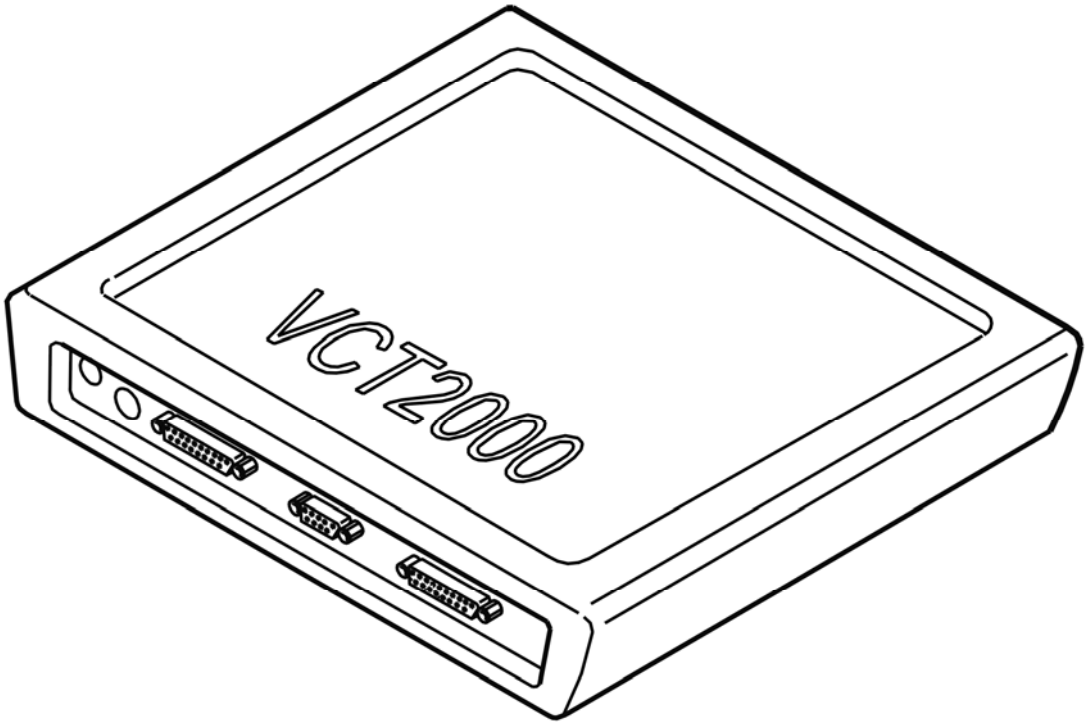

Fig. 227: Identifying VCT2000 Diagnostic Tool Symbol In VIDA
Courtesy of VOLVO CARS CORPORATION

Is the function OK?

- **YES**

  VERIFIED: Troubleshooting has been completed.

- **NO**

  Refer to **INFORMATION**

ECM-P001800: CRANKSHAFT POSITION - CAMSHAFT POSITION CORRELATION - BANK 2 SENSOR A. GENERAL FAILURE INFORMATION. NO SUB TYPE INFORMATION (B6324S5; 2011-2012)

DIAGNOSTIC TROUBLE CODE (DTC) INFORMATION ECM-P001800

see **DIAGNOSTIC TROUBLE CODE (DTC) INFORMATION ECM-P001800**

FAULT-TRACING

see **FAULT-TRACING**

ECM-P001800: CRANKSHAFT POSITION - CAMSHAFT POSITION CORRELATION - BANK 2 SENSOR A. GENERAL FAILURE INFORMATION. NO SUB TYPE INFORMATION (B8444S; 2008-2011)

DIAGNOSTIC TROUBLE CODE (DTC) INFORMATION

see **DIAGNOSTIC TROUBLE CODE (DTC) INFORMATION**

FAULT-TRACING

CHECKING THE STATUS

HINT: Sensor A covers the intake camshaft. Sensor B covers the exhaust camshaft.

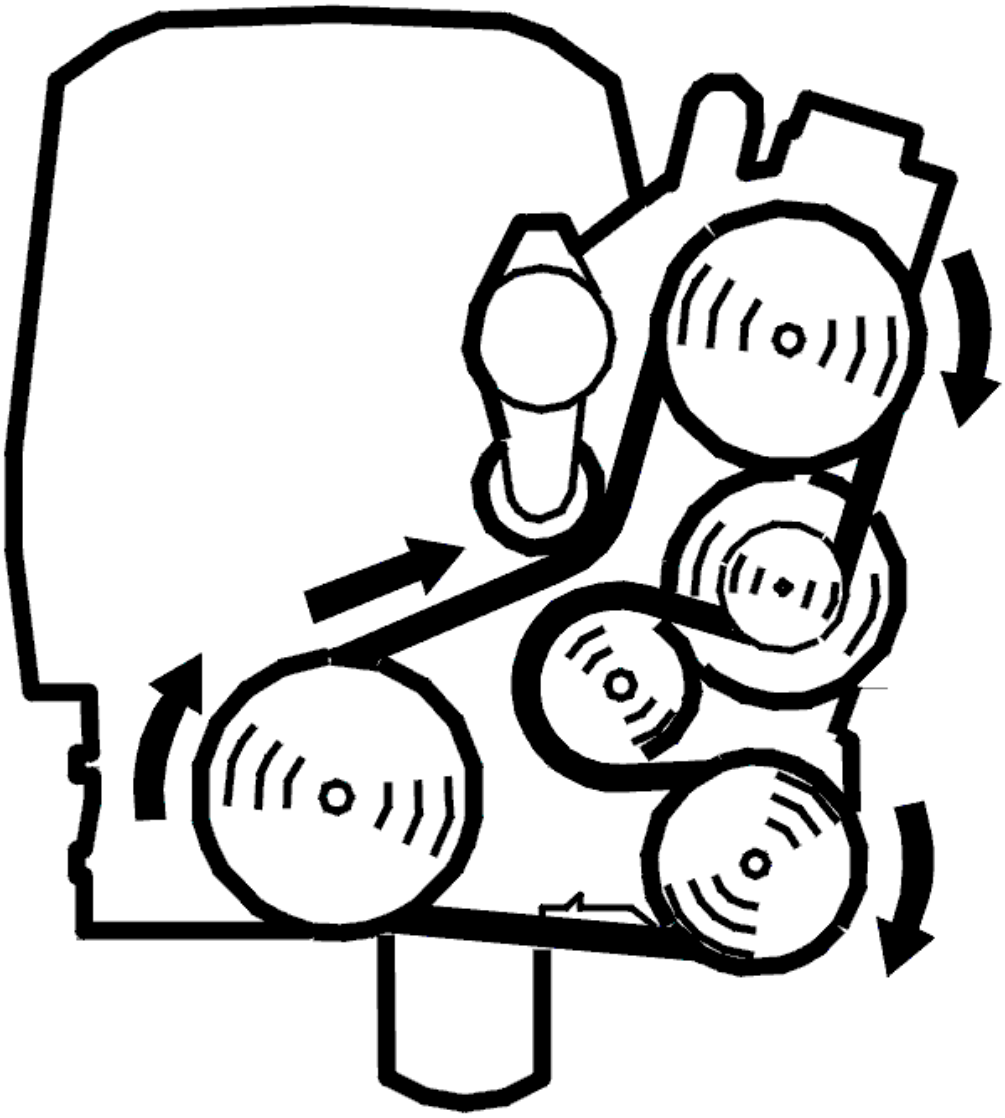

Fig. 228: Belt Routing / Engine Idling - Volvo
Courtesy of VOLVO CARS CORPORATION

- Start the engine.
- Read off the adaption for the camshaft, the camshaft shift angle and desired value for the camshaft shift angle.

  Check that the read off values correspond to the guide values below. The difference between the camshaft shift angle and desired value for camshaft shift angle can be read off from the lower digital display. Note the read off values as a basis for continuing fault-tracing.

  Adaption camshaft

  - Inlet camshaft: 75° CA (camshaft angle) (+/-8° CA)
  - Exhaust camshaft: 120° CA (+/-8° CA)

Camshaft shift angle

- The difference from the desired value of the camshaft shift angle (inlet and exhaust): approximately 8° CA

The fault is permanent if the values are not correct. If the values are correct, this indicates that the fault is intermittent and not presently active.

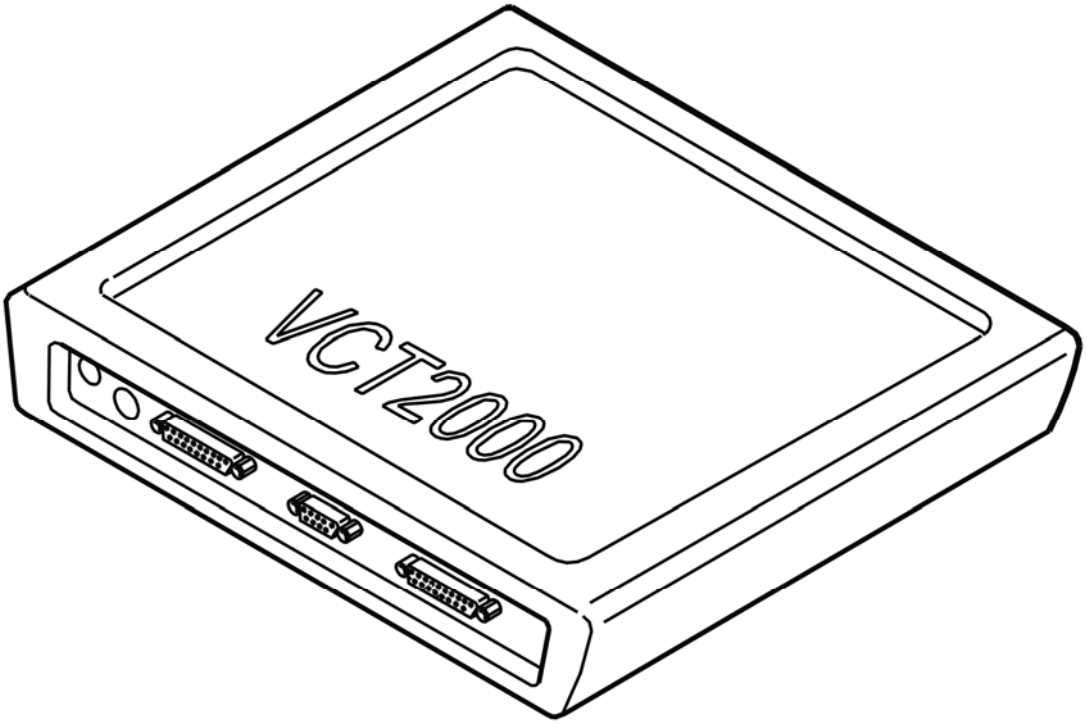

Fig. 229: Identifying VCT2000 Diagnostic Tool Symbol In VIDA
Courtesy of VOLVO CARS CORPORATION

- **Continue**

  Refer to **CHECKING COMPONENTS**

CHECKING COMPONENTS

HINT: Incorrect function on the camshaft reset valve is probably the cause of this diagnostic trouble code (DTC) if:

- The adaption value and camshaft shift angle are correct in the previous check (intermittent fault).
- The adaption value is correct but the camshaft shift angle is incorrect in the previous check.

HINT: Contaminants in the engine oil can damage components in the camshaft control which can cause

function faults.

Check the engine oil grade. Check especially for contaminants.

Remove the camshaft reset valve, check the reset valve and the oil ducts in the cylinder head. Check for contaminants and blockages.

Try a new camshaft reset valve if no fault is found or if the above remedies do not rectify the fault.

HINT: The fault can also be caused by a damaged variable valve timing (VVT) unit.

Remedy as necessary.

Other information

- see **VVT UNIT, RIGHT CYLINDER HEAD**
- see **VVT UNIT, LEFT CYLINDER HEAD**
- see **LOCATION OF COMPONENTS, ENGINE COMPARTMENT**

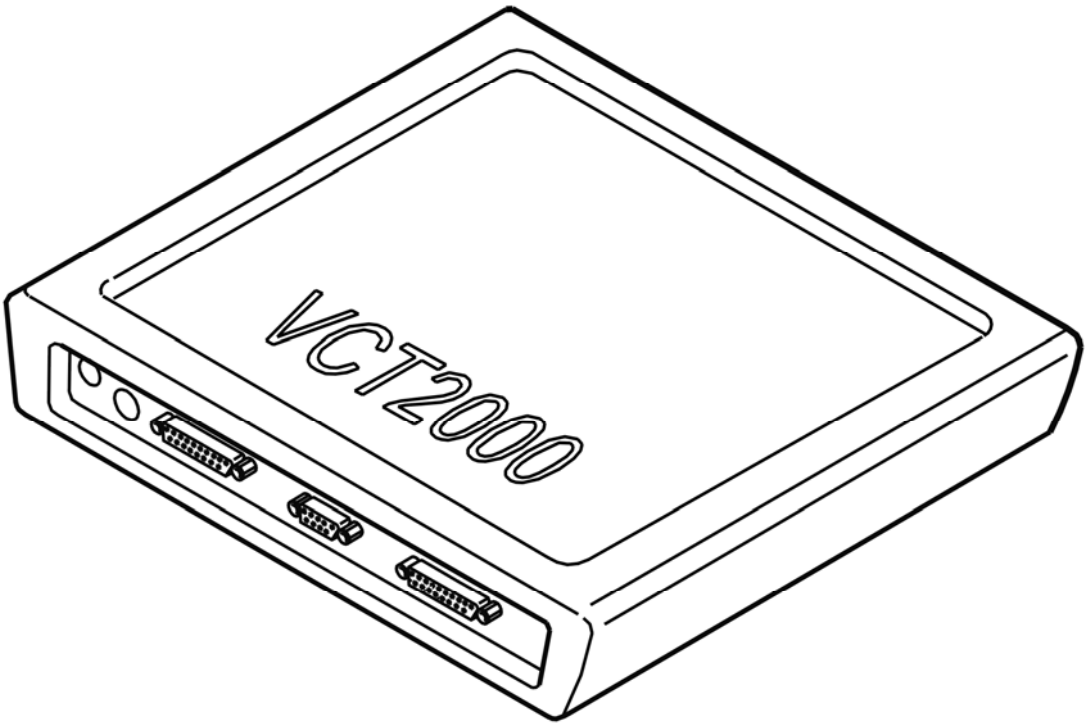

Fig. 230: Identifying VCT2000 Diagnostic Tool Symbol In VIDA
Courtesy of VOLVO CARS CORPORATION

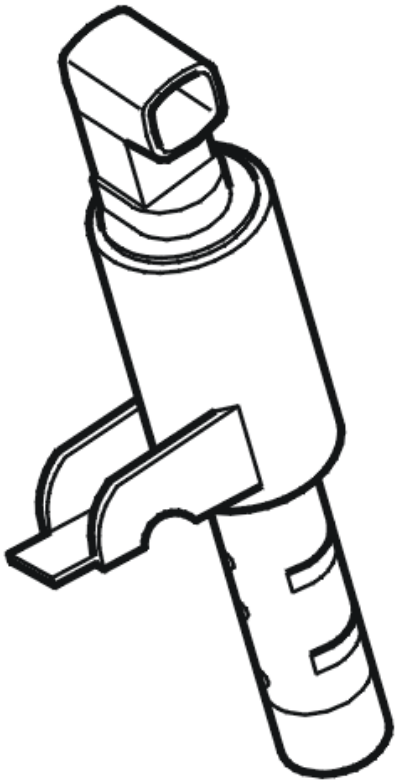

Fig. 231: Identifying Camshaft Reset Valve
Courtesy of VOLVO CARS CORPORATION

- **Continue**

  Refer to **VERIFICATION**

VERIFICATION

VERIFICATION, PART 1

HINT: After carrying out the repair, check that the fault has been remedied.

HINT: In order to verify this diagnostic trouble code (DTC), adaptation of the camshaft must be completed. Adaptation of the camshaft is carried out by the engine control module (ECM) when the engine is at operating temperature, during engine braking (fuel shut-off) above 1500 RPM for at least 10 seconds.

CAUTION: Test driving on the road must be carried out on a road with minimal traffic. Follow the highway code.

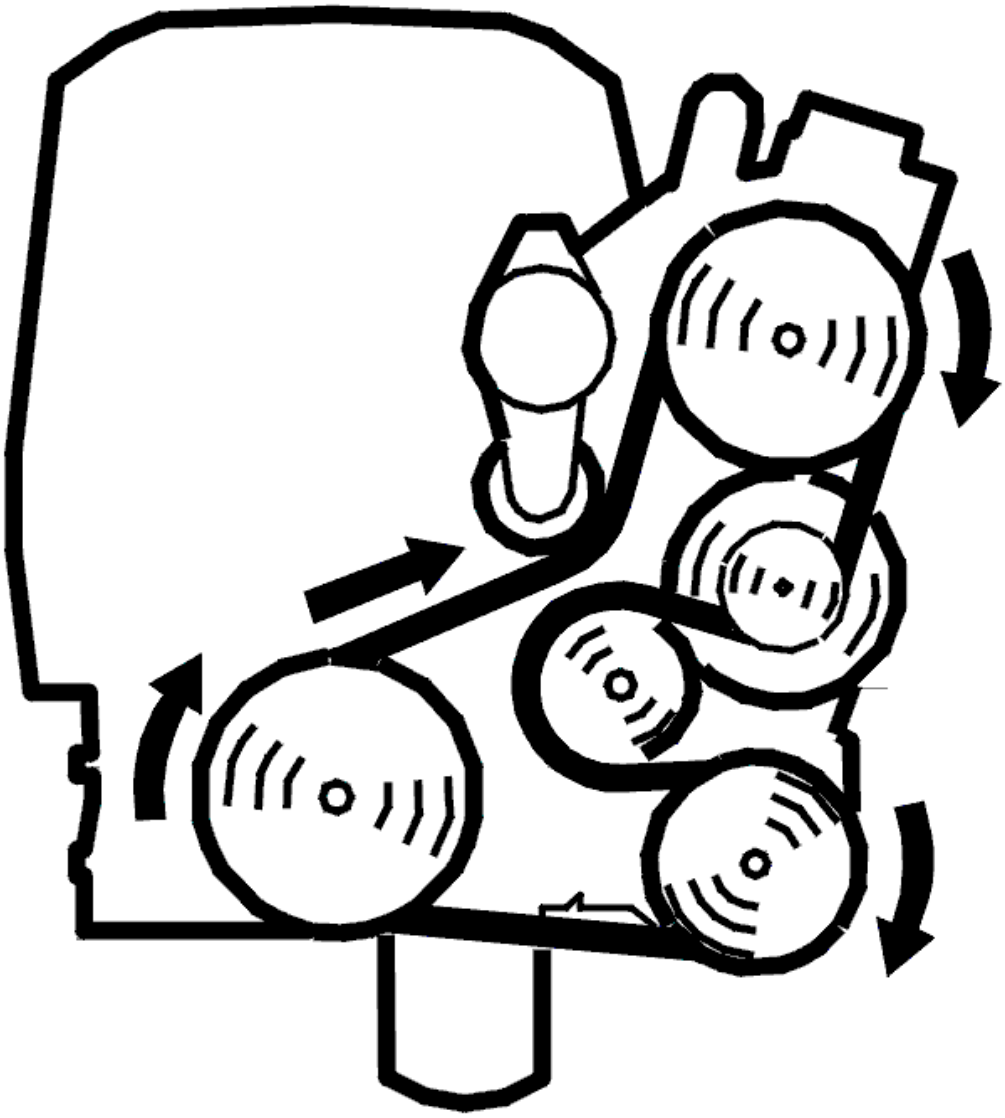

Fig. 232: Belt Routing / Engine Idling - Volvo
Courtesy of VOLVO CARS CORPORATION

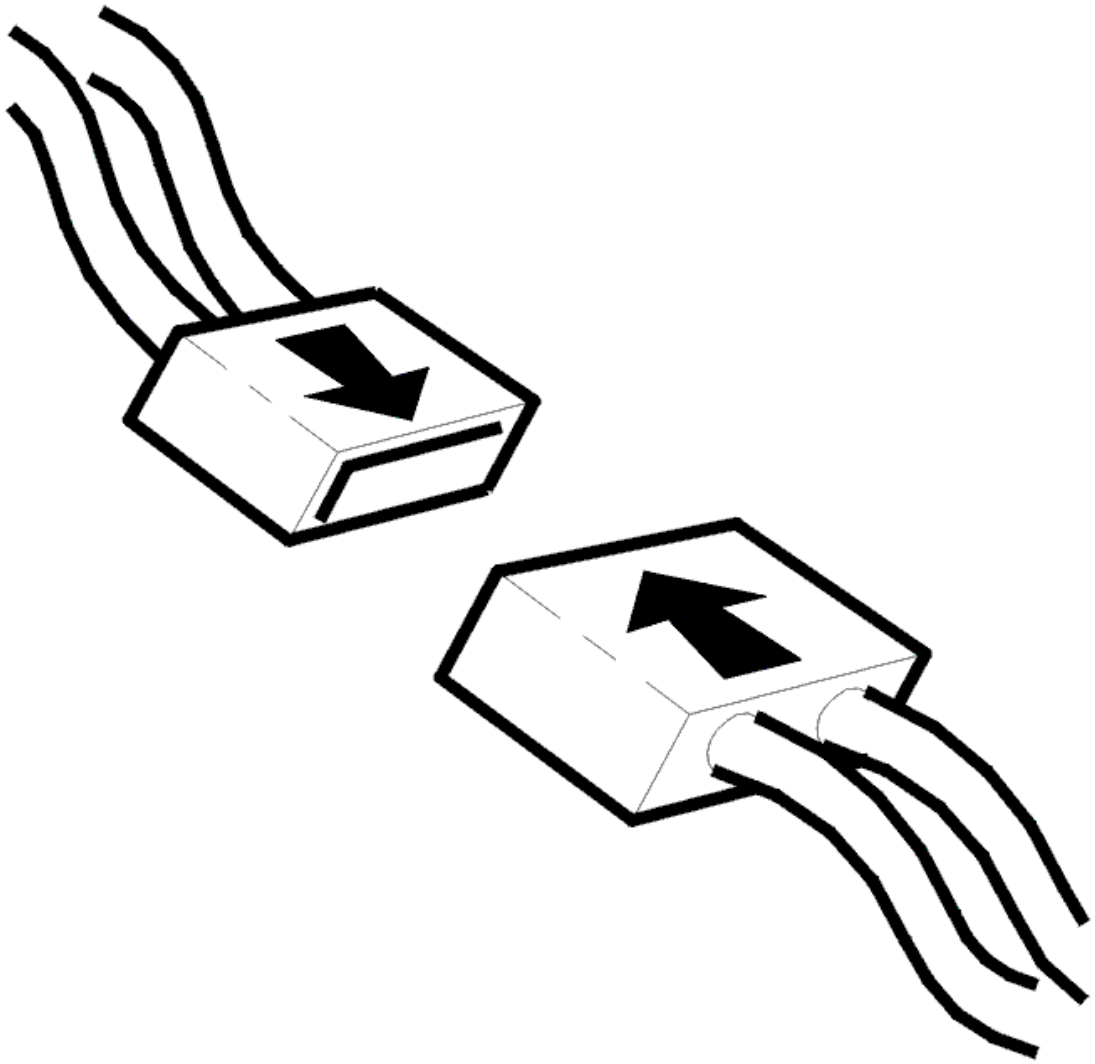

Fig. 233: Connecting Connector
Courtesy of VOLVO CARS CORPORATION

- Ignition off
- Reconnect the connectors, components, etc.
- Start and run the engine to operating temperature.
- Drive the vehicle on the road. Ensure that the conditions for camshaft adaptation are met: engine braking (fuel shut-off) above 1500 RPM for at least 10 seconds. The conditions can be satisfied for example by driving the vehicle with a high engine load (accelerating) up to approximately 90 km/h and then releasing the accelerator pedal for 10 seconds.

NOTE: **In order for the adaptation to be carried out, the accelerator pedal must not be touched during engine braking.**

- Repeat the schedule to ensure that the diagnosis and adaptation are carried out.

- Connect VCT2000 (or appropriate scan tool) to the data link connector **without switching off the engine.**
- Read the diagnostic status and fault status for the diagnostic trouble code by selecting the diagnostic trouble code in the list.

NOTE: If the engine is switched off, the stored fault status will be erased and the test drive will have to be repeated.

Check that the diagnostic status for the diagnostic trouble code (DTC) is "Completed". When the diagnostic status for the diagnostic trouble code (DTC) is "Completed", the engine control module (ECM) has carried out camshaft adaption. If the status is "Not completed" the test drive must be carried out again.

If the function is correct, the fault status must be "No fault found" when the diagnostic is complete.

Check that the value for camshaft adaption is correct when the diagnostic status for the diagnostic trouble code (DTC) is "Completed".

- Inlet camshaft: 75° CA (camshaft angle) (+/-8° CA)
- Exhaust camshaft: 120° CA (+/-8° CA)

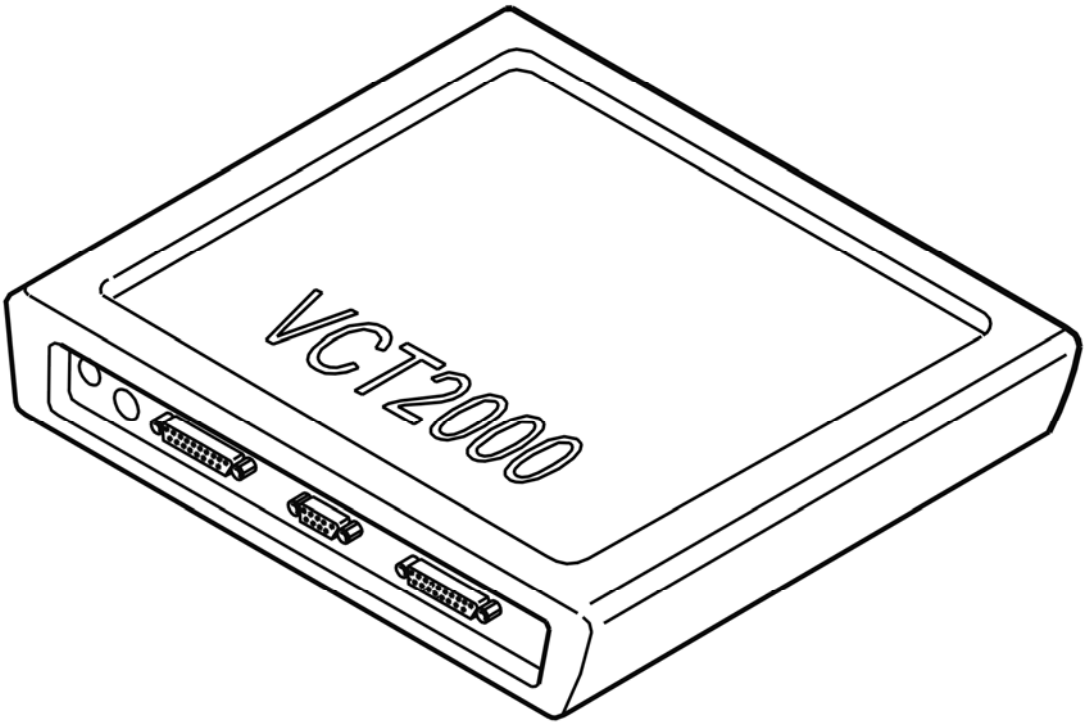

Fig. 234: Identifying VCT2000 Diagnostic Tool Symbol In VIDA
Courtesy of VOLVO CARS CORPORATION

Is the function OK?

- **YES**

  Refer to **VERIFICATION, PART 2**

- **NO**

  Refer to **INFORMATION**

VERIFICATION, PART 2

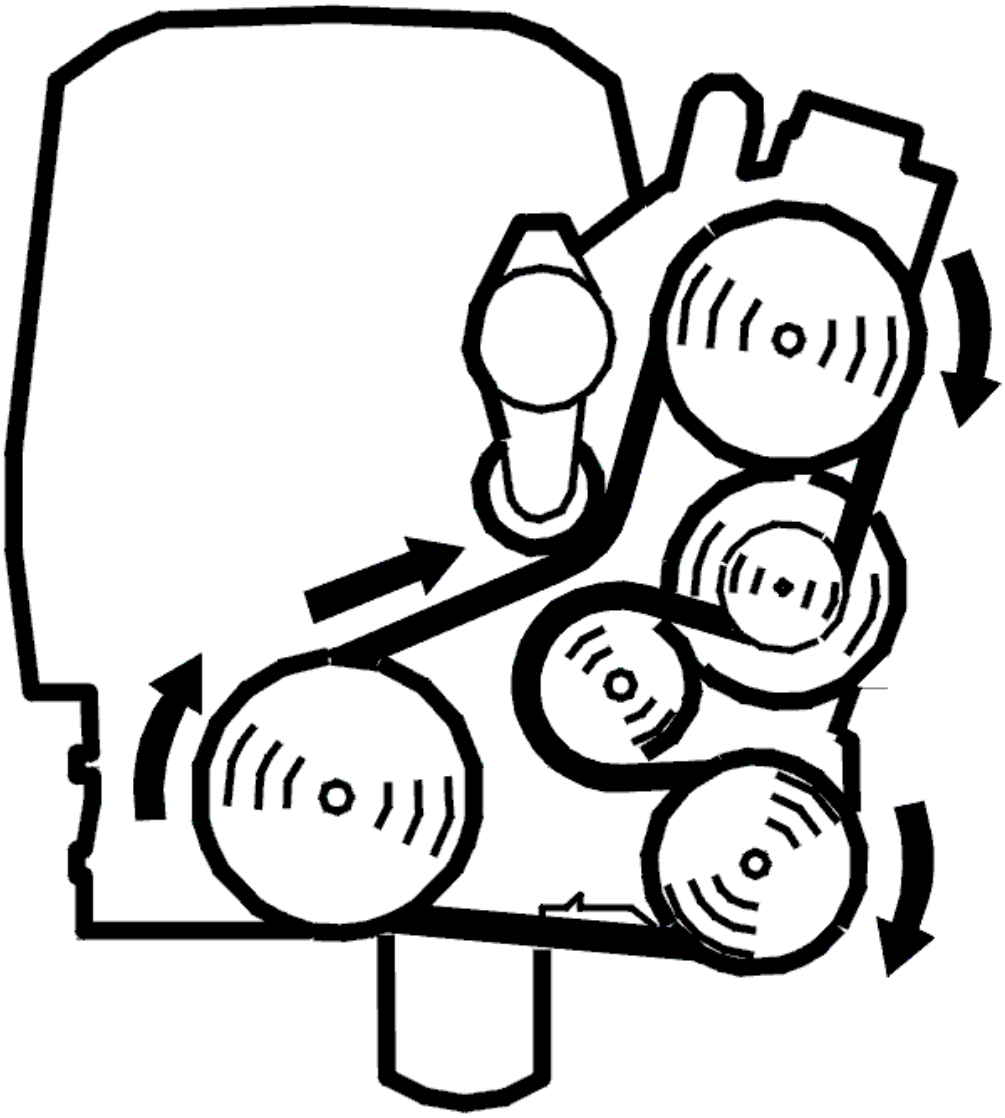

Fig. 235: Belt Routing / Engine Idling - Volvo
Courtesy of VOLVO CARS CORPORATION

- Engine running.

- Check the function. Read off the shift angle of the camshaft and the desired shift angle of the camshaft.

  Check that the camshaft shift angle corresponds to the desired value for the camshaft shift angle with an accuracy of approximately 8° CA (camshaft angle). The difference between the values can be read off in the lower digital display.

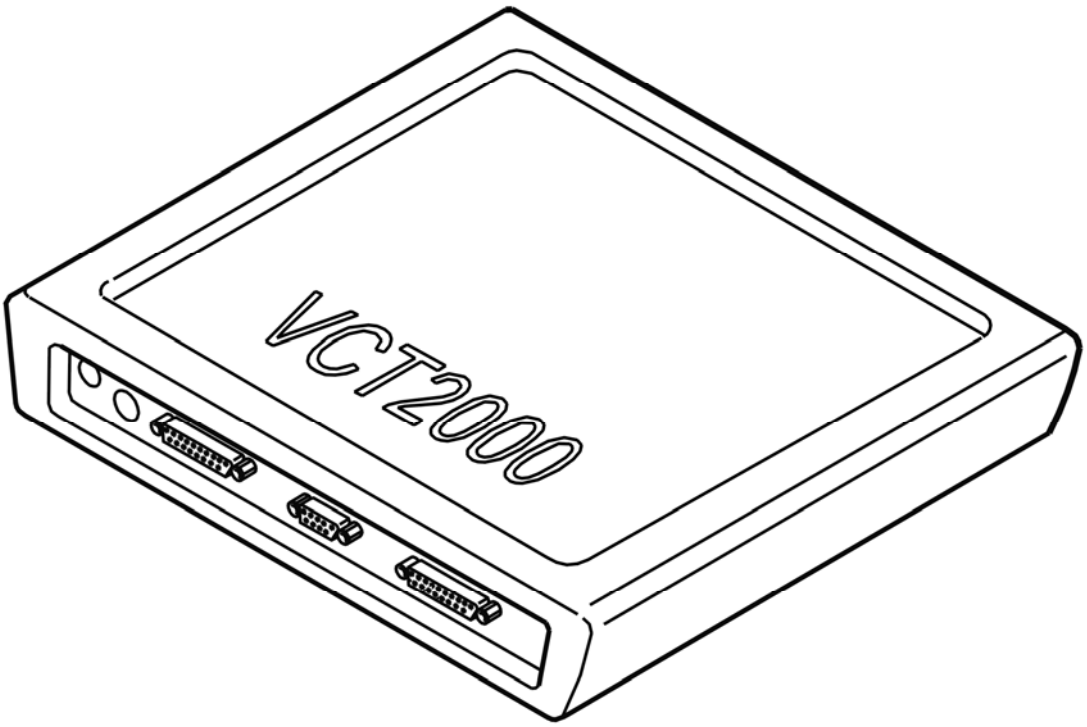

Fig. 236: Identifying VCT2000 Diagnostic Tool Symbol In VIDA
Courtesy of VOLVO CARS CORPORATION

Is the function OK?

- **YES**

  VERIFIED: Troubleshooting has been completed.

- **NO**

  Refer to **INFORMATION**

INFORMATION

FAULT-TRACING INFORMATION

The fault should have been detected and remedied. As this is not the case fault-tracing has failed.

Exit fault-tracing for this diagnostic trouble code (DTC) or make another attempt.

ECM-P001800: CRANKSHAFT POSITION - CAMSHAFT POSITION CORRELATION - BANK 2 SENSOR A. GENERAL FAULT INFORMATION. NO INFORMATION ABOUT FAULT TYPE (B8444S; 2005-2007)

DIAGNOSTIC TROUBLE CODE (DTC) INFORMATION

see **DIAGNOSTIC TROUBLE CODE (DTC) INFORMATION**

FAULT TRACING ECM-P001800

CHECKING THE STATUS

HINT: The diagnostic trouble code (DTC) specifies the relevant camshaft.

- ECM-P001600: Camshaft inlet, bank 1.
  - Bank 1 (cylinder row nearest the front): cylinders 1, 3, 5 and 7.
  - Bank 2 (cylinder row furthest to the rear, nearest the passenger compartment): cylinders 2, 4, 6, and 8.
- ECM-P001700: Camshaft exhaust, bank 1.
  - Bank 1 (cylinder row nearest the front): cylinders 1, 3, 5 and 7.
  - Bank 2 (cylinder row furthest to the rear, nearest the passenger compartment): cylinders 2, 4, 6, and 8.
- ECM-P001800: Camshaft inlet, bank 2.
  - Bank 1 (cylinder row nearest the front): cylinders 1, 3, 5 and 7.
  - Bank 2 (cylinder row furthest to the rear, nearest the passenger compartment): cylinders 2, 4, 6, and 8.
- ECM-P001900: Camshaft exhaust, bank 2.
  - Bank 1 (cylinder row nearest the front): cylinders 1, 3, 5 and 7.
  - Bank 2 (cylinder row furthest to the rear, nearest the passenger compartment): cylinders 2, 4, 6, and 8.

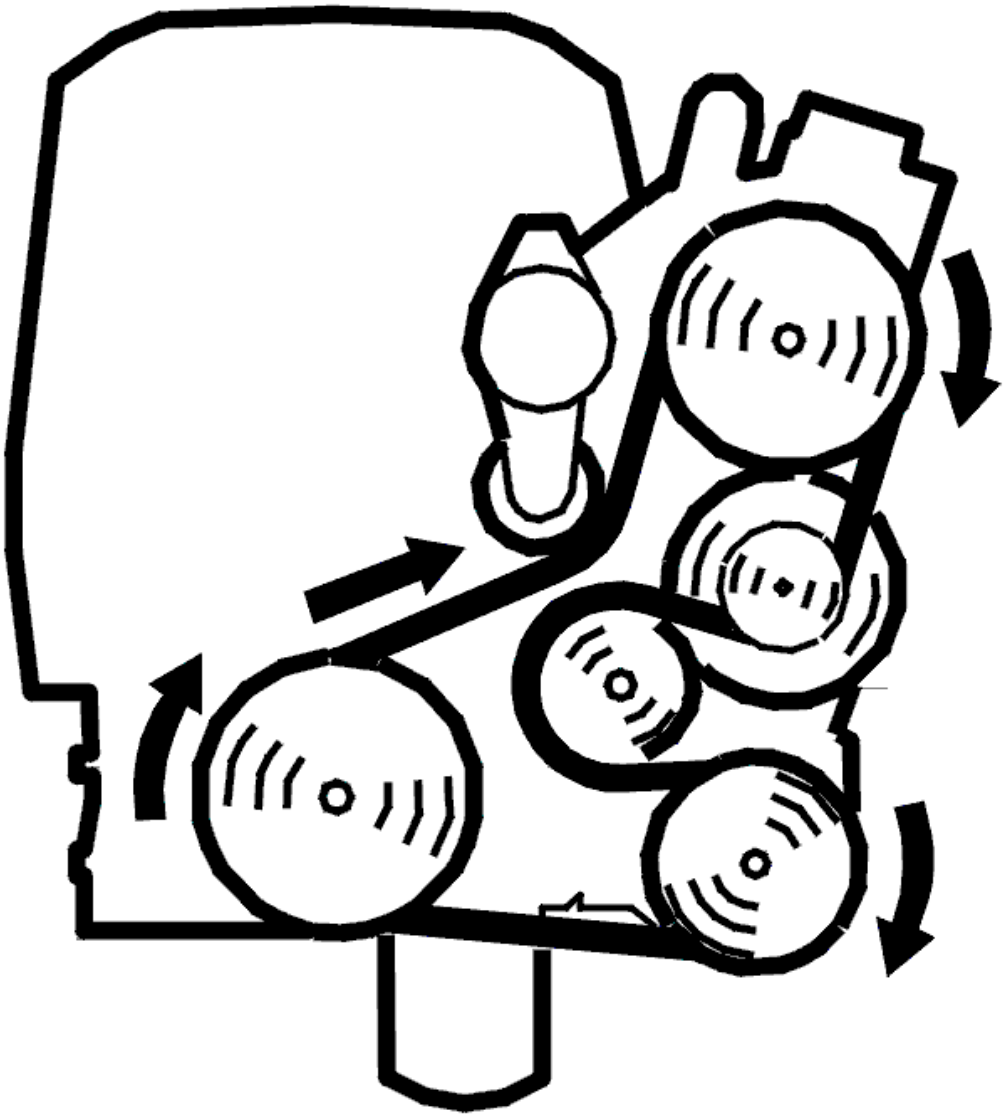

Fig. 237: Belt Routing / Engine Idling - Volvo
Courtesy of VOLVO CARS CORPORATION

- Start the engine.
- Read off the adaption for the camshaft, the camshaft shift angle and desired value for the camshaft shift angle.

  Check that the read off values correspond to the guide values below. The difference between the camshaft shift angle and desired value for camshaft shift angle can be read off from the lower digital display. Note the read off values as a basis for continuing fault-tracing.

  Adaption camshaft

  - Inlet camshaft: 75° CA (camshaft angle) (+/-8° CA)
  - Exhaust camshaft: 120° CA (+/-8° CA)

Camshaft shift angle

- The difference from the desired value of the camshaft shift angle (inlet and exhaust): approximately 8° CA

The fault is permanent if the values are not correct. If the values are correct, this indicates that the fault is intermittent and not presently active.

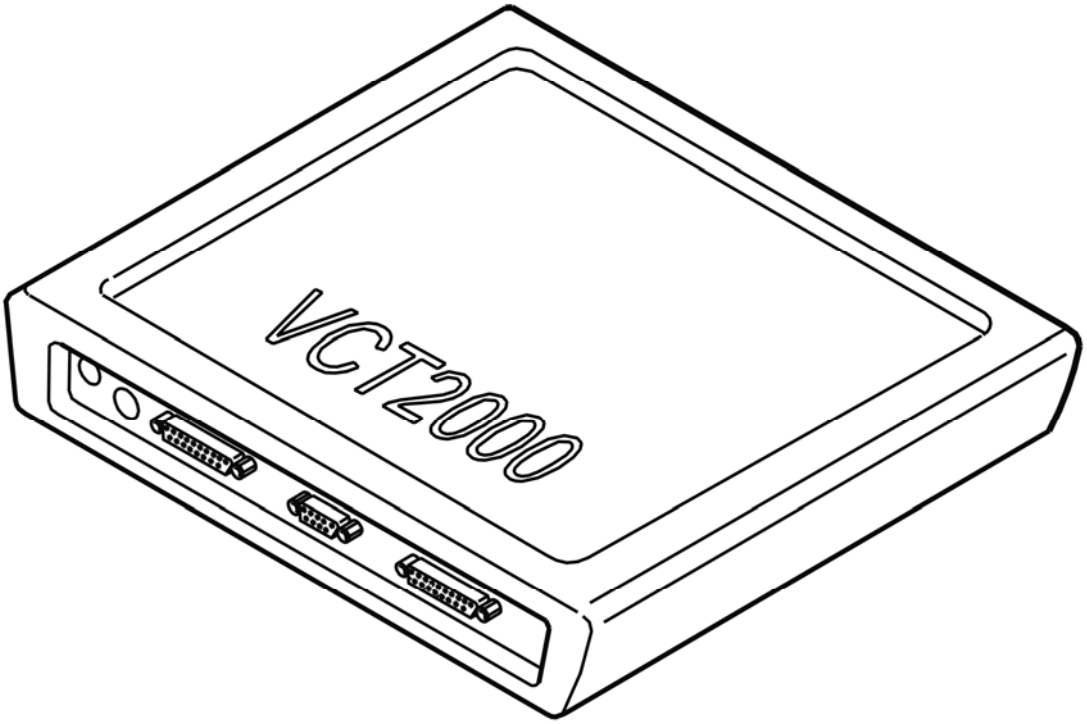

Fig. 238: Identifying VCT2000 Diagnostic Tool Symbol In VIDA
Courtesy of VOLVO CARS CORPORATION

- **Continue**

  Refer to **CHECKING COMPONENTS**

CHECKING COMPONENTS

HINT: Incorrect function on the camshaft reset valve is probably the cause of this diagnostic trouble code (DTC) if:

- The adaption value and camshaft shift angle are correct in the previous check (intermittent fault).
- The adaption value is correct but the camshaft shift angle is incorrect in the previous check.

HINT: Contaminants in the engine oil can damage components in the camshaft control which can cause

function faults.

Check the engine oil grade. Check especially for contaminants.

Check the default settings of the camshafts.

Remove the camshaft reset valve, check the reset valve and the oil ducts in the cylinder head. Check for contaminants and blockages.

Try a new camshaft reset valve if no fault is found or if the above remedies do not rectify the fault.

HINT: The fault can also be caused by a damaged variable valve timing (VVT) unit.

Remedy as necessary.

Other information

- see **VVT UNIT, RIGHT CYLINDER HEAD**
- see **VVT UNIT, LEFT CYLINDER HEAD**
- see **LOCATION OF COMPONENTS, ENGINE COMPARTMENT**

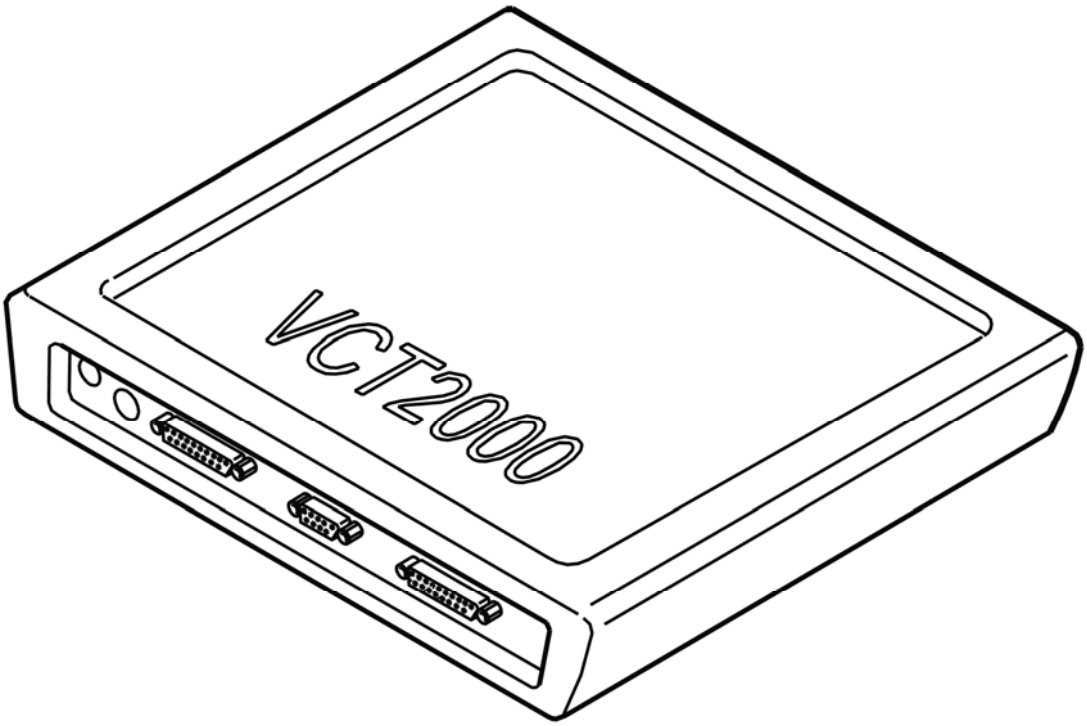

Fig. 239: Identifying VCT2000 Diagnostic Tool Symbol In VIDA
Courtesy of VOLVO CARS CORPORATION

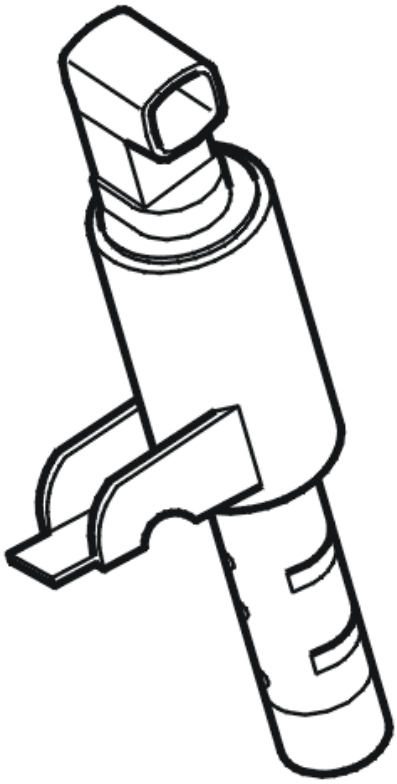

Fig. 240: Identifying Camshaft Reset Valve
Courtesy of VOLVO CARS CORPORATION

- **Continue**

  Refer to **VERIFICATION**

VERIFICATION

VERIFICATION, PART 1

HINT: After carrying out the repair, check that the fault has been remedied.

HINT: In order to verify this diagnostic trouble code (DTC), adaptation of the camshaft must be completed. Adaptation of the camshaft is carried out by the engine control module (ECM) when the engine is at operating temperature, during engine braking (fuel shut-off) above 1500 RPM for at least 10 seconds.

CAUTION: Test driving on the road must be carried out on a road with minimal traffic. Follow the highway code.

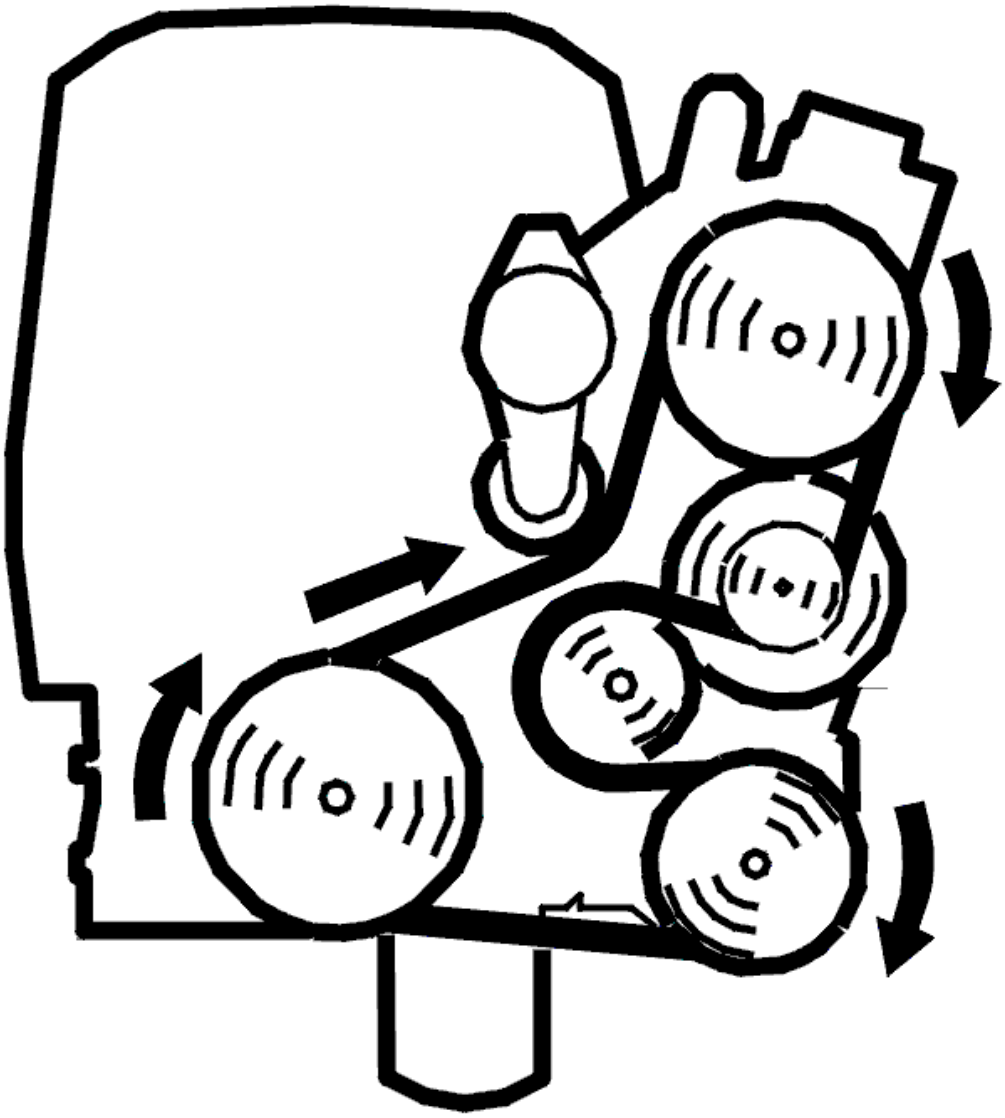

Fig. 241: Belt Routing / Engine Idling - Volvo
Courtesy of VOLVO CARS CORPORATION

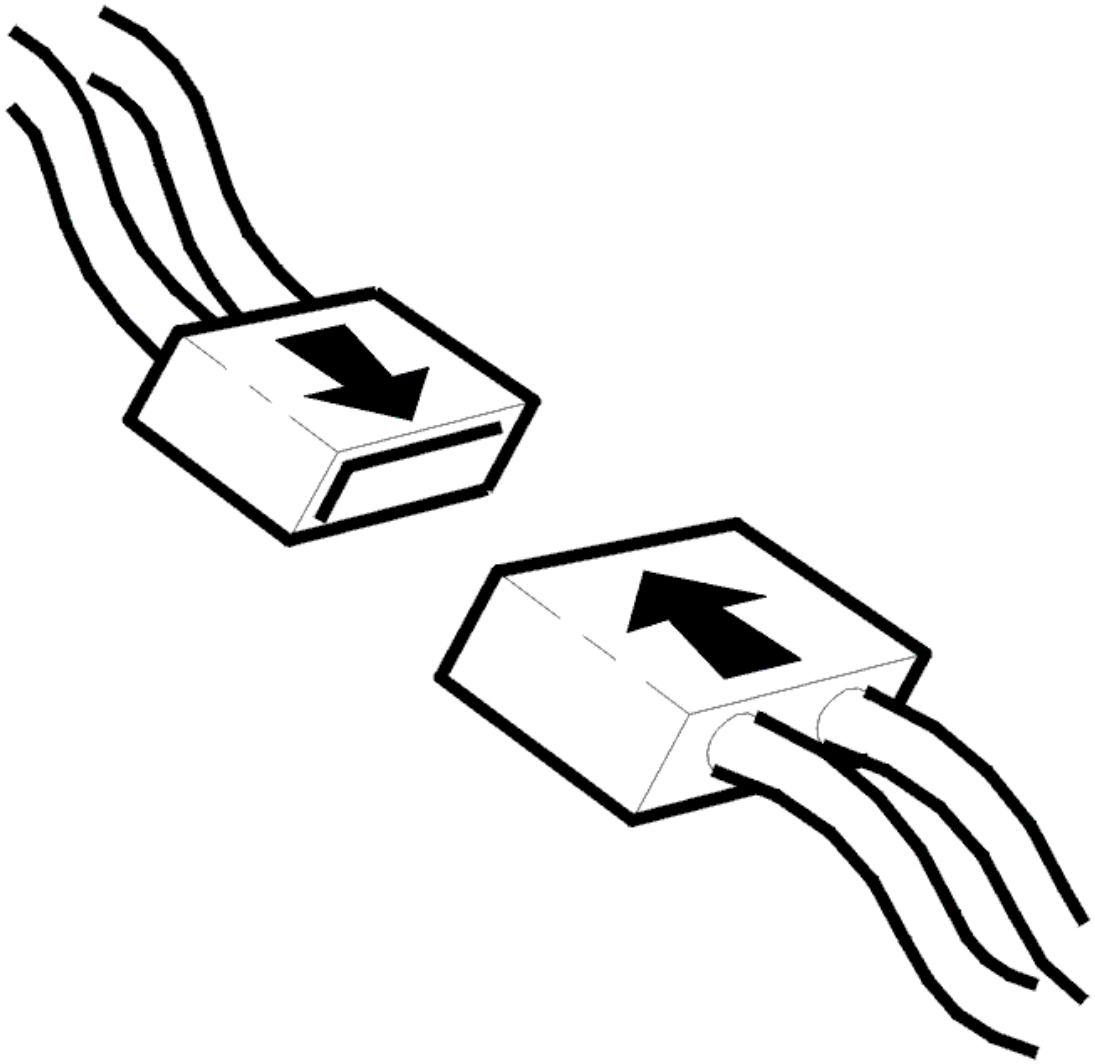

Fig. 242: Connecting Connector
Courtesy of VOLVO CARS CORPORATION

- Ignition off
- Reconnect the connectors, components, etc.
- Start and run the engine to operating temperature.
- Drive the vehicle on the road. Ensure that the conditions for camshaft adaptation are met: engine braking (fuel shut-off) above 1500 RPM for at least 10 seconds. The conditions can be satisfied for example by driving the vehicle with a high engine load (accelerating) up to approximately 90 km/h and then releasing the accelerator pedal for 10 seconds.

NOTE: **In order for the adaptation to be carried out, the accelerator pedal must not be touched during engine braking.**

- Repeat the schedule to ensure that the diagnosis and adaptation are carried out.

- Connect VCT2000 (or appropriate scan tool) to the data link connector **without switching off the engine.**
- Read the diagnostic status and fault status for the diagnostic trouble code by selecting the diagnostic trouble code in the list.

NOTE: If the engine is switched off, the stored fault status will be erased and the test drive will have to be repeated.

Check that the diagnostic status for the diagnostic trouble code (DTC) is "Completed". When the diagnostic status for the diagnostic trouble code (DTC) is "Completed", the engine control module (ECM) has carried out camshaft adaption. If the status is "Not completed" the test drive must be carried out again.

If the function is correct, the fault status must be "No fault found" when the diagnostic is complete.

Check that the value for camshaft adaption is correct when the diagnostic status for the diagnostic trouble code (DTC) is "Completed".

- Inlet camshaft: 75° CA (camshaft angle) (+/-8° CA)
- Exhaust camshaft: 120° CA (+/-8° CA)

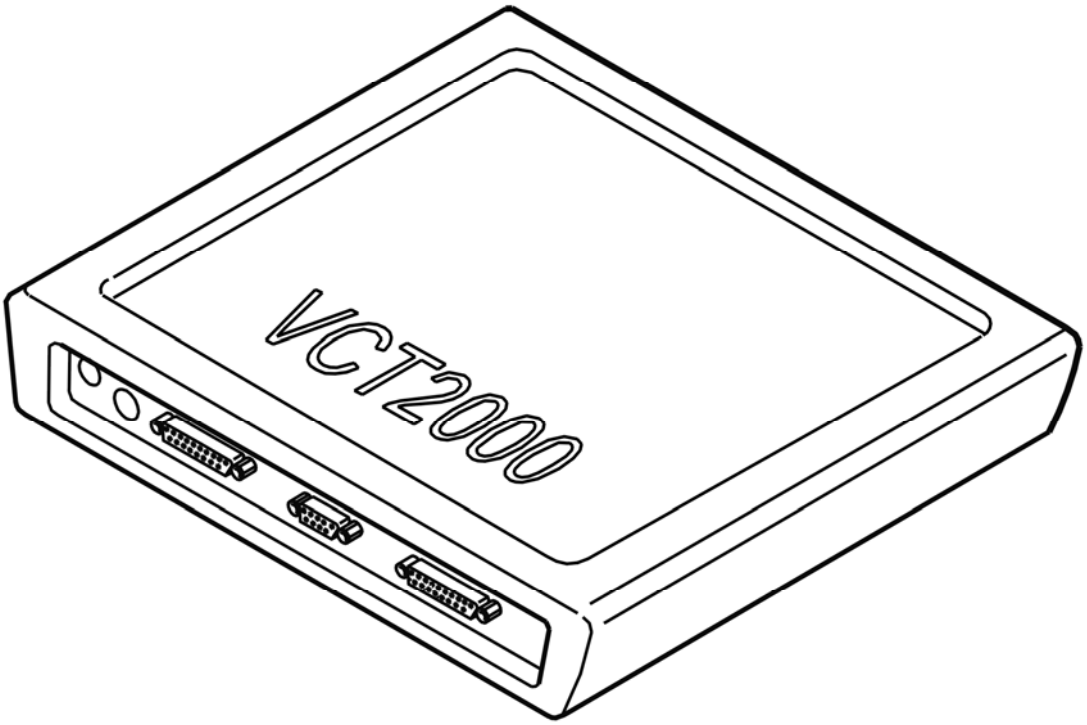

Fig. 243: Identifying VCT2000 Diagnostic Tool Symbol In VIDA
Courtesy of VOLVO CARS CORPORATION

Is the function OK?

- **YES**

  Refer to **VERIFICATION, PART 2**

- **NO**

  Refer to **INFORMATION**

VERIFICATION, PART 2

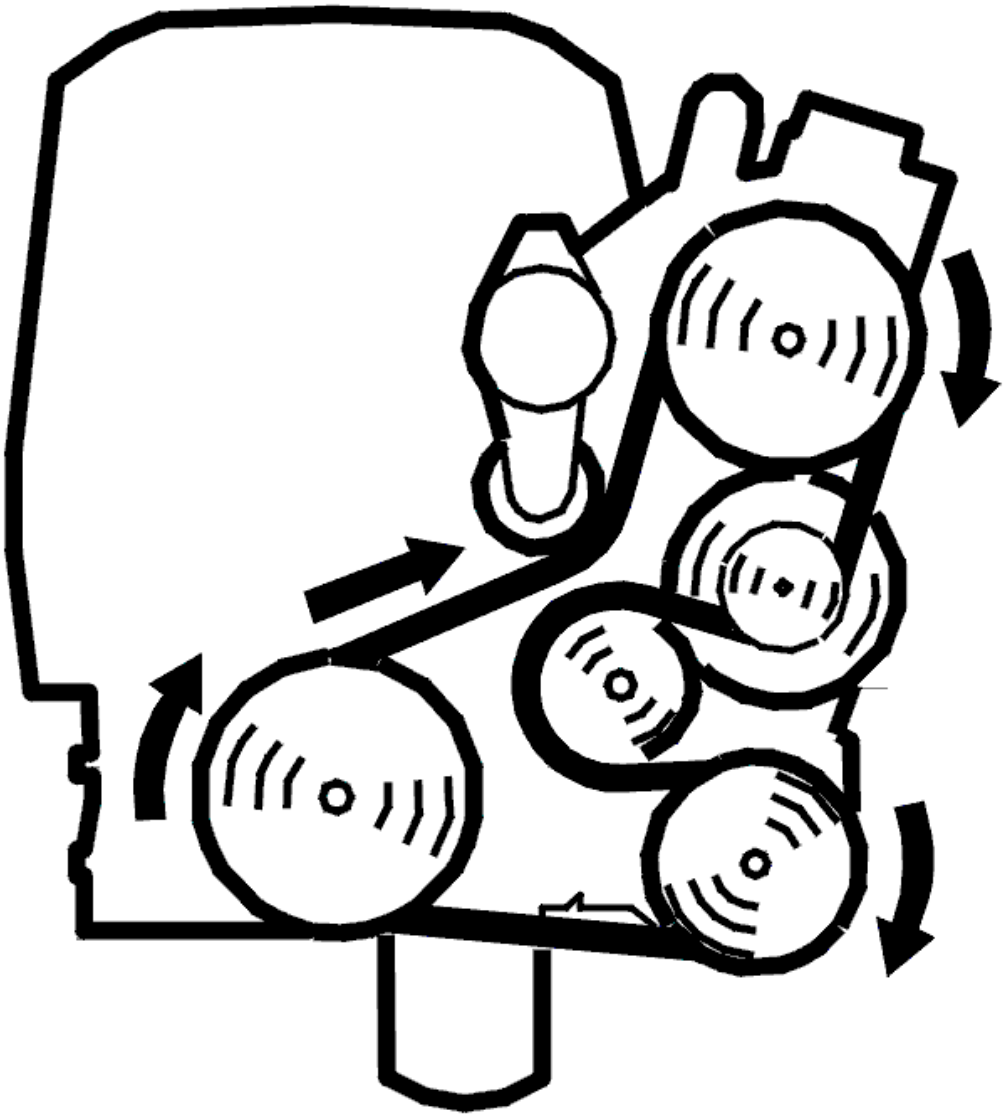

Fig. 244: Belt Routing / Engine Idling - Volvo
Courtesy of VOLVO CARS CORPORATION

- Engine running.

- Check the function. Read off the shift angle of the camshaft and the desired shift angle of the camshaft.

  Check that the camshaft shift angle corresponds to the desired value for the camshaft shift angle with an accuracy of approximately 8° CA (camshaft angle). The difference between the values can be read off in the lower digital display.

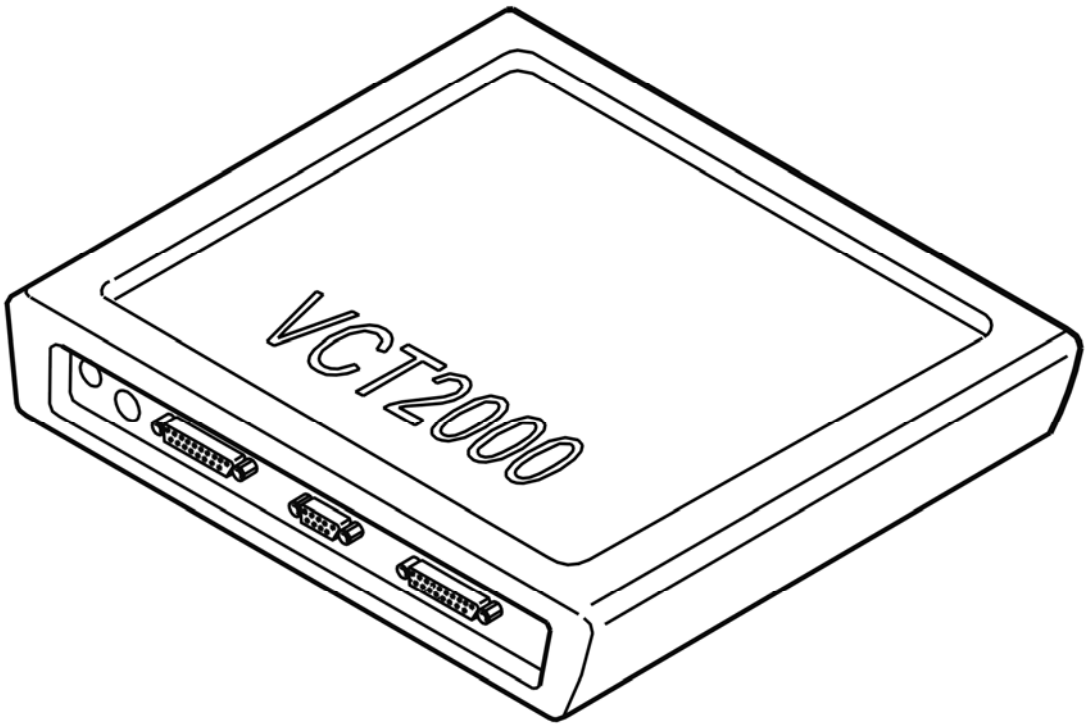

Fig. 245: Identifying VCT2000 Diagnostic Tool Symbol In VIDA
Courtesy of VOLVO CARS CORPORATION

Is the function OK?

- **YES**

  VERIFIED: Troubleshooting has been completed.

- **NO**

  Refer to **INFORMATION**

INFORMATION

FAULT-TRACING INFORMATION

The fault should have been detected and remedied. As this is not the case fault-tracing has failed.

Exit fault-tracing for this diagnostic trouble code (DTC) or make another attempt.

ECM-P001900: CRANKSHAFT POSITION - CAMSHAFT POSITION CORRELATION - BANK 2 SENSOR B. GENERAL FAILURE INFORMATION. NO SUB TYPE INFORMATION (B8444S; 2008-2011)

DIAGNOSTIC TROUBLE CODE (DTC) INFORMATION

see **DIAGNOSTIC TROUBLE CODE (DTC) INFORMATION**

FAULT-TRACING

CHECKING THE STATUS

HINT: Sensor A covers the intake camshaft. Sensor B covers the exhaust camshaft.

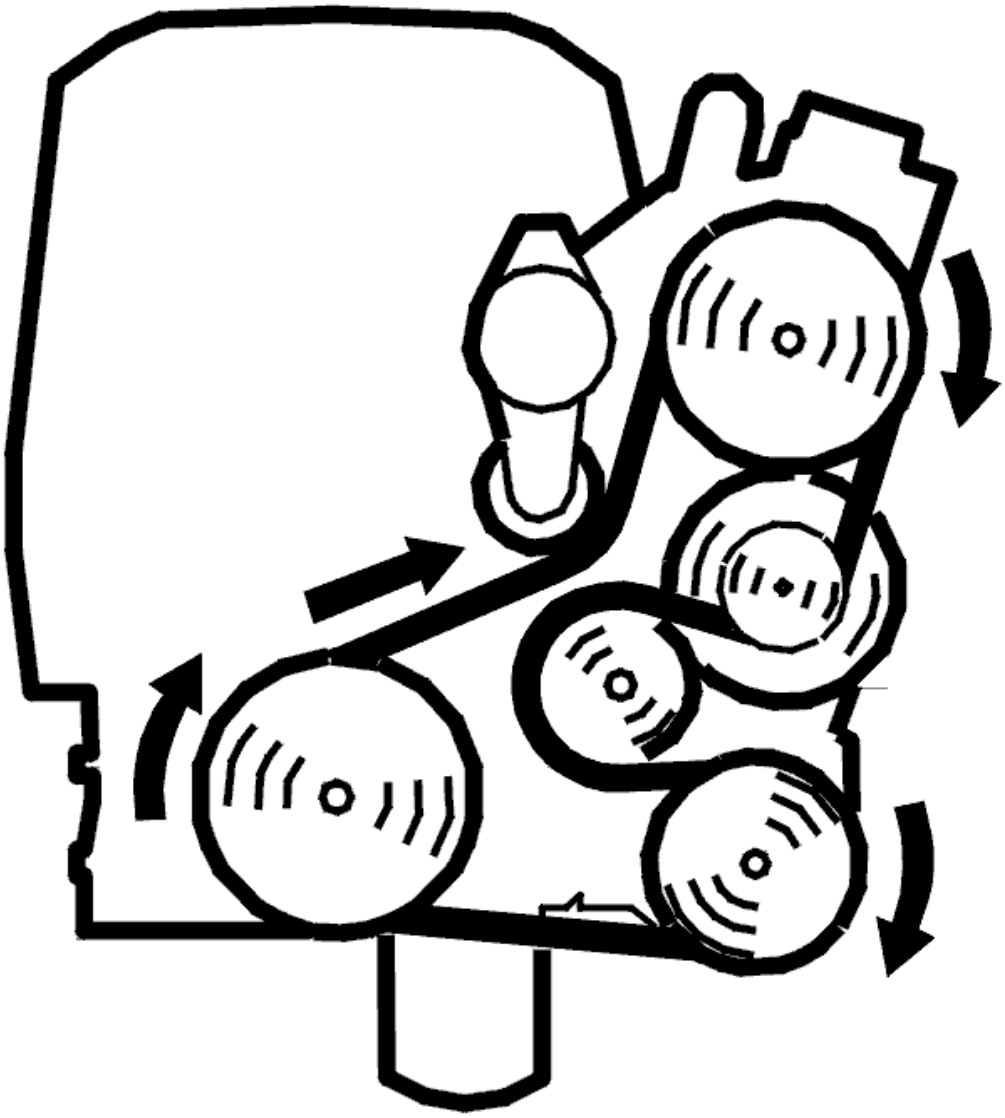

Fig. 246: Belt Routing / Engine Idling - Volvo
Courtesy of VOLVO CARS CORPORATION

- Start the engine.
- Read off the adaption for the camshaft, the camshaft shift angle and desired value for the camshaft shift angle.

  Check that the read off values correspond to the guide values below. The difference between the camshaft shift angle and desired value for camshaft shift angle can be read off from the lower digital display. Note the read off values as a basis for continuing fault-tracing.

  Adaption camshaft

  - Inlet camshaft: 75° CA (camshaft angle) (+/-8° CA)
  - Exhaust camshaft: 120° CA (+/-8° CA)

Camshaft shift angle

- The difference from the desired value of the camshaft shift angle (inlet and exhaust): approximately 8° CA

The fault is permanent if the values are not correct. If the values are correct, this indicates that the fault is intermittent and not presently active.

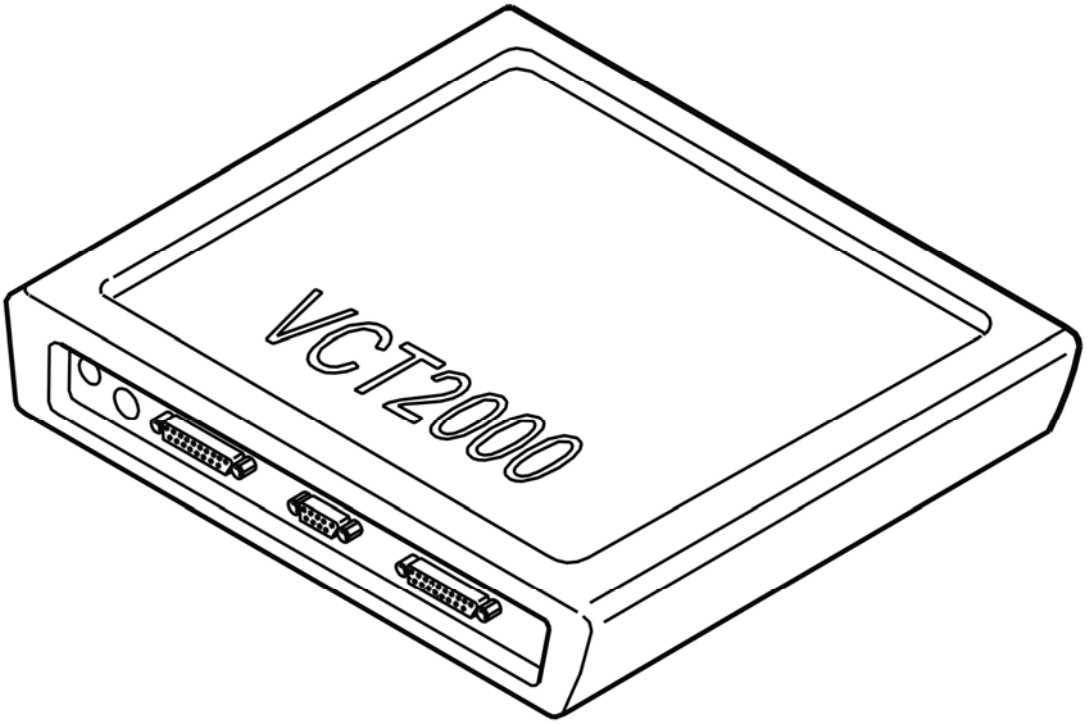

Fig. 247: Identifying VCT2000 Diagnostic Tool Symbol In VIDA
Courtesy of VOLVO CARS CORPORATION

- **Continue**

  Refer to **CHECKING COMPONENTS**

CHECKING COMPONENTS

HINT: Incorrect function on the camshaft reset valve is probably the cause of this diagnostic trouble code (DTC) if:

- The adaption value and camshaft shift angle are correct in the previous check (intermittent fault).
- The adaption value is correct but the camshaft shift angle is incorrect in the previous check.

HINT: Contaminants in the engine oil can damage components in the camshaft control which can cause

function faults.

Check the engine oil grade. Check especially for contaminants.

Remove the camshaft reset valve, check the reset valve and the oil ducts in the cylinder head. Check for contaminants and blockages.

Try a new camshaft reset valve if no fault is found or if the above remedies do not rectify the fault.

HINT: The fault can also be caused by a damaged variable valve timing (VVT) unit.

Remedy as necessary.

Other information

- see **VVT UNIT, RIGHT CYLINDER HEAD**
- see **VVT UNIT, LEFT CYLINDER HEAD**
- see **LOCATION OF COMPONENTS, ENGINE COMPARTMENT**

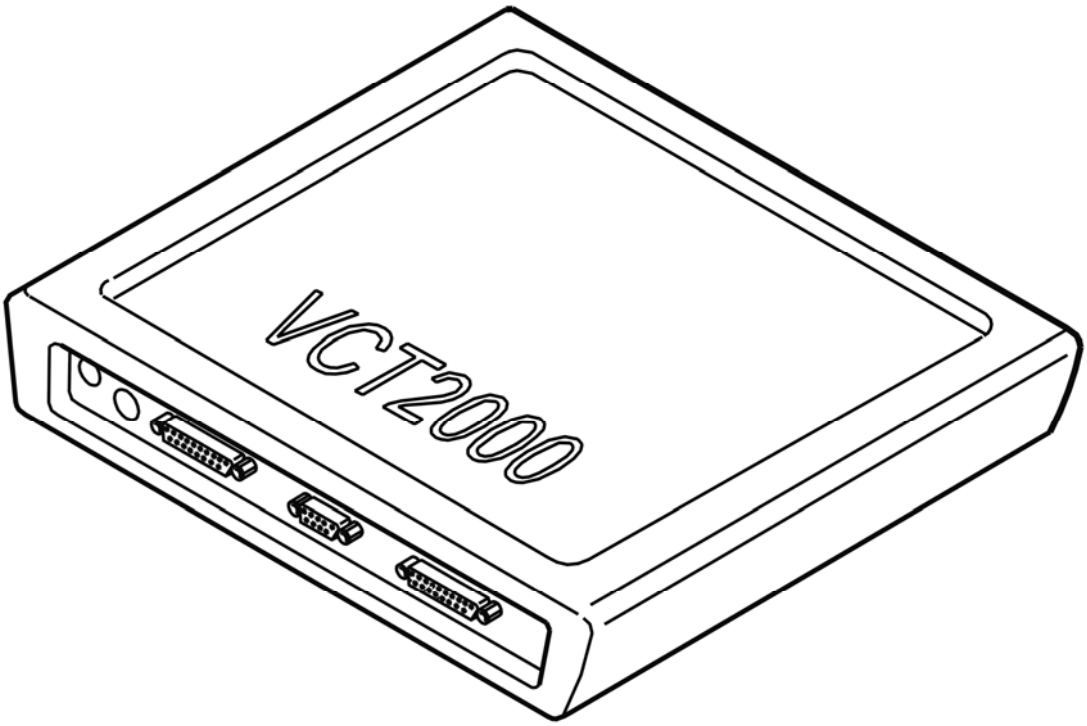

Fig. 248: Identifying VCT2000 Diagnostic Tool Symbol In VIDA
Courtesy of VOLVO CARS CORPORATION

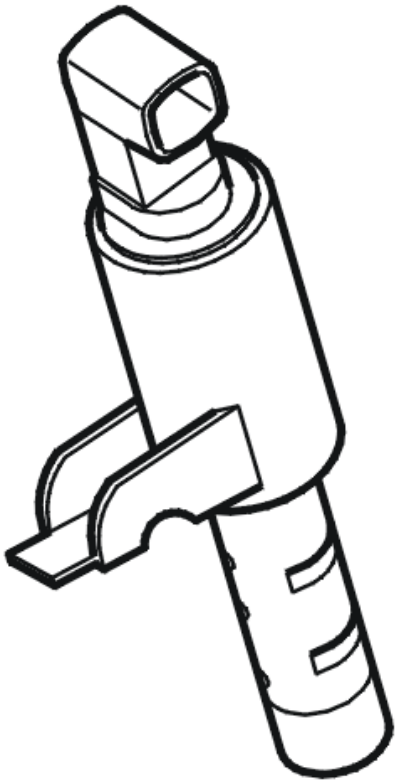

Fig. 249: Identifying Camshaft Reset Valve
Courtesy of VOLVO CARS CORPORATION

- **Continue**

  Refer to **VERIFICATION**

VERIFICATION

VERIFICATION, PART 1

HINT: After carrying out the repair, check that the fault has been remedied.

HINT: In order to verify this diagnostic trouble code (DTC), adaptation of the camshaft must be completed. Adaptation of the camshaft is carried out by the engine control module (ECM) when the engine is at operating temperature, during engine braking (fuel shut-off) above 1500 RPM for at least 10 seconds.

CAUTION: Test driving on the road must be carried out on a road with minimal traffic. Follow the highway code.

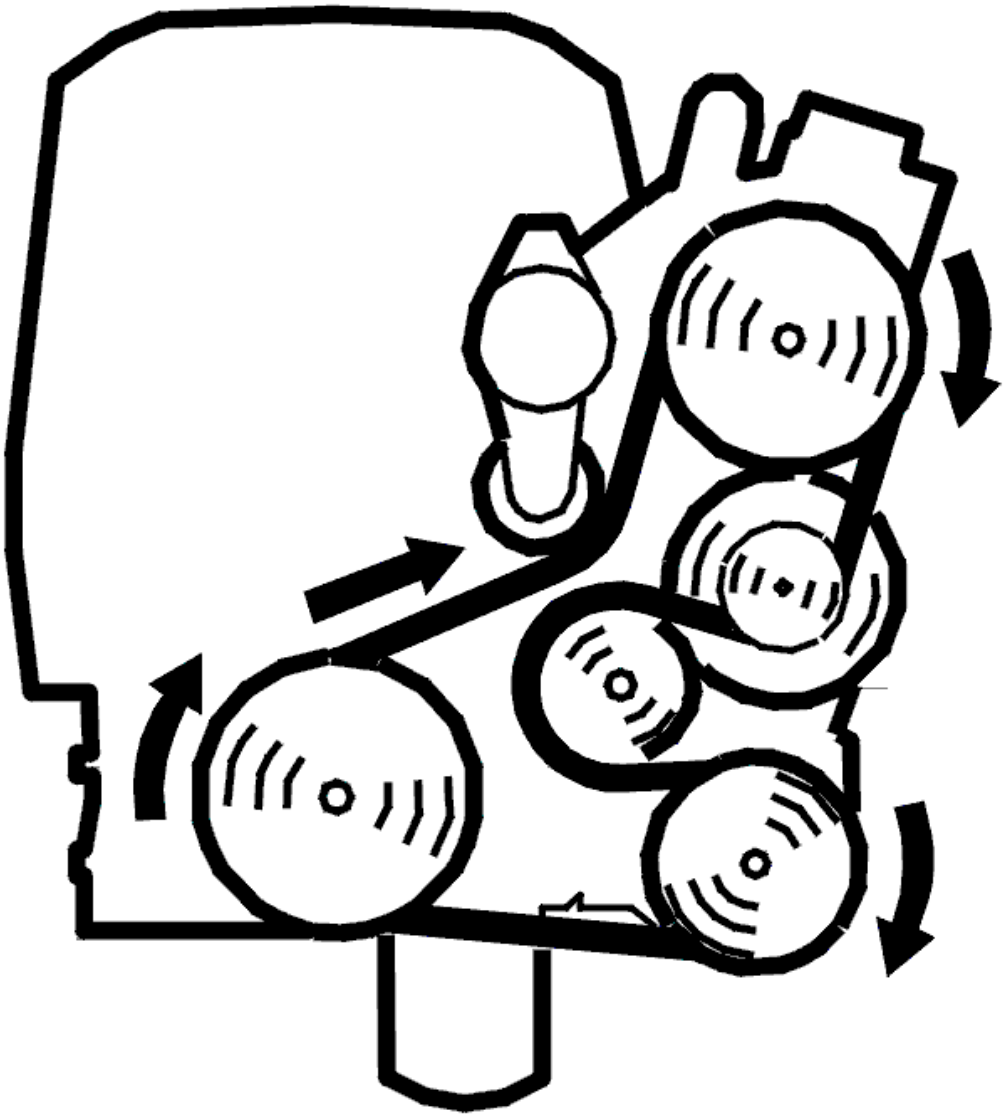

Fig. 250: Belt Routing / Engine Idling - Volvo
Courtesy of VOLVO CARS CORPORATION

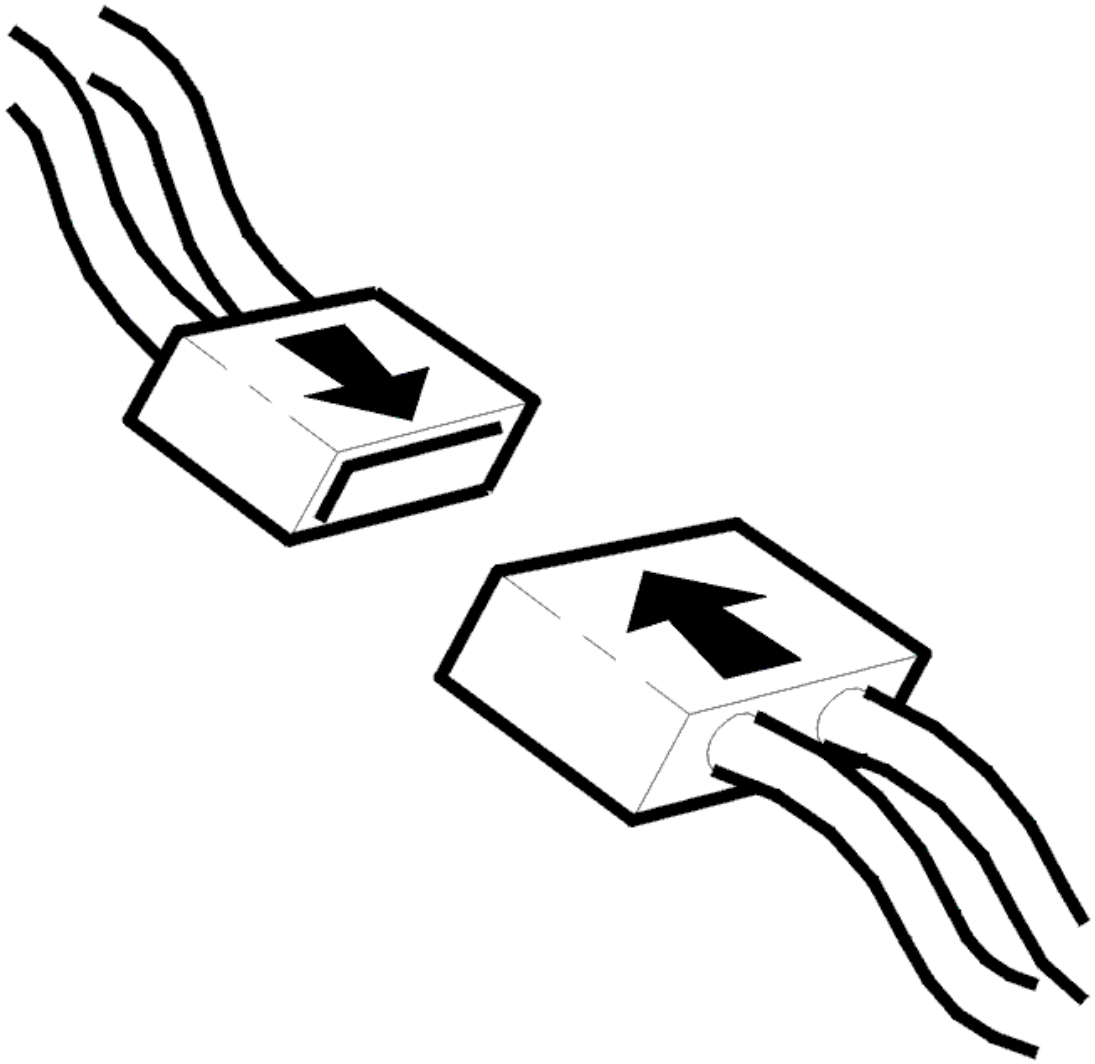

Fig. 251: Connecting Connector
Courtesy of VOLVO CARS CORPORATION

- Ignition off
- Reconnect the connectors, components, etc.
- Start and run the engine to operating temperature.
- Drive the vehicle on the road. Ensure that the conditions for camshaft adaptation are met: engine braking (fuel shut-off) above 1500 RPM for at least 10 seconds. The conditions can be satisfied for example by driving the vehicle with a high engine load (accelerating) up to approximately 90 km/h and then releasing the accelerator pedal for 10 seconds.

NOTE: **In order for the adaptation to be carried out, the accelerator pedal must not be touched during engine braking.**

- Repeat the schedule to ensure that the diagnosis and adaptation are carried out.

- Connect VCT2000 (or appropriate scan tool) to the data link connector **without switching off the engine.**
- Read the diagnostic status and fault status for the diagnostic trouble code by selecting the diagnostic trouble code in the list.

NOTE: If the engine is switched off, the stored fault status will be erased and the test drive will have to be repeated.

Check that the diagnostic status for the diagnostic trouble code (DTC) is "Completed". When the diagnostic status for the diagnostic trouble code (DTC) is "Completed", the engine control module (ECM) has carried out camshaft adaption. If the status is "Not completed" the test drive must be carried out again.

If the function is correct, the fault status must be "No fault found" when the diagnostic is complete.

Check that the value for camshaft adaption is correct when the diagnostic status for the diagnostic trouble code (DTC) is "Completed".

- Inlet camshaft: 75° CA (camshaft angle) (+/-8° CA)
- Exhaust camshaft: 120° CA (+/-8° CA)

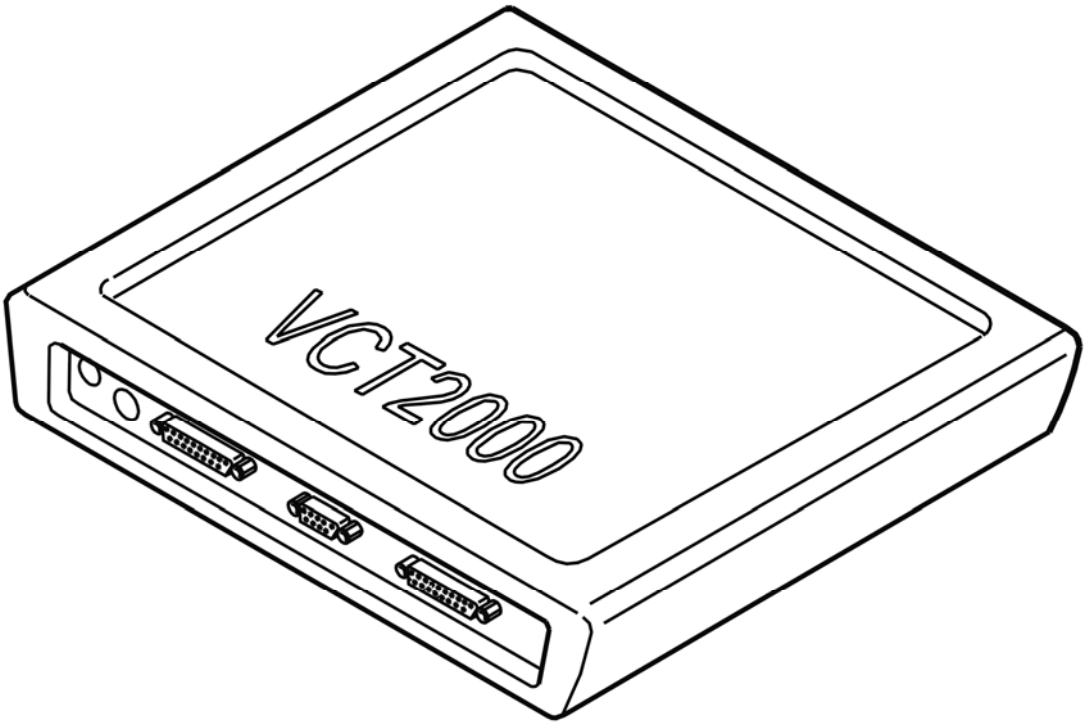

Fig. 252: Identifying VCT2000 Diagnostic Tool Symbol In VIDA
Courtesy of VOLVO CARS CORPORATION

Is the function OK?

- **YES**

  Refer to **VERIFICATION, PART 2**

- **NO**

  Refer to **INFORMATION**

VERIFICATION, PART 2

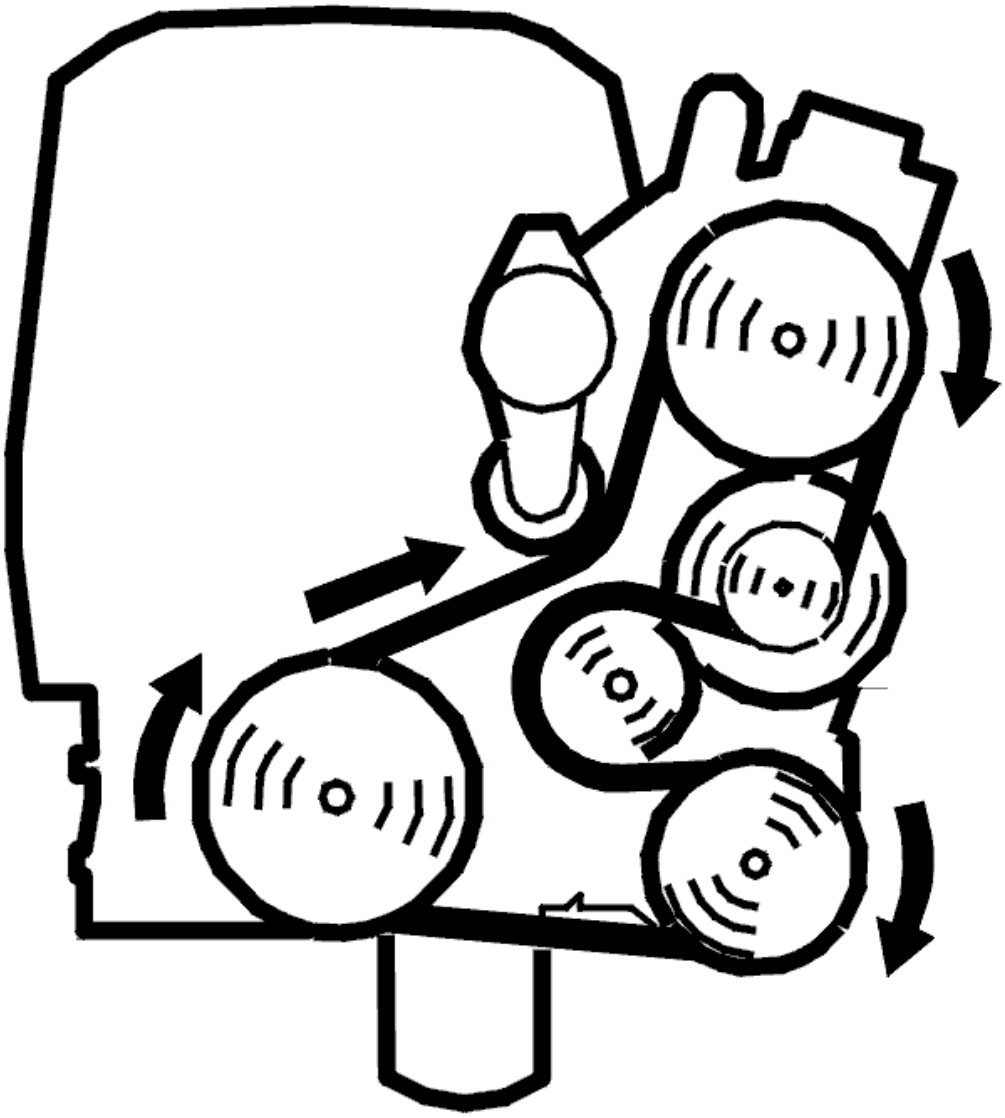

Fig. 253: Belt Routing / Engine Idling - Volvo
Courtesy of VOLVO CARS CORPORATION

- Engine running.

- Check the function. Read off the shift angle of the camshaft and the desired shift angle of the camshaft.

  Check that the camshaft shift angle corresponds to the desired value for the camshaft shift angle with an accuracy of approximately 8° CA (camshaft angle). The difference between the values can be read off in the lower digital display.

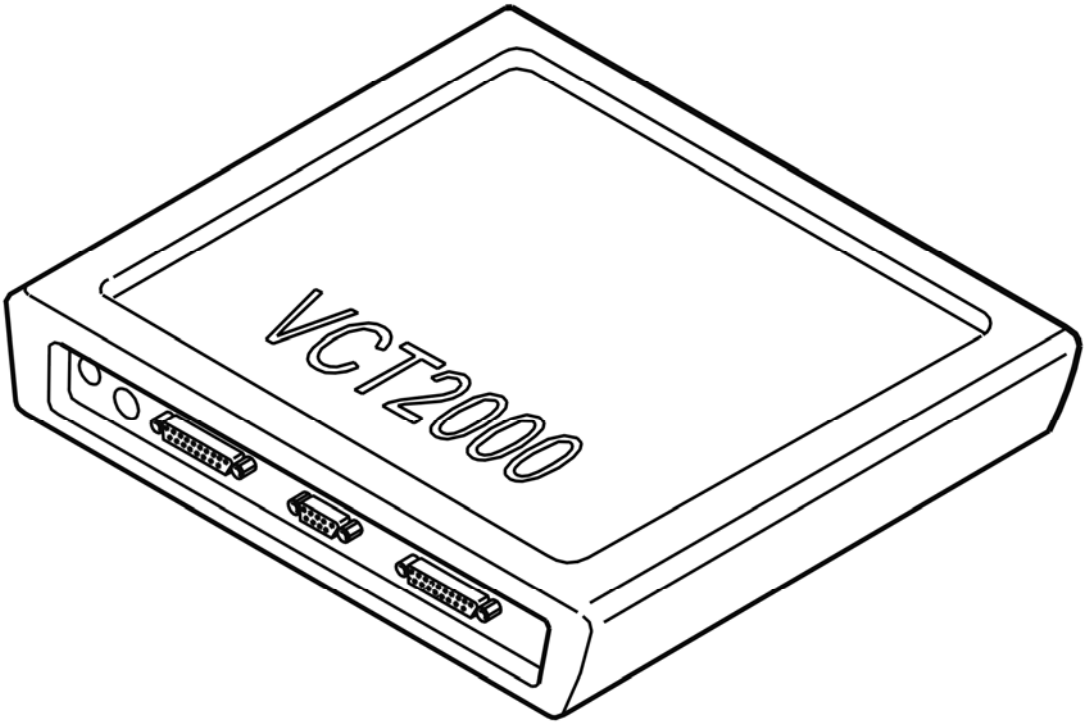

Fig. 254: Identifying VCT2000 Diagnostic Tool Symbol In VIDA
Courtesy of VOLVO CARS CORPORATION

Is the function OK?

- **YES**

  VERIFIED: Troubleshooting has been completed.

- **NO**

  Refer to **INFORMATION**

INFORMATION

FAULT-TRACING INFORMATION

The fault should have been detected and remedied. As this is not the case fault-tracing has failed.

Exit fault-tracing for this diagnostic trouble code (DTC) or make another attempt.

ECM-P001900: CRANKSHAFT POSITION - CAMSHAFT POSITION CORRELATION - BANK 2 SENSOR B. GENERAL FAULT INFORMATION. NO INFORMATION ABOUT FAULT TYPE (B8444S; 2005-2007)

DIAGNOSTIC TROUBLE CODE (DTC) INFORMATION

see **DIAGNOSTIC TROUBLE CODE (DTC) INFORMATION**

FAULT TRACING ECM-P001900

CHECKING THE STATUS

HINT: The diagnostic trouble code (DTC) specifies the relevant camshaft.

- ECM-P001600: Camshaft inlet, bank 1.
  - Bank 1 (cylinder row nearest the front): cylinders 1, 3, 5 and 7.
  - Bank 2 (cylinder row furthest to the rear, nearest the passenger compartment): cylinders 2, 4, 6, and 8.
- ECM-P001700: Camshaft exhaust, bank 1.
  - Bank 1 (cylinder row nearest the front): cylinders 1, 3, 5 and 7.
  - Bank 2 (cylinder row furthest to the rear, nearest the passenger compartment): cylinders 2, 4, 6, and 8.
- ECM-P001800: Camshaft inlet, bank 2.
  - Bank 1 (cylinder row nearest the front): cylinders 1, 3, 5 and 7.
  - Bank 2 (cylinder row furthest to the rear, nearest the passenger compartment): cylinders 2, 4, 6, and 8.
- ECM-P001900: Camshaft exhaust, bank 2.
  - Bank 1 (cylinder row nearest the front): cylinders 1, 3, 5 and 7.
  - Bank 2 (cylinder row furthest to the rear, nearest the passenger compartment): cylinders 2, 4, 6, and 8.

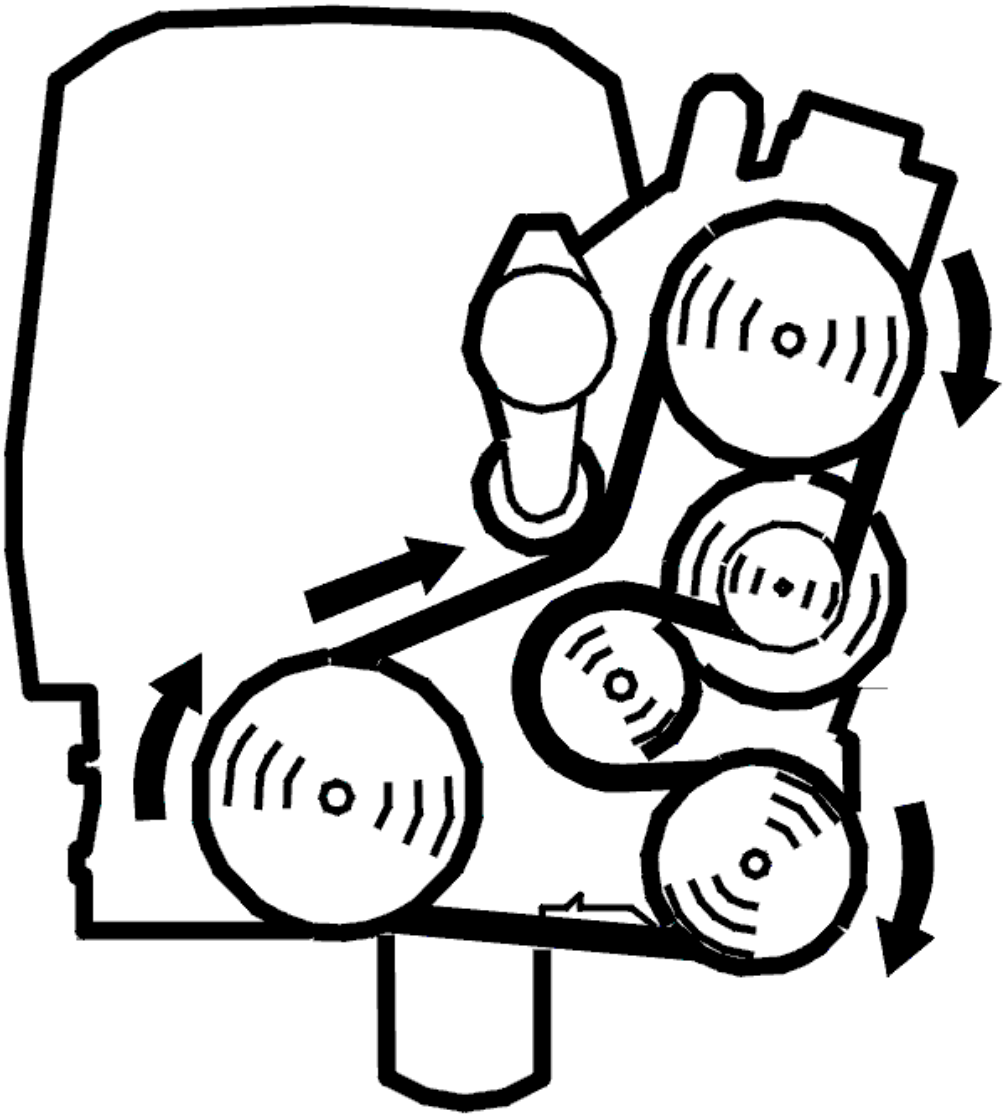

Fig. 255: Belt Routing / Engine Idling - Volvo
Courtesy of VOLVO CARS CORPORATION

- Start the engine.
- Read off the adaption for the camshaft, the camshaft shift angle and desired value for the camshaft shift angle.

  Check that the read off values correspond to the guide values below. The difference between the camshaft shift angle and desired value for camshaft shift angle can be read off from the lower digital display. Note the read off values as a basis for continuing fault-tracing.

  Adaption camshaft

  - Inlet camshaft: 75° CA (camshaft angle) (+/-8° CA)
  - Exhaust camshaft: 120° CA (+/-8° CA)

Camshaft shift angle

- The difference from the desired value of the camshaft shift angle (inlet and exhaust): approximately 8° CA

The fault is permanent if the values are not correct. If the values are correct, this indicates that the fault is intermittent and not presently active.

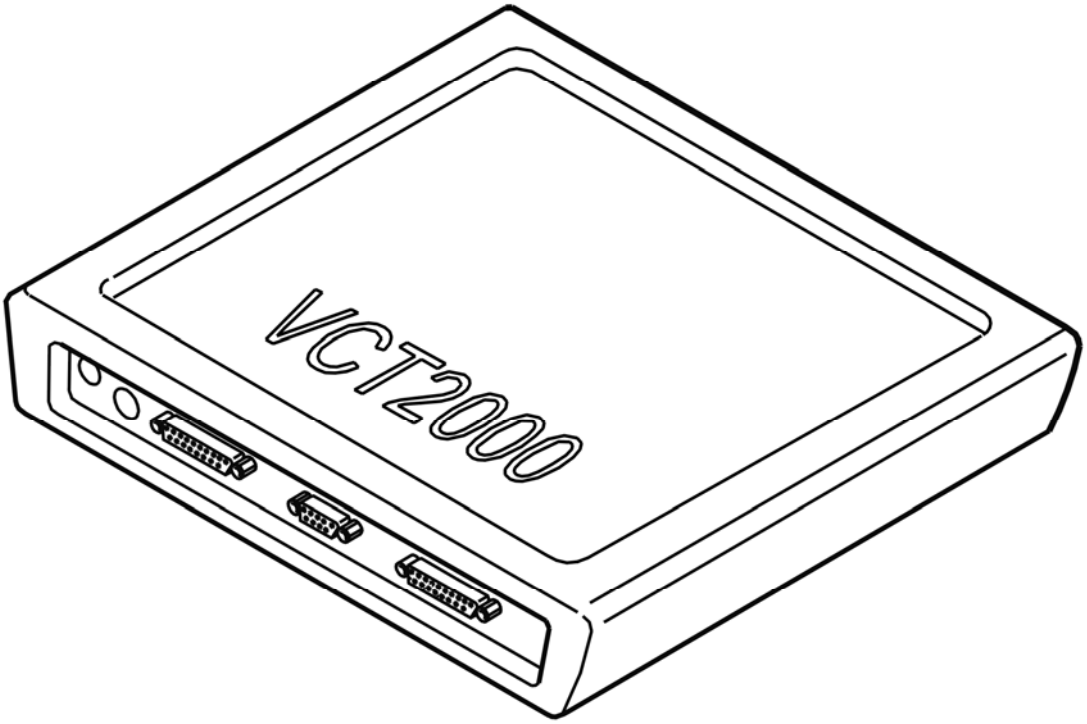

Fig. 256: Identifying VCT2000 Diagnostic Tool Symbol In VIDA
Courtesy of VOLVO CARS CORPORATION

- **Continue**

  Refer to **CHECKING COMPONENTS**

CHECKING COMPONENTS

HINT: Incorrect function on the camshaft reset valve is probably the cause of this diagnostic trouble code (DTC) if:

- The adaption value and camshaft shift angle are correct in the previous check (intermittent fault).
- The adaption value is correct but the camshaft shift angle is incorrect in the previous check.

HINT: Contaminants in the engine oil can damage components in the camshaft control which can cause

function faults.

Check the engine oil grade. Check especially for contaminants.

Check the default settings of the camshafts.

Remove the camshaft reset valve, check the reset valve and the oil ducts in the cylinder head. Check for contaminants and blockages.

Try a new camshaft reset valve if no fault is found or if the above remedies do not rectify the fault.

HINT: The fault can also be caused by a damaged variable valve timing (VVT) unit.

Remedy as necessary.

Other information

- see **VVT UNIT, RIGHT CYLINDER HEAD**
- see **VVT UNIT, LEFT CYLINDER HEAD**
- see **LOCATION OF COMPONENTS, ENGINE COMPARTMENT**

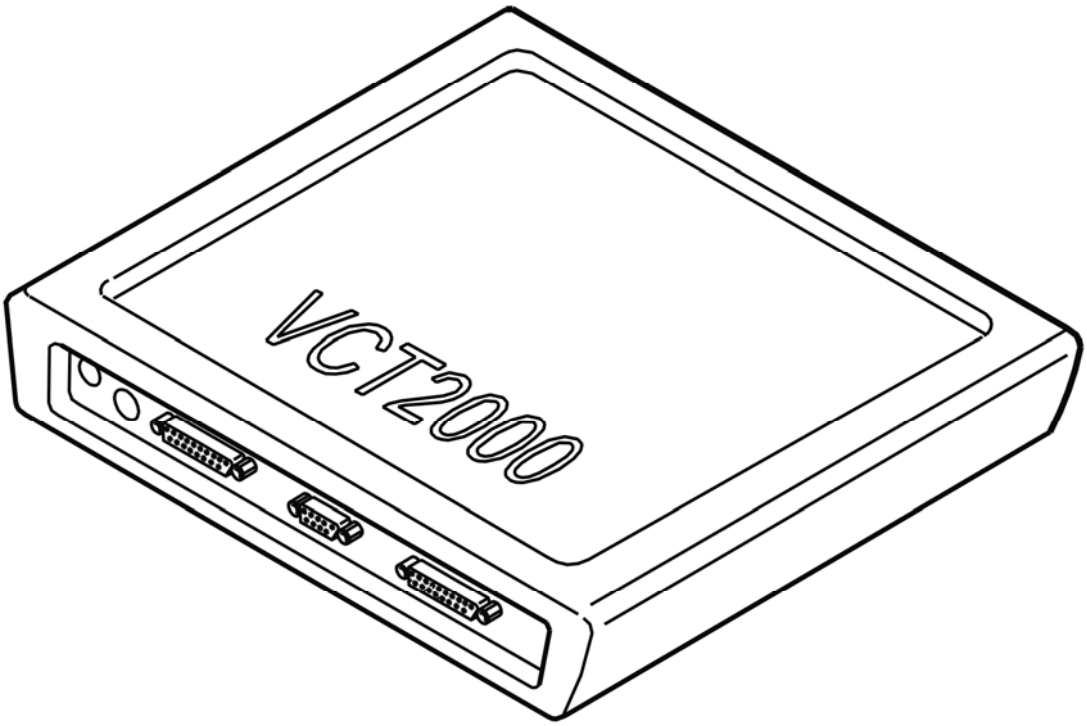

Fig. 257: Identifying VCT2000 Diagnostic Tool Symbol In VIDA
Courtesy of VOLVO CARS CORPORATION

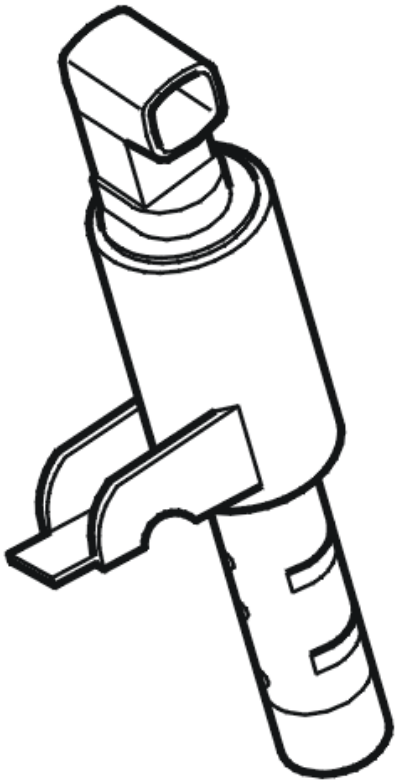

Fig. 258: Identifying Camshaft Reset Valve
Courtesy of VOLVO CARS CORPORATION

- **Continue**

  Refer to **VERIFICATION**

VERIFICATION

VERIFICATION, PART 1

HINT: After carrying out the repair, check that the fault has been remedied.

HINT: In order to verify this diagnostic trouble code (DTC), adaptation of the camshaft must be completed. Adaptation of the camshaft is carried out by the engine control module (ECM) when the engine is at operating temperature, during engine braking (fuel shut-off) above 1500 RPM for at least 10 seconds.

CAUTION: Test driving on the road must be carried out on a road with minimal traffic. Follow the highway code.

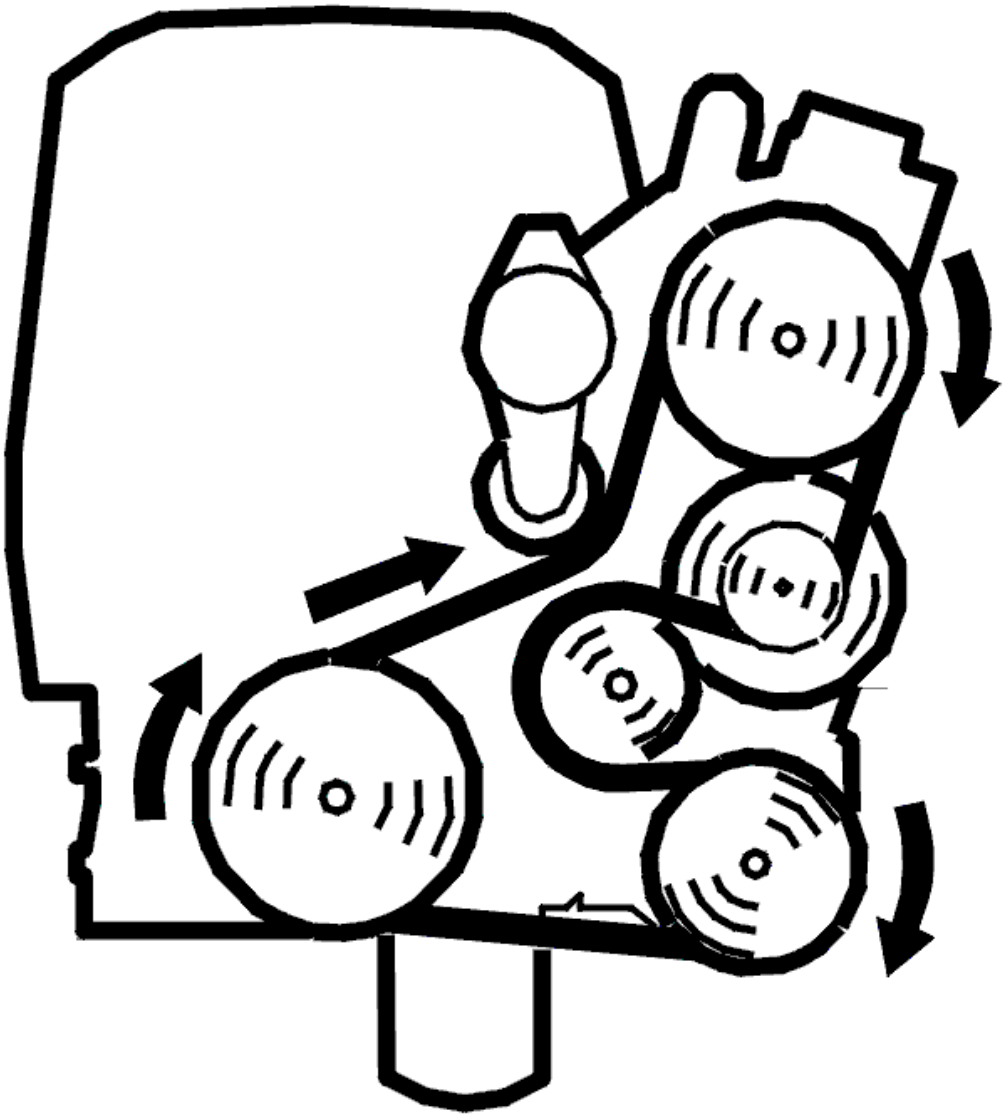

Fig. 259: Belt Routing / Engine Idling - Volvo
Courtesy of VOLVO CARS CORPORATION

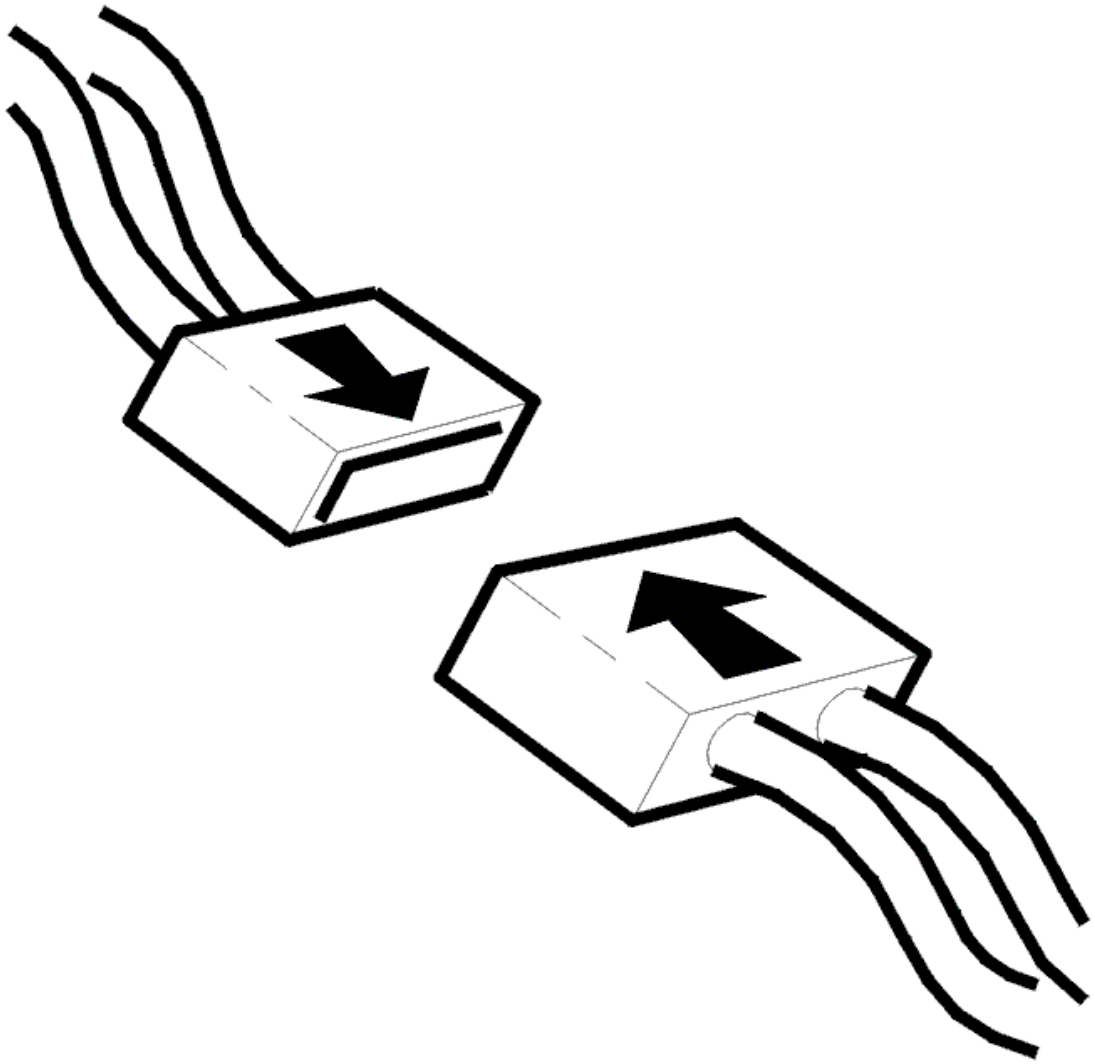

Fig. 260: Connecting Connector
Courtesy of VOLVO CARS CORPORATION

- Ignition off
- Reconnect the connectors, components, etc.
- Start and run the engine to operating temperature.
- Drive the vehicle on the road. Ensure that the conditions for camshaft adaptation are met: engine braking (fuel shut-off) above 1500 RPM for at least 10 seconds. The conditions can be satisfied for example by driving the vehicle with a high engine load (accelerating) up to approximately 90 km/h and then releasing the accelerator pedal for 10 seconds.

NOTE: **In order for the adaptation to be carried out, the accelerator pedal must not be touched during engine braking.**

- Repeat the schedule to ensure that the diagnosis and adaptation are carried out.

- Connect VCT2000 (or appropriate scan tool) to the data link connector **without switching off the engine.**
- Read the diagnostic status and fault status for the diagnostic trouble code by selecting the diagnostic trouble code in the list.

NOTE: If the engine is switched off, the stored fault status will be erased and the test drive will have to be repeated.

Check that the diagnostic status for the diagnostic trouble code (DTC) is "Completed". When the diagnostic status for the diagnostic trouble code (DTC) is "Completed", the engine control module (ECM) has carried out camshaft adaption. If the status is "Not completed" the test drive must be carried out again.

If the function is correct, the fault status must be "No fault found" when the diagnostic is complete.

Check that the value for camshaft adaption is correct when the diagnostic status for the diagnostic trouble code (DTC) is "Completed".

- Inlet camshaft: 75° CA (camshaft angle) (+/-8° CA)
- Exhaust camshaft: 120° CA (+/-8° CA)

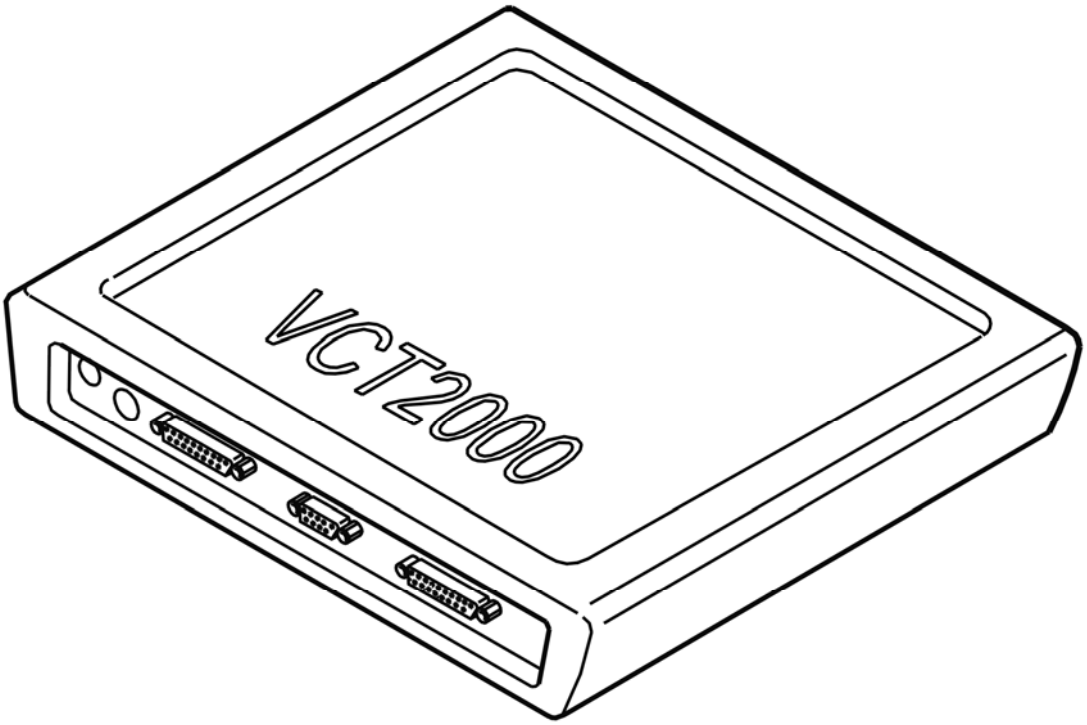

Fig. 261: Identifying VCT2000 Diagnostic Tool Symbol In VIDA
Courtesy of VOLVO CARS CORPORATION

Is the function OK?

- **YES**

  Refer to **VERIFICATION, PART 2**

- **NO**

  Refer to **INFORMATION**

VERIFICATION, PART 2

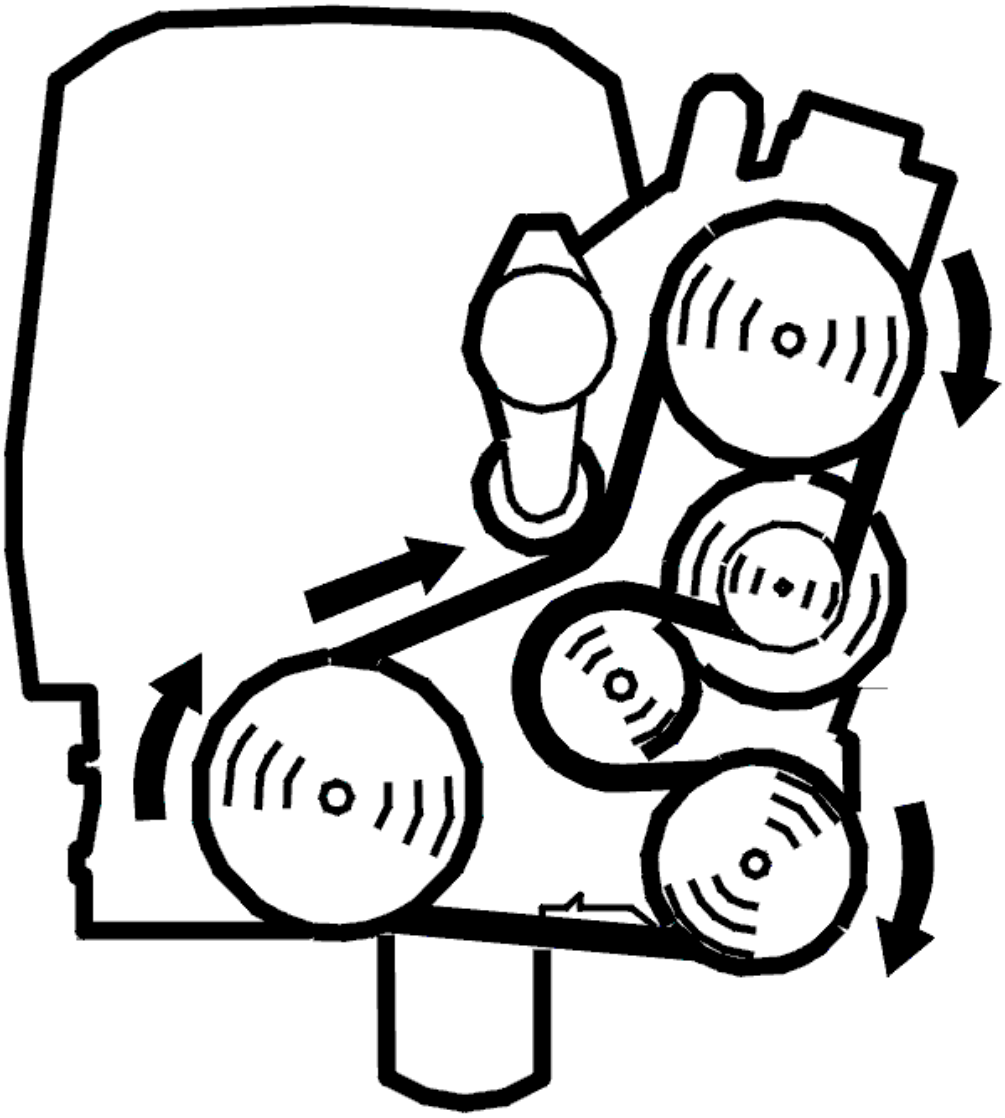

Fig. 262: Belt Routing / Engine Idling - Volvo
Courtesy of VOLVO CARS CORPORATION

- Engine running.

- Check the function. Read off the shift angle of the camshaft and the desired shift angle of the camshaft.

  Check that the camshaft shift angle corresponds to the desired value for the camshaft shift angle with an accuracy of approximately 8° CA (camshaft angle). The difference between the values can be read off in the lower digital display.

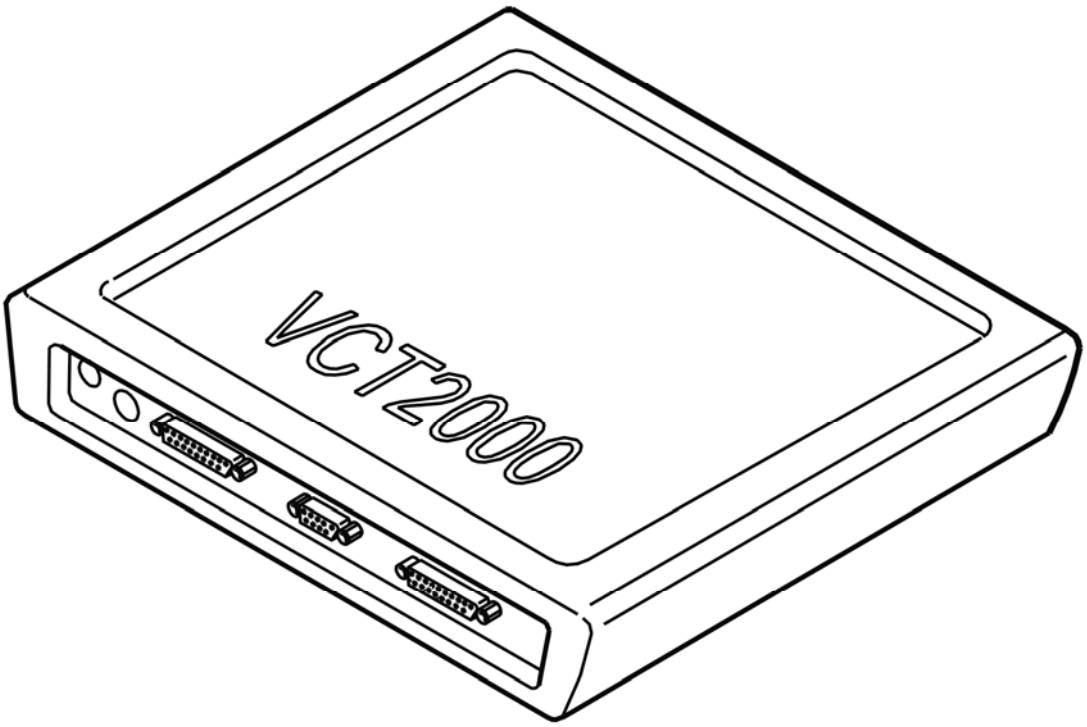

Fig. 263: Identifying VCT2000 Diagnostic Tool Symbol In VIDA
Courtesy of VOLVO CARS CORPORATION

Is the function OK?

- **YES**

  VERIFIED: Troubleshooting has been completed.

- **NO**

  Refer to **INFORMATION**

INFORMATION

FAULT-TRACING INFORMATION

The fault should have been detected and remedied. As this is not the case fault-tracing has failed.

Exit fault-tracing for this diagnostic trouble code (DTC) or make another attempt.

ECM-P001A00 INTAKE (A) CAM PROFILE CONTROL CIRCUIT / OPEN (BANK 1). GENERAL FAILURE INFORMATION. NO SUB TYPE INFORMATION (B6324S; 2007-2010)

DIAGNOSTIC TROUBLE CODE (DTC) INFORMATION

Condition

The engine control module (ECM) regulates the variable cam profiles. The engine control module (ECM) checks the control signal for the cam profile valves.

The diagnostic trouble code (DTC) is stored if the control module detects that:

- Signal missing.

The control module's test for the diagnostic trouble code (DTC) starts in the event of:

- Ignition switch position II.
- Battery voltage higher than 10.5 V.

NOTE: The control module can only detect the fault once the test has been started and the diagnostic trouble code (DTC) is stored when the conditions are met.

HINT: For this function, bank 1 consists of cylinders 1, 2 and 4. Bank 2 consists of cylinders 3, 5 and 6.

Substitute Value

- Both banks for variable cam profile in low lift.

Possible Source

- Dirty or damaged cam profile solenoid (CPS).
- Contact resistance or oxidation in the terminals.
- Open-circuit in the power supply cable.
- Open circuit on signal cable.

Fault symptom[s]

- Malfunction indicator light (MIL), on
- Uneven idle
- Engine is difficult to start
- High fuel consumption

- Poor performance

FAULT-TRACING

FAULT-TRACING INFORMATION

Use the following information and general checks during fault-tracing.

NOTE: Check that the fuses are intact. For locations, see the owner's manual or the cover for fuse box.

1. Check, if possible, relevant functions in the vehicle using buttons/controls/test drives to determine the status of the fault.

   NOTE: If the vehicle does not show any of the given symptoms in the diagnostic trouble code information (DTC), this may mean that the fault is intermittent or that the control module is not detecting the fault at this moment.

2. Use the diagnostic trouble code's **frozen values** , **status identifiers** and **counter** to determine the operating conditions when the fault was detected, the fault's current status and any degree of intermittence of the fault.
3. Check and fault-trace according to **the fault causes** that are specified in the **diagnostic trouble code (DTC) information** .
4. Use **VIDA (Volvo scan tool)** . Read off the parameters, activate components and functions, carry out quick tests and checking routines for the diagnostic trouble codes to identify the fault.
5. Check relevant components according to **Component specifications** .
6. Check relevant signals using the appropriate **signal specification** and **breakout box** service information.

NOTE: Impurities in the oil, such as cast material and cast burrs, may cause the cam profile solenoid (CPS) to jam. In most cases the solenoid does not have to be replaced, cleaning is enough. Replace the solenoid if it still has malfunctions after two cleanings.

Remedy as necessary.

Other information

- Cleaning:**CPS SOLENOID**
- Removing, replacing, and installing:**CPS SOLENOID**
- see **DESCRIPTION OF FROZEN VALUES**
- see **DESCRIPTION OF STATUS IDENTIFIER**
- see **DESCRIPTION OF COUNTER**
- see **DESCRIPTION OF PARAMETERS**
- see **DESCRIPTION OF ACTIVATIONS**

- see **LOCATION OF COMPONENTS**
- see **COMPONENT SPECIFICATIONS**
- see **CONNECTING THE BREAKOUT BOX**
- see **SIGNAL SPECIFICATION**
- see **CHECKING WIRING AND TERMINALS**

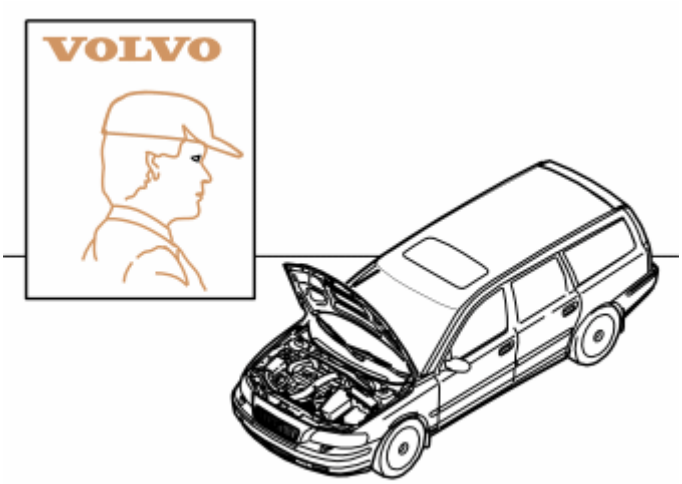

Fig. 264: Identifying VOLVO Certified Service Personnel
Courtesy of VOLVO CARS CORPORATION

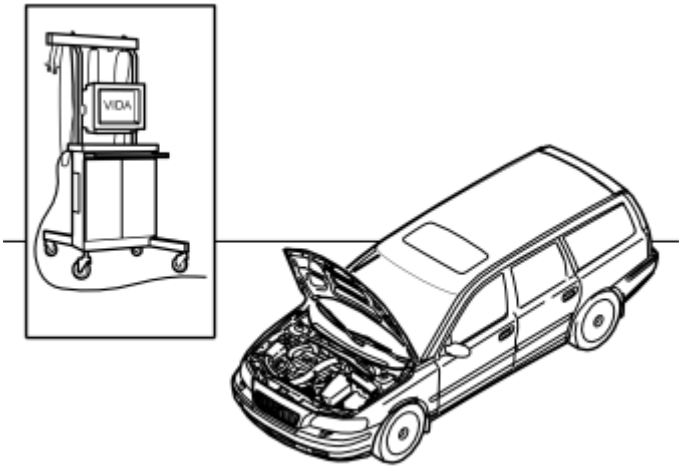

Fig. 265: Identifying VIDA
Courtesy of VOLVO CARS CORPORATION

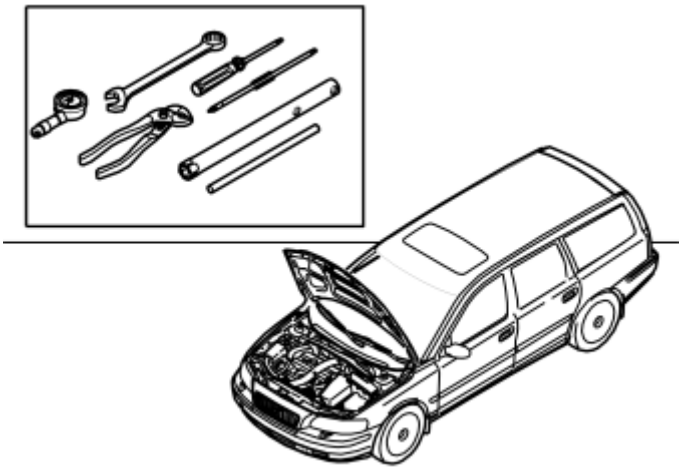

Fig. 266: Identifying Relevant Tools
Courtesy of VOLVO CARS CORPORATION

- **Continue**

  Refer to **VERIFICATION**

VERIFICATION

HINT: After carrying out the repair, check that the fault has been remedied.

- Read off the diagnostic status and the fault status for the diagnostic trouble code (DTC).
- Check that the diagnosis is Performed.

  HINT: To enable performing diagnostic status, special conditions must be fulfilled. These conditions are described in diagnostic trouble code (DTC) information for each diagnostic trouble code (DTC).

  If the function is correct, the fault status must be No fault found when the diagnostic is complete.

Fig. 267: Identifying VCT2000 Diagnostic Tool Symbol In VIDA
Courtesy of VOLVO CARS CORPORATION

Is the function OK?

- **YES**

OKAY: Troubleshooting has been completed.

- **NO**

  Refer to **INFORMATION**

INFORMATION

FAULT-TRACING INFORMATION

The fault should have been detected and remedied. As this is not the case fault-tracing has failed.

Exit fault-tracing for this diagnostic trouble code (DTC) or make another attempt.

ECM-P001A00 INTAKE (A) CAM PROFILE CONTROL CIRCUIT / OPEN (BANK 1). GENERAL FAILURE INFORMATION. NO SUB TYPE INFORMATION (B6324S5; 2011-2012)

DIAGNOSTIC TROUBLE CODE (DTC) INFORMATION

see **DIAGNOSTIC TROUBLE CODE (DTC) INFORMATION**

FAULT-TRACING

see **FAULT-TRACING**

ECM-P001B00 INTAKE (A) CAM PROFILE CONTROL CIRCUIT LOW (BANK 1). GENERAL FAILURE INFORMATION. NO SUB TYPE INFORMATION (B6324S; 2007-2010)

DIAGNOSTIC TROUBLE CODE (DTC) INFORMATION

Condition

The engine control module (ECM) regulates the variable cam profiles. The engine control module (ECM) checks the control signal for the cam profile valves.

The diagnostic trouble code (DTC) is stored if the control module detects that:

- Control signal is too low.

The control module's test for the diagnostic trouble code (DTC) starts in the event of:

- Ignition switch position II.
- Battery voltage higher than 10.5 V.

NOTE: **The control module can only detect the fault once the test has been started and the diagnostic trouble code (DTC) is stored when the conditions are met.**

HINT: For this function, bank 1 consists of cylinders 1, 2 and 4. Bank 2 consists of cylinders 3, 5 and 6.

Substitute Value

- Both banks for variable cam profile in low lift.

Possible Source

- Dirty or damaged cam profile solenoid (CPS).
- The signal cable (-) is short-circuited to ground.

Fault symptom[s]

- Malfunction indicator light (MIL), on
- Uneven idle
- Engine is difficult to start
- High fuel consumption
- Poor performance

FAULT-TRACING

see **FAULT-TRACING**

ECM-P001B00 INTAKE (A) CAM PROFILE CONTROL CIRCUIT LOW (BANK 1). GENERAL FAILURE INFORMATION. NO SUB TYPE INFORMATION (B6324S5; 2011-2012)

DIAGNOSTIC TROUBLE CODE (DTC) INFORMATION

see **DIAGNOSTIC TROUBLE CODE (DTC) INFORMATION**

FAULT-TRACING

see **FAULT-TRACING**

ECM-P001C00 INTAKE (A) CAM PROFILE CONTROL CIRCUIT HIGH (BANK 1). GENERAL FAILURE INFORMATION. NO SUB TYPE INFORMATION (B6324S; 2007-2010)

DIAGNOSTIC TROUBLE CODE (DTC) INFORMATION

Condition

The engine control module (ECM) regulates the variable cam profiles. The engine control module (ECM) checks the control signal for the cam profile valves.

The diagnostic trouble code (DTC) is stored if the control module detects that:

- Control signal is too high.

The control module's test for the diagnostic trouble code (DTC) starts in the event of:

- Ignition switch position II.
- Battery voltage higher than 10.5 V.

NOTE: The control module can only detect the fault once the test has been started and the diagnostic trouble code (DTC) is stored when the conditions are met.

HINT: For this function, bank 1 consists of cylinders 1, 2 and 4. Bank 2 consists of cylinders 3, 5 and 6.

Substitute Value

- Both banks for variable cam profile in low lift.

Possible Source

- Dirty or damaged cam profile solenoid (CPS).
- The signal cable (-) is short-circuited to voltage.

Fault symptom[s]

- Malfunction indicator light (MIL), on
- Uneven idle
- Engine is difficult to start
- High fuel consumption
- Poor performance

FAULT-TRACING

see **FAULT-TRACING**

ECM-P001C00 INTAKE (A) CAM PROFILE CONTROL CIRCUIT HIGH (BANK 1). GENERAL FAILURE INFORMATION. NO SUB TYPE INFORMATION (B6324S5; 2011-2012)

DIAGNOSTIC TROUBLE CODE (DTC) INFORMATION

see **DIAGNOSTIC TROUBLE CODE (DTC) INFORMATION**

FAULT-TRACING

see **FAULT-TRACING**

ECM-P002100: INTAKE CAMSHAFT POSITION CONTROL - EXTENDED TOO FAR - (BANK 2). GENERAL FAULT INFORMATION. TYPE OF FAULT NOT SPECIFIED. (B8444S; 2005-2011)

DIAGNOSTIC TROUBLE CODE (DTC) INFORMATION

see **DIAGNOSTIC TROUBLE CODE (DTC) INFORMATION**

FAULT TRACING ECM-P002100

CHECKING COMPONENTS

NOTE: **If the diagnostic trouble code (DTC) for correlation between the crankshaft position and camshaft position is stored, it must be fault-traced first.**

HINT: Contaminants in the engine oil can damage components in the variable valve timing (VVT) unit which can cause function faults.

Check the engine oil grade. Check especially for contaminants.

Remove the camshaft reset valve, check the reset valve and the oil ducts in the cylinder head. Check for contaminants and blockages.

Try a new camshaft reset valve if no fault is found or if the above remedies do not rectify the fault.

HINT: The fault can also be caused by an internal fault in the variable valve timing (VVT) unit. If the above fault-tracing/remedies do not rectify the fault, the variable valve timing (VVT) unit may be damaged.

Remedy as necessary.

Other information

- see **VVT UNIT, RIGHT CYLINDER HEAD**
- see **VVT UNIT, LEFT CYLINDER HEAD**
- see **LOCATION OF COMPONENTS, ENGINE COMPARTMENT**

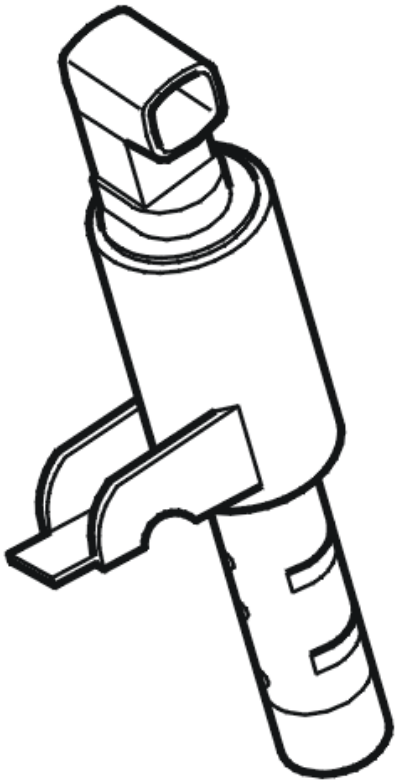

Fig. 268: Identifying Camshaft Reset Valve
Courtesy of VOLVO CARS CORPORATION

- **Continue**

  Refer to **VERIFICATION**

VERIFICATION

VERIFICATION, PART 1

HINT: After carrying out the repair, check that the fault has been remedied.

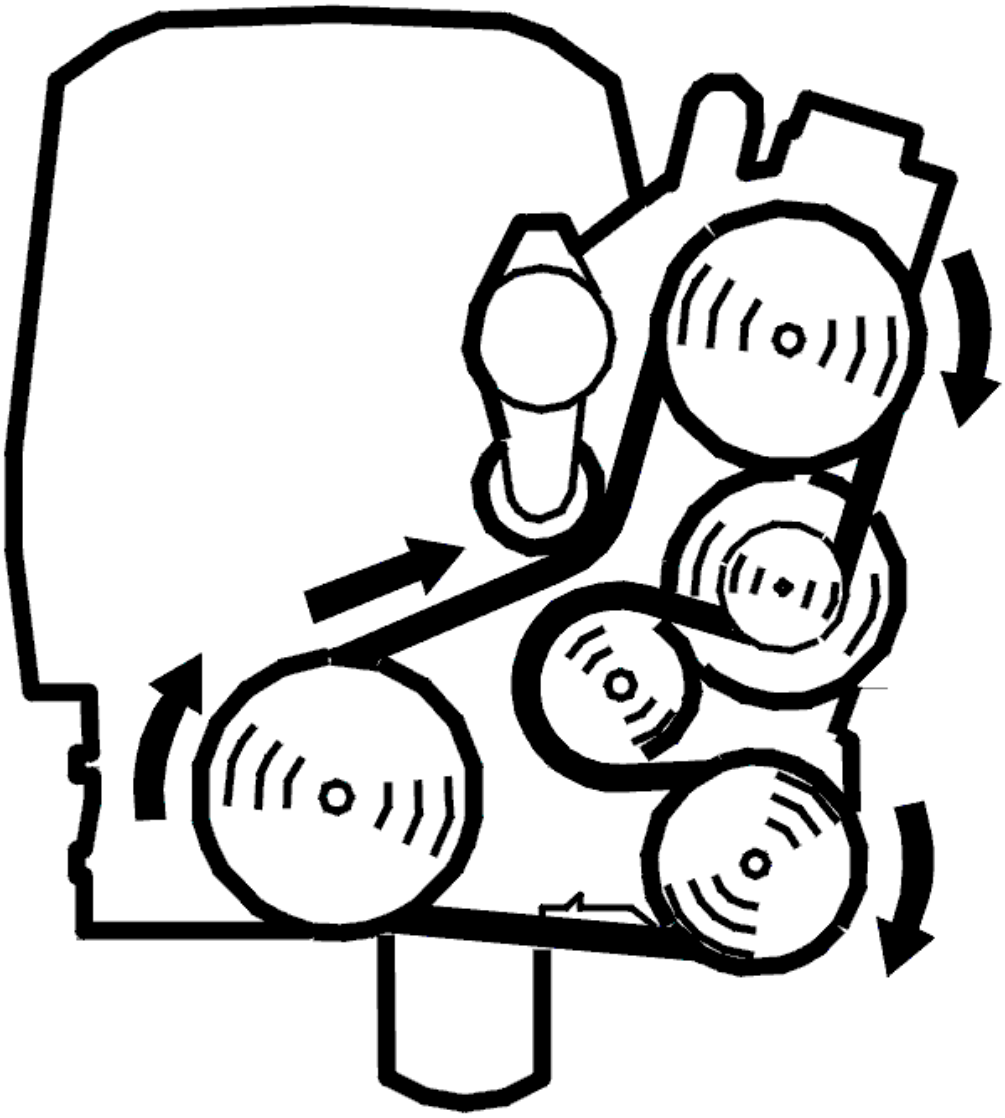

Fig. 269: Belt Routing / Engine Idling - Volvo
Courtesy of VOLVO CARS CORPORATION

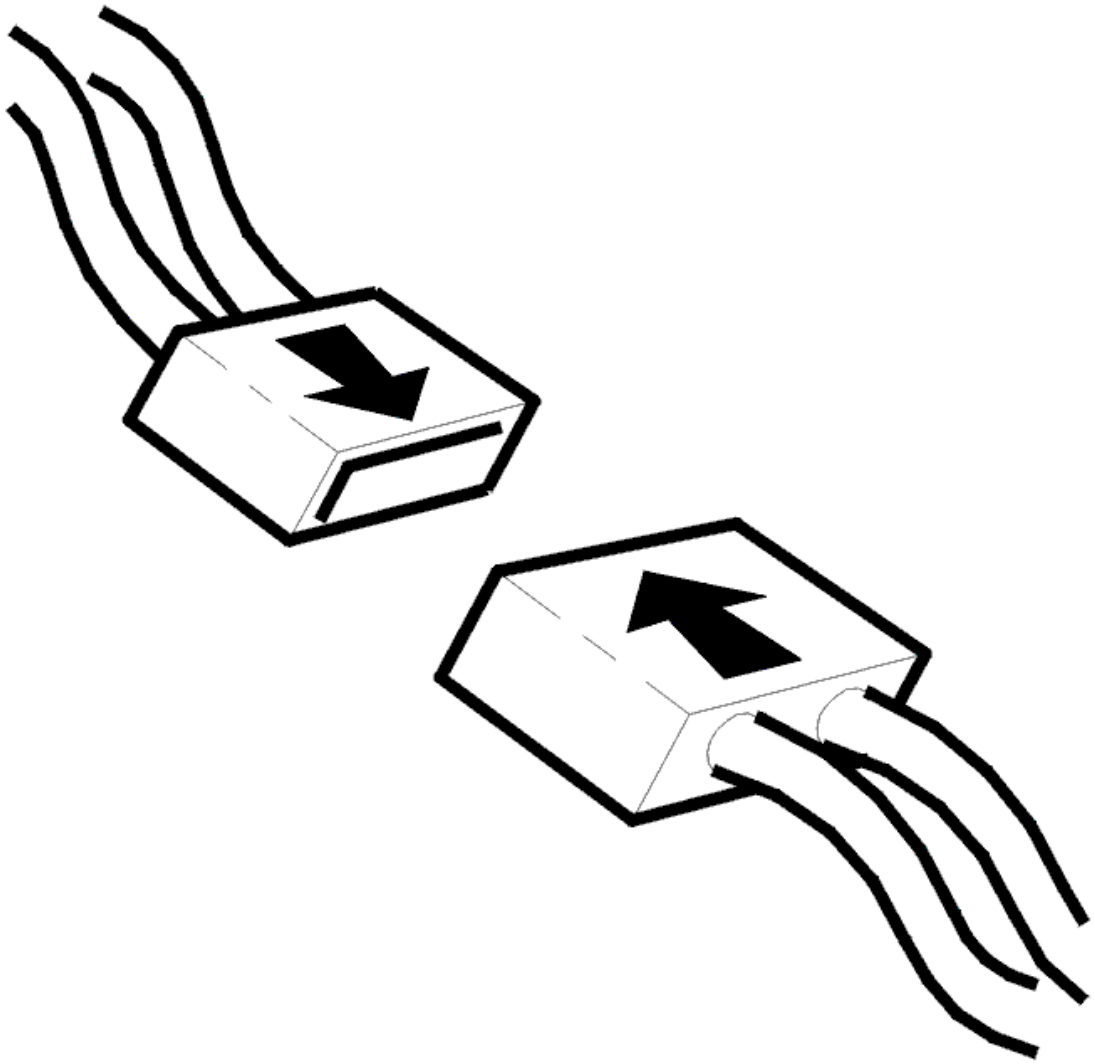

Fig. 270: Connecting Connector
Courtesy of VOLVO CARS CORPORATION

- Verification consists of 2 parts. Part 1 is carried out via a test in the workshop. Part 2 is carried out on the road.

  If the function is determined as **incorrect** in part 1, then part 2 does **not** need to be carried out. If the function is determined as being correct in part 1 and the vehicle can be tested on the road, part 2 must be carried out. This is because the function can be difficult the check in a workshop environment in certain cases.

- Ignition off
- Reconnect the connectors, components, etc.
- Start and run the engine to operating temperature.
- Read off the shift angle of the camshaft and the desired shift angle of the camshaft to check the function.

Check that the camshaft shift angle corresponds to the desired value for the camshaft shift angle with an accuracy of approximately 8° CA (camshaft angle). The difference between the values can be read off in the lower digital display.

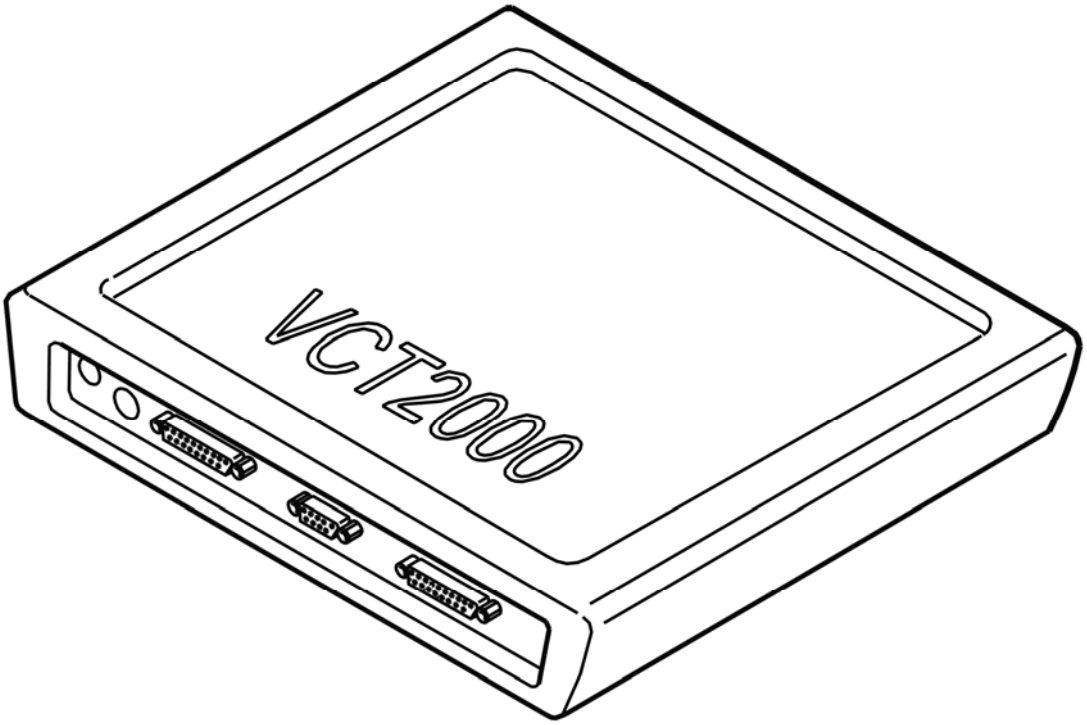

Fig. 271: Identifying VCT2000 Diagnostic Tool Symbol In VIDA
Courtesy of VOLVO CARS CORPORATION

Is the function OK?

- **YES**

  Refer to **VERIFICATION, PART 2**

- **NO**

  Refer to **INFORMATION**

VERIFICATION, PART 2

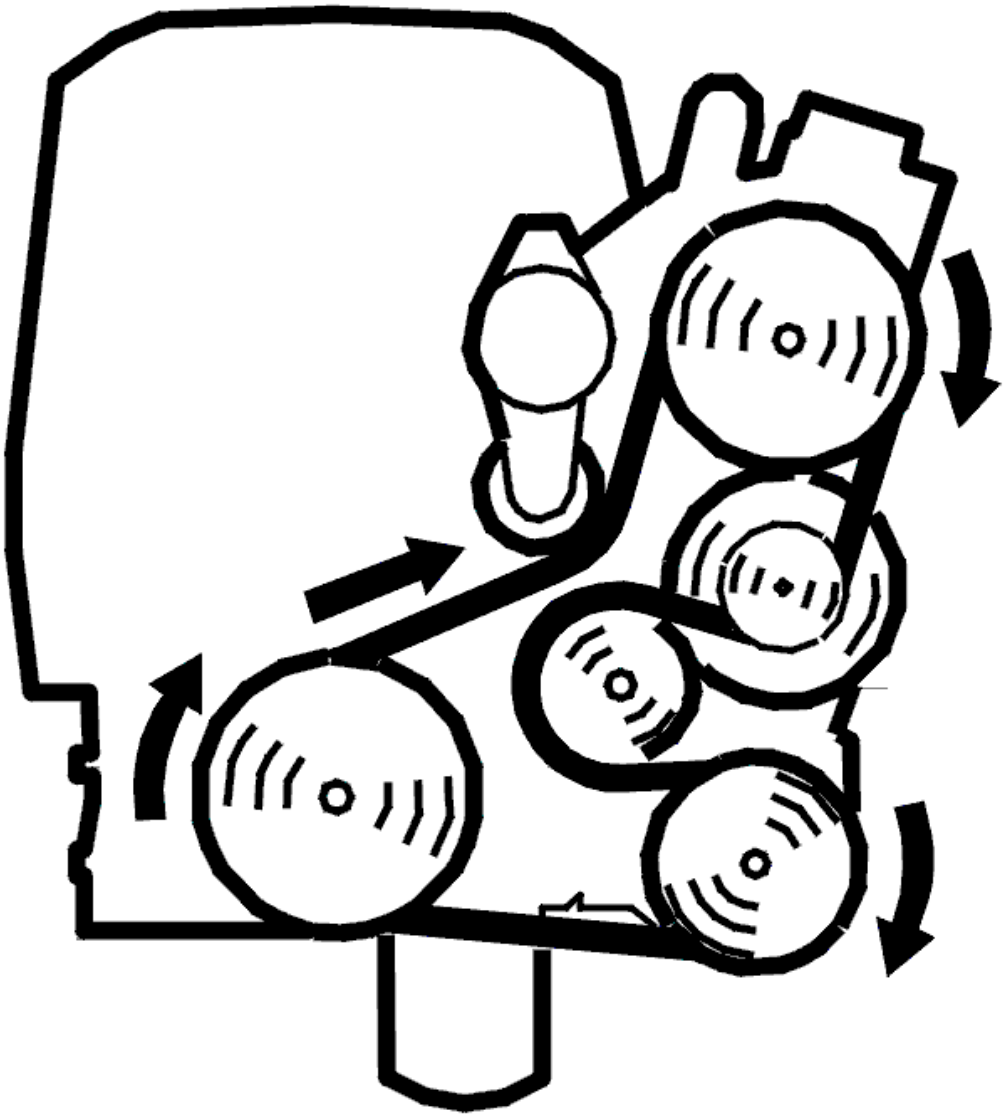

Fig. 272: Belt Routing / Engine Idling - Volvo
Courtesy of VOLVO CARS CORPORATION

- Test drive the car on the road. Use acceleration and engine braking. Repeat the procedure several times so that the camshaft control works and the engine control module (ECM) can carry out diagnostics.
- Connect VCT2000 (or appropriate scan tool) to the data link connector **without switching off the engine.**
- Read the diagnostic status and fault status for the diagnostic trouble code by selecting the diagnostic trouble code in the list.

NOTE: **If the engine is switched off, the stored fault status will be erased and the test drive will have to be repeated.**

Check the fault status for the diagnostic trouble code when the scan is "Implemented". When the function is correct the fault status should be "No fault found" when the scan is implemented.

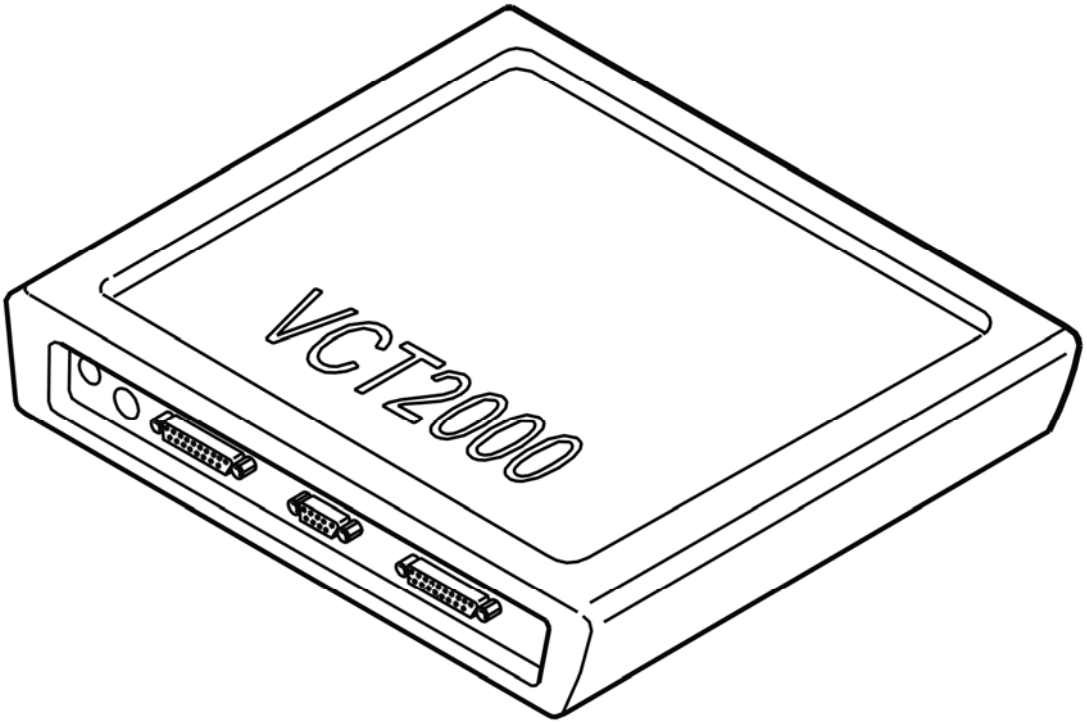

Fig. 273: Identifying VCT2000 Diagnostic Tool Symbol In VIDA
Courtesy of VOLVO CARS CORPORATION

Is the function OK?

- **YES**

  VERIFIED: Troubleshooting has been completed.

- **NO**

  Refer to **INFORMATION**

INFORMATION

FAULT-TRACING INFORMATION

The fault should have been detected and remedied. As this is not the case fault-tracing has failed.

Exit fault-tracing for this diagnostic trouble code (DTC) or make another attempt.

ECM-P002200: INTAKE CAMSHAFT POSITION CONTROL - RETURNED TOO FAR - (BANK 2). GENERAL FAULT INFORMATION. TYPE OF FAULT NOT

SPECIFIED. (B8444S; 2005-2011)

DIAGNOSTIC TROUBLE CODE (DTC) INFORMATION

see **DIAGNOSTIC TROUBLE CODE (DTC) INFORMATION**

FAULT TRACING ECM-P002200

CHECKING COMPONENTS

NOTE: **If the diagnostic trouble code (DTC) for correlation between the crankshaft position and camshaft position is stored, it must be fault-traced first.**

HINT: Incorrect oil grade can cause malfunctions in the variable valve timing (VVT) unit. Contaminants in the engine oil can cause damage to components in the variable valve timing (VVT) unit.

Check the engine oil grade. Check especially for contaminants.

Remove the camshaft reset valve, check the reset valve and the oil ducts in the cylinder head. Check for contaminants and blockages.

Check the engine oil pressure.

Try a new camshaft reset valve if no fault is found or if the above remedies do not rectify the fault.

HINT: The fault can also be caused by an internal fault in the variable valve timing (VVT) unit. If the above fault-tracing/remedies do not rectify the fault, the variable valve timing (VVT) unit may be damaged.

Remedy as necessary.

Other information

- see **OIL PRESSURE, CHECKING**
- see **VVT UNIT, RIGHT CYLINDER HEAD**
- see **VVT UNIT, LEFT CYLINDER HEAD**
- see **LOCATION OF COMPONENTS, ENGINE COMPARTMENT**

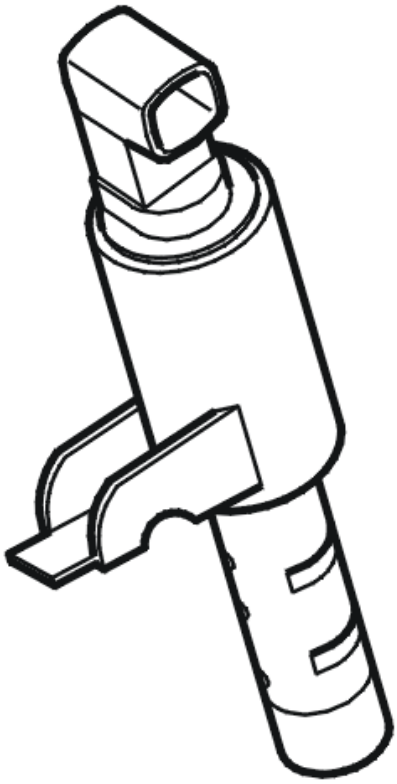

Fig. 274: Identifying Camshaft Reset Valve
Courtesy of VOLVO CARS CORPORATION

- **Continue**

  Refer to **VERIFICATION**

VERIFICATION

VERIFICATION, PART 1

HINT: After carrying out the repair, check that the fault has been remedied.

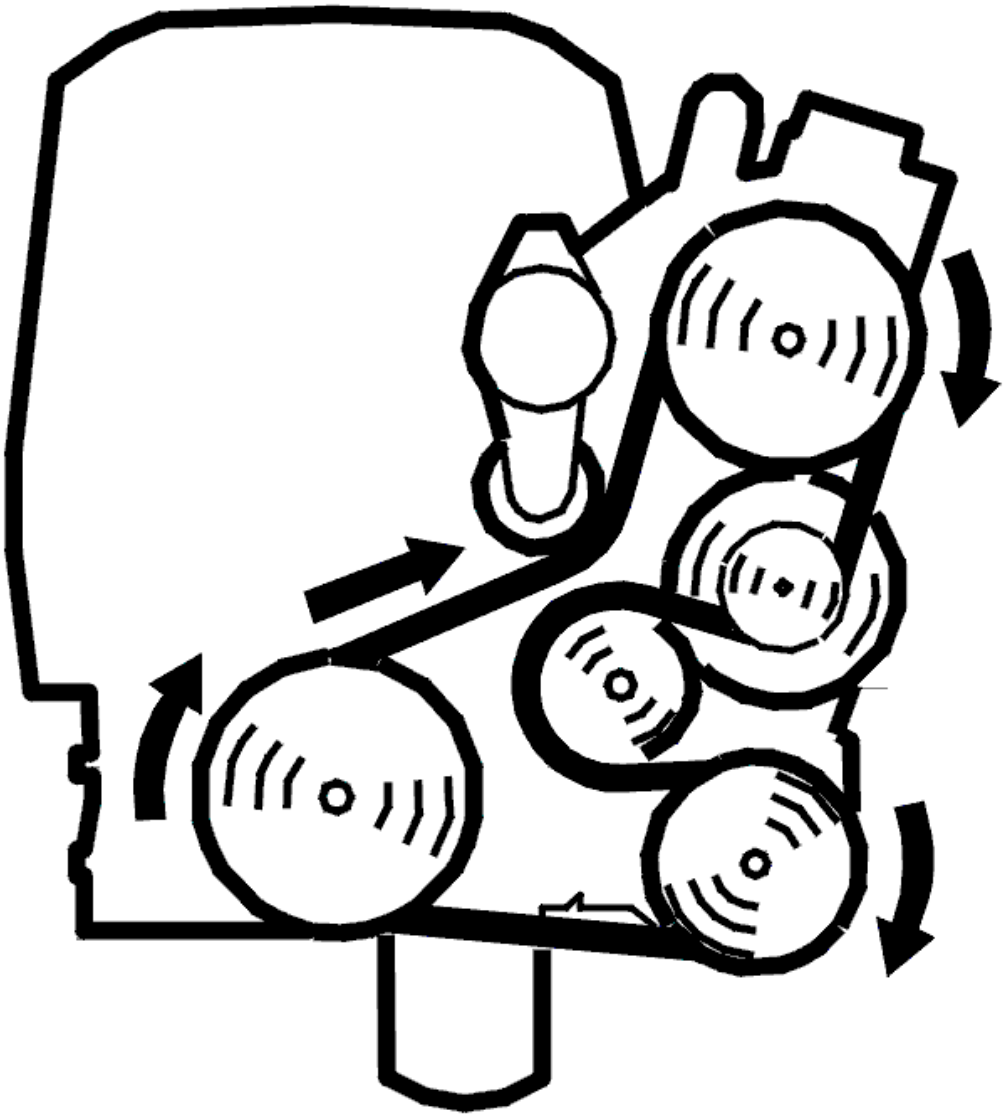

Fig. 275: Belt Routing / Engine Idling - Volvo
Courtesy of VOLVO CARS CORPORATION

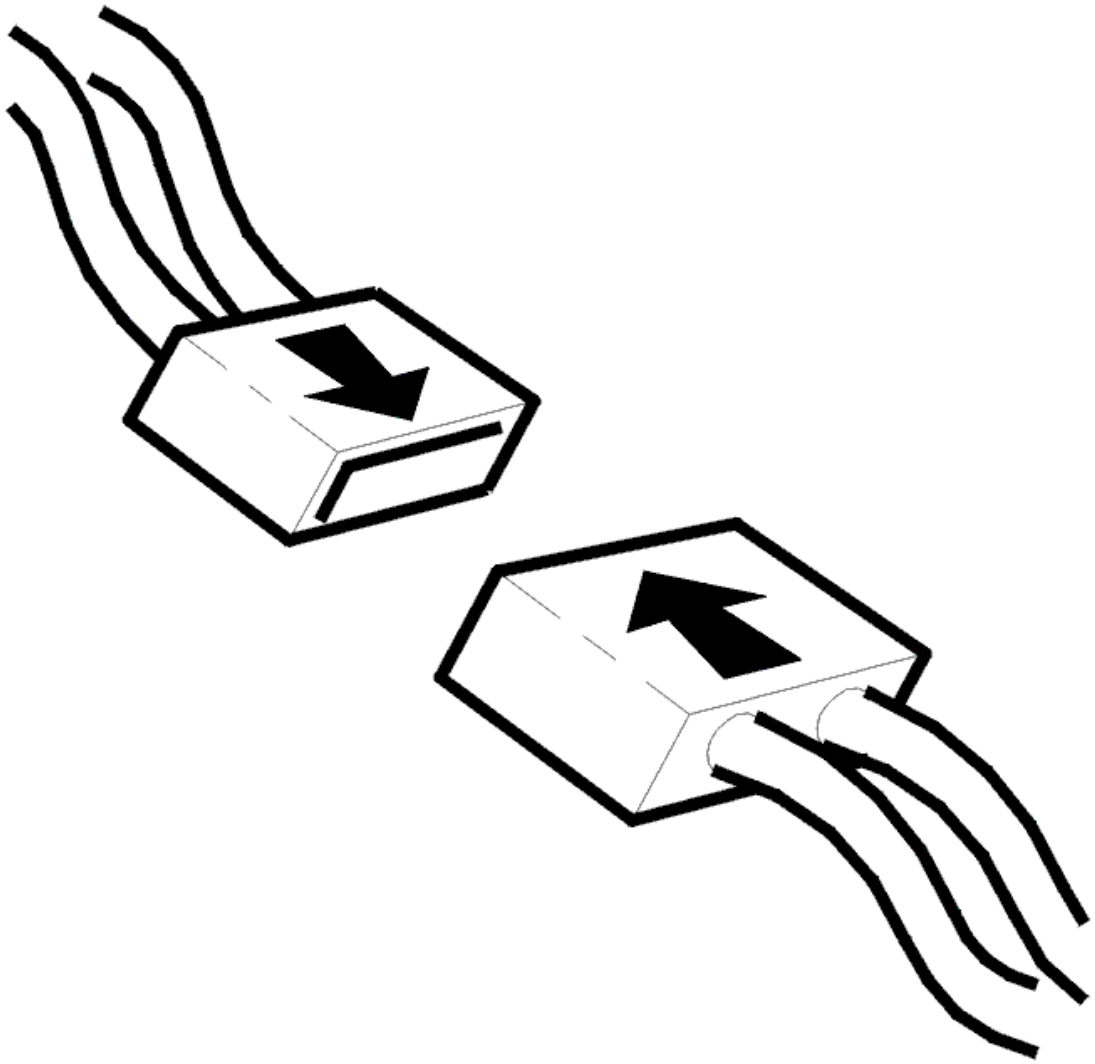

Fig. 276: Connecting Connector
Courtesy of VOLVO CARS CORPORATION

- Verification consists of 2 parts. Part 1 is carried out via a test in the workshop. Part 2 is carried out on the road.

  If the function is determined as **incorrect** in part 1, then part 2 does **not** need to be carried out. If the function is determined as being correct in part 1 and the vehicle can be tested on the road, part 2 must be carried out. This is because the function can be difficult the check in a workshop environment in certain cases.

- Ignition off
- Reconnect the connectors, components, etc.
- Start and run the engine to operating temperature.
- Read off the shift angle of the camshaft and the desired shift angle of the camshaft to check the function.

Check that the camshaft shift angle corresponds to the desired value for the camshaft shift angle with an accuracy of approximately 8° CA (camshaft angle). The difference between the values can be read off in the lower digital display.

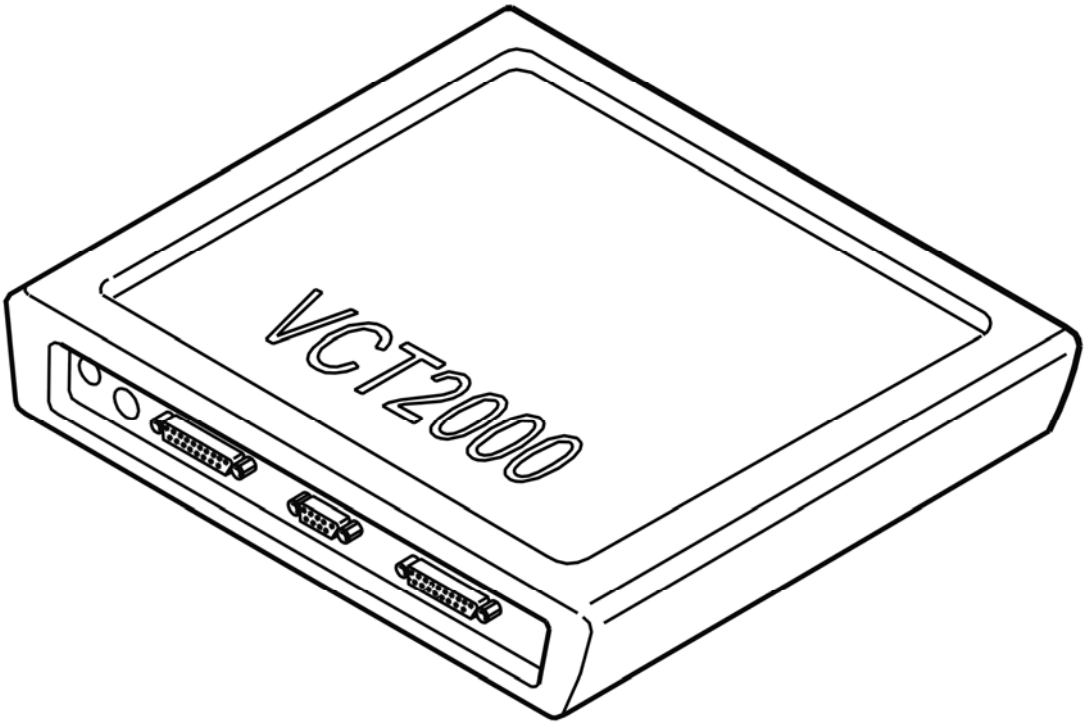

Fig. 277: Identifying VCT2000 Diagnostic Tool Symbol In VIDA
Courtesy of VOLVO CARS CORPORATION

Is the function OK?

- **YES**

  Refer to **VERIFICATION, PART 2**

- **NO**

  Refer to **INFORMATION**

VERIFICATION, PART 2

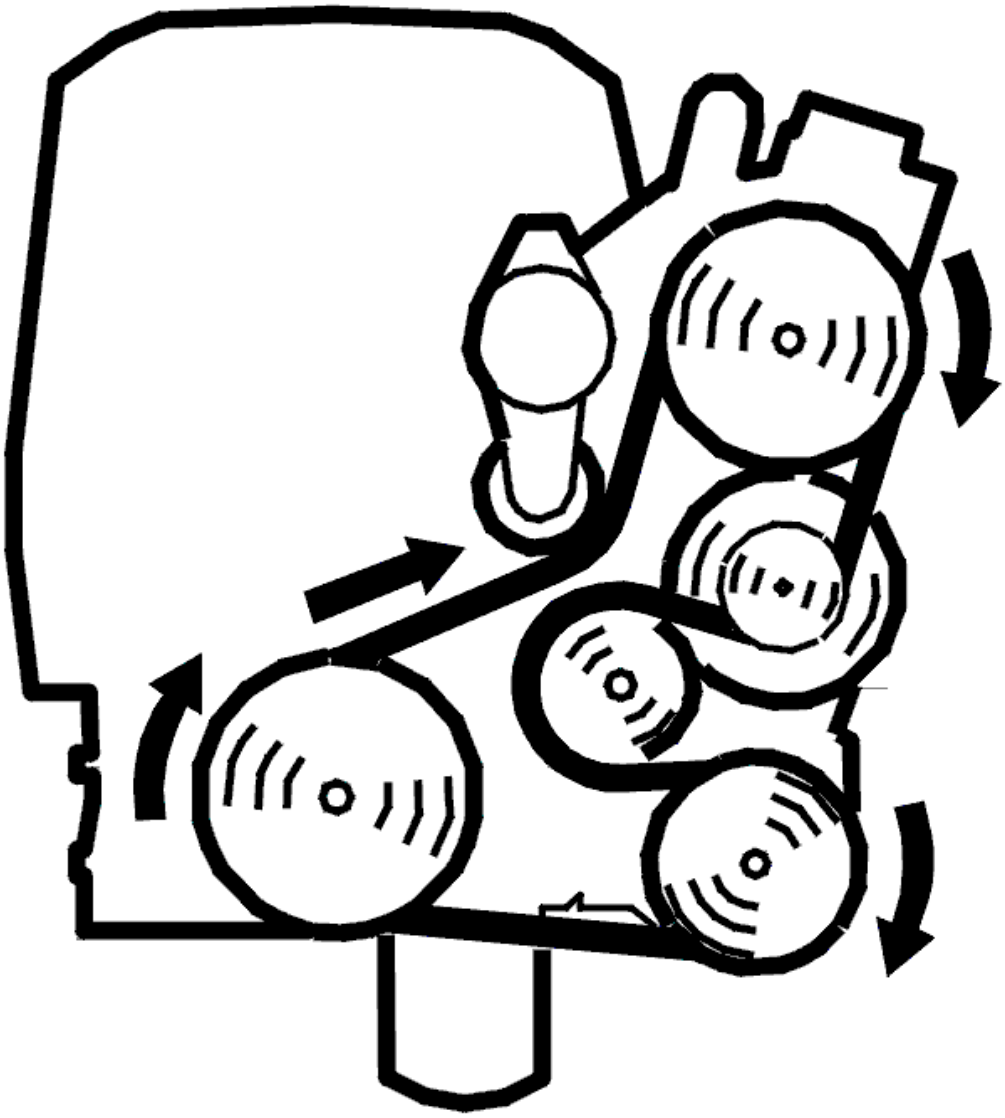

Fig. 278: Belt Routing / Engine Idling - Volvo
Courtesy of VOLVO CARS CORPORATION

- Test drive the car on the road. Use acceleration and engine braking. Repeat the procedure several times so that the camshaft control works and the engine control module (ECM) can carry out diagnostics.
- Connect VCT2000 (or appropriate scan tool) to the data link connector **without switching off the engine.**
- Read the diagnostic status and fault status for the diagnostic trouble code by selecting the diagnostic trouble code in the list.

NOTE: **If the engine is switched off, the stored fault status will be erased and the test drive will have to be repeated.**

Check the fault status for the diagnostic trouble code when the scan is "Implemented". When the function is correct the fault status should be "No fault found" when the scan is implemented.

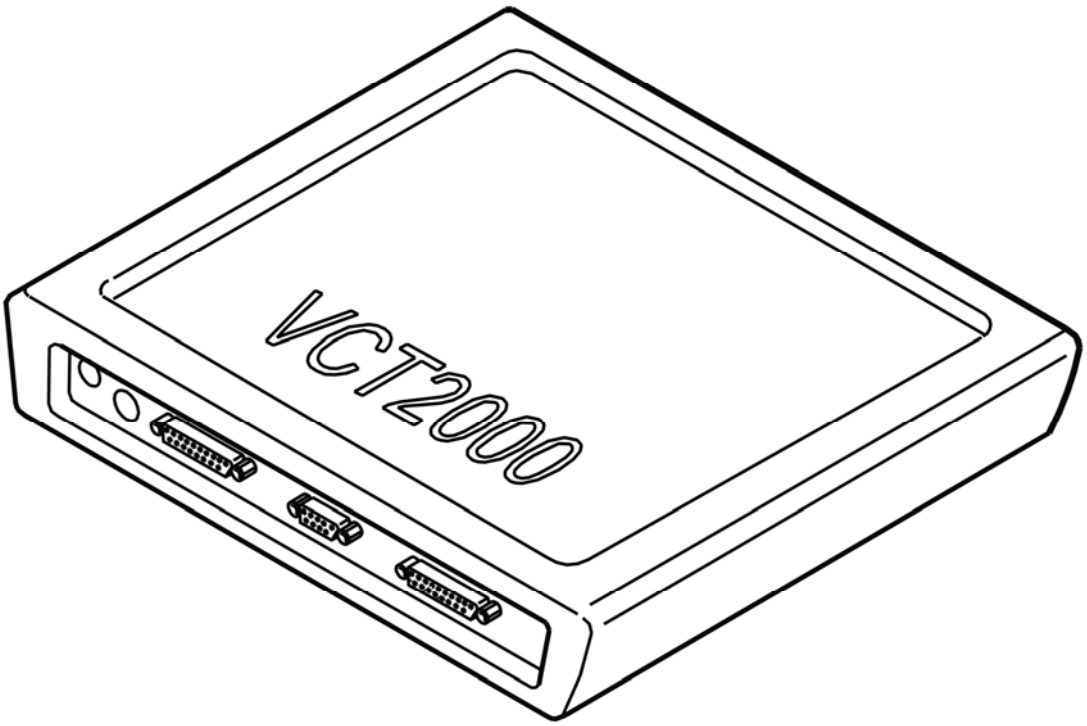

Fig. 279: Identifying VCT2000 Diagnostic Tool Symbol In VIDA
Courtesy of VOLVO CARS CORPORATION

Is the function OK?

- **YES**

  VERIFIED: Troubleshooting has been completed.

- **NO**

  Refer to **INFORMATION**

INFORMATION

FAULT-TRACING INFORMATION

The fault should have been detected and remedied. As this is not the case fault-tracing has failed.

Exit fault-tracing for this diagnostic trouble code (DTC) or make another attempt.

ECM-P002400: CONTROLLING CAMSHAFT POSITION EXHAUST - TOO MUCH CONTROL- (BANK 2). GENERAL FAULT INFORMATION. NO

INFORMATION ABOUT FAULT TYPE (B8444S; 2005-2011)

DIAGNOSTIC TROUBLE CODE (DTC) INFORMATION

see **DIAGNOSTIC TROUBLE CODE (DTC) INFORMATION**

FAULT TRACING ECM-P002400

CHECKING COMPONENTS

NOTE: **If the diagnostic trouble code (DTC) for correlation between the crankshaft position and camshaft position is stored, it must be fault-traced first.**

HINT: Incorrect oil grade can cause malfunctions in the variable valve timing (VVT) unit. Contaminants in the engine oil can cause damage to components in the variable valve timing (VVT) unit.

Check the engine oil grade. Check especially for contaminants.

HINT: The VVT unit for the exhaust camshaft has a spring which turns the camshaft at control. This means that if the oil pressure becomes too low for the VVT unit, the spring controls the camshaft out too much.

Remove the camshaft reset valve, check the reset valve and the oil ducts in the cylinder head. Check for contaminants and blockages.

Check the engine oil pressure.

Try a new camshaft reset valve if no fault is found or if the above remedies do not rectify the fault.

HINT: The fault can also be caused by an internal fault in the variable valve timing (VVT) unit. If the above fault-tracing/remedies do not rectify the fault, the variable valve timing (VVT) unit may be damaged.

Remedy as necessary.

Other information

- see **OIL PRESSURE, CHECKING**
- see **VVT UNIT EXHAUST CAMSHAFT, REPLACING**
- see **LOCATION OF COMPONENTS, ENGINE COMPARTMENT**

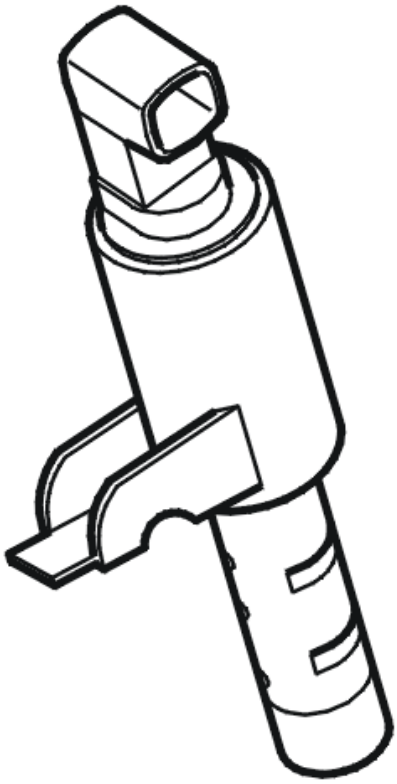

Fig. 280: Identifying Camshaft Reset Valve
Courtesy of VOLVO CARS CORPORATION

- **Continue**

  Refer to **VERIFICATION**

VERIFICATION

VERIFICATION, PART 1

HINT: After carrying out the repair, check that the fault has been remedied.

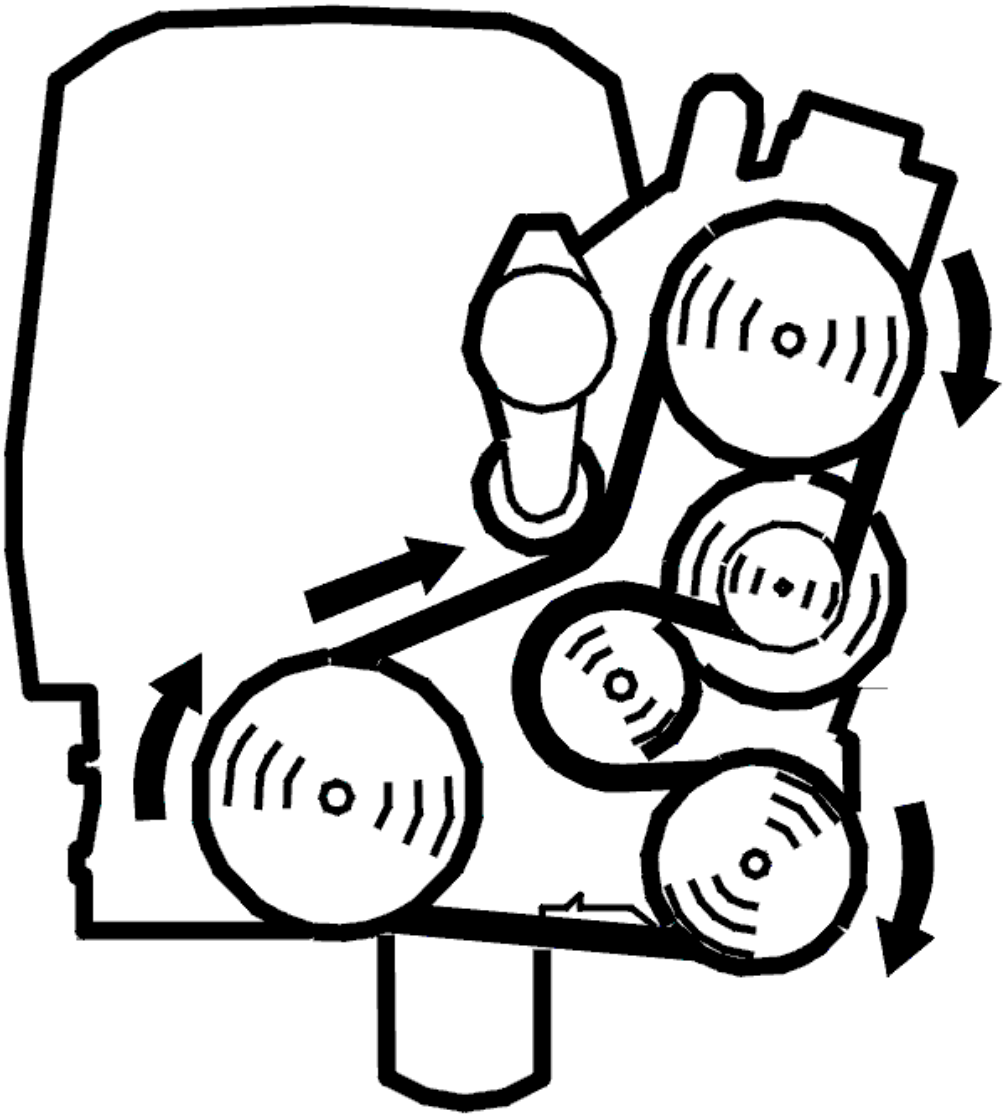

Fig. 281: Belt Routing / Engine Idling - Volvo
Courtesy of VOLVO CARS CORPORATION

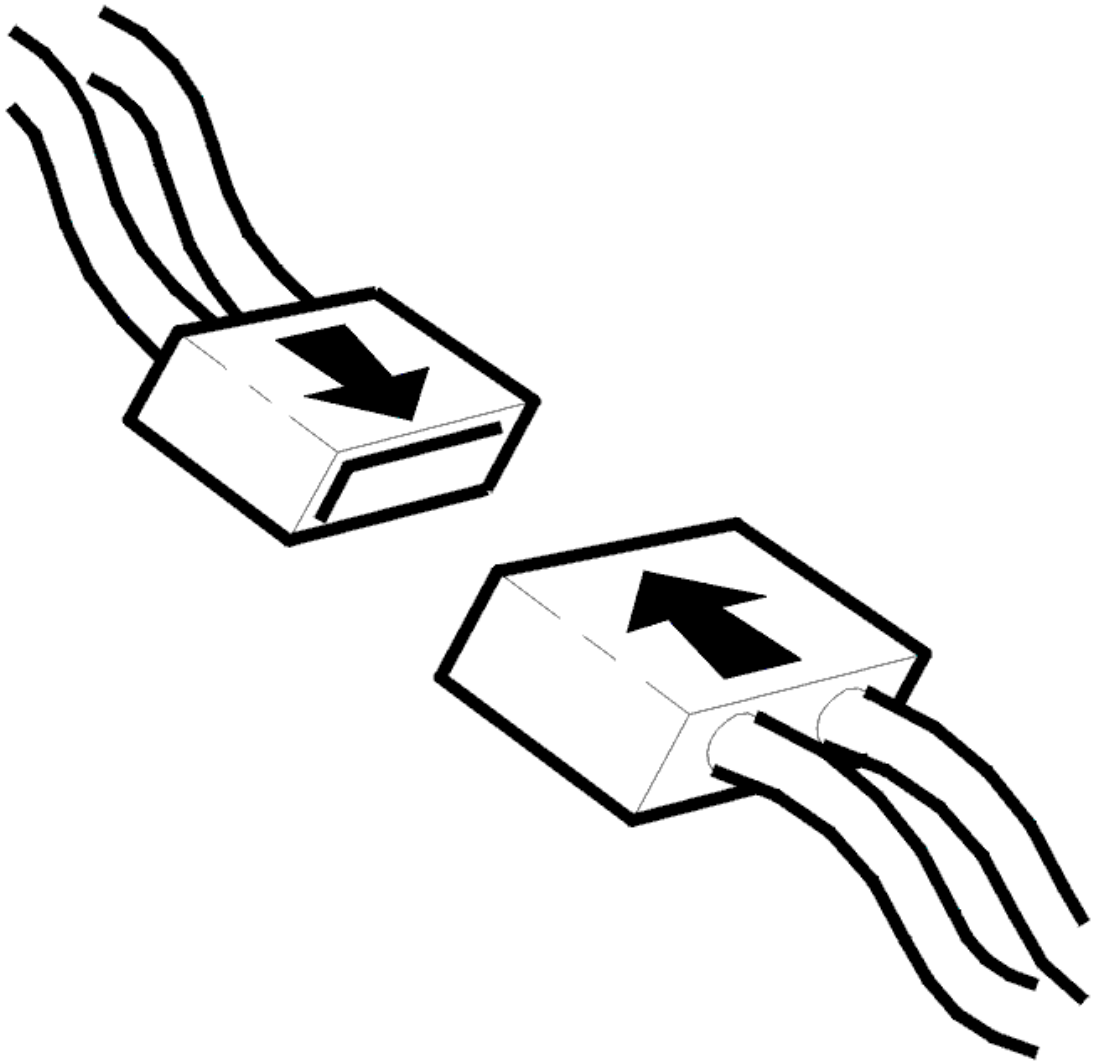

Fig. 282: Connecting Connector
Courtesy of VOLVO CARS CORPORATION

- Verification consists of 2 parts. Part 1 is carried out via a test in the workshop. Part 2 is carried out on the road.

  If the function is determined as **incorrect** in part 1, then part 2 does **not** need to be carried out. If the function is determined as being correct in part 1 and the vehicle can be tested on the road, part 2 must be carried out. This is because in certain cases the function can be difficult the check in a workshop environment.

- Ignition off
- Reconnect the connectors, components, etc.
- Start and run the engine to operating temperature.
- Read off the shift angle of the camshaft and the desired shift angle of the camshaft to check the function.

Check that the camshaft shift angle corresponds to the desired value for the camshaft shift angle with an accuracy of approximately 8° CA (camshaft angle). The difference between the values can be read off in the lower digital display.

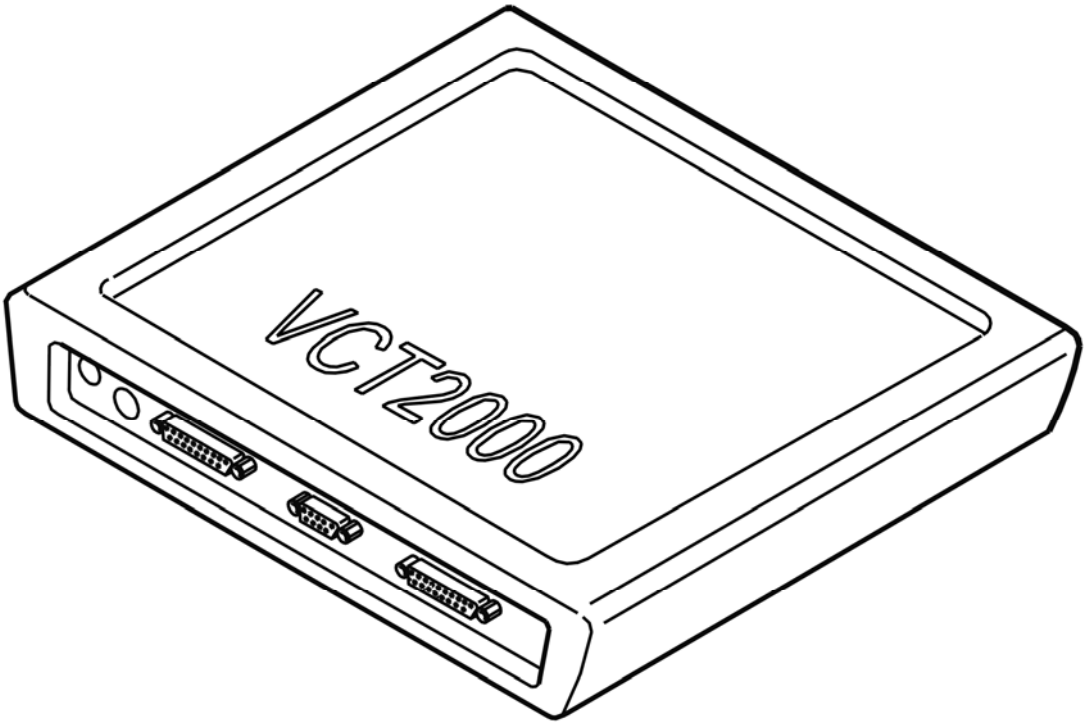

Fig. 283: Identifying VCT2000 Diagnostic Tool Symbol In VIDA
Courtesy of VOLVO CARS CORPORATION

Is the function OK?

- **YES**

  Refer to **VERIFICATION, PART 2**

- **NO**

  Refer to **INFORMATION**

VERIFICATION, PART 2

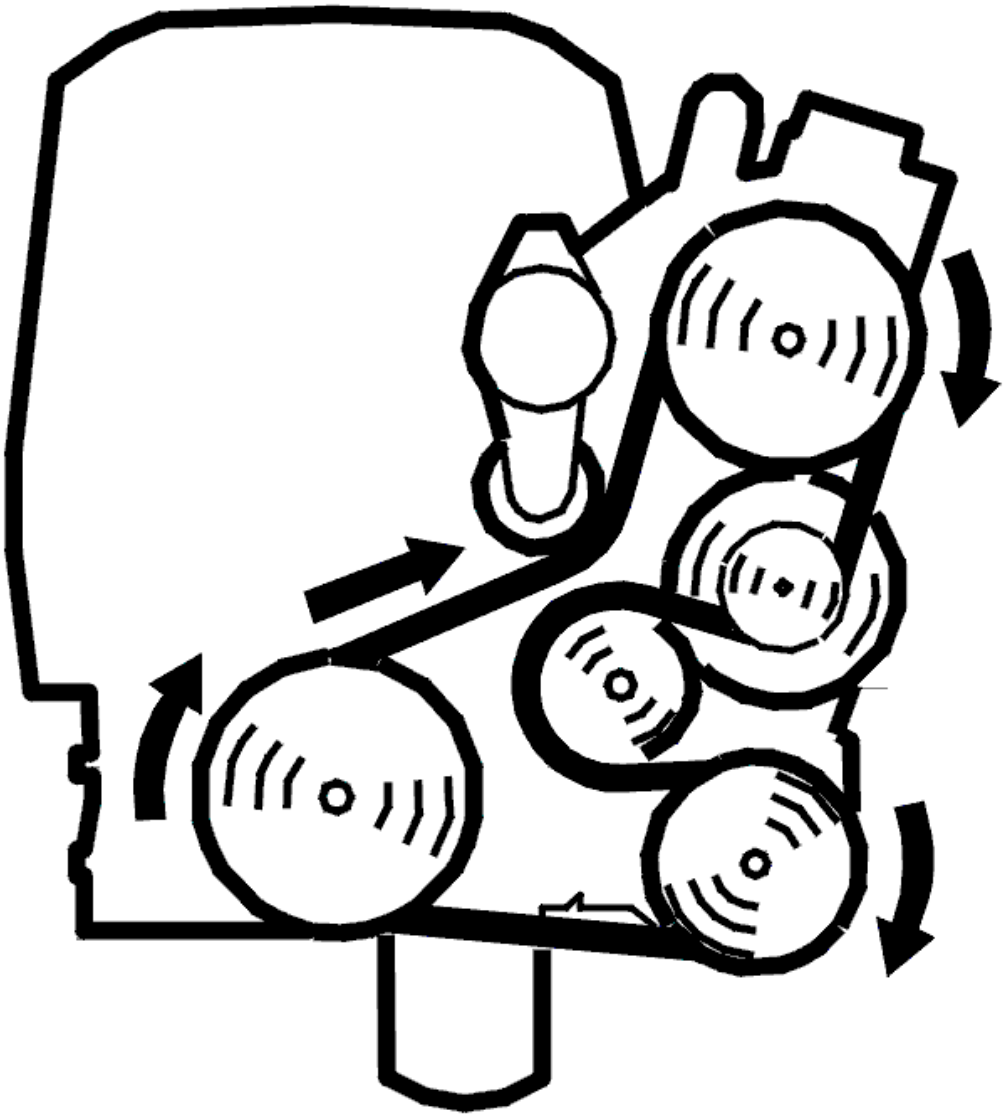

Fig. 284: Belt Routing / Engine Idling - Volvo
Courtesy of VOLVO CARS CORPORATION

- Test drive the car on the road. Use acceleration and engine braking. Repeat the procedure several times so that the camshaft control works and the engine control module (ECM) can carry out diagnostics.
- Connect VCT2000 (or appropriate scan tool) to the data link connector **without switching off the engine.**
- Read the diagnostic status and fault status for the diagnostic trouble code by selecting the diagnostic trouble code in the list.

NOTE: **If the engine is switched off, the stored fault status will be erased and the test drive will have to be repeated.**

Check the fault status for the diagnostic trouble code when the scan is "Implemented". When the function is correct the fault status should be "No fault found" when the scan is implemented.

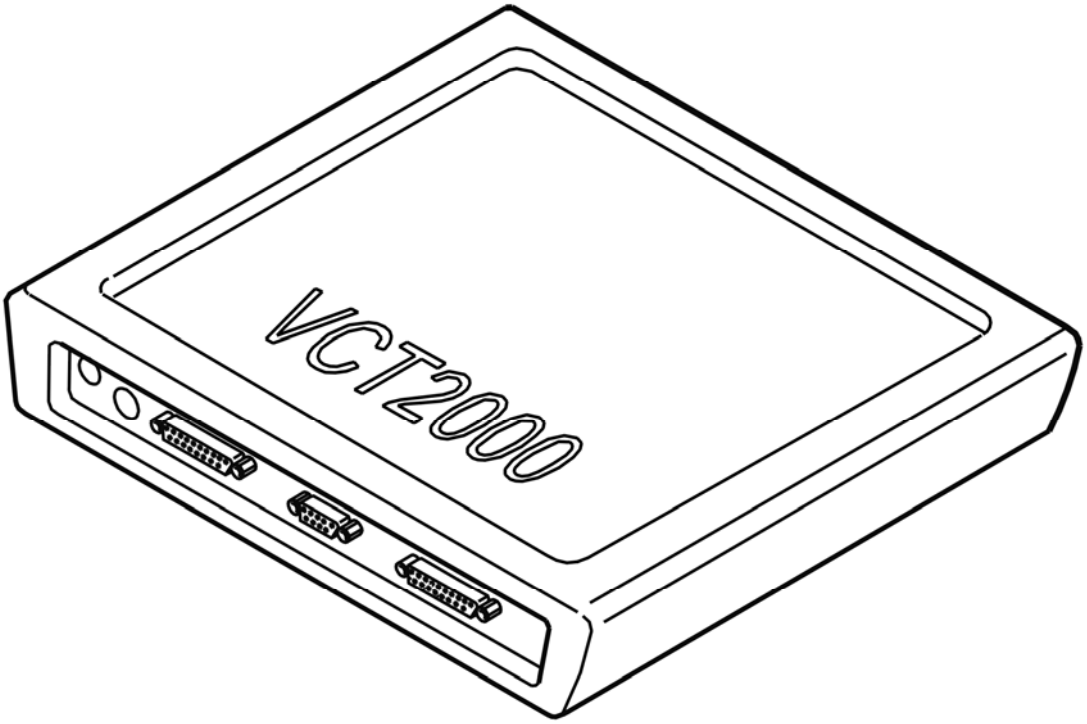

Fig. 285: Identifying VCT2000 Diagnostic Tool Symbol In VIDA
Courtesy of VOLVO CARS CORPORATION

Is the function OK?

- **YES**

  VERIFIED: Troubleshooting has been completed.

- **NO**

  Refer to **INFORMATION**

INFORMATION

FAULT-TRACING INFORMATION

The fault should have been detected and remedied. As this is not the case fault-tracing has failed.

Exit fault-tracing for this diagnostic trouble code (DTC) or make another attempt.

ECM-P002500: EXHAUST CAMSHAFT POSITION CONTROL - RETURNED TOO FAR - (BANK 2). GENERAL FAULT INFORMATION. TYPE OF FAULT

NOT SPECIFIED. (B8444S; 2005-2011)

DIAGNOSTIC TROUBLE CODE (DTC) INFORMATION

see **DIAGNOSTIC TROUBLE CODE (DTC) INFORMATION**

FAULT TRACING ECM-P002500

CHECKING COMPONENTS

NOTE: **If the diagnostic trouble code (DTC) for correlation between the crankshaft position and camshaft position is stored, it must be fault-traced first.**

HINT: Contaminants in the engine oil can cause damage to components in the variable valve timing (VVT) unit.

Check the engine oil grade. Check especially for contaminants.

Remove the camshaft reset valve, check the reset valve and the oil ducts in the cylinder head. Check for contaminants and blockages.

Try a new camshaft reset valve if no fault is found or if the above remedies do not rectify the fault.

HINT: The fault can also be caused by an internal fault in the variable valve timing (VVT) unit. If the above fault-tracing/remedies do not rectify the fault, the variable valve timing (VVT) unit may be damaged.

Remedy as necessary.

Other information

- see **VVT UNIT EXHAUST CAMSHAFT, REPLACING**
- see **LOCATION OF COMPONENTS, ENGINE COMPARTMENT**

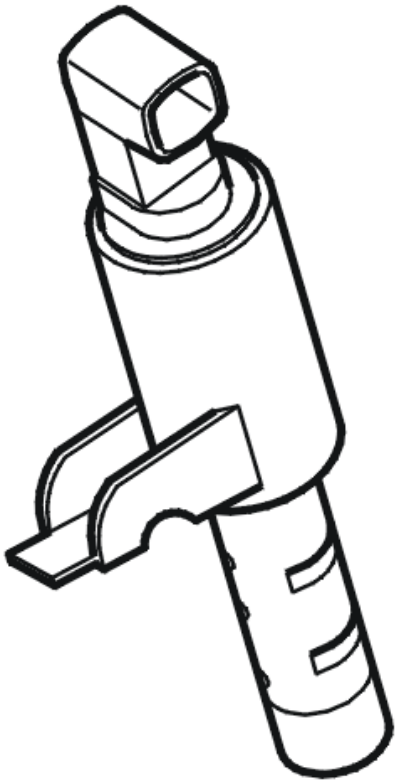

Fig. 286: Identifying Camshaft Reset Valve
Courtesy of VOLVO CARS CORPORATION

- **Continue**

  Refer to **VERIFICATION**

VERIFICATION

VERIFICATION, PART 1

HINT: After carrying out the repair, check that the fault has been remedied.

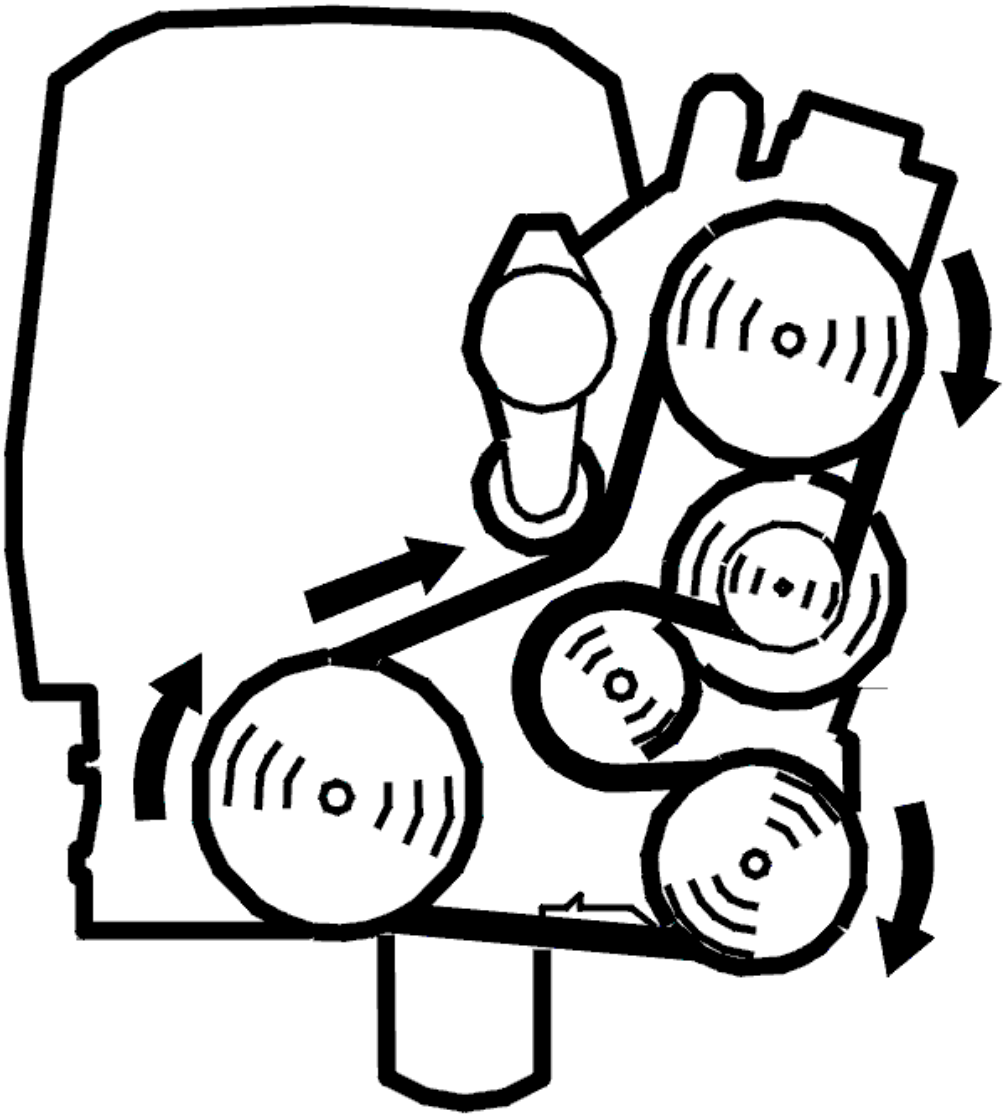

Fig. 287: Belt Routing / Engine Idling - Volvo
Courtesy of VOLVO CARS CORPORATION

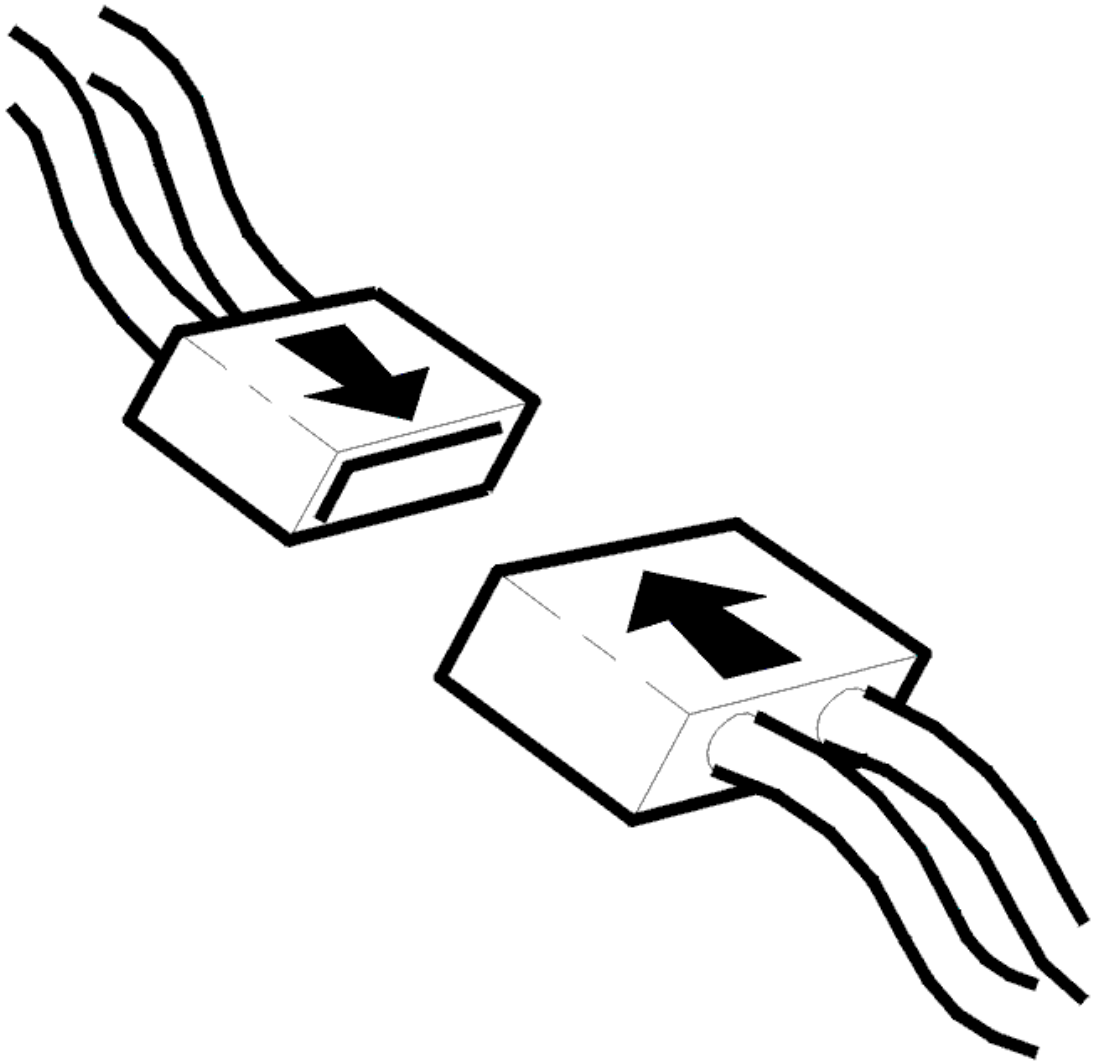

Fig. 288: Connecting Connector
Courtesy of VOLVO CARS CORPORATION

- Verification consists of 2 parts. Part 1 is carried out via a test in the workshop. Part 2 is carried out on the road.

  If the function is determined as **incorrect** in part 1, then part 2 does **not** need to be carried out. If the function is determined as being correct in part 1 and the vehicle can be tested on the road, part 2 must be carried out. This is because in certain cases the function can be difficult the check in a workshop environment.

- Ignition off
- Reconnect the connectors, components, etc.
- Start and run the engine to operating temperature.
- Read off the shift angle of the camshaft and the desired shift angle of the camshaft to check the function.

Check that the camshaft shift angle corresponds to the desired value for the camshaft shift angle with an accuracy of approximately 8° CA (camshaft angle). The difference between the values can be read off in the lower digital display.

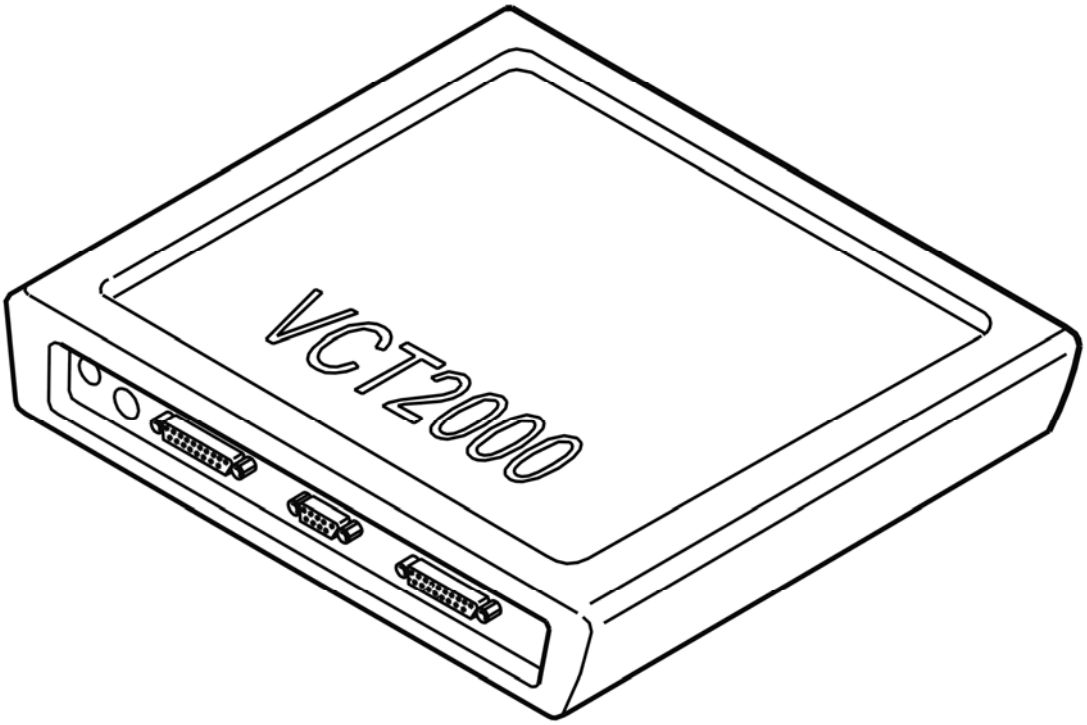

Fig. 289: Identifying VCT2000 Diagnostic Tool Symbol In VIDA
Courtesy of VOLVO CARS CORPORATION

Is the function OK?

- **YES**

  Refer to **VERIFICATION, PART 2**

- **NO**

  Refer to **INFORMATION**

VERIFICATION, PART 2

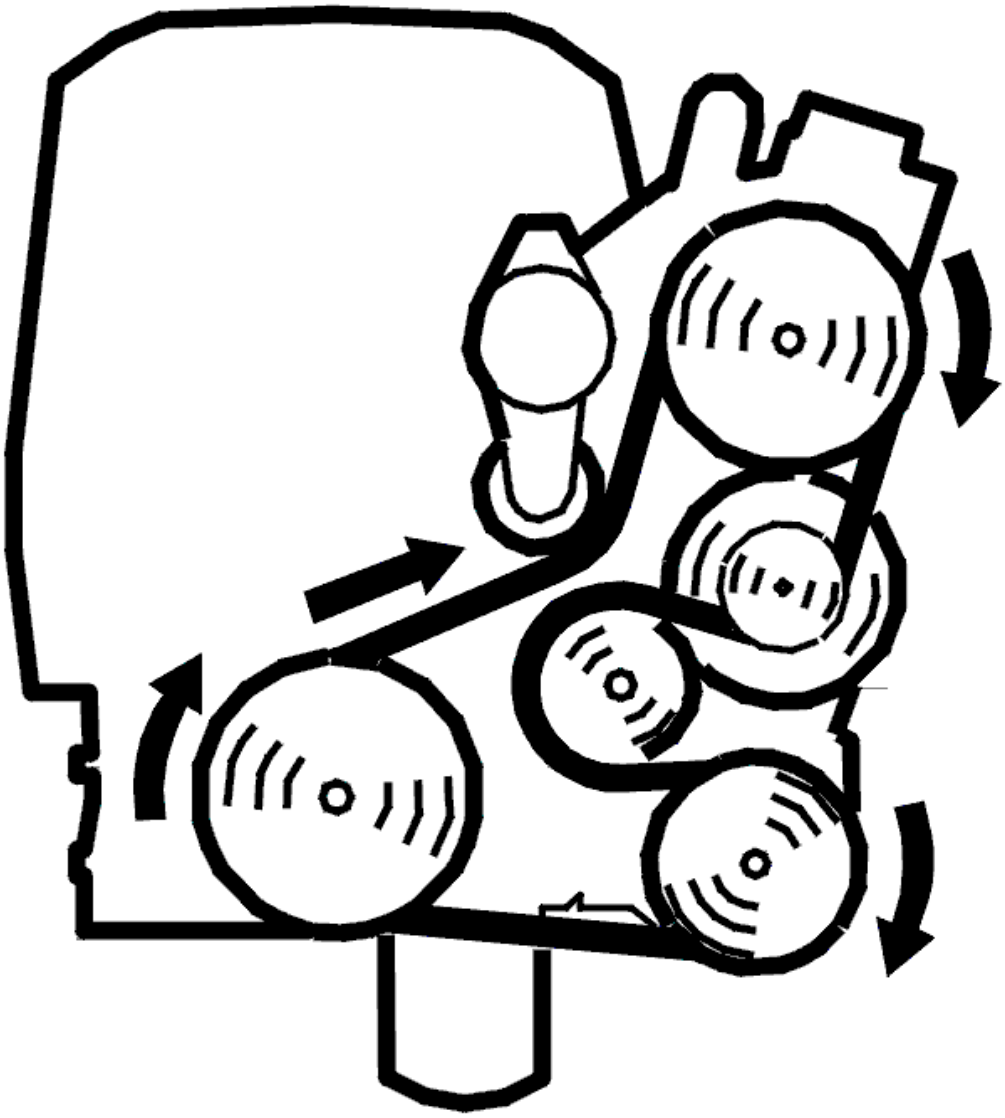

Fig. 290: Belt Routing / Engine Idling - Volvo
Courtesy of VOLVO CARS CORPORATION

- Test drive the car on the road. Use acceleration and engine braking. Repeat the procedure several times so that the camshaft control works and the engine control module (ECM) can carry out diagnostics.
- Connect VCT2000 (or appropriate scan tool) to the data link connector **without switching off the engine.**
- Read the diagnostic status and fault status for the diagnostic trouble code by selecting the diagnostic trouble code in the list.

NOTE: **If the engine is switched off, the stored fault status will be erased and the test drive will have to be repeated.**

Check the fault status for the diagnostic trouble code when the scan is "Implemented". When the function is correct the fault status should be "No fault found" when the scan is implemented.

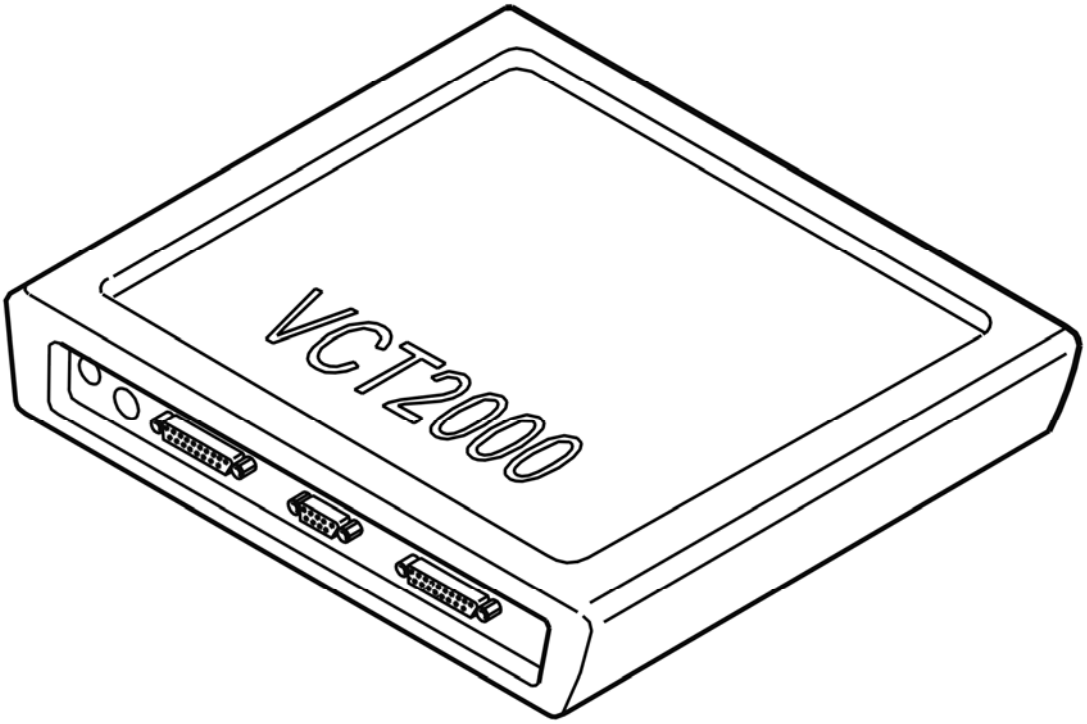

Fig. 291: Identifying VCT2000 Diagnostic Tool Symbol In VIDA
Courtesy of VOLVO CARS CORPORATION

Is the function OK?

- **YES**

  VERIFIED: Troubleshooting has been completed.

- **NO**

  Refer to **INFORMATION**

INFORMATION

FAULT-TRACING INFORMATION

The fault should have been detected and remedied. As this is not the case fault-tracing has failed.

Exit fault-tracing for this diagnostic trouble code (DTC) or make another attempt.

ECM-P003100: HO2S HEATER CONTROL CIRCUIT LOW (BANK 1, SENSOR 1). GENERAL FAILURE INFORMATION. NO SUB TYPE INFORMATION

(B6324S; 2007-2010)

DIAGNOSTIC TROUBLE CODE (DTC) INFORMATION ECM-P003100

Condition

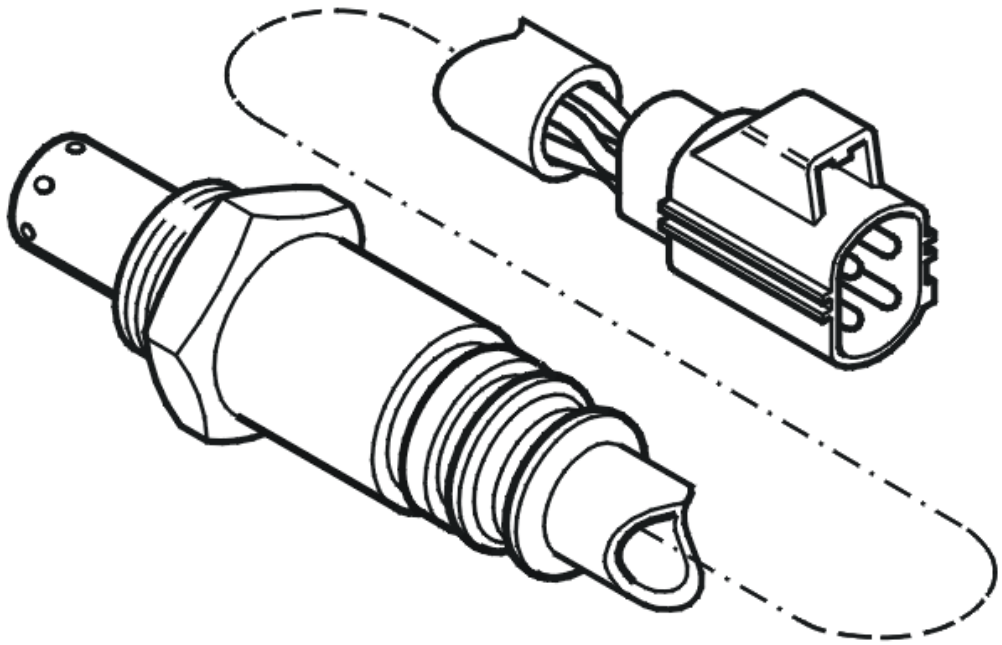

Fig. 292: Identifying Heated Oxygen Sensor
Courtesy of VOLVO CARS CORPORATION

The diagnostic trouble code (DTC) is stored if the Engine Control Module (ECM) registers that the front heated oxygen sensor (HO2S) preheating circuit (bank 1)has a short-circuit to ground, or if there is an open-circuit.

The engine cylinders are counted from the cylinder furthest away from the flywheel.

- Bank 1 (cylinder row nearest the front): cylinders 1, 3, 5 and 7.
- Bank 2 (cylinder row furthest to the rear, nearest the passenger compartment): cylinders 2, 4, 6, and 8.

The diagnostic trouble code can be diagnosed when the ignition is on.

Substitute Value

- Fuel trim switched off.
- Front heated oxygen sensor (HO2S) preheating switched off.

Possible Source

- Open-circuit in the power supply cable.
- Short-circuit to ground in the power cable.
- Damaged front heated oxygen sensor (HO2S).

Fault symptom[s]

- Malfunction indicator lamp (MIL) lit.

FAULT-TRACING

FAULT-TRACING INFORMATION

Use the following information and general checks during fault-tracing.

NOTE: Check that the fuses are intact. For locations, see the owner's manual or the cover for fuse box.

1. Check, if possible, relevant functions in the vehicle using buttons/controls/test drives to determine the status of the fault.

   NOTE: If the vehicle does not show any of the given symptoms in the diagnostic trouble code information (DTC), this may mean that the fault is intermittent or that the control module is not detecting the fault at this moment.

2. Use the diagnostic trouble code's **frozen values** , **status identifiers** and **counter** to determine the operating conditions when the fault was detected, the fault's current status and any degree of intermittence of the fault.
3. Check and fault-trace according to **the fault causes** that are specified in the **diagnostic trouble code (DTC) information** .
4. Use **VIDA (Volvo scan tool)** . Read off the parameters, activate components and functions, carry out quick tests and checking routines for the diagnostic trouble codes to identify the fault.
5. Check relevant components according to **Component specifications** .
6. Check relevant signals using the appropriate **signal specification** and **breakout box** service information.

Remedy as necessary.

Other information

- see **DESCRIPTION OF FROZEN VALUES**
- see **DESCRIPTION OF STATUS IDENTIFIER**
- see **DESCRIPTION OF COUNTER**
- see **DESCRIPTION OF PARAMETERS**

- see **DESCRIPTION OF ACTIVATIONS**
- see **LOCATION OF COMPONENTS**
- see **COMPONENT SPECIFICATIONS**
- see **CONNECTING THE BREAKOUT BOX**
- see **SIGNAL SPECIFICATION**
- see **CHECKING WIRING AND TERMINALS**

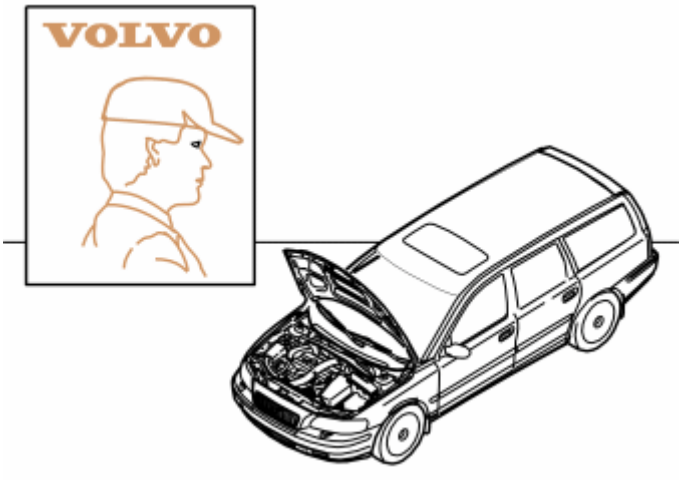

Fig. 293: Identifying VOLVO Certified Service Personnel
Courtesy of VOLVO CARS CORPORATION

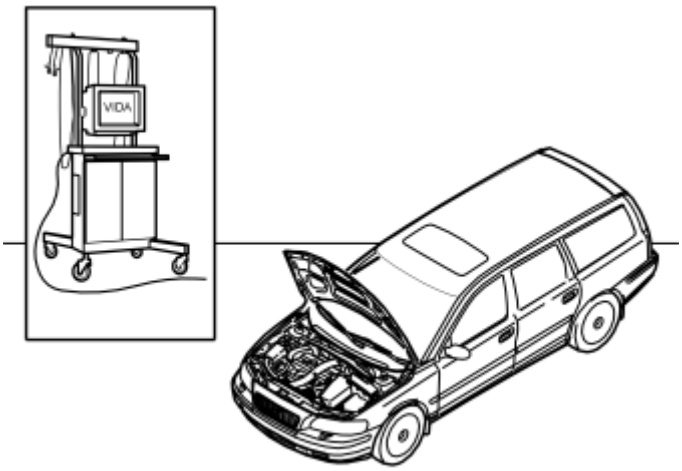

Fig. 294: Identifying VIDA
Courtesy of VOLVO CARS CORPORATION

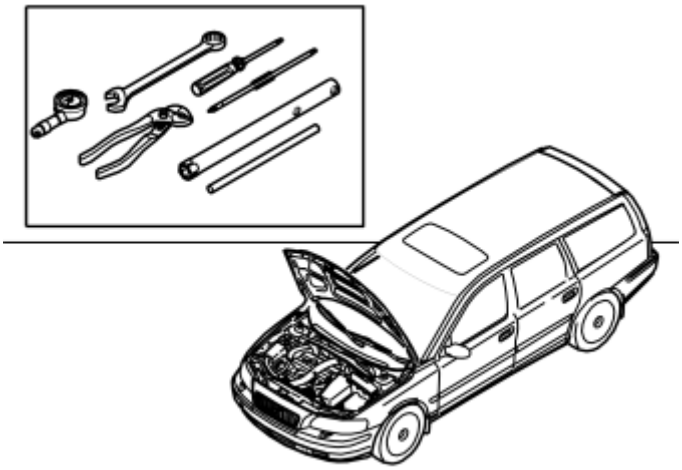

Fig. 295: Identifying Relevant Tools
Courtesy of VOLVO CARS CORPORATION

- **Continue**

  Refer to **VERIFICATION**

VERIFICATION

HINT: After carrying out the repair, check that the fault has been remedied.

- Read off the diagnostic status and the fault status for the diagnostic trouble code (DTC).
- Check that the diagnosis is Performed.

  HINT: To enable performing diagnostic status, special conditions must be fulfilled. These conditions are described in diagnostic trouble code (DTC) information for each diagnostic trouble code (DTC).

  If the function is correct, the fault status must be No fault found when the diagnostic is complete.

Fig. 296: Identifying VCT2000 Diagnostic Tool Symbol In VIDA
Courtesy of VOLVO CARS CORPORATION

Is the function OK?

- **YES**

OKAY: Troubleshooting has been completed.

- **NO**

  Refer to **INFORMATION**

INFORMATION

FAULT-TRACING INFORMATION

The fault should have been detected and remedied. As this is not the case fault-tracing has failed.

Exit fault-tracing for this diagnostic trouble code (DTC) or make another attempt.

ECM-P003100: HO2S HEATER CONTROL CIRCUIT LOW (BANK 1, SENSOR 1). GENERAL FAILURE INFORMATION. NO SUB TYPE INFORMATION (B6324S5; 2011-2012)

DIAGNOSTIC TROUBLE CODE (DTC) INFORMATION ECM-P003100

see **DIAGNOSTIC TROUBLE CODE (DTC) INFORMATION ECM-P003100**

FAULT-TRACING

see **FAULT-TRACING**

ECM-P003100: HEATED OXYGEN SENSOR (HO2S) CONTROL CIRCUIT LOW (BANK 1, SENSOR 1). GENERAL FAULT INFORMATION. NO INFORMATION ABOUT FAULT TYPE (B8444S; 2005-2011)

DIAGNOSTIC TROUBLE CODE (DTC) INFORMATION ECM-P003100

Condition

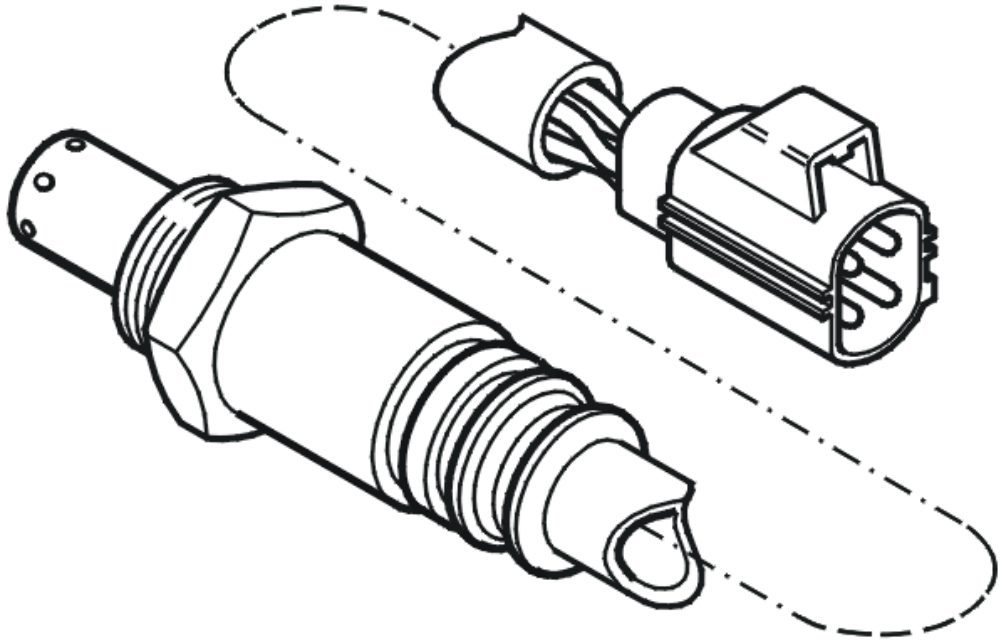

Fig. 297: Identifying Heated Oxygen Sensor
Courtesy of VOLVO CARS CORPORATION

The diagnostic trouble code (DTC) is stored if the Engine Control Module (ECM) registers that the front heated oxygen sensor (HO2S) preheating circuit (bank 1)has a short-circuit to ground, or if there is an open-circuit.

The engine cylinders are counted from the cylinder furthest away from the flywheel.

- Bank 1 (cylinder row nearest the front): cylinders 1, 3, 5 and 7.
- Bank 2 (cylinder row furthest to the rear, nearest the passenger compartment): cylinders 2, 4, 6, and 8.

The diagnostic trouble code can be diagnosed when the ignition is on.

Substitute Value

- Fuel trim switched off.
- Front heated oxygen sensor (HO2S) preheating switched off.

Possible Source

- Open-circuit in the power supply cable.
- Short-circuit to ground in the power cable.
- Damaged front heated oxygen sensor (HO2S).

Fault symptom[s]

- Malfunction indicator lamp (MIL) lit.

FAULT TRACING ECM-P003100

CHECKING THE STATUS

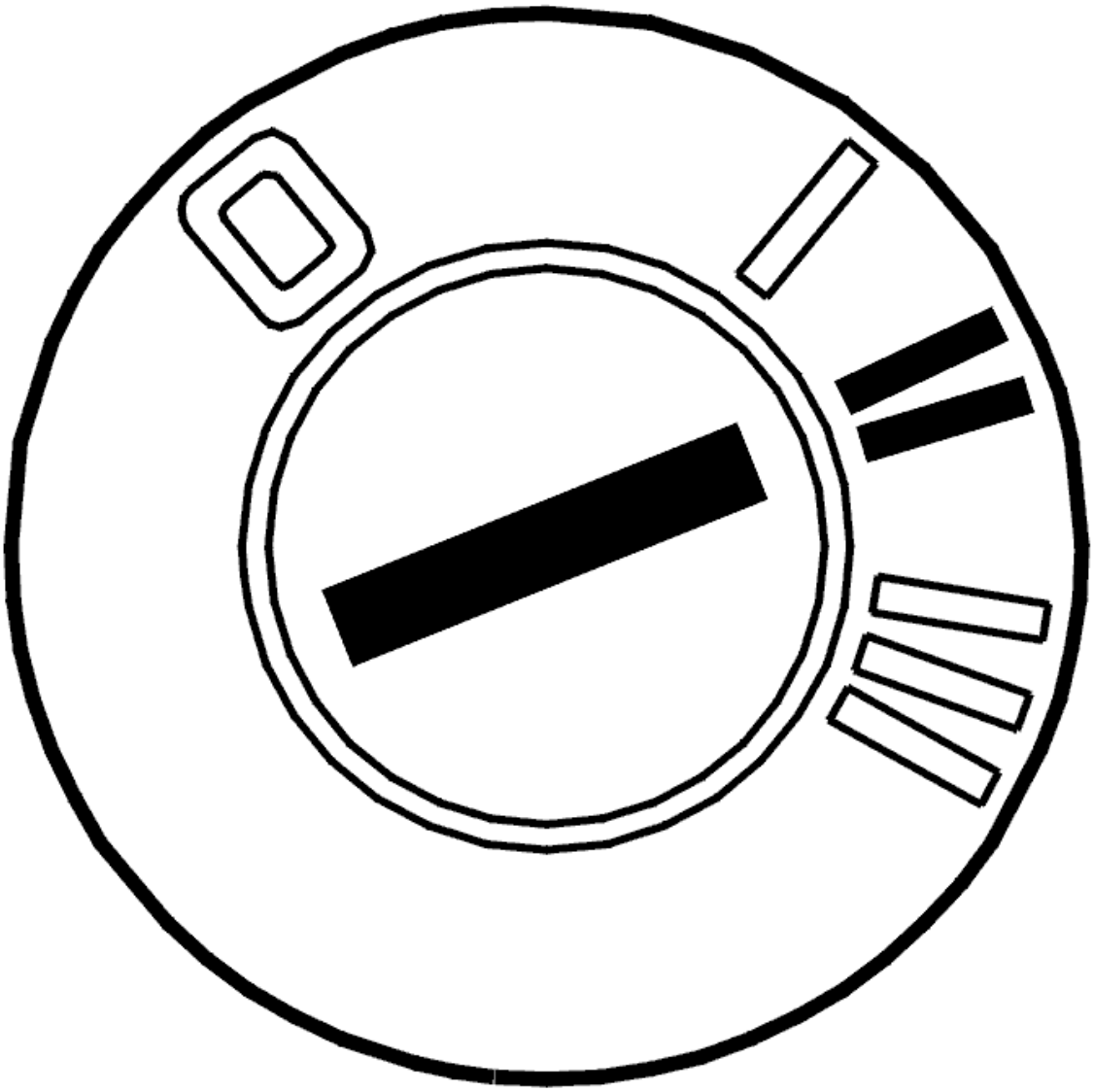

Fig. 298: Identifying Ignition ON
Courtesy of VOLVO CARS CORPORATION

- The ignition must be on to perform the diagnostic.

  Check whether the fault is permanent or intermittent. Read off the diagnostic trouble code (DTC) fault status when the diagnostic status is "Completed".

The fault is permanent if the fault status is "Fault found". The fault is intermittent if the fault status is "No fault found".

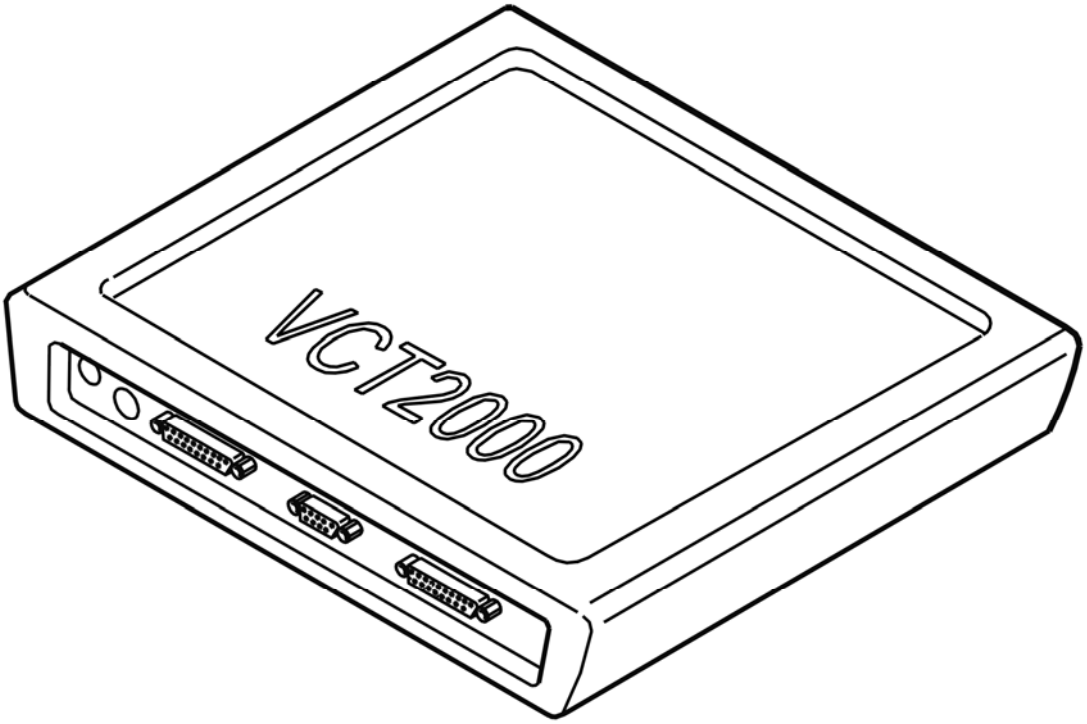

Fig. 299: Identifying VCT2000 Diagnostic Tool Symbol In VIDA
Courtesy of VOLVO CARS CORPORATION

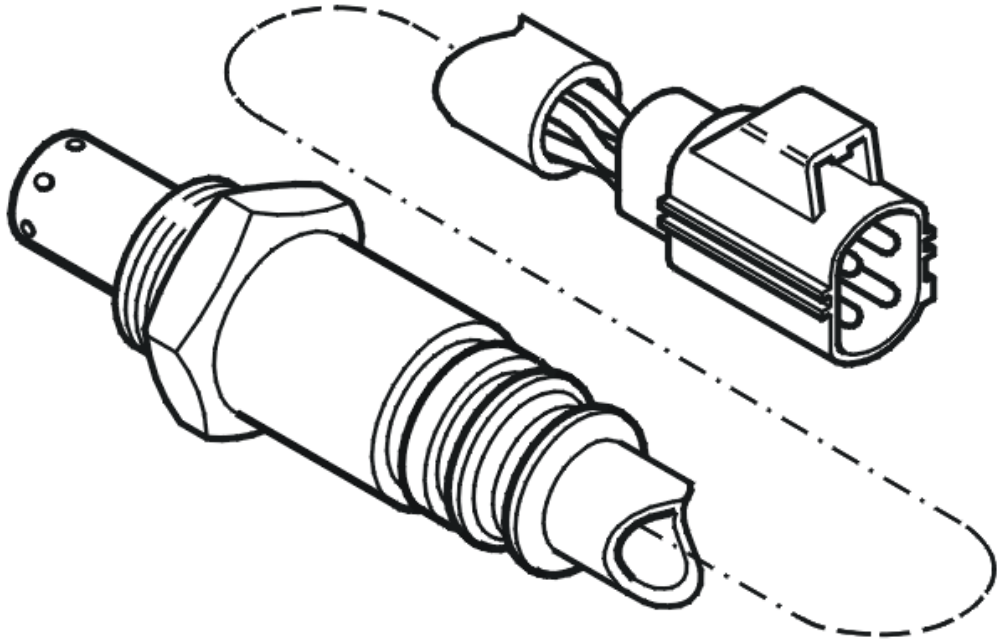

Fig. 300: Identifying Heated Oxygen Sensor
Courtesy of VOLVO CARS CORPORATION

- **Continue**

  Refer to **CHECKING COMPONENTS**

CHECKING COMPONENTS

CAUTION: Do not apply rust solvent spray or grease to the heated oxygen sensor (HO2S) connector.

Check the cable between front heated oxygen sensor (HO2S) terminal #1 (bank 1) and voltage supply from the system relay. Check for an open-circuit. Check for a short-circuit to ground.

Try a new heated oxygen sensor (HO2S) if the above fault-tracing does not remedy the fault.

Remedy as necessary.

Other information

- see **CONNECTING THE BREAKOUT BOX**
- see **SIGNAL SPECIFICATION, ENGINE CONTROL MODULE (ECM)**

- see **HEATED OXYGEN SENSOR (HO2S), REPLACING**
- see **CHECKING WIRING AND TERMINALS**

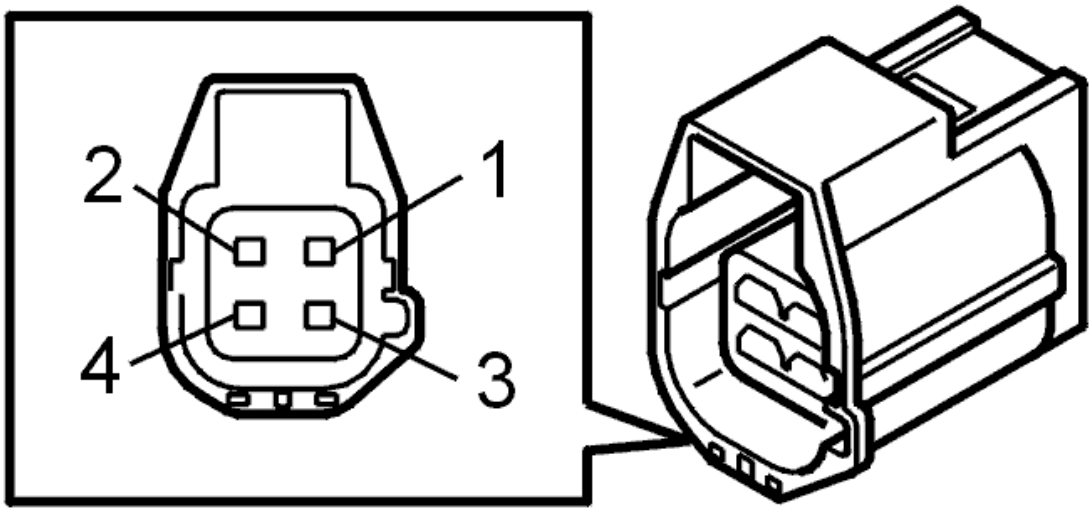

Fig. 301: Identifying 4-Bit Connector
Courtesy of VOLVO CARS CORPORATION

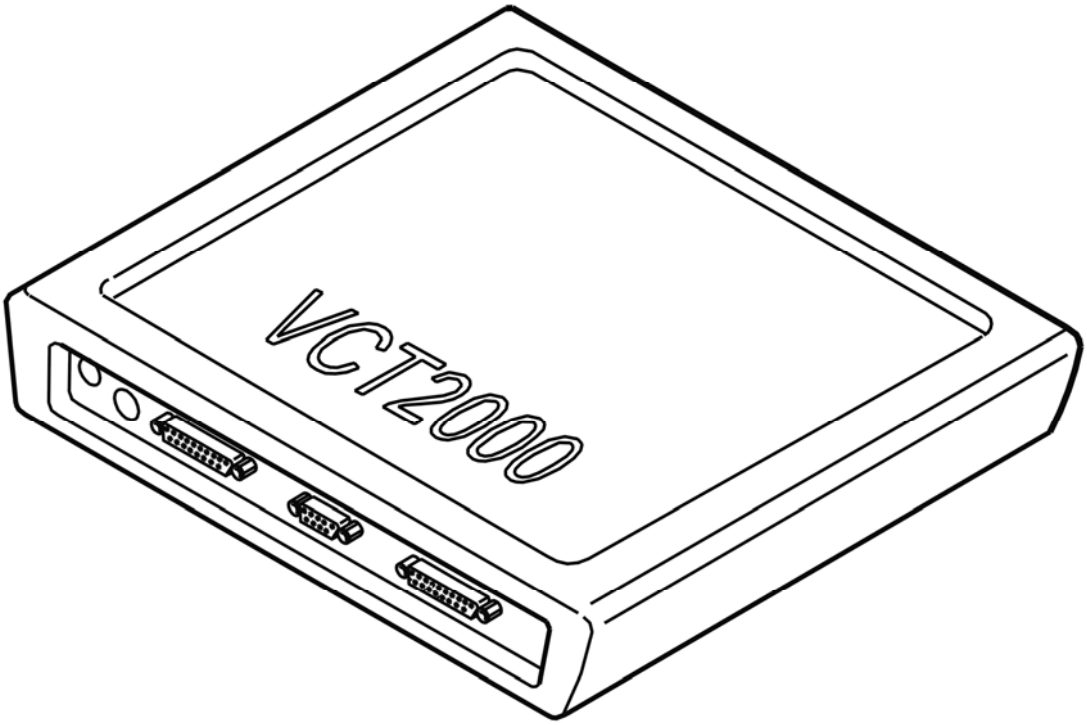

Fig. 302: Identifying VCT2000 Diagnostic Tool Symbol In VIDA
Courtesy of VOLVO CARS CORPORATION

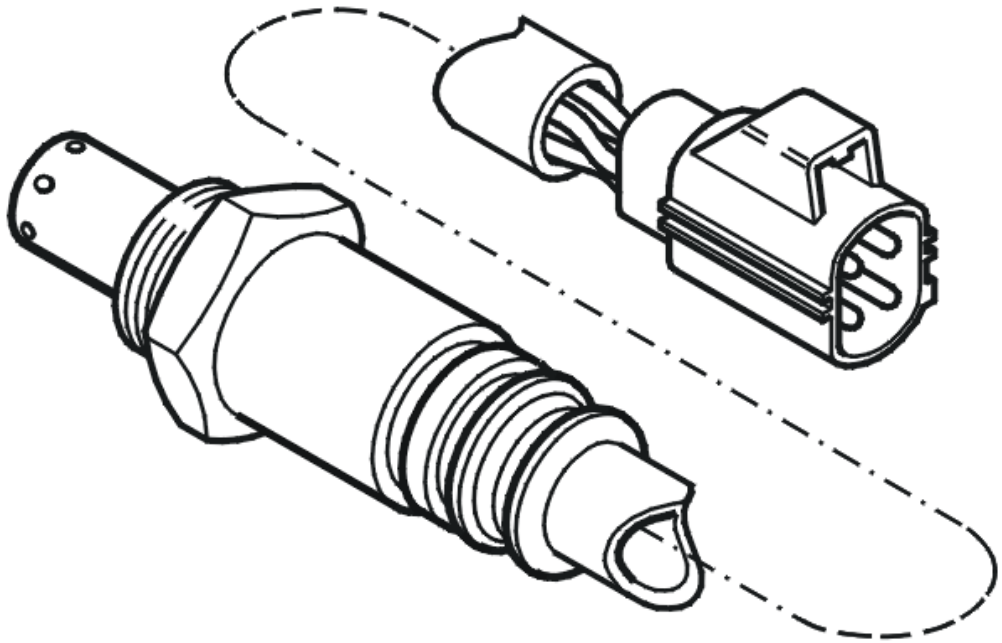

Fig. 303: Identifying Heated Oxygen Sensor
Courtesy of VOLVO CARS CORPORATION

- **Continue**

  Refer to **VERIFICATION**

VERIFICATION

VERIFICATION

HINT: After repairing, it is necessary to check that the malfunction has been fixed.

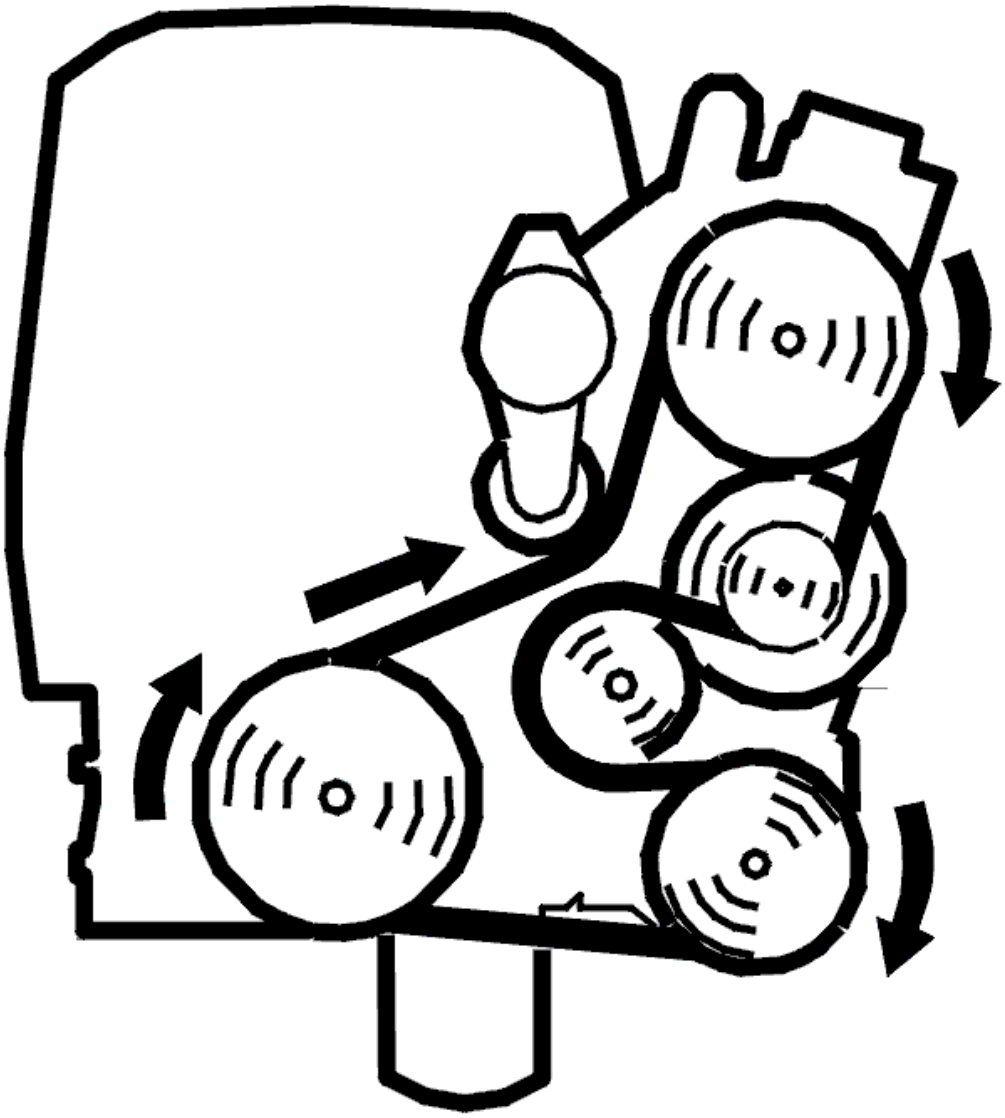

Fig. 304: Belt Routing / Engine Idling - Volvo
Courtesy of VOLVO CARS CORPORATION

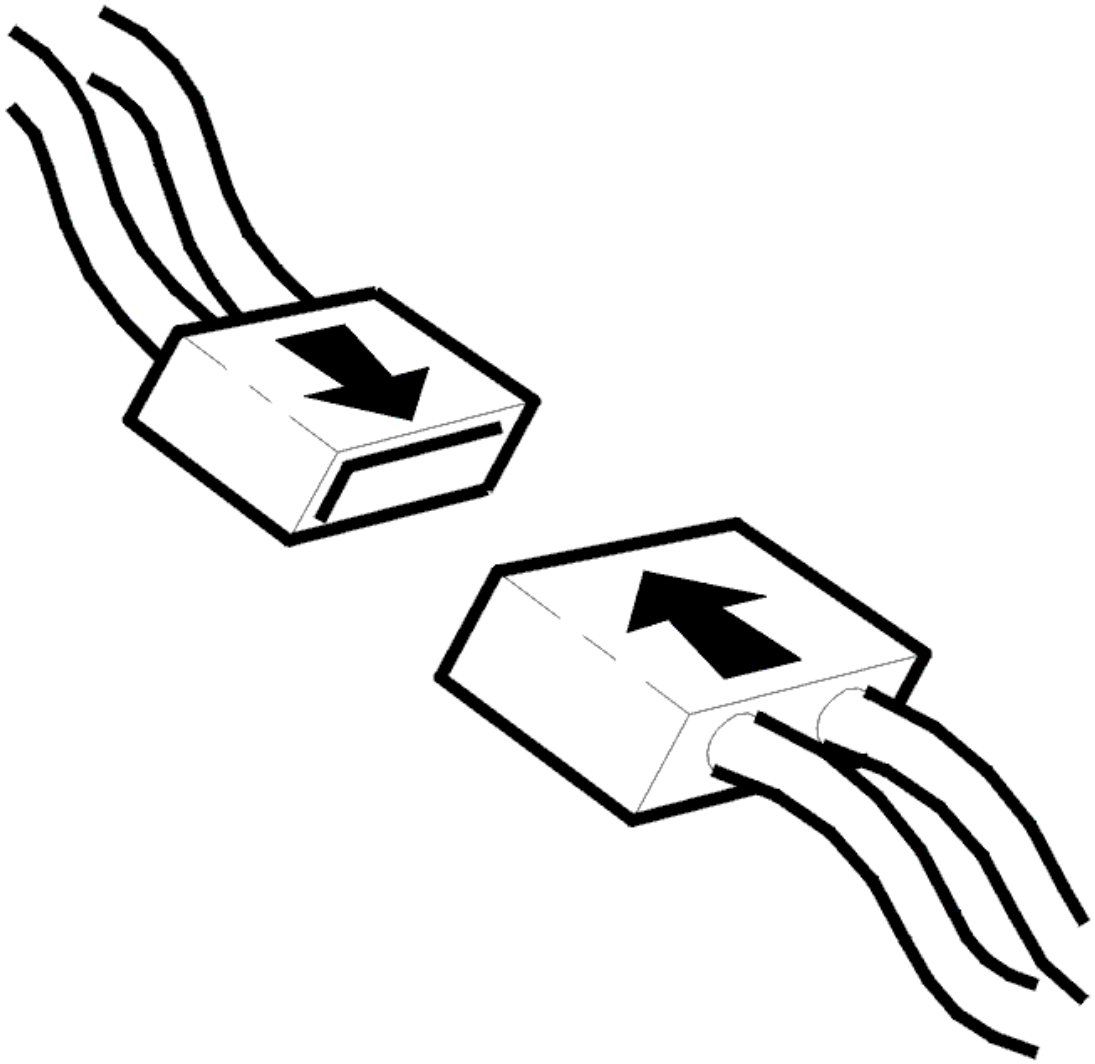

Fig. 305: Connecting Connector
Courtesy of VOLVO CARS CORPORATION

- Ignition off
- Reinstall the connectors, components etc.
- Ignition on to perform the diagnosis.

  Read off the diagnostic status and trouble status for the diagnostic trouble code.

  Check that the diagnosis is "Implemented" and that the trouble status is "No malfunction found". If the trouble status is "Malfunction found", this indicates defective function.

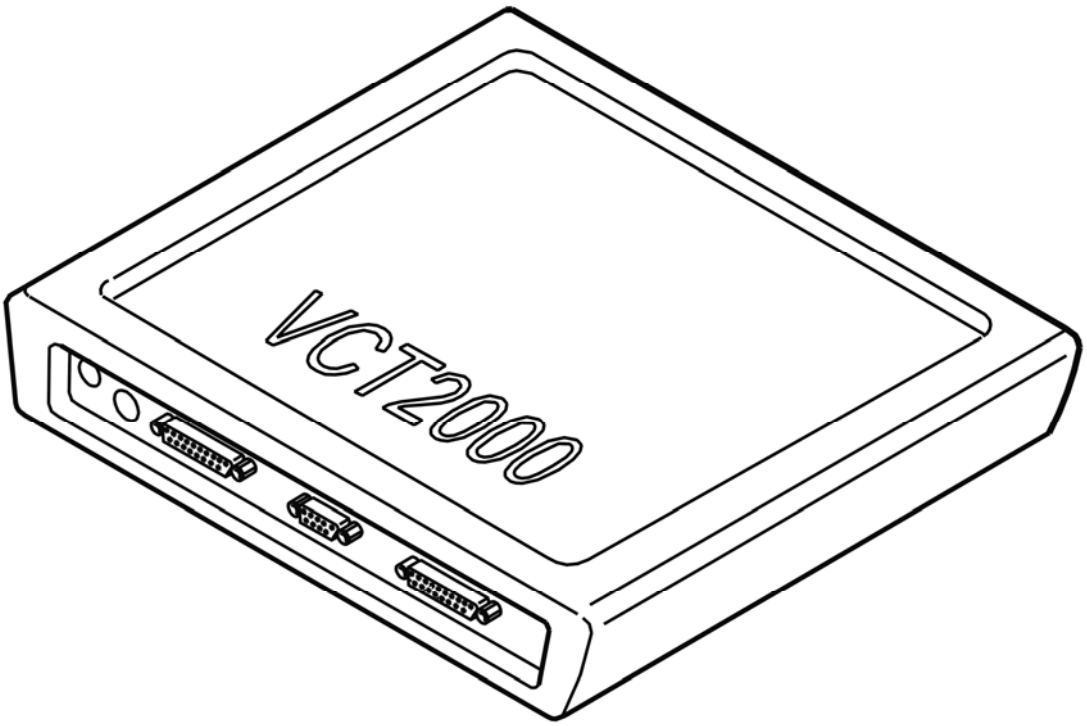

Fig. 306: Identifying VCT2000 Diagnostic Tool Symbol In VIDA
Courtesy of VOLVO CARS CORPORATION

Is the function OK?

- **YES**

  VERIFIED: Troubleshooting has been completed.

- **NO**

  Refer to **INFORMATION**

INFORMATION

FAULT-TRACING INFORMATION

The fault should have been detected and remedied. As this is not the case fault-tracing has failed.

Exit fault-tracing for this diagnostic trouble code (DTC) or make another attempt.

ECM-P003200: HO2S HEATER CONTROL CIRCUIT HIGH (BANK 1, SENSOR 1). GENERAL FAILURE INFORMATION. NO SUB TYPE INFORMATION

(B6324S; 2007-2010)

DIAGNOSTIC TROUBLE CODE (DTC) INFORMATION ECM-P003200

Condition

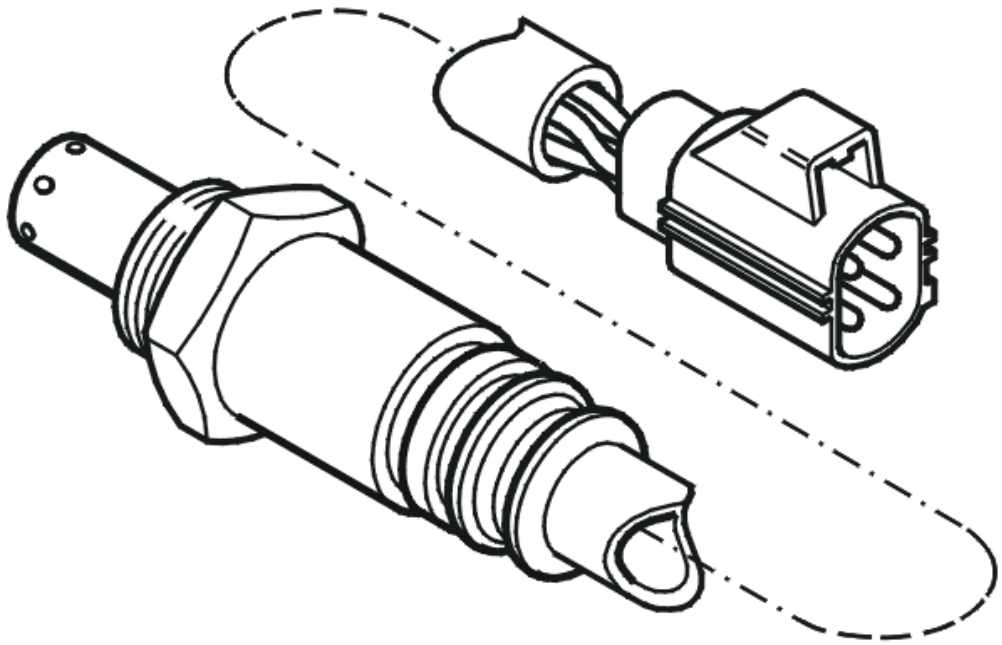

Fig. 307: Identifying Heated Oxygen Sensor
Courtesy of VOLVO CARS CORPORATION

The diagnostic trouble code (DTC) is stored if the Engine Control Module (ECM) registers that the front heated oxygen sensor (HO2S) preheating circuit (bank 1) has a short-circuit to supply voltage.

The engine cylinders are counted from the cylinder furthest away from the flywheel.

- Bank 1 (cylinder row nearest the front): cylinders 1, 3, 5 and 7.
- Bank 2 (cylinder row furthest to the rear, nearest the passenger compartment): cylinders 2, 4, 6, and 8.

The diagnostic trouble code can be diagnosed when the ignition is on.

Substitute Value

- Fuel trim switched off.
- Front heated oxygen sensor (HO2S) preheating switched off.

Possible Source

- Short-circuit to supply in the power cable.
- Damaged front heated oxygen sensor (HO2S).

Fault symptom[s]

- Malfunction indicator lamp (MIL) lit.

FAULT-TRACING

see **FAULT-TRACING**

ECM-P003200: HO2S HEATER CONTROL CIRCUIT HIGH (BANK 1, SENSOR 1). GENERAL FAILURE INFORMATION. NO SUB TYPE INFORMATION (B6324S5; 2011-2012)

DIAGNOSTIC TROUBLE CODE (DTC) INFORMATION ECM-P003200

see **DIAGNOSTIC TROUBLE CODE (DTC) INFORMATION ECM-P003200**

FAULT-TRACING

see **FAULT-TRACING**

ECM-P003200: HEATED OXYGEN SENSOR (HO2S) CONTROL CIRCUIT HIGH (BANK 1, SENSOR 1). GENERAL FAULT INFORMATION. NO INFORMATION ABOUT FAULT TYPE (B8444S; 2005-2011)

DIAGNOSTIC TROUBLE CODE (DTC) INFORMATION ECM-P003200

Condition

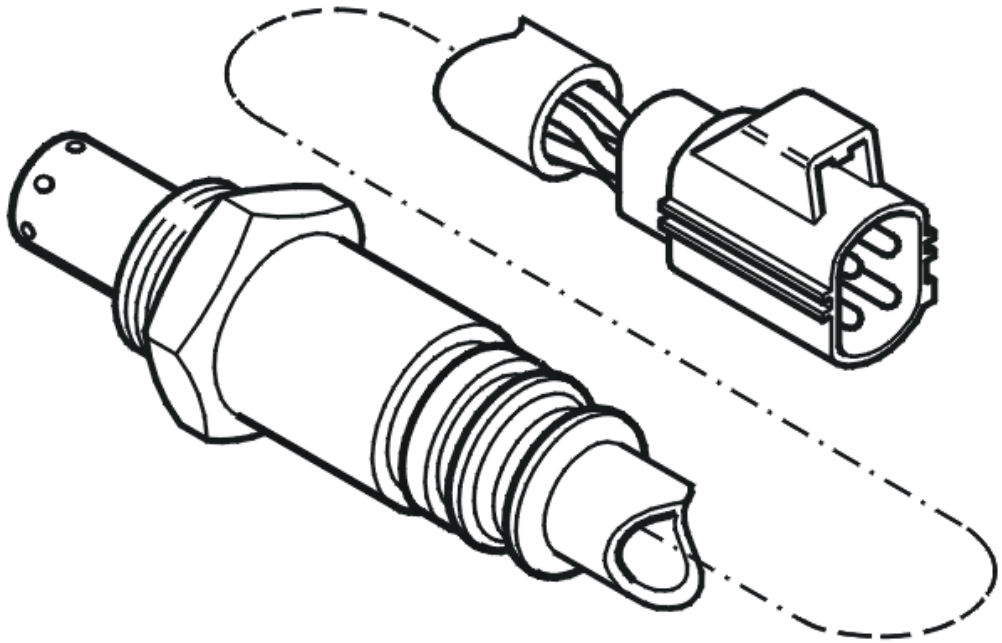

Fig. 308: Identifying Heated Oxygen Sensor
Courtesy of VOLVO CARS CORPORATION

The diagnostic trouble code (DTC) is stored if the Engine Control Module (ECM) registers that the front heated oxygen sensor (HO2S) preheating circuit (bank 1) has a short-circuit to supply voltage.

The engine cylinders are counted from the cylinder furthest away from the flywheel.

- Bank 1 (cylinder row nearest the front): cylinders 1, 3, 5 and 7.
- Bank 2 (cylinder row furthest to the rear, nearest the passenger compartment): cylinders 2, 4, 6, and 8.

The diagnostic trouble code can be diagnosed when the ignition is on.

Substitute Value

- Fuel trim switched off.
- Front heated oxygen sensor (HO2S) preheating switched off.

Possible Source

- Short-circuit to supply in the power cable.
- Damaged front heated oxygen sensor (HO2S).

Fault symptom[s]

- Malfunction indicator lamp (MIL) lit.

FAULT TRACING ECM-P003200

CHECKING THE STATUS

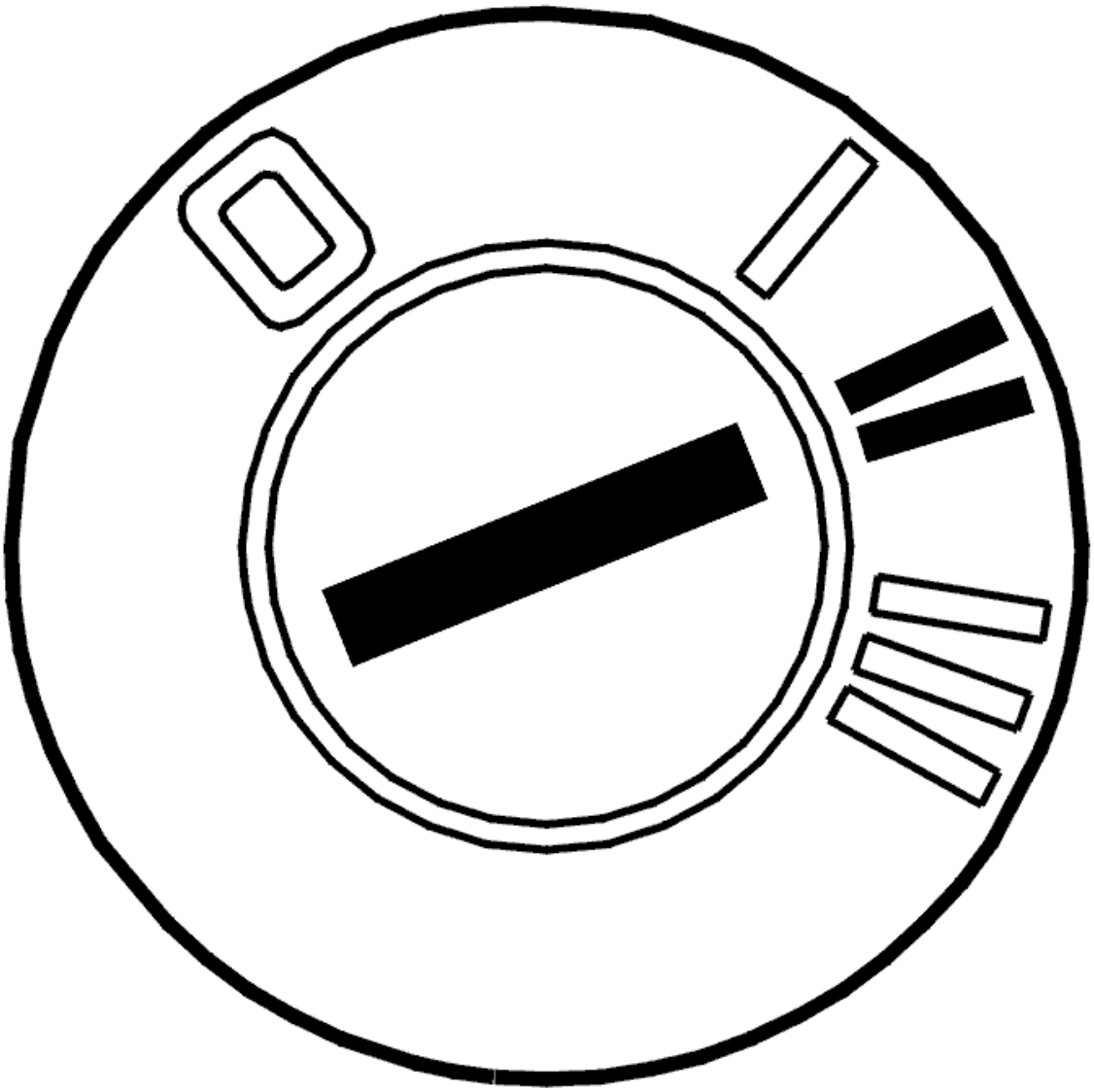

Fig. 309: Identifying Ignition ON
Courtesy of VOLVO CARS CORPORATION

- The ignition must be on to perform the diagnostic.

  Check whether the fault is permanent or intermittent. Read off the diagnostic trouble code (DTC) fault status when the diagnostic status is "Completed".

The fault is permanent if the fault status is "Fault found". The fault is intermittent if the fault status is "No fault found".

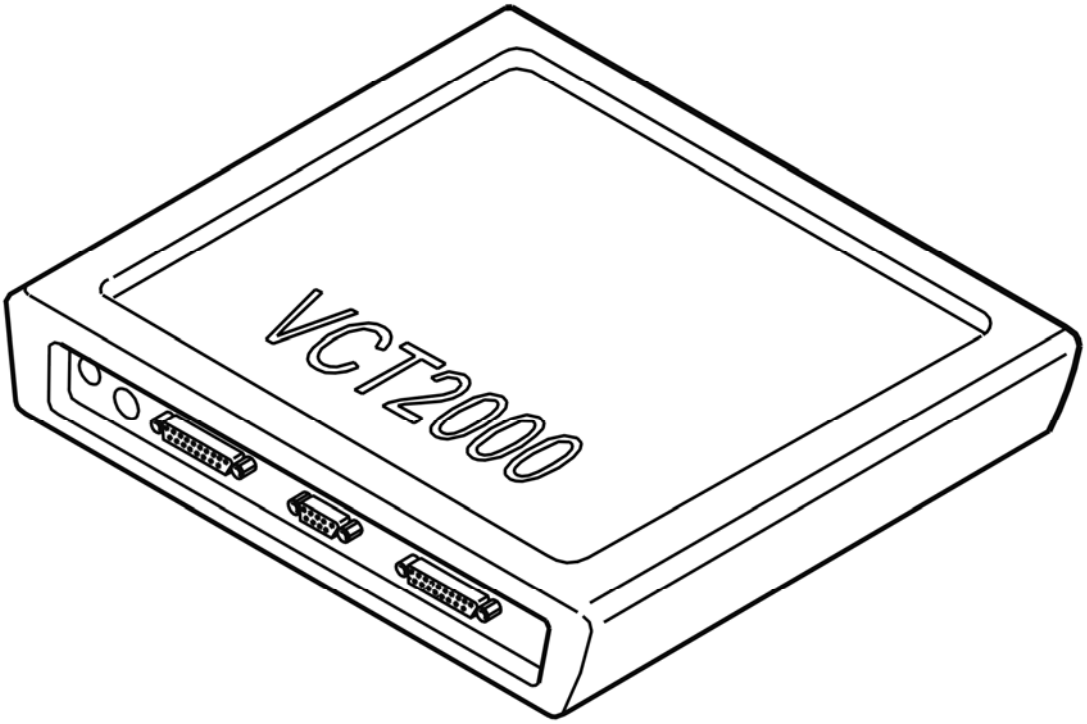

Fig. 310: Identifying VCT2000 Diagnostic Tool Symbol In VIDA
Courtesy of VOLVO CARS CORPORATION

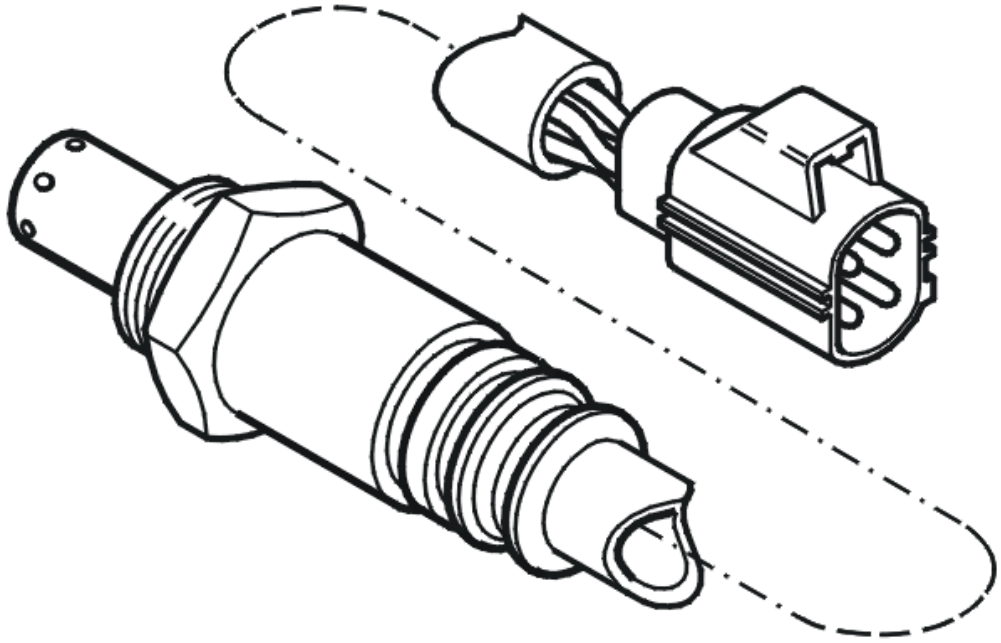

Fig. 311: Identifying Heated Oxygen Sensor
Courtesy of VOLVO CARS CORPORATION

- **Continue**

  Refer to **CHECKING COMPONENTS**

CHECKING COMPONENTS

CAUTION: Do not apply rust solvent spray or grease to the heated oxygen sensor (HO2S) connector.

Check the cable between front heated oxygen sensor (HO2S) terminal #1 (bank 1) and voltage supply from the system relay. Check for a short-circuit to supply voltage.

Try a new rear heated oxygen sensor if the above measure does not remedy the fault.

Remedy as necessary.

Other information

- see **CONNECTING THE BREAKOUT BOX**
- see **SIGNAL SPECIFICATION, ENGINE CONTROL MODULE (ECM)**

- see **HEATED OXYGEN SENSOR (HO2S), REPLACING**
- see **CHECKING WIRING AND TERMINALS**

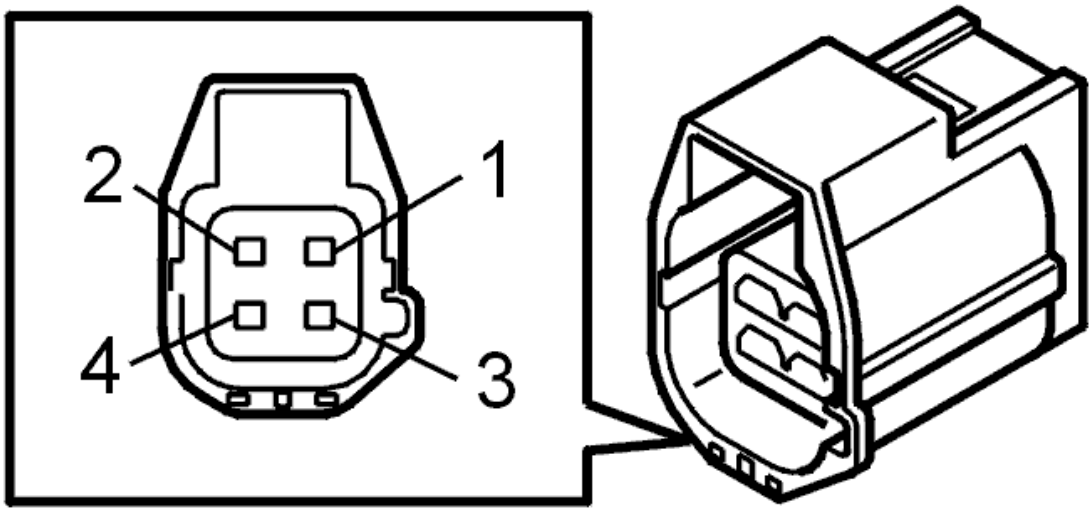

Fig. 312: Identifying 4-Bit Connector
Courtesy of VOLVO CARS CORPORATION

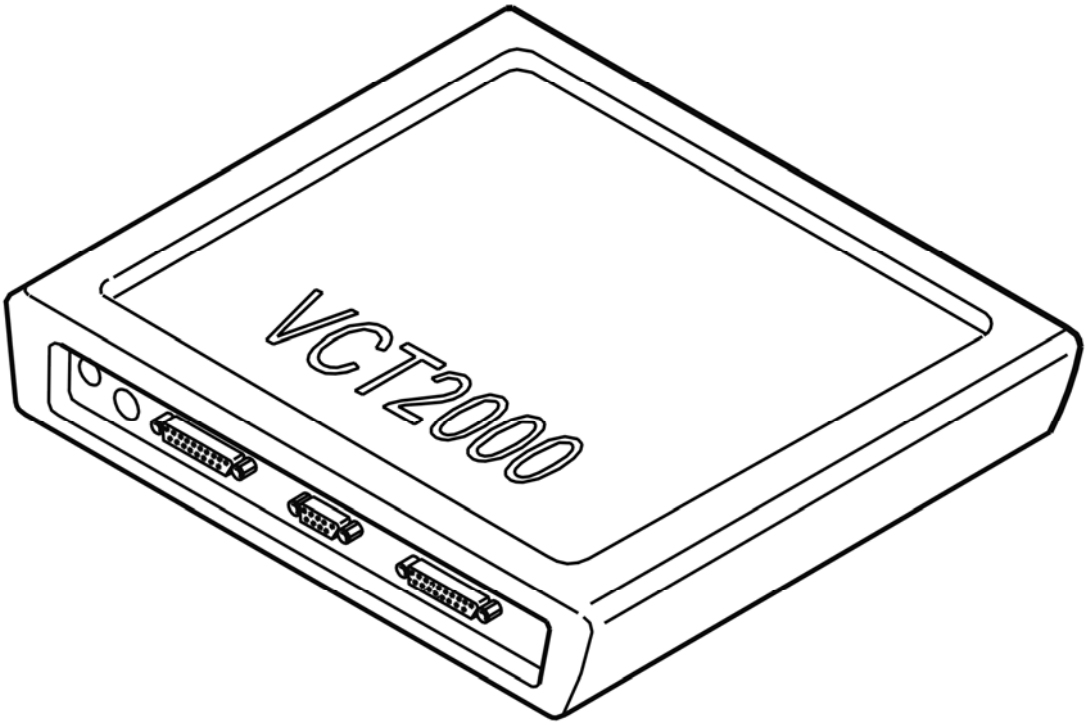

Fig. 313: Identifying VCT2000 Diagnostic Tool Symbol In VIDA
Courtesy of VOLVO CARS CORPORATION

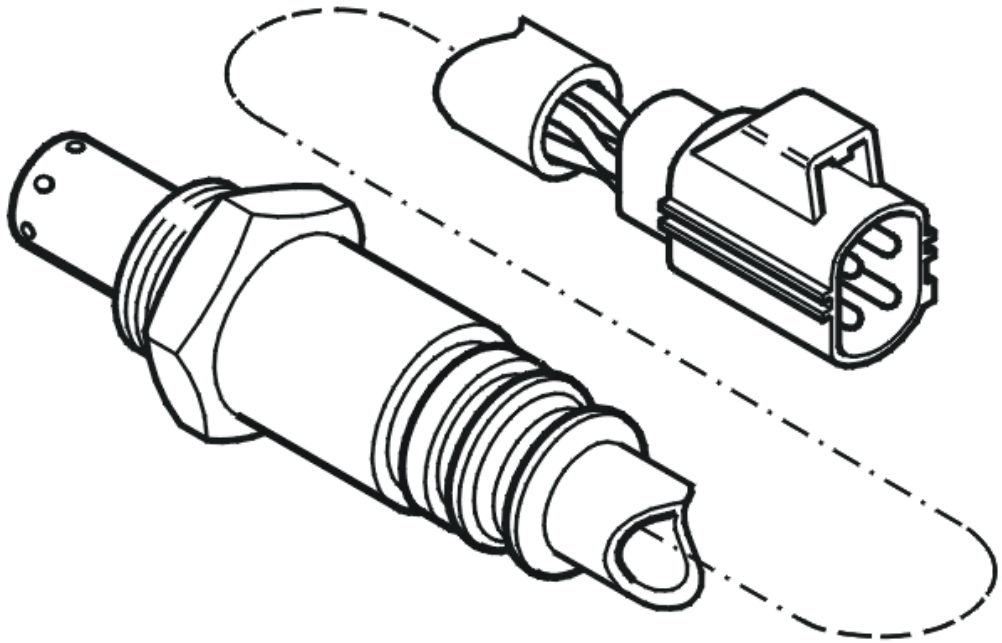

Fig. 314: Identifying Heated Oxygen Sensor
Courtesy of VOLVO CARS CORPORATION

- **Continue**

  Refer to **VERIFICATION**

VERIFICATION

VERIFICATION

HINT: After repairing, it is necessary to check that the malfunction has been fixed.

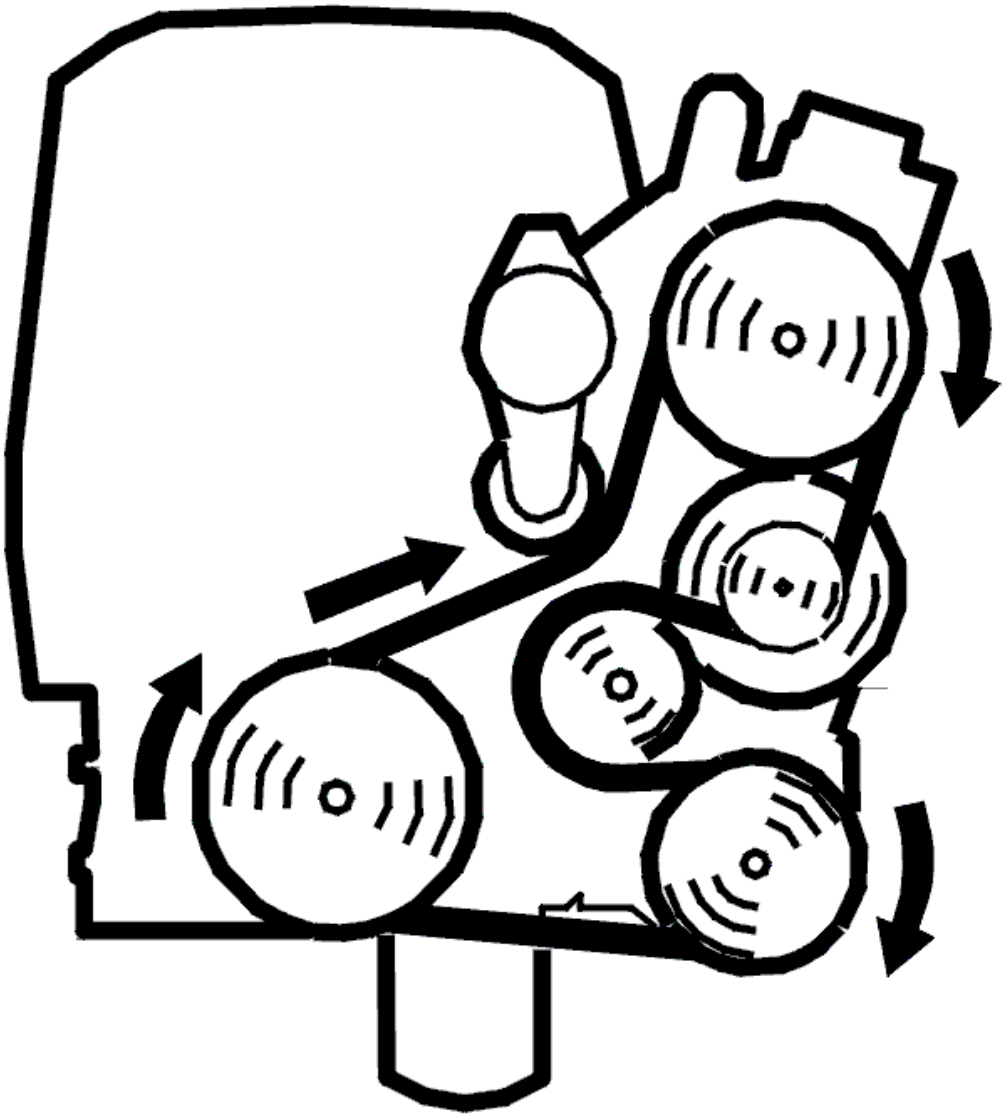

Fig. 315: Belt Routing / Engine Idling - Volvo
Courtesy of VOLVO CARS CORPORATION

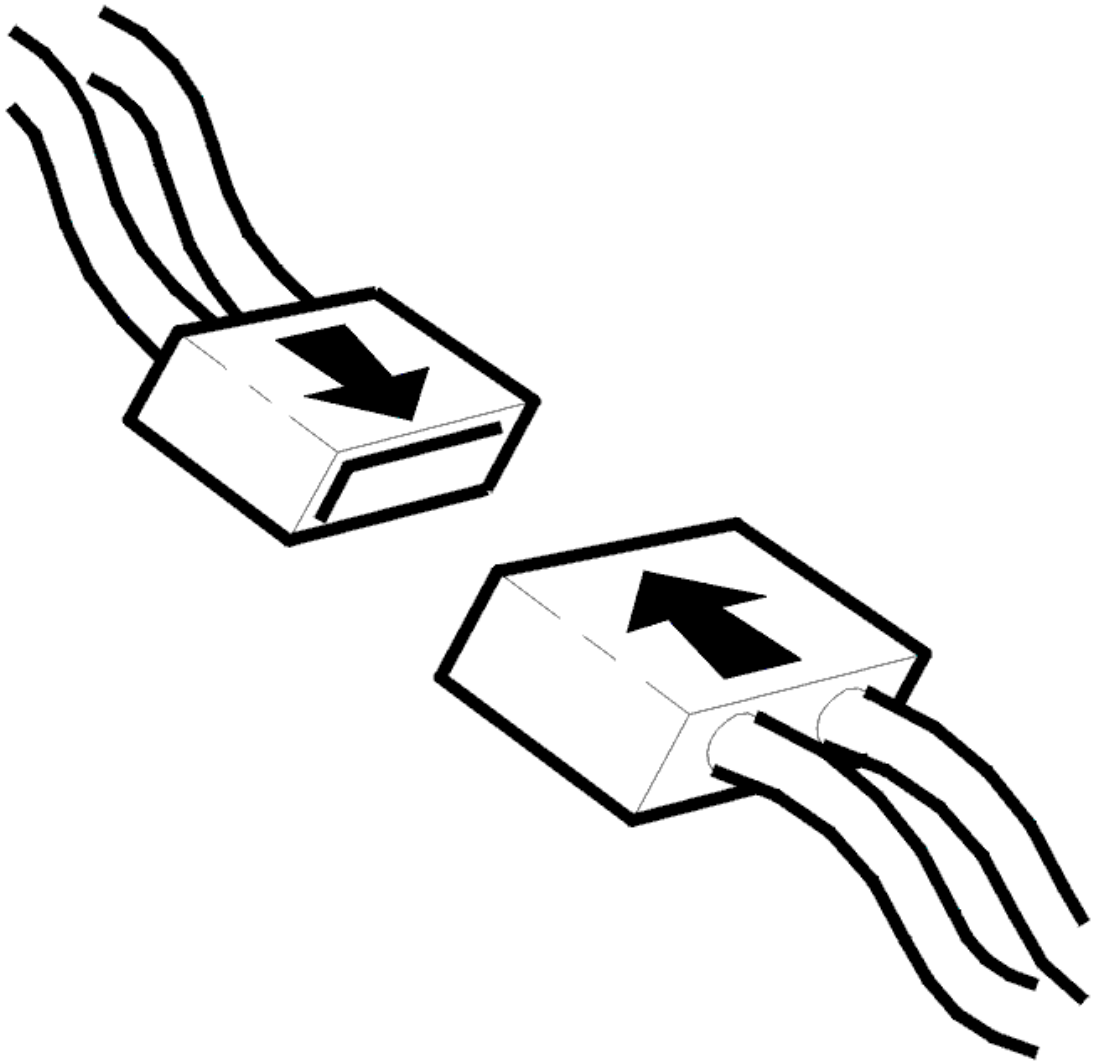

Fig. 316: Connecting Connector
Courtesy of VOLVO CARS CORPORATION

- Ignition off
- Reinstall the connectors, components etc.
- Ignition on to perform the diagnosis.

  Read off the diagnostic status and trouble status for the diagnostic trouble code.

  Check that the diagnosis is "Implemented" and that the trouble status is "No malfunction found". If the trouble status is "Malfunction found", this indicates defective function.

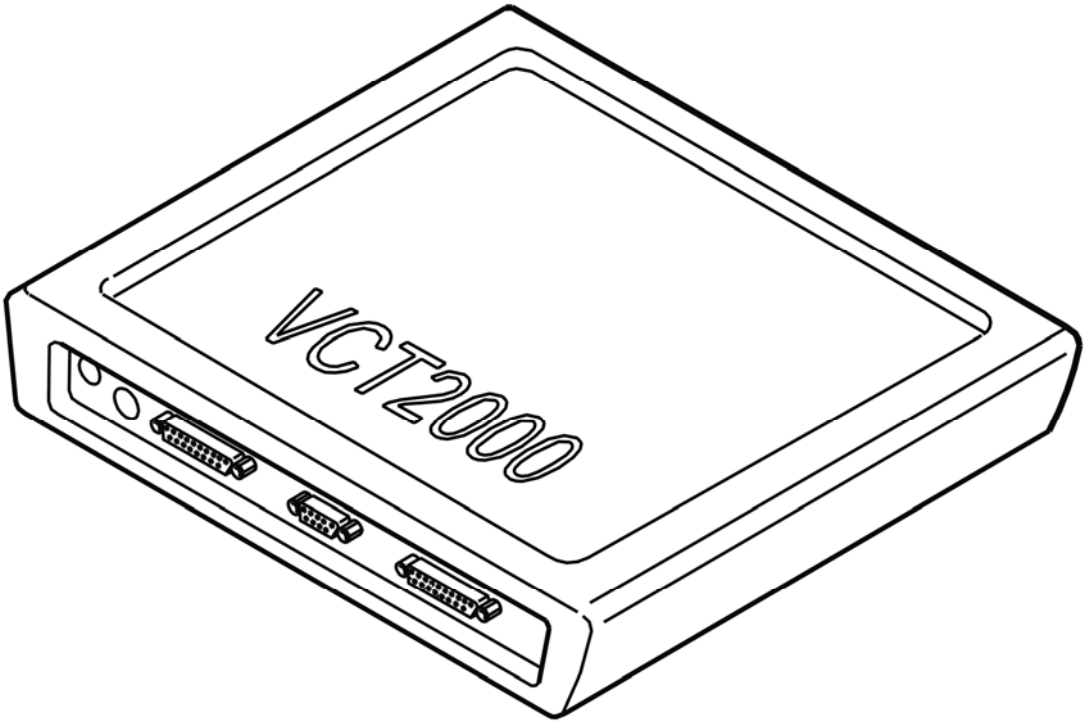

Fig. 317: Identifying VCT2000 Diagnostic Tool Symbol In VIDA
Courtesy of VOLVO CARS CORPORATION

Is the function OK?

- **YES**

  VERIFIED: Troubleshooting has been completed.

- **NO**

  Refer to **INFORMATION**

INFORMATION

FAULT-TRACING INFORMATION

The fault should have been detected and remedied. As this is not the case fault-tracing has failed.

Exit fault-tracing for this diagnostic trouble code (DTC) or make another attempt.

ECM-P003600: HO2S HEATER CONTROL CIRCUIT (BANK 1, SENSOR 2). GENERAL FAILURE INFORMATION. NO SUB TYPE INFORMATION

(B6324S5; 2011-2012)

DIAGNOSTIC TROUBLE CODE (DTC) INFORMATION

Condition

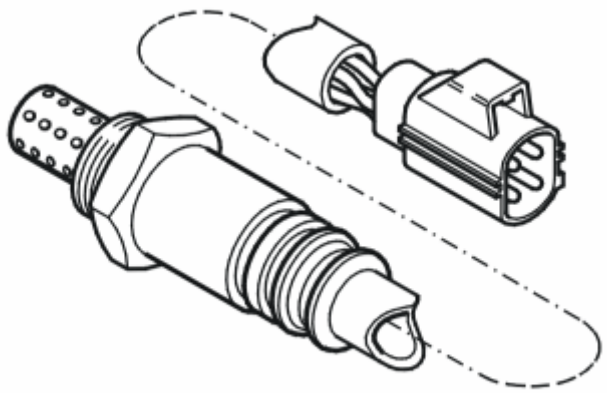

Fig. 318: Identifying Heated Oxygen Sensor
Courtesy of VOLVO CARS CORPORATION

The engine control module (ECM) checks the rear heated oxygen sensor (HO2S) signal (bank 2). The Engine control module (ECM) actively regulates between rich and lean fuel/air mixture and registers how well the rear heated oxygen sensor (HO2S) signal follows these changes.

The engine cylinders are counted from the cylinder furthest away from the flywheel.

- Bank 1 (cylinder row nearest the front): cylinders 1, 3, 5 and 7.
- Bank 2 (cylinder row furthest to the rear, nearest the passenger compartment): cylinders 2, 4, 6, and 8.

The diagnostic trouble code (DTC) is stored if the control module detects that:

- The heated oxygen sensor reacts too slowly at switch from rich to lean.

The control module's test for the diagnostic trouble code (DTC) starts in the event of:

- Special driving cases with fuel shut-offs.

Substitute Value

- None.

Possible Source

- Contact resistance or oxidation in the terminals.
- Damaged rear heated oxygen sensor (HO2S).

Fault symptom[s]

- Warning lights and chimes/Malfunction Indicator Light ("Check engine" light) indication/no indication

FAULT-TRACING

see **FAULT-TRACING**

ECM-P003600: HO2S HEATER CONTROL CIRCUIT (BANK 1, SENSOR 2). GENERAL FAILURE INFORMATION. NO SUB TYPE INFORMATION (B8444S; 2010-2011)

DIAGNOSTIC TROUBLE CODE (DTC) INFORMATION

Condition

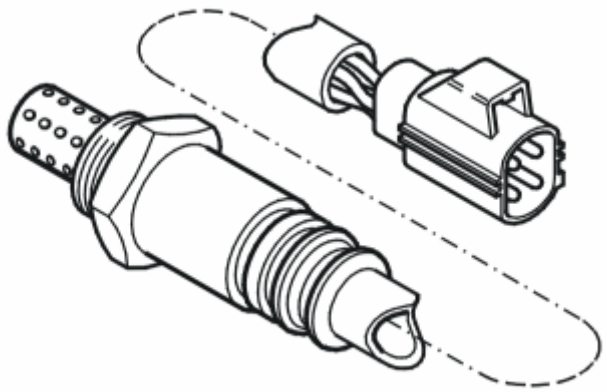

Fig. 319: Identifying Heated Oxygen Sensor
Courtesy of VOLVO CARS CORPORATION

Engine control module (ECM) monitors the rear heated oxygen sensor's heating coil and its ability to preheat the oxygen sensor. This is done to measure impedance across the heater circuit during the preheating sequence for the oxygen sensor.

The engine cylinders are counted from the cylinder furthest away from the flywheel.

- Bank 1 (cylinder row nearest the front): cylinders 1, 3, 5 and 7.
- Bank 2 (cylinder row furthest to the rear, nearest the passenger compartment): cylinders 2, 4, 6, and 8.

The diagnostic trouble code (DTC) is stored if the control module detects that:

- Impedance in the heater circuit exceeds 63.7 ohms.

The control module's test for the diagnostic trouble code (DTC) starts in the event of:

- Ignition position II or engine running.

Substitute Value

- None.

Possible Source

- Contact resistance or oxidation in the terminals.
- Damaged rear heated oxygen sensor (HO2S).

Fault symptom[s]

- Warning lights and chimes/Malfunction Indicator Light ("Check engine" light) indication/no indication

FAULT-TRACING

FAULT-TRACING INFORMATION

Use the following information and general checks during fault-tracing.

NOTE: Check that the fuses are intact. For locations, see the owner's manual or the cover for fuse box.

1. Check, if possible, relevant functions in the vehicle using buttons/controls/test drives to determine the status of the fault.

   NOTE: If the vehicle does not show any of the given symptoms in the diagnostic trouble code information (DTC), this may mean that the fault is intermittent or that the control module is not detecting the fault at this moment.

2. Use the diagnostic trouble code's **frozen values** , **status identifiers** and **counter** to determine the operating conditions when the fault was detected, the fault's current status and any degree of intermittence of the fault.
3. Check and fault-trace according to **the fault causes** that are specified in the **diagnostic trouble code (DTC) information** .
4. Use **VIDA (Volvo scan tool)** . Read off the parameters, activate components and functions, carry out quick tests and checking routines for the diagnostic trouble codes to identify the fault.
5. Check relevant components according to **Component specifications** .

6. Check relevant signals using the appropriate **signal specification** and **breakout box** service information.

Remedy as necessary.

Other information

- see **DESCRIPTION OF FROZEN VALUES**
- see **DESCRIPTION OF STATUS IDENTIFIER**
- see **DESCRIPTION OF COUNTER**
- see **DESCRIPTION OF PARAMETERS**
- see **DESCRIPTION OF ACTIVATIONS**
- see **LOCATION OF COMPONENTS, ENGINE COMPARTMENT**
- see **COMPONENT SPECIFICATIONS**
- see **CONNECTING THE BREAKOUT BOX**
- see **SIGNAL SPECIFICATION, ENGINE CONTROL MODULE (ECM)**
- see **CHECKING WIRING AND TERMINALS**

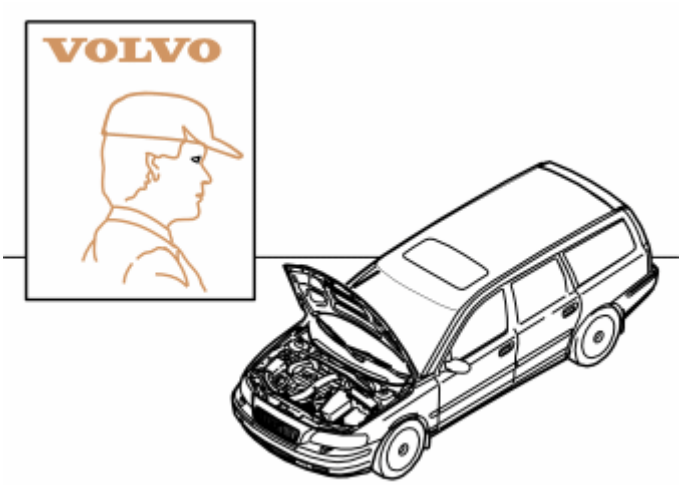

Fig. 320: Identifying VOLVO Certified Service Personnel
Courtesy of VOLVO CARS CORPORATION

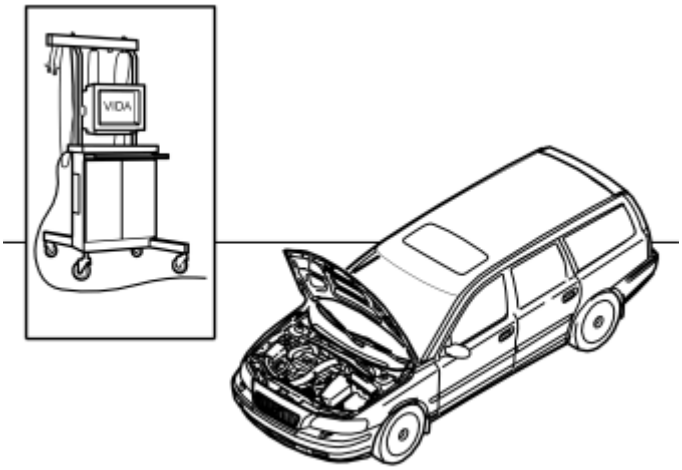

Fig. 321: Identifying VIDA
Courtesy of VOLVO CARS CORPORATION

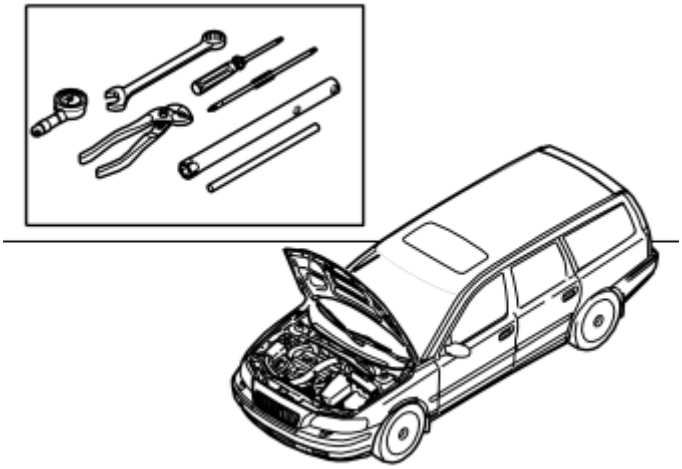

Fig. 322: Identifying Relevant Tools
Courtesy of VOLVO CARS CORPORATION

- **Continue**

  Refer to **VERIFICATION**

VERIFICATION

HINT: After carrying out the repair, check that the fault has been remedied.

- Read off the diagnostic status and the fault status for the diagnostic trouble code (DTC).
- Check that the diagnosis is Performed.

  HINT: To enable performing diagnostic status, special conditions must be fulfilled. These conditions are described in diagnostic trouble code (DTC) information for each diagnostic trouble

code (DTC).

If the function is correct, the fault status must be No fault found when the diagnostic is complete.

Fig. 323: Identifying VCT2000 Diagnostic Tool Symbol In VIDA
Courtesy of VOLVO CARS CORPORATION

Is the function OK?

- **YES**

  OKAY: Troubleshooting has been completed.

- **NO**

  Refer to **INFORMATION**

INFORMATION

FAULT-TRACING INFORMATION

The fault should have been detected and remedied. As this is not the case fault-tracing has failed.

Exit fault-tracing for this diagnostic trouble code (DTC) or make another attempt.

ECM-P003700: HO2S HEATER CONTROL CIRCUIT LOW (BANK 1, SENSOR 2). GENERAL FAILURE INFORMATION. NO SUB TYPE INFORMATION (B6324S; 2007-2010)

DIAGNOSTIC TROUBLE CODE (DTC) INFORMATION ECM-P003700

Condition

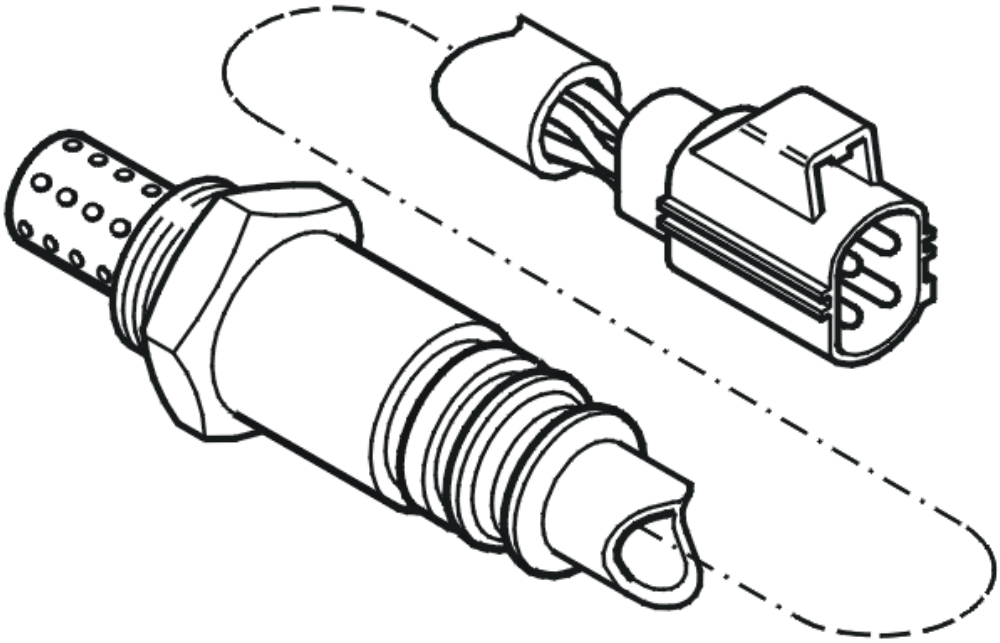

Fig. 324: Identifying Heated Oxygen Sensor
Courtesy of VOLVO CARS CORPORATION

Engine Control Module (ECM) checks if the rear heated oxygen sensor's preheating circuit (bank 1) is short-circuited to voltage, there is an open circuit or if the resistance in the heating resistor is incorrect.

The engine cylinders are counted from the cylinder furthest away from the flywheel.

- Bank 1 (cylinder row nearest the front): cylinders 1, 3, 5 and 7.
- Bank 2 (cylinder row furthest to the rear, nearest the passenger compartment): cylinders 2, 4, 6, and 8.

The diagnostic trouble code (DTC) is stored if the engine control module (ECM) registers any of these.

The diagnostic trouble code (DTC) can be diagnosed at ignition on and if the battery voltage is in the range 11-16 V.

Substitute Value

- Rear heated oxygen sensor (HO2S) preheating shut off.

Possible Source

- Contact resistance, oxidation in the terminals.

- Short-circuit to ground in the power cable.
- Open-circuit in the power supply cable.
- Damaged rear heated oxygen sensor (HO2S).

Fault symptom[s]

- Malfunction indicator lamp (MIL) lit.

FAULT-TRACING

see **FAULT-TRACING**

ECM-P003700: HO2S HEATER CONTROL CIRCUIT LOW (BANK 1, SENSOR 2). GENERAL FAILURE INFORMATION. NO SUB TYPE INFORMATION (B6324S5; 2011-2012)

DIAGNOSTIC TROUBLE CODE (DTC) INFORMATION ECM-P003700

see **DIAGNOSTIC TROUBLE CODE (DTC) INFORMATION ECM-P003700**

FAULT-TRACING

see **FAULT-TRACING**

ECM-P003700: HEATED OXYGEN SENSOR (HO2S) CONTROL CIRCUIT LOW (BANK 1, SENSOR 2). GENERAL FAULT INFORMATION. NO INFORMATION ABOUT FAULT TYPE (B8444S; 2005-2011)

DIAGNOSTIC TROUBLE CODE (DTC) INFORMATION ECM-P003700

Condition

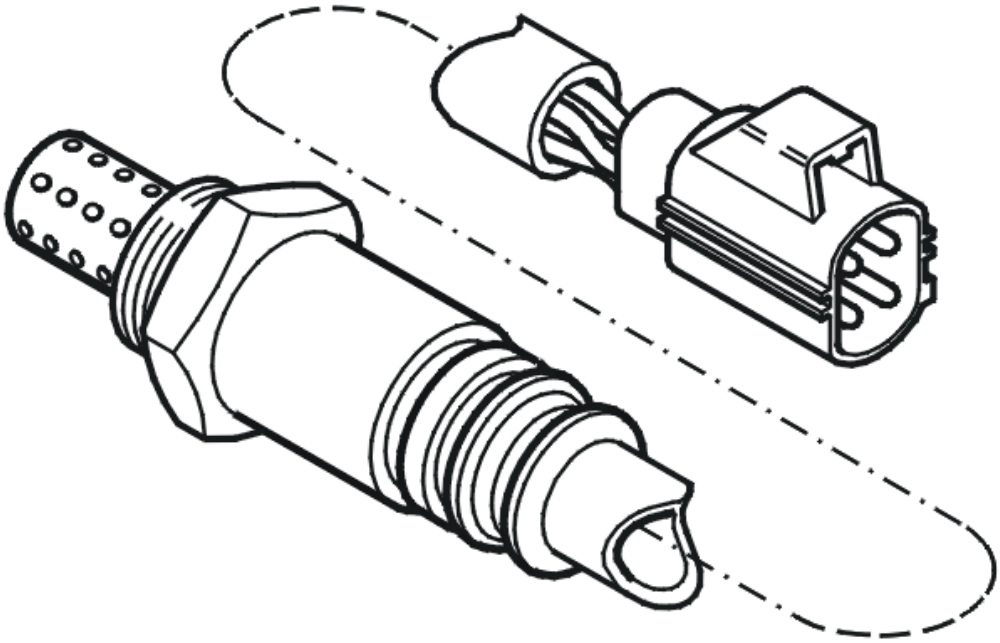

Fig. 325: Identifying Heated Oxygen Sensor
Courtesy of VOLVO CARS CORPORATION

Engine Control Module (ECM) checks if the rear heated oxygen sensor's preheating circuit (bank 1) is short-circuited to voltage, there is an open circuit or if the resistance in the heating resistor is incorrect.

The engine cylinders are counted from the cylinder furthest away from the flywheel.

- Bank 1 (cylinder row nearest the front): cylinders 1, 3, 5 and 7.
- Bank 2 (cylinder row furthest to the rear, nearest the passenger compartment): cylinders 2, 4, 6, and 8.

The diagnostic trouble code (DTC) is stored if the engine control module (ECM) registers any of these.

The diagnostic trouble code (DTC) can be diagnosed at ignition on and if the battery voltage is in the range 11-16 V.

Substitute Value

- Rear heated oxygen sensor (HO2S) preheating shut off.

Possible Source

- Contact resistance, oxidation in the terminals.

- Short-circuit to ground in the power cable.
- Open-circuit in the power supply cable.
- Damaged rear heated oxygen sensor (HO2S).

Fault symptom[s]

- Malfunction indicator lamp (MIL) lit.

FAULT TRACING ECM-P003700

CHECKING THE STATUS

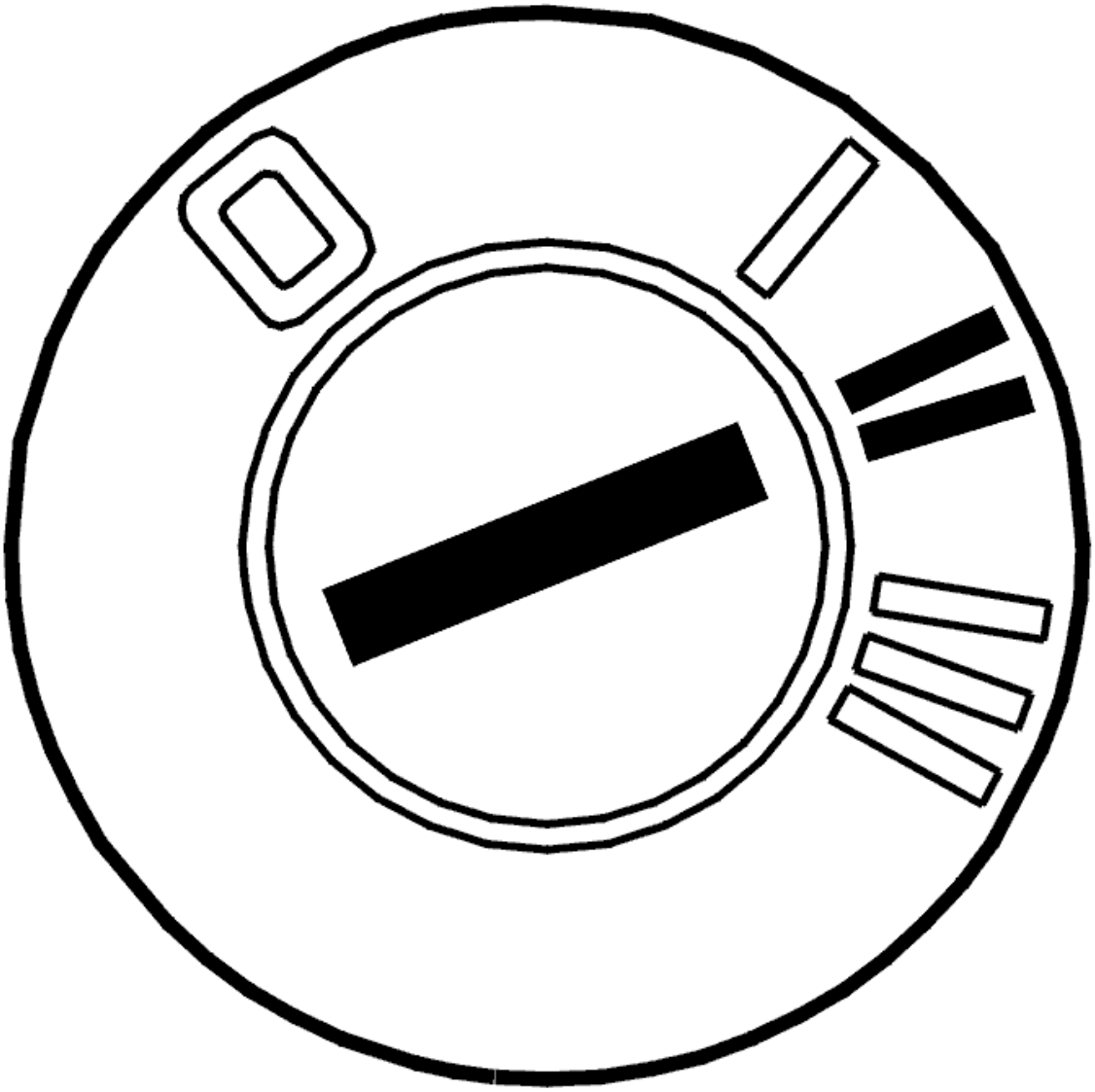

Fig. 326: Identifying Ignition ON
Courtesy of VOLVO CARS CORPORATION

- The ignition must be on to perform the diagnostic.

  Check whether the fault is permanent or intermittent. Read off the diagnostic trouble code (DTC) fault status when the diagnostic status is "Completed".

  The fault is permanent if the fault status is "Fault found". The fault is intermittent if the fault status is "No fault found".

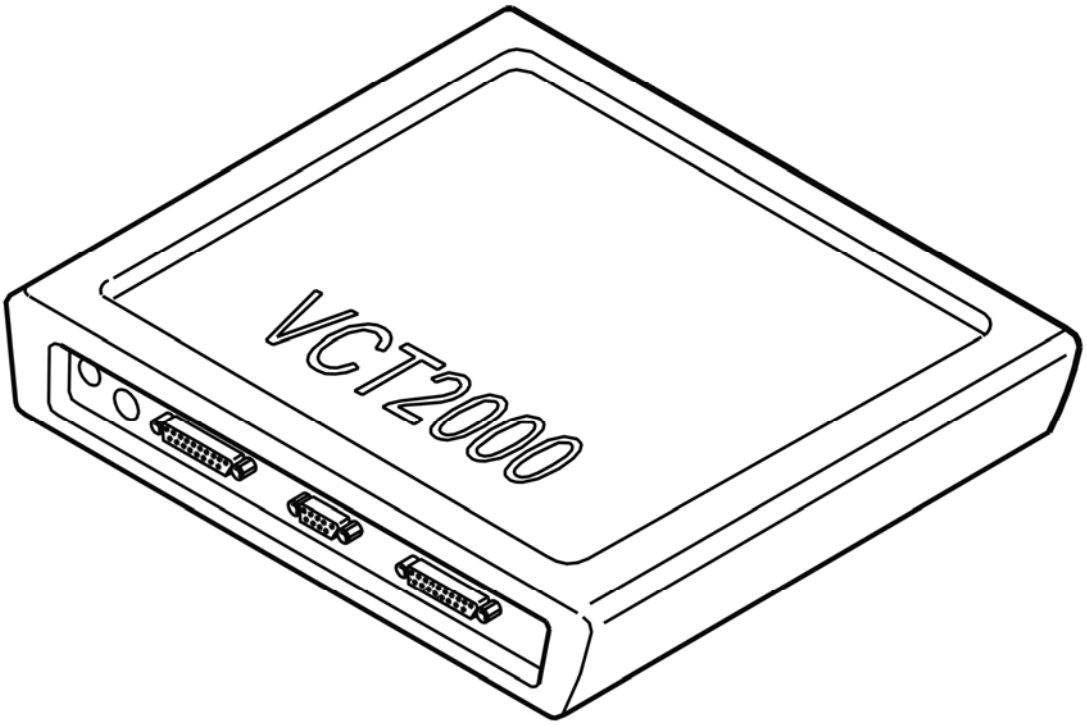

Fig. 327: Identifying VCT2000 Diagnostic Tool Symbol In VIDA
Courtesy of VOLVO CARS CORPORATION

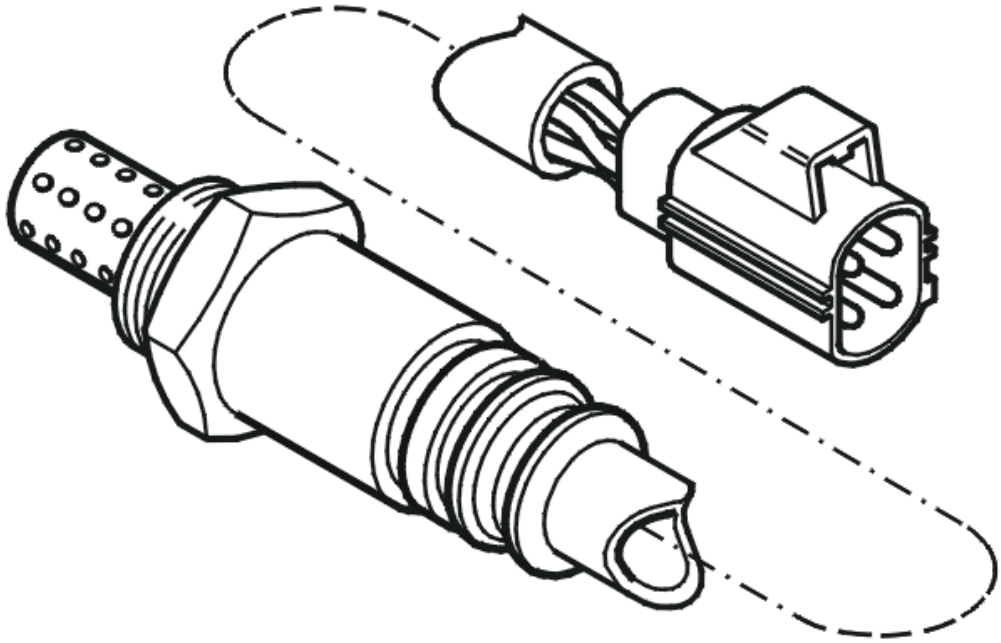

Fig. 328: Identifying Heated Oxygen Sensor
Courtesy of VOLVO CARS CORPORATION

- **Continue**

  Refer to **CHECKING COMPONENTS**

CHECKING COMPONENTS

CAUTION: Do not apply rust solvent spray or grease to the heated oxygen sensor (HO2S) connector.

Check the rear heated oxygen sensor connector (bank 1). Check for contact resistance and oxidation.

Check the cable between rear heated oxygen sensor (HO2S) terminal #1 and voltage supply from the system relay. Check for an open-circuit. Check for a short-circuit to ground

Try a new rear heated oxygen sensor if the above measure does not remedy the fault.

Remedy as necessary.

Other information

- see **CONNECTING THE BREAKOUT BOX**
- see **SIGNAL SPECIFICATION, ENGINE CONTROL MODULE (ECM)**
- see **HEATED OXYGEN SENSOR (HO2S), REPLACING**
- see **CHECKING WIRING AND TERMINALS**

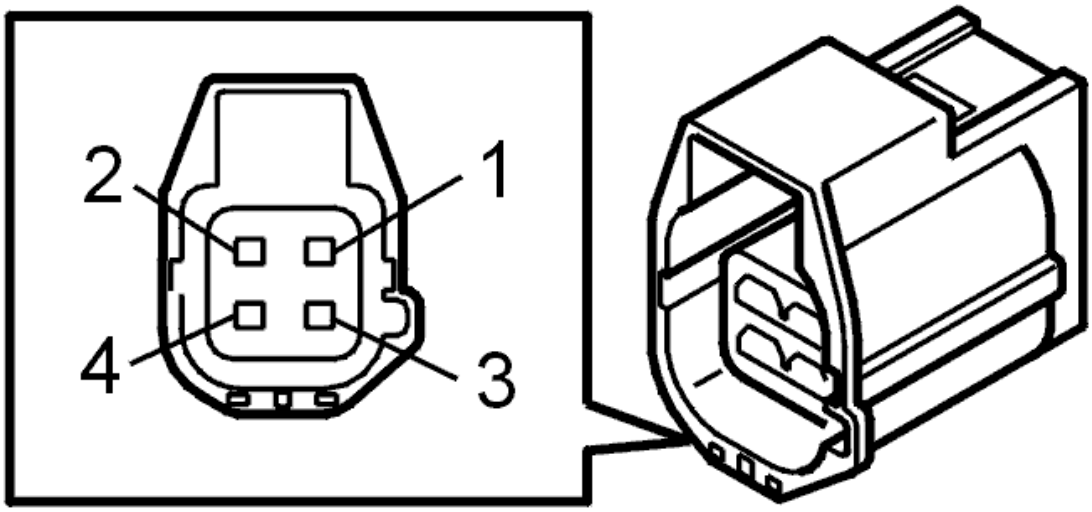

Fig. 329: Identifying 4-Bit Connector
Courtesy of VOLVO CARS CORPORATION

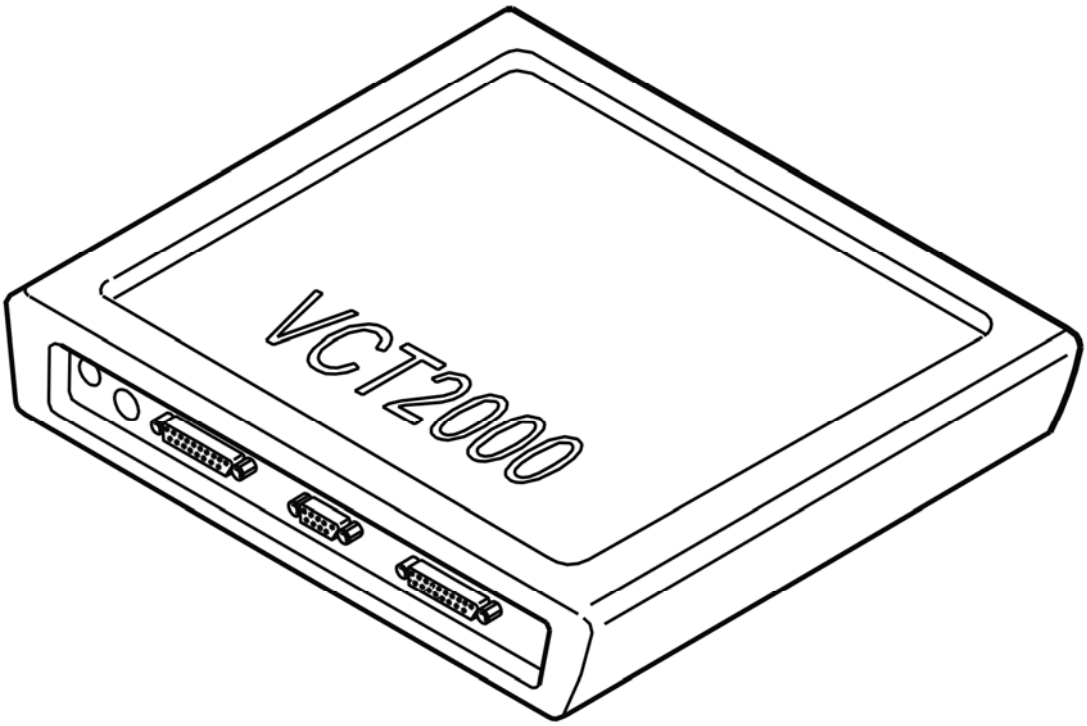

Fig. 330: Identifying VCT2000 Diagnostic Tool Symbol In VIDA
Courtesy of VOLVO CARS CORPORATION

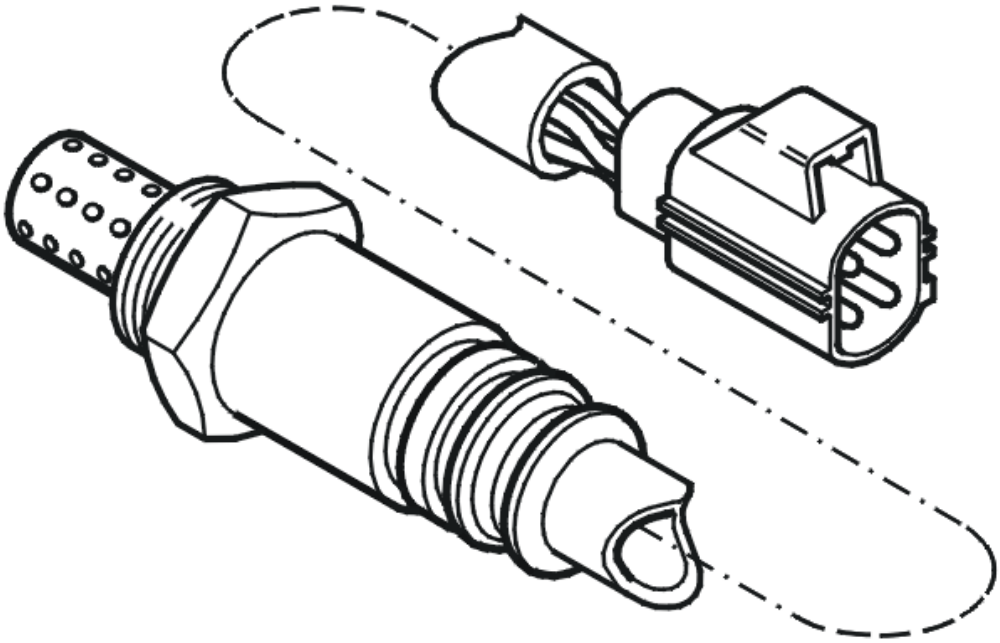

Fig. 331: Identifying Heated Oxygen Sensor
Courtesy of VOLVO CARS CORPORATION

- **Continue**

  Refer to **VERIFICATION**

VERIFICATION

VERIFICATION

HINT: After repairing, it is necessary to check that the malfunction has been fixed.

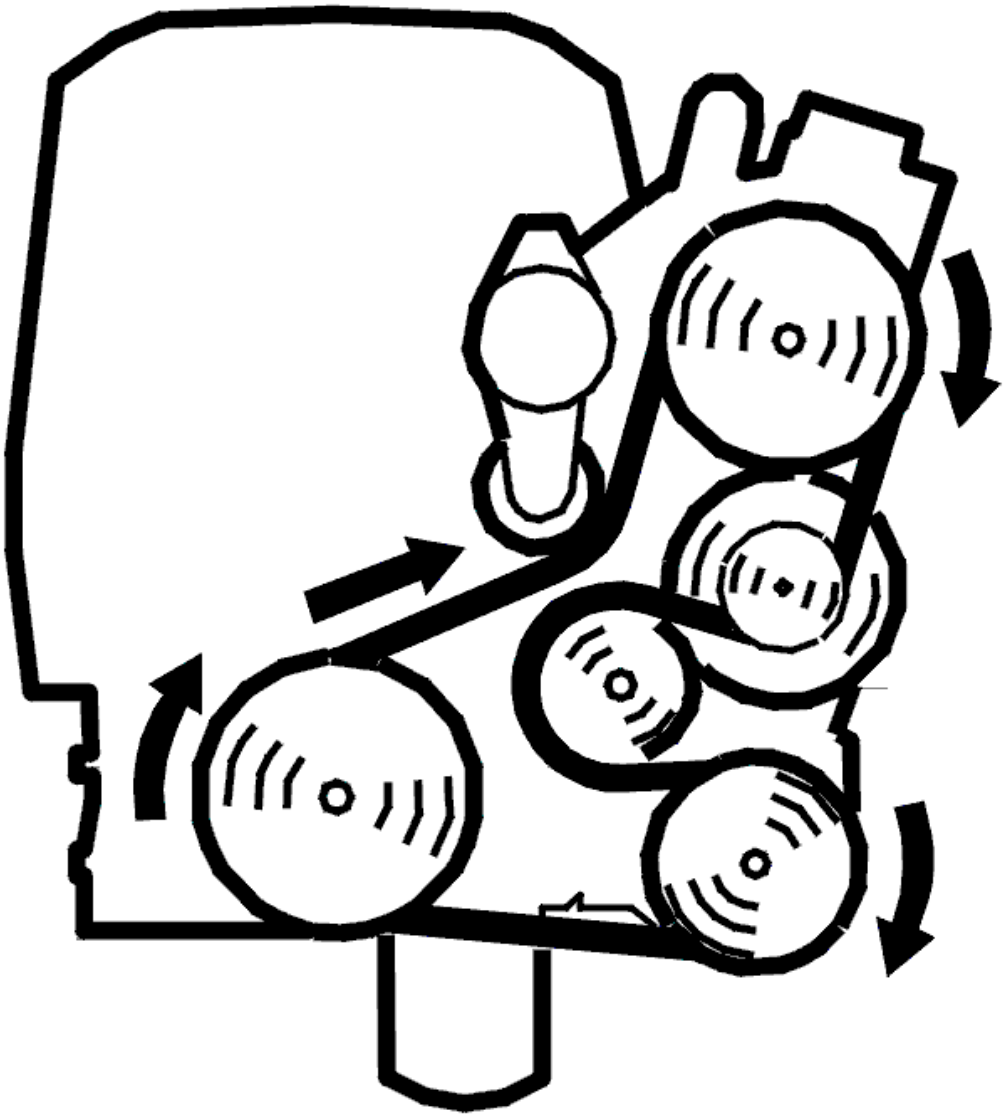

Fig. 332: Belt Routing / Engine Idling - Volvo
Courtesy of VOLVO CARS CORPORATION

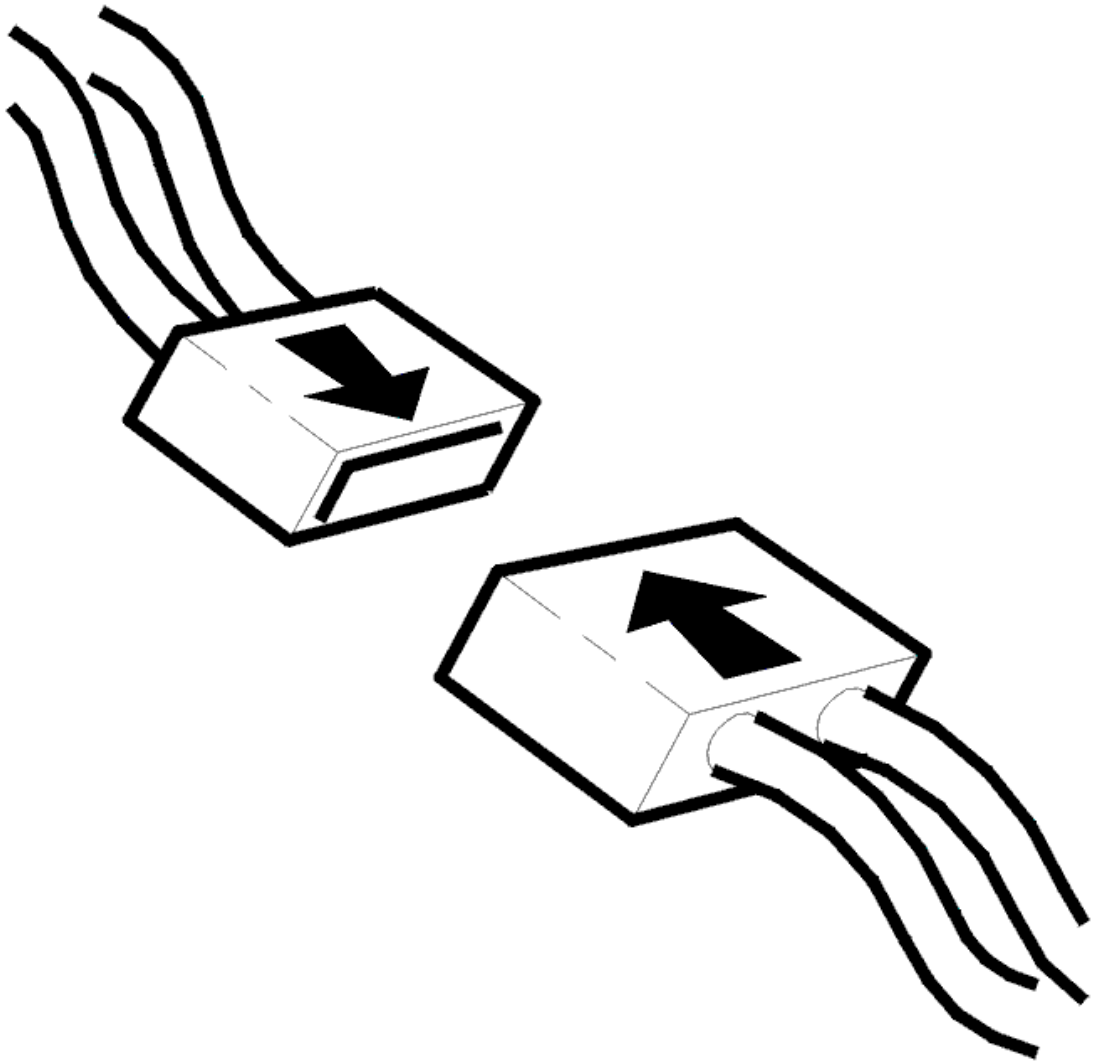

Fig. 333: Connecting Connector
Courtesy of VOLVO CARS CORPORATION

- Ignition off
- Reinstall the connectors, components etc.
- Ignition on to perform the diagnosis.

  Read off the diagnostic status and trouble status for the diagnostic trouble code.

  Check that the diagnosis is "Implemented" and that the trouble status is "No malfunction found". If the trouble status is "Malfunction found", this indicates defective function.

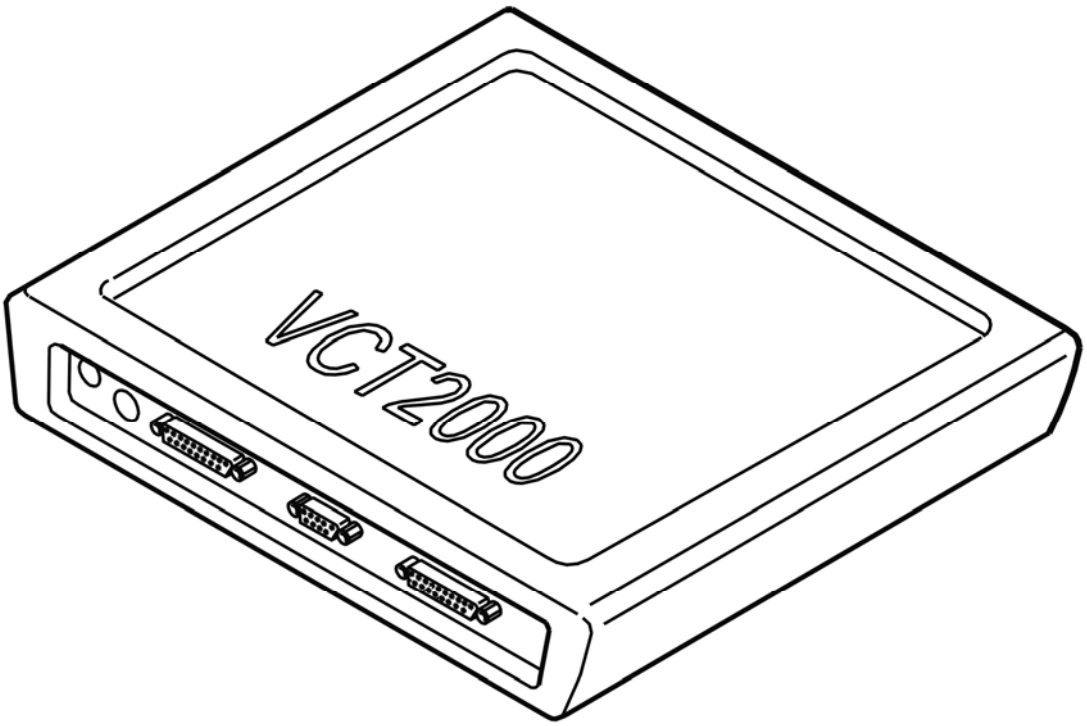

Fig. 334: Identifying VCT2000 Diagnostic Tool Symbol In VIDA
Courtesy of VOLVO CARS CORPORATION

Is the function OK?

- **YES**

  VERIFIED: Troubleshooting has been completed.

- **NO**

  Refer to **INFORMATION**

INFORMATION

FAULT-TRACING INFORMATION

The fault should have been detected and remedied. As this is not the case fault-tracing has failed.

Exit fault-tracing for this diagnostic trouble code (DTC) or make another attempt.

ECM-P003800: HO2S HEATER CONTROL CIRCUIT HIGH (BANK 1, SENSOR 2). GENERAL FAILURE INFORMATION. NO SUB TYPE INFORMATION

(B6324S; 2007-2010)

DIAGNOSTIC TROUBLE CODE (DTC) INFORMATION ECM-P003800

Condition

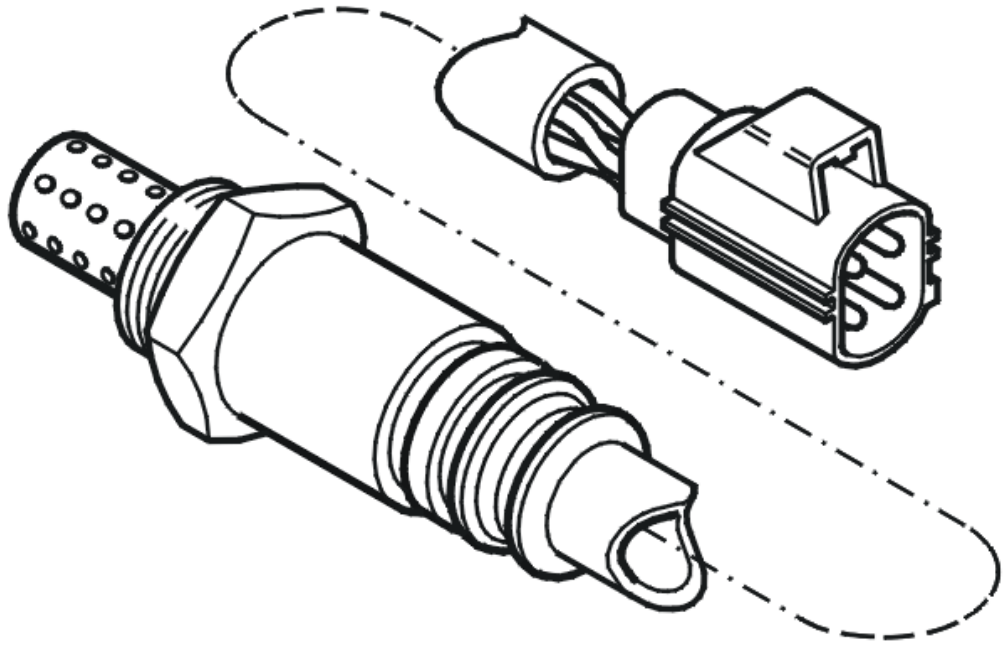

Fig. 335: Identifying Heated Oxygen Sensor
Courtesy of VOLVO CARS CORPORATION

Engine Control Module (ECM) checks if the rear heated oxygen sensor's preheating circuit (bank 1) is short-circuited to voltage.

The engine cylinders are counted from the cylinder furthest away from the flywheel.

- Bank 1 (cylinder row nearest the front): cylinders 1, 3, 5 and 7.
- Bank 2 (cylinder row furthest to the rear, nearest the passenger compartment): cylinders 2, 4, 6, and 8.

The diagnostic trouble code (DTC) is stored if the engine control module (ECM) registers any of these.

The diagnostic trouble code (DTC) can be diagnosed at ignition on and if the battery voltage is in the range 11-16 V.

Substitute Value

- Rear heated oxygen sensor (HO2S) preheating shut off.

Possible Source

- Short-circuit to supply in the power cable.
- Damaged rear heated oxygen sensor (HO2S).

Fault symptom[s]

- Malfunction indicator lamp (MIL) lit.

FAULT-TRACING

see **FAULT-TRACING**

ECM-P003800: HO2S HEATER CONTROL CIRCUIT HIGH (BANK 1, SENSOR 2). GENERAL FAILURE INFORMATION. NO SUB TYPE INFORMATION (B6324S5; 2011-2012)

DIAGNOSTIC TROUBLE CODE (DTC) INFORMATION ECM-P003800

see **DIAGNOSTIC TROUBLE CODE (DTC) INFORMATION ECM-P003800**

FAULT-TRACING

see **FAULT-TRACING**

ECM-P003800: HEATED OXYGEN SENSOR (HO2S) CONTROL CIRCUIT HIGH (BANK 1, SENSOR 2). GENERAL FAULT INFORMATION. NO INFORMATION ABOUT FAULT TYPE (B8444S; 2005-2011)

DIAGNOSTIC TROUBLE CODE (DTC) INFORMATION ECM-P003800

Condition

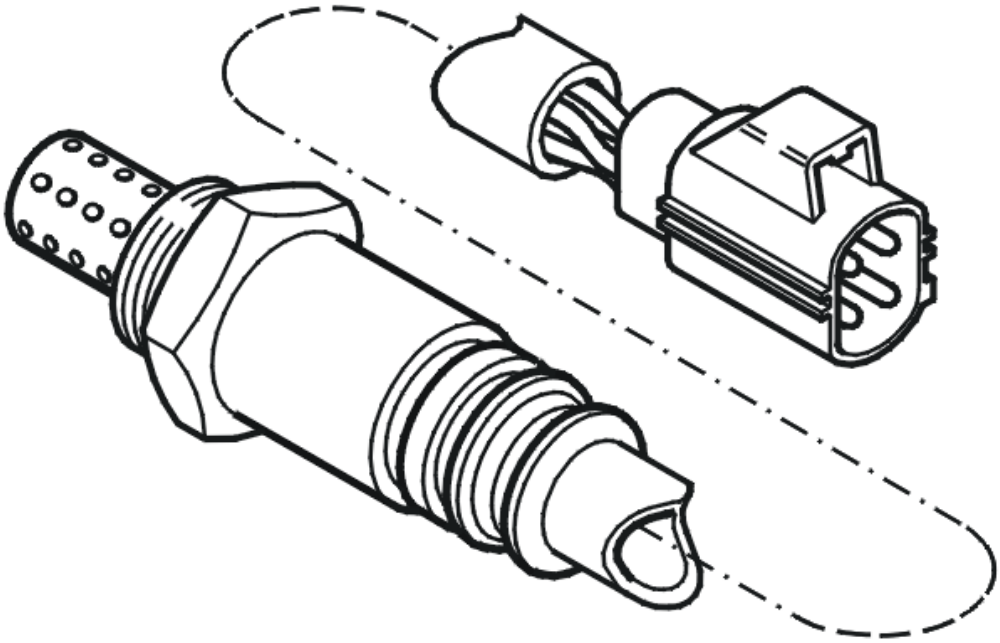

Fig. 336: Identifying Heated Oxygen Sensor
Courtesy of VOLVO CARS CORPORATION

Engine Control Module (ECM) checks if the rear heated oxygen sensor's preheating circuit (bank 1) is short-circuited to voltage.

The engine cylinders are counted from the cylinder furthest away from the flywheel.

- Bank 1 (cylinder row nearest the front): cylinders 1, 3, 5 and 7.
- Bank 2 (cylinder row furthest to the rear, nearest the passenger compartment): cylinders 2, 4, 6, and 8.

The diagnostic trouble code (DTC) is stored if the engine control module (ECM) registers any of these.

The diagnostic trouble code (DTC) can be diagnosed at ignition on and if the battery voltage is in the range 11-16 V.

Substitute Value

- Rear heated oxygen sensor (HO2S) preheating shut off.

Possible Source

- Short-circuit to supply in the power cable.

- Damaged rear heated oxygen sensor (HO2S).

Fault symptom[s]

- Malfunction indicator lamp (MIL) lit.

FAULT TRACING ECM-P003800

CHECKING THE STATUS

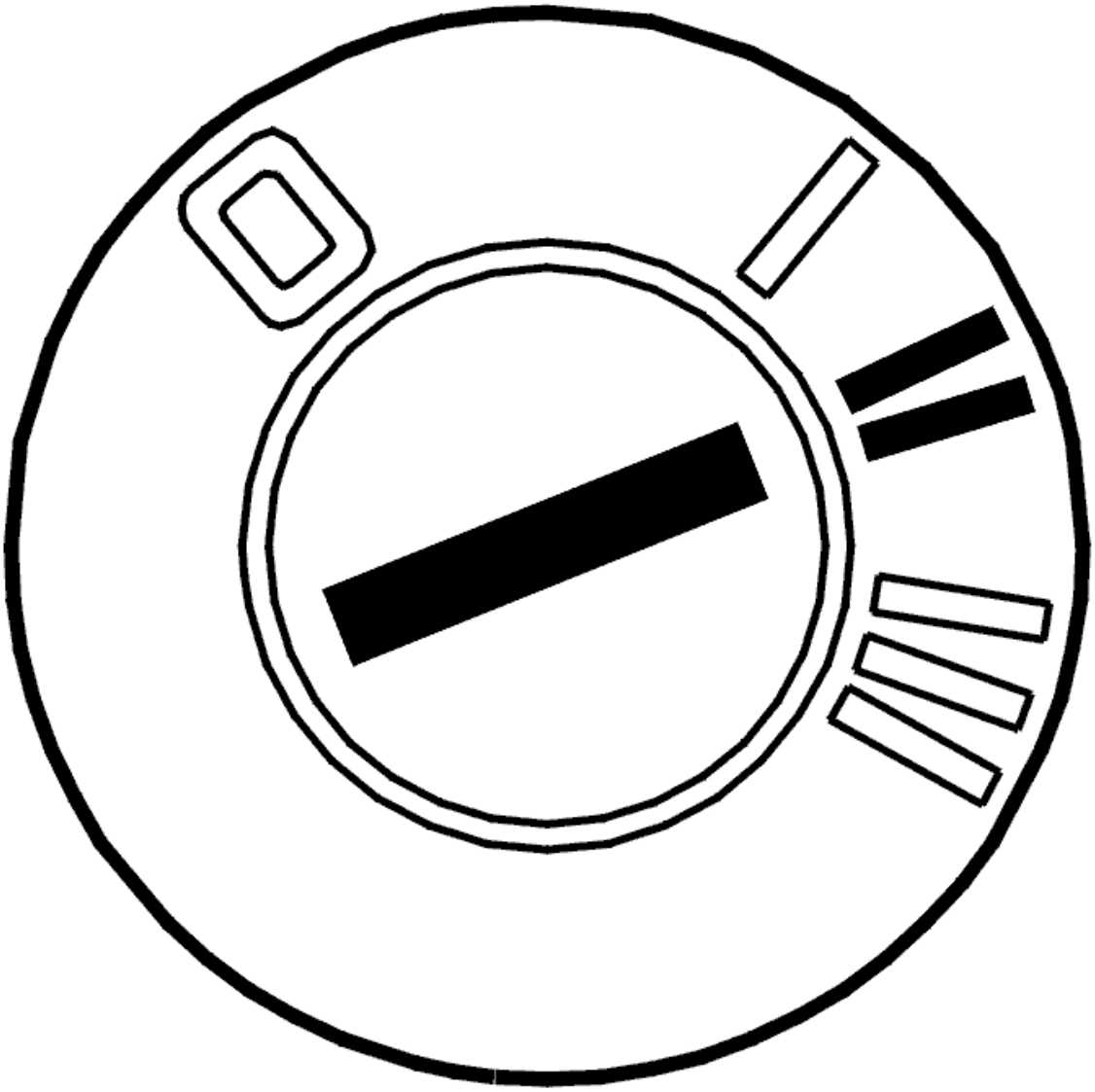

Fig. 337: Identifying Ignition ON
Courtesy of VOLVO CARS CORPORATION

- The ignition must be on to perform the diagnostic.

  Check whether the fault is permanent or intermittent. Read off the diagnostic trouble code (DTC) fault

status when the diagnostic status is "Completed".

The fault is permanent if the fault status is "Fault found". The fault is intermittent if the fault status is "No fault found".

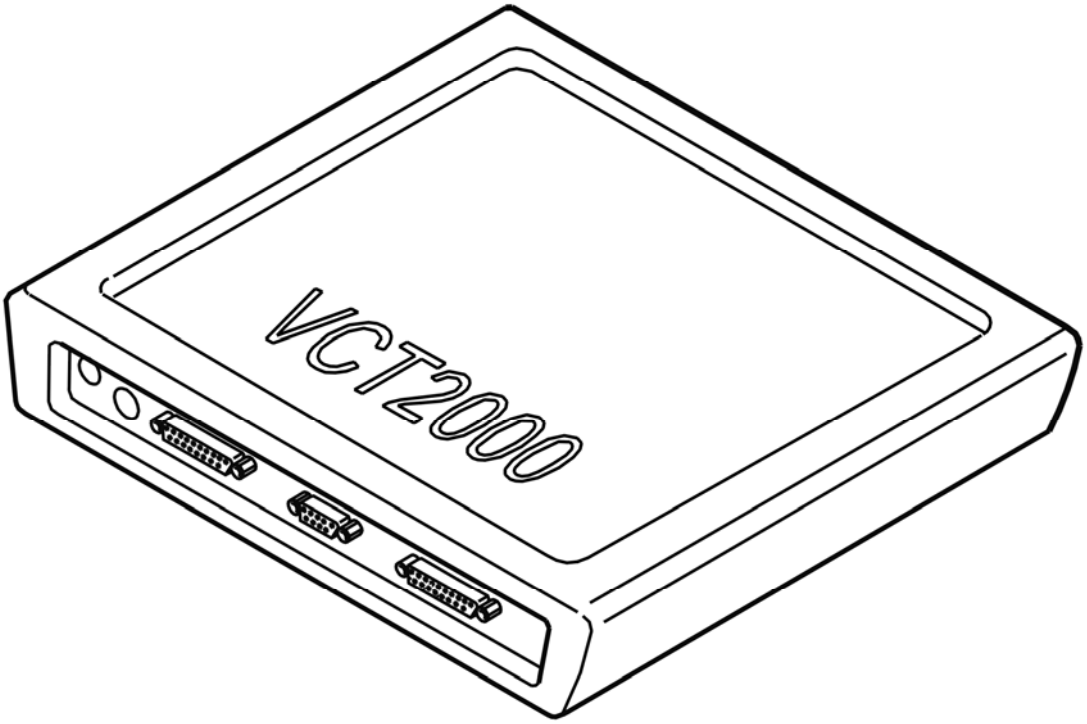

Fig. 338: Identifying VCT2000 Diagnostic Tool Symbol In VIDA
Courtesy of VOLVO CARS CORPORATION

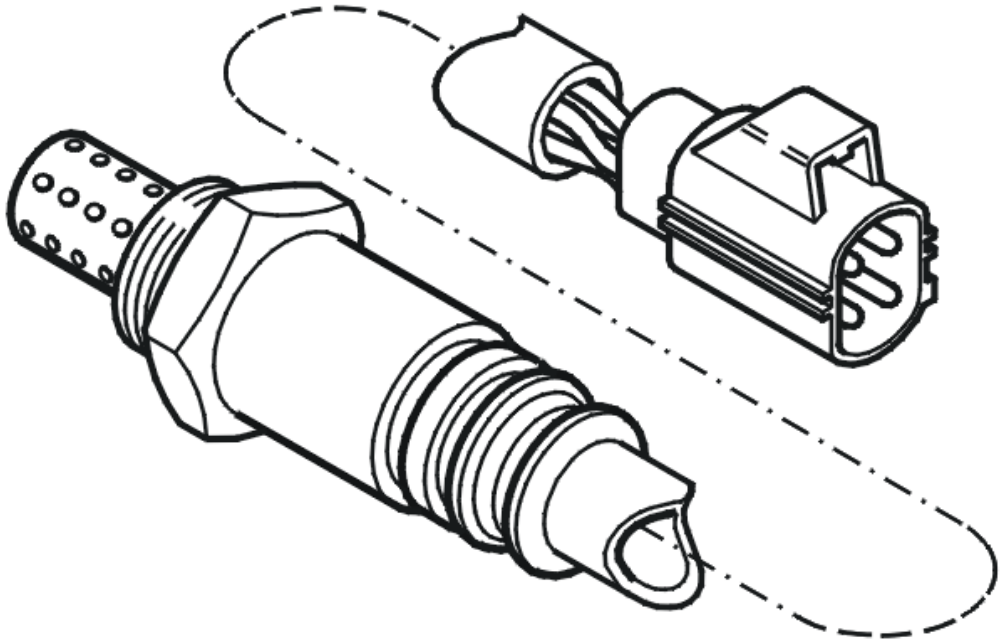

Fig. 339: Identifying Heated Oxygen Sensor
Courtesy of VOLVO CARS CORPORATION

- **Continue**

  Refer to **CHECKING COMPONENTS**

CHECKING COMPONENTS

CAUTION: Do not apply rust solvent spray or grease to the heated oxygen sensor (HO2S) connector.

Check the cable between rear heated oxygen sensor terminal #1 (bank 1) and voltage supply from the system relay. Check for a short-circuit to supply voltage.

Try a new rear heated oxygen sensor if the above measure does not remedy the fault.

Remedy as necessary.

Other information

- see **CONNECTING THE BREAKOUT BOX**
- see **SIGNAL SPECIFICATION, ENGINE CONTROL MODULE (ECM)**

- see **HEATED OXYGEN SENSOR (HO2S), REPLACING**
- see **CHECKING WIRING AND TERMINALS**

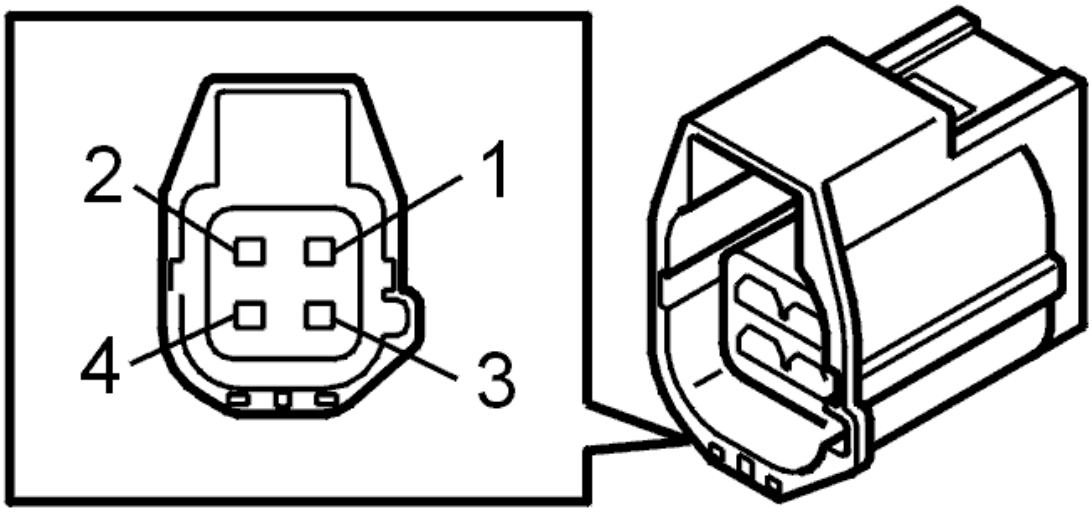

Fig. 340: Identifying 4-Bit Connector
Courtesy of VOLVO CARS CORPORATION

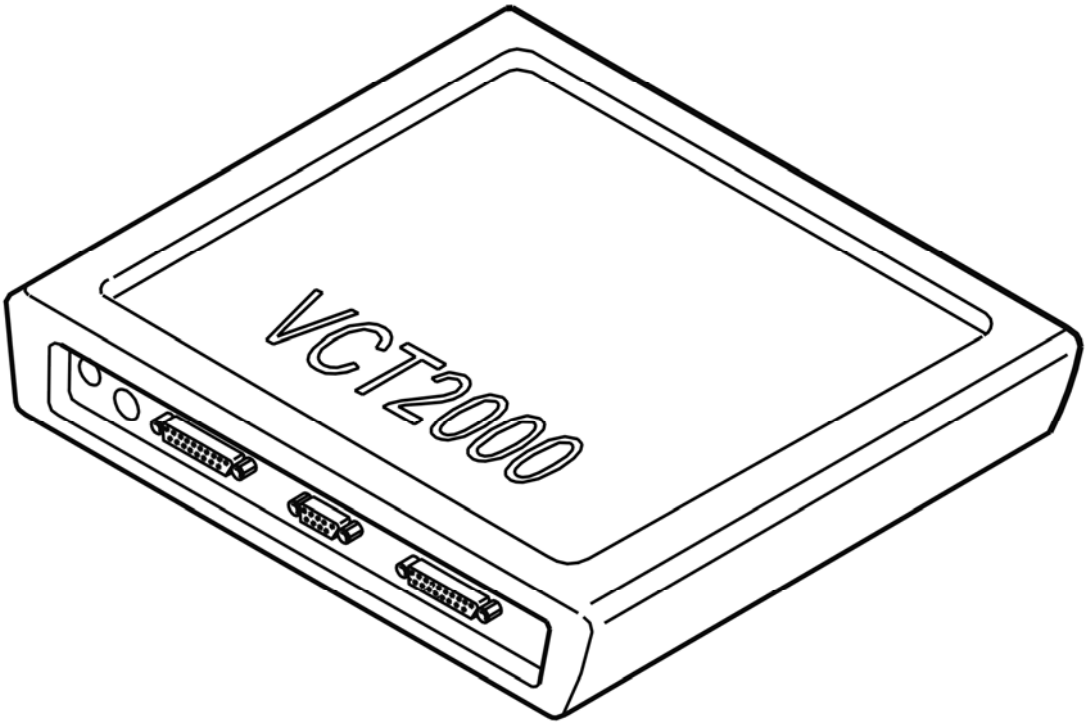

Fig. 341: Identifying VCT2000 Diagnostic Tool Symbol In VIDA
Courtesy of VOLVO CARS CORPORATION

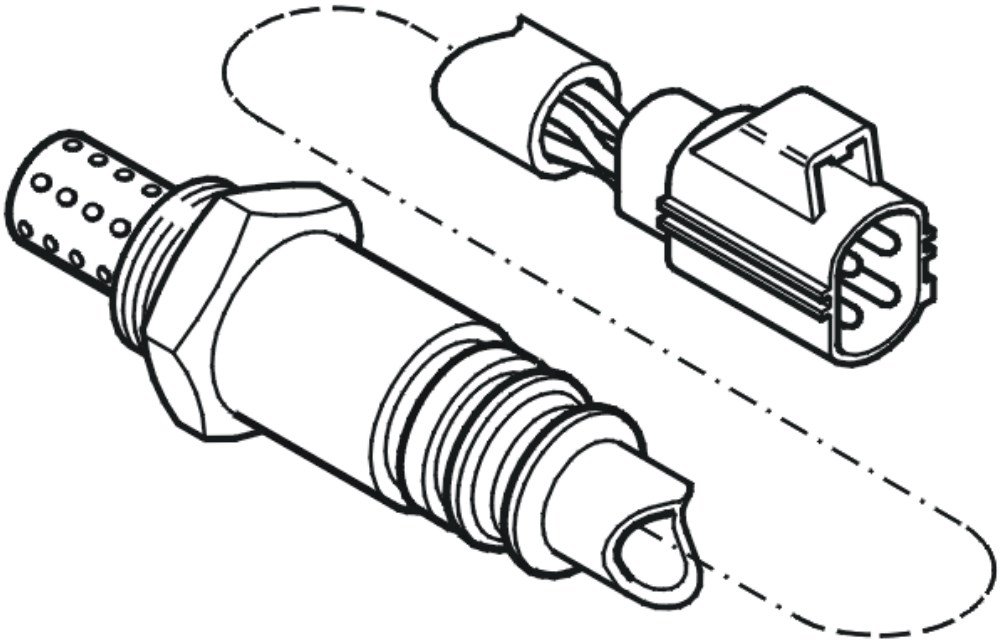

Fig. 342: Identifying Heated Oxygen Sensor
Courtesy of VOLVO CARS CORPORATION

- **Continue**

  Refer to **VERIFICATION**

VERIFICATION

VERIFICATION

HINT: After repairing, it is necessary to check that the malfunction has been fixed.

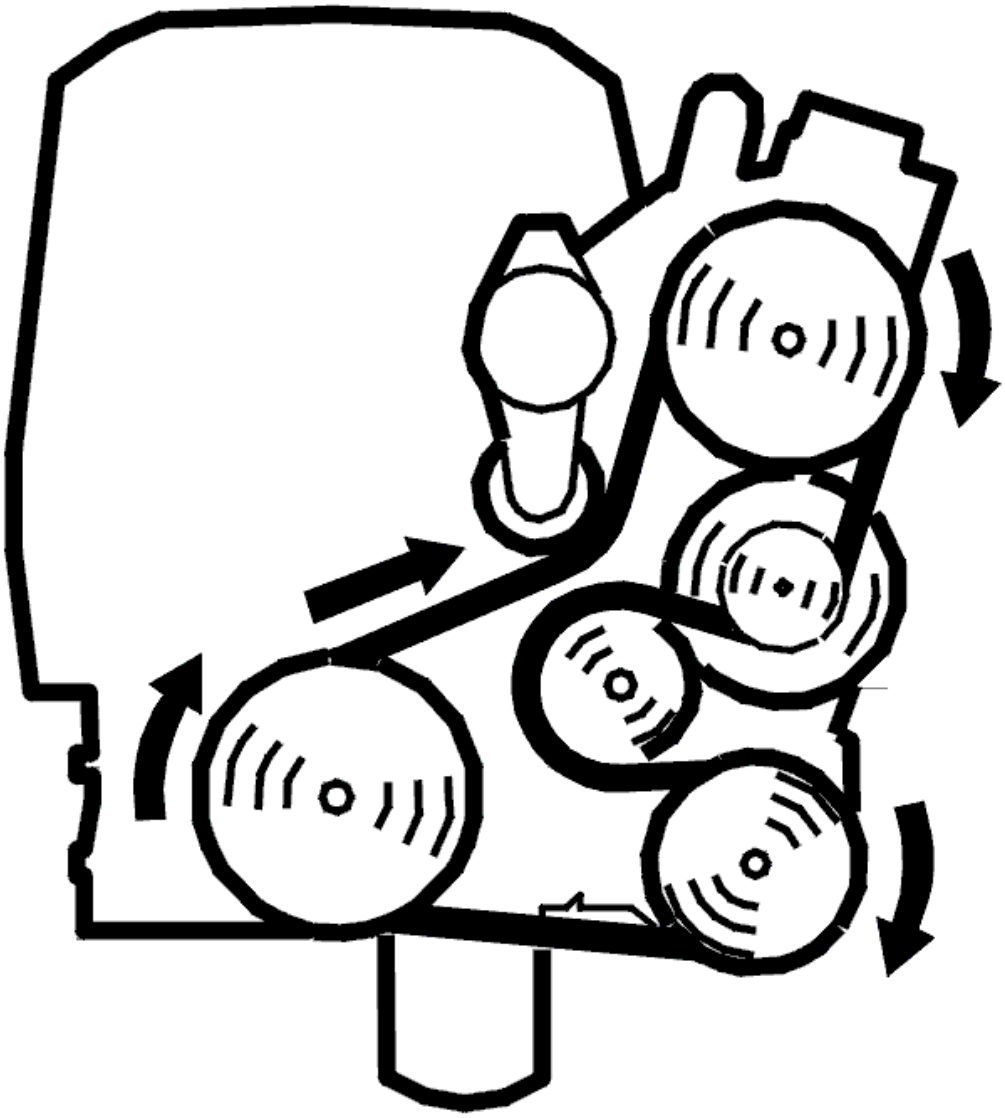

Fig. 343: Belt Routing / Engine Idling - Volvo
Courtesy of VOLVO CARS CORPORATION

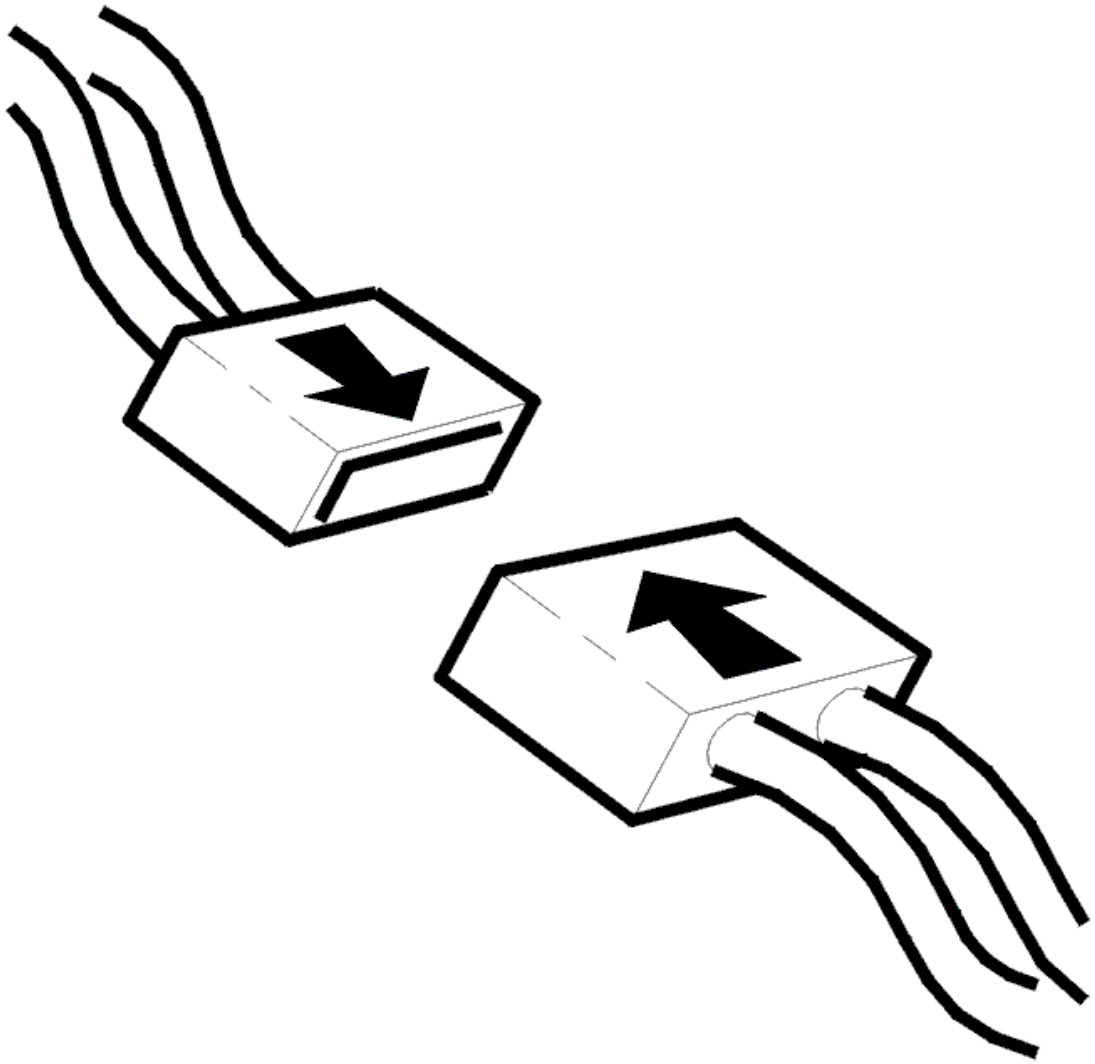

Fig. 344: Connecting Connector
Courtesy of VOLVO CARS CORPORATION

- Ignition off
- Reinstall the connectors, components etc.
- Ignition on to perform the diagnosis.

  Read off the diagnostic status and trouble status for the diagnostic trouble code.

  Check that the diagnosis is "Implemented" and that the trouble status is "No malfunction found". If the trouble status is "Malfunction found", this indicates defective function.

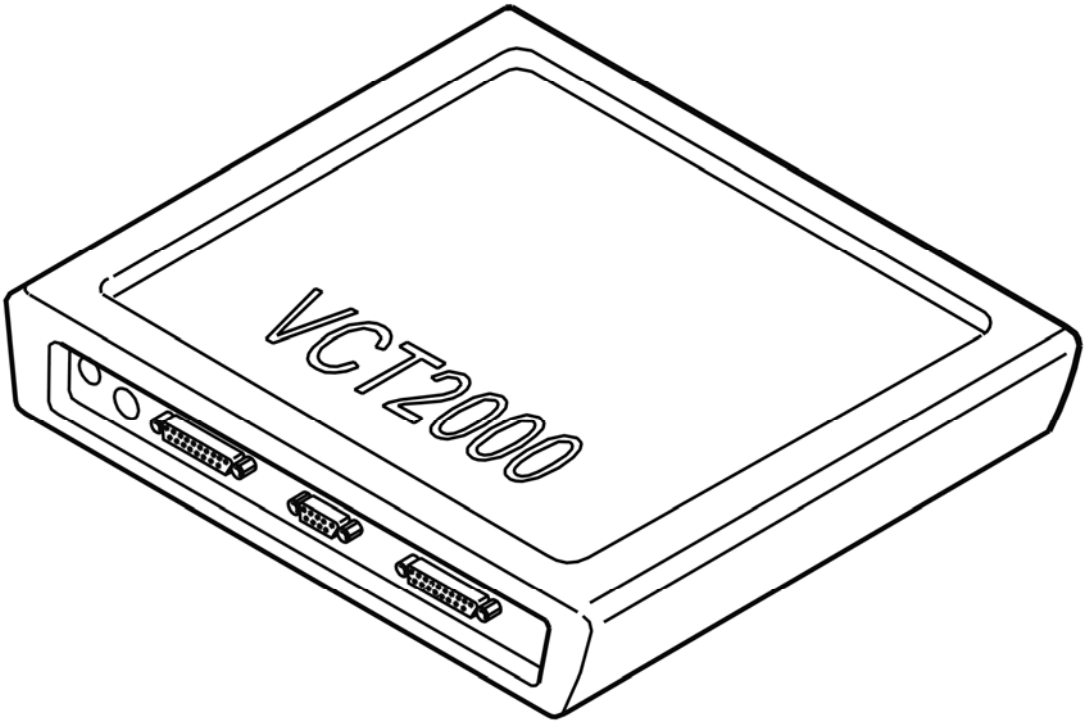

Fig. 345: Identifying VCT2000 Diagnostic Tool Symbol In VIDA
Courtesy of VOLVO CARS CORPORATION

Is the function OK?

- **YES**

  VERIFIED: Troubleshooting has been completed.

- **NO**

  Refer to **INFORMATION**

INFORMATION

FAULT-TRACING INFORMATION

The fault should have been detected and remedied. As this is not the case fault-tracing has failed.

Exit fault-tracing for this diagnostic trouble code (DTC) or make another attempt.

ECM-P003C00 INTAKE (A) CAMSHAFT PROFILE CONTROL PERFORMANCE OR STUCK OFF (BANK 1). GENERAL FAILURE

INFORMATION. NO SUB TYPE INFORMATION (B6324S; 2007-2010)

DIAGNOSTIC TROUBLE CODE (DTC) INFORMATION

Condition

The Engine control module (ECM) checks the function for Camshaft Position (CMP) Sensor control.

Cam profile control is carried out on two banks that are controlled by a valve for each bank.

The diagnostic trouble code (DTC) is stored if the control module detects that:

- The pressure in the intake manifold (during intake) differs between banks.
- Higher pressure than expected in the intake manifold (during intake) for the bank that the diagnostic trouble code refers to.

The control module's test for the diagnostic trouble code (DTC) starts in the event of:

- 30 seconds after engine start-up.
- Driving in high load range.
- Engine speed 3400-5400 RPM.
- Oil temperature between 40°C and 120°C.

HINT: For this function, Bank 1 cylinders 1, 2 and 4 apply. Bank 2 regards cylinders 3, 5 and 6.

NOTE: The control module can only detect the fault once the test has been started and the diagnostic trouble code (DTC) is stored when the conditions are met.

Substitute Value

- Both banks for variable cam profile in low lift.

Possible Source

- Dirty or damaged cam profile solenoid (CPS).
- Blocked oil ducts for variable cam profile.

Fault symptom[s]

- Malfunction indicator light (MIL), on
- Uneven idle
- Engine is difficult to start
- Poor performance

DIRTY OR DAMAGED CAM PROFILE SOLENOID (CPS).

CHECK OF DIRTY OR DAMAGED CAM PROFILE SOLENOID (CPS)

Impurities in the oil, such as cast material and cast burrs, may cause the cam profile solenoid (CPS) to jam. In most cases the solenoid does not have to be replaced, cleaning is enough.

Replace the solenoid if it still has malfunctions after two cleanings.

Other information

- Cleaning:**CPS SOLENOID**
- Removing, replacing, and installing:**CPS SOLENOID**

- **Continue**

  Refer to **INFORMATION**

INFORMATION

FAULT-TRACING INFORMATION

In case of this defect, troubleshooting is not followed by verification.

The information can be displayed again or the fault-tracing for this fault can be interrupted.

ECM-P003C00 INTAKE (A) CAMSHAFT PROFILE CONTROL PERFORMANCE OR STUCK OFF (BANK 1). GENERAL FAILURE INFORMATION. NO SUB TYPE INFORMATION (B6324S5; 2011-2012)

DIAGNOSTIC TROUBLE CODE (DTC) INFORMATION

see **DIAGNOSTIC TROUBLE CODE (DTC) INFORMATION**

DIRTY OR DAMAGED CAM PROFILE SOLENOID (CPS).

see **DIRTY OR DAMAGED CAM PROFILE SOLENOID (CPS).**

ECM-P003D00 INTAKE (A) CAMSHAFT PROFILE CONTROL STUCK ON (BANK 1). GENERAL FAILURE INFORMATION. NO SUB TYPE INFORMATION (B6324S; 2007-2010)

DIAGNOSTIC TROUBLE CODE (DTC) INFORMATION

Condition

The Engine control module (ECM) checks the function for Camshaft Position (CMP) Sensor control.

Cam profile control is carried out on two banks that are controlled by a valve for each bank.

The diagnostic trouble code (DTC) is stored if the control module detects that:

- The pressure in the intake manifold (during intake) differs between banks.
- Lower pressure than expected in the intake manifold (during intake) for the bank that the diagnostic trouble code refers to.

The control module's test for the diagnostic trouble code (DTC) starts in the event of:

- 30 seconds after engine start-up.
- Driving in part load range.
- Engine speed 1400-2800 RPM.
- Oil temperature between 40°C and 120°C.

HINT: For this function, Bank 1 cylinders 1, 2 and 4 apply. Bank 2 regards cylinders 3, 5 and 6.

NOTE: The control module can only detect the fault once the test has been started and the diagnostic trouble code (DTC) is stored when the conditions are met.

Substitute Value

- Both banks for variable cam profile in high lift.

Possible Source

- Dirty or damaged cam profile solenoid (CPS).
- Blocked oil ducts for variable cam profile.

Fault symptom[s]

- Malfunction indicator light (MIL), on
- Uneven idle
- Engine is difficult to start
- Poor performance
- High fuel consumption

DIRTY OR DAMAGED CAM PROFILE SOLENOID (CPS).

see **DIRTY OR DAMAGED CAM PROFILE SOLENOID (CPS).**

ECM-P003D00 INTAKE (A) CAMSHAFT PROFILE CONTROL STUCK ON

(BANK 1). GENERAL FAILURE INFORMATION. NO SUB TYPE INFORMATION (B6324S5; 2011-2012)

DIAGNOSTIC TROUBLE CODE (DTC) INFORMATION

see **DIAGNOSTIC TROUBLE CODE (DTC) INFORMATION**

DIRTY OR DAMAGED CAM PROFILE SOLENOID (CPS).

see **DIRTY OR DAMAGED CAM PROFILE SOLENOID (CPS).**

ECM-P005100: HO2S HEATER CONTROL CIRCUIT LOW (BANK 2, SENSOR 1). GENERAL FAILURE INFORMATION. NO SUB TYPE INFORMATION (B6324S; 2007-2010)

DIAGNOSTIC TROUBLE CODE (DTC) INFORMATION ECM-P005100

Condition

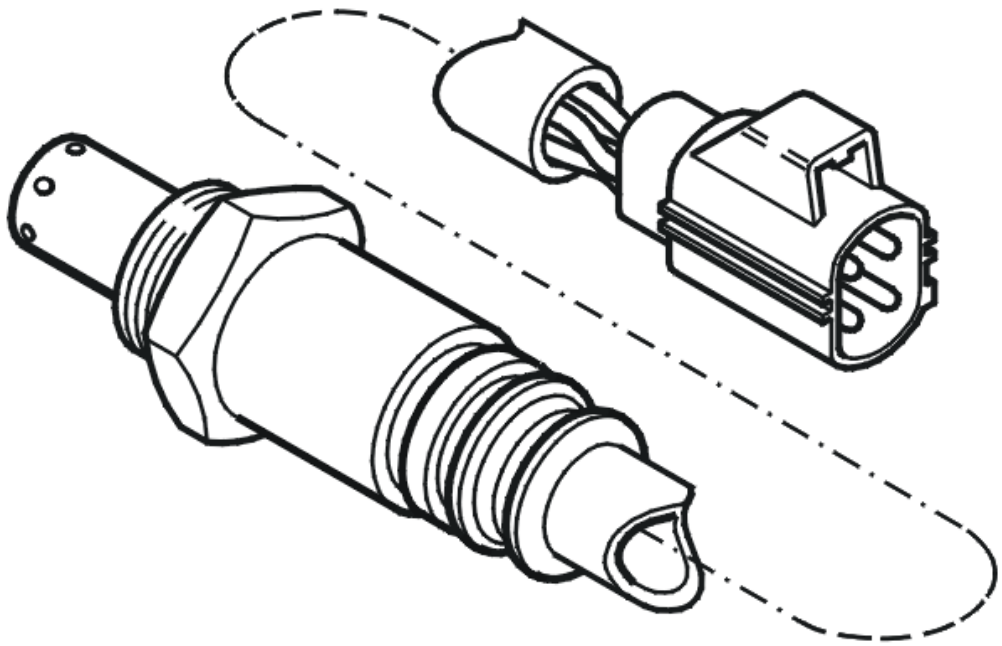

Fig. 346: Identifying Heated Oxygen Sensor
Courtesy of VOLVO CARS CORPORATION

The diagnostic trouble code (DTC) is stored if the Engine Control Module (ECM) registers that the front heated oxygen sensor (HO2S) preheating circuit (bank 2) has a short-circuit to ground or if there is an open-circuit.

The engine cylinders are counted from the cylinder furthest away from the flywheel.

- Bank 1 (cylinder row nearest the front): cylinders 1, 3, 5 and 7.
- Bank 2 (cylinder row furthest to the rear, nearest the passenger compartment): cylinders 2, 4, 6, and 8.

The diagnostic trouble code can be diagnosed when the ignition is on.

Substitute Value

- Fuel trim switched off.
- Front heated oxygen sensor (HO2S) preheating switched off.

Possible Source

- Open-circuit in the power supply cable.
- Short-circuit to ground in the power cable.
- Damaged front heated oxygen sensor (HO2S).

Fault symptom[s]

- Malfunction indicator lamp (MIL) lit.

FAULT-TRACING

see **FAULT-TRACING**

ECM-P005100: HO2S HEATER CONTROL CIRCUIT LOW (BANK 2, SENSOR 1). GENERAL FAILURE INFORMATION. NO SUB TYPE INFORMATION (B6324S5; 2011-2012)

DIAGNOSTIC TROUBLE CODE (DTC) INFORMATION ECM-P005100

see **DIAGNOSTIC TROUBLE CODE (DTC) INFORMATION ECM-P005100**

FAULT-TRACING

see **FAULT-TRACING**

ECM-P005100: HEATED OXYGEN SENSOR (HO2S) CONTROL CIRCUIT LOW (BANK 2, SENSOR 1). GENERAL FAULT INFORMATION. NO INFORMATION ABOUT FAULT TYPE (B8444S; 2005-2011)

DIAGNOSTIC TROUBLE CODE (DTC) INFORMATION ECM-P005100

Condition

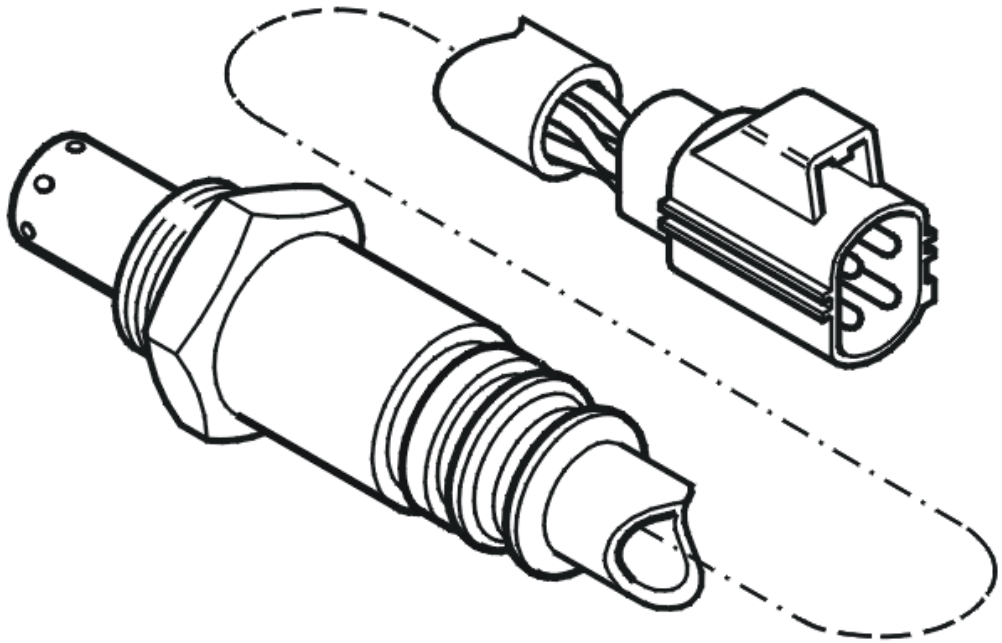

Fig. 347: Identifying Heated Oxygen Sensor
Courtesy of VOLVO CARS CORPORATION

The diagnostic trouble code (DTC) is stored if the Engine Control Module (ECM) registers that the front heated oxygen sensor (HO2S) preheating circuit (bank 2) has a short-circuit to ground or if there is an open-circuit.

The engine cylinders are counted from the cylinder furthest away from the flywheel.

- Bank 1 (cylinder row nearest the front): cylinders 1, 3, 5 and 7.
- Bank 2 (cylinder row furthest to the rear, nearest the passenger compartment): cylinders 2, 4, 6, and 8.

The diagnostic trouble code can be diagnosed when the ignition is on.

Substitute Value

- Fuel trim switched off.
- Front heated oxygen sensor (HO2S) preheating switched off.

Possible Source

- Open-circuit in the power supply cable.
- Short-circuit to ground in the power cable.
- Damaged front heated oxygen sensor (HO2S).

Fault symptom[s]

- Malfunction indicator lamp (MIL) lit.

FAULT TRACING ECM-P005100

CHECKING THE STATUS

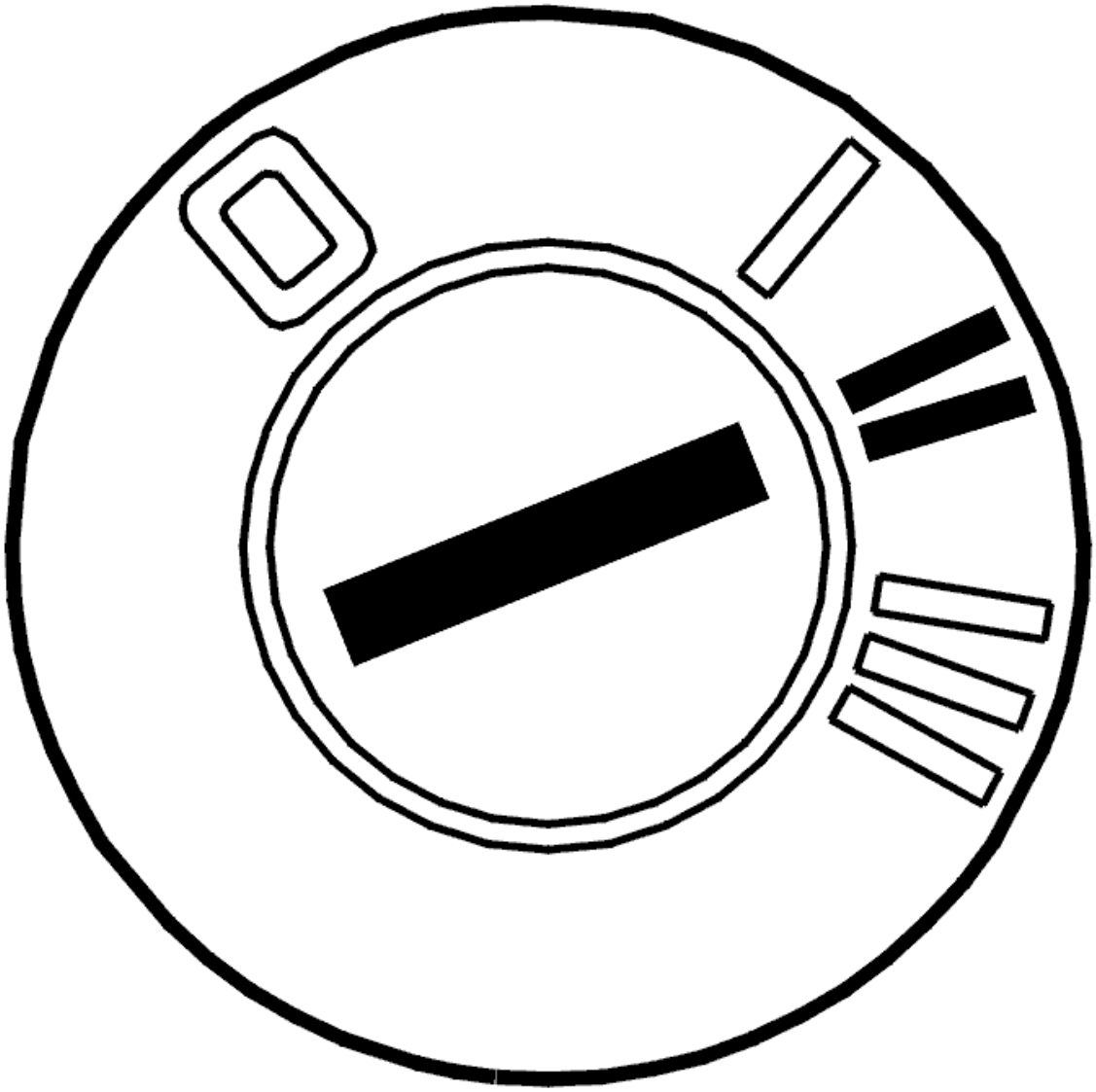

Fig. 348: Identifying Ignition ON
Courtesy of VOLVO CARS CORPORATION

- The ignition must be on to perform the diagnostic.

  Check whether the fault is permanent or intermittent. Read off the diagnostic trouble code (DTC) fault status when the diagnostic status is "Completed".

  The fault is permanent if the fault status is "Fault found". The fault is intermittent if the fault status is "No fault found".

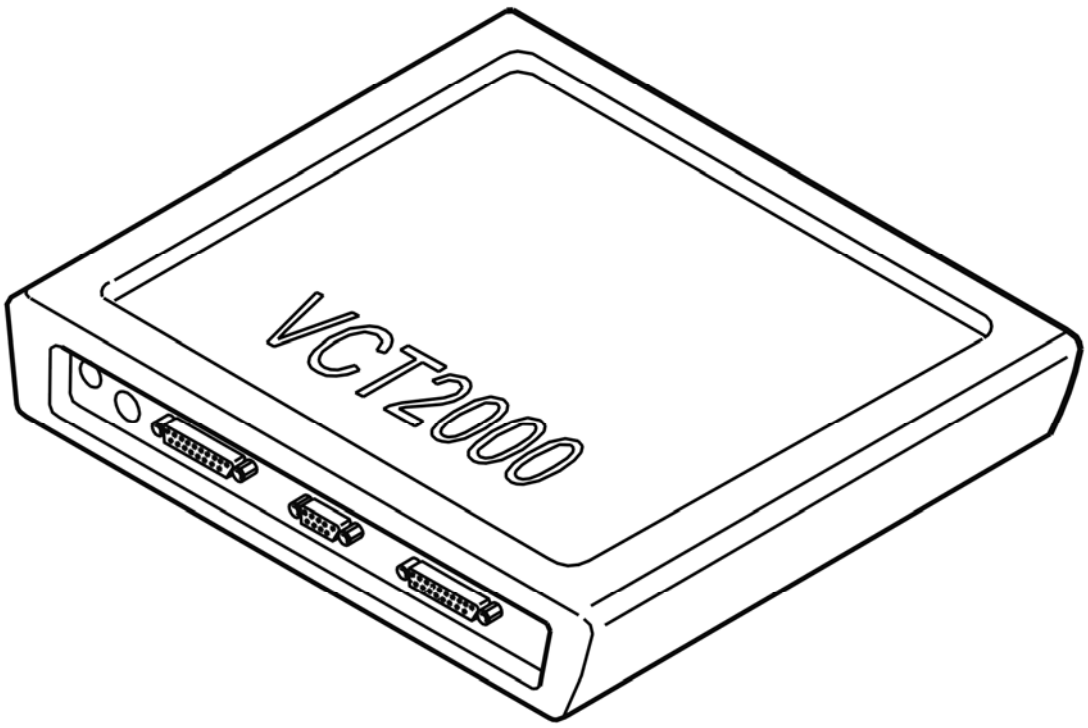

Fig. 349: Identifying VCT2000 Diagnostic Tool Symbol In VIDA
Courtesy of VOLVO CARS CORPORATION

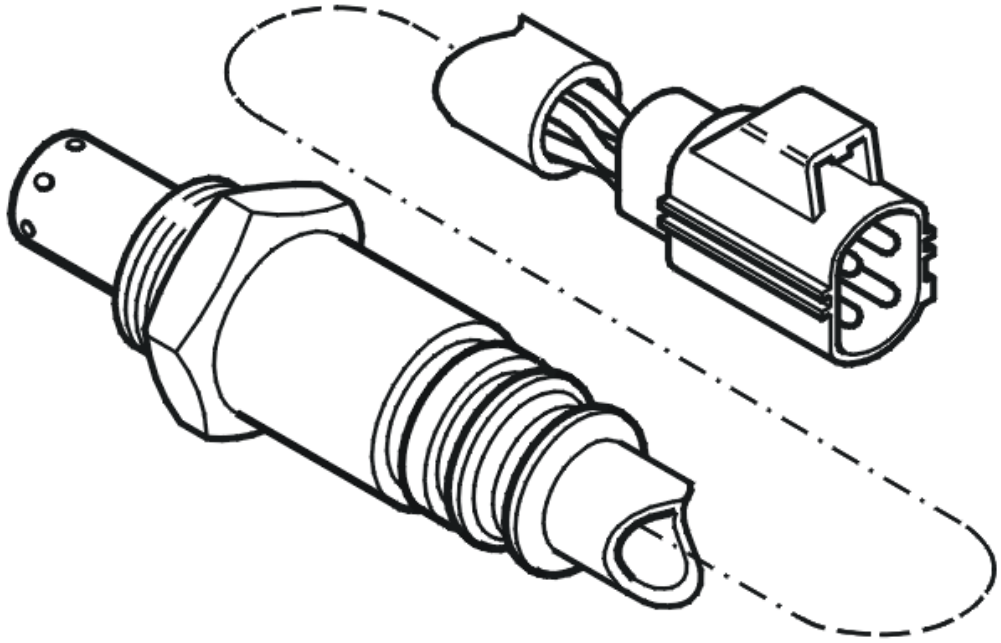

Fig. 350: Identifying Heated Oxygen Sensor
Courtesy of VOLVO CARS CORPORATION

- **Continue**

  Refer to **CHECKING COMPONENTS**

CHECKING COMPONENTS

CAUTION: Do not apply rust solvent spray or grease to the heated oxygen sensor (HO2S) connector.

Check the cable between front heated oxygen sensor (HO2S) terminal #1 (bank 2) and voltage supply from the system relay. Check for an open-circuit. Check for a short-circuit to ground.

Try a new rear heated oxygen sensor if the above measure does not remedy the fault.

Remedy as necessary.

Other information

- see **CONNECTING THE BREAKOUT BOX**
- see **SIGNAL SPECIFICATION, ENGINE CONTROL MODULE (ECM)**

- see **HEATED OXYGEN SENSOR (HO2S), REPLACING**
- see **CHECKING WIRING AND TERMINALS**

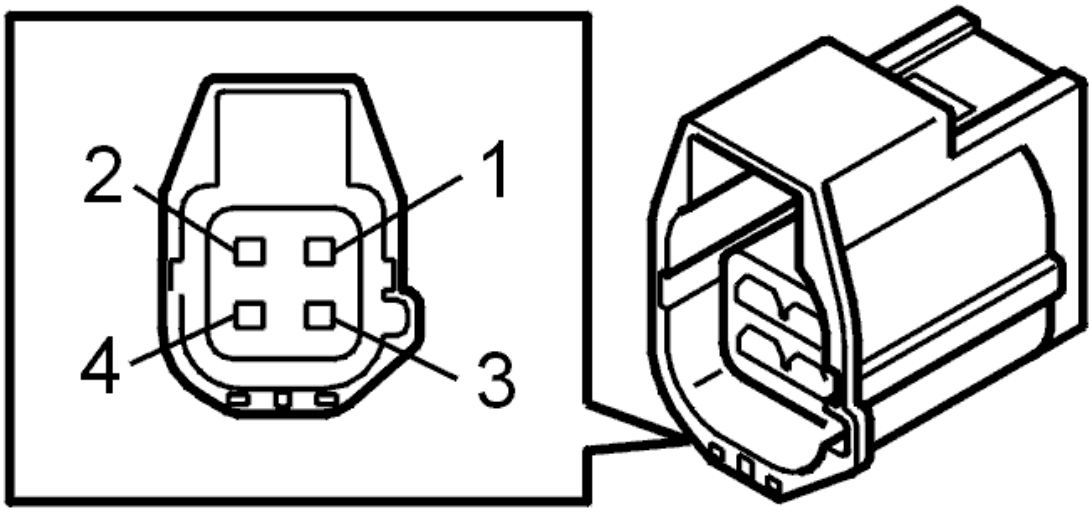

Fig. 351: Identifying 4-Bit Connector
Courtesy of VOLVO CARS CORPORATION

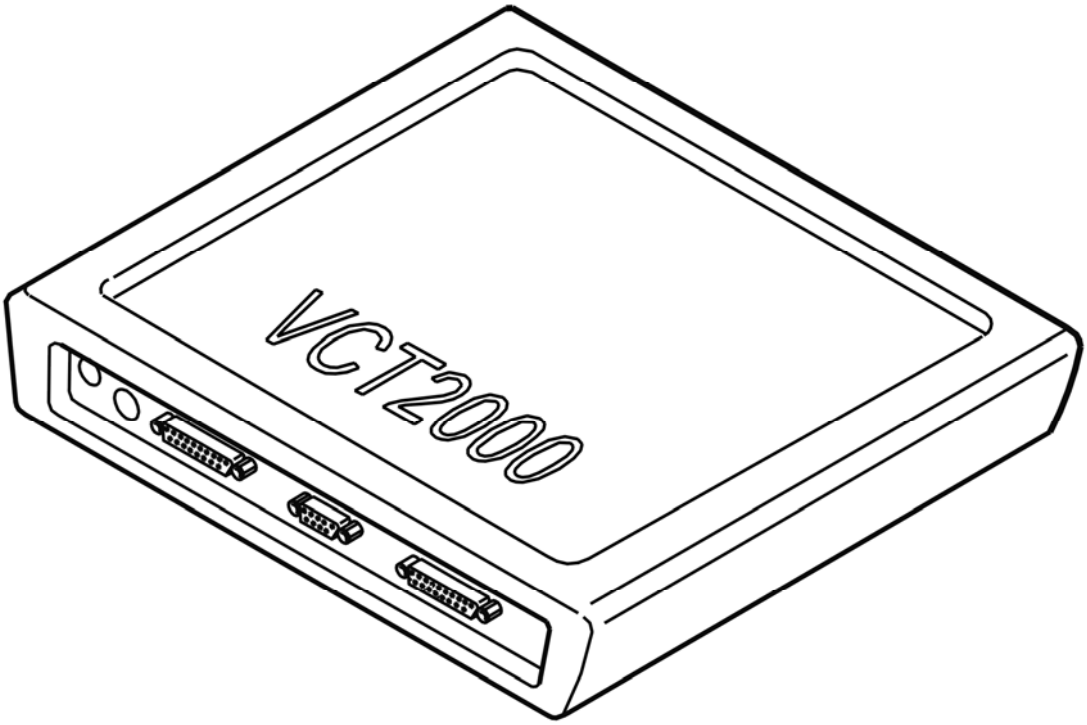

Fig. 352: Identifying VCT2000 Diagnostic Tool Symbol In VIDA
Courtesy of VOLVO CARS CORPORATION

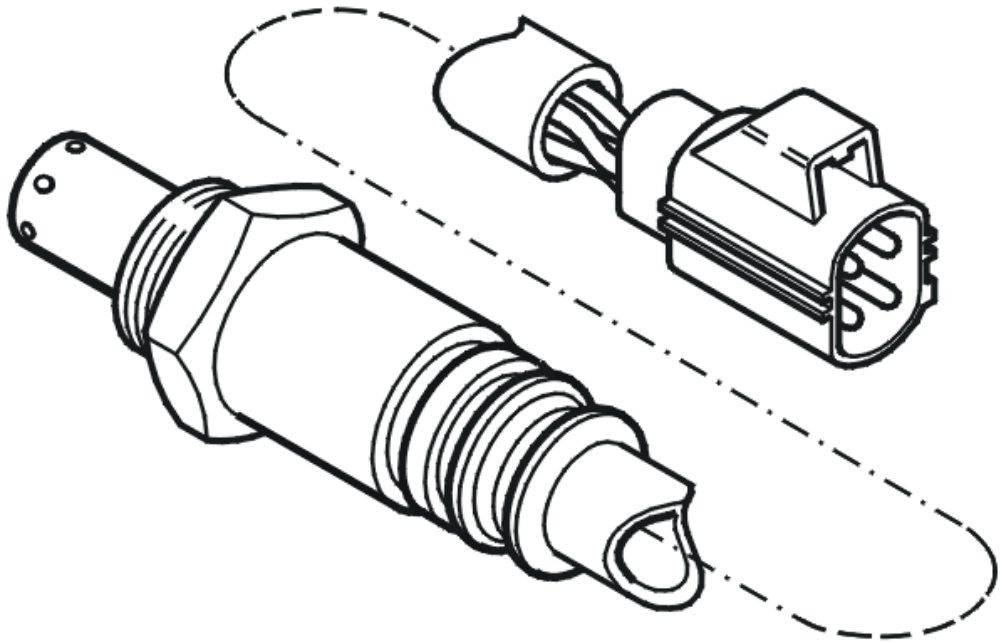

Fig. 353: Identifying Heated Oxygen Sensor
Courtesy of VOLVO CARS CORPORATION

- **Continue**

  Refer to **VERIFICATION**

VERIFICATION

VERIFICATION

HINT: After repairing, it is necessary to check that the malfunction has been fixed.

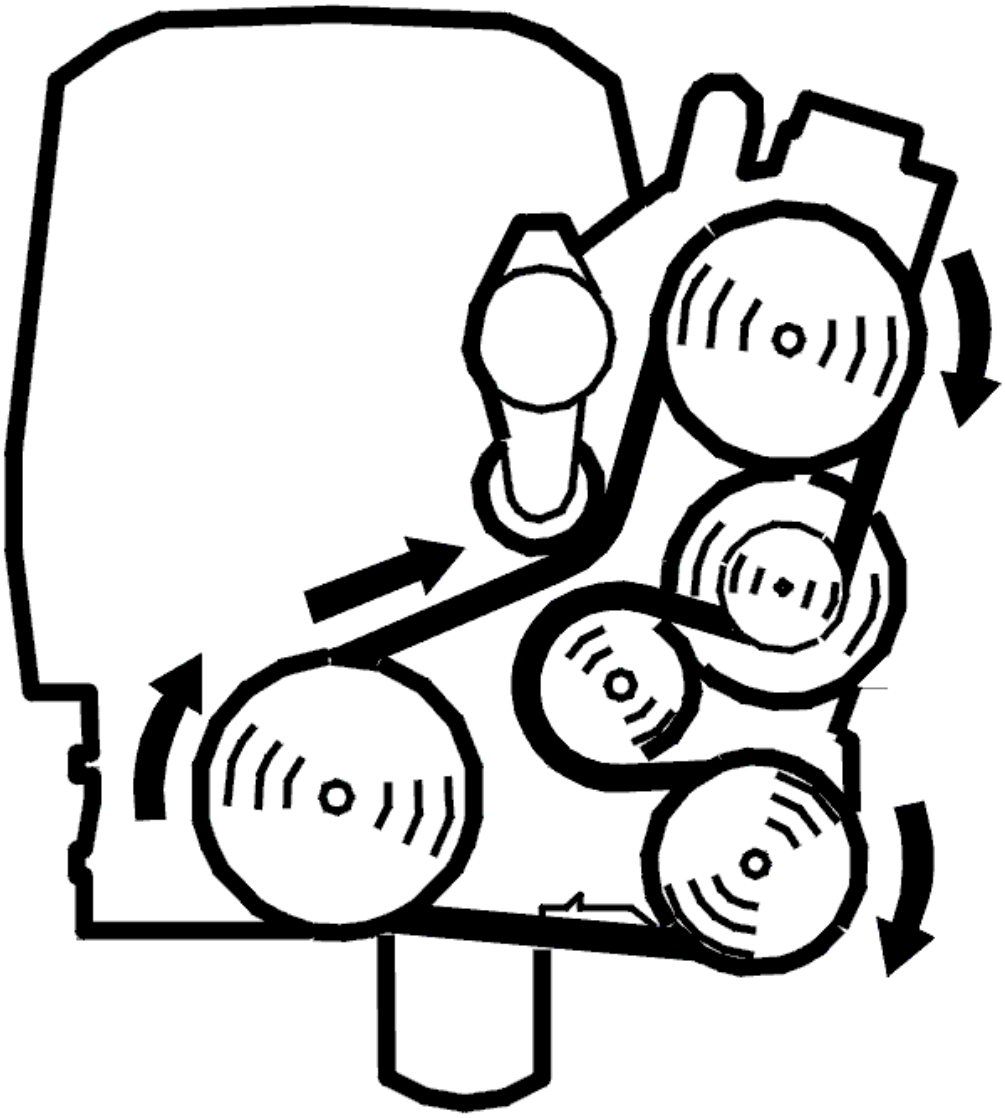

Fig. 354: Belt Routing / Engine Idling - Volvo
Courtesy of VOLVO CARS CORPORATION

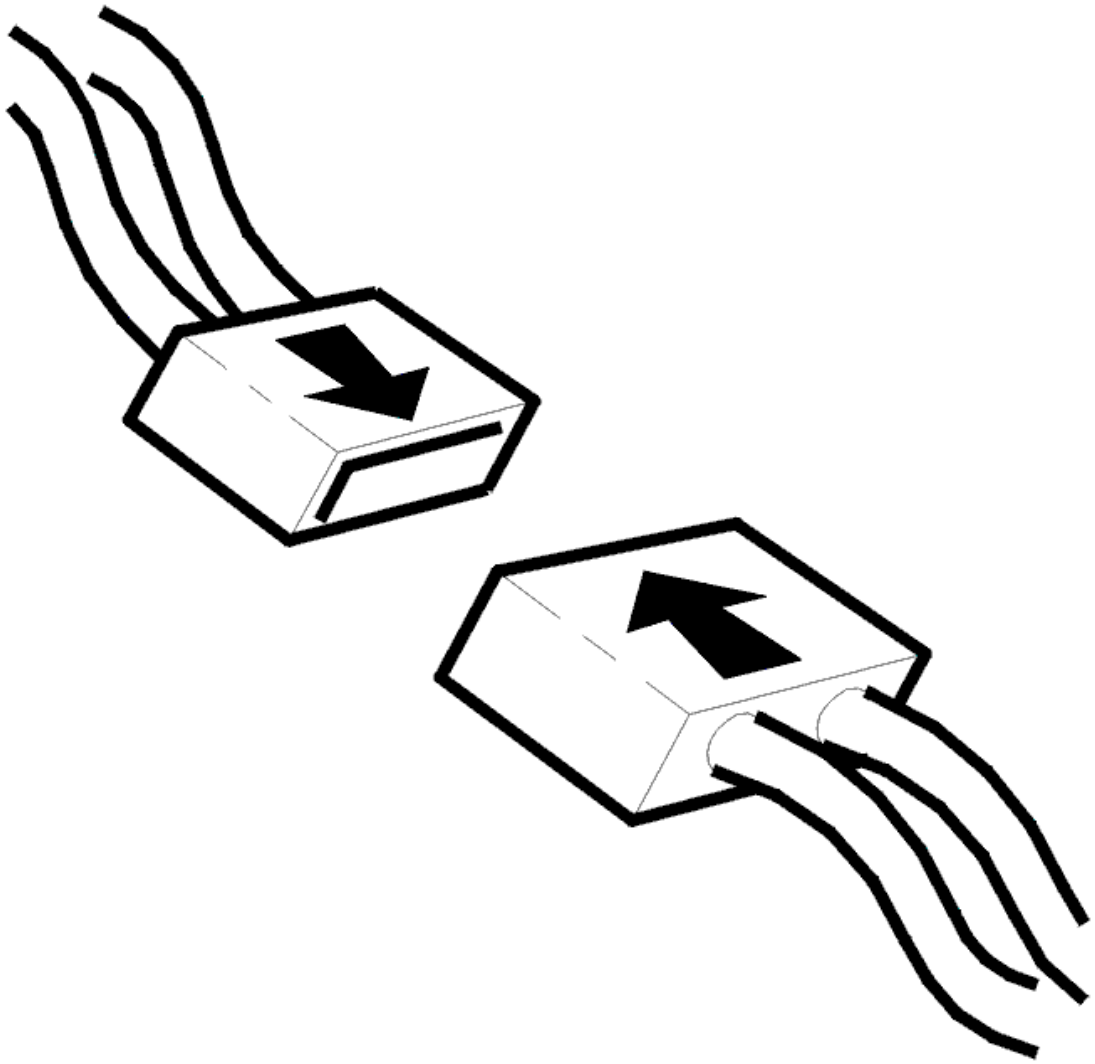

Fig. 355: Connecting Connector
Courtesy of VOLVO CARS CORPORATION

- Ignition off
- Reinstall the connectors, components etc.
- Ignition on to perform the diagnosis.

  Read off the diagnostic status and trouble status for the diagnostic trouble code.

  Check that the diagnosis is "Implemented" and that the trouble status is "No malfunction found". If the trouble status is "Malfunction found", this indicates defective function.

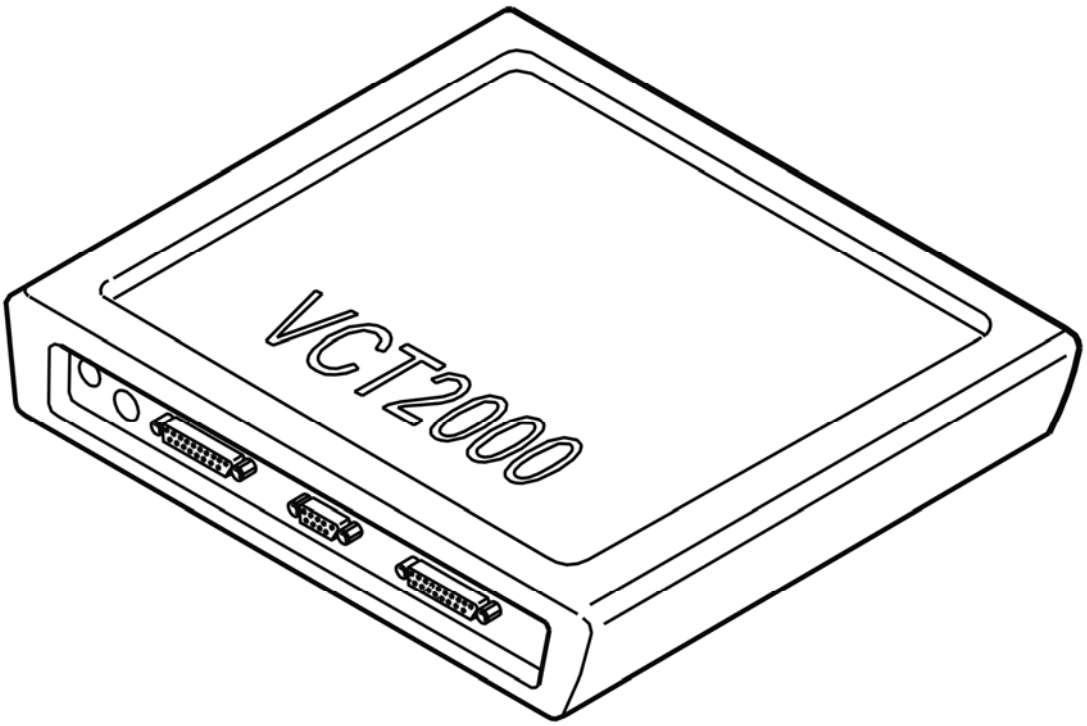

Fig. 356: Identifying VCT2000 Diagnostic Tool Symbol In VIDA
Courtesy of VOLVO CARS CORPORATION

Is the function OK?

- **YES**

  VERIFIED: Troubleshooting has been completed.

- **NO**

  Refer to **INFORMATION**

INFORMATION

FAULT-TRACING INFORMATION

The fault should have been detected and remedied. As this is not the case fault-tracing has failed.

Exit fault-tracing for this diagnostic trouble code (DTC) or make another attempt.

ECM-P005200: HO2S HEATER CONTROL CIRCUIT HIGH (BANK 2, SENSOR 1). GENERAL FAILURE INFORMATION. NO SUB TYPE INFORMATION

(B6324S; 2007-2010)

DIAGNOSTIC TROUBLE CODE (DTC) INFORMATION ECM-P005200

Condition

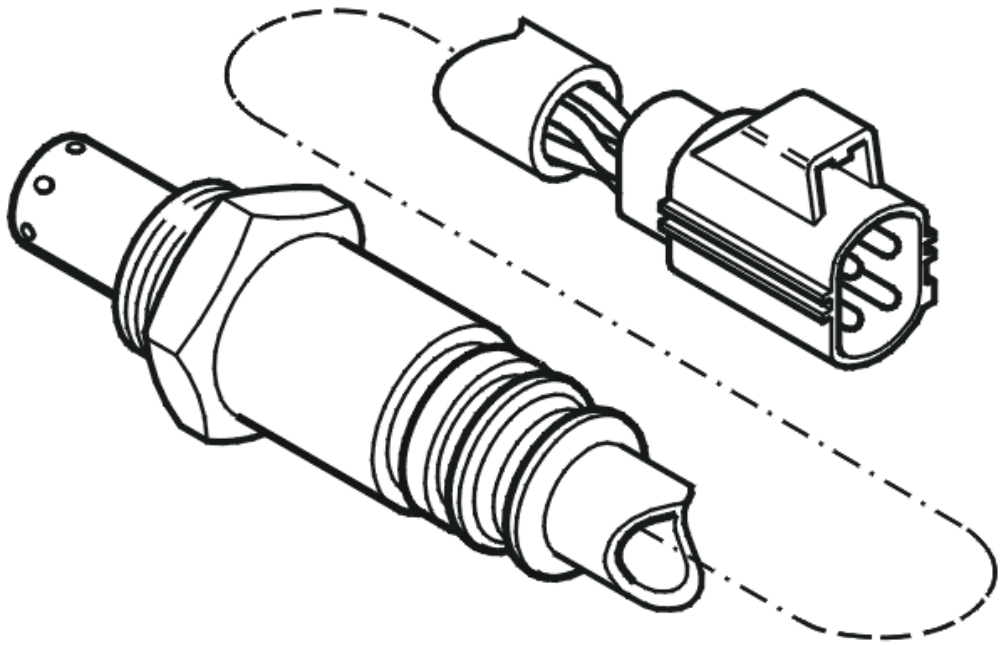

Fig. 357: Identifying Heated Oxygen Sensor
Courtesy of VOLVO CARS CORPORATION

The diagnostic trouble code (DTC) is stored if the Engine Control Module (ECM) registers that the front heated oxygen sensor (HO2S) preheating circuit (bank 2) has a short-circuit to supply voltage.

The engine cylinders are counted from the cylinder furthest away from the flywheel.

- Bank 1 (cylinder row nearest the front): cylinders 1, 3, 5 and 7.
- Bank 2 (cylinder row furthest to the rear, nearest the passenger compartment): cylinders 2, 4, 6, and 8.

The diagnostic trouble code can be diagnosed when the ignition is on.

Substitute Value

- Fuel trim switched off.
- Front heated oxygen sensor (HO2S) preheating switched off.

Possible Source

- Short-circuit to supply in the power cable.
- Damaged front heated oxygen sensor (HO2S).

Fault symptom[s]

- Malfunction indicator lamp (MIL) lit.

FAULT-TRACING

see **FAULT-TRACING**

ECM-P005200: HO2S HEATER CONTROL CIRCUIT HIGH (BANK 2, SENSOR 1). GENERAL FAILURE INFORMATION. NO SUB TYPE INFORMATION (B6324S5; 2011-2012)

DIAGNOSTIC TROUBLE CODE (DTC) INFORMATION ECM-P005200

see **DIAGNOSTIC TROUBLE CODE (DTC) INFORMATION ECM-P005200**

FAULT-TRACING

see **FAULT-TRACING**

ECM-P005200: HEATED OXYGEN SENSOR (HO2S) CONTROL CIRCUIT HIGH (BANK 2, SENSOR 1). GENERAL FAULT INFORMATION. NO INFORMATION ABOUT FAULT TYPE (B8444S; 2005-2011)

DIAGNOSTIC TROUBLE CODE (DTC) INFORMATION ECM-P005200

Condition

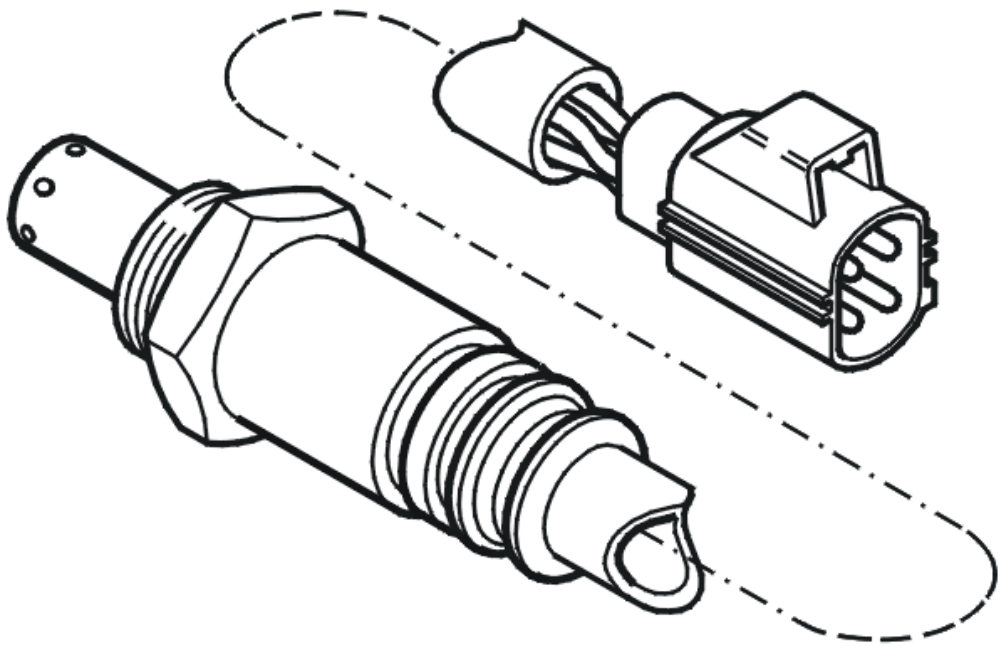

Fig. 1: Identifying Heated Oxygen Sensor
Courtesy of VOLVO CARS CORPORATION

The diagnostic trouble code (DTC) is stored if the Engine Control Module (ECM) registers that the front heated oxygen sensor (HO2S) preheating circuit (bank 2) has a short-circuit to supply voltage.

The engine cylinders are counted from the cylinder furthest away from the flywheel.

- Bank 1 (cylinder row nearest the front): cylinders 1, 3, 5 and 7.
- Bank 2 (cylinder row furthest to the rear, nearest the passenger compartment): cylinders 2, 4, 6, and 8.

The diagnostic trouble code can be diagnosed when the ignition is on.

Substitute Value

- Fuel trim switched off.
- Front heated oxygen sensor (HO2S) preheating switched off.

Possible Source

- Short-circuit to supply in the power cable.
- Damaged front heated oxygen sensor (HO2S).

Fault symptom[s]

- Malfunction indicator lamp (MIL) lit.

FAULT TRACING ECM-P005200

CHECKING THE STATUS

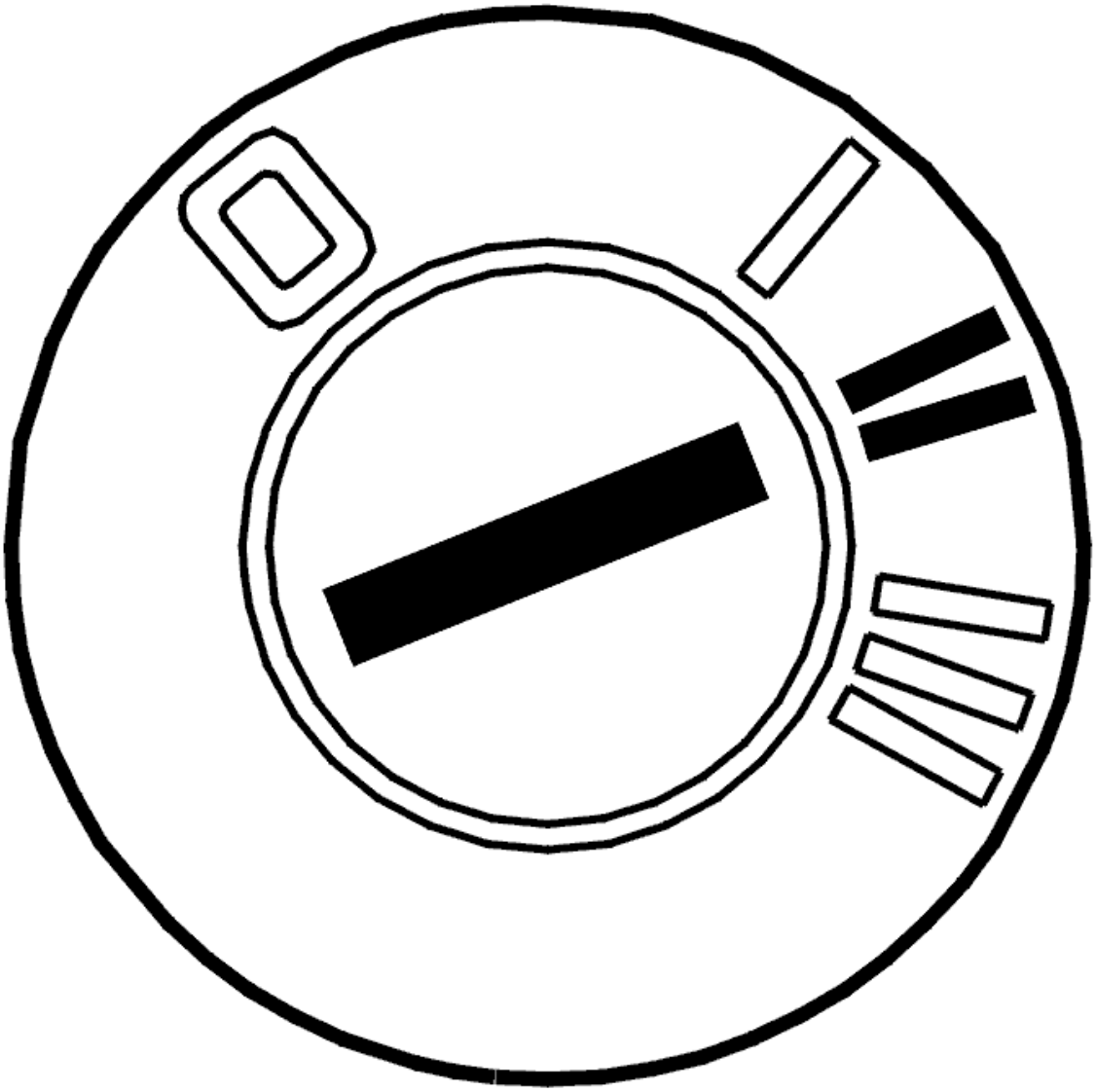

Fig. 2: Identifying Ignition ON
Courtesy of VOLVO CARS CORPORATION

- The ignition must be on to perform the diagnostic.

  Check whether the fault is permanent or intermittent. Read off the diagnostic trouble code (DTC) fault status when the diagnostic status is "Completed".

  The fault is permanent if the fault status is "Fault found". The fault is intermittent if the fault status is "No fault found".

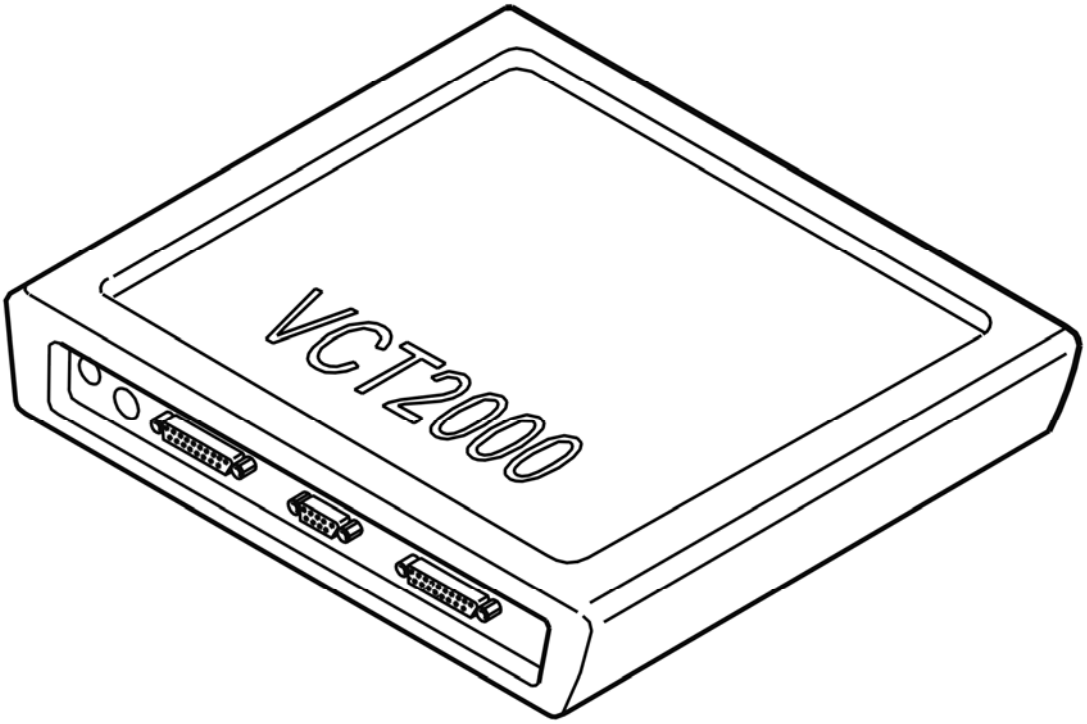

Fig. 3: Identifying VCT2000 Diagnostic Tool Symbol In VIDA
Courtesy of VOLVO CARS CORPORATION

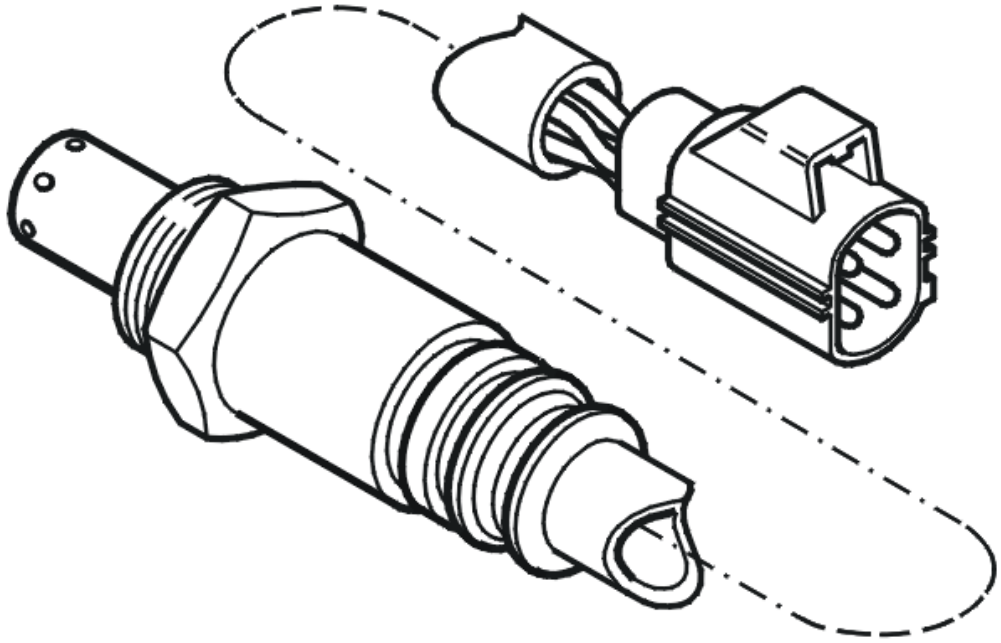

Fig. 4: Identifying Heated Oxygen Sensor
Courtesy of VOLVO CARS CORPORATION

- **Continue**

  Refer to **CHECKING COMPONENTS**

CHECKING COMPONENTS

CAUTION: Do not apply rust solvent spray or grease to the heated oxygen sensor (HO2S) connector.

Check the cable between front heated oxygen sensor (HO2S) terminal #1 (bank 2) and voltage supply from the system relay. Check for a short-circuit to supply voltage.

Try a new rear heated oxygen sensor if the above measure does not remedy the fault.

Remedy as necessary.

Other information

- see **CONNECTING THE BREAKOUT BOX**
- see **SIGNAL SPECIFICATION, ENGINE CONTROL MODULE (ECM)**

- see **HEATED OXYGEN SENSOR (HO2S), REPLACING**
- see **CHECKING WIRING AND TERMINALS**

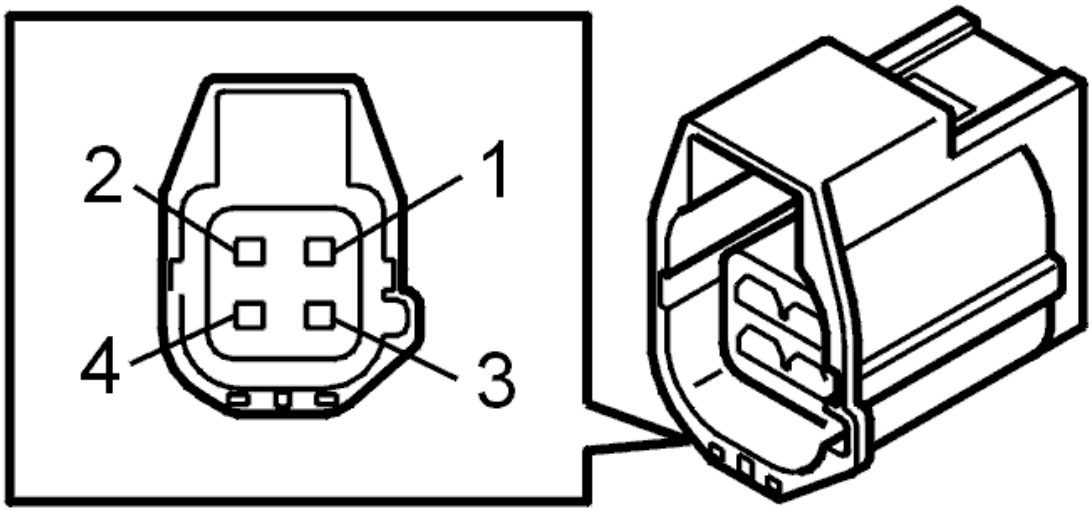

Fig. 5: Identifying 4-Bit Connector
Courtesy of VOLVO CARS CORPORATION

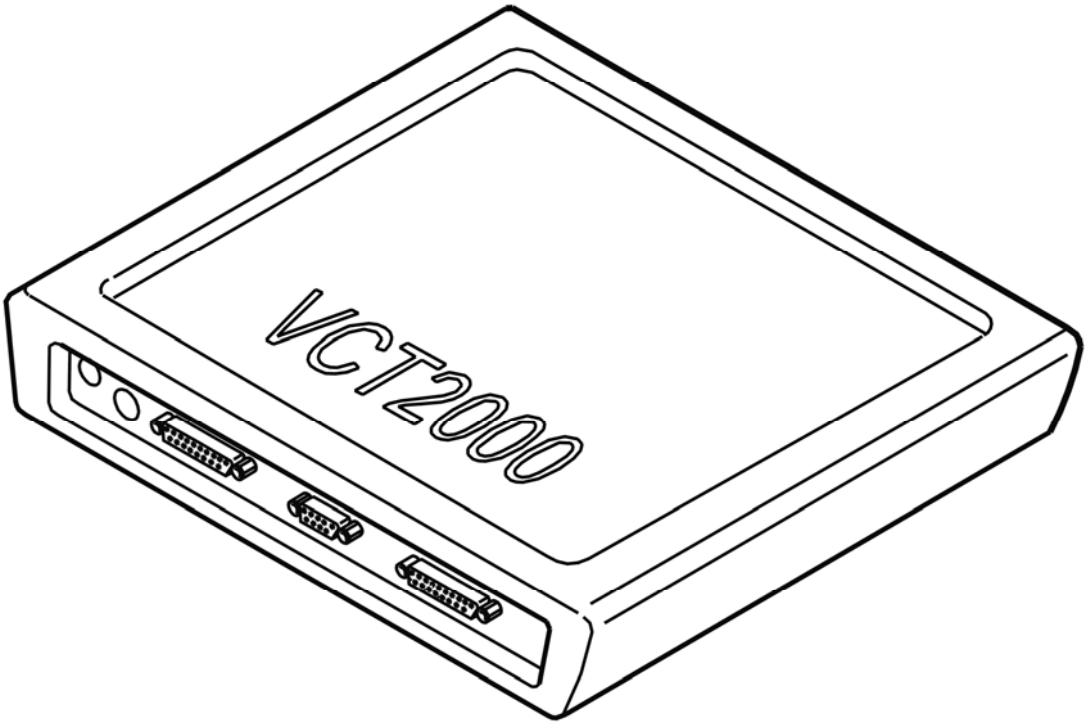

Fig. 6: Identifying VCT2000 Diagnostic Tool Symbol In VIDA
Courtesy of VOLVO CARS CORPORATION

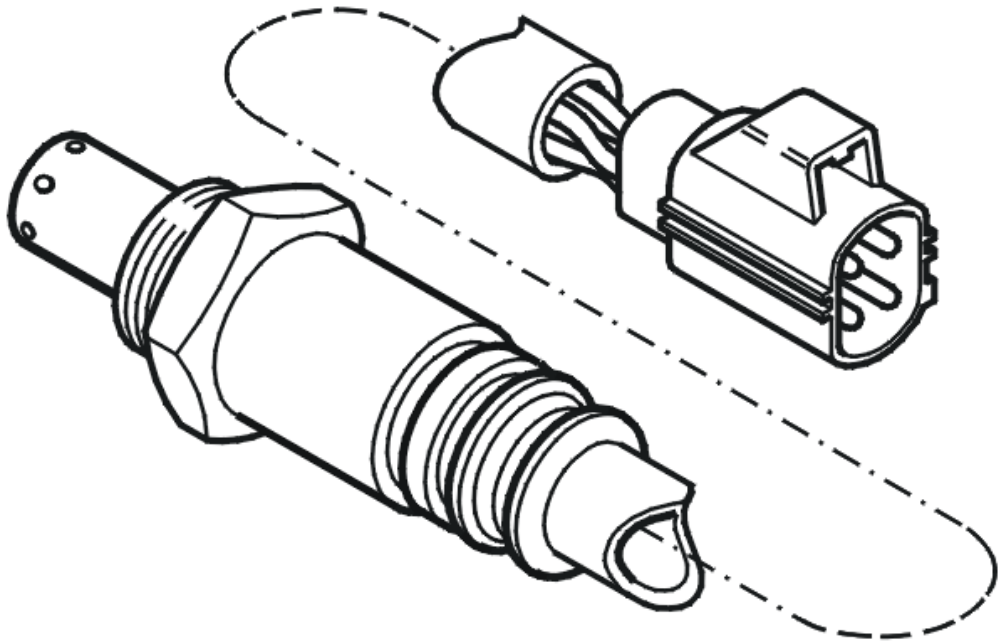

Fig. 7: Identifying Heated Oxygen Sensor
Courtesy of VOLVO CARS CORPORATION

- **Continue**

  Refer to **VERIFICATION**

VERIFICATION

VERIFICATION

HINT: After repairing, it is necessary to check that the malfunction has been fixed.

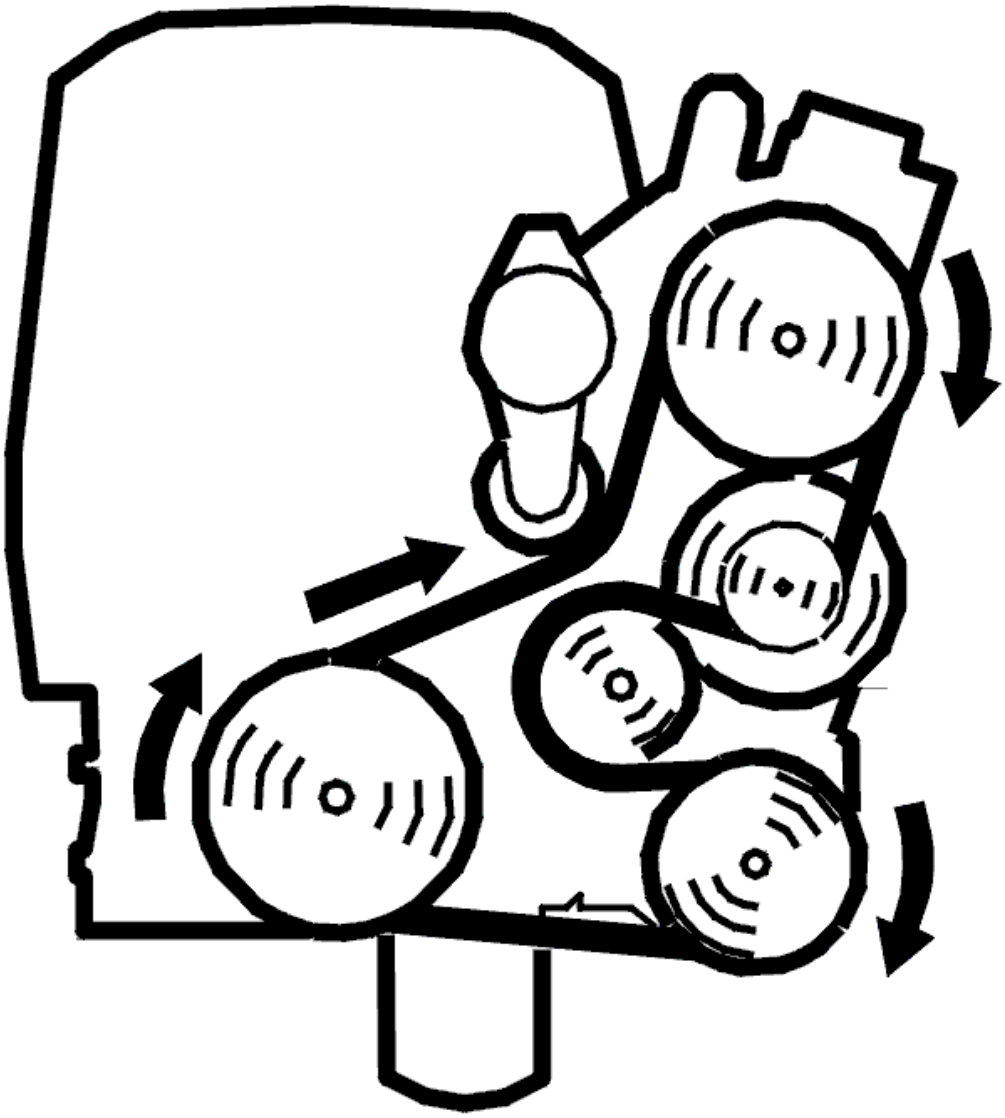

Fig. 8: Belt Routing / Engine Idling - Volvo
Courtesy of VOLVO CARS CORPORATION

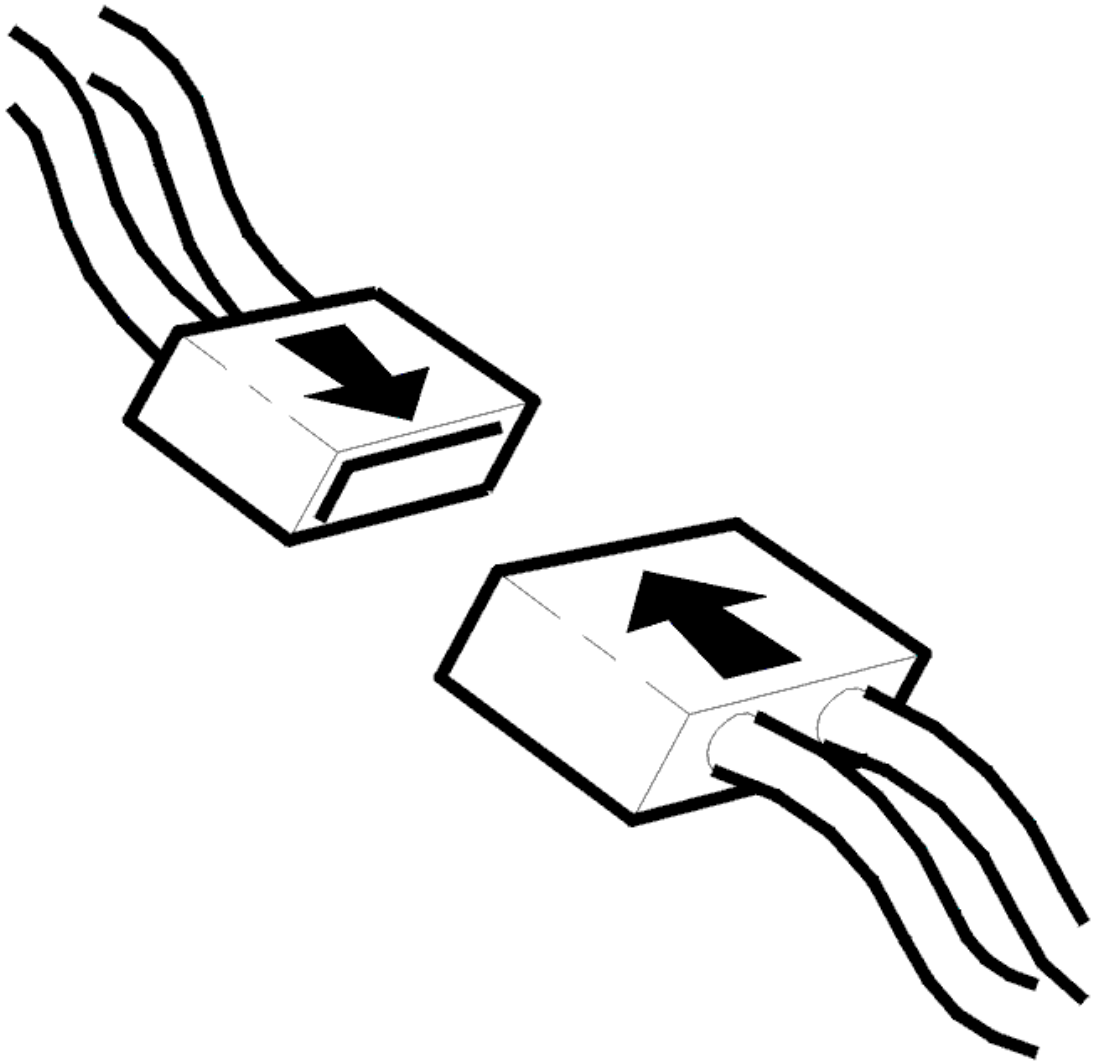

Fig. 9: Connecting Connector
Courtesy of VOLVO CARS CORPORATION

- Ignition off
- Reinstall the connectors, components etc.
- Ignition on to perform the diagnosis.

  Read off the diagnostic status and trouble status for the diagnostic trouble code.

  Check that the diagnosis is "Implemented" and that the trouble status is "No malfunction found". If the trouble status is "Malfunction found", this indicates defective function.

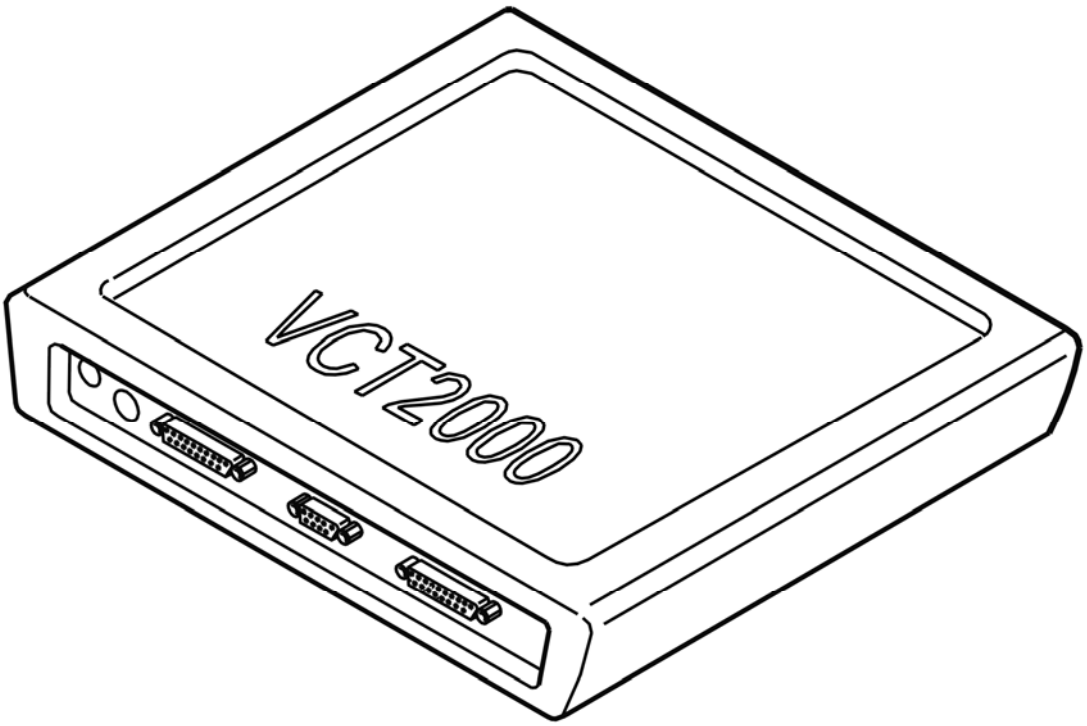

Fig. 10: Identifying VCT2000 Diagnostic Tool Symbol In VIDA
Courtesy of VOLVO CARS CORPORATION

Is the function OK?

- **YES**

  VERIFIED: Troubleshooting has been completed.

- **NO**

  Refer to **INFORMATION**

INFORMATION

FAULT-TRACING INFORMATION

The fault should have been detected and remedied. As this is not the case fault-tracing has failed.

Exit fault-tracing for this diagnostic trouble code (DTC) or make another attempt.

ECM-P005700: HO2S HEATER CONTROL CIRCUIT LOW (BANK 2, SENSOR 2). GENERAL FAILURE INFORMATION. NO SUB TYPE INFORMATION

(B6324S; 2007-2010)

DIAGNOSTIC TROUBLE CODE (DTC) INFORMATION ECM-P005700

Condition

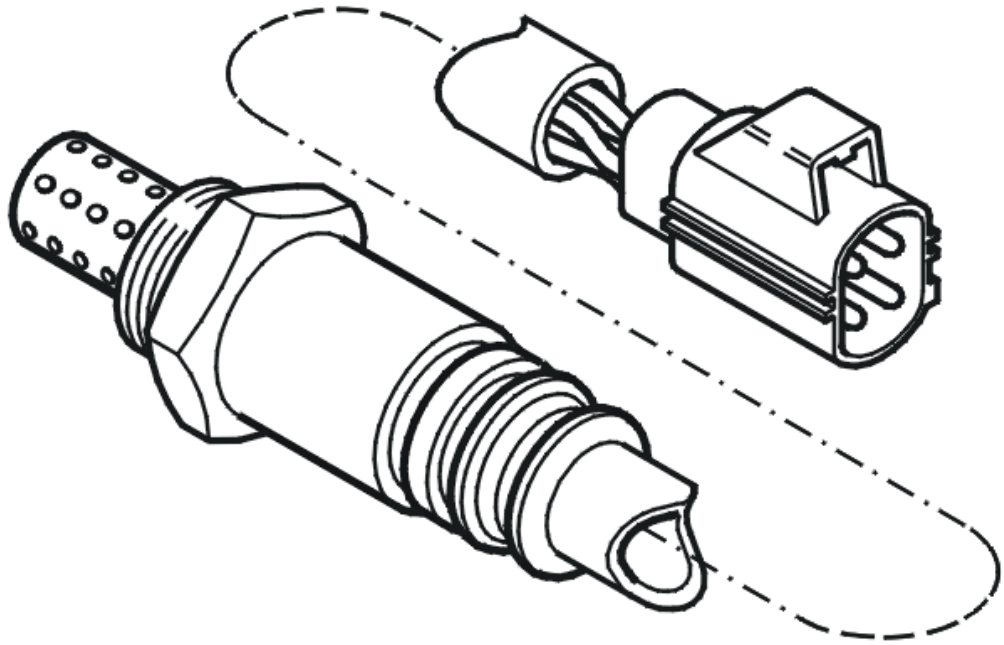

Fig. 11: Identifying Heated Oxygen Sensor
Courtesy of VOLVO CARS CORPORATION

Engine Control Module (ECM) checks if the rear heated oxygen sensor's preheating circuit (bank 2) is short-circuited to voltage, there is an open circuit or if the resistance in the heating resistor is incorrect.

The engine cylinders are counted from the cylinder furthest away from the flywheel.

- Bank 1 (cylinder row nearest the front): cylinders 1, 3, 5 and 7.
- Bank 2 (cylinder row furthest to the rear, nearest the passenger compartment): cylinders 2, 4, 6, and 8.

The diagnostic trouble code (DTC) is stored if the engine control module (ECM) registers any of these.

The diagnostic trouble code (DTC) can be diagnosed at ignition on and if the battery voltage is in the range 11-16 V.

Substitute Value

- Rear heated oxygen sensor (HO2S) preheating shut off.

Possible Source

- Contact resistance, oxidation in the terminals.
- Short-circuit to ground in the power cable.
- Open-circuit in the power supply cable.
- Damaged rear heated oxygen sensor (HO2S).

Fault symptom[s]

- Malfunction indicator lamp (MIL) lit.

FAULT-TRACING

see **FAULT-TRACING**

ECM-P005700: HO2S HEATER CONTROL CIRCUIT LOW (BANK 2, SENSOR 2). GENERAL FAILURE INFORMATION. NO SUB TYPE INFORMATION (B6324S5; 2011-2012)

DIAGNOSTIC TROUBLE CODE (DTC) INFORMATION ECM-P005700

see **DIAGNOSTIC TROUBLE CODE (DTC) INFORMATION ECM-P005700**

FAULT-TRACING

see **FAULT-TRACING**

ECM-P005700: HEATED OXYGEN SENSOR (HO2S) CONTROL CIRCUIT LOW (BANK 2, SENSOR 2). GENERAL FAULT INFORMATION. NO INFORMATION ABOUT FAULT TYPE (B8444S; 2005-2011)

DIAGNOSTIC TROUBLE CODE (DTC) INFORMATION ECM-P005700

Condition

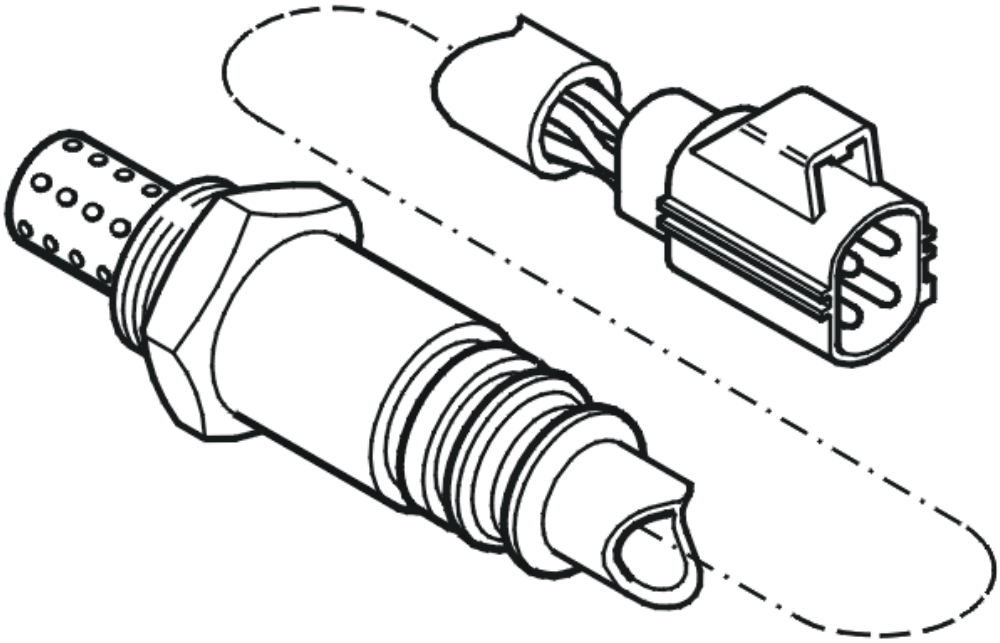

Fig. 12: Identifying Heated Oxygen Sensor
Courtesy of VOLVO CARS CORPORATION

Engine Control Module (ECM) checks if the rear heated oxygen sensor's preheating circuit (bank 2) is short-circuited to voltage, there is an open circuit or if the resistance in the heating resistor is incorrect.

The engine cylinders are counted from the cylinder furthest away from the flywheel.

- Bank 1 (cylinder row nearest the front): cylinders 1, 3, 5 and 7.
- Bank 2 (cylinder row furthest to the rear, nearest the passenger compartment): cylinders 2, 4, 6, and 8.

The diagnostic trouble code (DTC) is stored if the engine control module (ECM) registers any of these.

The diagnostic trouble code (DTC) can be diagnosed at ignition on and if the battery voltage is in the range 11-16 V.

Substitute Value

- Rear heated oxygen sensor (HO2S) preheating shut off.

Possible Source

- Contact resistance, oxidation in the terminals.

- Short-circuit to ground in the power cable.
- Open-circuit in the power supply cable.
- Damaged rear heated oxygen sensor (HO2S).

Fault symptom[s]

- Malfunction indicator lamp (MIL) lit.

FAULT TRACING ECM-P005700

CHECKING THE STATUS

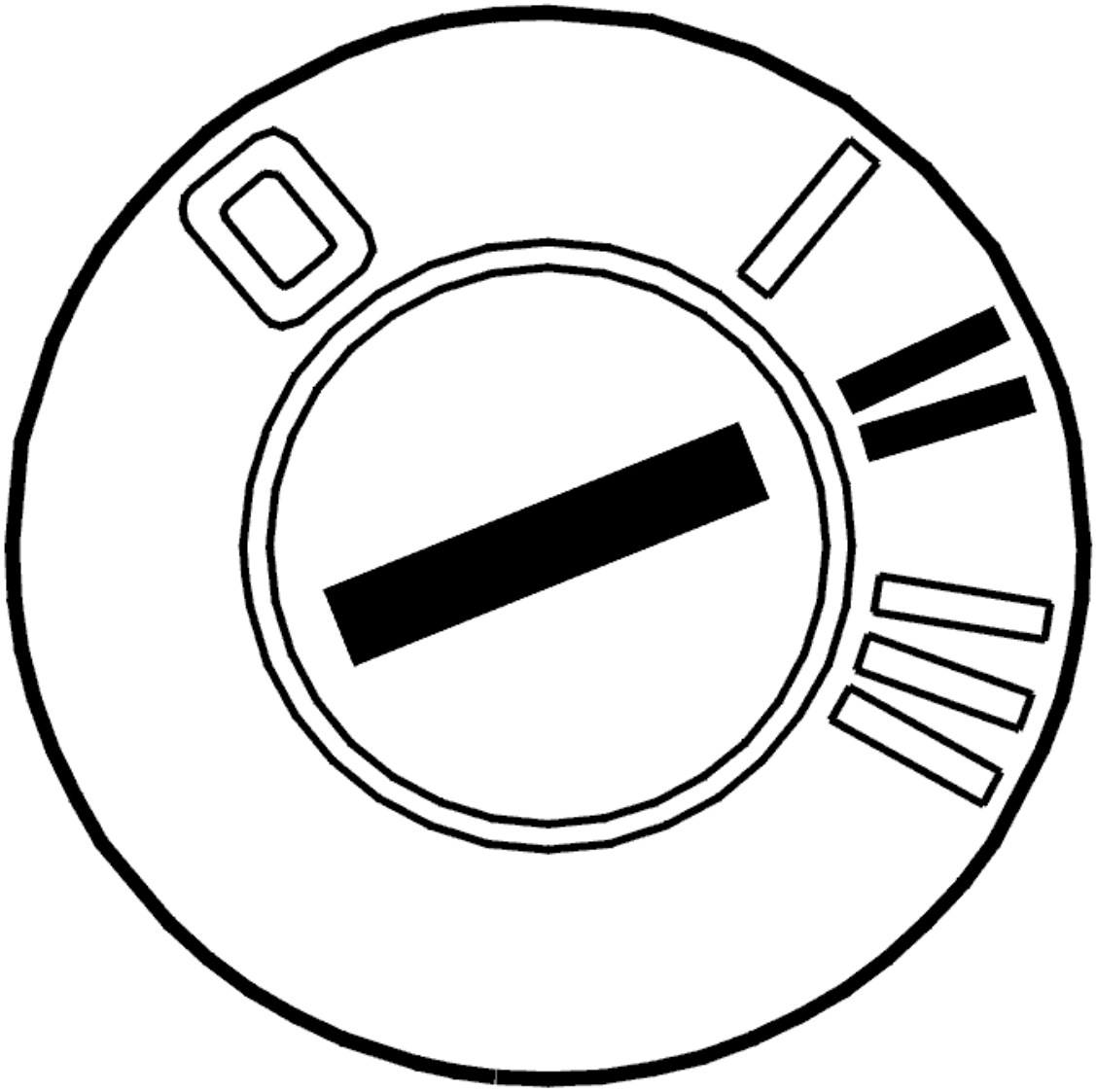

Fig. 13: Identifying Ignition ON
Courtesy of VOLVO CARS CORPORATION

- The ignition must be on to perform the diagnostic.

  Check whether the fault is permanent or intermittent. Read off the diagnostic trouble code (DTC) fault status when the diagnostic status is "Completed".

  The fault is permanent if the fault status is "Fault found". The fault is intermittent if the fault status is "No fault found".

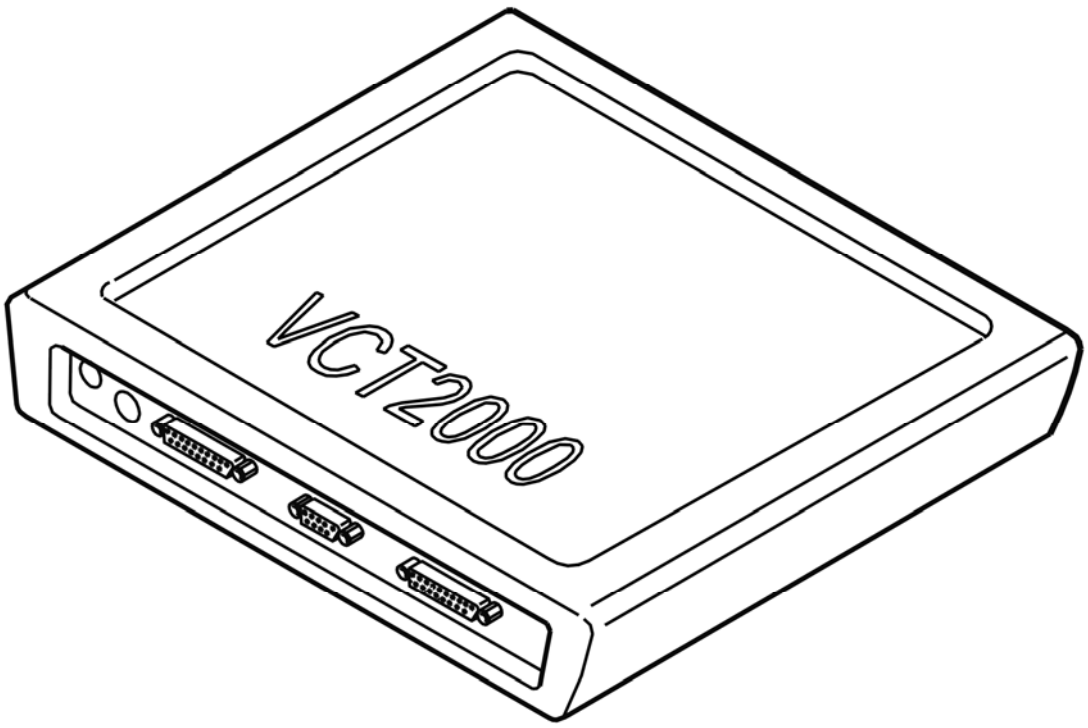

Fig. 14: Identifying VCT2000 Diagnostic Tool Symbol In VIDA
Courtesy of VOLVO CARS CORPORATION

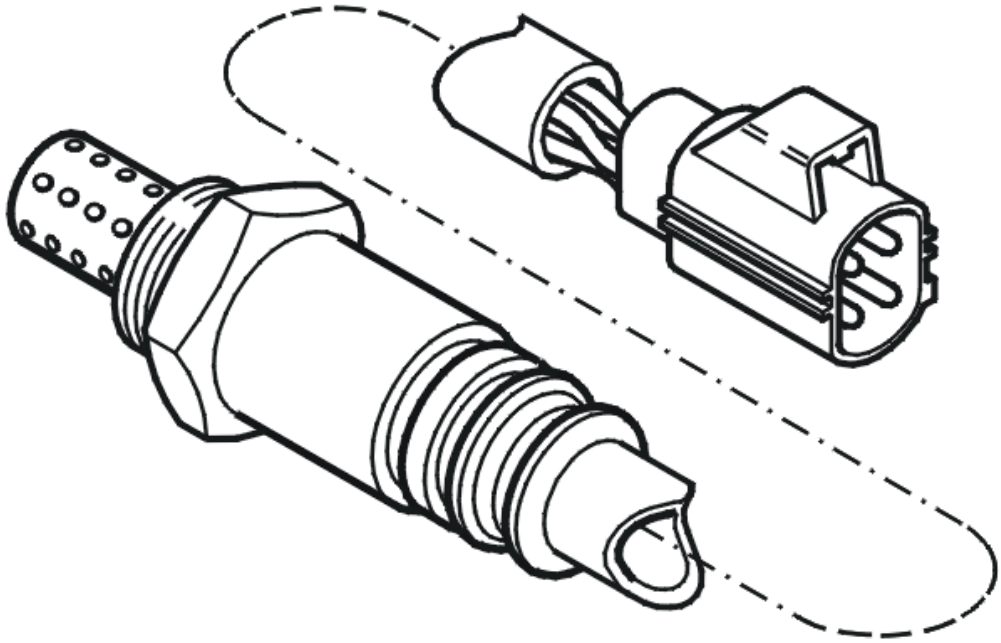

Fig. 15: Identifying Heated Oxygen Sensor
Courtesy of VOLVO CARS CORPORATION

- **Continue**

  Refer to **CHECKING COMPONENTS**

CHECKING COMPONENTS

CAUTION: Do not apply rust solvent spray or grease to the heated oxygen sensor (HO2S) connector.

Check the connector for the rear heated oxygen sensor (bank 2) for contact resistance and oxidation.

Check the cable between rear heated oxygen sensor (HO2S) terminal #1 and the voltage supply from the system relay. Check for an open-circuit. Check for a short-circuit to ground.

Try a new rear heated oxygen sensor if the above measure does not remedy the fault.

Remedy as necessary.

Other information

- see **CONNECTING THE BREAKOUT BOX**
- see **SIGNAL SPECIFICATION, ENGINE CONTROL MODULE (ECM)**
- see **HEATED OXYGEN SENSOR (HO2S), REPLACING**
- see **CHECKING WIRING AND TERMINALS**

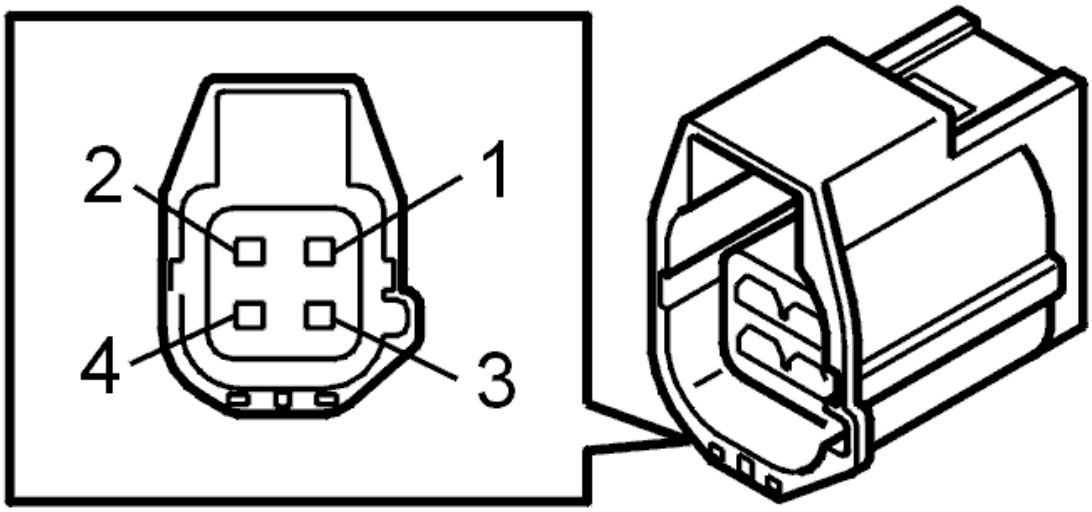

Fig. 16: Identifying 4-Bit Connector
Courtesy of VOLVO CARS CORPORATION

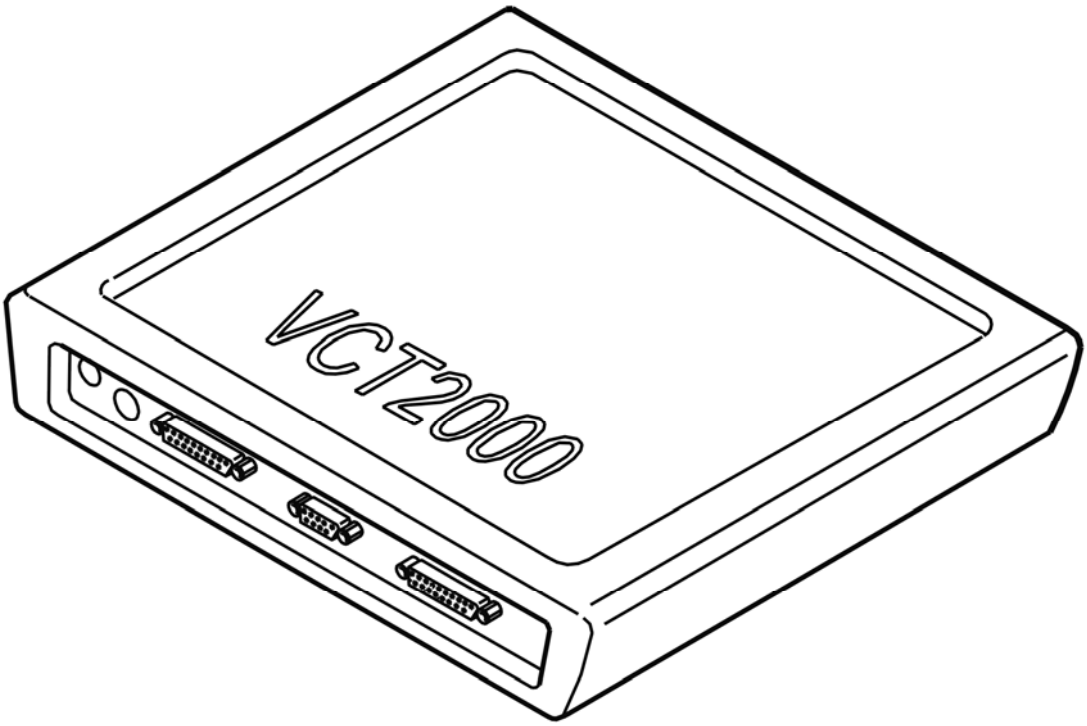

Fig. 17: Identifying VCT2000 Diagnostic Tool Symbol In VIDA
Courtesy of VOLVO CARS CORPORATION

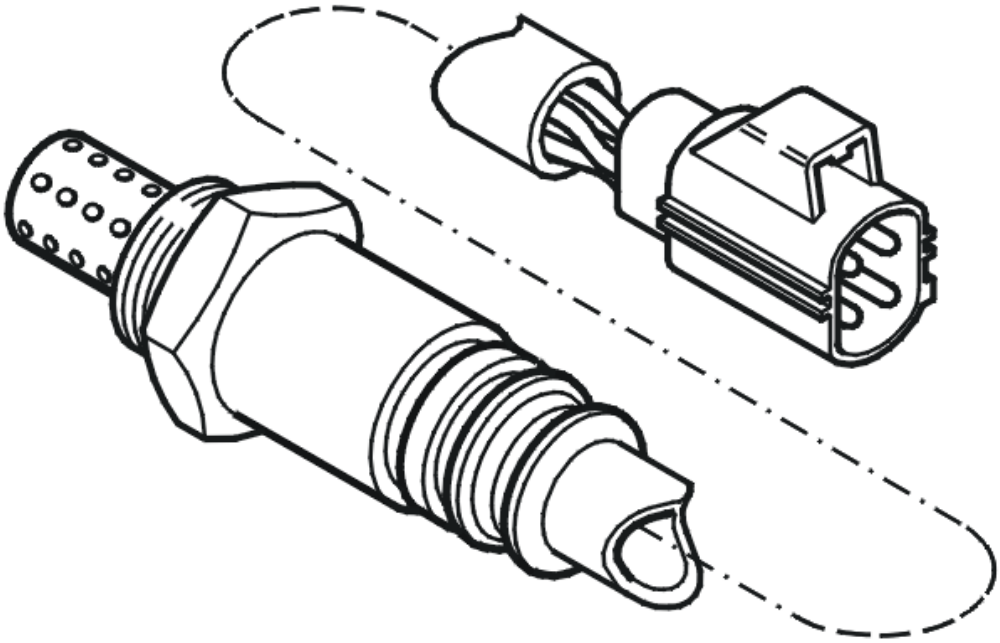

Fig. 18: Identifying Heated Oxygen Sensor
Courtesy of VOLVO CARS CORPORATION

- **Continue**

  Refer to **VERIFICATION**

VERIFICATION

VERIFICATION

HINT: After repairing, it is necessary to check that the malfunction has been fixed.

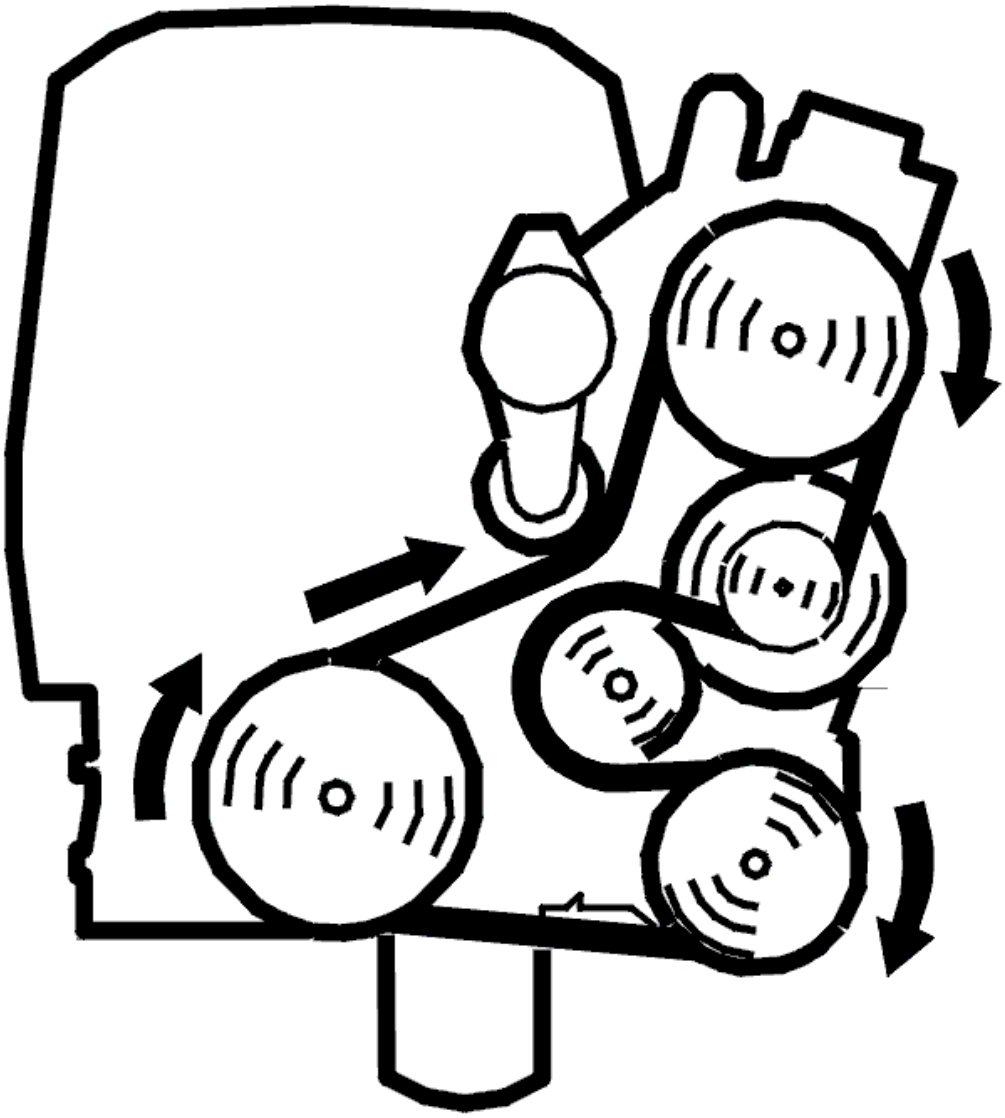

Fig. 19: Belt Routing / Engine Idling - Volvo
Courtesy of VOLVO CARS CORPORATION

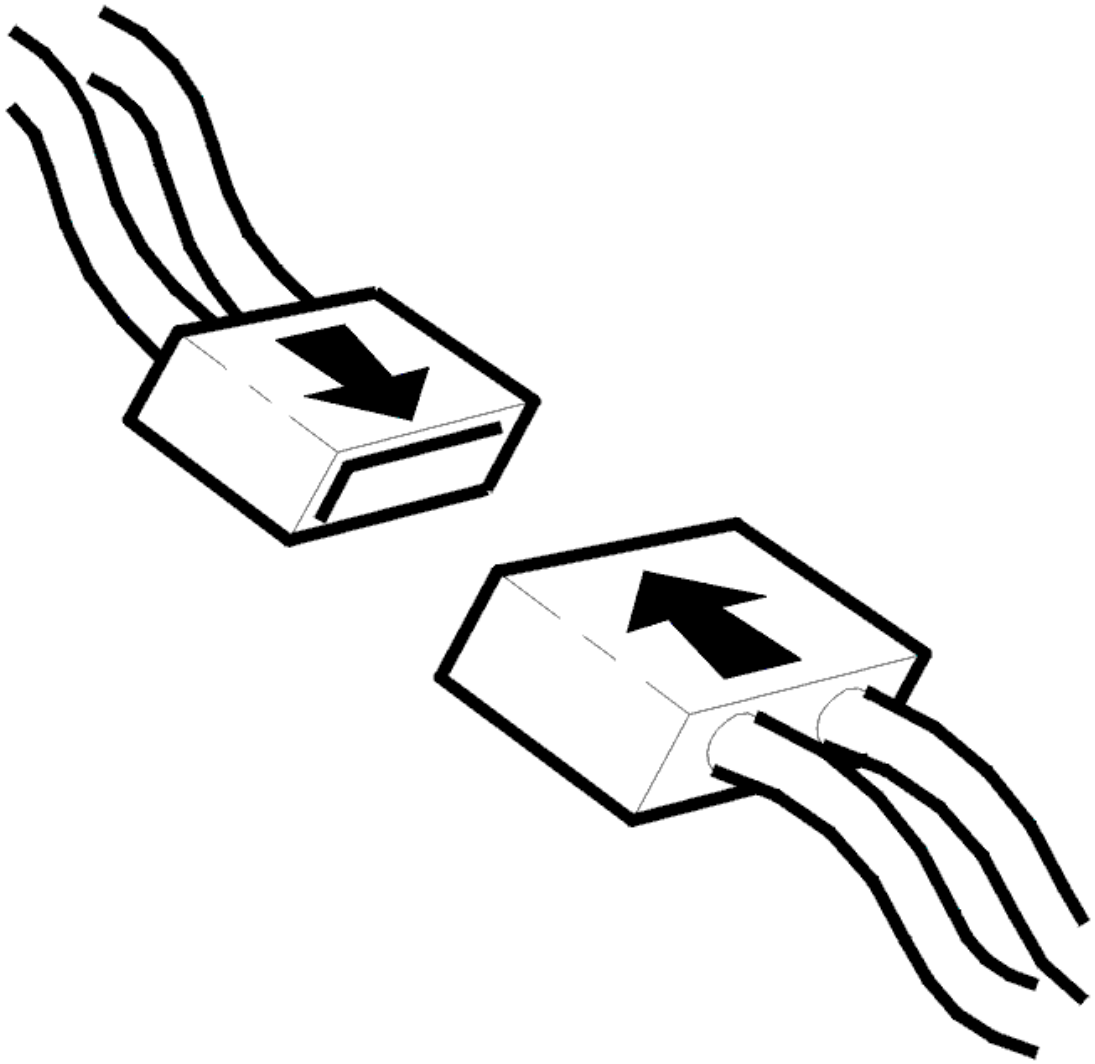

Fig. 20: Connecting Connector
Courtesy of VOLVO CARS CORPORATION

- Ignition off
- Reinstall the connectors, components etc.
- Ignition on to perform the diagnosis.

  Read off the diagnostic status and trouble status for the diagnostic trouble code.

  Check that the diagnosis is "Implemented" and that the trouble status is "No malfunction found". If the trouble status is "Malfunction found", this indicates defective function.

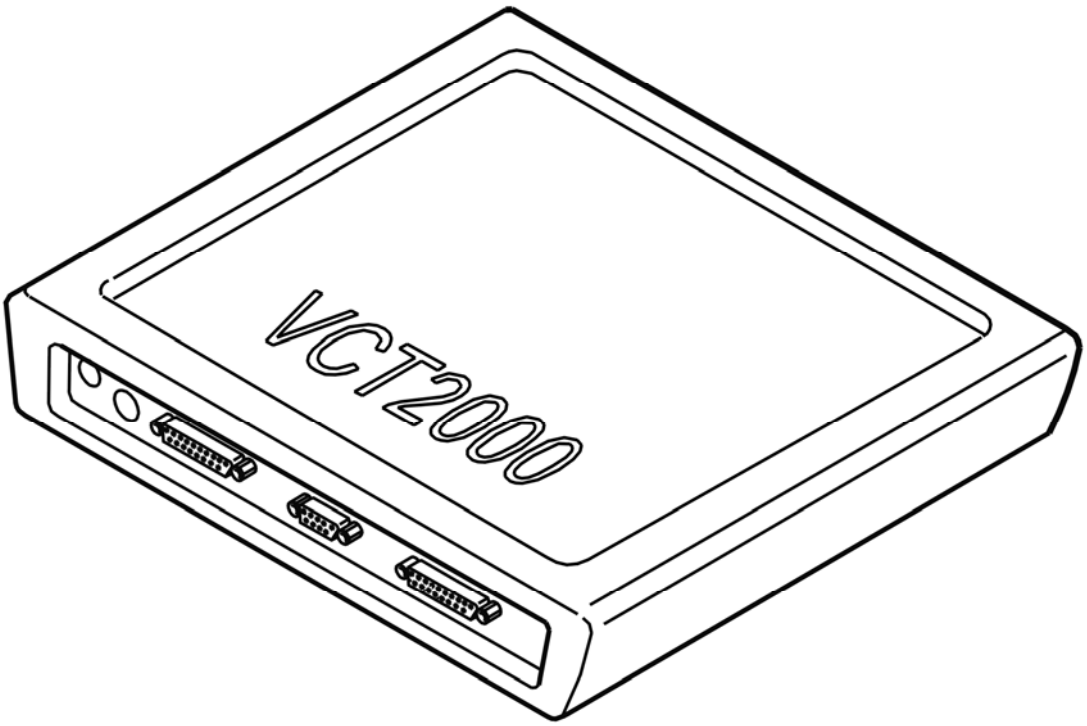

Fig. 21: Identifying VCT2000 Diagnostic Tool Symbol In VIDA
Courtesy of VOLVO CARS CORPORATION

Is the function OK?

- **YES**

  VERIFIED: Troubleshooting has been completed.

- **NO**

  Refer to **INFORMATION**

INFORMATION

FAULT-TRACING INFORMATION

The fault should have been detected and remedied. As this is not the case fault-tracing has failed.

Exit fault-tracing for this diagnostic trouble code (DTC) or make another attempt.

ECM-P005800: HO2S HEATER CONTROL CIRCUIT HIGH (BANK 2, SENSOR 2). GENERAL FAILURE INFORMATION. NO SUB TYPE INFORMATION

(B6324S; 2007-2010)

DIAGNOSTIC TROUBLE CODE (DTC) INFORMATION ECM-P005800

Condition

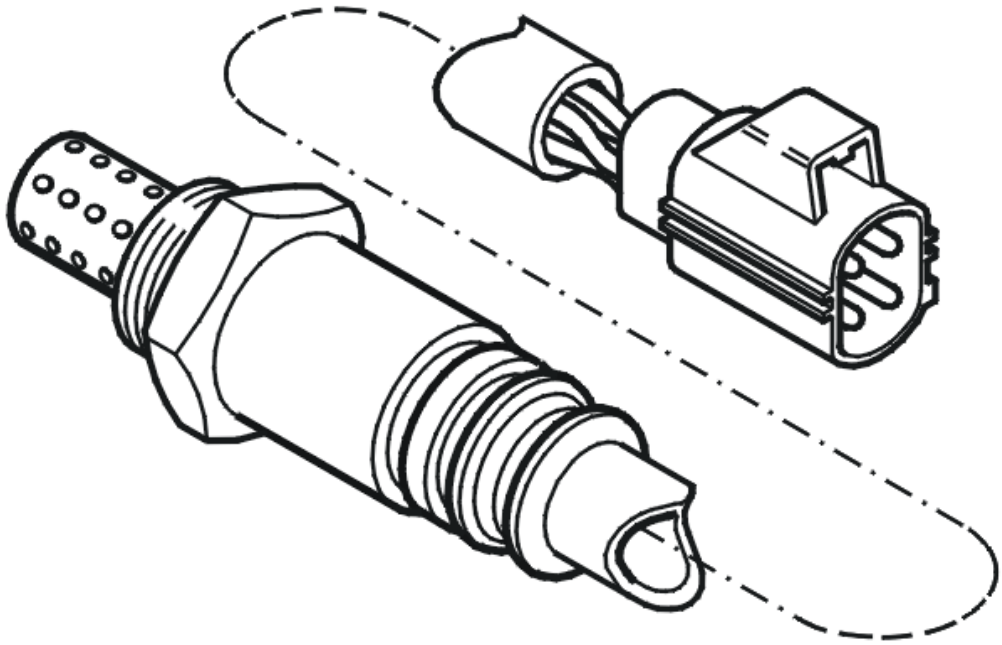

Fig. 22: Identifying Heated Oxygen Sensor
Courtesy of VOLVO CARS CORPORATION

Engine Control Module (ECM) checks if the rear heated oxygen sensor's preheating circuit (bank 2) is short-circuited to voltage.

The engine cylinders are counted from the cylinder furthest away from the flywheel.

- Bank 1 (cylinder row nearest the front): cylinders 1, 3, 5 and 7.
- Bank 2 (cylinder row furthest to the rear, nearest the passenger compartment): cylinders 2, 4, 6, and 8.

The diagnostic trouble code (DTC) is stored if the Engine Control Module (ECM) registers that the rear heated oxygen sensor preheating circuit (bank 2) has a short-circuit to supply voltage.

The diagnostic trouble code (DTC) can be diagnosed at ignition on and if the battery voltage is in the range 11-16 V.

Substitute Value

- Rear heated oxygen sensor (HO2S) preheating shut off.

Possible Source

- Short-circuit to supply in the power cable.
- Damaged rear heated oxygen sensor (HO2S).

Fault symptom[s]

- Malfunction indicator lamp (MIL) lit.

FAULT-TRACING

see **FAULT-TRACING**

ECM-P005800: HO2S HEATER CONTROL CIRCUIT HIGH (BANK 2, SENSOR 2). GENERAL FAILURE INFORMATION. NO SUB TYPE INFORMATION (B6324S5; 2011-2012)

DIAGNOSTIC TROUBLE CODE (DTC) INFORMATION ECM-P005800

see **DIAGNOSTIC TROUBLE CODE (DTC) INFORMATION ECM-P005800**

FAULT-TRACING

see **FAULT-TRACING**

ECM-P005800: HEATED OXYGEN SENSOR (HO2S) CONTROL CIRCUIT HIGH (BANK 2, SENSOR 2). GENERAL FAULT INFORMATION. NO INFORMATION ABOUT FAULT TYPE (B8444S; 2005-2011)

DIAGNOSTIC TROUBLE CODE (DTC) INFORMATION ECM-P005800

Condition

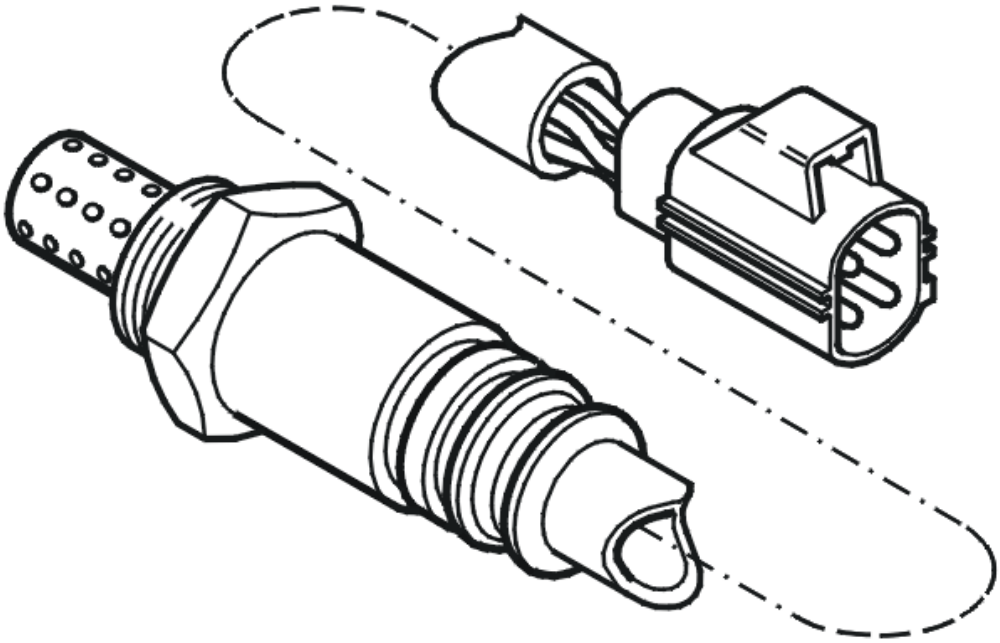

Fig. 23: Identifying Heated Oxygen Sensor
Courtesy of VOLVO CARS CORPORATION

Engine Control Module (ECM) checks if the rear heated oxygen sensor's preheating circuit (bank 2) is short-circuited to voltage.

The engine cylinders are counted from the cylinder furthest away from the flywheel.

- Bank 1 (cylinder row nearest the front): cylinders 1, 3, 5 and 7.
- Bank 2 (cylinder row furthest to the rear, nearest the passenger compartment): cylinders 2, 4, 6, and 8.

The diagnostic trouble code (DTC) is stored if the Engine Control Module (ECM) registers that the rear heated oxygen sensor preheating circuit (bank 2) has a short-circuit to supply voltage.

The diagnostic trouble code (DTC) can be diagnosed at ignition on and if the battery voltage is in the range 11-16 V.

Substitute Value

- Rear heated oxygen sensor (HO2S) preheating shut off.

Possible Source

- Short-circuit to supply in the power cable.
- Damaged rear heated oxygen sensor (HO2S).

Fault symptom[s]

- Malfunction indicator lamp (MIL) lit.

FAULT TRACING ECM-P005800

CHECKING THE STATUS

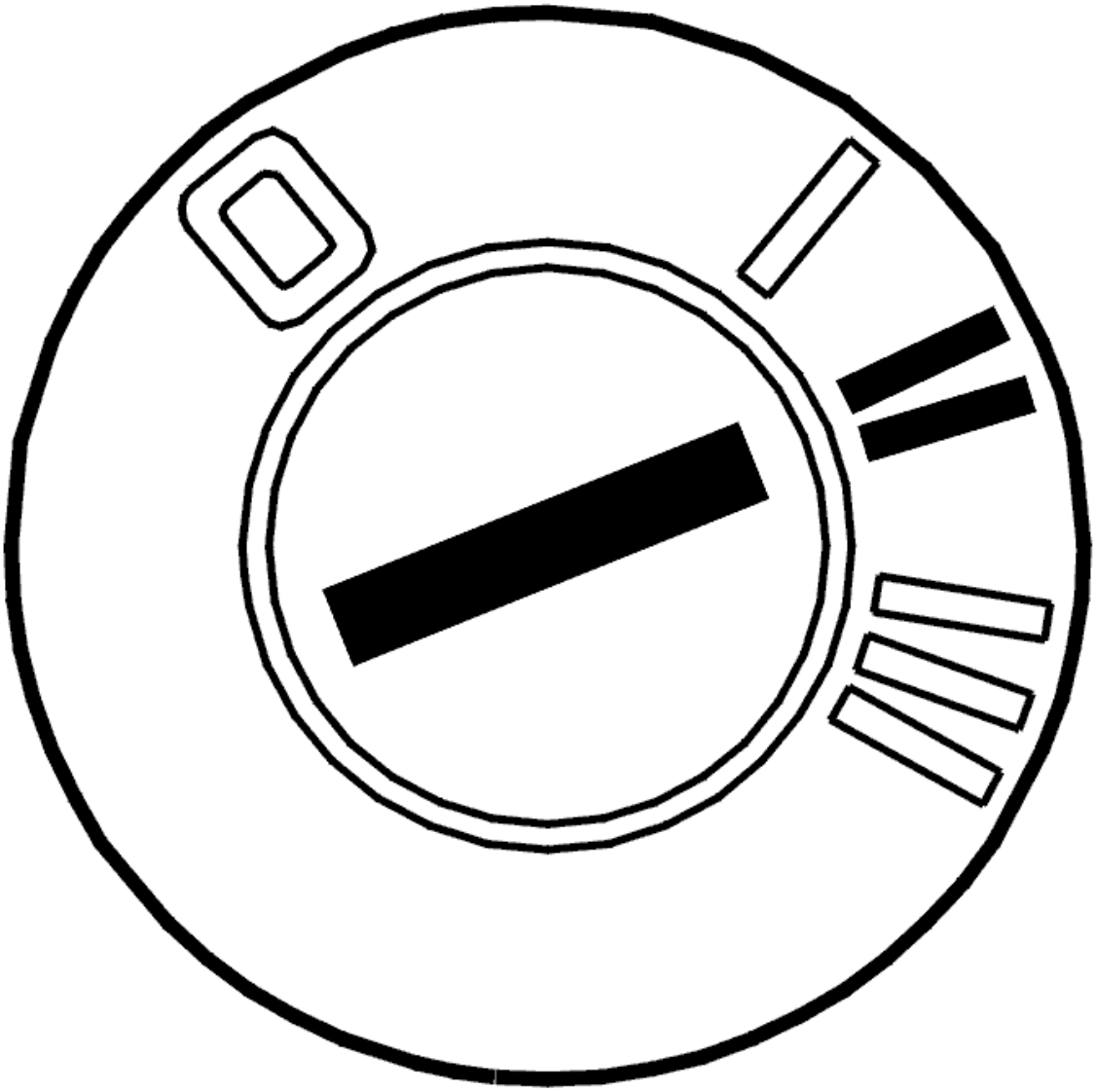

Fig. 24: Identifying Ignition ON
Courtesy of VOLVO CARS CORPORATION

- The ignition must be on to perform the diagnostic.

Check whether the fault is permanent or intermittent. Read off the diagnostic trouble code (DTC) fault status when the diagnostic status is "Completed".

The fault is permanent if the fault status is "Fault found". The fault is intermittent if the fault status is "No fault found".

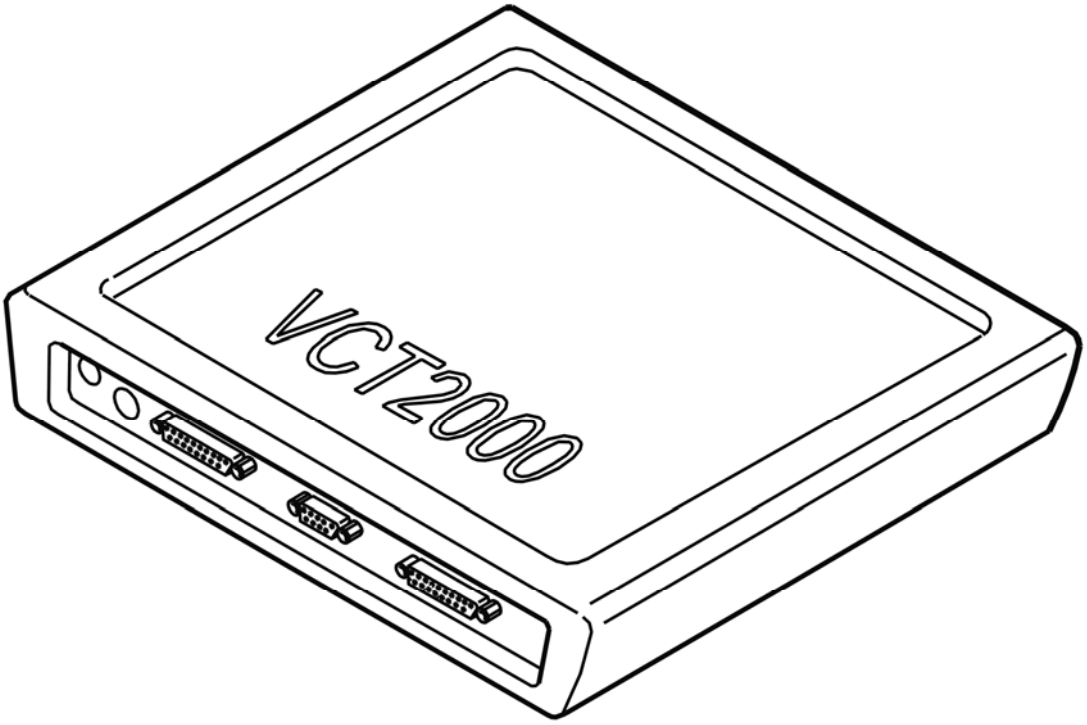

Fig. 25: Identifying VCT2000 Diagnostic Tool Symbol In VIDA
Courtesy of VOLVO CARS CORPORATION

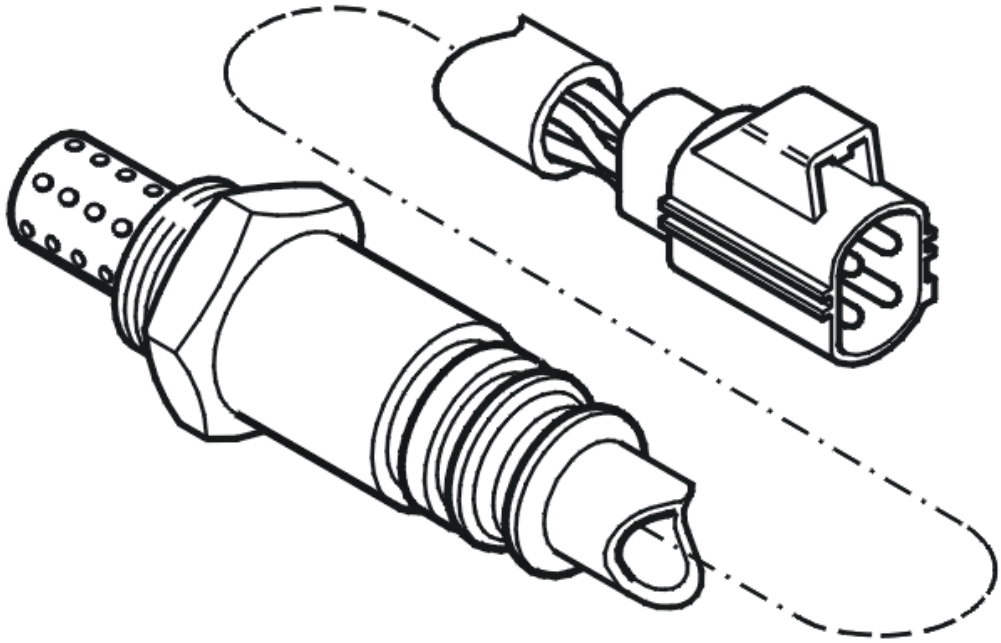

Fig. 26: Identifying Heated Oxygen Sensor
Courtesy of VOLVO CARS CORPORATION

- **Continue**

  Refer to **CHECKING COMPONENTS**

CHECKING COMPONENTS

CAUTION: Do not apply rust solvent spray or grease to the heated oxygen sensor (HO2S) connector.

Check the cable between rear heated oxygen sensor terminal #1 (bank 2) and voltage supply from the system relay. Check for a short-circuit to supply voltage.

Try a new rear heated oxygen sensor if the above measure does not remedy the fault.

Remedy as necessary.

Other information

- see **CONNECTING THE BREAKOUT BOX**
- see **SIGNAL SPECIFICATION, ENGINE CONTROL MODULE (ECM)**

- see **HEATED OXYGEN SENSOR (HO2S), REPLACING**
- see **CHECKING WIRING AND TERMINALS**

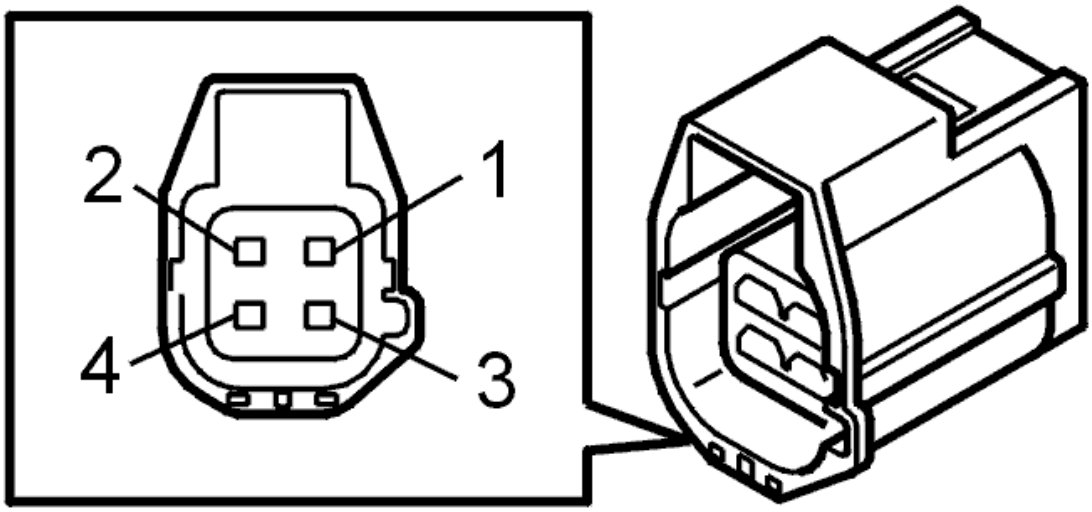

Fig. 27: Identifying 4-Bit Connector
Courtesy of VOLVO CARS CORPORATION

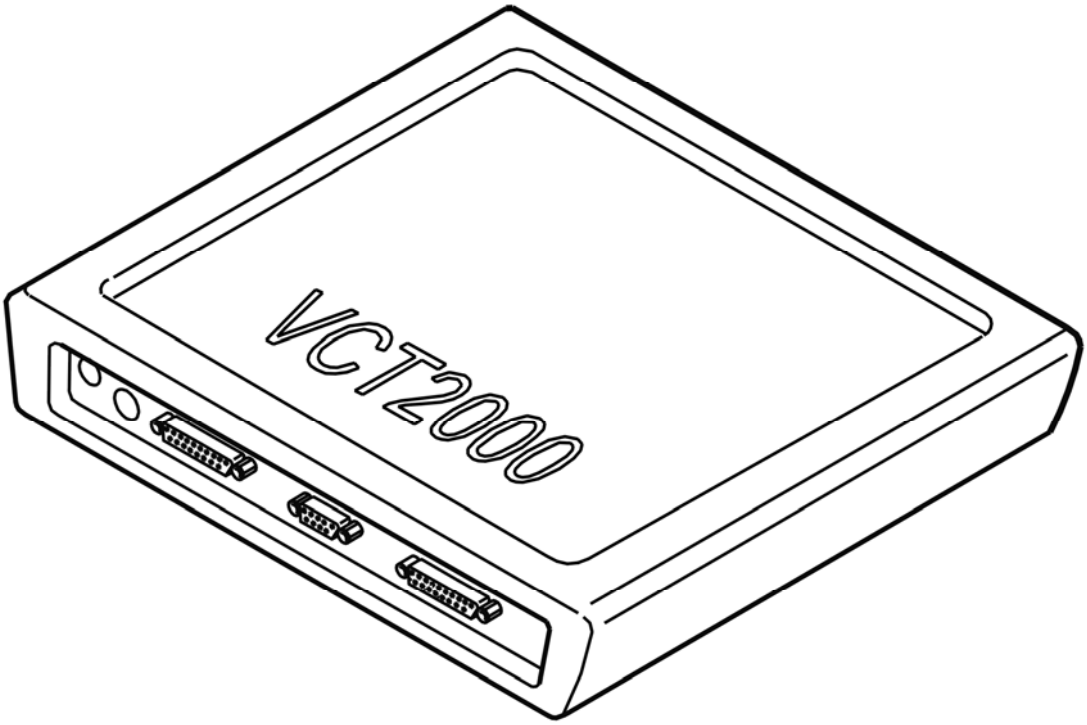

Fig. 28: Identifying VCT2000 Diagnostic Tool Symbol In VIDA
Courtesy of VOLVO CARS CORPORATION

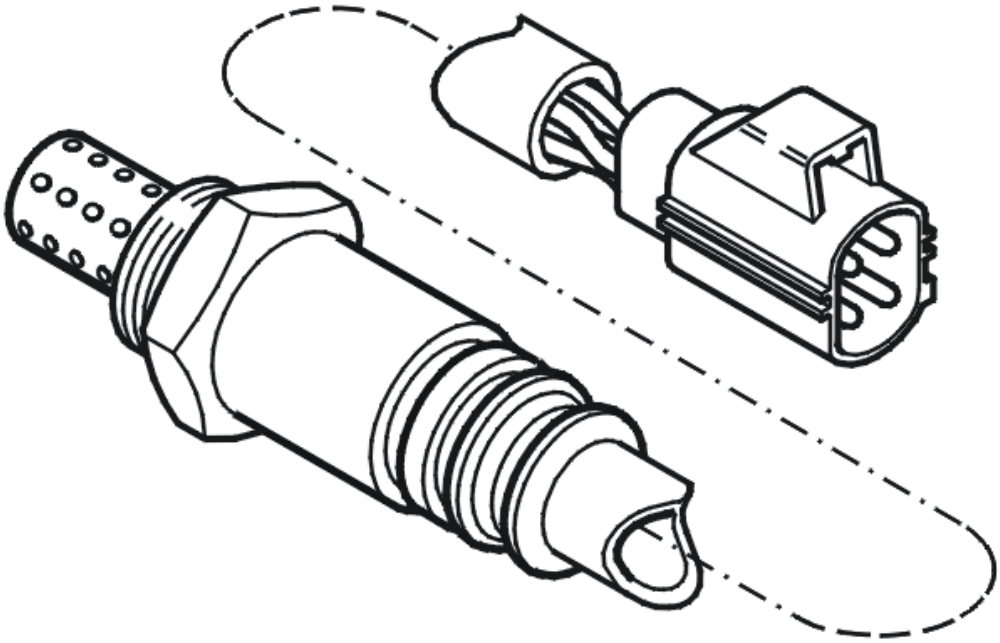

Fig. 29: Identifying Heated Oxygen Sensor
Courtesy of VOLVO CARS CORPORATION

- **Continue**

  Refer to **VERIFICATION**

VERIFICATION

VERIFICATION

HINT: After repairing, it is necessary to check that the malfunction has been fixed.

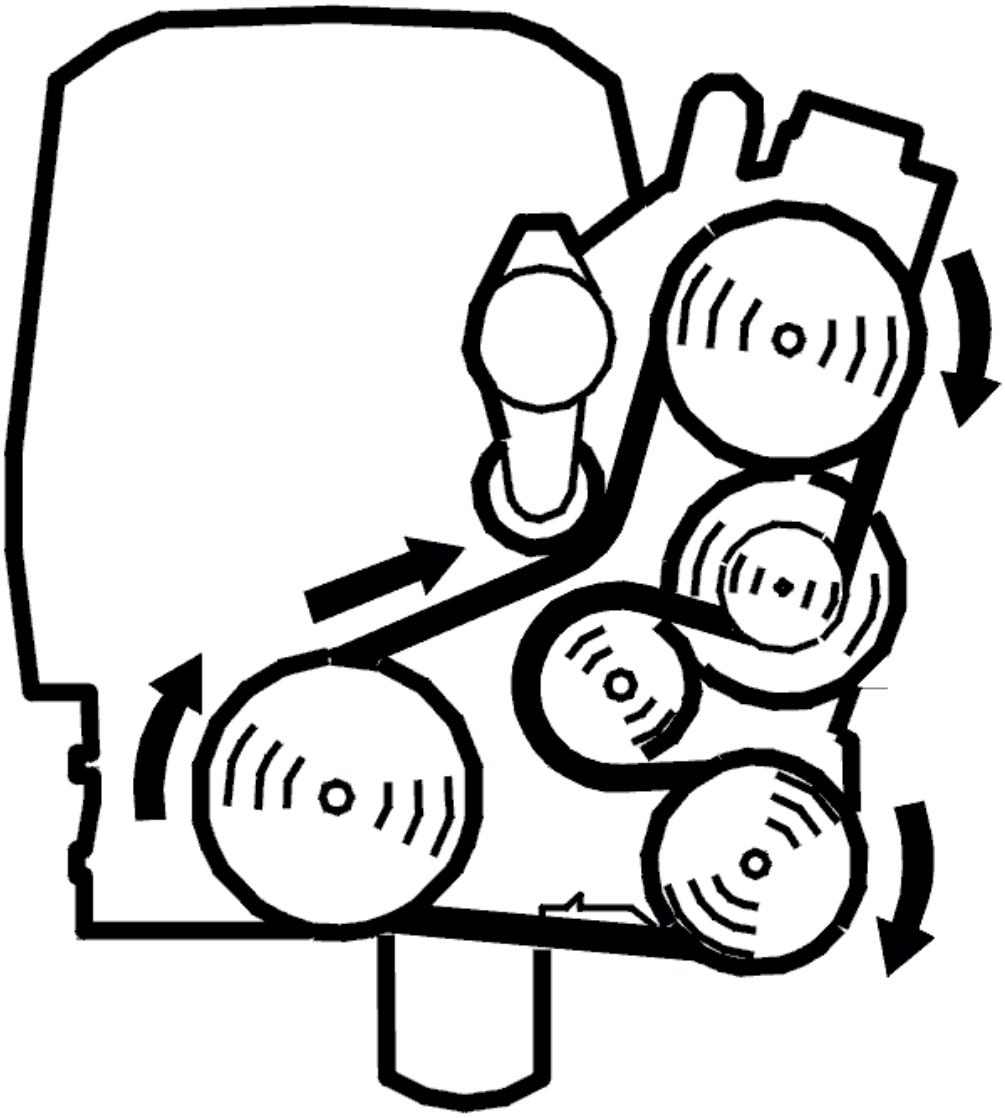

Fig. 30: Belt Routing / Engine Idling - Volvo
Courtesy of VOLVO CARS CORPORATION

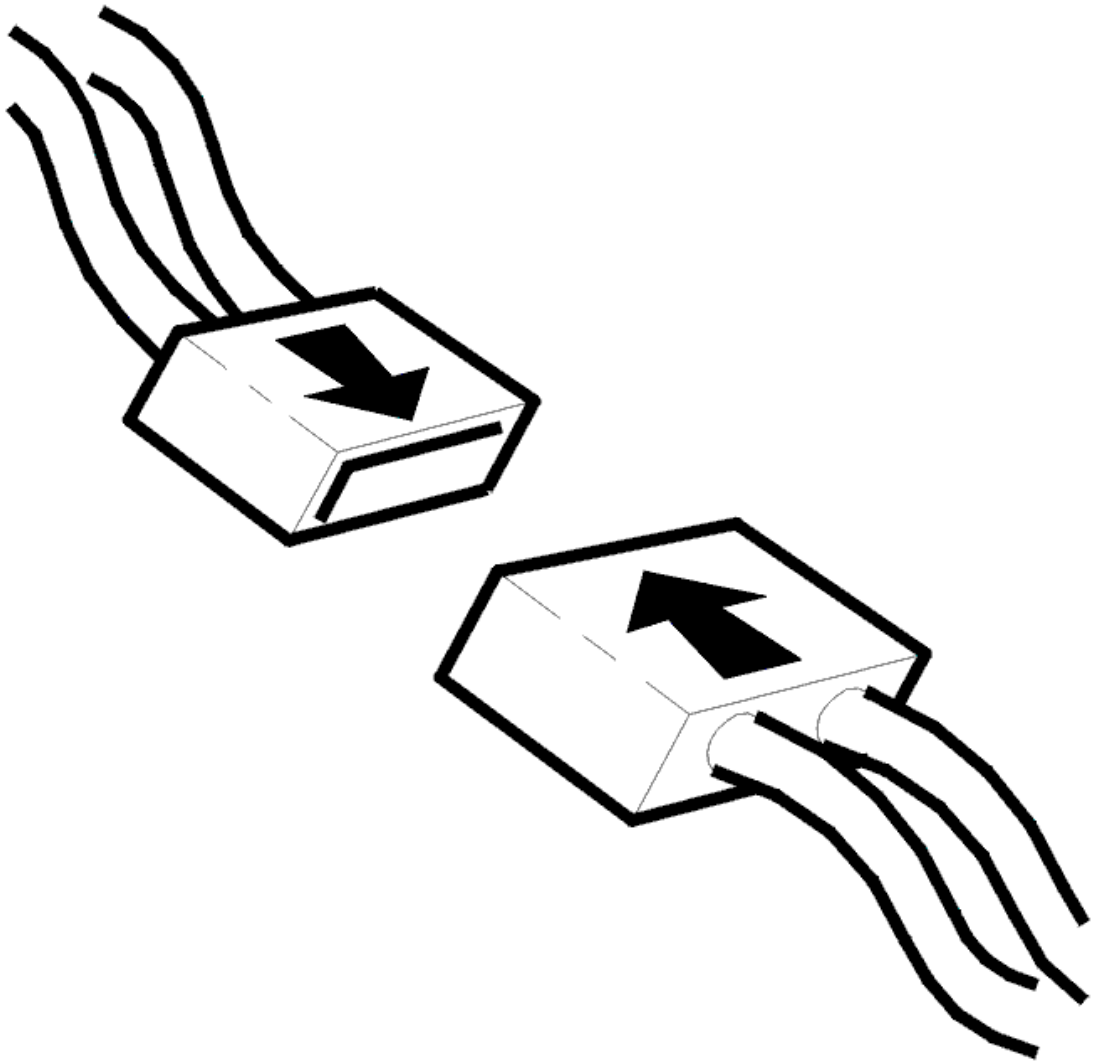

Fig. 31: Connecting Connector
Courtesy of VOLVO CARS CORPORATION

- Ignition off
- Reinstall the connectors, components etc.
- Ignition on to perform the diagnosis.

  Read off the diagnostic status and trouble status for the diagnostic trouble code.

  Check that the diagnosis is "Implemented" and that the trouble status is "No malfunction found". If the trouble status is "Malfunction found", this indicates defective function.

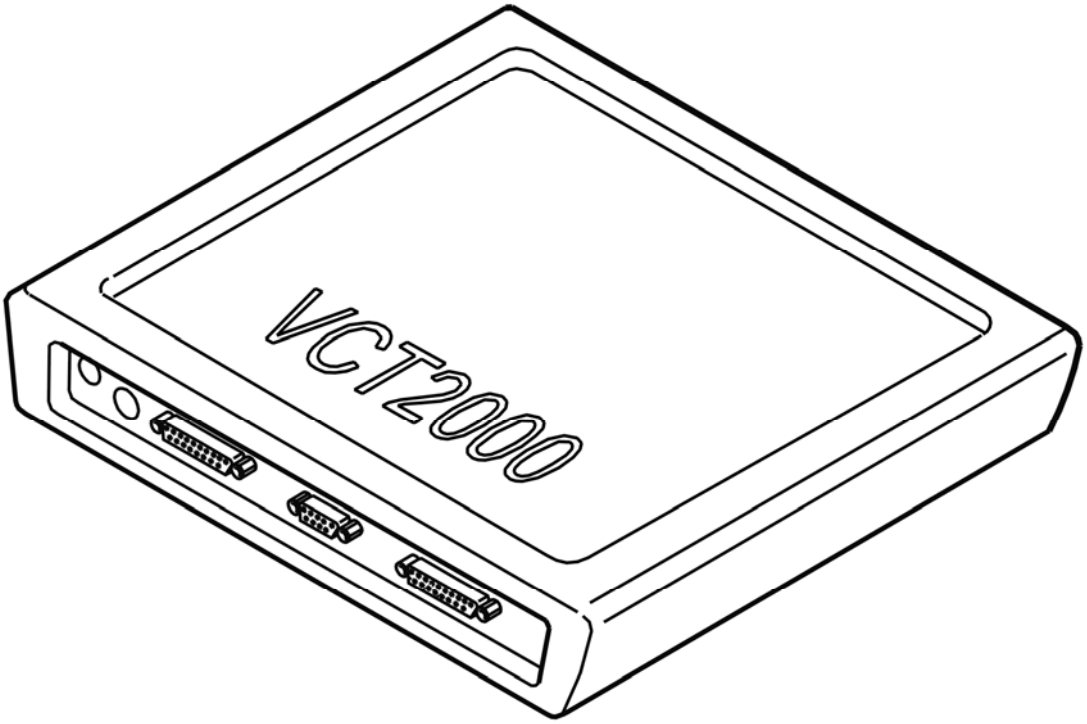

Fig. 32: Identifying VCT2000 Diagnostic Tool Symbol In VIDA
Courtesy of VOLVO CARS CORPORATION

Is the function OK?

- **YES**

  VERIFIED: Troubleshooting has been completed.

- **NO**

  Refer to **INFORMATION**

INFORMATION

FAULT-TRACING INFORMATION

The fault should have been detected and remedied. As this is not the case fault-tracing has failed.

Exit fault-tracing for this diagnostic trouble code (DTC) or make another attempt.

ECM-P007000: AMBIENT AIR TEMPERATURE SENSOR CIRCUIT. GENERAL FAILURE INFORMATION. NO SUB TYPE INFORMATION (B6324S; 2007-

2010)

DIAGNOSTIC TROUBLE CODE (DTC) INFORMATION ECM-P007000

Condition

Engine control module (ECM) measures the ambient temperature using an outside temperature sensor. The sensor is located in the left external rear-view mirror. The control module checks the direct voltage from the sensor.

The diagnostic trouble code (DTC) is stored if the control module detects that:

- The direct voltage is higher than 4.951 V.
- Incorrect value lasts longer than 9 seconds.
- Incorrect value lasts for 2 or more subsequent driving cycles.

The control module's test for the diagnostic trouble code (DTC) starts in the event of:

- Ignition switch position II.

NOTE: The control module can only detect the fault once the test has been started and the diagnostic trouble code (DTC) is stored when the conditions are met.

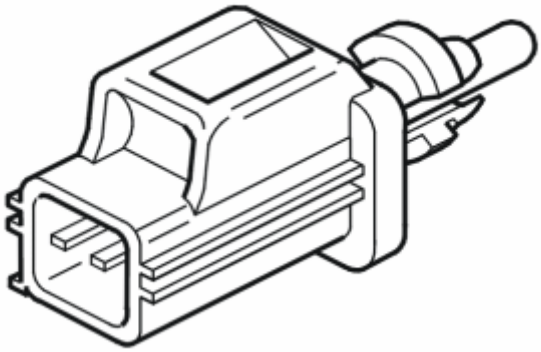

Fig. 33: Identifying Outside Temperature Sensor
Courtesy of VOLVO CARS CORPORATION

Substitute Value

- The control module uses a constant outside temperature, +20 °C.

Possible Source

- Open-circuit in signal cable or ground lead.
- Contact resistance and oxidation in the terminals.
- Short-circuit to supply voltage in the signal cable.
- Damaged outside temperature sensor.

Fault symptom[s]

- Malfunction indicator light (MIL), on

FAULT-TRACING

FAULT-TRACING INFORMATION

Use the following information and general checks during fault-tracing.

NOTE: Check that the fuses are intact. For locations, see the owner's manual or cover for fuse box.

1. Check, if possible, relevant functions in the vehicle using buttons/controls/test drives to determine the status of the fault.

   NOTE: If the vehicle does not show any of the given symptoms in the diagnostic trouble code information (DTC), this may mean that the fault is intermittent or that the control module is not detecting the fault at this moment.

2. Use the diagnostic trouble code's **frozen values** , **status identifiers** and **counter** to determine the operating conditions when the fault was detected, the fault's current status and any degree of intermittence of the fault.
3. Check and fault-trace according to **the fault causes** that are specified in the **diagnostic trouble code (DTC) information** .
4. Use **VIDA (Volvo scan tool)** . Read off the parameters, activate components and functions, carry out quick tests and checking routines for the diagnostic trouble codes to identify the fault.
5. Check relevant components according to **Component specifications** .
6. Check relevant signals using appropriate service information regarding **signal specification** and **breakout box** .

Remedy as necessary.

Other information

- see **DESCRIPTION OF STATUS IDENTIFIER**
- see **DESCRIPTION OF COUNTER**
- see **DESCRIPTION OF PARAMETERS**
- see **DESCRIPTION OF ACTIVATIONS**

- see **LOCATION OF COMPONENTS**
- see **COMPONENT SPECIFICATIONS**
- see **CONNECTING THE BREAKOUT BOX**
- see **SIGNAL SPECIFICATION**
- see **CHECKING WIRING AND TERMINALS**

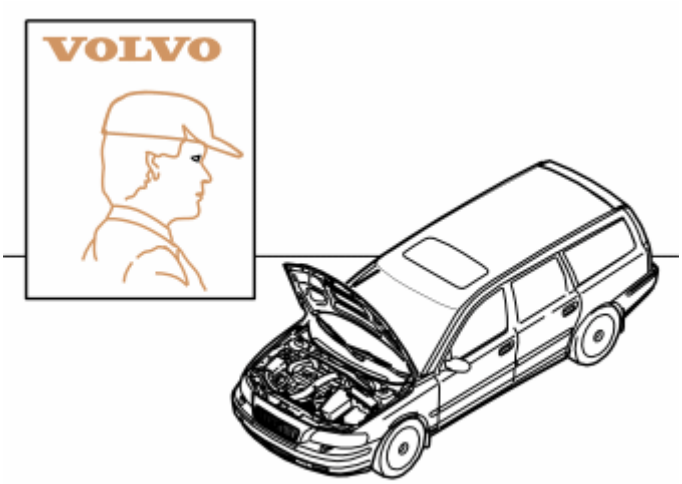

Fig. 34: Identifying VOLVO Certified Service Personnel
Courtesy of VOLVO CARS CORPORATION

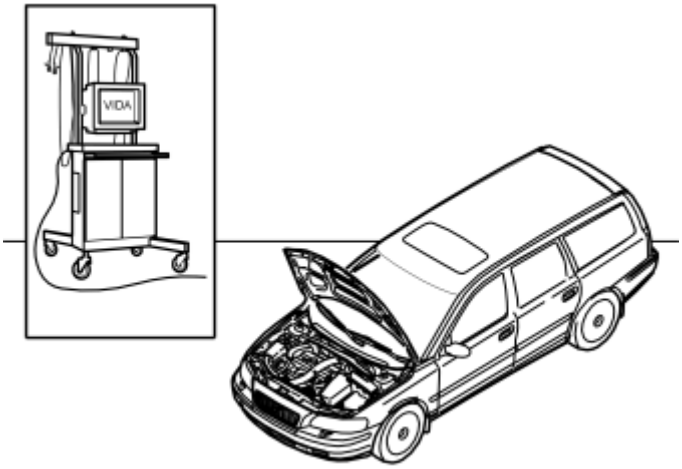

Fig. 35: Identifying VIDA
Courtesy of VOLVO CARS CORPORATION

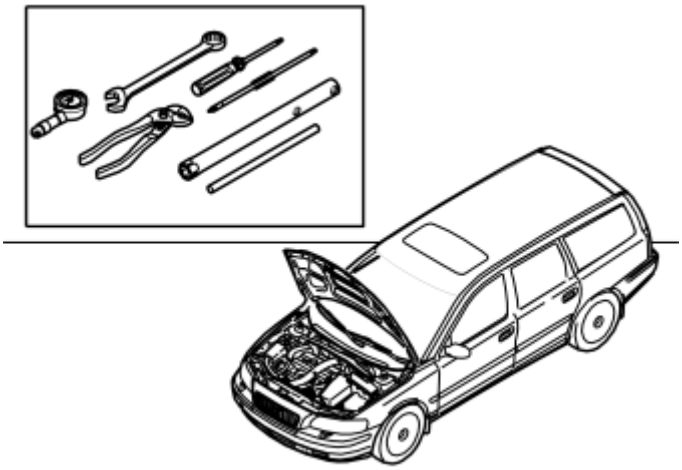

Fig. 36: Identifying Relevant Tools
Courtesy of VOLVO CARS CORPORATION

- **Continue**

  Refer to **INFORMATION**

INFORMATION

FAULT-TRACING INFORMATION

In case of this defect, troubleshooting is not followed by verification.

The information can be displayed again or the fault-tracing for this fault can be interrupted.

ECM-P007000: AMBIENT AIR TEMPERATURE SENSOR CIRCUIT. GENERAL FAILURE INFORMATION. NO SUB TYPE INFORMATION (B6324S5; 2011-2012)

DIAGNOSTIC TROUBLE CODE (DTC) INFORMATION ECM-P007000

see **DIAGNOSTIC TROUBLE CODE (DTC) INFORMATION ECM-P007000**

FAULT-TRACING

see **FAULT-TRACING**

ECM-P007100: AMBIENT AIR TEMPERATURE SENSOR RANGE/PERFORMANCE. GENERAL FAILURE INFORMATION. NO SUB TYPE INFORMATION (B6324S; 2007-2010)

DIAGNOSTIC TROUBLE CODE (DTC) INFORMATION ECM-P007100

Condition

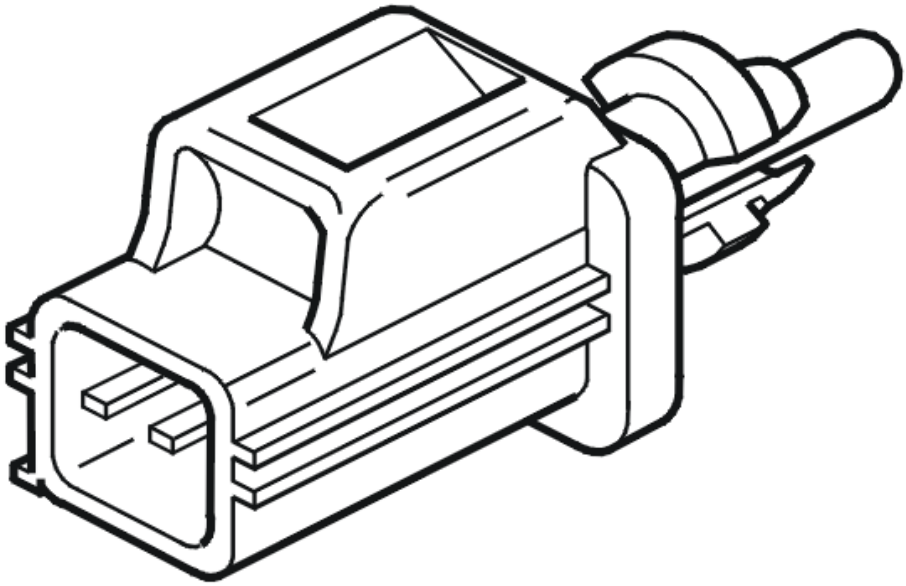

Fig. 37: Identifying Outside Temperature Sensor
Courtesy of VOLVO CARS CORPORATION

The engine control module (ECM) checks the signal from the outside temperature sensor in the left door mirror. The diagnostic trouble code is generated if the control module registers that the value from the outside temperature sensor deviates too much from the value of the intake temperature after the engine has cooled at least 8 hours since running at operating temperature.

The diagnostic trouble code can be diagnosed at ignition on after the engine temperature has dropped by at least 55 °C from fully warm engine (higher than 70 °C).

Substitute Value

- The value is set to the constant 20 °C.

Possible Source

- Contact resistance in connector.
- Damaged outside temperature sensor.

Fault symptom[s]

- Malfunction indicator lamp (MIL) lit.

FAULT-TRACING

CHECKING THE STATUS

Fig. 38: Identifying Ignition On Position
Courtesy of VOLVO CARS CORPORATION

- Ignition on.

  Check to, see if the fault is permanent or intermittent by reading off the external temperature sensor's signal.

  Check that the value is within its permitted range. The fault is permanent if the value is not within its permitted range. The fault is intermittent and not currently active if the value is within its permitted range.

Fig. 39: Identifying VCT2000 Diagnostic Tool Symbol In VIDA
Courtesy of VOLVO CARS CORPORATION

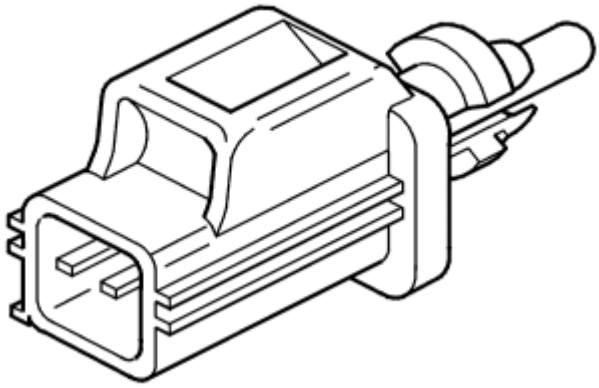

Fig. 40: Identifying Outside Temperature Sensor

Courtesy of VOLVO CARS CORPORATION

- **Continue**

  Refer to **CHECKING THE COMPONENT AND WIRING**

CHECKING THE COMPONENT AND WIRING

Fig. 41: Identifying Ignition On Position
Courtesy of VOLVO CARS CORPORATION

- Ignition off.
- Check the external temperature sensor connector and terminals. Check for contact resistance. Check for oxidation.
- Ignition on.

  Read off the external temperature using the VCT2000 (or appropriate scan tool).

  Remedy as necessary.

  Other information

  - see **CONNECTING THE BREAKOUT BOX**
  - see **SIGNAL SPECIFICATION**
  - see **OUTSIDE TEMPERATURE SENSOR DOOR MIRROR, REPLACING**
  - see **CHECKING WIRING AND TERMINALS**

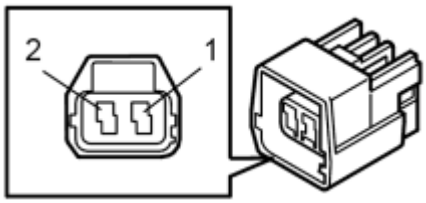

Fig. 42: Identifying Connector Terminals
Courtesy of VOLVO CARS CORPORATION

Fig. 43: Identifying VCT2000 Diagnostic Tool Symbol In VIDA
Courtesy of VOLVO CARS CORPORATION

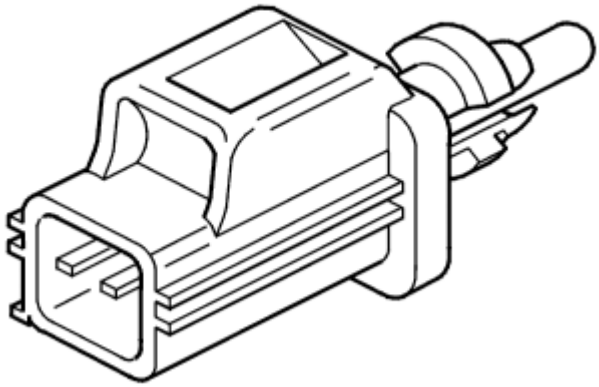

Fig. 44: Identifying Outside Temperature Sensor
Courtesy of VOLVO CARS CORPORATION

- **Continue**

  Refer to **VERIFICATION**

INFORMATION

FAULT-TRACING INFORMATION

The fault should have been detected and remedied. As this is not the case fault-tracing has failed.

Exit fault-tracing for this diagnostic trouble code (DTC) or make another attempt.

VERIFICATION

VERIFICATION

HINT: After carrying out the repair, check that the fault has been remedied.

Fig. 45: Identifying Ignition On Position
Courtesy of VOLVO CARS CORPORATION

- Ignition off.
- Reconnect the connectors, reinstall components etc.
- Ignition on.

  Read off the external temperature sensor's signal using the VCT2000 (or appropriate scan tool).

  Check that the signal is within its permitted range.

Fig. 46: Identifying VCT2000 Diagnostic Tool Symbol In VIDA
Courtesy of VOLVO CARS CORPORATION

Is the signal OK?

- **YES**

  VERIFIED: Troubleshooting has been completed.

- **NO**

  Refer to **INFORMATION**

ECM-P007100: AMBIENT AIR TEMPERATURE SENSOR RANGE/PERFORMANCE. GENERAL FAILURE INFORMATION. NO SUB TYPE INFORMATION (B6324S5; 2011-2012)

DIAGNOSTIC TROUBLE CODE (DTC) INFORMATION ECM-P007100

see **DIAGNOSTIC TROUBLE CODE (DTC) INFORMATION ECM-P007100**

FAULT-TRACING

see **FAULT-TRACING**

ECM-P007100: AMBIENT AIR TEMPERATURE SENSOR RANGE/PERFORMANCE. GENERAL FAILURE INFORMATION. NO SUB TYPE INFORMATION (B8444S; 2005-2011)

DIAGNOSTIC TROUBLE CODE (DTC) INFORMATION ECM-P007100

Condition

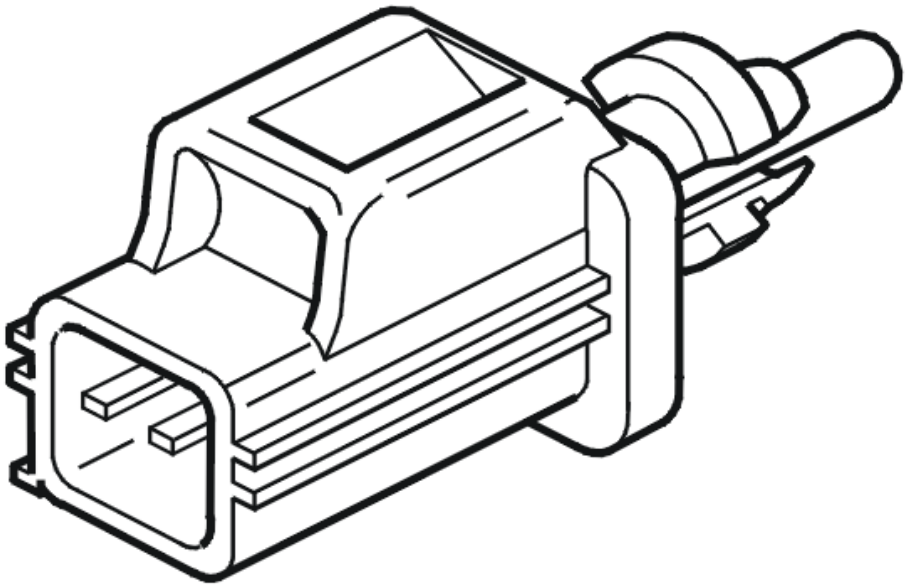

Fig. 47: Identifying Outside Temperature Sensor
Courtesy of VOLVO CARS CORPORATION

The engine control module (ECM) checks the signal from the outside temperature sensor in the left door mirror. The diagnostic trouble code is generated if the control module registers that the value from the outside temperature sensor deviates too much from the value of the intake temperature after the engine has cooled at least 8 hours since running at operating temperature.

The diagnostic trouble code can be diagnosed upon ignition after the engine has cooled at least 8 hours.

Substitute Value

- The value is set to the constant 20 °C.

Possible Source

- Contact resistance in connector.
- Damaged outside temperature sensor.

Fault symptom[s]

- Malfunction indicator lamp (MIL) lit.

FAULT-TRACING ECM-P007100

CHECKING THE STATUS

Fig. 48: Identifying Ignition On Position
Courtesy of VOLVO CARS CORPORATION

- Ignition on.

  Check to, see if the fault is permanent or intermittent by reading off the external temperature sensor's signal.

  Check that the value is within its permitted range. The fault is permanent if the value is not within its permitted range. The fault is intermittent and not currently active if the value is within its permitted range.

Fig. 49: Identifying VCT2000 Diagnostic Tool Symbol In VIDA
Courtesy of VOLVO CARS CORPORATION

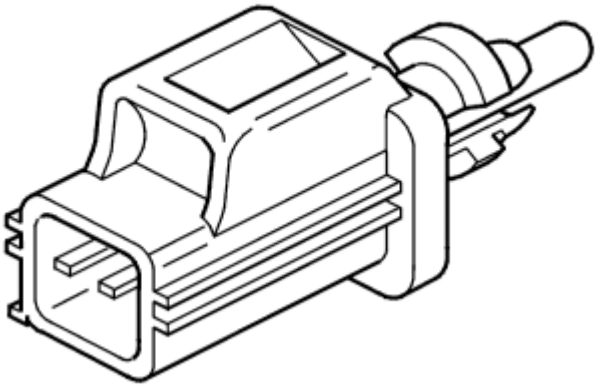

Fig. 50: Identifying Outside Temperature Sensor
Courtesy of VOLVO CARS CORPORATION

- **Continue**

  Refer to **CHECKING THE COMPONENT AND WIRING**

CHECKING THE COMPONENT AND WIRING

Fig. 51: Identifying Ignition On Position
Courtesy of VOLVO CARS CORPORATION

- Ignition off.
- Check the external temperature sensor connector and terminals. Check for contact resistance. Check for oxidation.
- Ignition on.

  Read off the external temperature using the VCT2000 (or appropriate scan tool).

  Remedy as necessary.

  Other information

  - see **CONNECTING THE BREAKOUT BOX**
  - see **SIGNAL SPECIFICATION, ENGINE CONTROL MODULE (ECM)**
  - see **SENSORS FOR CHECK AND WARNING SYSTEM**

- see **CHECKING WIRING AND TERMINALS**

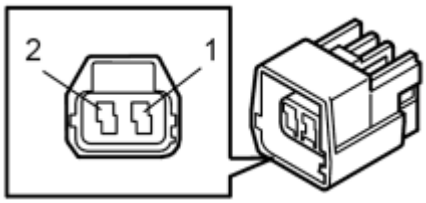

Fig. 52: Identifying Connector Terminals
Courtesy of VOLVO CARS CORPORATION

Fig. 53: Identifying VCT2000 Diagnostic Tool Symbol In VIDA
Courtesy of VOLVO CARS CORPORATION

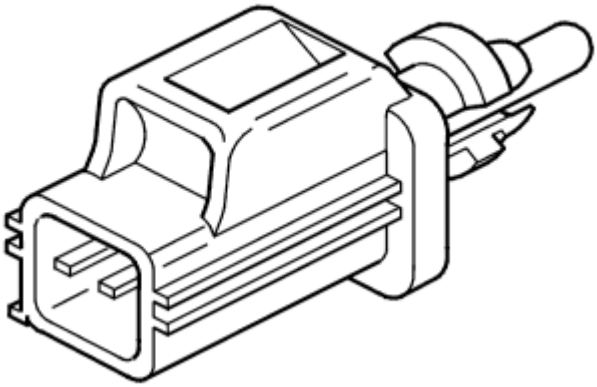

Fig. 54: Identifying Outside Temperature Sensor
Courtesy of VOLVO CARS CORPORATION

- **Continue**

  Refer to **VERIFICATION**

VERIFICATION

VERIFICATION

HINT: After carrying out the repair, check that the fault has been remedied.

Fig. 55: Identifying Ignition On Position
Courtesy of VOLVO CARS CORPORATION

- Ignition off.
- Reconnect the connectors, reinstall components etc.
- Ignition on.

  Read off the external temperature sensor's signal using the VCT2000 (or appropriate scan tool).

  Check that the signal is within its permitted range.

Fig. 56: Identifying VCT2000 Diagnostic Tool Symbol In VIDA
Courtesy of VOLVO CARS CORPORATION

Is the signal OK?

- **YES**

  VERIFIED: Troubleshooting has been completed.

- **NO**

  Refer to **INFORMATION**

INFORMATION

FAULT-TRACING INFORMATION

The fault should have been detected and remedied. As this is not the case fault-tracing has failed.

Exit fault-tracing for this diagnostic trouble code (DTC) or make another attempt.

ECM-P007200: AMBIENT AIR TEMPERATURE SENSOR CIRCUIT LOW INPUT. GENERAL FAILURE INFORMATION. NO SUB TYPE INFORMATION (B6324S; 2007-2010)

DIAGNOSTIC TROUBLE CODE (DTC) INFORMATION ECM-P007200

Condition

Engine control module (ECM) measures the ambient temperature using an outside temperature sensor. The sensor is located in the left external rear-view mirror. The control module checks the direct voltage from the sensor.

The diagnostic trouble code (DTC) is stored if the control module detects that:

- The direct voltage is lower than 0.498 V.
- Incorrect value lasts longer than 9 seconds.
- Incorrect value lasts for 2 or more subsequent driving cycles.

The control module's test for the diagnostic trouble code (DTC) starts in the event of:

- Ignition switch position II.

NOTE: The control module can only detect the fault once the test has been started and the diagnostic trouble code (DTC) is stored when the conditions are met.

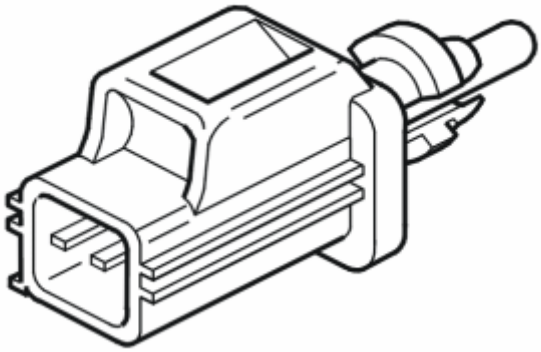

Fig. 57: Identifying Outside Temperature Sensor
Courtesy of VOLVO CARS CORPORATION

Substitute Value

- The control module uses a constant outside temperature, +20 °C.

Possible Source

- Contact resistance and oxidation in the terminals.
- Short-circuit to ground in the signal cable.

- Damaged outside temperature sensor.

Fault symptom[s]

- Malfunction indicator light (MIL), on

FAULT-TRACING

see **FAULT-TRACING**

ECM-P007200: AMBIENT AIR TEMPERATURE SENSOR CIRCUIT LOW INPUT. GENERAL FAILURE INFORMATION. NO SUB TYPE INFORMATION (B6324S5; 2011-2012)

DIAGNOSTIC TROUBLE CODE (DTC) INFORMATION ECM-P007200

see **DIAGNOSTIC TROUBLE CODE (DTC) INFORMATION ECM-P007200**

FAULT-TRACING

see **FAULT-TRACING**

ECM-P007200: AMBIENT AIR TEMPERATURE SENSOR CIRCUIT LOW INPUT SIGNAL. GENERAL FAULT INFORMATION. TYPE OF FAULT NOT SPECIFIED. (B8444S; 2005-2011)

DIAGNOSTIC TROUBLE CODE (DTC) INFORMATION ECM-P007200

Condition

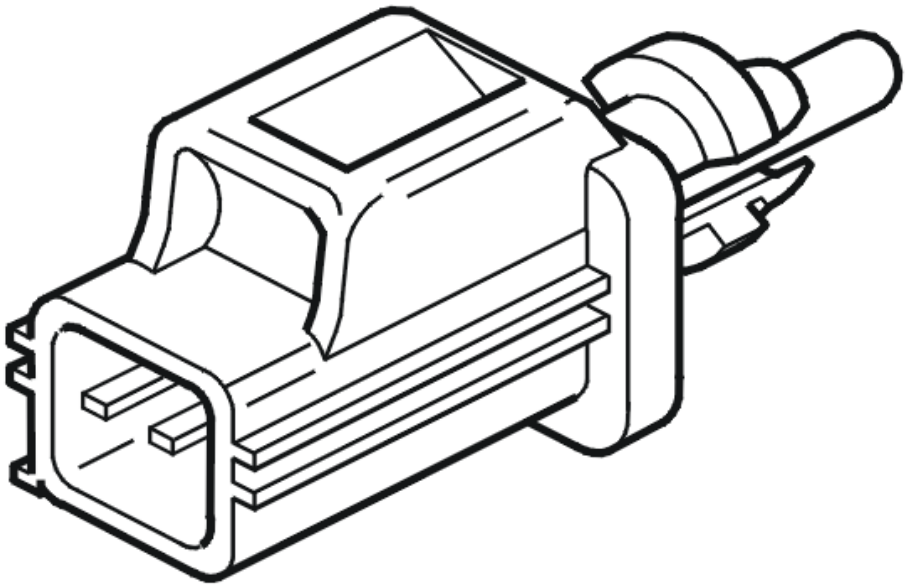

Fig. 58: Identifying Outside Temperature Sensor
Courtesy of VOLVO CARS CORPORATION

The engine control module (ECM) checks the signal from the outside temperature sensor.

The diagnostic trouble code (DTC) is stored if the Engine Control Module (ECM) detects that the signal from the outside temperature sensor is too low.

The diagnostic trouble code can be diagnosed when the ignition is on.

Substitute Value

- The value is set to the constant 20 °C.

Possible Source

- The signal cable is short-circuited to ground.
- Damaged outside temperature sensor.

Fault symptom[s]

- Malfunction indicator lamp (MIL) lit.

TROUBLESHOOTING ECM-P007200

CHECKING THE STATUS

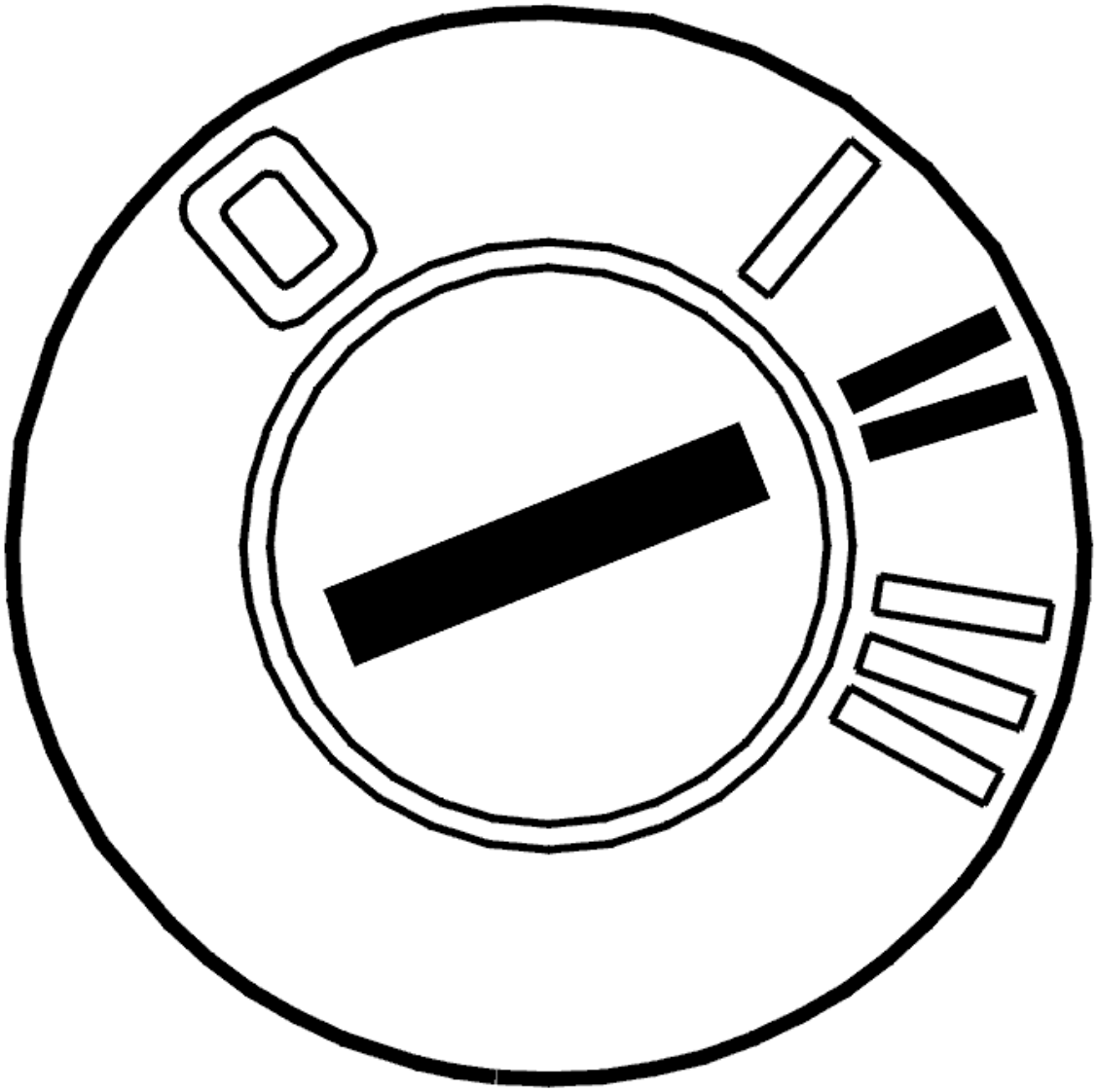

Fig. 59: Identifying Ignition ON
Courtesy of VOLVO CARS CORPORATION

- Ignition on

  Read the diagnostic status and fault status for the diagnostic trouble code by selecting the diagnostic trouble code in the list.

  Check if the malfunction is permanent or intermittent by reading off the diagnostic trouble code's status when the diagnostic status is "Implemented".

  If the trouble status is "Malfunction found", this indicates that the malfunction is permanent. If the trouble

status is "No malfunction found", this indicates that the malfunction is intermittent and not active right now.

NOTE: Trouble status cannot go from "Malfunction found" to "No malfunction found" in the same operating cycle.

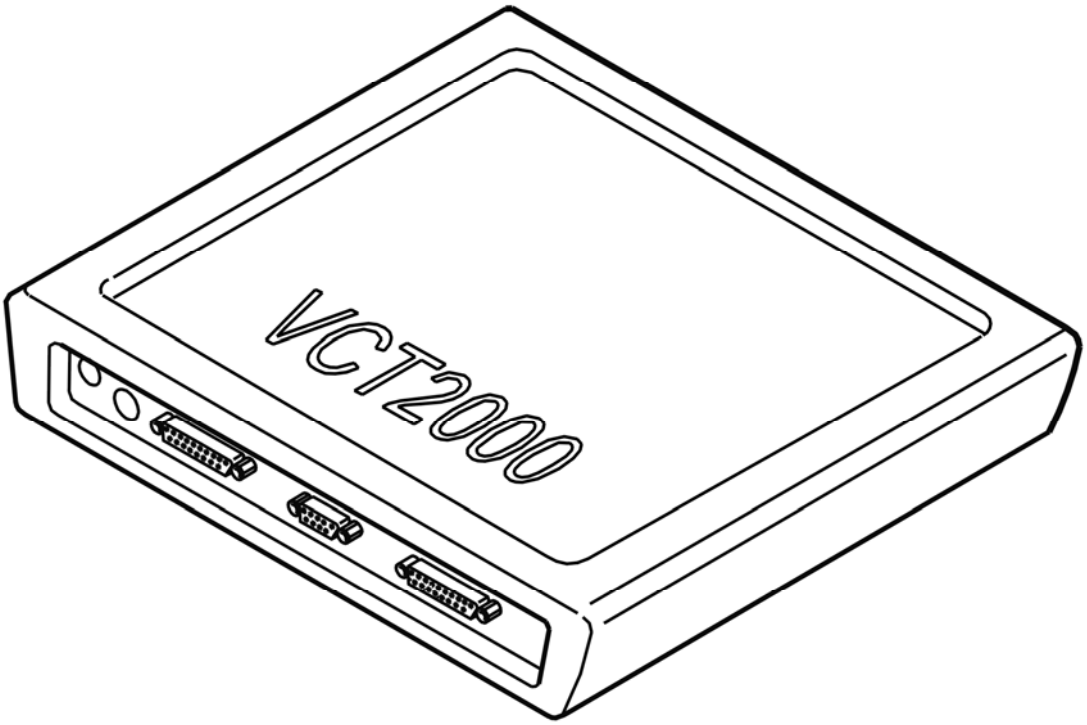

Fig. 60: Identifying VCT2000 Diagnostic Tool Symbol In VIDA
Courtesy of VOLVO CARS CORPORATION

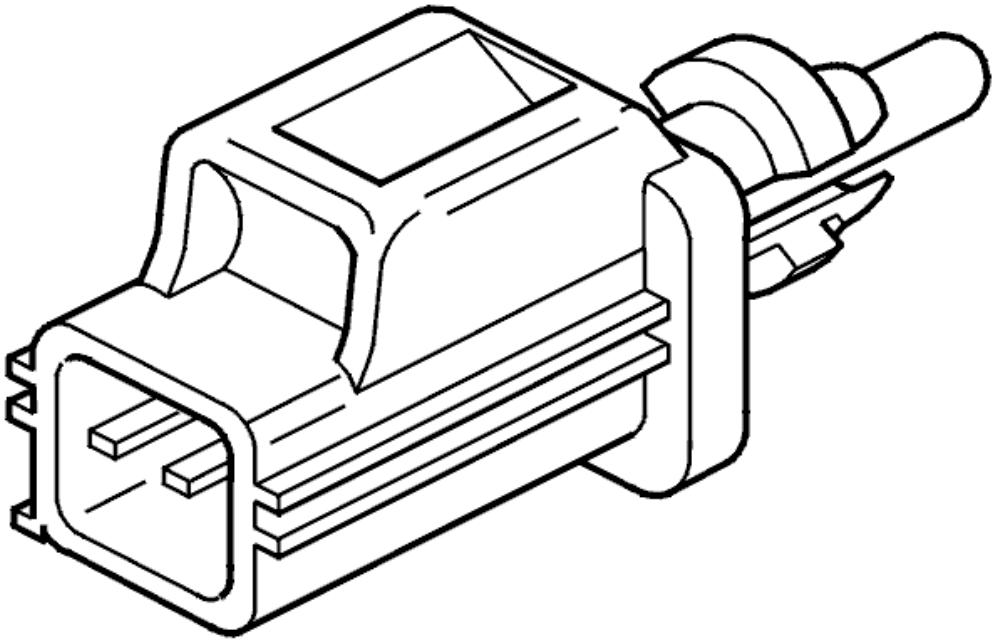

Fig. 61: Identifying Outside Temperature Sensor
Courtesy of VOLVO CARS CORPORATION

- **Continue**

Refer to **CHECKING COMPONENTS AND WIRING**

CHECKING COMPONENTS AND WIRING

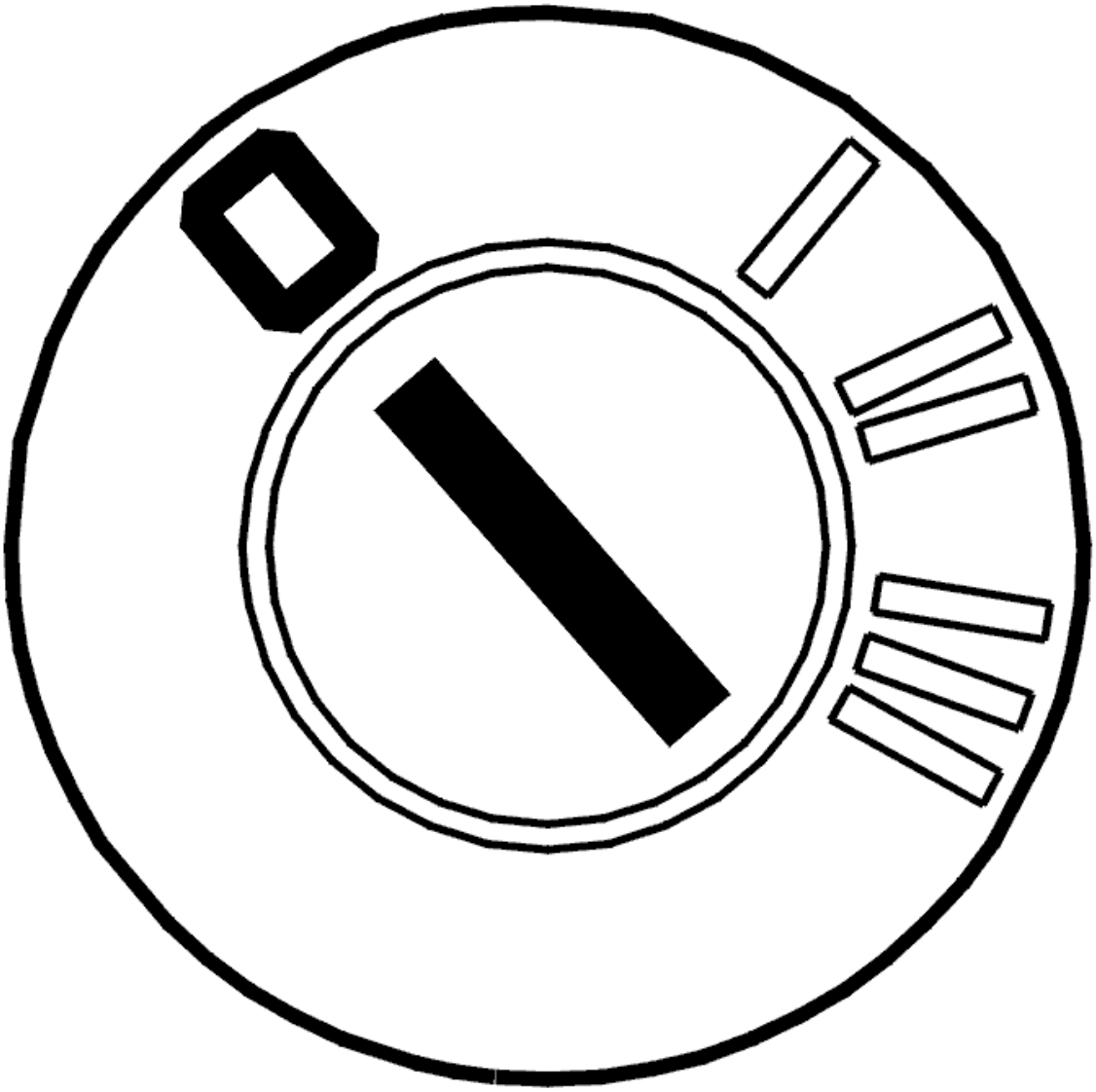

Fig. 62: Identifying Ignition OFF
Courtesy of VOLVO CARS CORPORATION

- Ignition off

  Check signal cable for short-circuit to ground.

  Check between:

  - Engine control module (ECM) #B29 (#C29) and outdoor temperature sensor's connector #1, signal cable (+).

  Remedy as necessary.

  Other information

- see **CONNECTING THE BREAKOUT BOX**
- see **SIGNAL SPECIFICATION, ENGINE CONTROL MODULE (ECM)**
- For replacing outdoor temperature sensor: **SENSORS FOR CHECK AND WARNING SYSTEM**
- see **CHECKING WIRING AND TERMINALS**

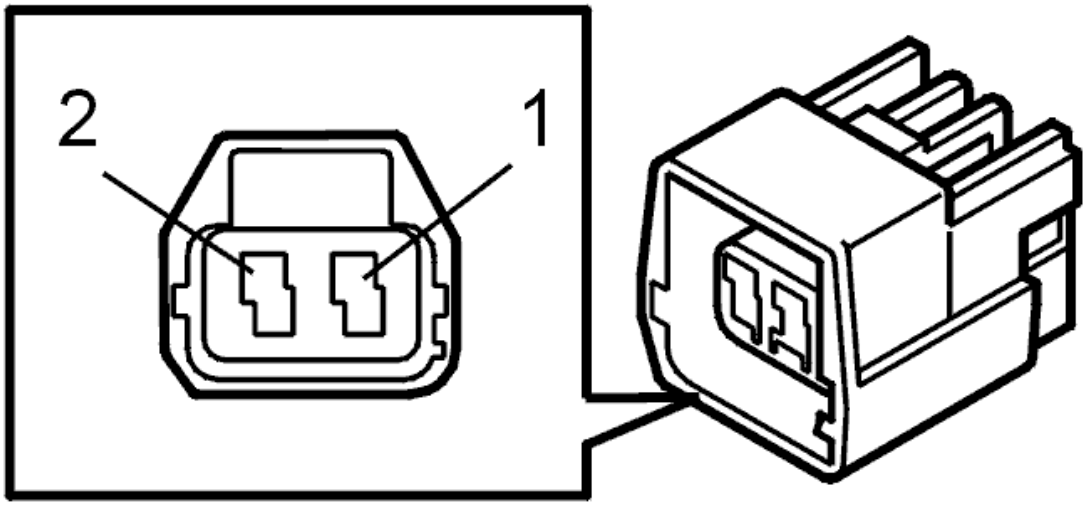

Fig. 63: Identifying Connector
Courtesy of VOLVO CARS CORPORATION

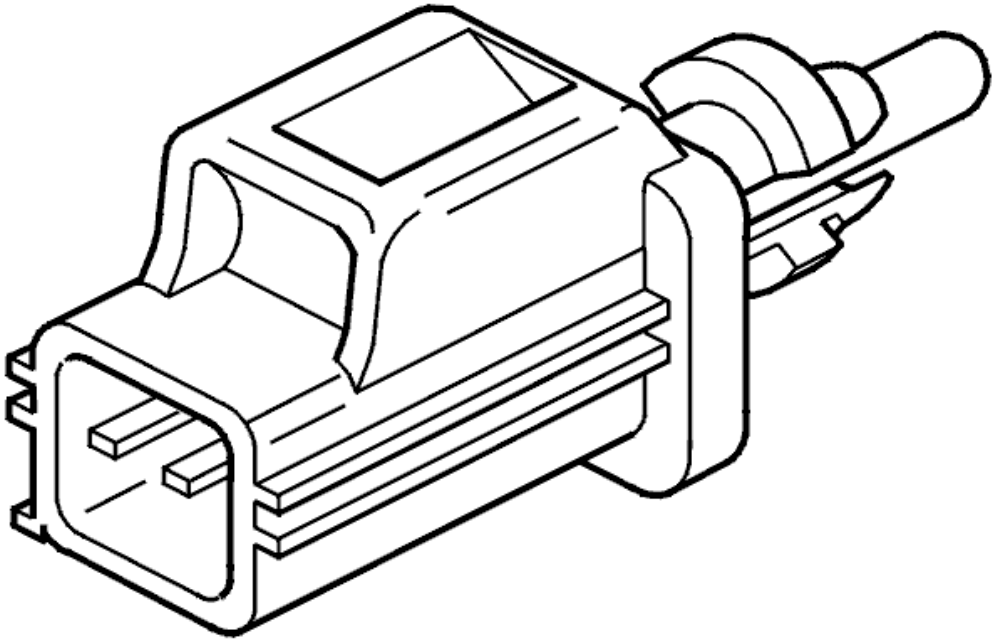

Fig. 64: Identifying Outside Temperature Sensor
Courtesy of VOLVO CARS CORPORATION

- **Continue**

  Refer to **VERIFICATION**

VERIFICATION

VERIFICATION

HINT: After repairing, it is necessary to check that the malfunction has been fixed.

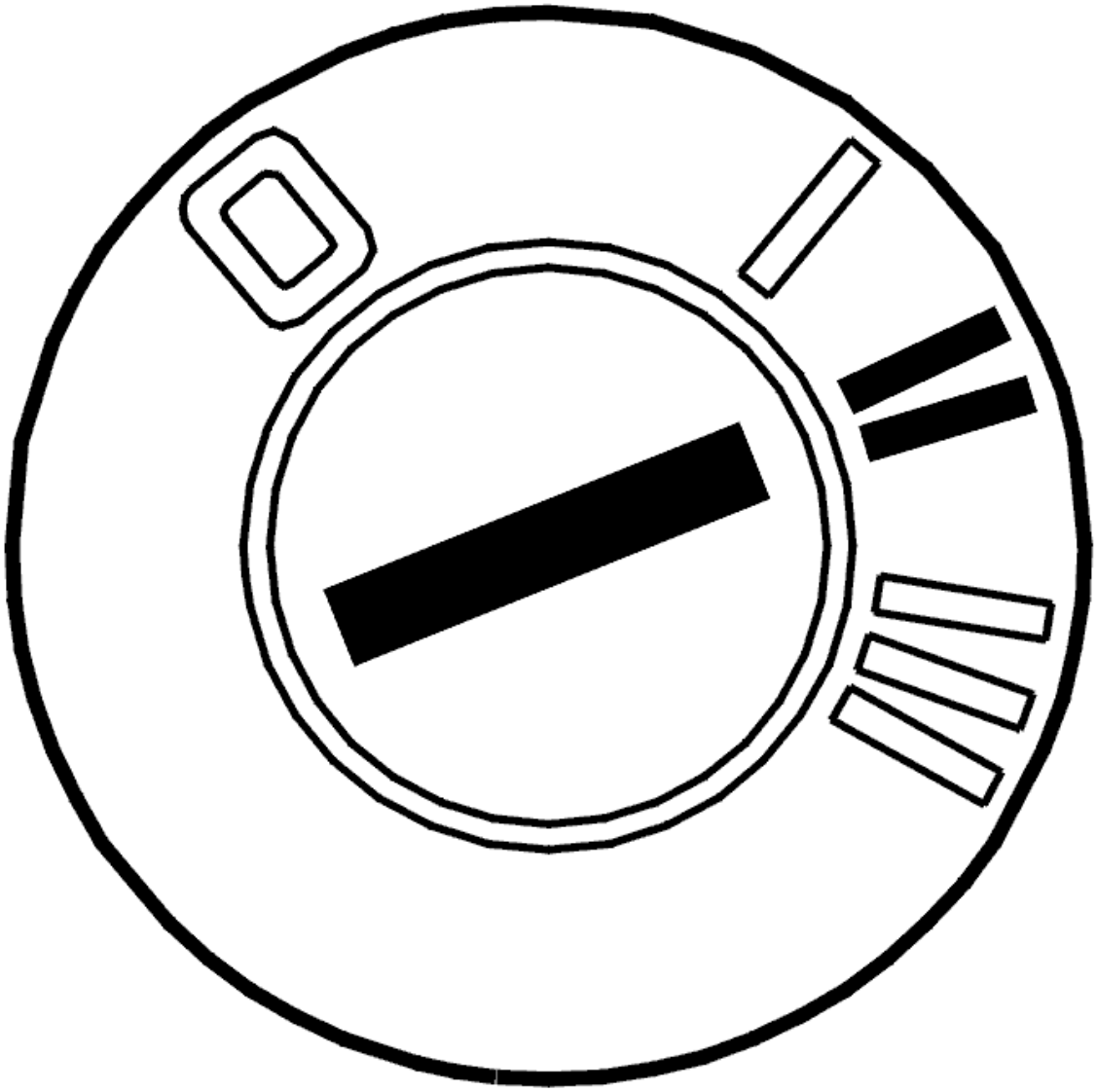

Fig. 65: Identifying Ignition ON
Courtesy of VOLVO CARS CORPORATION

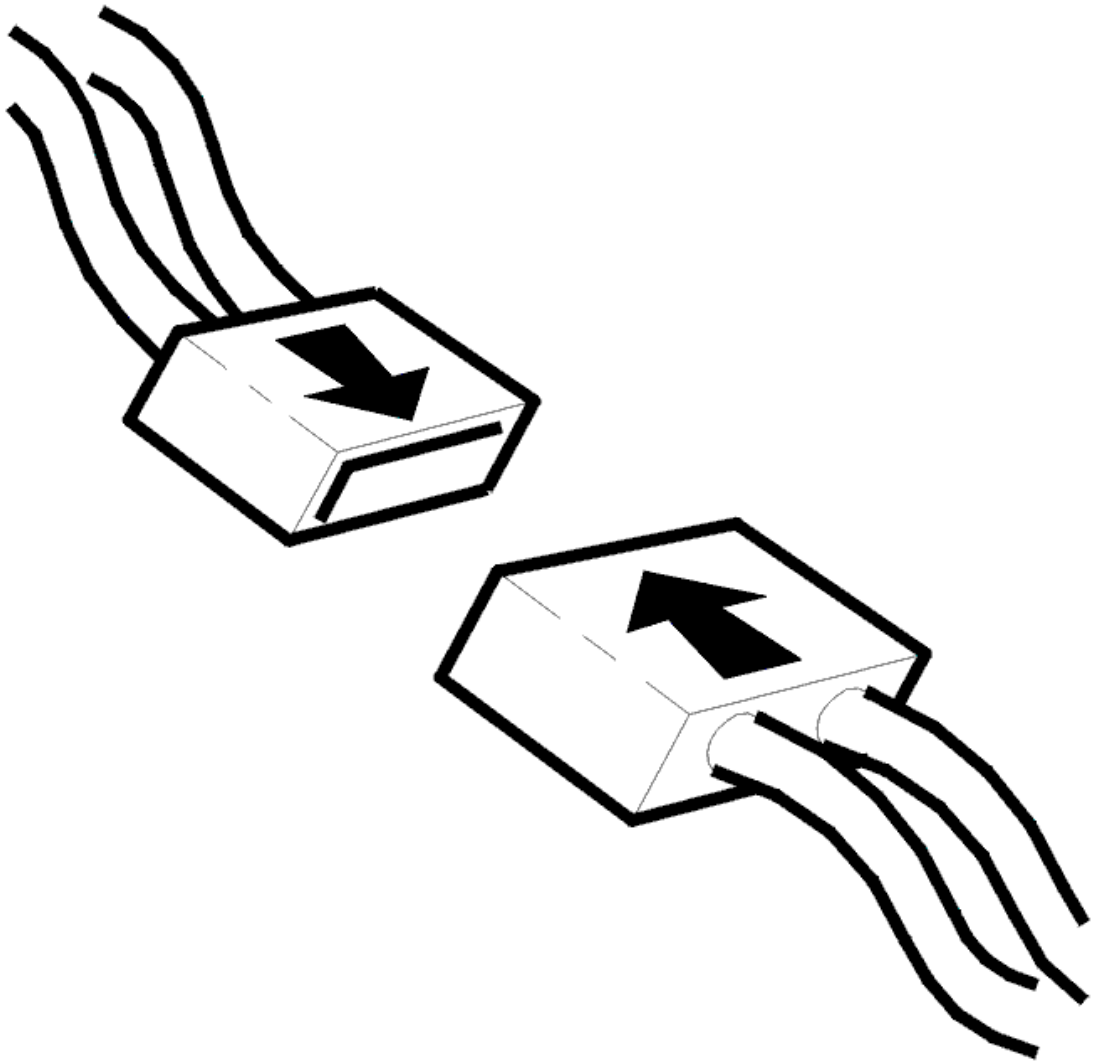

Fig. 66: Connecting Connector
Courtesy of VOLVO CARS CORPORATION

- Ignition off
- Reconnect the connectors, components, etc.
- Ignition on
- Read the diagnostic status and trouble status for the diagnostic trouble code by selecting the diagnostic trouble code in the list.

  Check the trouble status for the diagnostic trouble code when the diagnosis is "Implemented". When the function is correct the trouble status should be "No malfunction found" when the diagnosis is implemented.

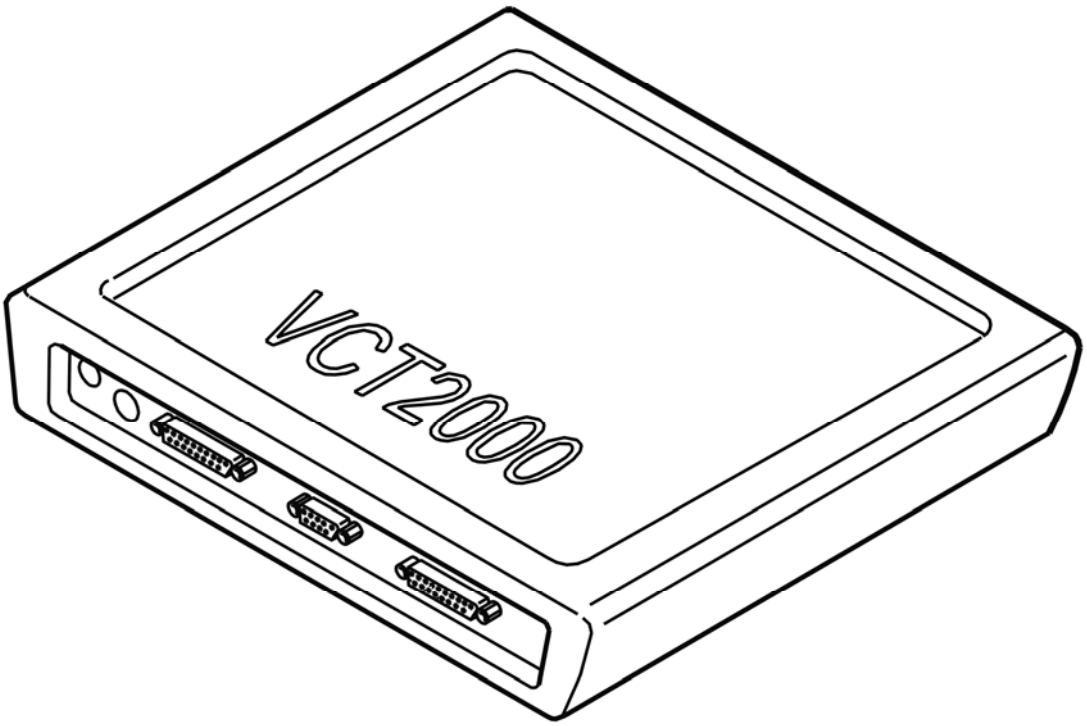

Fig. 67: Identifying VCT2000 Diagnostic Tool Symbol In VIDA
Courtesy of VOLVO CARS CORPORATION

Is the function OK?

- **YES**

  VERIFIED: Troubleshooting has been completed.

- **NO**

  Refer to **INFORMATION**

INFORMATION

FAULT-TRACING INFORMATION

The fault should have been detected and remedied. As this is not the case fault-tracing has failed.

Exit fault-tracing for this diagnostic trouble code (DTC) or make another attempt.

ECM-P007300: AMBIENT AIR TEMPERATURE SENSOR CIRCUIT HIGH INPUT. GENERAL FAILURE INFORMATION. NO SUB TYPE INFORMATION

(B6324S; 2007-2010)

DIAGNOSTIC TROUBLE CODE (DTC) INFORMATION ECM-P007300

Condition

Engine control module (ECM) measures the ambient temperature using an outside temperature sensor. The sensor is located in the left external rear-view mirror. The control module checks the direct voltage from the sensor.

The diagnostic trouble code (DTC) is stored if the control module detects that:

- The direct voltage is higher than 4.941 V.
- Incorrect value lasts longer than 9 seconds.
- Incorrect value lasts for 2 or more subsequent driving cycles.

The control module's test for the diagnostic trouble code (DTC) starts in the event of:

- Ignition switch position II.

NOTE: The control module can only detect the fault once the test has been started and the diagnostic trouble code (DTC) is stored when the conditions are met.

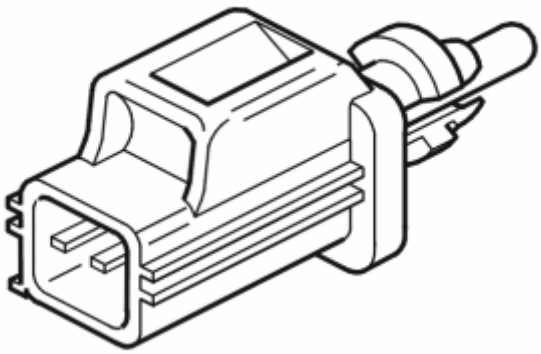

Fig. 68: Identifying Outside Temperature Sensor
Courtesy of VOLVO CARS CORPORATION

Substitute Value

- The control module uses a constant outside temperature, +20 °C.

Possible Source

- Contact resistance and oxidation in the terminals.
- Short-circuit to supply voltage in the signal cable.
- Open-circuit in the signal cable.
- Damaged outside temperature sensor.

Fault symptom[s]

- Malfunction indicator light (MIL), on

FAULT-TRACING

see **FAULT-TRACING**

ECM-P007300: AMBIENT AIR TEMPERATURE SENSOR CIRCUIT HIGH INPUT. GENERAL FAILURE INFORMATION. NO SUB TYPE INFORMATION (B6324S5; 2011-2012)

DIAGNOSTIC TROUBLE CODE (DTC) INFORMATION ECM-P007300

see **DIAGNOSTIC TROUBLE CODE (DTC) INFORMATION ECM-P007300**

FAULT-TRACING

see **FAULT-TRACING**

ECM-P007300: AMBIENT AIR TEMPERATURE SENSOR CIRCUIT HIGH INPUT SIGNAL. GENERAL FAULT INFORMATION. TYPE OF FAULT NOT SPECIFIED. (B8444S; 2005-2011)

DIAGNOSTIC TROUBLE CODE (DTC) INFORMATION ECM-P007300

Condition

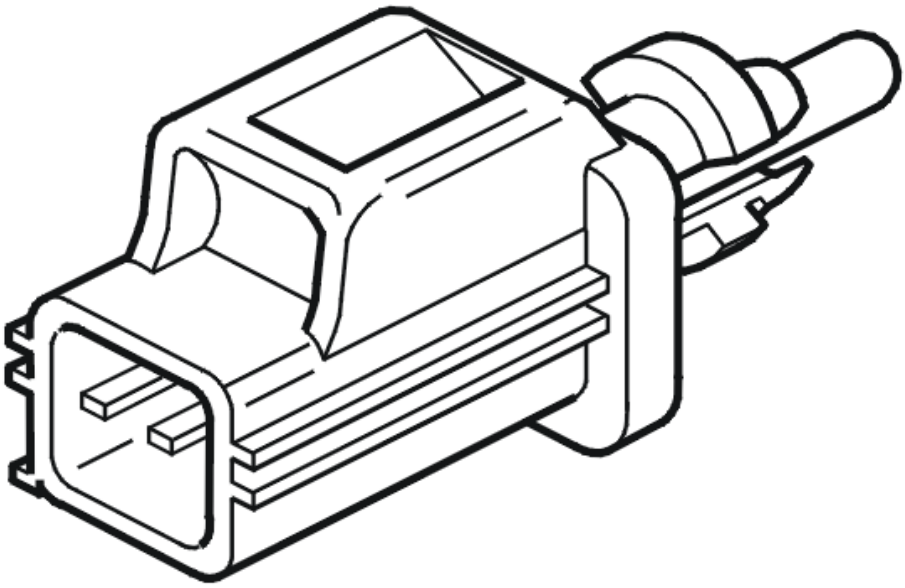

Fig. 69: Identifying Outside Temperature Sensor
Courtesy of VOLVO CARS CORPORATION

The engine control module (ECM) checks the signal from the outside temperature sensor.

The diagnostic trouble code (DTC) is stored if the Engine Control Module (ECM) detects that the signal from the outside temperature sensor is too high.

The diagnostic trouble code can be diagnosed when the ignition is on.

Substitute Value

- The value is set to the constant 20 °C.

Possible Source

- Short-circuit to supply voltage in the signal cable.
- Open circuit on signal cable.
- Damaged outside temperature sensor.

Fault symptom[s]

- Malfunction indicator lamp (MIL) lit.

TROUBLESHOOTING ECM-P007300

CHECKING THE STATUS

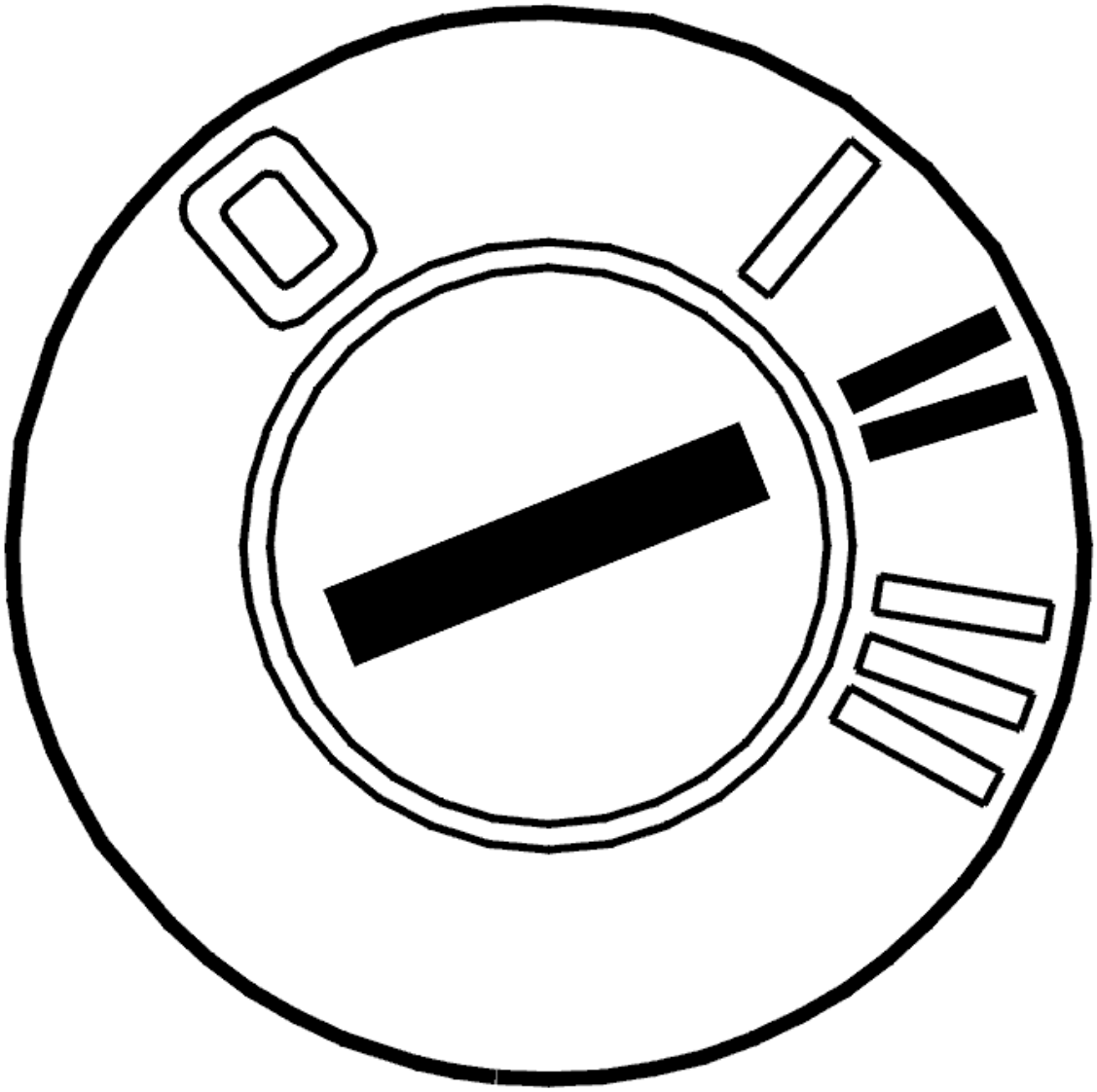

Fig. 70: Identifying Ignition ON
Courtesy of VOLVO CARS CORPORATION

- Ignition on

  Read the diagnostic status and fault status for the diagnostic trouble code by selecting the diagnostic trouble code in the list.

  Check if the malfunction is permanent or intermittent by reading off the diagnostic trouble code's status when the diagnostic status is "Implemented".

  If the trouble status is "Malfunction found", this indicates that the malfunction is permanent. If the trouble

status is "No malfunction found", this indicates that the malfunction is intermittent and not active right now.

NOTE: Trouble status cannot go from "Malfunction found" to "No malfunction found" in the same operating cycle.

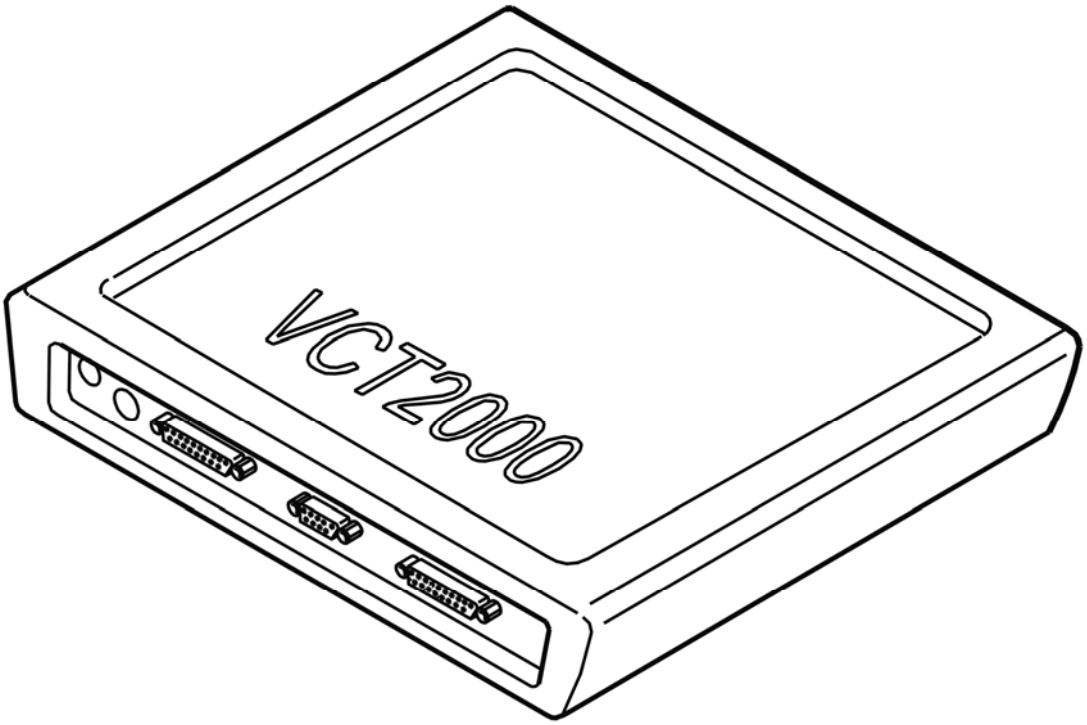

Fig. 71: Identifying VCT2000 Diagnostic Tool Symbol In VIDA
Courtesy of VOLVO CARS CORPORATION

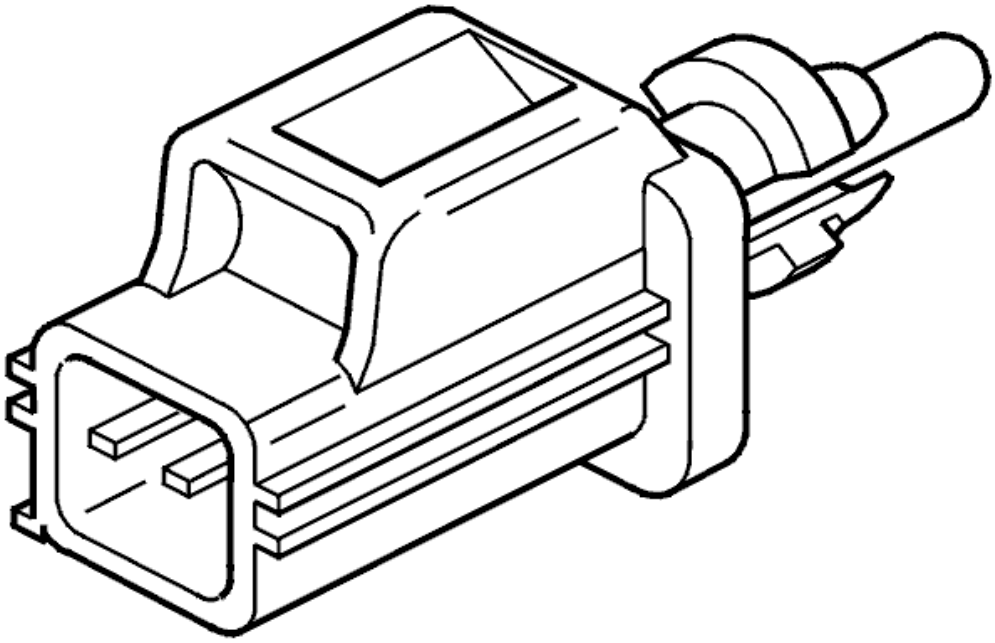

Fig. 72: Identifying Outside Temperature Sensor
Courtesy of VOLVO CARS CORPORATION

- **Continue**

  Refer to **CHECKING COMPONENTS AND WIRING**

CHECKING COMPONENTS AND WIRING

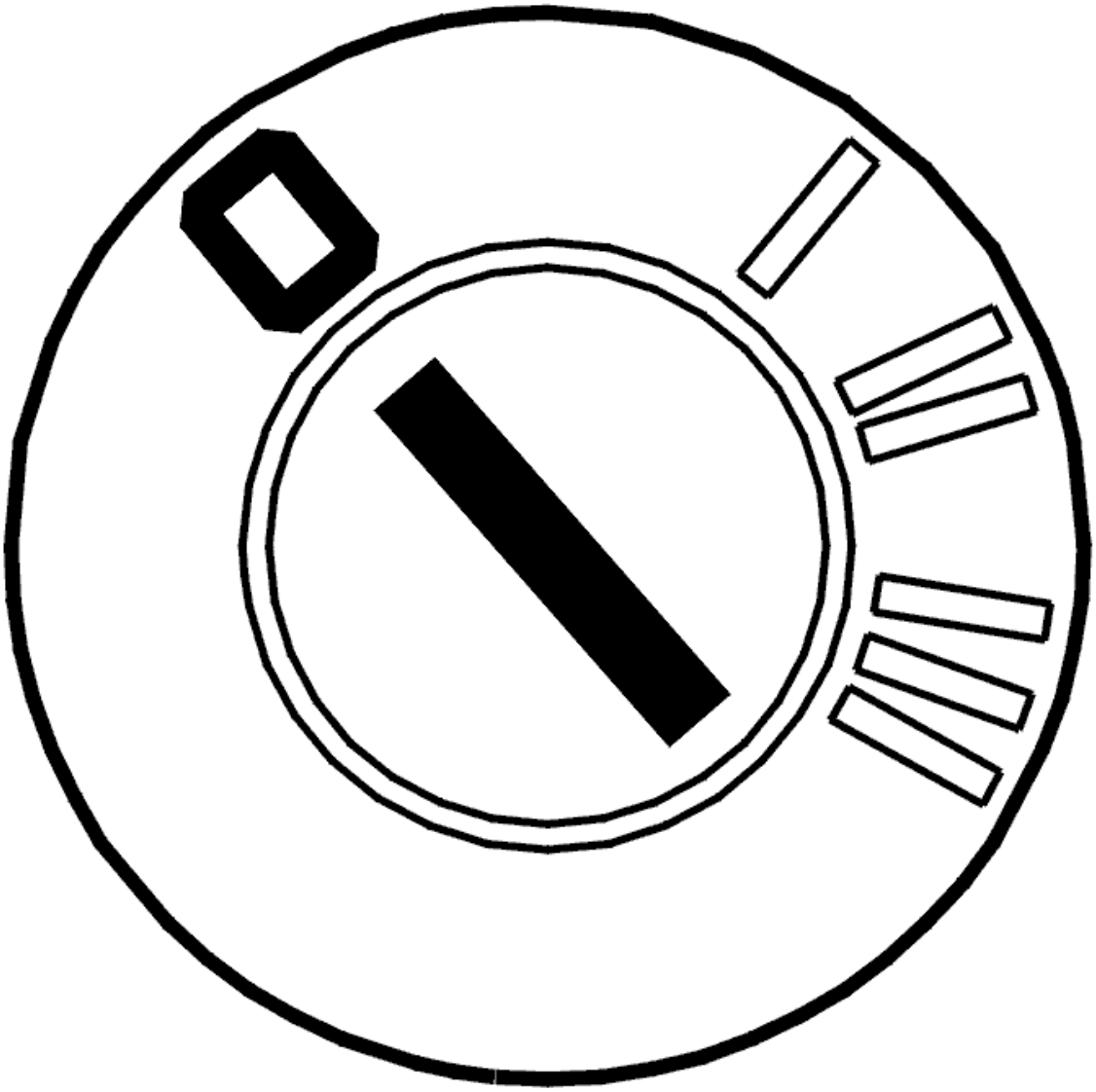

Fig. 73: Identifying Ignition OFF
Courtesy of VOLVO CARS CORPORATION

- Ignition off

  Check the signal cables. Check for a short-circuit to supply voltage. Check the signal cables for open circuit.

  Check between:

  - Engine control module (ECM) #B29 (#C29) and outdoor temperature sensor's connector #1, signal cable (+).
  - Engine control module (ECM) #B9 (#C9) and outdoor temperature sensor's connector #2, signal cable (-).

  Remedy as necessary.

Other information

- see **CONNECTING THE BREAKOUT BOX**
- see **SIGNAL SPECIFICATION, ENGINE CONTROL MODULE (ECM)**
- see **SENSORS FOR CHECK AND WARNING SYSTEM**
- see **CHECKING WIRING AND TERMINALS**

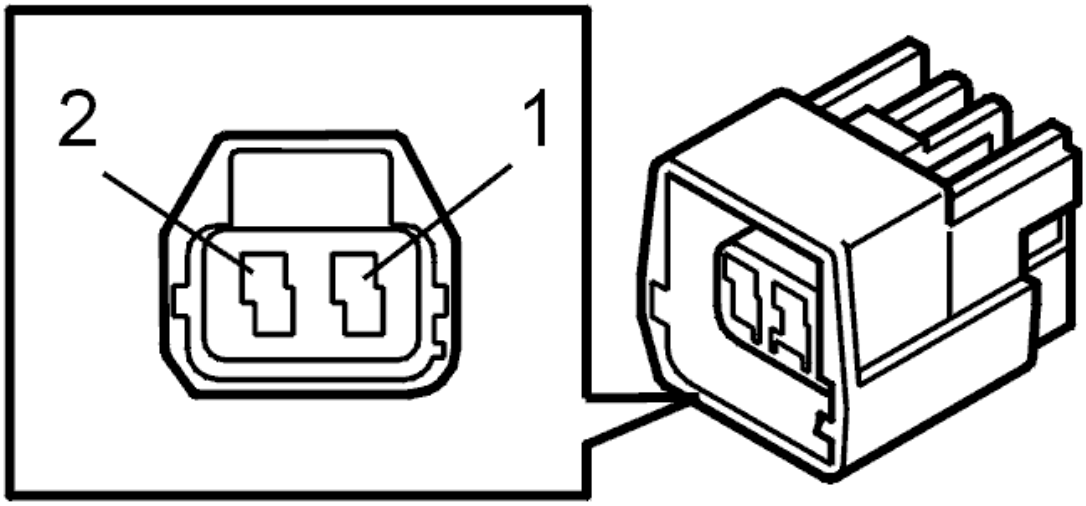

Fig. 74: Identifying Connector
Courtesy of VOLVO CARS CORPORATION

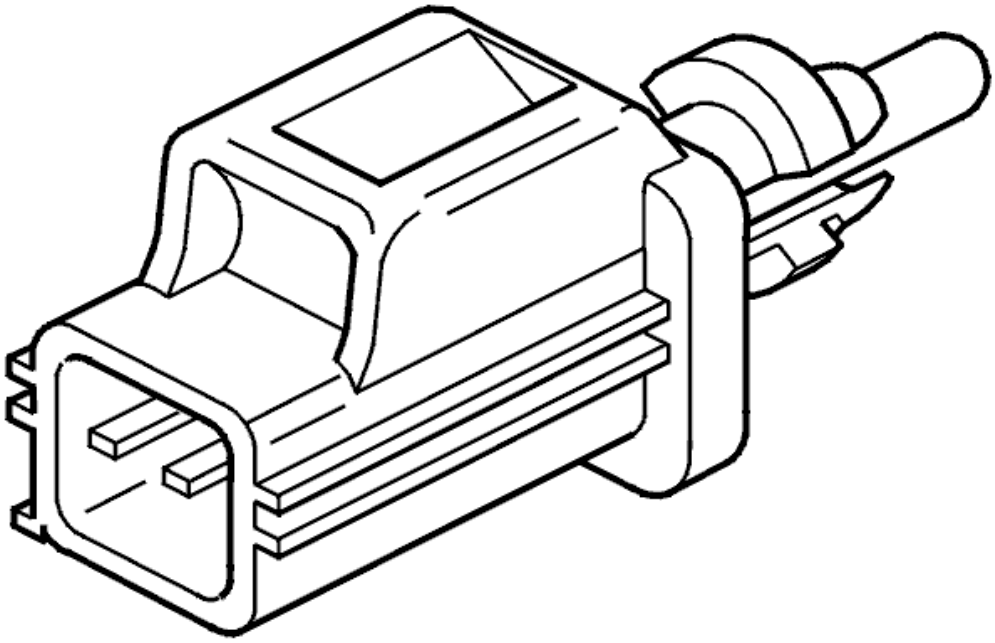

Fig. 75: Identifying Outside Temperature Sensor
Courtesy of VOLVO CARS CORPORATION

- **Continue**

  Refer to **VERIFICATION**

VERIFICATION

VERIFICATION

HINT: After repairing, it is necessary to check that the malfunction has been fixed.

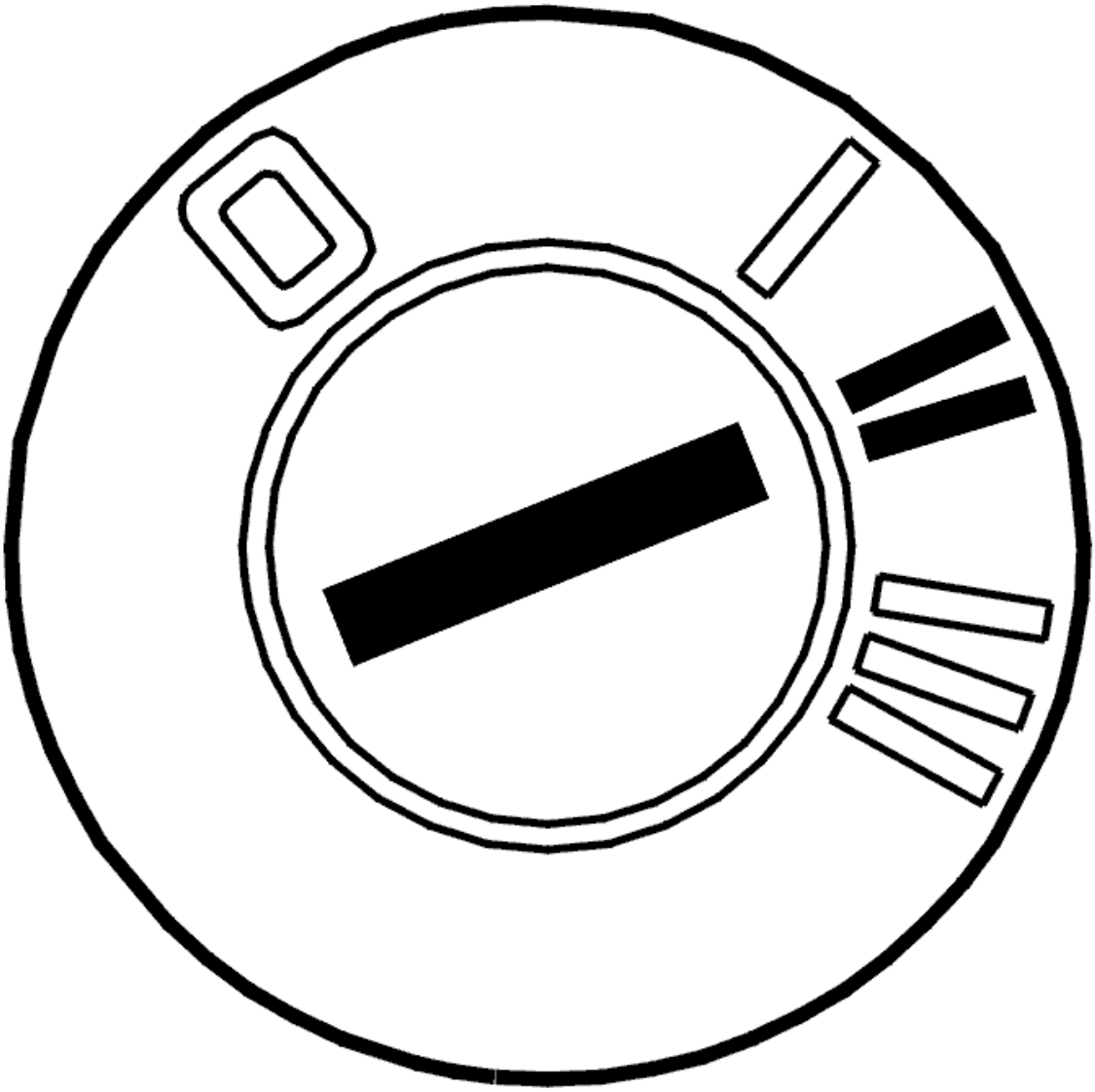

Fig. 76: Identifying Ignition ON
Courtesy of VOLVO CARS CORPORATION

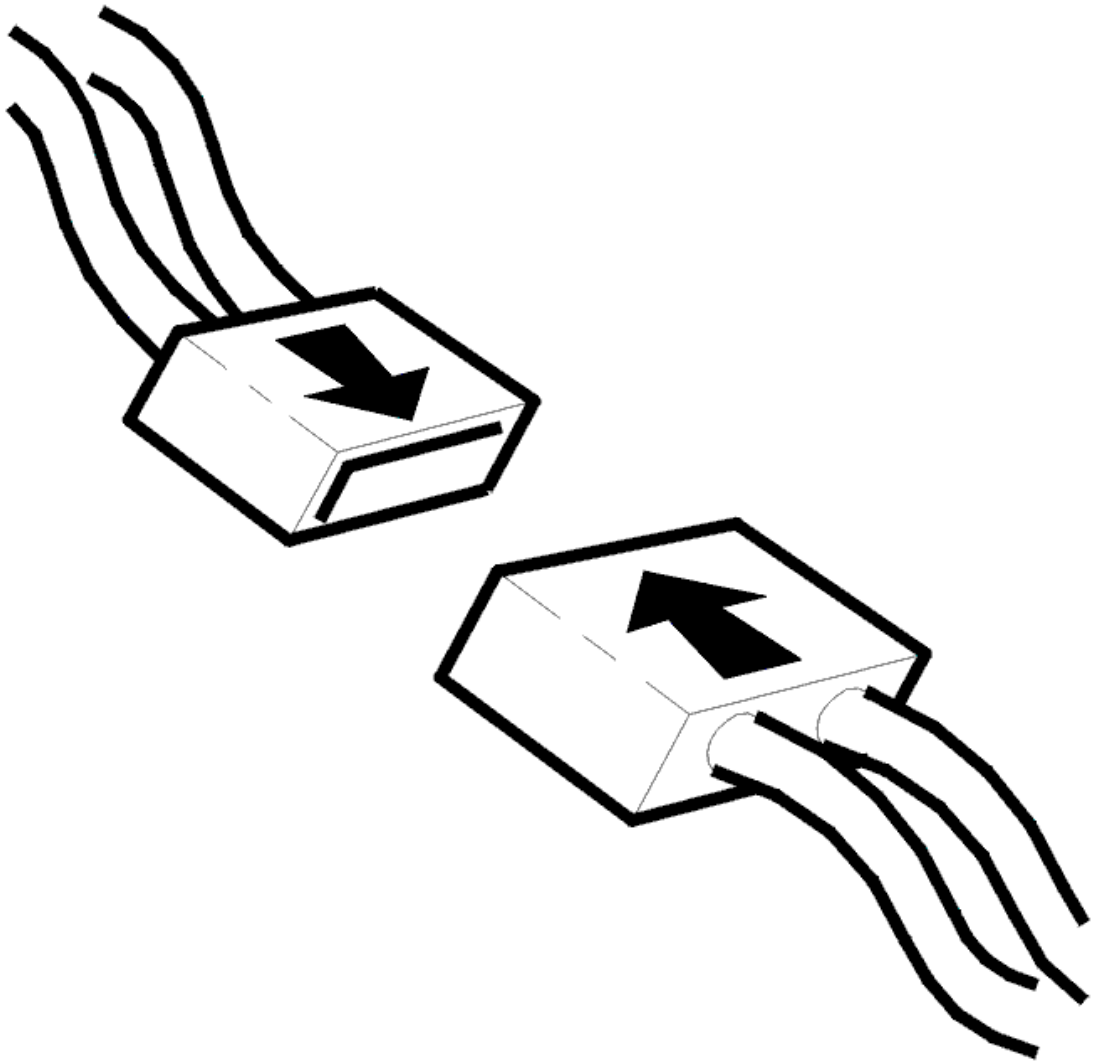

Fig. 77: Connecting Connector
Courtesy of VOLVO CARS CORPORATION

- Ignition off
- Reconnect the connectors, components, etc.
- Ignition on
- Read the diagnostic status and trouble status for the diagnostic trouble code by selecting the diagnostic trouble code in the list.

  Check the trouble status for the diagnostic trouble code when the diagnosis is "Implemented". When the function is correct the trouble status should be "No malfunction found" when the diagnosis is implemented.

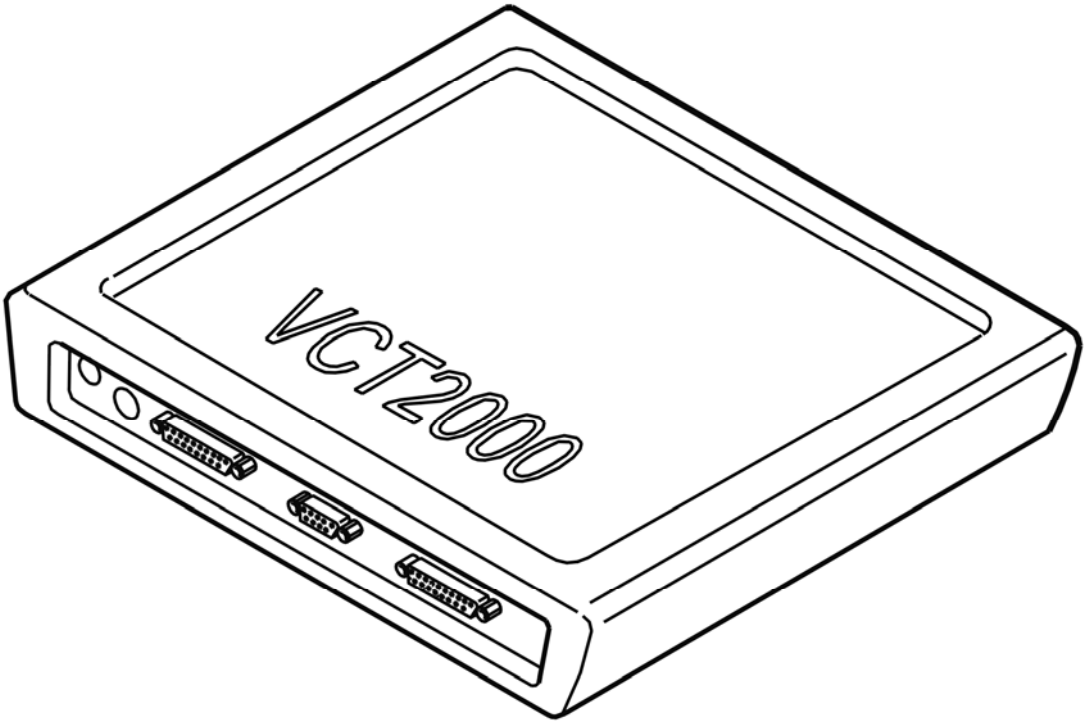

Fig. 78: Identifying VCT2000 Diagnostic Tool Symbol In VIDA
Courtesy of VOLVO CARS CORPORATION

Is the function OK?

- **YES**

  VERIFIED: Troubleshooting has been completed.

- **NO**

  Refer to **INFORMATION**

INFORMATION

FAULT-TRACING INFORMATION

The fault should have been detected and remedied. As this is not the case fault-tracing has failed.

Exit fault-tracing for this diagnostic trouble code (DTC) or make another attempt.

ECM-P007500: INTAKE VALVE CONTROL CIRCUIT (BANK 1). GENERAL FAILURE INFORMATION. NO SUB TYPE INFORMATION (B6324S; 2007-

2010)

DIAGNOSTIC TROUBLE CODE (DTC) INFORMATION ECM-P007500

Condition

The engine control module (ECM) regulates the position of the camshaft (angle) by regulating the camshaft reset valve.

The engine control module (ECM) checks the control signal for the camshaft reset valve.

The diagnostic trouble code (DTC) is stored if the control module detects that:

- Signal missing.

The control module's test for the diagnostic trouble code (DTC) starts in the event of:

- Ignition switch position II.
- Battery voltage higher than 10.5 V.

NOTE: The control module can only detect the fault once the test has been started and the diagnostic trouble code (DTC) is stored when the conditions are met.

Substitute Value

- Camshaft control switched off.

Possible Source

- Open circuit on signal cable.
- Open-circuit in the power supply cable.
- Damaged camshaft reset valve.

Fault symptom[s]

- Malfunction indicator light (MIL), on
- Uneven idle
- High emissions
- Engine stalls when driving

FAULT-TRACING

see **FAULT-TRACING**

ECM-P007500: INTAKE VALVE CONTROL CIRCUIT (BANK 1). GENERAL

FAILURE INFORMATION. NO SUB TYPE INFORMATION (B6324S5; 2011-2012)

DIAGNOSTIC TROUBLE CODE (DTC) INFORMATION ECM-P007500

see **DIAGNOSTIC TROUBLE CODE (DTC) INFORMATION ECM-P007500**

FAULT-TRACING

see **FAULT-TRACING**

ECM-P007500: INTAKE VALVE CONTROL CIRCUIT (BANK 1). GENERAL FAULT INFORMATION. TYPE OF FAULT NOT SPECIFIED. (B8444S; 2005-2011)

DIAGNOSTIC TROUBLE CODE (DTC) INFORMATION

Condition

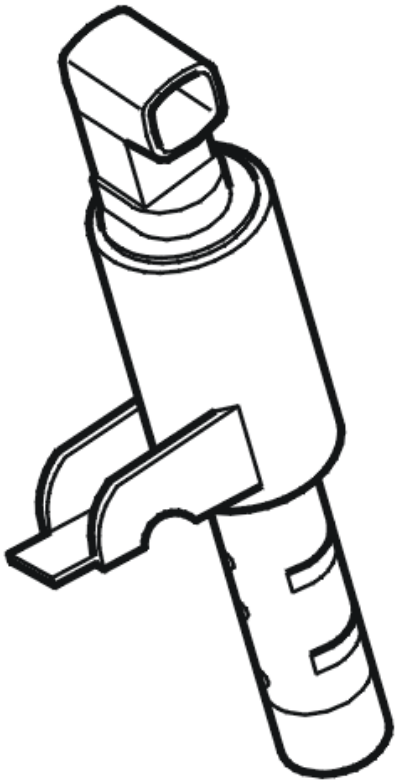

Fig. 79: Identifying Camshaft Reset Valve
Courtesy of VOLVO CARS CORPORATION

The engine control module (ECM) regulates the position of the camshaft (angle) by controlling the camshaft reset valve. The diagnostic trouble code (DTC) is stored if the control module detects that the control signal for the camshaft rest valve is missing.

The diagnostic trouble code can be diagnosed when the ignition is on.

Substitute Value

- Camshaft control switched off.

Possible Source

- Open-circuit on the signal cable.
- Open-circuit on the voltage supply cable.
- Damaged camshaft reset valve

Fault symptom[s]

- Malfunction indicator lamp (MIL) lit.
- Uneven idle.
- Poor performance.
- The engines cuts out whilst driving.

FAULT TRACING

CHECKING THE STATUS

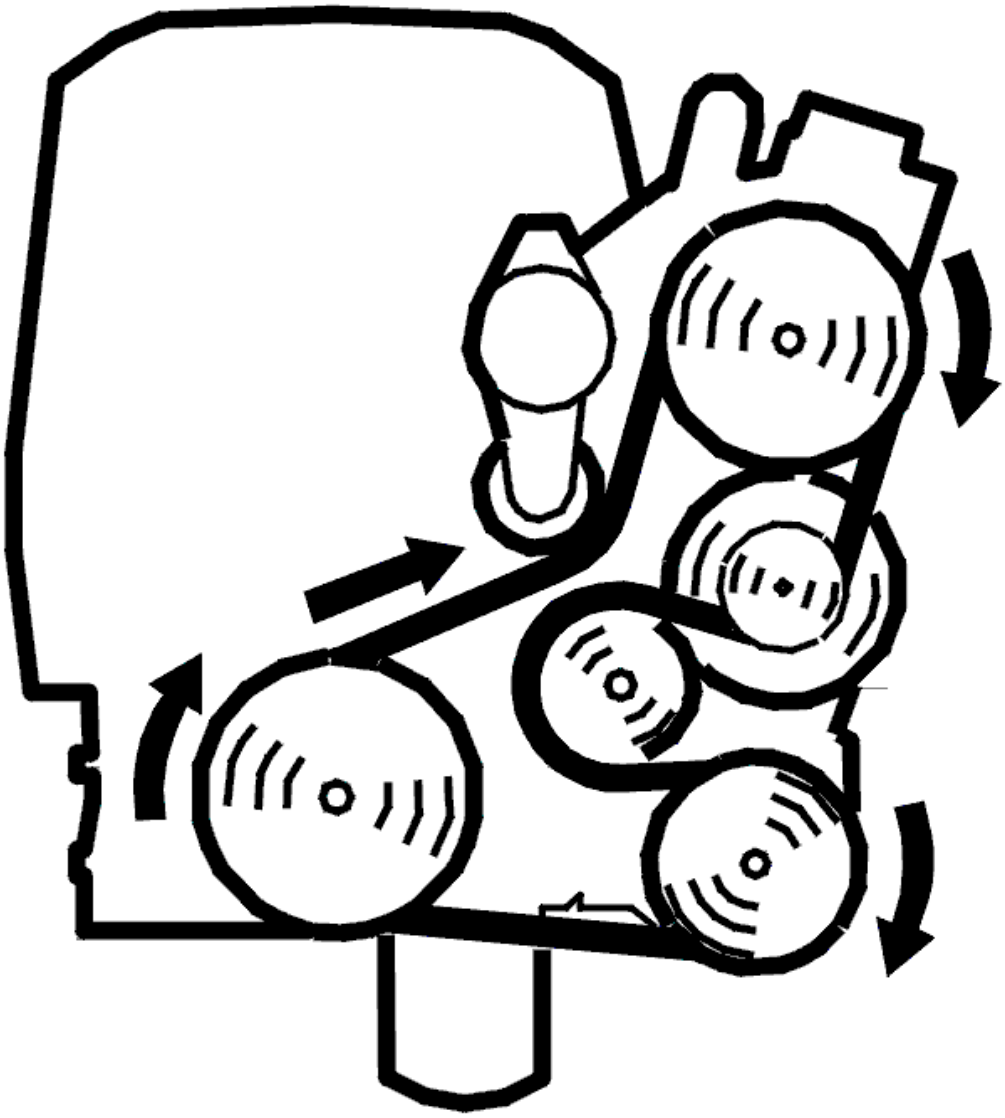

Fig. 80: Belt Routing / Engine Idling - Volvo
Courtesy of VOLVO CARS CORPORATION

- Start the engine.

  Read the diagnostic status and fault status for the diagnostic trouble code by selecting the diagnostic trouble code in the list.

  Check whether the fault is permanent or intermittent by reading the fault status of the trouble code when the diagnostic status is "Completed".

  If the fault status is "Fault found", the fault is permanent. If the fault status is "No fault found", the fault is intermittent and not currently active.

  NOTE: The fault status cannot switch from "Fault found" to "No fault found" within the same operating cycle.

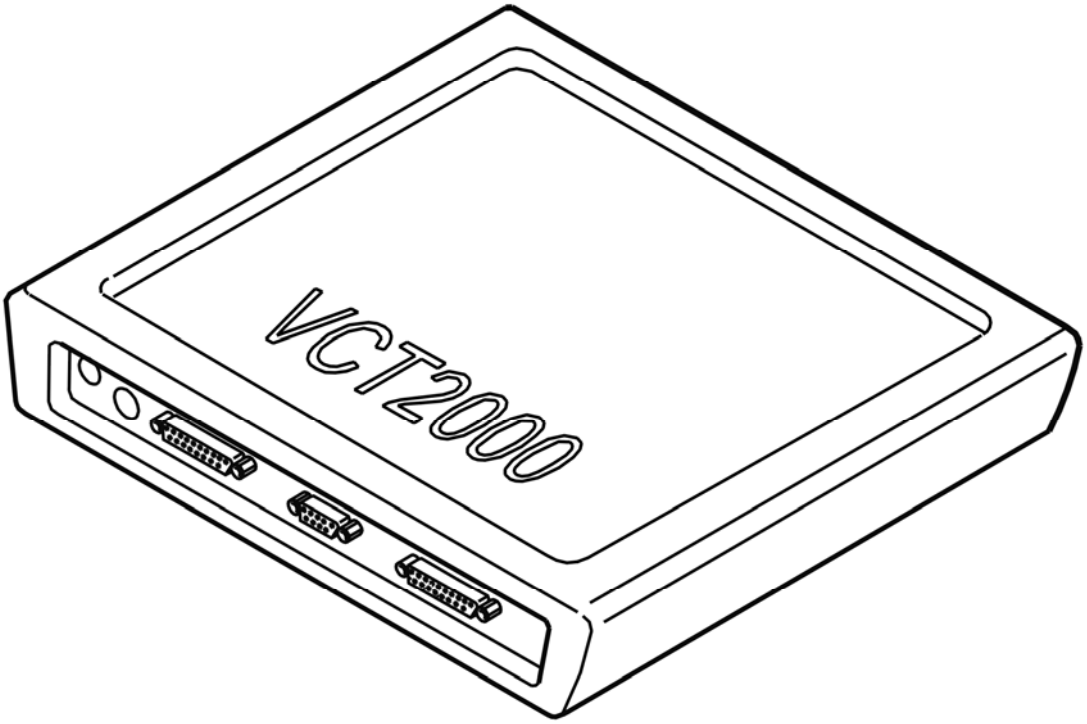

Fig. 81: Identifying VCT2000 Diagnostic Tool Symbol In VIDA
Courtesy of VOLVO CARS CORPORATION

- **Continue**

  Refer to **CHECKING COMPONENTS AND WIRING**

CHECKING COMPONENTS AND WIRING

HINT: Bank 1 (cylinder row nearest the front): cylinders 1, 3, 5 and 7. Bank 2 (cylinder row furthest to the rear, nearest the passenger compartment): cylinders 2, 4, 6, and 8.

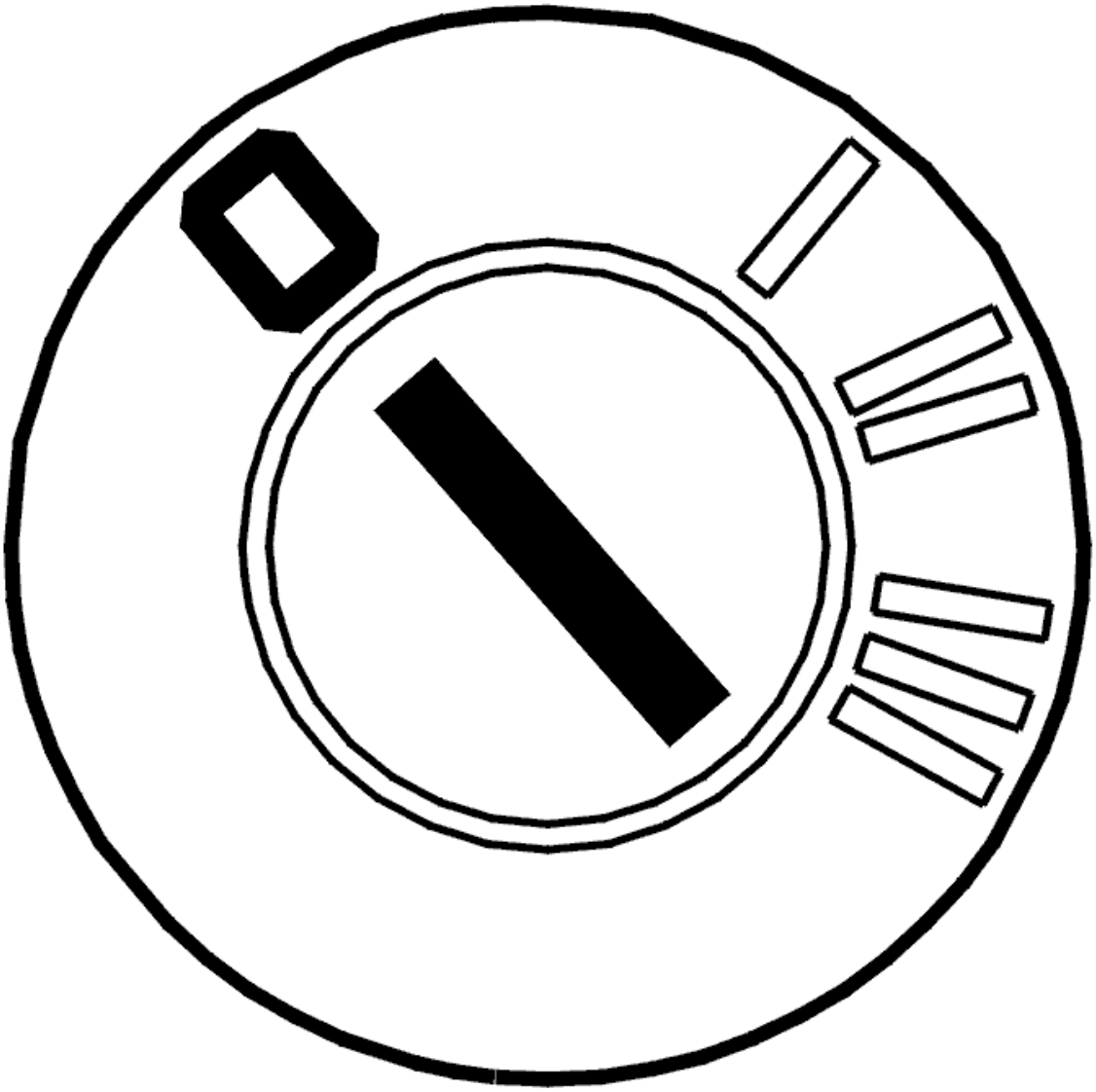

Fig. 82: Identifying Ignition OFF
Courtesy of VOLVO CARS CORPORATION

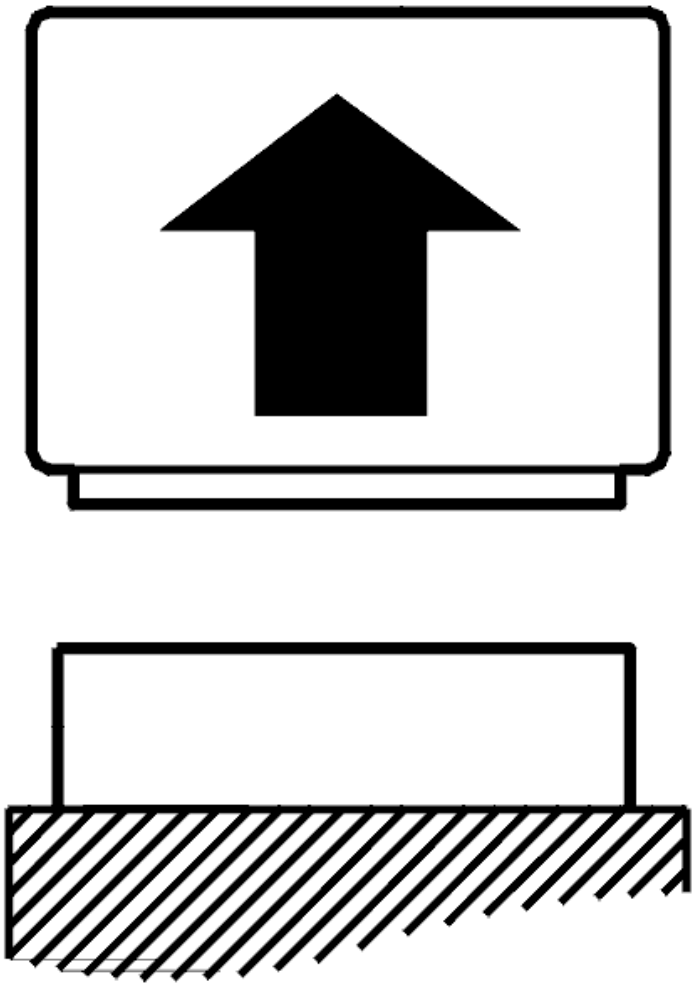

Fig. 83: Disconnecting Connector
Courtesy of VOLVO CARS CORPORATION

- Ignition off

  Check the fuse for the circuit. If the fuse is blown, check the cable for short-circuit to ground.

  Check changeover valve resistance.

  Disconnect the engine control module (ECM).

  Check the signal cable of the relevant changeover valve camshaft for open-circuit.

  Measure between:

  - Control module #A87 (#B27) and reset valve camshaft #2, inlet (bank 1).

- Control module #A86 (#B26) and reset valve camshaft #2, inlet (bank 2).

Check the power cable of the relevant changeover valve camshaft for open-circuit.

Measure between:

- System relay and reset valve camshaft #1, inlet (bank 1).
- System relay and reset valve camshaft #1, inlet (bank 2).

Remedy as necessary.

Other information

- see **CONNECTING THE BREAKOUT BOX**
- see **SIGNAL SPECIFICATION, ENGINE CONTROL MODULE (ECM)**
- For B5xx4T, see **VARIABLE VALVE TIMING SOLENOID, REPLACING**
- For B6xx4T, see **REPLACING THE VARIABLE VALVE TIMING SOLENOID** .
- see **COMPONENT SPECIFICATIONS**
- see **CHECKING WIRING AND TERMINALS**

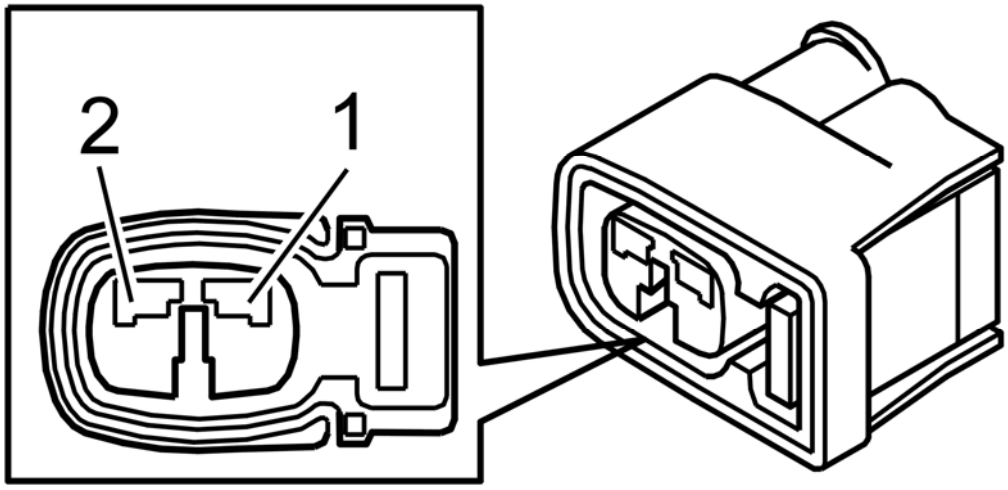

Fig. 84: Identifying Connector Terminals
Courtesy of VOLVO CARS CORPORATION

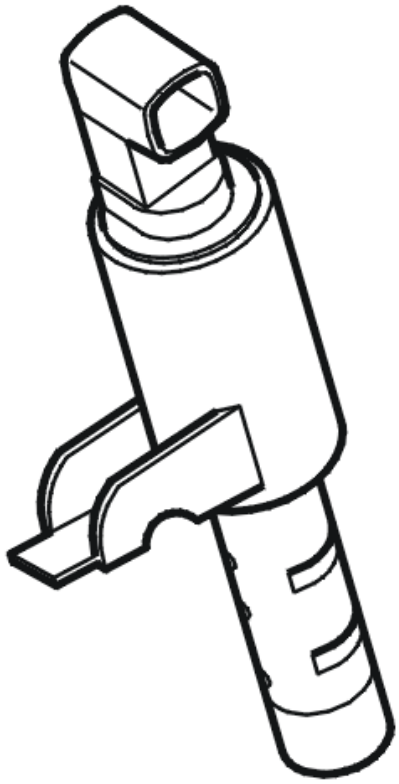

Fig. 85: Identifying Camshaft Reset Valve
Courtesy of VOLVO CARS CORPORATION

- **Continue**

  Refer to **VERIFICATION**

VERIFICATION

VERIFICATION

HINT: After carrying out the repair, check that the fault has been remedied.

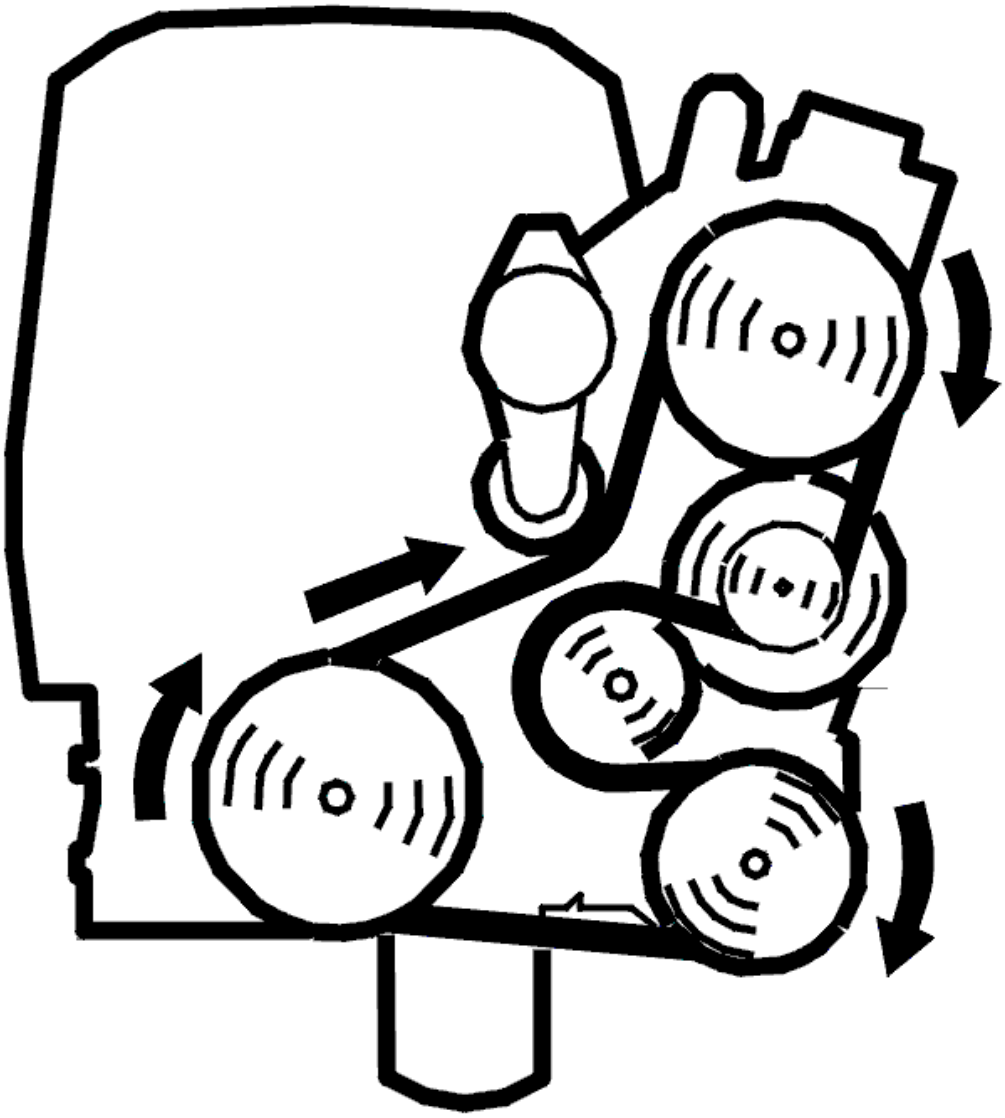

Fig. 86: Belt Routing / Engine Idling - Volvo
Courtesy of VOLVO CARS CORPORATION

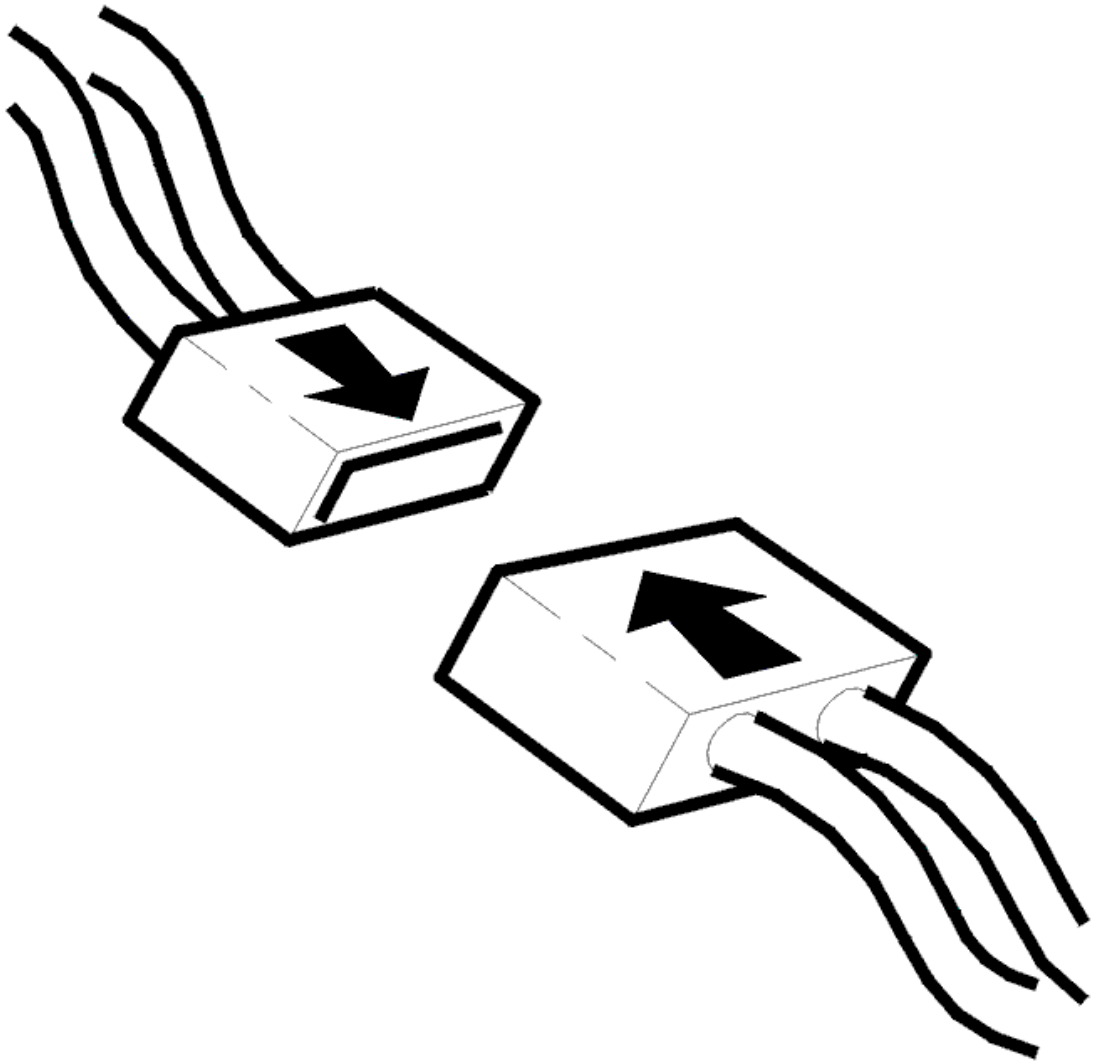

Fig. 87: Connecting Connector
Courtesy of VOLVO CARS CORPORATION

- Ignition off
- Reconnect the connectors, components, etc.
- Start the engine.
- Test drive the car on the road in different driving conditions with high and low loads so that the engine control module (ECM) can carry out diagnostics.
- Connect the VCT2000 (or appropriate scan tool) to the data link connector **without switching off the engine.**
- Read the diagnostic status and fault status for the diagnostic trouble code by selecting the diagnostic trouble code in the list.

NOTE: If the engine is switched off, the stored fault status will be erased and the

test drive will have to be repeated.

Check the fault status for the diagnostic trouble code when the scan is "Implemented". When the function is correct the fault status should be "No fault found" when the scan is implemented.

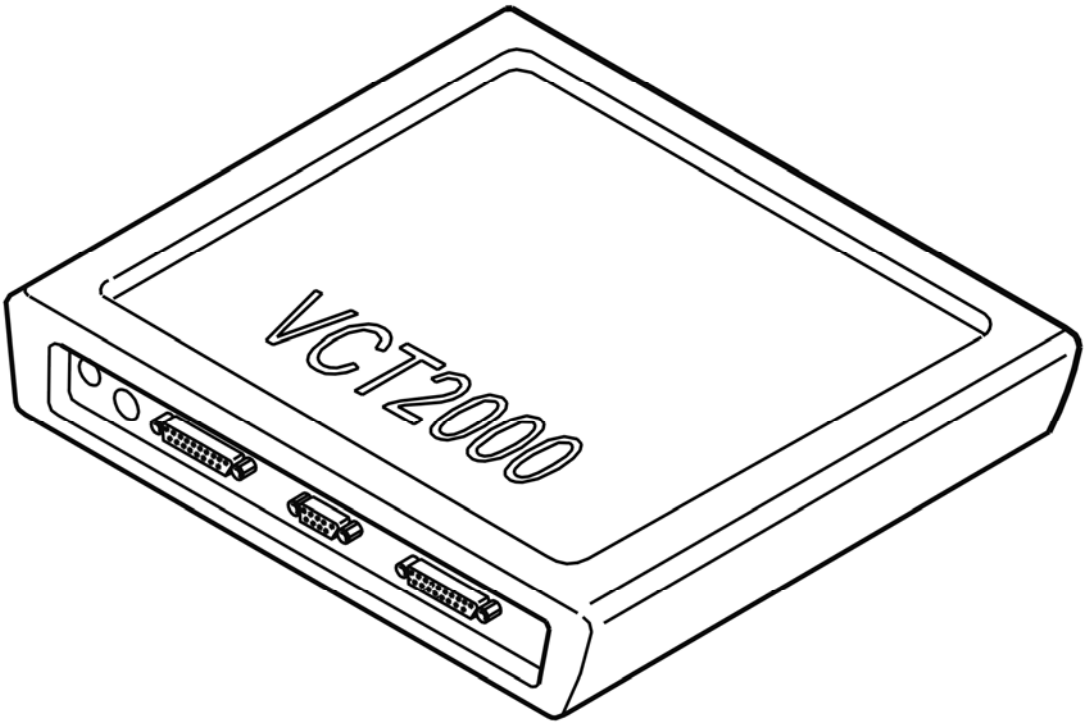

Fig. 88: Identifying VCT2000 Diagnostic Tool Symbol In VIDA
Courtesy of VOLVO CARS CORPORATION

Is the function OK?

- **YES**

  VERIFIED: Troubleshooting has been completed.

- **NO**

  Refer to **INFORMATION**

INFORMATION

FAULT-TRACING INFORMATION

The fault should have been detected and remedied. As this is not the case fault-tracing has failed.

Exit fault-tracing for this diagnostic trouble code (DTC) or make another attempt.

ECM-P007600: INTAKE VALVE CONTROL CIRCUIT LOW (BANK 1). GENERAL FAILURE INFORMATION. NO SUB TYPE INFORMATION (B6324S; 2007-2010)

DIAGNOSTIC TROUBLE CODE (DTC) INFORMATION ECM-P007600

Condition

The engine control module (ECM) regulates the position of the camshaft (angle) by regulating the camshaft reset valve.

The engine control module (ECM) checks the control signal for the camshaft reset valve.

The diagnostic trouble code (DTC) is stored if the control module detects that:

- Control signal is too low.

The control module's test for the diagnostic trouble code (DTC) starts in the event of:

- Ignition switch position II.
- Battery voltage higher than 10.5 V.

NOTE: The control module can only detect the fault once the test has been started and the diagnostic trouble code (DTC) is stored when the conditions are met.

Substitute Value

- Camshaft control switched off.

Possible Source

- Contact resistance or oxidation in the connectors.
- The signal cable is short-circuited to ground.
- The power supply cable is short-circuited to ground.
- Damaged camshaft reset valve.

Fault symptom[s]

- Malfunction indicator light (MIL), on
- Uneven idle
- High emissions
- Engine stalls when driving

FAULT-TRACING

see **FAULT-TRACING**

ECM-P007600: INTAKE VALVE CONTROL CIRCUIT LOW (BANK 1). GENERAL FAILURE INFORMATION. NO SUB TYPE INFORMATION (B6324S5; 2011-2012)

DIAGNOSTIC TROUBLE CODE (DTC) INFORMATION ECM-P007600

see **DIAGNOSTIC TROUBLE CODE (DTC) INFORMATION ECM-P007600**

FAULT-TRACING

see **FAULT-TRACING**

ECM-P007600: INTAKE VALVE CONTROL CIRCUIT LOW (BANK 1). GENERAL FAULT INFORMATION. TYPE OF FAULT NOT SPECIFIED. (B8444S; 2005-2011)

DIAGNOSTIC TROUBLE CODE (DTC) INFORMATION

Condition

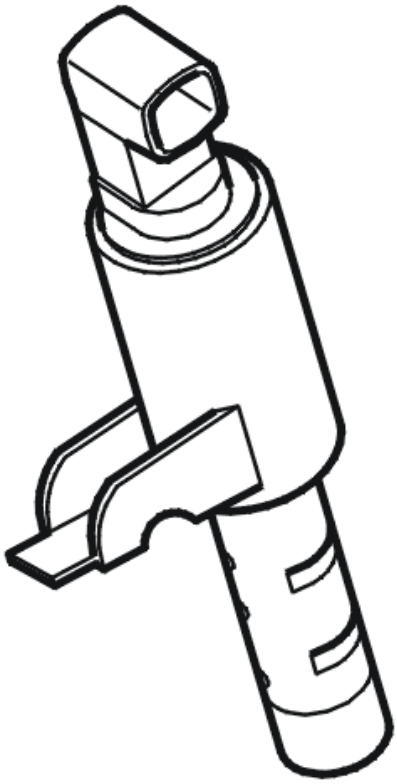

Fig. 89: Identifying Camshaft Reset Valve
Courtesy of VOLVO CARS CORPORATION

The engine control module (ECM) regulates camshaft position (angle position) by regulating the changeover valve camshaft. The diagnostic trouble code is generated if the control module detects that the control signal for the changeover valve camshaft is too low.

The diagnostic trouble code can be diagnosed when the ignition is on.

Substitute Value

- Camshaft regulation deactivated.

Possible Source

- Contact resistance in the connectors.
- The signal cable is short-circuited to ground.
- The power cable is short-circuited to ground.
- Damaged camshaft reset valve

Fault symptom[s]

- Malfunction indicator lamp (MIL) lit.

- Uneven idle.
- Poor performance.
- The engine stops while running.

FAULT TRACING

CHECKING THE STATUS

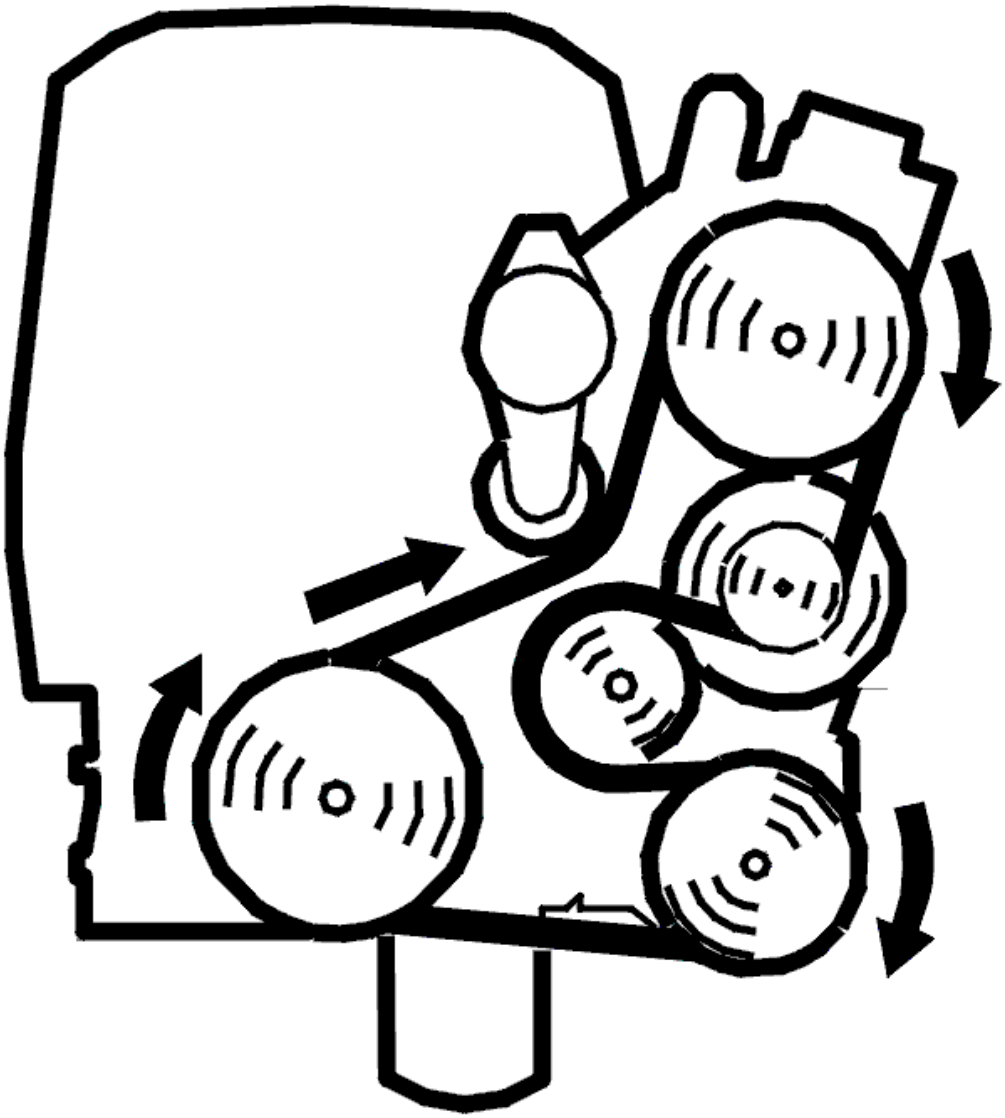

Fig. 90: Belt Routing / Engine Idling - Volvo
Courtesy of VOLVO CARS CORPORATION

- Start the engine.

  Read the diagnostic status and fault status for the diagnostic trouble code by selecting the diagnostic trouble code in the list.

Check whether the fault is permanent or intermittent. Read off the diagnostic trouble code (DTC) fault status when the diagnostic status is "Completed".

The fault is permanent if the fault status is "Fault found". If the fault status is "No fault found" the fault is intermittent and not presently active.

NOTE: The fault status cannot change from "Fault found" to "No fault found" in the same operating cycle.

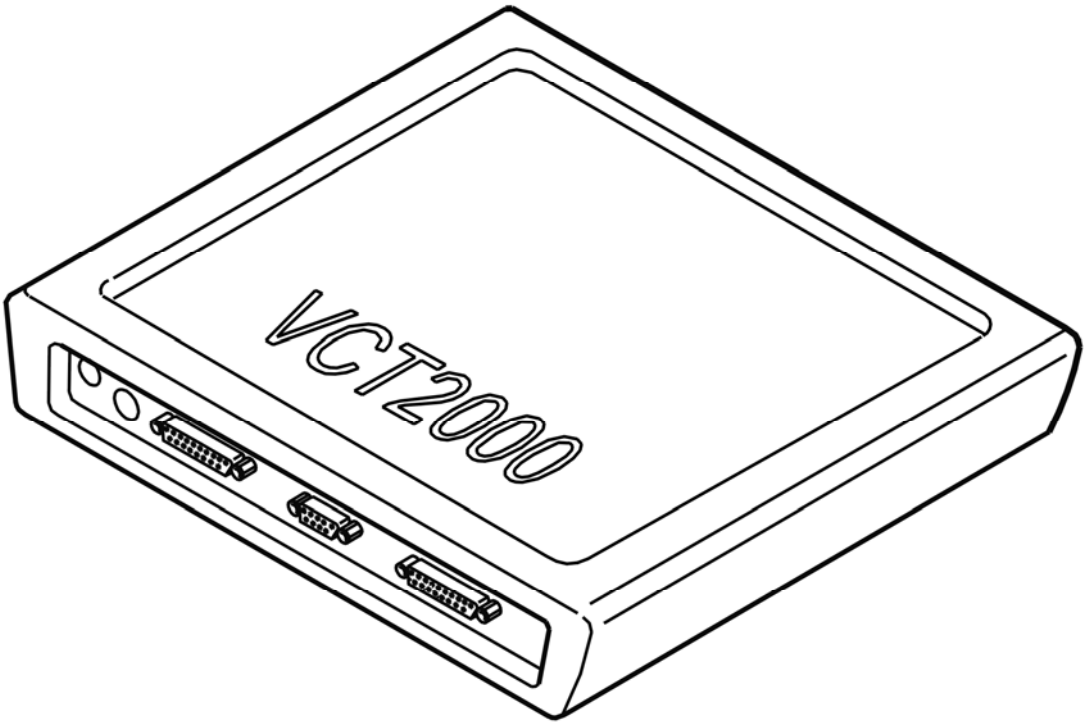

Fig. 91: Identifying VCT2000 Diagnostic Tool Symbol In VIDA
Courtesy of VOLVO CARS CORPORATION

- **Continue**

Refer to **CHECKING COMPONENTS AND WIRING**

CHECKING COMPONENTS AND WIRING

HINT: Bank 1 (cylinder row nearest the front): cylinders 1, 3, 5 and 7. Bank 2 (cylinder row furthest to the rear, nearest the passenger compartment): cylinders 2, 4, 6, and 8.

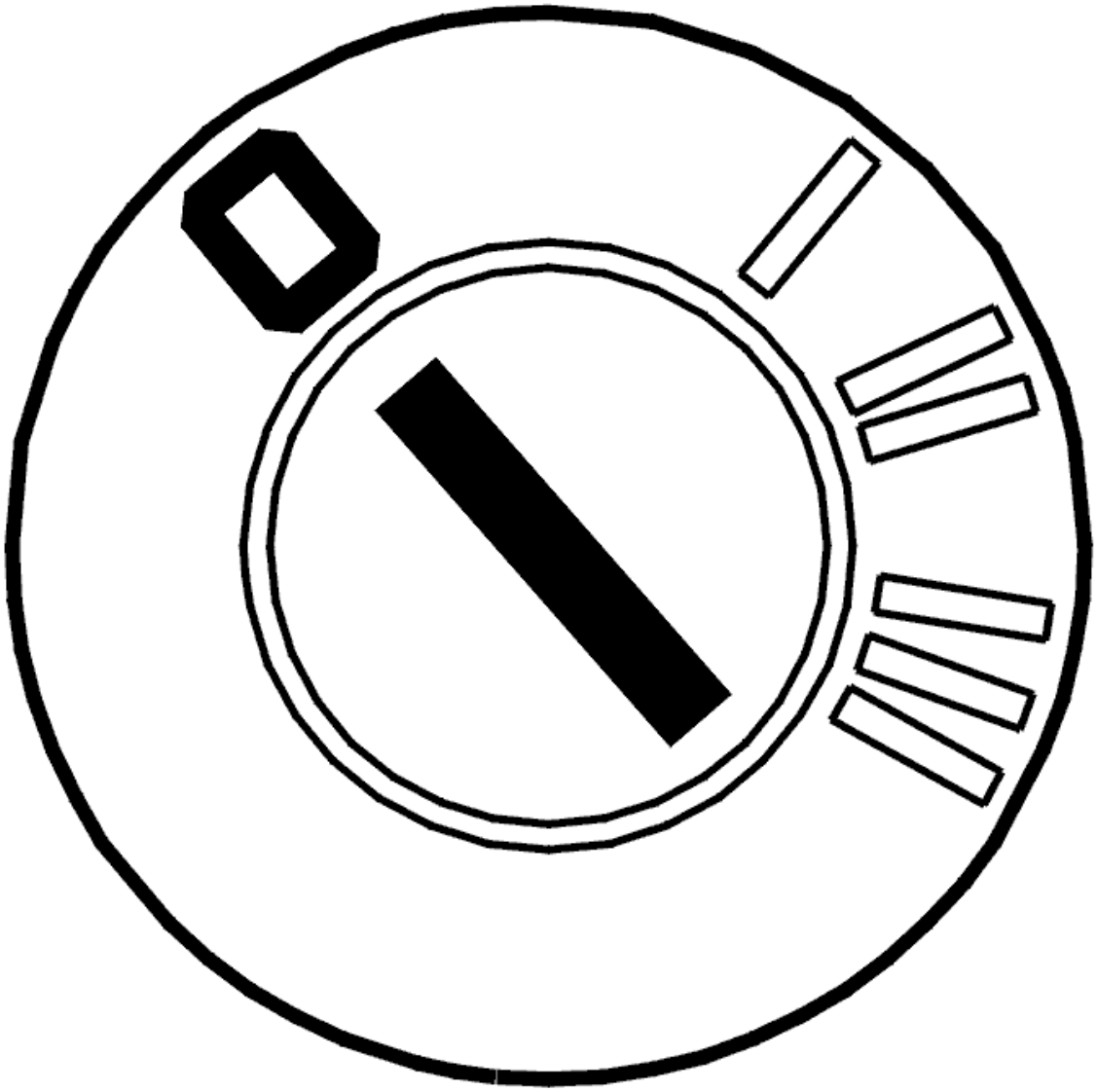

Fig. 92: Identifying Ignition OFF
Courtesy of VOLVO CARS CORPORATION

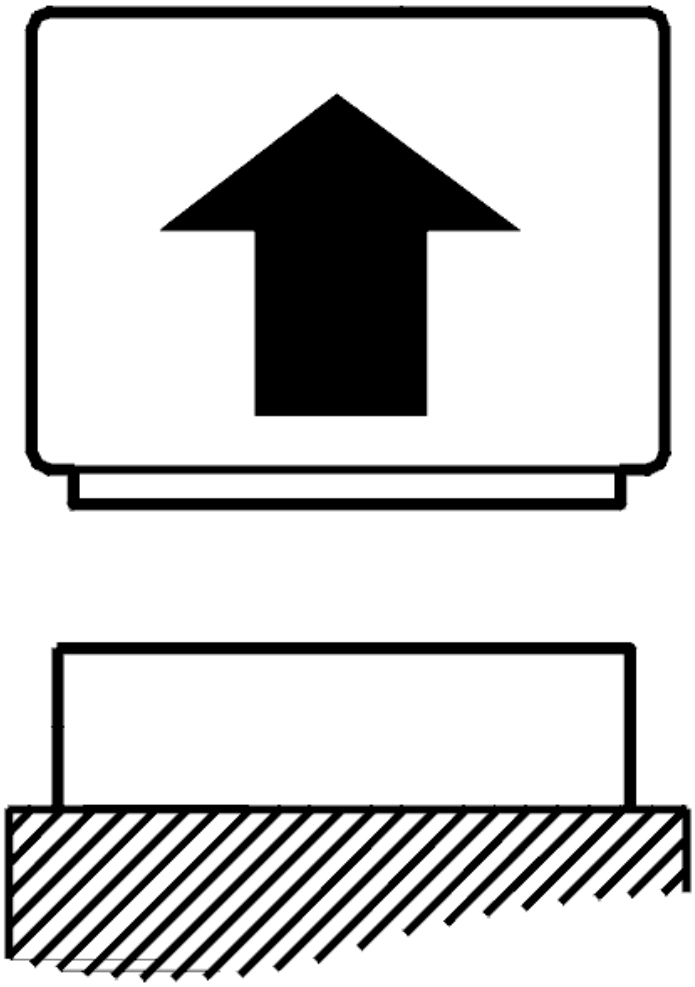

Fig. 93: Disconnecting Connector
Courtesy of VOLVO CARS CORPORATION

- Ignition off

  Check the fuse for the circuit. If the fuse is blown, check the cable. Check for a short-circuit to ground.

  Check the resistance of the reset valve.

  Check the connector for relevant camshaft reset valve. Check for contact resistance and oxidation.

  Disconnect the engine control module (ECM).

  Check the signal cable for the relevant camshaft reset valve. Check for a short-circuit to ground.

  Measure between:

- Control module #A87 (#B27) and reset valve camshaft #2, inlet (bank 1).
- Control module #A86 (#B26) and reset valve camshaft #2, inlet (bank 2).

Check the voltage supply cable for the relevant camshaft reset valve. Check for a short-circuit to supply voltage.

Measure between:

- System relay and reset valve camshaft #1, inlet (bank 1).
- System relay and reset valve camshaft #1, inlet (bank 2).

Remedy as necessary.

Other information

- see **CONNECTING THE BREAKOUT BOX**
- see **SIGNAL SPECIFICATION, ENGINE CONTROL MODULE (ECM)**
- see **COMPONENT SPECIFICATIONS**
- For B5xx4T, see **VARIABLE VALVE TIMING SOLENOID, REPLACING**
- For B6xx4T, see **REPLACING THE VARIABLE VALVE TIMING SOLENOID** .
- see **CHECKING WIRING AND TERMINALS**

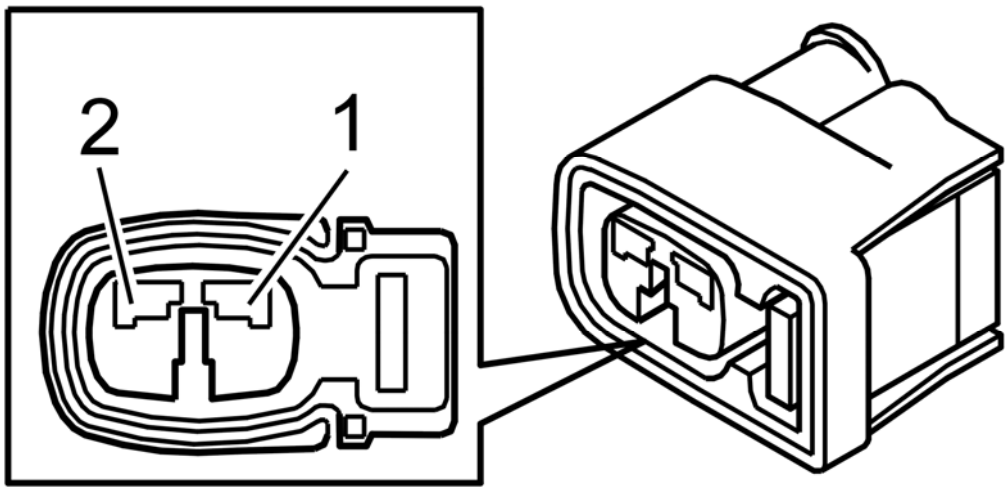

Fig. 94: Identifying Connector Terminals
Courtesy of VOLVO CARS CORPORATION

- **Continue**

  Refer to **VERIFICATION**

VERIFICATION

VERIFICATION

HINT: After carrying out the repair, check that the fault has been remedied.

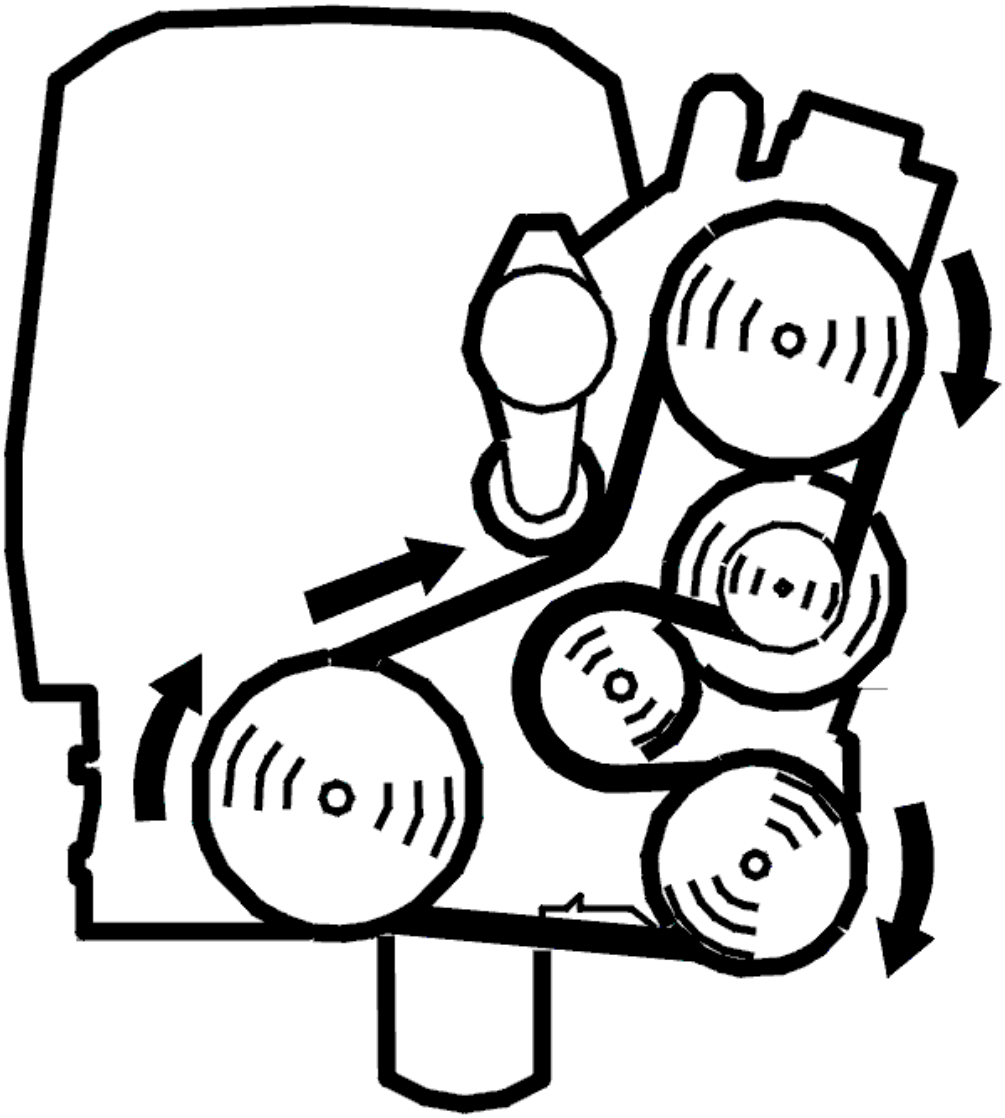

Fig. 95: Belt Routing / Engine Idling - Volvo
Courtesy of VOLVO CARS CORPORATION

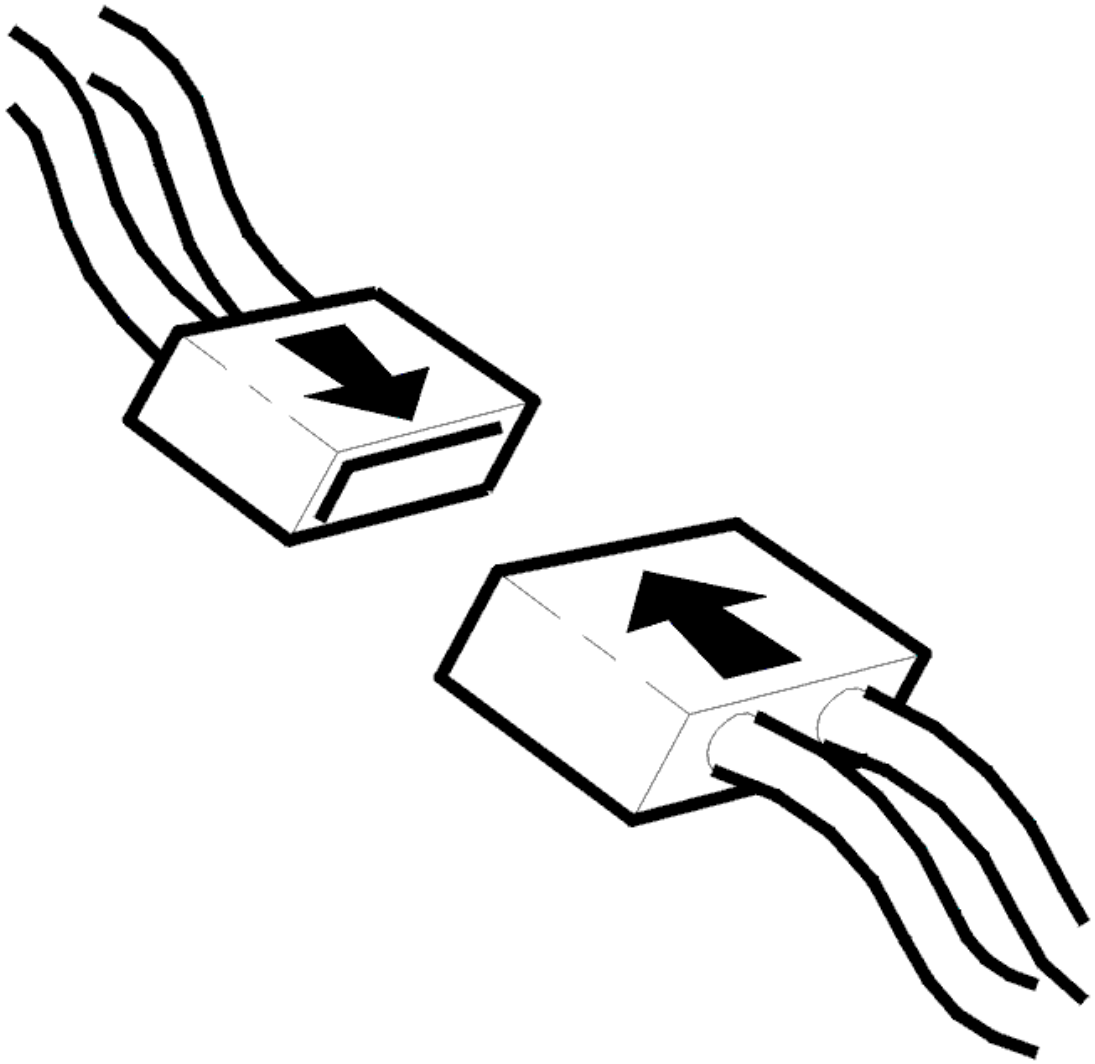

Fig. 96: Connecting Connector
Courtesy of VOLVO CARS CORPORATION

- Ignition off
- Reconnect the connectors, components, etc.
- Start the engine.
- Test drive the car on the road in different driving conditions with high and low loads so that the engine control module (ECM) can carry out diagnostics.
- Connect the VCT2000 (or appropriate scan tool) to the data link connector **without switching off the engine.**
- Read the diagnostic status and fault status for the diagnostic trouble code by selecting the diagnostic trouble code in the list.

NOTE: If the engine is switched off, the stored fault status will be erased and the

test drive will have to be repeated.

Check the fault status for the diagnostic trouble code when the scan is "Implemented". When the function is correct the fault status should be "No fault found" when the scan is implemented.

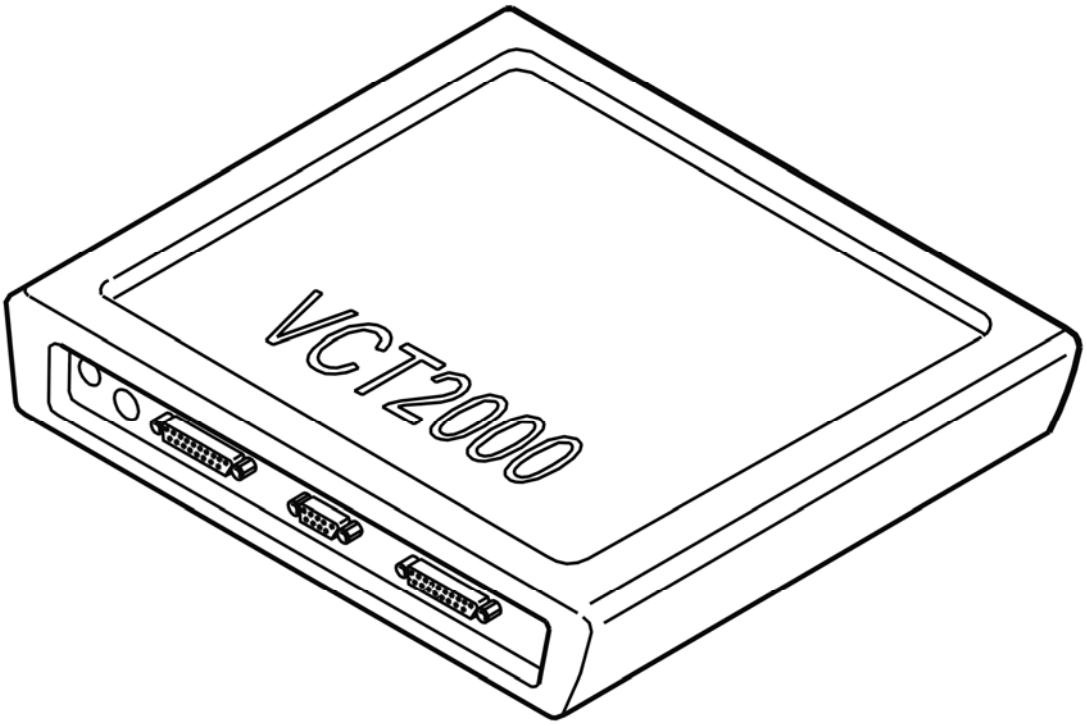

Fig. 97: Identifying VCT2000 Diagnostic Tool Symbol In VIDA
Courtesy of VOLVO CARS CORPORATION

Is the function OK?

- **YES**

  VERIFIED: Troubleshooting has been completed.

- **NO**

  Refer to **INFORMATION**

INFORMATION

FAULT-TRACING INFORMATION

The fault should have been detected and remedied. As this is not the case fault-tracing has failed.

Exit fault-tracing for this diagnostic trouble code (DTC) or make another attempt.

ECM-P007700: INTAKE VALVE CONTROL CIRCUIT HIGH (BANK 1). GENERAL FAILURE INFORMATION. NO SUB TYPE INFORMATION (B6324S; 2007-2010)

DIAGNOSTIC TROUBLE CODE (DTC) INFORMATION ECM-P007700

Condition

The engine control module (ECM) regulates the position of the camshaft (angle) by regulating the camshaft reset valve.

The engine control module (ECM) checks the control signal for the camshaft reset valve.

The diagnostic trouble code (DTC) is stored if the control module detects that:

- Control signal is too high.

The control module's test for the diagnostic trouble code (DTC) starts in the event of:

- Ignition switch position II.
- Battery voltage higher than 10.5 V.

NOTE: The control module can only detect the fault once the test has been started and the diagnostic trouble code (DTC) is stored when the conditions are met.

Substitute Value

- Camshaft control switched off.

Possible Source

- Short-circuit to supply voltage in the signal cable.
- Damaged camshaft reset valve.

Fault symptom[s]

- Malfunction indicator light (MIL), on
- Uneven idle
- High emissions
- Engine stalls when driving

FAULT-TRACING

see **FAULT-TRACING**

ECM-P007700: INTAKE VALVE CONTROL CIRCUIT HIGH (BANK 1). GENERAL FAILURE INFORMATION. NO SUB TYPE INFORMATION (B6324S5; 2011-2012)

DIAGNOSTIC TROUBLE CODE (DTC) INFORMATION ECM-P007700

see **DIAGNOSTIC TROUBLE CODE (DTC) INFORMATION ECM-P007700**

FAULT-TRACING

see **FAULT-TRACING**

ECM-P007700: INTAKE VALVE CONTROL CIRCUIT HIGH (BANK 1). GENERAL FAULT INFORMATION. TYPE OF FAULT NOT SPECIFIED. (B8444S; 2005-2011)

DIAGNOSTIC TROUBLE CODE (DTC) INFORMATION

Condition

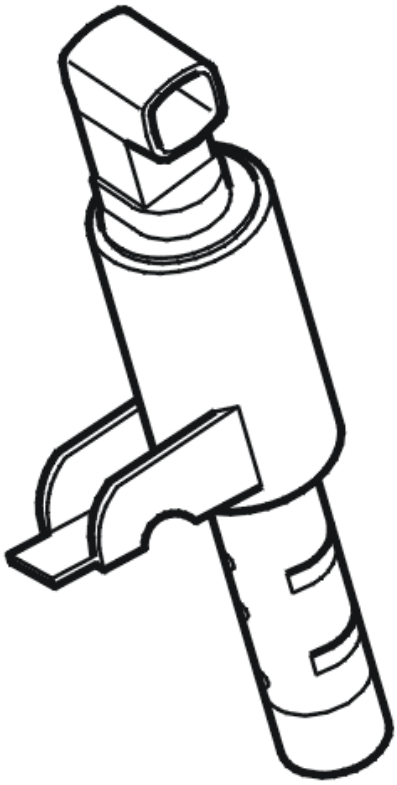

Fig. 98: Identifying Camshaft Reset Valve
Courtesy of VOLVO CARS CORPORATION

The engine control module (ECM) regulates camshaft position (angle position) by regulating the changeover valve camshaft. The diagnostic trouble code is generated if the control module detects that the control signal for the changeover valve camshaft is too high.

The diagnostic trouble code can be diagnosed when the ignition is on.

Substitute Value

- Camshaft regulation deactivated.

Possible Source

- The signal cable is short-circuited to voltage.
- Damaged camshaft reset valve

Fault symptom[s]

- Malfunction indicator lamp (MIL) lit.
- Uneven idle.
- Poor performance.
- The engine stops while running.

FAULT TRACING

CHECKING THE STATUS

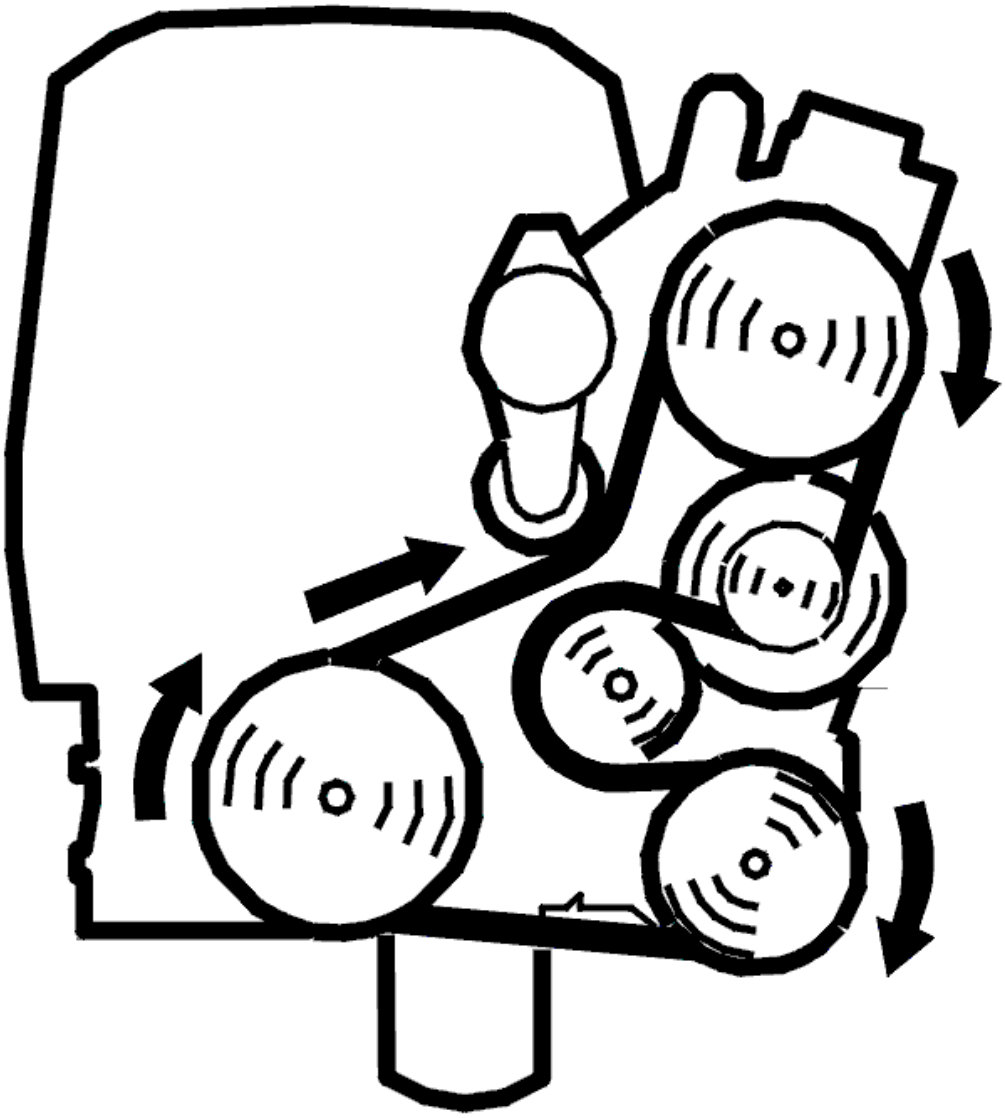

Fig. 99: Belt Routing / Engine Idling - Volvo
Courtesy of VOLVO CARS CORPORATION

- Start the engine.

  Read the diagnostic status and fault status for the diagnostic trouble code by selecting the diagnostic trouble code in the list.

  Check whether the fault is permanent or intermittent. Read off the diagnostic trouble code (DTC) fault status when the diagnostic status is "Completed".

  The fault is permanent if the fault status is "Fault found". If the fault status is "No fault found" the fault is intermittent and not presently active.

  NOTE: The fault status cannot change from "Fault found" to "No fault found" in the same operating cycle.

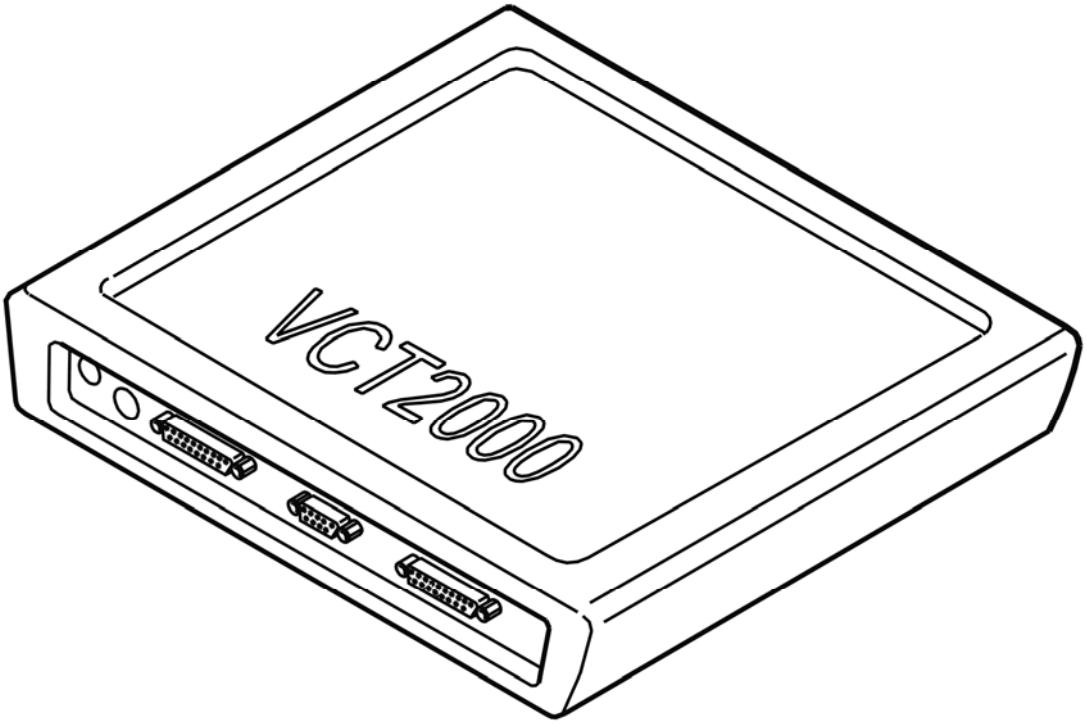

Fig. 100: Identifying VCT2000 Diagnostic Tool Symbol In VIDA
Courtesy of VOLVO CARS CORPORATION

- **Continue**

  Refer to **CHECKING COMPONENTS AND WIRING**

CHECKING COMPONENTS AND WIRING

HINT: Bank 1 (cylinder row nearest the front): cylinders 1, 3, 5 and 7. Bank 2 (cylinder row furthest to the rear, nearest the passenger compartment): cylinders 2, 4, 6, and 8.

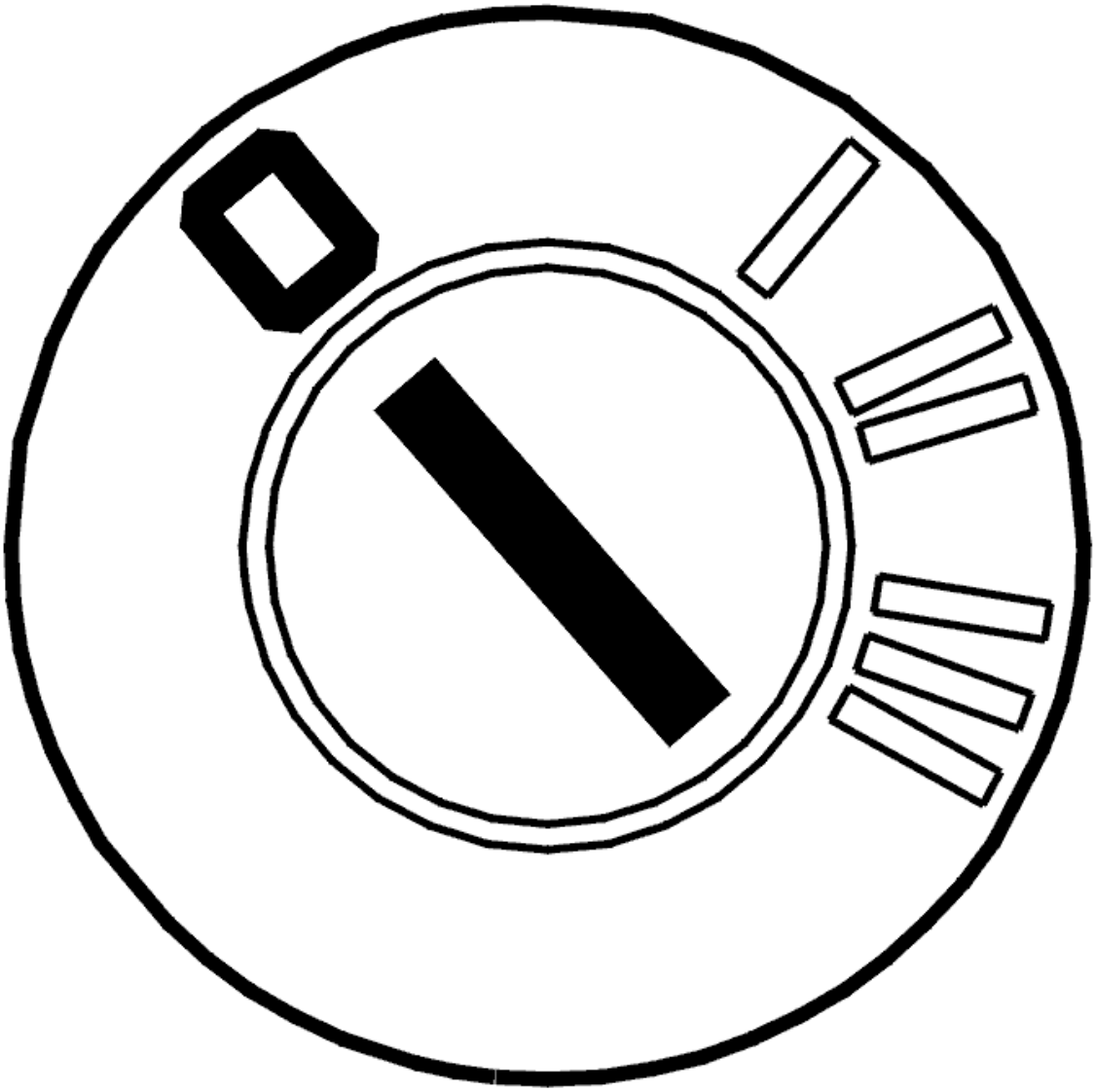

Fig. 101: Identifying Ignition OFF
Courtesy of VOLVO CARS CORPORATION

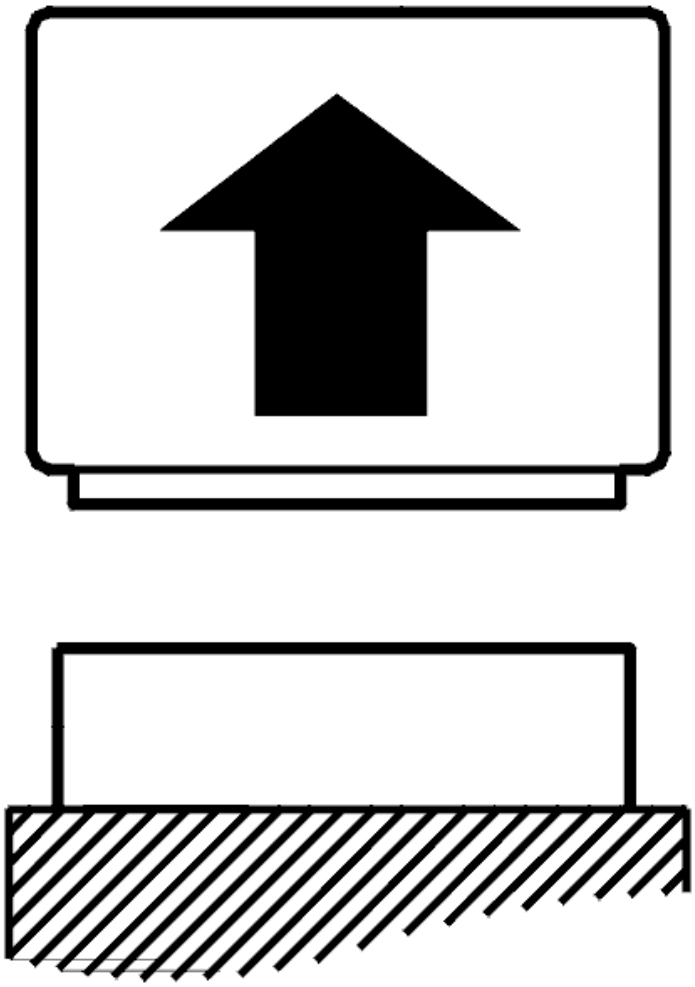

Fig. 102: Disconnecting Connector
Courtesy of VOLVO CARS CORPORATION

- Ignition off

  Disconnect the engine control module (ECM).

  Check the signal cable for the relevant camshaft reset valve. Check for a short-circuit to supply voltage.

  Measure between:

  - Control module #A87 (#B27) and reset valve camshaft #2, inlet (bank 1).
  - Control module #A86 (#B26) and reset valve camshaft #2, inlet (bank 2).

  Remedy as necessary.

Other information

- see **CONNECTING THE BREAKOUT BOX**
- see **SIGNAL SPECIFICATION, ENGINE CONTROL MODULE (ECM)**
- see **COMPONENT SPECIFICATIONS**
- For B5xx4T, see **VARIABLE VALVE TIMING SOLENOID, REPLACING**
- For B6xx4T, see **REPLACING THE VARIABLE VALVE TIMING SOLENOID** .
- see **CHECKING WIRING AND TERMINALS**

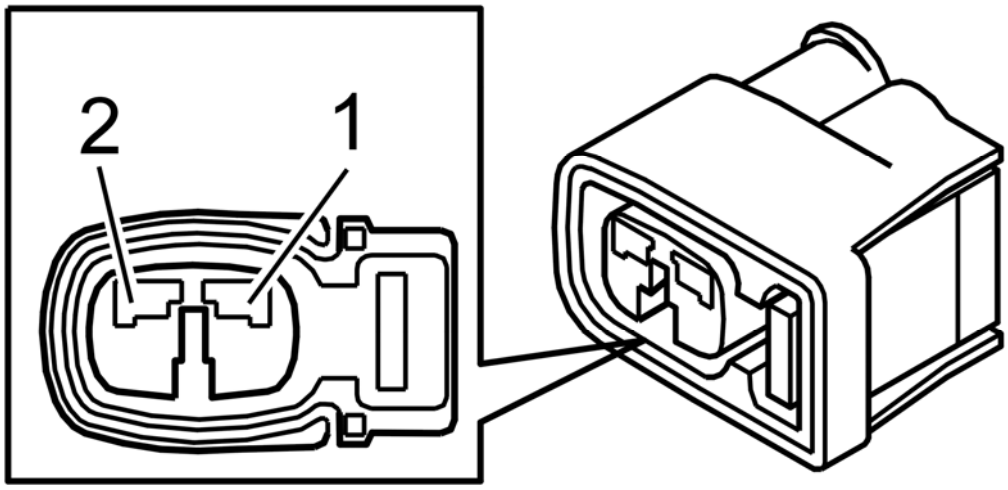

Fig. 103: Identifying Connector Terminals
Courtesy of VOLVO CARS CORPORATION

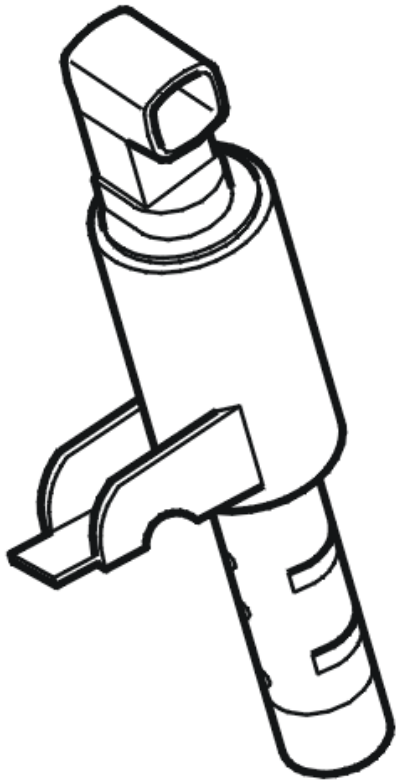

Fig. 104: Identifying Camshaft Reset Valve
Courtesy of VOLVO CARS CORPORATION

- **Continue**

  Refer to **VERIFICATION**

VERIFICATION

VERIFICATION

HINT: After carrying out the repair, check that the fault has been remedied.

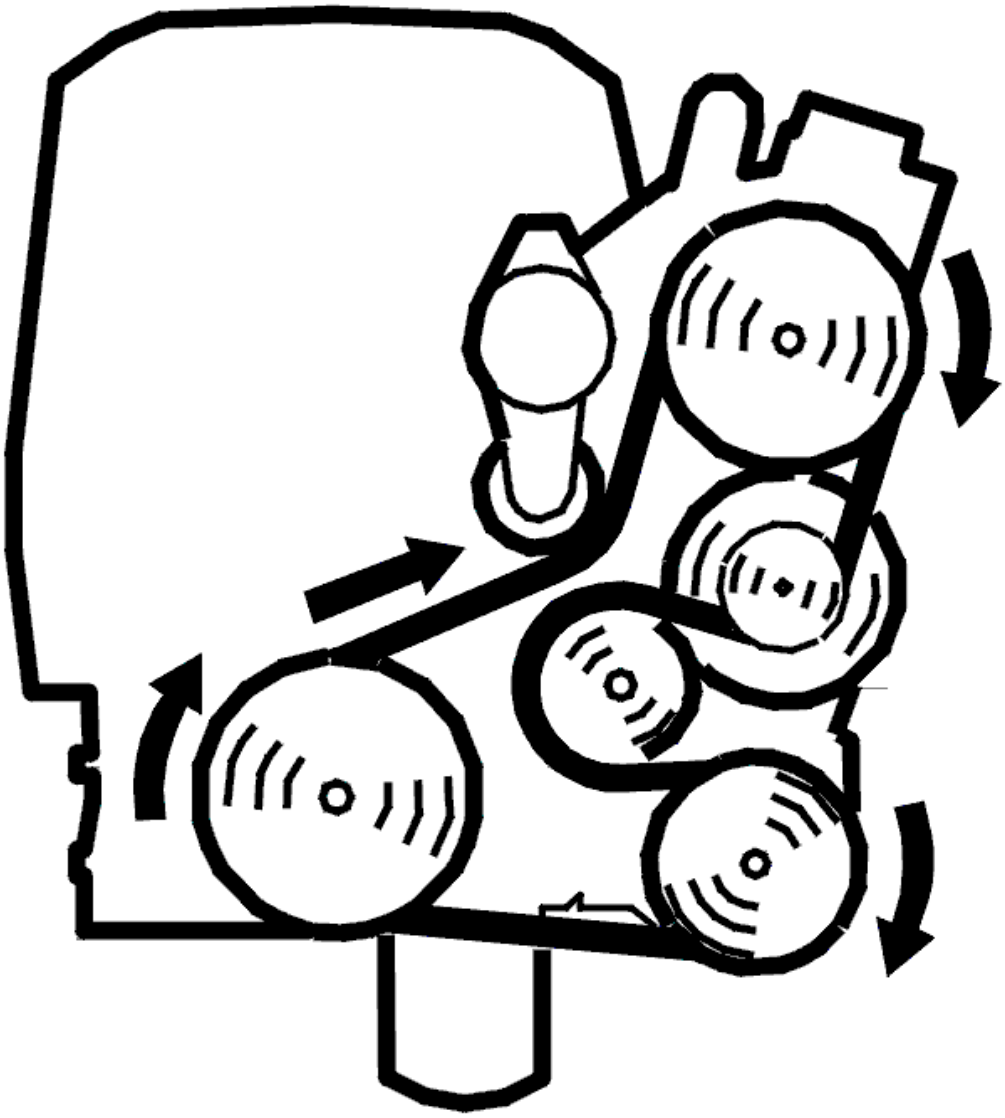

Fig. 105: Belt Routing / Engine Idling - Volvo
Courtesy of VOLVO CARS CORPORATION

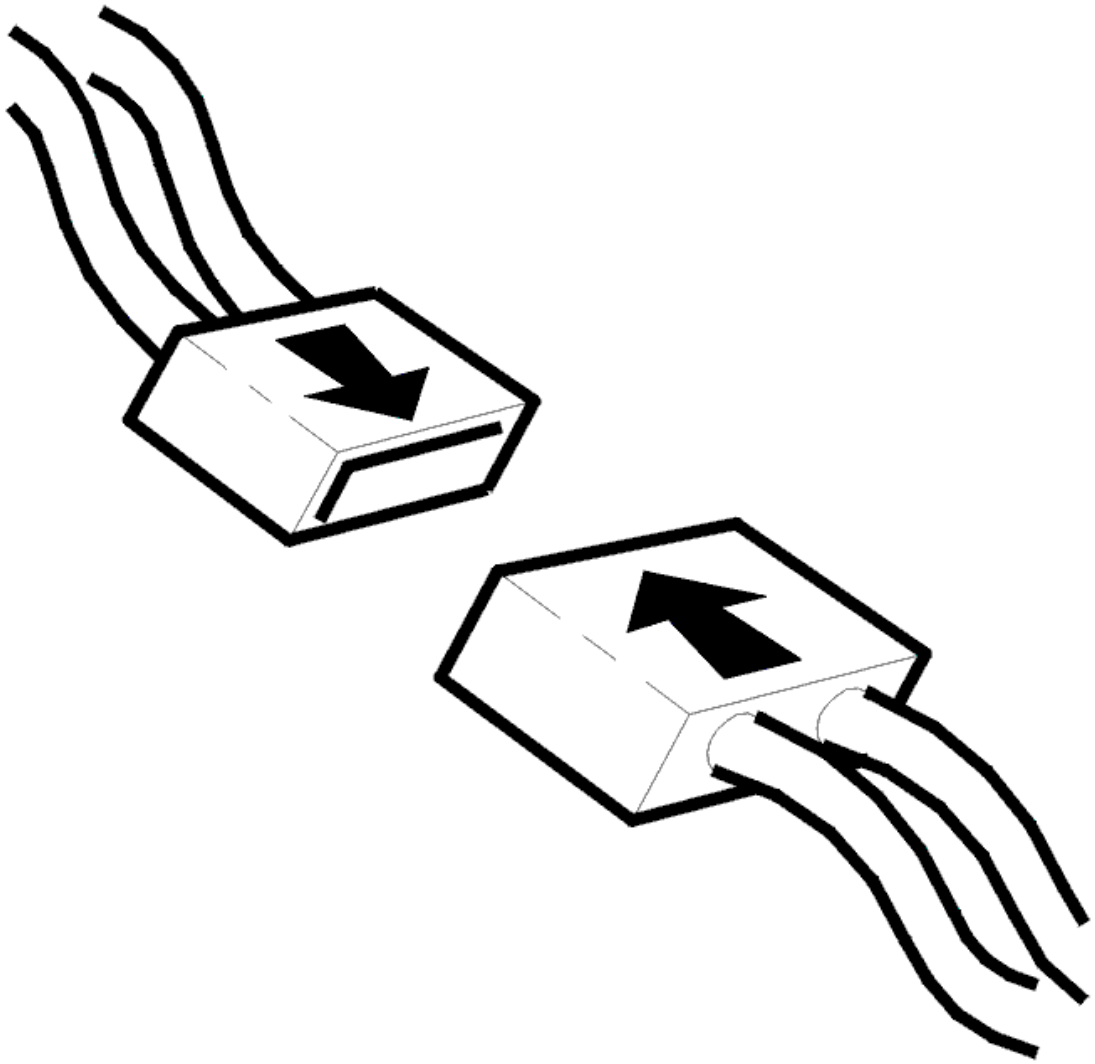

Fig. 106: Connecting Connector
Courtesy of VOLVO CARS CORPORATION

- Ignition off
- Reconnect the connectors, components, etc.
- Start the engine.
- Test drive the car on the road in different driving conditions with high and low loads so that the engine control module (ECM) can carry out diagnostics.
- Connect the VCT2000 (or appropriate scan tool) to the data link connector **without switching off the engine.**
- Read the diagnostic status and fault status for the diagnostic trouble code by selecting the diagnostic trouble code in the list.

NOTE: If the engine is switched off, the stored fault status will be erased and the

test drive will have to be repeated.

Check the fault status for the diagnostic trouble code when the scan is "Implemented". When the function is correct the fault status should be "No fault found" when the scan is implemented.

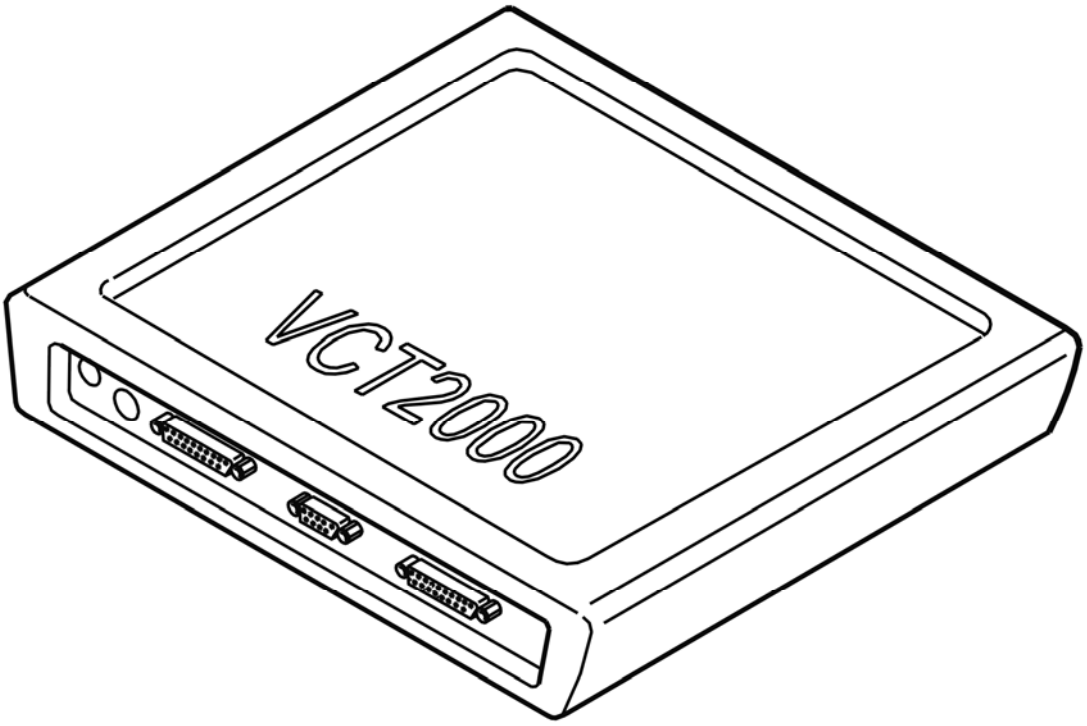

Fig. 107: Identifying VCT2000 Diagnostic Tool Symbol In VIDA
Courtesy of VOLVO CARS CORPORATION

Is the function OK?

- **YES**

  VERIFIED: Troubleshooting has been completed.

- **NO**

  Refer to **INFORMATION**

INFORMATION

FAULT-TRACING INFORMATION

The fault should have been detected and remedied. As this is not the case fault-tracing has failed.

Exit fault-tracing for this diagnostic trouble code (DTC) or make another attempt.

ECM-P007800: EXHAUST VALVE CONTROL CIRCUIT (BANK 1). GENERAL FAULT INFORMATION. TYPE OF FAULT NOT SPECIFIED. (B8444S; 2005-2011)

DIAGNOSTIC TROUBLE CODE (DTC) INFORMATION

see **DIAGNOSTIC TROUBLE CODE (DTC) INFORMATION**

FAULT TRACING

CHECKING THE STATUS

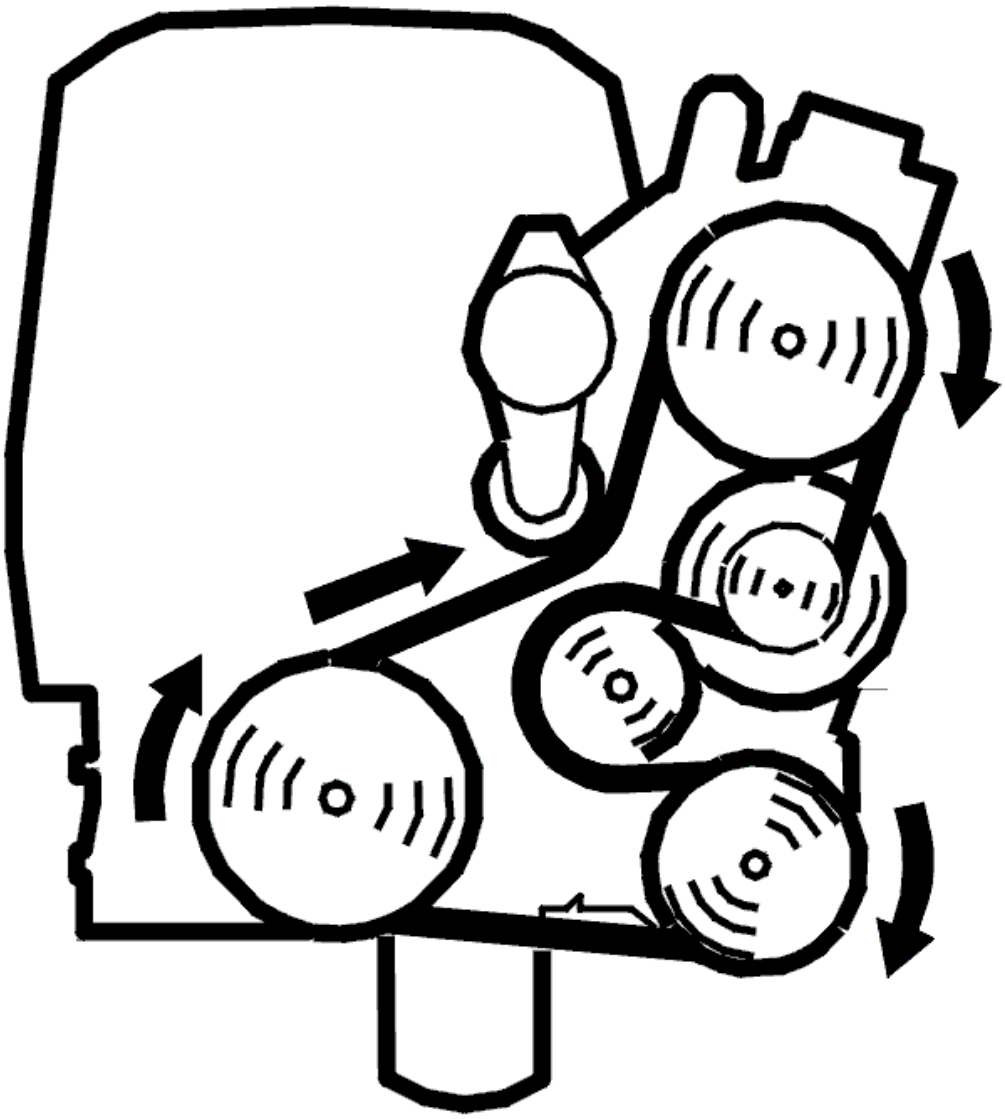

Fig. 108: Belt Routing / Engine Idling - Volvo

Courtesy of VOLVO CARS CORPORATION

- Start the engine.

  Read the diagnostic status and fault status for the diagnostic trouble code by selecting the diagnostic trouble code in the list.

  Check whether the fault is permanent or intermittent. Read off the diagnostic trouble code (DTC) fault status when the diagnostic status is "Completed".

  The fault is permanent if the fault status is "Fault found". If the fault status is "No fault found" the fault is intermittent and not presently active.

  NOTE: The fault status cannot change from "Fault found" to "No fault found" in the same operating cycle.

Fig. 109: Identifying VCT2000 Diagnostic Tool Symbol In VIDA
Courtesy of VOLVO CARS CORPORATION

- **Continue**

  Refer to **CHECKING COMPONENTS AND WIRING**

CHECKING COMPONENTS AND WIRING

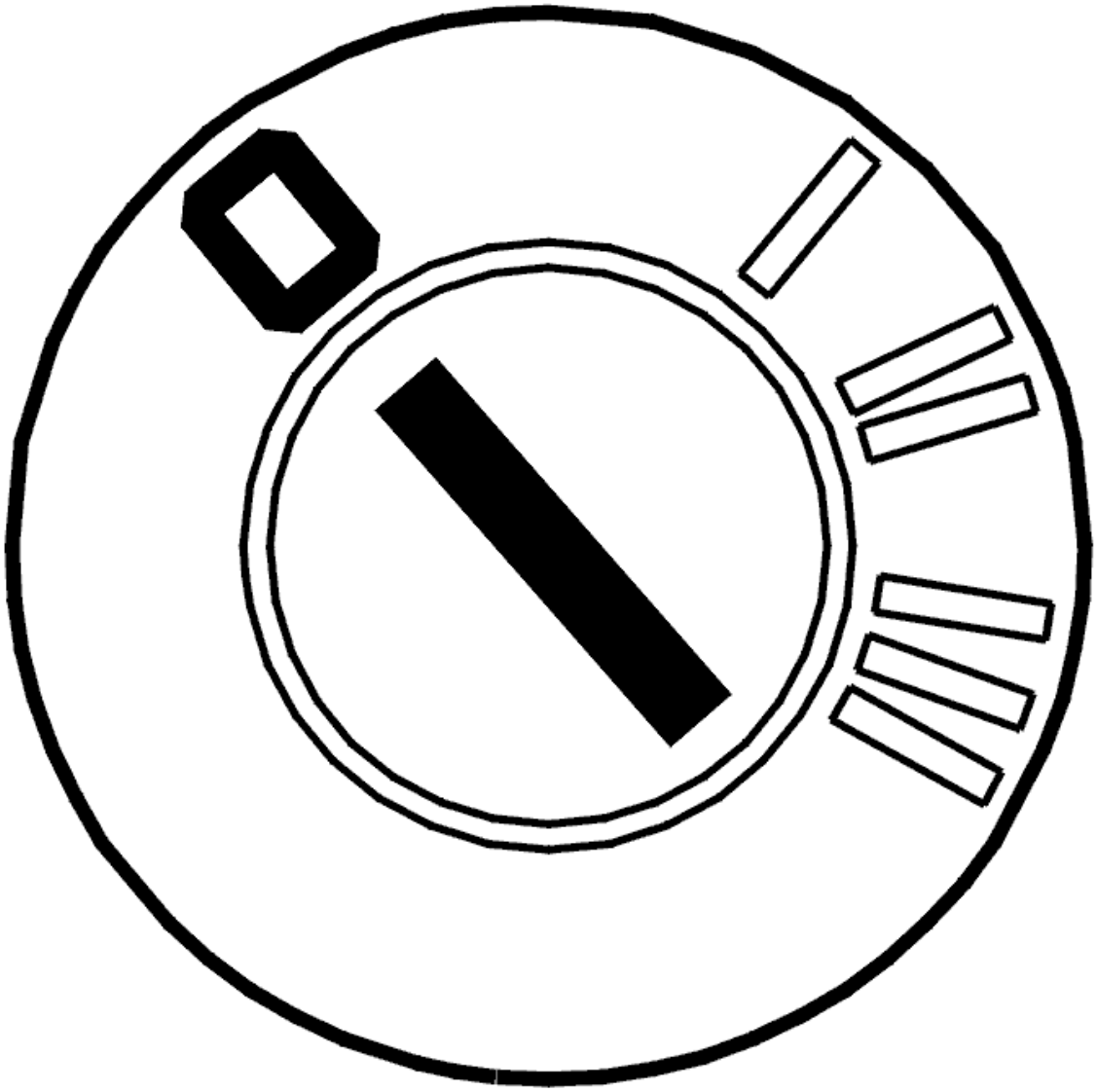

Fig. 110: Identifying Ignition OFF
Courtesy of VOLVO CARS CORPORATION

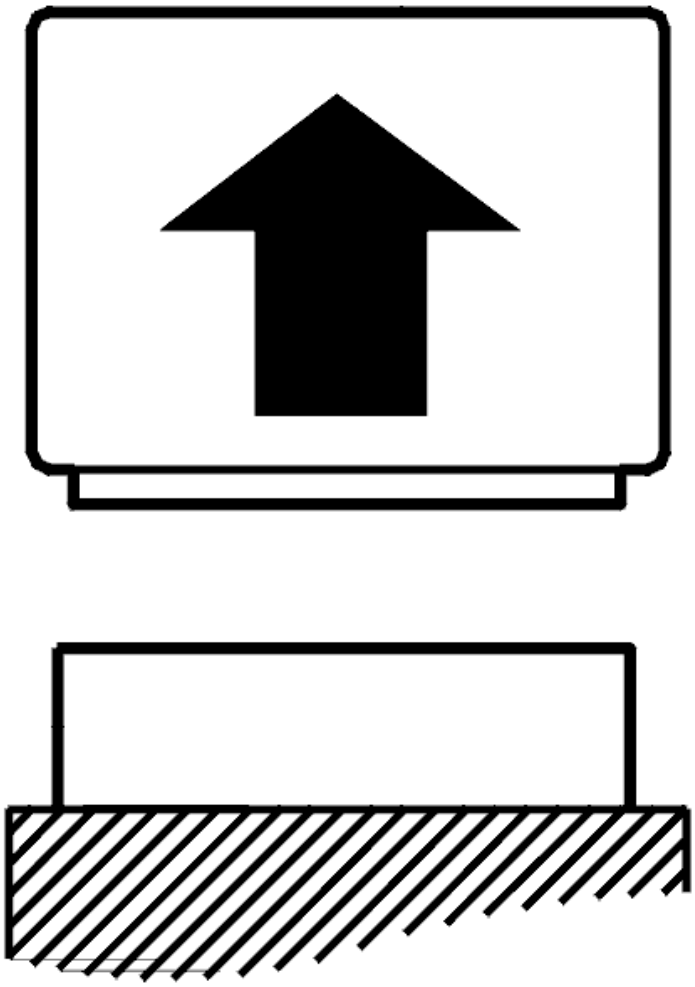

Fig. 111: Disconnecting Connector
Courtesy of VOLVO CARS CORPORATION

- Ignition off

  Check the fuse for the circuit. If the fuse is blown, check the cable. Check for a short-circuit to ground.

  Check the resistance of the reset valve.

  Disconnect the engine control module (ECM).

  Check the signal cable for the relevant camshaft reset valve. Check for an open-circuit.

  Measure between:

  - Control module #A91 (#B31) and reset valve camshaft #2, exhaust (bank 1).

- Control module #A90 (#B30) and reset valve camshaft #2, exhaust (bank 2).

Check the voltage supply cable for the relevant camshaft reset valve. Check for an open-circuit.

Measure between:

- System relay and reset valve camshaft #1, exhaust (bank 1).
- System relay and reset valve camshaft #1, exhaust (bank 2).

Remedy as necessary.

Other information

- see **CONNECTING THE BREAKOUT BOX**
- see **SIGNAL SPECIFICATION, ENGINE CONTROL MODULE (ECM)**
- see **COMPONENT SPECIFICATIONS**
- For B5xx4T, see **VARIABLE VALVE TIMING SOLENOID, REPLACING**
- For B6xx4T, see **REPLACING THE VARIABLE VALVE TIMING SOLENOID** .
- see **CHECKING WIRING AND TERMINALS**

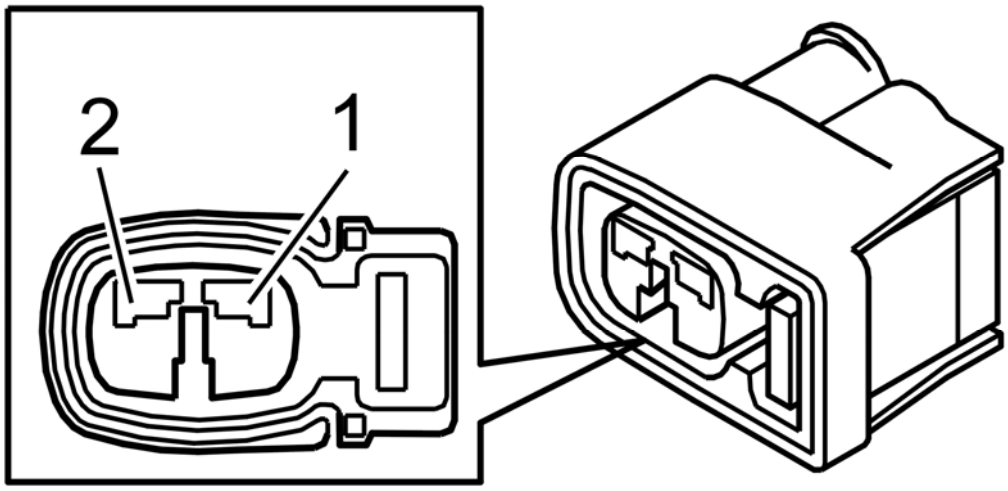

Fig. 112: Identifying Connector Terminals
Courtesy of VOLVO CARS CORPORATION

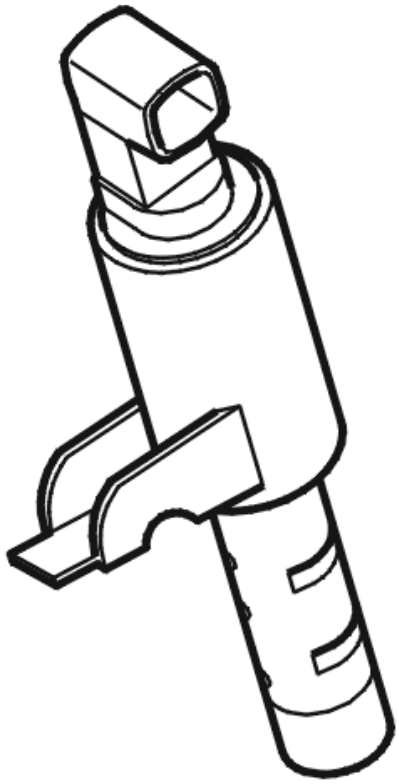

Fig. 113: Identifying Camshaft Reset Valve
Courtesy of VOLVO CARS CORPORATION

- **Continue**

  Refer to **VERIFICATION**

VERIFICATION

VERIFICATION

HINT: After carrying out the repair, check that the fault has been remedied.

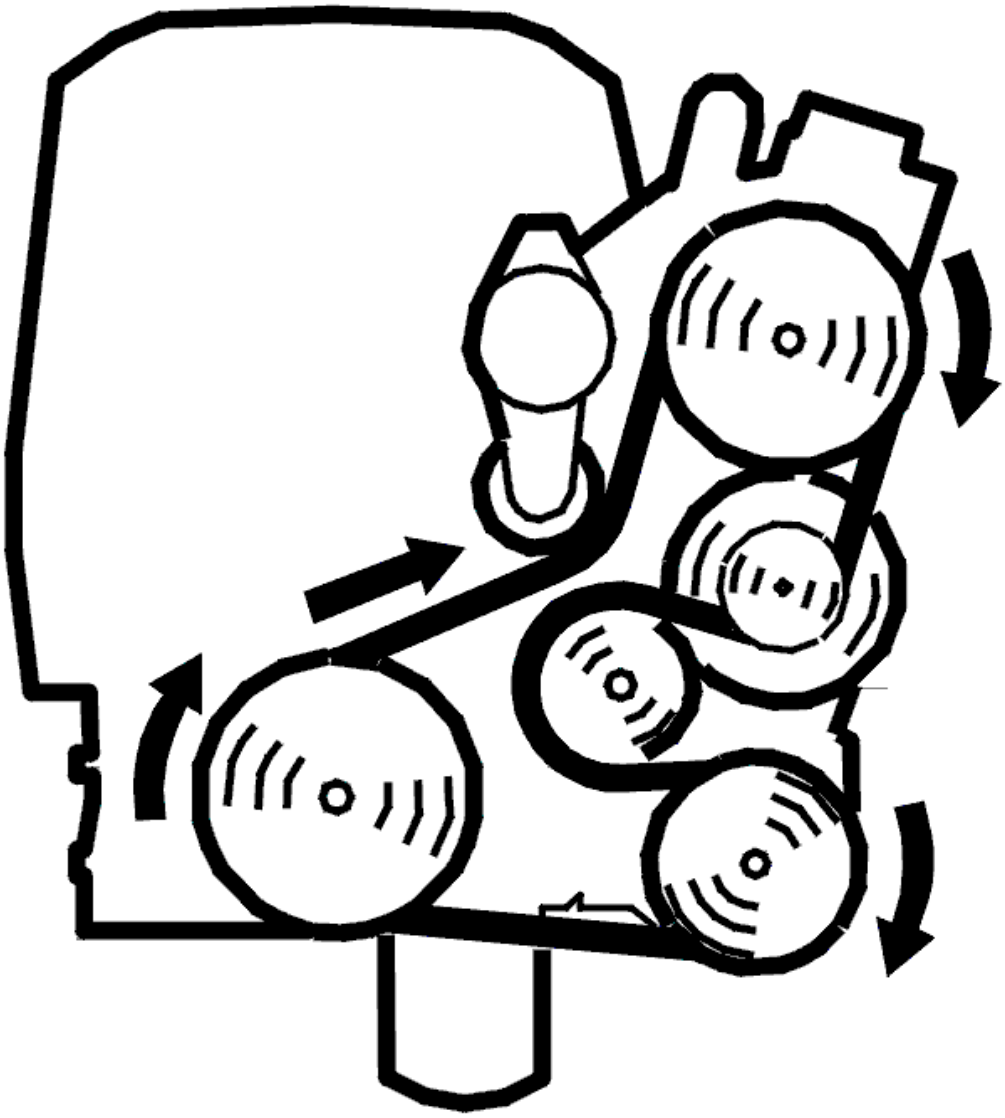

Fig. 114: Belt Routing / Engine Idling - Volvo
Courtesy of VOLVO CARS CORPORATION

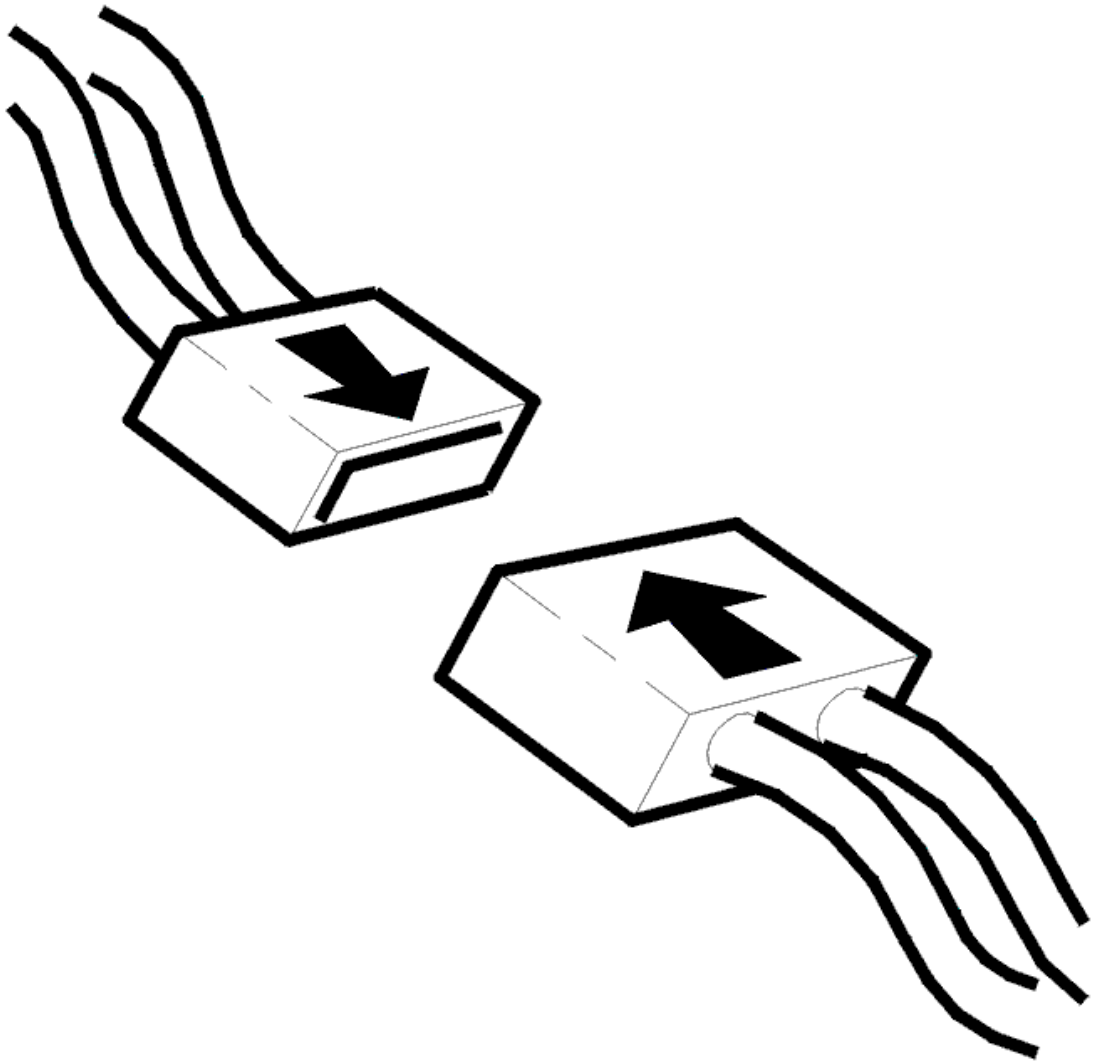

Fig. 115: Connecting Connector
Courtesy of VOLVO CARS CORPORATION

- Ignition off
- Reconnect the connectors, components, etc.
- Start the engine.
- Test drive the car on the road in different driving conditions with high and low loads so that the engine control module (ECM) can carry out diagnostics.
- Connect the VCT2000 (or appropriate scan tool) to the data link connector **without switching off the engine.**
- Read the diagnostic status and fault status for the diagnostic trouble code by selecting the diagnostic trouble code in the list.

NOTE: If the engine is switched off, the stored fault status will be erased and the

test drive will have to be repeated.

Check the fault status for the diagnostic trouble code when the scan is "Implemented". When the function is correct the fault status should be "No fault found" when the scan is implemented.

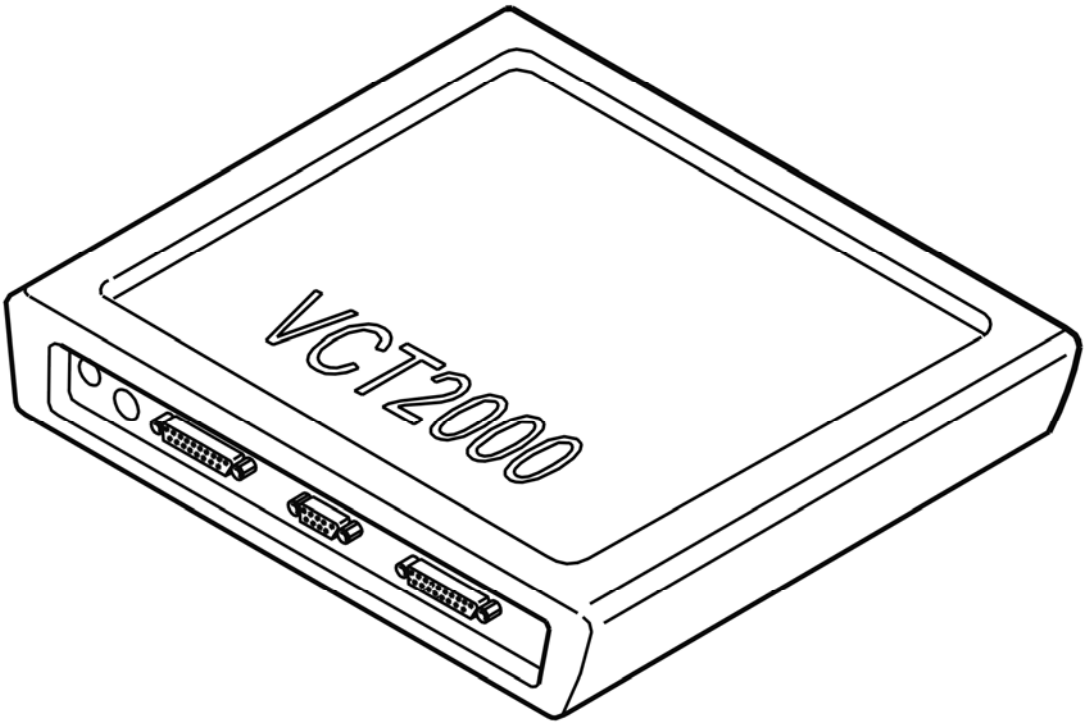

Fig. 116: Identifying VCT2000 Diagnostic Tool Symbol In VIDA
Courtesy of VOLVO CARS CORPORATION

Is the function OK?

- **YES**

  VERIFIED: Troubleshooting has been completed.

- **NO**

  Refer to **INFORMATION**

INFORMATION

FAULT-TRACING INFORMATION

The fault should have been detected and remedied. As this is not the case fault-tracing has failed.

Exit fault-tracing for this diagnostic trouble code (DTC) or make another attempt.

ECM-P007900: EXHAUST VALVE CONTROL CIRCUIT LOW (BANK 1). GENERAL FAULT INFORMATION. TYPE OF FAULT NOT SPECIFIED. (B8444S; 2005-2011)

DIAGNOSTIC TROUBLE CODE (DTC) INFORMATION

see **DIAGNOSTIC TROUBLE CODE (DTC) INFORMATION**

FAULT TRACING

CHECKING THE STATUS

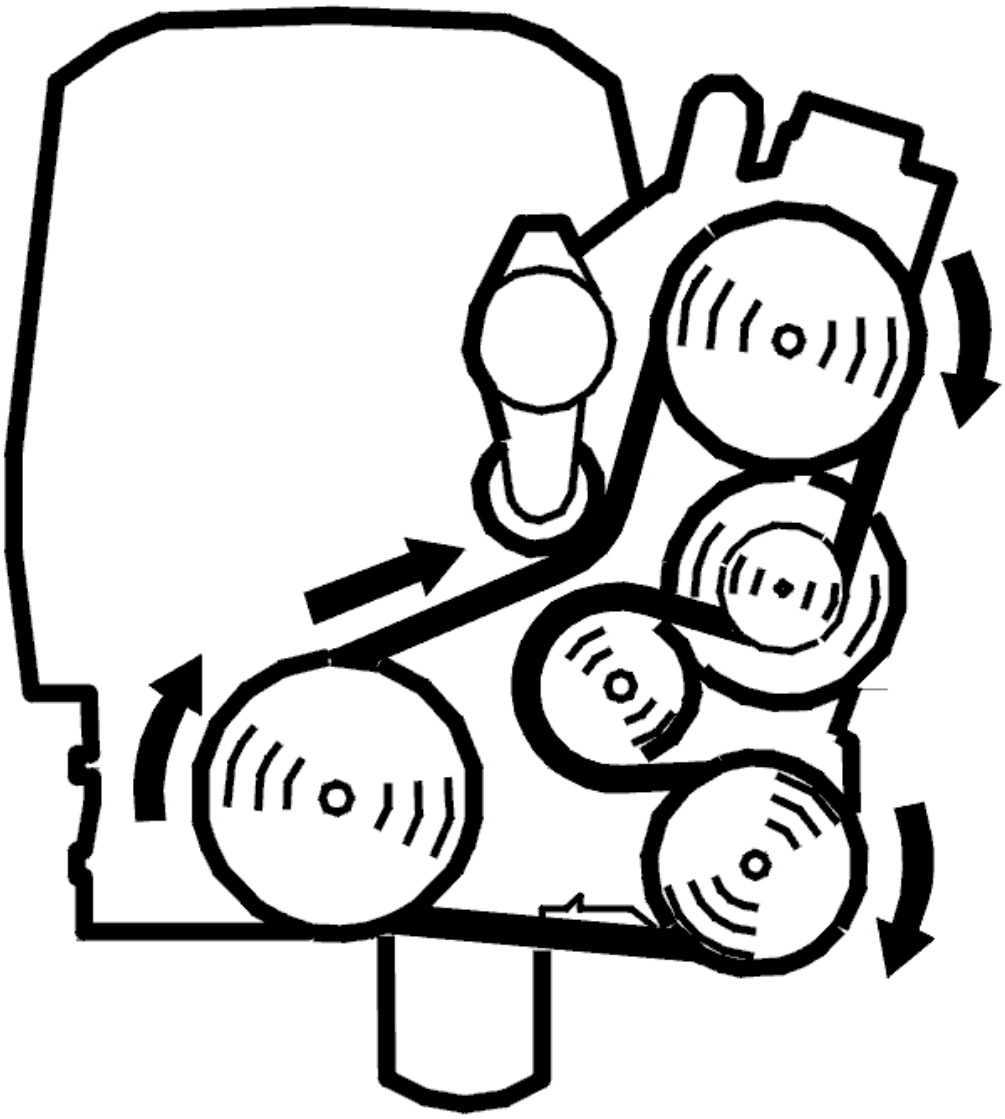

Fig. 117: Belt Routing / Engine Idling - Volvo

Courtesy of VOLVO CARS CORPORATION

- Start the engine.

  Read the diagnostic status and fault status for the diagnostic trouble code by selecting the diagnostic trouble code in the list.

  Check whether the fault is permanent or intermittent. Read off the diagnostic trouble code (DTC) fault status when the diagnostic status is "Completed".

  The fault is permanent if the fault status is "Fault found". If the fault status is "No fault found" the fault is intermittent and not presently active.

  NOTE: The fault status cannot change from "Fault found" to "No fault found" in the same operating cycle.

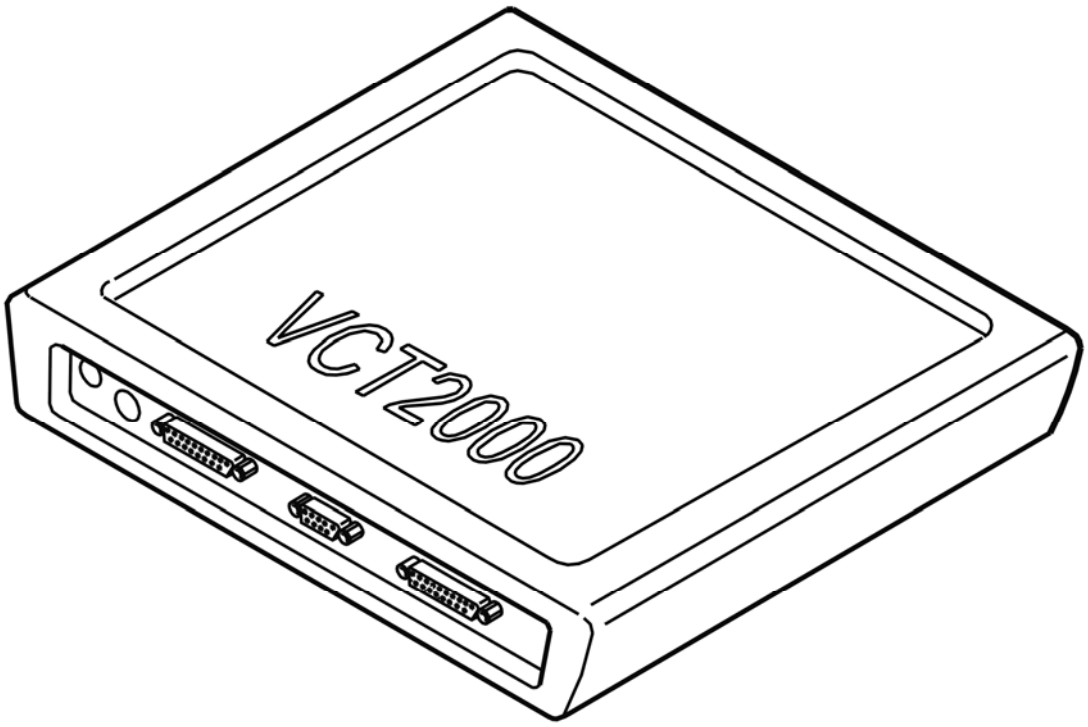

Fig. 118: Identifying VCT2000 Diagnostic Tool Symbol In VIDA
Courtesy of VOLVO CARS CORPORATION

- **Continue**

  Refer to **CHECKING COMPONENTS AND WIRING**

CHECKING COMPONENTS AND WIRING

HINT: Bank 1 (cylinder row nearest the front): cylinders 1, 3, 5 and 7. Bank 2 (cylinder row furthest to the rear, nearest the passenger compartment): cylinders 2, 4, 6, and 8.

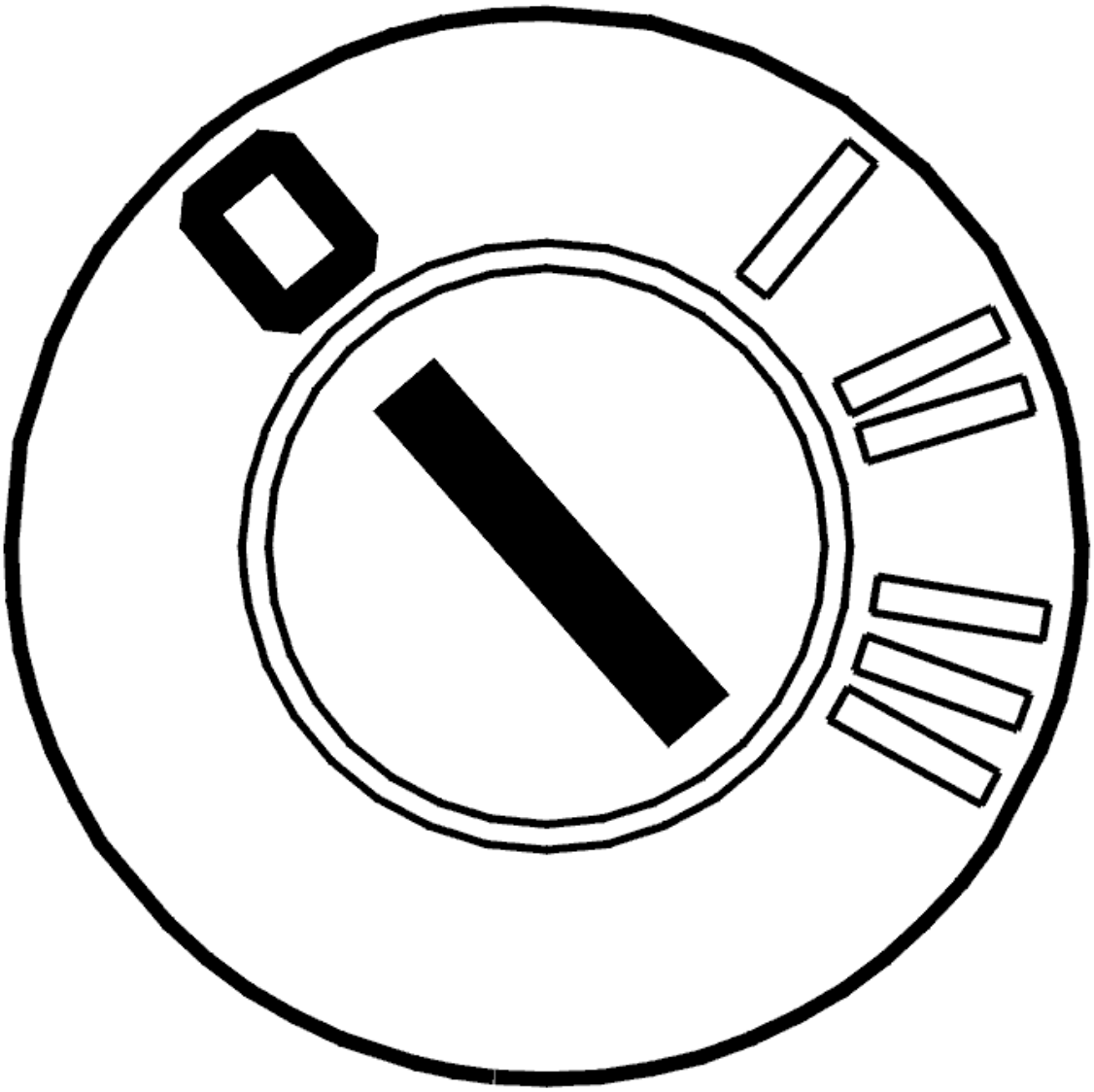

Fig. 119: Identifying Ignition OFF
Courtesy of VOLVO CARS CORPORATION

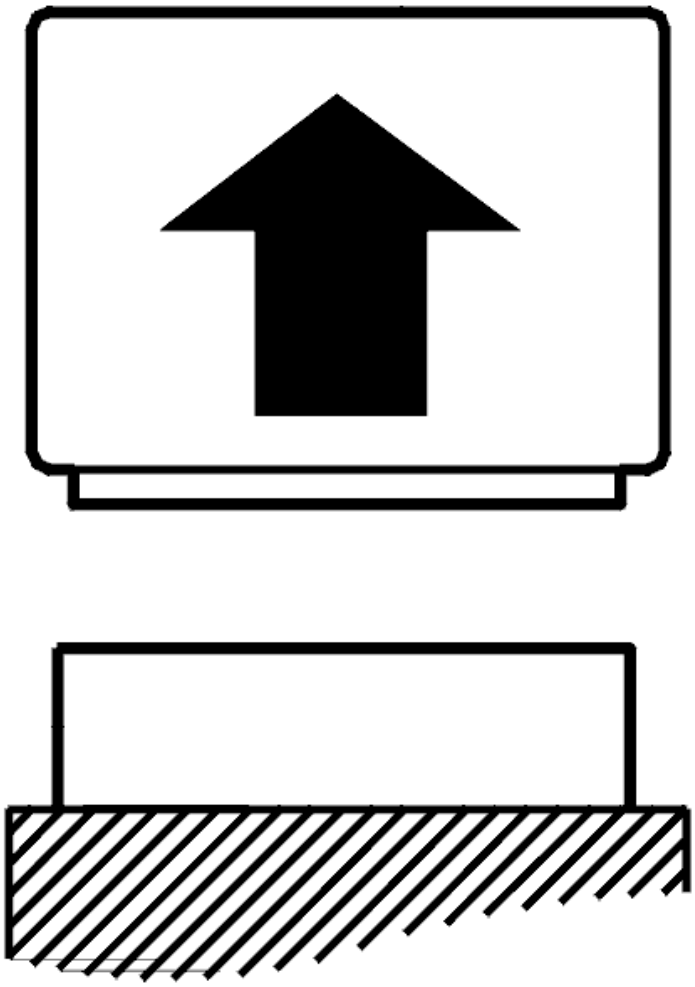

Fig. 120: Disconnecting Connector
Courtesy of VOLVO CARS CORPORATION

- Ignition off

  Check the fuse for the circuit. If the fuse is blown, check the cable. Check for a short-circuit to ground.

  Check the connector for relevant camshaft reset valve. Check for contact resistance and oxidation.

  Check the resistance of the reset valve.

  Disconnect the engine control module (ECM).

  Check the signal cable for the relevant camshaft reset valve. Check for a short-circuit to ground.

  Measure between:

- Control module #A91 (#B31) and reset valve camshaft #2, exhaust (bank 1).
- Control module #A90 (#B30) and reset valve camshaft #2, exhaust (bank 2).

Check the voltage supply cable for the relevant camshaft reset valve. Check for a short-circuit to supply voltage.

Measure between:

- System relay and reset valve camshaft #1, exhaust (bank 1).
- System relay and reset valve camshaft #1, exhaust (bank 2).

Remedy as necessary.

Other information

- see **CONNECTING THE BREAKOUT BOX**
- see **SIGNAL SPECIFICATION, ENGINE CONTROL MODULE (ECM)**
- For B5xx4T, see **VARIABLE VALVE TIMING SOLENOID, REPLACING**
- For B6xx4T, see **REPLACING THE VARIABLE VALVE TIMING SOLENOID** .
- see **CHECKING WIRING AND TERMINALS**

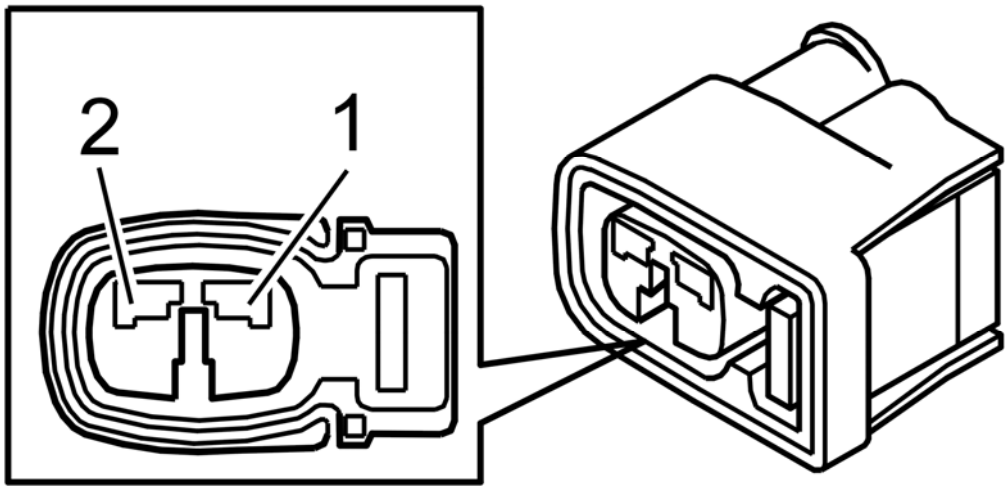

Fig. 121: Identifying Connector Terminals
Courtesy of VOLVO CARS CORPORATION

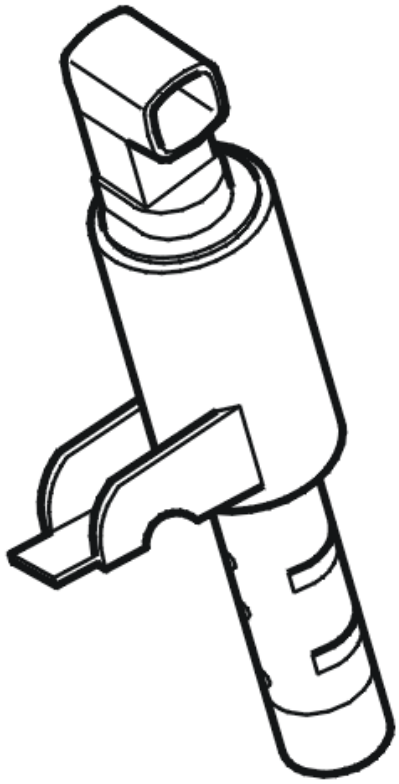

Fig. 122: Identifying Camshaft Reset Valve
Courtesy of VOLVO CARS CORPORATION

- **Continue**

  Refer to **VERIFICATION**

VERIFICATION

VERIFICATION

HINT: After carrying out the repair, check that the fault has been remedied.

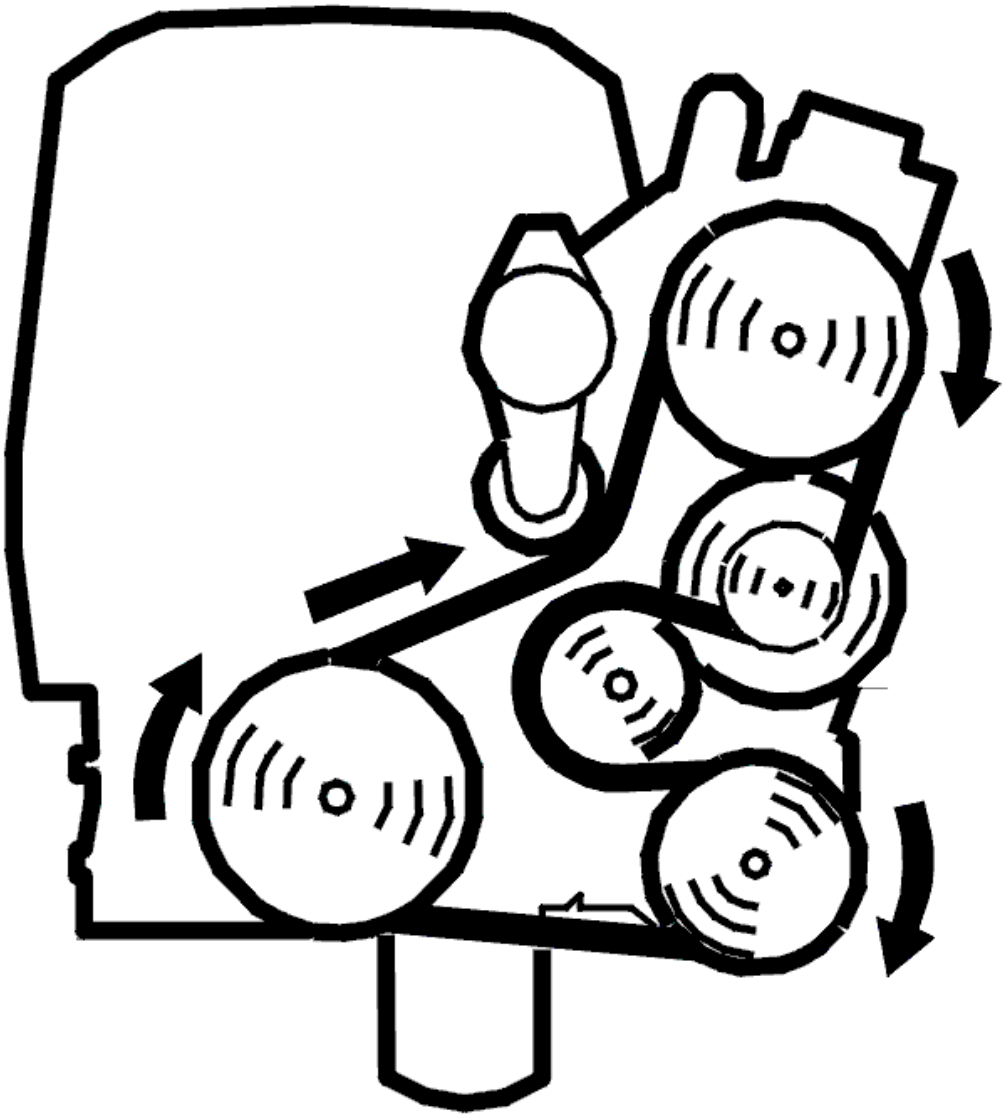

Fig. 123: Belt Routing / Engine Idling - Volvo
Courtesy of VOLVO CARS CORPORATION

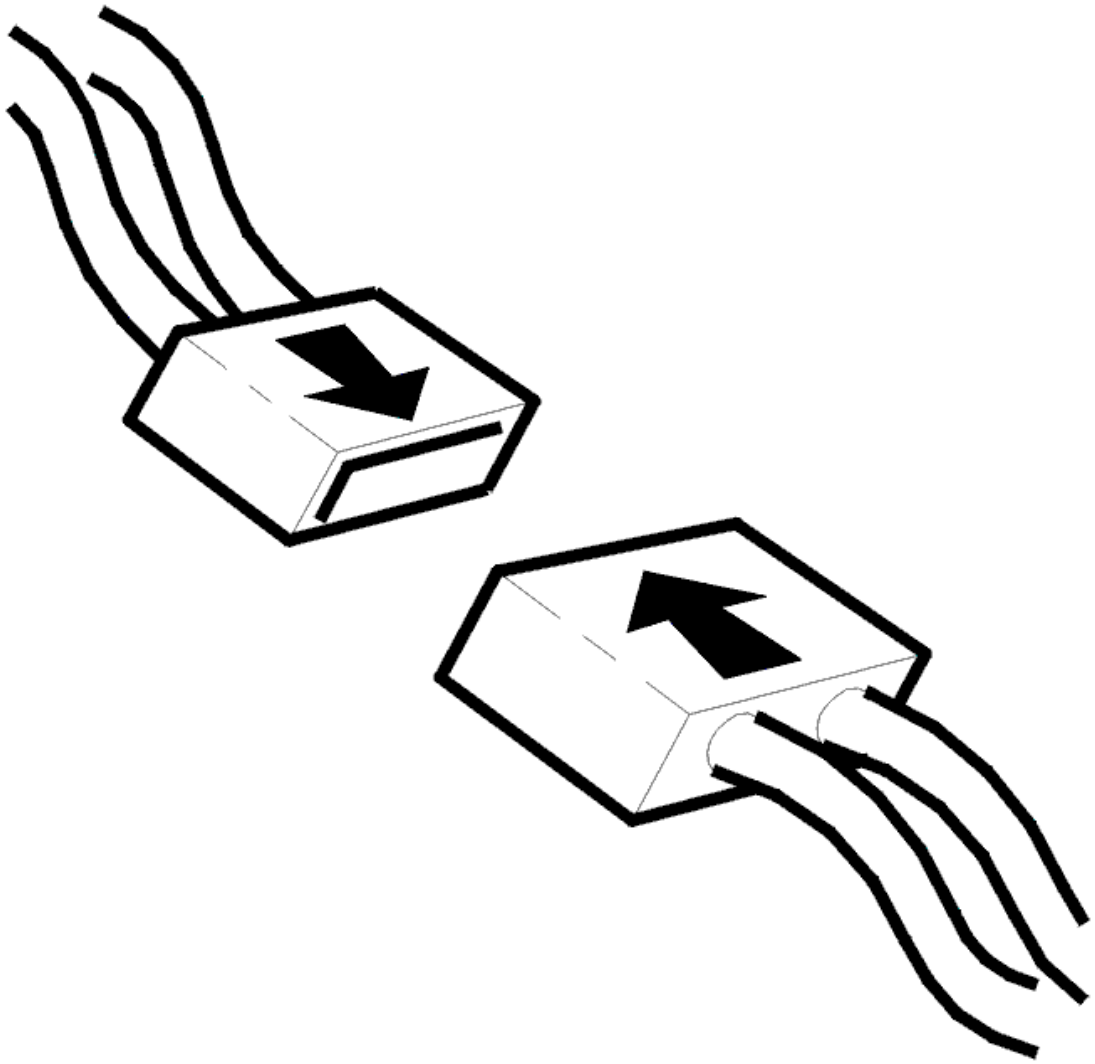

Fig. 124: Connecting Connector
Courtesy of VOLVO CARS CORPORATION

- Ignition off
- Reconnect the connectors, components, etc.
- Start the engine.
- Test drive the car on the road in different driving conditions with high and low loads so that the engine control module (ECM) can carry out diagnostics.
- Connect the VCT2000 (or appropriate scan tool) to the data link connector **without switching off the engine.**
- Read the diagnostic status and fault status for the diagnostic trouble code by selecting the diagnostic trouble code in the list.

NOTE: If the engine is switched off, the stored fault status will be erased and the

test drive will have to be repeated.

Check the fault status for the diagnostic trouble code when the scan is "Implemented". When the function is correct the fault status should be "No fault found" when the scan is implemented.

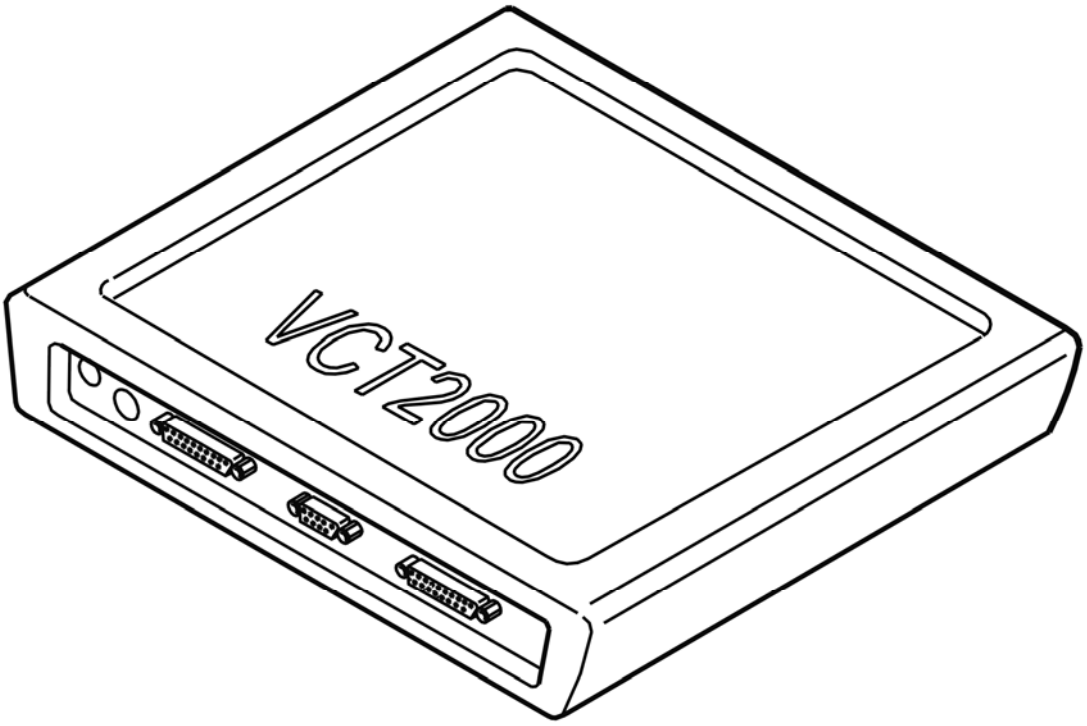

Fig. 125: Identifying VCT2000 Diagnostic Tool Symbol In VIDA
Courtesy of VOLVO CARS CORPORATION

Is the function OK?

- **YES**

  VERIFIED: Troubleshooting has been completed.

- **NO**

  Refer to **INFORMATION**

INFORMATION

FAULT-TRACING INFORMATION

The fault should have been detected and remedied. As this is not the case fault-tracing has failed.

Exit fault-tracing for this diagnostic trouble code (DTC) or make another attempt.

ECM-P008000: EXHAUST VALVE CONTROL CIRCUIT HIGH (BANK 1). GENERAL FAULT INFORMATION. TYPE OF FAULT NOT SPECIFIED. (B8444S; 2005-2011)

DIAGNOSTIC TROUBLE CODE (DTC) INFORMATION

see **DIAGNOSTIC TROUBLE CODE (DTC) INFORMATION**

FAULT TRACING

CHECKING THE STATUS

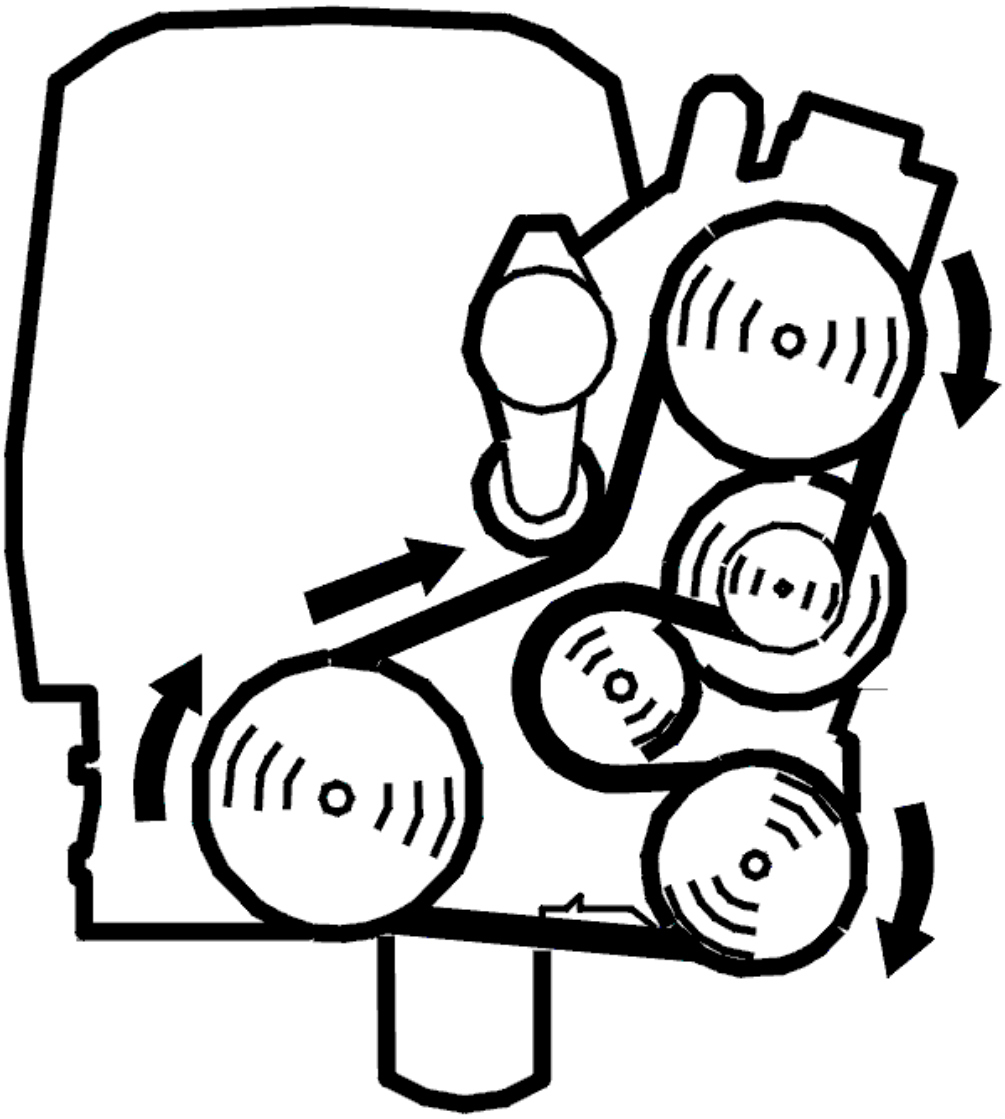

Fig. 126: Belt Routing / Engine Idling - Volvo

Courtesy of VOLVO CARS CORPORATION

- Start the engine.

  Read the diagnostic status and fault status for the diagnostic trouble code by selecting the diagnostic trouble code in the list.

  Check whether the fault is permanent or intermittent. Read off the diagnostic trouble code (DTC) fault status when the diagnostic status is "Completed".

  The fault is permanent if the fault status is "Fault found". If the fault status is "No fault found" the fault is intermittent and not presently active.

  NOTE: The fault status cannot change from "Fault found" to "No fault found" in the same operating cycle.

Fig. 127: Identifying VCT2000 Diagnostic Tool Symbol In VIDA
Courtesy of VOLVO CARS CORPORATION

- **Continue**

  Refer to **CHECKING COMPONENTS AND WIRING**

CHECKING COMPONENTS AND WIRING

HINT: Bank 1 (cylinder row nearest the front): cylinders 1, 3, 5 and 7. Bank 2 (cylinder row furthest to the rear, nearest the passenger compartment): cylinders 2, 4, 6, and 8.

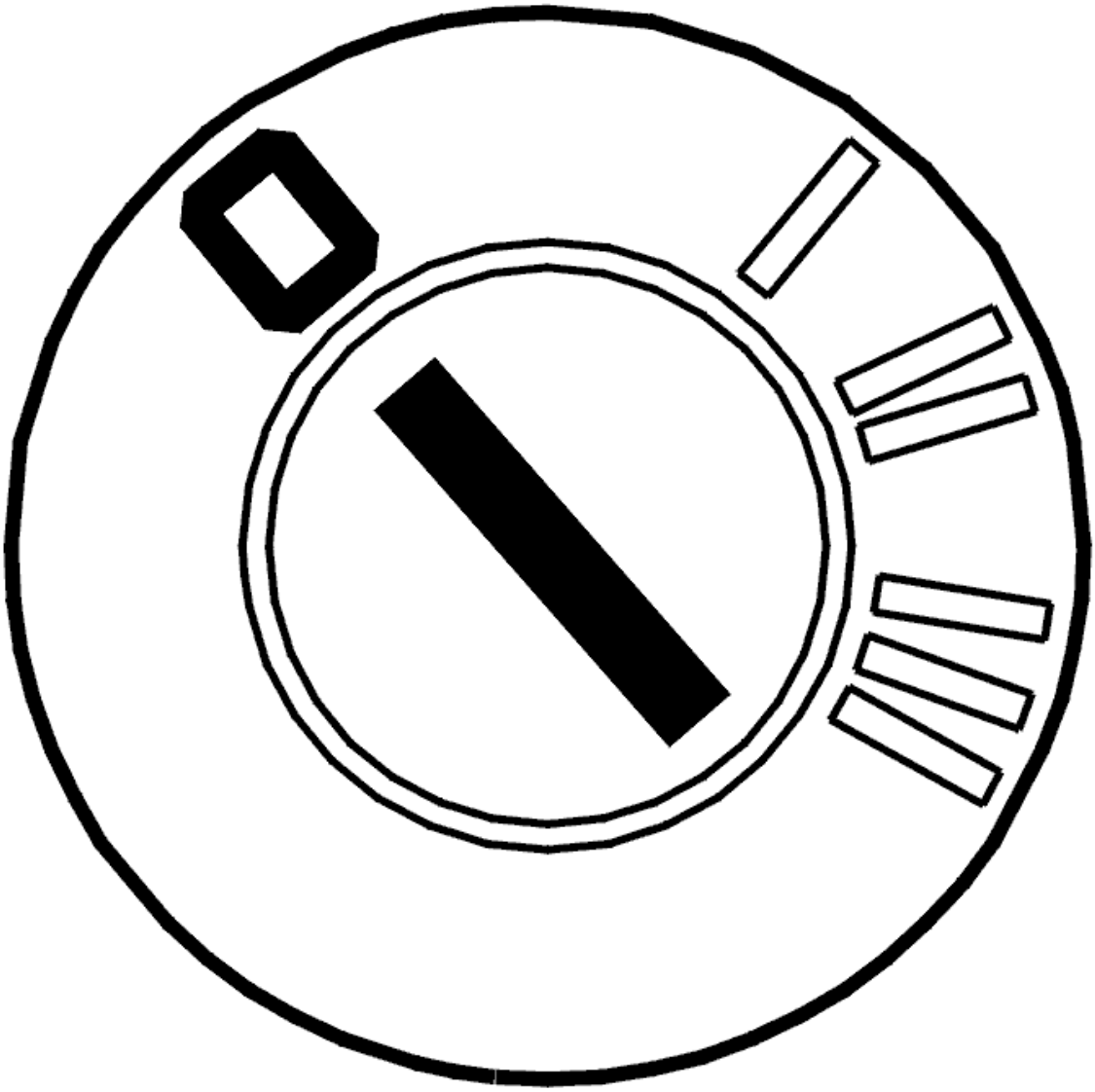

Fig. 128: Identifying Ignition OFF
Courtesy of VOLVO CARS CORPORATION

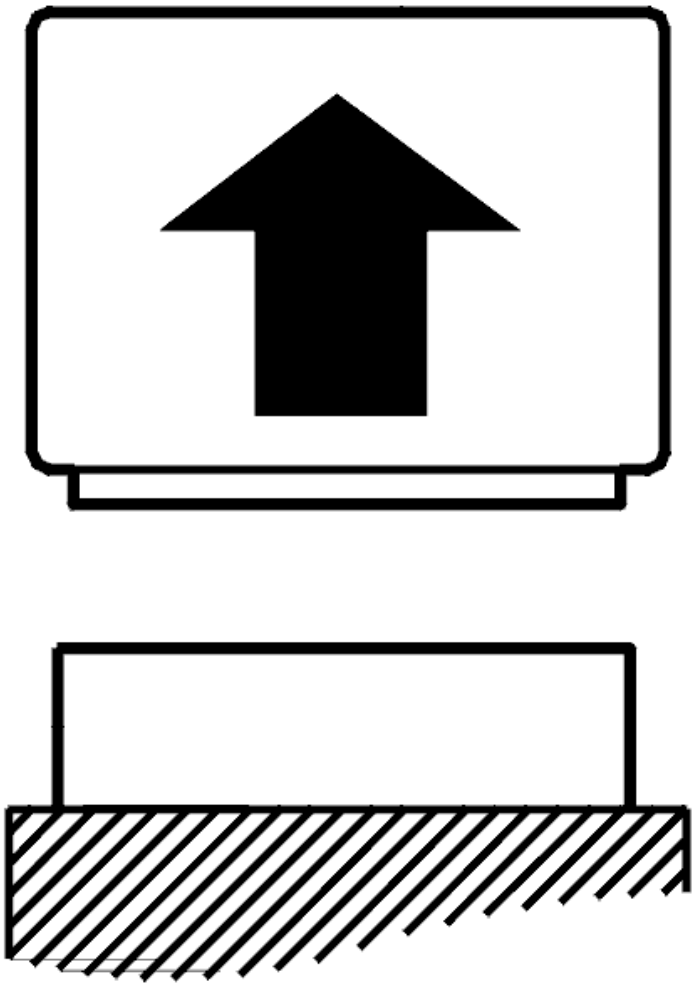

Fig. 129: Disconnecting Connector
Courtesy of VOLVO CARS CORPORATION

- Ignition off

  Disconnect the engine control module (ECM).

  Check the signal cable for the relevant camshaft reset valve. Check for a short-circuit to supply voltage.

  Measure between:

  - Control module #A91 (#B31) and reset valve camshaft #2, exhaust (bank 1).
  - Control module #A90 (#B30) and reset valve camshaft #2, exhaust (bank 2).

  Remedy as necessary.

Other information

- see **CONNECTING THE BREAKOUT BOX**
- see **SIGNAL SPECIFICATION, ENGINE CONTROL MODULE (ECM)**
- For B5xx4T, see **VARIABLE VALVE TIMING SOLENOID, REPLACING**
- For B6xx4T, see **REPLACING THE VARIABLE VALVE TIMING SOLENOID** .
- see **CHECKING WIRING AND TERMINALS**

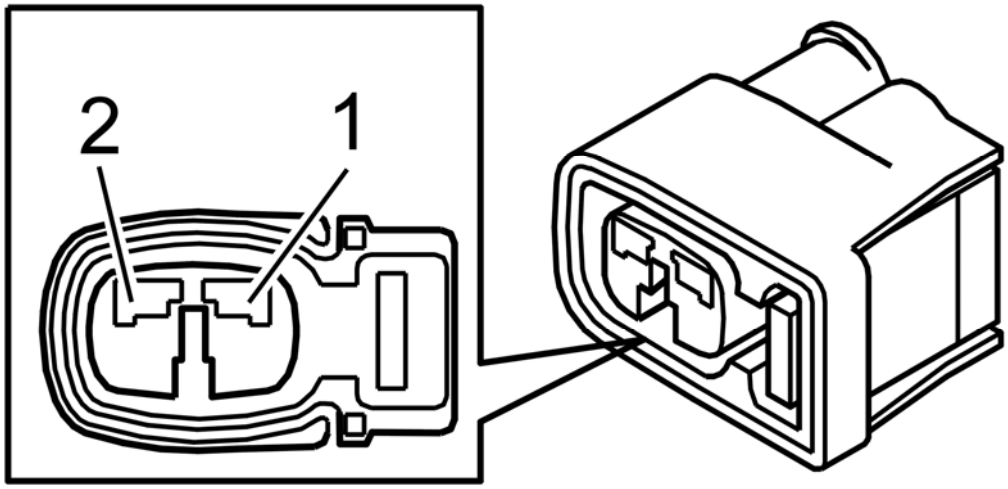

Fig. 130: Identifying Connector Terminals
Courtesy of VOLVO CARS CORPORATION

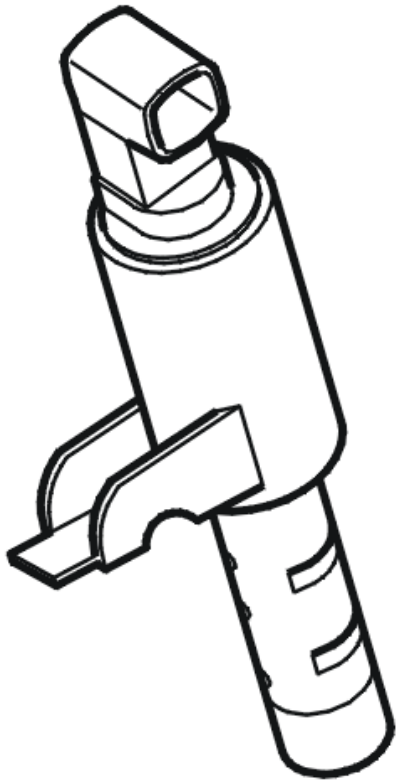

Fig. 131: Identifying Camshaft Reset Valve
Courtesy of VOLVO CARS CORPORATION

- **Continue**

  Refer to **VERIFICATION**

VERIFICATION

VERIFICATION

HINT: After carrying out the repair, check that the fault has been remedied.

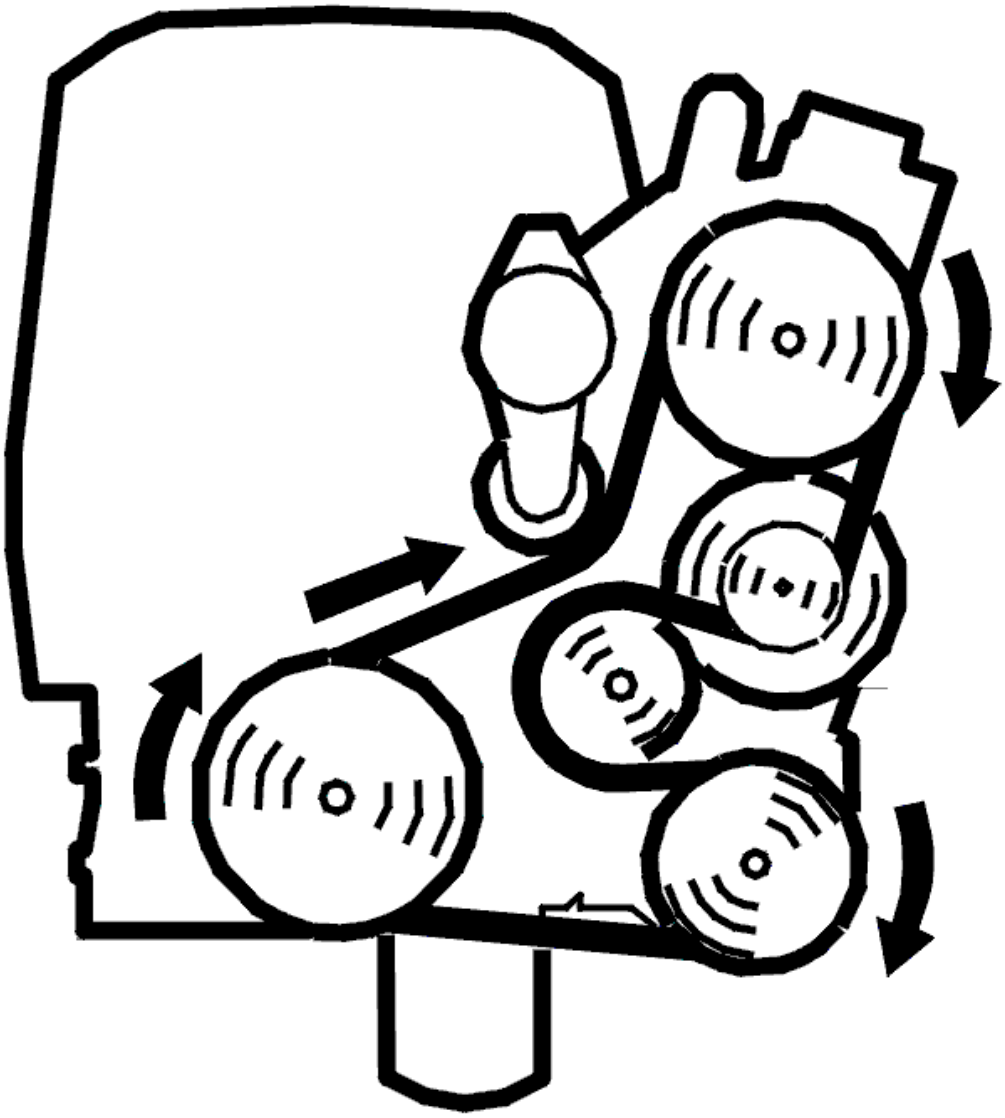

Fig. 132: Belt Routing / Engine Idling - Volvo
Courtesy of VOLVO CARS CORPORATION

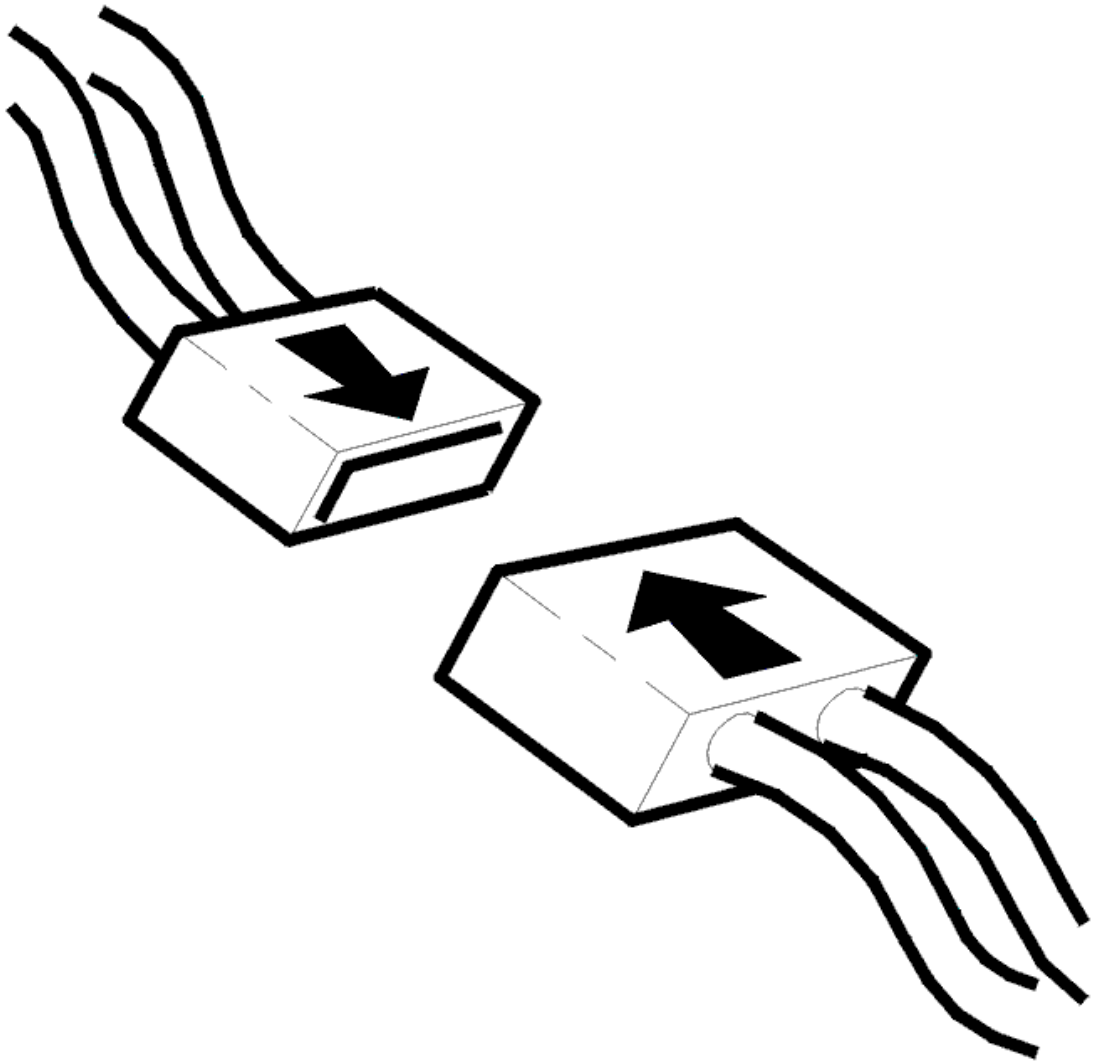

Fig. 133: Connecting Connector
Courtesy of VOLVO CARS CORPORATION

- Ignition off
- Reconnect the connectors, components, etc.
- Start the engine.
- Test drive the car on the road in different driving conditions with high and low loads so that the engine control module (ECM) can carry out diagnostics.
- Connect the VCT2000 (or appropriate scan tool) to the data link connector **without switching off the engine.**
- Read the diagnostic status and fault status for the diagnostic trouble code by selecting the diagnostic trouble code in the list.

NOTE: If the engine is switched off, the stored fault status will be erased and the

test drive will have to be repeated.

Check the fault status for the diagnostic trouble code when the scan is "Implemented". When the function is correct the fault status should be "No fault found" when the scan is implemented.

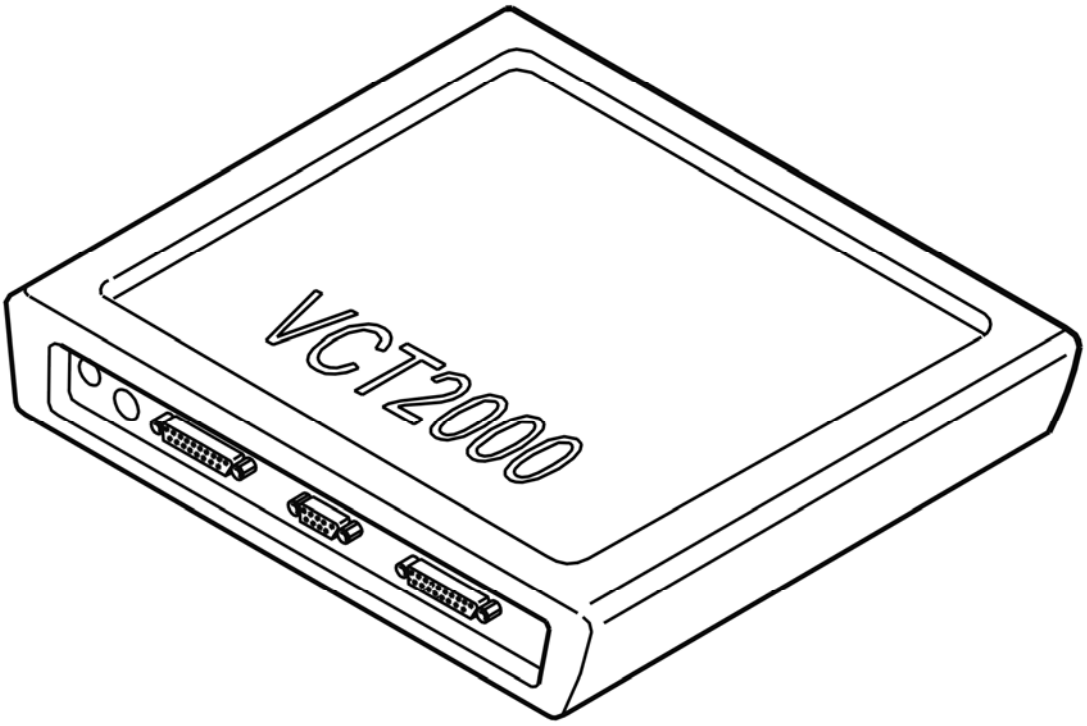

Fig. 134: Identifying VCT2000 Diagnostic Tool Symbol In VIDA
Courtesy of VOLVO CARS CORPORATION

Is the function OK?

- **YES**

  VERIFIED: Troubleshooting has been completed.

- **NO**

  Refer to **INFORMATION**

INFORMATION

FAULT-TRACING INFORMATION

The fault should have been detected and remedied. As this is not the case fault-tracing has failed.

Exit fault-tracing for this diagnostic trouble code (DTC) or make another attempt.

ECM-P008700: FUEL RAIL/SYSTEM PRESSURE - TOO LOW. GENERAL FAILURE INFORMATION. NO SUB TYPE INFORMATION (B6324S; 2007-2010)

DIAGNOSTIC TROUBLE CODE (DTC) INFORMATION ECM-P008700

Condition

The engine control module (ECM) controls the fuel pressure via the fuel pump (FP) control module using a pulse width modulation (PWM) signal.

The fuel pump (FP) control module then controls the fuel pump (FP) depending on the pressure requested by the engine control module (ECM).

The diagnostic trouble code (DTC) is stored if the control module detects that:

- Actual pressure (gauged pressure from the fuel pressure sensor) becomes too low compared with the requested pressure (engine control module (ECM) target value) for a certain amount of time.

The control module's test for the diagnostic trouble code (DTC) starts in the event of:

- Engine running.

NOTE: The control module can only detect the fault once the test has been started and the diagnostic trouble code (DTC) is stored when the conditions are met.

Substitute Value

- Fuel pump (FP) is controlled using a calculated value.

Possible Source

- Leakage in the fuel lines.
- Damaged fuel pressure sensor.
- Damaged fuel pump.
- Damaged fuel pump (FP) control module.

Fault symptom[s]

- Malfunction indicator light (MIL), on
- Poor performance
- Engine stalls

FAULT-TRACING

CHECKING FUEL PRESSURE SENSOR

NOTE: **If diagnostic trouble codes (DTC) for the fuel pressure sensor or atmospheric pressure sensor are stored, these diagnostic trouble codes (DTC) must be fault-traced and remedied first.**

HINT: The following method is for checking if the diagnostic trouble code has been caused by a defective fuel pressure sensor. This can be done by comparing the fuel pressure sensor's readout signal with actual fuel pressure (readout on pressure gauge connected to fuel system's lines).

- Connect pressure gauge: **FUEL PRESSURE GAUGE**

CAUTION: **The pressure in the fuel injection system can reach approximately 650 kPa when this diagnostic trouble code (DTC) is stored. Use an adapted manometer.**

- Run the engine until it is warm and let it idle.
- A/C off.

Read off relative fuel pressure.

The relative fuel pressure is calculated from the fuel pressure sensor's and the atmospheric pressure sensor's signal (=absolute pressure minus atmospheric pressure).

Check that the value on the pressure gauge and the readout value are about the same. Different values indicate malfunction in the circuit for the fuel pressure sensor.

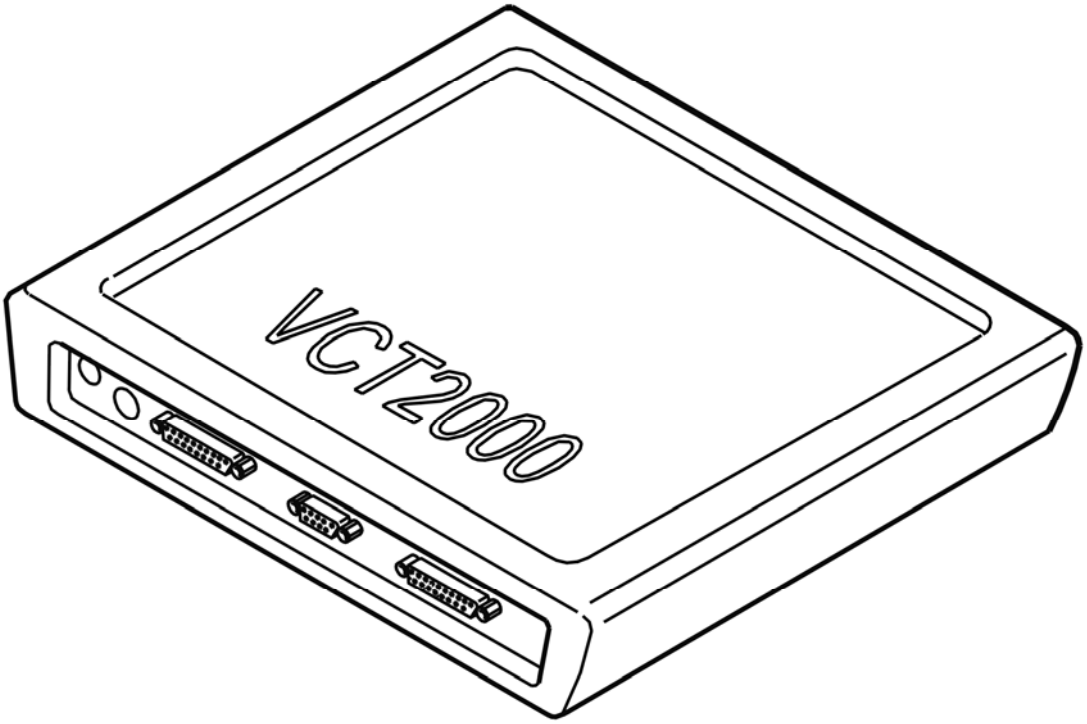

Fig. 135: Identifying VCT2000 Diagnostic Tool Symbol In VIDA
Courtesy of VOLVO CARS CORPORATION

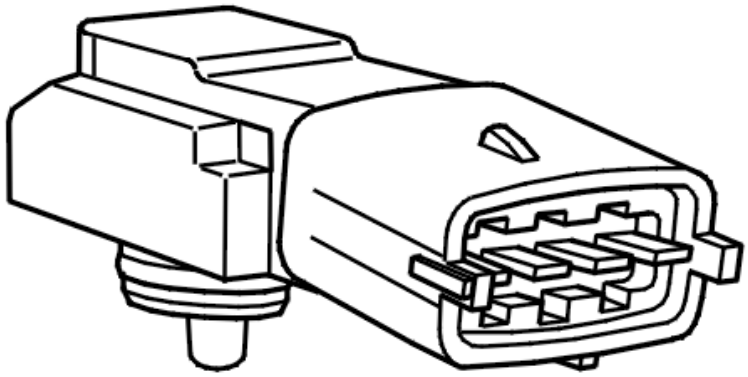

Fig. 136: Identifying Fuel Pressure Sensor
Courtesy of VOLVO CARS CORPORATION

Is the fuel pressure sensor OK?

- **YES**

  Refer to **CHECKING COMPONENTS**

- **NO**

  Refer to **CHECKING COMPONENTS AND WIRING**

CHECKING COMPONENTS

Check the connectors between fuel pump module and the fuel pump for contact resistance and oxidation.

Try with a new fuel pump module if no malfunction is found in the above troubleshooting.

Remedy as necessary.

Other information

- see **CONTROL MODULE FUEL PUMP (FP), REPLACING**

- see **CHECKING WIRING AND TERMINALS**

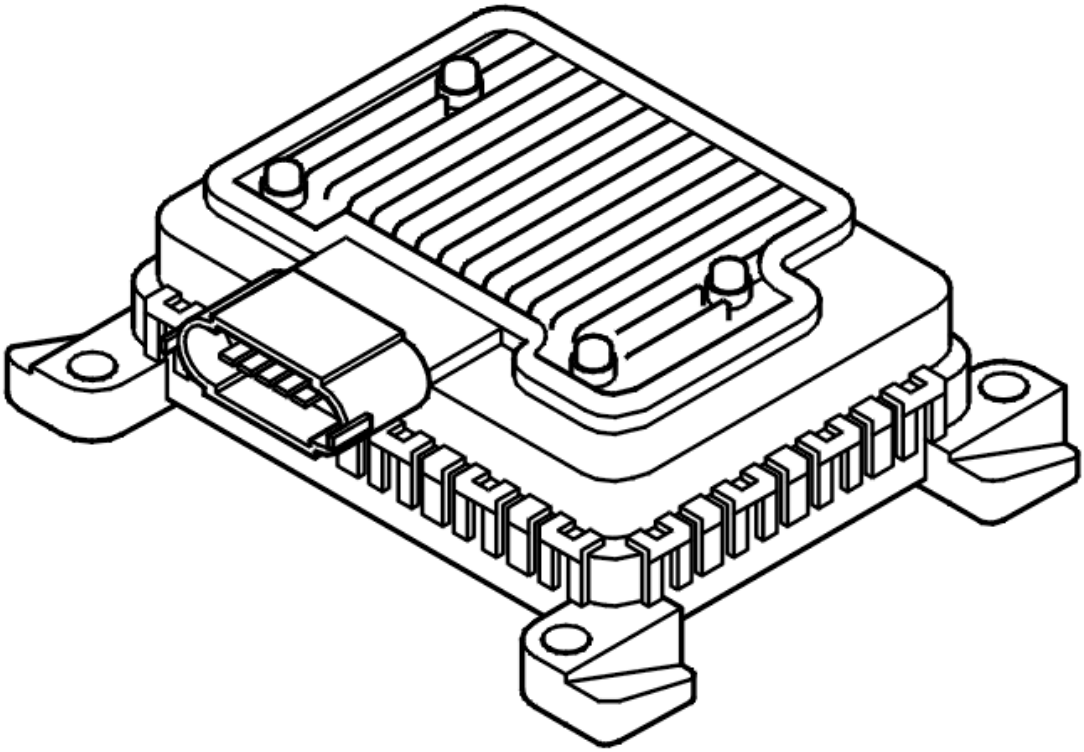

Fig. 137: Identifying Fuel Pump (FP) Control Module
Courtesy of VOLVO CARS CORPORATION

- **Continue**

  Refer to **VERIFICATION**

CHECKING COMPONENTS AND WIRING

Check the fuel pressure sensor's connector for contact resistance and oxidation.

Try with a new fuel pressure sensor if no malfunction is found in the above troubleshooting.

Remedy as necessary.

Other information

- see **CONNECTING THE BREAKOUT BOX**
- see **SIGNAL SPECIFICATION**
- see **CHECKING WIRING AND TERMINALS**

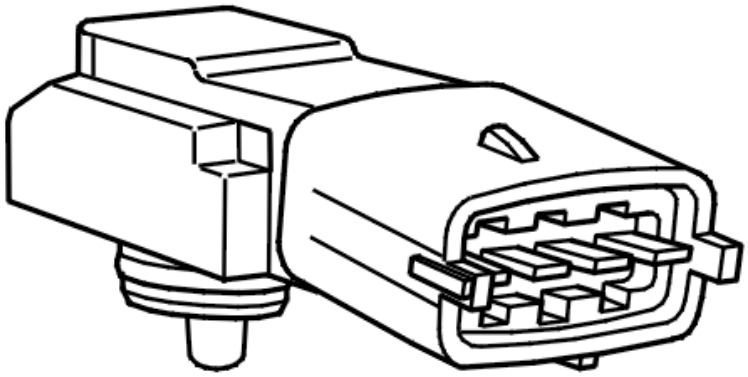

Fig. 138: Identifying Fuel Pressure Sensor
Courtesy of VOLVO CARS CORPORATION

- **Continue**

  Refer to **VERIFICATION**

INFORMATION

FAULT-TRACING INFORMATION

The fault should have been detected and remedied. As this is not the case fault-tracing has failed.

Exit fault-tracing for this diagnostic trouble code (DTC) or make another attempt.

VERIFICATION

VERIFICATION

HINT: After carrying out the repair, check that the fault has been remedied.

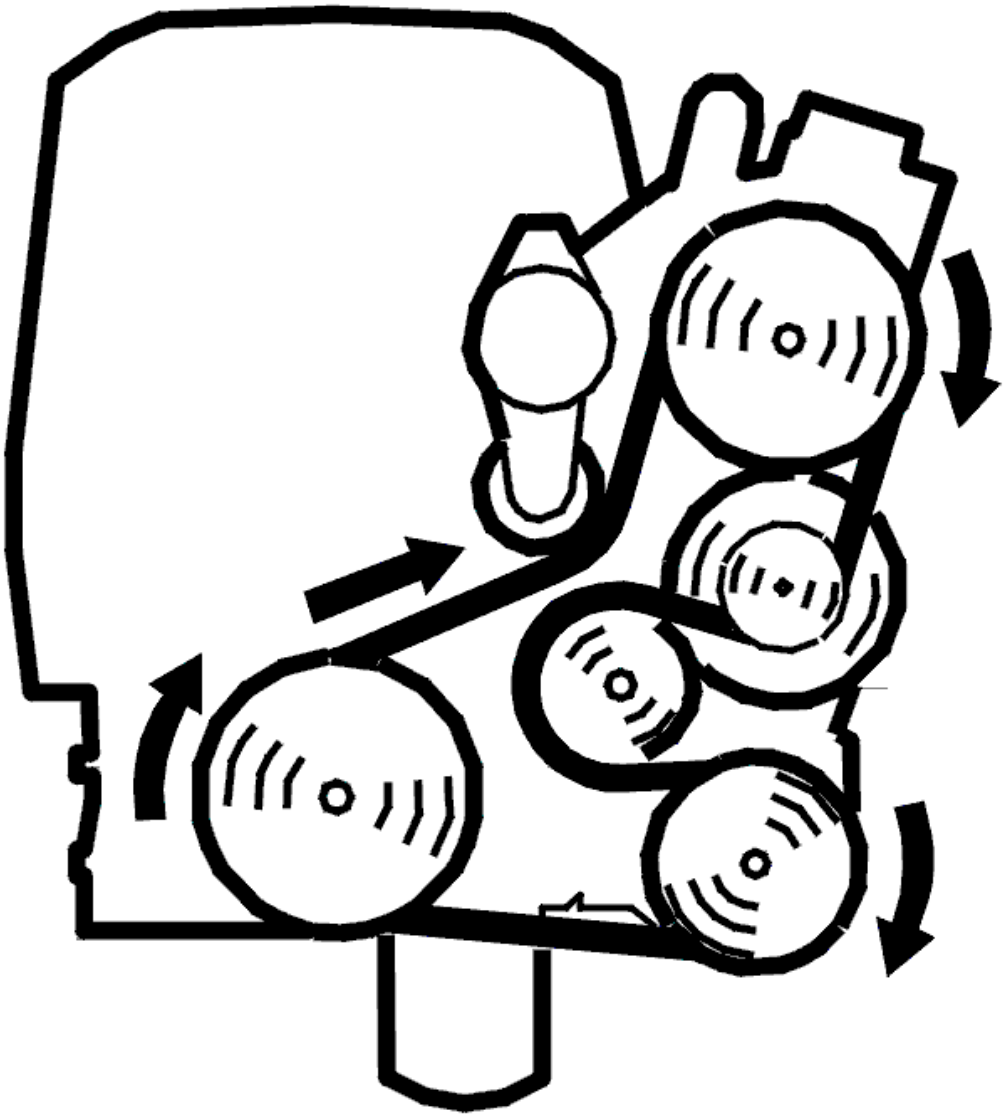

Fig. 139: Belt Routing / Engine Idling - Volvo
Courtesy of VOLVO CARS CORPORATION

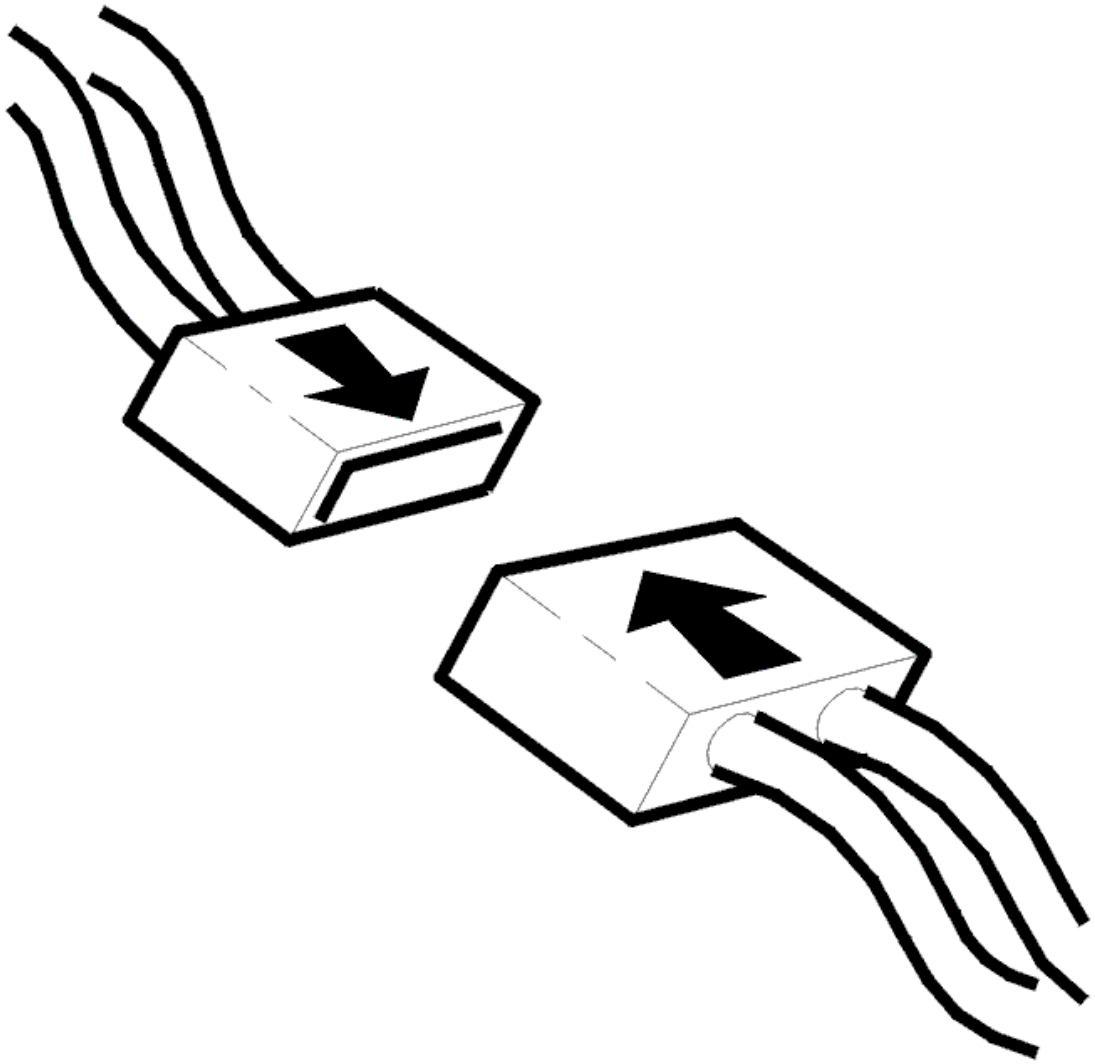

Fig. 140: Connecting Connector
Courtesy of VOLVO CARS CORPORATION

- Ignition off
- Reinstall the connectors, components etc.
- Engine idling
- Read off the fuel pressure and the work load of the fuel pump.
    - The upper digital display and the graphic display (red font color) indicate the absolute fuel pressure, calculated from the fuel pressure sensor
    - The center digital display (blue font color) indicates the current work load required for the fuel pump (FP) to maintain the present fuel pressure. (Normal value 50 % ±10& %.)
    - The lower digital display indicates the relative fuel pressure (white font color), calculated from the fuel pressure sensor and the atmospheric pressure sensor (= absolute pressure minus atmospheric pressure). If a manometer is connected during the test, it should indicate this pressure.

Check the fuel pressure value together with the value for the fuel pump work load. The requested pressure is 380 kPa at idle speed. A (relative) fuel pressure lower than 380 kPa together with a high fuel pump work load indicates a fault in pressure regulation.

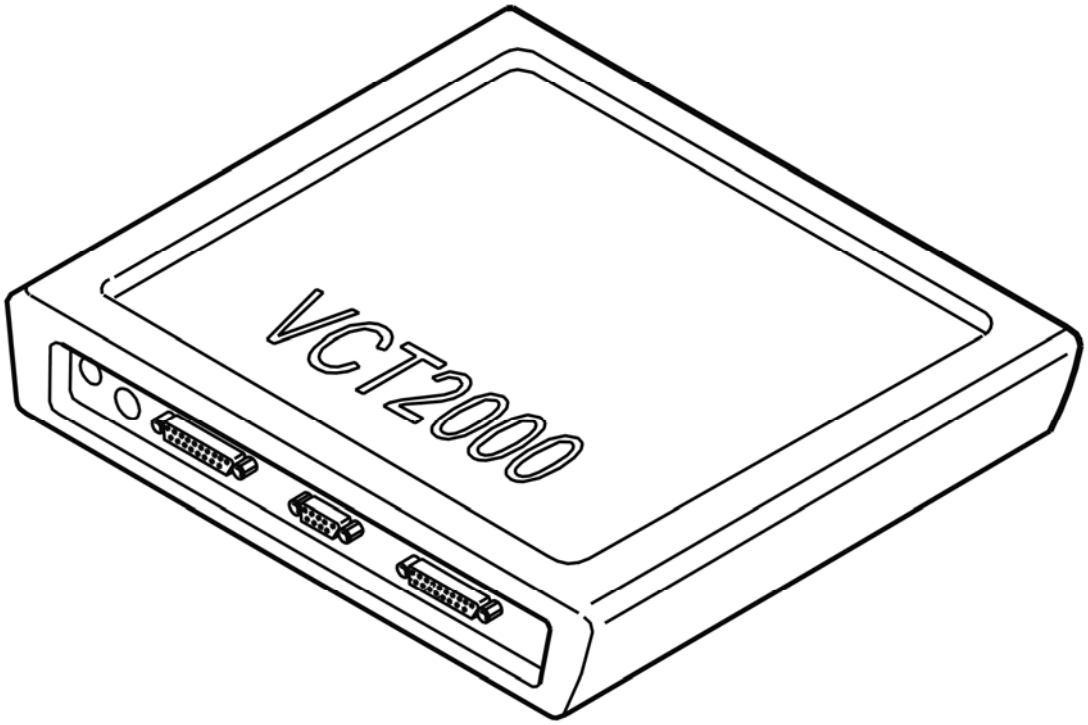

Fig. 141: Identifying VCT2000 Diagnostic Tool Symbol In VIDA
Courtesy of VOLVO CARS CORPORATION

Is the signal within its permitted range?

- **YES**

  VERIFIED: Troubleshooting has been completed.

- **NO**

  Refer to **INFORMATION**

VERIFICATION

VERIFICATION

HINT: After carrying out the repair, check that the fault has been remedied.

CAUTION: The pressure in the fuel injection system can reach approximately 650 kPa

when this diagnostic trouble code (DTC) is stored. Use an adapted manometer.

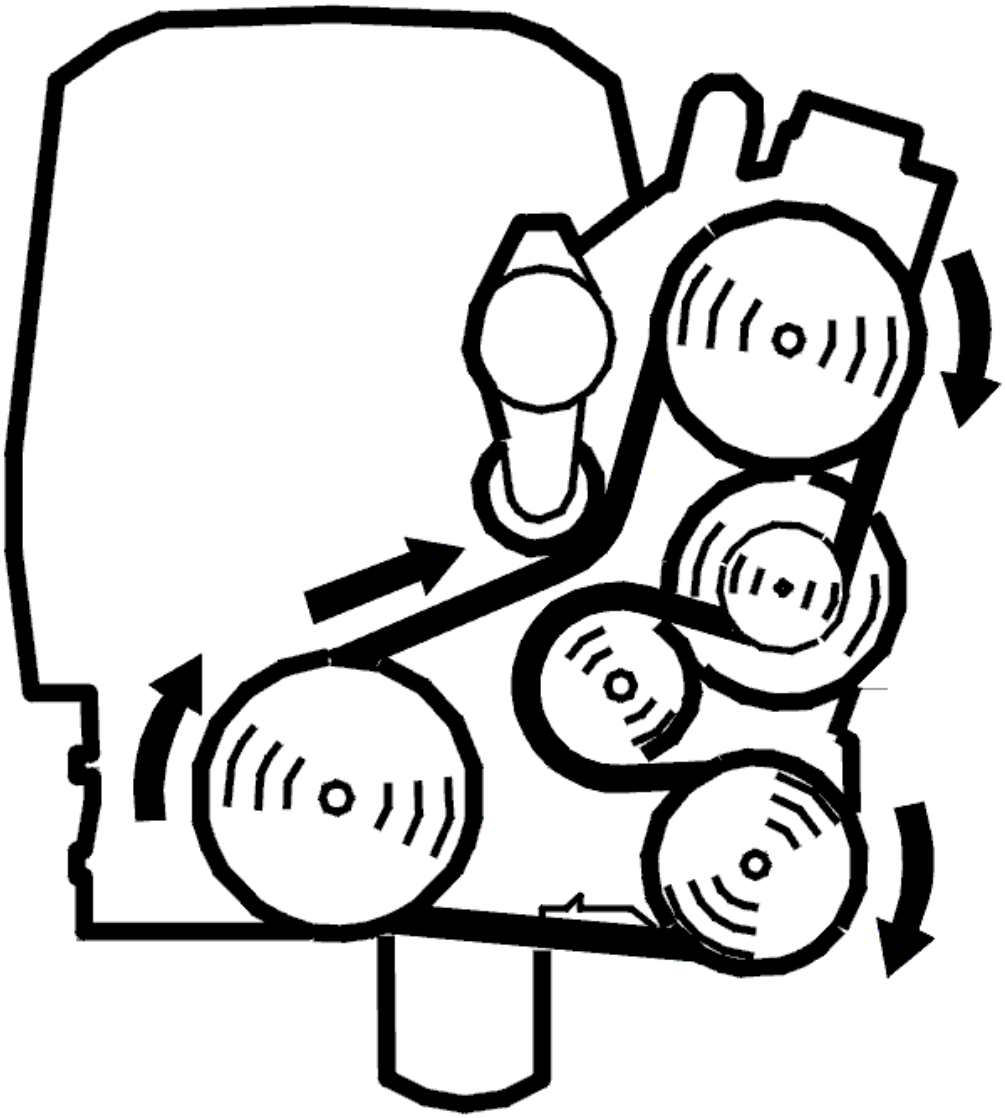

Fig. 142: Belt Routing / Engine Idling - Volvo
Courtesy of VOLVO CARS CORPORATION

- Connect pressure gauge: **FUEL PRESSURE GAUGE**
- Run the engine until it is warm and let it idle.
- A/C off.

Read off relative fuel pressure.

The relative fuel pressure is calculated from the fuel pressure sensor's and the atmospheric pressure sensor's signal (=absolute pressure minus atmospheric pressure).

Check that the value on the pressure gauge and the readout value are the same. Different values indicate malfunction.

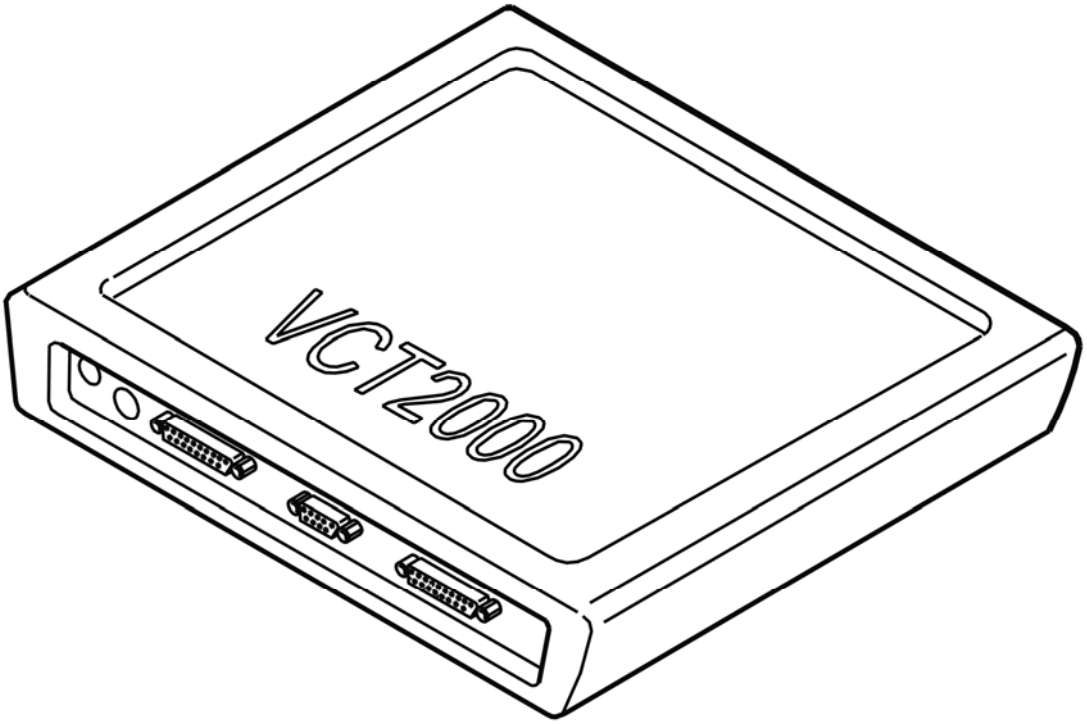

Fig. 143: Identifying VCT2000 Diagnostic Tool Symbol In VIDA
Courtesy of VOLVO CARS CORPORATION

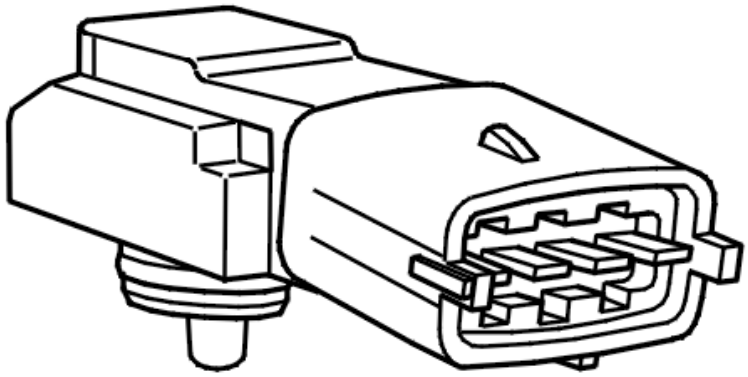

Fig. 144: Identifying Fuel Pressure Sensor
Courtesy of VOLVO CARS CORPORATION

Is the function OK?

- **YES**

  VERIFIED: Troubleshooting has been completed.

- **NO**

  Refer to **INFORMATION**

ECM-P008700: FUEL RAIL/SYSTEM PRESSURE - TOO LOW. GENERAL FAILURE INFORMATION. NO SUB TYPE INFORMATION (B6324S5; 2011-2012)

DIAGNOSTIC TROUBLE CODE (DTC) INFORMATION ECM-P008700

see **DIAGNOSTIC TROUBLE CODE (DTC) INFORMATION ECM-P008700**

FAULT-TRACING

see **FAULT-TRACING**

ECM-P008800: FUEL RAIL/SYSTEM PRESSURE - TOO HIGH. GENERAL FAILURE INFORMATION. NO SUB TYPE INFORMATION (B6324S; 2007-2010)

DIAGNOSTIC TROUBLE CODE (DTC) INFORMATION ECM-P008800

Condition

The engine control module (ECM) controls the fuel pressure via the fuel pump (FP) control module using a pulse width modulation (PWM) signal.

The fuel pump (FP) control module then controls the fuel pump (FP) depending on the pressure requested by the engine control module (ECM).

The diagnostic trouble code (DTC) is stored if the control module detects that:

- Actual pressure (gauged pressure from the fuel pressure sensor) becomes too high compared with the requested pressure (engine control module (ECM) target value) for a certain amount of time.

The control module's test for the diagnostic trouble code (DTC) starts in the event of:

- Engine running.

NOTE: The control module can only detect the fault once the test has been started and the diagnostic trouble code (DTC) is stored when the conditions are met.

Substitute Value

- Fuel pump (FP) is controlled using a calculated value.

Possible Source

- Leakage in the fuel lines.
- Damaged fuel pressure sensor.
- Damaged fuel pump.
- Damaged fuel pump (FP) control module.

Fault symptom[s]

- Malfunction indicator light (MIL), on
- Poor performance
- Engine stalls

FAULT-TRACING

CHECKING FUEL PRESSURE SENSOR

NOTE: **If diagnostic trouble codes (DTC) for the fuel pressure sensor or atmospheric pressure sensor are stored, these diagnostic trouble codes (DTC) must be fault-traced and remedied first.**

HINT: The following method is for checking if the diagnostic trouble code has been caused by a defective fuel pressure sensor. This can be done by comparing the fuel pressure sensor's readout signal with actual fuel pressure (readout on pressure gauge connected to fuel system's lines).

- Connect pressure gauge: **FUEL PRESSURE GAUGE**

CAUTION: **The pressure in the fuel injection system can reach approximately 650 kPa when this diagnostic trouble code (DTC) is stored. Use an adapted manometer.**

- Run the engine until it is warm and let it idle.
- A/C off.

Read off relative fuel pressure.

The relative fuel pressure is calculated from the fuel pressure sensor's and the atmospheric pressure sensor's signal (=absolute pressure minus atmospheric pressure).

Check that the value on the pressure gauge and the readout value are about the same. Different values indicate malfunction in the circuit for the fuel pressure sensor.

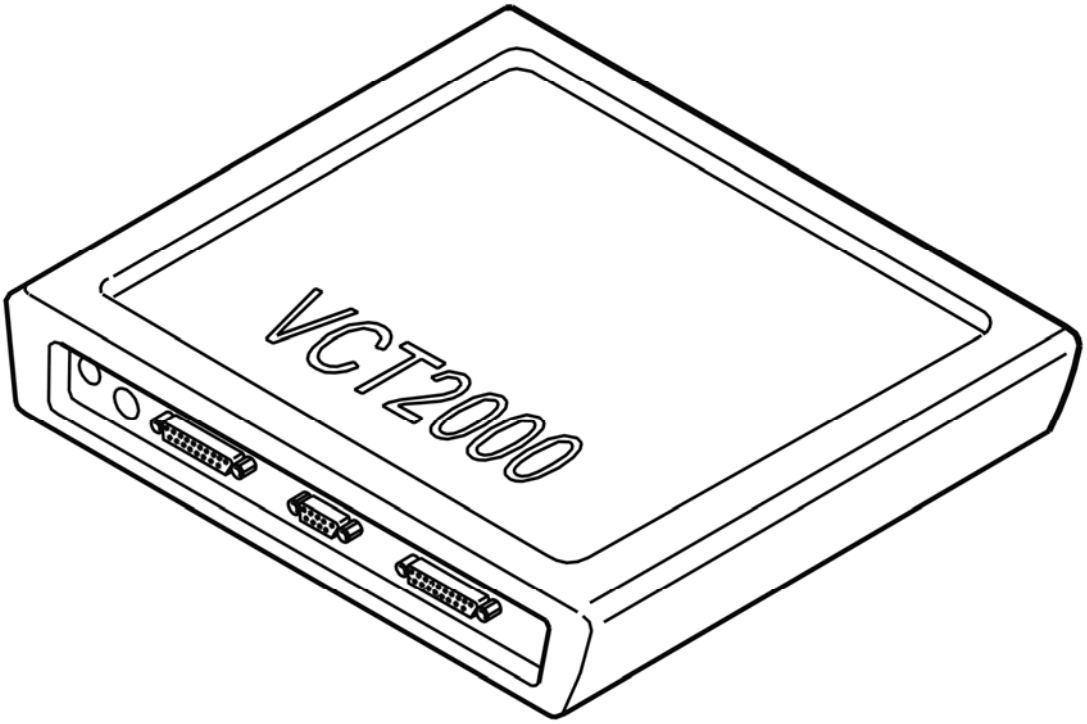

Fig. 145: Identifying VCT2000 Diagnostic Tool Symbol In VIDA
Courtesy of VOLVO CARS CORPORATION

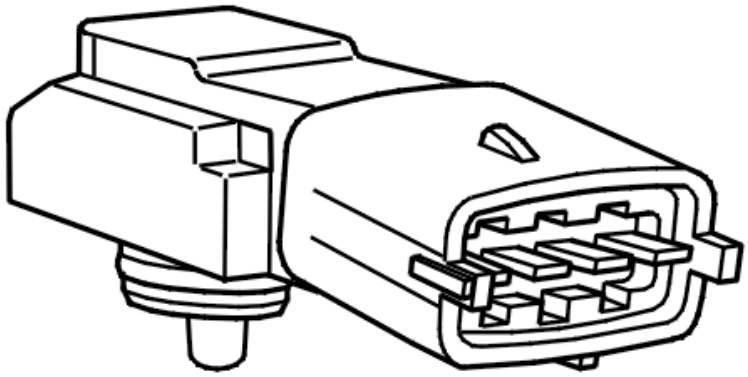

Fig. 146: Identifying Fuel Pressure Sensor
Courtesy of VOLVO CARS CORPORATION

Is the fuel pressure sensor OK?

- **YES**

  Refer to **CHECKING COMPONENTS**

- **NO**

  Refer to **CHECKING COMPONENTS AND WIRING**

CHECKING COMPONENTS

Check the connectors between fuel pump module and the fuel pump for contact resistance and oxidation.

Try with a new fuel pump module if no malfunction is found in the above troubleshooting.

Remedy as necessary.

Other information

- see **CONTROL MODULE FUEL PUMP (FP), REPLACING**

- see **CHECKING WIRING AND TERMINALS**

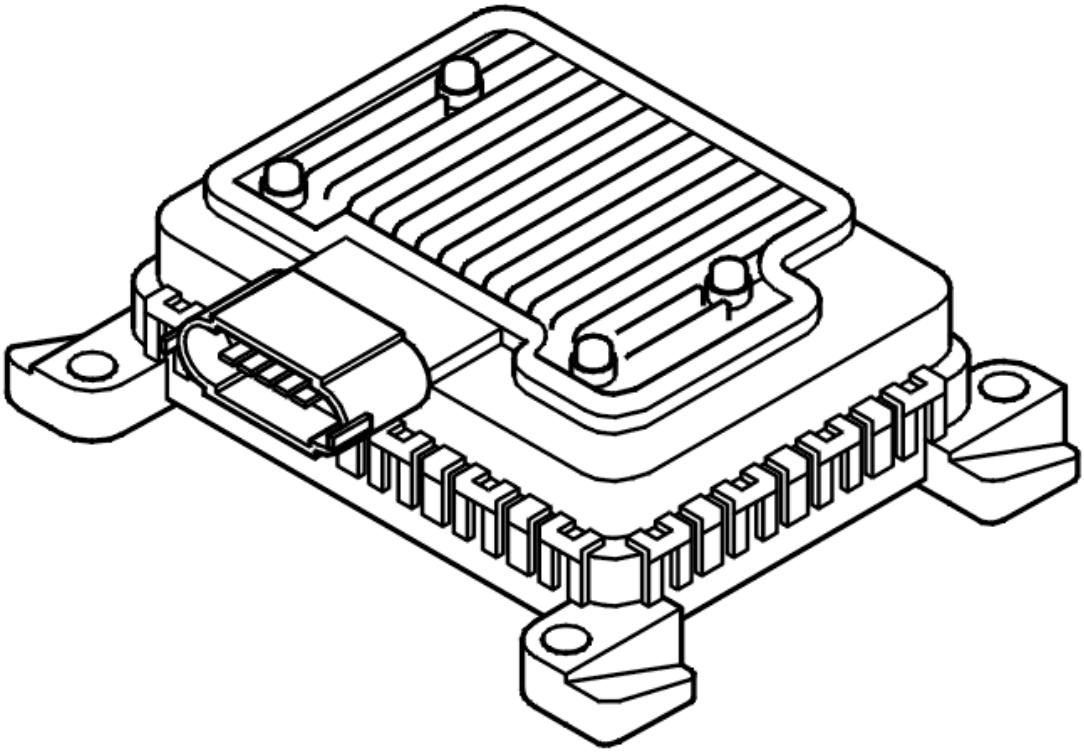

Fig. 147: Identifying Fuel Pump (FP) Control Module
Courtesy of VOLVO CARS CORPORATION

- **Continue**

  Refer to **VERIFICATION**

CHECKING COMPONENTS AND WIRING

Check the fuel pressure sensor's connector for contact resistance and oxidation.

Try with a new fuel pressure sensor if no malfunction is found in the above troubleshooting.

Remedy as necessary.

Other information

- see **CONNECTING THE BREAKOUT BOX**
- see **SIGNAL SPECIFICATION**
- see **CHECKING WIRING AND TERMINALS**

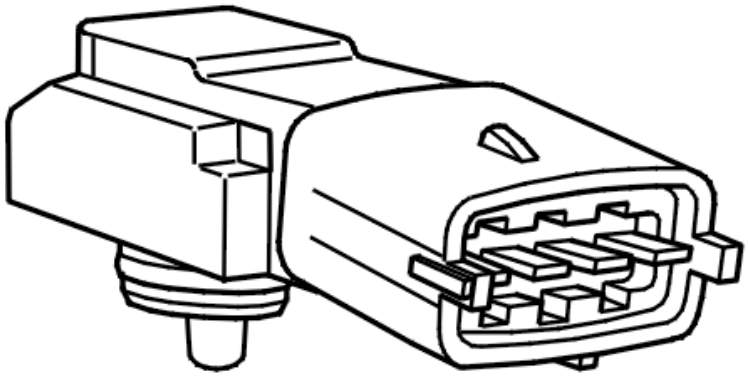

Fig. 148: Identifying Fuel Pressure Sensor
Courtesy of VOLVO CARS CORPORATION

- **Continue**

  Refer to **VERIFICATION**

INFORMATION

FAULT-TRACING INFORMATION

The fault should have been detected and remedied. As this is not the case fault-tracing has failed.

Exit fault-tracing for this diagnostic trouble code (DTC) or make another attempt.

VERIFICATION

VERIFICATION

HINT: After carrying out the repair, check that the fault has been remedied.

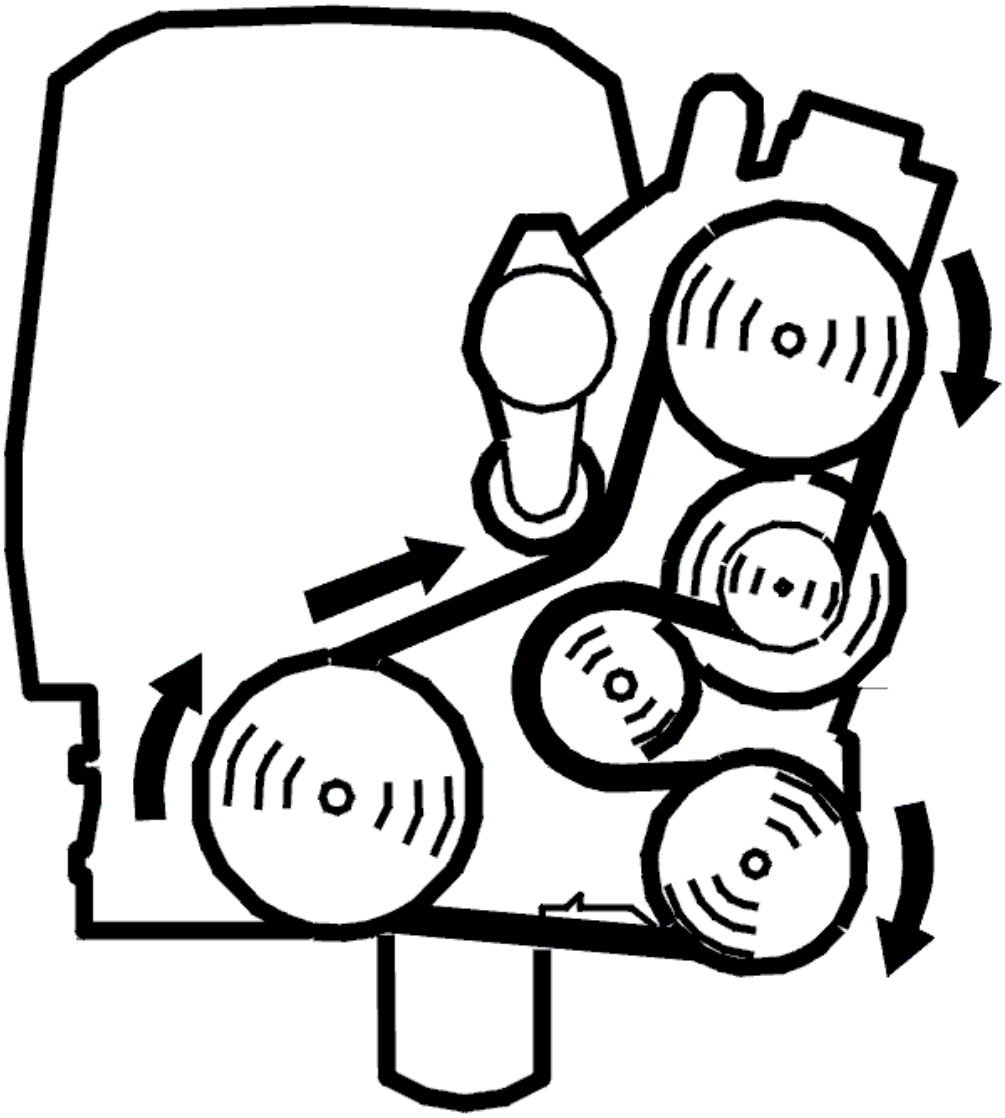

Fig. 149: Belt Routing / Engine Idling - Volvo
Courtesy of VOLVO CARS CORPORATION

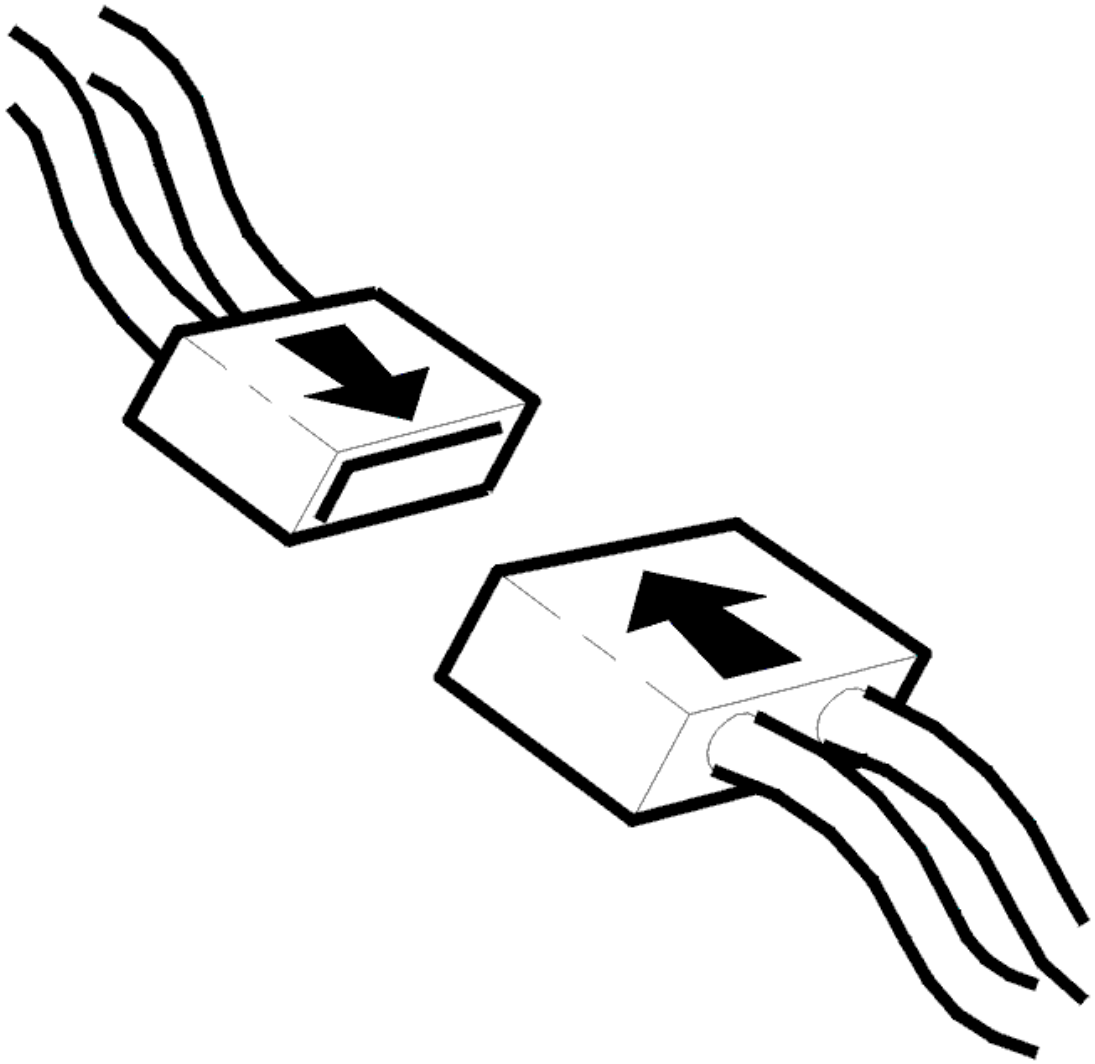

Fig. 150: Connecting Connector
Courtesy of VOLVO CARS CORPORATION

- Ignition off
- Reinstall the connectors, components etc.
- Engine idling
- Read off the fuel pressure and the work load of the fuel pump.
    - The upper digital display and the graphic display (red font color) indicate the absolute fuel pressure, calculated from the fuel pressure sensor
    - The center digital display (blue font color) indicates the current work load required for the fuel pump (FP) to maintain the present fuel pressure. (Normal value 50 % ±10& %.)
    - The lower digital display indicates the relative fuel pressure (white font color), calculated from the fuel pressure sensor and the atmospheric pressure sensor (= absolute pressure minus atmospheric pressure). If a manometer is connected during the test, it should indicate this pressure.

Check the fuel pressure value together with the value for the fuel pump work load. The requested pressure is 380 kPa at idle speed. A (relative) fuel pressure lower than 380 kPa together with a high fuel pump work load indicates a fault in pressure regulation.

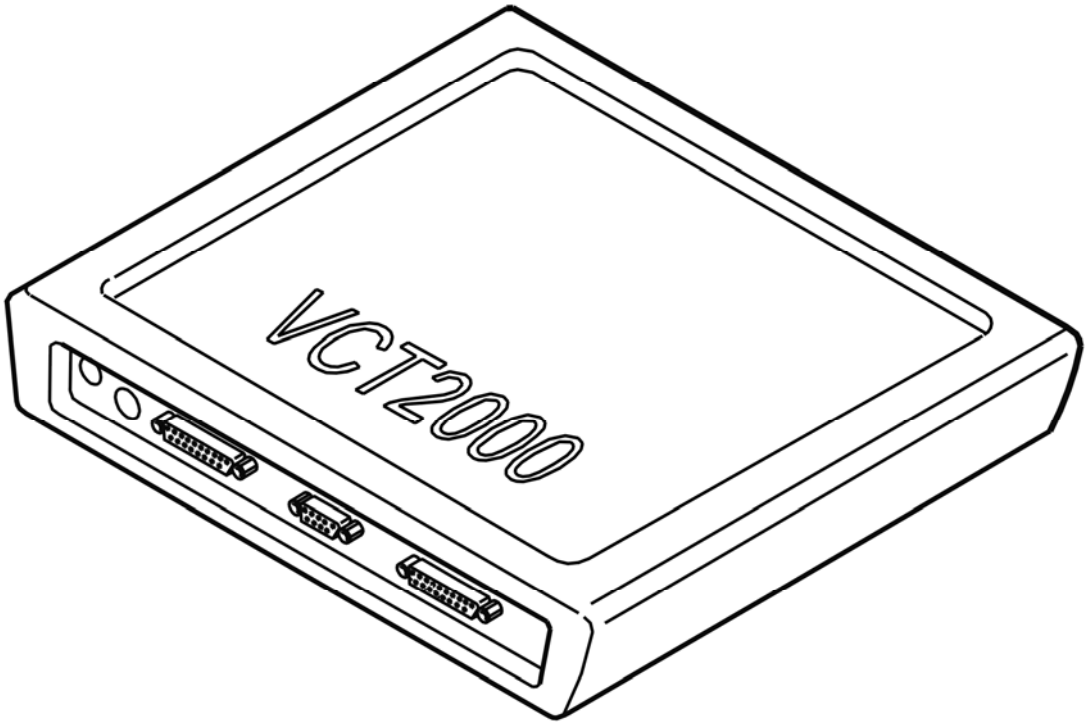

Fig. 151: Identifying VCT2000 Diagnostic Tool Symbol In VIDA
Courtesy of VOLVO CARS CORPORATION

Is the signal within its permitted range?

- **YES**

  VERIFIED: Troubleshooting has been completed.

- **NO**

  Refer to **INFORMATION**

VERIFICATION

VERIFICATION

HINT: After carrying out the repair, check that the fault has been remedied.

CAUTION: The pressure in the fuel injection system can reach approximately 650 kPa

when this diagnostic trouble code (DTC) is stored. Use an adapted manometer.

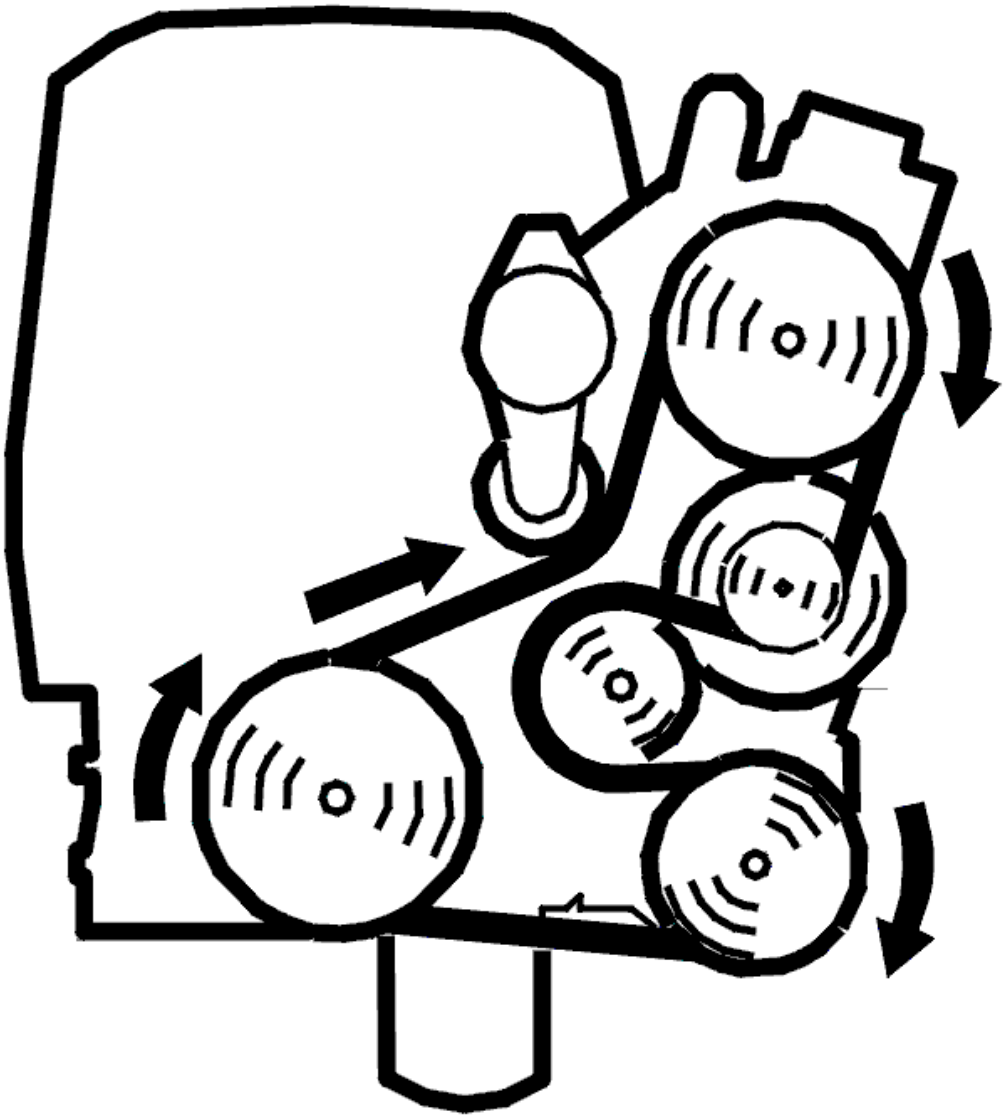

Fig. 152: Belt Routing / Engine Idling - Volvo
Courtesy of VOLVO CARS CORPORATION

- Connect pressure gauge: **FUEL PRESSURE GAUGE**
- Run the engine until it is warm and let it idle.
- A/C off.

Read off relative fuel pressure.

The relative fuel pressure is calculated from the fuel pressure sensor's and the atmospheric pressure sensor's signal (=absolute pressure minus atmospheric pressure).

Check that the value on the pressure gauge and the readout value are the same. Different values indicate malfunction.

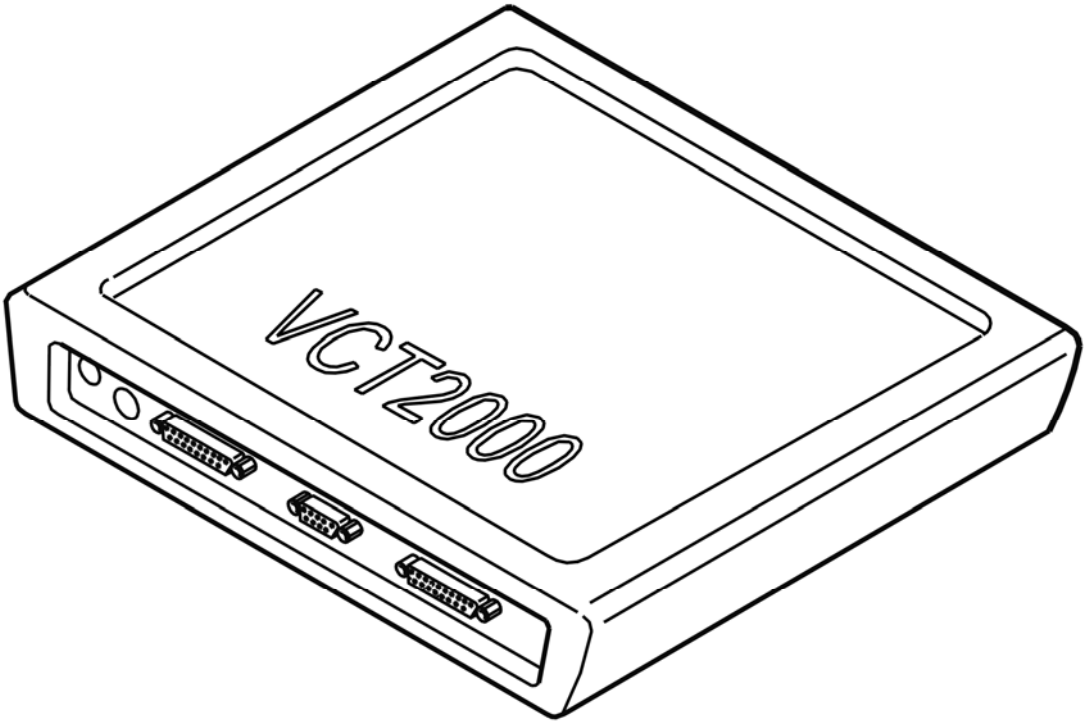

Fig. 153: Identifying VCT2000 Diagnostic Tool Symbol In VIDA
Courtesy of VOLVO CARS CORPORATION

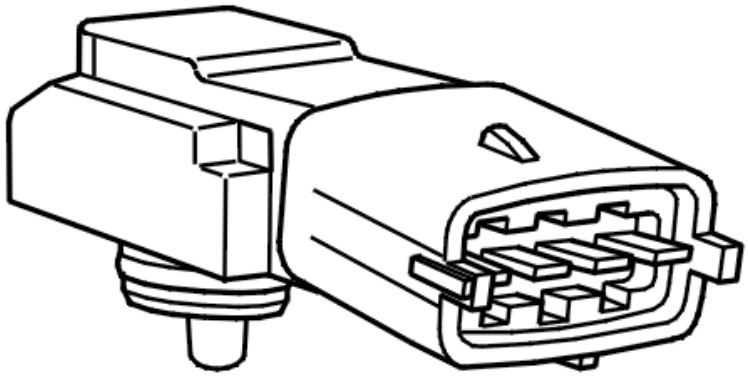

Fig. 154: Identifying Fuel Pressure Sensor
Courtesy of VOLVO CARS CORPORATION

Is the function OK?

- **YES**

  VERIFIED: Troubleshooting has been completed.

- **NO**

  Refer to **INFORMATION**

ECM-P008800: FUEL RAIL/SYSTEM PRESSURE - TOO HIGH. GENERAL FAILURE INFORMATION. NO SUB TYPE INFORMATION (B6324S5; 2011-2012)

DIAGNOSTIC TROUBLE CODE (DTC) INFORMATION ECM-P008800

see **DIAGNOSTIC TROUBLE CODE (DTC) INFORMATION ECM-P008800**

FAULT-TRACING

see **FAULT-TRACING**

ECM-P008900: FUEL PRESSURE REGULATOR PERFORMANCE. GENERAL FAULT INFORMATION. NO INFORMATION ABOUT FAULT TYPE (B8444S; 2005-2011)

DIAGNOSTIC TROUBLE CODE (DTC) INFORMATION ECM-P008900

Condition

the engine control module (ECM) controls the fuel pressure via the fuel pump (FP) control module using a pulse width modulation (PWM) signal. The fuel pump (FP) control module then controls the fuel pump (FP) depending on the pressure requested by the engine control module (ECM).

The diagnostic trouble code (DTC) (measured pressure from the fuel pressure sensor) is stored if the actual pressure varies/pulses too much.

The diagnostic trouble code (DTC) can be diagnosed when the engine is running.

Substitute Value

- The fuel pump (FP) is controlled using a calculated value.

Possible Source

- Air in the fuel lines.
- Blocked fuel lines.
- Damaged fuel pressure sensor.
- Damaged fuel pump.
- Damaged fuel pump (FP) control module.

Fault symptom[s]

- Malfunction indicator lamp (MIL) lit.
- Poor performance.
- Engine stops.

TROUBLESHOOTING ECM-P008900 (2005)

CHECKING FUEL PRESSURE SENSOR

NOTE: **If diagnostic trouble codes (DTC) for the fuel pressure sensor or atmospheric pressure sensor are stored, these diagnostic trouble codes (DTC) must be fault-traced and remedied first.**

HINT: The following method is for checking if the diagnostic trouble code has been caused by a defective fuel pressure sensor. This can be done by comparing if the fuel pressure sensor's signal (readout in the diagnostic tool) is unstable when actual fuel pressure (readout on pressure gauge connected to fuel system's lines) is stable.

- Connect pressure gauge: **FUEL PRESSURE GAUGE**

  CAUTION: The pressure in the fuel injection system can reach approximately 650 kPa when this diagnostic trouble code (DTC) is stored. Use an adapted manometer.

- Run the engine until it is warm and let it idle.
- A/C off.

  Read off relative fuel pressure.

  The relative fuel pressure is calculated from the fuel pressure sensor's and the atmospheric pressure sensor's signal (=absolute pressure minus atmospheric pressure).

  Check the value on the pressure gauge and the readout value in the diagnostic tool. If the fuel pressure sensor's readout signal is unstable when the actual fuel pressure (readout on pressure gauge connected to fuel system's lines) is stable, this indicates that there is a malfunction in the circuit for the fuel pressure sensor.

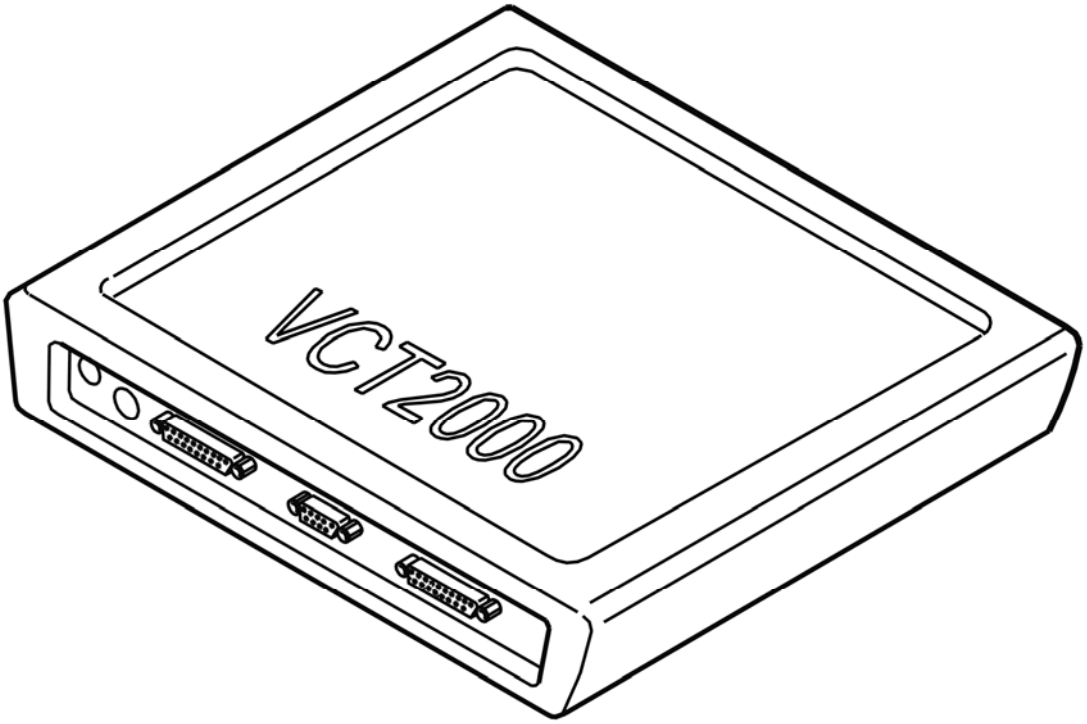

Fig. 155: Identifying VCT2000 Diagnostic Tool Symbol In VIDA
Courtesy of VOLVO CARS CORPORATION

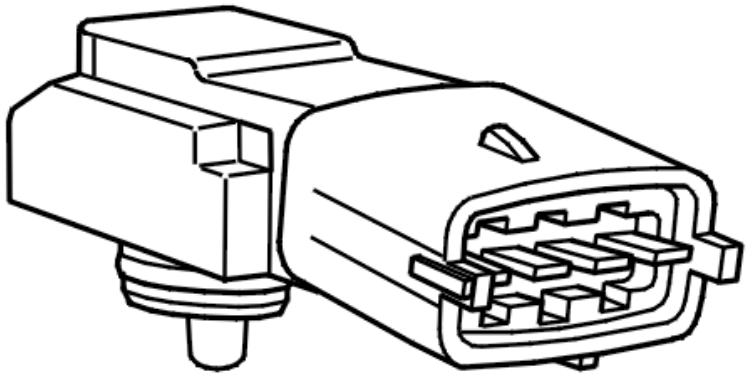

Fig. 156: Identifying Fuel Pressure Sensor
Courtesy of VOLVO CARS CORPORATION

Is the fuel pressure sensor OK?

- **YES**

  Refer to **CHECKING COMPONENTS**

- **NO**

  Refer to **CHECKING COMPONENTS AND WIRING**

CHECKING COMPONENTS

Check that the fuel level in the tank is not too low (almost no fuel).

Check the connectors between fuel pump module and the fuel pump for contact resistance and oxidation.

Check fuel lines and fuel filter for clogging and leakage.

Try with a new fuel pump if no malfunction is found in the above troubleshooting.

HINT: The diagnostic trouble code may also have been generated by a defective fuel pump module.

Remedy as necessary.

Other information

- For replacing fuel pump: **LEVEL SENSOR, FUEL TANK, RIGHT-HAND/FUEL TANK, REPLACING**
- see **FUEL PUMP DRIVER MODULE**
- see **CHECKING WIRING AND TERMINALS**

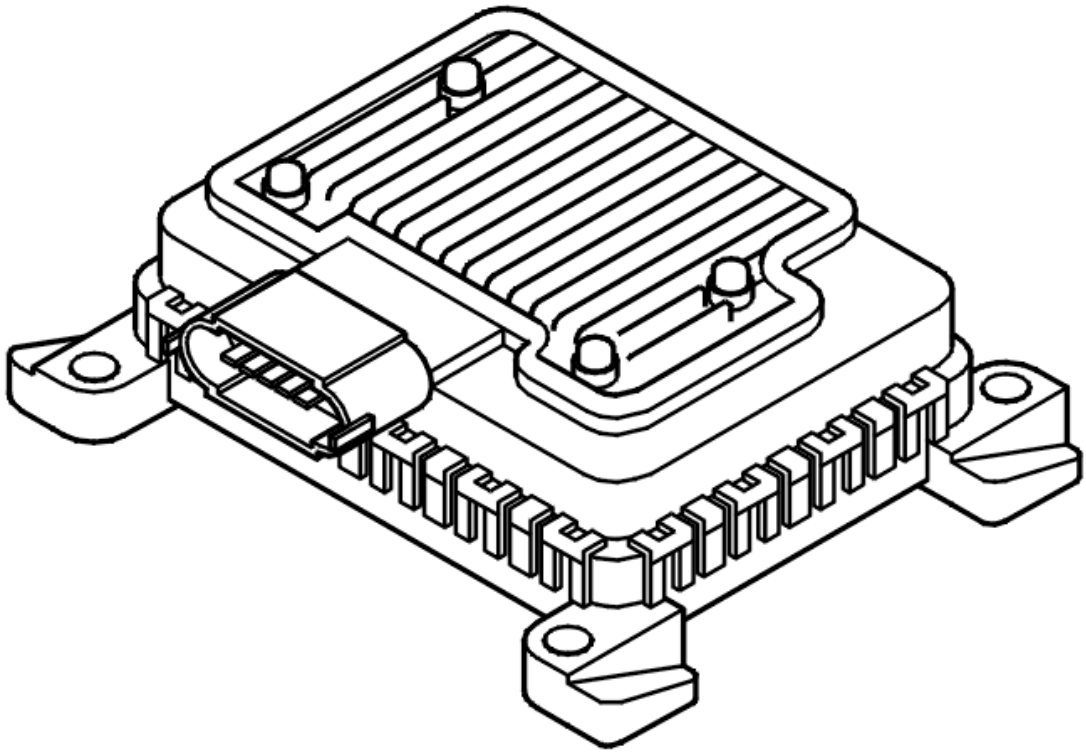

Fig. 157: Identifying Fuel Pump (FP) Control Module
Courtesy of VOLVO CARS CORPORATION

- **Continue**

  Refer to **VERIFICATION**

CHECKING COMPONENTS AND WIRING

Check the fuel pressure sensor's connector for contact resistance and oxidation.

Try with a new fuel pressure sensor if no malfunction is found in the above troubleshooting.

Remedy as necessary.

Other information

- see **CONNECTING THE BREAKOUT BOX**
- see **SIGNAL SPECIFICATION, ENGINE CONTROL MODULE (ECM)**
- see **FUEL PRESSURE AND TEMPERATURE SENSOR, REPLACING**
- see **CHECKING WIRING AND TERMINALS**

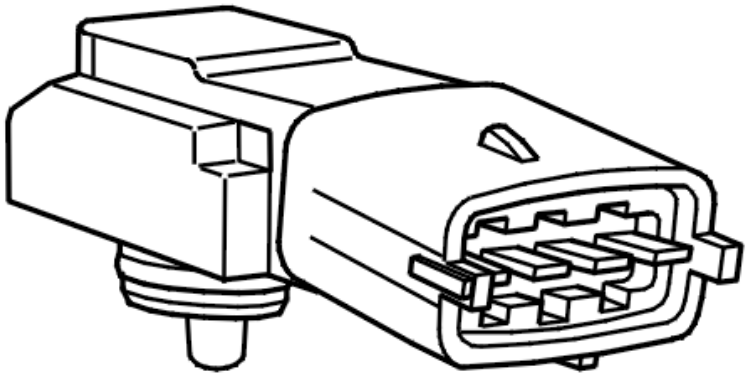

Fig. 158: Identifying Fuel Pressure Sensor
Courtesy of VOLVO CARS CORPORATION

- **Continue**

  Refer to **VERIFICATION**

VERIFICATION

VERIFICATION

HINT: After carrying out the repair, check that the fault has been remedied.

CAUTION: The pressure in the fuel injection system can reach approximately 650 kPa when this diagnostic trouble code (DTC) is stored. Use an adapted manometer.

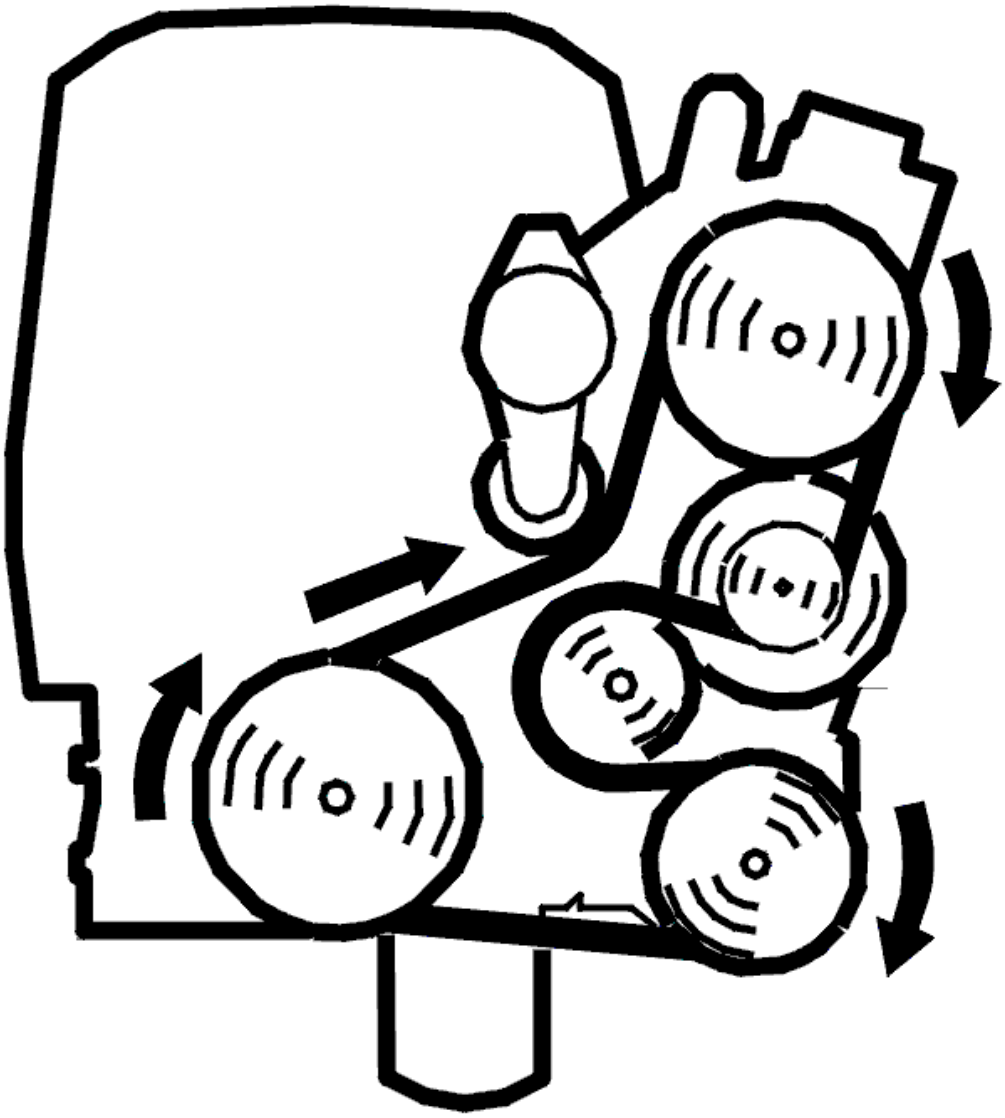

Fig. 159: Belt Routing / Engine Idling - Volvo
Courtesy of VOLVO CARS CORPORATION

- Connect pressure gauge:**FUEL PRESSURE GAUGE**
- Run the engine until it is warm and let it idle.
- A/C off.

  Read off relative fuel pressure.

  The relative fuel pressure is calculated from the fuel pressure sensor's and the atmospheric pressure sensor's signal (=absolute pressure minus atmospheric pressure).

  Check that the value on the pressure gauge and the readout value are the same. Different values indicate malfunction.

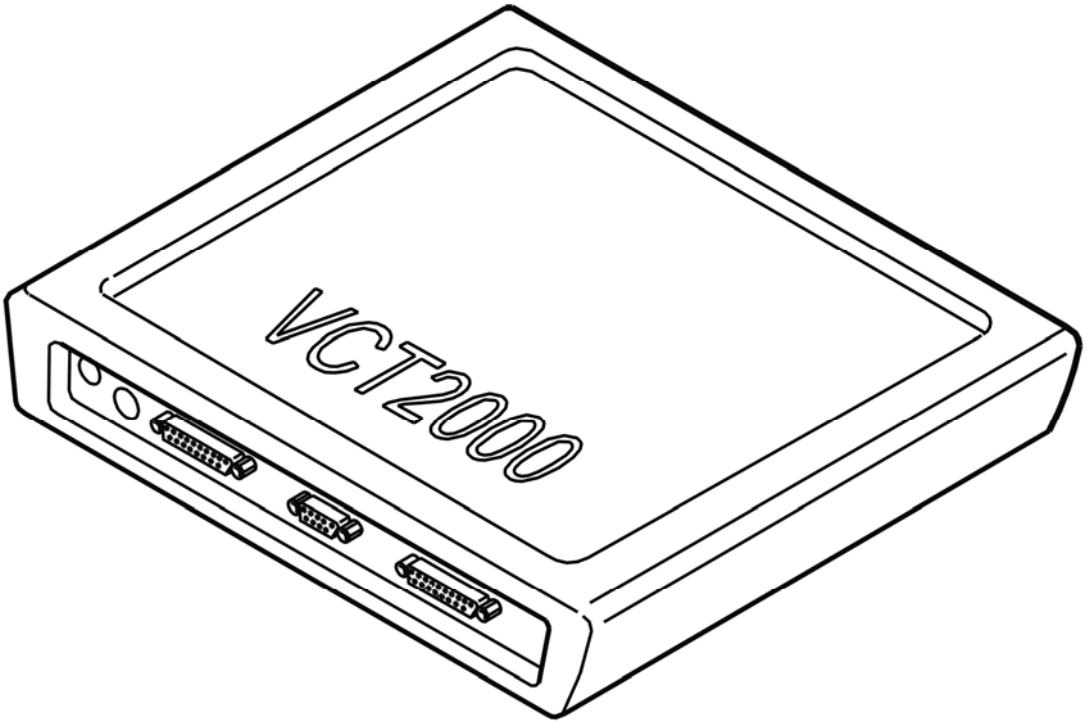

Fig. 160: Identifying VCT2000 Diagnostic Tool Symbol In VIDA
Courtesy of VOLVO CARS CORPORATION

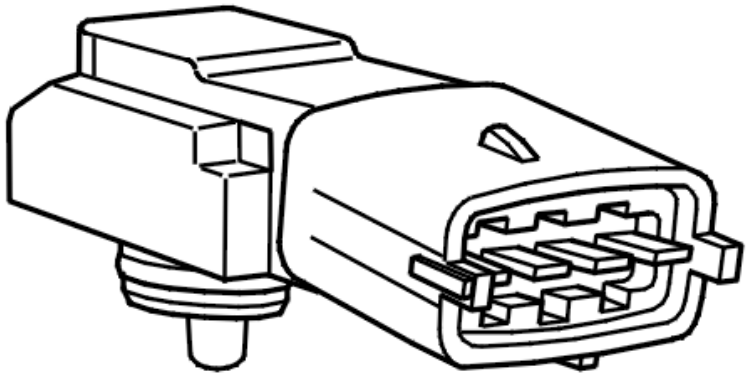

Fig. 161: Identifying Fuel Pressure Sensor
Courtesy of VOLVO CARS CORPORATION

Is the function OK?

- **YES**

  VERIFIED: Troubleshooting has been completed.

- **NO**

  Refer to **INFORMATION**

INFORMATION

FAULT-TRACING INFORMATION

The fault should have been detected and remedied. As this is not the case fault-tracing has failed.

Exit fault-tracing for this diagnostic trouble code (DTC) or make another attempt.

TROUBLESHOOTING ECM-P008900 (2006-2011)

CHECKING FUEL PRESSURE SENSOR

NOTE: **If diagnostic trouble codes (DTC) for the fuel pressure sensor or atmospheric pressure sensor are stored, these diagnostic trouble codes (DTC) must be fault-traced and remedied first.**

HINT: The following method is for checking if the diagnostic trouble code has been caused by a defective fuel pressure sensor. This can be done by comparing if the fuel pressure sensor's signal (readout in the diagnostic tool) is unstable when actual fuel pressure (readout on pressure gauge connected to fuel system's lines) is stable.

- Connect pressure gauge: **FUEL PRESSURE GAUGE**

CAUTION: **The pressure in the fuel injection system can reach approximately 650 kPa when this diagnostic trouble code (DTC) is stored. Use an adapted manometer.**

- Run the engine until it is warm and let it idle.
- A/C off.

Read off relative fuel pressure.

The relative fuel pressure is calculated from the fuel pressure sensor's and the atmospheric pressure sensor's signal (=absolute pressure minus atmospheric pressure).

Check the value on the pressure gauge and the readout value in the diagnostic tool. If the fuel pressure sensor's readout signal is unstable when the actual fuel pressure (readout on pressure gauge connected to fuel system's lines) is stable, this indicates that there is a malfunction in the circuit for the fuel pressure sensor.

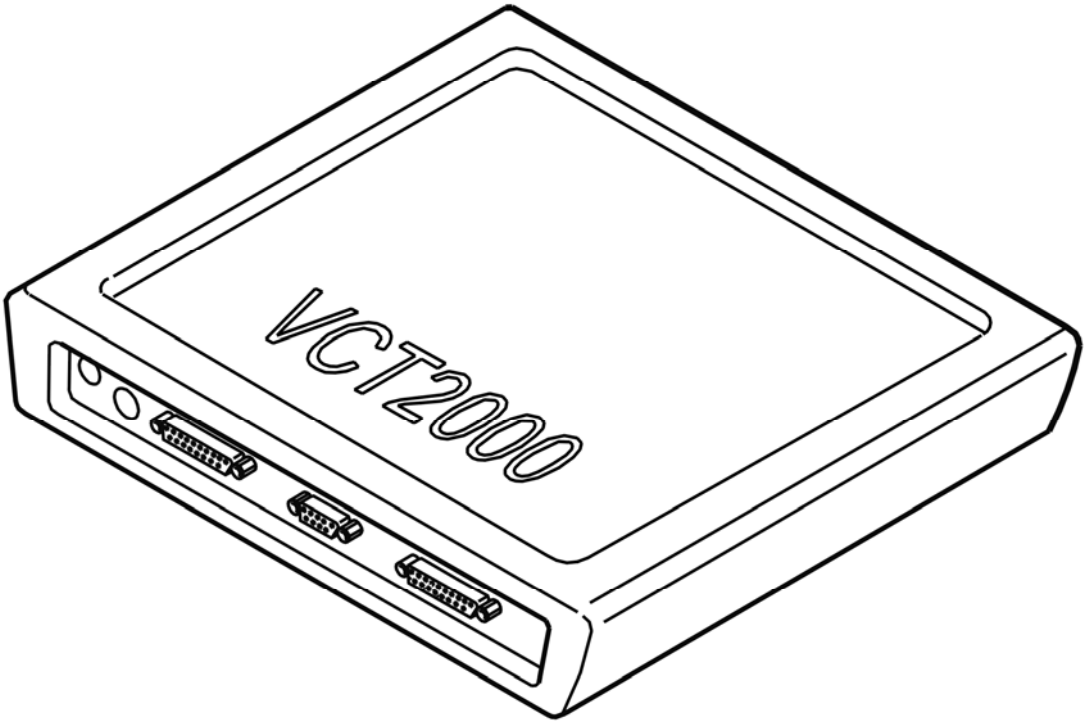

Fig. 162: Identifying VCT2000 Diagnostic Tool Symbol In VIDA
Courtesy of VOLVO CARS CORPORATION

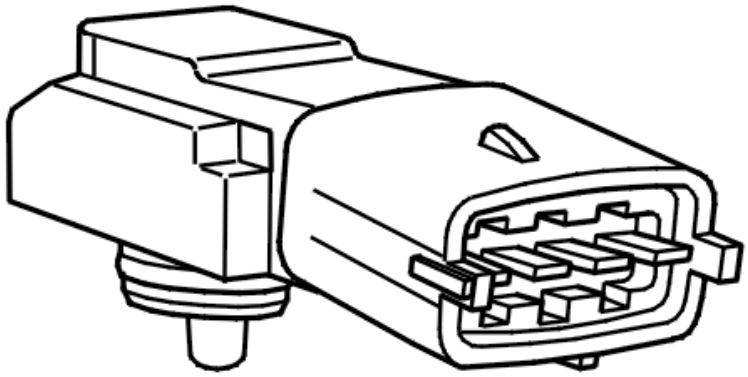

Fig. 163: Identifying Fuel Pressure Sensor
Courtesy of VOLVO CARS CORPORATION

Is the fuel pressure sensor OK?

- **YES**

  Refer to **CHECKING COMPONENTS**

- **NO**

  Refer to **CHECKING COMPONENTS AND WIRING**

CHECKING COMPONENTS

Check that the fuel level in the tank is not too low (almost no fuel).

Check the connectors between fuel pump module and the fuel pump for contact resistance and oxidation.

Check fuel lines and fuel filter for clogging and leakage.

Try with a new fuel pump if no malfunction is found in the above troubleshooting.

HINT: The diagnostic trouble code may also have been generated by a defective fuel pump module.

Remedy as necessary.

Other information

- For replacing fuel pump: **LEVEL SENSOR, FUEL TANK, RIGHT-HAND/FUEL TANK, REPLACING**
- see **CONTROL MODULE FUEL PUMP (FP), REPLACING**
- see **CHECKING WIRING AND TERMINALS**

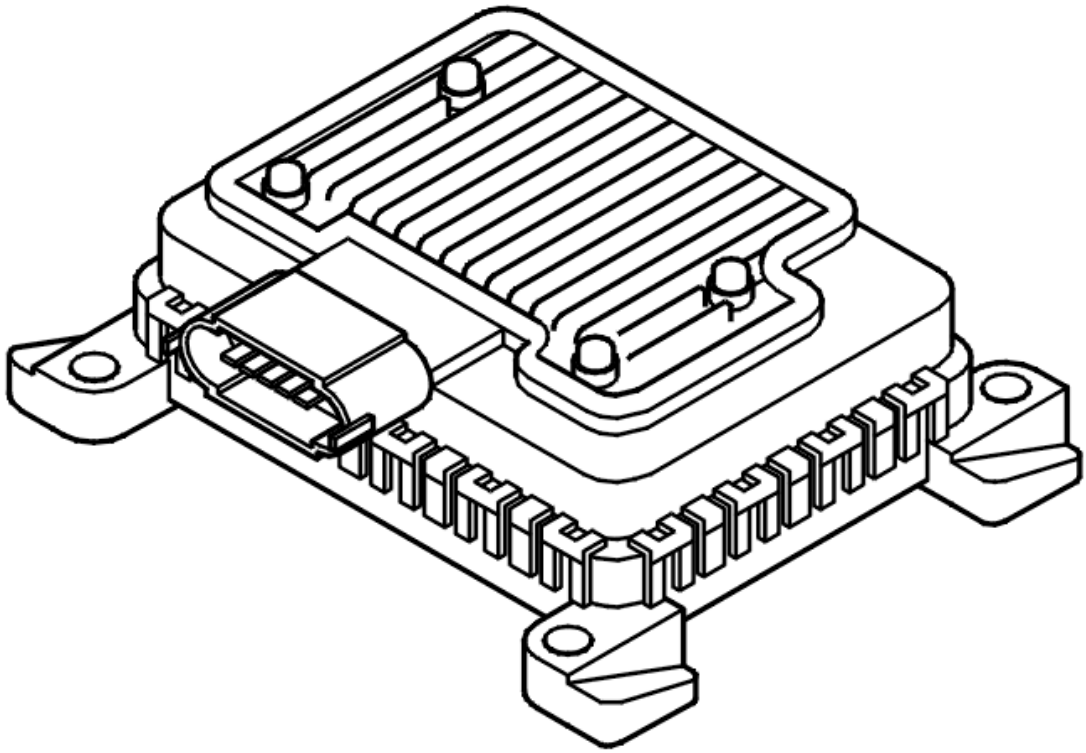

Fig. 164: Identifying Fuel Pump (FP) Control Module
Courtesy of VOLVO CARS CORPORATION

- **Continue**

  Refer to **VERIFICATION**

CHECKING COMPONENTS AND WIRING

Check the fuel pressure sensor's connector for contact resistance and oxidation.

Try with a new fuel pressure sensor if no malfunction is found in the above troubleshooting.

Remedy as necessary.

Other information

- see **CONNECTING THE BREAKOUT BOX**
- see **SIGNAL SPECIFICATION, ENGINE CONTROL MODULE (ECM)**
- see **FUEL PRESSURE AND TEMPERATURE SENSOR, REPLACING**
- see **CHECKING WIRING AND TERMINALS**

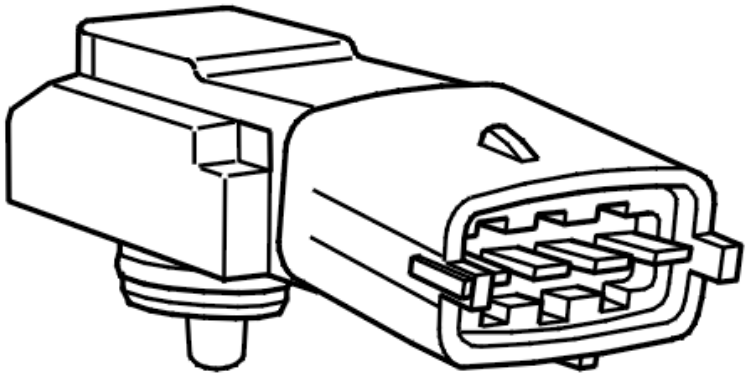

Fig. 165: Identifying Fuel Pressure Sensor
Courtesy of VOLVO CARS CORPORATION

- **Continue**

  Refer to **VERIFICATION**

VERIFICATION

VERIFICATION

HINT: After carrying out the repair, check that the fault has been remedied.

CAUTION: The pressure in the fuel injection system can reach approximately 650 kPa when this diagnostic trouble code (DTC) is stored. Use an adapted manometer.

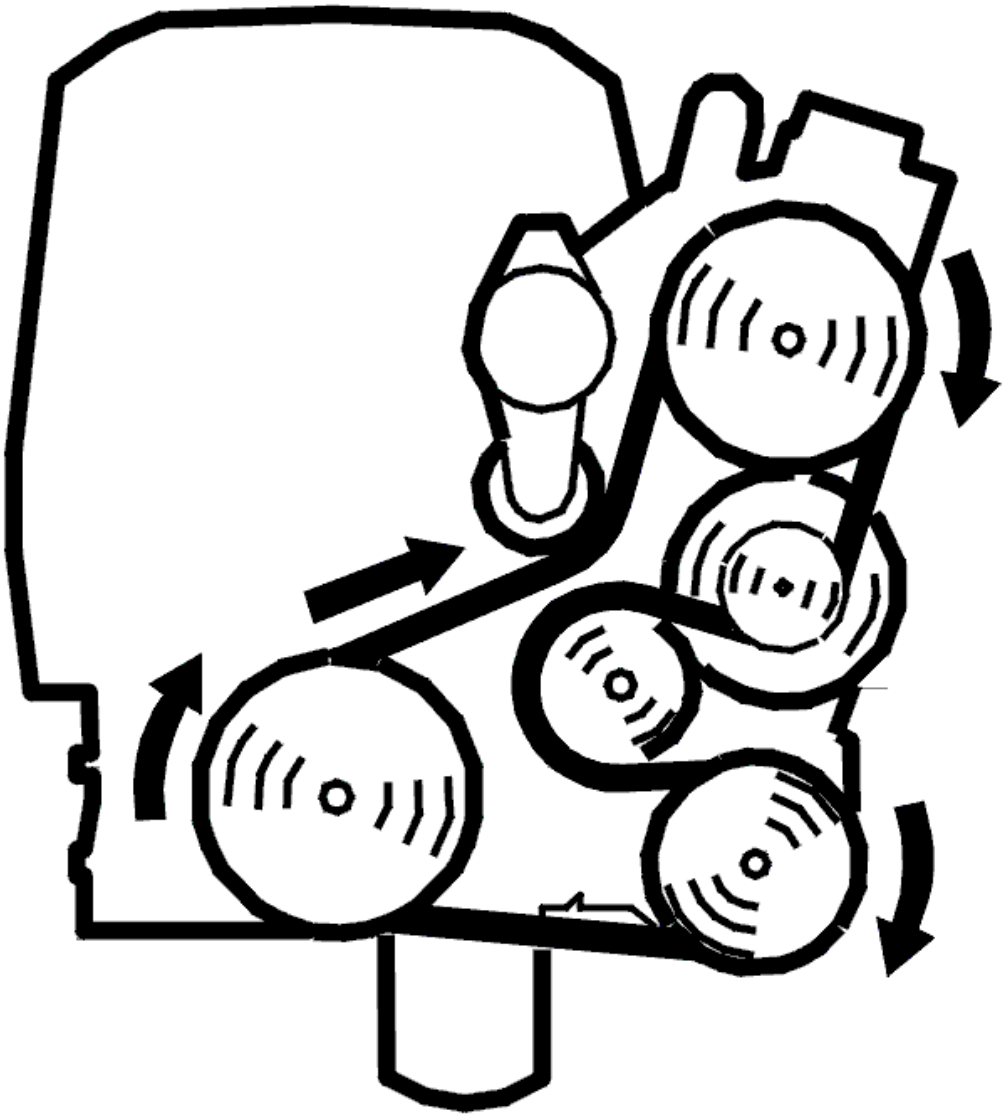

Fig. 166: Belt Routing / Engine Idling - Volvo
Courtesy of VOLVO CARS CORPORATION

- Connect pressure gauge:**FUEL PRESSURE GAUGE**
- Run the engine until it is warm and let it idle.
- A/C off.

  Read off relative fuel pressure.

  The relative fuel pressure is calculated from the fuel pressure sensor's and the atmospheric pressure sensor's signal (=absolute pressure minus atmospheric pressure).

  Check that the value on the pressure gauge and the readout value are the same. Different values indicate malfunction.

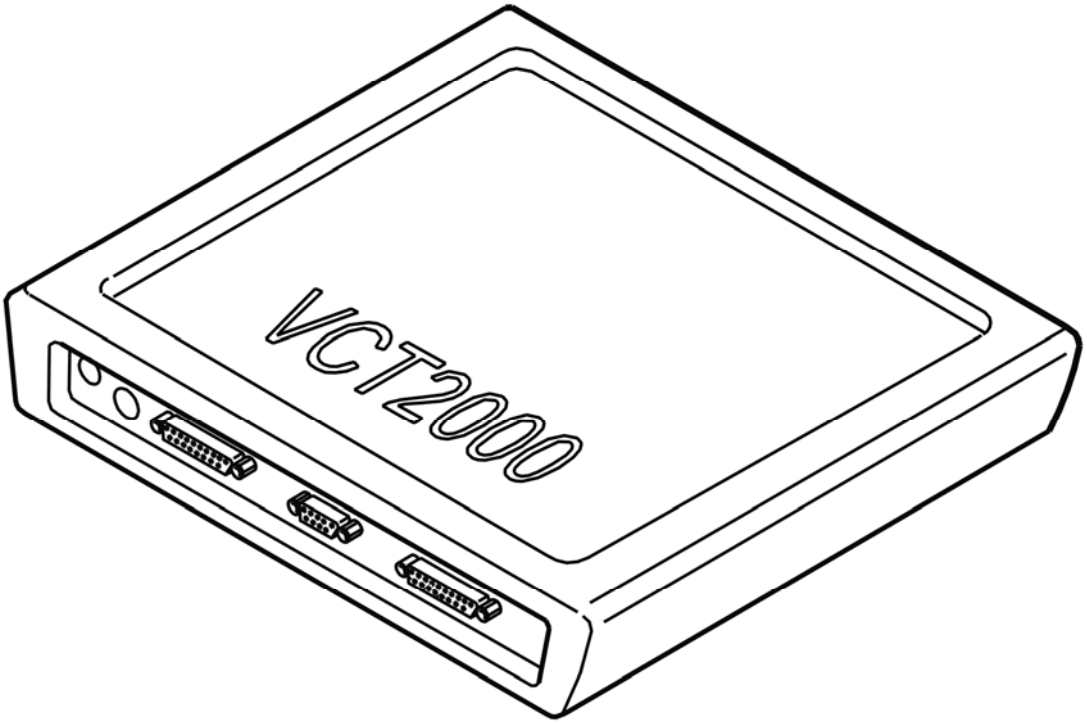

Fig. 167: Identifying VCT2000 Diagnostic Tool Symbol In VIDA
Courtesy of VOLVO CARS CORPORATION

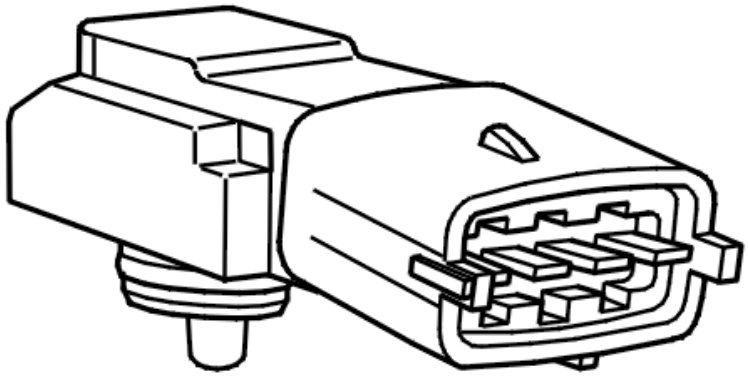

Fig. 168: Identifying Fuel Pressure Sensor
Courtesy of VOLVO CARS CORPORATION

Is the function OK?

- **YES**

  VERIFIED: Troubleshooting has been completed.

- **NO**

  Refer to **INFORMATION**

INFORMATION

FAULT-TRACING INFORMATION

The fault should have been detected and remedied. As this is not the case fault-tracing has failed.

Exit fault-tracing for this diagnostic trouble code (DTC) or make another attempt.

ECM-P008968: FUEL PRESSURE REGULATOR PERFORMANCE. ALGORITHM BASED FAILURES. EVENT INFORMATION (B6324S; 2007-

2010)

DIAGNOSTIC TROUBLE CODE (DTC) INFORMATION ECM-P008968

Condition

NOTE: **This diagnostic trouble code (DTC) status is an event controlled diagnostic trouble code (DTC). An event controlled diagnostic trouble code (DTC) does not mean that there is a fault in the control module when it is active, but is designed as information.**

Engine control module (ECM) monitors the fuel system. If the control module detects that the fuel pressure is too low for a certain time, the diagnostic trouble code is generated.

The diagnostic trouble code (DTC) can be diagnosed when the engine is running.

Substitute Value

- Nothing.

Possible Source

- This diagnostic trouble code (DTC) is not caused by a fault that needs to be remedied.

Fault symptom[s]

- None.

FAULT-TRACING INFORMATION

see **FAULT-TRACING INFORMATION**

ECM-P008968: FUEL PRESSURE REGULATOR PERFORMANCE. ALGORITHM BASED FAILURES. EVENT INFORMATION (B6324S5; 2011-2012)

DIAGNOSTIC TROUBLE CODE (DTC) INFORMATION ECM-P008968

see **DIAGNOSTIC TROUBLE CODE (DTC) INFORMATION ECM-P008968**

FAULT-TRACING INFORMATION

see **FAULT-TRACING INFORMATION**

ECM-P009100: FUEL PRESSURE REGULATOR CONTROL CIRCUIT LOW.

GENERAL FAULT INFORMATION. TYPE OF FAULT NOT SPECIFIED. (B8444S; 2005-2011)

DIAGNOSTIC TROUBLE CODE (DTC) INFORMATION ECM-P009100

Condition

the engine control module (ECM) controls the fuel pressure via the fuel pump (FP) control module using a pulse width modulation (PWM) signal. The fuel pump (FP) control module then controls the fuel pump (FP) depending on the pressure requested by the engine control module (ECM).

The diagnostic trouble code (DTC) is stored if the actual pressure (gauged pressure from the fuel pressure sensor) becomes too low compared with the requested pressure (engine control module (ECM) target value) for a certain amount of time.

The diagnostic trouble code (DTC) can be diagnosed when the engine is running.

Substitute Value

- The fuel pump (FP) is controlled using a calculated value.

Possible Source

- Leakage in the fuel lines.
- Damaged fuel pressure sensor.
- Damaged fuel pump.
- Damaged fuel pump (FP) control module.

Fault symptom[s]

- Malfunction indicator lamp (MIL) lit.
- Poor performance.
- Engine stops.

TROUBLESHOOTING ECM-P009100 (2005)

CHECKING FUEL PRESSURE SENSOR

NOTE: **If diagnostic trouble codes (DTC) for the fuel pressure sensor or atmospheric pressure sensor are stored, troubleshooting of these diagnostic trouble codes shall be performed and remedied first.**

HINT: The following method is for checking if the diagnostic trouble code has been caused by defective fuel pressure sensor. This can be done by comparing the readout signal from the fuel pressure sensor with actual fuel pressure (readout on pressure gauge connected to fuel system's lines). The method

requires accurate calibration of the pressure gauge for measuring the fuel pressure.

- Connect pressure gauge: **FUEL PRESSURE GAUGE**

  CAUTION: The pressure in the fuel system can reach approximately 650 kPa when this diagnostic trouble code (DTC) is stored. Use an adapted manometer.

- Run the engine until it is warm and let it idle.
- A/C off.

  Read off relative fuel pressure.

  The relative fuel pressure is calculated from the fuel pressure sensor's and the atmospheric pressure sensor's signal (=absolute pressure minus atmospheric pressure).

  Check that the value on the pressure gauge and the readout value are the same. Different values indicate malfunction in the circuit for the fuel pressure sensor.

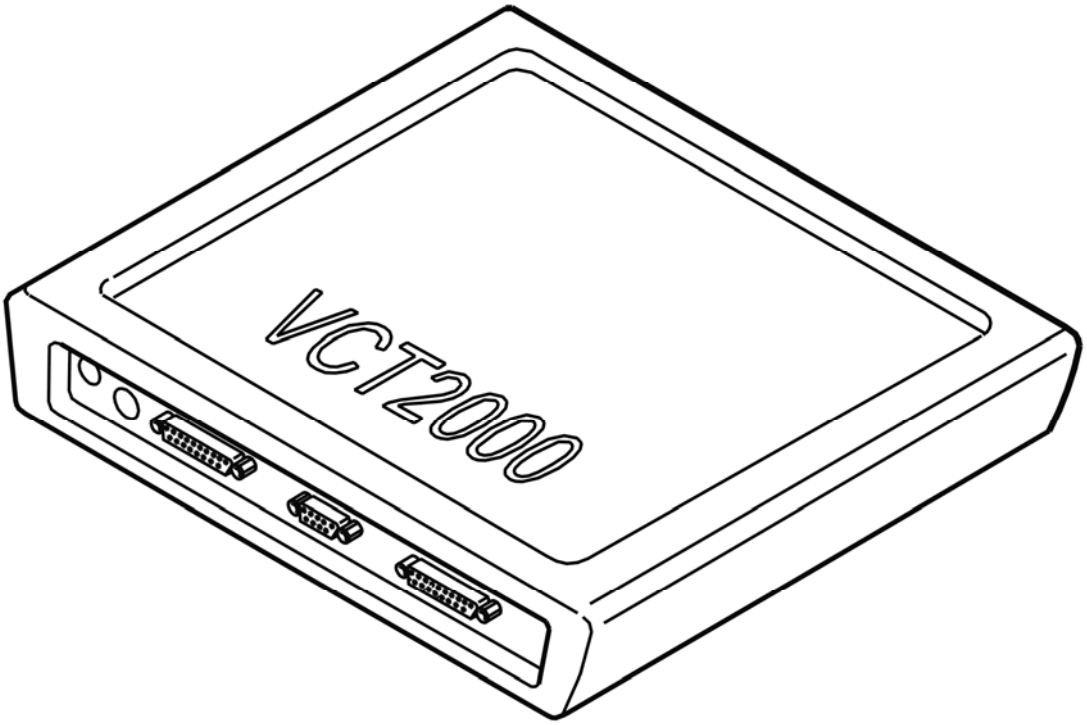

Fig. 169: Identifying VCT2000 Diagnostic Tool Symbol In VIDA
Courtesy of VOLVO CARS CORPORATION

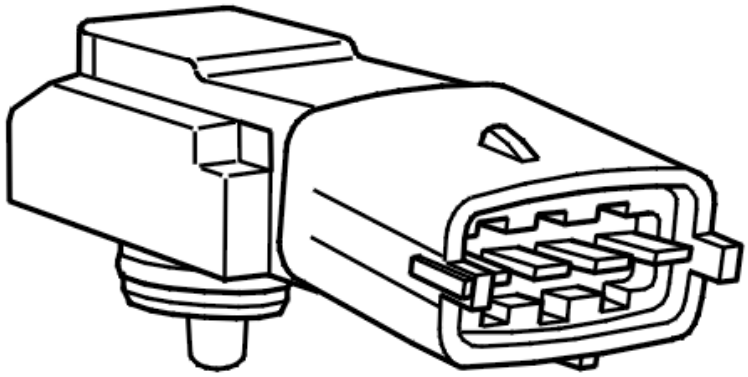

Fig. 170: Identifying Fuel Pressure Sensor
Courtesy of VOLVO CARS CORPORATION

Is the fuel pressure sensor OK?

- **YES**

  Refer to **CHECKING CONTROL OF FUEL PRESSURE**

- **NO**

  Refer to **CHECKING COMPONENTS AND WIRING**

CHECKING CONTROL OF FUEL PRESSURE

CAUTION: The pressure in the fuel system can reach approximately 650 kPa when this diagnostic trouble code (DTC) is stored. Use an adapted manometer.

HINT: The following method is for checking the fuel system's pressure by reading out fuel pressure and the fuel pump's working load. If pressure gauge for pressure up to 650 kPa is connected, the fuel pressure sensor can also be checked during the test.

- Disconnect the pressure gauge if it is not adapted for higher pressures than 650 kPa.

- Run the engine until it is warm and let it idle.
- A/C off.
- Read off fuel pressure and the fuel pump's working load.
  - The upper digital display and the graphic display (red characters) show absolute fuel pressure, calculated from the fuel pressure sensor.
  - The middle digital display (blue characters) shows the fuel pump's current working load to hold current fuel pressure. (Normal value 50% ±10%.)
  - The lower digital display shows the relative fuel pressure (white characters), calculated from the fuel pressure sensor and the atmospheric pressure sensor (=absolute pressure minus atmospheric pressure). If a pressure gauge is connected during the test it shall show this pressure.

Check the value for fuel pressure together with the value for the fuel pump's working load. Requested pressure is 380 kPa at idle. Fuel pressure (relative) lower than 380 kPa together with high working load on the fuel pump indicates a malfunction of the pressure control.

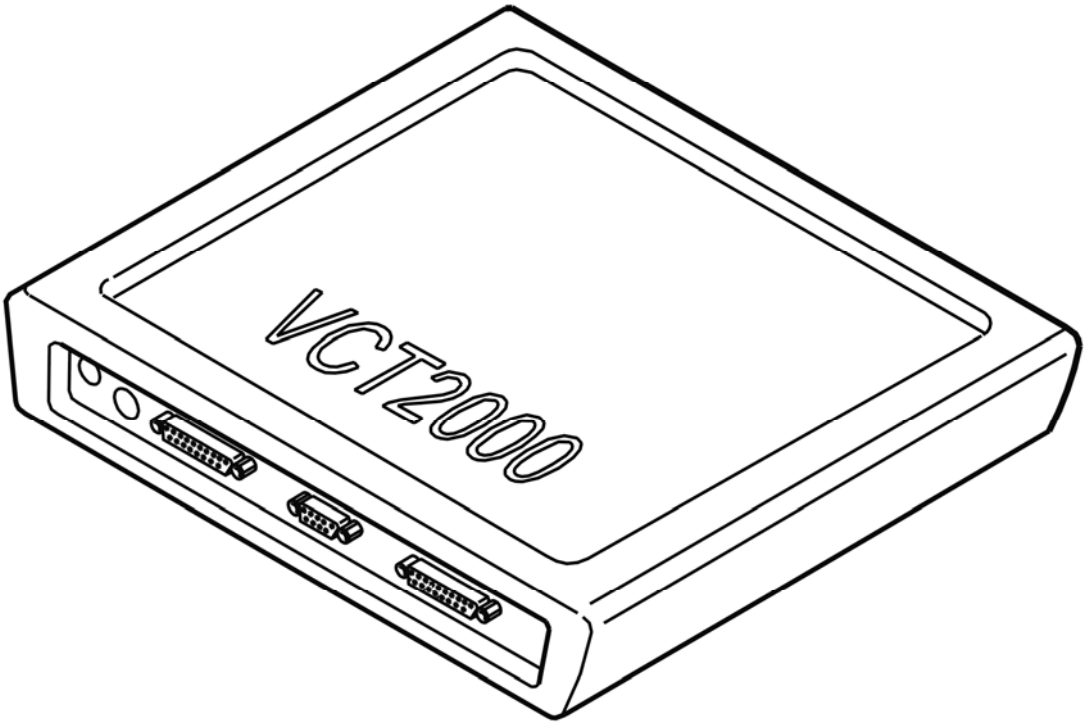

Fig. 171: Identifying VCT2000 Diagnostic Tool Symbol In VIDA
Courtesy of VOLVO CARS CORPORATION

Is the function OK?

- **YES**

Refer to **CHECKING COMPONENTS**

- **NO**

  Refer to **CHECKING COMPONENTS**

CHECKING COMPONENTS

HINT: The malfunction may be intermittent or may be due to the system having low flow capacity.

Check that the fuel level in the tank is not too low (almost no fuel).

Check fuel lines between fuel pump and the injector's distribution pipes for leakage.

Check the fuel pressure sensor's connector for contact resistance and oxidation.

Check the fuel pump module's connector for contact resistance and oxidation.

Check fuel lines and fuel filter for clogging.

Try with a new fuel pump if no malfunction is found in the above troubleshooting.

Remedy as necessary.

Other information

- see **CONNECTING THE BREAKOUT BOX**
- see **SIGNAL SPECIFICATION, ENGINE CONTROL MODULE (ECM)**
- For replacing fuel pump: **LEVEL SENSOR, FUEL TANK, RIGHT-HAND/FUEL TANK, REPLACING**
- see **FUEL PUMP DRIVER MODULE**
- see **CHECKING WIRING AND TERMINALS**

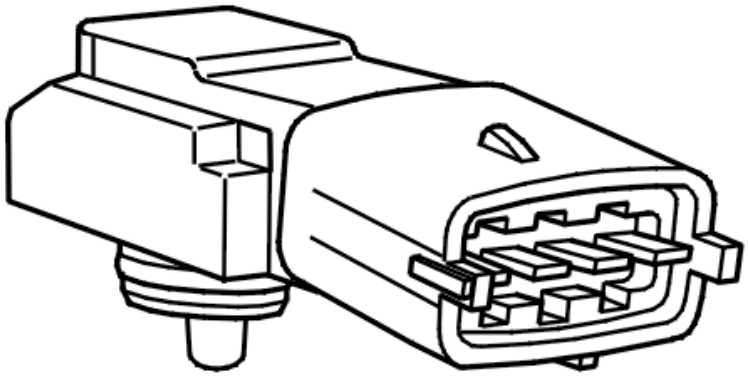

Fig. 172: Identifying Fuel Pressure Sensor
Courtesy of VOLVO CARS CORPORATION

- **Continue**

  Refer to **INFORMATION**

CHECKING COMPONENTS AND WIRING

Check the fuel pressure sensor's connector for contact resistance and oxidation.

Try with a new fuel pressure sensor if no malfunction is found in the above troubleshooting.

Remedy as necessary.

Other information

- see **CONNECTING THE BREAKOUT BOX**
- see **SIGNAL SPECIFICATION, ENGINE CONTROL MODULE (ECM)**
- see **FUEL PRESSURE AND TEMPERATURE SENSOR, REPLACING**
- see **CHECKING WIRING AND TERMINALS**

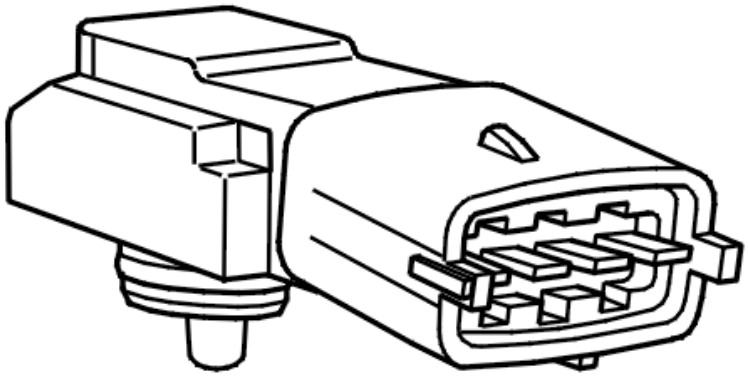

Fig. 173: Identifying Fuel Pressure Sensor
Courtesy of VOLVO CARS CORPORATION

- **Continue**

  Refer to **VERIFICATION**

CHECKING COMPONENTS

Check that the fuel level in the tank is not too low (almost no fuel).

Check the connectors between fuel pump module and the fuel pump for contact resistance and oxidation.

Check fuel lines and fuel filter for clogging.

If no malfunction is found in the above troubleshooting, try with a new fuel pump.

HINT: The diagnostic trouble code may also have been generated by a defective fuel pump module.

Remedy as necessary.

Other information

- For replacing fuel pump: **LEVEL SENSOR, FUEL TANK, RIGHT-HAND/FUEL TANK,**

REPLACING

- see **FUEL PUMP DRIVER MODULE**
- see **CHECKING WIRING AND TERMINALS**

- **Continue**

  Refer to **VERIFICATION**

INFORMATION

FAULT-TRACING INFORMATION

If the fault is intermittent, do not verify fault-tracing if the fault does not recur.

It is possible to view the information again, or leave fault-tracing for this diagnostic trouble code (DTC).

VERIFICATION

VERIFICATION

HINT: After carrying out the repair, check that the fault has been remedied.

CAUTION: The pressure in the fuel injection system can reach approximately 650 kPa when this diagnostic trouble code (DTC) is stored. Use an adapted manometer.

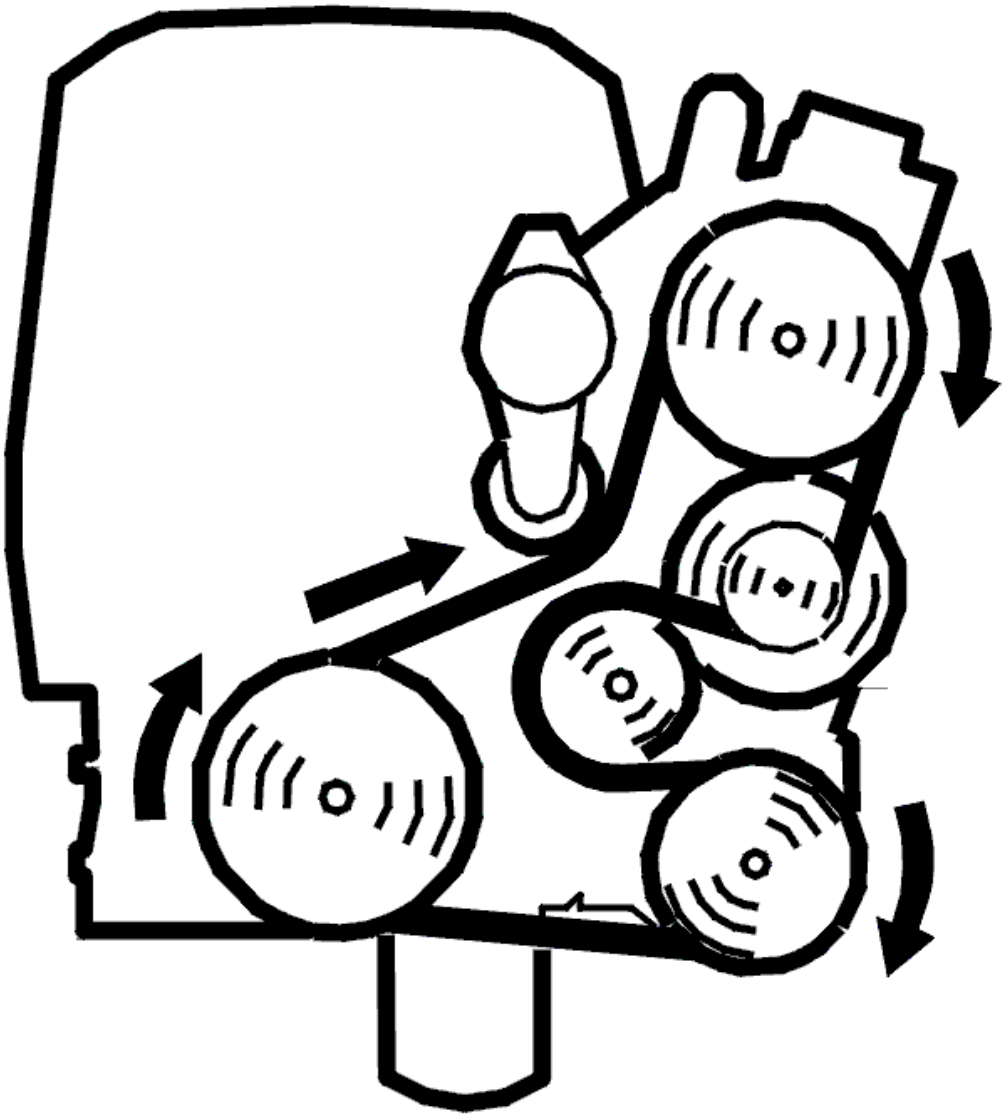

Fig. 174: Belt Routing / Engine Idling - Volvo
Courtesy of VOLVO CARS CORPORATION

- Connect pressure gauge:**FUEL PRESSURE GAUGE**
- Run the engine until it is warm and let it idle.
- A/C off.

  Read off relative fuel pressure.

  The relative fuel pressure is calculated from the fuel pressure sensor's and the atmospheric pressure sensor's signal (=absolute pressure minus atmospheric pressure).

  Check that the value on the pressure gauge and the readout value are the same. Different values indicate malfunction.

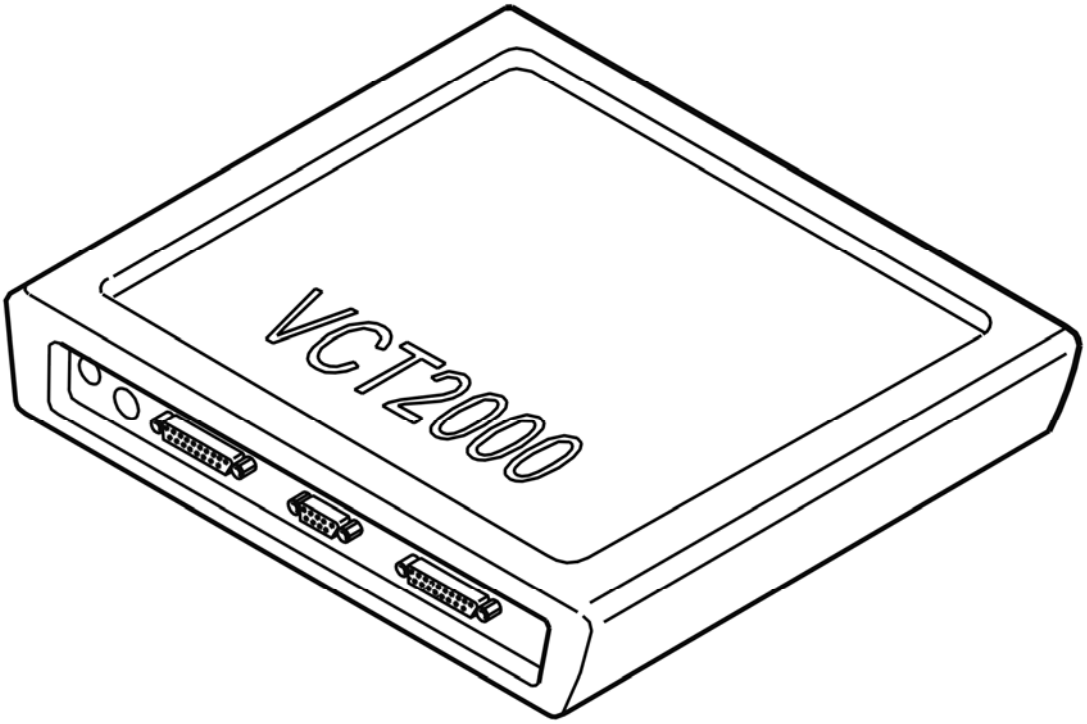

Fig. 175: Identifying VCT2000 Diagnostic Tool Symbol In VIDA
Courtesy of VOLVO CARS CORPORATION

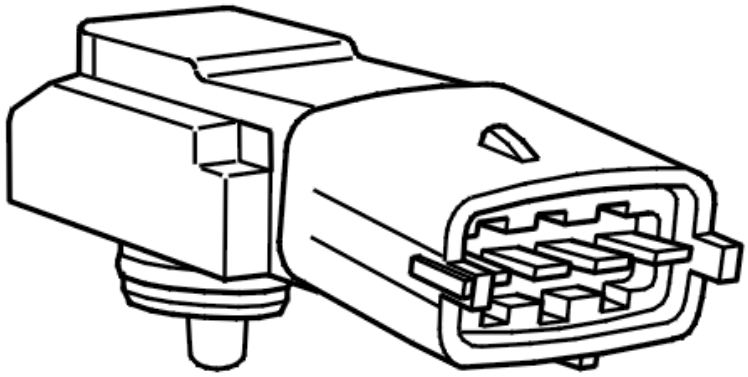

Fig. 176: Identifying Fuel Pressure Sensor
Courtesy of VOLVO CARS CORPORATION

Is the function OK?

- **YES**

  VERIFIED: Troubleshooting has been completed.

- **NO**

  Refer to **INFORMATION**

VERIFICATION

VERIFICATION

HINT: After carrying out the repair, check that the fault has been remedied.

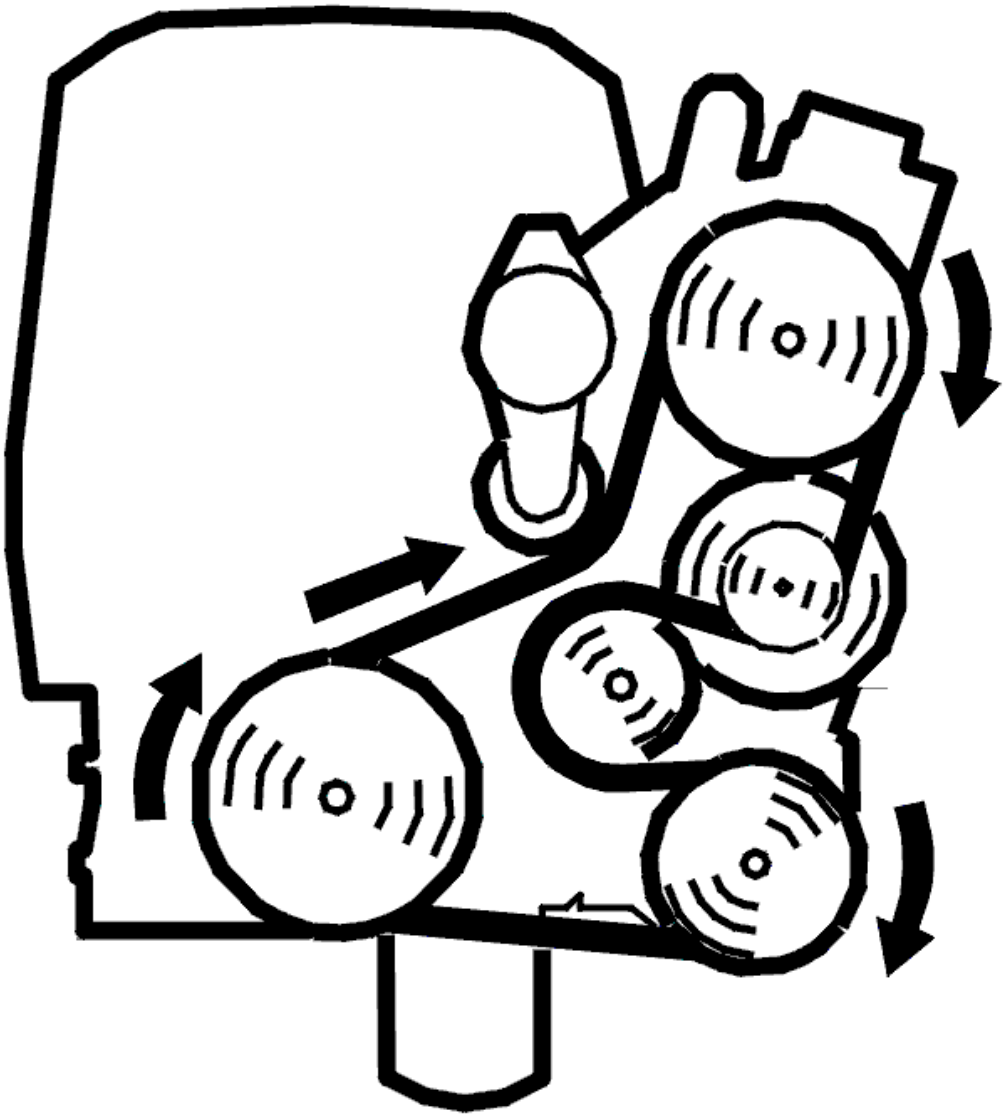

Fig. 177: Belt Routing / Engine Idling - Volvo
Courtesy of VOLVO CARS CORPORATION

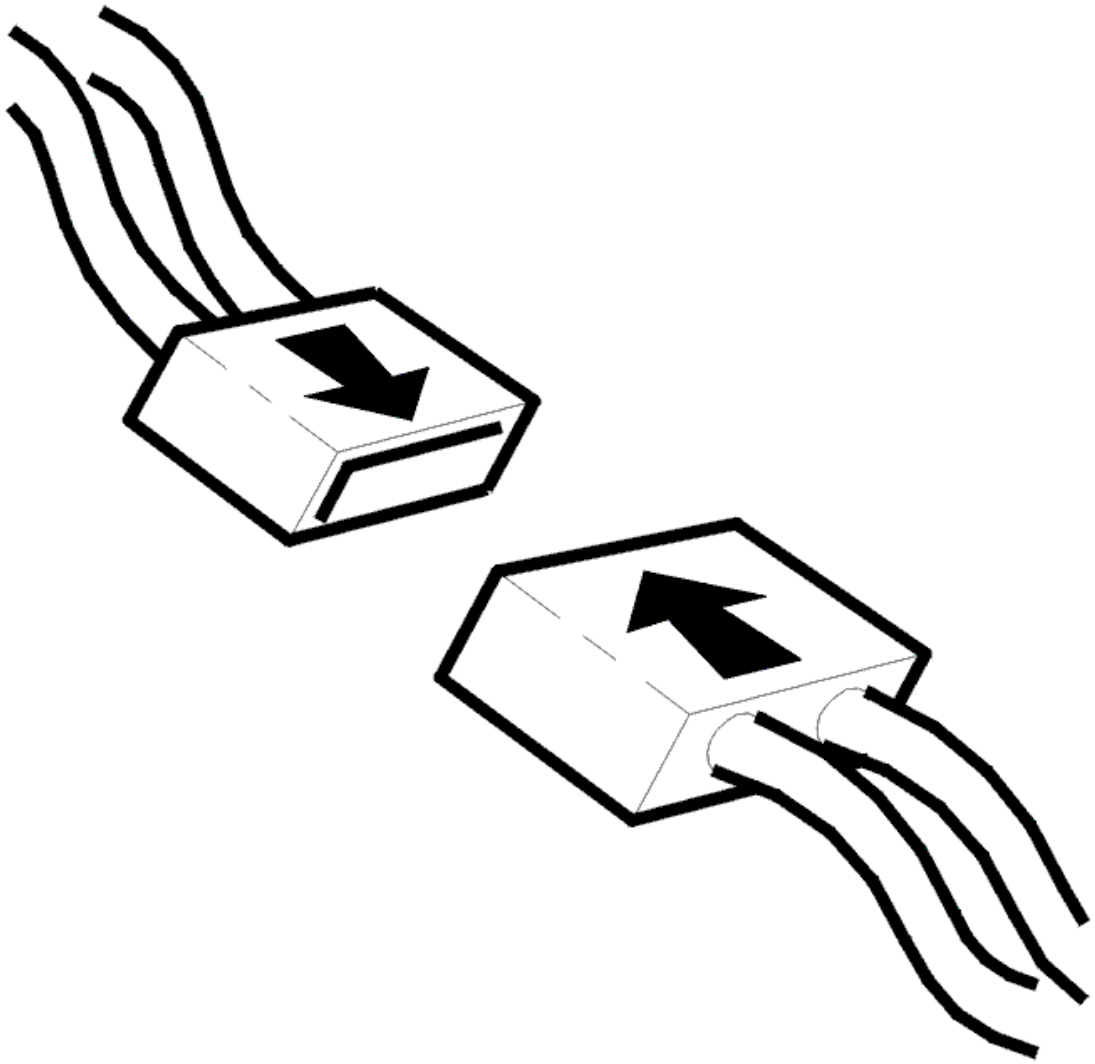

Fig. 178: Connecting Connector
Courtesy of VOLVO CARS CORPORATION

- Ignition off
- Reinstall the connectors, components etc.
- Engine idling
- Read off the fuel pressure and the work load of the fuel pump.
    - The upper digital display and the graphic display (red font color) indicate the absolute fuel pressure, calculated from the fuel pressure sensor
    - The center digital display (blue font color) indicates the current work load required for the fuel pump (FP) to maintain the present fuel pressure. (Normal value 50 % ±10& %.)
    - The lower digital display indicates the relative fuel pressure (white font color), calculated from the fuel pressure sensor and the atmospheric pressure sensor (= absolute pressure minus atmospheric pressure). If a manometer is connected during the test, it should indicate this pressure.

Check the fuel pressure value together with the value for the fuel pump work load. The requested pressure is 380 kPa at idle speed. A (relative) fuel pressure lower than 380 kPa together with a high fuel pump work load indicates a fault in pressure regulation.

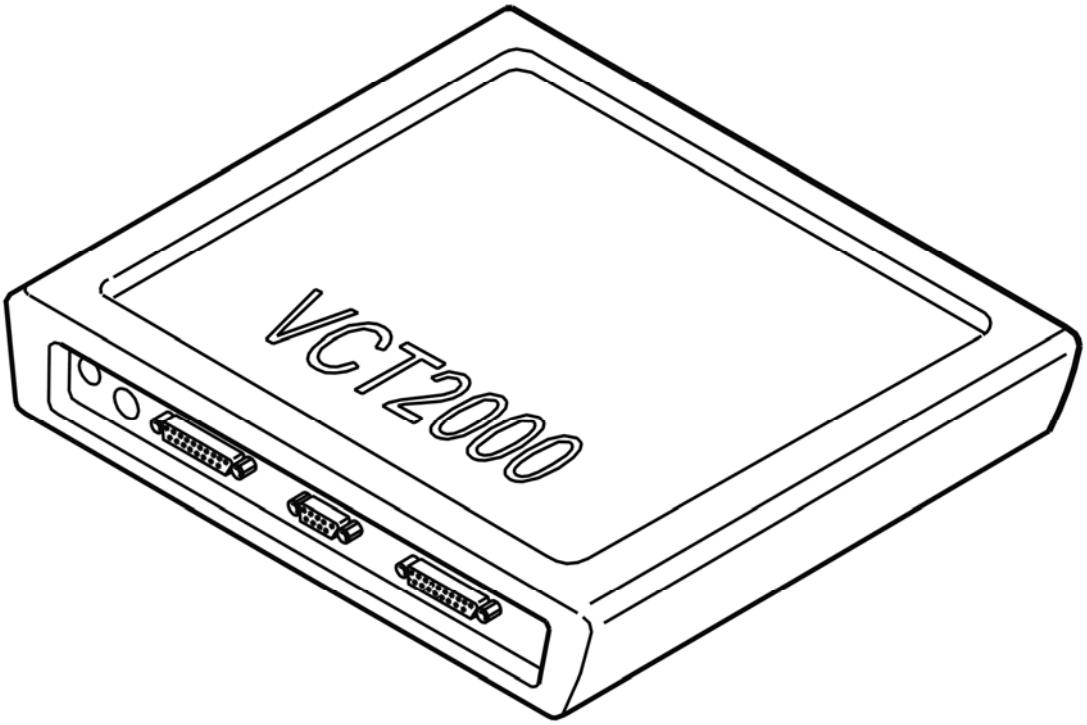

Fig. 179: Identifying VCT2000 Diagnostic Tool Symbol In VIDA
Courtesy of VOLVO CARS CORPORATION

Is the signal within its permitted range?

- **YES**

  VERIFIED: Troubleshooting has been completed.

- **NO**

  Refer to **INFORMATION**

INFORMATION

FAULT-TRACING INFORMATION

The fault should have been detected and remedied. As this is not the case fault-tracing has failed.

Exit fault-tracing for this diagnostic trouble code (DTC) or make another attempt.

TROUBLESHOOTING ECM-P009100 (2006-2011)

CHECKING FUEL PRESSURE SENSOR

NOTE: **If diagnostic trouble codes (DTC) for the fuel pressure sensor or atmospheric pressure sensor are stored, troubleshooting of these diagnostic trouble codes shall be performed and remedied first.**

HINT: The following method is for checking if the diagnostic trouble code has been caused by defective fuel pressure sensor. This can be done by comparing the readout signal from the fuel pressure sensor with actual fuel pressure (readout on pressure gauge connected to fuel system's lines). The method requires accurate calibration of the pressure gauge for measuring the fuel pressure.

- Connect pressure gauge: **FUEL PRESSURE GAUGE**

  CAUTION: The pressure in the fuel system can reach approximately 650 kPa when this diagnostic trouble code (DTC) is stored. Use an adapted manometer.

- Run the engine until it is warm and let it idle.
- A/C off.

  Read off relative fuel pressure.

  The relative fuel pressure is calculated from the fuel pressure sensor's and the atmospheric pressure sensor's signal (=absolute pressure minus atmospheric pressure).

  Check that the value on the pressure gauge and the readout value are the same. Different values indicate malfunction in the circuit for the fuel pressure sensor.

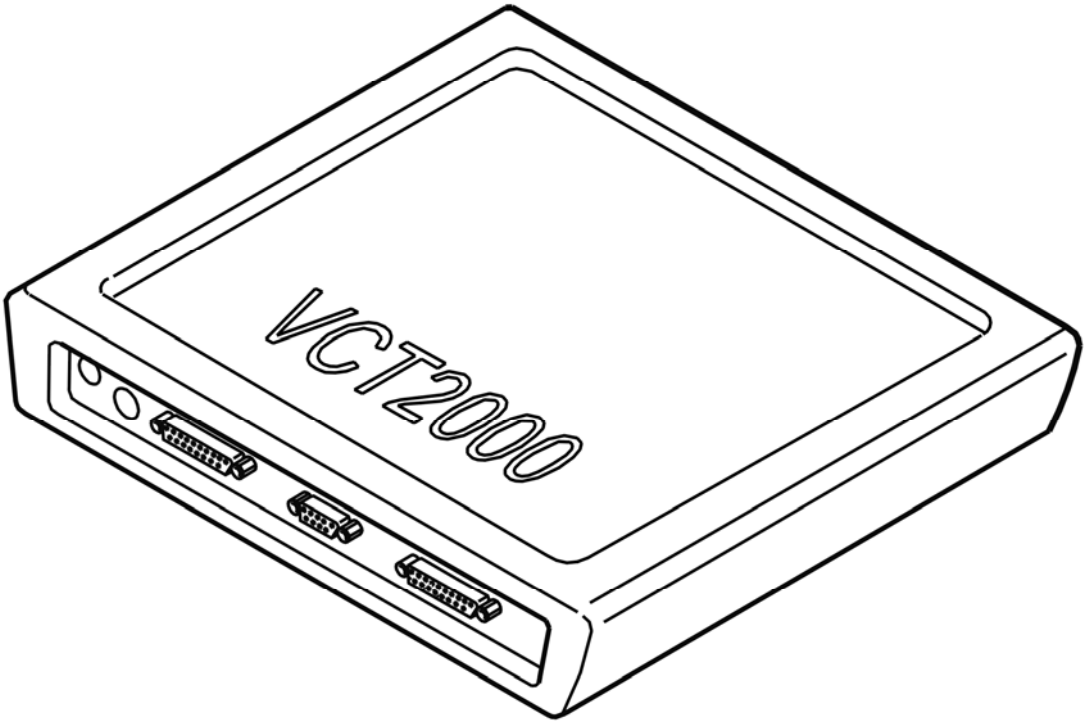

Fig. 180: Identifying VCT2000 Diagnostic Tool Symbol In VIDA
Courtesy of VOLVO CARS CORPORATION

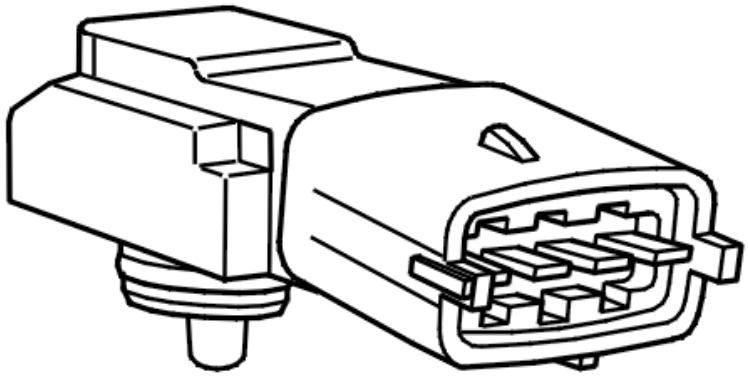

Fig. 181: Identifying Fuel Pressure Sensor
Courtesy of VOLVO CARS CORPORATION

Is the fuel pressure sensor OK?

- **YES**

  Refer to **CHECKING CONTROL OF FUEL PRESSURE**

- **NO**

  Refer to **CHECKING COMPONENTS AND WIRING**

CHECKING CONTROL OF FUEL PRESSURE

CAUTION: The pressure in the fuel system can reach approximately 650 kPa when this diagnostic trouble code (DTC) is stored. Use an adapted manometer.

HINT: The following method is for checking the fuel system's pressure by reading out fuel pressure and the fuel pump's working load. If pressure gauge for pressure up to 650 kPa is connected, the fuel pressure sensor can also be checked during the test.

- Disconnect the pressure gauge if it is not adapted for higher pressures than 650 kPa.

- Run the engine until it is warm and let it idle.
- A/C off.
- Read off fuel pressure and the fuel pump's working load.
  - The upper digital display and the graphic display (red characters) show absolute fuel pressure, calculated from the fuel pressure sensor.
  - The middle digital display (blue characters) shows the fuel pump's current working load to hold current fuel pressure. (Normal value 50% ±10%.)
  - The lower digital display shows the relative fuel pressure (white characters), calculated from the fuel pressure sensor and the atmospheric pressure sensor (=absolute pressure minus atmospheric pressure). If a pressure gauge is connected during the test it shall show this pressure.

Check the value for fuel pressure together with the value for the fuel pump's working load. Requested pressure is 380 kPa at idle. Fuel pressure (relative) lower than 380 kPa together with high working load on the fuel pump indicates a malfunction of the pressure control.

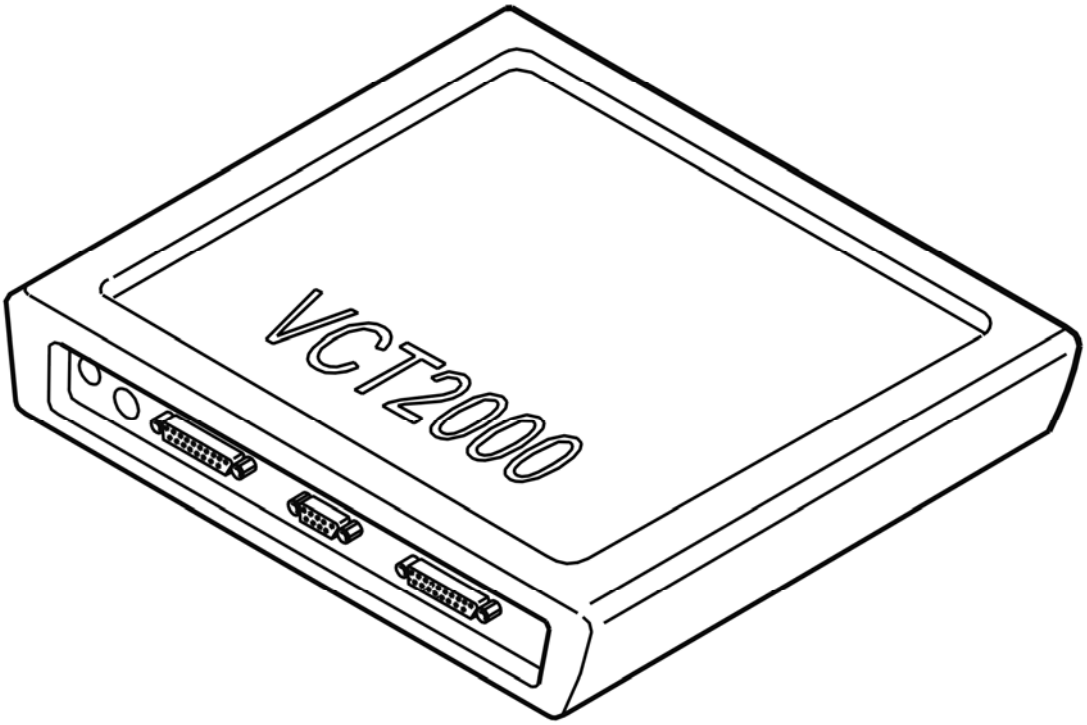

Fig. 182: Identifying VCT2000 Diagnostic Tool Symbol In VIDA
Courtesy of VOLVO CARS CORPORATION

Is the function OK?

- **YES**

Refer to **CHECKING COMPONENTS**

- **NO**

  Refer to **CHECKING COMPONENTS**

CHECKING COMPONENTS

HINT: The malfunction may be intermittent or may be due to the system having low flow capacity.

Check that the fuel level in the tank is not too low (almost no fuel).

Check fuel lines between fuel pump and the injector's distribution pipes for leakage.

Check the fuel pressure sensor's connector for contact resistance and oxidation.

Check the fuel pump module's connector for contact resistance and oxidation.

Check fuel lines and fuel filter for clogging.

Try with a new fuel pump if no malfunction is found in the above troubleshooting.

Remedy as necessary.

Other information

- see **CONNECTING THE BREAKOUT BOX**
- see **SIGNAL SPECIFICATION, ENGINE CONTROL MODULE (ECM)**
- For replacing fuel pump: **LEVEL SENSOR, FUEL TANK, RIGHT-HAND/FUEL TANK, REPLACING**
- see **CONTROL MODULE FUEL PUMP (FP), REPLACING**
- see **CHECKING WIRING AND TERMINALS**

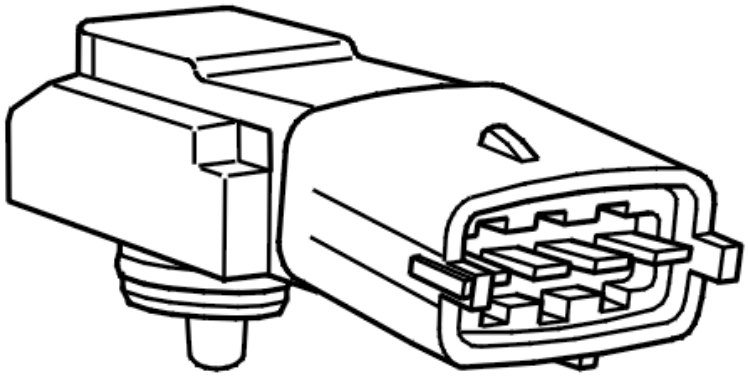

Fig. 183: Identifying Fuel Pressure Sensor
Courtesy of VOLVO CARS CORPORATION

- **Continue**

  Refer to **INFORMATION**

CHECKING COMPONENTS AND WIRING

Check the fuel pressure sensor's connector for contact resistance and oxidation.

Try with a new fuel pressure sensor if no malfunction is found in the above troubleshooting.

Remedy as necessary.

Other information

- see **CONNECTING THE BREAKOUT BOX**
- see **SIGNAL SPECIFICATION, ENGINE CONTROL MODULE (ECM)**
- see **FUEL PRESSURE AND TEMPERATURE SENSOR, REPLACING**
- see **CHECKING WIRING AND TERMINALS**

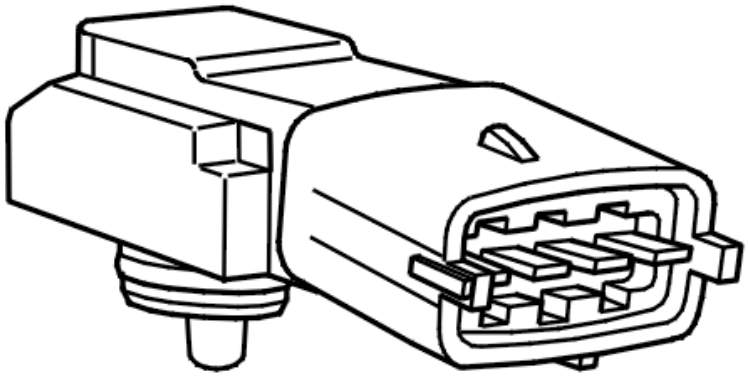

Fig. 184: Identifying Fuel Pressure Sensor
Courtesy of VOLVO CARS CORPORATION

- **Continue**

  Refer to **VERIFICATION**

CHECKING COMPONENTS

Check that the fuel level in the tank is not too low (almost no fuel).

Check the connectors between fuel pump module and the fuel pump for contact resistance and oxidation.

Check fuel lines and fuel filter for clogging.

If no malfunction is found in the above troubleshooting, try with a new fuel pump.

HINT: The diagnostic trouble code may also have been generated by a defective fuel pump module.

Remedy as necessary.

Other information

- For replacing fuel pump: **LEVEL SENSOR, FUEL TANK, RIGHT-HAND/FUEL TANK,**

REPLACING

- see **CONTROL MODULE FUEL PUMP (FP), REPLACING**
- see **CHECKING WIRING AND TERMINALS**

- **Continue**

  Refer to **VERIFICATION**

INFORMATION

FAULT-TRACING INFORMATION

If the fault is intermittent, do not verify fault-tracing if the fault does not recur.

It is possible to view the information again, or leave fault-tracing for this diagnostic trouble code (DTC).

VERIFICATION

VERIFICATION

HINT: After carrying out the repair, check that the fault has been remedied.

CAUTION: The pressure in the fuel injection system can reach approximately 650 kPa when this diagnostic trouble code (DTC) is stored. Use an adapted manometer.

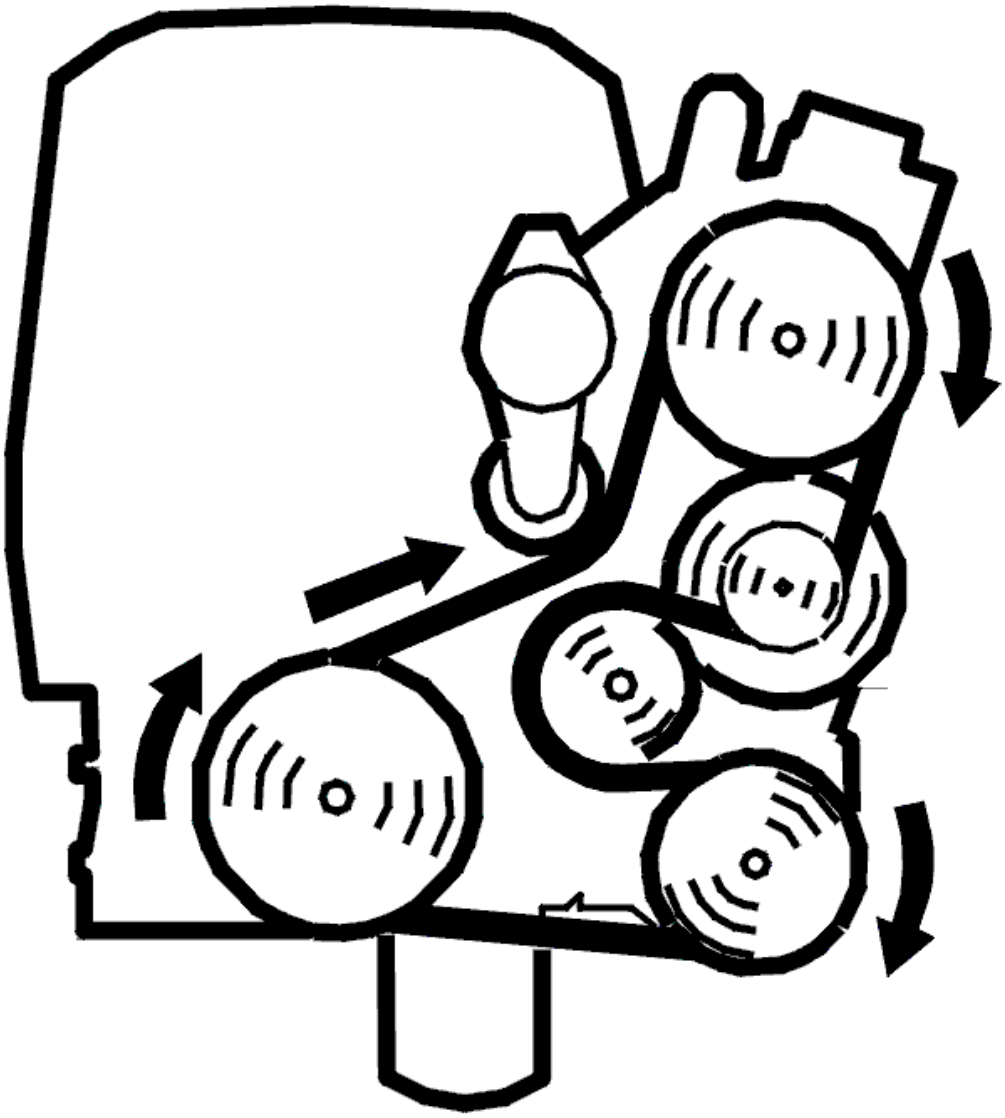

Fig. 185: Belt Routing / Engine Idling - Volvo
Courtesy of VOLVO CARS CORPORATION

- Connect pressure gauge:**FUEL PRESSURE GAUGE**
- Run the engine until it is warm and let it idle.
- A/C off.

  Read off relative fuel pressure.

  The relative fuel pressure is calculated from the fuel pressure sensor's and the atmospheric pressure sensor's signal (=absolute pressure minus atmospheric pressure).

  Check that the value on the pressure gauge and the readout value are the same. Different values indicate malfunction.

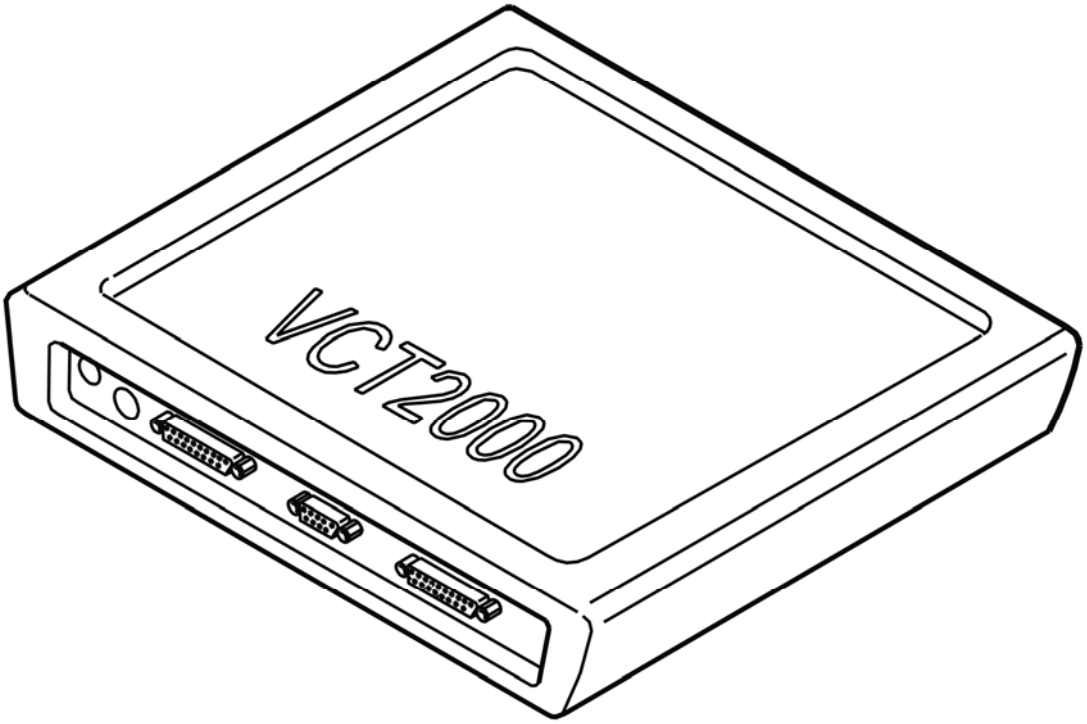

Fig. 186: Identifying VCT2000 Diagnostic Tool Symbol In VIDA
Courtesy of VOLVO CARS CORPORATION

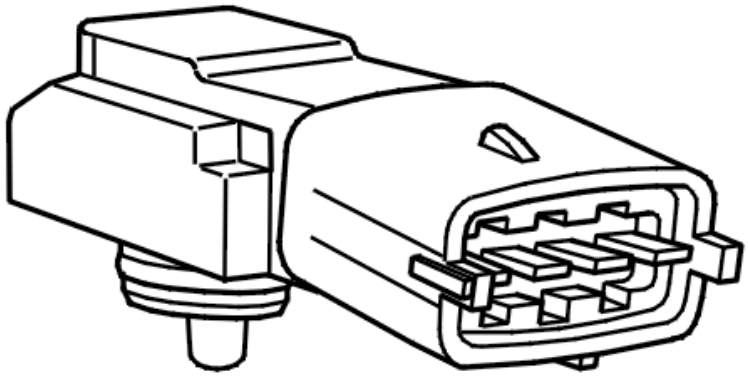

Fig. 187: Identifying Fuel Pressure Sensor
Courtesy of VOLVO CARS CORPORATION

Is the function OK?

- **YES**

  VERIFIED: Troubleshooting has been completed.

- **NO**

  Refer to **INFORMATION**

VERIFICATION

VERIFICATION

HINT: After carrying out the repair, check that the fault has been remedied.

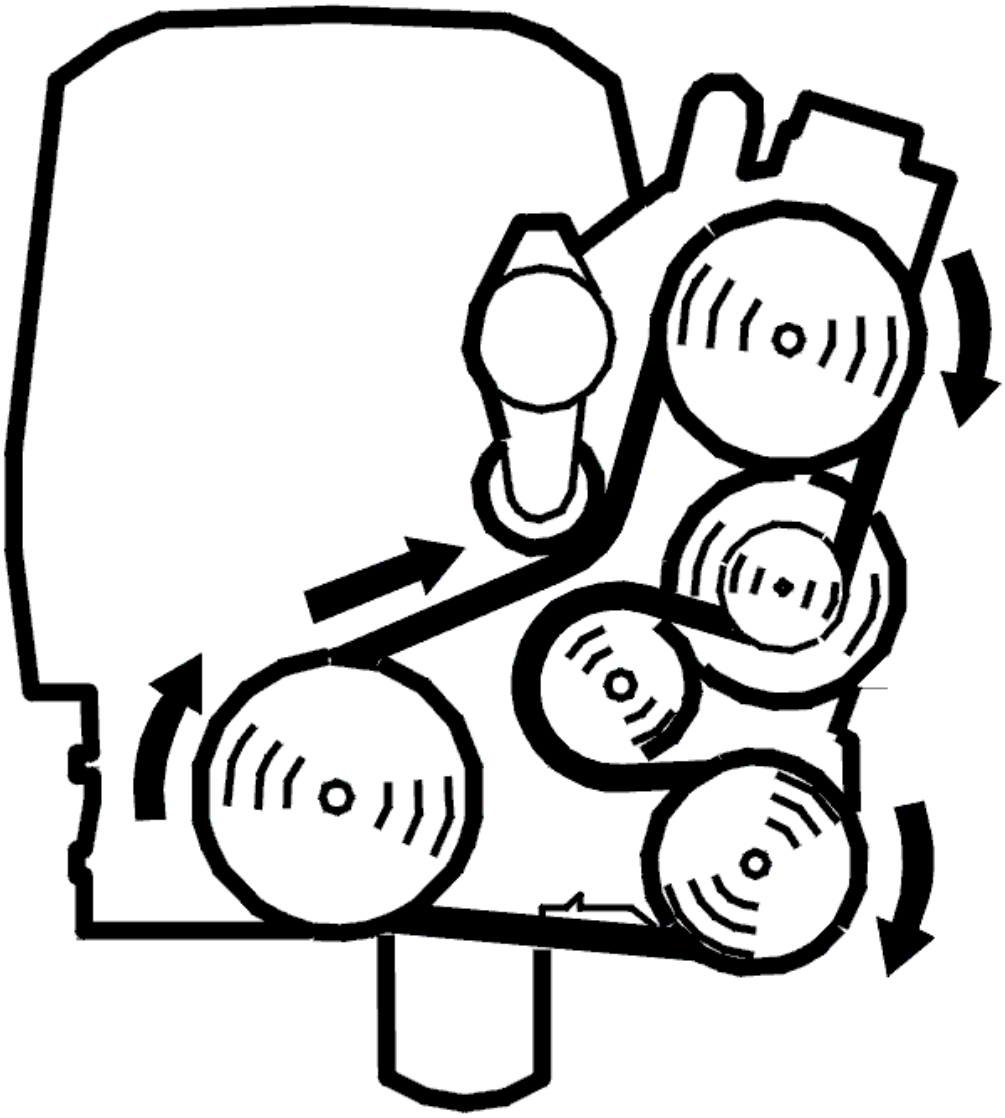

Fig. 188: Belt Routing / Engine Idling - Volvo
Courtesy of VOLVO CARS CORPORATION

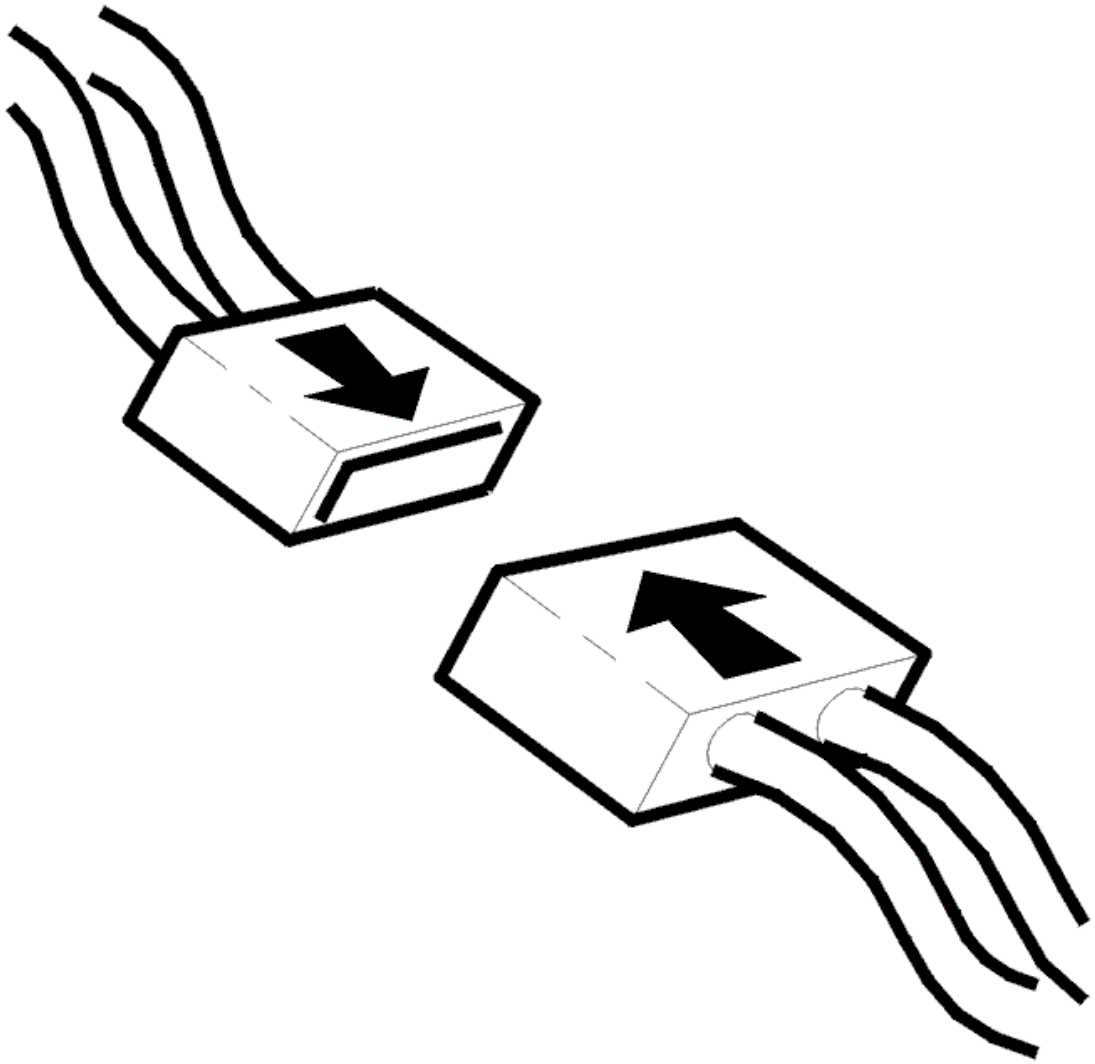

Fig. 189: Connecting Connector
Courtesy of VOLVO CARS CORPORATION

- Ignition off
- Reinstall the connectors, components etc.
- Engine idling
- Read off the fuel pressure and the work load of the fuel pump.
    - The upper digital display and the graphic display (red font color) indicate the absolute fuel pressure, calculated from the fuel pressure sensor
    - The center digital display (blue font color) indicates the current work load required for the fuel pump (FP) to maintain the present fuel pressure. (Normal value 50 % ±10& %.)
    - The lower digital display indicates the relative fuel pressure (white font color), calculated from the fuel pressure sensor and the atmospheric pressure sensor (= absolute pressure minus atmospheric pressure). If a manometer is connected during the test, it should indicate this pressure.

Check the fuel pressure value together with the value for the fuel pump work load. The requested pressure is 380 kPa at idle speed. A (relative) fuel pressure lower than 380 kPa together with a high fuel pump work load indicates a fault in pressure regulation.

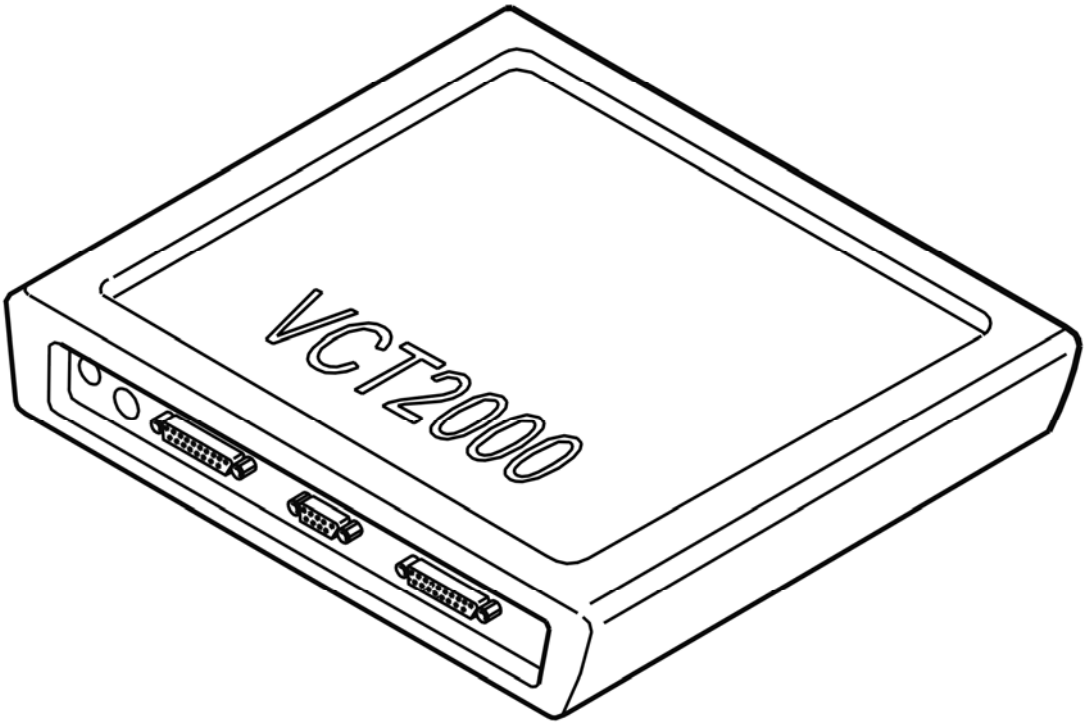

Fig. 190: Identifying VCT2000 Diagnostic Tool Symbol In VIDA
Courtesy of VOLVO CARS CORPORATION

Is the signal within its permitted range?

- **YES**

  VERIFIED: Troubleshooting has been completed.

- **NO**

  Refer to **INFORMATION**

INFORMATION

FAULT-TRACING INFORMATION

The fault should have been detected and remedied. As this is not the case fault-tracing has failed.

Exit fault-tracing for this diagnostic trouble code (DTC) or make another attempt.

ECM-P009200: FUEL PRESSURE REGULATOR CONTROL CIRCUIT HIGH. GENERAL FAULT INFORMATION. TYPE OF FAULT NOT SPECIFIED. (B8444S; 2005-2011)

DIAGNOSTIC TROUBLE CODE (DTC) INFORMATION ECM-P009200

Condition

the engine control module (ECM) controls the fuel pressure via the fuel pump (FP) control module using a pulse width modulation (PWM) signal. The fuel pump (FP) control module then controls the fuel pump (FP) depending on the pressure requested by the engine control module (ECM).

The diagnostic trouble code (DTC) (Signal too high/low) is stored if the actual pressure (gauged pressure from the fuel pressure sensor) becomes too high compared with the requested pressure (engine control module (ECM) target value) for a certain amount of time.

The diagnostic trouble code (DTC) can be diagnosed when the engine is running.

Substitute Value

- The fuel pump (FP) is controlled using a calculated value.

Possible Source

- Damaged fuel pressure sensor.
- Damaged fuel pump (FP) control module.

Fault symptom[s]

- Malfunction indicator lamp (MIL) lit.
- Poor performance.
- Engine stops.

TROUBLESHOOTING ECM-P009200 (2005)

CHECKING FUEL PRESSURE SENSOR

NOTE: **If diagnostic trouble codes (DTC) for the fuel pressure sensor or atmospheric pressure sensor are stored, these diagnostic trouble codes (DTC) must be fault-traced and remedied first.**

HINT: The following method is for checking if the diagnostic trouble code has been caused by a defective fuel pressure sensor. This can be done by comparing the fuel pressure sensor's readout signal with actual fuel pressure (readout on pressure gauge connected to fuel system's lines).

- Connect pressure gauge: **FUEL PRESSURE GAUGE**

CAUTION: The pressure in the fuel injection system can reach approximately 650 kPa when this diagnostic trouble code (DTC) is stored. Use an adapted manometer.

- Run the engine until it is warm and let it idle.
- A/C off.

Read off relative fuel pressure.

The relative fuel pressure is calculated from the fuel pressure sensor's and the atmospheric pressure sensor's signal (=absolute pressure minus atmospheric pressure).

Check that the value on the pressure gauge and the readout value are about the same. Different values indicate malfunction in the circuit for the fuel pressure sensor.

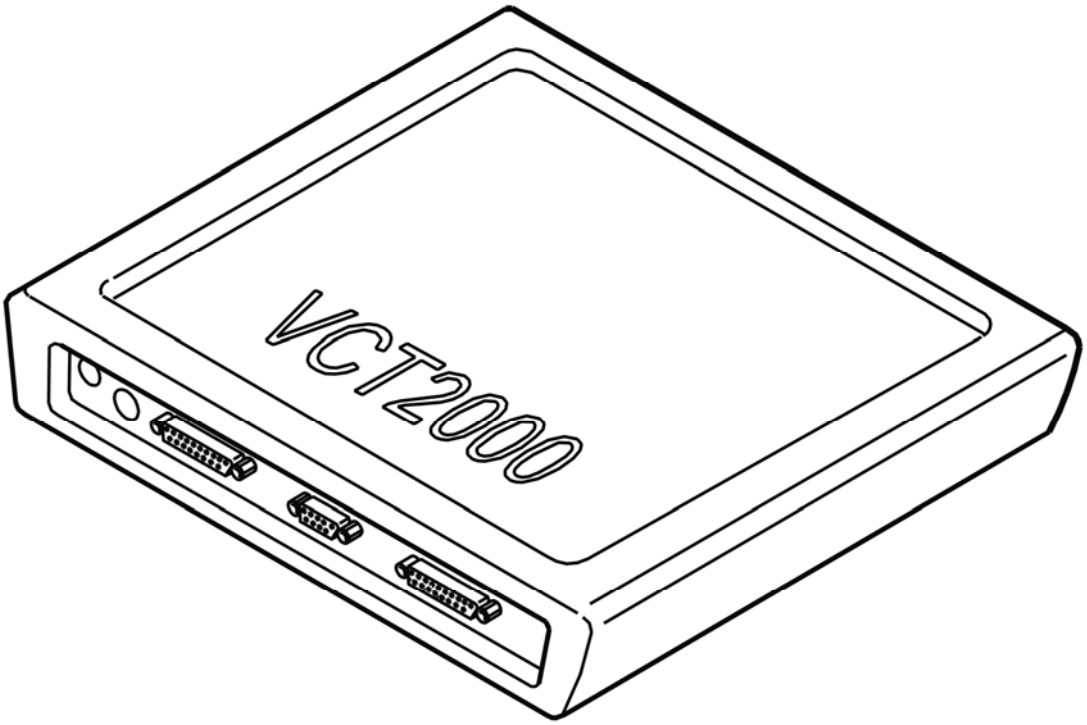

Fig. 191: Identifying VCT2000 Diagnostic Tool Symbol In VIDA
Courtesy of VOLVO CARS CORPORATION

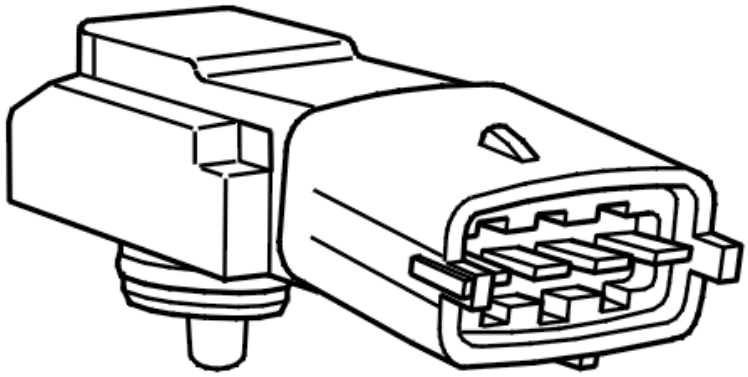

Fig. 192: Identifying Fuel Pressure Sensor
Courtesy of VOLVO CARS CORPORATION

Is the fuel pressure sensor OK?

- **YES**

  Refer to **CHECKING COMPONENTS**

- **NO**

  Refer to **CHECKING COMPONENTS AND WIRING**

CHECKING COMPONENTS

Check the connectors between fuel pump module and the fuel pump for contact resistance and oxidation.

Try with a new fuel pump module if no malfunction is found in the above troubleshooting.

Remedy as necessary.

Other information

- see **FUEL PUMP DRIVER MODULE**

- see **CHECKING WIRING AND TERMINALS**

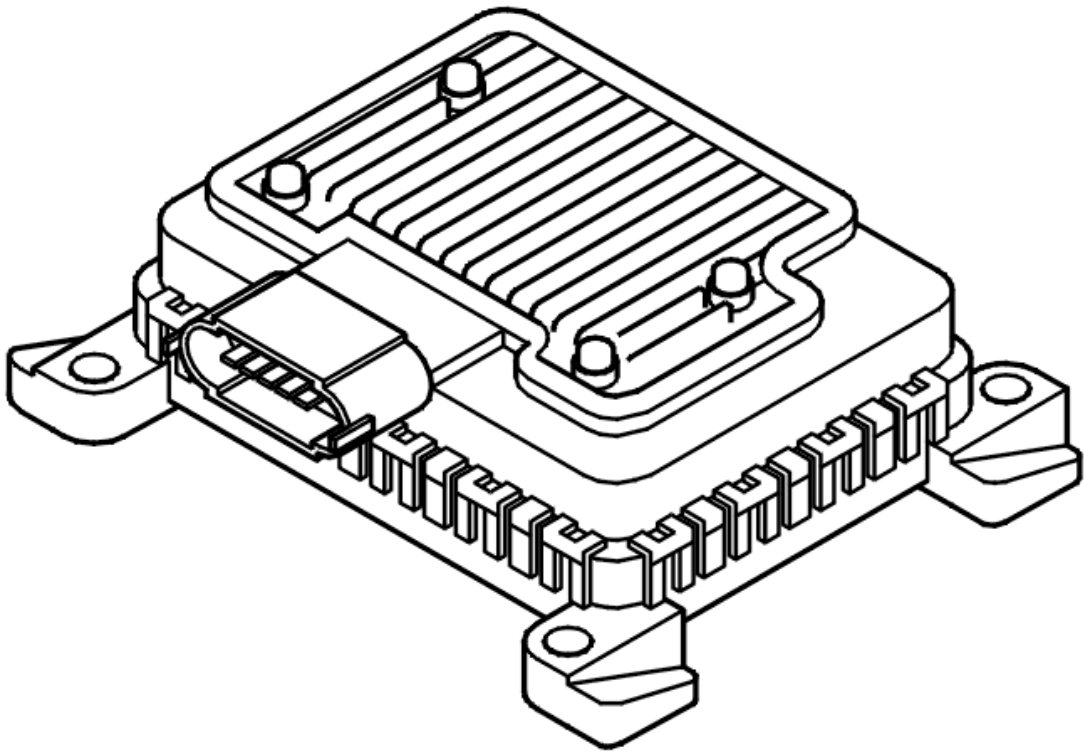

Fig. 193: Identifying Fuel Pump (FP) Control Module
Courtesy of VOLVO CARS CORPORATION

- **Continue**

  Refer to **VERIFICATION**

CHECKING COMPONENTS AND WIRING

Check the fuel pressure sensor's connector for contact resistance and oxidation.

Try with a new fuel pressure sensor if no malfunction is found in the above troubleshooting.

Remedy as necessary.

Other information

- see **CONNECTING THE BREAKOUT BOX**
- see **SIGNAL SPECIFICATION, ENGINE CONTROL MODULE (ECM)**
- see **FUEL PRESSURE AND TEMPERATURE SENSOR, REPLACING**
- see **CHECKING WIRING AND TERMINALS**

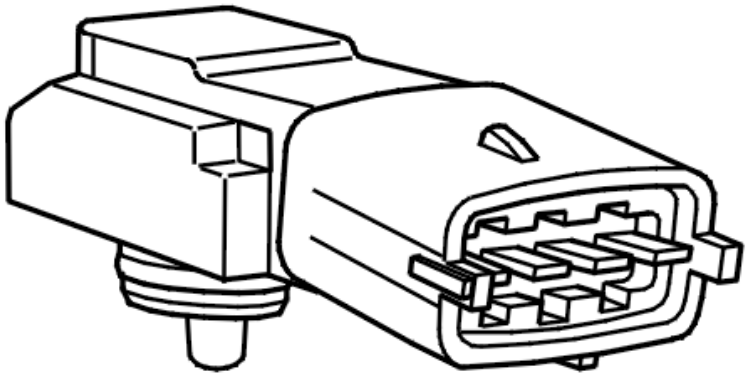

Fig. 194: Identifying Fuel Pressure Sensor
Courtesy of VOLVO CARS CORPORATION

- **Continue**

  Refer to **VERIFICATION**

VERIFICATION

VERIFICATION

HINT: After carrying out the repair, check that the fault has been remedied.

CAUTION: The pressure in the fuel injection system can reach approximately 650 kPa when this diagnostic trouble code (DTC) is stored. Use an adapted manometer.

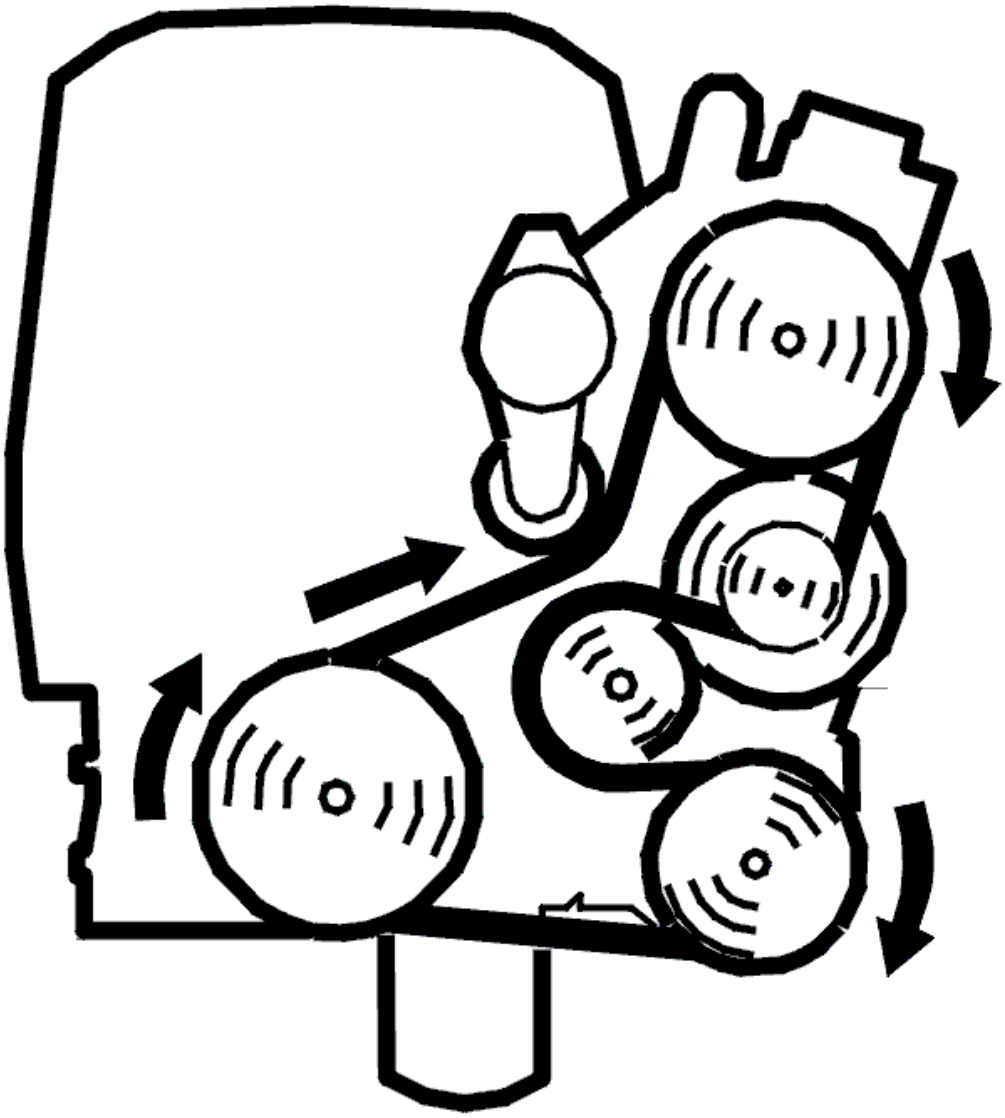

Fig. 195: Belt Routing / Engine Idling - Volvo
Courtesy of VOLVO CARS CORPORATION

- Connect pressure gauge:**FUEL PRESSURE GAUGE**
- Run the engine until it is warm and let it idle.
- A/C off.

  Read off relative fuel pressure.

  The relative fuel pressure is calculated from the fuel pressure sensor's and the atmospheric pressure sensor's signal (=absolute pressure minus atmospheric pressure).

  Check that the value on the pressure gauge and the readout value are the same. Different values indicate malfunction.

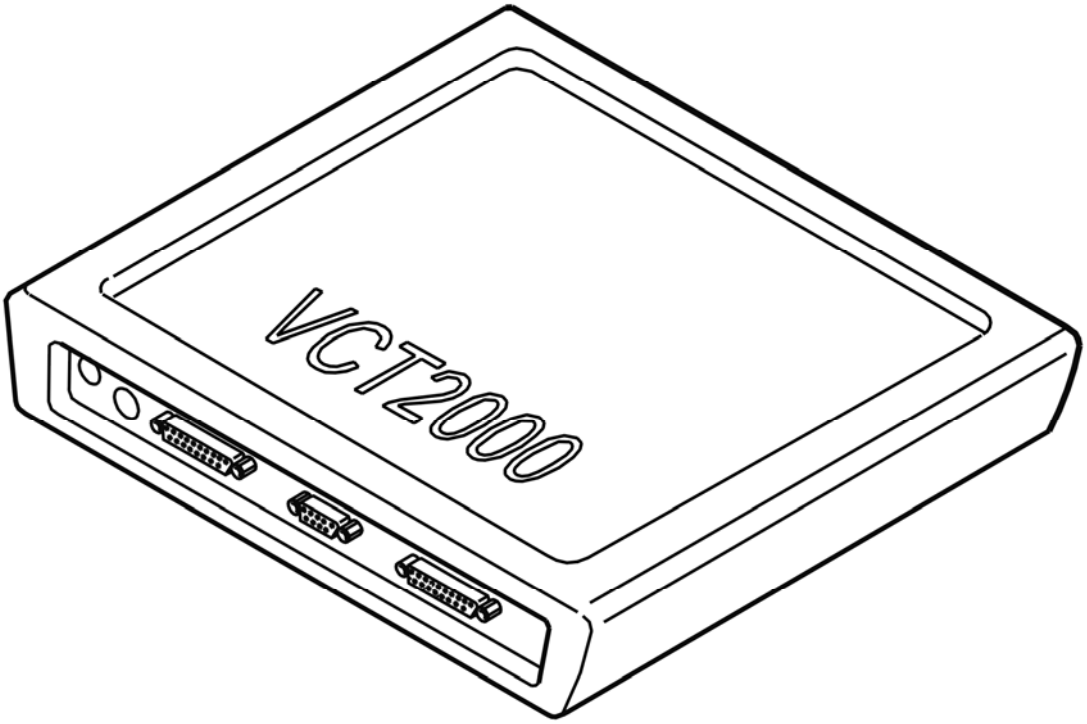

Fig. 196: Identifying VCT2000 Diagnostic Tool Symbol In VIDA
Courtesy of VOLVO CARS CORPORATION

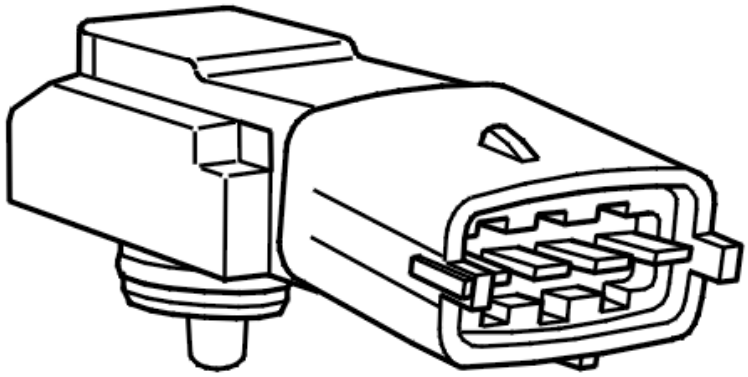

Fig. 197: Identifying Fuel Pressure Sensor
Courtesy of VOLVO CARS CORPORATION

Is the function OK?

- **YES**

  VERIFIED: Troubleshooting has been completed.

- **NO**

  Refer to **INFORMATION**

VERIFICATION

VERIFICATION

HINT: After carrying out the repair, check that the fault has been remedied.

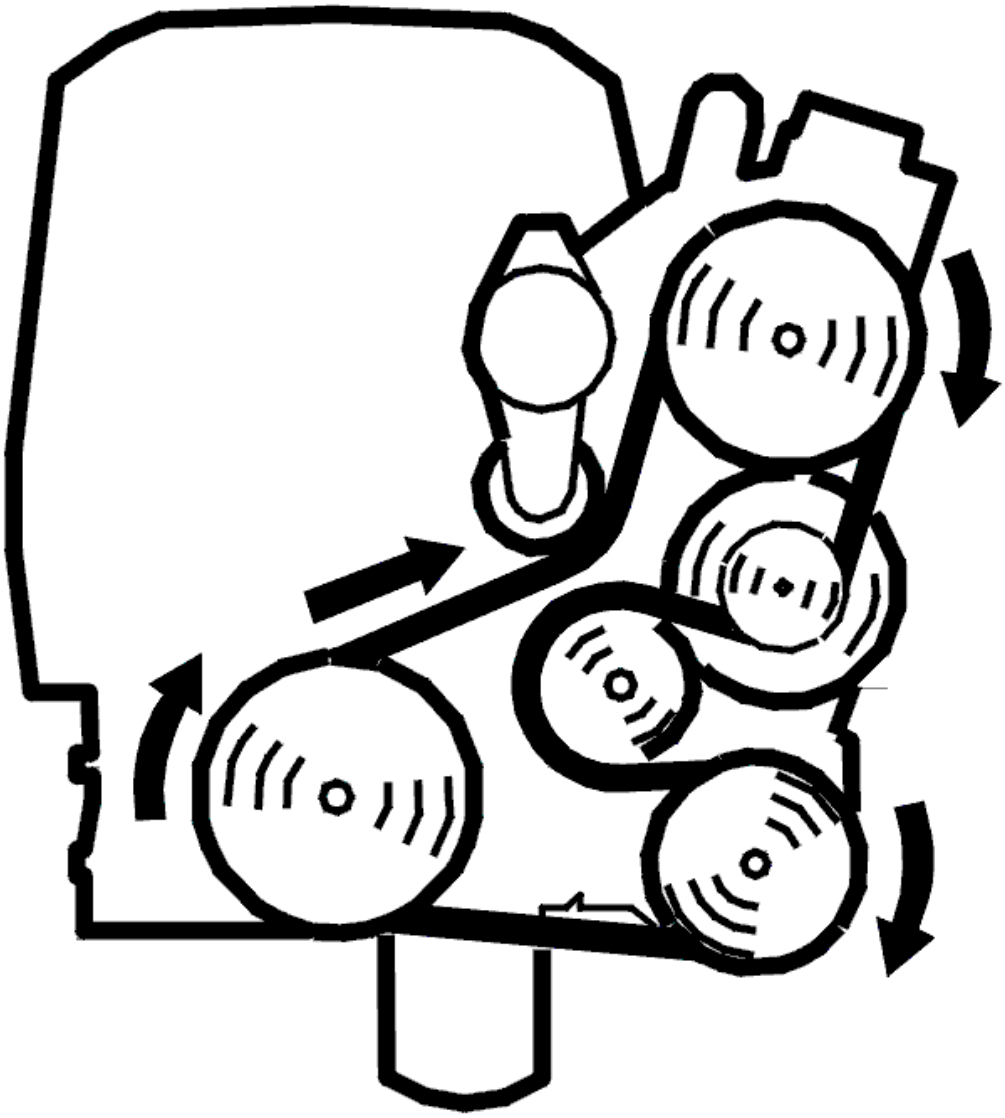

Fig. 198: Belt Routing / Engine Idling - Volvo
Courtesy of VOLVO CARS CORPORATION

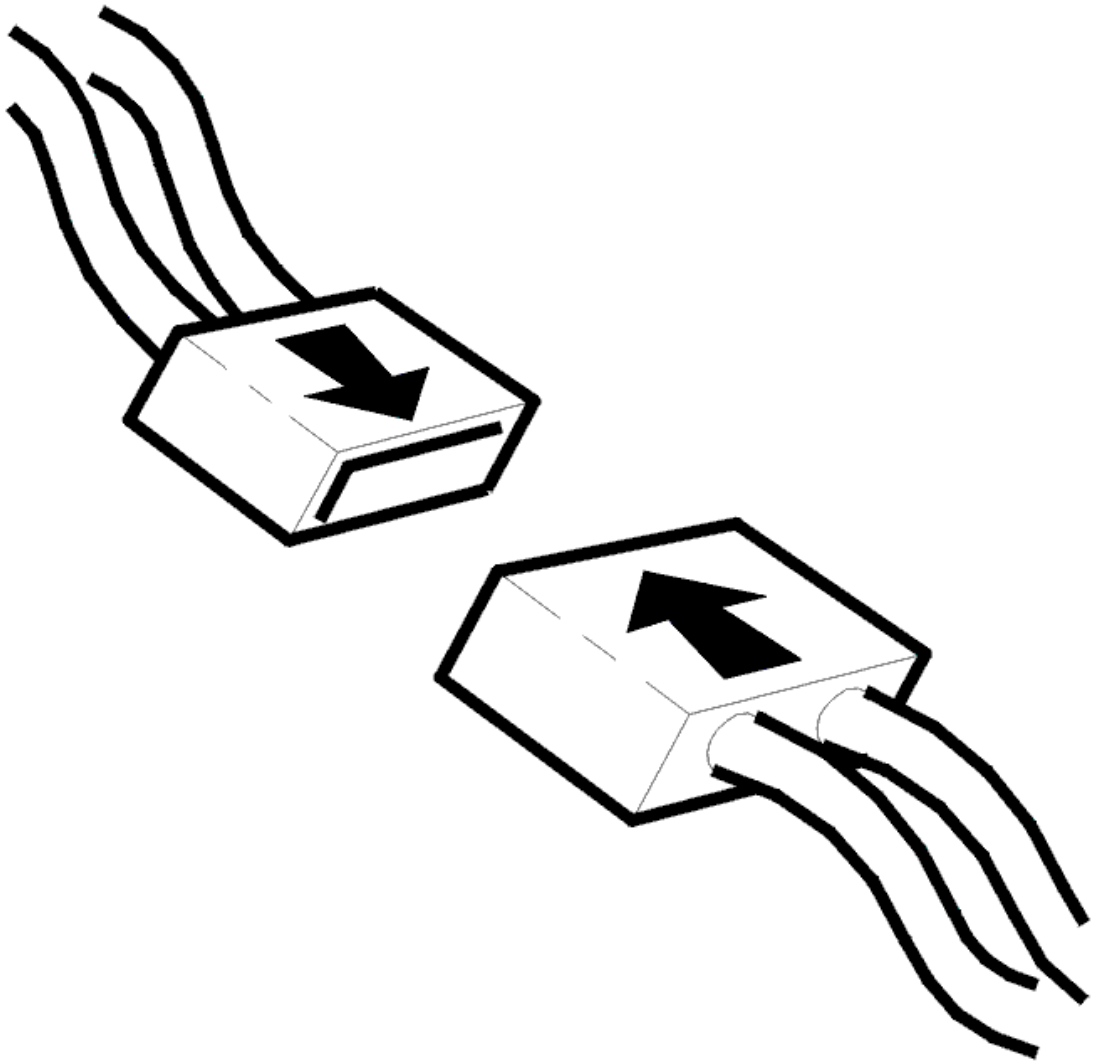

Fig. 199: Connecting Connector
Courtesy of VOLVO CARS CORPORATION

- Ignition off
- Reinstall the connectors, components etc.
- Engine idling
- Read off the fuel pressure and the work load of the fuel pump.
    - The upper digital display and the graphic display (red font color) indicate the absolute fuel pressure, calculated from the fuel pressure sensor
    - The center digital display (blue font color) indicates the current work load required for the fuel pump (FP) to maintain the present fuel pressure. (Normal value 50 % ±10& %.)
    - The lower digital display indicates the relative fuel pressure (white font color), calculated from the fuel pressure sensor and the atmospheric pressure sensor (= absolute pressure minus atmospheric pressure). If a manometer is connected during the test, it should indicate this pressure.

Check the fuel pressure value together with the value for the fuel pump work load. The requested pressure is 380 kPa at idle speed. A (relative) fuel pressure lower than 380 kPa together with a high fuel pump work load indicates a fault in pressure regulation.

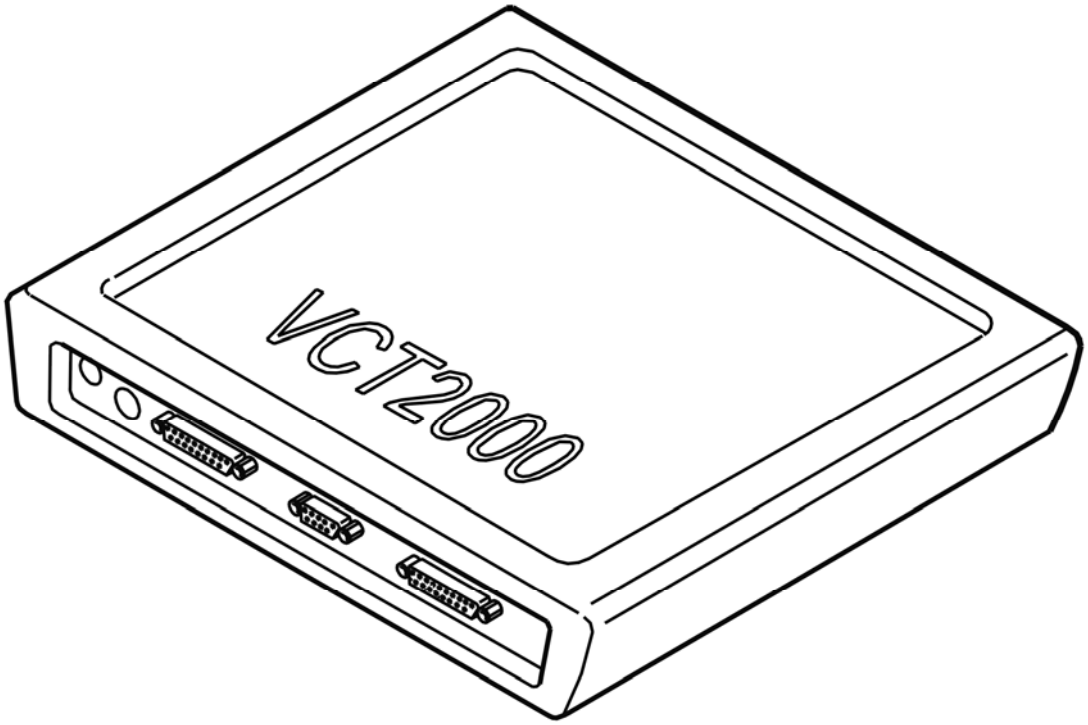

Fig. 200: Identifying VCT2000 Diagnostic Tool Symbol In VIDA
Courtesy of VOLVO CARS CORPORATION

Is the signal within its permitted range?

- **YES**

  VERIFIED: Troubleshooting has been completed.

- **NO**

  Refer to **INFORMATION**

INFORMATION

FAULT-TRACING INFORMATION

The fault should have been detected and remedied. As this is not the case fault-tracing has failed.

Exit fault-tracing for this diagnostic trouble code (DTC) or make another attempt.

TROUBLESHOOTING ECM-P009200 (2006-2011)

CHECKING FUEL PRESSURE SENSOR

NOTE: If diagnostic trouble codes (DTC) for the fuel pressure sensor or atmospheric pressure sensor are stored, these diagnostic trouble codes (DTC) must be fault-traced and remedied first.

HINT: The following method is for checking if the diagnostic trouble code has been caused by a defective fuel pressure sensor. This can be done by comparing the fuel pressure sensor's readout signal with actual fuel pressure (readout on pressure gauge connected to fuel system's lines).

- Connect pressure gauge: **FUEL PRESSURE GAUGE**

CAUTION: The pressure in the fuel injection system can reach approximately 650 kPa when this diagnostic trouble code (DTC) is stored. Use an adapted manometer.

- Run the engine until it is warm and let it idle.
- A/C off.

Read off relative fuel pressure.

The relative fuel pressure is calculated from the fuel pressure sensor's and the atmospheric pressure sensor's signal (=absolute pressure minus atmospheric pressure).

Check that the value on the pressure gauge and the readout value are about the same. Different values indicate malfunction in the circuit for the fuel pressure sensor.

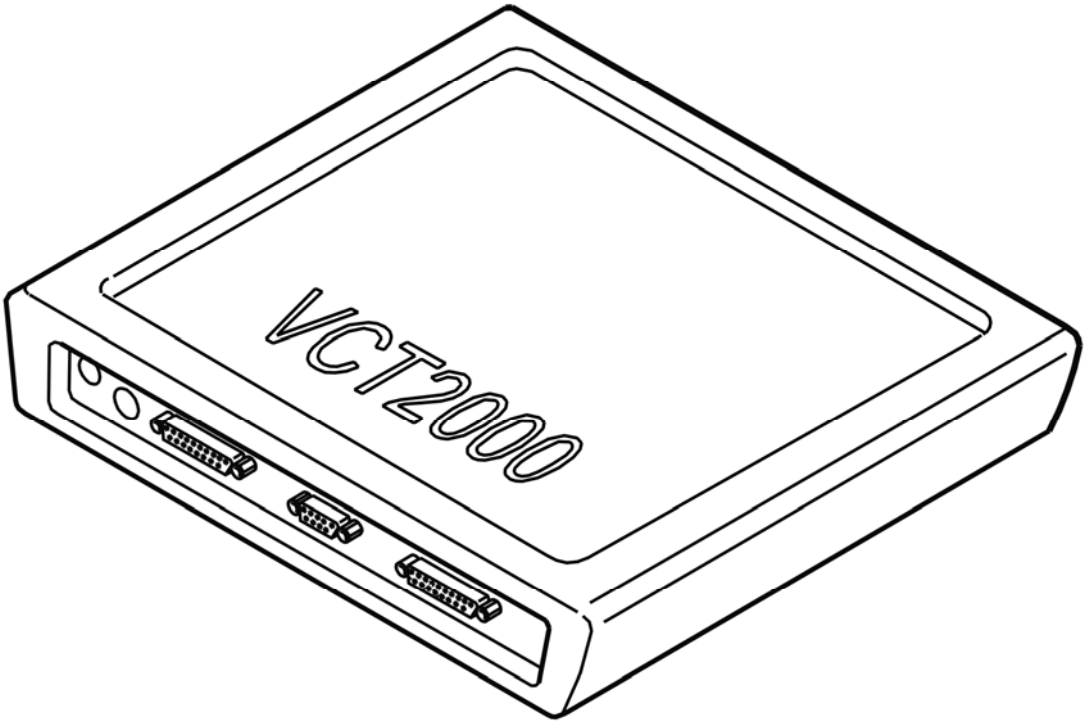

Fig. 201: Identifying VCT2000 Diagnostic Tool Symbol In VIDA
Courtesy of VOLVO CARS CORPORATION

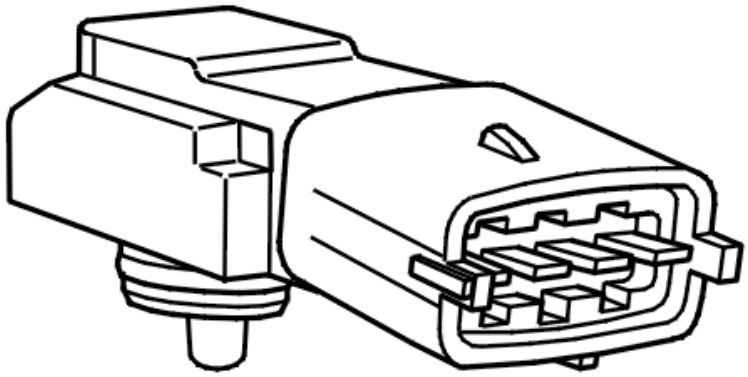

Fig. 202: Identifying Fuel Pressure Sensor
Courtesy of VOLVO CARS CORPORATION

Is the fuel pressure sensor OK?

- **YES**

  Refer to **CHECKING COMPONENTS**

- **NO**

  Refer to **CHECKING COMPONENTS AND WIRING**

CHECKING COMPONENTS

Check the connectors between fuel pump module and the fuel pump for contact resistance and oxidation.

Try with a new fuel pump module if no malfunction is found in the above troubleshooting.

Remedy as necessary.

Other information

- see **CONTROL MODULE FUEL PUMP (FP), REPLACING**

- see **CHECKING WIRING AND TERMINALS**

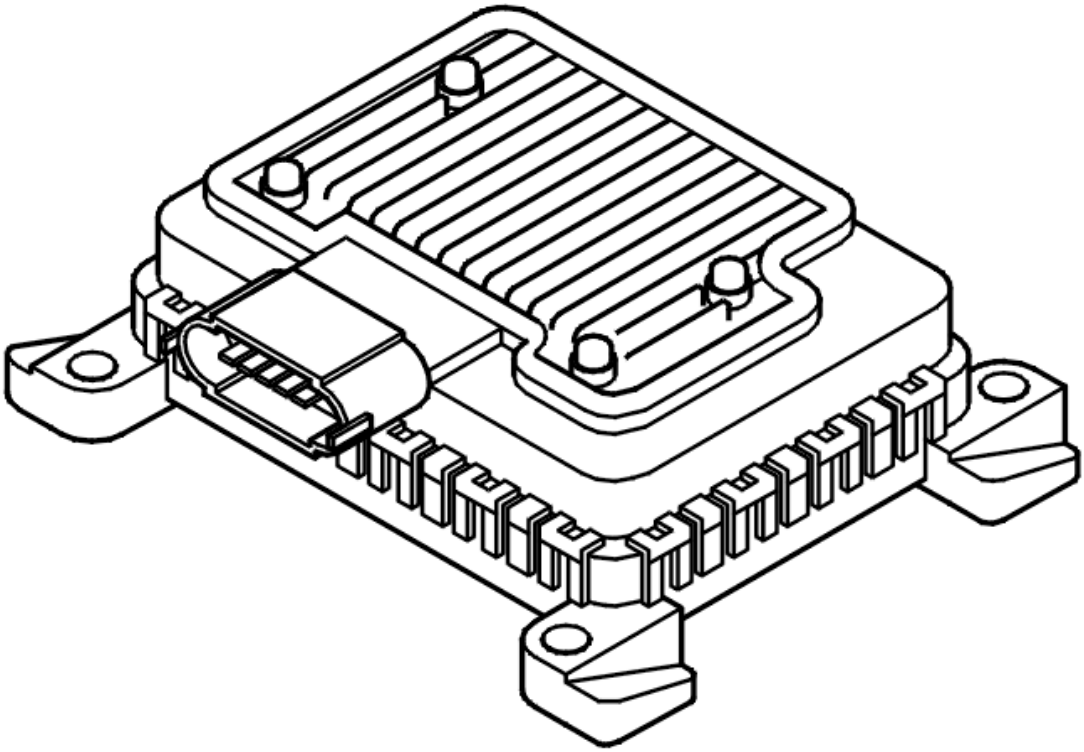

Fig. 203: Identifying Fuel Pump (FP) Control Module
Courtesy of VOLVO CARS CORPORATION

- **Continue**

  Refer to **VERIFICATION**

CHECKING COMPONENTS AND WIRING

Check the fuel pressure sensor's connector for contact resistance and oxidation.

Try with a new fuel pressure sensor if no malfunction is found in the above troubleshooting.

Remedy as necessary.

Other information

- see **CONNECTING THE BREAKOUT BOX**
- see **SIGNAL SPECIFICATION, ENGINE CONTROL MODULE (ECM)**
- see **FUEL PRESSURE AND TEMPERATURE SENSOR, REPLACING**
- see **CHECKING WIRING AND TERMINALS**

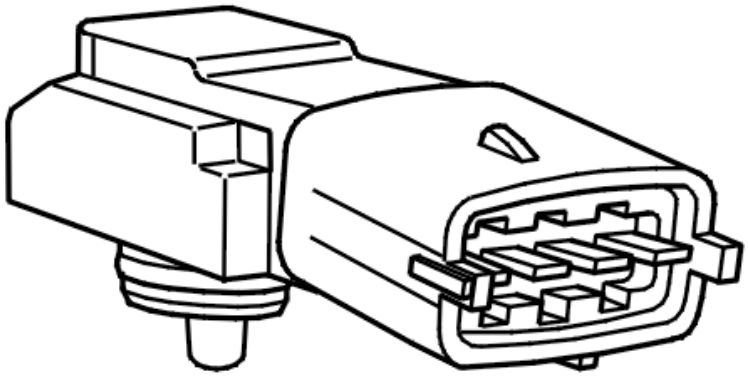

Fig. 204: Identifying Fuel Pressure Sensor
Courtesy of VOLVO CARS CORPORATION

- **Continue**

  Refer to **VERIFICATION**

VERIFICATION

VERIFICATION

HINT: After carrying out the repair, check that the fault has been remedied.

CAUTION: The pressure in the fuel injection system can reach approximately 650 kPa when this diagnostic trouble code (DTC) is stored. Use an adapted manometer.

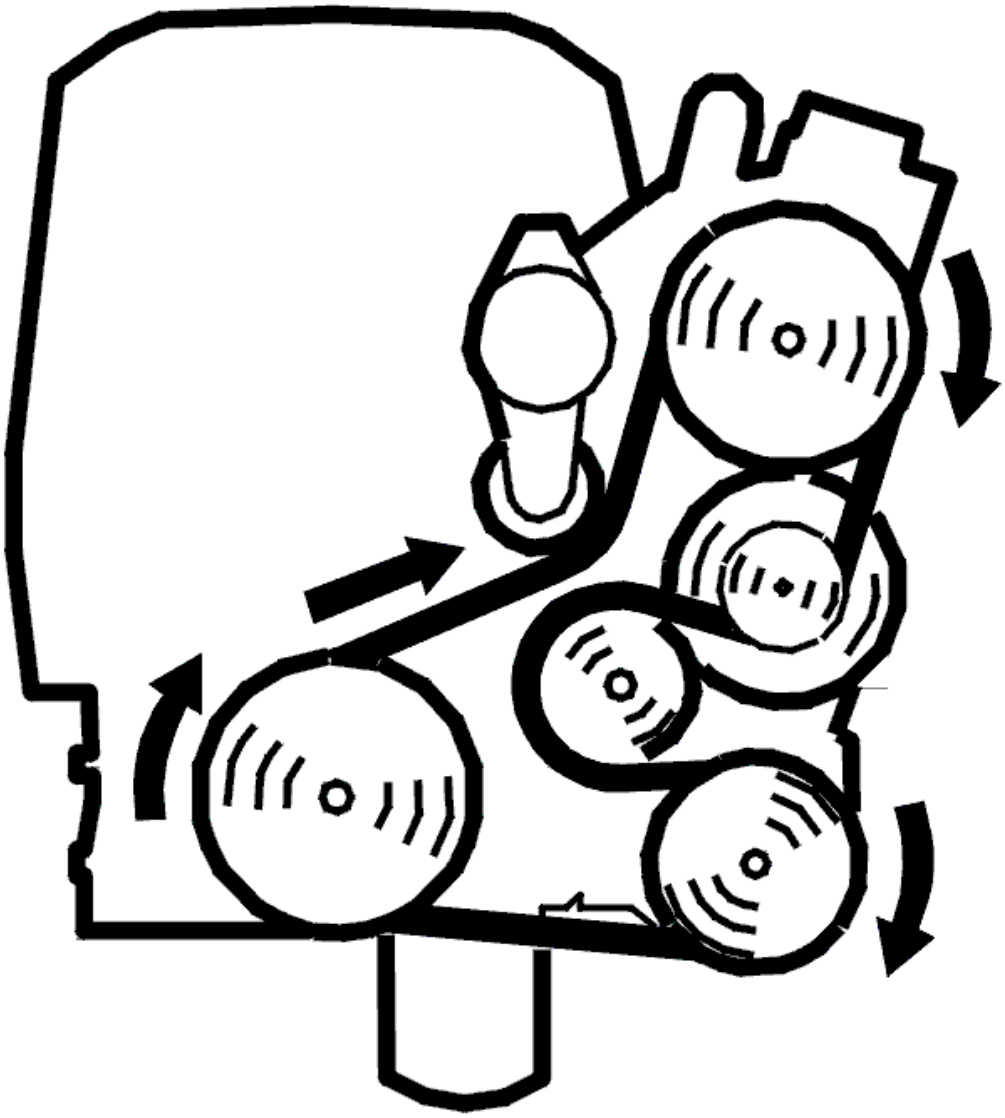

Fig. 205: Belt Routing / Engine Idling - Volvo
Courtesy of VOLVO CARS CORPORATION

- Connect pressure gauge:**FUEL PRESSURE GAUGE**
- Run the engine until it is warm and let it idle.
- A/C off.

  Read off relative fuel pressure.

  The relative fuel pressure is calculated from the fuel pressure sensor's and the atmospheric pressure sensor's signal (=absolute pressure minus atmospheric pressure).

  Check that the value on the pressure gauge and the readout value are the same. Different values indicate malfunction.

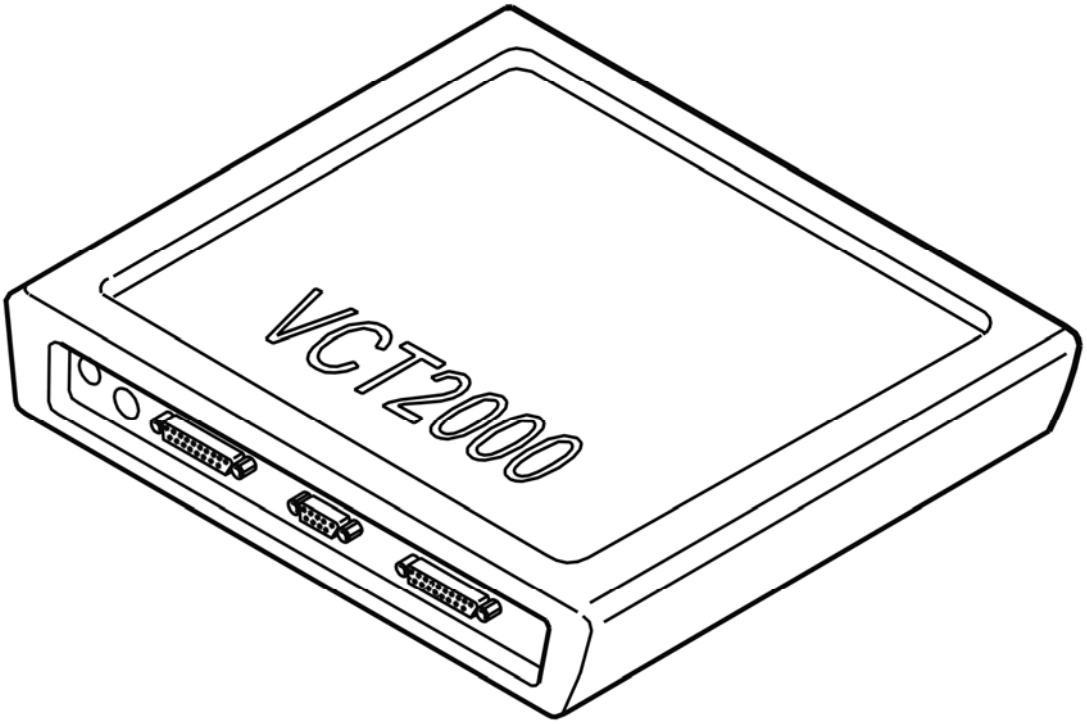

Fig. 206: Identifying VCT2000 Diagnostic Tool Symbol In VIDA
Courtesy of VOLVO CARS CORPORATION

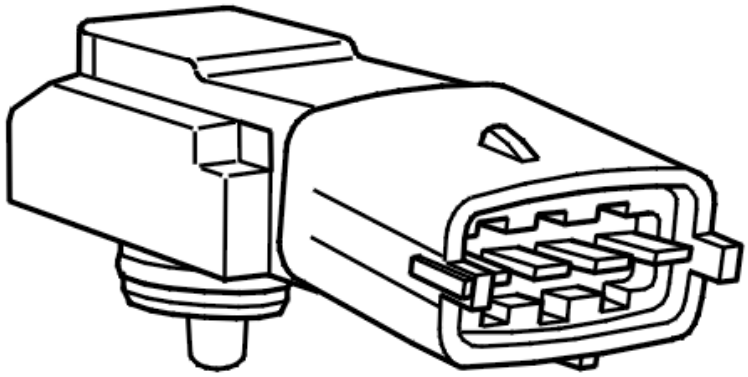

Fig. 207: Identifying Fuel Pressure Sensor
Courtesy of VOLVO CARS CORPORATION

Is the function OK?

- **YES**

  VERIFIED: Troubleshooting has been completed.

- **NO**

  Refer to **INFORMATION**

VERIFICATION

VERIFICATION

HINT: After carrying out the repair, check that the fault has been remedied.

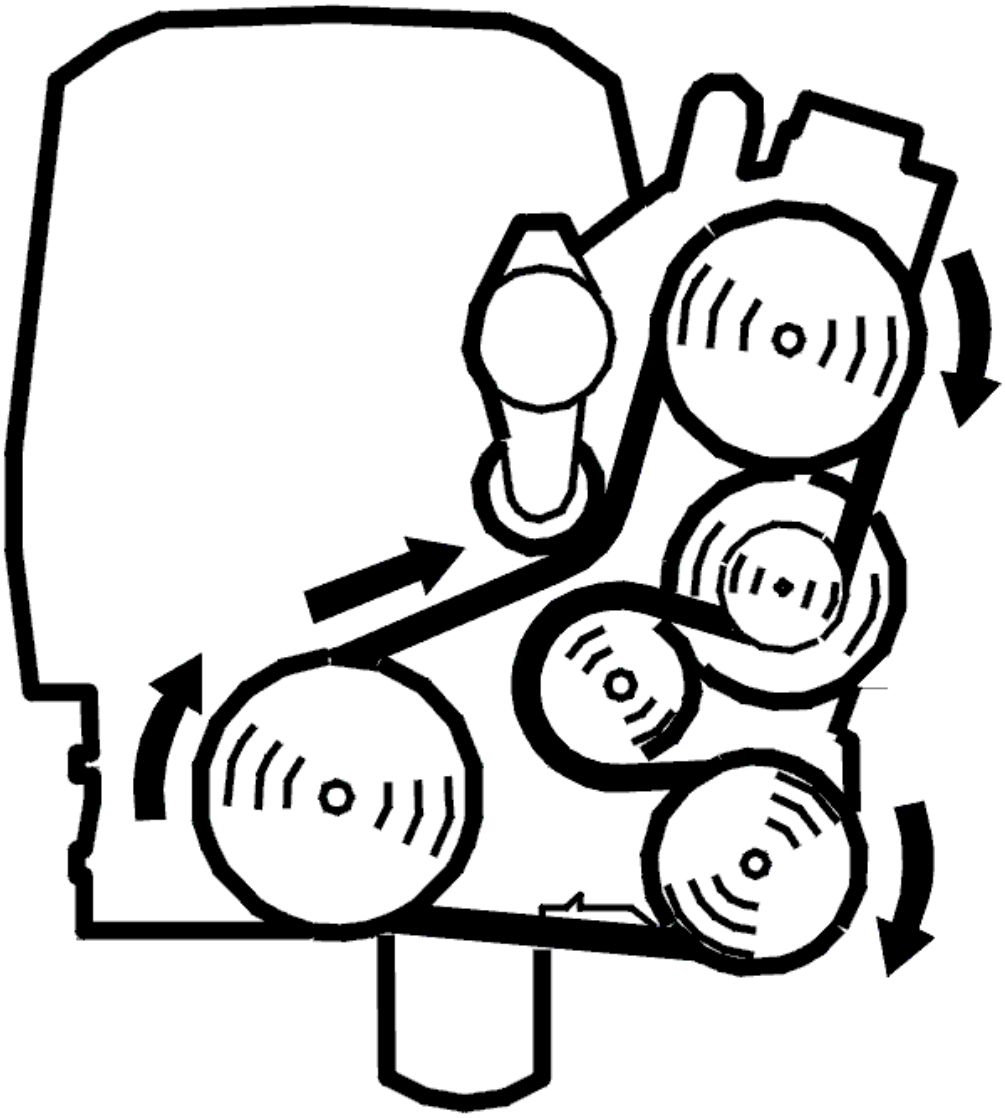

Fig. 208: Belt Routing / Engine Idling - Volvo
Courtesy of VOLVO CARS CORPORATION

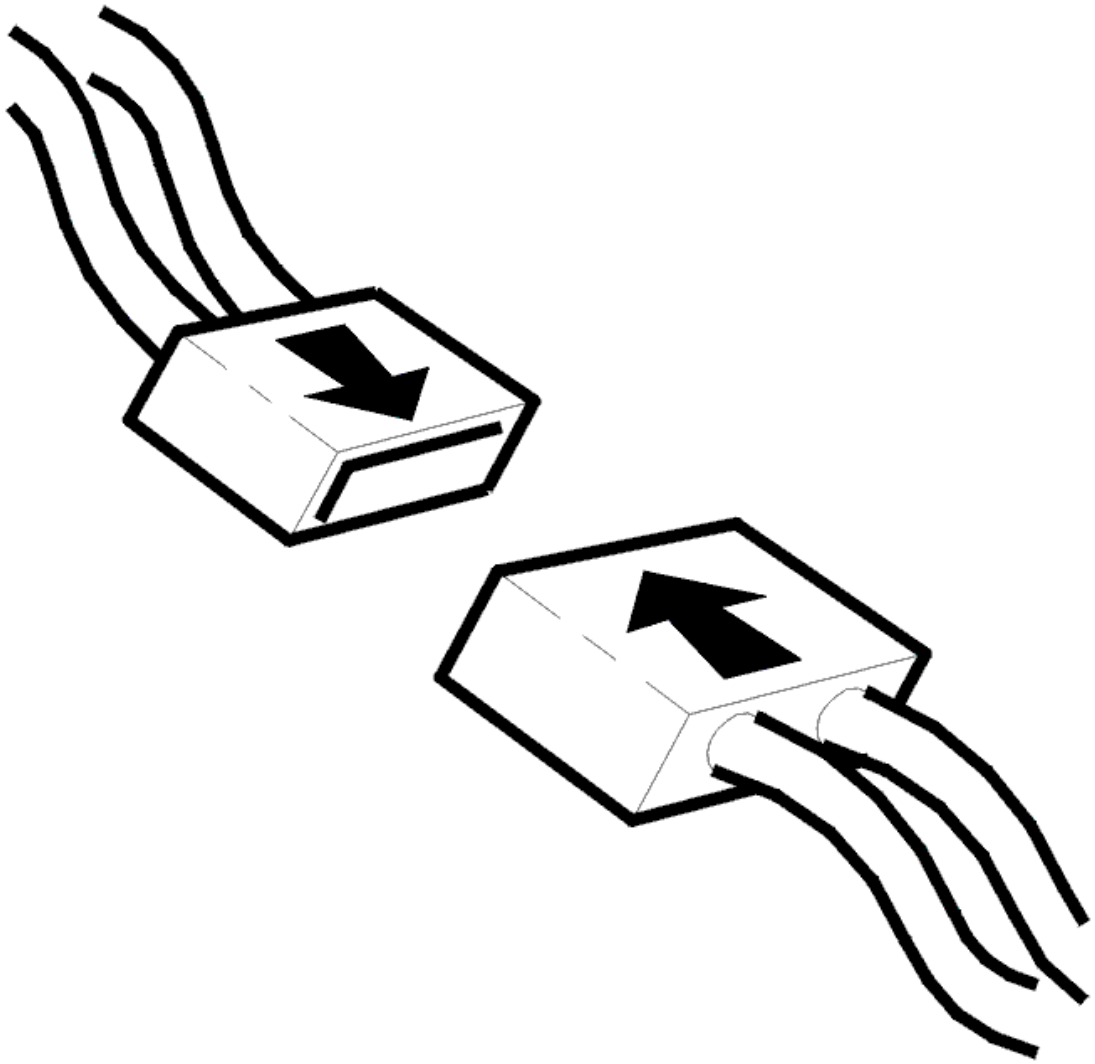

Fig. 209: Connecting Connector
Courtesy of VOLVO CARS CORPORATION

- Ignition off
- Reinstall the connectors, components etc.
- Engine idling
- Read off the fuel pressure and the work load of the fuel pump.
    - The upper digital display and the graphic display (red font color) indicate the absolute fuel pressure, calculated from the fuel pressure sensor
    - The center digital display (blue font color) indicates the current work load required for the fuel pump (FP) to maintain the present fuel pressure. (Normal value 50 % ±10& %.)
    - The lower digital display indicates the relative fuel pressure (white font color), calculated from the fuel pressure sensor and the atmospheric pressure sensor (= absolute pressure minus atmospheric pressure). If a manometer is connected during the test, it should indicate this pressure.

Check the fuel pressure value together with the value for the fuel pump work load. The requested pressure is 380 kPa at idle speed. A (relative) fuel pressure lower than 380 kPa together with a high fuel pump work load indicates a fault in pressure regulation.

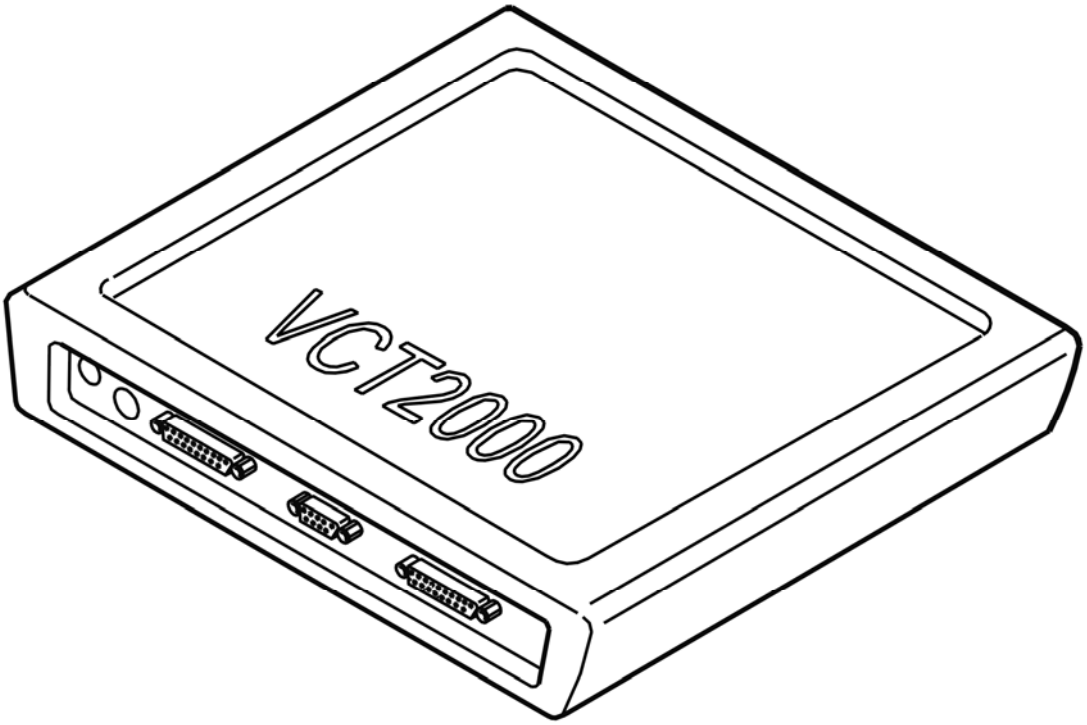

Fig. 210: Identifying VCT2000 Diagnostic Tool Symbol In VIDA
Courtesy of VOLVO CARS CORPORATION

Is the signal within its permitted range?

- **YES**

  VERIFIED: Troubleshooting has been completed.

- **NO**

  Refer to **INFORMATION**

INFORMATION

FAULT-TRACING INFORMATION

The fault should have been detected and remedied. As this is not the case fault-tracing has failed.

Exit fault-tracing for this diagnostic trouble code (DTC) or make another attempt.

ECM-P009A21 INTAKE AIR TEMPERATURE /AMBIENT AIR TEMPERATURE CORRELATION. GENERAL SIGNAL FAILURES. SIGNAL TOO LOW (B6324S5; 2011-2012)

DIAGNOSTIC TROUBLE CODE (DTC) INFORMATION

Condition

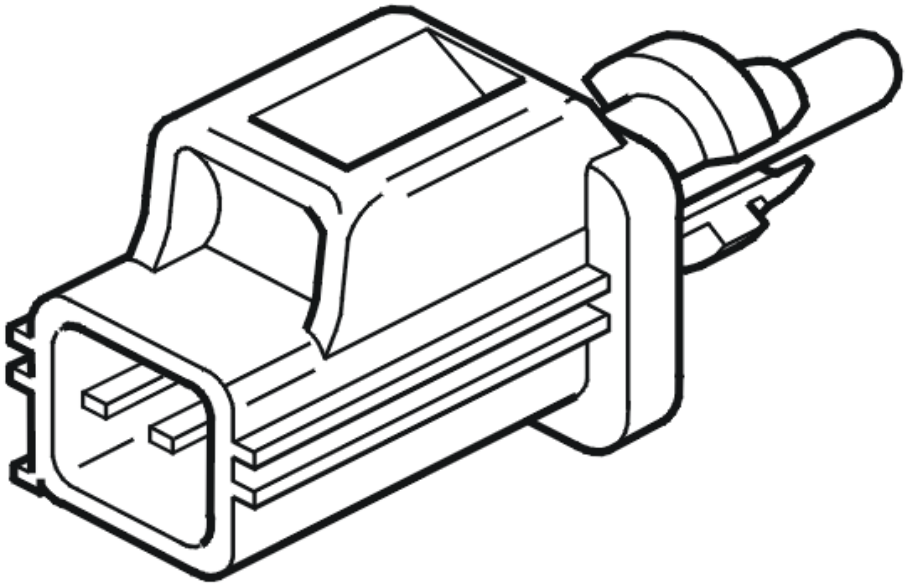

Fig. 211: Identifying Outside Temperature Sensor
Courtesy of VOLVO CARS CORPORATION

The engine control module (ECM) checks the signal from the outside temperature sensor in the left door mirror. If the control module registers that the value from the outdoor temperature sensor deviates more than 25 °C from the value calculated the control module, a diagnostic trouble code is generated.

The control module's test for the diagnostic trouble code starts once per driving cycle and first when the engine temperature is above 80 °C. Also, 4 kg of air shall have been used at vehicle speed above 40 km/h.

Substitute Value

- The driving cycle's lowest value from air temperature sensor inlet (integrated in mass airflow sensor) is used.
- In case of faulty air temperature sensor inlet (integrated in mass airflow sensor) constant temperature is

used, 20 °C.

Possible Source

- Contact resistance in connector.
- Damaged outside temperature sensor.

Fault symptom[s]

- Warning lights and chimes/Malfunction Indicator Light ("Check engine" light) indication/no indication

FAULT-TRACING

see **FAULT-TRACING**

ECM-P009A21 INTAKE AIR TEMPERATURE /AMBIENT AIR TEMPERATURE CORRELATION. GENERAL SIGNAL FAILURES. SIGNAL TOO LOW (B8444S; 2010-2011)

DIAGNOSTIC TROUBLE CODE (DTC) INFORMATION

Condition

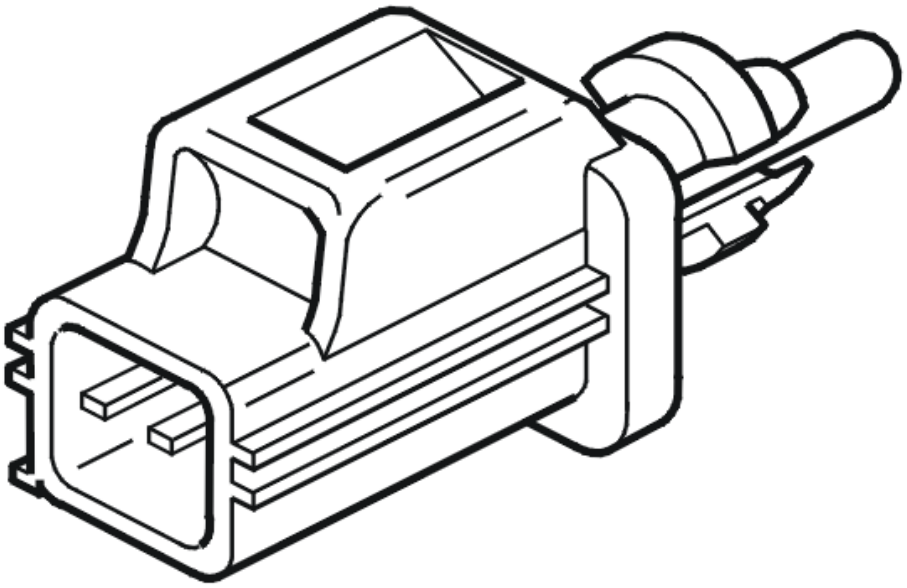

Fig. 212: Identifying Outside Temperature Sensor
Courtesy of VOLVO CARS CORPORATION

The engine control module (ECM) checks the signal from the outside temperature sensor in the left door mirror. If the control module registers that the value from the outdoor temperature sensor deviates more than 25 °C from the value calculated the control module, a diagnostic trouble code is generated.

The control module's test for the diagnostic trouble code starts once per driving cycle and first when the engine temperature is above 80 °C. Also, 4 kg of air shall have been used at vehicle speed above 40 km/h.

Substitute Value

- The driving cycle's lowest value from air temperature sensor inlet (integrated in mass airflow sensor) is used.
- In case of faulty air temperature sensor inlet (integrated in mass airflow sensor) constant temperature is used, 20 °C.

Possible Source

- Contact resistance in connector.
- Damaged outside temperature sensor.

Fault symptom[s]

- Warning lights and chimes/Malfunction Indicator Light ("Check engine" light) indication/no indication

FAULT-TRACING

see **FAULT-TRACING**

ECM-P010000: MASS OR VOLUME AIR FLOW CIRCUIT. GENERAL FAILURE INFORMATION. NO SUB TYPE INFORMATION (B6324S; 2007-2010)

DIAGNOSTIC TROUBLE CODE (DTC) INFORMATION ECM-P010000

Condition

Engine control module (ECM) measures the amount of air that passes through the inlet manifold using a mass air flow sensor. The control module checks the direct voltage from the sensor.

NOTE: The mass air flow sensor and air temperature sensor are integrated in the same component.

The diagnostic trouble code (DTC) is stored if the control module detects that:

- The direct voltage is lower than 0.049 V.

- Incorrect value lasts longer than 9 seconds.
- Incorrect value lasts for 2 or more subsequent driving cycles.

The control module's test for the diagnostic trouble code (DTC) starts in the event of:

- Ignition switch position II.

NOTE: The control module can only detect the fault once the test has been started and the diagnostic trouble code (DTC) is stored when the conditions are met.

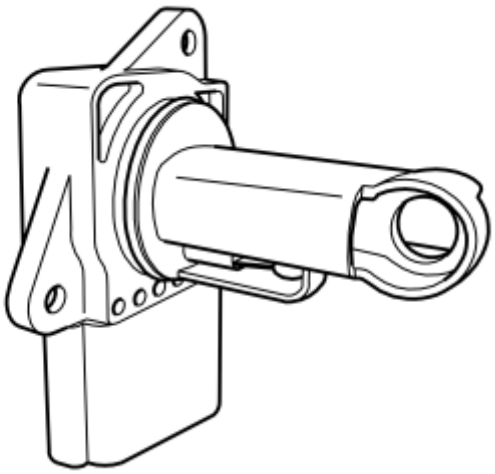

Fig. 213: Identifying Integrated Air Temperature Sensor
Courtesy of VOLVO CARS CORPORATION

Substitute Value

- A value calculated from engine speed (RPM) and pressure in the intake manifold is used.

Possible Source

- Open-circuit in signal cable or ground lead.
- Contact resistance and oxidation in the terminals.
- Short-circuit to ground in the signal cable.
- Damaged mass air flow (MAF) sensor.

Fault symptom[s]

- Malfunction indicator light (MIL), on

FAULT-TRACING

see **FAULT-TRACING**

ECM-P010000: MASS OR VOLUME AIR FLOW CIRCUIT. GENERAL FAILURE INFORMATION. NO SUB TYPE INFORMATION (B6324S5; 2011-2012)

DIAGNOSTIC TROUBLE CODE (DTC) INFORMATION ECM-P010000

see **DIAGNOSTIC TROUBLE CODE (DTC) INFORMATION ECM-P010000**

FAULT-TRACING

see **FAULT-TRACING**

ECM-P010100: MASS OR VOLUME AIR FLOW CIRCUIT RANGE/PERFORMANCE. GENERAL FAILURE INFORMATION. NO SUB TYPE INFORMATION (B6324S; 2007-2010)

DIAGNOSTIC TROUBLE CODE (DTC) INFORMATION ECM-P010100

Condition

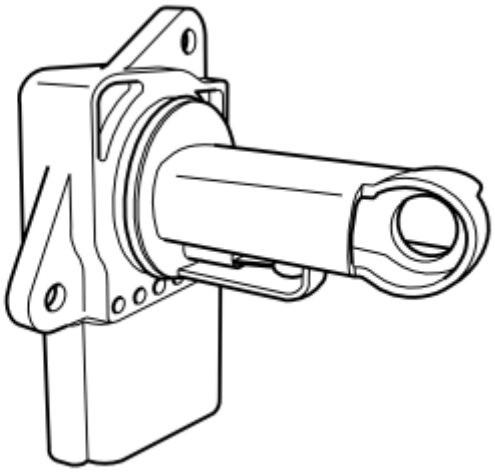

Fig. 214: Identifying Integrated Air Temperature Sensor
Courtesy of VOLVO CARS CORPORATION

The engine control module (ECM) measures the air mass through the intake manifold using a sensor.

The diagnostic trouble code (DTC) is stored if the Engine Control Module (ECM) detects that the signal from the mass air flow (MAF) sensor is too low.

The diagnostic trouble code can be diagnosed when the ignition is on.

Substitute Value

- A value calculated from factors such as engine speed and air pressure in the intake manifold is used.

Possible Source

- The signal cable is short-circuited to ground.
- Open-circuit in the signal cable.
- Damaged mass air flow sensor.

Fault symptom[s]

- Malfunction indicator lamp (MIL) lit.

FAULT-TRACING

CHECKING THE STATUS

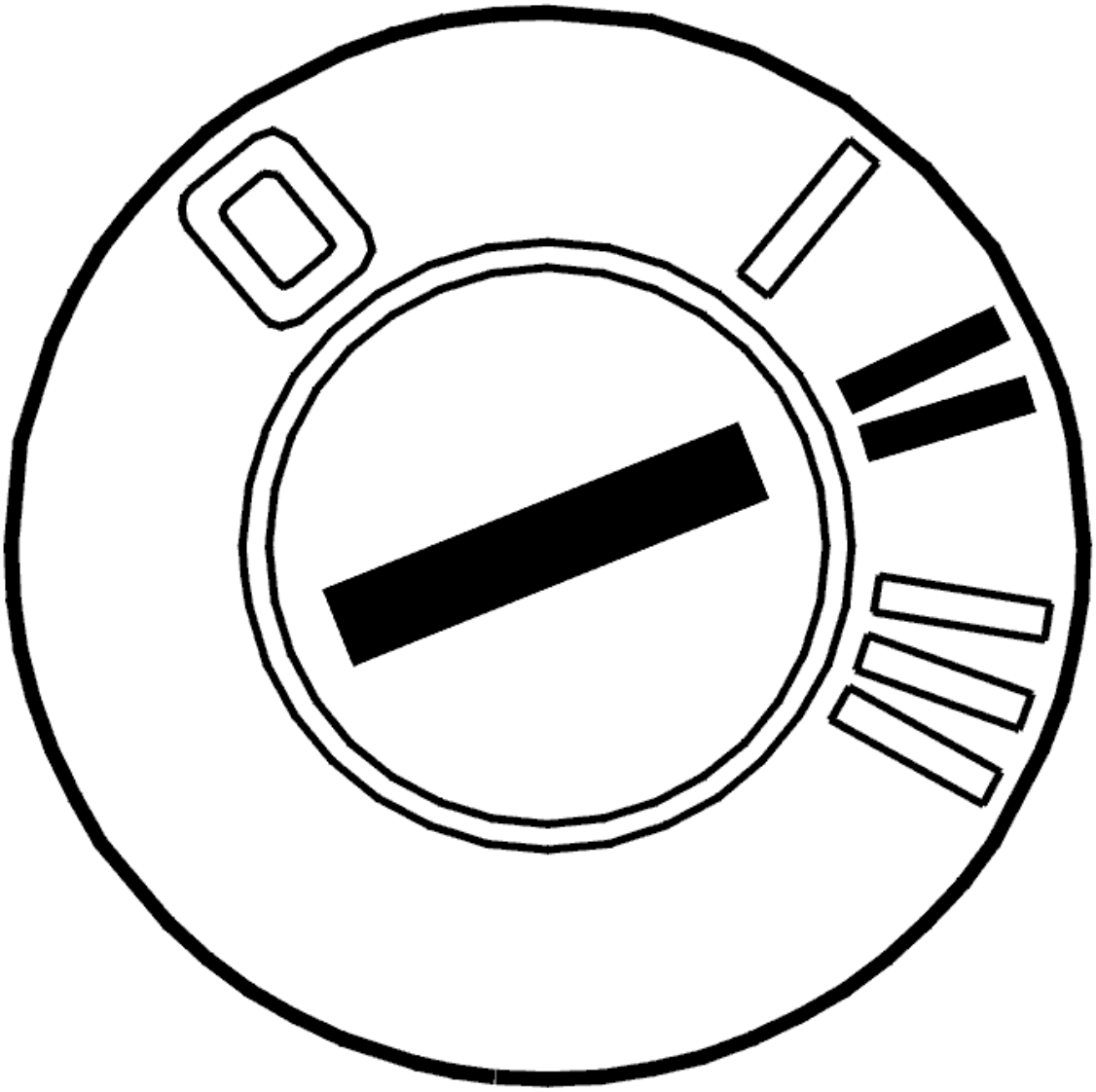

Fig. 215: Identifying Ignition ON

Courtesy of VOLVO CARS CORPORATION

- Ignition on

  Check whether the fault is permanent or intermittent by reading off the mass air flow (MAF) sensor signal. Check that the signal is approximately 5-6 g/s with the engine idling at operating temperature.

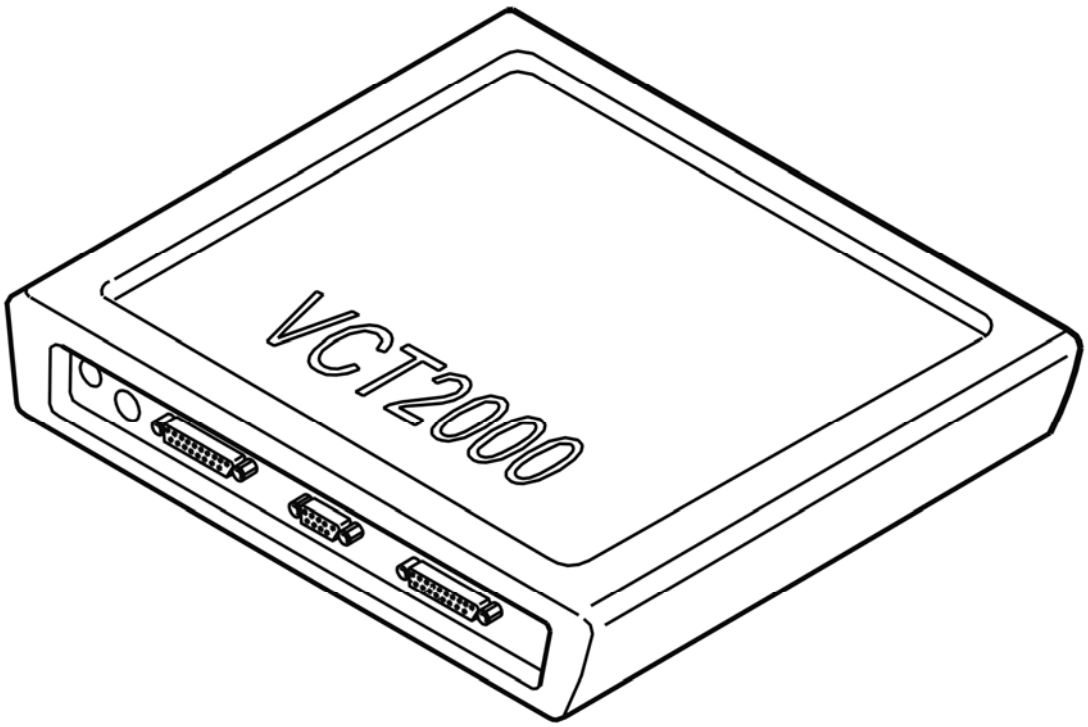

Fig. 216: Identifying VCT2000 Diagnostic Tool Symbol In VIDA
Courtesy of VOLVO CARS CORPORATION

- **Continue**

  Refer to **CHECKING COMPONENTS AND WIRING**

CHECKING COMPONENTS AND WIRING

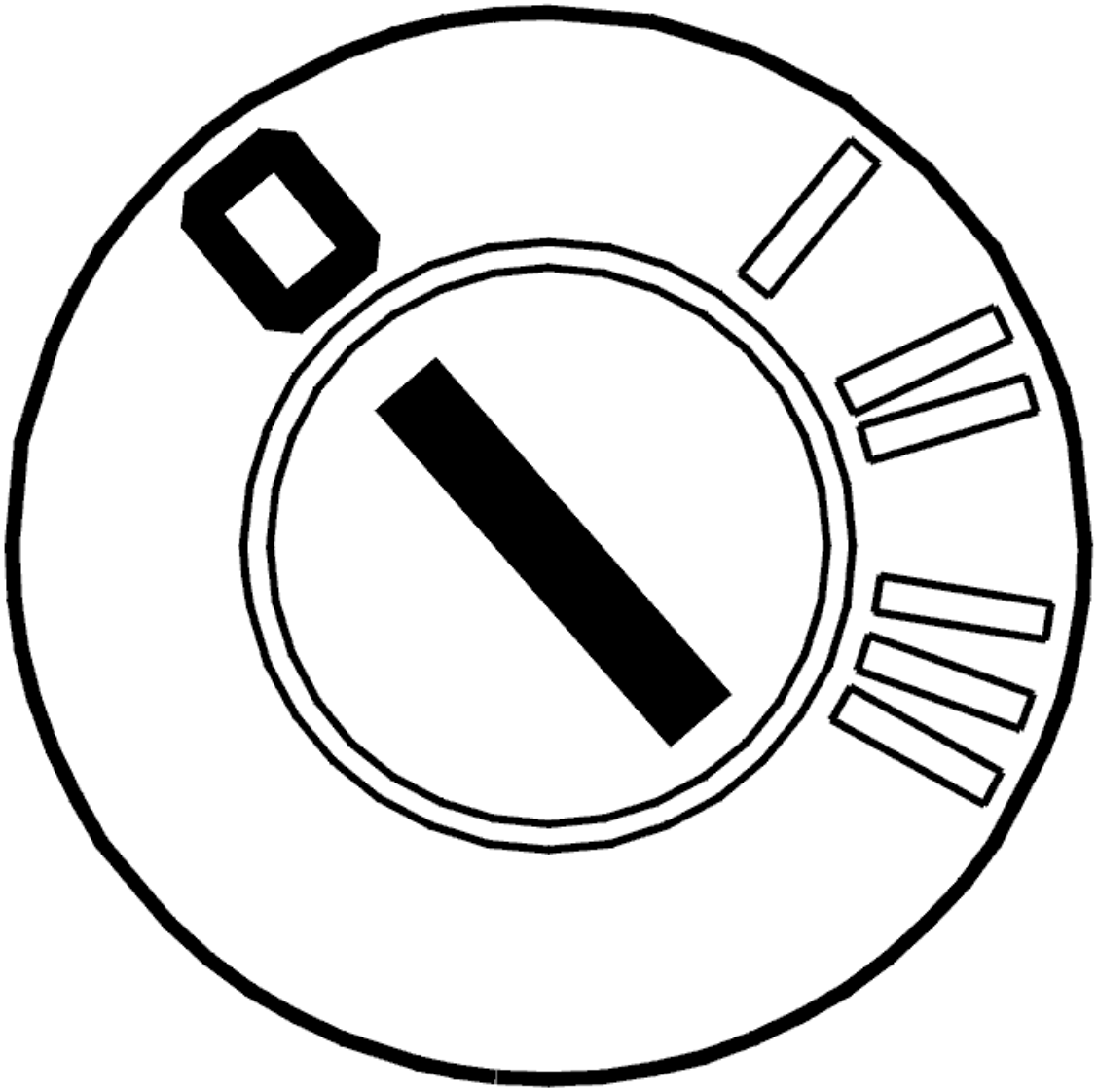

Fig. 217: Identifying Ignition OFF
Courtesy of VOLVO CARS CORPORATION

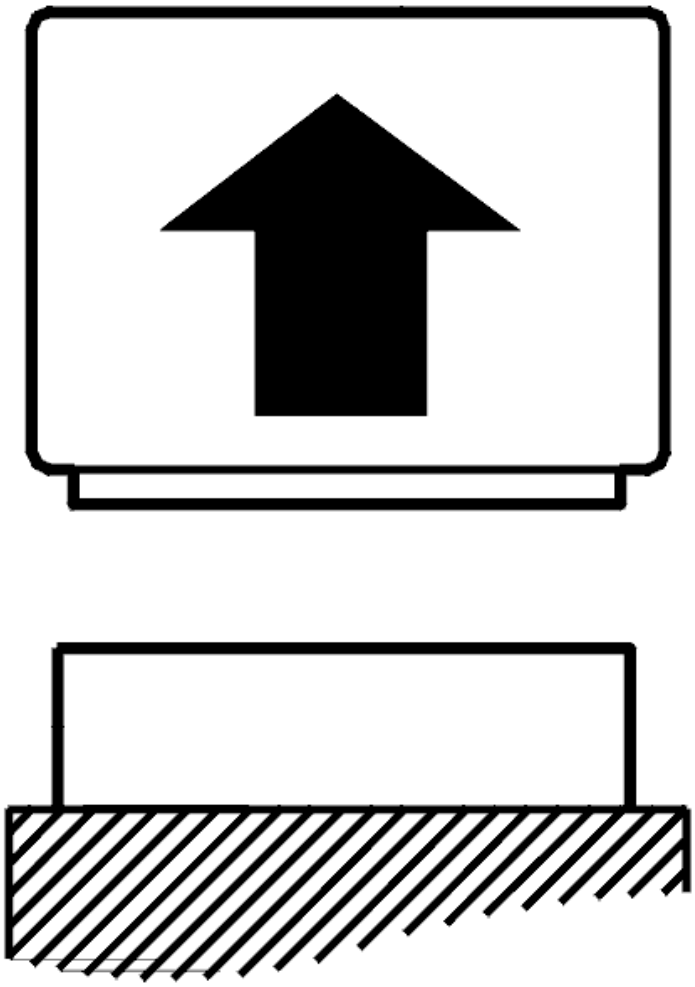

Fig. 218: Disconnecting Connector
Courtesy of VOLVO CARS CORPORATION

- Ignition off
- Disconnect the engine control module (ECM).

  Check the signal cable. Check for a short-circuit to ground. Check the signal cable with regard to open circuit.

  Take readings between control module terminal #A70 (#B10) and mass air flow (MAF) sensor terminal #3.

  Remedy as necessary.

  Other information

- see **CONNECTING THE BREAKOUT BOX**
- see **SIGNAL SPECIFICATION**
- see **MASS AIR FLOW SENSOR (MAF)**
- see **CHECKING WIRING AND TERMINALS**

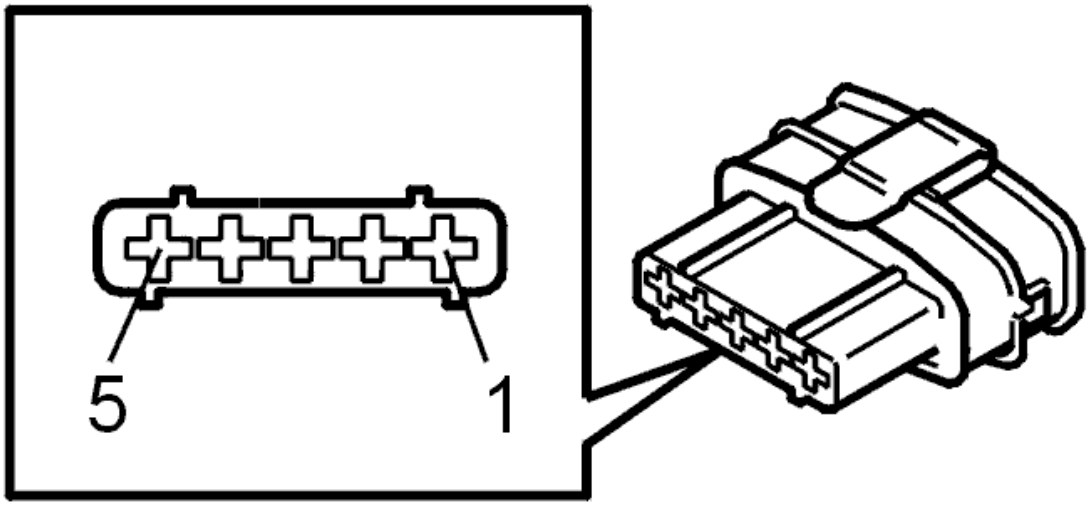

Fig. 219: Identifying Connector
Courtesy of VOLVO CARS CORPORATION

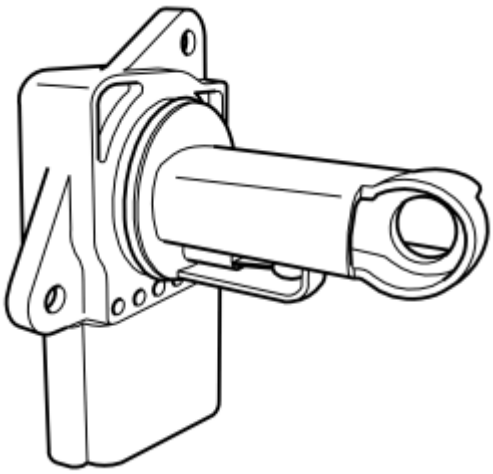

Fig. 220: Identifying Integrated Air Temperature Sensor
Courtesy of VOLVO CARS CORPORATION

- **Continue**

  Refer to **VERIFICATION**

VERIFICATION

VERIFICATION

HINT: After carrying out the repair, check that the fault has been remedied.

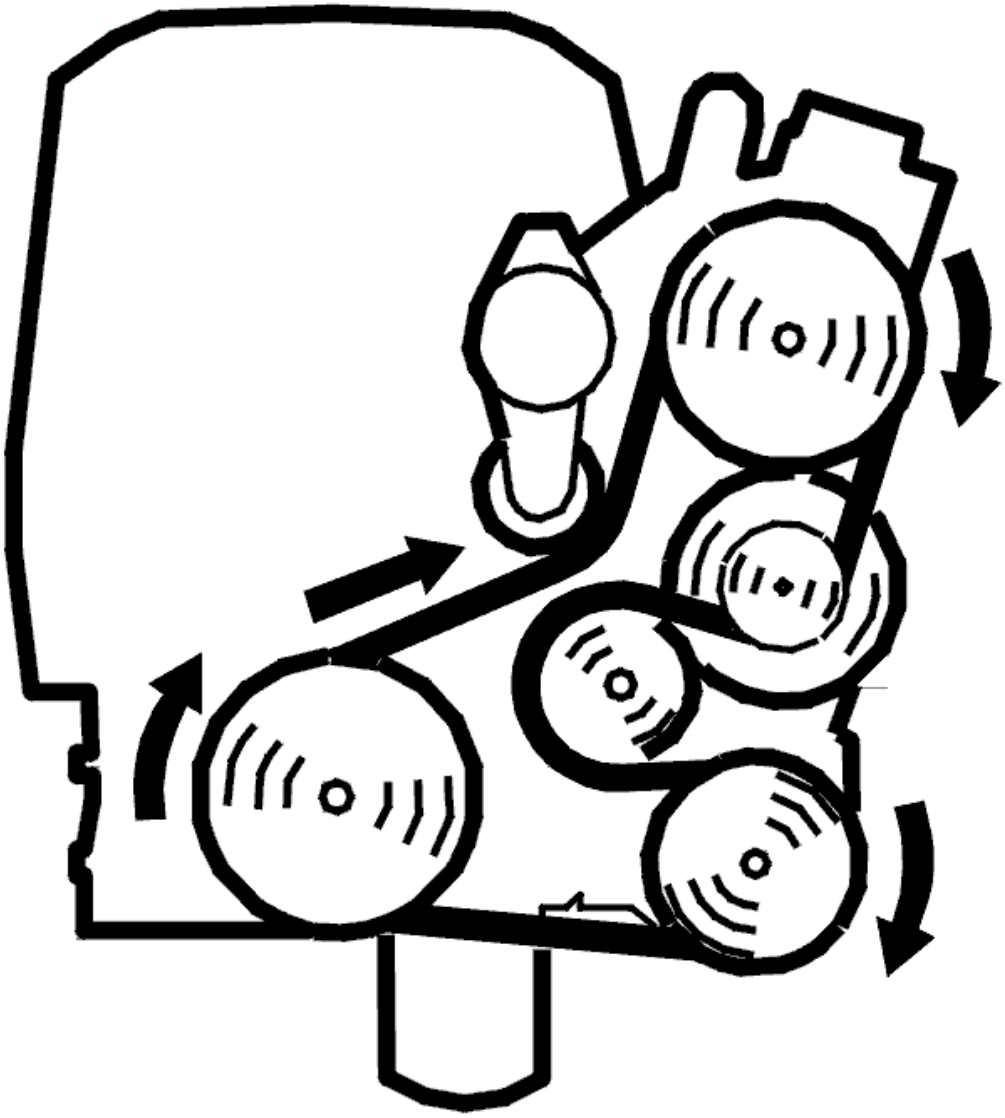

Fig. 221: Belt Routing / Engine Idling - Volvo
Courtesy of VOLVO CARS CORPORATION

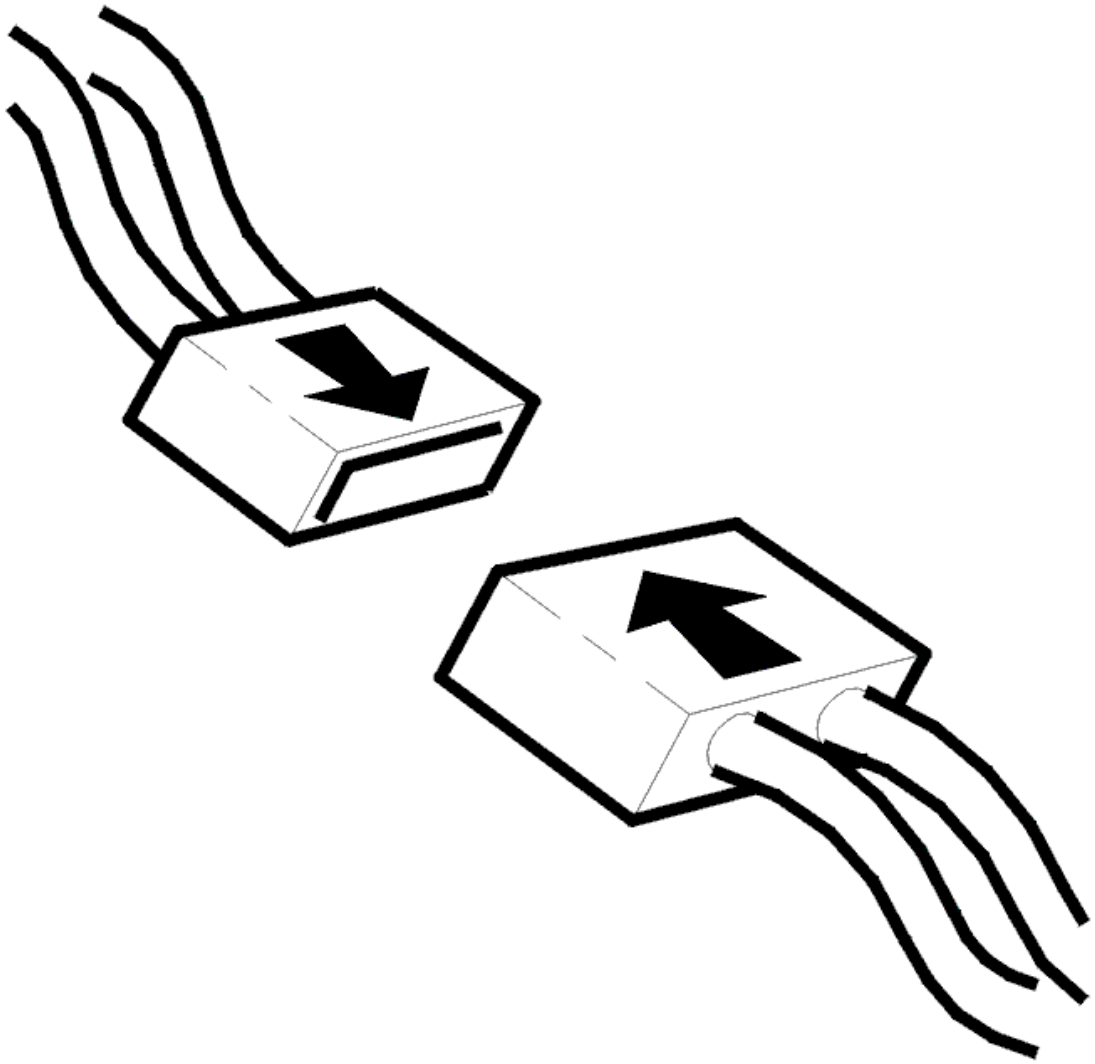

Fig. 222: Connecting Connector
Courtesy of VOLVO CARS CORPORATION

- Ignition off
- Reinstall the connectors, components etc.
- Start and run the engine to operating temperature.

  Read off the mass air flow (MAF) sensor signal using the VCT2000 (or appropriate scan tool). Check that the signal is approximately 5-6 g/s with the engine idling at operating temperature.

  Check that the signal from the mass air flow (MAF) sensor is correct.

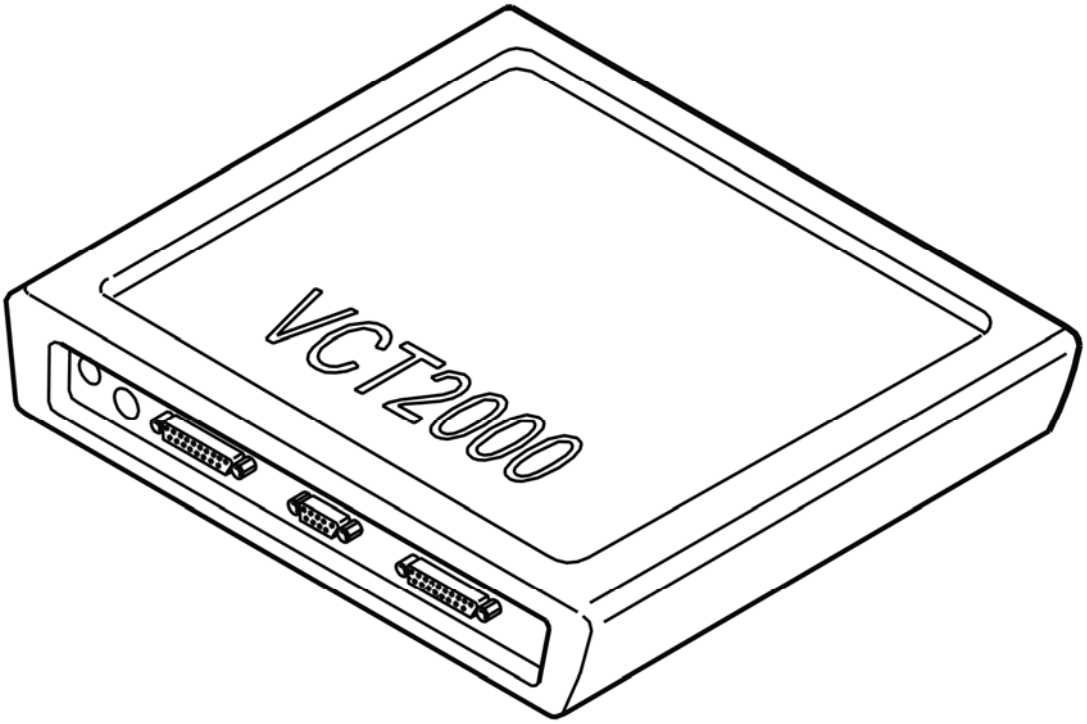

Fig. 223: Identifying VCT2000 Diagnostic Tool Symbol In VIDA
Courtesy of VOLVO CARS CORPORATION

Is the signal correct?

- **YES**

  VERIFIED: Troubleshooting has been completed.

- **NO**

  Refer to **INFORMATION**

INFORMATION

FAULT-TRACING INFORMATION

The fault should have been detected and remedied. As this is not the case fault-tracing has failed.

Exit fault-tracing for this diagnostic trouble code (DTC) or make another attempt.

ECM-P010100: MASS OR VOLUME AIR FLOW CIRCUIT RANGE/PERFORMANCE. GENERAL FAILURE INFORMATION. NO SUB

TYPE INFORMATION (B6324S5; 2011-2012)

DIAGNOSTIC TROUBLE CODE (DTC) INFORMATION ECM-P010100

see **DIAGNOSTIC TROUBLE CODE (DTC) INFORMATION ECM-P010100**

FAULT-TRACING

see **FAULT-TRACING**

ECM-P010100: AIR MASS OR VOLUME AIR FLOW CIRCUIT WITHIN/EXCEEDING LIMIT VALUES. GENERAL FAULT INFORMATION. TYPE OF FAULT NOT SPECIFIED. (B8444S; 2005-2011)

DIAGNOSTIC TROUBLE CODE (DTC) INFORMATION ECM-P010100

Condition

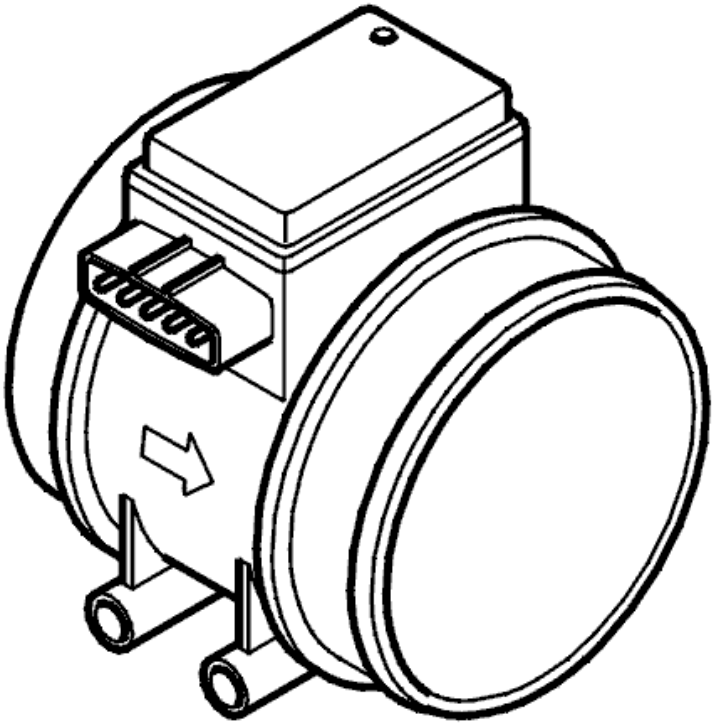

Fig. 224: Identifying Mass Air Flow Sensor (With Integrated Air Temperature Sensor)
Courtesy of VOLVO CARS CORPORATION

The engine control module (ECM) measures the air mass through the intake manifold using a sensor.

The diagnostic trouble code is generated if the control module detects that the sensor value deviates too much from the value calculated based on a model.

The diagnostic trouble code can be diagnosed when idling with a warm engine.

Substitute Value

- A value calculated from factors such as engine speed and air pressure in the intake manifold is used.

Possible Source

- Contact resistance in connector.
- Damaged fresh air hose.
- Damaged mass air flow sensor.

Fault symptom[s]

- Malfunction indicator lamp (MIL) lit.

FAULT-TRACING ECM-P010100

CHECKING COMPONENTS AND WIRING

Fig. 225: Identifying Ignition In Off Position
Courtesy of VOLVO CARS CORPORATION

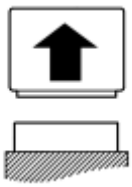

Fig. 226: Identifying Microphone Connectors
Courtesy of VOLVO CARS CORPORATION

- Ignition off.

  Check the connector and terminals for the mass air flow (MAF) sensor. Check for contact resistance. Check for oxidation. Check the intake system for air leakage.

  Remedy as necessary.

Other information

- see **AIR LEAKS IN THE INTAKE SYSTEM, CHECKING**
- see **MASS AIR FLOW (MAF) SENSOR, REPLACING**
- see **CHECKING WIRING AND TERMINALS**

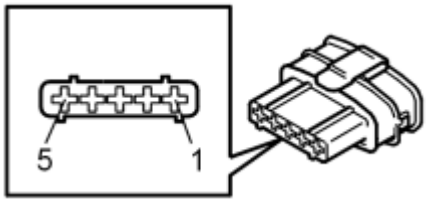

Fig. 227: Identifying Connector Terminals
Courtesy of VOLVO CARS CORPORATION

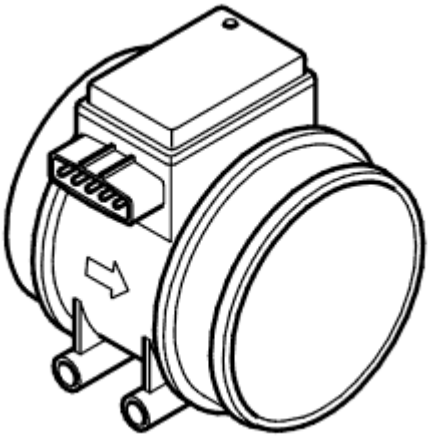

Fig. 228: Identifying Mass Air Flow Sensor (With Integrated Air Temperature Sensor)
Courtesy of VOLVO CARS CORPORATION

- **Continue**

Refer to **CHECKING THE MASS AIR FLOW (MAF) SENSOR**

CHECKING THE MASS AIR FLOW (MAF) SENSOR

Fig. 229: Identifying Belt Routing
Courtesy of VOLVO CARS CORPORATION

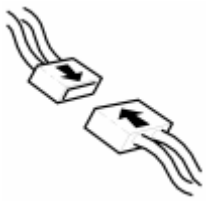

Fig. 230: Identifying Connector(s) Reinstallation
Courtesy of VOLVO CARS CORPORATION

- Engine running.

  Check and compare the calculated air mass with the actual, read-out from mass air flow sensor.

  Try measuring at different speeds (RPM).

  HINT: Differences of more than 20 % between the signals indicate a defective mass air flow sensor.

  NOTE: When replacing mass air flow sensor. Repeat the check to verify that the replacement solved the problem.

  Remedy as necessary.

  Other information

  - see **MASS AIR FLOW (MAF) SENSOR, REPLACING**

Fig. 231: Identifying VCT2000 Diagnostic Tool Symbol In VIDA
Courtesy of VOLVO CARS CORPORATION

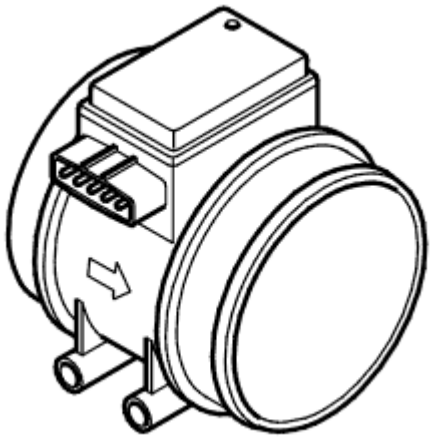

Fig. 232: Identifying Mass Air Flow Sensor (With Integrated Air Temperature Sensor)
Courtesy of VOLVO CARS CORPORATION

Is the function OK?

- **YES**

  Refer to **VERIFICATION**

- **NO**

  FAULT TRACING FAILED: The fault should have been detected and remedied. As this is not the case fault-tracing has failed. Exit fault-tracing for this diagnostic trouble code (DTC) or make another attempt.

INFORMATION

FAULT-TRACING INFORMATION

The fault should have been detected and remedied. As this is not the case fault-tracing has failed.

Exit fault-tracing for this diagnostic trouble code (DTC) or make another attempt.

VERIFICATION

VERIFICATION

HINT: After carrying out the repair, check that the fault has been remedied.

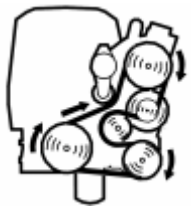

Fig. 233: Identifying Belt Routing
Courtesy of VOLVO CARS CORPORATION

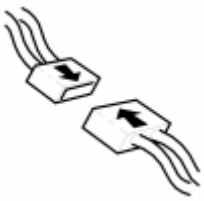

Fig. 234: Identifying Connector(s) Reinstallation
Courtesy of VOLVO CARS CORPORATION

- Ignition off.
- Reinstall the connectors, components etc.
- Start the engine and run it to normal operating temperature.

  Check and compare the calculated air mass with the actual, read-out from mass air flow sensor. Use the VCT2000 (or appropriate scan tool).

  Fig. 235: Identifying VCT2000 Diagnostic Tool Symbol In VIDA
  Courtesy of VOLVO CARS CORPORATION

Is the function OK?

- **YES**

  VERIFIED: Troubleshooting has been completed.

- **NO**

  Refer to **INFORMATION**

ECM-P010200: MASS OR VOLUME AIR FLOW CIRCUIT LOW INPUT. GENERAL FAILURE INFORMATION. NO SUB TYPE INFORMATION (B6324S; 2007-2010)

DIAGNOSTIC TROUBLE CODE (DTC) INFORMATION ECM-P010200

Condition

Engine control module (ECM) measures the amount of air that passes through the inlet manifold using a mass air flow sensor. The control module checks the direct voltage from the sensor.

NOTE: The mass air flow sensor and air temperature sensor are integrated in the same component.

The diagnostic trouble code (DTC) is stored if the control module detects that:

- The direct voltage is lower than 0.649 V.
- Incorrect value lasts longer than 9 seconds.
- Incorrect value lasts for 2 or more subsequent driving cycles.

The control module's test for the diagnostic trouble code (DTC) starts in the event of:

- Ignition switch position II.

NOTE: The control module can only detect the fault once the test has been started and the diagnostic trouble code (DTC) is stored when the conditions are met.

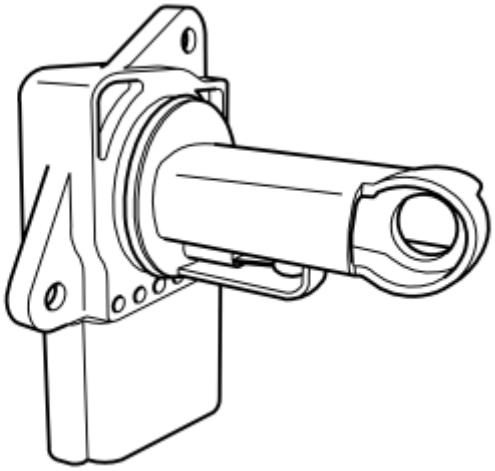

Fig. 236: Identifying Integrated Air Temperature Sensor
Courtesy of VOLVO CARS CORPORATION

Substitute Value

- The control module uses a calculated value for the air mass.

Possible Source

- Contact resistance and oxidation in the terminals.
- Short-circuit to ground in the signal cable.
- Open-circuit in the signal cable.

- Damaged mass air flow (MAF) sensor.

Fault symptom[s]

- Malfunction indicator light (MIL), on

FAULT-TRACING

see **FAULT-TRACING**

ECM-P010200: MASS OR VOLUME AIR FLOW CIRCUIT LOW INPUT. GENERAL FAILURE INFORMATION. NO SUB TYPE INFORMATION (B6324S5; 2011-2012)

DIAGNOSTIC TROUBLE CODE (DTC) INFORMATION ECM-P010200

see **DIAGNOSTIC TROUBLE CODE (DTC) INFORMATION ECM-P010200**

FAULT-TRACING

see **FAULT-TRACING**

ECM-P010200: AIR MASS OR VOLUME, AIRFLOW CIRCUIT LOW INPUT SIGNAL. GENERAL FAULT INFORMATION. TYPE OF FAULT NOT SPECIFIED. (B8444S; 2005-2011)

DIAGNOSTIC TROUBLE CODE (DTC) INFORMATION ECM-P010200

Condition

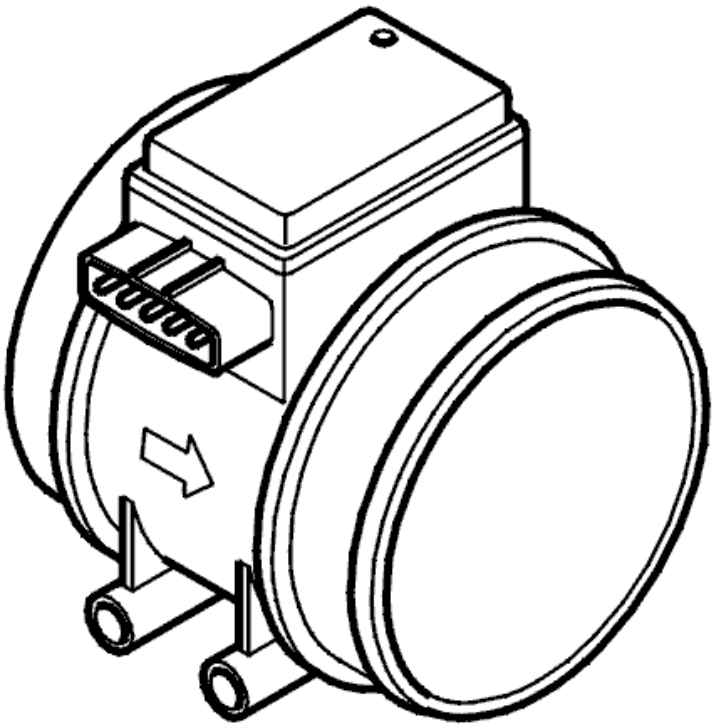

Fig. 237: Identifying Mass Air Flow Sensor (With Integrated Air Temperature Sensor)
Courtesy of VOLVO CARS CORPORATION

The engine control module (ECM) measures the air mass through the intake manifold using a sensor.

The diagnostic trouble code (DTC) is stored if the Engine Control Module (ECM) detects that the signal from the mass air flow (MAF) sensor is too low.

The diagnostic trouble code can be diagnosed when the ignition is on.

Substitute Value

- A value calculated from factors such as engine speed and air pressure in the intake manifold is used.

Possible Source

- The signal cable is short-circuited to ground.
- Open-circuit in the signal cable.
- Damaged mass air flow sensor.

Fault symptom[s]

- Malfunction indicator lamp (MIL) lit.

FAULT TRACING ECM-P010200

CHECKING THE STATUS

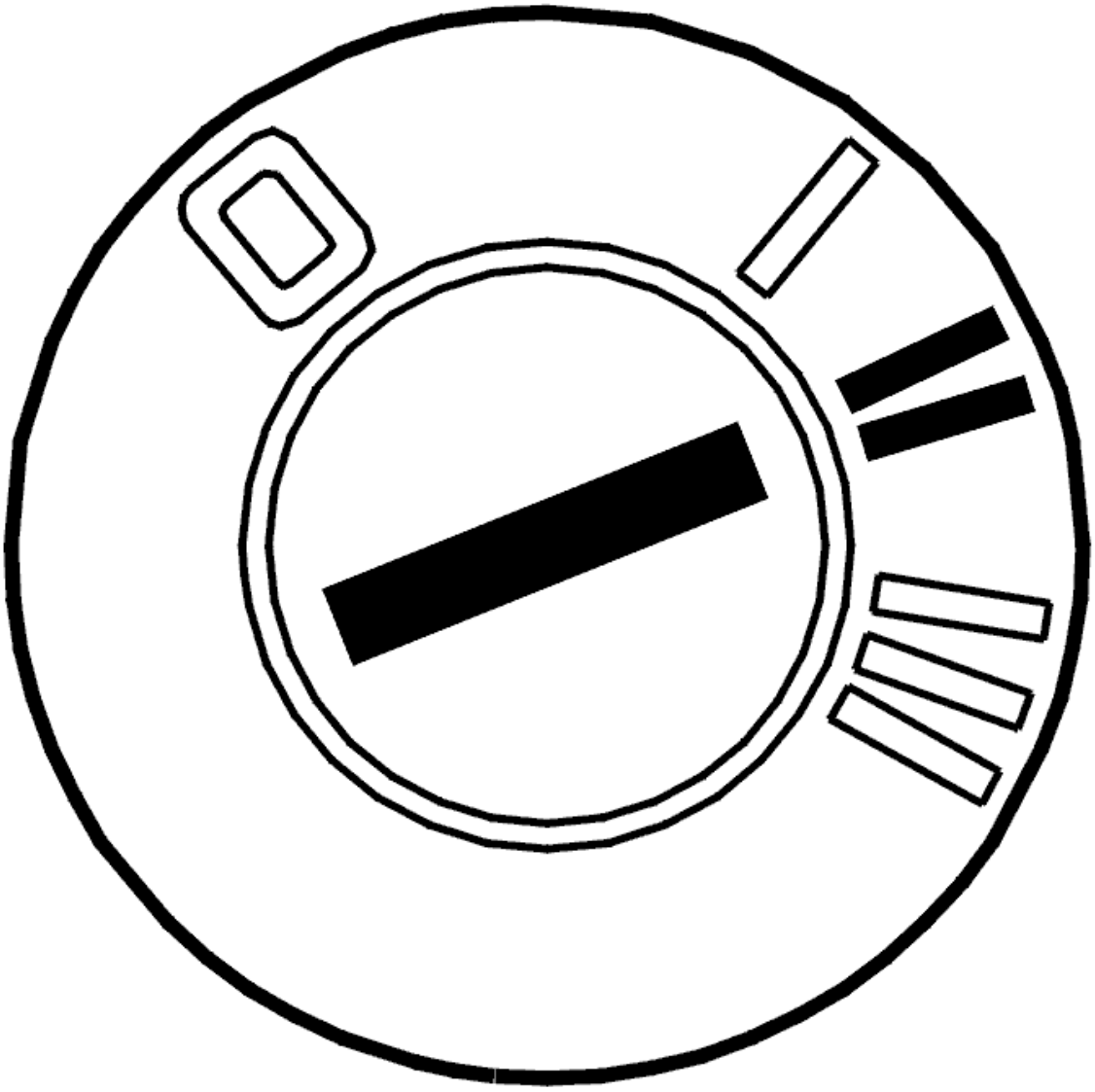

Fig. 238: Identifying Ignition ON
Courtesy of VOLVO CARS CORPORATION

- Ignition on

  Check whether the fault is permanent or intermittent by reading off the mass air flow (MAF) sensor signal. Check that the signal is approximately 5-6 g/s with the engine idling at operating temperature.

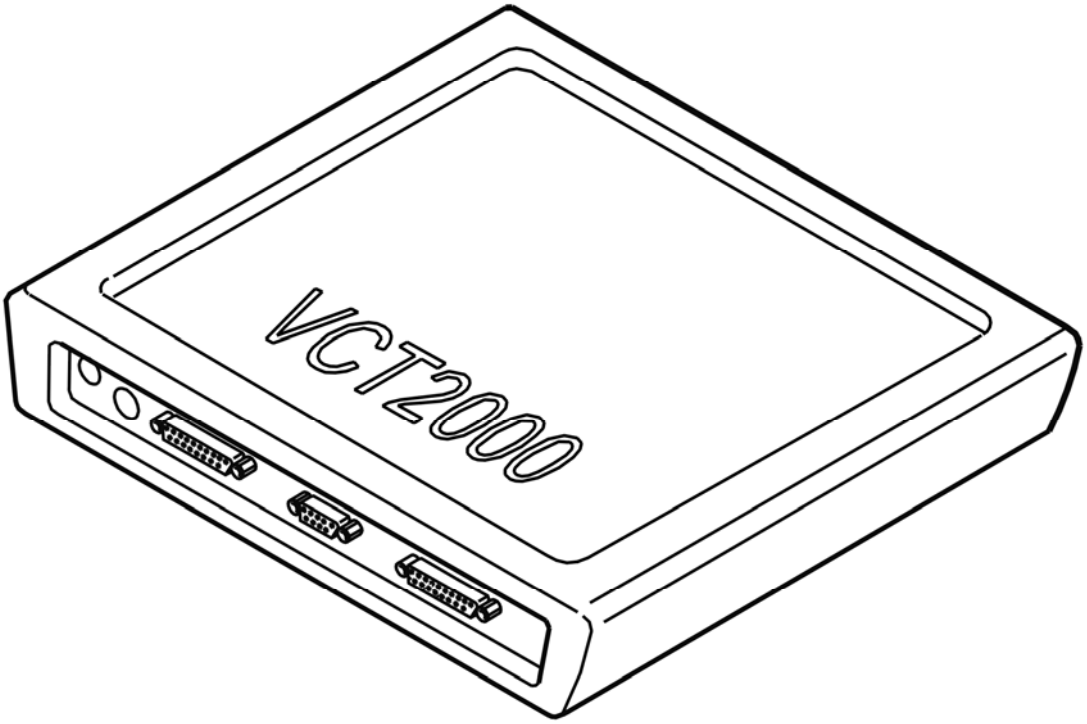

Fig. 239: Identifying VCT2000 Diagnostic Tool Symbol In VIDA
Courtesy of VOLVO CARS CORPORATION

- **Continue**

  Refer to **CHECKING COMPONENTS AND WIRING**

CHECKING COMPONENTS AND WIRING

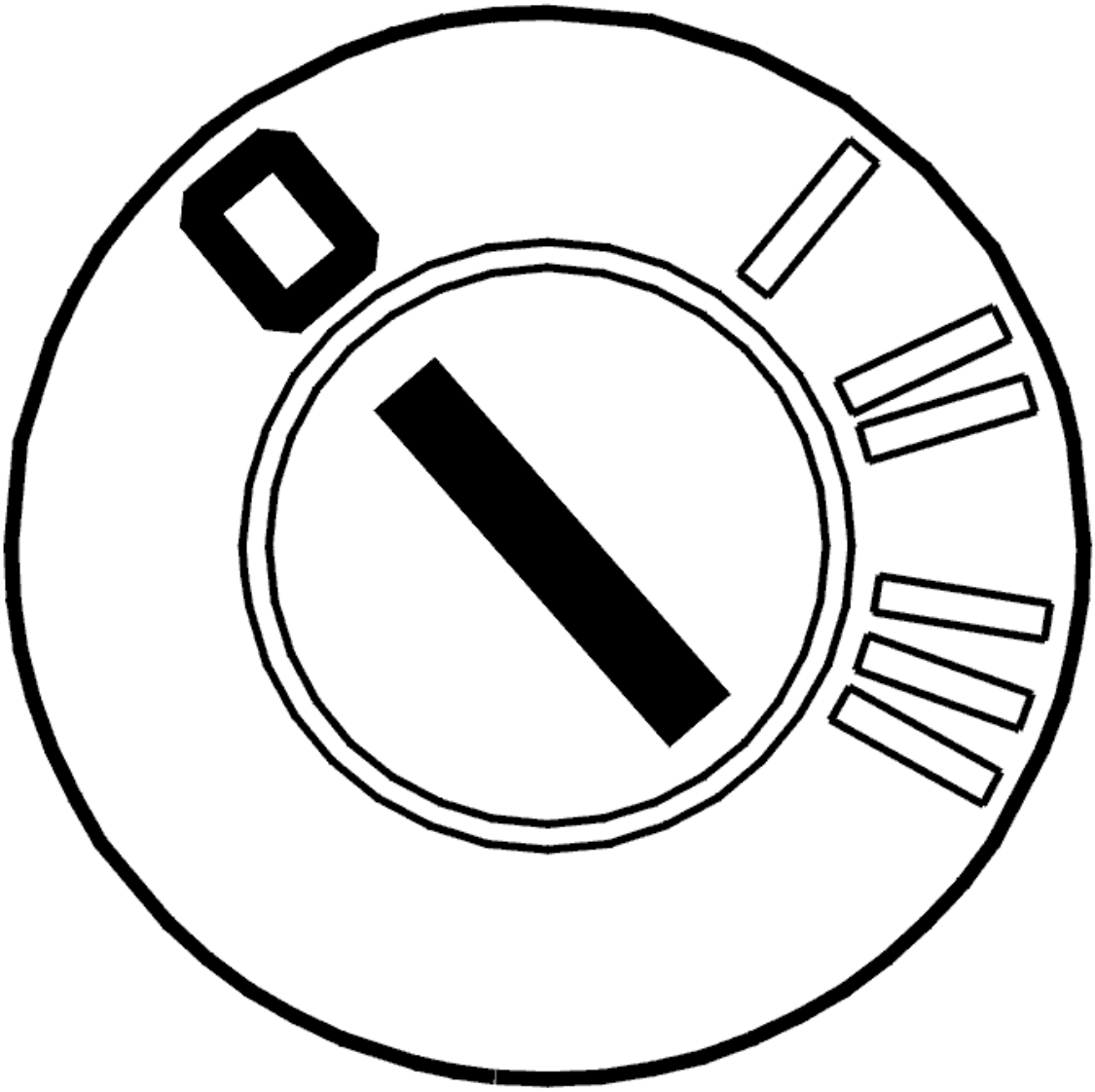

Fig. 240: Identifying Ignition OFF
Courtesy of VOLVO CARS CORPORATION

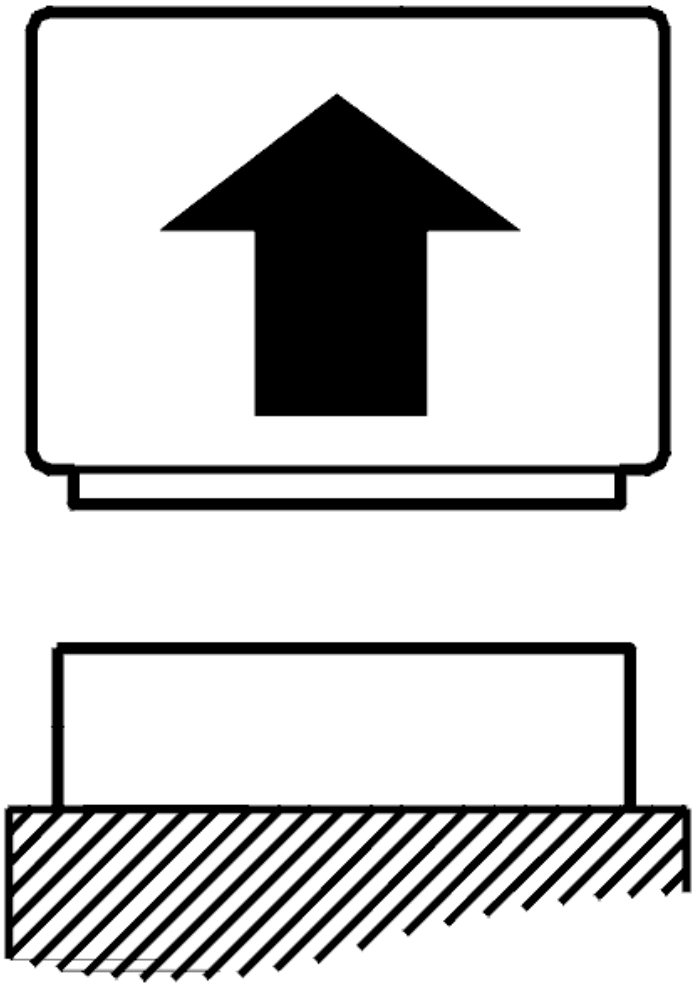

Fig. 241: Disconnecting Connector
Courtesy of VOLVO CARS CORPORATION

- Ignition off
- Disconnect the engine control module (ECM).

  Check the signal cable. Check for a short-circuit to ground. Check the signal cable with regard to open circuit.

  Take readings between control module terminal #A70 (#B10) and mass air flow (MAF) sensor terminal #3.

  Remedy as necessary.

  Other information

- see **CONNECTING THE BREAKOUT BOX**
- see **SIGNAL SPECIFICATION, ENGINE CONTROL MODULE (ECM)**
- see **MASS AIR FLOW (MAF) SENSOR, REPLACING**
- see **CHECKING WIRING AND TERMINALS**

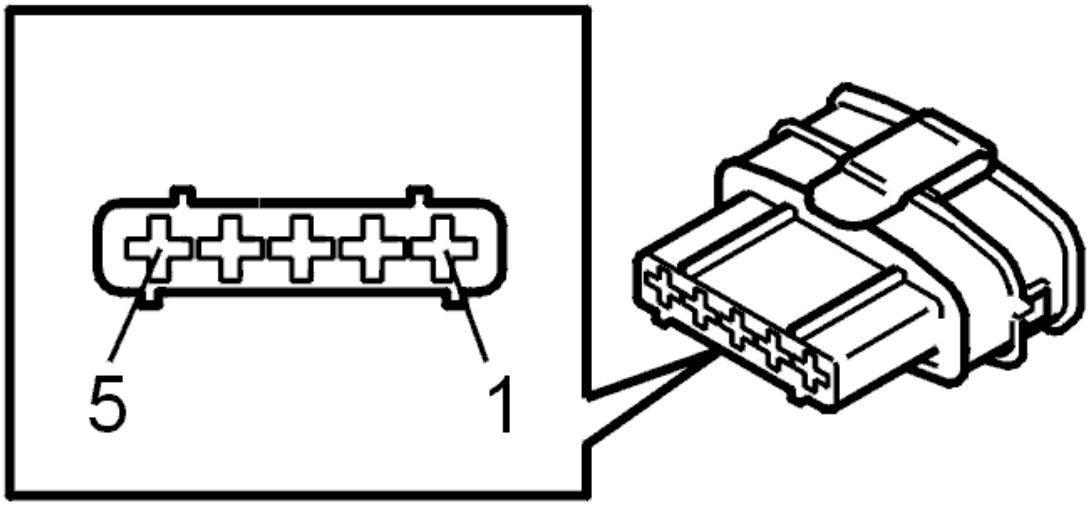

Fig. 242: Identifying Connector
Courtesy of VOLVO CARS CORPORATION

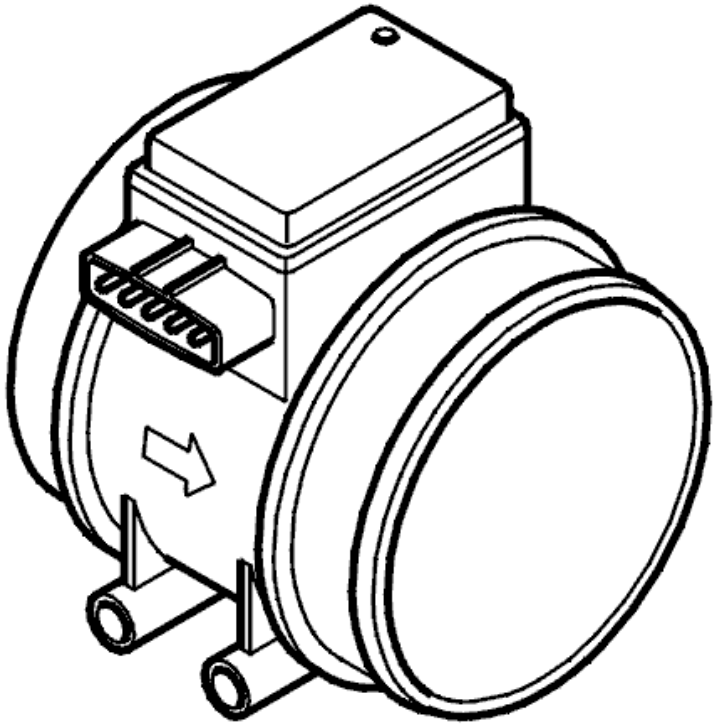

Fig. 243: Identifying Mass Air Flow Sensor (With Integrated Air Temperature Sensor)
Courtesy of VOLVO CARS CORPORATION

- **Continue**

  Refer to **VERIFICATION**

VERIFICATION

VERIFICATION

HINT: After carrying out the repair, check that the fault has been remedied.

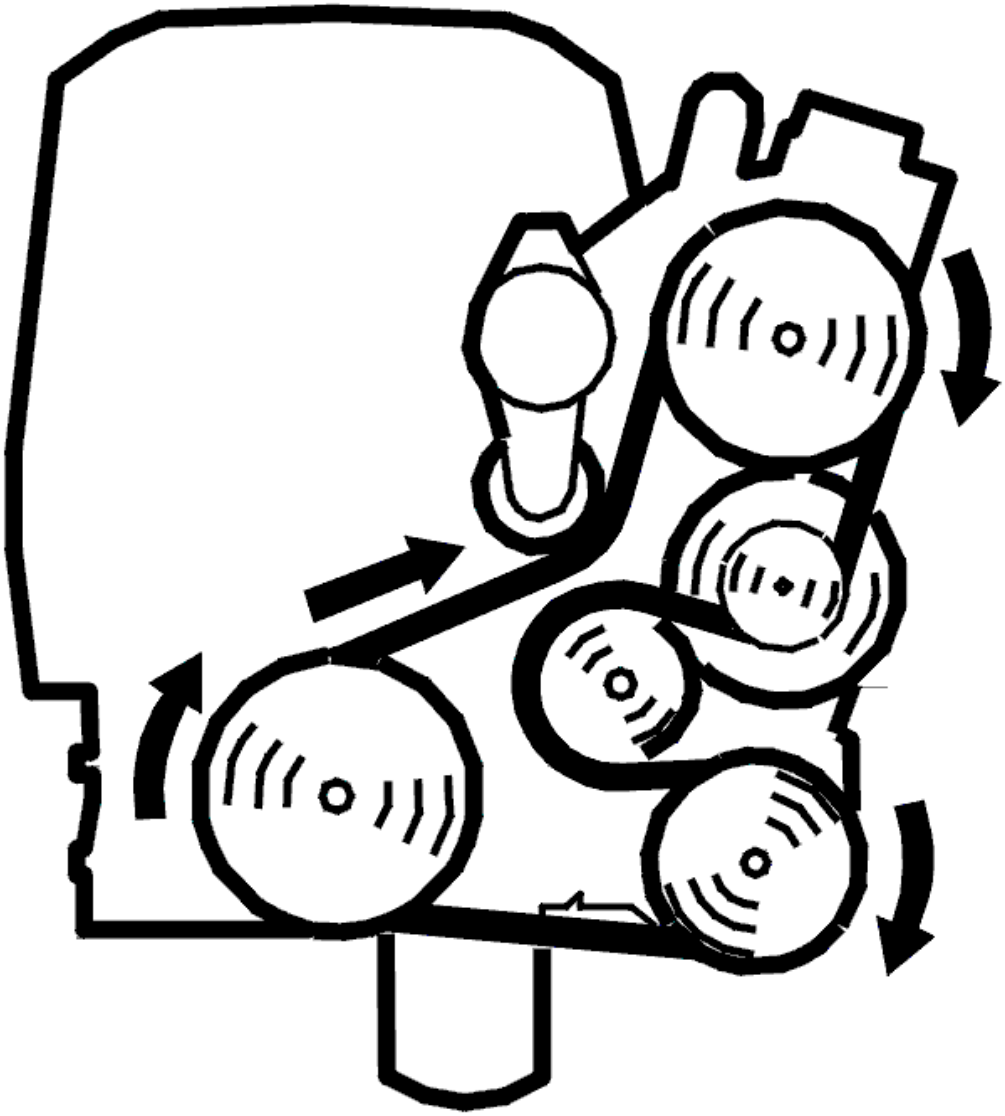

Fig. 244: Belt Routing / Engine Idling - Volvo
Courtesy of VOLVO CARS CORPORATION

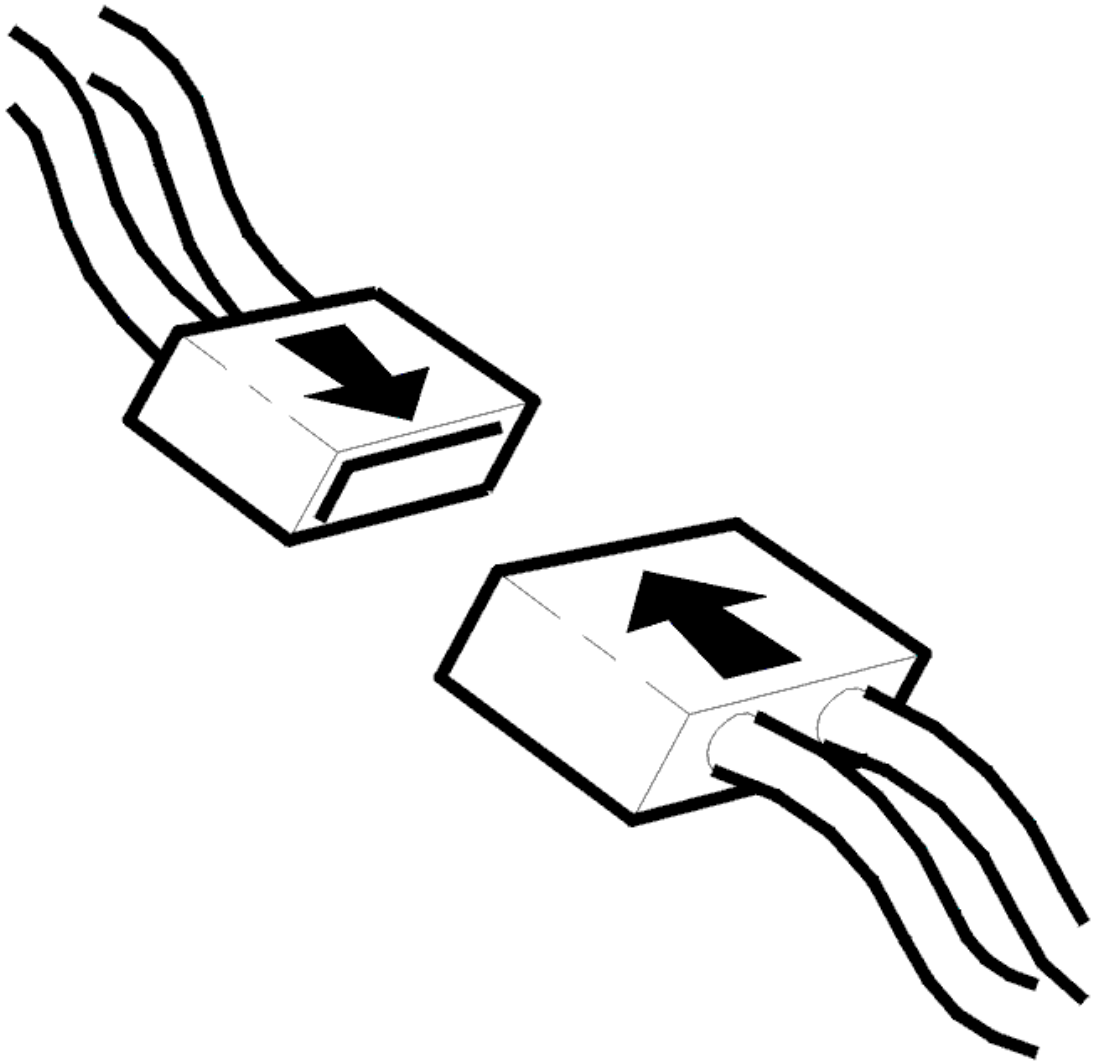

Fig. 245: Connecting Connector
Courtesy of VOLVO CARS CORPORATION

- Ignition off
- Reinstall the connectors, components etc.
- Start and run the engine to operating temperature.

  Read off the mass air flow (MAF) sensor signal using the VCT2000 (or appropriate scan tool). Check that the signal is approximately 5-6 g/s with the engine idling at operating temperature.

  Check that the signal from the mass air flow (MAF) sensor is correct.

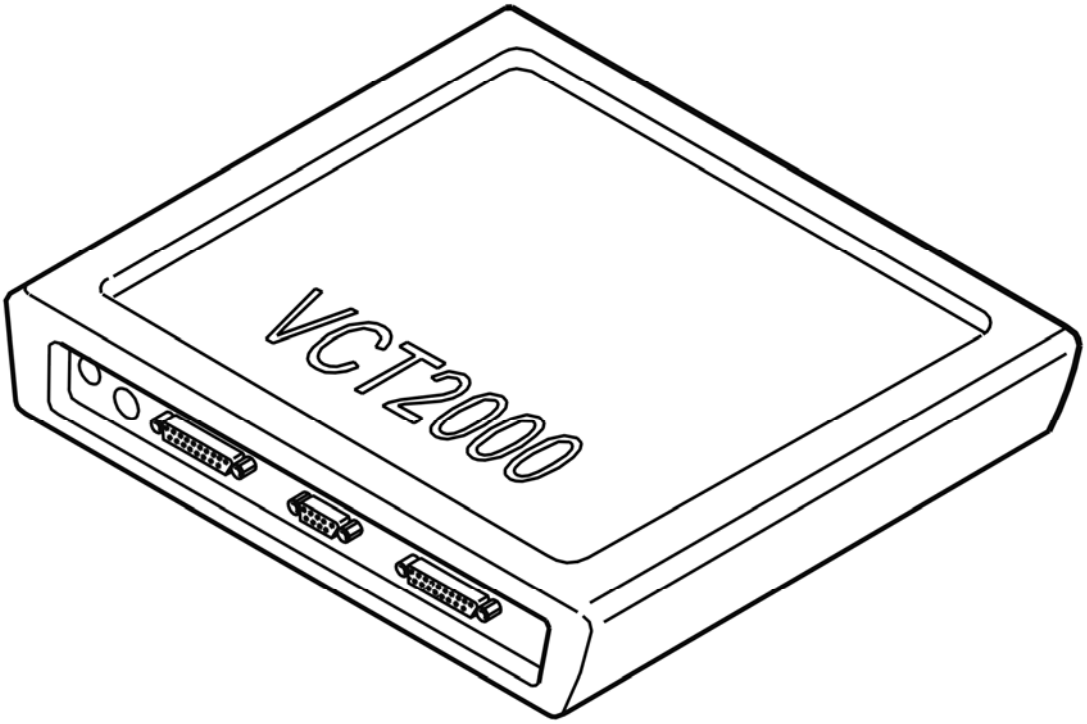

Fig. 246: Identifying VCT2000 Diagnostic Tool Symbol In VIDA
Courtesy of VOLVO CARS CORPORATION

Is the signal correct?

- **YES**

  VERIFIED: Troubleshooting has been completed.

- **NO**

  Refer to **INFORMATION**

INFORMATION

FAULT-TRACING INFORMATION

The fault should have been detected and remedied. As this is not the case fault-tracing has failed.

Exit fault-tracing for this diagnostic trouble code (DTC) or make another attempt.

ECM-P010300: MASS OR VOLUME AIR FLOW CIRCUIT HIGH INPUT. GENERAL FAILURE INFORMATION. NO SUB TYPE INFORMATION

(B6324S; 2007-2010)

DIAGNOSTIC TROUBLE CODE (DTC) INFORMATION ECM-P010300

Condition

Engine control module (ECM) measures the amount of air that passes through the inlet manifold using a mass air flow sensor. The control module checks the direct voltage from the sensor.

NOTE: The mass air flow sensor and air temperature sensor are integrated in the same component.

The diagnostic trouble code (DTC) is stored if the control module detects that:

- The direct voltage is higher than 4.6 V.
- Incorrect value lasts longer than 9 seconds.
- Incorrect value lasts for 2 or more subsequent driving cycles.

The control module's test for the diagnostic trouble code (DTC) starts in the event of:

- Ignition switch position II.

NOTE: The control module can only detect the fault once the test has been started and the diagnostic trouble code (DTC) is stored when the conditions are met.

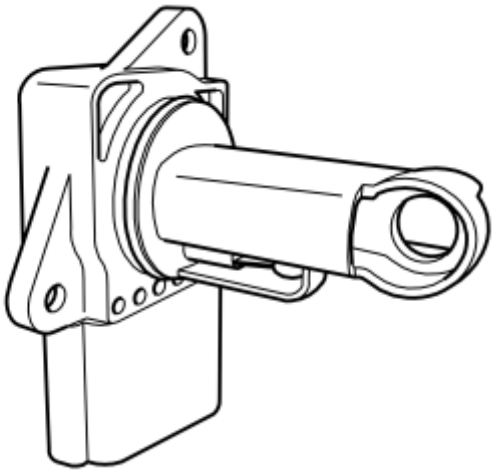

Fig. 247: Identifying Integrated Air Temperature Sensor
Courtesy of VOLVO CARS CORPORATION

Substitute Value

- The control module uses a calculated value for the air mass.

Possible Source

- Contact resistance and oxidation in the terminals.
- Short-circuit to supply voltage in the signal cable.
- Damaged mass air flow (MAF) sensor.

Fault symptom[s]

- Malfunction indicator light (MIL), on

FAULT-TRACING

see **FAULT-TRACING**

ECM-P010300: MASS OR VOLUME AIR FLOW CIRCUIT HIGH INPUT. GENERAL FAILURE INFORMATION. NO SUB TYPE INFORMATION (B6324S5; 2011-2012)

DIAGNOSTIC TROUBLE CODE (DTC) INFORMATION ECM-P010300

see **DIAGNOSTIC TROUBLE CODE (DTC) INFORMATION ECM-P010300**

FAULT-TRACING

see **FAULT-TRACING**

ECM-P010300: AIR MASS OR VOLUME, AIRFLOW CIRCUIT HIGH INPUT SIGNAL. GENERAL FAULT INFORMATION. TYPE OF FAULT NOT SPECIFIED. (B8444S; 2005-2011)

DIAGNOSTIC TROUBLE CODE (DTC) INFORMATION ECM-P010300

Condition

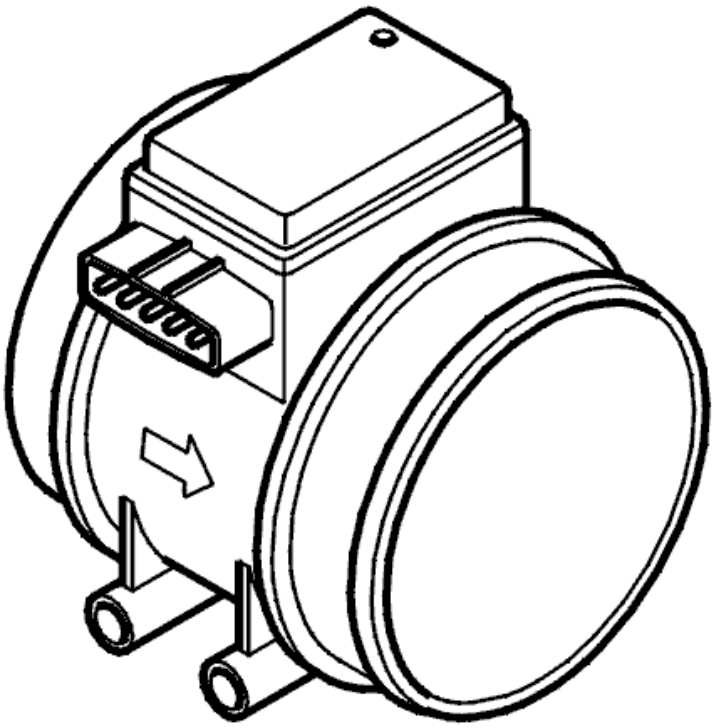

Fig. 248: Identifying Mass Air Flow Sensor (With Integrated Air Temperature Sensor)
Courtesy of VOLVO CARS CORPORATION

The engine control module (ECM) measures the air mass through the intake manifold using a sensor.

The diagnostic trouble code (DTC) is stored if the Engine Control Module (ECM) detects that the signal from the mass air flow (MAF) sensor is too high.

The diagnostic trouble code can be diagnosed when the ignition is on.

Substitute Value

- A value calculated from factors such as engine speed and air pressure in the intake manifold is used.

Possible Source

- The signal cable is short-circuited to voltage.
- Damaged mass air flow sensor.

Fault symptom[s]

- Malfunction indicator lamp (MIL) lit.

FAULT TRACING ECM-P010300

CHECKING THE STATUS

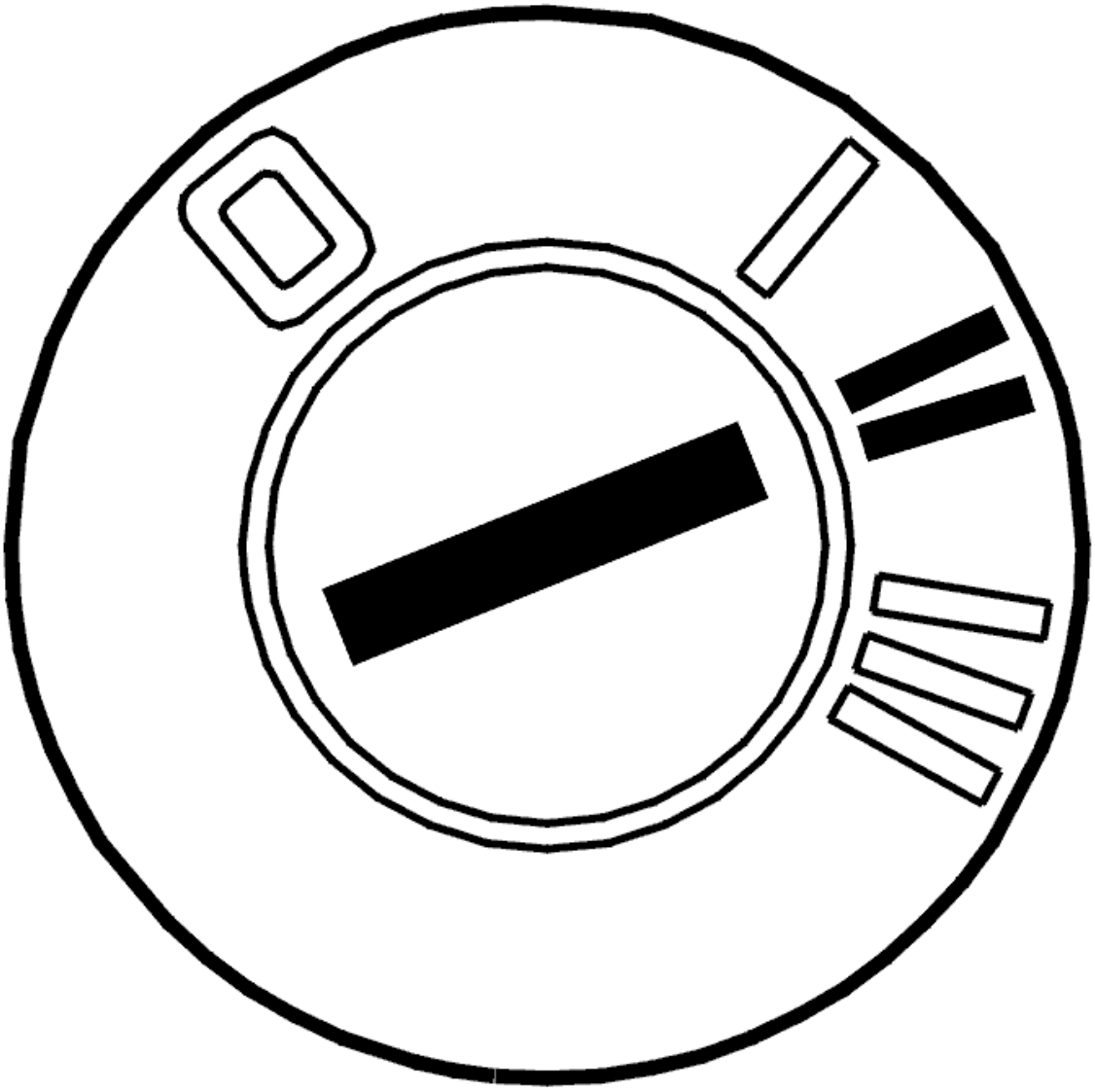

Fig. 249: Identifying Ignition ON
Courtesy of VOLVO CARS CORPORATION

- Ignition on

  Check whether the fault is permanent or intermittent by reading off the mass air flow (MAF) sensor signal. Check that the signal is approximately 5-6 g/s with the engine idling at operating temperature.

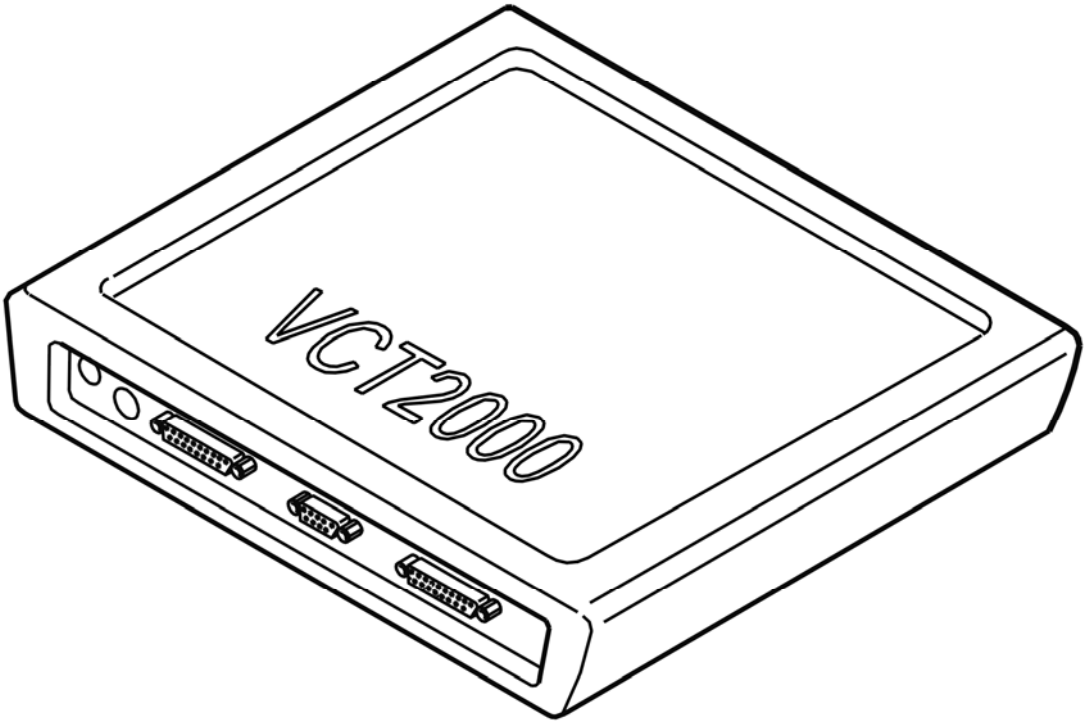

Fig. 250: Identifying VCT2000 Diagnostic Tool Symbol In VIDA
Courtesy of VOLVO CARS CORPORATION

- **Continue**

  Refer to **CHECKING COMPONENTS AND WIRING**

CHECKING COMPONENTS AND WIRING

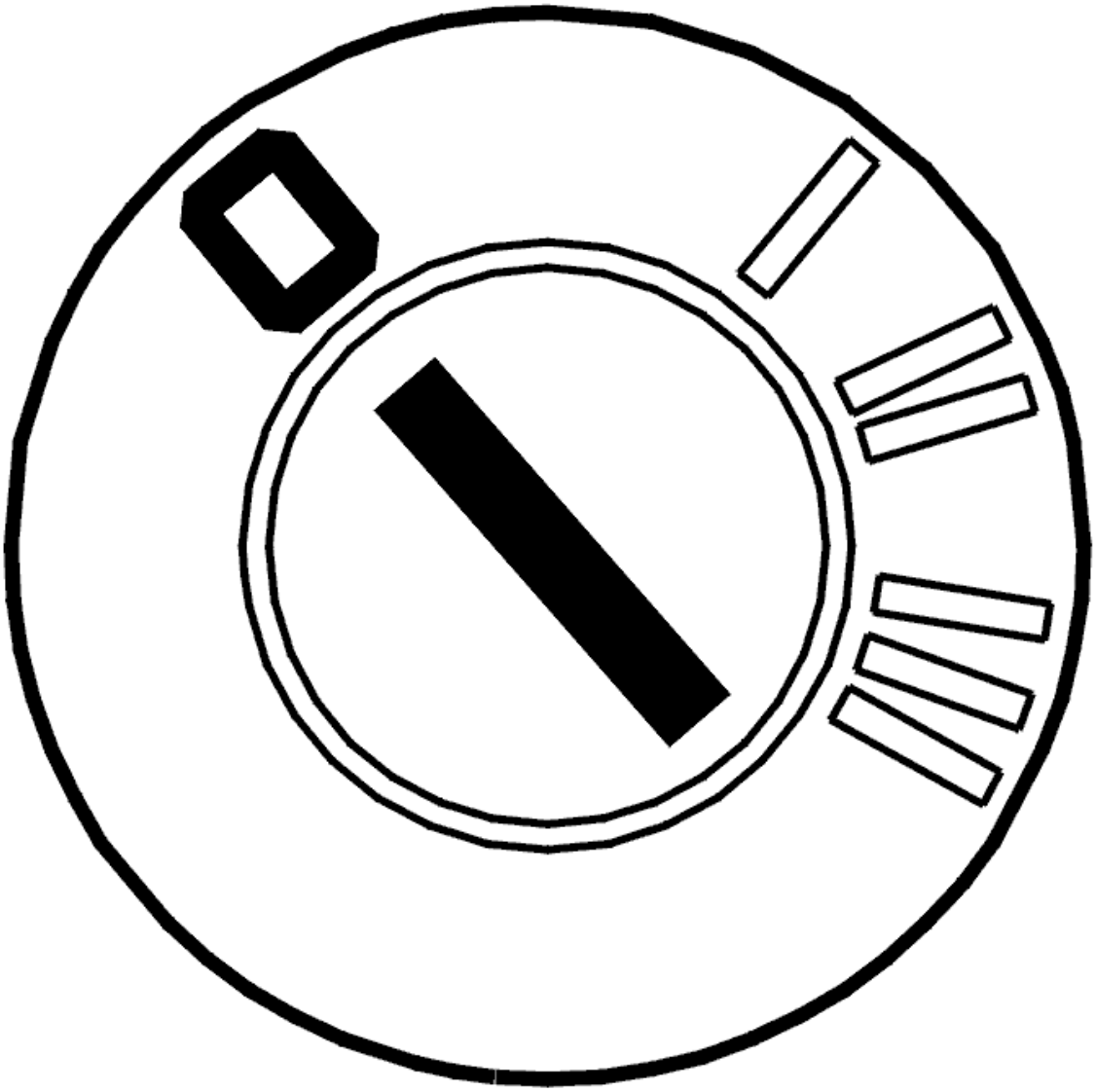

Fig. 251: Identifying Ignition OFF
Courtesy of VOLVO CARS CORPORATION

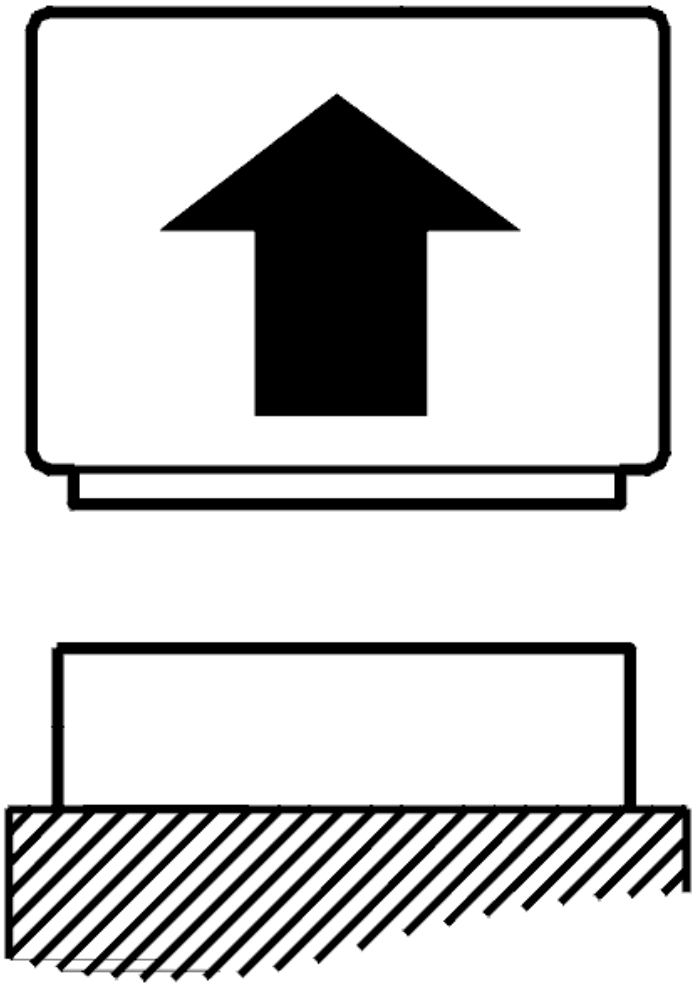

Fig. 252: Disconnecting Connector
Courtesy of VOLVO CARS CORPORATION

- Ignition off
- Disconnect the engine control module (ECM).

  Check the signal cable. Check for a short-circuit supply voltage.

  Take readings between control module terminal #A70 (#B10) and mass air flow (MAF) sensor terminal #3.

  Remedy as necessary.

  Other information

  - see **CONNECTING THE BREAKOUT BOX**

- see **SIGNAL SPECIFICATION, ENGINE CONTROL MODULE (ECM)**
- see **MASS AIR FLOW (MAF) SENSOR, REPLACING**
- see **CHECKING WIRING AND TERMINALS**

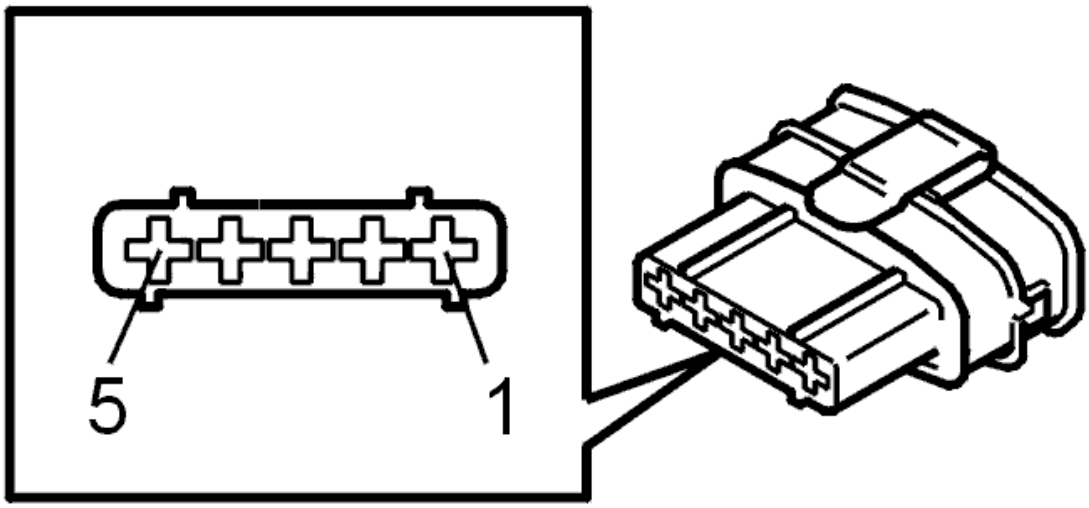

Fig. 253: Identifying Connector
Courtesy of VOLVO CARS CORPORATION

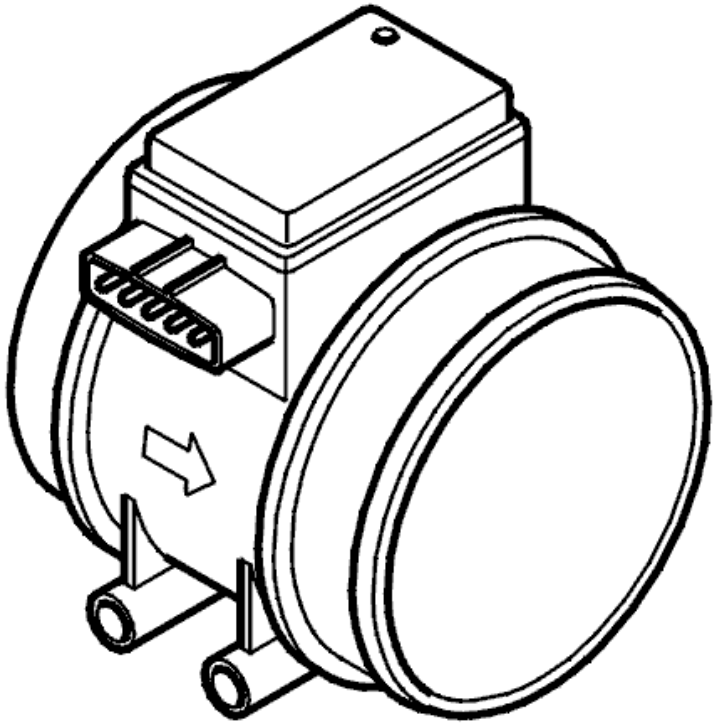

Fig. 254: Identifying Mass Air Flow Sensor (With Integrated Air Temperature Sensor)

Courtesy of VOLVO CARS CORPORATION

- **Continue**

  Refer to **VERIFICATION**

VERIFICATION

VERIFICATION

HINT: After carrying out the repair, check that the fault has been remedied.

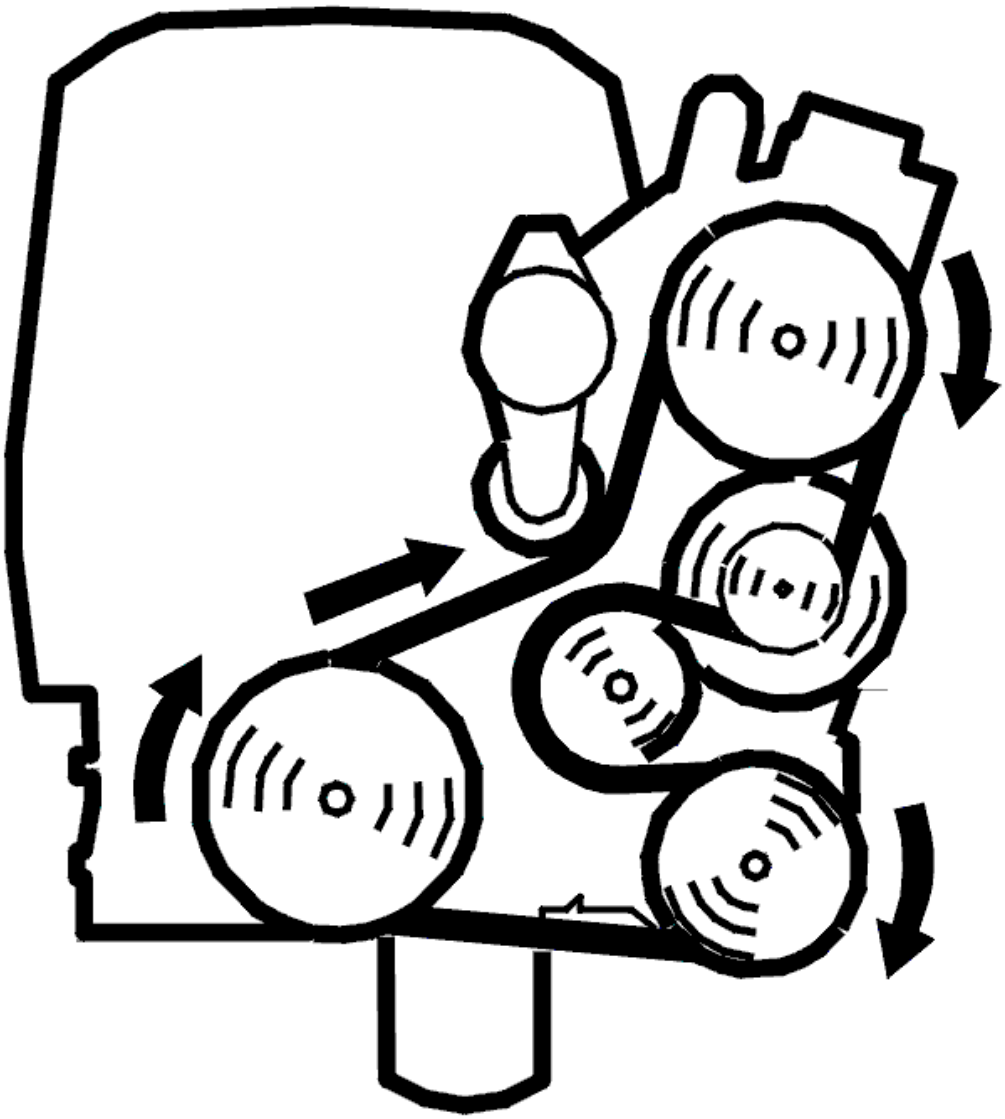

Fig. 255: Belt Routing / Engine Idling - Volvo
Courtesy of VOLVO CARS CORPORATION

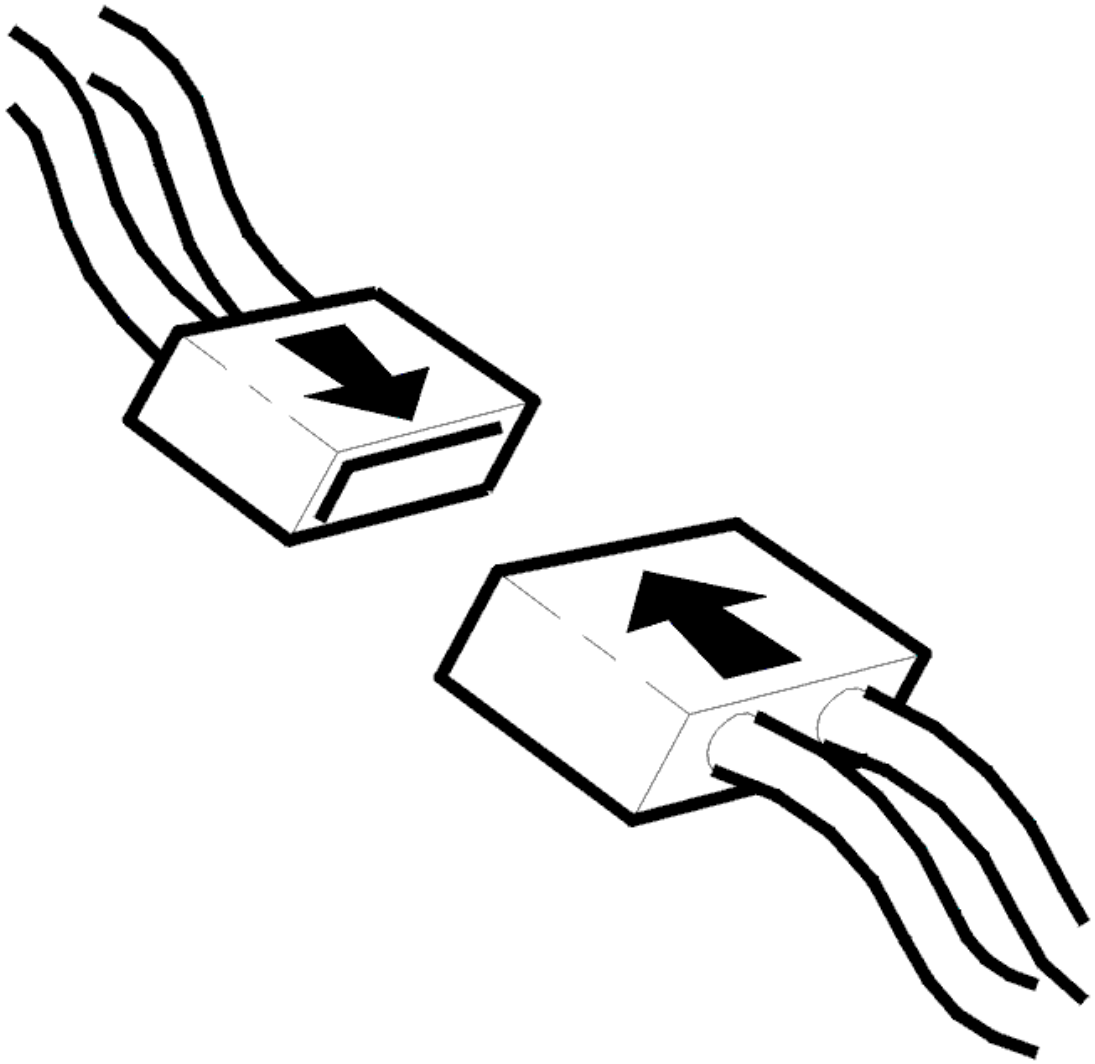

Fig. 256: Connecting Connector
Courtesy of VOLVO CARS CORPORATION

- Ignition off
- Reinstall the connectors, components etc.
- Start and run the engine to operating temperature.

  Read off the mass air flow (MAF) sensor signal using the VCT2000 (or appropriate scan tool). Check that the signal is approximately 5-6 g/s with the engine idling at operating temperature.

  Check that the signal from the mass air flow (MAF) sensor is correct.

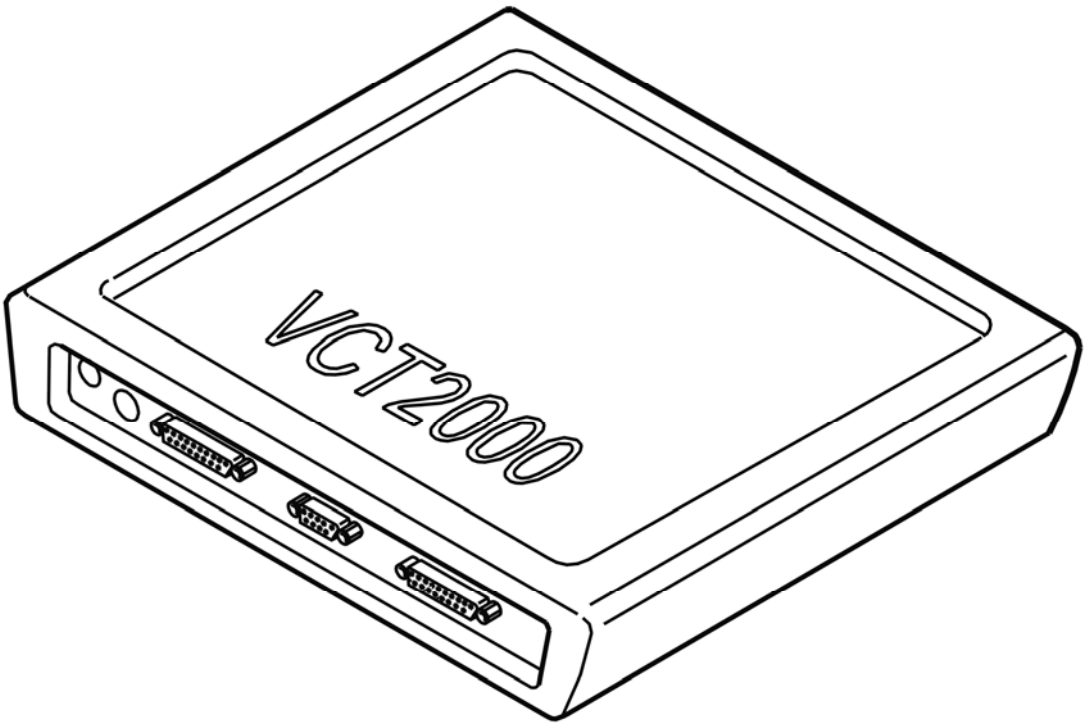

Fig. 257: Identifying VCT2000 Diagnostic Tool Symbol In VIDA
Courtesy of VOLVO CARS CORPORATION

Is the signal correct?

- **YES**

  VERIFIED: Troubleshooting has been completed.

- **NO**

  Refer to **INFORMATION**

INFORMATION

FAULT-TRACING INFORMATION

The fault should have been detected and remedied. As this is not the case fault-tracing has failed.

Exit fault-tracing for this diagnostic trouble code (DTC) or make another attempt.

ECM-P010500: MANIFOLD ABSOLUTE PRESSURE/BARO CIRCUIT. GENERAL FAILURE INFORMATION. NO SUB TYPE INFORMATION

(B6324S; 2007-2010)

DIAGNOSTIC TROUBLE CODE (DTC) INFORMATION ECM-P010500

Condition

The engine control module (ECM) measures the pressure in the intake manifold using an air pressure sensor. The control module checks the direct voltage from the sensor.

The diagnostic trouble code (DTC) is stored if the control module detects that:

- The direct voltage is higher than 4.951 V.
- Incorrect value lasts longer than 9 seconds.
- Incorrect value lasts for 2 or more subsequent driving cycles.

The control module's test for the diagnostic trouble code (DTC) starts in the event of:

- Ignition switch position II.

NOTE: The control module can only detect the fault once the test has been started and the diagnostic trouble code (DTC) is stored when the conditions are met.

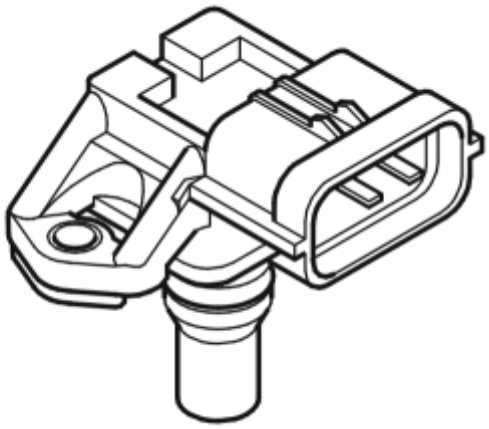

Fig. 258: Identifying Air Pressure Sensor
Courtesy of VOLVO CARS CORPORATION

Substitute Value

- The control module uses a constant air pressure in the inlet manifold.

Possible Source

- Open-circuit in signal cable or ground lead.

- Contact resistance and oxidation in the terminals.
- Short-circuit to supply voltage in the signal cable.
- Damaged air pressure sensor in the inlet manifold.

Fault symptom[s]

- Malfunction indicator light (MIL), on

FAULT-TRACING

see **FAULT-TRACING**

ECM-P010500: MANIFOLD ABSOLUTE PRESSURE/BARO CIRCUIT. GENERAL FAILURE INFORMATION. NO SUB TYPE INFORMATION (B6324S5; 2011-2012)

DIAGNOSTIC TROUBLE CODE (DTC) INFORMATION ECM-P010500

see **DIAGNOSTIC TROUBLE CODE (DTC) INFORMATION ECM-P010500**

FAULT-TRACING

see **FAULT-TRACING**

ECM-P010600: MANIFOLD ABSOLUTE PRESSURE/BARO SENSOR RANGE/PERFORMANCE. GENERAL FAILURE INFORMATION. NO SUB TYPE INFORMATION (B6324S; 2007-2010)

DIAGNOSTIC TROUBLE CODE (DTC) INFORMATION ECM-P010600

Condition

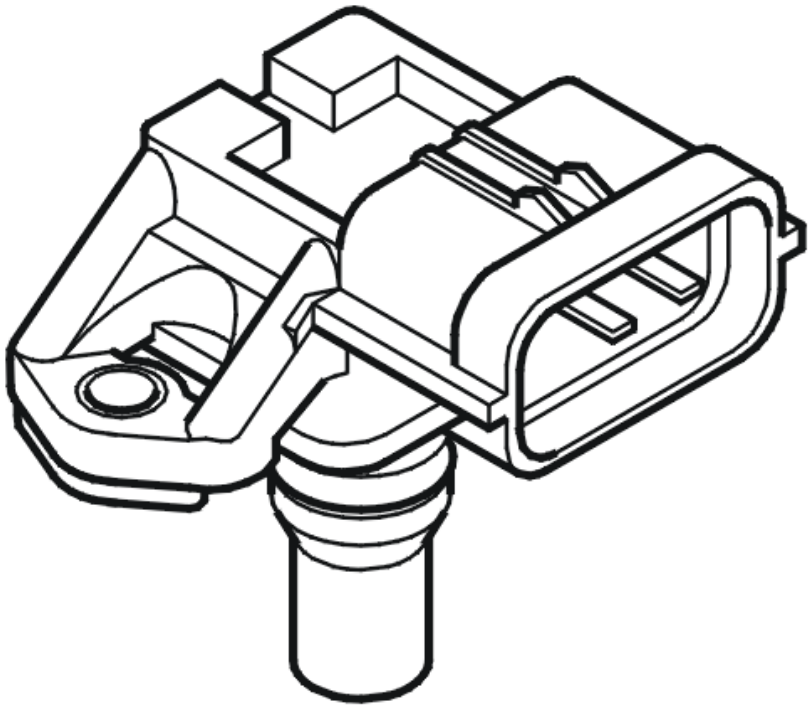

Fig. 259: Identifying Air Pressure Sensor
Courtesy of VOLVO CARS CORPORATION

The engine control module (ECM) measures the air pressure in the intake manifold using an air pressure sensor.

The diagnostic trouble code is generated if the control module detects that the air pressure sensor value deviates too much from the value calculated based on a model.

The diagnostic trouble code can be diagnosed at a fixed engine speed over 1250 RPM when the engine is warm (at least 70 °C).

Substitute Value

- The signal from the air pressure sensor in the intake manifold is set to a constant.
- Load/airflow calculations are carried out regardless of the signal from the air pressure sensor.

Possible Source

- Contact resistance in connector.
- Faulty hose connection.
- Damaged air pressure sensor in the intake manifold.

Fault symptom[s]

- Malfunction indicator lamp (MIL) lit.

FAULT-TRACING

CHECKING THE CONNECTORS AND HOSE CONNECTOR

Check the hose connectors on the intake manifold for damage and leakage.

Check the connector and terminals on the pressure sensor. Check for contact resistance. Check for oxidation.

Remedy as necessary.

Other information

- see **MANIFOLD ABSOLUTE PRESSURE (MAP) SENSOR**
- see **CHECKING WIRING AND TERMINALS**

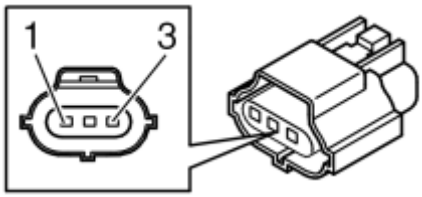

Fig. 260: Identifying Connector Terminals
Courtesy of VOLVO CARS CORPORATION

Fig. 261: Identifying Sensor Connector
Courtesy of VOLVO CARS CORPORATION

- **Continue**

  Refer to **VERIFICATION**

VERIFICATION

VERIFICATION

HINT: After carrying out the repair, check that the fault has been remedied.

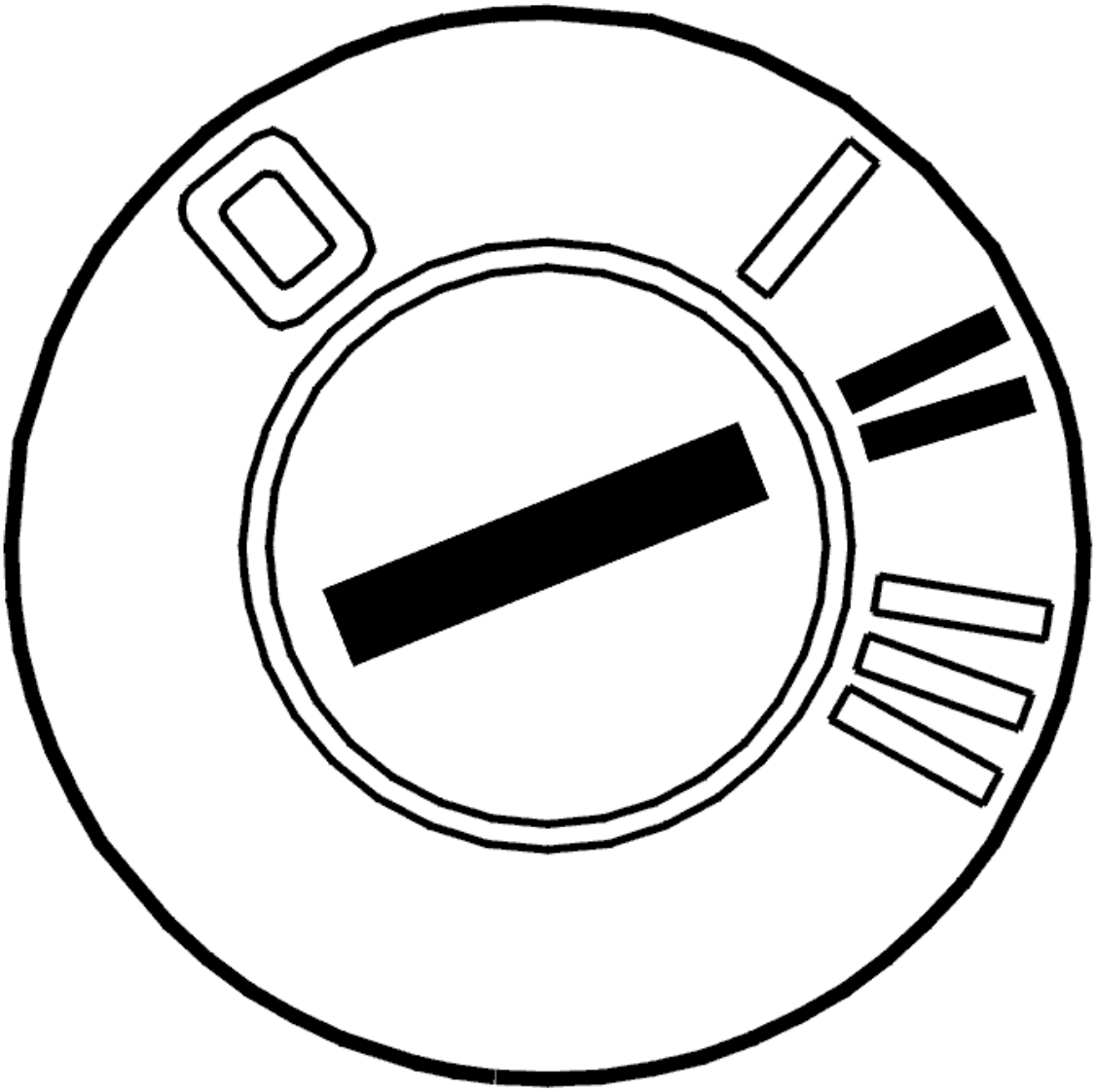

Fig. 262: Identifying Ignition ON
Courtesy of VOLVO CARS CORPORATION

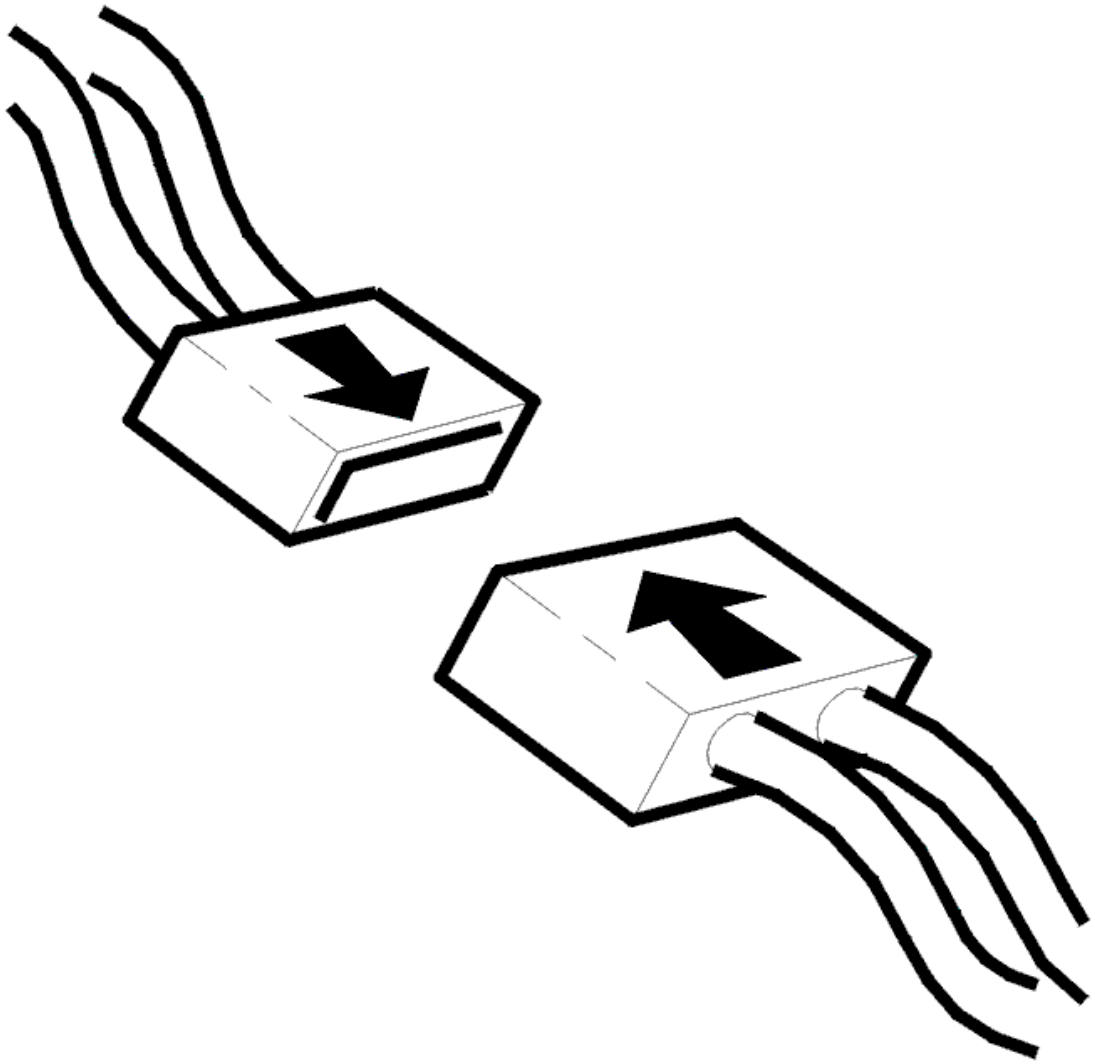

Fig. 263: Connecting Connector
Courtesy of VOLVO CARS CORPORATION

- Ignition off
- Reinstall the connectors, components etc.
- Ignition on

  Read off the pressure sensor signal for intake pressure and the atmospheric pressure sensor signal using the VCT2000 (or appropriate scan tool).

  Check that the values correspond. The atmospheric pressure sensor signal is used as a reference value in this check.

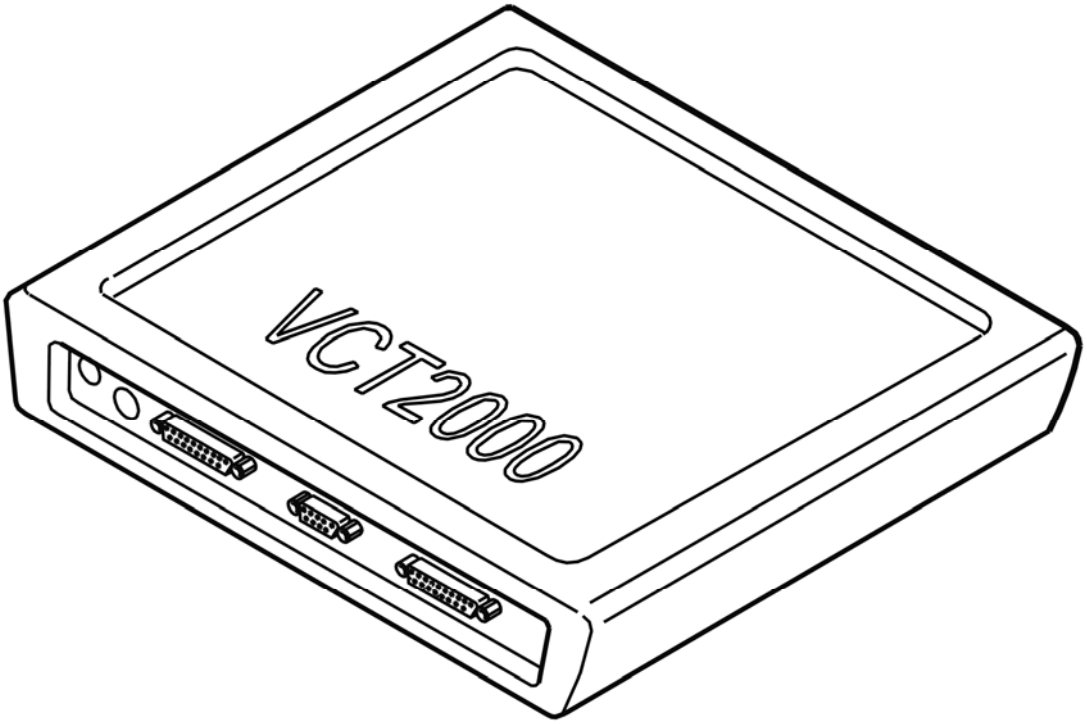

Fig. 264: Identifying VCT2000 Diagnostic Tool Symbol In VIDA
Courtesy of VOLVO CARS CORPORATION

Is the value within its permitted range?

- **YES**

  VERIFIED: Troubleshooting has been completed.

- **NO**

  Refer to **INFORMATION**

INFORMATION

FAULT-TRACING INFORMATION

The fault should have been detected and remedied. As this is not the case fault-tracing has failed.

Exit fault-tracing for this diagnostic trouble code (DTC) or make another attempt.

ECM-P010600: MANIFOLD ABSOLUTE PRESSURE/BARO SENSOR RANGE/PERFORMANCE. GENERAL FAILURE INFORMATION. NO SUB

TYPE INFORMATION (B6324S5; 2011-2012)

DIAGNOSTIC TROUBLE CODE (DTC) INFORMATION ECM-P010600

see **DIAGNOSTIC TROUBLE CODE (DTC) INFORMATION ECM-P010600**

FAULT-TRACING

see **FAULT-TRACING**

ECM-P010600: MANIFOLD ABSOLUTE PRESSURE/BARO SENSOR RANGE/PERFORMANCE. GENERAL FAILURE INFORMATION. NO SUB TYPE INFORMATION (B8444S; 2005-2011)

DIAGNOSTIC TROUBLE CODE (DTC) INFORMATION ECM-P010600

Condition

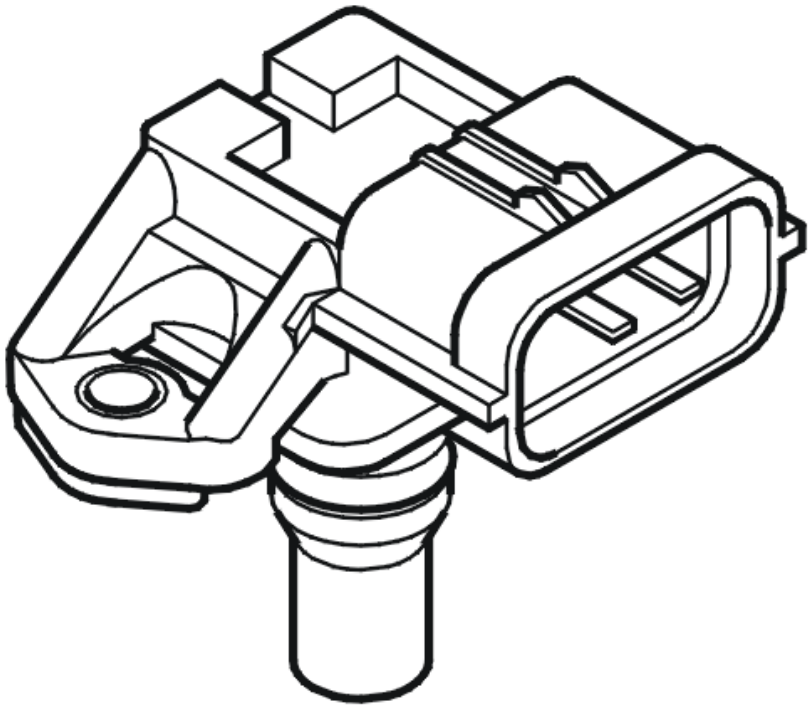

Fig. 265: Identifying Air Pressure Sensor
Courtesy of VOLVO CARS CORPORATION

The engine control module (ECM) measures the air pressure in the intake manifold using an air pressure sensor.

The diagnostic trouble code is generated if the control module detects that the air pressure sensor value deviates too much from the value calculated based on a model.

The diagnostic trouble code can be diagnosed at a fixed engine speed over 1250 RPM when the engine is warm (at least 70 °C).

Substitute Value

- The signal from the air pressure sensor in the intake manifold is set to a constant.
- Load/airflow calculations are carried out regardless of the signal from the air pressure sensor.

Possible Source

- Contact resistance in connector.
- Faulty hose connection.
- Damaged air pressure sensor in the intake manifold.

Fault symptom[s]

- Malfunction indicator lamp (MIL) lit.

FAULT-TRACING ECM-P010600

CHECKING THE CONNECTORS AND HOSE CONNECTOR

Check the hose connectors on the intake manifold for damage and leakage.

Check the connector and terminals on the pressure sensor. Check for contact resistance. Check for oxidation.

Remedy as necessary.

Other information

- see **MANIFOLD ABSOLUTE PRESSURE (MAP) SENSOR, REPLACING**
- see **CHECKING WIRING AND TERMINALS**

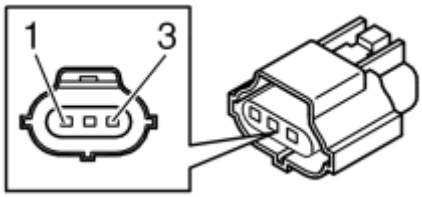

Fig. 266: Identifying Connector Terminals
Courtesy of VOLVO CARS CORPORATION

Fig. 267: Identifying Sensor Connector
Courtesy of VOLVO CARS CORPORATION

- **Continue**

  Refer to **VERIFICATION**

VERIFICATION

VERIFICATION

HINT: After carrying out the repair, check that the fault has been remedied.

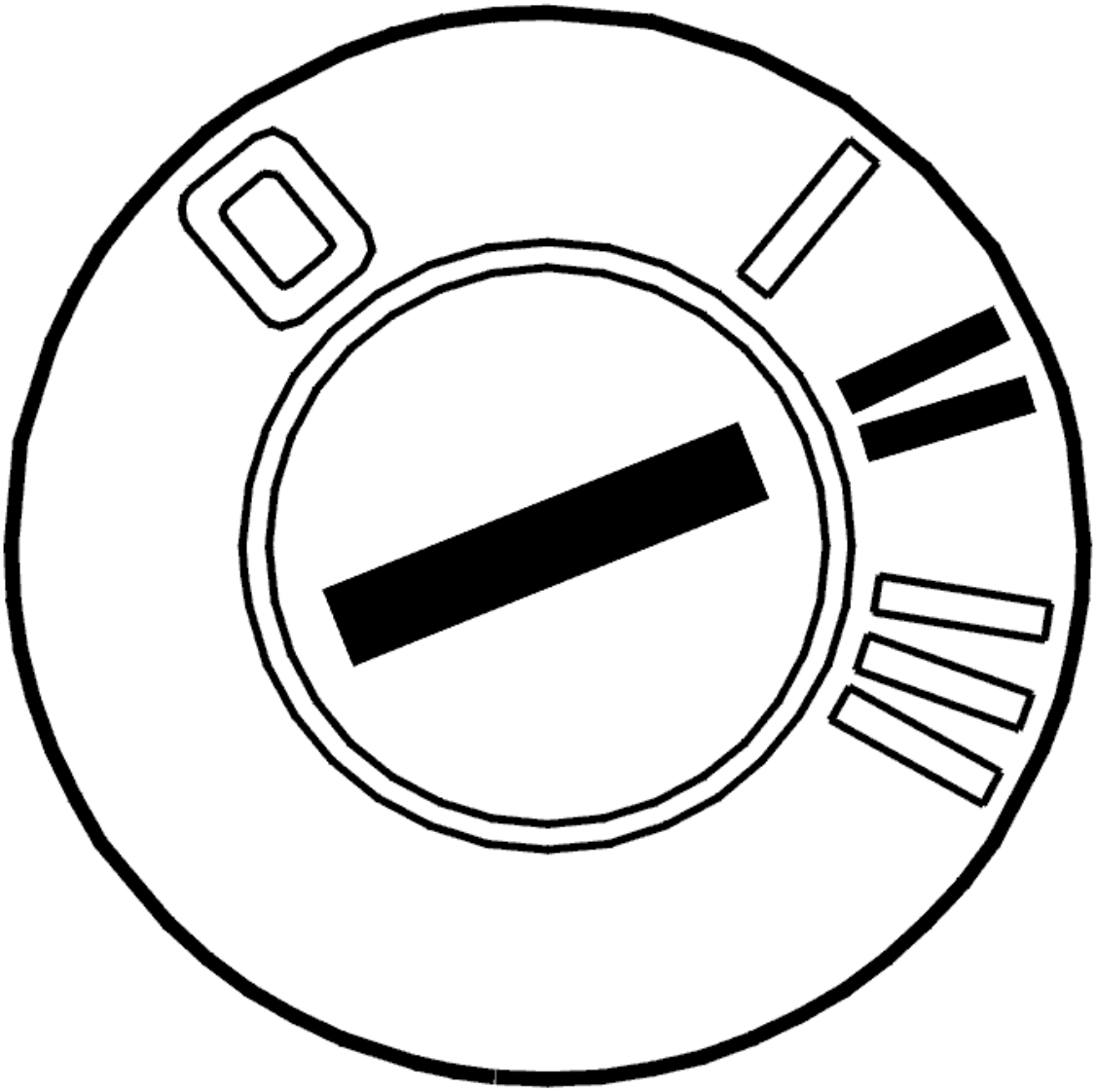

Fig. 268: Identifying Ignition ON
Courtesy of VOLVO CARS CORPORATION

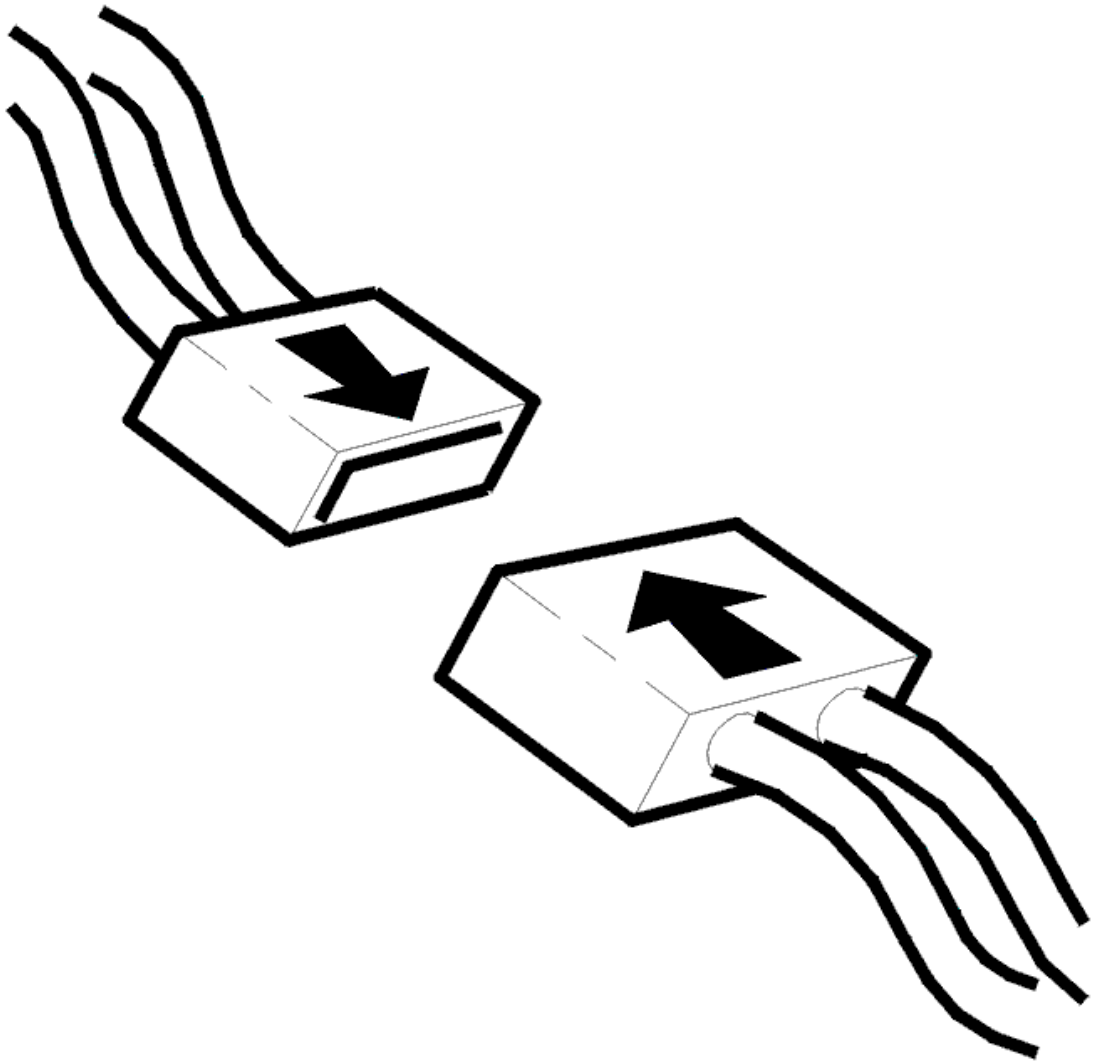

Fig. 269: Connecting Connector
Courtesy of VOLVO CARS CORPORATION

- Ignition off
- Reinstall the connectors, components etc.
- Ignition on

  Read off the pressure sensor signal for intake pressure and the atmospheric pressure sensor signal using the VCT2000 (or appropriate scan tool).

  Check that the values correspond. The atmospheric pressure sensor signal is used as a reference value in this check.

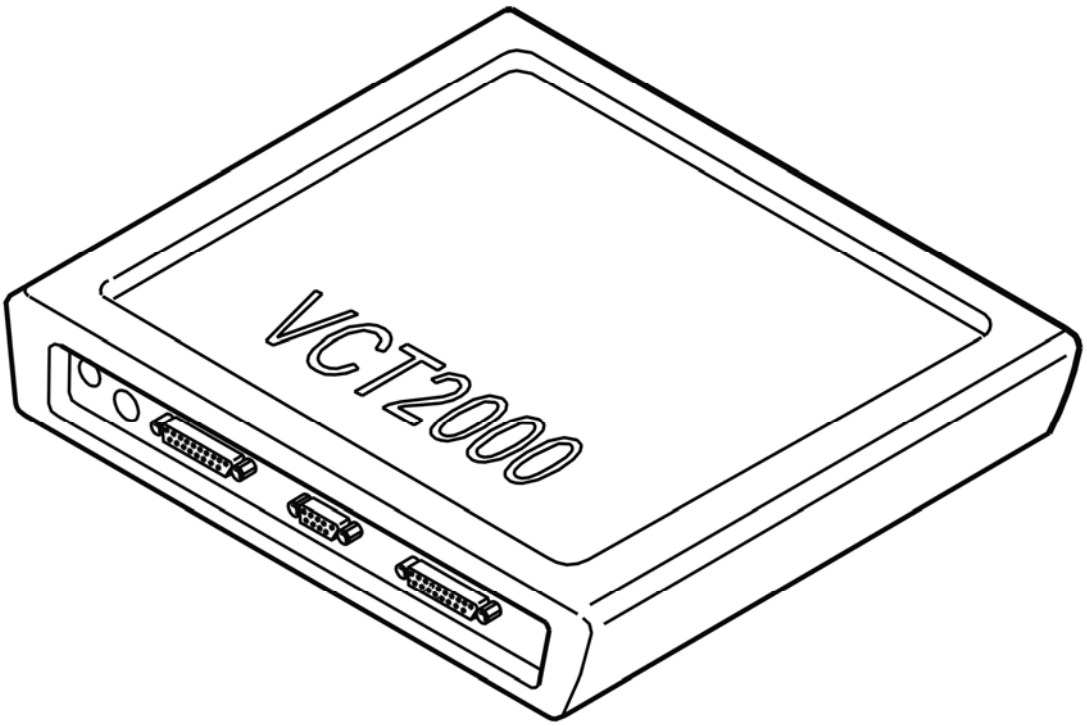

Fig. 270: Identifying VCT2000 Diagnostic Tool Symbol In VIDA
Courtesy of VOLVO CARS CORPORATION

Is the value within its permitted range?

- **YES**

  VERIFIED: Troubleshooting has been completed.

- **NO**

  Refer to **INFORMATION**

INFORMATION

FAULT-TRACING INFORMATION

The fault should have been detected and remedied. As this is not the case fault-tracing has failed.

Exit fault-tracing for this diagnostic trouble code (DTC) or make another attempt.

ECM-P010700: MANIFOLD ABSOLUTE PRESSURE/BARO SENSOR LOW INPUT. GENERAL FAILURE INFORMATION. NO SUB TYPE INFORMATION

(B6324S; 2007-2010)

DIAGNOSTIC TROUBLE CODE (DTC) INFORMATION ECM-P010700

Condition

The engine control module (ECM) measures the pressure in the intake manifold using an air pressure sensor. The control module checks the direct voltage from the sensor.

The diagnostic trouble code (DTC) is stored if the control module detects that:

- The direct voltage is lower than 0.649 V.
- Incorrect value lasts longer than 9 seconds.
- Incorrect value lasts for 2 or more subsequent driving cycles.

The control module's test for the diagnostic trouble code (DTC) starts in the event of:

- Ignition switch position II.

NOTE: The control module can only detect the fault once the test has been started and the diagnostic trouble code (DTC) is stored when the conditions are met.

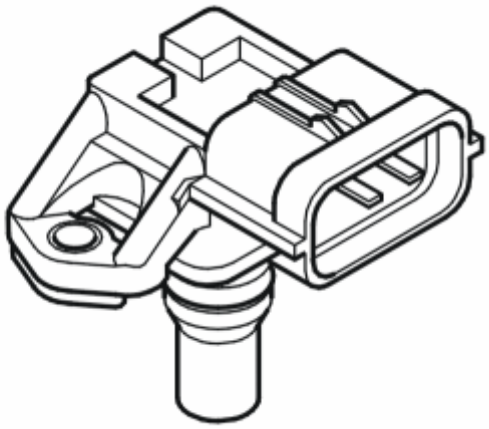

Fig. 271: Identifying Air Pressure Sensor
Courtesy of VOLVO CARS CORPORATION

Substitute Value

- The control module uses a constant air pressure in the inlet manifold.
- The control module performs load and air flow calculations independent of the signal from the air pressure sensor in the inlet manifold.

Possible Source

- Contact resistance and oxidation in the terminals.
- Short-circuit to ground in the signal cable.
- Damaged air pressure sensor in the inlet manifold.

Fault symptom[s]

- Malfunction indicator light (MIL), on

FAULT-TRACING

see **FAULT-TRACING**

ECM-P010700: MANIFOLD ABSOLUTE PRESSURE/BARO SENSOR LOW INPUT. GENERAL FAILURE INFORMATION. NO SUB TYPE INFORMATION (B6324S5; 2011-2012)

DIAGNOSTIC TROUBLE CODE (DTC) INFORMATION ECM-P010700

see **DIAGNOSTIC TROUBLE CODE (DTC) INFORMATION ECM-P010700**

FAULT-TRACING

see **FAULT-TRACING**

ECM-P010700: MANIFOLD ABSOLUTE PRESSURE/BARO SENSOR LOW INPUT. GENERAL FAULT INFORMATION. TYPE OF FAULT NOT SPECIFIED. (B8444S; 2005-2011)

DIAGNOSTIC TROUBLE CODE (DTC) INFORMATION ECM-P010700

Condition

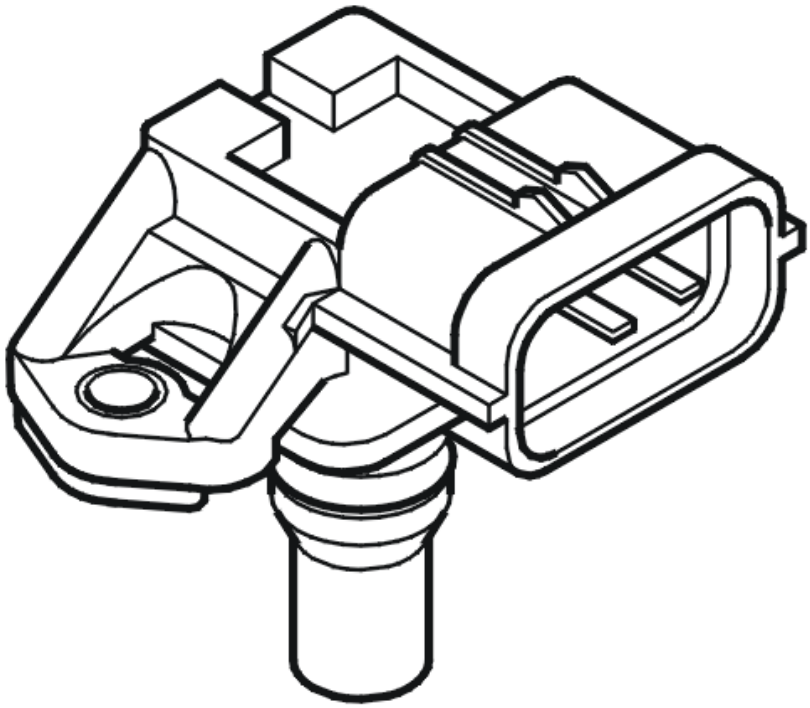

Fig. 272: Identifying Air Pressure Sensor
Courtesy of VOLVO CARS CORPORATION

The engine control module (ECM) measures the air pressure in the intake manifold using an air pressure sensor.

The diagnostic trouble code (DTC) is stored if the Engine Control Module (ECM) detects that the signal from the manifold absolute pressure (MAP) sensor in the intake manifold is too low.

The diagnostic trouble code can be diagnosed when the ignition is on.

Substitute Value

- The signal from the air pressure sensor in the intake manifold is set to a constant.
- Load/airflow calculations are carried out regardless of the signal from the air pressure sensor.

Possible Source

- The signal cable is short-circuited to ground.
- Damaged air pressure sensor in the intake manifold.

Fault symptom[s]

- Malfunction indicator lamp (MIL) lit.

FAULT TRACING ECM-P010700

CHECKING THE STATUS

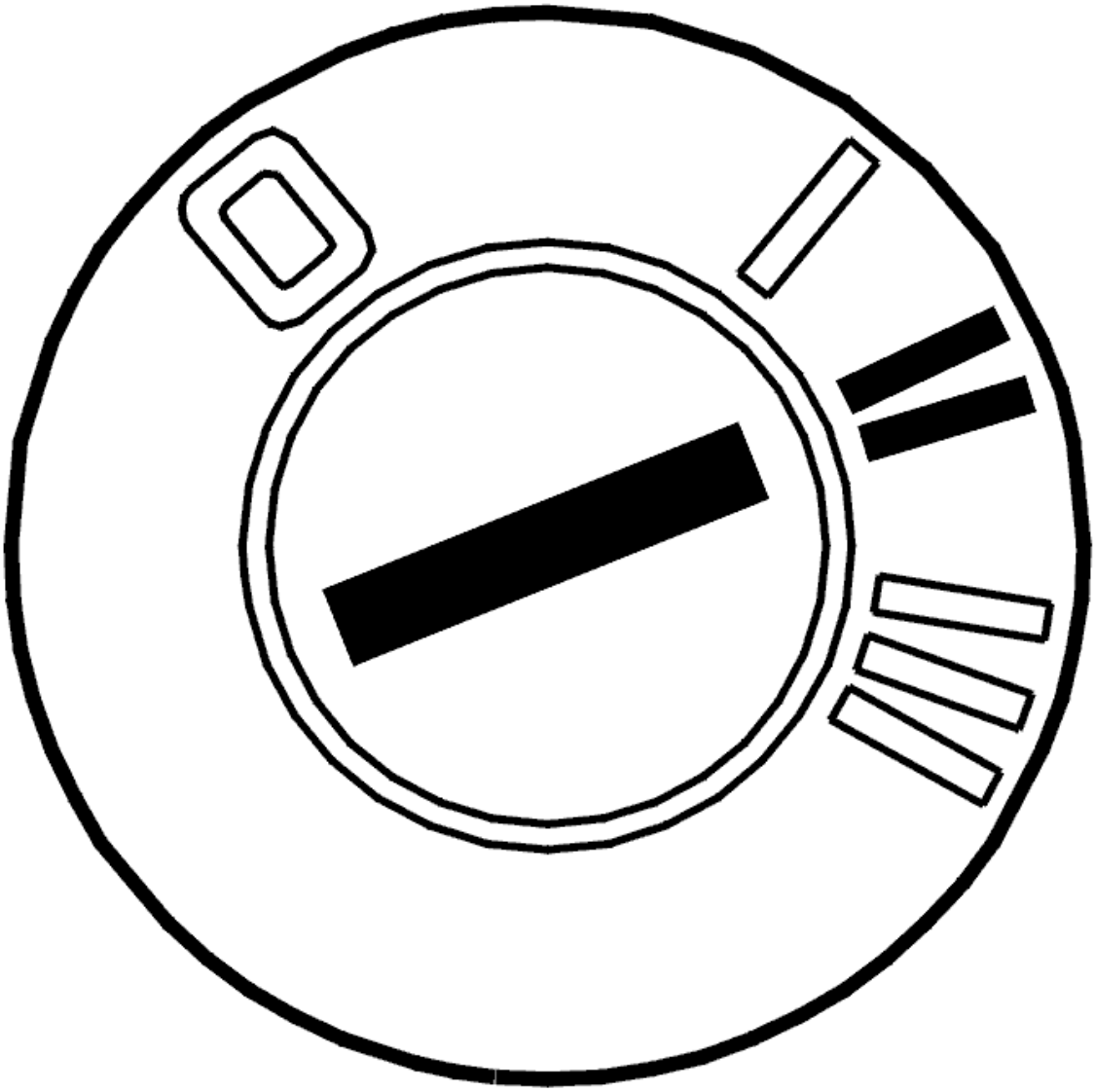

Fig. 273: Identifying Ignition ON
Courtesy of VOLVO CARS CORPORATION

- Ignition on

  Check whether the fault is permanent or intermittent. Read off the pressure sensor signal for intake pressure and the atmospheric pressure sensor signal. Check that the values are approximately the same.

  HINT: The atmospheric pressure sensor signal is used as a reference value for the pressure sensor signal for intake pressure.

  The fault is permanent if the values do not correspond. If the values do not correspond, it indicates that

the fault is intermittent and not presently active.

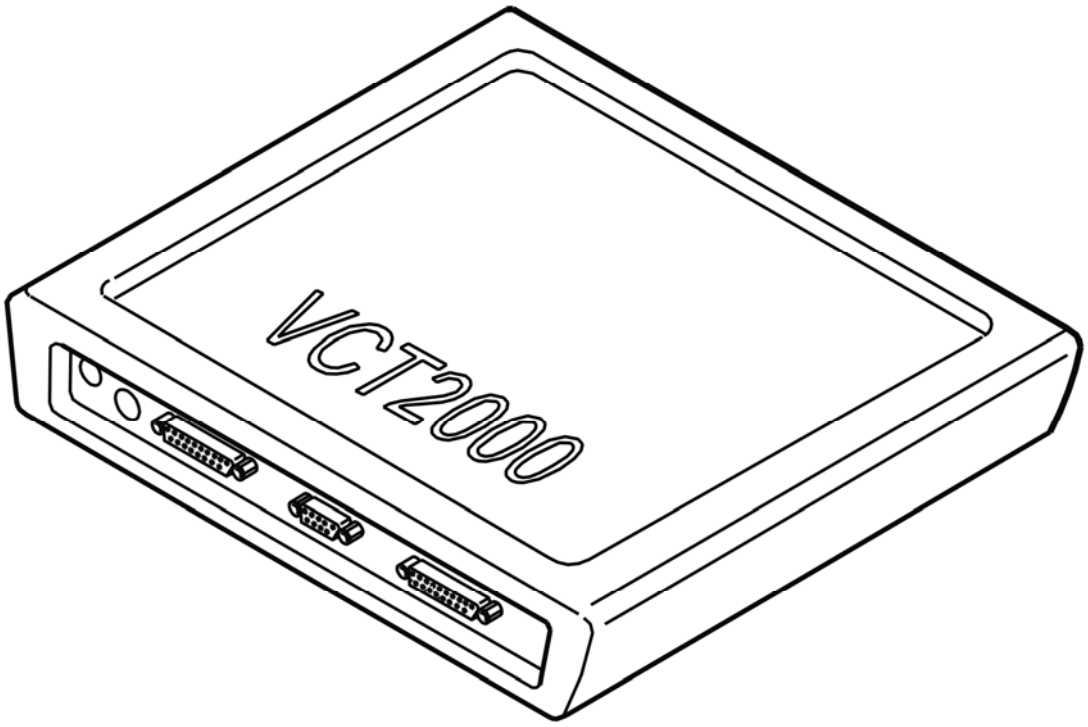

Fig. 274: Identifying VCT2000 Diagnostic Tool Symbol In VIDA
Courtesy of VOLVO CARS CORPORATION

- **Continue**

  Refer to **CHECKING COMPONENTS AND WIRING**

CHECKING COMPONENTS AND WIRING

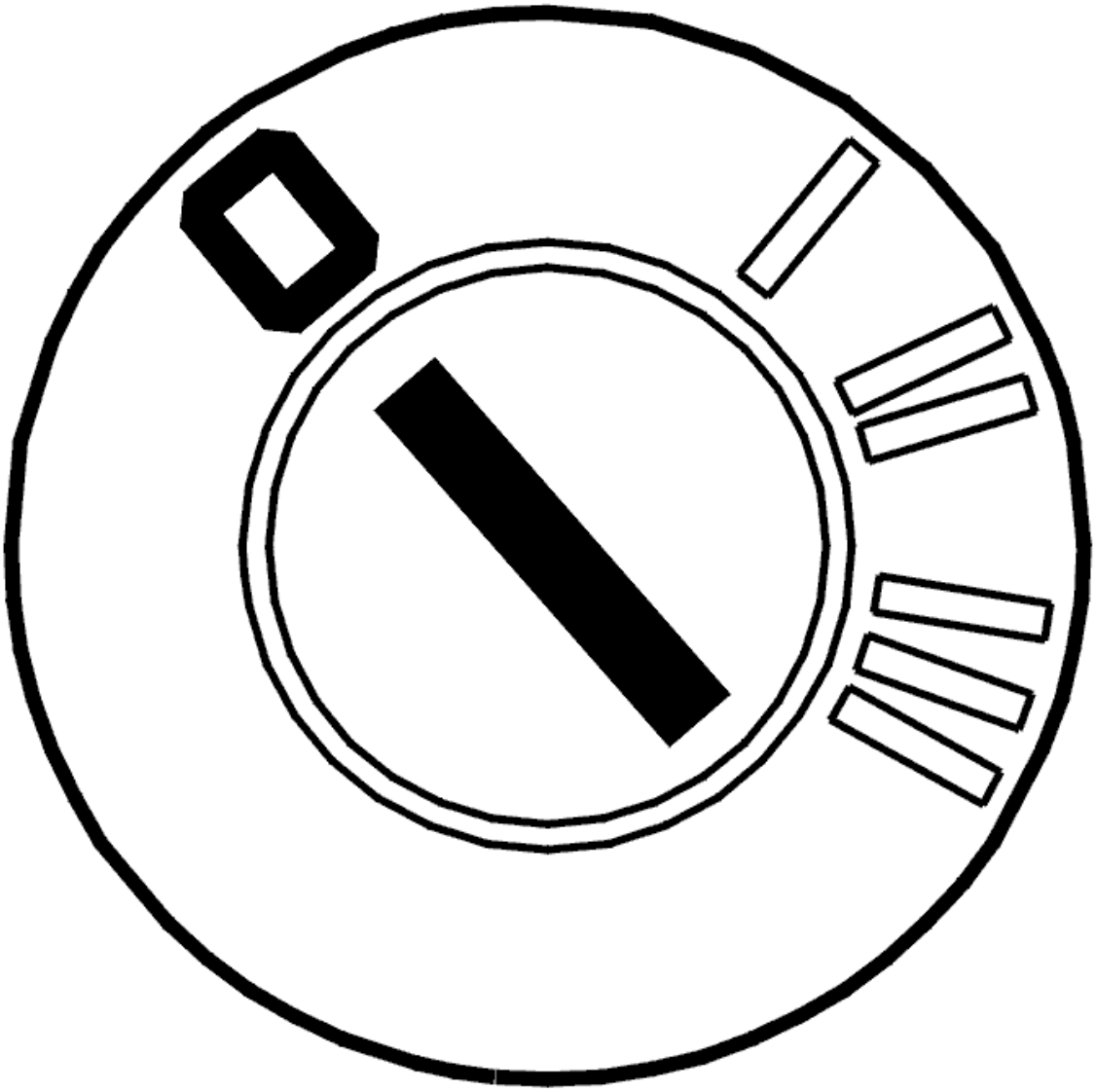

Fig. 275: Identifying Ignition OFF
Courtesy of VOLVO CARS CORPORATION

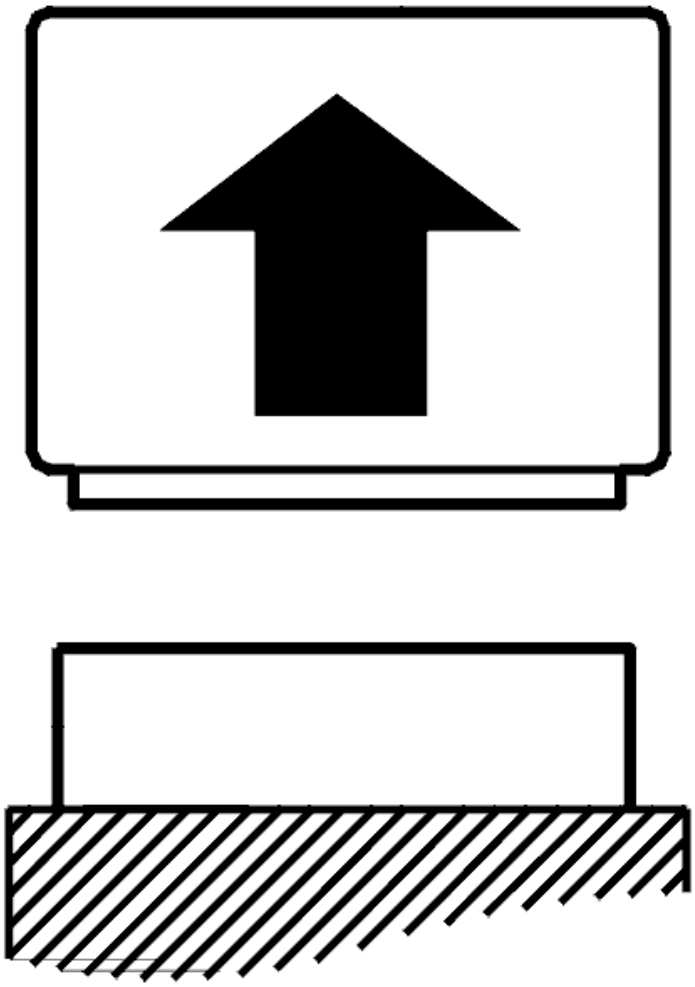

Fig. 276: Disconnecting Connector
Courtesy of VOLVO CARS CORPORATION

- Ignition off
- Disconnect the engine control module (ECM).

  Check the signal cable. Check for a short-circuit to ground.

  Take readings between control module terminal #A69 (#B09) and pressure sensor terminal #1.

  Remedy as necessary.

  Other information

  - see **CONNECTING THE BREAKOUT BOX**

- see **SIGNAL SPECIFICATION, ENGINE CONTROL MODULE (ECM)**
- see **MANIFOLD ABSOLUTE PRESSURE (MAP) SENSOR, REPLACING**
- see **CHECKING WIRING AND TERMINALS**

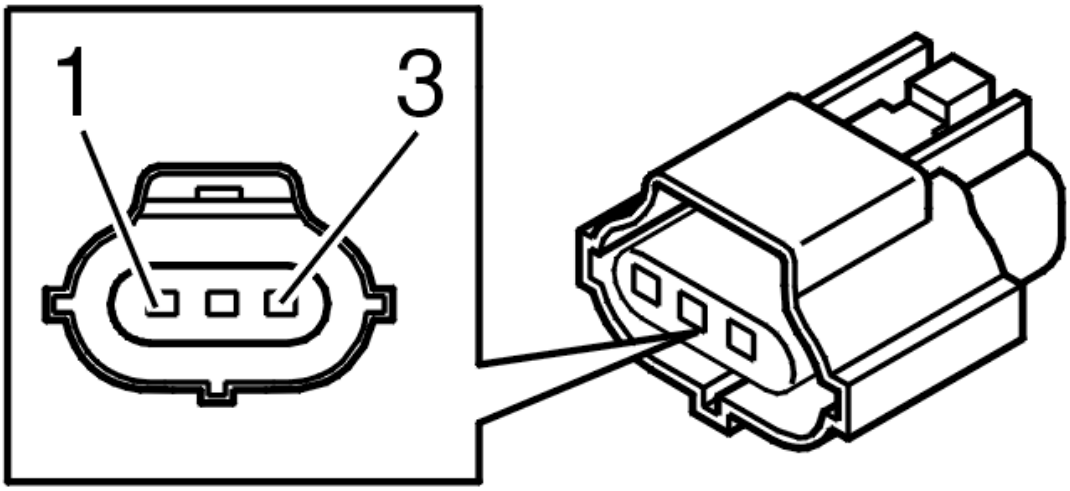

Fig. 277: Identifying 3-Bit Connector
Courtesy of VOLVO CARS CORPORATION

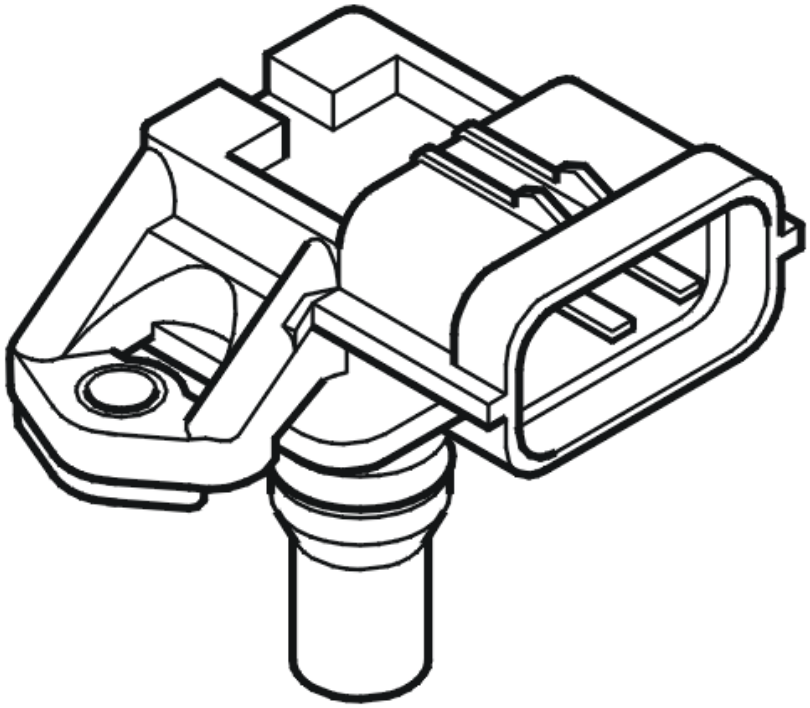

Fig. 278: Identifying Air Pressure Sensor

Courtesy of VOLVO CARS CORPORATION

- **Continue**

  Refer to **VERIFICATION**

VERIFICATION

VERIFICATION

HINT: After carrying out the repair, check that the fault has been remedied.

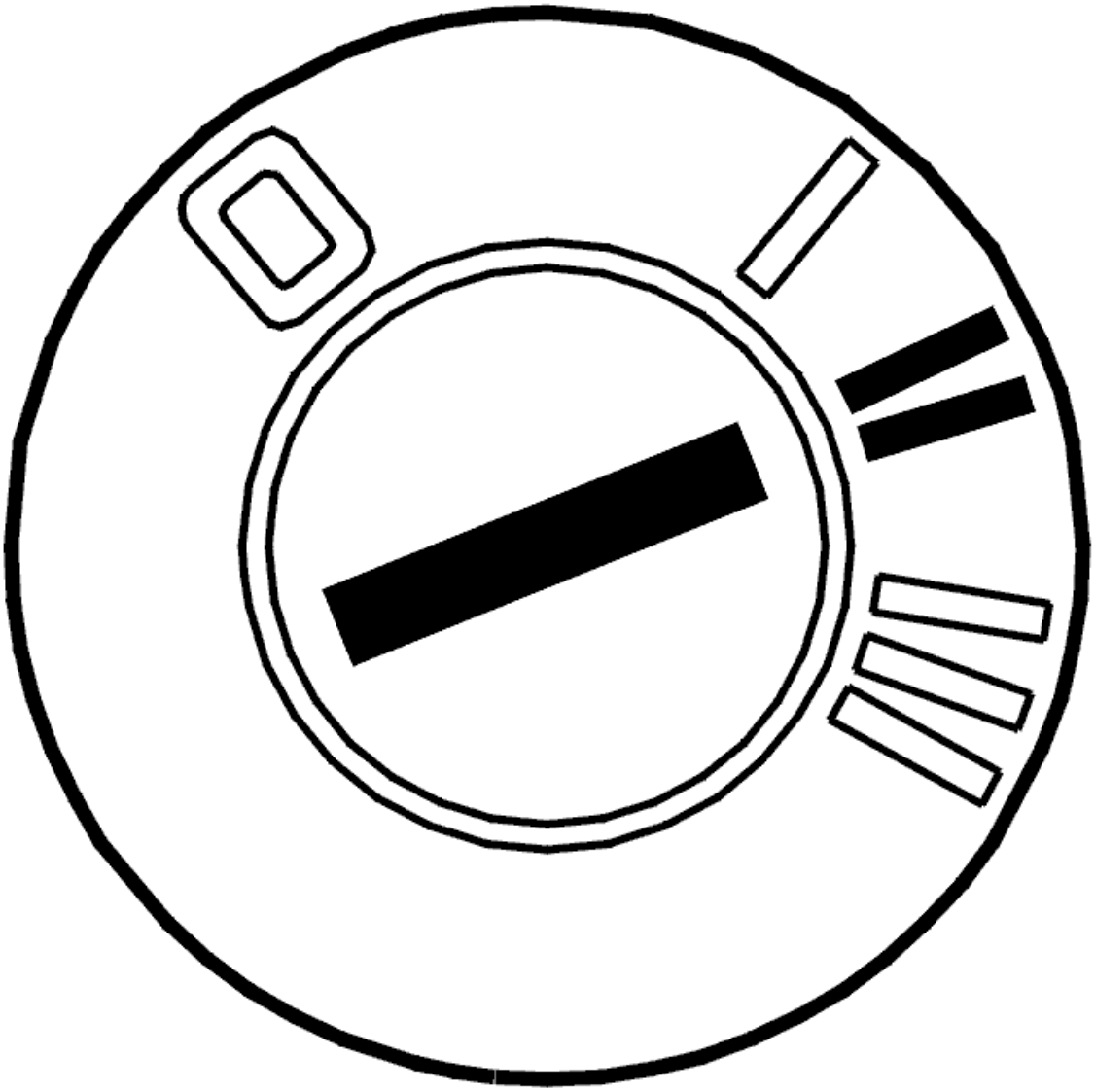

Fig. 279: Identifying Ignition ON
Courtesy of VOLVO CARS CORPORATION

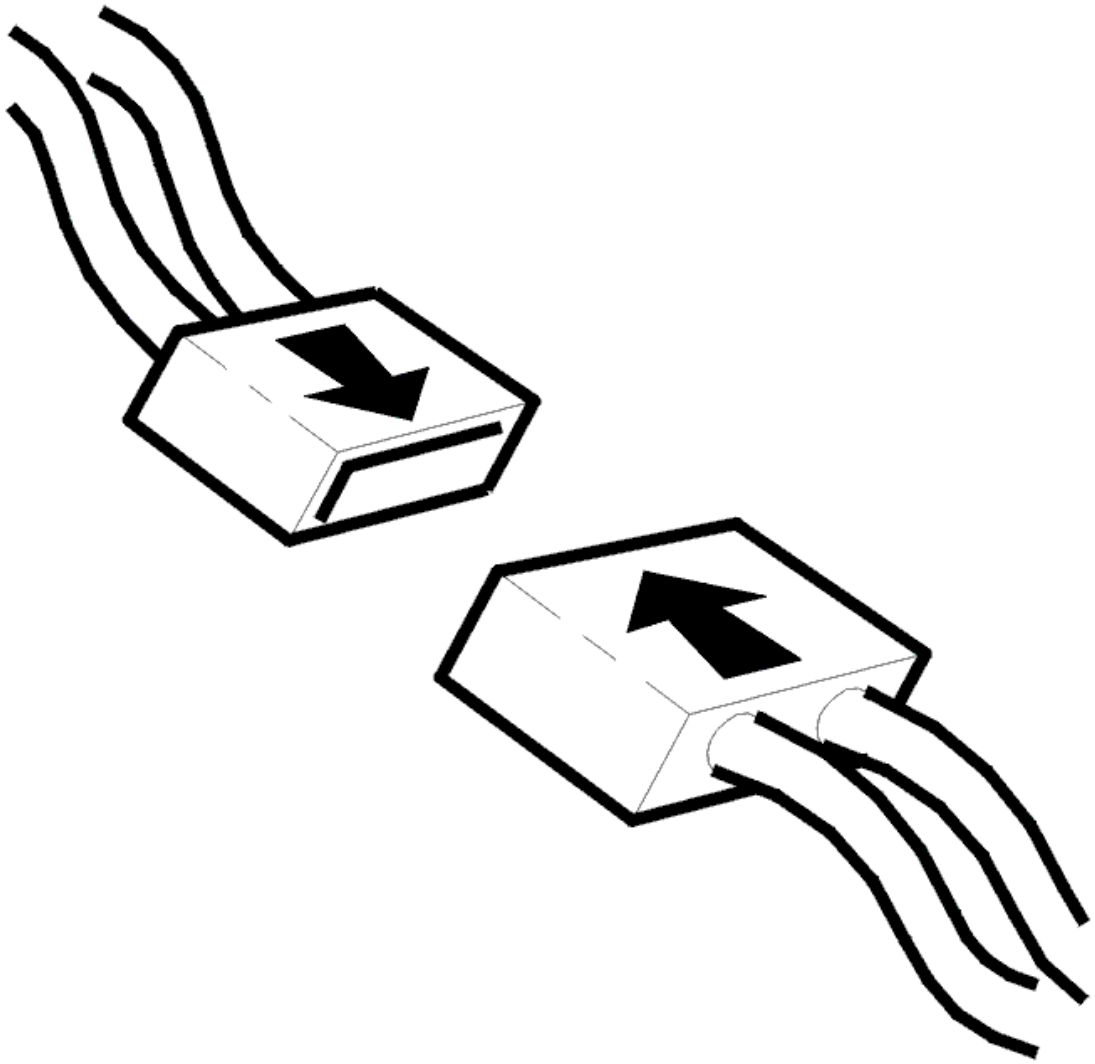

Fig. 280: Connecting Connector
Courtesy of VOLVO CARS CORPORATION

- Ignition off
- Reinstall the connectors, components etc.
- Ignition on

  Read off the pressure sensor signal for intake pressure and the atmospheric pressure sensor signal using the VCT2000 (or appropriate scan tool).

  Check that the values correspond. The atmospheric pressure sensor signal is used as a reference value in this check.

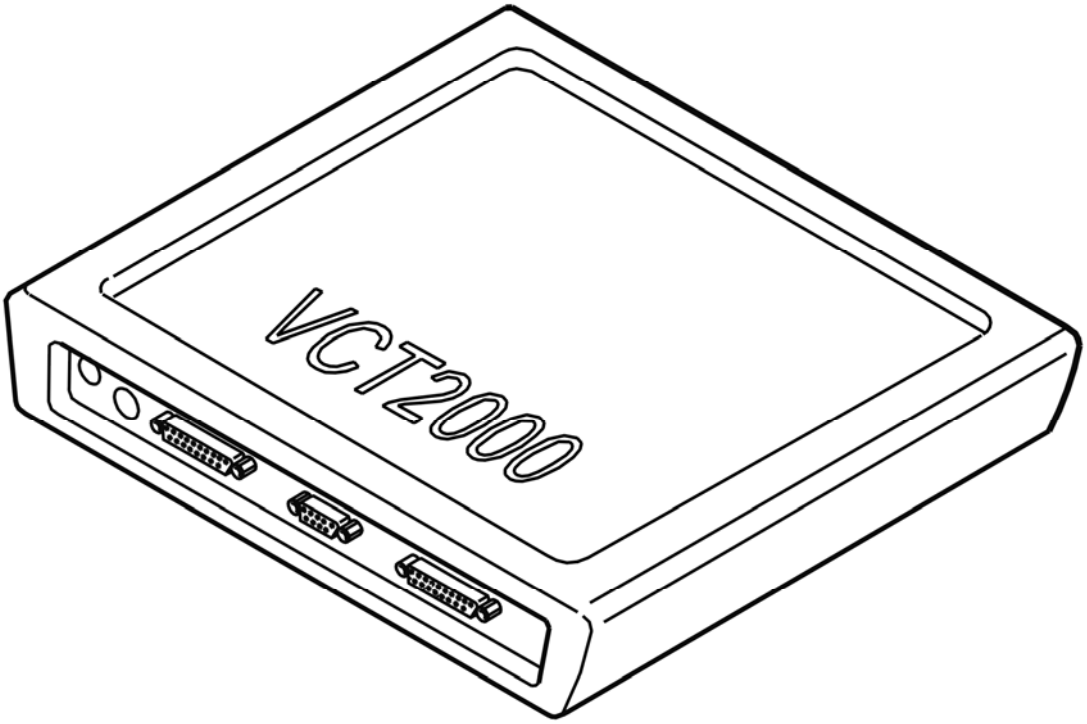

Fig. 281: Identifying VCT2000 Diagnostic Tool Symbol In VIDA
Courtesy of VOLVO CARS CORPORATION

Is the value within its permitted range?

- **YES**

  VERIFIED: Troubleshooting has been completed.

- **NO**

  Refer to **INFORMATION**

INFORMATION

FAULT-TRACING INFORMATION

The fault should have been detected and remedied. As this is not the case fault-tracing has failed.

Exit fault-tracing for this diagnostic trouble code (DTC) or make another attempt.

ECM-P010800: MANIFOLD ABSOLUTE PRESSURE/BARO SENSOR HIGH INPUT. GENERAL FAILURE INFORMATION. NO SUB TYPE INFORMATION

(B6324S; 2007-2010)

DIAGNOSTIC TROUBLE CODE (DTC) INFORMATION ECM-P010800

Condition

The engine control module (ECM) measures the pressure in the intake manifold using an air pressure sensor. The control module checks the direct voltage from the sensor.

The diagnostic trouble code (DTC) is stored if the control module detects that:

- The direct voltage is higher than 4.6 V.
- Incorrect value lasts longer than 9 seconds.
- Incorrect value lasts for 2 or more subsequent driving cycles.

The control module's test for the diagnostic trouble code (DTC) starts in the event of:

- Ignition switch position II.

NOTE: The control module can only detect the fault once the test has been started and the diagnostic trouble code (DTC) is stored when the conditions are met.

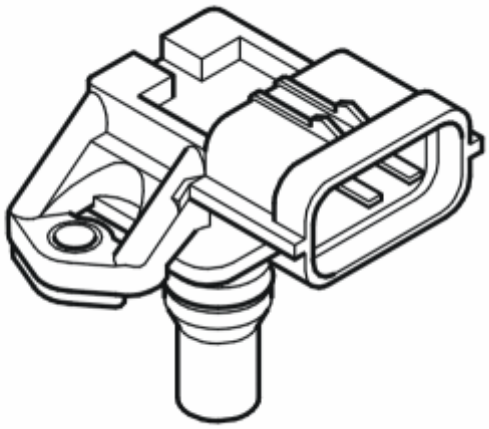

Fig. 282: Identifying Air Pressure Sensor
Courtesy of VOLVO CARS CORPORATION

Substitute Value

- The control module uses a constant air pressure in the inlet manifold.
- The control module performs load and air flow calculations independent of the signal from the air pressure sensor in the inlet manifold.

Possible Source

- Contact resistance and oxidation in the terminals.
- Short-circuit to supply voltage in the signal cable.
- Open-circuit in the signal cable.
- Damaged air pressure sensor in the inlet manifold.

Fault symptom[s]

- Malfunction indicator light (MIL), on

FAULT-TRACING

see **FAULT-TRACING**

ECM-P010800: MANIFOLD ABSOLUTE PRESSURE/BARO SENSOR HIGH INPUT. GENERAL FAILURE INFORMATION. NO SUB TYPE INFORMATION (B6324S5; 2011-2012)

DIAGNOSTIC TROUBLE CODE (DTC) INFORMATION ECM-P010800

see **DIAGNOSTIC TROUBLE CODE (DTC) INFORMATION ECM-P010800**

FAULT-TRACING

see **FAULT-TRACING**

ECM-P010800: MANIFOLD ABSOLUTE PRESSURE/BARO SENSOR HIGH INPUT. GENERAL FAULT INFORMATION. TYPE OF FAULT NOT SPECIFIED. (B8444S; 2005-2011)

DIAGNOSTIC TROUBLE CODE (DTC) INFORMATION ECM-P010800

Condition

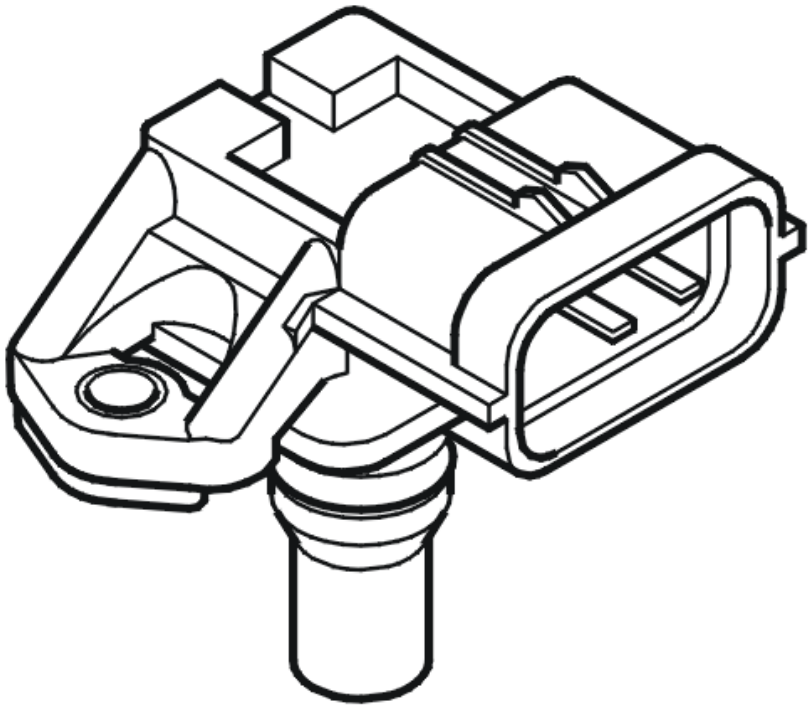

Fig. 283: Identifying Air Pressure Sensor
Courtesy of VOLVO CARS CORPORATION

The engine control module (ECM) measures the air pressure in the intake manifold using an air pressure sensor.

The diagnostic trouble code (DTC) is stored if the Engine Control Module (ECM) detects that the signal from the manifold absolute pressure (MAP) sensor in the intake manifold is too high.

The diagnostic trouble code can be diagnosed when the ignition is on.

Substitute Value

- The signal from the air pressure sensor in the intake manifold is set to a constant.
- Load/airflow calculations are carried out regardless of the signal from the air pressure sensor.

Possible Source

- The signal cable is short-circuited to voltage.
- Open-circuit in the signal cable.
- Damaged air pressure sensor in the intake manifold.

Fault symptom[s]

- Malfunction indicator lamp (MIL) lit.

FAULT TRACING ECM-P010800

CHECKING THE STATUS

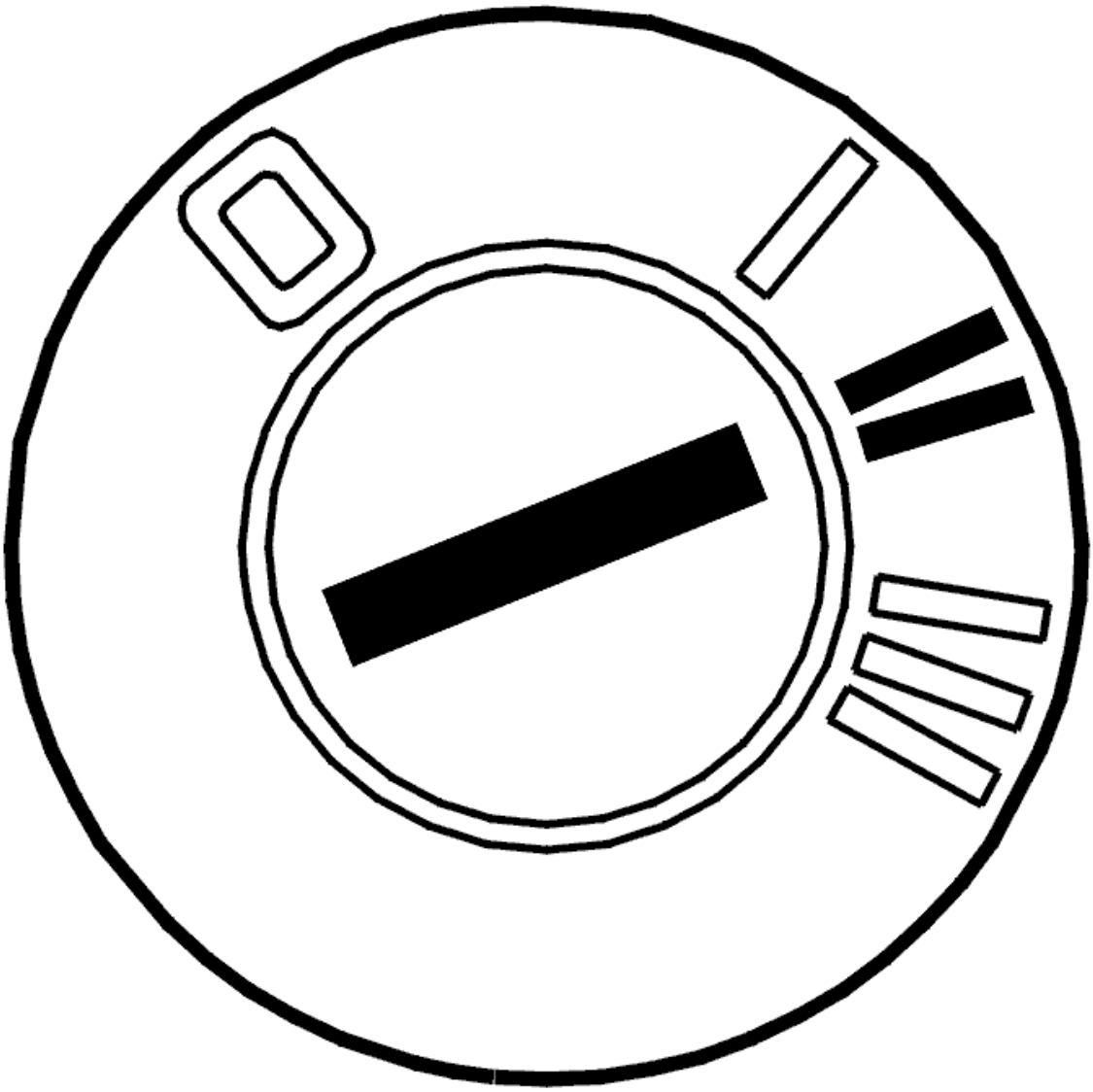

Fig. 284: Identifying Ignition ON
Courtesy of VOLVO CARS CORPORATION

- Ignition on

  Check whether the fault is permanent or intermittent. Read off the pressure sensor signal for intake pressure and the atmospheric pressure sensor signal. Check that the values are approximately the same.

  HINT: The atmospheric pressure sensor signal is used as a reference value for the pressure sensor signal for intake pressure.

The fault is permanent if the values do not correspond. If the values do not correspond, it indicates that the fault is intermittent and not presently active.

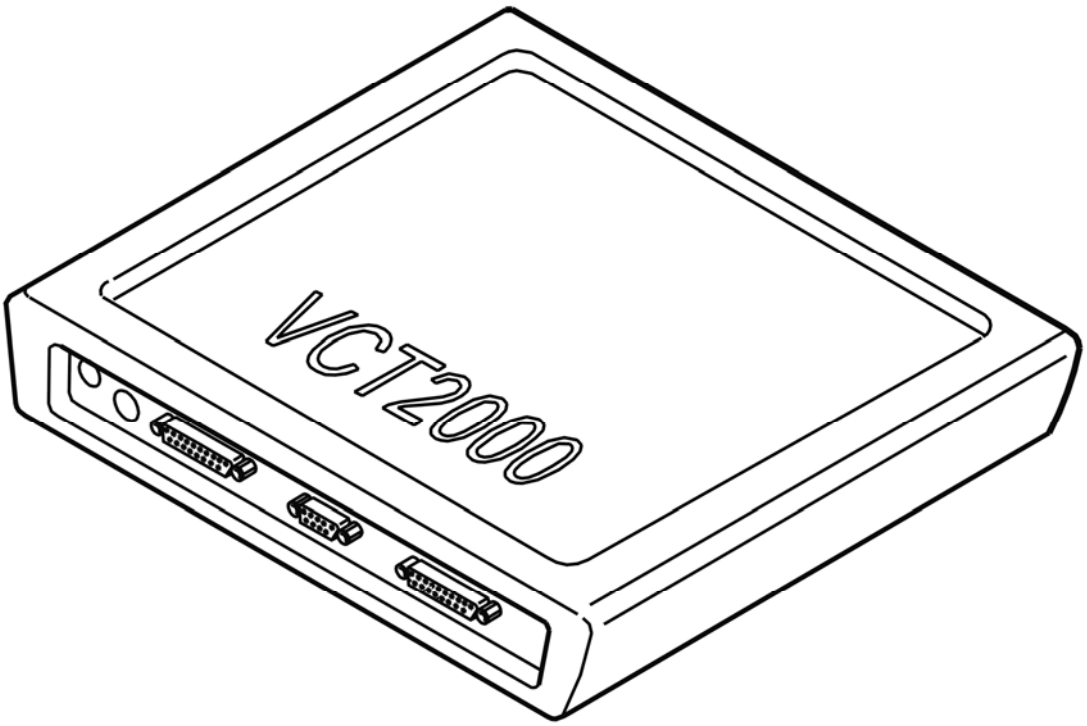

Fig. 285: Identifying VCT2000 Diagnostic Tool Symbol In VIDA
Courtesy of VOLVO CARS CORPORATION

- **Continue**

Refer to **CHECKING COMPONENTS AND WIRING**

CHECKING COMPONENTS AND WIRING

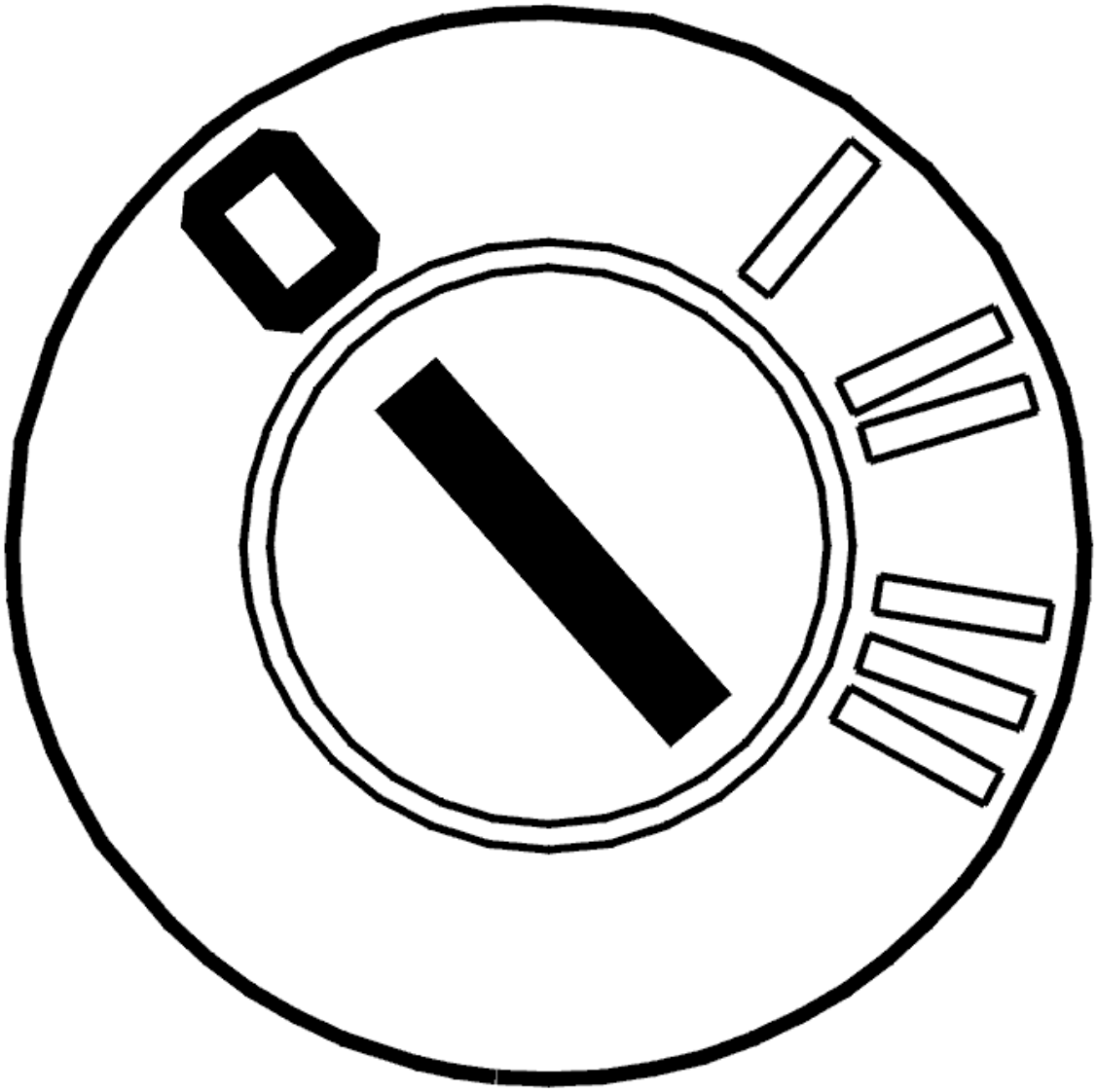

Fig. 286: Identifying Ignition OFF
Courtesy of VOLVO CARS CORPORATION

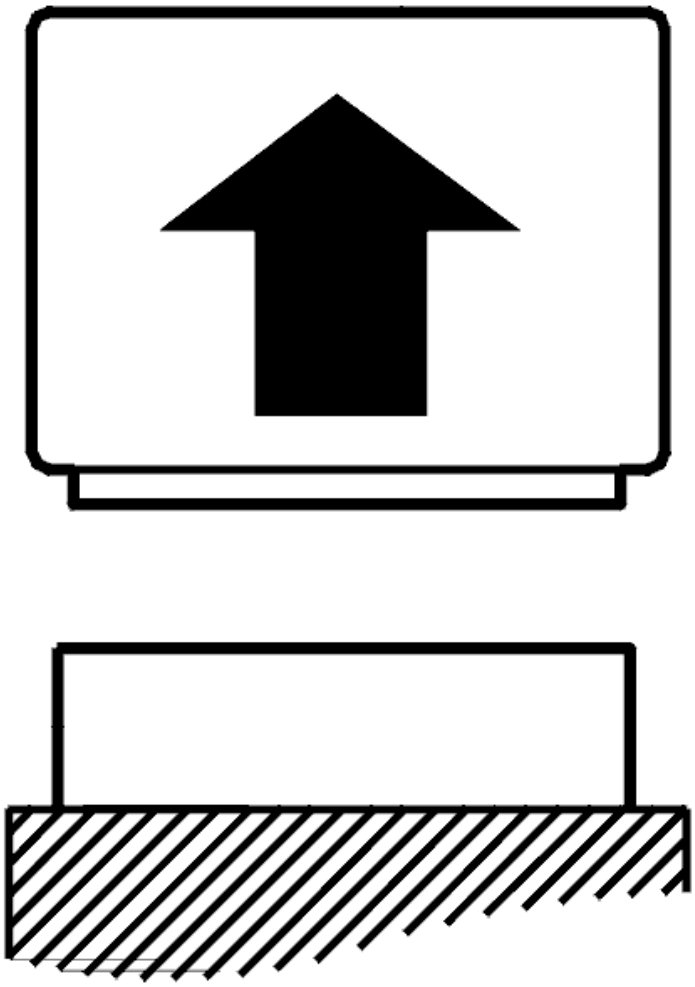

Fig. 287: Disconnecting Connector
Courtesy of VOLVO CARS CORPORATION

- Ignition off
- Disconnect the engine control module (ECM).

  Check the signal cable with regard to short circuit to supply voltage. Check the signal cable with regard to open circuit.

  Take readings between control module terminal #A69 (#B09) and pressure sensor terminal #1.

  Remedy as necessary.

  Other information

  - see **CONNECTING THE BREAKOUT BOX**

- see **SIGNAL SPECIFICATION, ENGINE CONTROL MODULE (ECM)**
- see **MANIFOLD ABSOLUTE PRESSURE (MAP) SENSOR, REPLACING**
- see **CHECKING WIRING AND TERMINALS**

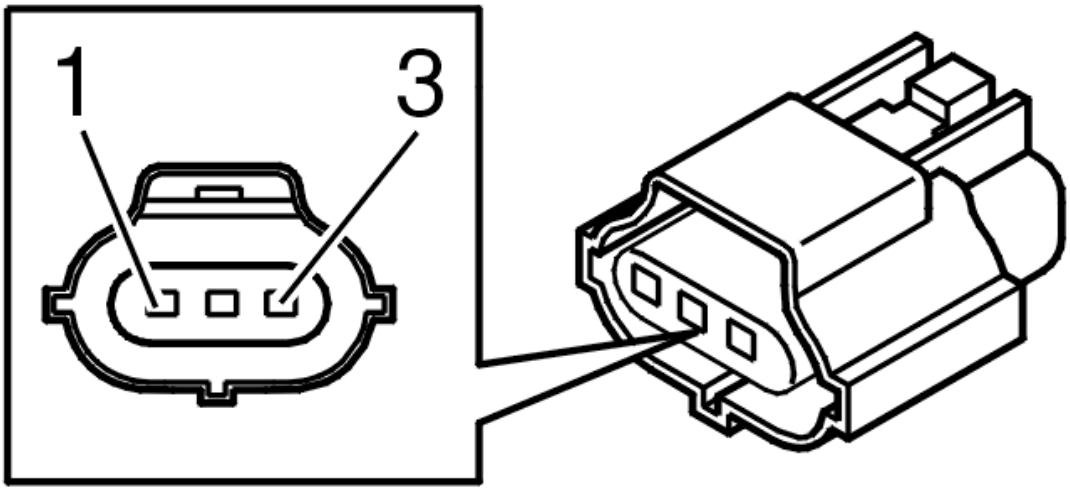

Fig. 288: Identifying 3-Bit Connector
Courtesy of VOLVO CARS CORPORATION

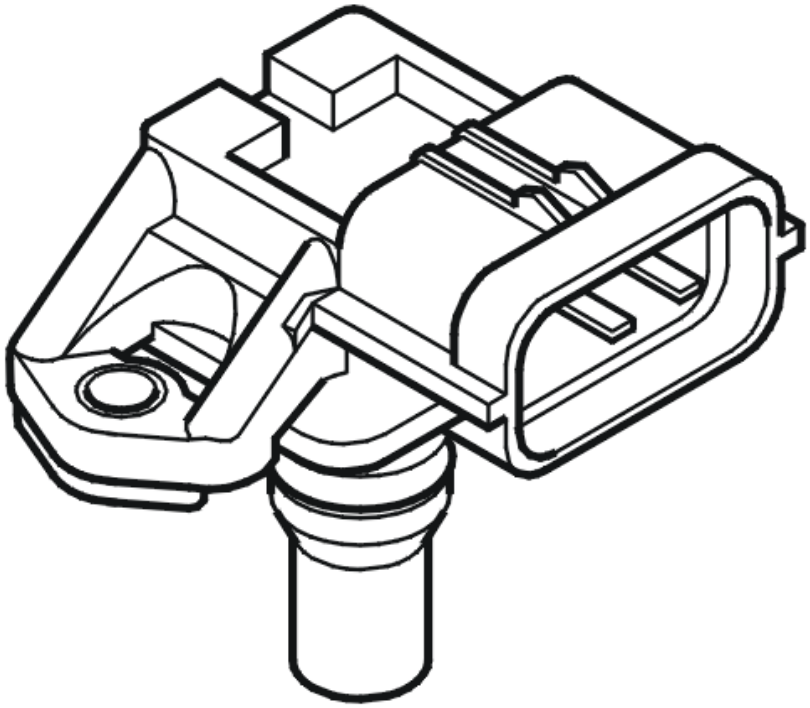

Fig. 289: Identifying Air Pressure Sensor

Courtesy of VOLVO CARS CORPORATION

- **Continue**

  Refer to **VERIFICATION**

VERIFICATION

VERIFICATION

HINT: After carrying out the repair, check that the fault has been remedied.

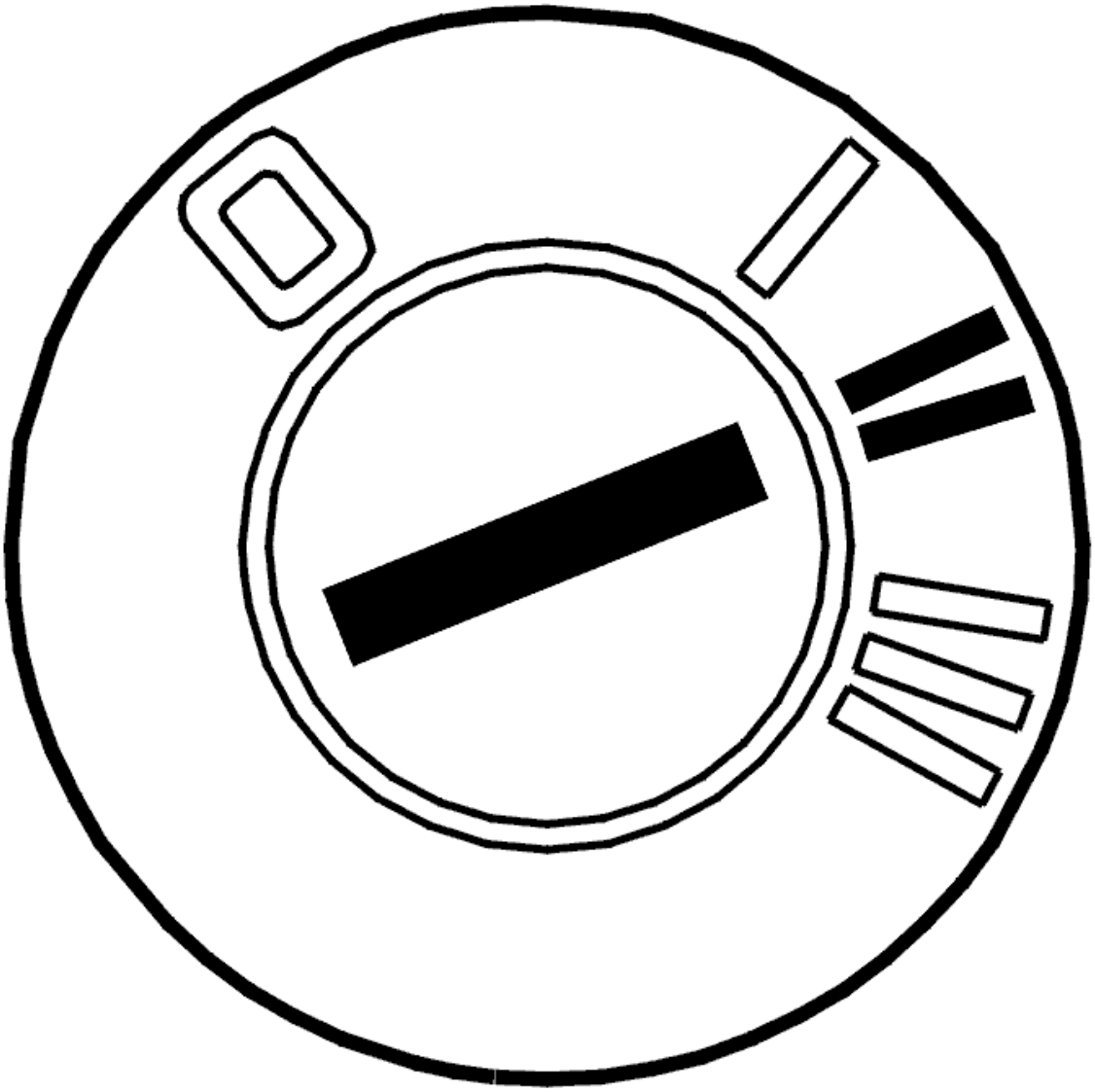

Fig. 290: Identifying Ignition ON
Courtesy of VOLVO CARS CORPORATION

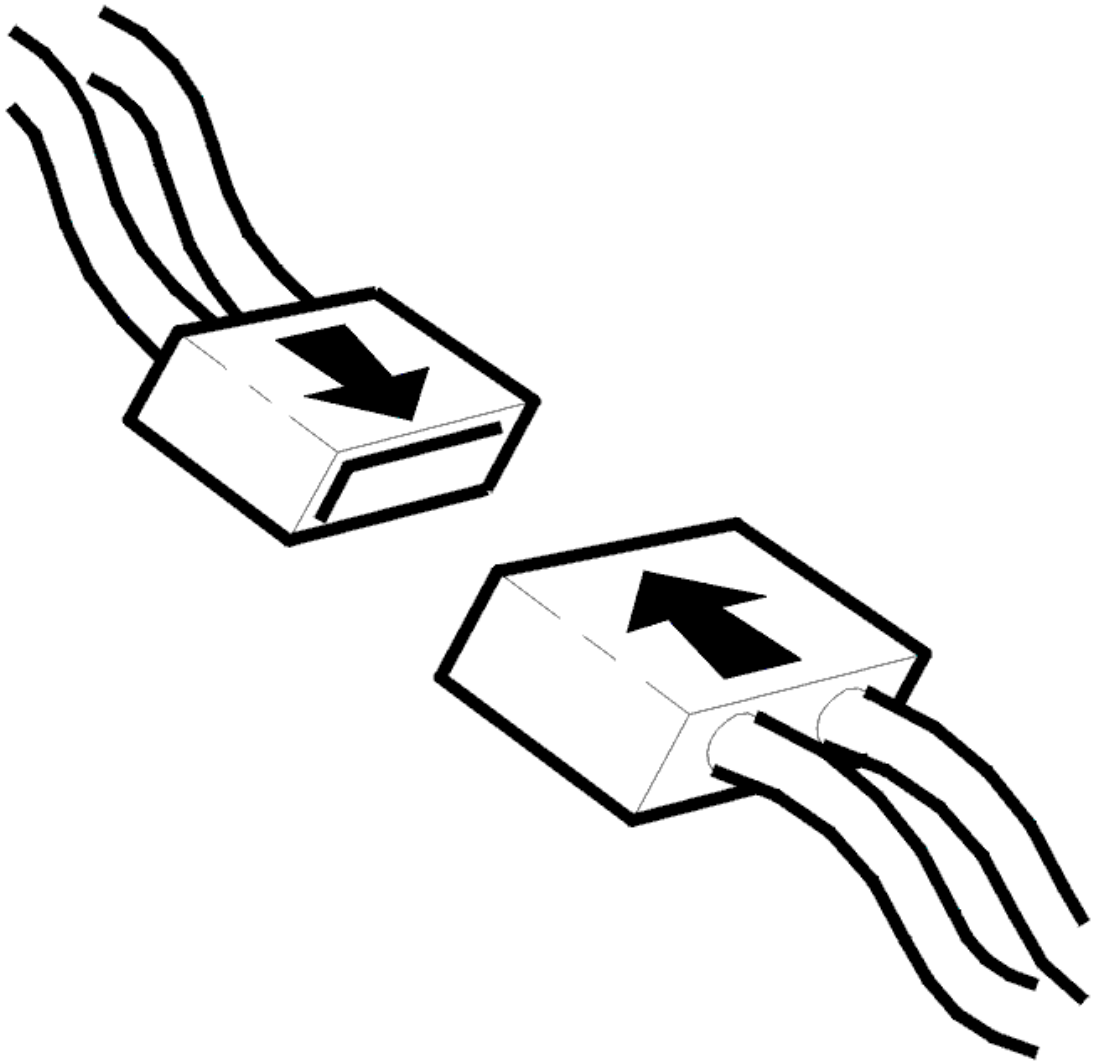

Fig. 291: Connecting Connector
Courtesy of VOLVO CARS CORPORATION

- Ignition off
- Reinstall the connectors, components etc.
- Ignition on

  Read off the pressure sensor signal for intake pressure and the atmospheric pressure sensor signal using the VCT2000 (or appropriate scan tool).

  Check that the values correspond. The atmospheric pressure sensor signal is used as a reference value in this check.

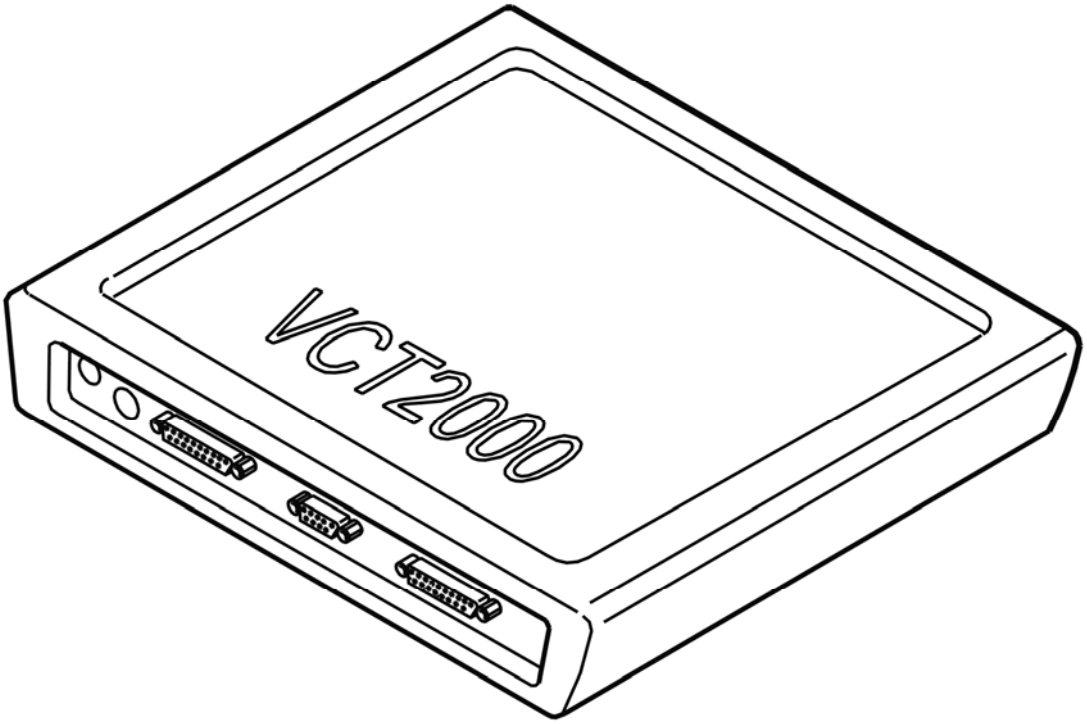

Fig. 292: Identifying VCT2000 Diagnostic Tool Symbol In VIDA
Courtesy of VOLVO CARS CORPORATION

Is the value within its permitted range?

- **YES**

  VERIFIED: Troubleshooting has been completed.

- **NO**

  Refer to **INFORMATION**

INFORMATION

FAULT-TRACING INFORMATION

The fault should have been detected and remedied. As this is not the case fault-tracing has failed.

Exit fault-tracing for this diagnostic trouble code (DTC) or make another attempt.

ECM-P011000: INTAKE AIR TEMPERATURE SENSOR 1 CIRCUIT. GENERAL FAILURE INFORMATION. NO SUB TYPE INFORMATION (B6324S; 2007-2010)

DIAGNOSTIC TROUBLE CODE (DTC) INFORMATION ECM-P011000

Condition

Engine control module (ECM) measures the temperature of the inducted air using an air temperature sensor in the inlet manifold. The control module checks the direct voltage from the sensor.

NOTE: The mass air flow sensor and air temperature sensor are integrated in the same component.

The diagnostic trouble code (DTC) is stored if the control module detects that:

- The direct voltage is higher than 4.951 V.
- Incorrect value lasts longer than 9 seconds.
- Incorrect value lasts for 2 or more subsequent driving cycles.

The control module's test for the diagnostic trouble code (DTC) starts in the event of:

- Ignition switch position II.

NOTE: The control module can only detect the fault once the test has been started and the diagnostic trouble code (DTC) is stored when the conditions are met.

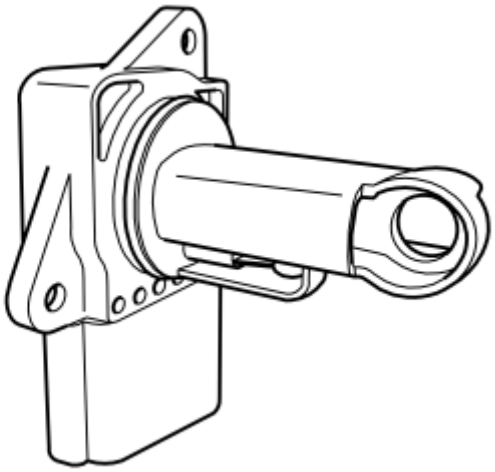

Fig. 293: Identifying Integrated Air Temperature Sensor
Courtesy of VOLVO CARS CORPORATION

Substitute Value

- The value for the inlet temperature is generated to equal to the value for the fuel temperature.

Possible Source

- Open-circuit in signal cable or ground lead.
- Contact resistance and oxidation in the terminals.
- Short-circuit to supply voltage in the signal cable.
- Damaged intake air temperature (IAT) sensor.

Fault symptom[s]

- Malfunction indicator light (MIL), on

FAULT-TRACING

see **FAULT-TRACING**

ECM-P011000: INTAKE AIR TEMPERATURE SENSOR 1 CIRCUIT. GENERAL FAILURE INFORMATION. NO SUB TYPE INFORMATION (B6324S5; 2011-2012)

DIAGNOSTIC TROUBLE CODE (DTC) INFORMATION ECM-P011000

see **DIAGNOSTIC TROUBLE CODE (DTC) INFORMATION ECM-P011000**

FAULT-TRACING

see **FAULT-TRACING**

ECM-P011100: INTAKE AIR TEMPERATURE SENSOR 1 CIRCUIT RANGE/PERFORMANCE. GENERAL FAILURE INFORMATION. NO SUB TYPE INFORMATION (B6324S; 2007-2010)

DIAGNOSTIC TROUBLE CODE (DTC) INFORMATION ECM-P011100

Condition

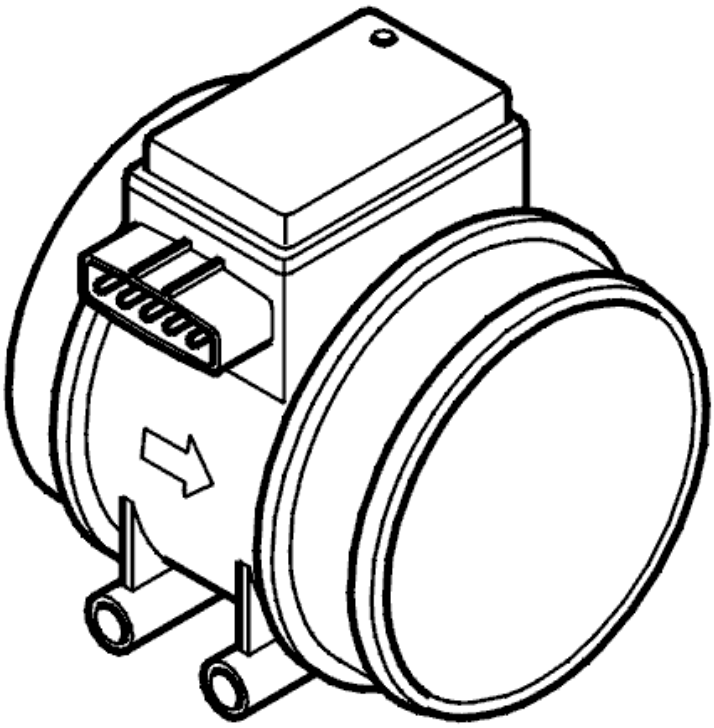

Fig. 294: Identifying Mass Air Flow Sensor (With Integrated Air Temperature Sensor)
Courtesy of VOLVO CARS CORPORATION

The engine control module (ECM) checks the signal from the air temperature sensor in the intake manifold.

The diagnostic trouble code is generated if the control module detects that the value from the air temperature sensor deviates too much from the value of the engine temperature sensor after the engine has been switched off for a period of time.

The diagnostic trouble code can be diagnosed once per operating cycle with the ignition on, but only once engine temperature has fallen to approx. 55 °C from operating temperature since the previous operating cycle.

Substitute Value

- The value for the inlet temperature is generated to equal to the value for the fuel temperature.

Possible Source

- Contact resistance in connector.
- Damaged air temperature sensor (integrated in mass air flow sensor).

Fault symptom[s]

- Malfunction indicator lamp (MIL) lit.

FAULT TRACING

CHECKING THE STATUS

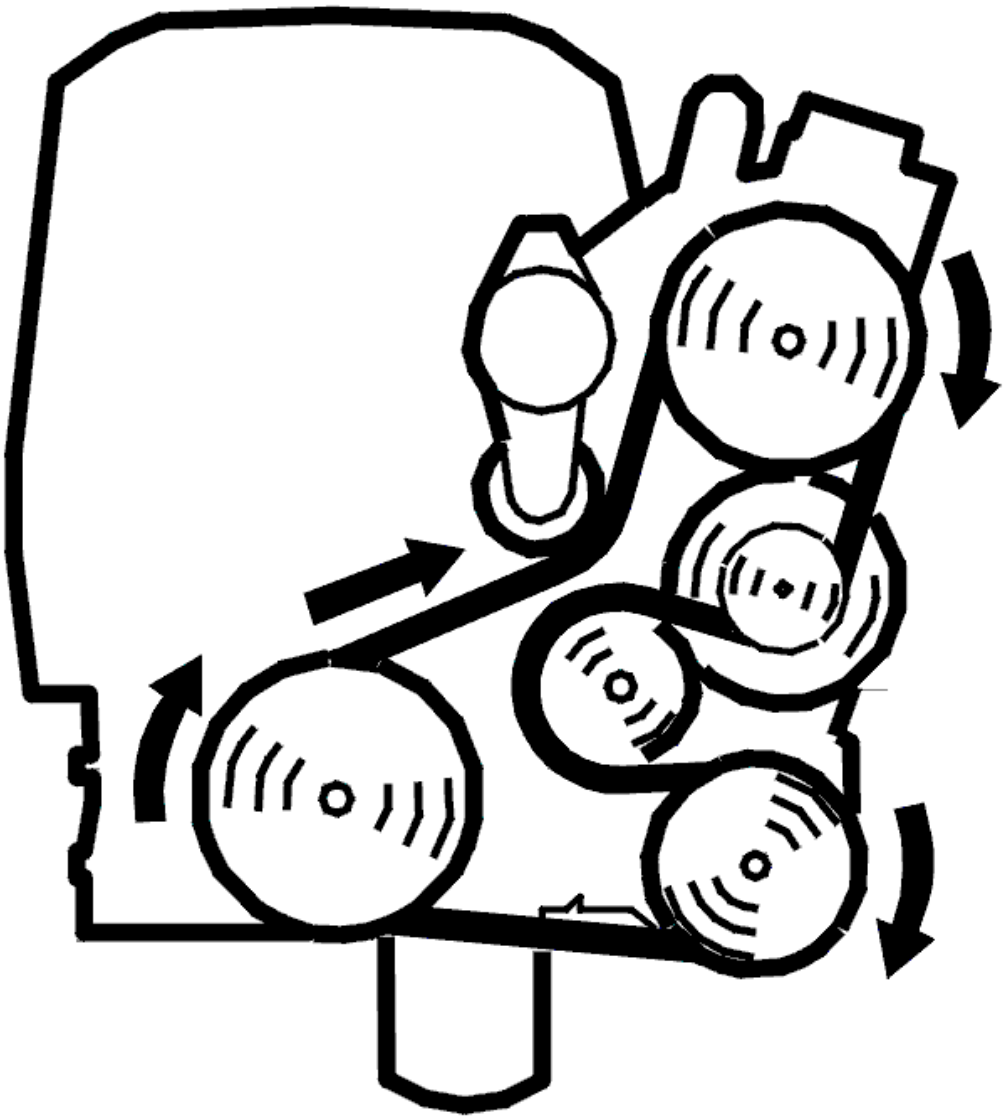

Fig. 295: Belt Routing / Engine Idling - Volvo
Courtesy of VOLVO CARS CORPORATION

- Start the engine.

  Check whether the fault is permanent or intermittent by reading the signal of the air temperature sensor. Check that the value is feasible.

  If the value is not feasible, the fault is permanent. If the value is feasible, the fault is intermittent and not currently active.

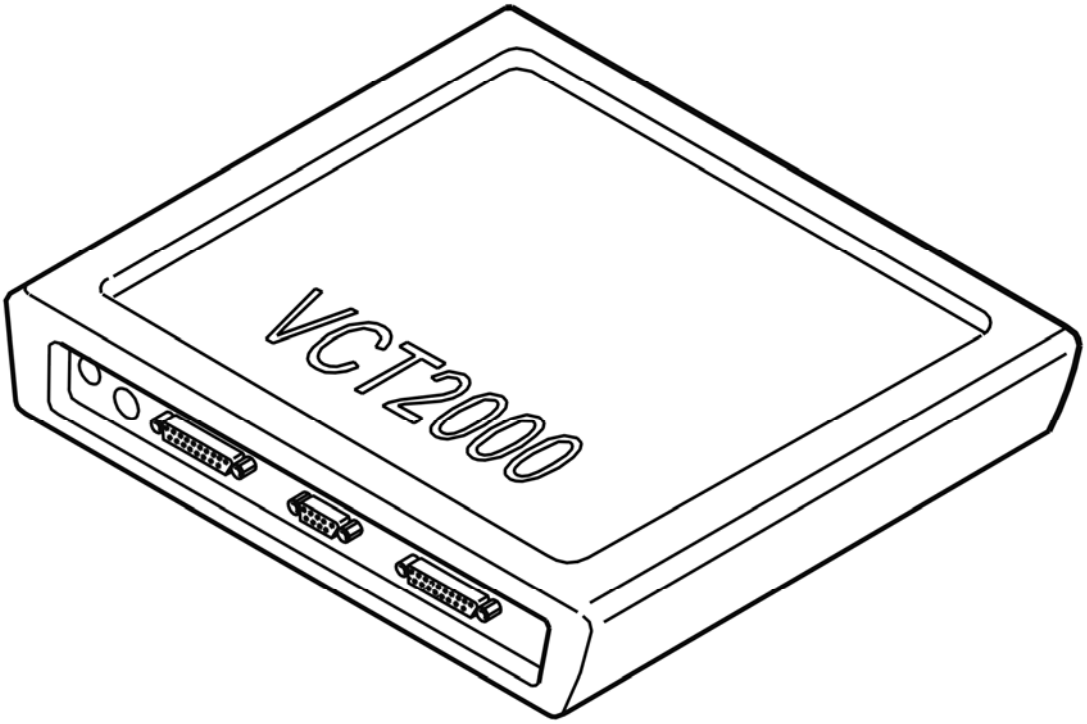

Fig. 296: Identifying VCT2000 Diagnostic Tool Symbol In VIDA
Courtesy of VOLVO CARS CORPORATION

- **Continue**

  Refer to **CHECKING COMPONENTS AND WIRING**

CHECKING COMPONENTS AND WIRING

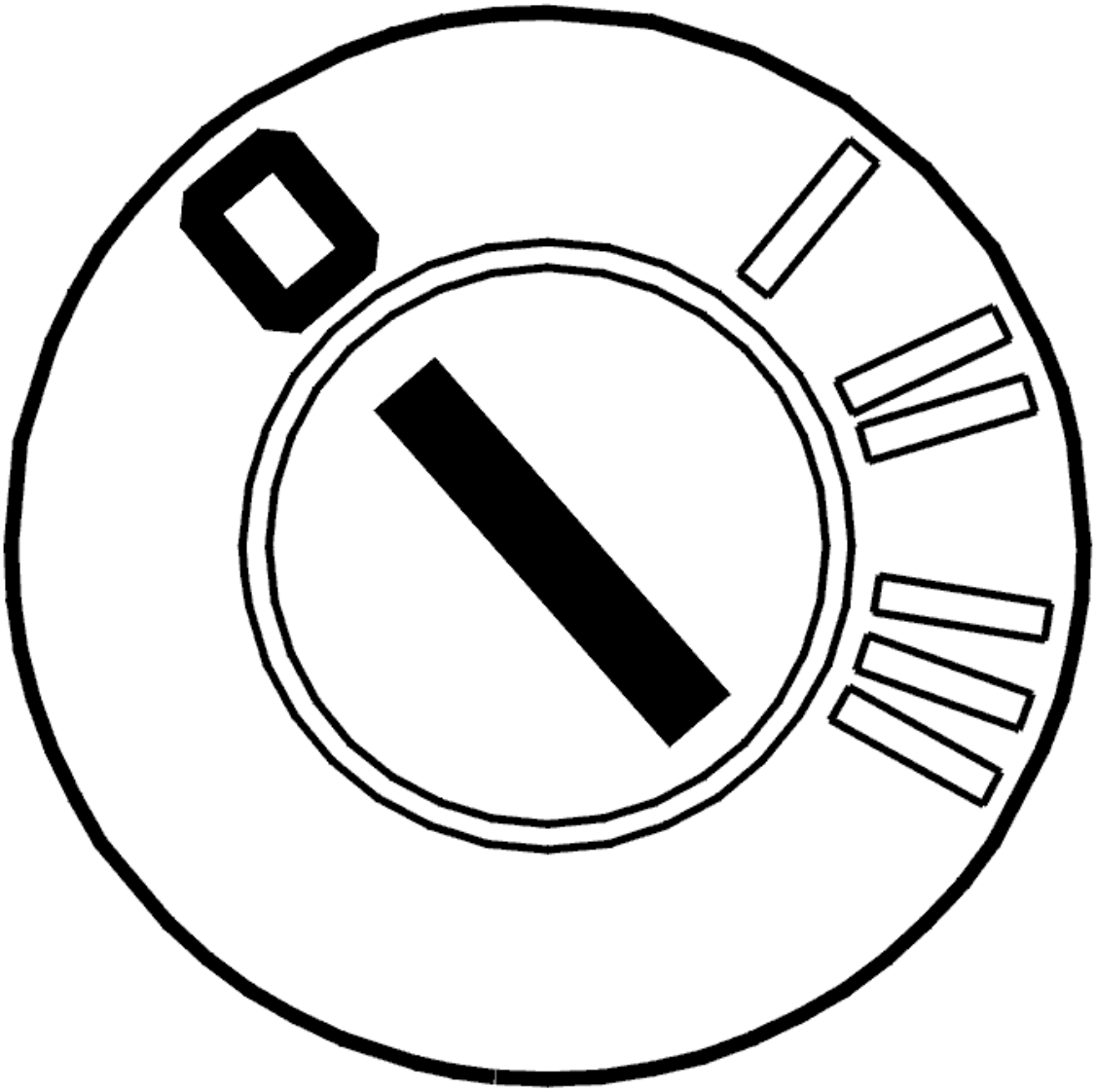

Fig. 297: Identifying Ignition OFF
Courtesy of VOLVO CARS CORPORATION

- Ignition off

  Check the mass air flow sensor connections for contact resistance and oxidation.

  Read the air temperature using the VCT2000 (or appropriate scan tool).

  Remedy as necessary.

  Other information

  - see **CONNECTING THE BREAKOUT BOX**
  - see **SIGNAL SPECIFICATION**

- see **MASS AIR FLOW SENSOR (MAF)**
- see **CHECKING WIRING AND TERMINALS**

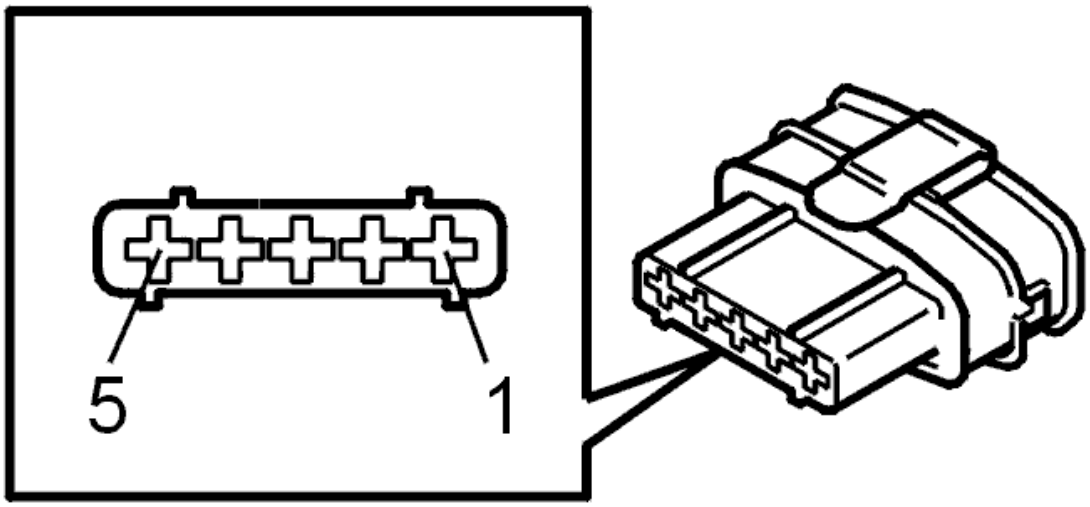

Fig. 298: Identifying Connector
Courtesy of VOLVO CARS CORPORATION

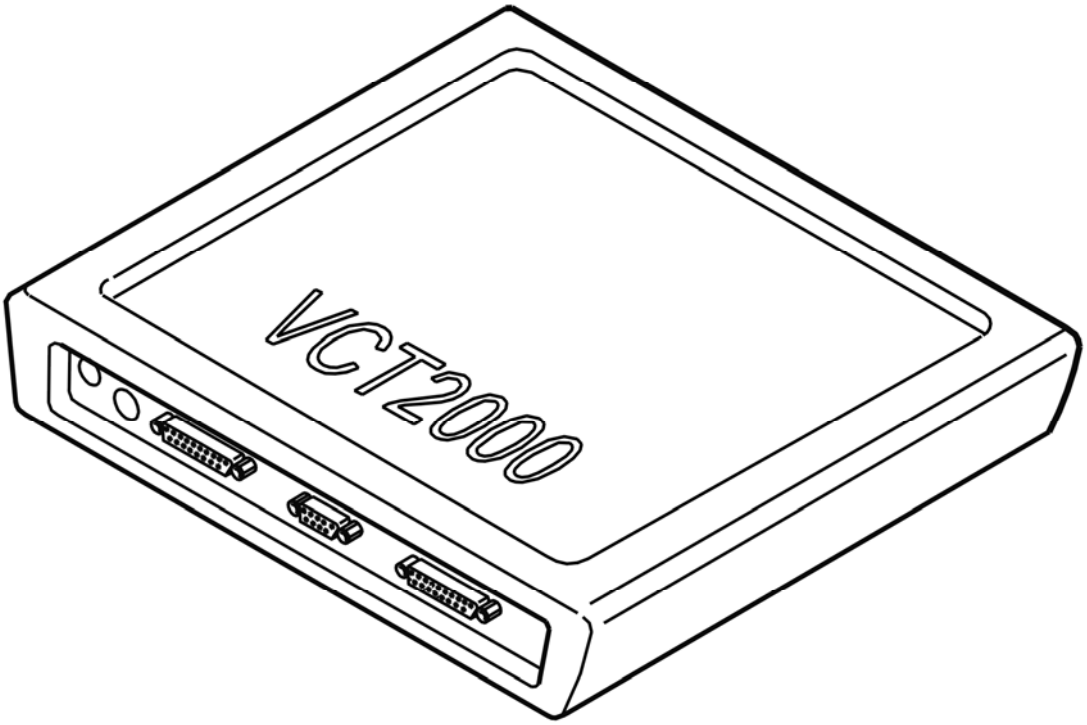

Fig. 299: Identifying VCT2000 Diagnostic Tool Symbol In VIDA
Courtesy of VOLVO CARS CORPORATION

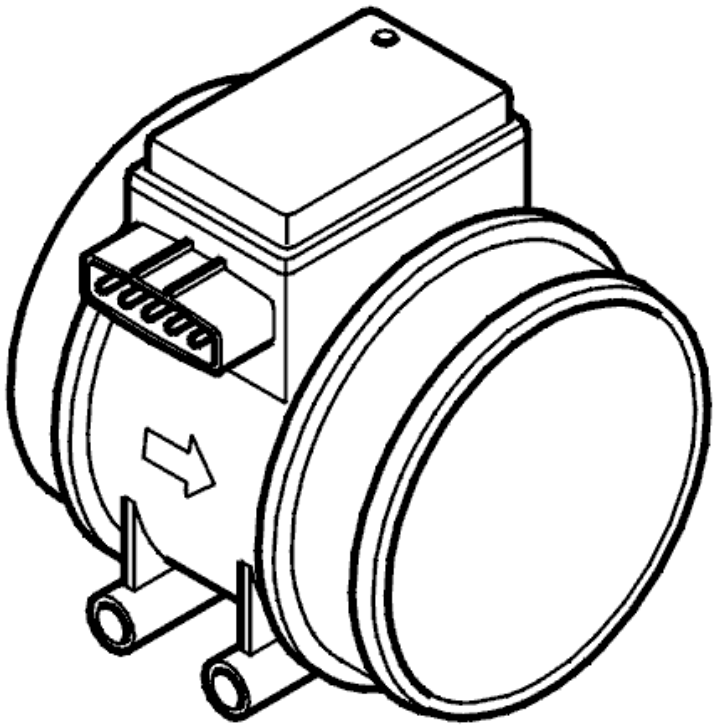

Fig. 300: Identifying Mass Air Flow Sensor (With Integrated Air Temperature Sensor)
Courtesy of VOLVO CARS CORPORATION

- **Continue**

  Refer to **VERIFICATION**

INFORMATION

FAULT-TRACING INFORMATION

The fault should have been detected and remedied. As this is not the case fault-tracing has failed.

Exit fault-tracing for this diagnostic trouble code (DTC) or make another attempt.

VERIFICATION

VERIFICATION

HINT: After carrying out the repair, check that the fault has been remedied.

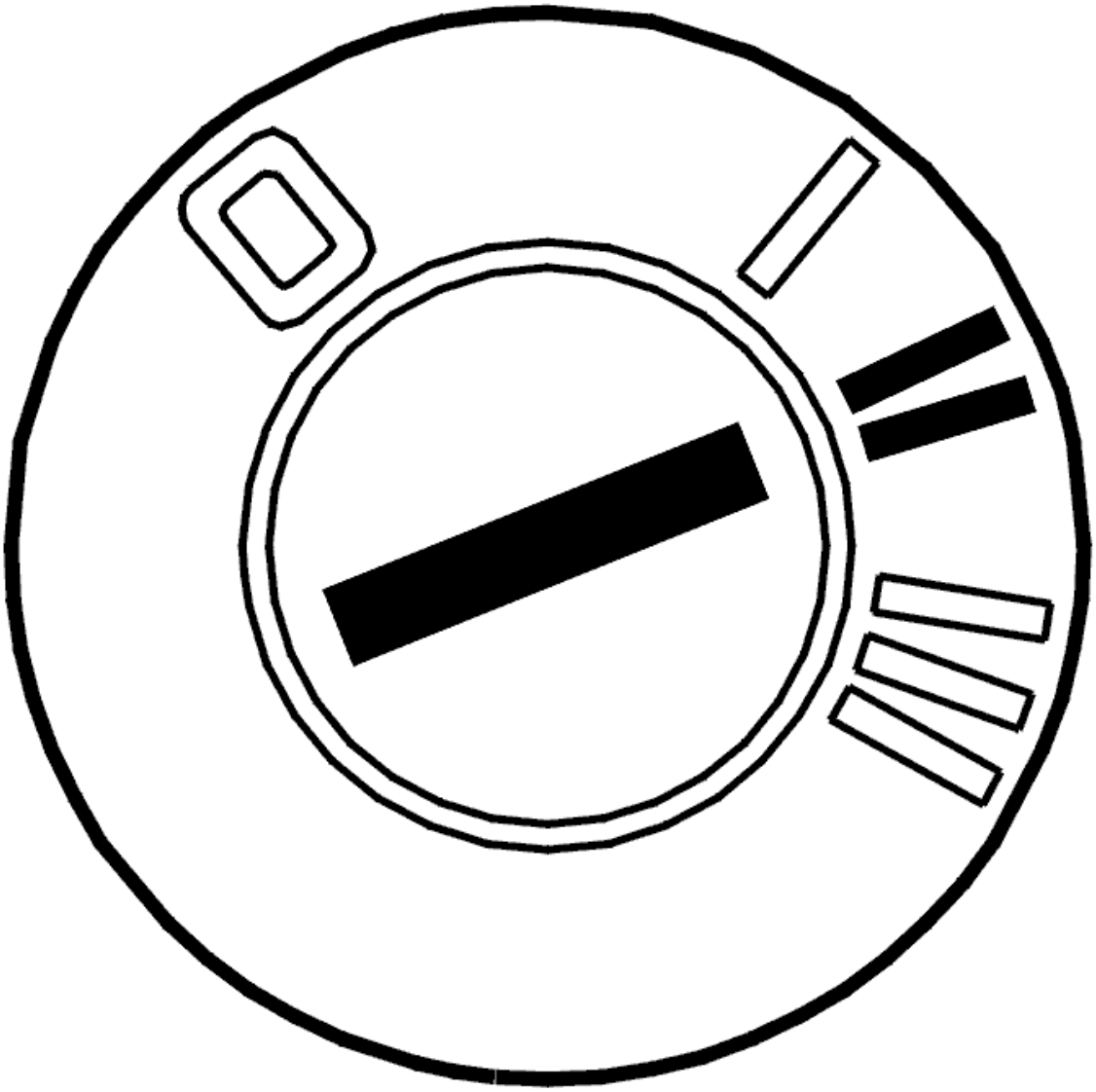

Fig. 301: Identifying Ignition ON
Courtesy of VOLVO CARS CORPORATION

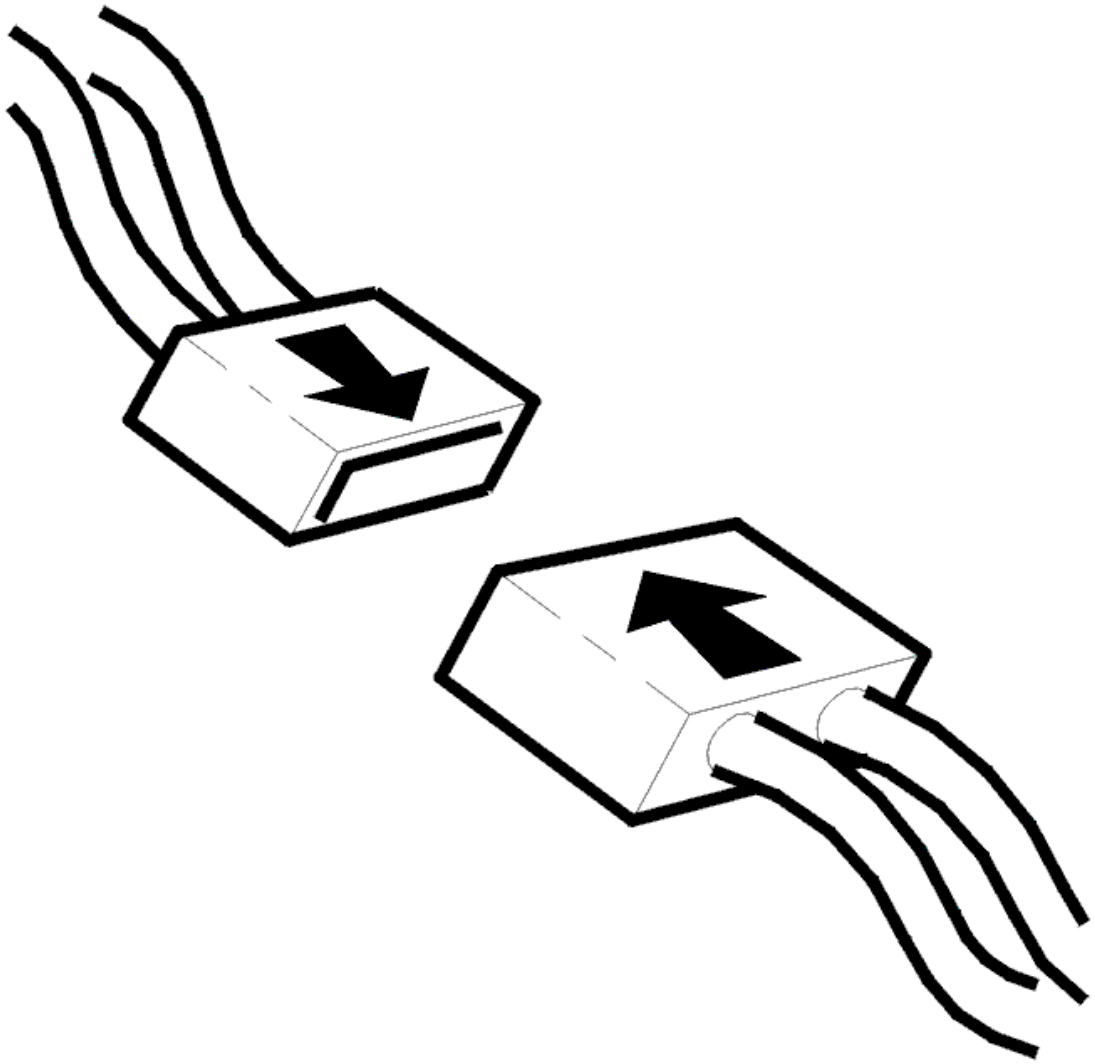

Fig. 302: Connecting Connector
Courtesy of VOLVO CARS CORPORATION

- Ignition off
- Reinstall the connectors, components etc.
- Ignition on

  Read off the intake air temperature sensor's signal using the VCT2000 (or appropriate scan tool).

  Check that the signal is within its permitted range.

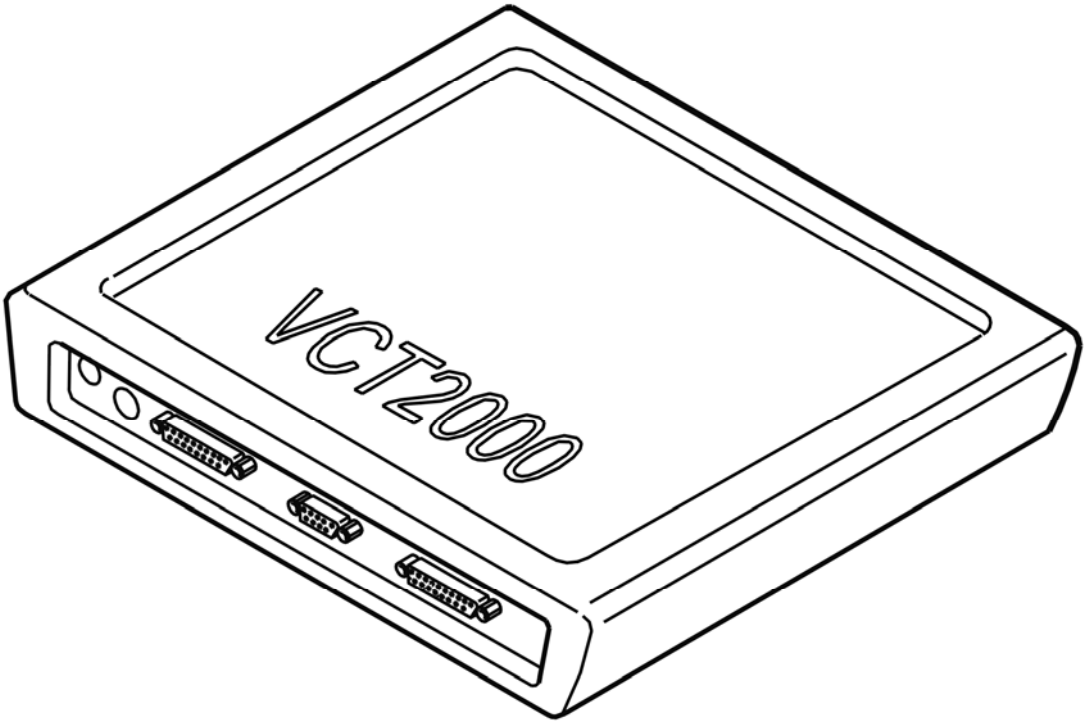

Fig. 303: Identifying VCT2000 Diagnostic Tool Symbol In VIDA
Courtesy of VOLVO CARS CORPORATION

Is the signal within its permitted range?

- **YES**

  VERIFIED: Troubleshooting has been completed.

- **NO**

  Refer to **INFORMATION**

ECM-P011100: INTAKE AIR TEMPERATURE SENSOR 1 CIRCUIT RANGE/PERFORMANCE. GENERAL FAILURE INFORMATION. NO SUB TYPE INFORMATION (B6324S5; 2011-2012)

DIAGNOSTIC TROUBLE CODE (DTC) INFORMATION ECM-P011100

see **DIAGNOSTIC TROUBLE CODE (DTC) INFORMATION ECM-P011100**

FAULT TRACING

see **FAULT TRACING**

ECM-P011100: INTAKE AIR TEMPERATURE SENSOR 1 CIRCUIT WITHIN/EXCEEDING LIMIT VALUES. GENERAL FAULT INFORMATION. TYPE OF FAULT NOT SPECIFIED. (B8444S; 2005-2011)

DIAGNOSTIC TROUBLE CODE (DTC) INFORMATION ECM-P011100

Condition

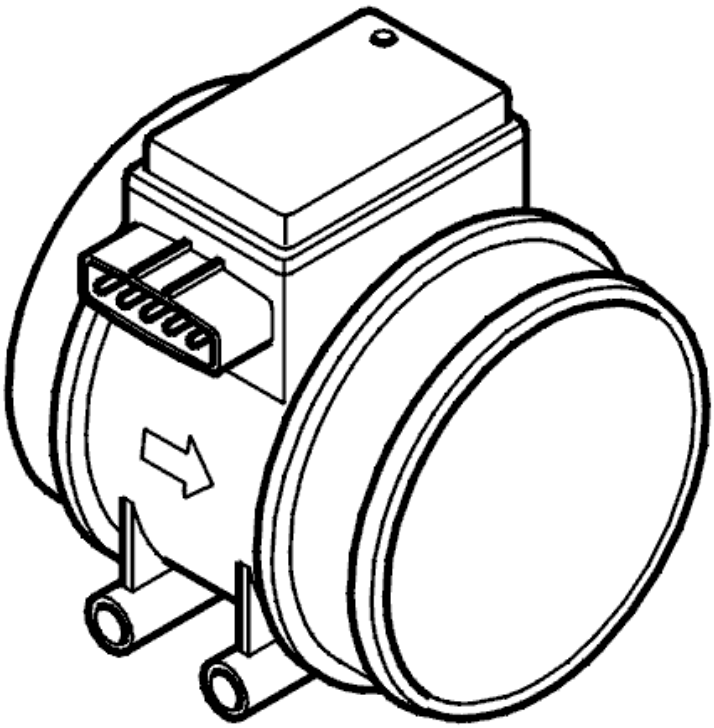

Fig. 304: Identifying Mass Air Flow Sensor (With Integrated Air Temperature Sensor)
Courtesy of VOLVO CARS CORPORATION

The engine control module (ECM) checks the signal from the air temperature sensor in the intake manifold.

The diagnostic trouble code is generated if the control module detects that the value from the air temperature sensor deviates too much from the value of the engine temperature sensor after the engine has been switched off for a period of time.

The diagnostic trouble code can be diagnosed once per operating cycle with the ignition on, but only once engine temperature has fallen to approx. 55 °C from operating temperature since the previous operating cycle.

Substitute Value

- The intake temperature value is set to 30 °C.

Possible Source

- Contact resistance in connector.
- Damaged air temperature sensor (integrated in mass air flow sensor).

Fault symptom[s]

- Malfunction indicator lamp (MIL) lit.

FAULT TRACING

CHECKING THE STATUS

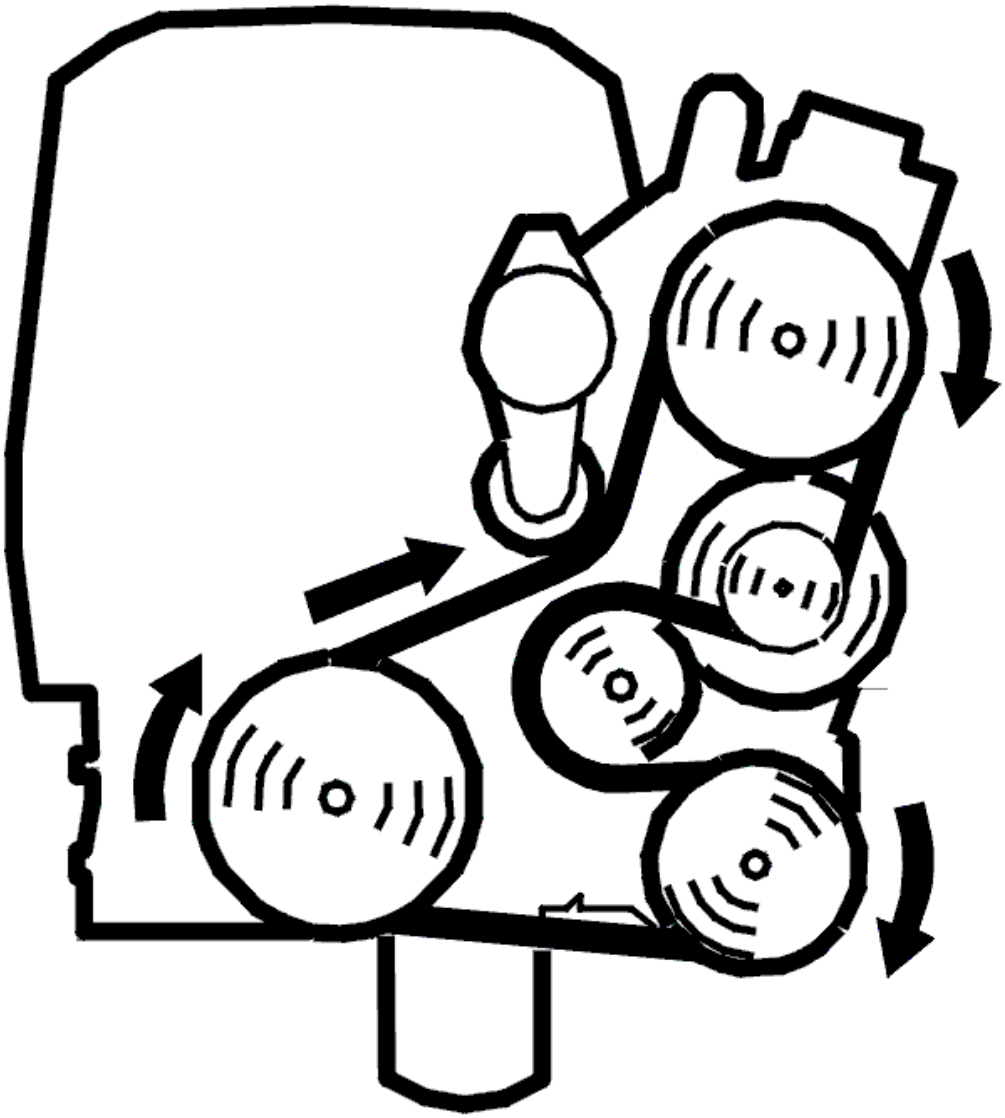

Fig. 305: Belt Routing / Engine Idling - Volvo
Courtesy of VOLVO CARS CORPORATION

- Start the engine.

  Check whether the fault is permanent or intermittent by reading the signal of the air temperature sensor. Check that the value is feasible.

  If the value is not feasible, the fault is permanent. If the value is feasible, the fault is intermittent and not currently active.

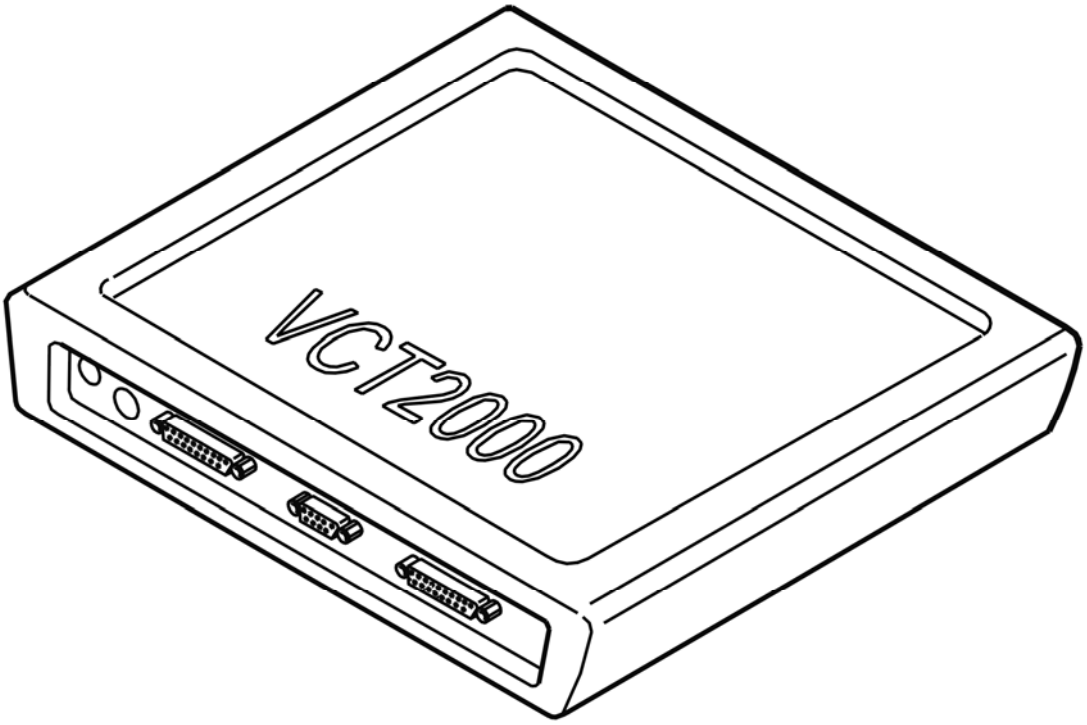

Fig. 306: Identifying VCT2000 Diagnostic Tool Symbol In VIDA
Courtesy of VOLVO CARS CORPORATION

- **Continue**

  Refer to **CHECKING COMPONENTS AND WIRING**

CHECKING COMPONENTS AND WIRING

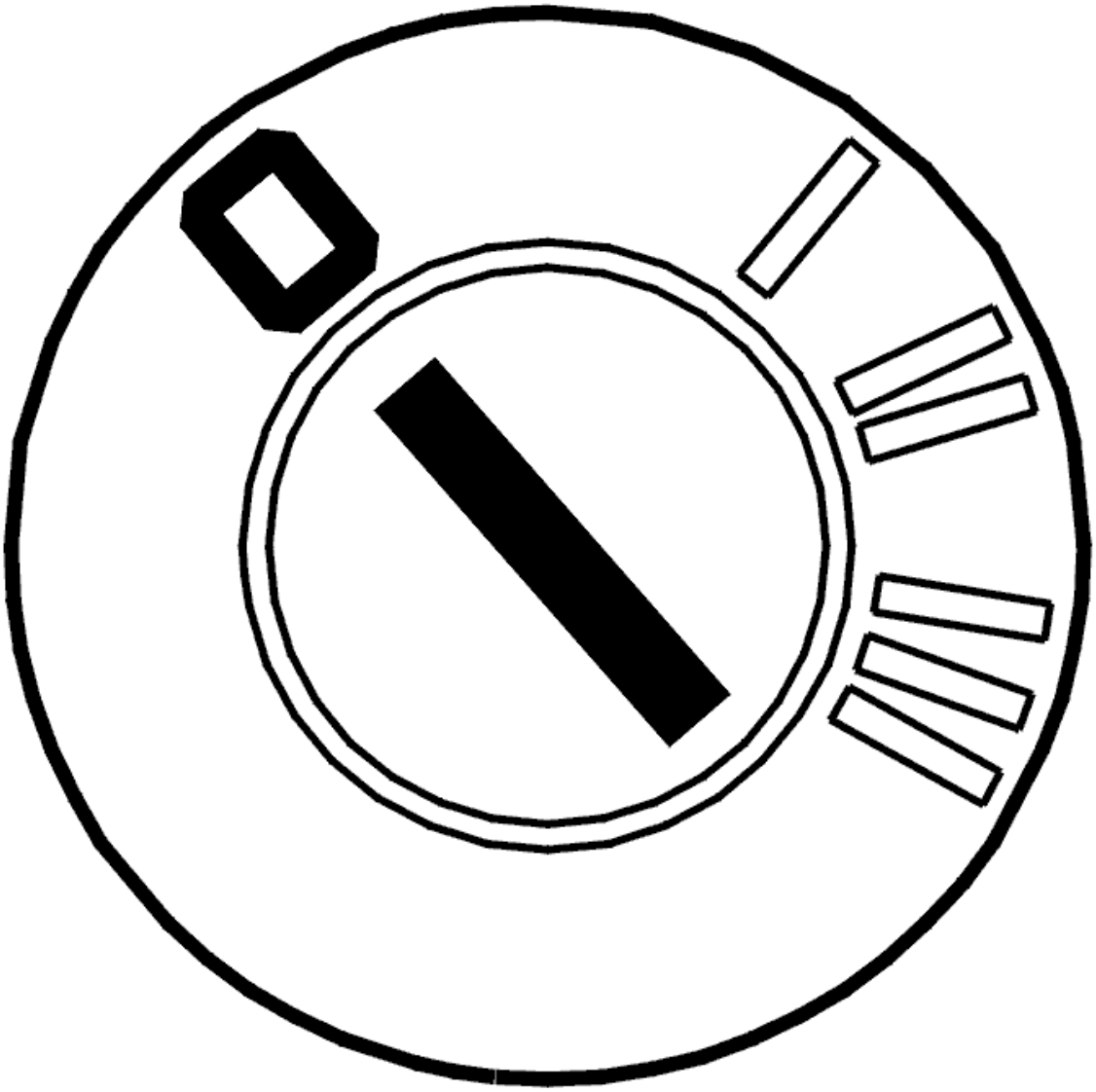

Fig. 307: Identifying Ignition OFF
Courtesy of VOLVO CARS CORPORATION

- Ignition off

  Check the mass air flow sensor connections for contact resistance and oxidation.

  Read the air temperature using the VCT2000 (or appropriate scan tool).

  Remedy as necessary.

  Other information

  - see **CONNECTING THE BREAKOUT BOX**
  - see **SIGNAL SPECIFICATION, ENGINE CONTROL MODULE (ECM)**

- see **MASS AIR FLOW (MAF) SENSOR, REPLACING**
- see **CHECKING WIRING AND TERMINALS**

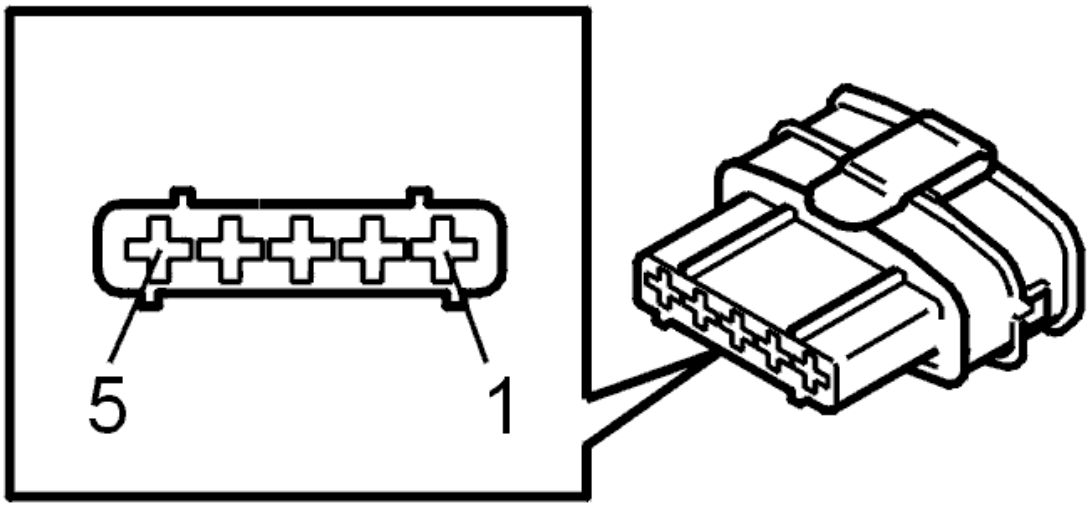

Fig. 308: Identifying Connector
Courtesy of VOLVO CARS CORPORATION

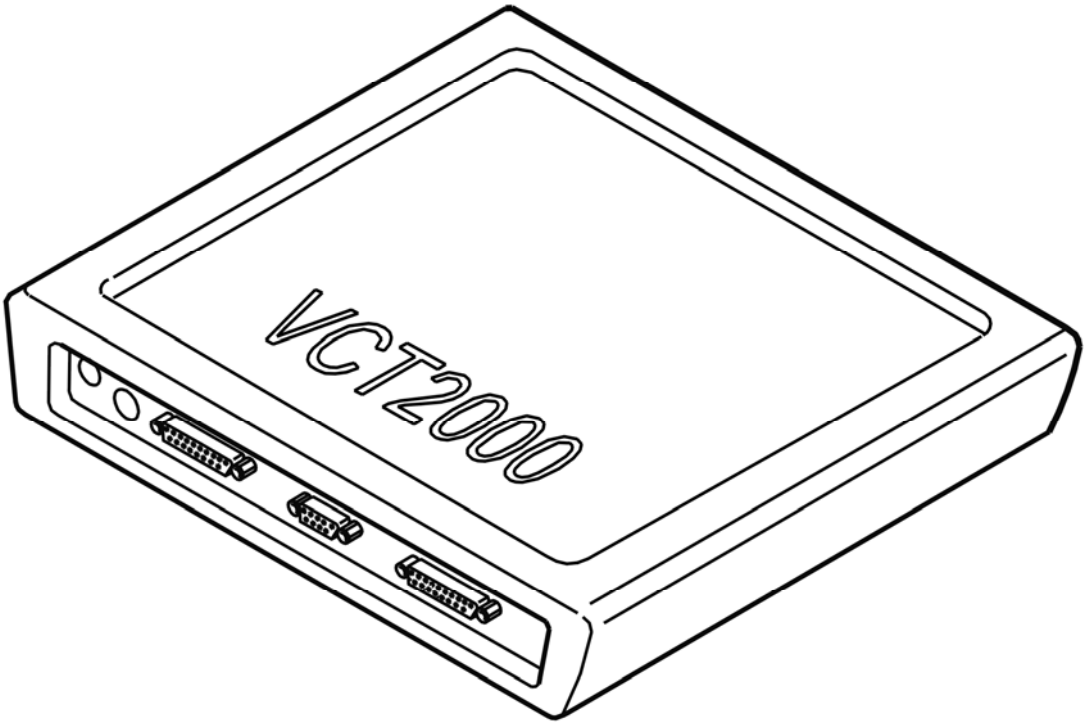

Fig. 309: Identifying VCT2000 Diagnostic Tool Symbol In VIDA
Courtesy of VOLVO CARS CORPORATION

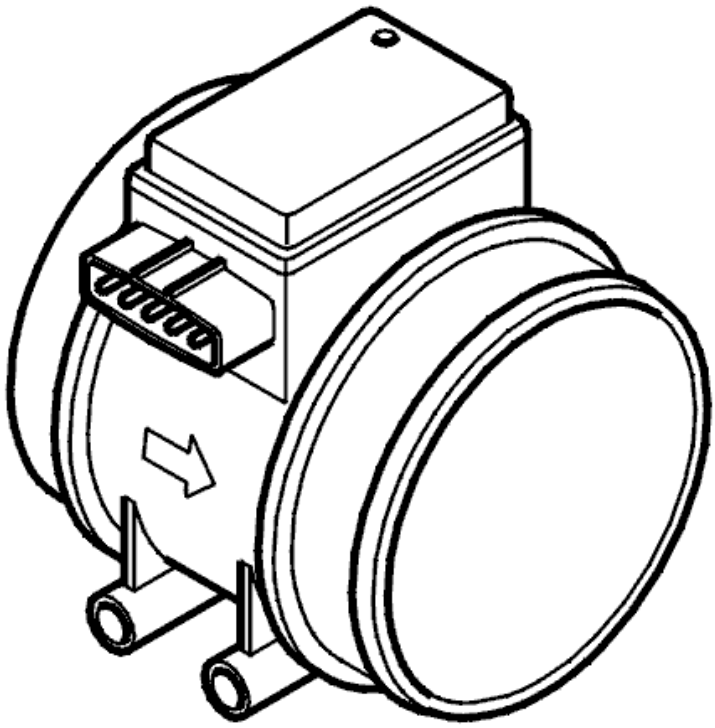

Fig. 310: Identifying Mass Air Flow Sensor (With Integrated Air Temperature Sensor)
Courtesy of VOLVO CARS CORPORATION

- **Continue**

  Refer to **VERIFICATION**

VERIFICATION

VERIFICATION

HINT: After carrying out the repair, check that the fault has been remedied.

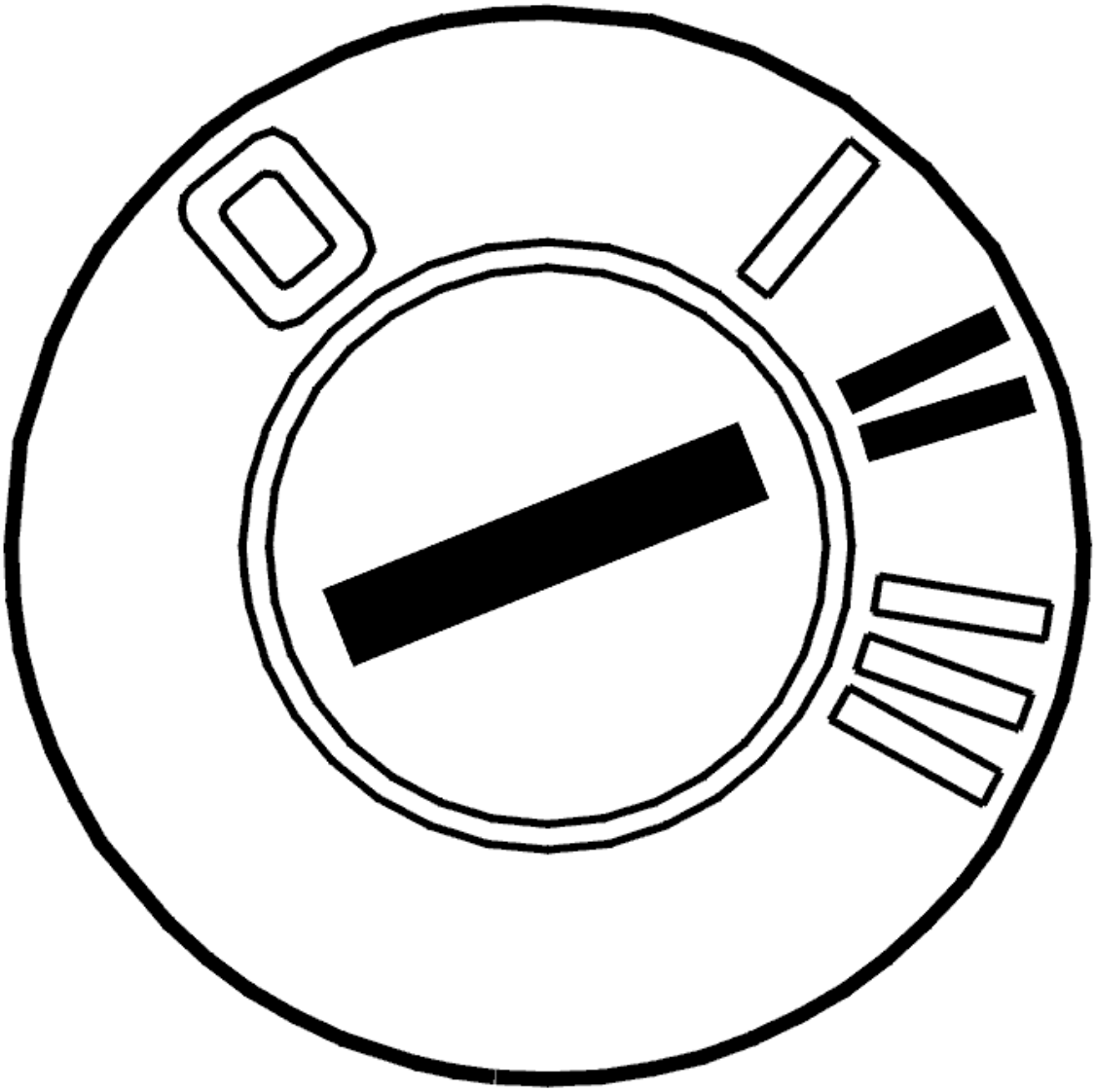

Fig. 311: Identifying Ignition ON
Courtesy of VOLVO CARS CORPORATION

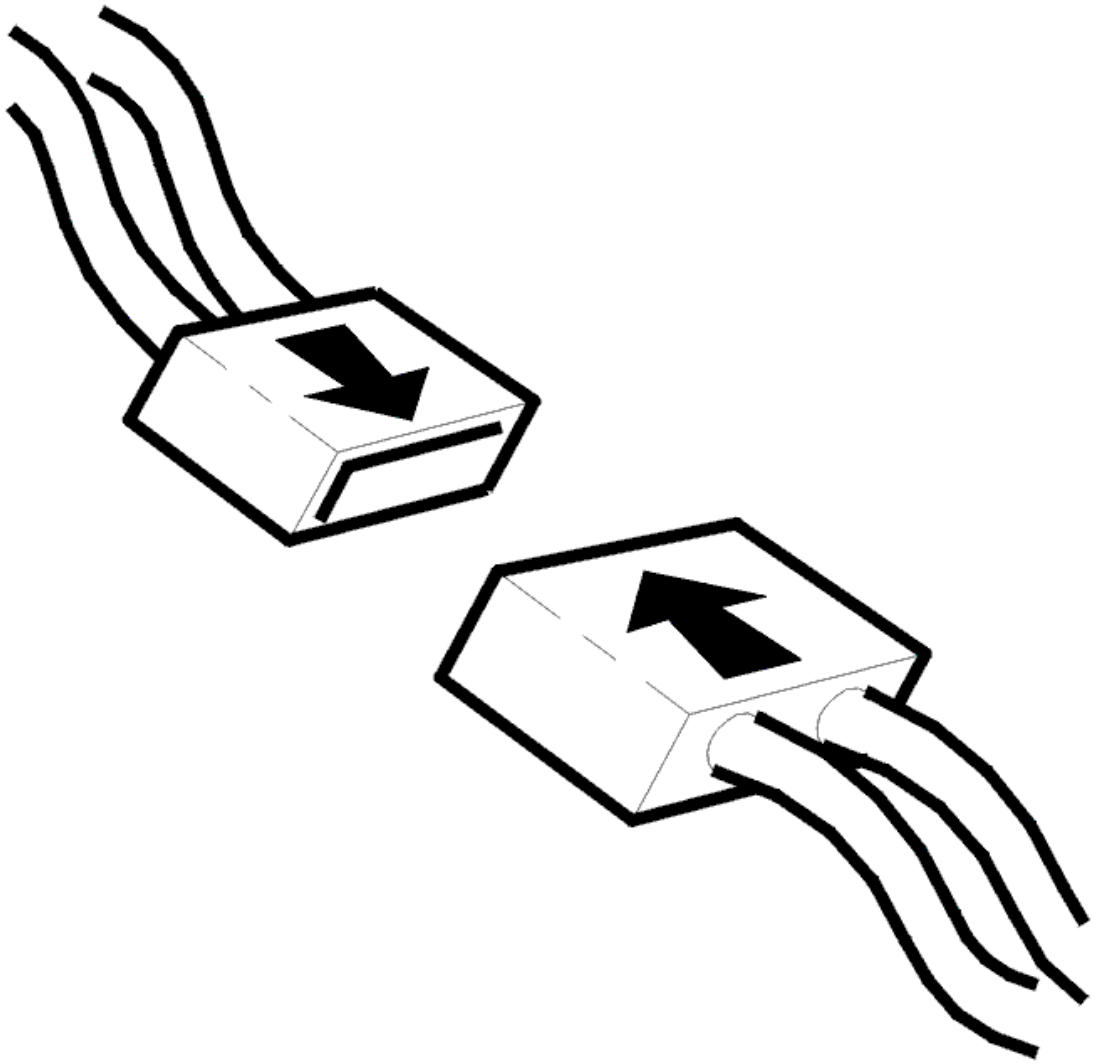

Fig. 312: Connecting Connector
Courtesy of VOLVO CARS CORPORATION

- Ignition off
- Reinstall the connectors, components etc.
- Ignition on

  Read off the intake air temperature sensor's signal using the VCT2000 (or appropriate scan tool).

  Check that the signal is within its permitted range.

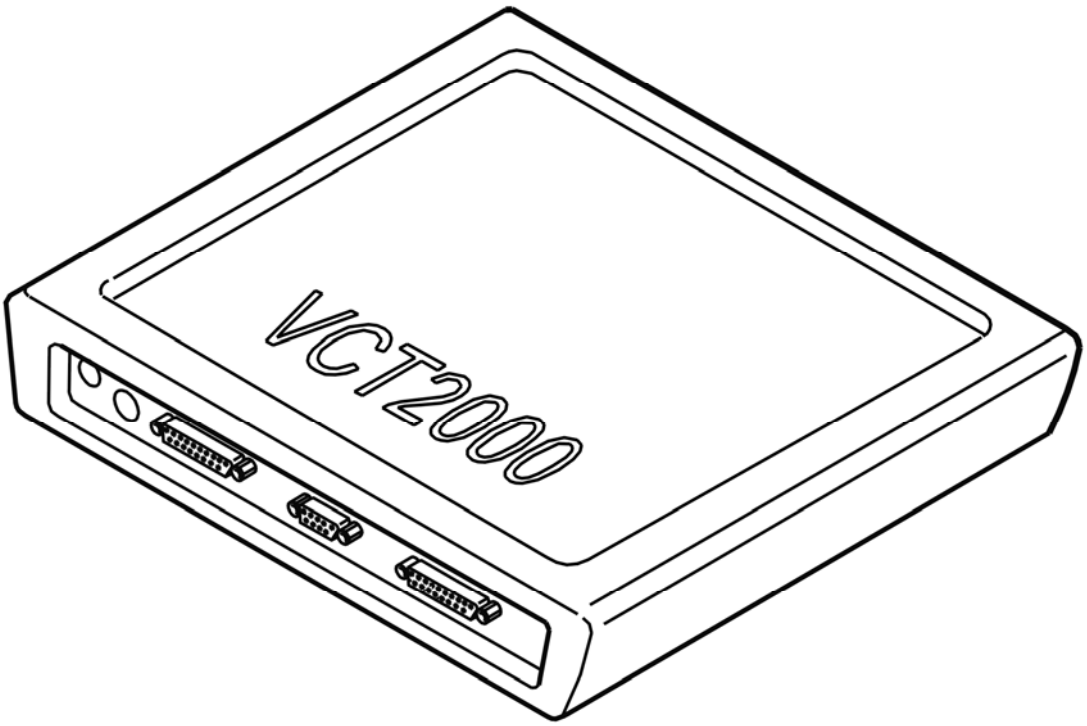

Fig. 313: Identifying VCT2000 Diagnostic Tool Symbol In VIDA
Courtesy of VOLVO CARS CORPORATION

Is the signal within its permitted range?

- **YES**

  VERIFIED: Troubleshooting has been completed.

- **NO**

  Refer to **INFORMATION**

INFORMATION

FAULT-TRACING INFORMATION

The fault should have been detected and remedied. As this is not the case fault-tracing has failed.

Exit fault-tracing for this diagnostic trouble code (DTC) or make another attempt.

ECM-P011200: INTAKE AIR TEMPERATURE SENSOR 1 CIRCUIT LOW INPUT. GENERAL FAILURE INFORMATION. NO SUB TYPE INFORMATION

(B6324S; 2007-2010)

DIAGNOSTIC TROUBLE CODE (DTC) INFORMATION ECM-P011200

Condition

Engine control module (ECM) measures the temperature of the inducted air using an air temperature sensor in the inlet manifold. The control module checks the direct voltage from the sensor.

NOTE: The mass air flow sensor and air temperature sensor are integrated in the same component.

The diagnostic trouble code (DTC) is stored if the control module detects that:

- The direct voltage is lower than 0.112 V.
- Incorrect value lasts longer than 9 seconds.
- Incorrect value lasts for 2 or more subsequent driving cycles.

The control module's test for the diagnostic trouble code (DTC) starts in the event of:

- Ignition switch position II.

NOTE: The control module can only detect the fault once the test has been started and the diagnostic trouble code (DTC) is stored when the conditions are met.

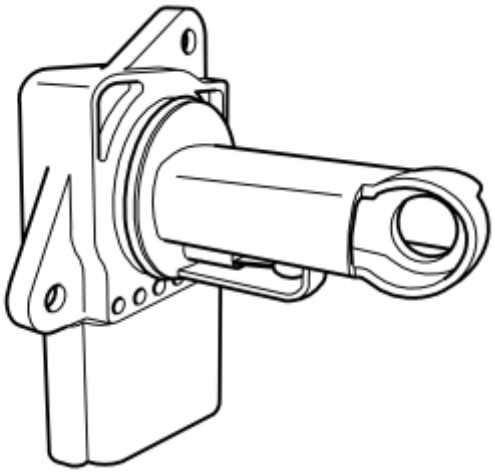

Fig. 314: Identifying Integrated Air Temperature Sensor
Courtesy of VOLVO CARS CORPORATION

Substitute Value

- The control module uses a constant air temperature in the inlet manifold, +30 °C.

Possible Source

- Contact resistance and oxidation in the terminals.
- Short-circuit to ground in the signal cable.
- Damaged intake air temperature (IAT) sensor.

Fault symptom[s]

- Malfunction indicator light (MIL), on

FAULT-TRACING

see **FAULT-TRACING**

ECM-P011200: INTAKE AIR TEMPERATURE SENSOR 1 CIRCUIT LOW INPUT. GENERAL FAILURE INFORMATION. NO SUB TYPE INFORMATION (B6324S5; 2011-2012)

DIAGNOSTIC TROUBLE CODE (DTC) INFORMATION ECM-P011200

see **DIAGNOSTIC TROUBLE CODE (DTC) INFORMATION ECM-P011200**

FAULT-TRACING

see **FAULT-TRACING**

ECM-P011200: INTAKE AIR TEMPERATURE SENSOR 1 CIRCUIT LOW INPUT SIGNAL. GENERAL FAULT INFORMATION. TYPE OF FAULT NOT SPECIFIED. (B8444S; 2005-2011)

DIAGNOSTIC TROUBLE CODE (DTC) INFORMATION ECM-P011200

Condition

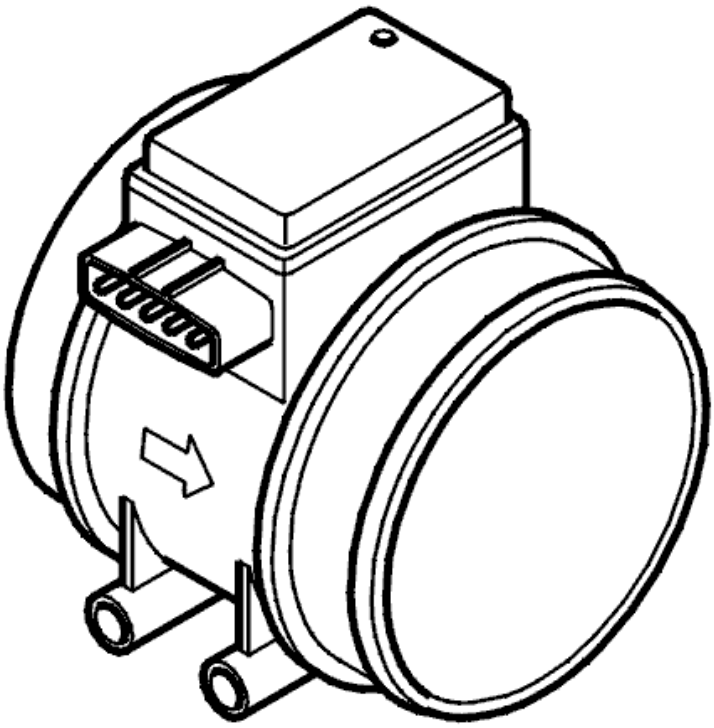

Fig. 315: Identifying Mass Air Flow Sensor (With Integrated Air Temperature Sensor)
Courtesy of VOLVO CARS CORPORATION

The engine control module (ECM) measures the temperature of intake air using a temperature sensor in the intake manifold (integrated in the mass air flow sensor).

The diagnostic trouble code (DTC) is stored if the Engine Control Module (ECM) detects that the signal from the intake air temperature (IAT) sensor in the intake manifold is too low.

The diagnostic trouble code can be diagnosed when the ignition is on.

Substitute Value

- The intake temperature value is set to 30 °C.

Possible Source

- The signal cable is short-circuited to ground.
- Damaged air temperature sensor (integrated in mass air flow sensor).

Fault symptom[s]

- Malfunction indicator lamp (MIL) lit.

FAULT TRACING ECM-P011200

CHECKING THE STATUS

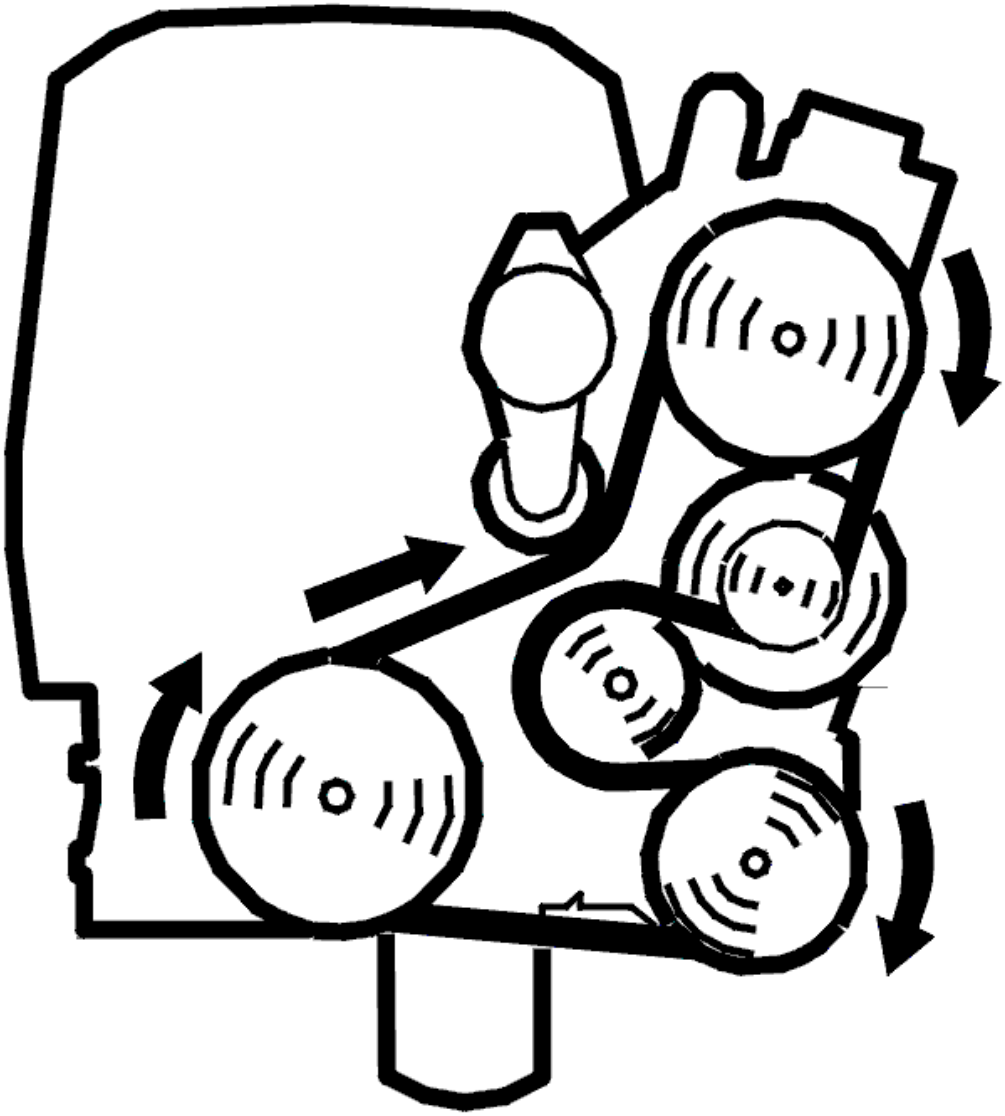

Fig. 316: Belt Routing / Engine Idling - Volvo
Courtesy of VOLVO CARS CORPORATION

- Start the engine.

  Check whether the fault is permanent or intermittent by reading the signal of the air temperature sensor. Check that the value is feasible.

  If the value is not feasible, the fault is permanent. If the value is feasible, the fault is intermittent and not currently active.

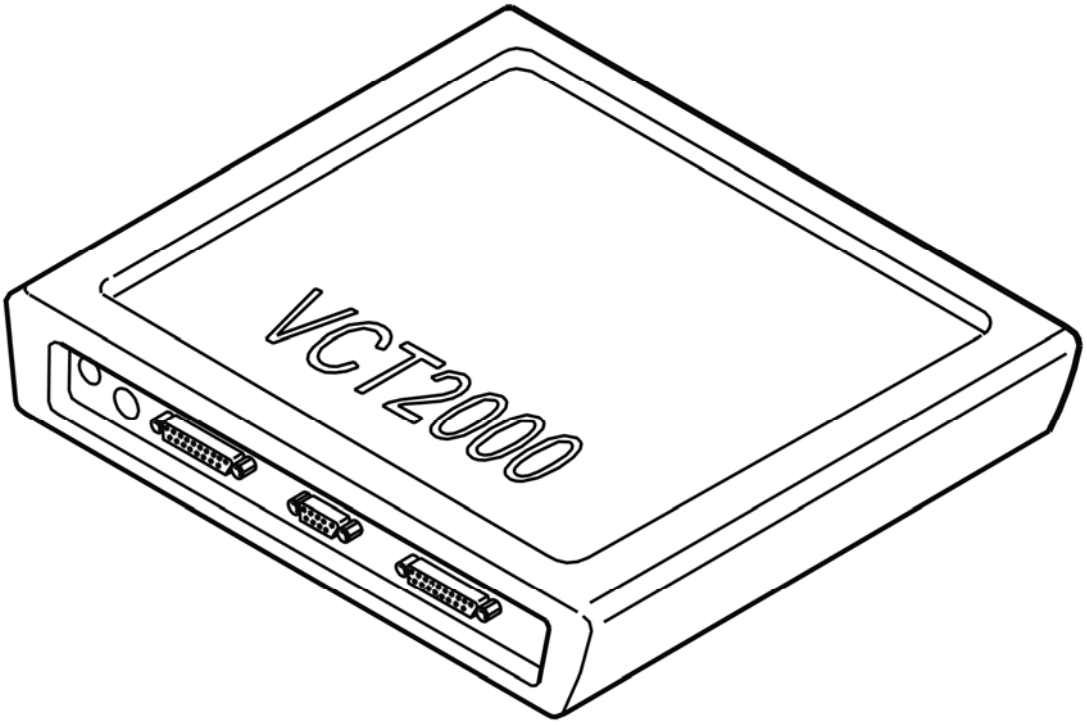

Fig. 317: Identifying VCT2000 Diagnostic Tool Symbol In VIDA
Courtesy of VOLVO CARS CORPORATION

- **Continue**

  Refer to **CHECKING COMPONENTS AND WIRING**

CHECKING COMPONENTS AND WIRING

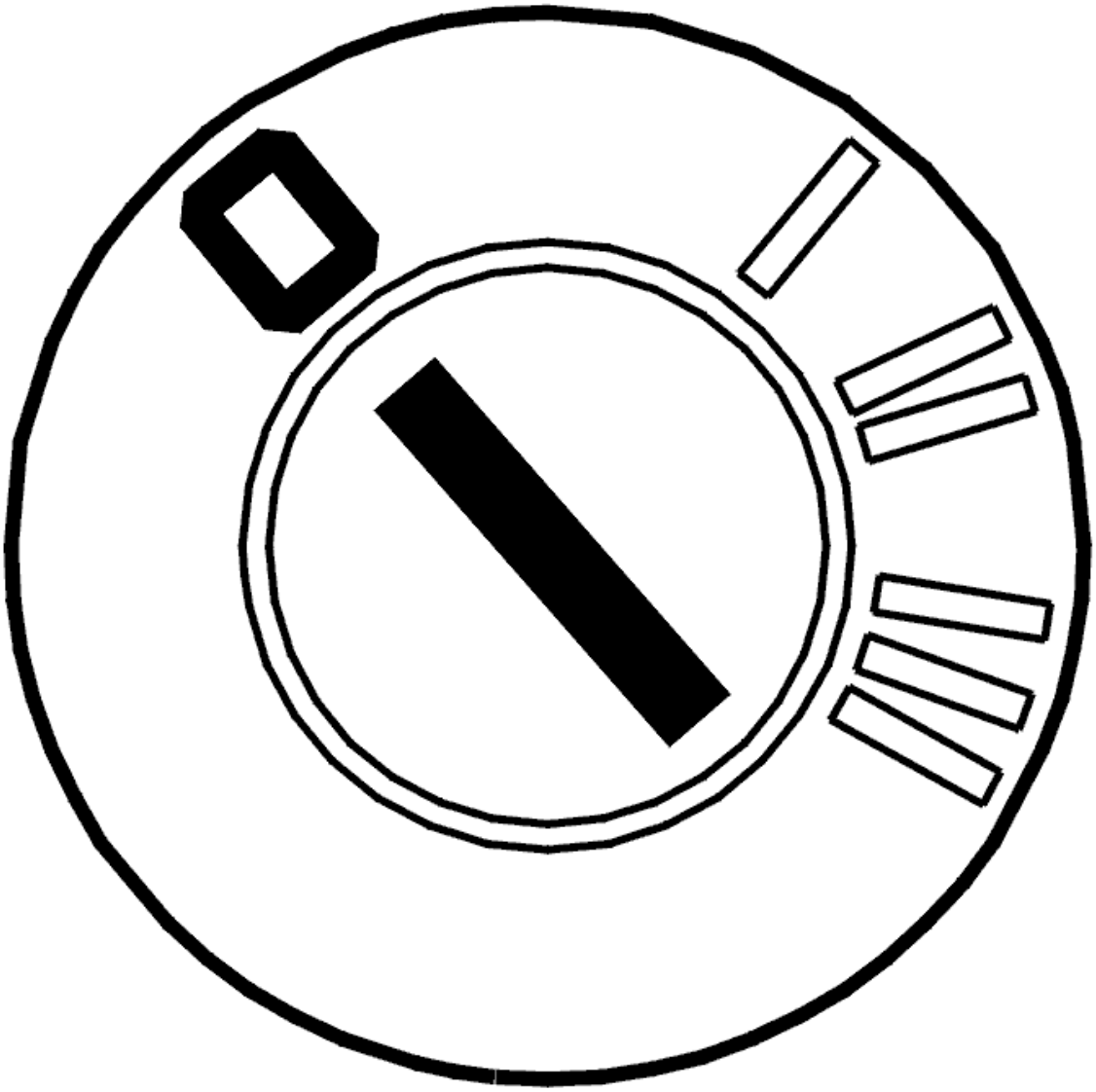

Fig. 318: Identifying Ignition OFF
Courtesy of VOLVO CARS CORPORATION

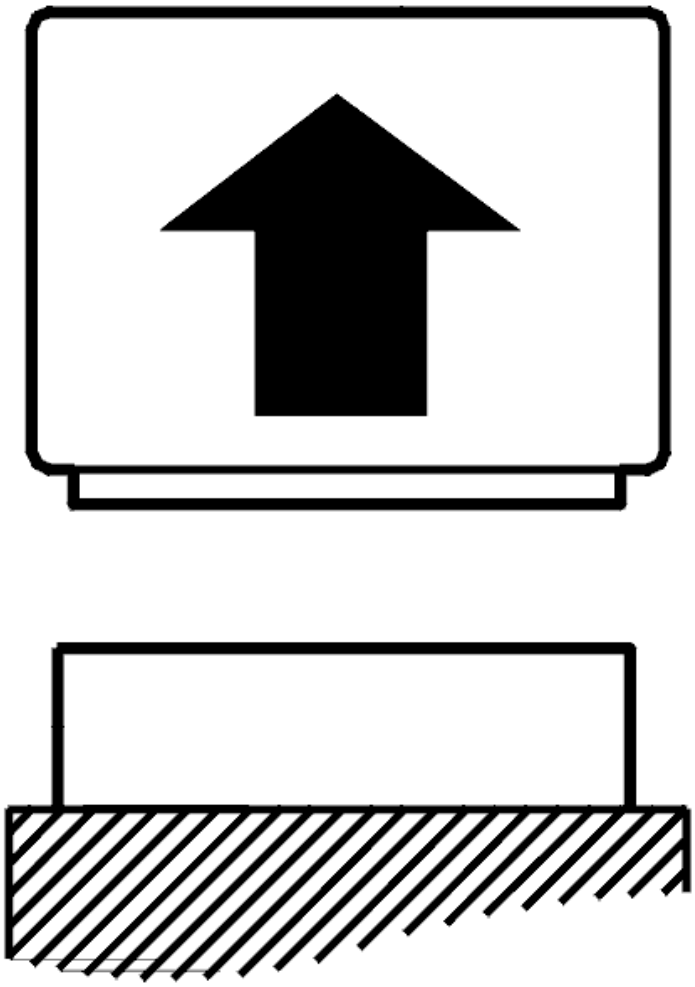

Fig. 319: Disconnecting Connector
Courtesy of VOLVO CARS CORPORATION

- Ignition off
- Disconnect the engine control module (ECM).

Check the temperature sensor signal cable for short-circuit to ground.

Measure between control module terminal #A66 (#B6) and mass air flow sensor terminal #4.

Read the air temperature using the VCT2000 (or appropriate scan tool).

Remedy as necessary.

Other information

- see **CONNECTING THE BREAKOUT BOX**
- see **SIGNAL SPECIFICATION, ENGINE CONTROL MODULE (ECM)**
- see **MASS AIR FLOW (MAF) SENSOR, REPLACING**
- see **CHECKING WIRING AND TERMINALS**

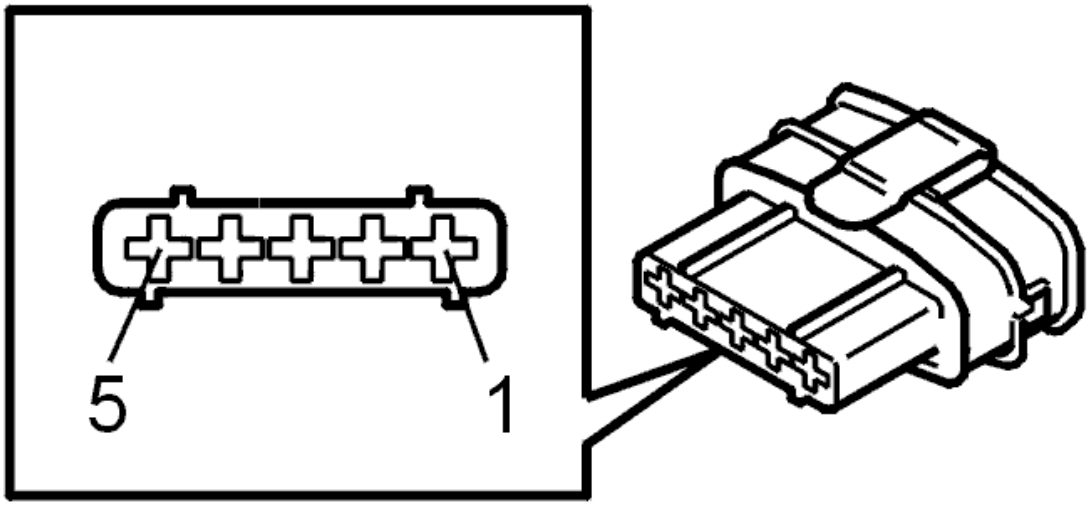

Fig. 320: Identifying Connector
Courtesy of VOLVO CARS CORPORATION

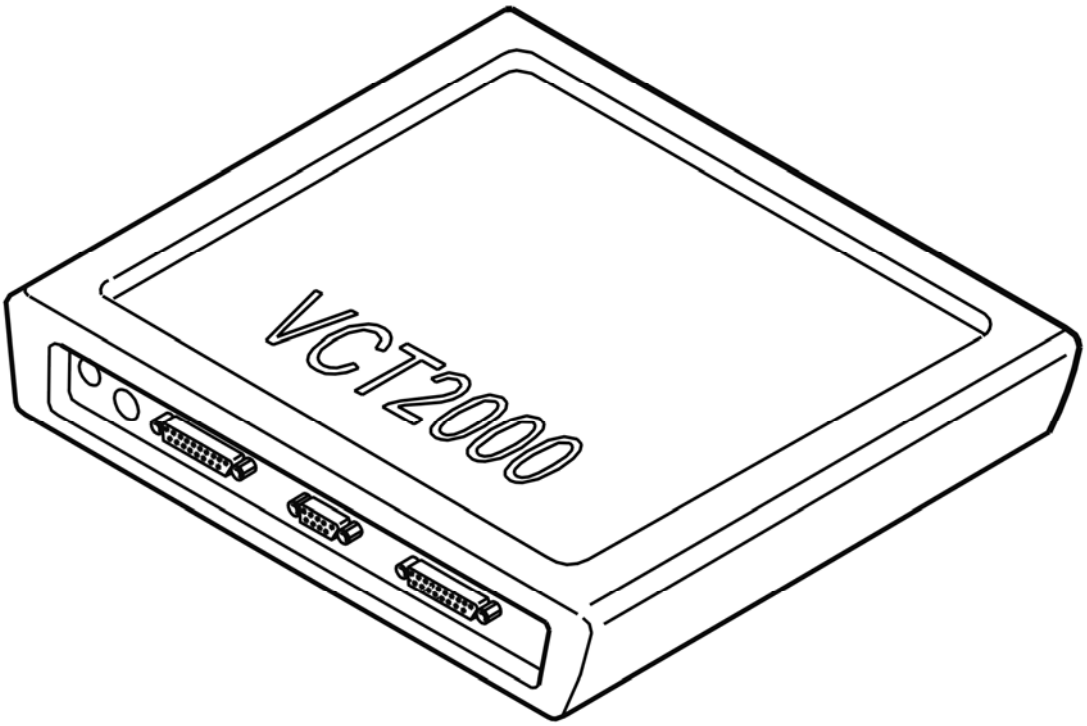

Fig. 321: Identifying VCT2000 Diagnostic Tool Symbol In VIDA
Courtesy of VOLVO CARS CORPORATION

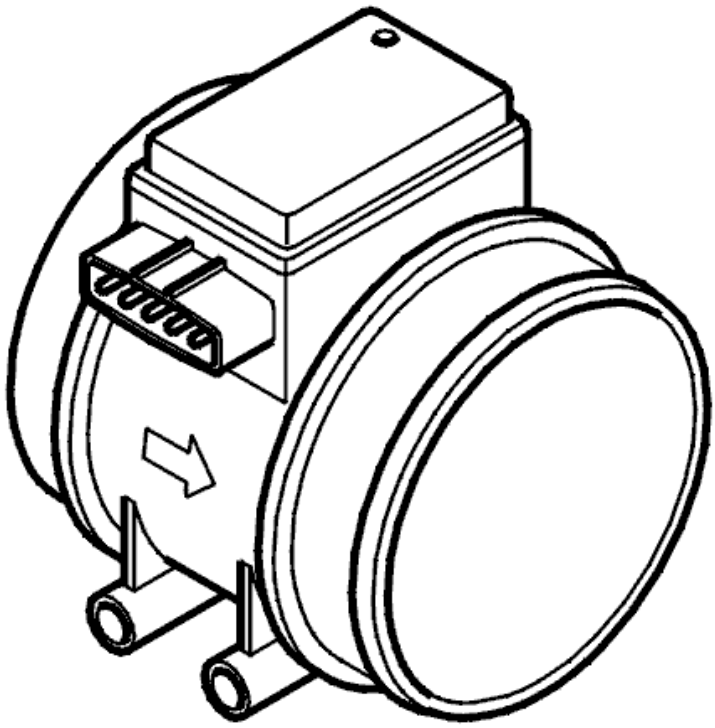

Fig. 322: Identifying Mass Air Flow Sensor (With Integrated Air Temperature Sensor)
Courtesy of VOLVO CARS CORPORATION

- **Continue**

  Refer to **VERIFICATION**

VERIFICATION

VERIFICATION

HINT: After carrying out the repair, check that the fault has been remedied.

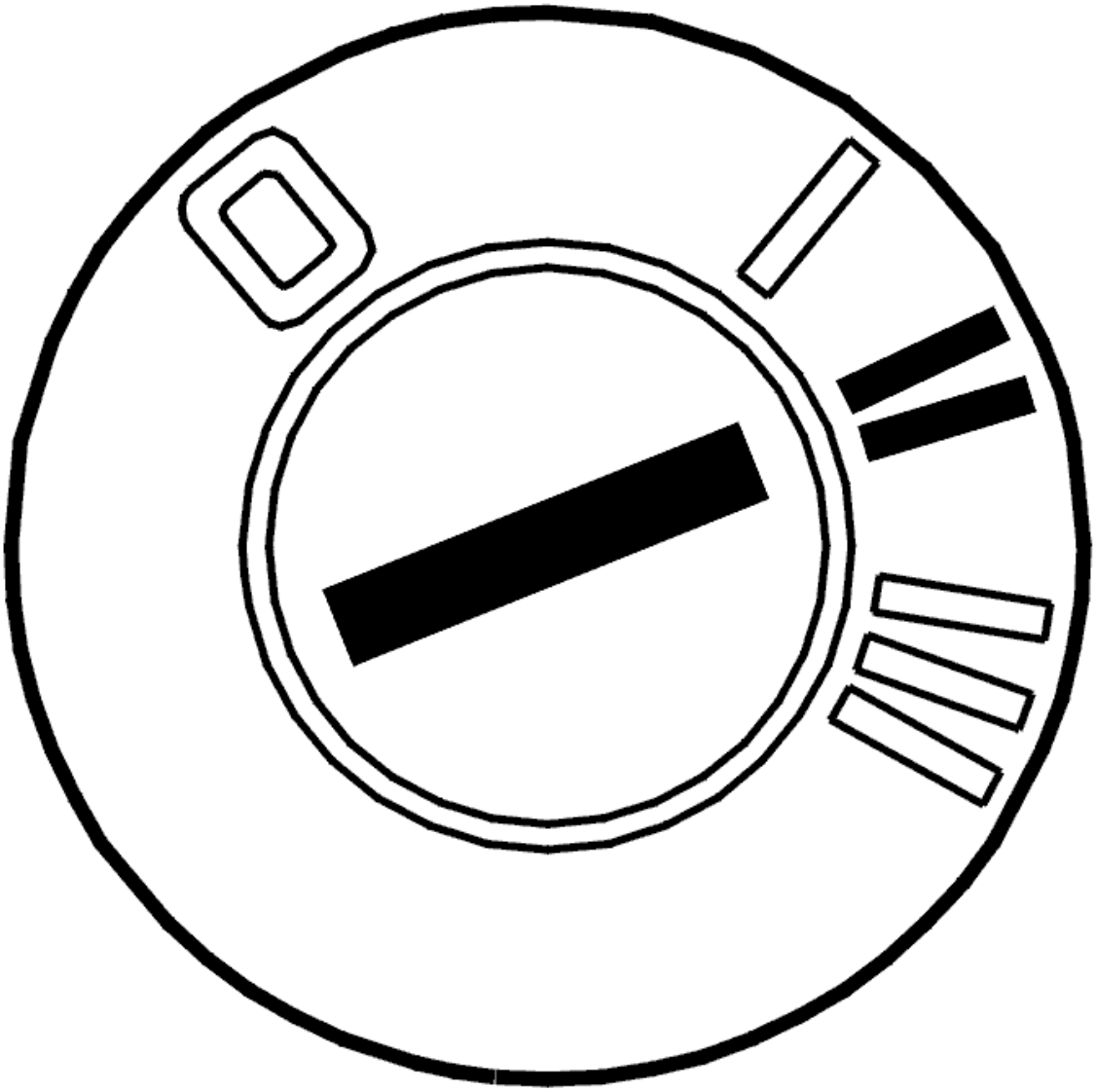

Fig. 323: Identifying Ignition ON
Courtesy of VOLVO CARS CORPORATION

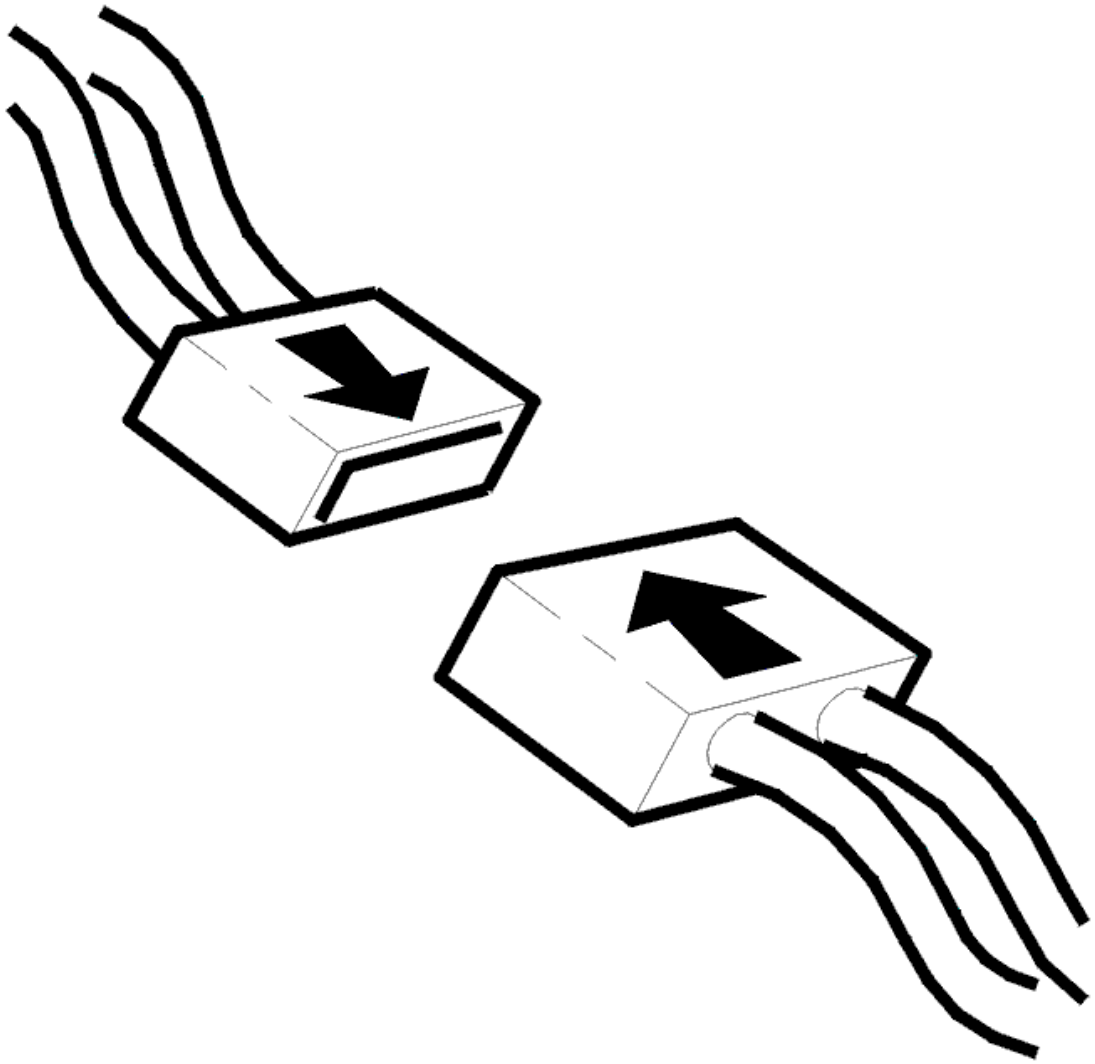

Fig. 324: Connecting Connector
Courtesy of VOLVO CARS CORPORATION

- Ignition off
- Reinstall the connectors, components etc.
- Ignition on

  Read off the intake air temperature sensor's signal using the VCT2000 (or appropriate scan tool).

  Check that the signal is within its permitted range.

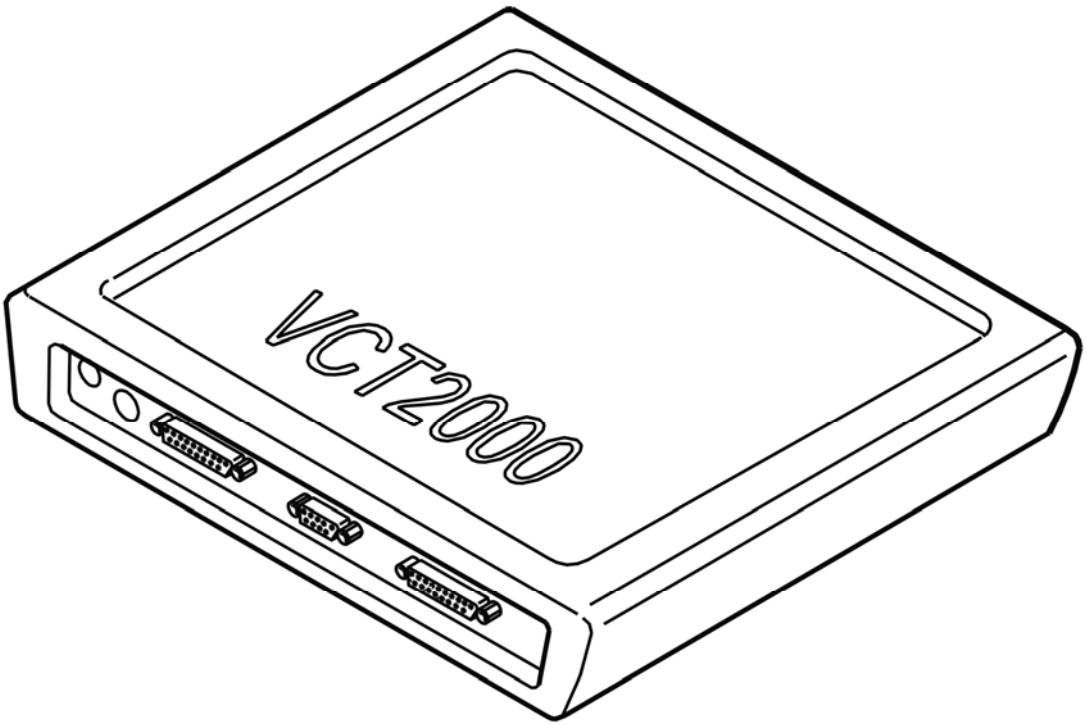

Fig. 325: Identifying VCT2000 Diagnostic Tool Symbol In VIDA
Courtesy of VOLVO CARS CORPORATION

Is the signal within its permitted range?

- **YES**

  VERIFIED: Troubleshooting has been completed.

- **NO**

  Refer to **INFORMATION**

INFORMATION

FAULT-TRACING INFORMATION

The fault should have been detected and remedied. As this is not the case fault-tracing has failed.

Exit fault-tracing for this diagnostic trouble code (DTC) or make another attempt.

ECM-P011300: INTAKE AIR TEMPERATURE SENSOR 1 CIRCUIT HIGH INPUT. GENERAL FAILURE INFORMATION. NO SUB TYPE INFORMATION

(B6324S; 2007-2010)

DIAGNOSTIC TROUBLE CODE (DTC) INFORMATION ECM-P011300

Condition

Engine control module (ECM) measures the temperature of the inducted air using an air temperature sensor in the inlet manifold. The control module checks the direct voltage from the sensor.

NOTE: The mass air flow sensor and air temperature sensor are integrated in the same component.

The diagnostic trouble code (DTC) is stored if the control module detects that:

- The direct voltage is higher than 4.902 V.
- Incorrect value lasts longer than 9 seconds.
- Incorrect value lasts for 2 or more subsequent driving cycles.

The control module's test for the diagnostic trouble code (DTC) starts in the event of:

- Ignition switch position II.

NOTE: The control module can only detect the fault once the test has been started and the diagnostic trouble code (DTC) is stored when the conditions are met.

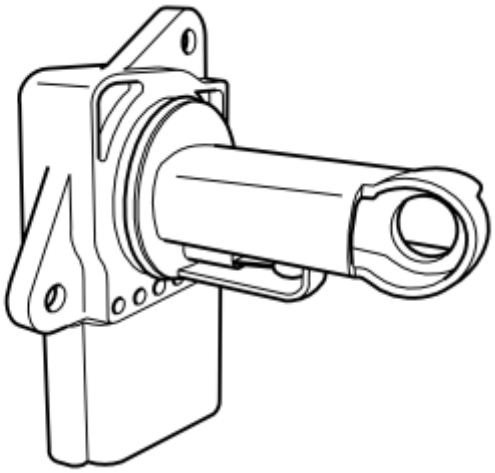

Fig. 326: Identifying Integrated Air Temperature Sensor
Courtesy of VOLVO CARS CORPORATION

Substitute Value

- The control module uses a constant air temperature in the inlet manifold, +30 °C.

Possible Source

- Contact resistance and oxidation in the terminals.
- Short-circuit to supply voltage in the signal cable.
- Open-circuit in the signal cable.
- Damaged intake air temperature (IAT) sensor.

Fault symptom[s]

- Malfunction indicator light (MIL), on

FAULT-TRACING

see **FAULT-TRACING**

ECM-P011300: INTAKE AIR TEMPERATURE SENSOR 1 CIRCUIT HIGH INPUT. GENERAL FAILURE INFORMATION. NO SUB TYPE INFORMATION (B6324S5; 2011-2012)

DIAGNOSTIC TROUBLE CODE (DTC) INFORMATION ECM-P011300

see **DIAGNOSTIC TROUBLE CODE (DTC) INFORMATION ECM-P011300**

FAULT-TRACING

see **FAULT-TRACING**

ECM-P011300: INTAKE AIR TEMPERATURE SENSOR 1 CIRCUIT HIGH INPUT SIGNAL. GENERAL FAULT INFORMATION. TYPE OF FAULT NOT SPECIFIED. (B8444S; 2005-2011)

DIAGNOSTIC TROUBLE CODE (DTC) INFORMATION ECM-P011300

Condition

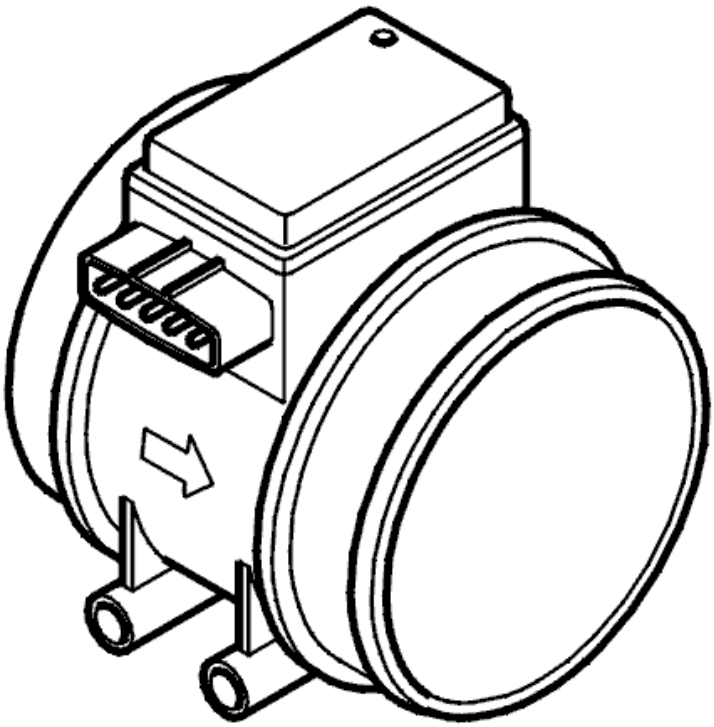

Fig. 327: Identifying Mass Air Flow Sensor (With Integrated Air Temperature Sensor)
Courtesy of VOLVO CARS CORPORATION

The engine control module (ECM) measures the temperature of intake air using a temperature sensor in the intake manifold (integrated in the mass air flow sensor).

The diagnostic trouble code (DTC) is stored if the Engine Control Module (ECM) detects that the signal from the intake air temperature (IAT) sensor in the intake manifold is too high.

The diagnostic trouble code can be diagnosed when the ignition is on.

Substitute Value

- The intake temperature value is set to 30 °C.

Possible Source

- The signal cable is short-circuited to supply voltage.
- Open-circuit in the signal cable.
- Damaged air temperature sensor (integrated in mass air flow sensor).

Fault symptom[s]

- Malfunction indicator lamp (MIL) lit.

FAULT TRACING ECM-P011300

CHECKING THE STATUS

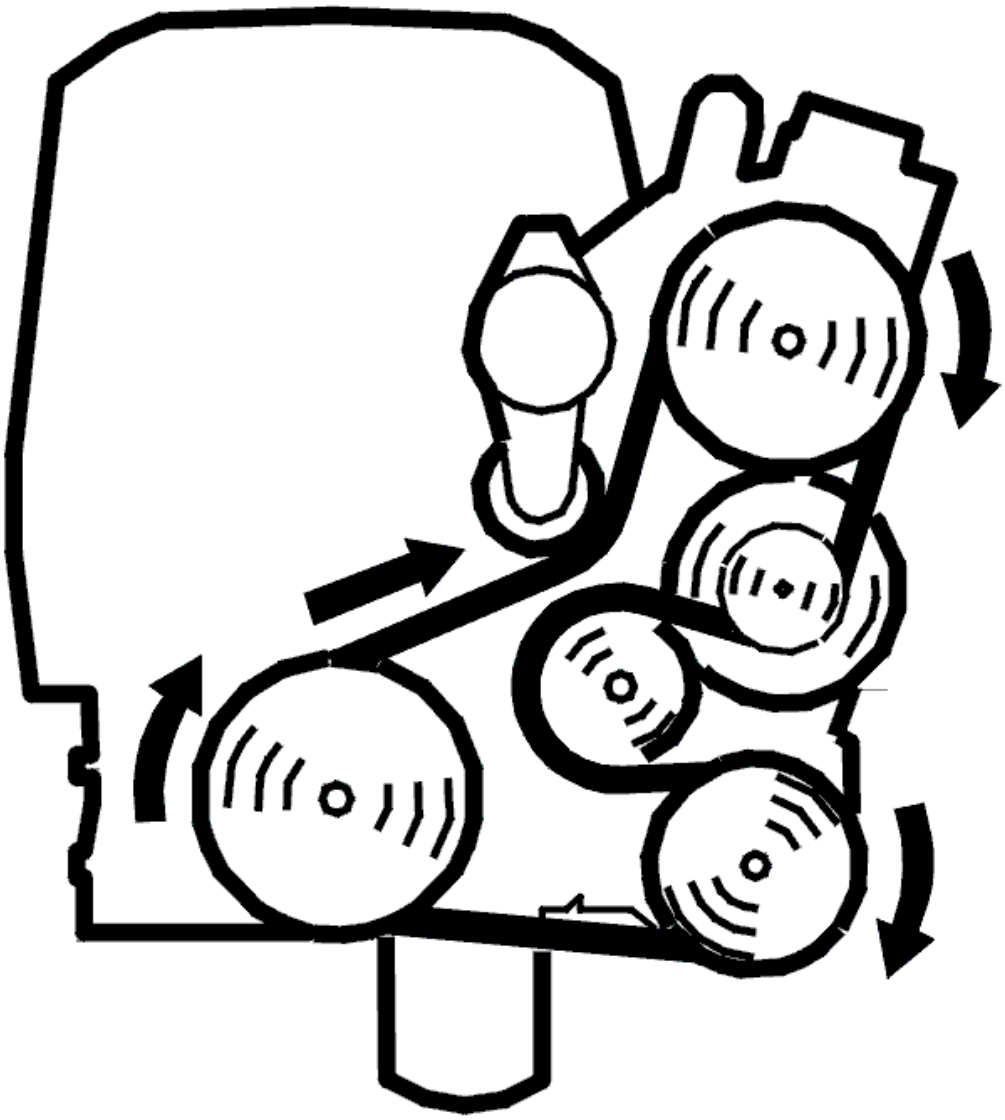

Fig. 328: Belt Routing / Engine Idling - Volvo
Courtesy of VOLVO CARS CORPORATION

- Start the engine.

  Check whether the fault is permanent or intermittent by reading the signal of the air temperature sensor. Check that the value is feasible.

  If the value is not feasible, the fault is permanent. If the value is feasible, the fault is intermittent and not currently active.

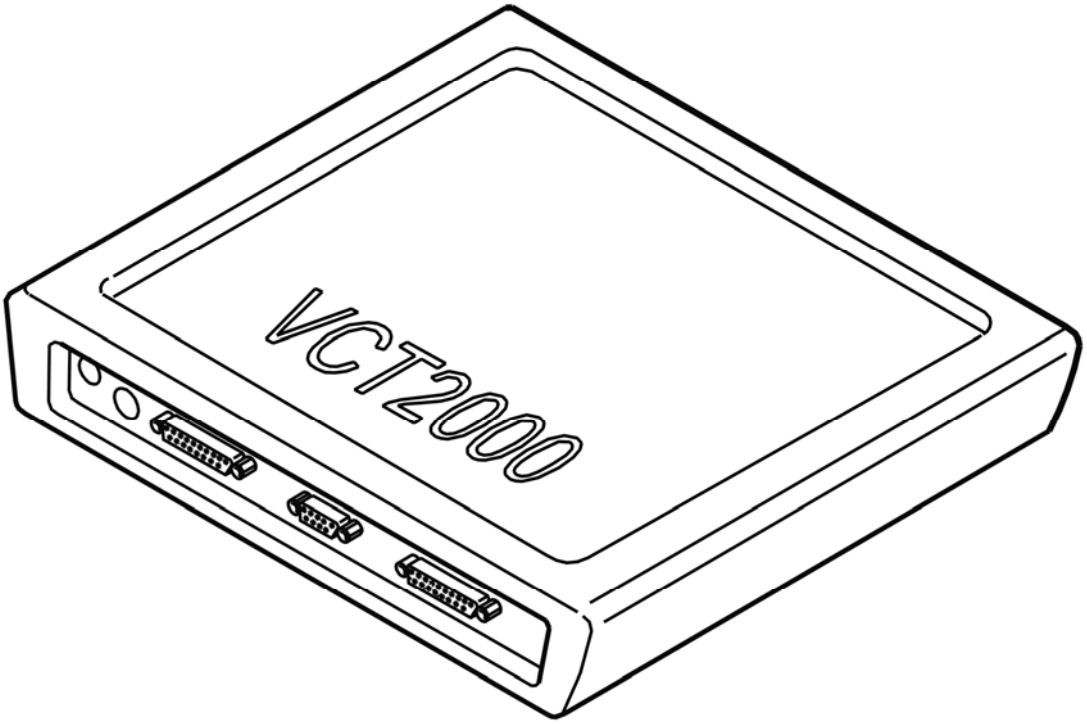

Fig. 329: Identifying VCT2000 Diagnostic Tool Symbol In VIDA
Courtesy of VOLVO CARS CORPORATION

- **Continue**

  Refer to **CHECKING COMPONENTS AND WIRING**

CHECKING COMPONENTS AND WIRING

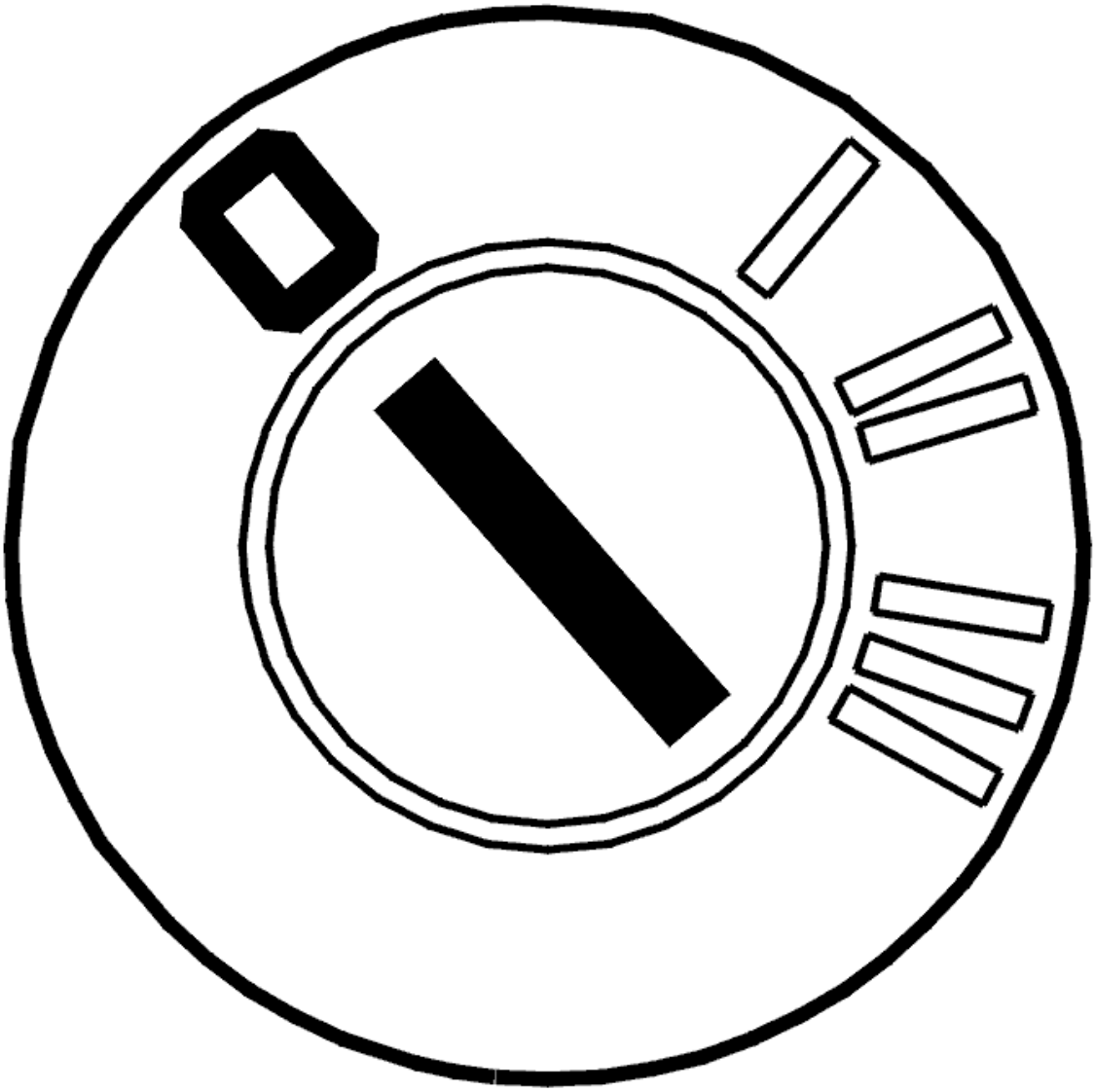

Fig. 330: Identifying Ignition OFF
Courtesy of VOLVO CARS CORPORATION

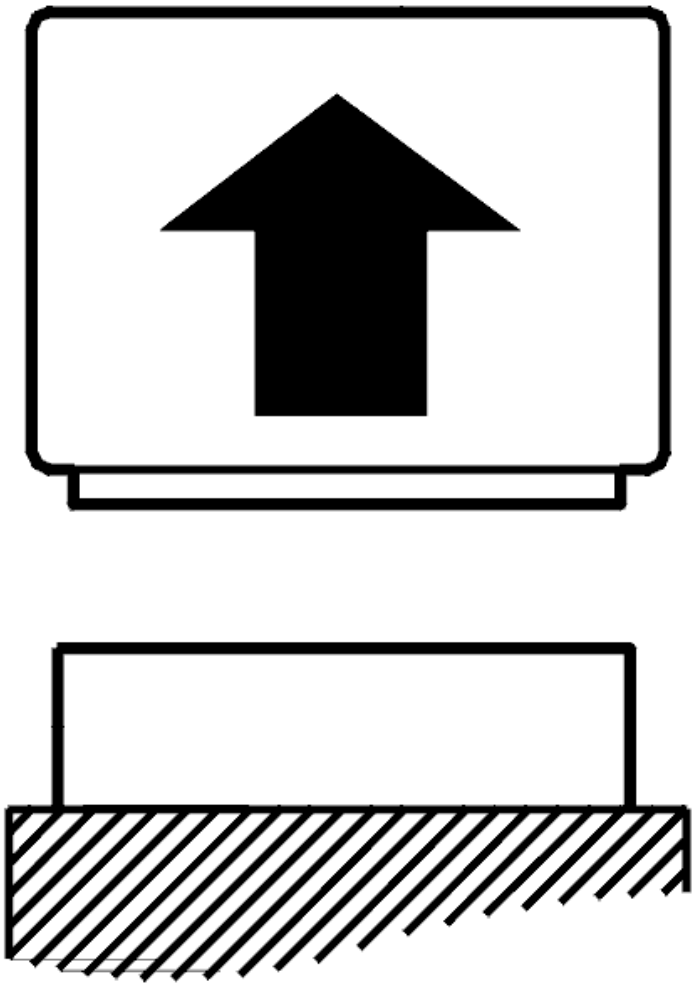

Fig. 331: Disconnecting Connector
Courtesy of VOLVO CARS CORPORATION

- Ignition off
- Disconnect the engine control module (ECM).

  Check the signal cable. Check for a short-circuit to supply voltage. Check the signal cable with regard to open circuit.

  Measure between control module terminal #A66 (#B6) and mass air flow sensor terminal #4.

  Read the air temperature using the VCT2000 (or appropriate scan tool).

  Remedy as necessary.

  Other information

- see **CONNECTING THE BREAKOUT BOX**
- see **SIGNAL SPECIFICATION, ENGINE CONTROL MODULE (ECM)**
- see **MASS AIR FLOW (MAF) SENSOR, REPLACING**
- see **CHECKING WIRING AND TERMINALS**

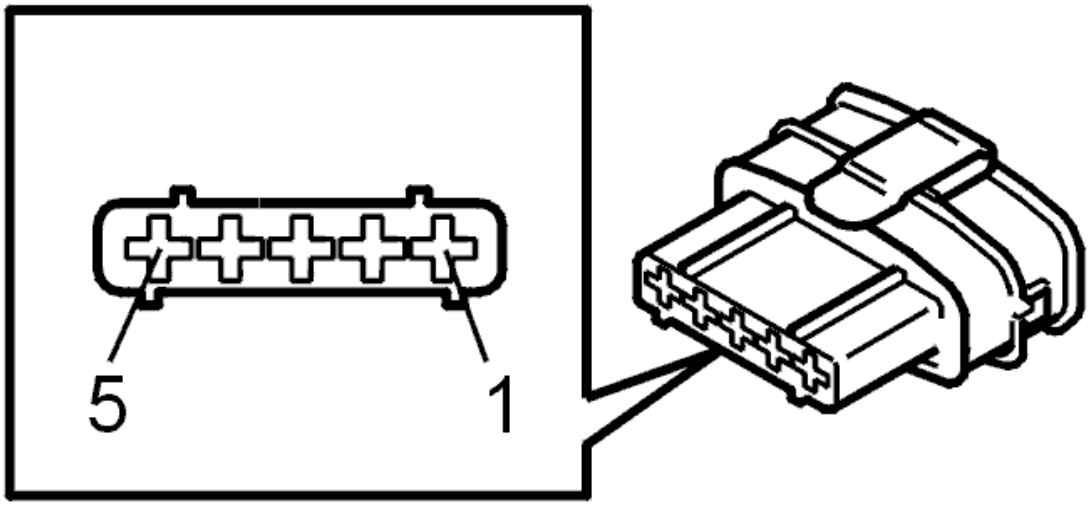

Fig. 332: Identifying Connector
Courtesy of VOLVO CARS CORPORATION

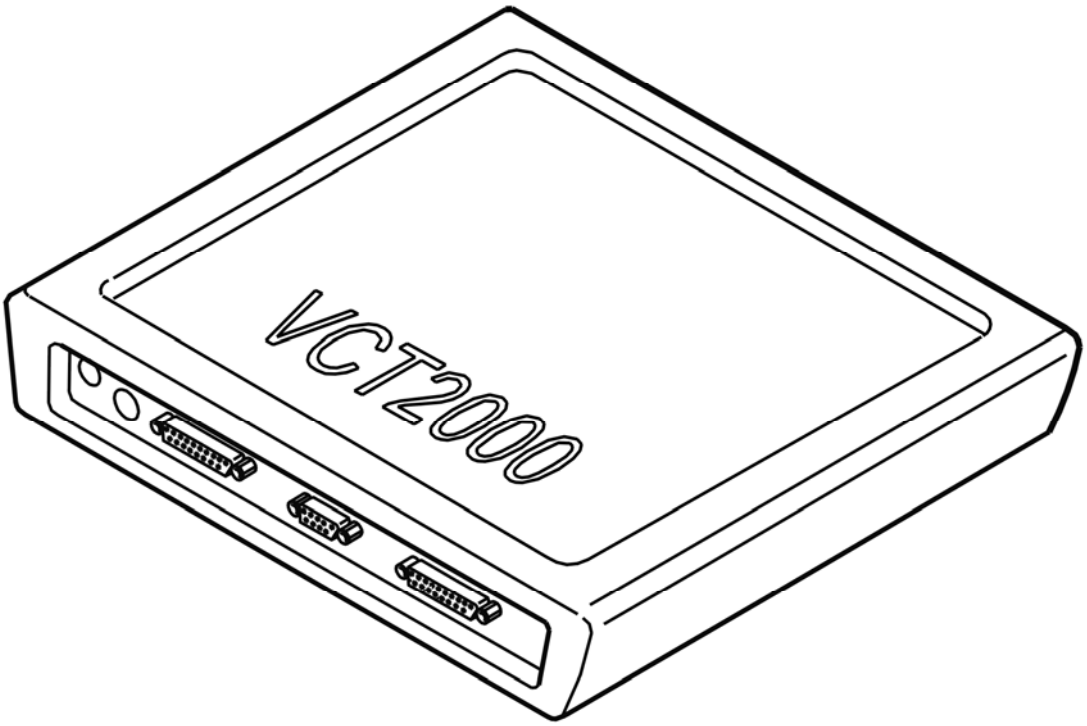

Fig. 333: Identifying VCT2000 Diagnostic Tool Symbol In VIDA
Courtesy of VOLVO CARS CORPORATION

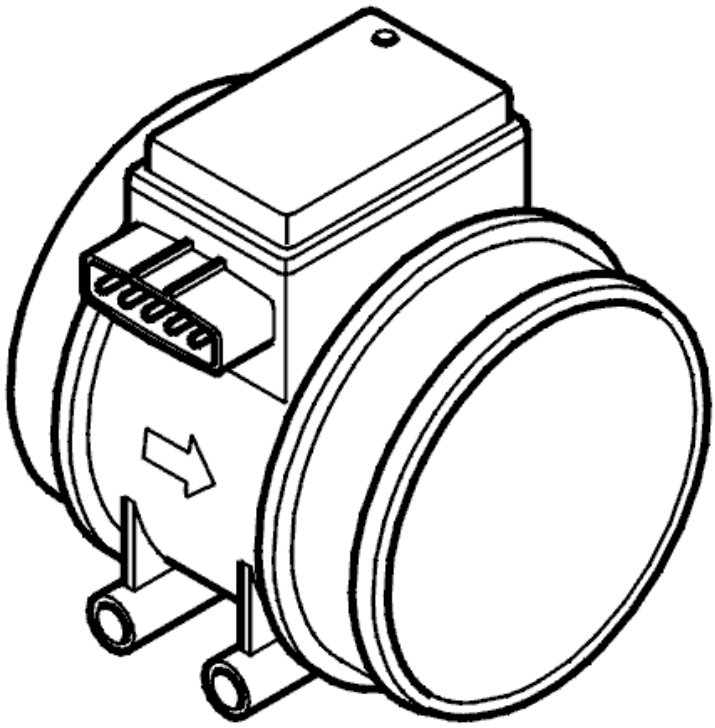

Fig. 334: Identifying Mass Air Flow Sensor (With Integrated Air Temperature Sensor)
Courtesy of VOLVO CARS CORPORATION

- **Continue**

  Refer to **VERIFICATION**

VERIFICATION

VERIFICATION

HINT: After carrying out the repair, check that the fault has been remedied.

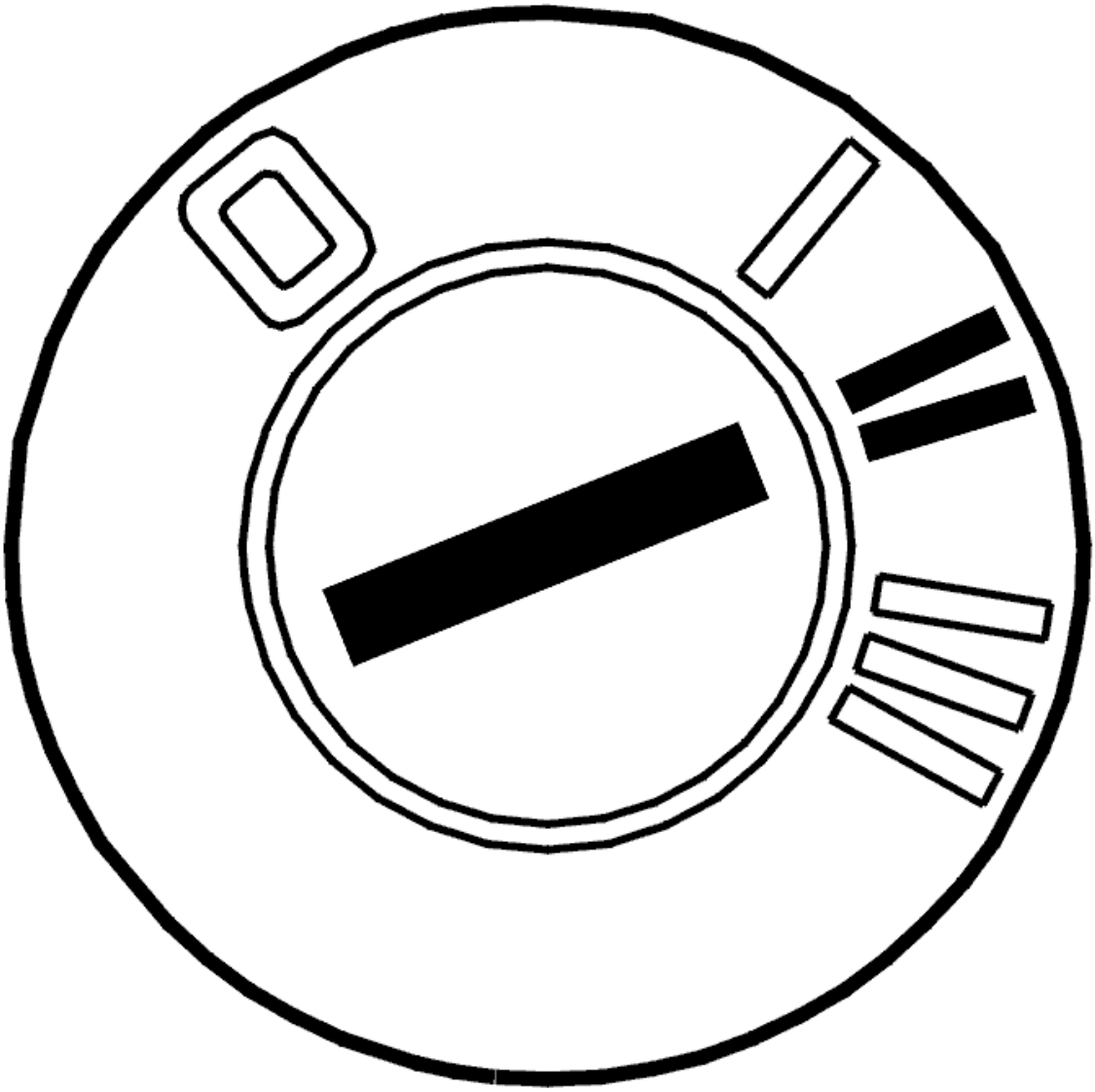

Fig. 335: Identifying Ignition ON
Courtesy of VOLVO CARS CORPORATION

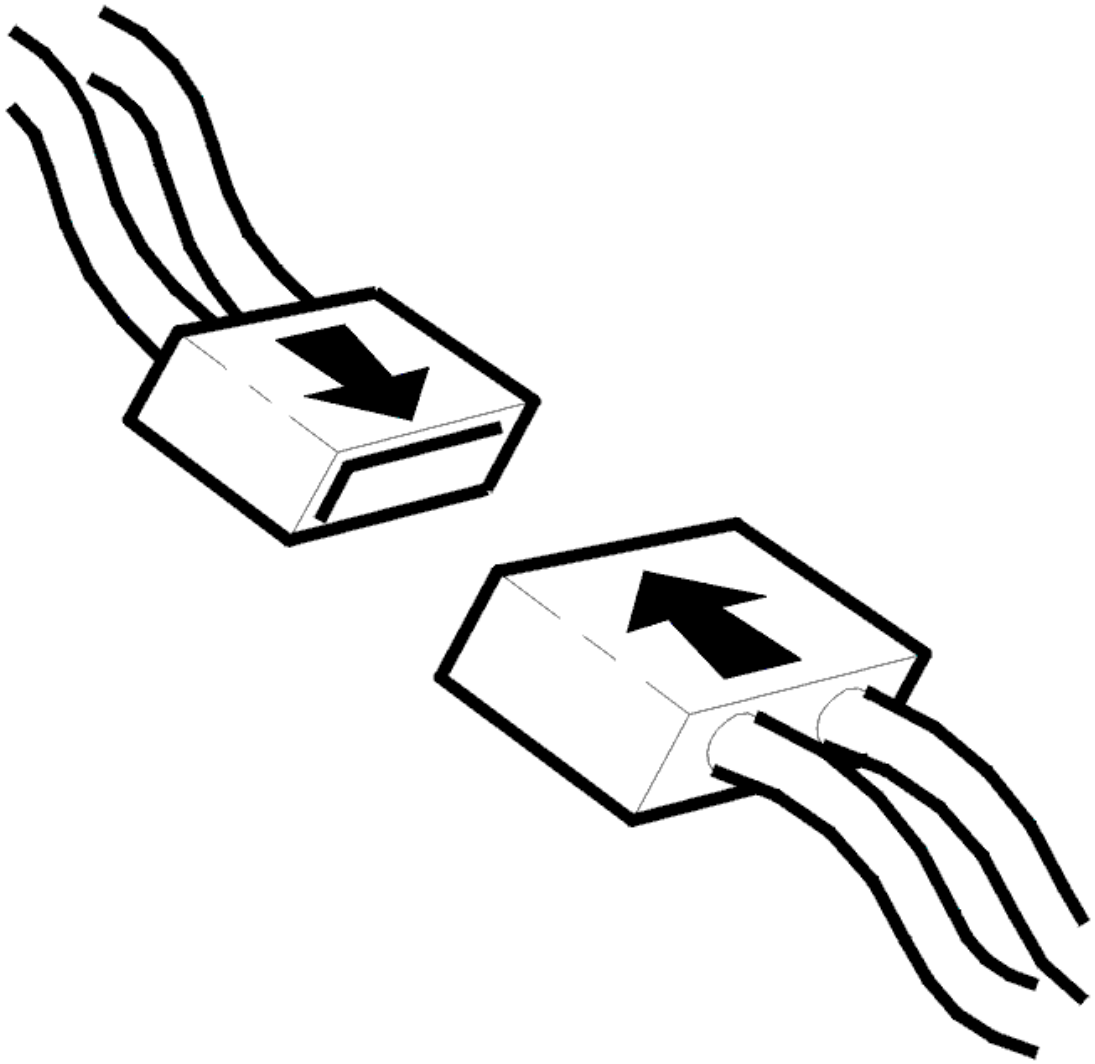

Fig. 336: Connecting Connector
Courtesy of VOLVO CARS CORPORATION

- Ignition off
- Reinstall the connectors, components etc.
- Ignition on

  Read off the intake air temperature sensor's signal using the VCT2000 (or appropriate scan tool).

  Check that the signal is within its permitted range.

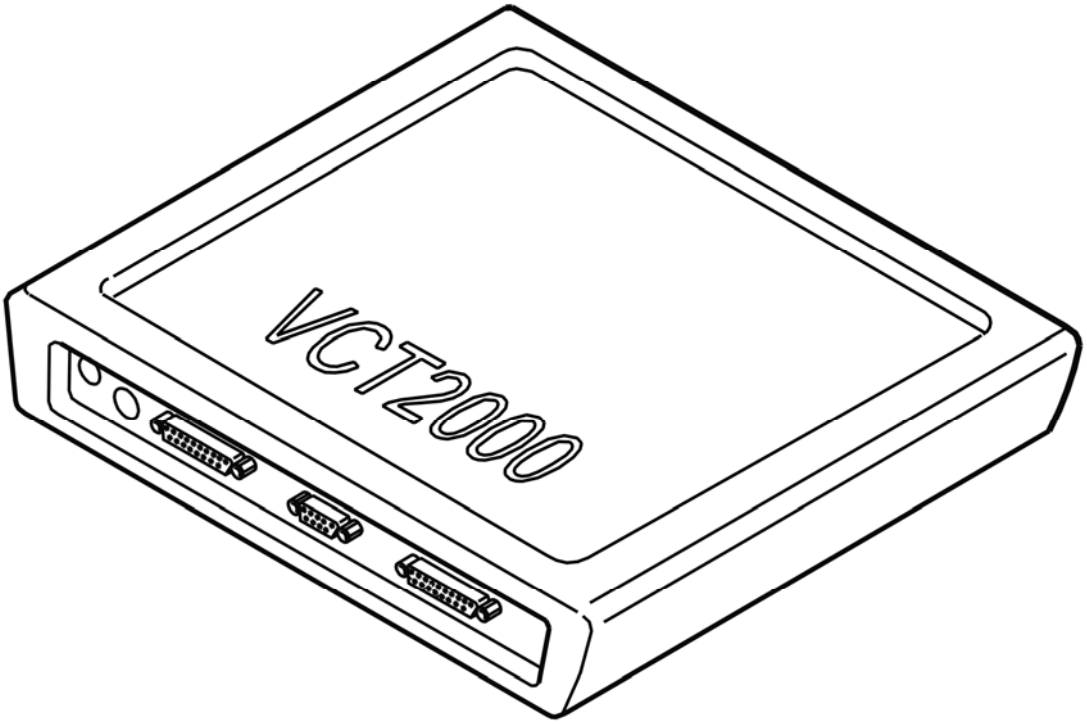

Fig. 337: Identifying VCT2000 Diagnostic Tool Symbol In VIDA
Courtesy of VOLVO CARS CORPORATION

Is the signal within its permitted range?

- **YES**

  VERIFIED: Troubleshooting has been completed.

- **NO**

  Refer to **INFORMATION**

INFORMATION

FAULT-TRACING INFORMATION

The fault should have been detected and remedied. As this is not the case fault-tracing has failed.

Exit fault-tracing for this diagnostic trouble code (DTC) or make another attempt.

ECM-P011400: INTAKE AIR TEMPERATURE SENSOR 1 INTERMITTENT/ERRATIC. GENERAL FAILURE INFORMATION. NO SUB

TYPE INFORMATION (B6324S; 2007-2010)

DIAGNOSTIC TROUBLE CODE (DTC) INFORMATION ECM-P011400

Condition

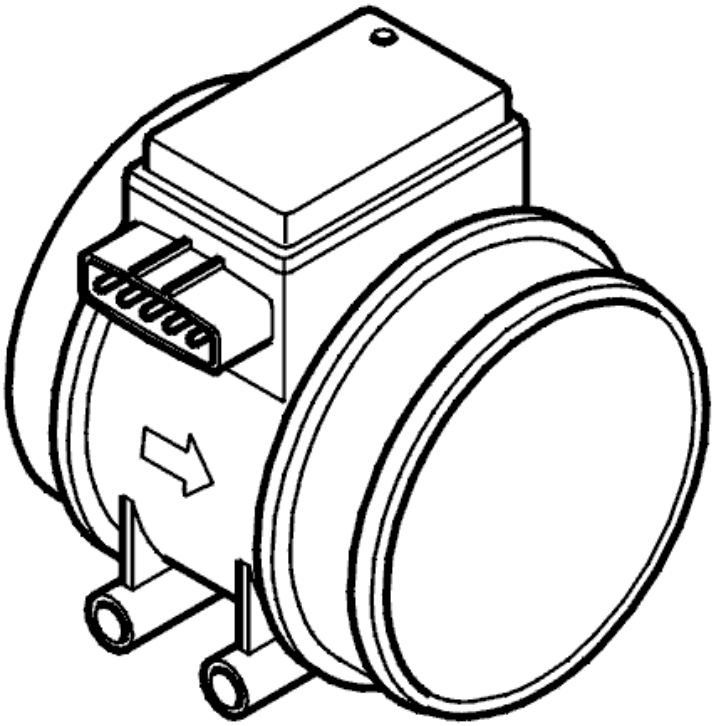

Fig. 338: Identifying Mass Air Flow Sensor (With Integrated Air Temperature Sensor)
Courtesy of VOLVO CARS CORPORATION

The engine control module (ECM) checks the signal from the temperature sensor in the intake manifold under two different driving conditions. The check is first made during high airflow while the vehicle is travelling and then while the vehicle is stationary and idling. The diagnostic trouble code is generated if the control module registers that the temperature difference between these two measurements is unreasonably similar.

Substitute Value

- The value for the inlet temperature is generated to equal to the value for the fuel temperature.

Possible Source

- Contact resistance in connector.
- Damaged air temperature sensor (integrated in mass air flow sensor).

Fault symptom[s]

- Malfunction indicator lamp (MIL) lit.

FAULT TRACING

see **FAULT TRACING**

ECM-P011400: INTAKE AIR TEMPERATURE SENSOR 1 INTERMITTENT/ERRATIC. GENERAL FAILURE INFORMATION. NO SUB TYPE INFORMATION (B6324S5; 2011-2012)

DIAGNOSTIC TROUBLE CODE (DTC) INFORMATION ECM-P011400

see **DIAGNOSTIC TROUBLE CODE (DTC) INFORMATION ECM-P011400**

FAULT TRACING

see **FAULT TRACING**

ECM-P011400: INTAKE AIR TEMPERATURE SENSOR 1 INTERMITTENT/IRREGULAR. GENERAL FAULT INFORMATION. TYPE OF FAULT NOT SPECIFIED. (B8444S; 2005-2011)

DIAGNOSTIC TROUBLE CODE (DTC) INFORMATION ECM-P011400

Condition

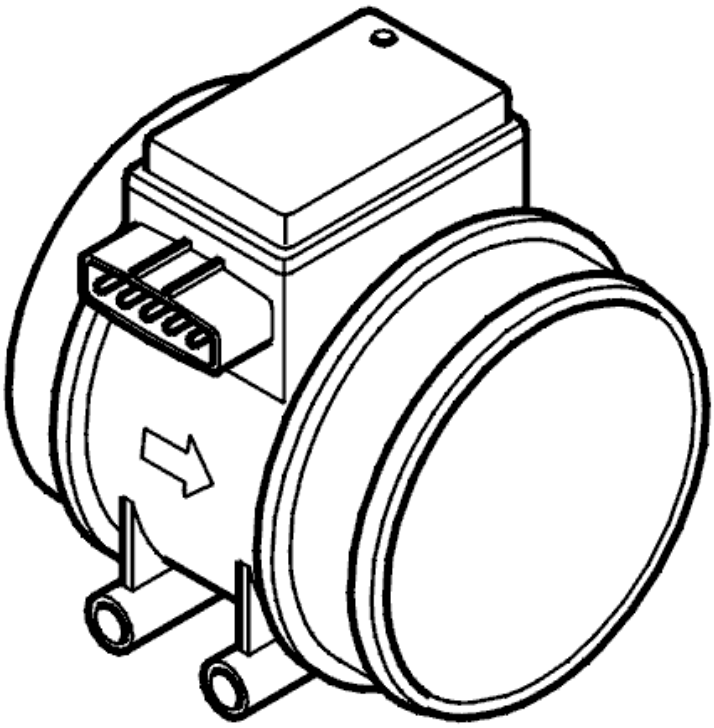

Fig. 339: Identifying Mass Air Flow Sensor (With Integrated Air Temperature Sensor)
Courtesy of VOLVO CARS CORPORATION

The engine control module (ECM) checks the signal from the temperature sensor in the intake manifold under two different driving conditions. The check is first made during high airflow while the vehicle is travelling and then while the vehicle is stationary and idling. The diagnostic trouble code is generated if the control module registers that the temperature difference between these two measurements is unreasonably similar.

Substitute Value

- The intake temperature value is set to 30 °C.

Possible Source

- Contact resistance in connector.
- Damaged air temperature sensor (integrated in mass air flow sensor).

Fault symptom[s]

- Malfunction indicator lamp (MIL) lit.

FAULT TRACING

see **FAULT TRACING**

ECM-P011500: ENGINE COOLANT TEMPERATURE CIRCUIT. GENERAL FAILURE INFORMATION. NO SUB TYPE INFORMATION (B6324S; 2007-2010)

DIAGNOSTIC TROUBLE CODE (DTC) INFORMATION ECM-P011500

Condition

Engine control module (ECM) measures the engine temperature using a coolant temperature sensor. The control module checks the direct voltage from the sensor.

The diagnostic trouble code (DTC) is stored if the control module detects that:

- The direct voltage is higher than 4.951 V.
- Incorrect value lasts longer than 9 seconds.
- Incorrect value lasts for 2 or more subsequent driving cycles.

The control module's test for the diagnostic trouble code (DTC) starts in the event of:

- Ignition switch position II.

NOTE: The control module can only detect the fault once the test has been started and the diagnostic trouble code (DTC) is stored when the conditions are met.

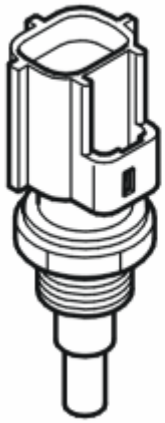

Fig. 340: Identifying Engine Coolant Temperature Sensor
Courtesy of VOLVO CARS CORPORATION

Substitute Value

- None.

Possible Source

- Open-circuit in signal cable or ground lead.
- Contact resistance and oxidation in the terminals.
- Short-circuit to supply voltage in the signal cable.
- Damaged coolant temperature sensor.

Fault symptom[s]

- Malfunction indicator light (MIL), on
- Engine is difficult to start
- Uneven idle
- Engine stalls
- Electric cooling fan runs continuously, when ignition is off

FAULT-TRACING

see **FAULT-TRACING**

ECM-P011500: ENGINE COOLANT TEMPERATURE CIRCUIT. GENERAL FAILURE INFORMATION. NO SUB TYPE INFORMATION (B6324S5; 2011-2012)

DIAGNOSTIC TROUBLE CODE (DTC) INFORMATION ECM-P011500

see **DIAGNOSTIC TROUBLE CODE (DTC) INFORMATION ECM-P011500**

FAULT-TRACING

see **FAULT-TRACING**

ECM-P011600: ENGINE COOLANT TEMPERATURE CIRCUIT RANGE/PERFORMANCE. GENERAL FAILURE INFORMATION. NO SUB TYPE INFORMATION (B6324S; 2007-2010)

DIAGNOSTIC TROUBLE CODE (DTC) INFORMATION ECM-P011600

Condition

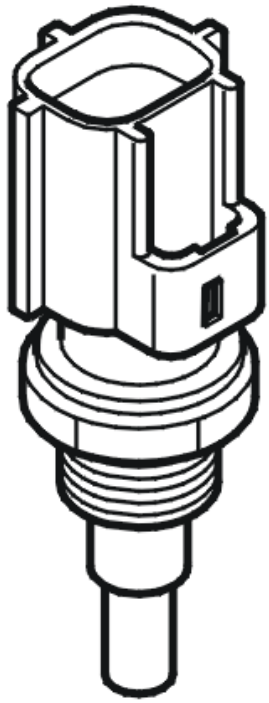

Fig. 341: Identifying Engine Coolant Temperature Sensor
Courtesy of VOLVO CARS CORPORATION

The engine control module (ECM) monitors the engine temperature using a sensor.

The diagnostic trouble code (DTC) is stored if the control module detects that the value from the engine coolant temperature (ECT) sensor deviates too much from the value for intake temperature after the engine has been switched off for an extended period.

The diagnostic trouble code is diagnosed at ignition on once per driving cycle, but only when the fuel temperature has dropped by at least 20 °C and has ended up near the outdoor temperature from the previous driving cycle.

HINT: The diagnostic trouble code may be set incorrectly if, for example, a retrofitted engine heated is used.

Substitute Value

- During start-up: The intake air temperature (IAT) is used if no fault has been detected on the intake temperature sensor
- After start-up: The engine coolant temperature (ECT) is calculated based on a model.
- Engine cooling fan (FC) is activated at the predefined speed.

Possible Source

- Contact resistance in connector.
- Damaged engine coolant temperature sensor.

Fault symptom[s]

- Malfunction indicator lamp (MIL) lit.
- Engine reluctant to start.
- Uneven idle.
- Engine stops.
- The engine cooling fan (FC) runs continuously even when the ignition is switched off.

FAULT-TRACING

CHECKING THE STATUS

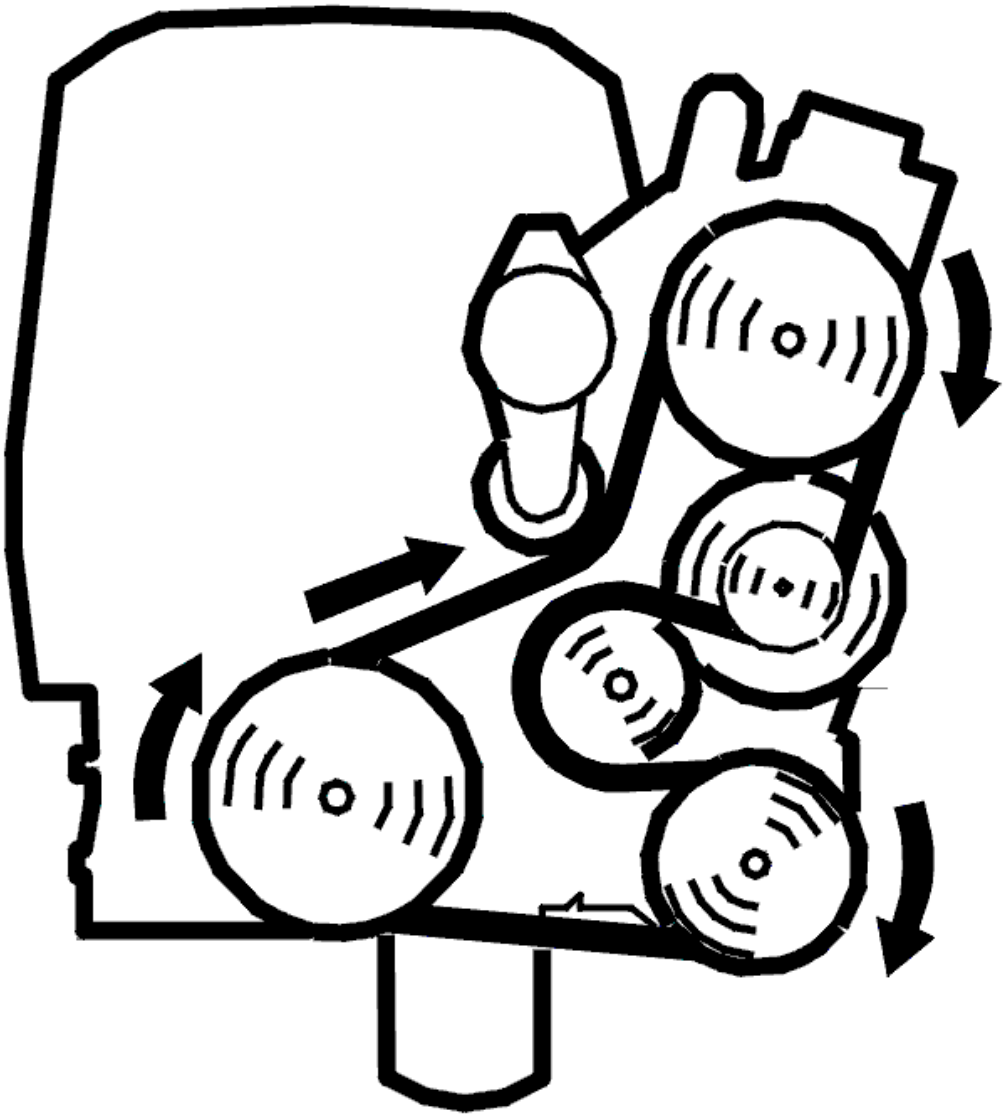

Fig. 342: Belt Routing / Engine Idling - Volvo
Courtesy of VOLVO CARS CORPORATION

- Start the engine.

  Check whether the fault is permanent or intermittent. Read off the engine coolant temperature sensor signal. Check that the value is within its permitted range.

  The fault is permanent if the value is not within its permitted range. If the value is within its permitted range, the fault is intermittent and not presently active.

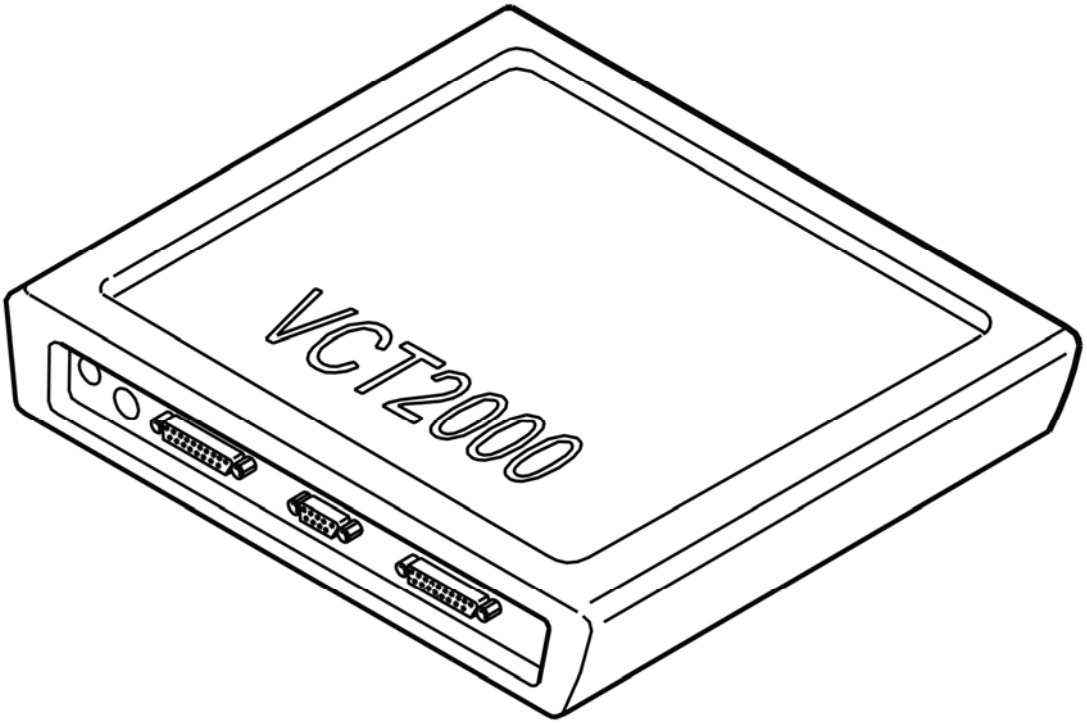

Fig. 343: Identifying VCT2000 Diagnostic Tool Symbol In VIDA
Courtesy of VOLVO CARS CORPORATION

- **Continue**

  Refer to **CHECKING COMPONENTS AND WIRING**

CHECKING COMPONENTS AND WIRING

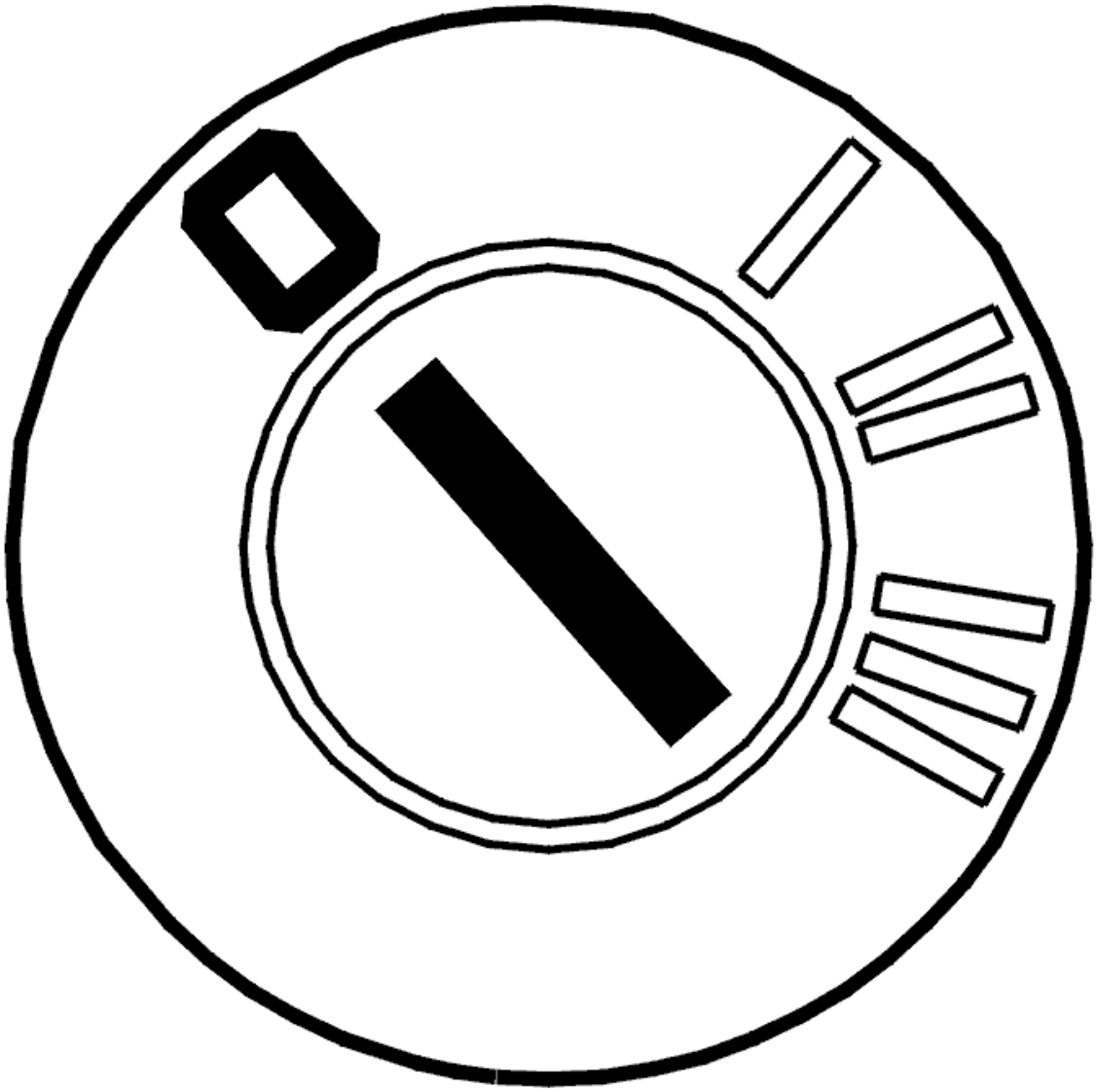

Fig. 344: Identifying Ignition OFF
Courtesy of VOLVO CARS CORPORATION

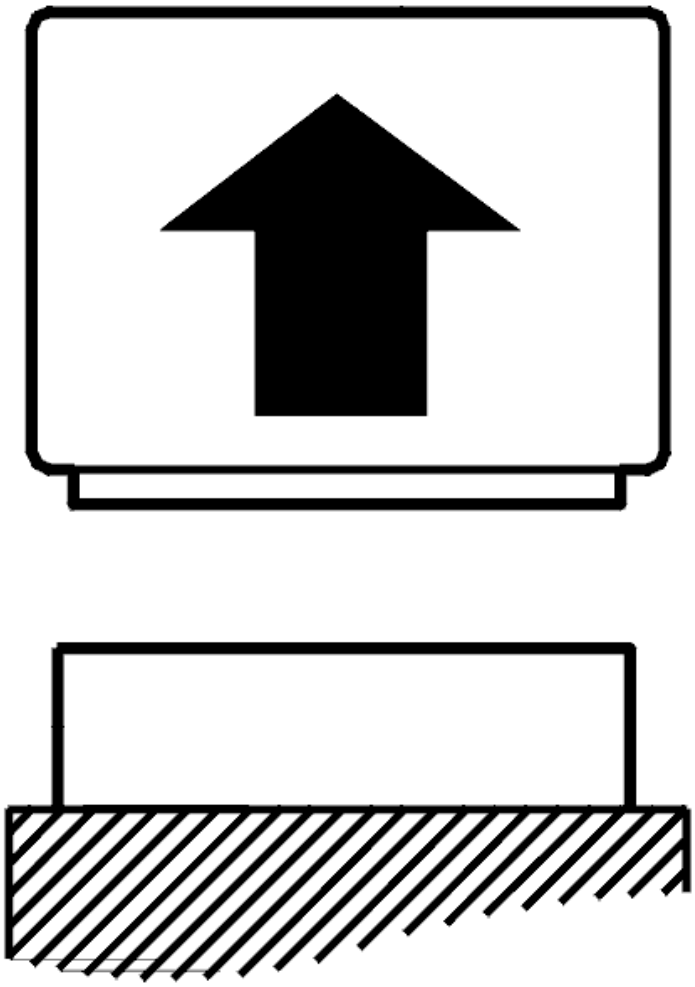

Fig. 345: Disconnecting Connector
Courtesy of VOLVO CARS CORPORATION

- Ignition off

  Check the engine coolant temperature (ECT) sensor connector and terminals. Check for contact resistance and oxidation.

  Check the engine coolant temperature (ECT) sensor resistance. Take readings between terminals #1 and #2.

  Remedy as necessary.

  Other information

  - see **CONNECTING THE BREAKOUT BOX**

- see **SIGNAL SPECIFICATION**
- see **COMPONENT SPECIFICATIONS**
- see **MASS AIR FLOW SENSOR (MAF)**
- see **CHECKING WIRING AND TERMINALS**

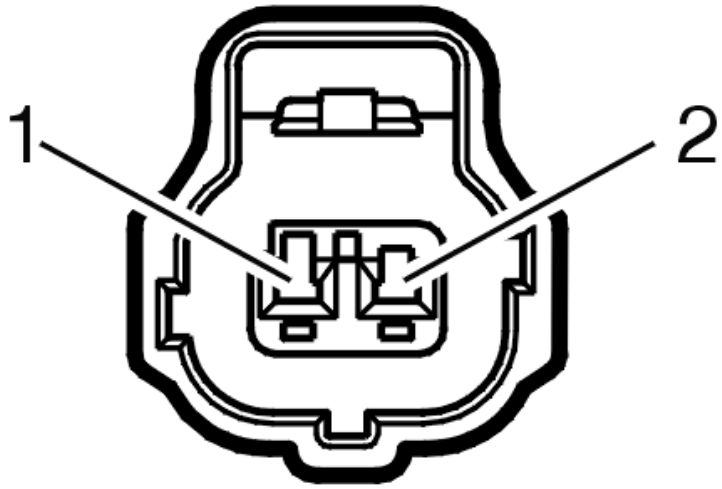

Fig. 346: Identifying 2-Bit Connector
Courtesy of VOLVO CARS CORPORATION

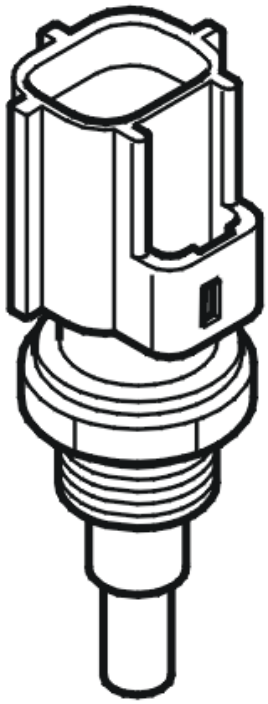

Fig. 347: Identifying Engine Coolant Temperature Sensor
Courtesy of VOLVO CARS CORPORATION

- **Continue**

  Refer to **VERIFICATION**

INFORMATION

FAULT-TRACING INFORMATION

The fault should have been detected and remedied. As this is not the case fault-tracing has failed.

Exit fault-tracing for this diagnostic trouble code (DTC) or make another attempt.

VERIFICATION

VERIFICATION

HINT: After carrying out the repair, check that the fault has been remedied.

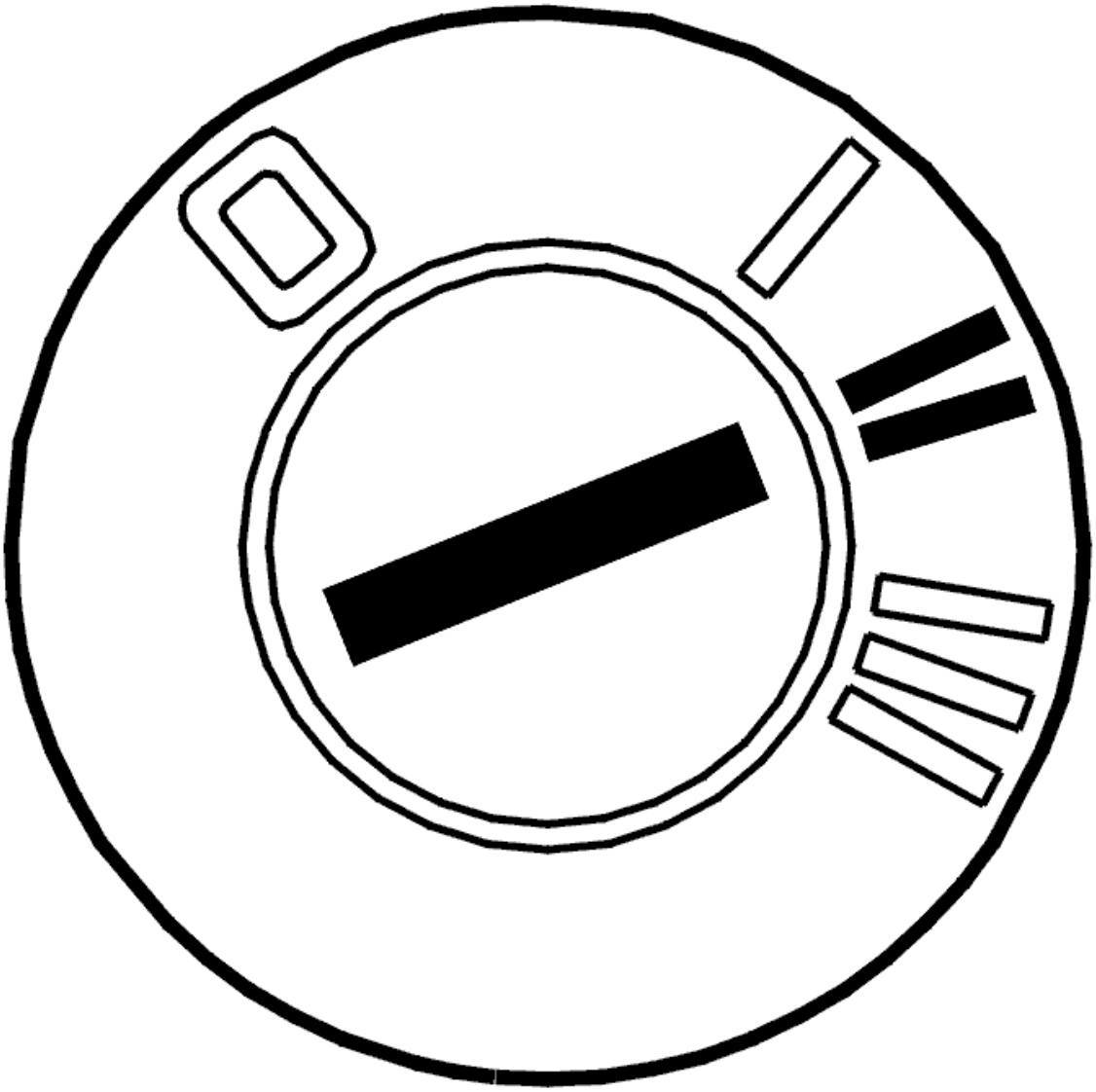

Fig. 348: Identifying Ignition ON
Courtesy of VOLVO CARS CORPORATION

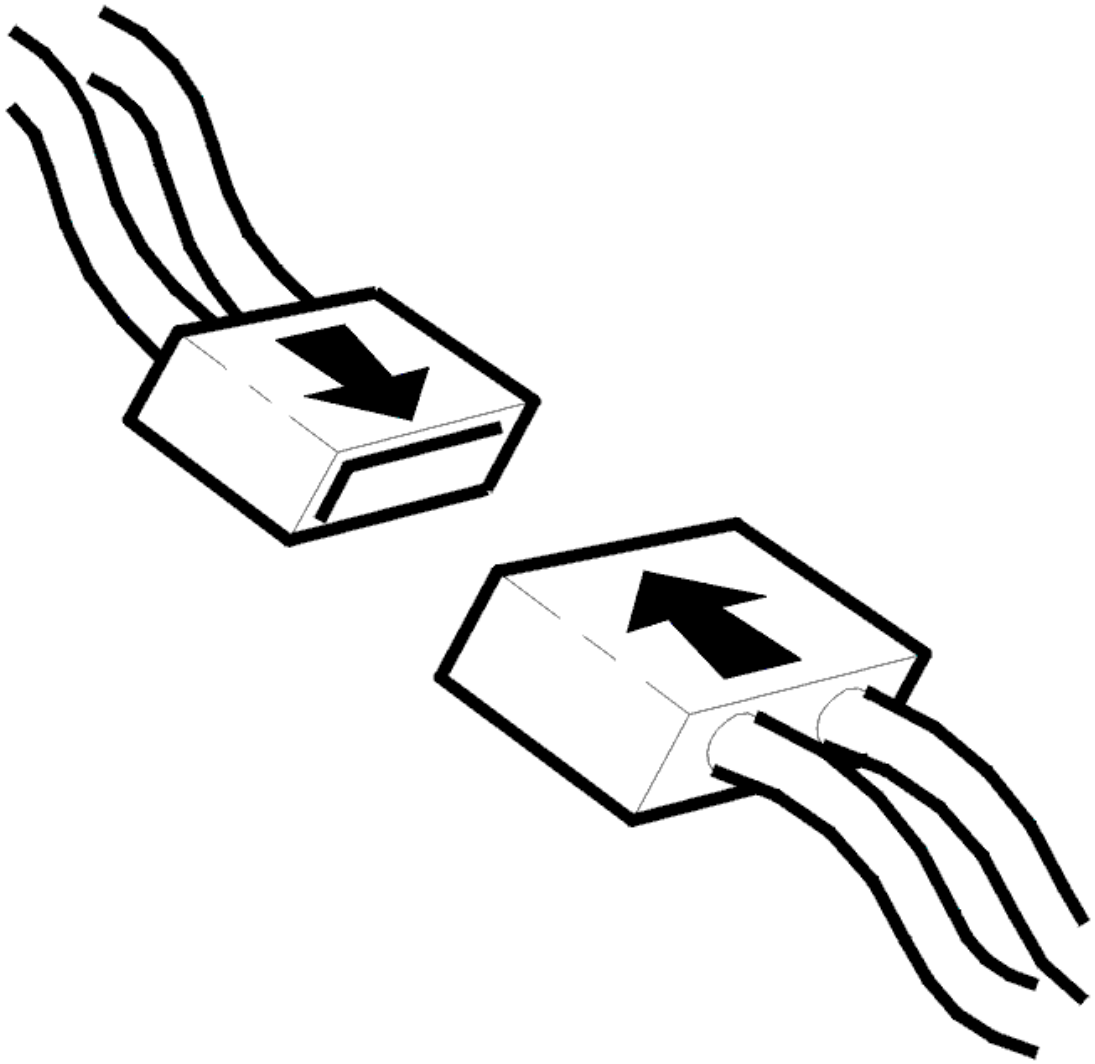

Fig. 349: Connecting Connector
Courtesy of VOLVO CARS CORPORATION

- Ignition off
- Reinstall the connectors, components etc.
- Ignition on

  Read the engine temperature sensor signal using the VCT2000 (or appropriate scan tool).

  Check that the signal corresponds with the engine temperature.

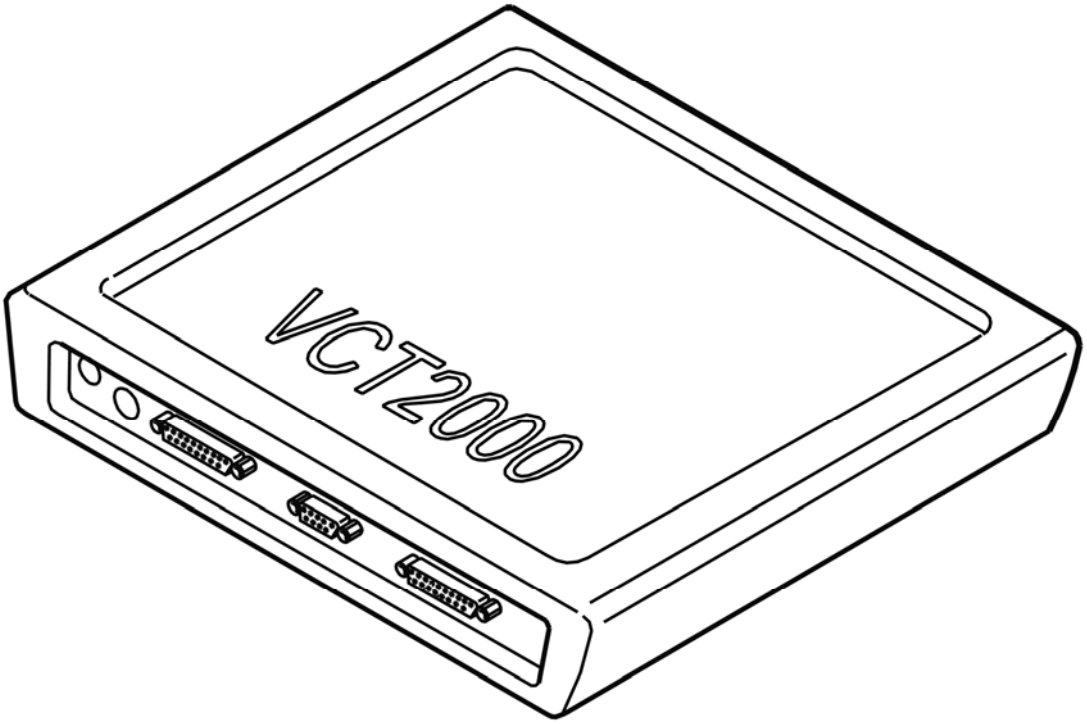

Fig. 350: Identifying VCT2000 Diagnostic Tool Symbol In VIDA
Courtesy of VOLVO CARS CORPORATION

Does the signal correspond to the engine temperature?

- **YES**

  VERIFIED: Troubleshooting has been completed.

- **NO**

  Refer to **INFORMATION**

ECM-P011600: ENGINE COOLANT TEMPERATURE CIRCUIT RANGE/PERFORMANCE. GENERAL FAILURE INFORMATION. NO SUB TYPE INFORMATION (B6324S5; 2011-2012)

DIAGNOSTIC TROUBLE CODE (DTC) INFORMATION ECM-P011600

see **DIAGNOSTIC TROUBLE CODE (DTC) INFORMATION ECM-P011600**

FAULT-TRACING

see **FAULT-TRACING**

ECM-P011600: COOLANT TEMPERATURE CIRCUIT WITHIN/OUTSIDE THE RANGE. GENERAL FAULT INFORMATION. NO INFORMATION ABOUT FAULT TYPE (B8444S; 2005-2011)

DIAGNOSTIC TROUBLE CODE (DTC) INFORMATION ECM-P011600

Condition

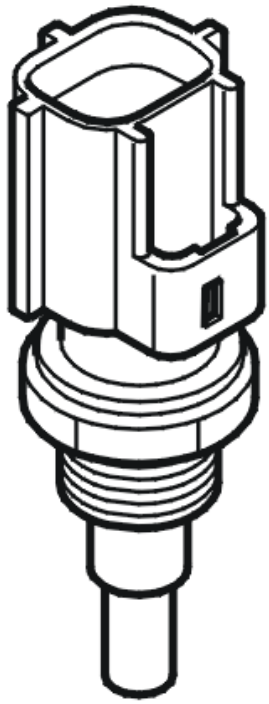

Fig. 351: Identifying Engine Coolant Temperature Sensor
Courtesy of VOLVO CARS CORPORATION

The engine control module (ECM) monitors the engine temperature using a sensor.

The diagnostic trouble code (DTC) is stored if the control module detects that the value from the engine coolant temperature (ECT) sensor deviates too much from the value for intake temperature after the engine has been switched off for an extended period.

The diagnostic trouble code (DTC) is diagnosed once per operating cycle, with the ignition on, but only when the temperature in the intake manifold has dropped by approximately 15°C, and has stabilized to near the ambient temperature since the previous operating cycle.

Substitute Value

- During start-up: The intake air temperature (IAT) is used if no fault has been detected on the intake temperature sensor
- After start-up: The engine coolant temperature (ECT) is calculated based on a model.
- Engine cooling fan (FC) is activated at the predefined speed.

Possible Source

- Contact resistance in connector.
- Damaged engine coolant temperature sensor.

Fault symptom[s]

- Malfunction indicator lamp (MIL) lit.
- Engine reluctant to start.
- Uneven idle.
- Engine stops.
- The engine cooling fan (FC) runs continuously even when the ignition is switched off.

FAULT TRACING ECM-P011600

CHECKING THE STATUS

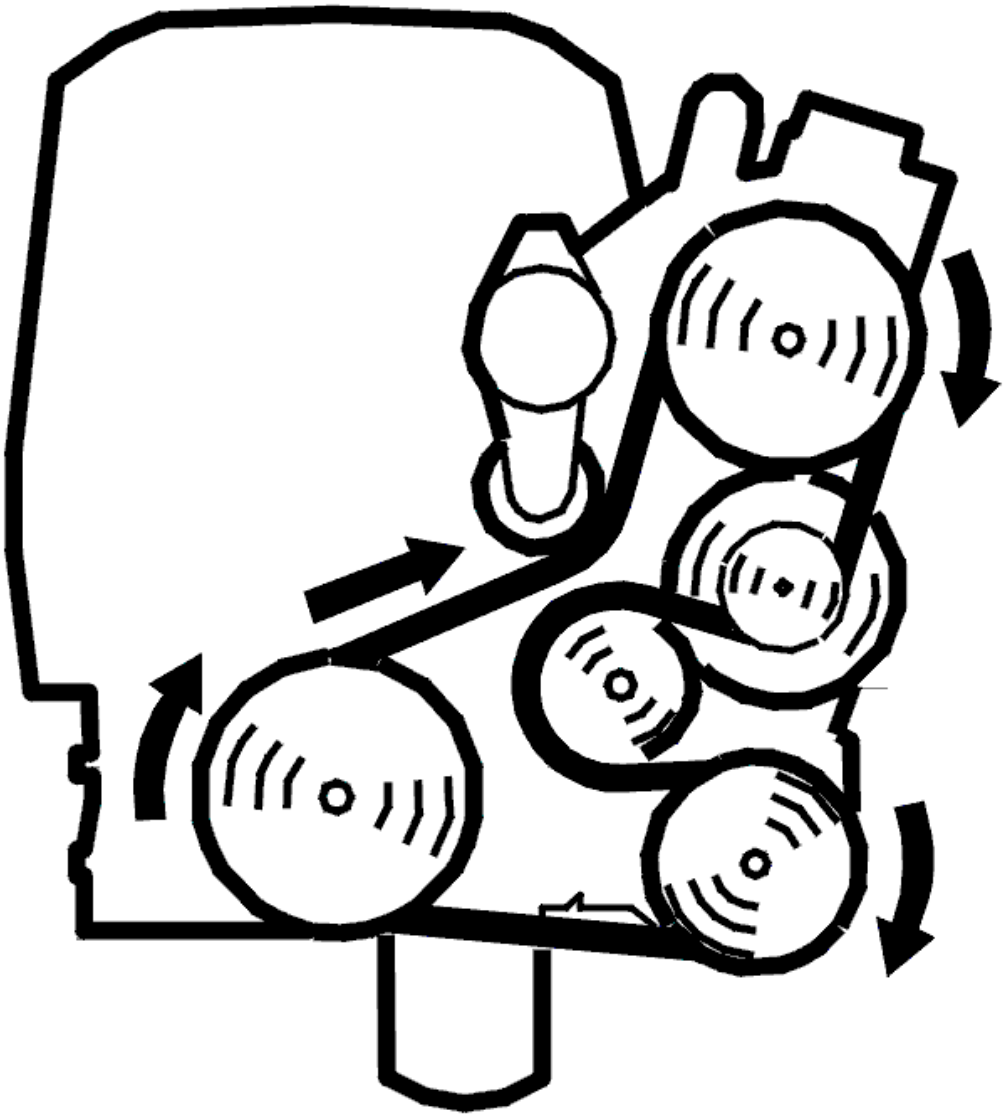

Fig. 352: Belt Routing / Engine Idling - Volvo
Courtesy of VOLVO CARS CORPORATION

- Start the engine.

  Check whether the fault is permanent or intermittent. Read off the engine coolant temperature sensor signal. Check that the value is within its permitted range.

  The fault is permanent if the value is not within its permitted range. If the value is within its permitted range, the fault is intermittent and not presently active.

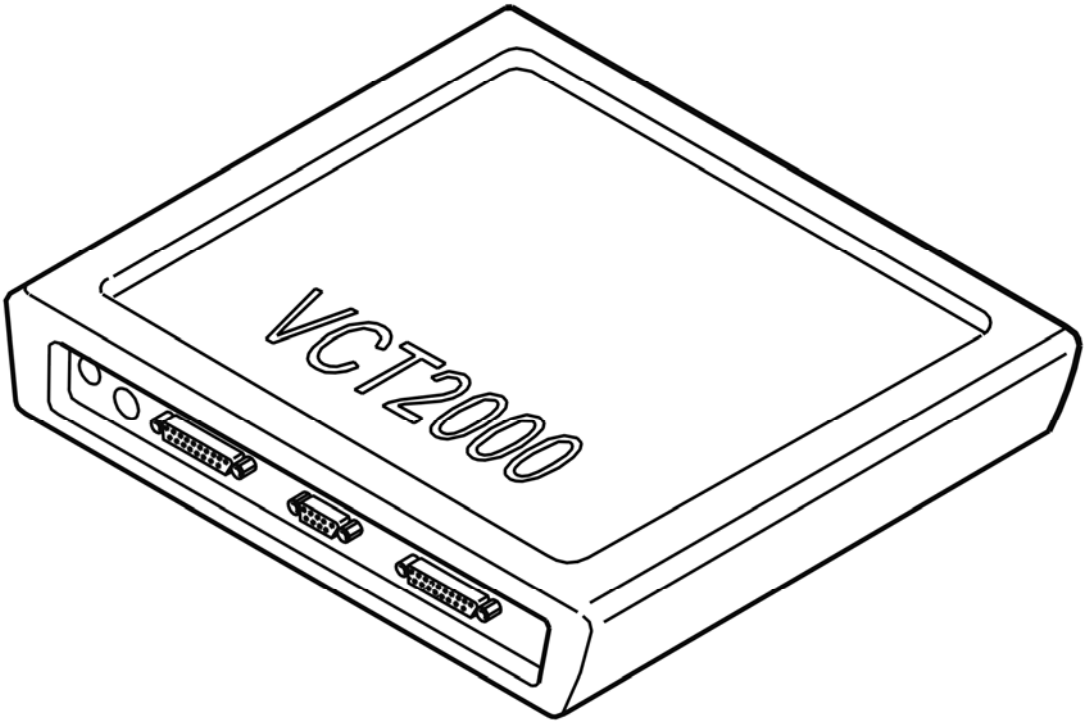

Fig. 353: Identifying VCT2000 Diagnostic Tool Symbol In VIDA
Courtesy of VOLVO CARS CORPORATION

- **Continue**

  Refer to **CHECKING COMPONENTS AND WIRING**

CHECKING COMPONENTS AND WIRING

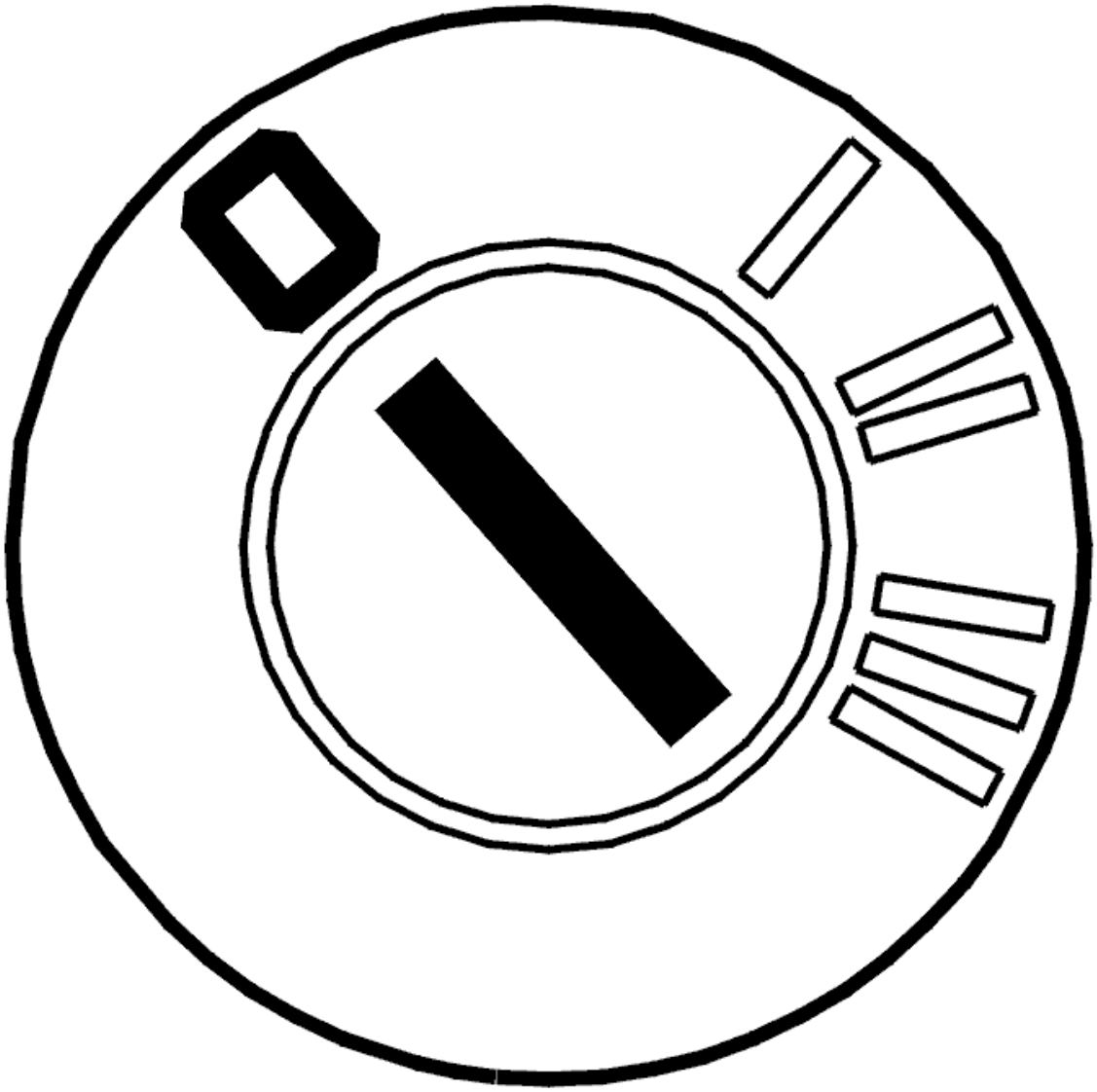

Fig. 354: Identifying Ignition OFF
Courtesy of VOLVO CARS CORPORATION

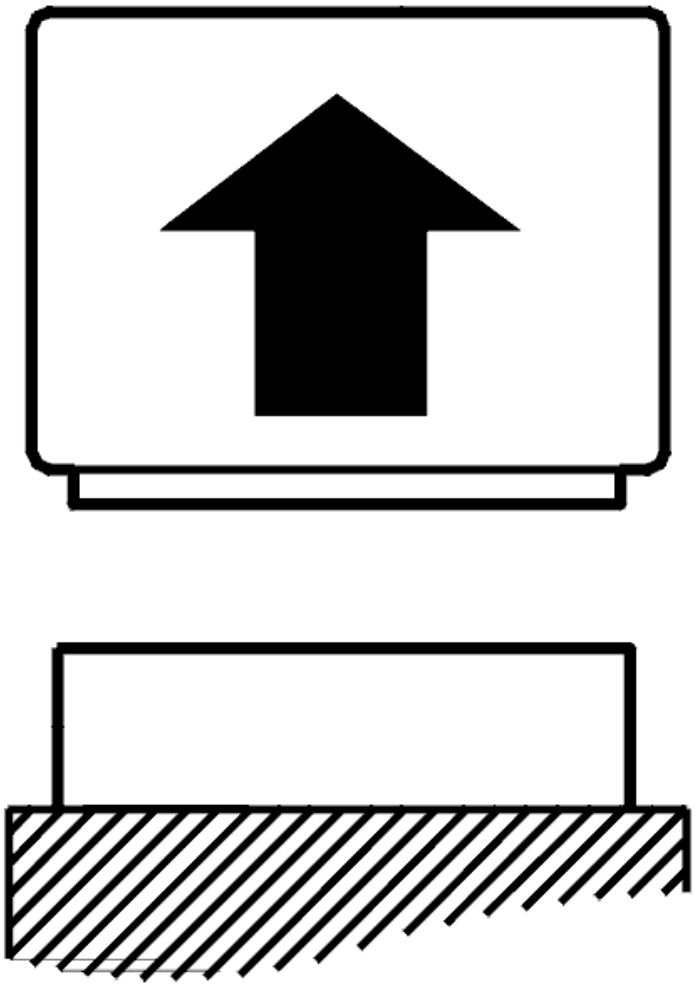

Fig. 355: Disconnecting Connector
Courtesy of VOLVO CARS CORPORATION

- Ignition off

  Check the engine coolant temperature (ECT) sensor connector and terminals. Check for contact resistance and oxidation.

  Check the engine coolant temperature (ECT) sensor resistance. Take readings between terminals #1 and #2.

  Remedy as necessary.

  Other information

  - see **CONNECTING THE BREAKOUT BOX**

- see **SIGNAL SPECIFICATION, ENGINE CONTROL MODULE (ECM)**
- see **MASS AIR FLOW (MAF) SENSOR, REPLACING**
- see **COMPONENT SPECIFICATIONS**
- see **CHECKING WIRING AND TERMINALS**

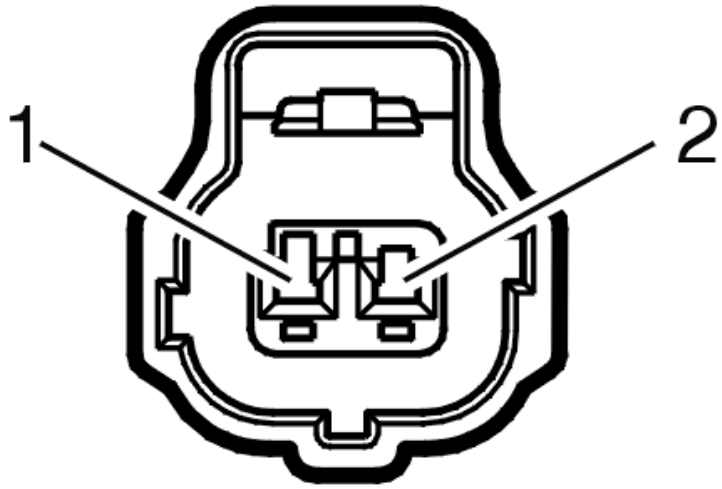

Fig. 356: Identifying 2-Bit Connector
Courtesy of VOLVO CARS CORPORATION

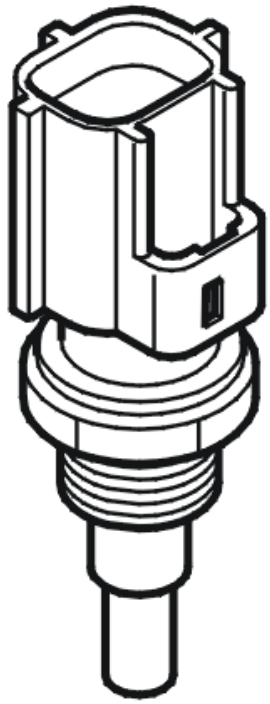

Fig. 357: Identifying Engine Coolant Temperature Sensor
Courtesy of VOLVO CARS CORPORATION

- **Continue**

  Refer to **VERIFICATION**

VERIFICATION

VERIFICATION

HINT: After carrying out the repair, check that the fault has been remedied.

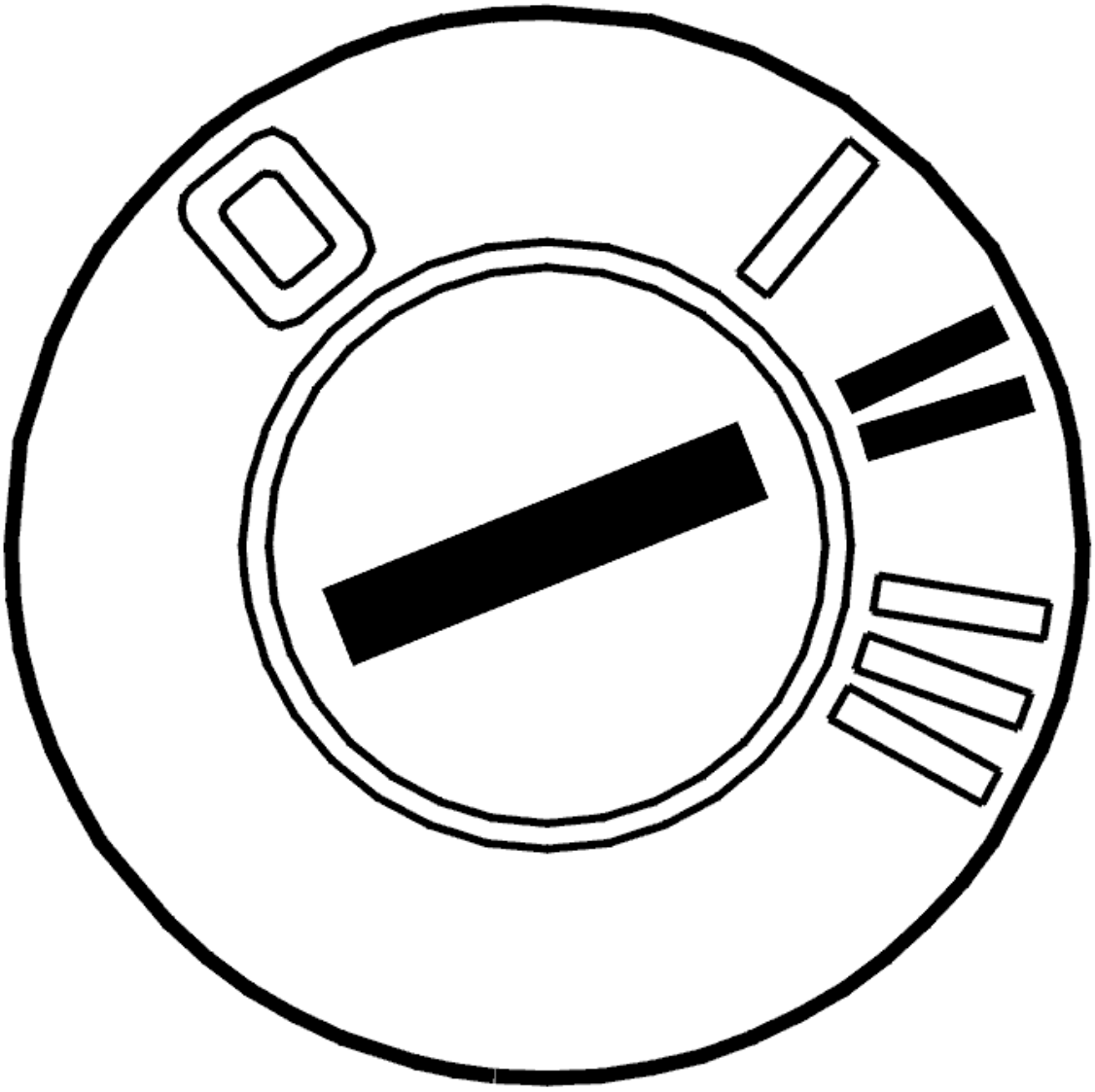

Fig. 358: Identifying Ignition ON
Courtesy of VOLVO CARS CORPORATION

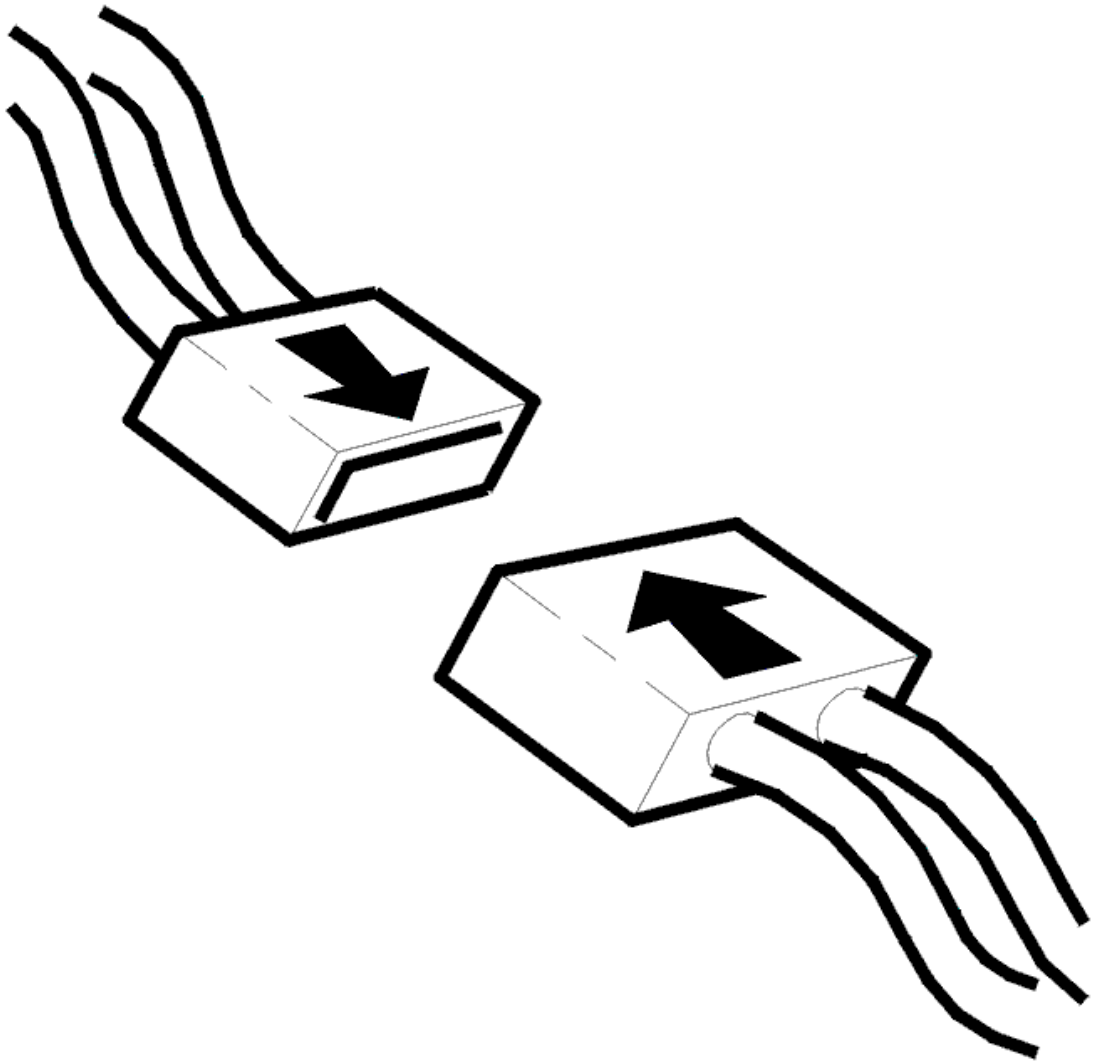

Fig. 359: Connecting Connector
Courtesy of VOLVO CARS CORPORATION

- Ignition off
- Reinstall the connectors, components etc.
- Ignition on

  Read the engine temperature sensor signal using the VCT2000 (or appropriate scan tool).

  Check that the signal corresponds with the engine temperature.

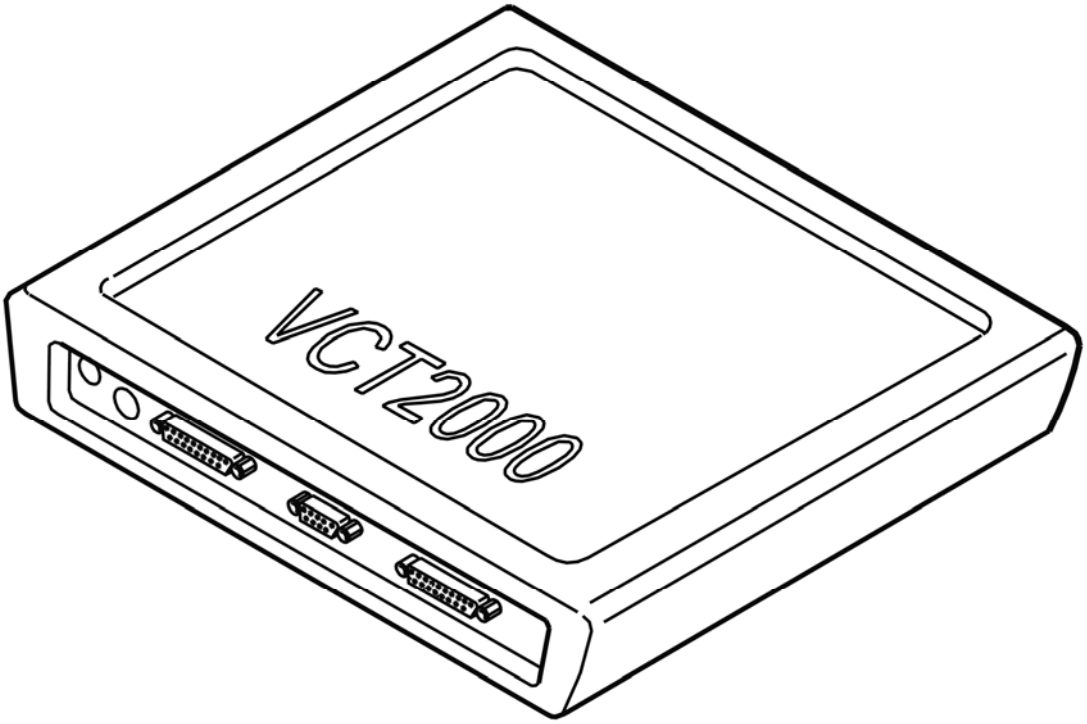

Fig. 360: Identifying VCT2000 Diagnostic Tool Symbol In VIDA
Courtesy of VOLVO CARS CORPORATION

Does the signal correspond to the engine temperature?

- **YES**

  VERIFIED: Troubleshooting has been completed.

- **NO**

  Refer to **INFORMATION**

INFORMATION

FAULT-TRACING INFORMATION

The fault should have been detected and remedied. As this is not the case fault-tracing has failed.

Exit fault-tracing for this diagnostic trouble code (DTC) or make another attempt.

ECM-P011629: ENGINE COOLANT TEMPERATURE SENSOR 1 CIRCUIT RANGE/PERFORMANCE. GENERAL SIGNAL FAILURES. SIGNAL INVALID

(B6324S5; 2011-2012)

DIAGNOSTIC TROUBLE CODE (DTC) INFORMATION ECM-P011629

Condition

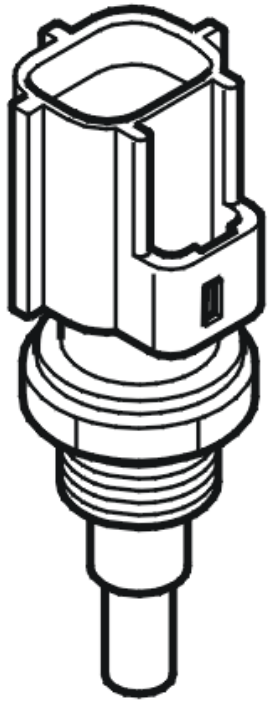

Fig. 361: Identifying Engine Coolant Temperature Sensor
Courtesy of VOLVO CARS CORPORATION

The engine control module (ECM) monitors the engine temperature using a sensor.

If the control module detects that the value from the engine temperature sensor does not change during engine warm-up phase, the diagnostic trouble code is generated.

The control module's for the diagnostic trouble code starts when the calculated engine temperature has increased by 20 °C and the fuel temperature by 5 °C since engine start, but only if the fuel temperature has dropped by at least 5 °C since the end of the previous driving cycle.

Substitute Value

- An estimated temperature value is used.

Possible Source

- Contact resistance in connector.
- Damaged engine coolant temperature sensor.

Fault symptom[s]

- Warning lights and chimes/Malfunction Indicator Light ("Check engine" light) indication/no indication

FAULT-TRACING

see **FAULT-TRACING**

ECM-P011629: ENGINE COOLANT TEMPERATURE SENSOR 1 CIRCUIT RANGE/PERFORMANCE. GENERAL SIGNAL FAILURES. SIGNAL INVALID (B8444S; 2010-2011)

DIAGNOSTIC TROUBLE CODE (DTC) INFORMATION ECM-P011629

Condition

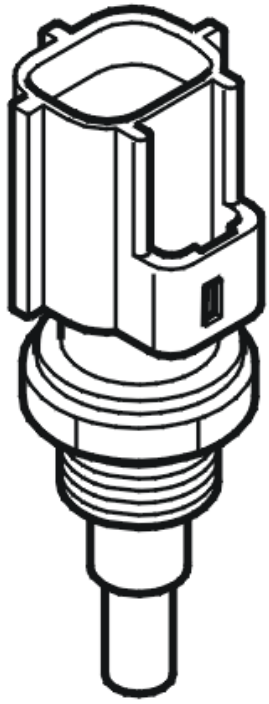

Fig. 362: Identifying Engine Coolant Temperature Sensor
Courtesy of VOLVO CARS CORPORATION

The engine control module (ECM) monitors the engine temperature using a sensor.

If the control module detects that the value from the engine temperature sensor does not change during engine warm-up phase, the diagnostic trouble code is generated.

The control module's for the diagnostic trouble code starts when the calculated engine temperature has increased by 20 °C and the fuel temperature by 5 °C since engine start, but only if the fuel temperature has dropped by at least 5 °C since the end of the previous driving cycle.

Substitute Value

- An estimated temperature value is used.

Possible Source

- Contact resistance in connector.
- Damaged engine coolant temperature sensor.

Fault symptom[s]

- Warning lights and chimes/Malfunction Indicator Light ("Check engine" light) indication/no indication

FAULT-TRACING

see **FAULT-TRACING**

ECM-P011700: ENGINE COOLANT TEMPERATURE CIRCUIT LOW INPUT. GENERAL FAILURE INFORMATION. NO SUB TYPE INFORMATION (B6324S; 2007-2010)

DIAGNOSTIC TROUBLE CODE (DTC) INFORMATION ECM-P011700

Condition

Engine control module (ECM) measures the engine temperature using a coolant temperature sensor. The control module checks the direct voltage from the sensor.

The diagnostic trouble code (DTC) is stored if the control module detects that:

- The direct voltage is lower than 0.151 V.
- Incorrect value lasts longer than 9 seconds.
- Incorrect value lasts for 2 or more subsequent driving cycles.

The control module's test for the diagnostic trouble code (DTC) starts in the event of:

- Ignition switch position II.

NOTE: **The control module can only detect the fault once the test has been started and the diagnostic trouble code (DTC) is stored when the conditions are met.**

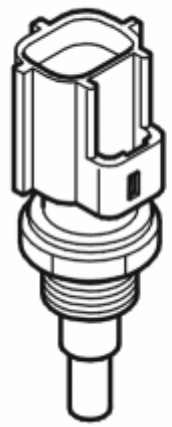

Fig. 363: Identifying Engine Coolant Temperature Sensor
Courtesy of VOLVO CARS CORPORATION

Substitute Value

- During start:The control module assumes that the coolant temperature is the same as the air temperature in the inlet manifold.
- After start:The control module uses a calculated coolant temperature.
- The control module controls the cooling fan (FC) according to pre-defined speed.

Possible Source

- Contact resistance and oxidation in the terminals.
- Short-circuit to ground in the signal cable.
- Damaged coolant temperature sensor.

Fault symptom[s]

- Malfunction indicator light (MIL), on
- Engine is difficult to start
- Uneven idle
- Engine stalls
- Electric cooling fan runs continuously, when ignition is off

FAULT-TRACING

see **FAULT-TRACING**

ECM-P011700: ENGINE COOLANT TEMPERATURE CIRCUIT LOW INPUT. GENERAL FAILURE INFORMATION. NO SUB TYPE INFORMATION (B6324S5; 2011-2012)

DIAGNOSTIC TROUBLE CODE (DTC) INFORMATION ECM-P011700

see **DIAGNOSTIC TROUBLE CODE (DTC) INFORMATION ECM-P011700**

FAULT-TRACING

see **FAULT-TRACING**

ECM-P011700: COOLANT TEMPERATURE CIRCUIT LOW INPUT SIGNAL. GENERAL FAULT INFORMATION. NO INFORMATION ABOUT FAULT TYPE (B8444S; 2005-2011)

DIAGNOSTIC TROUBLE CODE (DTC) INFORMATION ECM-P011700

Condition

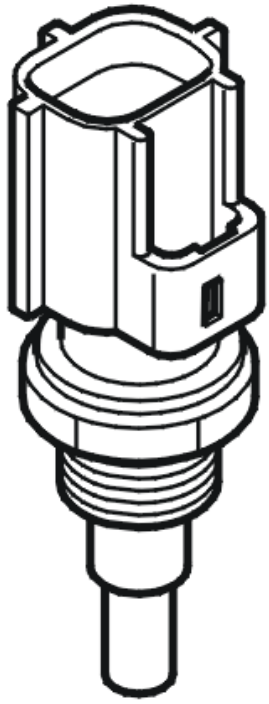

Fig. 364: Identifying Engine Coolant Temperature Sensor
Courtesy of VOLVO CARS CORPORATION

The engine control module (ECM) monitors the engine temperature using a sensor.

The diagnostic trouble code (DTC) is stored if the Engine Control Module (ECM) detects that the signal from the engine coolant temperature (ECT) sensor is too low.

The diagnostic trouble code can be diagnosed when the ignition is on.

Substitute Value

- During start-up: The intake air temperature (IAT) is used if no fault has been detected on the intake temperature sensor.
- After start-up: The engine coolant temperature (ECT) is calculated based on a model.
- Engine cooling fan (FC) is activated at the predefined speed.

Possible Source

- The signal cable is short-circuited to ground.
- Damaged engine coolant temperature sensor.

Fault symptom[s]

- Malfunction indicator lamp (MIL) lit.
- Engine reluctant to start.
- Uneven idle.
- Engine stops.
- The engine cooling fan (FC) runs continuously even when the ignition is switched off.

FAULT TRACING ECM-P011700

CHECKING THE STATUS

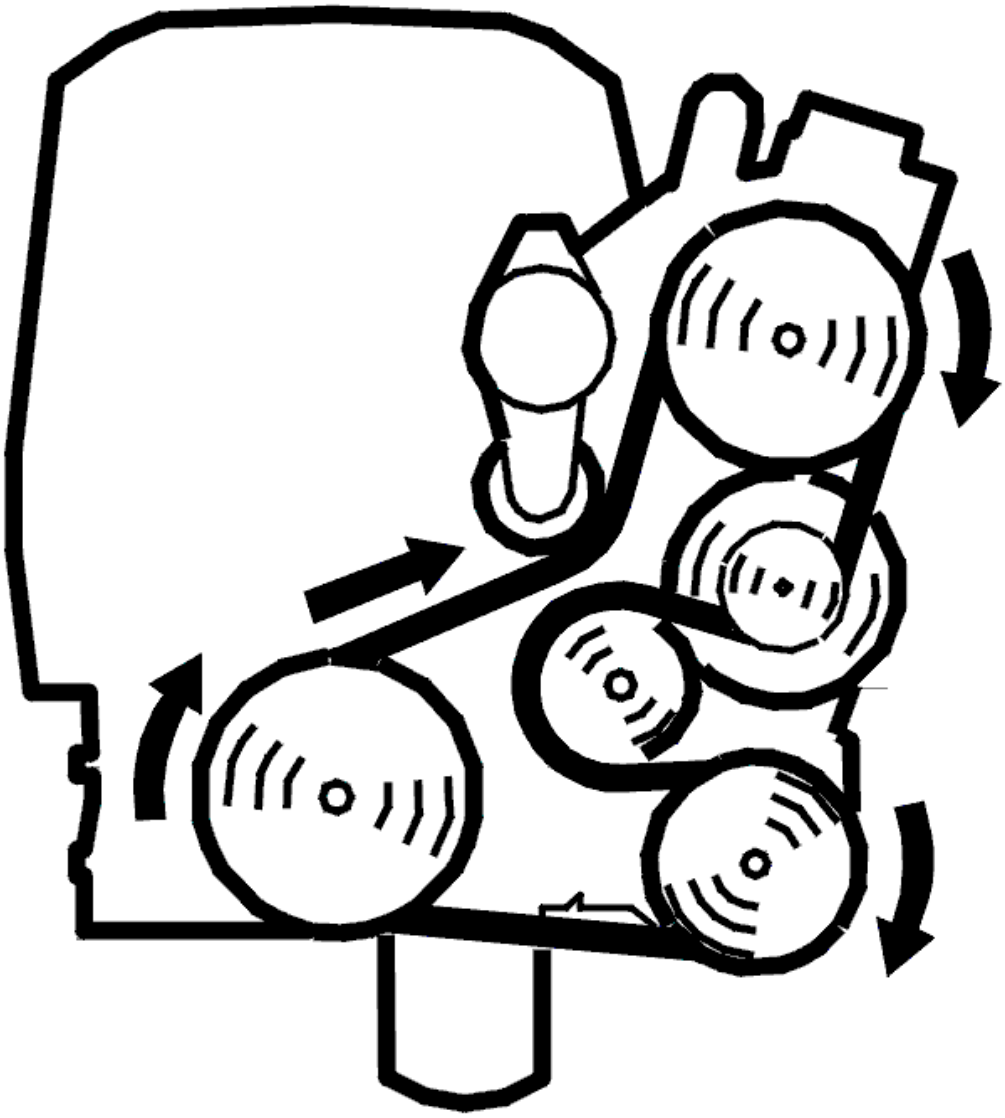

Fig. 365: Belt Routing / Engine Idling - Volvo
Courtesy of VOLVO CARS CORPORATION

- Start the engine.

  Check whether the fault is permanent or intermittent by reading the signal of the engine temperature sensor. Check that the value is feasible.

  If the value is not feasible, the fault is permanent. If the value is feasible, the fault is intermittent and not currently active.

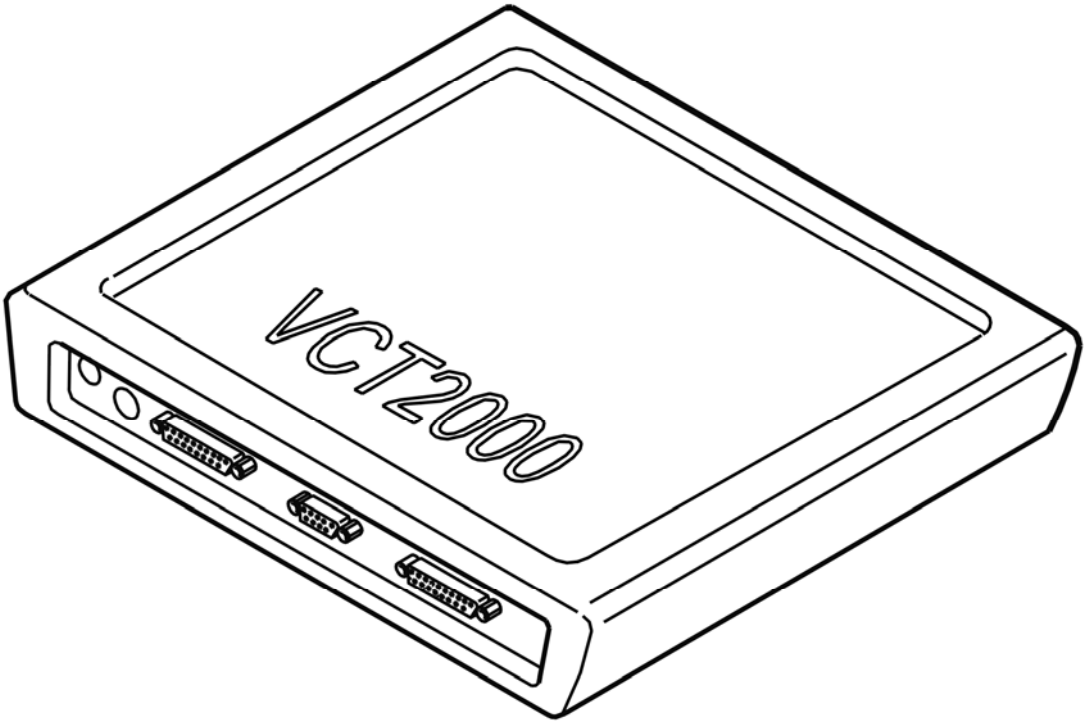

Fig. 366: Identifying VCT2000 Diagnostic Tool Symbol In VIDA
Courtesy of VOLVO CARS CORPORATION

- **Continue**

  Refer to **CHECKING COMPONENTS AND WIRING**

CHECKING COMPONENTS AND WIRING

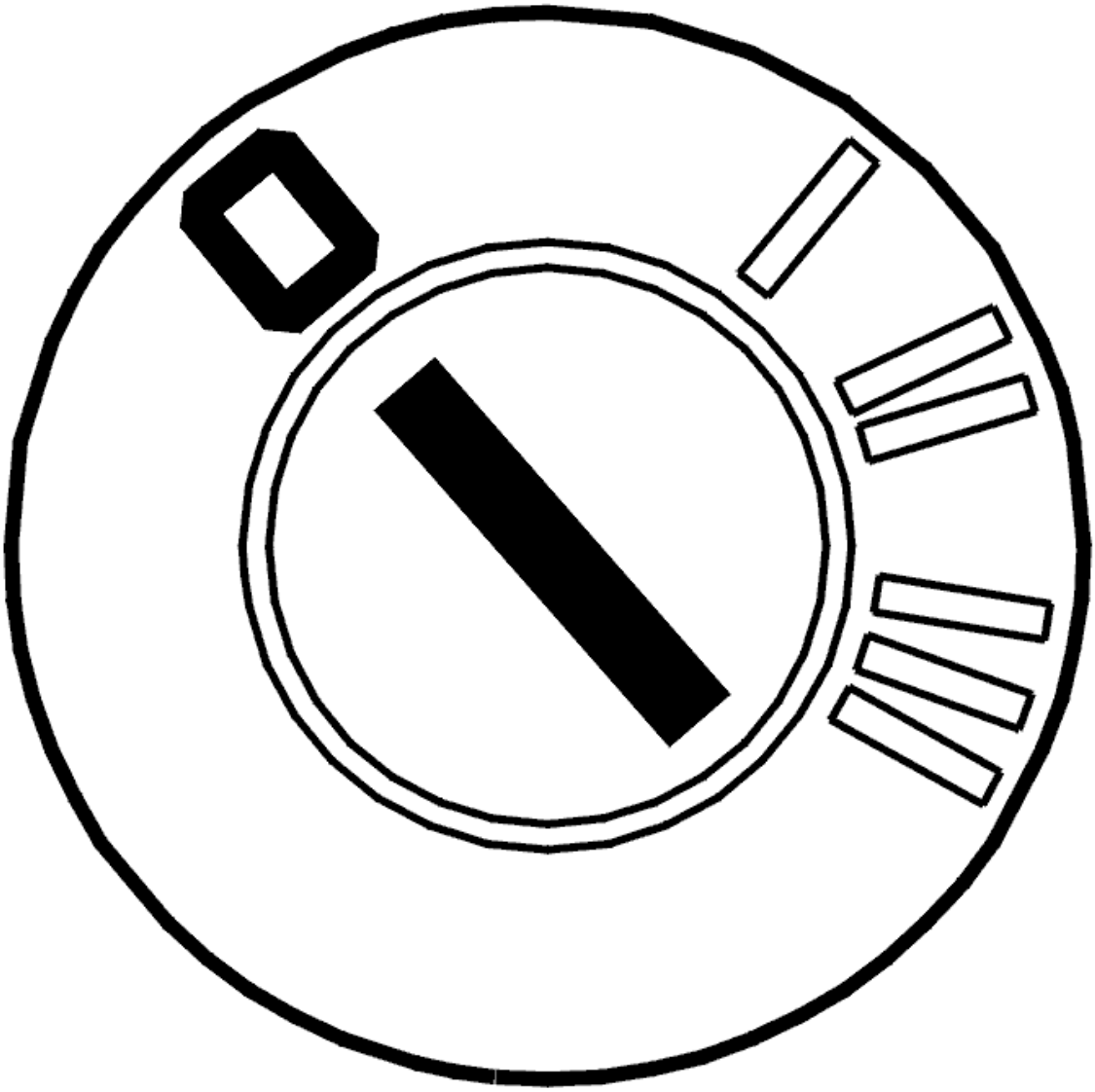

Fig. 367: Identifying Ignition OFF
Courtesy of VOLVO CARS CORPORATION

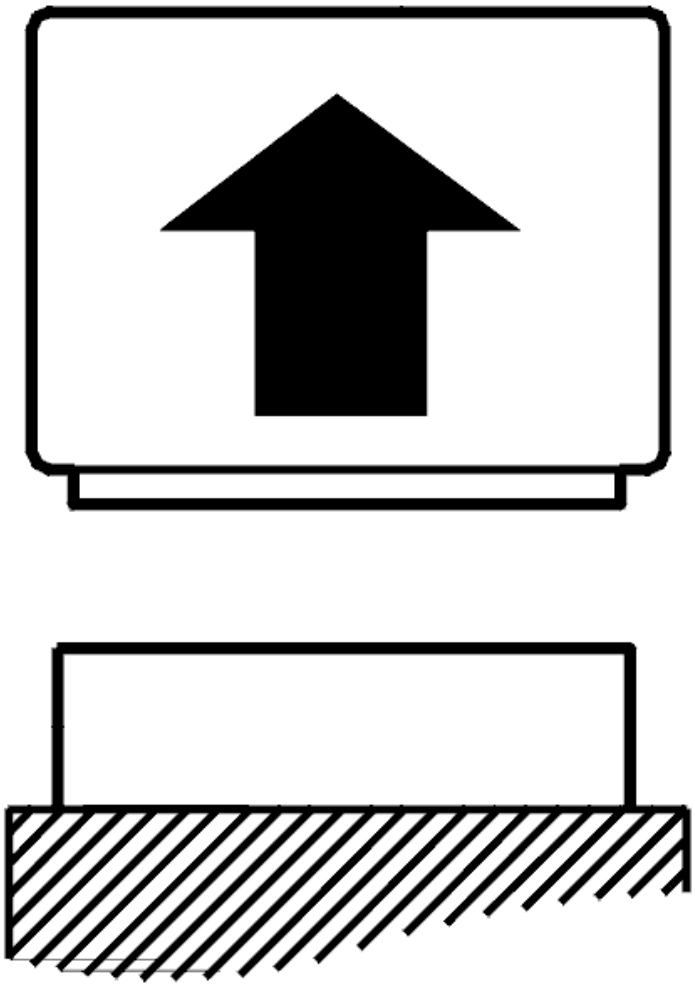

Fig. 368: Disconnecting Connector
Courtesy of VOLVO CARS CORPORATION

- Ignition off
- Disconnect the engine control module (ECM).

  Check the signal cable. Check for a short-circuit to ground.

  Measure between control module terminal #A68 (#B8) and engine temperature sensor terminal #1.

  Remedy as necessary.

  Other information

  - see **CONNECTING THE BREAKOUT BOX**

- see **SIGNAL SPECIFICATION, ENGINE CONTROL MODULE (ECM)**
- see **MASS AIR FLOW (MAF) SENSOR, REPLACING**
- see **CHECKING WIRING AND TERMINALS**

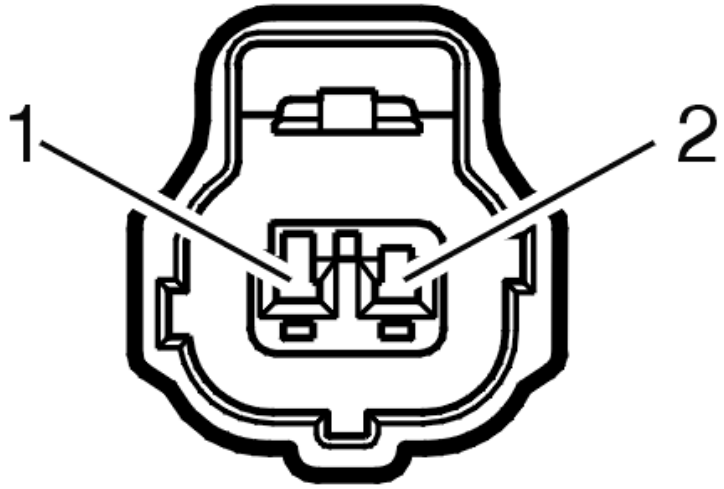

Fig. 369: Identifying 2-Bit Connector
Courtesy of VOLVO CARS CORPORATION

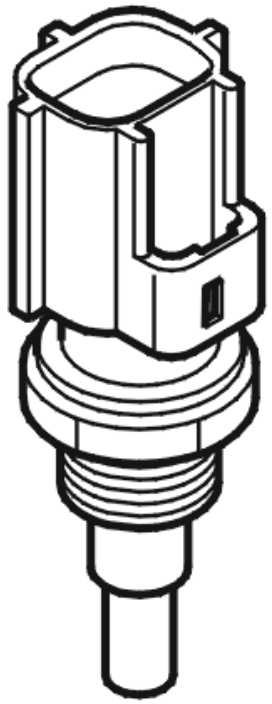

Fig. 370: Identifying Engine Coolant Temperature Sensor

Courtesy of VOLVO CARS CORPORATION

- **Continue**

  Refer to **VERIFICATION**

VERIFICATION

VERIFICATION

HINT: After carrying out the repair, check that the fault has been remedied.

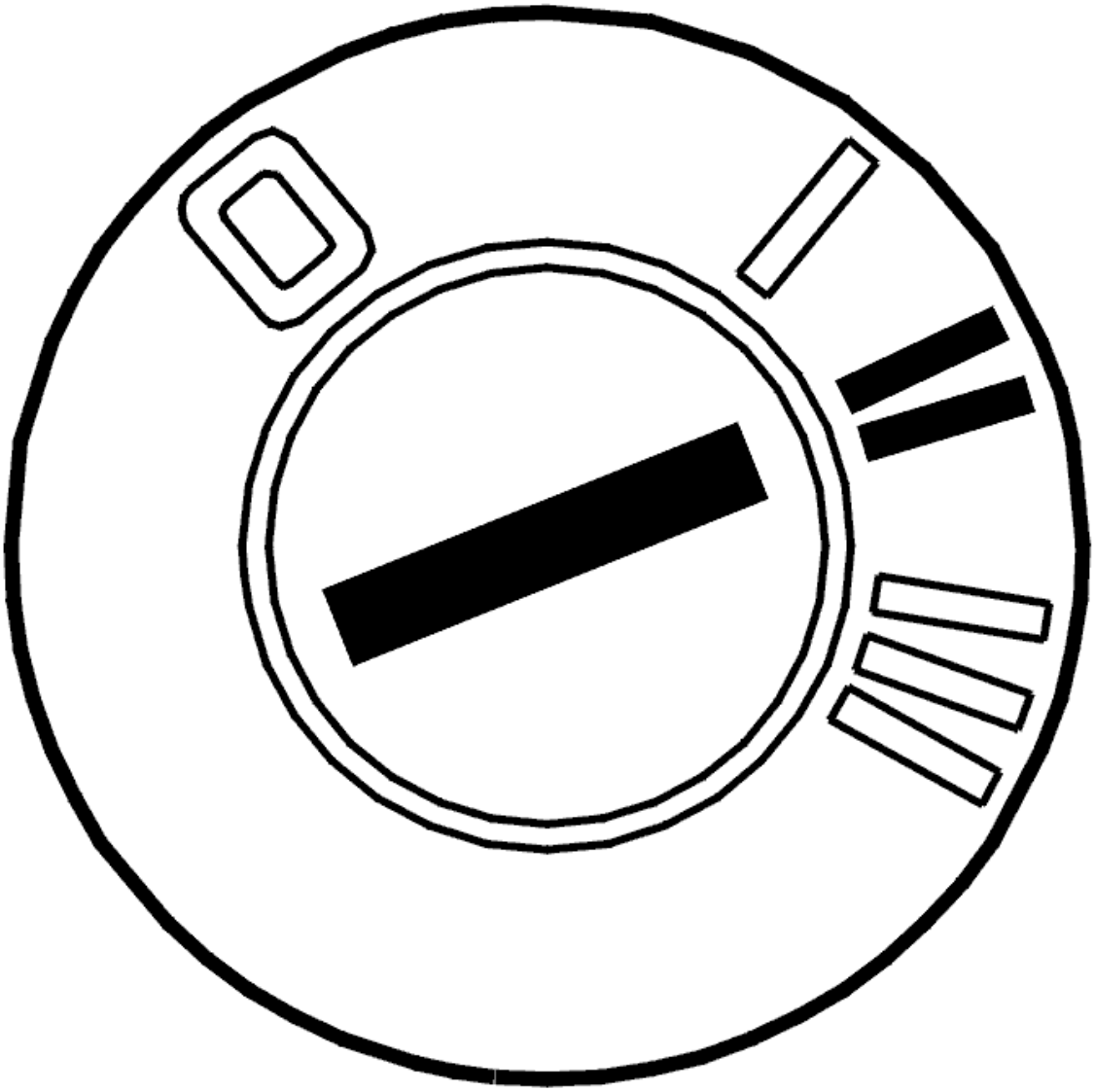

Fig. 371: Identifying Ignition ON
Courtesy of VOLVO CARS CORPORATION

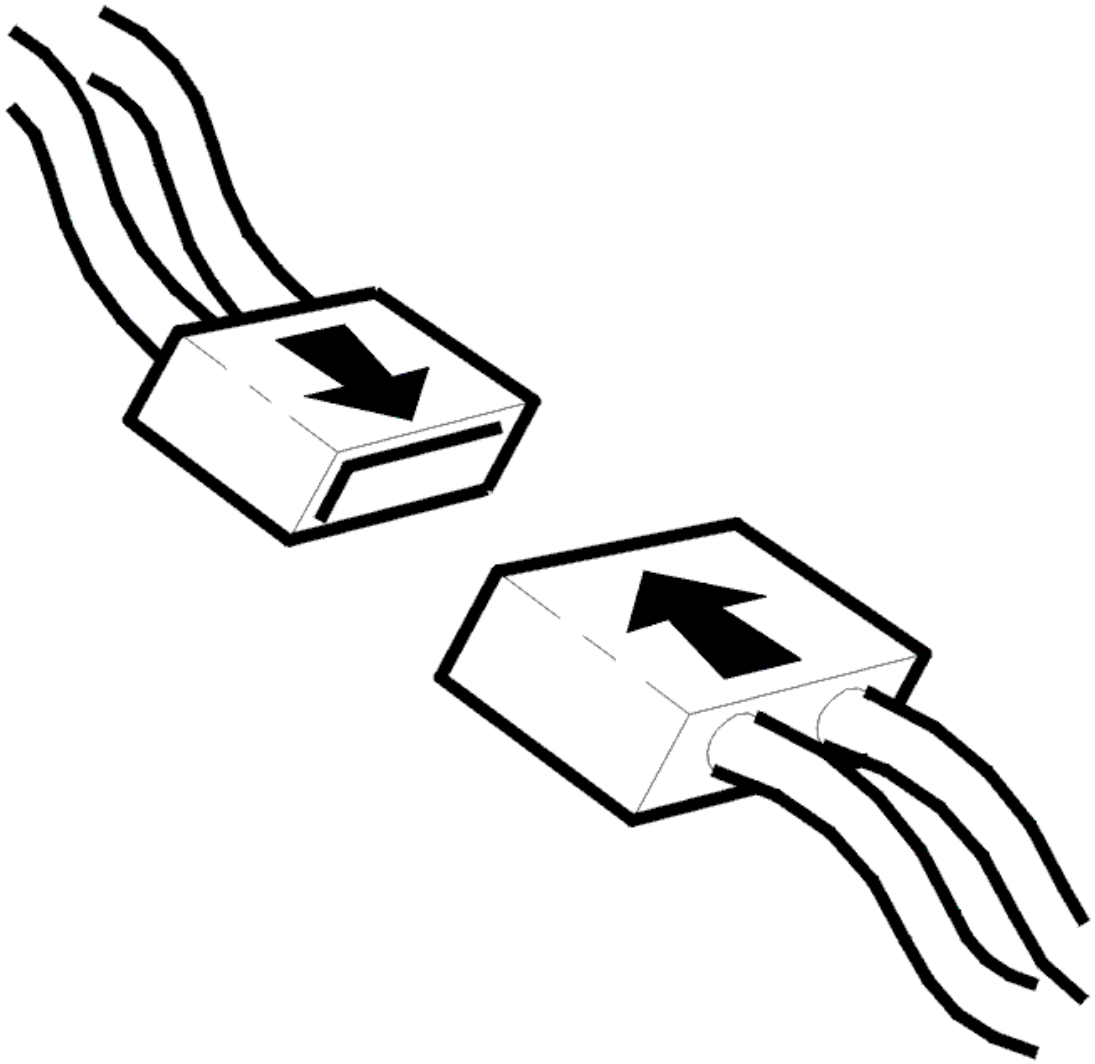

Fig. 372: Connecting Connector
Courtesy of VOLVO CARS CORPORATION

- Ignition off
- Reinstall the connectors, components etc.
- Ignition on

  Read the engine temperature sensor signal using the VCT2000 (or appropriate scan tool).

  Check that the signal corresponds with the engine temperature.

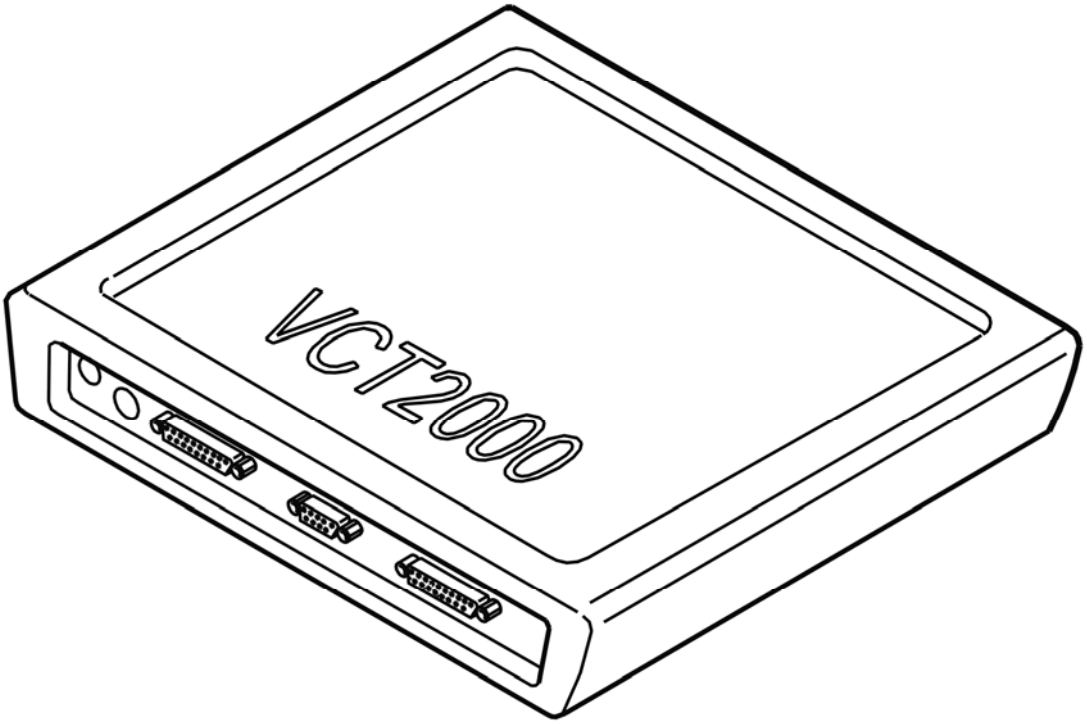

Fig. 373: Identifying VCT2000 Diagnostic Tool Symbol In VIDA
Courtesy of VOLVO CARS CORPORATION

Does the signal correspond to the engine temperature?

- **YES**

  VERIFIED: Troubleshooting has been completed.

- **NO**

  Refer to **INFORMATION**

INFORMATION

FAULT-TRACING INFORMATION

The fault should have been detected and remedied. As this is not the case fault-tracing has failed.

Exit fault-tracing for this diagnostic trouble code (DTC) or make another attempt.

ECM-P011800: ENGINE COOLANT TEMPERATURE CIRCUIT HIGH INPUT. GENERAL FAILURE INFORMATION. NO SUB TYPE INFORMATION

(B6324S; 2007-2010)

DIAGNOSTIC TROUBLE CODE (DTC) INFORMATION ECM-P011800

Condition

Engine control module (ECM) measures the engine temperature using a coolant temperature sensor. The control module checks the direct voltage from the sensor.

The diagnostic trouble code (DTC) is stored if the control module detects that:

- The direct voltage is higher than 4.9 V.
- Incorrect value lasts longer than 9 seconds.
- Incorrect value lasts for 2 or more subsequent driving cycles.

The control module's test for the diagnostic trouble code (DTC) starts in the event of:

- Ignition switch position II.

NOTE: The control module can only detect the fault once the test has been started and the diagnostic trouble code (DTC) is stored when the conditions are met.

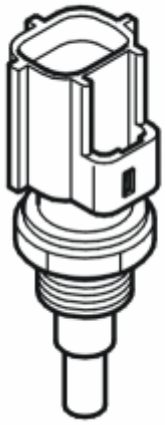

Fig. 374: Identifying Engine Coolant Temperature Sensor
Courtesy of VOLVO CARS CORPORATION

Substitute Value

- During start:The control module assumes that the coolant temperature is the same as the air temperature in the inlet manifold.
- After start:The control module uses a calculated coolant temperature.
- The control module controls the cooling fan (FC) according to pre-defined speed.

Possible Source

- Contact resistance and oxidation in the terminals.
- Short-circuit to supply voltage in the signal cable.
- Open-circuit in the signal cable.
- Damaged coolant temperature sensor.

Fault symptom[s]

- Malfunction indicator light (MIL), on
- Engine is difficult to start
- Uneven idle
- Engine stalls
- Electric cooling fan runs continuously, when ignition is off

FAULT-TRACING

see **FAULT-TRACING**

ECM-P011800: ENGINE COOLANT TEMPERATURE CIRCUIT HIGH INPUT. GENERAL FAILURE INFORMATION. NO SUB TYPE INFORMATION (B6324S5; 2011-2012)

DIAGNOSTIC TROUBLE CODE (DTC) INFORMATION ECM-P011800

see **DIAGNOSTIC TROUBLE CODE (DTC) INFORMATION ECM-P011800**

FAULT-TRACING

see **FAULT-TRACING**

ECM-P011800: COOLANT TEMPERATURE CIRCUIT HIGH INPUT SIGNAL. GENERAL FAULT INFORMATION. NO INFORMATION ABOUT FAULT TYPE (B8444S; 2005-2011)

DIAGNOSTIC TROUBLE CODE (DTC) INFORMATION ECM-P011800

Condition

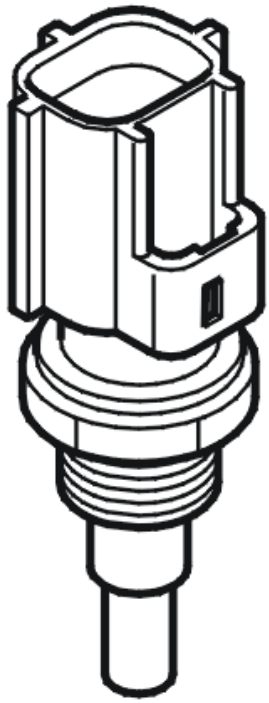

Fig. 375: Identifying Engine Coolant Temperature Sensor
Courtesy of VOLVO CARS CORPORATION

The engine control module (ECM) monitors the engine temperature using a sensor.

The diagnostic trouble code (DTC) is stored if the Engine Control Module (ECM) detects that the signal from the engine coolant temperature (ECT) sensor is too high.

The diagnostic trouble code can be diagnosed when the ignition is on.

Substitute Value

- During start-up: The intake air temperature (IAT) is used if no fault has been detected on the intake temperature sensor.
- After start-up: The engine coolant temperature (ECT) is calculated based on a model.
- Engine cooling fan (FC) is activated at the predefined speed.

Possible Source

- The signal cable is short-circuited to voltage.
- Open-circuit in the signal cable.
- Damaged engine coolant temperature sensor.

Fault symptom[s]

- Malfunction indicator lamp (MIL) lit.
- Engine reluctant to start.
- Uneven idle.
- Engine stops.
- The engine cooling fan (FC) runs continuously even when the ignition is switched off.

FAULT TRACING ECM-P011800

CHECKING THE STATUS

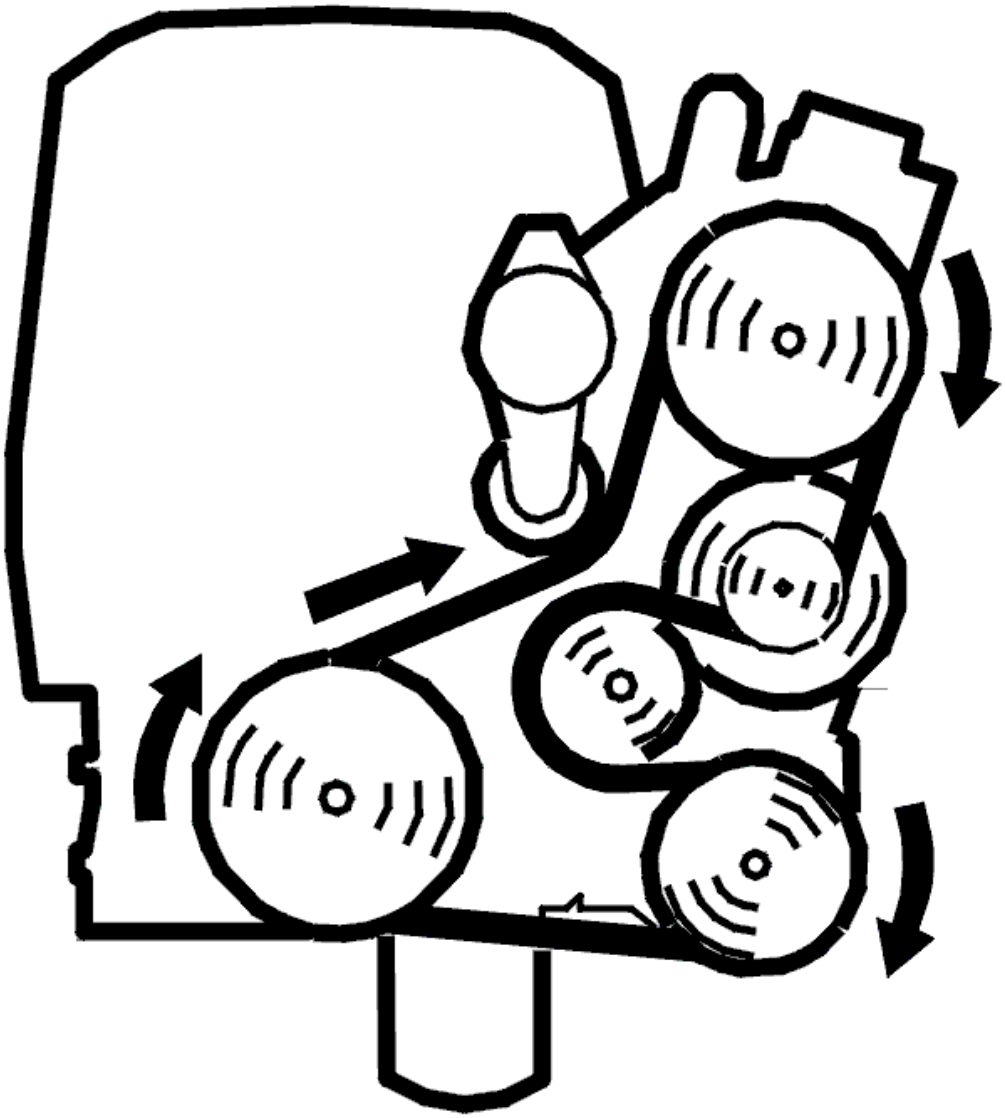

Fig. 376: Belt Routing / Engine Idling - Volvo
Courtesy of VOLVO CARS CORPORATION

- Start the engine.

  Check whether the fault is permanent or intermittent by reading the signal of the engine temperature sensor. Check that the value is feasible.

  If the value is not feasible, the fault is permanent. If the value is feasible, the fault is intermittent and not currently active.

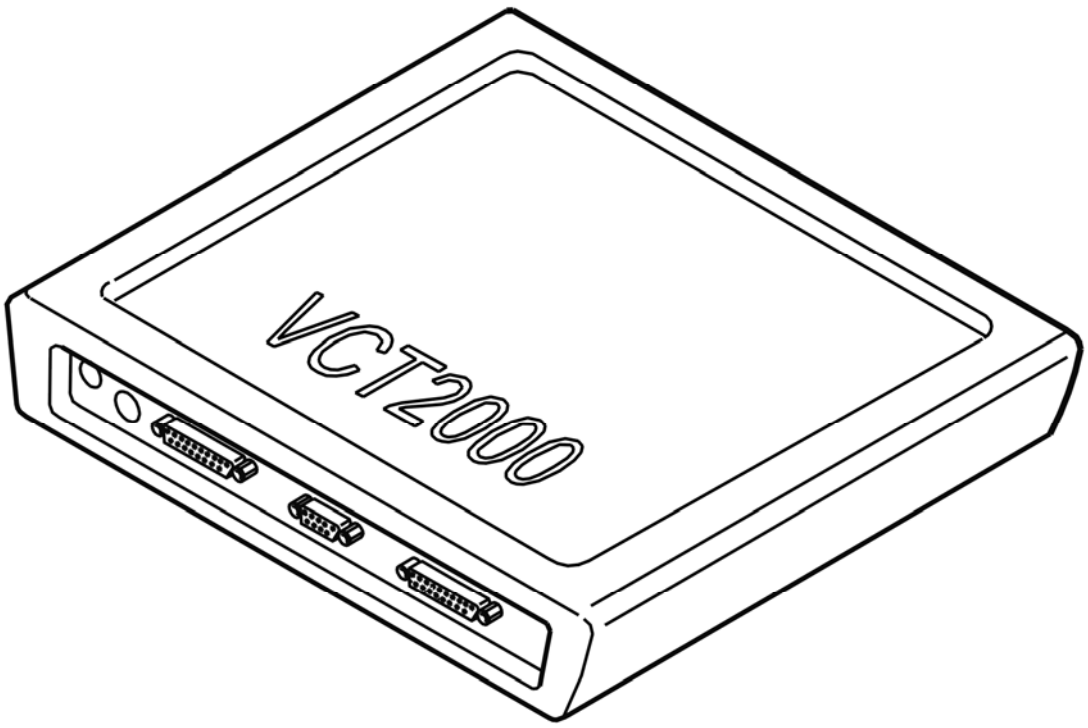

Fig. 377: Identifying VCT2000 Diagnostic Tool Symbol In VIDA
Courtesy of VOLVO CARS CORPORATION

- **Continue**

  Refer to **CHECKING COMPONENTS AND WIRING**

CHECKING COMPONENTS AND WIRING

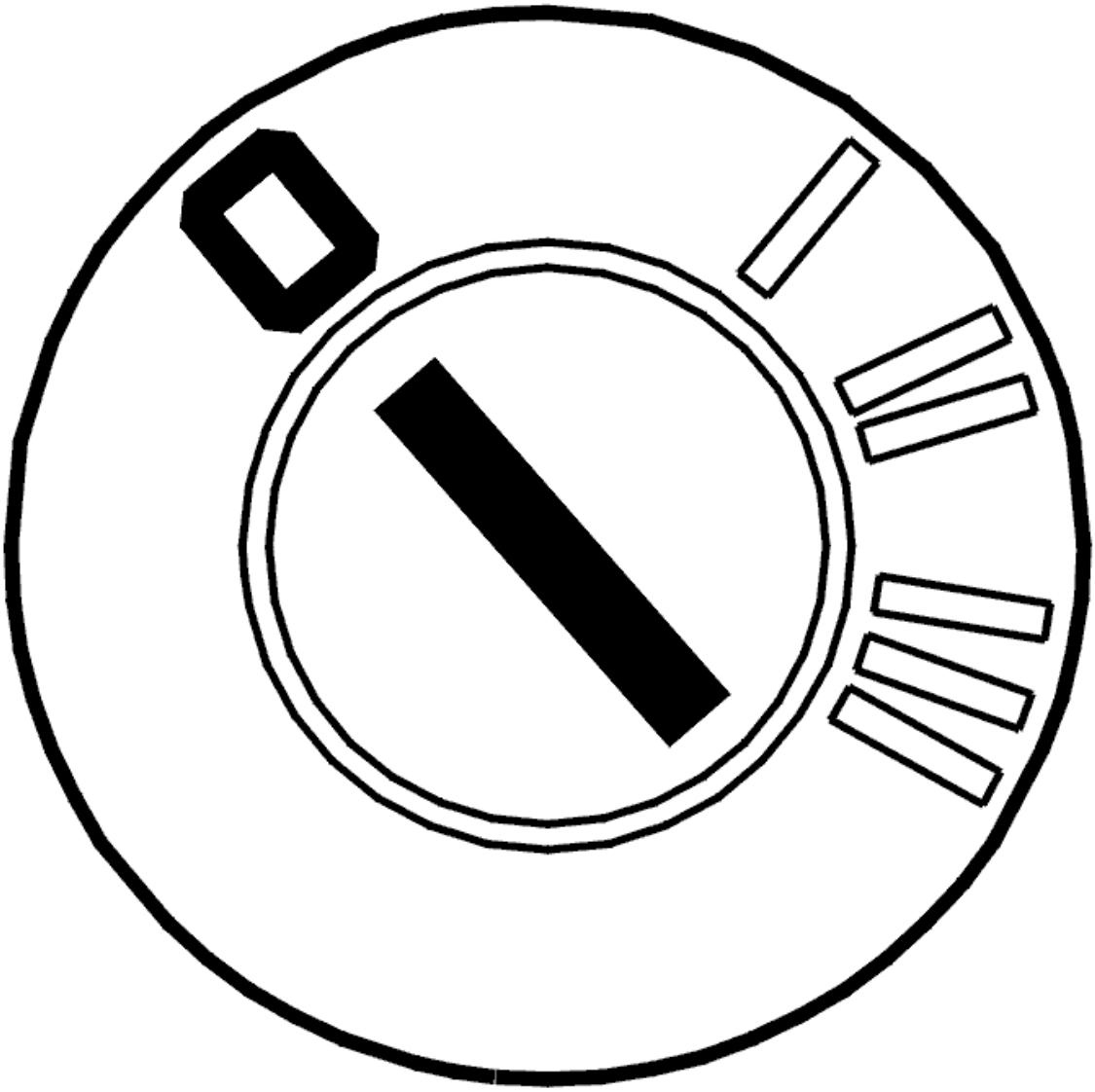

Fig. 378: Identifying Ignition OFF
Courtesy of VOLVO CARS CORPORATION

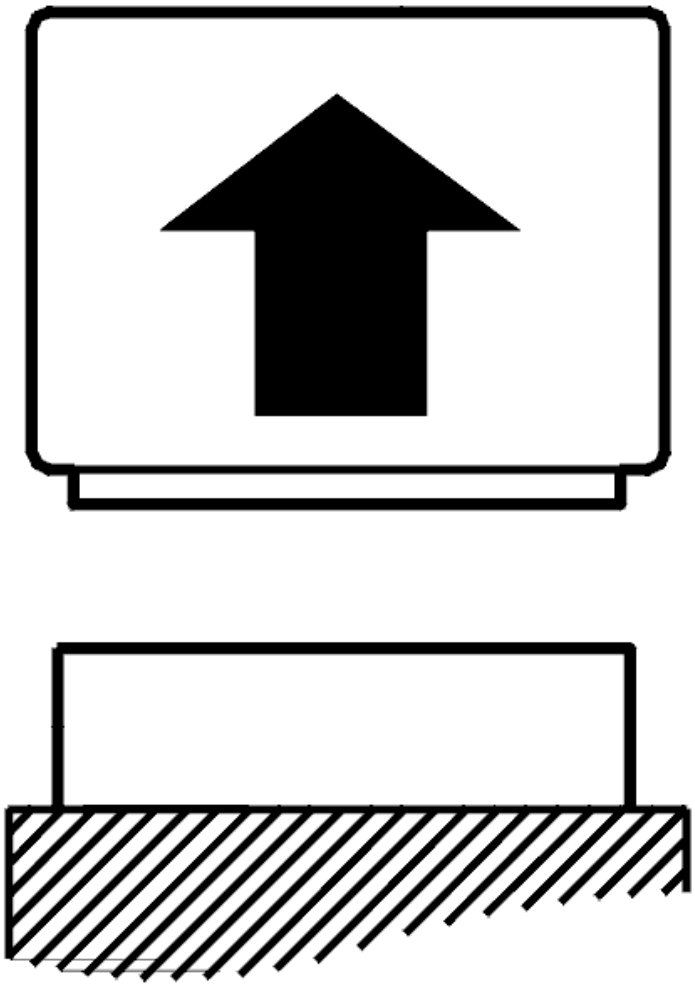

Fig. 379: Disconnecting Connector
Courtesy of VOLVO CARS CORPORATION

- Ignition off
- Disconnect the engine control module (ECM).

  Check the signal cable with regard to short circuit to supply voltage. Check the signal cable with regard to open circuit.

  Measure between control module terminal #A68 (#B8) and engine temperature sensor terminal #1.

  Remedy as necessary.

  Other information

  - see **CONNECTING THE BREAKOUT BOX**

- see **SIGNAL SPECIFICATION, ENGINE CONTROL MODULE (ECM)**
- see **MASS AIR FLOW (MAF) SENSOR, REPLACING**
- see **CHECKING WIRING AND TERMINALS**

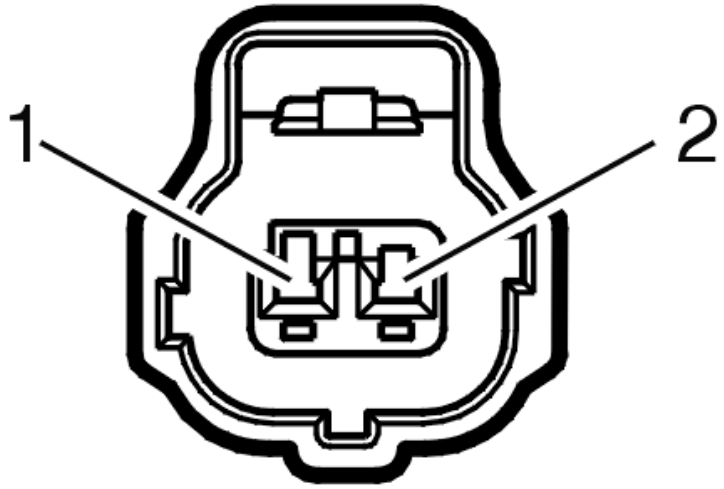

Fig. 380: Identifying 2-Bit Connector
Courtesy of VOLVO CARS CORPORATION

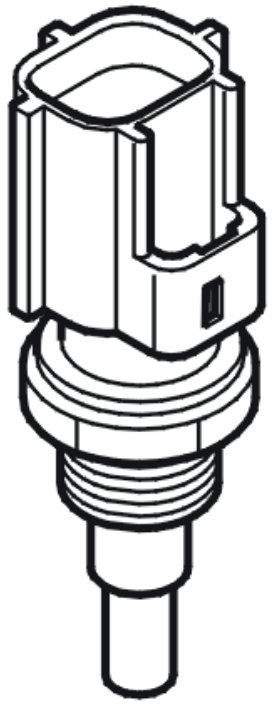

Fig. 381: Identifying Engine Coolant Temperature Sensor

Courtesy of VOLVO CARS CORPORATION

- **Continue**

  Refer to **VERIFICATION**

VERIFICATION

VERIFICATION

HINT: After carrying out the repair, check that the fault has been remedied.

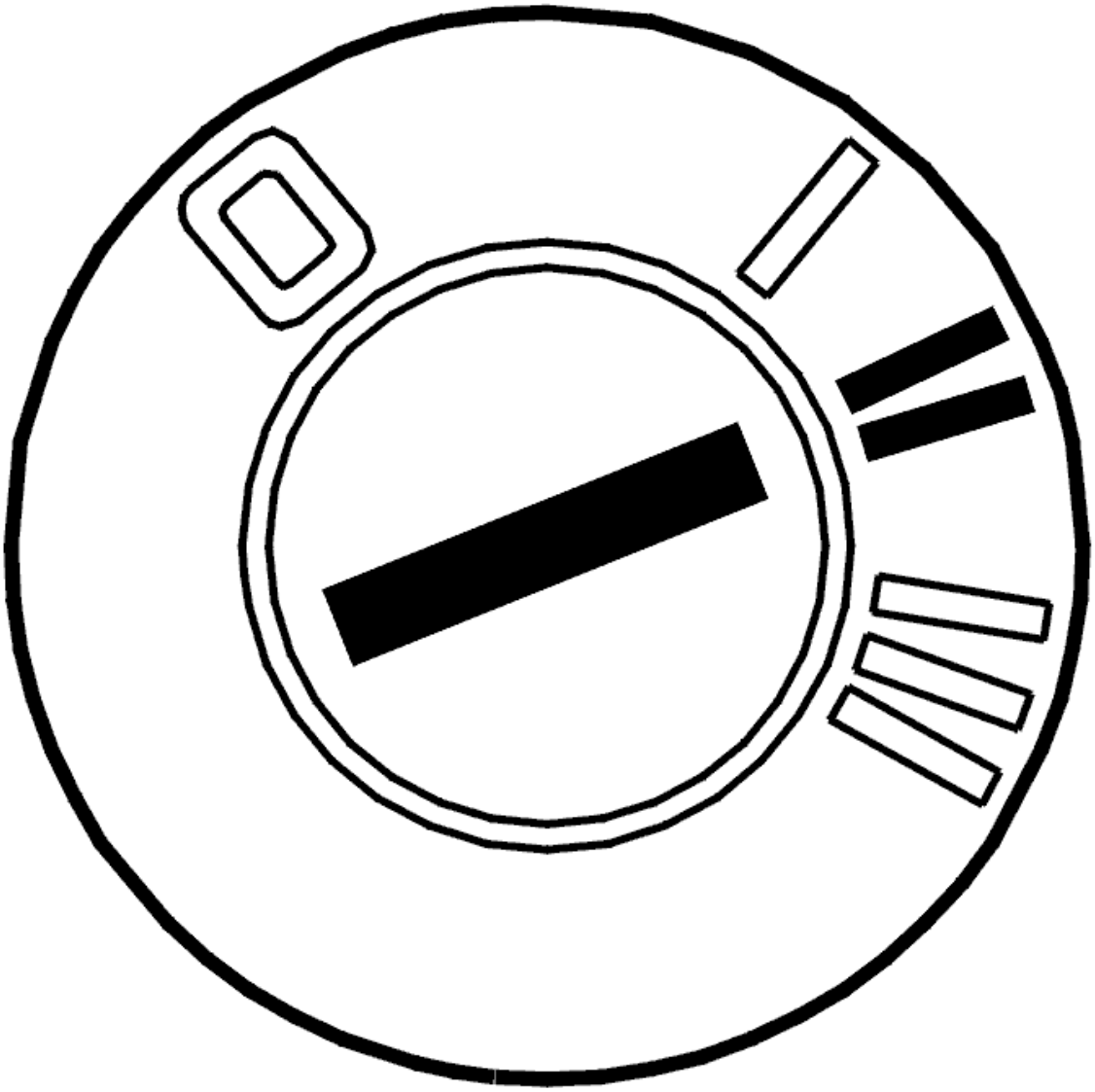

Fig. 382: Identifying Ignition ON
Courtesy of VOLVO CARS CORPORATION

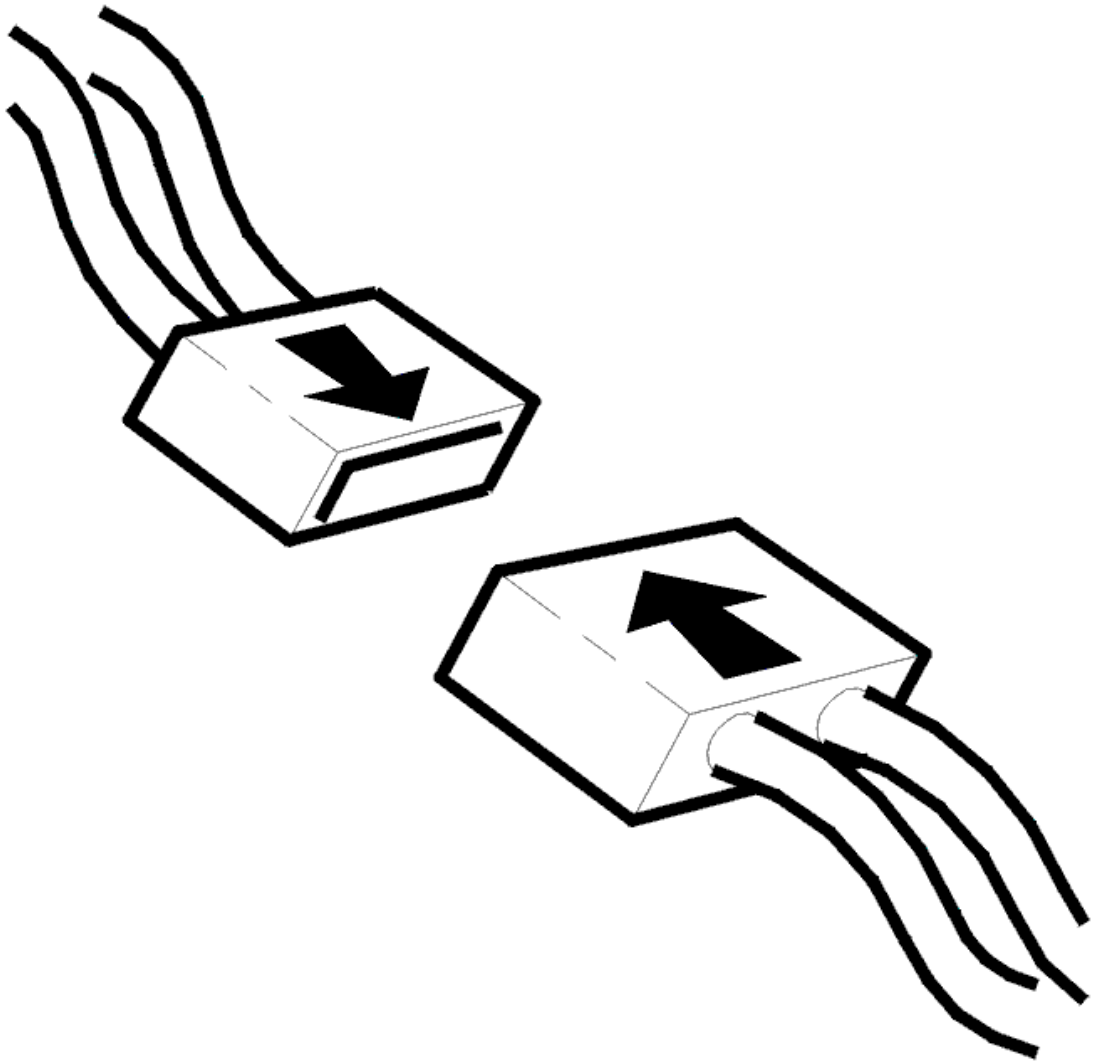

Fig. 383: Connecting Connector
Courtesy of VOLVO CARS CORPORATION

- Ignition off
- Reinstall the connectors, components etc.
- Ignition on

  Read the engine temperature sensor signal using the VCT2000 (or appropriate scan tool).

  Check that the signal corresponds with the engine temperature.

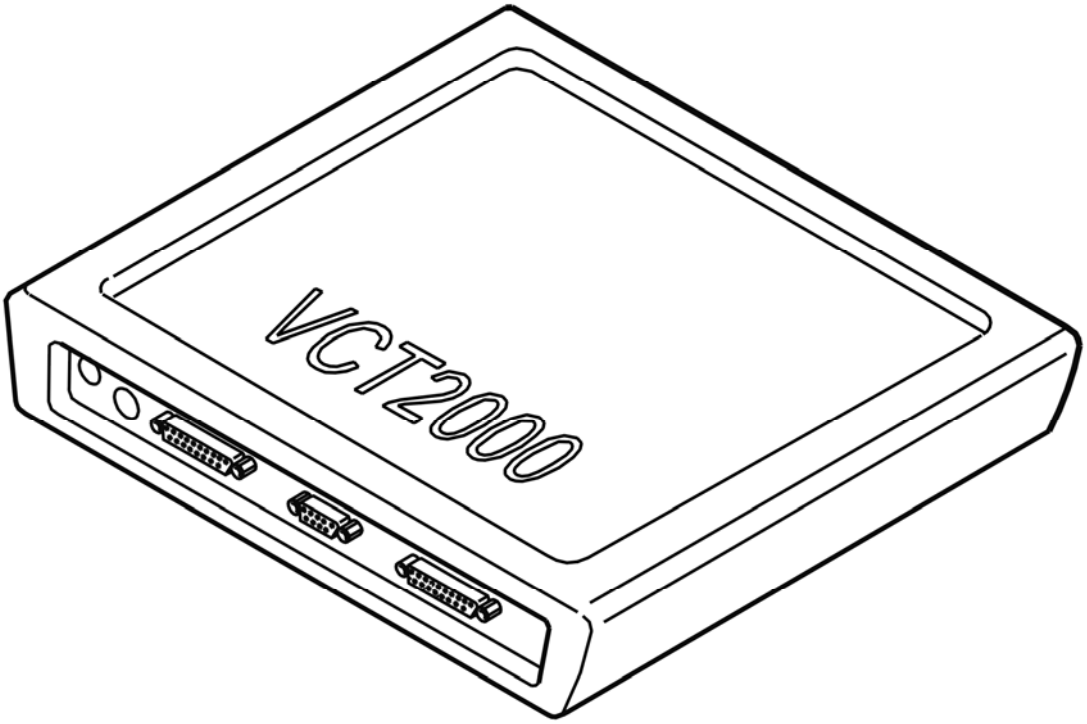

Fig. 384: Identifying VCT2000 Diagnostic Tool Symbol In VIDA
Courtesy of VOLVO CARS CORPORATION

Does the signal correspond to the engine temperature?

- **YES**

  VERIFIED: Troubleshooting has been completed.

- **NO**

  Refer to **INFORMATION**

INFORMATION

FAULT-TRACING INFORMATION

The fault should have been detected and remedied. As this is not the case fault-tracing has failed.

Exit fault-tracing for this diagnostic trouble code (DTC) or make another attempt.

ECM-P012023: THROTTLE/PEDAL POSITION SENSOR A CIRCUIT. GENERAL SIGNAL FAILURES. SIGNAL STUCK LOW (B6324S; 2007-2010)

DIAGNOSTIC TROUBLE CODE (DTC) INFORMATION ECM-P012023

Condition

The engine control module (ECM) checks the pulse width modulation (PWM) signal and the analog signal from the accelerator pedal (AP) position sensor. The analog signal is directly connected to the Central electronic module (CEM) and the signal is transmitted via CAN communication to the Engine control module (ECM). The pulse width modulation (PWM) signal is directly connected to the engine control module (ECM).

The PWM signal is used to determine the current accelerator pedal position in a fault free system.

The engine control module (ECM) checks the PWM signal.

The diagnostic trouble code (DTC) is stored if the control module detects that:

- The PWM signal is too low.
- Incorrect value lasts longer than 16 seconds.

The control module's test for the diagnostic trouble code (DTC) starts in the event of:

- Ignition switch position II.

NOTE: The control module can only detect the fault once the test has been started and the diagnostic trouble code (DTC) is stored when the conditions are met.

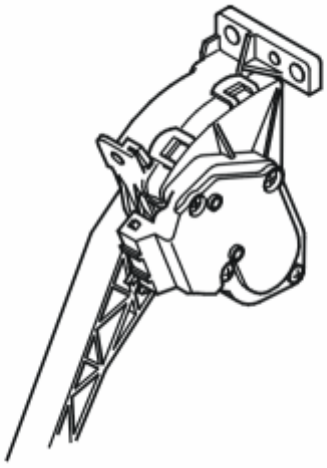

Fig. 385: Identifying Accelerator Pedal Position Sensor
Courtesy of VOLVO CARS CORPORATION

Substitute Value

- The control module uses analog signals (via CAN).
- The control module uses the accelerator pedal position corresponding to the released position when the

brake pedal is depressed at the same time.

Possible Source

- Short-circuit to ground in the signal cable.
- Damaged accelerator pedal (AP) position sensor.

Fault symptom[s]

- Message in information display
- Accelerator pedal ignored during braking

FAULT-TRACING

see **FAULT-TRACING**

ECM-P012023: THROTTLE/PEDAL POSITION SENSOR A CIRCUIT. GENERAL SIGNAL FAILURES. SIGNAL STUCK LOW (B6324S5; 2011-2012)

DIAGNOSTIC TROUBLE CODE (DTC) INFORMATION ECM-P012023

see **DIAGNOSTIC TROUBLE CODE (DTC) INFORMATION ECM-P012023**

FAULT-TRACING

see **FAULT-TRACING**

ECM-P012024: THROTTLE/PEDAL POSITION SENSOR A CIRCUIT. GENERAL SIGNAL FAILURES. SIGNAL STUCK HIGH (B6324S; 2007-2010)

DIAGNOSTIC TROUBLE CODE (DTC) INFORMATION ECM-P012024

Condition

The engine control module (ECM) checks the pulse width modulation (PWM) signal and the analog signal from the accelerator pedal (AP) position sensor. The analog signal is directly connected to the Central electronic module (CEM) and the signal is transmitted via CAN communication to the Engine control module (ECM). The pulse width modulation (PWM) signal is directly connected to the engine control module (ECM).

The PWM signal is used to determine the current accelerator pedal position in a fault free system.

The engine control module (ECM) checks the PWM signal.

The diagnostic trouble code (DTC) is stored if the control module detects that:

- The PWM signal is too high.

- Incorrect value lasts longer than 16 seconds.

The control module's test for the diagnostic trouble code (DTC) starts in the event of:

- Ignition switch position II.

NOTE: The control module can only detect the fault once the test has been started and the diagnostic trouble code (DTC) is stored when the conditions are met.

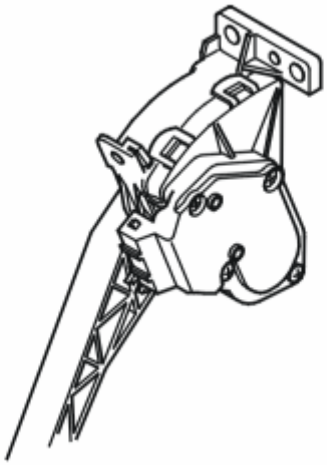

Fig. 386: Identifying Accelerator Pedal Position Sensor
Courtesy of VOLVO CARS CORPORATION

Substitute Value

- The control module uses analog signals (via CAN).
- The control module uses the accelerator pedal position corresponding to the released position when the brake pedal is depressed at the same time.

Possible Source

- Short-circuit to supply voltage in the signal cable.
- Open-circuit in the signal cable.
- Open-circuit in the power supply (12V) to the accelerator pedal (AP) position sensor.
- Open-circuit in the ground lead.
- Damaged accelerator pedal (AP) position sensor.

Fault symptom[s]

- Message in information display
- Accelerator pedal ignored during braking

FAULT-TRACING

see **FAULT-TRACING**

ECM-P012024: THROTTLE/PEDAL POSITION SENSOR A CIRCUIT. GENERAL SIGNAL FAILURES. SIGNAL STUCK HIGH (B6324S5; 2011-2012)

DIAGNOSTIC TROUBLE CODE (DTC) INFORMATION ECM-P012024

see **DIAGNOSTIC TROUBLE CODE (DTC) INFORMATION ECM-P012024**

FAULT-TRACING

see **FAULT-TRACING**

ECM-P012038: THROTTLE/PEDAL POSITION SENSOR A CIRCUIT. FM (FREQUENCY MODULATED) / PWM (PULSE WIDTH MODULATED) FAILURES. SIGNAL FREQUENCY INCORRECT (B6324S; 2007-2010)

DIAGNOSTIC TROUBLE CODE (DTC) INFORMATION ECM-P012038

Condition

The engine control module (ECM) checks the pulse width modulation (PWM) signal and the analog signal from the accelerator pedal (AP) position sensor. The analog signal is directly connected to the Central electronic module (CEM) and the signal is transmitted via CAN communication to the Engine control module (ECM). The pulse width modulation (PWM) signal is directly connected to the engine control module (ECM).

The PWM signal is used to determine the current accelerator pedal position in a fault free system.

The engine control module (ECM) checks the PWM signal.

The diagnostic trouble code (DTC) is stored if the control module detects that:

- Incorrect frequency on the PWM signal.
- Incorrect value lasts longer than 16 seconds.

The control module's test for the diagnostic trouble code (DTC) starts in the event of:

- Ignition switch position II.

NOTE: **The control module can only detect the fault once the test has been started and the diagnostic trouble code (DTC) is stored when the conditions are met.**

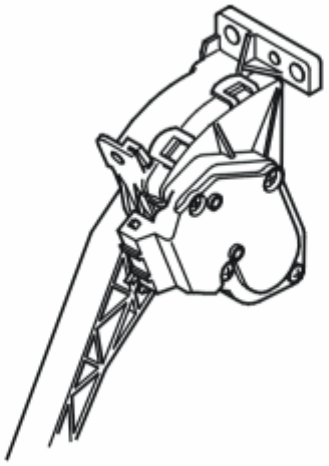

Fig. 387: Identifying Accelerator Pedal Position Sensor
Courtesy of VOLVO CARS CORPORATION

Substitute Value

- The control module uses analog signals (via CAN).
- The control module uses the accelerator pedal position corresponding to the released position when the brake pedal is depressed at the same time.

Possible Source

- Loose connections or contact resistance in the terminals on the pulse width modulation (PWM) signal cable.
- Interference on the pulse width modulation (PWM) signal cable.
- Damaged accelerator pedal (AP) position sensor.

Fault symptom[s]

- Message in information display
- Accelerator pedal ignored during braking

FAULT-TRACING

see **FAULT-TRACING**

ECM-P012038: THROTTLE/PEDAL POSITION SENSOR A CIRCUIT. FM (FREQUENCY MODULATED) / PWM (PULSE WIDTH MODULATED) FAILURES. SIGNAL FREQUENCY INCORRECT (B6324S5; 2011-2012)

DIAGNOSTIC TROUBLE CODE (DTC) INFORMATION ECM-P012038

see **DIAGNOSTIC TROUBLE CODE (DTC) INFORMATION ECM-P012038**

FAULT-TRACING

see **FAULT-TRACING**

ECM-P012200: THROTTLE/PEDAL POSITION SENSOR A CIRCUIT LOW INPUT SIGNAL. GENERAL FAULT INFORMATION. NO INFORMATION ABOUT FAULT TYPE. (B8444S; 2005-2011)

DIAGNOSTIC TROUBLE CODE (DTC) INFORMATION ECM-P012200

Condition

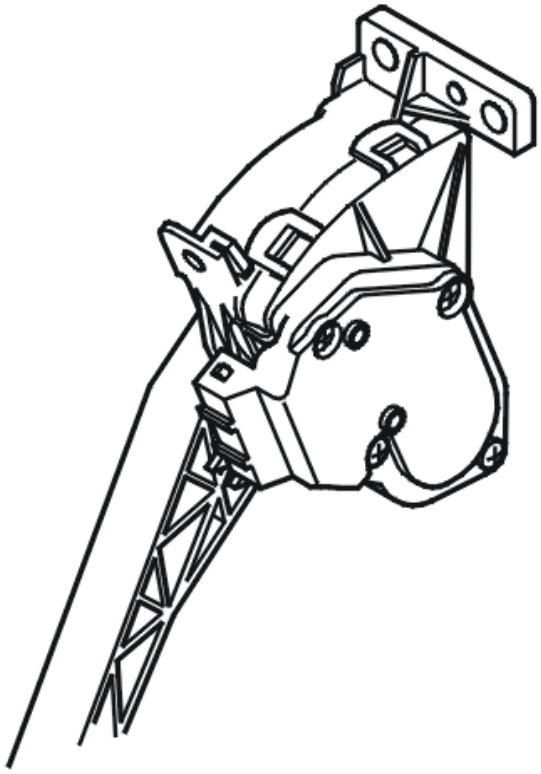

Fig. 388: Identifying Accelerator Pedal Position Sensor
Courtesy of VOLVO CARS CORPORATION

The engine control module (ECM) receives a pulse width modulation (PWM) signal and an analog signal from the accelerator pedal position sensor. In a fault-free system, the analog signal is used to determine the position of the accelerator pedal (AP).

The diagnostic trouble code (DTC) is stored if the control module registers that the analog signal is too low.

The diagnostic trouble code can be diagnosed when the ignition is on.

Substitute Value

- Acceleration is ignored when braking.
- Pulse width modulation (PWM) signal is used.

Possible Source

- The signal cable is short-circuited to ground.
- Open-circuit on the signal cable.
- Interruption of power supply.
- Open circuit in ground cable.
- Damaged accelerator pedal (AP) position sensor.

Fault symptom[s]

- Message in the display.
- Poor response from the accelerator pedal.
- Accelerator pedal (AP) is ignored when braking.
- Maximum vehicle speed reduced.

TROUBLESHOOTING ECM-P012200

CHECKING THE STATUS

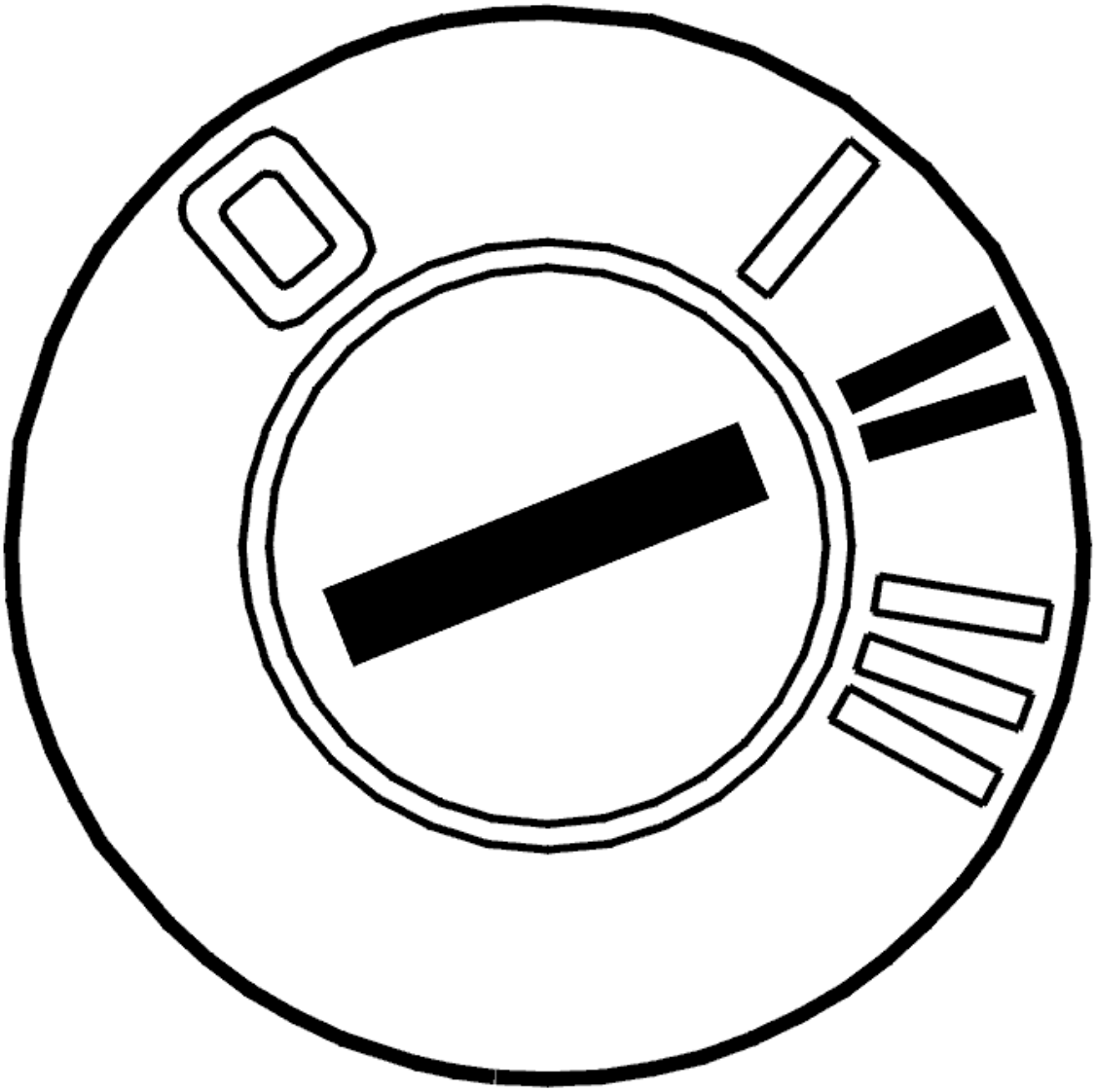

Fig. 389: Identifying Ignition ON
Courtesy of VOLVO CARS CORPORATION

- Ignition on

  Check if the malfunction is permanent or intermittent by activating readout of the accelerator pedal position sensor's signals.

  Check that the value for both signals at unaffected accelerator pedal is approx. 8% and when the pedal is fully pressed down approx. 82%.

  If the signal is incorrect, this indicates that the malfunction is permanent. If the signal is correct, this indicates that the malfunction is intermittent and not active right now.

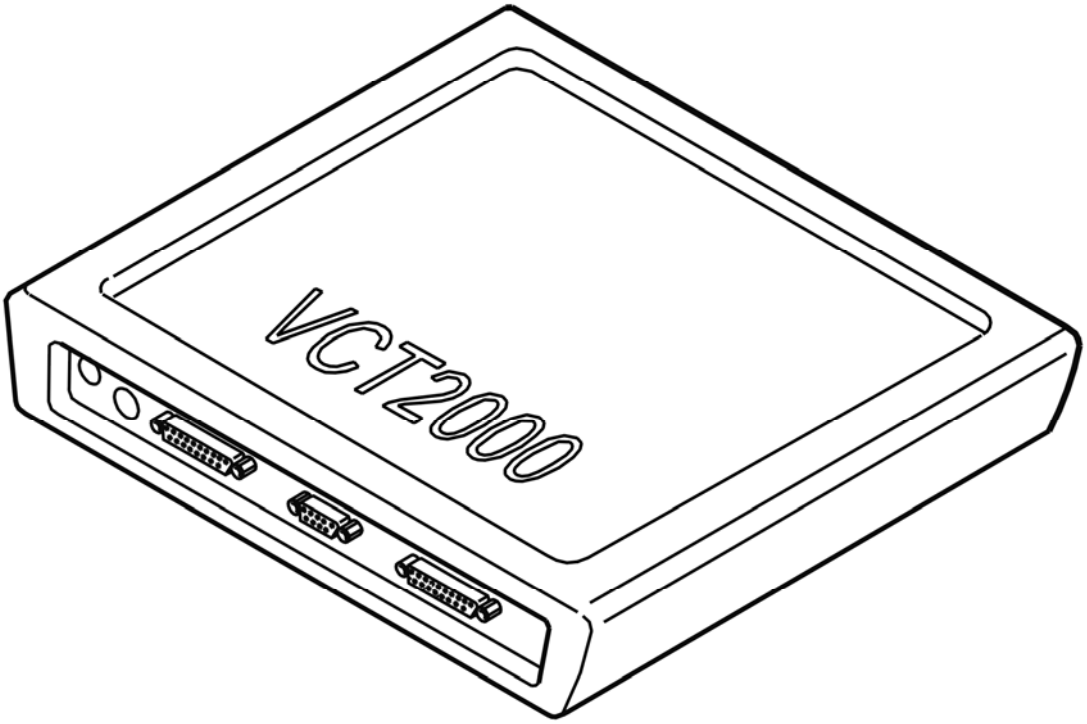

Fig. 390: Identifying VCT2000 Diagnostic Tool Symbol In VIDA
Courtesy of VOLVO CARS CORPORATION

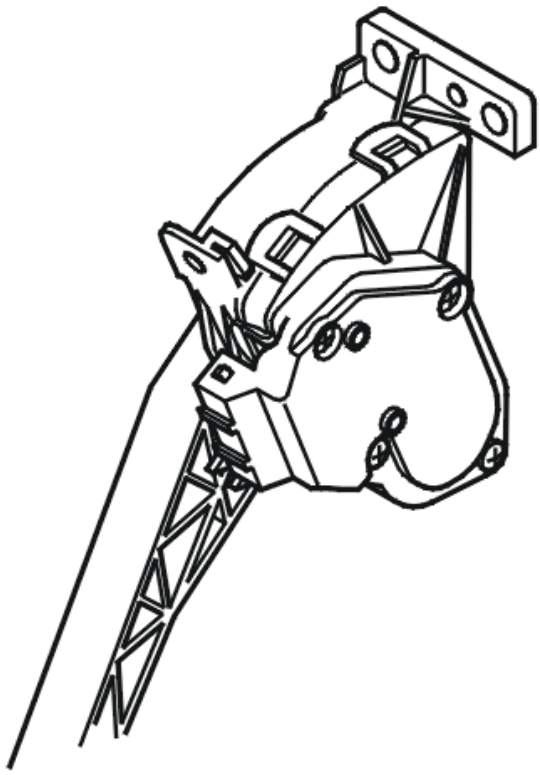

Fig. 391: Identifying Accelerator Pedal Position Sensor
Courtesy of VOLVO CARS CORPORATION

- **Continue**

  Refer to **CHECKING COMPONENTS AND WIRING**

CHECKING COMPONENTS AND WIRING

Check the cable between engine control module (ECM) #B24 (#C24) and accelerator pedal position sensor #5 for short-circuit to ground and open circuit.

Check the voltage feed from engine control module (ECM) #B32 (#C32) to accelerator pedal position sensor #6 for open circuit.

Check the ground cable between engine control module (ECM) #B7 (#C7) and accelerator pedal position sensor #4 for open circuit.

Remedy as necessary.

Other information

- see **CONNECTING THE BREAKOUT BOX**
- see **SIGNAL SPECIFICATION, ENGINE CONTROL MODULE (ECM)**

- For replacing accelerator pedal position sensor: **ACCELERATOR PEDAL (AP), REPLACING**
- see **CHECKING WIRING AND TERMINALS**

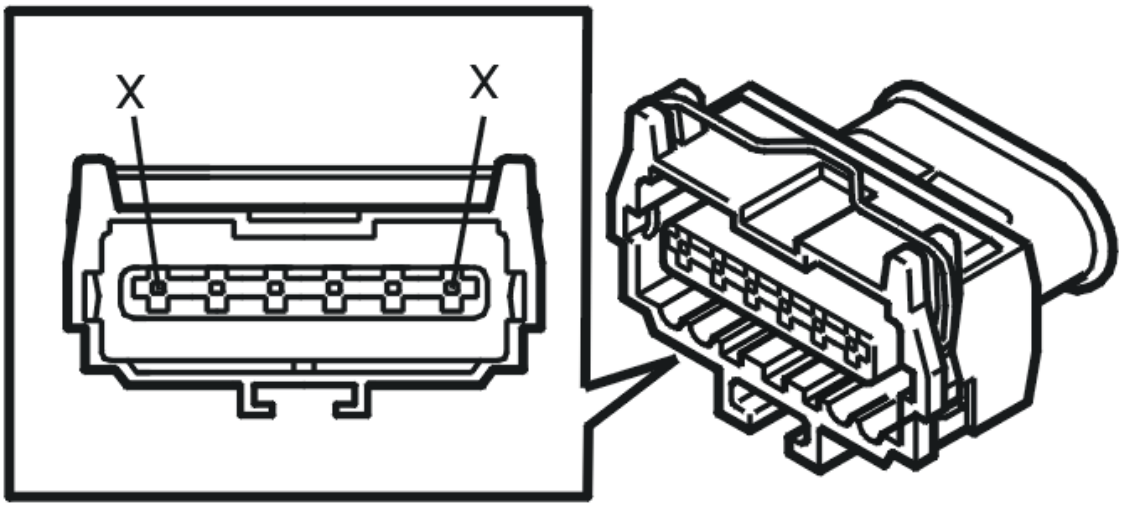

Fig. 392: Connector End View
Courtesy of VOLVO CARS CORPORATION

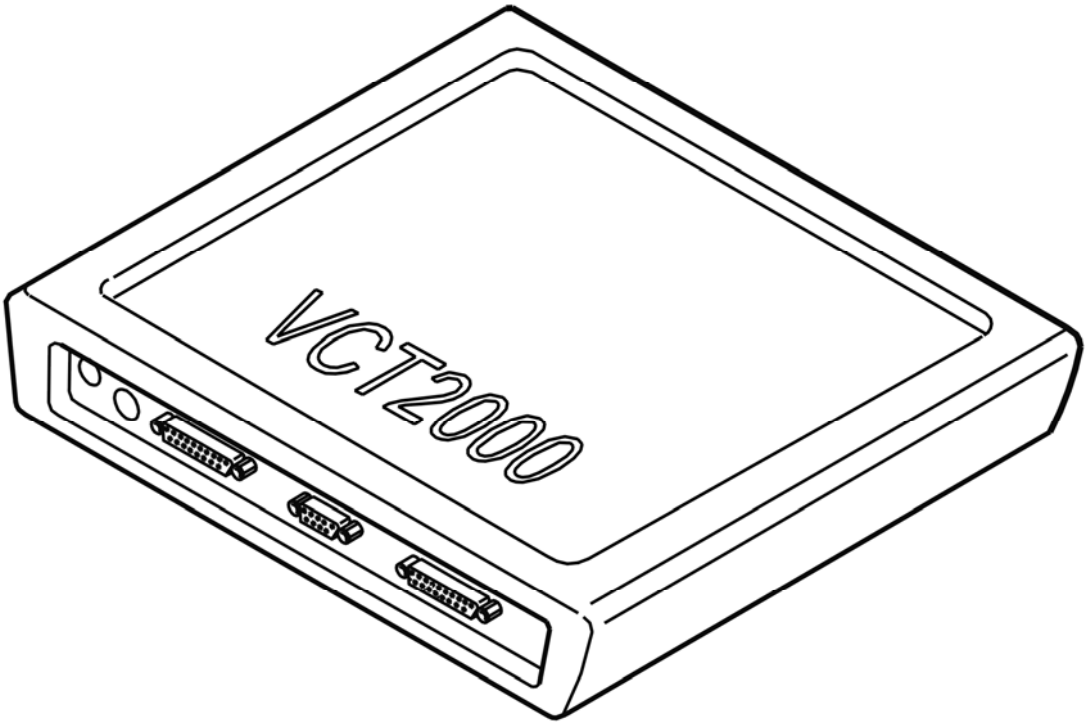

Fig. 393: Identifying VCT2000 Diagnostic Tool Symbol In VIDA
Courtesy of VOLVO CARS CORPORATION

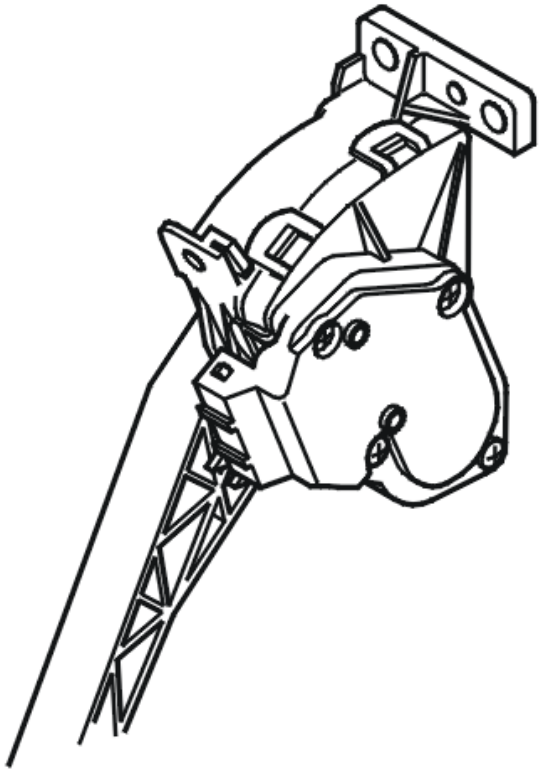

Fig. 394: Identifying Accelerator Pedal Position Sensor
Courtesy of VOLVO CARS CORPORATION

- **Continue**

  Refer to **VERIFICATION**

VERIFICATION

VERIFICATION

HINT: After carrying out the repair, check that the fault has been remedied.

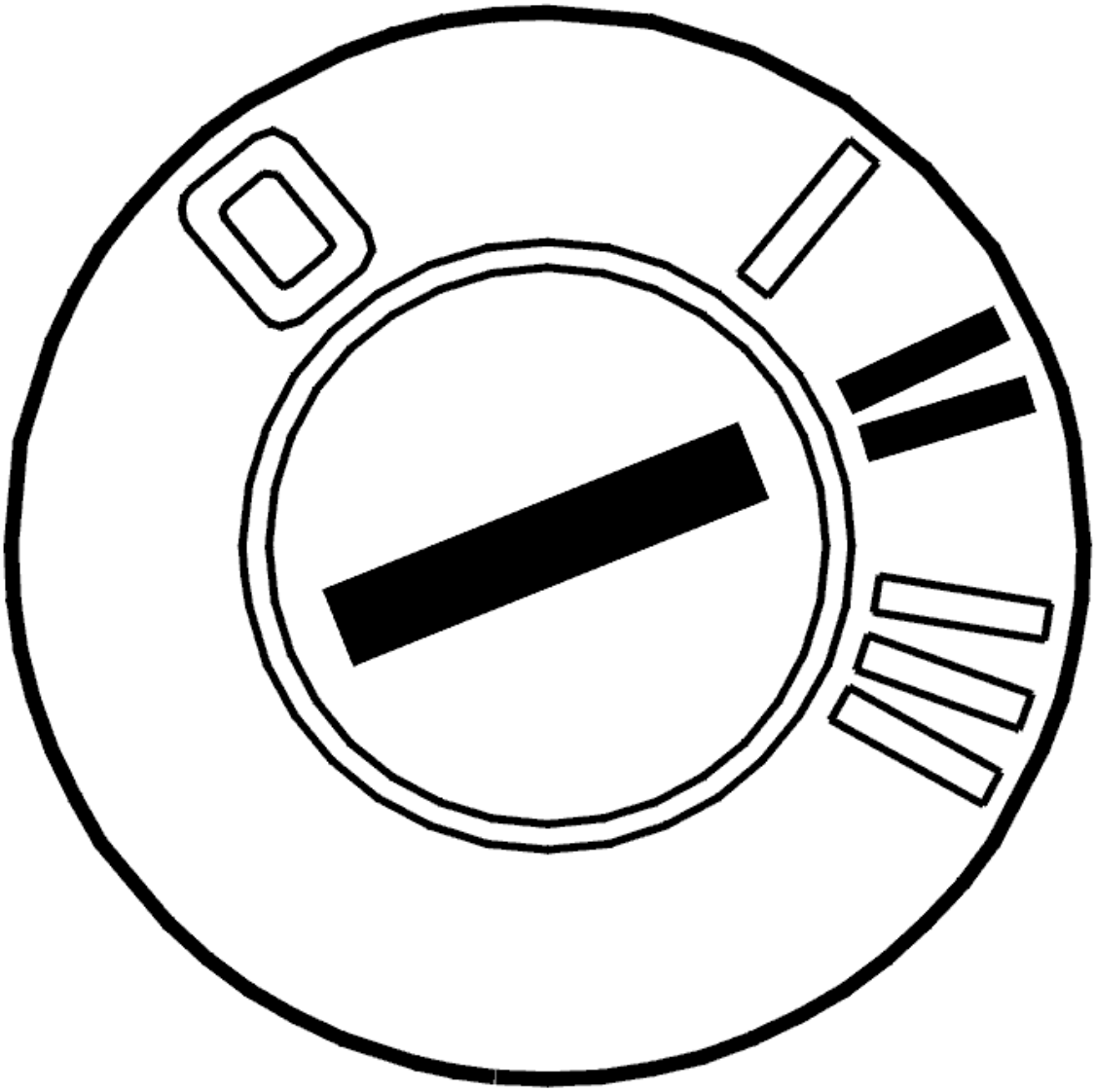

Fig. 395: Identifying Ignition ON
Courtesy of VOLVO CARS CORPORATION

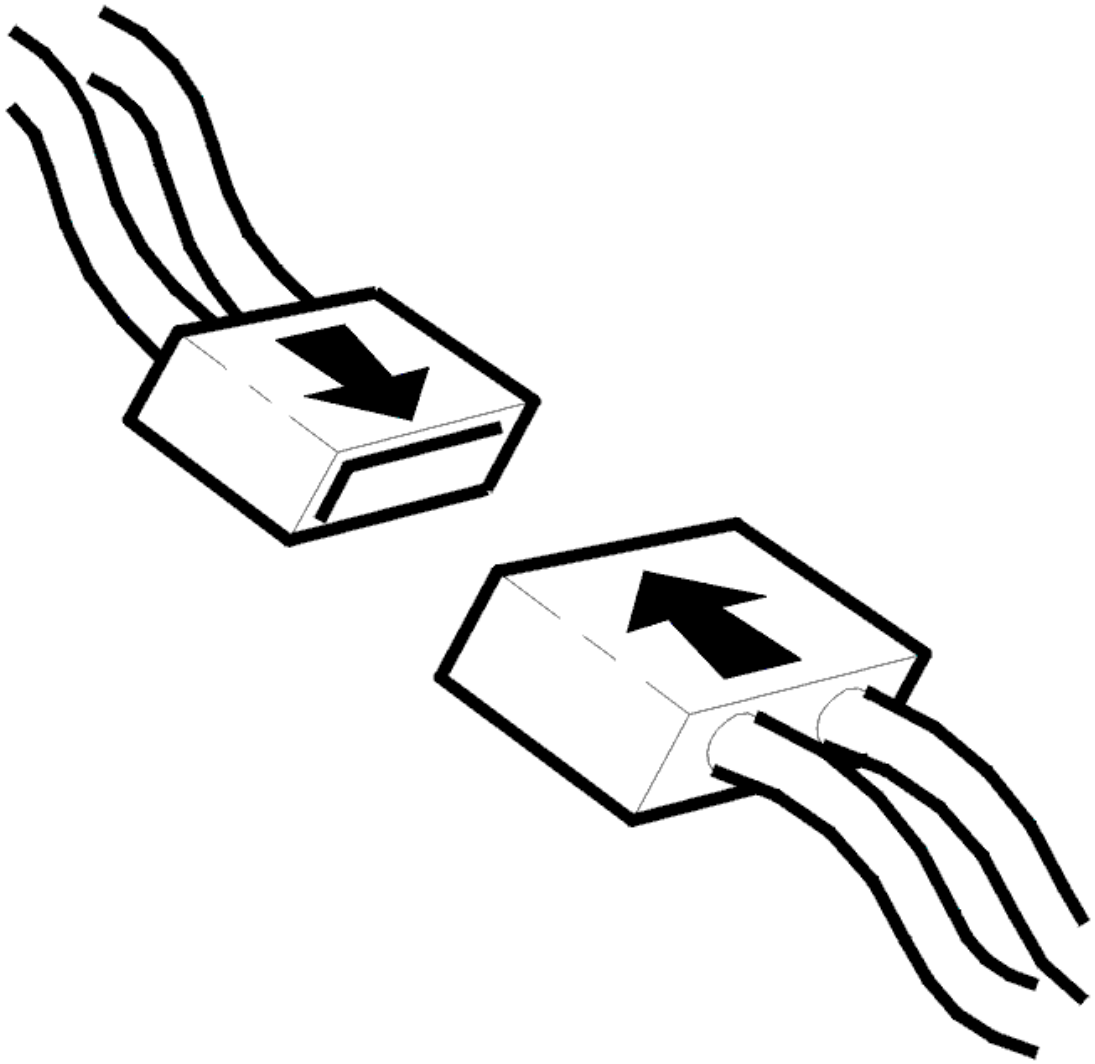

Fig. 396: Connecting Connector
Courtesy of VOLVO CARS CORPORATION

- Ignition off
- Reinstall the connectors, components etc.
- Ignition on

  Activate readout of the accelerator pedal position sensor's signals.

  Check that the value for both signals at unaffected accelerator pedal is approx. 8% and when the pedal is fully pressed down approx. 82%.

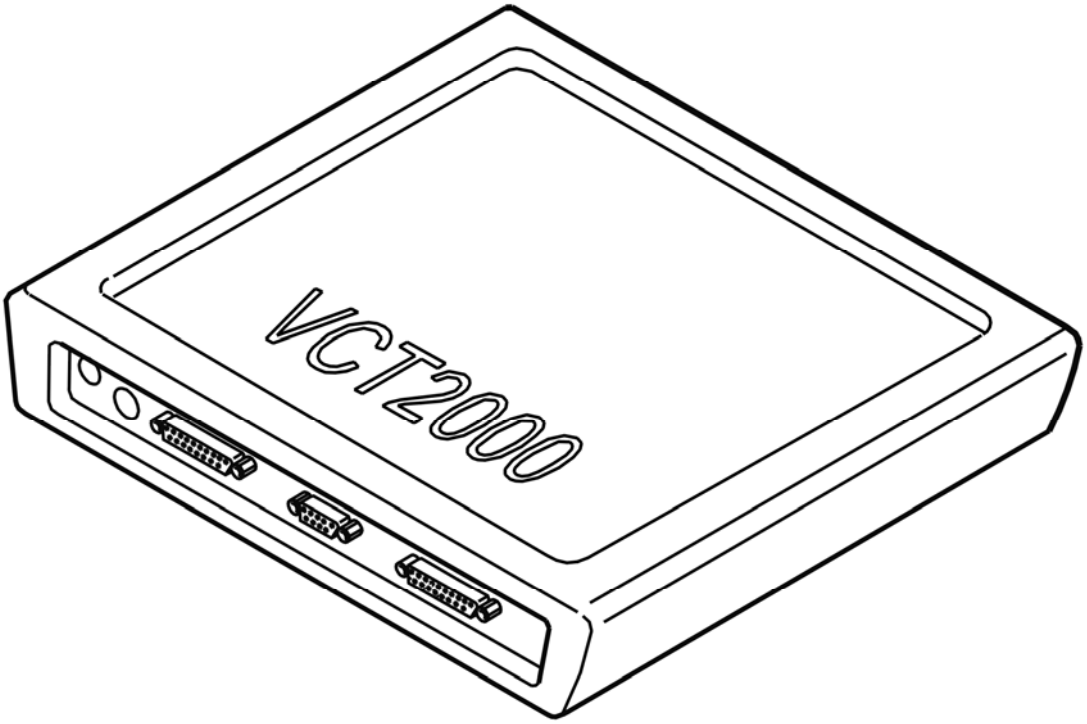

Fig. 397: Identifying VCT2000 Diagnostic Tool Symbol In VIDA
Courtesy of VOLVO CARS CORPORATION

Is the function OK?

- **YES**

  VERIFIED: Troubleshooting has been completed.

- **NO**

  Refer to **INFORMATION**

INFORMATION

FAULT-TRACING INFORMATION

The fault should have been detected and remedied. As this is not the case fault-tracing has failed.

Exit fault-tracing for this diagnostic trouble code (DTC) or make another attempt.

ECM-P012300: THROTTLE/PEDAL POSITION SENSOR A CIRCUIT HIGH INPUT SIGNAL. GENERAL FAULT INFORMATION. NO INFORMATION

ABOUT FAULT TYPE. (B8444S; 2005-2011)

DIAGNOSTIC TROUBLE CODE (DTC) INFORMATION ECM-P012300

Condition

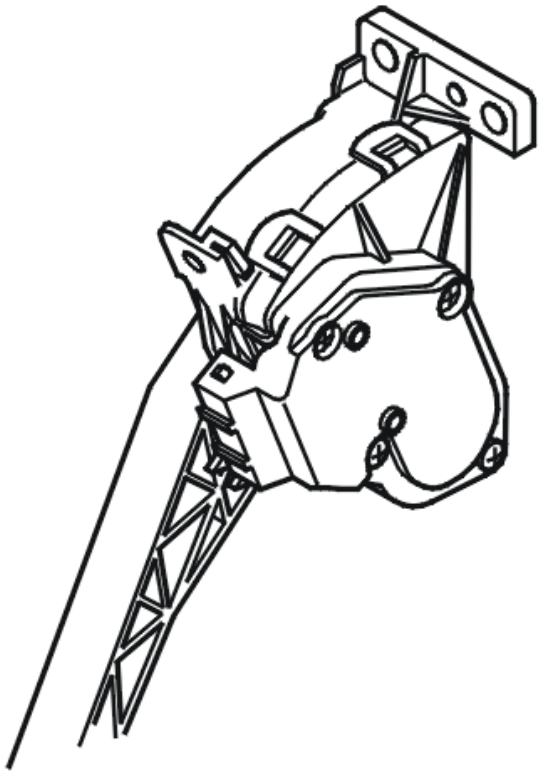

Fig. 398: Identifying Accelerator Pedal Position Sensor
Courtesy of VOLVO CARS CORPORATION

The engine control module (ECM) receives a pulse width modulation (PWM) signal and an analog signal from the accelerator pedal position sensor. In a fault-free system, the analog signal is used to determine the position of the accelerator pedal (AP).

The diagnostic trouble code (DTC) is stored if the control module registers that the analog signal is too high.

The diagnostic trouble code can be diagnosed when the ignition is on.

Substitute Value

- Acceleration is ignored when braking.
- Pulse width modulation (PWM) signal is used.

Possible Source

- The signal cable is short-circuited to voltage.
- Damaged accelerator pedal (AP) position sensor.

Fault symptom[s]

- Message in the display.
- Poor response from the accelerator pedal.
- Accelerator pedal (AP) is ignored when braking.
- Maximum vehicle speed reduced.

TROUBLESHOOTING ECM-P012300

CHECKING THE STATUS

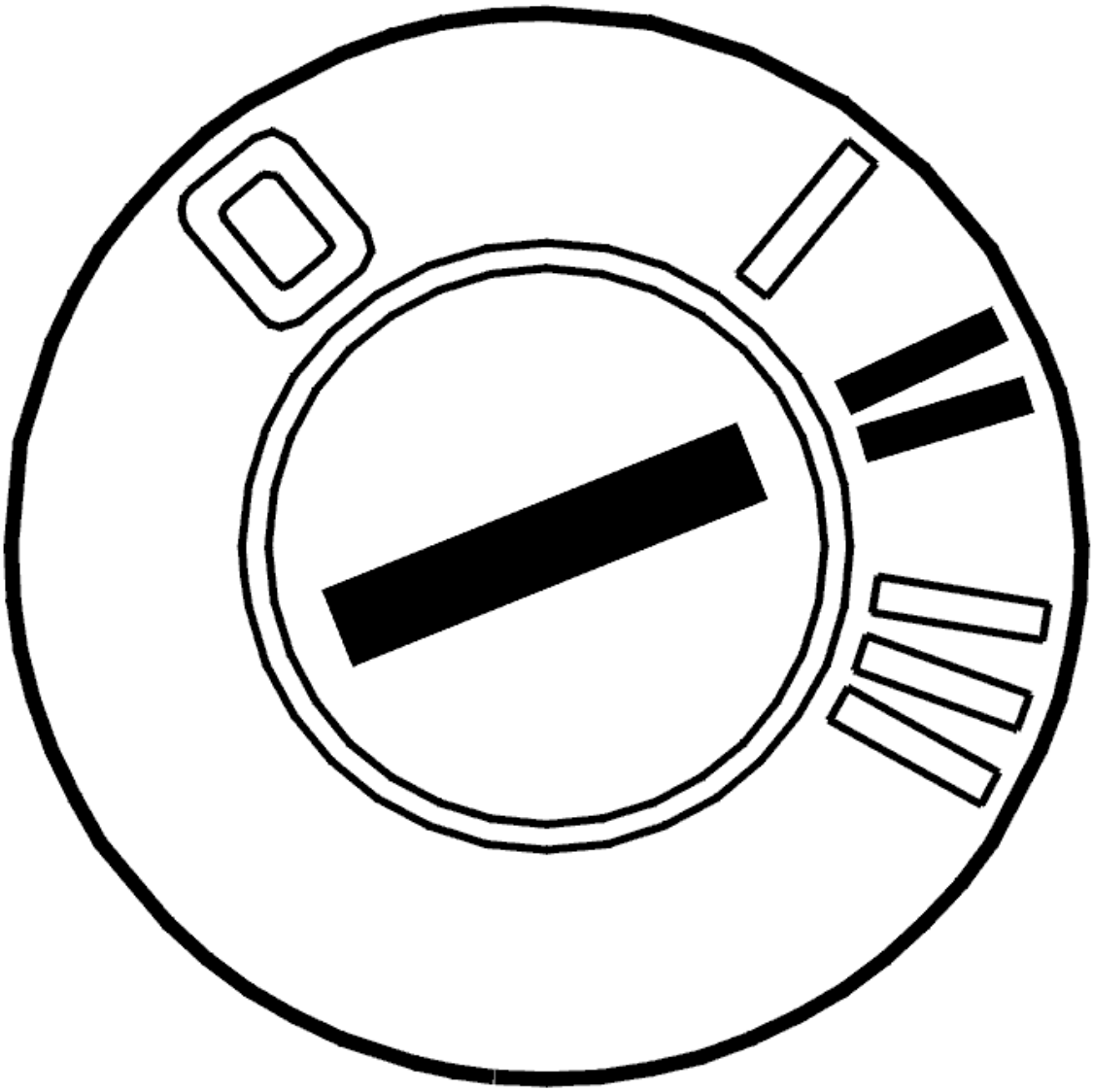

Fig. 399: Identifying Ignition ON

Courtesy of VOLVO CARS CORPORATION

- Ignition on

  Check if the malfunction is permanent or intermittent by activating readout of the accelerator pedal position sensor's signals.

  Check that the value for both signals at unaffected accelerator pedal is approx. 8% and when the pedal is fully pressed down approx. 82%.

  If the signal is incorrect, this indicates that the malfunction is permanent. If the signal is correct, this indicates that the malfunction is intermittent and not active right now.

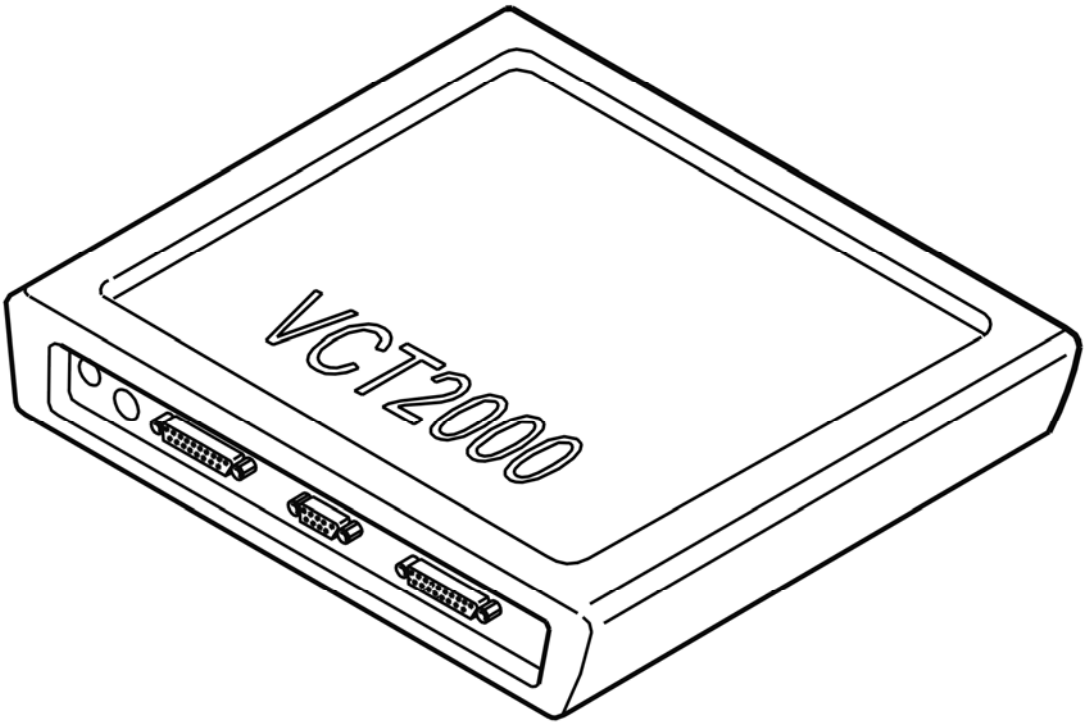

Fig. 400: Identifying VCT2000 Diagnostic Tool Symbol In VIDA
Courtesy of VOLVO CARS CORPORATION

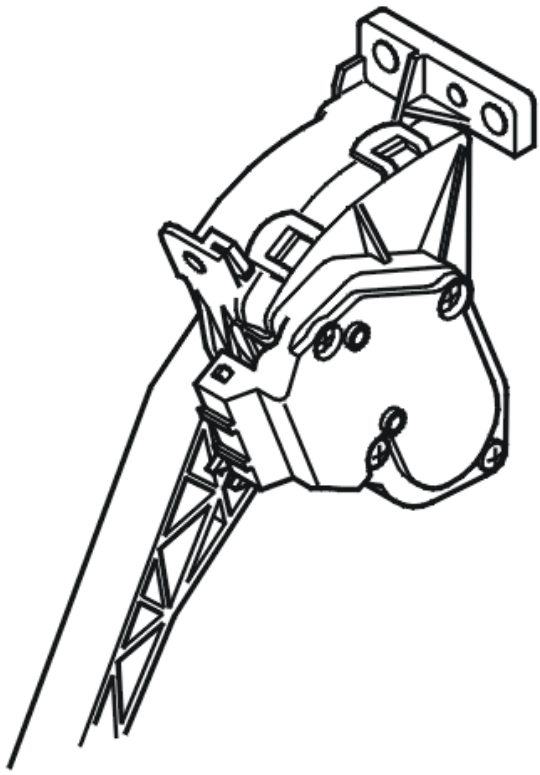

Fig. 401: Identifying Accelerator Pedal Position Sensor
Courtesy of VOLVO CARS CORPORATION

- **Continue**

  Refer to **CHECKING COMPONENTS AND WIRING**

CHECKING COMPONENTS AND WIRING

Check the cable between engine control module (ECM) #B24 (#C24) and accelerator pedal position sensor #5 for short-circuit to voltage.

Remedy as necessary.

Other information

- see **CONNECTING THE BREAKOUT BOX**
- see **SIGNAL SPECIFICATION, ENGINE CONTROL MODULE (ECM)**
- For replacing accelerator pedal position sensor: **ACCELERATOR PEDAL (AP), REPLACING**
- see **CHECKING WIRING AND TERMINALS**

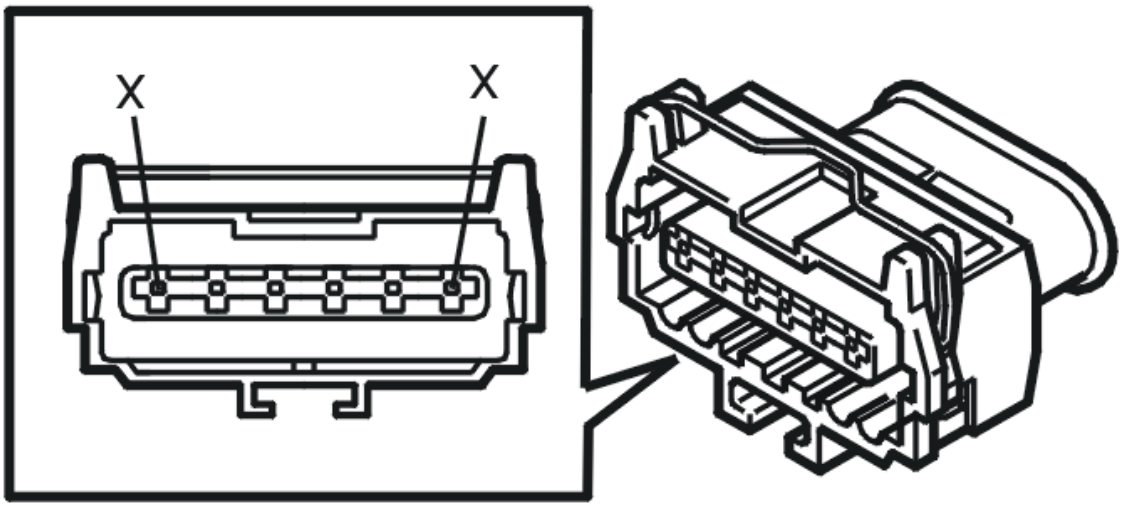

Fig. 402: Connector End View
Courtesy of VOLVO CARS CORPORATION

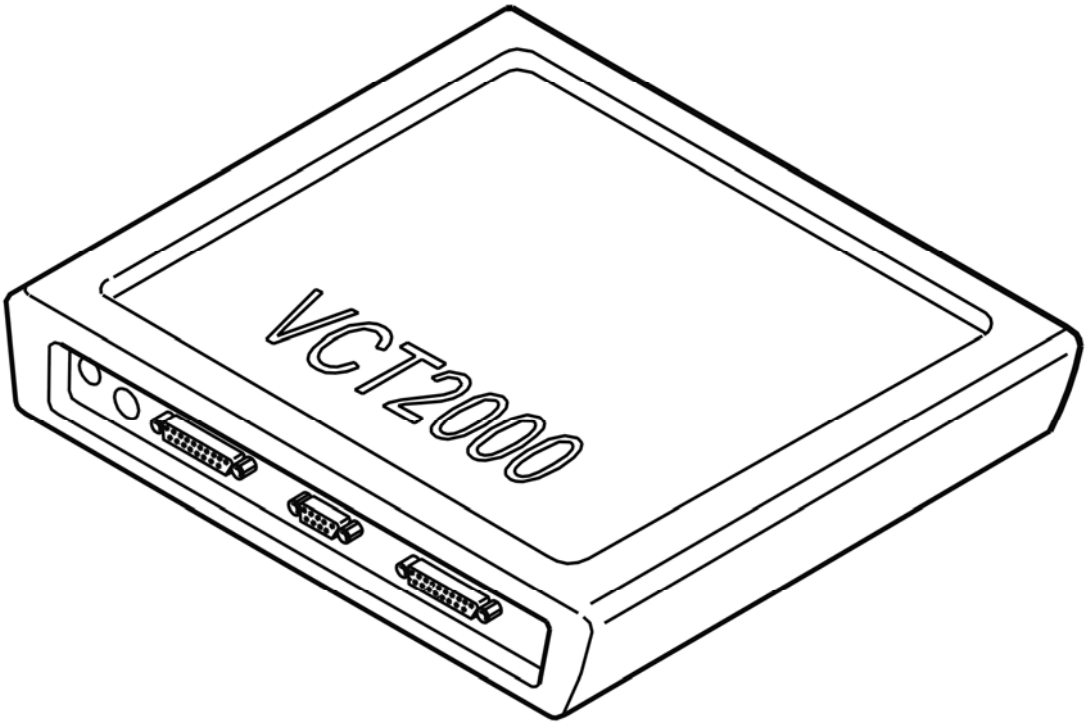

Fig. 403: Identifying VCT2000 Diagnostic Tool Symbol In VIDA
Courtesy of VOLVO CARS CORPORATION

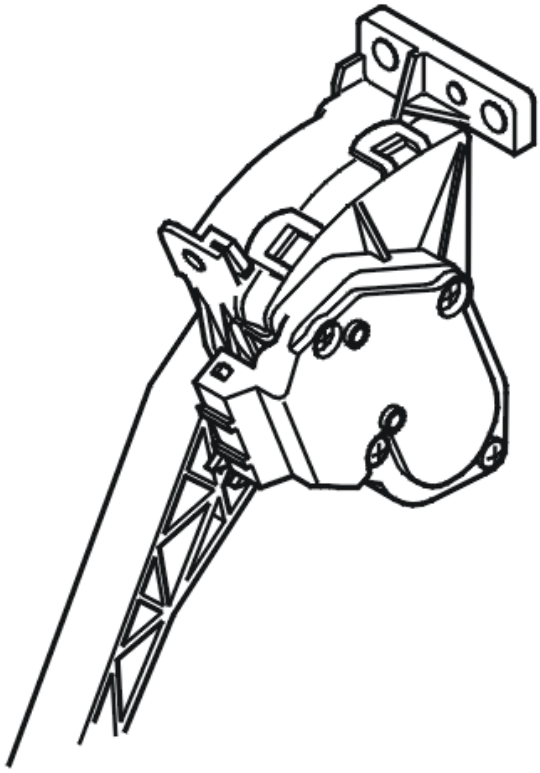

Fig. 404: Identifying Accelerator Pedal Position Sensor
Courtesy of VOLVO CARS CORPORATION

- **Continue**

  Refer to **VERIFICATION**

VERIFICATION

VERIFICATION

HINT: After carrying out the repair, check that the fault has been remedied.

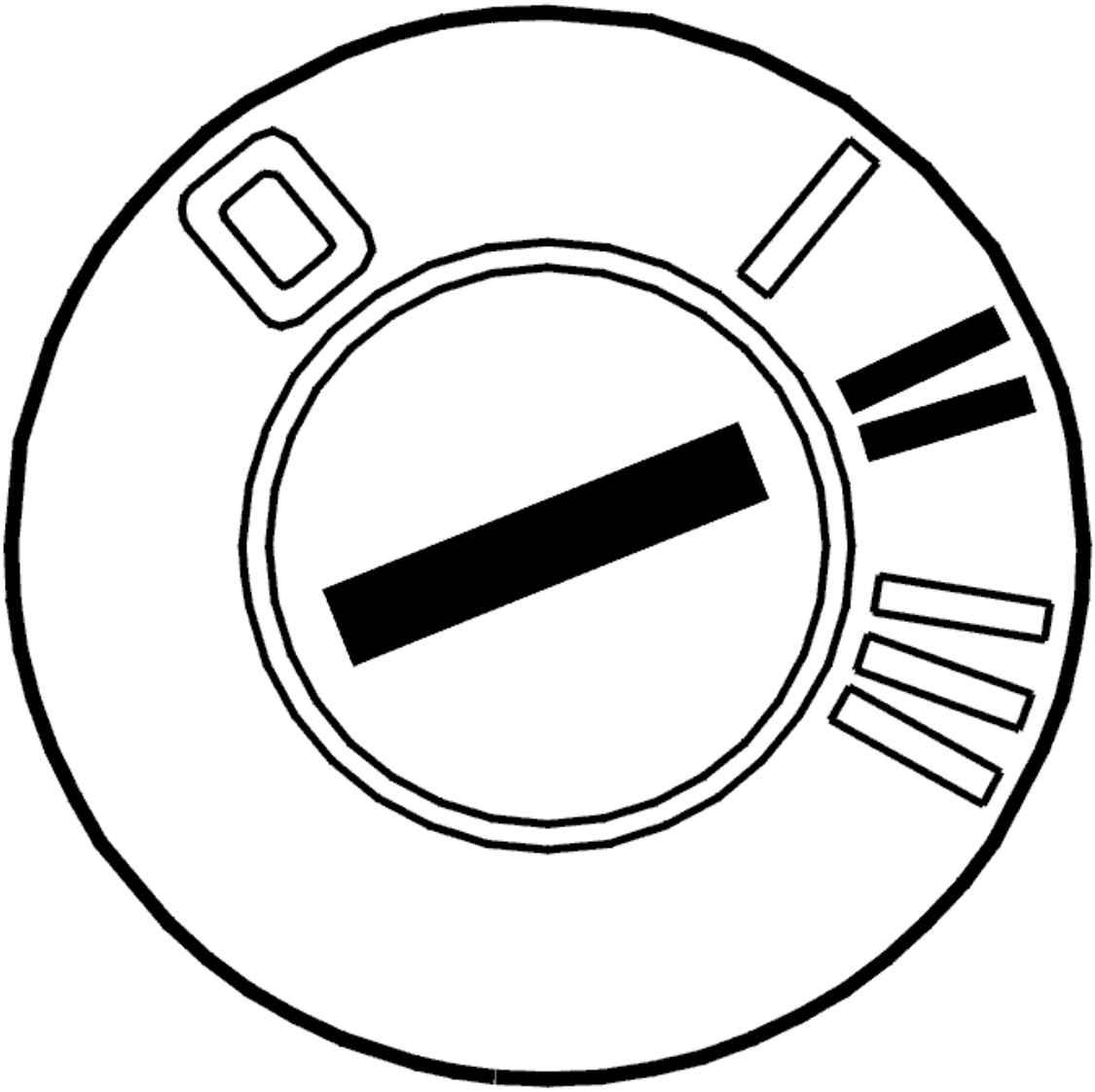

Fig. 405: Identifying Ignition ON
Courtesy of VOLVO CARS CORPORATION

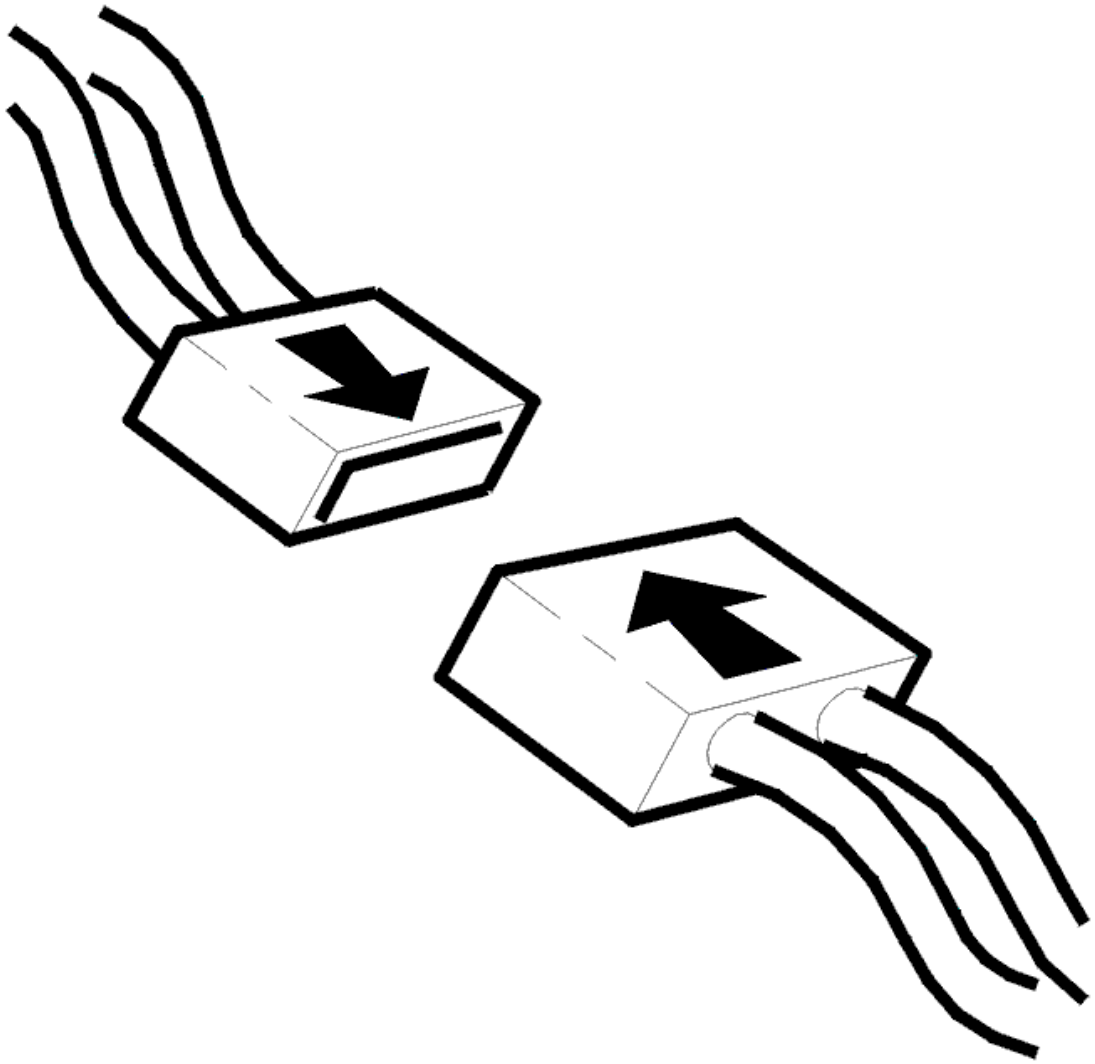

Fig. 406: Connecting Connector
Courtesy of VOLVO CARS CORPORATION

- Ignition off
- Reinstall the connectors, components etc.
- Ignition on

  Activate readout of the accelerator pedal position sensor's signals.

  Check that the value for both signals at unaffected accelerator pedal is approx. 8% and when the pedal is fully pressed down approx. 82%.

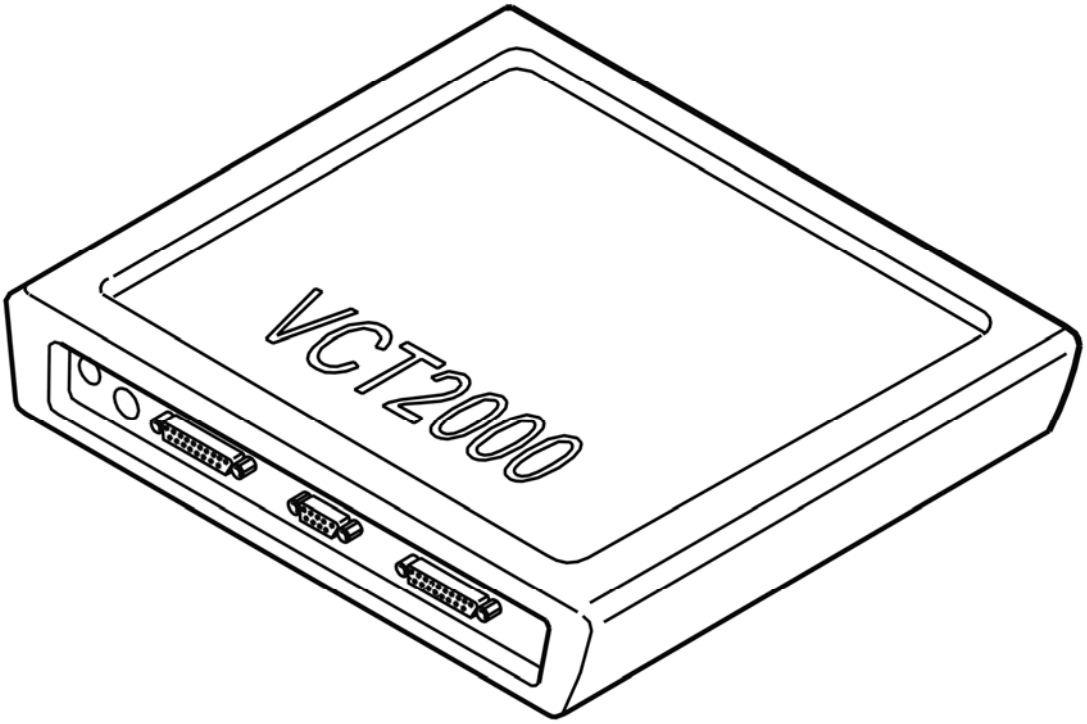

Fig. 407: Identifying VCT2000 Diagnostic Tool Symbol In VIDA
Courtesy of VOLVO CARS CORPORATION

Is the function OK?

- **YES**

  VERIFIED: Troubleshooting has been completed.

- **NO**

  Refer to **INFORMATION**

INFORMATION

FAULT-TRACING INFORMATION

The fault should have been detected and remedied. As this is not the case fault-tracing has failed.

Exit fault-tracing for this diagnostic trouble code (DTC) or make another attempt.

ECM-P012800: COOLANT THERMOSTAT (COOLANT TEMP BELOW THERMOSTAT REGULATING TEMPERATURE). GENERAL FAILURE

INFORMATION. NO SUB TYPE INFORMATION (B6324S; 2007-2010)

DIAGNOSTIC TROUBLE CODE (DTC) INFORMATION ECM-P012800

Condition

Checking of how the temperature increase proceeds takes place during the engine's warm-up phase. It is compared to the expected temperature increase, calculated according to load conditions and start temperature, among others.

If engine control module (ECM) registers that measured engine temperature deviates too much from the calculated, the diagnostic trouble code is generated.

The diagnostic trouble code is diagnosed once per operating cycle, with the engine running, when calculated engine temperature reaches 80 °C, but only if engine start is performed when measured engine temperature is between -10 and 63 °C.

Substitute Value

- Nothing.

Possible Source

- Damaged thermostat.
- Contact resistance and oxidation in cables and connections for the engine temperature sensor.
- Damaged engine temperature sensor.

Fault symptom[s]

- Malfunction indicator lamp (MIL) lit.
- Engine does not get warm.

FAULT-TRACING

REPLACING THERMOSTAT

NOTE: **This diagnostic trouble code (DTC) is stored if the engine temperature sensor freezes. This may happen if the coolant level is low or there is too little glycol in the coolant. Check the coolant level and its freezing point.**

Engine control module (ECM) has registered that the actual temperature increase has deviated from the calculated temperature increase. This deviation is probably due to a damaged thermostat.

Check cables and connectors between engine control module (ECM) and engine temperature sensor for contact resistance and oxidation.

Remedy as necessary.

Other information

- see **SIGNAL SPECIFICATION**
- see **THERMOSTAT**
- see **ENGINE COOLANT TEMPERATURE SENSOR (ECT)**
- see **CHECKING WIRING AND TERMINALS**

- **Continue**

  Refer to **CHECKING THE STATUS**

CHECKING THE STATUS

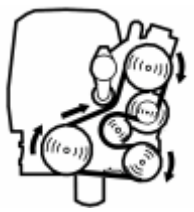

Fig. 408: Identifying Belt Routing
Courtesy of VOLVO CARS CORPORATION

- Start the engine.

Check whether the fault is permanent or intermittent by reading off the signal from the engine coolant temperature (ECT) sensor. Check that the value is within its permitted range.

The fault is permanent if the value is not within its permitted range. Check that the value is within its permitted range.

Fig. 409: Identifying VCT2000 Diagnostic Tool Symbol In VIDA
Courtesy of VOLVO CARS CORPORATION

- **Continue**

  Refer to **CHECKING COMPONENTS AND WIRING**

CHECKING COMPONENTS AND WIRING

Fig. 410: Identifying Ignition In Off Position
Courtesy of VOLVO CARS CORPORATION

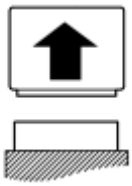

Fig. 411: Identifying Microphone Connectors
Courtesy of VOLVO CARS CORPORATION

- Ignition off.

Check the engine coolant temperature (ECT) sensor. Check for contact resistance and oxidation.

Check the engine temperature sensor's resistance between #1 and #2 (against the sensor).

Remedy as necessary.

Other information

- see **SIGNAL SPECIFICATION**
- see **CONNECTING THE BREAKOUT BOX**
- see **COMPONENT SPECIFICATIONS**
- see **CHECKING WIRING AND TERMINALS**

Fig. 412: Identifying 2-Bit Connector
Courtesy of VOLVO CARS CORPORATION

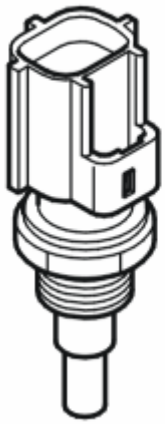

Fig. 413: Identifying Engine Coolant Temperature Sensor
Courtesy of VOLVO CARS CORPORATION

- **Continue**

  Refer to **VERIFICATION**

VERIFICATION

VERIFICATION

HINT: After carrying out the repair, check that the fault has been remedied.

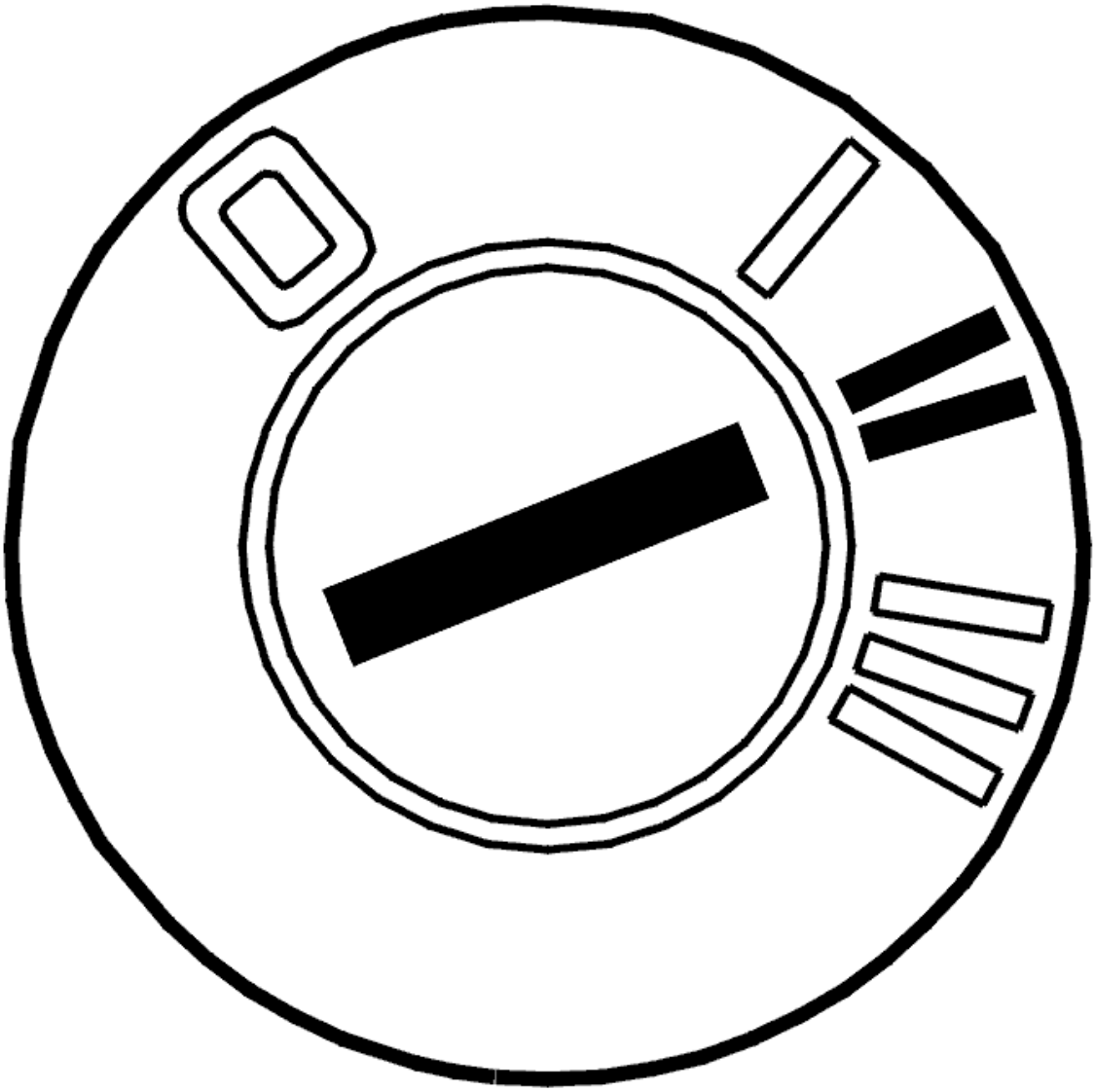

Fig. 414: Identifying Ignition ON
Courtesy of VOLVO CARS CORPORATION

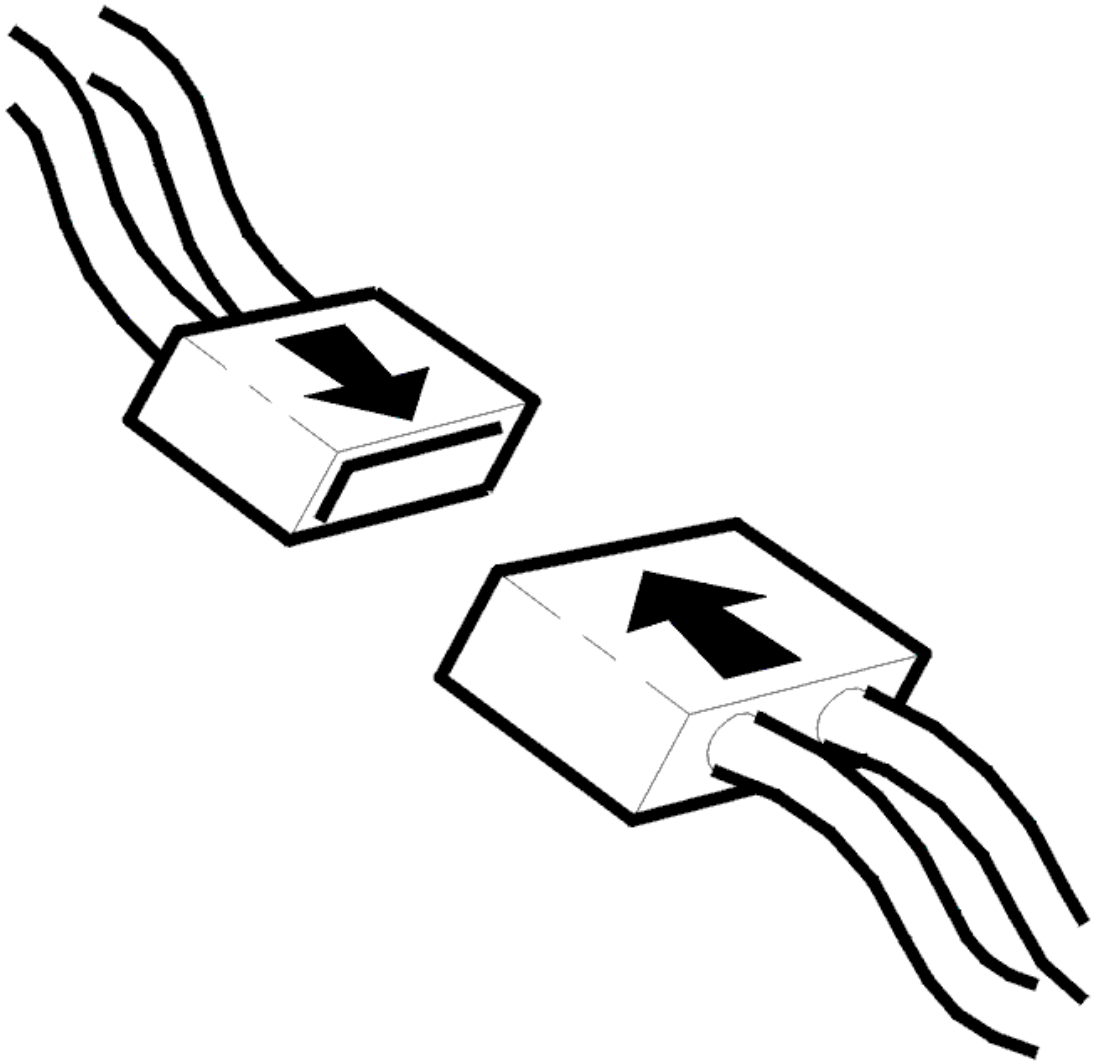

Fig. 415: Connecting Connector
Courtesy of VOLVO CARS CORPORATION

- Ignition off
- Reinstall the connectors, components etc.
- Ignition on

  Read the engine temperature sensor signal using the VCT2000 (or appropriate scan tool).

  Check that the signal corresponds with the engine temperature.

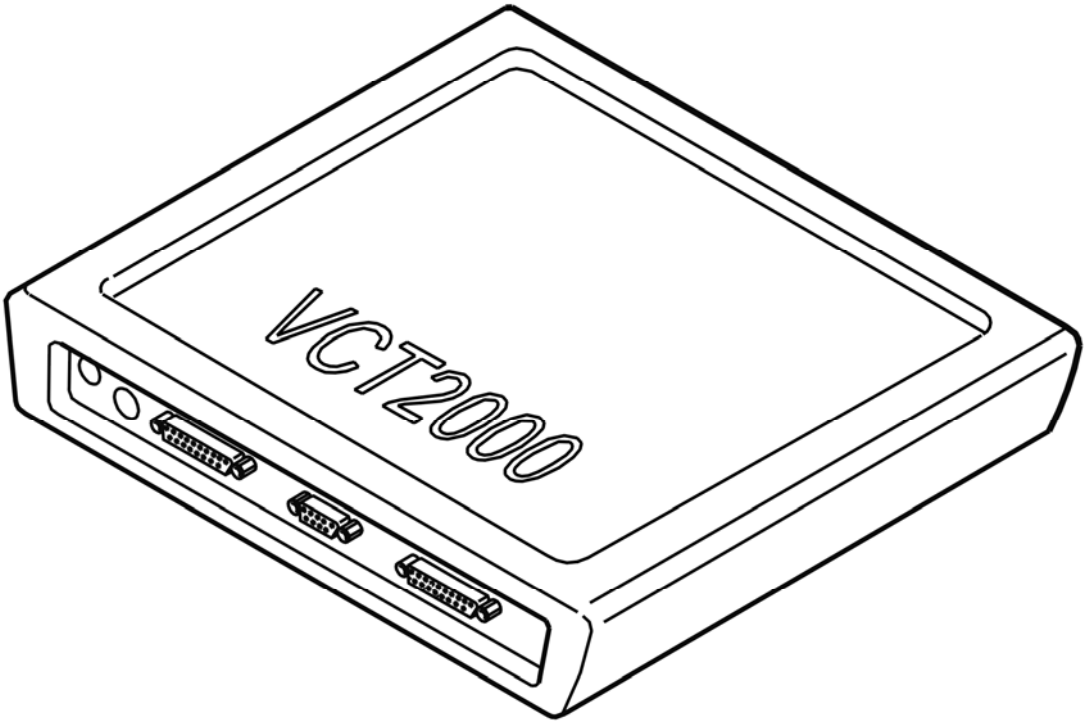

Fig. 416: Identifying VCT2000 Diagnostic Tool Symbol In VIDA
Courtesy of VOLVO CARS CORPORATION

Does the signal correspond to the engine temperature?

- **YES**

  VERIFIED: Troubleshooting has been completed.

- **NO**

  Refer to **INFORMATION**

INFORMATION

FAULT-TRACING INFORMATION

The fault should have been detected and remedied. As this is not the case fault-tracing has failed.

Exit fault-tracing for this diagnostic trouble code (DTC) or make another attempt.

ECM-P012800: COOLANT THERMOSTAT (COOLANT TEMP BELOW THERMOSTAT REGULATING TEMPERATURE). GENERAL FAILURE

INFORMATION. NO SUB TYPE INFORMATION (B6324S5; 2011-2012)

DIAGNOSTIC TROUBLE CODE (DTC) INFORMATION ECM-P012800

see **DIAGNOSTIC TROUBLE CODE (DTC) INFORMATION ECM-P012800**

FAULT-TRACING

see **FAULT-TRACING**

ECM-P012800: COOLANT THERMOSTAT (COOLANT TEMPERATURE LOWER THAN THERMOSTAT-CONTROL TEMPERATURE. GENERAL MALFUNCTION INFORMATION. NO INFORMATION ON MALFUNCTION TYPE (B8444S; 2005-2011)

DIAGNOSTIC TROUBLE CODE (DTC) INFORMATION ECM-P012800

Condition

Checking of how the temperature increase proceeds takes place during the engine's warm-up phase. It is compared to the expected temperature increase, calculated according to load conditions and start temperature, among others.

If engine control module (ECM) registers that measured engine temperature deviates too much from the calculated, the diagnostic trouble code is generated.

The diagnostic trouble code is diagnosed once per operating cycle, with the engine running, when calculated engine temperature reaches 80 °C, but only if engine start is performed when measured engine temperature is between -10 and 63 °C.

Substitute Value

- Nothing.

Possible Source

- Damaged thermostat.
- Contact resistance and oxidation in cables and connections for the engine temperature sensor.
- Damaged engine temperature sensor.

Fault symptom[s]

- Malfunction indicator lamp (MIL) lit.
- Engine does not get warm.

TROUBLESHOOTING ECM-P012800

REPLACING THERMOSTAT

NOTE: **This diagnostic trouble code (DTC) is stored if the engine temperature sensor freezes. This may happen if the coolant level is low or there is too little glycol in the coolant. Check the coolant level and its freezing point.**

Engine control module (ECM) has registered that the actual temperature increase has deviated from the calculated temperature increase. This deviation is probably due to a damaged thermostat.

Check cables and connectors between engine control module (ECM) and engine temperature sensor for contact resistance and oxidation.

Remedy as necessary.

Other information

- see **SIGNAL SPECIFICATION, ENGINE CONTROL MODULE (ECM)**
- see **THERMOSTAT, REPLACING**
- see **TEMPERATURE SENSOR ENGINE COOLANT, REPLACING**
- see **CHECKING WIRING AND TERMINALS**

- **Continue**

  Refer to **INFORMATION**

INFORMATION

FAULT-TRACING INFORMATION

In case of this defect, troubleshooting is not followed by verification.

The information can be displayed again or the fault-tracing for this fault can be interrupted.

ECM-P013100: O2 CIRCUIT LOW VOLTAGE (BANK 1, SENSOR 1). GENERAL FAILURE INFORMATION. NO SUB TYPE INFORMATION (B6324S; 2007-2010)

DIAGNOSTIC TROUBLE CODE (DTC) INFORMATION ECM-P013100

Condition

The Engine control module (ECM) measures the volume of oxygen in the exhaust gases before the three-way catalytic converter (TWC) using a front heated oxygen sensor (HO2S) (bank 1). The control module checks the direct voltage from the sensor.

The diagnostic trouble code (DTC) is stored if the control module detects that:

- The direct voltage is lower than 1.8 V.
- Incorrect value lasts longer than 5 seconds.
- Incorrect value lasts for 2 or more subsequent driving cycles.

The control module's test for the diagnostic trouble code (DTC) starts in the event of:

- Engine running for at least 2 minutes.

NOTE: The control module can only detect the fault once the test has been started and the diagnostic trouble code (DTC) is stored when the conditions are met.

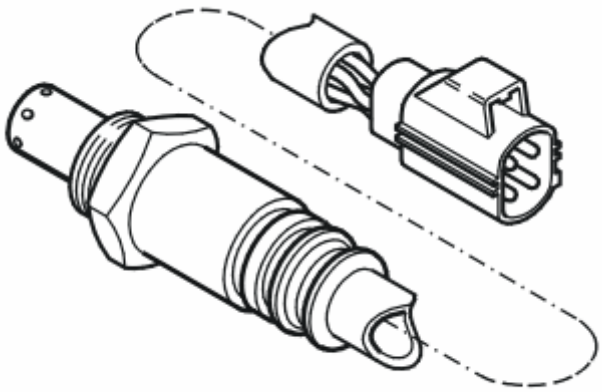

Fig. 417: Identifying Heated Oxygen Sensor
Courtesy of VOLVO CARS CORPORATION

Substitute Value

- None.

Possible Source

- Contact resistance and oxidation in the terminals.
- The signal cable is short-circuited to ground.
- Open-circuit in the signal cable.
- Damaged front heated oxygen sensor (bank 1).

Fault symptom[s]

- Malfunction indicator light (MIL), on
- Poor performance

FAULT-TRACING

see **FAULT-TRACING**

ECM-P013100: O2 CIRCUIT LOW VOLTAGE (BANK 1, SENSOR 1). GENERAL FAILURE INFORMATION. NO SUB TYPE INFORMATION (B6324S5; 2011-2012)

DIAGNOSTIC TROUBLE CODE (DTC) INFORMATION ECM-P013100

see **DIAGNOSTIC TROUBLE CODE (DTC) INFORMATION ECM-P013100**

FAULT-TRACING

see **FAULT-TRACING**

ECM-P013100: O2 CIRCUIT LOW VOLTAGE (BANK 1, SENSOR 1). GENERAL FAILURE INFORMATION. NO SUB TYPE INFORMATION (B8444S; 2005-2011)

DIAGNOSTIC TROUBLE CODE (DTC) INFORMATION ECM-P013100

Condition

The Engine control module (ECM) measures the volume of oxygen in the exhaust gases before the three-way catalytic converter (TWC) using a front heated oxygen sensor (HO2S) (bank 1). The control module checks the direct voltage from the sensor.

NOTE: **Engine cylinders are counted starting from the right side of the vehicle, that is, the cylinder farthest from the engine's flywheel. Bank 1 (cylinder row nearest the front): cylinders 1, 3, 5 and 7. Bank 2 (cylinder row furthest to the rear, nearest the passenger compartment): cylinders 2, 4, 6, and 8.**

The diagnostic trouble code (DTC) is stored if the control module detects that:

- The direct voltage is lower than 1.8 V.
- Incorrect value lasts longer than 5 seconds.
- Incorrect value lasts for 2 or more subsequent driving cycles.

The control module's test for the diagnostic trouble code (DTC) starts in the event of:

- Engine running for at least 2 minutes.

NOTE: **The control module can only detect the fault once the test has been started and the diagnostic trouble code (DTC) is stored when the conditions are met.**

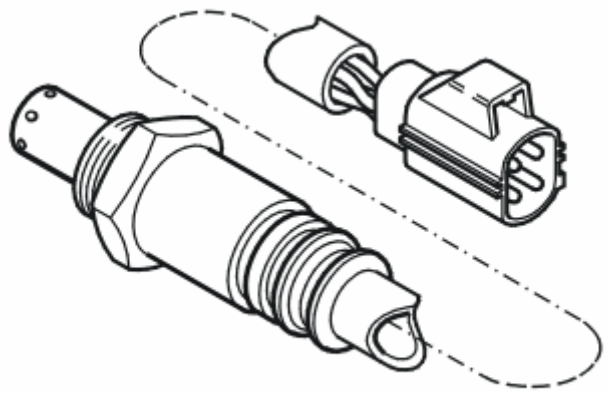

Fig. 418: Identifying Heated Oxygen Sensor
Courtesy of VOLVO CARS CORPORATION

Substitute Value

- None.

Possible Source

- Contact resistance and oxidation in the terminals.
- The signal cable is short-circuited to ground.
- Open-circuit in the signal cable.
- Damaged front heated oxygen sensor (bank 1).

Fault symptom[s]

- Malfunction indicator light (MIL), on
- Poor performance

FAULT-TRACING

see **FAULT-TRACING**

ECM-P013200: O2 CIRCUIT HIGH VOLTAGE (BANK 1, SENSOR 1). GENERAL FAILURE INFORMATION. NO SUB TYPE INFORMATION (B6324S; 2007-2010)

DIAGNOSTIC TROUBLE CODE (DTC) INFORMATION ECM-P013200

Condition

The Engine control module (ECM) measures the volume of oxygen in the exhaust gases before the three-way catalytic converter (TWC) using a front heated oxygen sensor (HO2S) (bank 1). The control module checks the direct voltage from the sensor.

The diagnostic trouble code (DTC) is stored if the control module detects that:

- The direct voltage is higher than 3.8 V.
- Incorrect value lasts longer than 5 seconds.
- Incorrect value lasts for 2 or more subsequent driving cycles.

The control module's test for the diagnostic trouble code (DTC) starts in the event of:

- Engine running for at least 2 minutes.

NOTE: The control module can only detect the fault once the test has been started and the diagnostic trouble code (DTC) is stored when the conditions are met.

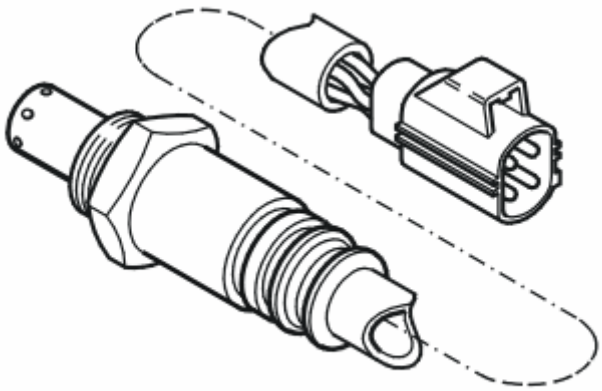

Fig. 419: Identifying Heated Oxygen Sensor
Courtesy of VOLVO CARS CORPORATION

Substitute Value

- None.

Possible Source

- Contact resistance and oxidation in the terminals.
- Short-circuit to supply voltage in the signal cable.
- Damaged front heated oxygen sensor (bank 1).

Fault symptom[s]

- Malfunction indicator light (MIL), on
- Poor performance

FAULT-TRACING

see **FAULT-TRACING**

ECM-P013200: O2 CIRCUIT HIGH VOLTAGE (BANK 1, SENSOR 1). GENERAL FAILURE INFORMATION. NO SUB TYPE INFORMATION (B6324S5; 2011-2012)

DIAGNOSTIC TROUBLE CODE (DTC) INFORMATION ECM-P013200

see **DIAGNOSTIC TROUBLE CODE (DTC) INFORMATION ECM-P013200**

FAULT-TRACING

see **FAULT-TRACING**

ECM-P013200: O2 CIRCUIT HIGH VOLTAGE (BANK 1, SENSOR 1). GENERAL FAILURE INFORMATION. NO SUB TYPE INFORMATION (B8444S; 2005-2011)

DIAGNOSTIC TROUBLE CODE (DTC) INFORMATION ECM-P013200

Condition

The Engine control module (ECM) measures the volume of oxygen in the exhaust gases before the three-way catalytic converter (TWC) using a front heated oxygen sensor (HO2S) (bank 1). The control module checks the direct voltage from the sensor.

NOTE: **Engine cylinders are counted starting from the right side of the vehicle, that is, the cylinder farthest from the engine's flywheel. Bank 1 (cylinder row nearest the front): cylinders 1, 3, 5 and 7. Bank 2 (cylinder row furthest to the rear, nearest the passenger compartment): cylinders 2, 4, 6, and 8.**

The diagnostic trouble code (DTC) is stored if the control module detects that:

- The direct voltage is higher than 3.8 V.
- Incorrect value lasts longer than 5 seconds.
- Incorrect value lasts for 2 or more subsequent driving cycles.

The control module's test for the diagnostic trouble code (DTC) starts in the event of:

- Engine running for at least 2 minutes.

NOTE: **The control module can only detect the fault once the test has been started and the diagnostic trouble code (DTC) is stored when the conditions are met.**

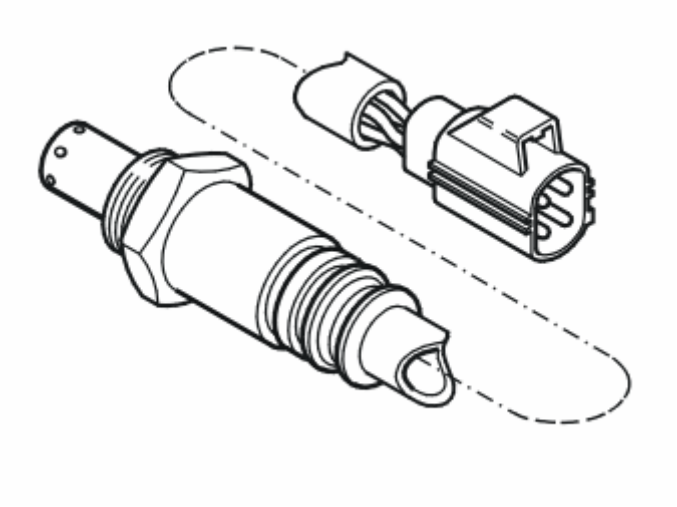

Fig. 420: Identifying Heated Oxygen Sensor
Courtesy of VOLVO CARS CORPORATION

Substitute Value

- None.

Possible Source

- Contact resistance and oxidation in the terminals.
- Short-circuit to supply voltage in the signal cable.
- Damaged front heated oxygen sensor (bank 1).

Fault symptom[s]

- Malfunction indicator light (MIL), on
- Poor performance

FAULT-TRACING

see **FAULT-TRACING**

ECM-P013300: O2 CIRCUIT SLOW RESPONSE (BANK 1, SENSOR 1). GENERAL FAILURE INFORMATION. NO SUB TYPE INFORMATION (B6324S; 2007-2010)

DIAGNOSTIC TROUBLE CODE (DTC) INFORMATION ECM-P013300

Condition

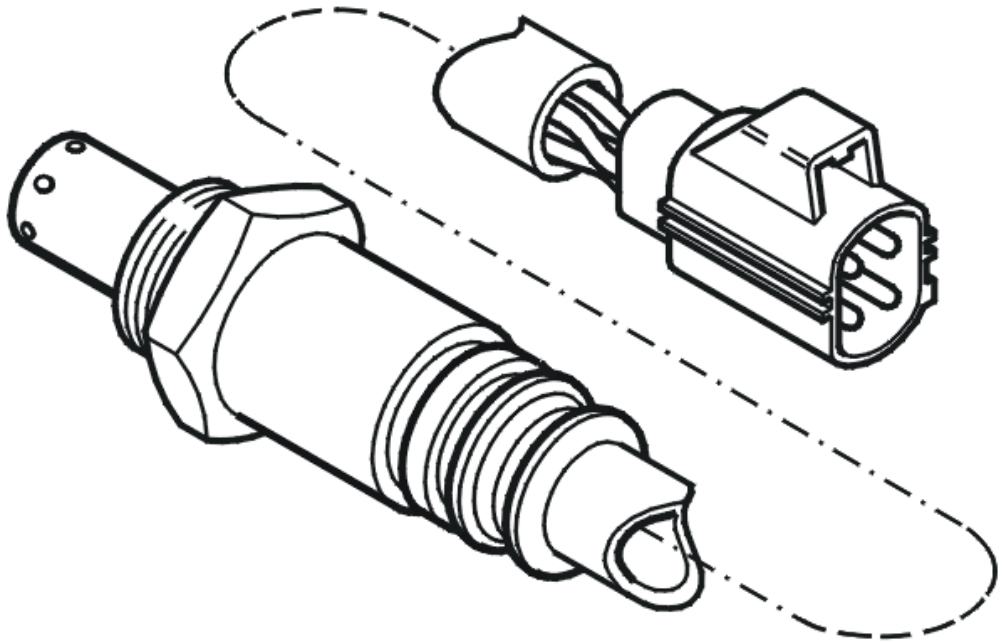

Fig. 421: Identifying Heated Oxygen Sensor
Courtesy of VOLVO CARS CORPORATION

Engine Control Module (ECM) checks the front heated oxygen sensor's signal (bank 1).

The Engine control module (ECM) actively regulates between rich and lean fuel / air mixture and registers how well the front heated oxygen sensor (HO2S) signal follows these changes.

The diagnostic trouble code (DTC) is stored if the engine control module (ECM) registers that the heated oxygen sensor (HO2S) is not activated or is activated too slowly.

The diagnostic trouble code (DTC) can be diagnosed with the engine at operating temperature, approximately 20 minutes after the engine has first been started if the vehicle is driven (normal road load) at 70-90 km/h for 40-50 seconds.

Substitute Value

- Nothing.

Possible Source

- Contact resistance in the terminals
- Damaged front heated oxygen sensor (HO2S).

Fault symptom[s]

- Poor performance.
- Malfunction indicator lamp (MIL) lit.

FAULT TRACING

CHECKING THE STATUS

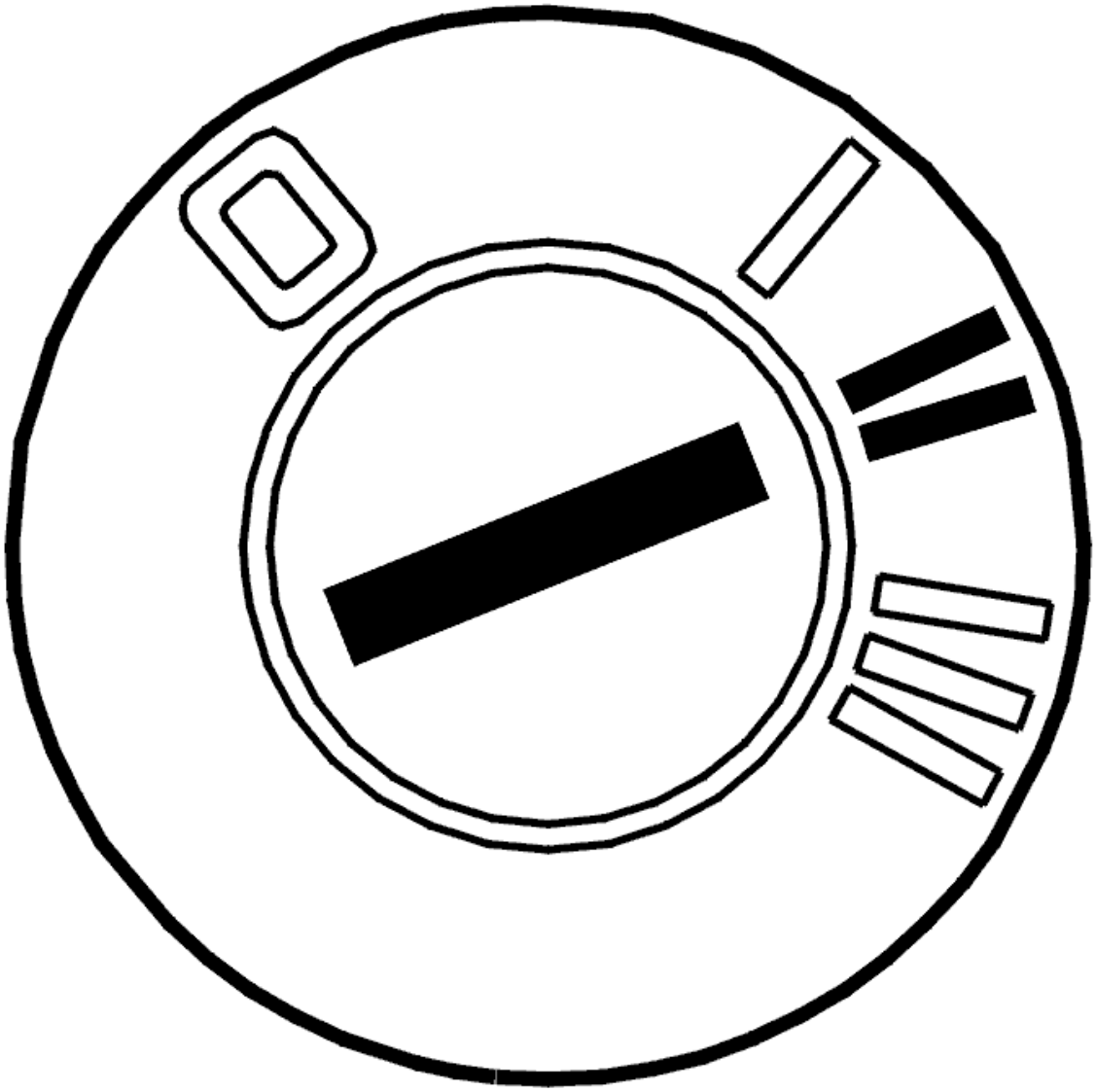

Fig. 422: Identifying Ignition ON
Courtesy of VOLVO CARS CORPORATION

- Start the engine to perform the diagnostic.

  Check whether the fault is permanent or intermittent. Read off the diagnostic trouble code (DTC) fault status when the diagnostic status is "Completed".

  The fault is permanent if the fault status is "Fault found". The fault is intermittent if the fault status is "No fault found".

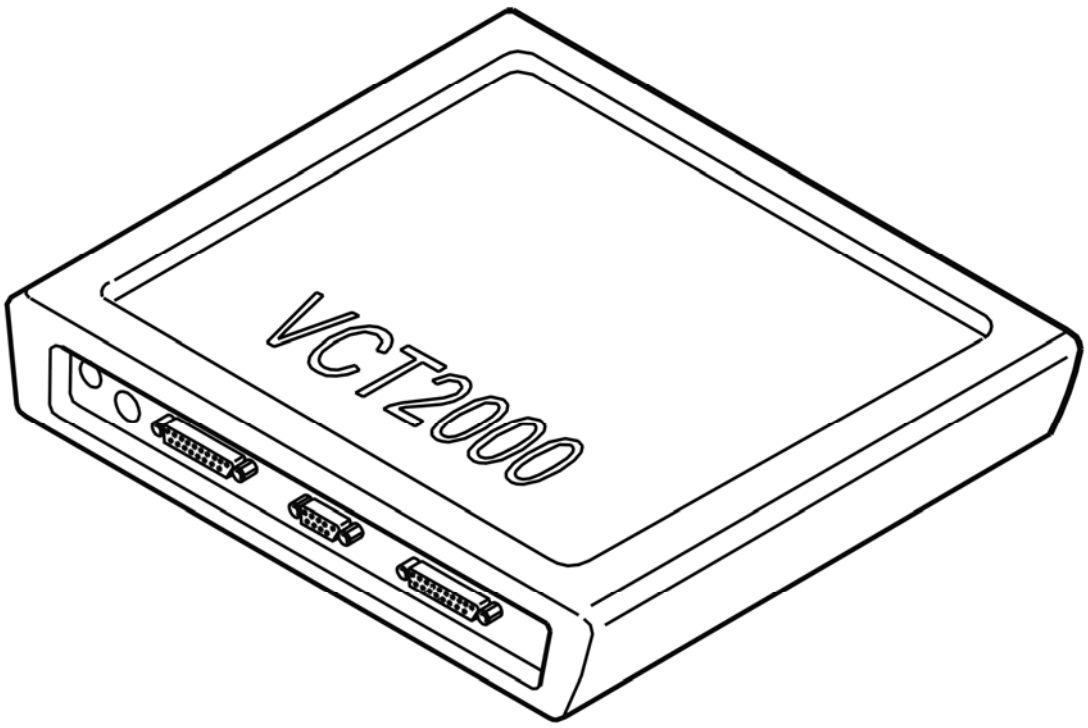

Fig. 423: Identifying VCT2000 Diagnostic Tool Symbol In VIDA
Courtesy of VOLVO CARS CORPORATION

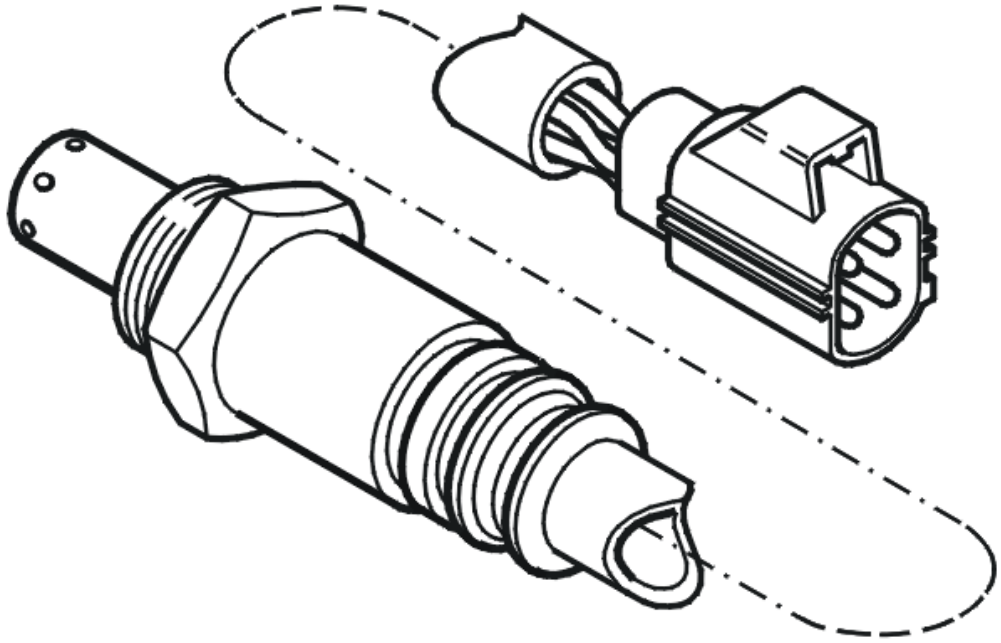

Fig. 424: Identifying Heated Oxygen Sensor
Courtesy of VOLVO CARS CORPORATION

- **Continue**

  Refer to **CHECKING COMPONENTS**

CHECKING COMPONENTS

CAUTION: Do not apply rust solvent spray or grease to the heated oxygen sensor (HO2S) connector.

Check the front heated oxygen sensor (HO2S) connector (bank 1). Check for contact resistance and oxidation.

Try a new rear heated oxygen sensor if the above measure does not remedy the fault.

Remedy as necessary.

Other information

- see **CONNECTING THE BREAKOUT BOX**
- see **SIGNAL SPECIFICATION**

- see **OXYGEN SENSOR (CATALYST MONITOR SENSOR)**
- see **CHECKING WIRING AND TERMINALS**

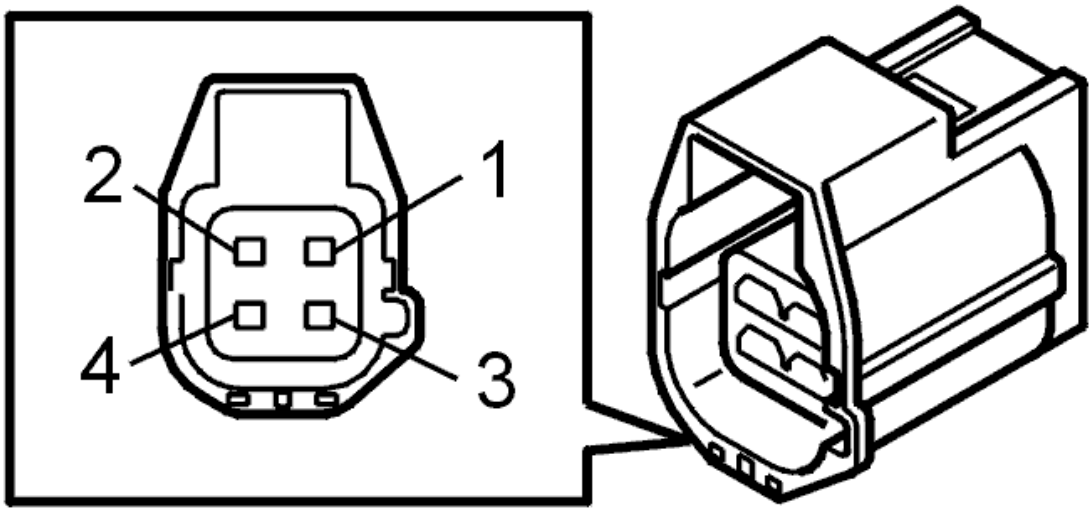

Fig. 425: Identifying 4-Bit Connector
Courtesy of VOLVO CARS CORPORATION

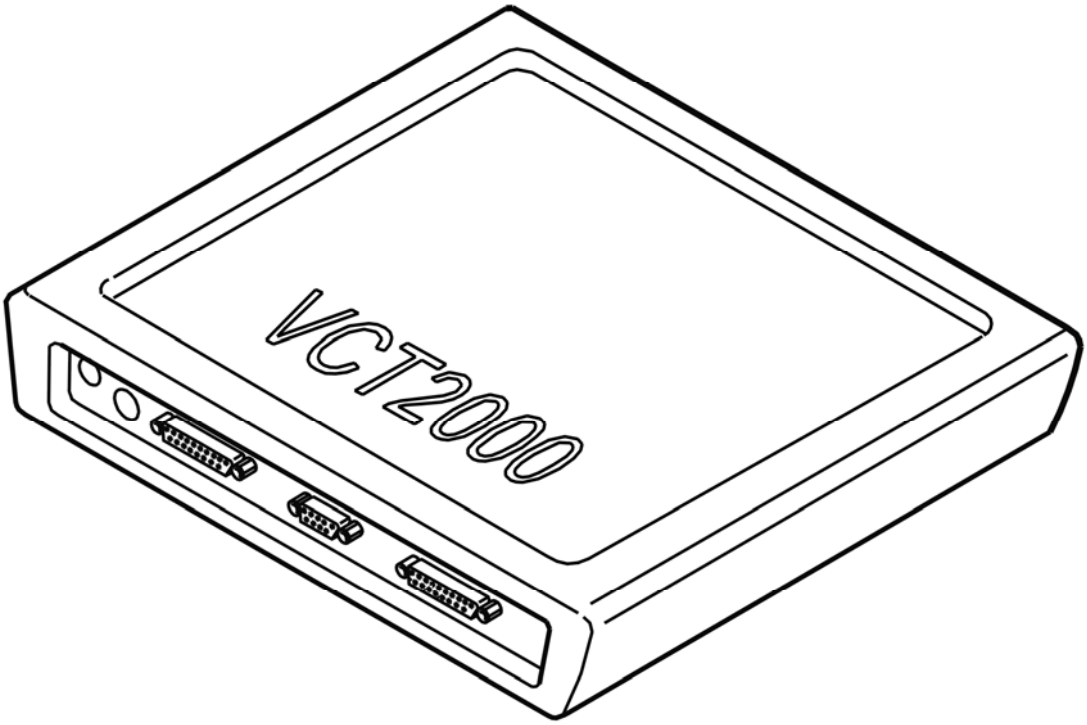

Fig. 426: Identifying VCT2000 Diagnostic Tool Symbol In VIDA
Courtesy of VOLVO CARS CORPORATION

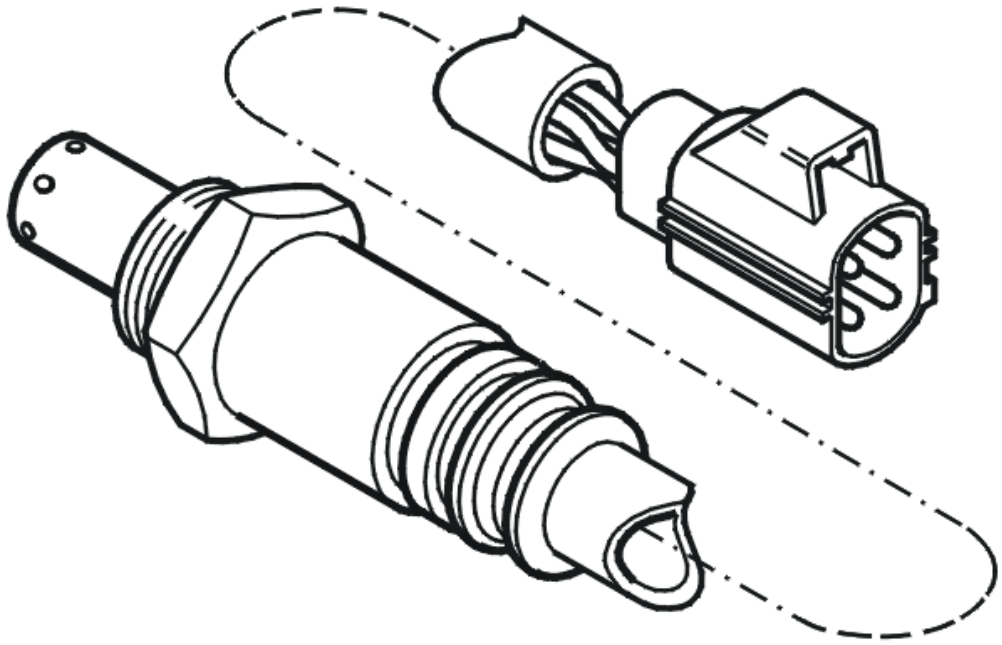

Fig. 427: Identifying Heated Oxygen Sensor
Courtesy of VOLVO CARS CORPORATION

- **Continue**

  Refer to **VERIFICATION**

INFORMATION

FAULT-TRACING INFORMATION

The fault should have been detected and remedied. As this is not the case fault-tracing has failed.

Exit fault-tracing for this diagnostic trouble code (DTC) or make another attempt.

VERIFICATION

VERIFICATION

HINT: After repairing, it is necessary to check that the malfunction has been fixed.

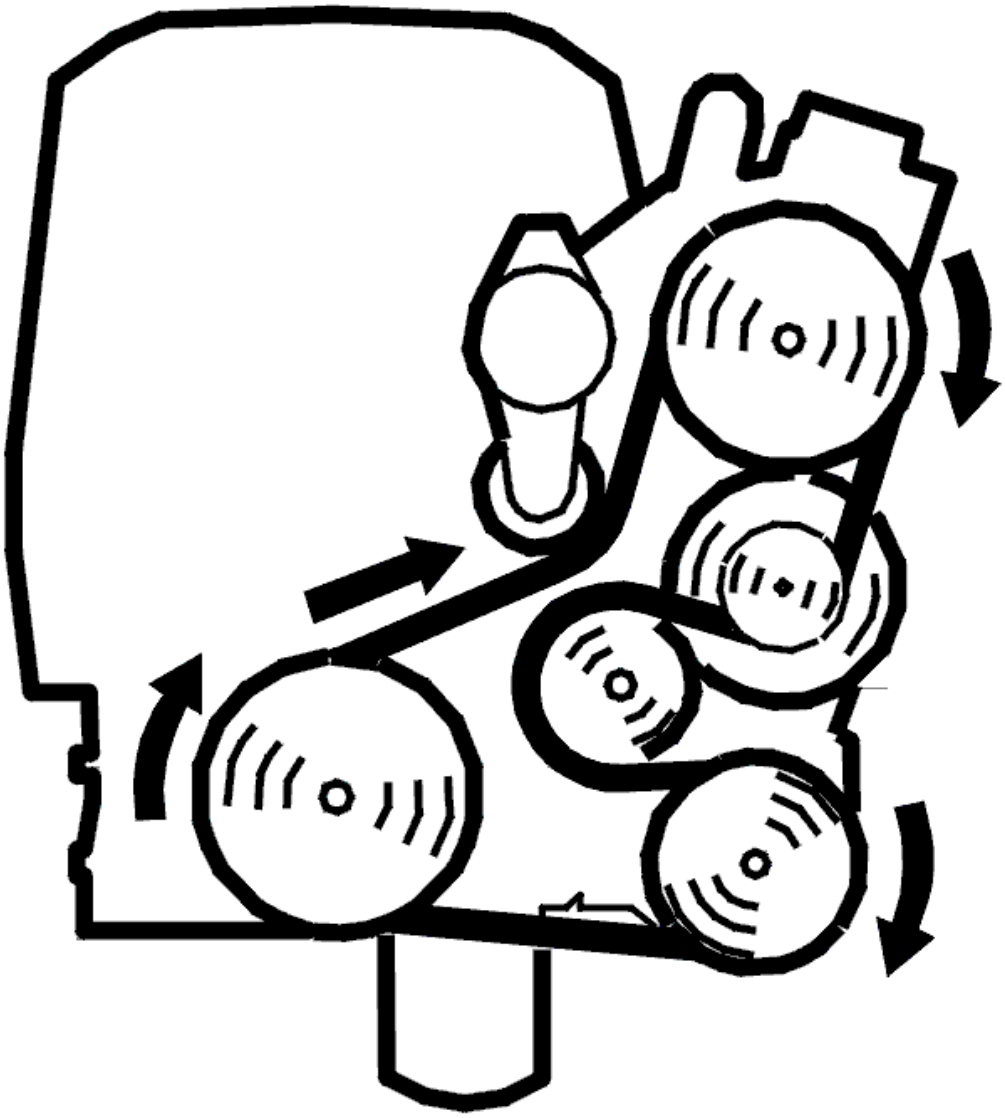

Fig. 428: Belt Routing / Engine Idling - Volvo
Courtesy of VOLVO CARS CORPORATION

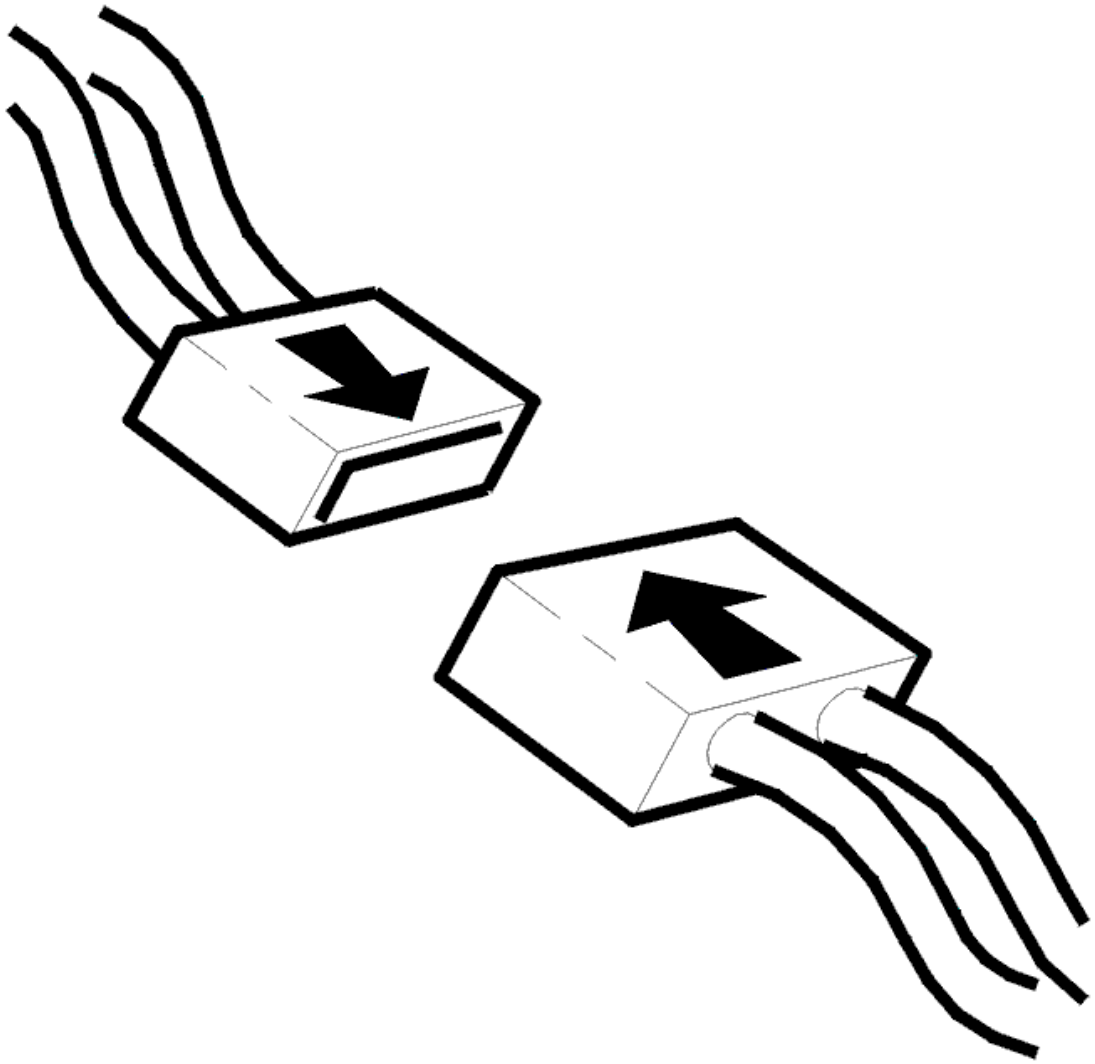

Fig. 429: Connecting Connector
Courtesy of VOLVO CARS CORPORATION

- Ignition off
- Reinstall the connectors, components etc.
- Start the engine to perform the diagnosis.

  Read off the diagnostic status and trouble status for the diagnostic trouble code.

  Check that the diagnosis is "Implemented" and that the trouble status is "No malfunction found". If the trouble status is "Malfunction found", this indicates defective function.

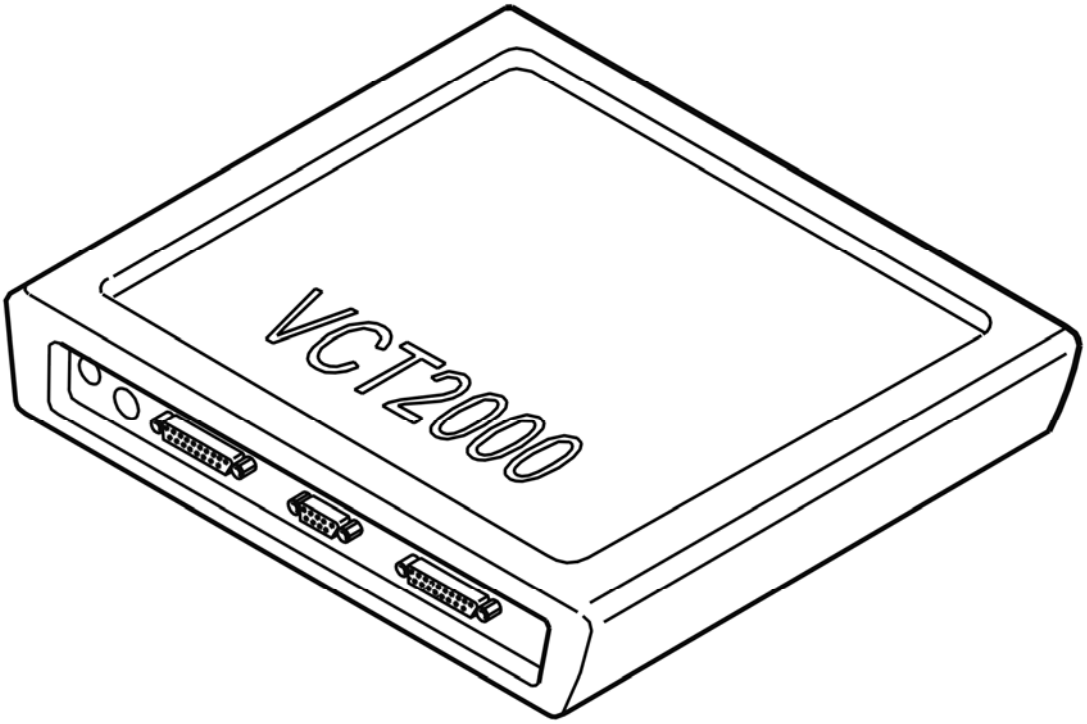

Fig. 430: Identifying VCT2000 Diagnostic Tool Symbol In VIDA
Courtesy of VOLVO CARS CORPORATION

Trouble status shows "No malfunction found"?

- **YES**

  VERIFIED: Troubleshooting has been completed.

- **NO**

  Refer to **INFORMATION**

ECM-P013300: O2 CIRCUIT SLOW RESPONSE (BANK 1, SENSOR 1). GENERAL FAILURE INFORMATION. NO SUB TYPE INFORMATION (B6324S5; 2011-2012)

DIAGNOSTIC TROUBLE CODE (DTC) INFORMATION ECM-P013300

see **DIAGNOSTIC TROUBLE CODE (DTC) INFORMATION ECM-P013300**

FAULT TRACING

see **FAULT TRACING**

ECM-P013300: HEATED OXYGEN SENSOR (HO2S) SLOW RESPONSE (BANK 1, SENSOR 1). GENERAL FAULT INFORMATION. NO INFORMATION ABOUT FAULT TYPE (B8444S; 2005-2011)

DIAGNOSTIC TROUBLE CODE (DTC) INFORMATION ECM-P013300

Condition

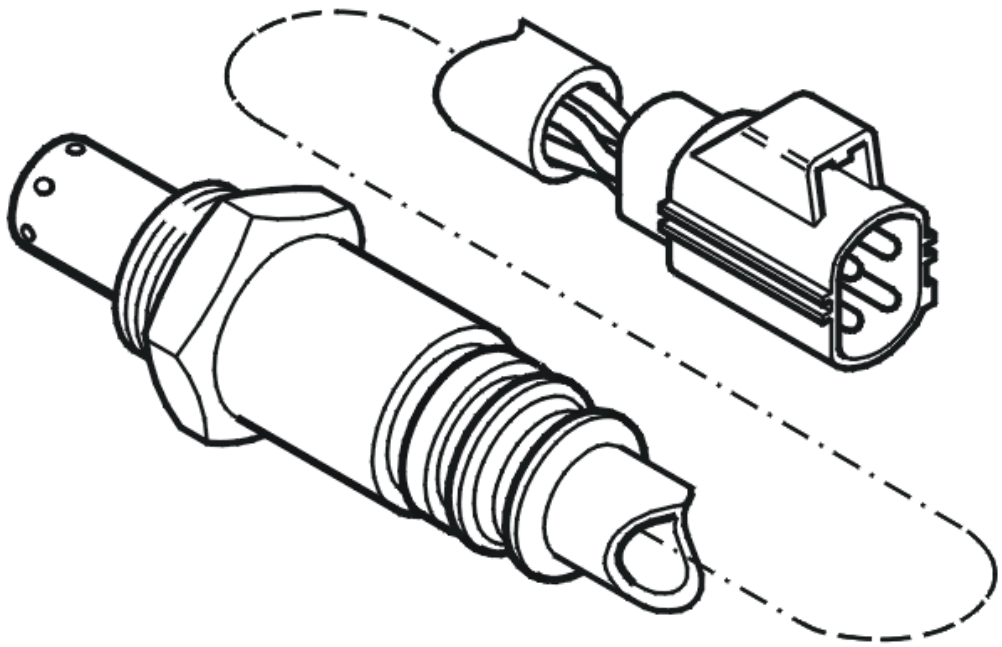

Fig. 431: Identifying Heated Oxygen Sensor
Courtesy of VOLVO CARS CORPORATION

Engine Control Module (ECM) checks the front heated oxygen sensor's signal (bank 1).

- Bank 1 (cylinder row nearest the front): cylinders 1, 3, 5 and 7.
- Bank 2 (cylinder row furthest to the rear, nearest the passenger compartment): cylinders 2, 4, 6, and 8.

The Engine control module (ECM) actively regulates between rich and lean fuel / air mixture and registers how well the front heated oxygen sensor (HO2S) signal follows these changes.

The diagnostic trouble code (DTC) is stored if the engine control module (ECM) registers that the heated oxygen sensor (HO2S) is not activated or is activated too slowly.

The diagnostic trouble code (DTC) can be diagnosed with the engine at operating temperature, approximately 20 minutes after the engine has first been started if the vehicle is driven (normal road load) at 70-90 km/h for 40-50 seconds.

Substitute Value

- Nothing.

Possible Source

- Contact resistance in the terminals
- Damaged front heated oxygen sensor (HO2S).

Fault symptom[s]

- Poor performance.
- Malfunction indicator lamp (MIL) lit.

FAULT TRACING

CHECKING THE STATUS

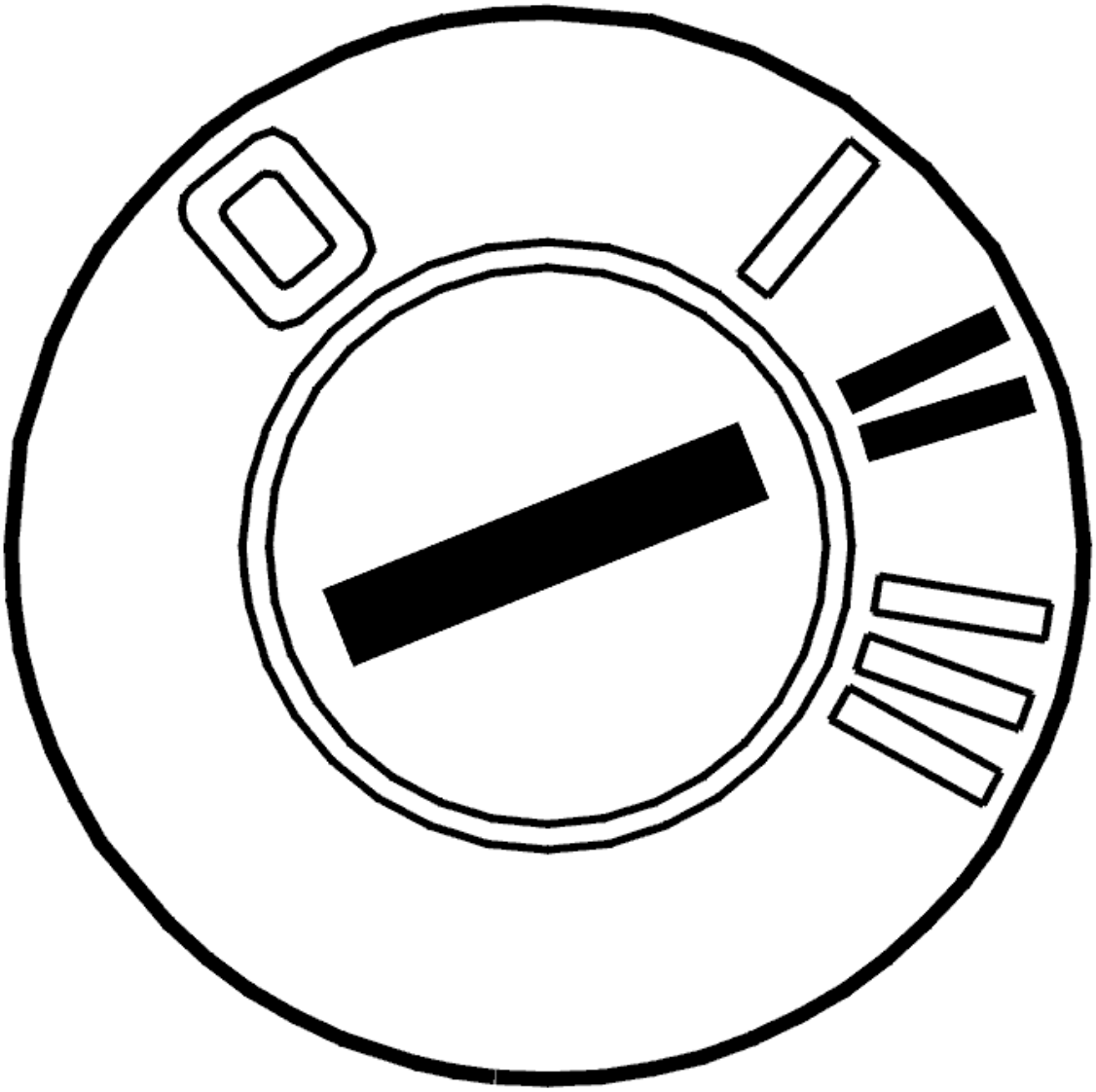

Fig. 432: Identifying Ignition ON
Courtesy of VOLVO CARS CORPORATION

- Start the engine to perform the diagnostic.

  Check whether the fault is permanent or intermittent. Read off the diagnostic trouble code (DTC) fault status when the diagnostic status is "Completed".

  The fault is permanent if the fault status is "Fault found". The fault is intermittent if the fault status is "No fault found".

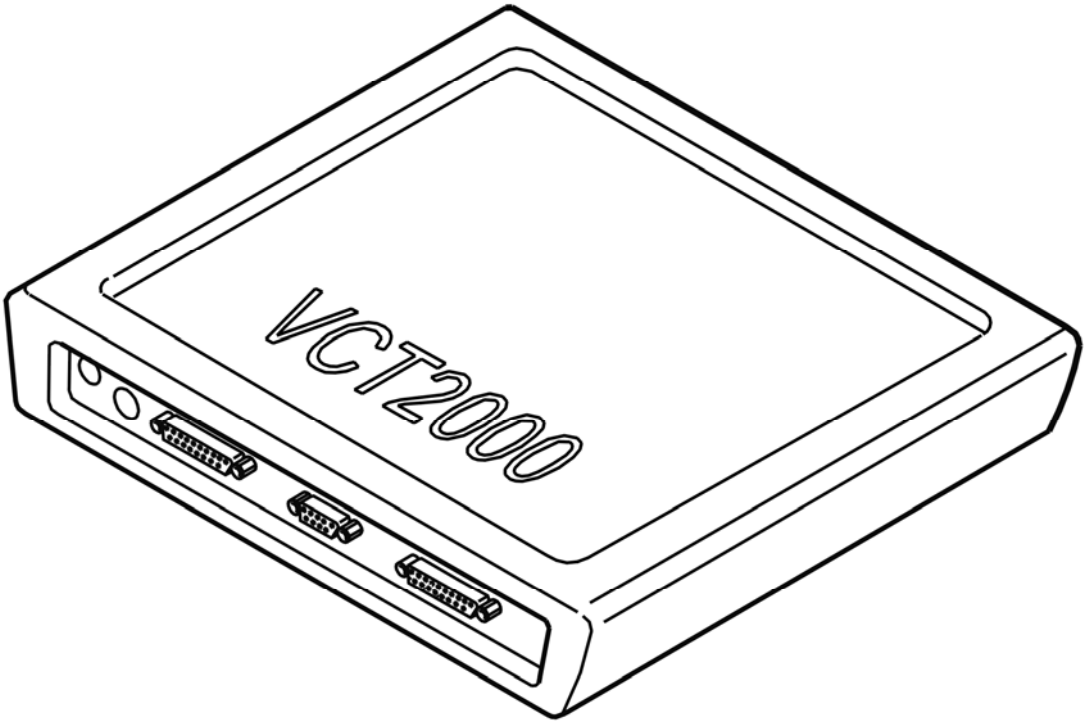

Fig. 433: Identifying VCT2000 Diagnostic Tool Symbol In VIDA
Courtesy of VOLVO CARS CORPORATION

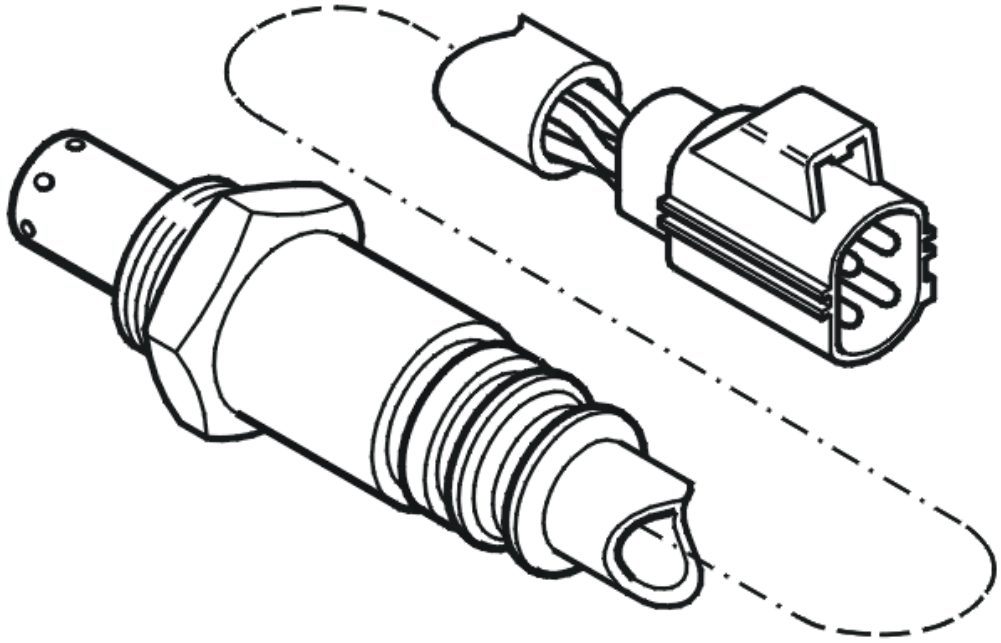

Fig. 434: Identifying Heated Oxygen Sensor
Courtesy of VOLVO CARS CORPORATION

- **Continue**

  Refer to **CHECKING COMPONENTS**

CHECKING COMPONENTS

CAUTION: Do not apply rust solvent spray or grease to the heated oxygen sensor (HO2S) connector.

Check the front heated oxygen sensor (HO2S) connector (bank 1). Check for contact resistance and oxidation.

Try a new heated oxygen sensor (HO2S) if the above fault-tracing does not remedy the fault.

Remedy as necessary.

Other information

- see **CONNECTING THE BREAKOUT BOX**
- see **SIGNAL SPECIFICATION, ENGINE CONTROL MODULE (ECM)**

- see **HEATED OXYGEN SENSOR (HO2S), REPLACING**
- see **CHECKING WIRING AND TERMINALS**

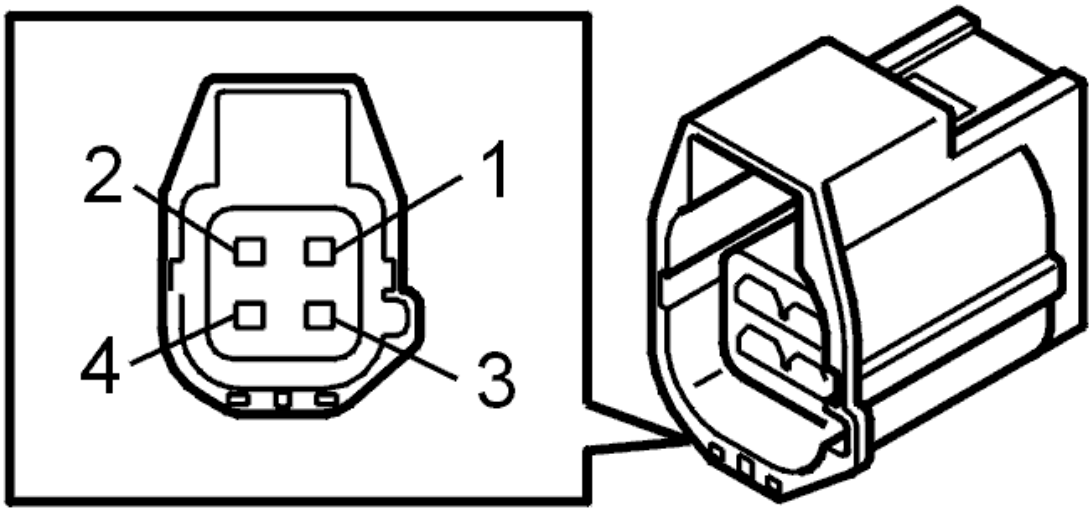

Fig. 435: Identifying 4-Bit Connector
Courtesy of VOLVO CARS CORPORATION

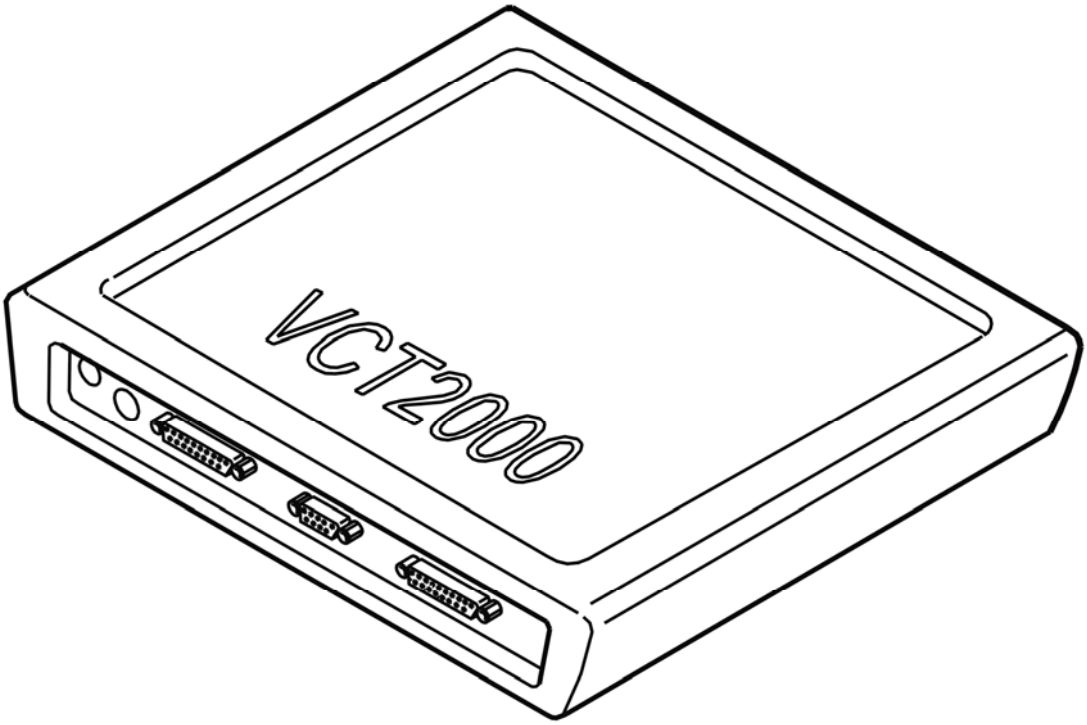

Fig. 436: Identifying VCT2000 Diagnostic Tool Symbol In VIDA
Courtesy of VOLVO CARS CORPORATION

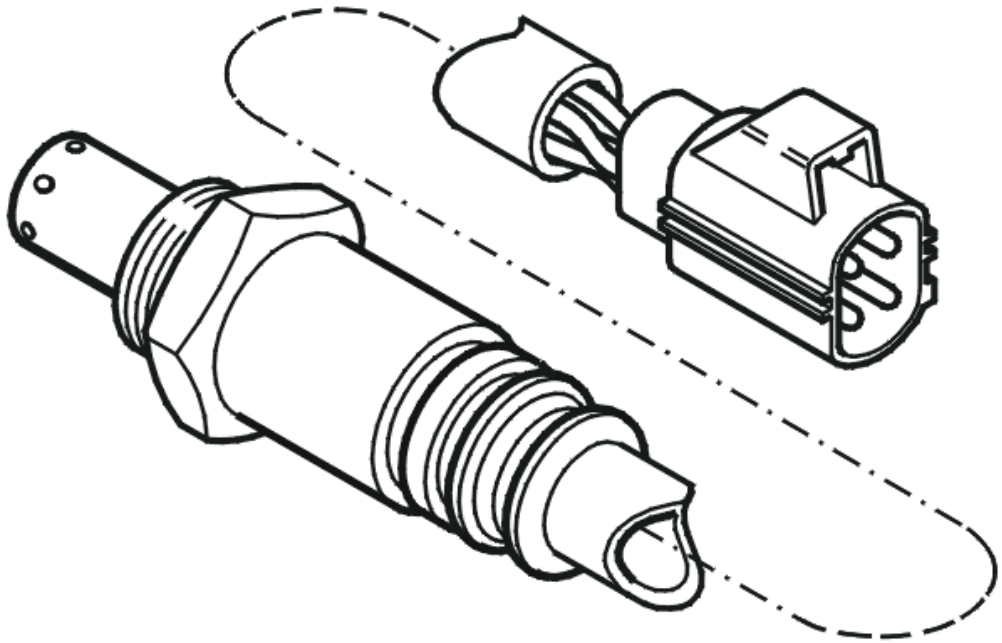

Fig. 437: Identifying Heated Oxygen Sensor
Courtesy of VOLVO CARS CORPORATION

- **Continue**

  Refer to **VERIFICATION**

VERIFICATION

VERIFICATION

HINT: After repairing, it is necessary to check that the malfunction has been fixed.

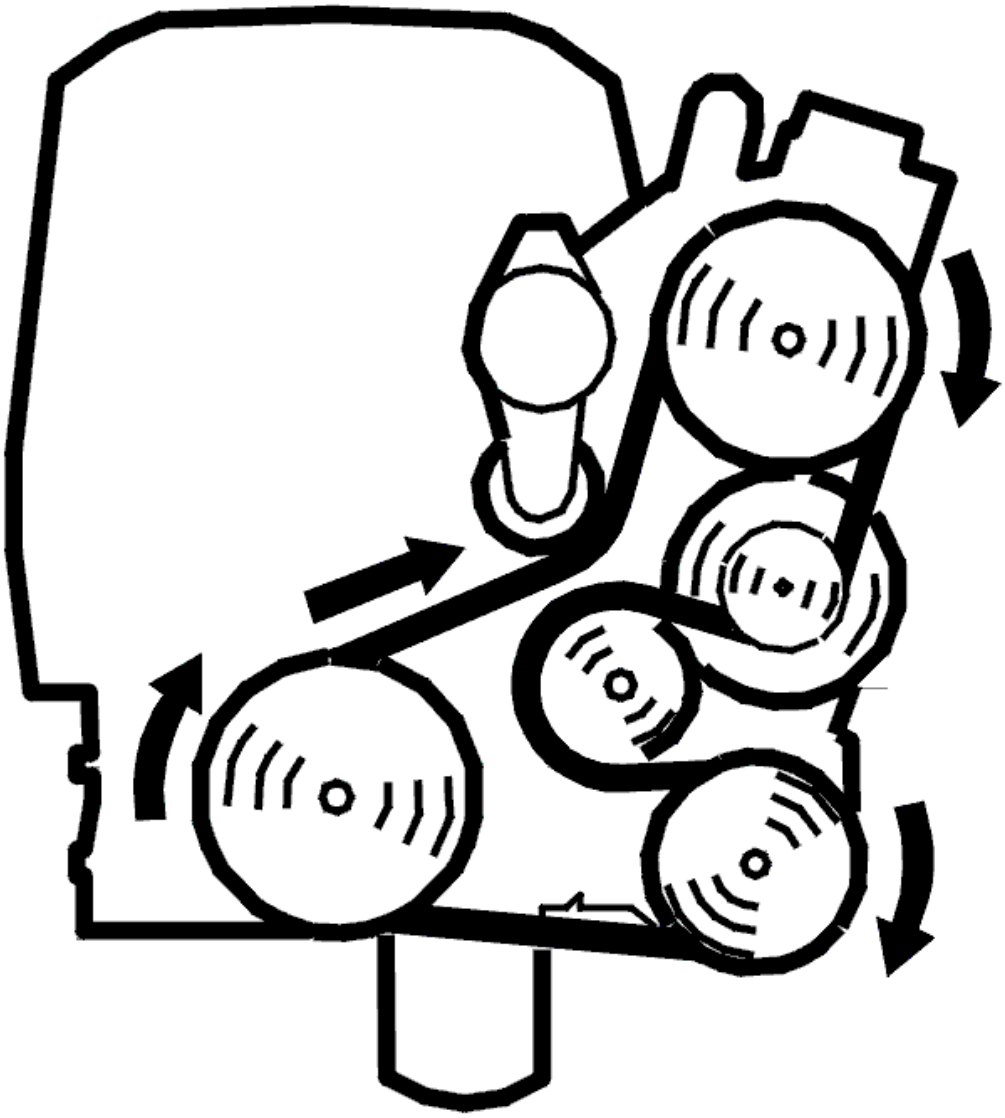

Fig. 438: Belt Routing / Engine Idling - Volvo
Courtesy of VOLVO CARS CORPORATION

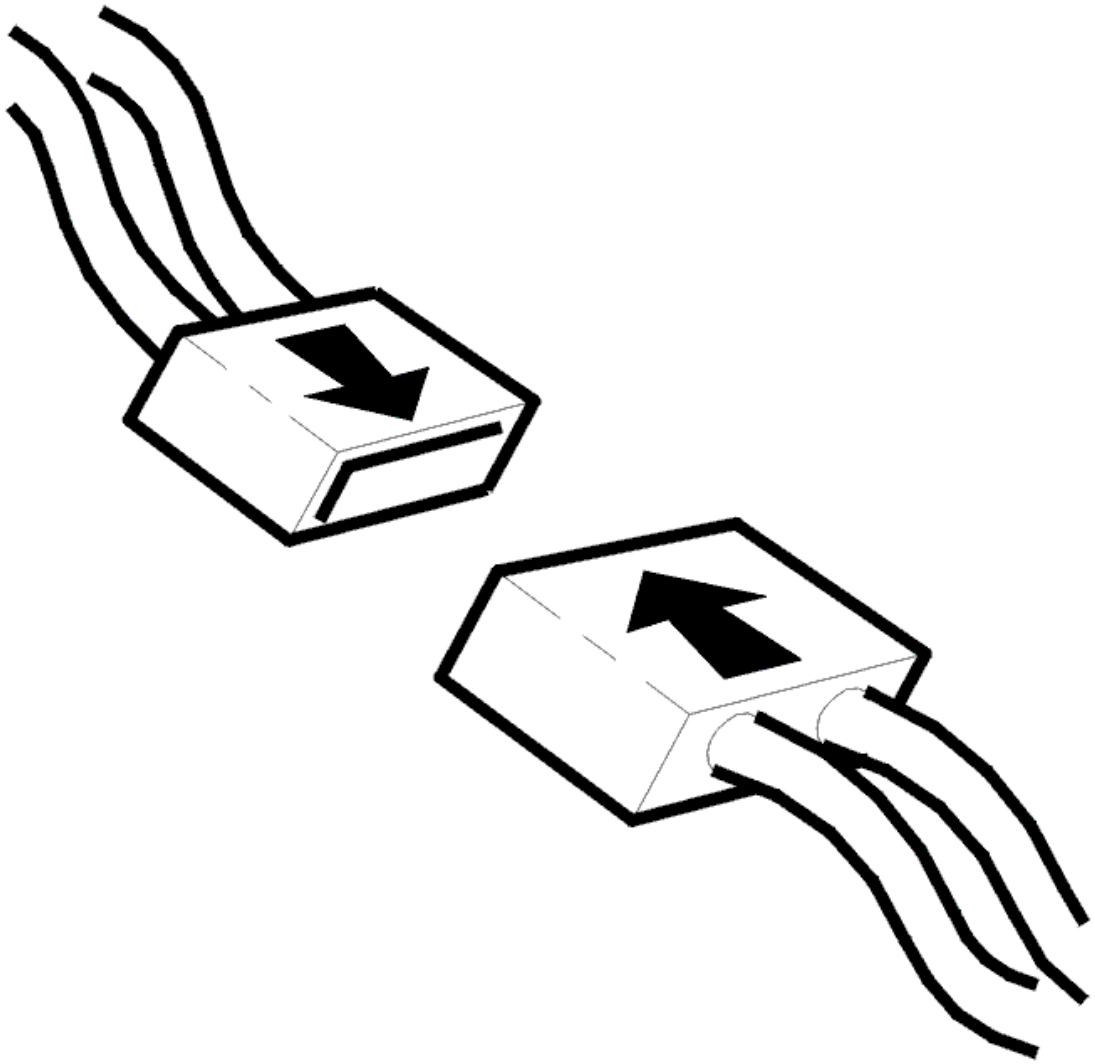

Fig. 439: Connecting Connector
Courtesy of VOLVO CARS CORPORATION

- Ignition off
- Reinstall the connectors, components etc.
- Start the engine to perform the diagnosis.

  Read off the diagnostic status and trouble status for the diagnostic trouble code.

  Check that the diagnosis is "Implemented" and that the trouble status is "No malfunction found". If the trouble status is "Malfunction found", this indicates defective function.

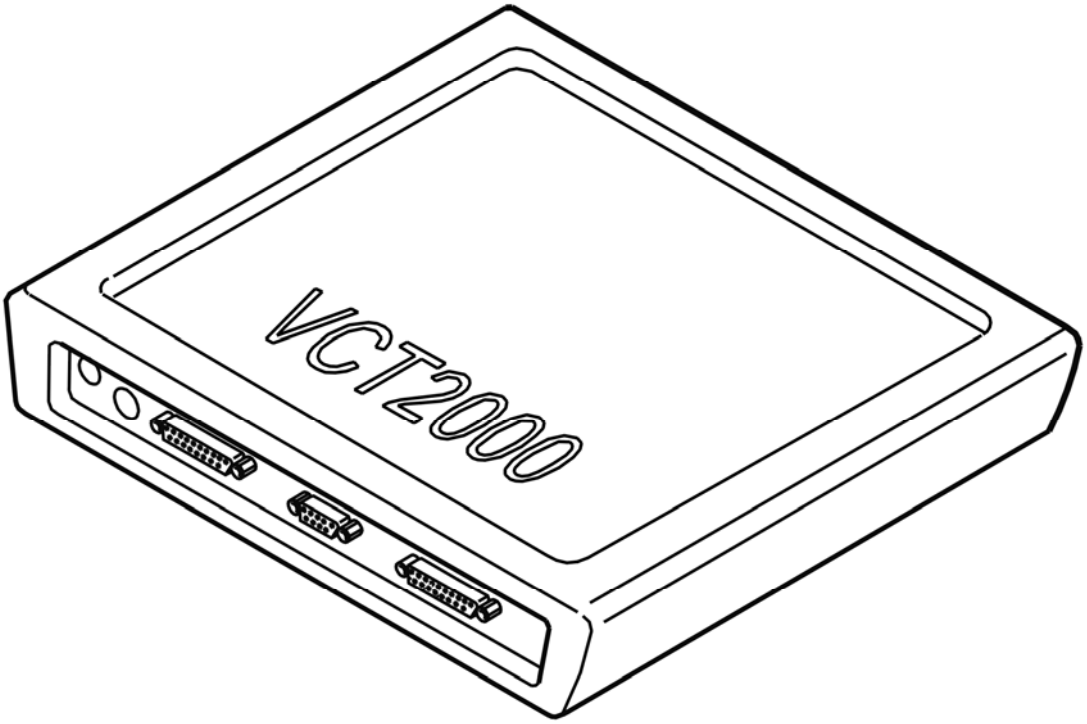

Fig. 440: Identifying VCT2000 Diagnostic Tool Symbol In VIDA
Courtesy of VOLVO CARS CORPORATION

Trouble status shows "No malfunction found"?

- **YES**

  VERIFIED: Troubleshooting has been completed.

- **NO**

  Refer to **INFORMATION**

INFORMATION

FAULT-TRACING INFORMATION

The fault should have been detected and remedied. As this is not the case fault-tracing has failed.

Exit fault-tracing for this diagnostic trouble code (DTC) or make another attempt.

ECM-P013400: O2 CIRCUIT NO ACTIVITY DETECTED (BANK 1, SENSOR 1). GENERAL FAILURE INFORMATION. NO SUB TYPE INFORMATION (B6324S; 2007-2010)

DIAGNOSTIC TROUBLE CODE (DTC) INFORMATION ECM-P013400

Condition

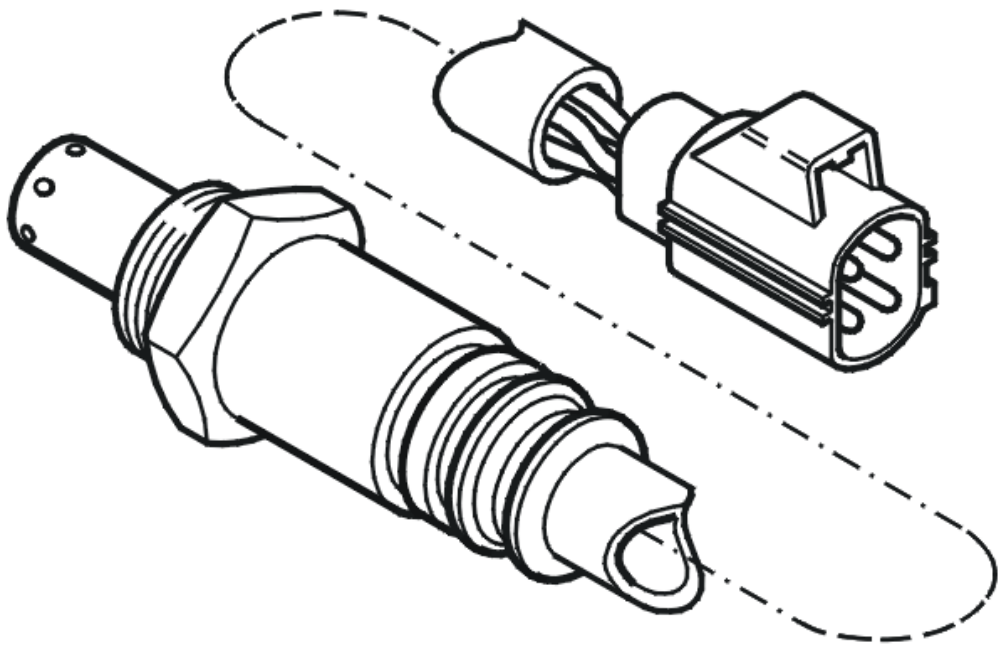

Fig. 1: Identifying Heated Oxygen Sensor
Courtesy of VOLVO CARS CORPORATION

Engine Control Module (ECM) checks the front heated oxygen sensor's signal (bank 1).

The engine cylinders are counted from the cylinder furthest away from the flywheel.

The diagnostic trouble code (DTC) is stored if the engine control module (ECM) registers that the heated oxygen sensor (HO2S) is not activated or is activated too slowly.

The diagnostic trouble code (DTC) can be diagnosed when the engine is running.

Substitute Value

- Nothing.

Possible Source

- Contact resistance in the terminals
- Damaged front heated oxygen sensor (HO2S).

Fault symptom[s]

- Malfunction indicator lamp (MIL) lit.

FAULT TRACING

see **FAULT TRACING**

ECM-P013400: O2 CIRCUIT NO ACTIVITY DETECTED (BANK 1, SENSOR 1). GENERAL FAILURE INFORMATION. NO SUB TYPE INFORMATION (B6324S5; 2011-2012)

DIAGNOSTIC TROUBLE CODE (DTC) INFORMATION ECM-P013400

see **DIAGNOSTIC TROUBLE CODE (DTC) INFORMATION ECM-P013400**

FAULT TRACING

see **FAULT TRACING**

ECM-P013400: HEATED OXYGEN SENSOR (HO2S) CIRCUIT NO ACTIVITY REGISTERED (BANK 1, SENSOR 1). GENERAL FAULT INFORMATION. NO INFORMATION ABOUT FAULT TYPE (B8444S; 2005-2011)

DIAGNOSTIC TROUBLE CODE (DTC) INFORMATION ECM-P013400

Condition

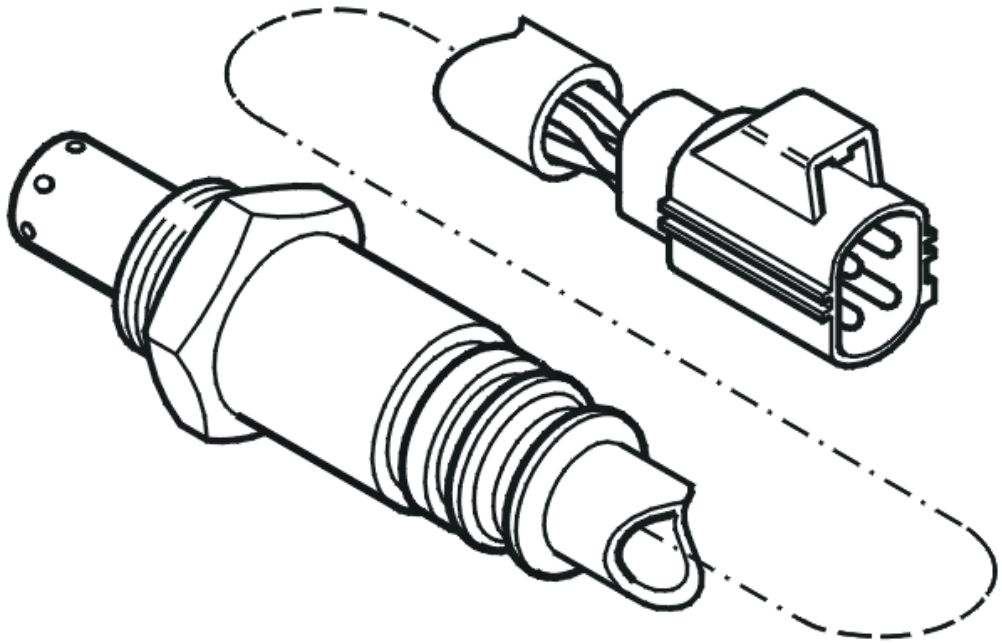

Fig. 2: Identifying Heated Oxygen Sensor
Courtesy of VOLVO CARS CORPORATION

Engine Control Module (ECM) checks the front heated oxygen sensor's signal (bank 1).

The engine cylinders are counted from the cylinder furthest away from the flywheel.

- Bank 1 (cylinder row nearest the front): cylinders 1, 3, 5 and 7.
- Bank 2 (cylinder row furthest to the rear, nearest the passenger compartment): cylinders 2, 4, 6, and 8.

The diagnostic trouble code (DTC) is stored if the engine control module (ECM) registers that the heated oxygen sensor (HO2S) is not activated or is activated too slowly.

The diagnostic trouble code (DTC) can be diagnosed when the engine is running.

Substitute Value

- Nothing.

Possible Source

- Contact resistance in the terminals
- Damaged front heated oxygen sensor (HO2S).

Fault symptom[s]

- Malfunction indicator lamp (MIL) lit.

FAULT TRACING

see **FAULT TRACING**

ECM-P013600: HEATED OXYGEN SENSOR (HO2S) CIRCUIT (BANK 1, SENSOR 2). GENERAL FAULT INFORMATION. NO INFORMATION ABOUT FAULT TYPE (B8444S; 2005-2011)

DIAGNOSTIC TROUBLE CODE (DTC) INFORMATION ECM-P013600

Condition

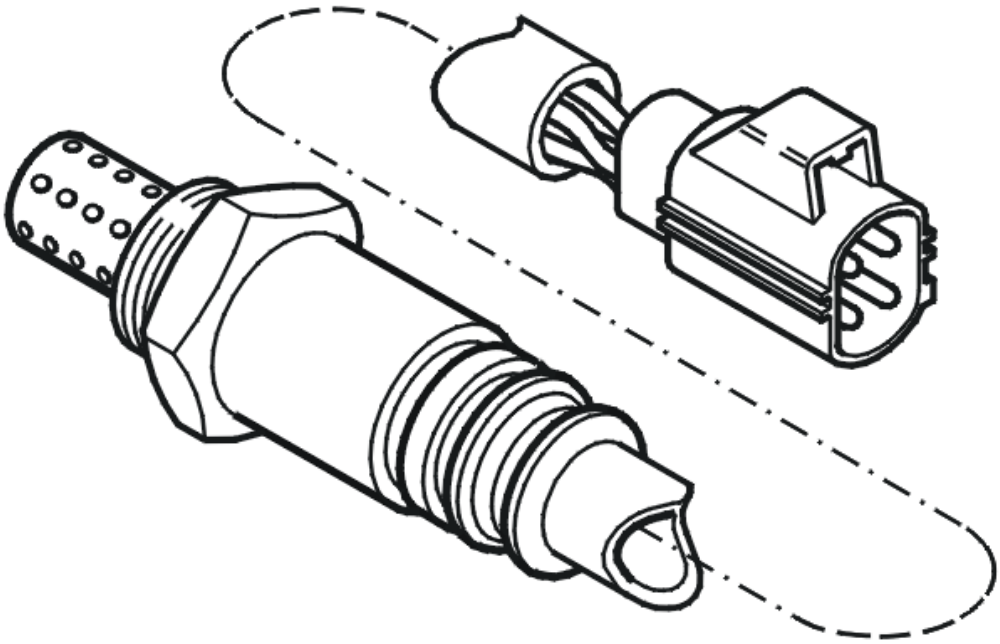

Fig. 3: Identifying Heated Oxygen Sensor
Courtesy of VOLVO CARS CORPORATION

Engine Control Module (ECM) measures the voltage difference between the rear heated oxygen sensor's (bank 1) max. value and min. value, and the difference must be greater than 0.3 V.

The engine cylinders are counted from the cylinder furthest away from the flywheel.

- Bank 1 (cylinder row nearest the front): cylinders 1, 3, 5 and 7.
- Bank 2 (cylinder row furthest to the rear, nearest the passenger compartment): cylinders 2, 4, 6, and 8.

The diagnostic trouble code (DTC) is stored if the engine control module (ECM) registers that these parameters are not reached after approximately 5 minutes and the accumulated or actual probe preheating has reached its parameter.

The diagnostic trouble code (DTC) can be diagnosed approximately 5 minutes after start, if the oxygen sensor preheating is active and at least one fuel shut-off (at least 3 seconds) has been carried out.

Substitute Value

- Rear heated oxygen sensor (HO2S) control shut off.

Possible Source

- Contact resistance or oxidation in the terminals
- Damaged rear heated oxygen sensor (HO2S).

Fault symptom[s]

- Malfunction indicator lamp (MIL) lit.

FAULT TRACING ECM-P013600

CHECKING COMPONENTS

CAUTION: Do not apply rust solvent spray or grease to the heated oxygen sensor (HO2S) connector.

Check the rear heated oxygen sensor connector (bank 1). Check for contact resistance and oxidation.

Try a new heated oxygen sensor (HO2S) if the above fault-tracing does not remedy the fault.

Remedy as necessary.

Other information

- see **CONNECTING THE BREAKOUT BOX**
- see **SIGNAL SPECIFICATION, ENGINE CONTROL MODULE (ECM)**
- see **HEATED OXYGEN SENSOR (HO2S), REPLACING**
- see **CHECKING WIRING AND TERMINALS**

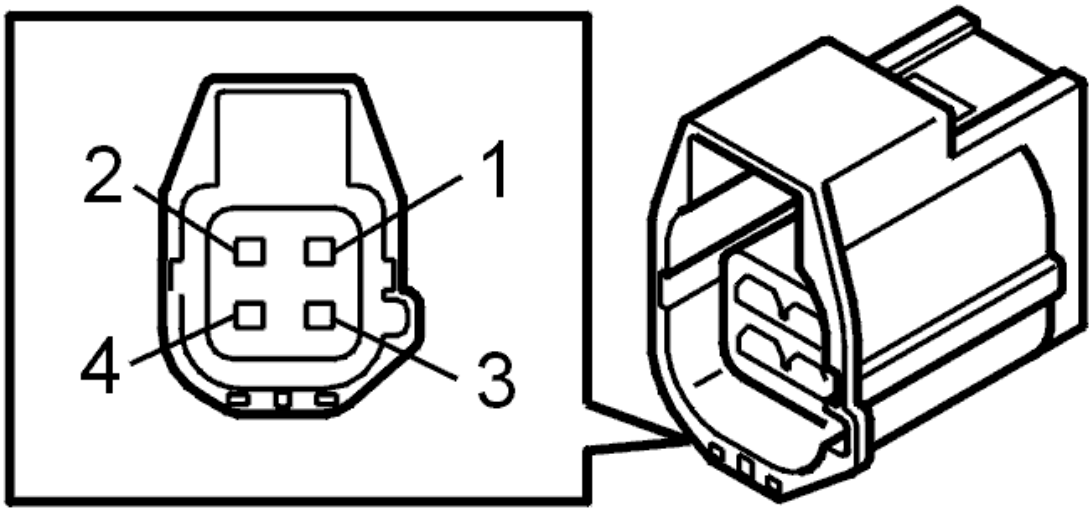

Fig. 4: Identifying 4-Bit Connector
Courtesy of VOLVO CARS CORPORATION

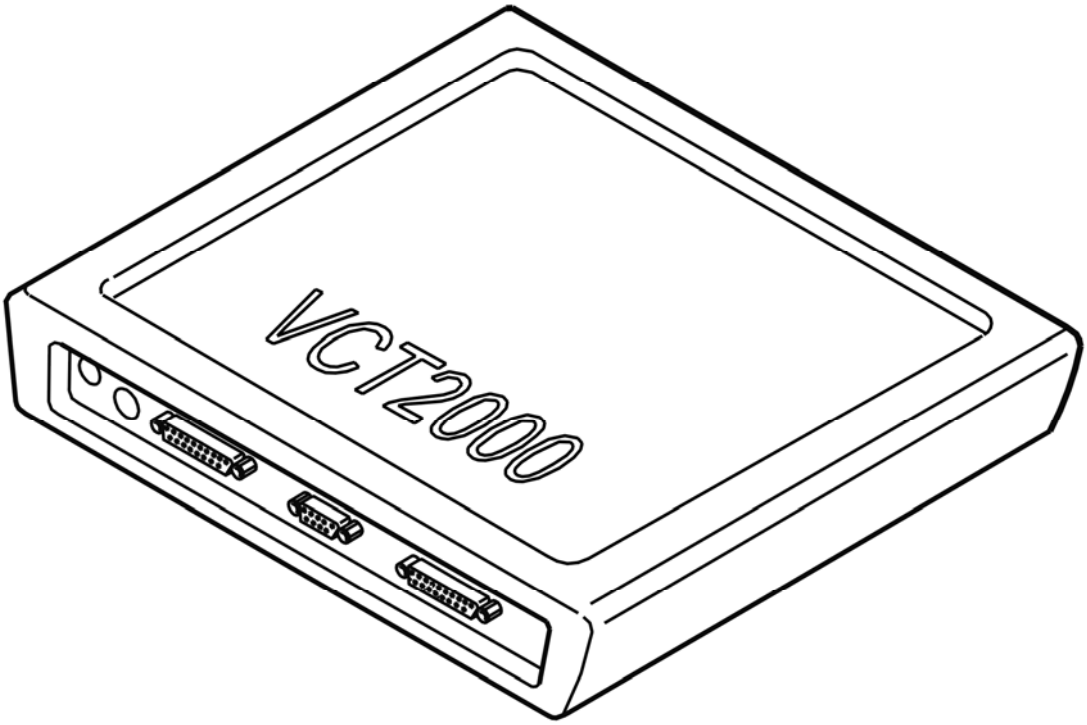

Fig. 5: Identifying VCT2000 Diagnostic Tool Symbol In VIDA
Courtesy of VOLVO CARS CORPORATION

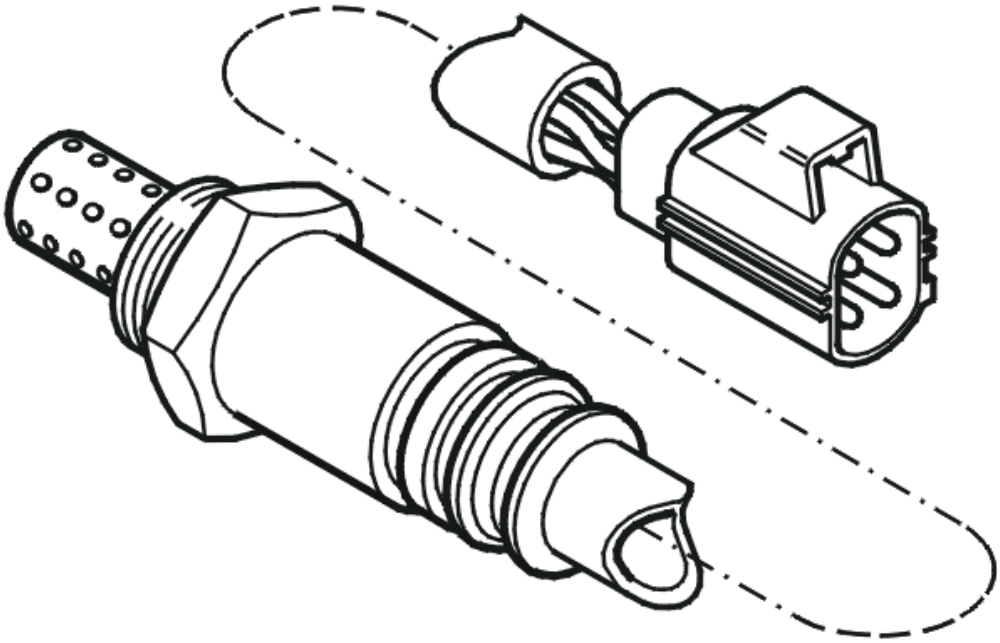

Fig. 6: Identifying Heated Oxygen Sensor
Courtesy of VOLVO CARS CORPORATION

- **Continue**

  Refer to **VERIFICATION**

VERIFICATION

VERIFICATION

HINT: After repairing, it is necessary to check that the malfunction has been fixed.

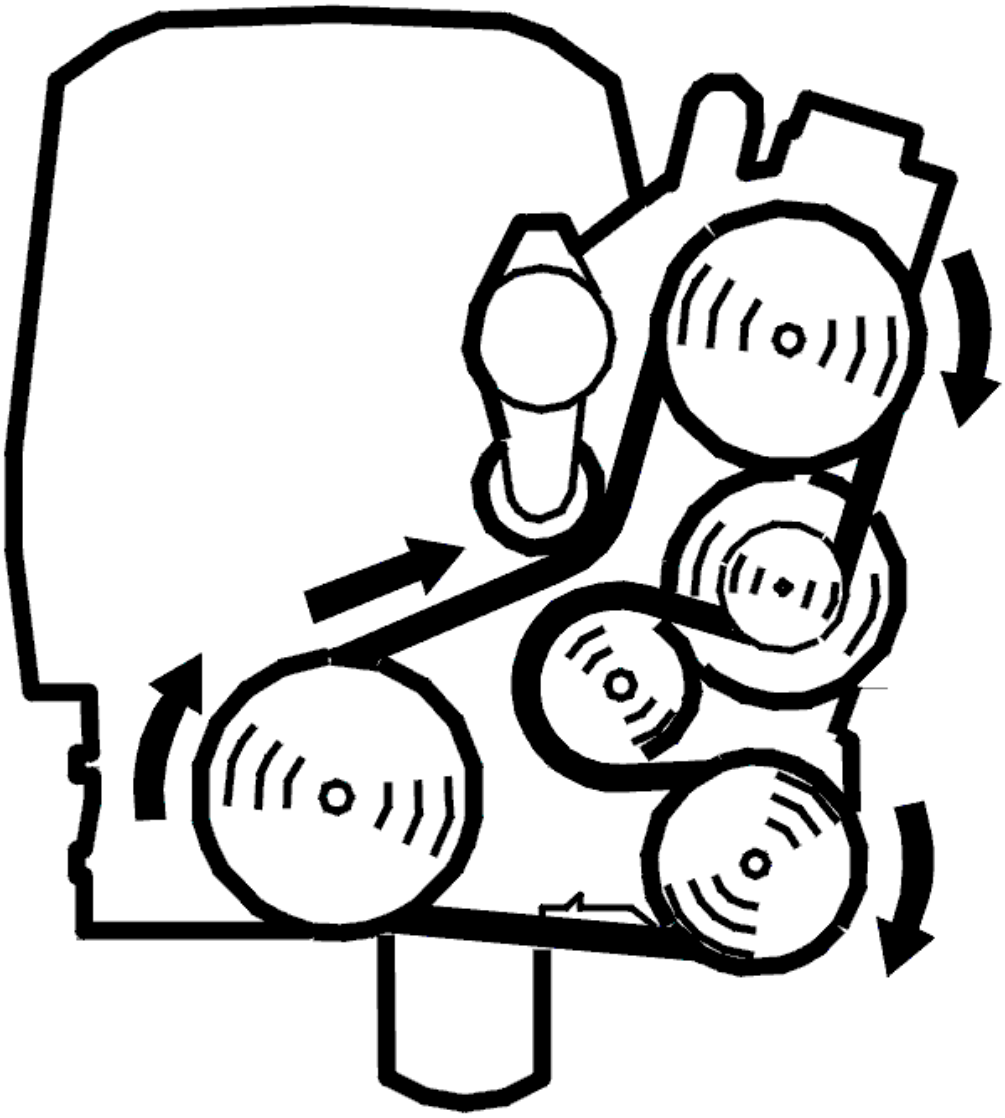

Fig. 7: Belt Routing / Engine Idling - Volvo
Courtesy of VOLVO CARS CORPORATION

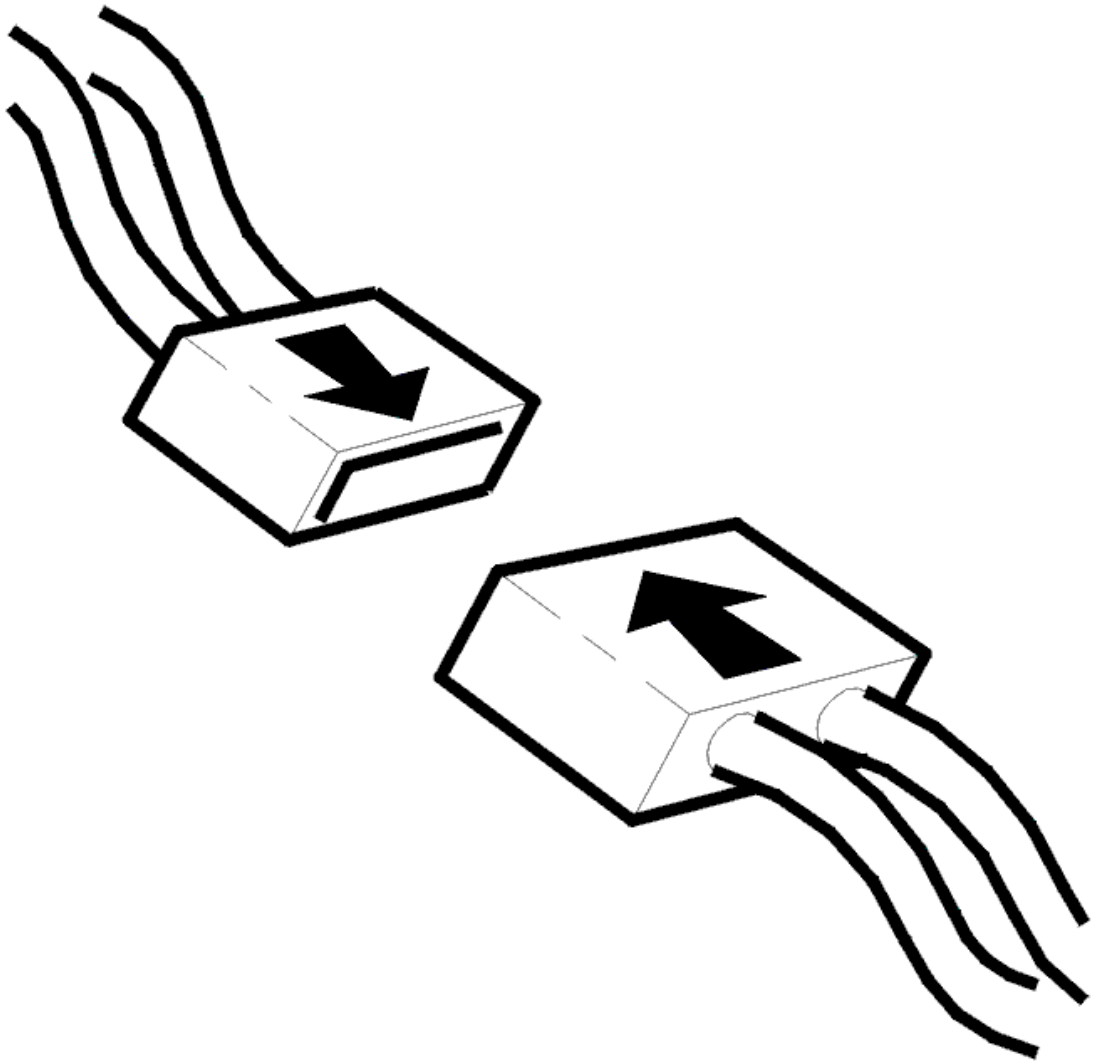

Fig. 8: Connecting Connector
Courtesy of VOLVO CARS CORPORATION

- Test-drive the vehicle on road and make sure that a fuel shut-off is performed. Easiest to do this by driving approx. 80 km/h and suddenly release the accelerator pedal for at least 5 seconds.
- Connect VCT2000 (or appropriate scan tool) to the data link connector without turning off the engine.

NOTE: **If the engine is turned off, the stored trouble status will be erased and the test-drive will have to be repeated.**

Read off the diagnostic status and trouble status for the diagnostic trouble code.

Check that the diagnosis is "Implemented" and that the trouble status is "No malfunction found". If the trouble status is "Malfunction found", this indicates defective function.

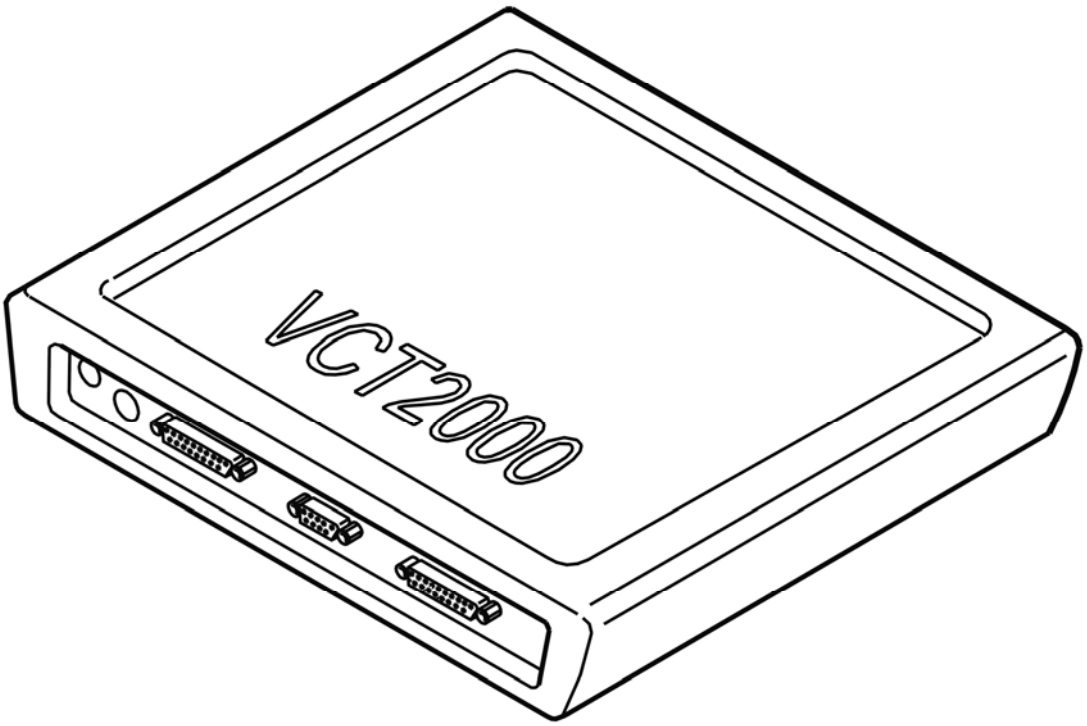

Fig. 9: Identifying VCT2000 Diagnostic Tool Symbol In VIDA
Courtesy of VOLVO CARS CORPORATION

Trouble status shows "No malfunction found"?

- **YES**

  VERIFIED: Troubleshooting has been completed.

- **NO**

  Refer to **INFORMATION**

INFORMATION

FAULT-TRACING INFORMATION

The fault should have been detected and remedied. As this is not the case fault-tracing has failed.

Exit fault-tracing for this diagnostic trouble code (DTC) or make another attempt.

ECM-P013700: O2 CIRCUIT LOW VOLTAGE (BANK 1, SENSOR 2). GENERAL FAILURE INFORMATION. NO SUB TYPE INFORMATION

(B6324S; 2007-2010)

DIAGNOSTIC TROUBLE CODE (DTC) INFORMATION ECM-P013700

Condition

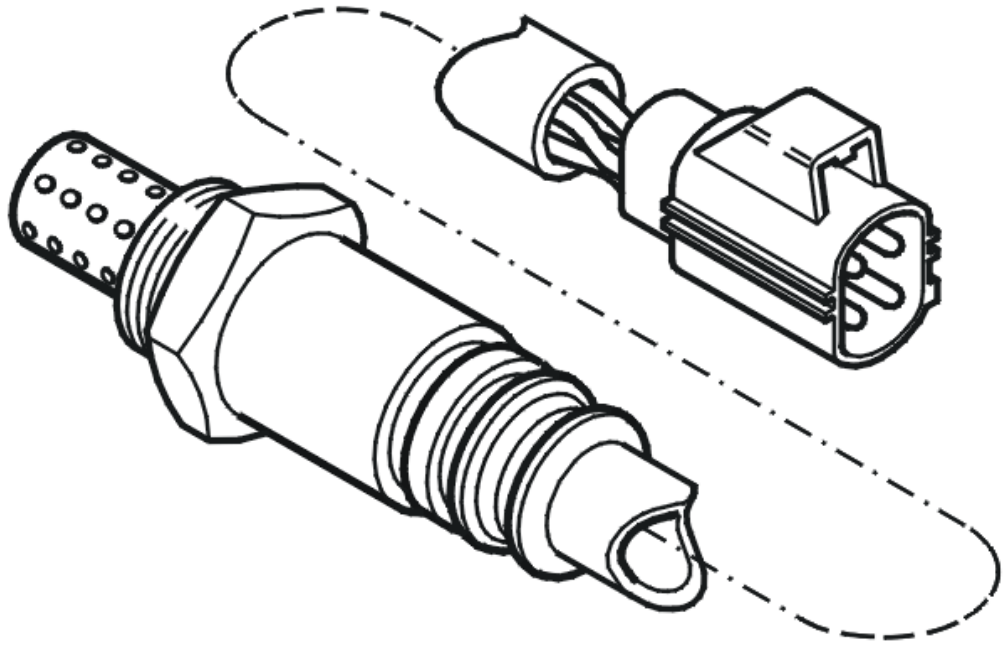

Fig. 10: Identifying Heated Oxygen Sensor
Courtesy of VOLVO CARS CORPORATION

The engine control module (ECM) assumes two initial values for probe voltage, 0 V and 5 V.

If probe preheating is active and if at least one fuel shut-off (accelerator pedal released for at least 3 seconds) has been made, the rear heated oxygen sensor (bank 1) maximum value must have exceeded 0.6 V and the minimum value must have been below 0.1 V.

The engine cylinders are counted from the cylinder furthest away from the flywheel.

The diagnostic trouble code (DTC) is stored and the engine control module (ECM) interprets it as a fault if these parameters are not achieved after approximately 5 minutes and both the accumulated and actual heated oxygen sensor preheating have reached certain parameters.

The diagnostic trouble code (DTC) can be diagnosed when the engine is running.

Substitute Value

- Rear heated oxygen sensor (HO2S) control shut off.

Possible Source

- The signal cable is short-circuited to ground.
- Open-circuit on the signal cable.
- Damaged rear heated oxygen sensor (HO2S).

Fault symptom[s]

- Malfunction indicator lamp (MIL) lit.

FAULT-TRACING

see **FAULT-TRACING**

ECM-P013700: O2 CIRCUIT LOW VOLTAGE (BANK 1, SENSOR 2). GENERAL FAILURE INFORMATION. NO SUB TYPE INFORMATION (B6324S5; 2011-2012)

DIAGNOSTIC TROUBLE CODE (DTC) INFORMATION ECM-P013700

see **DIAGNOSTIC TROUBLE CODE (DTC) INFORMATION ECM-P013700**

FAULT-TRACING

see **FAULT-TRACING**

ECM-P013700: HEATED OXYGEN SENSOR (HO2S) CIRCUIT LOW VOLTAGE (BANK 1, SENSOR 2). GENERAL FAULT INFORMATION. NO INFORMATION ABOUT FAULT TYPE (B8444S; 2005-2011)

DIAGNOSTIC TROUBLE CODE (DTC) INFORMATION ECM-P013700

Condition

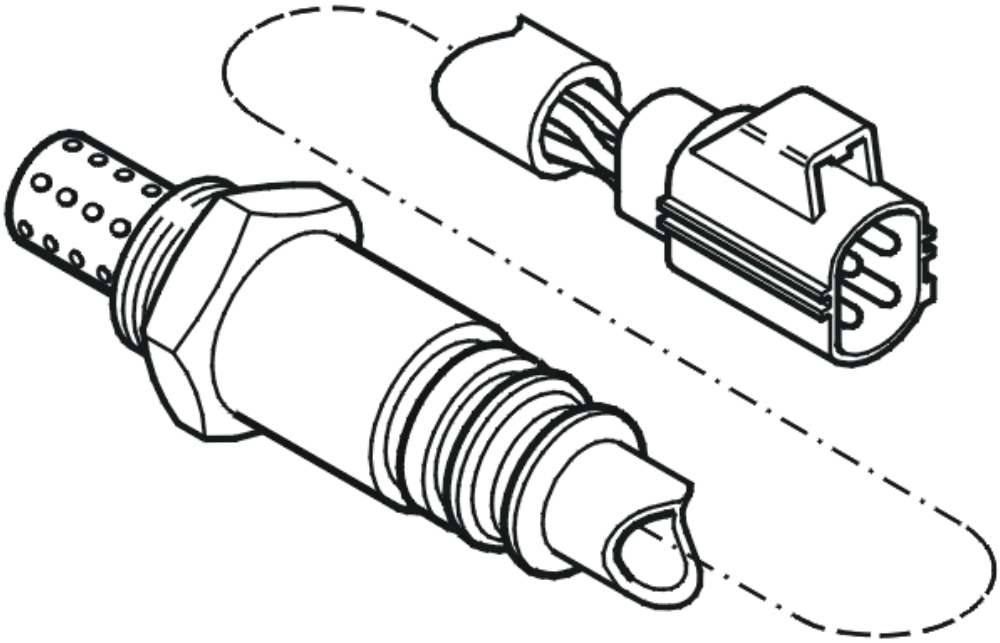

Fig. 11: Identifying Heated Oxygen Sensor
Courtesy of VOLVO CARS CORPORATION

The engine control module (ECM) assumes two initial values for probe voltage, 0 V and 5 V.

When sensor heating is active and at least one fuel shut-off (accelerator pedal fully released for at least 3 seconds) has been performed, the rear heated oxygen sensor's (bank 1) max. value must have been above 0.6 V and the min. value must have been below 0.3 V.

The engine cylinders are counted from the cylinder furthest away from the flywheel.

- Bank 1 (cylinder row nearest the front): cylinders 1, 3, 5 and 7.
- Bank 2 (cylinder row furthest to the rear, nearest the passenger compartment): cylinders 2, 4, 6, and 8.

The diagnostic trouble code (DTC) is stored and the engine control module (ECM) interprets it as a fault if these parameters are not achieved after approximately 5 minutes and both the accumulated and actual heated oxygen sensor preheating have reached certain parameters.

The diagnostic trouble code (DTC) can be diagnosed when the engine is running.

Substitute Value

- Rear heated oxygen sensor (HO2S) control shut off.

Possible Source

- The signal cable is short-circuited to ground.
- Open-circuit on the signal cable.
- Damaged rear heated oxygen sensor (HO2S).

Fault symptom[s]

- Malfunction indicator lamp (MIL) lit.

FAULT TRACING ECM-P013700

CHECKING THE STATUS

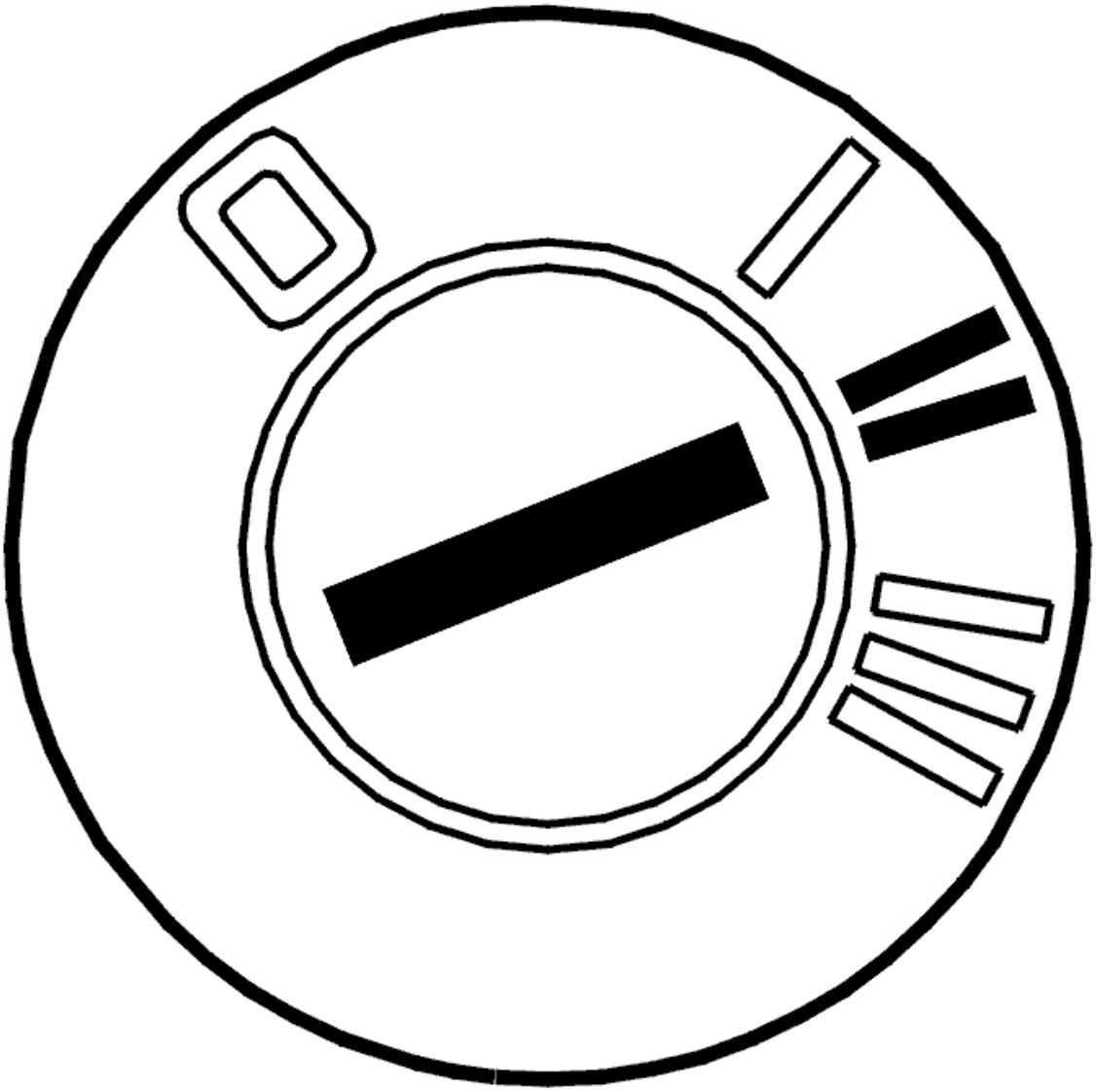

Fig. 12: Identifying Ignition ON

Courtesy of VOLVO CARS CORPORATION

- Start the engine to perform the diagnostic.

  Check whether the fault is permanent or intermittent. Read off the diagnostic trouble code (DTC) fault status when the diagnostic status is "Completed".

  The fault is permanent if the fault status is "Fault found". The fault is intermittent if the fault status is "No fault found".

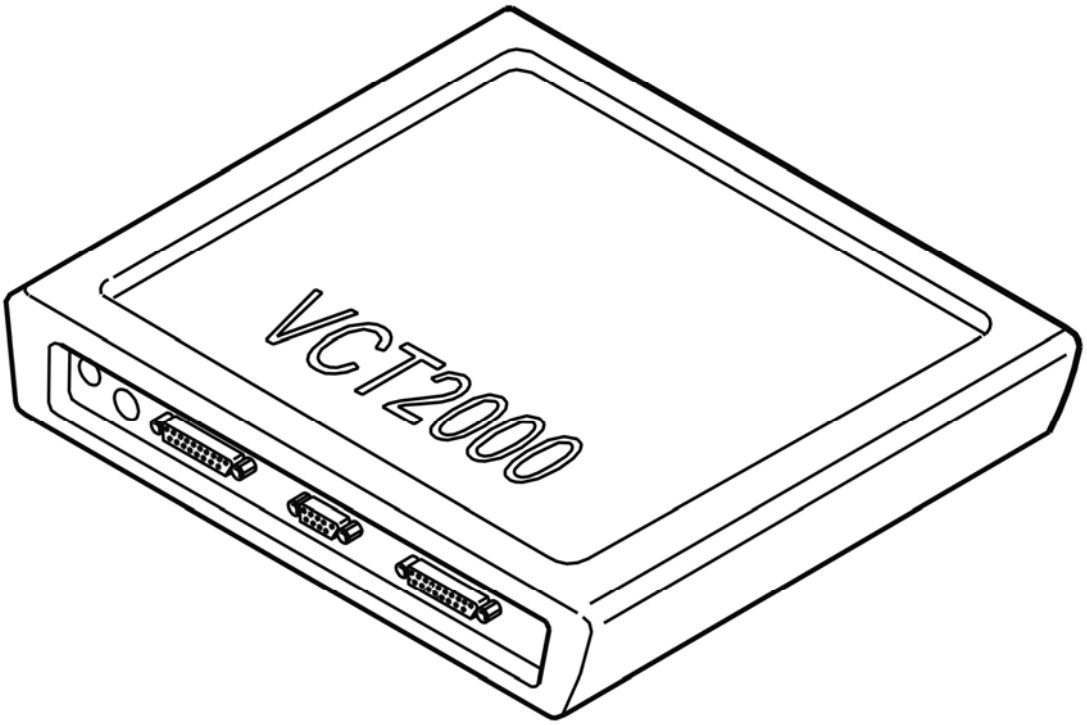

Fig. 13: Identifying VCT2000 Diagnostic Tool Symbol In VIDA
Courtesy of VOLVO CARS CORPORATION

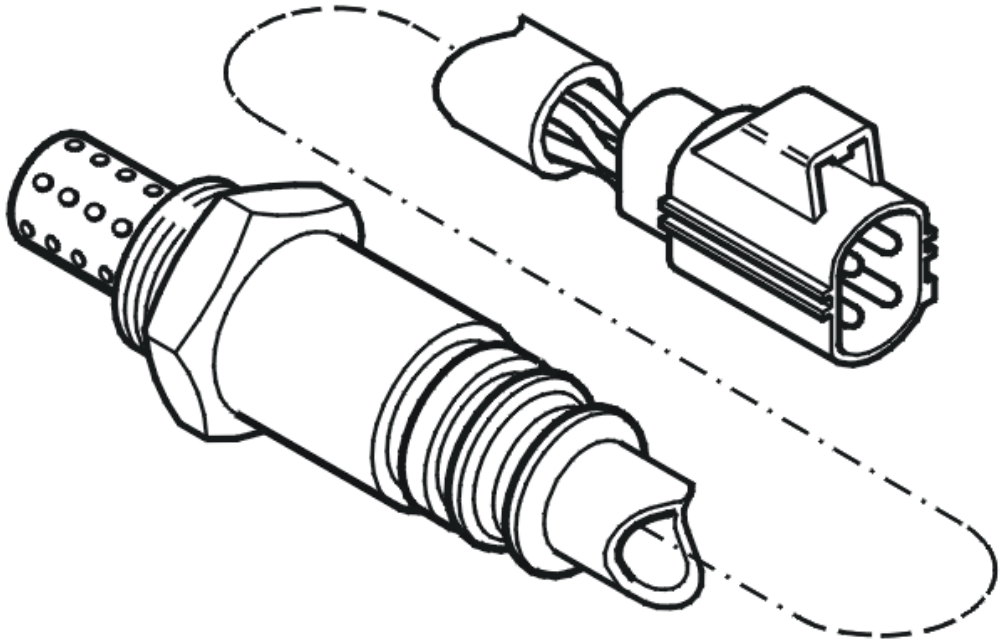

Fig. 14: Identifying Heated Oxygen Sensor
Courtesy of VOLVO CARS CORPORATION

- **Continue**

  Refer to **CHECKING COMPONENTS**

CHECKING COMPONENTS

CAUTION: Do not apply rust solvent spray or grease to the heated oxygen sensor (HO2S) connector.

Check the cable between the Engine Control Module (ECM) terminal #A41 (#A41) and rear heated oxygen sensor terminal #4 (bank 1). Check for an open-circuit. Check for a short-circuit to ground.

Try a new heated oxygen sensor (HO2S) if the above fault-tracing does not remedy the fault.

Remedy as necessary.

Other information

- see **CONNECTING THE BREAKOUT BOX**
- see **SIGNAL SPECIFICATION, ENGINE CONTROL MODULE (ECM)**

- see **HEATED OXYGEN SENSOR (HO2S), REPLACING**
- see **CHECKING WIRING AND TERMINALS**

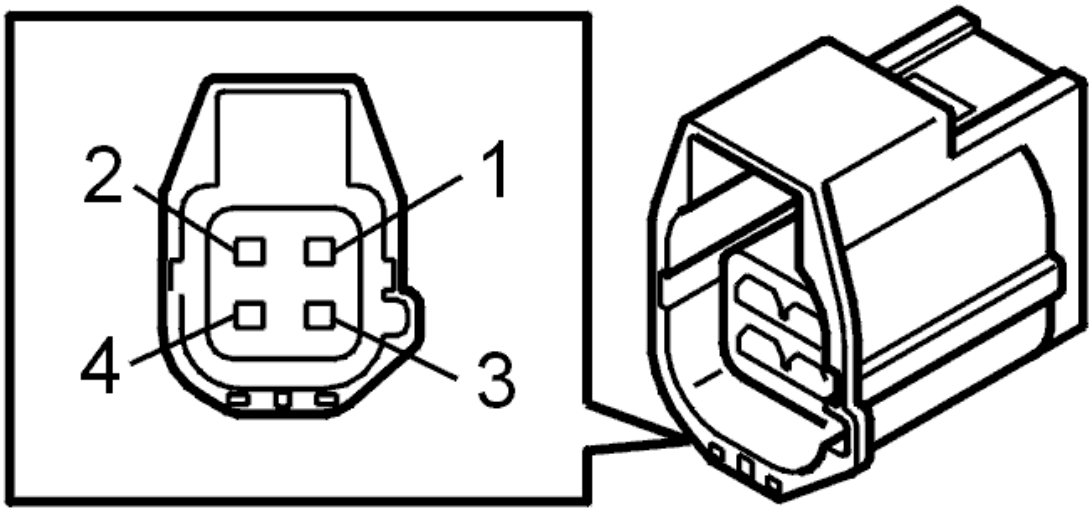

Fig. 15: Identifying 4-Bit Connector
Courtesy of VOLVO CARS CORPORATION

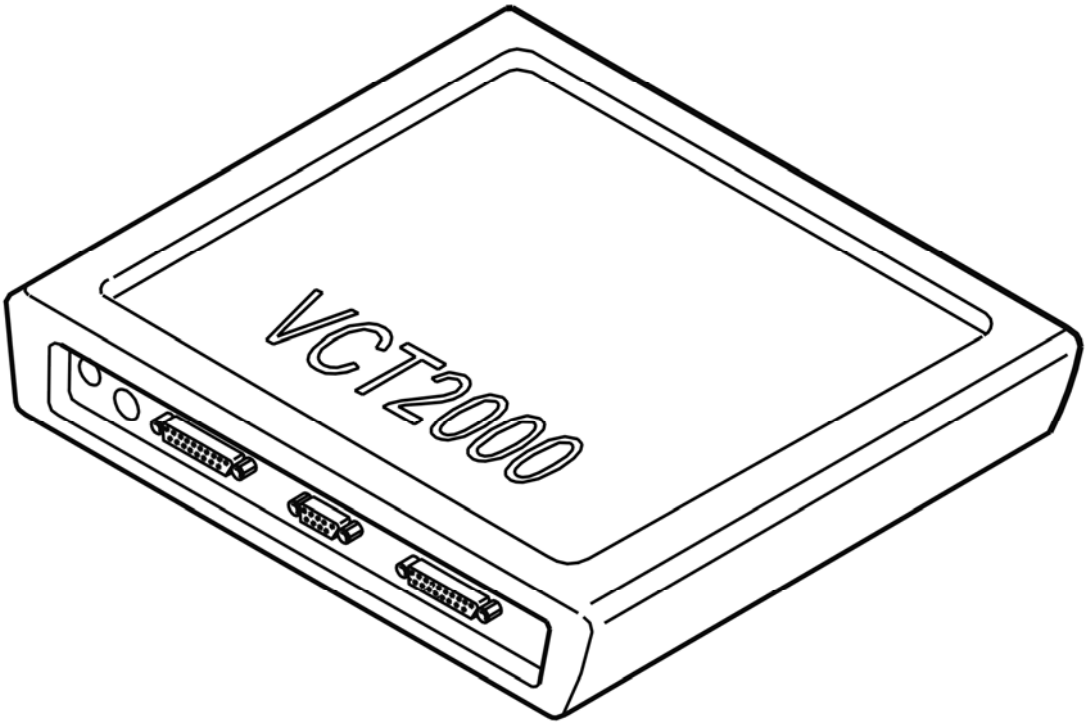

Fig. 16: Identifying VCT2000 Diagnostic Tool Symbol In VIDA
Courtesy of VOLVO CARS CORPORATION

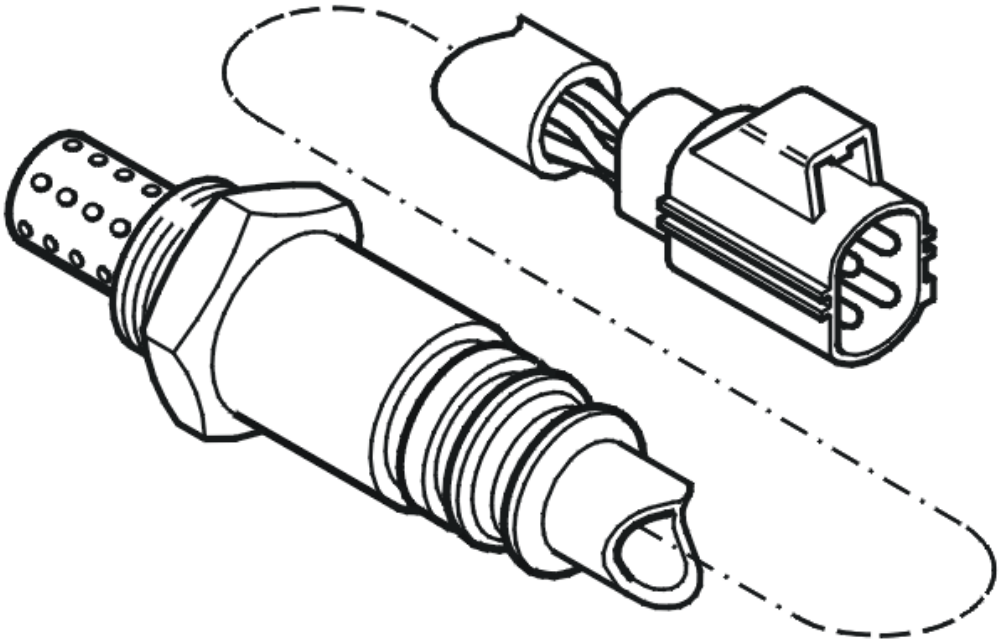

Fig. 17: Identifying Heated Oxygen Sensor
Courtesy of VOLVO CARS CORPORATION

- **Continue**

  Refer to **VERIFICATION**

VERIFICATION

VERIFICATION

HINT: After repairing, it is necessary to check that the malfunction has been fixed.

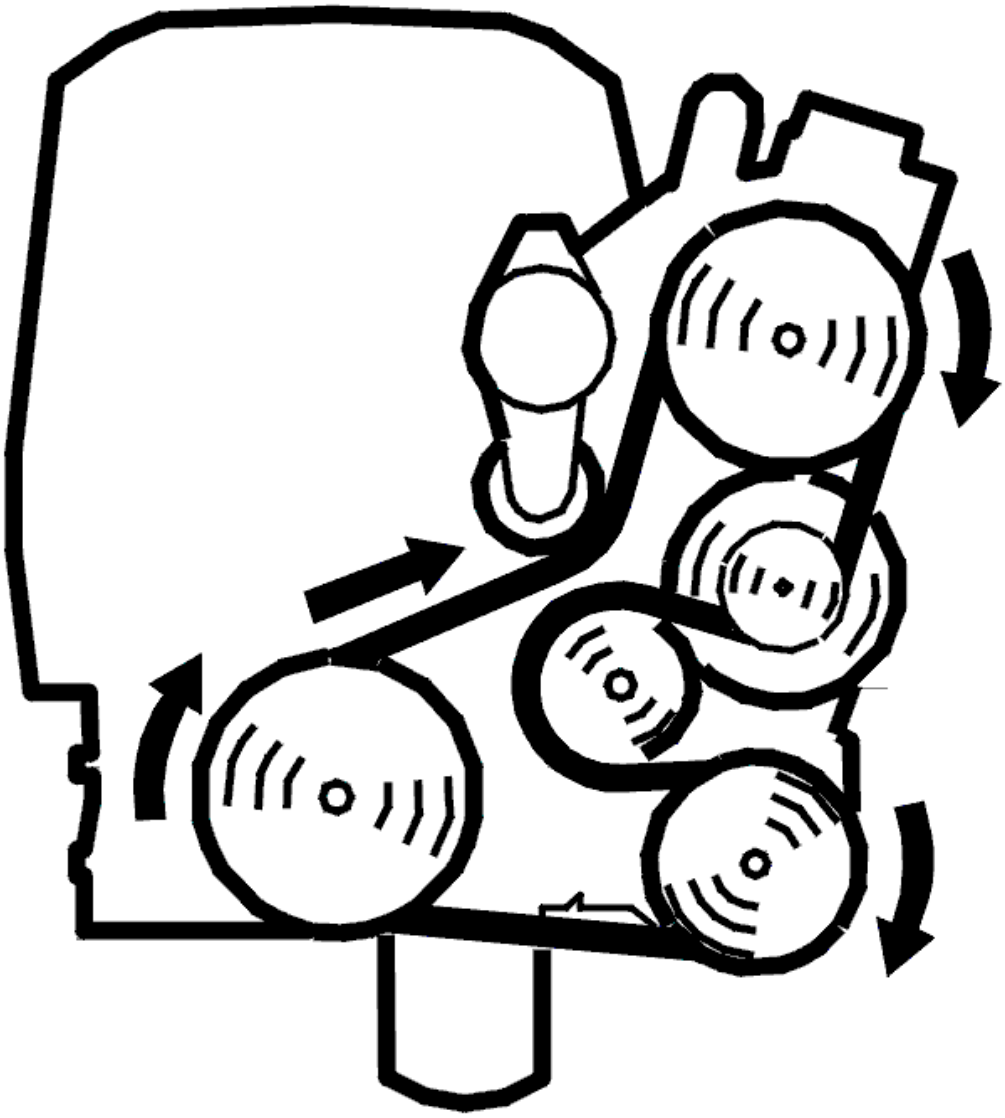

Fig. 18: Belt Routing / Engine Idling - Volvo
Courtesy of VOLVO CARS CORPORATION

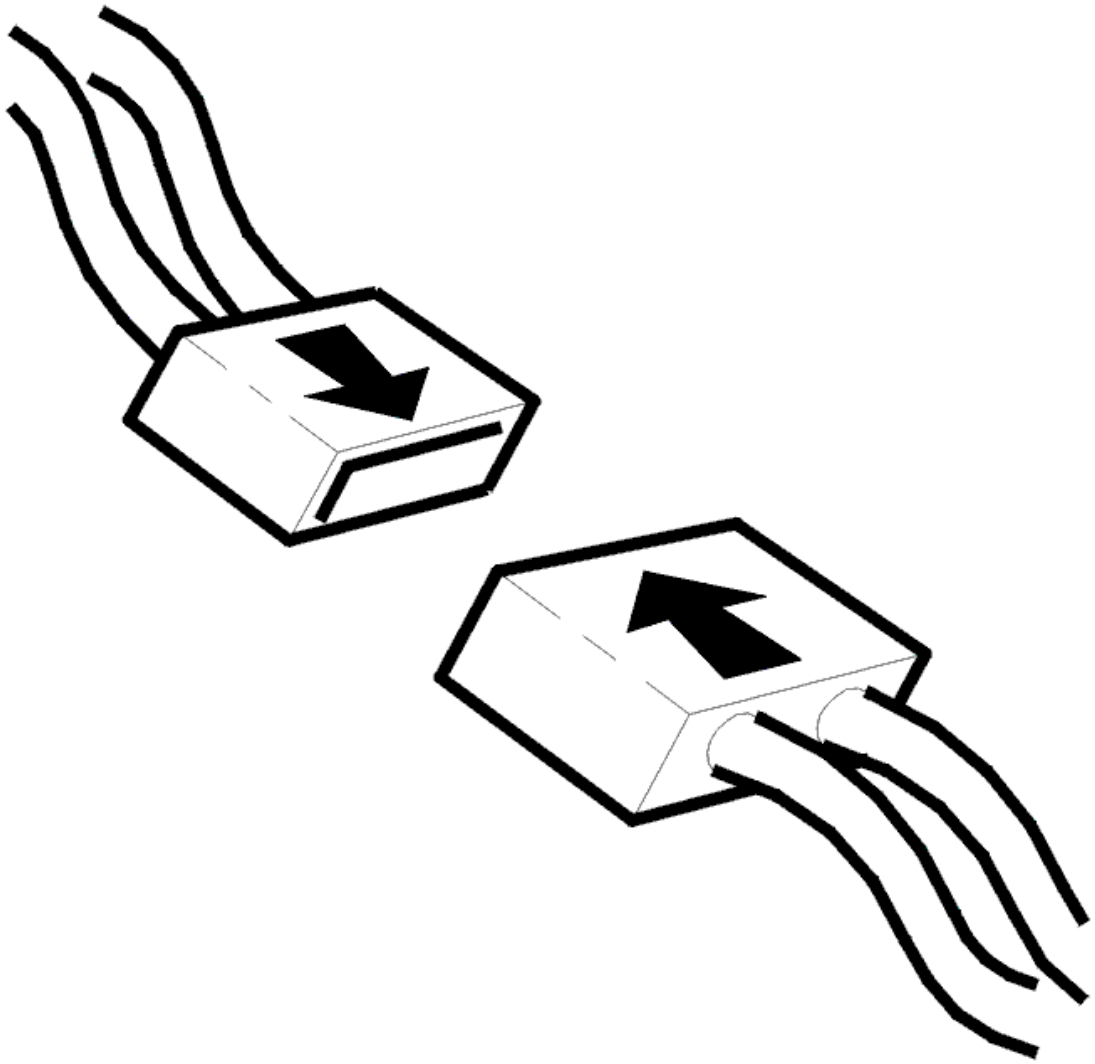

Fig. 19: Connecting Connector
Courtesy of VOLVO CARS CORPORATION

- Ignition off
- Reinstall the connectors, components etc.
- Start the engine to perform the diagnosis.

  Read off the diagnostic status and trouble status for the diagnostic trouble code.

  Check that the diagnosis is "Implemented" and that the trouble status is "No malfunction found". If the trouble status is "Malfunction found", this indicates defective function.

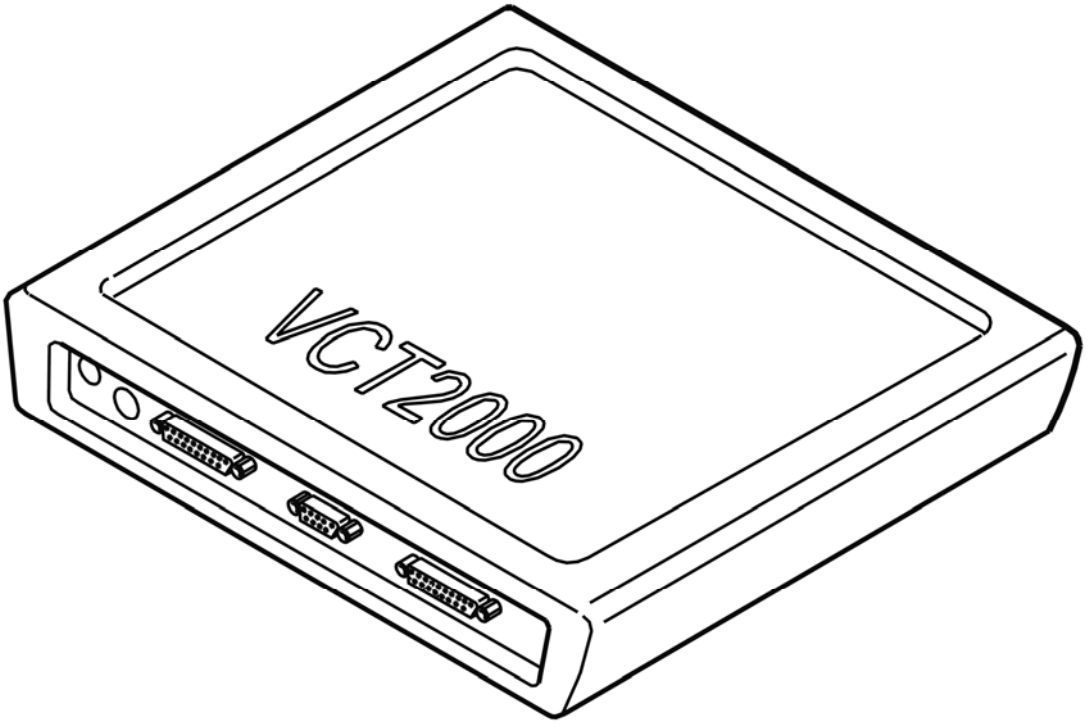

Fig. 20: Identifying VCT2000 Diagnostic Tool Symbol In VIDA
Courtesy of VOLVO CARS CORPORATION

Trouble status shows "No malfunction found"?

- **YES**

  VERIFIED: Troubleshooting has been completed.

- **NO**

  Refer to **INFORMATION**

INFORMATION

FAULT-TRACING INFORMATION

The fault should have been detected and remedied. As this is not the case fault-tracing has failed.

Exit fault-tracing for this diagnostic trouble code (DTC) or make another attempt.

ECM-P013800: O2 CIRCUIT HIGH VOLTAGE (BANK 1, SENSOR 2). GENERAL FAILURE INFORMATION. NO SUB TYPE INFORMATION

(B6324S; 2007-2010)

DIAGNOSTIC TROUBLE CODE (DTC) INFORMATION ECM-P013800

Condition

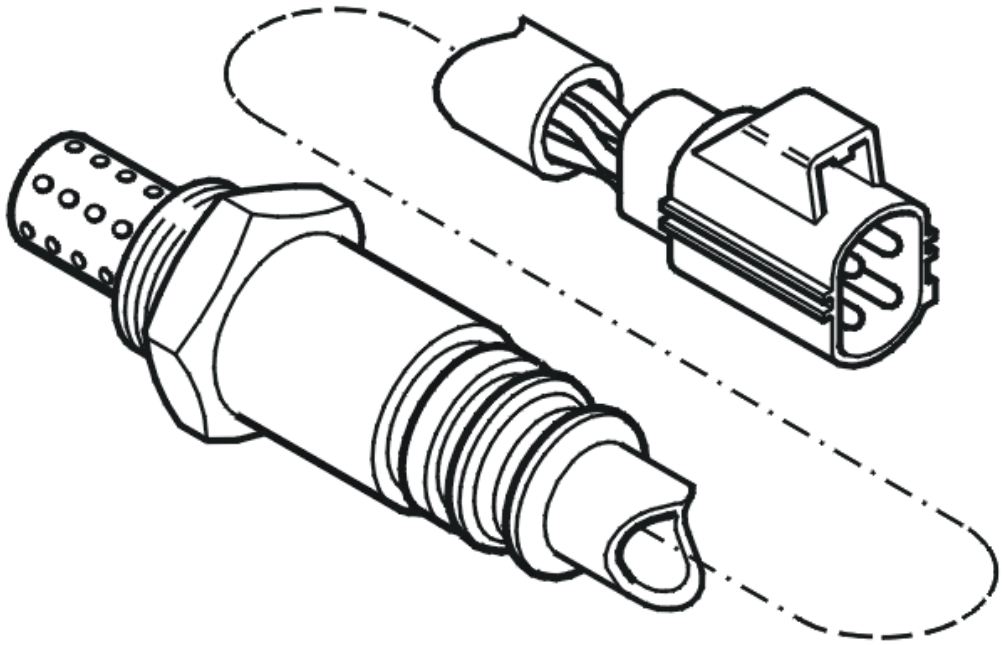

Fig. 21: Identifying Heated Oxygen Sensor
Courtesy of VOLVO CARS CORPORATION

The engine control module (ECM) assumes two initial values for probe voltage, 0 V and 5 V.

If probe preheating is active and if at least one fuel shut-off (accelerator pedal released for at least 3 seconds) has been made, the rear heated oxygen sensor (bank 1) maximum value must have exceeded 0.6 V and the minimum value must have been below 0.1 V.

The engine cylinders are counted from the cylinder furthest away from the flywheel.

The diagnostic trouble code (DTC) is stored and the engine control module (ECM) interprets it as a fault if these parameters are not achieved after approximately 5 minutes and both the accumulated and actual heated oxygen sensor preheating have reached certain parameters.

The diagnostic trouble code (DTC) can be diagnosed when the engine is running.

Substitute Value

- Rear heated oxygen sensor (HO2S) control shut off.

Possible Source

- The signal cable is short-circuited to voltage.
- Damaged rear heated oxygen sensor (HO2S).

Fault symptom[s]

- Malfunction indicator lamp (MIL) lit.

FAULT-TRACING

see **FAULT-TRACING**

ECM-P013800: O2 CIRCUIT HIGH VOLTAGE (BANK 1, SENSOR 2). GENERAL FAILURE INFORMATION. NO SUB TYPE INFORMATION (B6324S5; 2011-2012)

DIAGNOSTIC TROUBLE CODE (DTC) INFORMATION ECM-P013800

see **DIAGNOSTIC TROUBLE CODE (DTC) INFORMATION ECM-P013800**

FAULT-TRACING

see **FAULT-TRACING**

ECM-P013800: HEATED OXYGEN SENSOR (HO2S) CIRCUIT HIGH VOLTAGE (BANK 1, SENSOR 2). GENERAL FAULT INFORMATION. NO INFORMATION ABOUT FAULT TYPE (B8444S; 2005-2011)

DIAGNOSTIC TROUBLE CODE (DTC) INFORMATION ECM-P013800

Condition

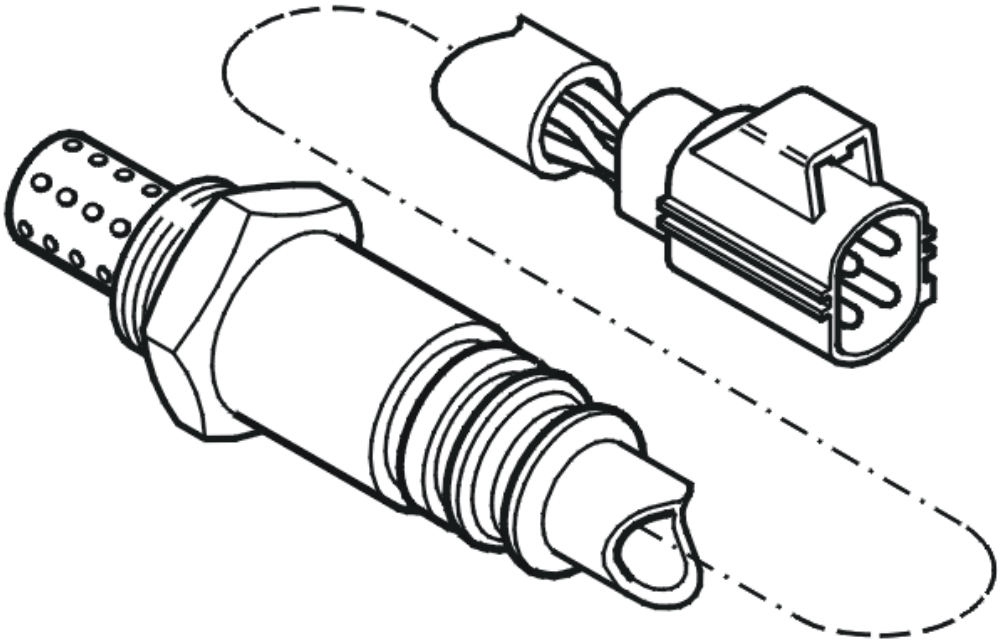

Fig. 22: Identifying Heated Oxygen Sensor
Courtesy of VOLVO CARS CORPORATION

The engine control module (ECM) assumes two initial values for probe voltage, 0 V and 5 V.

When sensor heating is active and at least one fuel shut-off (accelerator pedal fully released for at least 3 seconds) has been performed, the rear heated oxygen sensor's (bank 1) max. value must have been above 0.6 V and the min. value must have been below 0.3 V.

The engine cylinders are counted from the cylinder furthest away from the flywheel.

- Bank 1 (cylinder row nearest the front): cylinders 1, 3, 5 and 7.
- Bank 2 (cylinder row furthest to the rear, nearest the passenger compartment): cylinders 2, 4, 6, and 8.

The diagnostic trouble code (DTC) is stored and the engine control module (ECM) interprets it as a fault if these parameters are not achieved after approximately 5 minutes and both the accumulated and actual heated oxygen sensor preheating have reached certain parameters.

The diagnostic trouble code (DTC) can be diagnosed when the engine is running.

Substitute Value

- Rear heated oxygen sensor (HO2S) control shut off.

Possible Source

- The signal cable is short-circuited to voltage.
- Damaged rear heated oxygen sensor (HO2S).

Fault symptom[s]

- Malfunction indicator lamp (MIL) lit.

FAULT TRACING ECM-P013800

CHECKING THE STATUS

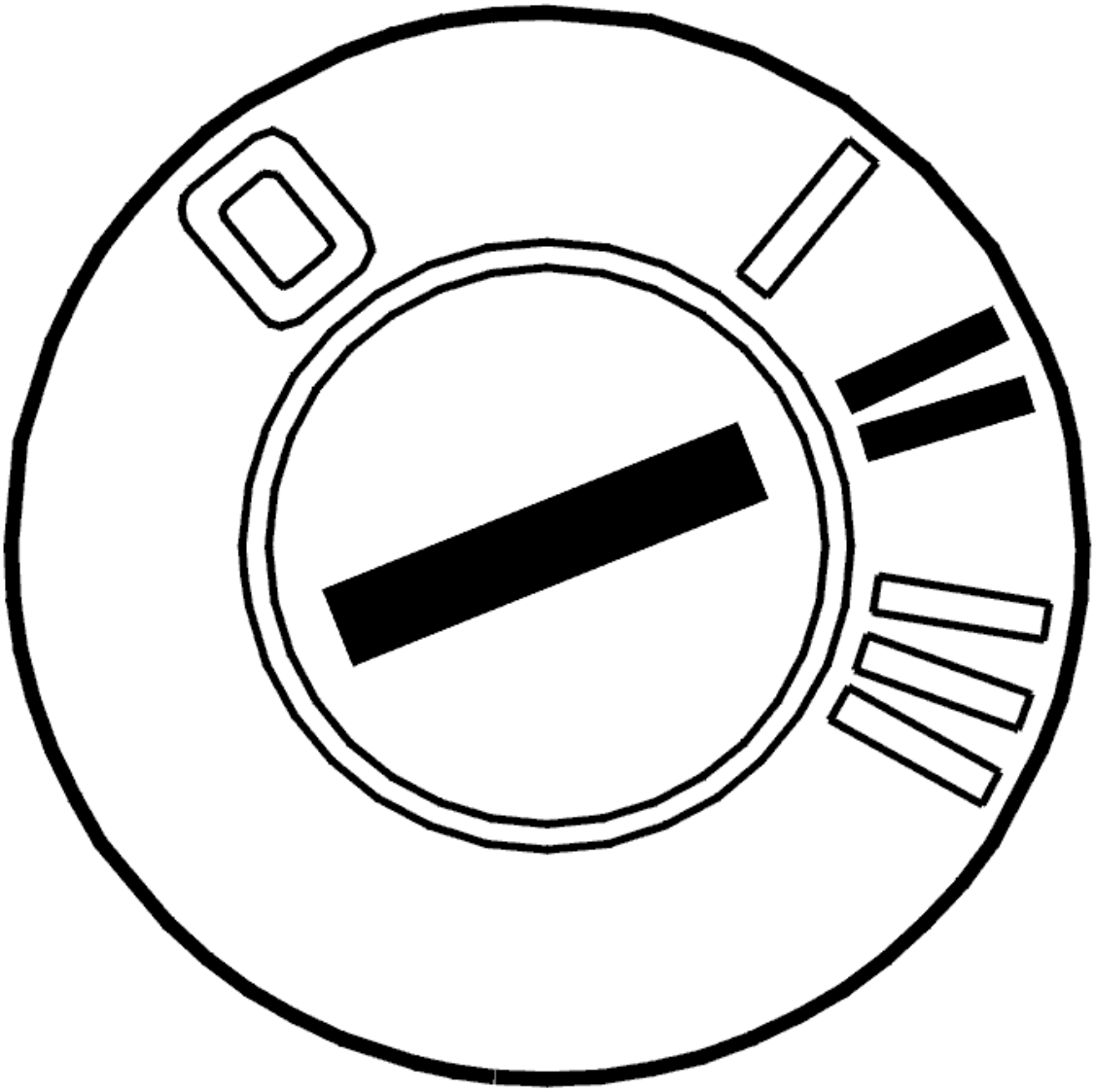

Fig. 23: Identifying Ignition ON
Courtesy of VOLVO CARS CORPORATION

- Start the engine to perform the diagnostic.

  Check whether the fault is permanent or intermittent. Read off the diagnostic trouble code (DTC) fault status when the diagnostic status is "Completed".

  The fault is permanent if the fault status is "Fault found". The fault is intermittent if the fault status is "No fault found".

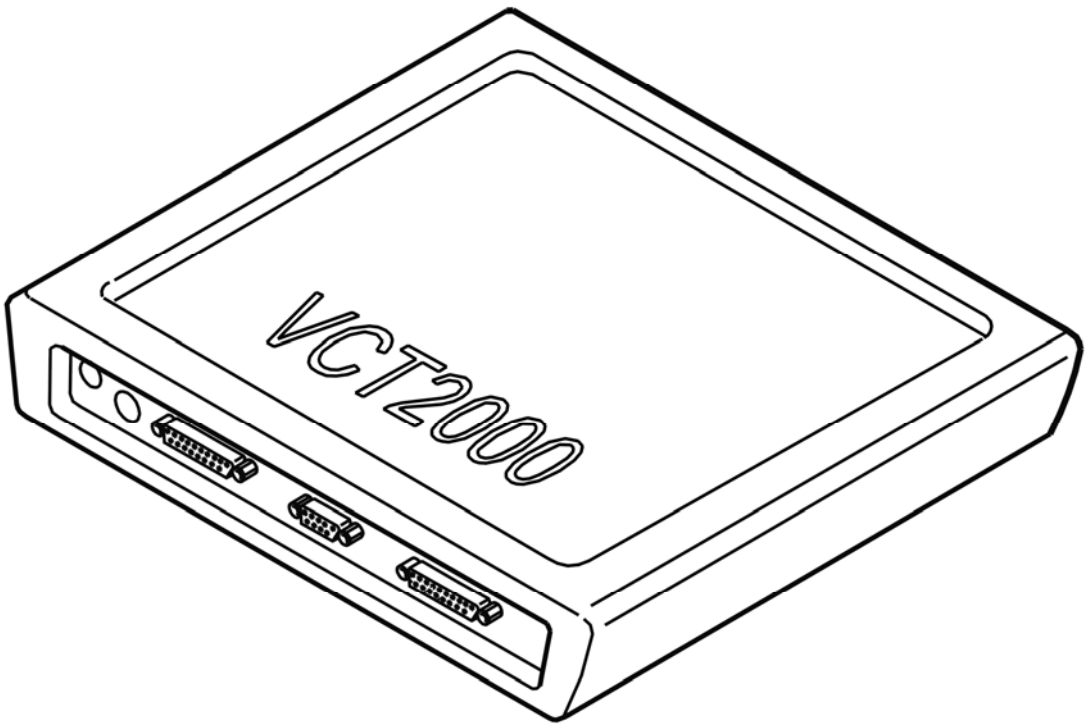

Fig. 24: Identifying VCT2000 Diagnostic Tool Symbol In VIDA
Courtesy of VOLVO CARS CORPORATION

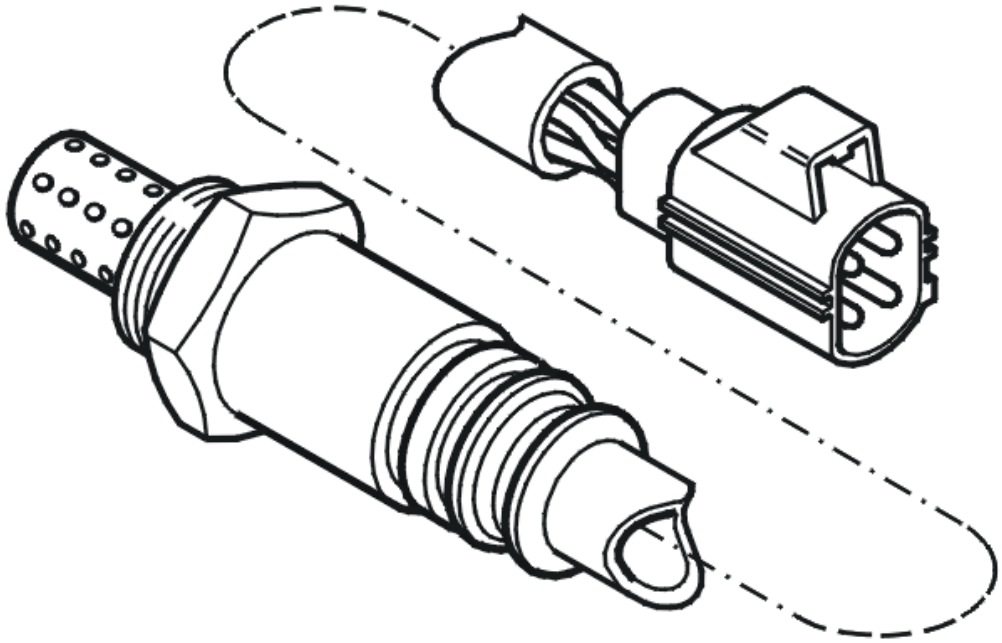

Fig. 25: Identifying Heated Oxygen Sensor
Courtesy of VOLVO CARS CORPORATION

- **Continue**

  Refer to **CHECKING COMPONENTS**

CHECKING COMPONENTS

CAUTION: Do not apply rust solvent spray or grease to the heated oxygen sensor (HO2S) connector.

Check the cable between the Engine Control Module (ECM) terminal #A41 (#A41) and rear heated oxygen sensor terminal #4 (bank 1). Check for a short-circuit to supply voltage.

Try a new heated oxygen sensor (HO2S) if the above fault-tracing does not remedy the fault.

Remedy as necessary.

Other information

- see **CONNECTING THE BREAKOUT BOX**
- see **SIGNAL SPECIFICATION, ENGINE CONTROL MODULE (ECM)**

- see **HEATED OXYGEN SENSOR (HO2S), REPLACING**
- see **CHECKING WIRING AND TERMINALS**

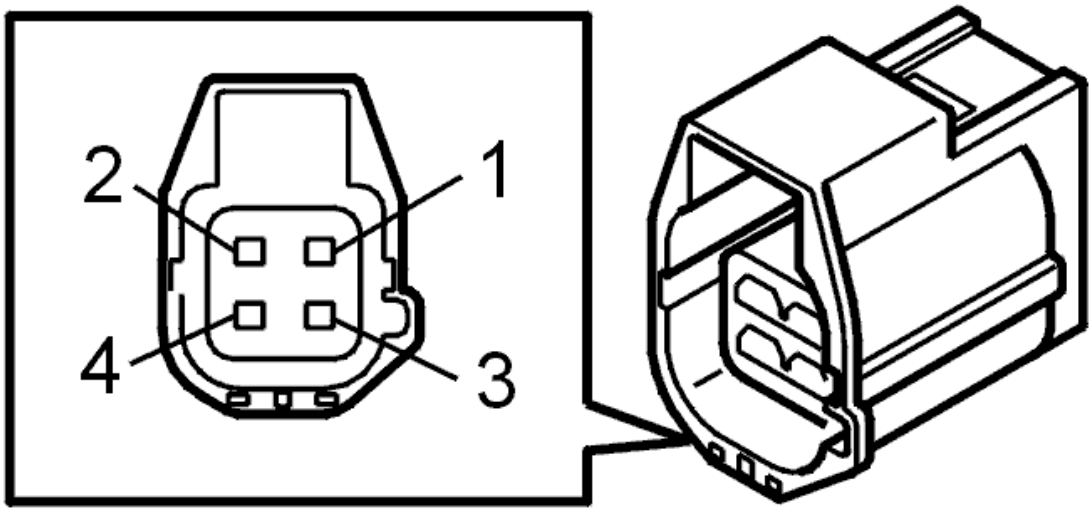

Fig. 26: Identifying 4-Bit Connector
Courtesy of VOLVO CARS CORPORATION

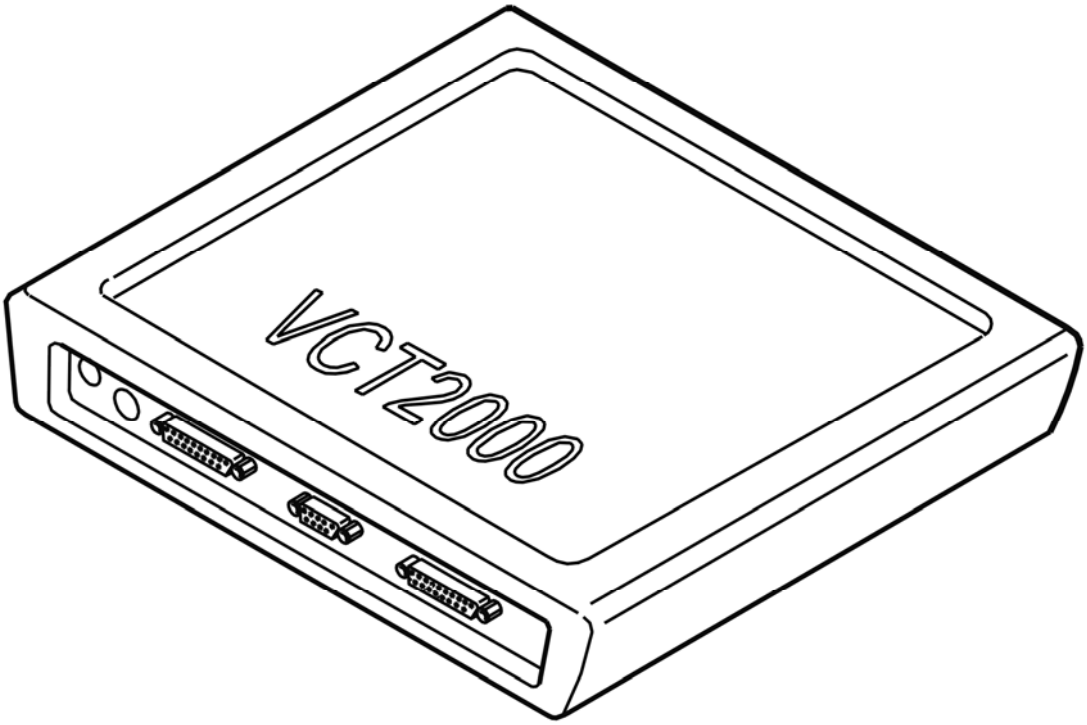

Fig. 27: Identifying VCT2000 Diagnostic Tool Symbol In VIDA
Courtesy of VOLVO CARS CORPORATION

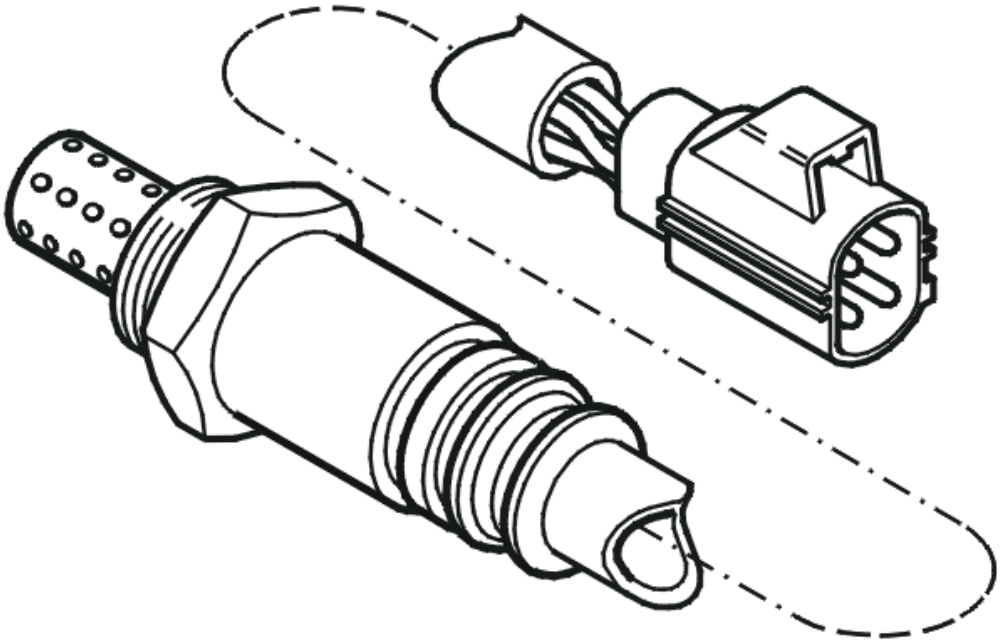

Fig. 28: Identifying Heated Oxygen Sensor
Courtesy of VOLVO CARS CORPORATION

- **Continue**

  Refer to **VERIFICATION**

VERIFICATION

VERIFICATION

HINT: After repairing, it is necessary to check that the malfunction has been fixed.

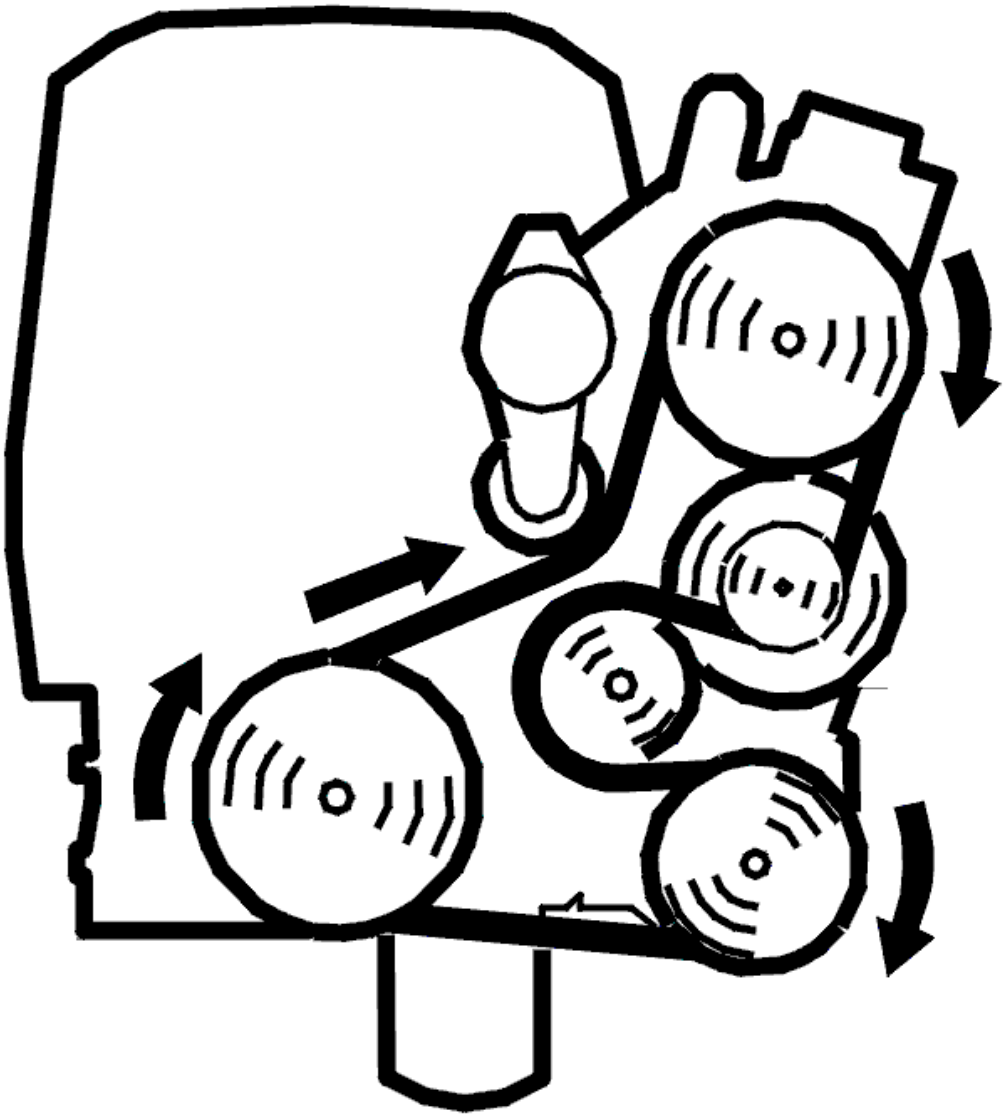

Fig. 29: Belt Routing / Engine Idling - Volvo
Courtesy of VOLVO CARS CORPORATION

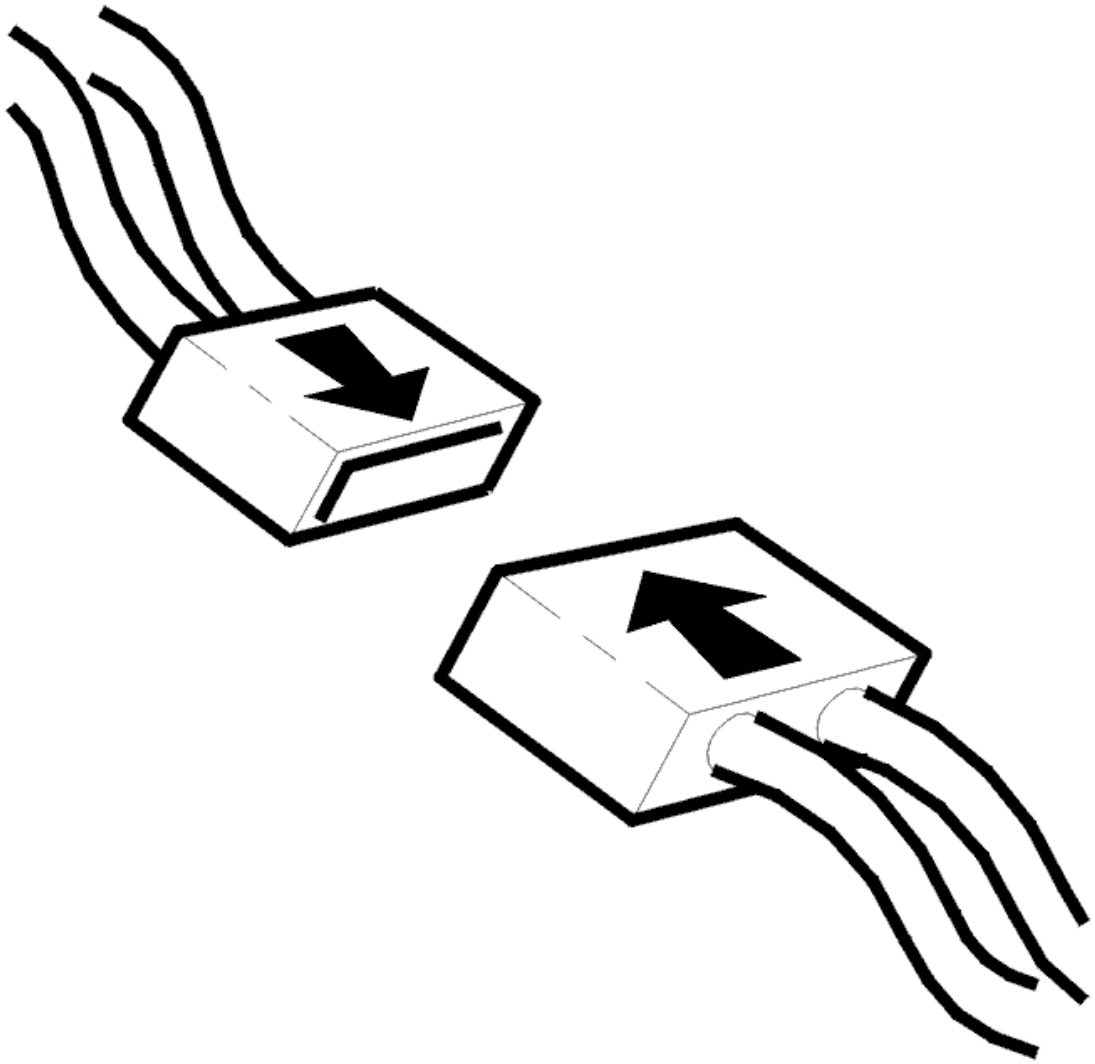

Fig. 30: Connecting Connector
Courtesy of VOLVO CARS CORPORATION

- Ignition off
- Reinstall the connectors, components etc.
- Start the engine to perform the diagnosis.

  Read off the diagnostic status and trouble status for the diagnostic trouble code.

  Check that the diagnosis is "Implemented" and that the trouble status is "No malfunction found". If the trouble status is "Malfunction found", this indicates defective function.

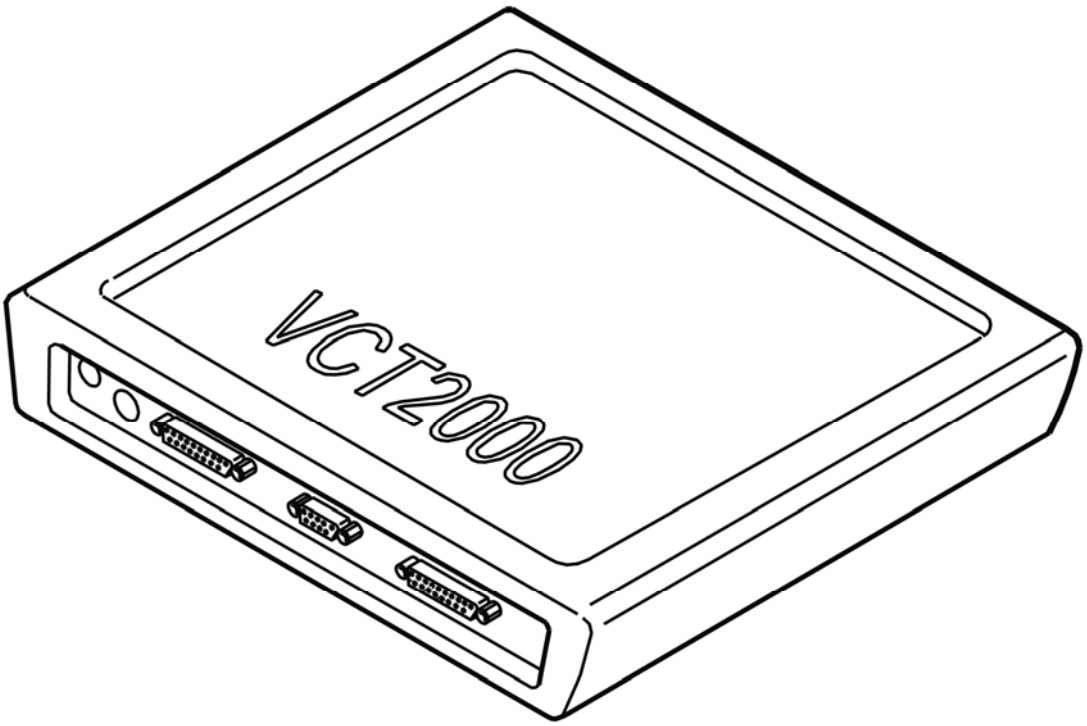

Fig. 31: Identifying VCT2000 Diagnostic Tool Symbol In VIDA
Courtesy of VOLVO CARS CORPORATION

Trouble status shows "No malfunction found"?

- **YES**

  VERIFIED: Troubleshooting has been completed.

- **NO**

  Refer to **INFORMATION**

INFORMATION

FAULT-TRACING INFORMATION

The fault should have been detected and remedied. As this is not the case fault-tracing has failed.

Exit fault-tracing for this diagnostic trouble code (DTC) or make another attempt.

ECM-P013A00 O2 SENSOR SLOW RESPONSE - RICH TO LEAN (BANK 1 AND SENSOR 2). GENERAL FAILURE INFORMATION. NO SUB TYPE

INFORMATION (B6324S5; 2011-2012)

DIAGNOSTIC TROUBLE CODE (DTC) INFORMATION

Condition

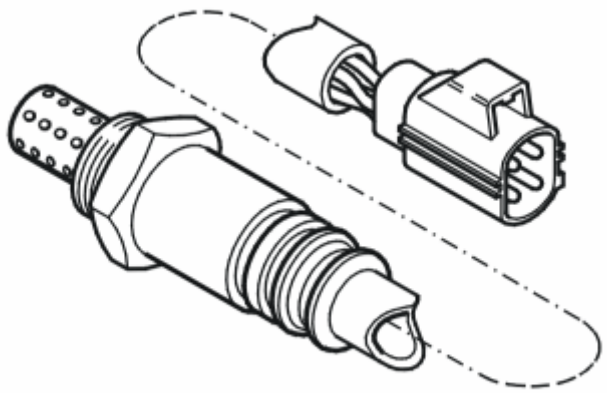

Fig. 32: Identifying Heated Oxygen Sensor
Courtesy of VOLVO CARS CORPORATION

The engine control module (ECM) checks the rear heated oxygen sensor (HO2S) signal (bank 1). The Engine control module (ECM) actively regulates between rich and lean fuel/air mixture and registers how well the rear heated oxygen sensor (HO2S) signal follows these changes.

The engine cylinders are counted from the cylinder furthest away from the flywheel.

- Bank 1 (cylinder row nearest the front): cylinders 1, 3, 5 and 7.
- Bank 2 (cylinder row furthest to the rear, nearest the passenger compartment): cylinders 2, 4, 6, and 8.

The diagnostic trouble code (DTC) is stored if the control module detects that:

- The heated oxygen sensor reacts too slowly at switch from rich to lean.

The control module's test for the diagnostic trouble code (DTC) starts in the event of:

- Special driving cases with fuel shut-offs.

Substitute Value

- None.

Possible Source

- Contact resistance or oxidation in the terminals.
- Damaged rear heated oxygen sensor (HO2S).

Fault symptom[s]

- Warning lights and chimes/Malfunction Indicator Light ("Check engine" light) indication/no indication

FAULT-TRACING

see **FAULT-TRACING**

ECM-P013A00 O2 SENSOR SLOW RESPONSE - RICH TO LEAN (BANK 1 AND SENSOR 2). GENERAL FAILURE INFORMATION. NO SUB TYPE INFORMATION (B8444S; 2010-2011)

DIAGNOSTIC TROUBLE CODE (DTC) INFORMATION

Condition

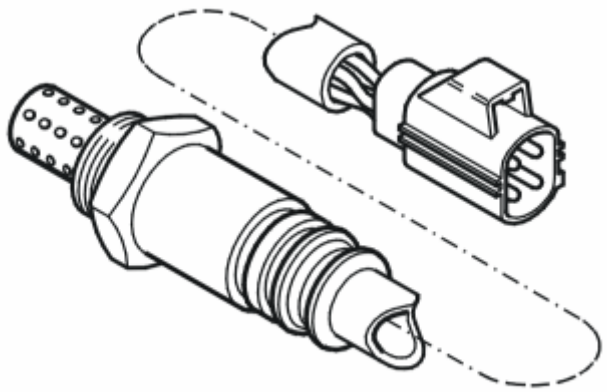

Fig. 33: Identifying Heated Oxygen Sensor
Courtesy of VOLVO CARS CORPORATION

The engine control module (ECM) checks the rear heated oxygen sensor (HO2S) signal (bank 1). The Engine control module (ECM) actively regulates between rich and lean fuel/air mixture and registers how well the rear heated oxygen sensor (HO2S) signal follows these changes.

The engine cylinders are counted from the cylinder furthest away from the flywheel.

- Bank 1 (cylinder row nearest the front): cylinders 1, 3, 5 and 7.
- Bank 2 (cylinder row furthest to the rear, nearest the passenger compartment): cylinders 2, 4, 6, and 8.

The diagnostic trouble code (DTC) is stored if the control module detects that:

- The heated oxygen sensor reacts too slowly at switch from rich to lean.

The control module's test for the diagnostic trouble code (DTC) starts in the event of:

- Special driving cases with fuel shut-offs.

Substitute Value

- None.

Possible Source

- Contact resistance or oxidation in the terminals.
- Damaged rear heated oxygen sensor (HO2S).

Fault symptom[s]

- Warning lights and chimes/Malfunction Indicator Light ("Check engine" light) indication/no indication

FAULT-TRACING

see **FAULT-TRACING**

ECM-P013C00 O2 SENSOR SLOW RESPONSE - RICH TO LEAN (BANK 2, SENSOR 2). GENERAL FAILURE INFORMATION. NO SUB TYPE INFORMATION (B8444S; 2010-2011)

DIAGNOSTIC TROUBLE CODE (DTC) INFORMATION

Condition

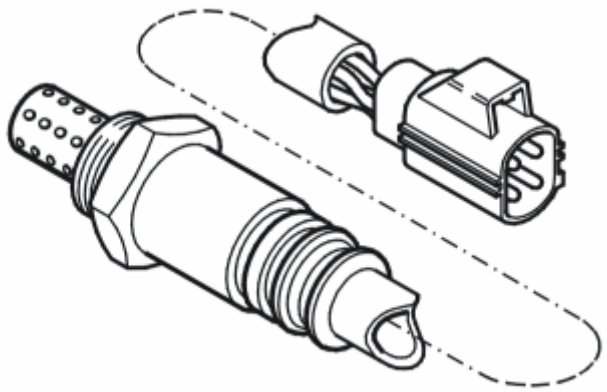

Fig. 34: Identifying Heated Oxygen Sensor
Courtesy of VOLVO CARS CORPORATION

The engine control module (ECM) checks the rear heated oxygen sensor (HO2S) signal (bank 2). The Engine control module (ECM) actively regulates between rich and lean fuel/air mixture and registers how well the rear heated oxygen sensor (HO2S) signal follows these changes.

The engine cylinders are counted from the cylinder furthest away from the flywheel.

- Bank 1 (cylinder row nearest the front): cylinders 1, 3, 5 and 7.
- Bank 2 (cylinder row furthest to the rear, nearest the passenger compartment): cylinders 2, 4, 6, and 8.

The diagnostic trouble code (DTC) is stored if the control module detects that:

- The heated oxygen sensor reacts too slowly at switch from rich to lean.

The control module's test for the diagnostic trouble code (DTC) starts in the event of:

- Special driving cases with fuel shut-offs.

Substitute Value

- None.

Possible Source

- Contact resistance or oxidation in the terminals.
- Damaged rear heated oxygen sensor (HO2S).

Fault symptom[s]

- Warning lights and chimes/Malfunction Indicator Light ("Check engine" light) indication/no indication

FAULT-TRACING

see **FAULT-TRACING**

ECM-P015100: O2 CIRCUIT LOW VOLTAGE (BANK 2, SENSOR 1). GENERAL FAILURE INFORMATION. NO SUB TYPE INFORMATION (B6324S; 2007-2010)

DIAGNOSTIC TROUBLE CODE (DTC) INFORMATION ECM-P015100

Condition

The Engine control module (ECM) measures the volume of oxygen in the exhaust gases before the three-way catalytic converter (TWC) using a front heated oxygen sensor (HO2S) (bank 2). The control module checks the direct voltage from the sensor.

The diagnostic trouble code (DTC) is stored if the control module detects that:

- The direct voltage is lower than 1.8 V.
- Incorrect value lasts longer than 5 seconds.
- Incorrect value lasts for 2 or more subsequent driving cycles.

The control module's test for the diagnostic trouble code (DTC) starts in the event of:

- Engine running for at least 2 minutes.

NOTE: The control module can only detect the fault once the test has been started and the diagnostic trouble code (DTC) is stored when the conditions are met.

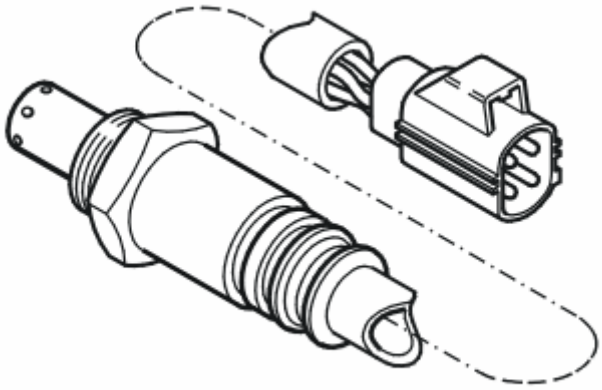

Fig. 35: Identifying Heated Oxygen Sensor
Courtesy of VOLVO CARS CORPORATION

Substitute Value

- None.

Possible Source

- Contact resistance and oxidation in the terminals.
- The signal cable is short-circuited to ground.
- Open-circuit in the signal cable.
- Damaged front heated oxygen sensor (bank 2).

Fault symptom[s]

- Malfunction indicator light (MIL), on
- Poor performance

FAULT-TRACING

see **FAULT-TRACING**

ECM-P015100: O2 CIRCUIT LOW VOLTAGE (BANK 2, SENSOR 1). GENERAL FAILURE INFORMATION. NO SUB TYPE INFORMATION (B6324S5; 2011-2012)

DIAGNOSTIC TROUBLE CODE (DTC) INFORMATION ECM-P015100

see **DIAGNOSTIC TROUBLE CODE (DTC) INFORMATION ECM-P015100**

FAULT-TRACING

see **FAULT-TRACING**

ECM-P015100: O2 CIRCUIT LOW VOLTAGE (BANK 2, SENSOR 1). GENERAL FAILURE INFORMATION. NO SUB TYPE INFORMATION (B8444S; 2005-2011)

DIAGNOSTIC TROUBLE CODE (DTC) INFORMATION ECM-P015100

Condition

The Engine control module (ECM) measures the volume of oxygen in the exhaust gases before the three-way catalytic converter (TWC) using a front heated oxygen sensor (HO2S) (bank 2). The control module checks the direct voltage from the sensor.

NOTE: **Engine cylinders are counted starting from the right side of the vehicle, that is, the cylinder farthest from the engine's flywheel. Bank 1 (cylinder row nearest the front): cylinders 1, 3, 5 and 7. Bank 2 (cylinder row furthest to the rear, nearest the passenger compartment): cylinders 2, 4, 6, and 8.**

The diagnostic trouble code (DTC) is stored if the control module detects that:

- The direct voltage is lower than 1.8 V.
- Incorrect value lasts longer than 5 seconds.
- Incorrect value lasts for 2 or more subsequent driving cycles.

The control module's test for the diagnostic trouble code (DTC) starts in the event of:

- Engine running for at least 2 minutes.

NOTE: **The control module can only detect the fault once the test has been started and the diagnostic trouble code (DTC) is stored when the conditions are met.**

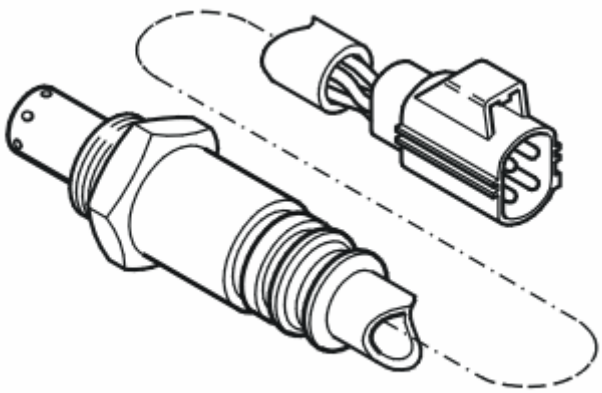

Fig. 36: Identifying Heated Oxygen Sensor
Courtesy of VOLVO CARS CORPORATION

Substitute Value

- None.

Possible Source

- Contact resistance and oxidation in the terminals.
- The signal cable is short-circuited to ground.
- Open-circuit in the signal cable.
- Damaged front heated oxygen sensor (bank 2).

Fault symptom[s]

- Malfunction indicator light (MIL), on
- Poor performance

FAULT-TRACING

see **FAULT-TRACING**

ECM-P015200: O2 CIRCUIT HIGH VOLTAGE (BANK 2, SENSOR 1). GENERAL FAILURE INFORMATION. NO SUB TYPE INFORMATION (B6324S; 2007-2010)

DIAGNOSTIC TROUBLE CODE (DTC) INFORMATION ECM-P015200

Condition

The Engine control module (ECM) measures the volume of oxygen in the exhaust gases before the three-way catalytic converter (TWC) using a front heated oxygen sensor (HO2S) (bank 2). The control module checks the direct voltage from the sensor.

The diagnostic trouble code (DTC) is stored if the control module detects that:

- The direct voltage is higher than 3.8 V.
- Incorrect value lasts longer than 5 seconds.
- Incorrect value lasts for 2 or more subsequent driving cycles.

The control module's test for the diagnostic trouble code (DTC) starts in the event of:

- Engine running for at least 2 minutes.

NOTE: **The control module can only detect the fault once the test has been started and the diagnostic trouble code (DTC) is stored when the conditions are met.**

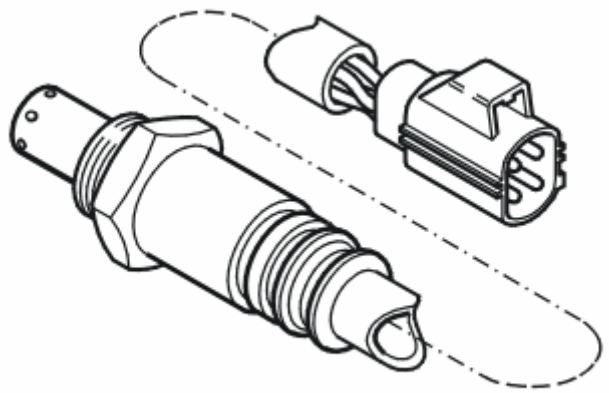

Fig. 37: Identifying Heated Oxygen Sensor
Courtesy of VOLVO CARS CORPORATION

Substitute Value

- None.

Possible Source

- Contact resistance and oxidation in the terminals.
- Short-circuit to supply voltage in the signal cable.
- Damaged front heated oxygen sensor (bank 2).

Fault symptom[s]

- Malfunction indicator light (MIL), on
- Poor performance

FAULT-TRACING

see **FAULT-TRACING**

ECM-P015200: O2 CIRCUIT HIGH VOLTAGE (BANK 2, SENSOR 1). GENERAL FAILURE INFORMATION. NO SUB TYPE INFORMATION (B6324S5; 2011-2012)

DIAGNOSTIC TROUBLE CODE (DTC) INFORMATION ECM-P015200

see **DIAGNOSTIC TROUBLE CODE (DTC) INFORMATION ECM-P015200**

FAULT-TRACING

see **FAULT-TRACING**

ECM-P015200: O2 CIRCUIT HIGH VOLTAGE (BANK 2, SENSOR 1). GENERAL FAILURE INFORMATION. NO SUB TYPE INFORMATION (B8444S; 2005-2011)

DIAGNOSTIC TROUBLE CODE (DTC) INFORMATION ECM-P015200

Condition

The Engine control module (ECM) measures the volume of oxygen in the exhaust gases before the three-way catalytic converter (TWC) using a front heated oxygen sensor (HO2S) (bank 2). The control module checks the direct voltage from the sensor.

NOTE: **Engine cylinders are counted starting from the right side of the vehicle, that is, the cylinder farthest from the engine's flywheel. Bank 1 (cylinder row nearest the front): cylinders 1, 3, 5 and 7. Bank 2 (cylinder row furthest to the rear, nearest the passenger compartment): cylinders 2, 4, 6, and 8.**

The diagnostic trouble code (DTC) is stored if the control module detects that:

- The direct voltage is higher than 3.8 V.
- Incorrect value lasts longer than 5 seconds.
- Incorrect value lasts for 2 or more subsequent driving cycles.

The control module's test for the diagnostic trouble code (DTC) starts in the event of:

- Engine running for at least 2 minutes.

NOTE: **The control module can only detect the fault once the test has been started and the diagnostic trouble code (DTC) is stored when the conditions are met.**

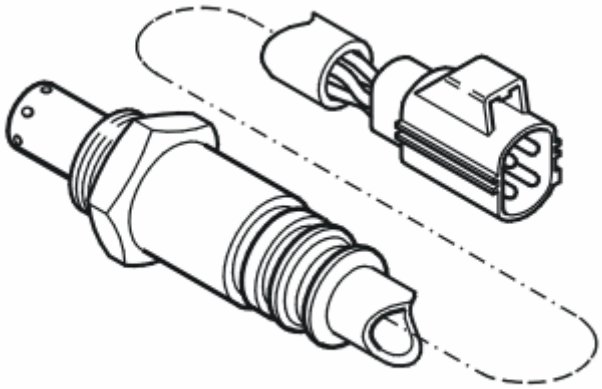

Fig. 38: Identifying Heated Oxygen Sensor
Courtesy of VOLVO CARS CORPORATION

Substitute Value

- None.

Possible Source

- Contact resistance and oxidation in the terminals.
- Short-circuit to supply voltage in the signal cable.
- Damaged front heated oxygen sensor (bank 2).

Fault symptom[s]

- Malfunction indicator light (MIL), on
- Poor performance

FAULT-TRACING

see **FAULT-TRACING**

ECM-P015300: O2 CIRCUIT SLOW RESPONSE (BANK 2, SENSOR 1). GENERAL FAILURE INFORMATION. NO SUB TYPE INFORMATION (B6324S; 2007-2010)

DIAGNOSTIC TROUBLE CODE (DTC) INFORMATION ECM-P015300

Condition

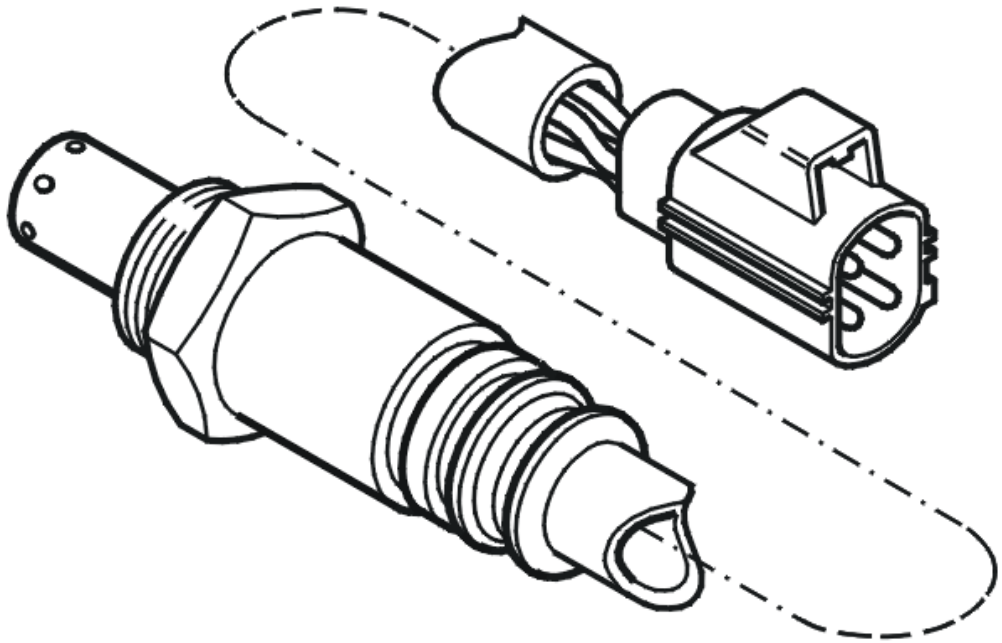

Fig. 39: Identifying Heated Oxygen Sensor
Courtesy of VOLVO CARS CORPORATION

Engine Control Module (ECM) checks the front heated oxygen sensor's signal (bank 2).

The engine cylinders are counted from the cylinder furthest away from the flywheel.

The diagnostic trouble code (DTC) is stored if the engine control module (ECM) registers that the heated oxygen sensor (HO2S) is not activated or is activated too slowly.

The diagnostic trouble code (DTC) can be diagnosed when the engine is running.

Substitute Value

- Nothing.

Possible Source

- Contact resistance in the terminals
- Damaged front heated oxygen sensor (HO2S).

Fault symptom[s]

- Poor performance.
- Malfunction indicator lamp (MIL) lit.

FAULT TRACING

CHECKING THE STATUS

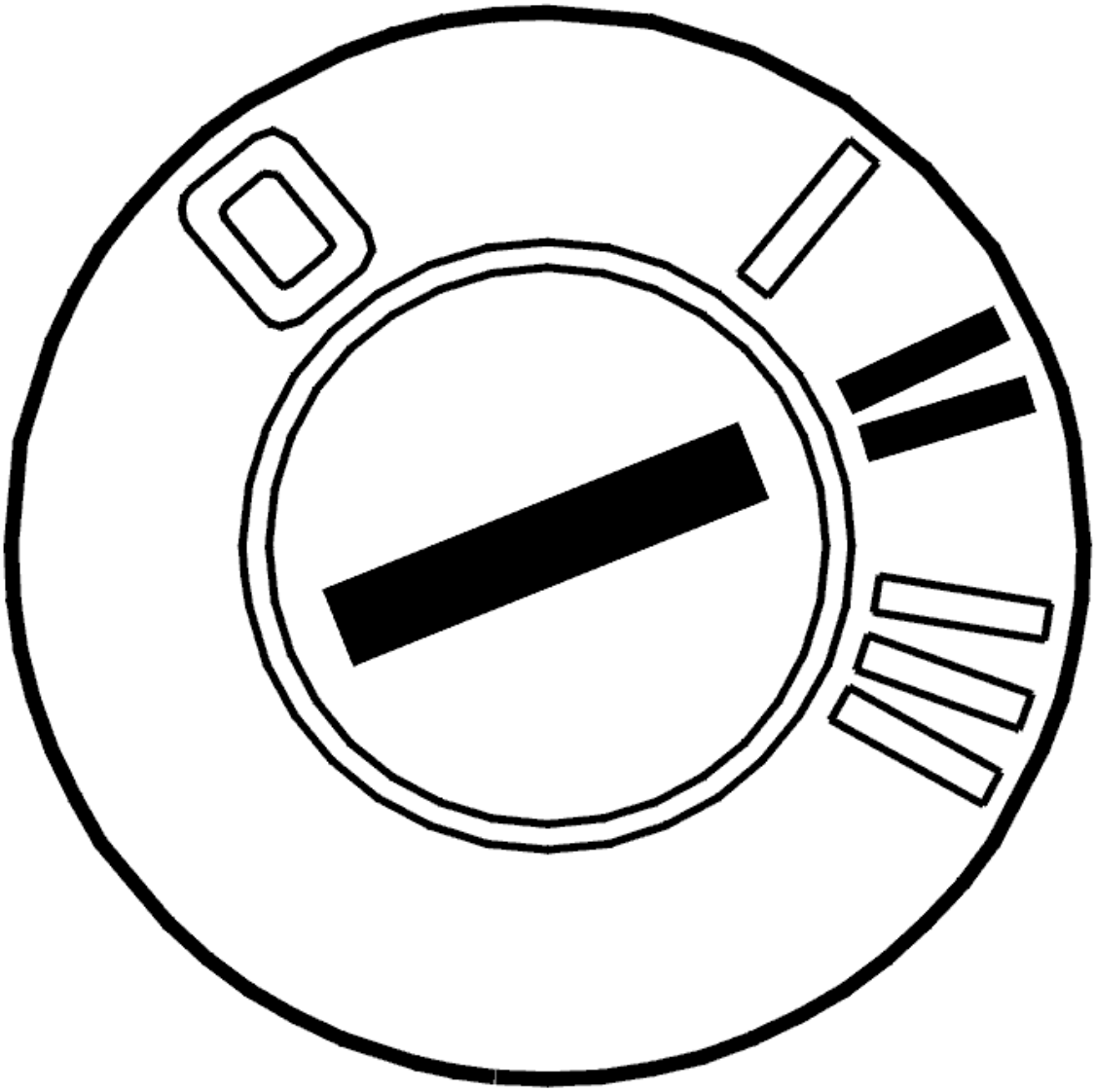

Fig. 40: Identifying Ignition ON
Courtesy of VOLVO CARS CORPORATION

- Start the engine to perform the diagnostic.

  Check whether the fault is permanent or intermittent. Read off the diagnostic trouble code (DTC) fault status when the diagnostic status is "Completed".

The fault is permanent if the fault status is "Fault found". The fault is intermittent if the fault status is "No fault found".

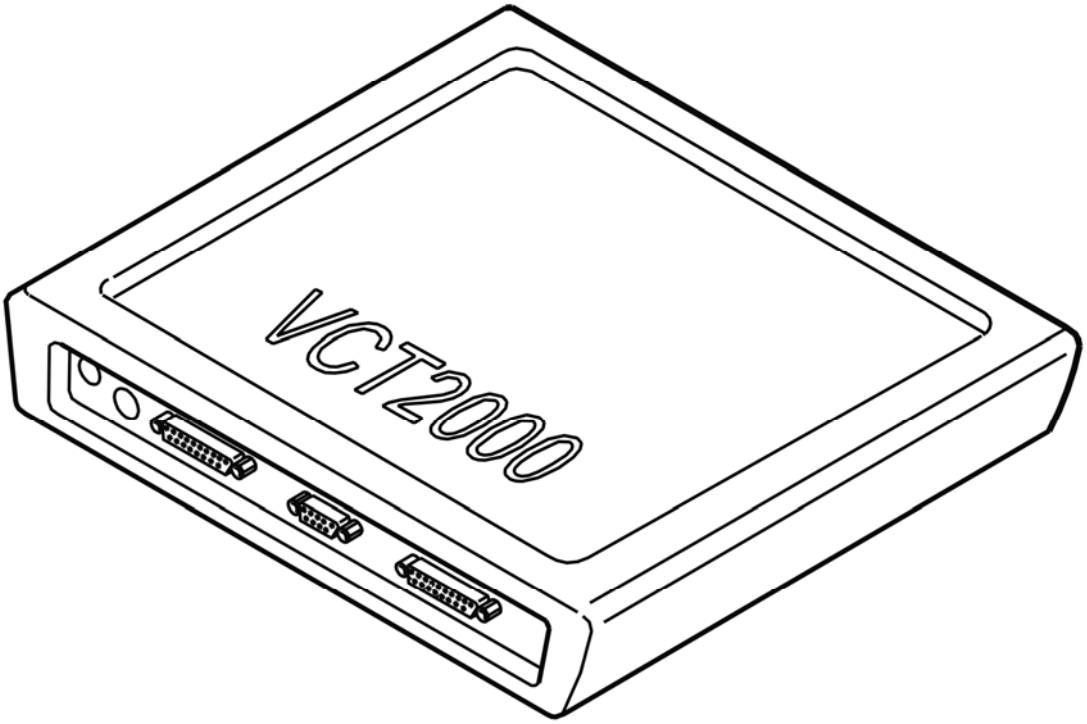

Fig. 41: Identifying VCT2000 Diagnostic Tool Symbol In VIDA
Courtesy of VOLVO CARS CORPORATION

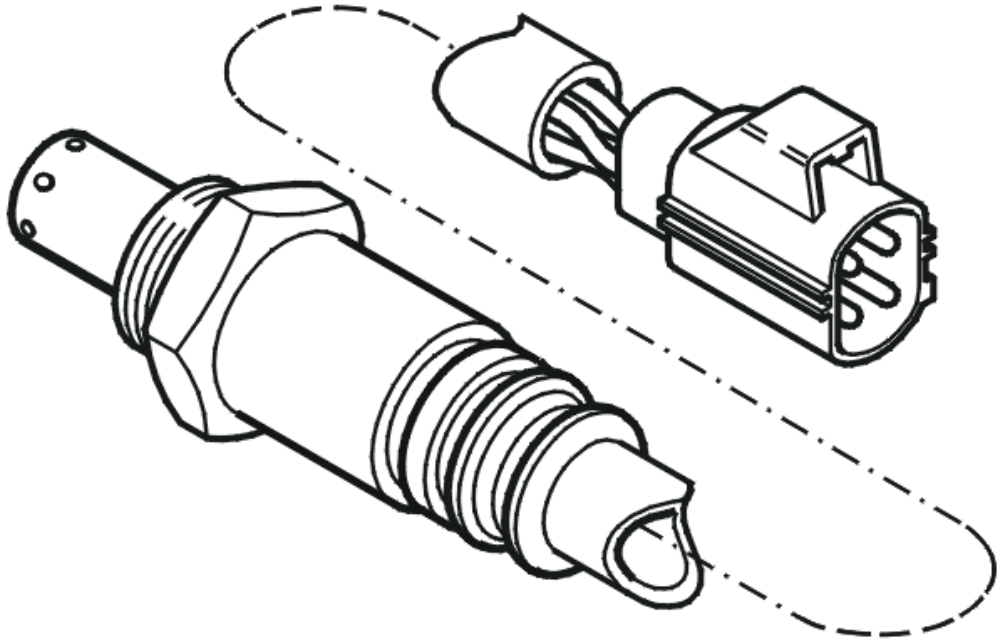

Fig. 42: Identifying Heated Oxygen Sensor
Courtesy of VOLVO CARS CORPORATION

- **Continue**

  Refer to **CHECKING COMPONENTS**

CHECKING COMPONENTS

CAUTION: Do not apply rust solvent spray or grease to the heated oxygen sensor (HO2S) connector.

Check the front heated oxygen sensor (HO2S) connector (bank 2). Check for contact resistance and oxidation.

Try a new rear heated oxygen sensor if the above measure does not remedy the fault.

Remedy as necessary.

Other information

- see **CONNECTING THE BREAKOUT BOX**
- see **SIGNAL SPECIFICATION**

- see **OXYGEN SENSOR (CATALYST MONITOR SENSOR)**
- see **CHECKING WIRING AND TERMINALS**

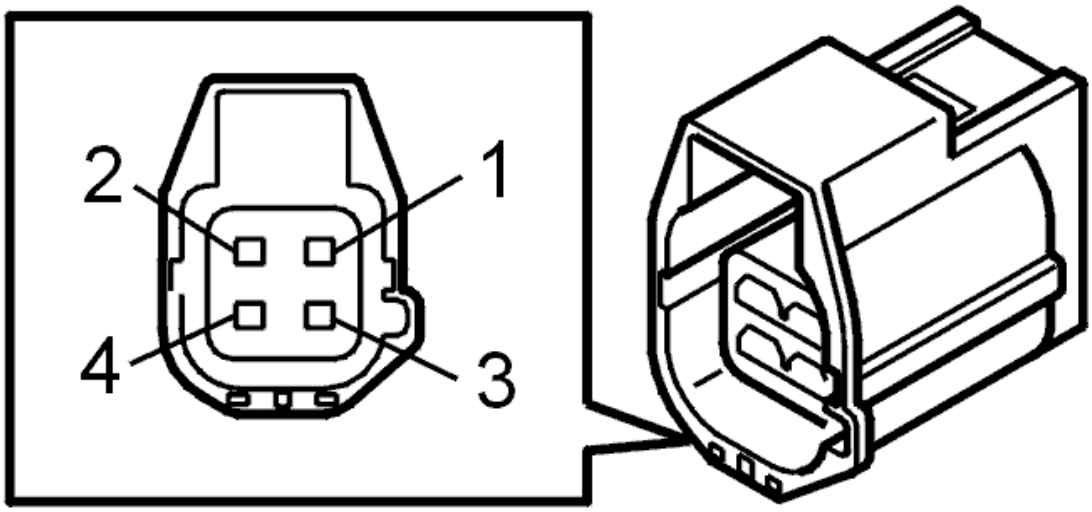

Fig. 43: Identifying 4-Bit Connector
Courtesy of VOLVO CARS CORPORATION

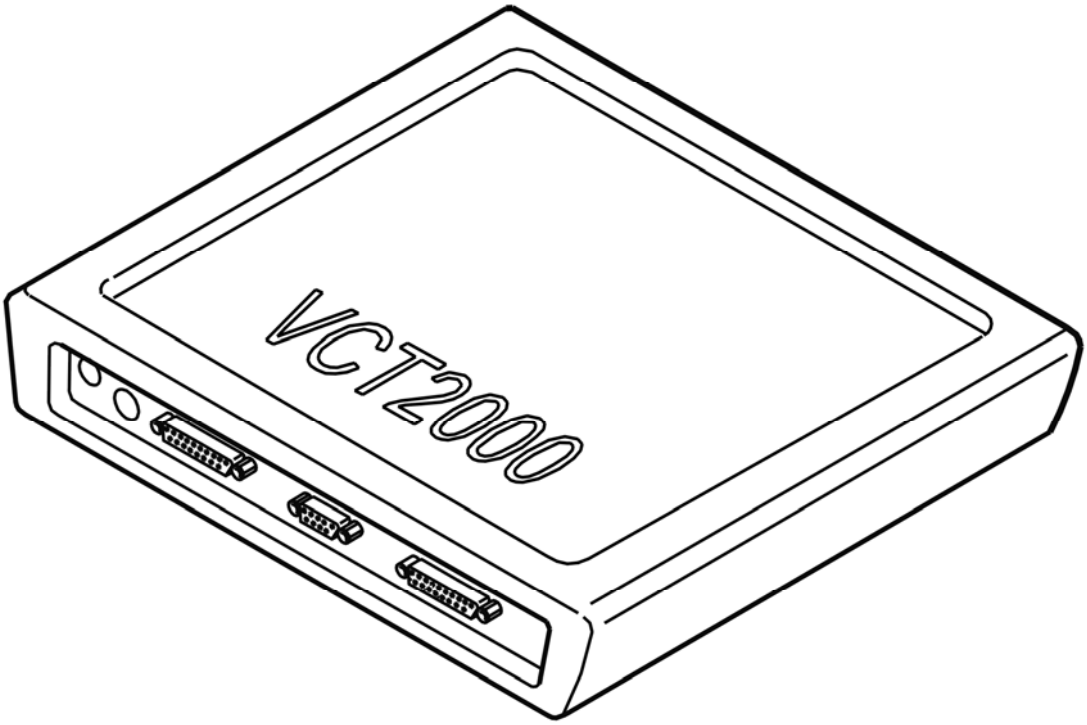

Fig. 44: Identifying VCT2000 Diagnostic Tool Symbol In VIDA
Courtesy of VOLVO CARS CORPORATION

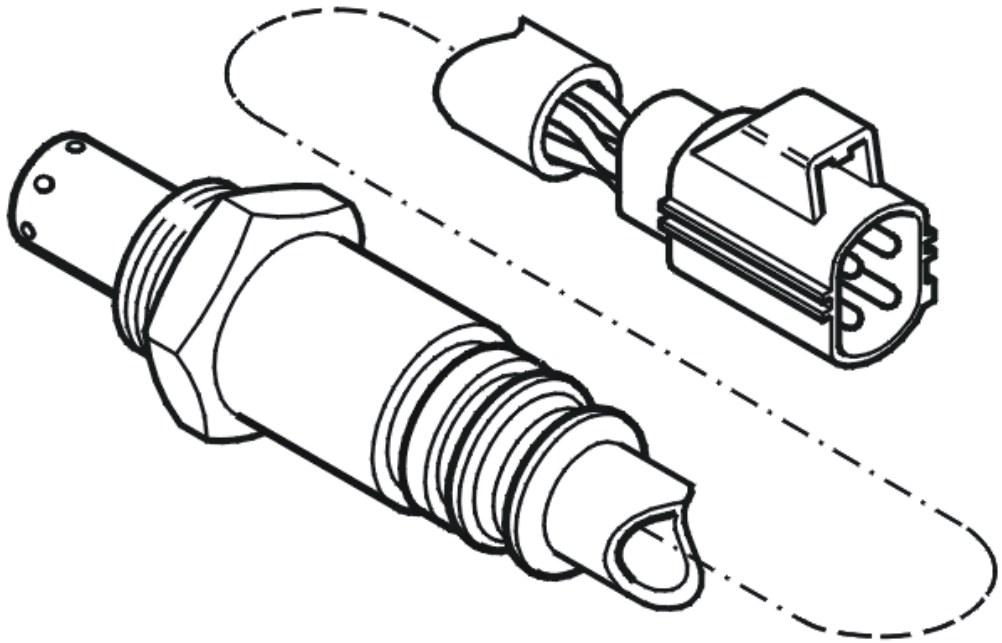

Fig. 45: Identifying Heated Oxygen Sensor
Courtesy of VOLVO CARS CORPORATION

- **Continue**

  Refer to **VERIFICATION**

INFORMATION

FAULT-TRACING INFORMATION

The fault should have been detected and remedied. As this is not the case fault-tracing has failed.

Exit fault-tracing for this diagnostic trouble code (DTC) or make another attempt.

VERIFICATION

VERIFICATION

HINT: After repairing, it is necessary to check that the malfunction has been fixed.

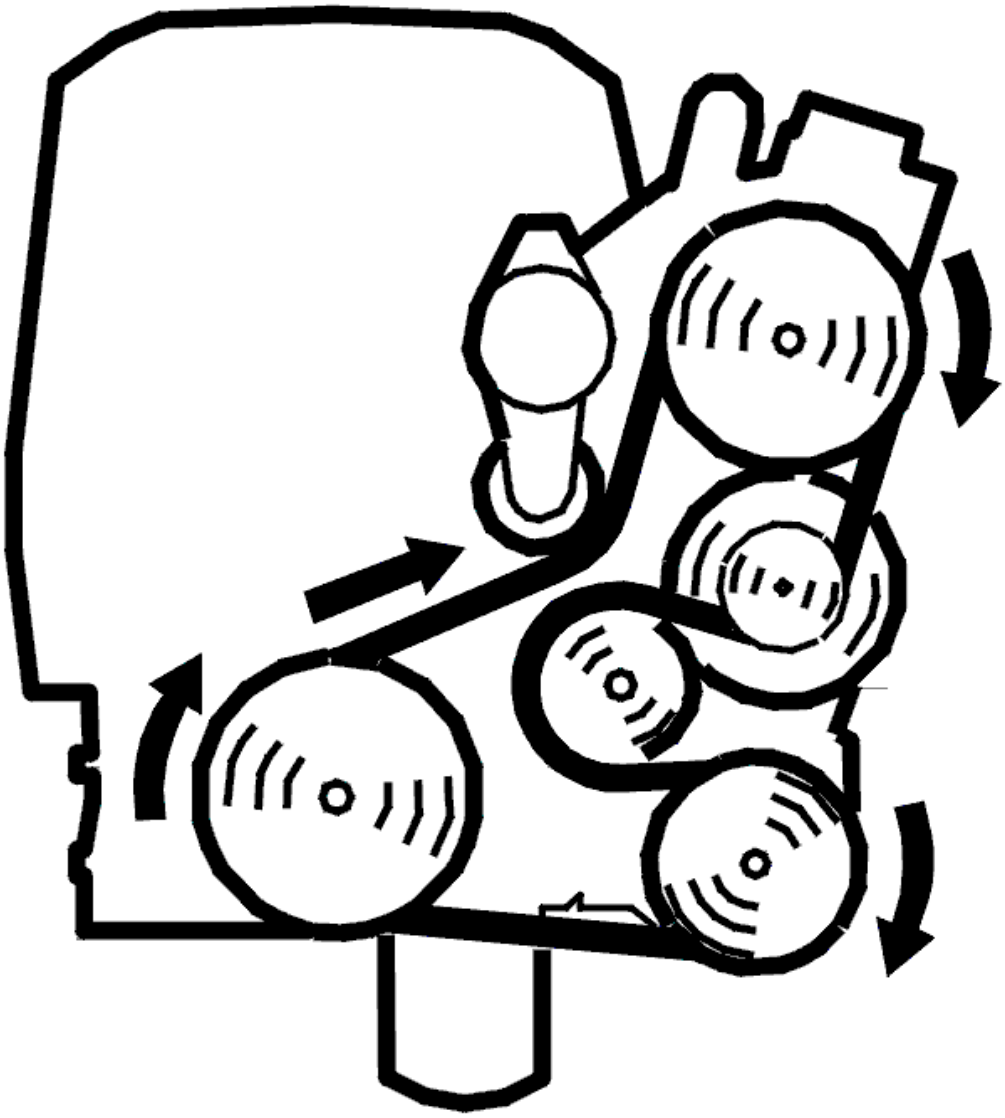

Fig. 46: Belt Routing / Engine Idling - Volvo
Courtesy of VOLVO CARS CORPORATION

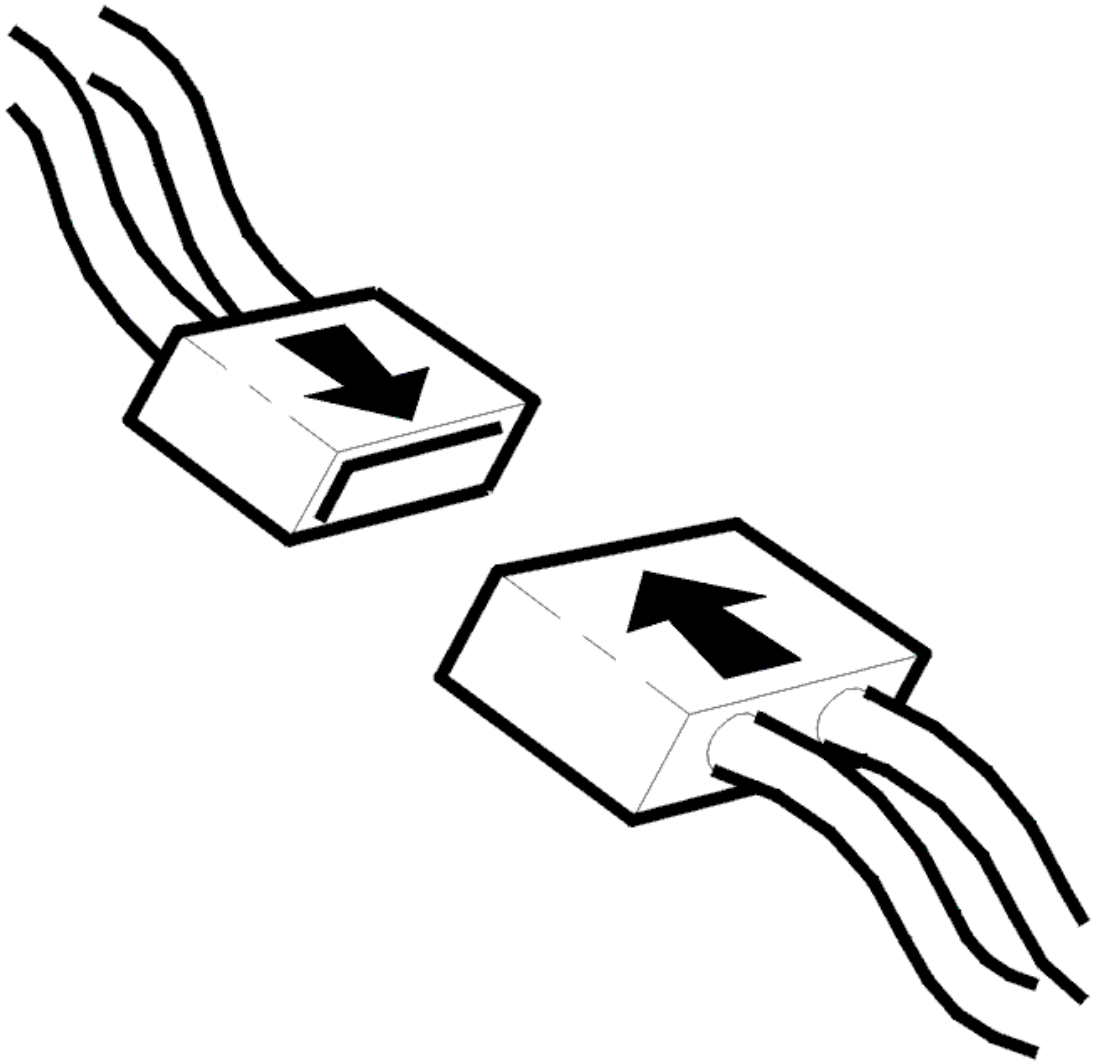

Fig. 47: Connecting Connector
Courtesy of VOLVO CARS CORPORATION

- Ignition off
- Reinstall the connectors, components etc.
- Start the engine to perform the diagnosis.

  Read off the diagnostic status and trouble status for the diagnostic trouble code.

  Check that the diagnosis is "Implemented" and that the trouble status is "No malfunction found". If the trouble status is "Malfunction found", this indicates defective function.

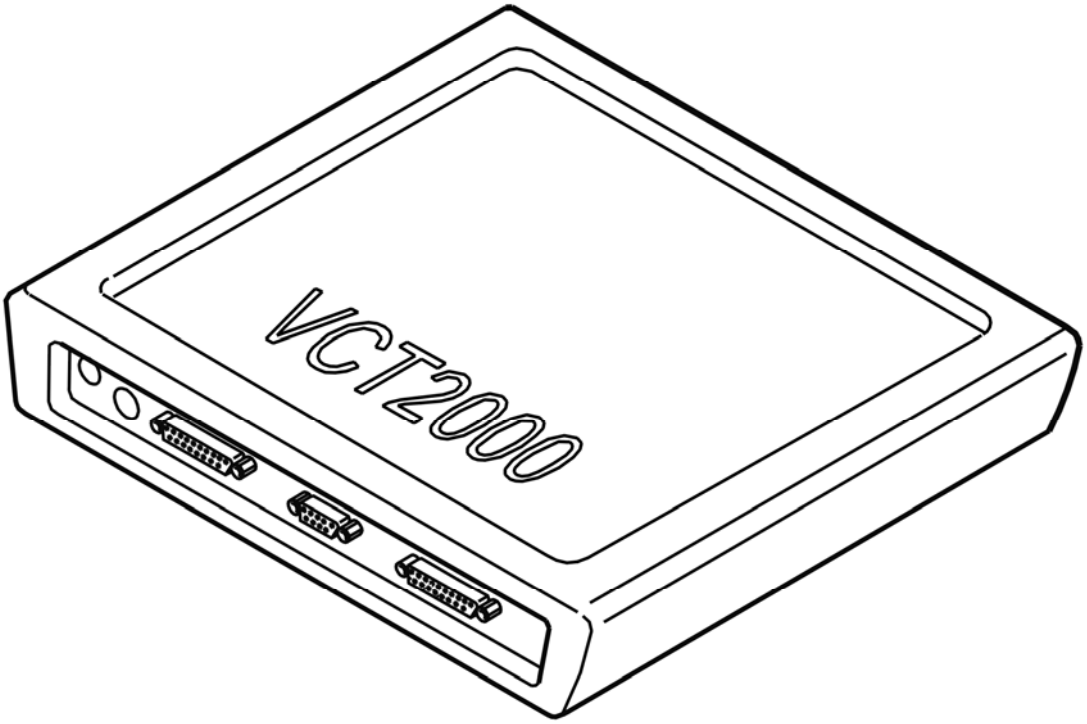

Fig. 48: Identifying VCT2000 Diagnostic Tool Symbol In VIDA
Courtesy of VOLVO CARS CORPORATION

Trouble status shows "No malfunction found"?

- **YES**

  VERIFIED: Troubleshooting has been completed.

- **NO**

  Refer to **INFORMATION**

ECM-P015300: O2 CIRCUIT SLOW RESPONSE (BANK 2, SENSOR 1). GENERAL FAILURE INFORMATION. NO SUB TYPE INFORMATION (B6324S5; 2011-2012)

DIAGNOSTIC TROUBLE CODE (DTC) INFORMATION ECM-P015300

see **DIAGNOSTIC TROUBLE CODE (DTC) INFORMATION ECM-P015300**

FAULT TRACING

see **FAULT TRACING**

ECM-P015300: HEATED OXYGEN SENSOR (HO2S) SLOW RESPONSE (BANK 2, SENSOR 1). GENERAL FAULT INFORMATION. NO INFORMATION ABOUT FAULT TYPE (B8444S; 2005-2011)

DIAGNOSTIC TROUBLE CODE (DTC) INFORMATION ECM-P015300

Condition

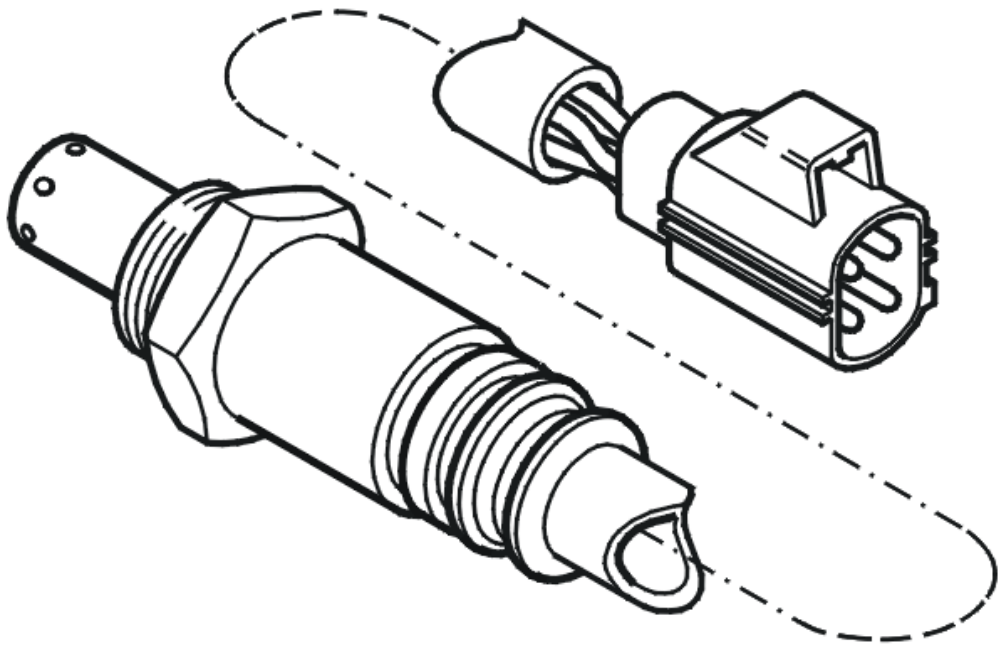

Fig. 49: Identifying Heated Oxygen Sensor
Courtesy of VOLVO CARS CORPORATION

Engine Control Module (ECM) checks the front heated oxygen sensor's signal (bank 2).

The engine cylinders are counted from the cylinder furthest away from the flywheel.

- Bank 1 (cylinder row nearest the front): cylinders 1, 3, 5 and 7.
- Bank 2 (cylinder row furthest to the rear, nearest the passenger compartment): cylinders 2, 4, 6, and 8.

The diagnostic trouble code (DTC) is stored if the engine control module (ECM) registers that the heated oxygen sensor (HO2S) is not activated or is activated too slowly.

The diagnostic trouble code (DTC) can be diagnosed when the engine is running.

Substitute Value

- Nothing.

Possible Source

- Contact resistance in the terminals
- Damaged front heated oxygen sensor (HO2S).

Fault symptom[s]

- Poor performance.
- Malfunction indicator lamp (MIL) lit.

FAULT TRACING

CHECKING THE STATUS

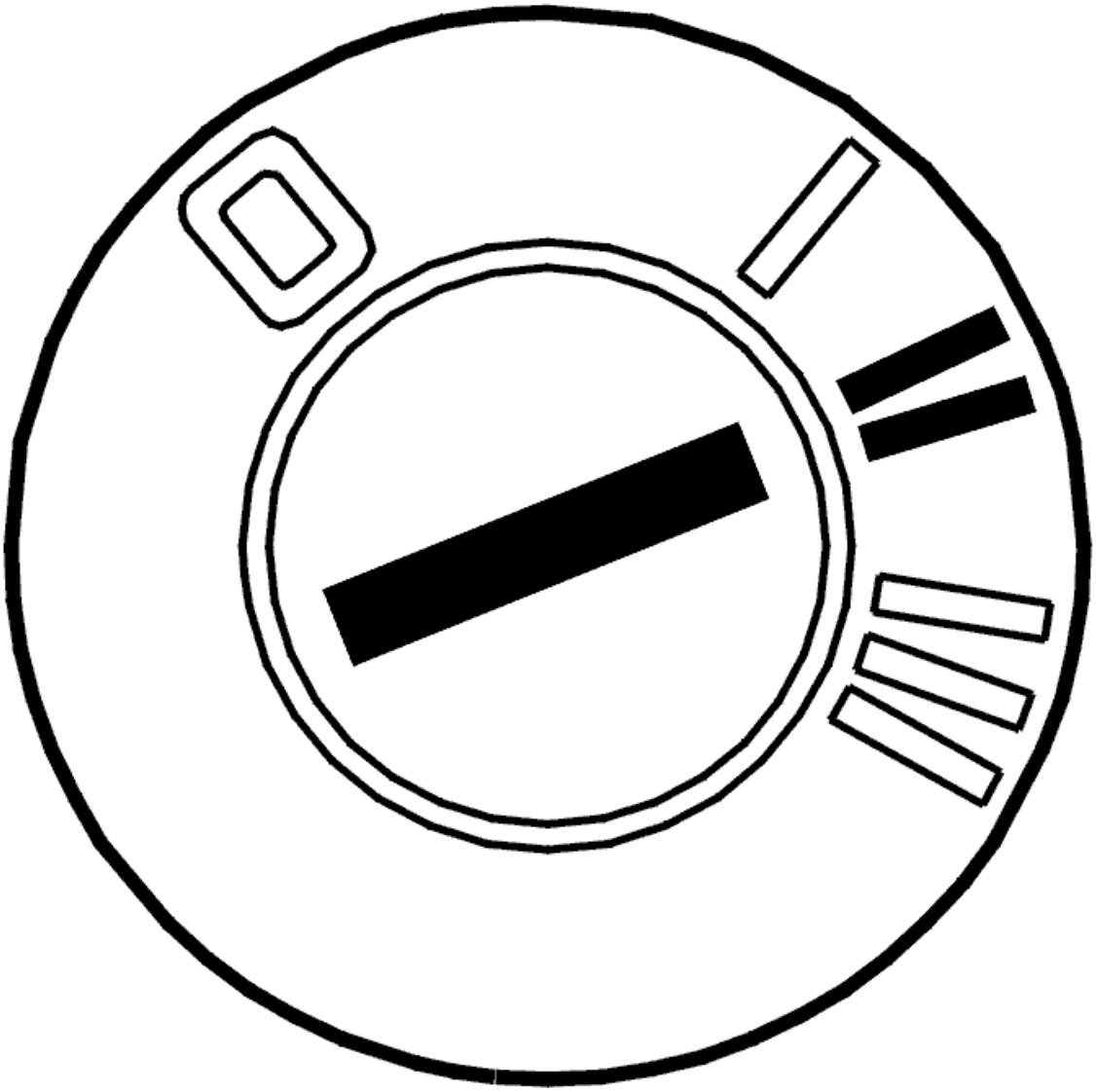

Fig. 50: Identifying Ignition ON
Courtesy of VOLVO CARS CORPORATION

- Start the engine to perform the diagnostic.

  Check whether the fault is permanent or intermittent. Read off the diagnostic trouble code (DTC) fault status when the diagnostic status is "Completed".

  The fault is permanent if the fault status is "Fault found". The fault is intermittent if the fault status is "No fault found".

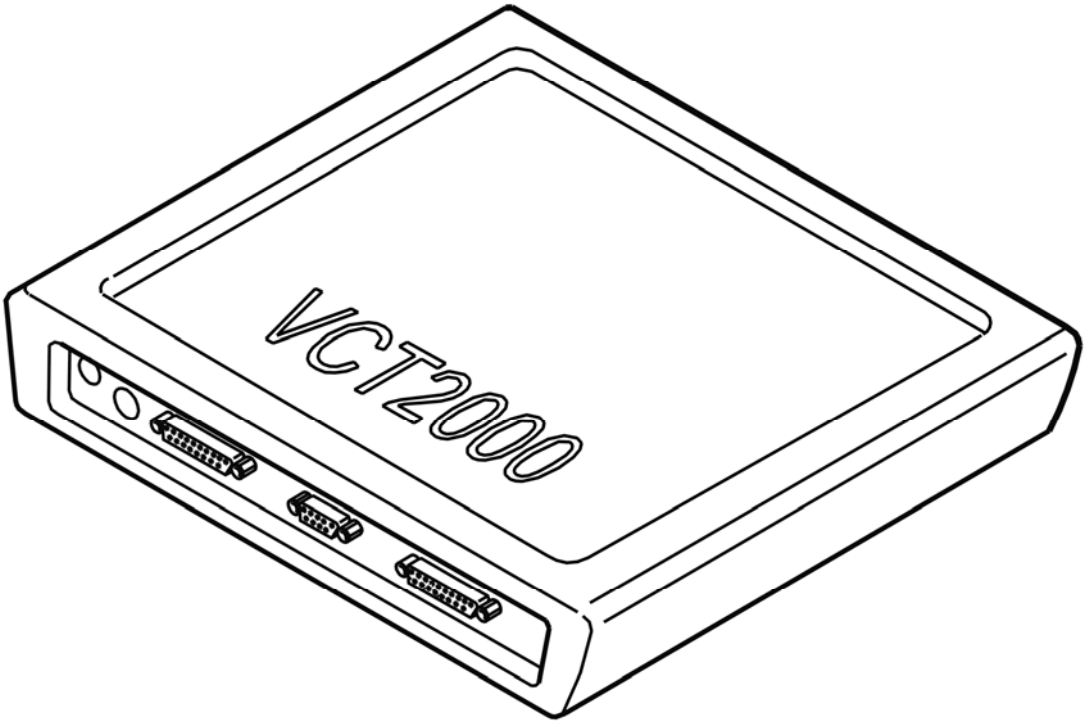

Fig. 51: Identifying VCT2000 Diagnostic Tool Symbol In VIDA
Courtesy of VOLVO CARS CORPORATION

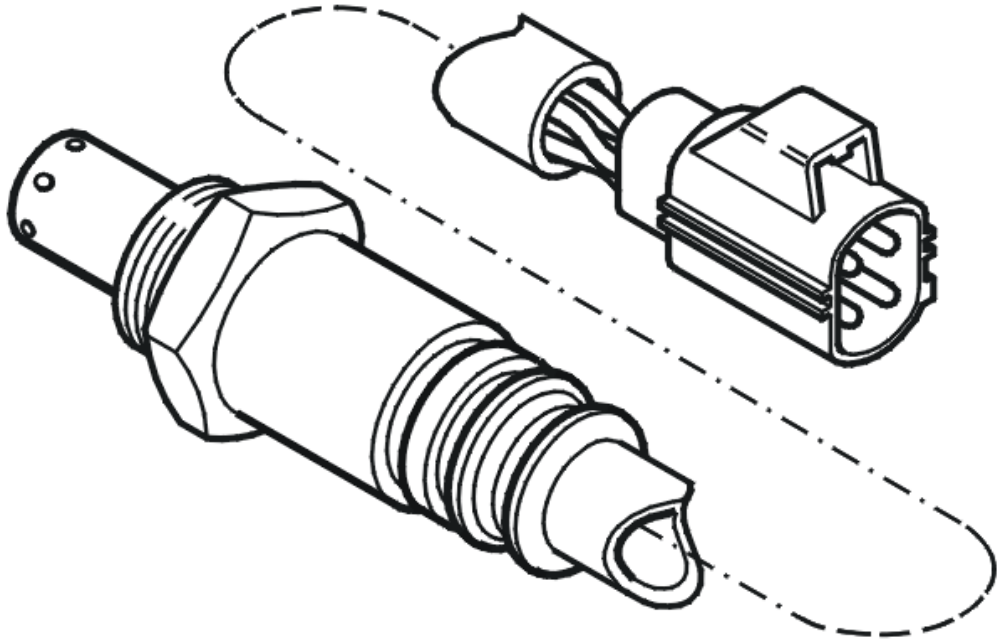

Fig. 52: Identifying Heated Oxygen Sensor
Courtesy of VOLVO CARS CORPORATION

- **Continue**

  Refer to **CHECKING COMPONENTS**

CHECKING COMPONENTS

CAUTION: Do not apply rust solvent spray or grease to the heated oxygen sensor (HO2S) connector.

Check the front heated oxygen sensor (HO2S) connector (bank 2). Check for contact resistance and oxidation.

Try a new heated oxygen sensor (HO2S) if the above fault-tracing does not remedy the fault.

Remedy as necessary.

Other information

- see **CONNECTING THE BREAKOUT BOX**
- see **SIGNAL SPECIFICATION, ENGINE CONTROL MODULE (ECM)**

- see **HEATED OXYGEN SENSOR (HO2S), REPLACING**
- see **CHECKING WIRING AND TERMINALS**

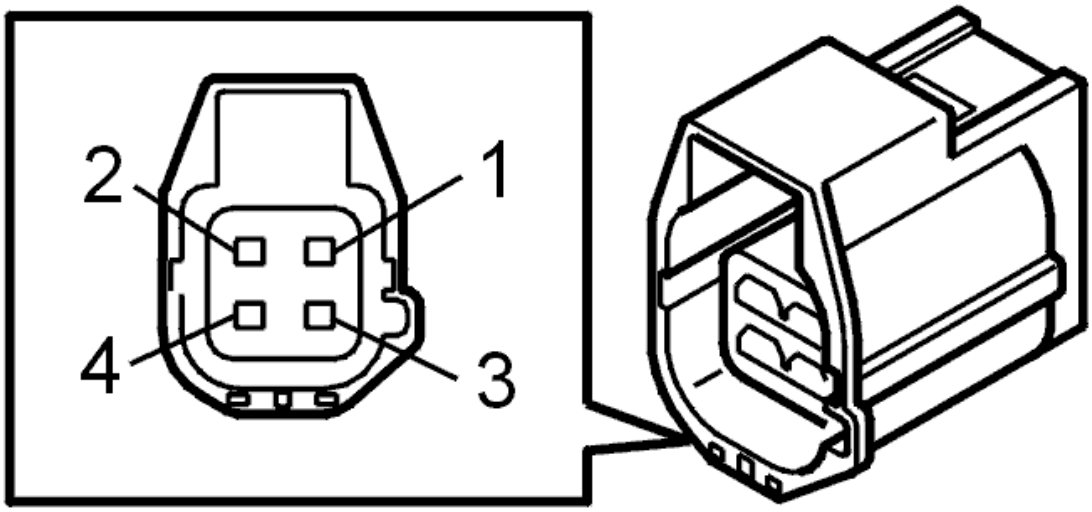

Fig. 53: Identifying 4-Bit Connector
Courtesy of VOLVO CARS CORPORATION

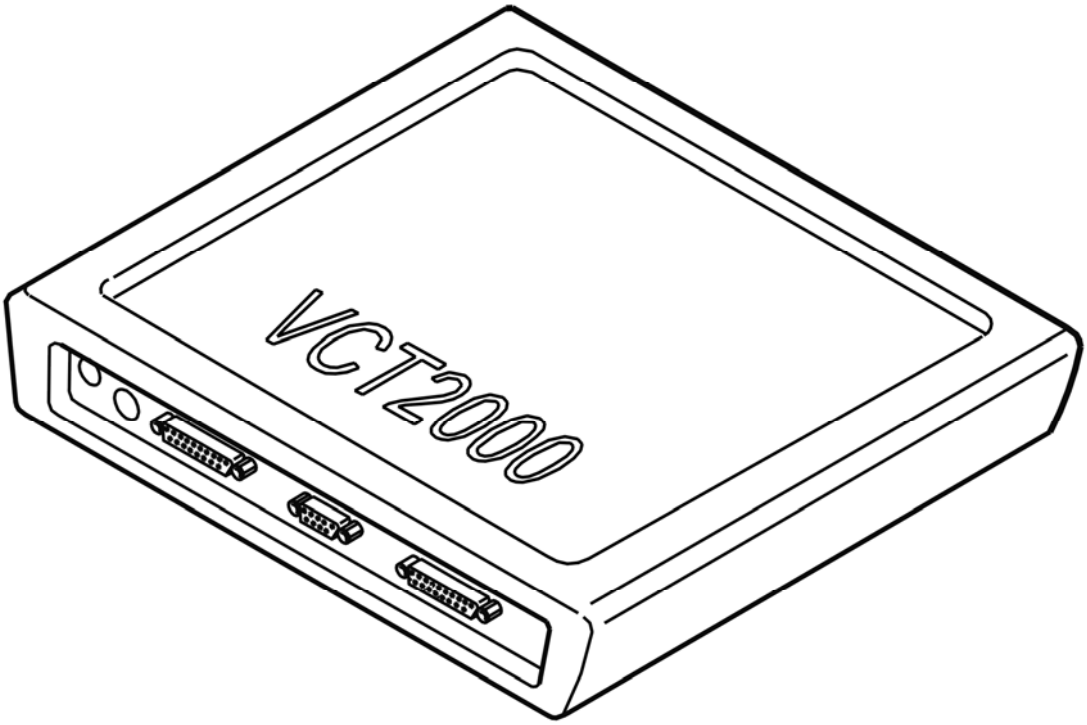

Fig. 54: Identifying VCT2000 Diagnostic Tool Symbol In VIDA
Courtesy of VOLVO CARS CORPORATION

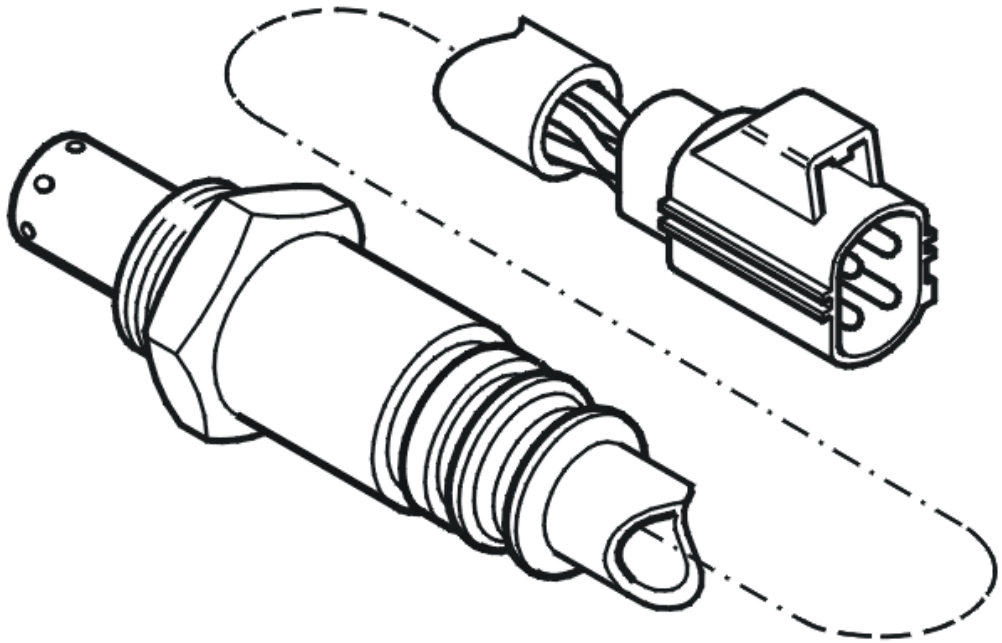

Fig. 55: Identifying Heated Oxygen Sensor
Courtesy of VOLVO CARS CORPORATION

- **Continue**

  Refer to **VERIFICATION**

VERIFICATION

VERIFICATION

HINT: After repairing, it is necessary to check that the malfunction has been fixed.

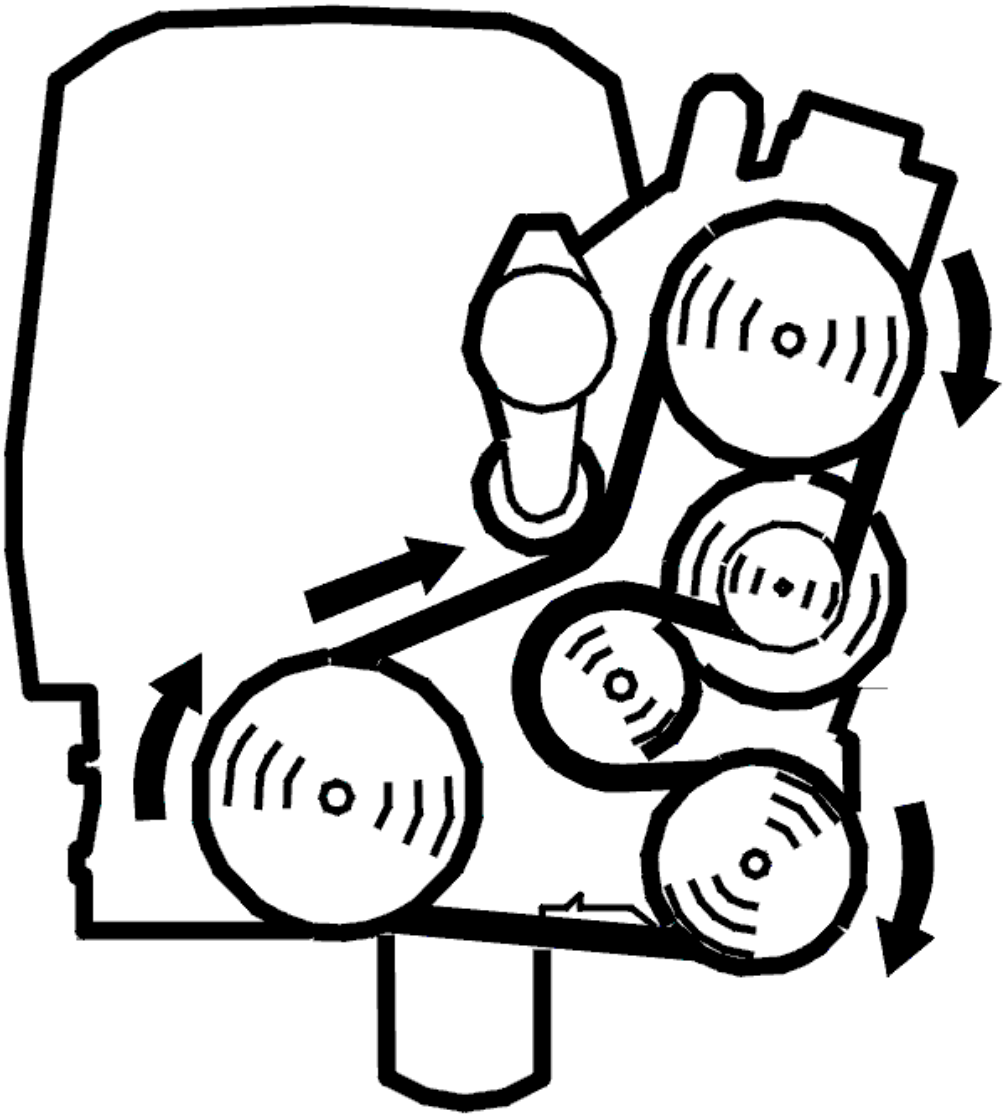

Fig. 56: Belt Routing / Engine Idling - Volvo
Courtesy of VOLVO CARS CORPORATION

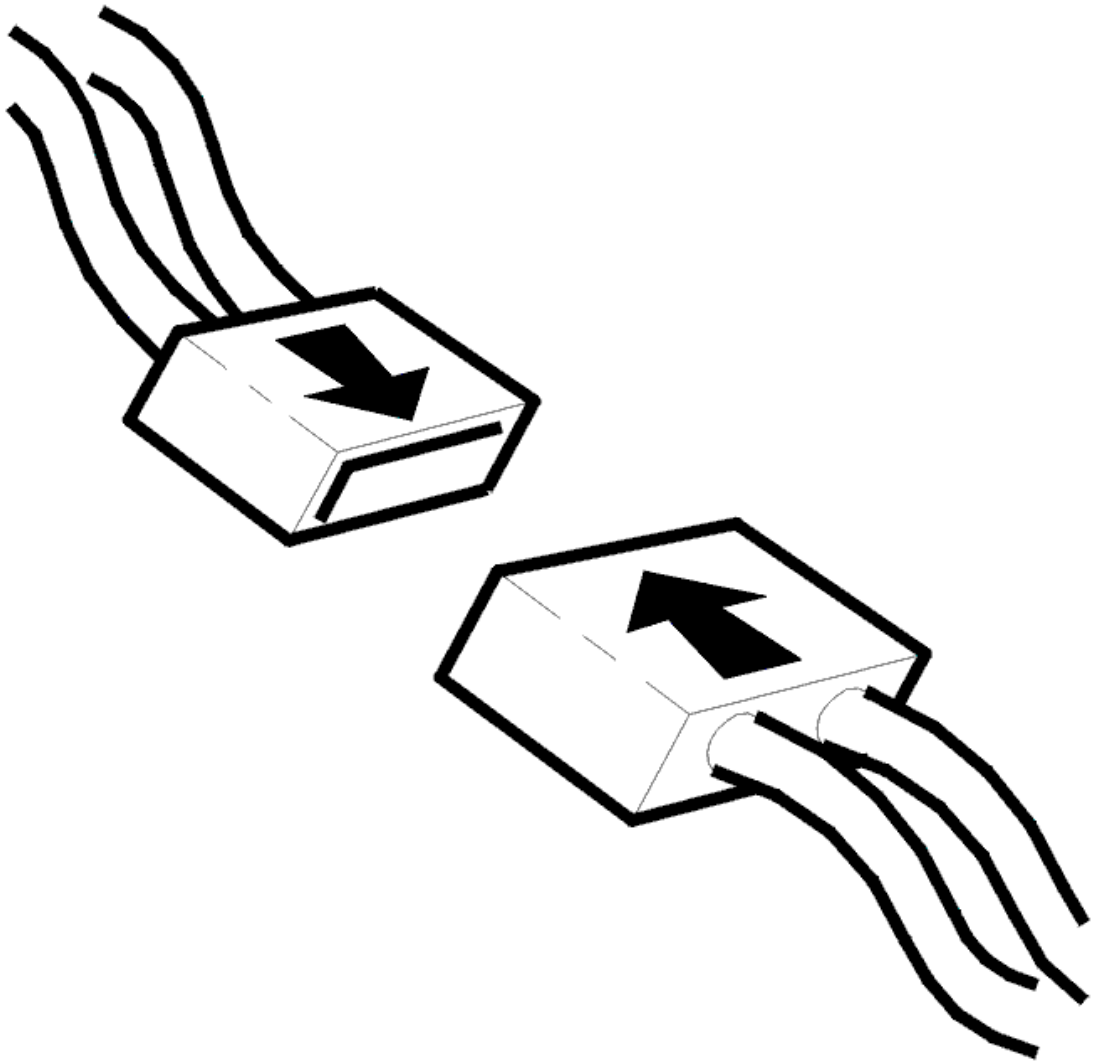

Fig. 57: Connecting Connector
Courtesy of VOLVO CARS CORPORATION

- Ignition off
- Reinstall the connectors, components etc.
- Start the engine to perform the diagnosis.

  Read off the diagnostic status and trouble status for the diagnostic trouble code.

  Check that the diagnosis is "Implemented" and that the trouble status is "No malfunction found". If the trouble status is "Malfunction found", this indicates defective function.

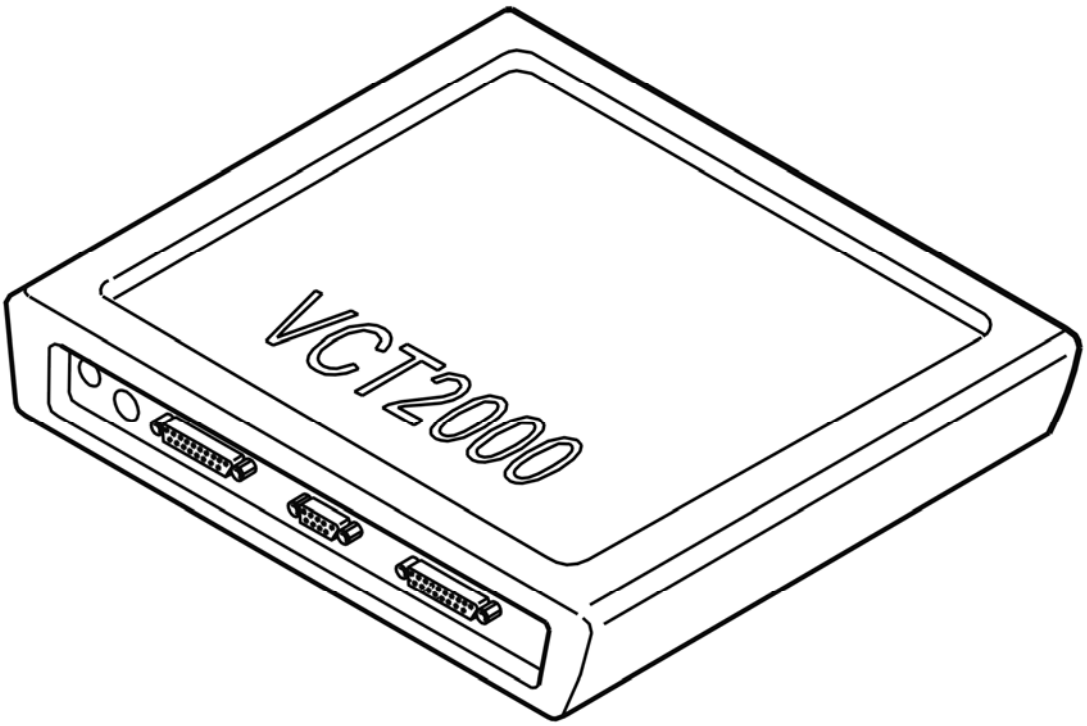

Fig. 58: Identifying VCT2000 Diagnostic Tool Symbol In VIDA
Courtesy of VOLVO CARS CORPORATION

Trouble status shows "No malfunction found"?

- **YES**

  VERIFIED: Troubleshooting has been completed.

- **NO**

  Refer to **INFORMATION**

INFORMATION

FAULT-TRACING INFORMATION

The fault should have been detected and remedied. As this is not the case fault-tracing has failed.

Exit fault-tracing for this diagnostic trouble code (DTC) or make another attempt.

ECM-P015400: O2 CIRCUIT NO ACTIVITY DETECTED (BANK 2, SENSOR 1). GENERAL FAILURE INFORMATION. NO SUB TYPE INFORMATION

(B6324S; 2007-2010)

DIAGNOSTIC TROUBLE CODE (DTC) INFORMATION ECM-P015400

Condition

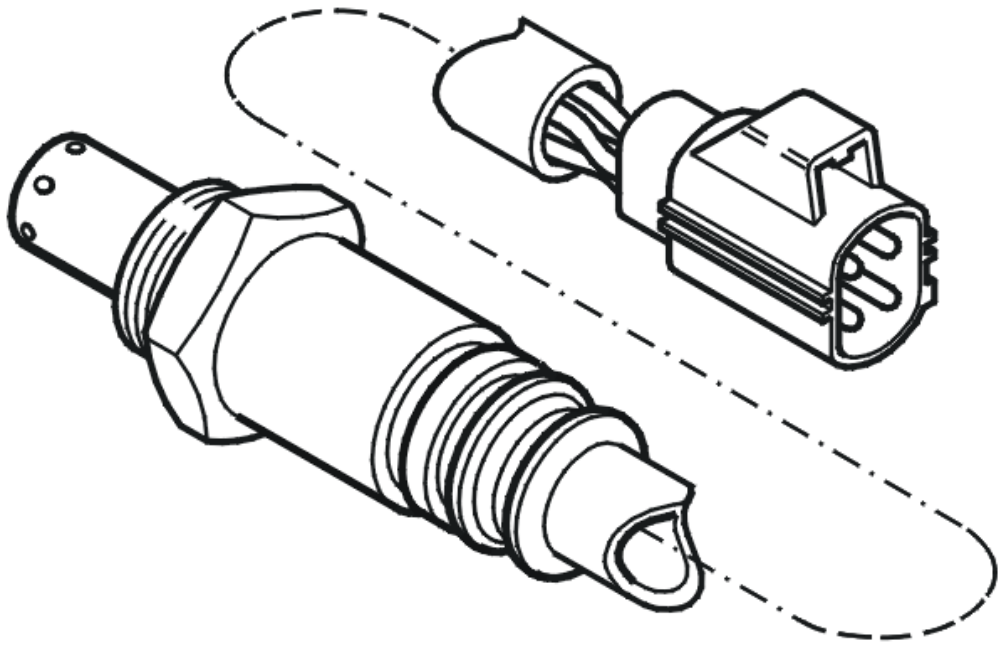

Fig. 59: Identifying Heated Oxygen Sensor
Courtesy of VOLVO CARS CORPORATION

Engine Control Module (ECM) checks the front heated oxygen sensor's signal (bank 2).

The engine cylinders are counted from the cylinder furthest away from the flywheel.

The diagnostic trouble code (DTC) is stored if the engine control module (ECM) registers that the heated oxygen sensor (HO2S) is not activated or is activated too slowly.

The diagnostic trouble code (DTC) can be diagnosed when the engine is running.

Substitute Value

- Nothing.

Possible Source

- Contact resistance in the terminals
- Damaged front heated oxygen sensor (HO2S).

Fault symptom[s]

- Malfunction indicator lamp (MIL) lit.

FAULT TRACING

see **FAULT TRACING**

ECM-P015400: O2 CIRCUIT NO ACTIVITY DETECTED (BANK 2, SENSOR 1). GENERAL FAILURE INFORMATION. NO SUB TYPE INFORMATION (B6324S5; 2011-2012)

DIAGNOSTIC TROUBLE CODE (DTC) INFORMATION ECM-P015400

see **DIAGNOSTIC TROUBLE CODE (DTC) INFORMATION ECM-P015400**

FAULT TRACING

see **FAULT TRACING**

ECM-P015400: HEATED OXYGEN SENSOR (HO2S) CIRCUIT NO ACTIVITY REGISTERED (BANK 2, SENSOR 1). GENERAL FAULT INFORMATION. NO INFORMATION ABOUT FAULT TYPE (B8444S; 2005-2011)

DIAGNOSTIC TROUBLE CODE (DTC) INFORMATION ECM-P015400

Condition

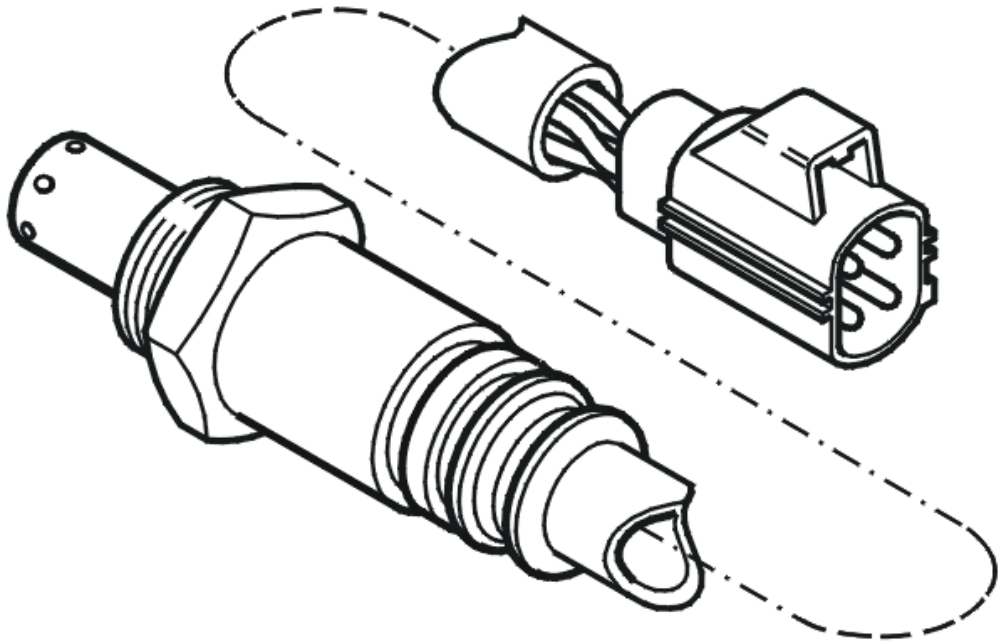

Fig. 60: Identifying Heated Oxygen Sensor
Courtesy of VOLVO CARS CORPORATION

Engine Control Module (ECM) checks the front heated oxygen sensor's signal (bank 2).

The engine cylinders are counted from the cylinder furthest away from the flywheel.

- Bank 1 (cylinder row nearest the front): cylinders 1, 3, 5 and 7.
- Bank 2 (cylinder row furthest to the rear, nearest the passenger compartment): cylinders 2, 4, 6, and 8.

The diagnostic trouble code (DTC) is stored if the engine control module (ECM) registers that the heated oxygen sensor (HO2S) is not activated or is activated too slowly.

The diagnostic trouble code (DTC) can be diagnosed when the engine is running.

Substitute Value

- Nothing.

Possible Source

- Contact resistance in the terminals
- Damaged front heated oxygen sensor (HO2S).

Fault symptom[s]

- Malfunction indicator lamp (MIL) lit.

FAULT TRACING

see **FAULT TRACING**

ECM-P015600: HEATED OXYGEN SENSOR (HO2S) CIRCUIT (BANK 2, SENSOR 2). GENERAL FAULT INFORMATION. NO INFORMATION ABOUT FAULT TYPE (B8444S; 2005-2011)

DIAGNOSTIC TROUBLE CODE (DTC) INFORMATION ECM-P015600

Condition

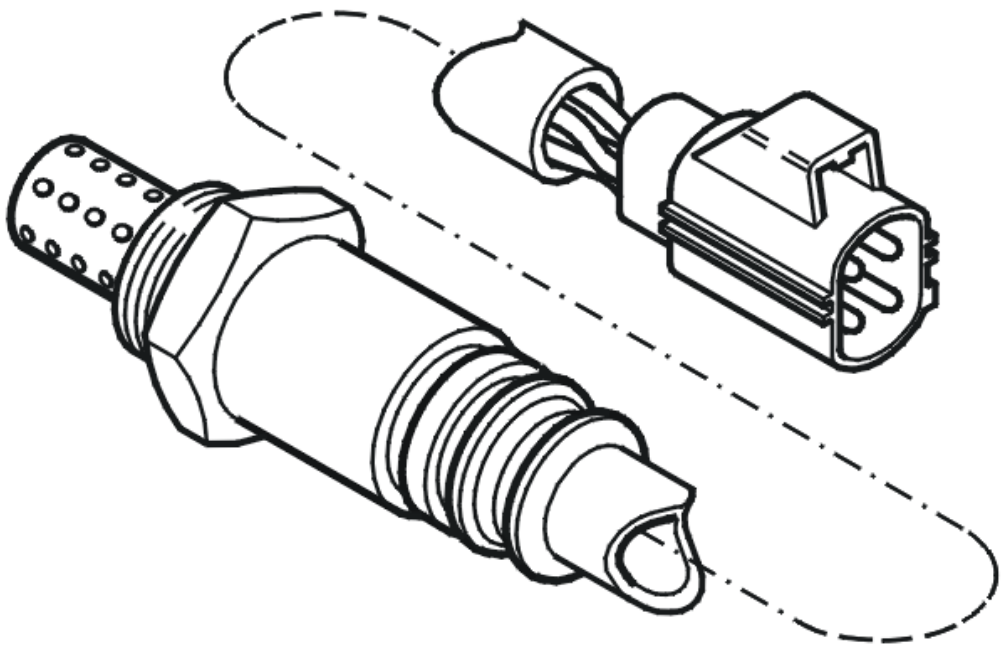

Fig. 61: Identifying Heated Oxygen Sensor
Courtesy of VOLVO CARS CORPORATION

Engine Control Module (ECM) measures the voltage difference between the rear heated oxygen sensor's (bank 2) max. value and min. value, and the difference must be greater than 0.3 V.

The engine cylinders are counted from the cylinder furthest away from the flywheel.

- Bank 1 (cylinder row nearest the front): cylinders 1, 3, 5 and 7.
- Bank 2 (cylinder row furthest to the rear, nearest the passenger compartment): cylinders 2, 4, 6, and 8.

The diagnostic trouble code (DTC) is stored if the engine control module (ECM) registers that these parameters are not reached after approximately 5 minutes and the accumulated or actual probe preheating has reached its parameter.

The diagnostic trouble code (DTC) can be diagnosed approximately 5 minutes after starting (if probe preheating is active and at least one fuel shut-off has been made for at least 3 seconds).

Substitute Value

- Rear heated oxygen sensor (HO2S) control shut off.

Possible Source

- Contact resistance or oxidation in the terminals
- Damaged rear heated oxygen sensor (HO2S).

Fault symptom[s]

- Malfunction indicator lamp (MIL) lit.

FAULT TRACING ECM-P015600

CHECKING COMPONENTS

CAUTION: Do not apply rust solvent spray or grease to the heated oxygen sensor (HO2S) connector.

Check the connector for the rear heated oxygen sensor (bank 2) for contact resistance and oxidation.

Try a new heated oxygen sensor (HO2S) if the above fault-tracing does not remedy the fault.

Remedy as necessary.

Other information

- see **CONNECTING THE BREAKOUT BOX**
- see **SIGNAL SPECIFICATION, ENGINE CONTROL MODULE (ECM)**
- see **HEATED OXYGEN SENSOR (HO2S), REPLACING**
- see **CHECKING WIRING AND TERMINALS**

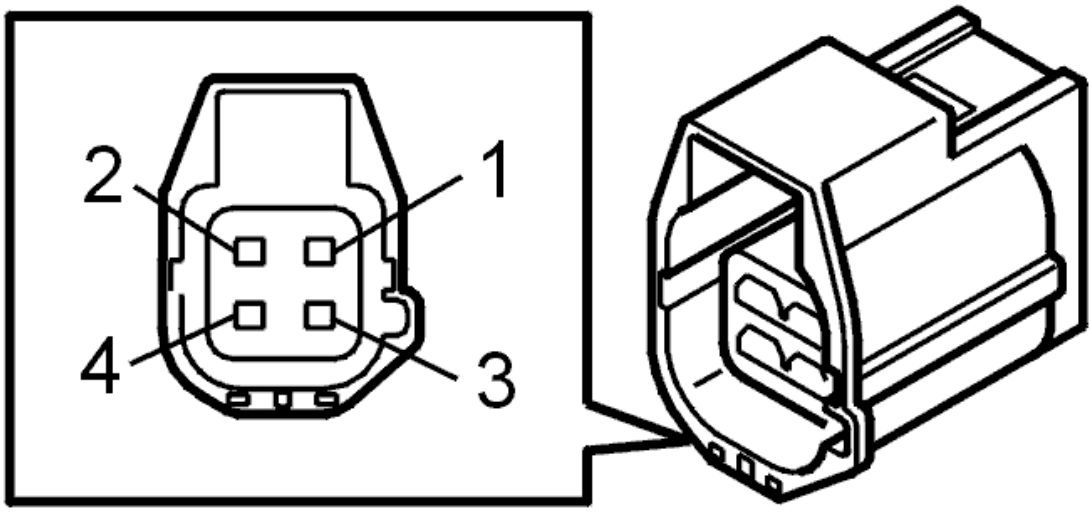

Fig. 62: Identifying 4-Bit Connector
Courtesy of VOLVO CARS CORPORATION

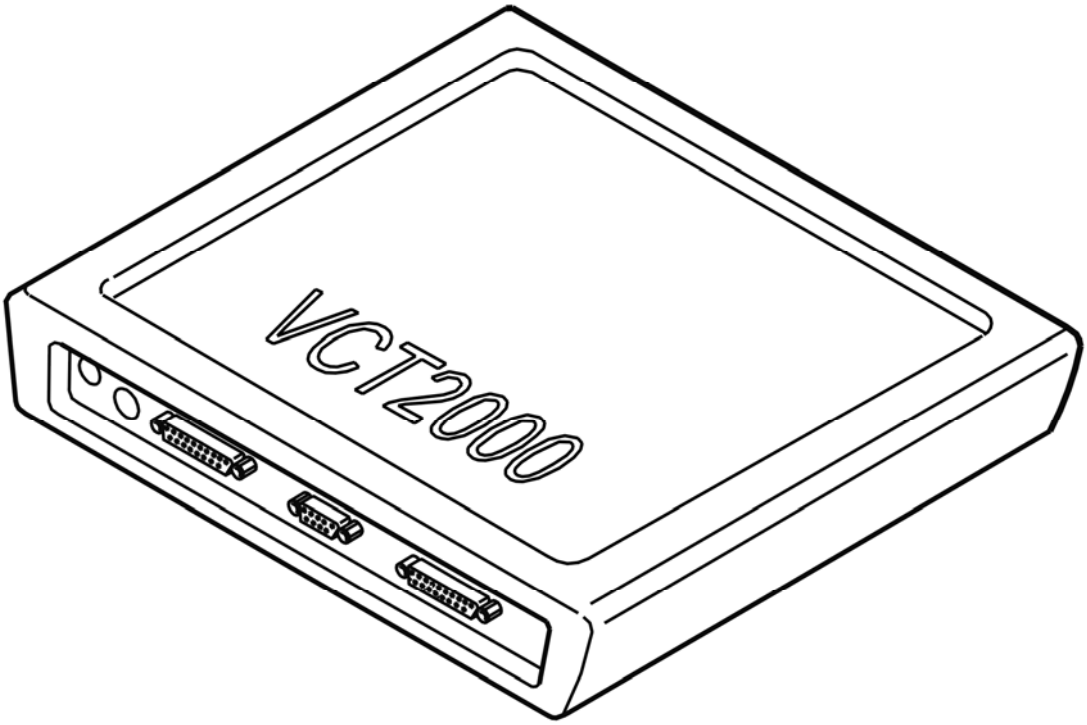

Fig. 63: Identifying VCT2000 Diagnostic Tool Symbol In VIDA
Courtesy of VOLVO CARS CORPORATION

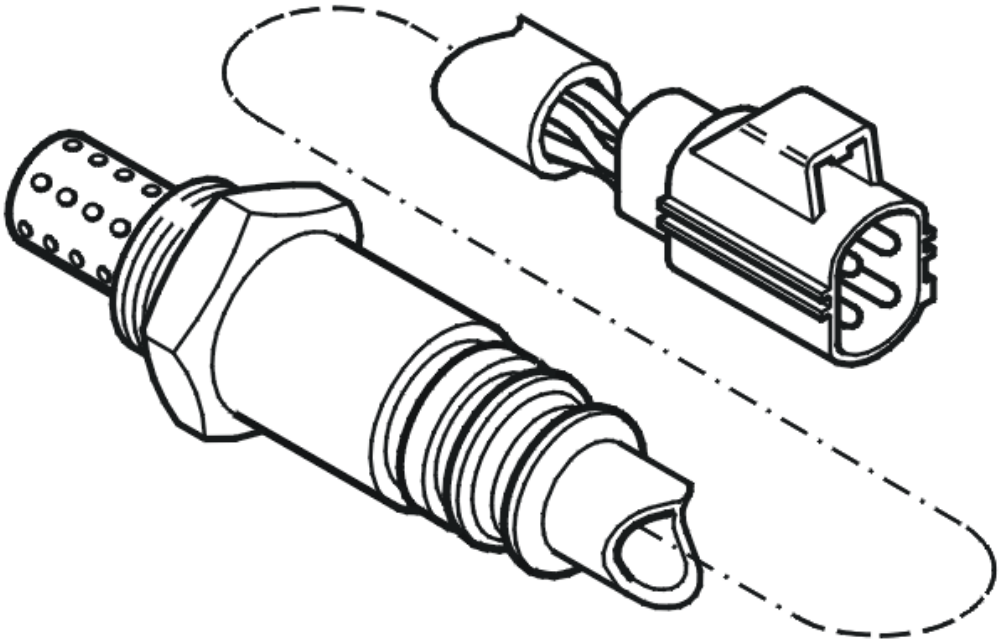

Fig. 64: Identifying Heated Oxygen Sensor
Courtesy of VOLVO CARS CORPORATION

- **Continue**

  Refer to **VERIFICATION**

VERIFICATION

VERIFICATION

HINT: After repairing, it is necessary to check that the malfunction has been fixed.

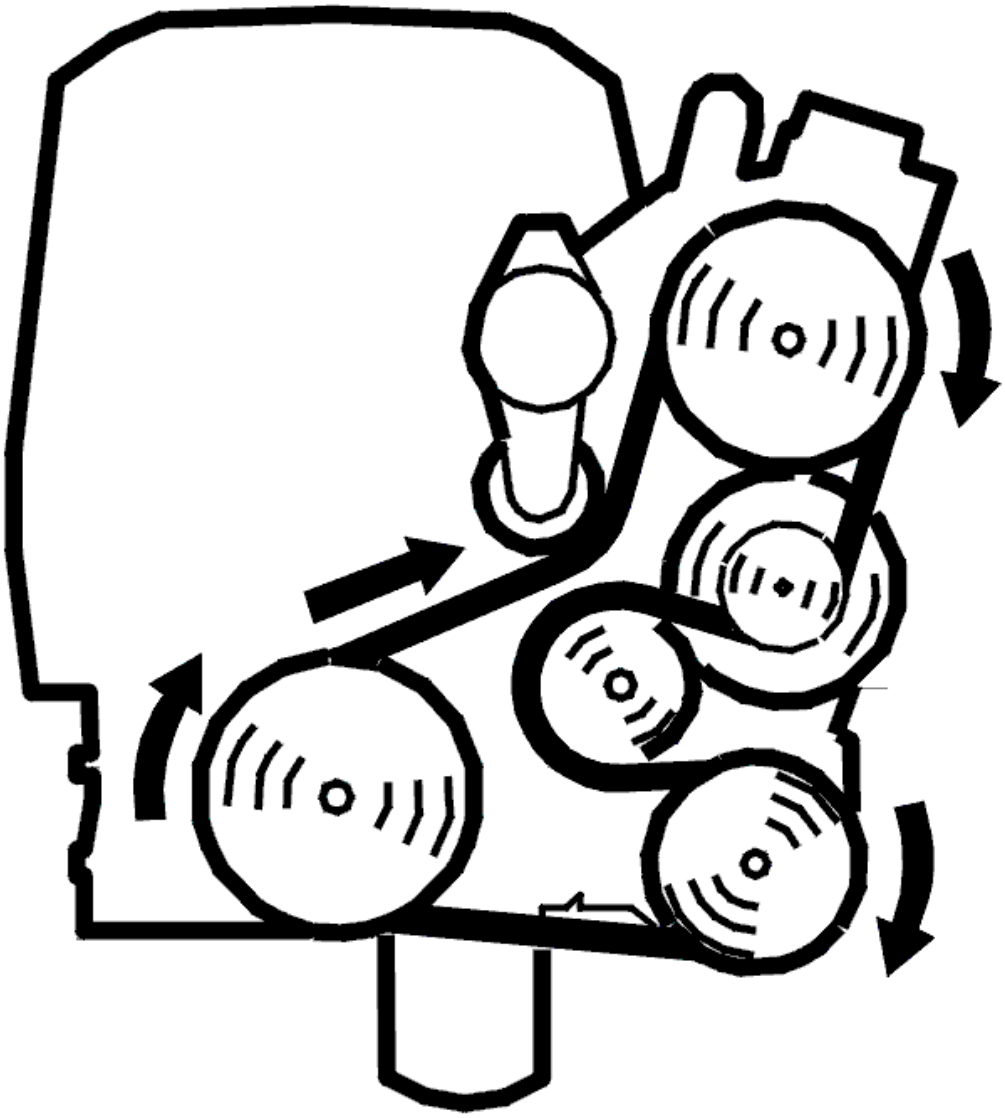

Fig. 65: Belt Routing / Engine Idling - Volvo
Courtesy of VOLVO CARS CORPORATION

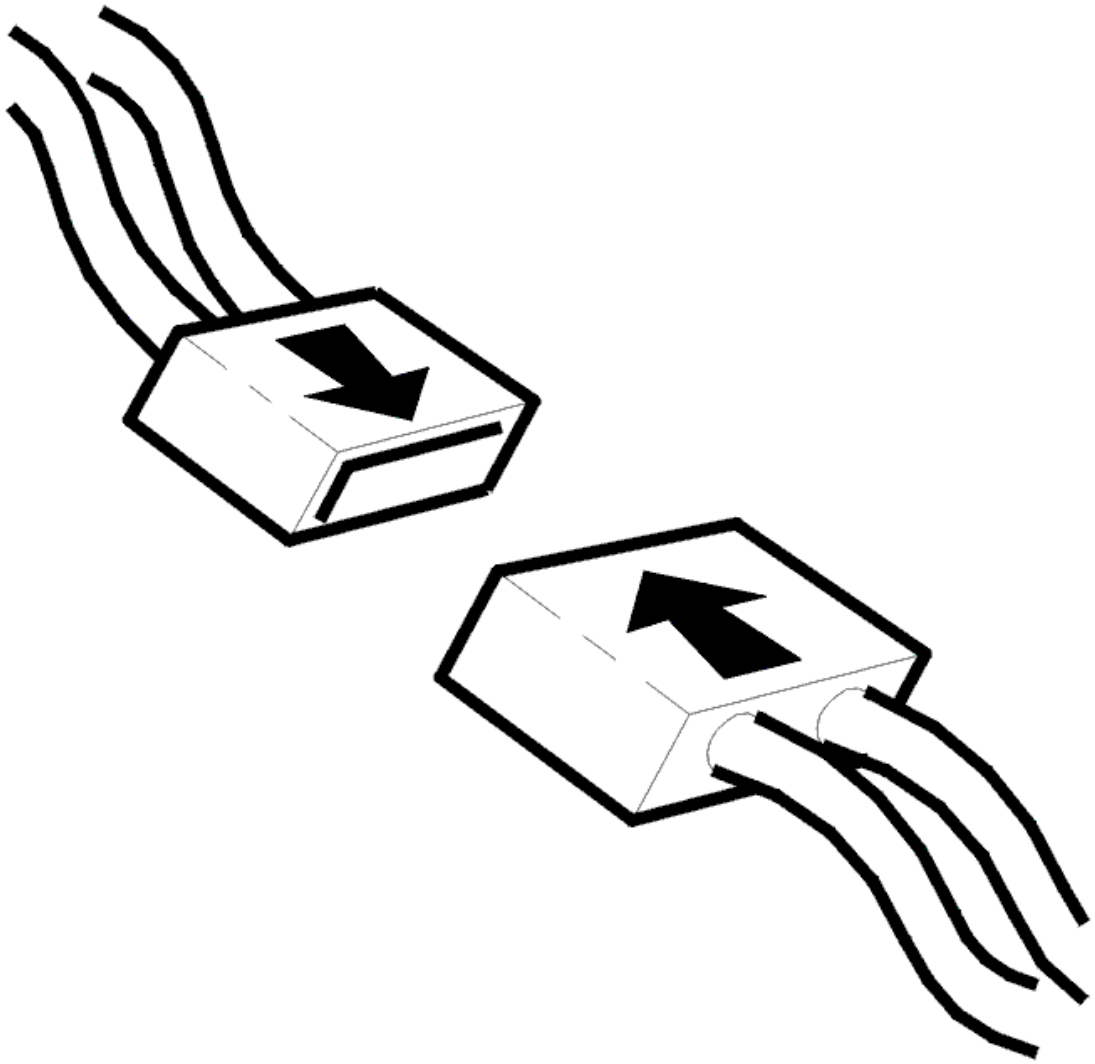

Fig. 66: Connecting Connector
Courtesy of VOLVO CARS CORPORATION

- Test-drive the vehicle on road and make sure that a fuel shut-off is performed. Easiest to do this by driving approx. 80 km/h and suddenly release the accelerator pedal for at least 5 seconds.
- Connect VCT2000 (or appropriate scan tool) to the data link connector without turning off the engine.

NOTE: **If the engine is turned off, the stored trouble status will be erased and the test-drive will have to be repeated.**

Read off the diagnostic status and trouble status for the diagnostic trouble code.

Check that the diagnosis is "Implemented" and that the trouble status is "No malfunction found". If the trouble status is "Malfunction found", this indicates defective function.

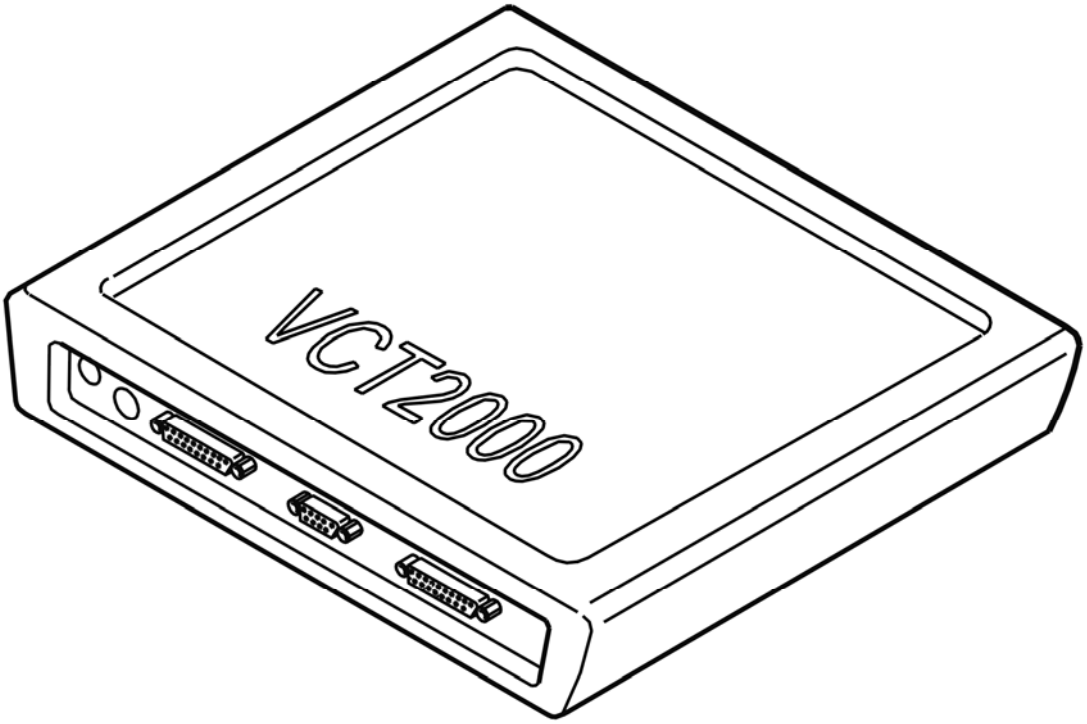

Fig. 67: Identifying VCT2000 Diagnostic Tool Symbol In VIDA
Courtesy of VOLVO CARS CORPORATION

Trouble status shows "No malfunction found"?

- **YES**

  VERIFIED: Troubleshooting has been completed.

- **NO**

  Refer to **INFORMATION**

INFORMATION

FAULT-TRACING INFORMATION

The fault should have been detected and remedied. As this is not the case fault-tracing has failed.

Exit fault-tracing for this diagnostic trouble code (DTC) or make another attempt.

ECM-P015700: O2 CIRCUIT LOW VOLTAGE (BANK 2, SENSOR 2). GENERAL FAILURE INFORMATION. NO SUB TYPE INFORMATION

(B6324S; 2007-2010)

DIAGNOSTIC TROUBLE CODE (DTC) INFORMATION ECM-P015700

Condition

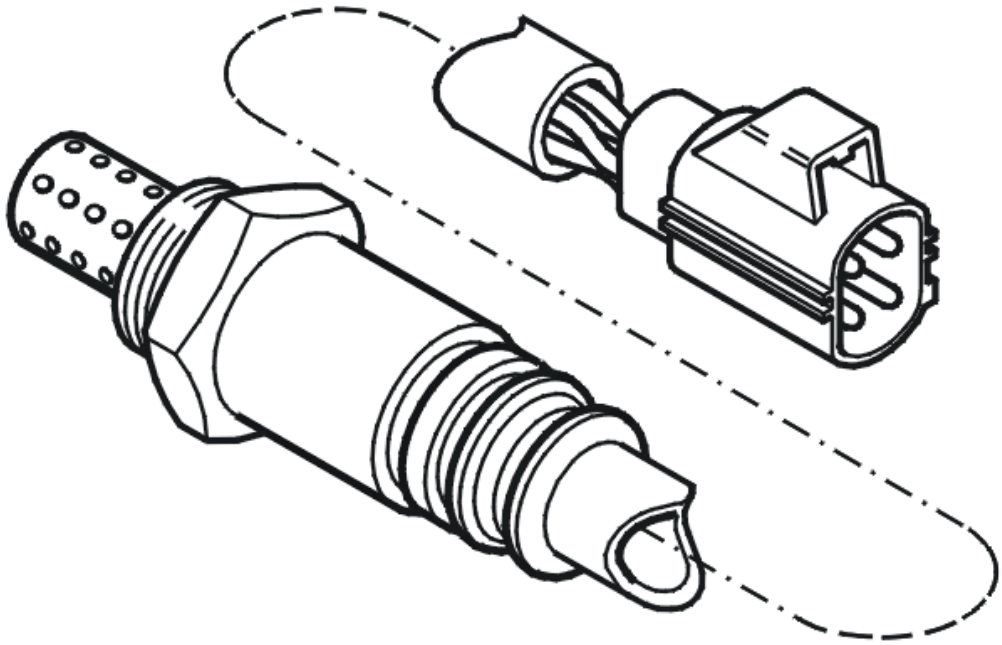

Fig. 68: Identifying Heated Oxygen Sensor
Courtesy of VOLVO CARS CORPORATION

The engine control module (ECM) is based on two initial sensor voltage values, 0 V and 5 V.

If probe preheating is active and if at least one fuel shut-off (accelerator pedal released for at least 3 seconds) has been made, the rear heated oxygen sensor (bank 2) maximum value must have exceeded 0.6 V and the minimum value must have been below 0.1 V.

The engine's cylinders are counted starting with the cylinder farthest from the engine's flywheel.

If these limit values are not reached after approx. 5 minutes and the accumulated as well as the current sensor preheating, respectively, have reached certain limit values, the engine control module (ECM) interprets this as a malfunction and generates the diagnostic trouble code.

The diagnostic trouble code can be diagnosed with the engine running.

Substitute Value

- Rear heated oxygen sensor control off.

Possible Source

- The signal cable is short-circuited to ground.
- Open circuit on the signal cable.
- Damaged rear heated oxygen sensor (HO2S).

Fault symptom[s]

- Malfunction indicator light (MIL) on.

FAULT-TRACING

see **FAULT-TRACING**

ECM-P015700: O2 CIRCUIT LOW VOLTAGE (BANK 2, SENSOR 2). GENERAL FAILURE INFORMATION. NO SUB TYPE INFORMATION (B6324S5; 2011-2012)

DIAGNOSTIC TROUBLE CODE (DTC) INFORMATION ECM-P015700

see **DIAGNOSTIC TROUBLE CODE (DTC) INFORMATION ECM-P015700**

FAULT-TRACING

see **FAULT-TRACING**

ECM-P015700: HEATED OXYGEN SENSOR (HO2S) CIRCUIT LOW VOLTAGE (BANK 2, SENSOR 2). GENERAL FAULT INFORMATION. NO INFORMATION ABOUT FAULT TYPE (B8444S; 2005-2011)

DIAGNOSTIC TROUBLE CODE (DTC) INFORMATION ECM-P015700

Condition

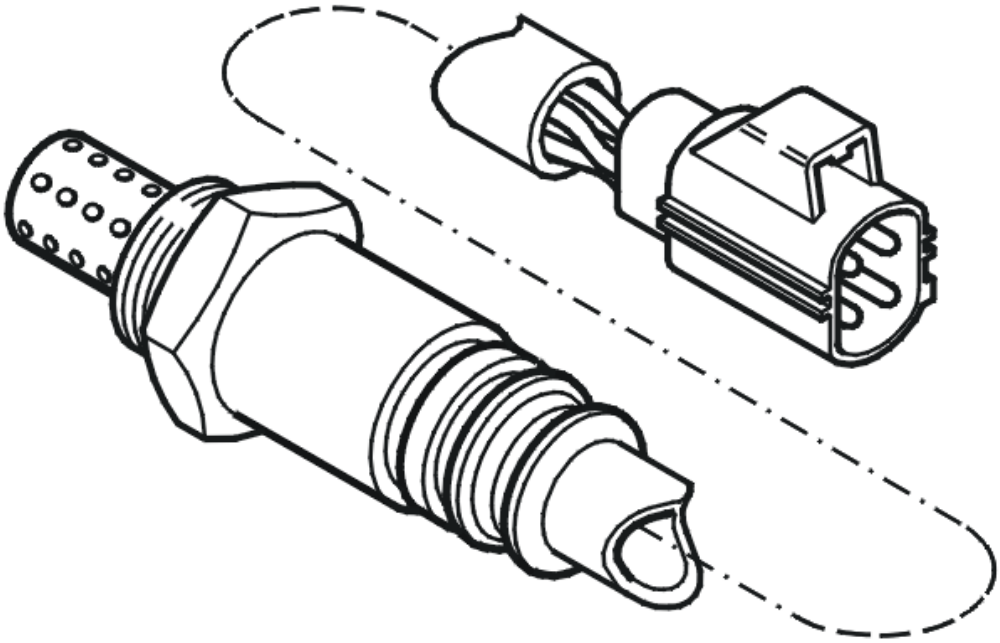

Fig. 69: Identifying Heated Oxygen Sensor
Courtesy of VOLVO CARS CORPORATION

The engine control module (ECM) is based on two initial sensor voltage values, 0 V and 5 V.

When sensor heating is active and at least one fuel shut-off (accelerator pedal fully released for at least 3 seconds) has been performed, the rear heated oxygen sensor's (bank 2) max. value must have been above 0.6 V and the min. value must have been below 0.3 V.

The engine's cylinders are counted starting with the cylinder farthest from the engine's flywheel.

- Bank 1 (cylinder row nearest the front): cylinders 1, 3, 5 and 7.
- Bank 2 (cylinder row furthest to the rear, nearest the passenger compartment): cylinders 2, 4, 6, and 8.

If these limit values are not reached after approx. 5 minutes and the accumulated as well as the current sensor preheating, respectively, have reached certain limit values, the engine control module (ECM) interprets this as a malfunction and generates the diagnostic trouble code.

The diagnostic trouble code can be diagnosed with the engine running.

Substitute Value

- Rear heated oxygen sensor control off.

Possible Source

- The signal cable is short-circuited to ground.
- Open circuit on the signal cable.
- Damaged rear heated oxygen sensor (HO2S).

Fault symptom[s]

- Malfunction indicator light (MIL) on.

TROUBLESHOOTING ECM-P015700

CHECKING THE STATUS

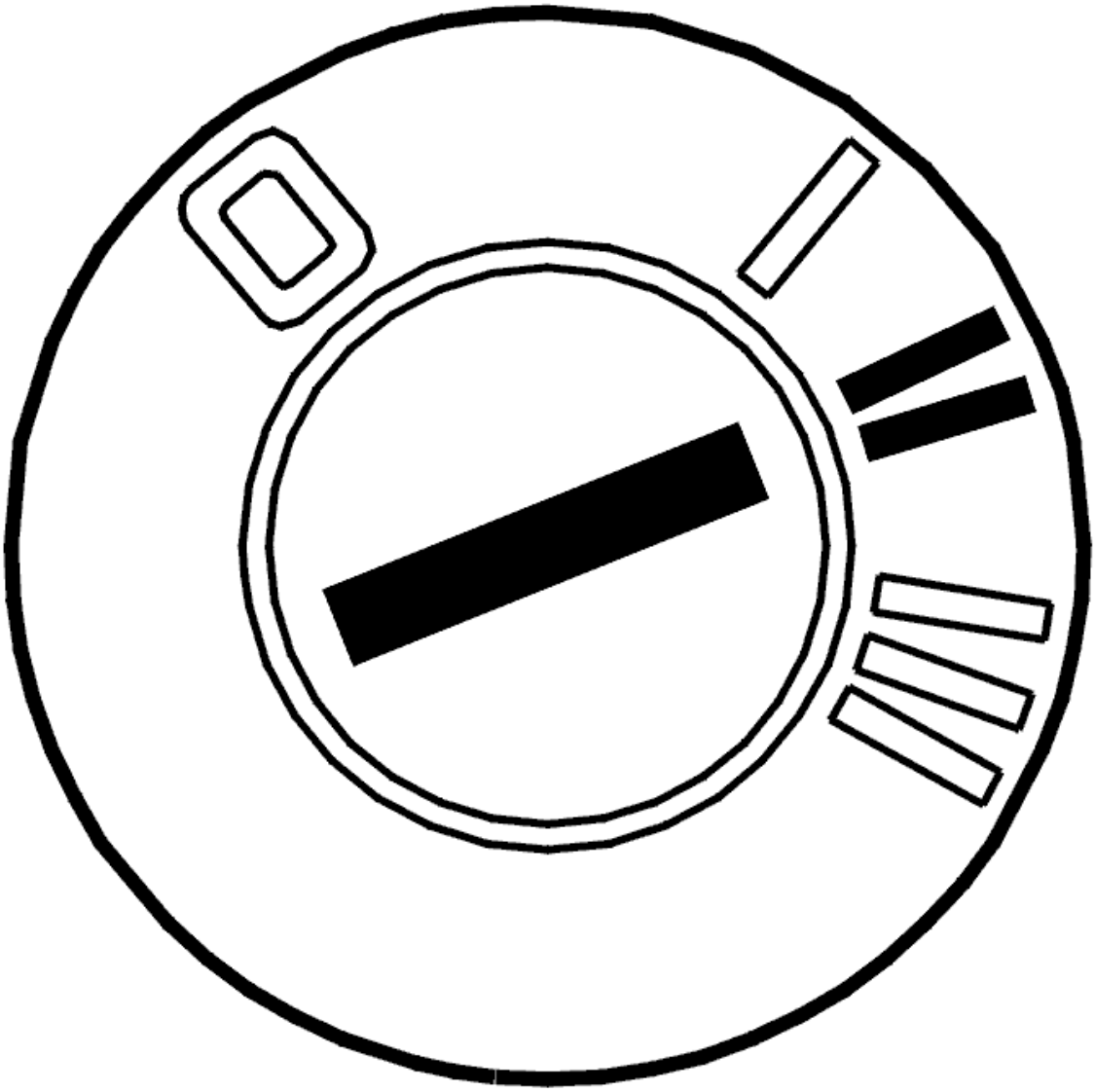

Fig. 70: Identifying Ignition ON

Courtesy of VOLVO CARS CORPORATION

- Start the engine to perform the diagnosis.

  Check if the malfunction is permanent or intermittent by reading off the diagnostic trouble code's status when the diagnostic status is "Implemented".

  If the trouble status is "Malfunction found", this indicates that the malfunction is permanent. If the trouble status is "No malfunction found", this indicates that the malfunction is intermittent.

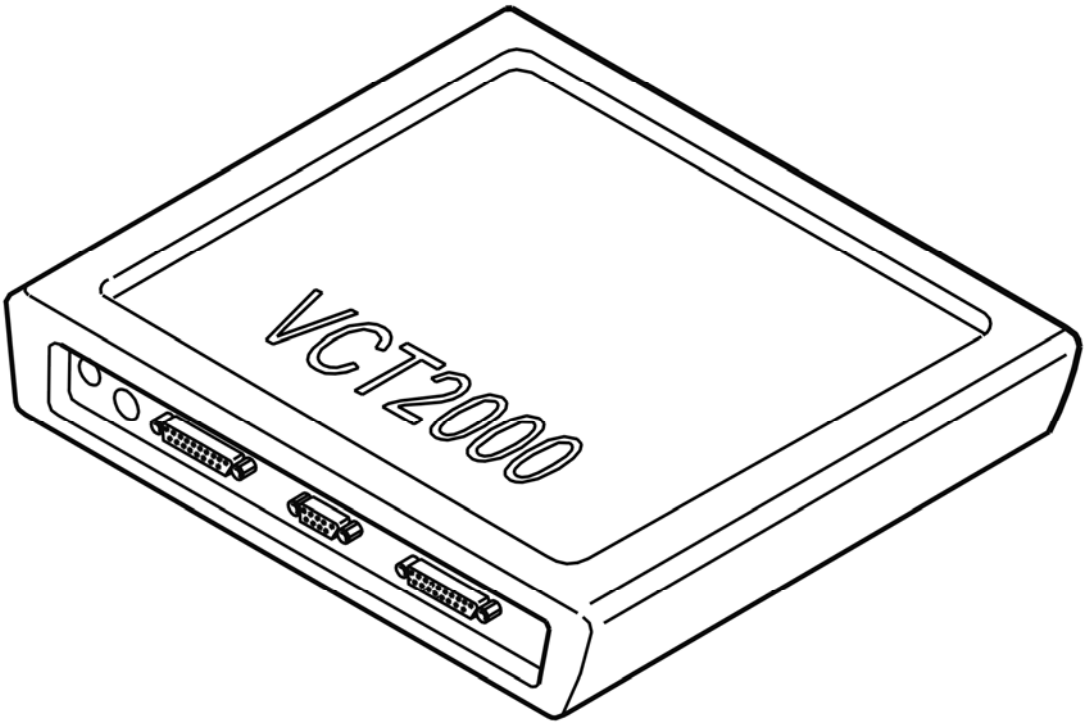

Fig. 71: Identifying VCT2000 Diagnostic Tool Symbol In VIDA
Courtesy of VOLVO CARS CORPORATION

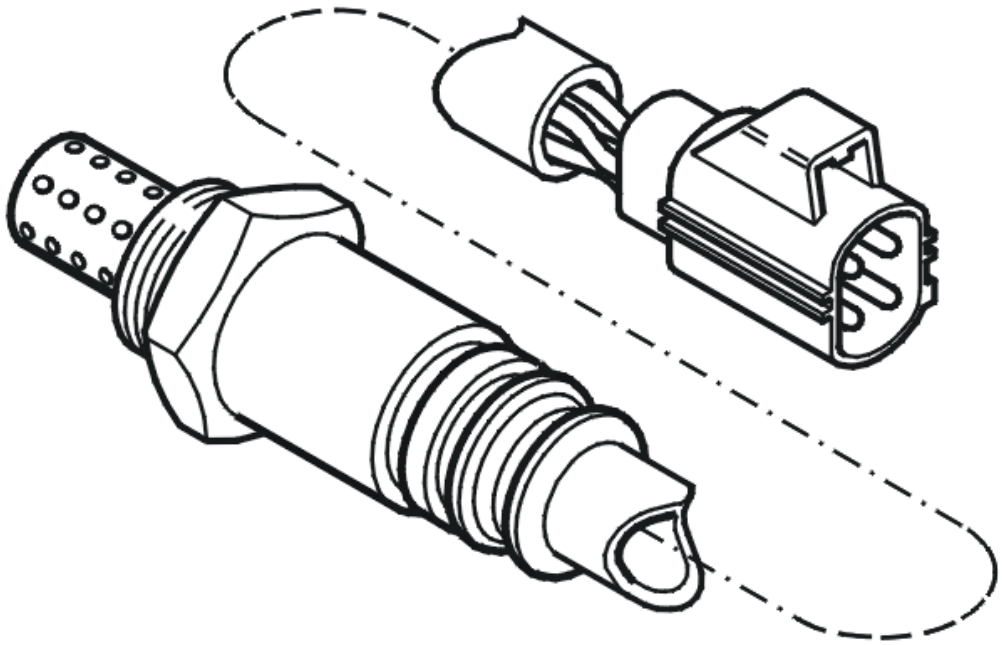

Fig. 72: Identifying Heated Oxygen Sensor
Courtesy of VOLVO CARS CORPORATION

- **Continue**

  Refer to **CHECKING COMPONENTS**

CHECKING COMPONENTS

CAUTION: Do not apply rust solvent spray or grease to the heated oxygen sensor's (HO2S) connector.

Check the cable between the Engine Control Module (ECM) terminal #A40 (#A40) and rear heated oxygen sensor terminal #4 (bank 2). Check for an open-circuit. Check for a short-circuit to ground.

If the above troubleshooting does not solve the problem, try a new heated oxygen sensor.

Remedy as necessary.

Other information

- see **CONNECTING THE BREAKOUT BOX**
- see **SIGNAL SPECIFICATION, ENGINE CONTROL MODULE (ECM)**

- see **HEATED OXYGEN SENSOR (HO2S), REPLACING**
- see **CHECKING WIRING AND TERMINALS**

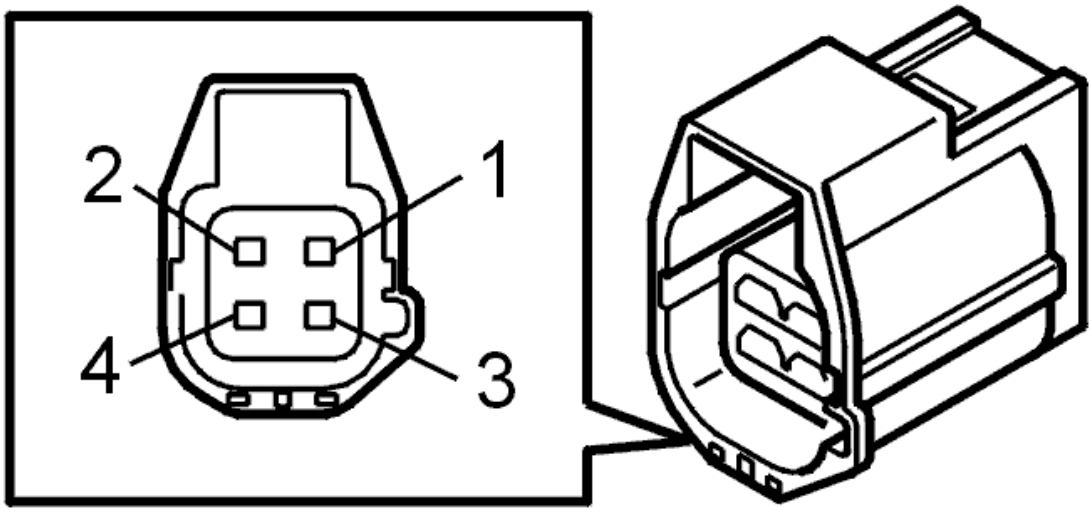

Fig. 73: Identifying 4-Bit Connector
Courtesy of VOLVO CARS CORPORATION

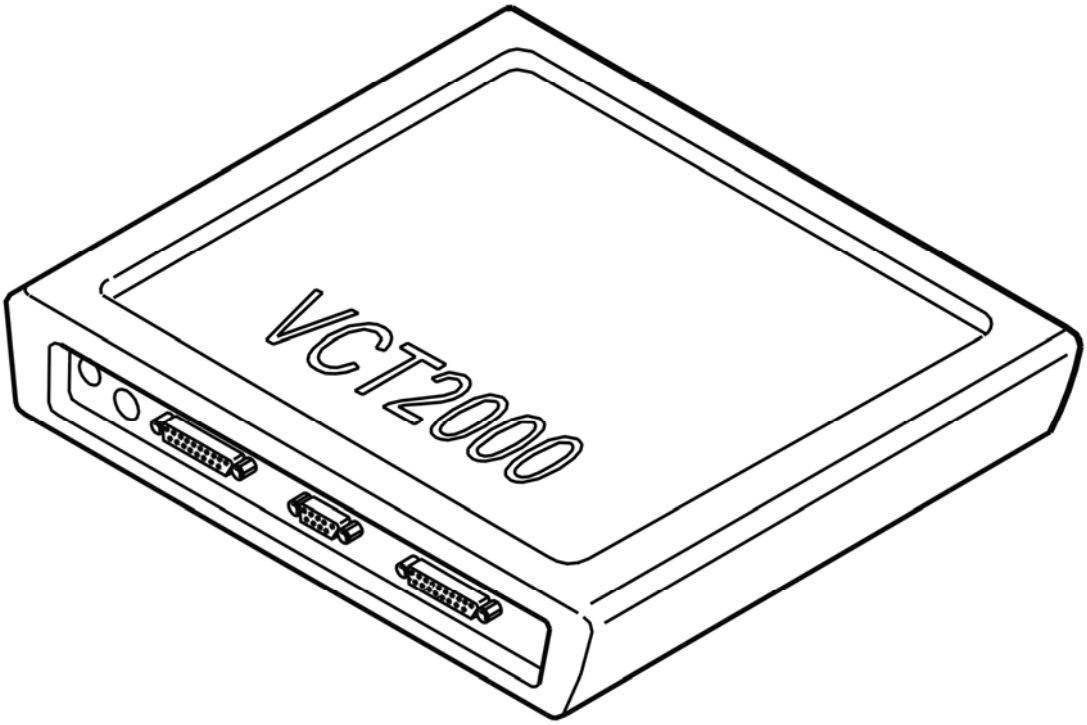

Fig. 74: Identifying VCT2000 Diagnostic Tool Symbol In VIDA
Courtesy of VOLVO CARS CORPORATION

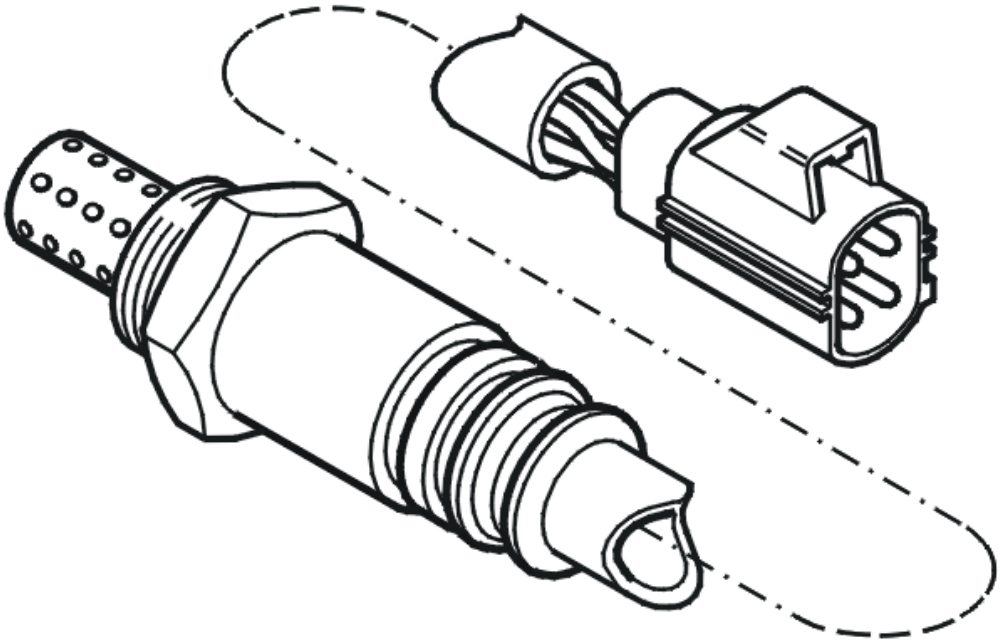

Fig. 75: Identifying Heated Oxygen Sensor
Courtesy of VOLVO CARS CORPORATION

- **Continue**

  Refer to **VERIFICATION**

VERIFICATION

VERIFICATION

HINT: After repairing, it is necessary to check that the malfunction has been fixed.

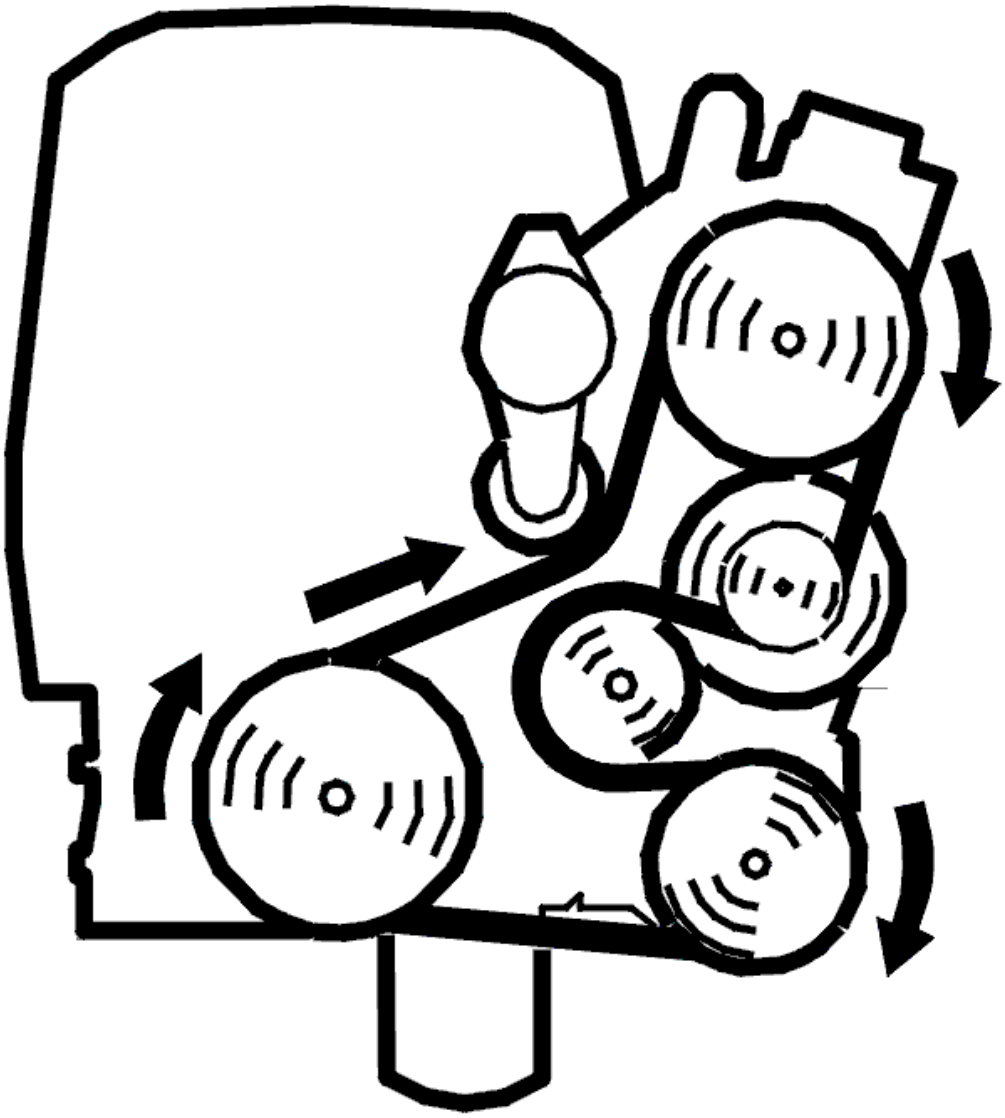

Fig. 76: Belt Routing / Engine Idling - Volvo
Courtesy of VOLVO CARS CORPORATION

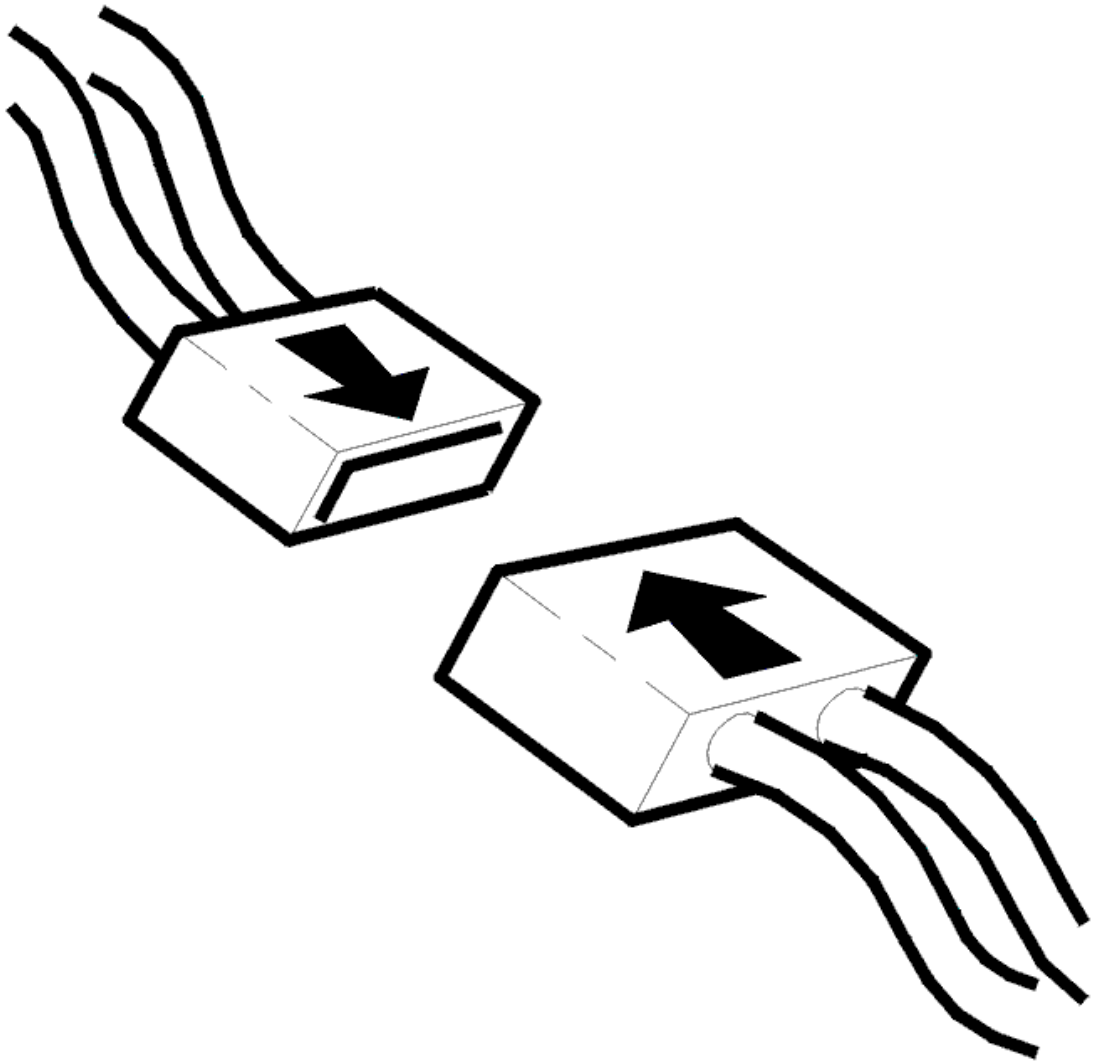

Fig. 77: Connecting Connector
Courtesy of VOLVO CARS CORPORATION

- Ignition off
- Reinstall the connectors, components etc.
- Start the engine to perform the diagnosis.

  Read off the diagnostic status and trouble status for the diagnostic trouble code.

  Check that the diagnosis is "Implemented" and that the trouble status is "No malfunction found". If the trouble status is "Malfunction found", this indicates defective function.

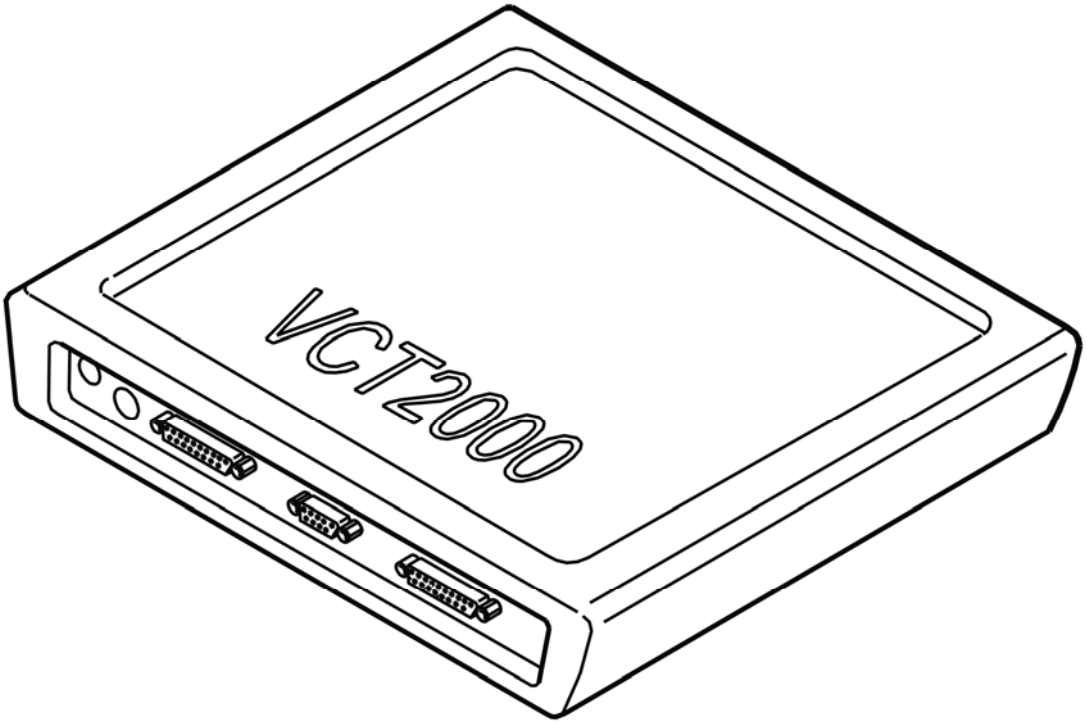

Fig. 78: Identifying VCT2000 Diagnostic Tool Symbol In VIDA
Courtesy of VOLVO CARS CORPORATION

Trouble status shows "No malfunction found"?

- **YES**

  VERIFIED: Troubleshooting has been completed.

- **NO**

  Refer to **INFORMATION**

INFORMATION

FAULT-TRACING INFORMATION

The fault should have been detected and remedied. As this is not the case fault-tracing has failed.

Exit fault-tracing for this diagnostic trouble code (DTC) or make another attempt.

ECM-P015800: O2 CIRCUIT HIGH VOLTAGE (BANK 2, SENSOR 2). GENERAL FAILURE INFORMATION. NO SUB TYPE INFORMATION

(B6324S; 2007-2010)

DIAGNOSTIC TROUBLE CODE (DTC) INFORMATION ECM-P015800

Condition

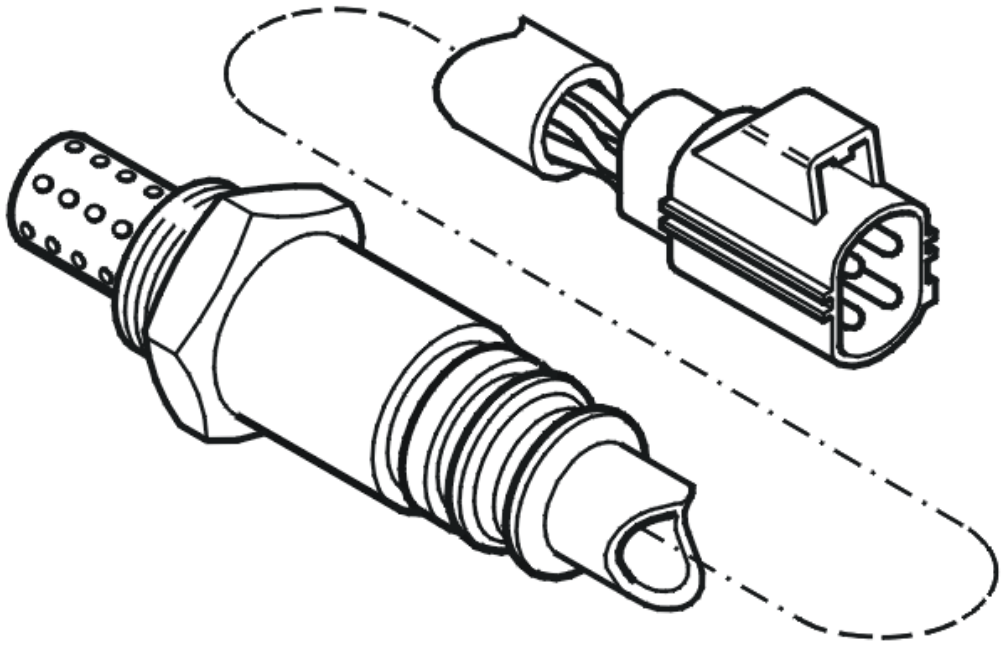

Fig. 79: Identifying Heated Oxygen Sensor
Courtesy of VOLVO CARS CORPORATION

The engine control module (ECM) is based on two initial sensor voltage values, 0 V and 5 V.

If probe preheating is active and if at least one fuel shut-off (accelerator pedal released for at least 3 seconds) has been made, the rear heated oxygen sensor (bank 2) maximum value must have exceeded 0.6 V and the minimum value must have been below 0.1 V.

The engine's cylinders are counted starting with the cylinder farthest from the engine's flywheel.

If these limit values are not reached after approx. 5 minutes and the accumulated as well as the current sensor preheating, respectively, have reached certain limit values, the engine control module (ECM) interprets this as a malfunction and generates the diagnostic trouble code.

The diagnostic trouble code can be diagnosed with the engine running.

Substitute Value

- Rear heated oxygen sensor control off.

Possible Source

- The signal cable is short-circuited to voltage.
- Damaged rear heated oxygen sensor (HO2S).

Fault symptom[s]

- Malfunction indicator light (MIL) on.

FAULT-TRACING

see **FAULT-TRACING**

ECM-P015800: O2 CIRCUIT HIGH VOLTAGE (BANK 2, SENSOR 2). GENERAL FAILURE INFORMATION. NO SUB TYPE INFORMATION (B6324S5; 2011-2012)

DIAGNOSTIC TROUBLE CODE (DTC) INFORMATION ECM-P015800

see **DIAGNOSTIC TROUBLE CODE (DTC) INFORMATION ECM-P015800**

FAULT-TRACING

see **FAULT-TRACING**

ECM-P015800: HEATED OXYGEN SENSOR CIRCUIT HIGH VOLTAGE (BANK 2, SENSOR 2). GENERAL MALFUNCTION INFORMATION. NO INFORMATION ON MALFUNCTION TYPE (B8444S; 2005-2011)

DIAGNOSTIC TROUBLE CODE (DTC) INFORMATION ECM-P015800

Condition

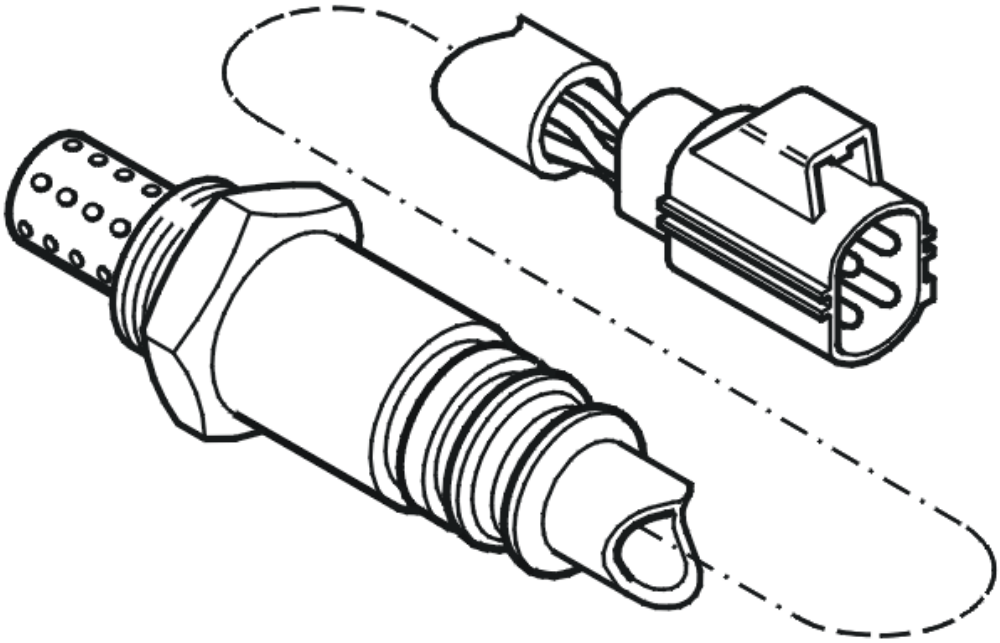

Fig. 80: Identifying Heated Oxygen Sensor
Courtesy of VOLVO CARS CORPORATION

The engine control module (ECM) is based on two initial sensor voltage values, 0 V and 5 V.

When sensor heating is active and at least one fuel shut-off (accelerator pedal fully released for at least 3 seconds) has been performed, the rear heated oxygen sensor's (bank 2) max. value must have been above 0.6 V and the min. value must have been below 0.3 V.

The engine's cylinders are counted starting with the cylinder farthest from the engine's flywheel.

- Bank 1 (cylinder row nearest the front): cylinders 1, 3, 5 and 7.
- Bank 2 (cylinder row furthest to the rear, nearest the passenger compartment): cylinders 2, 4, 6, and 8.

If these limit values are not reached after approx. 5 minutes and the accumulated as well as the current sensor preheating, respectively, have reached certain limit values, the engine control module (ECM) interprets this as a malfunction and generates the diagnostic trouble code.

The diagnostic trouble code can be diagnosed with the engine running.

Substitute Value

- Rear heated oxygen sensor control off.

Possible Source

- The signal cable is short-circuited to voltage.
- Damaged rear heated oxygen sensor (HO2S).

Fault symptom[s]

- Malfunction indicator light (MIL) on.

TROUBLESHOOTING ECM-P015800

CHECKING THE STATUS

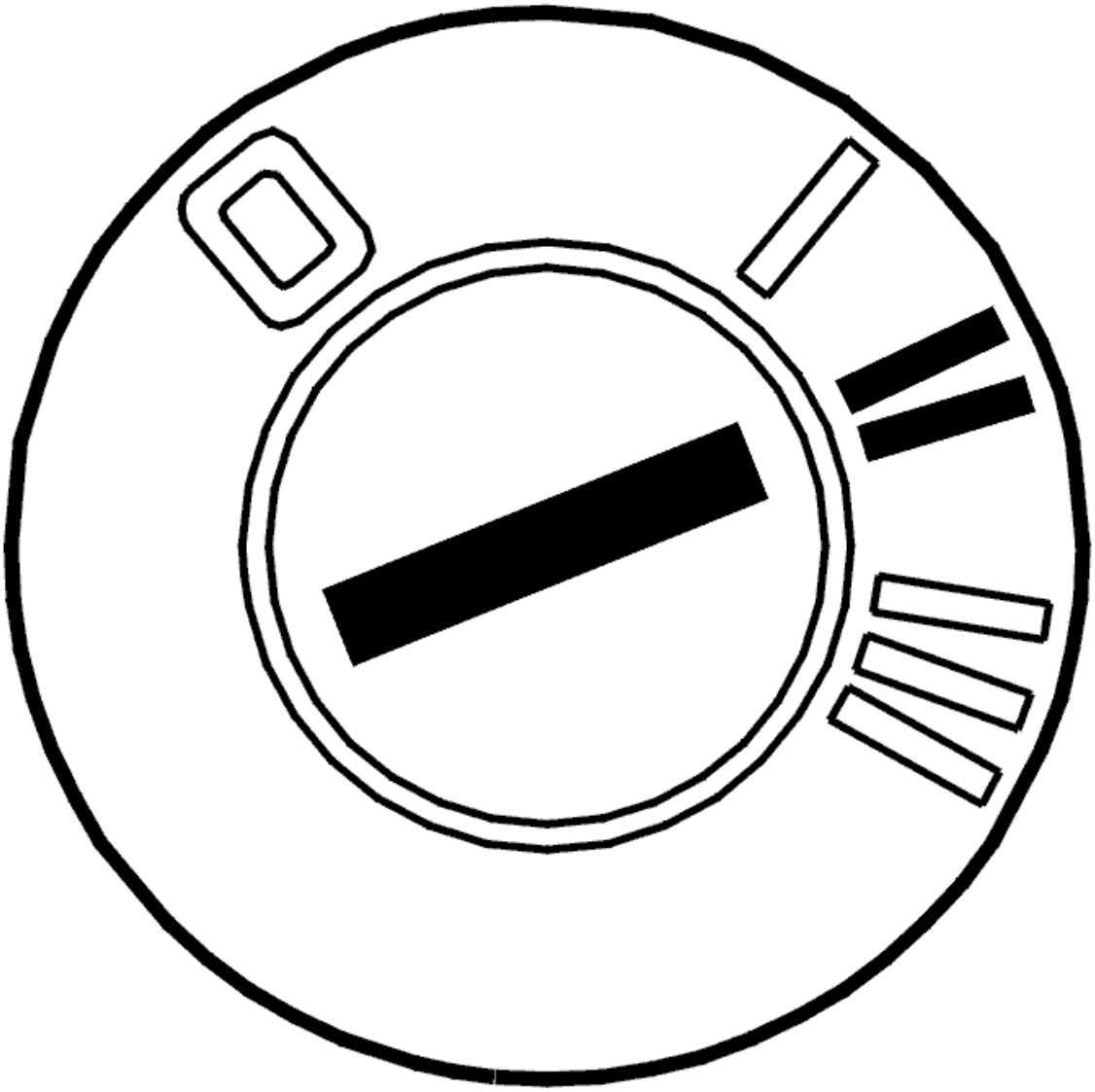

Fig. 81: Identifying Ignition ON
Courtesy of VOLVO CARS CORPORATION

- Start the engine to perform the diagnosis.

  Check if the malfunction is permanent or intermittent by reading off the diagnostic trouble code's status when the diagnostic status is "Implemented".

  If the trouble status is "Malfunction found", this indicates that the malfunction is permanent. If the trouble status is "No malfunction found", this indicates that the malfunction is intermittent.

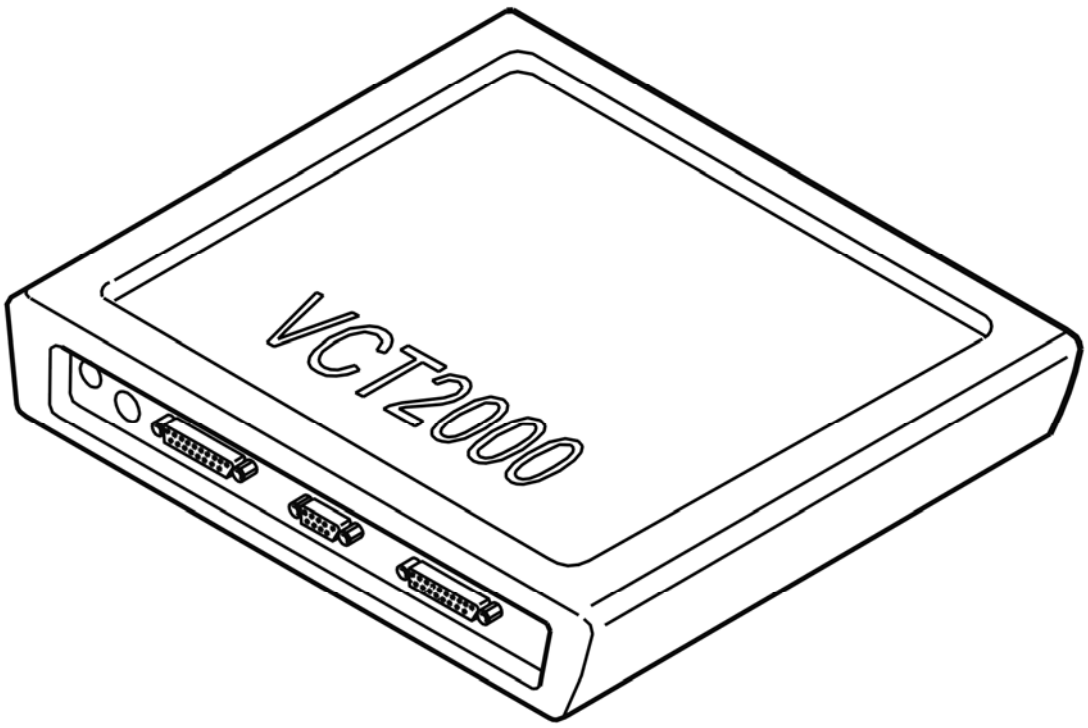

Fig. 82: Identifying VCT2000 Diagnostic Tool Symbol In VIDA
Courtesy of VOLVO CARS CORPORATION

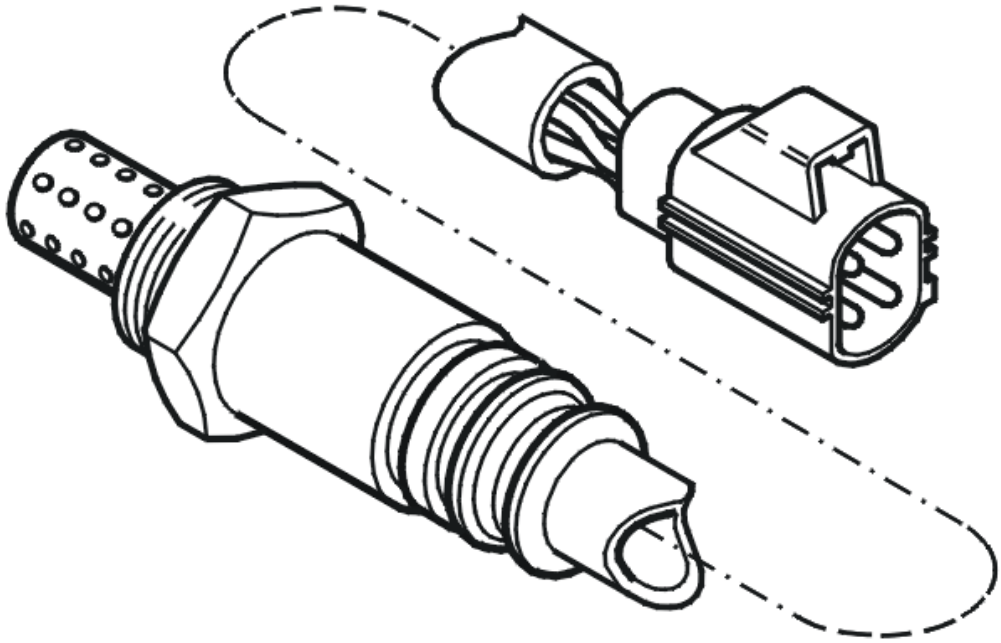

Fig. 83: Identifying Heated Oxygen Sensor
Courtesy of VOLVO CARS CORPORATION

- **Continue**

  Refer to **CHECKING COMPONENTS**

CHECKING COMPONENTS

CAUTION: Do not apply rust solvent spray or grease to the heated oxygen sensor's (HO2S) connector.

Check the cable between the Engine Control Module (ECM) terminal #A40 (#A40) and rear heated oxygen sensor terminal #4 (bank 2). Check for a short-circuit to supply voltage.

If the above troubleshooting does not solve the problem, try a new heated oxygen sensor.

Remedy as necessary.

Other information

- see **CONNECTING THE BREAKOUT BOX**
- see **SIGNAL SPECIFICATION, ENGINE CONTROL MODULE (ECM)**

- see **HEATED OXYGEN SENSOR (HO2S), REPLACING**
- see **CHECKING WIRING AND TERMINALS**

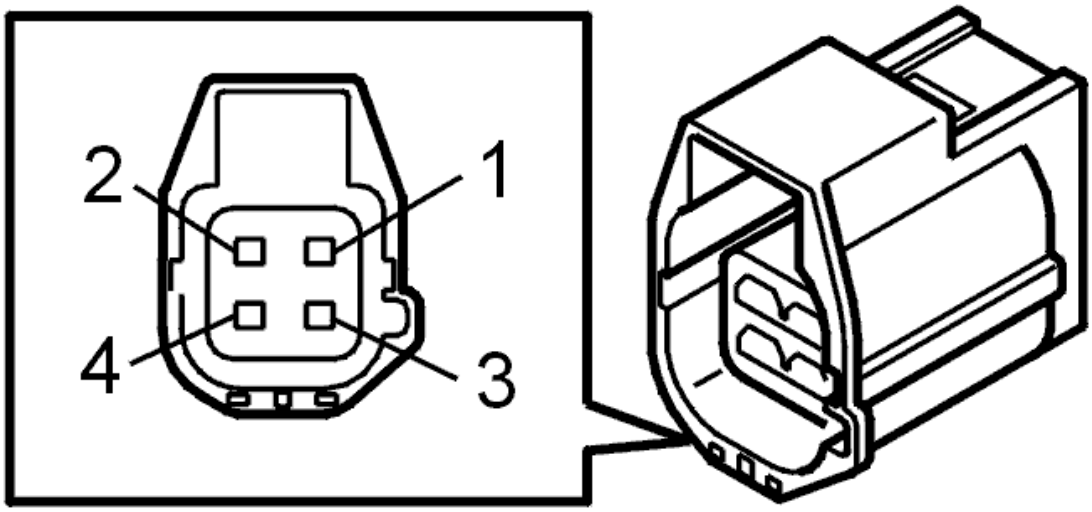

Fig. 84: Identifying 4-Bit Connector
Courtesy of VOLVO CARS CORPORATION

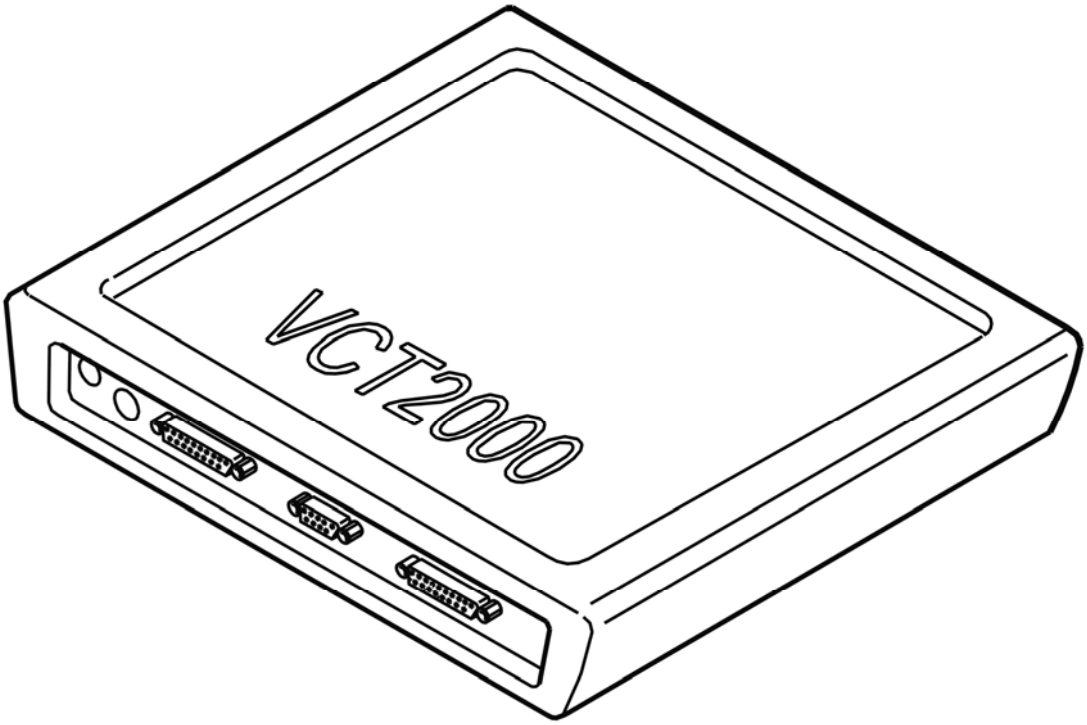

Fig. 85: Identifying VCT2000 Diagnostic Tool Symbol In VIDA
Courtesy of VOLVO CARS CORPORATION

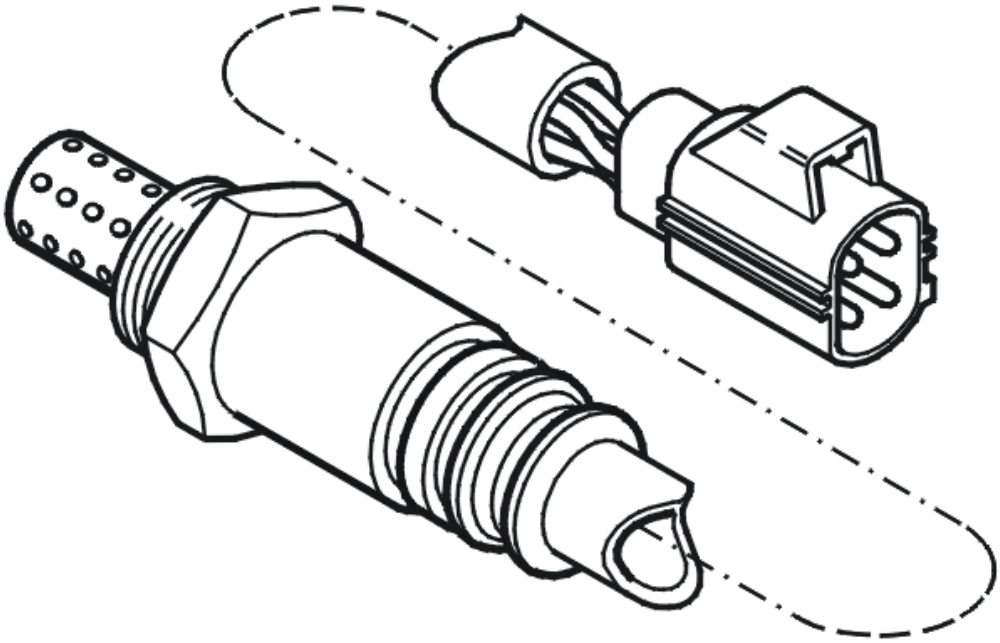

Fig. 86: Identifying Heated Oxygen Sensor
Courtesy of VOLVO CARS CORPORATION

- **Continue**

  Refer to **VERIFICATION**

VERIFICATION

VERIFICATION

HINT: After repairing, it is necessary to check that the malfunction has been fixed.

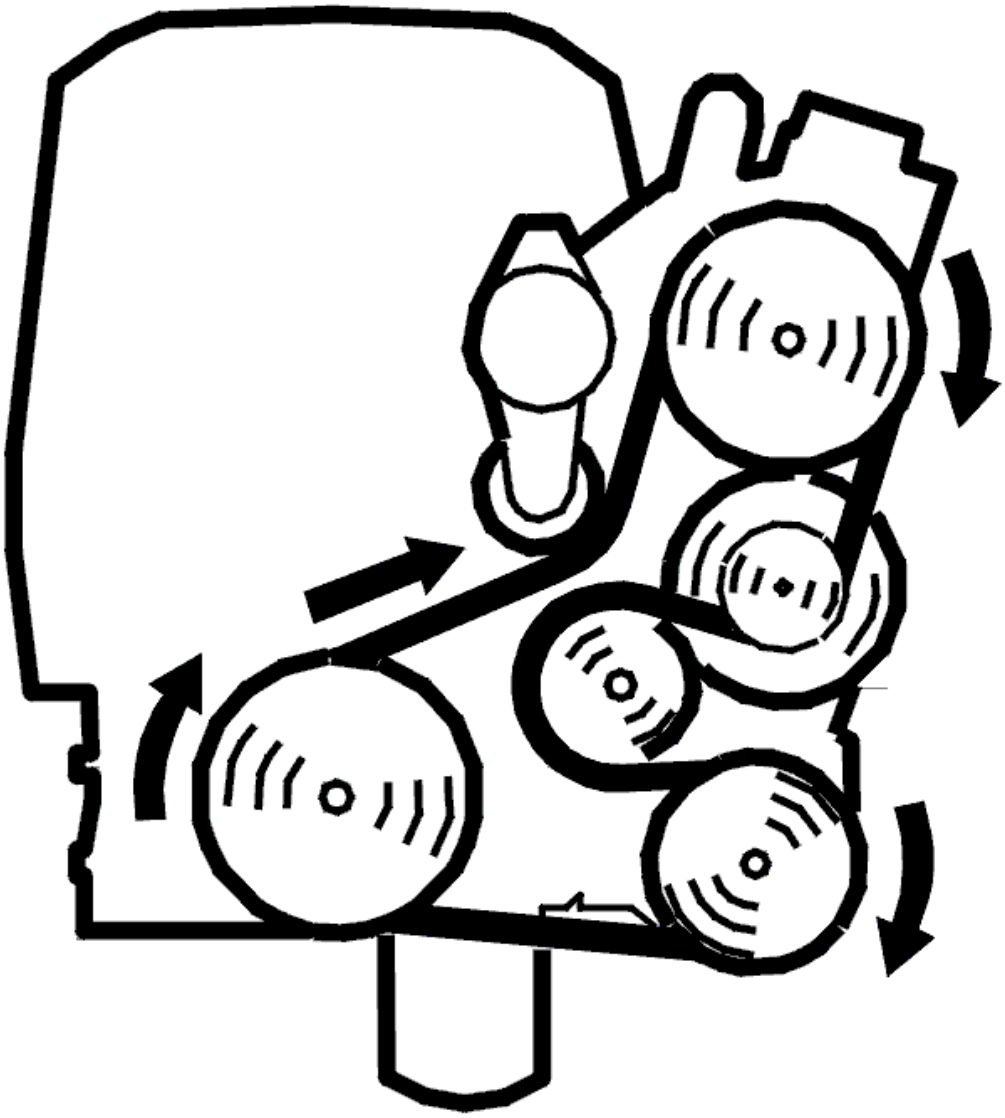

Fig. 87: Belt Routing / Engine Idling - Volvo
Courtesy of VOLVO CARS CORPORATION

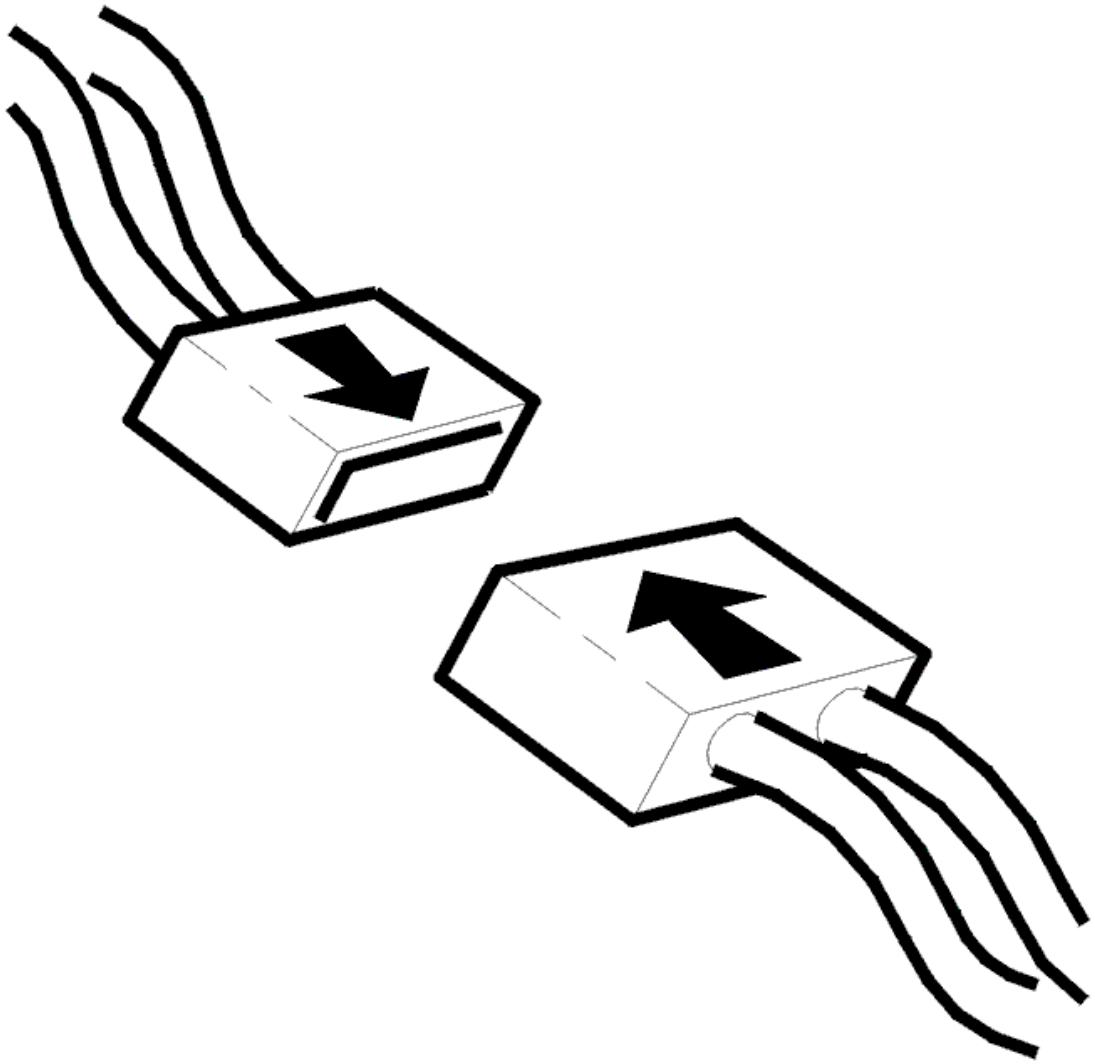

Fig. 88: Connecting Connector
Courtesy of VOLVO CARS CORPORATION

- Ignition off
- Reinstall the connectors, components etc.
- Start the engine to perform the diagnosis.

  Read off the diagnostic status and trouble status for the diagnostic trouble code.

  Check that the diagnosis is "Implemented" and that the trouble status is "No malfunction found". If the trouble status is "Malfunction found", this indicates defective function.

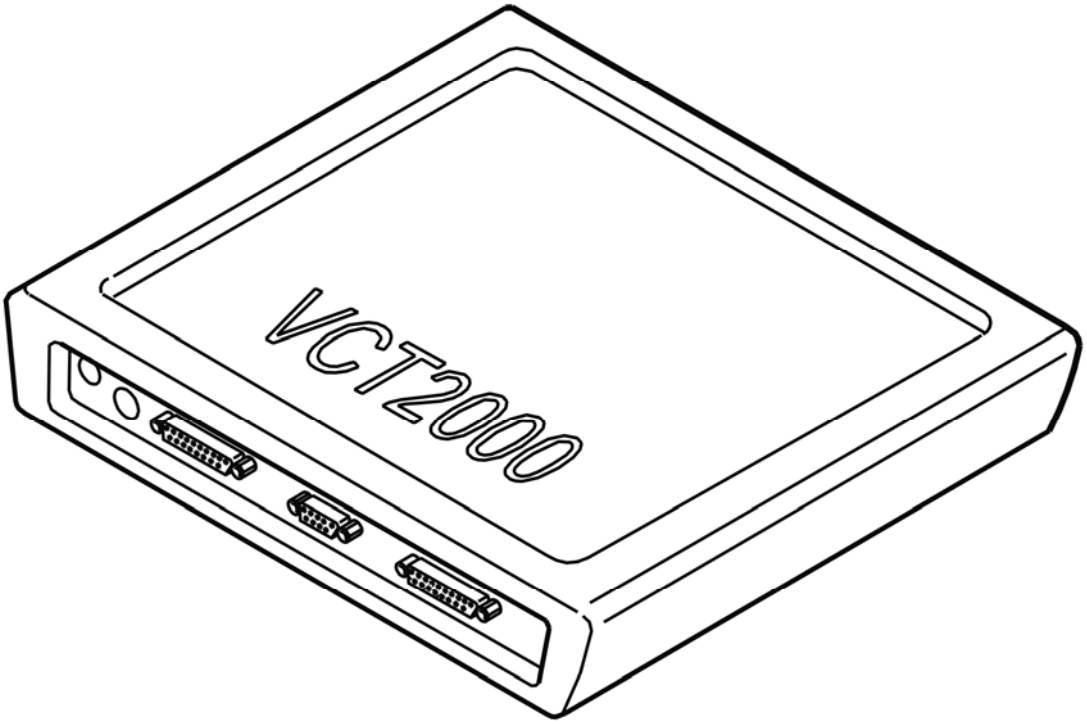

Fig. 89: Identifying VCT2000 Diagnostic Tool Symbol In VIDA
Courtesy of VOLVO CARS CORPORATION

Trouble status shows "No malfunction found"?

- **YES**

  VERIFIED: Troubleshooting has been completed.

- **NO**

  Refer to **INFORMATION**

INFORMATION

FAULT-TRACING INFORMATION

The fault should have been detected and remedied. As this is not the case fault-tracing has failed.

Exit fault-tracing for this diagnostic trouble code (DTC) or make another attempt.

ECM-P017068: FUEL TRIM (BANK 1). ALGORITHM BASED FAILURES. EVENT INFORMATION (B6324S; 2007-2010)

DIAGNOSTIC TROUBLE CODE (DTC) INFORMATION

Condition

NOTE: **This diagnostic trouble code (DTC) status is an event controlled diagnostic trouble code (DTC). An event controlled diagnostic trouble code (DTC) does not mean that there is a fault in the control module when it is active, but is designed as information.**

Engine control module (ECM) monitors the engine's heated oxygen sensor control. If the control module detects that heated oxygen sensor control is outside the limit values for a certain time when the engine is running, the diagnostic trouble code is generated.

The diagnostic trouble code (DTC) can be diagnosed when the engine is running.

Substitute Value

- Nothing.

Possible Source

- This diagnostic trouble code (DTC) is not caused by a fault that needs to be remedied.

Fault symptom[s]

- None.

FAULT-TRACING INFORMATION

see **FAULT-TRACING INFORMATION**

ECM-P017068: FUEL TRIM (BANK 1). ALGORITHM BASED FAILURES. EVENT INFORMATION (B6324S5; 2011-2012)

DIAGNOSTIC TROUBLE CODE (DTC) INFORMATION

see **DIAGNOSTIC TROUBLE CODE (DTC) INFORMATION**

FAULT-TRACING INFORMATION

see **FAULT-TRACING INFORMATION**

ECM-P017100: SYSTEM TOO LEAN (BANK 1). GENERAL FAILURE INFORMATION. NO SUB TYPE INFORMATION (B6324S; 2007-2010)

DIAGNOSTIC TROUBLE CODE (DTC) INFORMATION ECM-P017100

Condition

Engine Control Module (ECM) receives information from the heated oxygen sensor about fuel/air mixture in different load areas. If Engine Control Module (ECM) registers that fuel/air mixture deviates too much from target lambda, so that adaptations for bank 1 end up in any of its end-positions, the diagnostic trouble code is generated.

Substitute Value

- Nothing.

Possible Source

- Air leakage intake manifold.
- Air leakage, exhaust pipe.
- Low fuel pressure.
- Damaged mass air flow sensor.

Fault symptom[s]

- Malfunction indicator lamp (MIL) lit.
- Poor performance.
- Engine misfires.
- High idle RPM.

FAULT-TRACING

PREPARATORY CHECKS

Check and note which adaption area for bank 1 is faulty by going through the list of adaption areas.

The adaptation value is considered outside normal range if it is lower than 0.85 (engine runs rich) or higher than 1.15 (engine runs lean).

HINT: The ranges consist of a table where the first digit in the name designates RPM range and the second load range.

HINT: Thus, range 1.1 designates a case with low RPM with low load, and 6.6 a case with high RPM and high load.

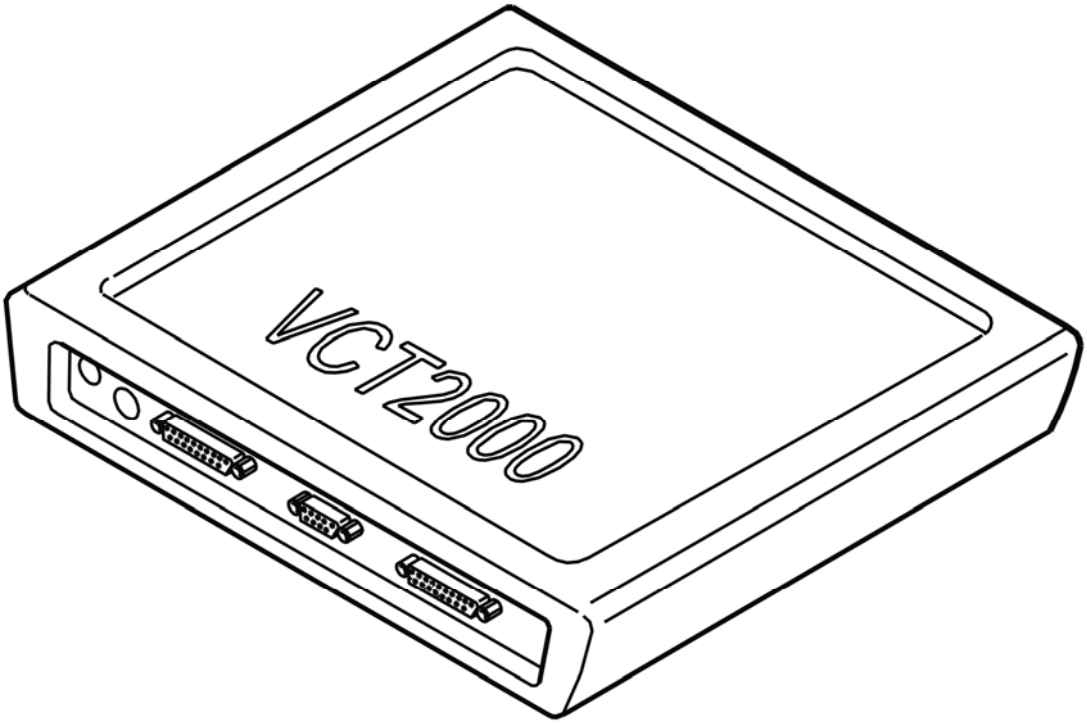

Fig. 90: Identifying VCT2000 Diagnostic Tool Symbol In VIDA
Courtesy of VOLVO CARS CORPORATION

- **Continue**

  Refer to **CHECKING SYSTEM**

CHECKING SYSTEM

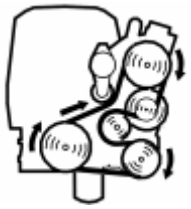

Fig. 91: Identifying Belt Routing
Courtesy of VOLVO CARS CORPORATION

HINT: If the fuel adaptations indicate too lean fuel/air mixture (adaptation value above 1.0) at idle, this indicates an air leak.

HINT: To find the problem, proceed as follows:

- Check the inlet system and exhaust system for leaks.

- Engine running.
- Check fuel pressure to, see if it is low.
- Ignition on
- Check residual pressure for too low residual pressure.

Remedy as necessary.

HINT: Normal fuel pressure at idle and warm engine shall be approx. 480 kPa.

HINT: The residual pressure when the engine is off and the ignition is on shall be approx. 100 kPa lower than during idle.

Other information

- see **CHECKING FOR AIR LEAKAGE IN THE EXHAUST SYSTEM**

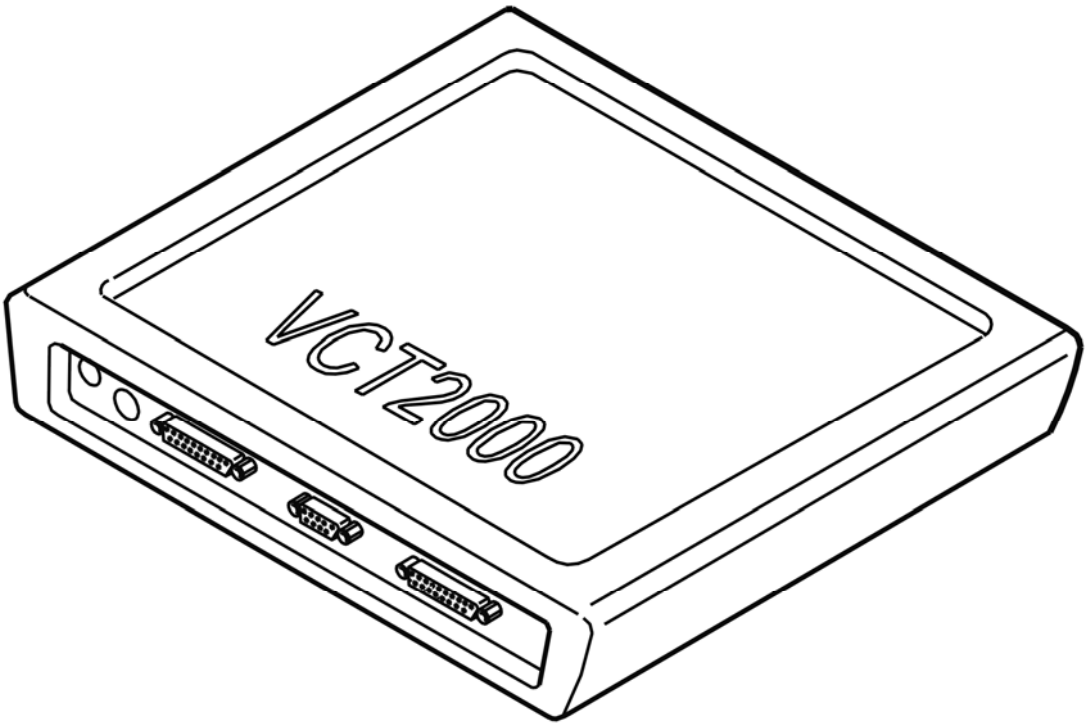

Fig. 92: Identifying VCT2000 Diagnostic Tool Symbol In VIDA
Courtesy of VOLVO CARS CORPORATION

- **Continue**

  Refer to **CHECKING MASS AIR FLOW SENSOR**

CHECKING MASS AIR FLOW SENSOR

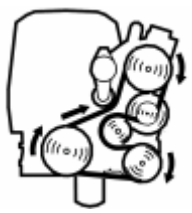

Fig. 93: Identifying Belt Routing
Courtesy of VOLVO CARS CORPORATION

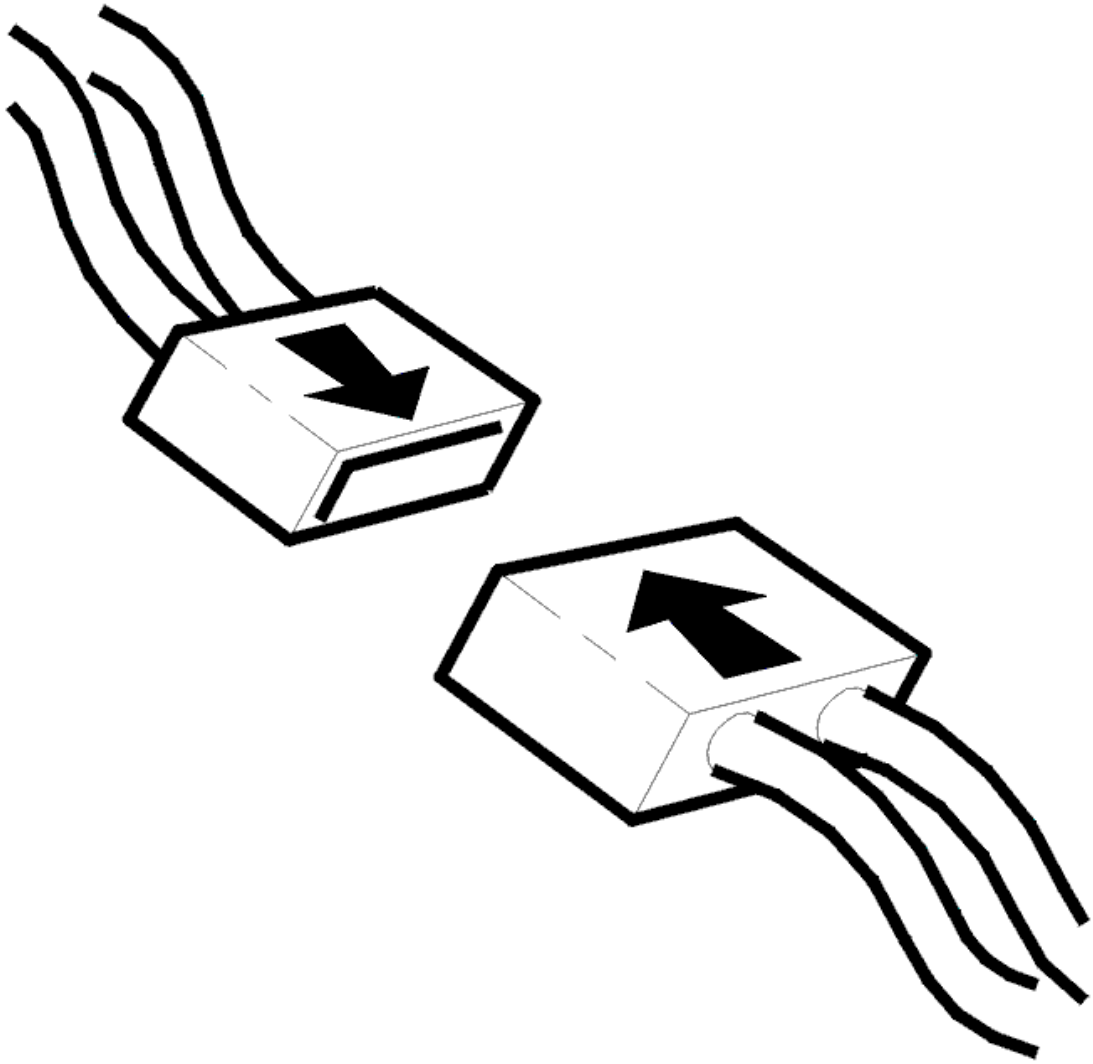

Fig. 94: Connecting Connector
Courtesy of VOLVO CARS CORPORATION

- Engine running.

Check and compare the calculated air mass with the actual air mass readout from the mass air flow sensor.

Try by measuring at different RPM.

HINT: Differences of more than approx. 20% between the signals indicate a malfunction of the mass air flow sensor.

HINT: Remedy as necessary.

NOTE: When replacing mass air flow sensor, repeat the check to verify that the problem has been solved with the replacement.

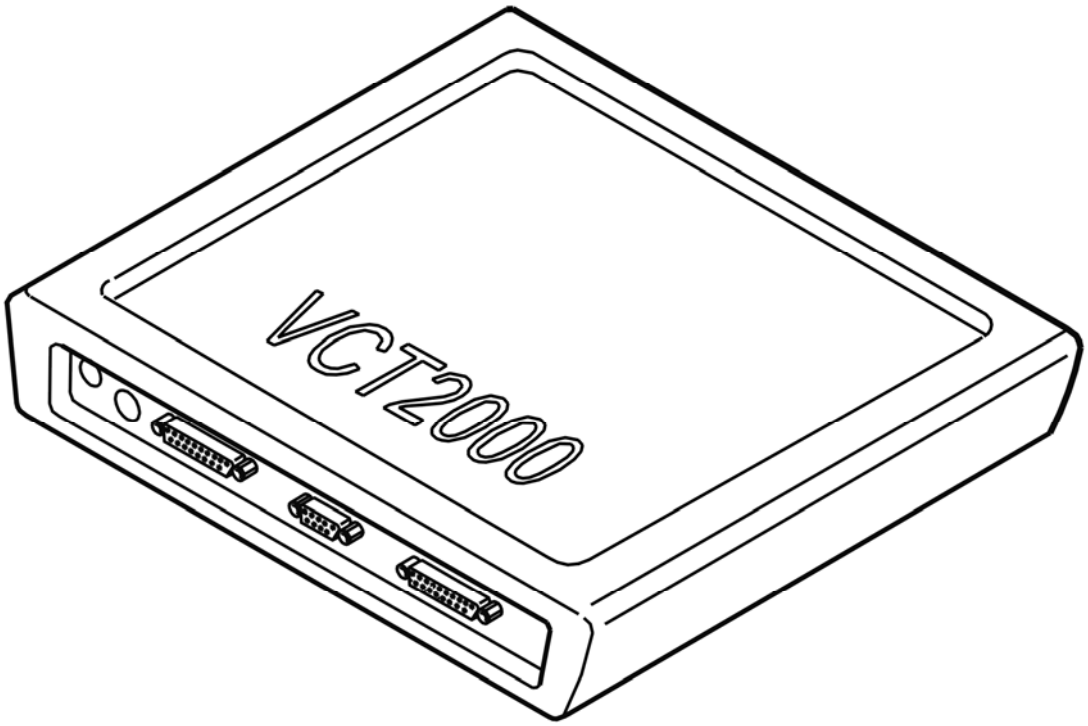

Fig. 95: Identifying VCT2000 Diagnostic Tool Symbol In VIDA
Courtesy of VOLVO CARS CORPORATION

- For more information about current fuel compensation, refer to **READOUT OF TOTAL FUEL COMPENSATION**.
- To continue, refer to **RESET ADAPTATIONS**

RESET ADAPTATIONS

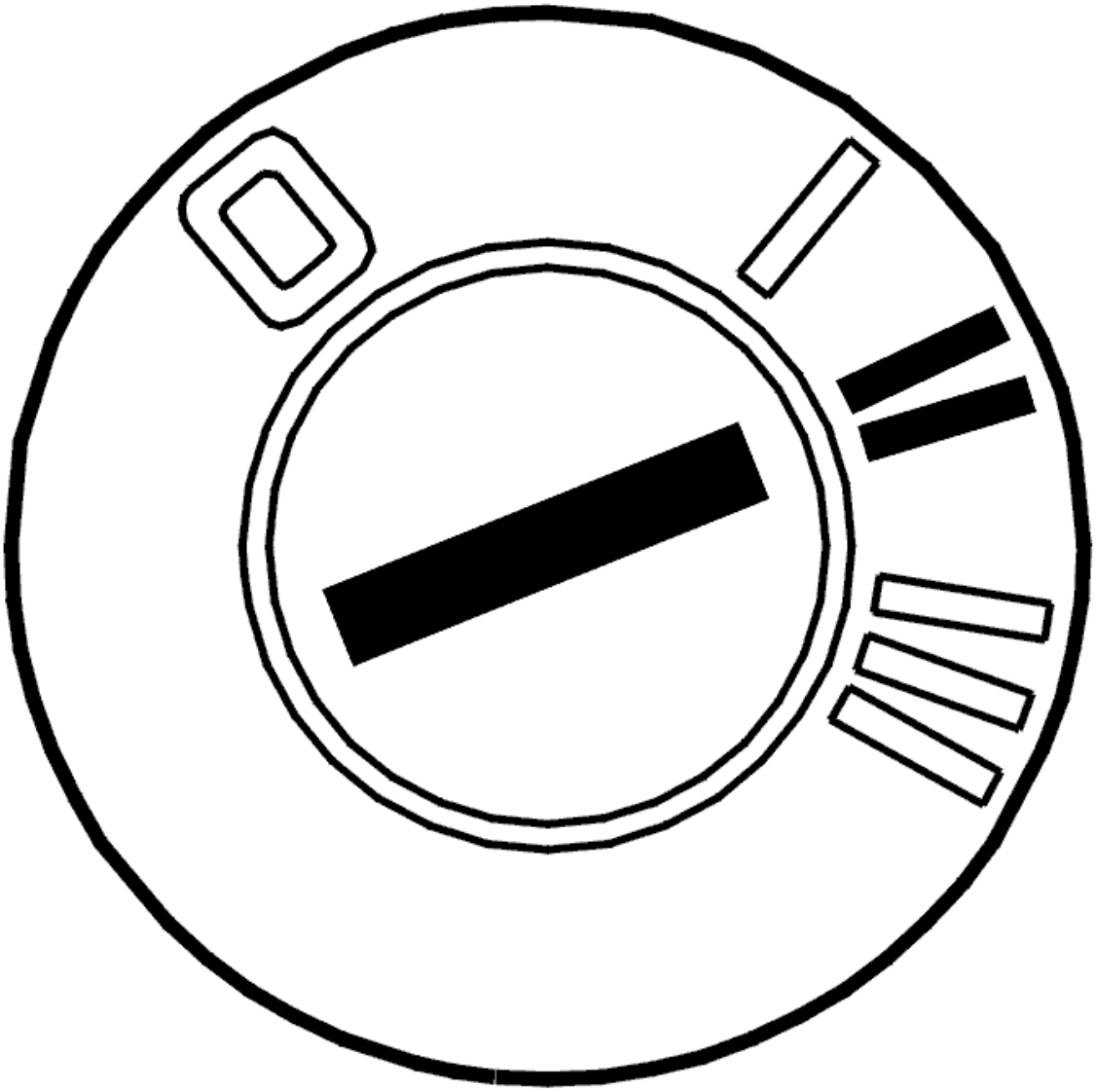

Fig. 96: Identifying Ignition ON
Courtesy of VOLVO CARS CORPORATION

- Turn off the engine.
- Ignition on

  Reset adaptations to zero using the VCT2000 (or appropriate scan tool).

  This is done to give the system a normal starting point. Thus it can be seen faster if the adaptations run off up or down.

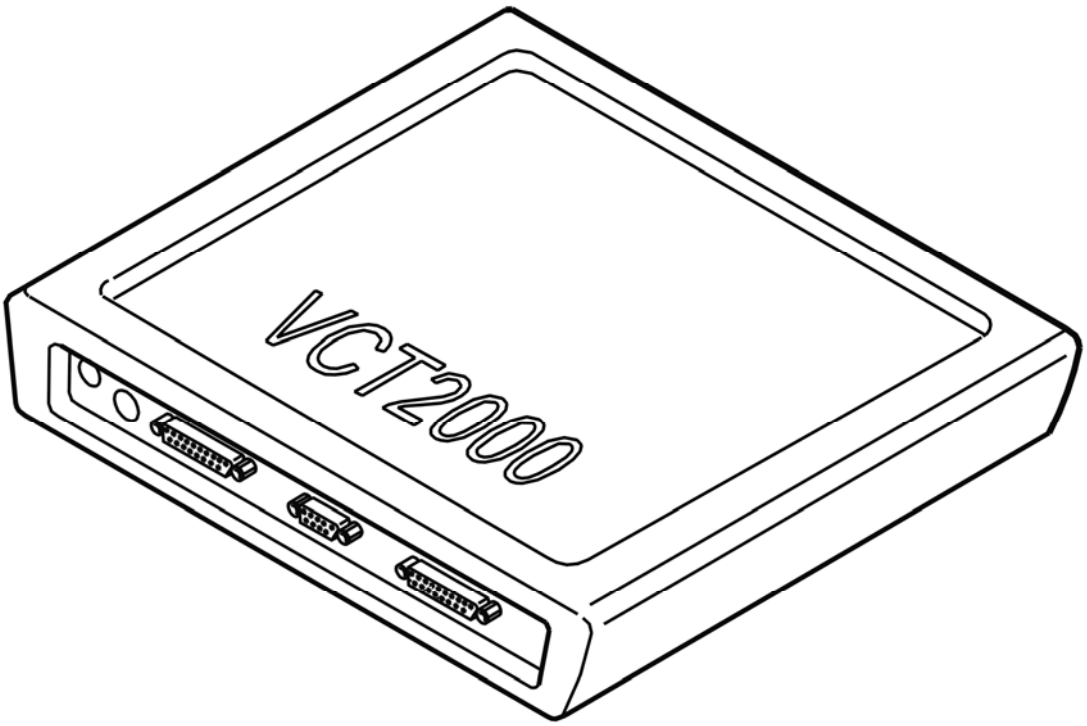

Fig. 97: Identifying VCT2000 Diagnostic Tool Symbol In VIDA
Courtesy of VOLVO CARS CORPORATION

- **Continue**

  Refer to **START ADAPTATIONS**

READOUT OF TOTAL FUEL COMPENSATION

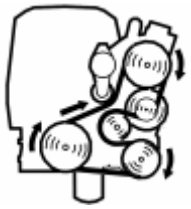

Fig. 98: Identifying Belt Routing
Courtesy of VOLVO CARS CORPORATION

- Engine running.
- For reading out total fuel compensation at every given moment, use the VCT2000 (or appropriate scan tool).

  HINT: The readout value shows the short-term fuel trim's and the long-term fuel trim's total compensation of the injection time in real time.

HINT: Positive values indicate additional fuel, negative values indicate reduction of additional fuel.

Try by measuring at different RPM with different engine load.

NOTE: Keep in mind that the EVAP-valve's addition of fuel vapors affect the readout. For example, squeeze the hose between the EVAP-valve and inlet pipe to minimize addition of fuel from the EVAP-system.

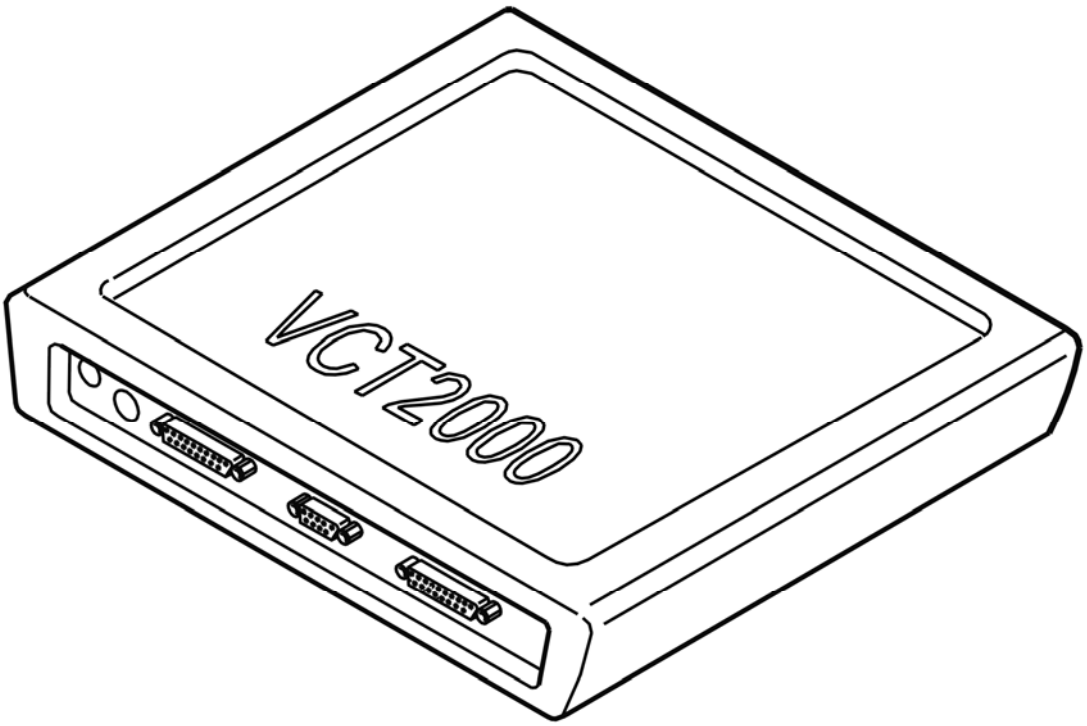

Fig. 99: Identifying VCT2000 Diagnostic Tool Symbol In VIDA
Courtesy of VOLVO CARS CORPORATION

- **Continue**

Refer to **RESET ADAPTATIONS**

START ADAPTATIONS

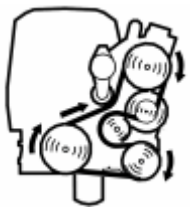

Fig. 100: Identifying Belt Routing

Courtesy of VOLVO CARS CORPORATION

Test-drive the vehicle on road and drive a little in different operating situations for 20 minutes, in order to complete as many adaptations as possible.

Check and note if any adaptation range is still incorrect by scrolling through the list with adaptation ranges.

The adaptation value is considered outside normal range if it is lower than 0.85 or higher than 1.15.

HINT: Also, perform a few full throttle accelerations to perform the adaptations that are not affected by normal driving.

For adaptation to start, certain conditions must be fulfilled

- Engine speed > or = 600 RPM.
- Engine temperature between 80-110°C.
- Adaptation active = executed.
- EVAP-valve not active = 0 µs.

HINT: At high fuel vaporization the EVAP-valve is active longer time and then it may be necessary to disconnect the hose between the EVAP-valve and the canister.

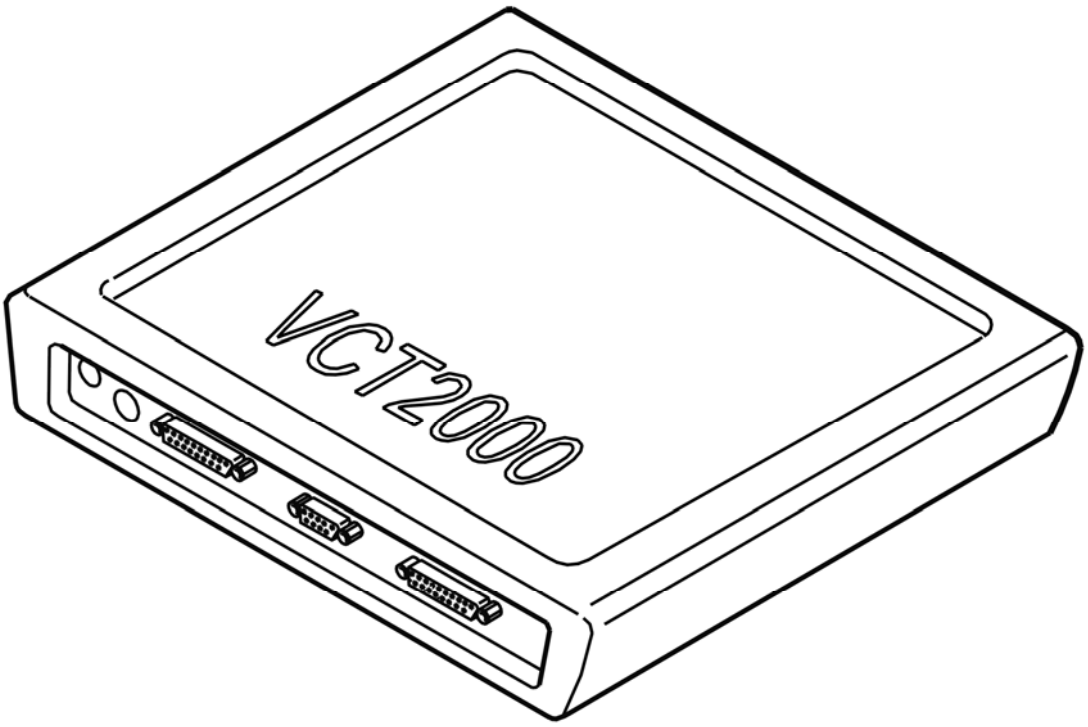

Fig. 101: Identifying VCT2000 Diagnostic Tool Symbol In VIDA

Courtesy of VOLVO CARS CORPORATION

Are these values OK?

- **YES**

  OKAY: Troubleshooting has been completed.

- **NO**

  Refer to **INFORMATION**

INFORMATION

FAULT-TRACING INFORMATION

The fault should have been detected and remedied. As this is not the case fault-tracing has failed.

Exit fault-tracing for this diagnostic trouble code (DTC) or make another attempt.

ECM-P017100: SYSTEM TOO LEAN (BANK 1). GENERAL FAILURE INFORMATION. NO SUB TYPE INFORMATION (B6324S5; 2011-2012)

DIAGNOSTIC TROUBLE CODE (DTC) INFORMATION ECM-P017100

see **DIAGNOSTIC TROUBLE CODE (DTC) INFORMATION ECM-P017100**

FAULT-TRACING

see **FAULT-TRACING**

ECM-P017100: SYSTEM TOO LEAN (BANK 1). GENERAL MALFUNCTION INFORMATION. NO INFORMATION ON MALFUNCTION TYPE (B8444S; 2005-2011)

DIAGNOSTIC TROUBLE CODE (DTC) INFORMATION ECM-P017100

Condition

Engine Control Module (ECM) receives information from the heated oxygen sensor about fuel/air mixture in different load areas. If Engine Control Module (ECM) registers that fuel/air mixture deviates too much from target lambda, so that adaptations for bank 1 end up in any of its end-positions, the diagnostic trouble code is generated.

Substitute Value

- Nothing.

Possible Source

- Too high ethanol content in fuel.
- Air leakage intake manifold.
- Air leakage, exhaust pipe.
- Low fuel pressure.
- Damaged mass air flow sensor.

Fault symptom[s]

- Malfunction indicator lamp (MIL) lit.
- Poor performance.
- Engine misfires.
- High idle RPM.

TROUBLESHOOTING ECM-P017100

PREPARATORY CHECKS

Check and note which adaption area for bank 1 is faulty by going through the list of adaption areas.

The adaptation value is considered outside normal range if it is lower than 0.85 (engine runs rich) or higher than 1.15 (engine runs lean).

HINT: The ranges consist of a table where the first digit in the name designates RPM range and the second load range.

HINT: Thus, range 1.1 designates a case with low RPM with low load, and 6.6 a case with high RPM and high load.

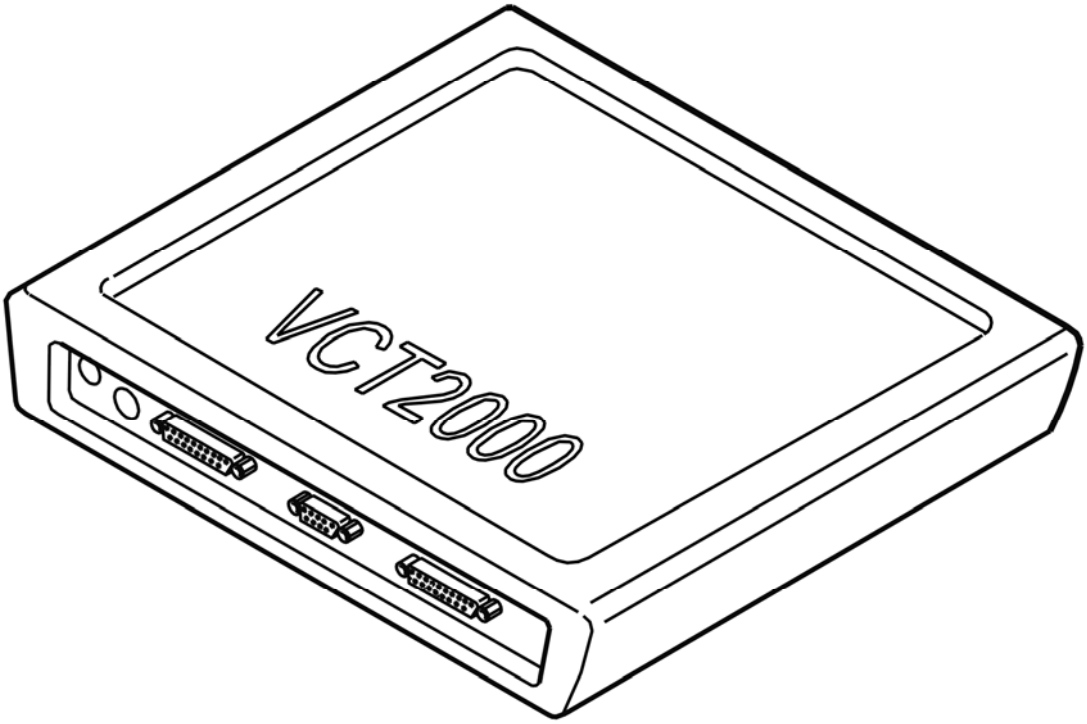

Fig. 102: Identifying VCT2000 Diagnostic Tool Symbol In VIDA
Courtesy of VOLVO CARS CORPORATION

- **Continue**

  Refer to **CHECKING ETHANOL CONTENT**

CHECKING THE SYSTEM

Fig. 103: Identifying Belt Routing
Courtesy of VOLVO CARS CORPORATION

HINT: If the fuel adaptations indicate too lean fuel/air mixture (adaptation value above 1.0) at idle, this indicates an air leak.

HINT: To find the problem, proceed as follows:

- Check the inlet system and exhaust system for leaks.

- Engine running.
- Check fuel pressure to, see if it is low.
- Ignition on
- Check residual pressure for too low residual pressure.

Remedy as necessary.

HINT: Normal fuel pressure at idle and warm engine shall be approx. 480 kPa.

HINT: The residual pressure when the engine is off and the ignition is on shall be approx. 100 kPa lower than during idle.

Other information

- see **AIR LEAKS IN THE INTAKE SYSTEM, CHECKING**
- see **CHECKING FOR AIR LEAKAGE IN THE EXHAUST SYSTEM**

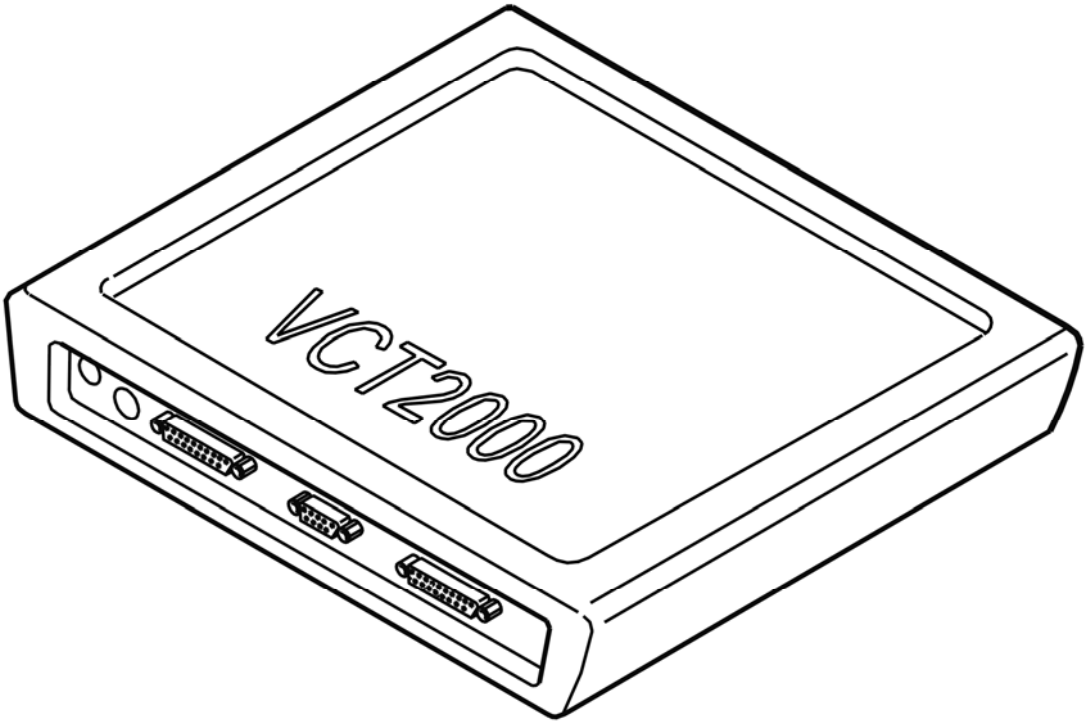

Fig. 104: Identifying VCT2000 Diagnostic Tool Symbol In VIDA
Courtesy of VOLVO CARS CORPORATION

- **Continue**

Refer to **CHECKING MASS AIR FLOW SENSOR**

CHECKING MASS AIR FLOW SENSOR

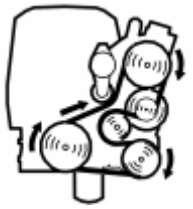

Fig. 105: Identifying Belt Routing
Courtesy of VOLVO CARS CORPORATION

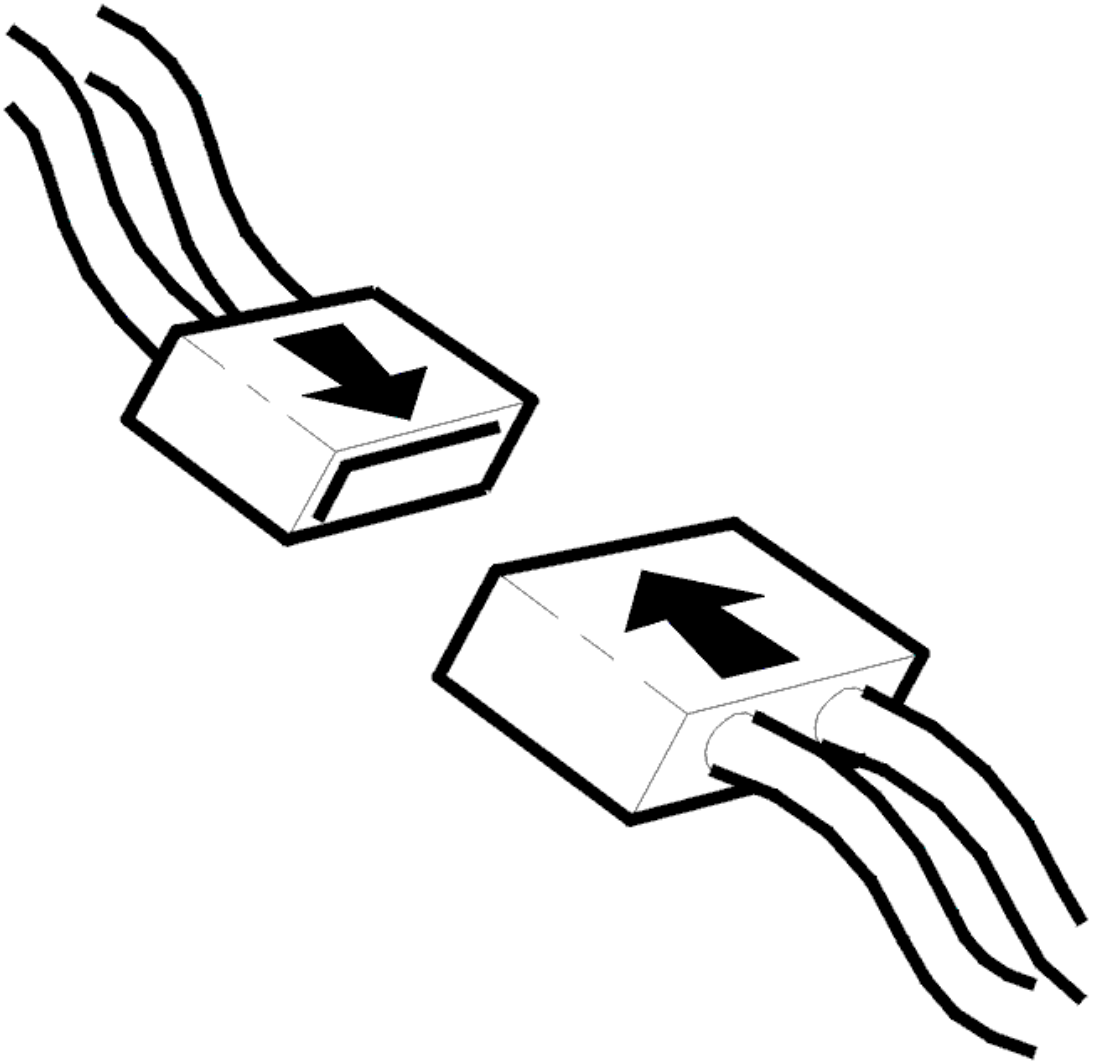

Fig. 106: Connecting Connector
Courtesy of VOLVO CARS CORPORATION

- Engine running.

  Check and compare the calculated air mass with the actual air mass readout from the mass air flow sensor.

  Try by measuring at different RPM.

  HINT: Differences of more than approx. 20% between the signals indicate a malfunction of the mass air flow sensor.

  HINT: Remedy as necessary.

  NOTE: When replacing mass air flow sensor, repeat the check to verify that the problem has been solved with the replacement.

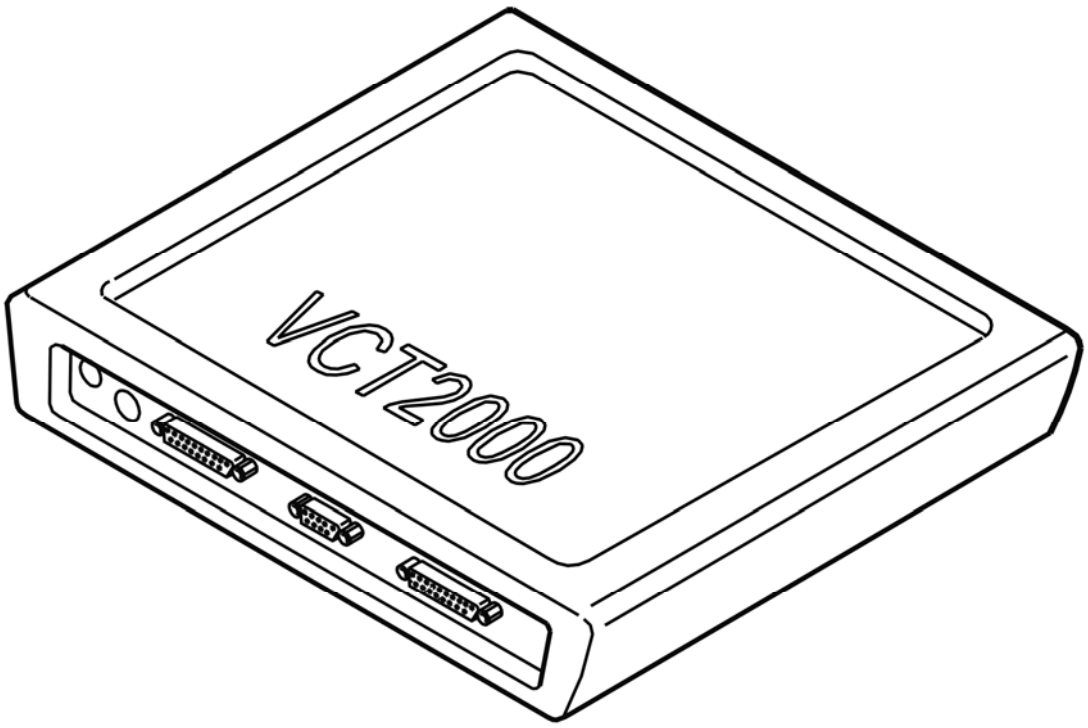

Fig. 107: Identifying VCT2000 Diagnostic Tool Symbol In VIDA
Courtesy of VOLVO CARS CORPORATION

- For more information about current fuel compensation, refer to **READOUT OF TOTAL FUEL COMPENSATION**.
- To continue, refer to **RESET ADAPTATIONS**

RESET ADAPTATIONS

Fig. 108: Identifying Ignition On Position
Courtesy of VOLVO CARS CORPORATION

- Turn off the engine.
- Ignition on

  Reset adaptations to zero using the VCT2000 (or appropriate scan tool).

  This is done to give the system a normal starting point. Thus it can be seen faster if the adaptations run off up or down.

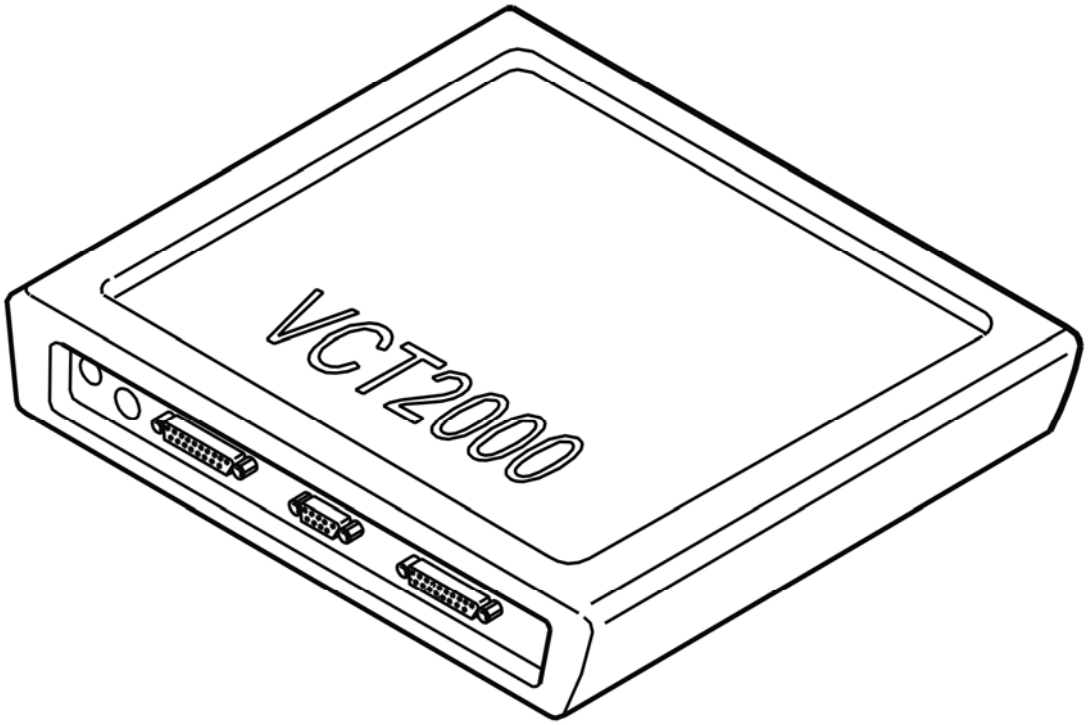

Fig. 109: Identifying VCT2000 Diagnostic Tool Symbol In VIDA
Courtesy of VOLVO CARS CORPORATION

- **Continue**

  Refer to **START ADAPTATIONS**

READOUT OF TOTAL FUEL COMPENSATION

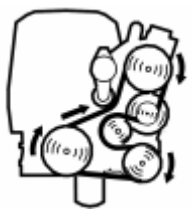

Fig. 110: Identifying Belt Routing
Courtesy of VOLVO CARS CORPORATION

- Engine running.
- For reading out total fuel compensation at every given moment, use the VCT2000 (or appropriate scan tool).

  HINT: The readout value shows the short-term fuel trim's and the long-term fuel trim's total compensation of the injection time in real time.

  HINT: Positive values indicate additional fuel, negative values indicate reduction of additional fuel.

  Try by measuring at different RPM with different engine load.

  NOTE: Keep in mind that the EVAP-valve's addition of fuel vapors affect the readout. For example, squeeze the hose between the EVAP-valve and inlet pipe to minimize addition of fuel from the EVAP-system.

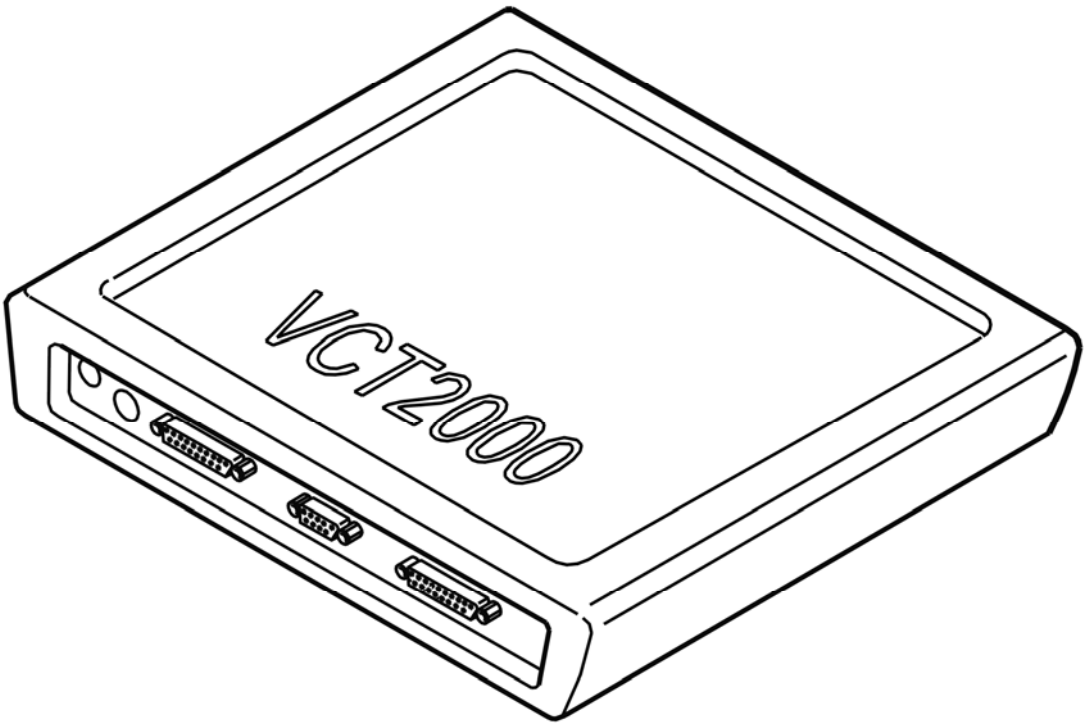

Fig. 111: Identifying VCT2000 Diagnostic Tool Symbol In VIDA
Courtesy of VOLVO CARS CORPORATION

- **Continue**

  Refer to **RESET ADAPTATIONS**

START ADAPTATIONS

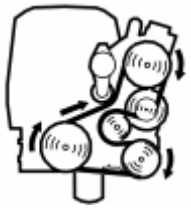

Fig. 112: Identifying Belt Routing
Courtesy of VOLVO CARS CORPORATION

Test-drive the vehicle on road and drive a little in different operating situations for 20 minutes, in order to complete as many adaptations as possible.

Check and note if any adaptation range is still incorrect by scrolling through the list with adaptation ranges.

The adaptation value is considered outside normal range if it is lower than 0.85 or higher than 1.15.

HINT: Also, perform a few full throttle accelerations to perform the adaptations that are not affected by normal driving.

For adaptation to start, certain conditions must be fulfilled

- Engine speed > or = 600 RPM.
- Engine temperature between 80-110°C.
- Adaptation active = executed.
- EVAP-valve not active = 0 µs.

HINT: At high fuel vaporization the EVAP-valve is active longer time and then it may be necessary to disconnect the hose between the EVAP-valve and the canister.

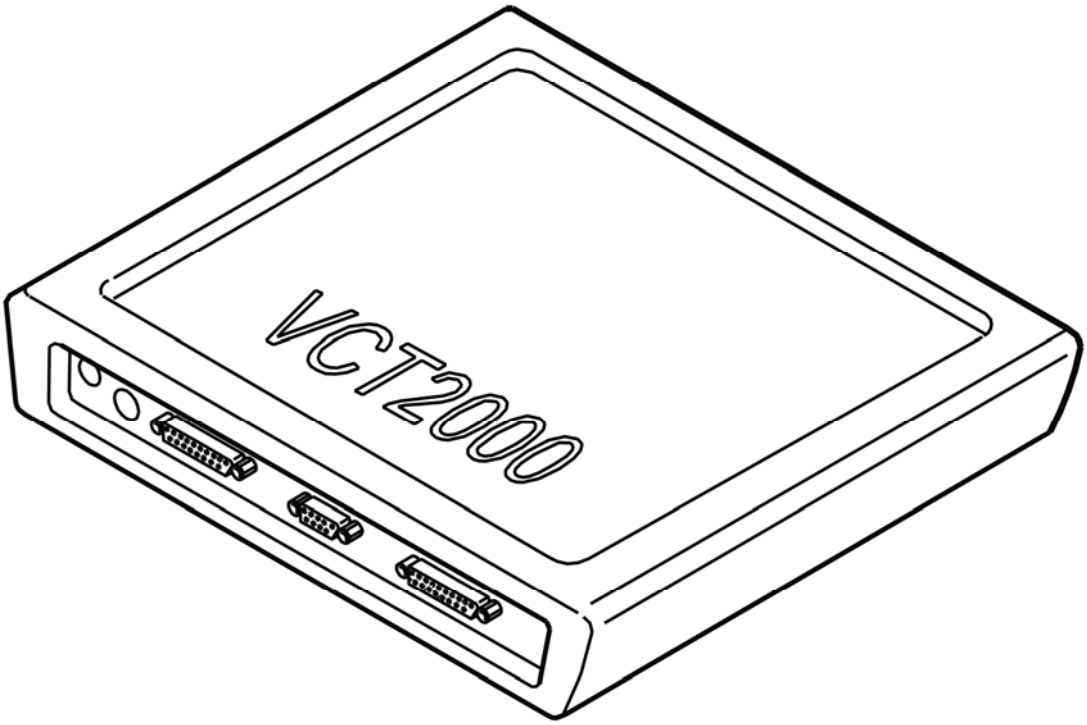

Fig. 113: Identifying VCT2000 Diagnostic Tool Symbol In VIDA
Courtesy of VOLVO CARS CORPORATION

Are these values OK?

- **YES**

  OKAY: Troubleshooting has been completed.

- **NO**

Refer to **INFORMATION**

CHECKING ETHANOL CONTENT

Fig. 114: Identifying Ignition On Position
Courtesy of VOLVO CARS CORPORATION

HINT: The cause of the symptom and/or diagnostic trouble code may be that the vehicle has been refuelled with incorrect fuel for that vehicle. The fuel system contains fuel with too high ethanol content.

The energy content in ethanol-diluted fuel is lower than in pure gasoline. This means that the control module compensates for the lower energy content, by increasing the injection volume, to be able to reach lambda=1 at the front heated oxygen sensor. This compensation is normally called "Front lambda control slow" or "Lambda integrator", and varies to compensate for the vehicle's status in the form of component spread, small air leaks, wear, etc. The value of this compensation in the ideal case is 1.0 for pure gasoline. Increased ethanol content of the fuel increases the compensation by approx. 0.05 per 10% ethanol dilution.

The control module is designed to handle an ethanol dilution up to 25%. In combination with other deviations from the ideal case, however, lower ethanol content may be enough to cause customer symptoms. This mainly occurs at engine start with cool engine at outdoor temperatures below 0 °C. Then the diagnostic trouble code may also be set for the engine running on too lean mixture.

NOTE: **In a vehicle intended for gasoline, only pure gasoline shall be used. Even if engine start/operation works, other fuel-related components in the vehicle may be damaged by too high ethanol content.**

- Measure the ethanol content of the fuel according to the instructions below.

  If measured ethanol content is above 25%, then ethanol dilution is the likely cause of the symptom and/or to the diagnostic trouble code being stored.

  If measured ethanol content is below 25%, symptoms and/or diagnostic trouble code may have been caused by earlier occurrence of incorrect fuel in the system for that vehicle.

  HINT: Check refuelling history by talking to customer.

  If nothing indicates incorrect fuel, neither now nor earlier, continue troubleshooting to check other possible causes of faults.

Other information

- see **MEASURING THE ETHANOL CONTENT**
- **Continue**

  Refer to **CHECKING THE SYSTEM**

INFORMATION

FAULT-TRACING INFORMATION

The fault should have been detected and remedied. As this is not the case fault-tracing has failed.

Exit fault-tracing for this diagnostic trouble code (DTC) or make another attempt.

ECM-P017200: SYSTEM TOO RICH (BANK 1). GENERAL FAILURE INFORMATION. NO SUB TYPE INFORMATION (B6324S; 2007-2010)

DIAGNOSTIC TROUBLE CODE (DTC) INFORMATION ECM-P017200

Condition

Engine Control Module (ECM) receives information from the heated oxygen sensor about fuel/air mixture in different load areas. If Engine Control Module (ECM) registers that fuel/air mixture deviates too much from target lambda, so that adaptations for bank 1 end up in any of its end-positions, the diagnostic trouble code is generated.

Substitute Value

- Nothing.

Possible Source

- Clogged air filter.
- Oil level too high.
- Contaminated engine oil (gasoline mixed in oil).
- Leaking injectors.
- Leaking EVAP-valve
- High fuel pressure.
- Damaged mass air flow sensor.

Fault symptom[s]

- Malfunction indicator lamp (MIL) lit.
- Poor performance.
- Engine misfires.

FAULT-TRACING

PREPARATORY CHECKS

Check and note which adaption area for bank 1 is faulty by going through the list of adaption areas.

The adaptation value is considered outside normal range if it is lower than 0.85 (engine runs rich) or higher than 1.15 (engine runs lean).

HINT: The ranges consist of a table where the first digit in the name designates RPM range and the second load range.

HINT: Thus, range 1.1 designates a case with low RPM with low load, and 6.6 a case with high RPM and high load.

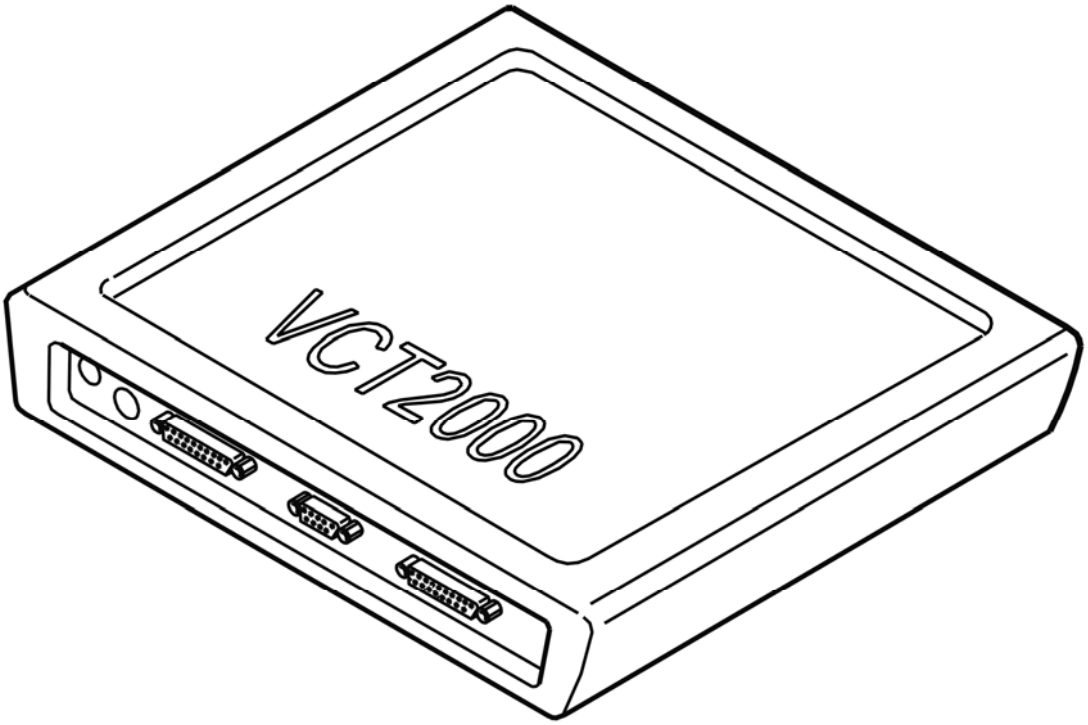

Fig. 115: Identifying VCT2000 Diagnostic Tool Symbol In VIDA
Courtesy of VOLVO CARS CORPORATION

- **Continue**

  Refer to **CHECKING SYSTEM**

CHECKING SYSTEM

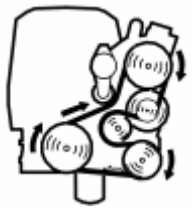

Fig. 116: Identifying Belt Routing
Courtesy of VOLVO CARS CORPORATION

- Check the air filter. Check for blockage.

HINT: If the fuel adaptations indicate too rich fuel/air mixture (adaptation value below 1.0) in several adaptation ranges, this indicates a fuel malfunction, e. g., too high fuel pressure.

HINT: To find the problem, proceed as follows:

- Check that the engine's oil level is not too high.

  HINT: The adaptations may show rich if several cold starts have been performed with short subsequent driving time, e. g., moving of vehicles, and the engine oil has thus been contaminated by gasoline. This affect on the adaptations disappears after a period of driving due to combustion of the fuel vapors by the engine.

  - Check the EVAP-valve for leakage.

  HINT: A valve that does not seal constantly leaks fuel vapors, which thus affect the adaptations.

- Engine running.
- Check fuel pressure for high fuel pressure.
- Ignition on
- Check residual pressure for too low residual pressure.

Remedy as necessary.

HINT: Normal fuel pressure at idle and warm engine shall be approx. 480 kPa.

HINT: The residual pressure when the engine is off and the ignition is on shall be approx. 100 kPa lower than during idle.

HINT: If the residual pressure is too low, one malfunction cause may be leaking (non-sealing) injectors, for example.

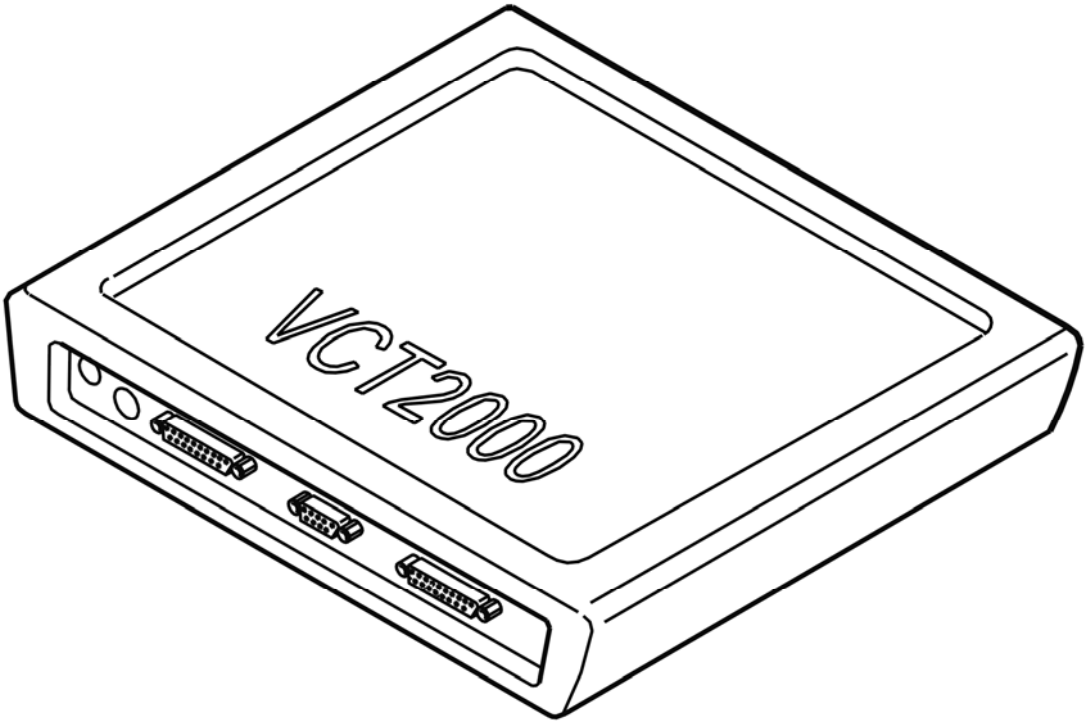

Fig. 117: Identifying VCT2000 Diagnostic Tool Symbol In VIDA
Courtesy of VOLVO CARS CORPORATION

- **Continue**

  Refer to **CHECKING MASS AIR FLOW SENSOR**

CHECKING MASS AIR FLOW SENSOR

Fig. 118: Identifying Belt Routing
Courtesy of VOLVO CARS CORPORATION

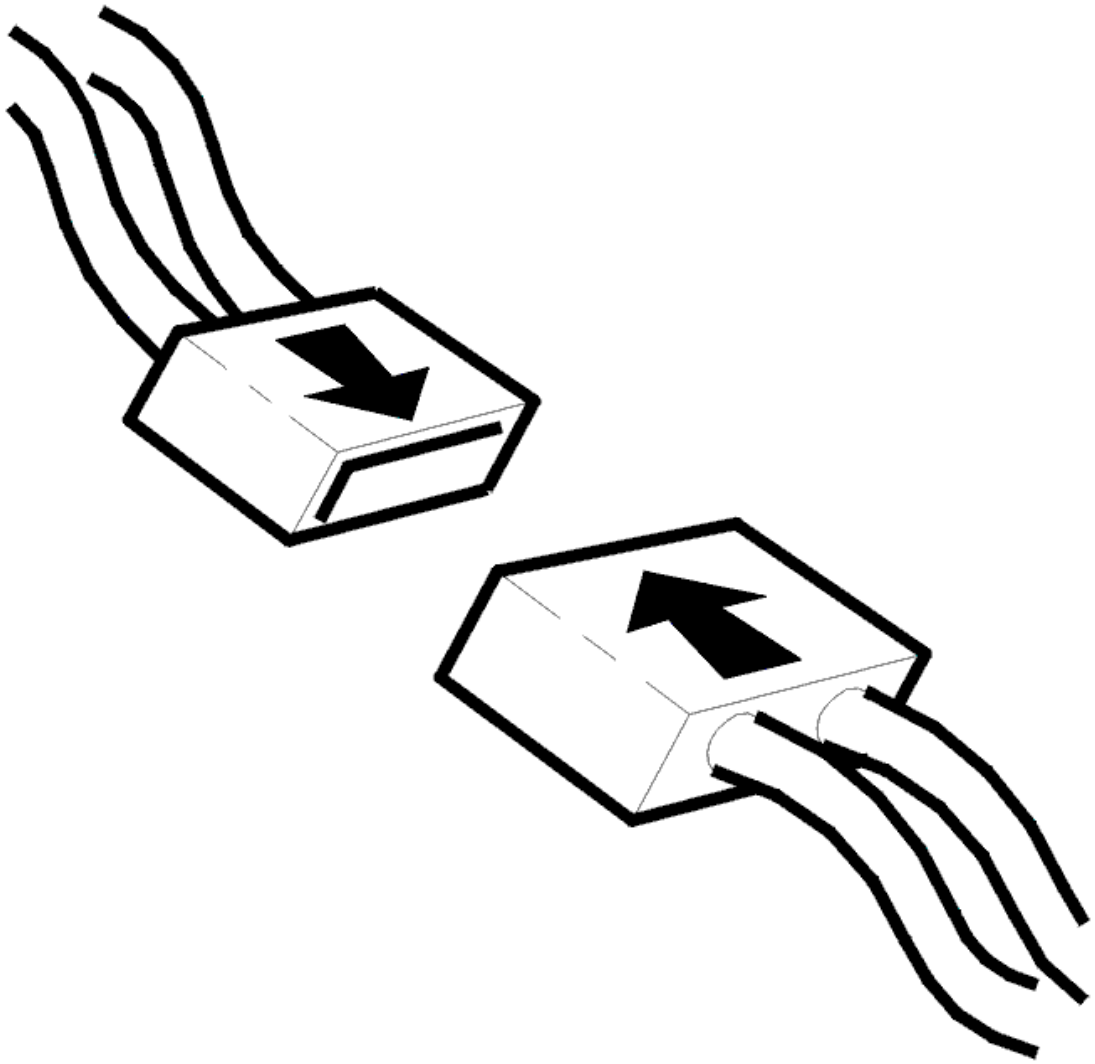

Fig. 119: Connecting Connector
Courtesy of VOLVO CARS CORPORATION

- Engine running.

  Check and compare the calculated air mass with the actual air mass readout from the mass air flow sensor.

  Try by measuring at different RPM.

  HINT: Differences of more than approx. 20% between the signals indicate a malfunction of the mass air flow sensor.

  HINT: Remedy as necessary.

  NOTE: When replacing mass air flow sensor, repeat the check to verify that the

problem has been solved with the replacement.

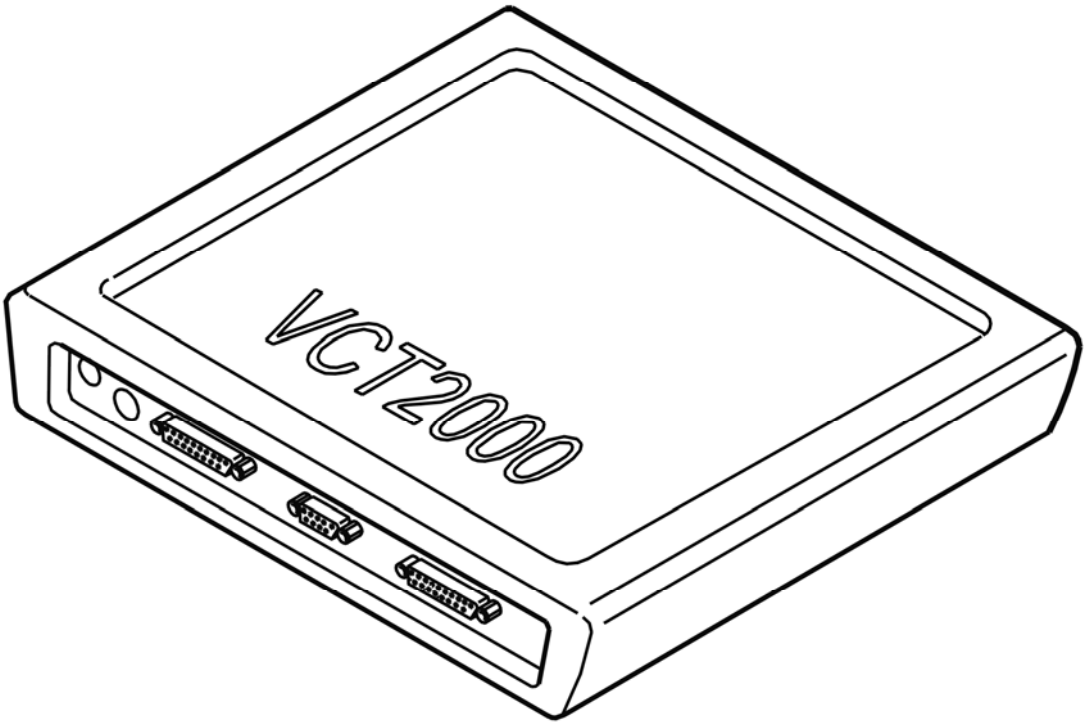

Fig. 120: Identifying VCT2000 Diagnostic Tool Symbol In VIDA
Courtesy of VOLVO CARS CORPORATION

- For more information about current fuel compensation, refer to **READOUT OF TOTAL FUEL COMPENSATION**.
- To continue, refer to **RESET ADAPTATIONS**

RESET ADAPTATIONS

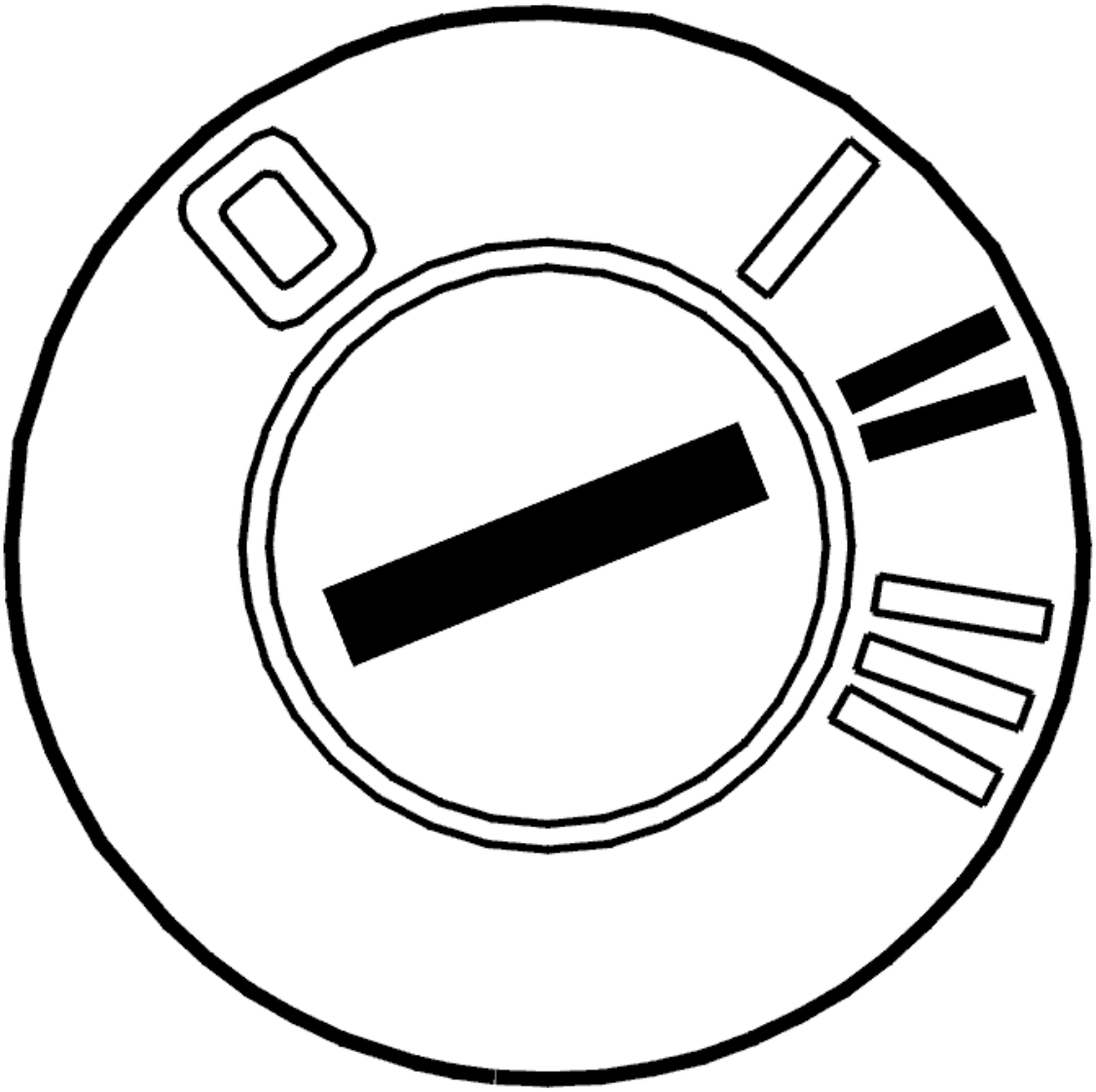

Fig. 121: Identifying Ignition ON
Courtesy of VOLVO CARS CORPORATION

- Turn off the engine.
- Ignition on

  Reset adaptations to zero using the VCT2000 (or appropriate scan tool).

  This is done to give the system a normal starting point. Thus it can be seen faster if the adaptations run off up or down.

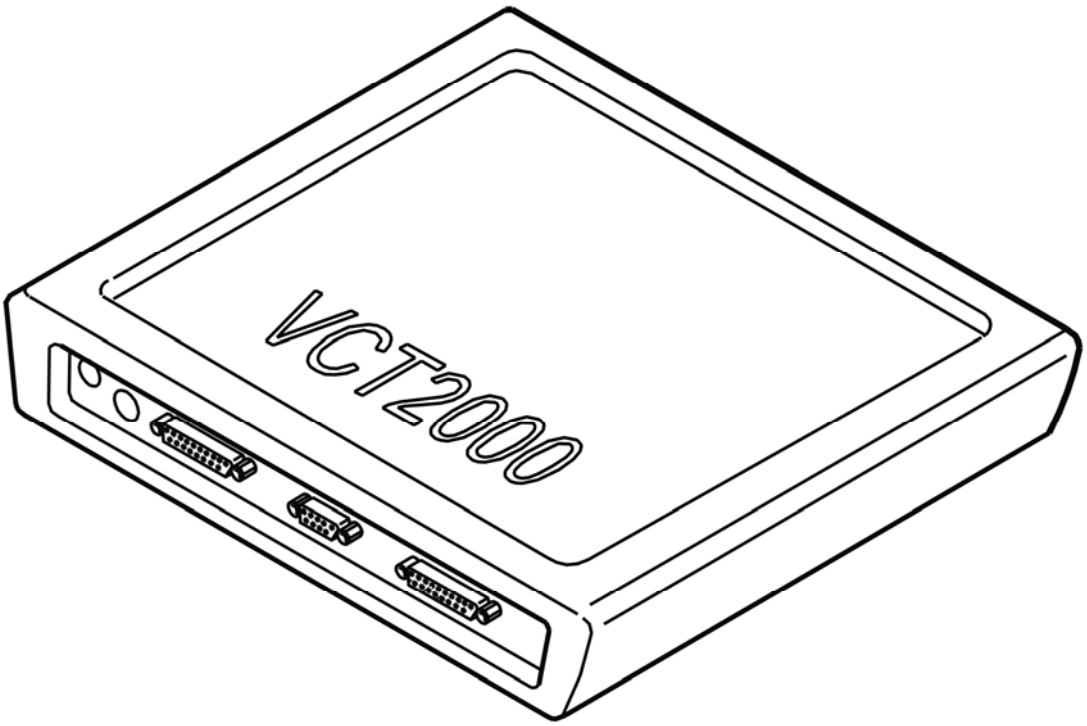

Fig. 122: Identifying VCT2000 Diagnostic Tool Symbol In VIDA
Courtesy of VOLVO CARS CORPORATION

- **Continue**

  Refer to **START ADAPTATIONS**

READOUT OF TOTAL FUEL COMPENSATION

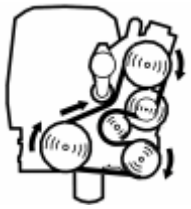

Fig. 123: Identifying Belt Routing
Courtesy of VOLVO CARS CORPORATION

- Engine running.
- For reading out total fuel compensation at every given moment, use the VCT2000 (or appropriate scan tool).

  HINT: The readout value shows the short-term fuel trim's and the long-term fuel trim's total compensation of the injection time in real time.

HINT: Positive values indicate additional fuel, negative values indicate reduction of additional fuel.

Try by measuring at different RPM with different engine load.

NOTE: Keep in mind that the EVAP-valve's addition of fuel vapors affect the readout. For example, squeeze the hose between the EVAP-valve and inlet pipe to minimize addition of fuel from the EVAP-system.

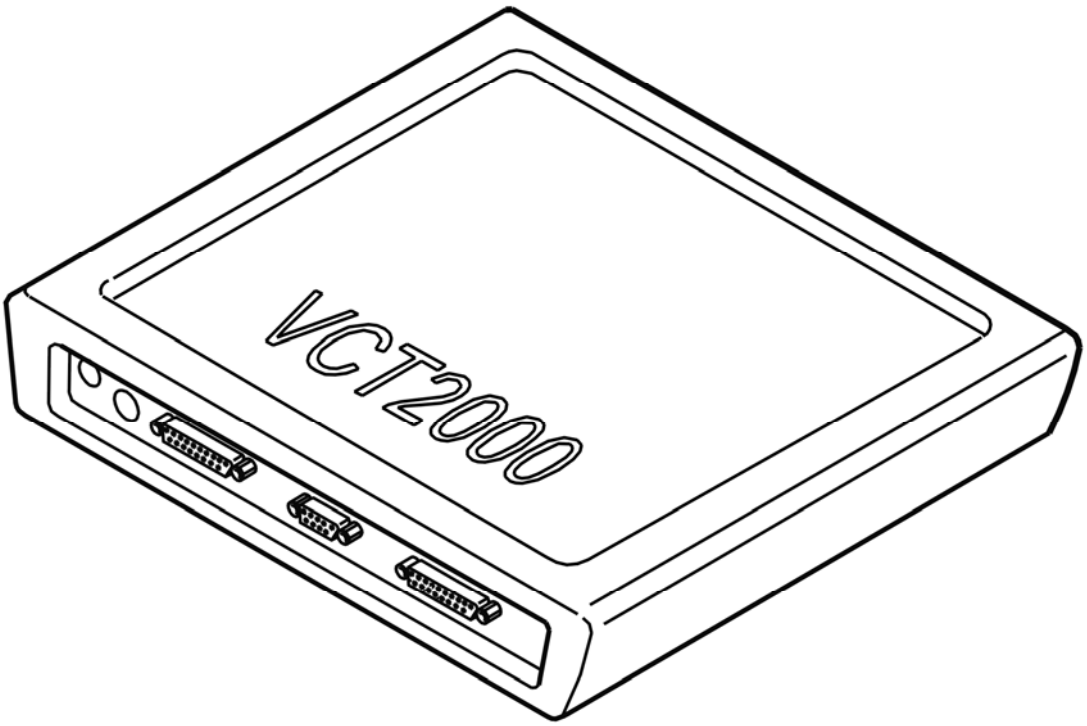

Fig. 124: Identifying VCT2000 Diagnostic Tool Symbol In VIDA
Courtesy of VOLVO CARS CORPORATION

- **Continue**

Refer to **RESET ADAPTATIONS**

START ADAPTATIONS

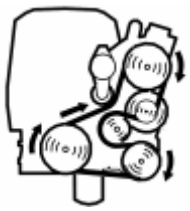

Fig. 125: Identifying Belt Routing

Courtesy of VOLVO CARS CORPORATION

Test-drive the vehicle on road and drive variably for 20 minutes, this is to perform as many adaptations as possible.

Check and note if any adaptation range is still incorrect by scrolling through the list with adaptation ranges.

The adaptation value is considered outside normal range if it is lower than 0.85 or higher than 1.15.

HINT: Also, perform a few full throttle accelerations to perform the adaptations that are not affected by normal driving.

For adaptation to start, certain conditions must be fulfilled

- Engine speed > or = 600 RPM.
- Engine temperature between 80-110°C.
- Adaptation active = executed.
- EVAP-valve not active = 0 µs.

HINT: At high fuel vaporization the EVAP-valve is active longer time and then it may be necessary to disconnect the hose between the EVAP-valve and the canister.

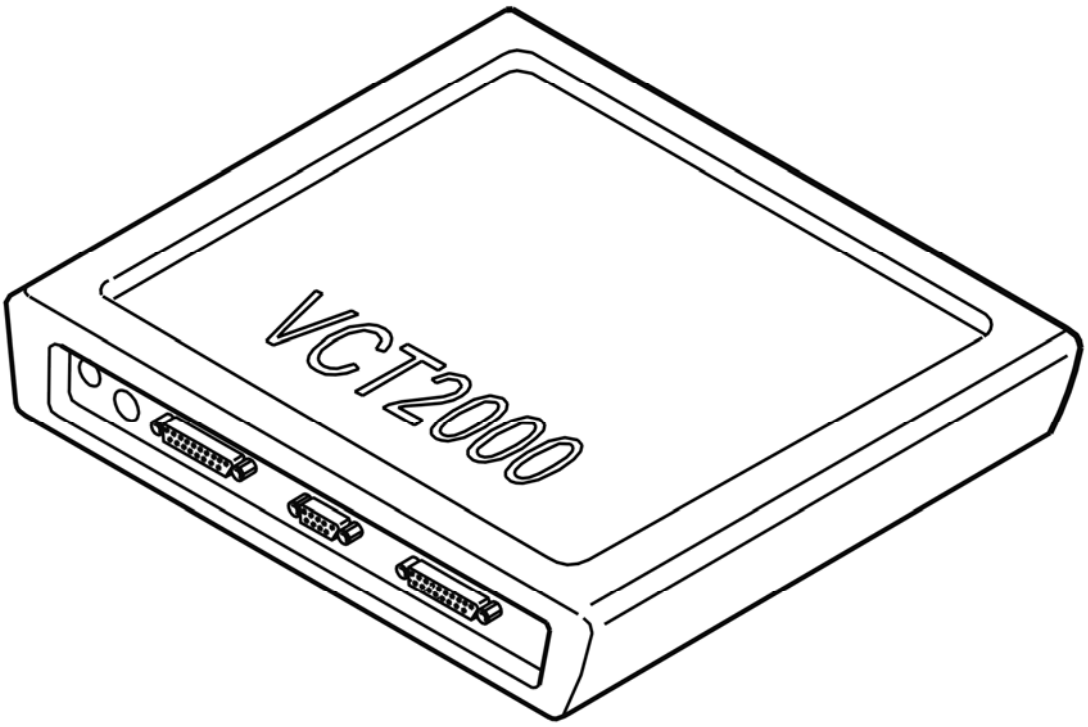

Fig. 126: Identifying VCT2000 Diagnostic Tool Symbol In VIDA

Courtesy of VOLVO CARS CORPORATION

Are these values OK?

- **YES**

  OKAY: Troubleshooting has been completed.

- **NO**

  Refer to **INFORMATION**

INFORMATION

FAULT-TRACING INFORMATION

The fault should have been detected and remedied. As this is not the case fault-tracing has failed.

Exit fault-tracing for this diagnostic trouble code (DTC) or make another attempt.

ECM-P017200: SYSTEM TOO RICH (BANK 1). GENERAL FAILURE INFORMATION. NO SUB TYPE INFORMATION (B6324S5; 2011-2012)

DIAGNOSTIC TROUBLE CODE (DTC) INFORMATION ECM-P017200

see **DIAGNOSTIC TROUBLE CODE (DTC) INFORMATION ECM-P017200**

FAULT-TRACING

see **FAULT-TRACING**

ECM-P017200: SYSTEM TOO RICH (BANK 1). GENERAL MALFUNCTION INFORMATION. NO INFORMATION ON MALFUNCTION TYPE (B8444S; 2005-2011)

DIAGNOSTIC TROUBLE CODE (DTC) INFORMATION ECM-P017200

Condition

Engine Control Module (ECM) receives information from the heated oxygen sensor about fuel/air mixture in different load areas. If Engine Control Module (ECM) registers that fuel/air mixture deviates too much from target lambda, so that adaptations for bank 1 end up in any of its end-positions, the diagnostic trouble code is generated.

Substitute Value

- Nothing.

Possible Source

- Clogged air filter.
- Oil level too high.
- Contaminated engine oil (gasoline mixed in oil).
- Leaking injectors.
- Leaking EVAP-valve
- High fuel pressure.
- Damaged mass air flow sensor.
- Loose components in the induction system.

Fault symptom[s]

- Malfunction indicator lamp (MIL) lit.
- Poor performance.
- Engine misfires.

TROUBLESHOOTING ECM-P017200

PREPARATORY CHECKS

Check and note which adaption area for bank 1 is faulty by going through the list of adaption areas.

The adaptation value is considered outside normal range if it is lower than 0.85 (engine runs rich) or higher than 1.15 (engine runs lean).

HINT: The ranges consist of a table where the first digit in the name designates RPM range and the second load range.

HINT: Thus, range 1.1 designates a case with low RPM with low load, and 6.6 a case with high RPM and high load.

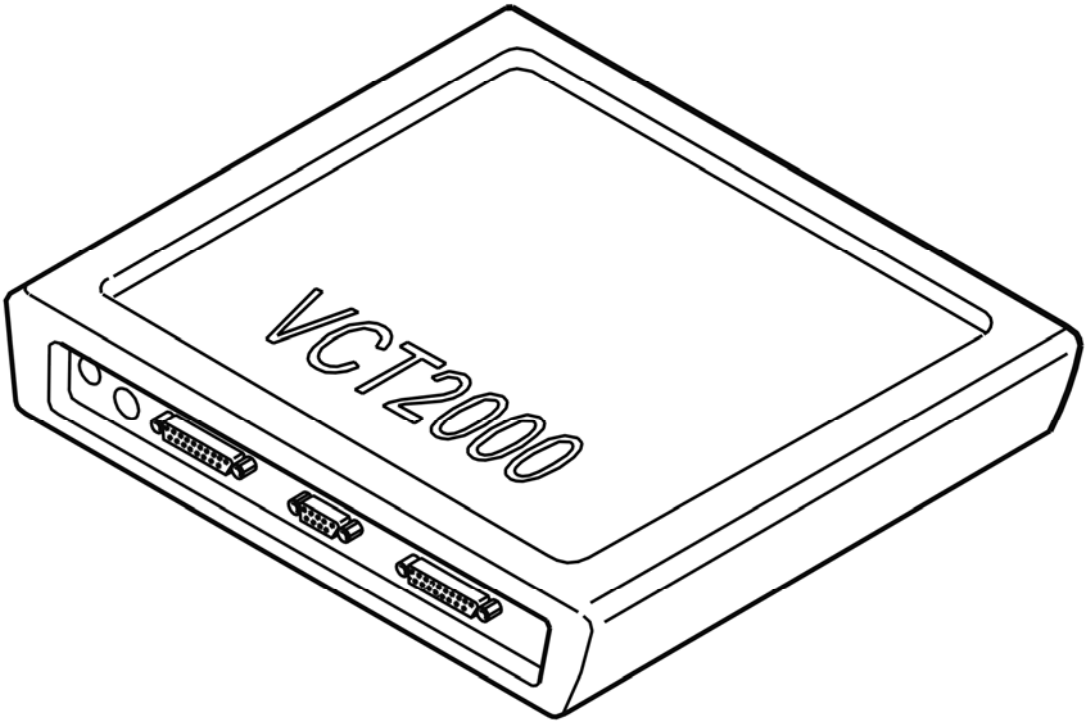

Fig. 127: Identifying VCT2000 Diagnostic Tool Symbol In VIDA
Courtesy of VOLVO CARS CORPORATION

- **Continue**

  Refer to **CHECKING SYSTEM**

CHECKING SYSTEM

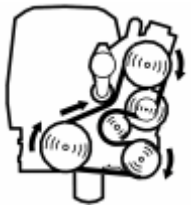

Fig. 128: Identifying Belt Routing
Courtesy of VOLVO CARS CORPORATION

- Check the air filter. Check for blockage.

HINT: If the fuel adaptations indicate too rich fuel/air mixture (adaptation value below 1.0) in several adaptation ranges, this indicates a fuel malfunction, e. g., too high fuel pressure.

HINT: To find the problem, proceed as follows:

- Check that the oil level is between the minimum and maximum markings
- Check the induction system for clogs and loose components (such as a loose air guide in the air filter holder).
- **HINT: The adaptations may show rich if several cold starts have been performed with short subsequent driving time, e. g., moving of vehicles, and the engine oil has thus been contaminated by gasoline. This affect on the adaptations disappears after a period of driving due to combustion of the fuel vapors by the engine.**
    - Check the EVAP-valve for leakage.

  HINT: A valve that does not seal constantly leaks fuel vapors, which thus affect the adaptations.

- Engine running.
- Check fuel pressure for high fuel pressure.
- Ignition on
- Check residual pressure for too low residual pressure.

Remedy as necessary.

HINT: Normal fuel pressure at idle and warm engine shall be approx. 480 kPa.

HINT: The residual pressure when the engine is off and the ignition is on shall be approx. 100 kPa lower than during idle.

HINT: If the residual pressure is too low, one malfunction cause may be leaking (non-sealing) injectors, for example.

Other information

- see **AIR LEAKS IN THE INTAKE SYSTEM, CHECKING**

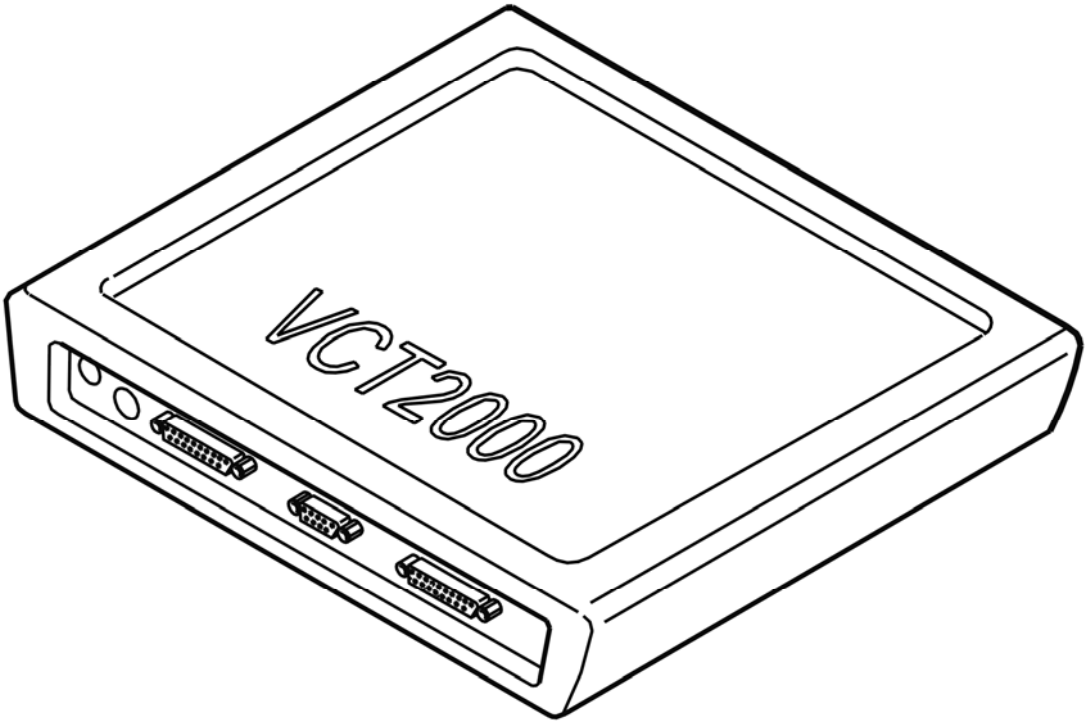

Fig. 129: Identifying VCT2000 Diagnostic Tool Symbol In VIDA
Courtesy of VOLVO CARS CORPORATION

- **Continue**

  Refer to **CHECKING MASS AIR FLOW SENSOR**

CHECKING MASS AIR FLOW SENSOR

Fig. 130: Identifying Belt Routing
Courtesy of VOLVO CARS CORPORATION

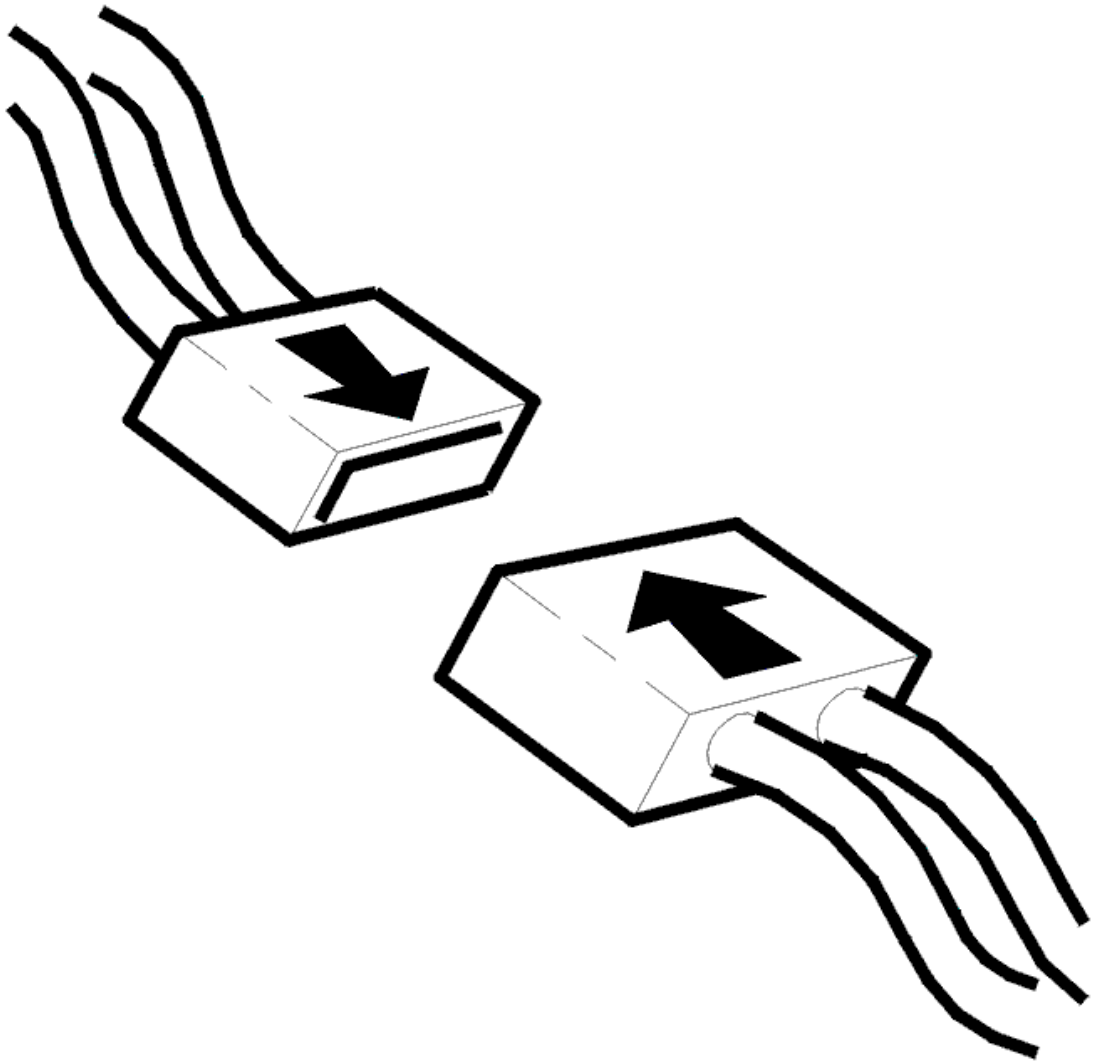

Fig. 131: Connecting Connector
Courtesy of VOLVO CARS CORPORATION

- Engine running.

  Check and compare the calculated air mass with the actual air mass readout from the mass air flow sensor.

  Try by measuring at different RPM.

  HINT: Differences of more than approx. 20% between the signals indicate a malfunction of the mass air flow sensor.

  HINT: Remedy as necessary.

  NOTE: When replacing mass air flow sensor, repeat the check to verify that the

problem has been solved with the replacement.

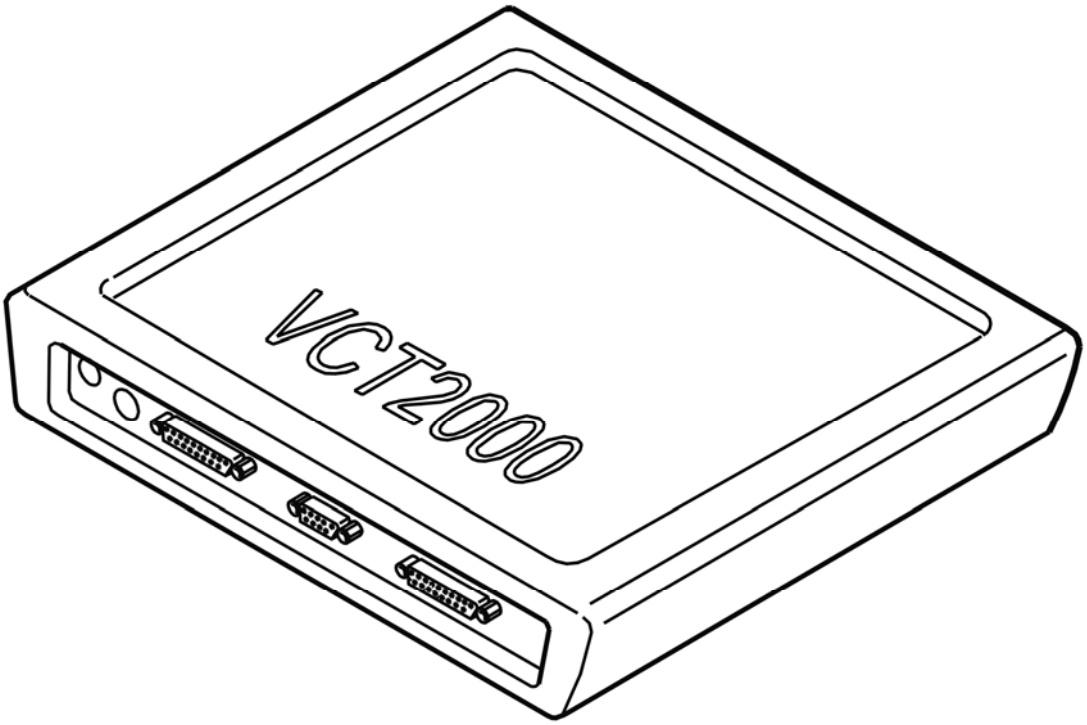

Fig. 132: Identifying VCT2000 Diagnostic Tool Symbol In VIDA
Courtesy of VOLVO CARS CORPORATION

- For more information about current fuel compensation, refer to **READOUT OF TOTAL FUEL COMPENSATION**.
- To continue, refer to **RESET ADAPTATIONS**.

RESET ADAPTATIONS

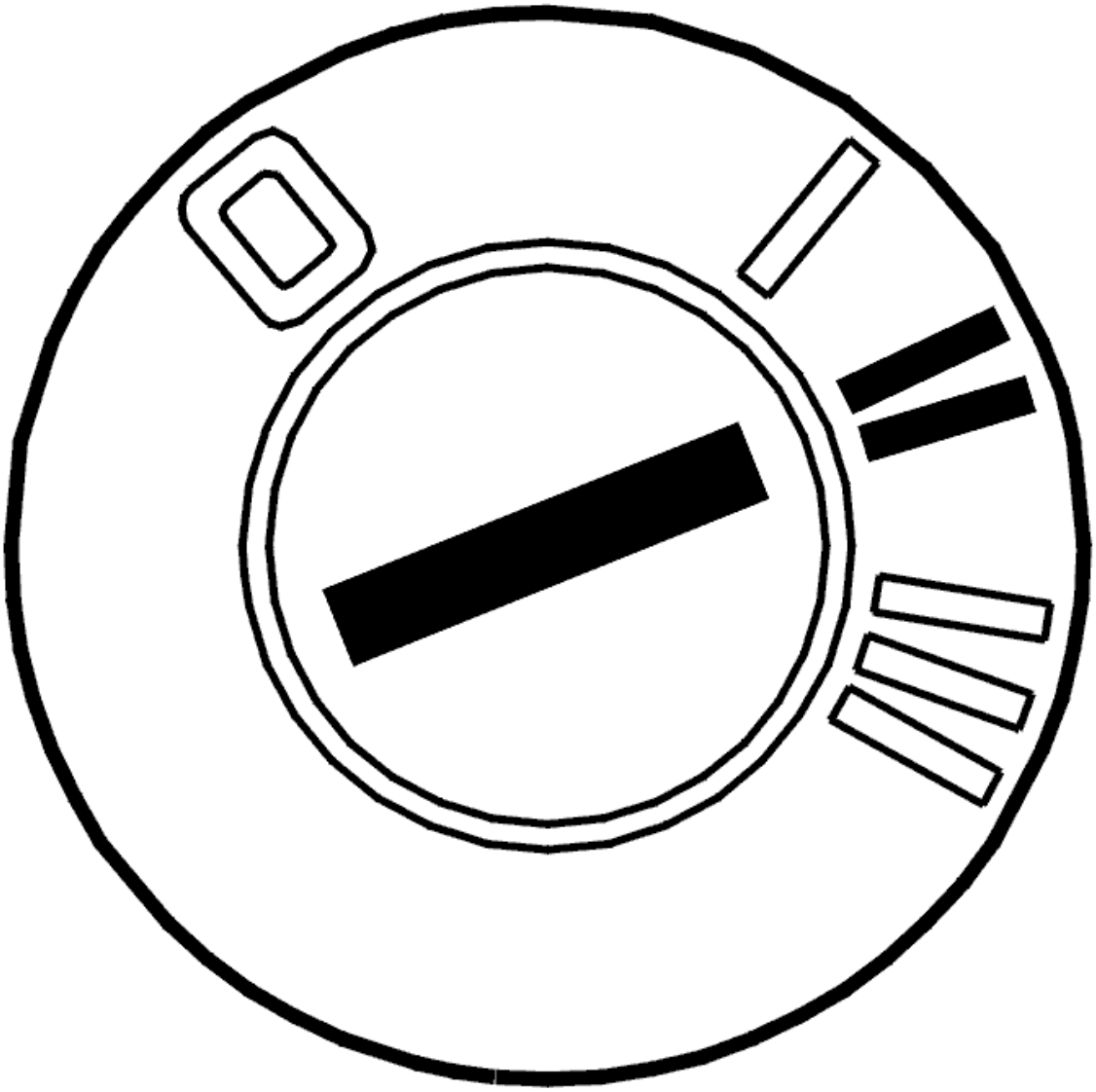

Fig. 133: Identifying Ignition ON
Courtesy of VOLVO CARS CORPORATION

- Turn off the engine.
- Ignition on

  Reset adaptations to zero using the VCT2000 (or appropriate scan tool).

  This is done to give the system a normal starting point. Thus it can be seen faster if the adaptations run off up or down.

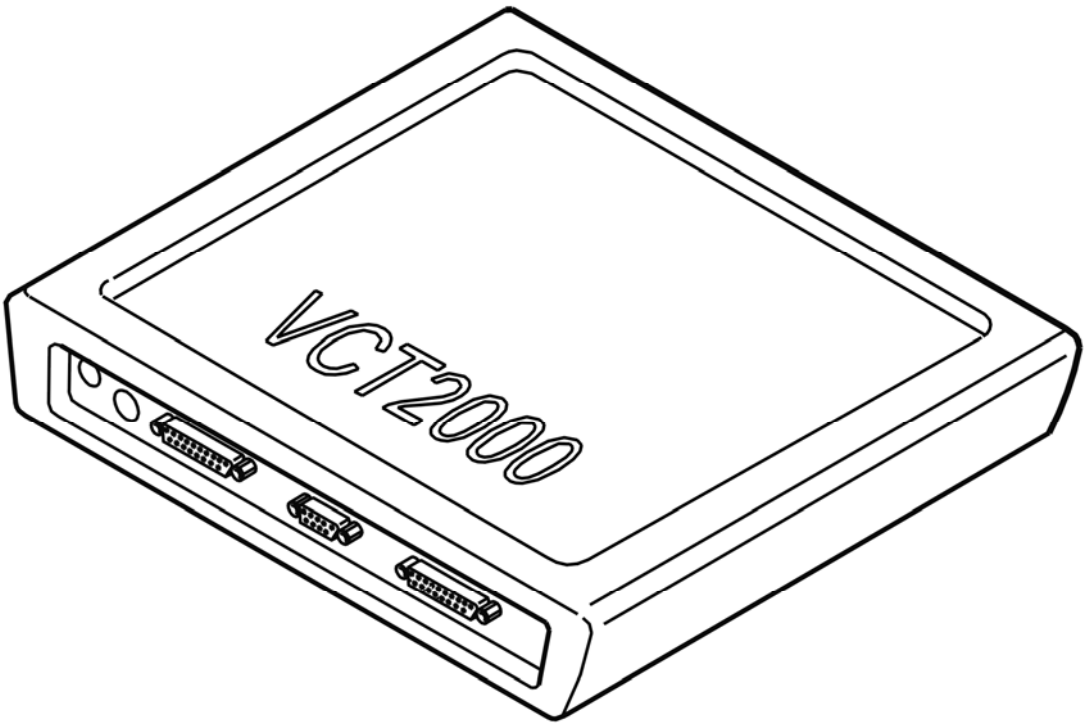

Fig. 134: Identifying VCT2000 Diagnostic Tool Symbol In VIDA
Courtesy of VOLVO CARS CORPORATION

- **Continue**

  Refer to **START ADAPTATIONS**

READOUT OF TOTAL FUEL COMPENSATION

Fig. 135: Identifying Belt Routing
Courtesy of VOLVO CARS CORPORATION

- Engine running.
- For reading out total fuel compensation at every given moment, use the VCT2000 (or appropriate scan tool).

  HINT: The readout value shows the short-term fuel trim's and the long-term fuel trim's total compensation of the injection time in real time.

HINT: Positive values indicate additional fuel, negative values indicate reduction of additional fuel.

Try by measuring at different RPM with different engine load.

NOTE: Keep in mind that the EVAP-valve's addition of fuel vapors affect the readout. For example, squeeze the hose between the EVAP-valve and inlet pipe to minimize addition of fuel from the EVAP-system.

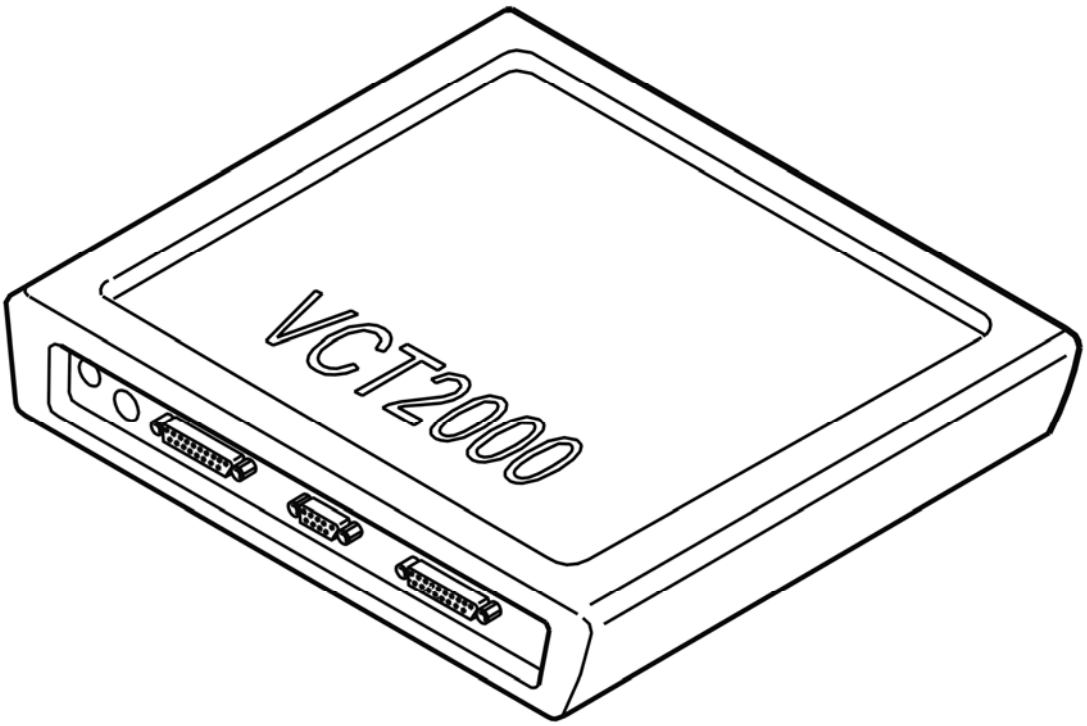

Fig. 136: Identifying VCT2000 Diagnostic Tool Symbol In VIDA
Courtesy of VOLVO CARS CORPORATION

- **Continue**

Refer to **RESET ADAPTATIONS**

START ADAPTATIONS

Fig. 137: Identifying Belt Routing

Courtesy of VOLVO CARS CORPORATION

Test-drive the vehicle on road and drive variably for 20 minutes, this is to perform as many adaptations as possible.

Check and note if any adaptation range is still incorrect by scrolling through the list with adaptation ranges.

The adaptation value is considered outside normal range if it is lower than 0.85 or higher than 1.15.

HINT: Also, perform a few full throttle accelerations to perform the adaptations that are not affected by normal driving.

For adaptation to start, certain conditions must be fulfilled

- Engine speed > or = 600 RPM.
- Engine temperature between 80-110°C.
- Adaptation active = executed.
- EVAP-valve not active = 0 µs.

HINT: At high fuel vaporization the EVAP-valve is active longer time and then it may be necessary to disconnect the hose between the EVAP-valve and the canister.

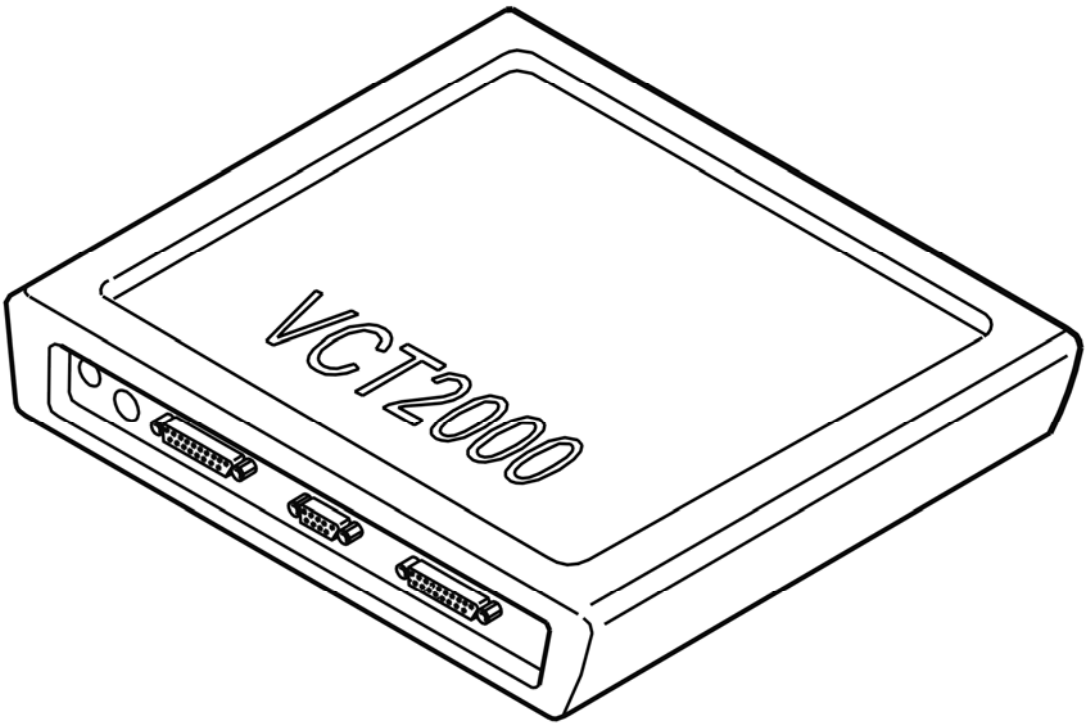

Fig. 138: Identifying VCT2000 Diagnostic Tool Symbol In VIDA

Courtesy of VOLVO CARS CORPORATION

Are these values OK?

- **YES**

  OKAY: Troubleshooting has been completed.

- **NO**

  Refer to **INFORMATION**

INFORMATION

FAULT-TRACING INFORMATION

The fault should have been detected and remedied. As this is not the case fault-tracing has failed.

Exit fault-tracing for this diagnostic trouble code (DTC) or make another attempt.

ECM-P017400: SYSTEM TOO LEAN (BANK 2). GENERAL FAILURE INFORMATION. NO SUB TYPE INFORMATION (B6324S; 2007-2010)

DIAGNOSTIC TROUBLE CODE (DTC) INFORMATION ECM-P017400

Condition

Engine Control Module (ECM) receives information from the heated oxygen sensor about fuel/air mixture in different load areas. If Engine Control Module (ECM) registers that fuel/air mixture deviates too much from target lambda, so that adaptations for bank 2 end up in any of its end-positions, the diagnostic trouble code is generated.

Substitute Value

- Nothing.

Possible Source

- Air leakage intake manifold.
- Air leakage, exhaust pipe.
- Low fuel pressure.
- Damaged mass air flow sensor.

Fault symptom[s]

- Malfunction indicator lamp (MIL) lit.

- Poor performance.
- Engine misfires.
- High idle RPM.

FAULT-TRACING

PREPARATORY CHECKS

Check and note which adaption area for bank 2 is faulty by going through the list of adaption areas.

The adaptation value is considered outside normal range if it is lower than 0.85 (engine runs rich) or higher than 1.15 (engine runs lean).

HINT: The ranges consist of a table where the first digit in the name designates RPM range and the second load range.

HINT: Thus, range 1.1 designates a case with low RPM with low load, and 6.6 a case with high RPM and high load.

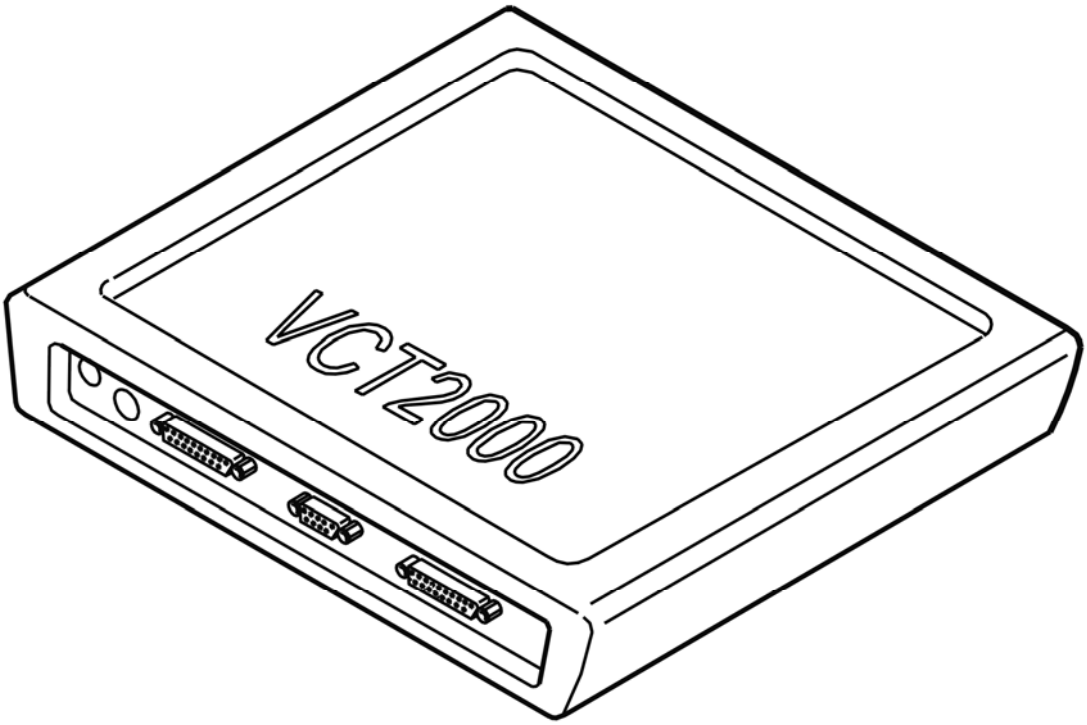

Fig. 139: Identifying VCT2000 Diagnostic Tool Symbol In VIDA
Courtesy of VOLVO CARS CORPORATION

- **Continue**

Refer to **CHECKING SYSTEM**

CHECKING SYSTEM

Fig. 140: Identifying Belt Routing
Courtesy of VOLVO CARS CORPORATION

HINT: If the fuel adaptations indicate too lean fuel/air mixture (adaptation value above 1.0) at idle, this indicates an air leak.

HINT: To find the problem, proceed as follows:

- Check the inlet system and exhaust system for leaks.
- Engine running.
- Check fuel pressure to, see if it is low.
- Ignition on
- Check residual pressure for too low residual pressure.

Remedy as necessary.

HINT: Normal fuel pressure at idle and warm engine shall be approx. 480 kPa.

HINT: The residual pressure when the engine is off and the ignition is on shall be approx. 100 kPa lower than during idle.

Other information

- see **CHECKING FOR AIR LEAKAGE IN THE EXHAUST SYSTEM**

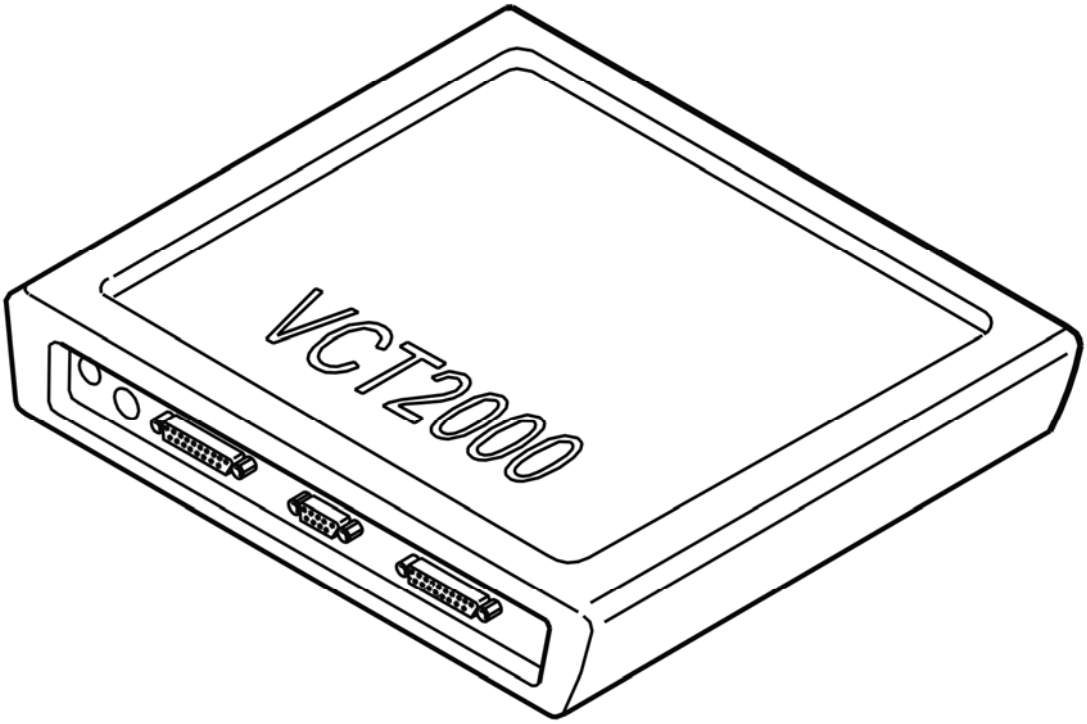

Fig. 141: Identifying VCT2000 Diagnostic Tool Symbol In VIDA
Courtesy of VOLVO CARS CORPORATION

- **Continue**

  Refer to **CHECKING MASS AIR FLOW SENSOR**

CHECKING MASS AIR FLOW SENSOR

Fig. 142: Identifying Belt Routing
Courtesy of VOLVO CARS CORPORATION

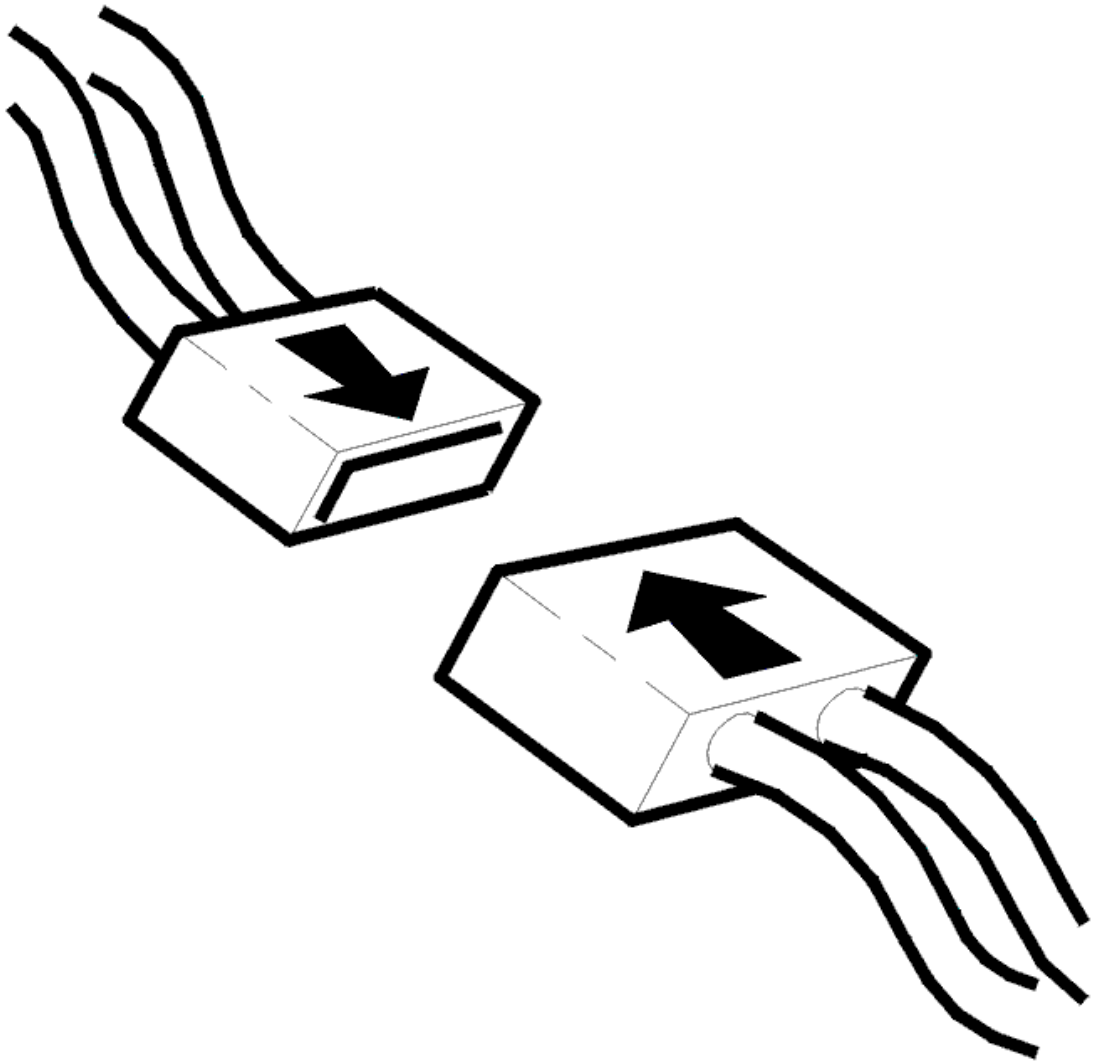

Fig. 143: Connecting Connector
Courtesy of VOLVO CARS CORPORATION

- Engine running.

  Check and compare the calculated air mass with the actual air mass readout from the mass air flow sensor.

  Try by measuring at different RPM.

  HINT: Differences of more than approx. 20% between the signals indicate a malfunction of the mass air flow sensor.

  HINT: Remedy as necessary.

  NOTE: When replacing mass air flow sensor, repeat the check to verify that the

problem has been solved with the replacement.

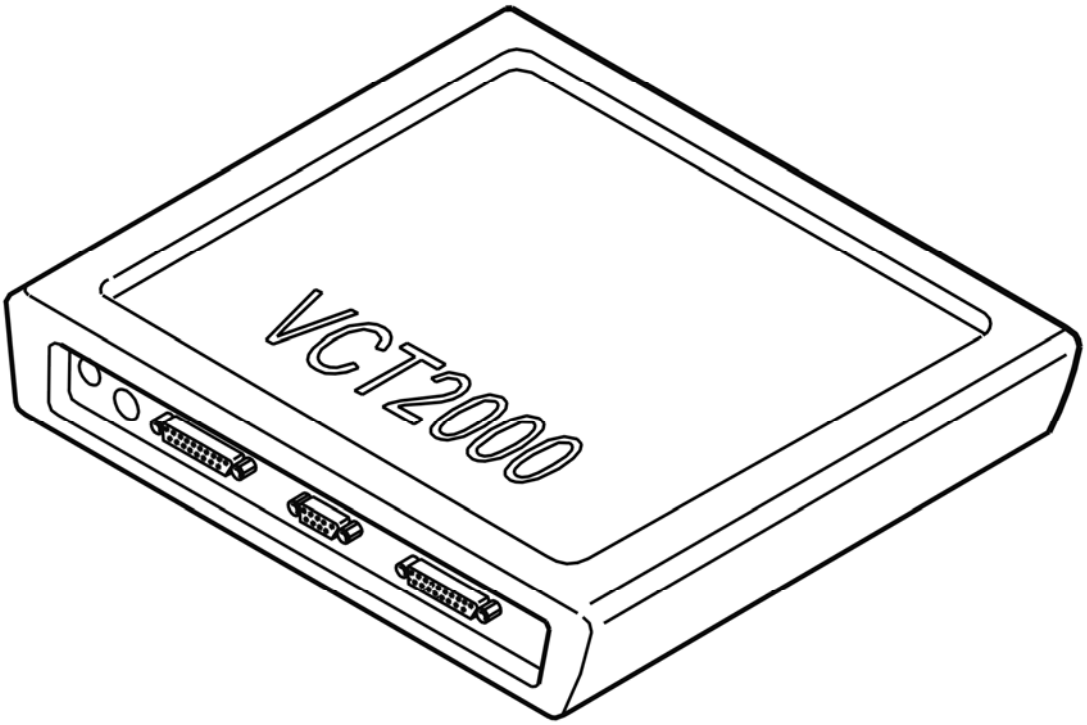

Fig. 144: Identifying VCT2000 Diagnostic Tool Symbol In VIDA
Courtesy of VOLVO CARS CORPORATION

- For more information about current fuel compensation, refer to **READOUT OF TOTAL FUEL COMPENSATION**.
- To continue, refer to **RESET ADAPTATIONS**.

RESET ADAPTATIONS

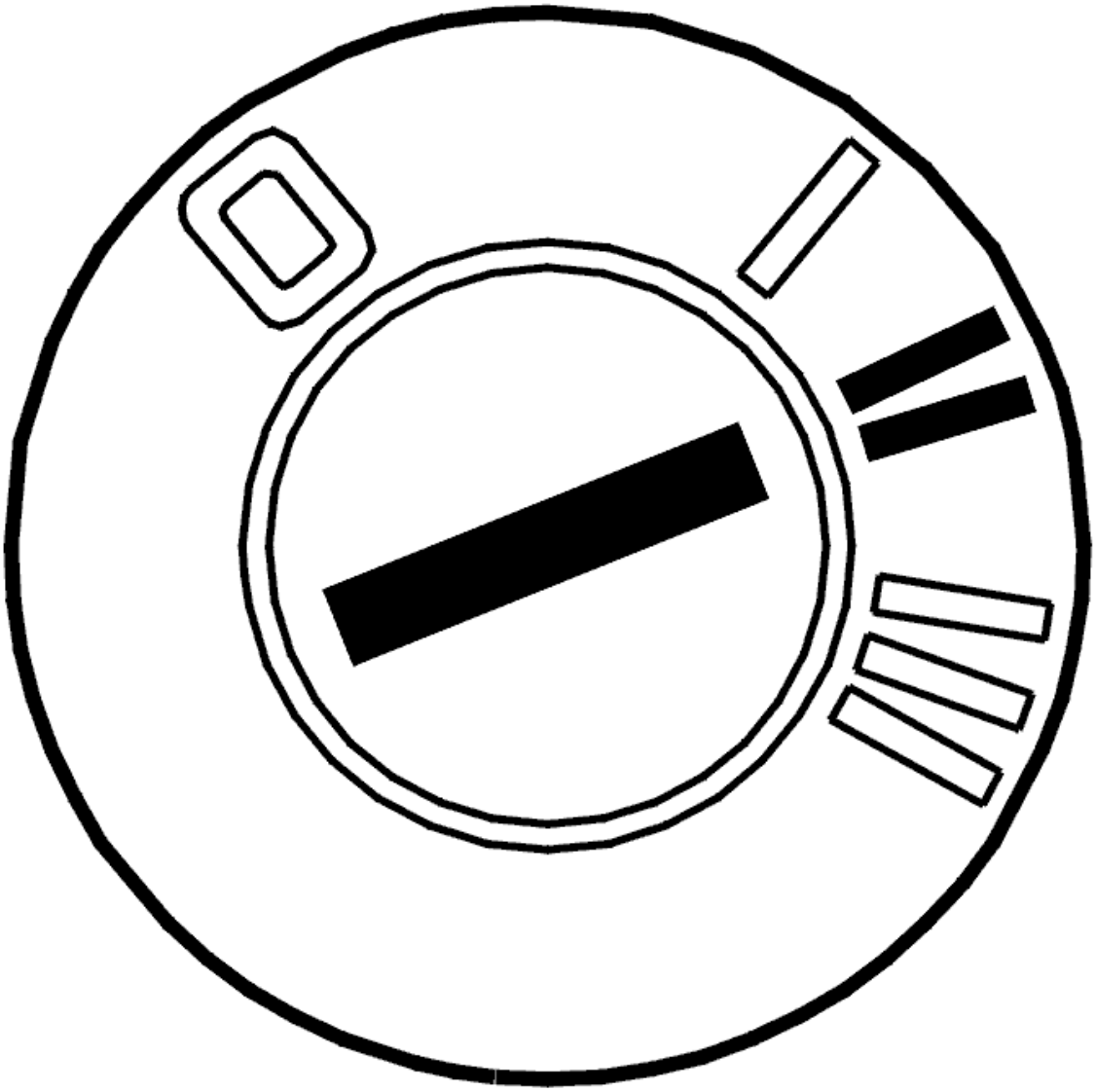

Fig. 145: Identifying Ignition ON
Courtesy of VOLVO CARS CORPORATION

- Turn off the engine.
- Ignition on

  Reset adaptations to zero using the VCT2000 (or appropriate scan tool).

  This is done to give the system a normal starting point. Thus it can be seen faster if the adaptations run off up or down.

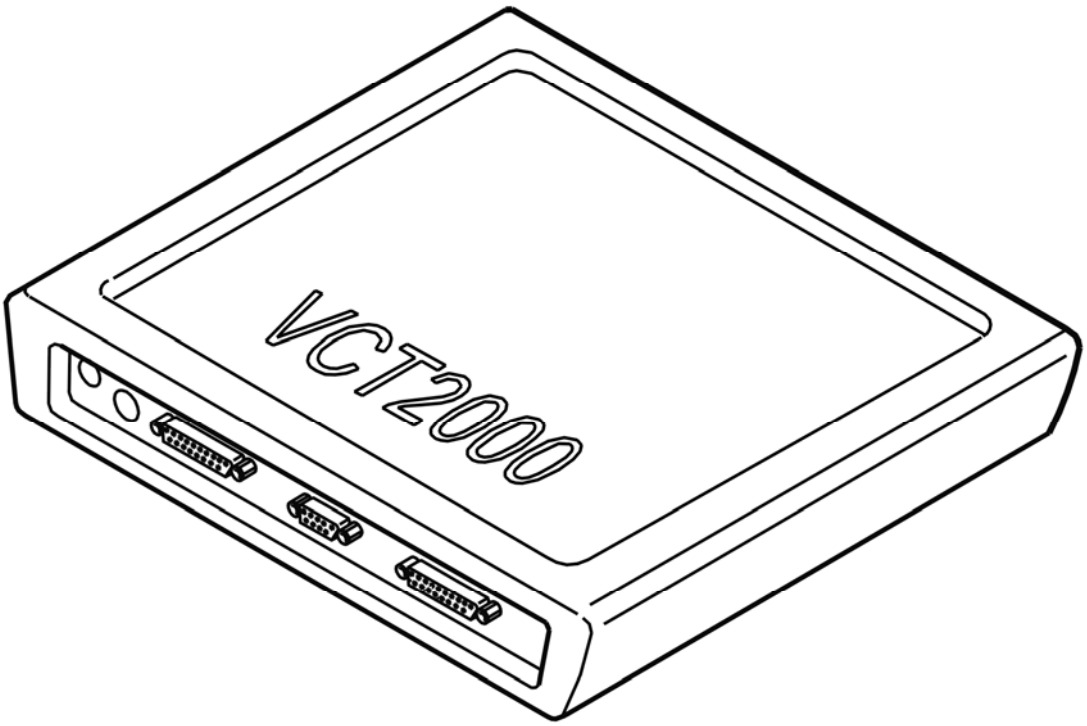

Fig. 146: Identifying VCT2000 Diagnostic Tool Symbol In VIDA
Courtesy of VOLVO CARS CORPORATION

- **Continue**

  Refer to **START ADAPTATIONS**

READOUT OF TOTAL FUEL COMPENSATION

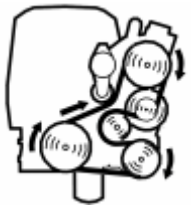

Fig. 147: Identifying Belt Routing
Courtesy of VOLVO CARS CORPORATION

- Engine running.
- For reading out total fuel compensation at every given moment, use the VCT2000 (or appropriate scan tool).

  HINT: The readout value shows the short-term fuel trim's and the long-term fuel trim's total compensation of the injection time in real time.

HINT: Positive values indicate additional fuel, negative values indicate reduction of additional fuel.

Try by measuring at different RPM with different engine load.

NOTE: Keep in mind that the EVAP-valve's addition of fuel vapors affects the read-out. Squeeze the hose between the EVAP-valve and inlet pipe to minimize the addition of fuel from the EVAP-system.

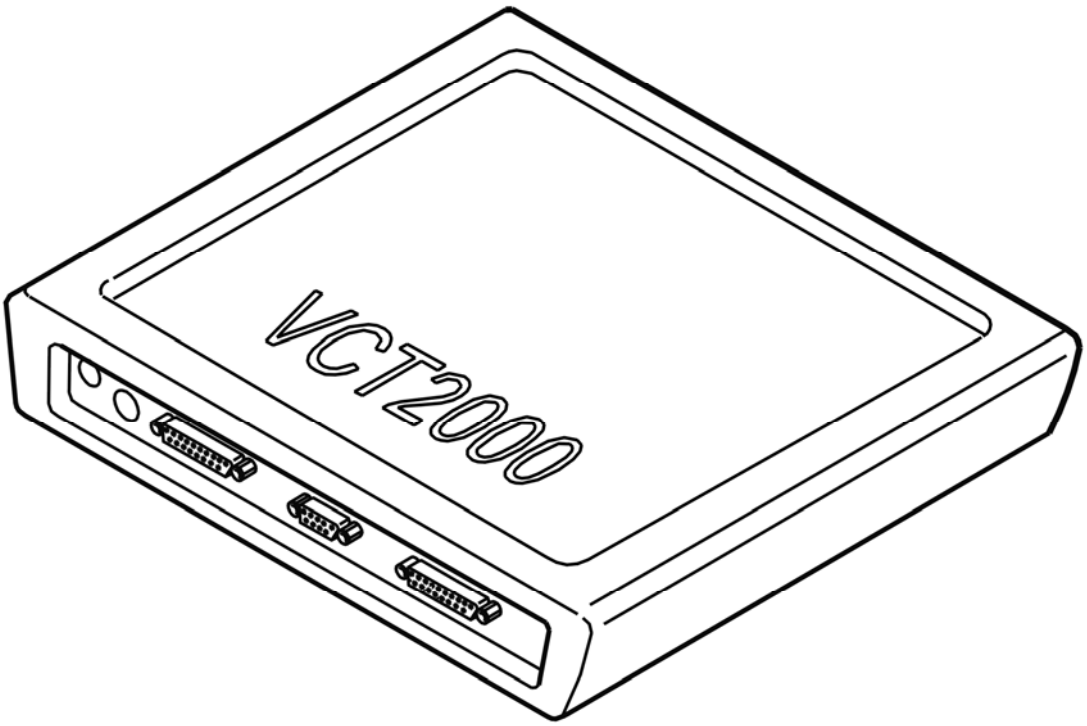

Fig. 148: Identifying VCT2000 Diagnostic Tool Symbol In VIDA
Courtesy of VOLVO CARS CORPORATION

- **Continue**

Refer to **RESET ADAPTATIONS**

START ADAPTATIONS

Fig. 149: Identifying Belt Routing

Courtesy of VOLVO CARS CORPORATION

Test-drive the vehicle on road and drive a little in different operating situations for 20 minutes, in order to complete as many adaptations as possible.

Check and note if any adaptation range is still incorrect by scrolling through the list with adaptation ranges.

The adaptation value is considered outside normal range if it is lower than 0.85 or higher than 1.15.

HINT: Also, perform a few full throttle accelerations to perform the adaptations that are not affected by normal driving.

For adaptation to start, certain conditions must be fulfilled

- Engine speed > or = 600 RPM.
- Engine temperature between 80-110°C.
- Adaptation active = executed.
- EVAP-valve not active = 0 µs.

HINT: At high fuel vaporization the EVAP-valve is active longer time and then it may be necessary to disconnect the hose between the EVAP-valve and the canister.

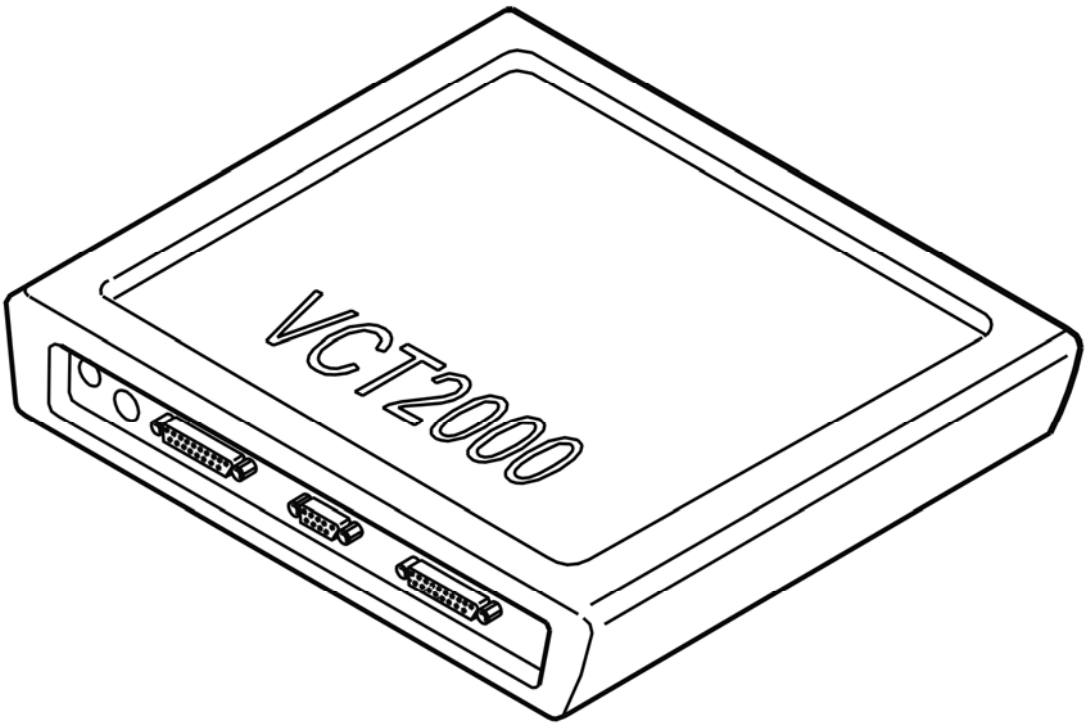

Fig. 150: Identifying VCT2000 Diagnostic Tool Symbol In VIDA

Courtesy of VOLVO CARS CORPORATION

Are these values OK?

- **YES**

  OKAY: Troubleshooting has been completed.

- **NO**

  Refer to **INFORMATION**

INFORMATION

FAULT-TRACING INFORMATION

The fault should have been detected and remedied. As this is not the case fault-tracing has failed.

Exit fault-tracing for this diagnostic trouble code (DTC) or make another attempt.

ECM-P017400: SYSTEM TOO LEAN (BANK 2). GENERAL FAILURE INFORMATION. NO SUB TYPE INFORMATION (B6324S5; 2011-2012)

DIAGNOSTIC TROUBLE CODE (DTC) INFORMATION ECM-P017400

see **DIAGNOSTIC TROUBLE CODE (DTC) INFORMATION ECM-P017400**

FAULT-TRACING

see **FAULT-TRACING**

ECM-P017400: SYSTEM TOO LEAN (BANK 2). GENERAL MALFUNCTION INFORMATION. NO INFORMATION ON MALFUNCTION TYPE (B8444S; 2005-2011)

DIAGNOSTIC TROUBLE CODE (DTC) INFORMATION ECM-P017400

Condition

Engine Control Module (ECM) receives information from the heated oxygen sensor about fuel/air mixture in different load areas. If Engine Control Module (ECM) registers that fuel/air mixture deviates too much from target lambda, so that adaptations for bank 2 end up in any of its end-positions, the diagnostic trouble code is generated.

Substitute Value

- Nothing.

Possible Source

- Too high ethanol content in fuel.
- Air leakage intake manifold.
- Air leakage, exhaust pipe.
- Low fuel pressure.
- Damaged mass air flow sensor.

Fault symptom[s]

- Malfunction indicator lamp (MIL) lit.
- Poor performance.
- Engine misfires.
- High idle RPM.

TROUBLESHOOTING ECM-P017400

PREPARATORY CHECKS

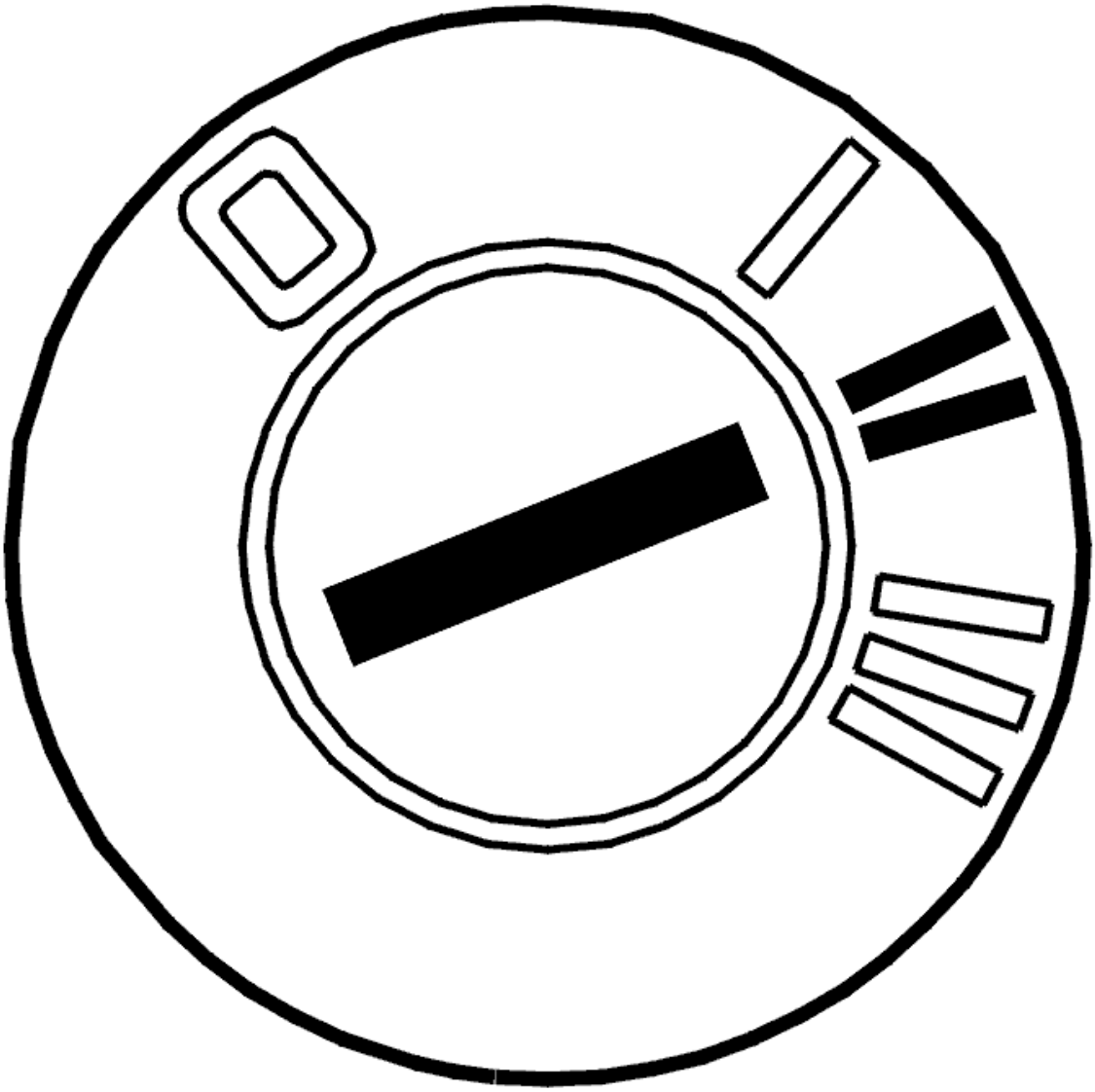

Fig. 151: Identifying Ignition ON
Courtesy of VOLVO CARS CORPORATION

Check and note which adaption area for bank 2 is faulty by going through the list of adaption areas.

The adaptation value is considered outside normal range if it is lower than 0.85 (engine runs rich) or higher than 1.15 (engine runs lean).

HINT: The ranges consist of a table where the first digit in the name designates RPM range and the second load range.

HINT: Thus, range 1.1 designates a case with low RPM with low load, and 6.6 a case with high RPM and high load.

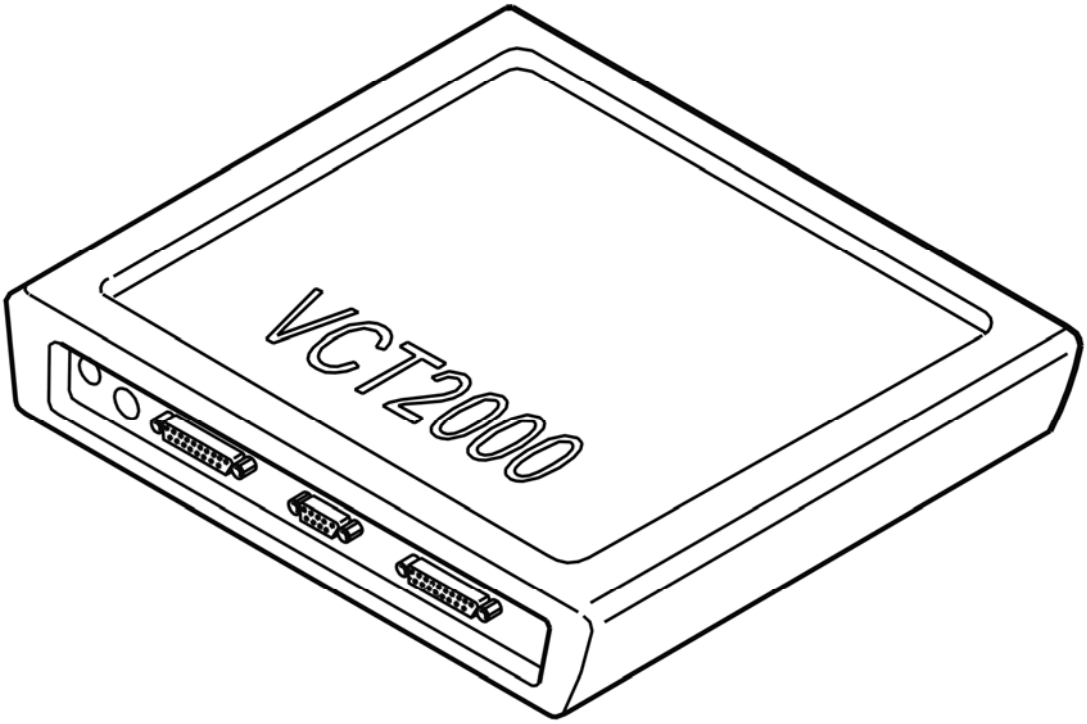

Fig. 152: Identifying VCT2000 Diagnostic Tool Symbol In VIDA
Courtesy of VOLVO CARS CORPORATION

- **Continue**

  Refer to **CHECKING ETHANOL CONTENT**

CHECKING SYSTEM

Fig. 153: Identifying Belt Routing
Courtesy of VOLVO CARS CORPORATION

HINT: If the fuel adaptations indicate too lean fuel/air mixture (adaptation value above 1.0) at idle, this indicates an air leak.

HINT: To find the problem, proceed as follows:

- Check the inlet system and exhaust system for leaks.

- Engine running.
- Check fuel pressure to, see if it is low.
- Ignition on
- Check residual pressure for too low residual pressure.

Remedy as necessary.

HINT: Normal fuel pressure at idle and warm engine shall be approx. 480 kPa.

HINT: The residual pressure when the engine is off and the ignition is on shall be approx. 100 kPa lower than during idle.

Other information

- see **AIR LEAKS IN THE INTAKE SYSTEM, CHECKING**
- see **CHECKING FOR AIR LEAKAGE IN THE EXHAUST SYSTEM**

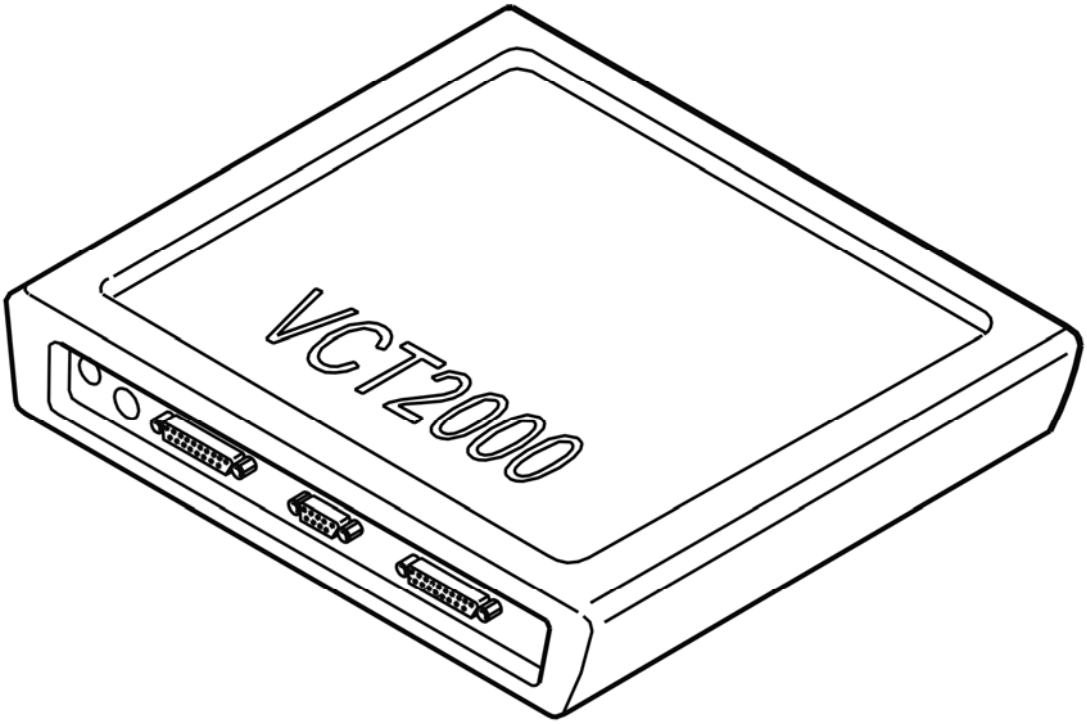

Fig. 154: Identifying VCT2000 Diagnostic Tool Symbol In VIDA
Courtesy of VOLVO CARS CORPORATION

- **Continue**

Refer to **CHECKING MASS AIR FLOW SENSOR**

CHECKING MASS AIR FLOW SENSOR

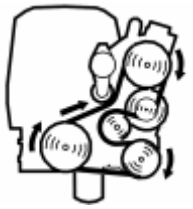

Fig. 155: Identifying Belt Routing
Courtesy of VOLVO CARS CORPORATION

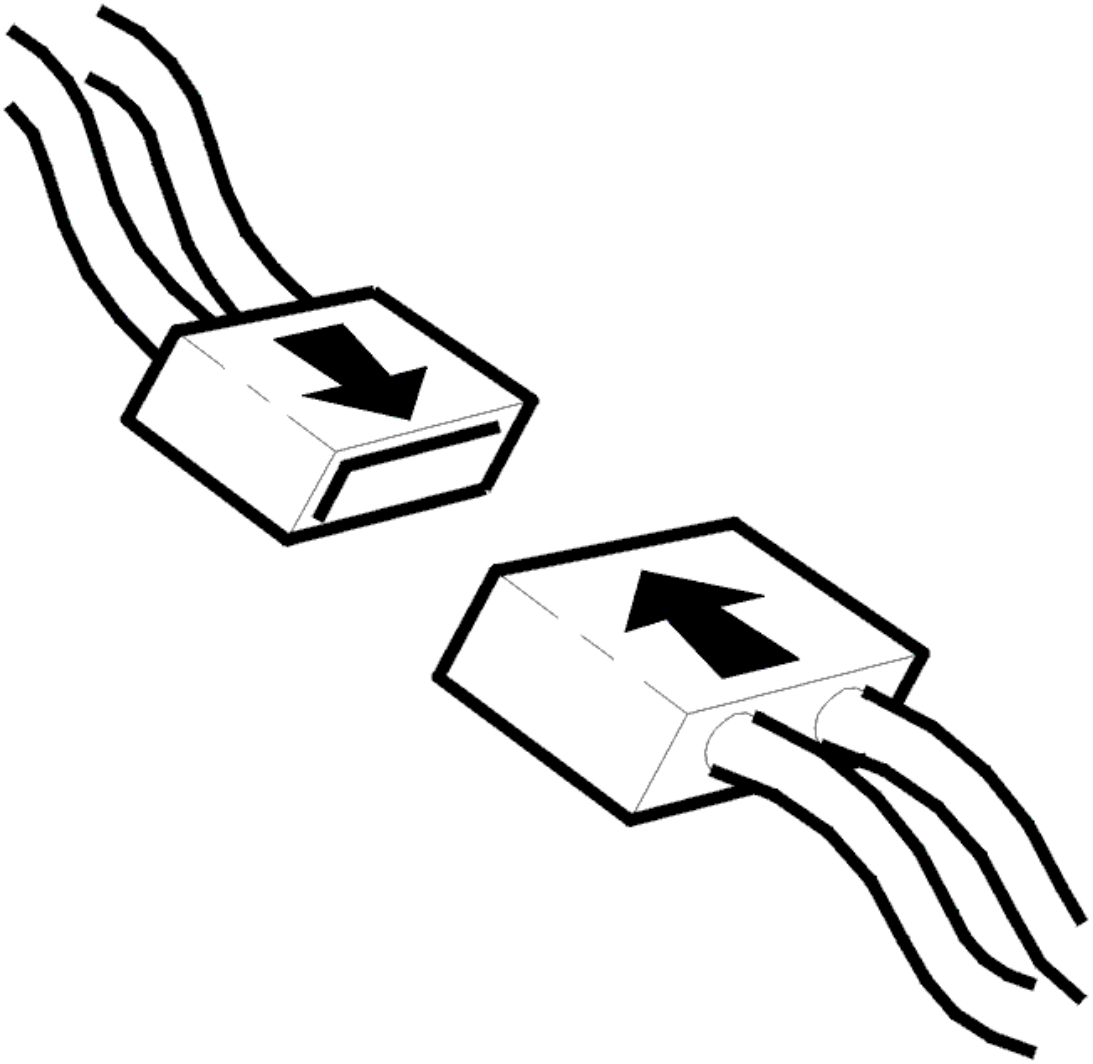

Fig. 156: Connecting Connector
Courtesy of VOLVO CARS CORPORATION

- Engine running.

  Check and compare the calculated air mass with the actual air mass readout from the mass air flow sensor.

  Try by measuring at different RPM.

  HINT: Differences of more than approx. 20% between the signals indicate a malfunction of the mass air flow sensor.

  HINT: Remedy as necessary.

  NOTE: When replacing mass air flow sensor, repeat the check to verify that the problem has been solved with the replacement.

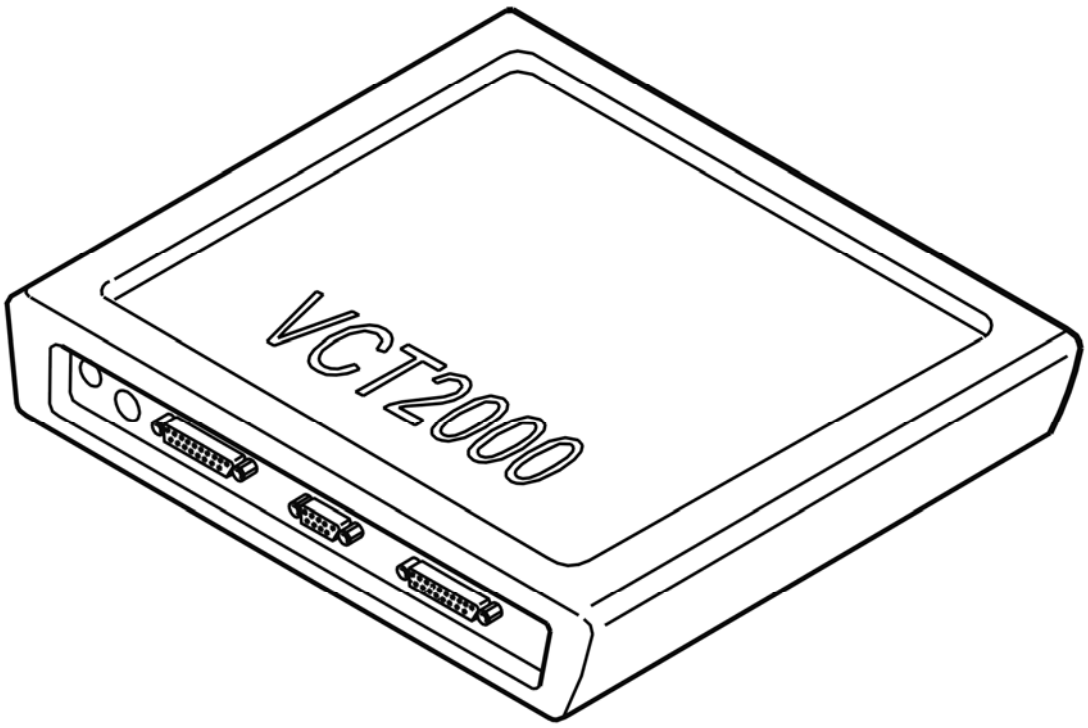

Fig. 157: Identifying VCT2000 Diagnostic Tool Symbol In VIDA
Courtesy of VOLVO CARS CORPORATION

- For more information about current fuel compensation, refer to **READOUT OF TOTAL FUEL COMPENSATION**.
- To continue, refer to **RESET ADAPTATIONS**.

RESET ADAPTATIONS

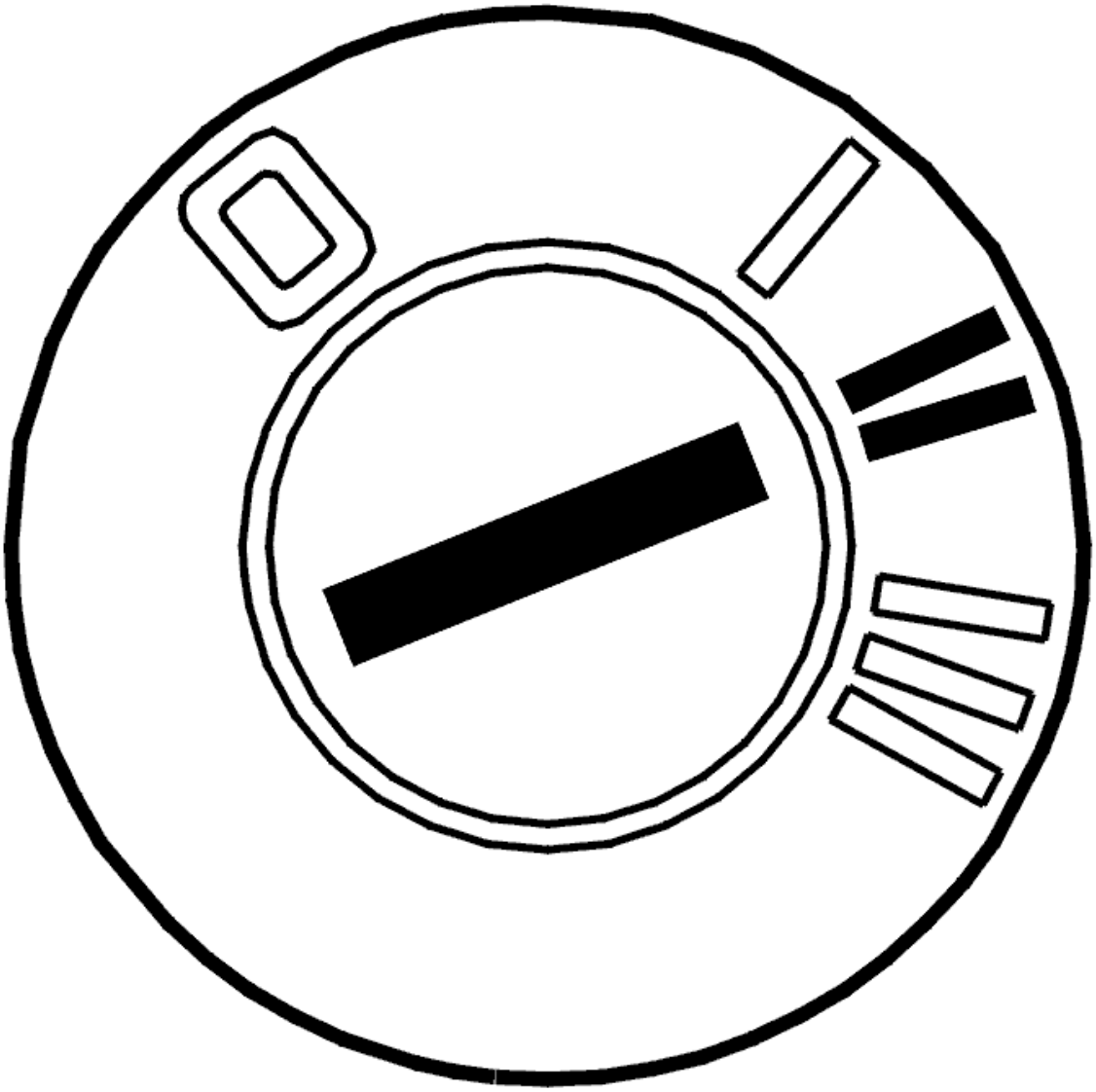

Fig. 158: Identifying Ignition ON
Courtesy of VOLVO CARS CORPORATION

- Turn off the engine.
- Ignition on

  Reset adaptations to zero using the VCT2000 (or appropriate scan tool).

  This is done to give the system a normal starting point. Thus it can be seen faster if the adaptations run off up or down.

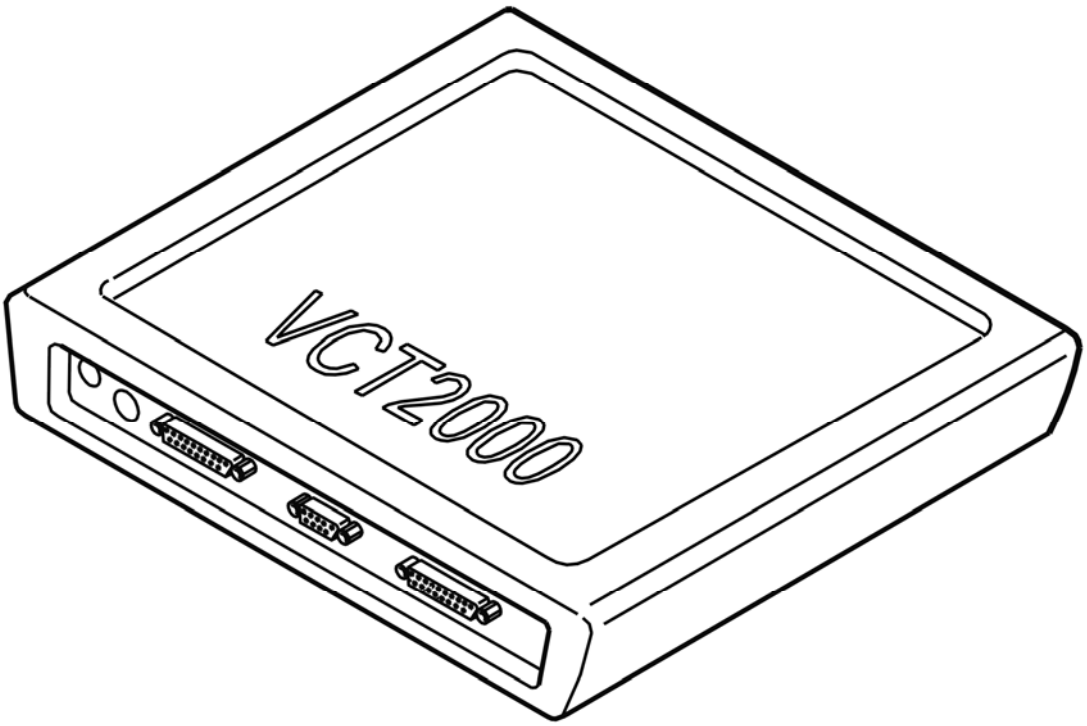

Fig. 159: Identifying VCT2000 Diagnostic Tool Symbol In VIDA
Courtesy of VOLVO CARS CORPORATION

- **Continue**

  Refer to **START ADAPTATIONS**

READOUT OF TOTAL FUEL COMPENSATION

Fig. 160: Identifying Belt Routing
Courtesy of VOLVO CARS CORPORATION

- Engine running.
- For reading out total fuel compensation at every given moment, use the VCT2000 (or appropriate scan tool).

  HINT: The readout value shows the short-term fuel trim's and the long-term fuel trim's total compensation of the injection time in real time.

HINT: Positive values indicate additional fuel, negative values indicate reduction of additional fuel.

Try by measuring at different RPM with different engine load.

NOTE: Keep in mind that the EVAP-valve's addition of fuel vapors affects the read-out. Squeeze the hose between the EVAP-valve and inlet pipe to minimize the addition of fuel from the EVAP-system.

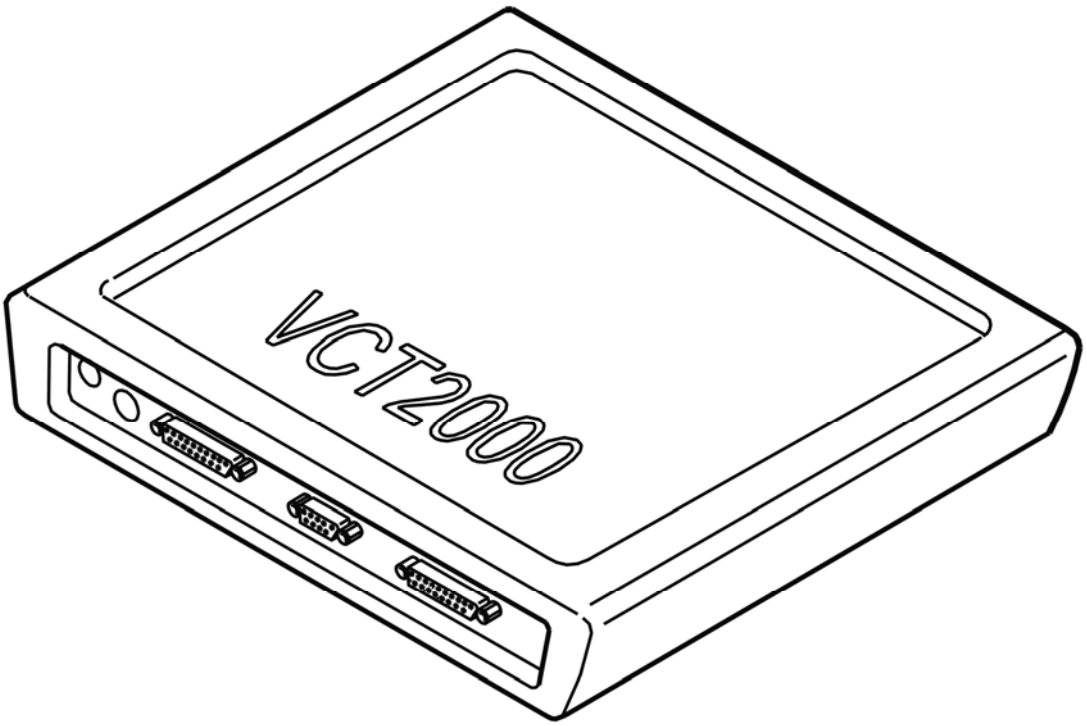

Fig. 161: Identifying VCT2000 Diagnostic Tool Symbol In VIDA
Courtesy of VOLVO CARS CORPORATION

- **Continue**

Refer to **RESET ADAPTATIONS**

START ADAPTATIONS

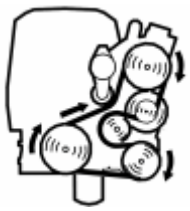

Fig. 162: Identifying Belt Routing

Courtesy of VOLVO CARS CORPORATION

Test-drive the vehicle on road and drive a little in different operating situations for 20 minutes, in order to complete as many adaptations as possible.

Check and note if any adaptation range is still incorrect by scrolling through the list with adaptation ranges.

The adaptation value is considered outside normal range if it is lower than 0.85 or higher than 1.15.

HINT: Also, perform a few full throttle accelerations to perform the adaptations that are not affected by normal driving.

For adaptation to start, certain conditions must be fulfilled

- Engine speed > or = 600 RPM.
- Engine temperature between 80-110°C.
- Adaptation active = executed.
- EVAP-valve not active = 0 µs.

HINT: At high fuel vaporization the EVAP-valve is active longer time and then it may be necessary to disconnect the hose between the EVAP-valve and the canister.

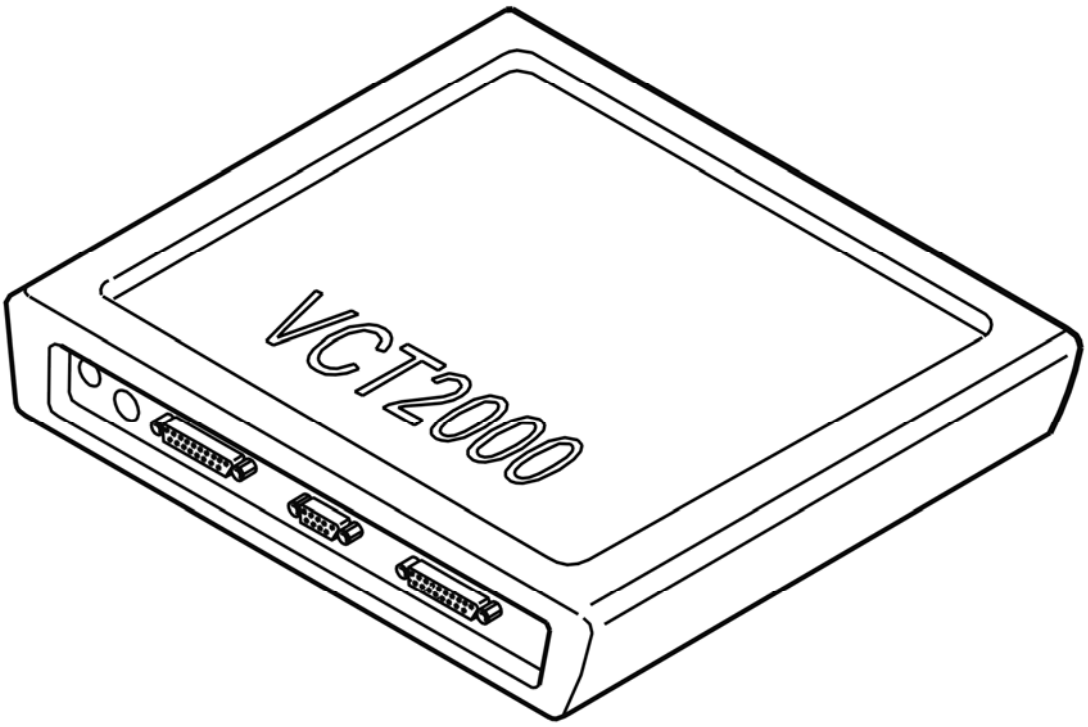

Fig. 163: Identifying VCT2000 Diagnostic Tool Symbol In VIDA

Courtesy of VOLVO CARS CORPORATION

Are these values OK?

- **YES**

  OKAY: Troubleshooting has been completed.

- **NO**

  Refer to **INFORMATION**

CHECKING ETHANOL CONTENT

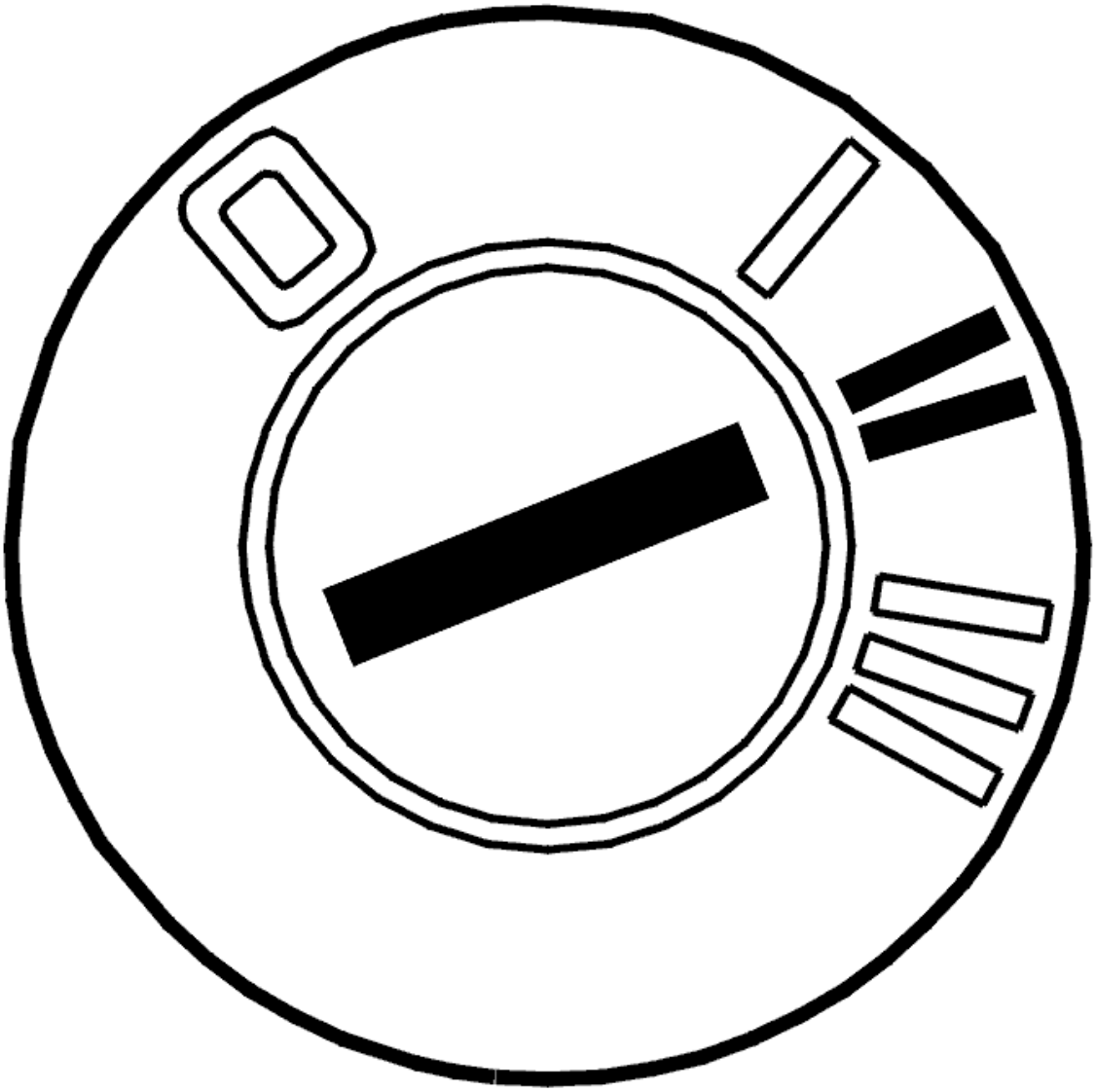

Fig. 164: Identifying Ignition ON
Courtesy of VOLVO CARS CORPORATION

HINT: The cause of the symptom and/or diagnostic trouble code may be that the vehicle has been refuelled with incorrect fuel for that vehicle. The fuel system contains fuel with too high ethanol content.

The energy content in ethanol-diluted fuel is lower than in pure gasoline. This means that the control module compensates for the lower energy content, by increasing the injection volume, to be able to reach lambda=1 at the front heated oxygen sensor. This compensation is normally called "Front lambda control slow" or "Lambda integrator", and varies to compensate for the vehicle's status in the form of component spread, small air leaks, wear, etc. The value of this compensation in the ideal case is 1.0 for pure gasoline. Increased ethanol content of the fuel increases the compensation by approx. 0.05 per 10% ethanol dilution.

The control module is designed to handle an ethanol dilution up to 25%. In combination with other deviations from the ideal case, however, lower ethanol content may be enough to cause customer symptoms. This mainly occurs at engine start with cool engine at outdoor temperatures below 0 °C. Then the diagnostic trouble code may also be set for the engine running on too lean mixture.

NOTE: **In a vehicle intended for gasoline, only pure gasoline shall be used. Even if engine start/operation works, other fuel-related components in the vehicle may be damaged by too high ethanol content.**

- Measure the ethanol content of the fuel according to the instructions below.

  If measured ethanol content is above 25%, then ethanol dilution is the likely cause of the symptom and/or to the diagnostic trouble code being stored.

  If measured ethanol content is below 25%, symptoms and/or diagnostic trouble code may have been caused by earlier occurrence of incorrect fuel in the system for that vehicle.

  HINT: Check refuelling history by talking to customer.

  If nothing indicates incorrect fuel, neither now nor earlier, continue troubleshooting to check other possible causes of faults.

Other information

- see **MEASURING THE ETHANOL CONTENT**

- **Continue**

  Refer to **CHECKING SYSTEM**

INFORMATION

FAULT-TRACING INFORMATION

The fault should have been detected and remedied. As this is not the case fault-tracing has failed.

Exit fault-tracing for this diagnostic trouble code (DTC) or make another attempt.

ECM-P017500: SYSTEM TOO RICH (BANK 2). GENERAL FAILURE INFORMATION. NO SUB TYPE INFORMATION (B6324S; 2007-2010)

DIAGNOSTIC TROUBLE CODE (DTC) INFORMATION ECM-P017500

Condition

Engine Control Module (ECM) receives information from the heated oxygen sensor about fuel/air mixture in different load areas. If Engine Control Module (ECM) registers that fuel/air mixture deviates too much from target lambda, so that adaptations for bank 2 end up in any of its end-positions, the diagnostic trouble code is generated.

Substitute Value

- Nothing.

Possible Source

- Clogged air filter.
- Oil level too high.
- Contaminated engine oil (gasoline mixed in oil).
- Leaking injectors.
- Leaking EVAP-valve
- High fuel pressure.
- Damaged mass air flow sensor.

Fault symptom[s]

- Malfunction indicator lamp (MIL) lit.
- Poor performance.
- Engine misfires.

FAULT-TRACING

PREPARATORY CHECKS

Check and note which adaption area for bank 2 is faulty by going through the list of adaption areas.

The adaptation value is considered outside normal range if it is lower than 0.85 (engine runs rich) or higher than 1.15 (engine runs lean).

HINT: The ranges consist of a table where the first digit in the name designates RPM range and the second load range.

HINT: Thus, range 1.1 designates a case with low RPM with low load, and 6.6 a case with high RPM and

high load.

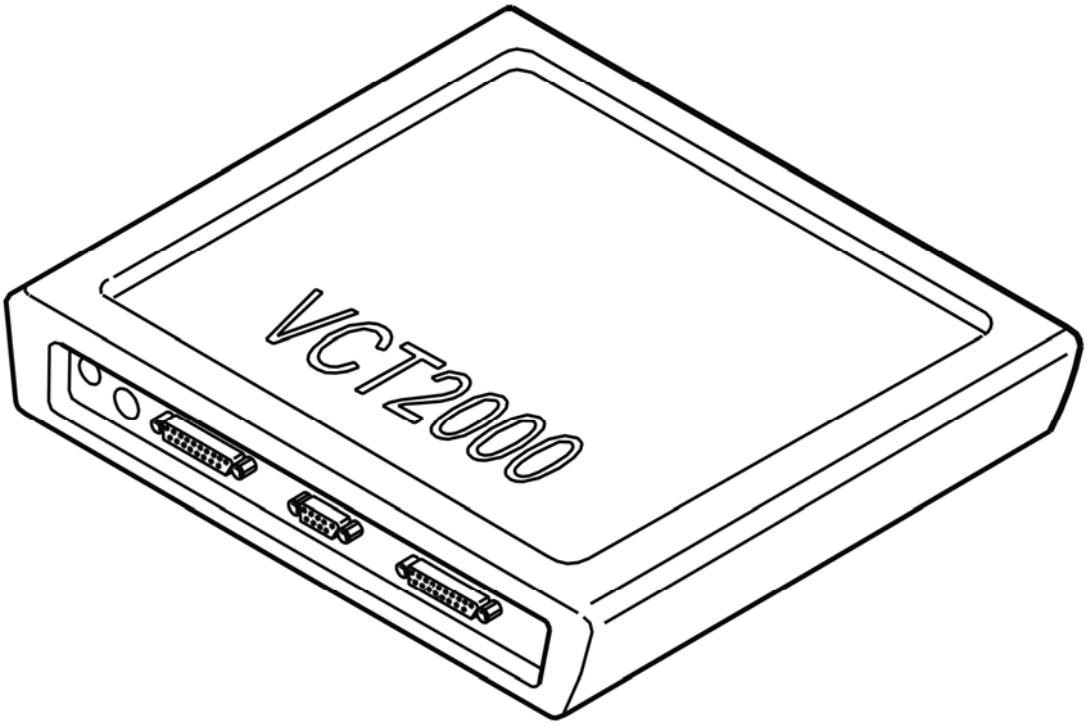

Fig. 165: Identifying VCT2000 Diagnostic Tool Symbol In VIDA
Courtesy of VOLVO CARS CORPORATION

- **Continue**

  Refer to **CHECKING SYSTEM**

CHECKING SYSTEM

Fig. 166: Identifying Belt Routing
Courtesy of VOLVO CARS CORPORATION

- Check the air filter. Check for blockage.

HINT: If fuel adaptations indicate too rich fuel/air mixture (adaptation value below 1.0) in several adaptation ranges, this indicates a fuel malfunction. The fault may be caused by too high fuel pressure

for example.

HINT: To find the problem, proceed as follows:

- Check that the engine's oil level is not too high.

  HINT: Adaptations may show rich fuel/air mixture if several cold starts with short subsequent driving time have been performed (e. g., moving cars) and thus the engine oil has been contaminated by gasoline. This affect on the adaptations disappears after driving for some time since the fuel vapors are combusted by the engine.

  - Check the EVAP-valve for leakage.

  HINT: A valve that does not seal constantly leaks fuel vapors, which thus affect the adaptations.

- Engine running.
- Check fuel pressure for high fuel pressure.
- Ignition on
- Check residual pressure for too low residual pressure.

Remedy as necessary.

HINT: Normal fuel pressure at idle and warm engine shall be approx. 480 kPa.

HINT: The residual pressure when the engine is off and the ignition is on shall be approx. 100 kPa lower than during idle.

HINT: If the residual pressure is too low, one malfunction cause may be leaking (non-sealing) injectors, for example.

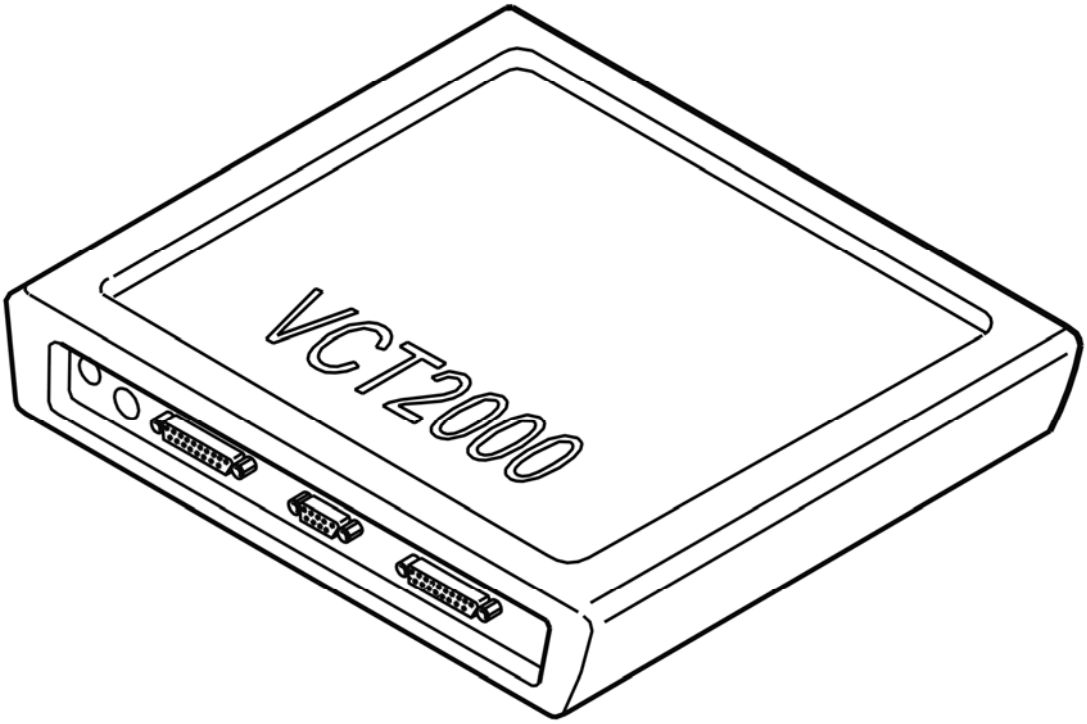

Fig. 167: Identifying VCT2000 Diagnostic Tool Symbol In VIDA
Courtesy of VOLVO CARS CORPORATION

- **Continue**

  Refer to **CHECKING MASS AIR FLOW SENSOR**

CHECKING MASS AIR FLOW SENSOR

Fig. 168: Identifying Belt Routing
Courtesy of VOLVO CARS CORPORATION

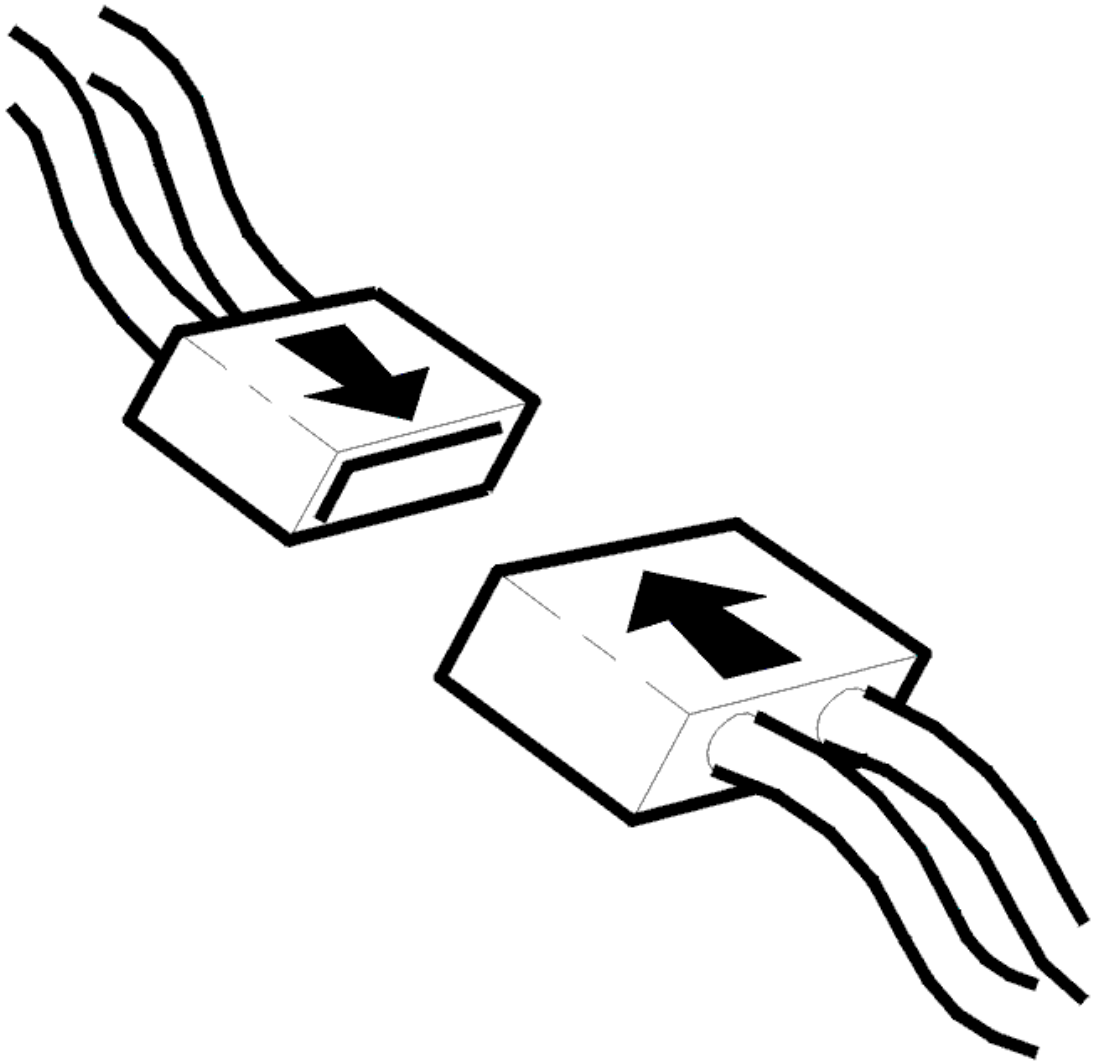

Fig. 169: Connecting Connector
Courtesy of VOLVO CARS CORPORATION

- Engine running.

  Check and compare the calculated air mass with the actual air mass readout from the mass air flow sensor.

  Try by measuring at different RPM.

  HINT: Differences of more than approx. 20% between the signals indicate a malfunction of the mass air flow sensor.

  HINT: Remedy as necessary.

  NOTE: When replacing mass air flow sensor, repeat the check to verify that the

problem has been solved with the replacement.

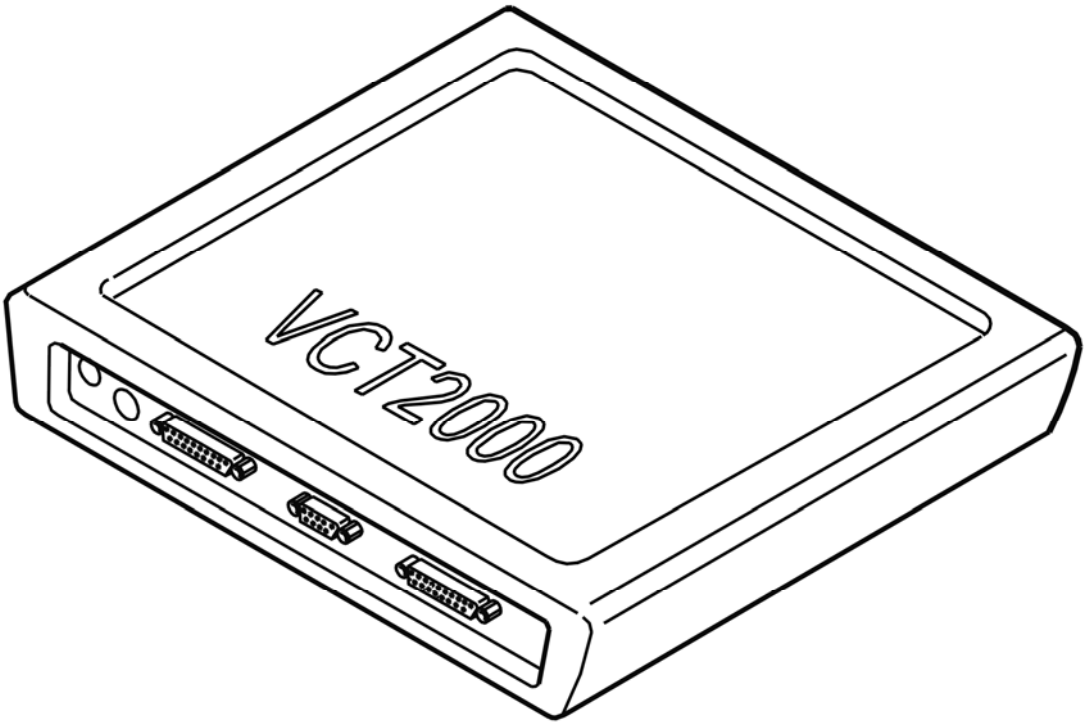

Fig. 170: Identifying VCT2000 Diagnostic Tool Symbol In VIDA
Courtesy of VOLVO CARS CORPORATION

- For more information about current fuel compensation, refer to **READOUT OF TOTAL FUEL COMPENSATION**.
- To continue, refer to **RESET ADAPTATIONS**.

RESET ADAPTATIONS

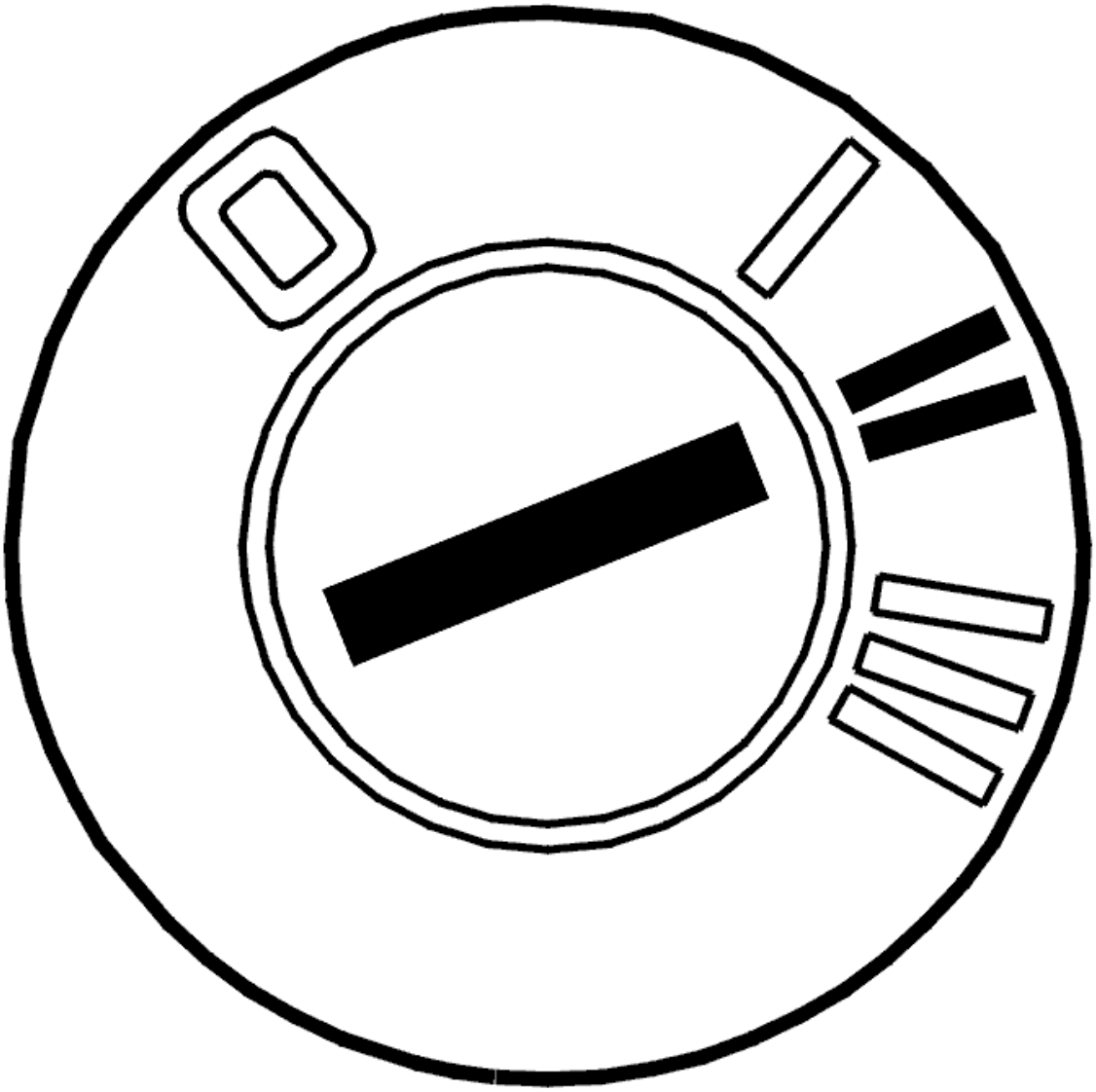

Fig. 171: Identifying Ignition ON
Courtesy of VOLVO CARS CORPORATION

- Turn off the engine.
- Ignition on

  Reset adaptations to zero using the VCT2000 (or appropriate scan tool).

  This is done to give the system a normal starting point. Thus it can be seen faster if the adaptations run off up or down.

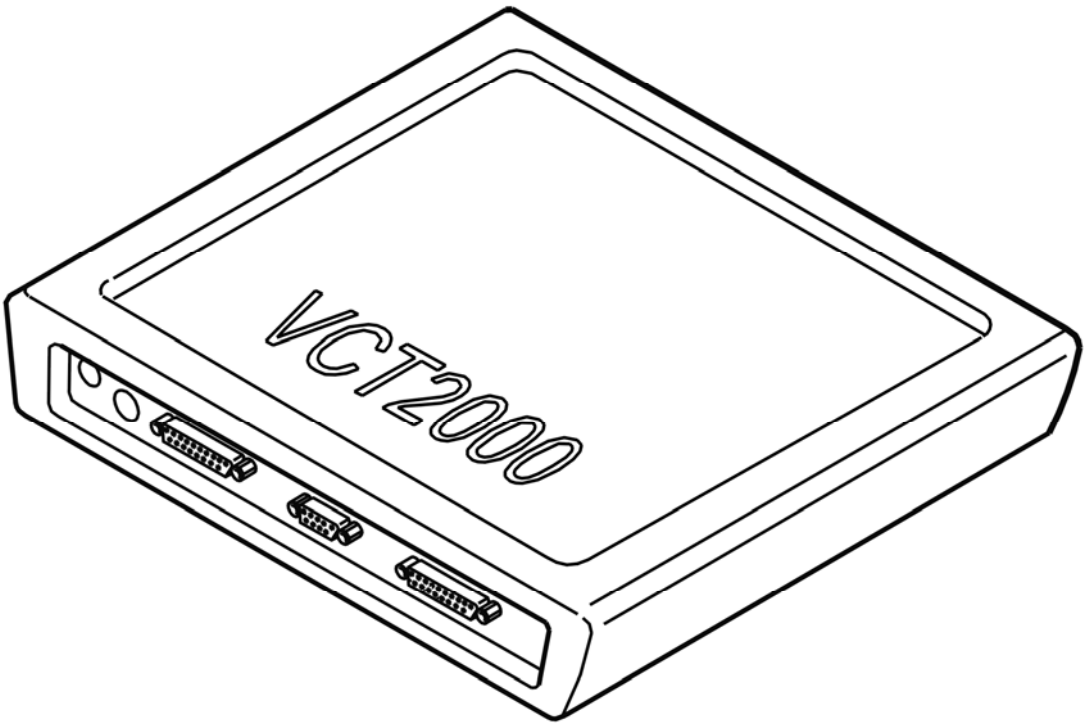

Fig. 172: Identifying VCT2000 Diagnostic Tool Symbol In VIDA
Courtesy of VOLVO CARS CORPORATION

- **Continue**

  Refer to **START ADAPTATIONS**

READOUT OF TOTAL FUEL COMPENSATION

Fig. 173: Identifying Belt Routing
Courtesy of VOLVO CARS CORPORATION

- Engine running.
- For reading out total fuel compensation at every given moment, use the VCT2000 (or appropriate scan tool).

  HINT: The readout value shows the short-term fuel trim's and the long-term fuel trim's total compensation of the injection time in real time.

HINT: Positive values indicate additional fuel, negative values indicate reduction of additional fuel.

Try by measuring at different RPM with different engine load.

NOTE: Keep in mind that the EVAP-valve's addition of fuel vapors affect the readout. For example, squeeze the hose between the EVAP-valve and inlet pipe to minimize addition of fuel from the EVAP-system.

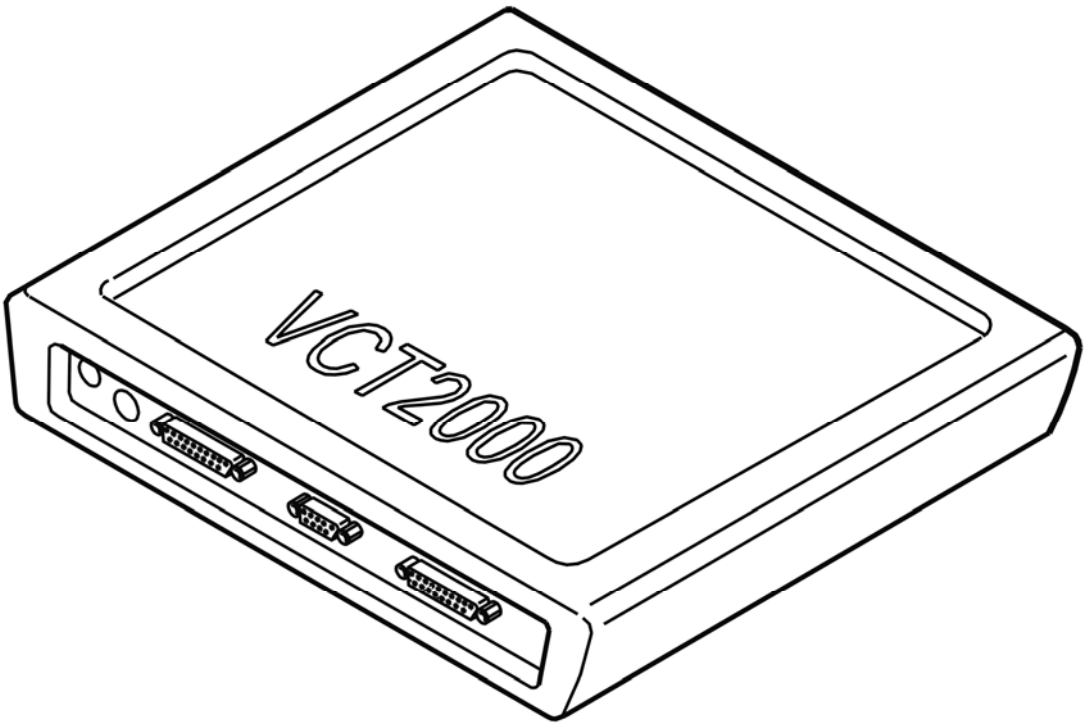

Fig. 174: Identifying VCT2000 Diagnostic Tool Symbol In VIDA
Courtesy of VOLVO CARS CORPORATION

- **Continue**

Refer to **RESET ADAPTATIONS**

START ADAPTATIONS

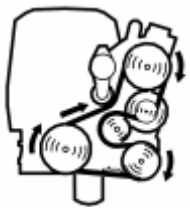

Fig. 175: Identifying Belt Routing

Courtesy of VOLVO CARS CORPORATION

Test-drive the vehicle on road and drive a little in different operating situations for 20 minutes, in order to complete as many adaptations as possible.

Check and note if any adaptation range is still incorrect by scrolling through the list with adaptation ranges.

The adaptation value is considered outside normal range if it is lower than 0.85 or higher than 1.15.

HINT: Also, perform a few full throttle accelerations to perform the adaptations that are not affected by normal driving.

For adaptation to start, certain conditions must be fulfilled

- Engine speed > or = 600 RPM.
- Engine temperature between 80-110°C.
- Adaptation active = executed.
- EVAP-valve not active = 0 µs.

HINT: At high fuel vaporization the EVAP-valve is active longer time and then it may be necessary to disconnect the hose between the EVAP-valve and the canister.

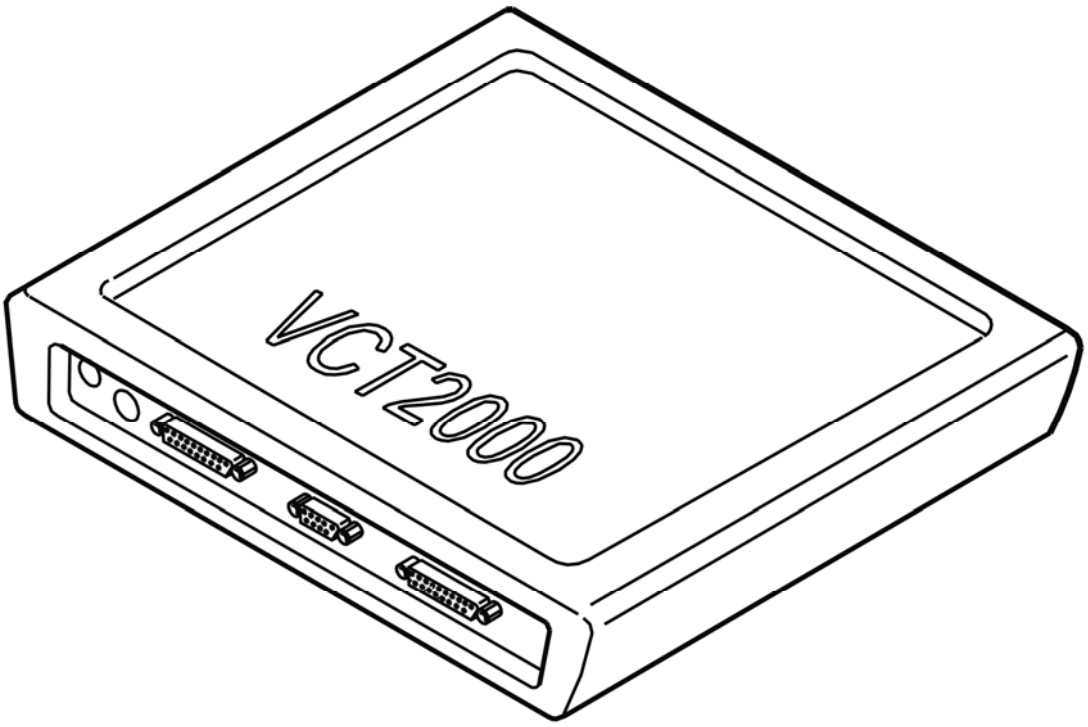

Fig. 176: Identifying VCT2000 Diagnostic Tool Symbol In VIDA

Courtesy of VOLVO CARS CORPORATION

Are these values OK?

- **YES**

  OKAY: Troubleshooting has been completed.

- **NO**

  Refer to **INFORMATION**

INFORMATION

FAULT-TRACING INFORMATION

The fault should have been detected and remedied. As this is not the case fault-tracing has failed.

Exit fault-tracing for this diagnostic trouble code (DTC) or make another attempt.

ECM-P017500: SYSTEM TOO RICH (BANK 2). GENERAL FAILURE INFORMATION. NO SUB TYPE INFORMATION (B6324S5; 2011-2012)

DIAGNOSTIC TROUBLE CODE (DTC) INFORMATION ECM-P017500

see **DIAGNOSTIC TROUBLE CODE (DTC) INFORMATION ECM-P017500**

FAULT-TRACING

see **FAULT-TRACING**

ECM-P017500: SYSTEM TOO RICH (BANK 2). GENERAL MALFUNCTION INFORMATION. NO INFORMATION ON MALFUNCTION TYPE (B8444S; 2005-2011)

DIAGNOSTIC TROUBLE CODE (DTC) INFORMATION ECM-P017500

Condition

Engine Control Module (ECM) receives information from the heated oxygen sensor about fuel/air mixture in different load areas. If Engine Control Module (ECM) registers that fuel/air mixture deviates too much from target lambda, so that adaptations for bank 2 end up in any of its end-positions, the diagnostic trouble code is generated.

Substitute Value

- Nothing.

Possible Source

- Clogged air filter.
- Oil level too high.
- Contaminated engine oil (gasoline mixed in oil).
- Leaking injectors.
- Leaking EVAP-valve
- High fuel pressure.
- Damaged mass air flow sensor.
- Loose components in the induction system.

Fault symptom[s]

- Malfunction indicator lamp (MIL) lit.
- Poor performance.
- Engine misfires.

TROUBLESHOOTING ECM-P017500

PREPARATORY CHECKS

Check and note which adaption area for bank 2 is faulty by going through the list of adaption areas.

The adaptation value is considered outside normal range if it is lower than 0.85 (engine runs rich) or higher than 1.15 (engine runs lean).

HINT: The ranges consist of a table where the first digit in the name designates RPM range and the second load range.

HINT: Thus, range 1.1 designates a case with low RPM with low load, and 6.6 a case with high RPM and high load.

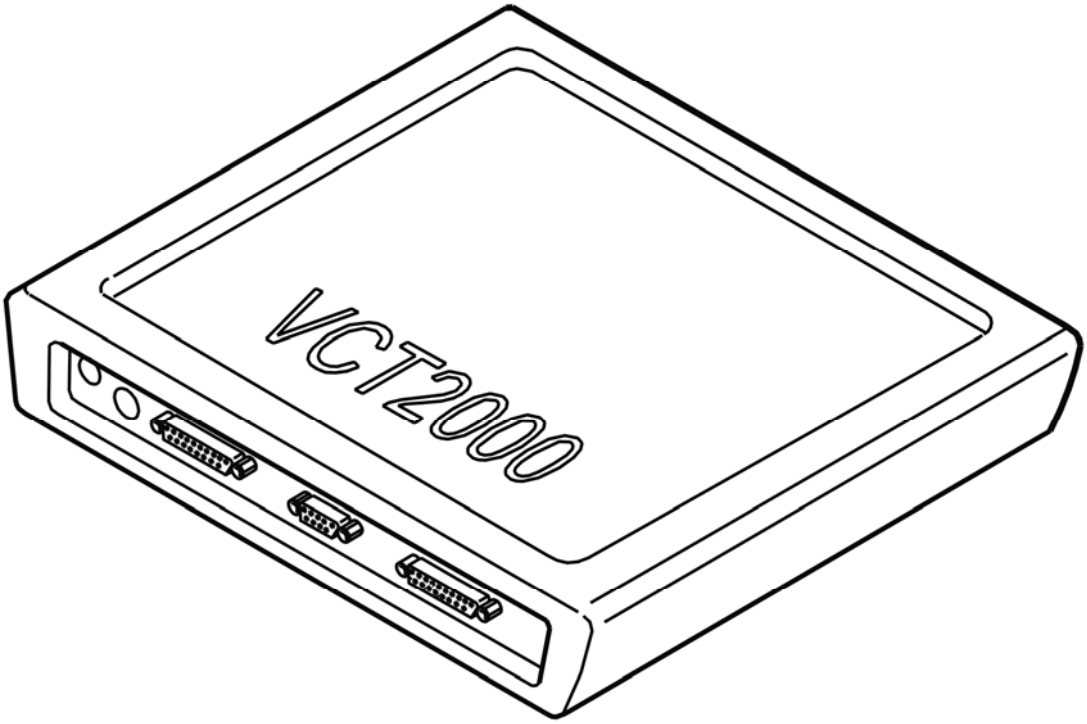

Fig. 177: Identifying VCT2000 Diagnostic Tool Symbol In VIDA
Courtesy of VOLVO CARS CORPORATION

- **Continue**

  Refer to **CHECKING SYSTEM**

CHECKING SYSTEM

Fig. 178: Identifying Belt Routing
Courtesy of VOLVO CARS CORPORATION

- Check the air filter. Check for blockage.

HINT: If fuel adaptations indicate too rich fuel/air mixture (adaptation value below 1.0) in several adaptation ranges, this indicates a fuel malfunction. The fault may be caused by too high fuel pressure for example.

HINT: To find the problem, proceed as follows:

- Check that the oil level is between the minimum and maximum markings
- Check the induction system for clogs and loose components (such as a loose air guide in the air filter holder).

  HINT: Adaptations may show rich fuel/air mixture if several cold starts with short subsequent driving time have been performed (e. g., moving cars) and thus the engine oil has been contaminated by gasoline. This affect on the adaptations disappears after driving for some time since the fuel vapors are combusted by the engine.

  - Check the EVAP-valve for leakage.

  HINT: A valve that does not seal constantly leaks fuel vapors, which thus affect the adaptations.

- Engine running.
- Check fuel pressure for high fuel pressure.
- Ignition on
- Check residual pressure for too low residual pressure.

Remedy as necessary.

HINT: Normal fuel pressure at idle and warm engine shall be approx. 480 kPa.

HINT: The residual pressure when the engine is off and the ignition is on shall be approx. 100 kPa lower than during idle.

HINT: If the residual pressure is too low, one malfunction cause may be leaking (non-sealing) injectors, for example.

Other information

- see **AIR LEAKS IN THE INTAKE SYSTEM, CHECKING**

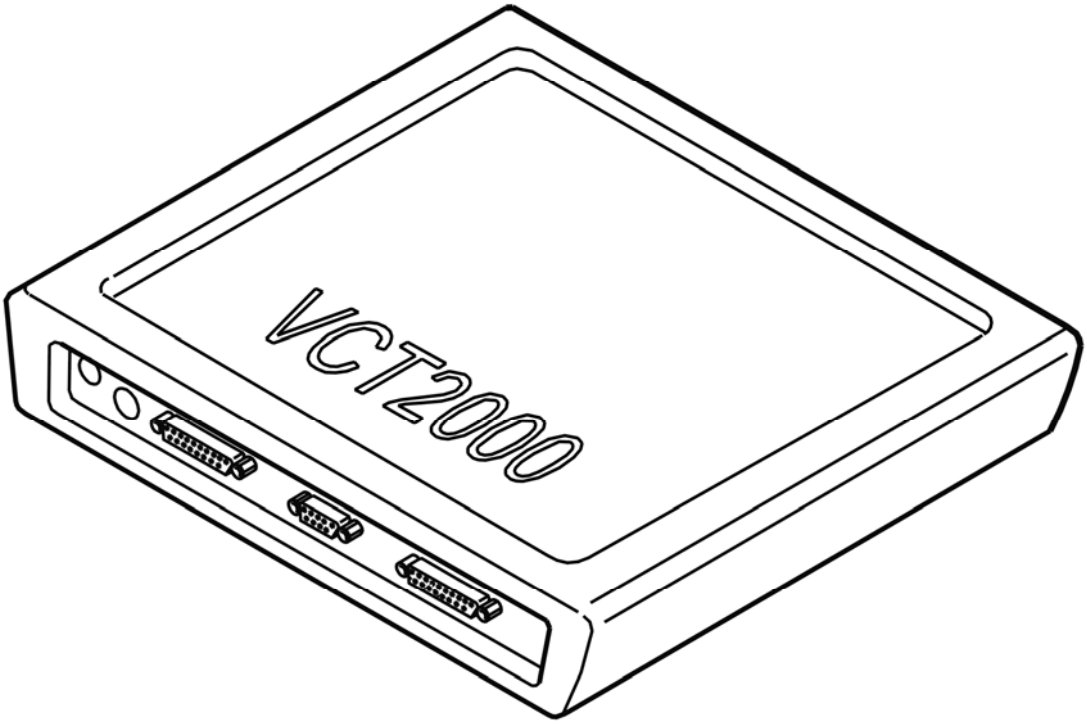

Fig. 179: Identifying VCT2000 Diagnostic Tool Symbol In VIDA
Courtesy of VOLVO CARS CORPORATION

- **Continue**

  Refer to **CHECKING MASS AIR FLOW SENSOR**

CHECKING MASS AIR FLOW SENSOR

Fig. 180: Identifying Belt Routing
Courtesy of VOLVO CARS CORPORATION

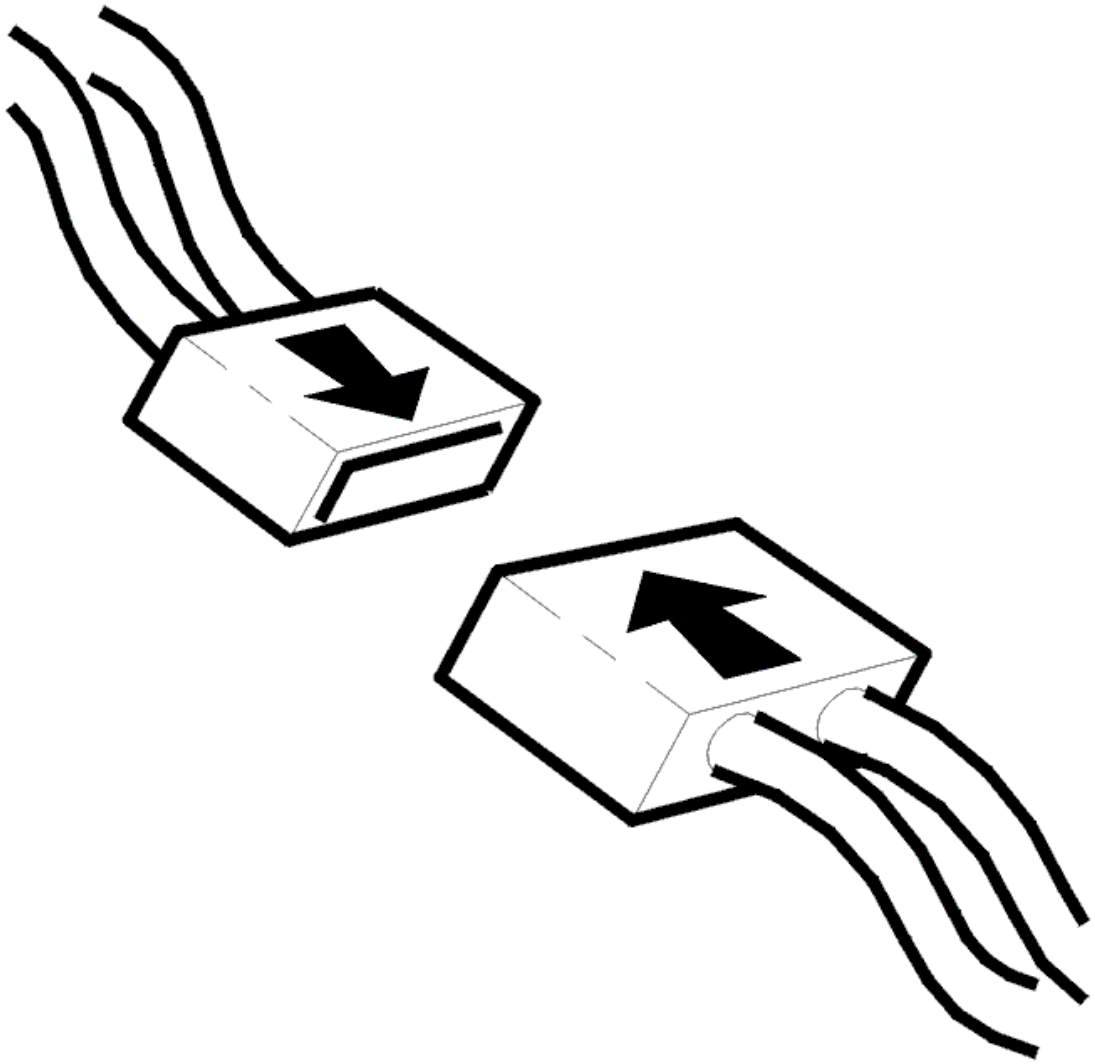

Fig. 181: Connecting Connector
Courtesy of VOLVO CARS CORPORATION

- Engine running.

  Check and compare the calculated air mass with the actual air mass readout from the mass air flow sensor.

  Try by measuring at different RPM.

  HINT: Differences of more than approx. 20% between the signals indicate a malfunction of the mass air flow sensor.

  HINT: Remedy as necessary.

  NOTE: When replacing mass air flow sensor, repeat the check to verify that the

problem has been solved with the replacement.

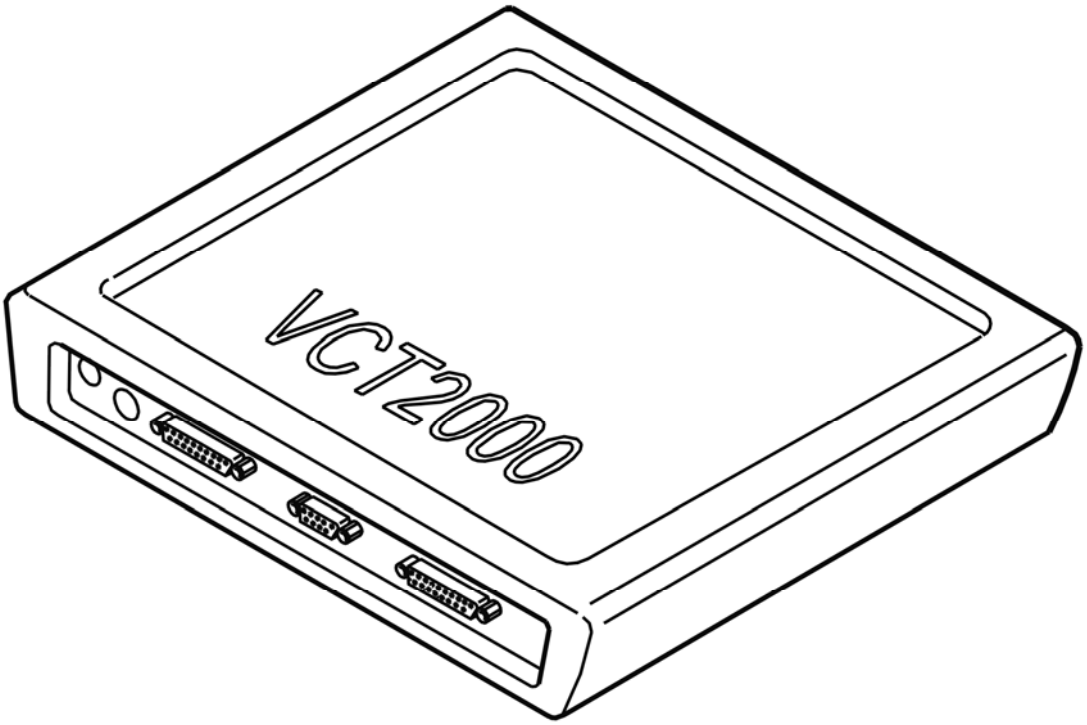

Fig. 182: Identifying VCT2000 Diagnostic Tool Symbol In VIDA
Courtesy of VOLVO CARS CORPORATION

- For more information about current fuel compensation, refer to **READOUT OF TOTAL FUEL COMPENSATION**.
- To continue, refer to **RESET ADAPTATIONS**.

RESET ADAPTATIONS

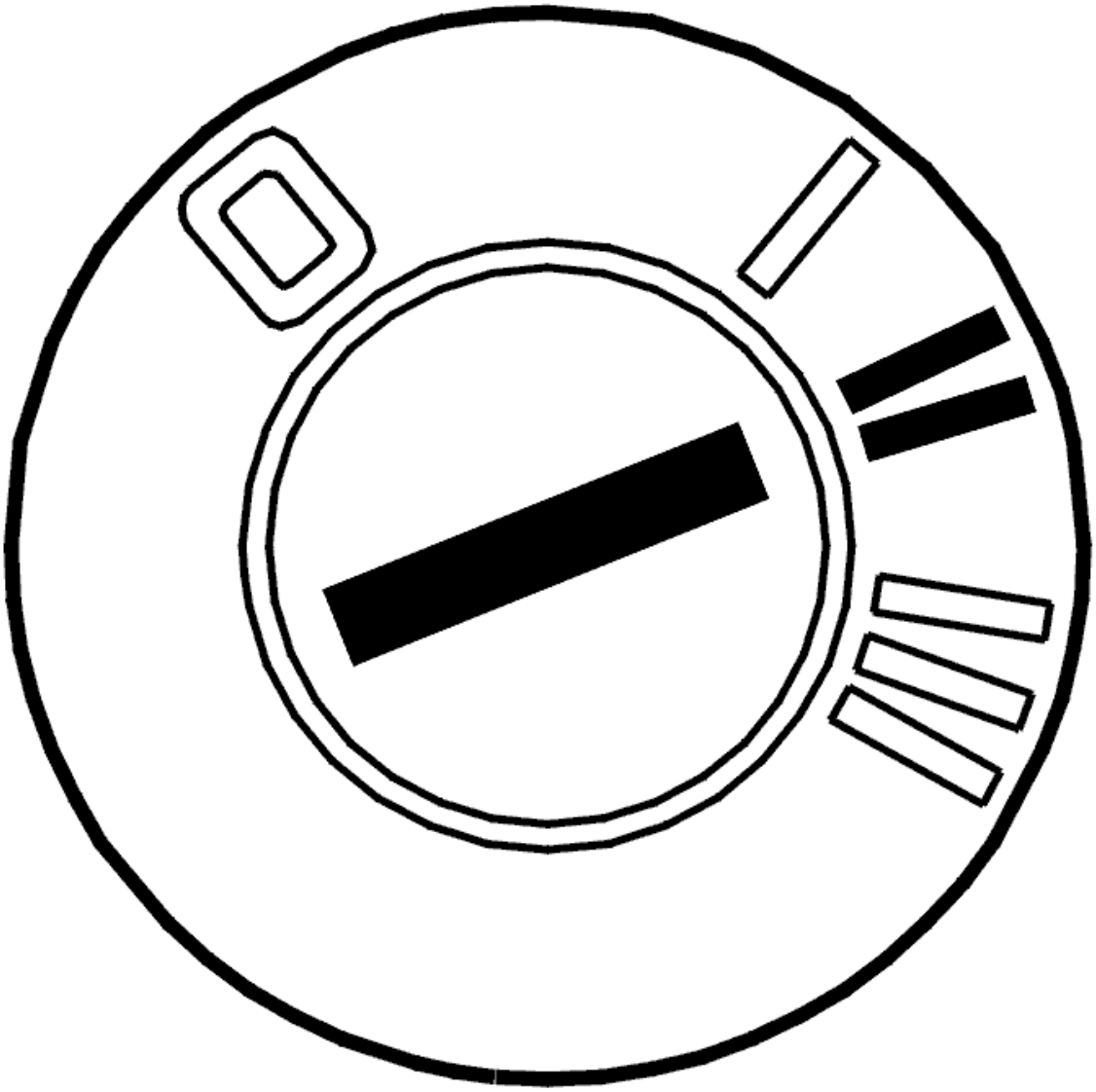

Fig. 183: Identifying Ignition ON
Courtesy of VOLVO CARS CORPORATION

- Turn off the engine.
- Ignition on

  Reset adaptations to zero using the VCT2000 (or appropriate scan tool).

  This is done to give the system a normal starting point. Thus it can be seen faster if the adaptations run off up or down.

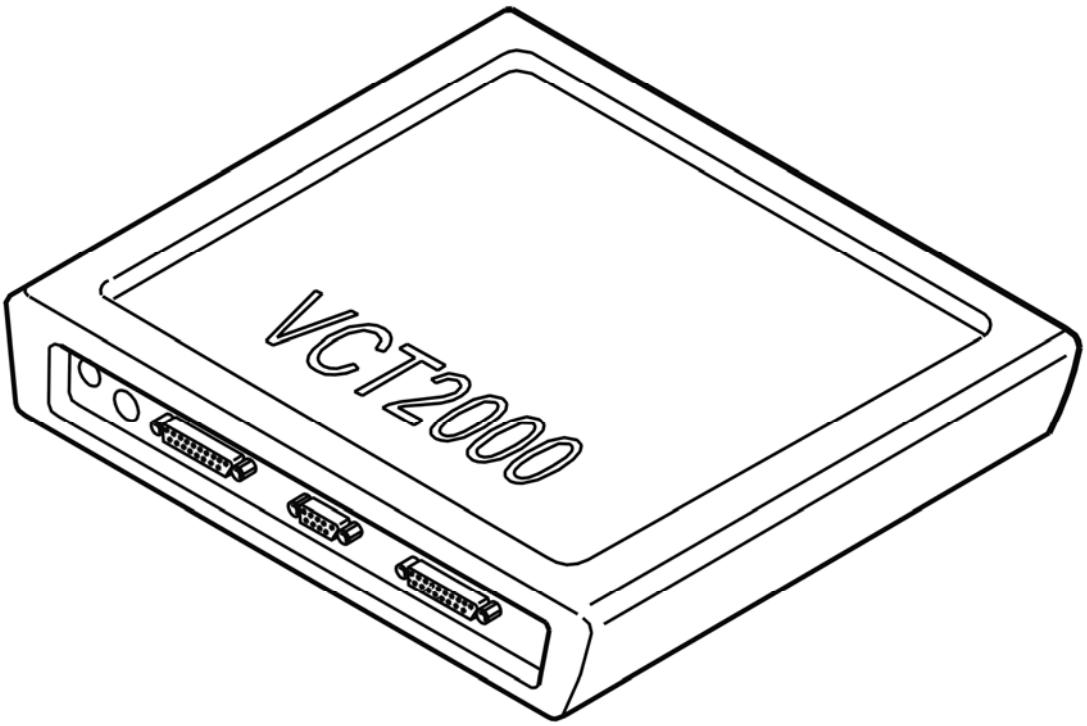

Fig. 184: Identifying VCT2000 Diagnostic Tool Symbol In VIDA
Courtesy of VOLVO CARS CORPORATION

- **Continue**

  Refer to **START ADAPTATIONS**

READOUT OF TOTAL FUEL COMPENSATION

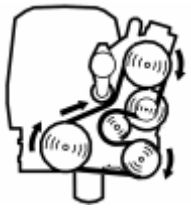

Fig. 185: Identifying Belt Routing
Courtesy of VOLVO CARS CORPORATION

- Engine running.
- For reading out total fuel compensation at every given moment, use the VCT2000 (or appropriate scan tool).

  HINT: The readout value shows the short-term fuel trim's and the long-term fuel trim's total compensation of the injection time in real time.

HINT: Positive values indicate additional fuel, negative values indicate reduction of additional fuel.

Try by measuring at different RPM with different engine load.

NOTE: Keep in mind that the EVAP-valve's addition of fuel vapors affect the readout. For example, squeeze the hose between the EVAP-valve and inlet pipe to minimize addition of fuel from the EVAP-system.

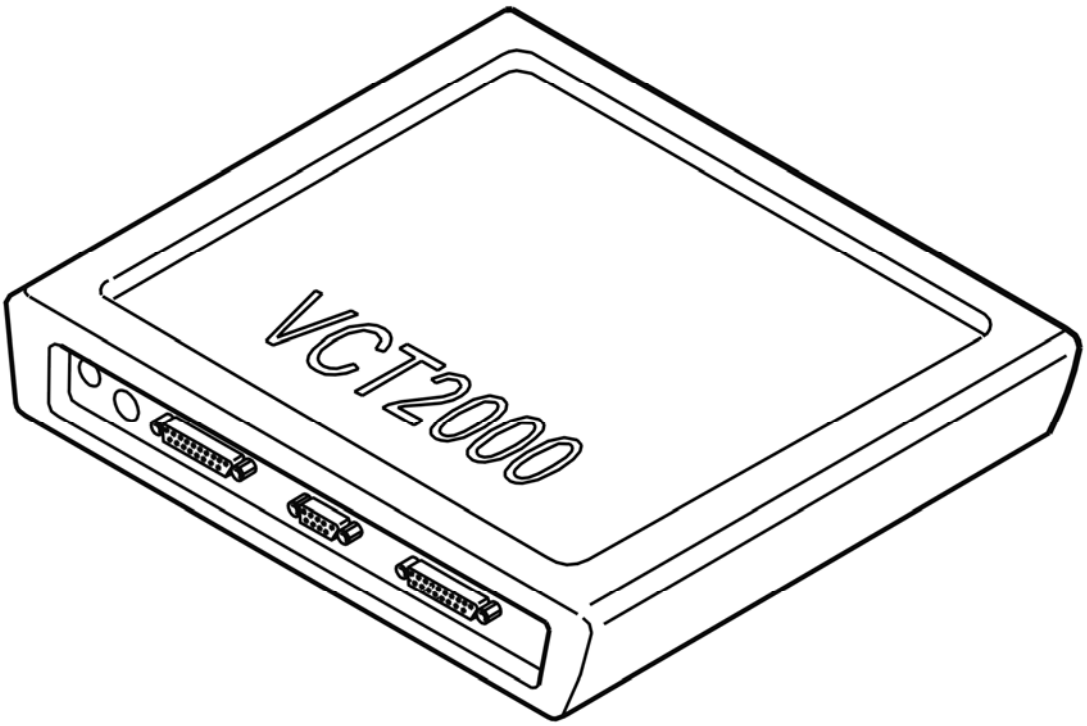

Fig. 186: Identifying VCT2000 Diagnostic Tool Symbol In VIDA
Courtesy of VOLVO CARS CORPORATION

- **Continue**

Refer to **RESET ADAPTATIONS**

START ADAPTATIONS

Fig. 187: Identifying Belt Routing

Courtesy of VOLVO CARS CORPORATION

Test-drive the vehicle on road and drive a little in different operating situations for 20 minutes, in order to complete as many adaptations as possible.

Check and note if any adaptation range is still incorrect by scrolling through the list with adaptation ranges.

The adaptation value is considered outside normal range if it is lower than 0.85 or higher than 1.15.

HINT: Also, perform a few full throttle accelerations to perform the adaptations that are not affected by normal driving.

For adaptation to start, certain conditions must be fulfilled

- Engine speed > or = 600 RPM.
- Engine temperature between 80-110°C.
- Adaptation active = executed.
- EVAP-valve not active = 0 µs.

HINT: At high fuel vaporization the EVAP-valve is active longer time and then it may be necessary to disconnect the hose between the EVAP-valve and the canister.

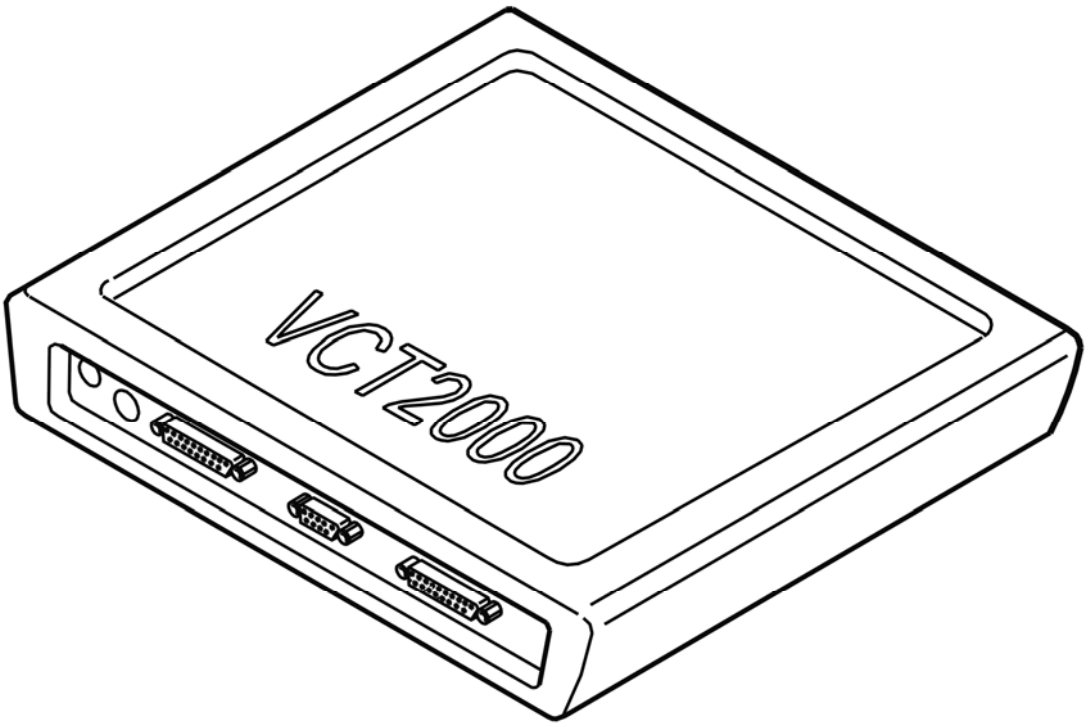

Fig. 188: Identifying VCT2000 Diagnostic Tool Symbol In VIDA

Courtesy of VOLVO CARS CORPORATION

Are these values OK?

- **YES**

  OKAY: Troubleshooting has been completed.

- **NO**

  Refer to **INFORMATION**

INFORMATION

FAULT-TRACING INFORMATION

The fault should have been detected and remedied. As this is not the case fault-tracing has failed.

Exit fault-tracing for this diagnostic trouble code (DTC) or make another attempt.

ECM-P018000: FUEL TEMPERATURE SENSOR A CIRCUIT. GENERAL FAILURE INFORMATION. NO SUB TYPE INFORMATION (B6324S; 2007-2010)

DIAGNOSTIC TROUBLE CODE (DTC) INFORMATION ECM-P018000

Condition

Engine control module (ECM) measures the temperature of the fuel in the fuel rail using a fuel temperature sensor. The control module checks the direct voltage from the sensor.

NOTE: The fuel pressure sensor and fuel temperature sensor are integrated in the same component.

The diagnostic trouble code (DTC) is stored if the control module detects that:

- The direct voltage is higher than 4.951 V.
- Incorrect value lasts longer than 5 seconds.
- Incorrect value lasts for 2 or more subsequent driving cycles.

The control module's test for the diagnostic trouble code (DTC) starts in the event of:

- Ignition switch position II.

NOTE: The control module can only detect the fault once the test has been started and the diagnostic trouble code (DTC) is stored when the conditions are met.

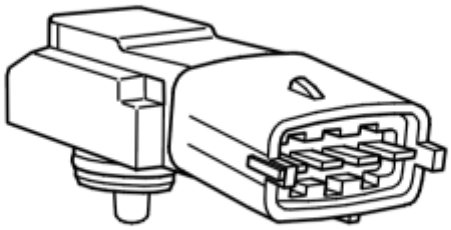

Fig. 189: Identifying Fuel Temperature Sensor
Courtesy of VOLVO CARS CORPORATION

Substitute Value

- The control module assumes that the fuel temperature is the same as the coolant temperature.

Possible Source

- Open-circuit in signal cable or ground lead.
- Contact resistance and oxidation in the terminals.
- Short-circuit to supply voltage in the signal cable.
- Damaged fuel temperature sensor.

Fault symptom[s]

- None.

FAULT-TRACING

see **FAULT-TRACING**

ECM-P018000: FUEL TEMPERATURE SENSOR A CIRCUIT. GENERAL FAILURE INFORMATION. NO SUB TYPE INFORMATION (B6324S5; 2011-2012)

DIAGNOSTIC TROUBLE CODE (DTC) INFORMATION ECM-P018000

see **DIAGNOSTIC TROUBLE CODE (DTC) INFORMATION ECM-P018000**

FAULT-TRACING

see **FAULT-TRACING**

ECM-P018100: FUEL TEMPERATURE SENSOR A CIRCUIT RANGE/PERFORMANCE. GENERAL FAILURE INFORMATION. NO SUB TYPE INFORMATION (B6324S; 2007-2010)

DIAGNOSTIC TROUBLE CODE (DTC) INFORMATION ECM-P018100

Condition

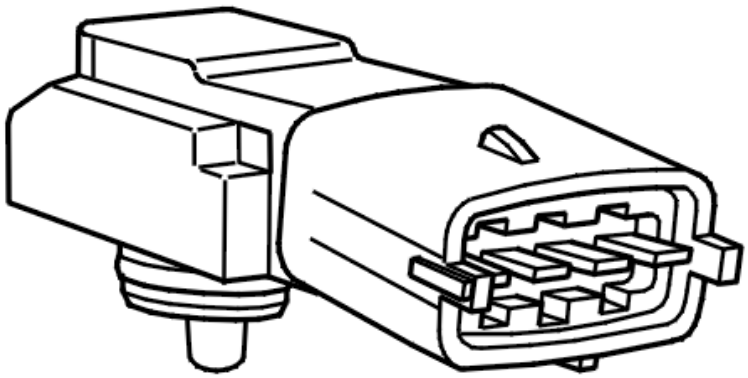

Fig. 190: Identifying Fuel Pressure Sensor
Courtesy of VOLVO CARS CORPORATION

The engine control module (ECM) checks the signal from the fuel temperature sensor.

The diagnostic trouble code (DTC) is stored if the control module detects that the value from the fuel temperature sensor deviates too much from the values for engine coolant and intake temperatures after the engine has been switched off for an extended period.

The diagnostic trouble code can be diagnosed at ignition on after the engine temperature has dropped by at least 55 °C from fully warm engine (higher than 70 °C).

Substitute Value

- The signal from the engine coolant temperature (ECT) sensor is used.

Possible Source

- Contact resistance in the connectors.
- Damaged fuel temperature sensor.

Fault symptom[s]

- Nothing.

FAULT TRACING

CHECKING THE STATUS

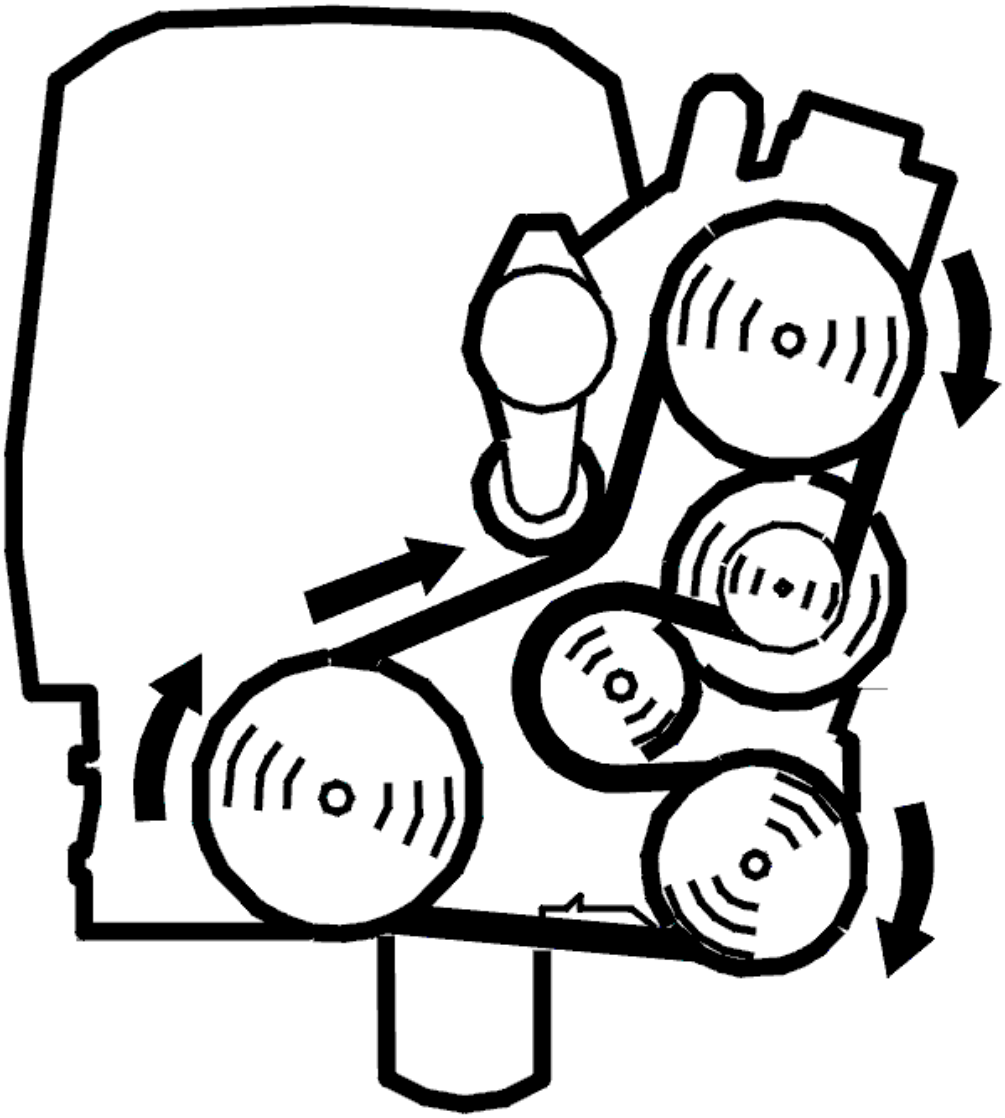

Fig. 191: Belt Routing / Engine Idling - Volvo
Courtesy of VOLVO CARS CORPORATION

- Start the engine.

  Check whether the fault is permanent or intermittent by reading the signal of the fuel temperature sensor. Check that the value is feasible.

  HINT: The signal is measured in the injector delivery pipe and is thus affected by engine temperature.

  If the value is not feasible, the fault is permanent. If the value is feasible, the fault is intermittent and not currently active.

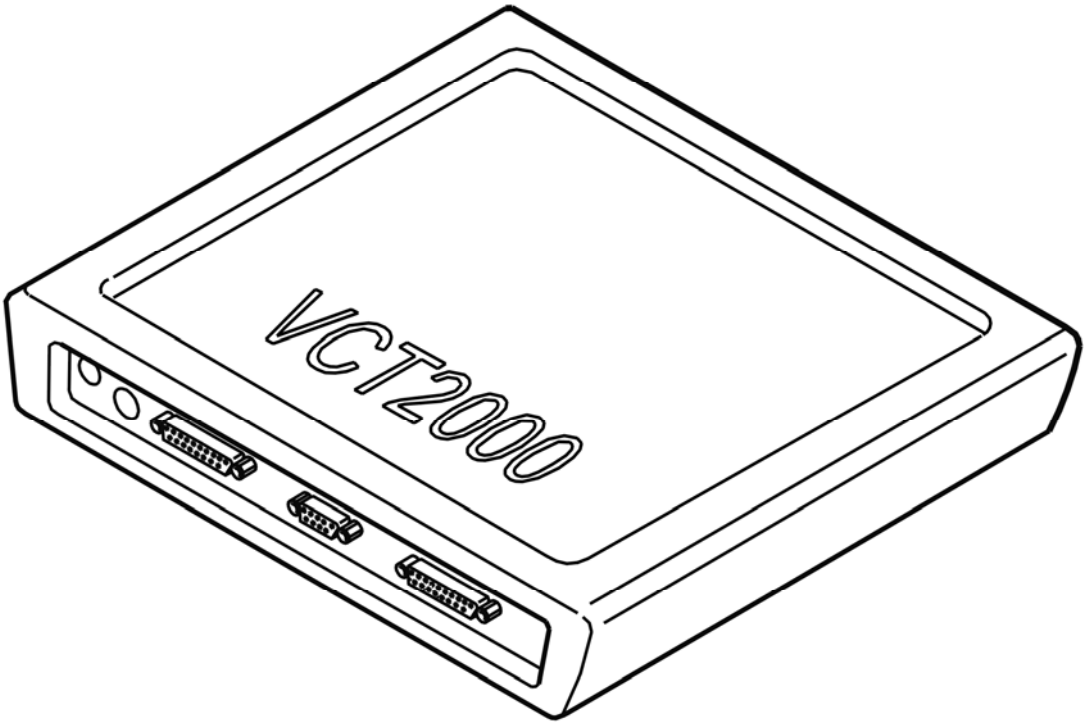

Fig. 192: Identifying VCT2000 Diagnostic Tool Symbol In VIDA
Courtesy of VOLVO CARS CORPORATION

- **Continue**

  Refer to **CHECKING COMPONENTS AND WIRING**

CHECKING COMPONENTS AND WIRING

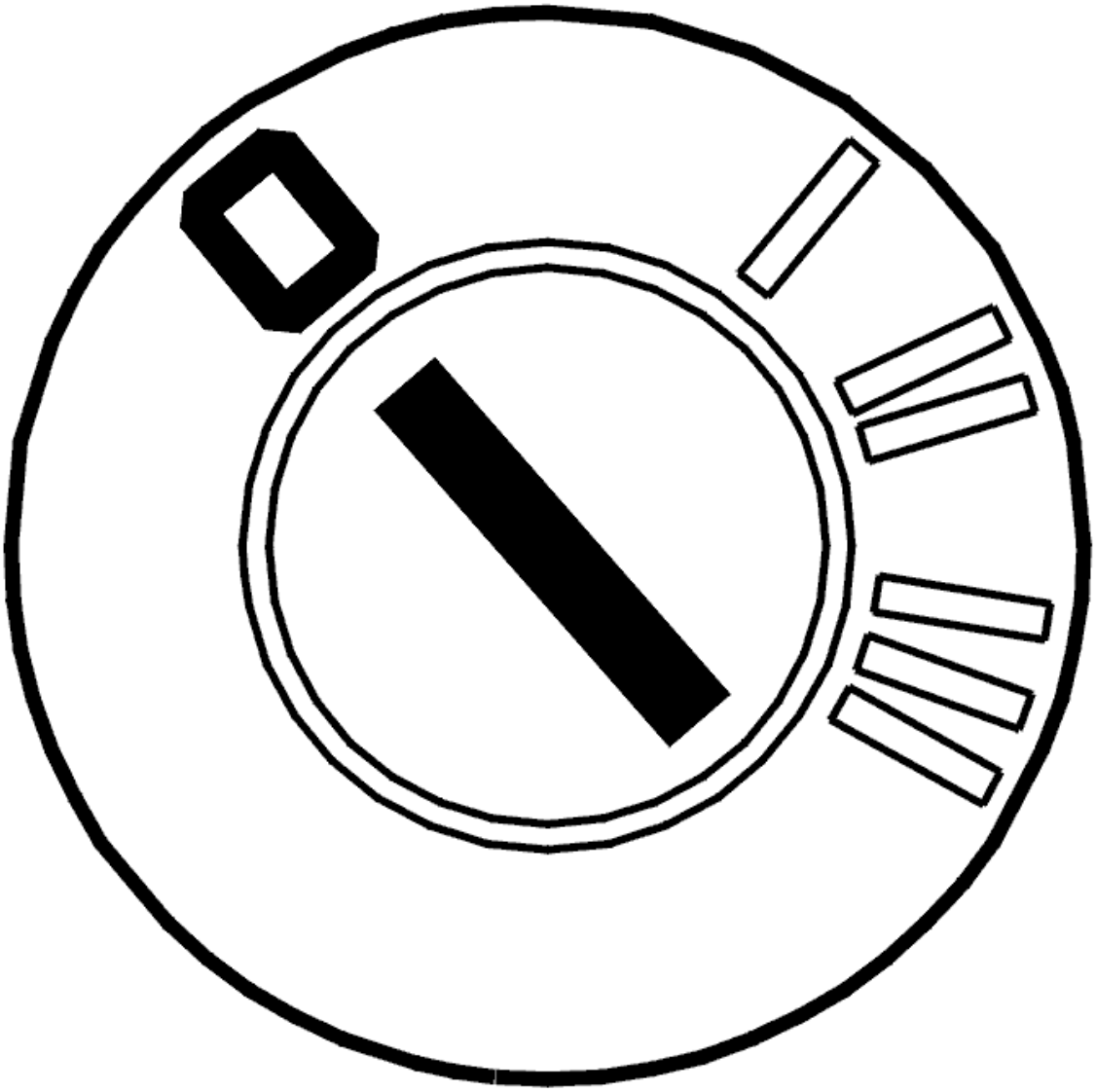

Fig. 193: Identifying Ignition OFF
Courtesy of VOLVO CARS CORPORATION

- Ignition off

  HINT: The fuel temperature sensor is integrated in the fuel pressure sensor.

  Check the fuel pressure sensor connectors and connections for contact resistance and oxidation.

  Remedy as necessary.

  Other information

  - see **CONNECTING THE BREAKOUT BOX**
  - see **SIGNAL SPECIFICATION**

- see **CHECKING WIRING AND TERMINALS**

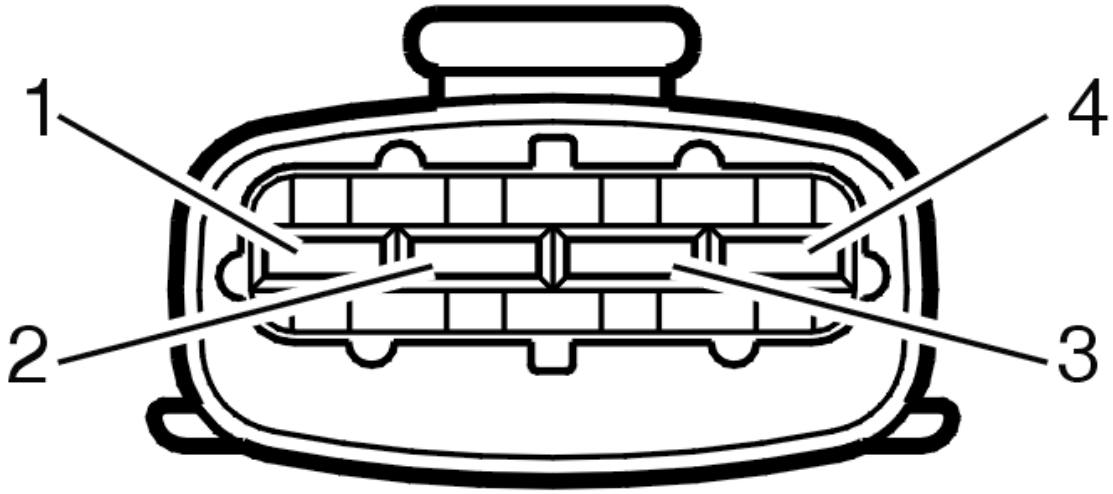

Fig. 194: Identifying 4-Bit Connector
Courtesy of VOLVO CARS CORPORATION

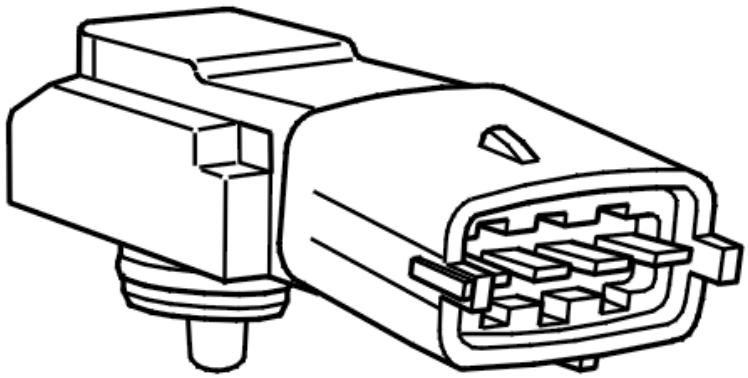

Fig. 195: Identifying Fuel Pressure Sensor
Courtesy of VOLVO CARS CORPORATION

- **Continue**

Refer to **VERIFICATION**

INFORMATION

FAULT-TRACING INFORMATION

The fault should have been detected and remedied. As this is not the case fault-tracing has failed.

Exit fault-tracing for this diagnostic trouble code (DTC) or make another attempt.

VERIFICATION

VERIFICATION

HINT: After carrying out the repair, check that the fault has been remedied.

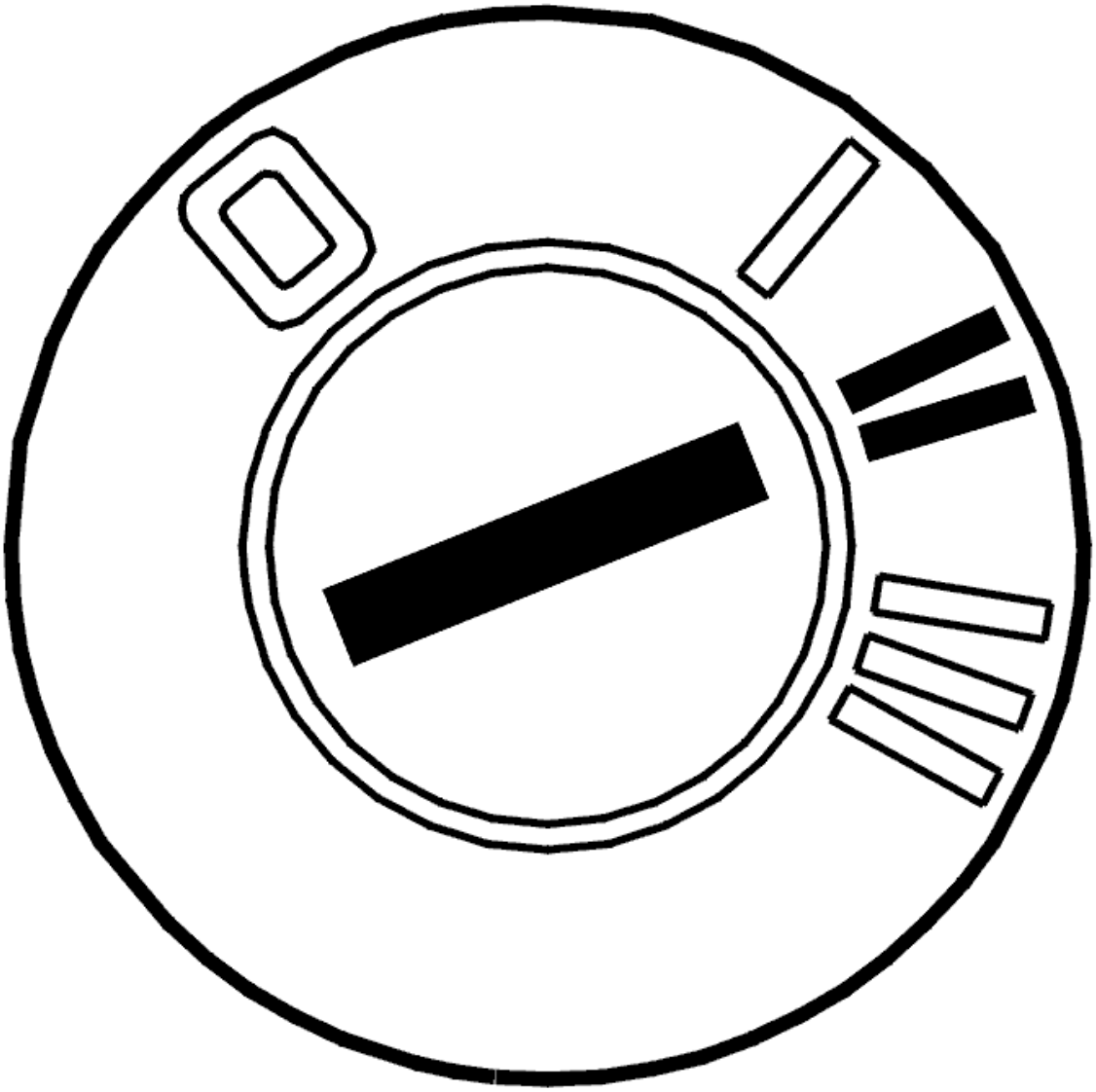

Fig. 196: Identifying Ignition ON
Courtesy of VOLVO CARS CORPORATION

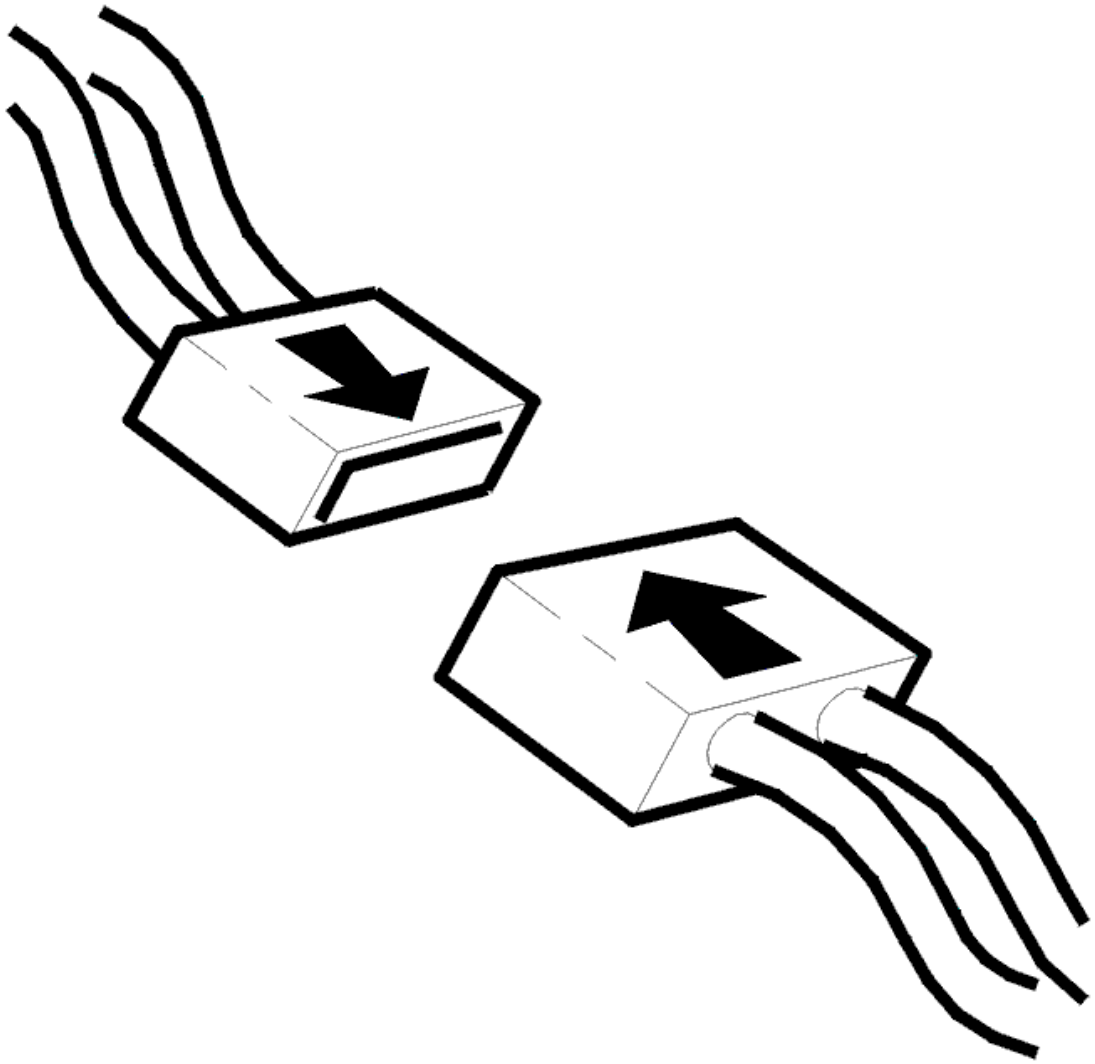

Fig. 197: Connecting Connector
Courtesy of VOLVO CARS CORPORATION

- Ignition off
- Reinstall the connectors, components etc.
- Ignition on

  Read off the fuel temperature sensor signal using the VCT2000 (or appropriate scan tool).

  Check that the signal is within its permitted range. The signal is measured in the injector delivery lines as the signal is affected by the engine temperature.

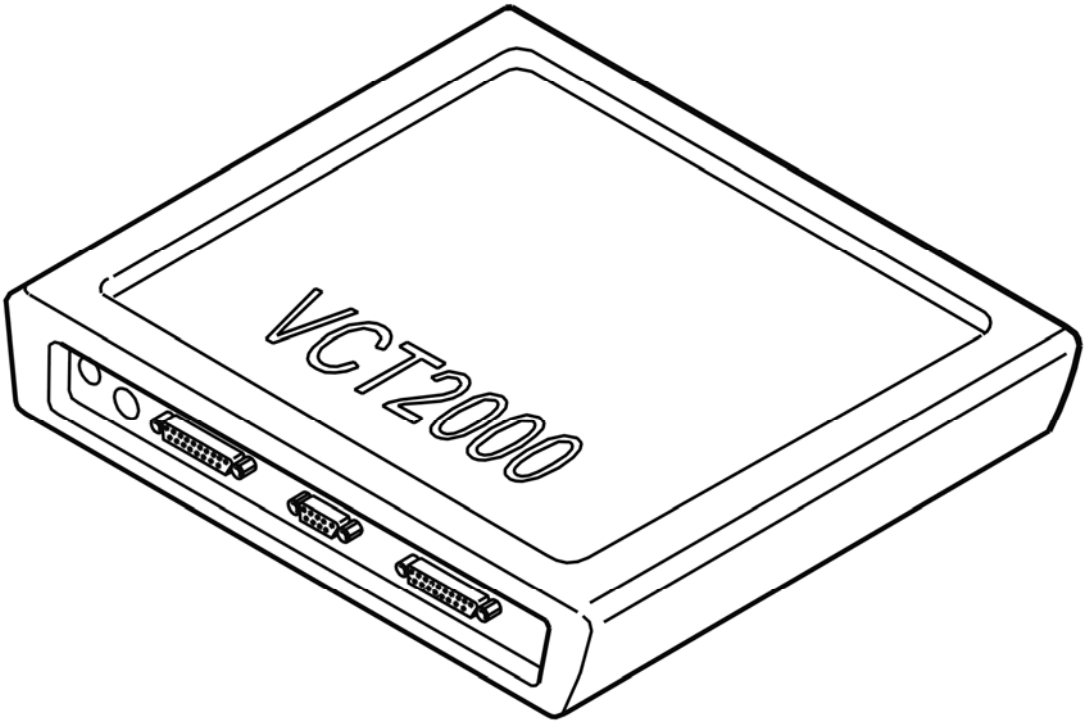

Fig. 198: Identifying VCT2000 Diagnostic Tool Symbol In VIDA
Courtesy of VOLVO CARS CORPORATION

Is the signal within its permitted range?

- **YES**

  VERIFIED: Troubleshooting has been completed.

- **NO**

  Refer to **INFORMATION**

ECM-P018100: FUEL TEMPERATURE SENSOR A CIRCUIT RANGE/PERFORMANCE. GENERAL FAILURE INFORMATION. NO SUB TYPE INFORMATION (B6324S5; 2011-2012)

DIAGNOSTIC TROUBLE CODE (DTC) INFORMATION ECM-P018100

see **DIAGNOSTIC TROUBLE CODE (DTC) INFORMATION ECM-P018100**

FAULT TRACING

see **FAULT TRACING**

ECM-P018100: FUEL PRESSURE TEMPERATURE SENSOR A CIRCUIT WITHIN/OUTSIDE RANGE. GENERAL FAULT INFORMATION. NO INFORMATION ABOUT FAULT TYPE (B8444S; 2005-2011)

DIAGNOSTIC TROUBLE CODE (DTC) INFORMATION

Condition

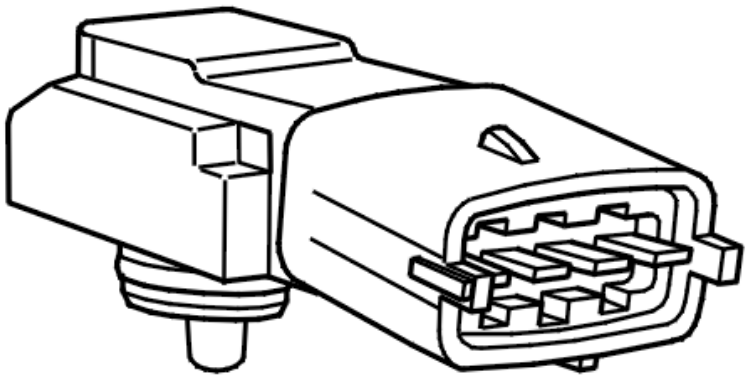

Fig. 199: Identifying Fuel Pressure Sensor
Courtesy of VOLVO CARS CORPORATION

The engine control module (ECM) checks the signal from the fuel temperature sensor.

The diagnostic trouble code (DTC) is stored if the control module detects that the value from the fuel temperature sensor deviates too much from the values for engine coolant and intake temperatures after the engine has been switched off for an extended period.

The diagnostic trouble code (DTC) is diagnosed once per operating cycle when the ignition is switched on, but only when the engine temperature has dropped by approximately 60°C from operating temperature (higher than 70°C) since the previous operating cycle.

Substitute Value

- The signal from the engine coolant temperature (ECT) sensor is used.

Possible Source

- Contact resistance in the connectors.
- Damaged fuel temperature sensor.

Fault symptom[s]

- Nothing.

FAULT TRACING

CHECKING THE STATUS

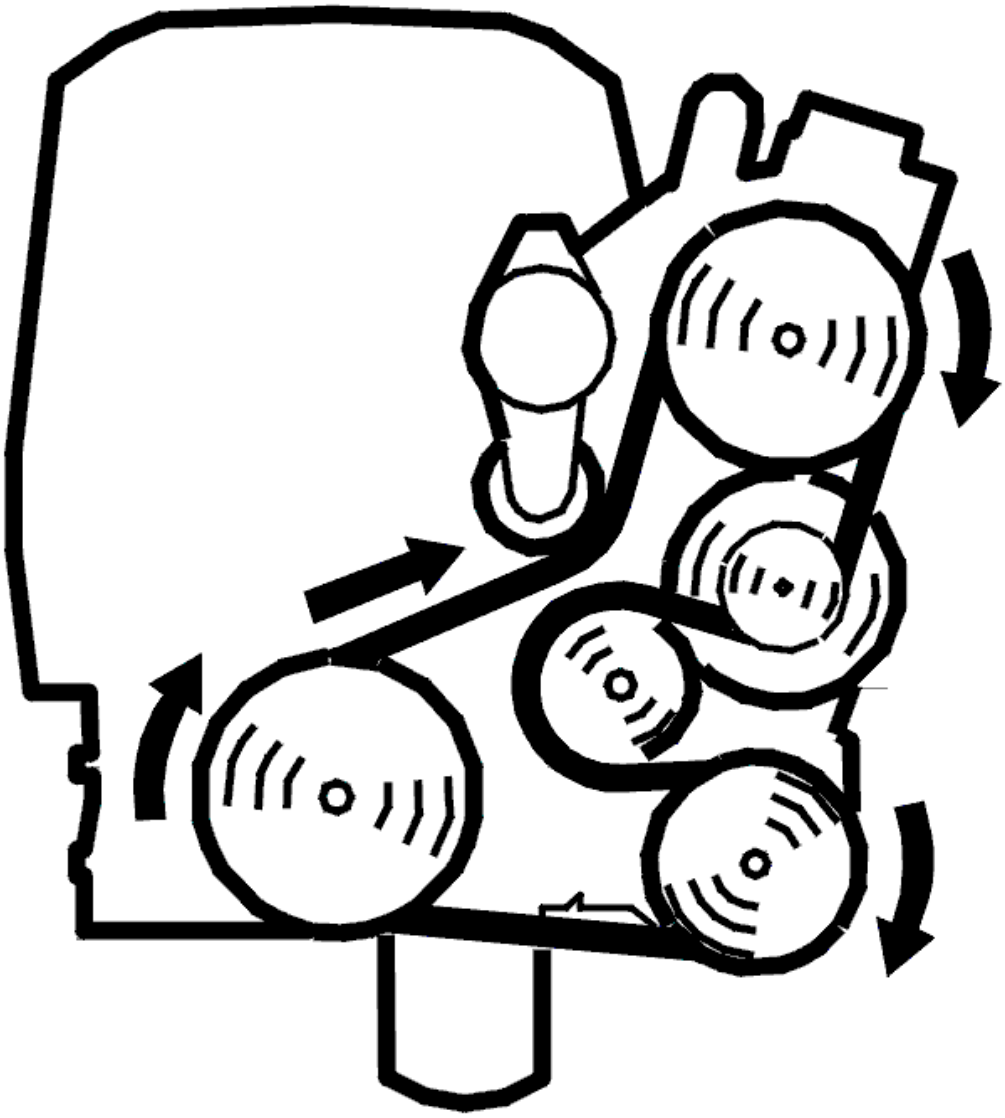

Fig. 200: Belt Routing / Engine Idling - Volvo
Courtesy of VOLVO CARS CORPORATION

- Start the engine.

  Check whether the fault is permanent or intermittent by reading the signal of the fuel temperature sensor. Check that the value is feasible.

  HINT: The signal is measured in the injector delivery pipe and is thus affected by engine temperature.

  If the value is not feasible, the fault is permanent. If the value is feasible, the fault is intermittent and not currently active.

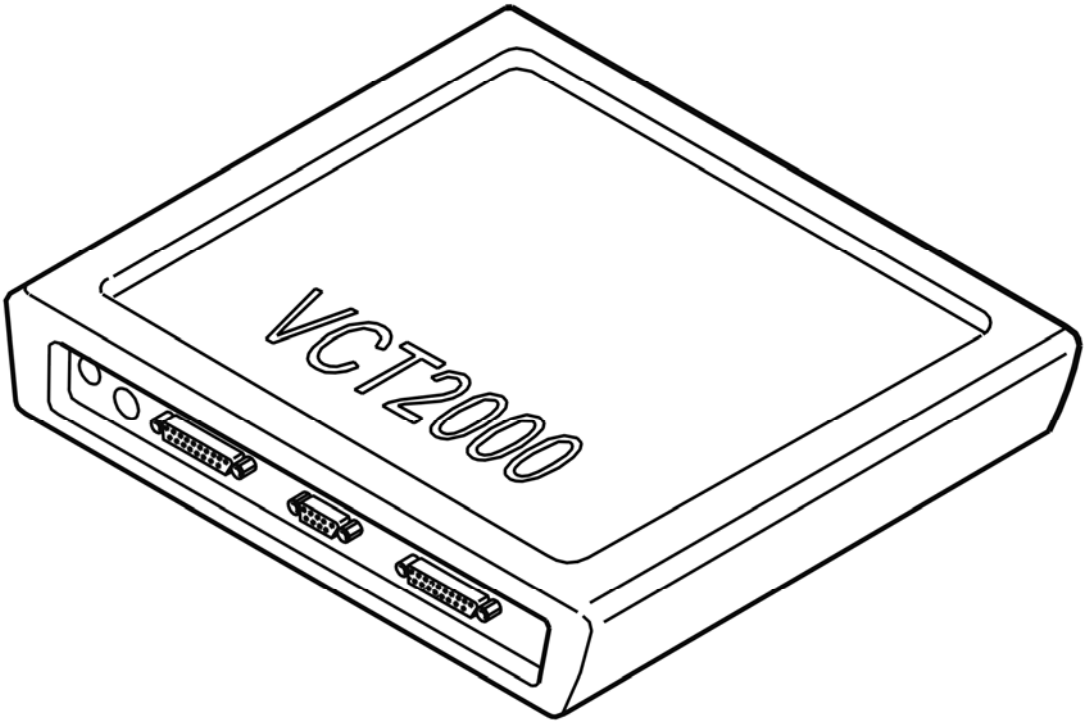

Fig. 201: Identifying VCT2000 Diagnostic Tool Symbol In VIDA
Courtesy of VOLVO CARS CORPORATION

- **Continue**

  Refer to **CHECKING COMPONENTS AND WIRING**

CHECKING COMPONENTS AND WIRING

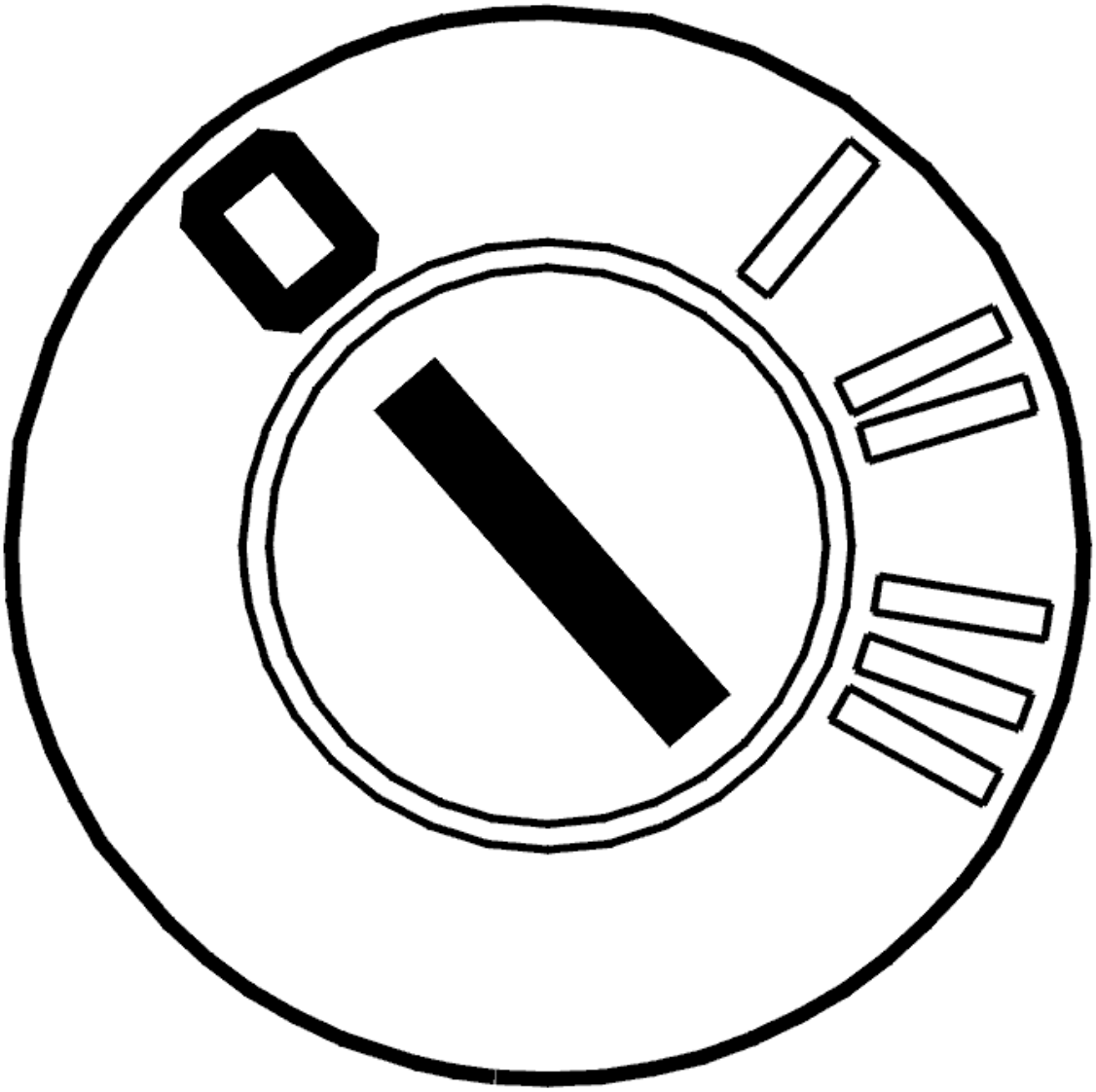

Fig. 202: Identifying Ignition OFF
Courtesy of VOLVO CARS CORPORATION

- Ignition off

  HINT: The fuel temperature sensor is integrated in the fuel pressure sensor.

  Check the fuel pressure sensor connectors and connections for contact resistance and oxidation.

  Remedy as necessary.

  Other information

  - see **CONNECTING THE BREAKOUT BOX**
  - see **SIGNAL SPECIFICATION, ENGINE CONTROL MODULE (ECM)**

- see **FUEL PRESSURE AND TEMPERATURE SENSOR, REPLACING**
- see **CHECKING WIRING AND TERMINALS**

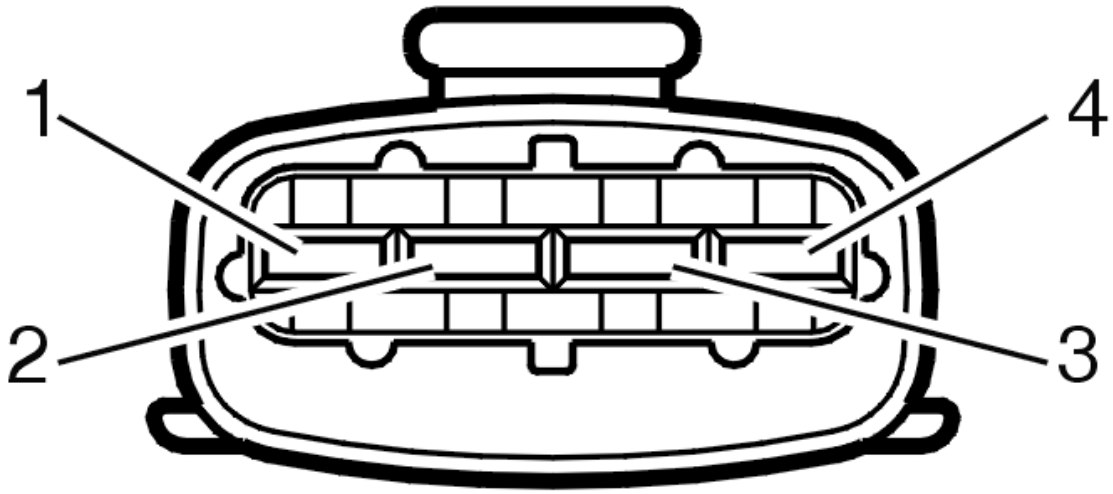

Fig. 203: Identifying 4-Bit Connector
Courtesy of VOLVO CARS CORPORATION

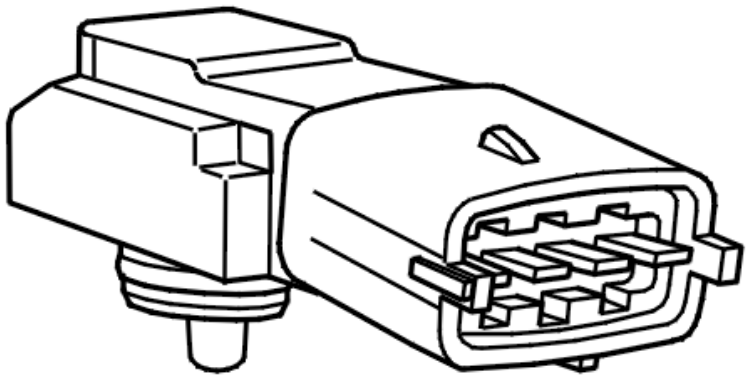

Fig. 204: Identifying Fuel Pressure Sensor
Courtesy of VOLVO CARS CORPORATION

- **Continue**

  Refer to **VERIFICATION**

VERIFICATION

VERIFICATION

HINT: After carrying out the repair, check that the fault has been remedied.

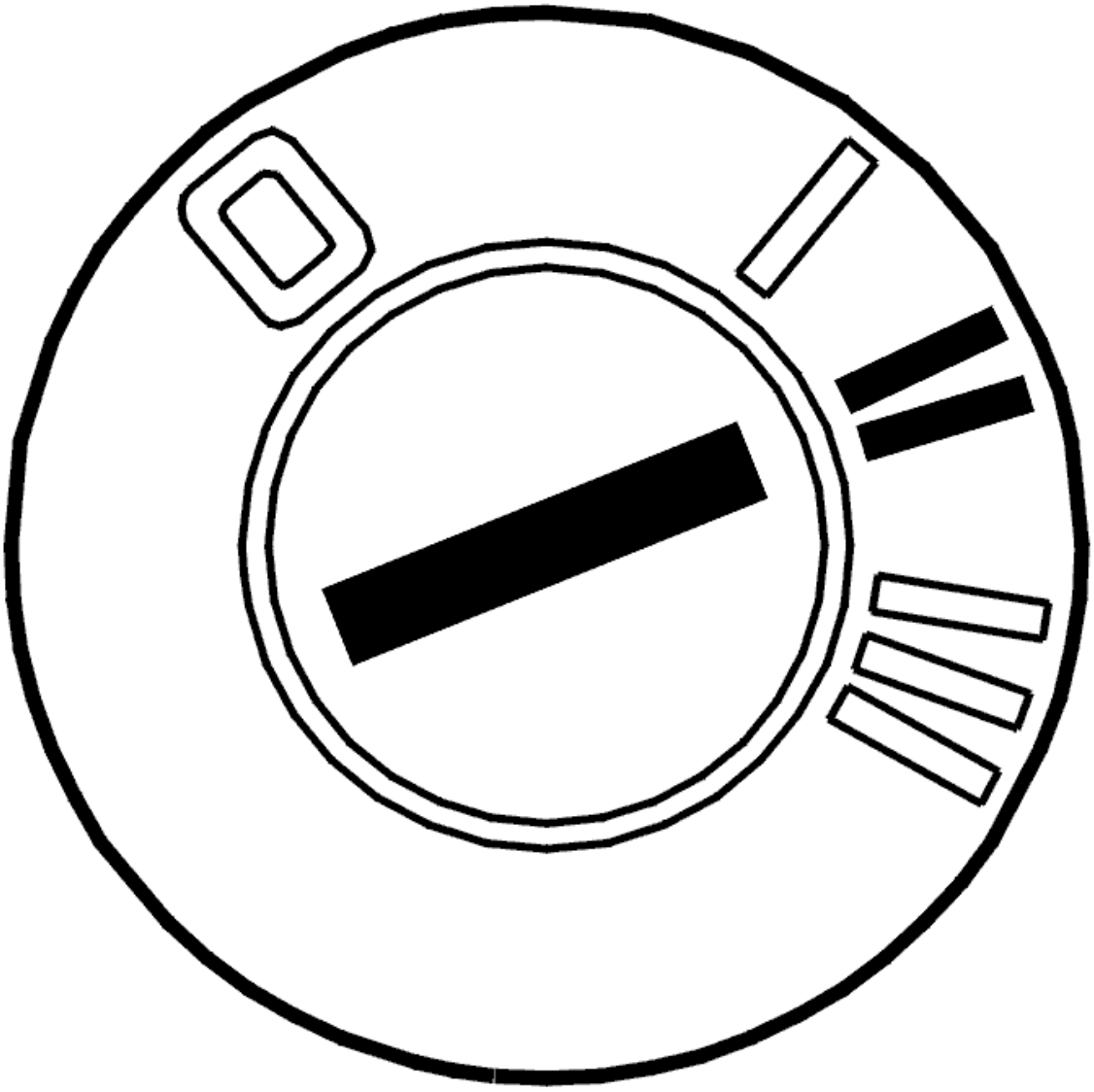

Fig. 205: Identifying Ignition ON
Courtesy of VOLVO CARS CORPORATION

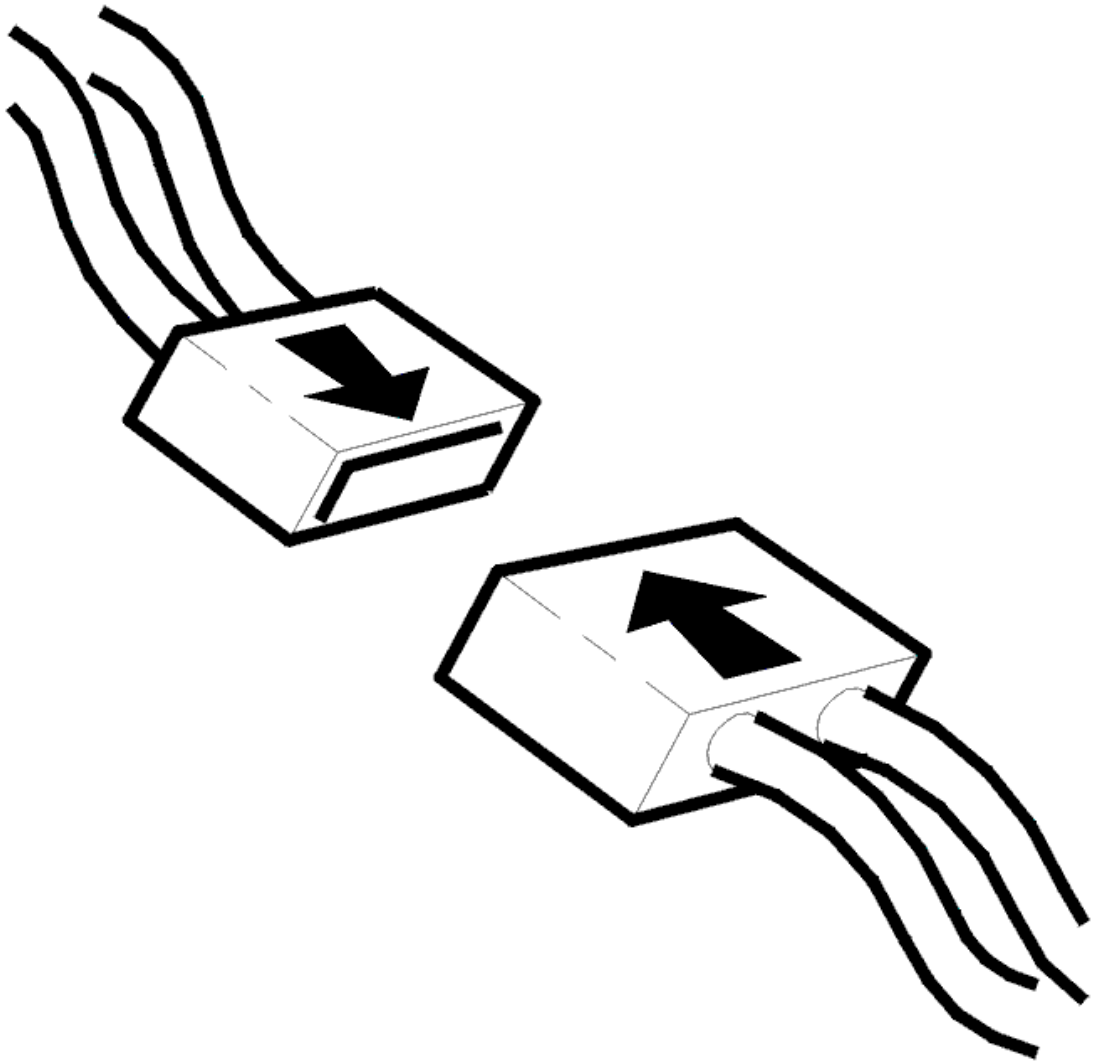

Fig. 206: Connecting Connector
Courtesy of VOLVO CARS CORPORATION

- Ignition off
- Reinstall the connectors, components etc.
- Ignition on

  Read off the fuel temperature sensor signal using the VCT2000 (or appropriate scan tool).

  Check that the signal is within its permitted range. The signal is measured in the injector delivery lines as the signal is affected by the engine temperature.

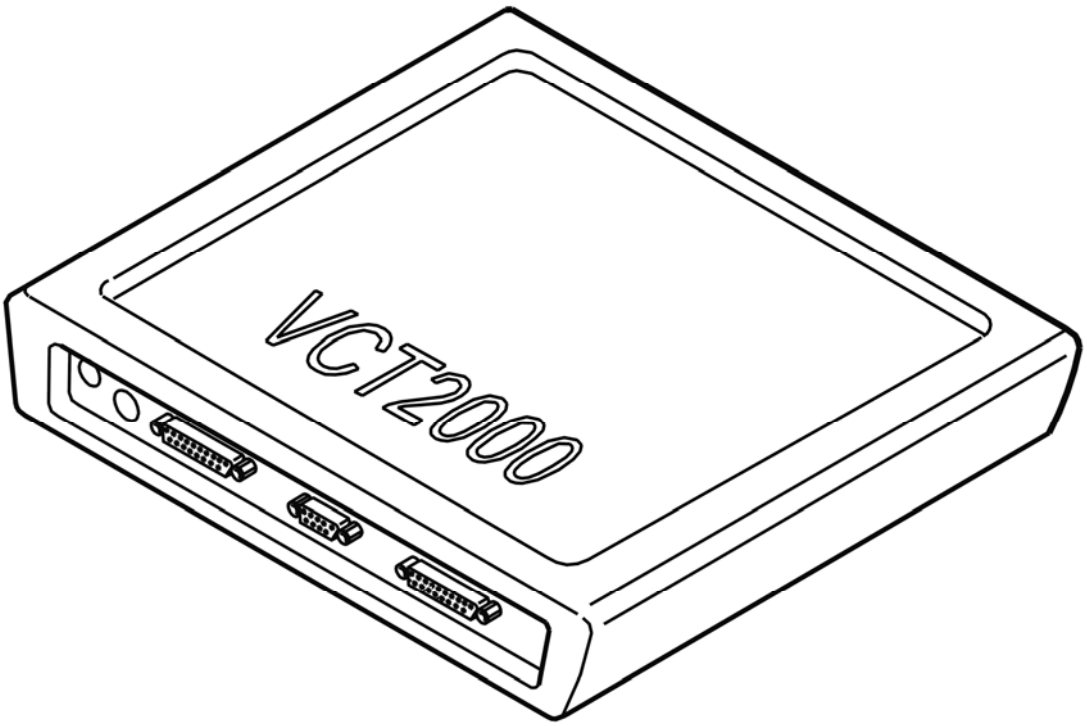

Fig. 207: Identifying VCT2000 Diagnostic Tool Symbol In VIDA
Courtesy of VOLVO CARS CORPORATION

Is the signal within its permitted range?

- **YES**

  VERIFIED: Troubleshooting has been completed.

- **NO**

  Refer to **INFORMATION**

INFORMATION

FAULT-TRACING INFORMATION

The fault should have been detected and remedied. As this is not the case fault-tracing has failed.

Exit fault-tracing for this diagnostic trouble code (DTC) or make another attempt.

ECM-P018200: FUEL TEMPERATURE SENSOR A CIRCUIT LOW INPUT. GENERAL FAILURE INFORMATION. NO SUB TYPE INFORMATION

(B6324S; 2007-2010)

DIAGNOSTIC TROUBLE CODE (DTC) INFORMATION ECM-P018200

Condition

Engine control module (ECM) measures the temperature of the fuel in the fuel rail using a fuel temperature sensor. The control module checks the direct voltage from the sensor.

NOTE: The fuel pressure sensor and fuel temperature sensor are integrated in the same component.

The diagnostic trouble code (DTC) is stored if the control module detects that:

- The direct voltage is lower than 0.4 V.
- Incorrect value lasts longer than 5 seconds.
- Incorrect value lasts for 2 or more subsequent driving cycles.

The control module's test for the diagnostic trouble code (DTC) starts in the event of:

- Ignition switch position II.

NOTE: The control module can only detect the fault once the test has been started and the diagnostic trouble code (DTC) is stored when the conditions are met.

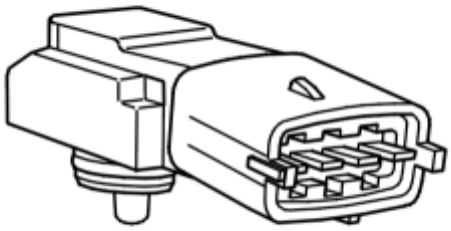

Fig. 208: Identifying Fuel Temperature Sensor
Courtesy of VOLVO CARS CORPORATION

Substitute Value

- The control module assumes that the fuel temperature is the same as the coolant temperature.

Possible Source

- Contact resistance and oxidation in the terminals.
- Short-circuit to ground in the signal cable.
- Damaged fuel temperature sensor.

Fault symptom[s]

- None.

FAULT-TRACING

see **FAULT-TRACING**

ECM-P018200: FUEL TEMPERATURE SENSOR A CIRCUIT LOW INPUT. GENERAL FAILURE INFORMATION. NO SUB TYPE INFORMATION (B6324S5; 2011-2012)

DIAGNOSTIC TROUBLE CODE (DTC) INFORMATION ECM-P018200

see **DIAGNOSTIC TROUBLE CODE (DTC) INFORMATION ECM-P018200**

FAULT-TRACING

see **FAULT-TRACING**

ECM-P018200: FUEL TEMPERATURE SENSOR A CIRCUIT LOW INPUT SIGNAL. GENERAL FAULT INFORMATION. NO INFORMATION ABOUT FAULT TYPE (B8444S; 2005-2011)

DIAGNOSTIC TROUBLE CODE (DTC) INFORMATION ECM-P018200

Condition

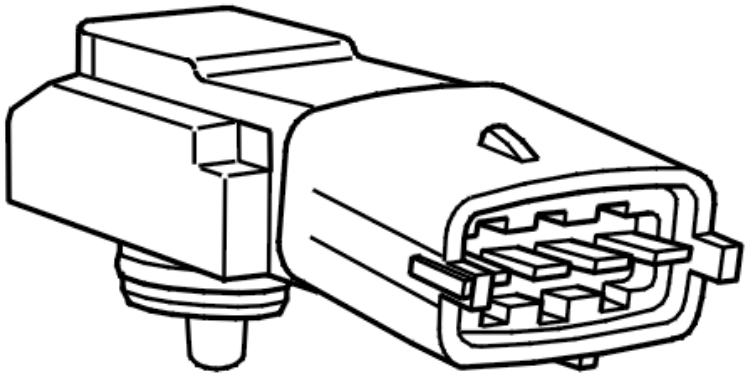

Fig. 209: Identifying Fuel Pressure Sensor
Courtesy of VOLVO CARS CORPORATION

The Engine control module (ECM) monitors the fuel temperature in the fuel rail using the fuel temperature sensor.

The diagnostic trouble code (DTC) is stored if the Engine Control Module (ECM) detects that the signal from the fuel temperature sensor is too low.

The diagnostic trouble code can be diagnosed when the ignition is on.

Substitute Value

- The signal from the engine coolant temperature (ECT) sensor is used.

Possible Source

- The signal cable is short-circuited to ground.
- Damaged fuel temperature sensor.

Fault symptom[s]

- Nothing.

FAULT TRACING ECM-P018200

CHECKING THE STATUS

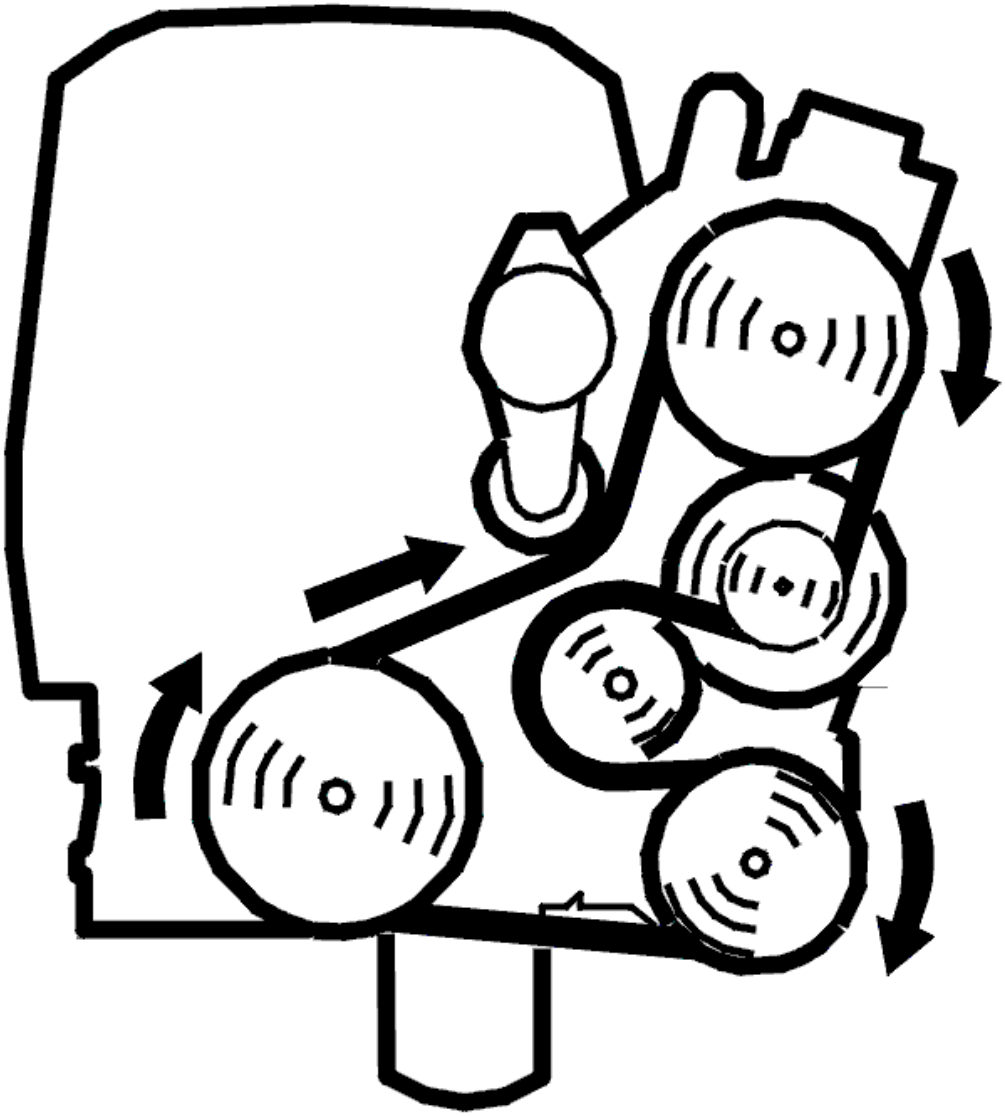

Fig. 210: Belt Routing / Engine Idling - Volvo
Courtesy of VOLVO CARS CORPORATION

- Start the engine.

  Check whether the fault is permanent or intermittent. Read off the fuel temperature sensor signal. Check that the value is within its permitted range.

  HINT: The signal is measured in the delivery line of the injectors and the signal is therefore affected by the engine temperature.

  The fault is permanent if the value is not within its permitted range. If the value is within its permitted

range, the fault is intermittent and not presently active.

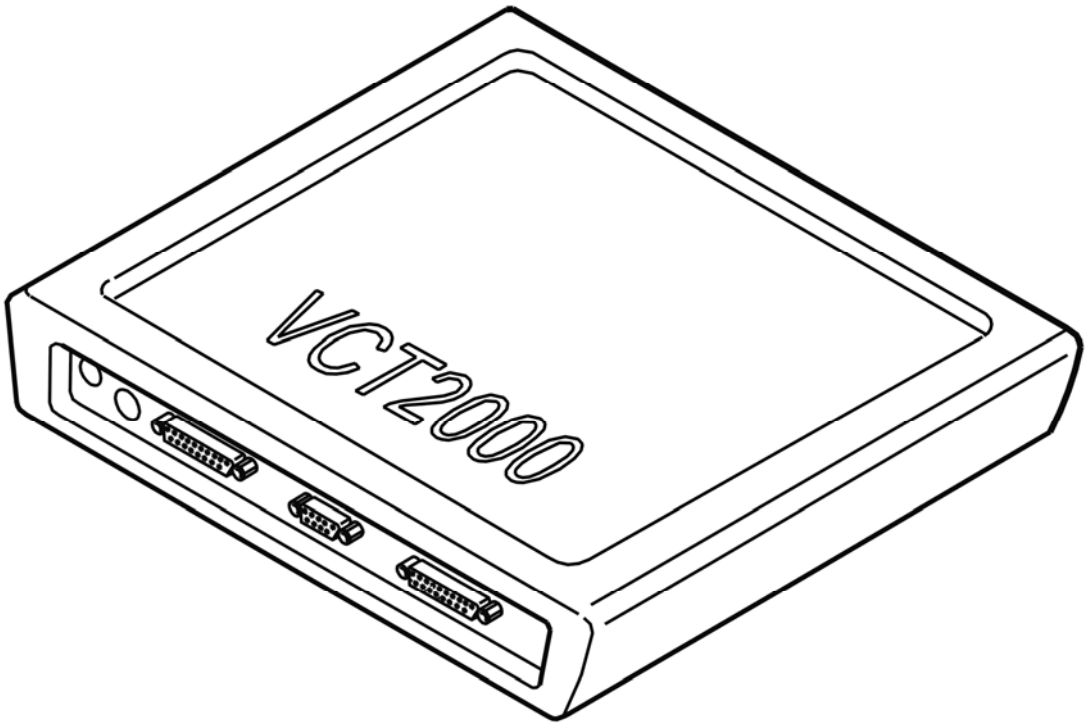

Fig. 211: Identifying VCT2000 Diagnostic Tool Symbol In VIDA
Courtesy of VOLVO CARS CORPORATION

- **Continue**

  Refer to **CHECKING COMPONENTS AND WIRING**

CHECKING COMPONENTS AND WIRING

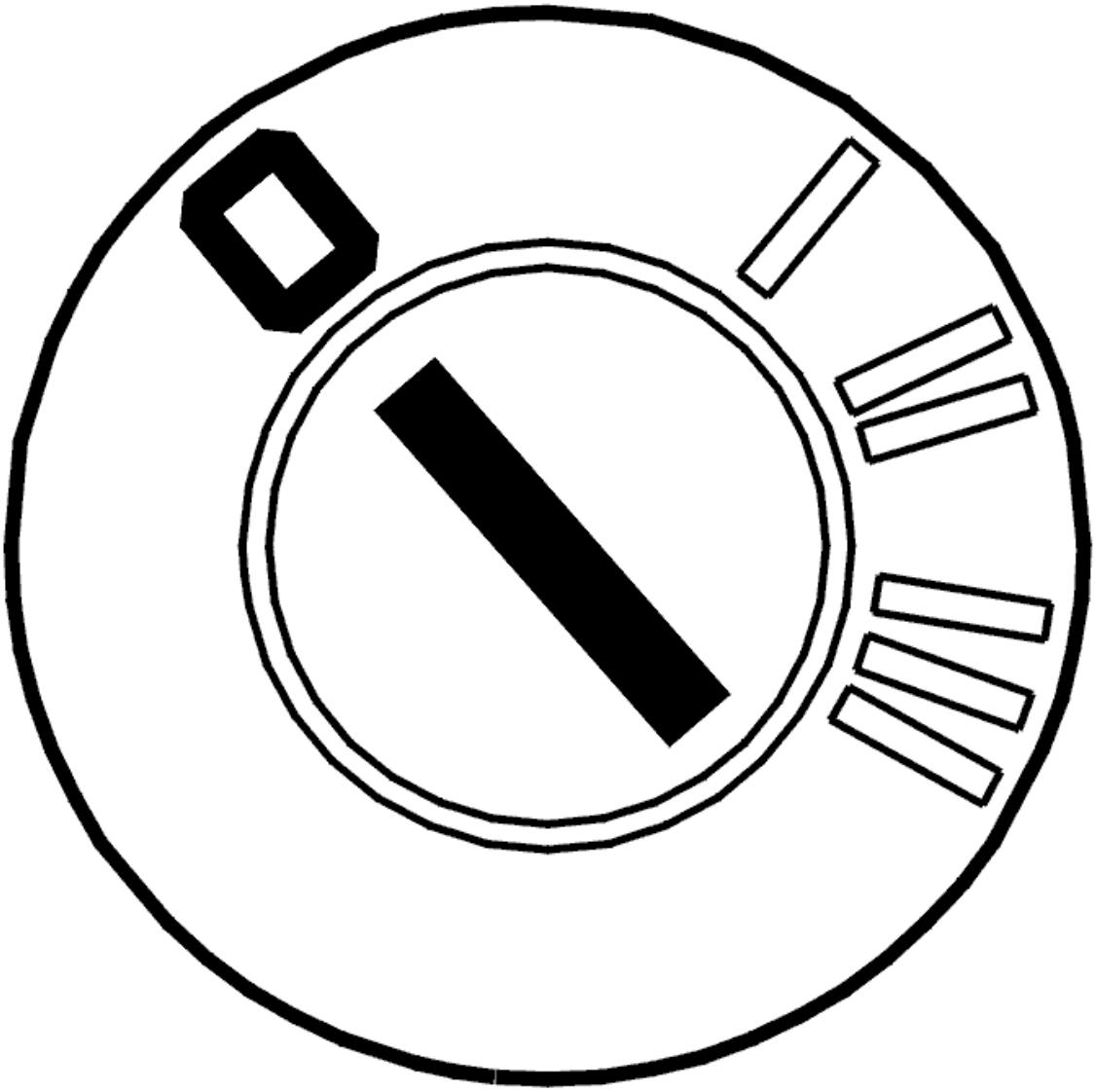

Fig. 212: Identifying Ignition OFF
Courtesy of VOLVO CARS CORPORATION

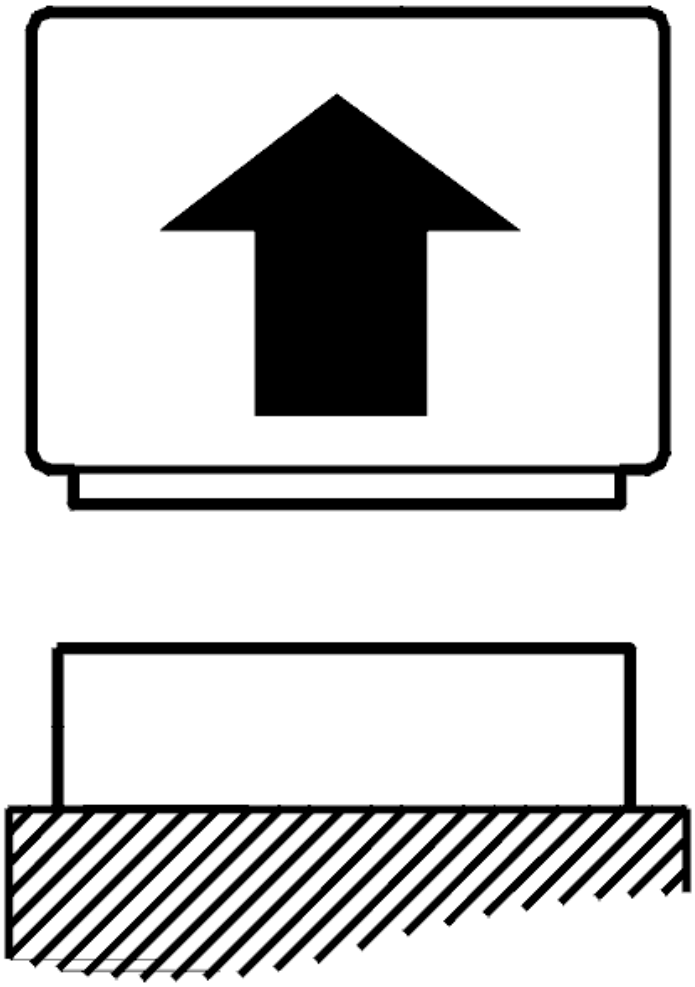

Fig. 213: Disconnecting Connector
Courtesy of VOLVO CARS CORPORATION

- Ignition off
- Disconnect the engine control module (ECM).

HINT: The fuel temperature sensor is integrated in the fuel pressure sensor.

Check the signal cable. Check for a short-circuit to ground.

Take readings between control module terminal #A46 (#A46) and fuel pressure sensor terminal #2.

Remedy as necessary.

Other information

- see **CONNECTING THE BREAKOUT BOX**
- see **SIGNAL SPECIFICATION, ENGINE CONTROL MODULE (ECM)**
- see **FUEL PRESSURE AND TEMPERATURE SENSOR, REPLACING**
- see **CHECKING WIRING AND TERMINALS**

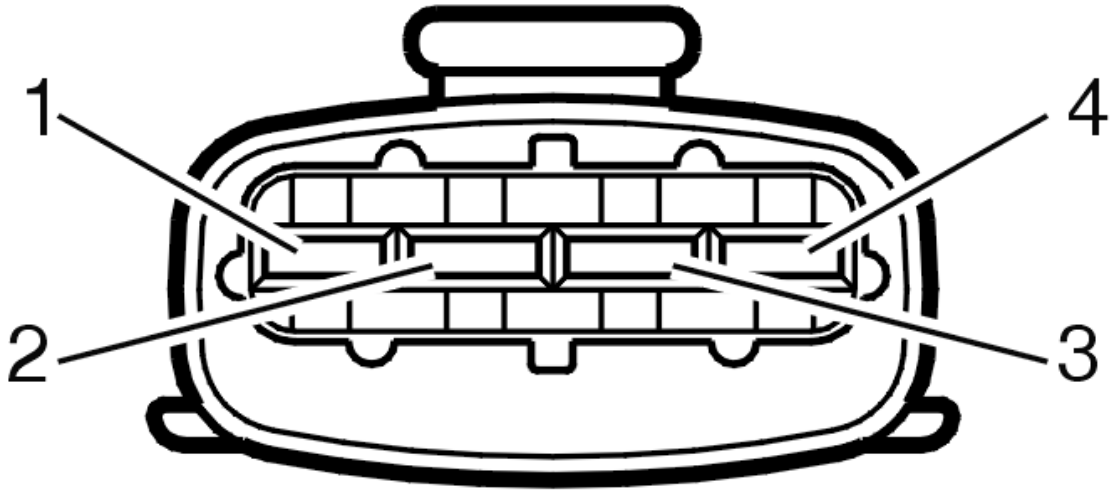

Fig. 214: Identifying 4-Bit Connector
Courtesy of VOLVO CARS CORPORATION

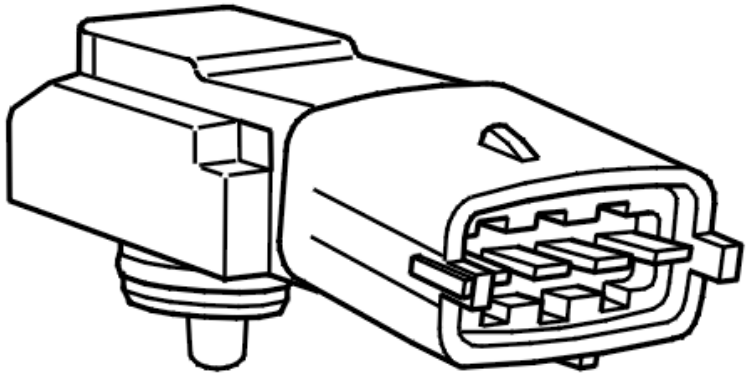

Fig. 215: Identifying Fuel Pressure Sensor
Courtesy of VOLVO CARS CORPORATION

- **Continue**

  Refer to **VERIFICATION**

VERIFICATION

VERIFICATION

HINT: After carrying out the repair, check that the fault has been remedied.

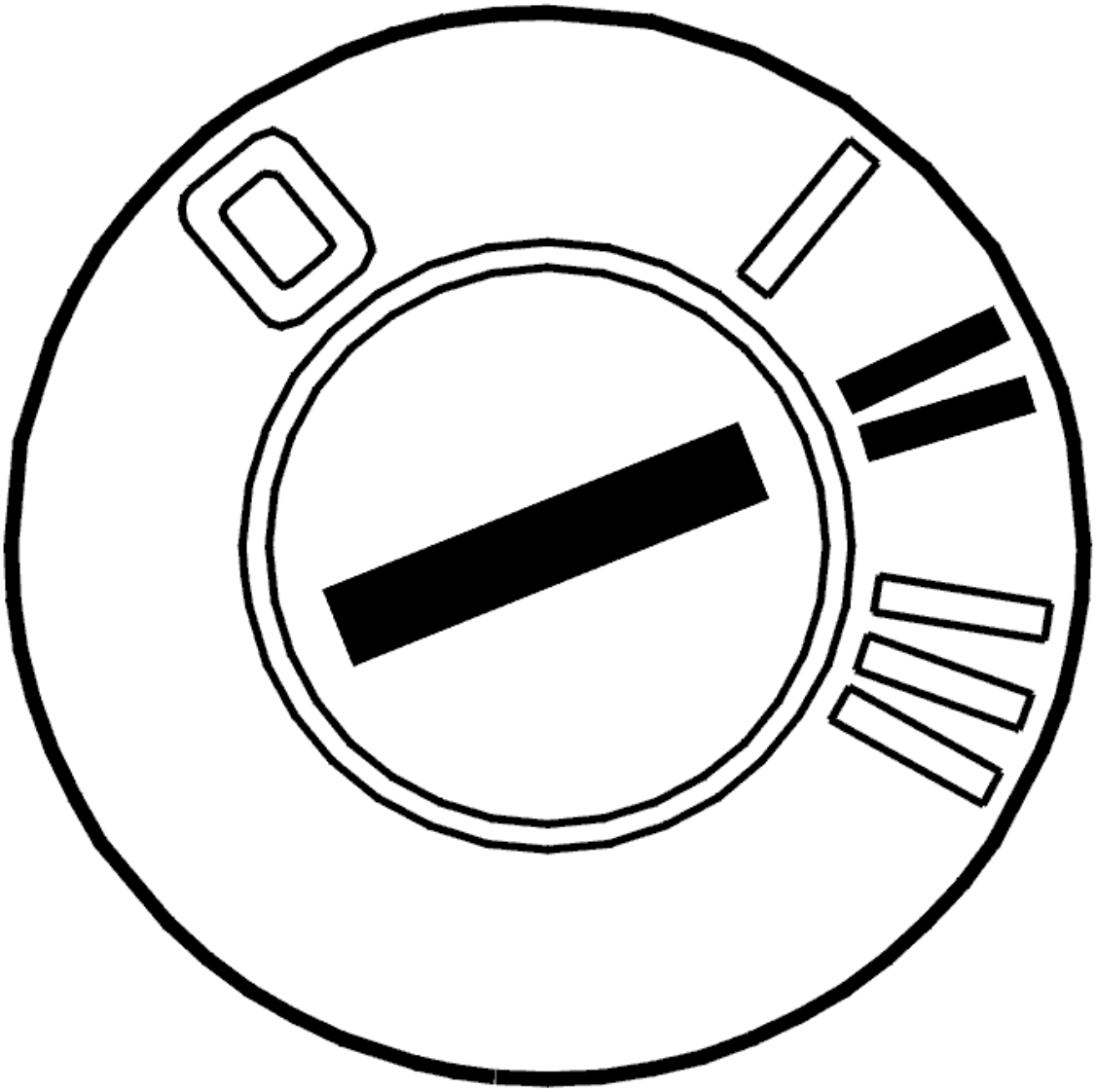

Fig. 216: Identifying Ignition ON
Courtesy of VOLVO CARS CORPORATION

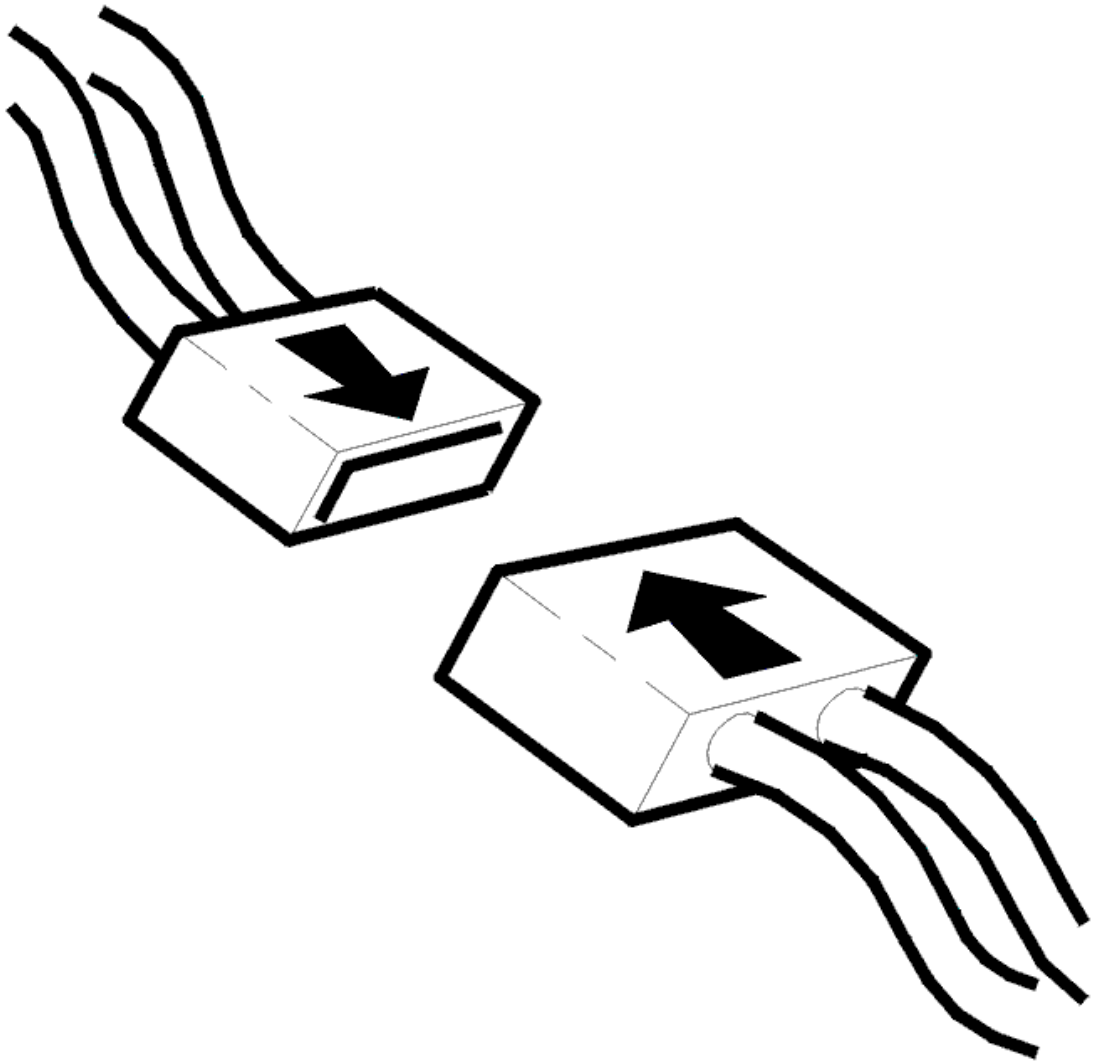

Fig. 217: Connecting Connector
Courtesy of VOLVO CARS CORPORATION

- Ignition off
- Reinstall the connectors, components etc.
- Ignition on

  Read off the fuel temperature sensor signal using the VCT2000 (or appropriate scan tool).

  Check that the signal is within its permitted range. The signal is measured in the injector delivery lines as the signal is affected by the engine temperature.

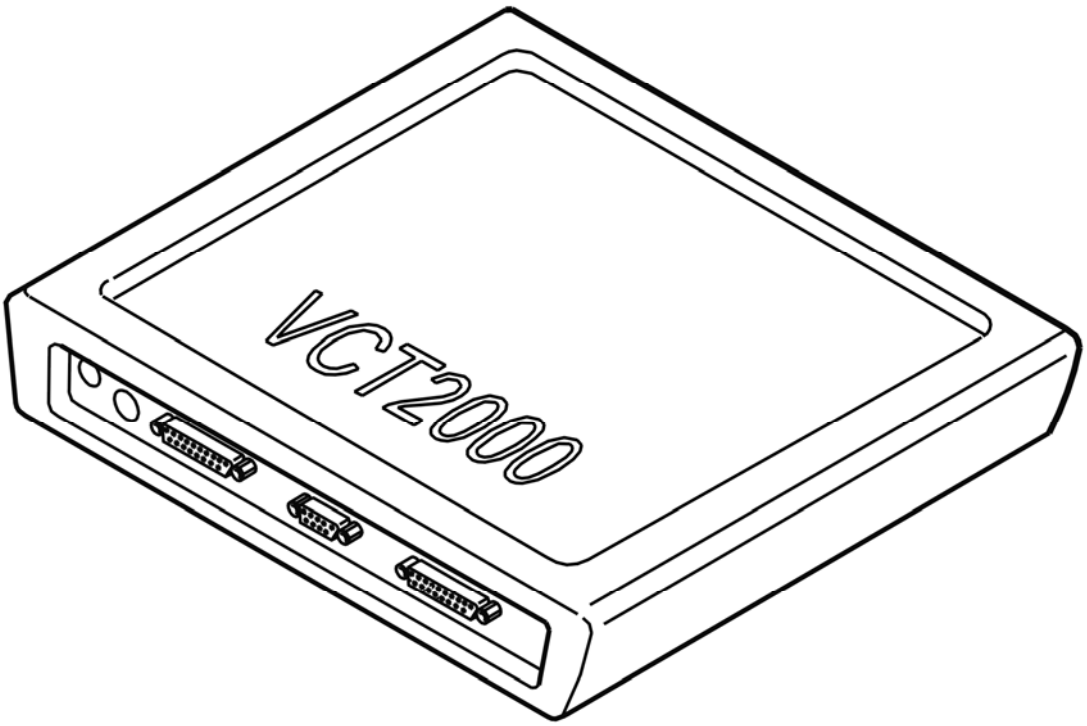

Fig. 218: Identifying VCT2000 Diagnostic Tool Symbol In VIDA
Courtesy of VOLVO CARS CORPORATION

Is the signal within its permitted range?

- **YES**

  VERIFIED: Troubleshooting has been completed.

- **NO**

  Refer to **INFORMATION**

INFORMATION

FAULT-TRACING INFORMATION

The fault should have been detected and remedied. As this is not the case fault-tracing has failed.

Exit fault-tracing for this diagnostic trouble code (DTC) or make another attempt.

ECM-P018300: FUEL TEMPERATURE SENSOR A CIRCUIT HIGH INPUT. GENERAL FAILURE INFORMATION. NO SUB TYPE INFORMATION

(B6324S; 2007-2010)

DIAGNOSTIC TROUBLE CODE (DTC) INFORMATION ECM-P018300

Condition

Engine control module (ECM) measures the temperature of the fuel in the fuel rail using a fuel temperature sensor. The control module checks the direct voltage from the sensor.

NOTE: The fuel pressure sensor and fuel temperature sensor are integrated in the same component.

The diagnostic trouble code (DTC) is stored if the control module detects that:

- The direct voltage is higher than 4.902 V.
- Incorrect value lasts longer than 5 seconds.
- Incorrect value lasts for 2 or more subsequent driving cycles.

The control module's test for the diagnostic trouble code (DTC) starts in the event of:

- Ignition switch position II.

NOTE: The control module can only detect the fault once the test has been started and the diagnostic trouble code (DTC) is stored when the conditions are met.

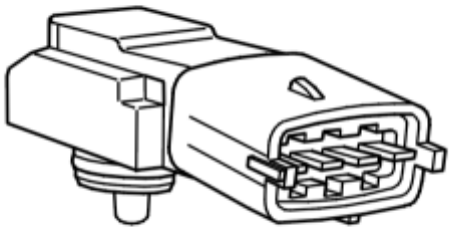

Fig. 219: Identifying Fuel Temperature Sensor
Courtesy of VOLVO CARS CORPORATION

Substitute Value

- The control module assumes that the fuel temperature is the same as the coolant temperature.

Possible Source

- Contact resistance and oxidation in the terminals.
- Short-circuit to supply voltage in the signal cable.
- Open-circuit in the signal cable.
- Damaged fuel temperature sensor.

Fault symptom[s]

- None.

FAULT-TRACING

see **FAULT-TRACING**

ECM-P018300: FUEL TEMPERATURE SENSOR A CIRCUIT HIGH INPUT. GENERAL FAILURE INFORMATION. NO SUB TYPE INFORMATION (B6324S5; 2011-2012)

DIAGNOSTIC TROUBLE CODE (DTC) INFORMATION ECM-P018300

see **DIAGNOSTIC TROUBLE CODE (DTC) INFORMATION ECM-P018300**

FAULT-TRACING

see **FAULT-TRACING**

ECM-P018300: FUEL TEMPERATURE SENSOR A CIRCUIT HIGH INPUT SIGNAL. GENERAL FAULT INFORMATION. NO INFORMATION ABOUT FAULT TYPE (B8444S; 2005-2011)

DIAGNOSTIC TROUBLE CODE (DTC) INFORMATION ECM-P018300

Condition

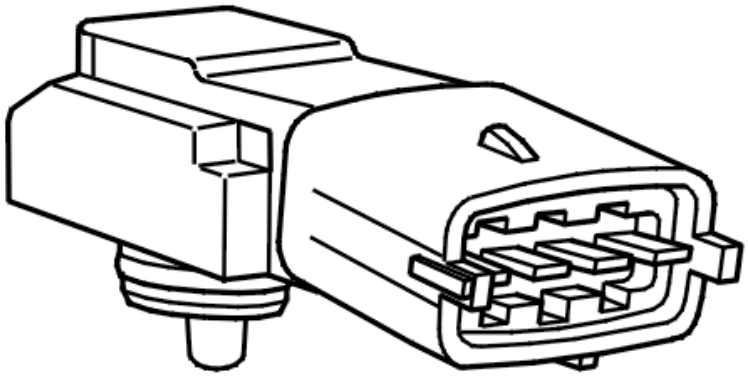

Fig. 220: Identifying Fuel Pressure Sensor
Courtesy of VOLVO CARS CORPORATION

The Engine control module (ECM) monitors the fuel temperature in the fuel rail using the fuel temperature sensor.

The diagnostic trouble code (DTC) is stored if the Engine Control Module (ECM) detects that the signal from the fuel temperature sensor is too high.

The diagnostic trouble code can be diagnosed when the ignition is on.

Substitute Value

- The signal from the engine coolant temperature (ECT) sensor is used.

Possible Source

- The signal cable is short-circuited to voltage.
- Open-circuit in the signal cable.
- Damaged fuel temperature sensor.

Fault symptom[s]

- Nothing.

FAULT TRACING ECM-P018300

CHECKING THE STATUS

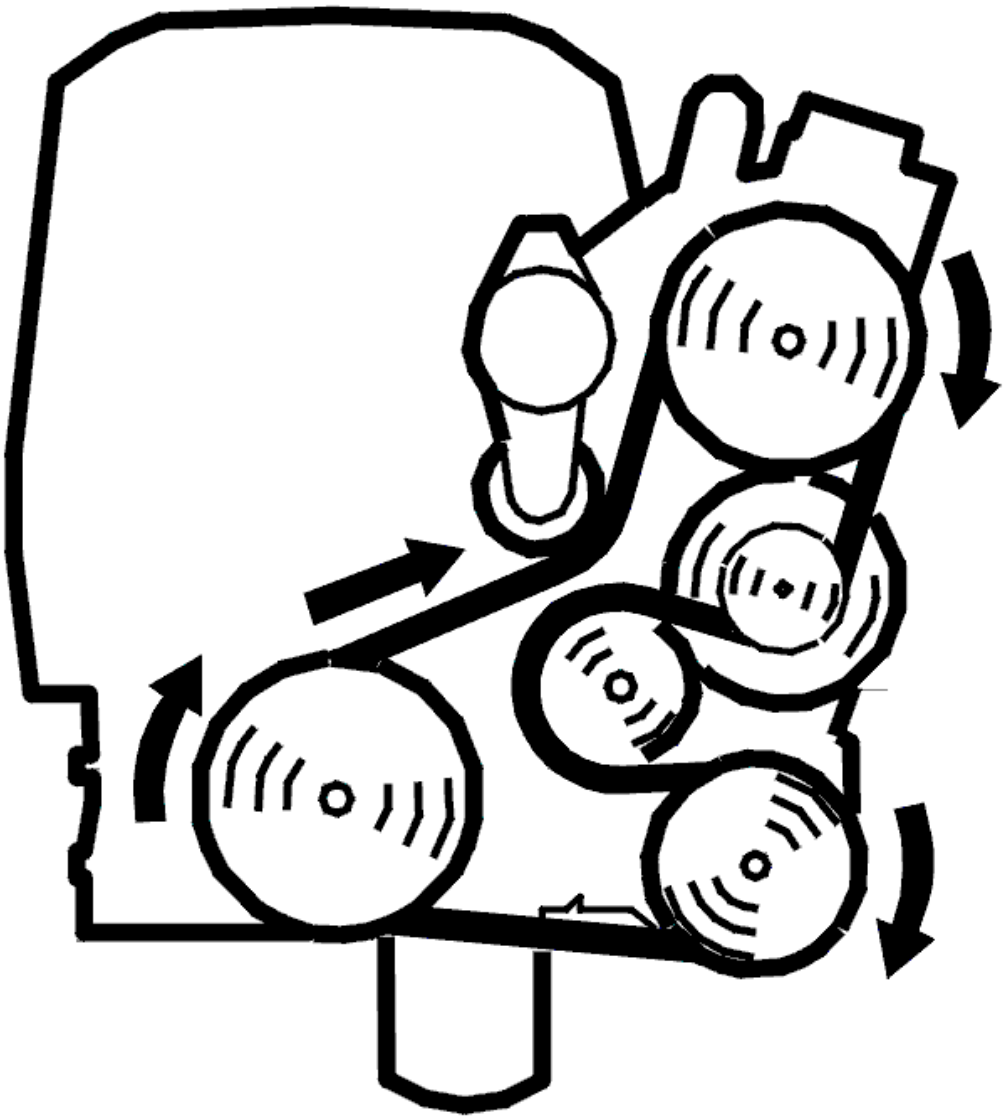

Fig. 221: Belt Routing / Engine Idling - Volvo
Courtesy of VOLVO CARS CORPORATION

- Start the engine.

  Check whether the fault is permanent or intermittent. Read off the fuel temperature sensor signal. Check that the value is within its permitted range.

  HINT: The signal is measured in the delivery line of the injectors and the signal is therefore affected by the engine temperature.

The fault is permanent if the value is not within its permitted range. If the value is within its permitted range, the fault is intermittent and not presently active.

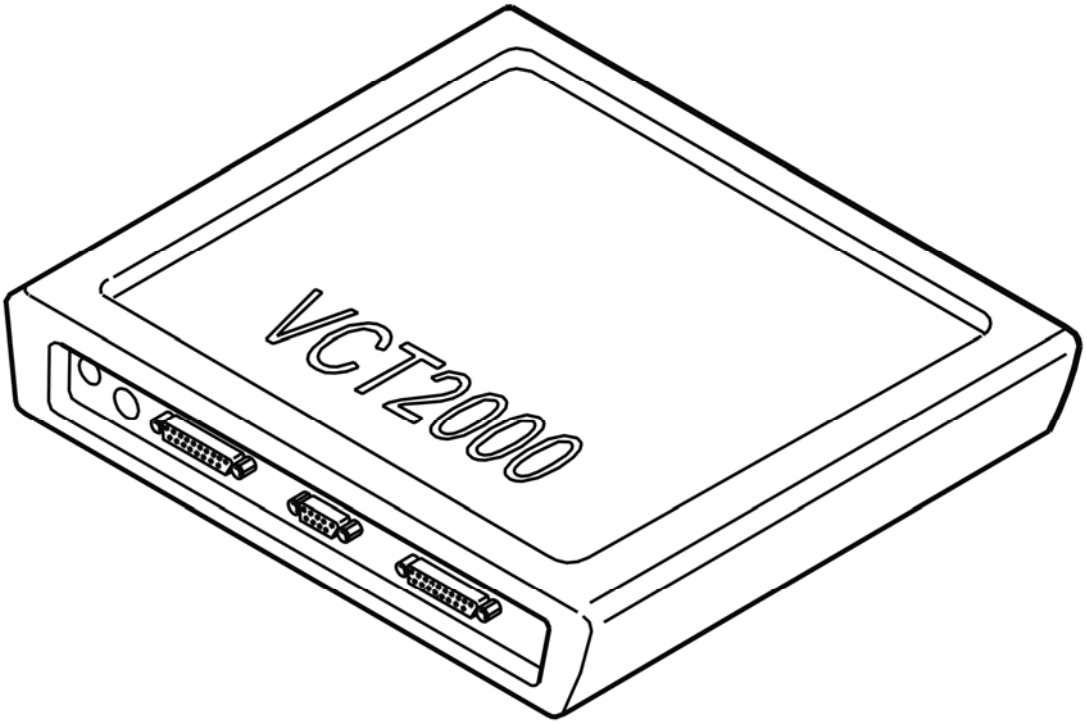

Fig. 222: Identifying VCT2000 Diagnostic Tool Symbol In VIDA
Courtesy of VOLVO CARS CORPORATION

- **Continue**

Refer to **CHECKING COMPONENTS AND WIRING**

CHECKING COMPONENTS AND WIRING

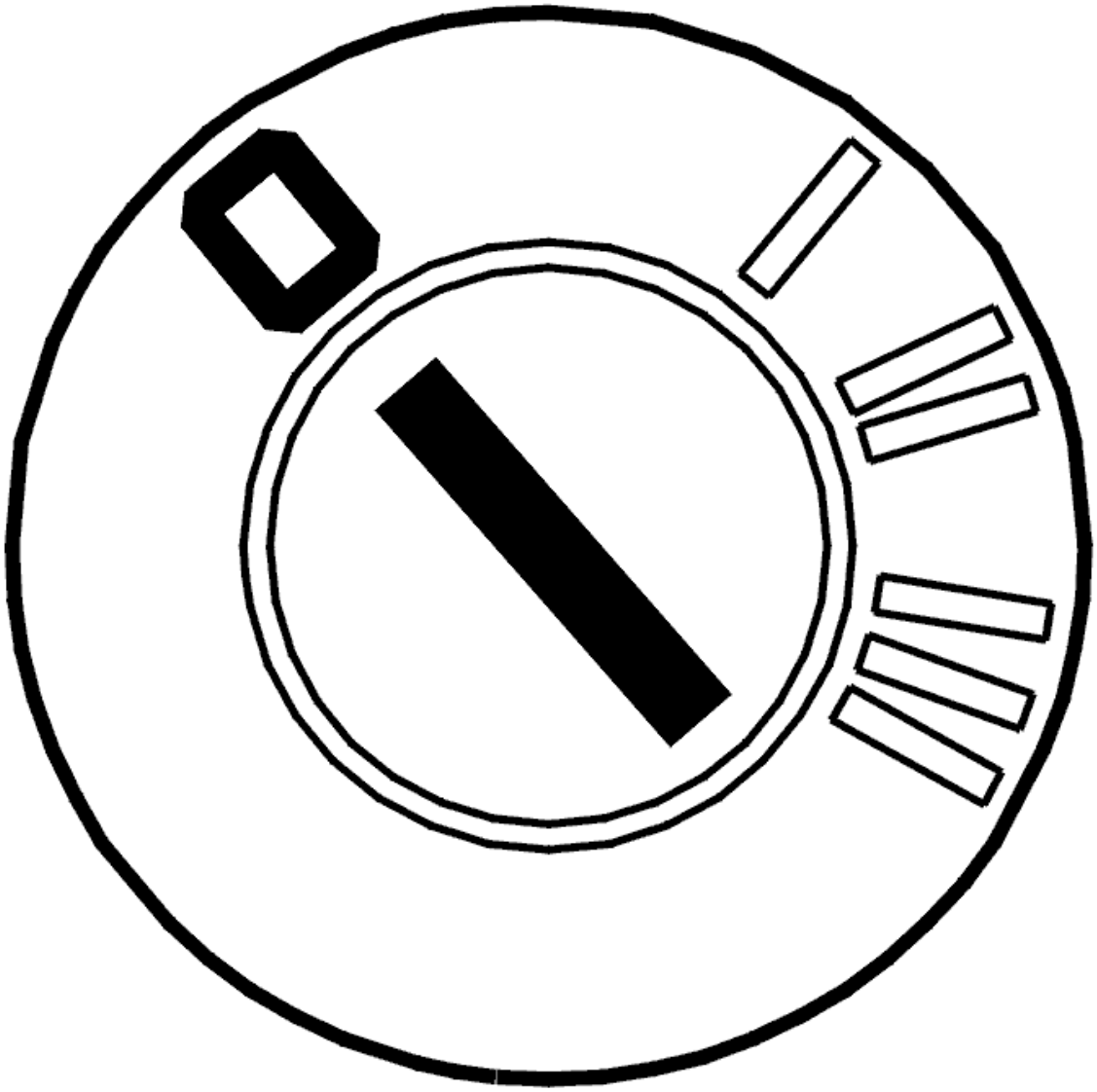

Fig. 223: Identifying Ignition OFF
Courtesy of VOLVO CARS CORPORATION

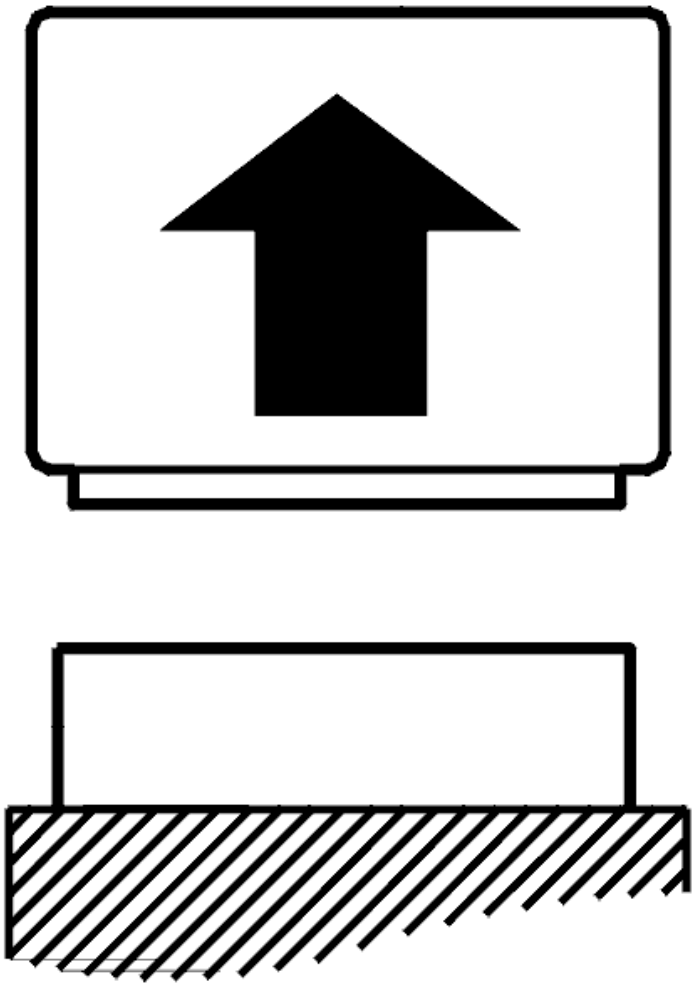

Fig. 224: Disconnecting Connector
Courtesy of VOLVO CARS CORPORATION

- Ignition off
- Disconnect the engine control module (ECM).

  HINT: The fuel temperature sensor is integrated in the fuel pressure sensor.

  Check the signal cable with regard to short circuit to supply voltage. Check the signal cable with regard to open circuit.

  Take readings between control module terminal #A46 (#A46) and fuel pressure sensor terminal #2.

  Remedy as necessary.

  Other information

- see **CONNECTING THE BREAKOUT BOX**
- see **SIGNAL SPECIFICATION, ENGINE CONTROL MODULE (ECM)**
- see **FUEL PRESSURE AND TEMPERATURE SENSOR, REPLACING**
- see **CHECKING WIRING AND TERMINALS**

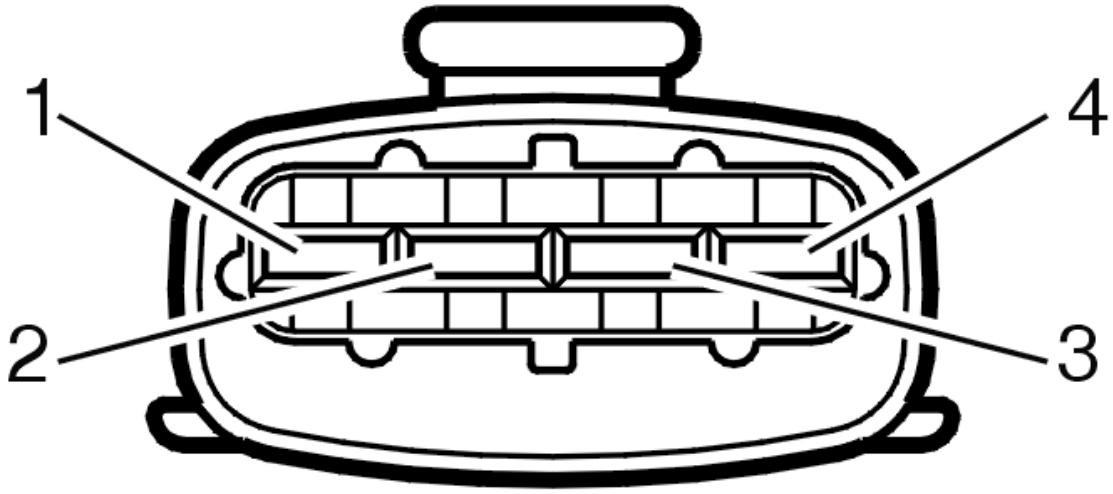

Fig. 225: Identifying 4-Bit Connector
Courtesy of VOLVO CARS CORPORATION

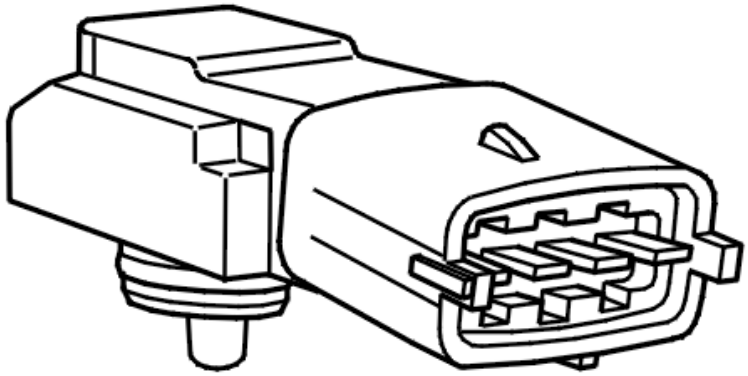

Fig. 226: Identifying Fuel Pressure Sensor
Courtesy of VOLVO CARS CORPORATION

- **Continue**

  Refer to **VERIFICATION**

VERIFICATION

VERIFICATION

HINT: After carrying out the repair, check that the fault has been remedied.

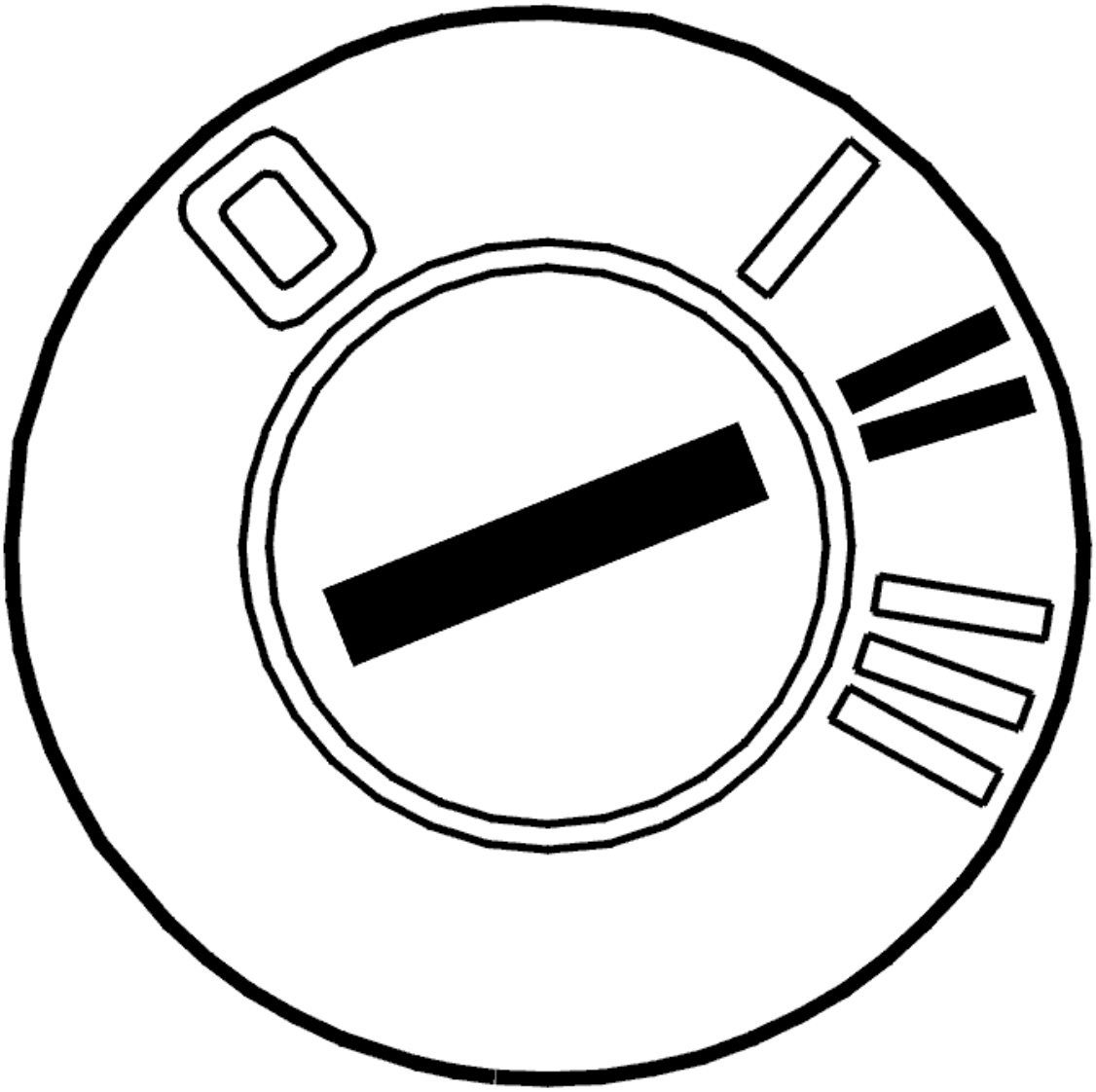

Fig. 227: Identifying Ignition ON
Courtesy of VOLVO CARS CORPORATION

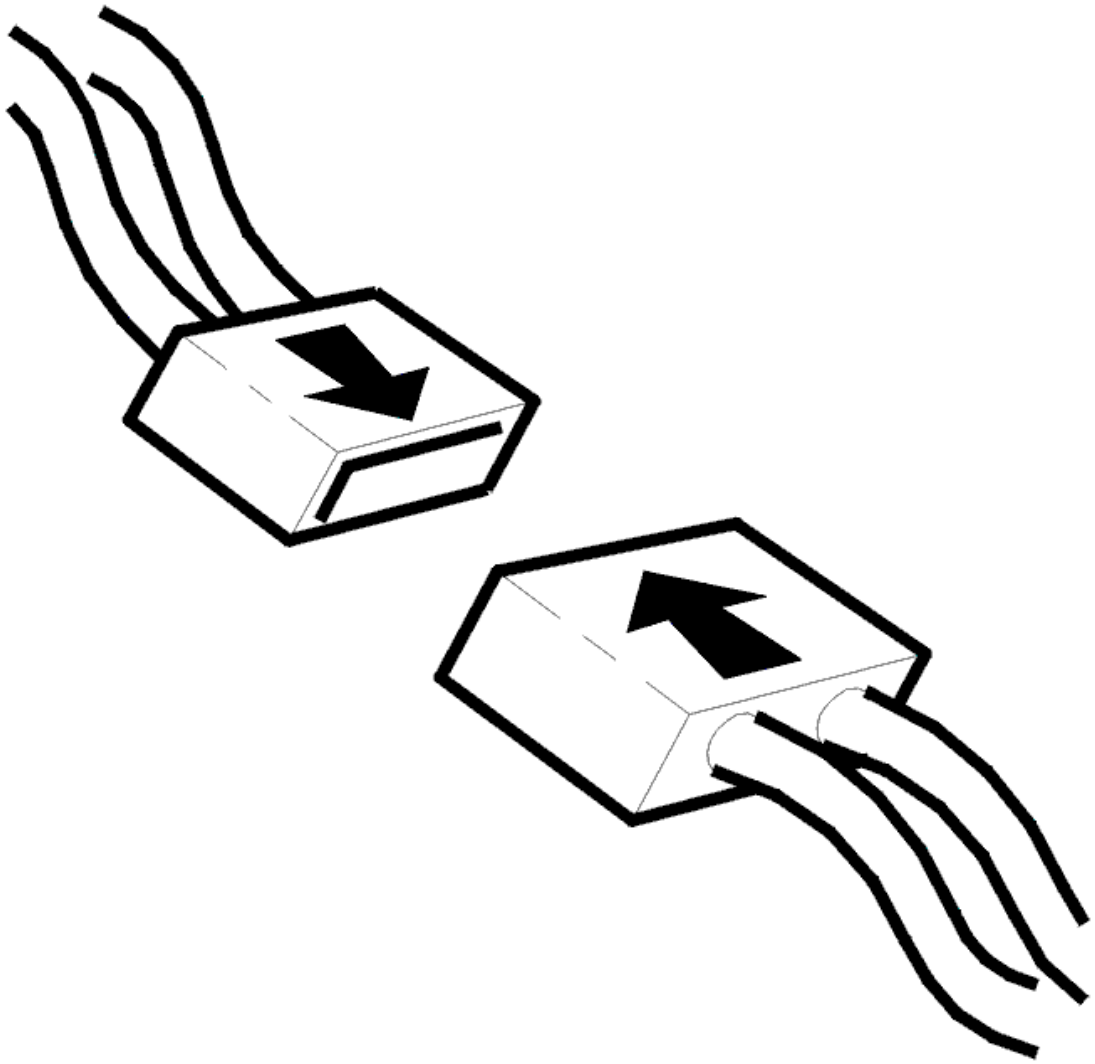

Fig. 228: Connecting Connector
Courtesy of VOLVO CARS CORPORATION

- Ignition off
- Reinstall the connectors, components etc.
- Ignition on

  Read off the fuel temperature sensor signal using the VCT2000 (or appropriate scan tool).

  Check that the signal is within its permitted range. The signal is measured in the injector delivery lines as the signal is affected by the engine temperature.

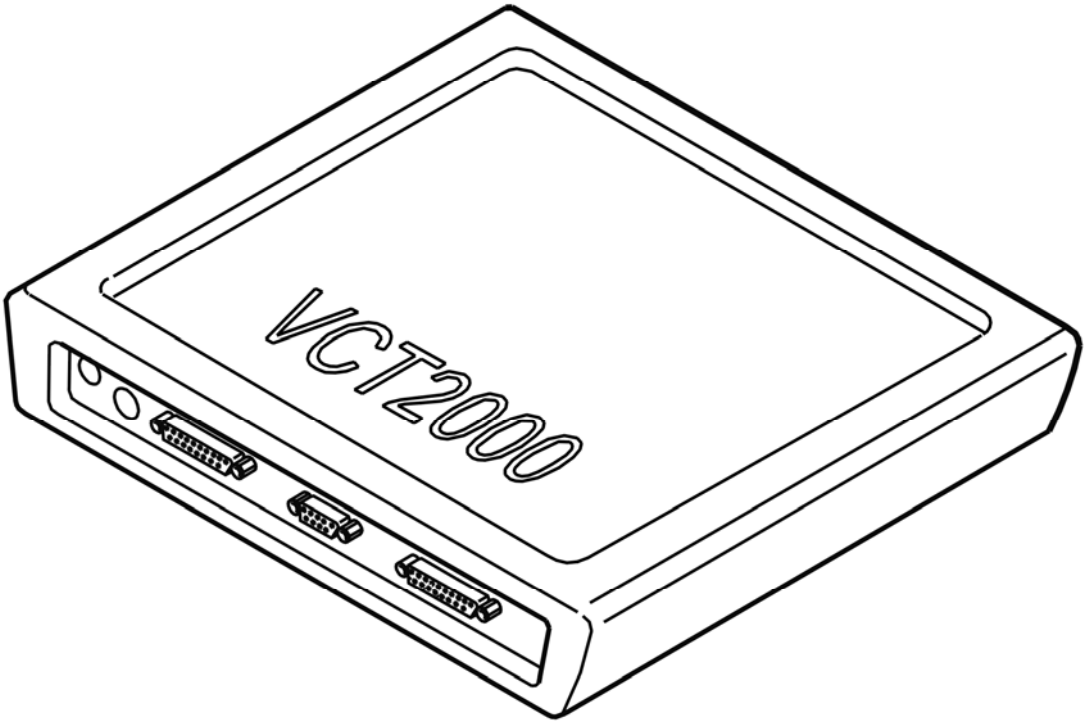

Fig. 229: Identifying VCT2000 Diagnostic Tool Symbol In VIDA
Courtesy of VOLVO CARS CORPORATION

Is the signal within its permitted range?

- **YES**

  VERIFIED: Troubleshooting has been completed.

- **NO**

  Refer to **INFORMATION**

INFORMATION

FAULT-TRACING INFORMATION

The fault should have been detected and remedied. As this is not the case fault-tracing has failed.

Exit fault-tracing for this diagnostic trouble code (DTC) or make another attempt.

ECM-P019000: FUEL RAIL PRESSURE SENSOR. GENERAL FAILURE INFORMATION. NO SUB TYPE INFORMATION (B6324S; 2007-2010)

DIAGNOSTIC TROUBLE CODE (DTC) INFORMATION ECM-P019000

Condition

The Engine control module (ECM) measures the fuel pressure in the fuel rail using the fuel pressure sensor. The control module checks the direct voltage from the sensor.

NOTE: The fuel pressure sensor and fuel temperature sensor are integrated in the same component.

The diagnostic trouble code (DTC) is stored if the control module detects that:

- The direct voltage is higher than 4.951 V.
- Incorrect value lasts longer than 9 seconds.
- Incorrect value lasts for 2 or more subsequent driving cycles.

The control module's test for the diagnostic trouble code (DTC) starts in the event of:

- Ignition switch position II.

NOTE: The control module can only detect the fault once the test has been started and the diagnostic trouble code (DTC) is stored when the conditions are met.

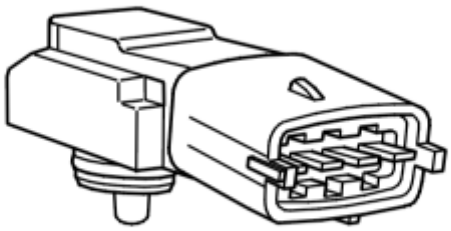

Fig. 230: Identifying Fuel Temperature Sensor
Courtesy of VOLVO CARS CORPORATION

Substitute Value

- The control module uses a constant fuel pressure.
- The control module controls the fuel pump, via the fuel pump module, with a constant signal.

Possible Source

- Open-circuit in signal cable or ground lead.
- Contact resistance and oxidation in the terminals.
- Short-circuit to supply voltage in the signal cable.
- Open-circuit in the signal cable.
- Damaged fuel pressure sensor.

Fault symptom[s]

- Malfunction indicator light (MIL), on
- Engine misfires

FAULT-TRACING

see **FAULT-TRACING**

ECM-P019000: FUEL RAIL PRESSURE SENSOR. GENERAL FAILURE INFORMATION. NO SUB TYPE INFORMATION (B6324S5; 2011-2012)

DIAGNOSTIC TROUBLE CODE (DTC) INFORMATION ECM-P019000

see **DIAGNOSTIC TROUBLE CODE (DTC) INFORMATION ECM-P019000**

FAULT-TRACING

see **FAULT-TRACING**

ECM-P019100: FUEL RAIL PRESSURE SENSOR RANGE/PERFORMANCE. GENERAL FAILURE INFORMATION. NO SUB TYPE INFORMATION (B6324S; 2007-2010)

DIAGNOSTIC TROUBLE CODE (DTC) INFORMATION ECM-P019100

Condition

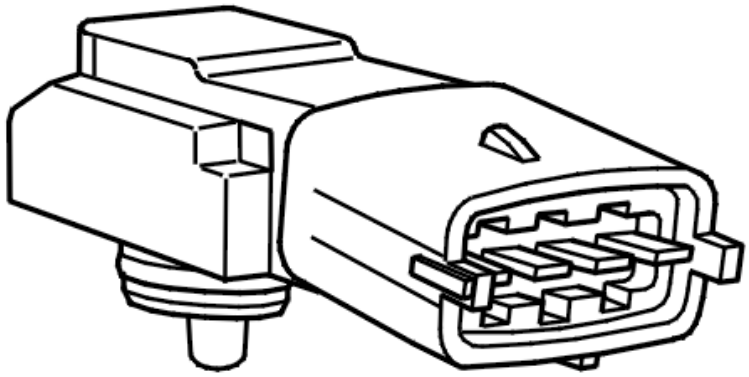

Fig. 231: Identifying Fuel Pressure Sensor
Courtesy of VOLVO CARS CORPORATION

The engine control module (ECM) checks the signal from the fuel pressure sensor.

The diagnostic trouble code (DTC) is stored if the control module registers that the signal from the fuel pressure sensor does not change when the fuel pump (FP) activation changes.

The diagnostic trouble code (DTC) can be diagnosed under specific driving conditions.

Substitute Value

- The fuel pressure is set to a constant.
- The control signal to the fuel pump (FP) control module is set to a calculated value.

Possible Source

- Contact resistance in the connectors.
- Damaged fuel pressure sensor.
- Damaged fuel pump module.

Fault symptom[s]

- Malfunction indicator light (MIL), on
- Engine misfires.
- Jerky operation.
- Engine stops.

FAULT-TRACING

CHECKING THE CONNECTORS

Check the fuel pressure sensor's connector and connections for contact resistance and oxidation.

Remedy as necessary.

Other information

- see **CONTROL MODULE FUEL PUMP (FP), REPLACING**
- see **CHECKING WIRING AND TERMINALS**

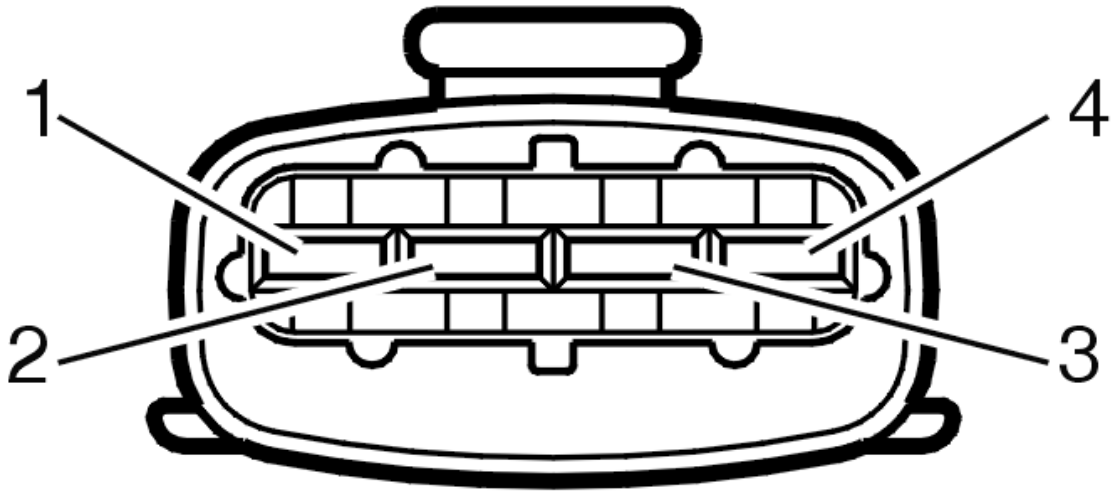

Fig. 232: Identifying 4-Bit Connector
Courtesy of VOLVO CARS CORPORATION

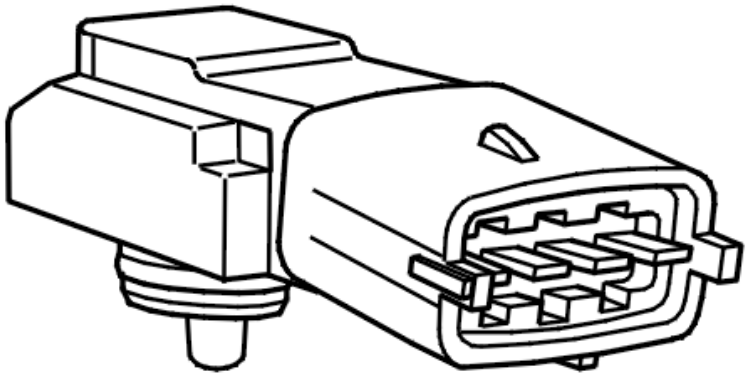

Fig. 233: Identifying Fuel Pressure Sensor
Courtesy of VOLVO CARS CORPORATION

- **Continue**

  Refer to **VERIFICATION**

INFORMATION

FAULT-TRACING INFORMATION

The fault should have been detected and remedied. As this is not the case fault-tracing has failed.

Exit fault-tracing for this diagnostic trouble code (DTC) or make another attempt.

VERIFICATION

VERIFICATION

HINT: After carrying out the repair, check that the fault has been remedied.

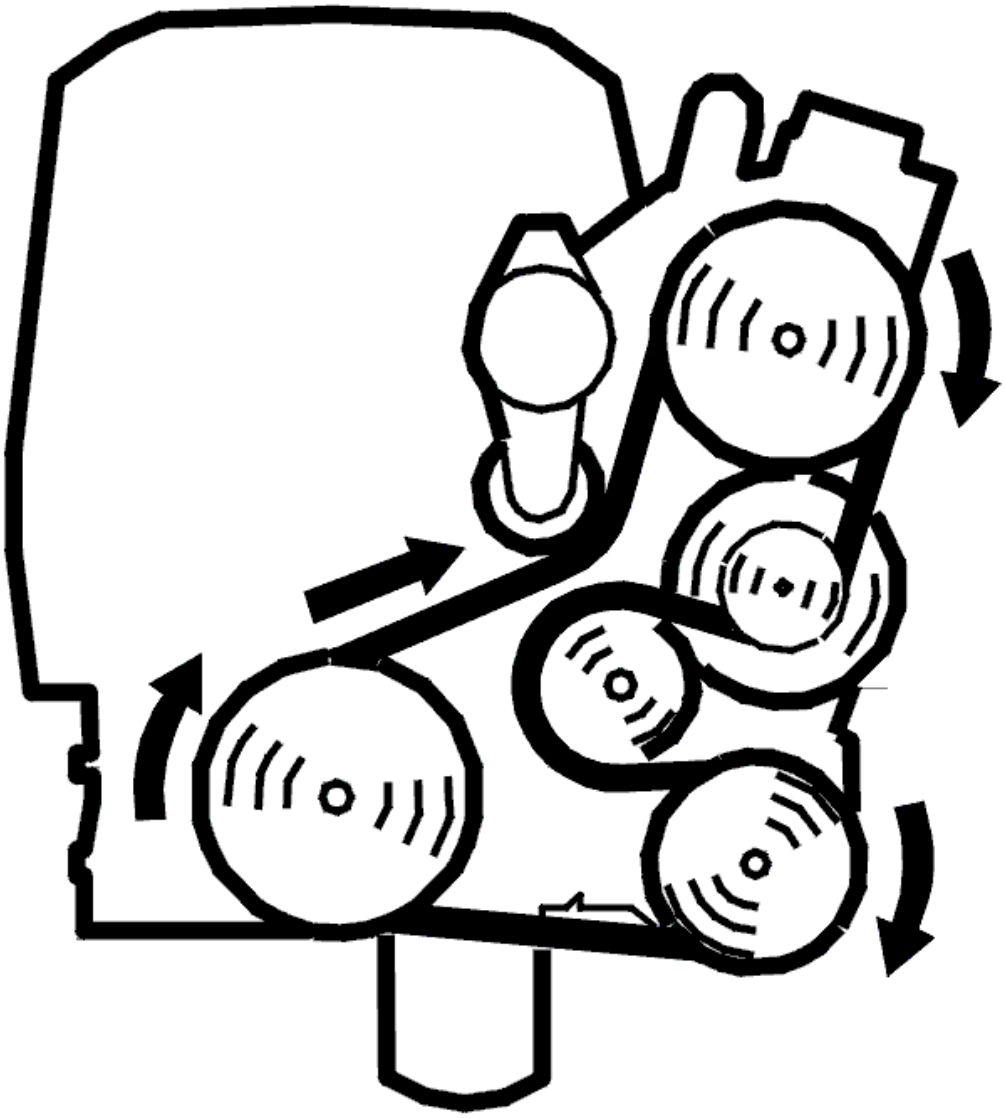

Fig. 234: Belt Routing / Engine Idling - Volvo
Courtesy of VOLVO CARS CORPORATION

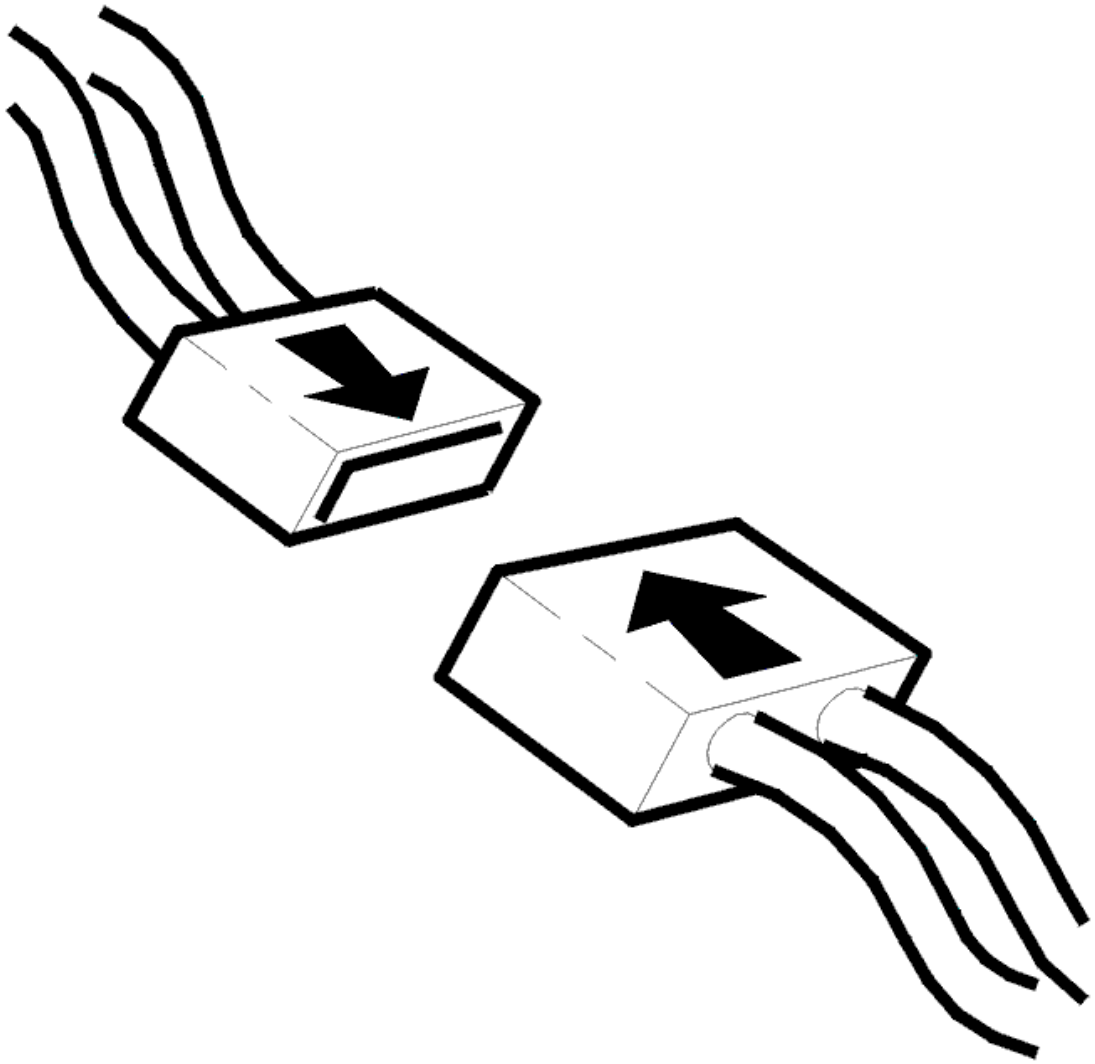

Fig. 235: Connecting Connector
Courtesy of VOLVO CARS CORPORATION

- Ignition off
- Reinstall the connectors, components etc.
- Engine idling.

Read off the signal from the fuel pressure sensor.

Check that the signal is reasonable. Normal value is 480 ± 5 kPa at idle.

Read off the signal from the fuel pressure sensor when the ignition is on and check that the fuel pressure has dropped. Normally, the pressure shall drop by approx. 100 kPa from the value at idle.

NOTE: The signal indicates absolute pressure.

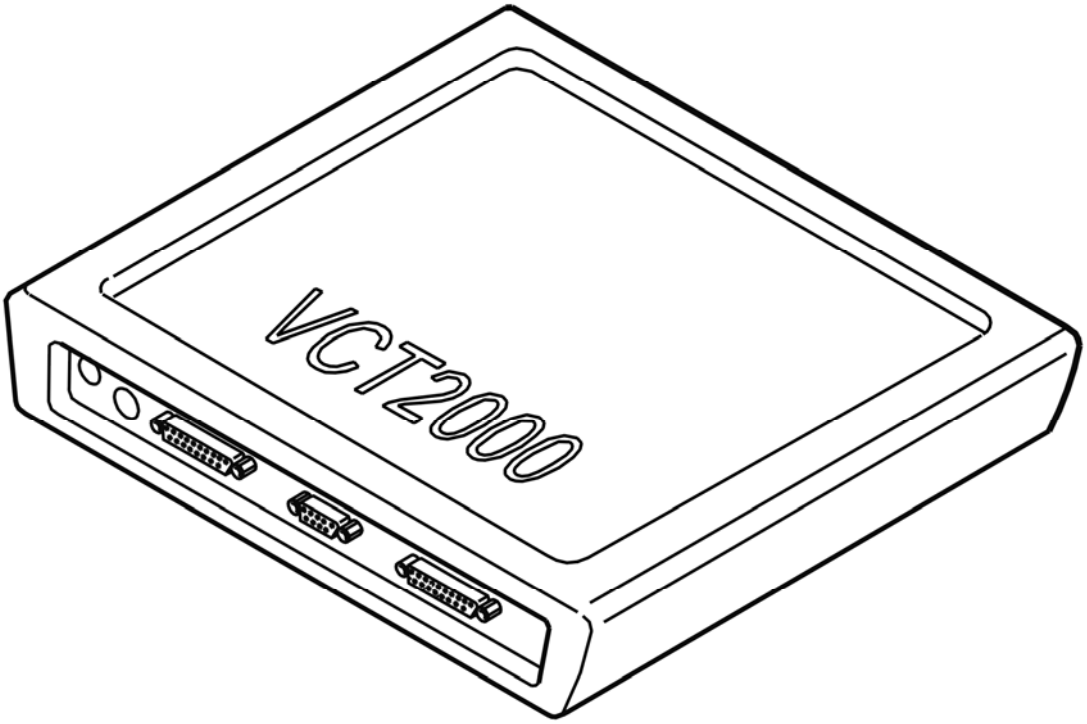

Fig. 236: Identifying VCT2000 Diagnostic Tool Symbol In VIDA
Courtesy of VOLVO CARS CORPORATION

Is the signal reasonable?

- **YES**

  VERIFIED: Troubleshooting has been completed.

- **NO**

  Refer to **INFORMATION**

ECM-P019100: FUEL RAIL PRESSURE SENSOR RANGE/PERFORMANCE. GENERAL FAILURE INFORMATION. NO SUB TYPE INFORMATION (B6324S5; 2011-2012)

DIAGNOSTIC TROUBLE CODE (DTC) INFORMATION ECM-P019100

see **DIAGNOSTIC TROUBLE CODE (DTC) INFORMATION ECM-P019100**

FAULT-TRACING

see **FAULT-TRACING**

ECM-P019100: FUEL RAIL PRESSURE SENSOR WITHIN/OUTSIDE LIMIT VALUES. GENERAL FAULT INFORMATION. NO INFORMATION ABOUT FAULT TYPE (B8444S; 2005-2011)

DIAGNOSTIC TROUBLE CODE (DTC) INFORMATION ECM-P019100

Condition

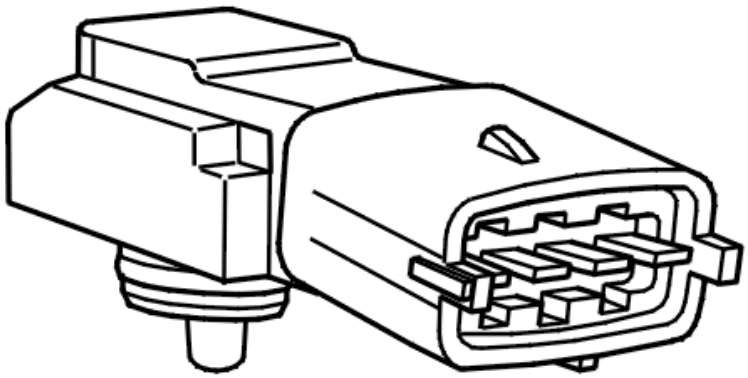

Fig. 237: Identifying Fuel Pressure Sensor
Courtesy of VOLVO CARS CORPORATION

The engine control module (ECM) checks the signal from the fuel pressure sensor.

The diagnostic trouble code (DTC) is stored if the control module registers that the signal from the fuel pressure sensor does not change when the fuel pump (FP) activation changes.

The diagnostic trouble code (DTC) can be diagnosed under specific driving conditions.

Substitute Value

- The fuel pressure is set to a constant.

- The control signal to the fuel pump (FP) control module is set to a calculated value.

Possible Source

- Contact resistance in the connectors.
- Damaged fuel pressure sensor.
- Damaged fuel pump module.

Fault symptom[s]

- Malfunction indicator light (MIL), on
- Engine misfires.
- Jerky operation.
- Engine stops.

TROUBLESHOOTING ECM-P019100 (2005)

CHECKING THE CONNECTORS

Check the fuel pressure sensor's connector and connections for contact resistance and oxidation.

Remedy as necessary.

Other information

- see **FUEL PRESSURE AND TEMPERATURE SENSOR, REPLACING**
- see **FUEL PUMP DRIVER MODULE**
- see **CHECKING WIRING AND TERMINALS**

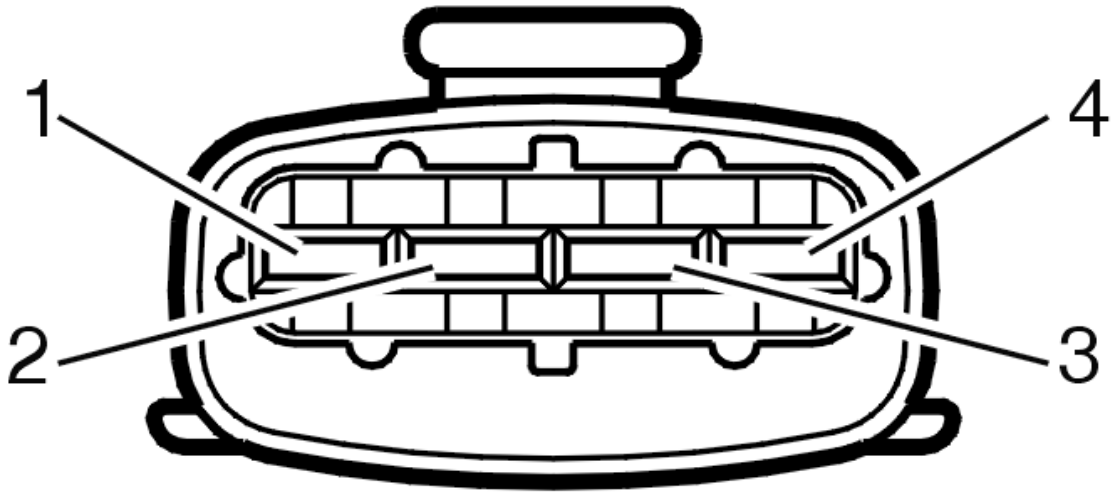

Fig. 238: Identifying 4-Bit Connector
Courtesy of VOLVO CARS CORPORATION

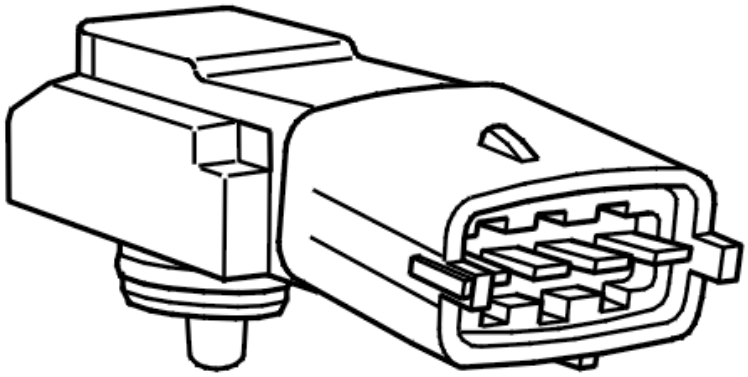

Fig. 239: Identifying Fuel Pressure Sensor
Courtesy of VOLVO CARS CORPORATION

- **Continue**

  Refer to **VERIFICATION**

VERIFICATION

VERIFICATION

HINT: After carrying out the repair, check that the fault has been remedied.

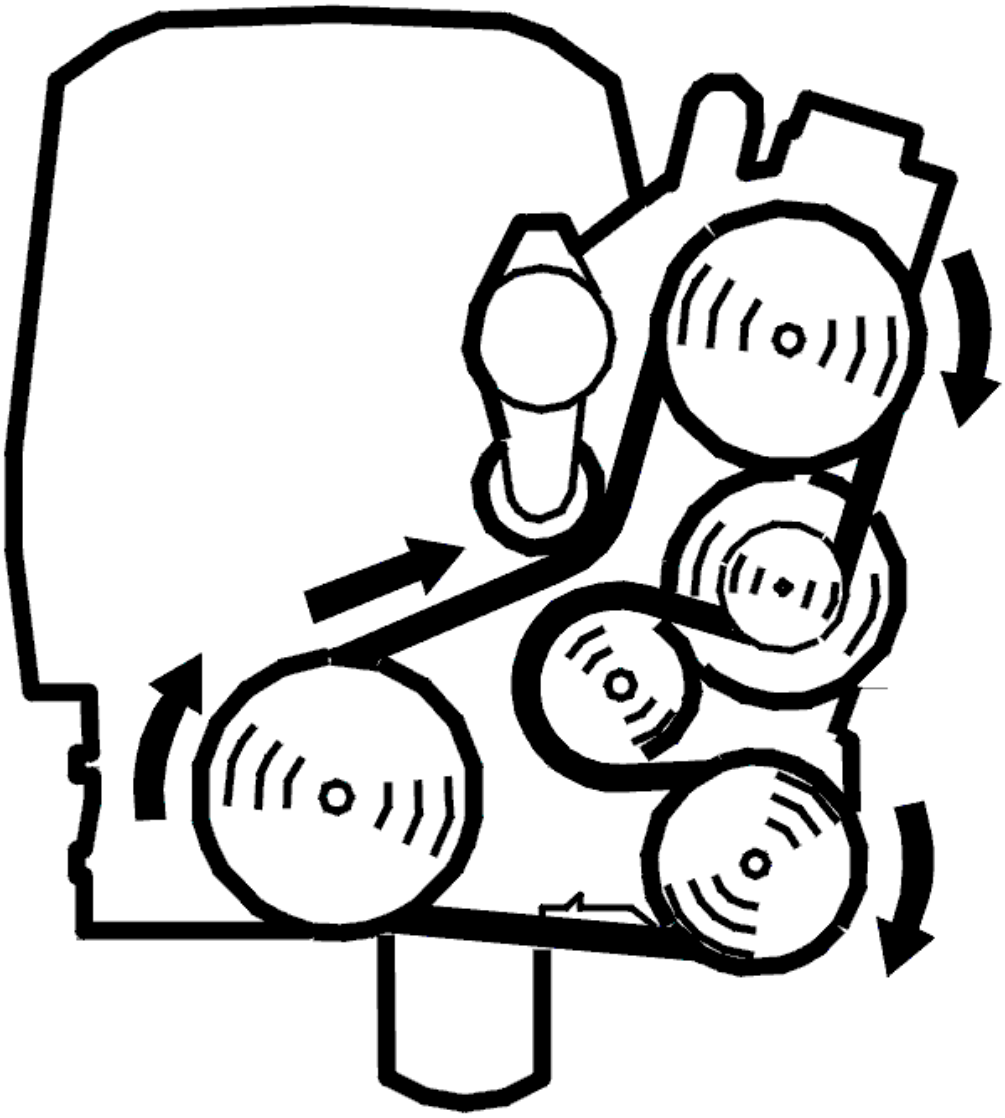

Fig. 240: Belt Routing / Engine Idling - Volvo
Courtesy of VOLVO CARS CORPORATION

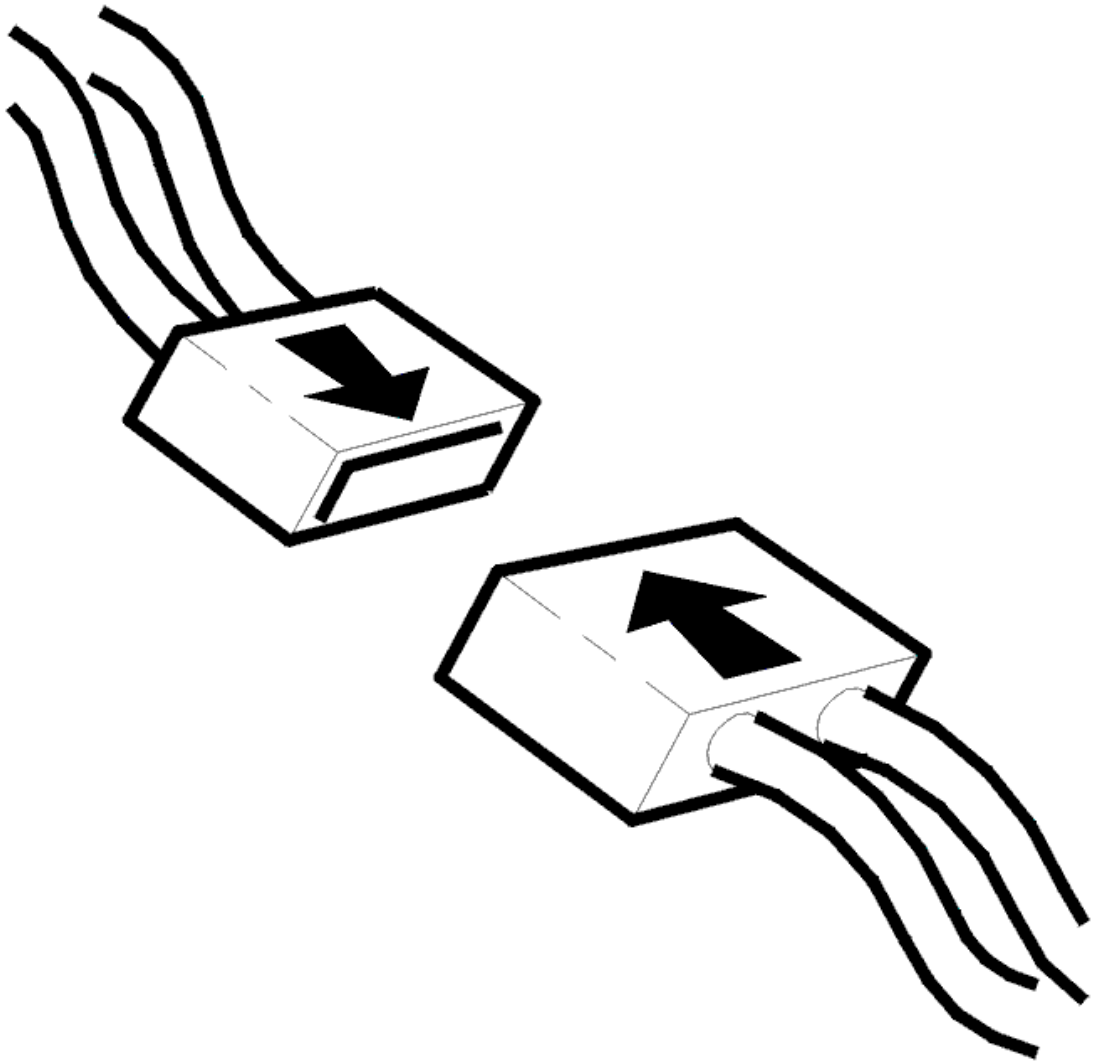

Fig. 241: Connecting Connector
Courtesy of VOLVO CARS CORPORATION

- Ignition off
- Reinstall the connectors, components etc.
- Engine idling.

Read off the signal from the fuel pressure sensor.

Check that the signal is reasonable. Normal value is 480 ± 5 kPa at idle.

Read off the signal from the fuel pressure sensor when the ignition is on and check that the fuel pressure has dropped. Normally, the pressure shall drop by approx. 100 kPa from the value at idle.

NOTE: The signal indicates absolute pressure.

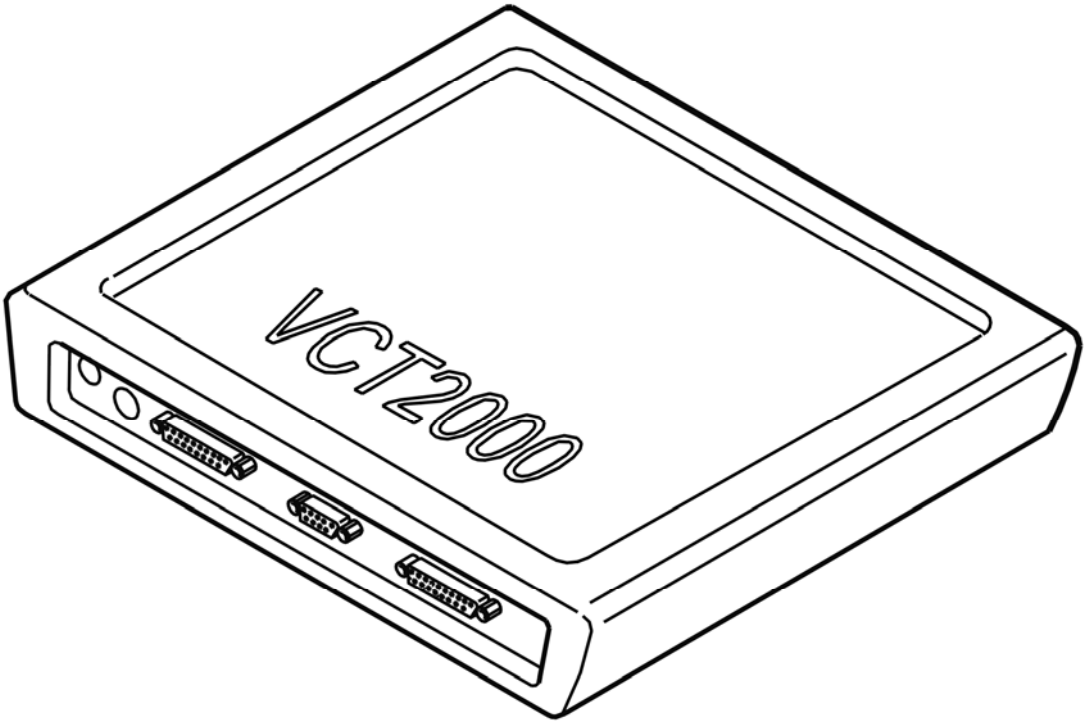

Fig. 242: Identifying VCT2000 Diagnostic Tool Symbol In VIDA
Courtesy of VOLVO CARS CORPORATION

Is the signal reasonable?

- **YES**

  VERIFIED: Troubleshooting has been completed.

- **NO**

  Refer to **INFORMATION**

INFORMATION

FAULT-TRACING INFORMATION

The fault should have been detected and remedied. As this is not the case fault-tracing has failed.

Exit fault-tracing for this diagnostic trouble code (DTC) or make another attempt.

TROUBLESHOOTING ECM-P019100 (2006-2011)

CHECKING THE CONNECTORS

Check the fuel pressure sensor's connector and connections for contact resistance and oxidation.

Remedy as necessary.

Other information

- see **FUEL PRESSURE AND TEMPERATURE SENSOR, REPLACING**
- see **CONTROL MODULE FUEL PUMP (FP), REPLACING**
- see **CHECKING WIRING AND TERMINALS**

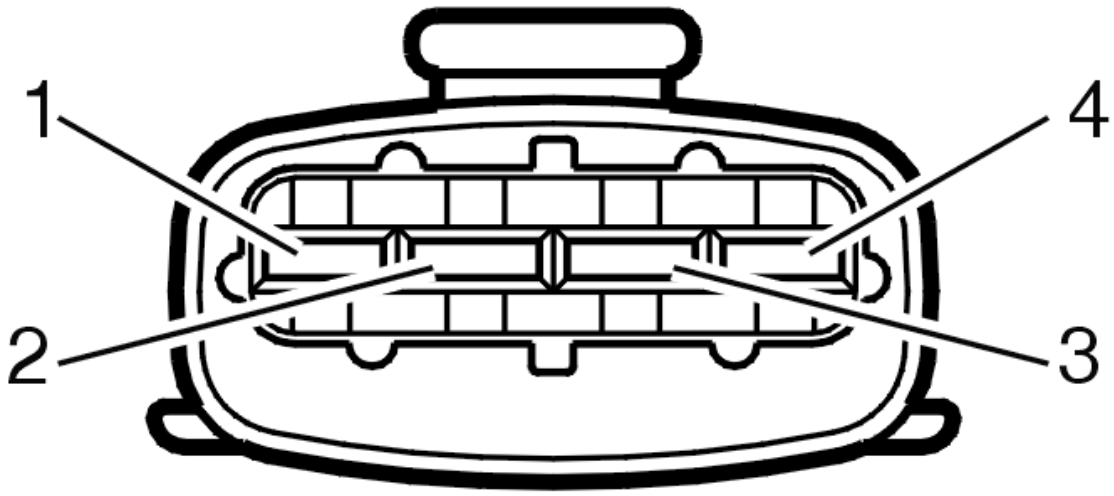

Fig. 243: Identifying 4-Bit Connector
Courtesy of VOLVO CARS CORPORATION

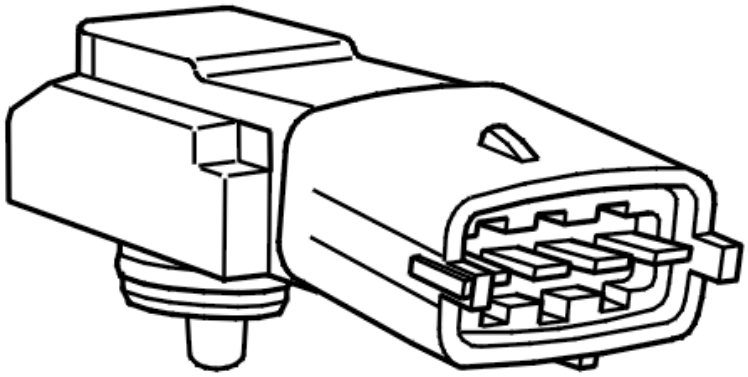

Fig. 244: Identifying Fuel Pressure Sensor
Courtesy of VOLVO CARS CORPORATION

- **Continue**

  Refer to **VERIFICATION**

VERIFICATION

VERIFICATION

HINT: After carrying out the repair, check that the fault has been remedied.

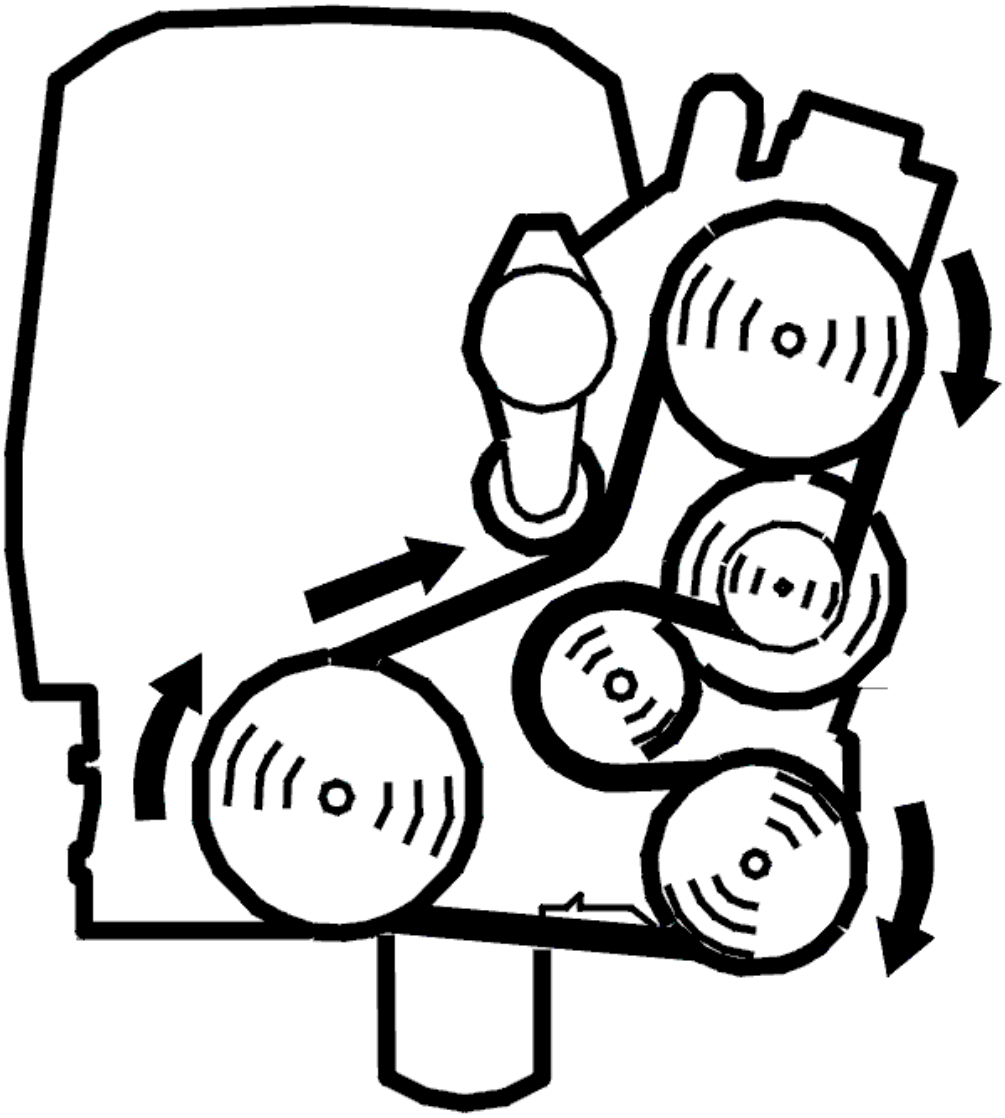

Fig. 245: Belt Routing / Engine Idling - Volvo
Courtesy of VOLVO CARS CORPORATION

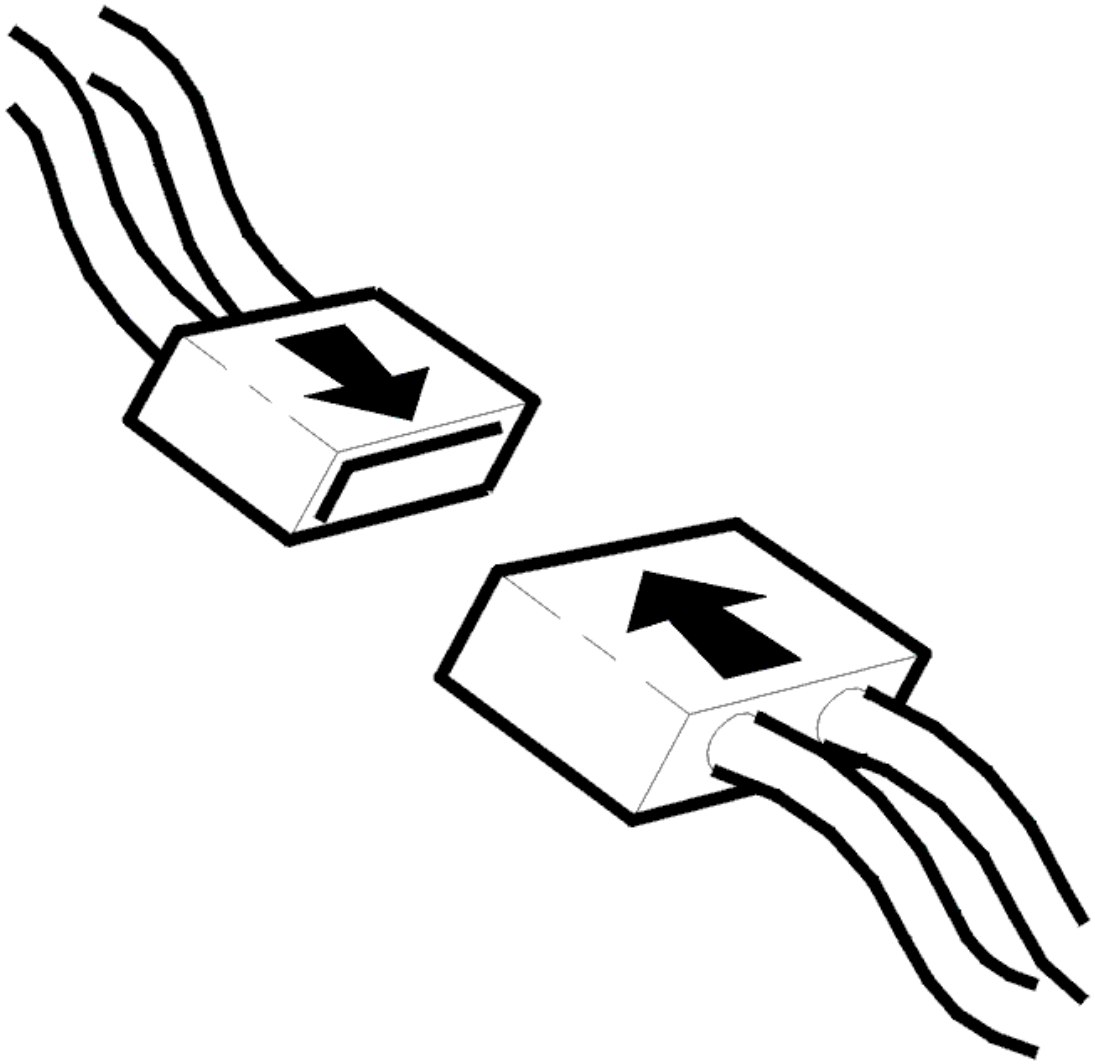

Fig. 246: Connecting Connector
Courtesy of VOLVO CARS CORPORATION

- Ignition off
- Reinstall the connectors, components etc.
- Engine idling.

Read off the signal from the fuel pressure sensor.

Check that the signal is reasonable. Normal value is 480 ± 5 kPa at idle.

Read off the signal from the fuel pressure sensor when the ignition is on and check that the fuel pressure has dropped. Normally, the pressure shall drop by approx. 100 kPa from the value at idle.

NOTE: The signal indicates absolute pressure.

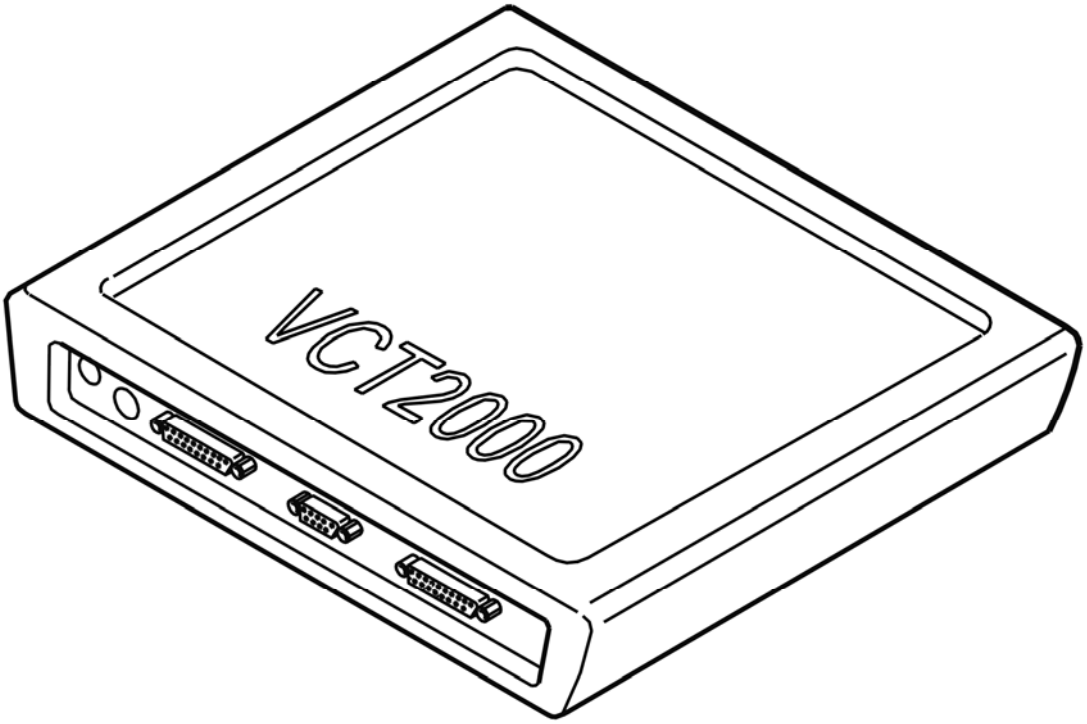

Fig. 247: Identifying VCT2000 Diagnostic Tool Symbol In VIDA
Courtesy of VOLVO CARS CORPORATION

Is the signal reasonable?

- **YES**

  VERIFIED: Troubleshooting has been completed.

- **NO**

  Refer to **INFORMATION**

INFORMATION

FAULT-TRACING INFORMATION

The fault should have been detected and remedied. As this is not the case fault-tracing has failed.

Exit fault-tracing for this diagnostic trouble code (DTC) or make another attempt.

ECM-P019200: FUEL RAIL PRESSURE SENSOR LOW INPUT. GENERAL FAILURE INFORMATION. NO SUB TYPE INFORMATION (B6324S; 2007-

2010)

DIAGNOSTIC TROUBLE CODE (DTC) INFORMATION ECM-P019200

Condition

The Engine control module (ECM) measures the fuel pressure in the fuel rail using the fuel pressure sensor. The control module checks the direct voltage from the sensor.

NOTE: The fuel pressure sensor and fuel temperature sensor are integrated in the same component.

The diagnostic trouble code (DTC) is stored if the control module detects that:

- The direct voltage is lower than 0.498 V.
- Incorrect value lasts longer than 9 seconds.
- Incorrect value lasts for 2 or more subsequent driving cycles.

The control module's test for the diagnostic trouble code (DTC) starts in the event of:

- Ignition switch position II.

NOTE: The control module can only detect the fault once the test has been started and the diagnostic trouble code (DTC) is stored when the conditions are met.

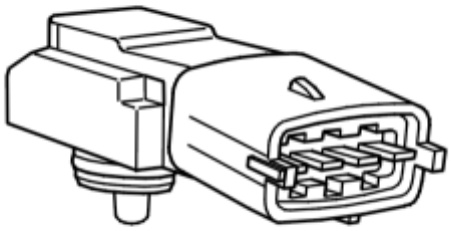

Fig. 248: Identifying Fuel Temperature Sensor
Courtesy of VOLVO CARS CORPORATION

Substitute Value

- The control module uses a constant fuel pressure.

- The control module controls the fuel pump, via the fuel pump module, with a constant signal.

Possible Source

- Contact resistance and oxidation in the terminals.
- Short-circuit to ground in the signal cable.
- Open-circuit in the signal cable.
- Damaged fuel pressure sensor.

Fault symptom[s]

- Malfunction indicator light (MIL), on
- Engine misfires

FAULT-TRACING

see **FAULT-TRACING**

ECM-P019200: FUEL RAIL PRESSURE SENSOR LOW INPUT. GENERAL FAILURE INFORMATION. NO SUB TYPE INFORMATION (B6324S5; 2011-2012)

DIAGNOSTIC TROUBLE CODE (DTC) INFORMATION ECM-P019200

see **DIAGNOSTIC TROUBLE CODE (DTC) INFORMATION ECM-P019200**

FAULT-TRACING

see **FAULT-TRACING**

ECM-P019200: FUEL RAIL PRESSURE SENSOR LOW INPUT. GENERAL FAULT INFORMATION. NO INFORMATION ABOUT FAULT TYPE (B8444S; 2005-2011)

DIAGNOSTIC TROUBLE CODE (DTC) INFORMATION ECM-P019200

Condition

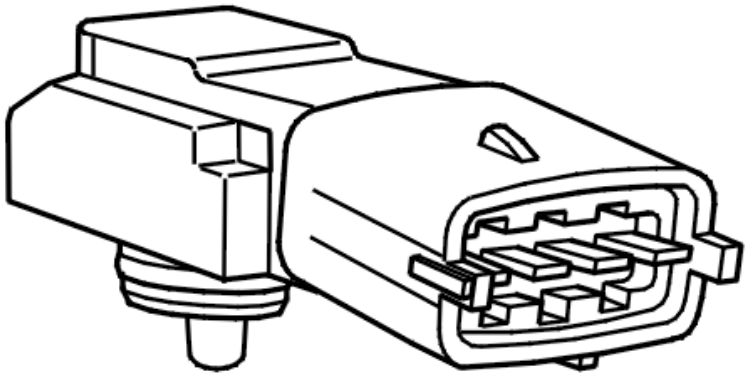

Fig. 249: Identifying Fuel Pressure Sensor
Courtesy of VOLVO CARS CORPORATION

The Engine control module (ECM) monitors the fuel pressure in the fuel rail using the fuel pressure sensor.

The diagnostic trouble code (DTC) is stored if the Engine Control Module (ECM) detects that the signal from the fuel pressure sensor is too low.

The diagnostic trouble code can be diagnosed when the ignition is on.

Substitute Value

- The fuel pressure is set to a constant.
- The control signal to the fuel pump (FP) control module is set to a calculated value.

Possible Source

- The signal cable is short-circuited to ground.
- Damaged fuel pressure sensor.

Fault symptom[s]

- Malfunction indicator light (MIL), on

- Engine misfires.

FAULT TRACING ECM-P019200

CHECKING THE STATUS

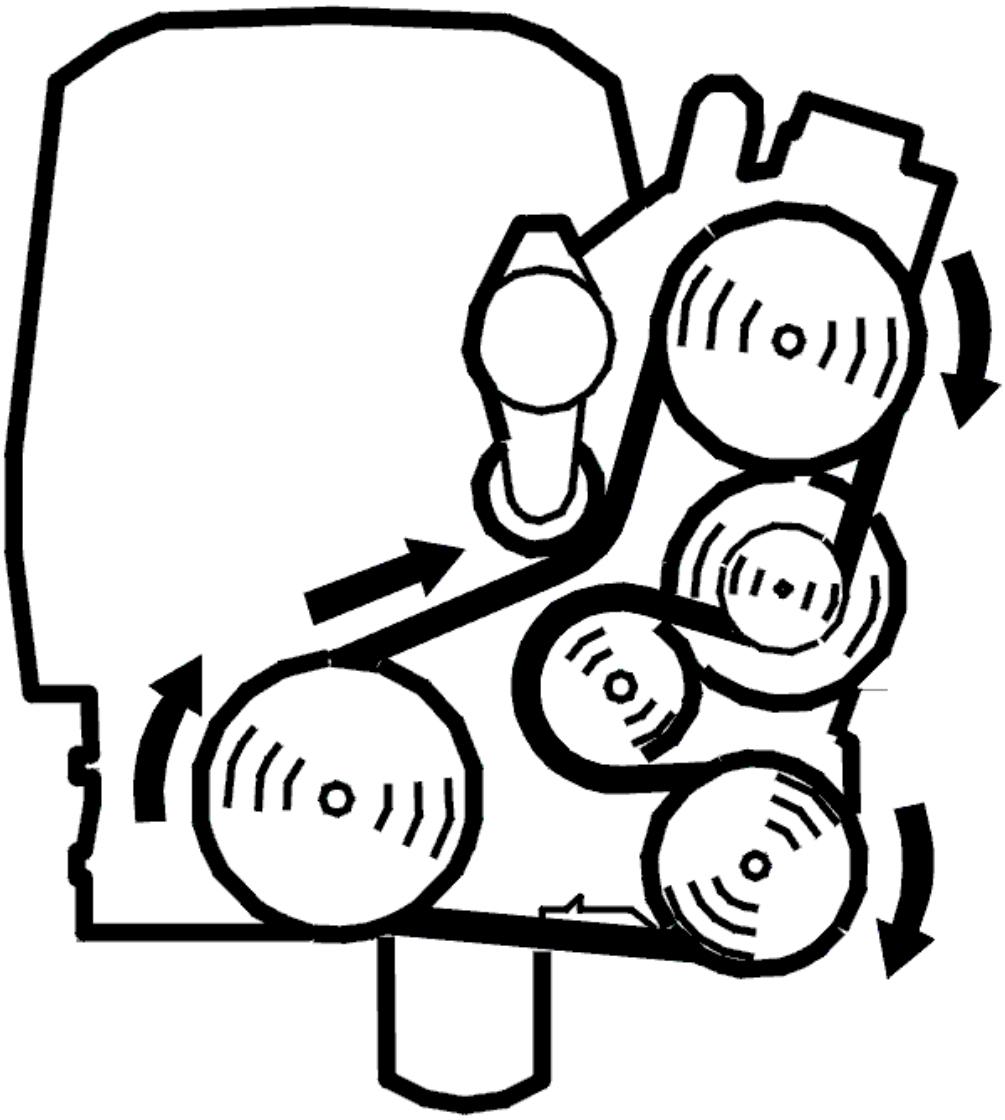

Fig. 250: Belt Routing / Engine Idling - Volvo
Courtesy of VOLVO CARS CORPORATION

- Start and run the engine to operating temperature.

  Check whether the fault is permanent or intermittent by reading off the signal from the fuel pressure sensor. Check that the value is within its permitted range. The value must be 480 ±5 kPa when idling, with the engine at operating temperature and in neutral. The pressure must drop with the ignition off.

  The fault is permanent if the value is not within its permitted range. If the value is within its permitted

range, this indicates that the fault is intermittent and not presently active.

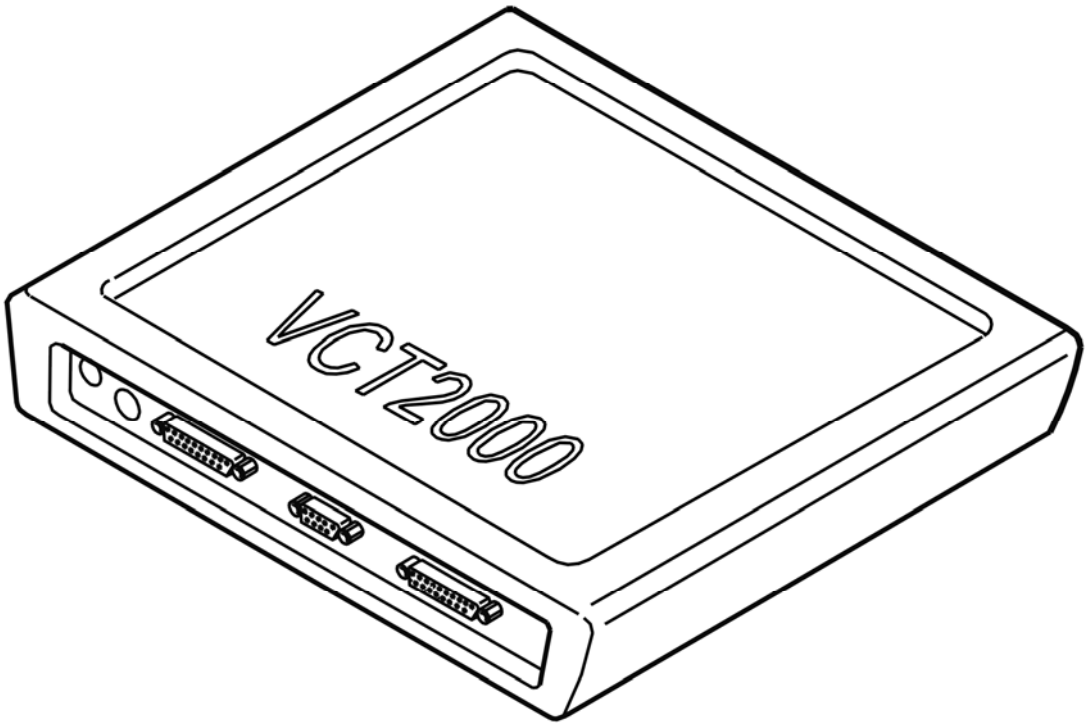

Fig. 251: Identifying VCT2000 Diagnostic Tool Symbol In VIDA
Courtesy of VOLVO CARS CORPORATION

- **Continue**

  Refer to **CHECKING COMPONENTS AND WIRING**

CHECKING COMPONENTS AND WIRING

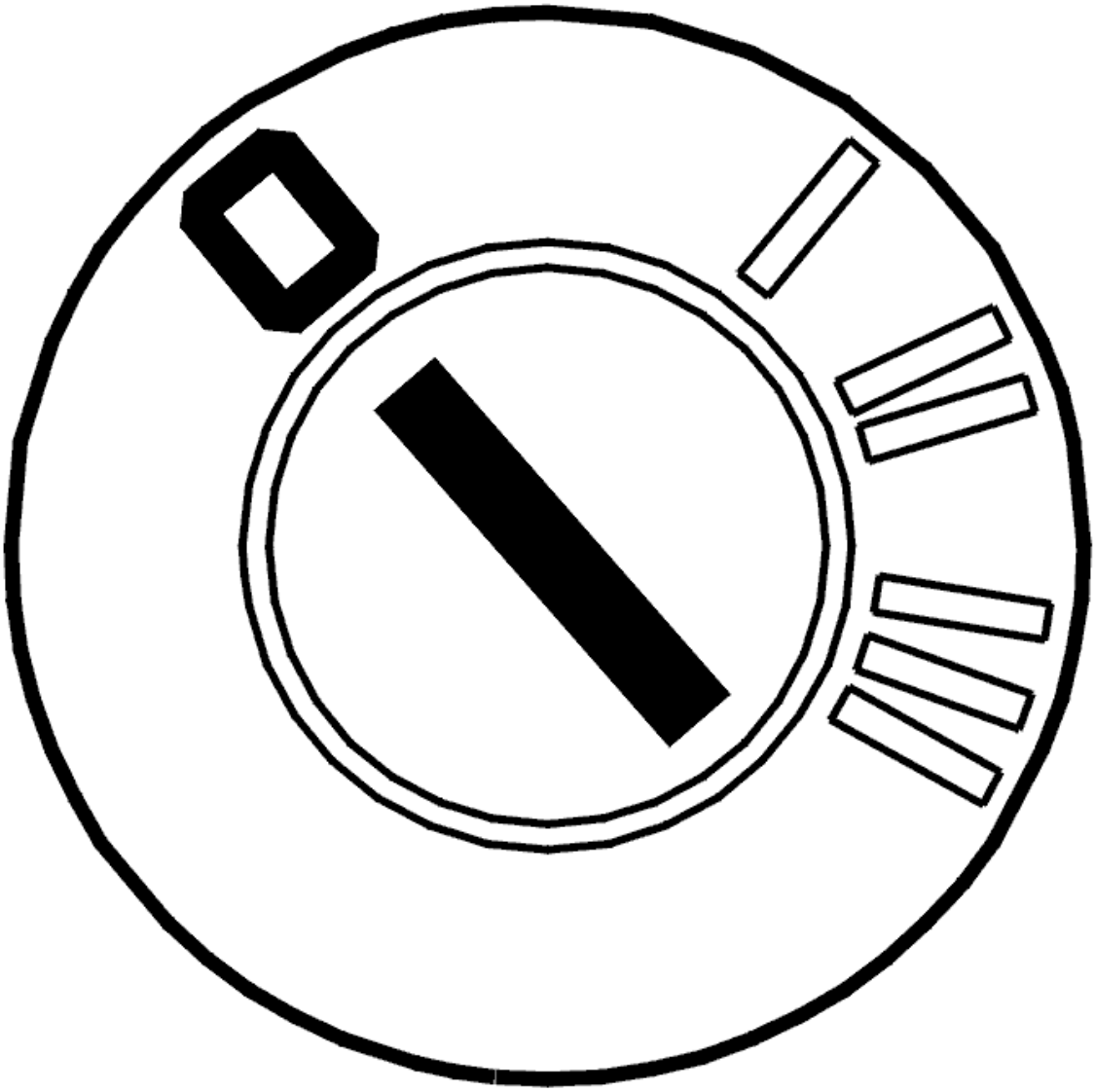

Fig. 252: Identifying Ignition OFF
Courtesy of VOLVO CARS CORPORATION

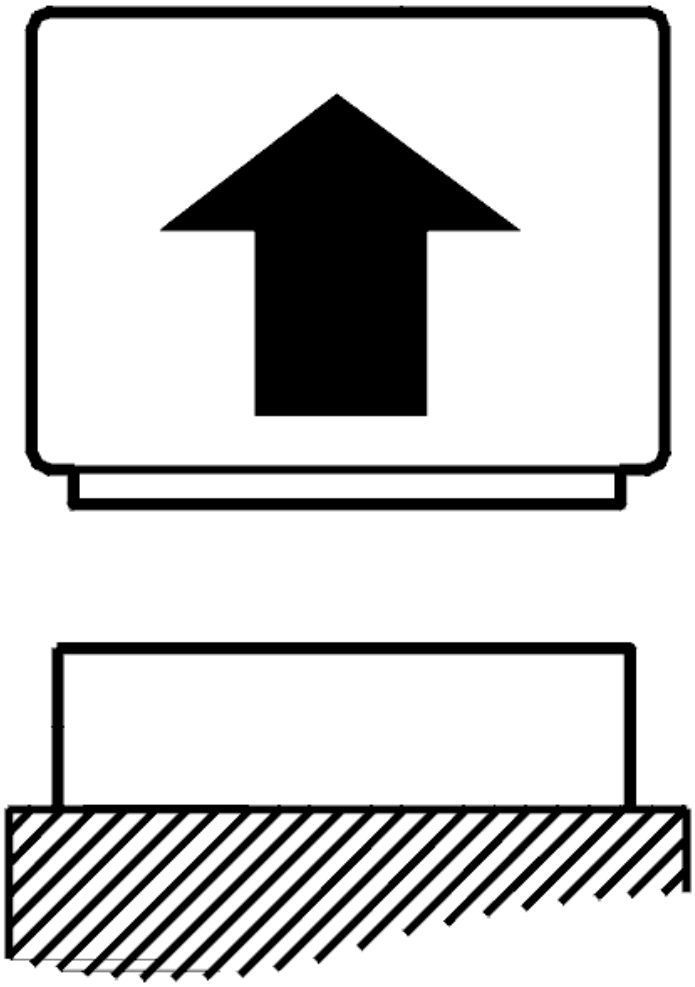

Fig. 253: Disconnecting Connector
Courtesy of VOLVO CARS CORPORATION

- Ignition off
- Disconnect the engine control module (ECM).

  Check the signal cable. Check for a short-circuit to ground.

  Take readings between control module terminal #A71 (#B11) and fuel pressure sensor terminal #4.

  Remedy as necessary.

  Other information

  - see **CONNECTING THE BREAKOUT BOX**

- see **SIGNAL SPECIFICATION, ENGINE CONTROL MODULE (ECM)**
- see **FUEL PRESSURE AND TEMPERATURE SENSOR, REPLACING**
- see **CHECKING WIRING AND TERMINALS**

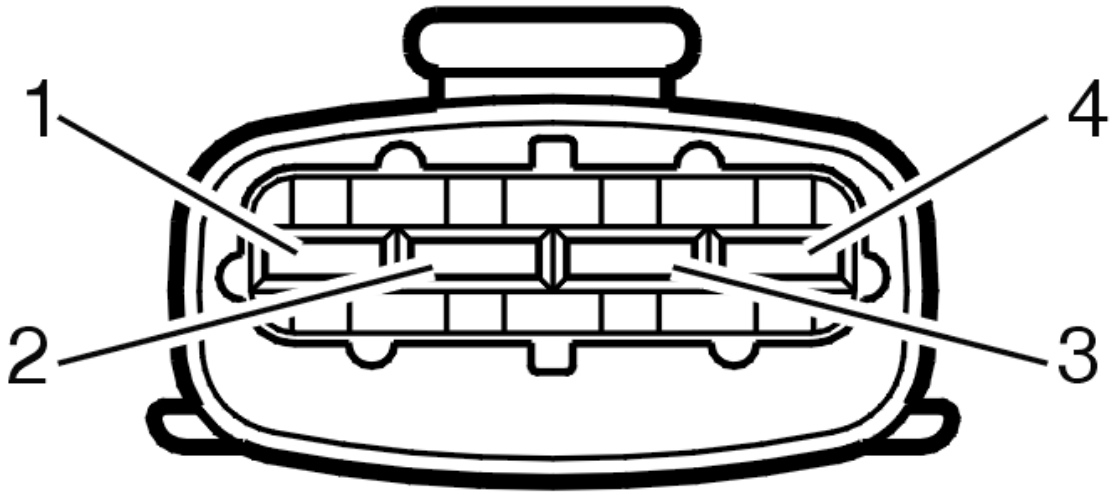

Fig. 254: Identifying 4-Bit Connector
Courtesy of VOLVO CARS CORPORATION

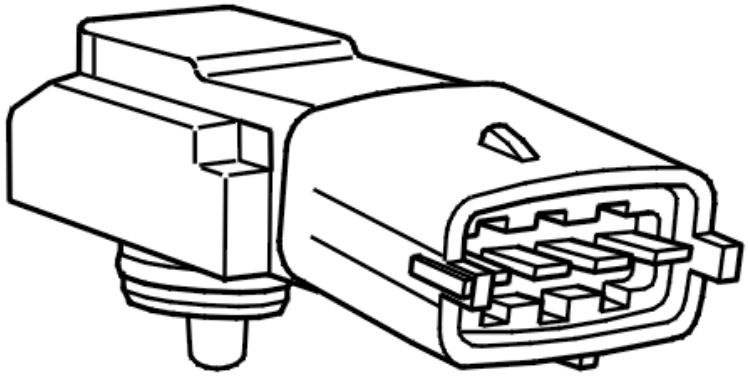

Fig. 255: Identifying Fuel Pressure Sensor

Courtesy of VOLVO CARS CORPORATION

- **Continue**

  Refer to **VERIFICATION**

VERIFICATION

VERIFICATION

HINT: After repairing, it is necessary to check that the malfunction has been fixed.

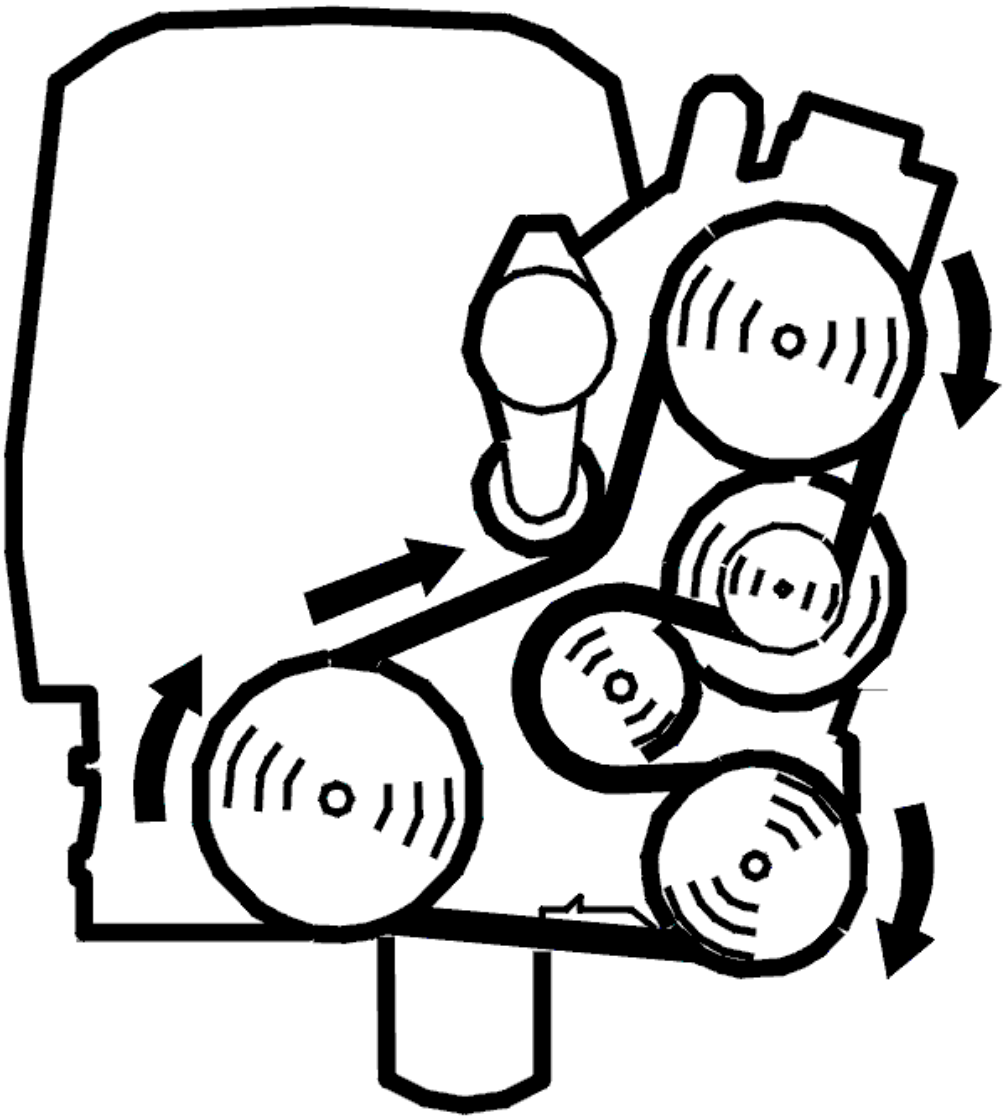

Fig. 256: Belt Routing / Engine Idling - Volvo
Courtesy of VOLVO CARS CORPORATION

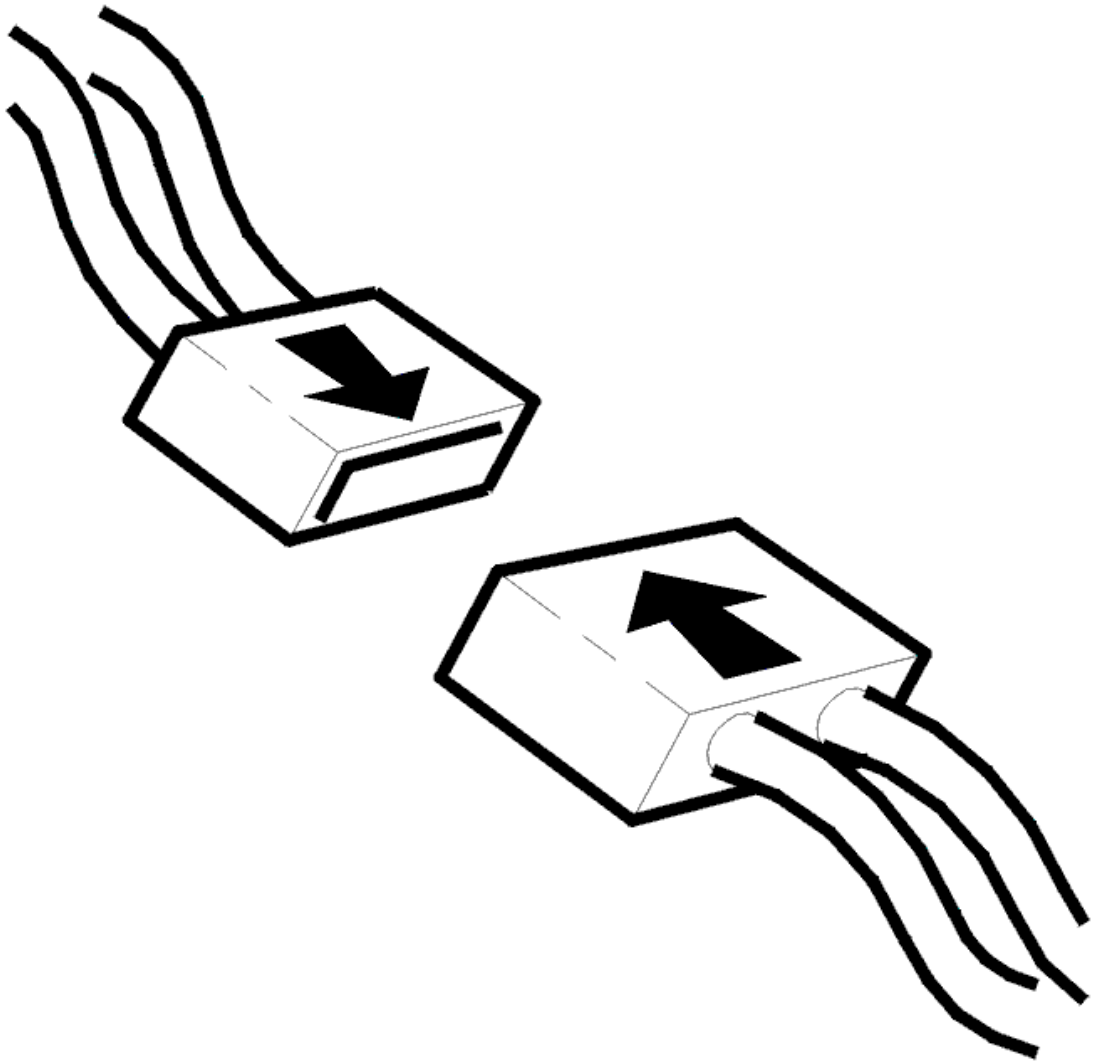

Fig. 257: Connecting Connector
Courtesy of VOLVO CARS CORPORATION

- Ignition off
- Reconnect the connectors, components, etc.
- Start and warm up the engine.
- Read off the fuel pressure sensor's signal.

  Check that the fuel pressure sensor's signal is correct. The value shall be 480 ± 5 kPa at idle, neutral and warm engine. The pressure shall drop at ignition off.

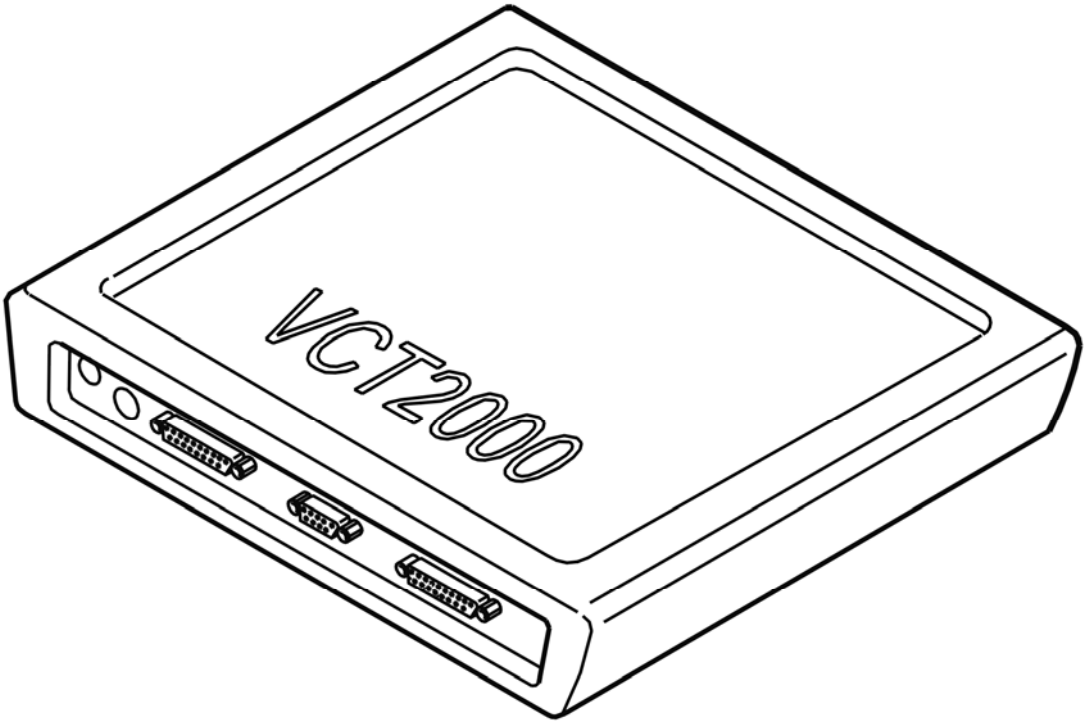

Fig. 258: Identifying VCT2000 Diagnostic Tool Symbol In VIDA
Courtesy of VOLVO CARS CORPORATION

Is the function OK?

- **YES**

  VERIFIED: Troubleshooting has been completed.

- **NO**

  Refer to **INFORMATION**

INFORMATION

FAULT-TRACING INFORMATION

The fault should have been detected and remedied. As this is not the case fault-tracing has failed.

Exit fault-tracing for this diagnostic trouble code (DTC) or make another attempt.

ECM-P019300: FUEL RAIL PRESSURE SENSOR HIGH INPUT. GENERAL FAILURE INFORMATION. NO SUB TYPE INFORMATION (B6324S; 2007-

2010)

DIAGNOSTIC TROUBLE CODE (DTC) INFORMATION ECM-P019300

Condition

The Engine control module (ECM) measures the fuel pressure in the fuel rail using the fuel pressure sensor. The control module checks the direct voltage from the sensor.

NOTE: The fuel pressure sensor and fuel temperature sensor are integrated in the same component.

The diagnostic trouble code (DTC) is stored if the control module detects that:

- The direct voltage is higher than 4.0 V.
- Incorrect value lasts longer than 9 seconds.
- Incorrect value lasts for 2 or more subsequent driving cycles.

The control module's test for the diagnostic trouble code (DTC) starts in the event of:

- Ignition switch position II.

NOTE: The control module can only detect the fault once the test has been started and the diagnostic trouble code (DTC) is stored when the conditions are met.

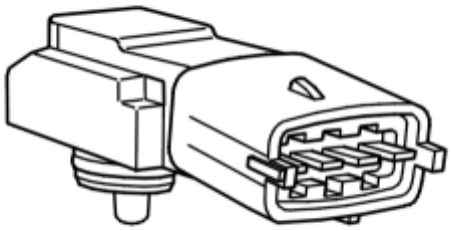

Fig. 259: Identifying Fuel Temperature Sensor
Courtesy of VOLVO CARS CORPORATION

Substitute Value

- The control module uses a constant fuel pressure.

- The control module controls the fuel pump, via the fuel pump module, with a constant signal.

Possible Source

- Contact resistance and oxidation in the terminals.
- Short-circuit to supply voltage in the signal cable.
- Damaged fuel pressure sensor.

Fault symptom[s]

- Malfunction indicator light (MIL), on
- Engine misfires

FAULT-TRACING

see **FAULT-TRACING**

ECM-P019300: FUEL RAIL PRESSURE SENSOR HIGH INPUT. GENERAL FAILURE INFORMATION. NO SUB TYPE INFORMATION (B6324S5; 2011-2012)

DIAGNOSTIC TROUBLE CODE (DTC) INFORMATION ECM-P019300

see **DIAGNOSTIC TROUBLE CODE (DTC) INFORMATION ECM-P019300**

FAULT-TRACING

see **FAULT-TRACING**

ECM-P019300: FUEL RAIL PRESSURE SENSOR HIGH INPUT. GENERAL FAULT INFORMATION. NO INFORMATION ABOUT FAULT TYPE (B8444S; 2005-2011)

DIAGNOSTIC TROUBLE CODE (DTC) INFORMATION ECM-P019300

Condition

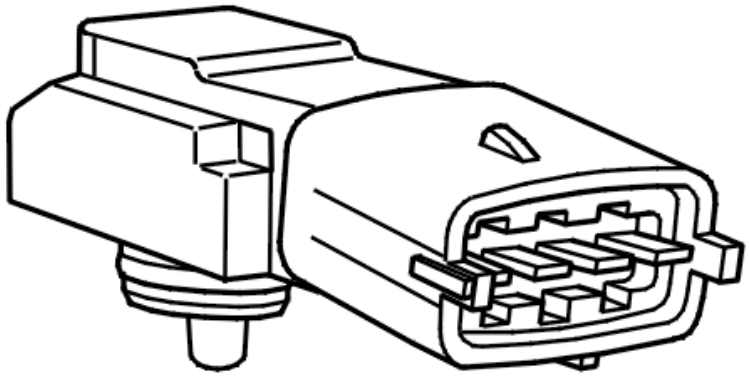

Fig. 260: Identifying Fuel Pressure Sensor
Courtesy of VOLVO CARS CORPORATION

The Engine control module (ECM) monitors the fuel pressure in the fuel rail using the fuel pressure sensor.

The diagnostic trouble code (DTC) is stored if the Engine Control Module (ECM) detects that the signal from the fuel pressure sensor is too high.

The diagnostic trouble code can be diagnosed when the ignition is on.

Substitute Value

- The fuel pressure is set to a constant.
- The control signal to the fuel pump (FP) control module is set to a calculated value.

Possible Source

- The signal cable is short-circuited to voltage.
- Open-circuit in the signal cable.
- Damaged fuel pressure sensor.

Fault symptom[s]

- Malfunction indicator light (MIL), on
- Engine misfires.

FAULT TRACING ECM-P019300

CHECKING THE STATUS

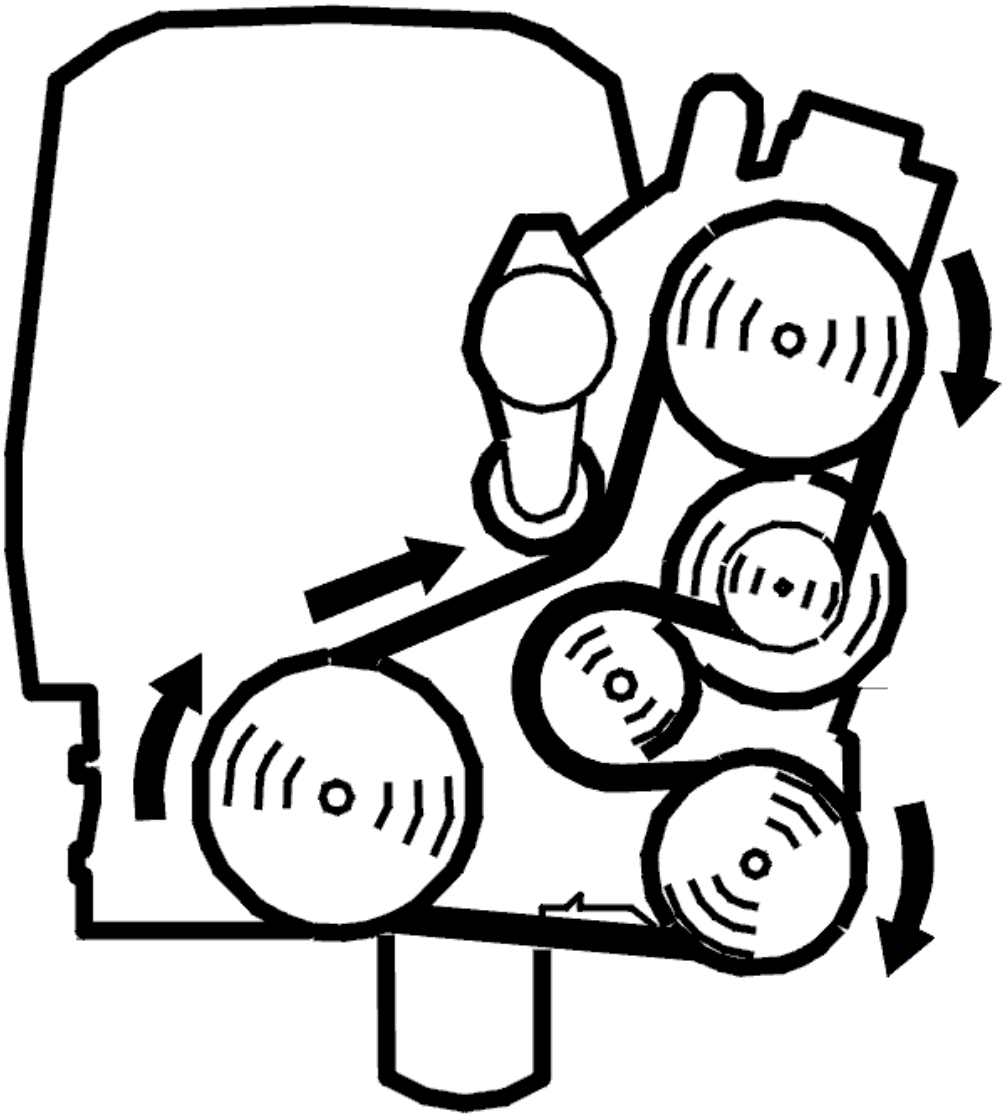

Fig. 261: Belt Routing / Engine Idling - Volvo
Courtesy of VOLVO CARS CORPORATION

- Start and run the engine to operating temperature.

  Check whether the fault is permanent or intermittent by reading off the signal from the fuel pressure sensor. Check that the value is within its permitted range. The value must be 480 ±5 kPa when idling, with the engine at operating temperature and in neutral. The pressure must drop with the ignition off.

The fault is permanent if the value is not within its permitted range. If the value is within its permitted range, this indicates that the fault is intermittent and not presently active.

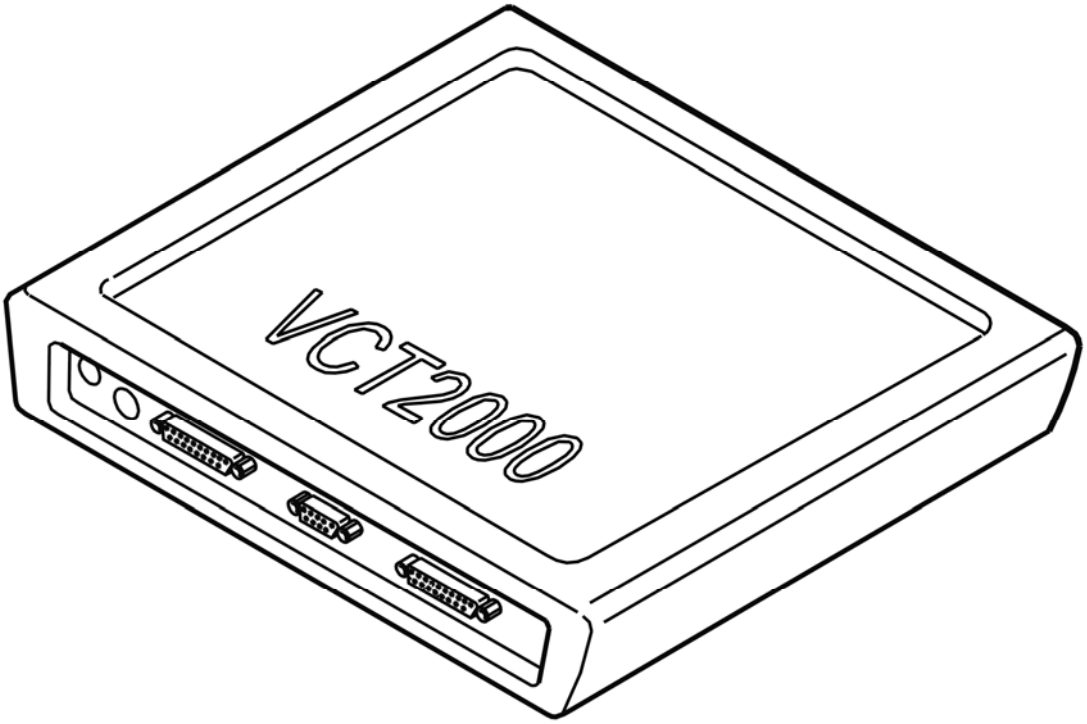

Fig. 262: Identifying VCT2000 Diagnostic Tool Symbol In VIDA
Courtesy of VOLVO CARS CORPORATION

- **Continue**

Refer to **CHECKING COMPONENTS AND WIRING**

CHECKING COMPONENTS AND WIRING

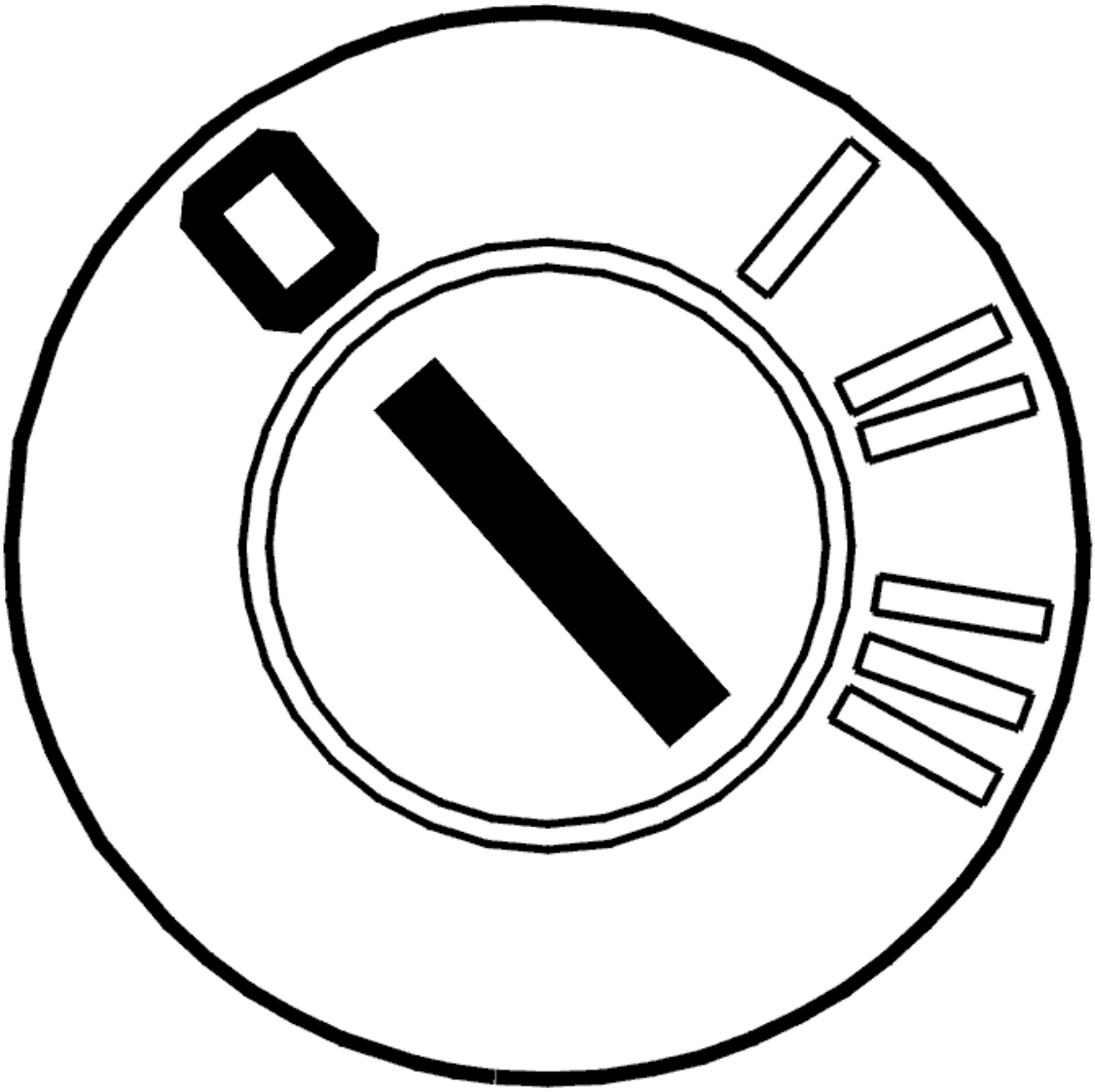

Fig. 263: Identifying Ignition OFF
Courtesy of VOLVO CARS CORPORATION

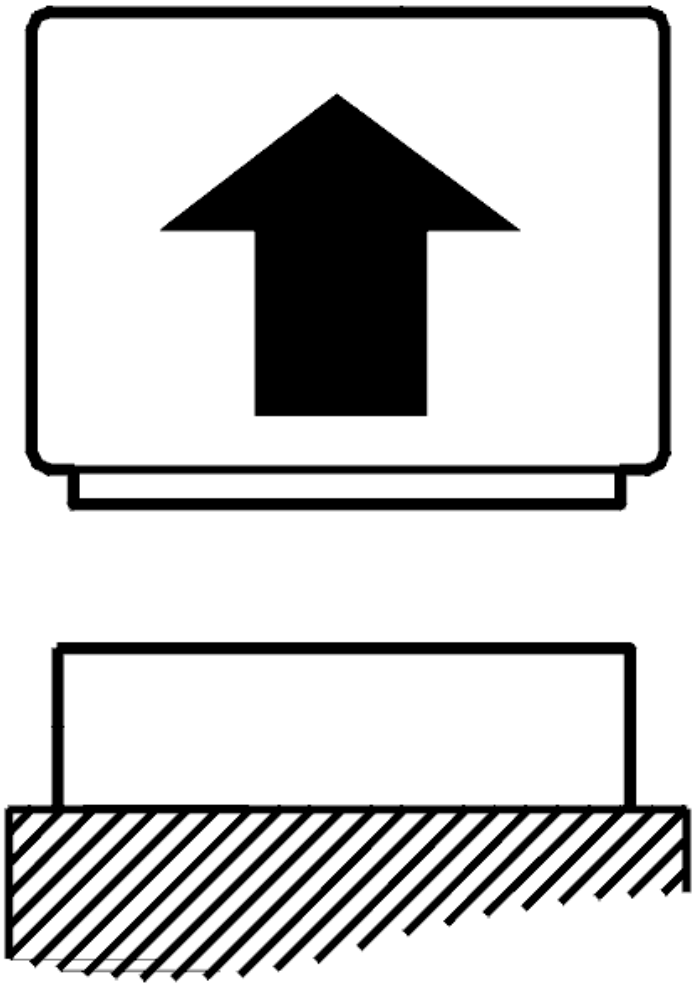

Fig. 264: Disconnecting Connector
Courtesy of VOLVO CARS CORPORATION

- Ignition off
- Disconnect the engine control module (ECM).

  Check the signal cable with regard to short circuit to supply voltage. Check the signal cable with regard to open circuit.

  Take readings between control module terminal #A71 (#B11) and fuel pressure sensor terminal #4.

  Remedy as necessary.

  Other information

  - see **CONNECTING THE BREAKOUT BOX**

- see **SIGNAL SPECIFICATION, ENGINE CONTROL MODULE (ECM)**
- see **FUEL PRESSURE AND TEMPERATURE SENSOR, REPLACING**
- see **CHECKING WIRING AND TERMINALS**

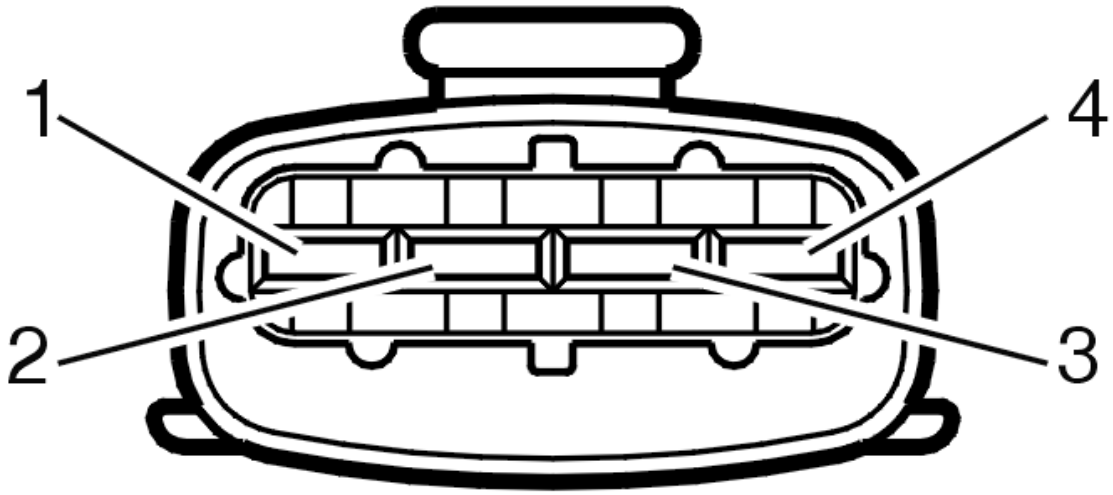

Fig. 265: Identifying 4-Bit Connector
Courtesy of VOLVO CARS CORPORATION

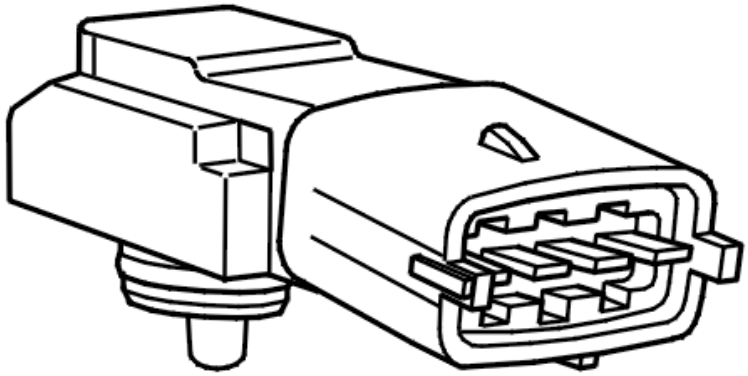

Fig. 266: Identifying Fuel Pressure Sensor

Courtesy of VOLVO CARS CORPORATION

- **Continue**

  Refer to **VERIFICATION**

VERIFICATION

VERIFICATION

HINT: After repairing, it is necessary to check that the malfunction has been fixed.

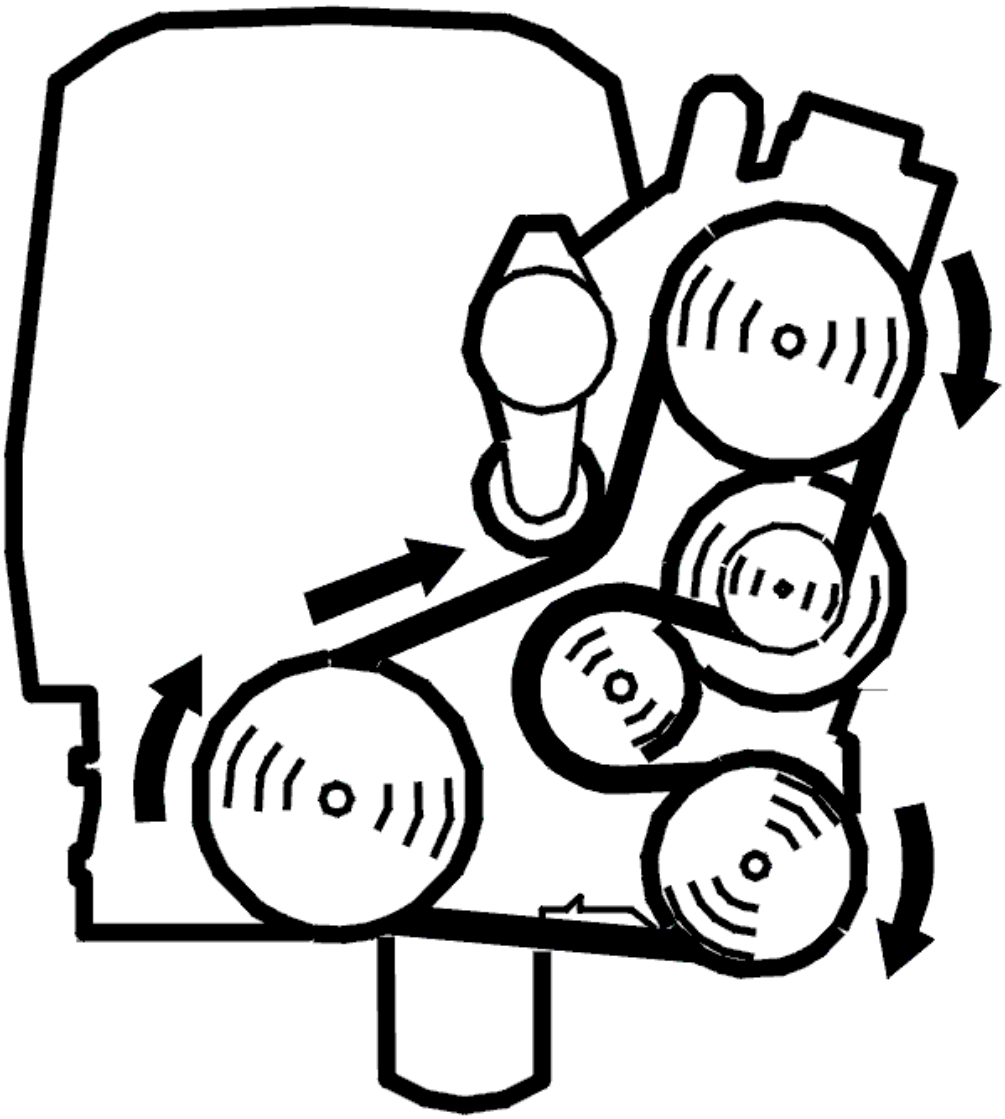

Fig. 267: Belt Routing / Engine Idling - Volvo
Courtesy of VOLVO CARS CORPORATION

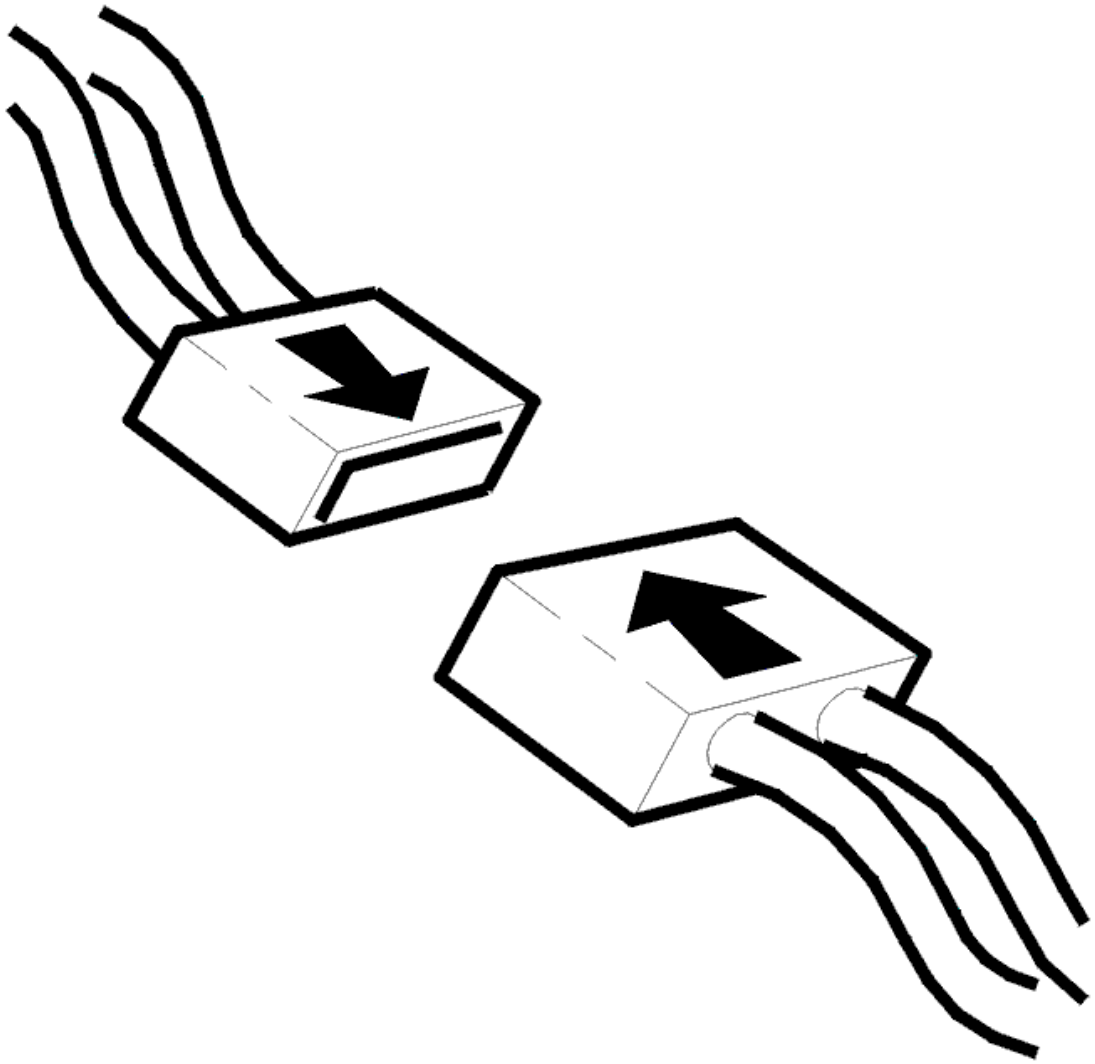

Fig. 268: Connecting Connector
Courtesy of VOLVO CARS CORPORATION

- Ignition off
- Reconnect the connectors, components, etc.
- Start and warm up the engine.
- Read off the fuel pressure sensor's signal.

  Check that the fuel pressure sensor's signal is correct. The value shall be 480 ± 5 kPa at idle, neutral and warm engine. The pressure shall drop at ignition off.

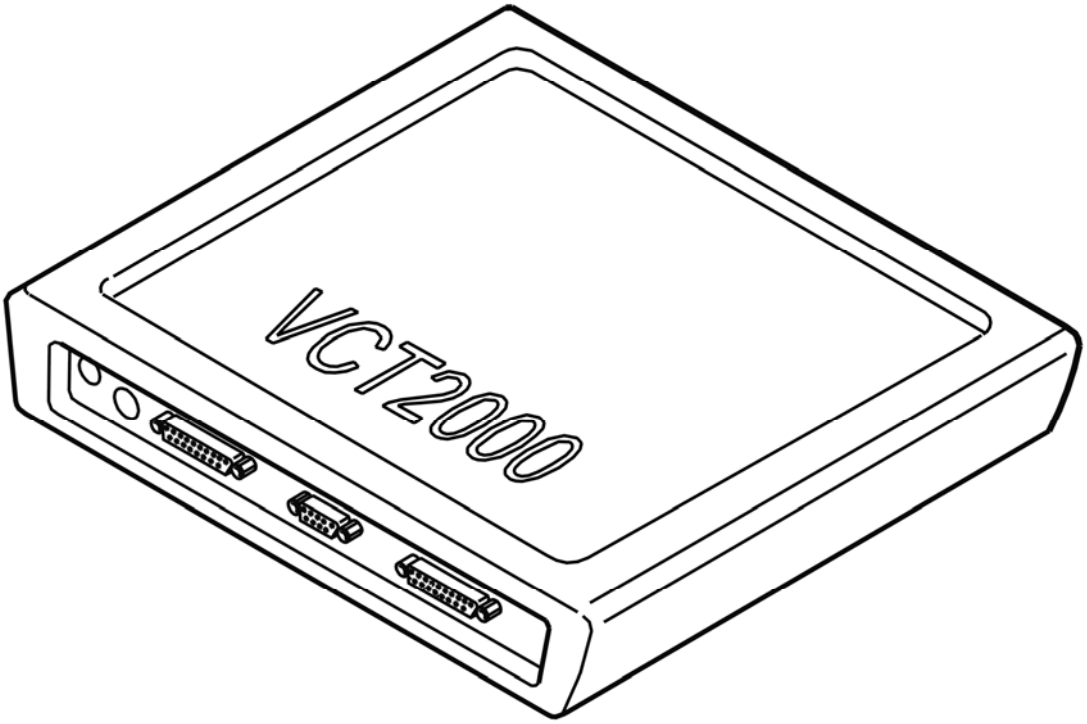

Fig. 269: Identifying VCT2000 Diagnostic Tool Symbol In VIDA
Courtesy of VOLVO CARS CORPORATION

Is the function OK?

- **YES**

  VERIFIED: Troubleshooting has been completed.

- **NO**

  Refer to **INFORMATION**

INFORMATION

FAULT-TRACING INFORMATION

The fault should have been detected and remedied. As this is not the case fault-tracing has failed.

Exit fault-tracing for this diagnostic trouble code (DTC) or make another attempt.

ECM-P020100: CYLINDER 1 INJECTOR CIRCUIT / OPEN. GENERAL FAILURE INFORMATION. NO SUB TYPE INFORMATION (B6324S; 2007-2010)

DIAGNOSTIC TROUBLE CODE (DTC) INFORMATION ECM-P020100

Condition

Engine control module (ECM) controls injection time and injection timing by controlling the injectors' opening and closing. Control is performed by pulsating grounding of the signal line to respective valve. The control module checks the signal's shape and amplitude at opening and closing.

The diagnostic trouble code (DTC) is stored if the control module detects that:

- The signal's shape and amplitude do not follow expected signal.
- Incorrect value in more than 20 of 400 pulses.
- Incorrect value lasts for 2 or more subsequent driving cycles.

The control module's test for the diagnostic trouble code (DTC) starts in the event of:

- Engine running.

NOTE: **The control module can only detect the fault once the test has been started and the diagnostic trouble code (DTC) is stored when the conditions are met.**

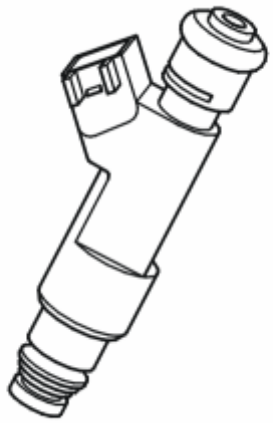

Fig. 270: Identifying Fuel Injector
Courtesy of VOLVO CARS CORPORATION

Substitute Value

- The control module blocks heated oxygen sensor control.

Possible Source

- Contact resistance and oxidation in the terminals.
- Short-circuit to supply voltage in the signal cable.
- Open-circuit in the signal cable.
- Open-circuit in the power supply cable.
- Damaged injector.

Fault symptom[s]

- Malfunction indicator light (MIL), on
- Engine does not fire on all cylinders
- Cranking motor running but engine does not start

FAULT-TRACING

see **FAULT-TRACING**

ECM-P020100: CYLINDER 1 INJECTOR CIRCUIT / OPEN. GENERAL FAILURE INFORMATION. NO SUB TYPE INFORMATION (B6324S5; 2011-2012)

DIAGNOSTIC TROUBLE CODE (DTC) INFORMATION ECM-P020100

see **DIAGNOSTIC TROUBLE CODE (DTC) INFORMATION ECM-P020100**

FAULT-TRACING

see **FAULT-TRACING**

ECM-P020100: INJECTOR CYLINDER 1 OPEN-CIRCUIT. GENERAL FAULT INFORMATION. TYPE OF FAULT NOT SPECIFIED. (B8444S; 2005-2011)

DIAGNOSTIC TROUBLE CODE (DTC) INFORMATION

Condition

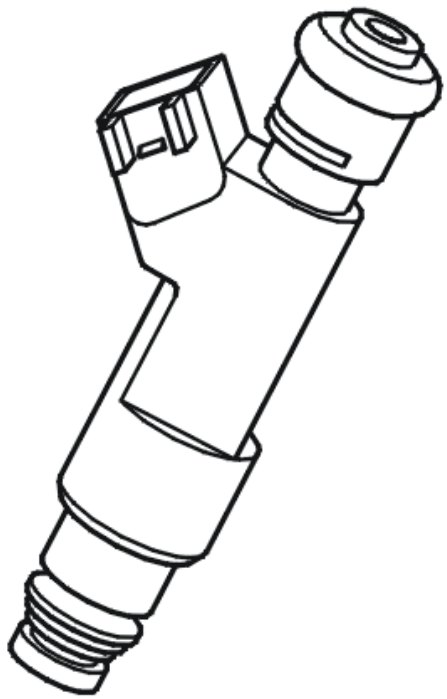

Fig. 271: Identifying Fuel Injector
Courtesy of VOLVO CARS CORPORATION

The engine control module (ECM) regulates the injection period and the injection time by controlling the opening/closing of the injectors.

The diagnostic trouble code (DTC) is stored if the control module detects that the control signal for the injector is too high, too low or if the signal is missing. The diagnostic trouble code (DTC) can be diagnosed when the engine is running.

The diagnostic trouble code (DTC) indicates which injector valve is being referred to:

- ECM-P020100, injector valve cylinder 1.
- ECM-P020200, injector valve cylinder 2.
- ECM-P020300, injector valve cylinder 3.
- ECM-P020400, injector valve cylinder 4.
- ECM-P020500, injector valve cylinder 5.
- ECM-P020600, injector valve cylinder 6.
- ECM-P020700, injector valve cylinder 7.
- ECM-P020800, injector valve cylinder 8.

Substitute Value

- Fuel trim disabled.

Possible Source

- Contact resistance and oxidation in the injector valve connector.
- The signal cable is short-circuited to voltage.
- Open-circuit on the signal cable.
- Open-circuit in the power supply cable.
- Damaged injector valve.

Fault symptom[s]

- Malfunction indicator lamp (MIL) lit.
- The engine is not firing on all cylinders.
- The starter motor turns but the engine does not start.

FAULT TRACING

CHECKING COMPONENTS AND WIRING

HINT: Engine cylinders are counted starting from the right-hand side of the vehicle, that is to say the cylinder farthest from the engine flywheel.

- Bank 1 (cylinder row nearest the front): cylinders 1, 3, 5 and 7.
- Bank 2 (cylinder row furthest to the rear, nearest the passenger compartment): cylinders 2, 4, 6, and 8.

HINT: If the engine does not start or if diagnostic trouble codes are stored for all the injectors, check the fuse. If the fuse is blown, check the circuit for short-circuit to supply voltage.

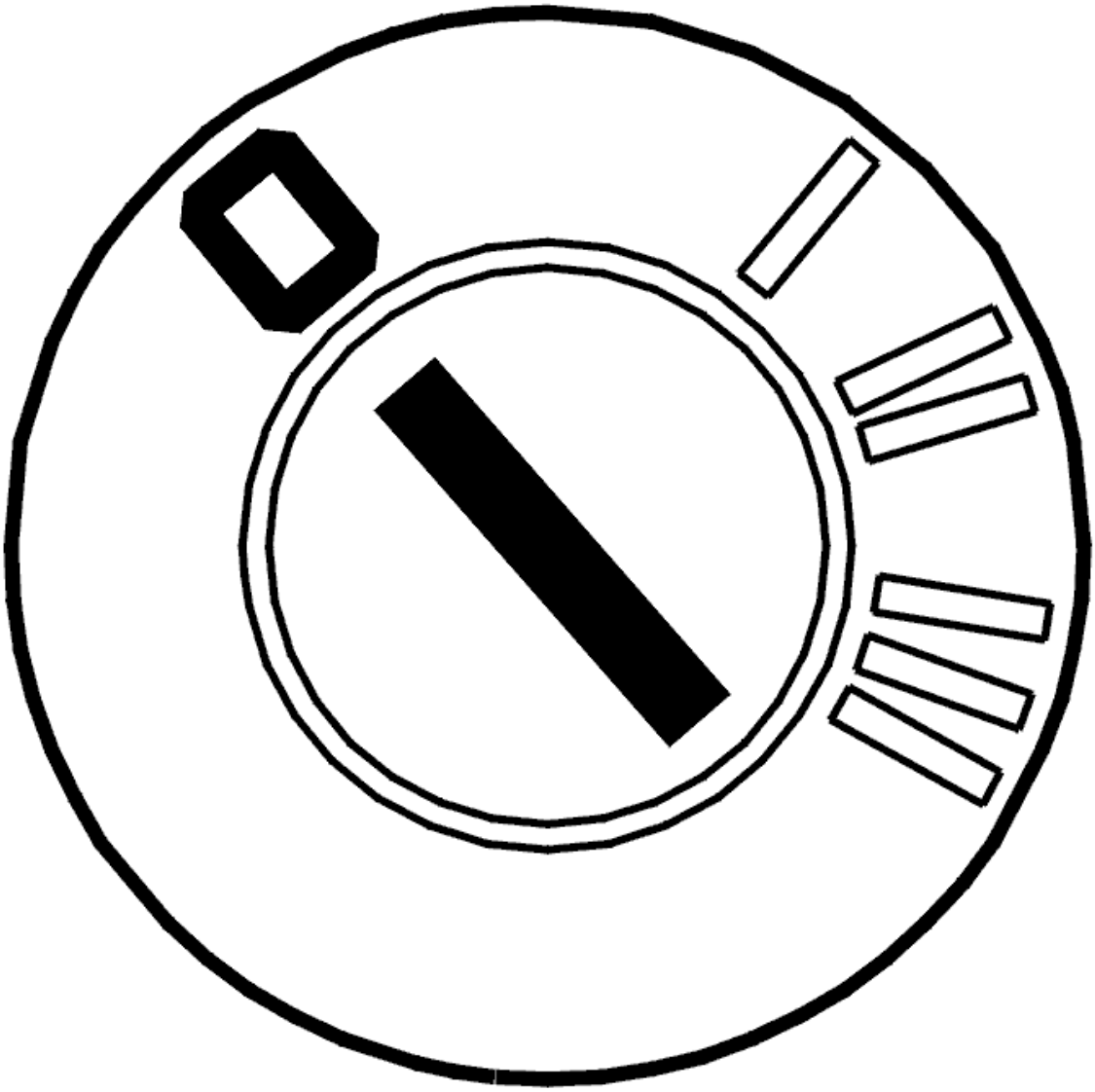

Fig. 272: Identifying Ignition OFF
Courtesy of VOLVO CARS CORPORATION

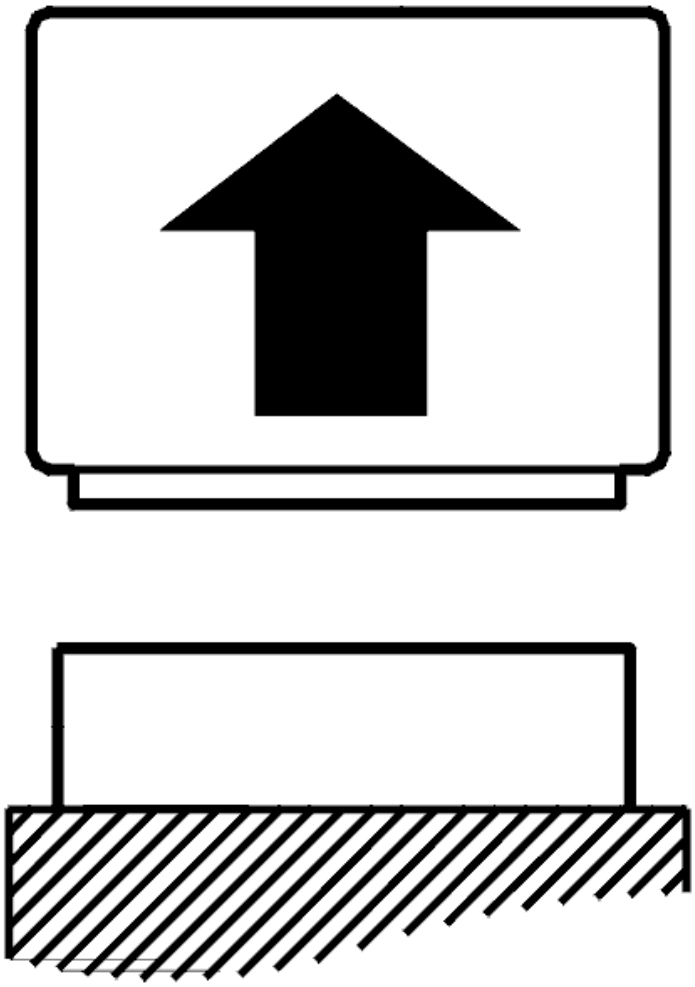

Fig. 273: Disconnecting Connector
Courtesy of VOLVO CARS CORPORATION

- Check the resistance of the injector to which the diagnostic trouble code refers.
- Ignition off
- Disconnect the engine control module (ECM).

  Check for contact resistance and oxidation on the injector connector to which the diagnostic trouble code refers.

  Check the power cable for open-circuit. Measure between the system relay and terminal #2 of the injector to which the diagnostic trouble code refers.

  Check the power cable to which the diagnostic trouble code refers for open-circuit as well as short-circuit to supply voltage and ground.

Measure between:

- Control module terminals #A79 (#B19) and #1 for injector 1 (ECM-P020100).
- Control module terminals #A78 (#B18) and #1 for injector 2 (ECM-P020200).
- Control module terminals #A81 (#B21) and #1 for injector 3 (ECM-P020300).
- Control module terminals #A80 (#B20) and #1 for injector 4 (ECM-P020400).
- Control module terminals #A83 (#B23) and #1 for injector 5 (ECM-P020500).
- Control module terminals #A82 (#B22) and #1 for injector 6 (ECM-P020600).
- Control module terminals #A85 (#B25) and #1 for injector 7 (ECM-P020700).
- Control module terminals #A84 (#B24) and #1 for injector 8 (ECM-P020800).

Activate the injector using the VCT2000 (or appropriate scan tool). The injector should make a clicking noise upon activation.

Remedy as necessary.

Other information

- see **CONNECTING THE BREAKOUT BOX**
- see **SIGNAL SPECIFICATION, ENGINE CONTROL MODULE (ECM)**
- see **INJECTORS/PULSATION DAMPERS, REPLACING**
- see **CHECKING WIRING AND TERMINALS**

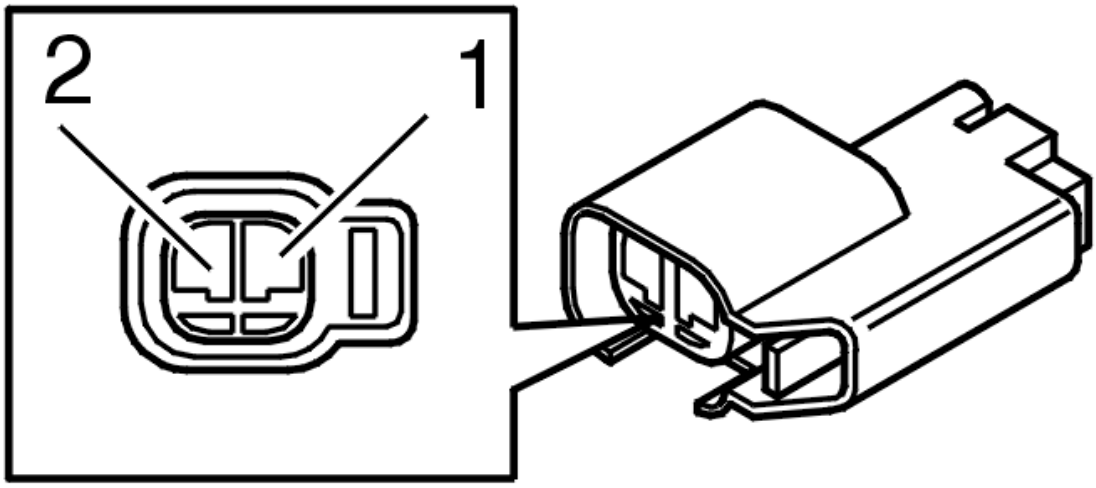

Fig. 274: Identifying 2-Bit Connector
Courtesy of VOLVO CARS CORPORATION

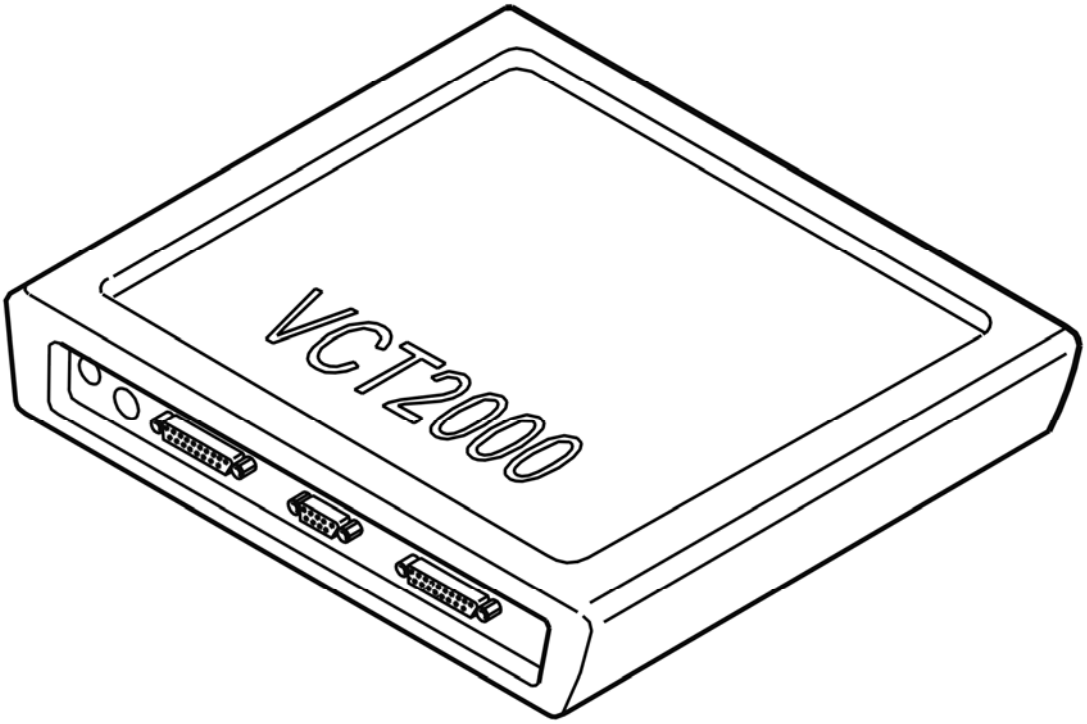

Fig. 275: Identifying VCT2000 Diagnostic Tool Symbol In VIDA
Courtesy of VOLVO CARS CORPORATION

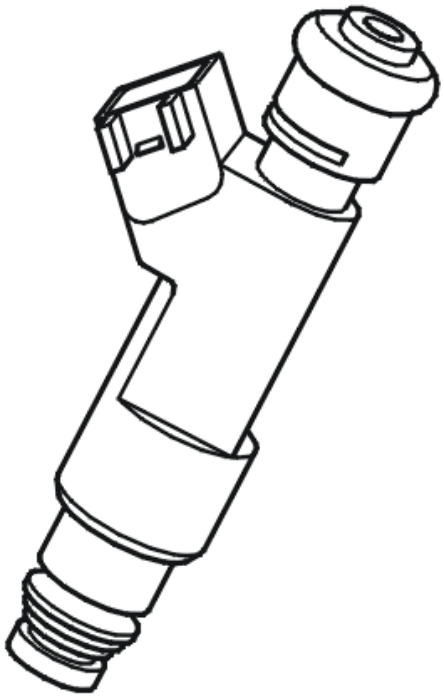

Fig. 276: Identifying Fuel Injector
Courtesy of VOLVO CARS CORPORATION

- **Continue**

  Refer to **VERIFICATION**

VERIFICATION

VERIFICATION

HINT: After carrying out the repair, check that the fault has been remedied.

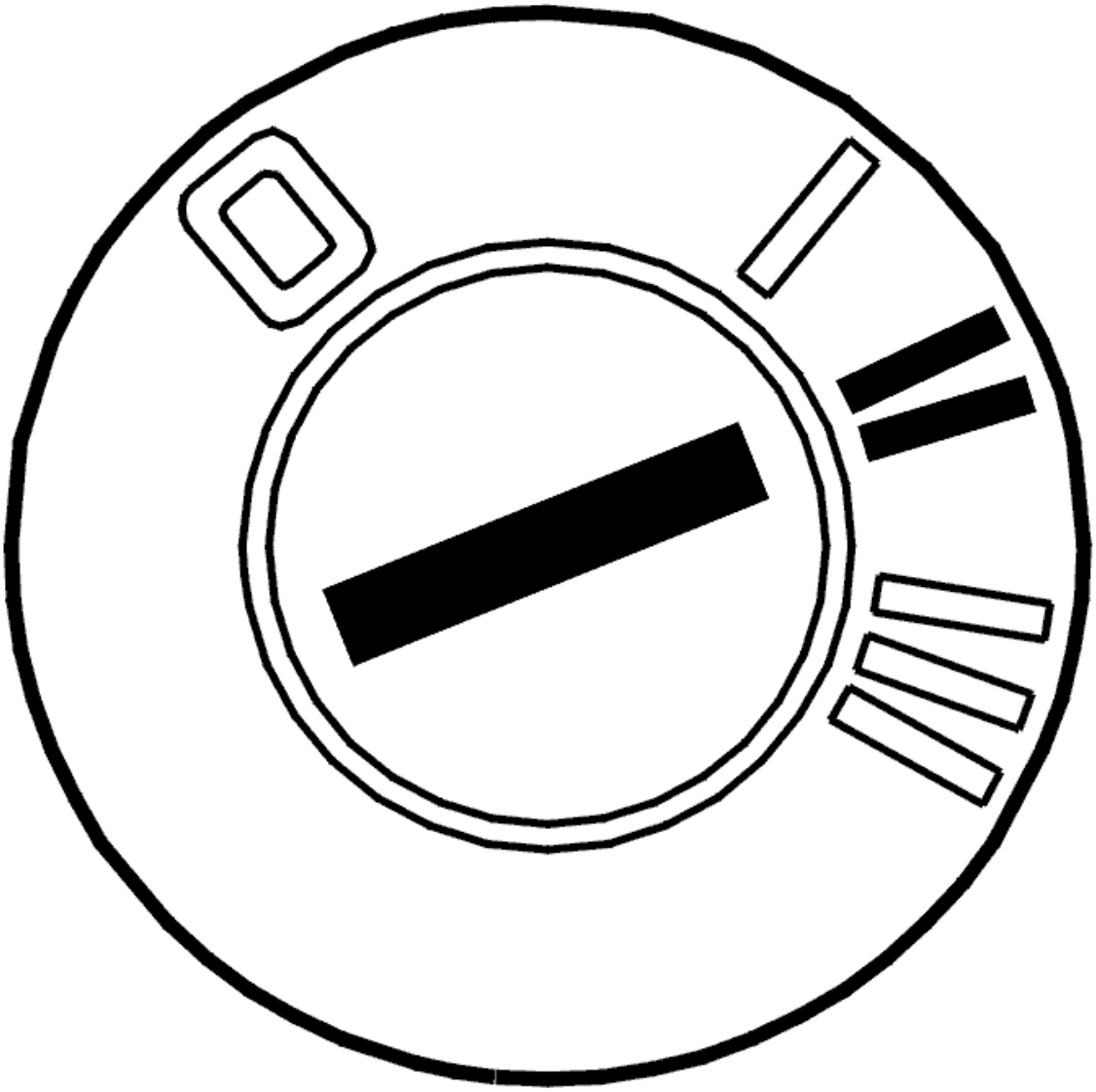

Fig. 277: Identifying Ignition ON
Courtesy of VOLVO CARS CORPORATION

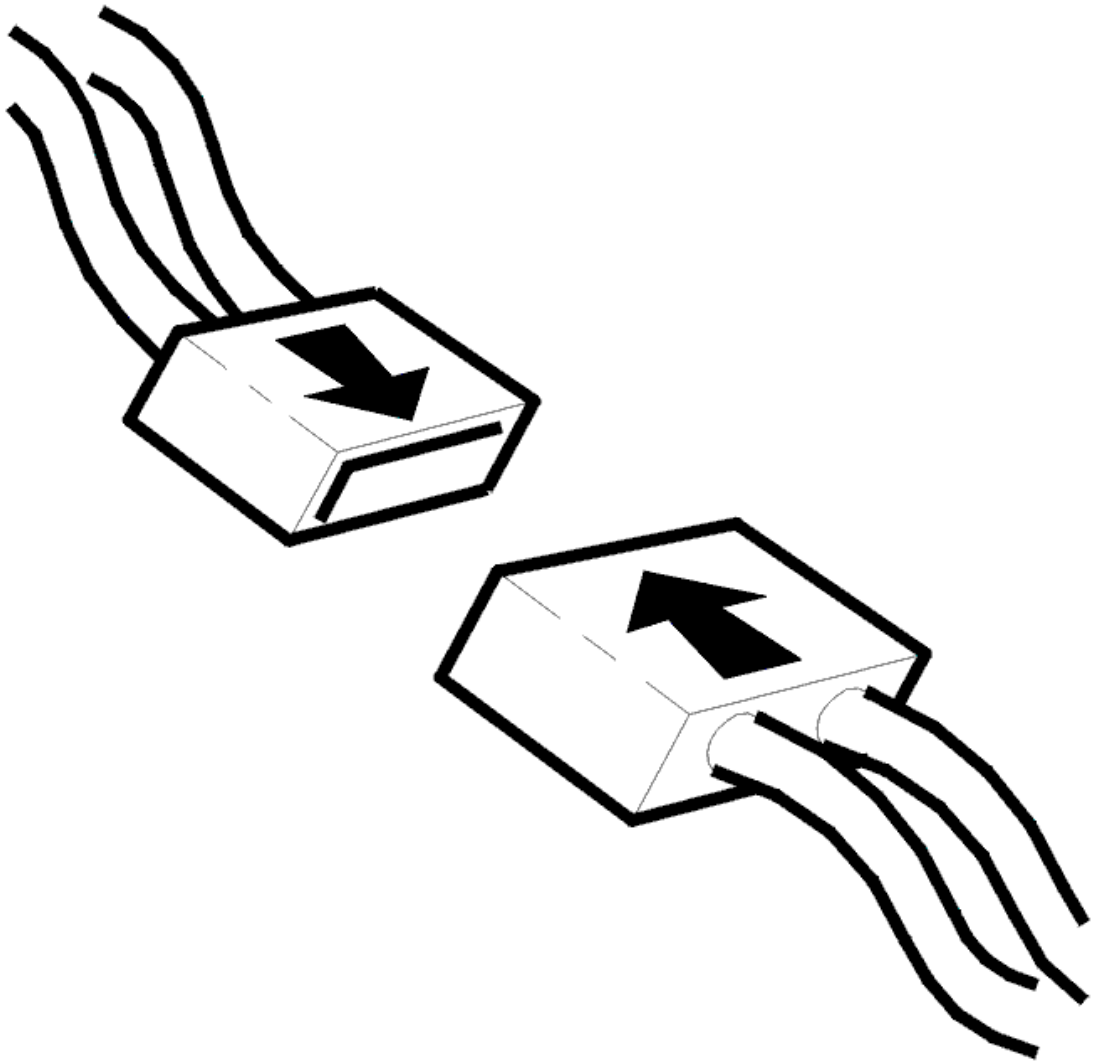

Fig. 278: Connecting Connector
Courtesy of VOLVO CARS CORPORATION

- Ignition off
- Reinstall the connectors, components etc.
- Ignition on

  Activate the injector to which the diagnostic trouble code refers using the VCT2000 (or appropriate scan tool).

  The injector should make a clicking noise upon activation.

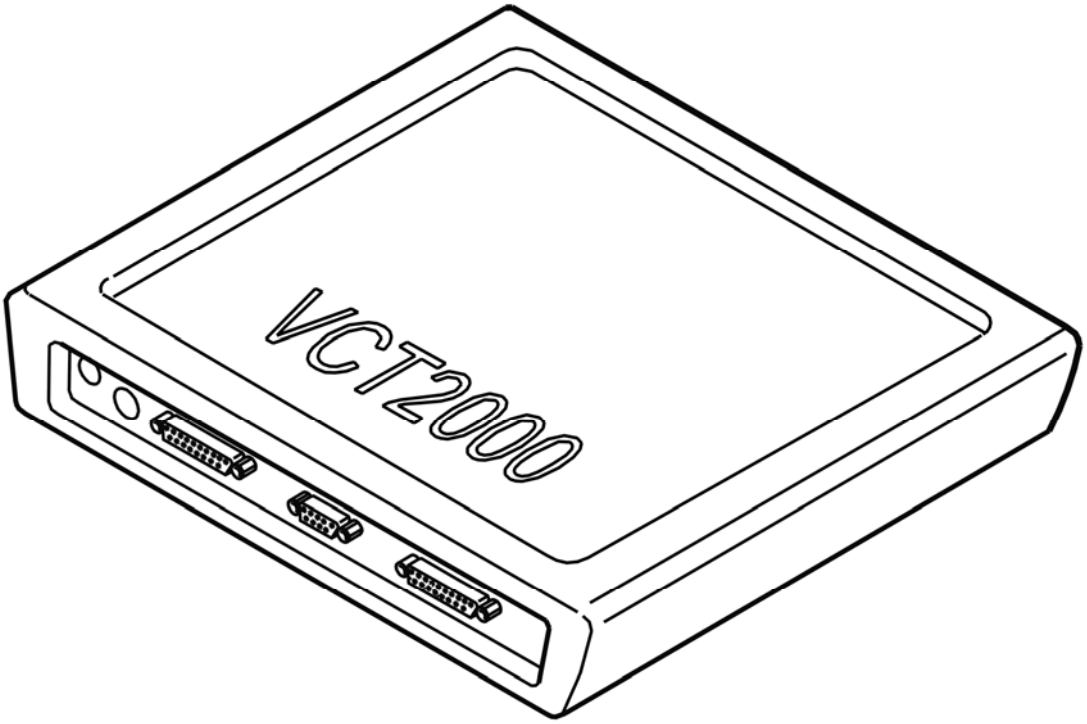

Fig. 279: Identifying VCT2000 Diagnostic Tool Symbol In VIDA
Courtesy of VOLVO CARS CORPORATION

Is the function OK?

- **YES**

  VERIFIED: Troubleshooting has been completed.

- **NO**

  Refer to **INFORMATION**

INFORMATION

FAULT-TRACING INFORMATION

The fault should have been detected and remedied. As this is not the case fault-tracing has failed.

Exit fault-tracing for this diagnostic trouble code (DTC) or make another attempt.

ECM-P020200: CYLINDER 2 INJECTOR CIRCUIT / OPEN. GENERAL FAILURE INFORMATION. NO SUB TYPE INFORMATION (B6324S; 2007-

2010)

DIAGNOSTIC TROUBLE CODE (DTC) INFORMATION ECM-P020200

Condition

Engine control module (ECM) controls injection time and injection timing by controlling the injectors' opening and closing. Control is performed by pulsating grounding of the signal line to respective valve. The control module checks the signal's shape and amplitude at opening and closing.

The diagnostic trouble code (DTC) is stored if the control module detects that:

- The signal's shape and amplitude do not follow expected signal.
- Incorrect value in more than 20 of 400 pulses.
- Incorrect value lasts for 2 or more subsequent driving cycles.

The control module's test for the diagnostic trouble code (DTC) starts in the event of:

- Engine running.

NOTE: **The control module can only detect the fault once the test has been started and the diagnostic trouble code (DTC) is stored when the conditions are met.**

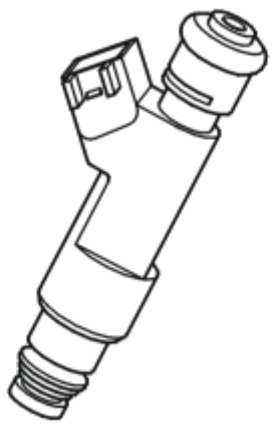

Fig. 280: Identifying Fuel Injector
Courtesy of VOLVO CARS CORPORATION

Substitute Value

- The control module blocks heated oxygen sensor control.

Possible Source

- Contact resistance and oxidation in the terminals.
- Short-circuit to supply voltage in the signal cable.
- Open-circuit in the signal cable.
- Open-circuit in the power supply cable.
- Damaged injector.

Fault symptom[s]

- Malfunction indicator light (MIL), on
- Engine does not fire on all cylinders
- Cranking motor running but engine does not start

FAULT-TRACING

see **FAULT-TRACING**

ECM-P020200: CYLINDER 2 INJECTOR CIRCUIT / OPEN. GENERAL FAILURE INFORMATION. NO SUB TYPE INFORMATION (B6324S5; 2011-2012)

DIAGNOSTIC TROUBLE CODE (DTC) INFORMATION ECM-P020200

see **DIAGNOSTIC TROUBLE CODE (DTC) INFORMATION ECM-P020200**

FAULT-TRACING

see **FAULT-TRACING**

ECM-P020300: CYLINDER 3 INJECTOR CIRCUIT / OPEN. GENERAL FAILURE INFORMATION. NO SUB TYPE INFORMATION (B6324S; 2007-2010)

DIAGNOSTIC TROUBLE CODE (DTC) INFORMATION ECM-P020300

Condition

Engine control module (ECM) controls injection time and injection timing by controlling the injectors' opening and closing. Control is performed by pulsating grounding of the signal line to respective valve. The control module checks the signal's shape and amplitude at opening and closing.

The diagnostic trouble code (DTC) is stored if the control module detects that:

- The signal's shape and amplitude do not follow expected signal.
- Incorrect value in more than 20 of 400 pulses.

- Incorrect value lasts for 2 or more subsequent driving cycles.

The control module's test for the diagnostic trouble code (DTC) starts in the event of:

- Engine running.

NOTE: The control module can only detect the fault once the test has been started and the diagnostic trouble code (DTC) is stored when the conditions are met.

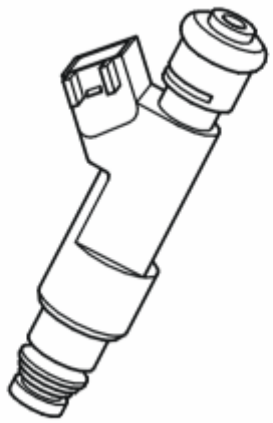

Fig. 281: Identifying Fuel Injector
Courtesy of VOLVO CARS CORPORATION

Substitute Value

- The control module blocks heated oxygen sensor control.

Possible Source

- Contact resistance and oxidation in the terminals.
- Short-circuit to supply voltage in the signal cable.
- Open-circuit in the signal cable.
- Open-circuit in the power supply cable.
- Damaged injector.

Fault symptom[s]

- Malfunction indicator light (MIL), on
- Engine does not fire on all cylinders
- Cranking motor running but engine does not start

FAULT-TRACING

see **FAULT-TRACING**

ECM-P020300: CYLINDER 3 INJECTOR CIRCUIT / OPEN. GENERAL FAILURE INFORMATION. NO SUB TYPE INFORMATION (B6324S5; 2011-2012)

DIAGNOSTIC TROUBLE CODE (DTC) INFORMATION ECM-P020300

see **DIAGNOSTIC TROUBLE CODE (DTC) INFORMATION ECM-P020300**

FAULT-TRACING

see **FAULT-TRACING**

ECM-P020400: CYLINDER 4 INJECTOR CIRCUIT / OPEN. GENERAL FAILURE INFORMATION. NO SUB TYPE INFORMATION (B6324S; 2007-2010)

DIAGNOSTIC TROUBLE CODE (DTC) INFORMATION ECM-P020400

Condition

Engine control module (ECM) controls injection time and injection timing by controlling the injectors' opening and closing. Control is performed by pulsating grounding of the signal line to respective valve. The control module checks the signal's shape and amplitude at opening and closing.

The diagnostic trouble code (DTC) is stored if the control module detects that:

- The signal's shape and amplitude do not follow expected signal.
- Incorrect value in more than 20 of 400 pulses.
- Incorrect value lasts for 2 or more subsequent driving cycles.

The control module's test for the diagnostic trouble code (DTC) starts in the event of:

- Engine running.

NOTE: The control module can only detect the fault once the test has been started and the diagnostic trouble code (DTC) is stored when the conditions are met.

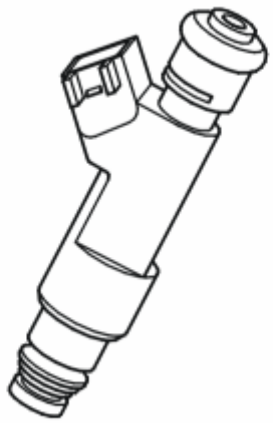

Fig. 282: Identifying Fuel Injector
Courtesy of VOLVO CARS CORPORATION

Substitute Value

- The control module blocks heated oxygen sensor control.

Possible Source

- Contact resistance and oxidation in the terminals.
- Short-circuit to supply voltage in the signal cable.
- Open-circuit in the signal cable.
- Open-circuit in the power supply cable.
- Damaged injector.

Fault symptom[s]

- Malfunction indicator light (MIL), on
- Engine does not fire on all cylinders
- Cranking motor running but engine does not start

FAULT-TRACING

see **FAULT-TRACING**

ECM-P020400: CYLINDER 4 INJECTOR CIRCUIT / OPEN. GENERAL FAILURE INFORMATION. NO SUB TYPE INFORMATION (B6324S5; 2011-2012)

DIAGNOSTIC TROUBLE CODE (DTC) INFORMATION ECM-P020400

see **DIAGNOSTIC TROUBLE CODE (DTC) INFORMATION ECM-P020400**

FAULT-TRACING

see **FAULT-TRACING**

ECM-P020500: CYLINDER 5 INJECTOR CIRCUIT / OPEN. GENERAL FAILURE INFORMATION. NO SUB TYPE INFORMATION (B6324S; 2007-2010)

DIAGNOSTIC TROUBLE CODE (DTC) INFORMATION ECM-P020500

Condition

Engine control module (ECM) controls injection time and injection timing by controlling the injectors' opening and closing. Control is performed by pulsating grounding of the signal line to respective valve. The control module checks the signal's shape and amplitude at opening and closing.

The diagnostic trouble code (DTC) is stored if the control module detects that:

- The signal's shape and amplitude do not follow expected signal.
- Incorrect value in more than 20 of 400 pulses.
- Incorrect value lasts for 2 or more subsequent driving cycles.

The control module's test for the diagnostic trouble code (DTC) starts in the event of:

- Engine running.

NOTE: **The control module can only detect the fault once the test has been started and the diagnostic trouble code (DTC) is stored when the conditions are met.**

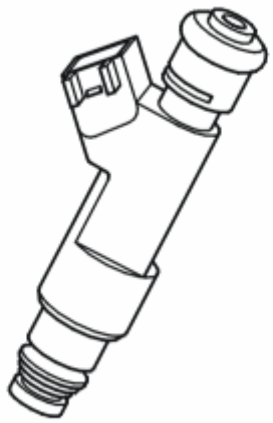

Fig. 283: Identifying Fuel Injector
Courtesy of VOLVO CARS CORPORATION

Substitute Value

- The control module blocks heated oxygen sensor control.

Possible Source

- Contact resistance and oxidation in the terminals.
- Short-circuit to supply voltage in the signal cable.
- Open-circuit in the signal cable.
- Open-circuit in the power supply cable.
- Damaged injector.

Fault symptom[s]

- Malfunction indicator light (MIL), on
- Engine does not fire on all cylinders
- Cranking motor running but engine does not start

FAULT-TRACING

see **FAULT-TRACING**

ECM-P020500: CYLINDER 5 INJECTOR CIRCUIT / OPEN. GENERAL FAILURE INFORMATION. NO SUB TYPE INFORMATION (B6324S5; 2011-2012)

DIAGNOSTIC TROUBLE CODE (DTC) INFORMATION ECM-P020500

see **DIAGNOSTIC TROUBLE CODE (DTC) INFORMATION ECM-P020500**

FAULT-TRACING

see **FAULT-TRACING**

ECM-P020600: CYLINDER 6 INJECTOR CIRCUIT / OPEN. GENERAL FAILURE INFORMATION. NO SUB TYPE INFORMATION (B6324S; 2007-2010)

DIAGNOSTIC TROUBLE CODE (DTC) INFORMATION ECM-P020600

Condition

Engine control module (ECM) controls injection time and injection timing by controlling the injectors' opening and closing. Control is performed by pulsating grounding of the signal line to respective valve. The control module checks the signal's shape and amplitude at opening and closing.

The diagnostic trouble code (DTC) is stored if the control module detects that:

- The signal's shape and amplitude do not follow expected signal.
- Incorrect value in more than 20 of 400 pulses.
- Incorrect value lasts for 2 or more subsequent driving cycles.

The control module's test for the diagnostic trouble code (DTC) starts in the event of:

- Engine running.

NOTE: The control module can only detect the fault once the test has been started and the diagnostic trouble code (DTC) is stored when the conditions are met.

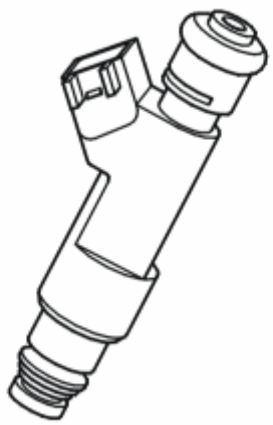

Fig. 284: Identifying Fuel Injector
Courtesy of VOLVO CARS CORPORATION

Substitute Value

- The control module blocks heated oxygen sensor control.

Possible Source

- Contact resistance and oxidation in the terminals.
- Short-circuit to supply voltage in the signal cable.
- Open-circuit in the signal cable.
- Open-circuit in the power supply cable.
- Damaged injector.

Fault symptom[s]

- Malfunction indicator light (MIL), on
- Engine does not fire on all cylinders
- Cranking motor running but engine does not start

FAULT-TRACING

see **FAULT-TRACING**

ECM-P020600: CYLINDER 6 INJECTOR CIRCUIT / OPEN. GENERAL FAILURE INFORMATION. NO SUB TYPE INFORMATION (B6324S5; 2011-2012)

DIAGNOSTIC TROUBLE CODE (DTC) INFORMATION ECM-P020600

see **DIAGNOSTIC TROUBLE CODE (DTC) INFORMATION ECM-P020600**

FAULT-TRACING

see **FAULT-TRACING**

ECM-P022023: THROTTLE/PEDAL POSITION SWITCH B CIRCUIT. GENERAL SIGNAL FAILURES. SIGNAL STUCK LOW (B6324S; 2007-2010)

DIAGNOSTIC TROUBLE CODE (DTC) INFORMATION ECM-P022023

Condition

The engine control module (ECM) checks the pulse width modulation (PWM) signal and the analog signal from the accelerator pedal (AP) position sensor. The analog signal is directly connected to the Central electronic module (CEM) and the signal is transmitted via CAN communication to the Engine control module (ECM). The pulse width modulation (PWM) signal is directly connected to the engine control module (ECM).

The PWM signal is used to determine the current accelerator pedal position in a fault free system.

The Engine control module (ECM) checks the analog signal (via CAN).

The diagnostic trouble code (DTC) is stored if the control module detects that:

- Analog signal (via CAN) is too low.
- Incorrect value lasts longer than 16 seconds.

The control module's test for the diagnostic trouble code (DTC) starts in the event of:

- Ignition switch position II.

NOTE: **The control module can only detect the fault once the test has been started and the diagnostic trouble code (DTC) is stored when the conditions are met.**

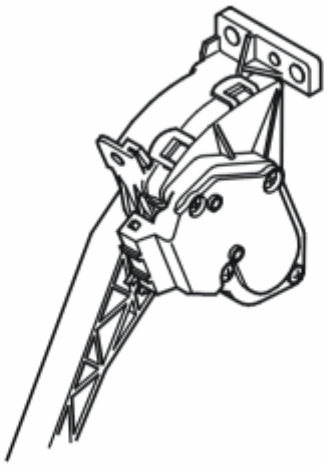

Fig. 285: Identifying Accelerator Pedal Position Sensor
Courtesy of VOLVO CARS CORPORATION

Substitute Value

- The control module uses the accelerator pedal position corresponding to the released position when the brake pedal is depressed at the same time.

Possible Source

- Fault-trace the central electronic module (CEM).

Fault symptom[s]

- Message in information display
- Accelerator pedal ignored during braking

FAULT-TRACING

see **FAULT-TRACING**

ECM-P022023: THROTTLE/PEDAL POSITION SWITCH B CIRCUIT. GENERAL SIGNAL FAILURES. SIGNAL STUCK LOW (B6324S5; 2011-2012)

DIAGNOSTIC TROUBLE CODE (DTC) INFORMATION ECM-P022023

see **DIAGNOSTIC TROUBLE CODE (DTC) INFORMATION ECM-P022023**

FAULT-TRACING

see **FAULT-TRACING**

ECM-P022024: THROTTLE/PEDAL POSITION SWITCH B CIRCUIT. GENERAL SIGNAL FAILURES. SIGNAL STUCK HIGH (B6324S; 2007-2010)

DIAGNOSTIC TROUBLE CODE (DTC) INFORMATION ECM-P022024

Condition

The engine control module (ECM) checks the pulse width modulation (PWM) signal and the analog signal from the accelerator pedal (AP) position sensor. The analog signal is directly connected to the Central electronic module (CEM) and the signal is transmitted via CAN communication to the Engine control module (ECM). The pulse width modulation (PWM) signal is directly connected to the engine control module (ECM).

The PWM signal is used to determine the current accelerator pedal position in a fault free system.

The Engine control module (ECM) checks the analog signal (via CAN).

The diagnostic trouble code (DTC) is stored if the control module detects that:

- Analog signal (via CAN) is too high.
- Incorrect value lasts longer than 16 seconds.

The control module's test for the diagnostic trouble code (DTC) starts in the event of:

- Ignition switch position II.

NOTE: **The control module can only detect the fault once the test has been started and the diagnostic trouble code (DTC) is stored when the conditions are met.**

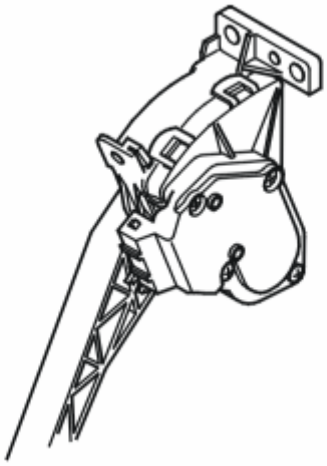

Fig. 286: Identifying Accelerator Pedal Position Sensor
Courtesy of VOLVO CARS CORPORATION

Substitute Value

- The control module uses the accelerator pedal position corresponding to the released position when the brake pedal is depressed at the same time.

Possible Source

- Fault-trace the central electronic module (CEM).

Fault symptom[s]

- Message in information display
- Accelerator pedal ignored during braking

FAULT-TRACING

see **FAULT-TRACING**

ECM-P022024: THROTTLE/PEDAL POSITION SWITCH B CIRCUIT. GENERAL SIGNAL FAILURES. SIGNAL STUCK HIGH (B6324S5; 2011-2012)

DIAGNOSTIC TROUBLE CODE (DTC) INFORMATION ECM-P022024

see **DIAGNOSTIC TROUBLE CODE (DTC) INFORMATION ECM-P022024**

FAULT-TRACING

see **FAULT-TRACING**

ECM-P022082: THROTTLE/PEDAL POSITION SWITCH B CIRCUIT. BUS SIGNAL / MESSAGE FAILURES. ALIVE / SEQUENCE COUNTER INCORRECT / NOT UPDATED (B6324S; 2007-2010)

DIAGNOSTIC TROUBLE CODE (DTC) INFORMATION ECM-P022082

Condition

The engine control module (ECM) checks the pulse width modulation (PWM) signal and the analog signal from the accelerator pedal (AP) position sensor. The analog signal is directly connected to the Central electronic module (CEM) and the signal is transmitted via CAN communication to the Engine control module (ECM). The pulse width modulation (PWM) signal is directly connected to the engine control module (ECM).

The PWM signal is used to determine the current accelerator pedal position in a fault free system.

The control module checks the communication with the Central electronic module (CEM).

The diagnostic trouble code (DTC) is stored if the control module detects that:

- No communication with the Central electronic module (CEM).

The control module's test for the diagnostic trouble code (DTC) starts in the event of:

- Ignition switch position II.

NOTE: The control module can only detect the fault once the test has been started and the diagnostic trouble code (DTC) is stored when the conditions are met.

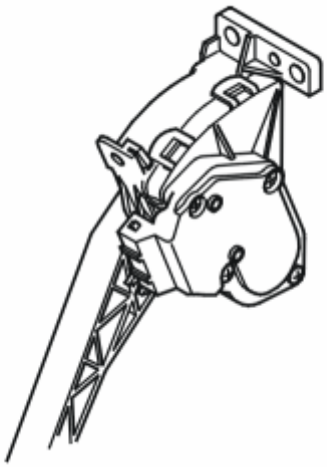

Fig. 287: Identifying Accelerator Pedal Position Sensor
Courtesy of VOLVO CARS CORPORATION

Substitute Value

- The control module uses the accelerator pedal position corresponding to the released position when the brake pedal is depressed at the same time.

Possible Source

- Open-circuit in the communication cable.
- Short-circuit to ground in the communication cable.
- Short-circuit to supply voltage in the communication cable.
- Contact resistance or oxidation in the terminals.
- Open-circuit in terminals.
- Short-circuit in connections.

Fault symptom[s]

- Message in information display
- Accelerator pedal ignored during braking

FAULT-TRACING

see **FAULT-TRACING**

ECM-P022082: THROTTLE/PEDAL POSITION SWITCH B CIRCUIT. BUS SIGNAL / MESSAGE FAILURES. ALIVE / SEQUENCE COUNTER INCORRECT / NOT UPDATED (B6324S5; 2011-2012)

DIAGNOSTIC TROUBLE CODE (DTC) INFORMATION ECM-P022082

see **DIAGNOSTIC TROUBLE CODE (DTC) INFORMATION ECM-P022082**

FAULT-TRACING

see **FAULT-TRACING**

ECM-P022100: THROTTLE/PEDAL POSITION SWITCH B CIRCUIT WITHIN/OUTSIDE RANGE. GENERAL FAULT INFORMATION. NO INFORMATION ABOUT FAULT TYPE. (B8444S; 2005-2011)

DIAGNOSTIC TROUBLE CODE (DTC) INFORMATION ECM-P022100

Condition

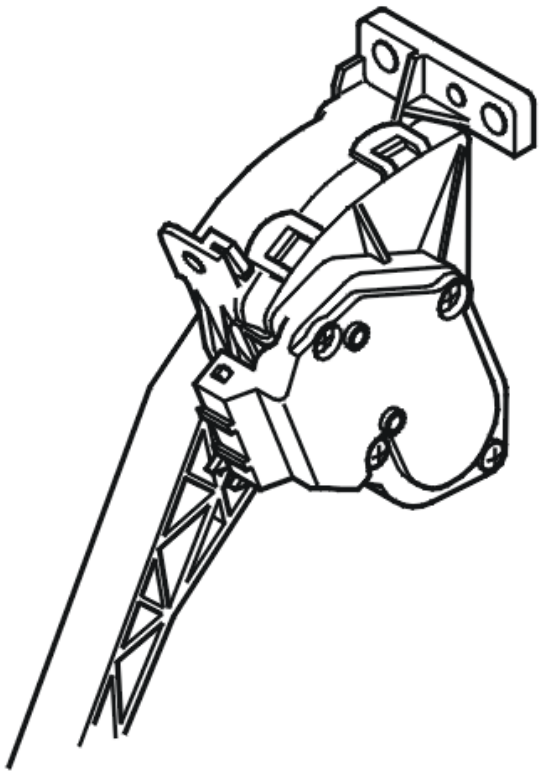

Fig. 288: Identifying Accelerator Pedal Position Sensor
Courtesy of VOLVO CARS CORPORATION

The engine control module (ECM) receives a pulse width modulation (PWM) signal and an analog signal from the accelerator pedal position sensor. In a fault-free system, the analog signal is used to determine the position of the accelerator pedal (AP).

The diagnostic trouble code is stored if the control module registers an incorrect pulse width modulation (PWM) signal.

The diagnostic trouble code can be diagnosed when the ignition is on.

Substitute Value

- Acceleration is ignored when braking.

Possible Source

- Loose connections or contact resistance in the connections on the pulse width modulation (PWM) signal cable.
- Interference on the pulse width modulation (PWM) signal cable.
- Damaged accelerator pedal (AP) position sensor.

Fault symptom[s]

- Message in the display.
- Poor response from the accelerator pedal.
- Accelerator pedal (AP) is ignored when braking.
- Maximum vehicle speed reduced.

TROUBLESHOOTING ECM-P022100

CHECKING THE STATUS

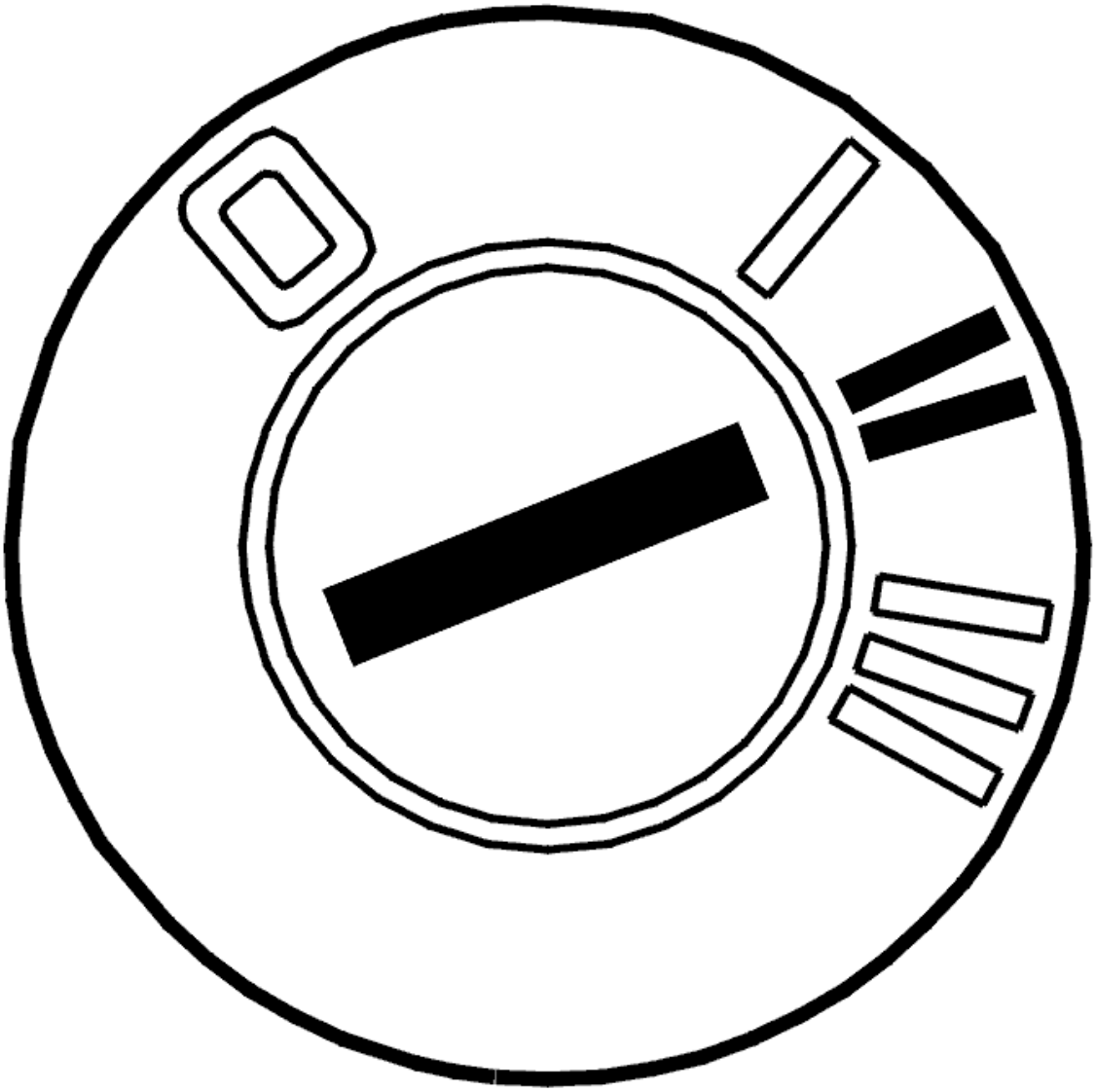

Fig. 289: Identifying Ignition ON
Courtesy of VOLVO CARS CORPORATION

- Ignition on

Check if the malfunction is permanent or intermittent by activating readout of the accelerator pedal position sensor's signals.

Check that the value for both signals at unaffected accelerator pedal is approx. 8% and when the pedal is fully pressed down approx. 82%.

If the signal is incorrect, this indicates that the malfunction is permanent. If the signal is correct, this indicates that the malfunction is intermittent and not active right now.

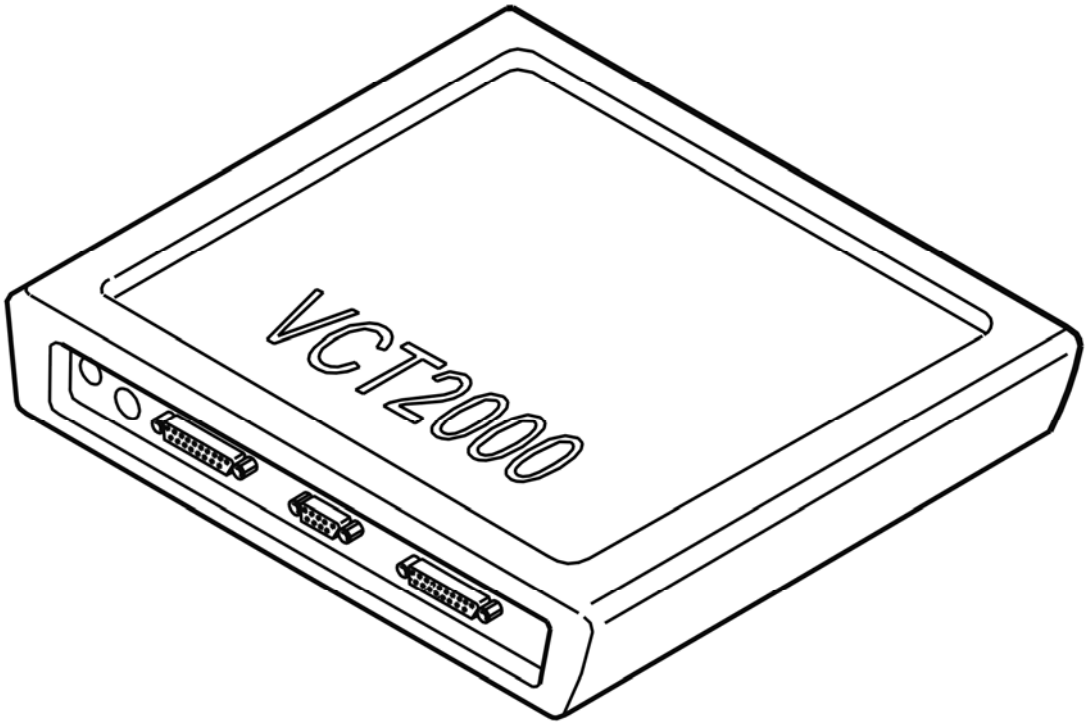

Fig. 290: Identifying VCT2000 Diagnostic Tool Symbol In VIDA
Courtesy of VOLVO CARS CORPORATION

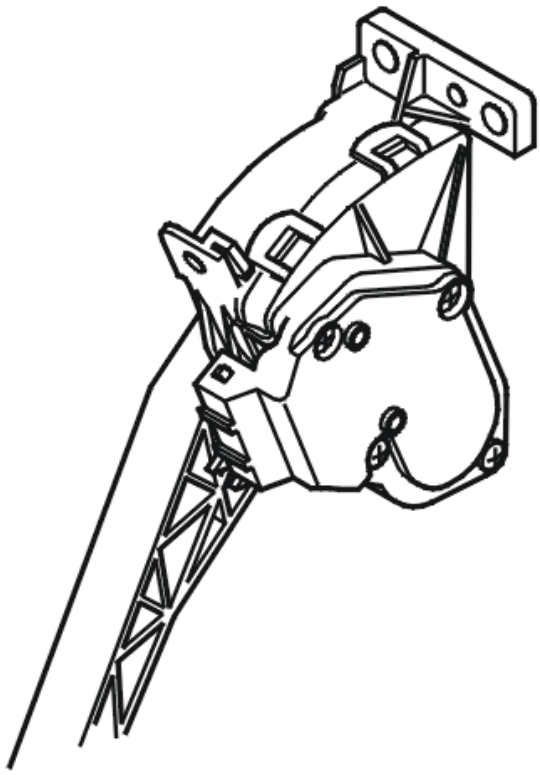

Fig. 291: Identifying Accelerator Pedal Position Sensor
Courtesy of VOLVO CARS CORPORATION

- **Continue**

  Refer to **CHECKING COMPONENTS AND WIRING**

CHECKING COMPONENTS AND WIRING

Check connector for contact resistance and oxidation.

Check the cable between engine control module (ECM) #B28 (#C28) and accelerator pedal position sensor #2 for interference.

Remedy as necessary.

Other information

- see **CONNECTING THE BREAKOUT BOX**
- see **SIGNAL SPECIFICATION, ENGINE CONTROL MODULE (ECM)**
- For replacing accelerator pedal position sensor: **ACCELERATOR PEDAL (AP), REPLACING**
- see **CHECKING WIRING AND TERMINALS**

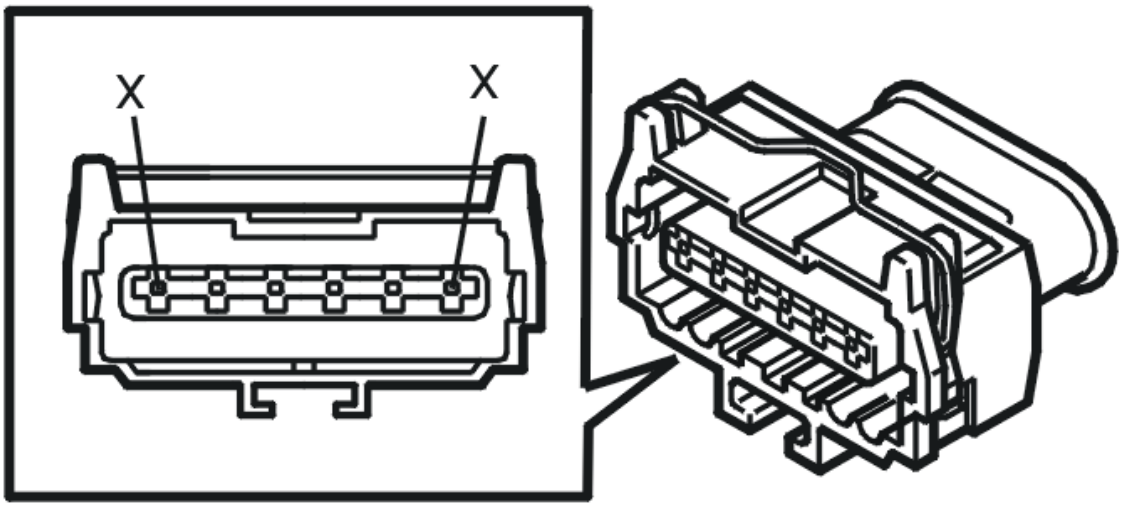

Fig. 292: Connector End View
Courtesy of VOLVO CARS CORPORATION

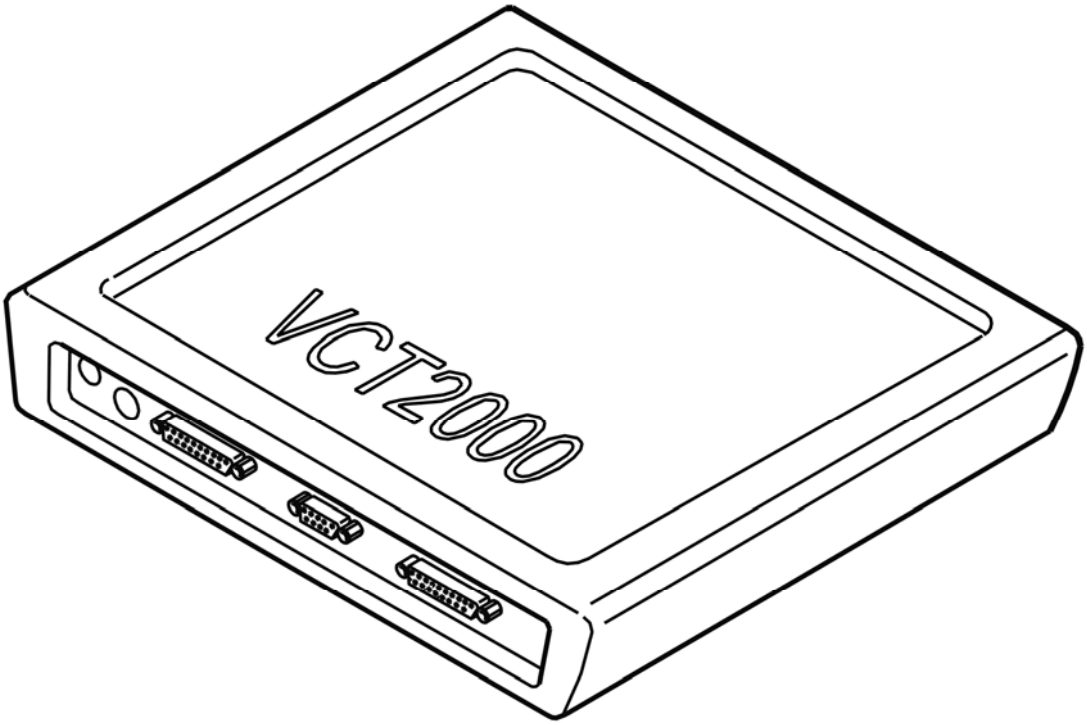

Fig. 293: Identifying VCT2000 Diagnostic Tool Symbol In VIDA
Courtesy of VOLVO CARS CORPORATION

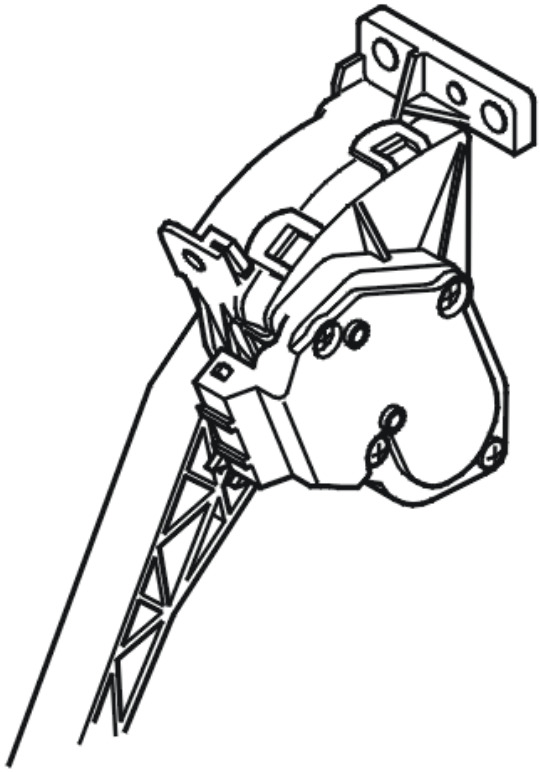

Fig. 294: Identifying Accelerator Pedal Position Sensor
Courtesy of VOLVO CARS CORPORATION

- **Continue**

  Refer to **VERIFICATION**

VERIFICATION

VERIFICATION

HINT: After carrying out the repair, check that the fault has been remedied.

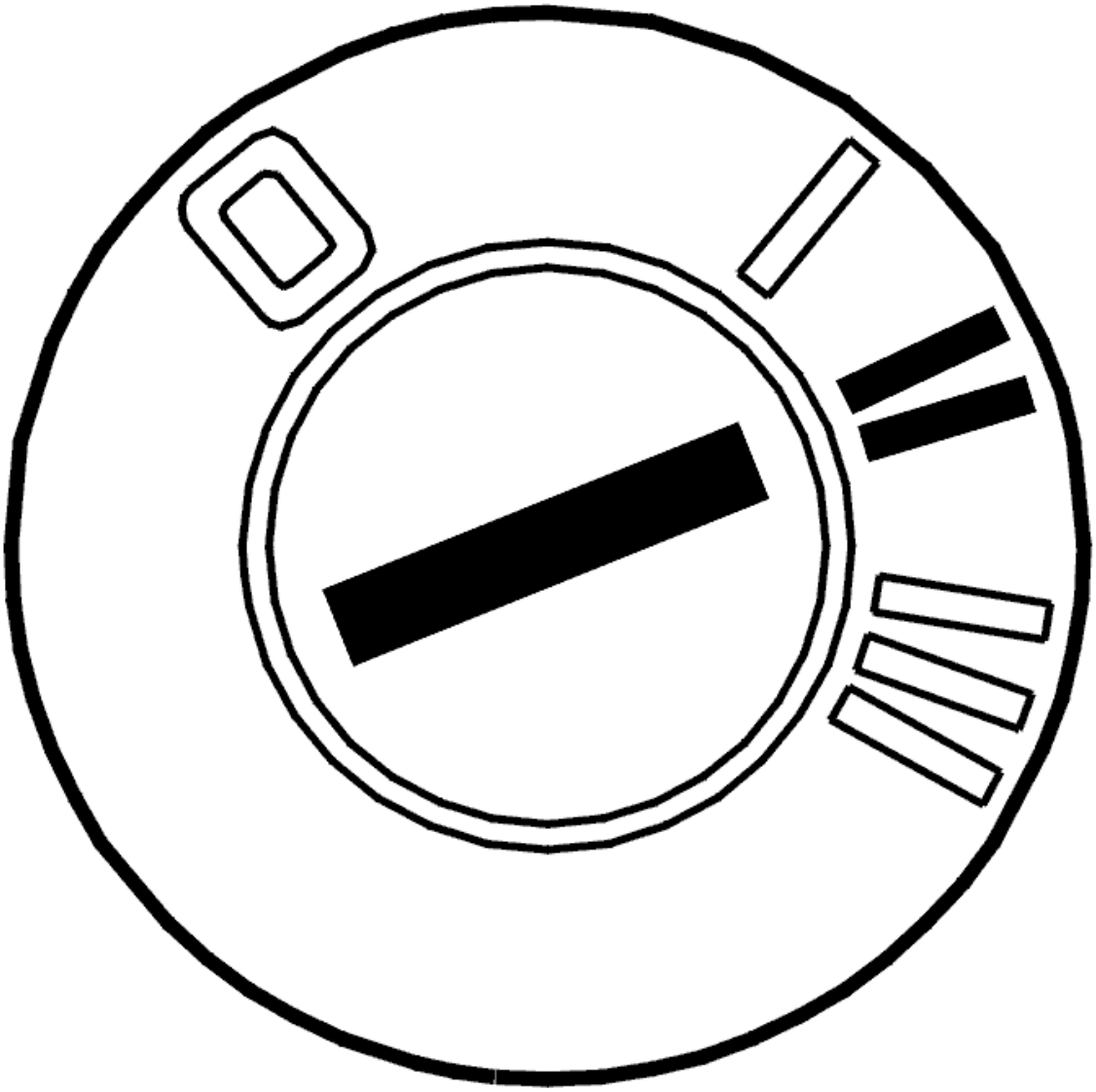

Fig. 295: Identifying Ignition ON
Courtesy of VOLVO CARS CORPORATION

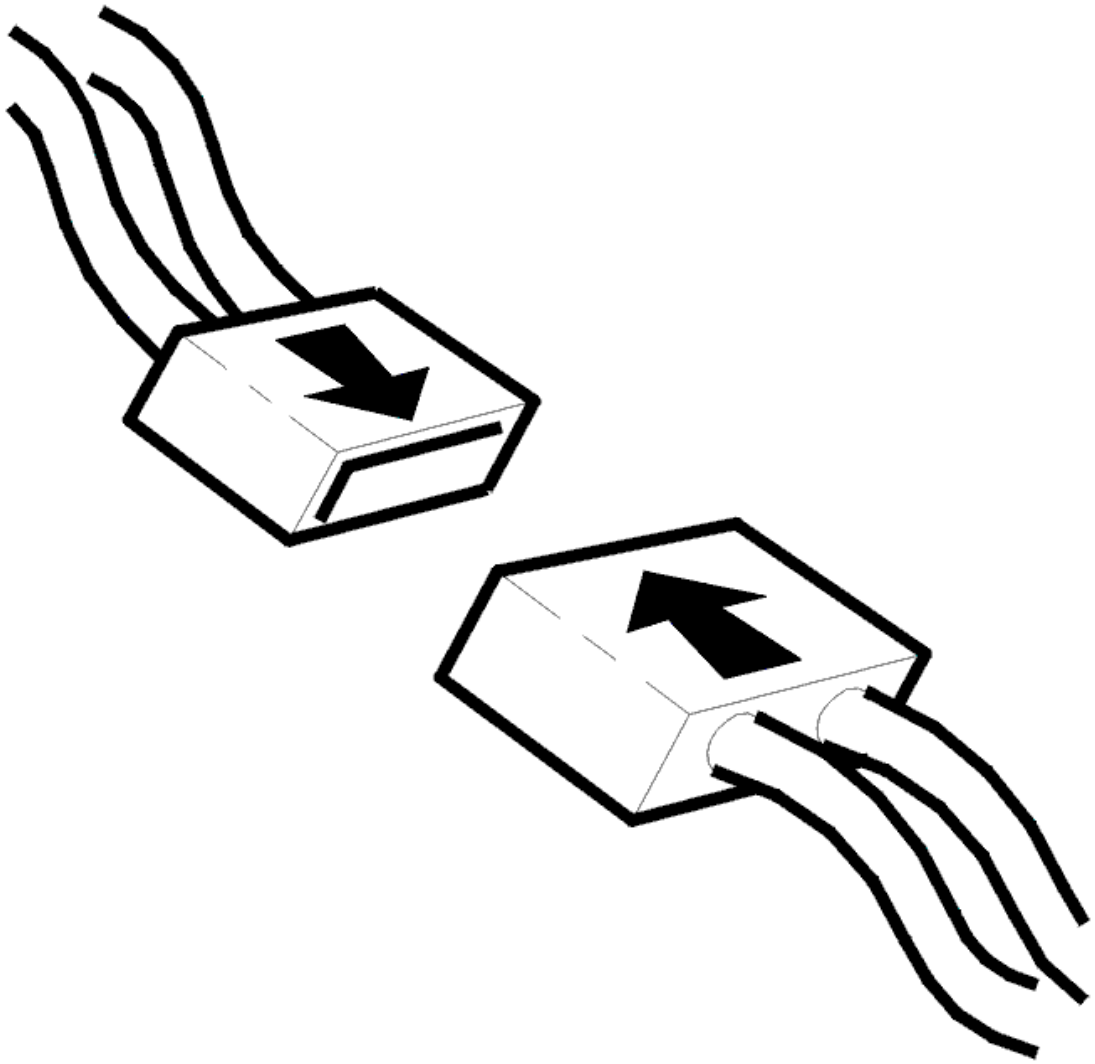

Fig. 296: Connecting Connector
Courtesy of VOLVO CARS CORPORATION

- Ignition off
- Reinstall the connectors, components etc.
- Ignition on

  Activate readout of the accelerator pedal position sensor's signals.

  Check that the value for both signals at unaffected accelerator pedal is approx. 8% and when the pedal is fully pressed down approx. 82%.

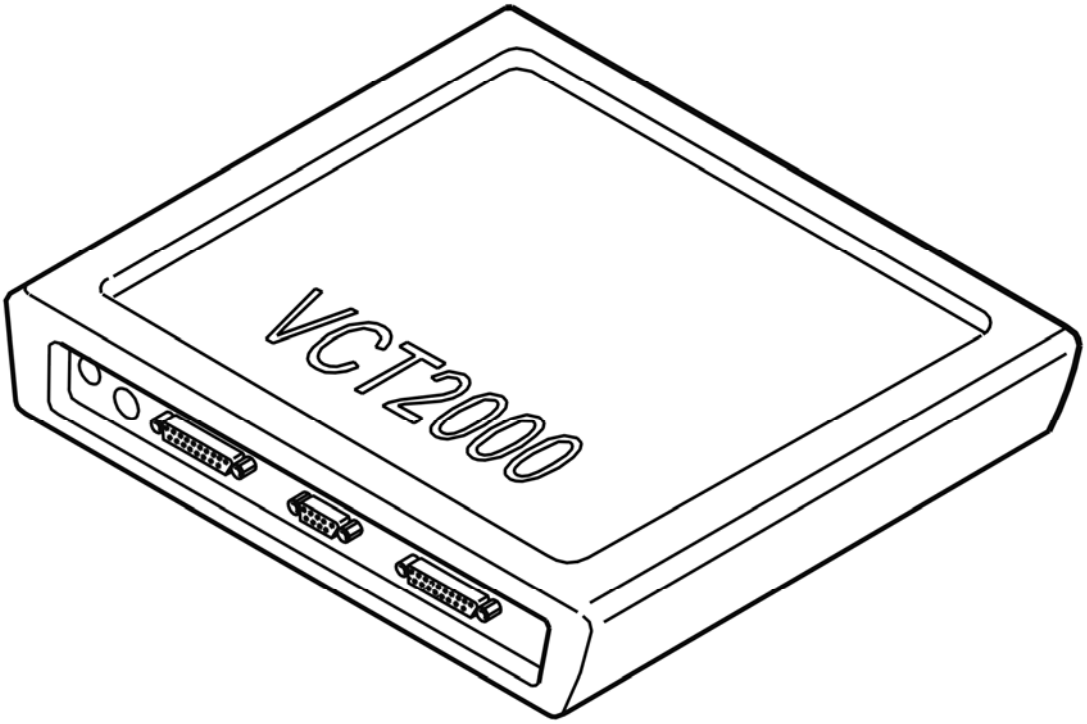

Fig. 297: Identifying VCT2000 Diagnostic Tool Symbol In VIDA
Courtesy of VOLVO CARS CORPORATION

Is the function OK?

- **YES**

  VERIFIED: Troubleshooting has been completed.

- **NO**

  Refer to **INFORMATION**

INFORMATION

FAULT-TRACING INFORMATION

The fault should have been detected and remedied. As this is not the case fault-tracing has failed.

Exit fault-tracing for this diagnostic trouble code (DTC) or make another attempt.

ECM-P022200: THROTTLE/PEDAL POSITION SENSOR B CIRCUIT LOW INPUT SIGNAL. GENERAL FAULT INFORMATION. NO INFORMATION

ABOUT FAULT TYPE. (B8444S; 2005-2011)

DIAGNOSTIC TROUBLE CODE (DTC) INFORMATION ECM-P022200

Condition

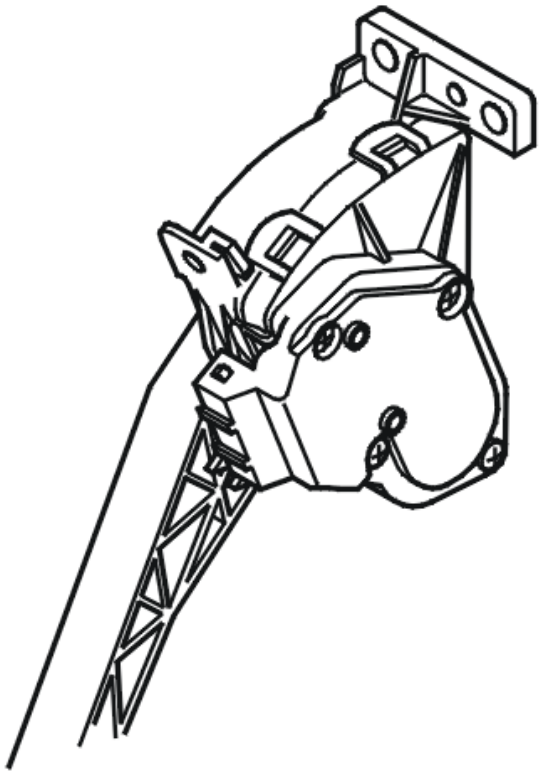

Fig. 298: Identifying Accelerator Pedal Position Sensor
Courtesy of VOLVO CARS CORPORATION

The engine control module (ECM) receives a pulse width modulation (PWM) signal and an analog signal from the accelerator pedal position sensor. In a fault-free system, the analog signal is used to determine the position of the accelerator pedal (AP).

The diagnostic trouble code (DTC) is stored if the control module registers that the pulse width modulation (PWM) signal is too low.

The diagnostic trouble code can be diagnosed when the ignition is on.

Substitute Value

- Acceleration is ignored when braking.

Possible Source

- The signal cable is short-circuited to voltage.
- Open-circuit on the signal cable.
- Interruption of power supply.
- Open circuit in ground cable.
- Damaged accelerator pedal (AP) position sensor.

Fault symptom[s]

- Message in the display.
- Poor response from the accelerator pedal.
- Accelerator pedal (AP) is ignored when braking.
- Maximum vehicle speed reduced.

TROUBLESHOOTING ECM-P022200

CHECKING THE STATUS

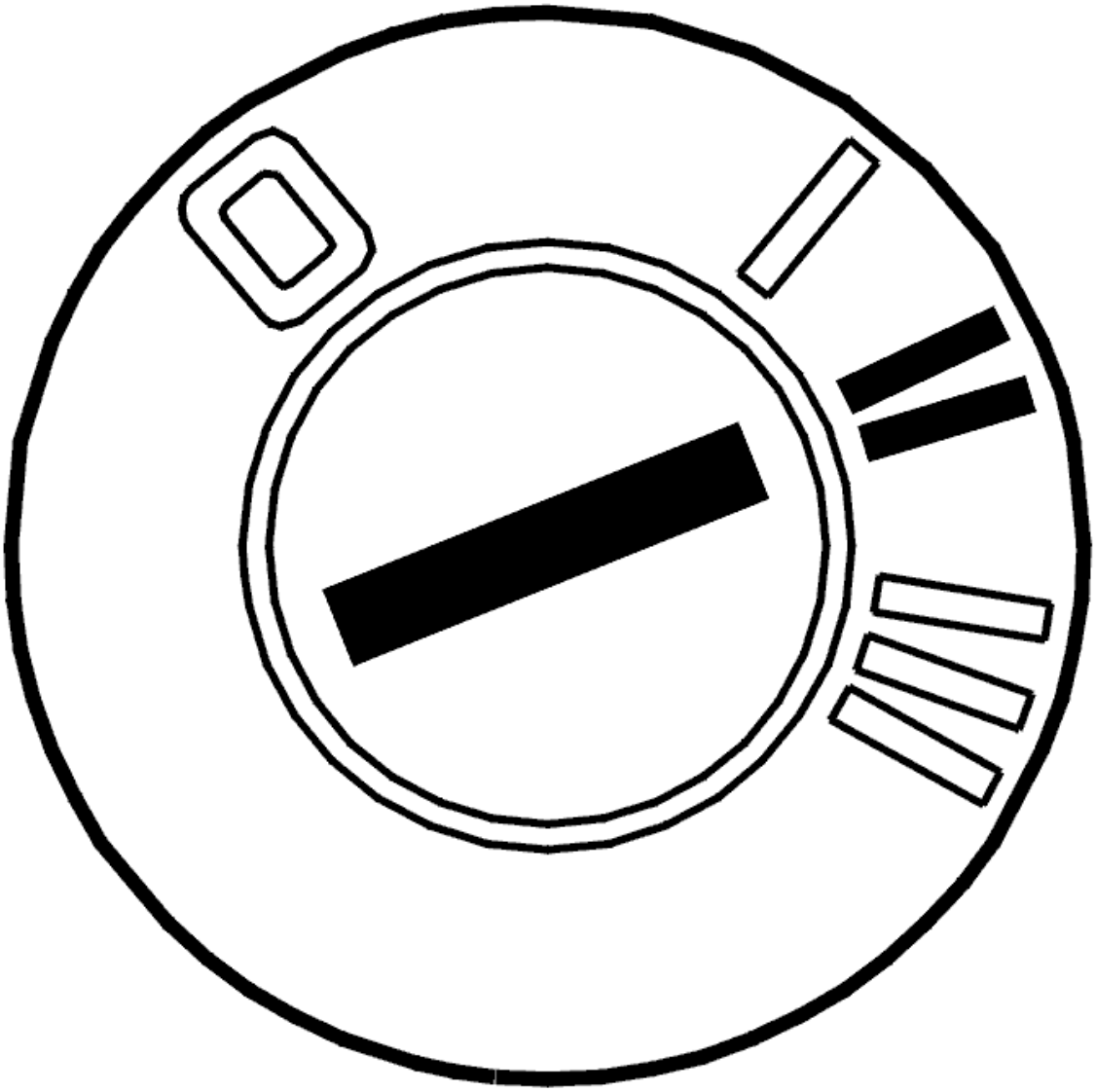

Fig. 299: Identifying Ignition ON
Courtesy of VOLVO CARS CORPORATION

- Ignition on

  Check if the malfunction is permanent or intermittent by activating readout of the accelerator pedal position sensor's signals.

  Check that the value for both signals at unaffected accelerator pedal is approx. 8% and when the pedal is fully pressed down approx. 82%.

  If the signal is incorrect, this indicates that the malfunction is permanent. If the signal is correct, this indicates that the malfunction is intermittent and not active right now.

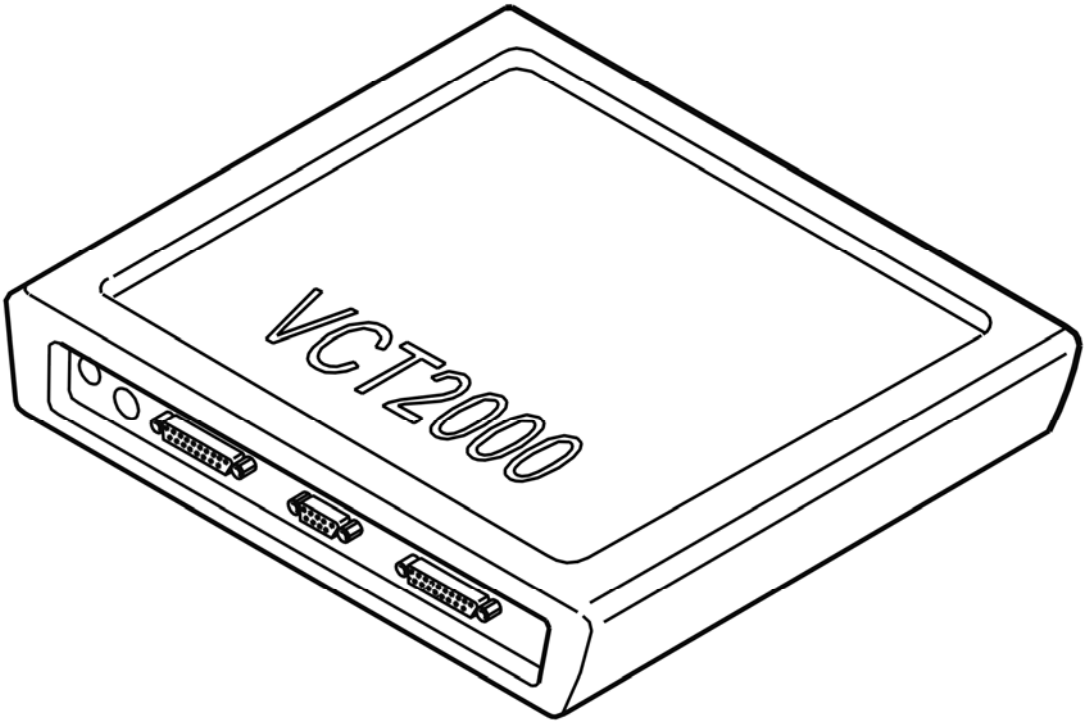

Fig. 300: Identifying VCT2000 Diagnostic Tool Symbol In VIDA
Courtesy of VOLVO CARS CORPORATION

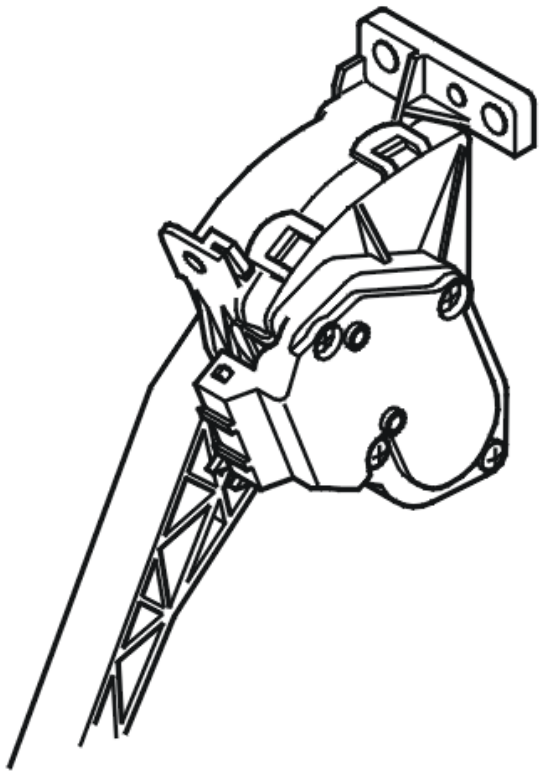

Fig. 301: Identifying Accelerator Pedal Position Sensor
Courtesy of VOLVO CARS CORPORATION

- **Continue**

  Refer to **CHECKING COMPONENTS AND WIRING**

CHECKING COMPONENTS AND WIRING

Check the cable between engine control module (ECM) #B28 (#C28) and accelerator pedal position sensor #2 for short-circuit to voltage, also check for open circuit.

Check voltage feed to the accelerator pedal position sensor #1 for open circuit.

Check the ground cable from the accelerator pedal position sensor #3 for open circuit.

Remedy as necessary.

Other information

- see **CONNECTING THE BREAKOUT BOX**
- see **SIGNAL SPECIFICATION, ENGINE CONTROL MODULE (ECM)**
- For replacing accelerator pedal position sensor: **ACCELERATOR PEDAL (AP), REPLACING**

- see **CHECKING WIRING AND TERMINALS**

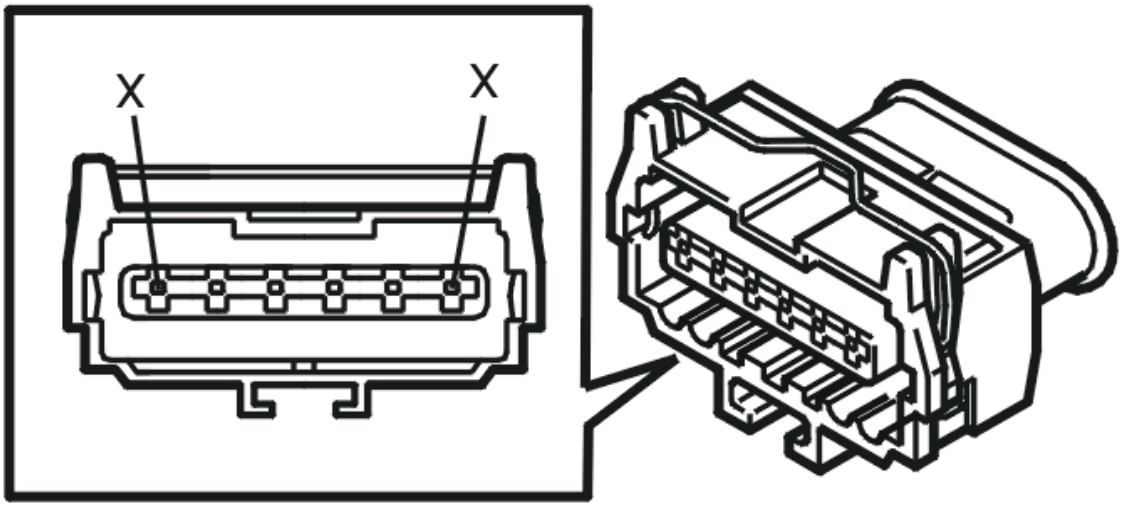

Fig. 302: Connector End View
Courtesy of VOLVO CARS CORPORATION

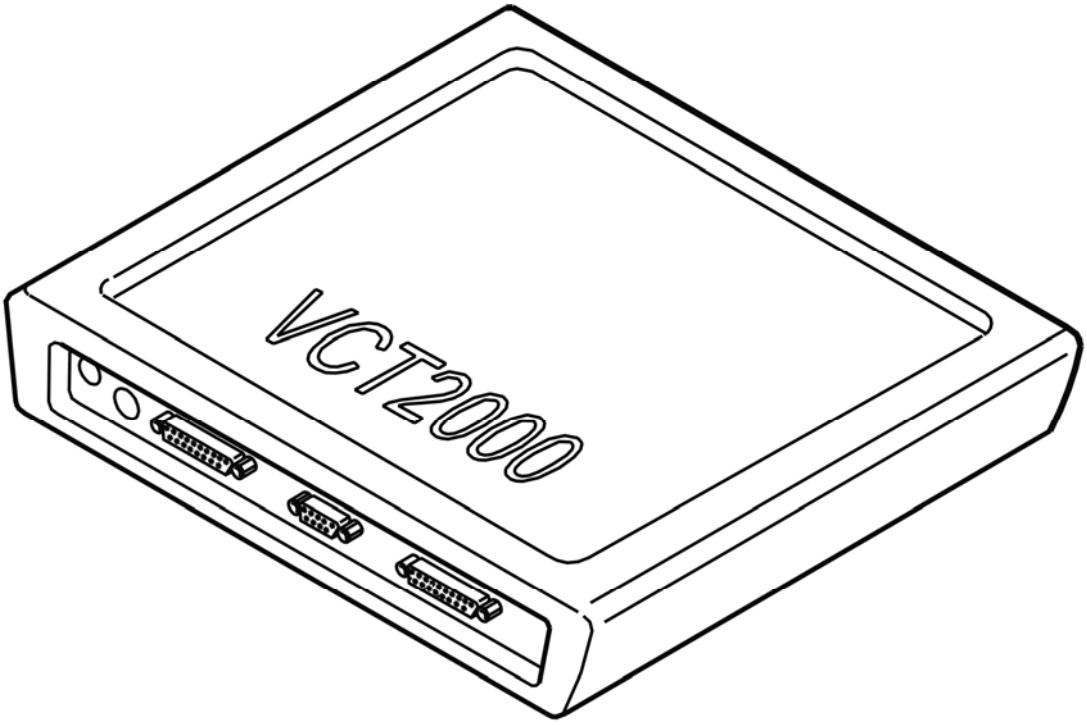

Fig. 303: Identifying VCT2000 Diagnostic Tool Symbol In VIDA
Courtesy of VOLVO CARS CORPORATION

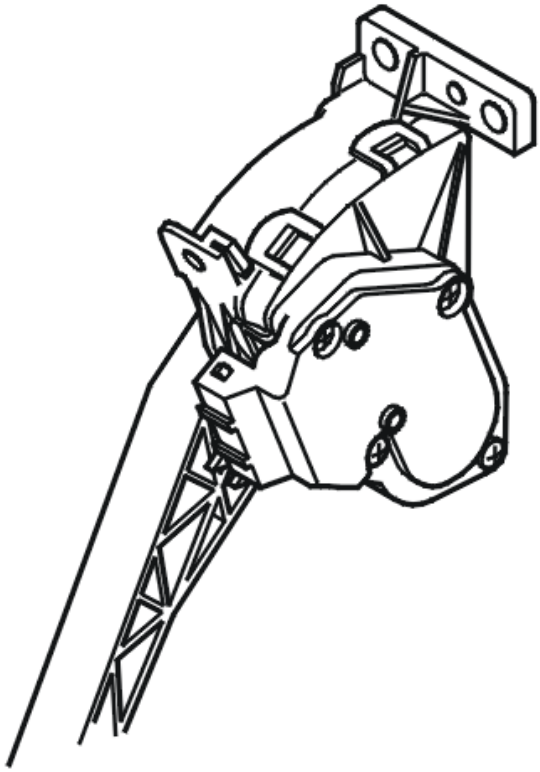

Fig. 304: Identifying Accelerator Pedal Position Sensor
Courtesy of VOLVO CARS CORPORATION

- **Continue**

  Refer to **VERIFICATION**

VERIFICATION

VERIFICATION

HINT: After carrying out the repair, check that the fault has been remedied.

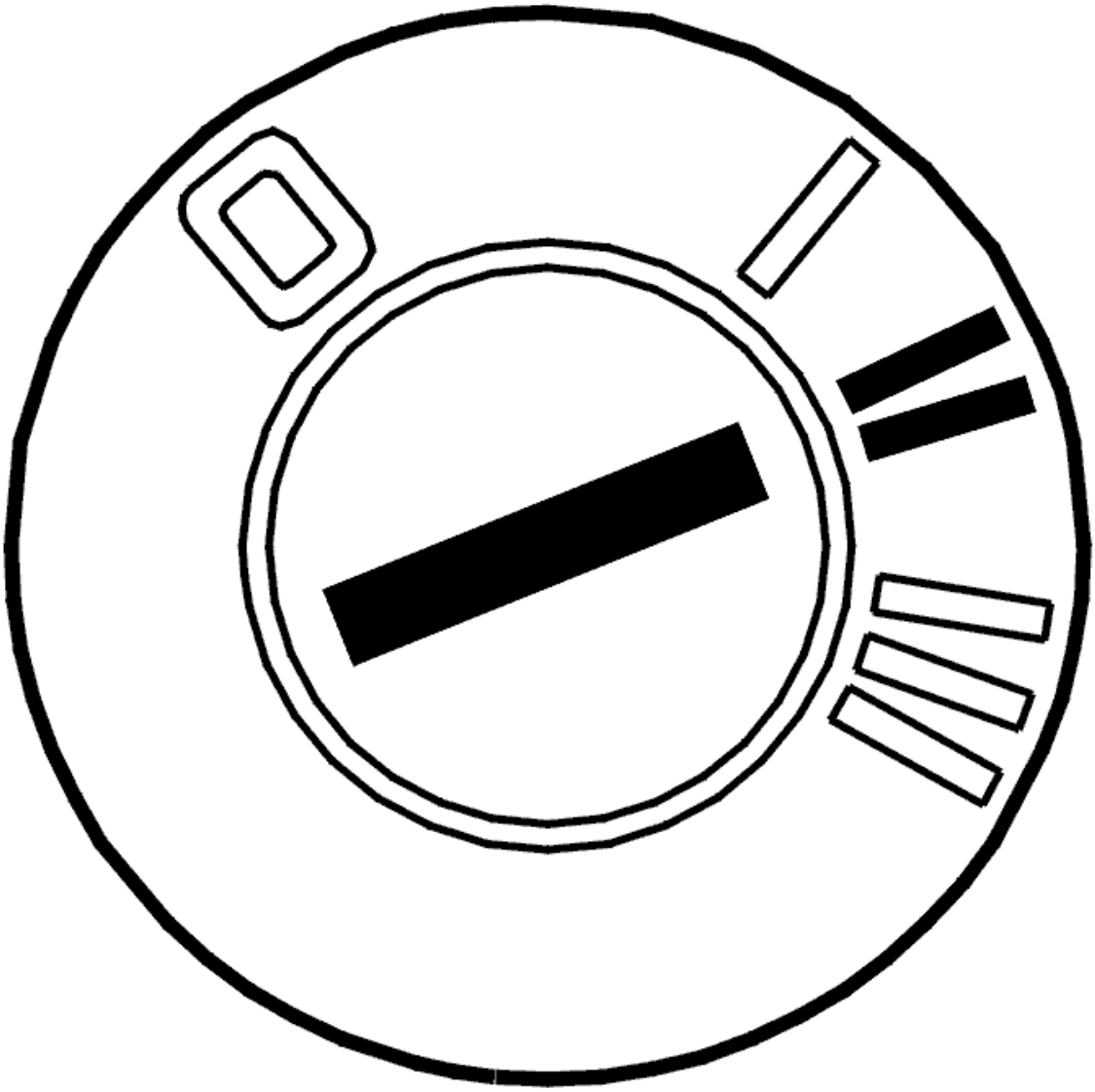

Fig. 305: Identifying Ignition ON
Courtesy of VOLVO CARS CORPORATION

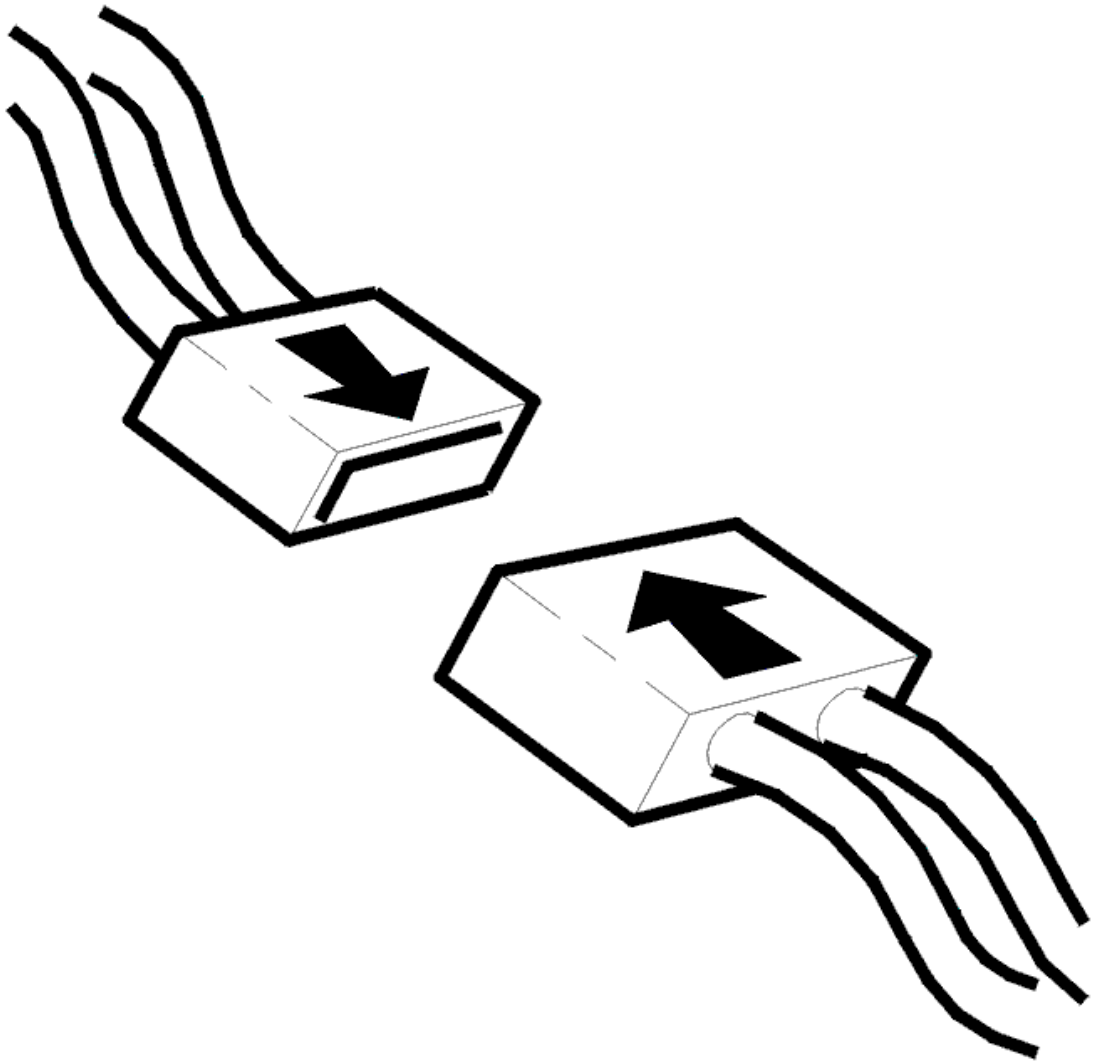

Fig. 306: Connecting Connector
Courtesy of VOLVO CARS CORPORATION

- Ignition off
- Reinstall the connectors, components etc.
- Ignition on

  Activate readout of the accelerator pedal position sensor's signals.

  Check that the value for both signals at unaffected accelerator pedal is approx. 8% and when the pedal is fully pressed down approx. 82%.

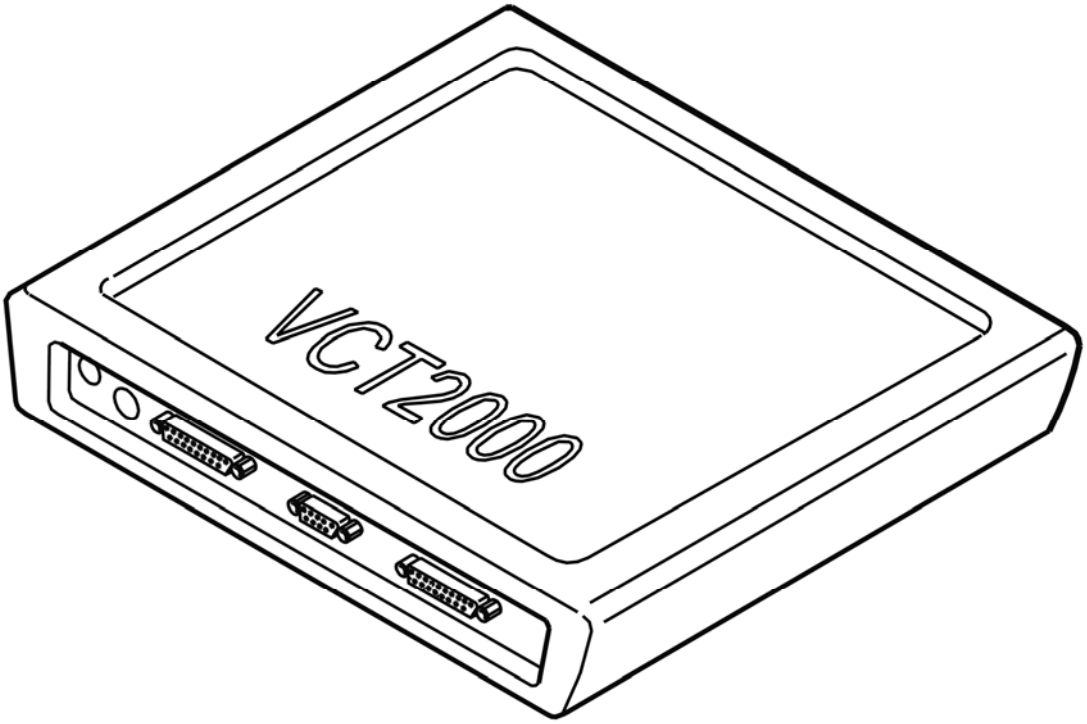

Fig. 307: Identifying VCT2000 Diagnostic Tool Symbol In VIDA
Courtesy of VOLVO CARS CORPORATION

Is the function OK?

- **YES**

  VERIFIED: Troubleshooting has been completed.

- **NO**

  Refer to **INFORMATION**

INFORMATION

FAULT-TRACING INFORMATION

The fault should have been detected and remedied. As this is not the case fault-tracing has failed.

Exit fault-tracing for this diagnostic trouble code (DTC) or make another attempt.

ECM-P022300: THROTTLE/PEDAL POSITION SENSOR B CIRCUIT HIGH INPUT SIGNAL. GENERAL FAULT INFORMATION. NO INFORMATION

ABOUT FAULT TYPE (B8444S; 2005-2011)

DIAGNOSTIC TROUBLE CODE (DTC) INFORMATION ECM-P022300

Condition

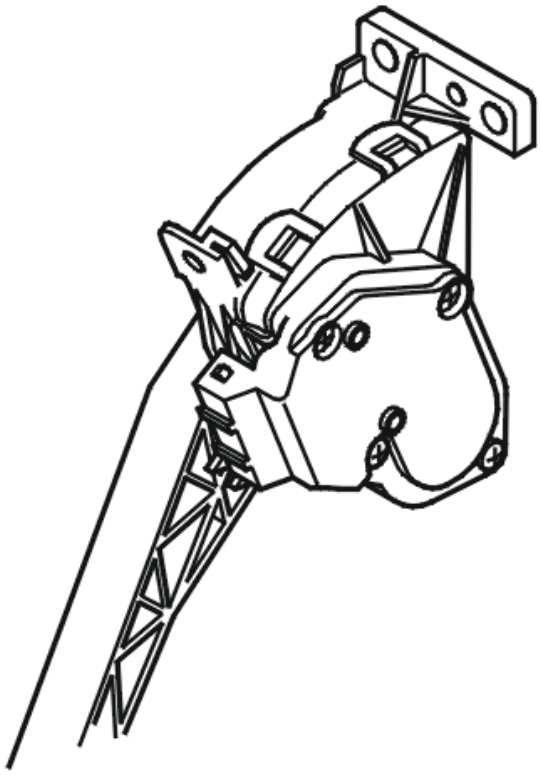

Fig. 308: Identifying Accelerator Pedal Position Sensor
Courtesy of VOLVO CARS CORPORATION

The engine control module (ECM) receives a pulse width modulation (PWM) signal and an analog signal from the accelerator pedal position sensor. In a fault-free system, the analog signal is used to determine the position of the accelerator pedal (AP).

The diagnostic trouble code (DTC) is stored if the control module registers that the pulse width modulation (PWM) signal is too high.

The diagnostic trouble code can be diagnosed when the ignition is on.

Substitute Value

- Acceleration is ignored when braking.

Possible Source

- The signal cable is short-circuited to ground.
- Damaged accelerator pedal (AP) position sensor.

Fault symptom[s]

- Message in the display.
- Poor response from the accelerator pedal.
- Accelerator pedal (AP) is ignored when braking.
- Maximum vehicle speed reduced.

TROUBLESHOOTING ECM-P022300

CHECKING THE STATUS

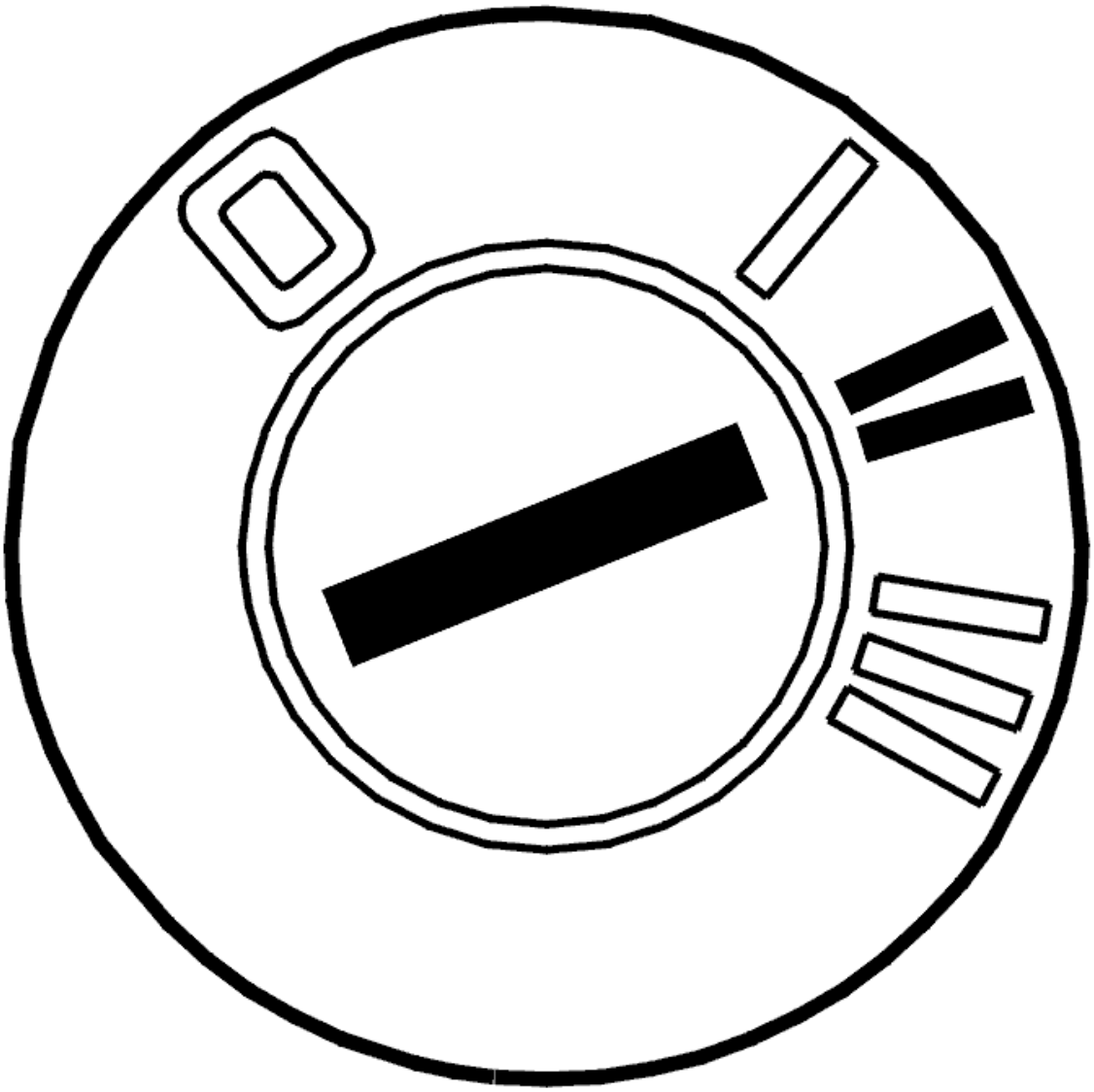

Fig. 309: Identifying Ignition ON

Courtesy of VOLVO CARS CORPORATION

- Ignition on

  Check if the malfunction is permanent or intermittent by activating readout of the accelerator pedal position sensor's signals.

  Check that the value for both signals at unaffected accelerator pedal is approx. 8% and when the pedal is fully pressed down approx. 82%.

  If the signal is incorrect, this indicates that the malfunction is permanent. If the signal is correct, this indicates that the malfunction is intermittent and not active right now.

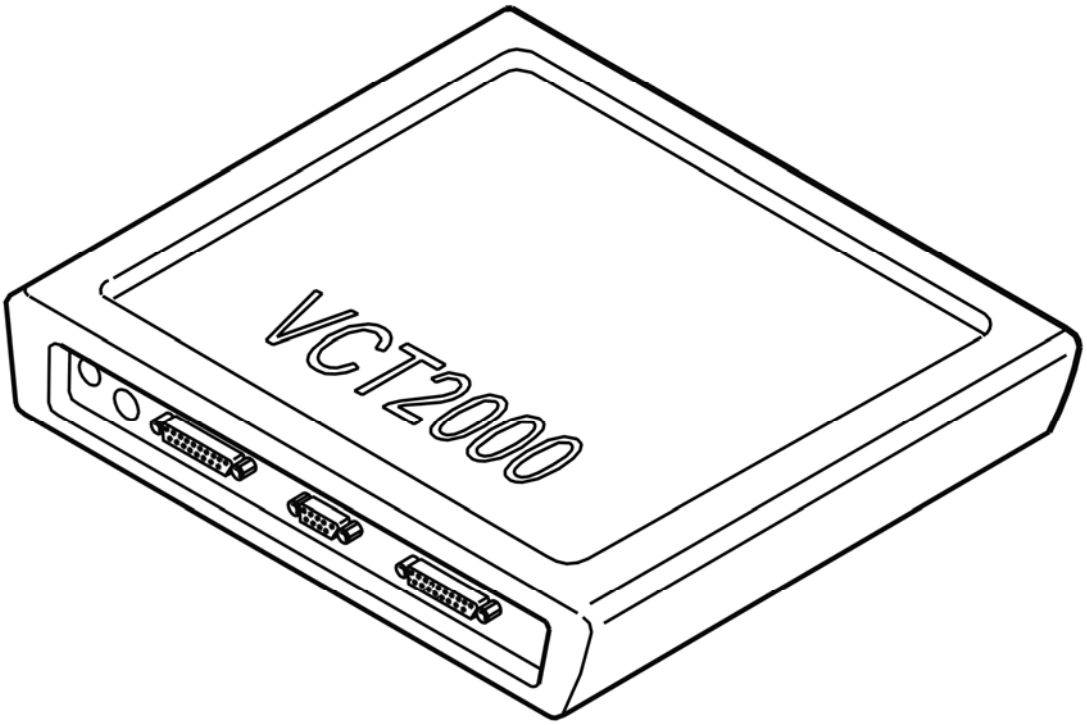

Fig. 310: Identifying VCT2000 Diagnostic Tool Symbol In VIDA
Courtesy of VOLVO CARS CORPORATION

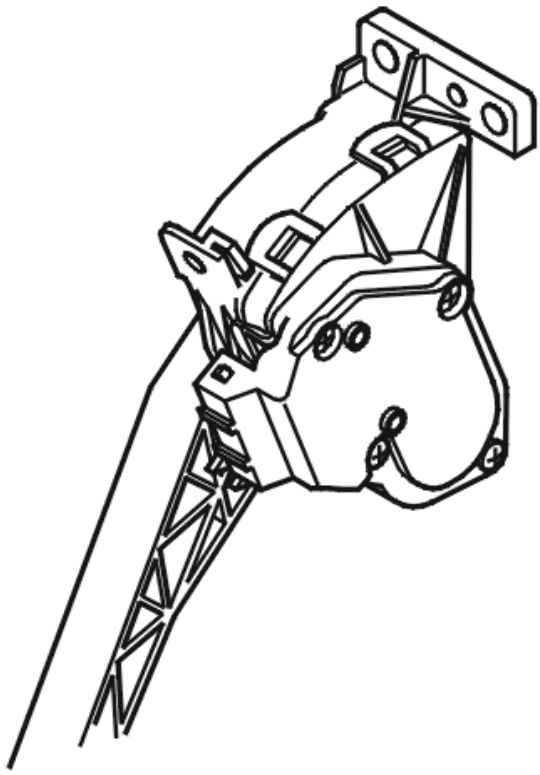

Fig. 311: Identifying Accelerator Pedal Position Sensor
Courtesy of VOLVO CARS CORPORATION

- **Continue**

  Refer to **CHECKING COMPONENTS AND WIRING**

CHECKING COMPONENTS AND WIRING

Check the cable between engine control module (ECM) #B28 (#C28) and accelerator pedal position sensor #2 for short-circuit to ground.

Remedy as necessary.

Other information

- see **CONNECTING THE BREAKOUT BOX**
- see **SIGNAL SPECIFICATION, ENGINE CONTROL MODULE (ECM)**
- For replacing accelerator pedal position sensor: **ACCELERATOR PEDAL (AP), REPLACING**
- see **CHECKING WIRING AND TERMINALS**

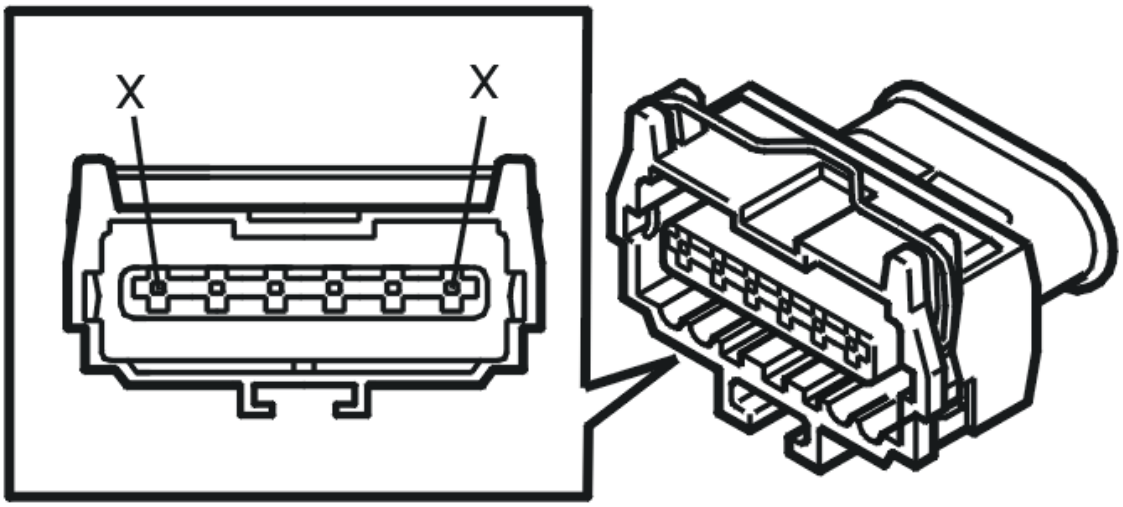

Fig. 312: Connector End View
Courtesy of VOLVO CARS CORPORATION

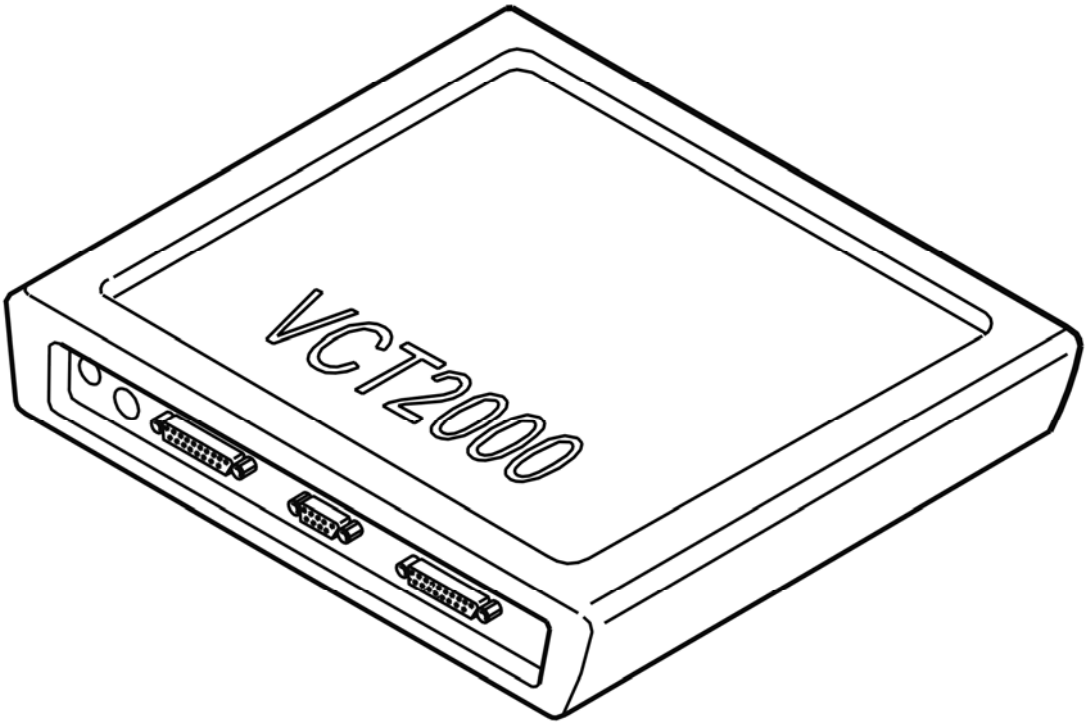

Fig. 313: Identifying VCT2000 Diagnostic Tool Symbol In VIDA
Courtesy of VOLVO CARS CORPORATION

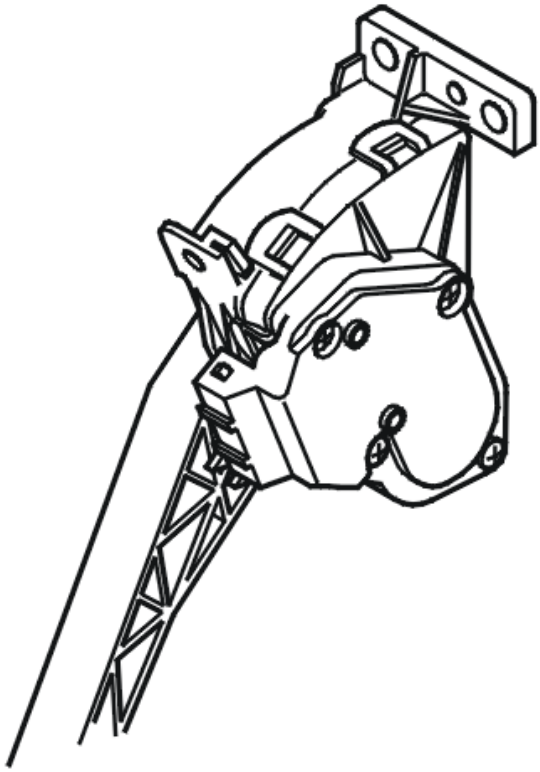

Fig. 314: Identifying Accelerator Pedal Position Sensor
Courtesy of VOLVO CARS CORPORATION

- **Continue**

  Refer to **VERIFICATION**

VERIFICATION

VERIFICATION

HINT: After carrying out the repair, check that the fault has been remedied.

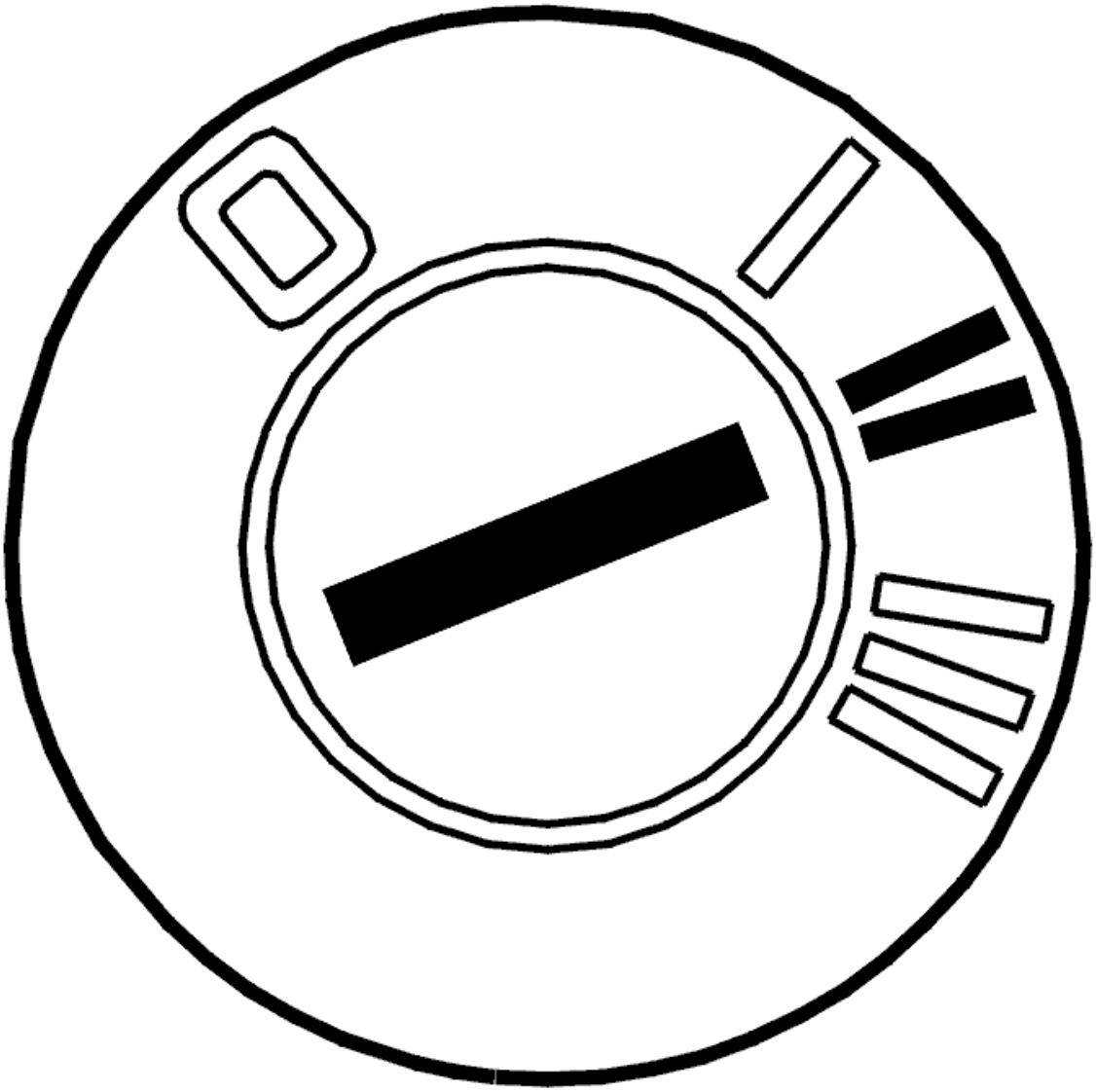

Fig. 315: Identifying Ignition ON
Courtesy of VOLVO CARS CORPORATION

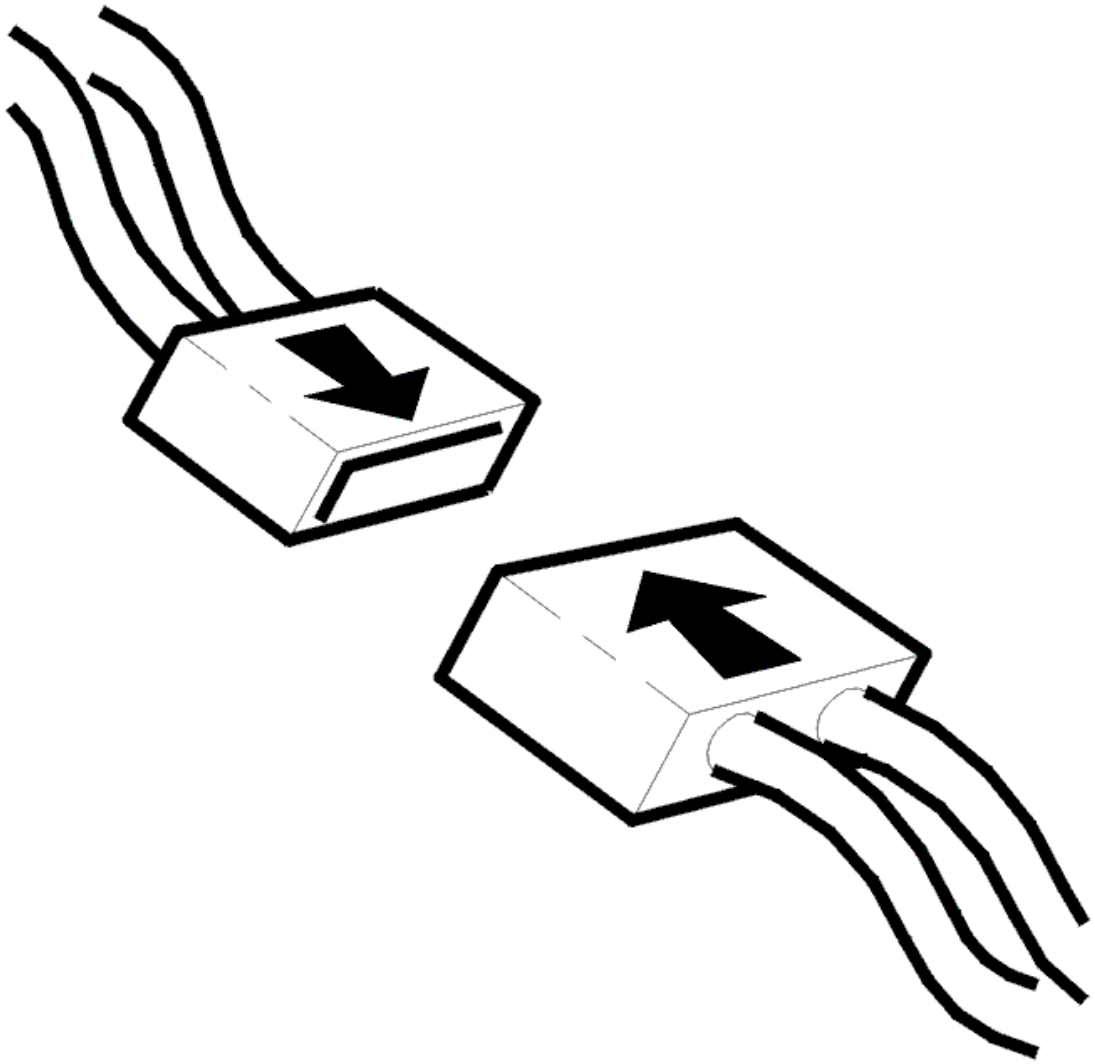

Fig. 316: Connecting Connector
Courtesy of VOLVO CARS CORPORATION

- Ignition off
- Reinstall the connectors, components etc.
- Ignition on

  Activate readout of the accelerator pedal position sensor's signals.

  Check that the value for both signals at unaffected accelerator pedal is approx. 8% and when the pedal is fully pressed down approx. 82%.

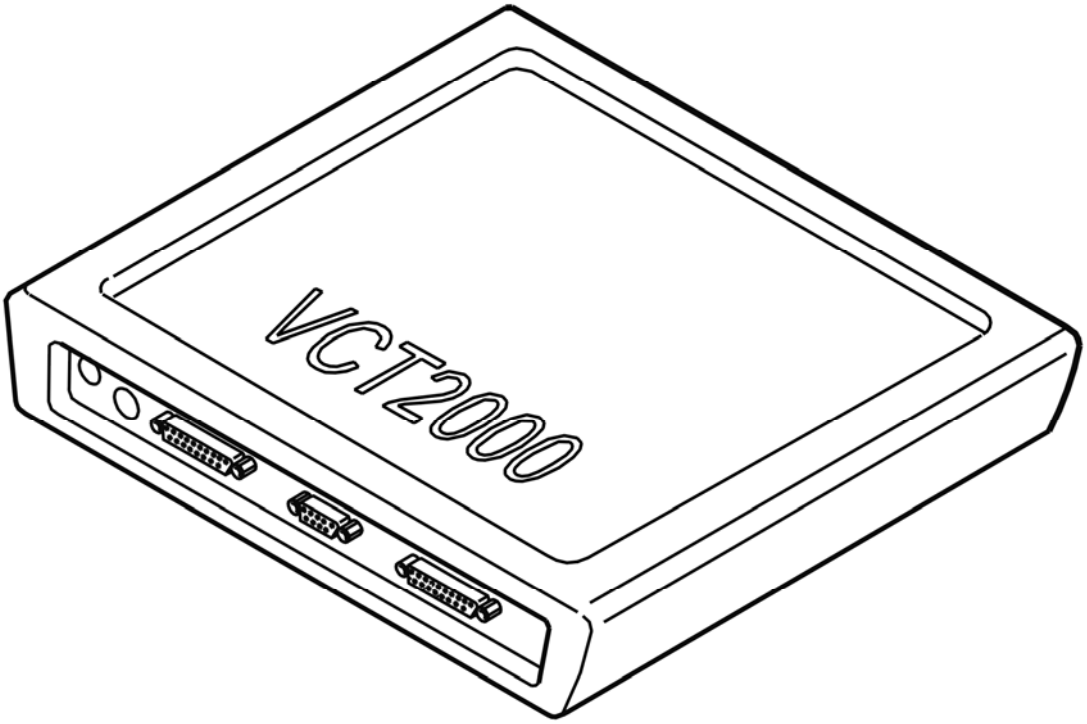

Fig. 317: Identifying VCT2000 Diagnostic Tool Symbol In VIDA
Courtesy of VOLVO CARS CORPORATION

Is the function OK?

- **YES**

  VERIFIED: Troubleshooting has been completed.

- **NO**

  Refer to **INFORMATION**

INFORMATION

FAULT-TRACING INFORMATION

The fault should have been detected and remedied. As this is not the case fault-tracing has failed.

Exit fault-tracing for this diagnostic trouble code (DTC) or make another attempt.

ECM-P029C68 CYLINDER 1 BALANCE - INJECTOR RESTRICTED. ALGORITHM BASED FAILURES. EVENT INFORMATION (B6324S; 2007-

2010)

DIAGNOSTIC TROUBLE CODE (DTC) INFORMATION ECM-P029C68

Condition

The Engine control module (ECM) continually monitors the engine's exhaust gases from the oxygen content in the exhaust gases (the lambda value).

Using the built-in functions, the control module can determine the lambda value for each cylinder individually.

The diagnostic trouble code (DTC) is stored if the control module detects that:

- The discrepancy in the lambda value between the cylinders in bank 1 (cyl. 1-3) is too great to be compensated using individual fuel trim.

The control module's test for the diagnostic trouble code (DTC) starts in the event of:

- Individual cylinder fuel trim active.

NOTE: The control module can only detect the fault once the test has been started and the diagnostic trouble code (DTC) is stored when the conditions are met.

Substitute Value

- Individual cylinder fuel trim is deactivated.

Possible Source

- Mechanical fault causes in the engine.

Fault symptom[s]

- None.

FAULT-TRACING INFORMATION

see **FAULT-TRACING INFORMATION**

ECM-P029C68 CYLINDER 1 BALANCE - INJECTOR RESTRICTED. ALGORITHM BASED FAILURES. EVENT INFORMATION (B6324S5; 2011-2012)

DIAGNOSTIC TROUBLE CODE (DTC) INFORMATION ECM-P029C68

see **DIAGNOSTIC TROUBLE CODE (DTC) INFORMATION ECM-P029C68**

FAULT-TRACING INFORMATION

see **FAULT-TRACING INFORMATION**

ECM-P02A068 CYLINDER 2 BALANCE - INJECTOR RESTRICTED. ALGORITHM BASED FAILURES. EVENT INFORMATION (B6324S; 2007-2010)

DIAGNOSTIC TROUBLE CODE (DTC) INFORMATION ECM-P02A068

Condition

The Engine control module (ECM) continually monitors the engine's exhaust gases from the oxygen content in the exhaust gases (the lambda value).

Using the built-in functions, the control module can determine the lambda value for each cylinder individually.

The diagnostic trouble code (DTC) is stored if the control module detects that:

- The Engine control module (ECM) detects that the deviation in the lambda value between the cylinders in bank 2 (cyl. 4-6) is too great to compensate using individual fuel trim.

The control module's test for the diagnostic trouble code (DTC) starts in the event of:

- Individual cylinder fuel trim active.

NOTE: The control module can only detect the fault once the test has been started and the diagnostic trouble code (DTC) is stored when the conditions are met.

Substitute Value

- Individual cylinder fuel trim is deactivated.

Possible Source

- Mechanical fault causes in the engine.

Fault symptom[s]

- None.

FAULT-TRACING INFORMATION

see **FAULT-TRACING INFORMATION**

ECM-P02A068 CYLINDER 2 BALANCE - INJECTOR RESTRICTED.

ALGORITHM BASED FAILURES. EVENT INFORMATION (B6324S5; 2011-2012)

DIAGNOSTIC TROUBLE CODE (DTC) INFORMATION ECM-P02A068

see **DIAGNOSTIC TROUBLE CODE (DTC) INFORMATION ECM-P02A068**

FAULT-TRACING INFORMATION

see **FAULT-TRACING INFORMATION**

ECM-P02A468 CYLINDER 3 BALANCE - INJECTOR RESTRICTED. ALGORITHM BASED FAILURES. EVENT INFORMATION (B6324S; 2007-2010)

DIAGNOSTIC TROUBLE CODE (DTC) INFORMATION ECM-P02A468

Condition

The Engine control module (ECM) continually monitors the engine's exhaust gases from the oxygen content in the exhaust gases (the lambda value).

Using the built-in functions, the control module can determine the lambda value for each cylinder individually.

The diagnostic trouble code (DTC) is stored if the control module detects that:

- The front heated oxygen sensor (bank 1) has become too slow to be used in cylinder individual fuel trim.

The control module's test for the diagnostic trouble code (DTC) starts in the event of:

- Individual cylinder fuel trim active.

NOTE: **The control module can only detect the fault once the test has been started and the diagnostic trouble code (DTC) is stored when the conditions are met.**

Substitute Value

- Individual cylinder fuel trim is deactivated.

Possible Source

- Mechanical fault causes in the engine.

Fault symptom[s]

- None.

FAULT-TRACING INFORMATION

see **FAULT-TRACING INFORMATION**

ECM-P02A468 CYLINDER 3 BALANCE - INJECTOR RESTRICTED. ALGORITHM BASED FAILURES. EVENT INFORMATION (B6324S5; 2011-2012)

DIAGNOSTIC TROUBLE CODE (DTC) INFORMATION ECM-P02A468

see **DIAGNOSTIC TROUBLE CODE (DTC) INFORMATION ECM-P02A468**

FAULT-TRACING INFORMATION

see **FAULT-TRACING INFORMATION**

ECM-P02A868 CYLINDER 4 BALANCE - INJECTOR RESTRICTED. ALGORITHM BASED FAILURES. EVENT INFORMATION (B6324S; 2007-2010)

DIAGNOSTIC TROUBLE CODE (DTC) INFORMATION ECM-P02A868

Condition

The Engine control module (ECM) continually monitors the engine's exhaust gases from the oxygen content in the exhaust gases (the lambda value).

Using the built-in functions, the control module can determine the lambda value for each cylinder individually.

The diagnostic trouble code (DTC) is stored if the control module detects that:

- The front heated oxygen sensor (bank 2) has become too slow to be used in cylinder individual fuel trim.

The control module's test for the diagnostic trouble code (DTC) starts in the event of:

- Individual cylinder fuel trim active.

NOTE: **The control module can only detect the fault once the test has been started and the diagnostic trouble code (DTC) is stored when the conditions are met.**

Substitute Value

- Individual cylinder fuel trim is deactivated.

Possible Source

- Mechanical fault causes in the engine.

Fault symptom[s]

- None.

FAULT-TRACING INFORMATION

see **FAULT-TRACING INFORMATION**

ECM-P02A868 CYLINDER 4 BALANCE - INJECTOR RESTRICTED. ALGORITHM BASED FAILURES. EVENT INFORMATION (B6324S5; 2011-2012)

DIAGNOSTIC TROUBLE CODE (DTC) INFORMATION ECM-P02A868

see **DIAGNOSTIC TROUBLE CODE (DTC) INFORMATION ECM-P02A868**

FAULT-TRACING INFORMATION

see **FAULT-TRACING INFORMATION**

ECM-P030000: RANDOM MISFIRE DETECTED. GENERAL FAILURE INFORMATION. NO SUB TYPE INFORMATION (B6324S; 2007-2010)

DIAGNOSTIC TROUBLE CODE (DTC) INFORMATION ECM-P030000

Condition

The engine control module (ECM) checks engine combustion regarding misfire by registering speed deviations in flywheel rotation. If a certain number of misfires are detected for several cylinders during a certain number of crankshaft rotations, the misfires are considered emission-related or capable of damaging the catalytic converter and the diagnostic trouble code is generated.

The diagnostic trouble code can be diagnosed when the engine is running.

Substitute Value

- Nothing.

Possible Source

- Low fuel level.
- Repeated cold starts where the engine temperature does not reach proper operating temperature between starts.

- Water in spark plug wells.
- Damaged spark plug.
- Dirty or damaged cam profile solenoid (CPS).
- Dirty or damaged valve depressor.
- Contaminated or wrong fuel.
- Wrong fuel grade (summer fuel in the winter, certain markets).
- Air leakage.
- Blocked crankcase ventilation.
- Damaged VVT-unit.
- Clogged/leaking injector.
- Faulty fuel pressure.
- Uneven compression.

Fault symptom[s]

- Malfunction indicator lamp (MIL) lit.
- Malfunction indicator lamp (MIL) flashes.
- Engine misfire.
- Engine reluctant to start.
- Poor performance.
- Uneven idle.
- The engine does not run on all cylinders.
- Message in the display.

FAULT-TRACING

CHECKING THE FUEL INJECTION SYSTEM, IGNITION SYSTEM AND COMPONENTS

NOTE: In the event of diagnostic trouble codes (DTCs), that affect camshaft control or camshaft reset valve, these must be fault-traced first.

HINT: Engine cylinders are counted starting from the right side of the vehicle, that is, the cylinder farthest from the engine's flywheel.

HINT: The cause of misfiring does not necessarily have to be associated to the specific identified cylinder. The cause may sometimes be traced to previous cylinder/cylinders (counted in firing order) or to components connected per bank and thus to several cylinders.

Check the fuel level in the tank.

Check that the engine oil level is correct.

Check for moisture in the electrical terminals for the ignition coils and in the spark plug well.

Check the spark plugs. Search for damage to the insulation and other damage.

Check cam profile solenoid and valve depressor for dirt and damages.

Check the engine intake system for air leakage.

Check the function of the crankcase ventilation.

Check the fuel pressure and residual pressure.

Check the compression of the engine.

HINT: Read off the misfire counter using the VCT2000 (or appropriate scan tool).

Remedy as necessary.

Other information

- see **CONTROL MODULE FUEL PUMP (FP), REPLACING**
- see **IGNITION COIL**
- see **CYLINDER LEAKAGE TEST**

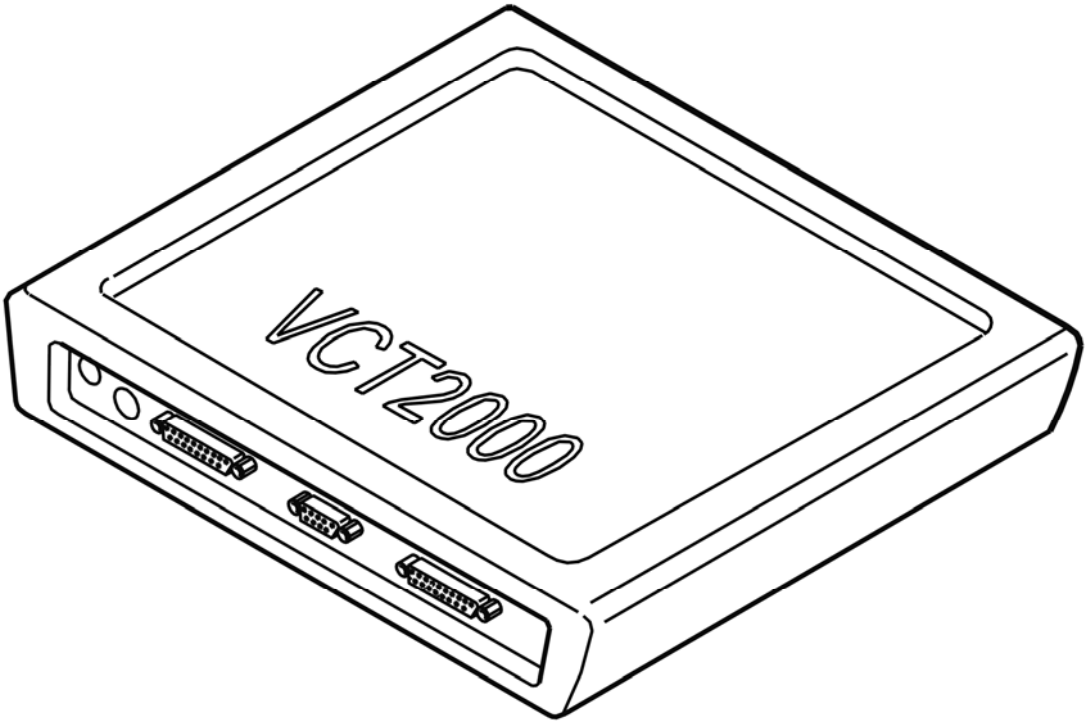

Fig. 318: Identifying VCT2000 Diagnostic Tool Symbol In VIDA
Courtesy of VOLVO CARS CORPORATION

- **Continue**

  Refer to **VERIFICATION**

INFORMATION

FAULT-TRACING INFORMATION

The fault should have been detected and remedied. As this is not the case fault-tracing has failed.

Exit fault-tracing for this diagnostic trouble code (DTC) or make another attempt.

VERIFICATION

VERIFICATION

HINT: After repairing, it is necessary to check that the malfunction has been fixed.

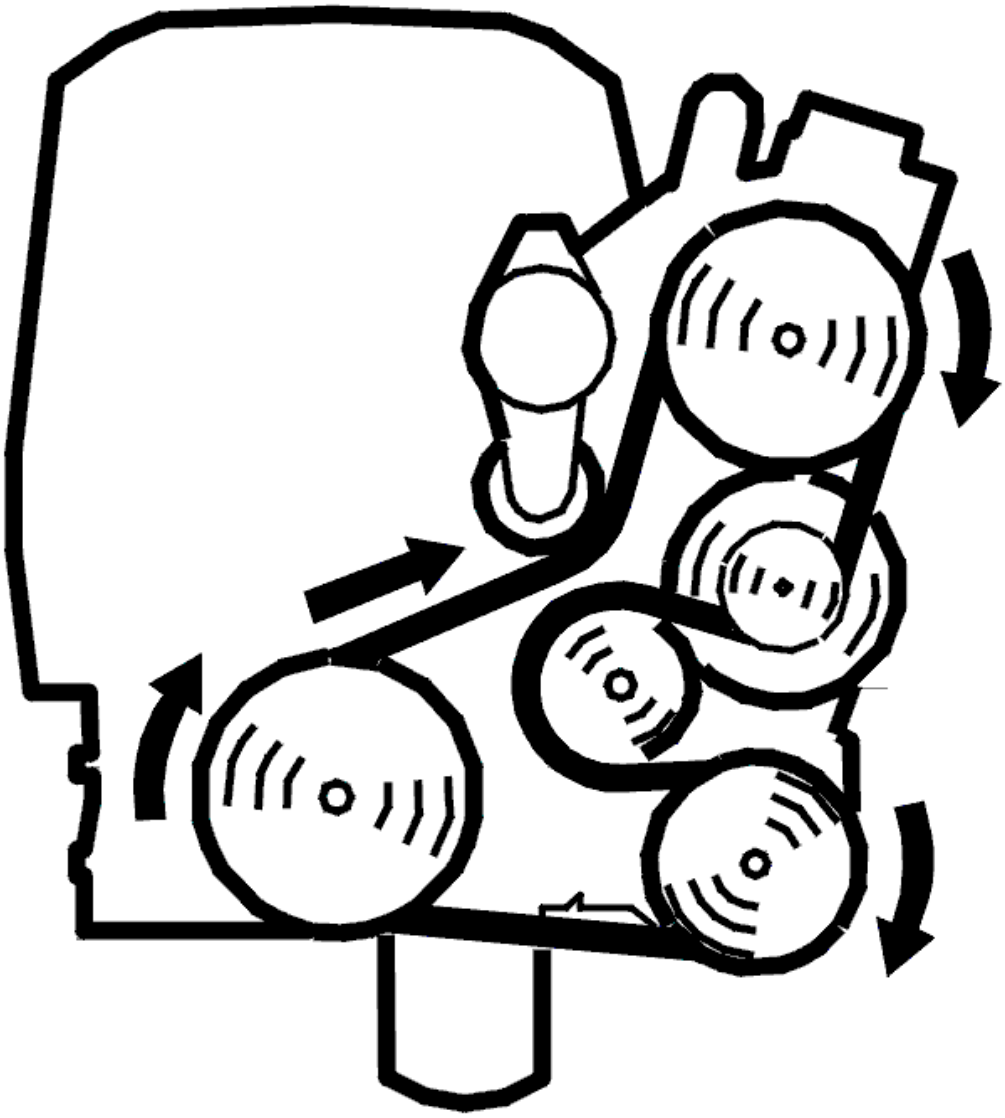

Fig. 319: Belt Routing / Engine Idling - Volvo
Courtesy of VOLVO CARS CORPORATION

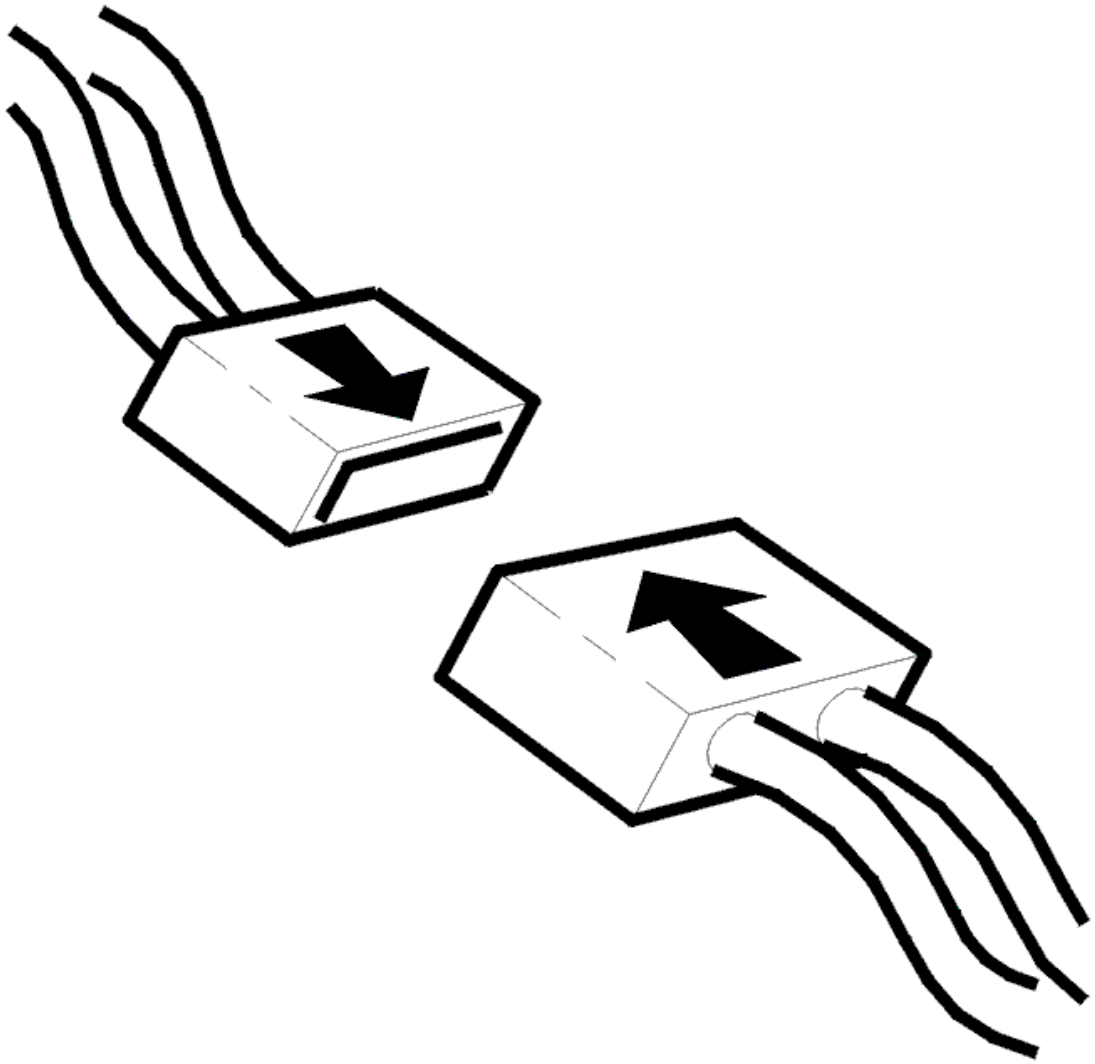

Fig. 320: Connecting Connector
Courtesy of VOLVO CARS CORPORATION

- Ignition off
- Reinstall the connectors, components etc.
- Start the engine.

Check that the misfiring counter does not count up and that the engine runs on all cylinders.

NOTE: Misfire can occur at different engine speeds and loads.

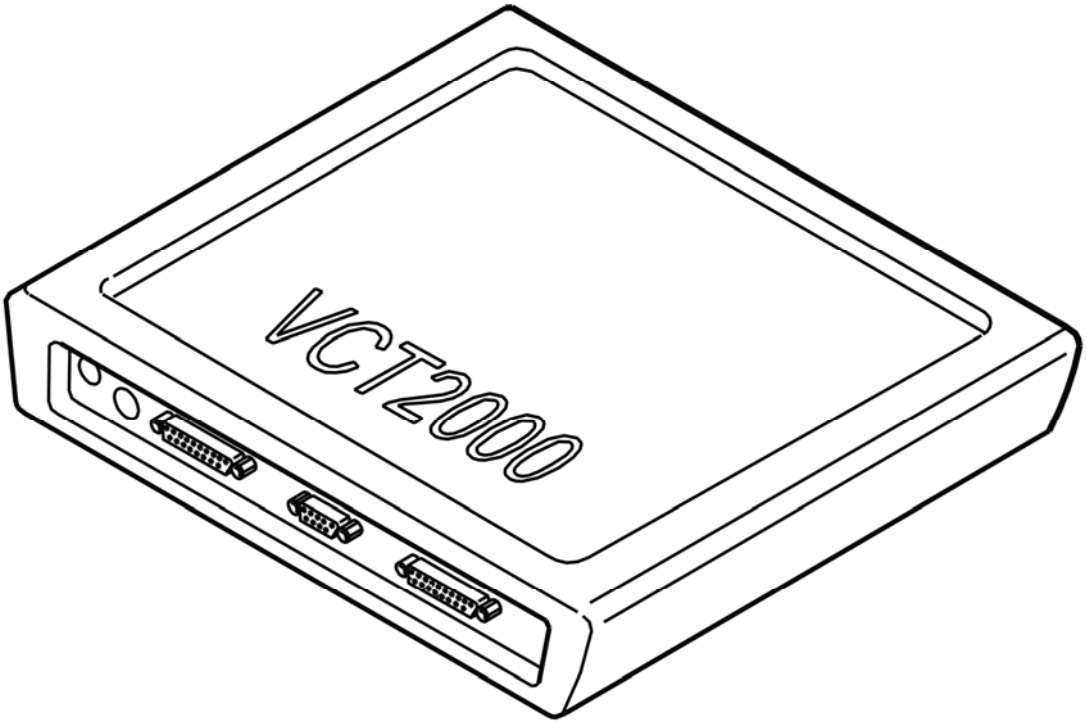

Fig. 321: Identifying VCT2000 Diagnostic Tool Symbol In VIDA
Courtesy of VOLVO CARS CORPORATION

Is the function OK?

- **YES**

  VERIFIED: Troubleshooting has been completed.

- **NO**

  Refer to **INFORMATION**

ECM-P030000: RANDOM MISFIRE DETECTED. GENERAL FAILURE INFORMATION. NO SUB TYPE INFORMATION (B6324S5; 2011-2012)

DIAGNOSTIC TROUBLE CODE (DTC) INFORMATION ECM-P030000

see **DIAGNOSTIC TROUBLE CODE (DTC) INFORMATION ECM-P030000**

FAULT-TRACING

see **FAULT-TRACING**

ECM-P030000: RANDOM MISFIRE REGISTERED. GENERAL FAULT INFORMATION. TYPE OF FAULT NOT SPECIFIED. (B8444S; 2005-2011)

DIAGNOSTIC TROUBLE CODE (DTC) INFORMATION ECM-P030000

Condition

The engine control module (ECM) checks engine combustion regarding misfire by registering speed deviations in flywheel rotation. If a certain number of misfires are detected for several cylinders during a certain number of crankshaft rotations, the misfires are considered emission-related or capable of damaging the catalytic converter and the diagnostic trouble code is generated.

The diagnostic trouble code can be diagnosed when the engine is running.

Substitute Value

- Nothing.

Possible Source

- Low fuel level.
- Repeated cold starts where the engine temperature does not reach proper operating temperature between starts.
- Damaged spark plug.
- Contaminated or wrong fuel.
- Wrong fuel grade (summer fuel in the winter, certain markets).
- Air leakage.
- Blocked crankcase ventilation.
- Damaged VVT-unit.
- Clogged/leaking injector.
- Faulty fuel pressure.
- Uneven compression.

Fault symptom[s]

- Malfunction indicator lamp (MIL) lit.
- Malfunction indicator lamp (MIL) flashes.
- Engine misfire.
- Engine reluctant to start.
- Poor performance.
- Uneven idle.
- The engine does not run on all cylinders.

- Message in the display.

FAULT TRACING

CHECKING THE FUEL INJECTION SYSTEM, IGNITION SYSTEM AND COMPONENTS

NOTE: In the event of diagnostic trouble codes (DTCs), that affect camshaft control or camshaft reset valve, these must be fault-traced first.

HINT: The engine cylinders are counted from the cylinder furthest away from the flywheel.

- Bank 1 (cylinder row nearest the front): cylinders 1, 3, 5 and 7.
- Bank 2 (cylinder row furthest to the rear, nearest the passenger compartment): cylinders 2, 4, 6, and 8.

Check the fuel level in the tank.

Check that the engine oil level is correct.

Check for moisture in the electrical terminals for the ignition coils and in the spark plug well.

Check the spark plugs. Search for damage to the insulation and other damage.

Check the engine intake system for air leakage.

Check the fuel pressure and residual pressure.

Check the compression of the engine.

HINT: Read off the misfire counter using the VCT2000 (or appropriate scan tool).

Remedy as necessary.

Other information

- see **AIR LEAKS IN THE INTAKE SYSTEM, CHECKING**
- see **IGNITION COIL, REPLACING**
- see **CONTROL MODULE FUEL PUMP (FP), REPLACING**
- see **CYLINDER LEAKAGE TEST**

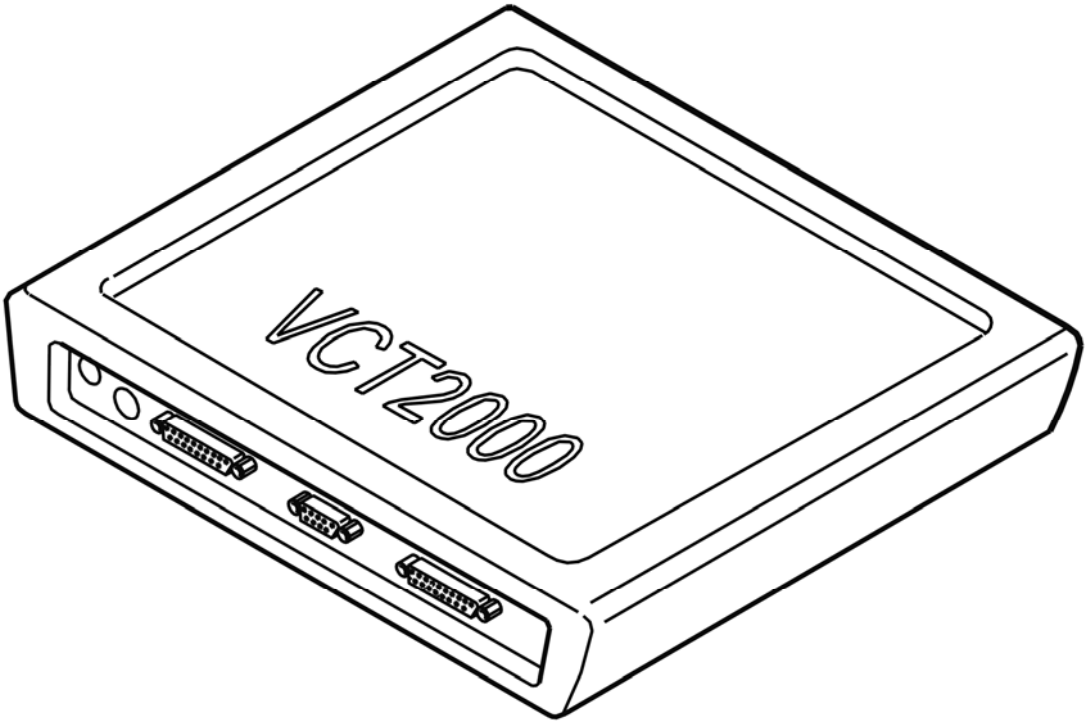

Fig. 322: Identifying VCT2000 Diagnostic Tool Symbol In VIDA
Courtesy of VOLVO CARS CORPORATION

- **Continue**

  Refer to **VERIFICATION**

VERIFICATION

VERIFICATION

HINT: After repairing, it is necessary to check that the malfunction has been fixed.

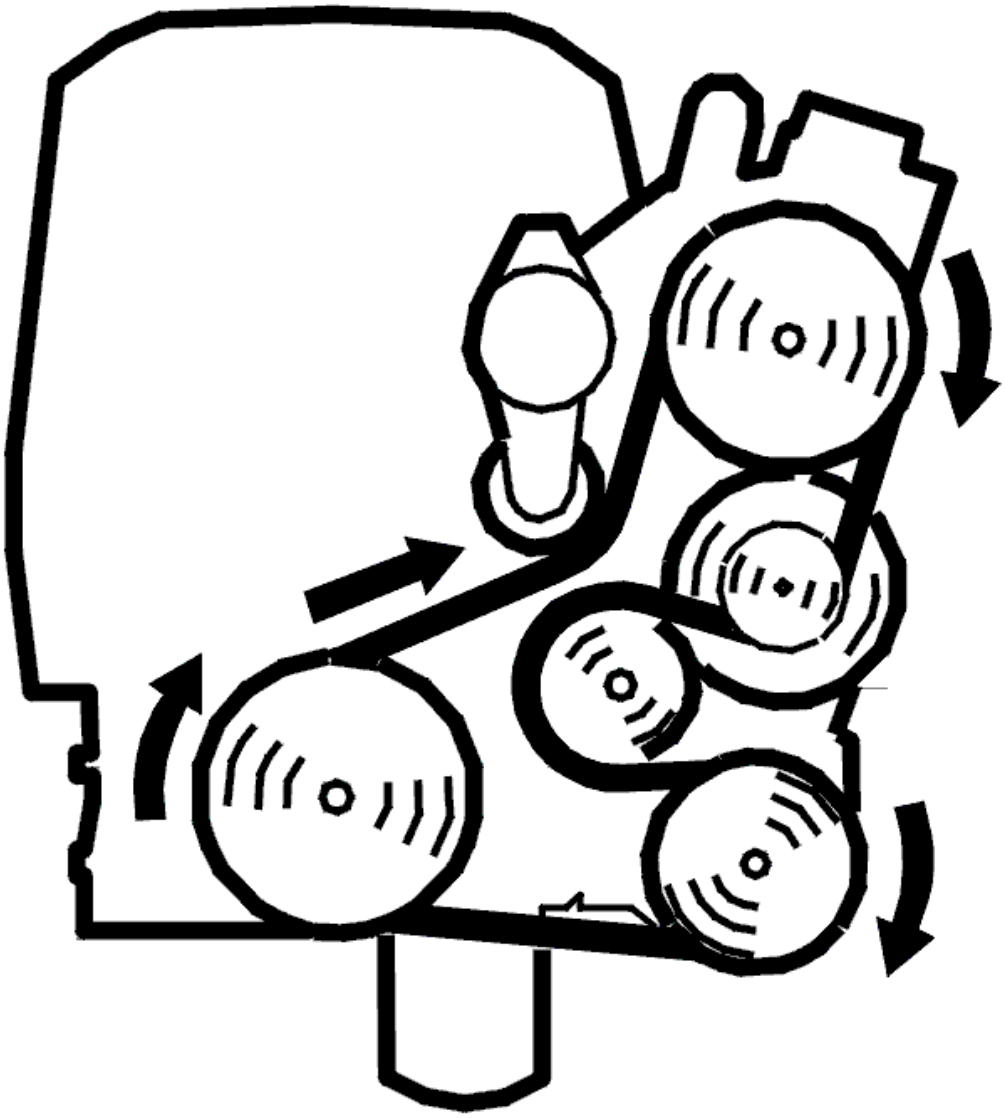

Fig. 323: Belt Routing / Engine Idling - Volvo
Courtesy of VOLVO CARS CORPORATION

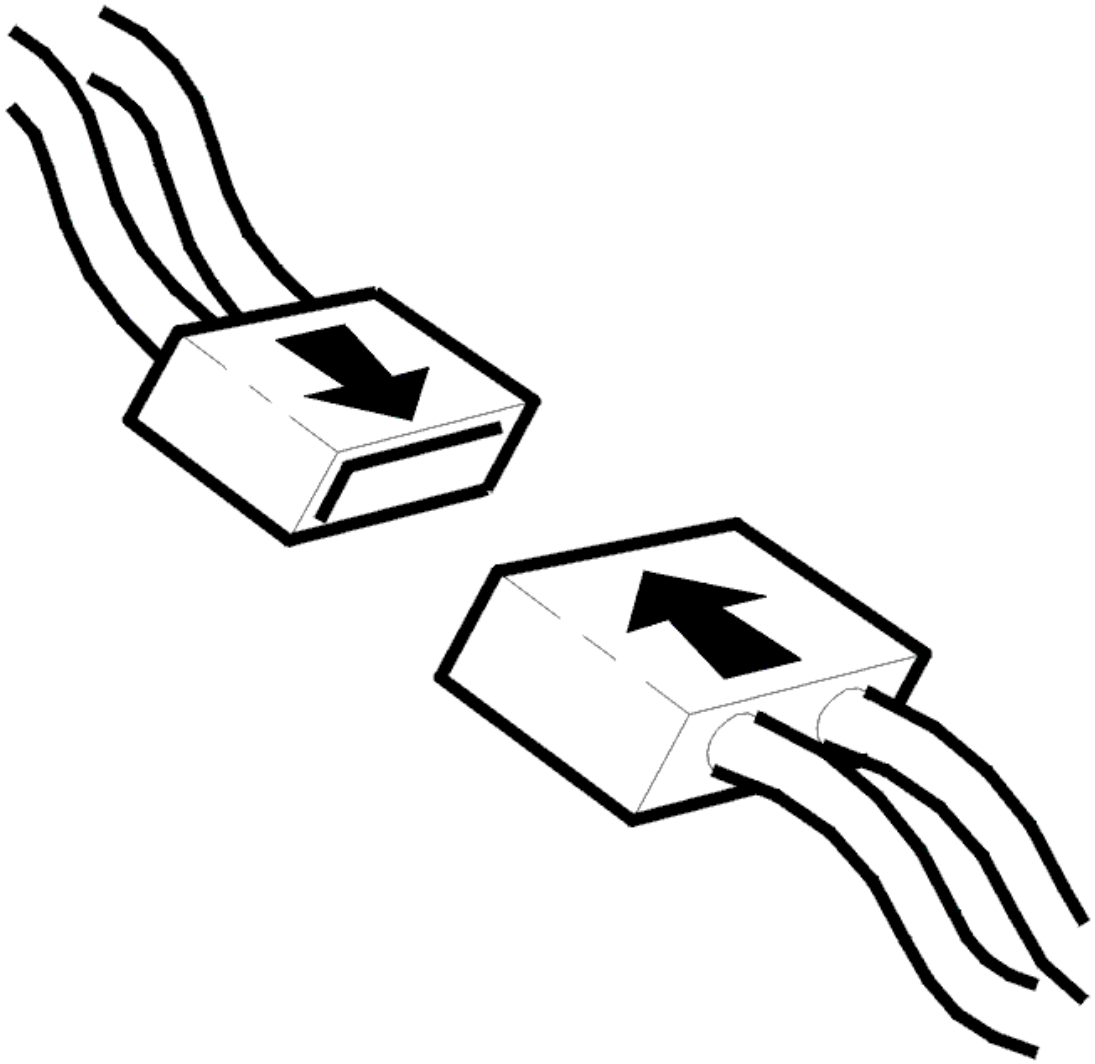

Fig. 324: Connecting Connector
Courtesy of VOLVO CARS CORPORATION

- Ignition off
- Reinstall the connectors, components etc.
- Start the engine.

Check that the misfiring counter does not count up and that the engine runs on all cylinders.

NOTE: Misfire can occur at different engine speeds and loads.

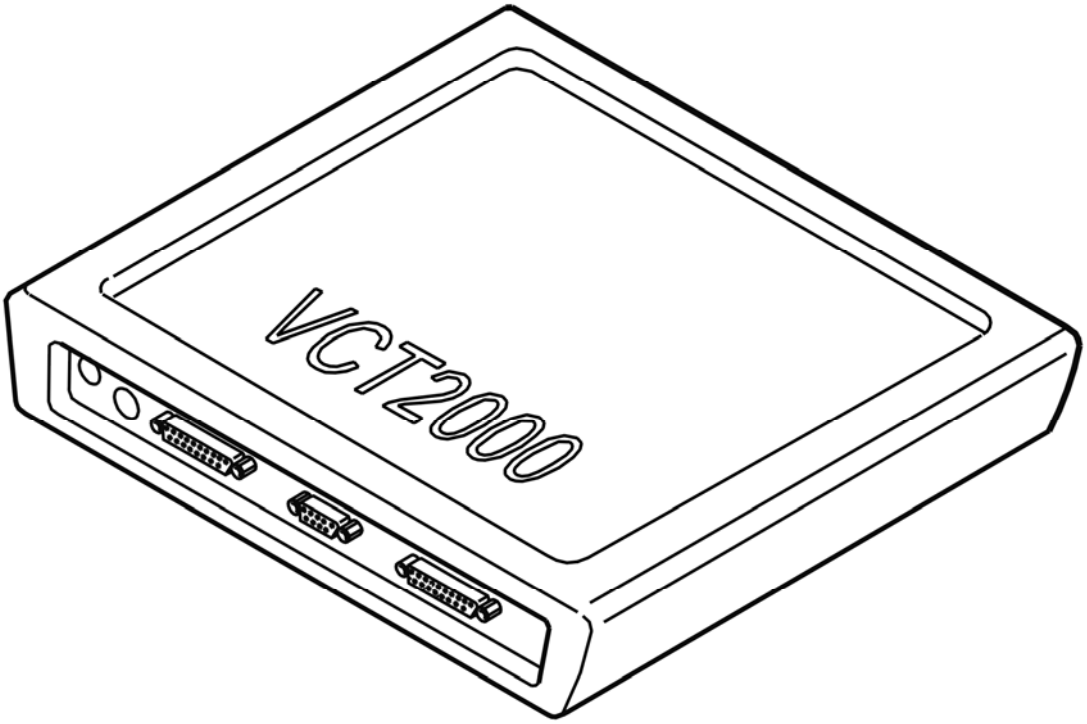

Fig. 325: Identifying VCT2000 Diagnostic Tool Symbol In VIDA
Courtesy of VOLVO CARS CORPORATION

Is the function OK?

- **YES**

  VERIFIED: Troubleshooting has been completed.

- **NO**

  Refer to **INFORMATION**

INFORMATION

FAULT-TRACING INFORMATION

The fault should have been detected and remedied. As this is not the case fault-tracing has failed.

Exit fault-tracing for this diagnostic trouble code (DTC) or make another attempt.

ECM-P030100: CYLINDER 1 MISFIRE DETECTED. GENERAL FAILURE INFORMATION. NO SUB TYPE INFORMATION (B6324S; 2007-2010)

DIAGNOSTIC TROUBLE CODE (DTC) INFORMATION

Condition

The engine control module (ECM) checks engine combustion regarding misfire by registering speed deviations in flywheel rotation. If a certain number of misfires are detected for several cylinders during a certain number of crankshaft rotations, the misfires are considered emission-related or capable of damaging the catalytic converter and the diagnostic trouble code is generated.

The diagnostic trouble code can be diagnosed when the engine is running.

The trouble code indicates which cylinder is misfiring:

- ECM-P030100, cylinder 1 misfire.
- ECM-P030200, cylinder 2 misfire.
- ECM-P030300, cylinder 3 misfire.
- ECM-P030400, cylinder 4 misfire.
- ECM-P030500, cylinder 5 misfire.
- ECM-P030600, cylinder 6 misfire.

Substitute Value

- Nothing.

Possible Source

- Low fuel level.
- Repeated cold starts where the engine temperature does not reach proper operating temperature between starts.
- Water in spark plug wells.
- Damaged spark plug.
- Dirty or damaged cam profile solenoid (CPS).
- Dirty or damaged valve depressor.
- Contaminated or wrong fuel.
- Wrong fuel grade (summer fuel in the winter, certain markets).
- Air leakage.
- Blocked crankcase ventilation.
- Damaged VVT-unit.
- Clogged/leaking injector.
- Faulty fuel pressure.
- Uneven compression.

Fault symptom[s]

- Malfunction indicator lamp (MIL) lit.
- Malfunction indicator lamp (MIL) flashes.
- Engine misfire.
- Engine reluctant to start.
- Poor performance.
- Uneven idle.
- The engine does not run on all cylinders.
- Message in the display.

FAULT-TRACING

see **FAULT-TRACING**

ECM-P030100: CYLINDER 1 MISFIRE DETECTED. GENERAL FAILURE INFORMATION. NO SUB TYPE INFORMATION (B6324S5; 2011-2012)

DIAGNOSTIC TROUBLE CODE (DTC) INFORMATION

see **DIAGNOSTIC TROUBLE CODE (DTC) INFORMATION**

FAULT-TRACING

see **FAULT-TRACING**

ECM-P030100: CYLINDER 1 MISFIRE REGISTERED. GENERAL FAULT INFORMATION. TYPE OF FAULT NOT SPECIFIED. (B8444S; 2005-2011)

DIAGNOSTIC TROUBLE CODE (DTC) INFORMATION

Condition

The engine control module (ECM) checks engine combustion regarding misfire by registering speed deviations in flywheel rotation. If a certain number of misfires are detected for several cylinders during a certain number of crankshaft rotations, the misfires are considered emission-related or capable of damaging the catalytic converter and the diagnostic trouble code is generated.

The diagnostic trouble code can be diagnosed when the engine is running.

The trouble code indicates which cylinder is misfiring:

- ECM-P030100, cylinder 1 misfire.
- ECM-P030200, cylinder 2 misfire.
- ECM-P030300, cylinder 3 misfire.

- ECM-P030400, cylinder 4 misfire.
- ECM-P030500, cylinder 5 misfire.
- ECM-P030600, cylinder 6 misfire.
- ECM-P030700, cylinder 7 misfire.
- ECM-P030800, cylinder 8 misfire.

Substitute Value

- Nothing.

Possible Source

- Low fuel level.
- Repeated cold starts where the engine temperature does not reach proper operating temperature between starts.
- Damaged spark plug.
- Contaminated or wrong fuel.
- Wrong fuel grade (summer fuel in the winter, certain markets).
- Air leakage.
- Blocked crankcase ventilation.
- Damaged VVT-unit.
- Clogged/leaking injector.
- Faulty fuel pressure.
- Uneven compression.

Fault symptom[s]

- Malfunction indicator lamp (MIL) lit.
- Malfunction indicator lamp (MIL) flashes.
- Engine misfire.
- Engine reluctant to start.
- Poor performance.
- Uneven idle.
- The engine does not run on all cylinders.
- Message in the display.

FAULT TRACING

see **FAULT TRACING**

ECM-P032600: KNOCK SENSOR 1 CIRCUIT RANGE/PERFORMANCE

(BANK 1). GENERAL FAILURE INFORMATION. NO SUB TYPE INFORMATION (B6324S; 2007-2010)

DIAGNOSTIC TROUBLE CODE (DTC) INFORMATION ECM-P032600

Condition

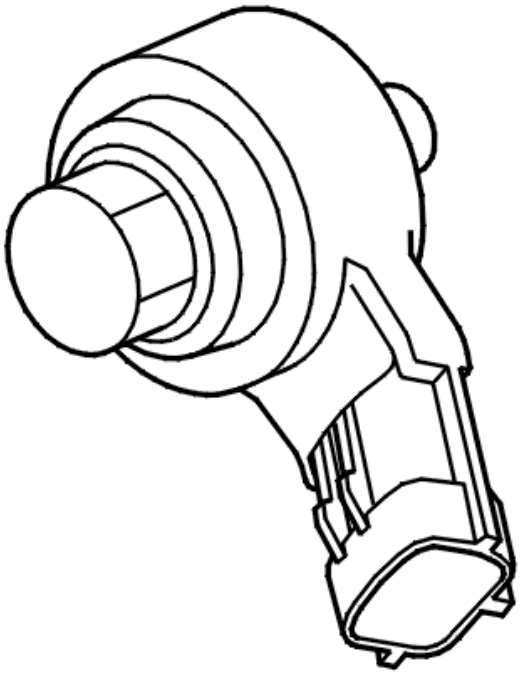

Fig. 326: Identifying Knock Sensor (KS) Connector
Courtesy of VOLVO CARS CORPORATION

The knock sensor signal varies with engine speed. The engine control module (ECM) checks that the knock sensor signal is within certain limits, which are determined by engine speed. The diagnostic trouble code is generated if the signal from the knock sensor is not within the limit values.

The diagnostic trouble code can be diagnosed during a road test.

The diagnostic trouble code refers to knock sensor 1.

Substitute Value

- Ignition angle reduction for reasons of safety.
- Knock control is blocked.

Possible Source

- Contact resistance or oxidation in the knock sensor connector.
- Improperly installed knock sensor.
- Damaged knock sensor.

Fault symptom[s]

- Poor performance.

FAULT-TRACING

see **FAULT-TRACING**

ECM-P032600: KNOCK SENSOR 1 CIRCUIT RANGE/PERFORMANCE (BANK 1). GENERAL FAILURE INFORMATION. NO SUB TYPE INFORMATION (B6324S5; 2011-2012)

DIAGNOSTIC TROUBLE CODE (DTC) INFORMATION ECM-P032600

see **DIAGNOSTIC TROUBLE CODE (DTC) INFORMATION ECM-P032600**

FAULT-TRACING

see **FAULT-TRACING**

ECM-P032600: KNOCK SENSOR 1 CIRCUIT WITHIN/EXCEEDING LIMIT VALUES (BANK 1). GENERAL FAULT INFORMATION. TYPE OF FAULT NOT SPECIFIED. (B8444S; 2005-2011)

DIAGNOSTIC TROUBLE CODE (DTC) INFORMATION ECM-P032600

Condition

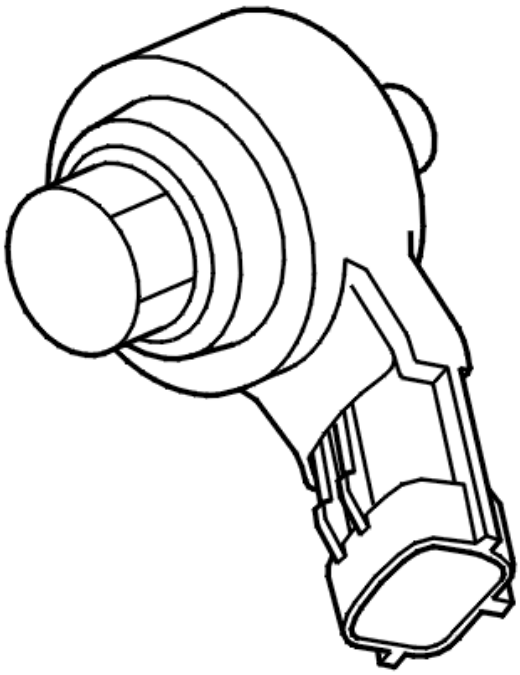

Fig. 327: Identifying Knock Sensor (KS) Connector
Courtesy of VOLVO CARS CORPORATION

The knock sensor signal varies with engine speed. The engine control module (ECM) checks that the knock sensor signal is within certain limits, which are determined by engine speed. The diagnostic trouble code is generated if the signal from the knock sensor is not within the limit values.

The diagnostic trouble code can be diagnosed during a road test.

The diagnostic trouble code refers to knock sensor 1.

HINT: Knock sensor 1detects knocking on cylinders 5, 6, 7 and 8.

Substitute Value

- Ignition angle reduction for reasons of safety.
- Knock control is blocked.

Possible Source

- Contact resistance or oxidation in the knock sensor connector.
- Improperly installed knock sensor.
- Damaged knock sensor.

Fault symptom[s]

- Poor performance.

FAULT TRACING

CHECKING COMPONENTS AND WIRING

HINT: Knock sensor 1detects knocking on cylinders 5, 6, 7 and 8.

HINT: Knock sensor 2 detects knocking on cylinders 1, 2, 3 and 4.

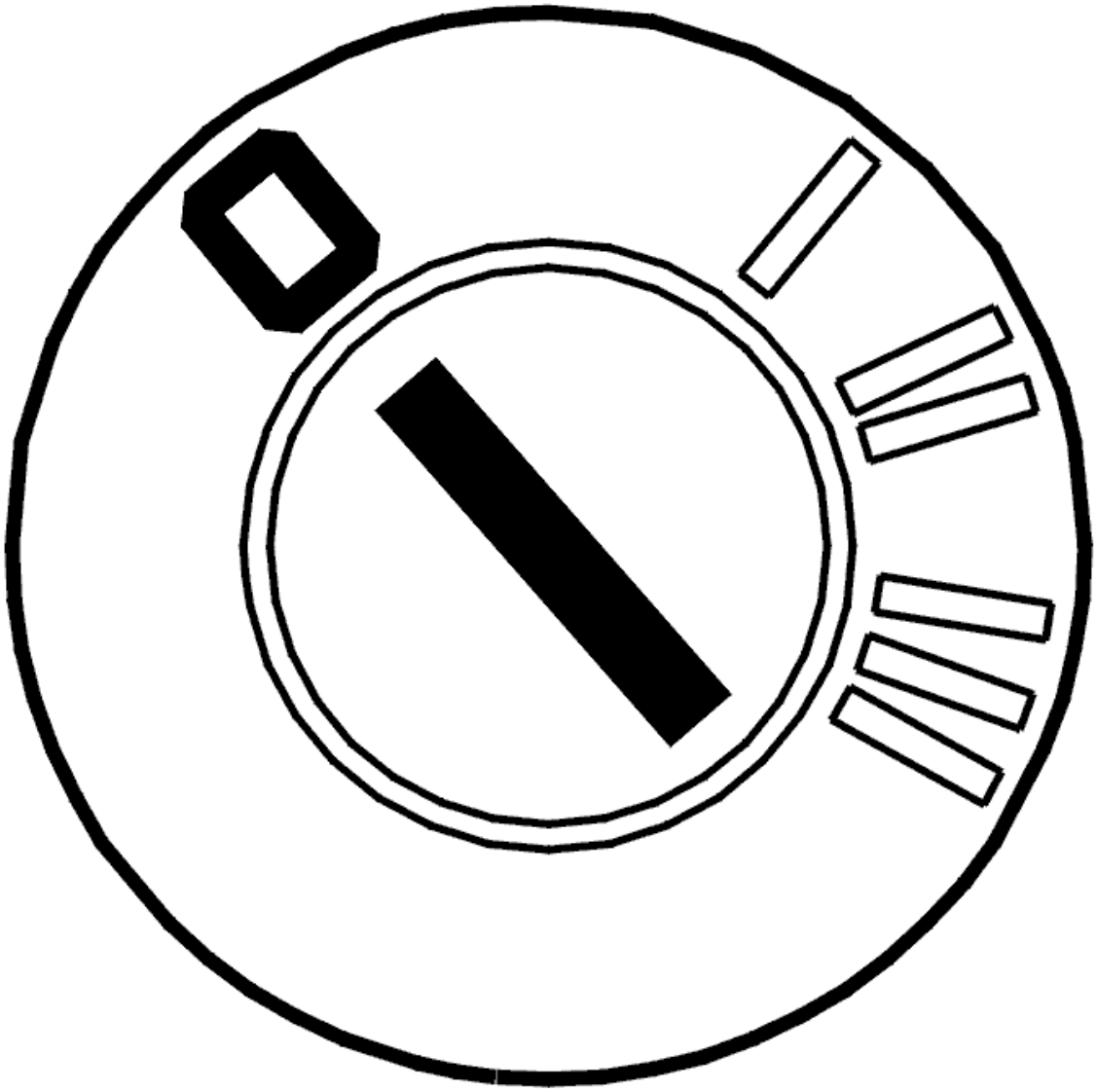

Fig. 328: Identifying Ignition OFF
Courtesy of VOLVO CARS CORPORATION

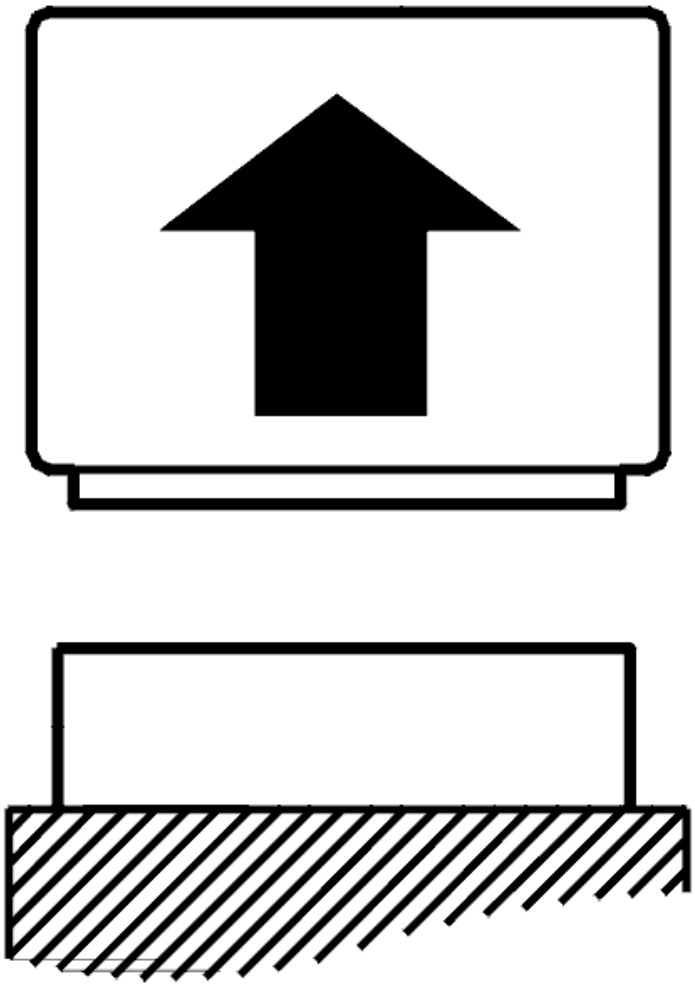

Fig. 329: Disconnecting Connector
Courtesy of VOLVO CARS CORPORATION

- Ignition off

  Check the connector of the relevant knock sensor for contact resistance and oxidation.

  Check that the relevant knock sensor is properly installed.

  Remedy as necessary.

  Other information

  - see **KNOCK SENSOR (KS), REPLACING**
  - see **CHECKING WIRING AND TERMINALS**

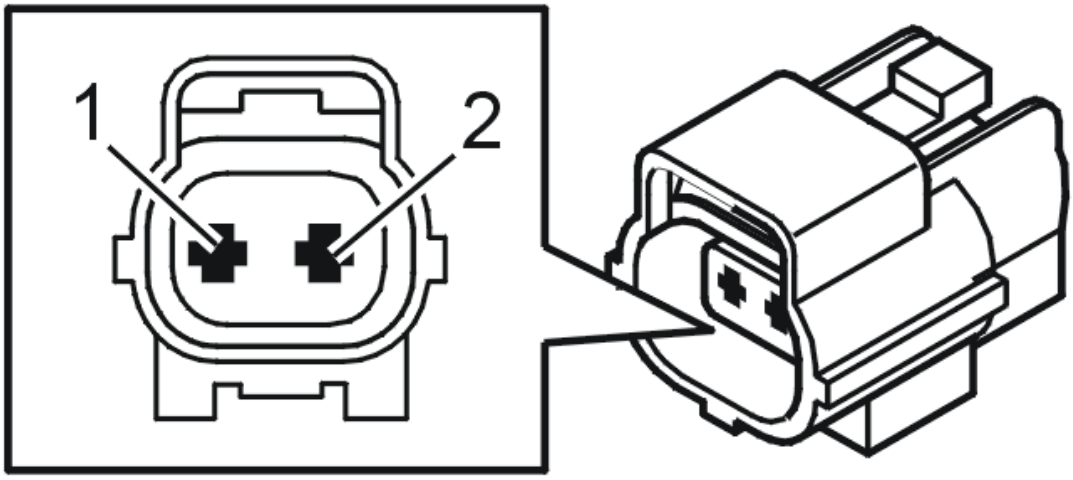

Fig. 330: Identifying Connector Terminals
Courtesy of VOLVO CARS CORPORATION

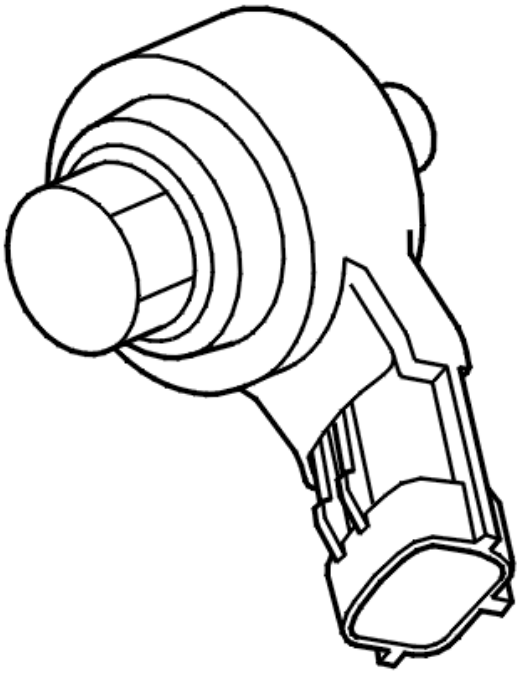

Fig. 331: Identifying Knock Sensor (KS) Connector
Courtesy of VOLVO CARS CORPORATION

- **Continue**

  Refer to **VERIFICATION**

VERIFICATION

VERIFICATION

HINT: After carrying out the repair, check that the fault has been remedied.

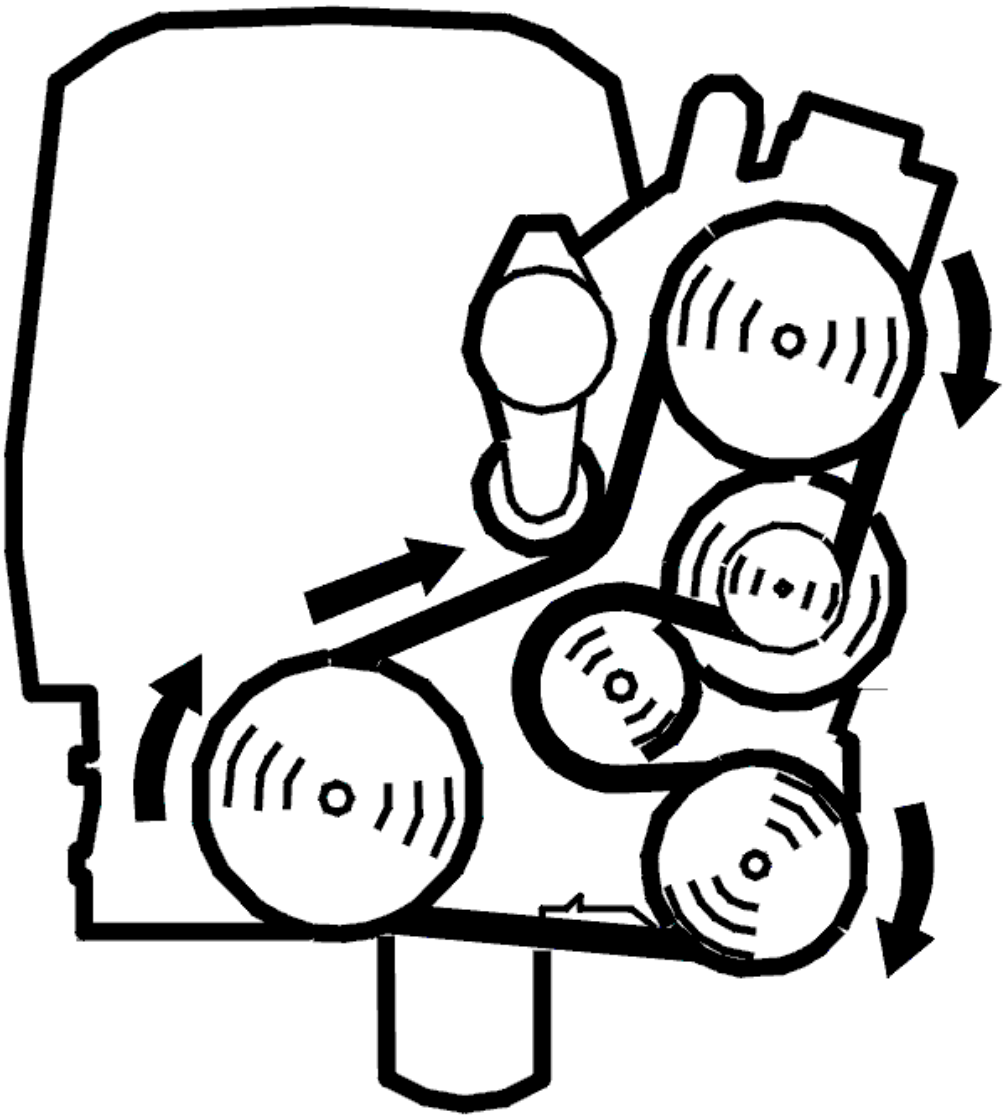

Fig. 332: Belt Routing / Engine Idling - Volvo
Courtesy of VOLVO CARS CORPORATION

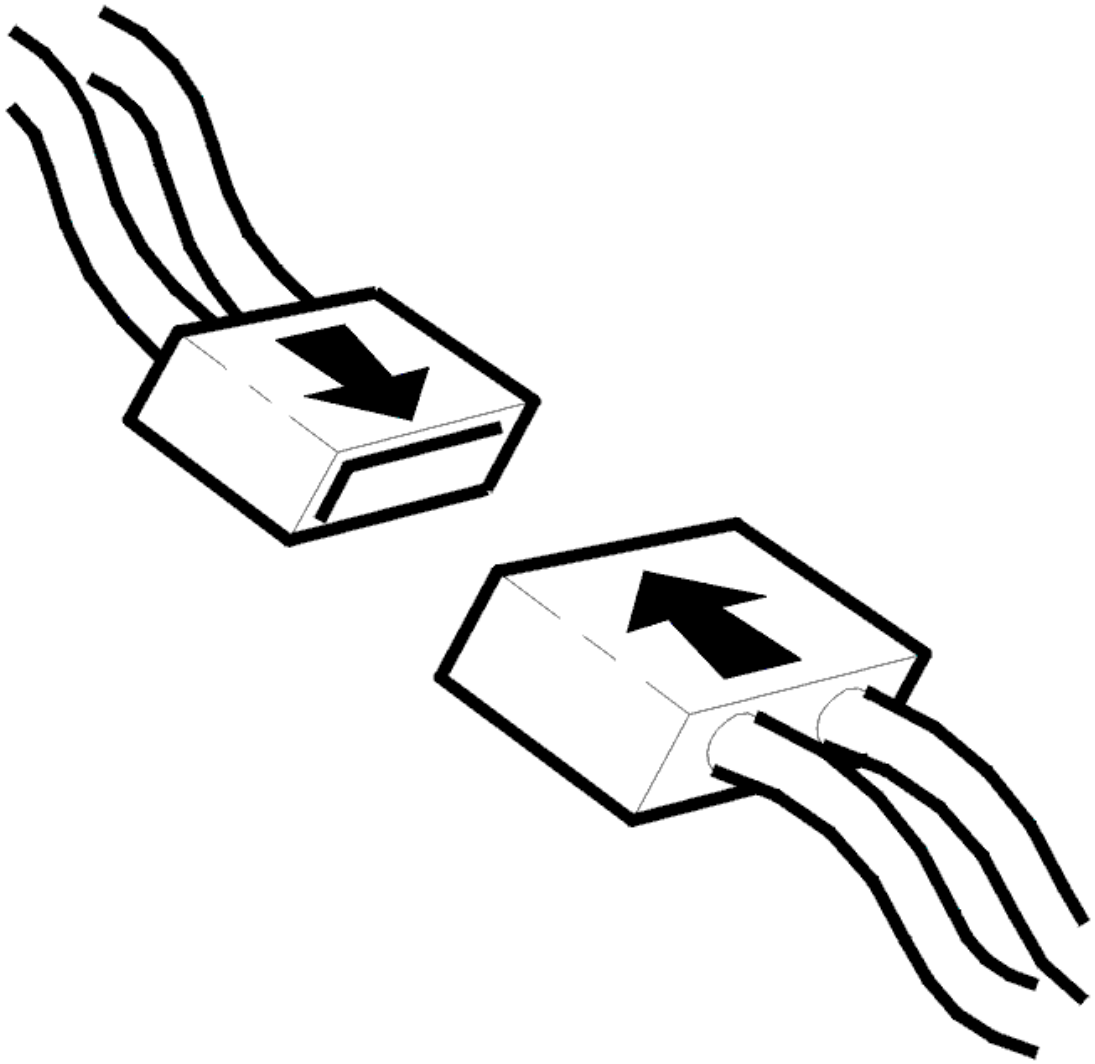

Fig. 333: Connecting Connector
Courtesy of VOLVO CARS CORPORATION

- Ignition off
- Reconnect the connectors, components, etc.
- Start the engine.
- Test drive the car on the road in different driving conditions with high and low loads so that the engine control module (ECM) can carry out diagnostics.
- Connect VCT2000 (or appropriate scan tool) to the data link connector **without switching off the engine.**
- Read the diagnostic status and fault status for the diagnostic trouble code by selecting the diagnostic trouble code in the list.

NOTE: **If the engine is switched off, the stored fault status will be erased and the test drive will have to be repeated.**

Check the fault status for the diagnostic trouble code when the scan is "Implemented". When the function is correct the fault status should be "No fault found" when the scan is implemented.

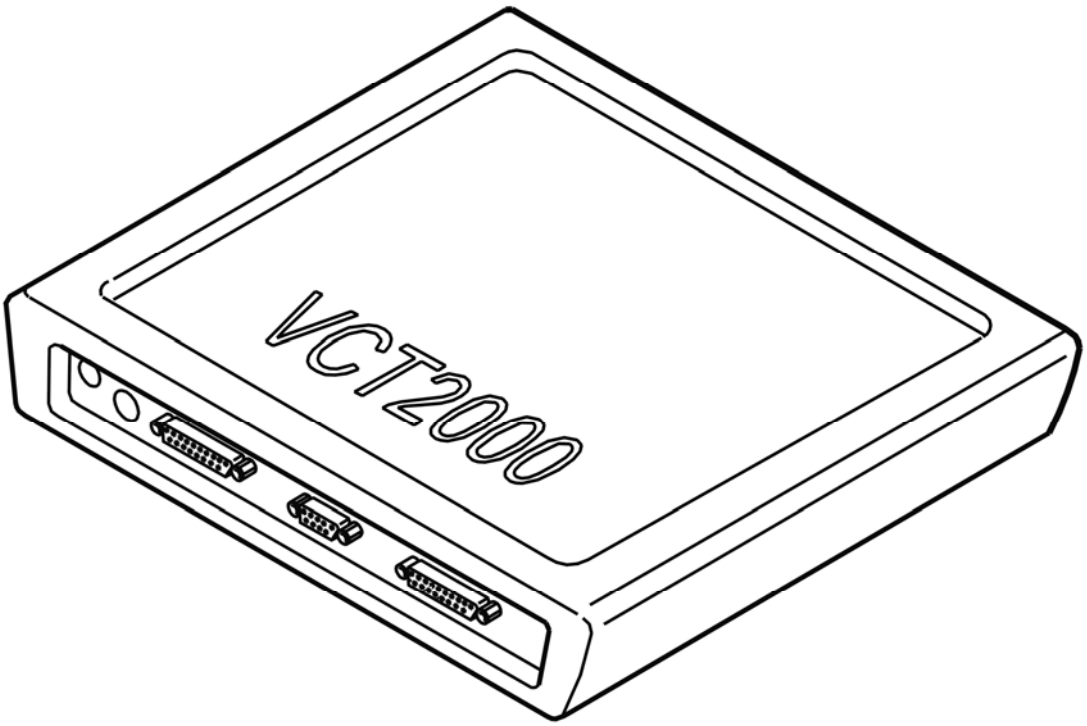

Fig. 334: Identifying VCT2000 Diagnostic Tool Symbol In VIDA
Courtesy of VOLVO CARS CORPORATION

Is the function OK?

- **YES**

  VERIFIED: Troubleshooting has been completed.

- **NO**

  Refer to **INFORMATION**

INFORMATION

FAULT-TRACING INFORMATION

The fault should have been detected and remedied. As this is not the case fault-tracing has failed.

Exit fault-tracing for this diagnostic trouble code (DTC) or make another attempt.

ECM-P032700: KNOCK SENSOR 1 CIRCUIT LOW INPUT (BANK1). GENERAL FAILURE INFORMATION. NO SUB TYPE INFORMATION (B6324S; 2007-2010)

DIAGNOSTIC TROUBLE CODE (DTC) INFORMATION ECM-P032700

Condition

Engine control module (ECM) monitors combustion knock from the engine to, when needed, adjust the ignition and thus prevent continued knock. Monitoring is performed with two knock sensors located on the engine block between the cylinder rows. The control module checks the direct voltage from the sensors.

The diagnostic trouble code (DTC) is stored if the control module detects that:

- The direct voltage is lower than 1.25 V.
- Incorrect value lasts longer than 26 seconds.
- Incorrect value lasts for 2 or more subsequent driving cycles.

The control module's test for the diagnostic trouble code (DTC) starts in the event of:

- Ignition switch position II.

NOTE: The control module can only detect the fault once the test has been started and the diagnostic trouble code (DTC) is stored when the conditions are met.

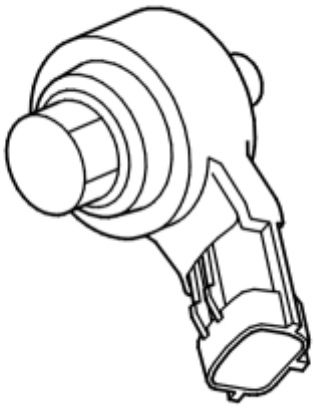

Fig. 335: Identifying Knock Sensor
Courtesy of VOLVO CARS CORPORATION

Substitute Value

- The control module reduces the ignition angle.

- The control module blocks knock control.

Possible Source

- Contact resistance and oxidation in the terminals.
- Short-circuit to ground in the signal cable.
- Damaged knock sensor (KS).

Fault symptom[s]

- Poor performance

FAULT-TRACING

see **FAULT-TRACING**

ECM-P032700: KNOCK SENSOR 1 CIRCUIT LOW INPUT (BANK1). GENERAL FAILURE INFORMATION. NO SUB TYPE INFORMATION (B6324S5; 2011-2012)

DIAGNOSTIC TROUBLE CODE (DTC) INFORMATION ECM-P032700

see **DIAGNOSTIC TROUBLE CODE (DTC) INFORMATION ECM-P032700**

FAULT-TRACING

see **FAULT-TRACING**

ECM-P032700: KNOCK SENSOR 1 CIRCUIT LOW INPUT SIGNAL (BANK 1). GENERAL FAULT INFORMATION. TYPE OF FAULT NOT SPECIFIED. (B8444S; 2005-2011)

DIAGNOSTIC TROUBLE CODE (DTC) INFORMATION ECM-P032700

Condition

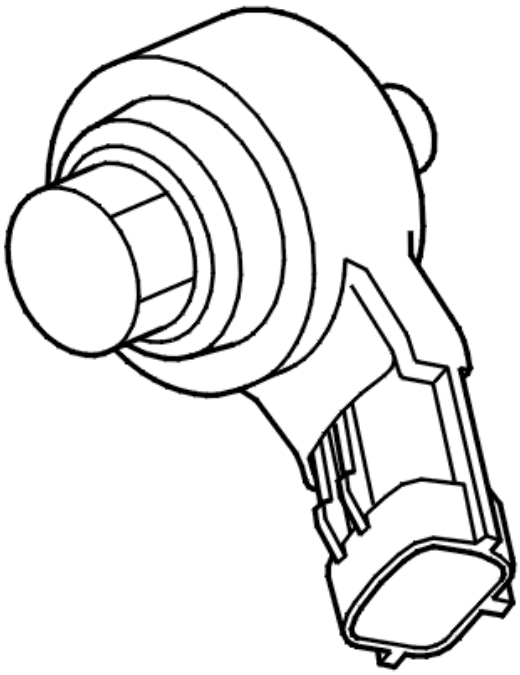

Fig. 336: Identifying Knock Sensor (KS) Connector
Courtesy of VOLVO CARS CORPORATION

The engine control module (ECM) uses the signal from the knock sensors to detect combustion knocks in the cylinders. The diagnostic trouble code is generated if the control module detects that the signal from the knock sensor is lower than its normal signal interval for a certain period of time.

The diagnostic trouble code can be diagnosed when the ignition is on.

The diagnostic trouble code refers to knock sensor 1.

HINT: Knock sensor 1detects knocking on cylinders 5, 6, 7 and 8.

Substitute Value

- Ignition angle reduction for reasons of safety.
- Knock control blocked.

Possible Source

- The signal cable is short-circuited to ground.
- Damaged knock sensor.

Fault symptom[s]

- Poor performance.

FAULT TRACING

CHECKING COMPONENTS AND WIRING

HINT: Knock sensor 1detects knocking on cylinders 5, 6, 7 and 8.

HINT: Knock sensor 2 detects knocking on cylinders 1, 2, 3 and 4.

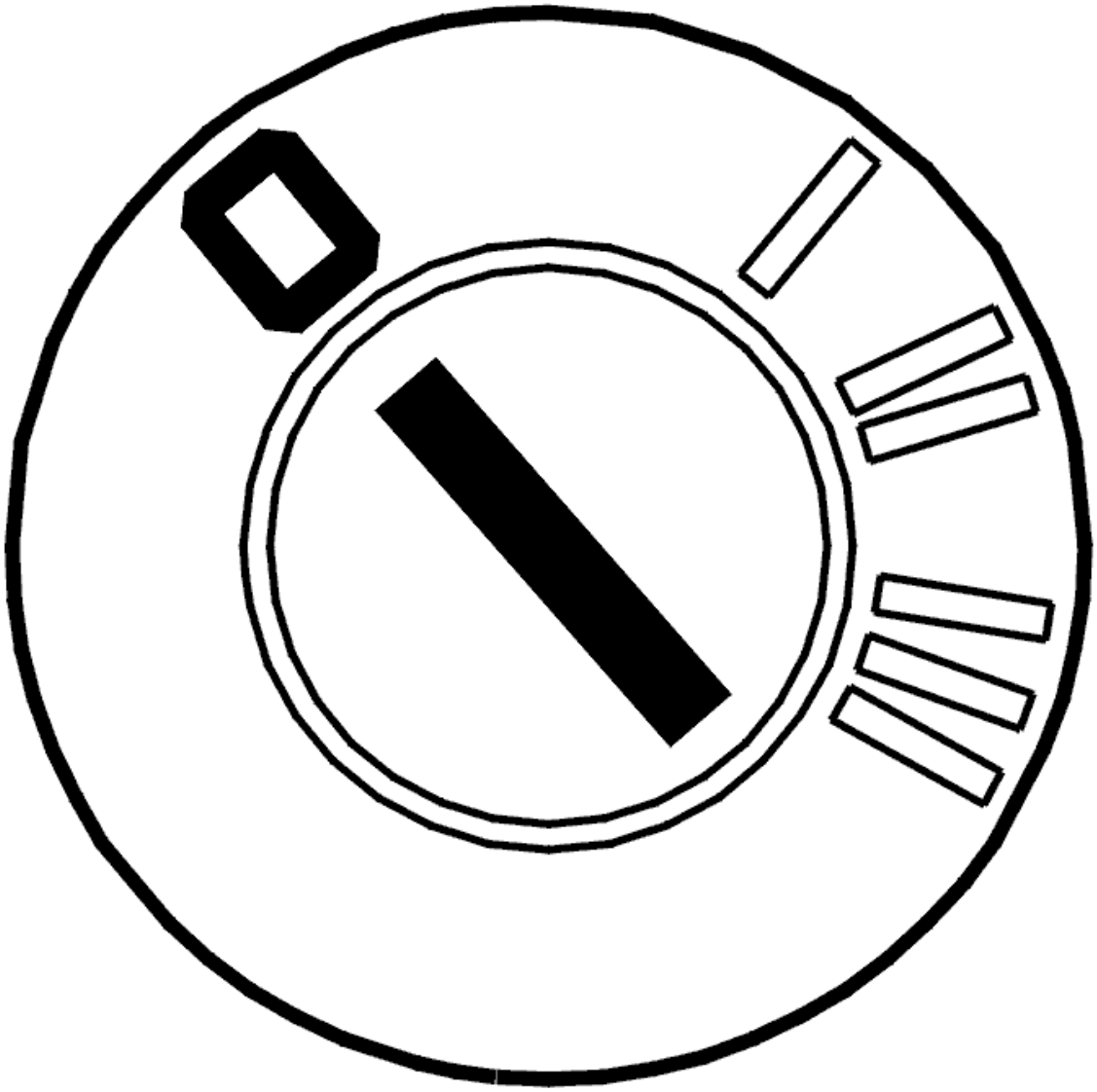

Fig. 337: Identifying Ignition OFF
Courtesy of VOLVO CARS CORPORATION

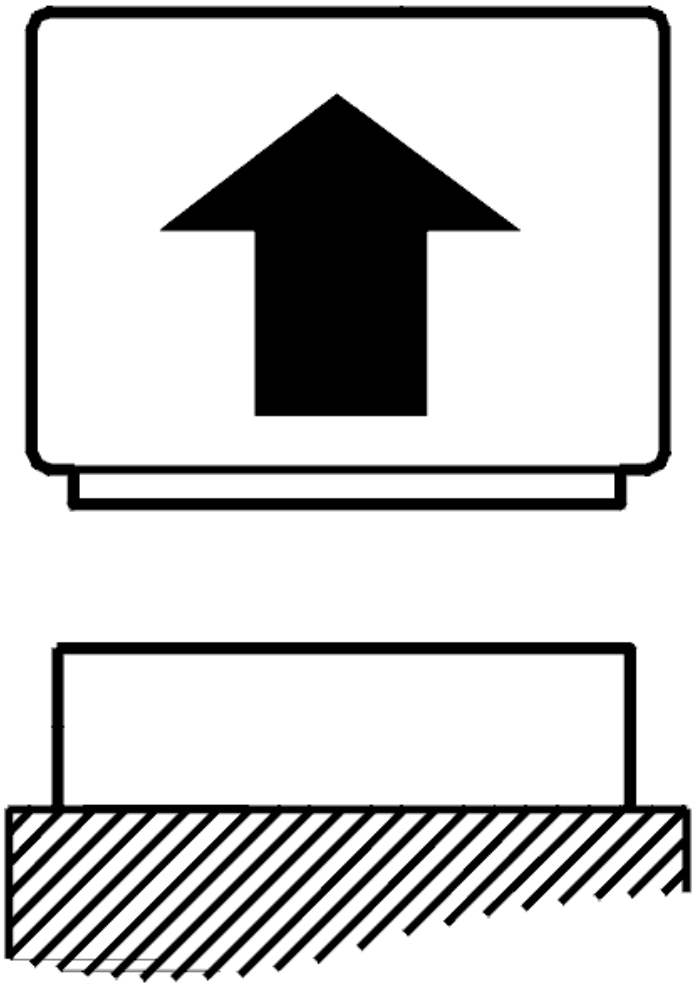

Fig. 338: Disconnecting Connector
Courtesy of VOLVO CARS CORPORATION

- Ignition off
- Disconnect the engine control module (ECM).

  Check the signal cable (+) between the control module and the connector of the relevant knock sensor for short-circuit to ground.

  Measure between:

  - Control module terminal #A43 (#A43) and knock sensor bank 1 terminal #2, (ECM-P032700).
  - Control module terminal #A42 (#A42) and knock sensor bank 2 terminal #2, (ECM-P033200).

  Check the signal cable (-) between the control module and the connector of the relevant knock sensor for

short-circuit to ground.

Measure between:

- Control module terminal #A20 (#A20) and knock sensor bank 1 terminal #1, (ECM-P032700).
- Control module terminal #A19 (#A19) and knock sensor bank 2 terminal #1, (ECM-P033200).

Remedy as necessary.

Other information

- see **CONNECTING THE BREAKOUT BOX**
- see **SIGNAL SPECIFICATION, ENGINE CONTROL MODULE (ECM)**
- see **KNOCK SENSOR (KS), REPLACING**
- see **CHECKING WIRING AND TERMINALS**

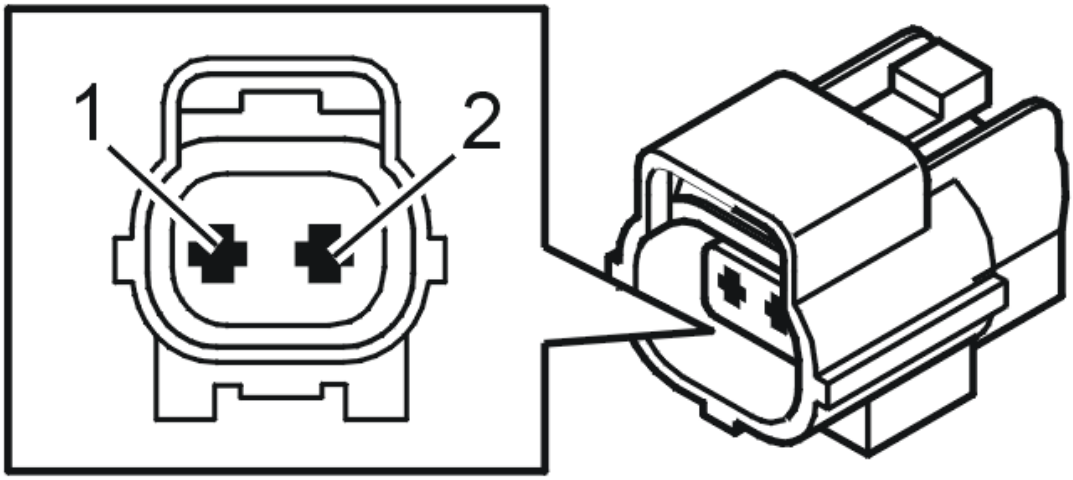

Fig. 339: Identifying Connector Terminals
Courtesy of VOLVO CARS CORPORATION

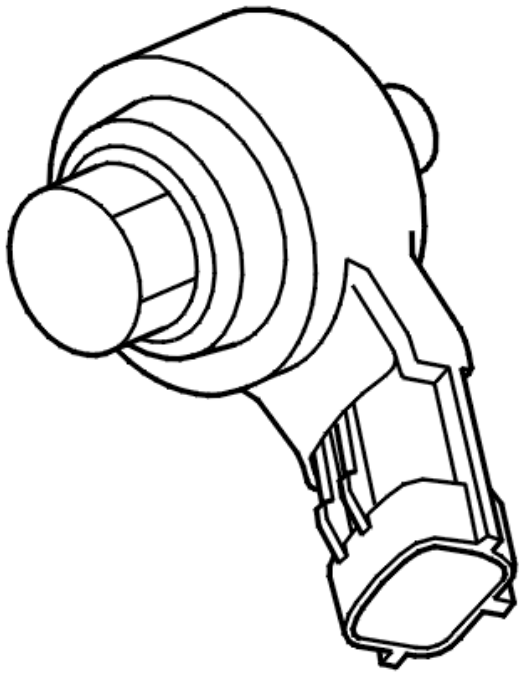

Fig. 340: Identifying Knock Sensor (KS) Connector
Courtesy of VOLVO CARS CORPORATION

- **Continue**

  Refer to **VERIFICATION**

VERIFICATION

VERIFICATION

HINT: After carrying out the repair, check that the fault has been remedied.

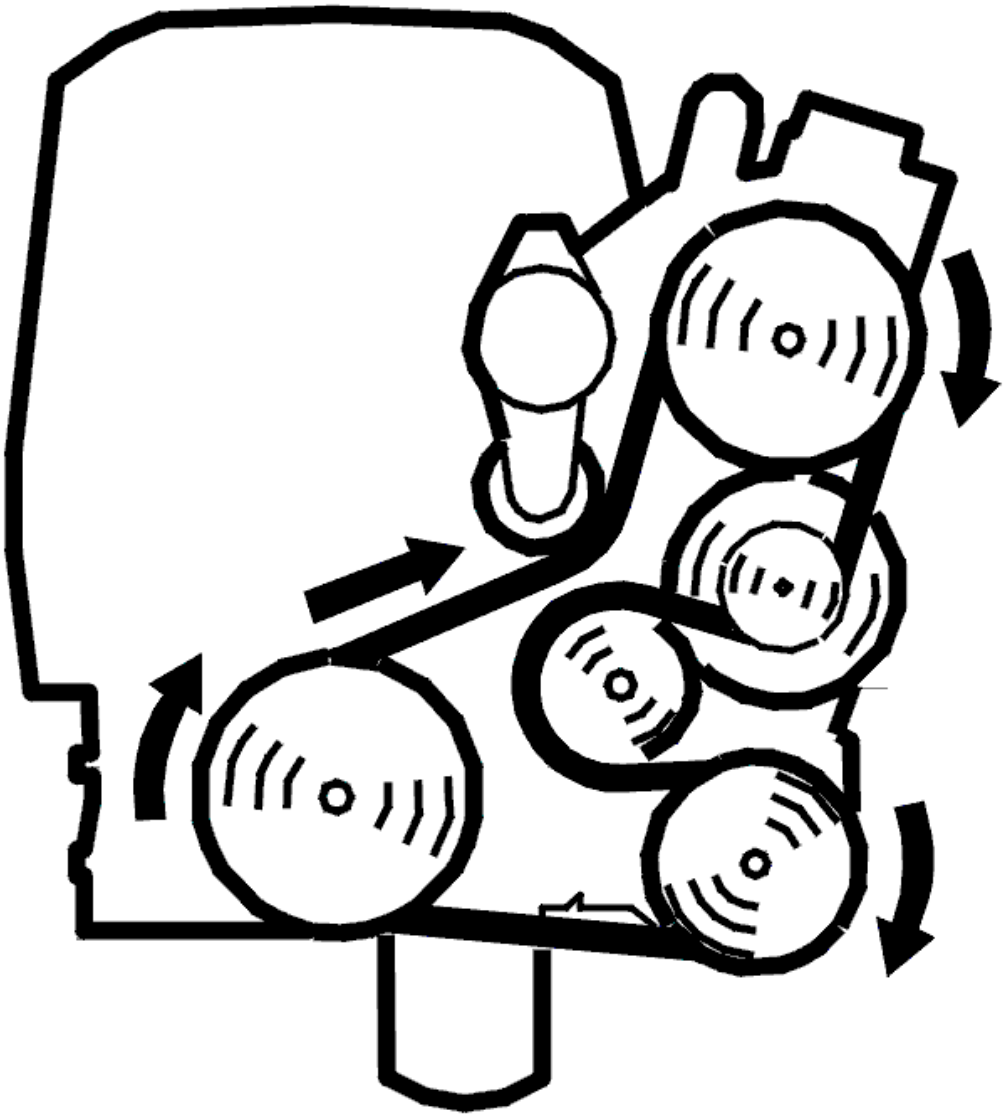

Fig. 341: Belt Routing / Engine Idling - Volvo
Courtesy of VOLVO CARS CORPORATION

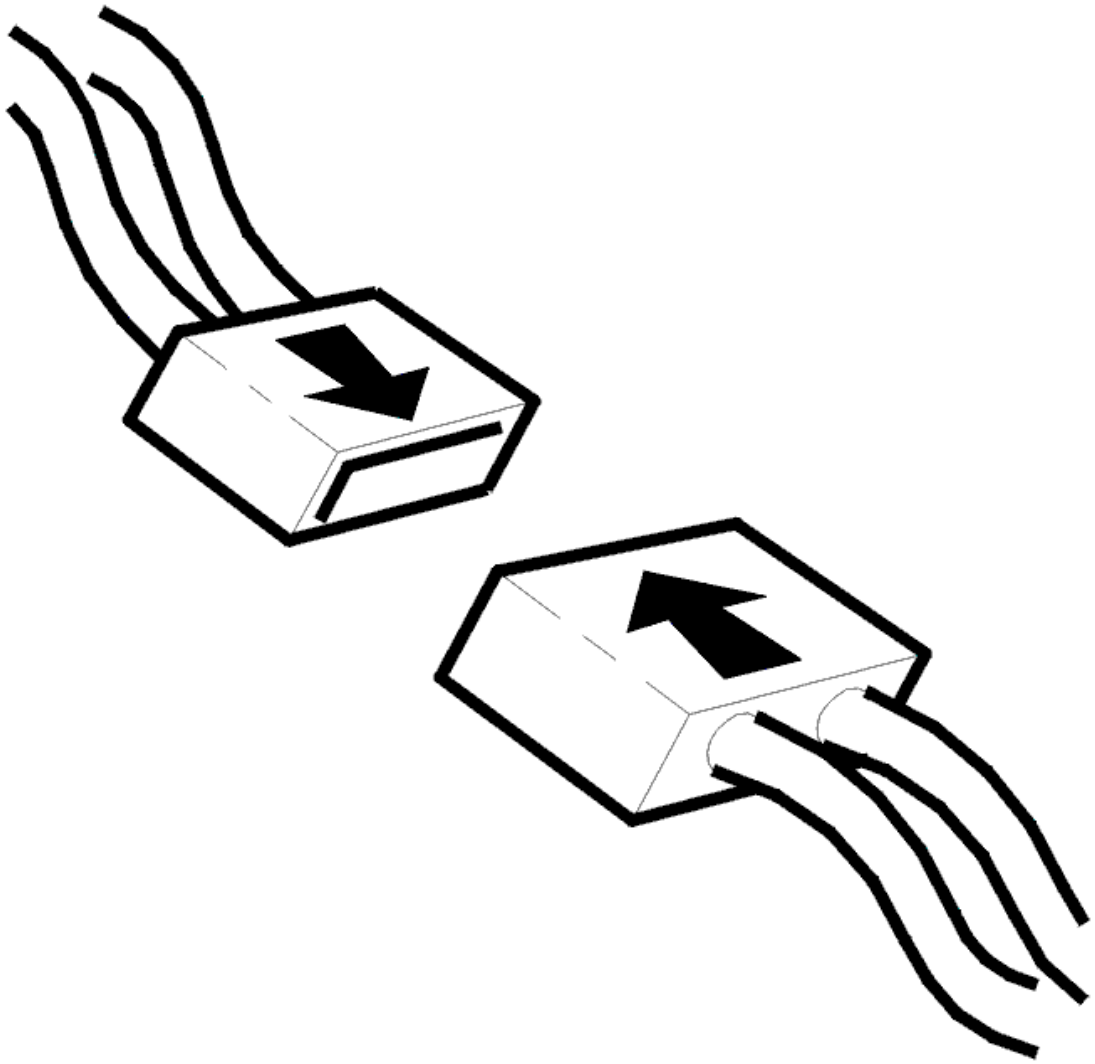

Fig. 342: Connecting Connector
Courtesy of VOLVO CARS CORPORATION

- Ignition off
- Reconnect the connectors, components, etc.
- Start the engine.
- Test drive the car on the road in different driving conditions with high and low loads so that the engine control module (ECM) can carry out diagnostics.
- Connect VCT2000 (or appropriate scan tool) to the data link connector **without switching off the engine.**
- Read the diagnostic status and fault status for the diagnostic trouble code by selecting the diagnostic trouble code in the list.

NOTE: **If the engine is switched off, the stored fault status will be erased and the test drive will have to be repeated.**

Check the fault status for the diagnostic trouble code when the scan is "Implemented". When the function is correct the fault status should be "No fault found" when the scan is implemented.

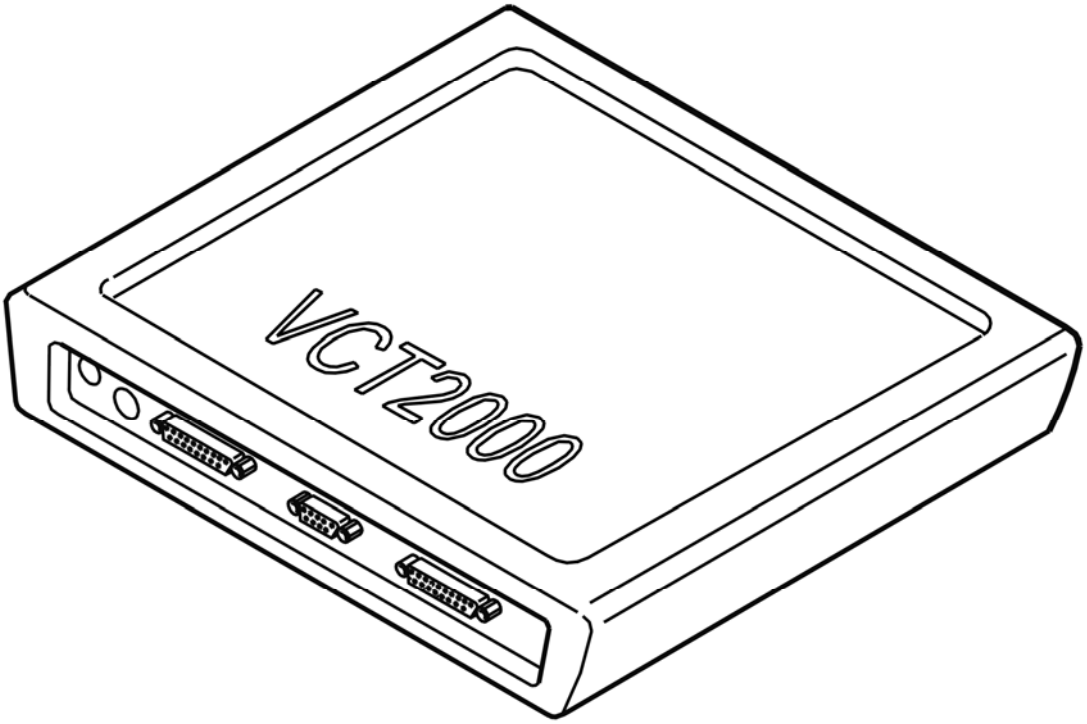

Fig. 343: Identifying VCT2000 Diagnostic Tool Symbol In VIDA
Courtesy of VOLVO CARS CORPORATION

Is the function OK?

- **YES**

  VERIFIED: Troubleshooting has been completed.

- **NO**

  Refer to **INFORMATION**

INFORMATION

FAULT-TRACING INFORMATION

The fault should have been detected and remedied. As this is not the case fault-tracing has failed.

Exit fault-tracing for this diagnostic trouble code (DTC) or make another attempt.

ECM-P032800: KNOCK SENSOR 1 CIRCUIT HIGH INPUT (BANK 1). GENERAL FAILURE INFORMATION. NO SUB TYPE INFORMATION (B6324S; 2007-2010)

DIAGNOSTIC TROUBLE CODE (DTC) INFORMATION ECM-P032800

Condition

Engine control module (ECM) monitors combustion knock from the engine to, when needed, adjust the ignition and thus prevent continued knock. Monitoring is performed with two knock sensors located on the engine block between the cylinder rows. The control module checks the direct voltage from the sensors.

The diagnostic trouble code (DTC) is stored if the control module detects that:

- The direct voltage is higher than 4.75 V.
- Incorrect value lasts longer than 26 seconds.
- Incorrect value lasts for 2 or more subsequent driving cycles.

The control module's test for the diagnostic trouble code (DTC) starts in the event of:

- Ignition switch position II.

NOTE: The control module can only detect the fault once the test has been started and the diagnostic trouble code (DTC) is stored when the conditions are met.

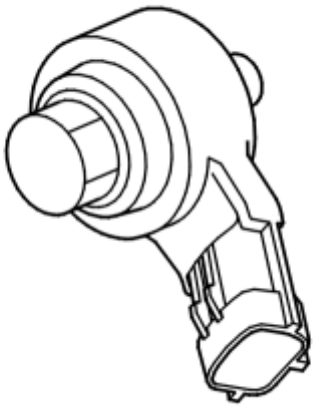

Fig. 344: Identifying Knock Sensor
Courtesy of VOLVO CARS CORPORATION

Substitute Value

- The control module reduces the ignition angle.

- The control module blocks knock control.

Possible Source

- Contact resistance and oxidation in the terminals.
- Short-circuit to supply voltage in the signal cable.
- Open-circuit in the signal cable.
- Damaged knock sensor (KS).

Fault symptom[s]

- Poor performance

FAULT-TRACING

see **FAULT-TRACING**

ECM-P032800: KNOCK SENSOR 1 CIRCUIT HIGH INPUT (BANK 1). GENERAL FAILURE INFORMATION. NO SUB TYPE INFORMATION (B6324S5; 2011-2012)

DIAGNOSTIC TROUBLE CODE (DTC) INFORMATION ECM-P032800

see **DIAGNOSTIC TROUBLE CODE (DTC) INFORMATION ECM-P032800**

FAULT-TRACING

see **FAULT-TRACING**

ECM-P032800: KNOCK SENSOR 1 CIRCUIT HIGH INPUT SIGNAL (BANK 1). GENERAL FAULT INFORMATION. TYPE OF FAULT NOT SPECIFIED. (B8444S; 2005-2011)

DIAGNOSTIC TROUBLE CODE (DTC) INFORMATION ECM-P032800

Condition

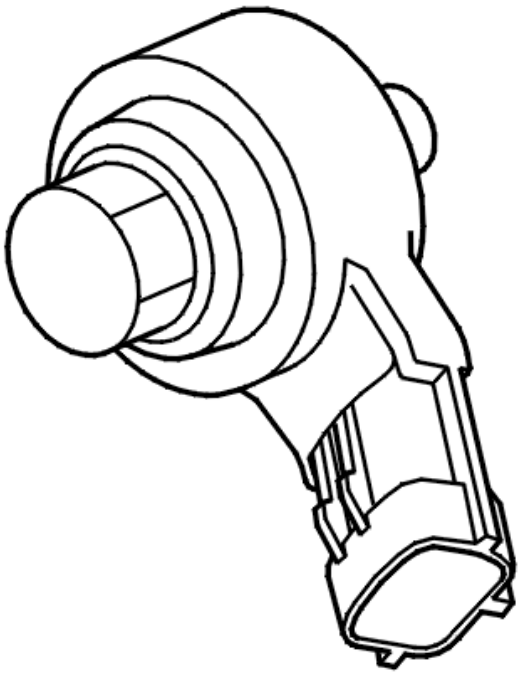

Fig. 345: Identifying Knock Sensor (KS) Connector
Courtesy of VOLVO CARS CORPORATION

The engine control module (ECM) uses the signal from the knock sensors to detect combustion knocks in the cylinders. The diagnostic trouble code is generated if the control module detects that the signal from the knock sensor is higher than its normal signal interval for a certain period of time.

The diagnostic trouble code can be diagnosed when the ignition is on.

The diagnostic trouble code refers to knock sensor 1.

HINT: Knock sensor 1detects knocking on cylinders 5, 6, 7 and 8.

Substitute Value

- Ignition angle reduction for reasons of safety.
- Knock control is blocked.

Possible Source

- The signal cable is short-circuited to voltage.
- Open-circuit on the signal cable.
- Contact resistance or oxidation in the knock sensor connector.

- Damaged knock sensor.

Fault symptom[s]

- Poor performance.

FAULT TRACING

CHECKING COMPONENTS AND WIRING

HINT: Knock sensor 1detects knocking on cylinders 5, 6, 7 and 8.

HINT: Knock sensor 2 detects knocking on cylinders 1, 2, 3 and 4.

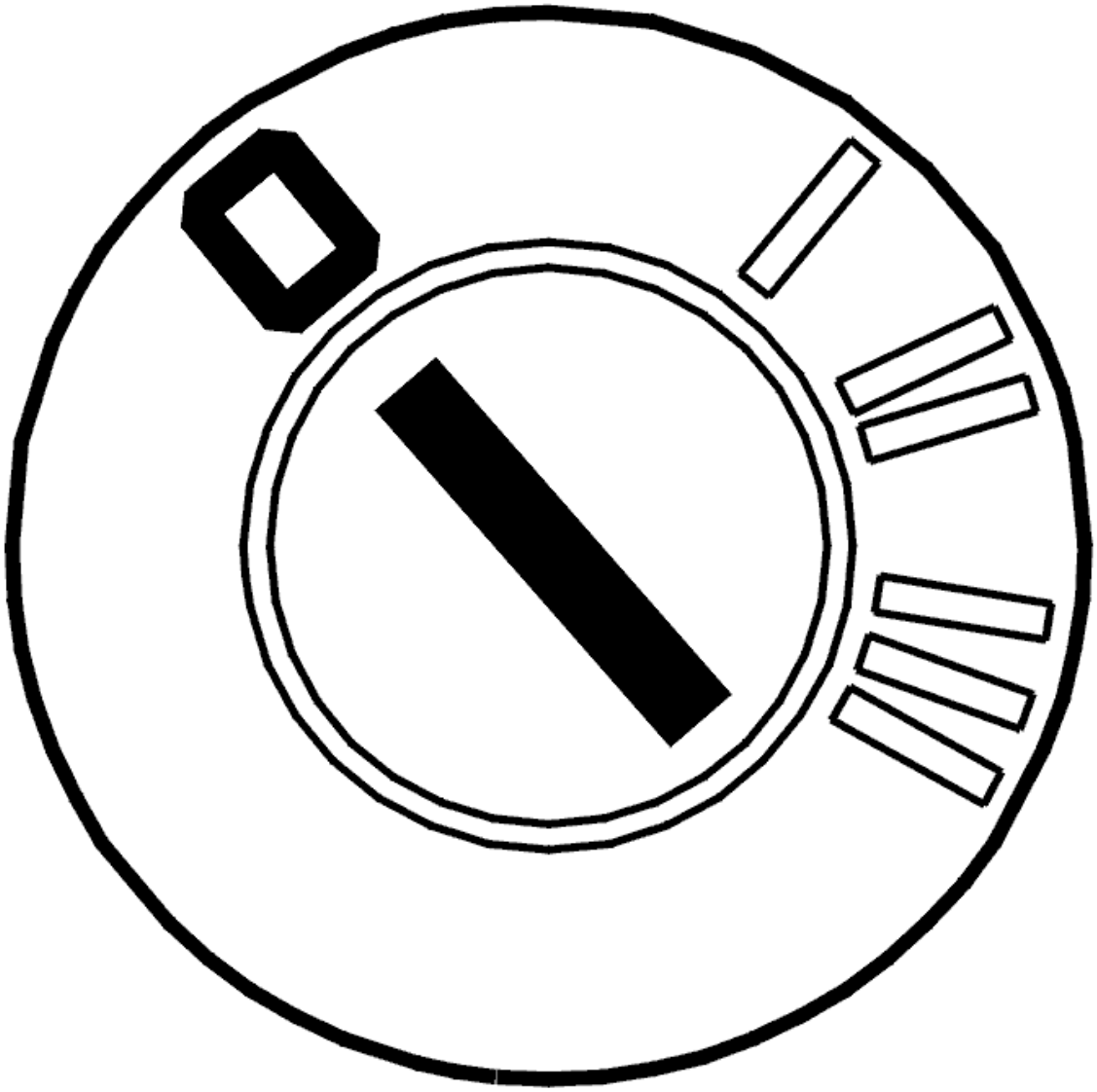

Fig. 346: Identifying Ignition OFF
Courtesy of VOLVO CARS CORPORATION

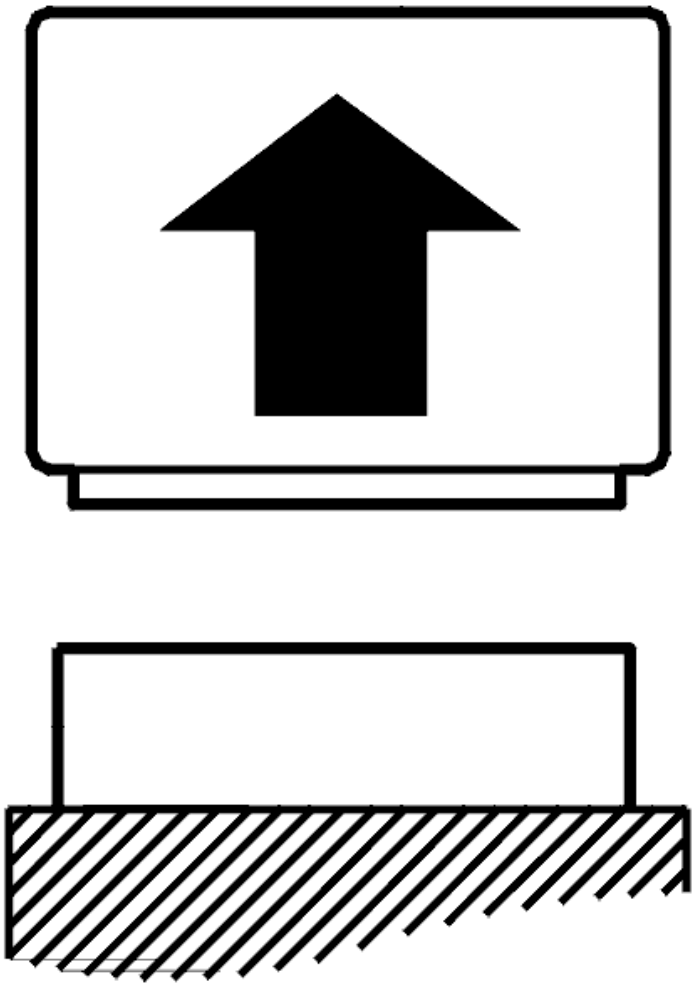

Fig. 347: Disconnecting Connector
Courtesy of VOLVO CARS CORPORATION

- Ignition off

  Check the connector of the knock sensor to which the diagnostic trouble code refers for contact resistance and oxidation.

  Disconnect the engine control module (ECM).

  Check the signal cable (+) between the control module and the connector of the knock sensor to which the diagnostic trouble code refers for open-circuit and short-circuit to supply voltage.

  Measure between:

  - Control module terminal #A43 (#A43) and knock sensor bank 1 terminal #2, (ECM-P032800).

- Control module terminal #A42 (#A42) and knock sensor bank 2 terminal #2, (ECM-P033300).

Check the signal cable (-) between the control module and the connector of the knock sensor to which the diagnostic trouble code refers for open-circuit and short-circuit to supply voltage.

Measure between:

- Control module terminal #A20 (#A20) and knock sensor bank 1 terminal #1, (ECM-P032800).
- Control module terminal #A19 (#A19) and knock sensor bank 2 terminal #1, (ECM-P033300).

Remedy as necessary.

Other information

- see **CONNECTING THE BREAKOUT BOX**
- see **SIGNAL SPECIFICATION, ENGINE CONTROL MODULE (ECM)**
- see **KNOCK SENSOR (KS), REPLACING**
- see **CHECKING WIRING AND TERMINALS**

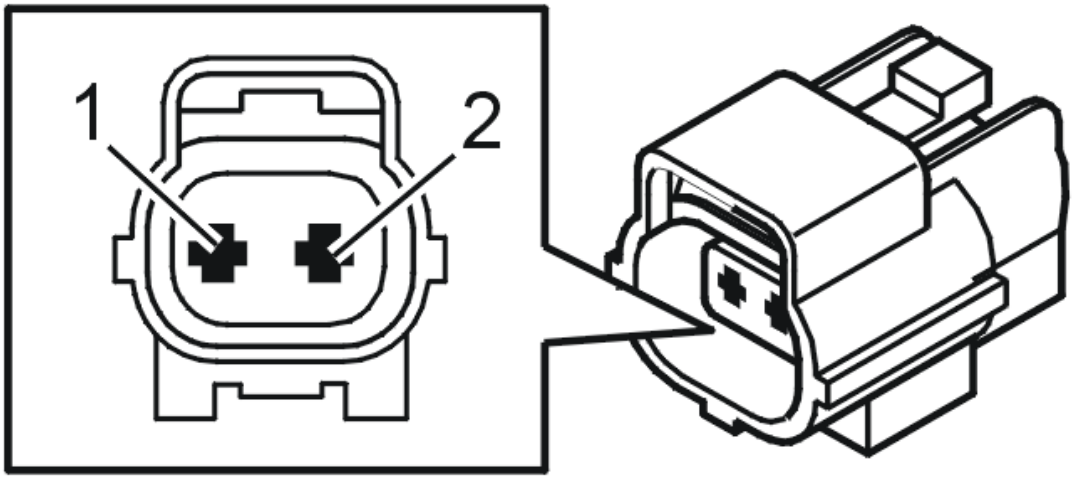

Fig. 348: Identifying Connector Terminals
Courtesy of VOLVO CARS CORPORATION

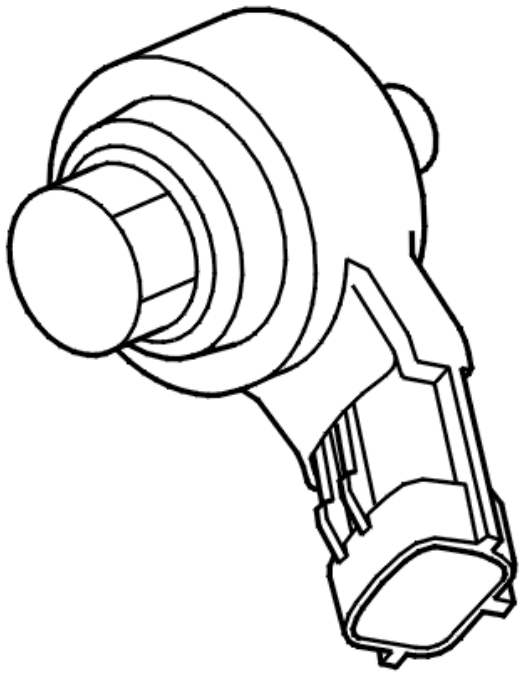

Fig. 349: Identifying Knock Sensor (KS) Connector
Courtesy of VOLVO CARS CORPORATION

- **Continue**

  Refer to **VERIFICATION**

VERIFICATION

VERIFICATION

HINT: After carrying out the repair, check that the fault has been remedied.

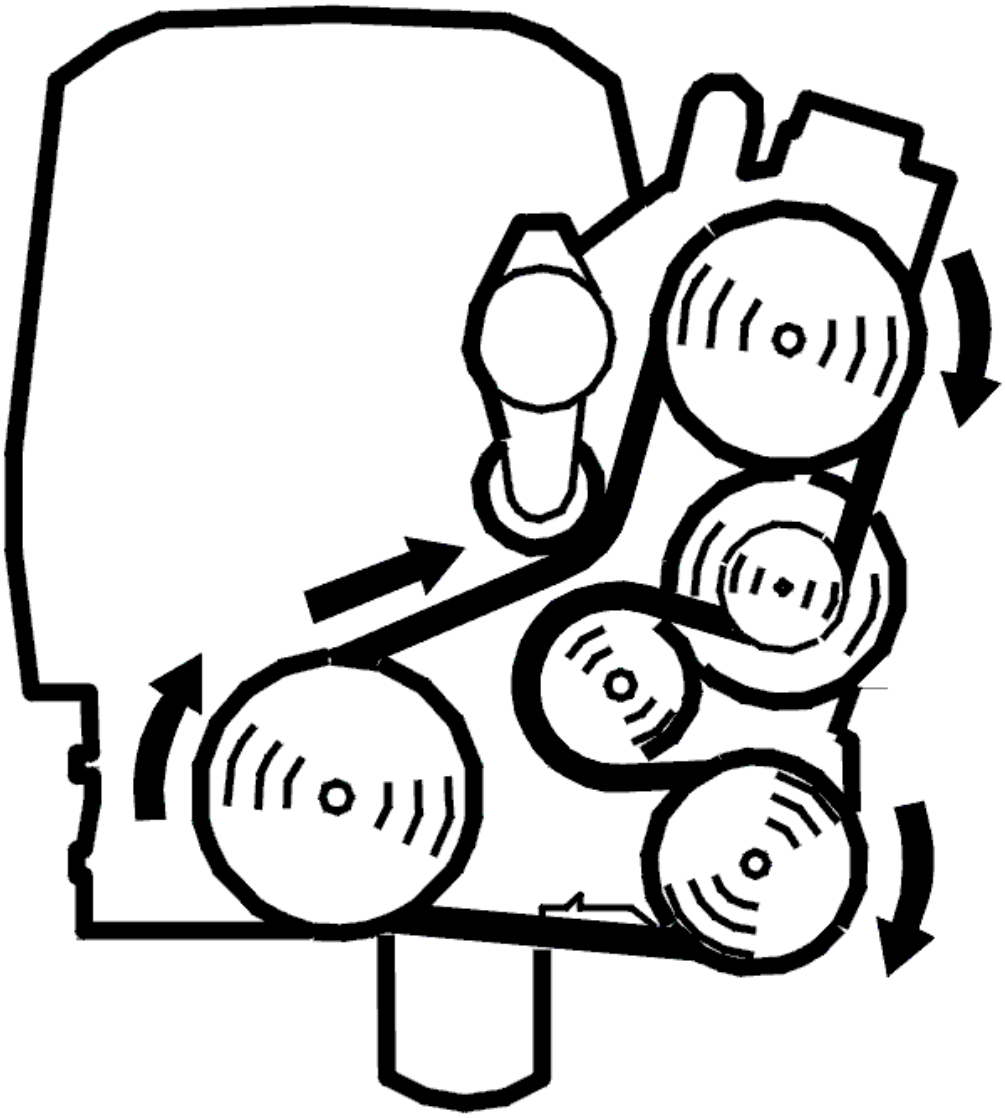

Fig. 350: Belt Routing / Engine Idling - Volvo
Courtesy of VOLVO CARS CORPORATION

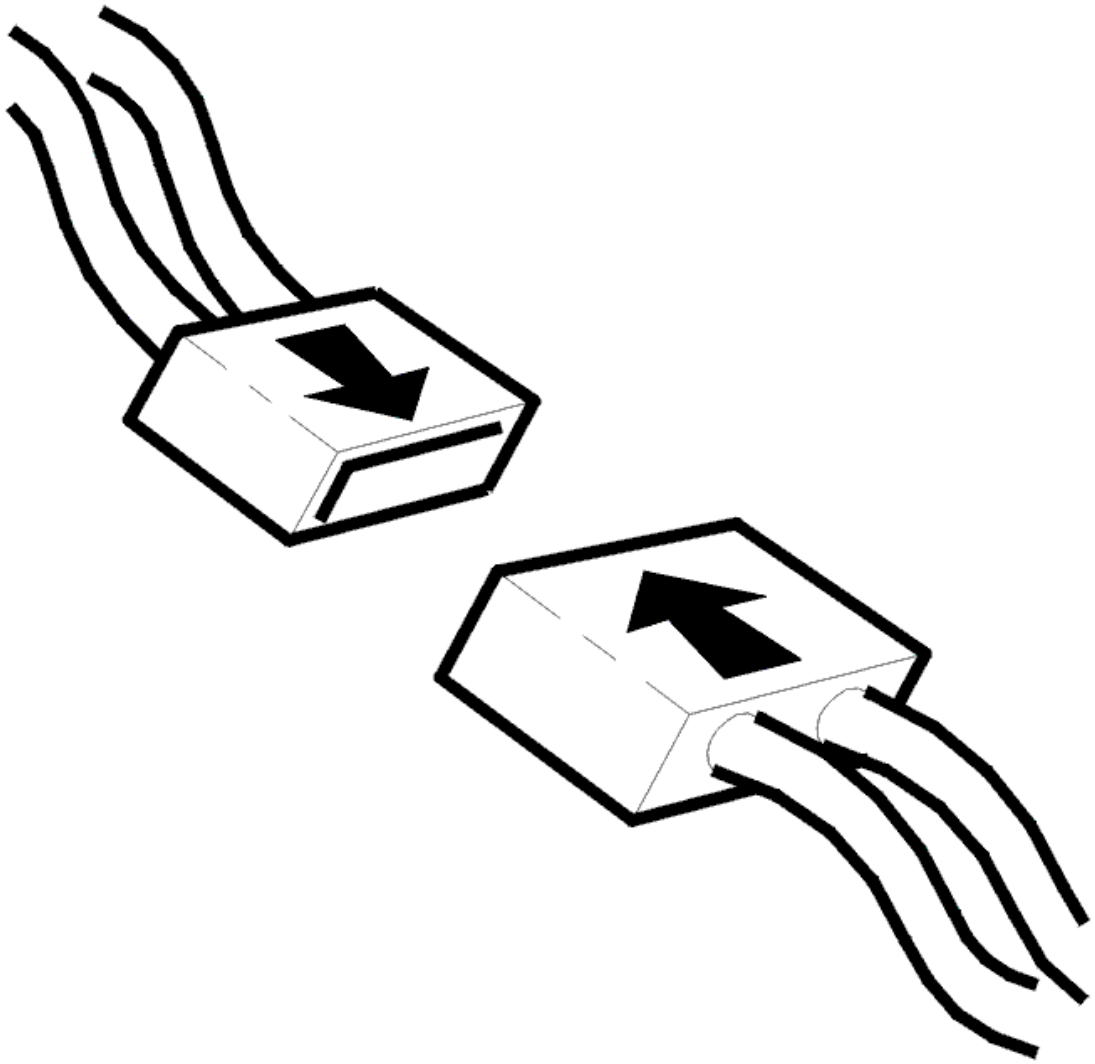

Fig. 351: Connecting Connector
Courtesy of VOLVO CARS CORPORATION

- Ignition off
- Reconnect the connectors, components, etc.
- Start the engine.
- Test drive the car on the road in different driving conditions with high and low loads so that the engine control module (ECM) can carry out diagnostics.
- Connect VCT2000 (or appropriate scan tool) to the data link connector **without switching off the engine.**
- Read the diagnostic status and fault status for the diagnostic trouble code by selecting the diagnostic trouble code in the list.

NOTE: **If the engine is switched off, the stored fault status will be erased and the test drive will have to be repeated.**

Check the fault status for the diagnostic trouble code when the scan is "Implemented". When the function is correct the fault status should be "No fault found" when the scan is implemented.

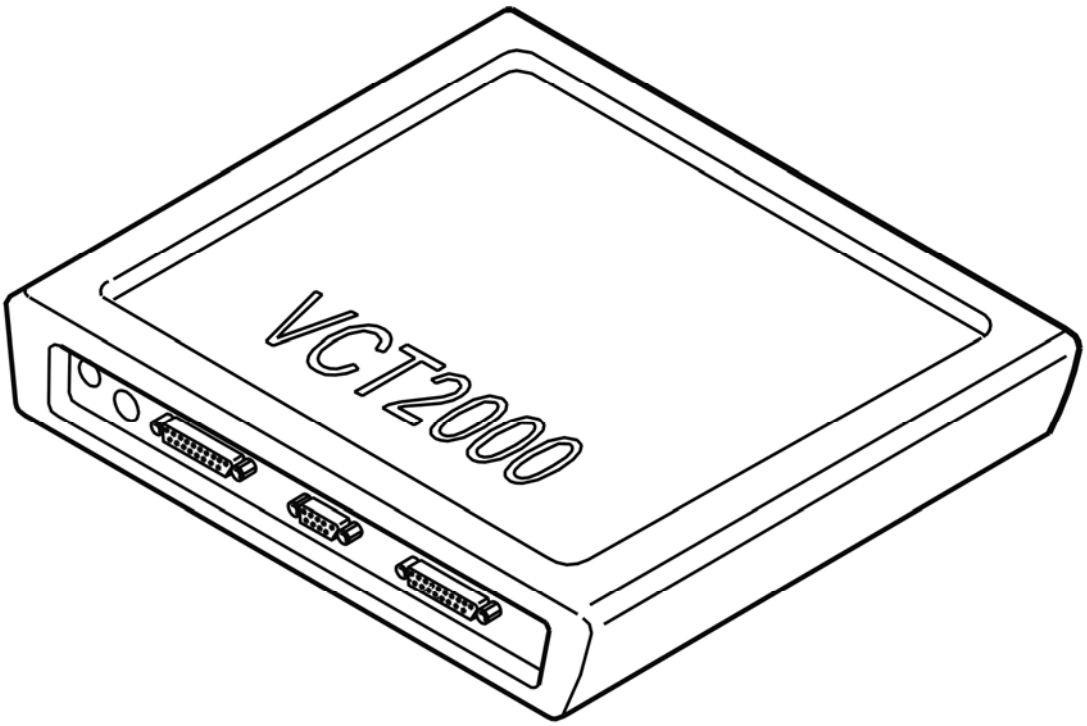

Fig. 352: Identifying VCT2000 Diagnostic Tool Symbol In VIDA
Courtesy of VOLVO CARS CORPORATION

Is the function OK?

- **YES**

  VERIFIED: Troubleshooting has been completed.

- **NO**

  Refer to **INFORMATION**

INFORMATION

FAULT-TRACING INFORMATION

The fault should have been detected and remedied. As this is not the case fault-tracing has failed.

Exit fault-tracing for this diagnostic trouble code (DTC) or make another attempt.

ECM-P033100: KNOCK SENSOR 2 CIRCUIT RANGE/PERFORMANCE (BANK 2). GENERAL FAILURE INFORMATION. NO SUB TYPE INFORMATION (B6324S; 2007-2010)

DIAGNOSTIC TROUBLE CODE (DTC) INFORMATION ECM-P033100

Condition

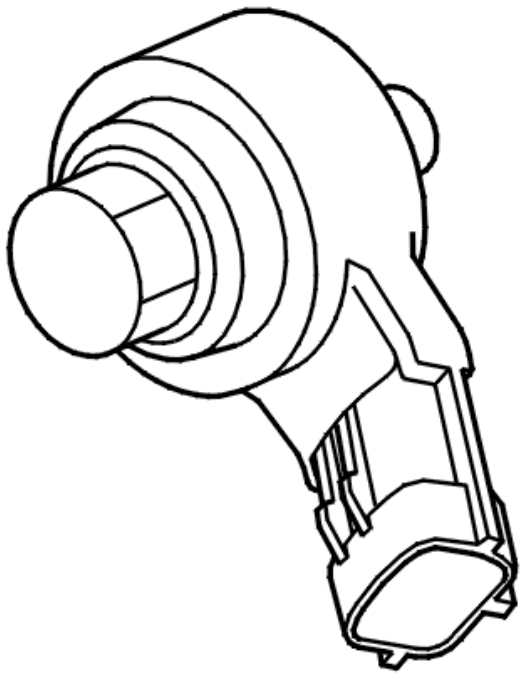

Fig. 353: Identifying Knock Sensor (KS) Connector
Courtesy of VOLVO CARS CORPORATION

The knock sensor signal varies with engine speed. The engine control module (ECM) checks that the knock sensor signal is within certain limits, which are determined by engine speed. The diagnostic trouble code is generated if the signal from the knock sensor is not within the limit values.

The diagnostic trouble code can be diagnosed during a road test.

The diagnostic trouble code refers to knock sensor 2.

Substitute Value

- Ignition angle reduction for reasons of safety.

Possible Source

- Contact resistance or oxidation in the connector for the knock sensor (KS).
- Loosely installed knock sensor (KS).
- Damaged knock sensor (KS).

Fault symptom[s]

- Poor performance.

FAULT-TRACING

see **FAULT-TRACING**

ECM-P033100: KNOCK SENSOR 2 CIRCUIT RANGE/PERFORMANCE (BANK 2). GENERAL FAILURE INFORMATION. NO SUB TYPE INFORMATION (B6324S5; 2011-2012)

DIAGNOSTIC TROUBLE CODE (DTC) INFORMATION ECM-P033100

see **DIAGNOSTIC TROUBLE CODE (DTC) INFORMATION ECM-P033100**

FAULT-TRACING

see **FAULT-TRACING**

ECM-P033100: KNOCK SENSOR 2 CIRCUIT WITHIN/EXCEEDING LIMIT VALUES (BANK 2). GENERAL FAULT INFORMATION. TYPE OF FAULT NOT SPECIFIED. (B8444S; 2005-2011)

DIAGNOSTIC TROUBLE CODE (DTC) INFORMATION ECM-P033100

Condition

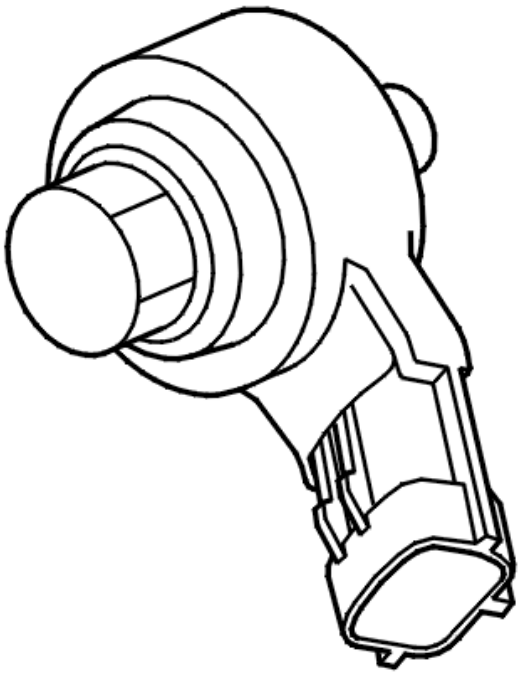

Fig. 354: Identifying Knock Sensor (KS) Connector
Courtesy of VOLVO CARS CORPORATION

The knock sensor signal varies with engine speed. The engine control module (ECM) checks that the knock sensor signal is within certain limits, which are determined by engine speed. The diagnostic trouble code is generated if the signal from the knock sensor is not within the limit values.

The diagnostic trouble code can be diagnosed during a road test.

The diagnostic trouble code refers to knock sensor 2.

HINT: Knock sensor 2 detects knocking on cylinders 1, 2, 3 and 4.

Substitute Value

- Ignition angle reduction for reasons of safety.

Possible Source

- Improperly installed knock sensor.
- Damaged knock sensor.
- Contact resistance or oxidation in the knock sensor connector.

Fault symptom[s]

- Poor performance.

FAULT TRACING

see **FAULT TRACING**

ECM-P033200: KNOCK SENSOR 2 CIRCUIT LOW INPUT (BANK 2). GENERAL FAILURE INFORMATION. NO SUB TYPE INFORMATION (B6324S; 2007-2010)

DIAGNOSTIC TROUBLE CODE (DTC) INFORMATION ECM-P033200

Condition

Engine control module (ECM) monitors combustion knock from the engine to, when needed, adjust the ignition and thus prevent continued knock. Monitoring is performed with two knock sensors located on the engine block between the cylinder rows. The control module checks the direct voltage from the sensors.

The diagnostic trouble code (DTC) is stored if the control module detects that:

- The direct voltage is lower than 1.25 V.
- Incorrect value lasts longer than 26 seconds.
- Incorrect value lasts for 2 or more subsequent driving cycles.

The control module's test for the diagnostic trouble code (DTC) starts in the event of:

- Ignition switch position II.

NOTE: The control module can only detect the fault once the test has been started and the diagnostic trouble code (DTC) is stored when the conditions are met.

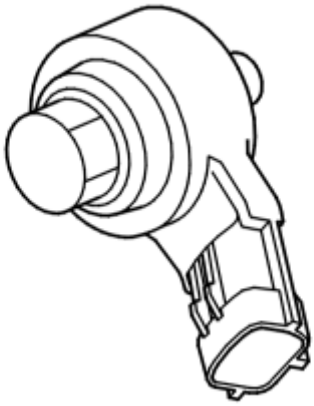

Fig. 355: Identifying Knock Sensor
Courtesy of VOLVO CARS CORPORATION

Substitute Value

- The control module reduces the ignition angle.
- The control module blocks knock control.

Possible Source

- Contact resistance and oxidation in the terminals.
- Short-circuit to ground in the signal cable.
- Damaged knock sensor (KS).

Fault symptom[s]

- Poor performance

FAULT-TRACING

see **FAULT-TRACING**

ECM-P033200: KNOCK SENSOR 2 CIRCUIT LOW INPUT (BANK 2). GENERAL FAILURE INFORMATION. NO SUB TYPE INFORMATION (B6324S5; 2011-2012)

DIAGNOSTIC TROUBLE CODE (DTC) INFORMATION ECM-P033200

see **DIAGNOSTIC TROUBLE CODE (DTC) INFORMATION ECM-P033200**

FAULT-TRACING

see **FAULT-TRACING**

ECM-P033200: KNOCK SENSOR 2 CIRCUIT LOW INPUT SIGNAL (BANK 2). GENERAL FAULT INFORMATION. TYPE OF FAULT NOT SPECIFIED. (B8444S; 2005-2011)

DIAGNOSTIC TROUBLE CODE (DTC) INFORMATION ECM-P033200

Condition

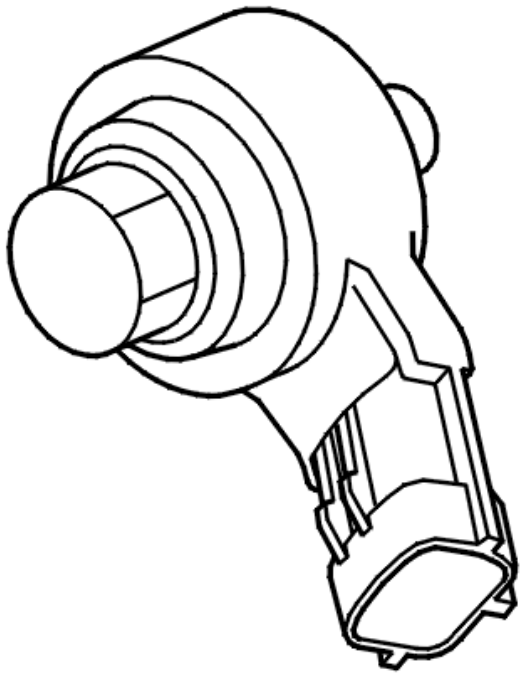

Fig. 356: Identifying Knock Sensor (KS) Connector
Courtesy of VOLVO CARS CORPORATION

The engine control module (ECM) uses the signal from the knock sensors to detect combustion knocks in the cylinders. The diagnostic trouble code is generated if the control module detects that the signal from the knock sensor is lower than its normal signal interval for a certain period of time.

The diagnostic trouble code can be diagnosed when the ignition is on.

Knock sensor 2 detects knocking on cylinders 1, 2, 3 and 4.

Substitute Value

- Ignition angle reduction for reasons of safety.
- Knock control blocked.

Possible Source

- The signal cable is short-circuited to ground.
- Damaged knock sensor.

Fault symptom[s]

- Poor performance.

FAULT TRACING

see **FAULT TRACING**

ECM-P033300: KNOCK SENSOR 2 CIRCUIT HIGH INPUT (BANK 2). GENERAL FAILURE INFORMATION. NO SUB TYPE INFORMATION (B6324S; 2007-2010)

DIAGNOSTIC TROUBLE CODE (DTC) INFORMATION ECM-P033300

Condition

Engine control module (ECM) monitors combustion knock from the engine to, when needed, adjust the ignition and thus prevent continued knock. Monitoring is performed with two knock sensors located on the engine block between the cylinder rows. The control module checks the direct voltage from the sensors.

The diagnostic trouble code (DTC) is stored if the control module detects that:

- The direct voltage is higher than 4.75 V.
- Incorrect value lasts longer than 26 seconds.
- Incorrect value lasts for 2 or more subsequent driving cycles.

The control module's test for the diagnostic trouble code (DTC) starts in the event of:

- Ignition switch position II.

NOTE: **The control module can only detect the fault once the test has been started and the diagnostic trouble code (DTC) is stored when the conditions are met.**

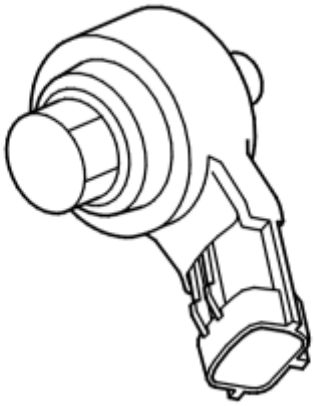

Fig. 357: Identifying Knock Sensor
Courtesy of VOLVO CARS CORPORATION

Substitute Value

- The control module reduces the ignition angle.
- The control module blocks knock control.

Possible Source

- Contact resistance and oxidation in the terminals.
- Short-circuit to supply voltage in the signal cable.
- Open-circuit in the signal cable.
- Damaged knock sensor (KS).

Fault symptom[s]

- Poor performance

FAULT-TRACING

see **FAULT-TRACING**

ECM-P033300: KNOCK SENSOR 2 CIRCUIT HIGH INPUT (BANK 2). GENERAL FAILURE INFORMATION. NO SUB TYPE INFORMATION (B6324S5; 2011-2012)

DIAGNOSTIC TROUBLE CODE (DTC) INFORMATION ECM-P033300

see **DIAGNOSTIC TROUBLE CODE (DTC) INFORMATION ECM-P033300**

FAULT-TRACING

see **FAULT-TRACING**

ECM-P033300: KNOCK SENSOR 2 CIRCUIT HIGH INPUT SIGNAL (BANK 2). GENERAL FAULT INFORMATION. TYPE OF FAULT NOT SPECIFIED. (B8444S; 2005-2011)

DIAGNOSTIC TROUBLE CODE (DTC) INFORMATION ECM-P033300

Condition

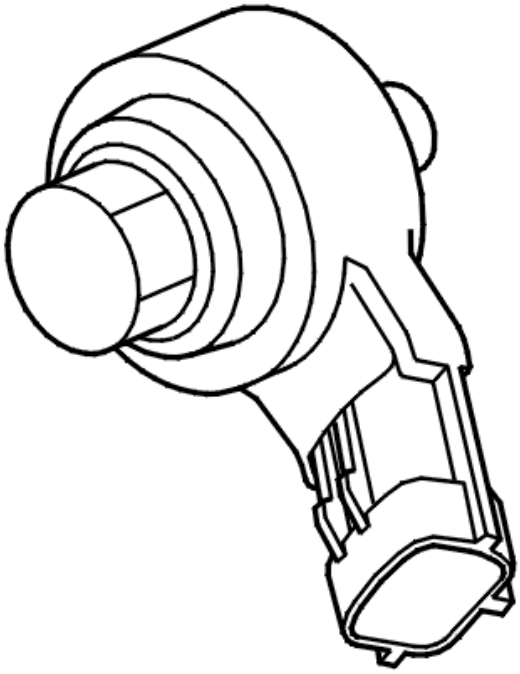

Fig. 358: Identifying Knock Sensor (KS) Connector
Courtesy of VOLVO CARS CORPORATION

The engine control module (ECM) uses the signal from the knock sensors to detect combustion knocks in the cylinders. The diagnostic trouble code is generated if the control module detects that the signal from the knock sensor is higher than its normal signal interval for a certain period of time.

The diagnostic trouble code can be diagnosed when the ignition is on.

The diagnostic trouble code refers to knock sensor 2.

HINT: Knock sensor 2 detects knocking on cylinders 1, 2, 3 and 4.

Substitute Value

- Ignition angle reduction for reasons of safety.
- Knock control blocked.

Possible Source

- The signal cable is short-circuited to voltage.
- Open-circuit on the signal cable.
- Contact resistance or oxidation in the knock sensor connector.
- Damaged knock sensor.

Fault symptom[s]

- Poor performance.

FAULT TRACING

see **FAULT TRACING**

ECM-P033500: CRANKSHAFT POSITION SENSOR A CIRCUIT. GENERAL FAILURE INFORMATION. NO SUB TYPE INFORMATION (B6324S; 2007-2010)

DIAGNOSTIC TROUBLE CODE (DTC) INFORMATION ECM-P033500

Condition

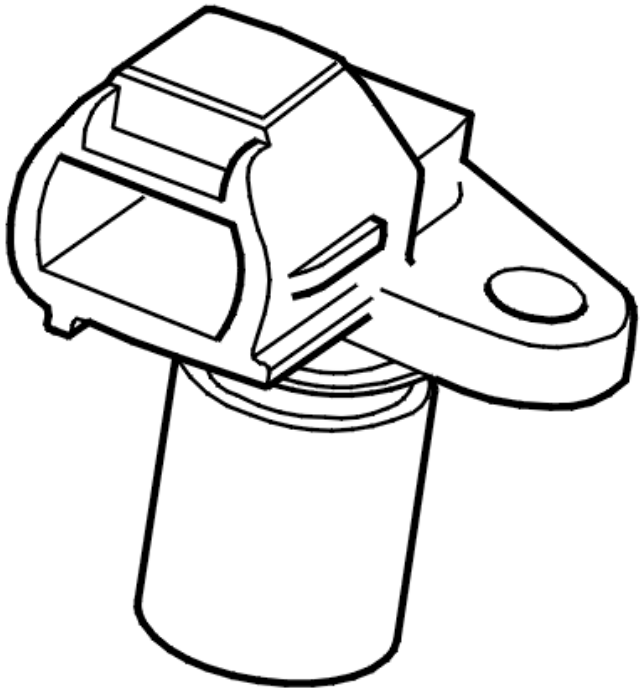

Fig. 359: Detecting The Reference Positions Of The Camshaft
Courtesy of VOLVO CARS CORPORATION

The signal sent by the engine speed sensor to the engine control module (ECM) provides information on the number of teeth in the flywheel/number of holes in the carrier plate that has passed the engine speed sensor. The control module uses the signal to calculate engine speed. The diagnostic code is generated if via the engine speed sensor signal the control module detects an incorrect number of teeth on the flywheel/holes in the carrier plate for a certain number of crankshaft revolutions.

The diagnostic trouble code can be diagnosed by the control module when the starter motor is running.

Substitute Value

- Signal from the camshaft position sensor.

Possible Source

- The signal cable (+) has an open-circuit or is short-circuited to ground or supply voltage.
- The signal cable (-) has an open-circuit or is short-circuited to ground or supply voltage.
- Damaged engine speed (RPM) sensor

Fault symptom[s]

- Nothing.

FAULT-TRACING

see **FAULT-TRACING**

ECM-P033500: CRANKSHAFT POSITION SENSOR A CIRCUIT. GENERAL FAILURE INFORMATION. NO SUB TYPE INFORMATION (B6324S5; 2011-2012)

DIAGNOSTIC TROUBLE CODE (DTC) INFORMATION ECM-P033500

see **DIAGNOSTIC TROUBLE CODE (DTC) INFORMATION ECM-P033500**

FAULT-TRACING

see **FAULT-TRACING**

ECM-P033500: CRANKSHAFT POSITION SENSOR A CIRCUIT LOW INPUT SIGNAL. GENERAL FAULT INFORMATION. TYPE OF FAULT NOT SPECIFIED. (B8444S; 2005-2011)

DIAGNOSTIC TROUBLE CODE (DTC) INFORMATION ECM-P033500

Condition

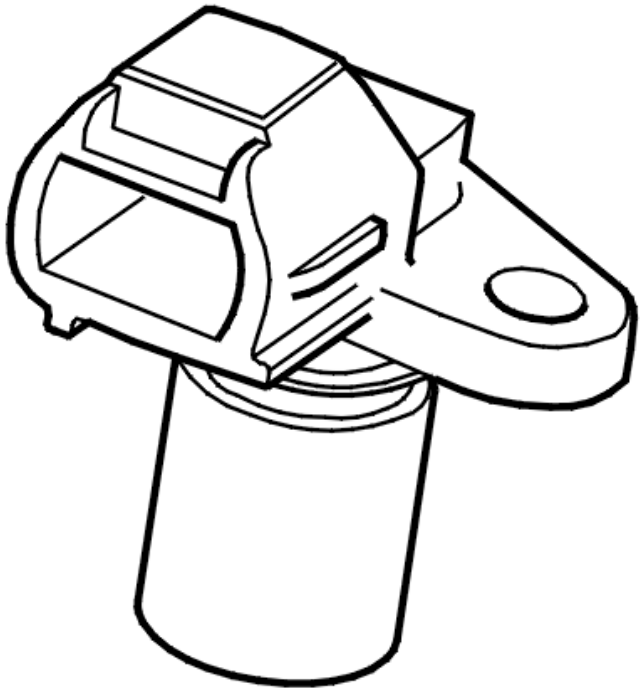

Fig. 360: Detecting The Reference Positions Of The Camshaft
Courtesy of VOLVO CARS CORPORATION

The signal sent by the engine speed sensor to the engine control module (ECM) provides information on the number of teeth in the flywheel/number of holes in the carrier plate that has passed the engine speed sensor. The control module uses the signal to calculate engine speed. The diagnostic code is generated if via the engine speed sensor signal the control module detects an incorrect number of teeth on the flywheel/holes in the carrier plate for a certain number of crankshaft revolutions.

The diagnostic trouble code can be diagnosed by the control module when the starter motor is running.

Substitute Value

- Signal from the camshaft position sensor.

Possible Source

- The signal cable (+) has an open-circuit or is short-circuited to ground or supply voltage.
- The signal cable (-) has an open-circuit or is short-circuited to ground or supply voltage.
- Damaged engine speed (RPM) sensor

Fault symptom[s]

- Nothing.

FAULT TRACING ECM-P033500

CHECKING THE STATUS

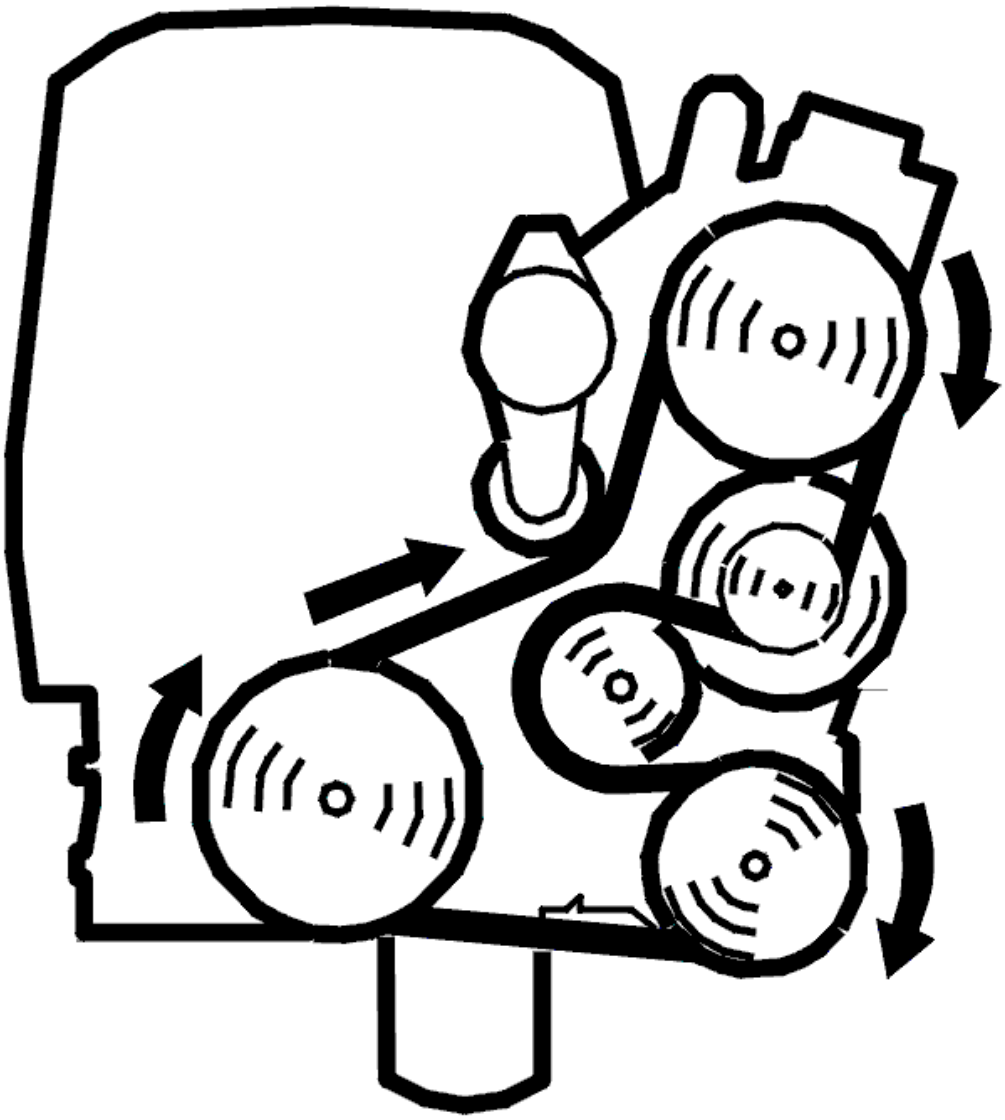

Fig. 361: Belt Routing / Engine Idling - Volvo
Courtesy of VOLVO CARS CORPORATION

- Start the engine.

  Read the diagnostic status and fault status for the diagnostic trouble code by selecting the diagnostic trouble code in the list.

  Increase the engine speed a few times until the diagnosis is "Completed".

Check whether the fault is permanent or intermittent by reading the fault status of the trouble code when the diagnostic status is "Completed".

If the fault status is "Fault found", the fault is permanent. If the fault status is "No fault found", the fault is intermittent and not currently active.

NOTE: The fault status cannot switch from "Fault found" to "No fault found" within the same operating cycle.

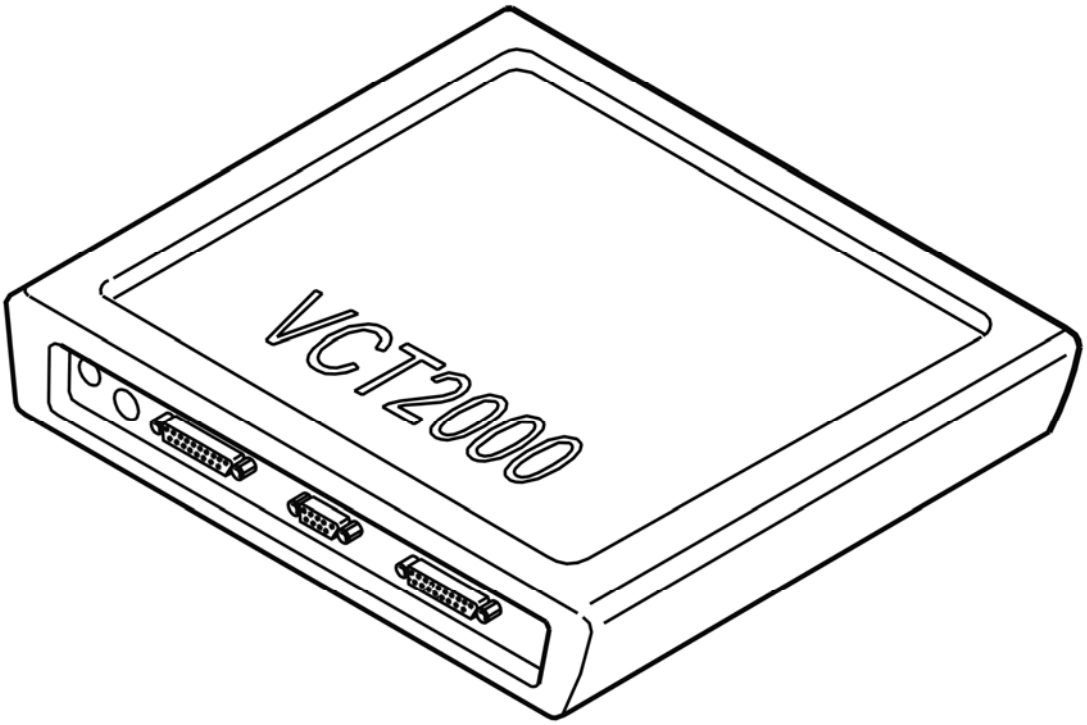

Fig. 362: Identifying VCT2000 Diagnostic Tool Symbol In VIDA
Courtesy of VOLVO CARS CORPORATION

- **Continue**

Refer to **CHECKING COMPONENTS AND WIRING**

CHECKING COMPONENTS AND WIRING

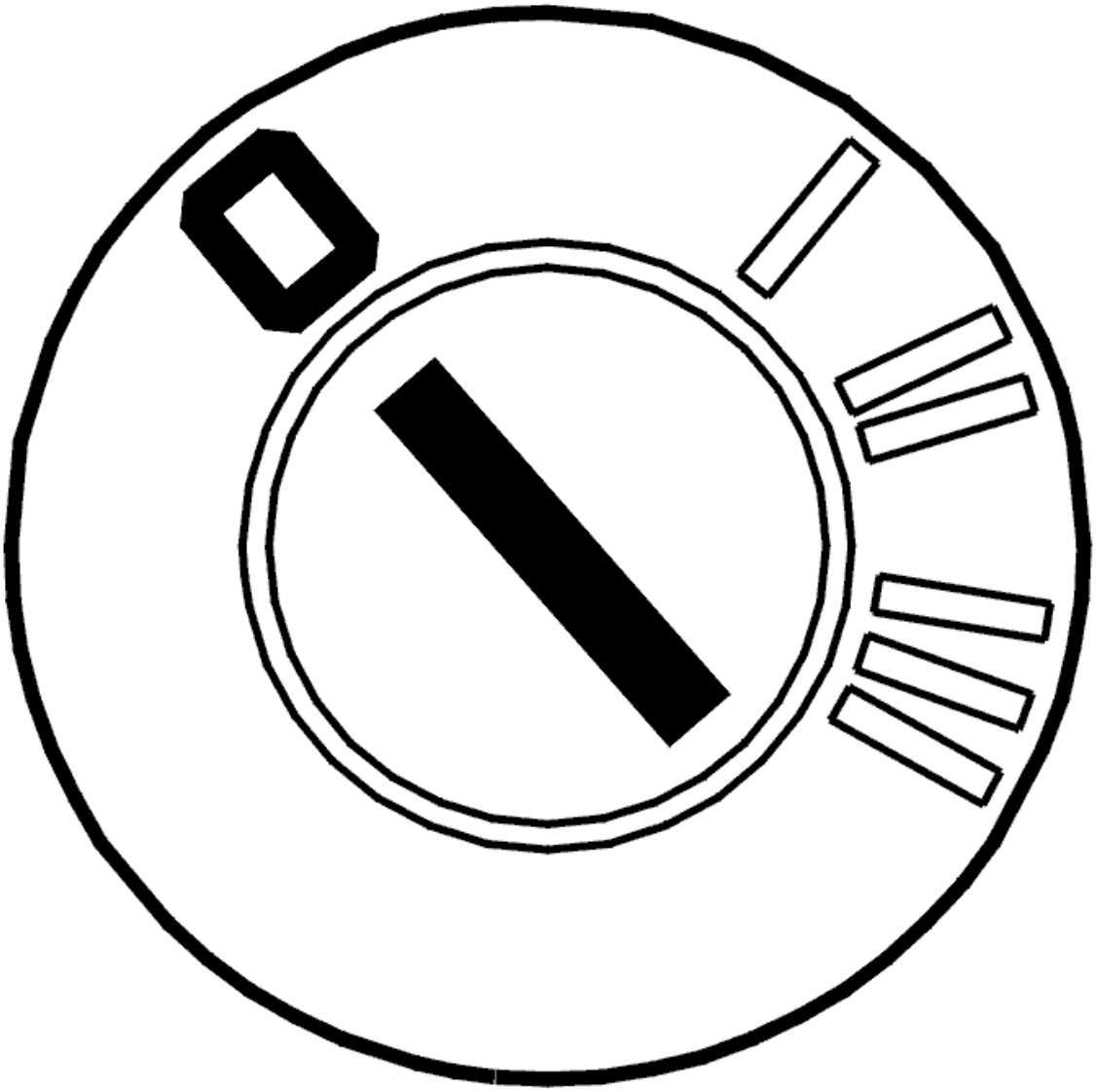

Fig. 363: Identifying Ignition OFF
Courtesy of VOLVO CARS CORPORATION

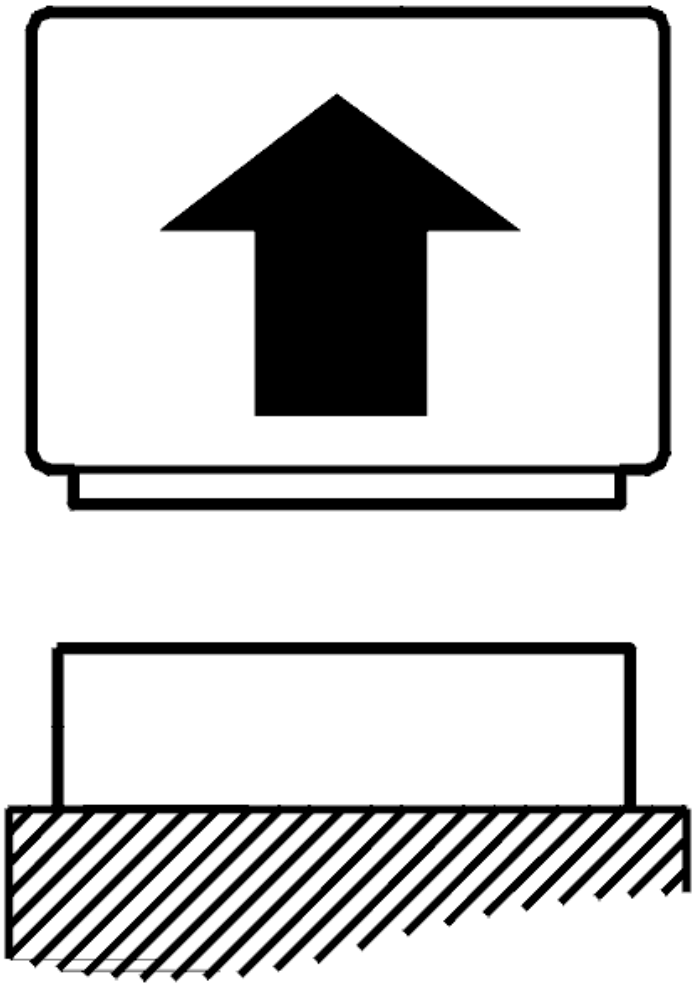

Fig. 364: Disconnecting Connector
Courtesy of VOLVO CARS CORPORATION

- Ignition off
- Disconnect the engine control module (ECM).

  Check the signal cables for open-circuit or short-circuit to ground or supply voltage.

  Check between:

  - Control module terminal #A30 (#A30) and engine speed sensor connector #1, signal cable (+).
  - Control module terminal #A6 (#A6) and engine speed sensor connector #2, signal cable (-).

  Remedy as necessary.

Other information

- see **CONNECTING THE BREAKOUT BOX**
- see **SIGNAL SPECIFICATION, ENGINE CONTROL MODULE (ECM)**
- see **ENGINE SPEED (RPM) SENSOR, REPLACING**
- see **CHECKING WIRING AND TERMINALS**

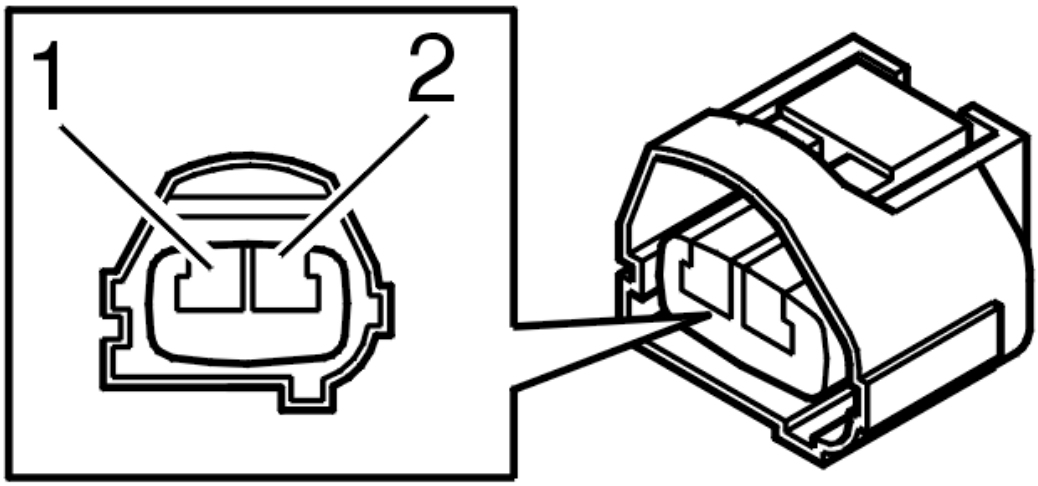

Fig. 365: Identifying 2-Bit Connector
Courtesy of VOLVO CARS CORPORATION

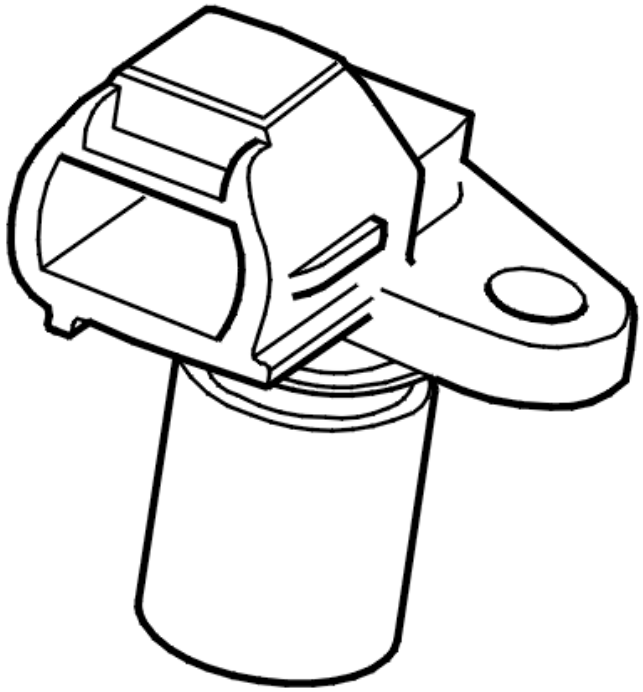

Fig. 366: Detecting The Reference Positions Of The Camshaft
Courtesy of VOLVO CARS CORPORATION

- **Continue**

  Refer to **VERIFICATION**

VERIFICATION

VERIFICATION

HINT: After carrying out the repair, check that the fault has been remedied.

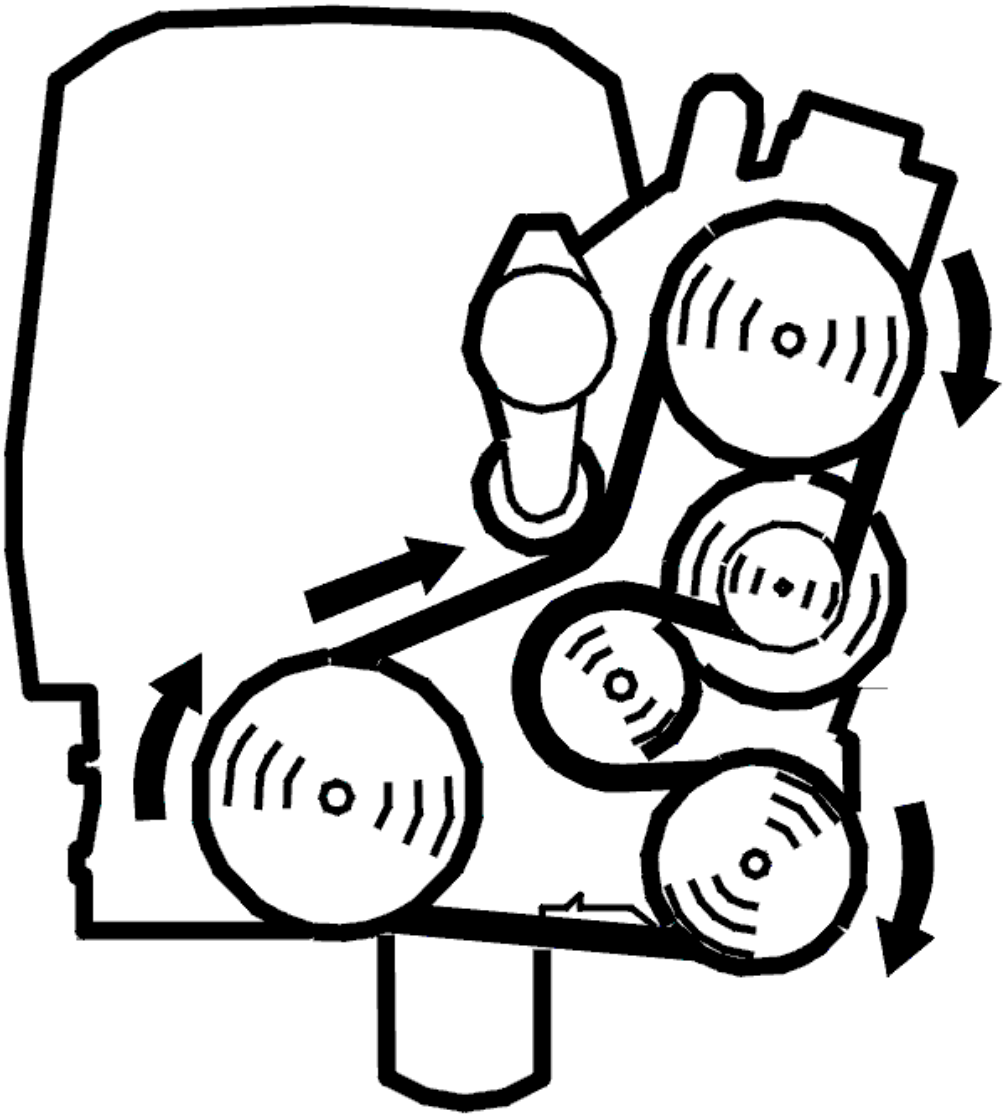

Fig. 367: Belt Routing / Engine Idling - Volvo
Courtesy of VOLVO CARS CORPORATION

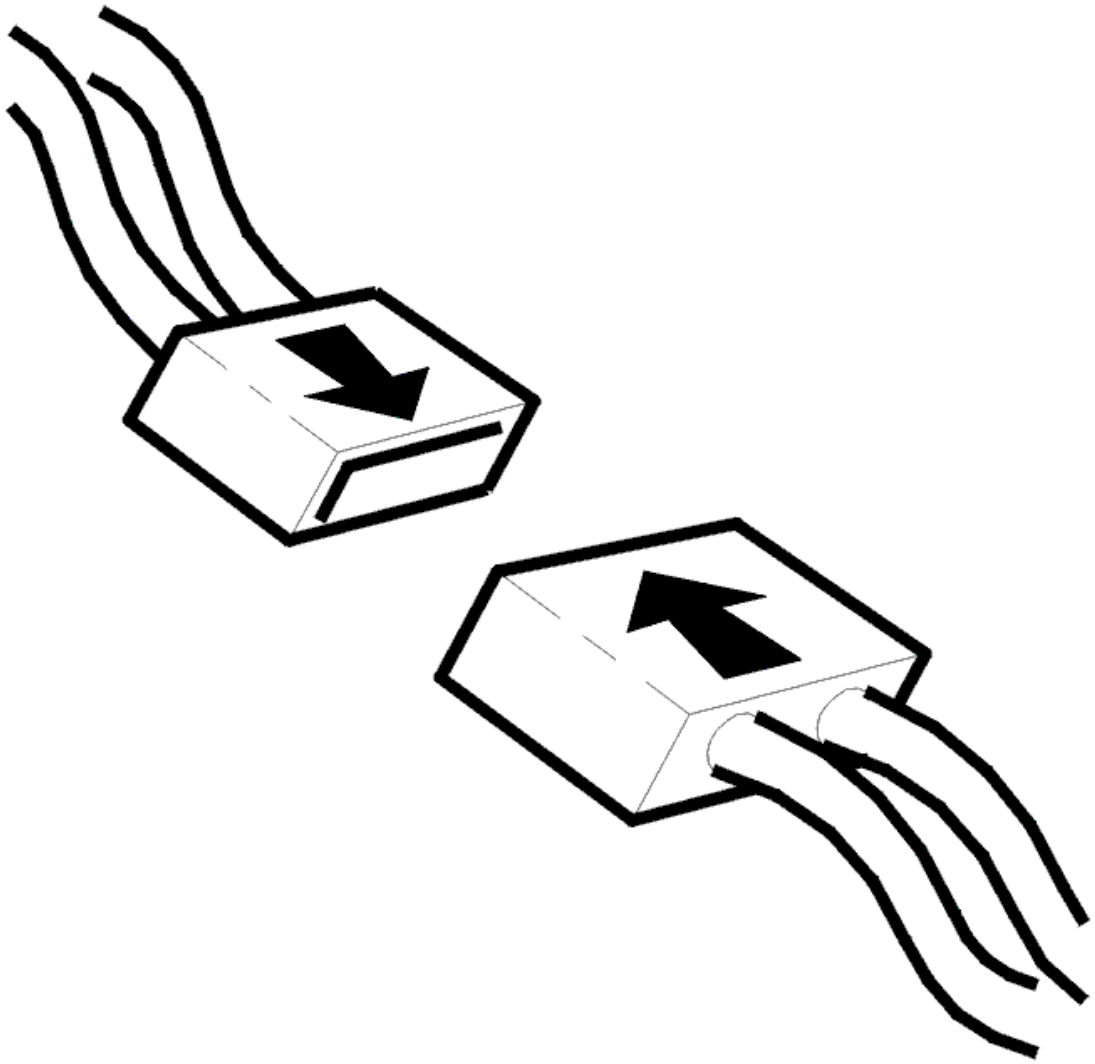

Fig. 368: Connecting Connector
Courtesy of VOLVO CARS CORPORATION

- Ignition off
- Reconnect the connectors, components, etc.
- Start the engine.
- Read the diagnostic status and fault status for the diagnostic trouble code by selecting the diagnostic trouble code in the list.

  Increase the engine speed a few times until the scan is "Implemented".

  Check the fault status for the diagnostic trouble code when the scan is "Implemented". When the function is correct the fault status should be "No fault found" when the scan is implemented.

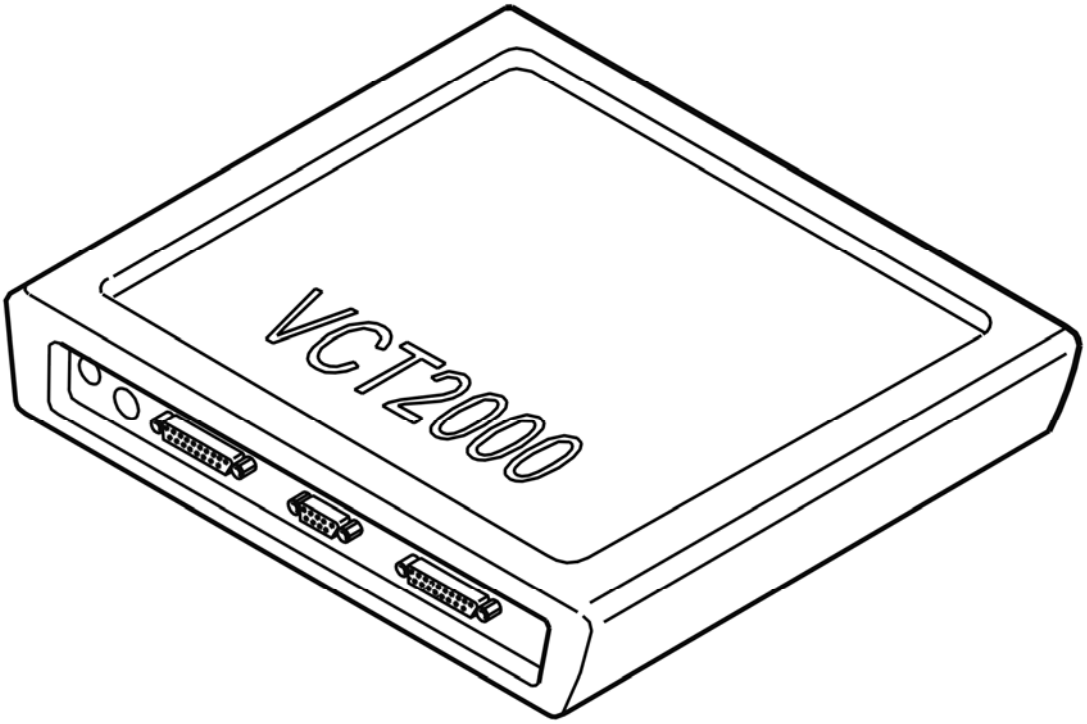

Fig. 369: Identifying VCT2000 Diagnostic Tool Symbol In VIDA
Courtesy of VOLVO CARS CORPORATION

Is the function OK?

- **YES**

  VERIFIED: Troubleshooting has been completed.

- **NO**

  Refer to **INFORMATION**

INFORMATION

FAULT-TRACING INFORMATION

The fault should have been detected and remedied. As this is not the case fault-tracing has failed.

Exit fault-tracing for this diagnostic trouble code (DTC) or make another attempt.

ECM-P033600: CRANKSHAFT POSITION SENSOR A CIRCUIT RANGE/PERFORMANCE. GENERAL FAILURE INFORMATION. NO SUB

TYPE INFORMATION (B6324S; 2007-2010)

DIAGNOSTIC TROUBLE CODE (DTC) INFORMATION ECM-P033600

Condition

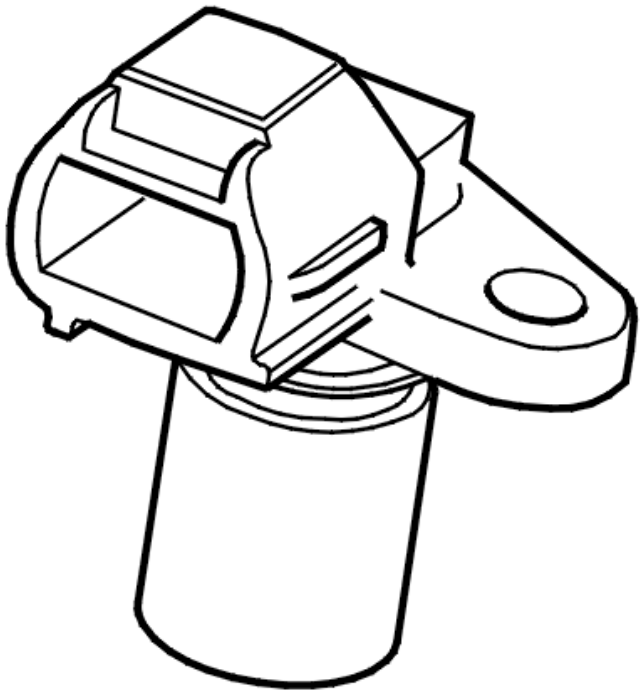

Fig. 370: Detecting The Reference Positions Of The Camshaft
Courtesy of VOLVO CARS CORPORATION

The signal sent by the engine speed sensor to the engine control module (ECM) provides information on the number of teeth in the flywheel/number of holes in the carrier plate that has passed the engine speed sensor. The control module uses the signal to calculate engine speed. The diagnostic code is generated if via the engine speed sensor signal the control module detects an incorrect number of teeth on the flywheel/holes in the carrier plate for a certain number of crankshaft revolutions.

The diagnostic trouble code can be diagnosed by the control module when engine speed exceeds 1000 RPM.

Substitute Value

- Signal from the camshaft position sensor.

Possible Source

- Contact resistance or oxidation in the engine speed sensor connector.
- Engine speed (RPM) sensor fitted incorrectly.
- Damage to flywheel/carrier plate.
- Damaged engine speed (RPM) sensor

Fault symptom[s]

- Nothing.

FAULT-TRACING

CHECKING THE STATUS

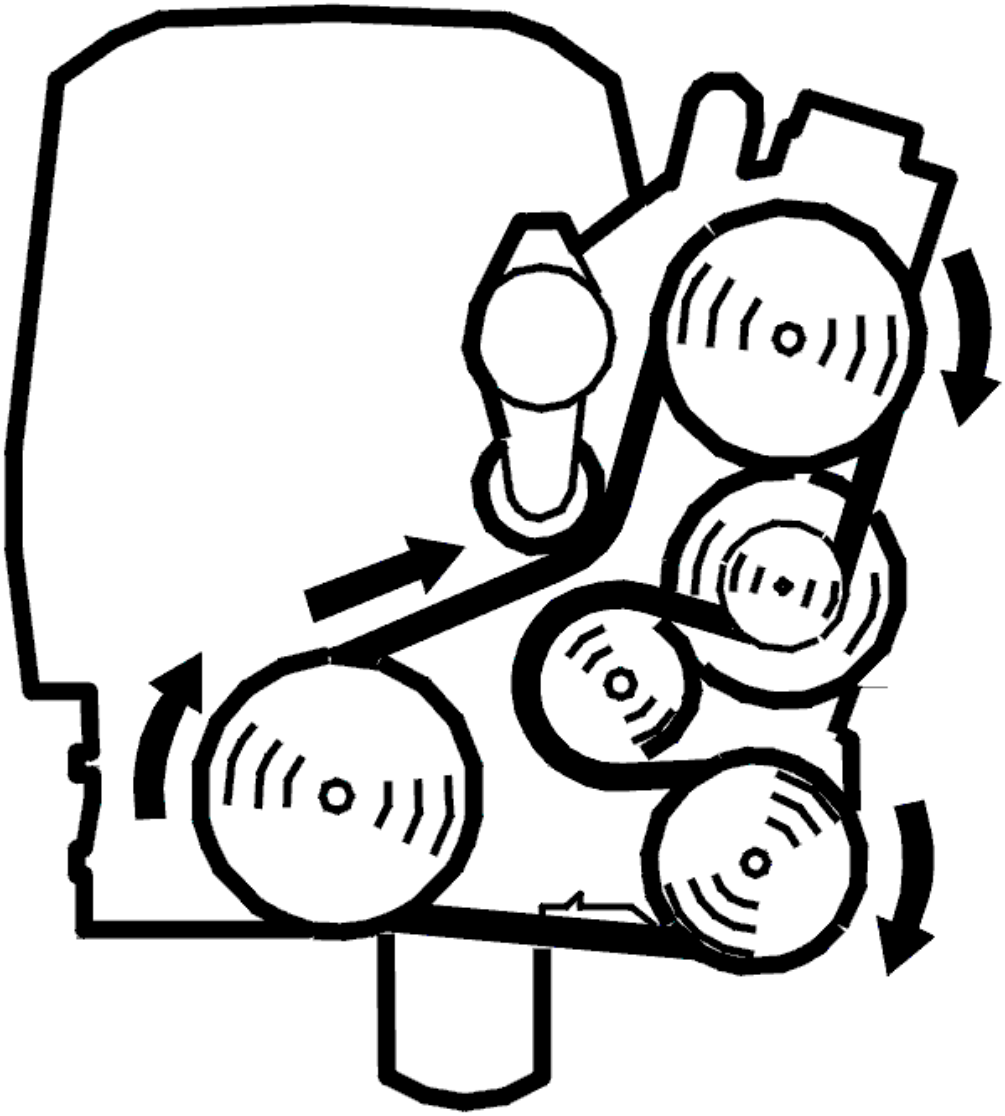

Fig. 371: Belt Routing / Engine Idling - Volvo
Courtesy of VOLVO CARS CORPORATION

- Start the engine.

  Read the diagnostic status and fault status for the diagnostic trouble code by selecting the diagnostic trouble code in the list.

  Increase the engine speed a few times until the diagnosis is "Completed".

  Check whether the fault is permanent or intermittent by reading the fault status of the trouble code when the diagnostic status is "Completed".

  If the fault status is "Fault found", the fault is permanent. If the fault status is "No fault found", the fault is intermittent and not currently active.

  NOTE: The fault status cannot switch from "Fault found" to "No fault found" within the same operating cycle.

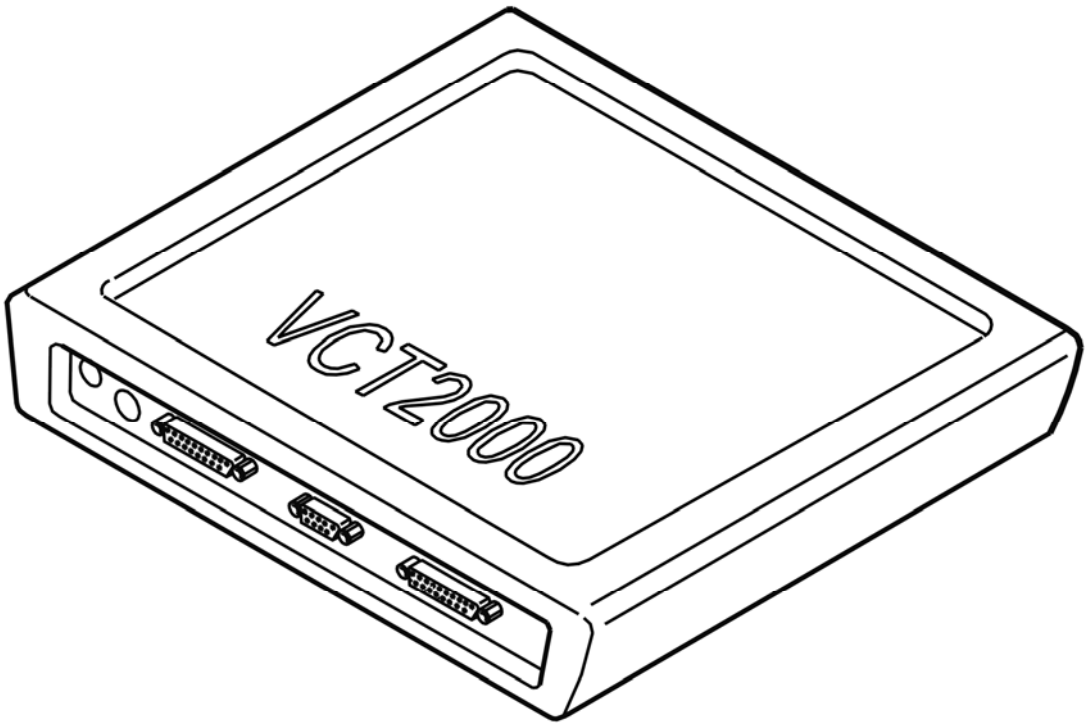

Fig. 372: Identifying VCT2000 Diagnostic Tool Symbol In VIDA
Courtesy of VOLVO CARS CORPORATION

- **Continue**

  Refer to **CHECKING COMPONENTS AND WIRING**

CHECKING COMPONENTS AND WIRING

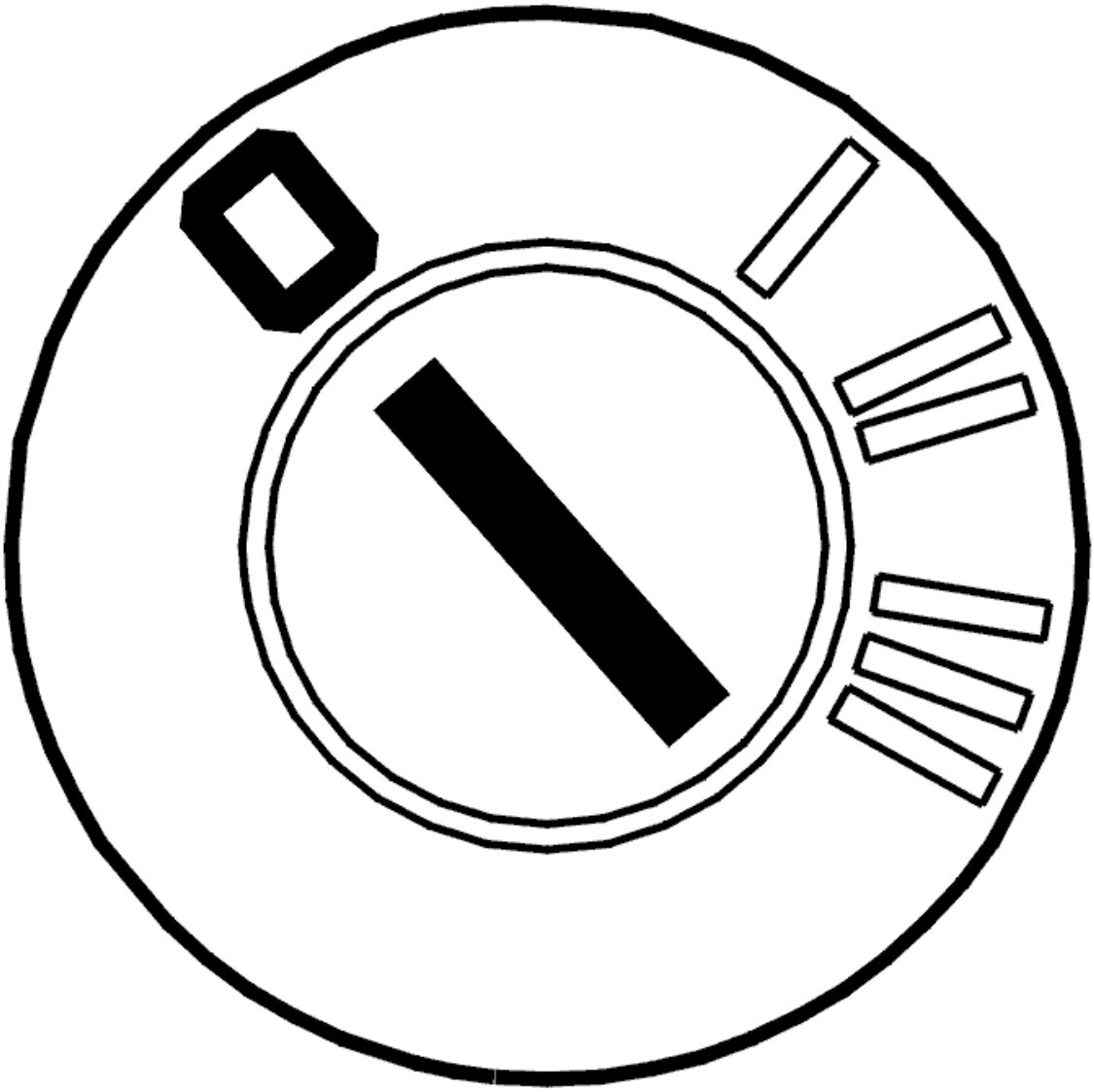

Fig. 373: Identifying Ignition OFF
Courtesy of VOLVO CARS CORPORATION

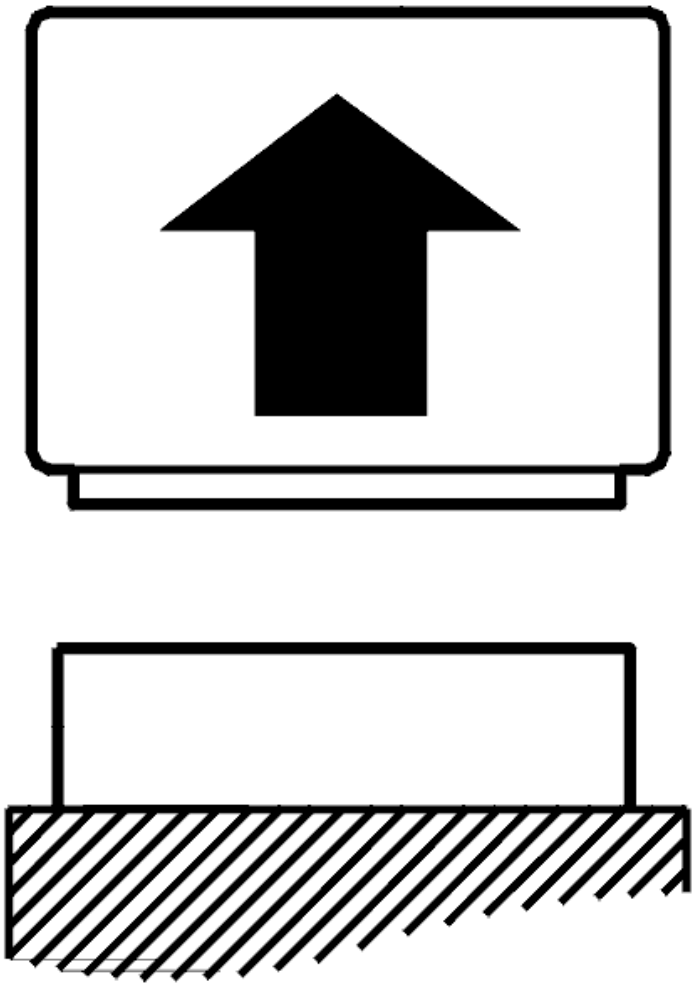

Fig. 374: Disconnecting Connector
Courtesy of VOLVO CARS CORPORATION

- Ignition off

  Check the engine speed sensor connections for contact resistance and oxidation.

  Check that the engine speed sensor is properly installed and in the correct position.

  HINT: The engine speed sensor and its cables are sensitive to disruptions from nearby cables, such as the starter motor cable or a similar cable with a high current rating.

  Check if a cable with high current consumption is improperly installed, that is to say lies too close to the engine speed sensor or its cables.

  HINT: The cause of this diagnostic trouble code can also be damage to the flywheel reference holes

for the engine speed sensor.

Remedy as necessary.

Other information

- see **CRANKSHAFT POSITION SENSOR (CKP)**
- see **CHECKING WIRING AND TERMINALS**

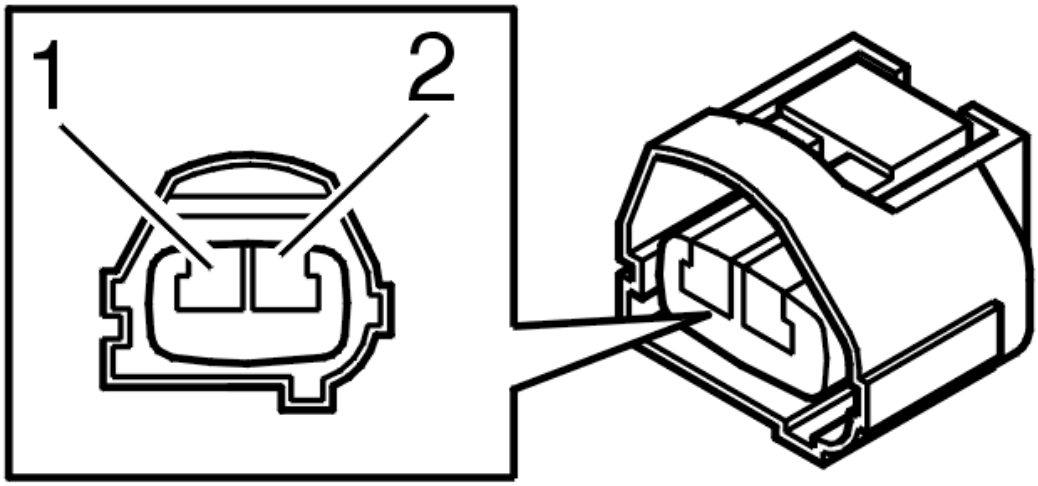

Fig. 375: Identifying 2-Bit Connector
Courtesy of VOLVO CARS CORPORATION

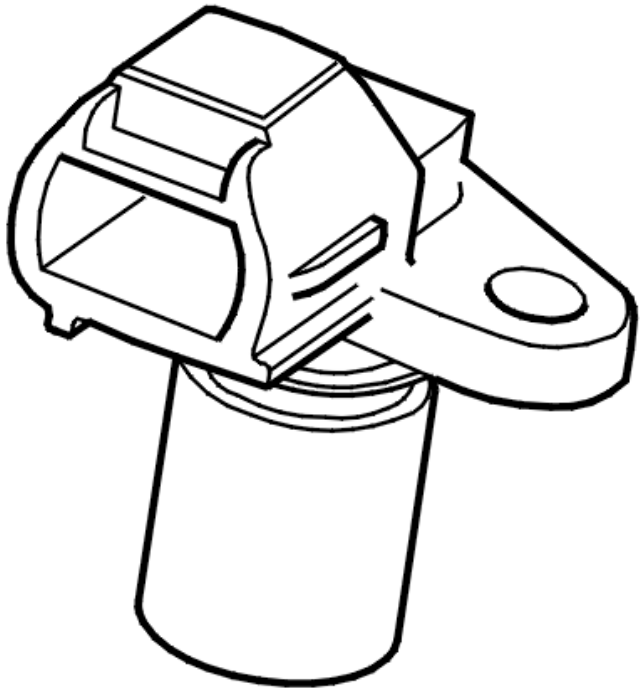

Fig. 376: Detecting The Reference Positions Of The Camshaft
Courtesy of VOLVO CARS CORPORATION

- **Continue**

  Refer to **VERIFICATION**

INFORMATION

FAULT-TRACING INFORMATION

The fault should have been detected and remedied. As this is not the case fault-tracing has failed.

Exit fault-tracing for this diagnostic trouble code (DTC) or make another attempt.

VERIFICATION

VERIFICATION

HINT: After carrying out the repair, check that the fault has been remedied.

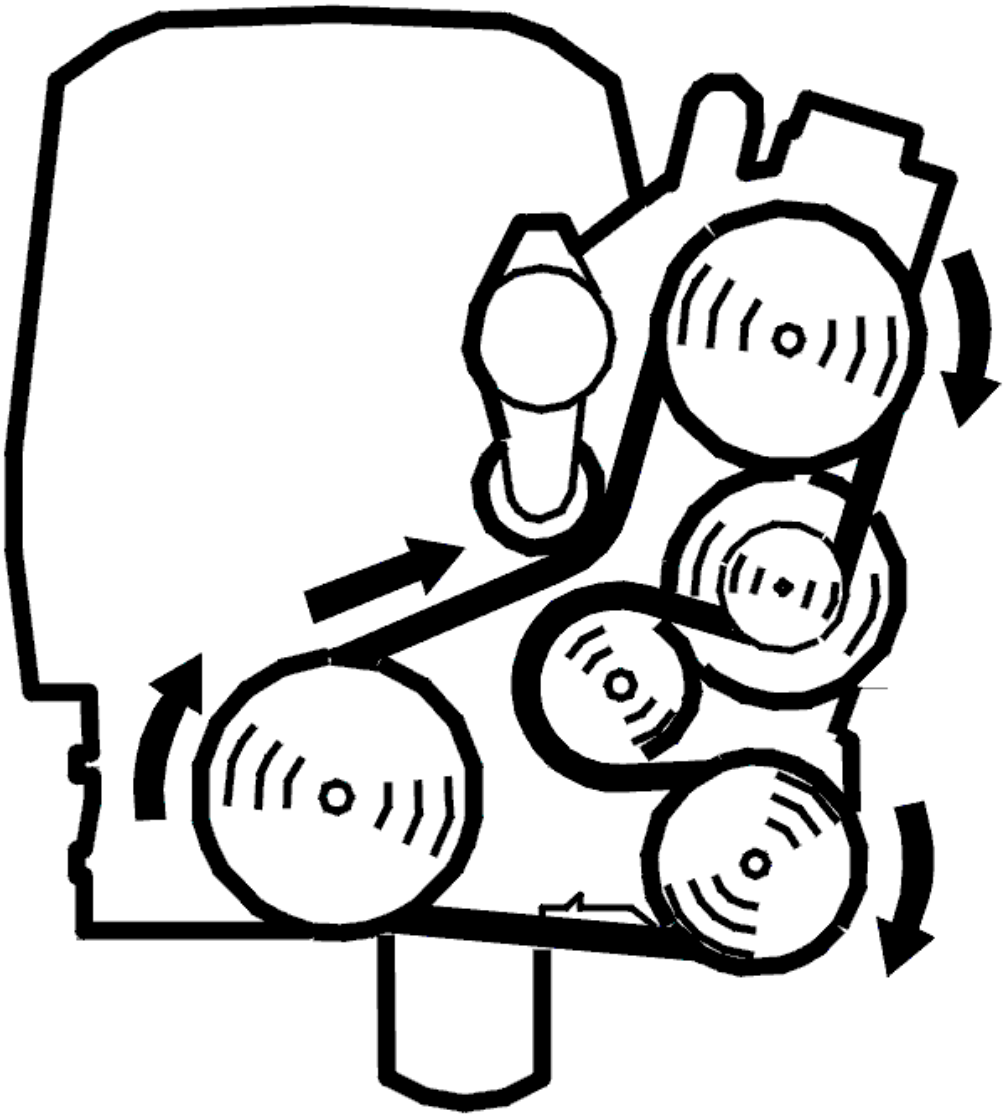

Fig. 377: Belt Routing / Engine Idling - Volvo
Courtesy of VOLVO CARS CORPORATION

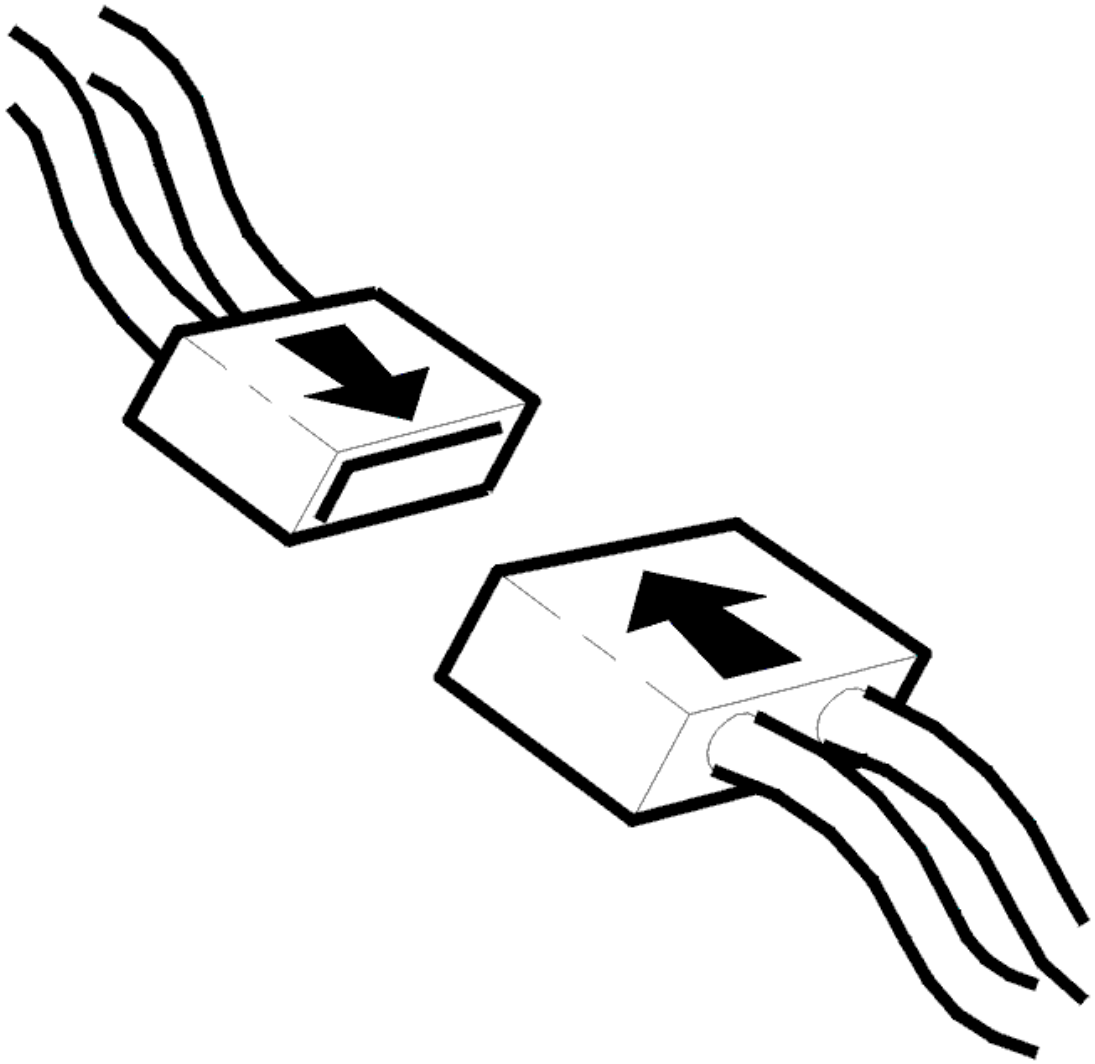

Fig. 378: Connecting Connector
Courtesy of VOLVO CARS CORPORATION

- Ignition off
- Reconnect the connectors, components, etc.
- Start the engine.
- Read the diagnostic status and fault status for the diagnostic trouble code by selecting the diagnostic trouble code in the list.

  Increase the engine speed a few times until the scan is "Implemented".

  Check the fault status for the diagnostic trouble code when the scan is "Implemented". When the function is correct the fault status should be "No fault found" when the scan is implemented.

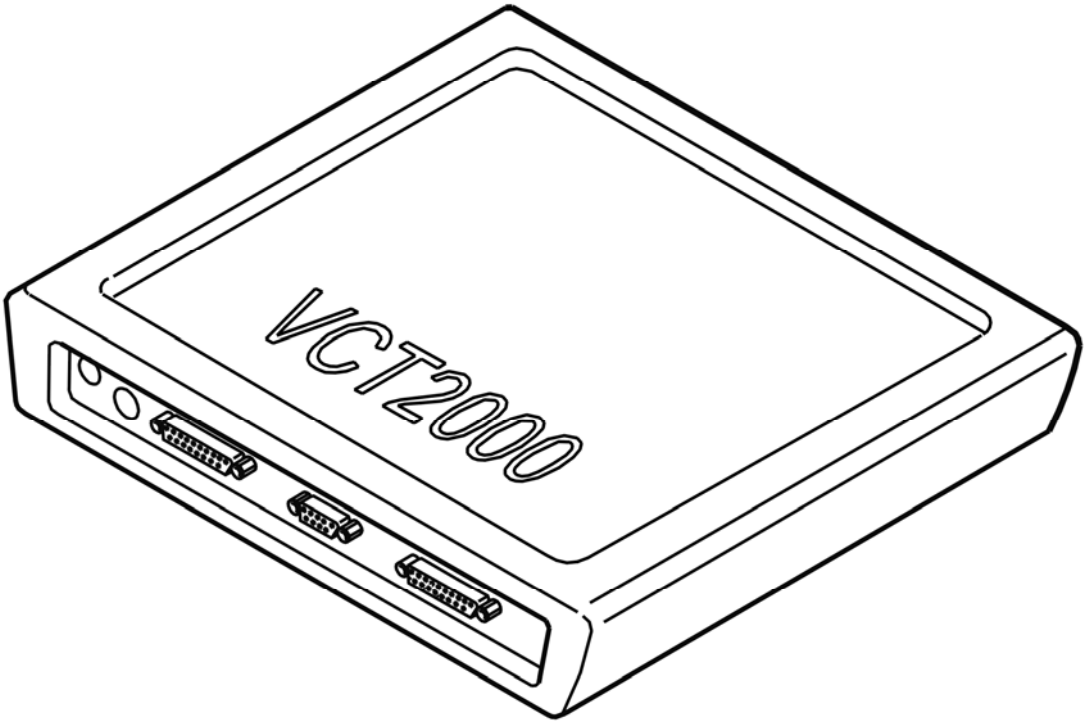

Fig. 379: Identifying VCT2000 Diagnostic Tool Symbol In VIDA
Courtesy of VOLVO CARS CORPORATION

Is the function OK?

- **YES**

  VERIFIED: Troubleshooting has been completed.

- **NO**

  Refer to **INFORMATION**

ECM-P033600: CRANKSHAFT POSITION SENSOR A CIRCUIT RANGE/PERFORMANCE. GENERAL FAILURE INFORMATION. NO SUB TYPE INFORMATION (B6324S5; 2011-2012)

DIAGNOSTIC TROUBLE CODE (DTC) INFORMATION ECM-P033600

see **DIAGNOSTIC TROUBLE CODE (DTC) INFORMATION ECM-P033600**

FAULT-TRACING

see **FAULT-TRACING**

ECM-P033600: CRANKSHAFT POSITION SENSOR A CIRCUIT WITHIN/EXCEEDING LIMIT VALUES. GENERAL FAULT INFORMATION. TYPE OF FAULT NOT SPECIFIED. (B8444S; 2005-2011)

DIAGNOSTIC TROUBLE CODE (DTC) INFORMATION ECM-P033600

Condition

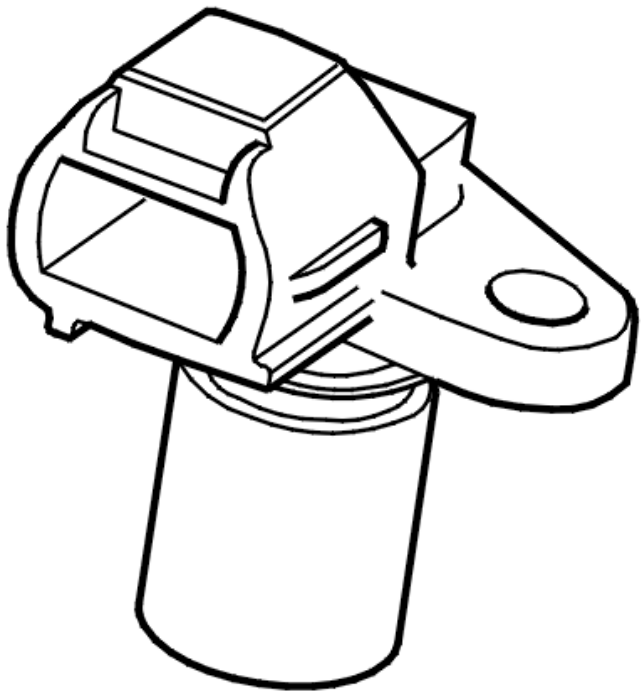

Fig. 380: Detecting The Reference Positions Of The Camshaft
Courtesy of VOLVO CARS CORPORATION

The signal sent by the engine speed sensor to the engine control module (ECM) provides information on the number of teeth in the flywheel/number of holes in the carrier plate that has passed the engine speed sensor. The control module uses the signal to calculate engine speed. The diagnostic code is generated if via the engine speed sensor signal the control module detects an incorrect number of teeth on the flywheel/holes in the carrier plate for a certain number of crankshaft revolutions.

The diagnostic trouble code can be diagnosed by the control module when engine speed exceeds 1000 RPM.

Substitute Value

- Signal from the camshaft position sensor.

Possible Source

- Contact resistance or oxidation in the engine speed sensor connector.
- Engine speed (RPM) sensor fitted incorrectly.
- Damage to flywheel/carrier plate.
- Damaged engine speed (RPM) sensor

Fault symptom[s]

- Nothing.

FAULT TRACING ECM-P033600

CHECKING THE STATUS

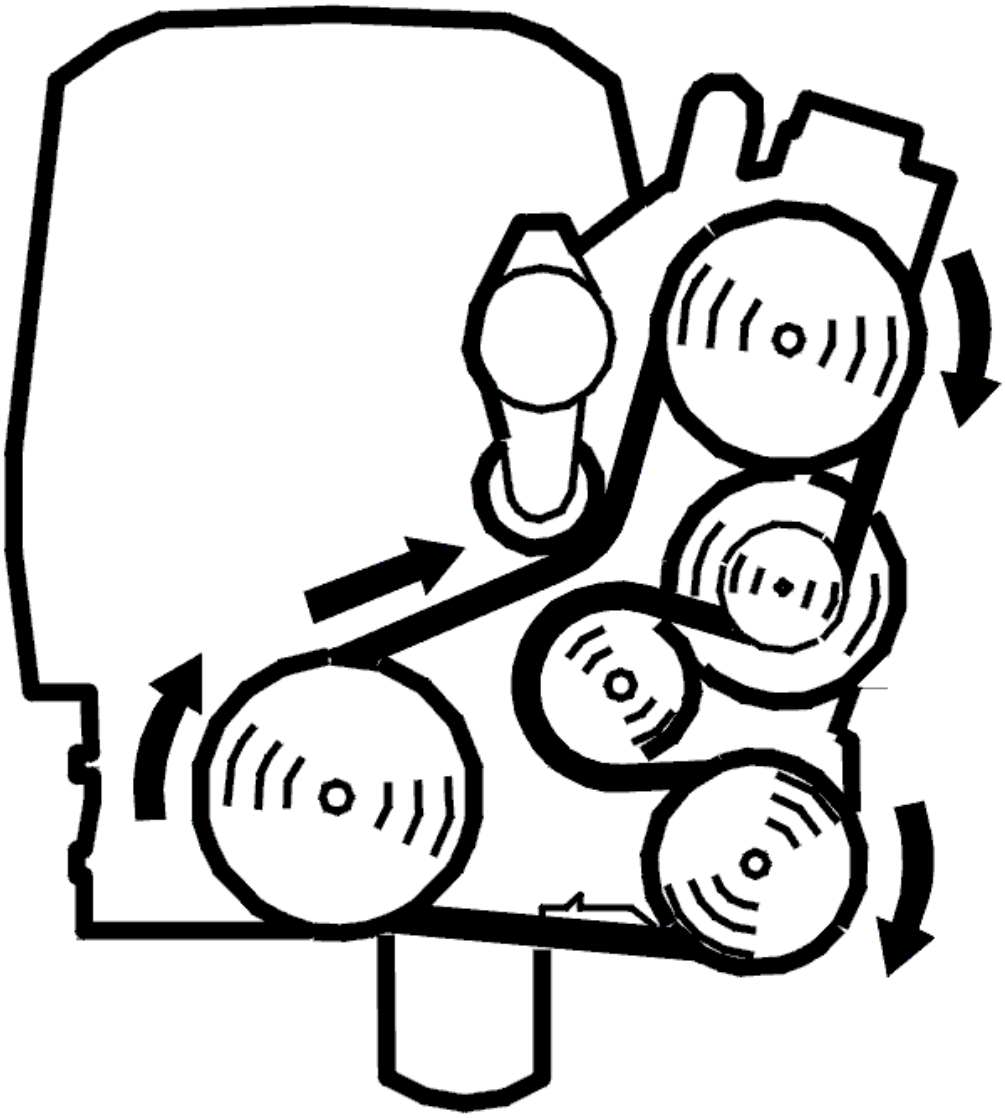

Fig. 381: Belt Routing / Engine Idling - Volvo
Courtesy of VOLVO CARS CORPORATION

- Start the engine.

  Read the diagnostic status and fault status for the diagnostic trouble code by selecting the diagnostic trouble code in the list.

  Increase the engine speed a few times until the diagnosis is "Completed".

  Check whether the fault is permanent or intermittent by reading the fault status of the trouble code when the diagnostic status is "Completed".

  If the fault status is "Fault found", the fault is permanent. If the fault status is "No fault found", the fault is intermittent and not currently active.

NOTE: **The fault status cannot switch from "Fault found" to "No fault found" within the same operating cycle.**

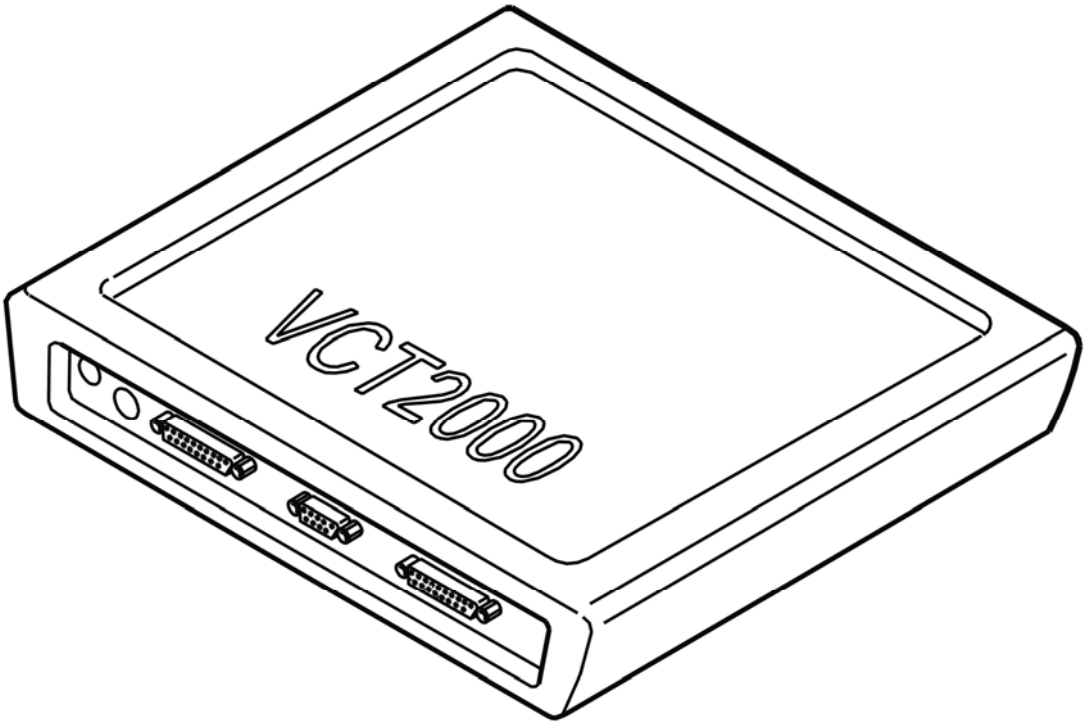

Fig. 382: Identifying VCT2000 Diagnostic Tool Symbol In VIDA
Courtesy of VOLVO CARS CORPORATION

- **Continue**

Refer to **CHECKING COMPONENTS AND WIRING**

CHECKING COMPONENTS AND WIRING

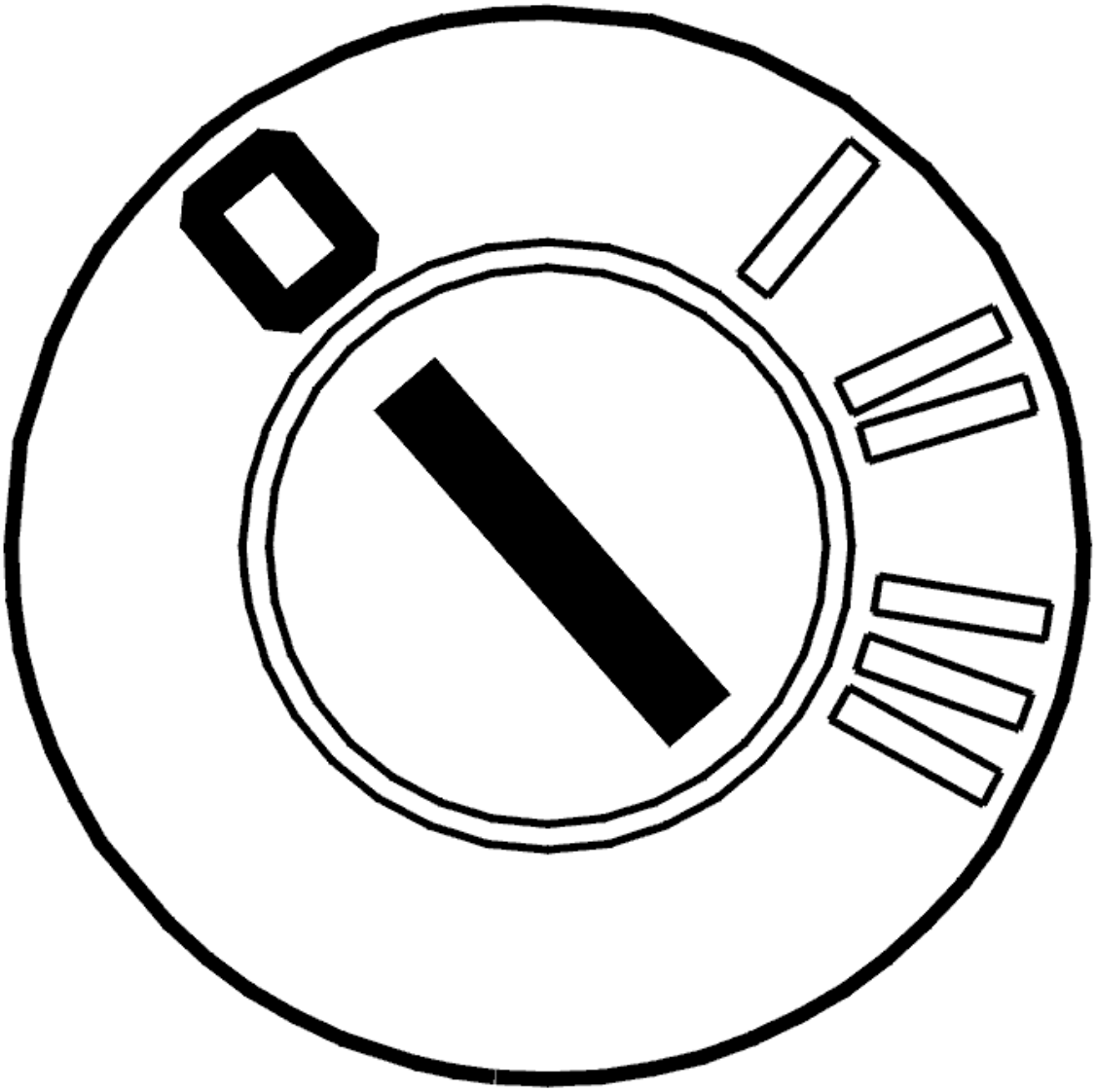

Fig. 383: Identifying Ignition OFF
Courtesy of VOLVO CARS CORPORATION

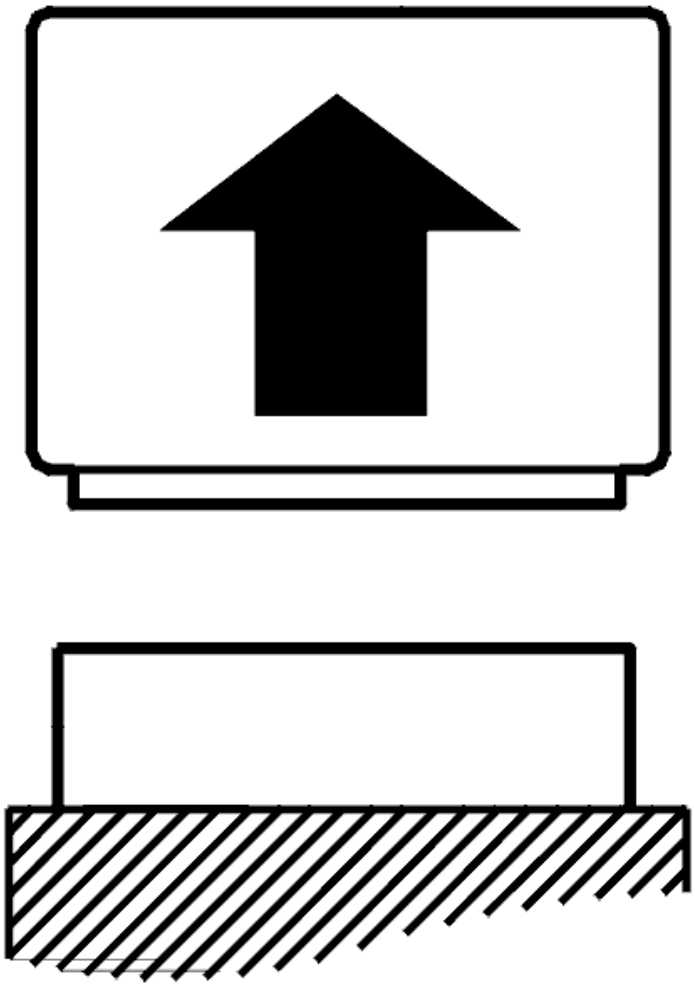

Fig. 384: Disconnecting Connector
Courtesy of VOLVO CARS CORPORATION

- Ignition off

  Check the engine speed sensor connections for contact resistance and oxidation.

  Check that the engine speed sensor is properly installed and in the correct position.

  HINT: The engine speed sensor and its cables are sensitive to disruptions from nearby cables, such as the starter motor cable or a similar cable with a high current rating.

  Check if a cable with high current consumption is improperly installed, that is to say lies too close to the engine speed sensor or its cables.

  HINT: The cause of this diagnostic trouble code can also be damage to the flywheel reference holes

for the engine speed sensor.

Remedy as necessary.

Other information

- see **ENGINE SPEED (RPM) SENSOR, REPLACING**
- see **CHECKING WIRING AND TERMINALS**

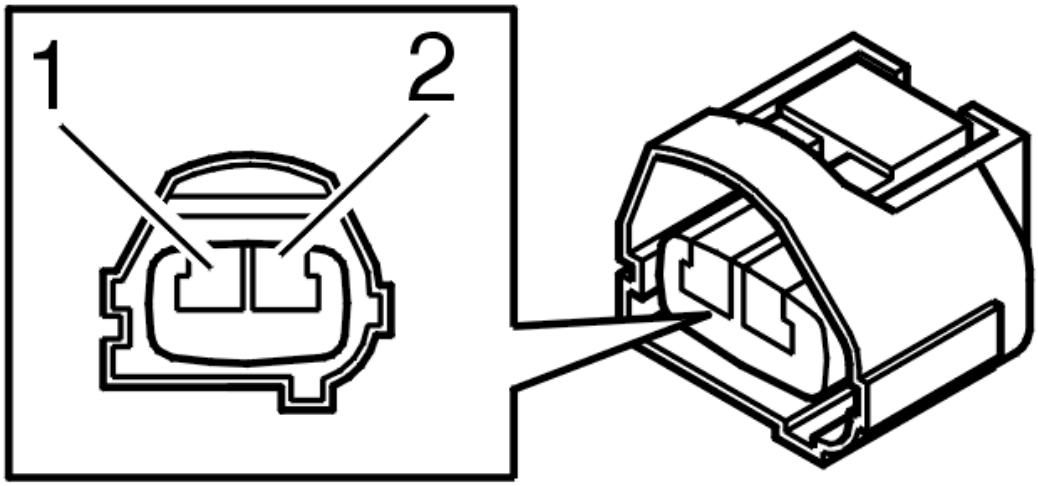

Fig. 385: Identifying 2-Bit Connector
Courtesy of VOLVO CARS CORPORATION

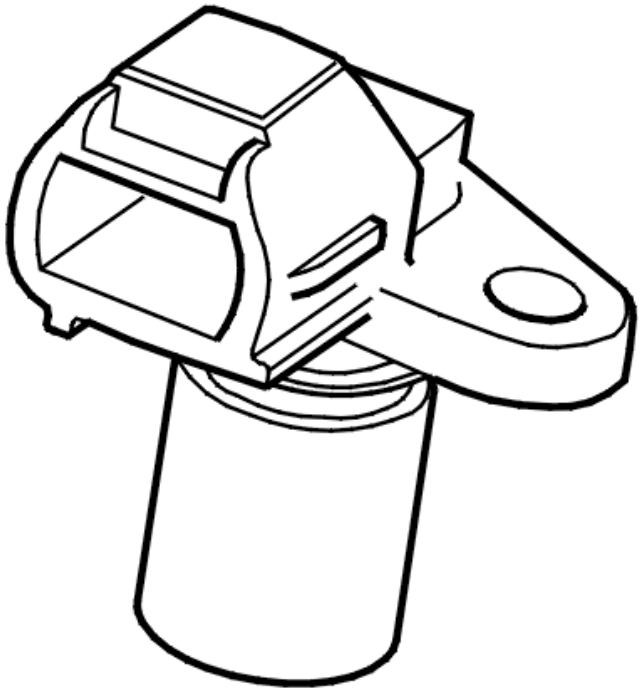

Fig. 386: Detecting The Reference Positions Of The Camshaft
Courtesy of VOLVO CARS CORPORATION

- **Continue**

  Refer to **VERIFICATION**

VERIFICATION

VERIFICATION

HINT: After carrying out the repair, check that the fault has been remedied.

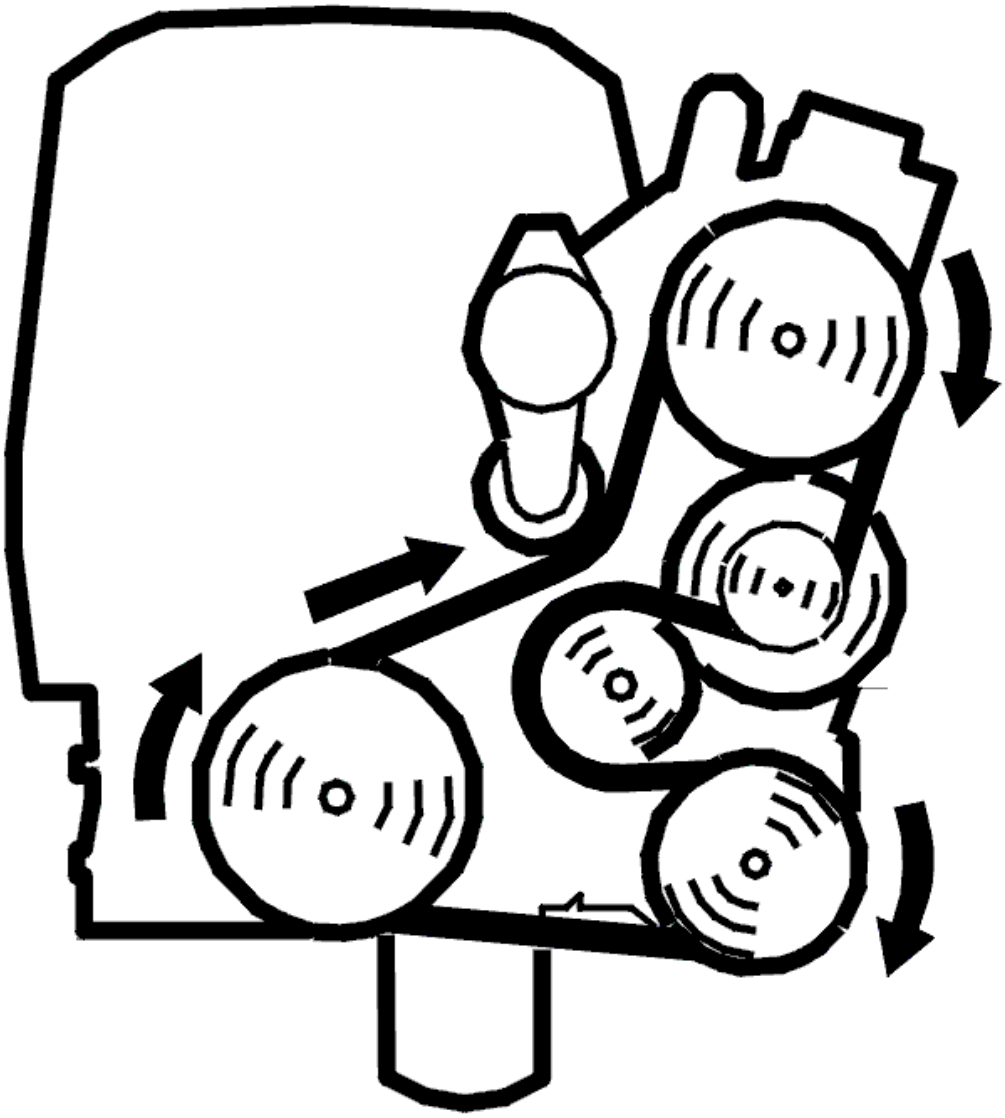

Fig. 387: Belt Routing / Engine Idling - Volvo
Courtesy of VOLVO CARS CORPORATION

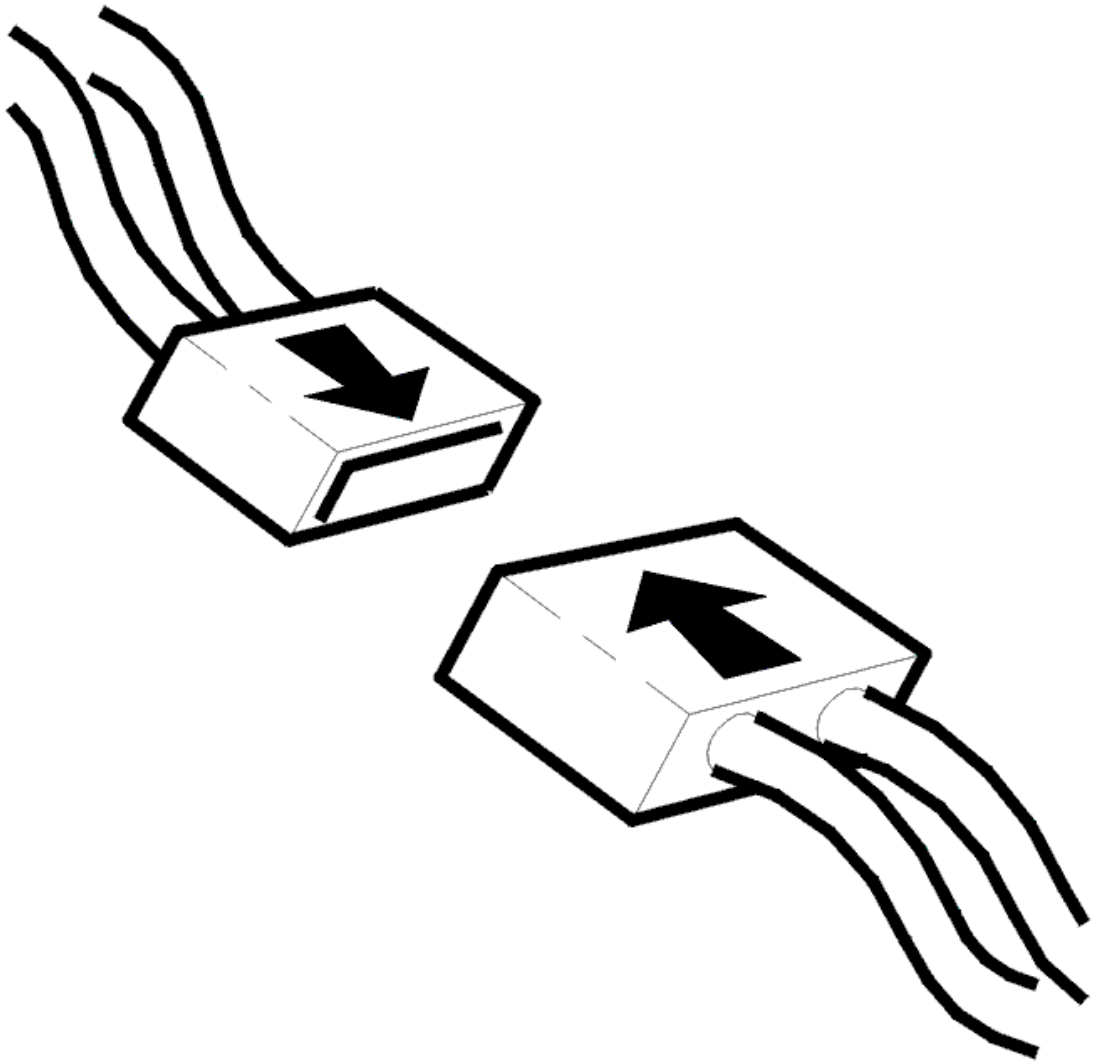

Fig. 388: Connecting Connector
Courtesy of VOLVO CARS CORPORATION

- Ignition off
- Reconnect the connectors, components, etc.
- Start the engine.
- Read the diagnostic status and fault status for the diagnostic trouble code by selecting the diagnostic trouble code in the list.

  Increase the engine speed a few times until the scan is "Implemented".

  Check the fault status for the diagnostic trouble code when the scan is "Implemented". When the function is correct the fault status should be "No fault found" when the scan is implemented.

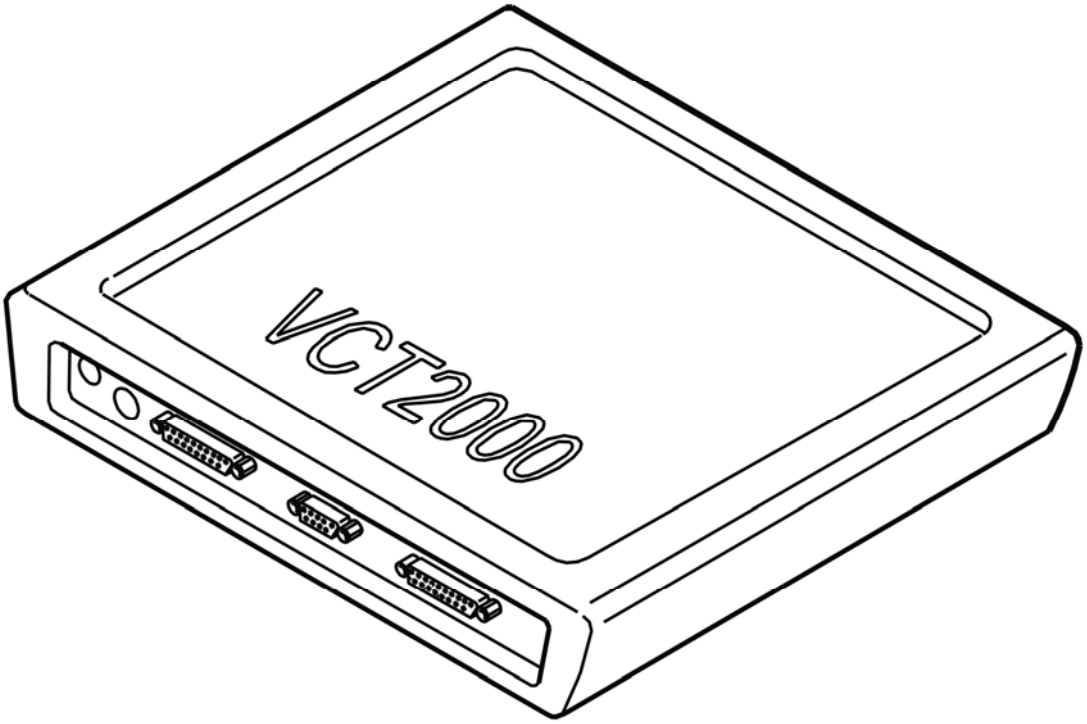

Fig. 389: Identifying VCT2000 Diagnostic Tool Symbol In VIDA
Courtesy of VOLVO CARS CORPORATION

Is the function OK?

- **YES**

  VERIFIED: Troubleshooting has been completed.

- **NO**

  Refer to **INFORMATION**

INFORMATION

FAULT-TRACING INFORMATION

The fault should have been detected and remedied. As this is not the case fault-tracing has failed.

Exit fault-tracing for this diagnostic trouble code (DTC) or make another attempt.

ECM-P033900: CRANKSHAFT POSITION SENSOR A CIRCUIT INTERMITTENT. GENERAL FAILURE INFORMATION. NO SUB TYPE

INFORMATION (B6324S; 2007-2010)

DIAGNOSTIC TROUBLE CODE (DTC) INFORMATION ECM-P033900

Condition

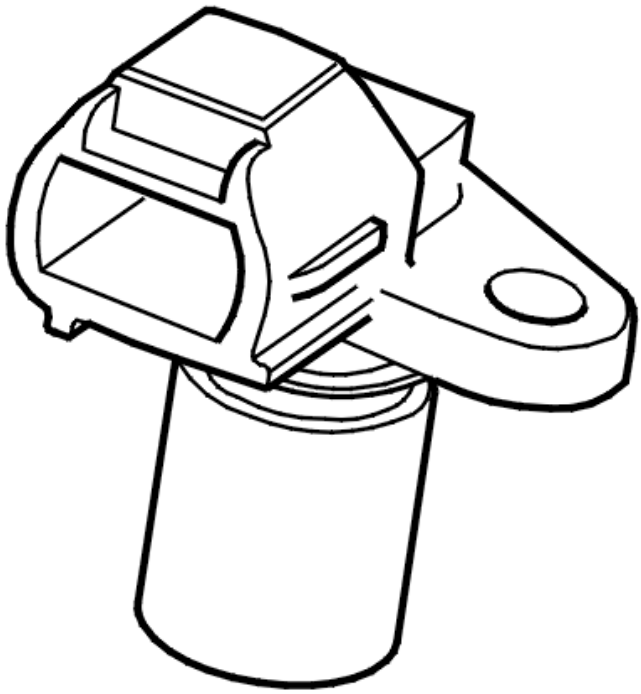

Fig. 390: Detecting The Reference Positions Of The Camshaft
Courtesy of VOLVO CARS CORPORATION

The signal sent by the engine speed sensor to the engine control module (ECM) provides information on the number of teeth in the flywheel/number of holes in the carrier plate that has passed the engine speed sensor. The control module uses the signal to calculate engine speed. The diagnostic code is generated if via the engine speed sensor signal the control module detects an incorrect number of teeth on the flywheel/holes in the carrier plate for a certain number of crankshaft revolutions.

The diagnostic trouble code (DTC) can be diagnosed when the engine is running.

Substitute Value

- Signal from the camshaft position sensor.

Possible Source

- The signal cable (+) has an open-circuit or is short-circuited to ground or supply voltage.
- The signal cable (-) has an open-circuit or is short-circuited to ground or supply voltage.
- Damaged engine speed (RPM) sensor

Fault symptom[s]

- Nothing.

FAULT-TRACING

see **FAULT-TRACING**

ECM-P033900: CRANKSHAFT POSITION SENSOR A CIRCUIT INTERMITTENT. GENERAL FAILURE INFORMATION. NO SUB TYPE INFORMATION (B6324S5; 2011-2012)

DIAGNOSTIC TROUBLE CODE (DTC) INFORMATION ECM-P033900

see **DIAGNOSTIC TROUBLE CODE (DTC) INFORMATION ECM-P033900**

FAULT-TRACING

see **FAULT-TRACING**

ECM-P033900: CRANKSHAFT POSITION SENSOR A CIRCUIT INTERMITTENT. GENERAL FAULT INFORMATION. TYPE OF FAULT NOT SPECIFIED. (B8444S; 2005-2011)

DIAGNOSTIC TROUBLE CODE (DTC) INFORMATION ECM-P033900

Condition

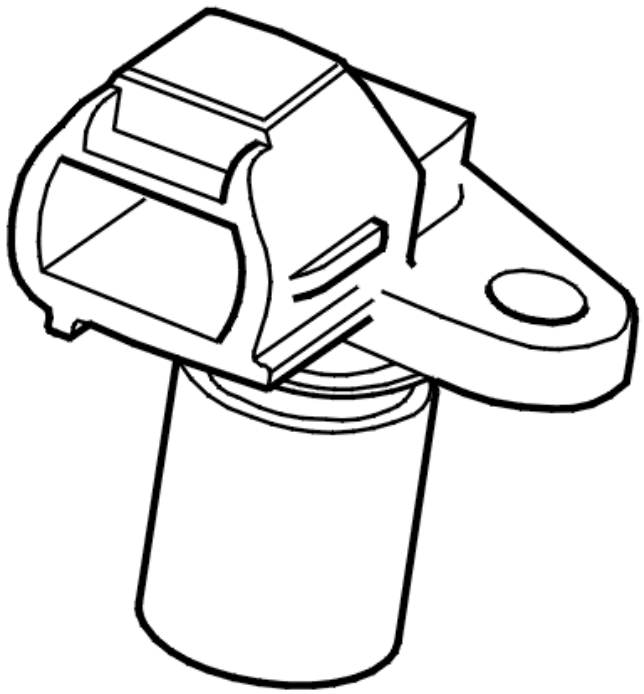

Fig. 391: Detecting The Reference Positions Of The Camshaft
Courtesy of VOLVO CARS CORPORATION

The signal sent by the engine speed sensor to the engine control module (ECM) provides information on the number of teeth in the flywheel/number of holes in the carrier plate that has passed the engine speed sensor. The control module uses the signal to calculate engine speed. The diagnostic code is generated if via the engine speed sensor signal the control module detects an incorrect number of teeth on the flywheel/holes in the carrier plate for a certain number of crankshaft revolutions.

The diagnostic trouble code can be diagnosed by the control module when the engine is running.

Substitute Value

- Signal from the camshaft position sensor.

Possible Source

- The signal cable (+) has an open-circuit or is short-circuited to ground or supply voltage.
- The signal cable (-) has an open-circuit or is short-circuited to ground or supply voltage.
- Damage to flywheel/carrier plate.
- Damaged engine speed (RPM) sensor

Fault symptom[s]

- Nothing.

FAULT TRACING ECM-P033900

CHECKING THE STATUS

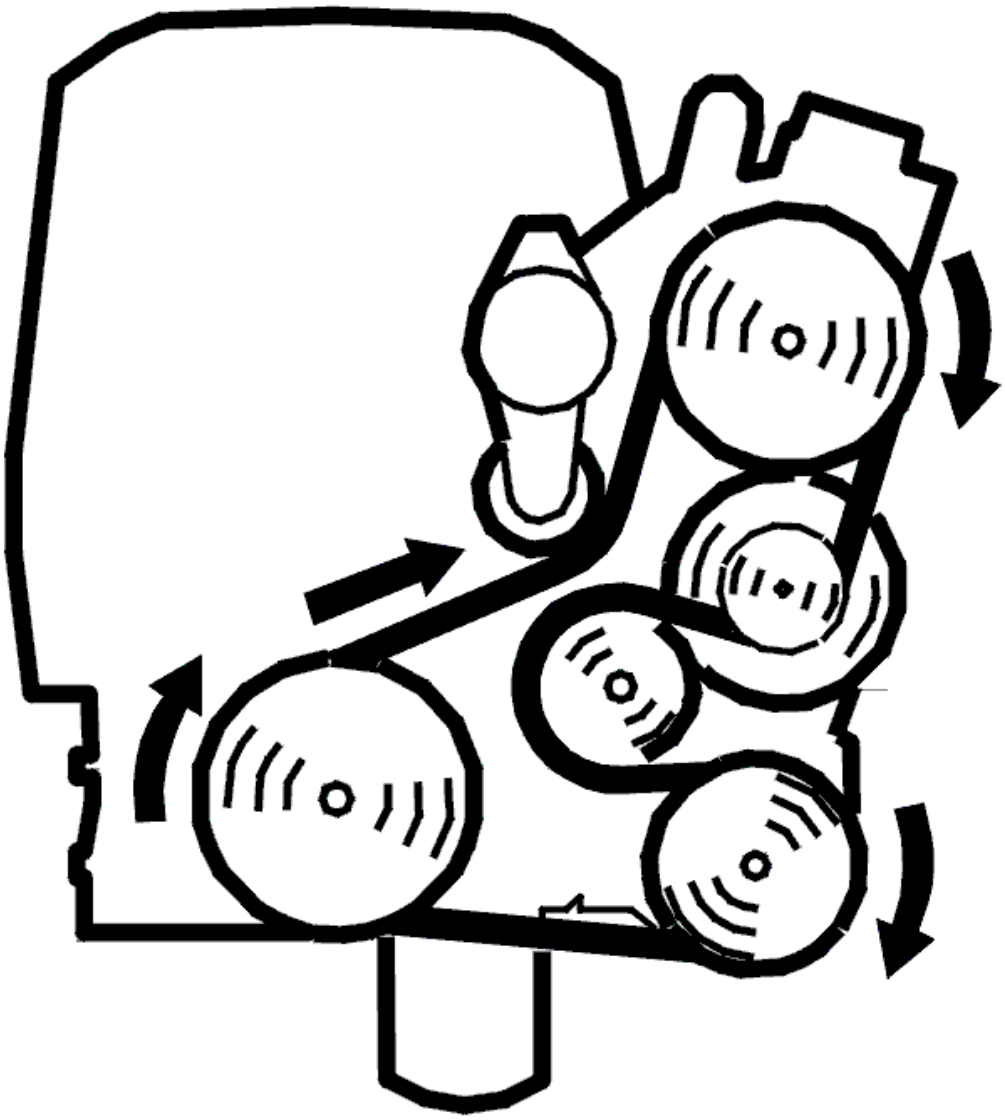

Fig. 392: Belt Routing / Engine Idling - Volvo
Courtesy of VOLVO CARS CORPORATION

- Start the engine.

  Read the diagnostic status and fault status for the diagnostic trouble code by selecting the diagnostic trouble code in the list.

  Increase the engine speed a few times until the scan is "Implemented".

Check whether the fault is permanent or intermittent. Read off the diagnostic trouble code (DTC) fault status when the diagnostic status is "Completed".

The fault is permanent if the fault status is "Fault found". If the fault status is "No fault found" the fault is intermittent and not presently active.

NOTE: The fault status cannot change from "Fault found" to "No fault found" in the same operating cycle.

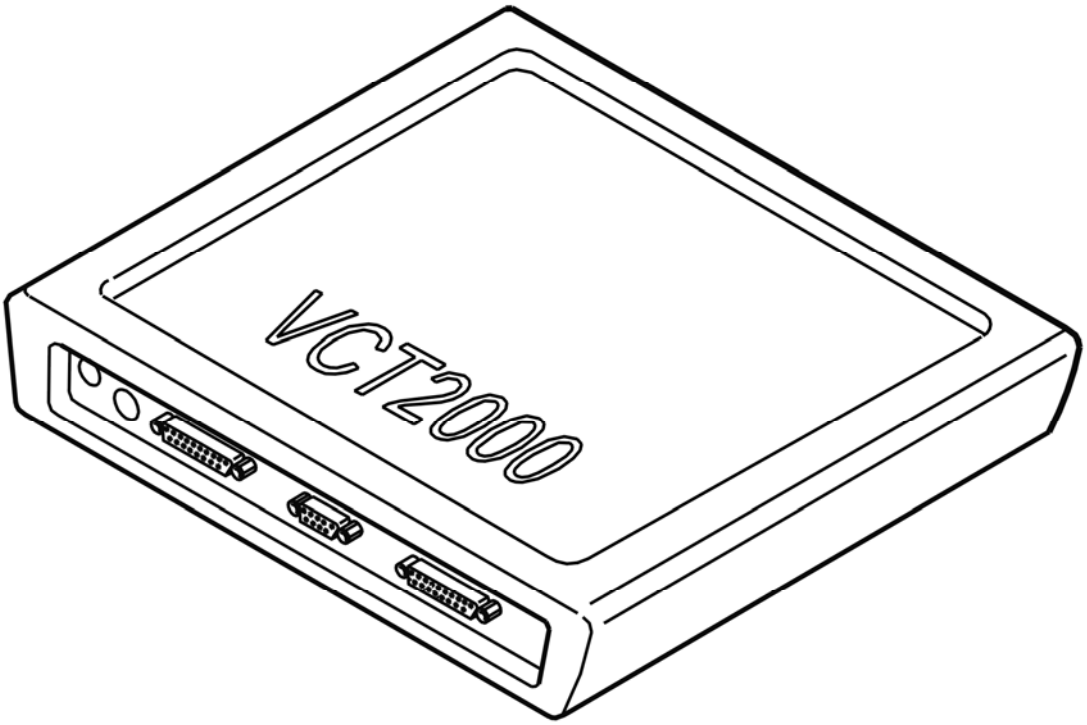

Fig. 393: Identifying VCT2000 Diagnostic Tool Symbol In VIDA
Courtesy of VOLVO CARS CORPORATION

- **Continue**

Refer to **CHECKING COMPONENTS AND WIRING**

CHECKING COMPONENTS AND WIRING

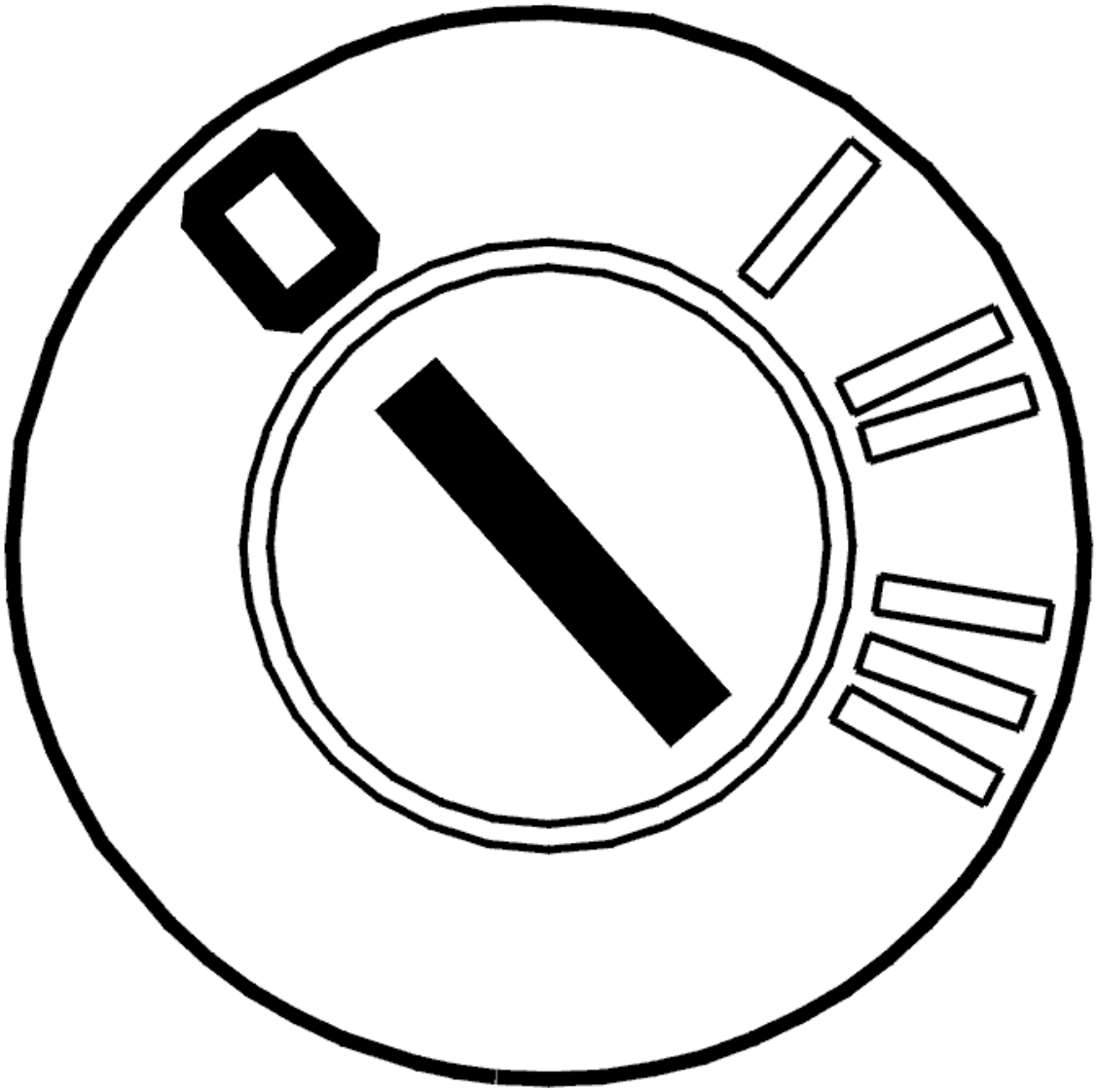

Fig. 394: Identifying Ignition OFF
Courtesy of VOLVO CARS CORPORATION

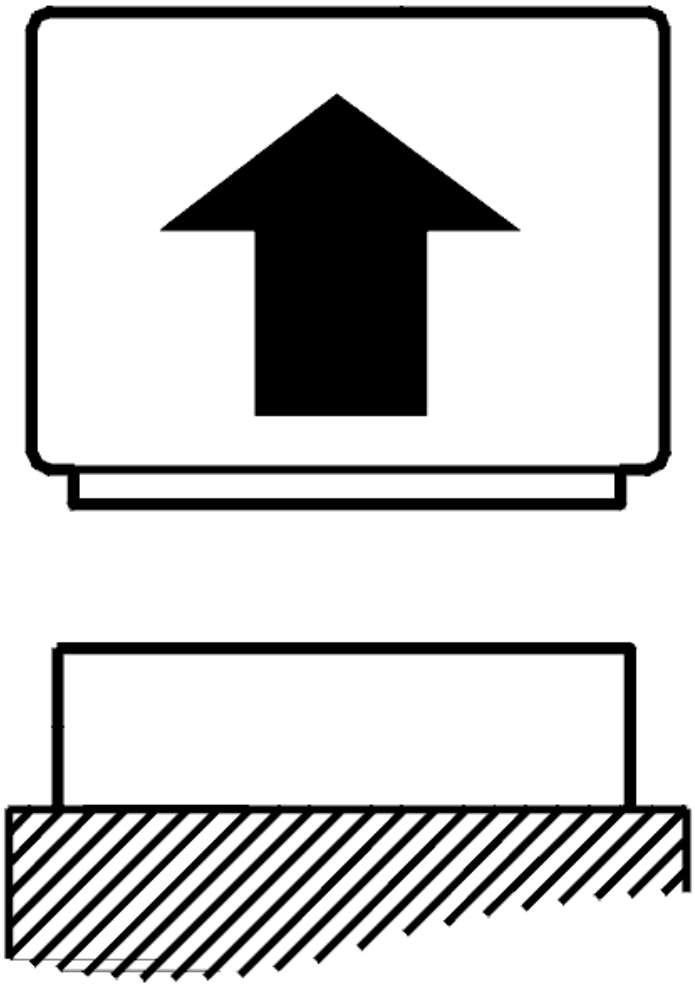

Fig. 395: Disconnecting Connector
Courtesy of VOLVO CARS CORPORATION

- Ignition off
- Disconnect the engine control module (ECM).

  Check the signal cables. Check for a short-circuit to ground. Check for a short-circuit to supply voltage. Check for an open-circuit.

  Check between:

  - Control module #A30 (#A30) and engine speed (RPM) sensor connector terminal #1, signal cable (+).
  - Control module terminal #A6 (#A6) and engine speed (RPM) sensor connector terminal #2, signal cable (-).

HINT: The diagnostic trouble code (DTC) may be the result of a damaged flywheel.

Remedy as necessary.

Other information

- see **CONNECTING THE BREAKOUT BOX**
- see **SIGNAL SPECIFICATION, ENGINE CONTROL MODULE (ECM)**
- see **ENGINE SPEED (RPM) SENSOR, REPLACING**
- see **CHECKING WIRING AND TERMINALS**

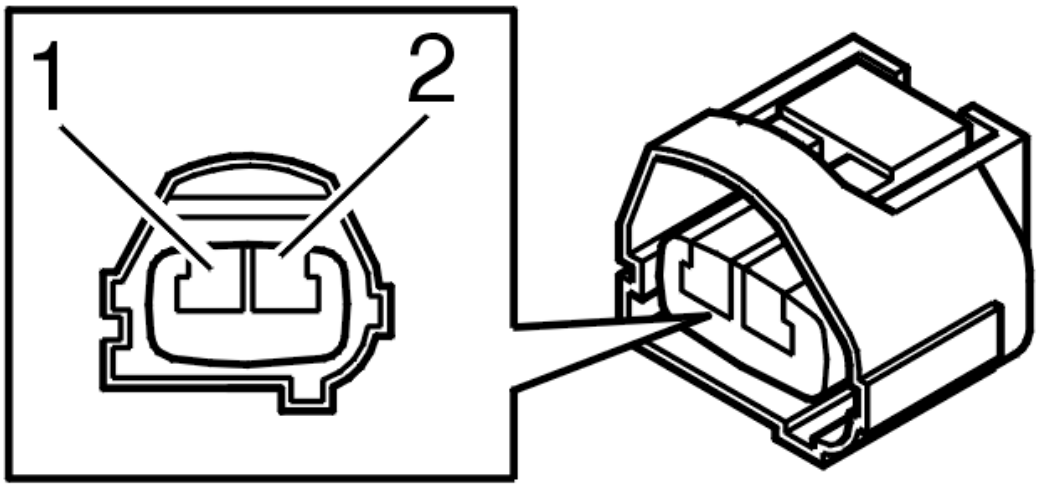

Fig. 396: Identifying 2-Bit Connector
Courtesy of VOLVO CARS CORPORATION

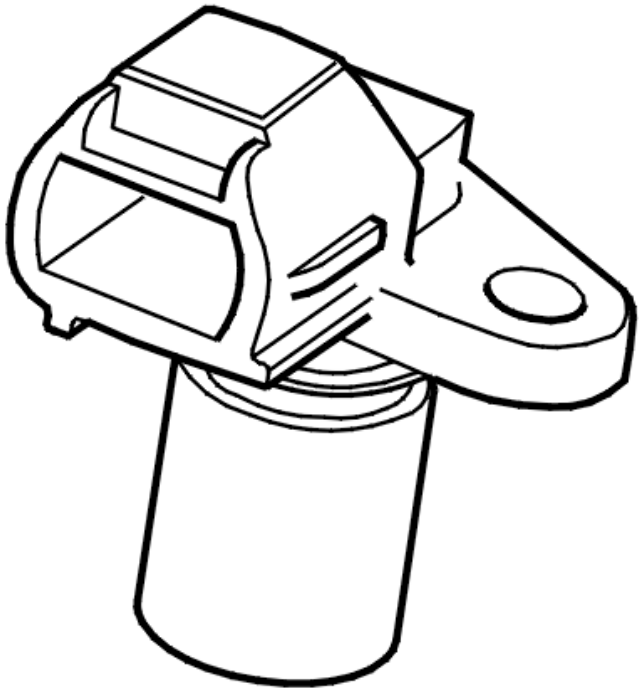

Fig. 397: Detecting The Reference Positions Of The Camshaft
Courtesy of VOLVO CARS CORPORATION

- **Continue**

  Refer to **VERIFICATION**

VERIFICATION

VERIFICATION

HINT: After carrying out the repair, check that the fault has been remedied.

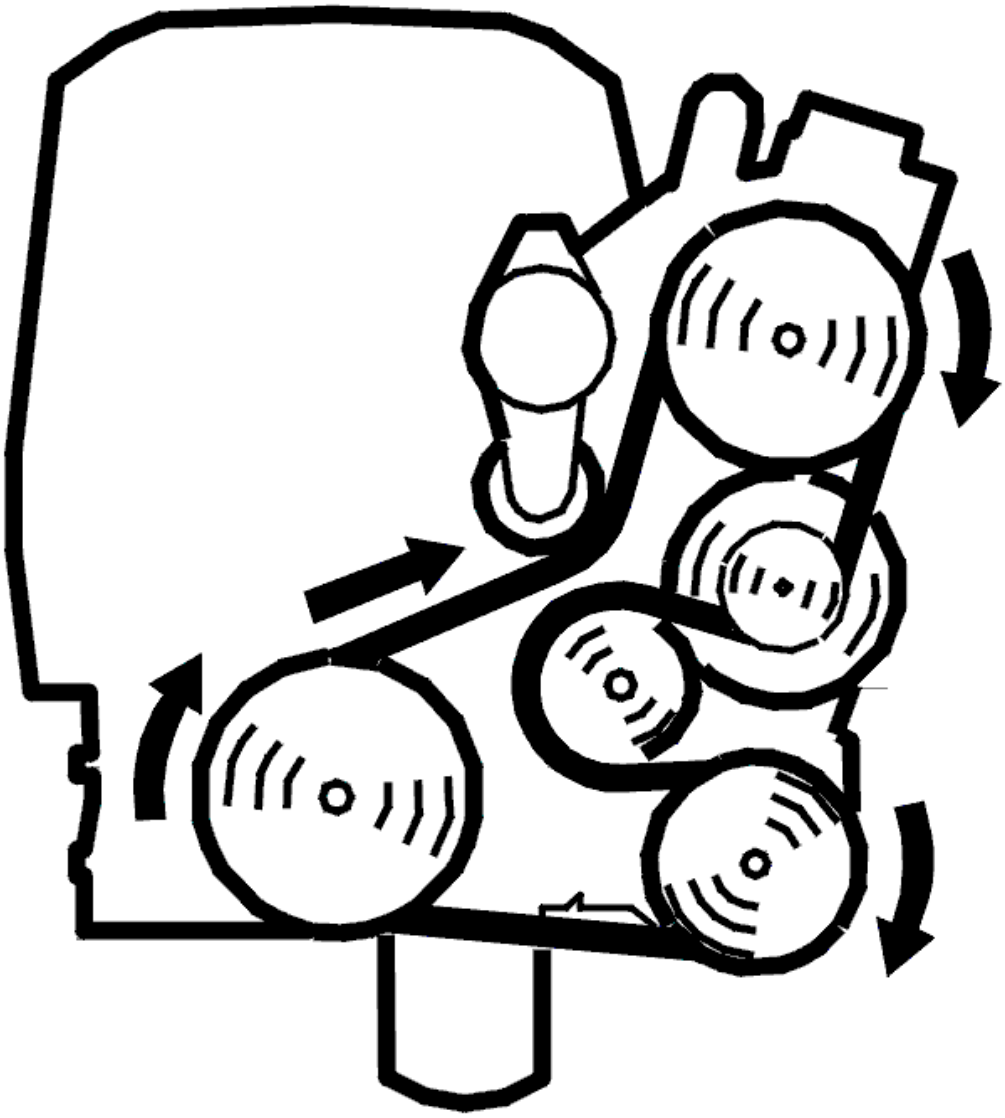

Fig. 398: Belt Routing / Engine Idling - Volvo
Courtesy of VOLVO CARS CORPORATION

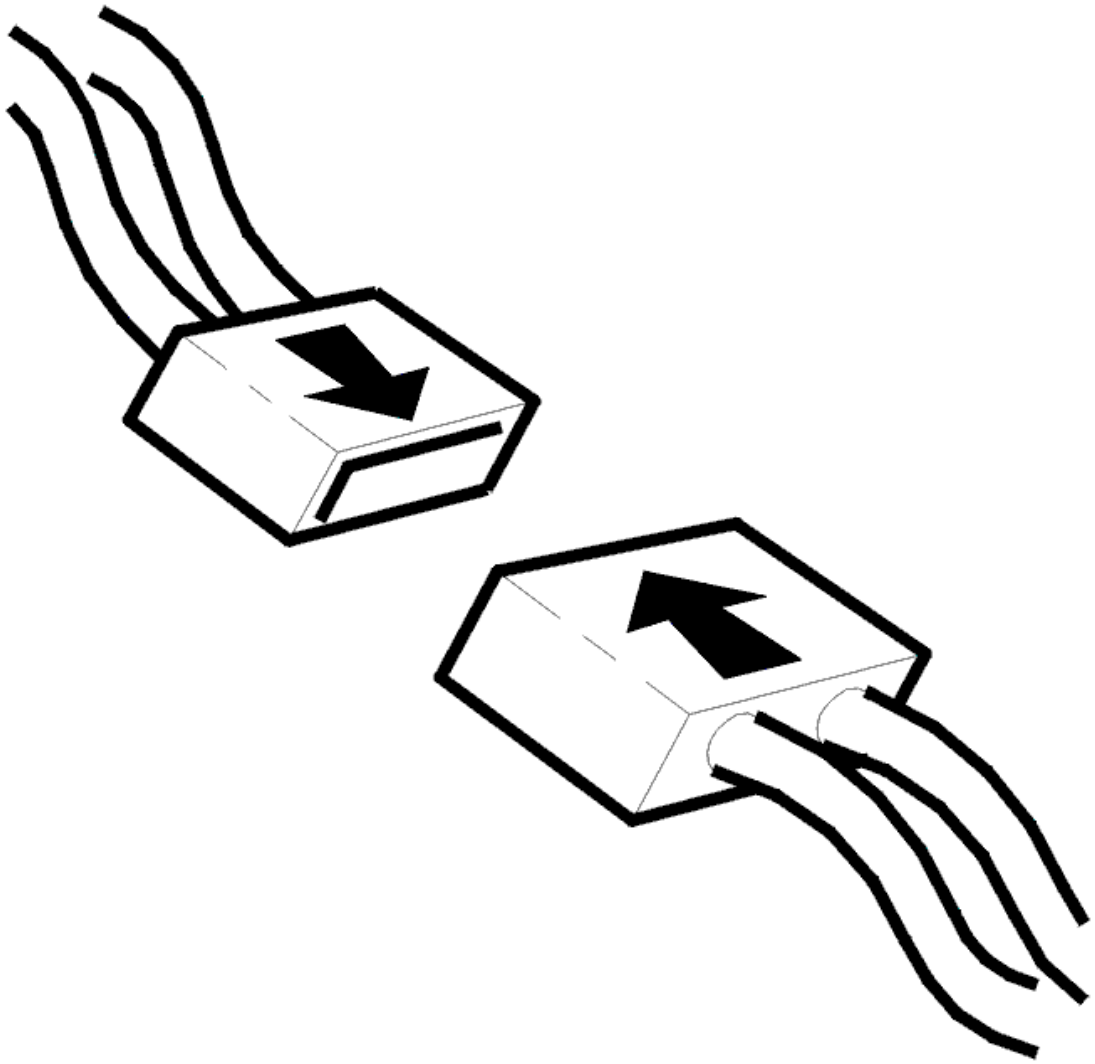

Fig. 399: Connecting Connector
Courtesy of VOLVO CARS CORPORATION

- Ignition off
- Reconnect the connectors, components, etc.
- Start the engine.
- Read the diagnostic status and fault status for the diagnostic trouble code by selecting the diagnostic trouble code in the list.

  Increase the engine speed a few times until the scan is "Implemented".

  Check the fault status for the diagnostic trouble code when the scan is "Implemented". When the function is correct the fault status should be "No fault found" when the scan is implemented.

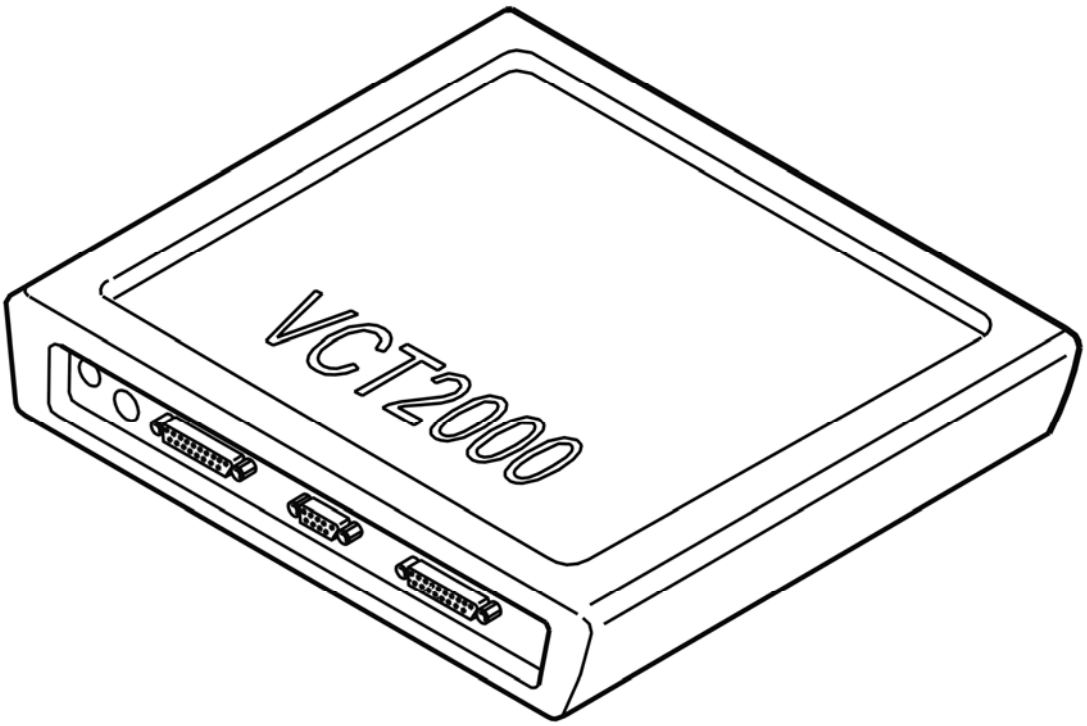

Fig. 400: Identifying VCT2000 Diagnostic Tool Symbol In VIDA
Courtesy of VOLVO CARS CORPORATION

Is the function OK?

- **YES**

  VERIFIED: Troubleshooting has been completed.

- **NO**

  Refer to **INFORMATION**

INFORMATION

FAULT-TRACING INFORMATION

The fault should have been detected and remedied. As this is not the case fault-tracing has failed.

Exit fault-tracing for this diagnostic trouble code (DTC) or make another attempt.

ECM-P034000: CAMSHAFT POSITION SENSOR A CIRCUIT (BANK 1 OR SINGLE SENSOR). GENERAL FAILURE INFORMATION. NO SUB TYPE

INFORMATION (B6324S; 2007-2010)

DIAGNOSTIC TROUBLE CODE (DTC) INFORMATION ECM-P034000

Condition

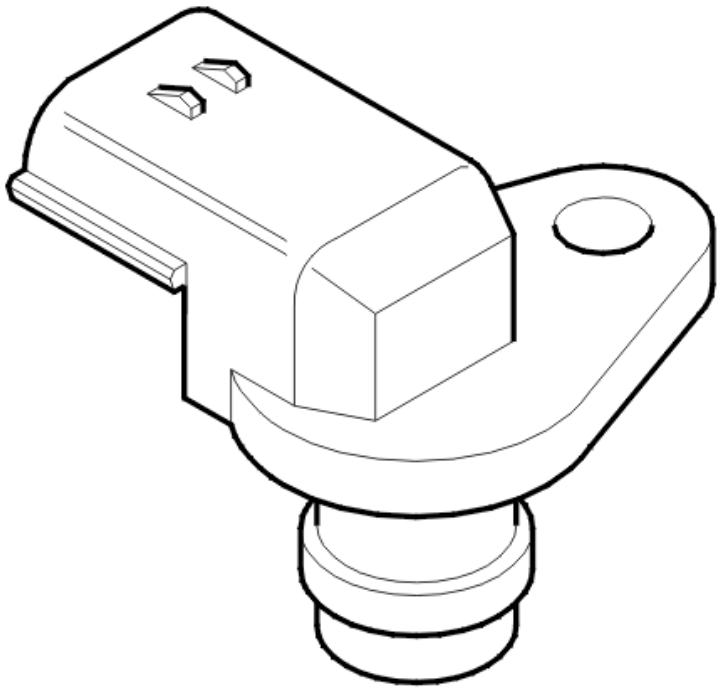

Fig. 401: Detecting Camshaft Flanks On Sensor
Courtesy of VOLVO CARS CORPORATION

The camshaft is divided into a number of segments (flanks). The camshaft houses a gearwheel with a number of teeth (the teeth are positioned between each segment) that are read by the engine control module (ECM) via the camshaft position sensor. The diagnostic trouble code is generated if the control module detects too few segments for a certain number of crankshaft revolutions.

The diagnostic trouble code (DTC) can be diagnosed when starting the engine.

Substitute Value

- Engine speed sensor signal.

Possible Source

- Open-circuit on the signal cable.

- The signal cable is short-circuited to ground.
- The signal cable is short-circuited to voltage.
- Damaged mass air flow sensor.

Fault symptom[s]

- Nothing.

FAULT-TRACING

see **FAULT-TRACING**

ECM-P034000: CAMSHAFT POSITION SENSOR A CIRCUIT (BANK 1 OR SINGLE SENSOR). GENERAL FAILURE INFORMATION. NO SUB TYPE INFORMATION (B6324S5; 2011-2012)

DIAGNOSTIC TROUBLE CODE (DTC) INFORMATION ECM-P034000

see **DIAGNOSTIC TROUBLE CODE (DTC) INFORMATION ECM-P034000**

FAULT-TRACING

see **FAULT-TRACING**

ECM-P034000: CAMSHAFT POSITION SENSOR A CIRCUIT (BANK 1 OR SINGLE SENSOR). GENERAL FAILURE INFORMATION. NO SUB TYPE INFORMATION (B8444S; 2005-2011)

DIAGNOSTIC TROUBLE CODE (DTC) INFORMATION ECM-P034000

Condition

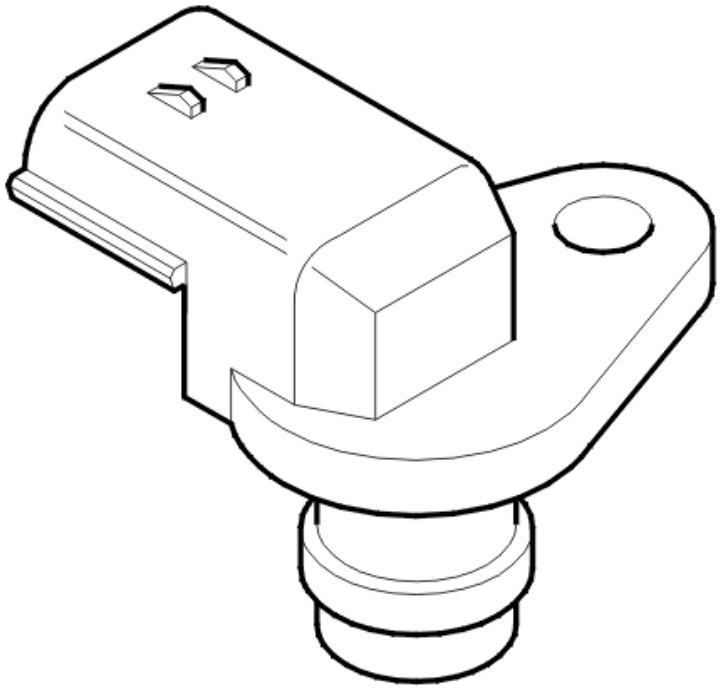

Fig. 402: Detecting Camshaft Flanks On Sensor
Courtesy of VOLVO CARS CORPORATION

The camshaft houses a gearwheel with a number of teeth (the teeth are positioned between each segment) that are read by the engine control module (ECM) via the camshaft position sensor. The diagnostic trouble code is generated if the control module detects too few segments for a certain number of crankshaft revolutions.

The diagnostic trouble code can be diagnosed by the control module when the engine is running and engine speed exceeds a certain value.

The diagnostic trouble code (DTC) corresponds to intake camshaft position (CMP) sensor, bank 1.

Substitute Value

- Engine speed sensor signal.

Possible Source

- Open-circuit on the signal cable.
- The signal cable is short-circuited to ground.
- The signal cable is short-circuited to voltage.
- Damaged mass air flow sensor.

Fault symptom[s]

- Nothing.

FAULT TRACING

CHECKING THE STATUS

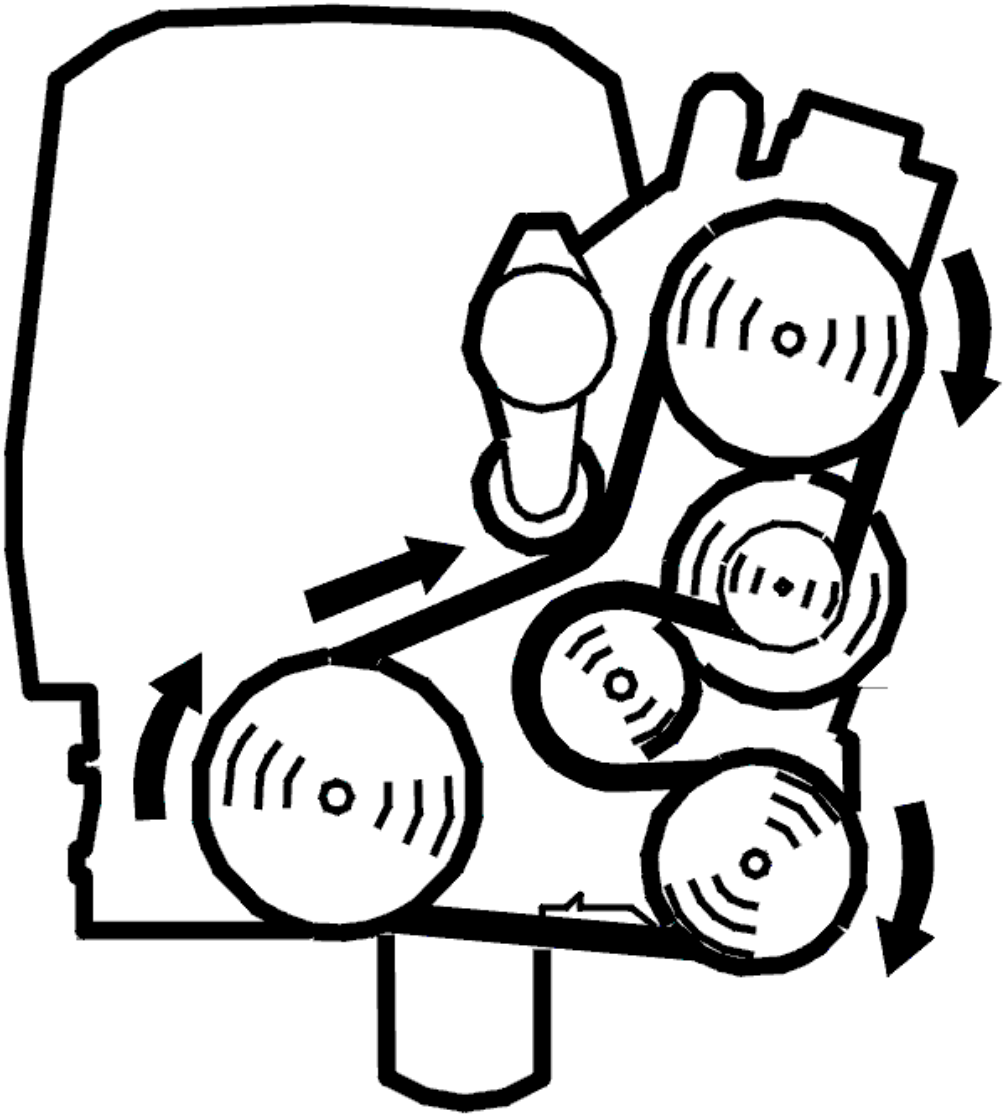

Fig. 403: Belt Routing / Engine Idling - Volvo
Courtesy of VOLVO CARS CORPORATION

- Start the engine.

  Read the diagnostic status and fault status for the diagnostic trouble code by selecting the diagnostic trouble code in the list.

Increase the engine speed a few times until the scan is "Implemented".

Check whether the fault is permanent or intermittent. Read off the diagnostic trouble code (DTC) fault status when the diagnostic status is "Completed".

The fault is permanent if the fault status is "Fault found". If the fault status is "No fault found" the fault is intermittent and not presently active.

NOTE: The fault status cannot change from "Fault found" to "No fault found" in the same operating cycle.

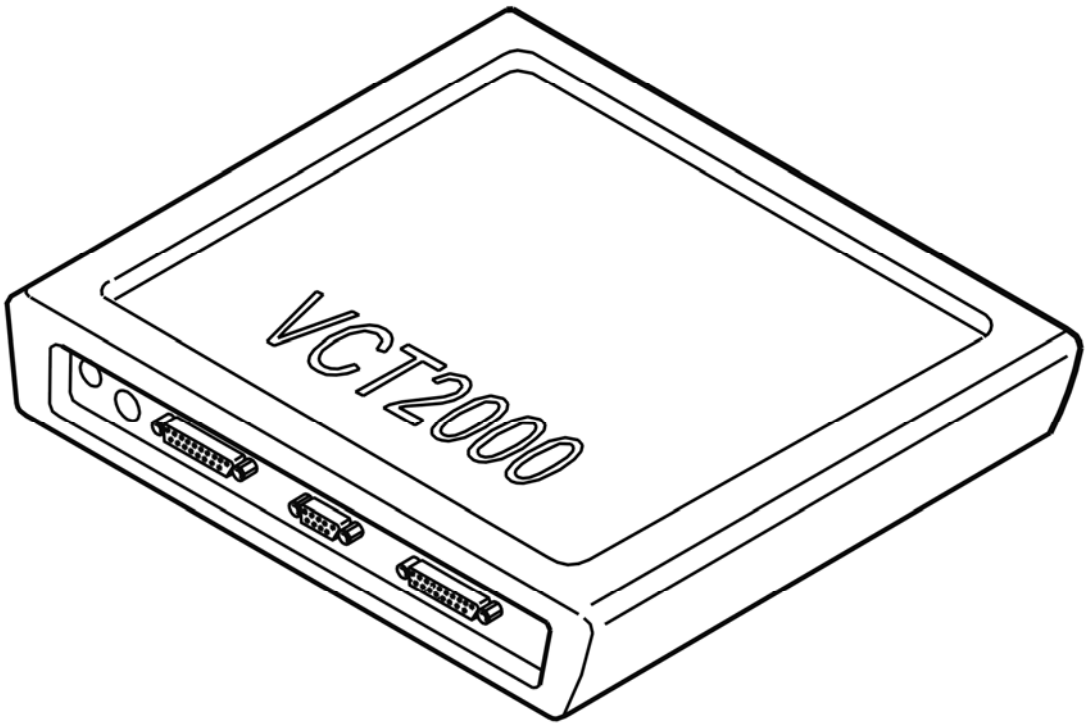

Fig. 404: Identifying VCT2000 Diagnostic Tool Symbol In VIDA
Courtesy of VOLVO CARS CORPORATION

- **Continue**

Refer to **CHECKING COMPONENTS AND WIRING**

CHECKING COMPONENTS AND WIRING

HINT: Bank 1 (cylinder row nearest the front): cylinders 1, 3, 5 and 7.

HINT: Bank 2 (cylinder row furthest to the rear, nearest the passenger compartment): cylinders 2, 4, 6,

and 8.

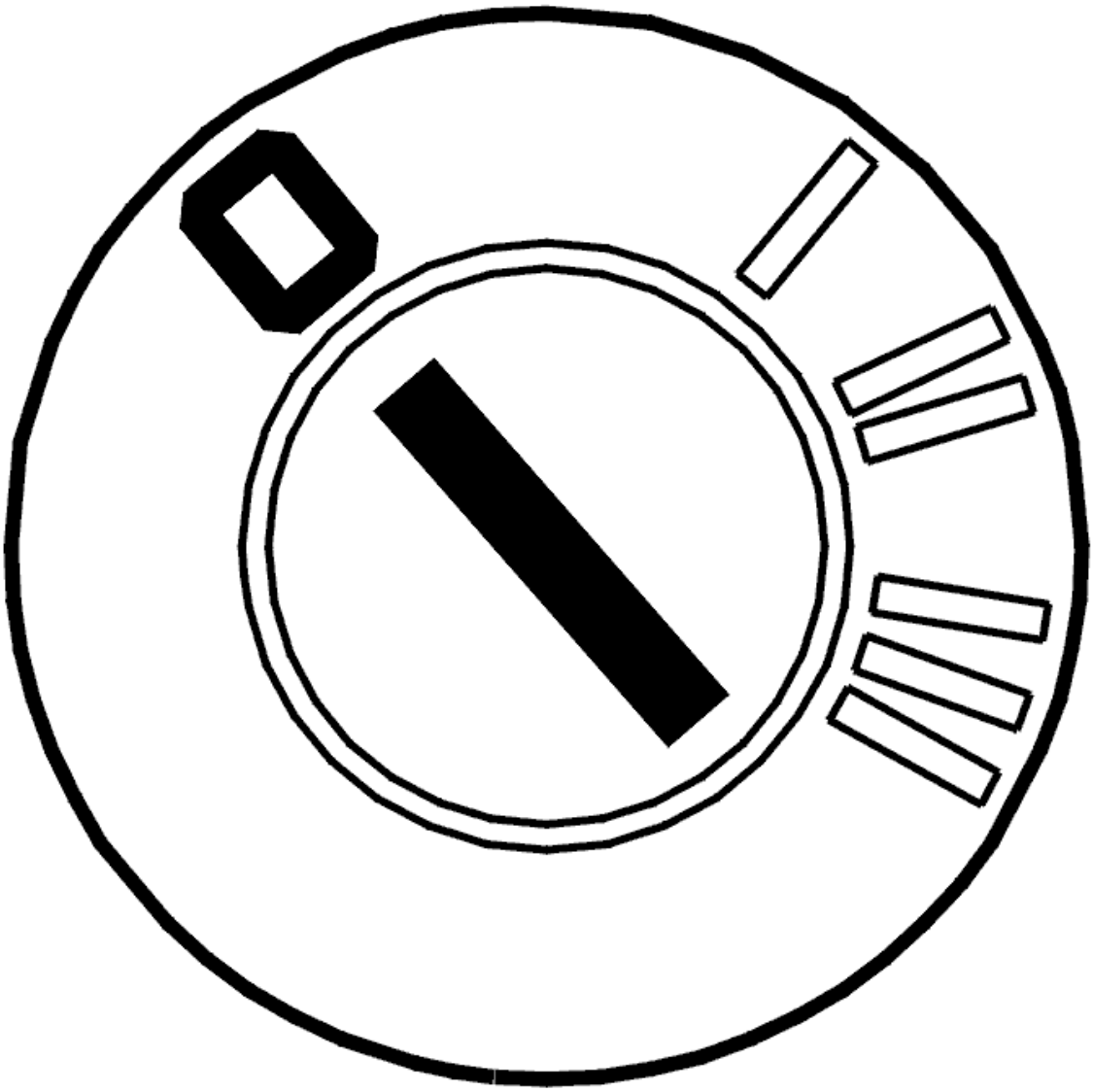

Fig. 405: Identifying Ignition OFF
Courtesy of VOLVO CARS CORPORATION

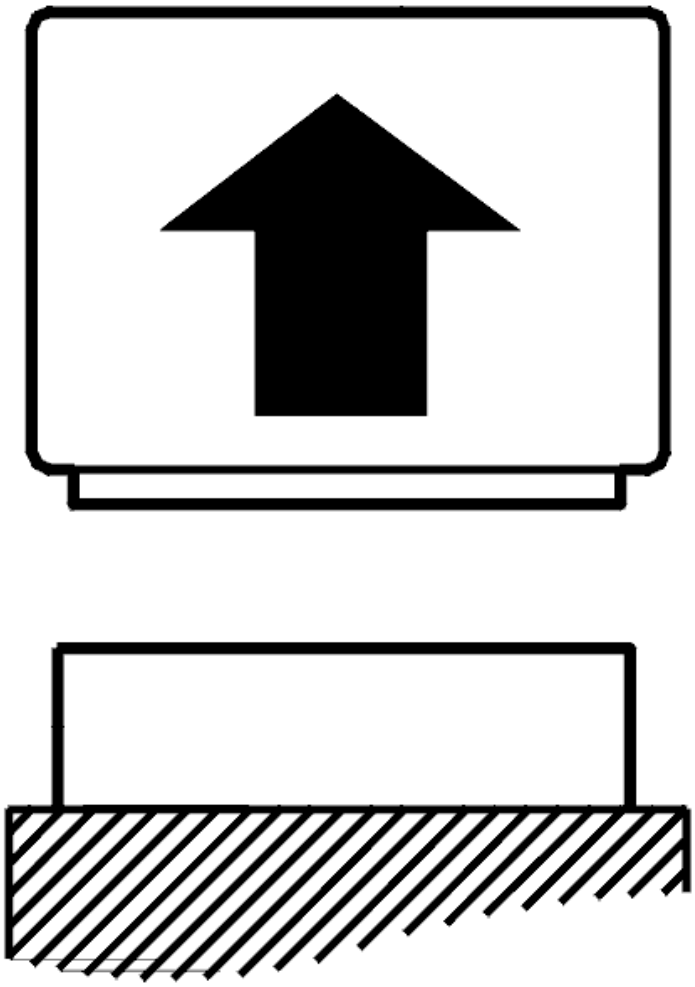

Fig. 406: Disconnecting Connector
Courtesy of VOLVO CARS CORPORATION

- Ignition off
- Disconnect the engine control module (ECM).

  Check the signal cable between the control module and the connector for the diagnostic trouble codes (DTC) relevant camshaft position sensor. Check for a short-circuit to ground. Check for a short-circuit to supply voltage. Check for an open-circuit.

  Measure between:

  - Control module terminal #A33 (#A33) and camshaft position sensor terminal #3 inlet, bank 1 (ECM-P034000).
  - Control module terminal #A34 (#A34) and camshaft position sensor terminal #3 inlet, bank 2

(ECM-P034500).
- Control module terminal #A31 (#A31) and camshaft position sensor terminal #3 exhaust, bank 1 (ECM-P036500).
- Control module terminal #A32 (#A32) and camshaft position sensor terminal #3 exhaust, bank 2 (ECM-P039000).

Check the voltage supply cable between the control module and the connector for the diagnostic trouble codes (DTC) relevant camshaft position sensor. Check for a short-circuit to ground. Check for a short-circuit to supply voltage. Check for an open-circuit.

Measure between:

- Control module terminal #A72 (#B12) and camshaft position sensor terminal #1.

Check the ground lead between the control module and the connector for the diagnostic trouble codes (DTC) relevant camshaft position sensor. Check for a short-circuit to ground. Check for a short-circuit to supply voltage. Check for an open-circuit.

Measure between:

- Control module terminal #A07 (#A7) and camshaft position sensor terminal #2.

Remedy as necessary.

Other information

- see **CONNECTING THE BREAKOUT BOX**
- see **SIGNAL SPECIFICATION, ENGINE CONTROL MODULE (ECM)**
- see **KNOCK SENSOR (KS), REPLACING**
- see **CHECKING WIRING AND TERMINALS**

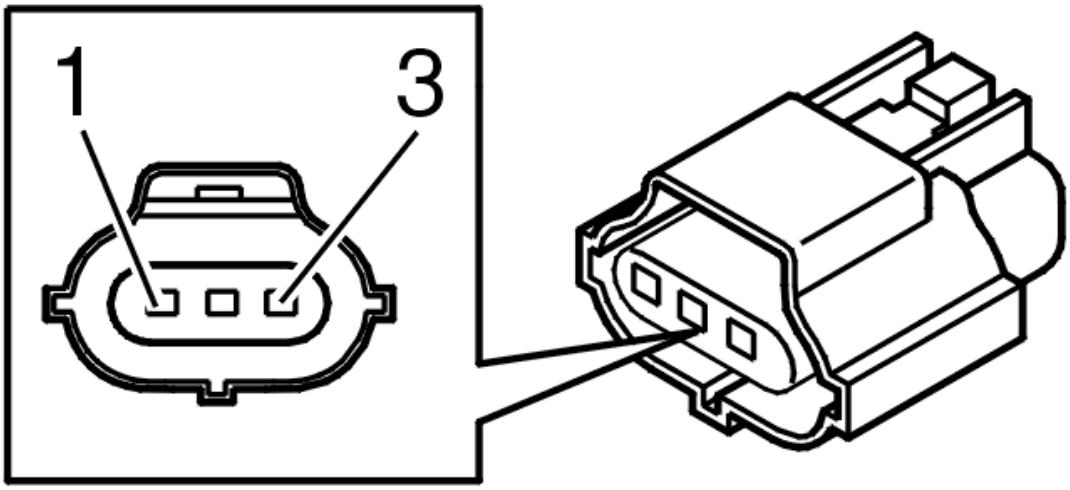

Fig. 407: Identifying 3-Bit Connector
Courtesy of VOLVO CARS CORPORATION

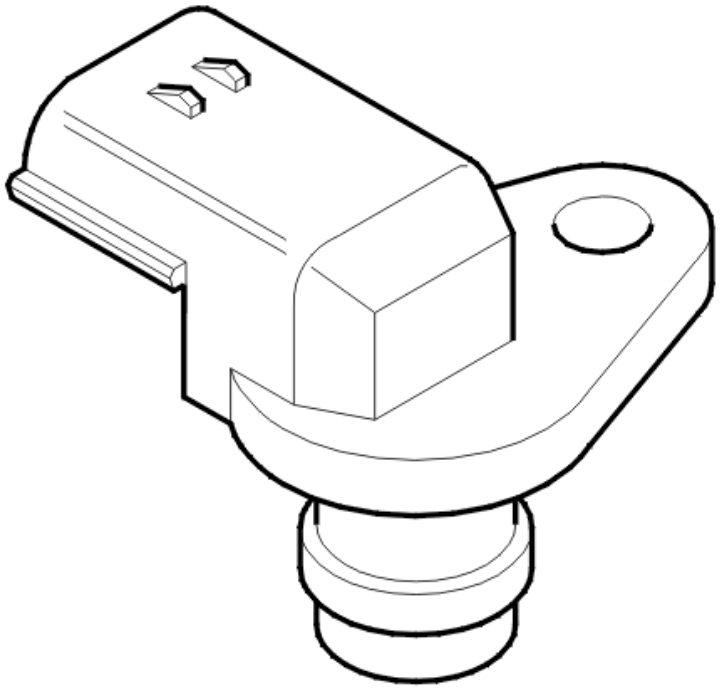

Fig. 408: Detecting Camshaft Flanks On Sensor
Courtesy of VOLVO CARS CORPORATION

- **Continue**

  Refer to **VERIFICATION**

VERIFICATION

VERIFICATION

HINT: After carrying out the repair, check that the fault has been remedied.

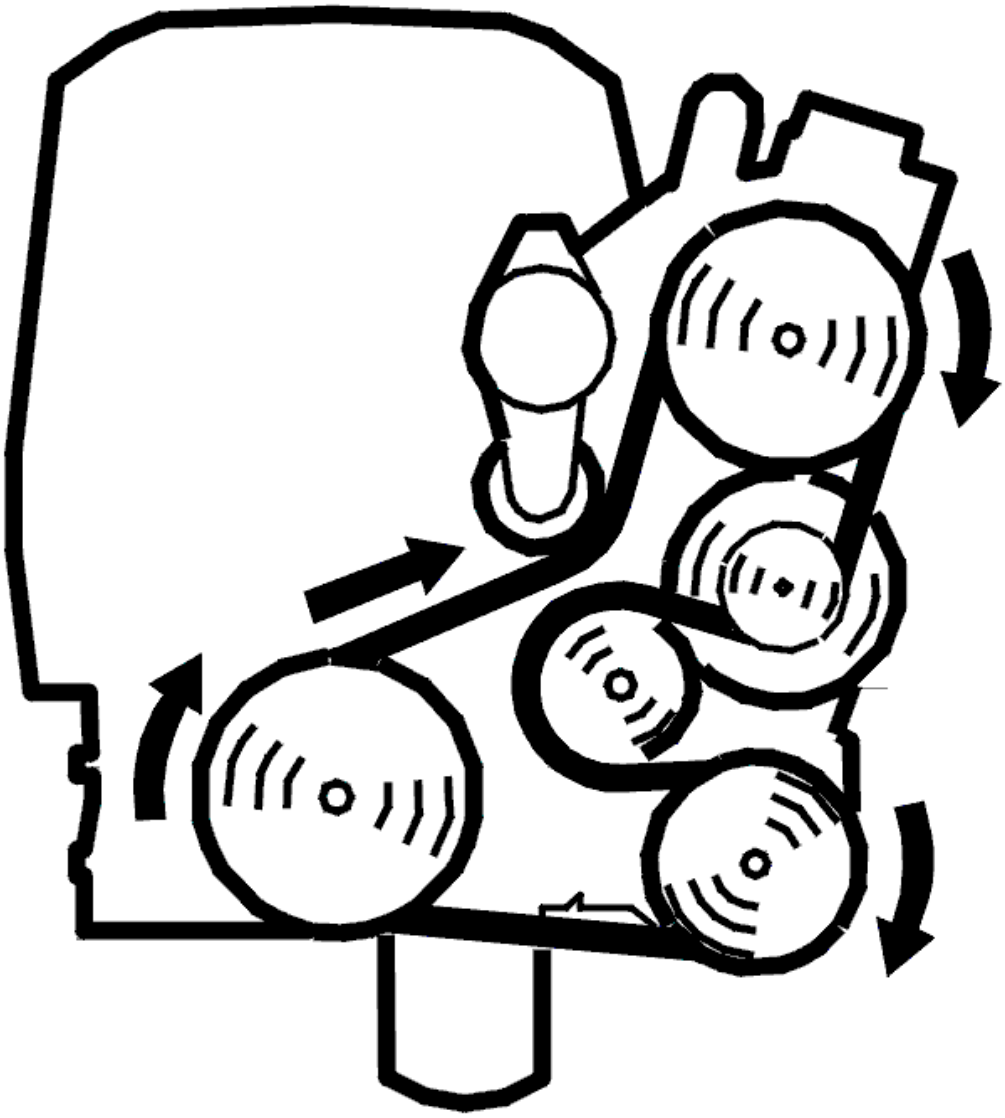

Fig. 409: Belt Routing / Engine Idling - Volvo
Courtesy of VOLVO CARS CORPORATION

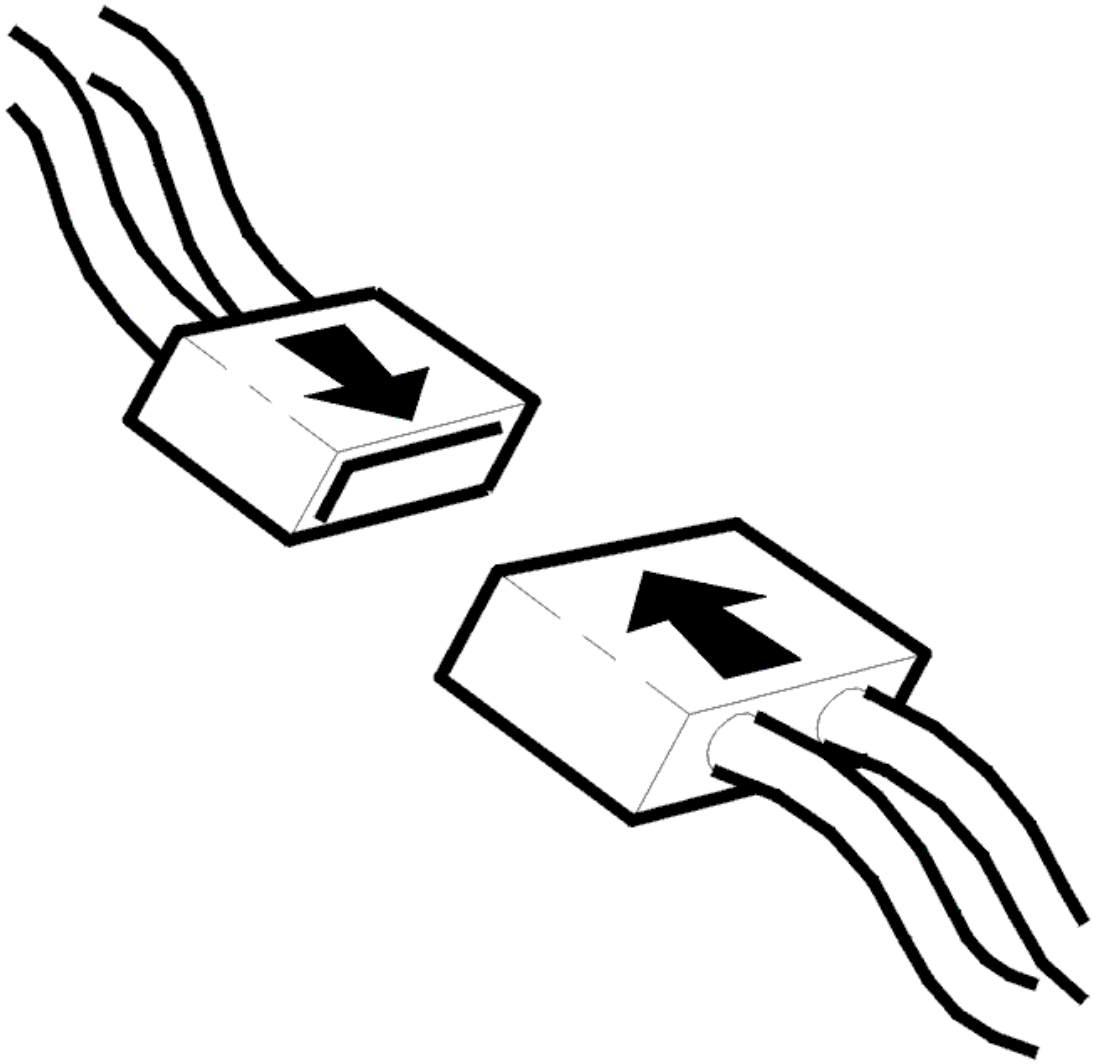

Fig. 410: Connecting Connector
Courtesy of VOLVO CARS CORPORATION

- Ignition off
- Reconnect the connectors, components, etc.
- Start the engine.
- Read the diagnostic status and fault status for the diagnostic trouble code by selecting the diagnostic trouble code in the list.

  Increase the engine speed a few times until the scan is "Implemented".

  Check the fault status for the diagnostic trouble code when the scan is "Implemented". When the function is correct the fault status should be "No fault found" when the scan is implemented.

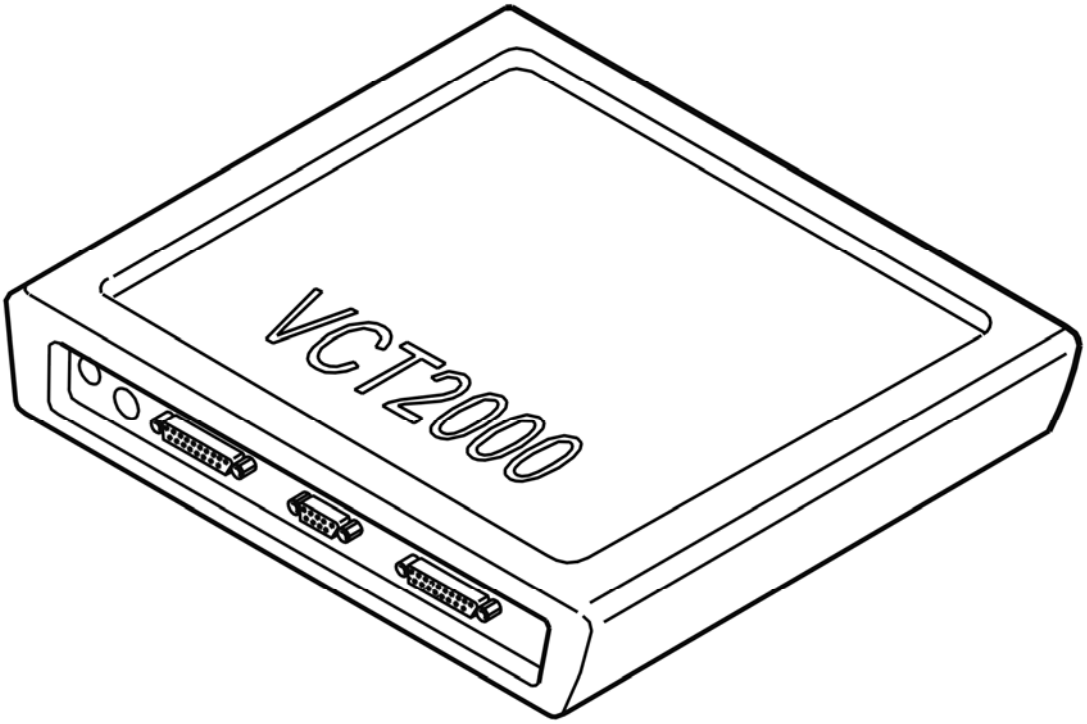

Fig. 411: Identifying VCT2000 Diagnostic Tool Symbol In VIDA
Courtesy of VOLVO CARS CORPORATION

Is the function OK?

- **YES**

  VERIFIED: Troubleshooting has been completed.

- **NO**

  Refer to **INFORMATION**

INFORMATION

FAULT-TRACING INFORMATION

The fault should have been detected and remedied. As this is not the case fault-tracing has failed.

Exit fault-tracing for this diagnostic trouble code (DTC) or make another attempt.

ECM-P034100: CAMSHAFT POSITION SENSOR A CIRCUIT RANGE/PERFORMANCE (BANK 1 OR SINGLE SENSOR). GENERAL

FAILURE INFORMATION. NO SUB TYPE INFORMATION (B6324S; 2007-2010)

DIAGNOSTIC TROUBLE CODE (DTC) INFORMATION ECM-P034100

Condition

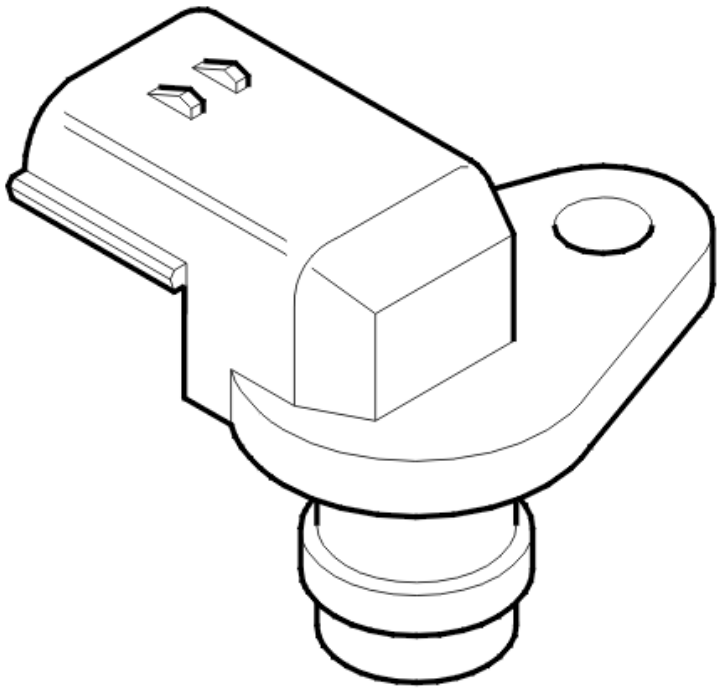

Fig. 412: Detecting Camshaft Flanks On Sensor
Courtesy of VOLVO CARS CORPORATION

The camshaft is divided into a number of segments (flanks). The camshaft houses a gearwheel with a number of teeth (the teeth are positioned between each segment) that are read by the engine control module (ECM) via the camshaft position sensor.

The diagnostic trouble code can be diagnosed by the control module when the engine is running and engine speed exceeds a certain value.

Substitute Value

- Engine speed sensor signal.

Possible Source

- Intermittent fault in the cable harness or connectors.
- Camshaft sensor fitted incorrectly.
- Damaged mass air flow sensor.

Fault symptom[s]

- Nothing.

FAULT-TRACING

see **FAULT-TRACING**

ECM-P034100: CAMSHAFT POSITION SENSOR A CIRCUIT RANGE/PERFORMANCE (BANK 1 OR SINGLE SENSOR). GENERAL FAILURE INFORMATION. NO SUB TYPE INFORMATION (B6324S5; 2011-2012)

DIAGNOSTIC TROUBLE CODE (DTC) INFORMATION ECM-P034100

see **DIAGNOSTIC TROUBLE CODE (DTC) INFORMATION ECM-P034100**

FAULT-TRACING

see **FAULT-TRACING**

ECM-P034100: CAMSHAFT POSITION SENSOR A CIRCUIT WITHIN/EXCEEDING LIMIT VALUES (BANK 1 OR SINGLE SENSOR). GENERAL FAULT INFORMATION. TYPE OF FAULT NOT SPECIFIED. (B8444S; 2005-2011)

DIAGNOSTIC TROUBLE CODE (DTC) INFORMATION ECM-P034100

Condition

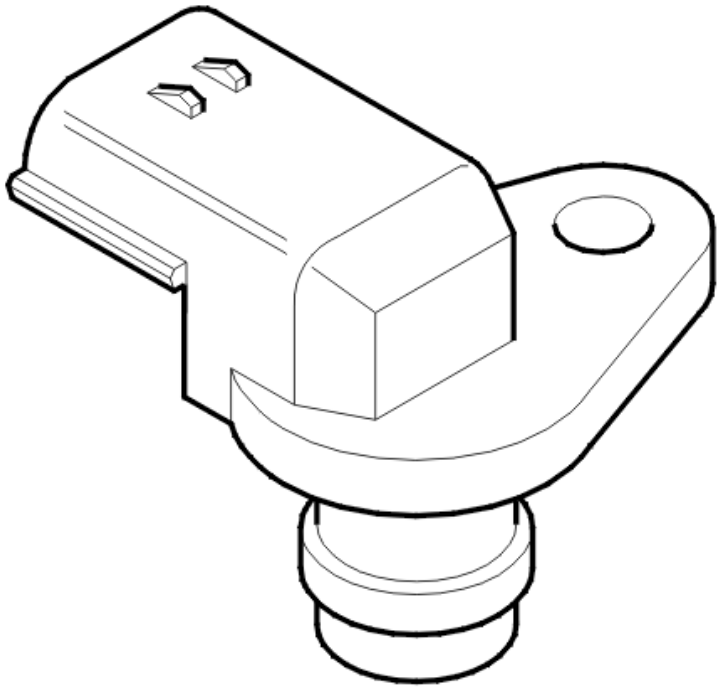

Fig. 413: Detecting Camshaft Flanks On Sensor
Courtesy of VOLVO CARS CORPORATION

The camshaft is divided into a number of segments (flanks). The camshaft houses a gearwheel with a number of teeth (the teeth are positioned between each segment) that are read by the engine control module (ECM) via the camshaft position sensor. The diagnostic trouble code is generated if the control module detects too few segments for 2 crankshaft revolutions (one camshaft revolution).

The diagnostic trouble code can be diagnosed by the control module when the engine is running and engine speed exceeds a certain value.

The diagnostic trouble code (DTC) corresponds to intake camshaft position (CMP) sensor, bank 1.

Substitute Value

- Engine speed sensor signal.

Possible Source

- Intermittent fault in the cable harness or connectors.
- Camshaft sensor fitted incorrectly.
- Damaged mass air flow sensor.

Fault symptom[s]

- Nothing.

FAULT TRACING

CHECKING THE STATUS

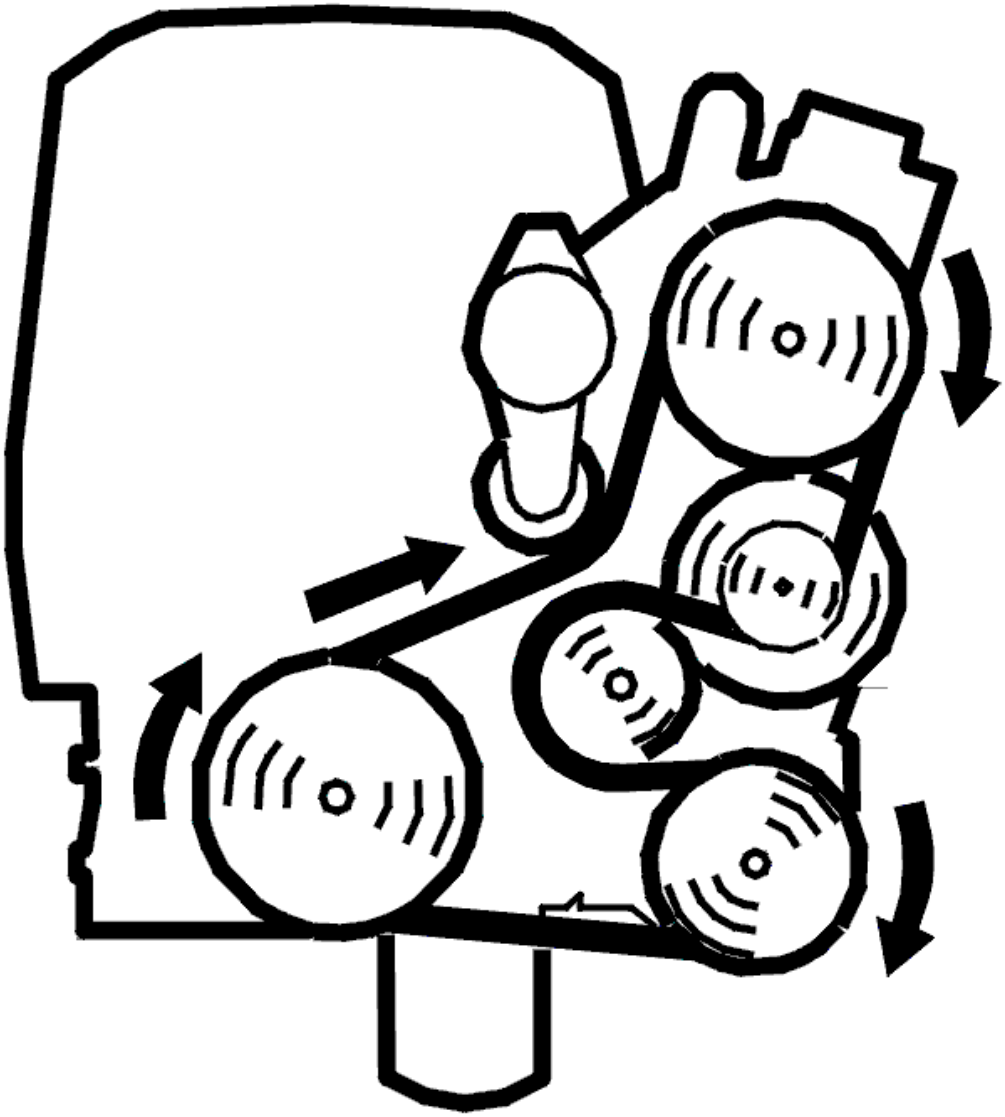

Fig. 414: Belt Routing / Engine Idling - Volvo
Courtesy of VOLVO CARS CORPORATION

- Start the engine.

  Read the diagnostic status and fault status for the diagnostic trouble code by selecting the diagnostic trouble code in the list.

Increase the engine speed a few times until the scan is "Implemented".

Check whether the fault is permanent or intermittent. Read off the diagnostic trouble code (DTC) fault status when the diagnostic status is "Completed".

The fault is permanent if the fault status is "Fault found". If the fault status is "No fault found" the fault is intermittent and not presently active.

NOTE: The fault status cannot change from "Fault found" to "No fault found" in the same operating cycle.

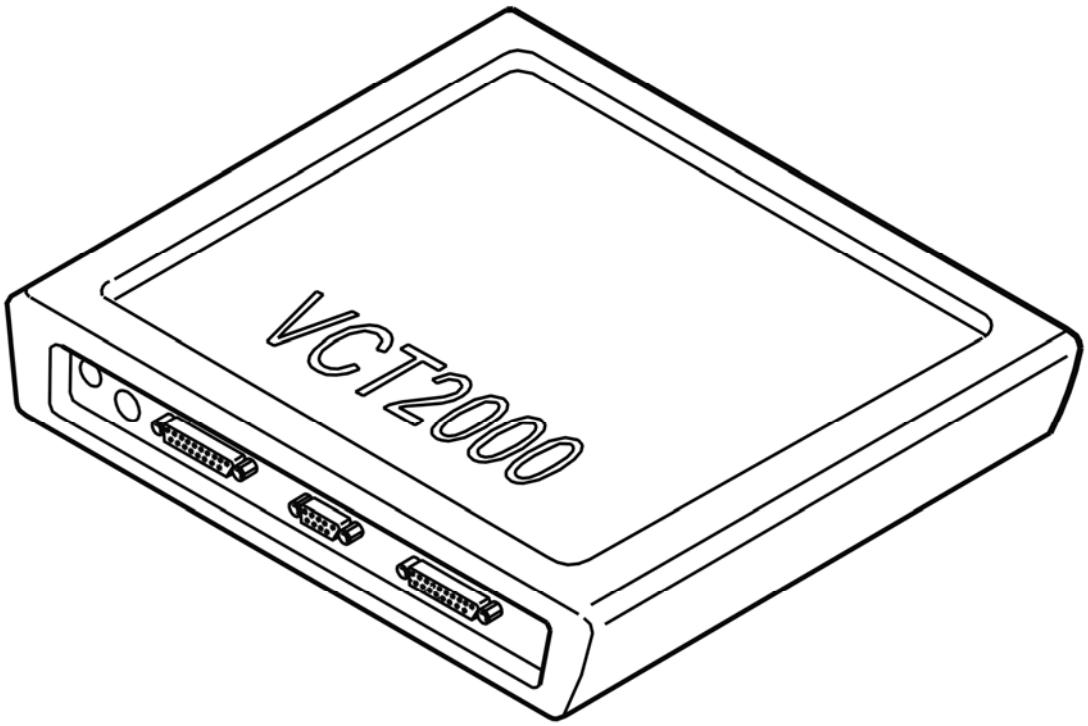

Fig. 415: Identifying VCT2000 Diagnostic Tool Symbol In VIDA
Courtesy of VOLVO CARS CORPORATION

- **Continue**

Refer to **CHECKING COMPONENTS AND WIRING**

CHECKING COMPONENTS AND WIRING

HINT: Bank 1 (cylinder row nearest the front): cylinders 1, 3, 5 and 7.

HINT: Bank 2 (cylinder row furthest to the rear, nearest the passenger compartment): cylinders 2, 4, 6,

and 8.

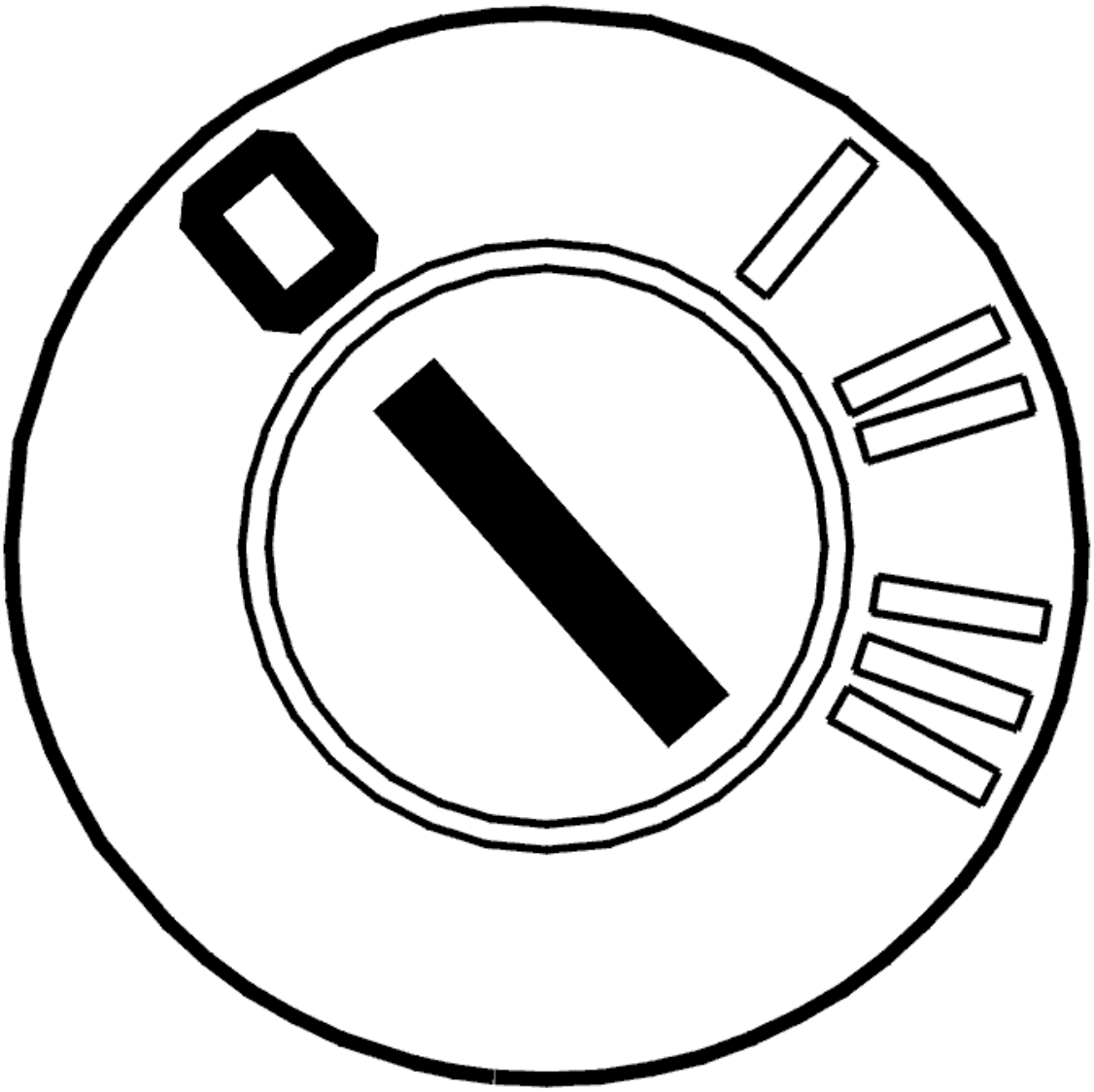

Fig. 416: Identifying Ignition OFF
Courtesy of VOLVO CARS CORPORATION

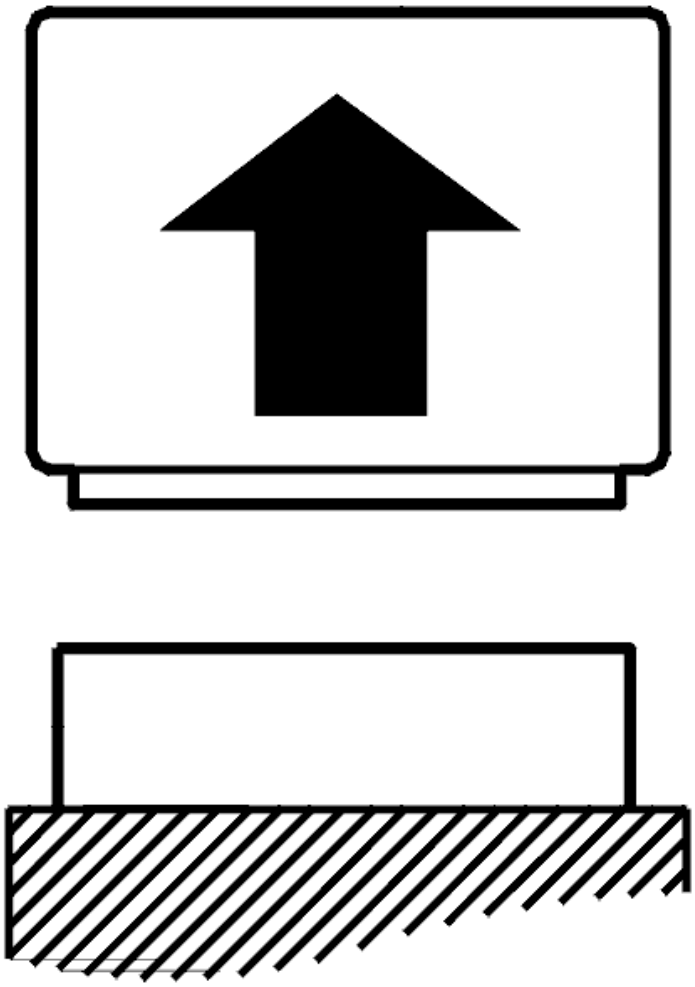

Fig. 417: Disconnecting Connector
Courtesy of VOLVO CARS CORPORATION

- Ignition off

  Check the camshaft position sensor connector with regard to contact resistance and oxidation.

  Check that the camshaft position sensor is correctly installed. Check the mounting and position of the camshaft position sensor.

  Disconnect the engine control module (ECM).

  Check the signal cable between the engine control module (ECM) and the connector for relevant camshaft position sensor. Check for an intermittent short-circuit to ground. Check for an intermittent short-circuit to supply voltage. Check for an intermittent open-circuit.

Measure between:

- Control module terminal #A33 (#A33) and camshaft position sensor terminal #3 inlet, bank 1 (ECM-P034100).
- Control module #A34 (#A34) and camshaft position sensor #3 inlet, bank 2 (ECM-P034600).
- Control module terminal #A31 (#A31) and camshaft position sensor terminal #3 exhaust, bank 1 (ECM-P036600).
- Control module terminal #A32 (#A32) and camshaft position sensor terminal #3 exhaust, bank 2 (ECM-P039100).

Check the supply cable between the control module and the connector for relevant camshaft position sensor. Check for an intermittent short-circuit to ground. Check for an intermittent short-circuit to supply voltage. Check for an intermittent open-circuit.

Measure between:

- Control module terminal #A72 (#B12) and camshaft position sensor terminal #1.

Check the ground lead between the control module and the connector for relevant camshaft position sensor. Check for an intermittent short-circuit to ground. Check for an intermittent short-circuit to supply voltage. Check for an intermittent open-circuit.

Measure between:

- Control module terminal #A07 (#A7) and camshaft position sensor terminal #2.

Remedy as necessary.

Other information

- see **CONNECTING THE BREAKOUT BOX**
- see **SIGNAL SPECIFICATION, ENGINE CONTROL MODULE (ECM)**
- see **CONTROL SYSTEM, IGNITION (B8444S; 2005-2011)**
- see **CHECKING WIRING AND TERMINALS**

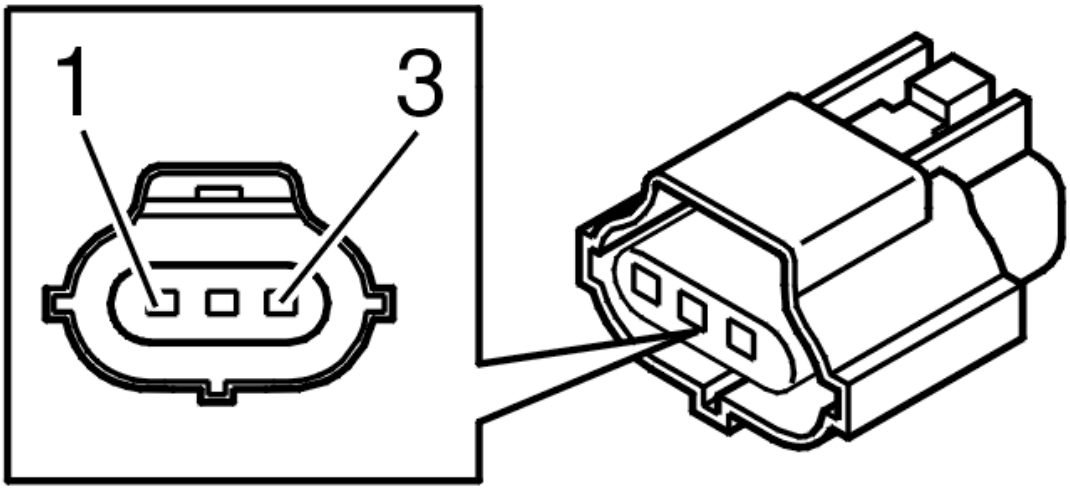

Fig. 418: Identifying 3-Bit Connector
Courtesy of VOLVO CARS CORPORATION

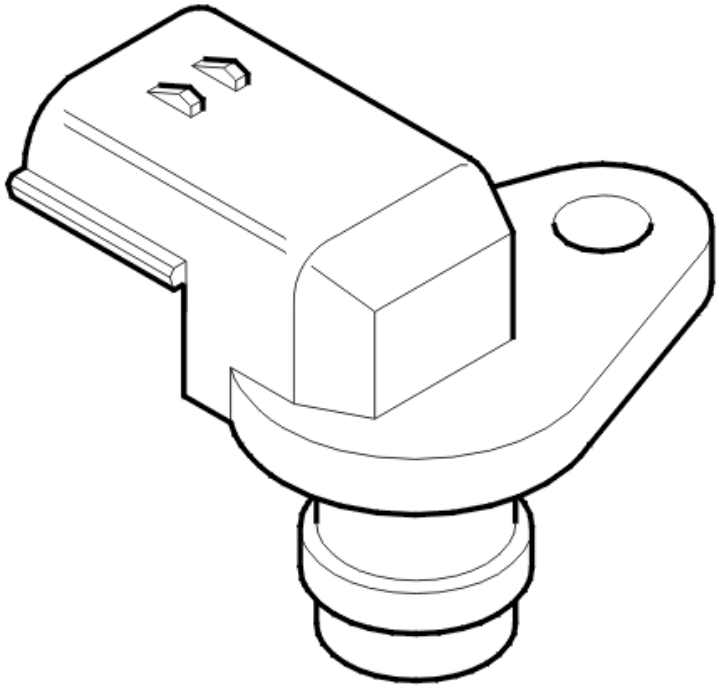

Fig. 419: Detecting Camshaft Flanks On Sensor
Courtesy of VOLVO CARS CORPORATION

- **Continue**

  Refer to **VERIFICATION**

VERIFICATION

VERIFICATION

HINT: After carrying out the repair, check that the fault has been remedied.

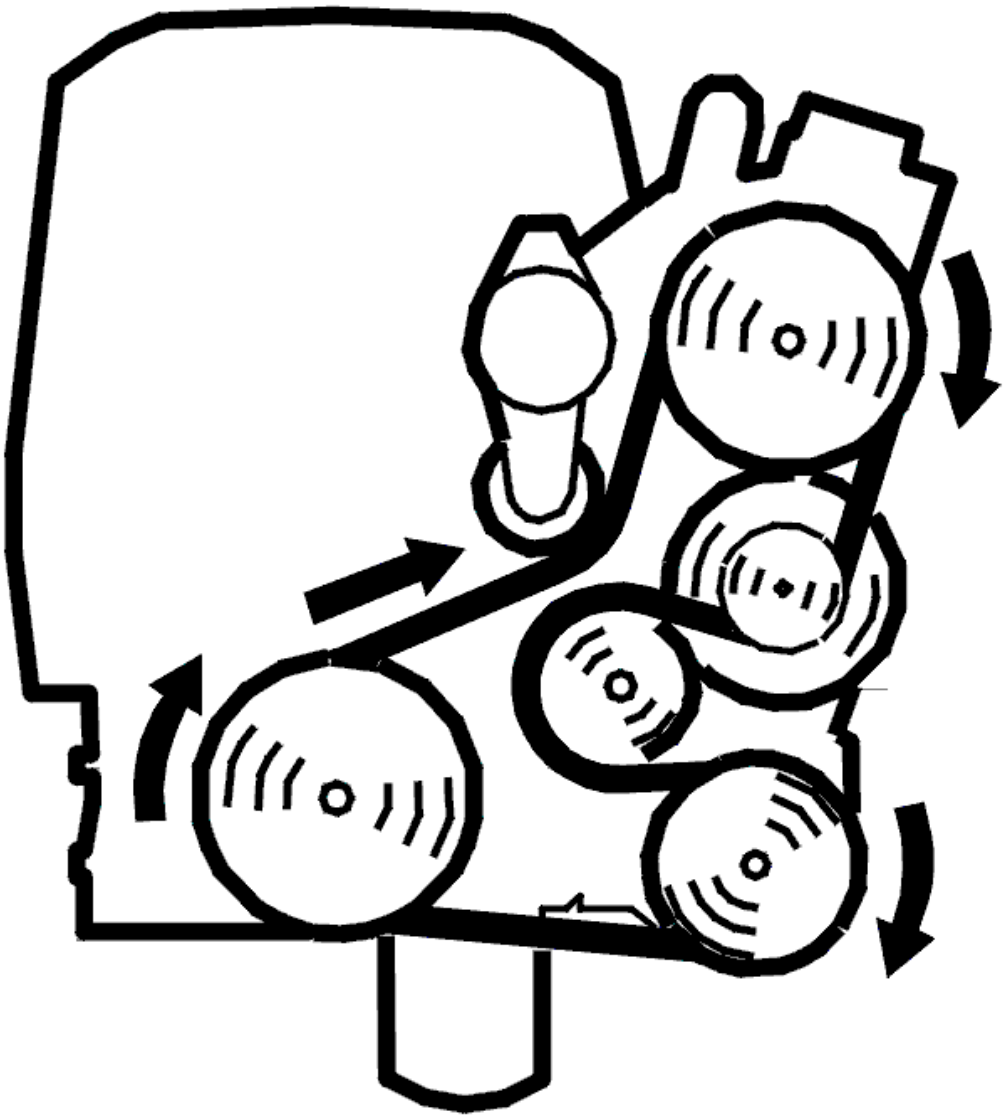

Fig. 420: Belt Routing / Engine Idling - Volvo
Courtesy of VOLVO CARS CORPORATION

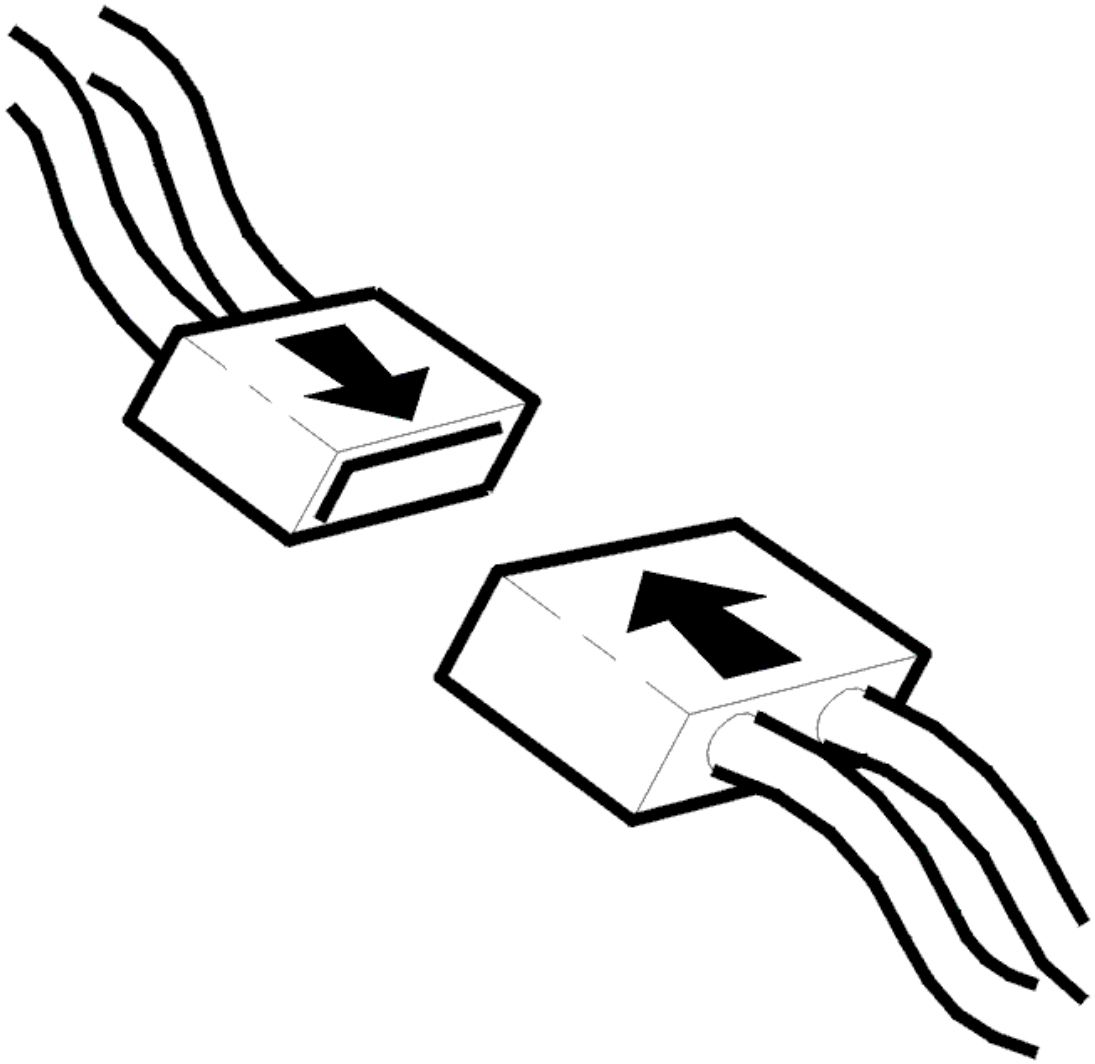

Fig. 421: Connecting Connector
Courtesy of VOLVO CARS CORPORATION

- Ignition off
- Reconnect the connectors, components, etc.
- Start the engine.
- Read the diagnostic status and fault status for the diagnostic trouble code by selecting the diagnostic trouble code in the list.

  Increase the engine speed a few times until the scan is "Implemented".

  Check the fault status for the diagnostic trouble code when the scan is "Implemented". When the function is correct the fault status should be "No fault found" when the scan is implemented.

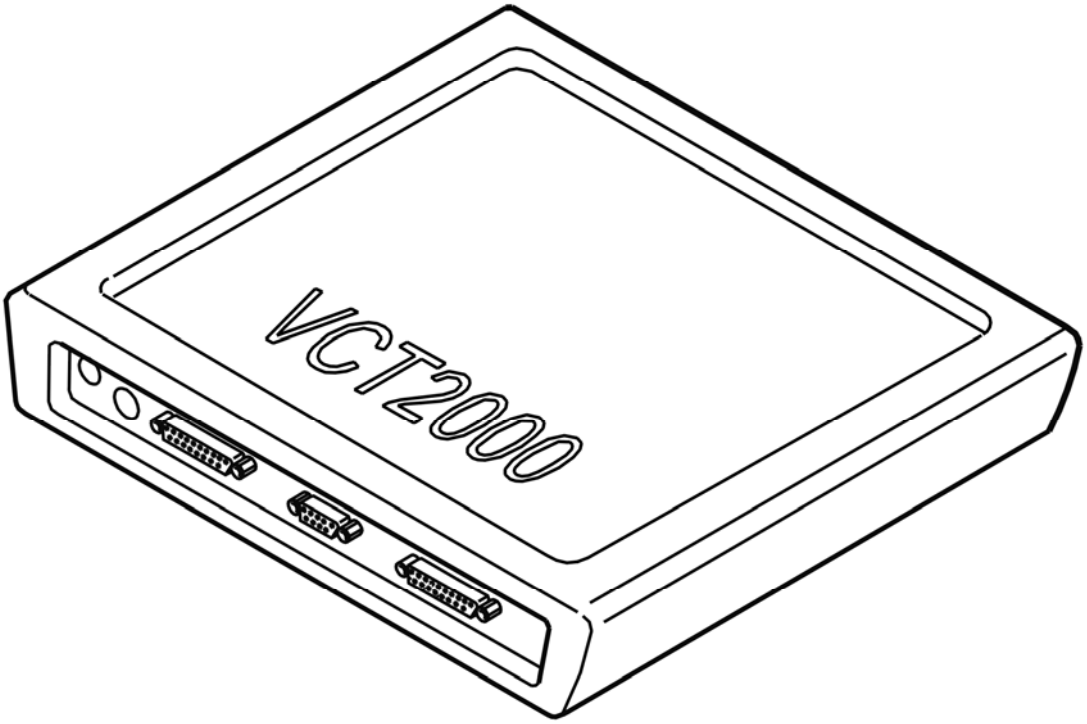

Fig. 422: Identifying VCT2000 Diagnostic Tool Symbol In VIDA
Courtesy of VOLVO CARS CORPORATION

Is the function OK?

- **YES**

  VERIFIED: Troubleshooting has been completed.

- **NO**

  Refer to **INFORMATION**

INFORMATION

FAULT-TRACING INFORMATION

The fault should have been detected and remedied. As this is not the case fault-tracing has failed.

Exit fault-tracing for this diagnostic trouble code (DTC) or make another attempt.

ECM-P034400: CAMSHAFT POSITION SENSOR A CIRCUIT INTERMITTENT (BANK 1 OR SINGLE SENSOR). GENERAL FAILURE INFORMATION. NO

SUB TYPE INFORMATION (B6324S; 2007-2010)

DIAGNOSTIC TROUBLE CODE (DTC) INFORMATION ECM-P034400

Condition

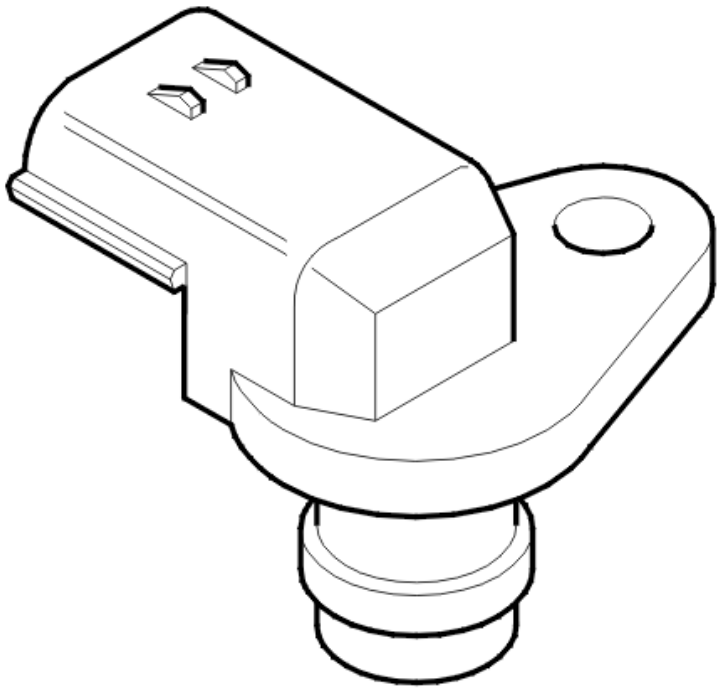

Fig. 423: Detecting Camshaft Flanks On Sensor
Courtesy of VOLVO CARS CORPORATION

The camshaft is divided into a number of segments (flanks). The camshaft houses a gearwheel with a number of teeth (the teeth are positioned between each segment) that are read by the engine control module (ECM) via the camshaft position sensor. The diagnostic trouble code is generated if the control module detects too few segments for a certain number of crankshaft revolutions.

The diagnostic trouble code (DTC) can be diagnosed when the engine is running.

Substitute Value

- Engine speed sensor signal.

Possible Source

- Open-circuit on the signal cable.

- The signal cable is short-circuited to ground.
- The signal cable is short-circuited to voltage.
- Damaged mass air flow sensor.

Fault symptom[s]

- Nothing.

FAULT-TRACING

see **FAULT-TRACING**

ECM-P034400: CAMSHAFT POSITION SENSOR A CIRCUIT INTERMITTENT (BANK 1 OR SINGLE SENSOR). GENERAL FAILURE INFORMATION. NO SUB TYPE INFORMATION (B6324S5; 2011-2012)

DIAGNOSTIC TROUBLE CODE (DTC) INFORMATION ECM-P034400

see **DIAGNOSTIC TROUBLE CODE (DTC) INFORMATION ECM-P034400**

FAULT-TRACING

see **FAULT-TRACING**

ECM-P034500: CAMSHAFT POSITION SENSOR A CIRCUIT (BANK 2). GENERAL FAILURE INFORMATION. NO SUB TYPE INFORMATION (B6324S; 2007-2010)

DIAGNOSTIC TROUBLE CODE (DTC) INFORMATION ECM-P034500

Condition

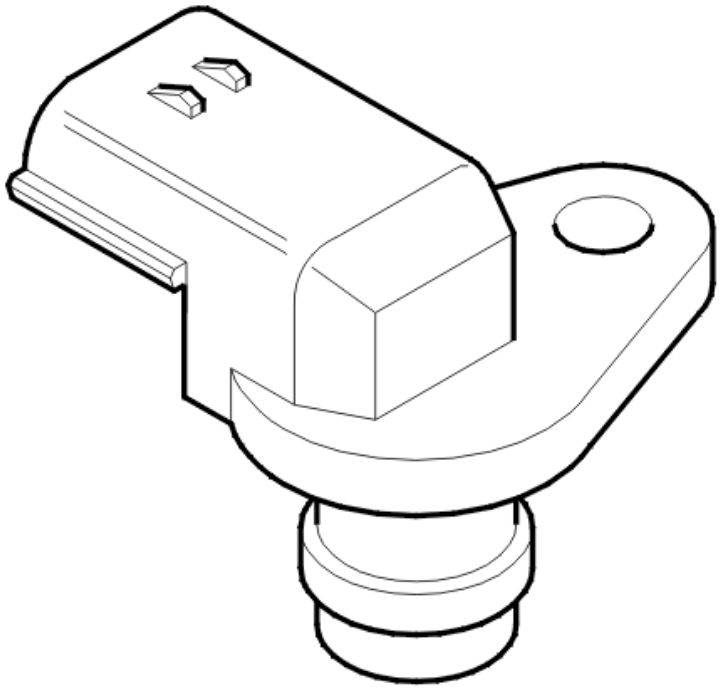

Fig. 424: Detecting Camshaft Flanks On Sensor
Courtesy of VOLVO CARS CORPORATION

The camshaft houses a gearwheel with a number of teeth (the teeth are positioned between each segment) that are read by the engine control module (ECM) via the camshaft position sensor. The diagnostic trouble code is generated if the control module detects too few segments for a certain number of crankshaft revolutions.

The diagnostic trouble code (DTC) can be diagnosed when the engine is running.

Substitute Value

- Engine speed sensor signal.

Possible Source

- Open-circuit on the signal cable.
- The signal cable is short-circuited to ground.
- The signal cable is short-circuited to voltage.
- Damaged mass air flow sensor.

Fault symptom[s]

- Nothing.

FAULT-TRACING

see **FAULT-TRACING**

ECM-P034500: CAMSHAFT POSITION SENSOR A CIRCUIT (BANK 2). GENERAL FAILURE INFORMATION. NO SUB TYPE INFORMATION (B6324S5; 2011-2012)

DIAGNOSTIC TROUBLE CODE (DTC) INFORMATION ECM-P034500

see **DIAGNOSTIC TROUBLE CODE (DTC) INFORMATION ECM-P034500**

FAULT-TRACING

see **FAULT-TRACING**

ECM-P034500: CAMSHAFT POSITION SENSOR A CIRCUIT (BANK 2). GENERAL FAILURE INFORMATION. NO SUB TYPE INFORMATION (B8444S; 2005-2011)

DIAGNOSTIC TROUBLE CODE (DTC) INFORMATION ECM-P034500

Condition

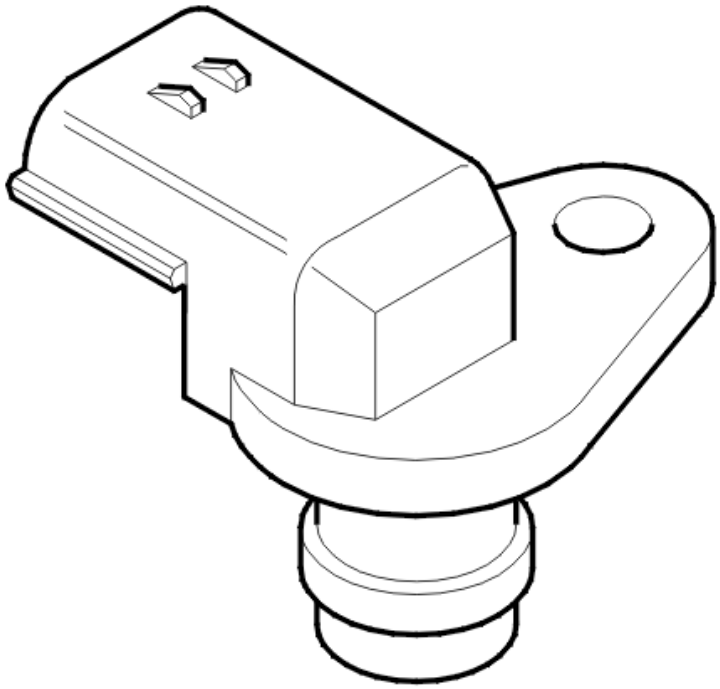

Fig. 425: Detecting Camshaft Flanks On Sensor
Courtesy of VOLVO CARS CORPORATION

The camshaft is divided into a number of segments (flanks). The camshaft houses a gearwheel with a number of teeth (the teeth are positioned between each segment) that are read by the engine control module (ECM) via the camshaft position sensor. The diagnostic trouble code is generated if the control module detects too few segments for a certain number of crankshaft revolutions.

The diagnostic trouble code can be diagnosed by the control module when the engine is running and engine speed exceeds a certain value.

The diagnostic trouble code (DTC) corresponds to intake camshaft position (CMP) sensor, bank 2.

Substitute Value

- Engine speed sensor signal.

Possible Source

- Open-circuit on the signal cable.
- The signal cable is short-circuited to ground.
- The signal cable is short-circuited to voltage.
- Damaged mass air flow sensor.

Fault symptom[s]

- Nothing.

FAULT TRACING

see **FAULT TRACING**

ECM-P034600: CAMSHAFT POSITION SENSOR A CIRCUIT RANGE/PERFORMANCE (BANK 2). GENERAL FAILURE INFORMATION. NO SUB TYPE INFORMATION (B6324S; 2007-2010)

DIAGNOSTIC TROUBLE CODE (DTC) INFORMATION ECM-P034600

Condition

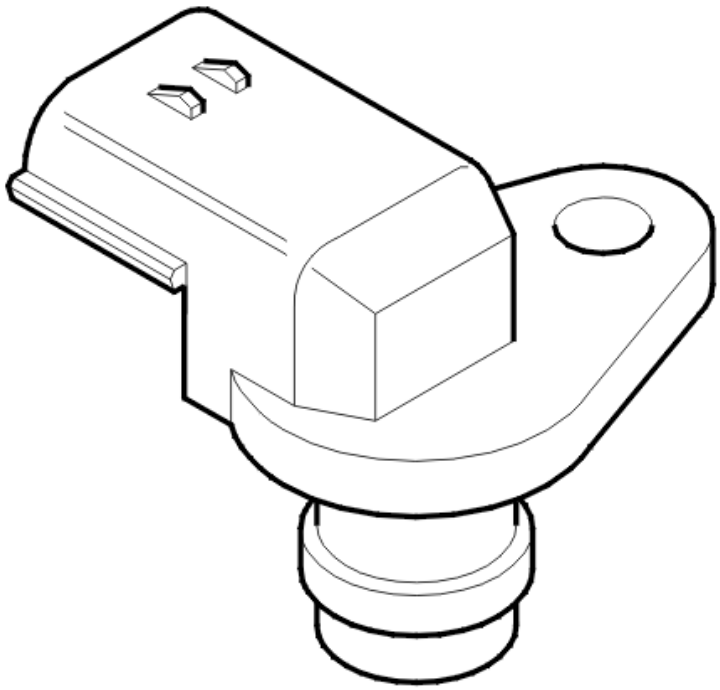

Fig. 426: Detecting Camshaft Flanks On Sensor
Courtesy of VOLVO CARS CORPORATION

The camshaft is divided into a number of segments (flanks). The camshaft houses a gearwheel with a number of teeth (the teeth are positioned between each segment) that are read by the engine control module (ECM) via the camshaft position sensor. The diagnostic trouble code is generated if the control module detects too few segments for 2 crankshaft revolutions (one camshaft revolution).

The diagnostic trouble code can be diagnosed by the control module when the engine is running and engine speed exceeds a certain value.

Substitute Value

- Engine speed sensor signal.

Possible Source

- Intermittent fault in the cable harness or connectors.
- Camshaft sensor fitted incorrectly.
- Damaged mass air flow sensor.

Fault symptom[s]

- Nothing.

FAULT-TRACING

see **FAULT-TRACING**

E9CM-P034600: CAMSHAFT POSITION SENSOR A CIRCUIT RANGE/PERFORMANCE (BANK 2). GENERAL FAILURE INFORMATION. NO SUB TYPE INFORMATION (B6324S5; 2011-2012)

DIAGNOSTIC TROUBLE CODE (DTC) INFORMATION ECM-P034600

see **DIAGNOSTIC TROUBLE CODE (DTC) INFORMATION ECM-P034600**

FAULT-TRACING

see **FAULT-TRACING**

ECM-P034600: CAMSHAFT POSITION SENSOR A CIRCUIT WITHIN/EXCEEDING LIMIT VALUES (BANK 2). GENERAL FAULT INFORMATION. TYPE OF FAULT NOT SPECIFIED. (B8444S; 2005-2011)

DIAGNOSTIC TROUBLE CODE (DTC) INFORMATION ECM-P034600

Condition

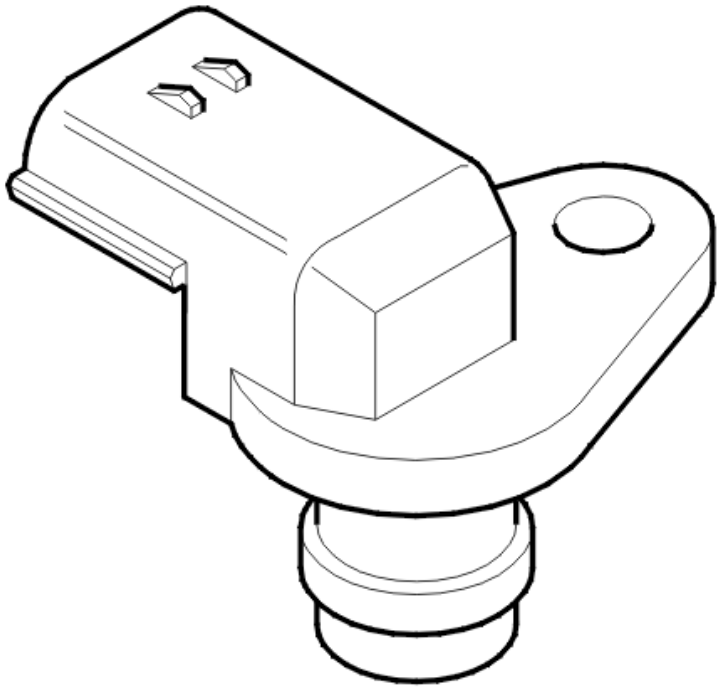

Fig. 427: Detecting Camshaft Flanks On Sensor
Courtesy of VOLVO CARS CORPORATION

The camshaft is divided into a number of segments (flanks). The camshaft houses a gearwheel with a number of teeth (the teeth are positioned between each segment) that are read by the engine control module (ECM) via the camshaft position sensor.

The diagnostic trouble code can be diagnosed by the control module when the engine is running and engine speed exceeds a certain value.

The diagnostic trouble code (DTC) corresponds to intake camshaft position (CMP) sensor, bank 2.

Substitute Value

- Engine speed sensor signal.

Possible Source

- Intermittent fault in the cable harness or connectors.
- Camshaft sensor fitted incorrectly.
- Damaged mass air flow sensor.

Fault symptom[s]

- Nothing.

FAULT TRACING

see **FAULT TRACING**

ECM-P034900: CAMSHAFT POSITION SENSOR A CIRCUIT INTERMITTENT (BANK 2). GENERAL FAILURE INFORMATION. NO SUB TYPE INFORMATION (B6324S; 2007-2010)

DIAGNOSTIC TROUBLE CODE (DTC) INFORMATION ECM-P034900

Condition

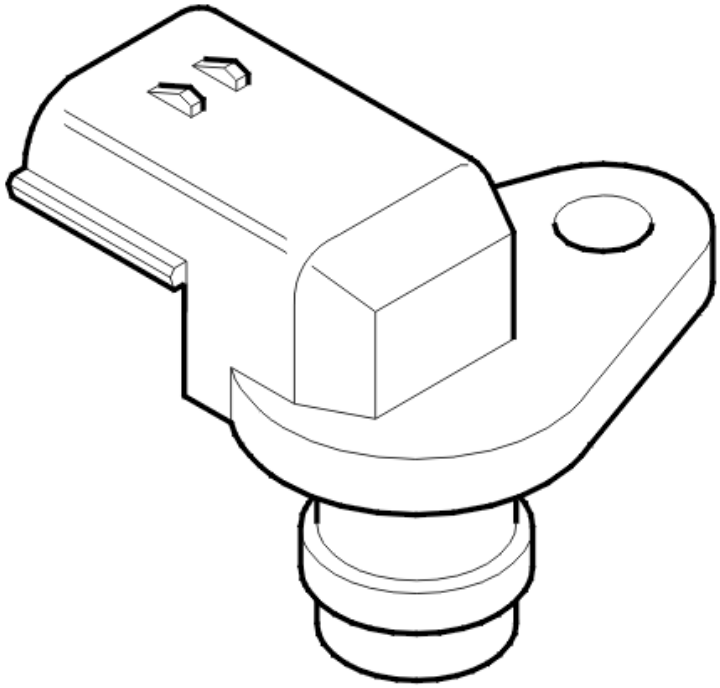

Fig. 428: Detecting Camshaft Flanks On Sensor
Courtesy of VOLVO CARS CORPORATION

The camshaft houses a gearwheel with a number of teeth (the teeth are positioned between each segment) that are read by the engine control module (ECM) via the camshaft position sensor. The diagnostic trouble code is generated if the control module detects too few segments for a certain number of crankshaft revolutions.

The diagnostic trouble code can be diagnosed by the control module when the engine is running and engine speed exceeds a certain value.

Substitute Value

- Engine speed sensor signal.

Possible Source

- Open-circuit on the signal cable.
- The signal cable is short-circuited to ground.
- The signal cable is short-circuited to voltage.
- Damaged mass air flow sensor.

Fault symptom[s]

- Nothing.

FAULT-TRACING

see **FAULT-TRACING**

ECM-P034900: CAMSHAFT POSITION SENSOR A CIRCUIT INTERMITTENT (BANK 2). GENERAL FAILURE INFORMATION. NO SUB TYPE INFORMATION (B6324S5; 2011-2012)

DIAGNOSTIC TROUBLE CODE (DTC) INFORMATION ECM-P034900

see **DIAGNOSTIC TROUBLE CODE (DTC) INFORMATION ECM-P034900**

FAULT-TRACING

see **FAULT-TRACING**

ENGINE PERFORMANCE

Ignition And Control Systems - Diagnostic Trouble Codes and Associated Procedures

ECM-P035100: IGNITION COIL A PRIMARY/SECONDARY CIRCUIT. GENERAL FAILURE INFORMATION. NO SUB TYPE INFORMATION (B6324S; 2007-2010)

DIAGNOSTIC TROUBLE CODE (DTC) INFORMATION ECM-P035100

Condition

Engine control module (ECM) controls the ignition coils so that spark occurs at the right time. The control module checks the ignition coils' function using a separate diagnostic line.

The control module also checks the direct voltage on the signal line from the ignition coil.

The diagnostic trouble code (DTC) is stored if the control module detects that:

- The signal in the diagnostics line indicates malfunction, or that direct voltage in the signal line is considered too high or too low.
- Incorrect value lasts longer than 9 seconds.
- Incorrect value lasts for 2 or more subsequent driving cycles.

The control module's test for the diagnostic trouble code (DTC) starts in the event of:

- Engine running.

NOTE: **The control module can only detect the fault once the test has been started and the diagnostic trouble code (DTC) is stored when the conditions are met.**

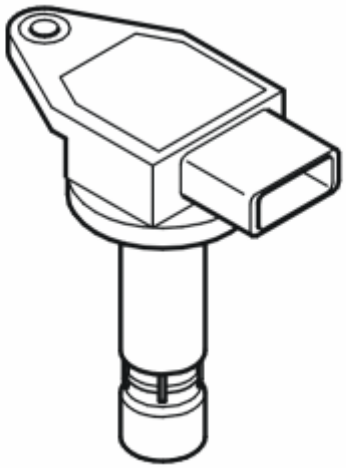

Fig. 1: Identifying Ignition Coil
Courtesy of VOLVO CARS CORPORATION

Substitute Value

- The control module blocks heated oxygen sensor control.

Possible Source

- Contact resistance and oxidation in the terminals.
- Short-circuit to supply voltage in the signal cable.
- Short-circuit to ground in the signal cable.
- Open-circuit in the signal cable.
- Open-circuit in the power supply cable.
- Diagnostics line short-circuited to voltage.
- Diagnostics line short-circuited to ground.
- Open-circuit on the diagnostic cable.
- Damaged ignition coil.

Fault symptom[s]

- Engine misfires

FAULT-TRACING

see **FAULT-TRACING**

ECM-P035100: IGNITION COIL A PRIMARY/SECONDARY CIRCUIT. GENERAL FAILURE INFORMATION. NO SUB TYPE INFORMATION (B6324S5; 2011-2012)

DIAGNOSTIC TROUBLE CODE (DTC) INFORMATION ECM-P035100

see **DIAGNOSTIC TROUBLE CODE (DTC) INFORMATION ECM-P035100**

FAULT-TRACING

see **FAULT-TRACING**

ECM-P035100: IGNITION COIL A, PRIMARY/SECONDARY CIRCUIT. GENERAL FAULT INFORMATION. TYPE OF FAULT NOT SPECIFIED. (B8444S; 2005-2011)

DIAGNOSTIC TROUBLE CODE (DTC) INFORMATION

Condition

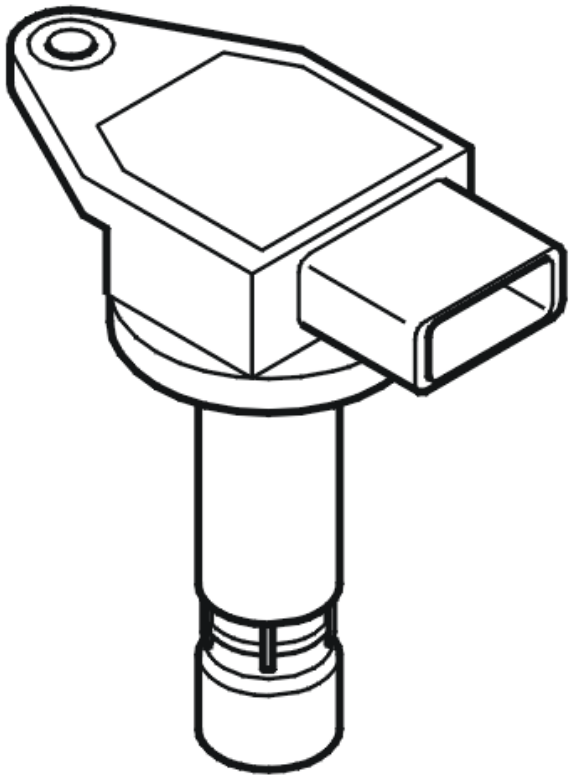

Fig. 2: Identifying Ignition Coil
Courtesy of VOLVO CARS CORPORATION

The engine control module (ECM) regulates the ignition coils and checks their function via a separate diagnostic cable. The diagnostic trouble code is generated if the control module detects that the signal for an ignition coil is faulty.

The diagnostic trouble code can be diagnosed when the engine is running.

The trouble code indicates which ignition coil is involved.

- ECM-P035100, ignition coil cylinder 1.
- ECM-P035200, ignition coil cylinder 2.
- ECM-P035300, ignition coil cylinder 3.
- ECM-P035400, ignition coil cylinder 4.
- ECM-P035500, ignition coil cylinder 5.
- ECM-P035600, ignition coil cylinder 6.
- ECM-P035700, ignition coil cylinder 7.
- ECM-P035800, ignition coil cylinder 8.

Substitute Value

- Closed loop blocked.

Possible Source

- Contact resistance and oxidation in the ignition coil connector.
- The signal cable is short-circuited to ground or supply voltage.
- Open-circuit on the signal cable.
- Open-circuit in the power supply cable.
- The diagnostic cable is short-circuited to ground or supply voltage.
- Open-circuit on the diagnostic cable.
- Damaged ignition coil.

Fault symptom[s]

- Engine misfire.

FAULT TRACING

CHECKING COMPONENTS AND WIRING

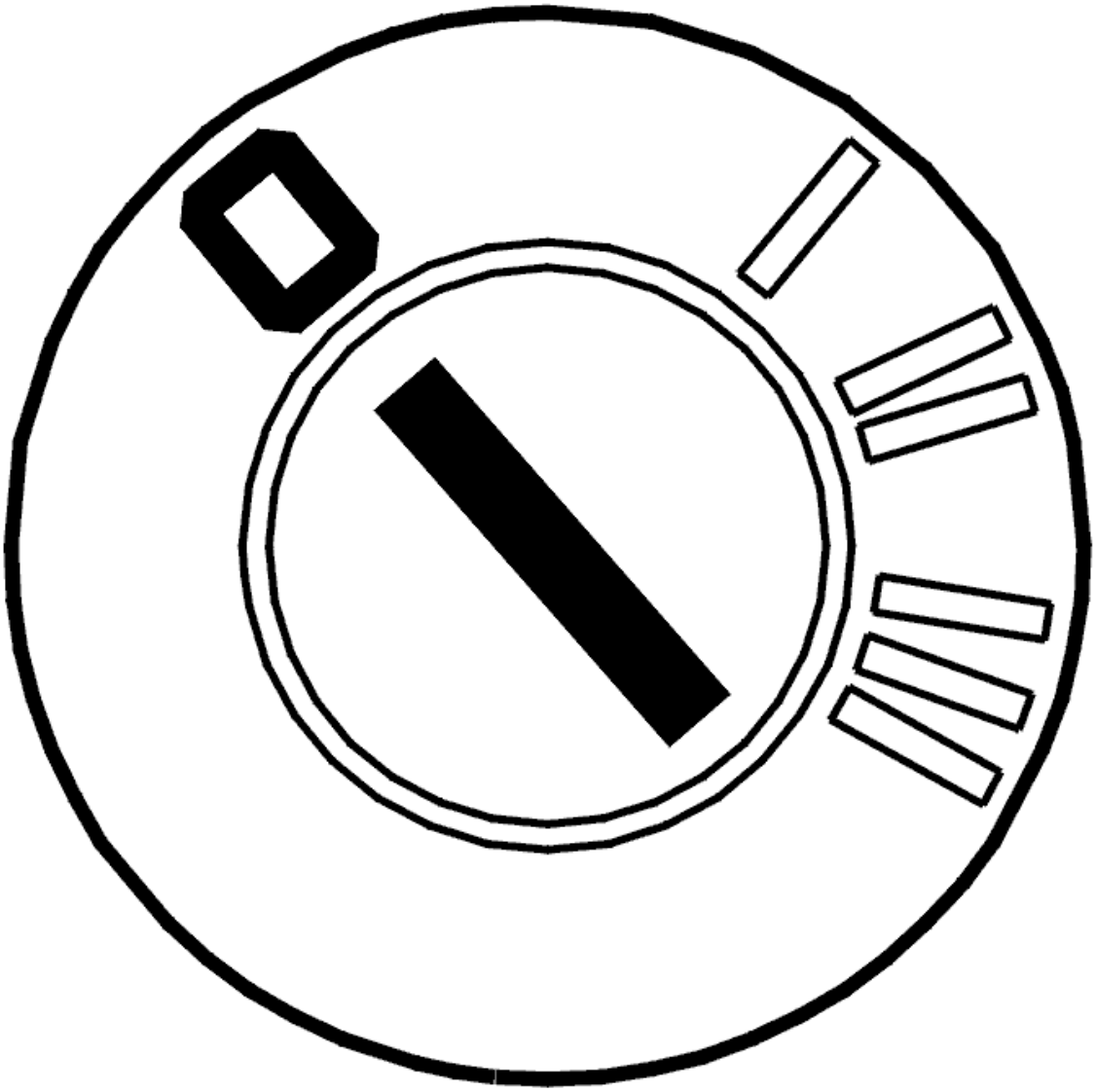

Fig. 3: Identifying Ignition OFF
Courtesy of VOLVO CARS CORPORATION

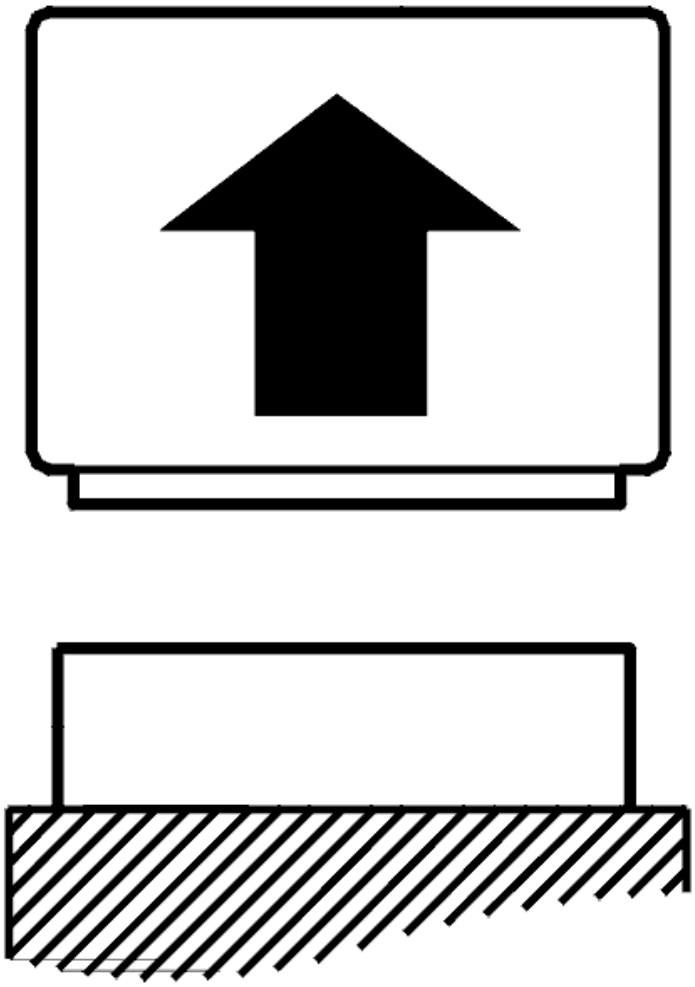

Fig. 4: Disconnecting Connector
Courtesy of VOLVO CARS CORPORATION

- Ignition off

  HINT: The engine cylinders are counted from the right-hand side of the vehicle. I. E. the cylinder furthest away from the flywheel.

  - Bank 1 (cylinder row nearest the front): cylinders 1, 3, 5 and 7.
  - Bank 2 (cylinder row furthest to the rear, nearest the passenger compartment): cylinders 2, 4, 6, and 8.

  HINT: If diagnostic trouble codes (DTCs) are stored for all ignition coils, the most probable fault cause is a faulty diagnostic cable or power supply cable for the ignition coils. If the diagnostic trouble code (DTC) is stored for an individual ignition coil, the most probable cause is a faulty signal cable or ignition coil.

Check the ignition coil connector. Check for contact resistance and oxidation.

Disconnect the engine control module (ECM).

Check the diagnostic cables between the control module and the diagnostic trouble codes (DTC) relevant camshaft position sensor. Check for a short-circuit to ground. Check for a short-circuit to supply voltage. Check for an open-circuit.

Measure between:

- For ignition coils cylinder 2, 3, 5 and 8: control module terminal #A62 (#B2) and relevant ignition coil terminal #2.
- For ignition coils cylinder 1, 4, 6 and 7: control module terminal #A64 (#B4) and relevant ignition coil terminal #2.

Check the voltage supply cable between the system relay and the relevant ignition coil terminal #1. Check for a short-circuit to ground. Check for an open-circuit.

Check the diagnostic trouble code (DTC) relevant signal cable. Check for a short-circuit to ground. Check for a short-circuit to supply voltage. Check for an open-circuit.

Measure between:

- Control module #A60 (#A60) and #4 for ignition coil cylinder 1.
- Control module #A61 (#B1) and #4 for ignition coil cylinder 2.
- Control module #A58 (#A58) and #4 for ignition coil cylinder 3.
- Control module #A59 (#A59) and #4 for ignition coil cylinder 4.
- Control module #A56 (#A56) and #4 for ignition coil cylinder 5.
- Control module #A57 (#A57) and #4 for ignition coil cylinder 6.
- Control module #A54 (#A54) and #4 for ignition coil cylinder 7.
- Control module #A55 (#A55) and #4 for ignition coil cylinder 8.

Remedy as necessary.

Other information

- see **CONNECTING THE BREAKOUT BOX**
- see **SIGNAL SPECIFICATION, ENGINE CONTROL MODULE (ECM)**
- see **IGNITION COIL, REPLACING**
- see **CHECKING WIRING AND TERMINALS**

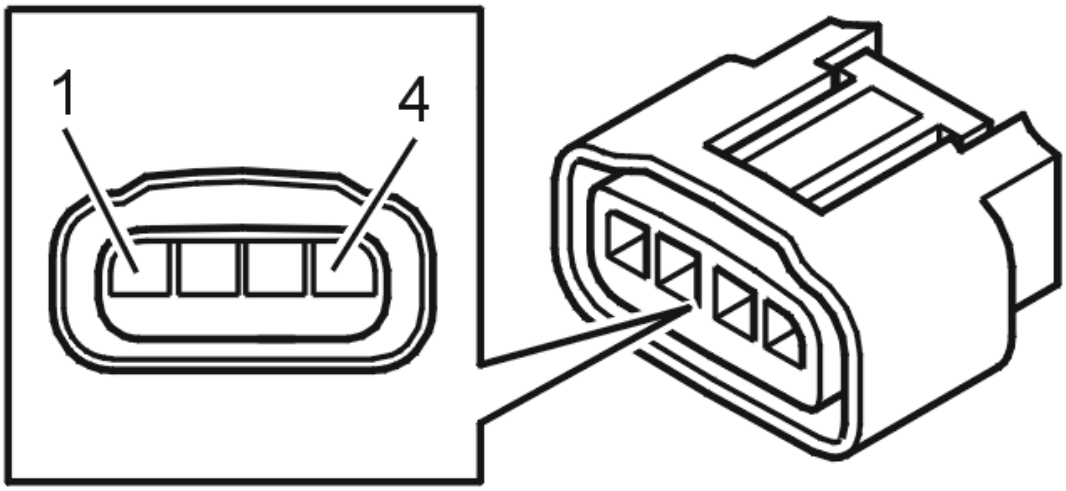

Fig. 5: Identifying Connector Terminals
Courtesy of VOLVO CARS CORPORATION

- **Continue**

  Refer to **VERIFICATION**

VERIFICATION

VERIFICATION

HINT: After carrying out the repair, check that the fault has been remedied.

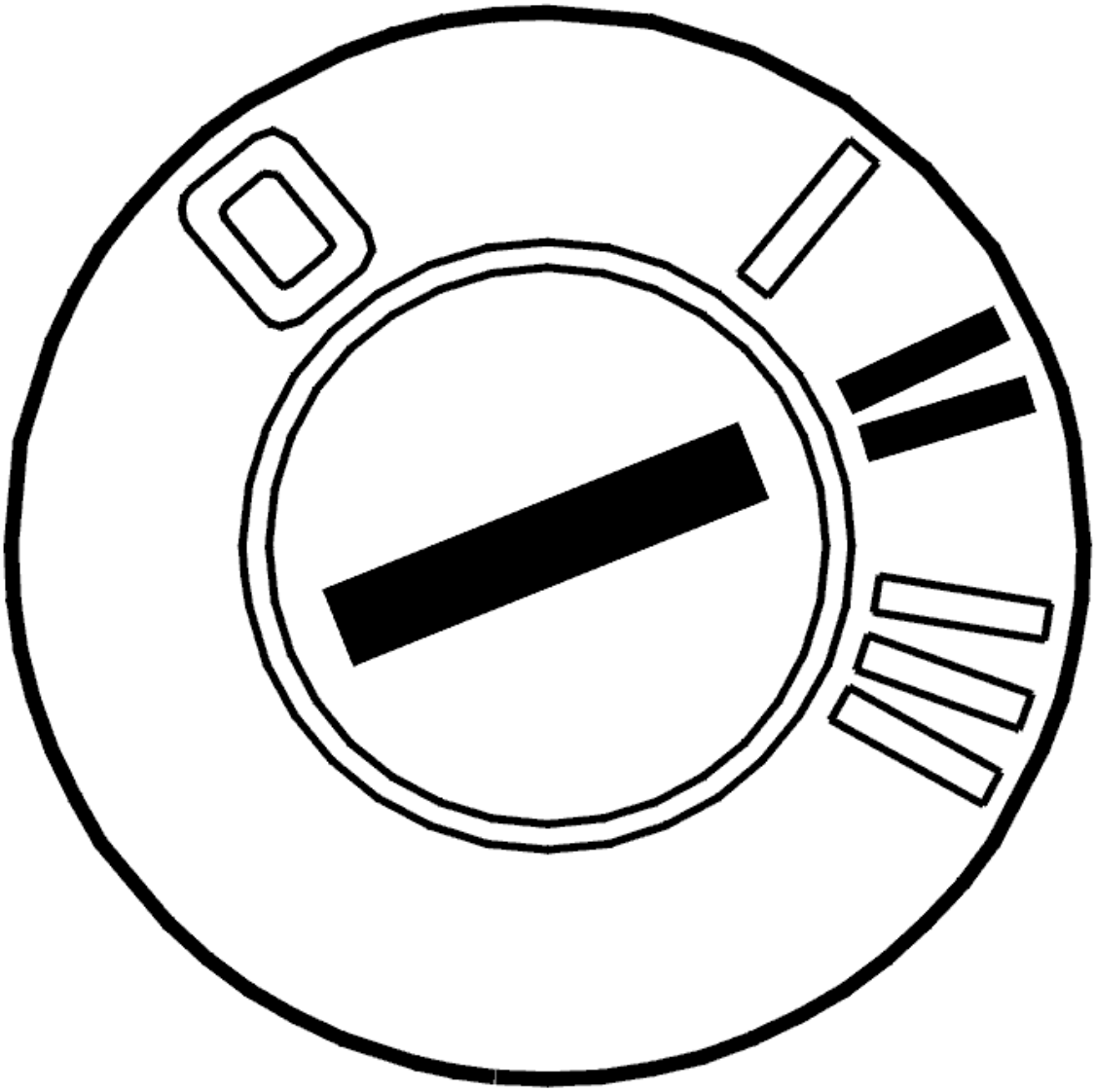

Fig. 6: Identifying Ignition ON
Courtesy of VOLVO CARS CORPORATION

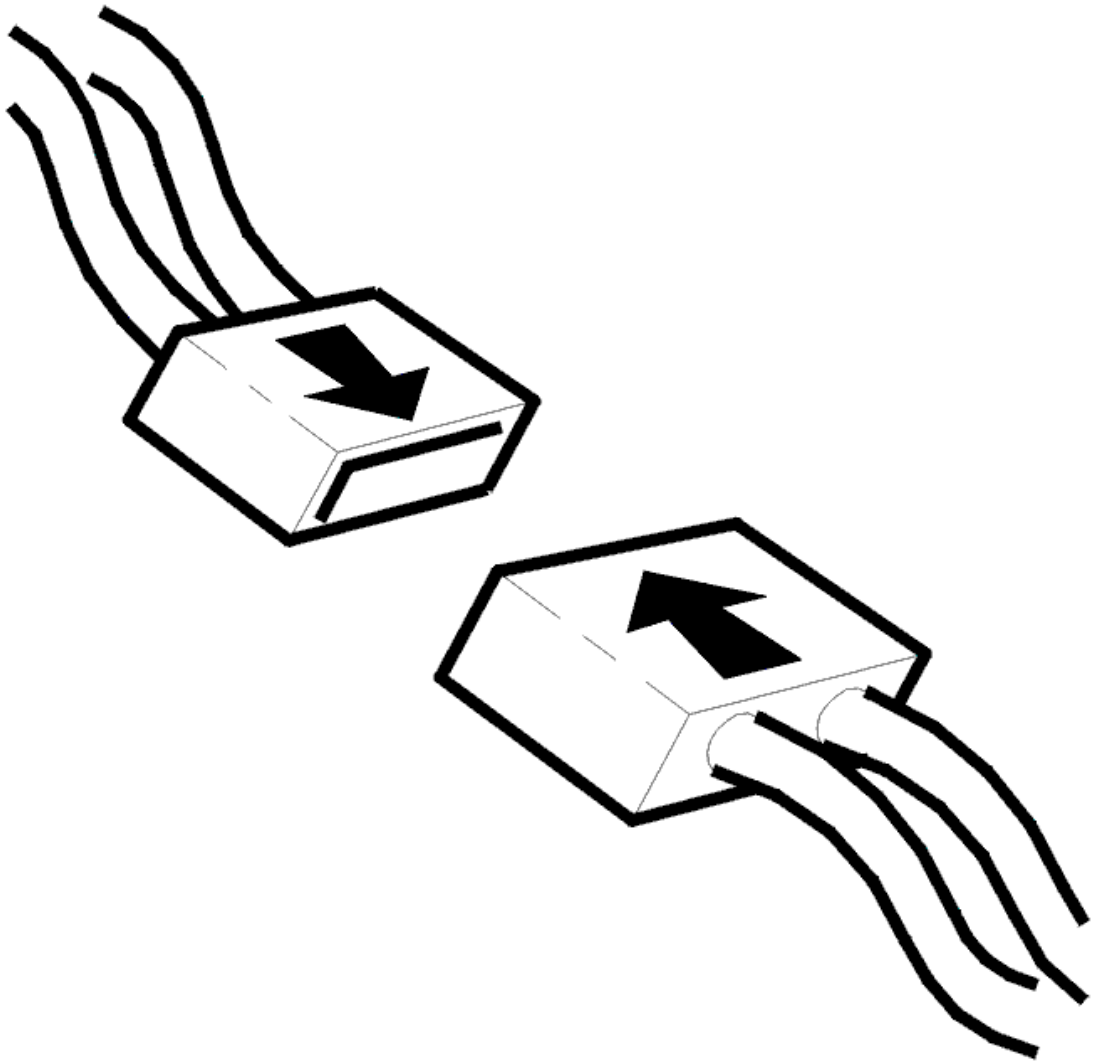

Fig. 7: Connecting Connector
Courtesy of VOLVO CARS CORPORATION

- Ignition off
- Reinstall the connectors, components etc.
- Start the engine.

  Check that the engine is firing on all cylinders and is not misfiring.

Is the engine running on all cylinders?

- **YES**

  VERIFIED: Troubleshooting has been completed.

- **NO**

  Refer to **INFORMATION**

INFORMATION

FAULT-TRACING INFORMATION

The fault should have been detected and remedied. As this is not the case fault-tracing has failed.

Exit fault-tracing for this diagnostic trouble code (DTC) or make another attempt.

ECM-P035200: IGNITION COIL B PRIMARY/SECONDARY CIRCUIT. GENERAL FAILURE INFORMATION. NO SUB TYPE INFORMATION (B6324S; 2007-2010)

DIAGNOSTIC TROUBLE CODE (DTC) INFORMATION ECM-P035200

Condition

Engine control module (ECM) controls the ignition coils so that spark occurs at the right time. The control module checks the ignition coils' function using a separate diagnostic line.

The control module also checks the direct voltage on the signal line from the ignition coil.

The diagnostic trouble code (DTC) is stored if the control module detects that:

- The signal in the diagnostics line indicates malfunction, or that direct voltage in the signal line is considered too high or too low.
- Incorrect value lasts longer than 9 seconds.
- Incorrect value lasts for 2 or more subsequent driving cycles.

The control module's test for the diagnostic trouble code (DTC) starts in the event of:

- Engine running.

NOTE: The control module can only detect the fault once the test has been started and the diagnostic trouble code (DTC) is stored when the conditions are met.

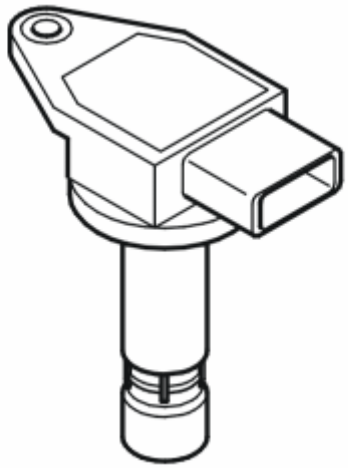

Fig. 8: Identifying Ignition Coil
Courtesy of VOLVO CARS CORPORATION

Substitute Value

- The control module blocks heated oxygen sensor control.

Possible Source

- Contact resistance and oxidation in the terminals.
- Short-circuit to supply voltage in the signal cable.
- Short-circuit to ground in the signal cable.
- Open-circuit in the signal cable.
- Open-circuit in the power supply cable.
- Diagnostics line short-circuited to voltage.
- Diagnostics line short-circuited to ground.
- Open-circuit on the diagnostic cable.
- Damaged ignition coil.

Fault symptom[s]

- Engine misfires

FAULT-TRACING

see **FAULT-TRACING**

ECM-P035200: IGNITION COIL B PRIMARY/SECONDARY CIRCUIT. GENERAL FAILURE INFORMATION. NO SUB TYPE INFORMATION (B6324S5; 2011-2012)

DIAGNOSTIC TROUBLE CODE (DTC) INFORMATION ECM-P035200

see **DIAGNOSTIC TROUBLE CODE (DTC) INFORMATION ECM-P035200**

FAULT-TRACING

see **FAULT-TRACING**

ECM-P035300: IGNITION COIL C PRIMARY/SECONDARY CIRCUIT. GENERAL FAILURE INFORMATION. NO SUB TYPE INFORMATION (B6324S; 2007-2010)

DIAGNOSTIC TROUBLE CODE (DTC) INFORMATION ECM-P035300

Condition

Engine control module (ECM) controls the ignition coils so that spark occurs at the right time. The control module checks the ignition coils' function using a separate diagnostic line.

The control module also checks the direct voltage on the signal line from the ignition coil.

The diagnostic trouble code (DTC) is stored if the control module detects that:

- The signal in the diagnostics line indicates malfunction, or that direct voltage in the signal line is considered too high or too low.
- Incorrect value lasts longer than 9 seconds.
- Incorrect value lasts for 2 or more subsequent driving cycles.

The control module's test for the diagnostic trouble code (DTC) starts in the event of:

- Engine running.

NOTE: **The control module can only detect the fault once the test has been started and the diagnostic trouble code (DTC) is stored when the conditions are met.**

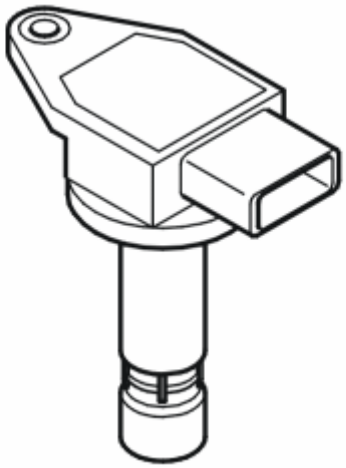

Fig. 9: Identifying Ignition Coil
Courtesy of VOLVO CARS CORPORATION

Substitute Value

- The control module blocks heated oxygen sensor control.

Possible Source

- Contact resistance and oxidation in the terminals.
- Short-circuit to supply voltage in the signal cable.
- Short-circuit to ground in the signal cable.
- Open-circuit in the signal cable.
- Open-circuit in the power supply cable.
- Diagnostics line short-circuited to voltage.
- Diagnostics line short-circuited to ground.
- Open-circuit on the diagnostic cable.
- Damaged ignition coil.

Fault symptom[s]

- Engine misfires

FAULT-TRACING

see **FAULT-TRACING**

ECM-P035300: IGNITION COIL C PRIMARY/SECONDARY CIRCUIT. GENERAL FAILURE INFORMATION. NO SUB TYPE INFORMATION (B6324S5; 2011-2012)

DIAGNOSTIC TROUBLE CODE (DTC) INFORMATION ECM-P035300

see **DIAGNOSTIC TROUBLE CODE (DTC) INFORMATION ECM-P035300**

FAULT-TRACING

see **FAULT-TRACING**

ECM-P035400: IGNITION COIL D PRIMARY/SECONDARY CIRCUIT. GENERAL FAILURE INFORMATION. NO SUB TYPE INFORMATION (B6324S; 2007-2010)

DIAGNOSTIC TROUBLE CODE (DTC) INFORMATION ECM-P035400

Condition

Engine control module (ECM) controls the ignition coils so that spark occurs at the right time. The control module checks the ignition coils' function using a separate diagnostic line.

The control module also checks the direct voltage on the signal line from the ignition coil.

The diagnostic trouble code (DTC) is stored if the control module detects that:

- The signal in the diagnostics line indicates malfunction, or that direct voltage in the signal line is considered too high or too low.
- Incorrect value lasts longer than 9 seconds.
- Incorrect value lasts for 2 or more subsequent driving cycles.

The control module's test for the diagnostic trouble code (DTC) starts in the event of:

- Engine running.

NOTE: **The control module can only detect the fault once the test has been started and the diagnostic trouble code (DTC) is stored when the conditions are met.**

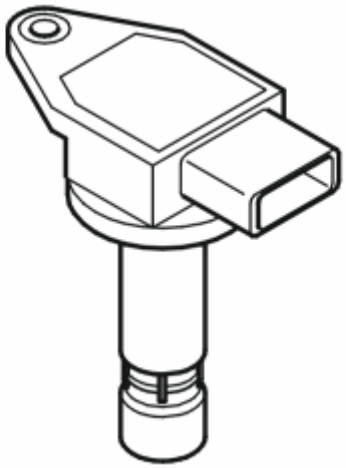

Fig. 10: Identifying Ignition Coil
Courtesy of VOLVO CARS CORPORATION

Substitute Value

- The control module blocks heated oxygen sensor control.

Possible Source

- Contact resistance and oxidation in the terminals.
- Short-circuit to supply voltage in the signal cable.
- Short-circuit to ground in the signal cable.
- Open-circuit in the signal cable.
- Open-circuit in the power supply cable.
- Diagnostics line short-circuited to voltage.
- Diagnostics line short-circuited to ground.
- Open-circuit on the diagnostic cable.
- Damaged ignition coil.

Fault symptom[s]

- Engine misfires

FAULT-TRACING

see **FAULT-TRACING**

ECM-P035400: IGNITION COIL D PRIMARY/SECONDARY CIRCUIT. GENERAL FAILURE INFORMATION. NO SUB TYPE INFORMATION (B6324S5; 2011-2012)

DIAGNOSTIC TROUBLE CODE (DTC) INFORMATION ECM-P035400

see **DIAGNOSTIC TROUBLE CODE (DTC) INFORMATION ECM-P035400**

FAULT-TRACING

see **FAULT-TRACING**

ECM-P035500: IGNITION COIL E PRIMARY/SECONDARY CIRCUIT. GENERAL FAILURE INFORMATION. NO SUB TYPE INFORMATION (B6324S; 2007-2010)

DIAGNOSTIC TROUBLE CODE (DTC) INFORMATION ECM-P035500

Condition

Engine control module (ECM) controls the ignition coils so that spark occurs at the right time. The control module checks the ignition coils' function using a separate diagnostic line.

The control module also checks the direct voltage on the signal line from the ignition coil.

The diagnostic trouble code (DTC) is stored if the control module detects that:

- The signal in the diagnostics line indicates malfunction, or that direct voltage in the signal line is considered too high or too low.
- Incorrect value lasts longer than 9 seconds.
- Incorrect value lasts for 2 or more subsequent driving cycles.

The control module's test for the diagnostic trouble code (DTC) starts in the event of:

- Engine running.

NOTE: **The control module can only detect the fault once the test has been started and the diagnostic trouble code (DTC) is stored when the conditions are met.**

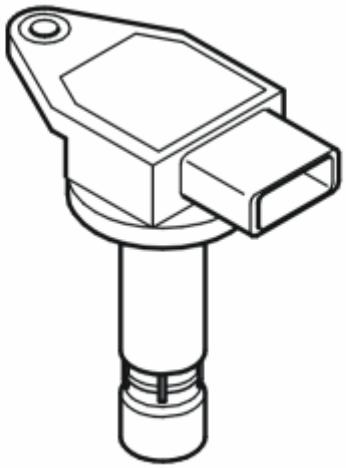

Fig. 11: Identifying Ignition Coil
Courtesy of VOLVO CARS CORPORATION

Substitute Value

- The control module blocks heated oxygen sensor control.

Possible Source

- Contact resistance and oxidation in the terminals.
- Short-circuit to supply voltage in the signal cable.
- Short-circuit to ground in the signal cable.
- Open-circuit in the signal cable.
- Open-circuit in the power supply cable.
- Diagnostics line short-circuited to voltage.
- Diagnostics line short-circuited to ground.
- Open-circuit on the diagnostic cable.
- Damaged ignition coil.

Fault symptom[s]

- Engine misfires

FAULT-TRACING

see **FAULT-TRACING**

ECM-P035500: IGNITION COIL E PRIMARY/SECONDARY CIRCUIT. GENERAL FAILURE INFORMATION. NO SUB TYPE INFORMATION (B6324S5; 2011-2012)

DIAGNOSTIC TROUBLE CODE (DTC) INFORMATION ECM-P035500

see **DIAGNOSTIC TROUBLE CODE (DTC) INFORMATION ECM-P035500**

FAULT-TRACING

see **FAULT-TRACING**

ECM-P035600: IGNITION COIL F PRIMARY/SECONDARY CIRCUIT. GENERAL FAILURE INFORMATION. NO SUB TYPE INFORMATION (B6324S; 2007-2010)

DIAGNOSTIC TROUBLE CODE (DTC) INFORMATION ECM-P035600

Condition

Engine control module (ECM) controls the ignition coils so that spark occurs at the right time. The control module checks the ignition coils' function using a separate diagnostic line.

The control module also checks the direct voltage on the signal line from the ignition coil.

The diagnostic trouble code (DTC) is stored if the control module detects that:

- The signal in the diagnostics line indicates malfunction, or that direct voltage in the signal line is considered too high or too low.
- Incorrect value lasts longer than 9 seconds.
- Incorrect value lasts for 2 or more subsequent driving cycles.

The control module's test for the diagnostic trouble code (DTC) starts in the event of:

- Engine running.

NOTE: **The control module can only detect the fault once the test has been started and the diagnostic trouble code (DTC) is stored when the conditions are met.**

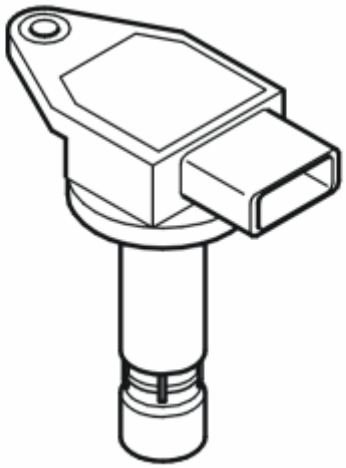

Fig. 12: Identifying Ignition Coil
Courtesy of VOLVO CARS CORPORATION

Substitute Value

- The control module blocks heated oxygen sensor control.

Possible Source

- Contact resistance and oxidation in the terminals.
- Short-circuit to supply voltage in the signal cable.
- Short-circuit to ground in the signal cable.
- Open-circuit in the signal cable.
- Open-circuit in the power supply cable.
- Diagnostics line short-circuited to voltage.
- Diagnostics line short-circuited to ground.
- Open-circuit on the diagnostic cable.
- Damaged ignition coil.

Fault symptom[s]

- Engine misfires

FAULT-TRACING

see **FAULT-TRACING**

ECM-P035600: IGNITION COIL F PRIMARY/SECONDARY CIRCUIT. GENERAL FAILURE INFORMATION. NO SUB TYPE INFORMATION (B6324S5; 2011-2012)

DIAGNOSTIC TROUBLE CODE (DTC) INFORMATION ECM-P035600

see **DIAGNOSTIC TROUBLE CODE (DTC) INFORMATION ECM-P035600**

FAULT-TRACING

see **FAULT-TRACING**

ECM-P036500: CAMSHAFT POSITION SENSOR B CIRCUIT (BANK 1). GENERAL FAILURE INFORMATION. NO SUB TYPE INFORMATION (B6324S; 2007-2010)

DIAGNOSTIC TROUBLE CODE (DTC) INFORMATION ECM-P036500

Condition

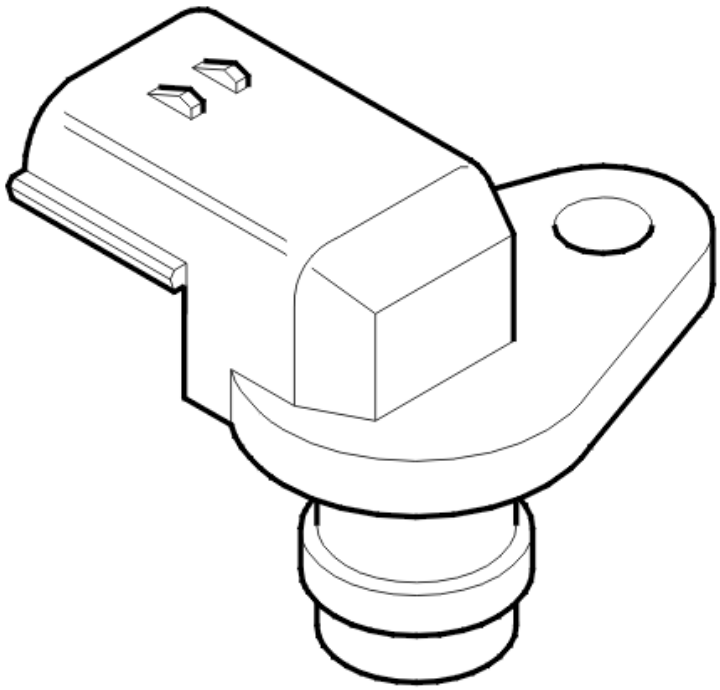

Fig. 13: Detecting Camshaft Flanks On Sensor
Courtesy of VOLVO CARS CORPORATION

The camshaft is divided into a number of segments (flanks). The camshaft houses a gearwheel with a number of teeth (the teeth are positioned between each segment) that are read by the engine control module (ECM) via the camshaft position sensor. The diagnostic trouble code is generated if the control module detects too few segments for a certain number of crankshaft revolutions.

The diagnostic trouble code (DTC) can be diagnosed when starting the engine.

Substitute Value

- Engine speed sensor signal.

Possible Source

- Open-circuit on the signal cable.
- The signal cable is short-circuited to ground.
- The signal cable is short-circuited to voltage.
- Damaged mass air flow sensor.

Fault symptom[s]

- Warning lights and chimes/Malfunction Indicator Light ("Check engine" light) indication/no indication

FAULT-TRACING

see **FAULT-TRACING**

ECM-P036500: CAMSHAFT POSITION SENSOR B CIRCUIT (BANK 1). GENERAL FAILURE INFORMATION. NO SUB TYPE INFORMATION (B6324S5; 2011-2012)

DIAGNOSTIC TROUBLE CODE (DTC) INFORMATION ECM-P036500

see **DIAGNOSTIC TROUBLE CODE (DTC) INFORMATION ECM-P036500**

FAULT-TRACING

see **FAULT-TRACING**

ECM-P036500: CAMSHAFT POSITION SENSOR B CIRCUIT (BANK 1). GENERAL FAILURE INFORMATION. NO SUB TYPE INFORMATION (B8444S; 2005-2011)

DIAGNOSTIC TROUBLE CODE (DTC) INFORMATION ECM-P036500

Condition

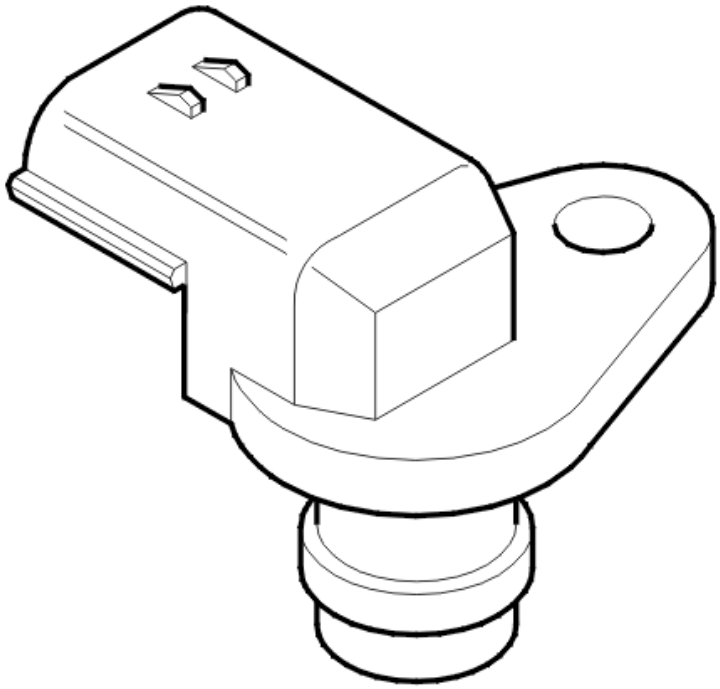

Fig. 14: Detecting Camshaft Flanks On Sensor
Courtesy of VOLVO CARS CORPORATION

The camshaft is divided into a number of segments (flanks). The camshaft houses a gearwheel with a number of teeth (the teeth are positioned between each segment) that are read by the engine control module (ECM) via the camshaft position sensor. The diagnostic trouble code is generated if the control module detects too few segments for a certain number of crankshaft revolutions.

The diagnostic trouble code can be diagnosed by the control module when the engine is running and engine speed exceeds a certain value.

The diagnostic trouble code (DTC) corresponds to exhaust camshaft position (CMP) sensor, bank 1.

Substitute Value

- Engine speed sensor signal.

Possible Source

- Open-circuit on the signal cable.
- The signal cable is short-circuited to ground.
- The signal cable is short-circuited to voltage.
- Damaged mass air flow sensor.

Fault symptom[s]

- Warning lights and chimes/Malfunction Indicator Light ("Check engine" light) indication/no indication

FAULT TRACING

see **FAULT TRACING**

ECM-P036600: CAMSHAFT POSITION SENSOR B CIRCUIT RANGE/PERFORMANCE (BANK 1). GENERAL FAILURE INFORMATION. NO SUB TYPE INFORMATION (B6324S; 2007-2010)

DIAGNOSTIC TROUBLE CODE (DTC) INFORMATION ECM-P036600

Condition

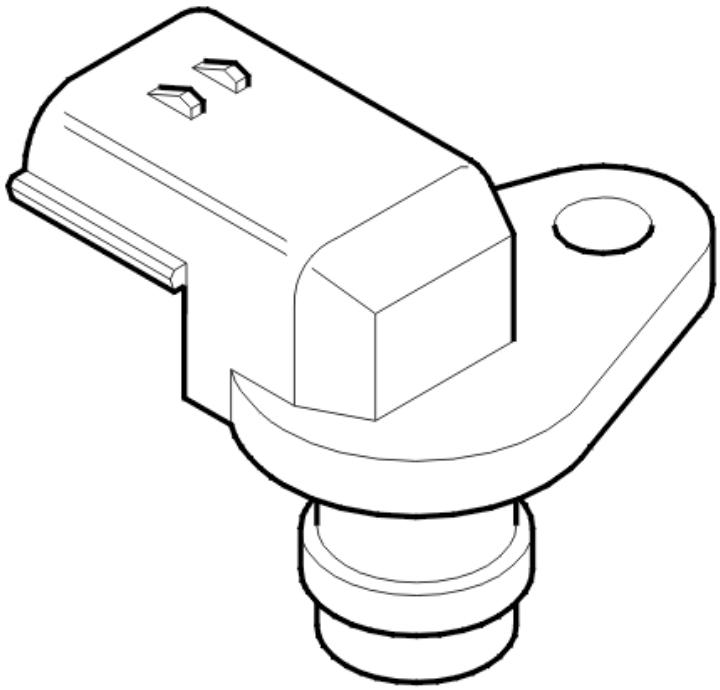

Fig. 15: Detecting Camshaft Flanks On Sensor
Courtesy of VOLVO CARS CORPORATION

The camshaft is divided into a number of segments (flanks). The camshaft houses a gearwheel with a number of teeth (the teeth are positioned between each segment) that are read by the engine control module (ECM) via the camshaft position sensor.

The diagnostic trouble code can be diagnosed by the control module when the engine is running and engine speed exceeds a certain value.

Substitute Value

- Engine speed sensor signal.

Possible Source

- Intermittent fault in the cable harness or connectors.
- Camshaft sensor fitted incorrectly.
- Damaged mass air flow sensor.

Fault symptom[s]

- Warning lights and chimes/Malfunction Indicator Light ("Check engine" light) indication/no indication

FAULT-TRACING

see **FAULT-TRACING**

ECM-P036600: CAMSHAFT POSITION SENSOR B CIRCUIT RANGE/PERFORMANCE (BANK 1). GENERAL FAILURE INFORMATION. NO SUB TYPE INFORMATION (B6324S5; 2011-2012)

DIAGNOSTIC TROUBLE CODE (DTC) INFORMATION ECM-P036600

see **DIAGNOSTIC TROUBLE CODE (DTC) INFORMATION ECM-P036600**

FAULT-TRACING

see **FAULT-TRACING**

ECM-P036600: CAMSHAFT POSITION SENSOR B CIRCUIT RANGE/PERFORMANCE (BANK 1). GENERAL FAILURE INFORMATION. NO SUB TYPE INFORMATION (B8444S; 2005-2011)

DIAGNOSTIC TROUBLE CODE (DTC) INFORMATION ECM-P036600

Condition

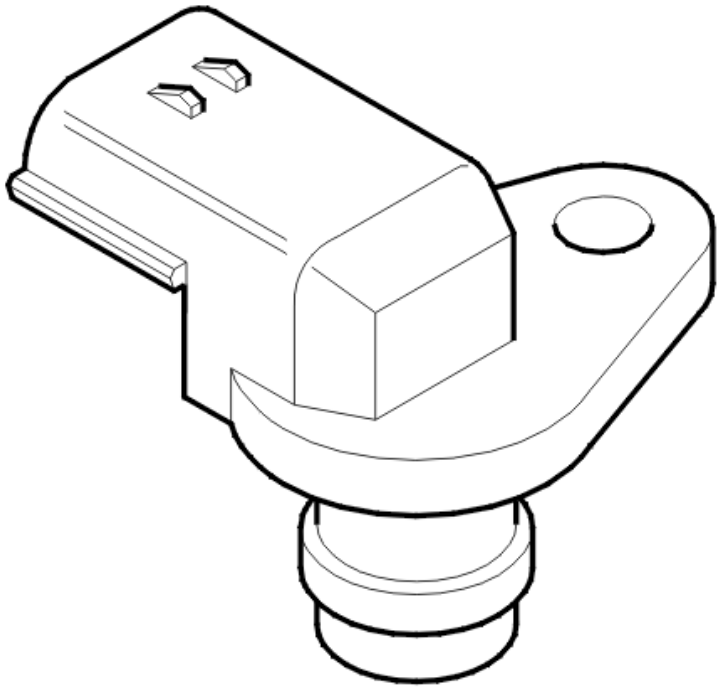

Fig. 16: Detecting Camshaft Flanks On Sensor
Courtesy of VOLVO CARS CORPORATION

The camshaft is divided into a number of segments (flanks). The camshaft houses a gearwheel with a number of teeth (the teeth are positioned between each segment) that are read by the engine control module (ECM) via the camshaft position sensor. The diagnostic trouble code is generated if the engine control module (ECM) detects too few segments for 2 crankshaft revolutions (one camshaft revolution).

The diagnostic trouble code can be diagnosed by the engine control module (ECM) when the engine is running and engine speed exceeds a certain value.

The diagnostic trouble code (DTC) corresponds to exhaust camshaft position (CMP) sensor, bank 1.

Substitute Value

- Engine speed sensor signal.

Possible Source

- Intermittent fault in the cable harness or connections.
- Camshaft sensor fitted incorrectly.
- Damaged mass air flow sensor.

Fault symptom[s]

- Warning lights and chimes/Malfunction Indicator Light ("Check engine" light) indication/no indication

FAULT TRACING

see **FAULT TRACING**

ECM-P036900: CAMSHAFT POSITION SENSOR B CIRCUIT INTERMITTENT (BANK 1). GENERAL FAILURE INFORMATION. NO SUB TYPE INFORMATION (B6324S; 2007-2010)

DIAGNOSTIC TROUBLE CODE (DTC) INFORMATION ECM-P036900

Condition

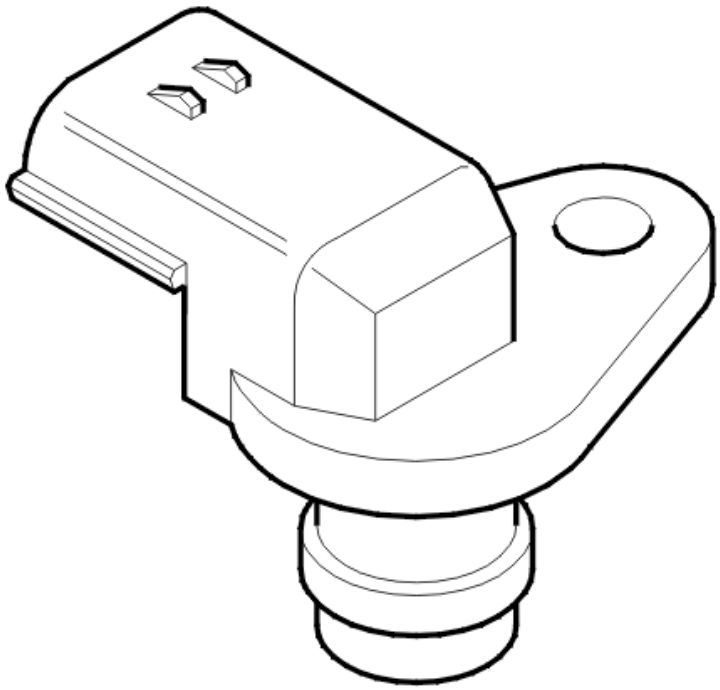

Fig. 17: Detecting Camshaft Flanks On Sensor
Courtesy of VOLVO CARS CORPORATION

The camshaft is divided into a number of segments (flanks). The camshaft houses a gearwheel with a number of teeth (the teeth are positioned between each segment) that are read by the engine control module (ECM) via the camshaft position sensor. The diagnostic trouble code is generated if the control module detects too few segments for a certain number of crankshaft revolutions.

The diagnostic trouble code (DTC) can be diagnosed when the engine is running.

Substitute Value

- Engine speed sensor signal.

Possible Source

- Open-circuit on the signal cable.
- The signal cable is short-circuited to ground.
- The signal cable is short-circuited to voltage.
- Damaged mass air flow sensor.

Fault symptom[s]

- Warning lights and chimes/Malfunction Indicator Light ("Check engine" light) indication/no indication

FAULT-TRACING

see **FAULT-TRACING**

ECM-P036900: CAMSHAFT POSITION SENSOR B CIRCUIT INTERMITTENT (BANK 1). GENERAL FAILURE INFORMATION. NO SUB TYPE INFORMATION (B6324S5; 2011-2012)

DIAGNOSTIC TROUBLE CODE (DTC) INFORMATION ECM-P036900

see **DIAGNOSTIC TROUBLE CODE (DTC) INFORMATION ECM-P036900**

FAULT-TRACING

see **FAULT-TRACING**

ECM-P039000: CAMSHAFT POSITION SENSOR B CIRCUIT (BANK 2). GENERAL FAILURE INFORMATION. NO SUB TYPE INFORMATION (B8444S; 2005-2011)

DIAGNOSTIC TROUBLE CODE (DTC) INFORMATION ECM-P039000

Condition

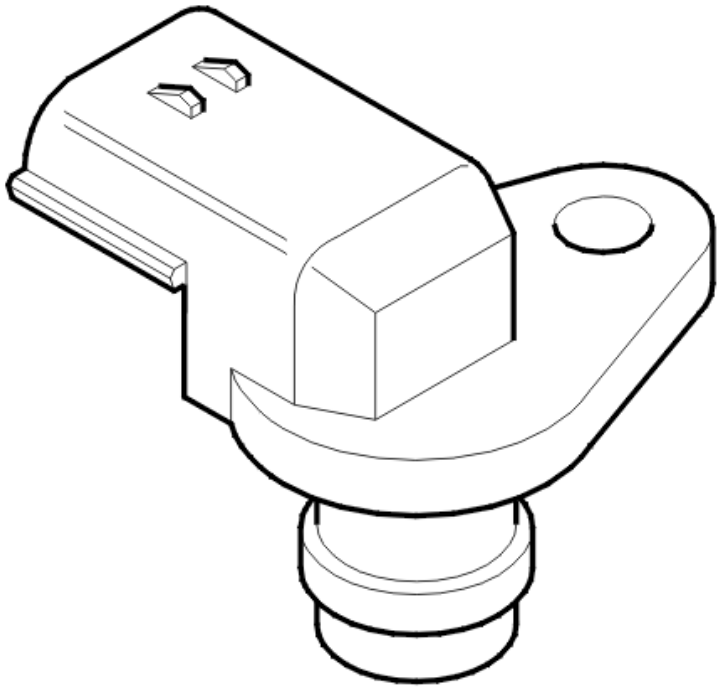

Fig. 18: Detecting Camshaft Flanks On Sensor
Courtesy of VOLVO CARS CORPORATION

The camshaft is divided into a number of segments (flanks). The camshaft houses a gearwheel with a number of teeth (the teeth are positioned between each segment) that are read by the engine control module (ECM) via the camshaft position sensor. The diagnostic trouble code is generated if the control module detects too few segments for a certain number of crankshaft revolutions.

The diagnostic trouble code can be diagnosed by the control module when the engine is running and engine speed exceeds a certain value.

The diagnostic trouble code (DTC) corresponds to exhaust camshaft position (CMP) sensor, bank 2.

Substitute Value

- Engine speed sensor signal.

Possible Source

- Open-circuit on the signal cable.
- The signal cable is short-circuited to ground.
- The signal cable is short-circuited to voltage.
- Damaged mass air flow sensor.

Fault symptom[s]

- Warning lights and chimes/Malfunction Indicator Light ("Check engine" light) indication/no indication

FAULT TRACING

see **FAULT TRACING**

ECM-P039100: CAMSHAFT POSITION SENSOR B CIRCUIT RANGE/PERFORMANCE (BANK 2). GENERAL FAILURE INFORMATION. NO SUB TYPE INFORMATION (B8444S; 2005-2011)

DIAGNOSTIC TROUBLE CODE (DTC) INFORMATION ECM-P039100

Condition

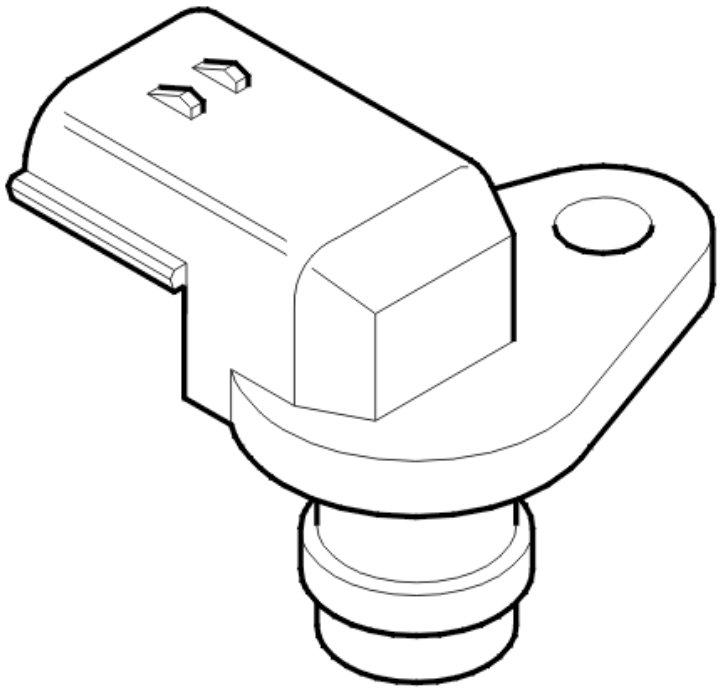

Fig. 19: Detecting Camshaft Flanks On Sensor
Courtesy of VOLVO CARS CORPORATION

The camshaft is divided into a number of segments (flanks). The camshaft houses a gearwheel with a number of teeth (the teeth are positioned between each segment) that are read by the engine control module (ECM) via the camshaft position sensor. The diagnostic trouble code is generated if the engine control module (ECM) detects too few segments for 2 crankshaft revolutions (one camshaft revolution).

The diagnostic trouble code can be diagnosed by the engine control module (ECM) when the engine is running and engine speed exceeds a certain value.

The diagnostic trouble code (DTC) corresponds to exhaust camshaft position (CMP) sensor, bank 2.

Substitute Value

- Engine speed sensor signal.

Possible Source

- Intermittent fault in the cable harness or connectors.
- Camshaft sensor fitted incorrectly.
- Damaged mass air flow sensor.

Fault symptom[s]

- Warning lights and chimes/Malfunction Indicator Light ("Check engine" light) indication/no indication

FAULT TRACING

see **FAULT TRACING**

ECM-P042000: CATALYST SYSTEM EFFICIENCY BELOW THRESHOLD (BANK 1). GENERAL FAILURE INFORMATION. NO SUB TYPE INFORMATION (B6324S; 2007-2010)

DIAGNOSTIC TROUBLE CODE (DTC) INFORMATION ECM-P042000

Condition

Engine Control Module (ECM) checks the efficiency of catalytic converter (bank 1) by switching between rich and lean fuel/air mixture. When the change-over is made, the signal from the rear heated oxygen sensor (HO2S) is checked and the time taken for the probe to switch.

The diagnostic trouble code (DTC) is stored if the engine control module (ECM) registers that the rear heated oxygen sensor (HO2S) switches too quickly and is interpreted as poor catalytic converter efficiency.

The diagnostic trouble code (DTC) can be diagnosed with the engine at operating temperature, approximately 15 minutes after the engine has first been started if the vehicle is driven (normal road load) at 70-90 km/h for 30-40 seconds.

Substitute Value

- Nothing.

Possible Source

- Air leak in the exhaust system.
- Damaged front heated oxygen sensor (bank 1).
- Damaged front catalytic converter (bank 1).

Fault symptom[s]

- Malfunction indicator lamp (MIL) lit.

FAULT-TRACING

CHECKING AIR LEAKAGE AND COMPONENT

Check the exhaust system for air leakage.

If no air leakage is found on the exhaust system, replace the front heated oxygen sensor (bank 1).

If the above troubleshooting does not fix the problem, try with a new front catalytic converter (bank 1).

Remedy as necessary.

Other information:

- see **EXHAUST MANIFOLD**
- see **OXYGEN SENSOR (CATALYST MONITOR SENSOR)**

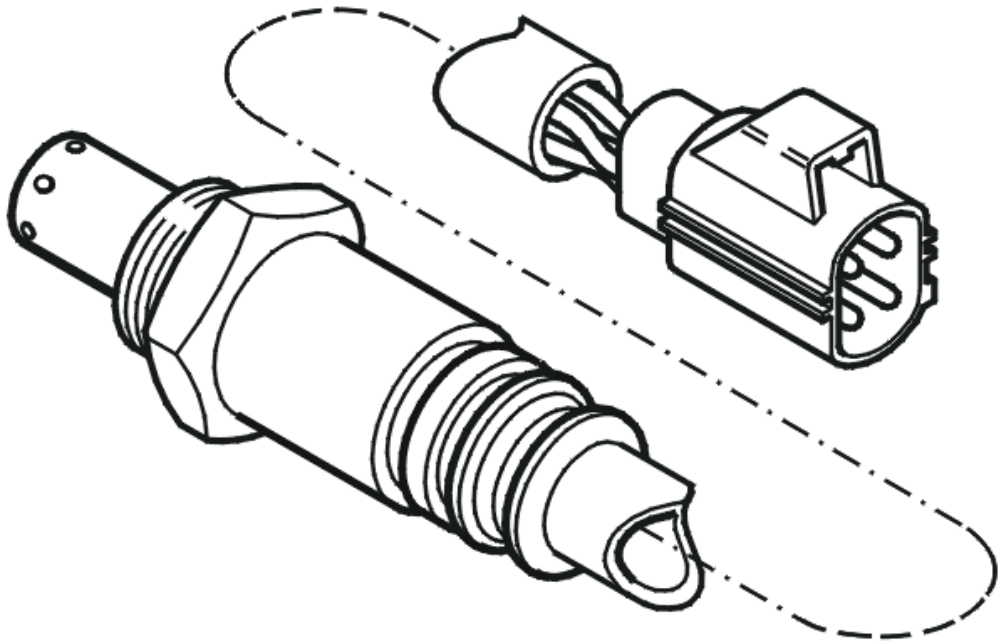

Fig. 20: Identifying Heated Oxygen Sensor
Courtesy of VOLVO CARS CORPORATION

- **Continue**

  Refer to **VERIFICATION**

INFORMATION

FAULT-TRACING INFORMATION

The fault should have been detected and remedied. As this is not the case fault-tracing has failed.

Exit fault-tracing for this diagnostic trouble code (DTC) or make another attempt.

VERIFICATION

VERIFICATION

HINT: After carrying out the repair, check that the fault has been remedied.

- Start the engine and let it idle until it has reached operating temperature (approx. 80 °C).
- Test-drive the vehicle on road. Drive in float mode (normal road load), constant speed around 70-90 km/h for approx. 30-40 seconds.

- Connect the VCT2000 (or appropriate scan tool) to the data link connector without turning off the engine.

  NOTE: If the engine is switched off, the stored fault status will be erased and the test drive will have to be repeated.

  Read off the diagnostic status and trouble status for the diagnostic trouble code.

  Check that the diagnosis is "Implemented" and that the trouble status is "No malfunction found". If the trouble status is "Malfunction found", this indicates defective function.

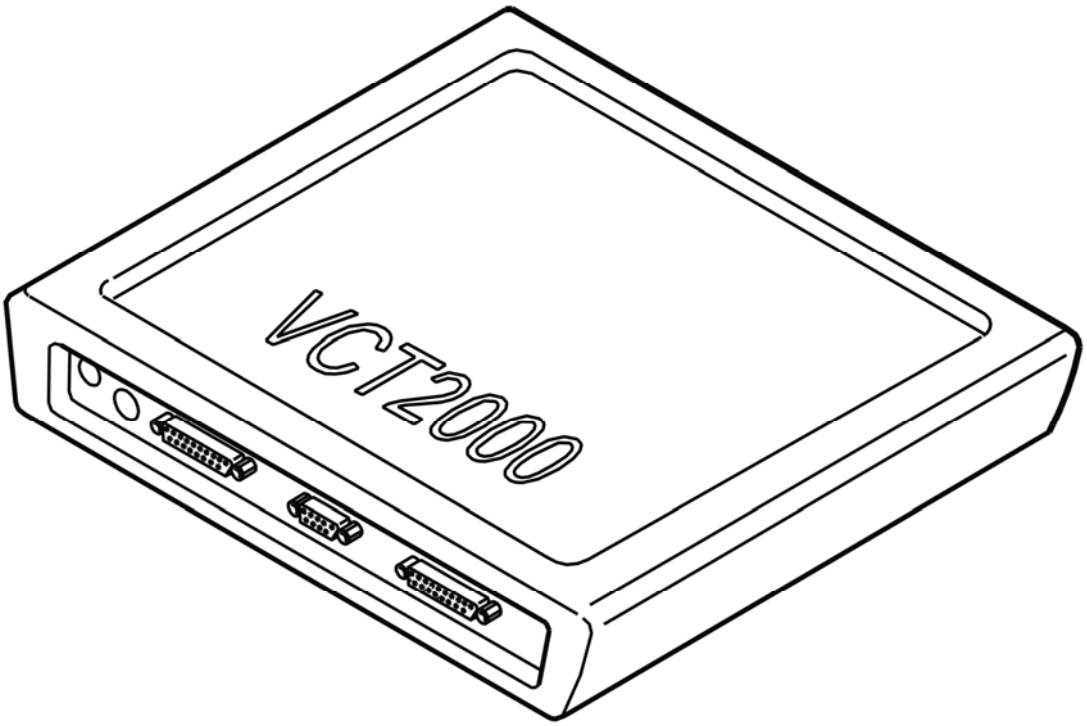

Fig. 21: Identifying VCT2000 Diagnostic Tool Symbol In VIDA
Courtesy of VOLVO CARS CORPORATION

Trouble status shows "No malfunction found"?

- **YES**

  VERIFIED: Troubleshooting has been completed.

- **NO**

  Refer to **INFORMATION**

ECM-P042000: CATALYST SYSTEM EFFICIENCY BELOW THRESHOLD (BANK 1). GENERAL FAILURE INFORMATION. NO SUB TYPE INFORMATION (B6324S5; 2011-2012)

DIAGNOSTIC TROUBLE CODE (DTC) INFORMATION ECM-P042000

see **DIAGNOSTIC TROUBLE CODE (DTC) INFORMATION ECM-P042000**

FAULT-TRACING

see **FAULT-TRACING**

ECM-P042000: CATALYST SYSTEM EFFICIENCY BELOW THRESHOLD (BANK 1). GENERAL FAILURE INFORMATION. NO SUB TYPE INFORMATION (B8444S; 2005-2011)

DIAGNOSTIC TROUBLE CODE (DTC) INFORMATION ECM-P042000

Condition

Engine Control Module (ECM) checks the efficiency of catalytic converter (bank 1) by switching between rich and lean fuel/air mixture. When the change-over is made, the signal from the rear heated oxygen sensor (HO2S) is checked and the time taken for the probe to switch.

The diagnostic trouble code (DTC) is stored if the engine control module (ECM) registers that the rear heated oxygen sensor (HO2S) switches too quickly and is interpreted as poor catalytic converter efficiency.

The diagnostic trouble code (DTC) can be diagnosed with the engine at operating temperature, approximately 15 minutes after the engine has first been started if the vehicle is driven (normal road load) at 70-90 km/h for 30-40 seconds.

Substitute Value

- Nothing.

Possible Source

- Air leak in the exhaust system.
- Damaged front heated oxygen sensor (bank 1).
- Damaged front catalytic converter (bank 1).

Fault symptom[s]

- Malfunction indicator lamp (MIL) lit.

TROUBLESHOOTING ECM-P042000

CHECKING AIR LEAKAGE AND COMPONENT

Check the exhaust system for air leakage.

If no air leakage is found on the exhaust system, replace the front heated oxygen sensor (bank 1).

If the above troubleshooting does not fix the problem, try with a new front catalytic converter (bank 1).

Remedy as necessary.

Other information:

- see **AIR LEAKS IN THE INTAKE SYSTEM, CHECKING**
- see **HEATED OXYGEN SENSOR (HO2S), REPLACING**
- see **EXHAUST MANIFOLD/GASKET, CYLINDER 1, 3, 5 AND 7 (BANK 1), REPLACING**

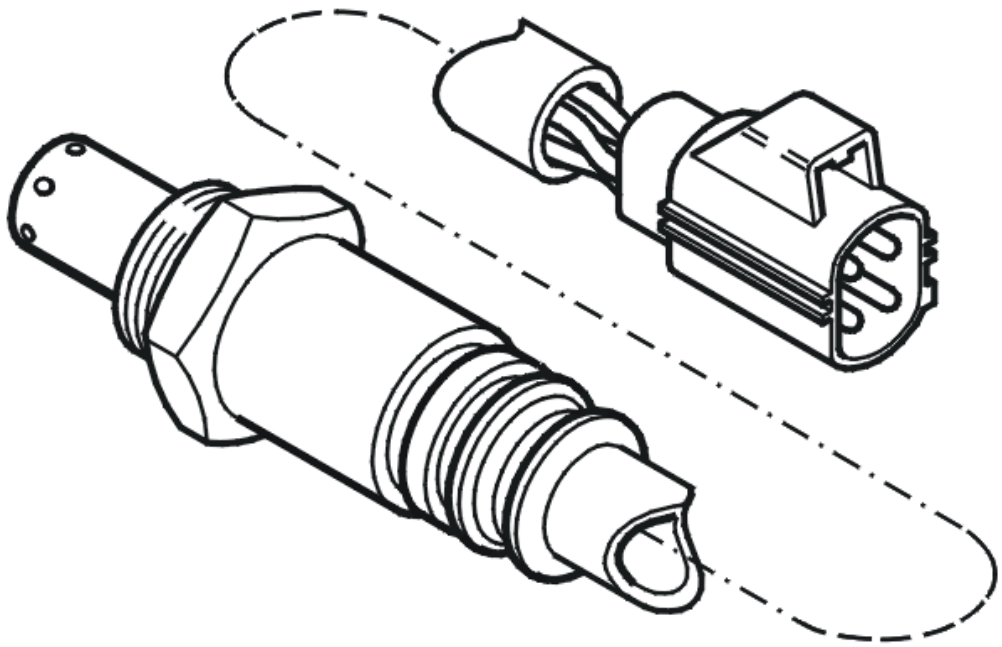

Fig. 22: Identifying Heated Oxygen Sensor
Courtesy of VOLVO CARS CORPORATION

- **Continue**

Refer to **VERIFICATION**

VERIFICATION

VERIFICATION

HINT: After carrying out the repair, check that the fault has been remedied.

- Start the engine and let it idle until it has reached operating temperature (approx. 80 °C).
- Test-drive the vehicle on road. Drive in float mode (normal road load), constant speed around 70-90 km/h for approx. 30-40 seconds.
- Connect the VCT2000 (or appropriate scan tool) to the data link connector without turning off the engine.

NOTE: **If the engine is switched off, the stored fault status will be erased and the test drive will have to be repeated.**

Read off the diagnostic status and trouble status for the diagnostic trouble code.

Check that the diagnosis is "Implemented" and that the trouble status is "No malfunction found". If the trouble status is "Malfunction found", this indicates defective function.

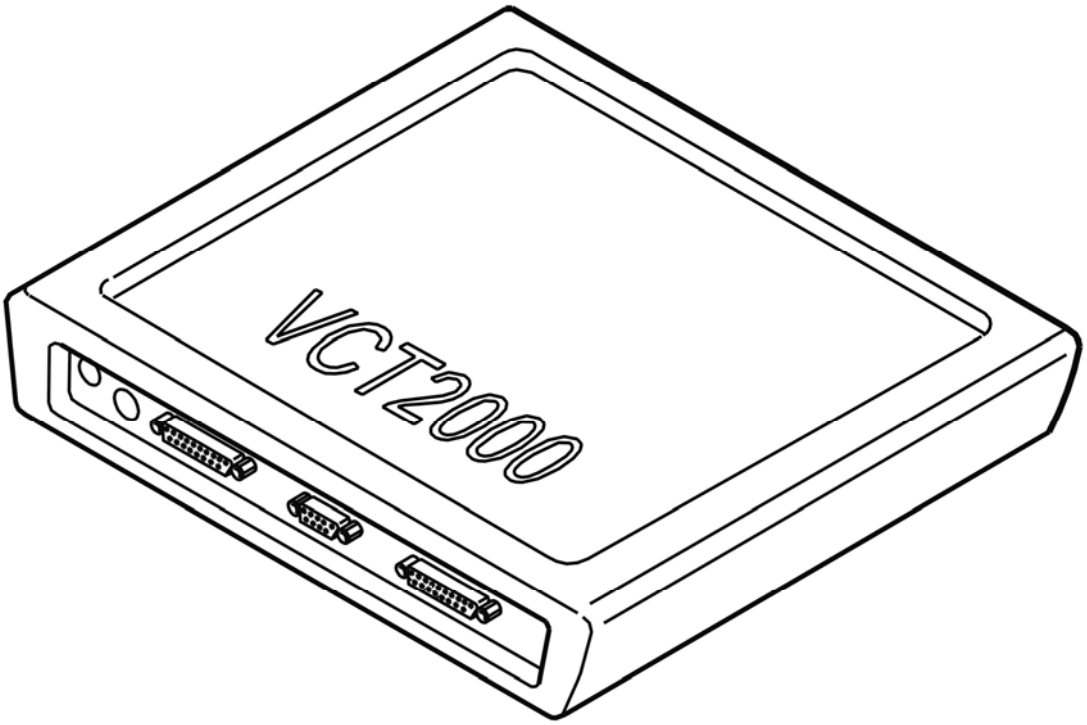

Fig. 23: Identifying VCT2000 Diagnostic Tool Symbol In VIDA
Courtesy of VOLVO CARS CORPORATION

Trouble status shows "No malfunction found"?

- **YES**

  VERIFIED: Troubleshooting has been completed.

- **NO**

  Refer to **INFORMATION**

INFORMATION

FAULT-TRACING INFORMATION

The fault should have been detected and remedied. As this is not the case fault-tracing has failed.

Exit fault-tracing for this diagnostic trouble code (DTC) or make another attempt.

ECM-P043000: CATALYST SYSTEM EFFICIENCY BELOW THRESHOLD (BANK 2). GENERAL FAILURE INFORMATION. NO SUB TYPE INFORMATION (B6324S; 2007-2010)

DIAGNOSTIC TROUBLE CODE (DTC) INFORMATION ECM-P043000

Condition

Engine Control Module (ECM) checks the efficiency of catalytic converter (bank 2) by switching between rich and lean fuel/air mixture. When shifting takes place the signal from the rear heated oxygen sensor (bank 2) is checked and how fast the sensor shifts.

The diagnostic trouble code (DTC) is stored if the engine control module (ECM) registers that the rear heated oxygen sensor (HO2S) switches too quickly and is interpreted as poor catalytic converter efficiency.

The diagnostic trouble code (DTC) can be diagnosed with the engine at operating temperature, approximately 15 minutes after the engine has first been started if the vehicle is driven (normal road load) at 70-90 km/h for 30-40 seconds.

Substitute Value

- Nothing.

Possible Source

- Air leak in the exhaust system.
- Damaged front heated oxygen sensor (bank 2).
- Damaged front catalytic converter (bank 2).

Fault symptom[s]

- Malfunction indicator lamp (MIL) lit.

FAULT-TRACING

CHECKING AIR LEAKAGE AND COMPONENT

Check the exhaust system for air leakage.

If no air leakage is found on the exhaust system, replace the front heated oxygen sensor (bank 2).

If the above troubleshooting does not fix the problem, try with a new front catalytic converter (bank 2).

Remedy as necessary.

Other information:

- see **EXHAUST MANIFOLD**
- see **OXYGEN SENSOR (CATALYST MONITOR SENSOR)**

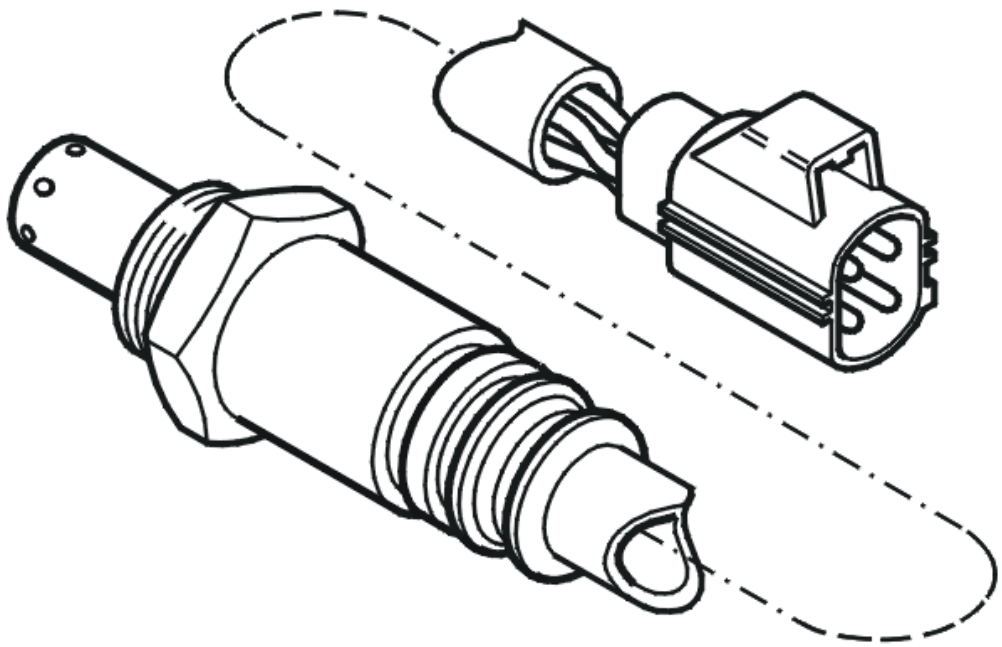

Fig. 24: Identifying Heated Oxygen Sensor
Courtesy of VOLVO CARS CORPORATION

- **Continue**

  Refer to **VERIFICATION**

INFORMATION

FAULT-TRACING INFORMATION

The fault should have been detected and remedied. As this is not the case fault-tracing has failed.

Exit fault-tracing for this diagnostic trouble code (DTC) or make another attempt.

VERIFICATION

VERIFICATION

HINT: After carrying out the repair, check that the fault has been remedied.

- Start the engine and let it idle until it has reached operating temperature (approx. 80 °C).
- Test-drive the vehicle on road. Drive in float mode (normal road load), constant speed around 70-90 km/h for approx. 30-40 seconds.
- Connect the VCT2000 (or appropriate scan tool) to the data link connector without turning off the engine.

  NOTE: If the engine is switched off, the stored fault status will be erased and the test drive will have to be repeated.

  Read off the diagnostic status and trouble status for the diagnostic trouble code.

  Check that the diagnosis is "Implemented" and that the trouble status is "No malfunction found". If the trouble status is "Malfunction found", this indicates defective function.

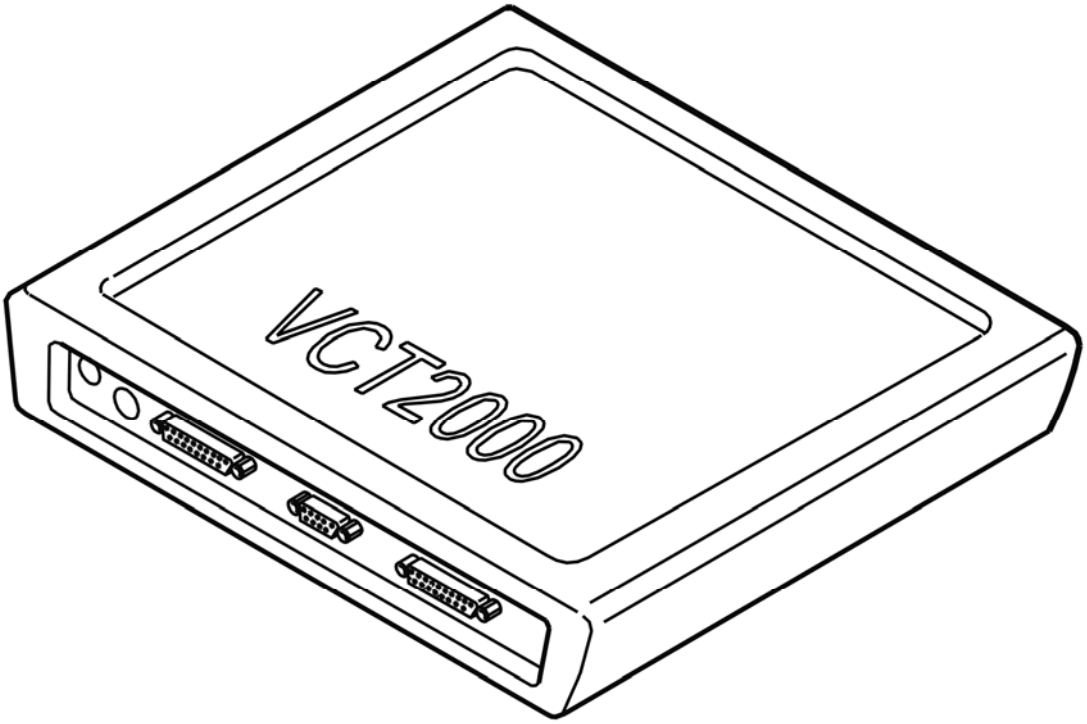

Fig. 25: Identifying VCT2000 Diagnostic Tool Symbol In VIDA
Courtesy of VOLVO CARS CORPORATION

Trouble status shows "No malfunction found"?

- **YES**

  VERIFIED: Troubleshooting has been completed.

- **NO**

  Refer to **INFORMATION**

ECM-P043000: CATALYST SYSTEM EFFICIENCY BELOW THRESHOLD (BANK 2). GENERAL FAILURE INFORMATION. NO SUB TYPE INFORMATION (B6324S5; 2011-2012)

DIAGNOSTIC TROUBLE CODE (DTC) INFORMATION ECM-P043000

see **DIAGNOSTIC TROUBLE CODE (DTC) INFORMATION ECM-P043000**

FAULT-TRACING

see **FAULT-TRACING**

ECM-P043000: CATALYST SYSTEM EFFICIENCY BELOW THRESHOLD (BANK 2). GENERAL FAILURE INFORMATION. NO SUB TYPE INFORMATION (B8444S; 2005-2011)

DIAGNOSTIC TROUBLE CODE (DTC) INFORMATION ECM-P043000

Condition

Engine Control Module (ECM) checks the efficiency of catalytic converter (bank 2) by switching between rich and lean fuel/air mixture. When shifting takes place the signal from the rear heated oxygen sensor (bank 2) is checked and how fast the sensor shifts.

The diagnostic trouble code (DTC) is stored if the engine control module (ECM) registers that the rear heated oxygen sensor (HO2S) switches too quickly and is interpreted as poor catalytic converter efficiency.

The diagnostic trouble code (DTC) can be diagnosed with the engine at operating temperature, approximately 15 minutes after the engine has first been started if the vehicle is driven (normal road load) at 70-90 km/h for 30-40 seconds.

Substitute Value

- None.

Possible Source

- Installation of the front and rear heated oxygen sensor mixed up.
- Air leakage in the exhaust system.
- Damaged front heated oxygen sensor (bank 2).
- Damaged front catalytic converter (bank 2).

Fault symptom[s]

- Malfunction indicator light (MIL), on

FAULT-TRACING ECM-P043000

CHECKING AIR LEAKAGE AND COMPONENT

NOTE: **This diagnostic trouble code (DTC) can be stored if installation of the front and rear oxygen sensors is mixed up. Mixing up regards the physical installation of the heated oxygen sensors, where the front one is screwed into place where the rear one is to be located, and vice versa. The connectors and cable harness are correctly connected. These cannot be mixed.**

HINT: Check the part nos. of the components visually and compare with the parts register in VIDA (Volvo scan tool). Ensure that they are installed in the correct location.

Check the exhaust system for air leakage.

If no air leakage is found on the exhaust system, replace the front heated oxygen sensor (bank 2).

If the above troubleshooting does not fix the problem, try with a new front catalytic converter (bank 2).

Remedy as necessary.

Other information

- see **AIR LEAKS IN THE INTAKE SYSTEM, CHECKING**
- see **HEATED OXYGEN SENSOR (HO2S), REPLACING**
- see **EXHAUST MANIFOLD/GASKET, CYLINDER 2, 4, 6 AND 8 (BANK 2), REPLACING**

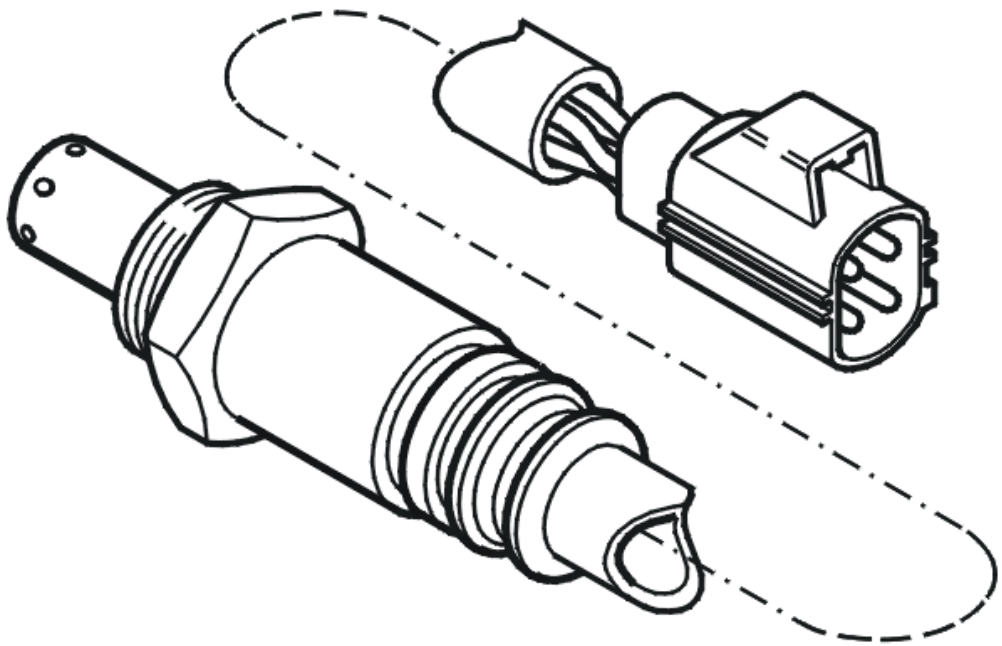

Fig. 26: Identifying Heated Oxygen Sensor
Courtesy of VOLVO CARS CORPORATION

- **Continue**

  Refer to **VERIFICATION**

VERIFICATION

VERIFICATION

HINT: After carrying out the repair, check that the fault has been remedied.

- Start the engine and let it idle until it has reached operating temperature (approx. 80 °C).
- Test-drive the vehicle on road. Drive in float mode (normal road load), constant speed around 70-90 km/h for approx. 30-40 seconds.
- Connect the VCT2000 (or appropriate scan tool) to the data link connector without turning off the engine.

NOTE: If the engine is switched off, the stored fault status will be erased and the test drive will have to be repeated.

Read off the diagnostic status and trouble status for the diagnostic trouble code.

Check that the diagnosis is "Implemented" and that the trouble status is "No malfunction found". If the trouble status is "Malfunction found", this indicates defective function.

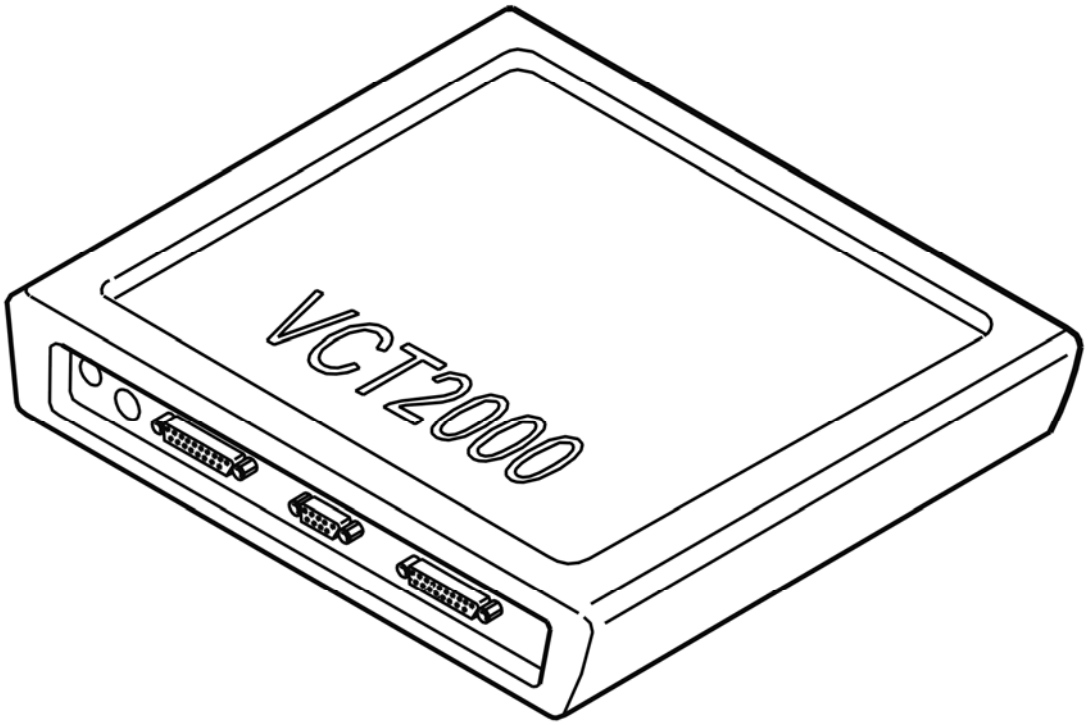

Fig. 27: Identifying VCT2000 Diagnostic Tool Symbol In VIDA
Courtesy of VOLVO CARS CORPORATION

Trouble status shows "No malfunction found"?

- **YES**

  VERIFIED: Troubleshooting has been completed.

- **NO**

  Refer to **INFORMATION**

INFORMATION

FAULT-TRACING INFORMATION

The fault should have been detected and remedied. As this is not the case fault-tracing has failed.

Exit fault-tracing for this diagnostic trouble code (DTC) or make another attempt.

ECM-P043E00 EVAPORATIVE EMISSION SYSTEM LEAK DETECTION REFERENCE ORIFICE LOW FLOW. GENERAL FAILURE INFORMATION. NO SUB TYPE INFORMATION (B6324S; 2007-2010)

DIAGNOSTIC TROUBLE CODE (DTC) INFORMATION

Condition

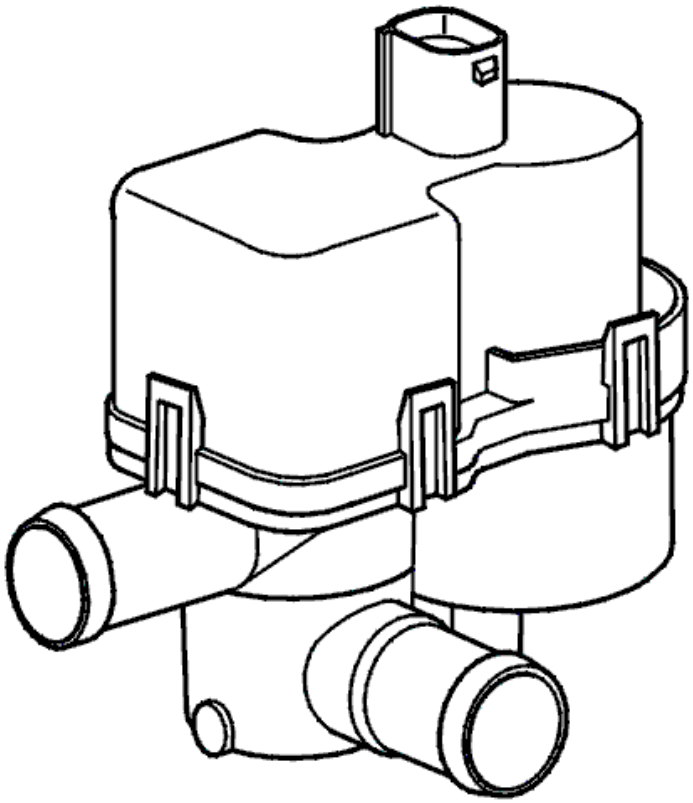

Fig. 28: Identifying Leak Diagnostic Pump
Courtesy of VOLVO CARS CORPORATION

The engine control module (ECM) checks the function of the leakage diagnosis unit by measuring the current through the leakage diagnosis pump.

If the control module registers that the current curve is unreasonably high, low or noisy, it determines that the reference measurement has produced a faulty result and the diagnostic trouble code is generated.

The diagnostic trouble code can be diagnosed when leakage diagnosis is running.

Substitute Value

- Leakage diagnosis is interrupted.

Possible Source

- Dirt or moisture in the pump.
- Damaged heating element in the pump.
- Damage leakage diagnosis pump.

Fault symptom[s]

- Malfunction indicator lamp (MIL) lit.

FAULT-TRACING

CHECKING SOFTWARE

NOTE: For vehicles of model year 2007-2008, the software in the engine control module (ECM) should be checked before fault tracing is carried out of the fault relating to the leak from the tank system.

Fig. 29: Identifying Ignition On Position
Courtesy of VOLVO CARS CORPORATION

- Ignition on.

  Use the VCT2000 (or appropriate scan tool) to read out and check the software version in the Engine control module.

  NOTE: More instructions follow together with the read out.

Fig. 30: Identifying VCT2000 Diagnostic Tool Symbol In VIDA
Courtesy of VOLVO CARS CORPORATION

Has the latest software been downloaded to the control module?

- **YES**

  Refer to **PERFORM QUICK-TEST TANK SYSTEM**

PERFORM QUICK-TEST TANK SYSTEM

Fig. 31: Identifying Ignition On Position
Courtesy of VOLVO CARS CORPORATION

- Activate the test using the VCT2000 (or appropriate scan tool).
- Read off initial parameters and check them according to start conditions for performing the test.
- Check that the test has started. Parameters run status shall go to "In progress" and the test phase shall go to "Reference".

NOTE: If the test does not start, check that the start conditions are fulfilled.

When the reference phase is finished, check of the tank system starts. The pressure in the tank starts to increase, see graph. Within 15 minutes the Engine control module makes a decision as to whether there is leakage in the tank system or not. The test is finished.

- Check parameters for test result and follow relevant instructions provided in this service information.

NOTE: Estimated leakage shall be used to get an idea of the proximity to the diagnostic trouble code limit. If the estimated leakage is very near the diagnostic trouble code limit (greater than 0.3mm), troubleshooting should probably be performed despite the Tank system, test result shows "No leakage found", especially if a diagnostic trouble code for leakage has been stored earlier.

NOTE: Use diagnostic trouble code counter to, see the frequency of the problem. Also use frozen values to get an idea if external conditions may have affected the result. Compare with current conditions in the workshop.

Conditions for starting the quick test of the fuel tank system

- No DTCs related to EVAP purge valve or ambient air pressure sensor set.
- Battery voltage 11-15 V.
- Atmospheric pressure higher than 750 hPa, approx. 2500 m (8200 ft).
- Fuel level 0-85 %.
- Ambient air temperature 4-35 °C.

NOTE: The battery voltage must be correct throughout the entire test. The test can take up to 15 minutes, depending on the quantity of fuel in the fuel tank. It is highly recommended to use the constant voltage charger, Midtronics PSC-550, during the test. For more information, see 30-04

(USA/CDN).

Other information

- see **DESCRIPTION OF PARAMETERS, QUICK TEST OF THE FUEL TANK SYSTEM**
- see **TEST PHASES, QUICK TEST FUEL TANK SYSTEM**
- see **LOCATION OF COMPONENTS**
- see **LEAK DIAGNOSTIC PUMP, REPLACING**

Select alternative according to relevant test results:

1. DMTL, test result = "Problem found"

   Refer to **DMTL, TEST RESULT = "PROBLEM FOUND"**

2. Tank system, test result = "No leakage found"

   Refer to **TANK SYSTEM, TEST RESULT = "NO LEAKAGE FOUND"**

3. Tank system, test result = "Major leakage found" or "Minor leakage found"

   Refer to **TANK SYSTEM, TEST RESULT = "MAJOR LEAKAGE FOUND" OR "MINOR LEAKAGE FOUND"**

4. DMTL, test result and Tank system, test result = "Unknown"

   Refer to **DMTL, TEST RESULT AND TANK SYSTEM, TEST RESULT = "UNKNOWN"**

5. Cancel fault-tracing.

   FAULT NOT FOUND: Troubleshooting has been completed.

Fig. 32: Identifying VCT2000 Diagnostic Tool Symbol In VIDA
Courtesy of VOLVO CARS CORPORATION

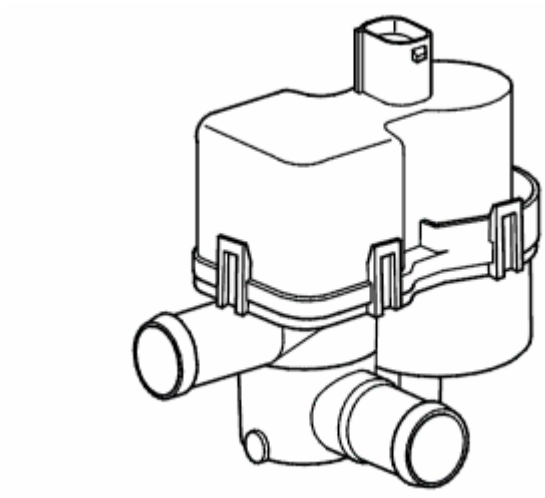

Fig. 33: Identifying Leak Diagnostic Pump
Courtesy of VOLVO CARS CORPORATION

DMTL, TEST RESULT = "PROBLEM FOUND"

If a problem is detected on the leakage diagnostics unit (DMTL), it may be due to a defective DMTL.

- Replace leakage diagnostics unit (DMTL).
- Perform "Quick-test tank system" again to verify that the problem has been solved.

NOTE: The tank system's status is unknown since the test was interrupted.

- **Continue**

  Refer to **PERFORM QUICK-TEST TANK SYSTEM**

TANK SYSTEM, TEST RESULT = "NO LEAKAGE FOUND"

Diagnostic trouble code limit (minor leakage):Estimated leakage = 0.40 mm

No problem has been detected on leakage diagnostics unit and fuel tank system is OK. The vehicle is ready to be delivered back to customer.

NOTE: The parameter estimated leakage does not necessarily have to show 0 mm for a sealed system.

TANK SYSTEM, TEST RESULT = "MAJOR LEAKAGE FOUND" OR "MINOR LEAKAGE FOUND"

If a leakage is detected during this test, it indicates that the problem with the leakage diagnostics unit (DMTL) is solved. Now the Engine control module (ECM) has the possibility to check the fuel tank system. A leakage has been found.

- Cancel troubleshooting for this problem.
- Read off diagnostic trouble codes again and start troubleshooting for the new diagnostic trouble code.

DMTL, TEST RESULT AND TANK SYSTEM, TEST RESULT = "UNKNOWN"

Engine control module (ECM) cannot perform check of tank system. This may be due to the conditions for start of the quick-test not being fulfilled, that they have changed during the course of the test, or that a problem has occurred during troubleshooting.

- Check that all conditions for start of the quick-test are fulfilled.
- Visually check hoses and connections on leakage diagnostics unit, canister, EVAP-valve, and filler pipe. Check for damage or incorrect/loose installation.
- Remedy as necessary.
- Restart the test.

- **Continue**

  Refer to **PERFORM QUICK-TEST TANK SYSTEM**

ECM-P043E00 EVAPORATIVE EMISSION SYSTEM LEAK DETECTION REFERENCE ORIFICE LOW FLOW. GENERAL FAILURE INFORMATION. NO SUB TYPE INFORMATION (B6324S5; 2011-2012)

DIAGNOSTIC TROUBLE CODE (DTC) INFORMATION

see **DIAGNOSTIC TROUBLE CODE (DTC) INFORMATION**

FAULT-TRACING

see **FAULT-TRACING**

ECM-P043E00 EVAPORATIVE EMISSION SYSTEM LEAK DETECTION REFERENCE ORIFICE LOW FLOW. GENERAL FAILURE INFORMATION. NO SUB TYPE INFORMATION (B8444S; 2005-2011)

DIAGNOSTIC TROUBLE CODE (DTC) INFORMATION

Condition

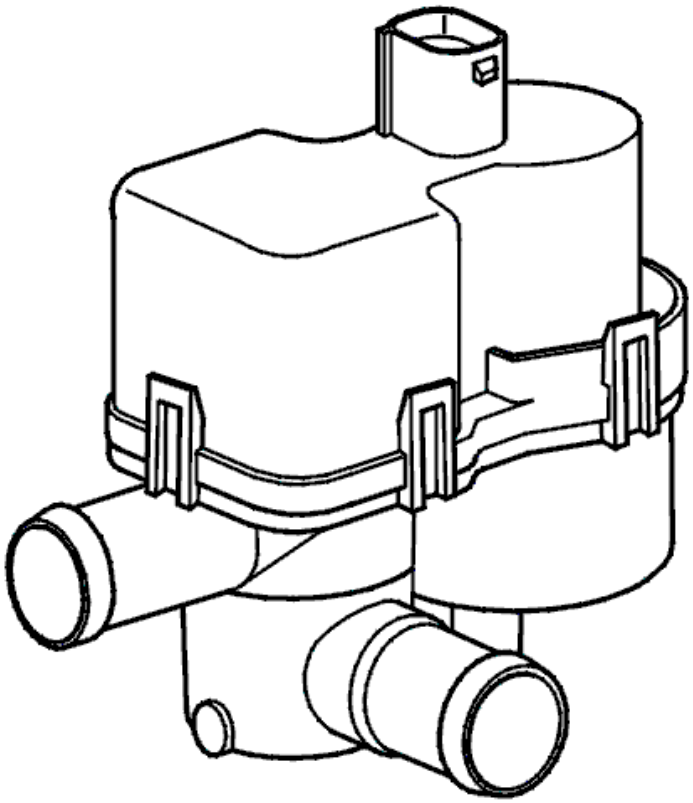

Fig. 34: Identifying Leak Diagnostic Pump
Courtesy of VOLVO CARS CORPORATION

The engine control module (ECM) checks the function of the leakage diagnosis unit by measuring the current through the leakage diagnosis pump.

If the control module registers that the current curve is unreasonably high, low or noisy, it determines that the reference measurement has produced a faulty result and the diagnostic trouble code is generated.

The diagnostic trouble code can be diagnosed when leakage diagnosis is running.

Substitute Value

- Leakage diagnosis is interrupted.

Possible Source

- Dirt or moisture in the pump.
- Damaged heating element in the pump.
- Damage leakage diagnosis pump.

Fault symptom[s]

- Malfunction indicator lamp (MIL) lit.

FAULT-TRACING

CHECKING SOFTWARE

NOTE: For vehicles of model year 2005-2007, the software in the engine control module (ECM) should be checked before fault tracing of the fault relating to the leak from the tank system is carried out.

Fig. 35: Identifying Ignition On Position
Courtesy of VOLVO CARS CORPORATION

- Ignition on.

  Use the VCT2000 (or appropriate scan tool) to read out and check the software version in the Engine control module.

  NOTE: More instructions follow together with the read out.

Fig. 36: Identifying VCT2000 Diagnostic Tool Symbol In VIDA
Courtesy of VOLVO CARS CORPORATION

Has the latest software been downloaded to the control module?

- **YES**

  Refer to **PERFORM QUICK-TEST TANK SYSTEM**

PERFORM QUICK-TEST TANK SYSTEM

Fig. 37: Identifying Ignition On Position
Courtesy of VOLVO CARS CORPORATION

- Activate the test using the VCT2000 (or appropriate scan tool).
- Read off initial parameters and check them according to start conditions for performing the test.
- Check that the test has started. Parameters run status shall go to "In progress" and the test phase shall go to "Reference".

NOTE: If the test does not start, check that the start conditions are fulfilled.

When the reference phase is finished, check of the tank system starts. The pressure in the tank starts to increase, see graph. Within 15 minutes the Engine control module makes a decision as to whether there is leakage in the tank system or not. The test is finished.

- Check parameters for test result and follow relevant instructions below.

NOTE: In the event of a the results from the estimated leakage must be entered in

NOTE: Estimated leakage shall be used to get an idea of the proximity to the diagnostic trouble code limit. If the estimated leakage is very near the diagnostic trouble code limit (greater than 0.3mm), troubleshooting should probably be performed despite the Tank system, test result shows "No leakage found", especially if a diagnostic trouble code for leakage has been stored earlier.

NOTE: Use diagnostic trouble code counter to, see the frequency of the problem. Also use frozen values to get an idea if external conditions may have affected the result. Compare with current conditions in the workshop.

Conditions for starting the quick test of the fuel tank system

- No DTCs related to EVAP purge valve or ambient air pressure sensor set.
- Battery voltage 11-15 V.
- Atmospheric pressure higher than 750 hPa, approx. 2500 m (8200 ft).
- Fuel level 0-85 %.
- Ambient air temperature 4-35 °C.

NOTE: The battery voltage must be correct throughout the entire test. The test

can take up to 15 minutes, depending on the quantity of fuel in the fuel tank. It is highly recommended to use the constant voltage charger, Midtronics PSC-550, during the test. For more information, see 30-04 (USA/CDN).

Other information

- see **DESCRIPTION OF PARAMETERS, QUICK TEST OF THE FUEL TANK SYSTEM**
- see **TEST PHASES, QUICK TEST FUEL TANK SYSTEM**
- see **LOCATION OF COMPONENTS, ENGINE COMPARTMENT**
- see **LEAK DIAGNOSTIC PUMP, REPLACING**

Select alternative according to relevant test results:

1. DMTL, test result = "Problem found"

   Refer to **DMTL, TEST RESULT = "PROBLEM FOUND"**

2. Tank system, test result = "No leakage found"

   Refer to **TANK SYSTEM, TEST RESULT = "NO LEAKAGE FOUND"**

3. Tank system, test result = "Major leakage found" or "Minor leakage found"

   Refer to **TANK SYSTEM, TEST RESULT = "MAJOR LEAKAGE FOUND" OR "MINOR LEAKAGE FOUND"**

4. DMTL, test result and Tank system, test result = "Unknown"

   Refer to **DMTL, TEST RESULT AND TANK SYSTEM, TEST RESULT = "UNKNOWN"**

5. Cancel fault-tracing.

   FAULT NOT FOUND: Troubleshooting has been completed.

Fig. 38: Identifying VCT2000 Diagnostic Tool Symbol In VIDA
Courtesy of VOLVO CARS CORPORATION

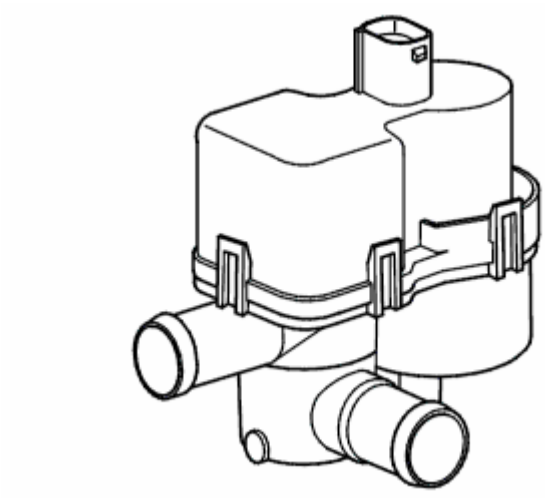

Fig. 39: Identifying Leak Diagnostic Pump
Courtesy of VOLVO CARS CORPORATION

DMTL, TEST RESULT = "PROBLEM FOUND"

If a problem is detected on the leakage diagnostics unit (DMTL), it may be due to a defective DMTL.

- Replace leakage diagnostics unit (DMTL).
- Perform "Quick-test tank system" again to verify that the problem has been solved.

NOTE: The tank system's status is unknown since the test was interrupted.

- **Continue**

  Refer to **PERFORM QUICK-TEST TANK SYSTEM**

TANK SYSTEM, TEST RESULT = "NO LEAKAGE FOUND"

Diagnostic trouble code limit (minor leakage):Estimated leakage = 0.40 mm

No problem has been detected on leakage diagnostics unit and fuel tank system is OK. The vehicle is ready to be delivered back to customer.

NOTE: The parameter estimated leakage does not necessarily have to show 0 mm for a sealed system.

TANK SYSTEM, TEST RESULT = "MAJOR LEAKAGE FOUND" OR "MINOR LEAKAGE FOUND"

If a leakage is detected during this test, it indicates that the problem with the leakage diagnostics unit (DMTL) is solved. Now the Engine control module (ECM) has the possibility to check the fuel tank system. A leakage has been found.

- Cancel troubleshooting for this problem.
- Read off diagnostic trouble codes again and start troubleshooting for the new diagnostic trouble code.

DMTL, TEST RESULT AND TANK SYSTEM, TEST RESULT = "UNKNOWN"

Engine control module (ECM) cannot perform check of tank system. This may be due to the conditions for start of the quick-test not being fulfilled, that they have changed during the course of the test, or that a problem has occurred during troubleshooting.

- Check that all conditions for start of the quick-test are fulfilled.
- Visually check hoses and connections on leakage diagnostics unit, canister, EVAP-valve, and filler pipe. Check for damage or incorrect/loose installation.
- Remedy as necessary.
- Restart the test.

- **Continue**

  Refer to **PERFORM QUICK-TEST TANK SYSTEM**

ECM-P044100: EVAPORATIVE EMISSION SYSTEM INCORRECT PURGE FLOW. GENERAL FAILURE INFORMATION. NO SUB TYPE INFORMATION (B6324S; 2007-2010)

DIAGNOSTIC TROUBLE CODE (DTC) INFORMATION ECM-P044100

Condition

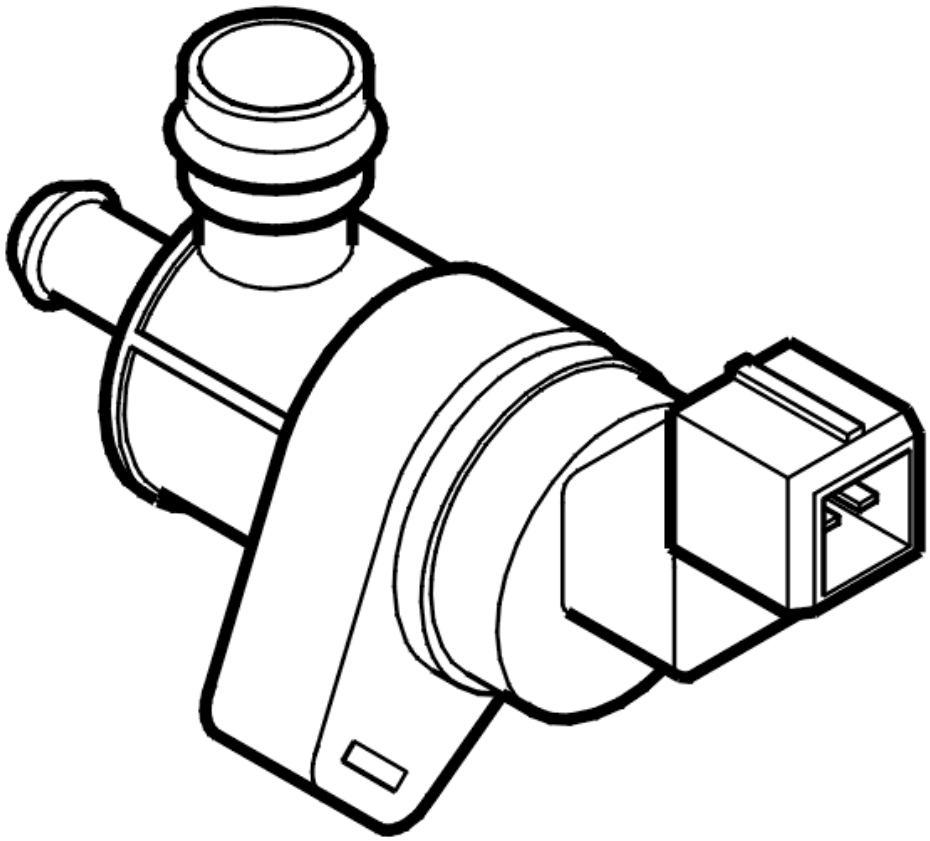

Fig. 40: Identifying Canister Purge (CP) Valve
Courtesy of VOLVO CARS CORPORATION

The engine control module (ECM) detects a fault in the function of the EVAP valve by analyzing the signal from the pressure sensor in the induction pipe. The diagnostic trouble code is generated if the control module registers that the EVAP valve has seized.

The diagnostic trouble code can be diagnosed during EVAP control.

Substitute Value

- Nothing.

Possible Source

- The hose between the induction pipe and EVAP valve is broken, clogged or pinched.
- The hose between the EVAP valve and canister is broken, clogged or pinched.
- The EVAP valve is stuck in the open position.
- The EVAP valve is stuck in the closed position.

Fault symptom[s]

- Malfunction indicator lamp (MIL) lit.

- Fuel odor.

FAULT-TRACING

CHECKING COMPONENT AND CONNECTIONS

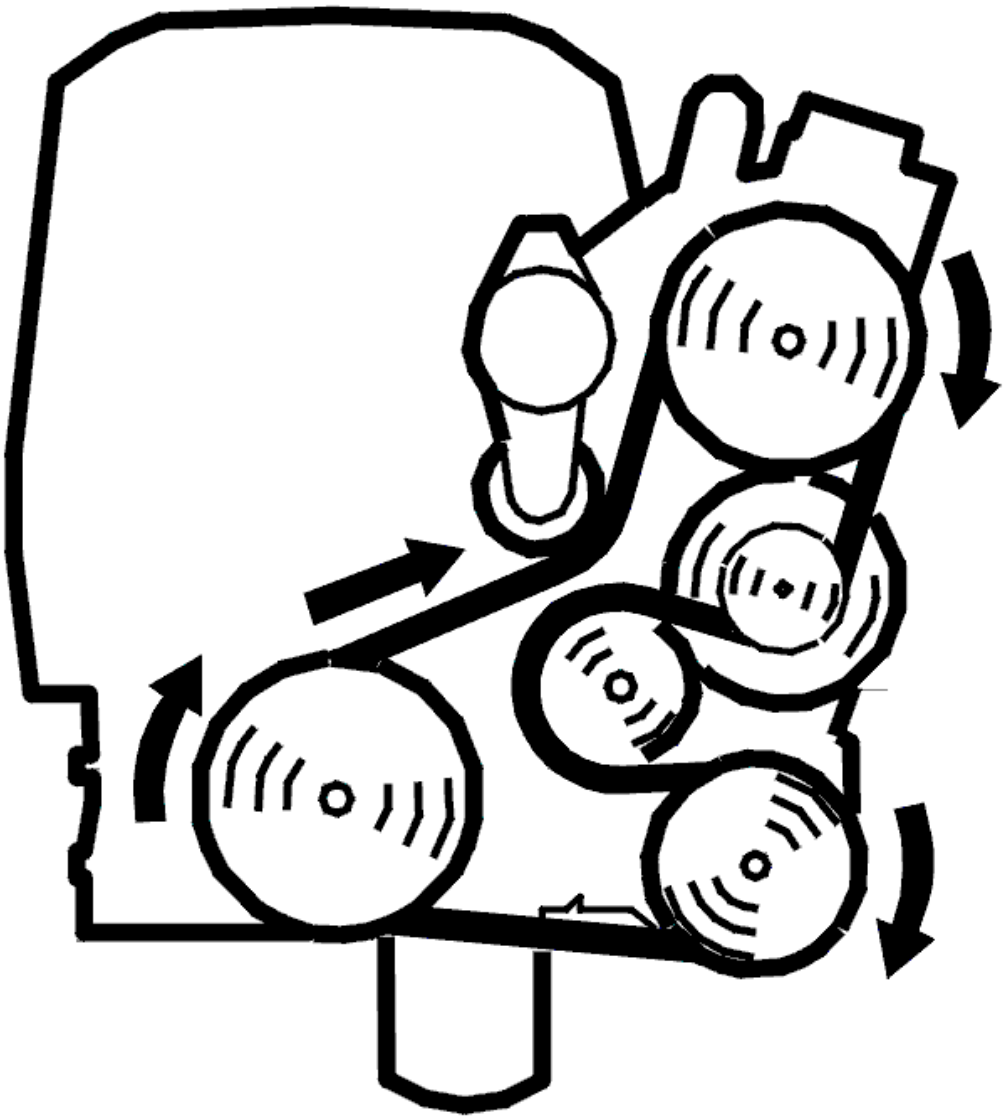

Fig. 41: Belt Routing / Engine Idling - Volvo
Courtesy of VOLVO CARS CORPORATION

- By activating quick-test of EVAP-valve, the valve's status can be decided. The test is based on pressure pulses through the valve and, in this way, the valve's function can be checked.

  If malfunction is detected on the EVAP-valve when performing the quick-test, this indicates that the malfunction is permanent.

- Engine idling during the entire test.

Activate quick-test EVAP-valve. The test takes a few seconds.

If the result shows "Malfunction found", function is poor. Check hose/hose connections between EVAP-valve and canister for damage, clogging or squeezing. The valve may need to be cleaned or replaced.

If the result shows "No malfunction found", function is correct. Then check hose/hose connections between EVAP-valve and inlet pipe for damage, clogging or squeezing.

Remedy as necessary.

Other information

- see **LOCATION OF COMPONENTS**

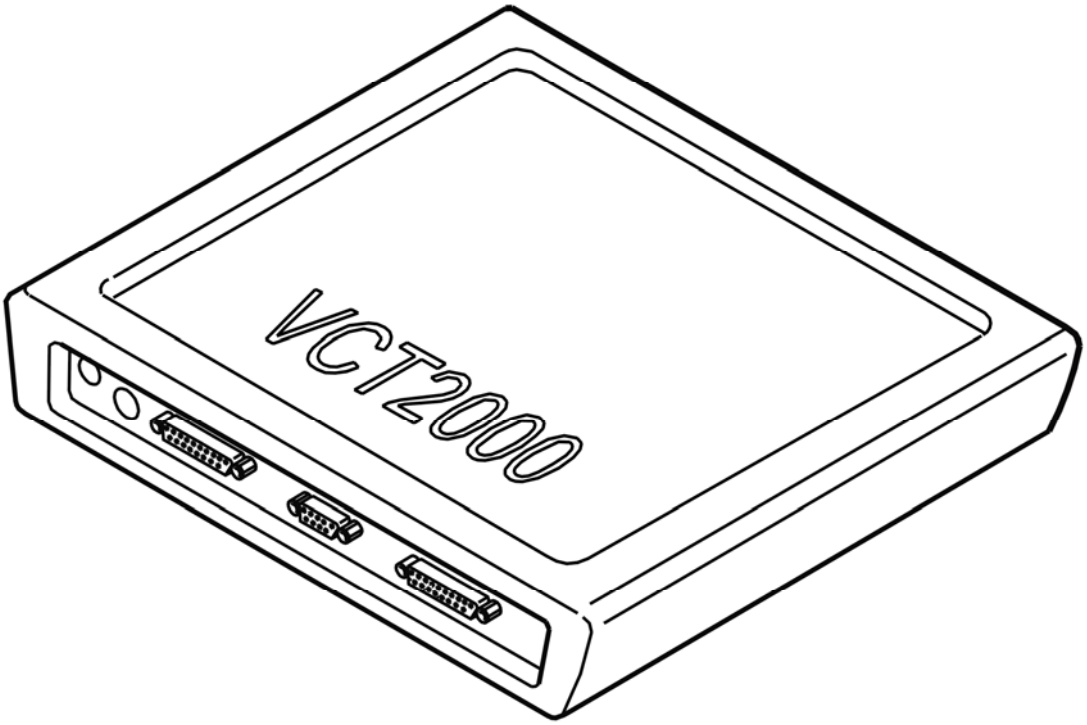

Fig. 42: Identifying VCT2000 Diagnostic Tool Symbol In VIDA
Courtesy of VOLVO CARS CORPORATION

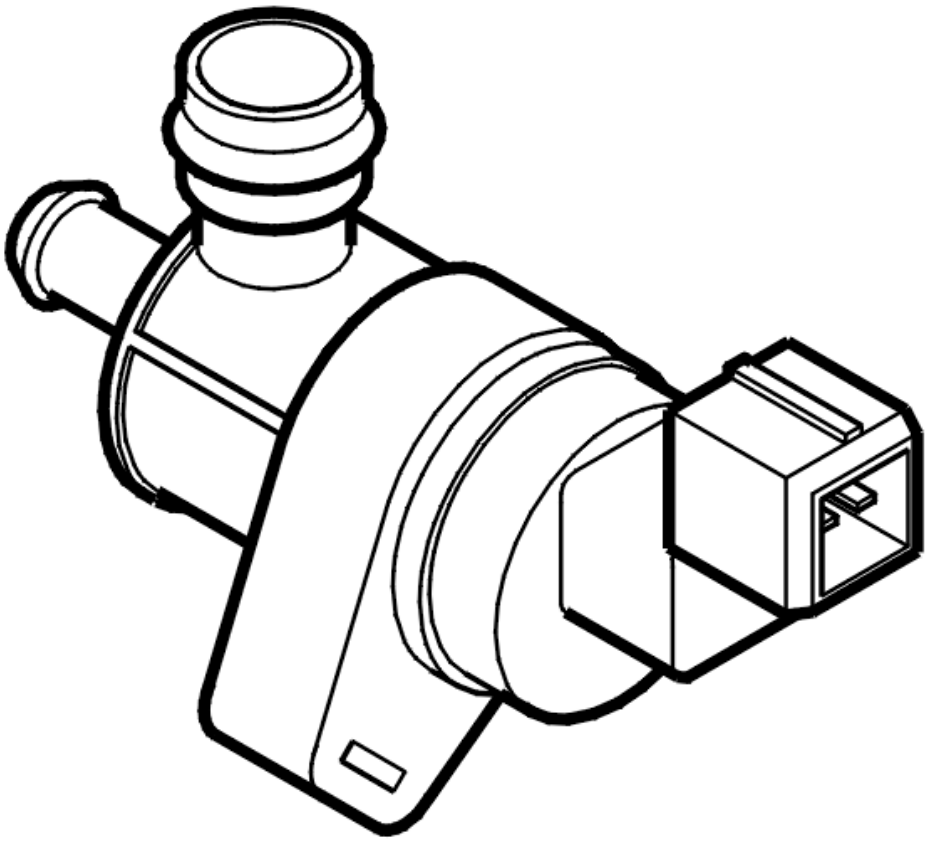

Fig. 43: Identifying Canister Purge (CP) Valve
Courtesy of VOLVO CARS CORPORATION

- **Continue**

  Refer to **VERIFICATION**

INFORMATION

FAULT-TRACING INFORMATION

The fault should have been detected and remedied. As this is not the case fault-tracing has failed.

Exit fault-tracing for this diagnostic trouble code (DTC) or make another attempt.

VERIFICATION

VERIFICATION

HINT: After repairing, it is necessary to check that the malfunction has been fixed.

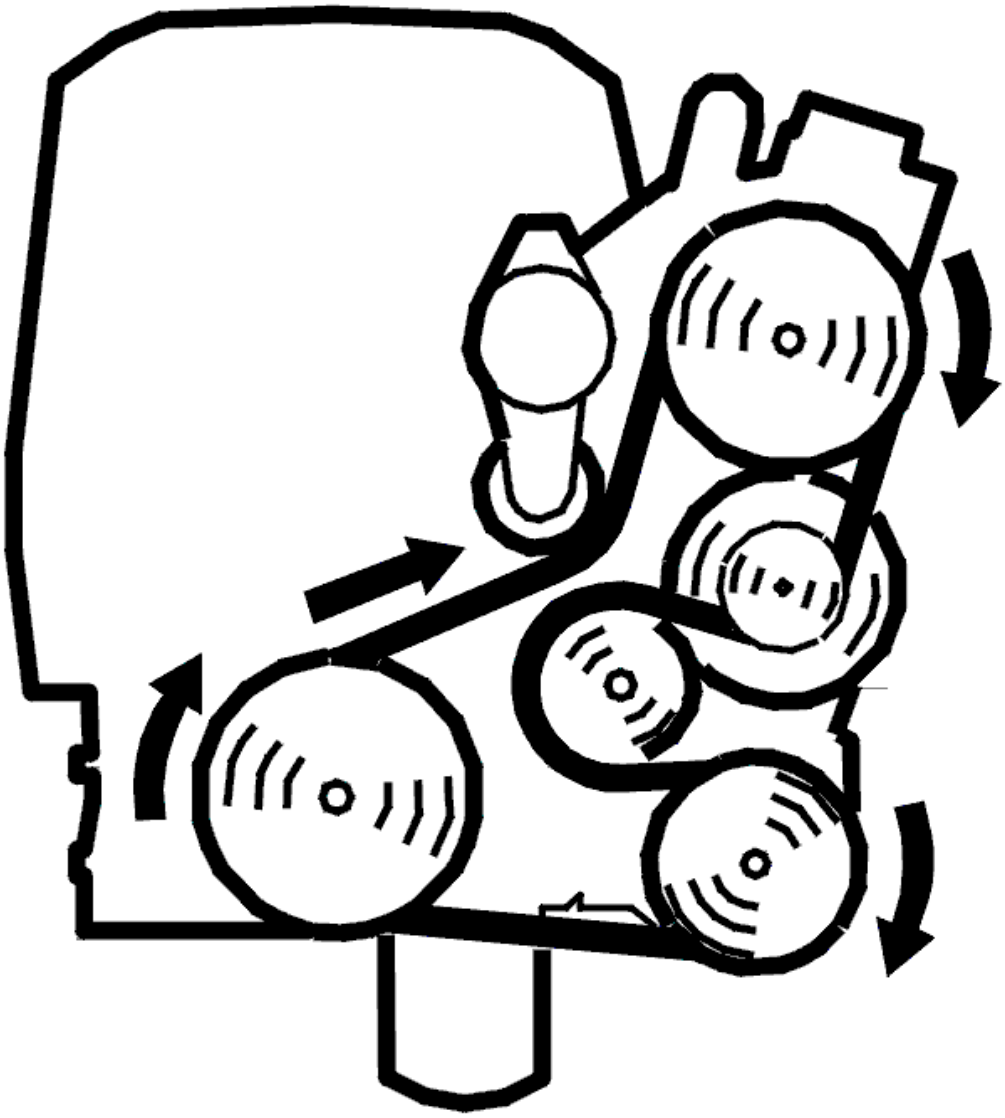

Fig. 44: Belt Routing / Engine Idling - Volvo
Courtesy of VOLVO CARS CORPORATION

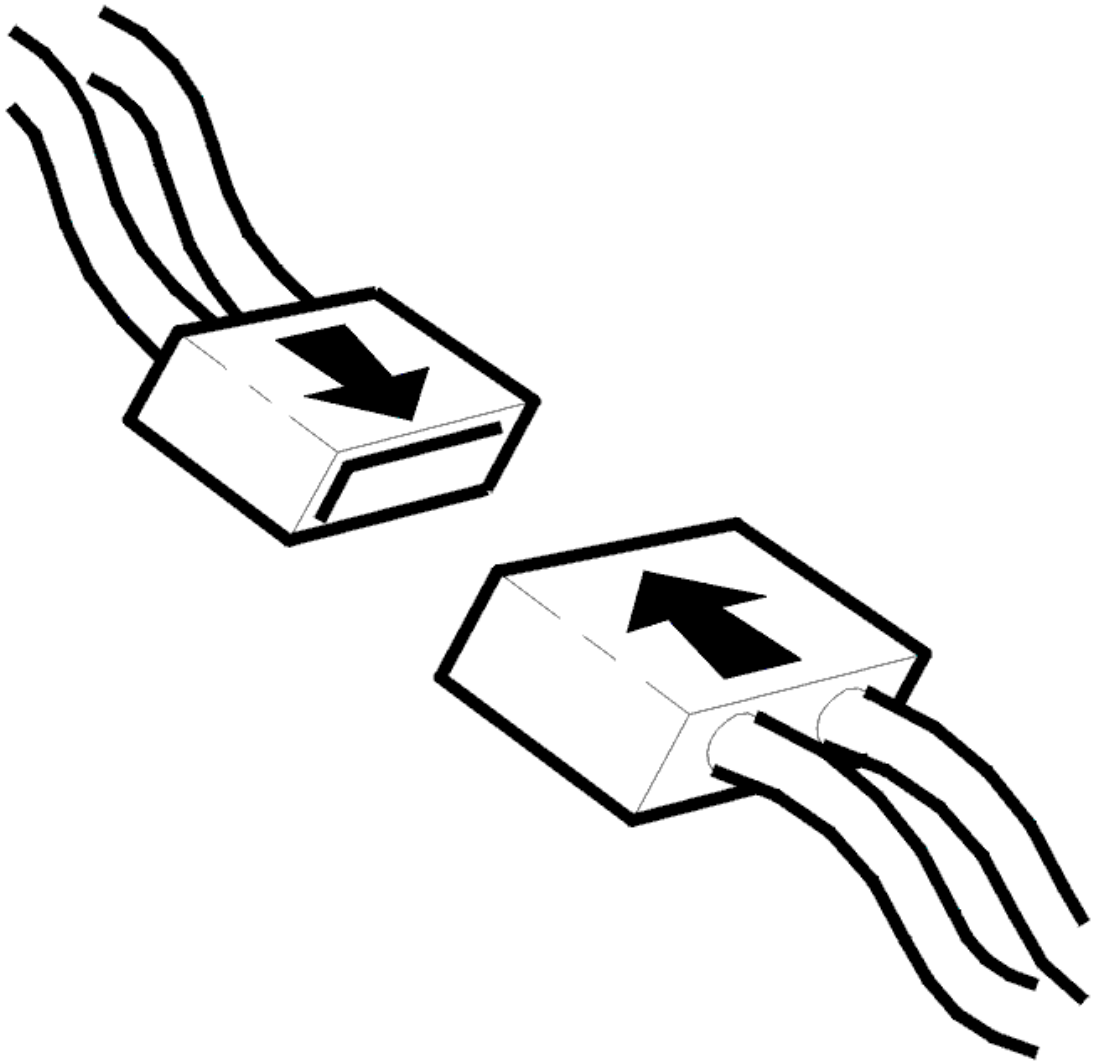

Fig. 45: Connecting Connector
Courtesy of VOLVO CARS CORPORATION

- Ignition off
- Reinstall the connectors, components etc.
- By once again starting quick-test of EVAP-valve and checking result, one can confirm if the work has fixed the malfunction.
- Engine idling during the entire test.

  Activate quick-test EVAP-valve. The test takes a few seconds.

  Check that the result shows "No malfunction found". This indicates that the malfunction has been fixed and the function is OK.

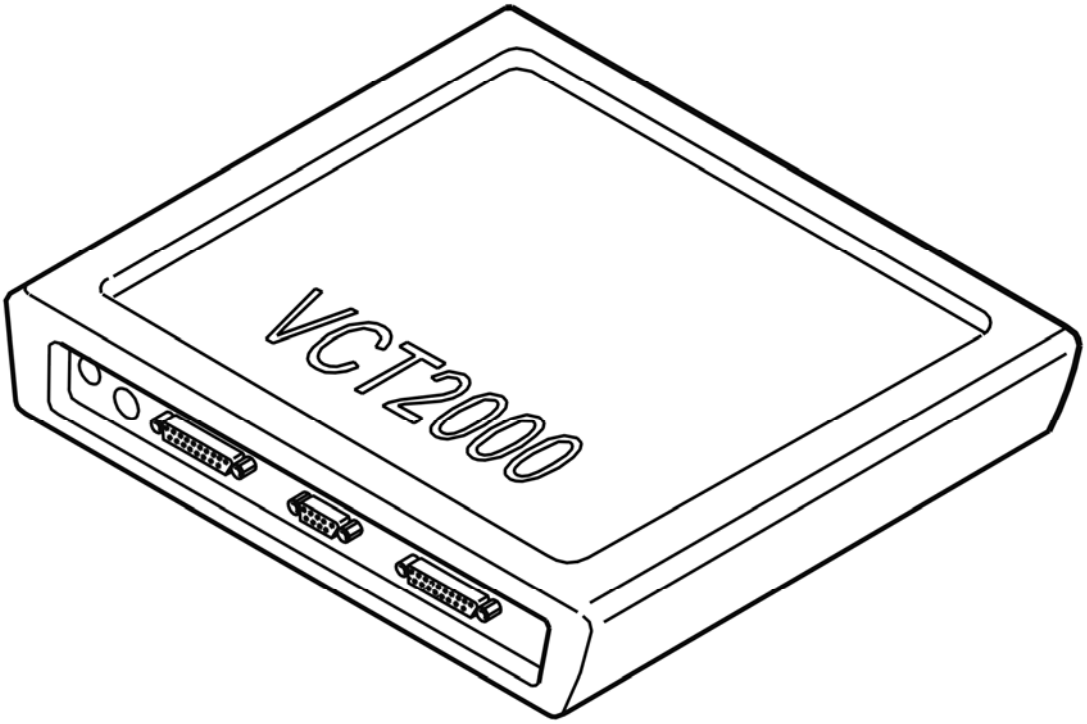

Fig. 46: Identifying VCT2000 Diagnostic Tool Symbol In VIDA
Courtesy of VOLVO CARS CORPORATION

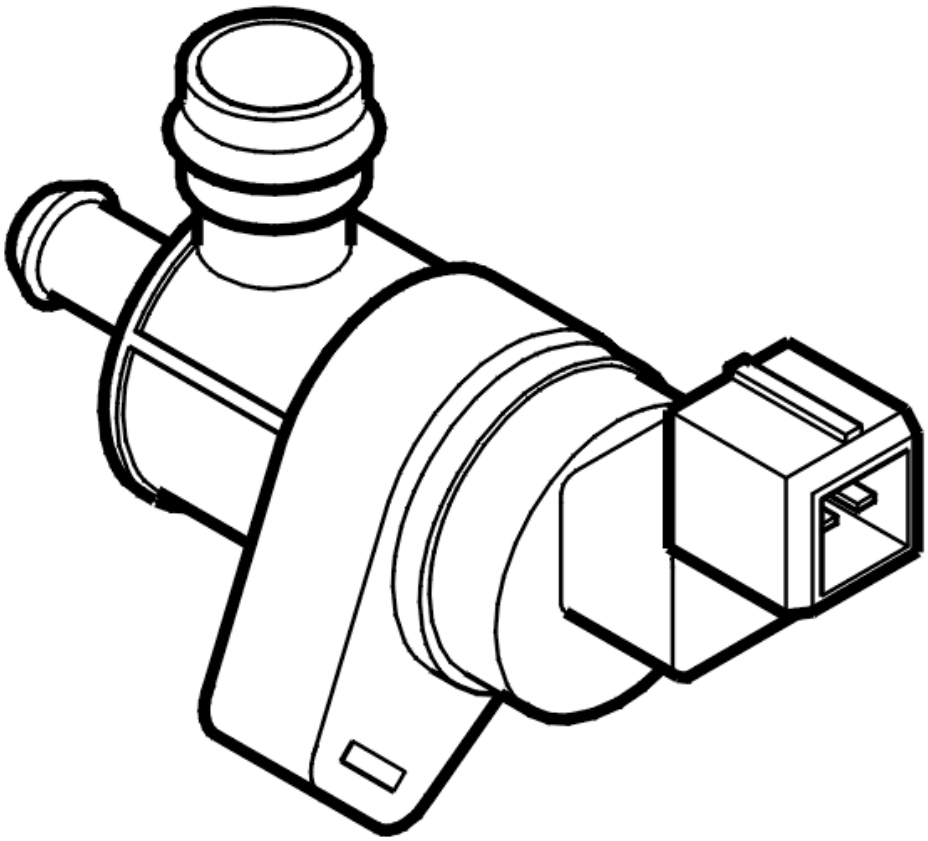

Fig. 47: Identifying Canister Purge (CP) Valve
Courtesy of VOLVO CARS CORPORATION

Is the function OK?

- **YES**

  VERIFIED: Troubleshooting has been completed.

- **NO**

  Refer to **INFORMATION**

ECM-P044100: EVAPORATIVE EMISSION SYSTEM INCORRECT PURGE FLOW. GENERAL FAILURE INFORMATION. NO SUB TYPE INFORMATION (B6324S5; 2011-2012)

DIAGNOSTIC TROUBLE CODE (DTC) INFORMATION ECM-P044100

see **DIAGNOSTIC TROUBLE CODE (DTC) INFORMATION ECM-P044100**

FAULT-TRACING

see **FAULT-TRACING**

ECM-P044100: EVAP EMISSION SYSTEM, FAULTY PURGE FLOW. GENERAL FAULT INFORMATION. TYPE OF FAULT NOT SPECIFIED. (B8444S; 2005-2011)

DIAGNOSTIC TROUBLE CODE (DTC) INFORMATION ECM-P044100

Condition

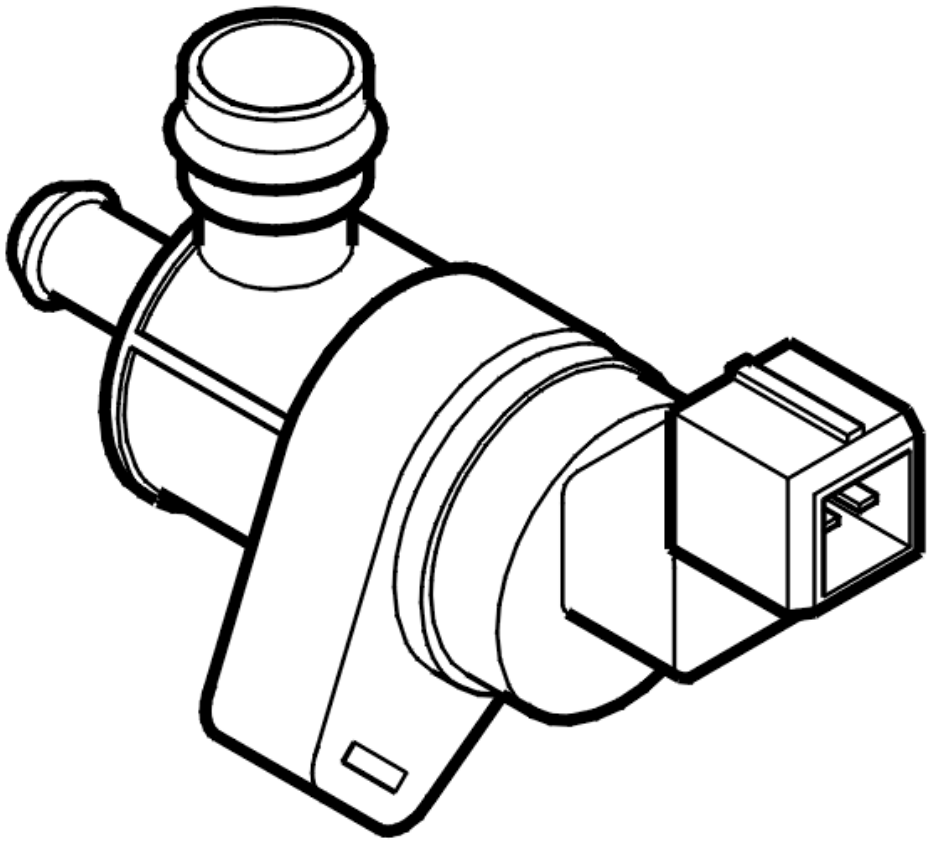

Fig. 48: Identifying Canister Purge (CP) Valve
Courtesy of VOLVO CARS CORPORATION

The engine control module (ECM) detects a fault in the function of the EVAP valve by analyzing the signal from the pressure sensor in the induction pipe. The diagnostic trouble code is generated if the control module registers that the EVAP valve has seized.

The diagnostic trouble code can be diagnosed during EVAP control.

Substitute Value

- Nothing.

Possible Source

- The hose between the induction pipe and EVAP valve is broken, clogged or pinched.
- The hose between the EVAP valve and canister is broken, clogged or pinched.
- The EVAP valve is stuck in the open position.
- The EVAP valve is stuck in the closed position.

Fault symptom[s]

- Malfunction indicator lamp (MIL) lit.
- Fuel odor.

TROUBLESHOOTING ECM-P044100

CHECKING COMPONENT AND CONNECTIONS

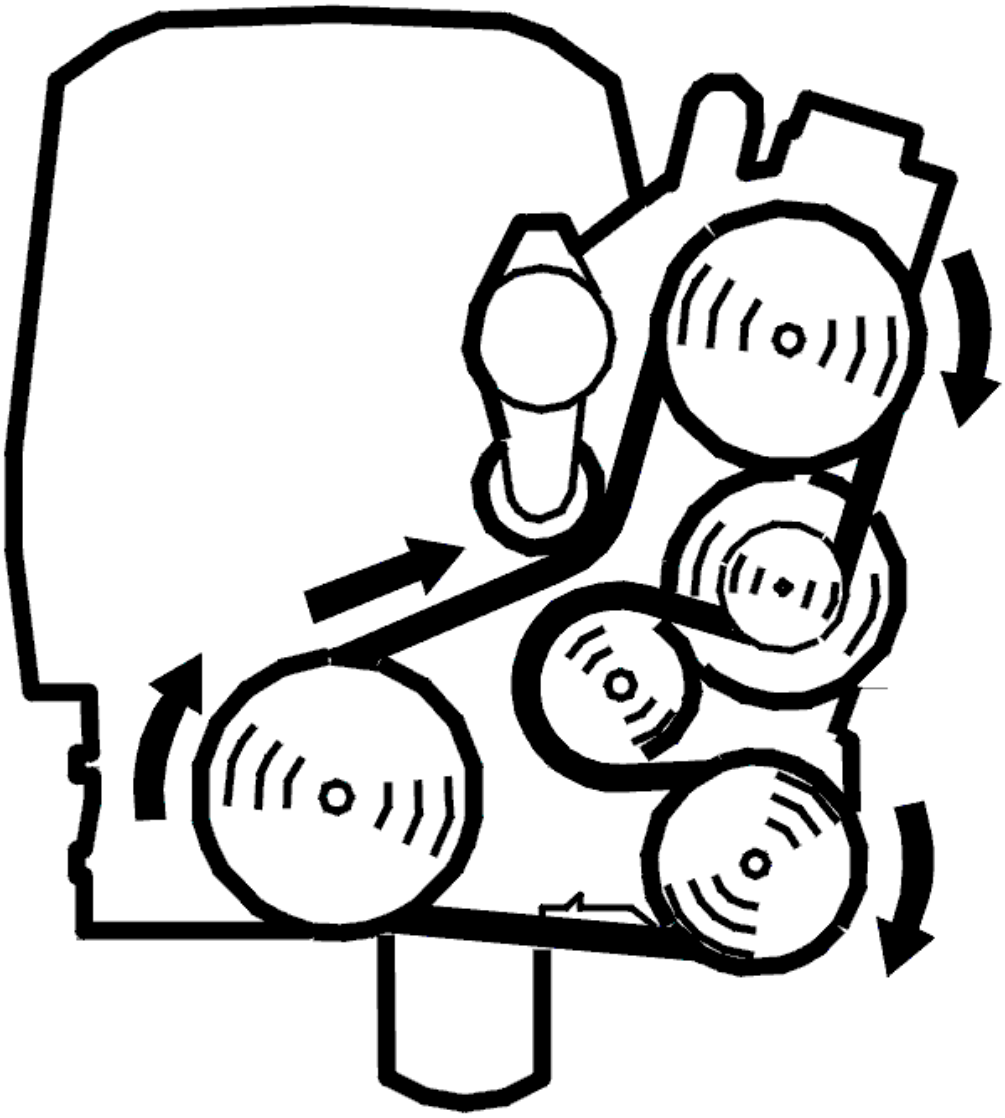

Fig. 49: Belt Routing / Engine Idling - Volvo
Courtesy of VOLVO CARS CORPORATION

- By activating quick-test of EVAP-valve, the valve's status can be decided. The test is based on pressure pulses through the valve and, in this way, the valve's function can be checked.

  If malfunction is detected on the EVAP-valve when performing the quick-test, this indicates that the malfunction is permanent.

- Engine idling during the entire test.

  Activate quick-test EVAP-valve. The test takes a few seconds.

  If the result shows "Malfunction found", function is poor. Check hose/hose connections between EVAP-valve and canister for damage, clogging or squeezing. The valve may need to be cleaned or replaced.

If the result shows "No malfunction found", function is correct. Then check hose/hose connections between EVAP-valve and inlet pipe for damage, clogging or squeezing.

Remedy as necessary.

Other information

- see **LOCATION OF COMPONENTS, ENGINE COMPARTMENT**

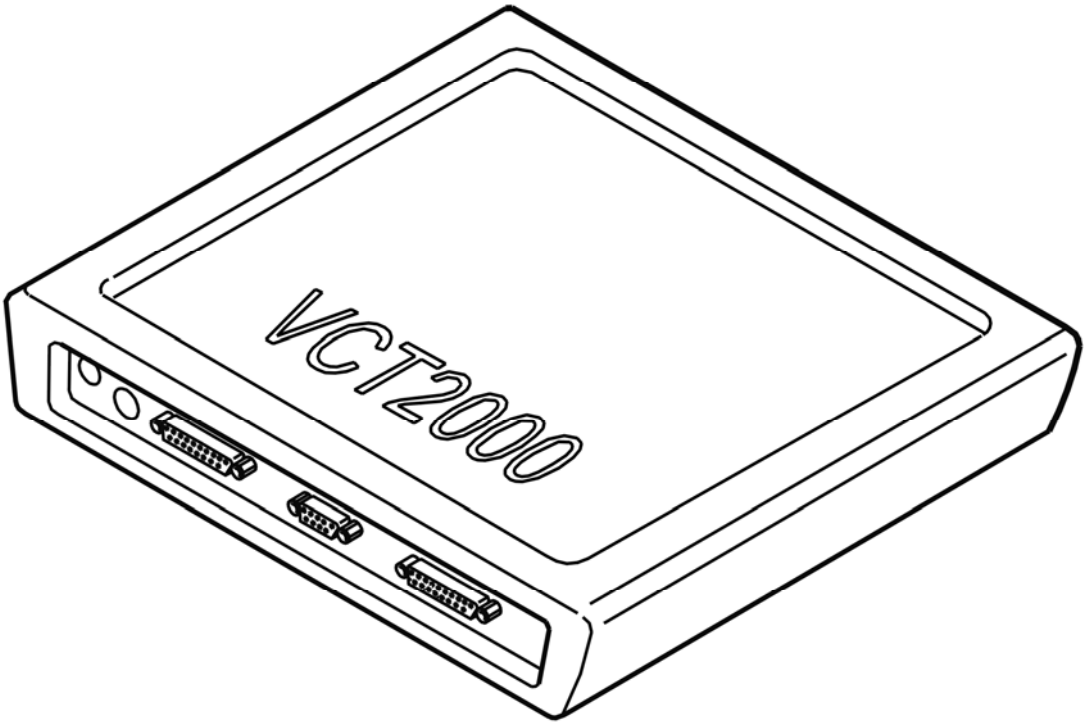

Fig. 50: Identifying VCT2000 Diagnostic Tool Symbol In VIDA
Courtesy of VOLVO CARS CORPORATION

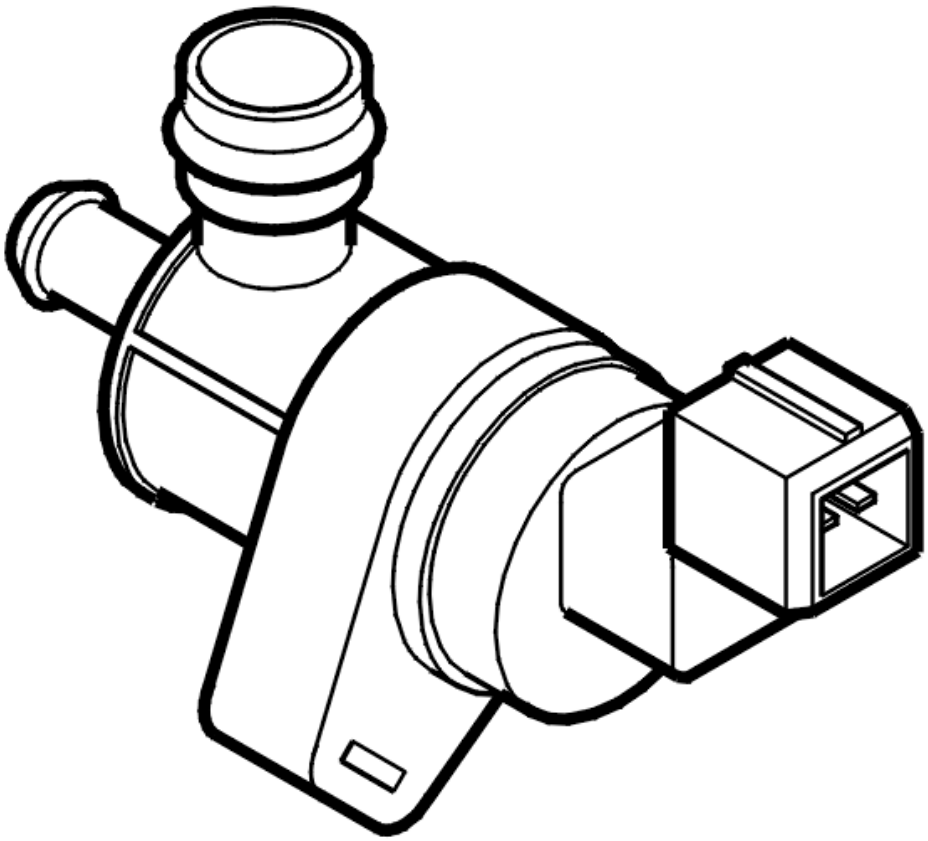

Fig. 51: Identifying Canister Purge (CP) Valve
Courtesy of VOLVO CARS CORPORATION

- **Continue**

  Refer to **VERIFICATION**

VERIFICATION

VERIFICATION

HINT: After repairing, it is necessary to check that the malfunction has been fixed.

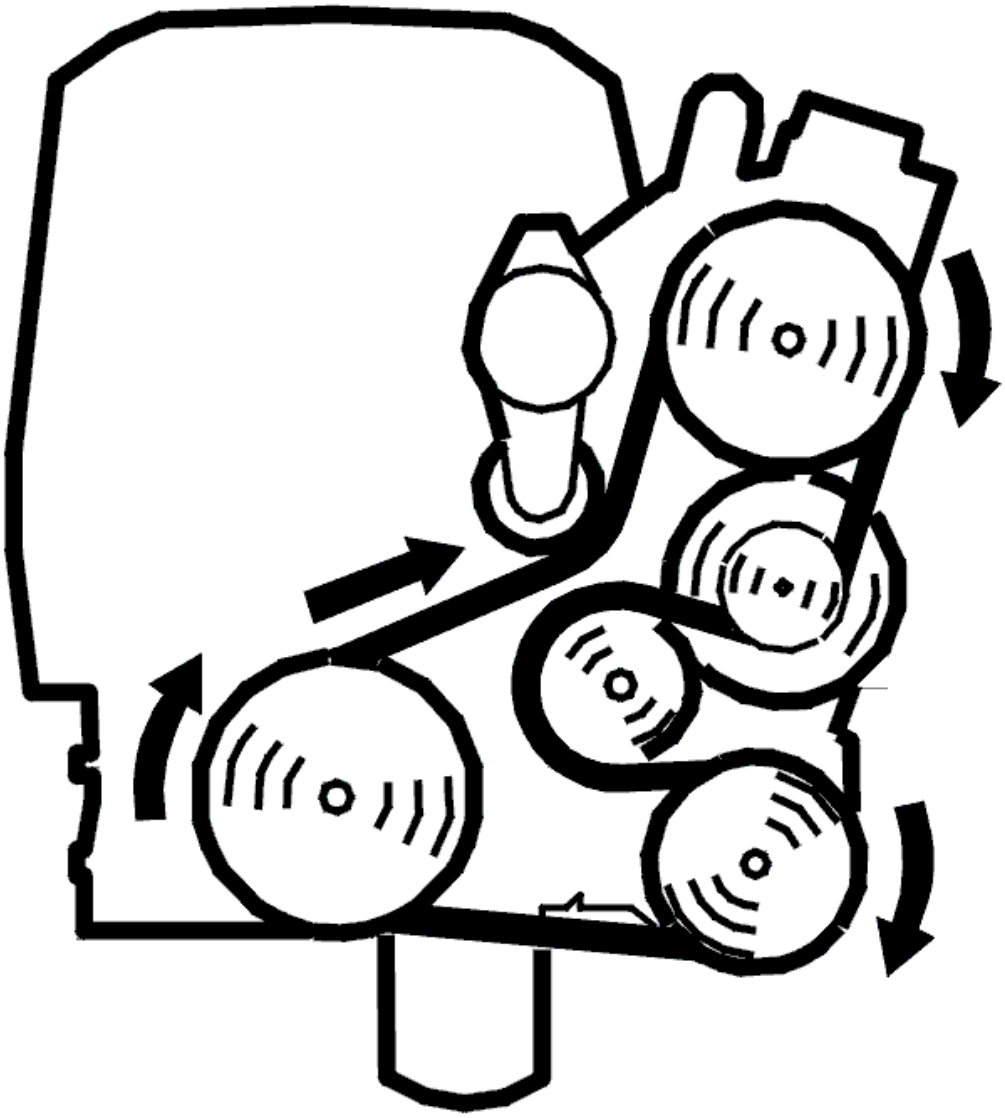

Fig. 52: Belt Routing / Engine Idling - Volvo
Courtesy of VOLVO CARS CORPORATION

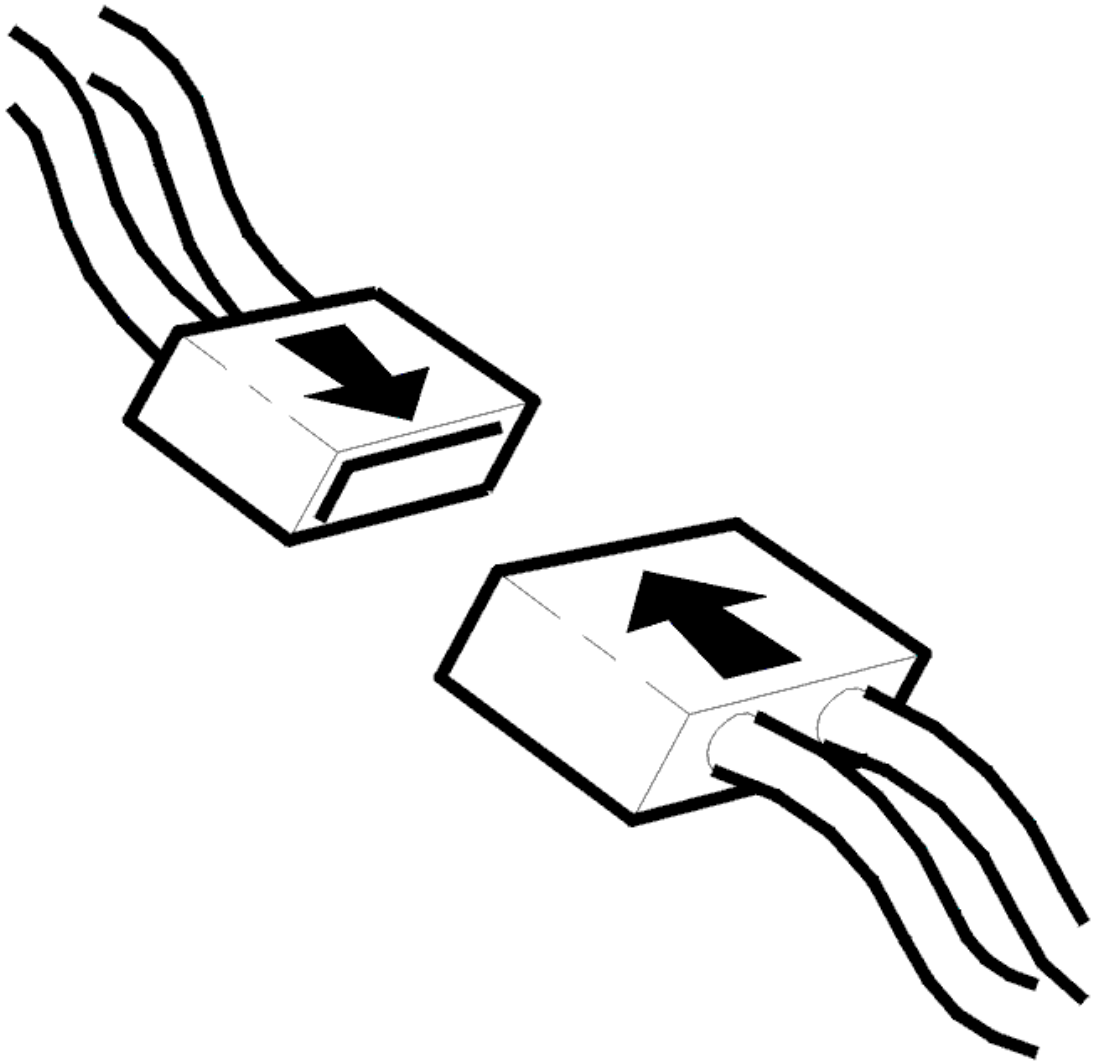

Fig. 53: Connecting Connector
Courtesy of VOLVO CARS CORPORATION

- Ignition off
- Reinstall the connectors, components etc.
- By once again starting quick-test of EVAP-valve and checking result, one can confirm if the work has fixed the malfunction.
- Engine idling during the entire test.

  Activate quick-test EVAP-valve. The test takes a few seconds.

  Check that the result shows "No malfunction found". This indicates that the malfunction has been fixed and the function is OK.

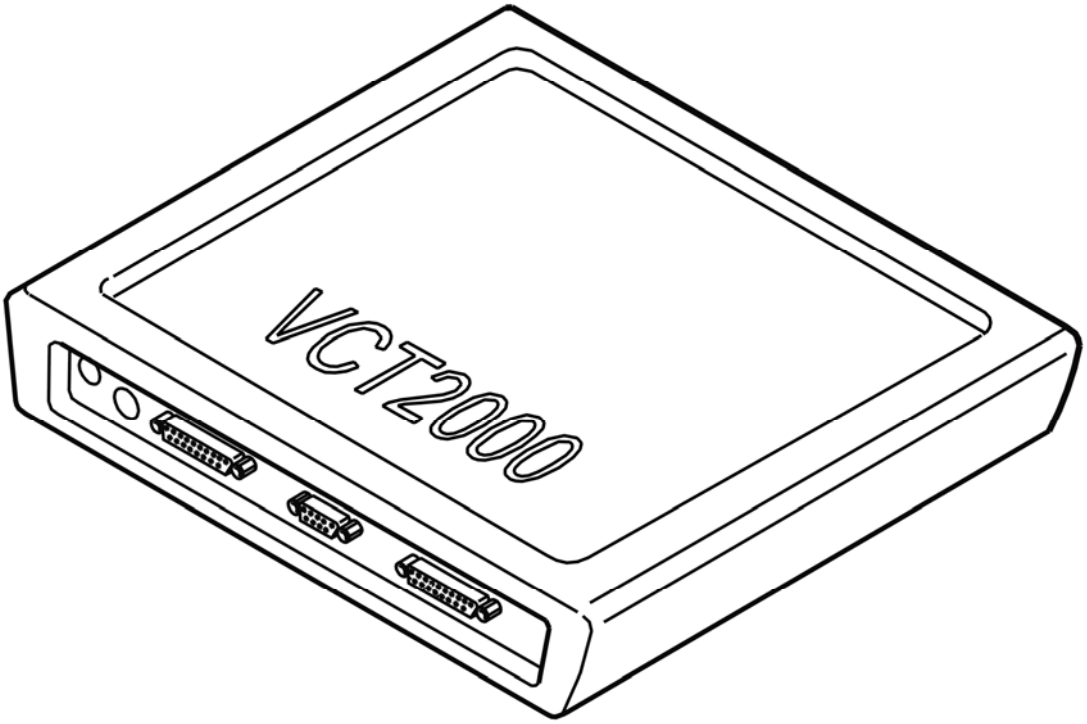

Fig. 54: Identifying VCT2000 Diagnostic Tool Symbol In VIDA
Courtesy of VOLVO CARS CORPORATION

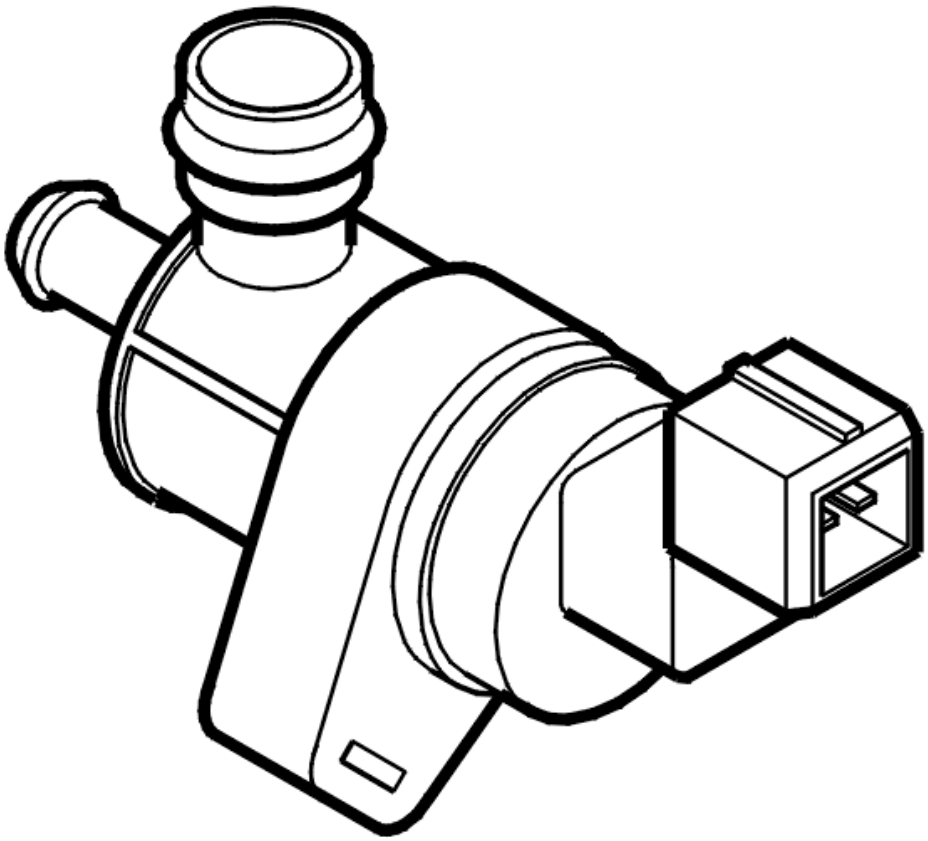

Fig. 55: Identifying Canister Purge (CP) Valve
Courtesy of VOLVO CARS CORPORATION

Is the function OK?

- **YES**

  VERIFIED: Troubleshooting has been completed.

- **NO**

  Refer to **INFORMATION**

INFORMATION

FAULT-TRACING INFORMATION

The fault should have been detected and remedied. As this is not the case fault-tracing has failed.

Exit fault-tracing for this diagnostic trouble code (DTC) or make another attempt.

ECM-P044200: EVAPORATIVE EMISSION SYSTEM LEAK DETECTED (SMALL LEAK). GENERAL FAILURE INFORMATION. NO SUB TYPE

INFORMATION (B6324S; 2007-2010)

DIAGNOSTIC TROUBLE CODE (DTC) INFORMATION ECM-P044200

Condition

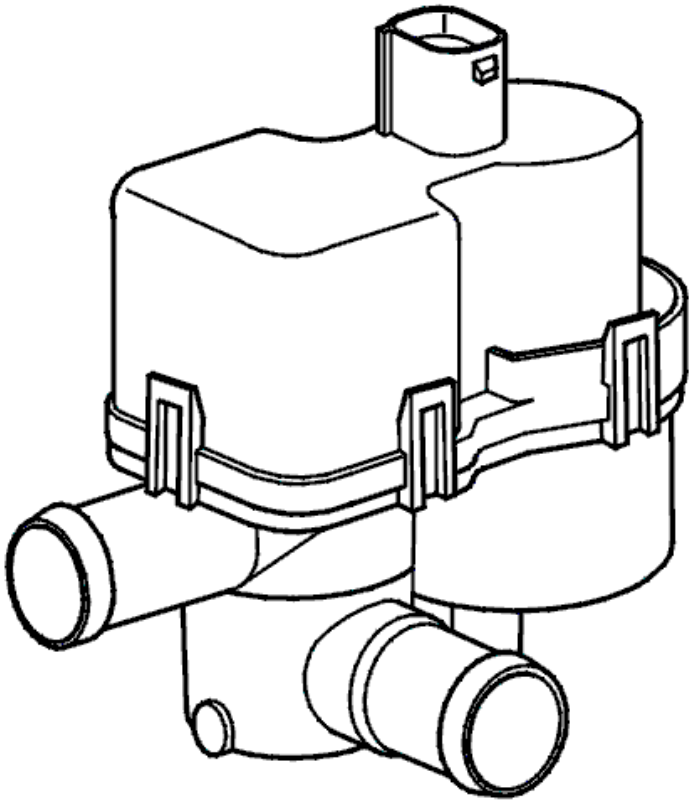

Fig. 56: Identifying Leak Diagnostic Pump
Courtesy of VOLVO CARS CORPORATION

The engine control module (ECM) checks for leaks in the fuel system by measuring the current consumption of the leakage diagnosis pump when pressure is applied.

If the current consumption measured under pressure does not change in a specific way or a certain pressure is not obtained in the system within a reasonable amount of time, the control module assesses this as a small leak (leak between 0.5 mm and 1.0 mm) from the fuel system.

The diagnostic trouble code can be diagnosed when leakage diagnosis is running.

Substitute Value

- Nothing.

Possible Source

- Leaking tank, filler pipe, tank cap, canister, EVAP valve or lines between these components.

Fault symptom[s]

- Malfunction indicator lamp (MIL) lit.

FAULT-TRACING

CHECKING SOFTWARE

NOTE: **For vehicles of model year 2007-2008, the software in the engine control module (ECM) should be checked before fault tracing is carried out of the fault relating to the leak from the tank system.**

Fig. 57: Identifying Ignition On Position
Courtesy of VOLVO CARS CORPORATION

- Ignition on.

  Use the VCT2000 (or appropriate scan tool) to read out and check the software version in the Engine control module.

  NOTE: **More instructions follow together with the read out.**

Fig. 58: Identifying VCT2000 Diagnostic Tool Symbol In VIDA
Courtesy of VOLVO CARS CORPORATION

Has the latest software been downloaded to the control module?

- **YES**

  Refer to **PERFORM QUICK-TEST TANK SYSTEM**

PERFORM QUICK-TEST TANK SYSTEM

Fig. 59: Identifying Ignition On Position
Courtesy of VOLVO CARS CORPORATION

- Activate the test using the VCT2000 (or appropriate scan tool).
- Read off initial parameters and check them according to start conditions for performing the test.
- Check that the test has started. Parameters run status shall go to "In progress" and the test phase shall go to "Reference".

NOTE: If the test does not start, check that the start conditions are fulfilled.

When the reference phase is finished, check of the tank system starts. The pressure in the tank starts to increase, see graph. Within 15 minutes the Engine control module makes a decision as to whether there is leakage in the tank system or not. The test is finished.

- Check parameters for test result and follow relevant instructions provided in this service information.

NOTE: Estimated leakage shall be used to get an idea of the proximity to the diagnostic trouble code limit. If the estimated leakage is very near the diagnostic trouble code limit (greater than 0.3mm), troubleshooting should probably be performed despite the Tank system, test result shows "No leakage found", especially if a diagnostic trouble code for leakage has been stored earlier.

NOTE: Use diagnostic trouble code counter to, see the frequency of the problem. Also use frozen values to get an idea if external conditions may have affected the result. Compare with current conditions in the workshop.

Conditions for starting the quick test of the fuel tank system

- No DTCs related to EVAP purge valve or ambient air pressure sensor set.
- Battery voltage 11-15 V.
- Atmospheric pressure higher than 750 hPa, approx. 2500 m (8200 ft).
- Fuel level 0-85 %.
- Ambient air temperature 4-35 °C.

NOTE: The battery voltage must be correct throughout the entire test. The test can take up to 15 minutes, depending on the quantity of fuel in the fuel tank. It is highly recommended to use the constant voltage charger, Midtronics PSC-550, during the test. For more information, see 30-04

(USA/CDN).

Other information

- see **DESCRIPTION OF PARAMETERS, QUICK TEST OF THE FUEL TANK SYSTEM**
- see **TEST PHASES, QUICK TEST FUEL TANK SYSTEM**
- see **LOCATION OF COMPONENTS**

Select alternative according to relevant test results:

1. DMTL, test result = "Problem found"

   Refer to **DMTL, TEST RESULT = "PROBLEM FOUND"**

2. Tank system, test result = "No leakage found"

   Refer to **TANK SYSTEM, TEST RESULT = "NO LEAKAGE FOUND"**

3. Tank system, test result = "Minor leakage found"

   Refer to **TANK SYSTEM, TEST RESULT = "MINOR LEAKAGE FOUND"**

4. Tank system, test result = "Major leakage found"

   Refer to **TANK SYSTEM, TEST RESULT = "MAJOR LEAKAGE FOUND"**

5. DMTL, test result and Tank system, test result = "Unknown"

   Refer to **DMTL, TEST RESULT AND TANK SYSTEM, TEST RESULT = "UNKNOWN"**

6. Cancel fault-tracing.

   FAULT NOT FOUND: Troubleshooting has been completed.

Fig. 60: Identifying VCT2000 Diagnostic Tool Symbol In VIDA
Courtesy of VOLVO CARS CORPORATION

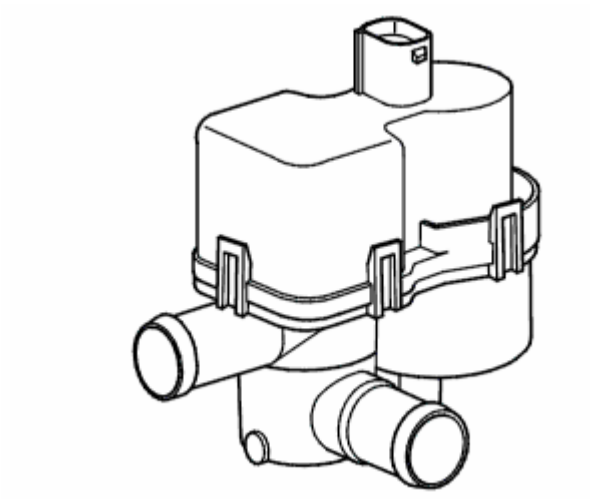

Fig. 61: Identifying Leak Diagnostic Pump
Courtesy of VOLVO CARS CORPORATION

DMTL, TEST RESULT = "PROBLEM FOUND"

If a problem is detected on the leakage diagnostics unit (DMTL), this may have been caused during the test itself. Checks on DMTL are normal electric checks of leakage diagnostics unit and cabling and is no indication of if there is leakage or not.

- Cancel troubleshooting for this problem.
- Read off diagnostic trouble codes again and start troubleshooting for the new diagnostic trouble code.

NOTE: The tank system's status is unknown since the test was interrupted.

TANK SYSTEM, TEST RESULT = "NO LEAKAGE FOUND"

Diagnostic trouble code limit (minor leakage):Estimated leakage = 0.40 mm

If no leakage was found, the Engine control module (ECM) has detected leakage in the tank system earlier, but the problem is not active at this time. The fault could be caused by leakage in the tank, filler pipe, fuel tank filler cap, canister, EVAP valve, leakage diagnosis unit or hoses between these components.

NOTE: Problems caused by a loose tank cap or loose hose connections may be difficult to find. If no leakage was found in the quick-test of the tank system after completed checks and actions according to the above, the problem has likely been repaired.

NOTE: The parameter estimated leakage does not necessarily have to show 0 mm for a sealed system.

TANK SYSTEM, TEST RESULT = "MINOR LEAKAGE FOUND"

Diagnostic trouble code limit:Estimated leakage = 0.40 mm

- Check that the tank cap is properly fitted and that its seal is undamaged.
- Check the hoses and connections on the leak diagnostic unit, the canister, EVAP-valve and the fuel filler pipe visually. Check for damage or incorrect/loose installation.
- Remedy as necessary.
- Restart the test.

NOTE: **Problems caused by a loose tank cap or loose hose connections may be difficult to find. If no leakage was found in the quick-test of the tank system after completed checks and actions according to the above, the problem has likely been repaired.**

NOTE: **By blocking the hose between canister and EVAP-valve and then repeating quick-test tank system, leakage through the EVAP-valve can be detected. If leakage was detected in a previous quick test of the fuel tank system but is not now detected when the hose between the canister and the EVAP valve is blocked, the leakage may be through the EVAP valve.**

- Disconnect the hose between the EVAP canister purge valve and the EVAP canister from the connection to the EVAP canister purge valve.
- Block the hose while running the quick test of the fuel tank system.

- **Continue**

  Refer to **PERFORM QUICK-TEST TANK SYSTEM**

DMTL, TEST RESULT AND TANK SYSTEM, TEST RESULT = "UNKNOWN"

Engine control module (ECM) cannot perform check of tank system. This may be due to the conditions for start of the quick-test not being fulfilled, that they have changed during the course of the test, or that a problem has occurred during troubleshooting.

- Check that all conditions for start of the quick-test are fulfilled.
- Visually check hoses and connections on leakage diagnostics unit, canister, EVAP-valve, and filler pipe. Check for damage or incorrect/loose installation.
- Remedy as necessary.
- Restart the test.

- **Continue**

  Refer to **PERFORM QUICK-TEST TANK SYSTEM**

TANK SYSTEM, TEST RESULT = "MAJOR LEAKAGE FOUND"

Diagnostic trouble code limit:Tank pressure lower than 1500 Pa after 450 seconds in test phase "Major leakage".

- Check that the tank cap is properly fitted and that its seal is undamaged.
- Check the hoses and connections on the leak diagnostic unit, the canister, EVAP-valve and the fuel filler pipe visually. Check for damage or incorrect/loose installation.
- Remedy as necessary.
- Restart the test.

NOTE: **Problems caused by a loose tank cap or loose hose connections may be difficult to find. If no leakage was found in the quick-test of the tank system after completed checks and actions according to the above, the problem has likely been repaired.**

- **Continue**

  Refer to **PERFORM QUICK-TEST TANK SYSTEM**

ECM-P044200: EVAPORATIVE EMISSION SYSTEM LEAK DETECTED (SMALL LEAK). GENERAL FAILURE INFORMATION. NO SUB TYPE INFORMATION (B6324S5; 2011-2012)

DIAGNOSTIC TROUBLE CODE (DTC) INFORMATION ECM-P044200

see **DIAGNOSTIC TROUBLE CODE (DTC) INFORMATION ECM-P044200**

FAULT-TRACING

see **FAULT-TRACING**

ECM-P044200: EVAPORATIVE EMISSION SYSTEM LEAK DETECTED (SMALL LEAK). GENERAL FAILURE INFORMATION. NO SUB TYPE INFORMATION (B8444S; 2005-2011)

DIAGNOSTIC TROUBLE CODE (DTC) INFORMATION ECM-P044200

Condition

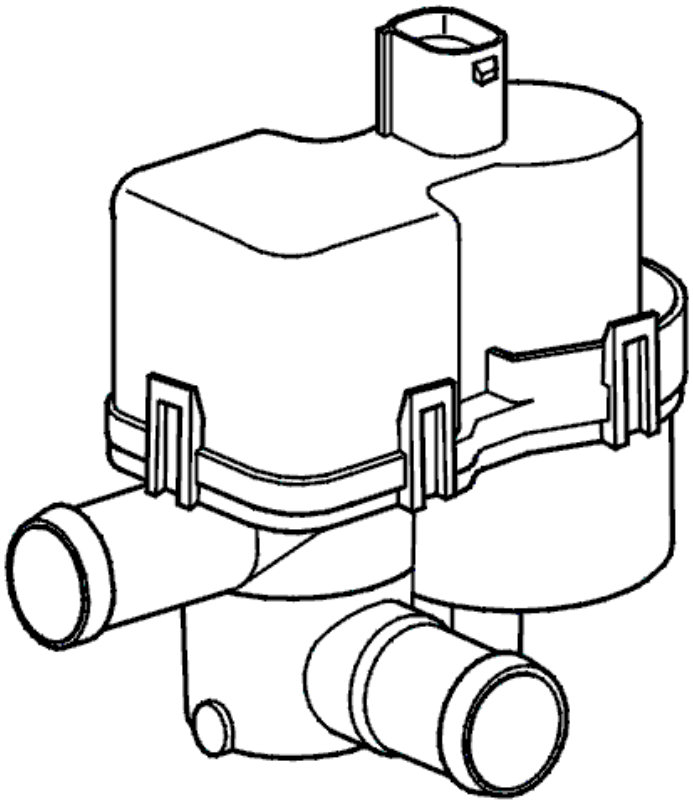

Fig. 62: Identifying Leak Diagnostic Pump
Courtesy of VOLVO CARS CORPORATION

Engine control module (ECM) checks sealing in the fuel tank system by, using the leakage diagnostics unit, pressurizing the tank system and at the same time measuring the relationship between reached pressure and flow from the pump. In a sealed system, the relationship between these shall be linear. Any deviations from the linear relationship are calculated and used to evaluate the tank system's sealing.

If Engine control module (ECM) determines that the deviation corresponds to a leakage bigger than 0.5 mm in diameter, the diagnostic trouble code for minor leakage is stored.

The diagnostic trouble code can be diagnosed when leakage diagnosis is running.

Substitute Value

- Nothing.

Possible Source

- Leaking tank, filler pipe, tank cap, canister, EVAP valve or lines between these components.

Fault symptom[s]

- Malfunction indicator lamp (MIL) lit.

FAULT-TRACING

CHECKING SOFTWARE

NOTE: For vehicles of model year 2005-2007, the software in the engine control module (ECM) should be checked before fault tracing of the fault relating to the leak from the tank system is carried out.

Fig. 63: Identifying Ignition On Position
Courtesy of VOLVO CARS CORPORATION

- Ignition on.

  Use the VCT2000 (or appropriate scan tool) to read out and check the software version in the Engine control module.

  NOTE: More instructions follow together with the read out.

Fig. 64: Identifying VCT2000 Diagnostic Tool Symbol In VIDA
Courtesy of VOLVO CARS CORPORATION

Has the latest software been downloaded to the control module?

- **YES**

  Refer to **PERFORM QUICK-TEST TANK SYSTEM**

PERFORM QUICK-TEST TANK SYSTEM

Fig. 65: Identifying Ignition On Position
Courtesy of VOLVO CARS CORPORATION

- Activate the test using the VCT2000 (or appropriate scan tool).
- Read off initial parameters and check them according to start conditions for performing the test.
- Check that the test has started. Parameters run status shall go to "In progress" and the test phase shall go to "Reference".

NOTE: If the test does not start, check that the start conditions are fulfilled.

When the reference phase is finished, check of the tank system starts. The pressure in the tank starts to increase, see graph. Within 15 minutes the Engine control module makes a decision as to whether there is leakage in the tank system or not. The test is finished.

- Check parameters for test result and follow relevant instructions below.

NOTE: In the event of a the results from the estimated leakage must be entered in

NOTE: Estimated leakage shall be used to get an idea of the proximity to the diagnostic trouble code limit. If the estimated leakage is very near the diagnostic trouble code limit (greater than 0.3mm), troubleshooting should probably be performed despite the Tank system, test result shows "No leakage found", especially if a diagnostic trouble code for leakage has been stored earlier.

NOTE: Use diagnostic trouble code counter to, see the frequency of the problem. Also use frozen values to get an idea if external conditions may have affected the result. Compare with current conditions in the workshop.

Conditions for starting the quick test of the fuel tank system

- No DTCs related to EVAP purge valve or ambient air pressure sensor set.
- Battery voltage 11-15 V.
- Atmospheric pressure higher than 750 hPa, approx. 2500 m (8200 ft).
- Fuel level 0-85 %.
- Ambient air temperature 4-35 °C.

NOTE: The battery voltage must be correct throughout the entire test. The test can take up to 15 minutes, depending on the quantity of fuel in the fuel tank. It is highly recommended to use the constant voltage charger, Midtronics PSC-550, during the test. For more information, see 30-04 (USA/CDN).

Other information

- see **DESCRIPTION OF PARAMETERS, QUICK TEST OF THE FUEL TANK SYSTEM**
- see **TEST PHASES, QUICK TEST FUEL TANK SYSTEM**
- see **LOCATION OF COMPONENTS, ENGINE COMPARTMENT**

Select alternative according to relevant test results:

1. DMTL, test result = "Problem found"

   Refer to **DMTL, TEST RESULT = "PROBLEM FOUND"**

2. Tank system, test result = "No leakage found"

   Refer to **TANK SYSTEM, TEST RESULT = "NO LEAKAGE FOUND"**

3. Tank system, test result = "Minor leakage found"

   Refer to **TANK SYSTEM, TEST RESULT = "MINOR LEAKAGE FOUND"**

4. Tank system, test result = "Major leakage found"

   Refer to **TANK SYSTEM, TEST RESULT = "MAJOR LEAKAGE FOUND"**

5. DMTL, test result and Tank system, test result = "Unknown"

   Refer to **DMTL, TEST RESULT AND TANK SYSTEM, TEST RESULT = "UNKNOWN"**

6. Cancel fault-tracing.

   FAULT NOT FOUND: Troubleshooting has been completed.

Fig. 66: Identifying VCT2000 Diagnostic Tool Symbol In VIDA
Courtesy of VOLVO CARS CORPORATION

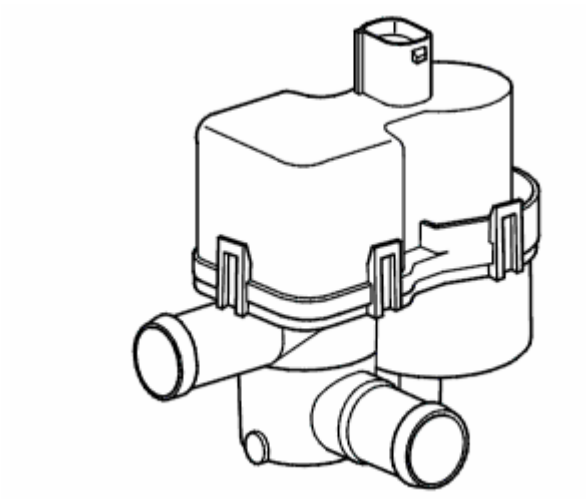

Fig. 67: Identifying Leak Diagnostic Pump
Courtesy of VOLVO CARS CORPORATION

DMTL, TEST RESULT = "PROBLEM FOUND"

If a problem is detected on the leakage diagnostics unit (DMTL), this may have been caused during the test itself. Checks on DMTL are normal electric checks of leakage diagnostics unit and cabling and is no indication of if there is leakage or not.

- Cancel troubleshooting for this problem.
- Read off diagnostic trouble codes again and start troubleshooting for the new diagnostic trouble code.

NOTE: The tank system's status is unknown since the test was interrupted.

TANK SYSTEM, TEST RESULT = "NO LEAKAGE FOUND"

Diagnostic trouble code limit (minor leakage):Estimated leakage = 0.40 mm

If no leakage was found, the Engine control module (ECM) has detected leakage in the tank system earlier, but the problem is not active at this time. The fault could be caused by leakage in the tank, filler pipe, fuel tank filler cap, canister, EVAP valve, leakage diagnosis unit or hoses between these components.

NOTE: Problems caused by a loose tank cap or loose hose connections may be difficult to find. If no leakage was found in the quick-test of the tank system after completed checks and actions according to the above, the problem has likely been repaired.

NOTE: The parameter estimated leakage does not necessarily have to show 0 mm for a sealed system.

TANK SYSTEM, TEST RESULT = "MINOR LEAKAGE FOUND"

Diagnostic trouble code limit:Estimated leakage = 0.40 mm

- Check that the tank cap is properly fitted and that its seal is undamaged.
- Check the hoses and connections on the leak diagnostic unit, the canister, EVAP-valve and the fuel filler pipe visually. Check for damage or incorrect/loose installation.
- Remedy as necessary.
- Restart the test.

NOTE: **Problems caused by a loose tank cap or loose hose connections may be difficult to find. If no leakage was found in the quick-test of the tank system after completed checks and actions according to the above, the problem has likely been repaired.**

NOTE: **By blocking the hose between canister and EVAP-valve and then repeating quick-test tank system, leakage through the EVAP-valve can be detected. If leakage was detected in a previous quick test of the fuel tank system but is not now detected when the hose between the canister and the EVAP valve is blocked, the leakage may be through the EVAP valve.**

- Disconnect the hose between the EVAP canister purge valve and the EVAP canister from the connection to the EVAP canister purge valve.
- Block the hose while running the quick test of the fuel tank system.

- **Continue**

  Refer to **PERFORM QUICK-TEST TANK SYSTEM**

DMTL, TEST RESULT AND TANK SYSTEM, TEST RESULT = "UNKNOWN"

Engine control module (ECM) cannot perform check of tank system. This may be due to the conditions for start of the quick-test not being fulfilled, that they have changed during the course of the test, or that a problem has occurred during troubleshooting.

- Check that all conditions for start of the quick-test are fulfilled.
- Visually check hoses and connections on leakage diagnostics unit, canister, EVAP-valve, and filler pipe. Check for damage or incorrect/loose installation.
- Remedy as necessary.
- Restart the test.

- **Continue**

  Refer to **PERFORM QUICK-TEST TANK SYSTEM**

TANK SYSTEM, TEST RESULT = "MAJOR LEAKAGE FOUND"

Diagnostic trouble code limit:Tank pressure lower than 1500 Pa after 450 seconds in test phase "Major leakage".

- Check that the tank cap is properly fitted and that its seal is undamaged.
- Check the hoses and connections on the leak diagnostic unit, the canister, EVAP-valve and the fuel filler pipe visually. Check for damage or incorrect/loose installation.
- Remedy as necessary.
- Restart the test.

NOTE: **Problems caused by a loose tank cap or loose hose connections may be difficult to find. If no leakage was found in the quick-test of the tank system after completed checks and actions according to the above, the problem has likely been repaired.**

- **Continue**

  Refer to **PERFORM QUICK-TEST TANK SYSTEM**

ECM-P044400: EVAPORATIVE EMISSION SYSTEM PURGE CONTROL VALVE CIRCUIT OPEN. GENERAL FAILURE INFORMATION. NO SUB TYPE INFORMATION (B6324S; 2007-2010)

DIAGNOSTIC TROUBLE CODE (DTC) INFORMATION ECM-P044400

Condition

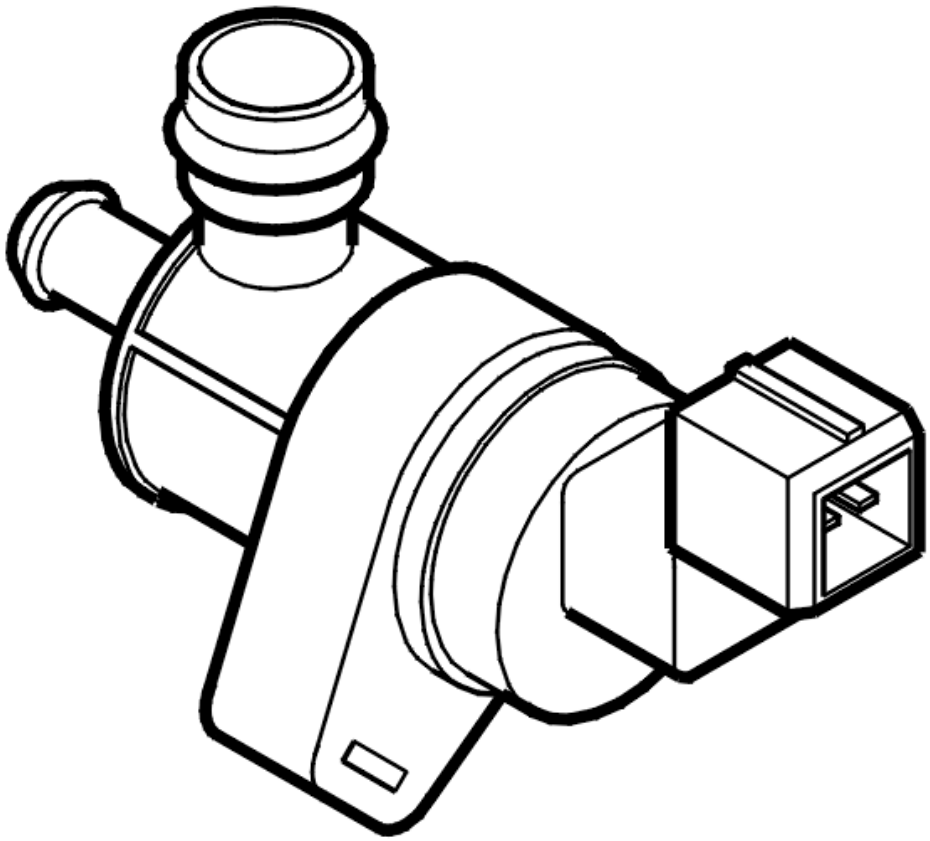

Fig. 68: Identifying Canister Purge (CP) Valve
Courtesy of VOLVO CARS CORPORATION

If the Engine control module (ECM) registers an open circuit on the signal line between the control module and the EVAP-valve, the diagnostic trouble code is generated.

The diagnostic trouble code can be diagnosed when the ignition is on.

Substitute Value

- Fuel trim blocked.

Possible Source

- Contact resistance in the connectors.
- Open-circuit on the signal cable.
- Damaged EVAP valve.

Fault symptom[s]

- Malfunction indicator lamp (MIL) lit.
- Fuel odor.

FAULT-TRACING

see **FAULT-TRACING**

ECM-P044400: EVAPORATIVE EMISSION SYSTEM PURGE CONTROL VALVE CIRCUIT OPEN. GENERAL FAILURE INFORMATION. NO SUB TYPE INFORMATION (B6324S5; 2011-2012)

DIAGNOSTIC TROUBLE CODE (DTC) INFORMATION ECM-P044400

see **DIAGNOSTIC TROUBLE CODE (DTC) INFORMATION ECM-P044400**

FAULT-TRACING

see **FAULT-TRACING**

ECM-P045500: EVAPORATIVE EMISSION SYSTEM LEAK DETECTED (GROSS LEAK/NO FLOW). GENERAL FAILURE INFORMATION. NO SUB TYPE INFORMATION (B6324S; 2007-2010)

DIAGNOSTIC TROUBLE CODE (DTC) INFORMATION ECM-P045500

Condition

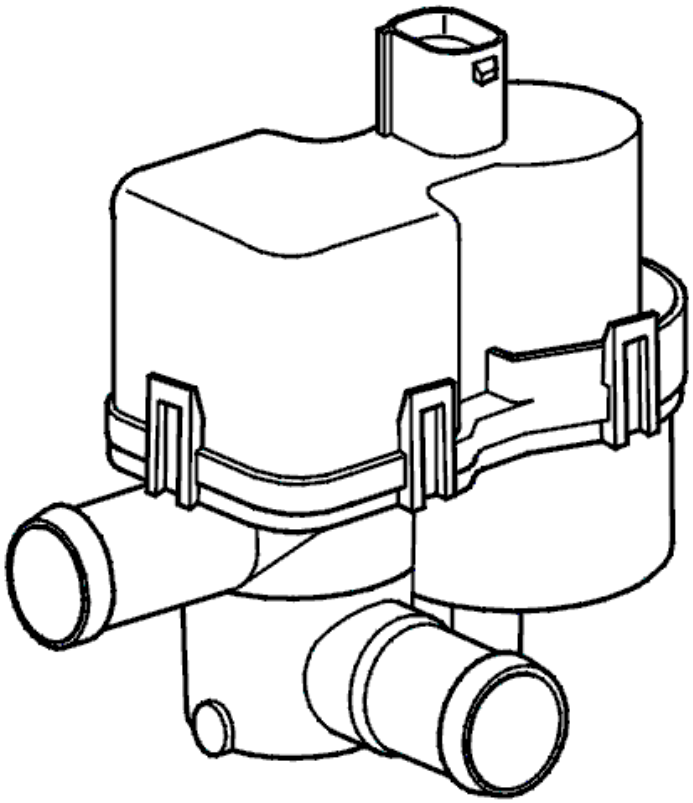

Fig. 69: Identifying Leak Diagnostic Pump
Courtesy of VOLVO CARS CORPORATION

The engine control module (ECM) checks for leaks in the fuel system by measuring the current consumption of the leakage diagnosis pump when pressure is applied.

If the current consumption measured under pressure does not change in a specific way or a certain pressure is not obtained in the system within a reasonable amount of time, the control module assesses this as a large leak (leak larger than 1.0 mm) from the fuel system.

The diagnostic trouble code can be diagnosed when leakage diagnosis is running.

Substitute Value

- Nothing.

Possible Source

- Tank cap not properly tightened or not in place.
- Leaking tank, filler pipe, tank cap, canister, EVAP valve or lines between these components.

Fault symptom[s]

- Malfunction indicator lamp (MIL) lit.

FAULT-TRACING

see **FAULT-TRACING**

ECM-P045500: EVAPORATIVE EMISSION SYSTEM LEAK DETECTED (GROSS LEAK/NO FLOW). GENERAL FAILURE INFORMATION. NO SUB TYPE INFORMATION (B6324S5; 2011-2012)

DIAGNOSTIC TROUBLE CODE (DTC) INFORMATION ECM-P045500

see **DIAGNOSTIC TROUBLE CODE (DTC) INFORMATION ECM-P045500**

FAULT-TRACING

see **FAULT-TRACING**

ECM-P045500: EVAP EMISSION SYSTEM LEAKAGE REGISTERED (LARGE LEAK/NO FLOW). GENERAL FAULT INFORMATION. TYPE OF FAULT NOT SPECIFIED. (B8444S; 2005-2011)

DIAGNOSTIC TROUBLE CODE (DTC) INFORMATION ECM-P045500

Condition

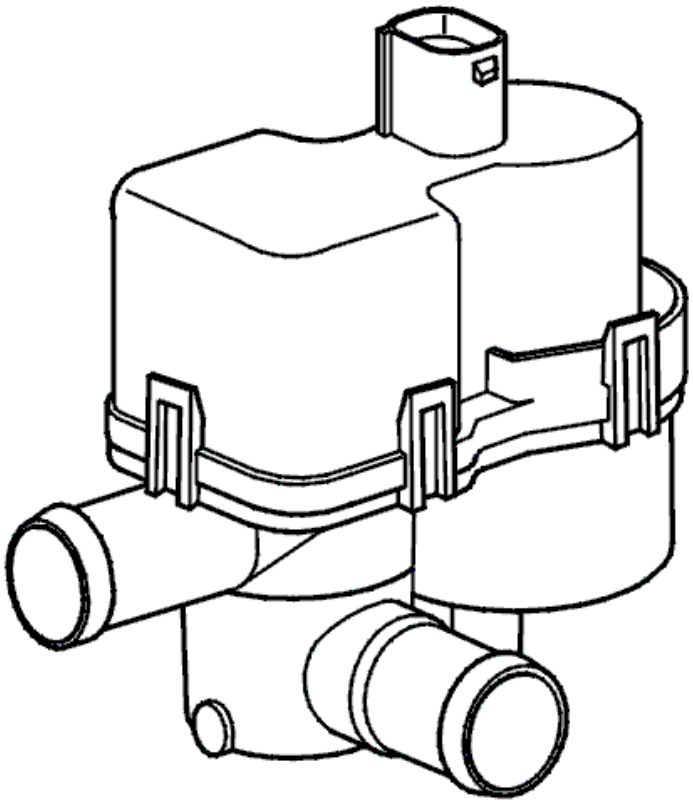

Fig. 70: Identifying Leak Diagnostic Pump
Courtesy of VOLVO CARS CORPORATION

Engine control module (ECM) checks sealing in the fuel tank system by, using the leakage diagnostics unit, pressurizing the tank system and at the same time monitor the pressure build-up. The pressure is a calculated pressure, calculated using measured power consumption on the pump.

If the pressure is stabilized and/or does not reach over 1500 Pa within 450 seconds, it is interpreted as a leakage bigger than 1.0 mm in diameter from the fuel tank system. Diagnostic trouble code for major leakage stored.

The diagnostic trouble code can be diagnosed when leakage diagnosis is running.

Substitute Value

- Nothing.

Possible Source

- Tank cap not properly tightened or not in place.
- Leaking tank, filler pipe, tank cap, canister, EVAP valve or lines between these components.

Fault symptom[s]

- Malfunction indicator lamp (MIL) lit.

FAULT-TRACING

see **FAULT-TRACING**

ECM-P045800: EVAPORATIVE EMISSION SYSTEM PURGE CONTROL VALVE CIRCUIT LOW. GENERAL FAILURE INFORMATION. NO SUB TYPE INFORMATION (B6324S; 2007-2010)

DIAGNOSTIC TROUBLE CODE (DTC) INFORMATION ECM-P045800

Condition

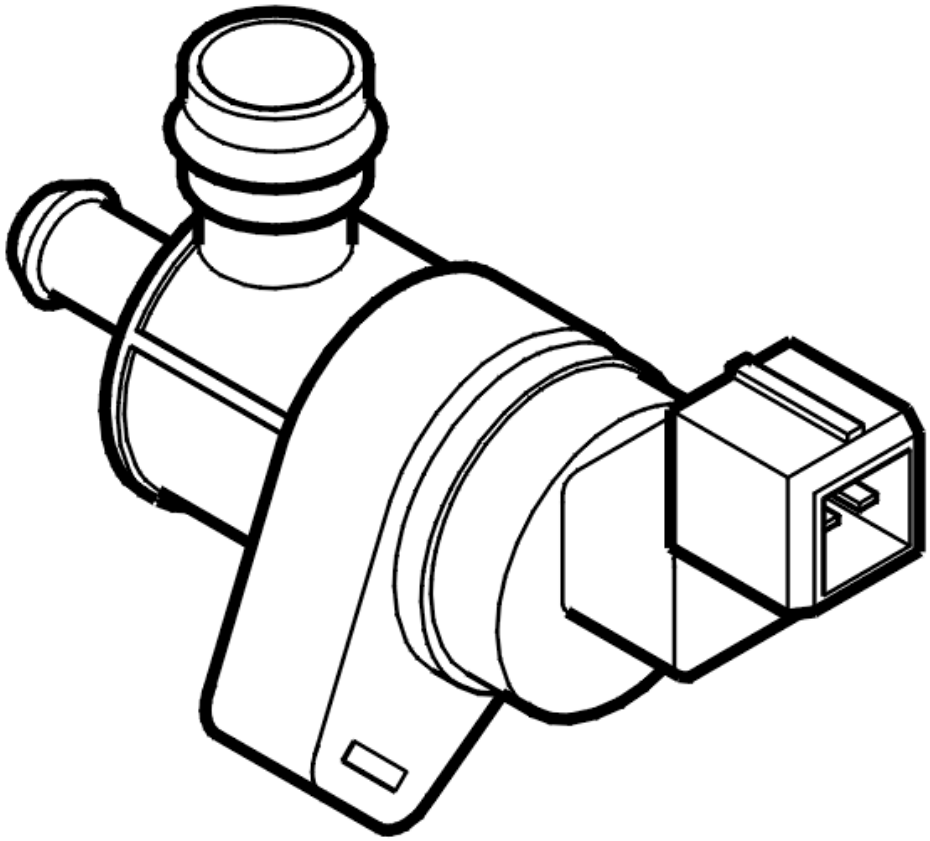

Fig. 71: Identifying Canister Purge (CP) Valve
Courtesy of VOLVO CARS CORPORATION

The diagnostic trouble code is generated if the engine control module (ECM) registers that the EVAP valve signal cable is short-circuited to ground or that the circuit is open.

The diagnostic trouble code can be diagnosed when the ignition is on.

Substitute Value

- Fuel trim blocked.

Possible Source

- Contact resistance in the connectors.
- The signal cable is short-circuited to ground.
- Open-circuit on the signal cable.
- Damaged EVAP valve.

Fault symptom[s]

- Malfunction indicator lamp (MIL) lit.
- Fuel odor.

FAULT-TRACING

see **FAULT-TRACING**

ECM-P045800: EVAPORATIVE EMISSION SYSTEM PURGE CONTROL VALVE CIRCUIT LOW. GENERAL FAILURE INFORMATION. NO SUB TYPE INFORMATION (B6324S5; 2011-2012)

DIAGNOSTIC TROUBLE CODE (DTC) INFORMATION ECM-P045800

see **DIAGNOSTIC TROUBLE CODE (DTC) INFORMATION ECM-P045800**

FAULT-TRACING

see **FAULT-TRACING**

ECM-P045800: EVAP EMISSION SYSTEM PURGE CONTROL VALVE CIRCUIT LOW. GENERAL FAULT INFORMATION. TYPE OF FAULT NOT SPECIFIED. (B8444S; 2005-2011)

DIAGNOSTIC TROUBLE CODE (DTC) INFORMATION ECM-P045800

Condition

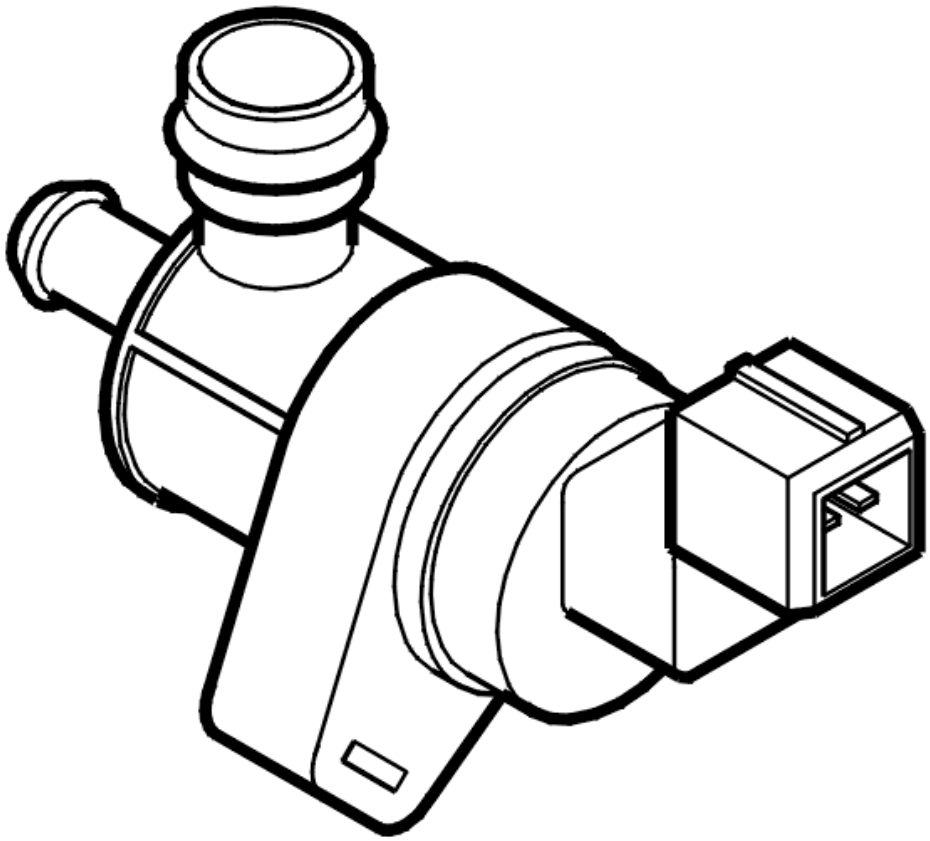

Fig. 72: Identifying Canister Purge (CP) Valve
Courtesy of VOLVO CARS CORPORATION

The diagnostic trouble code is generated if the engine control module (ECM) registers that the EVAP valve signal cable is short-circuited to ground or that the circuit is open.

The diagnostic trouble code can be diagnosed when the ignition is on.

Substitute Value

- Fuel trim blocked.

Possible Source

- Contact resistance in the connectors.
- The signal cable is short-circuited to ground.
- Open-circuit on the signal cable.
- Damaged EVAP valve.

Fault symptom[s]

- Malfunction indicator lamp (MIL) lit.
- Fuel odor.

TROUBLESHOOTING ECM-P045800

CHECKING THE STATUS

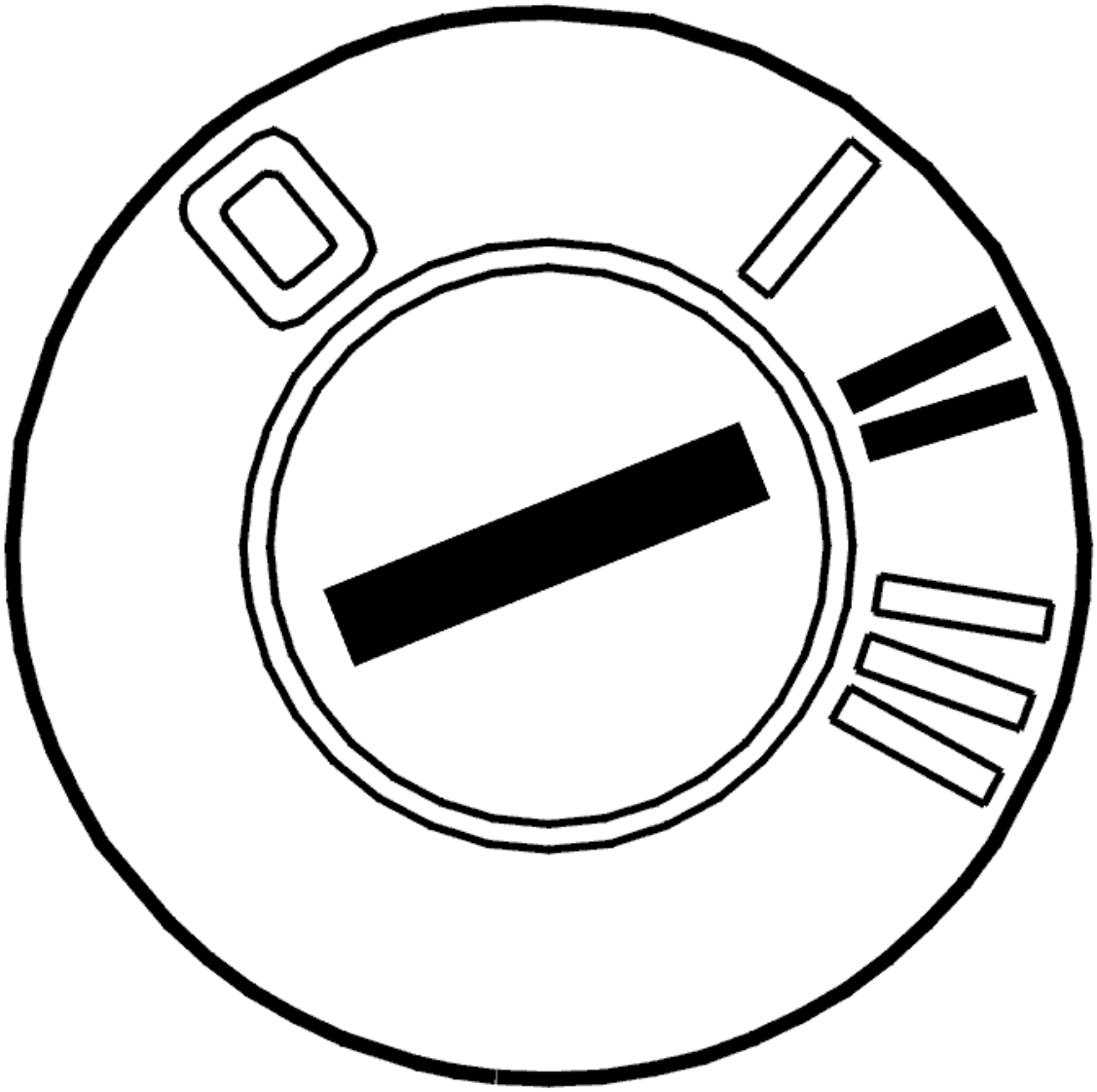

Fig. 73: Identifying Ignition ON
Courtesy of VOLVO CARS CORPORATION

- Ignition on

  Check if the malfunction is permanent or intermittent by activating the EVAP-valve. Listen for clicking sounds and/or feel the valve for frequent vibrations.

  If the valve does not vibrate, this indicates a permanent malfunction. If the valve vibrates, this indicates that the malfunction is intermittent and not active right now.

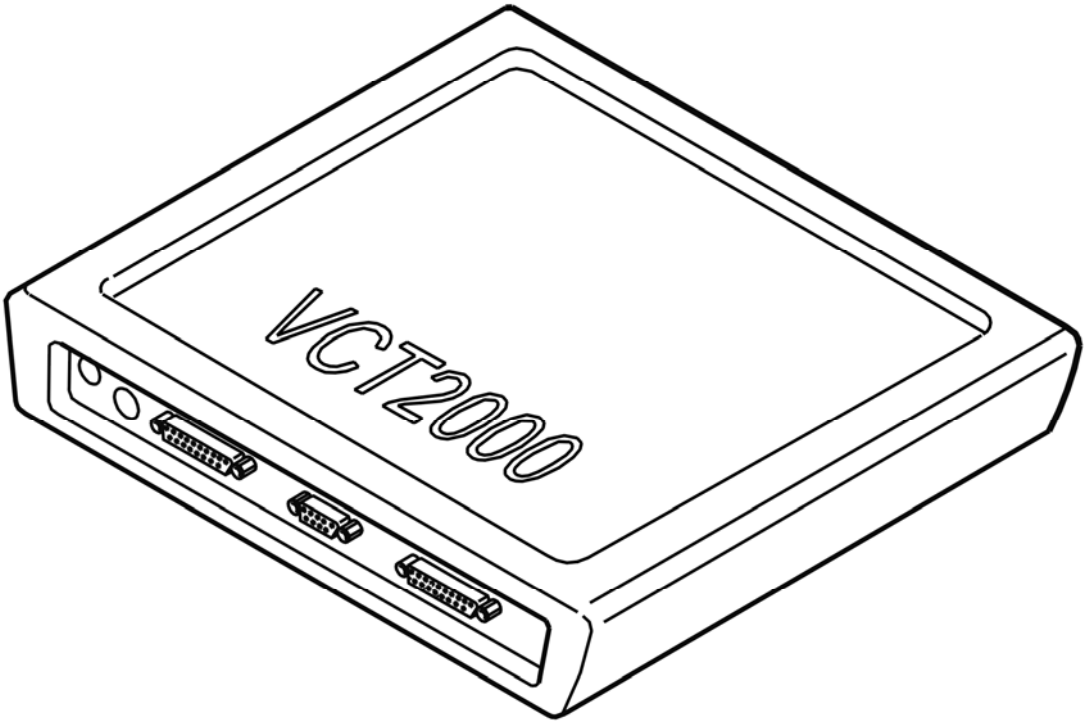

Fig. 74: Identifying VCT2000 Diagnostic Tool Symbol In VIDA
Courtesy of VOLVO CARS CORPORATION

- **Continue**

  Refer to **CHECKING COMPONENT AND CABLES**

CHECKING COMPONENT AND CABLES

Check the EVAP-valve's connector for contact resistance and oxidation.

Check the cable between engine control module (ECM) #A92 (#B32) and EVAP-valve #2 for short-circuit to ground and open circuit.

Remedy as necessary.

Other information

- see **CONNECTING THE BREAKOUT BOX**
- see **SIGNAL SPECIFICATION, ENGINE CONTROL MODULE (ECM)**
- see **EVAP VALVE, REPLACING**
- see **CHECKING WIRING AND TERMINALS**

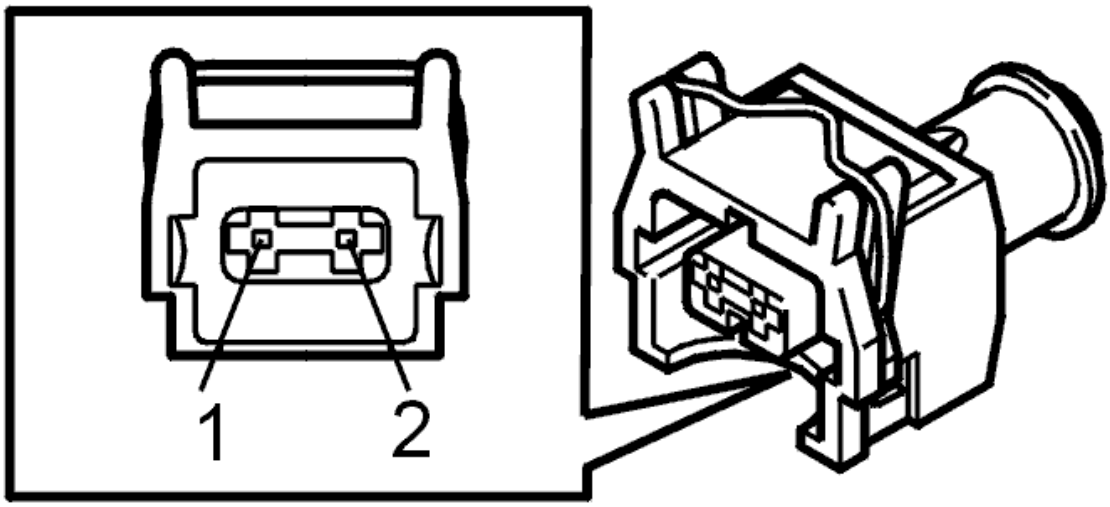

Fig. 75: Identifying 2 Pin Connector
Courtesy of VOLVO CARS CORPORATION

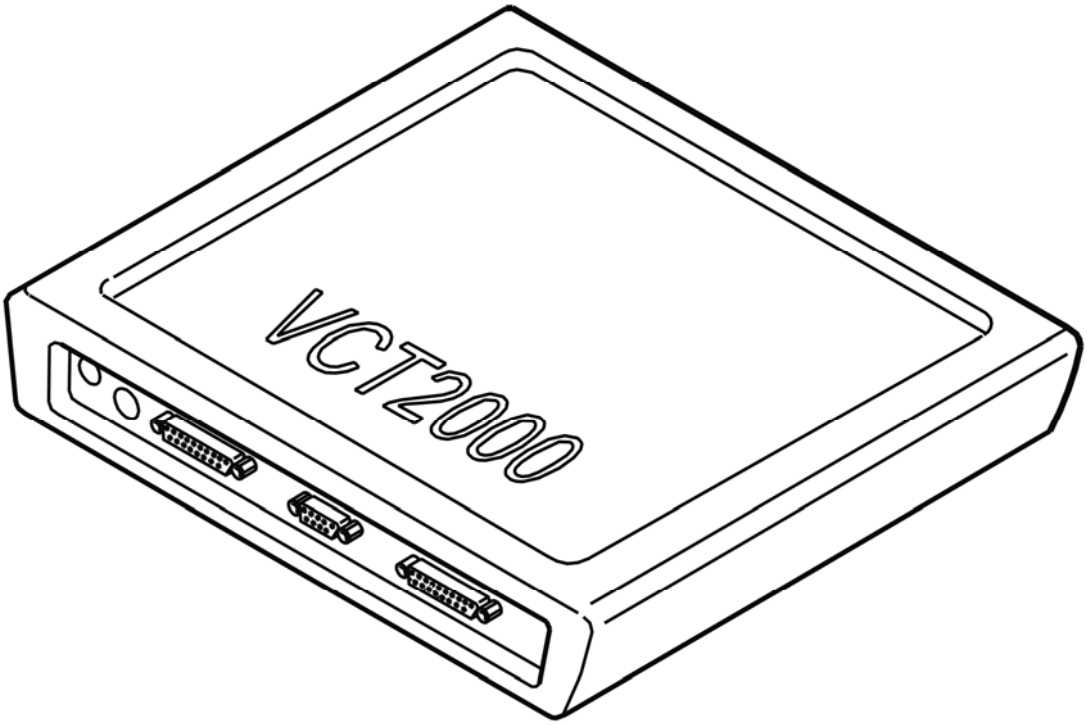

Fig. 76: Identifying VCT2000 Diagnostic Tool Symbol In VIDA
Courtesy of VOLVO CARS CORPORATION

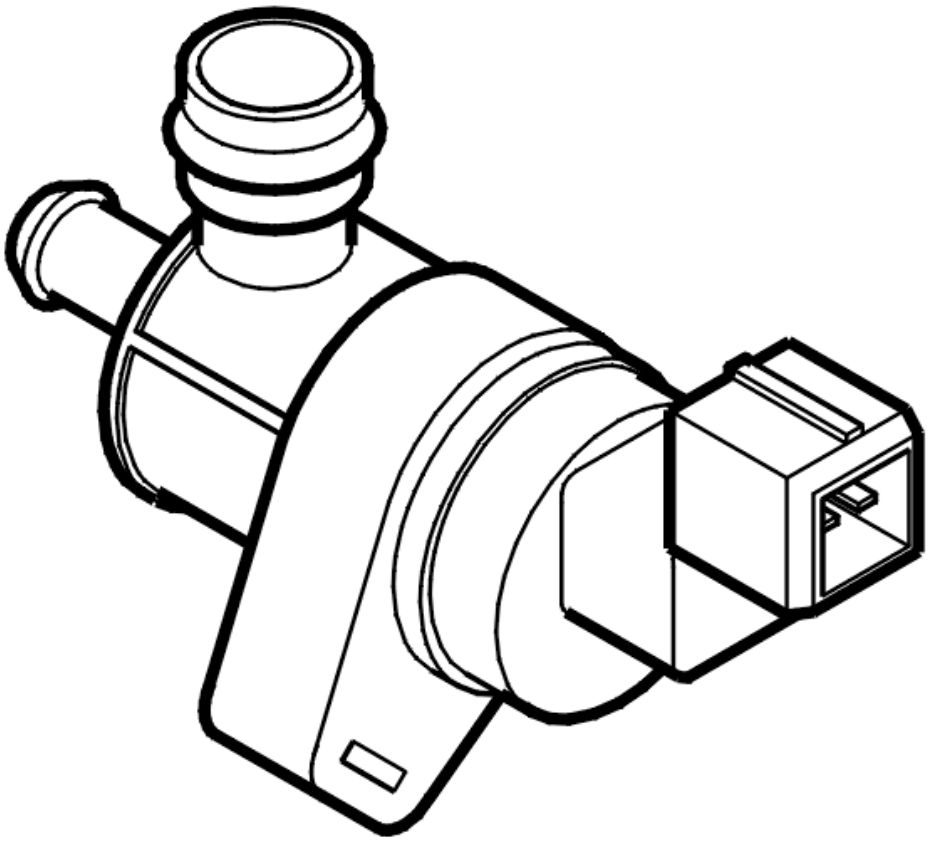

Fig. 77: Identifying Canister Purge (CP) Valve
Courtesy of VOLVO CARS CORPORATION

- **Continue**

  Refer to **VERIFICATION**

VERIFICATION

VERIFICATION

HINT: After repairing, it is necessary to check that the malfunction has been fixed.

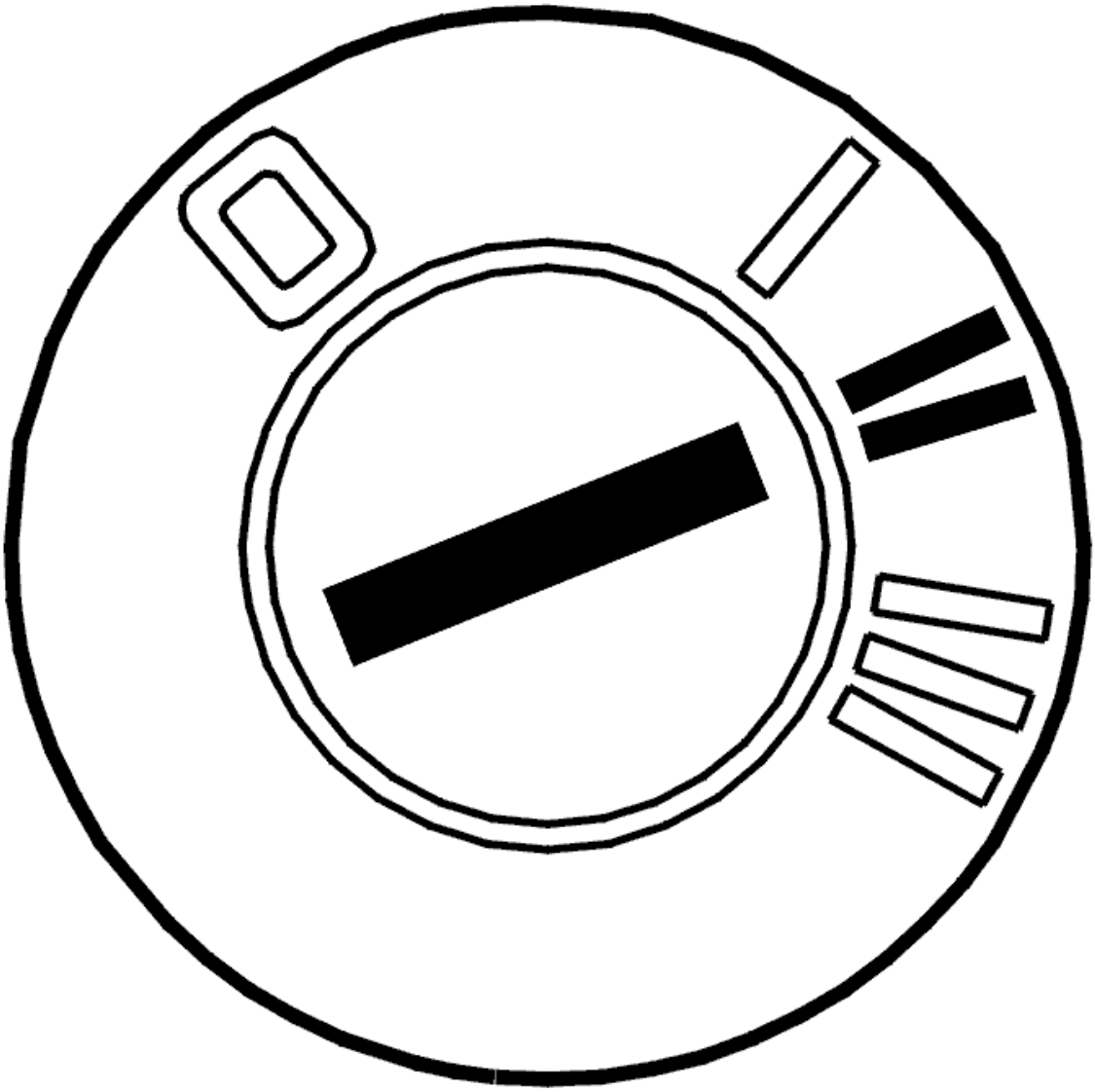

Fig. 78: Identifying Ignition ON
Courtesy of VOLVO CARS CORPORATION

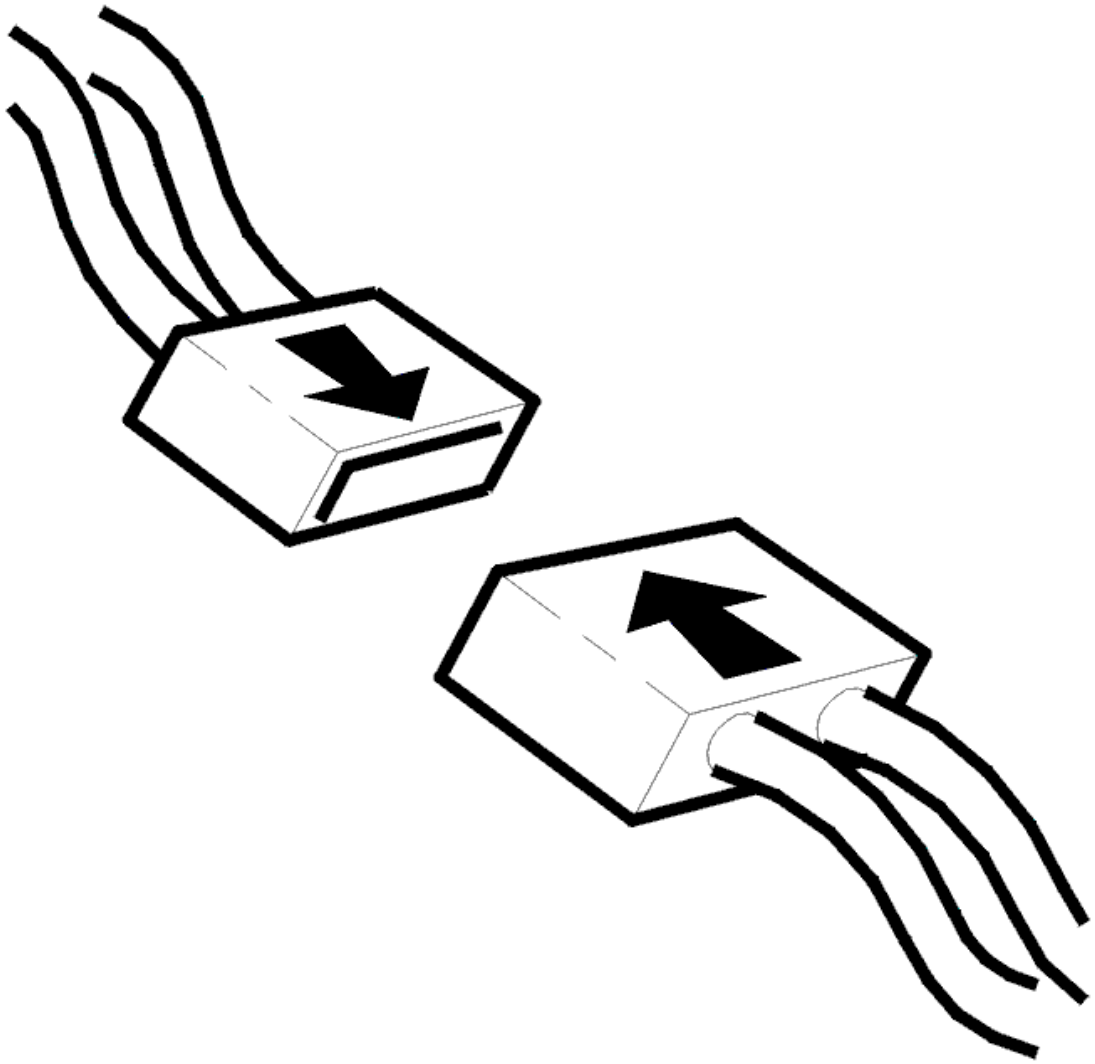

Fig. 79: Connecting Connector
Courtesy of VOLVO CARS CORPORATION

- Ignition off
- Reconnect the connectors, components, etc.
- Ignition on
- Start activation of the EVAP-valve.

  Listen for clicking sounds and/or feel the valve for frequent vibrations.

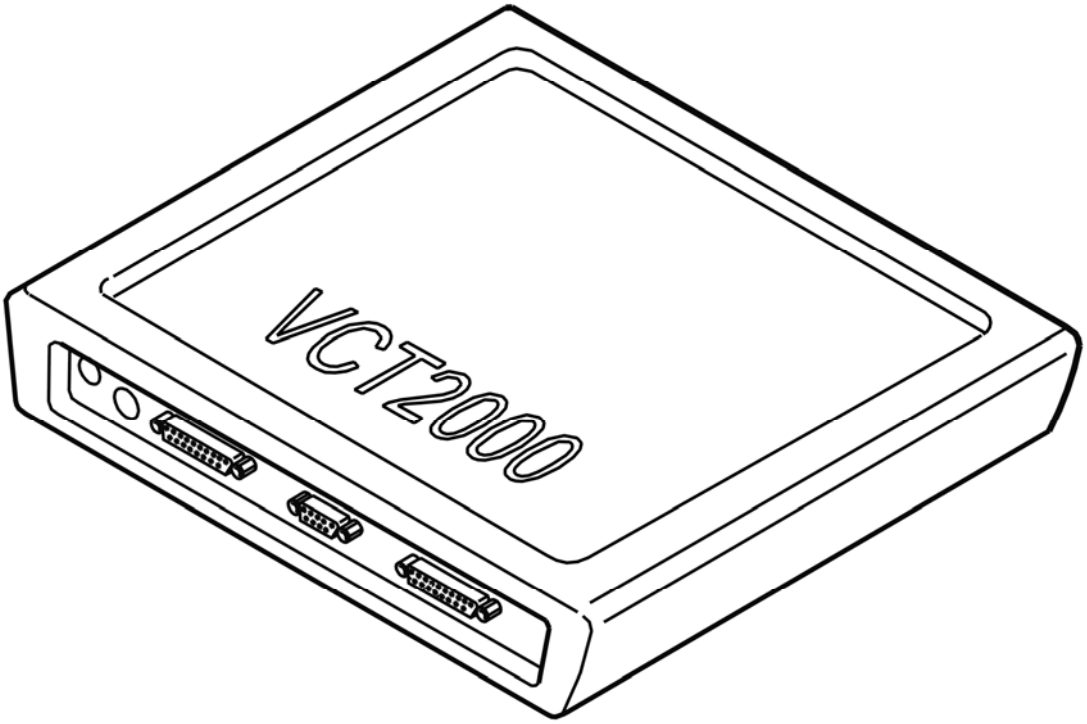

Fig. 80: Identifying VCT2000 Diagnostic Tool Symbol In VIDA
Courtesy of VOLVO CARS CORPORATION

Is the function OK?

- **YES**

  VERIFIED: Troubleshooting has been completed.

- **NO**

  Refer to **INFORMATION**

INFORMATION

FAULT-TRACING INFORMATION

The fault should have been detected and remedied. As this is not the case fault-tracing has failed.

Exit fault-tracing for this diagnostic trouble code (DTC) or make another attempt.

ECM-P045900: EVAPORATIVE EMISSION SYSTEM PURGE CONTROL VALVE CIRCUIT HIGH. GENERAL FAILURE INFORMATION. NO SUB TYPE

INFORMATION (B6324S; 2007-2010)

DIAGNOSTIC TROUBLE CODE (DTC) INFORMATION ECM-P045900

Condition

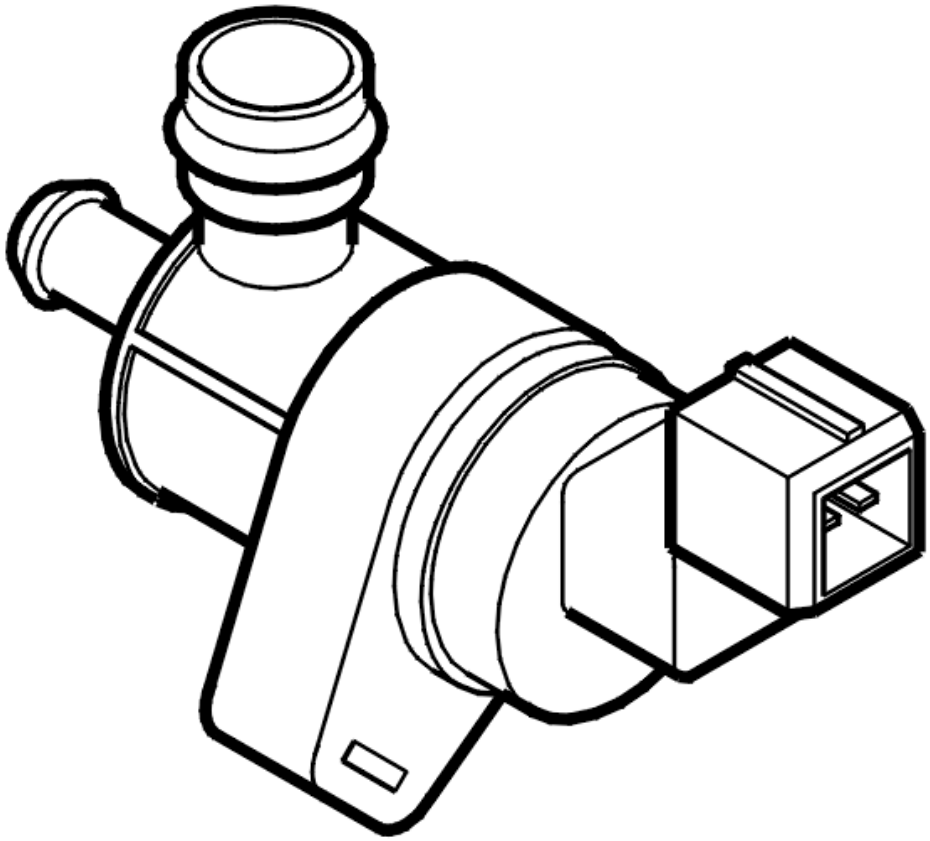

Fig. 81: Identifying Canister Purge (CP) Valve
Courtesy of VOLVO CARS CORPORATION

The diagnostic trouble code is generated if the engine control module (ECM) registers that the EVAP valve signal cable is short-circuited to supply voltage.

The diagnostic trouble code can be diagnosed when the ignition is on.

Substitute Value

- Fuel trim blocked.

Possible Source

- Contact resistance in the connectors.
- The signal cable is short-circuited to voltage.
- Damaged EVAP valve.

Fault symptom[s]

- Malfunction indicator lamp (MIL) lit.
- Fuel odor.

FAULT-TRACING

see **FAULT-TRACING**

ECM-P045900: EVAPORATIVE EMISSION SYSTEM PURGE CONTROL VALVE CIRCUIT HIGH. GENERAL FAILURE INFORMATION. NO SUB TYPE INFORMATION (B6324S5; 2011-2012)

DIAGNOSTIC TROUBLE CODE (DTC) INFORMATION ECM-P045900

see **DIAGNOSTIC TROUBLE CODE (DTC) INFORMATION ECM-P045900**

FAULT-TRACING

see **FAULT-TRACING**

ECM-P045900: EVAP EMISSION SYSTEM PURGE CONTROL VALVE CIRCUIT HIGH. GENERAL FAULT INFORMATION. TYPE OF FAULT NOT SPECIFIED. (B8444S; 2005-2011)

DIAGNOSTIC TROUBLE CODE (DTC) INFORMATION ECM-P045900

Condition

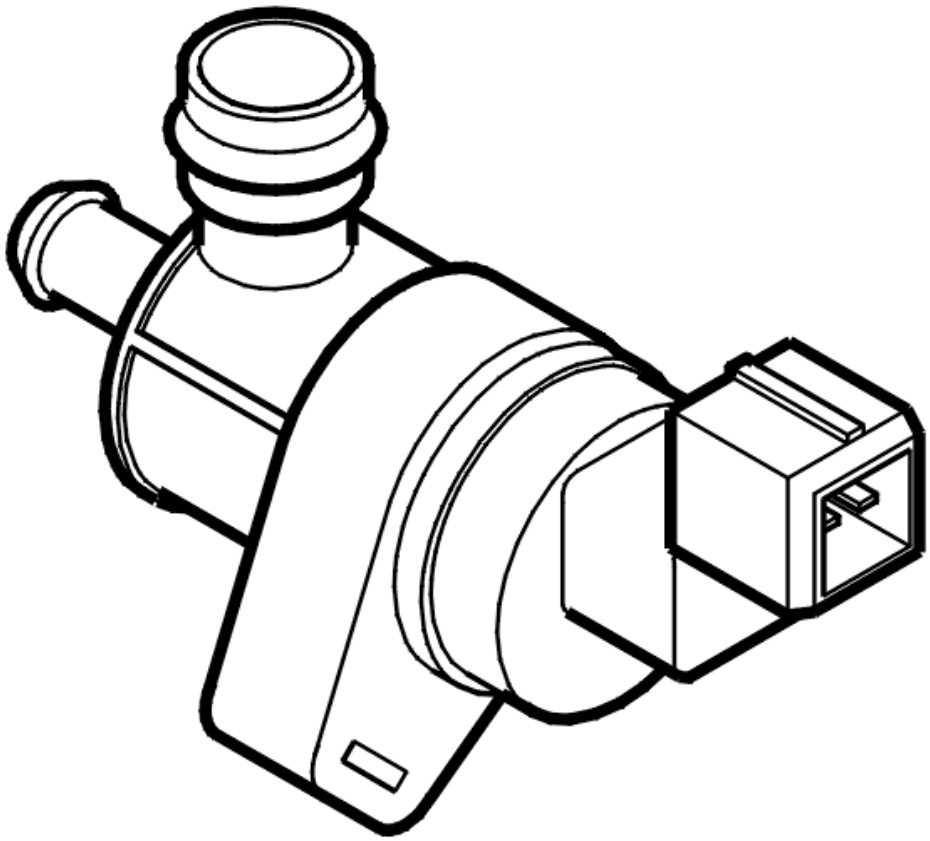

Fig. 82: Identifying Canister Purge (CP) Valve
Courtesy of VOLVO CARS CORPORATION

The diagnostic trouble code is generated if the engine control module (ECM) registers that the EVAP valve signal cable is short-circuited to supply voltage.

The diagnostic trouble code can be diagnosed when the ignition is on.

Substitute Value

- Fuel trim blocked.

Possible Source

- Contact resistance in the connectors.
- The signal cable is short-circuited to voltage.
- Damaged EVAP valve.

Fault symptom[s]

- Malfunction indicator lamp (MIL) lit.
- Fuel odor.

TROUBLESHOOTING ECM-P045900

CHECKING THE STATUS

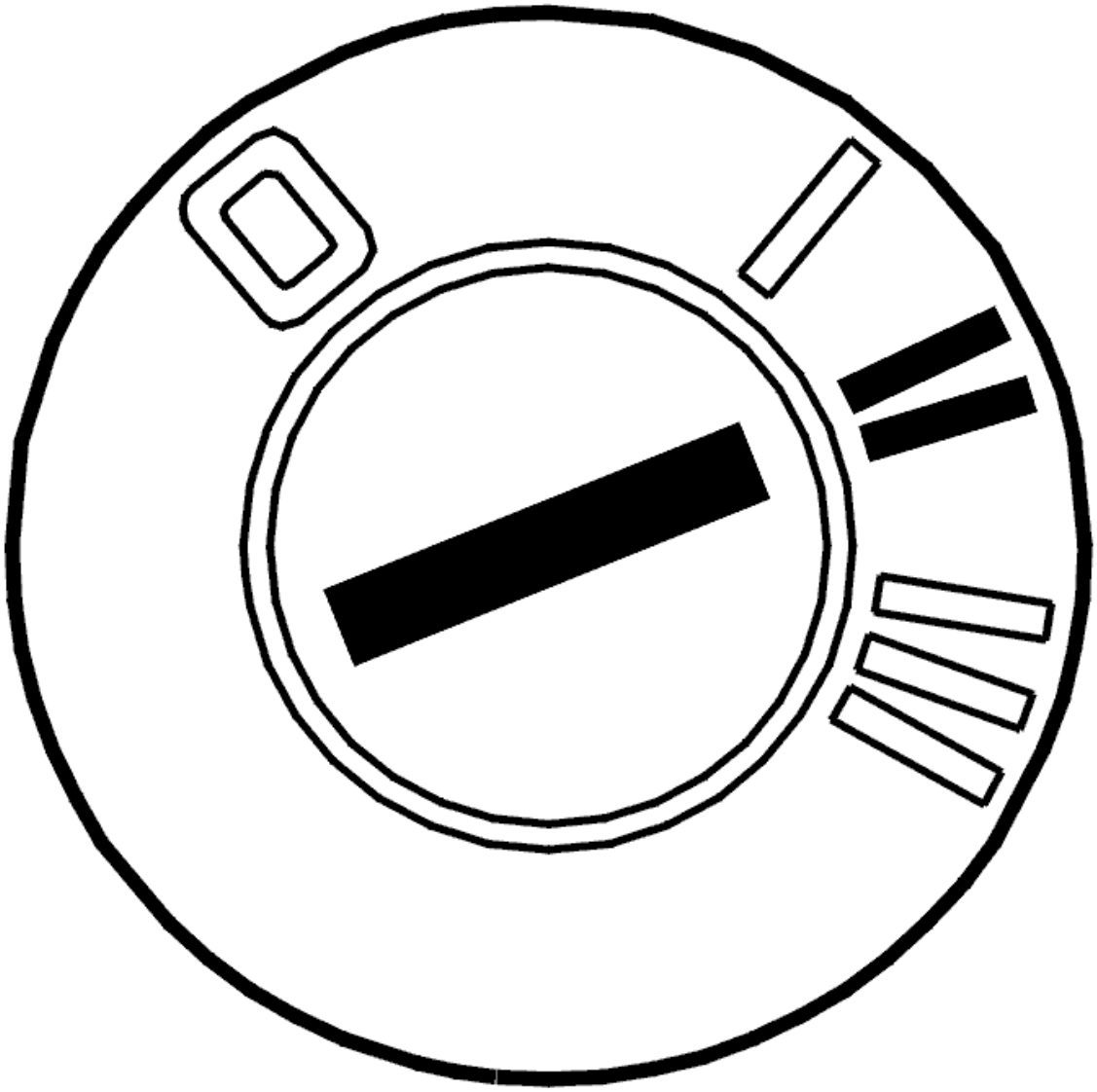

Fig. 83: Identifying Ignition ON
Courtesy of VOLVO CARS CORPORATION

- Ignition on

  Check if the malfunction is permanent or intermittent by activating the EVAP-valve. Listen for clicking sounds and/or feel the valve for frequent vibrations.

  If the valve does not vibrate, this indicates a permanent malfunction. If the valve vibrates, this indicates that the malfunction is intermittent and not active right now.

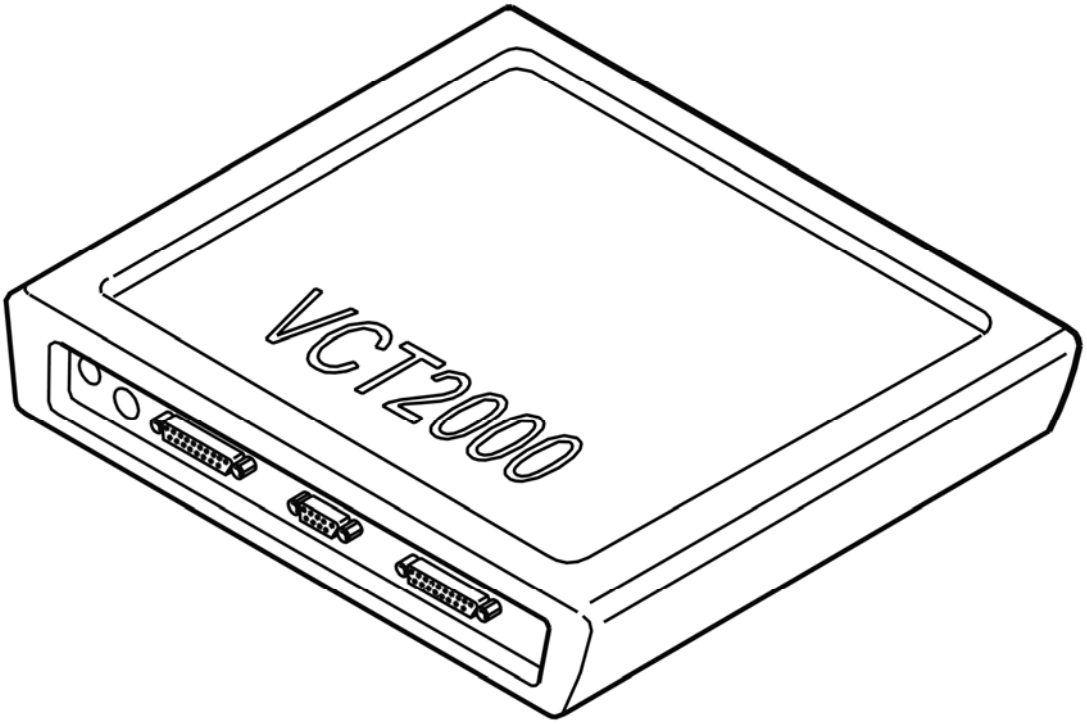

Fig. 84: Identifying VCT2000 Diagnostic Tool Symbol In VIDA
Courtesy of VOLVO CARS CORPORATION

- **Continue**

  Refer to **CHECKING COMPONENTS AND CABLES**

CHECKING COMPONENTS AND CABLES

Check the EVAP-valve's connector for contact resistance and oxidation.

Check the cable between engine control module (ECM) #A92 (#B32) and EVAP-valve #2 for short-circuit to voltage.

Remedy as necessary.

Other information

- see **CONNECTING THE BREAKOUT BOX**
- see **SIGNAL SPECIFICATION, ENGINE CONTROL MODULE (ECM)**
- see **EVAP VALVE, REPLACING**
- see **CHECKING WIRING AND TERMINALS**

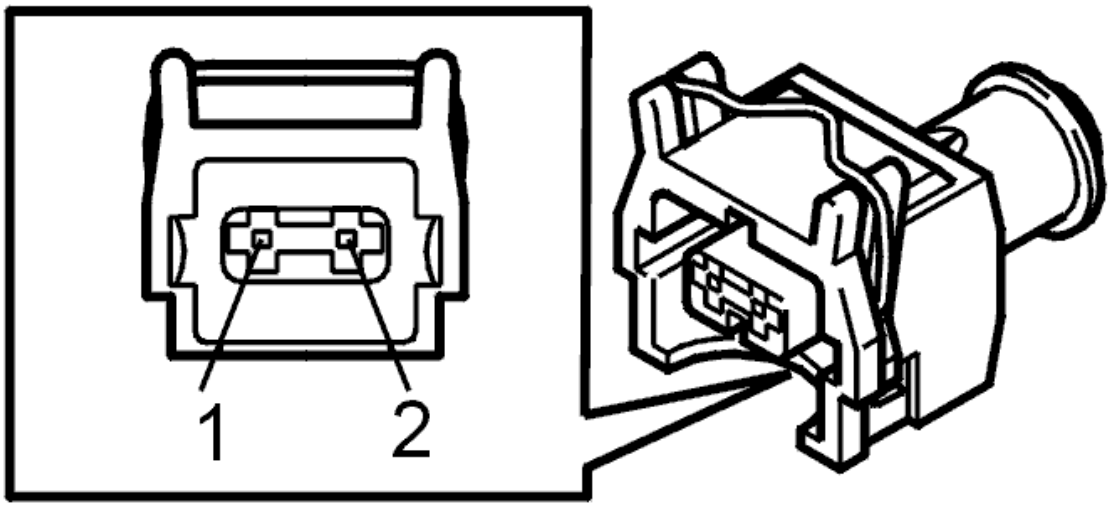

Fig. 85: Identifying 2 Pin Connector
Courtesy of VOLVO CARS CORPORATION

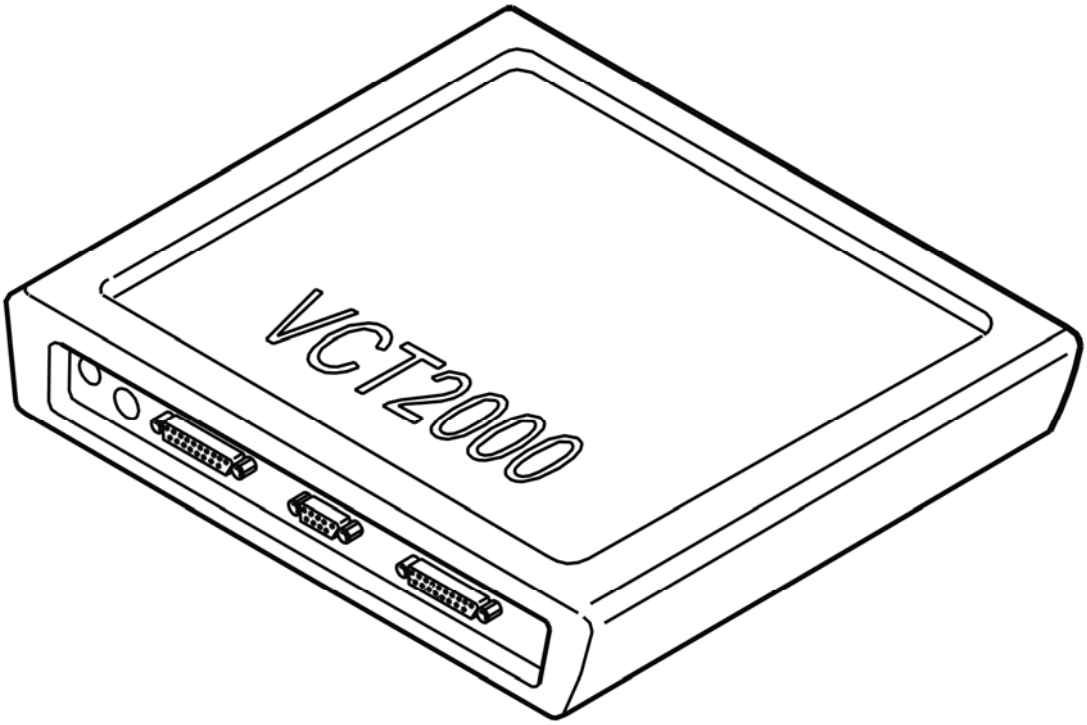

Fig. 86: Identifying VCT2000 Diagnostic Tool Symbol In VIDA
Courtesy of VOLVO CARS CORPORATION

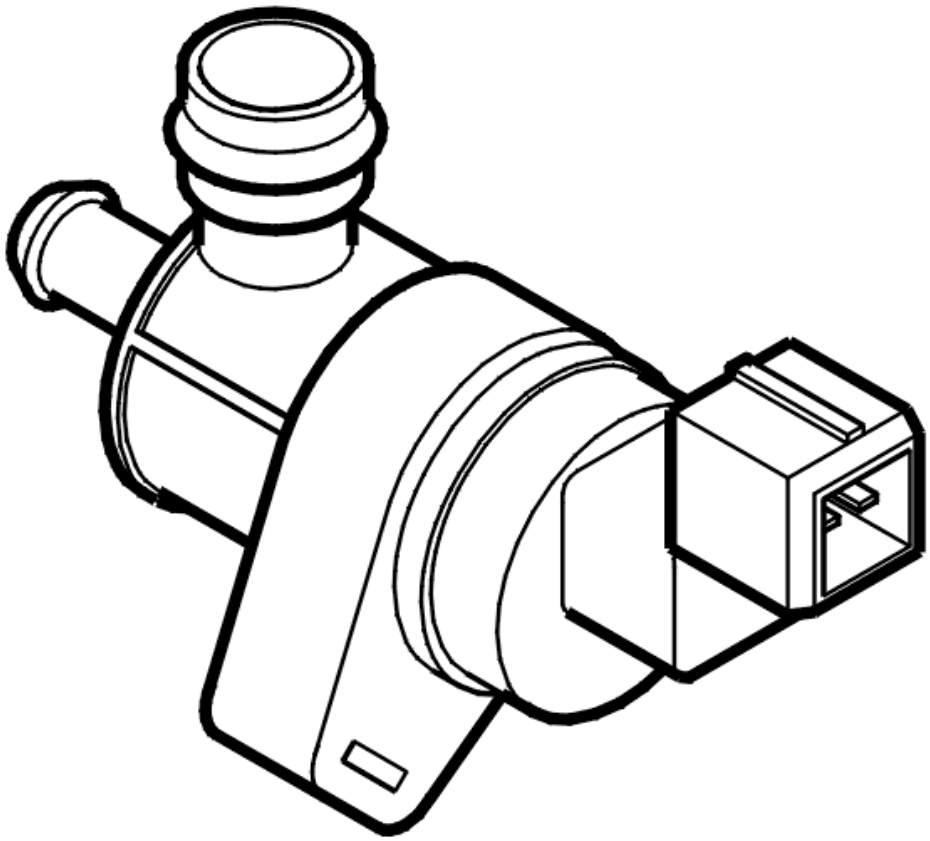

Fig. 87: Identifying Canister Purge (CP) Valve
Courtesy of VOLVO CARS CORPORATION

- **Continue**

  Refer to **VERIFICATION**

VERIFICATION

VERIFICATION

HINT: After repairing, it is necessary to check that the malfunction has been fixed.

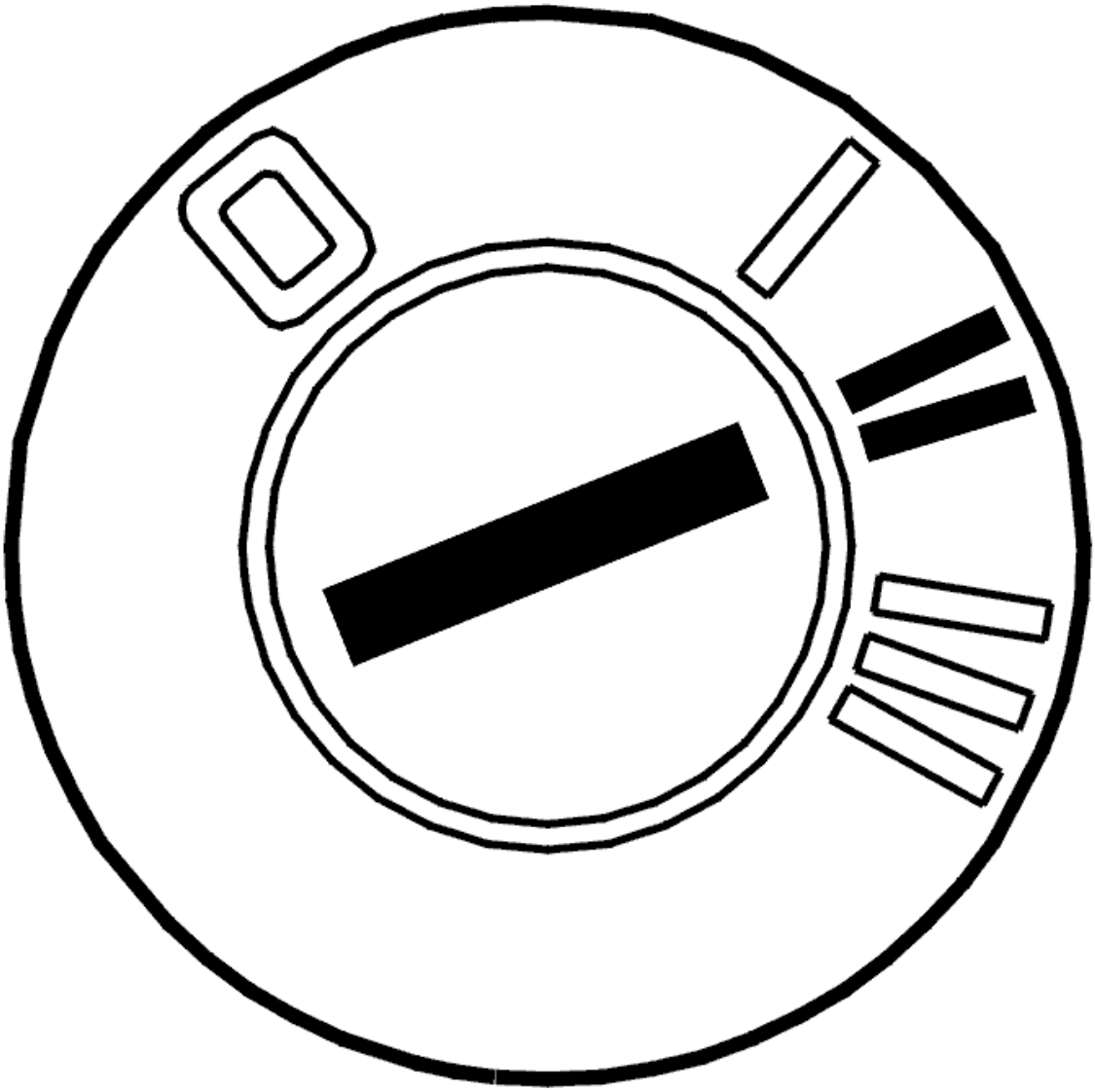

Fig. 88: Identifying Ignition ON
Courtesy of VOLVO CARS CORPORATION

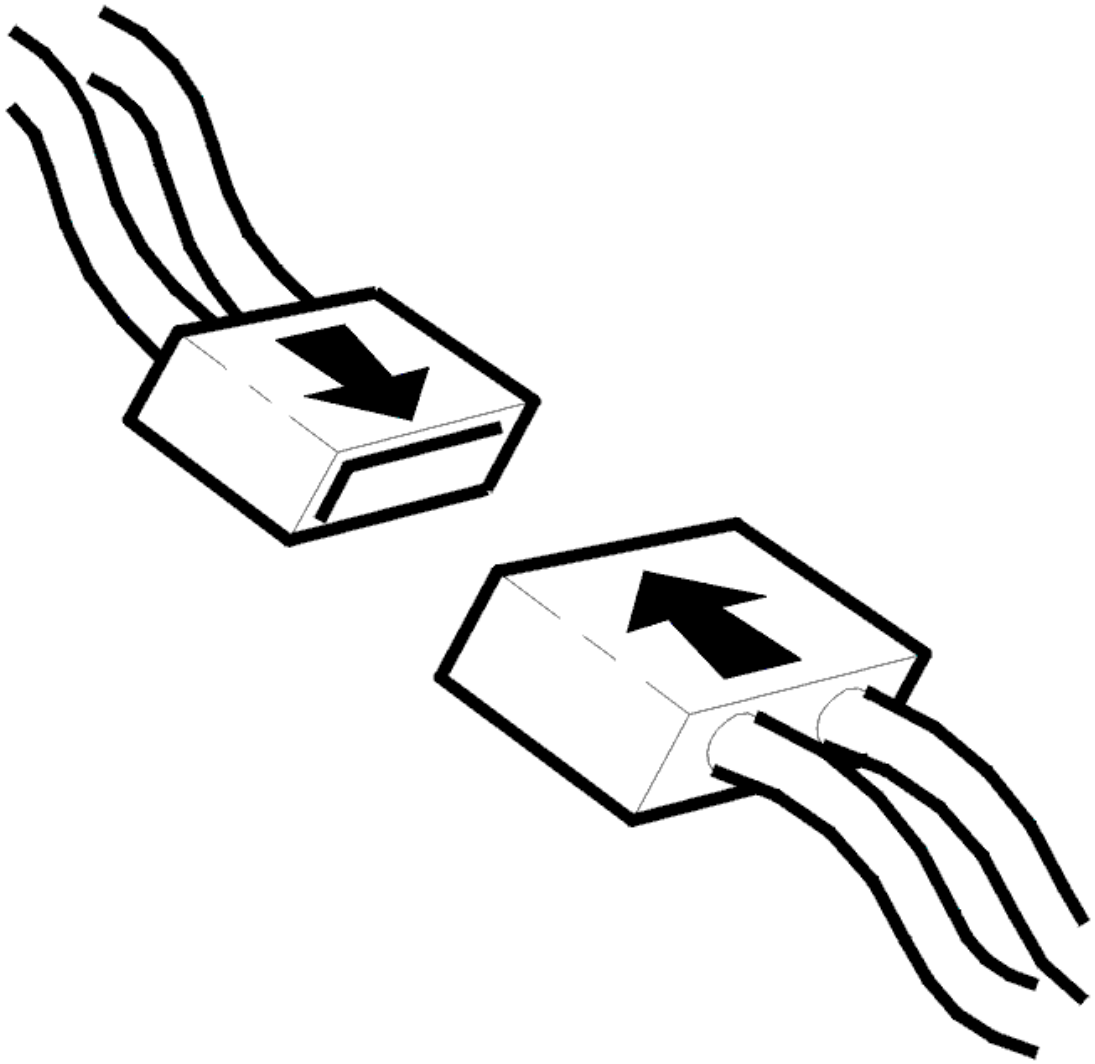

Fig. 89: Connecting Connector
Courtesy of VOLVO CARS CORPORATION

- Ignition off
- Reconnect the connectors, components, etc.
- Ignition on
- Start activation of the EVAP-valve.

  Listen for clicking sounds and/or feel the valve for frequent vibrations.

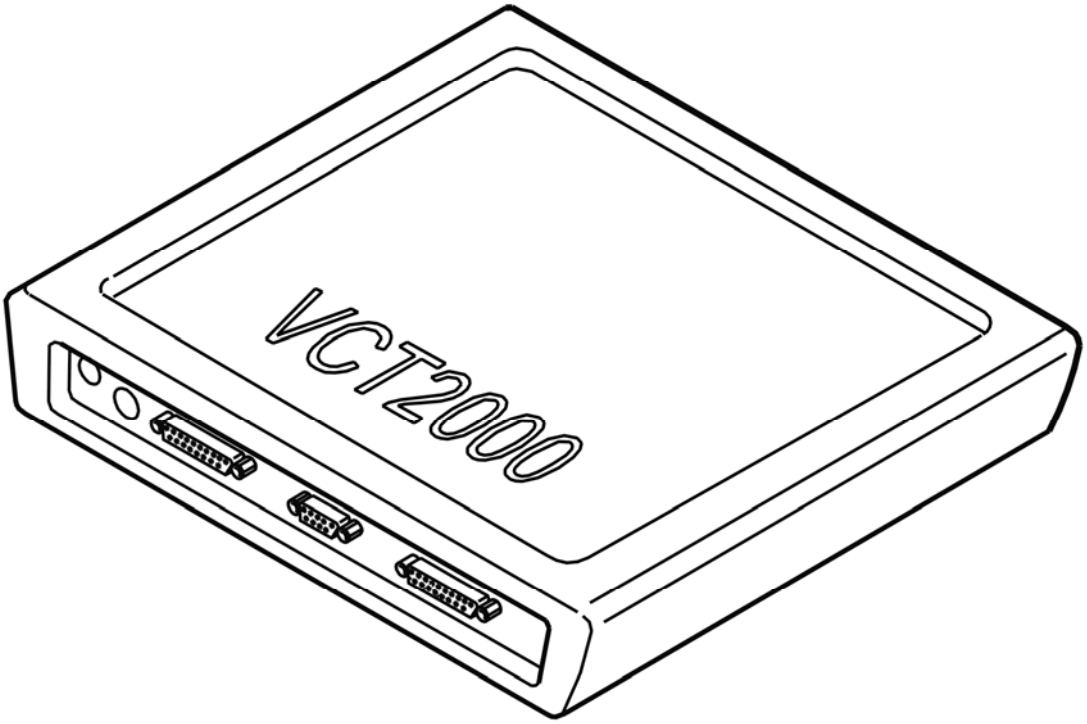

Fig. 90: Identifying VCT2000 Diagnostic Tool Symbol In VIDA
Courtesy of VOLVO CARS CORPORATION

Is the function OK?

- **YES**

  VERIFIED: Troubleshooting has been completed.

- **NO**

  Refer to **INFORMATION**

INFORMATION

FAULT-TRACING INFORMATION

The fault should have been detected and remedied. As this is not the case fault-tracing has failed.

Exit fault-tracing for this diagnostic trouble code (DTC) or make another attempt.

ECM-P046000: FUEL LEVEL SENSOR A CIRCUIT. GENERAL FAILURE INFORMATION. NO SUB TYPE INFORMATION (B6324S; 2007-2010)

DIAGNOSTIC TROUBLE CODE (DTC) INFORMATION ECM-P046000

Condition

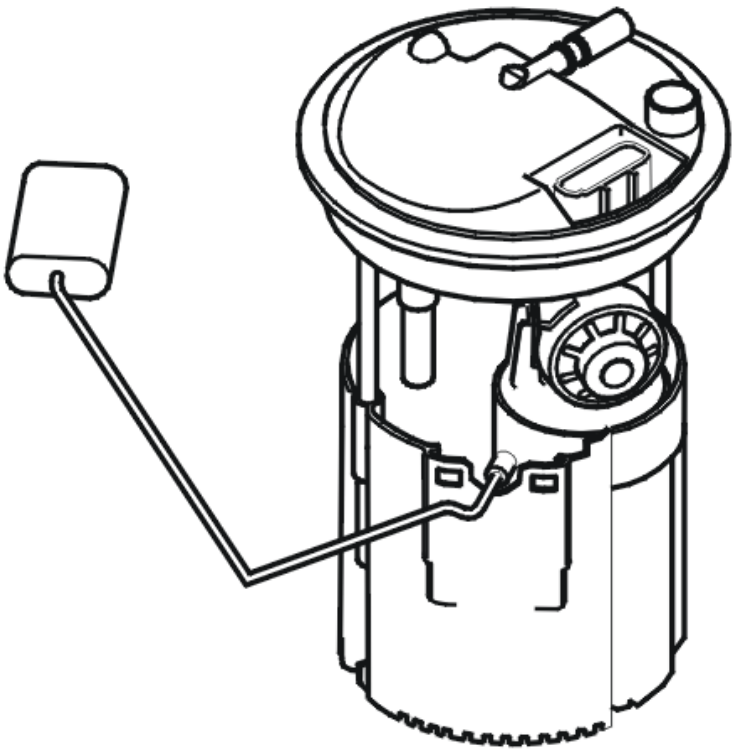

Fig. 91: Identifying Fuel Level Sensor
Courtesy of VOLVO CARS CORPORATION

If a malfunction of the fuel level sensor's pump part is detected by central electronic module (CEM), a malfunction message is sent to engine control module (ECM) and the diagnostic trouble code is generated.

The diagnostic trouble code can be diagnosed when the ignition is on.

Substitute Value

- Nothing.

Possible Source

- Look for the cause of the malfunction in central electronic module (CEM).

Fault symptom[s]

- Nothing.

FAULT-TRACING

see **FAULT-TRACING**

ECM-P046000: FUEL LEVEL SENSOR A CIRCUIT. GENERAL FAILURE INFORMATION. NO SUB TYPE INFORMATION (B6324S5; 2011-2012)

DIAGNOSTIC TROUBLE CODE (DTC) INFORMATION ECM-P046000

see **DIAGNOSTIC TROUBLE CODE (DTC) INFORMATION ECM-P046000**

FAULT-TRACING

see **FAULT-TRACING**

ECM-P046100: FUEL LEVEL SENSOR A CIRCUIT RANGE/PERFORMANCE. GENERAL FAILURE INFORMATION. NO SUB TYPE INFORMATION (B6324S; 2007-2010)

DIAGNOSTIC TROUBLE CODE (DTC) INFORMATION ECM-P046100

Condition

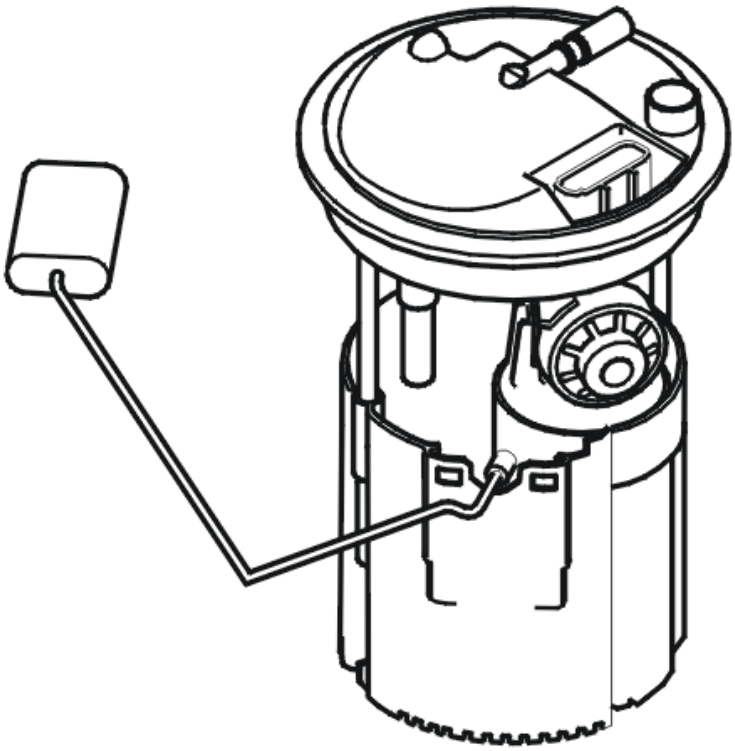

Fig. 92: Identifying Fuel Level Sensor
Courtesy of VOLVO CARS CORPORATION

The central electronic module (CEM) sends the engine control module (ECM) information on fuel level and the fault status of the fuel level sensor.

The engine control module (ECM) compares engine fuel consumption with the change in the fuel level over a certain period of time. The diagnostic trouble code is generated if the engine control module (ECM) registers an unreasonably small reduction in the fuel level as compared to calculated fuel consumption.

The diagnostic trouble code can be diagnosed when the ignition is on.

Substitute Value

- Nothing.

Possible Source

- Contact resistance in the connectors.
- Damaged fuel level sensor.

Fault symptom[s]

- Nothing.

FAULT TRACING

CHECKING THE STATUS

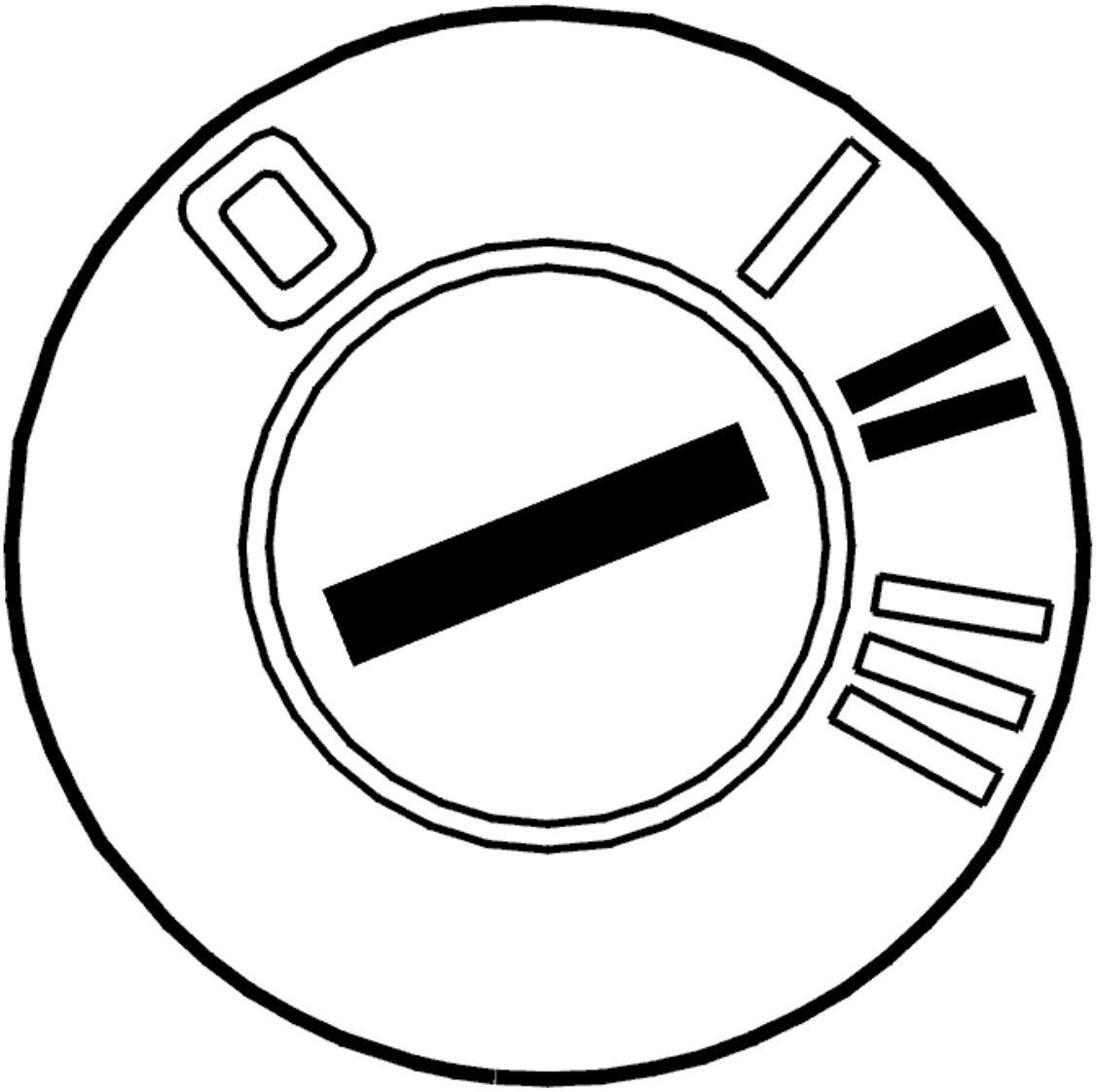

Fig. 93: Identifying Ignition ON
Courtesy of VOLVO CARS CORPORATION

- Ignition on

  Check if the malfunction is permanent or intermittent by reading off the signal from the fuel level sensor (via central electronic module (CEM)) and check that it is reasonable, that it moves when the vehicle is rocked lightly and that it then stabilizes at a reasonable level.

  Incorrect signal indicates that the malfunction is permanent. If the signal is reasonable, this indicates that the malfunction is intermittent.

  HINT: Completely full tank may mean that the level change when rocking the vehicle is not clear enough.

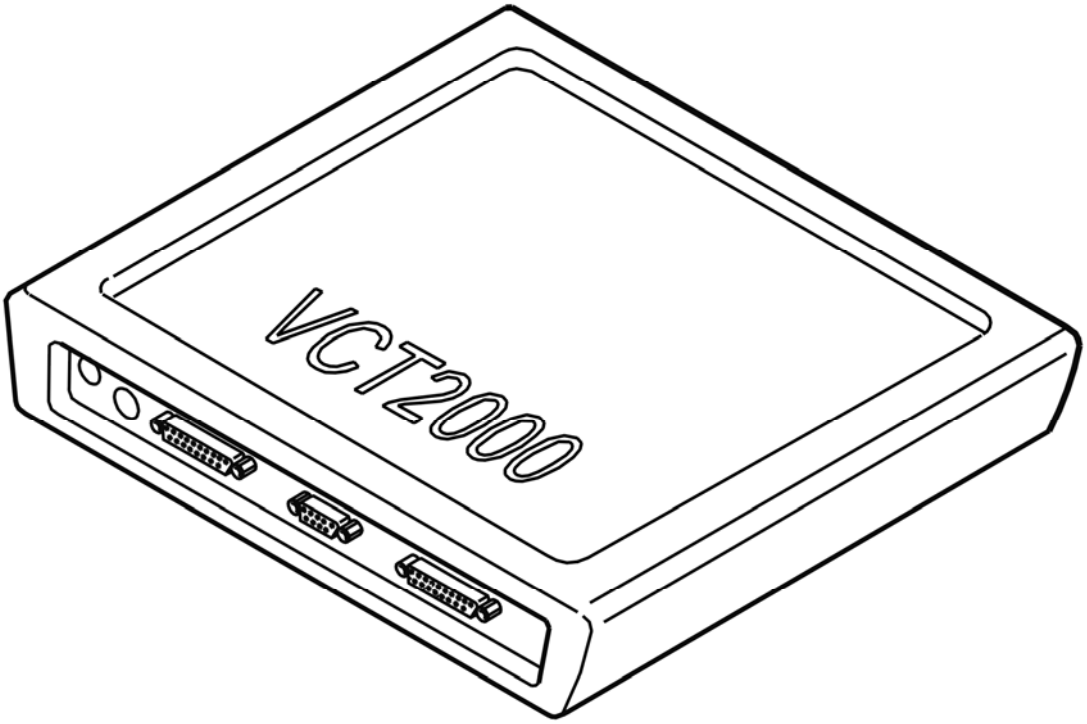

Fig. 94: Identifying VCT2000 Diagnostic Tool Symbol In VIDA
Courtesy of VOLVO CARS CORPORATION

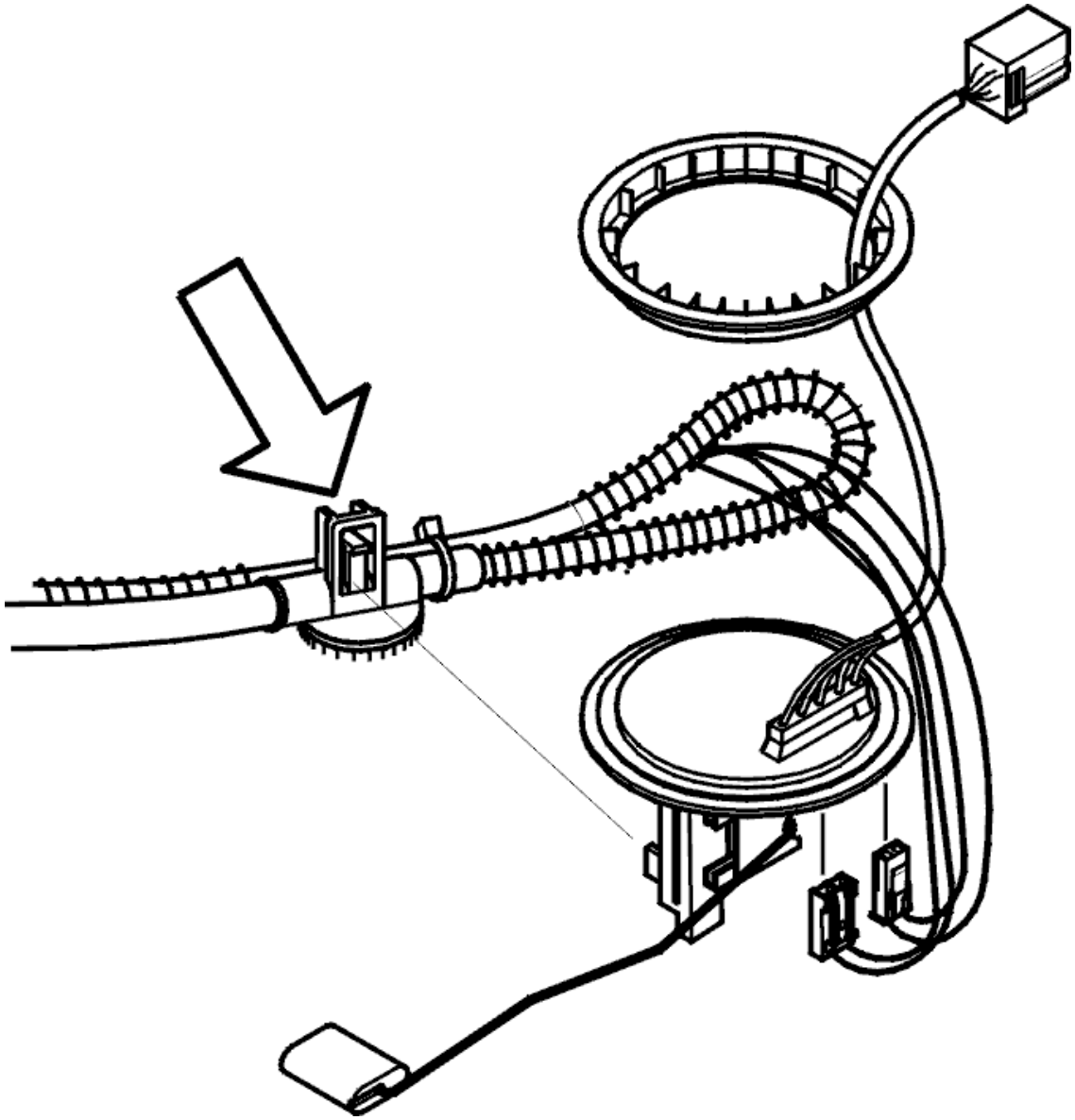

Fig. 95: Fuel Level Sensor Connector
Courtesy of VOLVO CARS CORPORATION

- **Continue**

  Refer to **CHECKING CONNECTOR**

CHECKING CONNECTOR

Check the fuel level sensor's connector and connections for contact resistance and oxidation.

Remedy as necessary.

Other information

- For replacement of fuel pump:**LEVEL SENSOR, FUEL TANK, RIGHT-HAND/FUEL TANK, REPLACING**
- see **CHECKING WIRING AND TERMINALS**

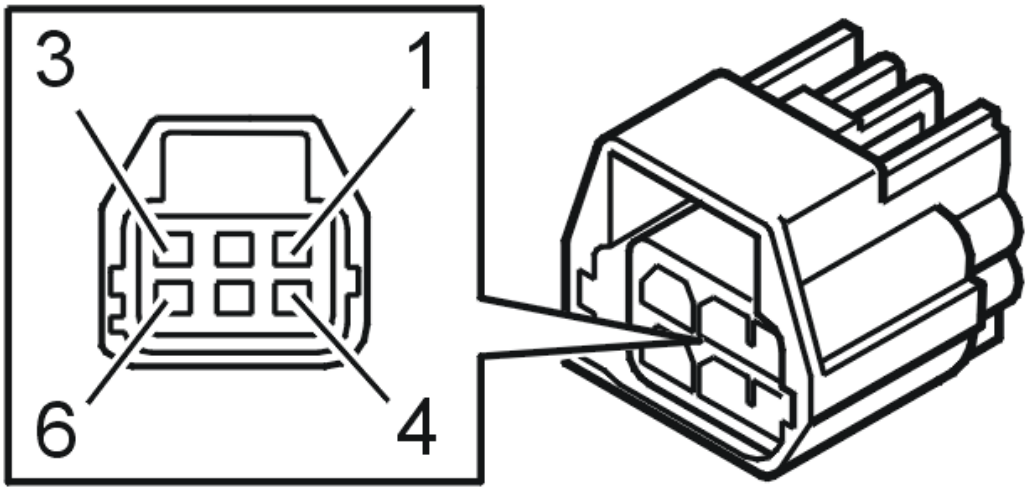

Fig. 96: Identifying Connector Terminals
Courtesy of VOLVO CARS CORPORATION

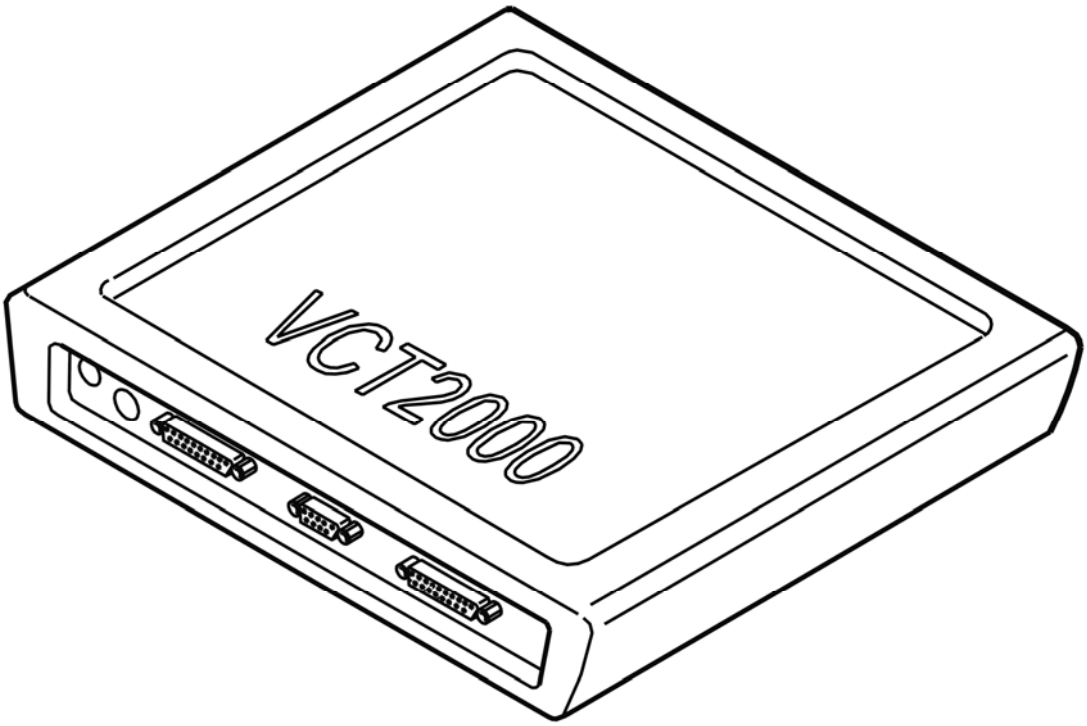

Fig. 97: Identifying VCT2000 Diagnostic Tool Symbol In VIDA
Courtesy of VOLVO CARS CORPORATION

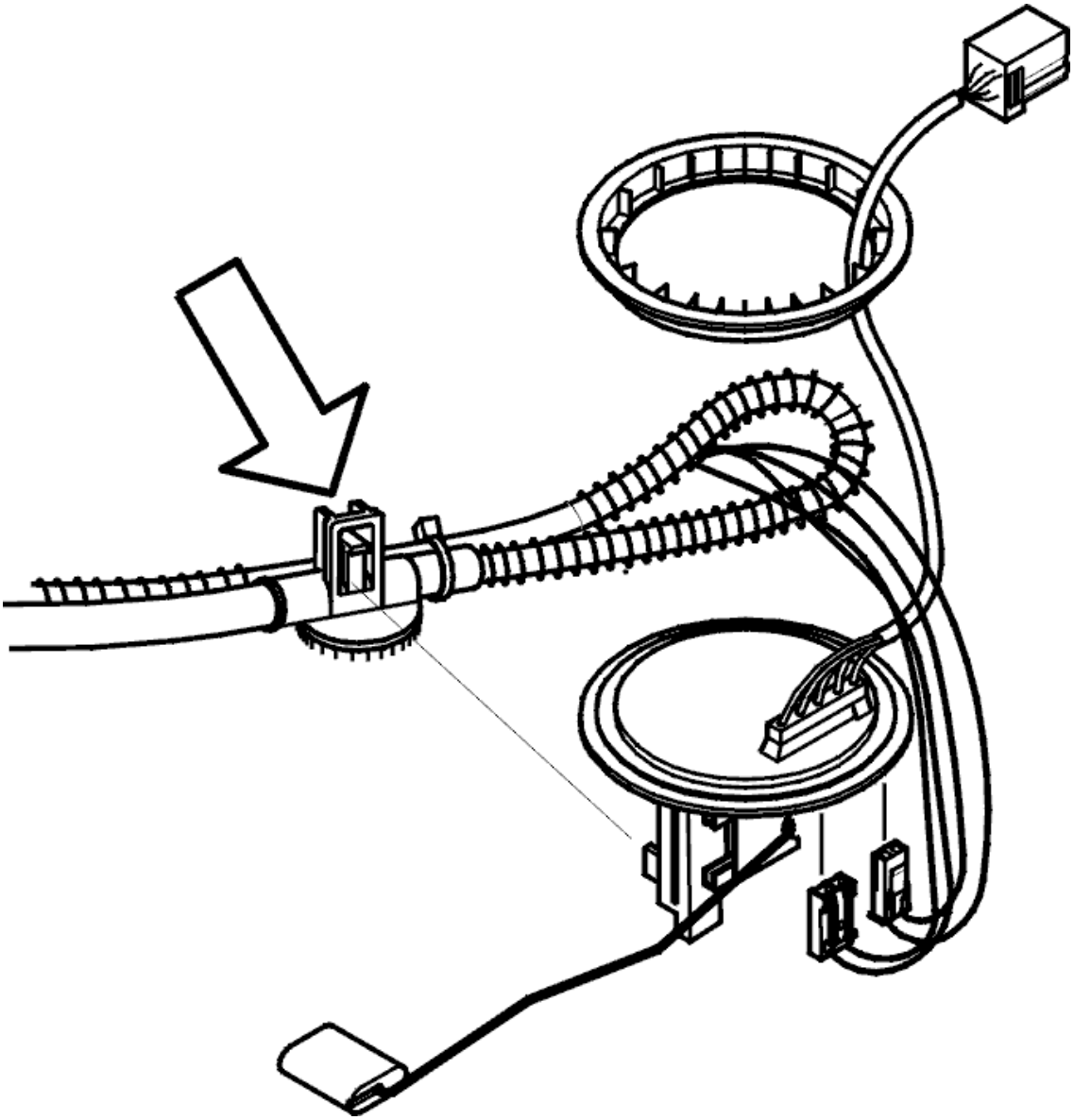

Fig. 98: Fuel Level Sensor Connector
Courtesy of VOLVO CARS CORPORATION

- **Continue**

  Refer to **VERIFICATION**

INFORMATION

FAULT-TRACING INFORMATION

The fault should have been detected and remedied. As this is not the case fault-tracing has failed.

Exit fault-tracing for this diagnostic trouble code (DTC) or make another attempt.

VERIFICATION

VERIFICATION

HINT: After carrying out the repair, check that the fault has been remedied.

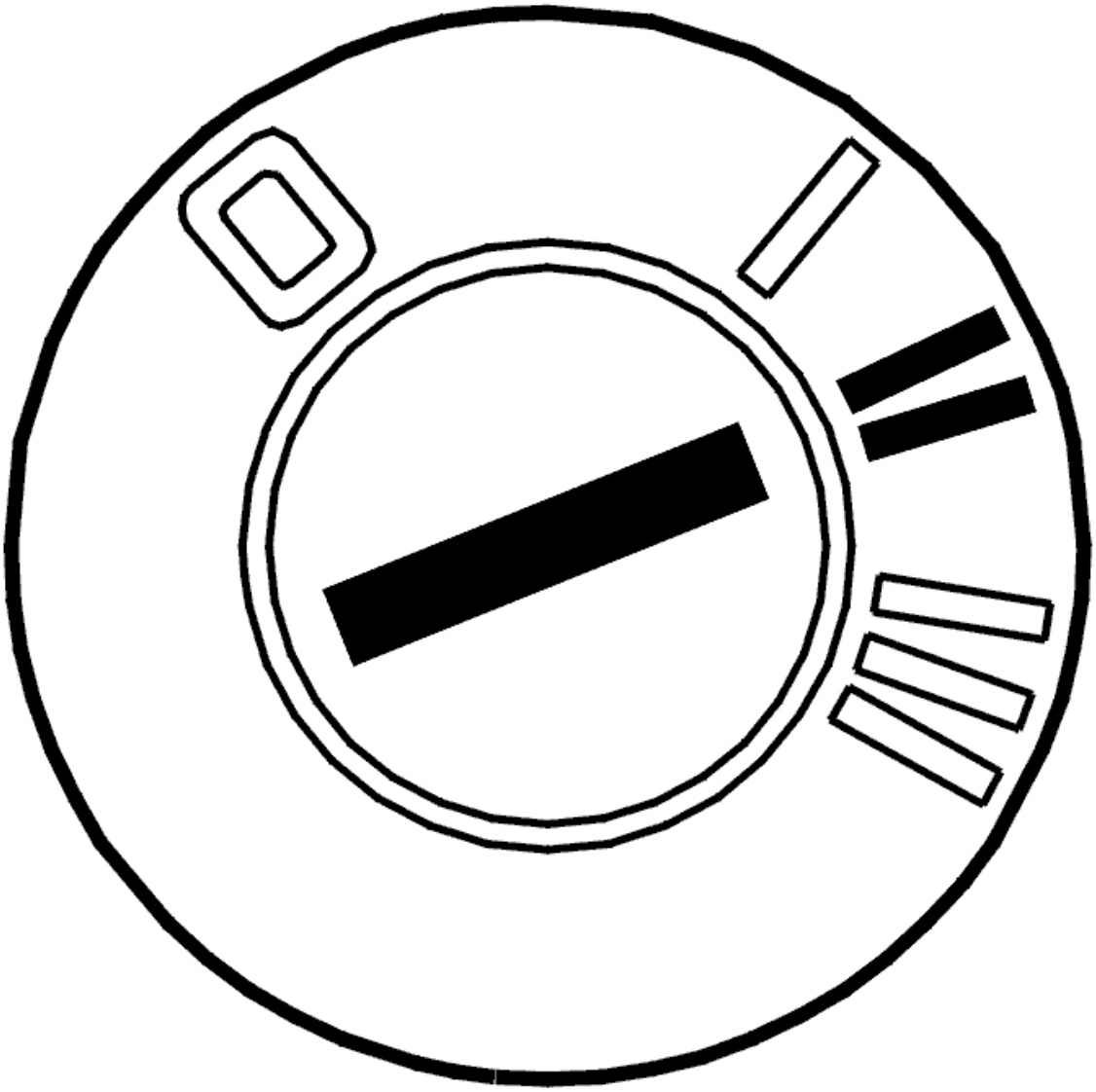

Fig. 99: Identifying Ignition ON
Courtesy of VOLVO CARS CORPORATION

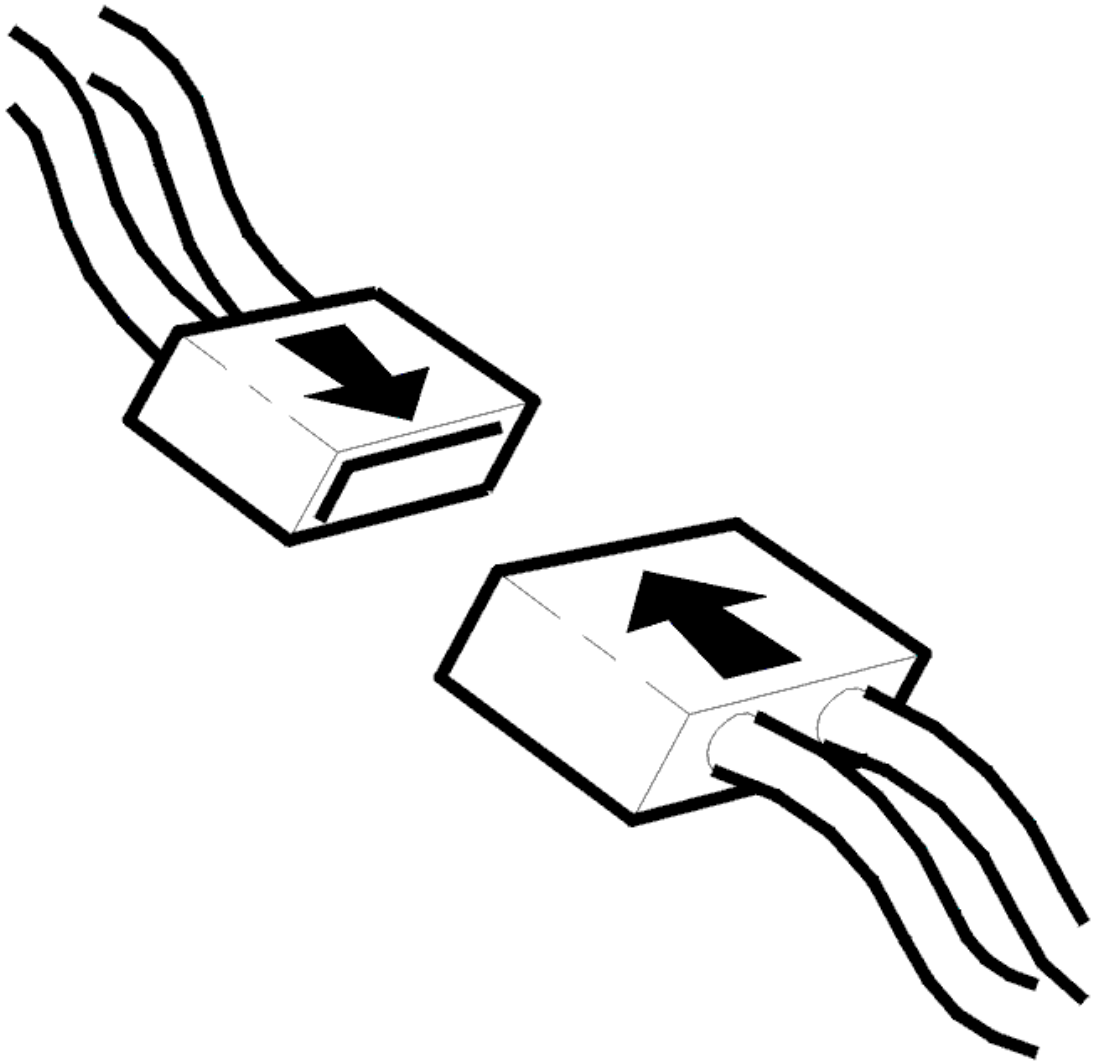

Fig. 100: Connecting Connector
Courtesy of VOLVO CARS CORPORATION

- Ignition off
- Reinstall the connectors, components etc.
- Ignition on

  Read off the signal from the fuel level sensor (via central electronic module (CEM)).

  Check that the signal is reasonable, that it moves when the vehicle is rocked lightly and that it then stabilizes at a reasonable level.

  Reasonable signal indicates that the malfunction has been remedied.

  HINT: Completely full tank may mean that the level change when rocking the vehicle is not clear

enough.

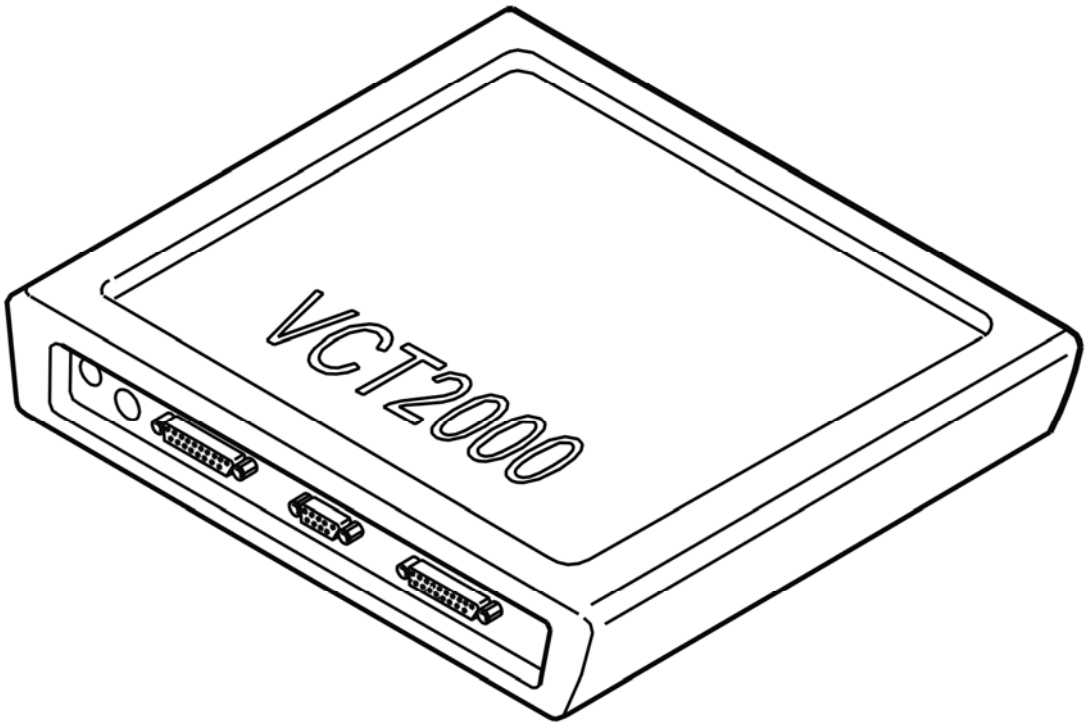

Fig. 101: Identifying VCT2000 Diagnostic Tool Symbol In VIDA
Courtesy of VOLVO CARS CORPORATION

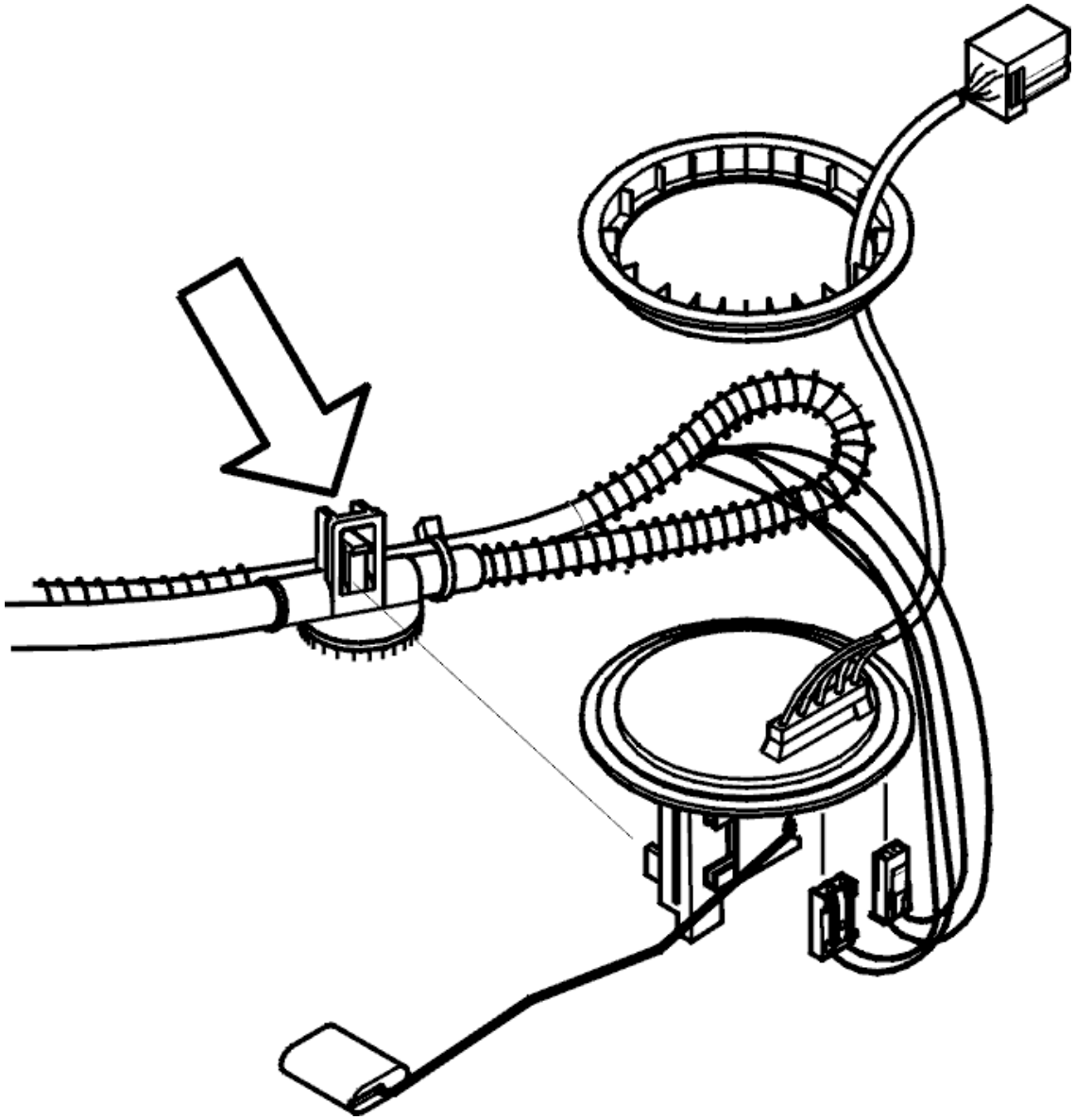

Fig. 102: Fuel Level Sensor Connector
Courtesy of VOLVO CARS CORPORATION

Is the signal reasonable?

- **YES**

  VERIFIED: Troubleshooting has been completed.

- **NO**

  Refer to **INFORMATION**

ECM-P046100: FUEL LEVEL SENSOR A CIRCUIT RANGE/PERFORMANCE.

GENERAL FAILURE INFORMATION. NO SUB TYPE INFORMATION (B6324S5; 2011-2012)

DIAGNOSTIC TROUBLE CODE (DTC) INFORMATION ECM-P046100

see **DIAGNOSTIC TROUBLE CODE (DTC) INFORMATION ECM-P046100**

FAULT TRACING

see **FAULT TRACING**

ECM-P046100: FUEL LEVEL SENSOR A CIRCUIT WITHIN/OUTSIDE LIMIT VALUES. GENERAL MALFUNCTION INFORMATION. NO INFORMATION ON MALFUNCTION TYPE (B8444S; 2005-2011)

DIAGNOSTIC TROUBLE CODE (DTC) INFORMATION ECM-P046100

Condition

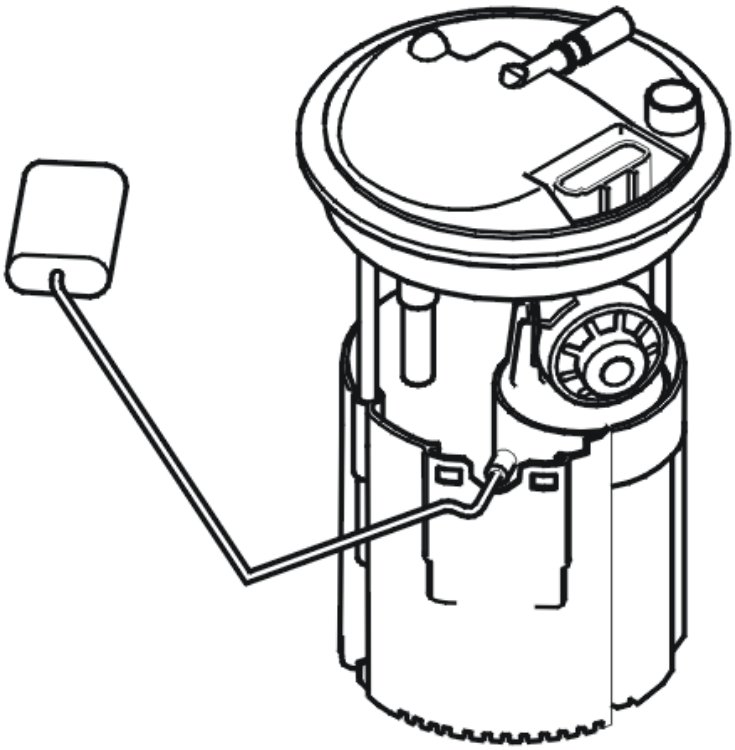

Fig. 103: Identifying Fuel Level Sensor
Courtesy of VOLVO CARS CORPORATION

The central electronic module (CEM) sends the engine control module (ECM) information on fuel level and the fault status of the fuel level sensor.

The engine control module (ECM) compares engine fuel consumption with the change in the fuel level over a certain period of time. The diagnostic trouble code is generated if the engine control module (ECM) registers an unreasonably small reduction in the fuel level as compared to calculated fuel consumption.

The diagnostic trouble code can be diagnosed when the ignition is on.

Substitute Value

- Nothing.

Possible Source

- Contact resistance in the connectors.
- Damaged fuel level sensor.

Fault symptom[s]

- Nothing.

FAULT TRACING

CHECKING THE STATUS

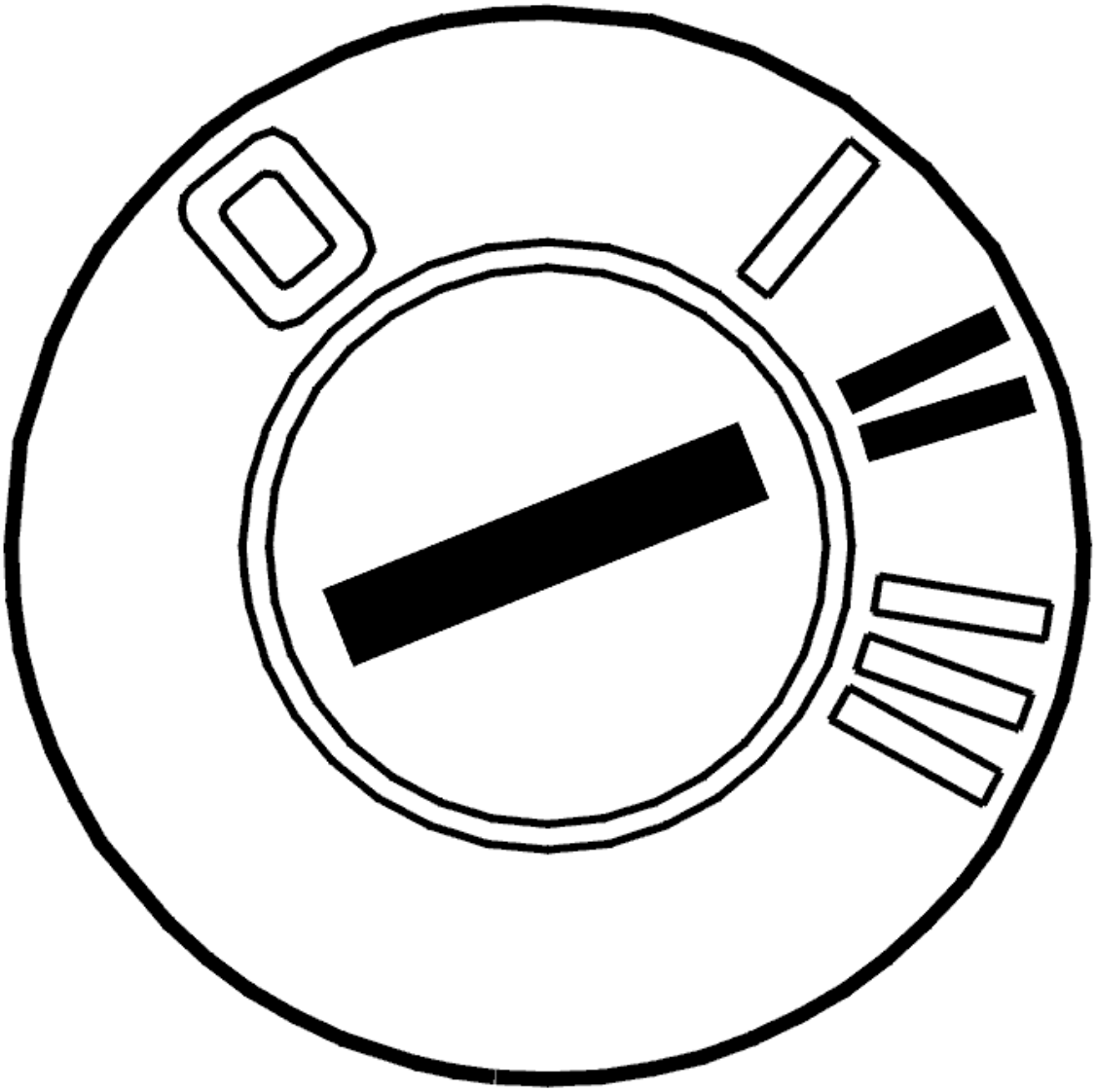

Fig. 104: Identifying Ignition ON
Courtesy of VOLVO CARS CORPORATION

- Ignition on

  Check if the malfunction is permanent or intermittent by reading off the signal from the fuel level sensor (via central electronic module (CEM)) and check that it is reasonable, that it moves when the vehicle is rocked lightly and that it then stabilizes at a reasonable level.

  Incorrect signal indicates that the malfunction is permanent. If the signal is reasonable, this indicates that the malfunction is intermittent.

  HINT: Completely full tank may mean that the level change when rocking the vehicle is not clear enough.

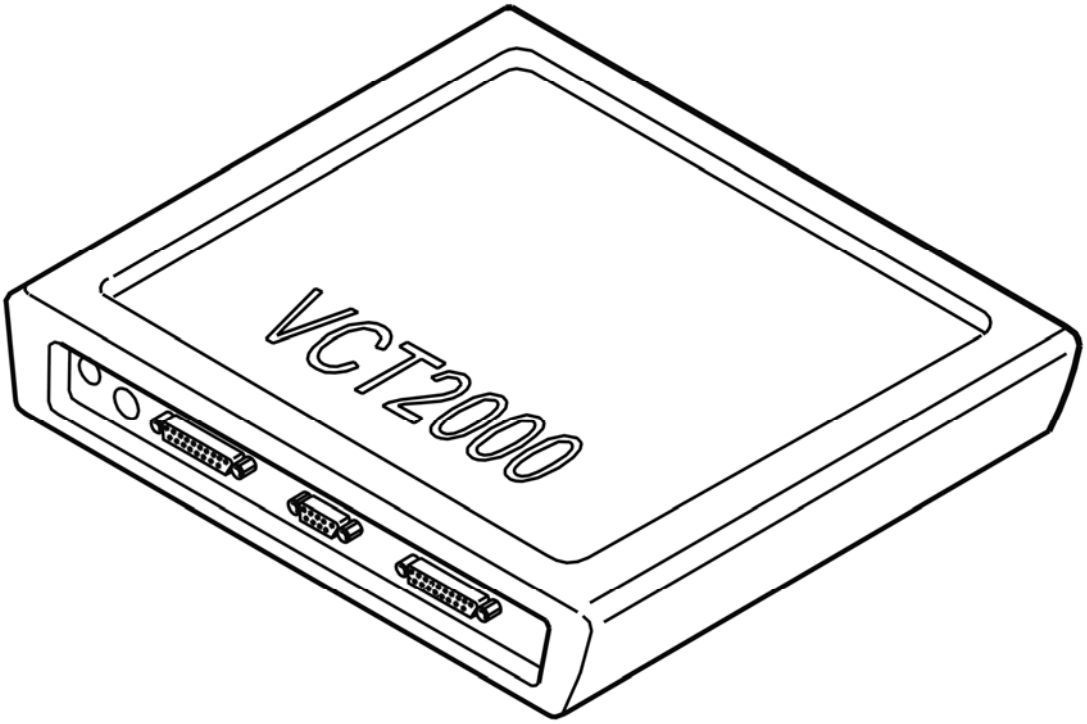

Fig. 105: Identifying VCT2000 Diagnostic Tool Symbol In VIDA
Courtesy of VOLVO CARS CORPORATION

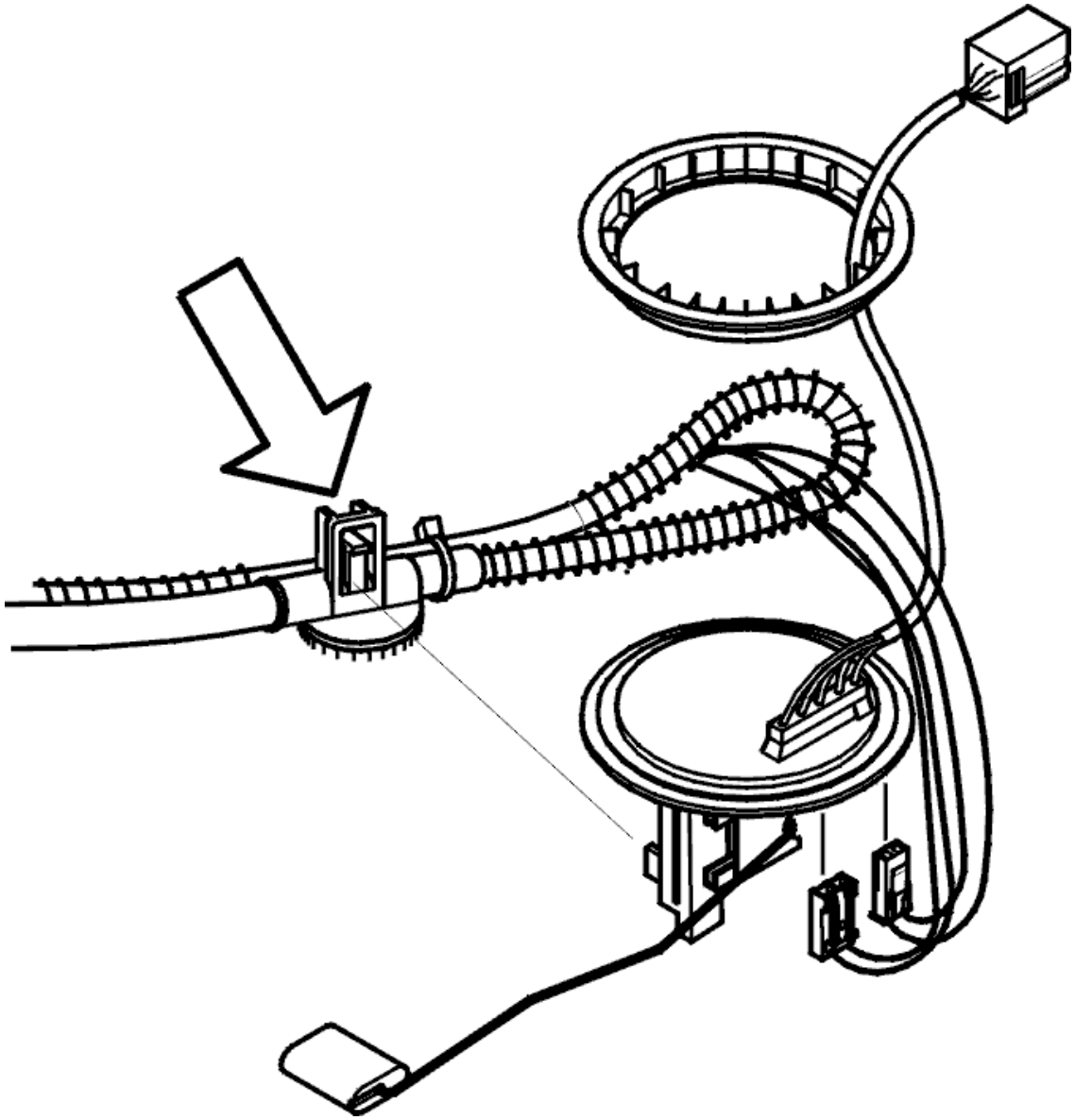

Fig. 106: Fuel Level Sensor Connector
Courtesy of VOLVO CARS CORPORATION

- **Continue**

  Refer to **CHECKING CONNECTOR**

CHECKING CONNECTOR

Check the fuel level sensor's connector and connections for contact resistance and oxidation.

Remedy as necessary.

Other information

- For replacing fuel pump: **LEVEL SENSOR, FUEL TANK, RIGHT-HAND/FUEL TANK, REPLACING**
- see **CHECKING WIRING AND TERMINALS**

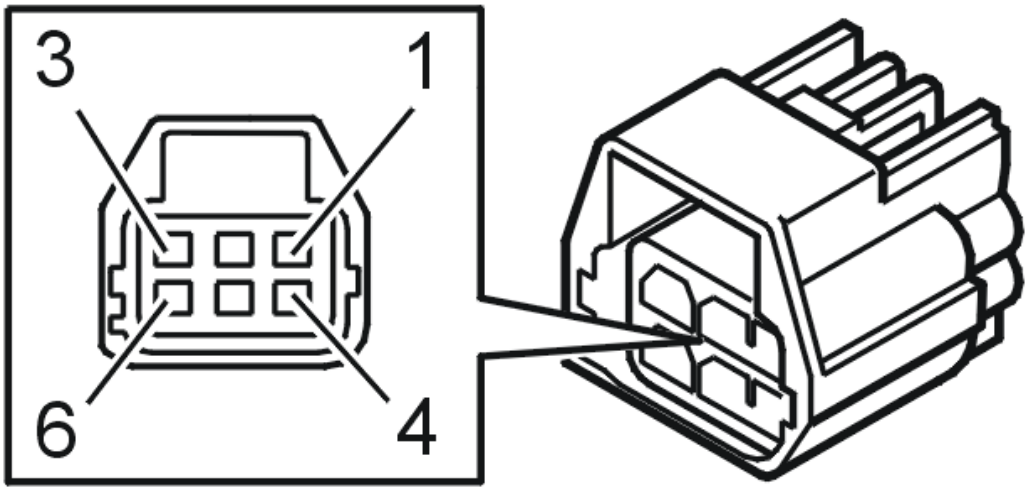

Fig. 107: Identifying Connector Terminals
Courtesy of VOLVO CARS CORPORATION

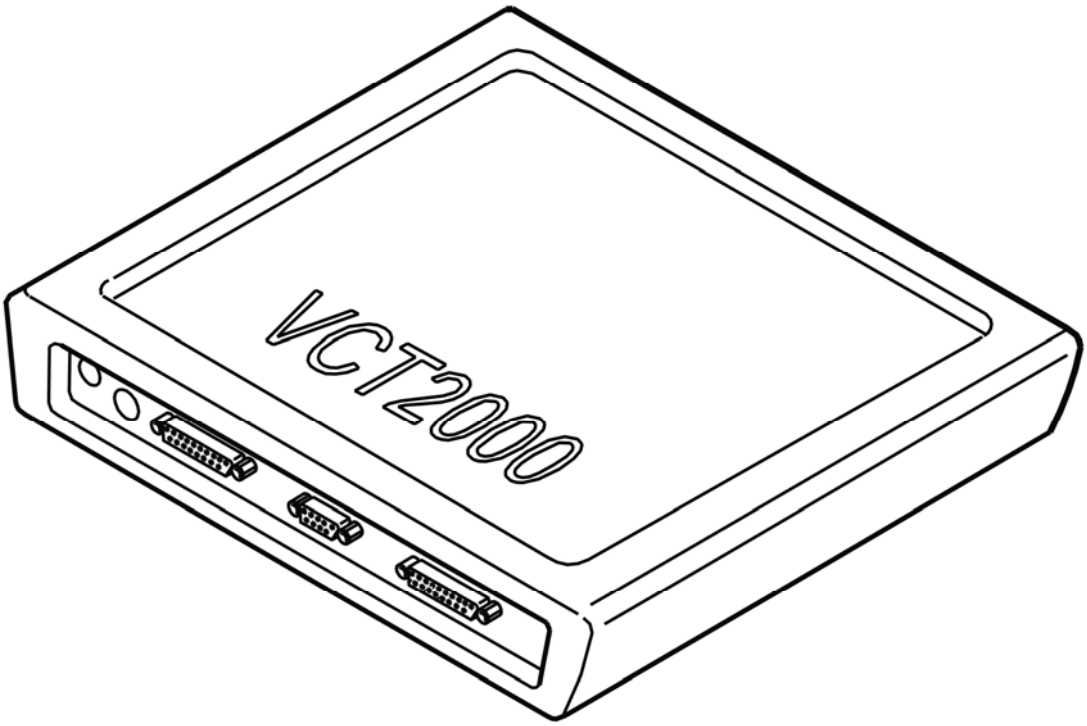

Fig. 108: Identifying VCT2000 Diagnostic Tool Symbol In VIDA
Courtesy of VOLVO CARS CORPORATION

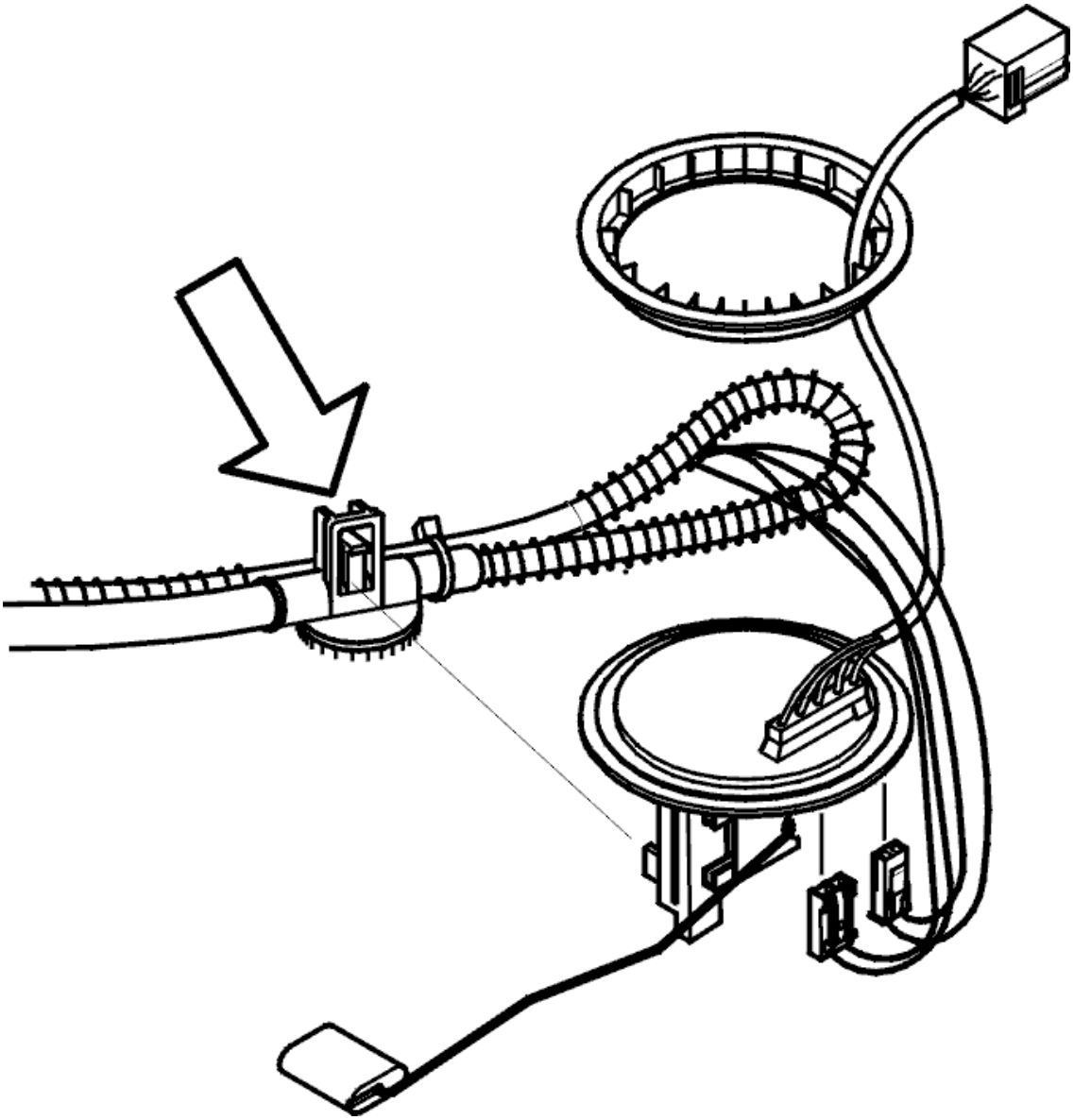

Fig. 109: Fuel Level Sensor Connector
Courtesy of VOLVO CARS CORPORATION

- **Continue**

  Refer to **VERIFICATION**

VERIFICATION

VERIFICATION

HINT: After carrying out the repair, check that the fault has been remedied.

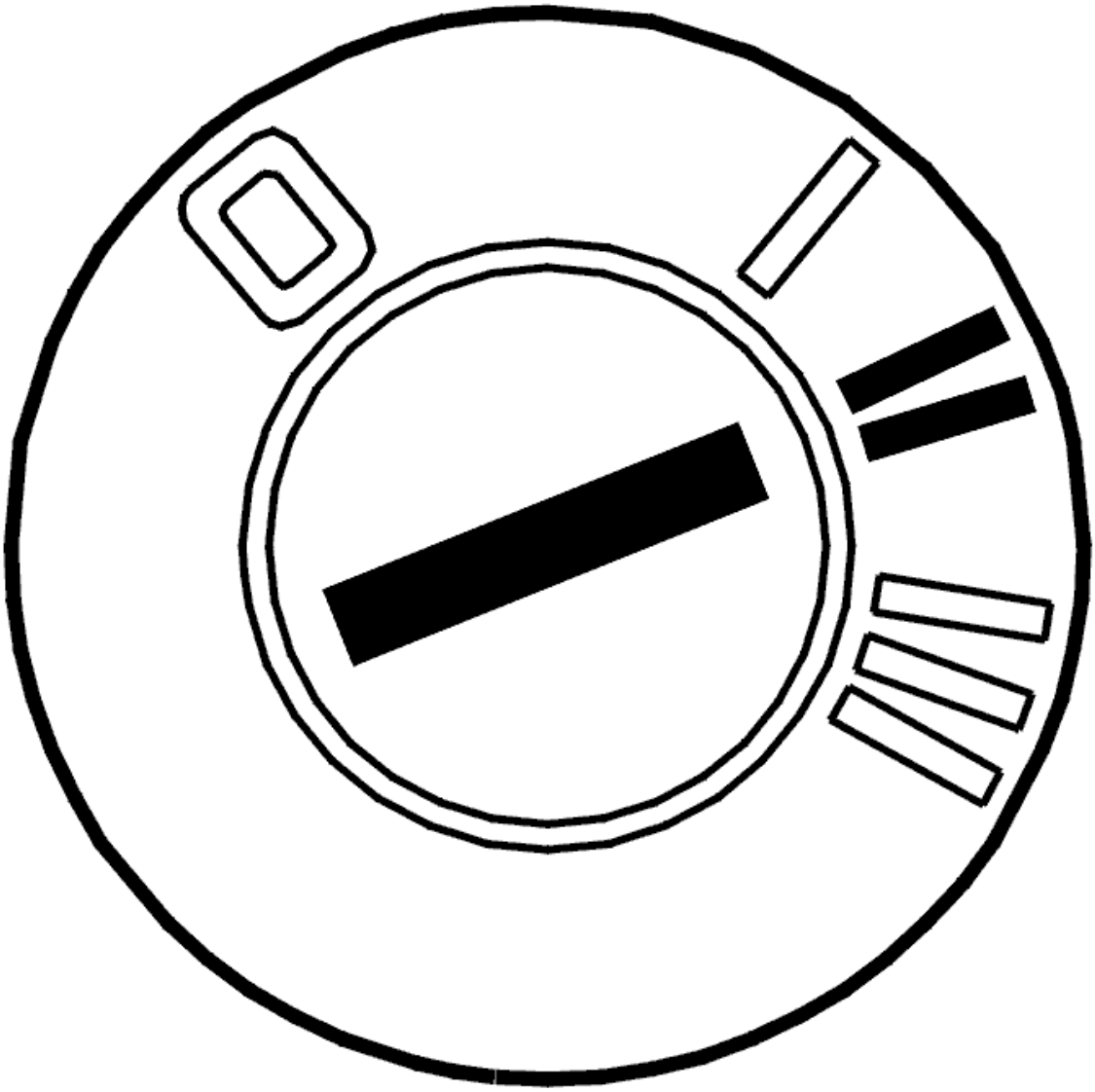

Fig. 110: Identifying Ignition ON
Courtesy of VOLVO CARS CORPORATION

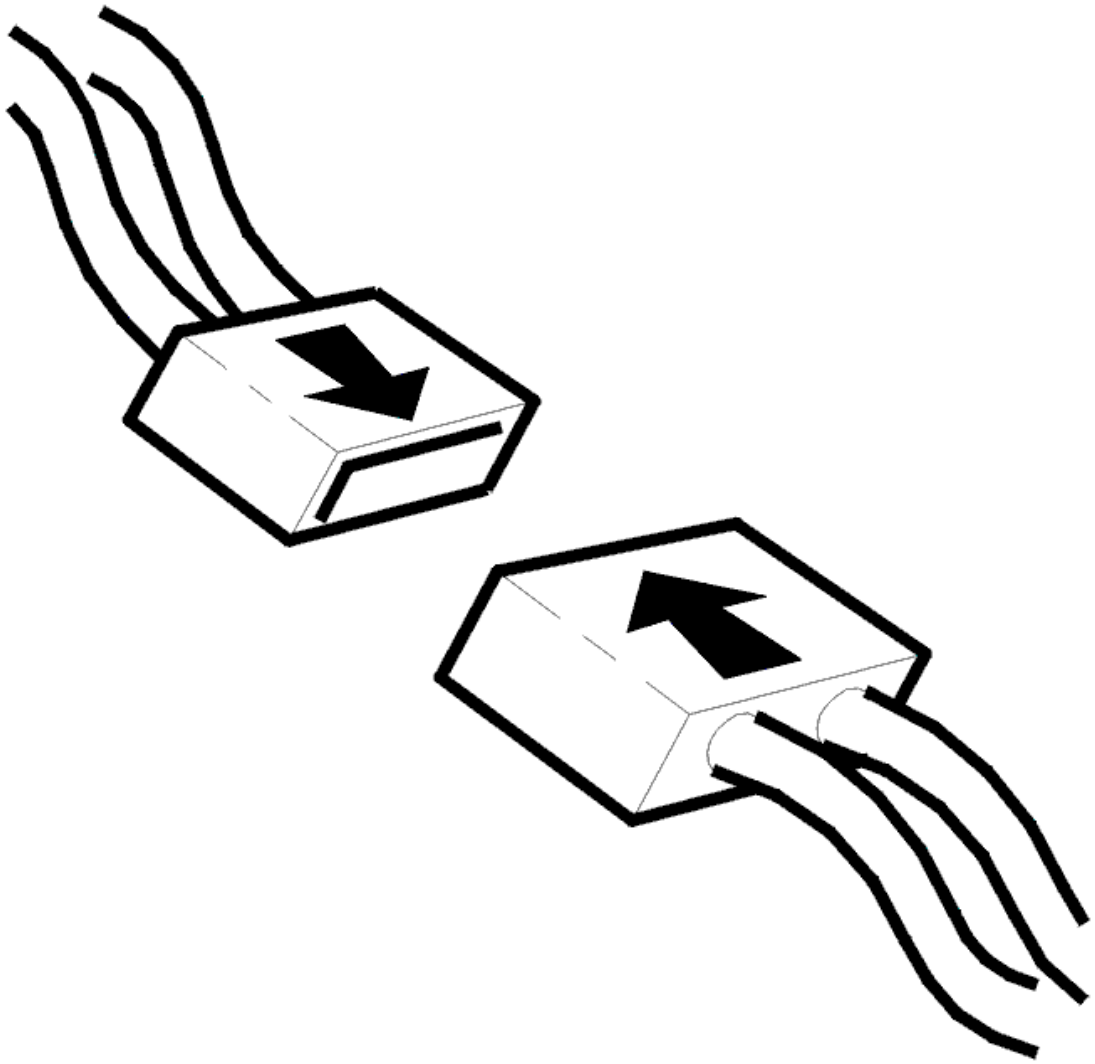

Fig. 111: Connecting Connector
Courtesy of VOLVO CARS CORPORATION

- Ignition off
- Reinstall the connectors, components etc.
- Ignition on

  Read off the signal from the fuel level sensor (via central electronic module (CEM)).

  Check that the signal is reasonable, that it moves when the vehicle is rocked lightly and that it then stabilizes at a reasonable level.

  Reasonable signal indicates that the malfunction has been remedied.

  HINT: Completely full tank may mean that the level change when rocking the vehicle is not clear

enough.

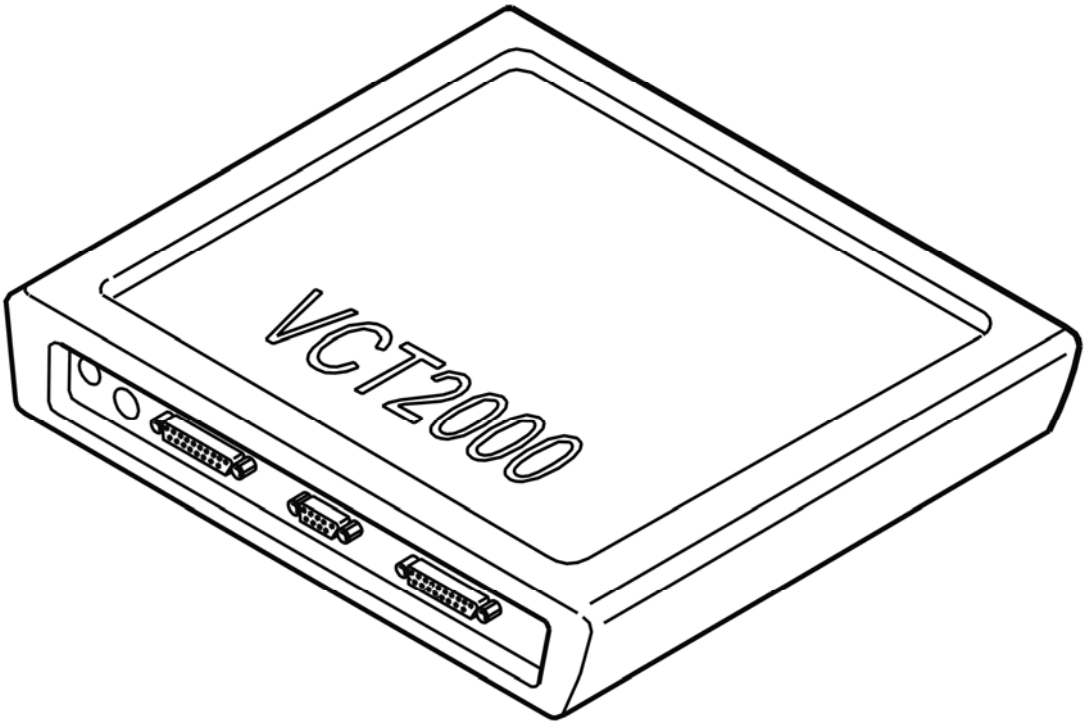

Fig. 112: Identifying VCT2000 Diagnostic Tool Symbol In VIDA
Courtesy of VOLVO CARS CORPORATION

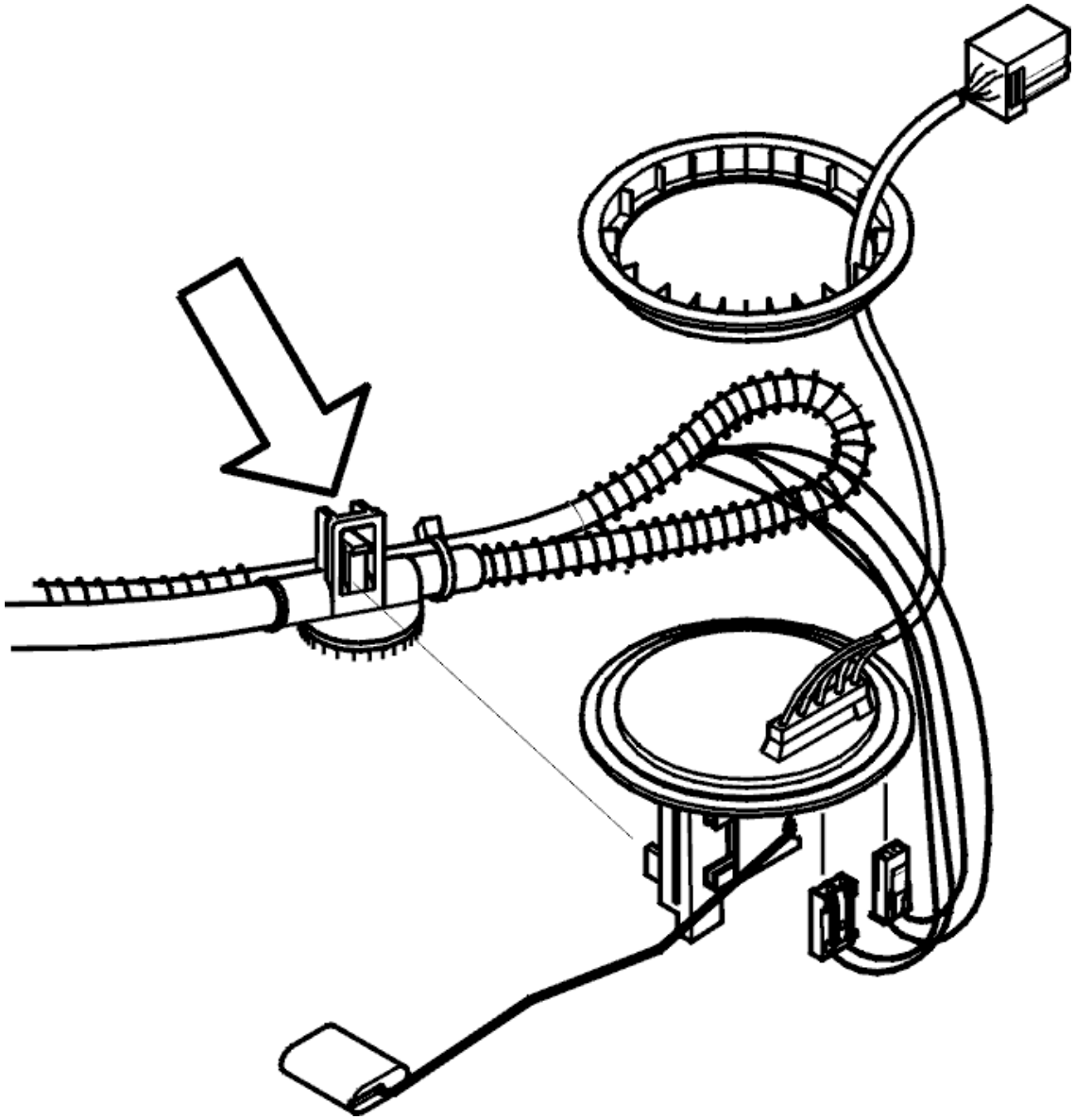

Fig. 113: Fuel Level Sensor Connector
Courtesy of VOLVO CARS CORPORATION

Is the signal reasonable?

- **YES**

  VERIFIED: Troubleshooting has been completed.

- **NO**

  Refer to **INFORMATION**

INFORMATION

FAULT-TRACING INFORMATION

The fault should have been detected and remedied. As this is not the case fault-tracing has failed.

Exit fault-tracing for this diagnostic trouble code (DTC) or make another attempt.

ECM-P046200: FUEL LEVEL SENSOR A CIRCUIT LOW INPUT SIGNAL. GENERAL MALFUNCTION INFORMATION. NO INFORMATION ON MALFUNCTION TYPE (B8444S; 2005-2011)

DIAGNOSTIC TROUBLE CODE (DTC) INFORMATION ECM-P046200

Condition

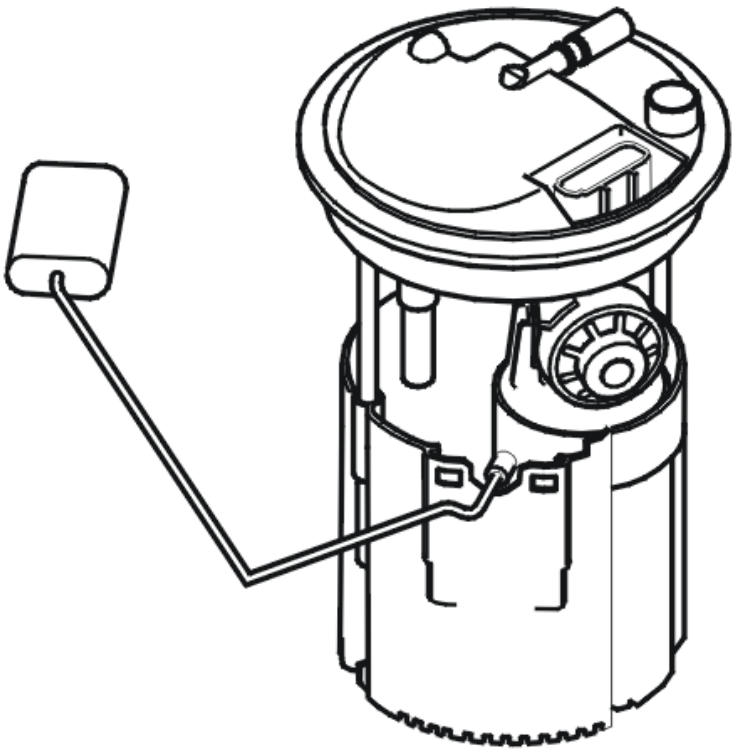

Fig. 114: Identifying Fuel Level Sensor
Courtesy of VOLVO CARS CORPORATION

If a malfunction of the fuel level sensor's pump part is detected by central electronic module (CEM), a malfunction message is sent to engine control module (ECM) and the diagnostic trouble code is generated.

The diagnostic trouble code can be diagnosed when the ignition is on.

Substitute Value

- Nothing.

Possible Source

- Look for the cause of the malfunction in central electronic module (CEM).

Fault symptom[s]

- Nothing.

FAULT TRACING

see **FAULT TRACING**

ECM-P046400: FUEL LEVEL SENSOR A CIRCUIT INTERMITTENT. GENERAL FAILURE INFORMATION. NO SUB TYPE INFORMATION (B6324S; 2007-2010)

DIAGNOSTIC TROUBLE CODE (DTC) INFORMATION ECM-P046400

Condition

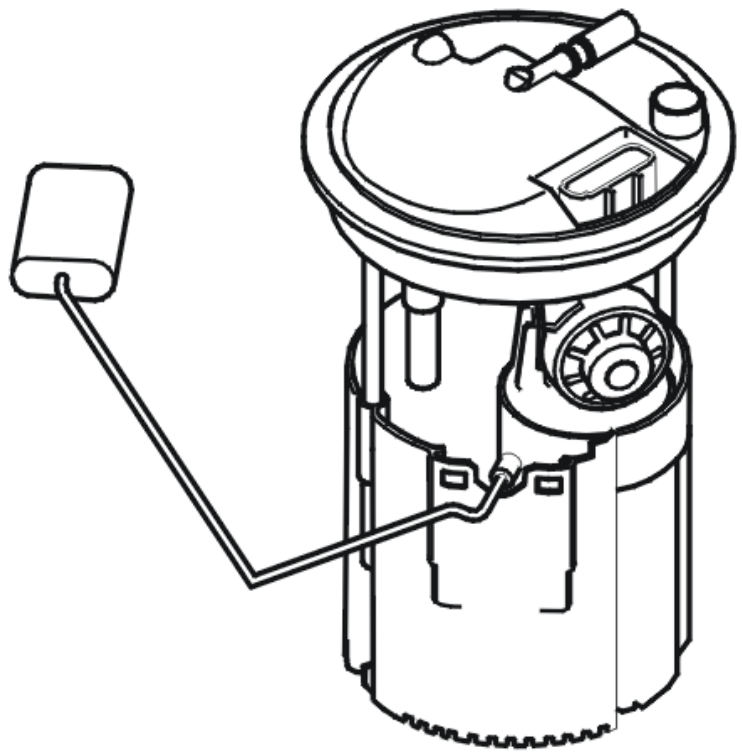

Fig. 115: Identifying Fuel Level Sensor

Courtesy of VOLVO CARS CORPORATION

The central electronic module (CEM) sends the engine control module (ECM) information on fuel level and the fault status of the fuel level sensor.

The engine control module (ECM) compares engine fuel consumption with the change in the fuel level over a certain period of time. The diagnostic trouble code is generated if the engine control module (ECM) registers great fluctuations in the fuel level while the vehicle is stationary.

The diagnostic trouble code can be diagnosed when the ignition is on.

Substitute Value

- Nothing.

Possible Source

- Contact resistance in the connectors.
- Damaged fuel level sensor.

Fault symptom[s]

- Nothing.

FAULT TRACING

see **FAULT TRACING**

ECM-P046400: FUEL LEVEL SENSOR A CIRCUIT INTERMITTENT. GENERAL FAILURE INFORMATION. NO SUB TYPE INFORMATION (B6324S5; 2011-2012)

DIAGNOSTIC TROUBLE CODE (DTC) INFORMATION ECM-P046400

see **DIAGNOSTIC TROUBLE CODE (DTC) INFORMATION ECM-P046400**

FAULT TRACING

see **FAULT TRACING**

ECM-P046400: FUEL LEVEL SENSOR A CIRCUIT INTERMITTENT. GENERAL MALFUNCTION INFORMATION. NO INFORMATION ON MALFUNCTION TYPE (B8444S; 2005-2011)

DIAGNOSTIC TROUBLE CODE (DTC) INFORMATION ECM-P046400

Condition

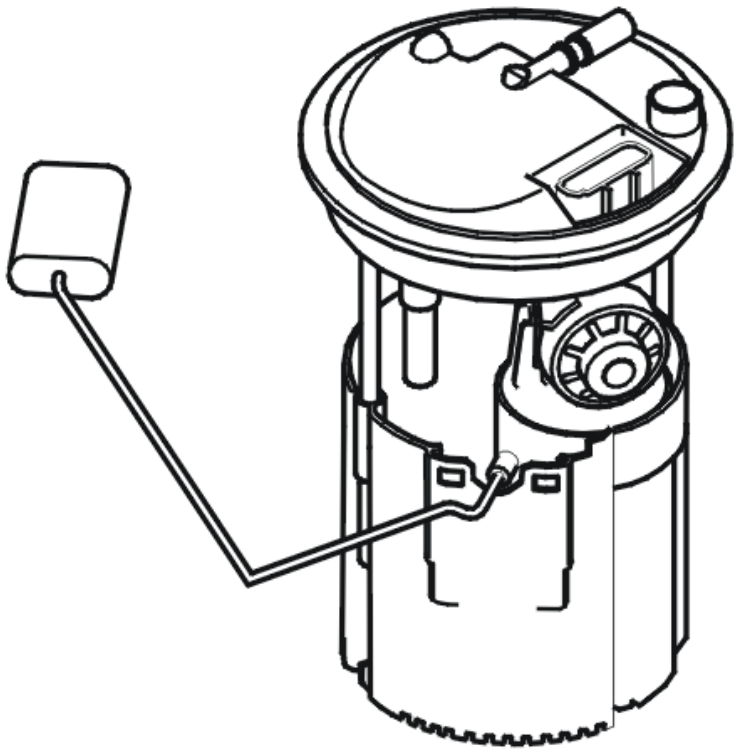

Fig. 116: Identifying Fuel Level Sensor
Courtesy of VOLVO CARS CORPORATION

The central electronic module (CEM) sends the engine control module (ECM) information on fuel level and the fault status of the fuel level sensor.

The engine control module (ECM) compares engine fuel consumption with the change in the fuel level over a certain period of time. The diagnostic trouble code is generated if the engine control module (ECM) registers great fluctuations in the fuel level while the vehicle is stationary.

The diagnostic trouble code can be diagnosed when the ignition is on.

Substitute Value

- Nothing.

Possible Source

- Contact resistance in the connectors.
- Damaged fuel level sensor.

Fault symptom[s]

- Nothing.

FAULT TRACING

see **FAULT TRACING**

ECM-P048000: FAN 1 CONTROL CIRCUIT. GENERAL FAILURE INFORMATION. NO SUB TYPE INFORMATION (B6324S; 2007-2010)

DIAGNOSTIC TROUBLE CODE (DTC) INFORMATION ECM-P048000

Condition

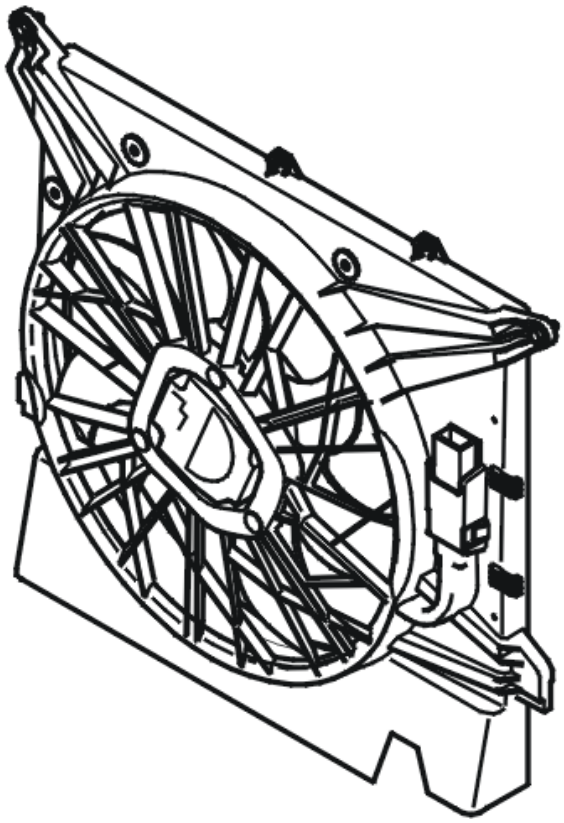

Fig. 117: Identifying Engine Cooling Fan
Courtesy of VOLVO CARS CORPORATION

The engine control module (ECM) sends a signal (speed request to the cooling fan) to the cooling fan module. The cooling fan module then regulates voltage to the fan motor at an infinitely variable rate. The diagnostic trouble code is generated if the engine control module (ECM) detects that fan speed is low.

The diagnostic trouble code can be diagnosed when the engine is running.

NOTE: **The electric cooling fan may have a post-running time of up to approx. 6 minutes after the engine has been shut off. The time for the electric cooling fan's post-running depends on the engine's temperature, temperature in the engine compartment as well as the pressure level in the AC system.**

Substitute Value

- Nothing.

Possible Source

- Blocked fan blade.
- Cooling fan seizing.
- Open-circuit on cooling fan power cable.
- Damaged cooling fan module.

Fault symptom[s]

- Overheated engine.
- Electric cooling fan does not operate

FAULT-TRACING

see **FAULT-TRACING**

ECM-P048000: FAN 1 CONTROL CIRCUIT. GENERAL FAILURE INFORMATION. NO SUB TYPE INFORMATION (B6324S5; 2011-2012)

DIAGNOSTIC TROUBLE CODE (DTC) INFORMATION ECM-P048000

see **DIAGNOSTIC TROUBLE CODE (DTC) INFORMATION ECM-P048000**

FAULT-TRACING

see **FAULT-TRACING**

ECM-P048000: FAN 1 CONTROL CIRCUIT. GENERAL FAULT INFORMATION. TYPE OF FAULT NOT SPECIFIED. (B8444S; 2005-2011)

DIAGNOSTIC TROUBLE CODE (DTC) INFORMATION ECM-P048000

Condition

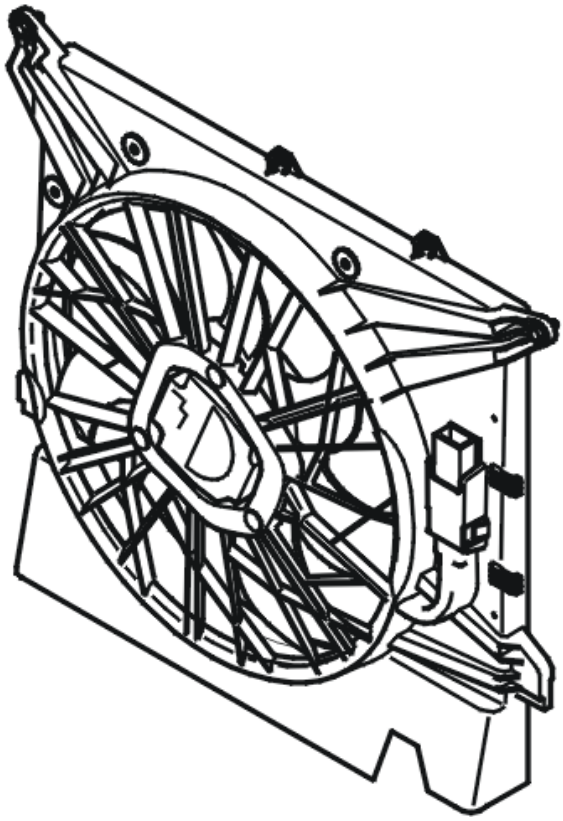

Fig. 118: Identifying Engine Cooling Fan
Courtesy of VOLVO CARS CORPORATION

The engine control module (ECM) sends a signal (speed request to the cooling fan) to the cooling fan module. The cooling fan module then regulates voltage to the fan motor at an infinitely variable rate. The diagnostic trouble code is generated if the engine control module (ECM) detects that fan speed is low.

The diagnostic trouble code can be diagnosed when the engine is running.

NOTE: **The electric cooling fan may have a post-running time of up to approx. 6 minutes after the engine has been shut off. The time for the electric cooling fan's post-running depends on the engine's temperature, temperature in the engine compartment as well as the pressure level in the AC system.**

Substitute Value

- Nothing.

Possible Source

- Blocked fan blade.
- Cooling fan seizing.
- Open-circuit on cooling fan power cable.

- Damaged cooling fan module.

Fault symptom[s]

- Overheated engine.
- Electric cooling fan does not operate

FAULT TRACING ECM-P048000

CHECKING COMPONENTS AND WIRING

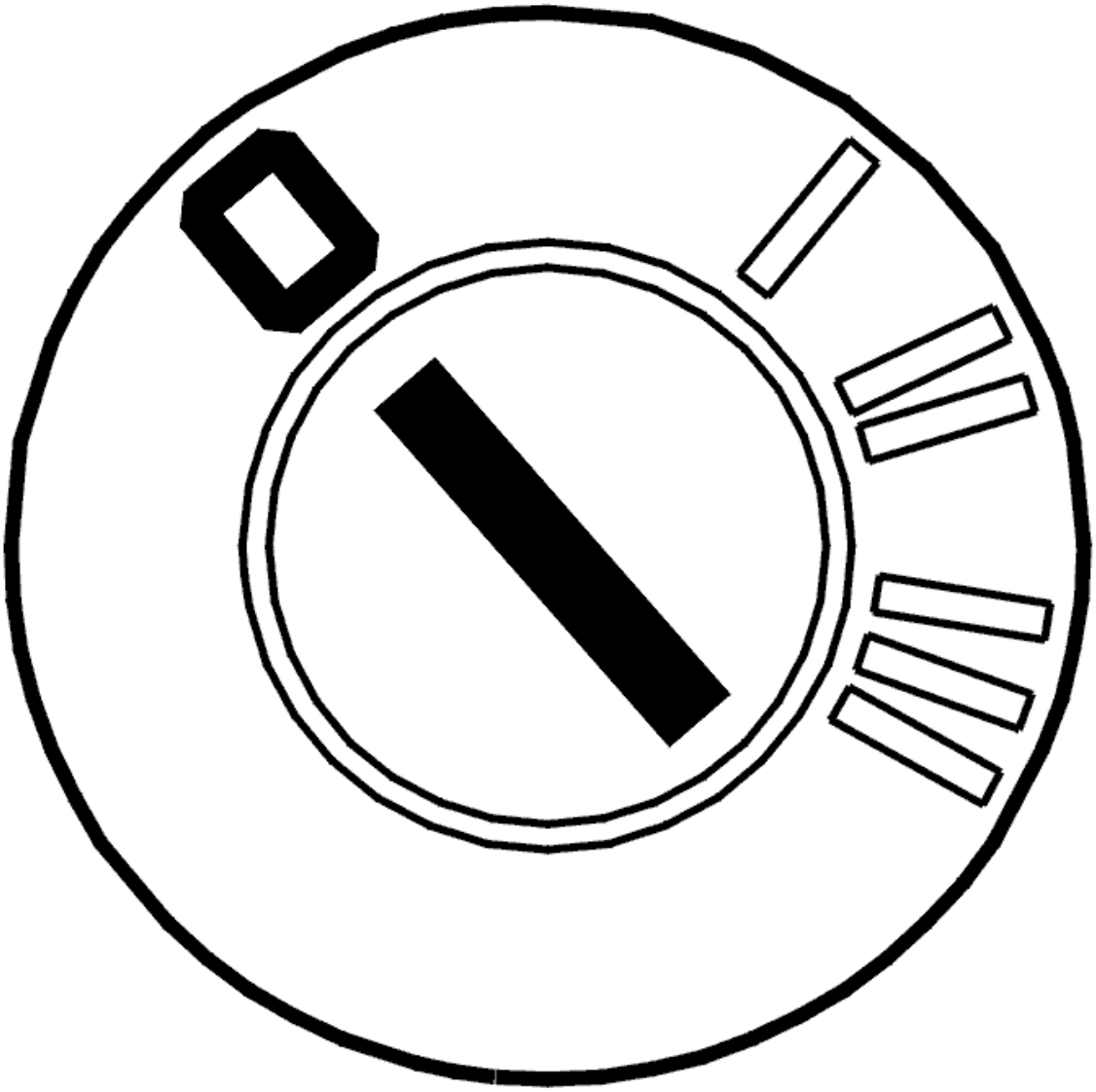

Fig. 119: Identifying Ignition OFF
Courtesy of VOLVO CARS CORPORATION

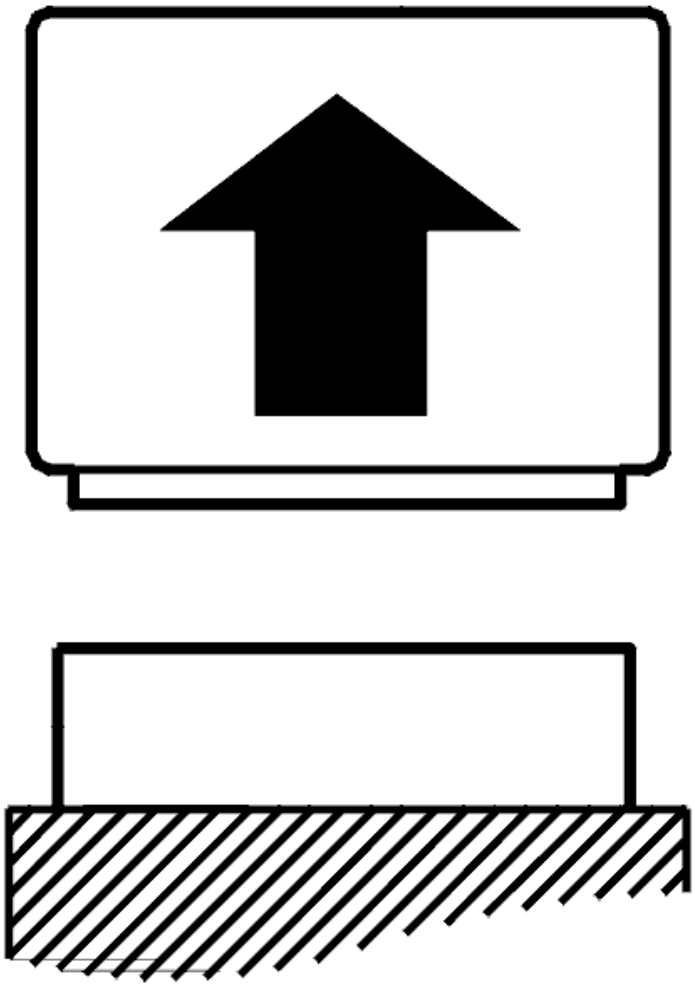

Fig. 120: Disconnecting Connector
Courtesy of VOLVO CARS CORPORATION

- Ignition off

  Check that the fan blade of the engine cooling fan (FC) rotates easily and that nothing is obstructing it.

  Check the voltage supply cable. Check for an open-circuit. Take readings between the system relay and engine cooling fan (FC) control module terminal #2.

  Activate the engine cooling fan using the VCT2000 (or appropriate scan tool).

  Remedy as necessary.

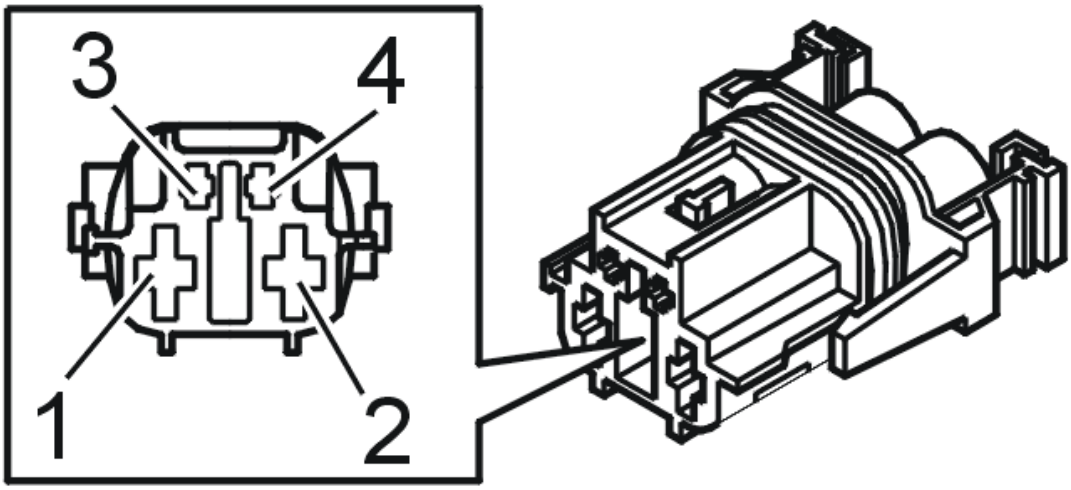

Fig. 121: Identifying Connector Terminals
Courtesy of VOLVO CARS CORPORATION

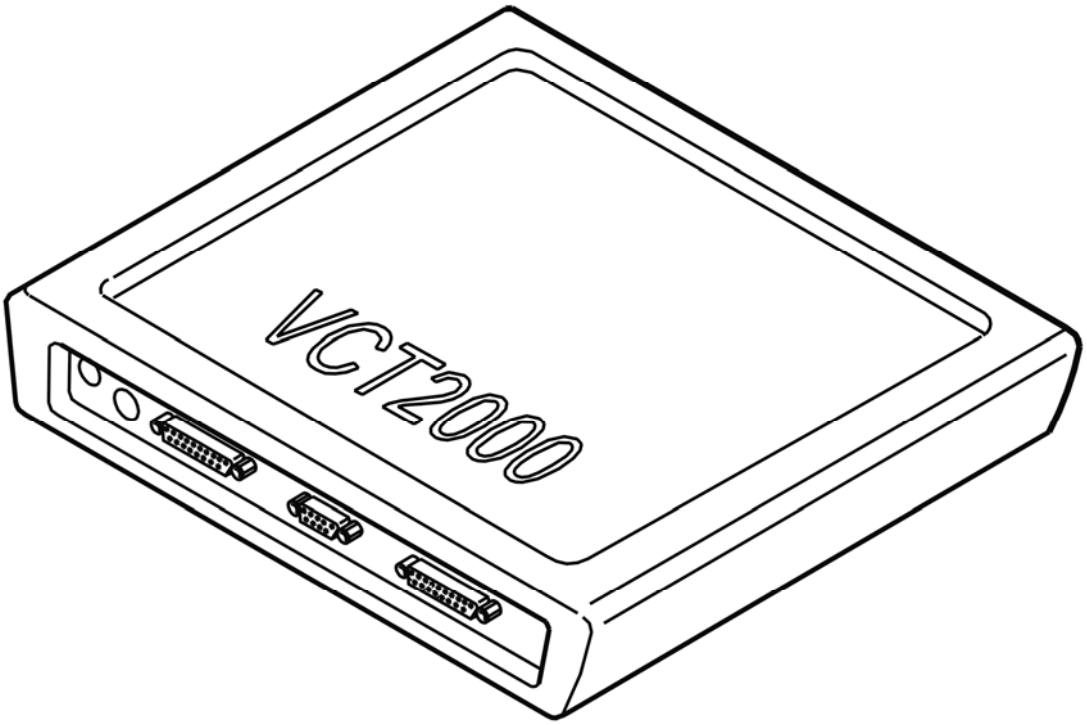

Fig. 122: Identifying VCT2000 Diagnostic Tool Symbol In VIDA
Courtesy of VOLVO CARS CORPORATION

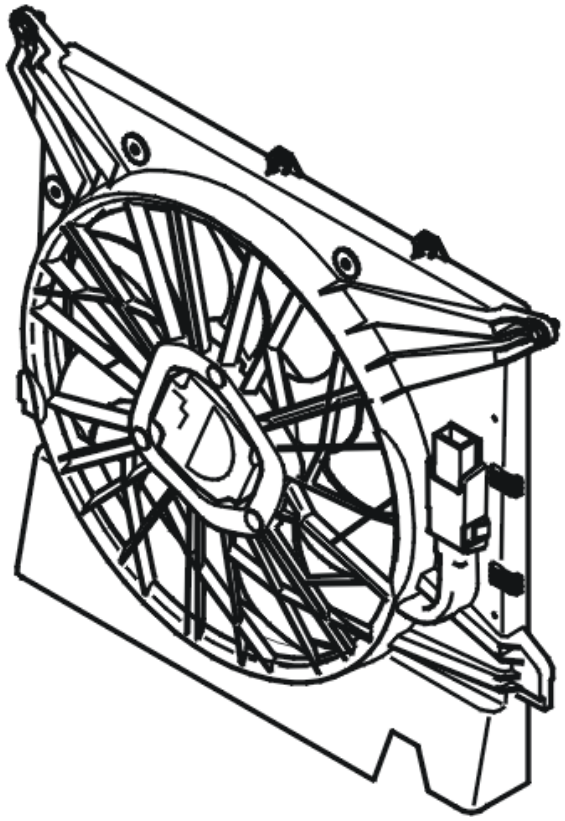

Fig. 123: Identifying Engine Cooling Fan
Courtesy of VOLVO CARS CORPORATION

- **Continue**

  Refer to **VERIFICATION**

VERIFICATION

VERIFICATION

HINT: After carrying out the repair, check that the fault has been remedied.

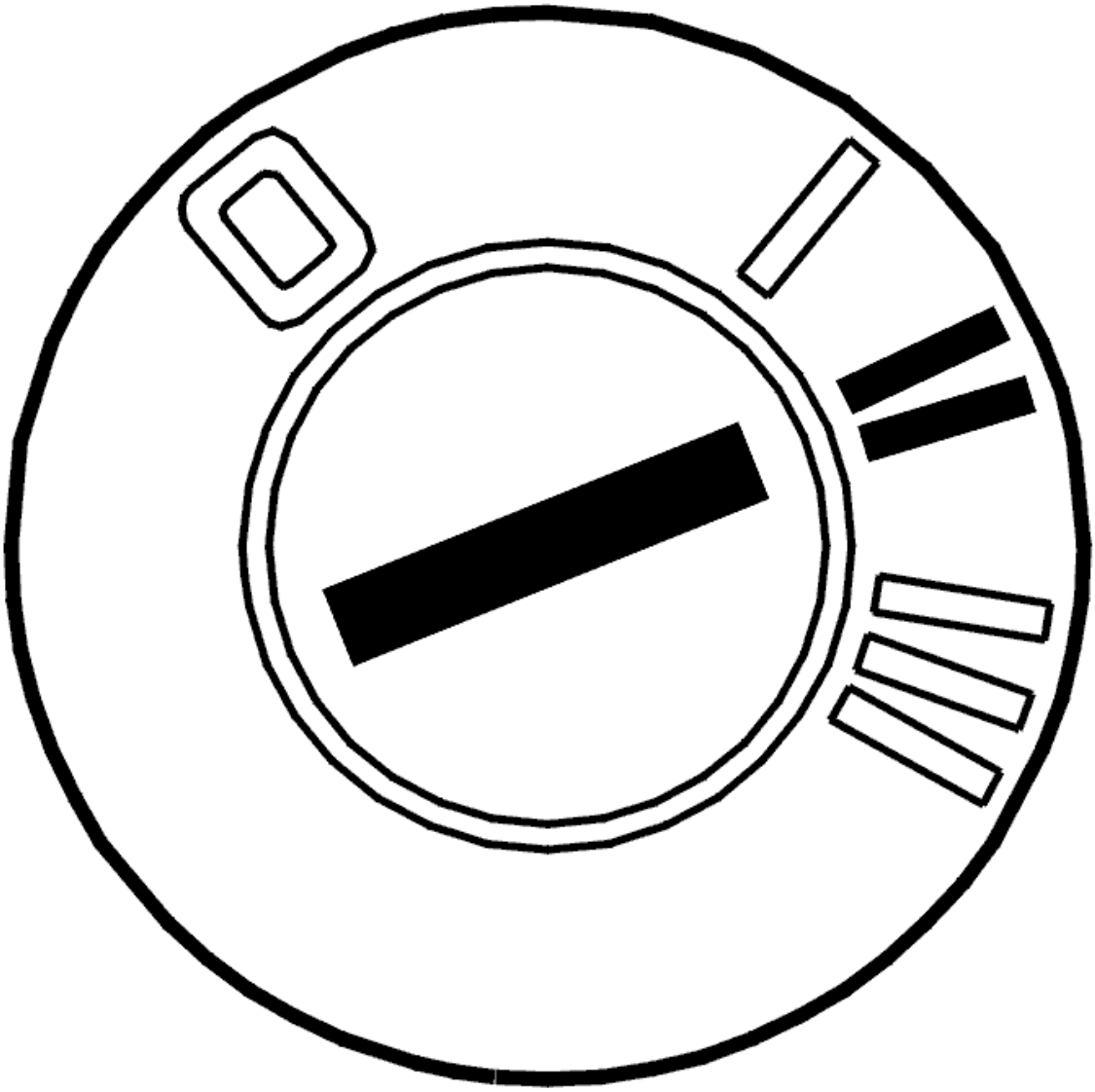

Fig. 124: Identifying Ignition ON
Courtesy of VOLVO CARS CORPORATION

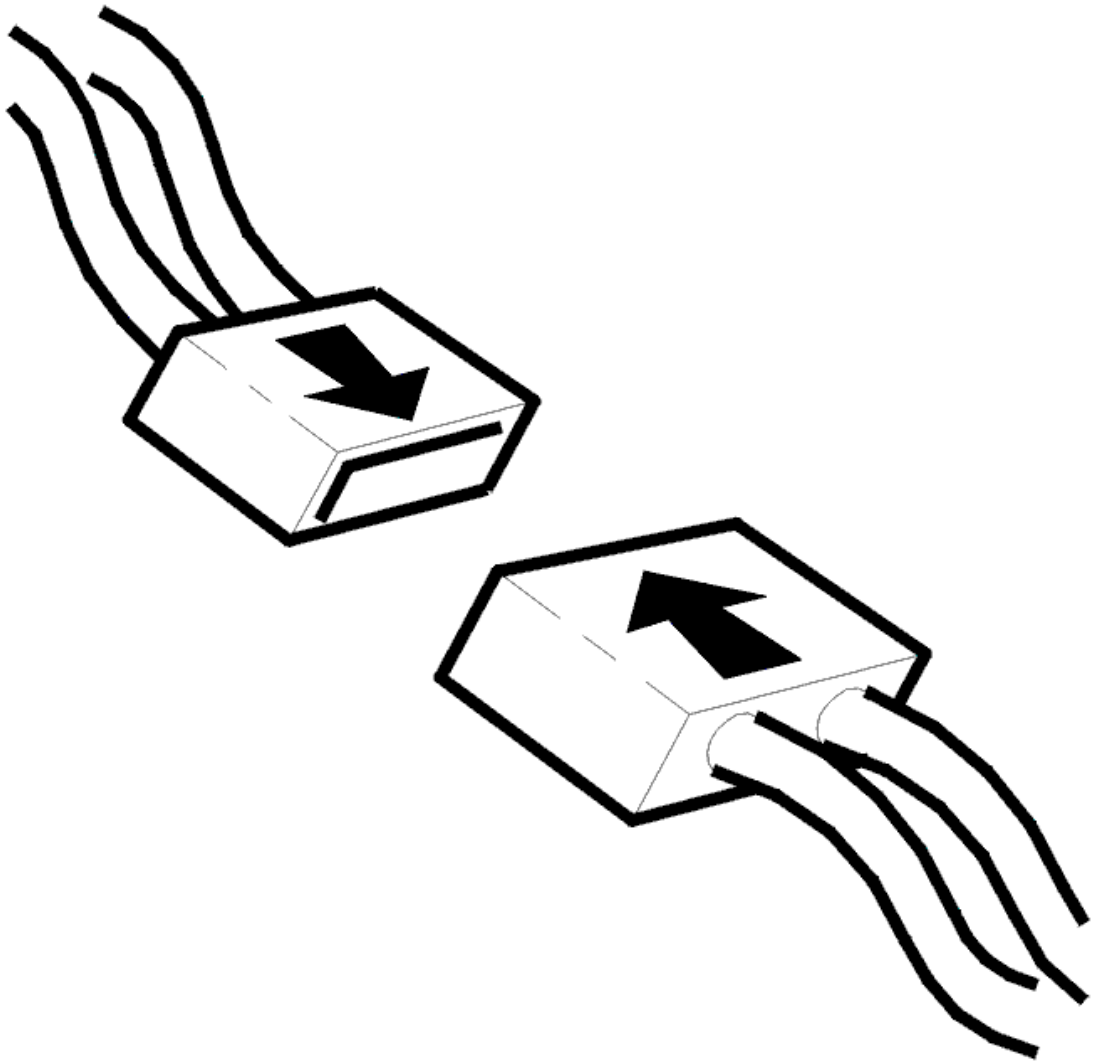

Fig. 125: Connecting Connector
Courtesy of VOLVO CARS CORPORATION

- Ignition off
- Reinstall the connectors, components etc.
- Ignition on

  Activate the engine cooling fan using the VCT2000 (or appropriate scan tool).

  Check that the engine cooling fan (FC) starts when activated.

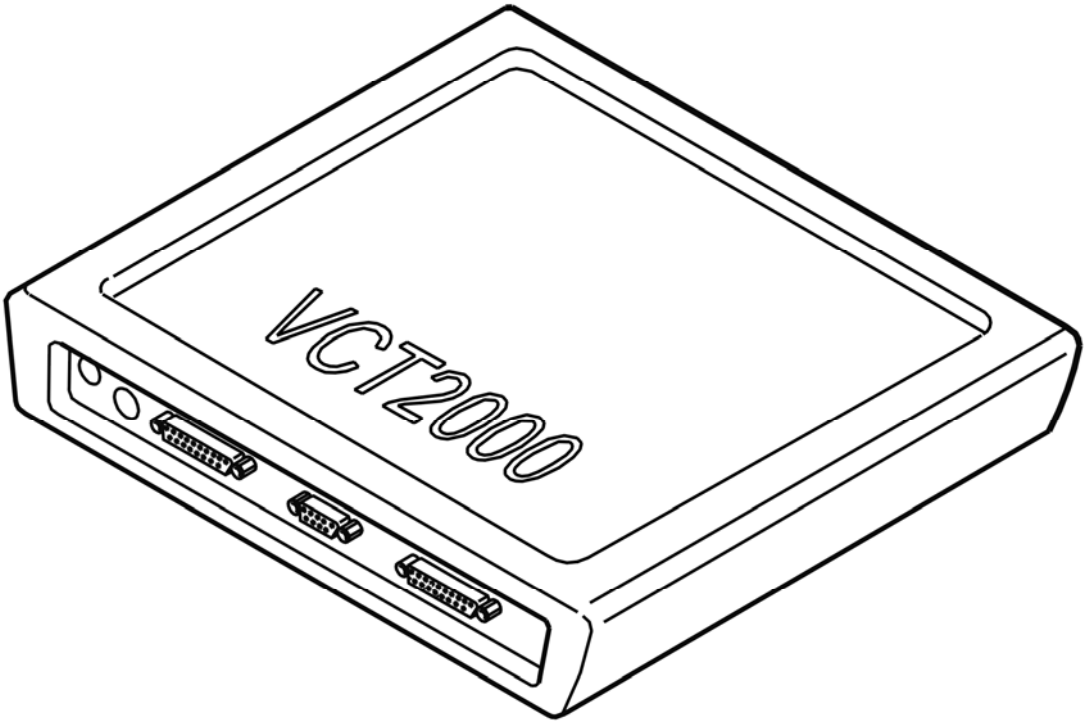

Fig. 126: Identifying VCT2000 Diagnostic Tool Symbol In VIDA
Courtesy of VOLVO CARS CORPORATION

Is the function OK?

- **YES**

  VERIFIED: Troubleshooting has been completed.

- **NO**

  Refer to **INFORMATION**

INFORMATION

FAULT-TRACING INFORMATION

The fault should have been detected and remedied. As this is not the case fault-tracing has failed.

Exit fault-tracing for this diagnostic trouble code (DTC) or make another attempt.

ECM-P048100: FAN 2 CONTROL CIRCUIT. GENERAL FAILURE INFORMATION. NO SUB TYPE INFORMATION (B6324S; 2007-2010)

DIAGNOSTIC TROUBLE CODE (DTC) INFORMATION ECM-P048100

Condition

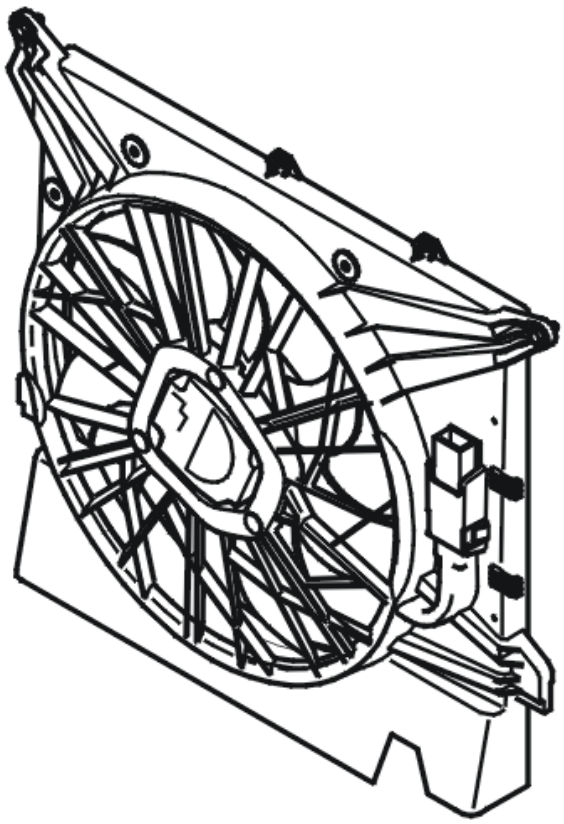

Fig. 127: Identifying Engine Cooling Fan
Courtesy of VOLVO CARS CORPORATION

The engine control module (ECM) sends a signal (speed request to the cooling fan) to the cooling fan module. The cooling fan module then regulates voltage to the fan motor at an infinitely variable rate. The diagnostic trouble code is generated if the engine control module (ECM) detects that fan speed is low.

The diagnostic trouble code can be diagnosed when the engine is running.

NOTE: **The electric cooling fan may have a post-running time of up to approx. 6 minutes after the engine has been shut off. The time for the electric cooling fan's post-running depends on the engine's temperature, temperature in the engine compartment as well as the pressure level in the AC system.**

Substitute Value

- Nothing.

Possible Source

- The cooling fan control module detects that the voltage feed is too high or too low.

Fault symptom[s]

- None

FAULT-TRACING

see **FAULT-TRACING**

ECM-P048100: FAN 2 CONTROL CIRCUIT. GENERAL FAILURE INFORMATION. NO SUB TYPE INFORMATION (B6324S5; 2011-2012)

DIAGNOSTIC TROUBLE CODE (DTC) INFORMATION ECM-P048100

see **DIAGNOSTIC TROUBLE CODE (DTC) INFORMATION ECM-P048100**

FAULT-TRACING

see **FAULT-TRACING**

ECM-P048368: FAN PERFORMANCE. ALGORITHM BASED FAILURES. EVENT INFORMATION (B6324S; 2007-2010)

DIAGNOSTIC TROUBLE CODE (DTC) INFORMATION ECM-P048368

Condition

NOTE: **This diagnostic trouble code (DTC) status is an event controlled diagnostic trouble code (DTC). An event controlled diagnostic trouble code (DTC) does not mean that there is a fault in the control module when it is active, but is designed as information.**

Engine control module (ECM) monitors the engine's cooling system. The diagnostic trouble code (DTC) is stored if the control module detects that:

- The electric cooling fan is blocked.
- The electric cooling fan is overheated.
- Voltage feed to the electric cooling fan is too low.

The diagnostic trouble code (DTC) can be diagnosed when the engine is running.

Substitute Value

- Nothing.

Possible Source

- This diagnostic trouble code (DTC) is not caused by a fault that needs to be remedied.

Fault symptom[s]

- None.

FAULT-TRACING INFORMATION

see **FAULT-TRACING INFORMATION**

ECM-P048368: FAN PERFORMANCE. ALGORITHM BASED FAILURES. EVENT INFORMATION (B6324S5; 2011-2012)

DIAGNOSTIC TROUBLE CODE (DTC) INFORMATION ECM-P048368

see **DIAGNOSTIC TROUBLE CODE (DTC) INFORMATION ECM-P048368**

FAULT-TRACING INFORMATION

see **FAULT-TRACING INFORMATION**

ECM-P050000: SPEED SENSOR A. GENERAL MALFUNCTION INFORMATION. NO INFORMATION ON MALFUNCTION TYPE (B8444S; 2005-2011)

DIAGNOSTIC TROUBLE CODE (DTC) INFORMATION ECM-P050000

Condition

Information about vehicle speed is sent on the CAN-network from brake control module (BCM) to engine control module (ECM).

If brake control module (BCM) registers a malfunction of the speed signal, information about the malfunction is sent to engine control module (ECM) which generates the diagnostic trouble code.

The diagnostic trouble code can be diagnosed when the ignition is on.

Substitute Value

- Cruise control turned off when malfunction is active.

Possible Source

- Look for the cause of the malfunction in the brake control module (BCM).

Fault symptom[s]

- Cruise control does not function at all.
- Message in the display.

TROUBLESHOOTING INFORMATION

INFORMATION

No troubleshooting has been developed for this diagnostic trouble code (DTC). Diagnostic trouble code (DTC) for this malfunction is first stored in the brake control module (BCM), then in the engine control module (ECM). This diagnostic trouble code (DTC) cannot be erased before the diagnostic trouble code (DTC) in the brake control module (BCM) has been erased and remedied.

Therefore, first read off the diagnostic trouble codes in the brake control module (BCM), perform troubleshooting and take appropriate action. Then this diagnostic trouble code can be erased.

ECM-P050082: VEHICLE SPEED SENSOR A. BUS SIGNAL / MESSAGE FAILURES. ALIVE / SEQUENCE COUNTER INCORRECT / NOT UPDATED (B6324S; 2007-2010)

DIAGNOSTIC TROUBLE CODE (DTC) INFORMATION

Condition

Information about vehicle speed is sent on the CAN-network from brake control module (BCM) to engine control module (ECM).

If brake control module (BCM) registers a malfunction of the speed signal, information about the malfunction is sent to engine control module (ECM) which generates the diagnostic trouble code.

The diagnostic trouble code can be diagnosed when the ignition is on.

Substitute Value

- Cruise control turned off when malfunction is active.

Possible Source

- Look for the cause of the malfunction in the brake control module (BCM).

Fault symptom[s]

- Cruise control does not function at all.
- Message in the display.

FAULT-TRACING

INFORMATION

No fault-tracing has been developed for this diagnostic trouble code (DTC).

The diagnostic trouble code (DTC) for this fault is first stored in the Brake control module (BCM), then in the Engine control module (ECM). This diagnostic trouble code (DTC) can first be erased when the root fault has been remedied and the diagnostic trouble code (DTC) for the root fault has been erased.

For further information on this diagnostic trouble code, see Diagnostic trouble code (DTC) information.

ECM-P050082: VEHICLE SPEED SENSOR A. BUS SIGNAL / MESSAGE FAILURES. ALIVE / SEQUENCE COUNTER INCORRECT / NOT UPDATED (B6324S5; 2011-2012)

DIAGNOSTIC TROUBLE CODE (DTC) INFORMATION

see **DIAGNOSTIC TROUBLE CODE (DTC) INFORMATION**

FAULT-TRACING

see **FAULT-TRACING**

ECM-P050087: VEHICLE SPEED SENSOR A. BUS SIGNAL / MESSAGE FAILURES. MISSING MESSAGE (B6324S; 2007-2010)

DIAGNOSTIC TROUBLE CODE (DTC) INFORMATION ECM-P050087

Condition

Information about vehicle speed is sent on the CAN-network from brake control module (BCM) to engine control module (ECM).

If communication between brake control module (BCM) and engine control module (ECM) is missing, the diagnostic trouble code is generated.

The diagnostic trouble code can be diagnosed when the ignition is on.

Substitute Value

- Cruise control turned off when malfunction is active.

Possible Source

- Open circuit on one of the CAN-cables.

- Short-circuit between the control area network (CAN) wiring.
- Internal malfunction in brake control module (BCM).
- Internal malfunction in engine control module (ECM).
- Internal malfunction in another control module in the same part of the CAN-network.

Fault symptom[s]

- Cruise control does not function at all.
- Message in the display.

FAULT-TRACING

see **FAULT-TRACING**

ECM-P050087: VEHICLE SPEED SENSOR A. BUS SIGNAL / MESSAGE FAILURES. MISSING MESSAGE (B6324S5; 2011-2012)

DIAGNOSTIC TROUBLE CODE (DTC) INFORMATION ECM-P050087

see **DIAGNOSTIC TROUBLE CODE (DTC) INFORMATION ECM-P050087**

FAULT-TRACING

see **FAULT-TRACING**

ECM-P050100: SPEED SENSOR A WITHIN/OUTSIDE LIMIT VALUES. GENERAL MALFUNCTION INFORMATION. NO INFORMATION ON MALFUNCTION TYPE (B8444S; 2005-2011)

DIAGNOSTIC TROUBLE CODE (DTC) INFORMATION ECM-P050100

Condition

Information about vehicle speed is sent on the CAN-network from brake control module (BCM) to engine control module (ECM).

If communication between brake control module (BCM) and engine control module (ECM) is missing, the diagnostic trouble code is generated.

The diagnostic trouble code can be diagnosed when the ignition is on.

Substitute Value

- Cruise control turned off when malfunction is active.

Possible Source

- Open circuit on one of the CAN-cables.
- Short-circuit between the control area network (CAN) wiring.
- Internal malfunction in brake control module (BCM).
- Internal malfunction in engine control module (ECM).
- Internal malfunction in another control module in the same part of the CAN-network.

Fault symptom[s]

- Cruise control does not function at all.
- Message in the display.

FAULT-TRACING INFORMATION

INFORMATION

There is no troubleshooting for this diagnostic trouble code (DTC). A diagnostic trouble code for CAN-communication can also be generated in the central electronic module (CEM). In some instances, the diagnostic trouble code is generated in other related control modules. This code should not be erased until the code in the central electronic module (CEM) and other related control modules has been remedied and erased. Thus, first read out diagnostic trouble codes (DTCs) in the central electronic module (CEM) and other related control modules, perform troubleshooting and take appropriate action. After that, this code can be erased.

Other information

- see **GENERAL INFORMATION ABOUT FAULT-TRACING IN THE CAN NETWORK**

HINT: Try using the Information Manager if the desired diagnostic trouble code information cannot be found.

ECM-P050429: BRAKE SWITCH A / B CORRELATION. GENERAL SIGNAL FAILURES. SIGNAL INVALID (B6324S; 2007-2010)

DIAGNOSTIC TROUBLE CODE (DTC) INFORMATION ECM-P050429

Condition

The engine control module (ECM) checks the stop lamp switch by comparing the received signal with the brake pedal switch position. Information about the position of the brake pedal switch is transmitted from the brake control module (BCM) via CAN communication.

The control module compares both the signals.

The diagnostic trouble code (DTC) is stored if the control module detects that:

- The signals indicate different positions of the brake pedal at several times.

The control module's test for the diagnostic trouble code (DTC) starts in the event of:

- Ignition switch position II.
- The brake pedal depressed several times.

NOTE: The control module can only detect the fault once the test has been started and the diagnostic trouble code (DTC) is stored when the conditions are met.

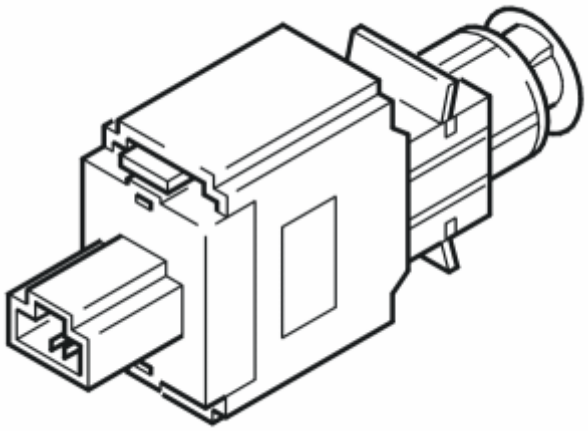

Fig. 128: Identifying Stop Lamp Switch
Courtesy of VOLVO CARS CORPORATION

Substitute Value

- The control module blocks auto start.
- Cruise control is disengaged when the fault is active.

Possible Source

- Contact resistance or oxidation in brake light contact connections.
- Contact resistance or oxidation in the terminals for the brake pedal switch. Look for the cause of the fault in the brake control module (BCM).
- Open circuit on signal cable.
- The signal cable is short-circuited to ground.
- Damaged stop lamp switch.
- Damaged brake pedal switch. Look for the cause of the fault in the brake control module (BCM).

Fault symptom[s]

- Cruise control does not operate

- Autostart; No Functionality

FAULT-TRACING

see **FAULT-TRACING**

ECM-P050429: BRAKE SWITCH A / B CORRELATION. GENERAL SIGNAL FAILURES. SIGNAL INVALID (B6324S5; 2011-2012)

DIAGNOSTIC TROUBLE CODE (DTC) INFORMATION ECM-P050429

see **DIAGNOSTIC TROUBLE CODE (DTC) INFORMATION ECM-P050429**

FAULT-TRACING

see **FAULT-TRACING**

ECM-P050462: BRAKE SWITCH A / B CORRELATION. ALGORITHM BASED FAILURES. SIGNAL COMPARE FAILURE (B6324S; 2007-2010)

DIAGNOSTIC TROUBLE CODE (DTC) INFORMATION ECM-P050462

Condition

The engine control module (ECM) checks the stop lamp switch by comparing the received signal with the brake pedal switch position. Information about the position of the brake pedal switch is transmitted from the brake control module (BCM) via CAN communication.

The control module compares both the signals.

The diagnostic trouble code (DTC) is stored if the control module detects that:

- The signals indicate different positions on the brake pedal for a total of two minutes and at least 5 shifts.

The control module's test for the diagnostic trouble code (DTC) starts in the event of:

- Ignition switch position II.
- The brake pedal depressed several times.

NOTE: **The control module can only detect the fault once the test has been started and the diagnostic trouble code (DTC) is stored when the conditions are met.**

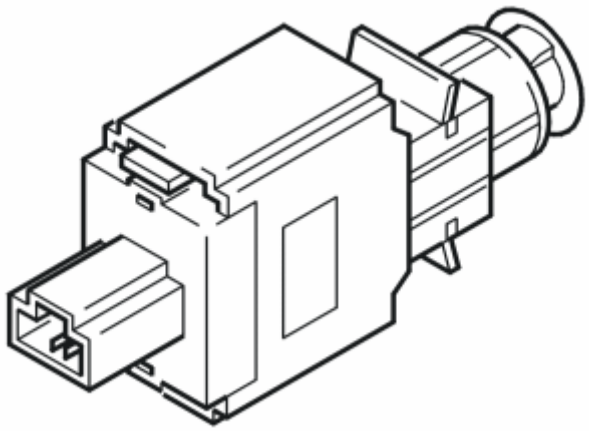

Fig. 129: Identifying Stop Lamp Switch
Courtesy of VOLVO CARS CORPORATION

Substitute Value

- The control module blocks auto start.
- Cruise control is disengaged when the fault is active.

Possible Source

- Contact resistance or oxidation in brake light contact connections.
- Contact resistance or oxidation in the terminals for the brake pedal switch. Look for the cause of the fault in the brake control module (BCM).
- Open circuit on signal cable.
- The signal cable is short-circuited to ground.
- Damaged stop lamp switch.
- Damaged brake pedal switch. Look for the cause of the fault in the brake control module (BCM).

Fault symptom[s]

- Cruise control does not operate
- Autostart; No Functionality

FAULT-TRACING

see **FAULT-TRACING**

ECM-P050462: BRAKE SWITCH A / B CORRELATION. ALGORITHM BASED FAILURES. SIGNAL COMPARE FAILURE (B6324S5; 2011-2012)

DIAGNOSTIC TROUBLE CODE (DTC) INFORMATION ECM-P050462

see **DIAGNOSTIC TROUBLE CODE (DTC) INFORMATION ECM-P050462**

FAULT-TRACING

see **FAULT-TRACING**

ECM-P050465: BRAKE SWITCH A / B CORRELATION. ALGORITHM BASED FAILURES. SIGNAL HAS TOO FEW TRANSITIONS / EVENTS (B6324S; 2007-2010)

DIAGNOSTIC TROUBLE CODE (DTC) INFORMATION ECM-P050465

Condition

The engine control module (ECM) checks the stop lamp switch by comparing the received signal with the brake pedal switch position. Information about the position of the brake pedal switch is transmitted from the brake control module (BCM) via CAN communication.

The control module compares both the signals.

The diagnostic trouble code (DTC) is stored if the control module detects that:

- The signals indicate one and the same position for an implausibly long time.

The control module's test for the diagnostic trouble code (DTC) starts in the event of:

- Ignition switch position II.
- The brake pedal depressed several times.

NOTE: **The control module can only detect the fault once the test has been started and the diagnostic trouble code (DTC) is stored when the conditions are met.**

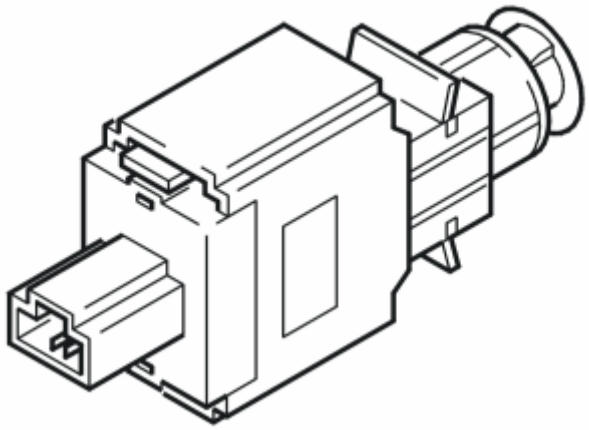

Fig. 130: Identifying Stop Lamp Switch
Courtesy of VOLVO CARS CORPORATION

Substitute Value

- The control module blocks auto start.
- Cruise control is disengaged when the fault is active.

Possible Source

- Contact resistance or oxidation in brake light contact connections.
- Contact resistance or oxidation in the terminals for the brake pedal switch. Look for the cause of the fault in the brake control module (BCM).
- Open circuit on signal cable.
- The signal cable is short-circuited to ground.
- Damaged stop lamp switch.
- Damaged brake pedal switch. Look for the cause of the fault in the brake control module (BCM).

Fault symptom[s]

- Cruise control does not operate
- Autostart; No Functionality

FAULT-TRACING

see **FAULT-TRACING**

ECM-P050465: BRAKE SWITCH A / B CORRELATION. ALGORITHM BASED FAILURES. SIGNAL HAS TOO FEW TRANSITIONS / EVENTS (B6324S5; 2011-2012)

DIAGNOSTIC TROUBLE CODE (DTC) INFORMATION ECM-P050465

see **DIAGNOSTIC TROUBLE CODE (DTC) INFORMATION ECM-P050465**

FAULT-TRACING

see **FAULT-TRACING**

ECM-P050568: IDLE AIR CONTROL SYSTEM. ALGORITHM BASED FAILURES. EVENT INFORMATION (B6324S; 2007-2010)

DIAGNOSTIC TROUBLE CODE (DTC) INFORMATION ECM-P050568

Condition

NOTE: **This diagnostic trouble code (DTC) status is an event controlled diagnostic trouble code (DTC). An event controlled diagnostic trouble code (DTC) does not mean that there is a fault in the control module when it is active, but is designed as information.**

Engine control module (ECM) monitors the idle control. If the control module detects that idle control has been outside the limit value for a certain time, the diagnostic trouble code is generated.

The diagnostic trouble code (DTC) can be diagnosed when the engine is running.

Substitute Value

- Nothing.

Possible Source

- This diagnostic trouble code (DTC) is not caused by a fault that needs to be remedied.

Fault symptom[s]

- None.

FAULT-TRACING INFORMATION

see **FAULT-TRACING INFORMATION**

ECM-P050568: IDLE AIR CONTROL SYSTEM. ALGORITHM BASED FAILURES. EVENT INFORMATION (B6324S5; 2011-2012)

DIAGNOSTIC TROUBLE CODE (DTC) INFORMATION ECM-P050568

see **DIAGNOSTIC TROUBLE CODE (DTC) INFORMATION ECM-P050568**

FAULT-TRACING INFORMATION

see **FAULT-TRACING INFORMATION**

ECM-P050600: IDLE CONTROL RPM LOWER THAN EXPECTED. GENERAL MALFUNCTION INFORMATION. NO INFORMATION ON MALFUNCTION TYPE (B6324S; 2007-2010)

DIAGNOSTIC TROUBLE CODE (DTC) INFORMATION ECM-P050600

Condition

If engine control module (ECM) registers that idle RPM is 100 RPM lower than the nominal idle RPM, the diagnostic trouble code is generated.

The diagnostic trouble code can be diagnosed with warm engine (higher than 80 °C), vehicle stationary and idling.

Substitute Value

- Nothing.

Possible Source

- Look for the cause of the malfunction in some part of the air or fuel system (air leakage, clogging, etc.).

Fault symptom[s]

- Malfunction indicator lamp (MIL) lit.
- Low idle RPM.

FAULT-TRACING INFORMATION

see **FAULT-TRACING INFORMATION**

ECM-P050600: IDLE CONTROL RPM LOWER THAN EXPECTED. GENERAL MALFUNCTION INFORMATION. NO INFORMATION ON MALFUNCTION TYPE (B6324S5; 2011-2012)

DIAGNOSTIC TROUBLE CODE (DTC) INFORMATION ECM-P050600

see **DIAGNOSTIC TROUBLE CODE (DTC) INFORMATION ECM-P050600**

FAULT-TRACING INFORMATION

see **FAULT-TRACING INFORMATION**

ECM-P050600: IDLE CONTROL RPM LOWER THAN EXPECTED. GENERAL MALFUNCTION INFORMATION. NO INFORMATION ON MALFUNCTION TYPE (B8444S; 2005-2011)

DIAGNOSTIC TROUBLE CODE (DTC) INFORMATION ECM-P050600

Condition

If engine control module (ECM) registers that idle RPM is 100 RPM lower than the nominal idle RPM, the diagnostic trouble code is generated.

The diagnostic trouble code can be diagnosed with warm engine (higher than 80 °C), vehicle stationary and idling.

Substitute Value

- Nothing.

Possible Source

- Look for the cause of the malfunction in some part of the air or fuel system (air leakage, clogging, etc.).

Fault symptom[s]

- Malfunction indicator lamp (MIL) lit.
- Low idle RPM.

FAULT-TRACING INFORMATION

see **FAULT-TRACING INFORMATION**

ECM-P050700: IDLE CONTROL RPM HIGHER THAN EXPECTED. GENERAL MALFUNCTION INFORMATION. NO INFORMATION ON MALFUNCTION TYPE (B6324S; 2007-2010)

DIAGNOSTIC TROUBLE CODE (DTC) INFORMATION ECM-P050700

Condition

The diagnostic trouble code (DTC) is stored if the control module detects that:

- Idling speed is 200 RPM greater than the nominal idling speed.

The control module's test for the diagnostic trouble code (DTC) starts in the event of:

- Run the engine to operating temperature (coolant temperature greater than 80 °C).
- Stationary vehicle idling.

Substitute Value

- None.

Possible Source

- Search the air and fuel supplies in the fuel system for the fault cause (air leakage, blockages, etc.).

Fault symptom[s]

- Malfunction indicator light (MIL), on
- High idle speed

FAULT-TRACING INFORMATION

see **FAULT-TRACING INFORMATION**

ECM-P050700: IDLE CONTROL RPM HIGHER THAN EXPECTED. GENERAL MALFUNCTION INFORMATION. NO INFORMATION ON MALFUNCTION TYPE (B6324S5; 2011-2012)

DIAGNOSTIC TROUBLE CODE (DTC) INFORMATION ECM-P050700

see **DIAGNOSTIC TROUBLE CODE (DTC) INFORMATION ECM-P050700**

FAULT-TRACING INFORMATION

see **FAULT-TRACING INFORMATION**

ECM-P050700: IDLE CONTROL RPM HIGHER THAN EXPECTED. GENERAL MALFUNCTION INFORMATION. NO INFORMATION ON MALFUNCTION TYPE (B8444S; 2005-2011)

DIAGNOSTIC TROUBLE CODE (DTC) INFORMATION ECM-P050700

Condition

The diagnostic trouble code (DTC) is stored if the control module detects that:

- Idling speed is 200 RPM greater than the nominal idling speed.

The control module's test for the diagnostic trouble code (DTC) starts in the event of:

- The vehicle is stationary.
- The engine is idling.
- THE engine temperature shall be over 80 °C with warm engine (upper radiator hose shall be warm).

NOTE: The control module can only detect the fault once the test has been started and the diagnostic trouble code (DTC) is stored when the conditions are met.

Substitute Value

- None

Possible Source

- Search the air and fuel supplies in the fuel system for the fault cause (air leakage, blockages, etc.).

Fault symptom[s]

- Malfunction indicator light (MIL), on
- High idle speed

FAULT-TRACING INFORMATION

see **FAULT-TRACING INFORMATION**

ECM-P050A00 COLD START IDLE AIR CONTROL SYSTEM PERFORMANCE. GENERAL FAILURE INFORMATION. NO SUB TYPE INFORMATION (B6324S5; 2011-2012)

DIAGNOSTIC TROUBLE CODE (DTC) INFORMATION

Condition

The Engine control module (ECM) checks the function for quick catalytic converter warm-up. The catalytic converter can be warmed up quickly by increasing the throttle angle, changing the camshaft angle etc. for example. The Engine control module (ECM) checks the function for catalytic converter warm-up.

The Engine control module (ECM) calculates the difference between the requested energy applied for catalytic converter warm-up and the actual excess energy for catalytic converter warm-up.

The diagnostic trouble code (DTC) is stored if the control module detects that:

- The difference between applied energy for warm-up of the catalytic converter and the actual energy for warm-up of the catalytic converter is too great.

The control module's test for the diagnostic trouble code (DTC) starts in the event of:

- When starting the engine.
- Cold engine.
- Warming-up of catalytic converter started.

NOTE: The control module can only detect the fault once the test has been started and the diagnostic trouble code (DTC) is stored when the conditions are met.

Substitute Value

- None.

Possible Source

- Sticking throttle.
- Fault in the throttle.
- Blocked intake system.
- Clogged air filter.
- Sticking/slow throttle.
- Mechanical fault causes in the engine.

Fault symptom[s]

- Warning lights and chimes/Malfunction Indicator Light ("Check engine" light) indication/no indication

FAULT-TRACING

see **FAULT-TRACING**

ECM-P050A00 COLD START IDLE AIR CONTROL SYSTEM PERFORMANCE. GENERAL FAILURE INFORMATION. NO SUB TYPE INFORMATION (B8444S; 2010-2011)

DIAGNOSTIC TROUBLE CODE (DTC) INFORMATION

Condition

The Engine control module (ECM) checks the function for quick catalytic converter warm-up. The catalytic converter can be warmed up quickly by increasing the throttle angle, changing the camshaft angle etc. for example. The Engine control module (ECM) checks the function for catalytic converter warm-up.

The Engine control module (ECM) calculates the difference between the requested energy applied for catalytic converter warm-up and the actual excess energy for catalytic converter warm-up.

The diagnostic trouble code (DTC) is stored if the control module detects that:

- The difference between applied energy for warm-up of the catalytic converter and the actual energy for warm-up of the catalytic converter is too great.

The control module's test for the diagnostic trouble code (DTC) starts in the event of:

- When starting the engine.
- Cold engine.
- Warming-up of catalytic converter started.

NOTE: The control module can only detect the fault once the test has been started and

the diagnostic trouble code (DTC) is stored when the conditions are met.

Substitute Value

- None.

Possible Source

- Sticking throttle.
- Fault in the throttle.
- Blocked intake system.
- Clogged air filter.
- Sticking/slow throttle.
- Mechanical fault causes in the engine.

Fault symptom[s]

- Warning lights and chimes/Malfunction Indicator Light ("Check engine" light) indication/no indication

FAULT-TRACING

see **FAULT-TRACING**

ECM-P050B00 COLD START IGNITION TIMING PERFORMANCE. GENERAL FAILURE INFORMATION. NO SUB TYPE INFORMATION (B6324S; 2007-2010)

DIAGNOSTIC TROUBLE CODE (DTC) INFORMATION ECM-P050B00

Condition

The Engine control module (ECM) checks the function for catalytic converter warm-up.

The Engine control module (ECM) calculates the difference between the requested energy applied for catalytic converter warm-up and the actual excess energy for catalytic converter warm-up.

The diagnostic trouble code (DTC) is stored if the control module detects that:

- The difference between applied energy for warm-up of the catalytic converter and the actual energy for warm-up of the catalytic converter is too great.

The control module's test for the diagnostic trouble code (DTC) starts in the event of:

- Cold engine.
- Warming-up of catalytic converter started.

NOTE: **The control module can only detect the fault once the test has been started and the diagnostic trouble code (DTC) is stored when the conditions are met.**

Substitute Value

- None.

Possible Source

- Blocked intake system.
- Clogged air filter.
- Sticking/slow throttle.
- Mechanical fault causes in the engine.

Fault symptom[s]

- Malfunction indicator light (MIL), on

FAULT-TRACING

see **FAULT-TRACING**

ECM-P050B00 COLD START IGNITION TIMING PERFORMANCE. GENERAL FAILURE INFORMATION. NO SUB TYPE INFORMATION (B6324S5; 2011-2012)

DIAGNOSTIC TROUBLE CODE (DTC) INFORMATION ECM-P050B00

see **DIAGNOSTIC TROUBLE CODE (DTC) INFORMATION ECM-P050B00**

FAULT-TRACING

see **FAULT-TRACING**

ECM-P050B00 COLD START IGNITION TIMING PERFORMANCE. GENERAL FAILURE INFORMATION. NO SUB TYPE INFORMATION (B8444S; 2008-2011)

DIAGNOSTIC TROUBLE CODE (DTC) INFORMATION

Condition

The Engine control module (ECM) checks the function for quick catalytic converter warm-up. The catalytic converter can be warmed up quickly by increasing the throttle angle, changing the camshaft angle etc. for example. The Engine control module (ECM) checks the function for catalytic converter warm-up.

The Engine control module (ECM) calculates the difference between the requested energy applied for catalytic converter warm-up and the actual excess energy for catalytic converter warm-up.

The diagnostic trouble code (DTC) is stored if the control module detects that:

- The difference between applied energy for warm-up of the catalytic converter and the actual energy for warm-up of the catalytic converter is too great.

The control module's test for the diagnostic trouble code (DTC) starts in the event of:

- When starting the engine.
- Cold engine.
- Warming-up of catalytic converter started.

NOTE: The control module can only detect the fault once the test has been started and the diagnostic trouble code (DTC) is stored when the conditions are met.

Substitute Value

- None.

Possible Source

- Sticking throttle.
- Fault in the throttle.
- Blocked intake system.
- Clogged air filter.
- Sticking/slow throttle.
- Mechanical fault causes in the engine.

Fault symptom[s]

- Malfunction indicator light (MIL), on

FAULT-TRACING

see **FAULT-TRACING**

ECM-P051200: START REQUEST CIRCUIT. GENERAL FAULT INFORMATION. TYPE OF FAULT NOT SPECIFIED. (B8444S; 2005-2011)

DIAGNOSTIC TROUBLE CODE (DTC) INFORMATION ECM-P051200

Condition

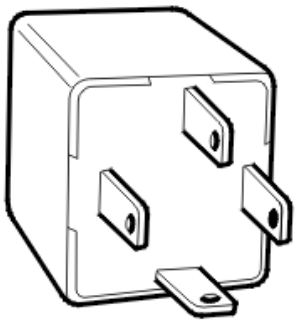

Fig. 131: Identifying Main Relay
Courtesy of VOLVO CARS CORPORATION

The engine control module (ECM) regulates the starter motor via the starter relay and checks its function. The diagnostic trouble code is generated if the control module detects that the start signal from the ignition switch is lost when engine speed exceeds a certain value and no vehicle speed has been registered or if the control module detects a start signal from the ignition switch during driving conditions when there should not be a start signal.

Substitute Value

- Nothing.

Possible Source

- The signal cable from the ignition switch is short-circuited to supply voltage.
- The signal cable from the ignition switch is short-circuited to ground.
- Open-circuit on the signal cable from the ignition switch.
- Damaged starter relay.

Fault symptom[s]

- None.

FAULT TRACING ECM-P051200

CHECKING COMPONENTS AND WIRING

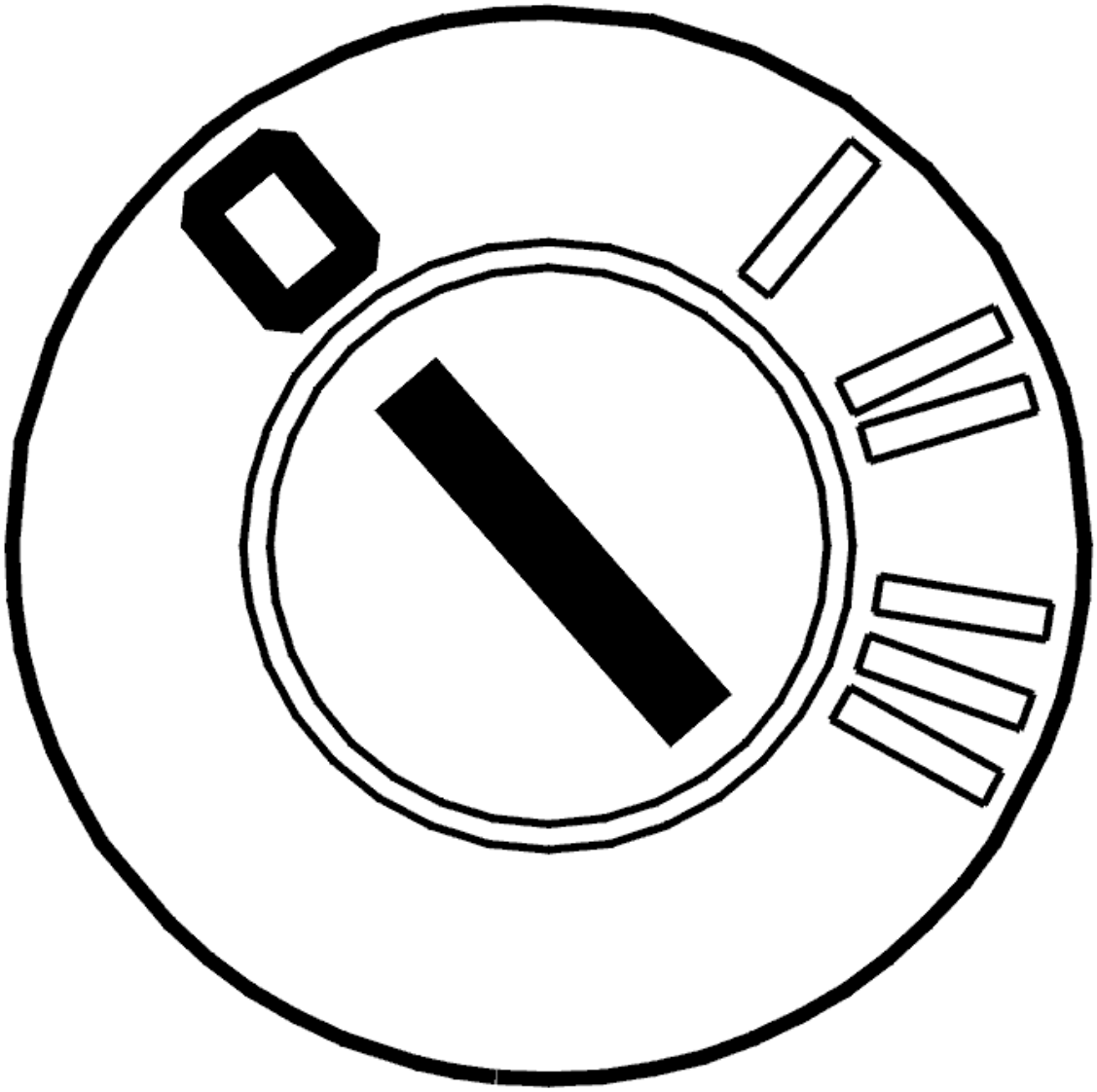

Fig. 132: Identifying Ignition OFF
Courtesy of VOLVO CARS CORPORATION

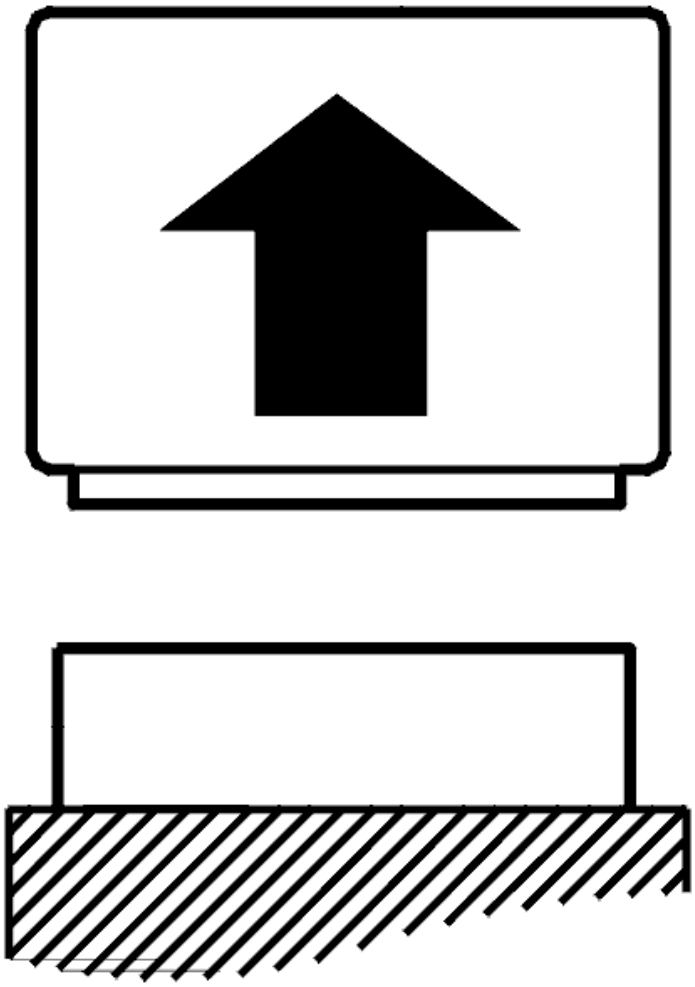

Fig. 133: Disconnecting Connector
Courtesy of VOLVO CARS CORPORATION

- Ignition off

  Check the fuse for the signal cable from the ignition lock. If the fuse has blown, check the cable. Check for a short-circuit to ground.

  Disconnect the engine control module (ECM).

  Check the signal cable from the ignition lock. Check for a short-circuit to supply. Check for an open-circuit.

  Measure between:

  - Engine control module (ECM) terminal #B17 and the central electronic module (CEM).

Remedy as necessary.

Other information

- see **CONNECTING THE BREAKOUT BOX**
- see **SIGNAL SPECIFICATION, ENGINE CONTROL MODULE (ECM)**
- see **LOCATION OF COMPONENTS, ENGINE COMPARTMENT**
- see **COMPONENT SPECIFICATIONS**
- see **CHECKING WIRING AND TERMINALS**

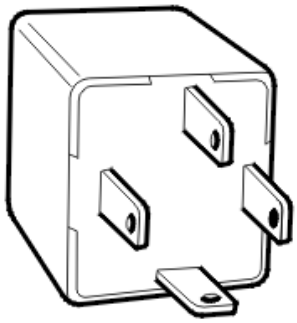

Fig. 134: Identifying Main Relay
Courtesy of VOLVO CARS CORPORATION

- **Continue**

  Refer to **VERIFICATION**

VERIFICATION

VERIFICATION

HINT: After carrying out the repair, check that the fault has been remedied.

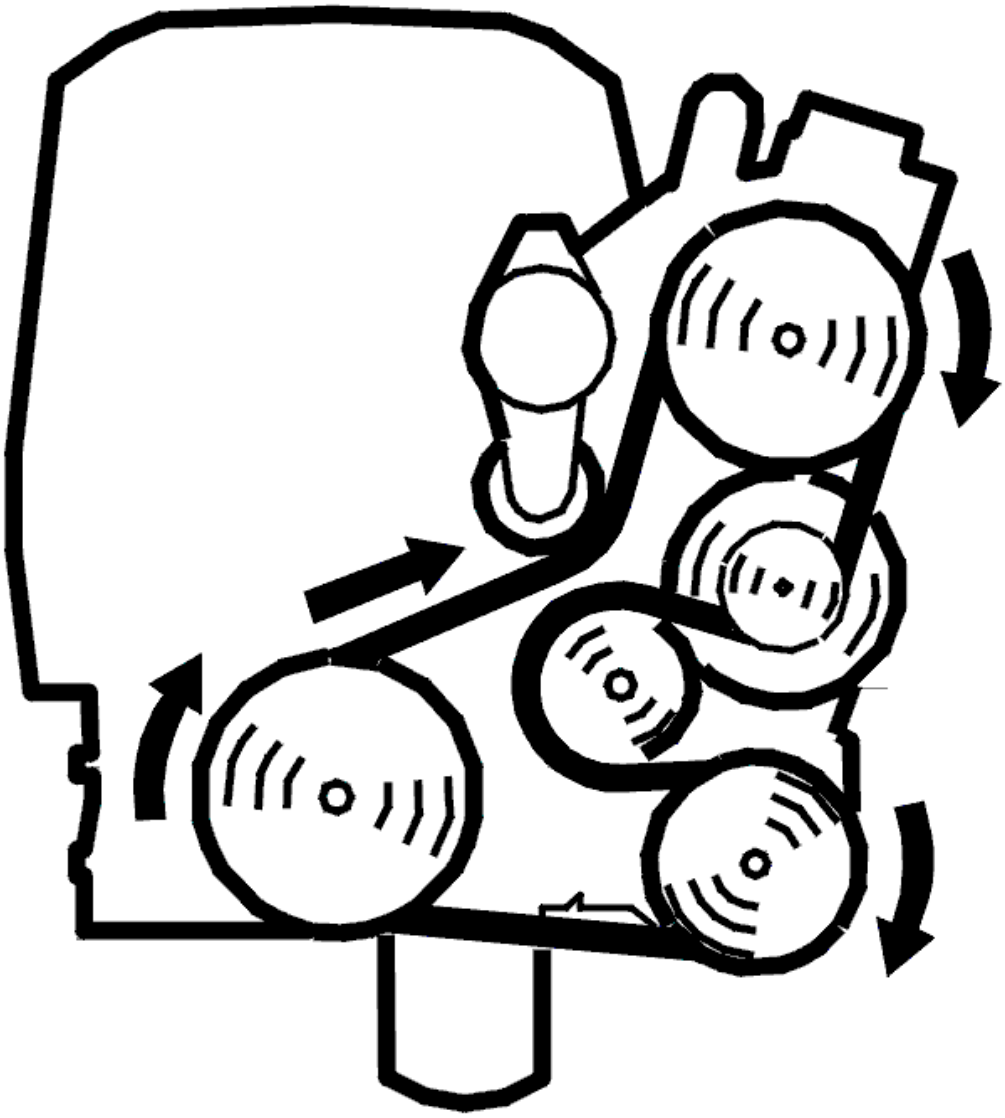

Fig. 135: Belt Routing / Engine Idling - Volvo
Courtesy of VOLVO CARS CORPORATION

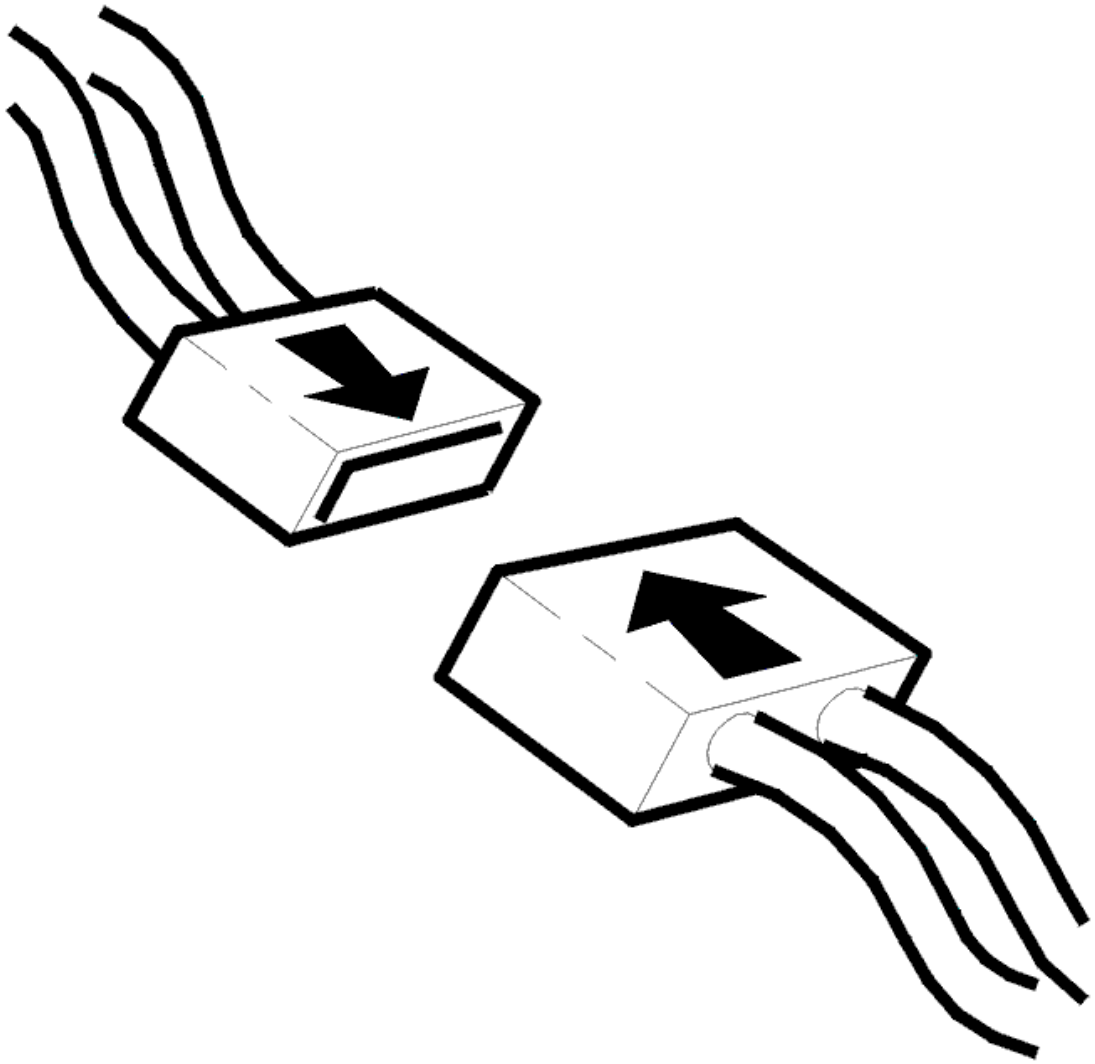

Fig. 136: Connecting Connector
Courtesy of VOLVO CARS CORPORATION

- Ignition off
- Reconnect the connectors, components, etc.
- Run the starter motor/start the engine.
- Read off the status from the ignition lock.

  Check that the read off status from the ignition lock corresponds to the actual position of the ignition lock.

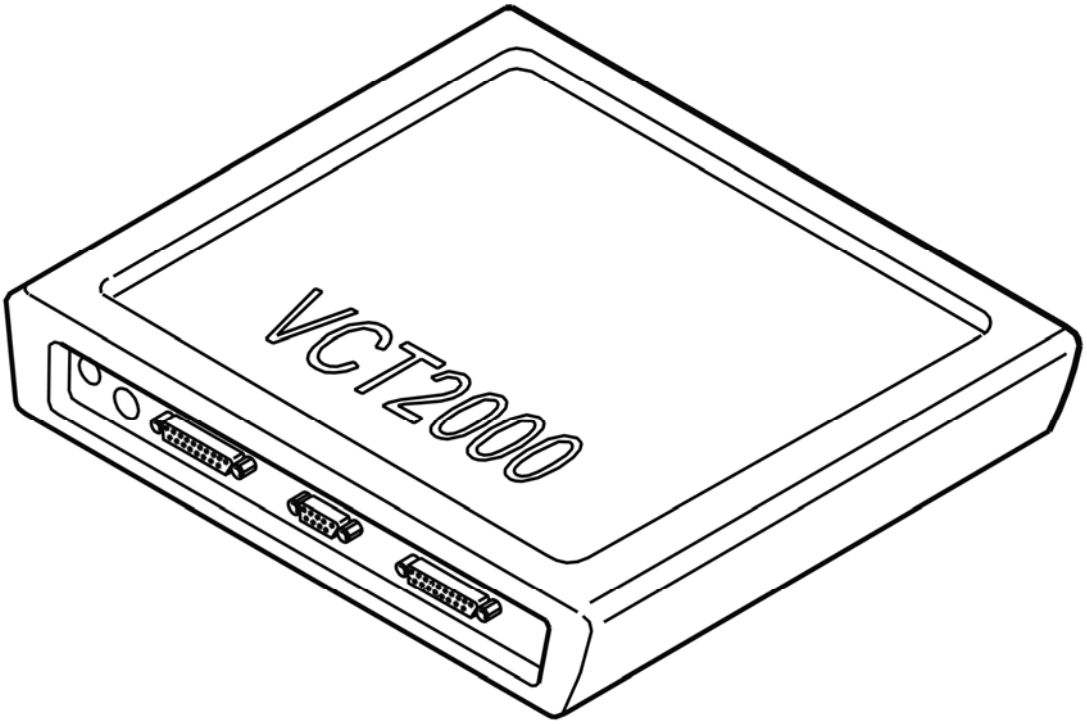

Fig. 137: Identifying VCT2000 Diagnostic Tool Symbol In VIDA
Courtesy of VOLVO CARS CORPORATION

Is the function OK?

- **YES**

  VERIFIED: Troubleshooting has been completed.

- **NO**

  Refer to **INFORMATION**

INFORMATION

FAULT-TRACING INFORMATION

The fault should have been detected and remedied. As this is not the case fault-tracing has failed.

Exit fault-tracing for this diagnostic trouble code (DTC) or make another attempt.

ECM-P052548: CRUISE CONTROL SERVO CONTROL CIRCUIT RANGE/PERFORMANCE. SYSTEM INTERNAL FAILURES. SUPERVISION

SOFTWARE FAILURE (B6324S; 2007-2010)

DIAGNOSTIC TROUBLE CODE (DTC) INFORMATION ECM-P052548

Condition

The diagnostic trouble code (DTC) is stored if the engine control module (ECM) registers an internal fault when the cruise control is active.

The diagnostic trouble code (DTC) can be diagnosed when the ignition is switched on.

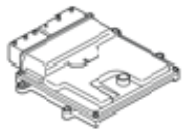

Fig. 138: Identifying Engine Control Module (ECM)
Courtesy of VOLVO CARS CORPORATION

Substitute Value

- Cruise control is disengaged when the fault is active.

Possible Source

- Damaged engine control module (ECM).

Fault symptom[s]

- Cruise control does not operate

FAULT TRACING

CHECKING THE STATUS

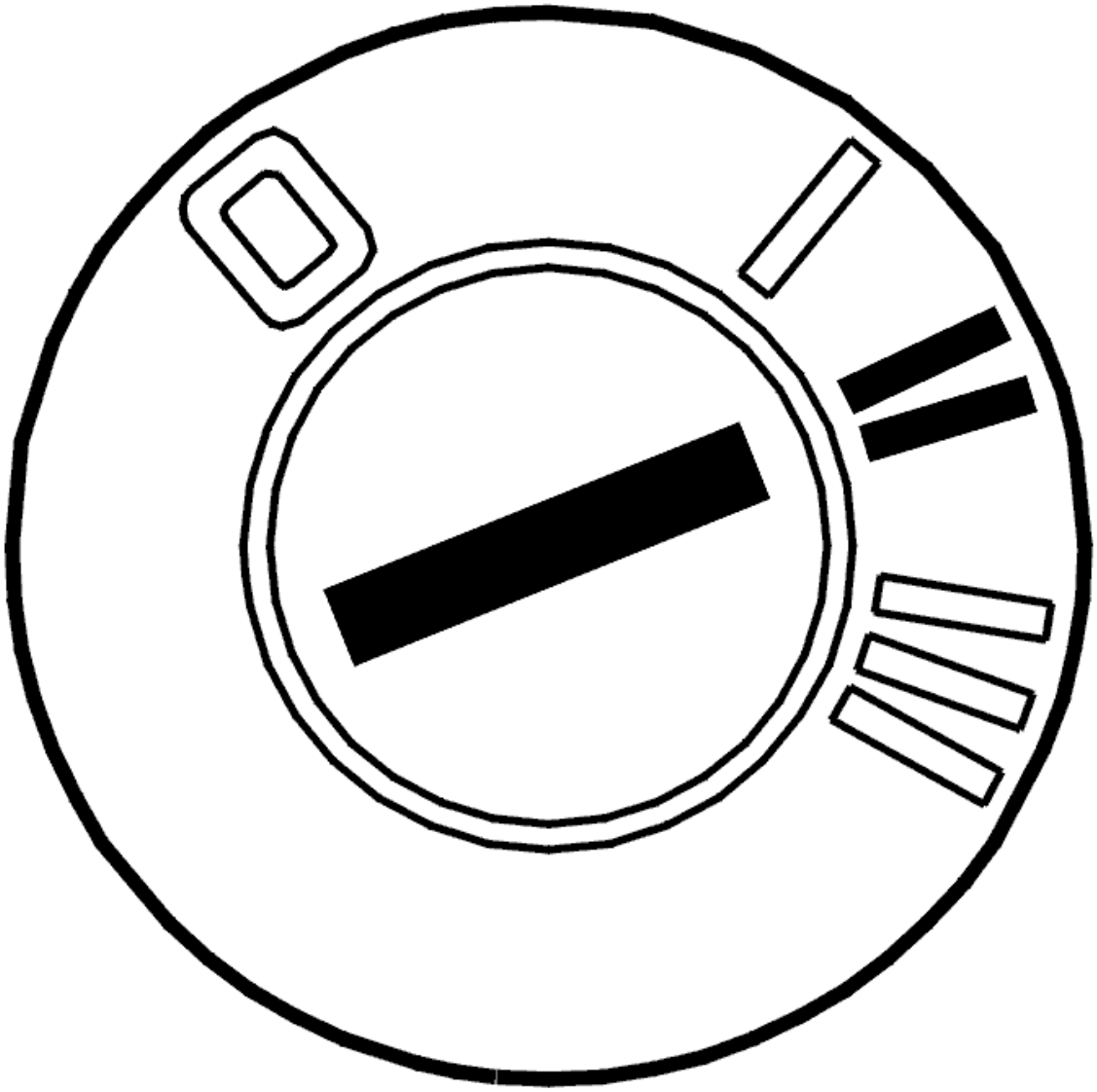

Fig. 139: Identifying Ignition ON
Courtesy of VOLVO CARS CORPORATION

- Ignition on, wait for at least 15 seconds to perform the diagnosis.

  Read the diagnostic status and fault status for the diagnostic trouble code by selecting the diagnostic trouble code in the list.

  Check if the malfunction is permanent or intermittent by reading off the diagnostic trouble code's status when the diagnostic status is "Implemented".

  If the trouble status is "Malfunction found", this indicates that the malfunction is permanent. If the trouble status is "No malfunction found", this indicates that the malfunction is intermittent and not active right now.

NOTE: Trouble status cannot go from "Malfunction found" to "No malfunction

found" in the same operating cycle.

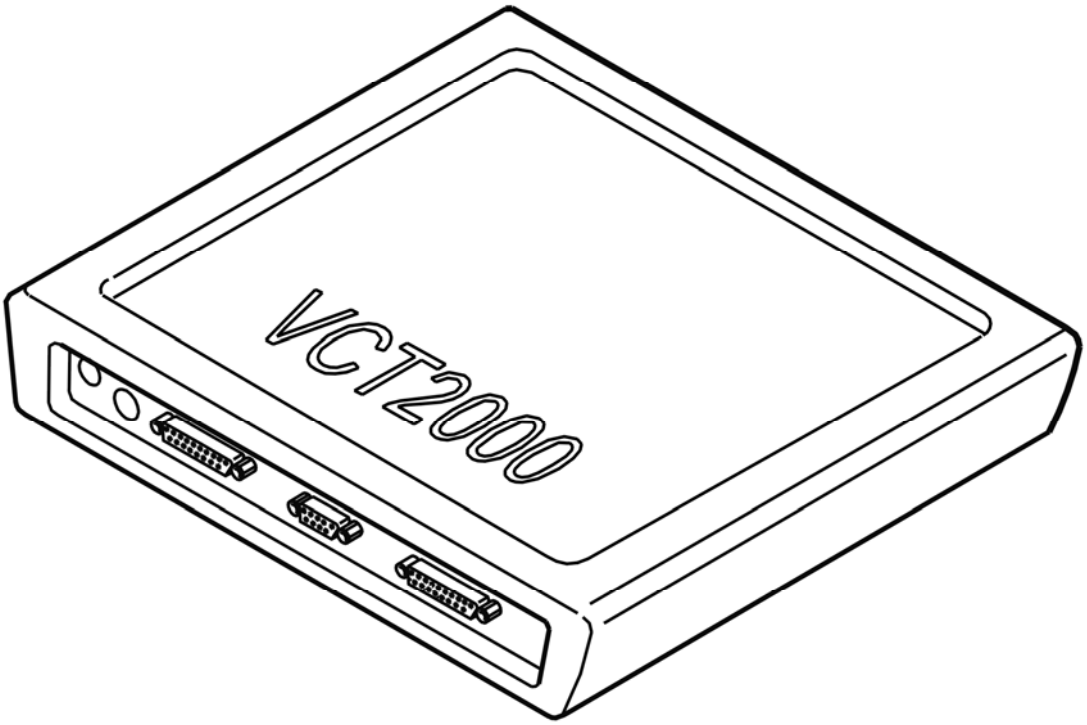

Fig. 140: Identifying VCT2000 Diagnostic Tool Symbol In VIDA
Courtesy of VOLVO CARS CORPORATION

- **Continue**

  Refer to **REPLACING THE COMPONENT**

REPLACING THE COMPONENT

The engine control module (ECM) has registered an internal fault.

If the fault is intermittent, it has been registered previously but no longer remains. Intermittent faults can be due to disruption when the engine control module (ECM) started or can be another type of fault that may recur at different instances. The fault is assessed on a case by case basis. If the fault recurs, replace the engine control module (ECM).

In the event of a permanent fault, replace the engine control module (ECM).

Remedy as necessary.

Other information

- see **ENGINE CONTROL MODULE (ECM)**

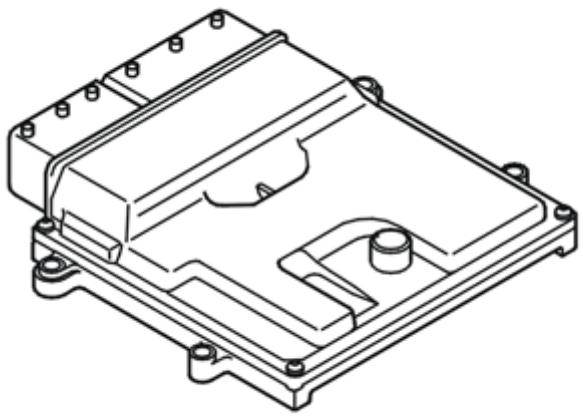

Fig. 141: Identifying Engine Control Module (ECM)
Courtesy of VOLVO CARS CORPORATION

- **Continue**

  Refer to **INFORMATION**

INFORMATION

FAULT-TRACING INFORMATION

In case of this defect, troubleshooting is not followed by verification.

The information can be displayed again or the fault-tracing for this fault can be interrupted.

ECM-P052548: CRUISE CONTROL SERVO CONTROL CIRCUIT RANGE/PERFORMANCE. SYSTEM INTERNAL FAILURES. SUPERVISION SOFTWARE FAILURE (B6324S5; 2011-2012)

DIAGNOSTIC TROUBLE CODE (DTC) INFORMATION ECM-P052548

see **DIAGNOSTIC TROUBLE CODE (DTC) INFORMATION ECM-P052548**

FAULT TRACING

see **FAULT TRACING**

ECM-P052A00 COLD START CAMSHAFT POSITION TIMING OVER-ADVANCED (BANK 1). GENERAL FAILURE INFORMATION. NO SUB TYPE

INFORMATION (B6324S; 2007-2010)

DIAGNOSTIC TROUBLE CODE (DTC) INFORMATION ECM-P052A00

Condition

The Engine control module (ECM) regulates the camshaft position (angle). The difference between requested angle and actual angle is stored in the Engine control module (ECM) during warm-up of the catalytic converter.

The diagnostic trouble code (DTC) is stored if the control module detects that:

- The camshaft angle is greater than the requested during warm-up of the catalytic converter.

The control module's test for the diagnostic trouble code (DTC) starts in the event of:

- Cold engine.
- Warming-up of catalytic converter.

NOTE: The control module can only detect the fault once the test has been started and the diagnostic trouble code (DTC) is stored when the conditions are met.

Substitute Value

- None.

Possible Source

- Poor engine oil quality.
- Low oil pressure.
- Damaged camshaft reset valve.
- Damaged VVT-unit.

Fault symptom[s]

- Uneven idle
- Poor performance

FAULT-TRACING

see **FAULT-TRACING**

ECM-P052A00 COLD START CAMSHAFT POSITION TIMING OVER-ADVANCED (BANK 1). GENERAL FAILURE INFORMATION. NO SUB TYPE INFORMATION (B6324S5; 2011-2012)

DIAGNOSTIC TROUBLE CODE (DTC) INFORMATION ECM-P052A00

see **DIAGNOSTIC TROUBLE CODE (DTC) INFORMATION ECM-P052A00**

FAULT-TRACING

see **FAULT-TRACING**

ECM-P052A00 COLD START CAMSHAFT POSITION TIMING OVER-ADVANCED (BANK 1). GENERAL FAILURE INFORMATION. NO SUB TYPE INFORMATION (B8444S; 2008-2011)

DIAGNOSTIC TROUBLE CODE (DTC) INFORMATION

Condition

The Engine control module (ECM) regulates the camshaft position (angle). The difference between requested angle and actual angle is stored in the Engine control module (ECM) during warm-up of the catalytic converter.

The diagnostic trouble code (DTC) is stored if the control module detects that:

- The camshaft angle is greater than the requested during warm-up of the catalytic converter.

The control module's test for the diagnostic trouble code (DTC) starts in the event of:

- Cold engine.
- Warming-up of catalytic converter.

NOTE: The control module can only detect the fault once the test has been started and the diagnostic trouble code (DTC) is stored when the conditions are met.

Substitute Value

- None.

Possible Source

- Poor engine oil quality.
- Low oil pressure.
- Damaged camshaft reset valve.
- Damaged VVT-unit.

Fault symptom[s]

- Uneven idle

- Engine misfires

FAULT-TRACING

CHECKING COMPONENTS

HINT: Incorrect oil grade can cause malfunctions in the variable valve timing (VVT) unit. Contaminants in the engine oil can cause damage to components in the variable valve timing (VVT) unit.

Check the engine oil grade. Check especially for contaminants.

Remove the camshaft reset valve, check the reset valve and the oil ducts in the cylinder head. Check for contaminants and blockages.

Check the engine oil pressure.

Try a new camshaft reset valve if no fault is found or if the above remedies do not rectify the fault.

HINT: The fault can also be caused by an internal fault in the variable valve timing (VVT) unit. If the above fault-tracing/remedies do not rectify the fault, the variable valve timing (VVT) unit may be damaged.

Remedy as necessary.

Other information

- see **OIL PRESSURE, CHECKING**
- see **VVT UNIT, RIGHT CYLINDER HEAD**
- see **VVT UNIT, LEFT CYLINDER HEAD**
- see **LOCATION OF COMPONENTS, ENGINE COMPARTMENT**

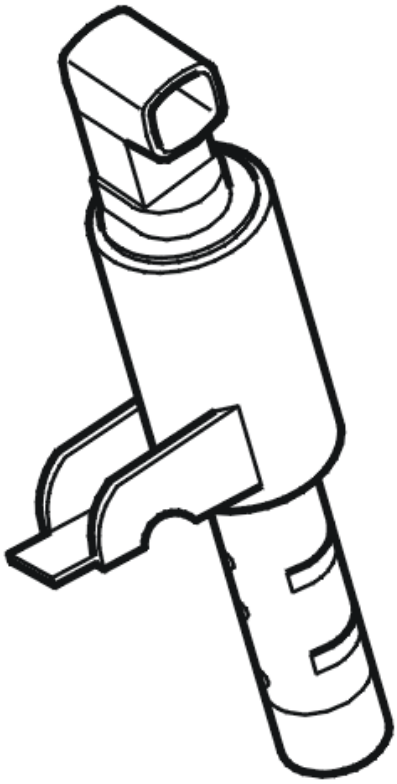

Fig. 142: Identifying Camshaft Reset Valve
Courtesy of VOLVO CARS CORPORATION

- **Continue**

  Refer to **VERIFICATION**

VERIFICATION

VERIFICATION, PART 1

HINT: After carrying out the repair, check that the fault has been remedied.

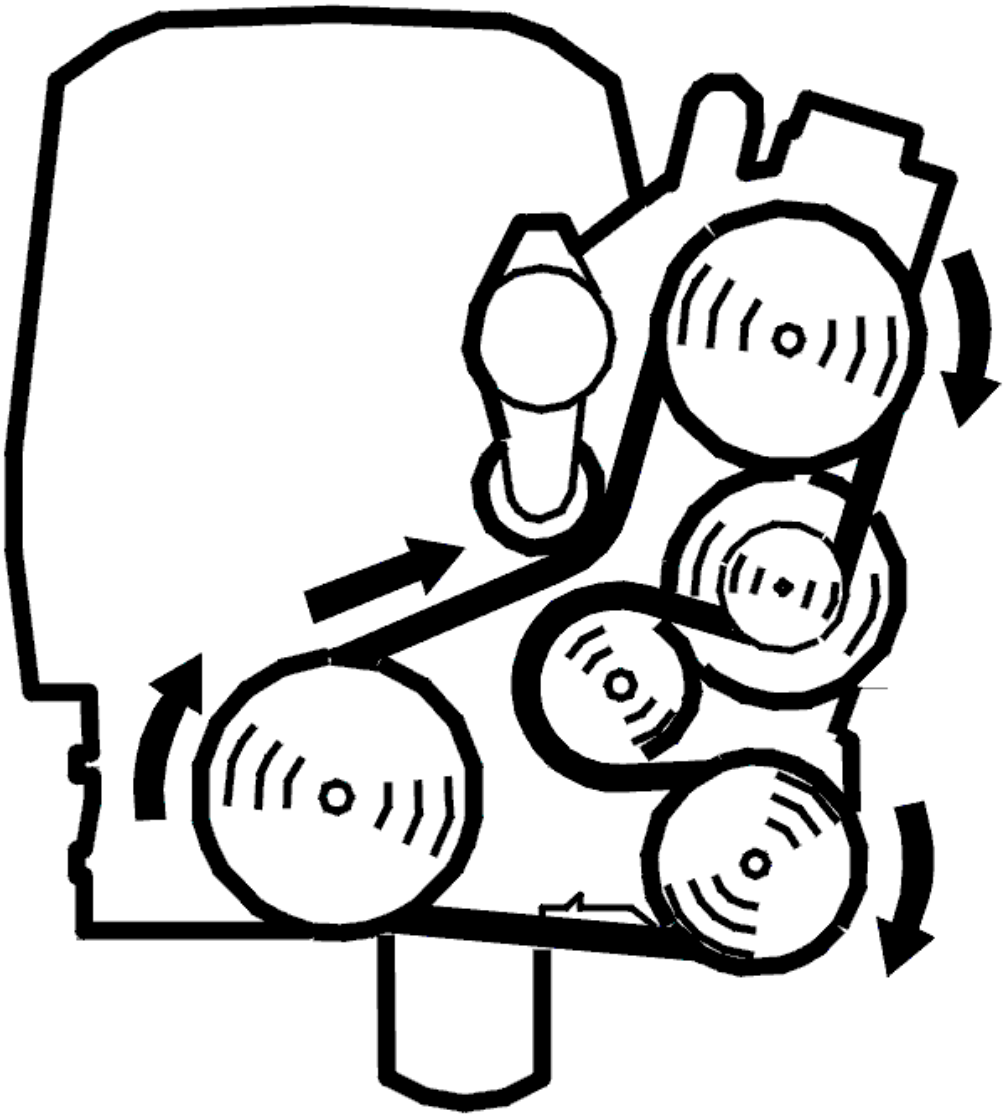

Fig. 143: Belt Routing / Engine Idling - Volvo
Courtesy of VOLVO CARS CORPORATION

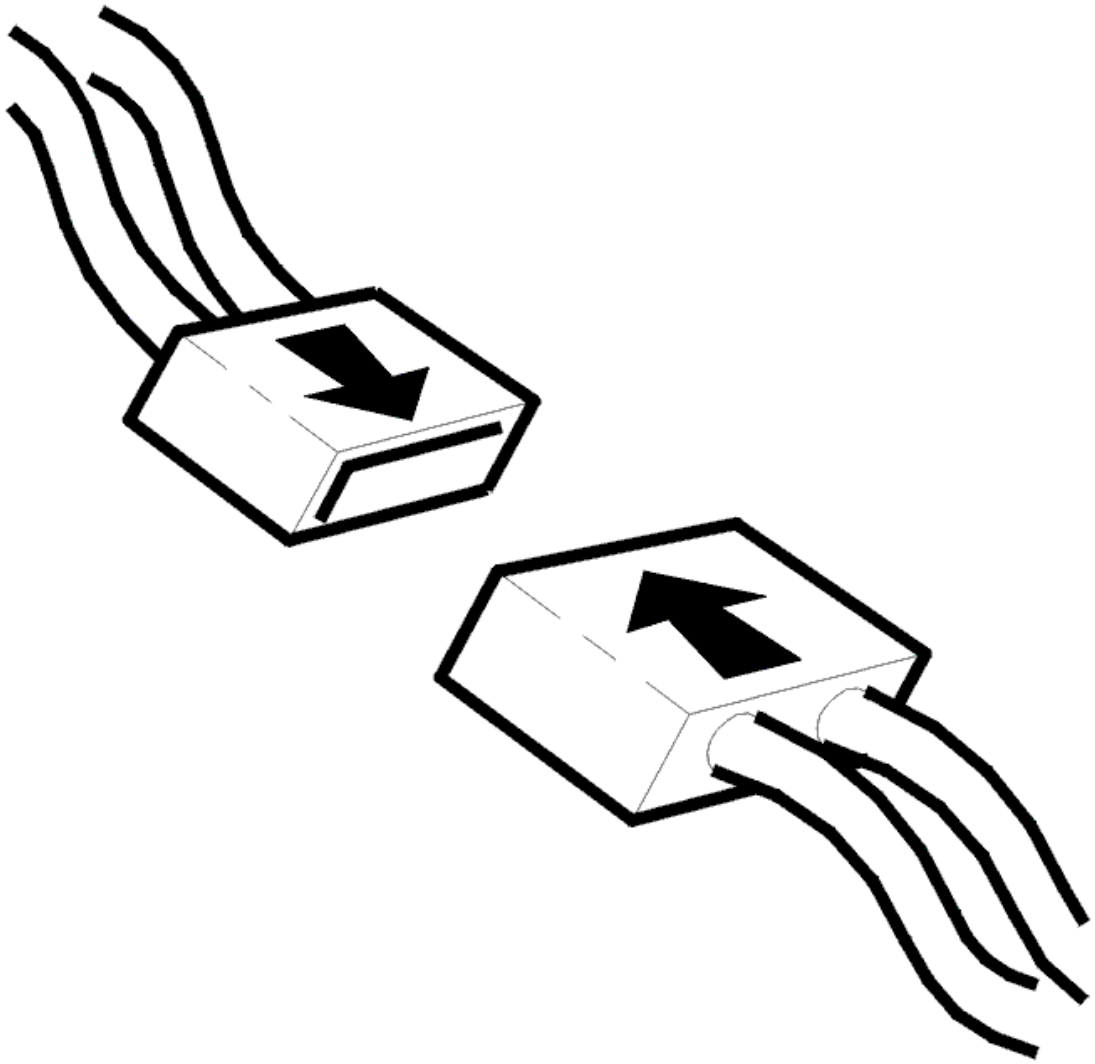

Fig. 144: Connecting Connector
Courtesy of VOLVO CARS CORPORATION

- Verification consists of 2 parts. Part 1 is carried out via a test in the workshop. Part 2 is carried out on the road.

  If the function is determined as **incorrect** in part 1, then part 2 does **not** need to be carried out. If the function is determined as being correct in part 1 and the vehicle can be tested on the road, part 2 must be carried out. This is because the function can be difficult the check in a workshop environment in certain cases.

- Ignition off
- Reconnect the connectors, components, etc.
- Start and run the engine to operating temperature.
- Read off the shift angle of the camshaft and the desired shift angle of the camshaft to check the function.

Check that the camshaft shift angle corresponds to the desired value for the camshaft shift angle with an accuracy of approximately 8° CA (camshaft angle). The difference between the values can be read off in the lower digital display.

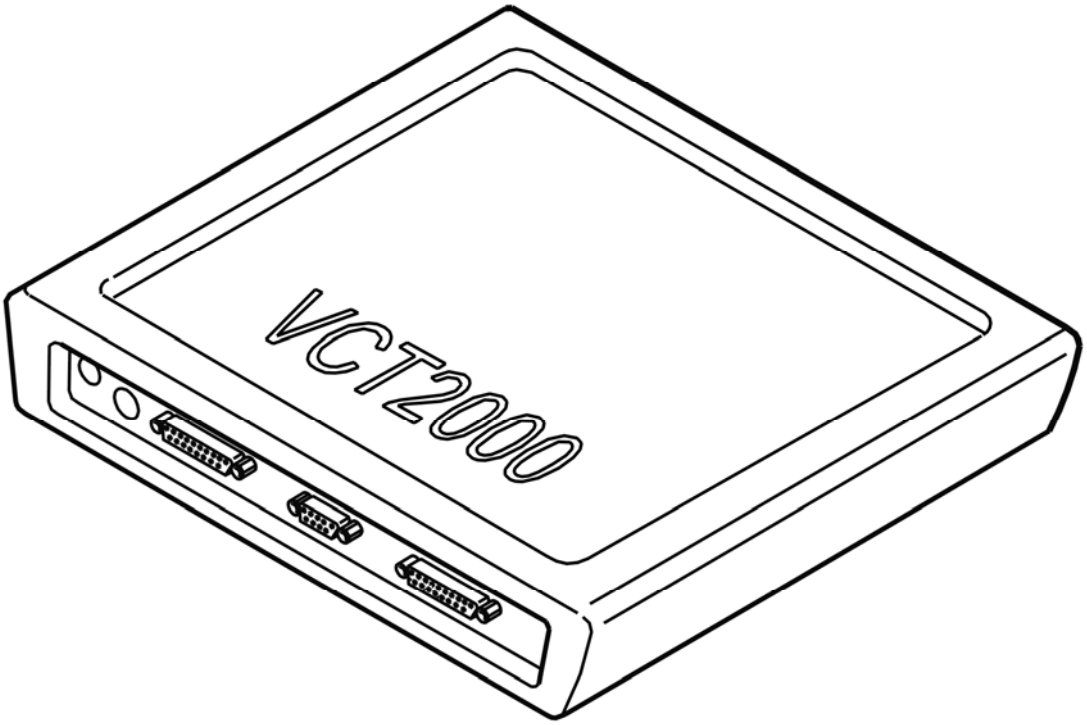

Fig. 145: Identifying VCT2000 Diagnostic Tool Symbol In VIDA
Courtesy of VOLVO CARS CORPORATION

Is the function OK?

- **YES**

  Refer to **VERIFICATION, PART 2**

- **NO**

  Refer to **INFORMATION**

VERIFICATION, PART 2

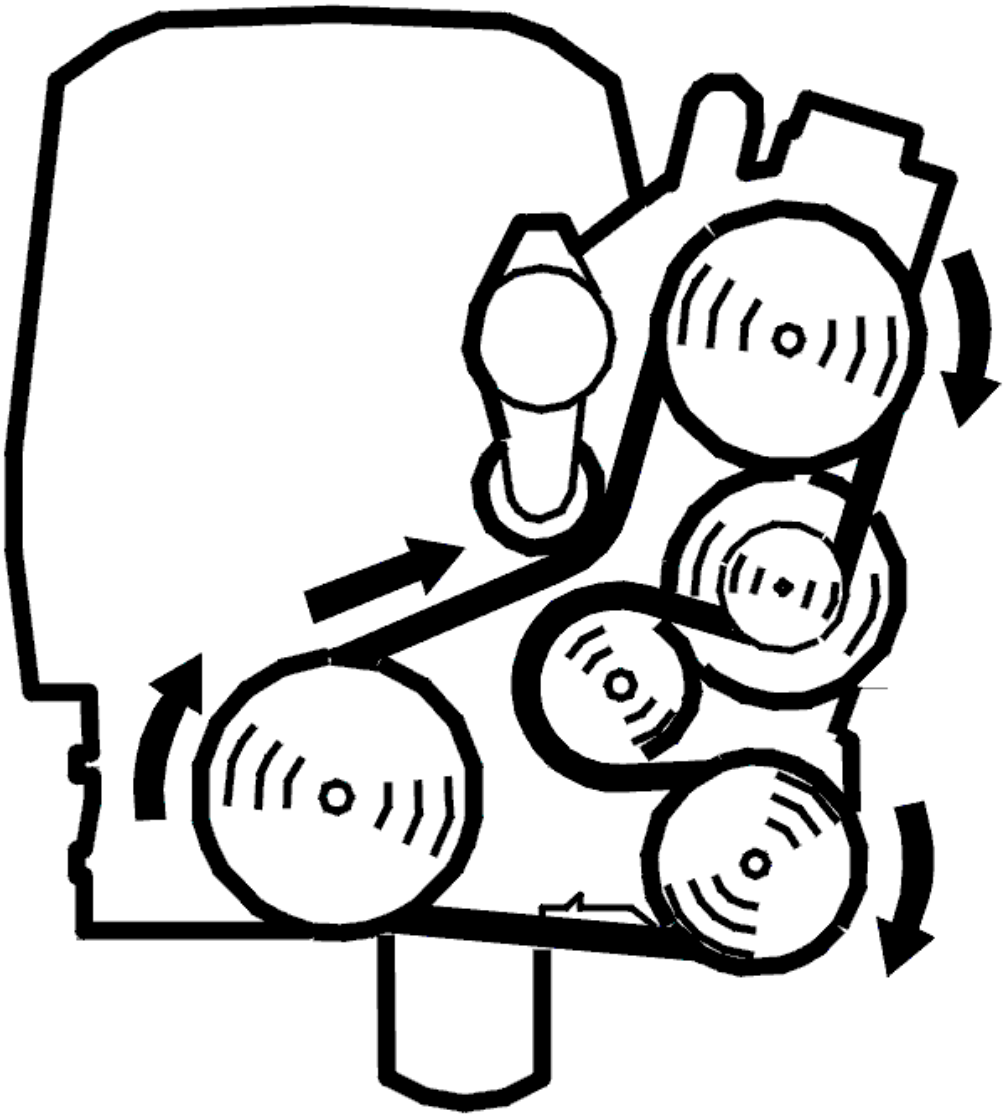

Fig. 146: Belt Routing / Engine Idling - Volvo
Courtesy of VOLVO CARS CORPORATION

- Test drive the car on the road. Use acceleration and engine braking. Repeat the procedure several times so that the camshaft control works and the engine control module (ECM) can carry out diagnostics.
- Connect the VCT2000 (or appropriate scan tool) to the data link connector **without switching off the engine.**
- Read the diagnostic status and fault status for the diagnostic trouble code by selecting the diagnostic trouble code in the list.

NOTE: **If the engine is switched off, the stored fault status will be erased and the test drive will have to be repeated.**

Check the fault status for the diagnostic trouble code when the scan is "Implemented". When the function is correct the fault status should be "No fault found" when the scan is implemented.

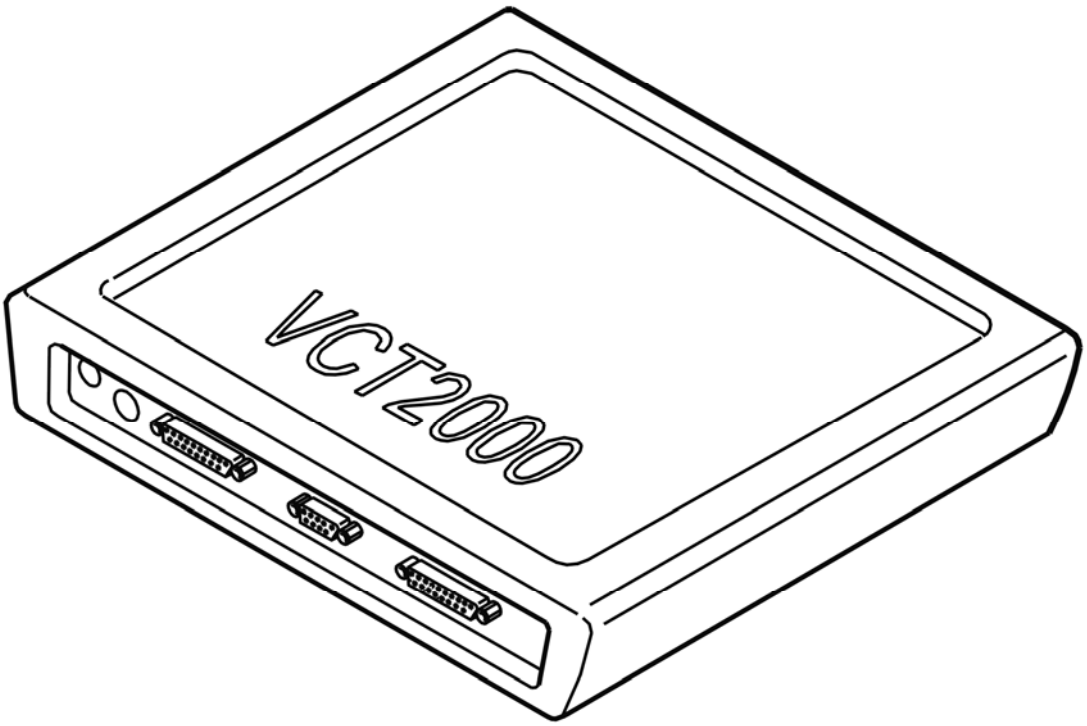

Fig. 147: Identifying VCT2000 Diagnostic Tool Symbol In VIDA
Courtesy of VOLVO CARS CORPORATION

Is the function OK?

- **YES**

  VERIFIED: Troubleshooting has been completed.

- **NO**

  Refer to **INFORMATION**

INFORMATION

FAULT-TRACING INFORMATION

The fault should have been detected and remedied. As this is not the case fault-tracing has failed.

Exit fault-tracing for this diagnostic trouble code (DTC) or make another attempt.

ECM-P052B00 COLD START CAMSHAFT POSITION TIMING OVER-RETARDED (BANK 1). GENERAL FAILURE INFORMATION. NO SUB TYPE

INFORMATION (B8444S; 2008-2011)

DIAGNOSTIC TROUBLE CODE (DTC) INFORMATION

Condition

The Engine control module (ECM) regulates the camshaft position (angle). The difference between requested angle and actual angle is stored in the Engine control module (ECM) during warm-up of the catalytic converter.

The diagnostic trouble code (DTC) is stored if the control module detects that:

- The camshaft angle is less than the requested during warm-up of the catalytic converter.

The control module's test for the diagnostic trouble code (DTC) starts in the event of:

- Cold engine.
- Warming-up of catalytic converter.

NOTE: The control module can only detect the fault once the test has been started and the diagnostic trouble code (DTC) is stored when the conditions are met.

Substitute Value

- None.

Possible Source

- Poor engine oil quality.
- Low oil pressure.
- Damaged camshaft reset valve.
- Damaged VVT-unit.

Fault symptom[s]

- Uneven idle
- Poor performance
- Malfunction indicator light (MIL), on

FAULT-TRACING

see **FAULT-TRACING**

ECM-P052B00 COLD START INTAKE (A) CAMSHAFT POSITION TIMING OVER-RETARDED (BANK 1). GENERAL FAILURE INFORMATION. NO SUB

TYPE INFORMATION (B6324S; 2007-2010)

DIAGNOSTIC TROUBLE CODE (DTC) INFORMATION ECM-P052B00

Condition

The Engine control module (ECM) regulates the camshaft position (angle). The difference between requested angle and actual angle is stored in the Engine control module (ECM) during warm-up of the catalytic converter.

The diagnostic trouble code (DTC) is stored if the control module detects that:

- The camshaft angle is less than the requested during warm-up of the catalytic converter.

The control module's test for the diagnostic trouble code (DTC) starts in the event of:

- Cold engine.
- Warming-up of catalytic converter.

NOTE: The control module can only detect the fault once the test has been started and the diagnostic trouble code (DTC) is stored when the conditions are met.

Substitute Value

- None.

Possible Source

- Poor engine oil quality.
- Low oil pressure.
- Damaged camshaft reset valve.
- Damaged VVT-unit.

Fault symptom[s]

- Uneven idle
- Poor performance
- Malfunction indicator light (MIL), on

FAULT-TRACING

CHECKING COMPONENTS

HINT: Incorrect oil grade can cause malfunctions in the variable valve timing (VVT) unit. Contaminants in the engine oil can cause damage to components in the variable valve timing (VVT) unit.

Check the engine oil grade. Check especially for contaminants.

Remove the camshaft reset valve, check the reset valve and the oil ducts in the cylinder head. Check for contaminants and blockages.

Check the engine oil pressure.

Try a new camshaft reset valve if no fault is found or if the above remedies do not rectify the fault.

HINT: The fault can also be caused by an internal fault in the variable valve timing (VVT) unit. If the above fault-tracing/remedies do not rectify the fault, the variable valve timing (VVT) unit may be damaged.

Remedy as necessary.

Other information

- see **LOCATION OF COMPONENTS**
- see **VARIABLE CAMSHAFT TIMING OIL CONTROL SOLENOID**
- see **VARIABLE CAMSHAFT TIMING OIL CONTROL SOLENOID**

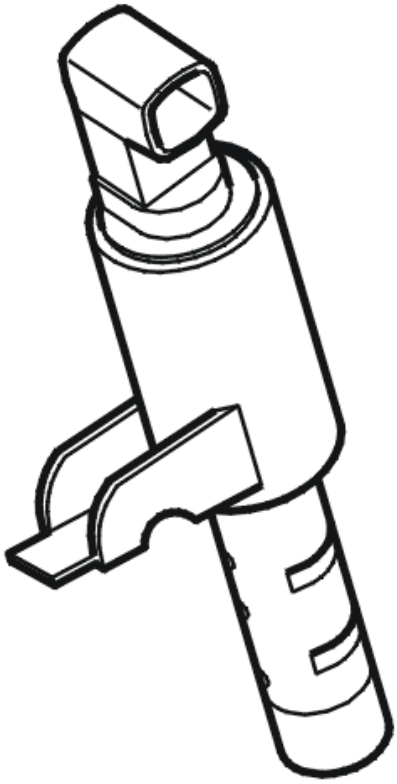

Fig. 148: Identifying Camshaft Reset Valve
Courtesy of VOLVO CARS CORPORATION

- **Continue**

  Refer to **VERIFICATION**

VERIFICATION

VERIFICATION, PART 1

HINT: After carrying out the repair, check that the fault has been remedied.

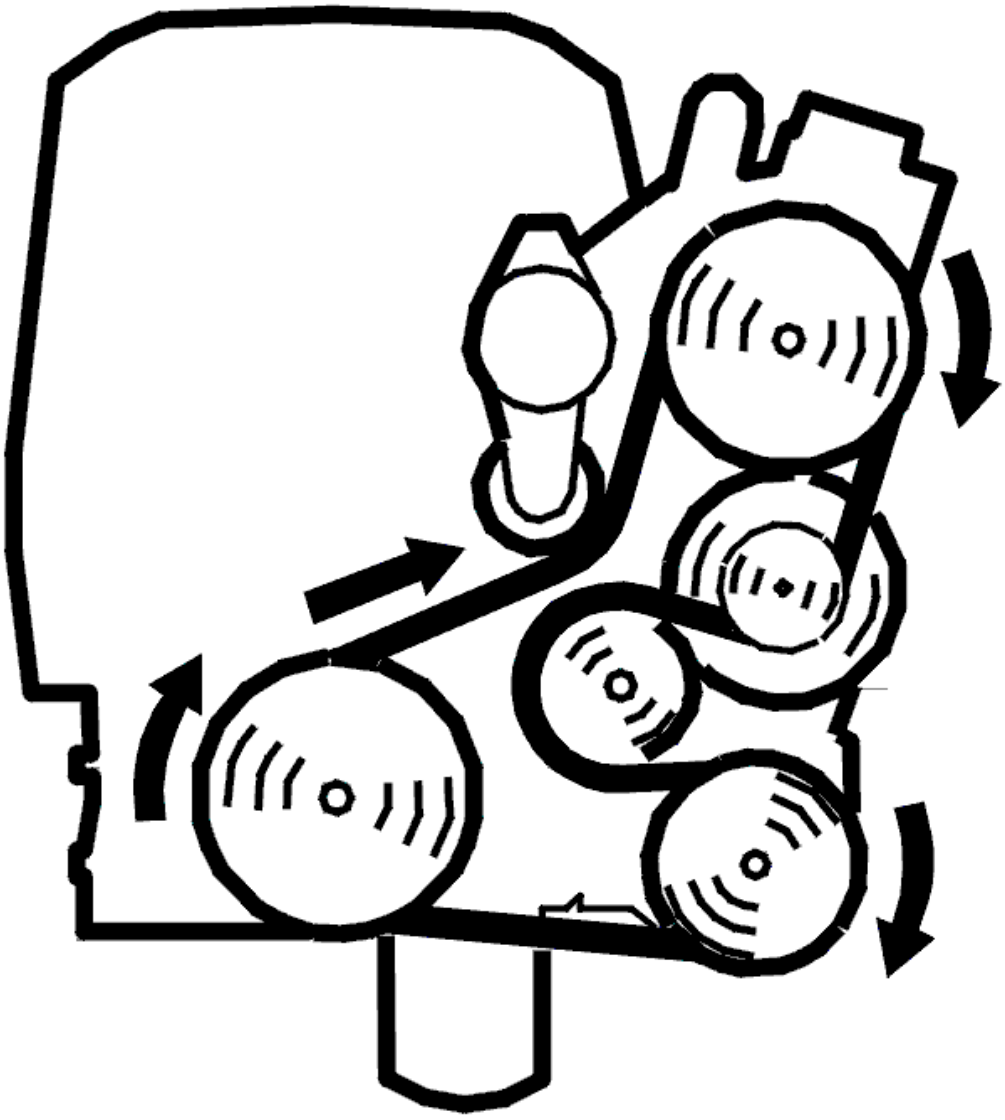

Fig. 149: Belt Routing / Engine Idling - Volvo
Courtesy of VOLVO CARS CORPORATION

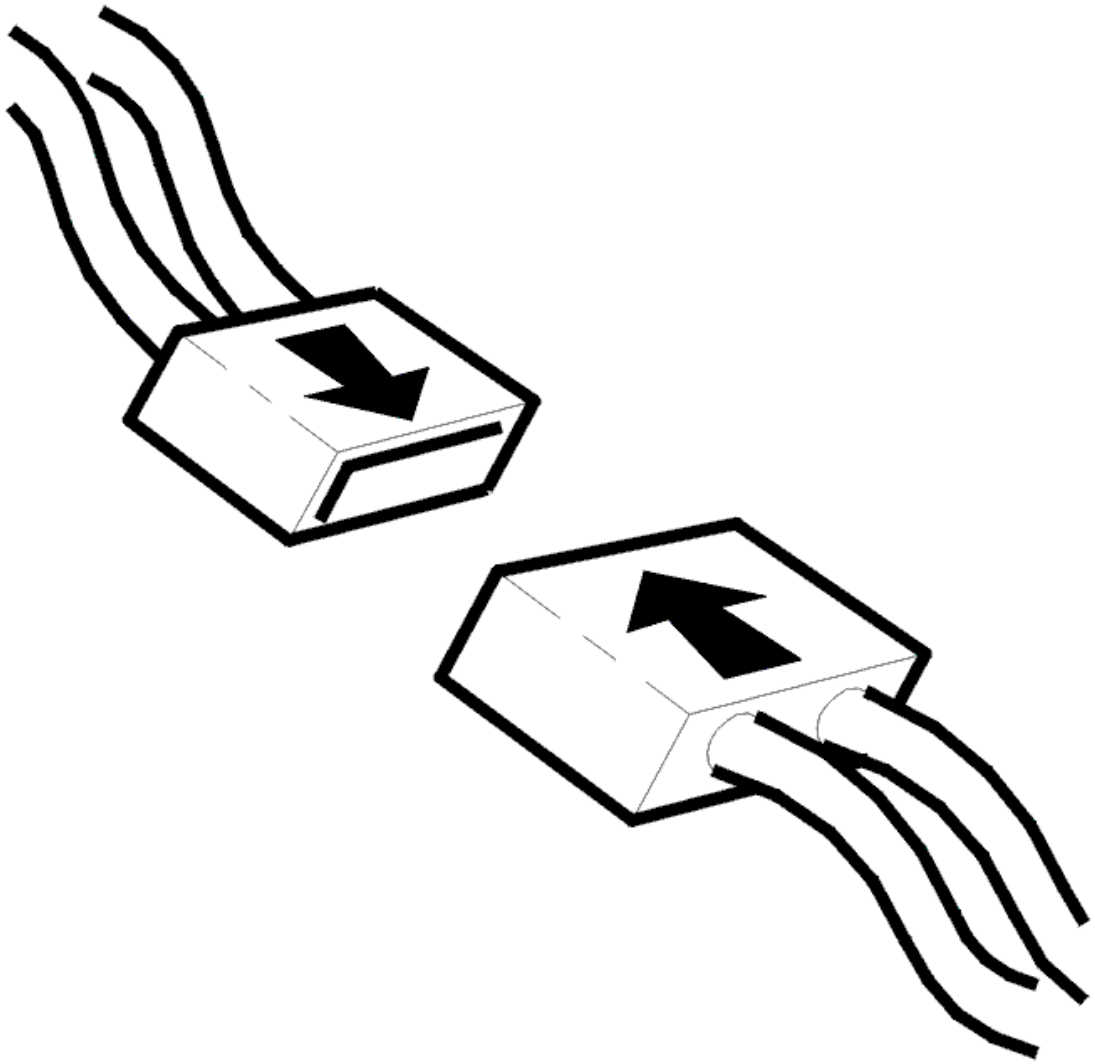

Fig. 150: Connecting Connector
Courtesy of VOLVO CARS CORPORATION

- Verification consists of 2 parts. Part 1 is carried out via a test in the workshop. Part 2 is carried out on the road.

  If the function is determined as **incorrect** in part 1, then part 2 does **not** need to be carried out. If the function is determined as being correct in part 1 and the vehicle can be tested on the road, part 2 must be carried out. This is because in certain cases the function can be difficult the check in a workshop environment.

- Ignition off
- Reconnect the connectors, components, etc.
- Start and run the engine to operating temperature.
- Read off the shift angle of the camshaft and the desired shift angle of the camshaft to check the function.

Check that the camshaft shift angle corresponds to the desired value for the camshaft shift angle with an accuracy of approximately 8° CA (camshaft angle). The difference between the values can be read off in the lower digital display.

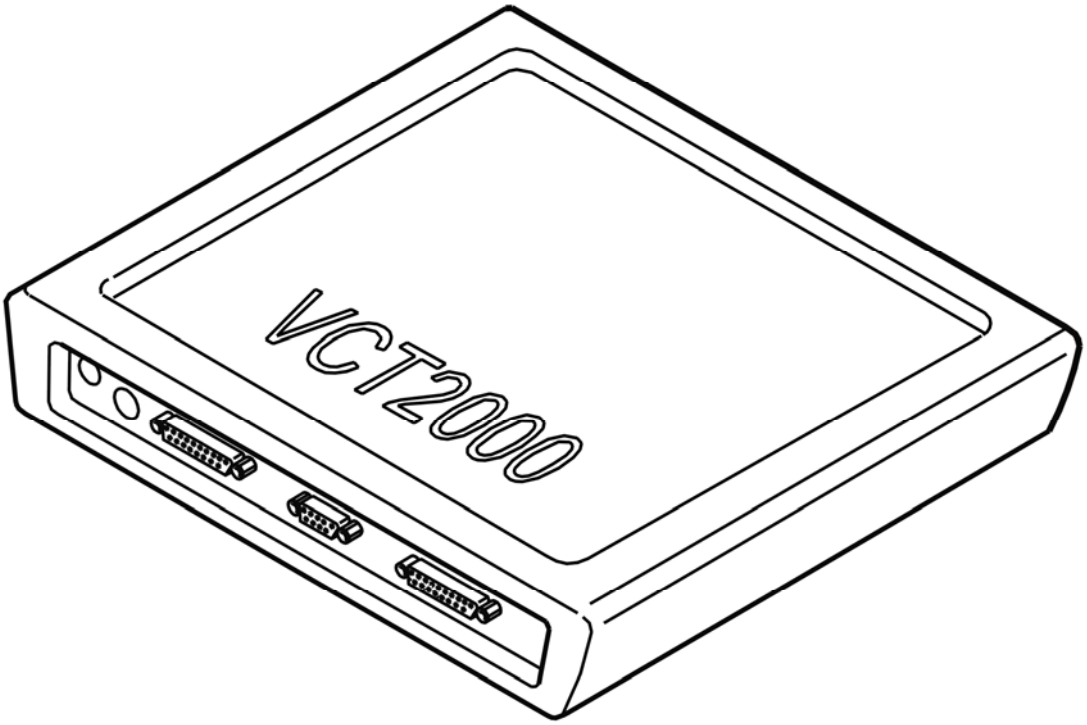

Fig. 151: Identifying VCT2000 Diagnostic Tool Symbol In VIDA
Courtesy of VOLVO CARS CORPORATION

Is the function OK?

- **YES**

  Refer to **VERIFICATION, PART 2**

- **NO**

  Refer to **INFORMATION**

VERIFICATION, PART 2

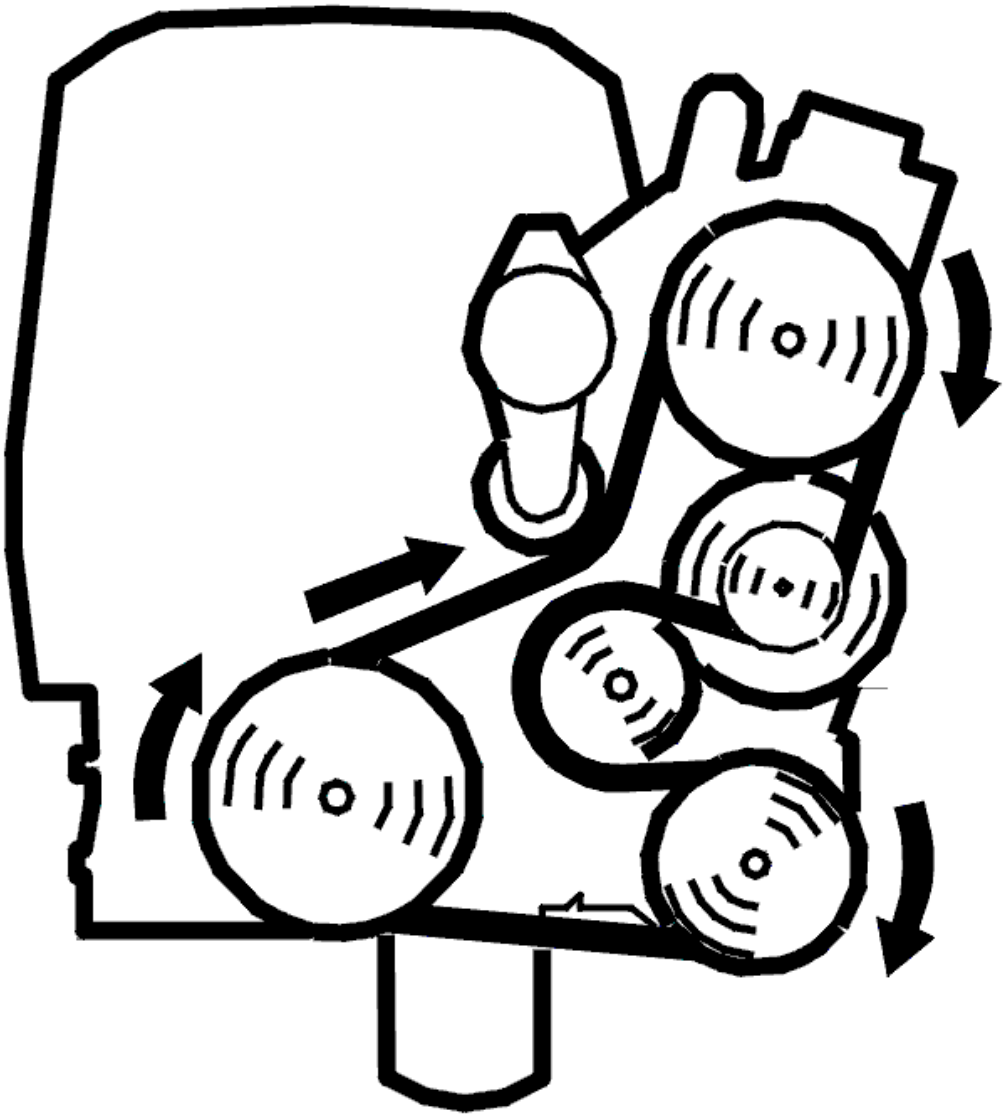

Fig. 152: Belt Routing / Engine Idling - Volvo
Courtesy of VOLVO CARS CORPORATION

- Test drive the car on the road. Use acceleration and engine braking. Repeat the procedure several times so that the camshaft control works and the engine control module (ECM) can carry out diagnostics.
- Connect the VCT2000 (or appropriate scan tool) to the data link connector **without switching off the engine.**
- Read the diagnostic status and fault status for the diagnostic trouble code by selecting the diagnostic trouble code in the list.

NOTE: **If the engine is switched off, the stored fault status will be erased and the test drive will have to be repeated.**

Check the fault status for the diagnostic trouble code when the scan is "Implemented". When the function is correct the fault status should be "No fault found" when the scan is implemented.

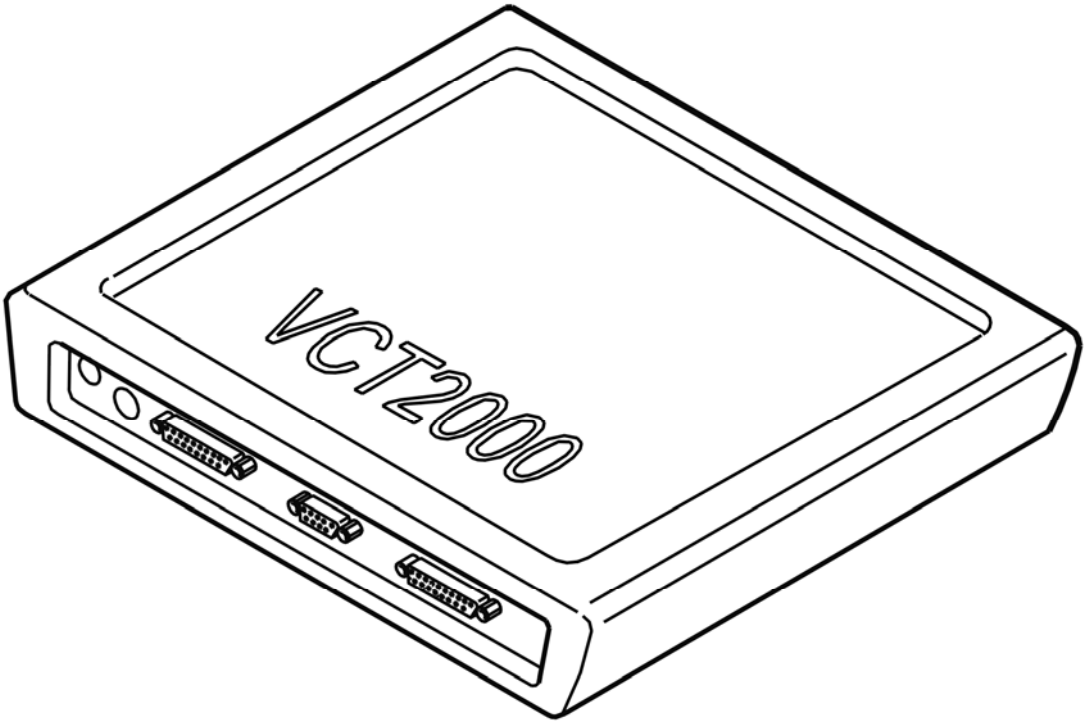

Fig. 153: Identifying VCT2000 Diagnostic Tool Symbol In VIDA
Courtesy of VOLVO CARS CORPORATION

Is the function OK?

- **YES**

  VERIFIED: Troubleshooting has been completed.

- **NO**

  Refer to **INFORMATION**

INFORMATION

FAULT-TRACING INFORMATION

The fault should have been detected and remedied. As this is not the case fault-tracing has failed.

Exit fault-tracing for this diagnostic trouble code (DTC) or make another attempt.

ECM-P052B00 COLD START INTAKE (A) CAMSHAFT POSITION TIMING OVER-RETARDED (BANK 1). GENERAL FAILURE INFORMATION. NO SUB

TYPE INFORMATION (B6324S5; 2011-2012)

DIAGNOSTIC TROUBLE CODE (DTC) INFORMATION ECM-P052B00

see **DIAGNOSTIC TROUBLE CODE (DTC) INFORMATION ECM-P052B00**

FAULT-TRACING

see **FAULT-TRACING**

ECM-P052C00 COLD START CAMSHAFT POSITION TIMING OVER-ADVANCED (BANK 2). GENERAL FAILURE INFORMATION. NO SUB TYPE INFORMATION (B8444S; 2008-2011)

DIAGNOSTIC TROUBLE CODE (DTC) INFORMATION

see **DIAGNOSTIC TROUBLE CODE (DTC) INFORMATION**

FAULT-TRACING

CHECKING COMPONENTS

HINT: Incorrect oil grade can cause malfunctions in the variable valve timing (VVT) unit. Contaminants in the engine oil can cause damage to components in the variable valve timing (VVT) unit.

Check the engine oil grade. Check especially for contaminants.

Remove the camshaft reset valve, check the reset valve and the oil ducts in the cylinder head. Check for contaminants and blockages.

Check the engine oil pressure.

Try a new camshaft reset valve if no fault is found or if the above remedies do not rectify the fault.

HINT: The fault can also be caused by an internal fault in the variable valve timing (VVT) unit. If the above fault-tracing/remedies do not rectify the fault, the variable valve timing (VVT) unit may be damaged.

Remedy as necessary.

Other information

- see **OIL PRESSURE, CHECKING**
- see **VVT UNIT, RIGHT CYLINDER HEAD**
- see **VVT UNIT, LEFT CYLINDER HEAD**
- see **LOCATION OF COMPONENTS, ENGINE COMPARTMENT**

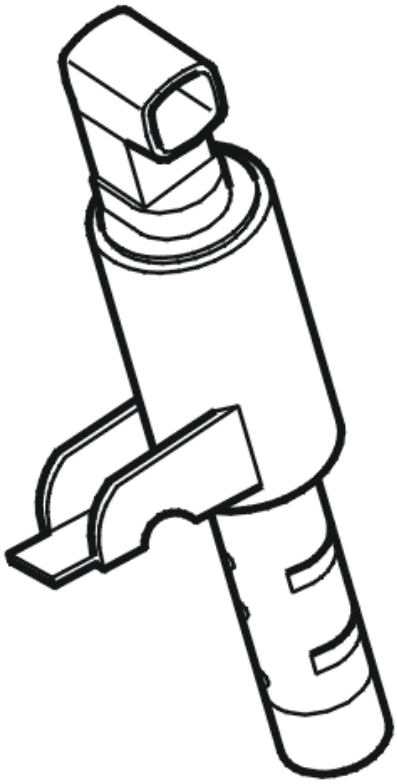

Fig. 154: Identifying Camshaft Reset Valve
Courtesy of VOLVO CARS CORPORATION

- **Continue**

  Refer to **VERIFICATION**

VERIFICATION

VERIFICATION, PART 1

HINT: After carrying out the repair, check that the fault has been remedied.

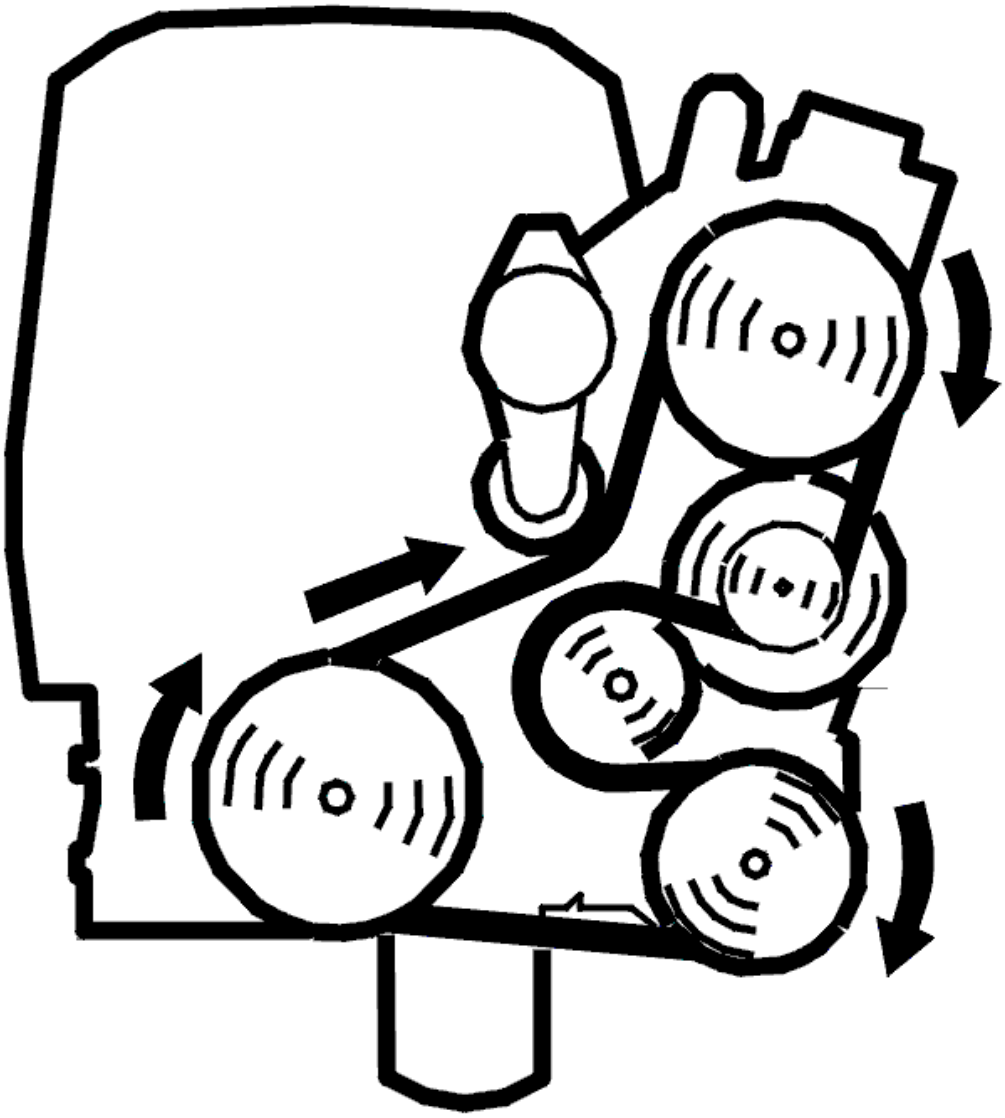

Fig. 155: Belt Routing / Engine Idling - Volvo
Courtesy of VOLVO CARS CORPORATION

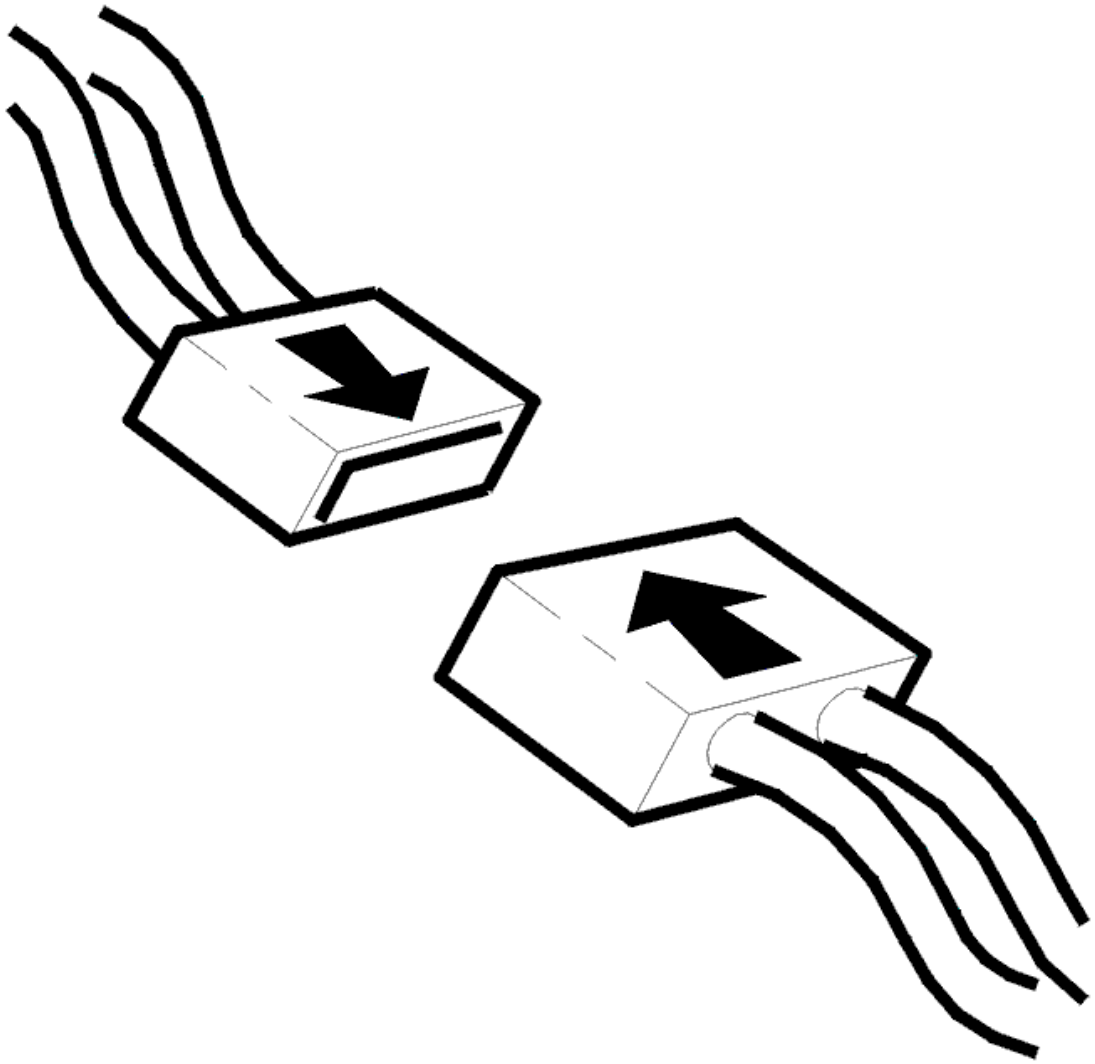

Fig. 156: Connecting Connector
Courtesy of VOLVO CARS CORPORATION

- Verification consists of 2 parts. Part 1 is carried out via a test in the workshop. Part 2 is carried out on the road.

  If the function is determined as **incorrect** in part 1, then part 2 does **not** need to be carried out. If the function is determined as being correct in part 1 and the vehicle can be tested on the road, part 2 must be carried out. This is because in certain cases the function can be difficult the check in a workshop environment.

- Ignition off
- Reconnect the connectors, components, etc.
- Start and run the engine to operating temperature.
- Read off the shift angle of the camshaft and the desired shift angle of the camshaft to check the function.

Check that the camshaft shift angle corresponds to the desired value for the camshaft shift angle with an accuracy of approximately 8° CA (camshaft angle). The difference between the values can be read off in the lower digital display.

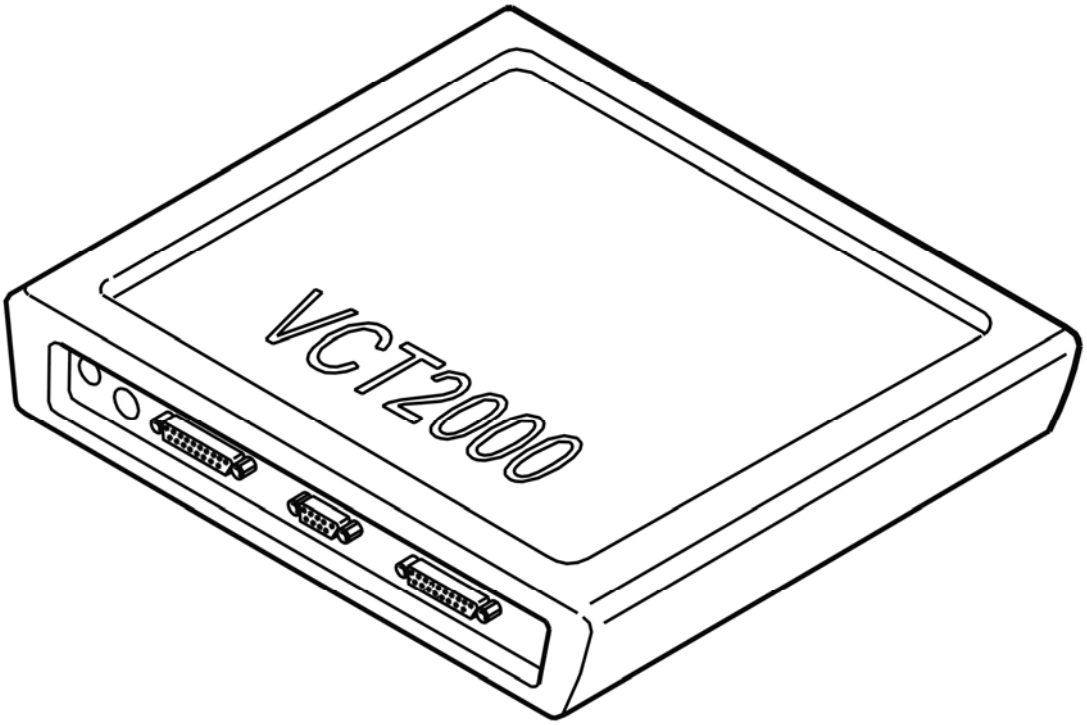

Fig. 157: Identifying VCT2000 Diagnostic Tool Symbol In VIDA
Courtesy of VOLVO CARS CORPORATION

Is the function OK?

- **YES**

  Refer to **VERIFICATION, PART 2**

- **NO**

  Refer to **INFORMATION**

VERIFICATION, PART 2

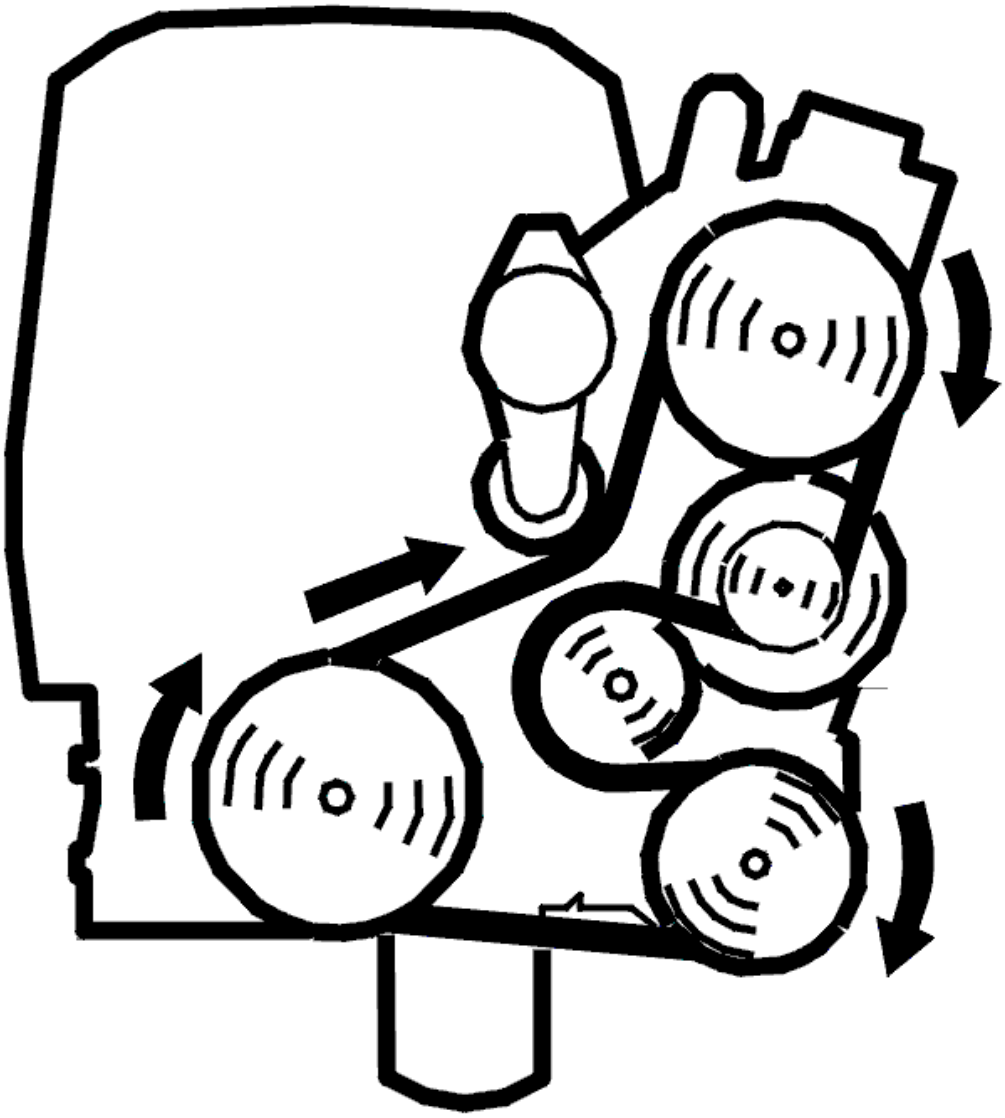

Fig. 158: Belt Routing / Engine Idling - Volvo
Courtesy of VOLVO CARS CORPORATION

- Test drive the car on the road. Use acceleration and engine braking. Repeat the procedure several times so that the camshaft control works and the engine control module (ECM) can carry out diagnostics.
- Connect the VCT2000 (or appropriate scan tool) to the data link connector **without switching off the engine.**
- Read the diagnostic status and fault status for the diagnostic trouble code by selecting the diagnostic trouble code in the list.

NOTE: **If the engine is switched off, the stored fault status will be erased and the test drive will have to be repeated.**

Check the fault status for the diagnostic trouble code when the scan is "Implemented". When the function is correct the fault status should be "No fault found" when the scan is implemented.

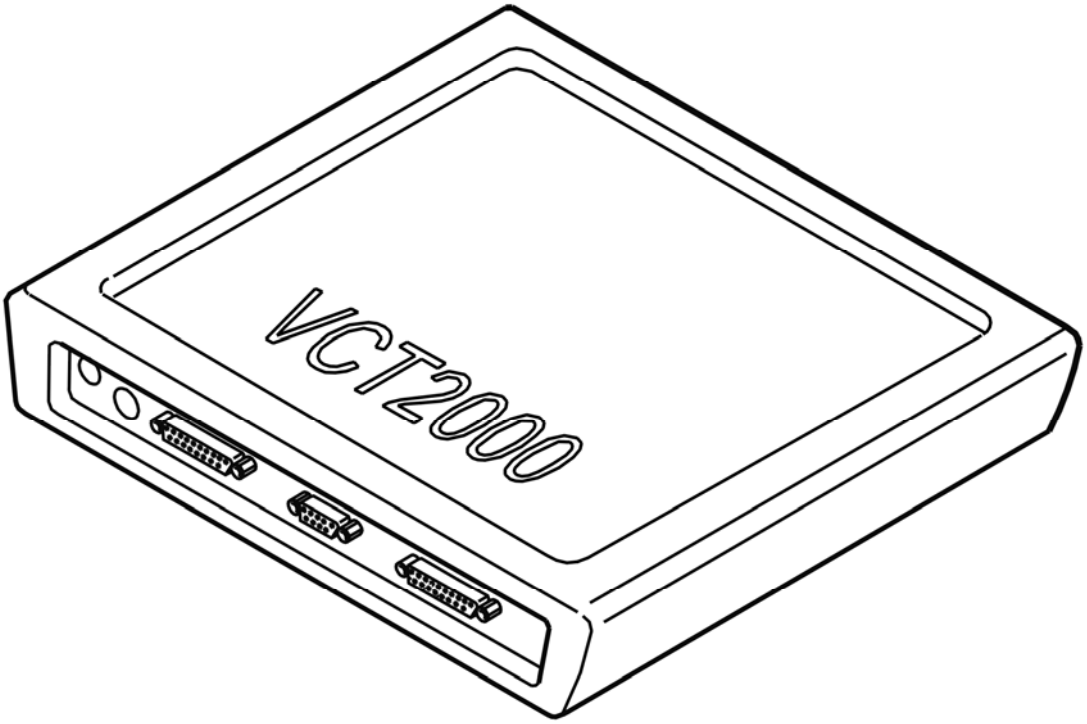

Fig. 159: Identifying VCT2000 Diagnostic Tool Symbol In VIDA
Courtesy of VOLVO CARS CORPORATION

Is the function OK?

- **YES**

  VERIFIED: Troubleshooting has been completed.

- **NO**

  Refer to **INFORMATION**

INFORMATION

FAULT-TRACING INFORMATION

The fault should have been detected and remedied. As this is not the case fault-tracing has failed.

Exit fault-tracing for this diagnostic trouble code (DTC) or make another attempt.

ECM-P052D00 COLD START CAMSHAFT POSITION TIMING OVER-RETARDED (BANK 2). GENERAL FAILURE INFORMATION. NO SUB TYPE

INFORMATION (B6324S; 2007-2010)

DIAGNOSTIC TROUBLE CODE (DTC) INFORMATION ECM-P052D00

Condition

The Engine control module (ECM) regulates the camshaft position (angle). The difference between requested angle and actual angle is stored in the Engine control module (ECM) during warm-up of the catalytic converter.

The diagnostic trouble code (DTC) is stored if the control module detects that:

- The camshaft angle is less than the requested during warm-up of the catalytic converter.

The control module's test for the diagnostic trouble code (DTC) starts in the event of:

- Cold engine.
- Warming-up of catalytic converter.

NOTE: The control module can only detect the fault once the test has been started and the diagnostic trouble code (DTC) is stored when the conditions are met.

Substitute Value

- None.

Possible Source

- Poor engine oil quality.
- Low oil pressure.
- Damaged camshaft reset valve.
- Damaged VVT-unit.

Fault symptom[s]

- Uneven idle
- Poor performance

FAULT-TRACING

see **FAULT-TRACING**

ECM-P052D00 COLD START CAMSHAFT POSITION TIMING OVER-RETARDED (BANK 2). GENERAL FAILURE INFORMATION. NO SUB TYPE INFORMATION (B6324S5; 2011-2012)

DIAGNOSTIC TROUBLE CODE (DTC) INFORMATION ECM-P052D00

see **DIAGNOSTIC TROUBLE CODE (DTC) INFORMATION ECM-P052D00**

FAULT-TRACING

see **FAULT-TRACING**

ECM-P052D00 COLD START CAMSHAFT POSITION TIMING OVER-RETARDED (BANK 2). GENERAL FAILURE INFORMATION. NO SUB TYPE INFORMATION (B8444S; 2008-2011)

DIAGNOSTIC TROUBLE CODE (DTC) INFORMATION

see **DIAGNOSTIC TROUBLE CODE (DTC) INFORMATION**

FAULT-TRACING

see **FAULT-TRACING**

ECM-P053100: A/C REFRIGERANT PRESSURE SENSOR A CIRCUIT RANGE/PERFORMANCE. GENERAL FAILURE INFORMATION. NO SUB TYPE INFORMATION (B6324S; 2007-2010)

DIAGNOSTIC TROUBLE CODE (DTC) INFORMATION ECM-P053100

Condition

The engine control module (ECM) calculates when a certain pressure change should have been reached in the air conditioning (A/C) system.

The control module also measures the actual pressure changes at the air conditioning (A/C) pressure sensor.

The diagnostic trouble code (DTC) is stored if the control module detects that:

- The calculated A/C pressure value differs from the actual pressure value.

The control module's test for the diagnostic trouble code (DTC) starts in the event of:

- Engine running.
- Air conditioning (A/C) control, active.

NOTE: **The control module can only detect the fault once the test has been started and the diagnostic trouble code (DTC) is stored when the conditions are met.**

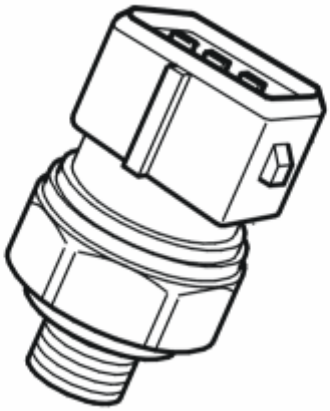

Fig. 160: Identifying A/C Pressure Sensor
Courtesy of VOLVO CARS CORPORATION

Substitute Value

- No substitute value.

Possible Source

- Open-circuit in the power supply.
- Open-circuit in the signal cable.
- Open-circuit in the ground lead.
- Damaged A/C pressure sensor.

Fault symptom[s]

- A/C system does not operate

FAULT-TRACING

CHECKING THE STATUS

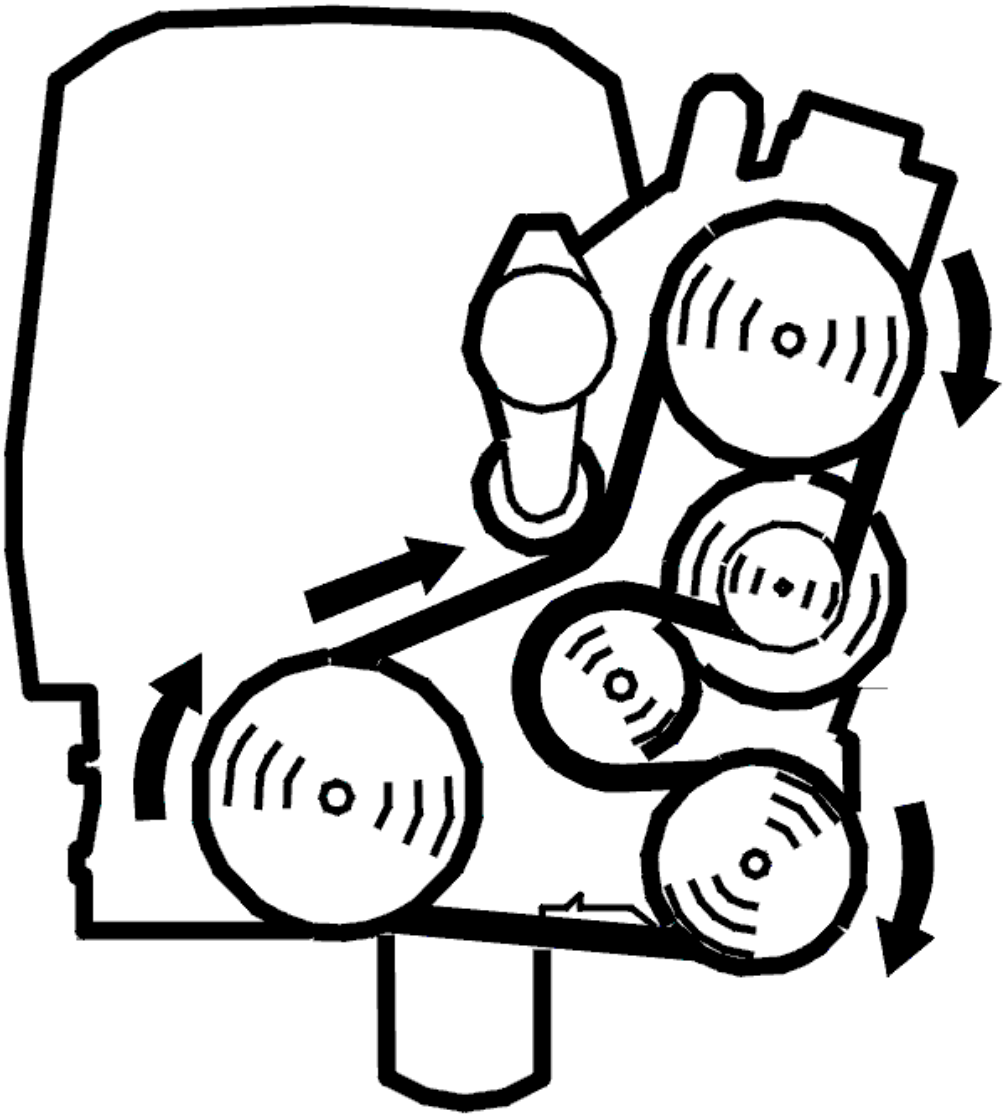

Fig. 161: Belt Routing / Engine Idling - Volvo
Courtesy of VOLVO CARS CORPORATION

- Start the engine.
- A/C on.

  Read the diagnostic status and trouble status for the diagnostic trouble code by selecting the diagnostic trouble code in the list.

  Check if the malfunction is permanent or intermittent by reading off the diagnostic trouble code's status when the diagnostic status is "Implemented".

  If the trouble status is "Malfunction found", this indicates that the malfunction is permanent. If the trouble status is "No malfunction found", this indicates that the malfunction is intermittent and not active right now.

NOTE: **Trouble status cannot go from "Malfunction found" to "No malfunction found" in the same operating cycle.**

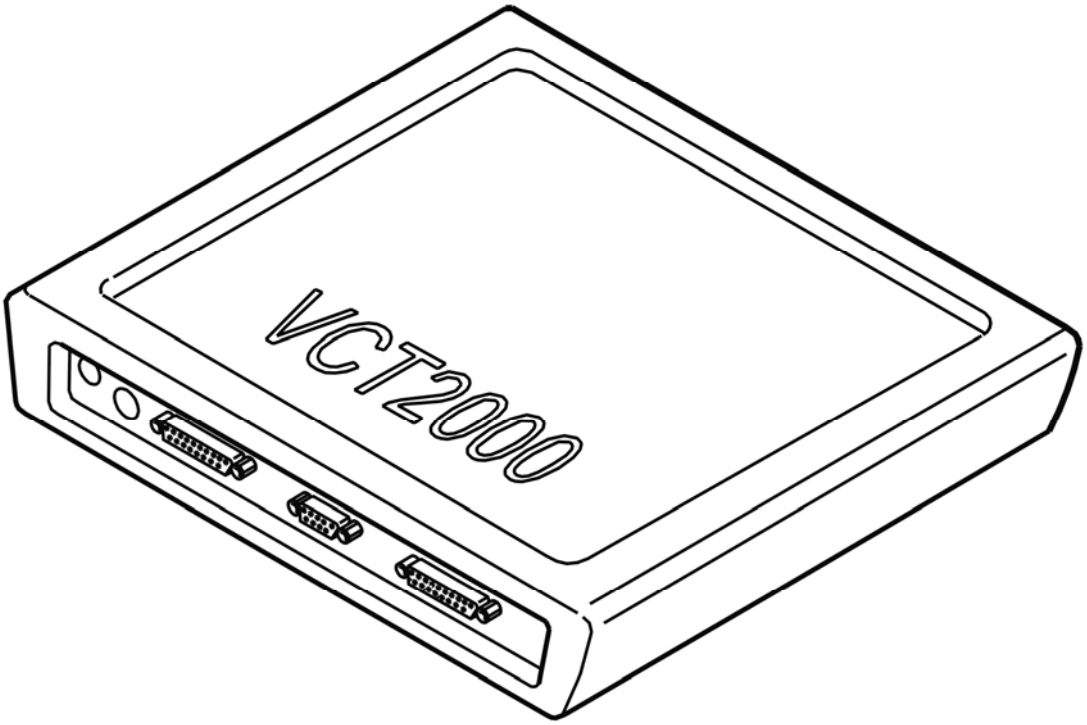

Fig. 162: Identifying VCT2000 Diagnostic Tool Symbol In VIDA
Courtesy of VOLVO CARS CORPORATION

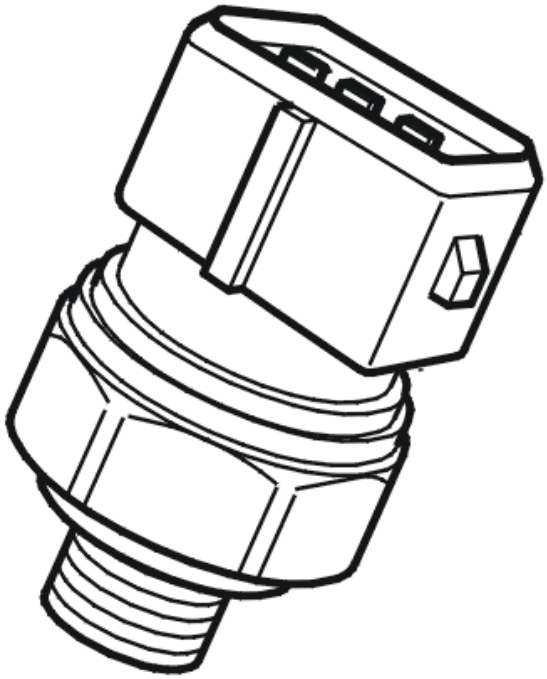

Fig. 163: Identifying A/C Pressure Sensor
Courtesy of VOLVO CARS CORPORATION

- **Continue**

  Refer to **REPLACING THE COMPONENT**

REPLACING THE COMPONENT

Engine control module (ECM) has registered that the A/C pressure sensor is damaged.

If the malfunction is intermittent, it has been registered previously but no longer remains. Intermittent malfunctions can be due to disruption when the control module started or can be another type of malfunction that may recur at different instances. If the malfunction is permanent it means that it is active right now. The malfunction is assessed on a case by case basis.

Remedy as necessary.

Other information

- see **CONNECTING THE BREAKOUT BOX**
- see **SIGNAL SPECIFICATION**
- see **LOCATION OF COMPONENTS**

- see **CHECKING WIRING AND TERMINALS**

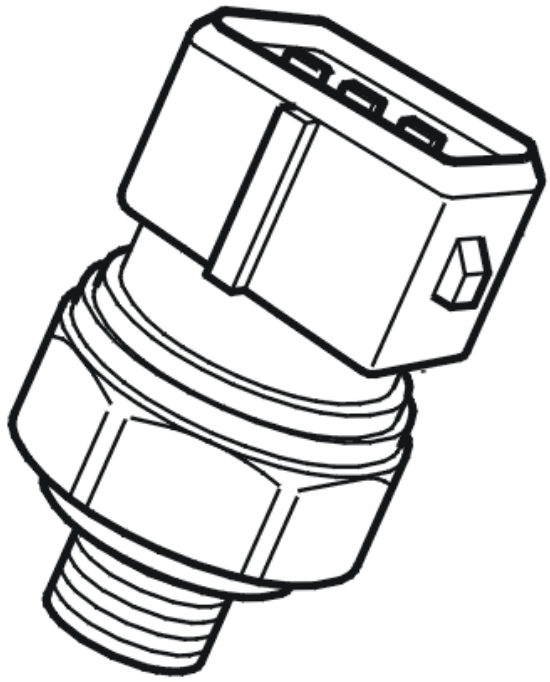

Fig. 164: Identifying A/C Pressure Sensor
Courtesy of VOLVO CARS CORPORATION

- **Continue**

  Refer to **VERIFICATION**

INFORMATION

FAULT-TRACING INFORMATION

The fault should have been detected and remedied. As this is not the case fault-tracing has failed.

Exit fault-tracing for this diagnostic trouble code (DTC) or make another attempt.

VERIFICATION

VERIFICATION

HINT: After repairing, it is necessary to check that the malfunction has been fixed.

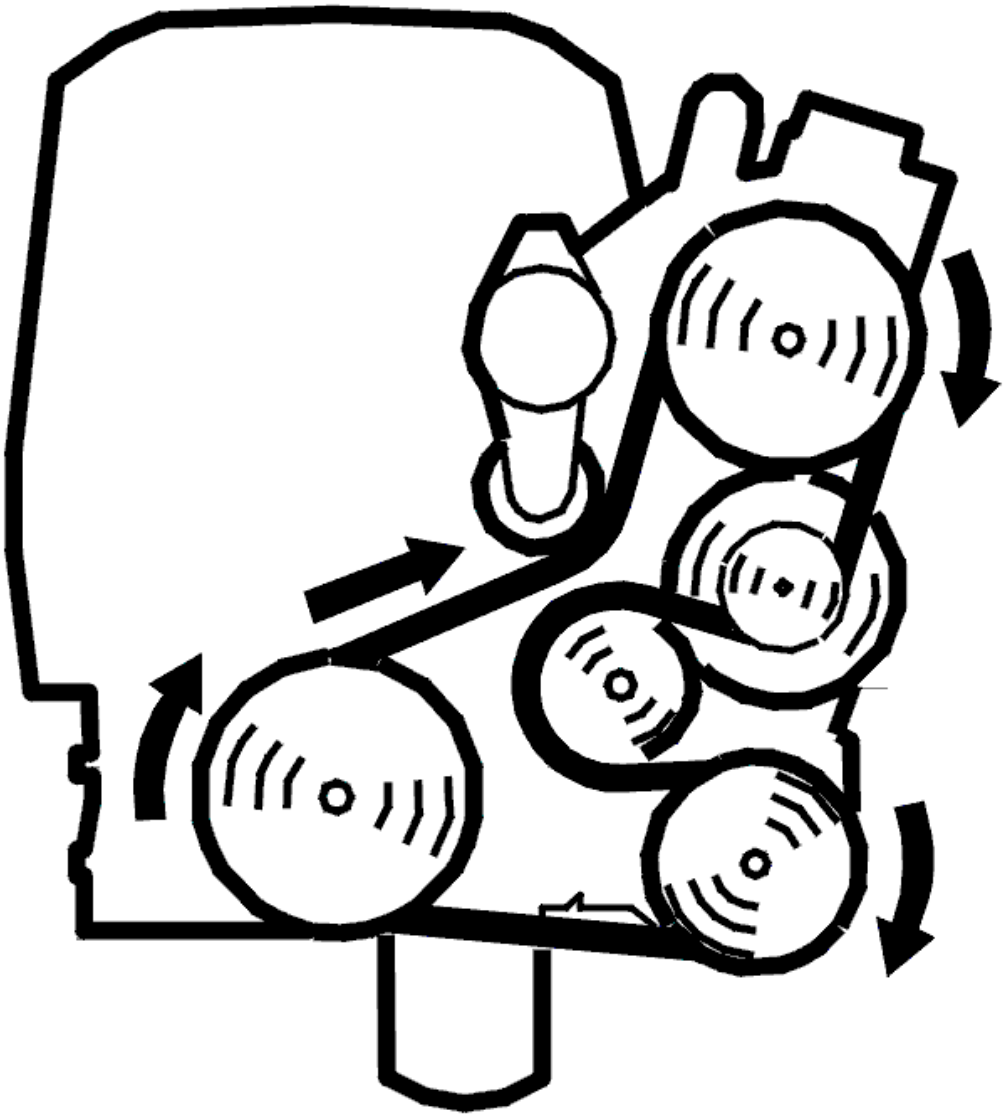

Fig. 165: Belt Routing / Engine Idling - Volvo
Courtesy of VOLVO CARS CORPORATION

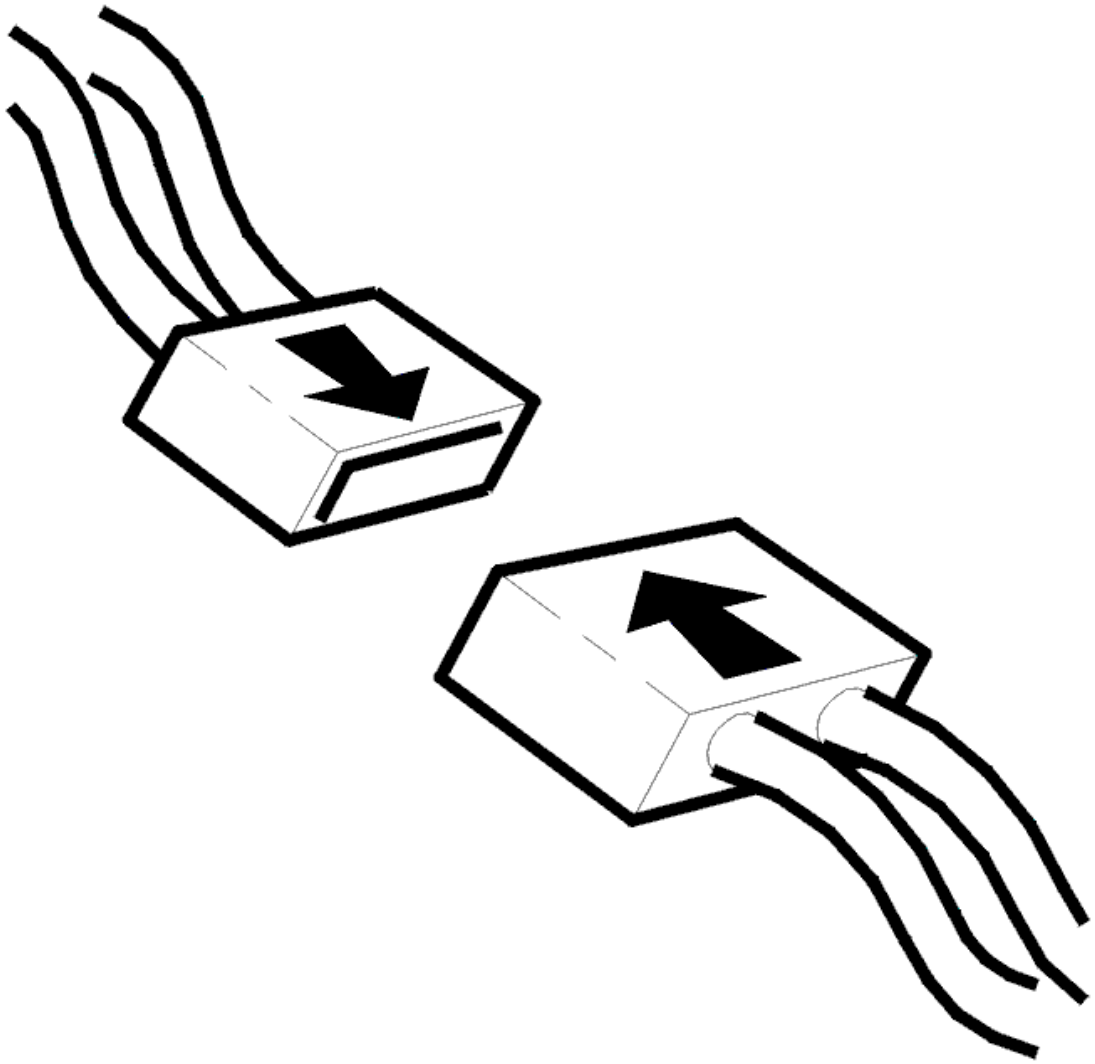

Fig. 166: Connecting Connector
Courtesy of VOLVO CARS CORPORATION

- Ignition off
- Reconnect the connectors, components, etc.
- Start the engine.
- A/C on.
- Read the diagnostic status and trouble status for the diagnostic trouble code by selecting the diagnostic trouble code in the list.

  Check the trouble status for the diagnostic trouble code when the diagnosis is "Implemented". When the function is correct the trouble status should be "No malfunction found" when the diagnosis is implemented.

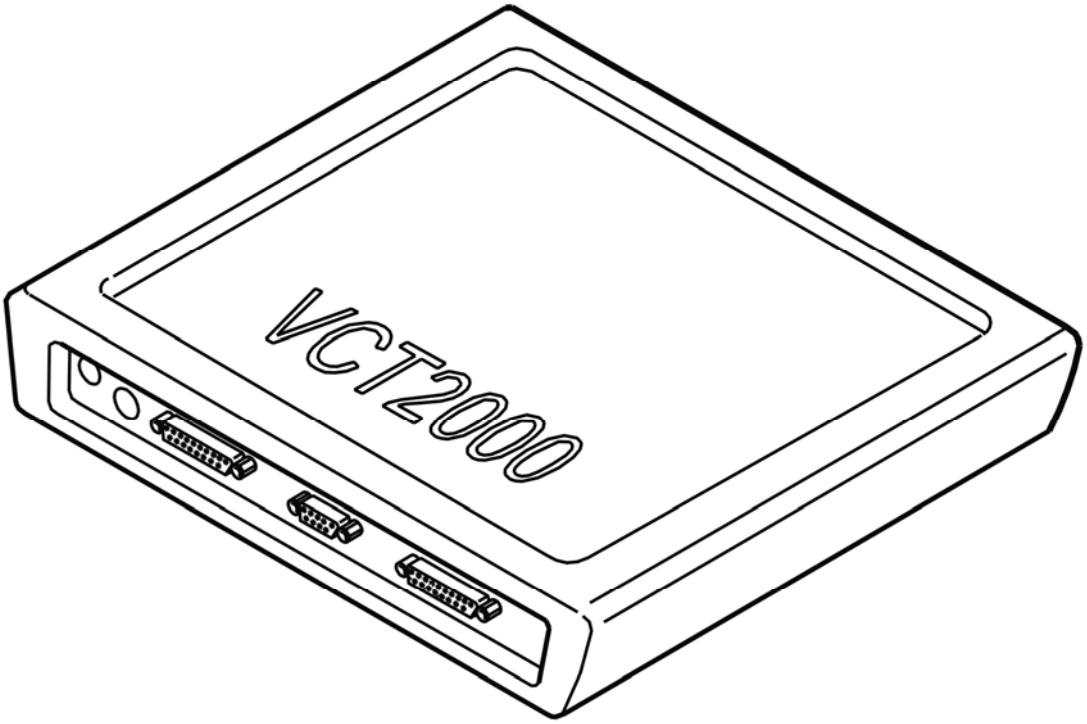

Fig. 167: Identifying VCT2000 Diagnostic Tool Symbol In VIDA
Courtesy of VOLVO CARS CORPORATION

Is the function OK?

- **YES**

  VERIFIED: Troubleshooting has been completed.

- **NO**

  Refer to **INFORMATION**

ECM-P053100: A/C REFRIGERANT PRESSURE SENSOR A CIRCUIT RANGE/PERFORMANCE. GENERAL FAILURE INFORMATION. NO SUB TYPE INFORMATION (B6324S5; 2011-2012)

DIAGNOSTIC TROUBLE CODE (DTC) INFORMATION ECM-P053100

see **DIAGNOSTIC TROUBLE CODE (DTC) INFORMATION ECM-P053100**

FAULT-TRACING

see **FAULT-TRACING**

ECM-P053100: A/C REFRIGERANT PRESSURE SENSOR A CIRCUIT WITHIN/OUTSIDE LIMIT VALUES. GENERAL MALFUNCTION INFORMATION. NO INFORMATION ON MALFUNCTION TYPE (B8444S; 2005-2011)

DIAGNOSTIC TROUBLE CODE (DTC) INFORMATION ECM-P053100

Condition

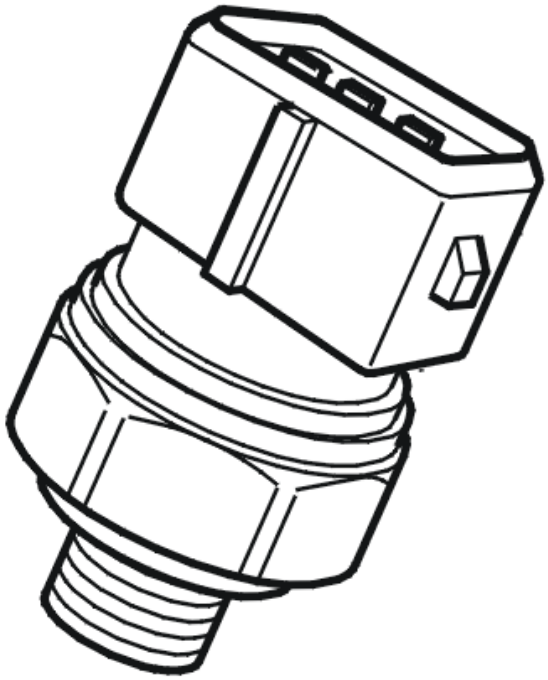

Fig. 168: Identifying A/C Pressure Sensor
Courtesy of VOLVO CARS CORPORATION

Engine control module (ECM) calculates when a certain minimum pressure change shall have been reached in the A/C system. The control module also measures the actual pressure change using the A/C pressure sensor. If the conditions for the minimum calculated pressure change are fulfilled but the measured pressure change is not, the control module interprets this as a malfunction and the diagnostic trouble code is generated.

The diagnostic trouble code can be diagnosed with the engine running and the A/C control active.

Substitute Value

- Nothing.

Possible Source

- Damaged A/C pressure sensor.

Fault symptom[s]

- A/C system does not work.

TROUBLESHOOTING ECM-P053100

CHECKING THE STATUS

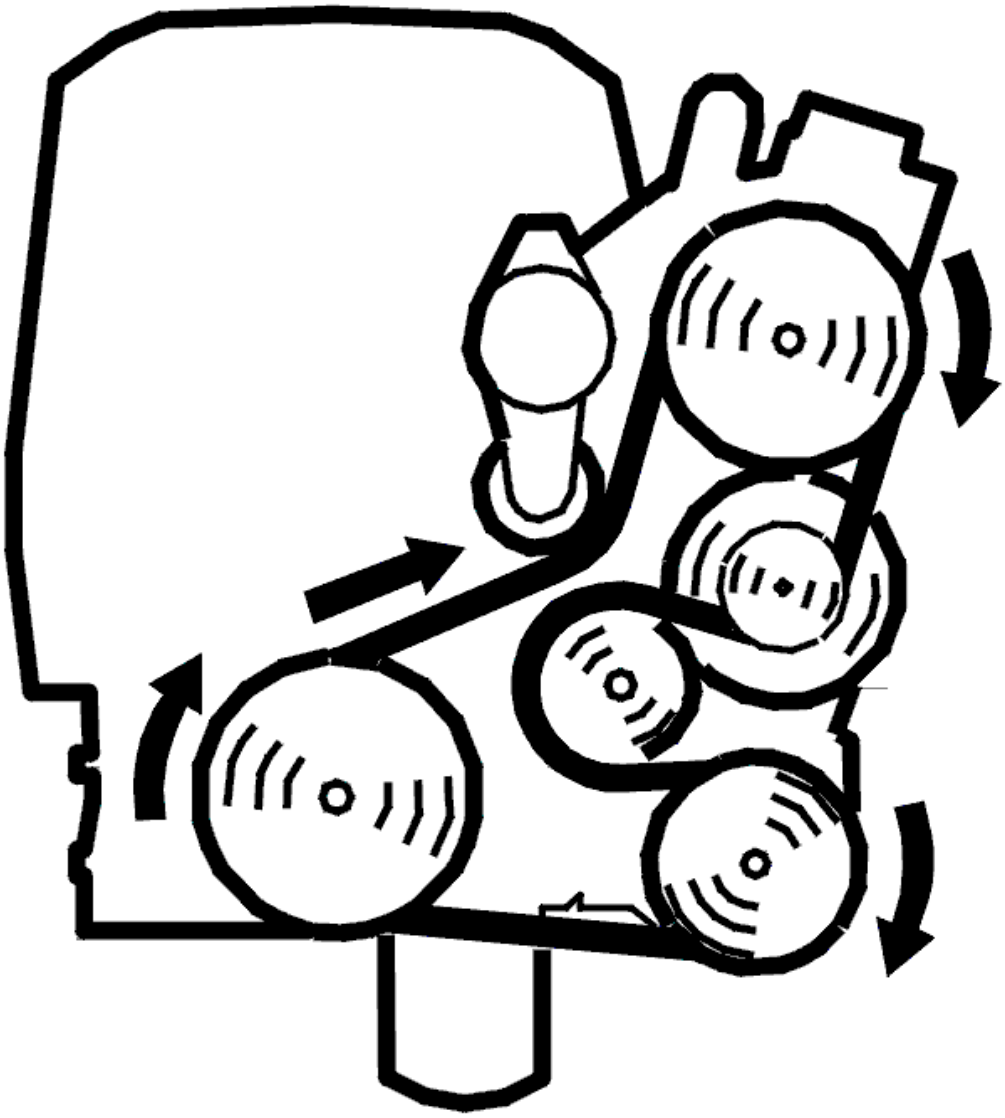

Fig. 169: Belt Routing / Engine Idling - Volvo
Courtesy of VOLVO CARS CORPORATION

- Start the engine.
- A/C on.

Read the diagnostic status and trouble status for the diagnostic trouble code by selecting the diagnostic trouble code in the list.

Check if the malfunction is permanent or intermittent by reading off the diagnostic trouble code's status when the diagnostic status is "Implemented".

If the trouble status is "Malfunction found", this indicates that the malfunction is permanent. If the trouble status is "No malfunction found", this indicates that the malfunction is intermittent and not active right now.

NOTE: Trouble status cannot go from "Malfunction found" to "No malfunction found" in the same operating cycle.

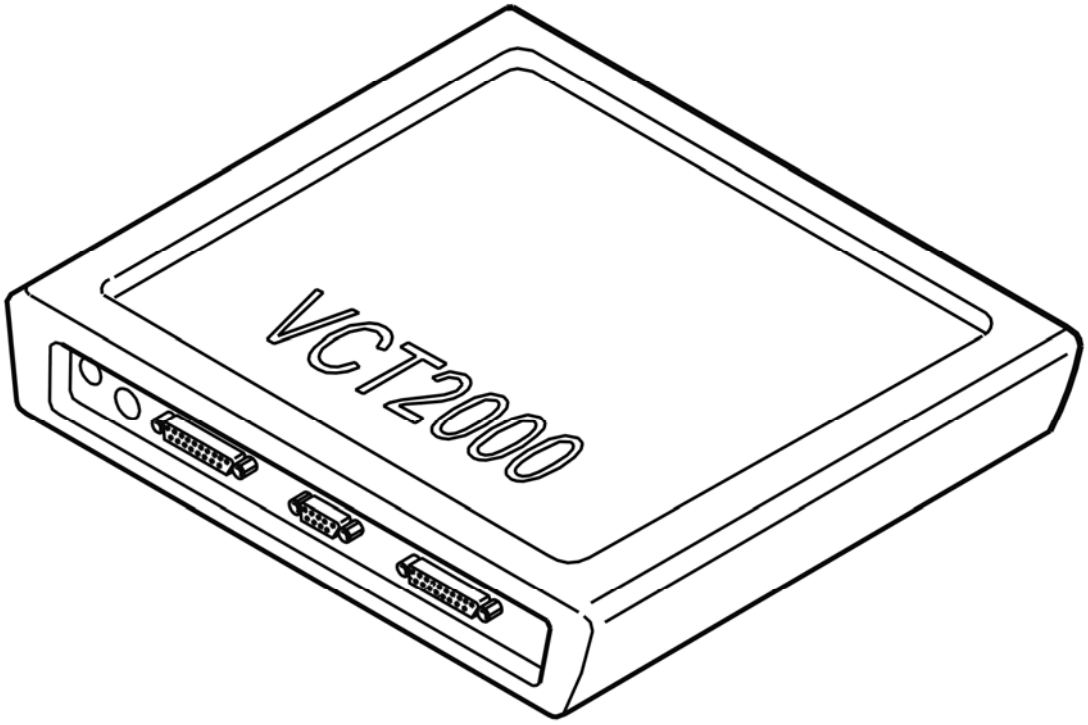

Fig. 170: Identifying VCT2000 Diagnostic Tool Symbol In VIDA
Courtesy of VOLVO CARS CORPORATION

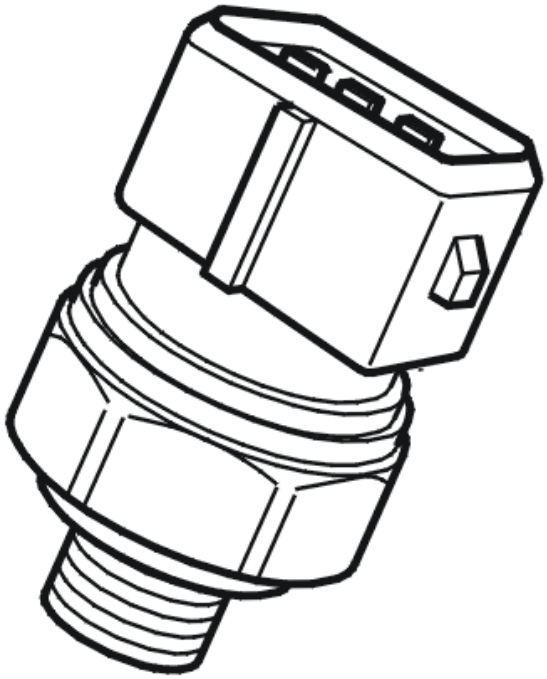

Fig. 171: Identifying A/C Pressure Sensor
Courtesy of VOLVO CARS CORPORATION

- **Continue**

  Refer to **REPLACING THE COMPONENT**

REPLACING THE COMPONENT

Engine control module (ECM) has registered that the A/C pressure sensor is damaged.

If the malfunction is intermittent, it has been registered previously but no longer remains. Intermittent malfunctions can be due to disruption when the control module started or can be another type of malfunction that may recur at different instances. If the malfunction is permanent it means that it is active right now. The malfunction is assessed on a case by case basis.

Remedy as necessary.

Other information

- see **CONNECTING THE BREAKOUT BOX**
- see **SIGNAL SPECIFICATION, ENGINE CONTROL MODULE (ECM)**
- see **LOCATION OF COMPONENTS, ENGINE COMPARTMENT**

- see **CHECKING WIRING AND TERMINALS**

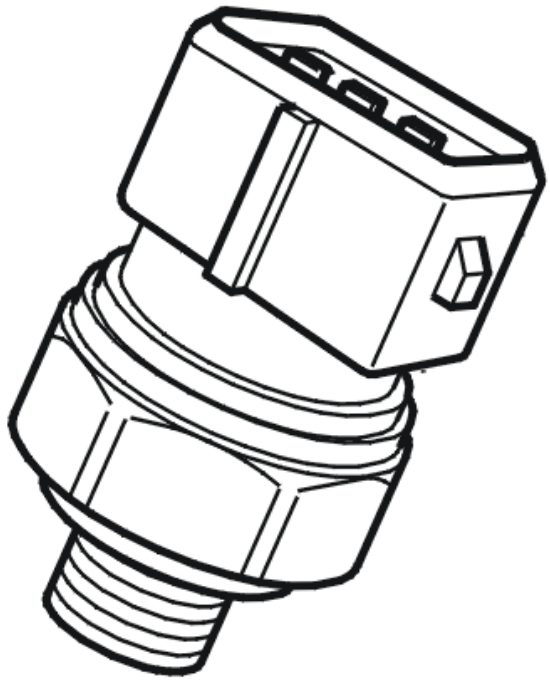

Fig. 172: Identifying A/C Pressure Sensor
Courtesy of VOLVO CARS CORPORATION

- **Continue**

  Refer to **VERIFICATION**

VERIFICATION

VERIFICATION

HINT: After repairing, it is necessary to check that the malfunction has been fixed.

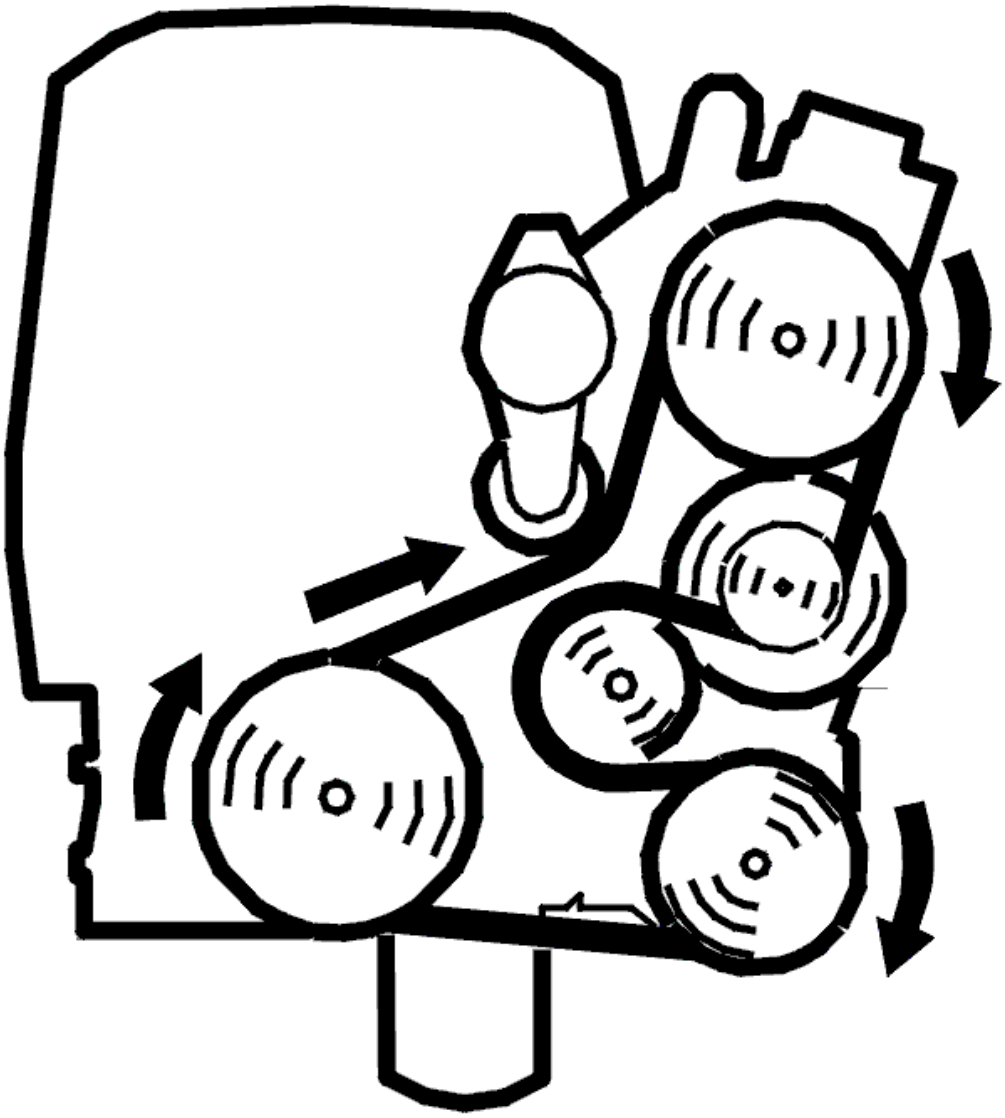

Fig. 173: Belt Routing / Engine Idling - Volvo
Courtesy of VOLVO CARS CORPORATION

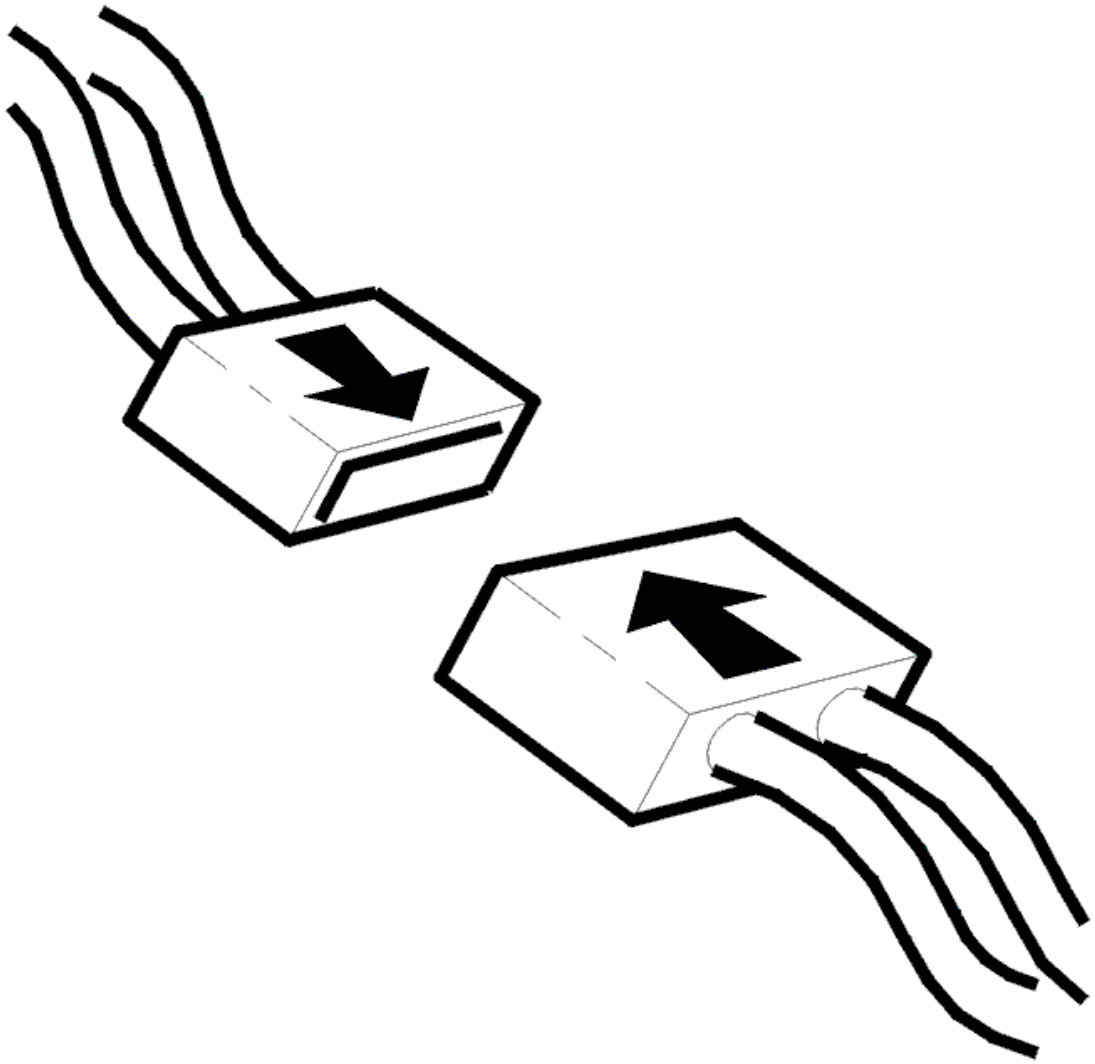

Fig. 174: Connecting Connector
Courtesy of VOLVO CARS CORPORATION

- Ignition off
- Reconnect the connectors, components, etc.
- Start the engine.
- A/C on.
- Read the diagnostic status and trouble status for the diagnostic trouble code by selecting the diagnostic trouble code in the list.

  Check the trouble status for the diagnostic trouble code when the diagnosis is "Implemented". When the function is correct the trouble status should be "No malfunction found" when the diagnosis is implemented.

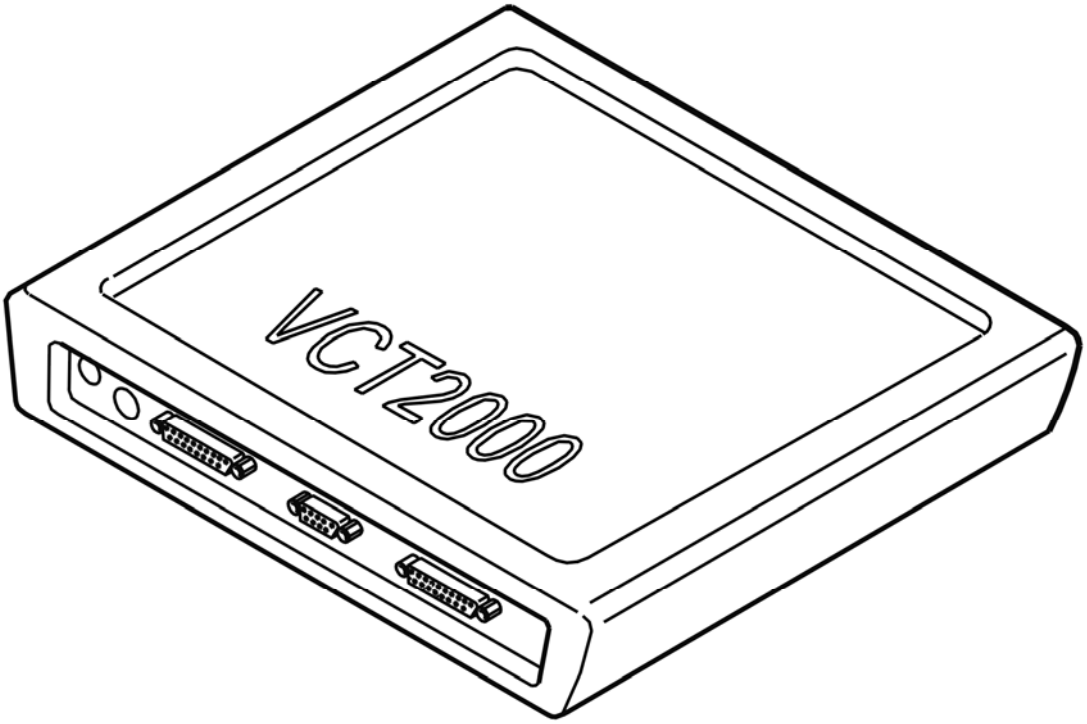

Fig. 175: Identifying VCT2000 Diagnostic Tool Symbol In VIDA
Courtesy of VOLVO CARS CORPORATION

Is the function OK?

- **YES**

  VERIFIED: Troubleshooting has been completed.

- **NO**

  Refer to **INFORMATION**

INFORMATION

FAULT-TRACING INFORMATION

The fault should have been detected and remedied. As this is not the case fault-tracing has failed.

Exit fault-tracing for this diagnostic trouble code (DTC) or make another attempt.

ECM-P053200: A/C REFRIGERANT PRESSURE SENSOR A CIRCUIT LOW INPUT. GENERAL FAILURE INFORMATION. NO SUB TYPE INFORMATION

(B6324S; 2007-2010)

DIAGNOSTIC TROUBLE CODE (DTC) INFORMATION ECM-P053200

Condition

The engine control module (ECM) checks if the signal from the air conditioning (A/C) pressure sensor is within its permitted range.

The diagnostic trouble code (DTC) is stored if the control module detects that:

- The signal from the pressure sensor corresponds to a lower pressure than the normal operating value.

The control module's test for the diagnostic trouble code (DTC) starts in the event of:

- Ignition on.

NOTE: The control module can only detect the fault once the test has been started and the diagnostic trouble code (DTC) is stored when the conditions are met.

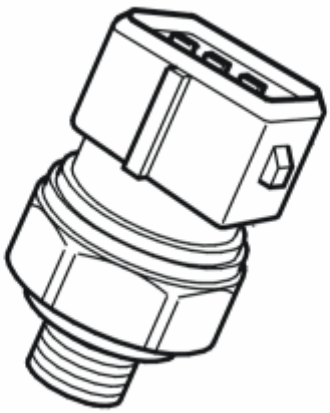

Fig. 176: Identifying A/C Pressure Sensor
Courtesy of VOLVO CARS CORPORATION

Substitute Value

No substitute value.

Possible Source

- Open-circuit in the power supply.
- Open-circuit in the signal cable.
- Open-circuit in the ground lead.

- Damaged A/C pressure sensor.

Fault symptom[s]

- A/C system does not operate

FAULT-TRACING

see **FAULT-TRACING**

ECM-P053200: A/C REFRIGERANT PRESSURE SENSOR A CIRCUIT LOW INPUT. GENERAL FAILURE INFORMATION. NO SUB TYPE INFORMATION (B6324S5; 2011-2012)

DIAGNOSTIC TROUBLE CODE (DTC) INFORMATION ECM-P053200

see **DIAGNOSTIC TROUBLE CODE (DTC) INFORMATION ECM-P053200**

FAULT-TRACING

see **FAULT-TRACING**

ECM-P053200: A/C REFRIGERANT PRESSURE SENSOR A CIRCUIT LOW INPUT SIGNAL. GENERAL MALFUNCTION INFORMATION. NO INFORMATION ON MALFUNCTION TYPE (B8444S; 2005-2011)

DIAGNOSTIC TROUBLE CODE (DTC) INFORMATION ECM-P053200

Condition

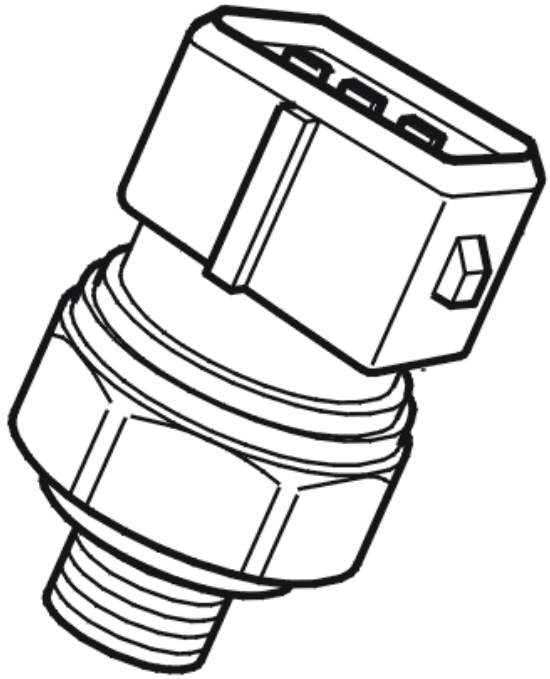

Fig. 177: Identifying A/C Pressure Sensor
Courtesy of VOLVO CARS CORPORATION

Engine control module (ECM) checks if the signal from the A/C pressure sensor is reasonable. If the signal from the A/C pressure sensor corresponds to a pressure that is lower than the A/C pressure sensor's normal working range, the control module interprets this as a malfunction and generates the diagnostic trouble code.

The diagnostic trouble code can be diagnosed when the ignition is on.

Substitute Value

- Nothing.

Possible Source

- Open circuit on the voltage feed.
- Open circuit on the signal cable.
- Open circuit in ground cable.
- Damaged A/C pressure sensor.

Fault symptom[s]

- A/C system does not work.

TROUBLESHOOTING ECM-P053200

CHECKING THE STATUS

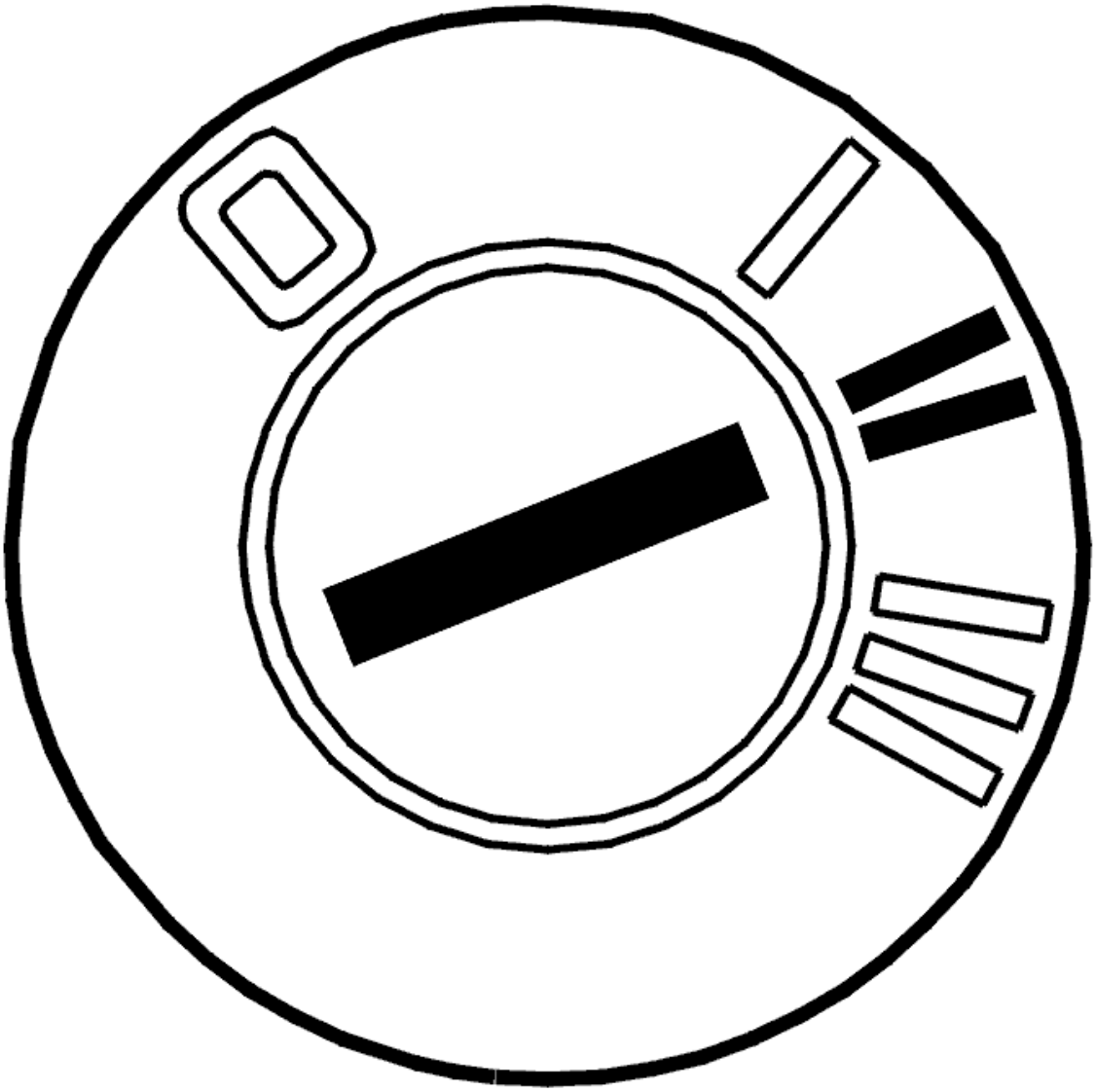

Fig. 178: Identifying Ignition ON
Courtesy of VOLVO CARS CORPORATION

- Ignition on

  Read the diagnostic status and trouble status for the diagnostic trouble code by selecting the diagnostic trouble code in the list.

  Check if the malfunction is permanent or intermittent by reading off the diagnostic trouble code's status when the diagnostic status is "Implemented".

  If the trouble status is "Malfunction found", this indicates that the malfunction is permanent. If the trouble

status is "No malfunction found", this indicates that the malfunction is intermittent and not active right now.

NOTE: Trouble status cannot go from "Malfunction found" to "No malfunction found" in the same operating cycle.

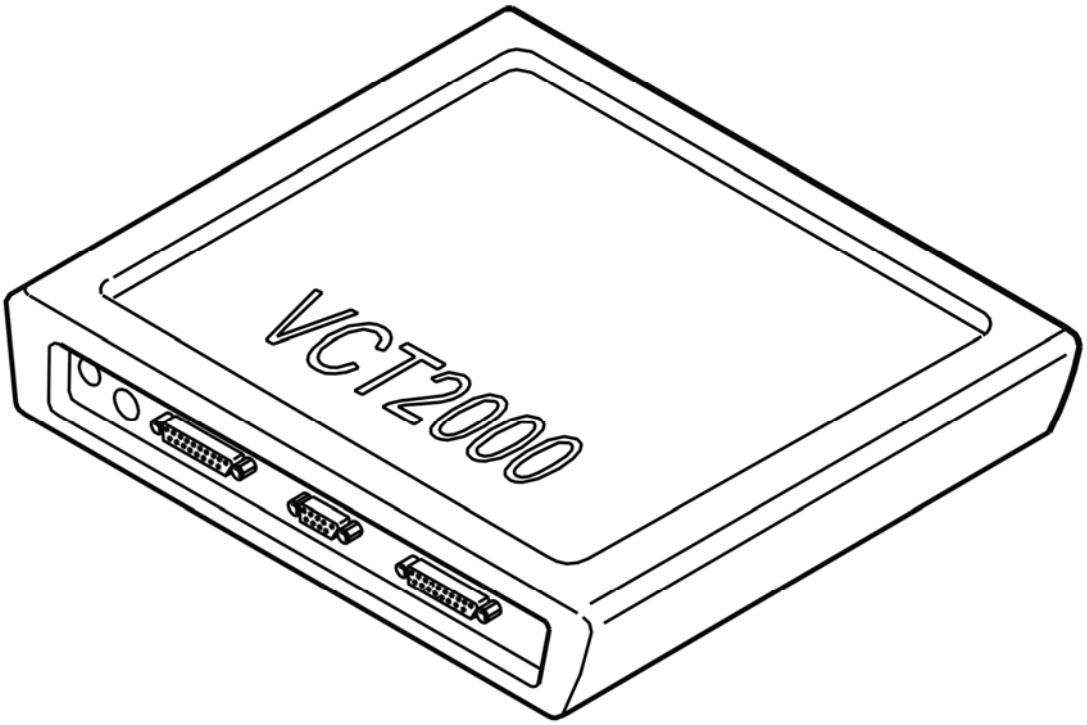

Fig. 179: Identifying VCT2000 Diagnostic Tool Symbol In VIDA
Courtesy of VOLVO CARS CORPORATION

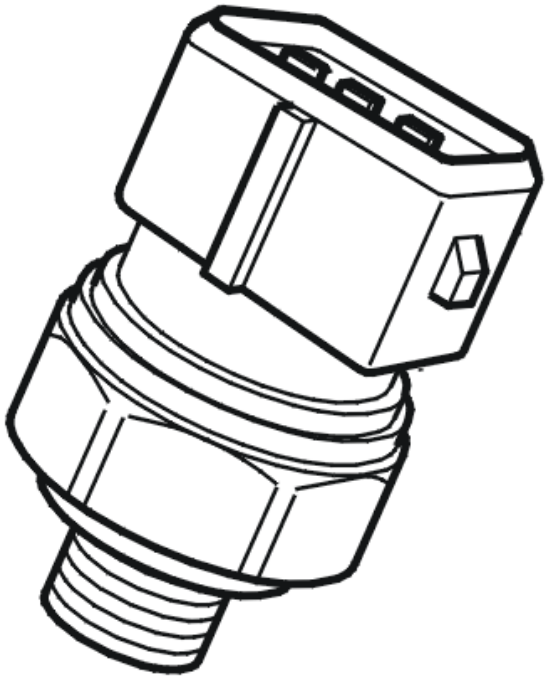

Fig. 180: Identifying A/C Pressure Sensor
Courtesy of VOLVO CARS CORPORATION

- **Continue**

  Refer to **CHECKING COMPONENT AND CABLES**

CHECKING COMPONENT AND CABLES

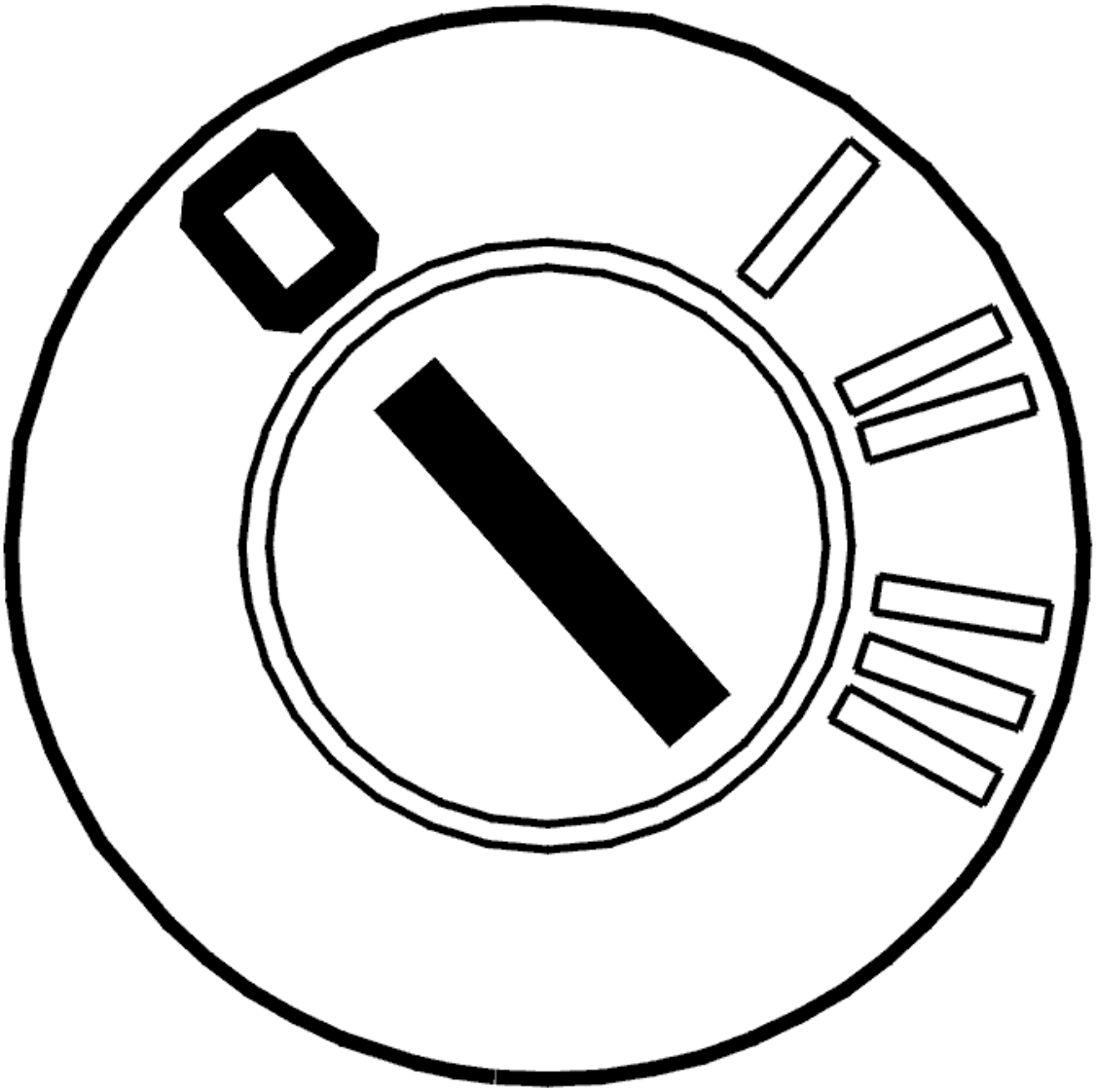

Fig. 181: Identifying Ignition OFF
Courtesy of VOLVO CARS CORPORATION

- Ignition off

  Check the signal cables for open circuit.

  Check between:

  - Engine control module (ECM) #B12 (#C12) and A/C pressure sensor's connector #12, signal cable (+).
  - Engine control module (ECM) #B19 (#C19) and A/C pressure sensor's connector #3, voltage feed.
  - Engine control module (ECM) #B8 (#C8) and A/C pressure sensor's connector #1, ground.

  Remedy as necessary.

Other information

- see **CONNECTING THE BREAKOUT BOX**
- see **SIGNAL SPECIFICATION, ENGINE CONTROL MODULE (ECM)**
- see **LOCATION OF COMPONENTS, ENGINE COMPARTMENT**
- see **CHECKING WIRING AND TERMINALS**

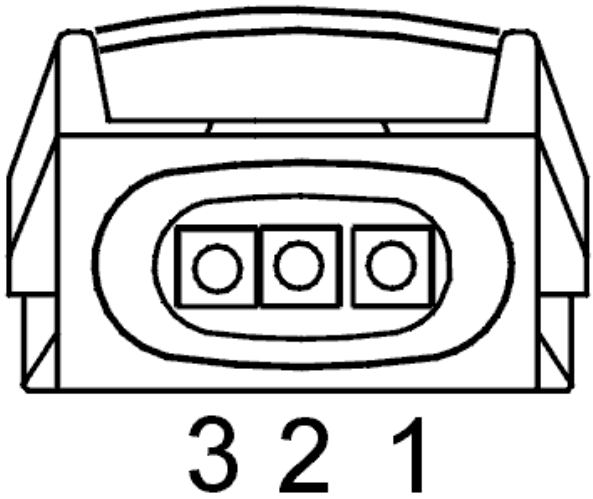

Fig. 182: Identifying Connector Terminals
Courtesy of VOLVO CARS CORPORATION

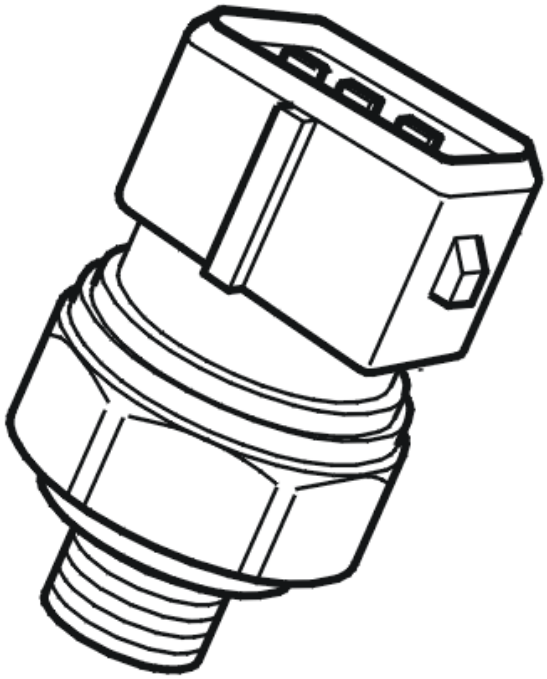

Fig. 183: Identifying A/C Pressure Sensor
Courtesy of VOLVO CARS CORPORATION

- **Continue**

  Refer to **VERIFICATION**

VERIFICATION

VERIFICATION

HINT: After repairing, it is necessary to check that the malfunction has been fixed.

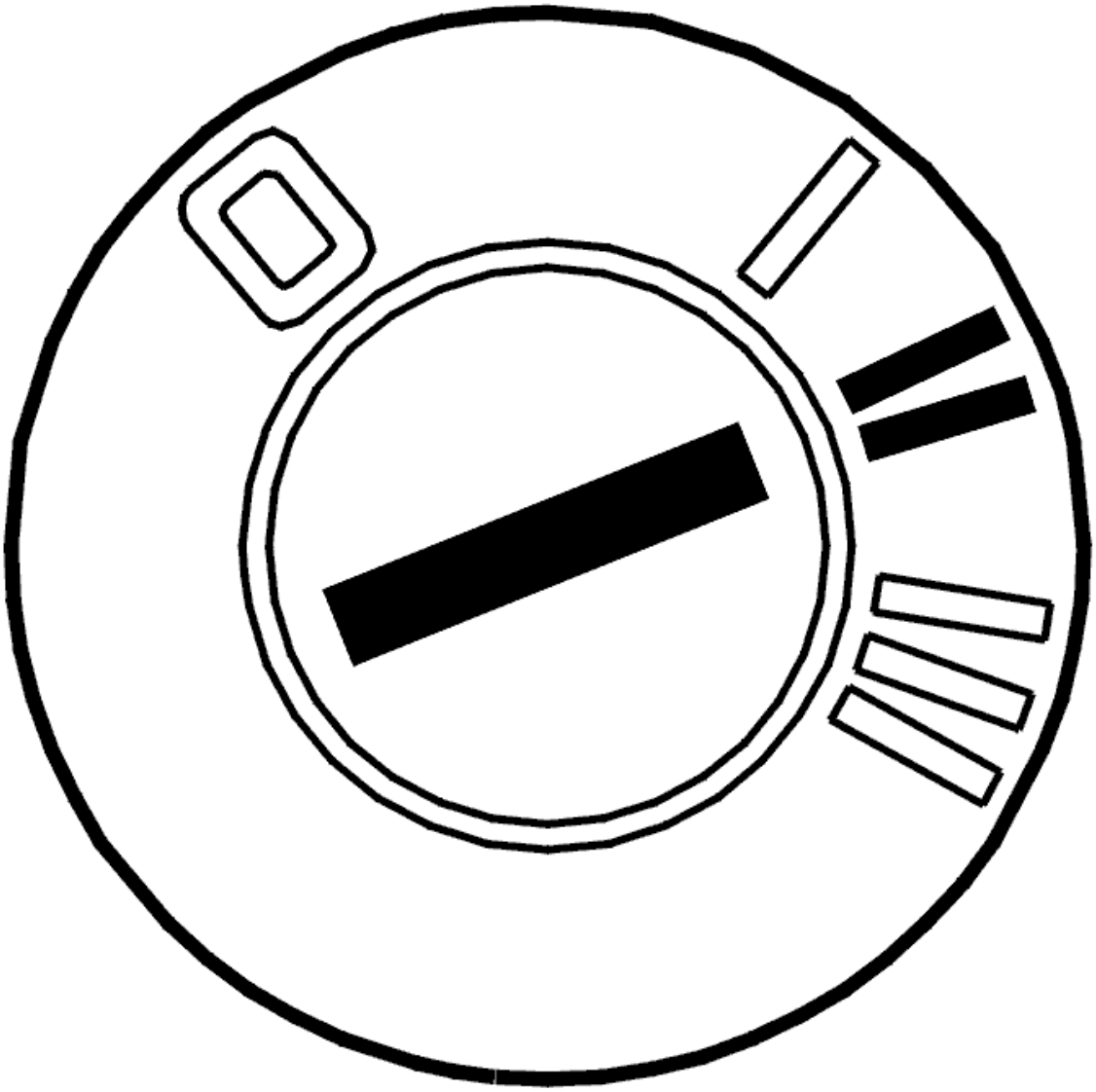

Fig. 184: Identifying Ignition ON
Courtesy of VOLVO CARS CORPORATION

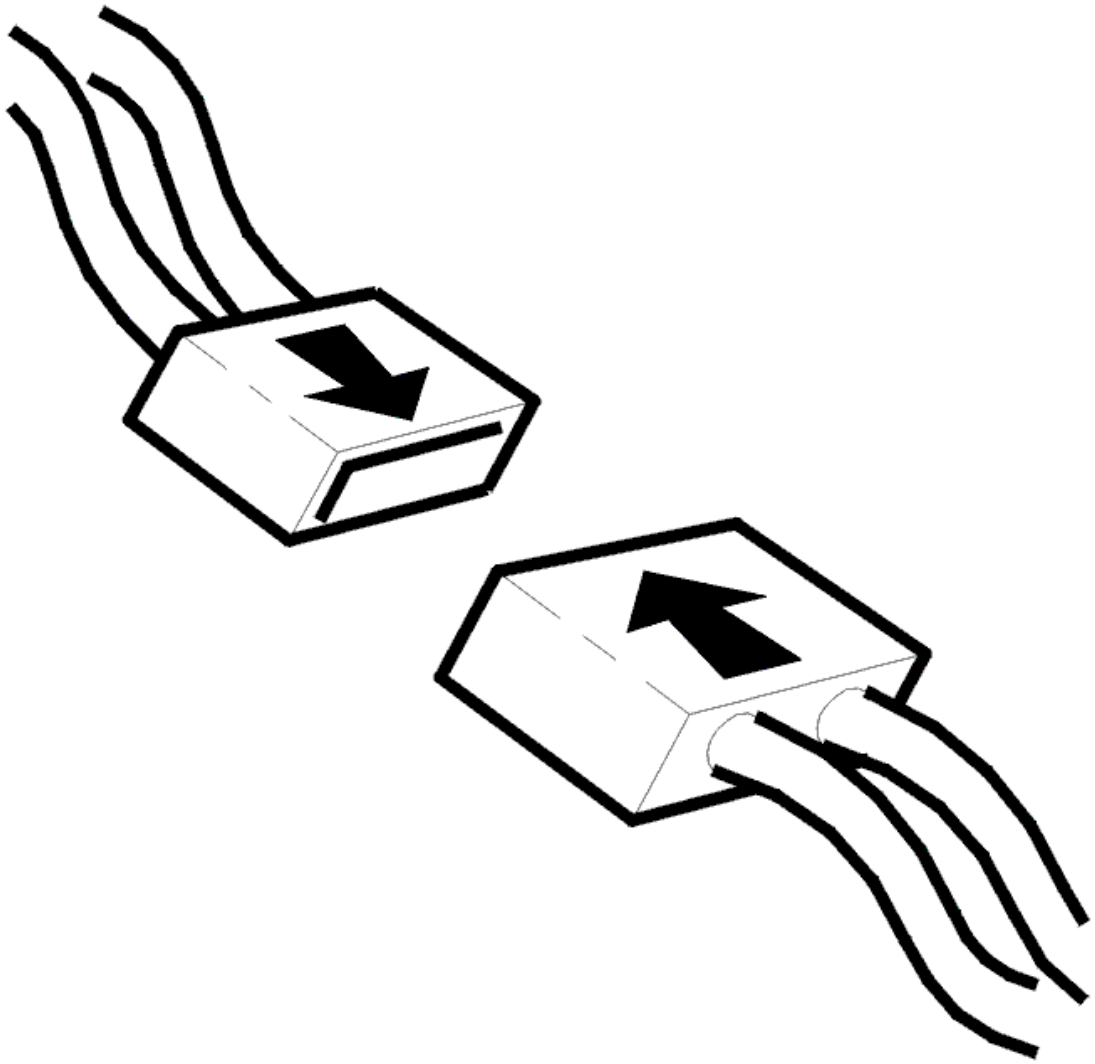

Fig. 185: Connecting Connector
Courtesy of VOLVO CARS CORPORATION

- Ignition off
- Reconnect the connectors, components, etc.
- Ignition on
- Read the diagnostic status and trouble status for the diagnostic trouble code by selecting the diagnostic trouble code in the list.

  Check the trouble status for the diagnostic trouble code when the diagnosis is "Implemented". When the function is correct the trouble status should be "No malfunction found" when the diagnosis is implemented.

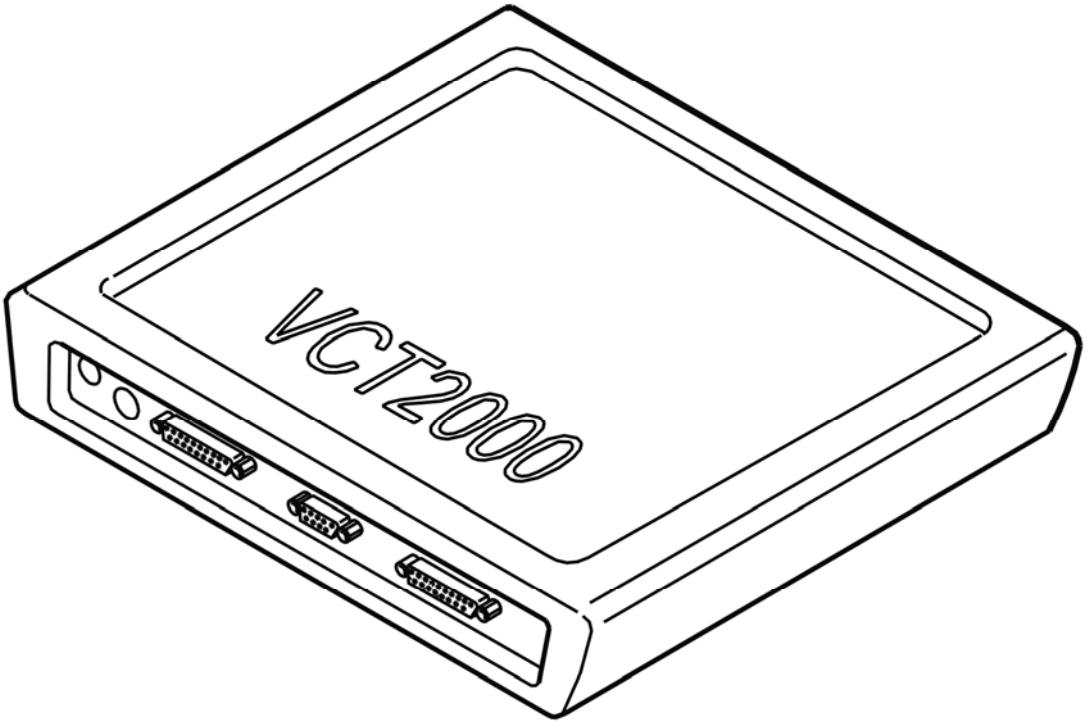

Fig. 186: Identifying VCT2000 Diagnostic Tool Symbol In VIDA
Courtesy of VOLVO CARS CORPORATION

Is the function OK?

- **YES**

  VERIFIED: Troubleshooting has been completed.

- **NO**

  Refer to **INFORMATION**

INFORMATION

FAULT-TRACING INFORMATION

The fault should have been detected and remedied. As this is not the case fault-tracing has failed.

Exit fault-tracing for this diagnostic trouble code (DTC) or make another attempt.

ECM-P053300: A/C REFRIGERANT PRESSURE SENSOR A CIRCUIT HIGH INPUT. GENERAL FAILURE INFORMATION. NO SUB TYPE INFORMATION

(B6324S; 2007-2010)

DIAGNOSTIC TROUBLE CODE (DTC) INFORMATION ECM-P053300

Condition

The engine control module (ECM) checks if the signal from the air conditioning (A/C) pressure sensor is within its permitted range.

The diagnostic trouble code (DTC) is stored if the control module detects that:

- The signal from the pressure sensor corresponds to a higher pressure than the normal operating value.

The control module's test for the diagnostic trouble code (DTC) starts in the event of:

- Ignition on.

NOTE: The control module can only detect the fault once the test has been started and the diagnostic trouble code (DTC) is stored when the conditions are met.

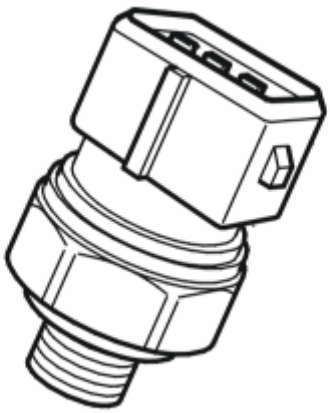

Fig. 187: Identifying A/C Pressure Sensor
Courtesy of VOLVO CARS CORPORATION

Substitute Value

- No substitute value.

Possible Source

- Short-circuit to supply voltage in the signal cable.
- Open-circuit in the power supply.
- Open-circuit in the signal cable.

- Open-circuit in the ground lead.
- Damaged A/C pressure sensor.

Fault symptom[s]

- A/C system does not operate

FAULT-TRACING

see **FAULT-TRACING**

ECM-P053300: A/C REFRIGERANT PRESSURE SENSOR A CIRCUIT HIGH INPUT. GENERAL FAILURE INFORMATION. NO SUB TYPE INFORMATION (B6324S5; 2011-2012)

DIAGNOSTIC TROUBLE CODE (DTC) INFORMATION ECM-P053300

see **DIAGNOSTIC TROUBLE CODE (DTC) INFORMATION ECM-P053300**

FAULT-TRACING

see **FAULT-TRACING**

ECM-P053300: A/C REFRIGERANT PRESSURE SENSOR A CIRCUIT HIGH INPUT SIGNAL. GENERAL MALFUNCTION INFORMATION. NO INFORMATION ON MALFUNCTION TYPE (B8444S; 2005-2011)

DIAGNOSTIC TROUBLE CODE (DTC) INFORMATION ECM-P053300

Condition

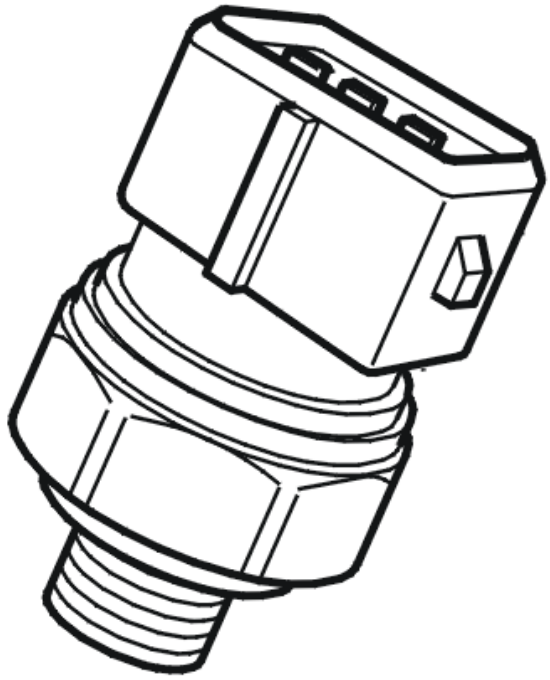

Fig. 188: Identifying A/C Pressure Sensor
Courtesy of VOLVO CARS CORPORATION

Engine control module (ECM) checks if the signal from the A/C pressure sensor is reasonable. If the signal from the A/C pressure sensor corresponds to a pressure that is higher than the A/C pressure sensor's normal working range, the control module interprets this as a malfunction and generates the diagnostic trouble code.

The diagnostic trouble code can be diagnosed when the ignition is on.

Substitute Value

- Nothing.

Possible Source

- The signal cable is short-circuited to voltage.
- Open circuit on the voltage feed.
- Open circuit on signal cable.
- Open circuit in ground cable.
- Damaged A/C pressure sensor.

Fault symptom[s]

- A/C system does not work.

TROUBLESHOOTING ECM-P053300

CHECKING THE STATUS

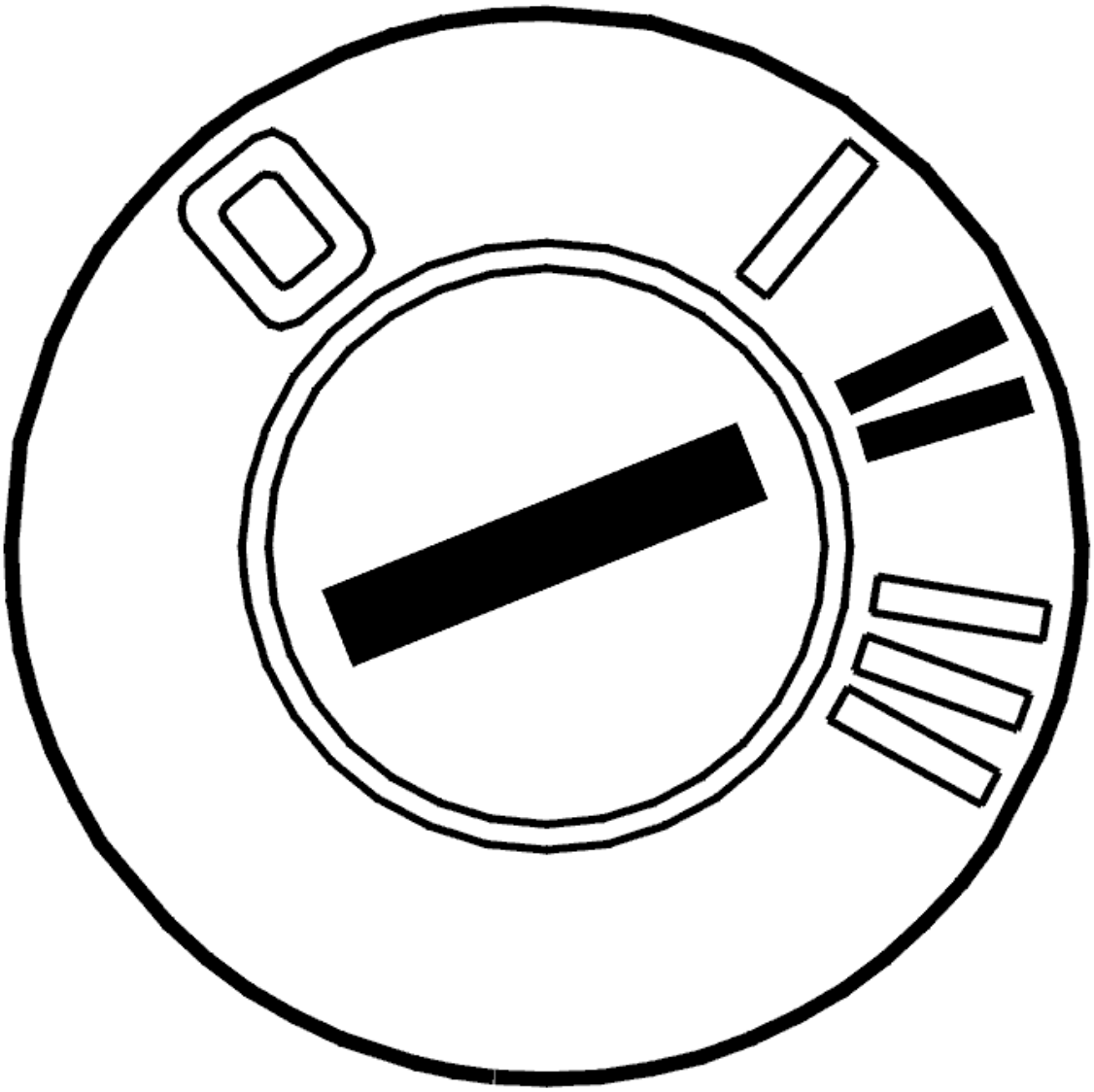

Fig. 189: Identifying Ignition ON
Courtesy of VOLVO CARS CORPORATION

- Ignition on

  Read the diagnostic status and trouble status for the diagnostic trouble code by selecting the diagnostic trouble code in the list.

  Check if the malfunction is permanent or intermittent by reading off the diagnostic trouble code's status when the diagnostic status is "Implemented".

If the trouble status is "Malfunction found", this indicates that the malfunction is permanent. If the trouble status is "No malfunction found", this indicates that the malfunction is intermittent and not active right now.

NOTE: Trouble status cannot go from "Malfunction found" to "No malfunction found" in the same operating cycle.

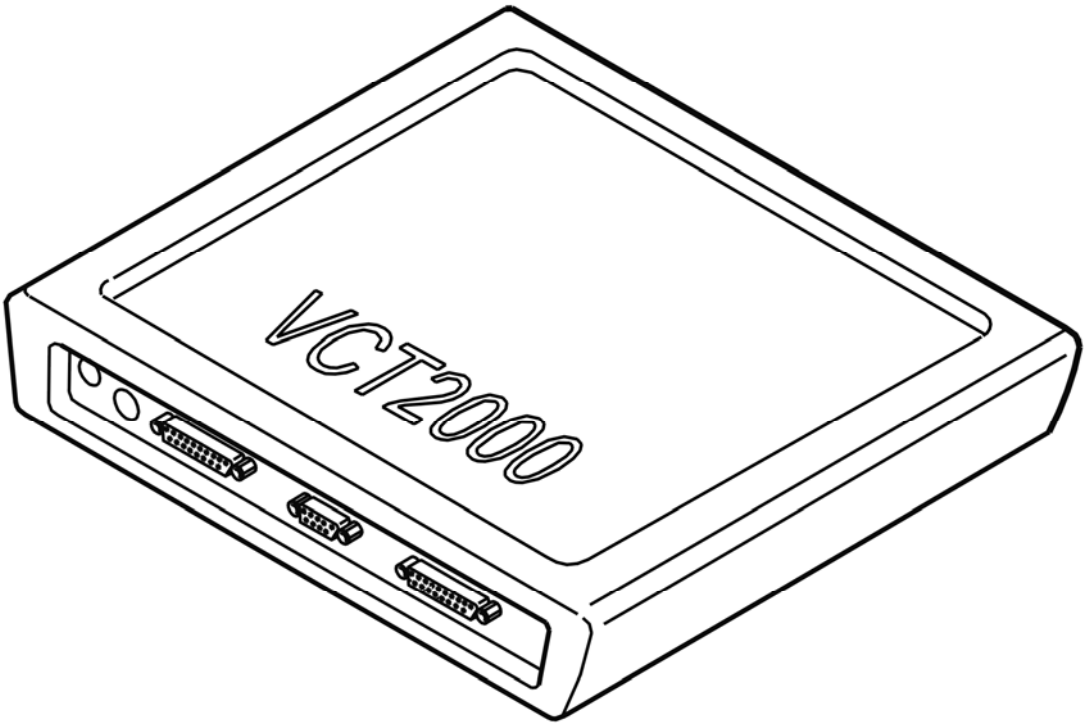

Fig. 190: Identifying VCT2000 Diagnostic Tool Symbol In VIDA
Courtesy of VOLVO CARS CORPORATION

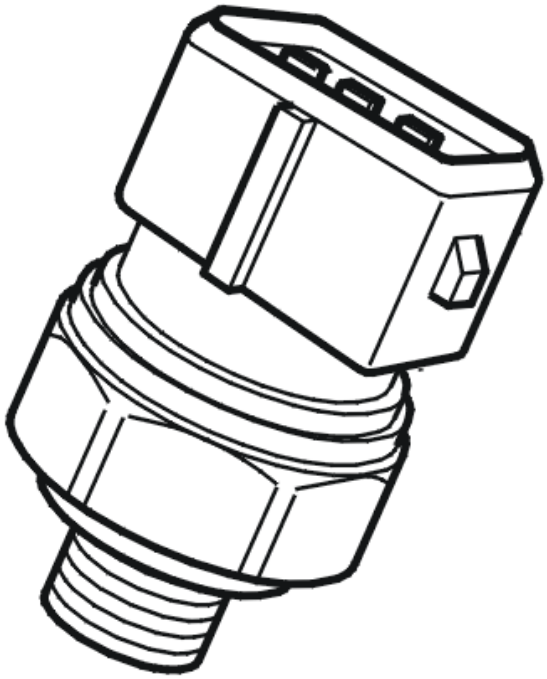

Fig. 191: Identifying A/C Pressure Sensor
Courtesy of VOLVO CARS CORPORATION

- **Continue**

  Refer to **CHECKING COMPONENT AND CABLES**

CHECKING COMPONENT AND CABLES

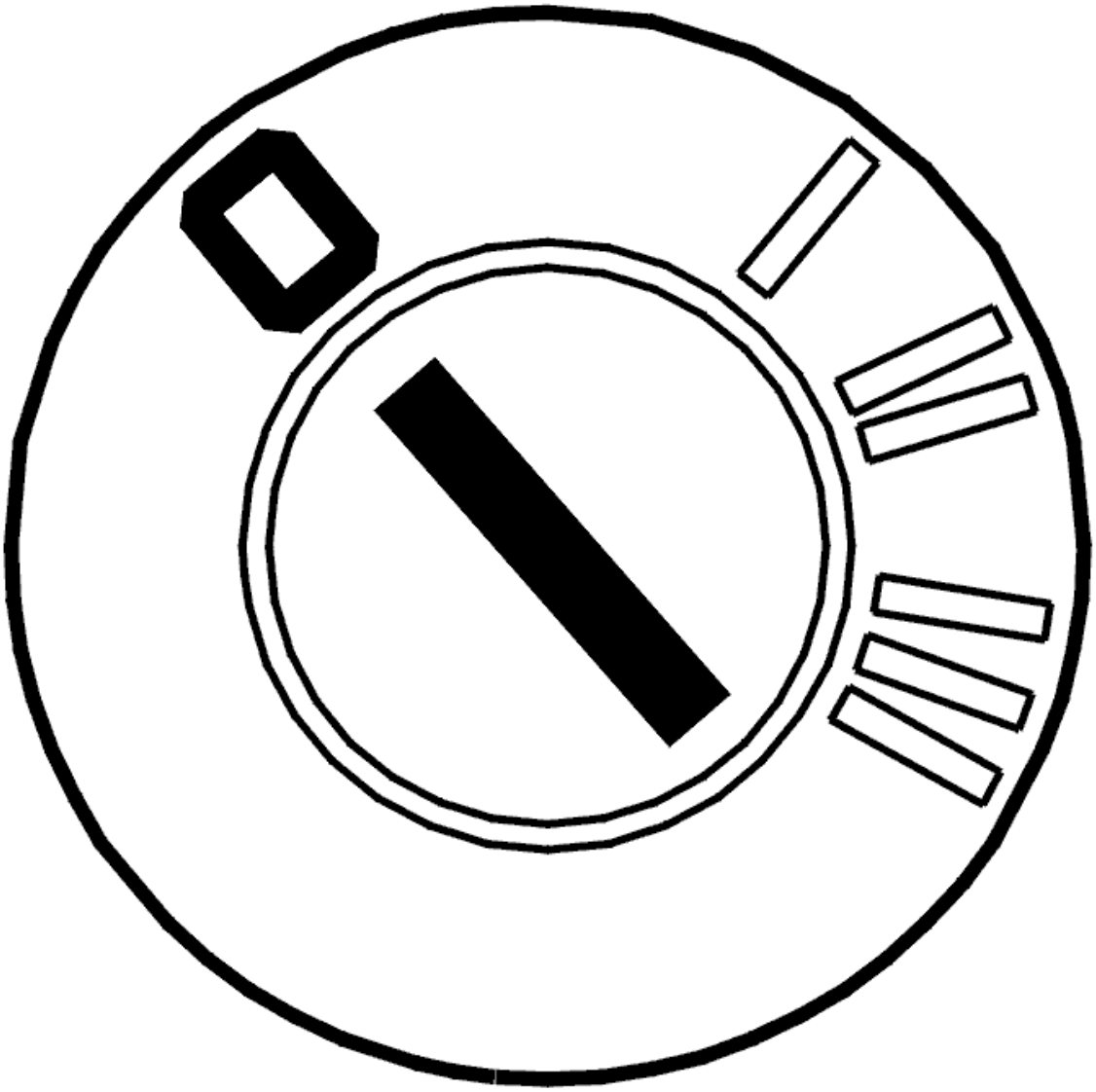

Fig. 192: Identifying Ignition OFF
Courtesy of VOLVO CARS CORPORATION

- Ignition off

  Check the signal cables for short-circuit to voltage and open circuit.

  Check between:

  - Engine control module (ECM) #B12 (#C12) and A/C pressure sensor's connector #12, signal cable (+).
  - Engine control module (ECM) #B19 (#C19) and A/C pressure sensor's connector #3, voltage feed.
  - Engine control module (ECM) #B8 (#C8) and A/C pressure sensor's connector #1, ground.

  Remedy as necessary.

Other information

- see **CONNECTING THE BREAKOUT BOX**
- see **SIGNAL SPECIFICATION, ENGINE CONTROL MODULE (ECM)**
- see **LOCATION OF COMPONENTS, ENGINE COMPARTMENT**
- see **CHECKING WIRING AND TERMINALS**

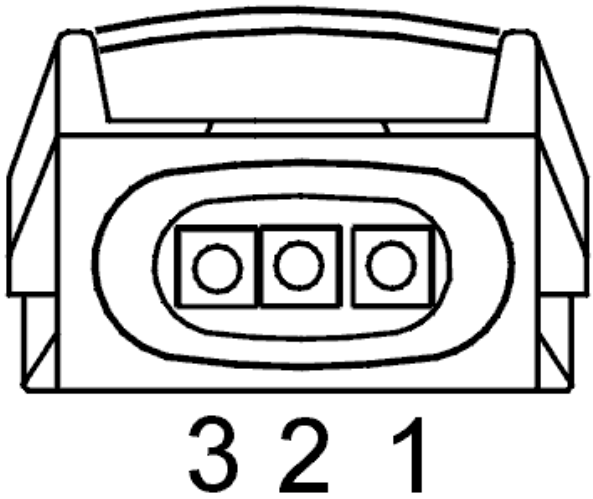

Fig. 193: Identifying Connector Terminals
Courtesy of VOLVO CARS CORPORATION

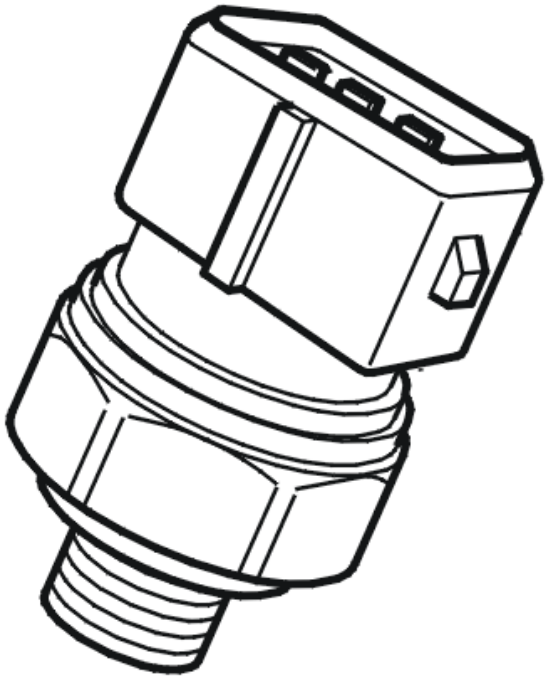

Fig. 194: Identifying A/C Pressure Sensor
Courtesy of VOLVO CARS CORPORATION

- **Continue**

  Refer to **VERIFICATION**

VERIFICATION

VERIFICATION

HINT: After repairing, it is necessary to check that the malfunction has been fixed.

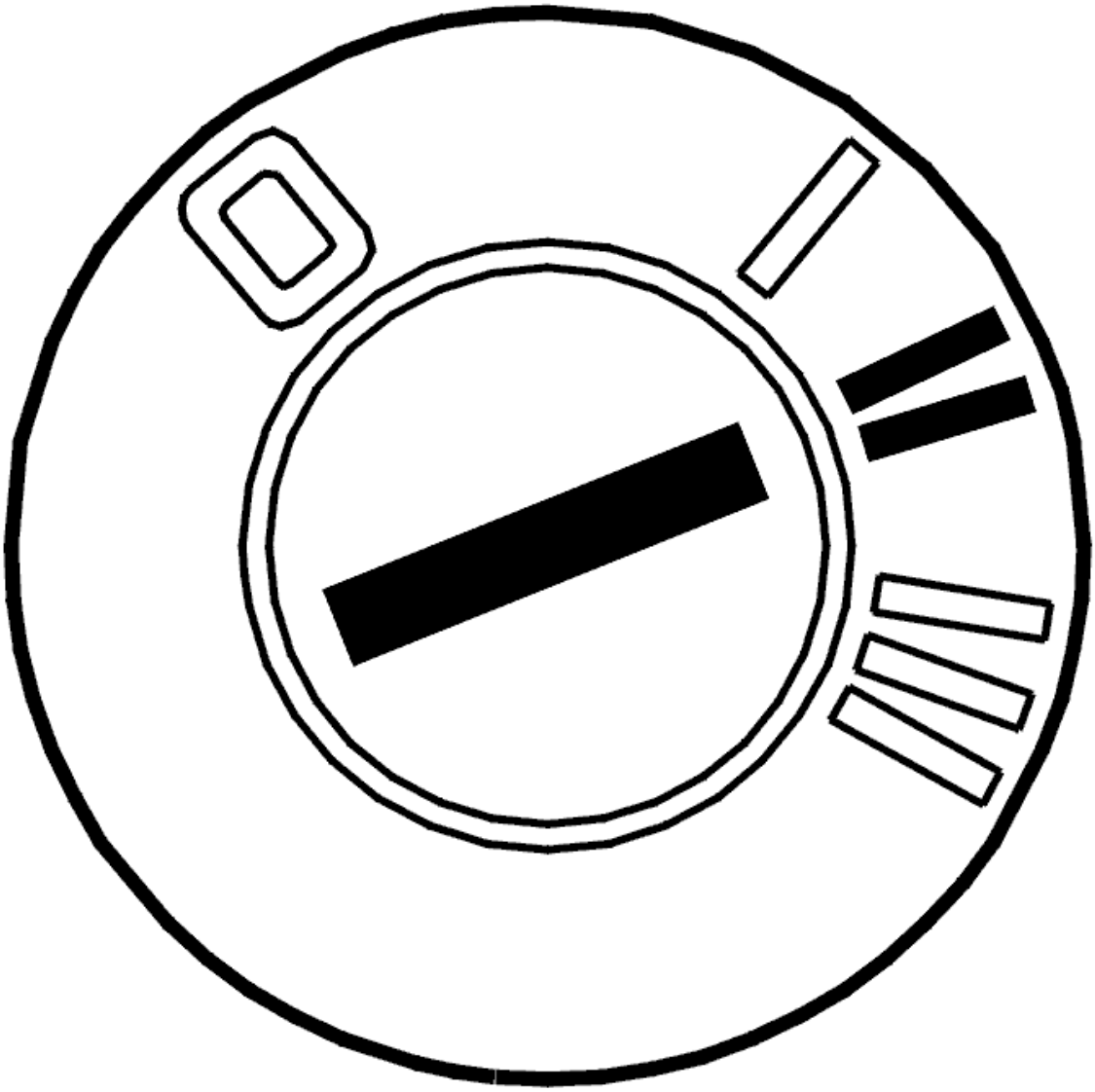

Fig. 195: Identifying Ignition ON
Courtesy of VOLVO CARS CORPORATION

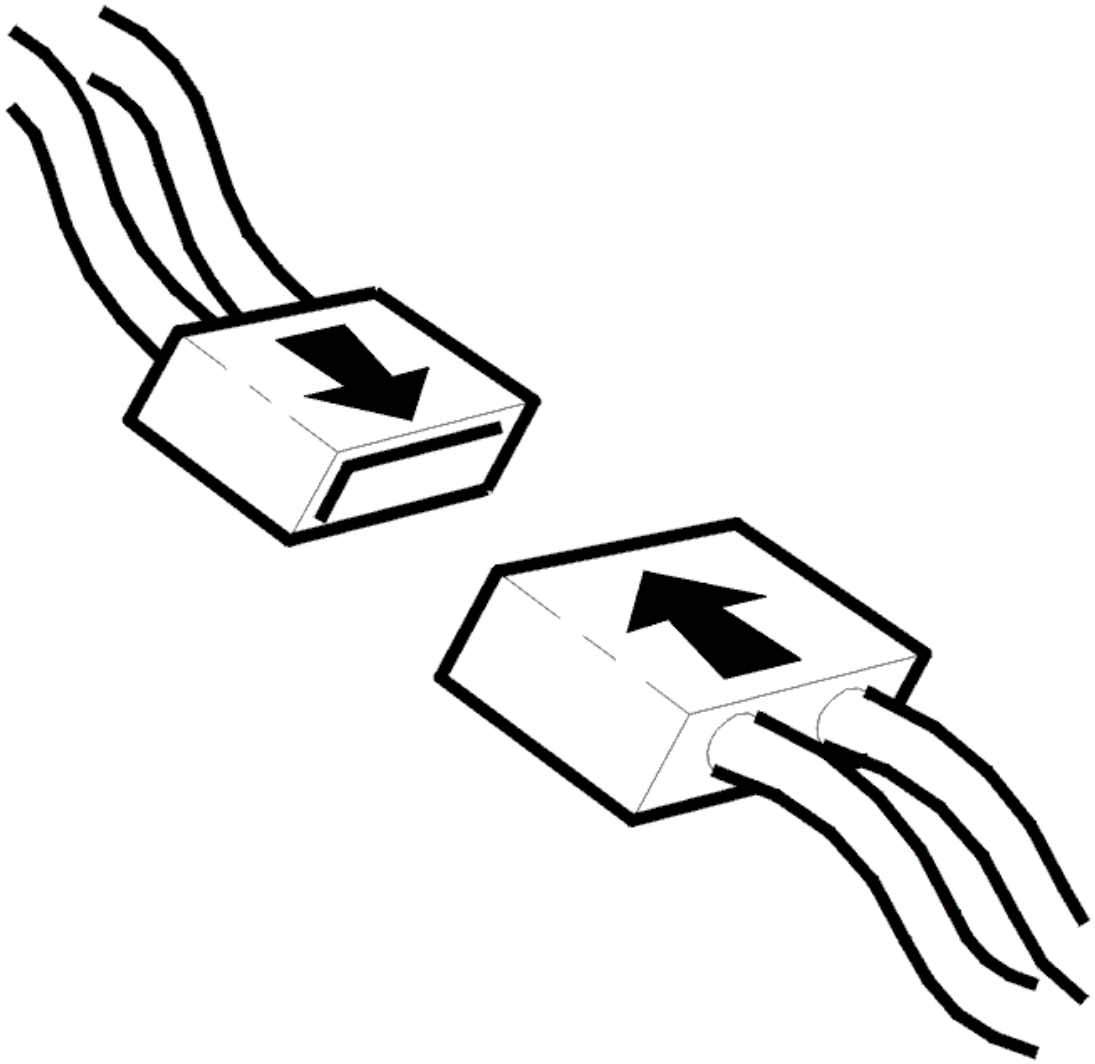

Fig. 196: Connecting Connector
Courtesy of VOLVO CARS CORPORATION

- Ignition off
- Reconnect the connectors, components, etc.
- Ignition on
- Read the diagnostic status and trouble status for the diagnostic trouble code by selecting the diagnostic trouble code in the list.

  Check the trouble status for the diagnostic trouble code when the diagnosis is "Implemented". When the function is correct the trouble status should be "No malfunction found" when the diagnosis is implemented.

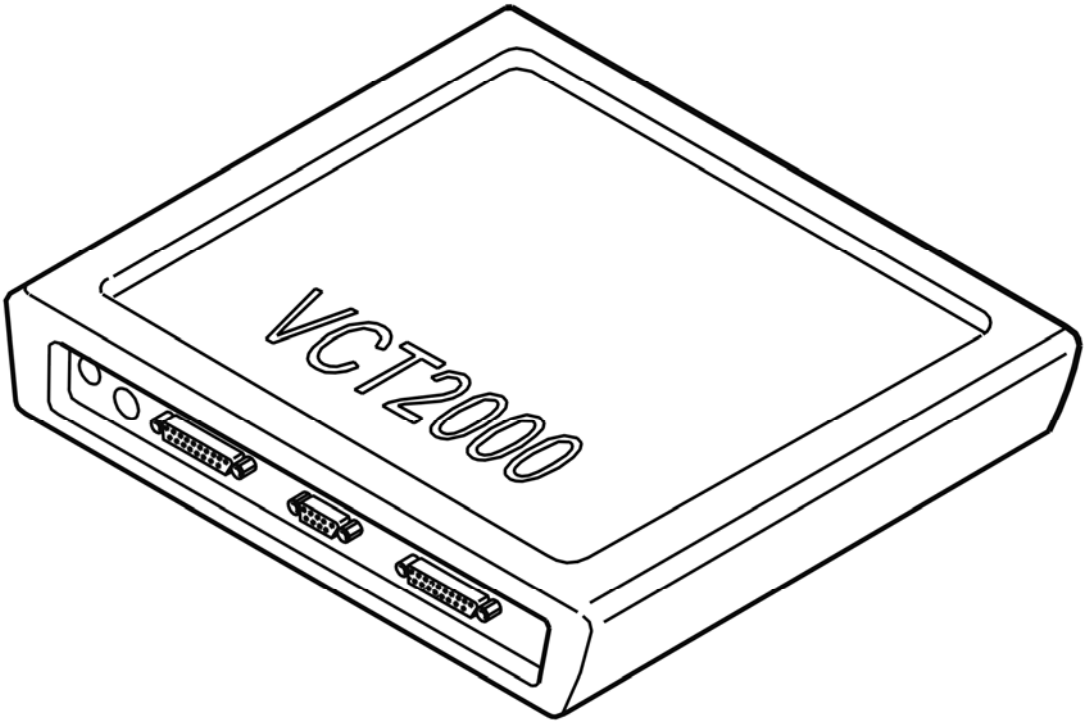

Fig. 197: Identifying VCT2000 Diagnostic Tool Symbol In VIDA
Courtesy of VOLVO CARS CORPORATION

Is the function OK?

- **YES**

  VERIFIED: Troubleshooting has been completed.

- **NO**

  Refer to **INFORMATION**

INFORMATION

FAULT-TRACING INFORMATION

The fault should have been detected and remedied. As this is not the case fault-tracing has failed.

Exit fault-tracing for this diagnostic trouble code (DTC) or make another attempt.

ECM-P053400: A/C REFRIGERANT CHARGE LOSS. GENERAL FAILURE INFORMATION. NO SUB TYPE INFORMATION (B6324S; 2007-2010)

DIAGNOSTIC TROUBLE CODE (DTC) INFORMATION ECM-P053400

Condition

The air conditioning (A/C) system must have a certain basic pressure in order for it to function optimally.

The diagnostic trouble code (DTC) is stored if the control module detects that:

- The basic pressure in the air conditioning (A/C) system is too low.

The control module's test for the diagnostic trouble code (DTC) starts in the event of:

- Engine running.
- Air conditioning (A/C) control, active.

NOTE: The control module can only detect the fault once the test has been started and the diagnostic trouble code (DTC) is stored when the conditions are met.

Substitute Value

- None.

Possible Source

- Leak in the A/C system.

Fault symptom[s]

- A/C system does not operate

FAULT-TRACING INFORMATION

see **FAULT-TRACING INFORMATION**

ECM-P053400: A/C REFRIGERANT CHARGE LOSS. GENERAL FAILURE INFORMATION. NO SUB TYPE INFORMATION (B6324S5; 2011-2012)

DIAGNOSTIC TROUBLE CODE (DTC) INFORMATION ECM-P053400

see **DIAGNOSTIC TROUBLE CODE (DTC) INFORMATION ECM-P053400**

FAULT-TRACING INFORMATION

see **FAULT-TRACING INFORMATION**

ECM-P053400: A/C REFRIGERANT CHARGING LOSS. GENERAL

MALFUNCTION INFORMATION. NO INFORMATION ON MALFUNCTION TYPE (B8444S; 2005-2011)

DIAGNOSTIC TROUBLE CODE (DTC) INFORMATION ECM-P053400

Condition

The A/C system must have a certain basic pressure for optimal function. If engine control module (ECM) detects a pressure that is too low in the A/C system, the control module interprets this as a malfunction and the diagnostic trouble code is generated.

The diagnostic trouble code can be diagnosed with the engine running and the A/C control active.

Substitute Value

- Nothing.

Possible Source

- Leak in the A/C system.

Fault symptom[s]

- A/C system does not work.

FAULT-TRACING INFORMATION

see **FAULT-TRACING INFORMATION**

ECM-P054A00 COLD START EXHAUST (B) CAMSHAFT POSITION TIMING OVER-ADVANCED (BANK 1). GENERAL FAILURE INFORMATION. NO SUB TYPE INFORMATION (B8444S; 2008-2011)

DIAGNOSTIC TROUBLE CODE (DTC) INFORMATION

see **DIAGNOSTIC TROUBLE CODE (DTC) INFORMATION**

FAULT-TRACING

CHECKING COMPONENTS

HINT: Incorrect oil grade can cause malfunctions in the variable valve timing (VVT) unit. Contaminants in the engine oil can cause damage to components in the variable valve timing (VVT) unit.

Check the engine oil grade. Check especially for contaminants.

HINT: The VVT unit for the exhaust camshaft has a spring which turns the camshaft at control. This means that if the oil pressure becomes too low for the VVT unit, the spring controls the camshaft out too much.

Remove the camshaft reset valve, check the reset valve and the oil ducts in the cylinder head. Check for contaminants and blockages.

Check the engine oil pressure.

Try a new camshaft reset valve if no fault is found or if the above remedies do not rectify the fault.

HINT: The fault can also be caused by an internal fault in the variable valve timing (VVT) unit. If the above fault-tracing/remedies do not rectify the fault, the variable valve timing (VVT) unit may be damaged.

Remedy as necessary.

Other information

- see **OIL PRESSURE, CHECKING**
- see **VVT UNIT EXHAUST CAMSHAFT, REPLACING**
- see **LOCATION OF COMPONENTS, ENGINE COMPARTMENT**

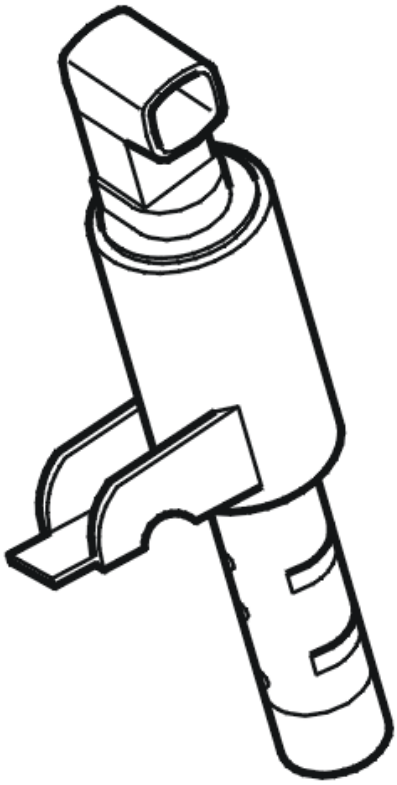

Fig. 198: Identifying Camshaft Reset Valve
Courtesy of VOLVO CARS CORPORATION

- **Continue**

  Refer to **VERIFICATION**

VERIFICATION

VERIFICATION, PART 1

HINT: After carrying out the repair, check that the fault has been remedied.

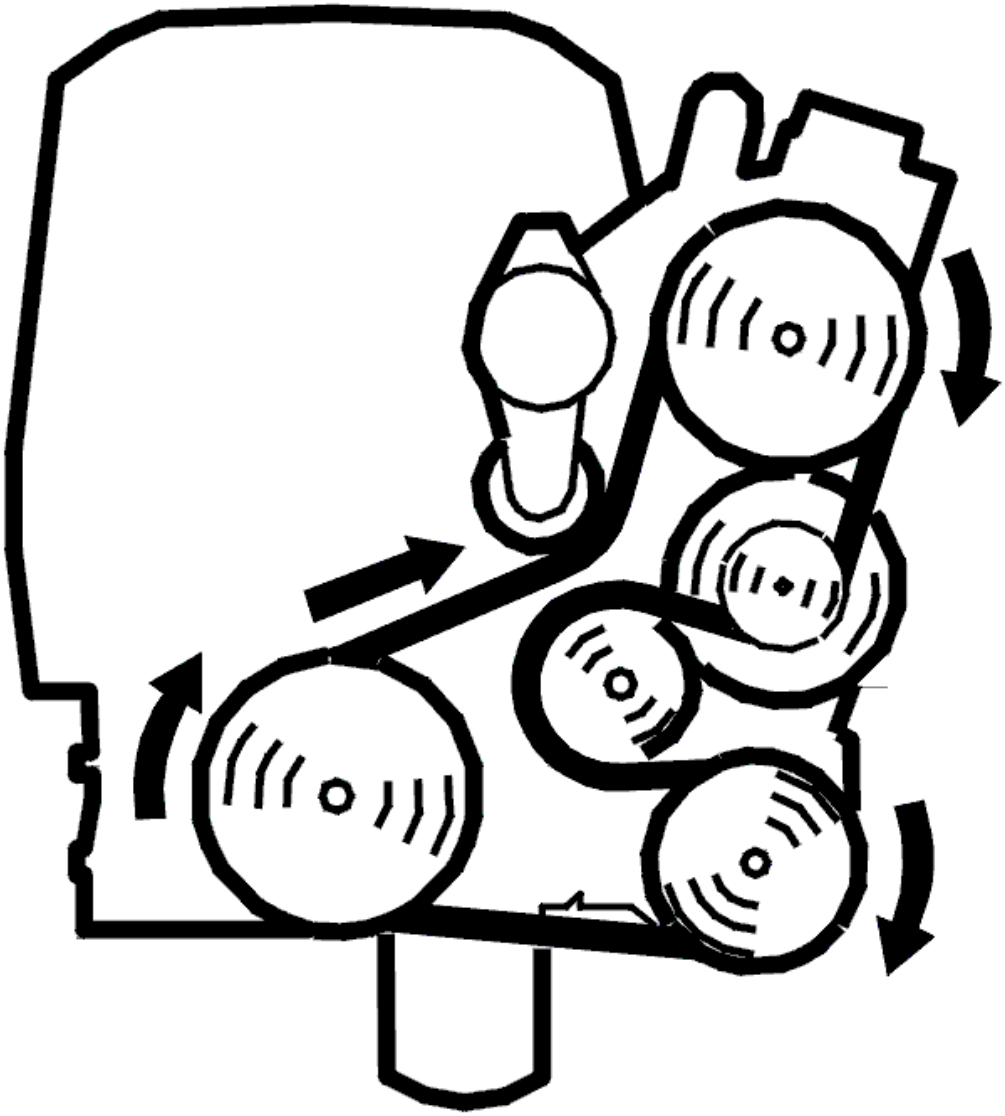

Fig. 199: Belt Routing / Engine Idling - Volvo
Courtesy of VOLVO CARS CORPORATION

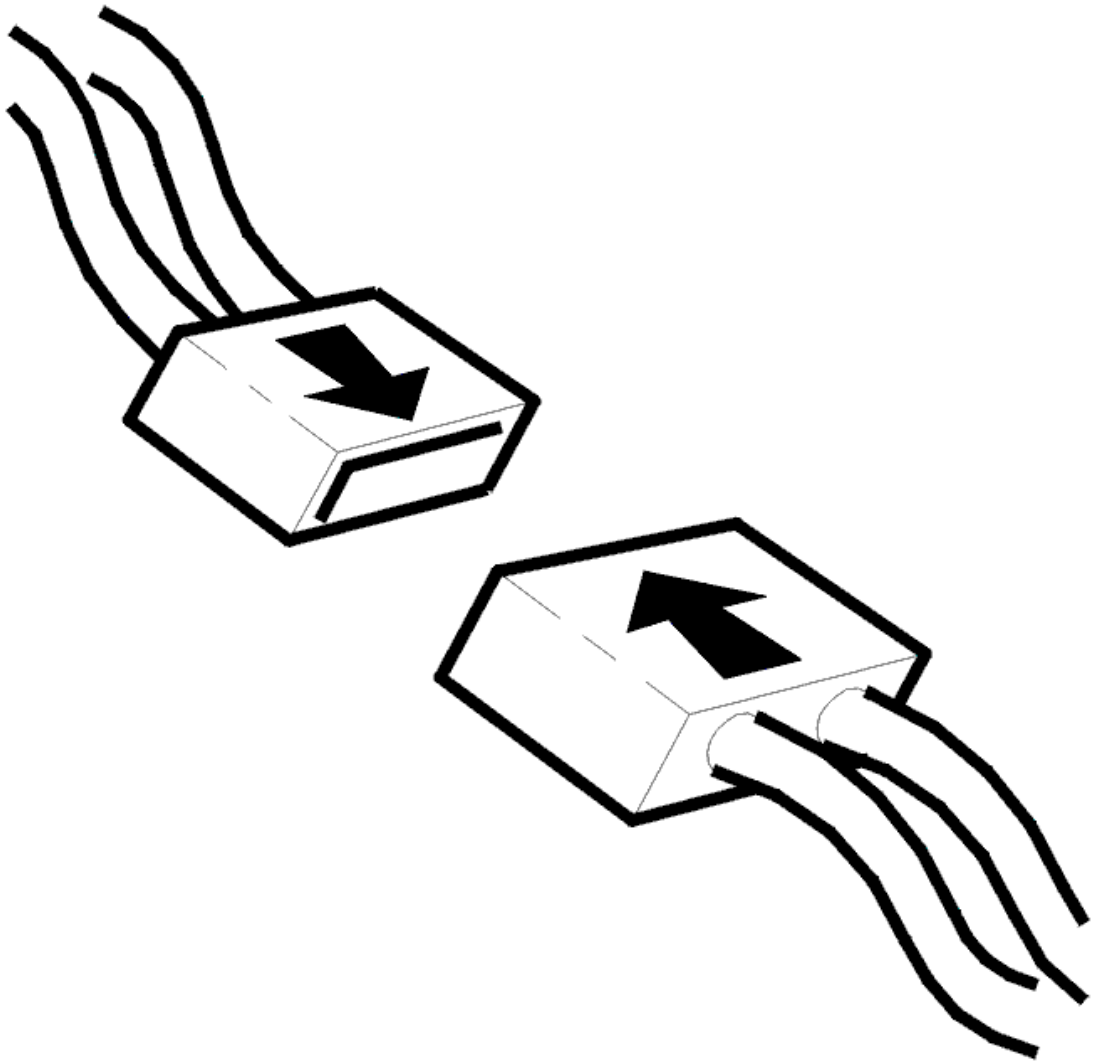

Fig. 200: Connecting Connector
Courtesy of VOLVO CARS CORPORATION

- Verification consists of 2 parts. Part 1 is carried out via a test in the workshop. Part 2 is carried out on the road.

  If the function is determined as **incorrect** in part 1, then part 2 does **not** need to be carried out. If the function is determined as being correct in part 1 and the vehicle can be tested on the road, part 2 must be carried out. This is because in certain cases the function can be difficult the check in a workshop environment.

- Ignition off
- Reconnect the connectors, components, etc.
- Start and run the engine to operating temperature.
- Read off the shift angle of the camshaft and the desired shift angle of the camshaft to check the function.

Check that the camshaft shift angle corresponds to the desired value for the camshaft shift angle with an accuracy of approximately 8° CA (camshaft angle). The difference between the values can be read off in the lower digital display.

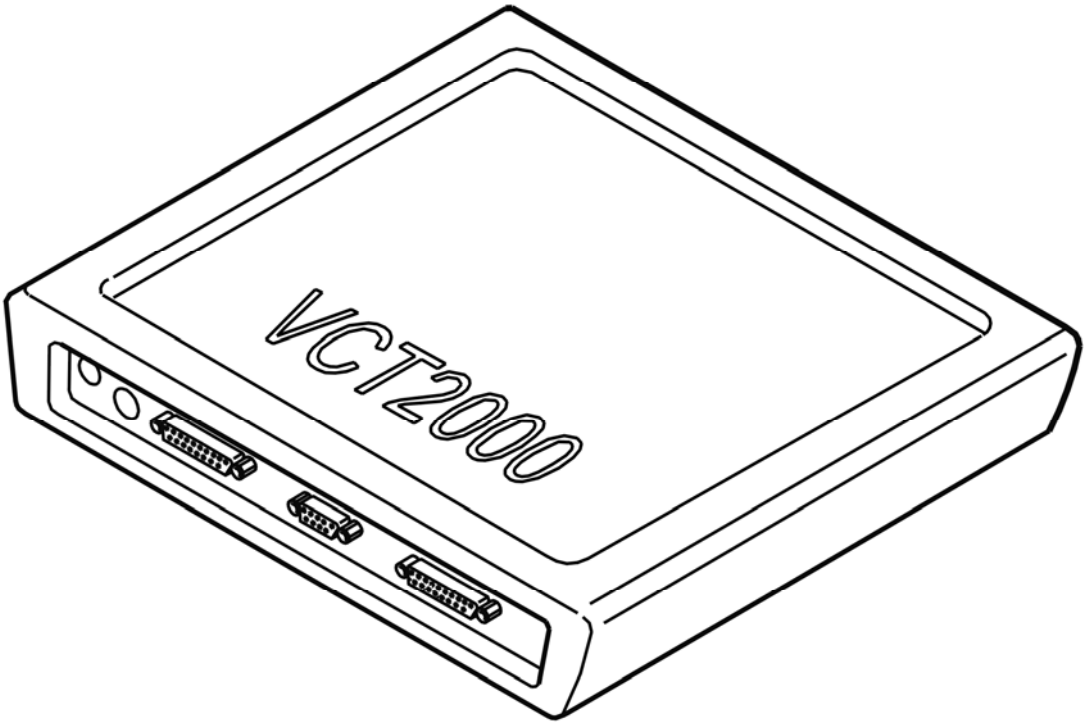

Fig. 201: Identifying VCT2000 Diagnostic Tool Symbol In VIDA
Courtesy of VOLVO CARS CORPORATION

Is the function OK?

- **YES**

  Refer to **VERIFICATION, PART 2**

- **NO**

  Refer to **INFORMATION**

VERIFICATION, PART 2

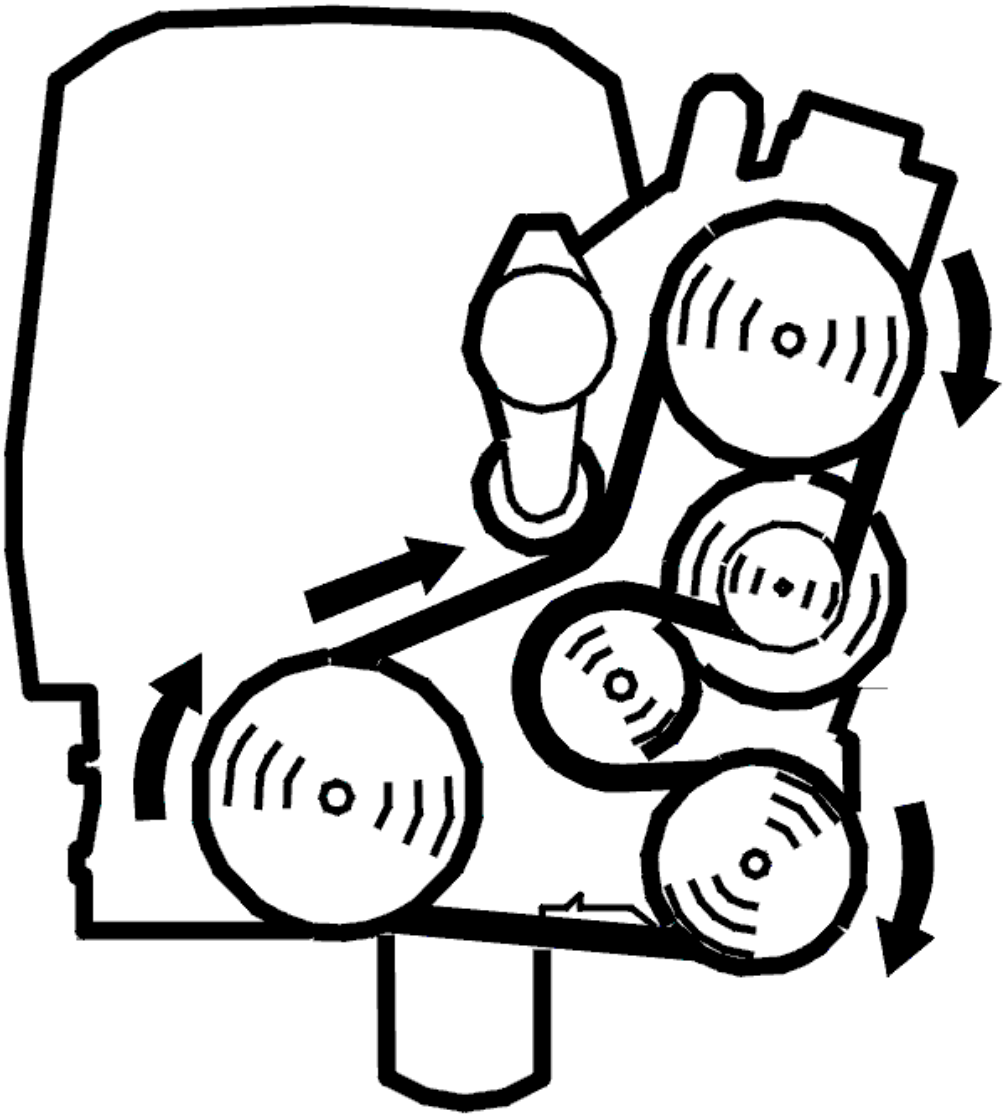

Fig. 202: Belt Routing / Engine Idling - Volvo
Courtesy of VOLVO CARS CORPORATION

- Test drive the car on the road. Use acceleration and engine braking. Repeat the procedure several times so that the camshaft control works and the engine control module (ECM) can carry out diagnostics.
- Connect the VCT2000 (or appropriate scan tool) to the data link connector **without switching off the engine.**
- Read the diagnostic status and fault status for the diagnostic trouble code by selecting the diagnostic trouble code in the list.

NOTE: **If the engine is switched off, the stored fault status will be erased and the test drive will have to be repeated.**

Check the fault status for the diagnostic trouble code when the scan is "Implemented". When the function is correct the fault status should be "No fault found" when the scan is implemented.

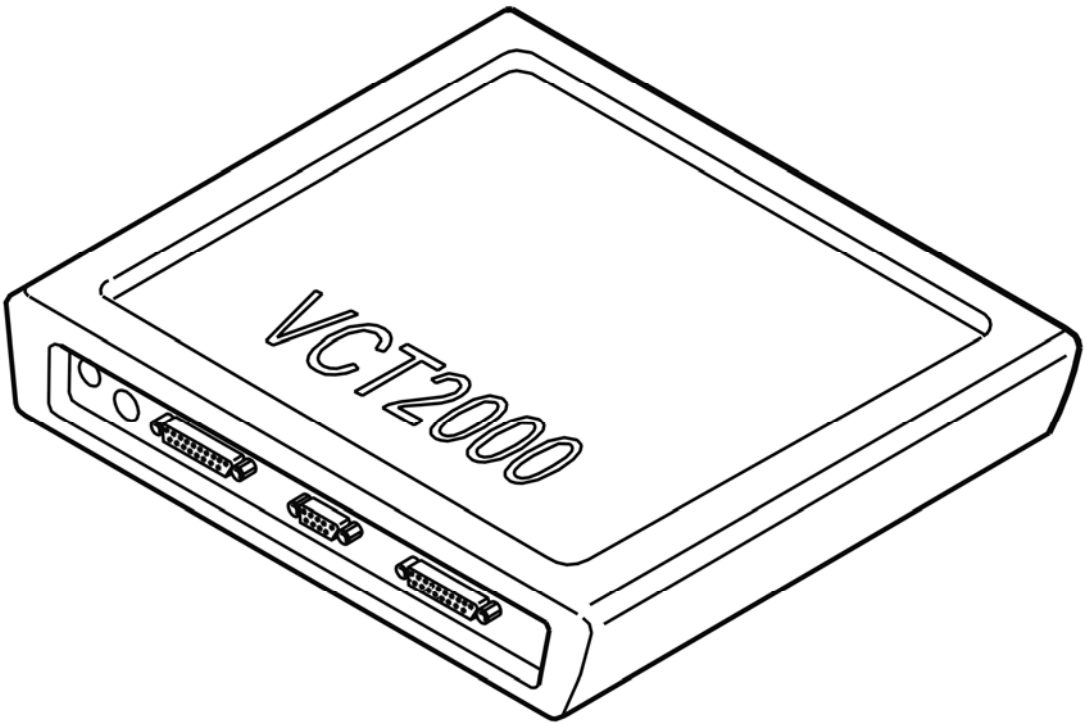

Fig. 203: Identifying VCT2000 Diagnostic Tool Symbol In VIDA
Courtesy of VOLVO CARS CORPORATION

Is the function OK?

- **YES**

  VERIFIED: Troubleshooting has been completed.

- **NO**

  Refer to **INFORMATION**

INFORMATION

FAULT-TRACING INFORMATION

The fault should have been detected and remedied. As this is not the case fault-tracing has failed.

Exit fault-tracing for this diagnostic trouble code (DTC) or make another attempt.

ECM-P054B00 COLD START EXHAUST (B) CAMSHAFT POSITION TIMING OVER-RETARDED (BANK 1). GENERAL FAILURE INFORMATION. NO SUB

TYPE INFORMATION (B8444S; 2008-2011)

DIAGNOSTIC TROUBLE CODE (DTC) INFORMATION

see **DIAGNOSTIC TROUBLE CODE (DTC) INFORMATION**

FAULT-TRACING

see **FAULT-TRACING**

ECM-P054C00 COLD START EXHAUST (B) CAMSHAFT POSITION TIMING OVER-ADVANCED (BANK 2). GENERAL FAILURE INFORMATION. NO SUB TYPE INFORMATION (B8444S; 2008-2011)

DIAGNOSTIC TROUBLE CODE (DTC) INFORMATION

see **DIAGNOSTIC TROUBLE CODE (DTC) INFORMATION**

FAULT-TRACING

CHECKING COMPONENTS

HINT: Contaminants in the engine oil can cause damage to components in the variable valve timing (VVT) unit.

Check the engine oil grade. Check especially for contaminants.

Remove the camshaft reset valve, check the reset valve and the oil ducts in the cylinder head. Check for contaminants and blockages.

Try a new camshaft reset valve if no fault is found or if the above remedies do not rectify the fault.

HINT: The fault can also be caused by an internal fault in the variable valve timing (VVT) unit. If the above fault-tracing/remedies do not rectify the fault, the variable valve timing (VVT) unit may be damaged.

Remedy as necessary.

Other information

- see **VVT UNIT EXHAUST CAMSHAFT, REPLACING**
- see **LOCATION OF COMPONENTS, ENGINE COMPARTMENT**

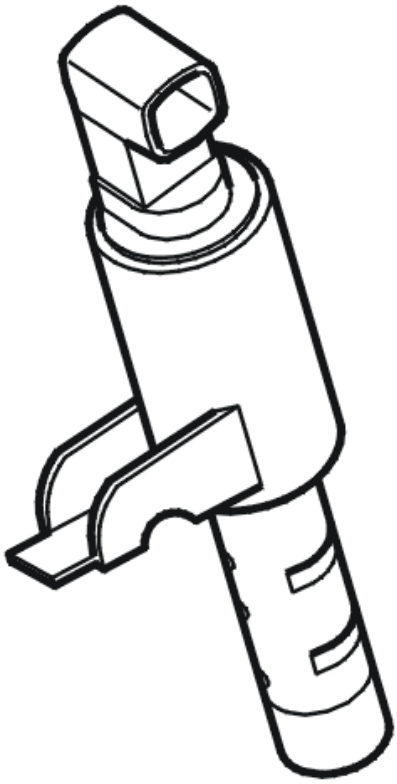

Fig. 204: Identifying Camshaft Reset Valve
Courtesy of VOLVO CARS CORPORATION

- **Continue**

  Refer to **VERIFICATION**

VERIFICATION

VERIFICATION, PART 1

HINT: After carrying out the repair, check that the fault has been remedied.

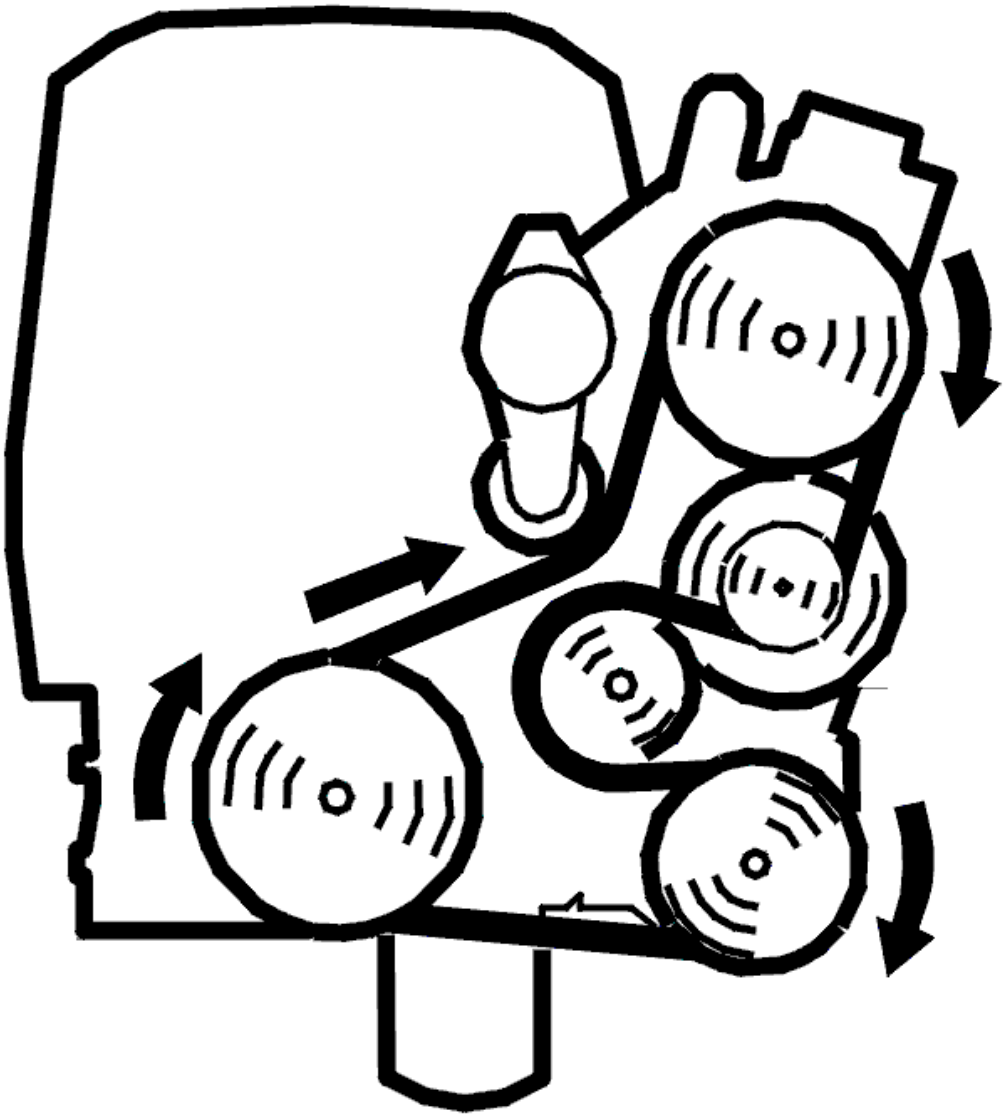

Fig. 205: Belt Routing / Engine Idling - Volvo
Courtesy of VOLVO CARS CORPORATION

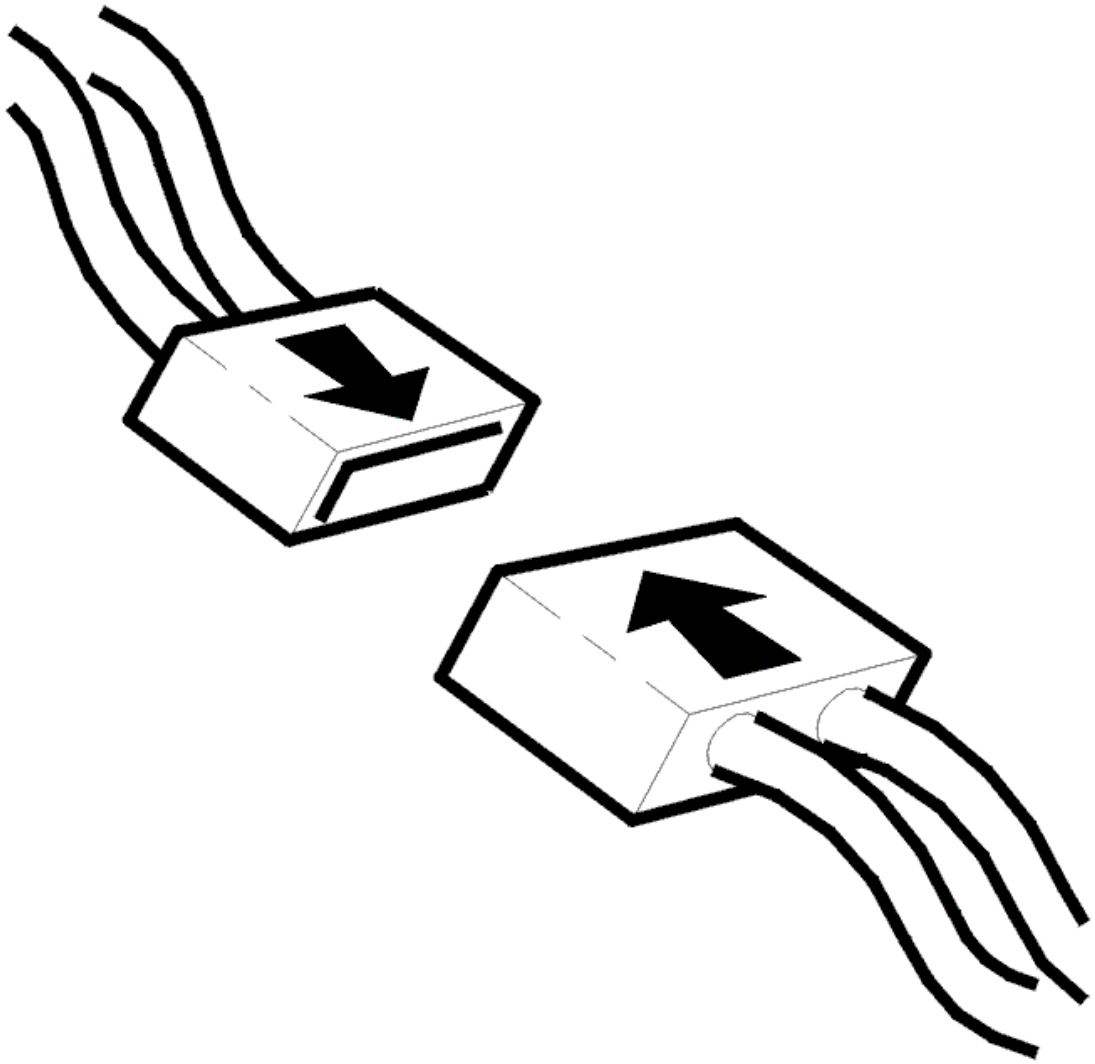

Fig. 206: Connecting Connector
Courtesy of VOLVO CARS CORPORATION

- Verification consists of 2 parts. Part 1 is carried out via a test in the workshop. Part 2 is carried out on the road.

  If the function is determined as **incorrect** in part 1, then part 2 does **not** need to be carried out. If the function is determined as being correct in part 1 and the vehicle can be tested on the road, part 2 must be carried out. This is because in certain cases the function can be difficult the check in a workshop environment.

- Ignition off
- Reconnect the connectors, components, etc.
- Start and run the engine to operating temperature.
- Read off the shift angle of the camshaft and the desired shift angle of the camshaft to check the function.

Check that the camshaft shift angle corresponds to the desired value for the camshaft shift angle with an accuracy of approximately 8° CA (camshaft angle). The difference between the values can be read off in the lower digital display.

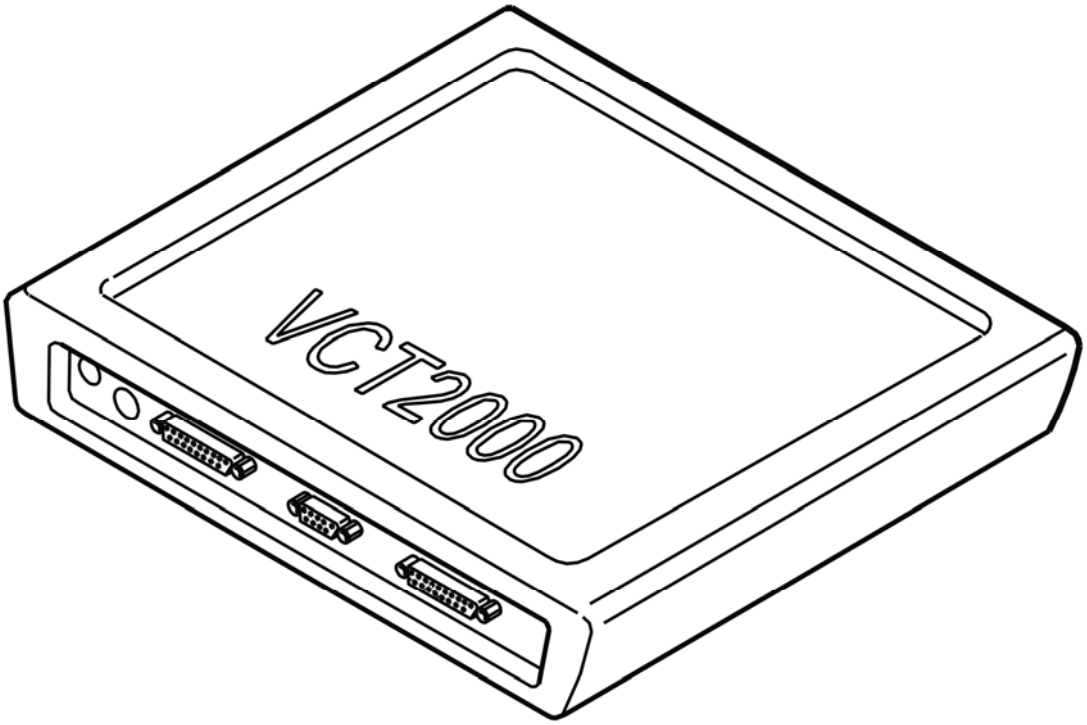

Fig. 207: Identifying VCT2000 Diagnostic Tool Symbol In VIDA
Courtesy of VOLVO CARS CORPORATION

Is the function OK?

- **YES**

  Refer to **VERIFICATION, PART 2**

- **NO**

  Refer to **INFORMATION**

VERIFICATION, PART 2

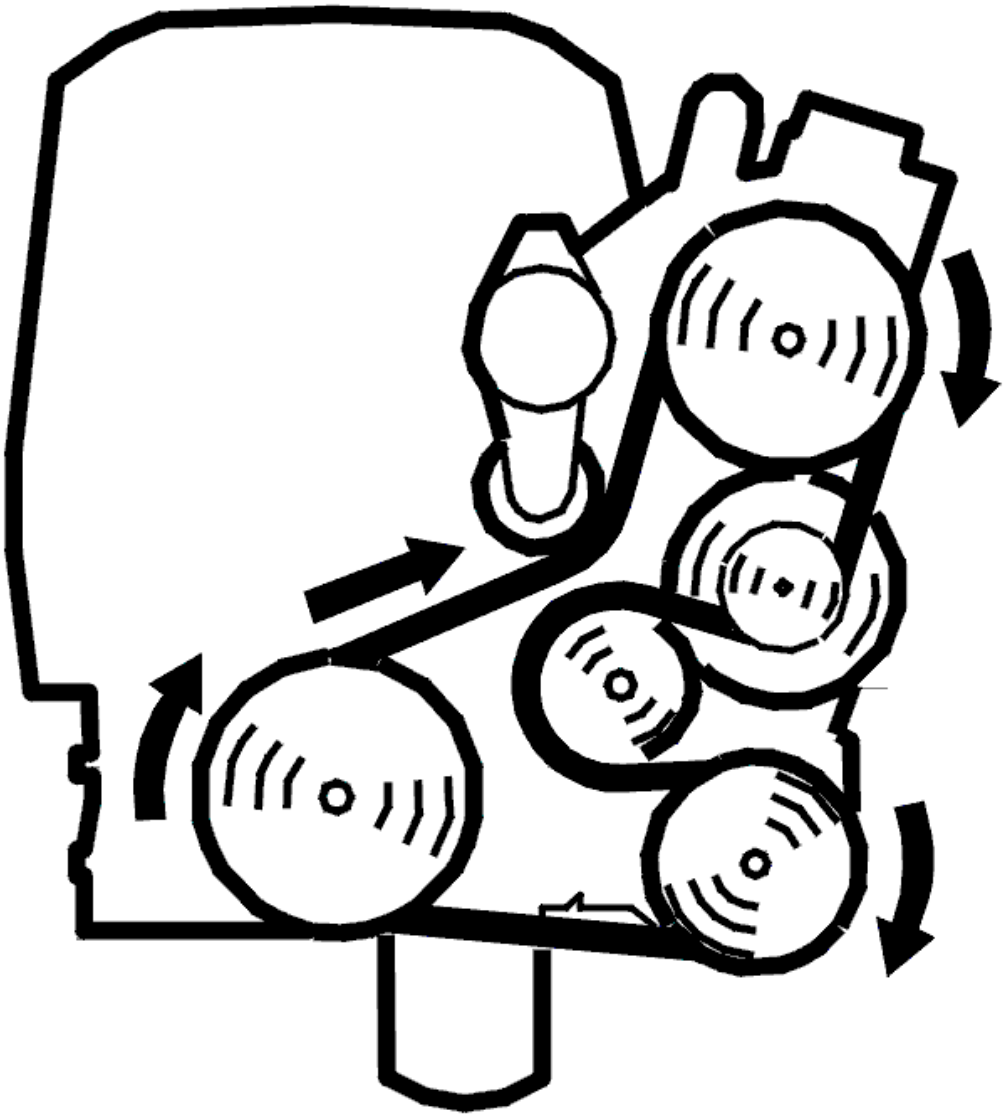

Fig. 208: Belt Routing / Engine Idling - Volvo
Courtesy of VOLVO CARS CORPORATION

- Test drive the car on the road. Use acceleration and engine braking. Repeat the procedure several times so that the camshaft control works and the engine control module (ECM) can carry out diagnostics.
- Connect the VCT2000 (or appropriate scan tool) to the data link connector **without switching off the engine.**
- Read the diagnostic status and fault status for the diagnostic trouble code by selecting the diagnostic trouble code in the list.

NOTE: **If the engine is switched off, the stored fault status will be erased and the test drive will have to be repeated.**

Check the fault status for the diagnostic trouble code when the scan is "Implemented". When the function is correct the fault status should be "No fault found" when the scan is implemented.

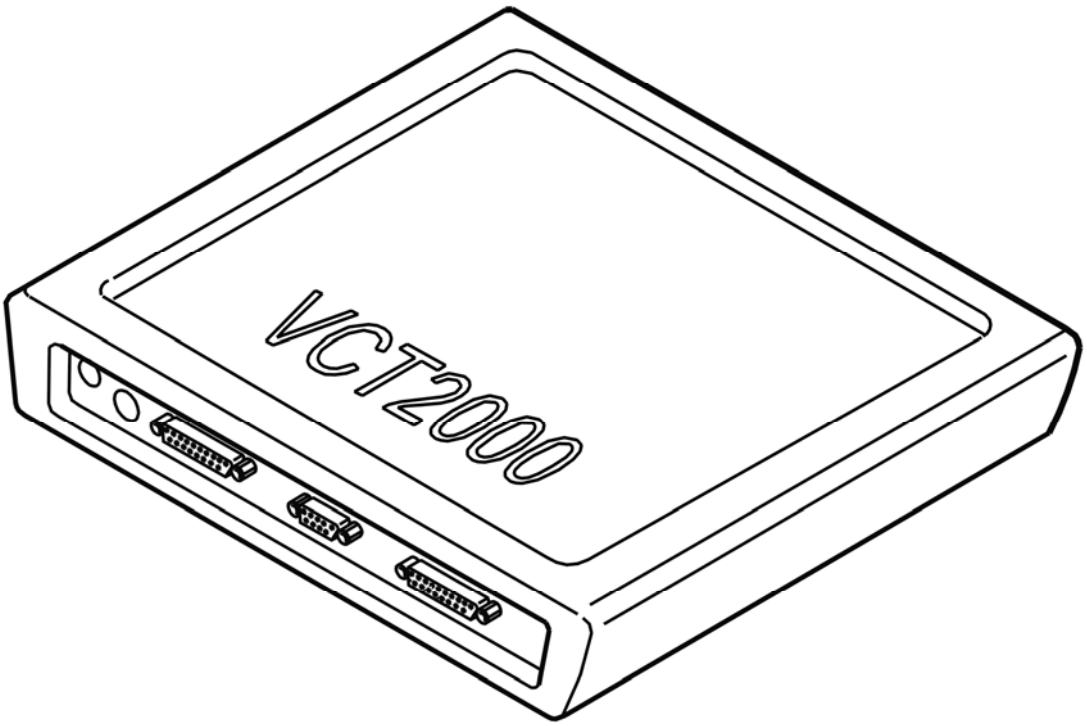

Fig. 209: Identifying VCT2000 Diagnostic Tool Symbol In VIDA
Courtesy of VOLVO CARS CORPORATION

Is the function OK?

- **YES**

  VERIFIED: Troubleshooting has been completed.

- **NO**

  Refer to **INFORMATION**

INFORMATION

FAULT-TRACING INFORMATION

The fault should have been detected and remedied. As this is not the case fault-tracing has failed.

Exit fault-tracing for this diagnostic trouble code (DTC) or make another attempt.

ECM-P054D00 COLD START EXHAUST (B) CAMSHAFT POSITION TIMING OVER-RETARDED (BANK 2). GENERAL FAILURE INFORMATION. NO SUB

TYPE INFORMATION (B8444S; 2008-2011)

DIAGNOSTIC TROUBLE CODE (DTC) INFORMATION

see **DIAGNOSTIC TROUBLE CODE (DTC) INFORMATION**

FAULT-TRACING

see **FAULT-TRACING**

ECM-P056200: SYSTEM VOLTAGE LOW. GENERAL FAILURE INFORMATION. NO SUB TYPE INFORMATION (B6324S; 2007-2010)

DIAGNOSTIC TROUBLE CODE (DTC) INFORMATION ECM-P056200

Condition

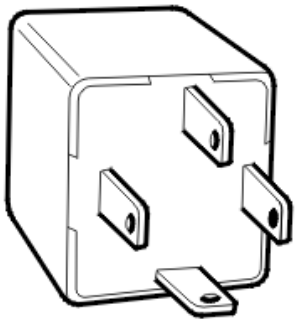

Fig. 210: Identifying Main Relay
Courtesy of VOLVO CARS CORPORATION

Engine control module (ECM) checks the voltage level in the system.

If engine control module (ECM) detects that the voltage is below a certain level, this is interpreted as a malfunction and the diagnostic trouble code is generated.

The diagnostic trouble code can be diagnosed when the ignition is on.

Substitute Value

- Nothing.

Possible Source

- Contact resistance in connections system relay.

- Contact resistance in connections battery.
- Damaged power supply/charging system.
- Damaged battery.

Fault symptom[s]

- Nothing.

FAULT-TRACING

CHECKING COMPONENTS AND WIRING

NOTE: If diagnostic trouble code for alternator is stored, then troubleshoot that diagnostic trouble code first.

Check the battery's connections for contact resistance and oxidation.

Check the system relay's connector for contact resistance and oxidation.

Check the charging system's function for low voltage.

HINT: Read off the battery voltage using the VCT2000 (or appropriate scan tool).

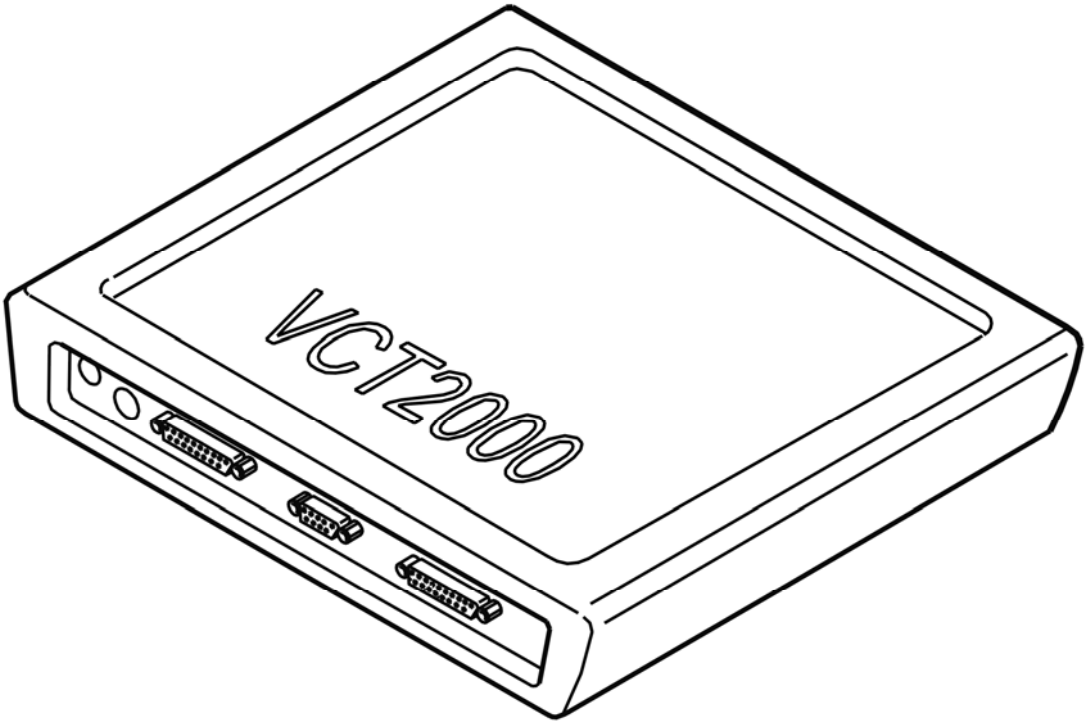

Fig. 211: Identifying VCT2000 Diagnostic Tool Symbol In VIDA
Courtesy of VOLVO CARS CORPORATION

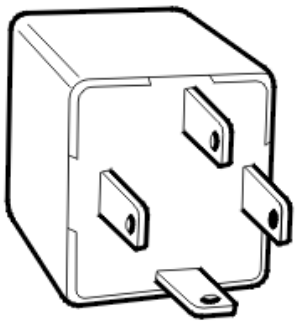

Fig. 212: Identifying Main Relay
Courtesy of VOLVO CARS CORPORATION

- **Continue**

  Refer to **VERIFICATION**

INFORMATION

FAULT-TRACING INFORMATION

The fault should have been detected and remedied. As this is not the case fault-tracing has failed.

Exit fault-tracing for this diagnostic trouble code (DTC) or make another attempt.

VERIFICATION

VERIFICATION

HINT: After carrying out the repair, check that the fault has been remedied.

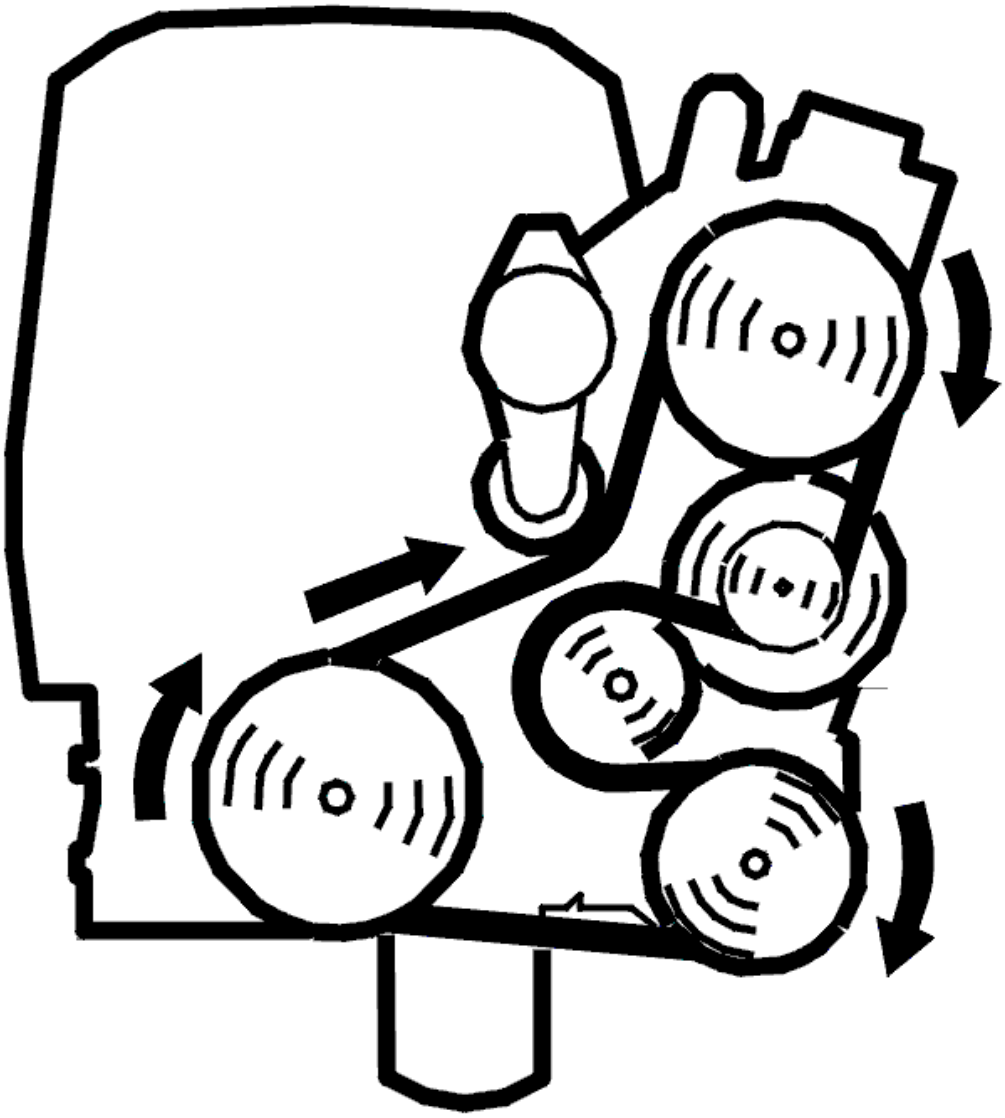

Fig. 213: Belt Routing / Engine Idling - Volvo
Courtesy of VOLVO CARS CORPORATION

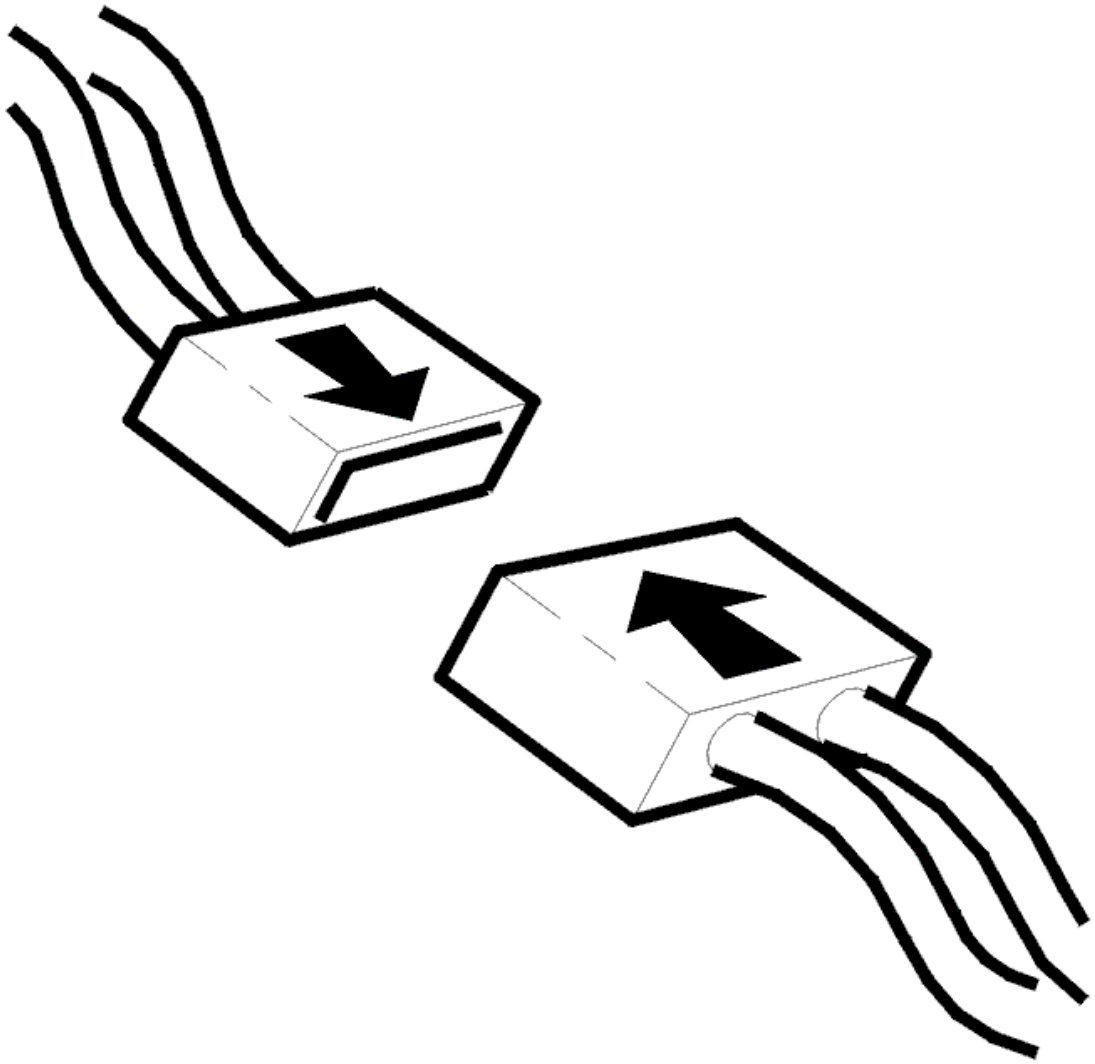

Fig. 214: Connecting Connector
Courtesy of VOLVO CARS CORPORATION

- Ignition off
- Reinstall the connectors, components etc.
- Start the engine.

  Read off the battery voltage.

  Check the battery voltage, battery voltage shall be 13.5 V-14 V.

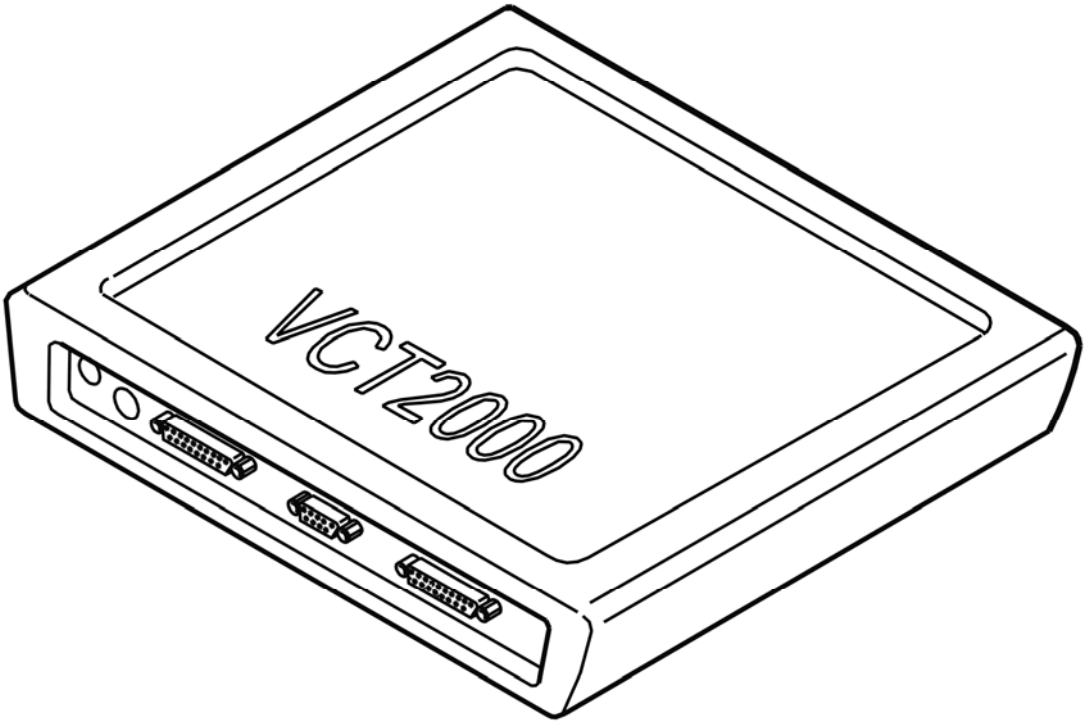

Fig. 215: Identifying VCT2000 Diagnostic Tool Symbol In VIDA
Courtesy of VOLVO CARS CORPORATION

Is the function OK?

- **YES**

  VERIFIED: Troubleshooting has been completed.

- **NO**

  Refer to **INFORMATION**

ECM-P056200: SYSTEM VOLTAGE LOW. GENERAL FAILURE INFORMATION. NO SUB TYPE INFORMATION (B6324S5; 2011-2012)

DIAGNOSTIC TROUBLE CODE (DTC) INFORMATION ECM-P056200

see **DIAGNOSTIC TROUBLE CODE (DTC) INFORMATION ECM-P056200**

FAULT-TRACING

see **FAULT-TRACING**

ECM-P056200: SYSTEM VOLTAGE LOW. GENERAL MALFUNCTION INFORMATION. NO INFORMATION ON MALFUNCTION TYPE (B8444S; 2005-2011)

DIAGNOSTIC TROUBLE CODE (DTC) INFORMATION ECM-P056200

Condition

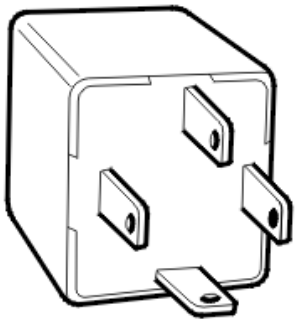

Fig. 216: Identifying Main Relay
Courtesy of VOLVO CARS CORPORATION

Engine control module (ECM) checks the voltage level in the system.

If engine control module (ECM) detects that the voltage is below a certain level, this is interpreted as a malfunction and the diagnostic trouble code is generated.

The diagnostic trouble code can be diagnosed when the ignition is on.

Substitute Value

- Nothing.

Possible Source

- Contact resistance in connections system relay.
- Contact resistance in connections battery.
- Damaged power supply/charging system.
- Damaged battery.

Fault symptom[s]

- Nothing.

TROUBLESHOOTING ECM-P056200

CHECKING COMPONENTS AND WIRING

NOTE: If diagnostic trouble code for alternator is stored, then troubleshoot that diagnostic trouble code first.

Check the battery's connections for contact resistance and oxidation.

Check the system relay's connector for contact resistance and oxidation.

Check the charging system's function for low voltage.

HINT: Read off the battery voltage using the VCT2000 (or appropriate scan tool).

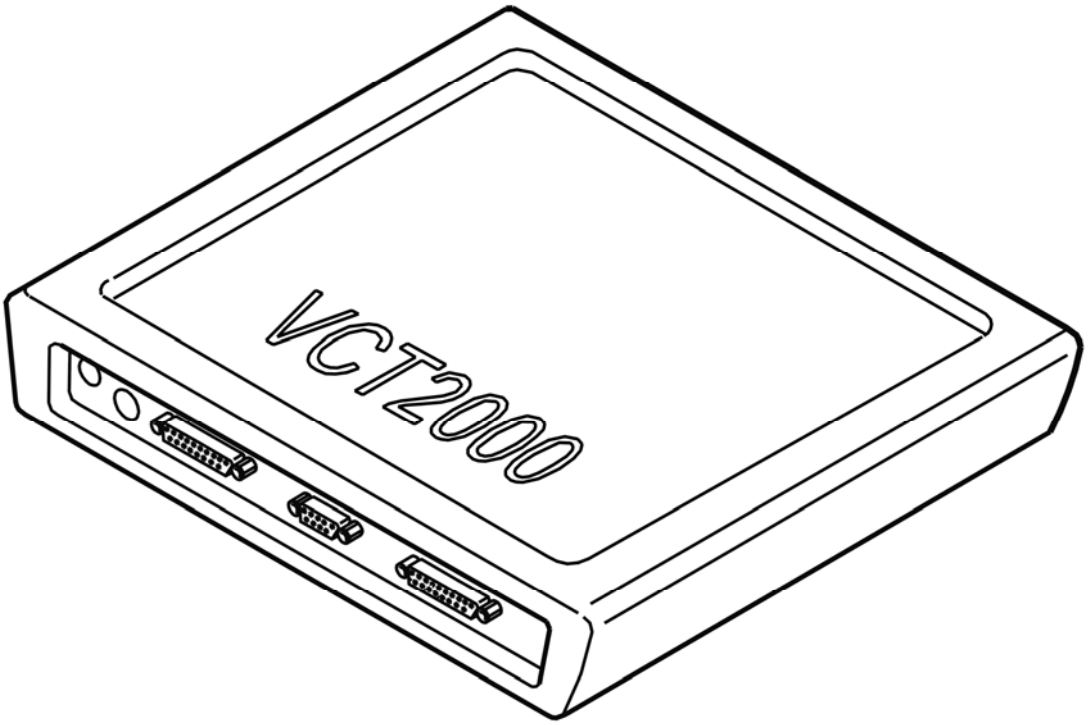

Fig. 217: Identifying VCT2000 Diagnostic Tool Symbol In VIDA
Courtesy of VOLVO CARS CORPORATION

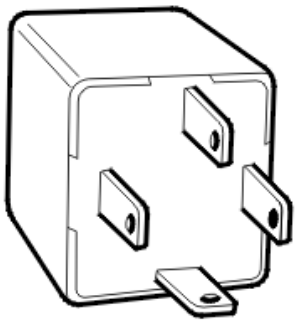

Fig. 218: Identifying Main Relay
Courtesy of VOLVO CARS CORPORATION

- **Continue**

  Refer to **VERIFICATION**

VERIFICATION

VERIFICATION

HINT: After carrying out the repair, check that the fault has been remedied.

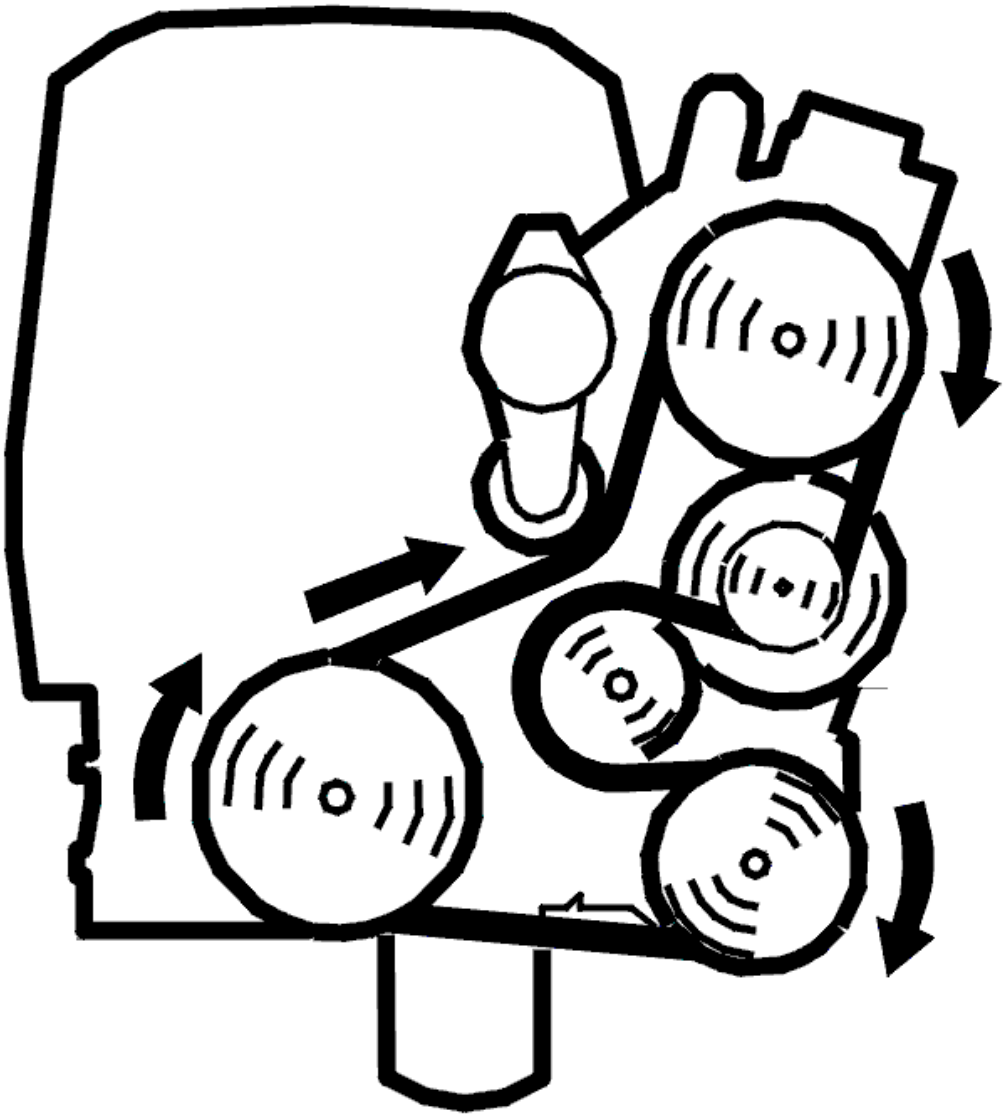

Fig. 219: Belt Routing / Engine Idling - Volvo
Courtesy of VOLVO CARS CORPORATION

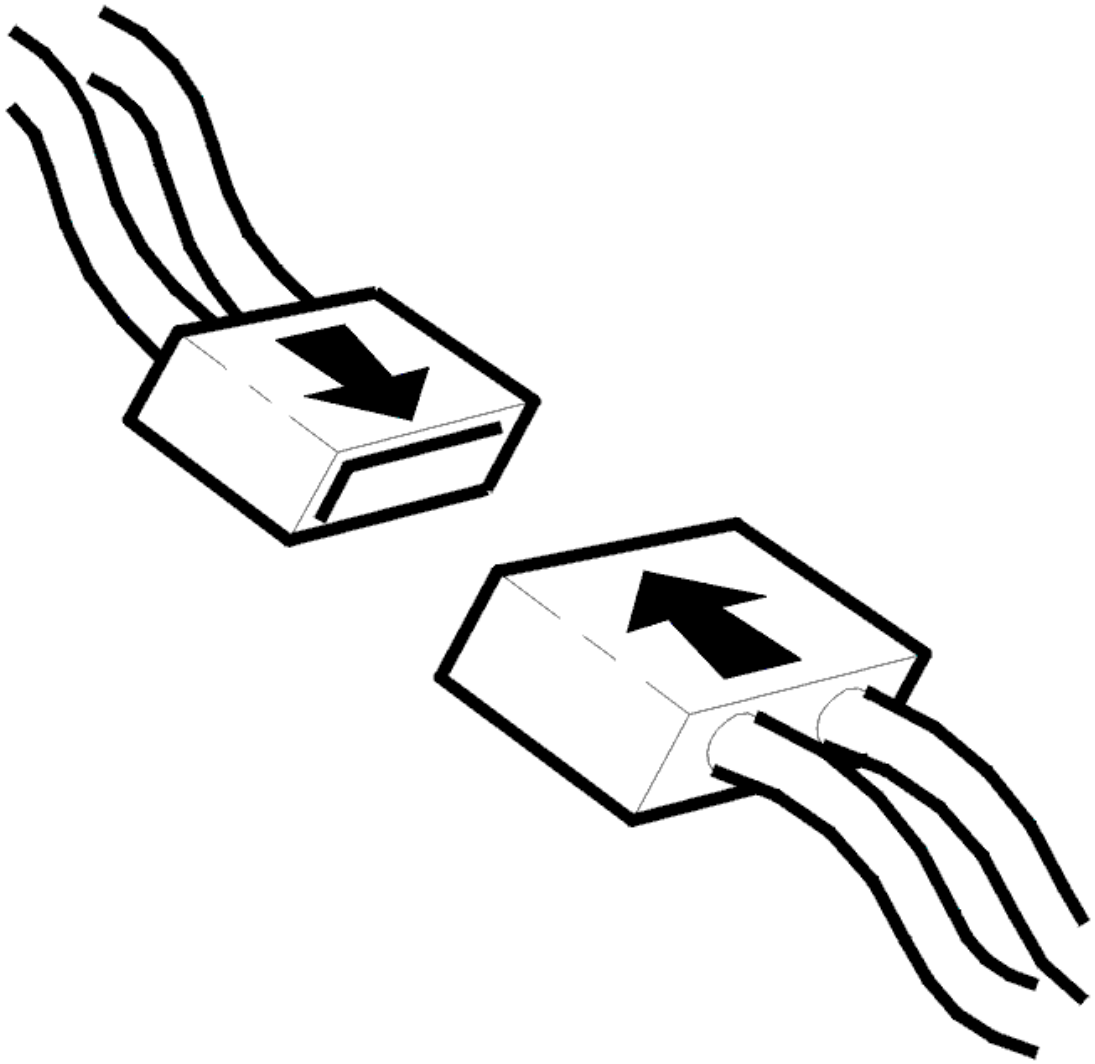

Fig. 220: Connecting Connector
Courtesy of VOLVO CARS CORPORATION

- Ignition off
- Reinstall the connectors, components etc.
- Start the engine.

  Read off the battery voltage.

  Check the battery voltage, battery voltage shall be 13.5 V-14 V.

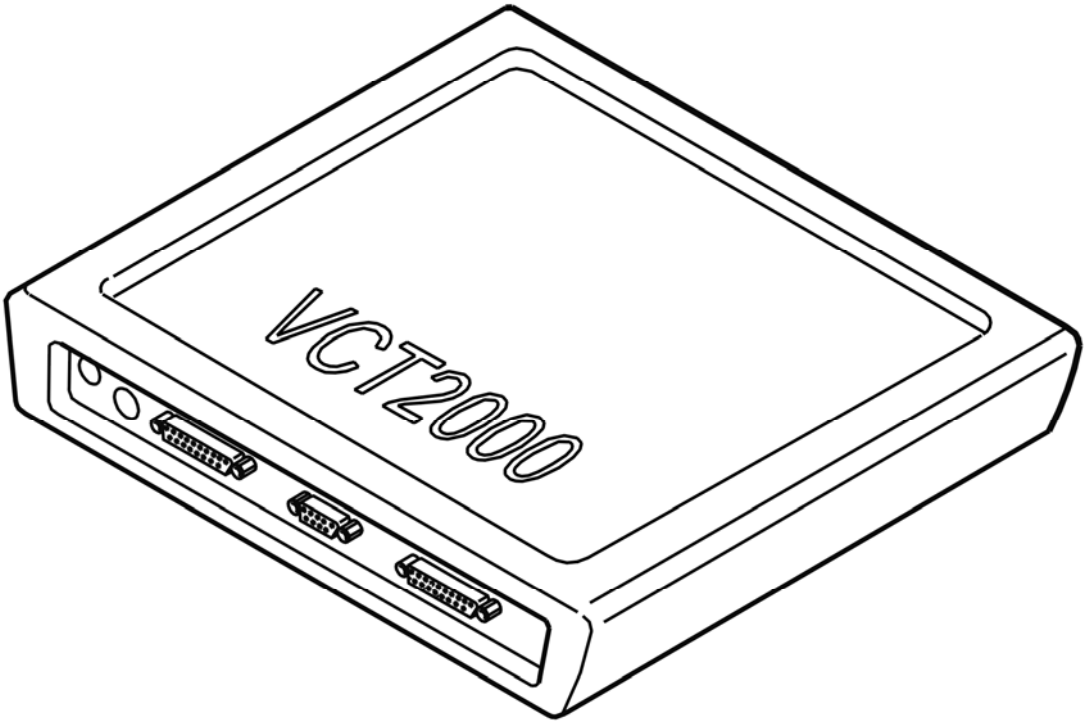

Fig. 221: Identifying VCT2000 Diagnostic Tool Symbol In VIDA
Courtesy of VOLVO CARS CORPORATION

Is the function OK?

- **YES**

  VERIFIED: Troubleshooting has been completed.

- **NO**

  Refer to **INFORMATION**

INFORMATION

FAULT-TRACING INFORMATION

The fault should have been detected and remedied. As this is not the case fault-tracing has failed.

Exit fault-tracing for this diagnostic trouble code (DTC) or make another attempt.

ECM-P056300: SYSTEM VOLTAGE HIGH. GENERAL FAILURE INFORMATION. NO SUB TYPE INFORMATION (B6324S; 2007-2010)

DIAGNOSTIC TROUBLE CODE (DTC) INFORMATION ECM-P056300

Condition

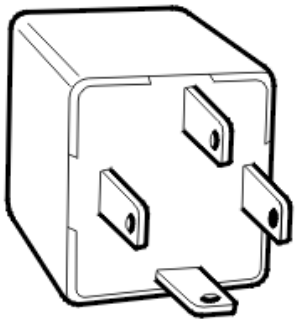

Fig. 222: Identifying Main Relay
Courtesy of VOLVO CARS CORPORATION

Engine control module (ECM) checks the voltage level in the system.

If engine control module (ECM) detects that the voltage is above a certain level, this is interpreted as a malfunction and the diagnostic trouble code is generated.

The diagnostic trouble code can be diagnosed when the ignition is on.

Substitute Value

- Nothing.

Possible Source

- Damaged power supply/charging system.

Fault symptom[s]

- Nothing.

FAULT-TRACING

CHECKING COMPONENTS AND WIRING

NOTE: **If diagnostic trouble code for alternator is stored, then troubleshoot that diagnostic trouble code first.**

Check the charging system's function for high voltage.

HINT: Read off the battery voltage using the VCT2000 (or appropriate scan tool).

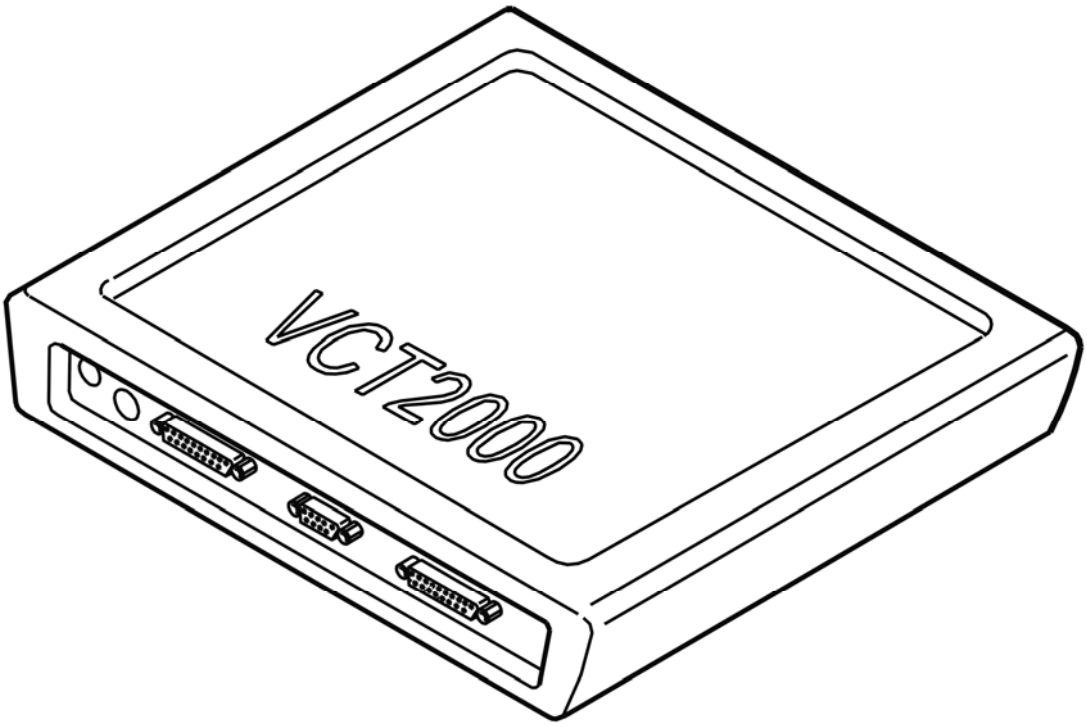

Fig. 223: Identifying VCT2000 Diagnostic Tool Symbol In VIDA
Courtesy of VOLVO CARS CORPORATION

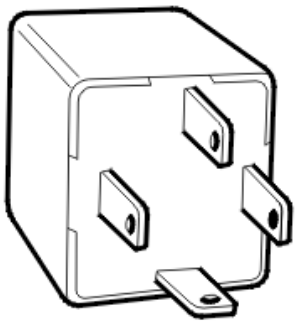

Fig. 224: Identifying Main Relay
Courtesy of VOLVO CARS CORPORATION

- **Continue**

  Refer to **VERIFICATION**

INFORMATION

FAULT-TRACING INFORMATION

The fault should have been detected and remedied. As this is not the case fault-tracing has failed.

Exit fault-tracing for this diagnostic trouble code (DTC) or make another attempt.

VERIFICATION

VERIFICATION

HINT: After carrying out the repair, check that the fault has been remedied.

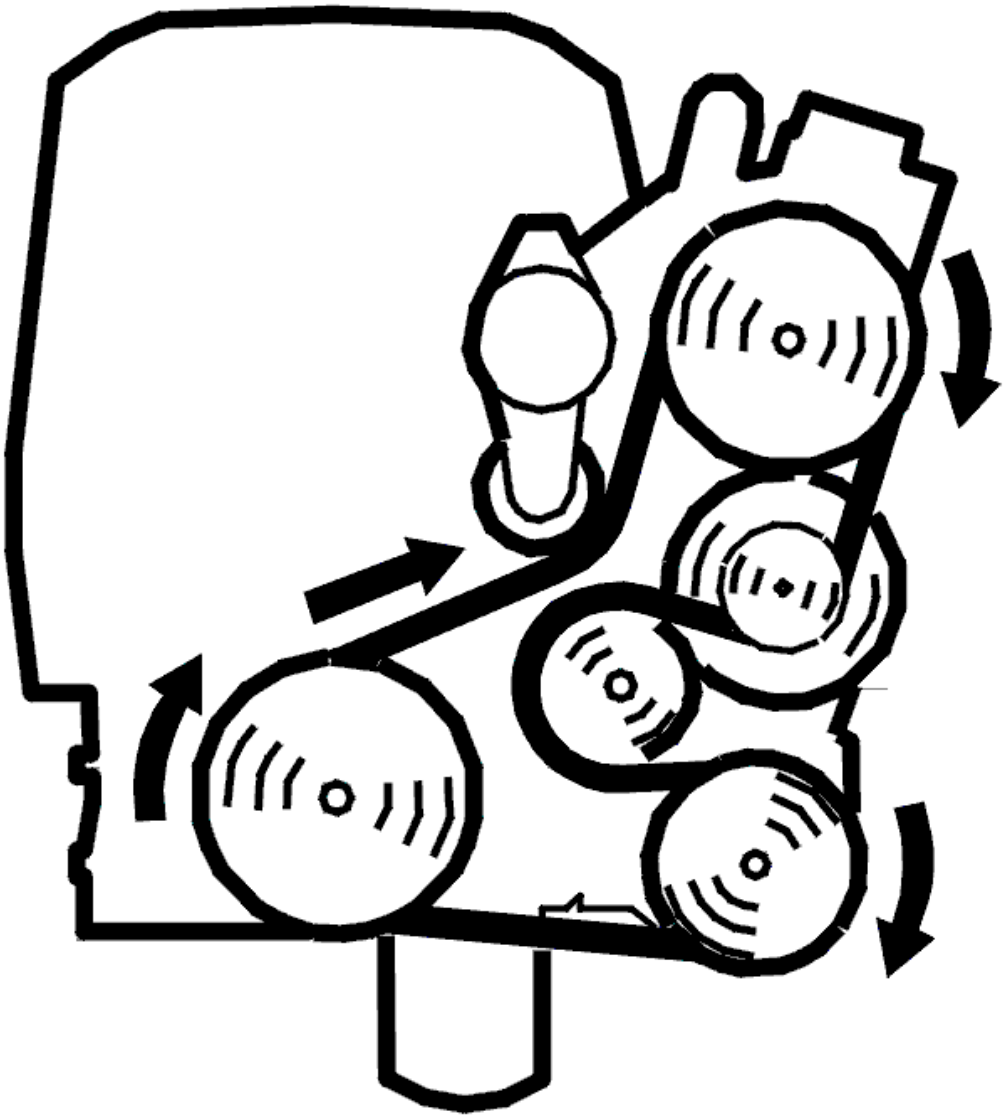

Fig. 225: Belt Routing / Engine Idling - Volvo
Courtesy of VOLVO CARS CORPORATION

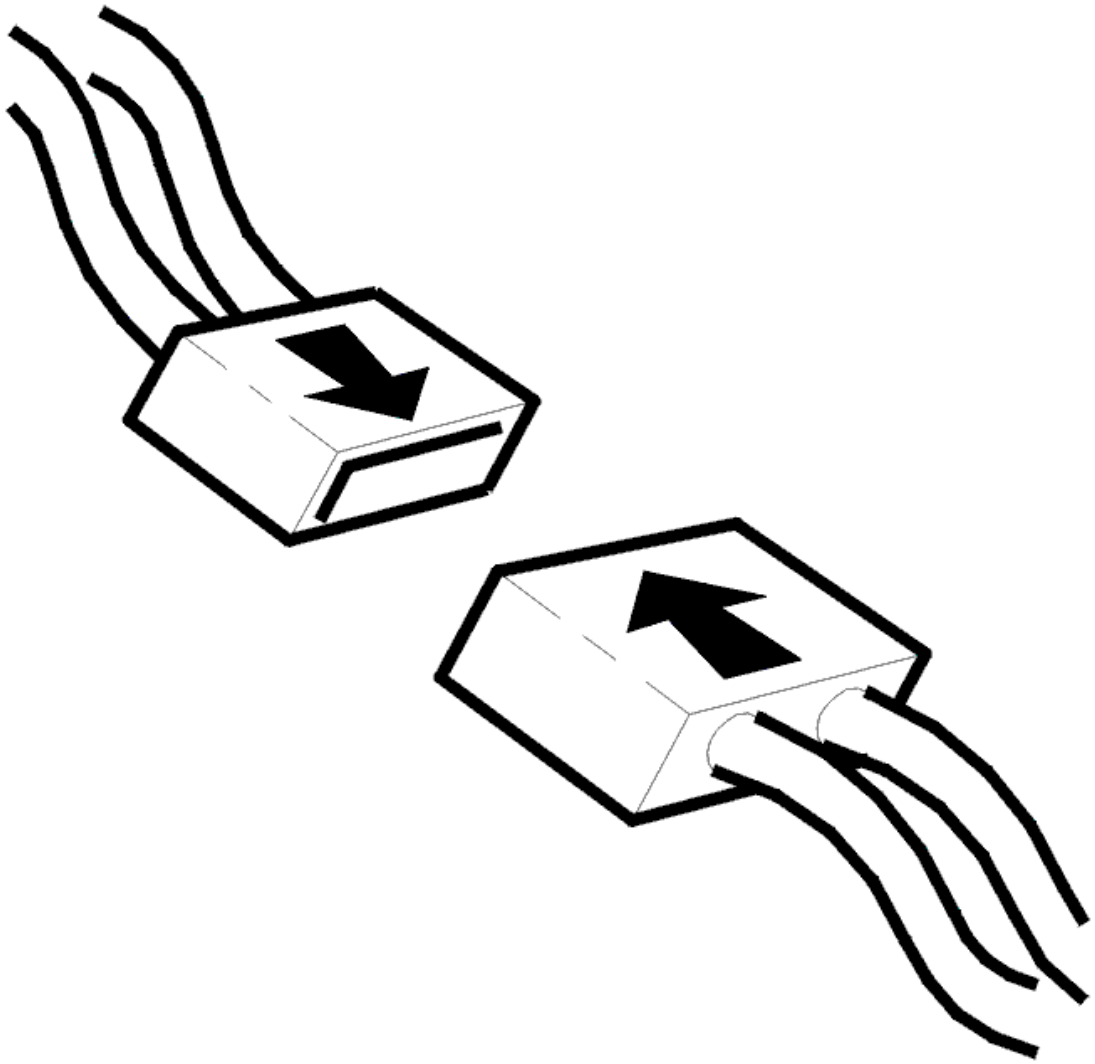

Fig. 226: Connecting Connector
Courtesy of VOLVO CARS CORPORATION

- Ignition off
- Reinstall the connectors, components etc.
- Start the engine.

  Read off the battery voltage.

  Check the battery voltage, battery voltage shall be 13.5 V-14 V.

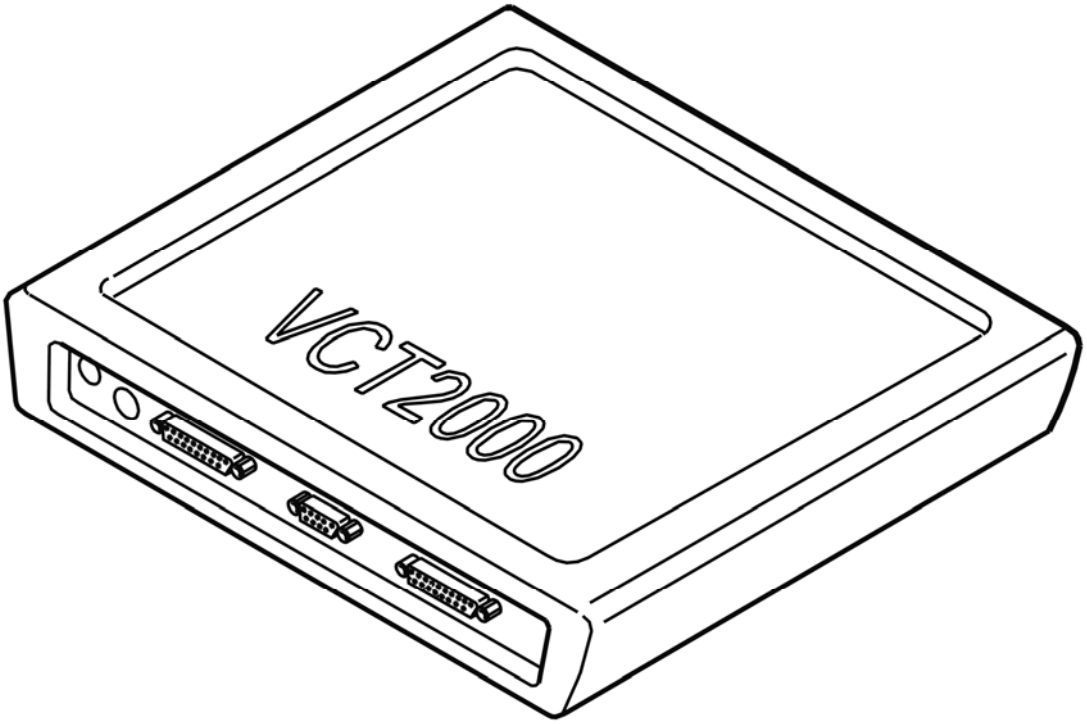

Fig. 227: Identifying VCT2000 Diagnostic Tool Symbol In VIDA
Courtesy of VOLVO CARS CORPORATION

Is the function OK?

- **YES**

  VERIFIED: Troubleshooting has been completed.

- **NO**

  Refer to **INFORMATION**

ECM-P056300: SYSTEM VOLTAGE HIGH. GENERAL FAILURE INFORMATION. NO SUB TYPE INFORMATION (B6324S5; 2011-2012)

DIAGNOSTIC TROUBLE CODE (DTC) INFORMATION ECM-P056300

see **DIAGNOSTIC TROUBLE CODE (DTC) INFORMATION ECM-P056300**

FAULT-TRACING

see **FAULT-TRACING**

ECM-P056300: SYSTEM VOLTAGE HIGH. GENERAL MALFUNCTION INFORMATION. NO INFORMATION ON MALFUNCTION TYPE (B8444S; 2005-2011)

DIAGNOSTIC TROUBLE CODE (DTC) INFORMATION ECM-P056300

Condition

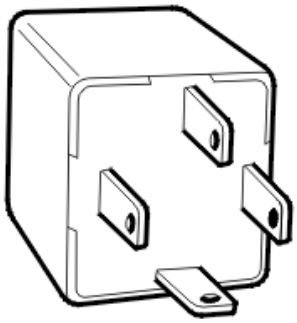

Fig. 228: Identifying Main Relay
Courtesy of VOLVO CARS CORPORATION

Engine control module (ECM) checks the voltage level in the system.

If engine control module (ECM) detects that the voltage is above a certain level, this is interpreted as a malfunction and the diagnostic trouble code is generated.

The diagnostic trouble code can be diagnosed when the ignition is on.

Substitute Value

- Nothing.

Possible Source

- Damaged power supply/charging system.

Fault symptom[s]

- Nothing.

TROUBLESHOOTING ECM-P056300

CHECKING COMPONENTS AND WIRING

NOTE: **If diagnostic trouble code for alternator is stored, then troubleshoot that diagnostic trouble code first.**

Check the charging system's function for high voltage.

HINT: Read off the battery voltage using the VCT2000 (or appropriate scan tool).

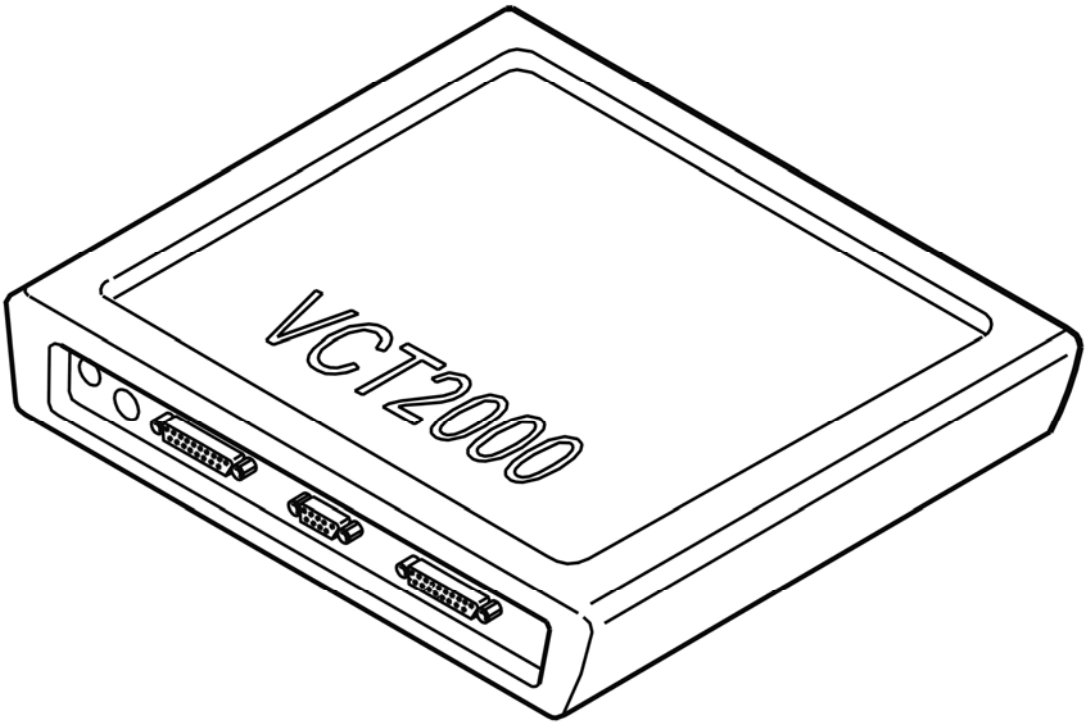

Fig. 229: Identifying VCT2000 Diagnostic Tool Symbol In VIDA
Courtesy of VOLVO CARS CORPORATION

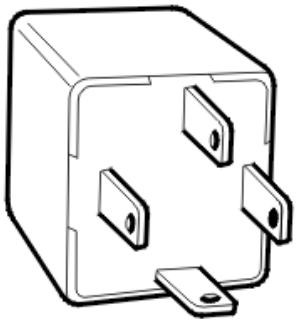

Fig. 230: Identifying Main Relay

Courtesy of VOLVO CARS CORPORATION

- **Continue**

  Refer to **VERIFICATION**

VERIFICATION

VERIFICATION

HINT: After carrying out the repair, check that the fault has been remedied.

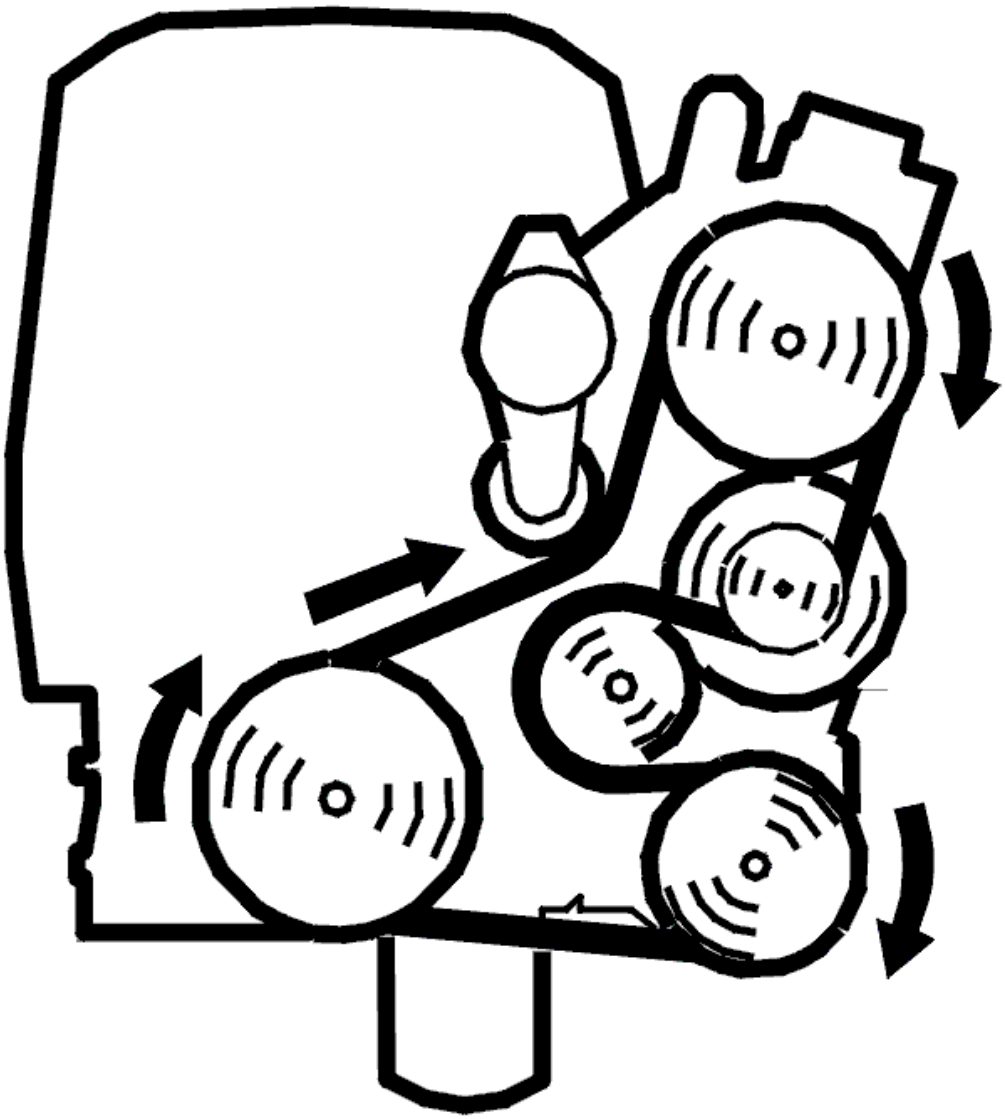

Fig. 231: Belt Routing / Engine Idling - Volvo
Courtesy of VOLVO CARS CORPORATION

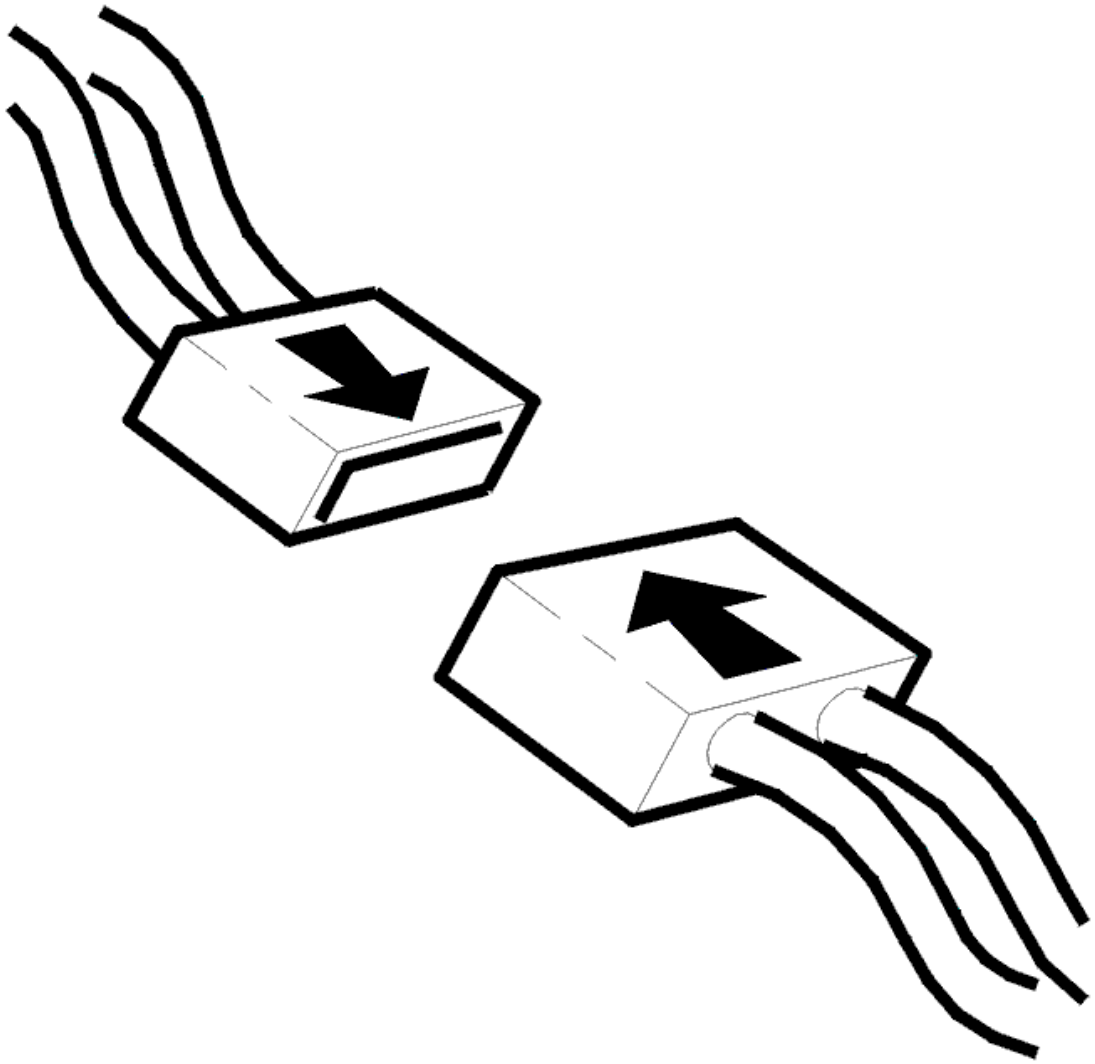

Fig. 232: Connecting Connector
Courtesy of VOLVO CARS CORPORATION

- Ignition off
- Reinstall the connectors, components etc.
- Start the engine.

  Read off the battery voltage.

  Check the battery voltage, battery voltage shall be 13.5 V-14 V.

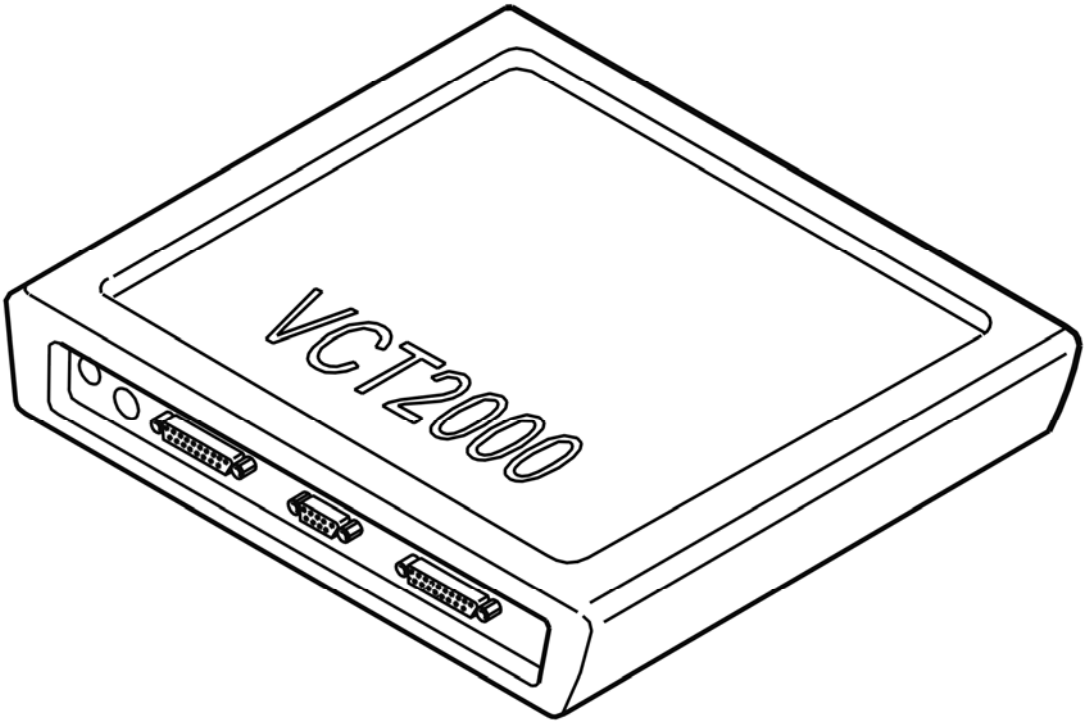

Fig. 233: Identifying VCT2000 Diagnostic Tool Symbol In VIDA
Courtesy of VOLVO CARS CORPORATION

Is the function OK?

- **YES**

  VERIFIED: Troubleshooting has been completed.

- **NO**

  Refer to **INFORMATION**

INFORMATION

FAULT-TRACING INFORMATION

The fault should have been detected and remedied. As this is not the case fault-tracing has failed.

Exit fault-tracing for this diagnostic trouble code (DTC) or make another attempt.

ECM-P057400: CRUISE CONTROL SYSTEM - VEHICLE SPEED TOO HIGH. GENERAL FAILURE INFORMATION. NO SUB TYPE INFORMATION

(B8444S; 2005-2011)

DIAGNOSTIC TROUBLE CODE (DTC) INFORMATION ECM-P057400

Condition

The diagnostic trouble code (DTC) is stored if the engine control module (ECM) registers an internal fault when the cruise control is active.

The diagnostic trouble code (DTC) can be diagnosed when the ignition is switched on.

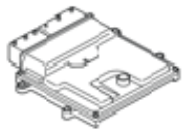

Fig. 234: Identifying Engine Control Module (ECM)
Courtesy of VOLVO CARS CORPORATION

Substitute Value

- Cruise control is disengaged when the fault is active.

Possible Source

- Damaged engine control module (ECM).

Fault symptom[s]

- Cruise control does not operate

FAULT TRACING

CHECKING THE STATUS

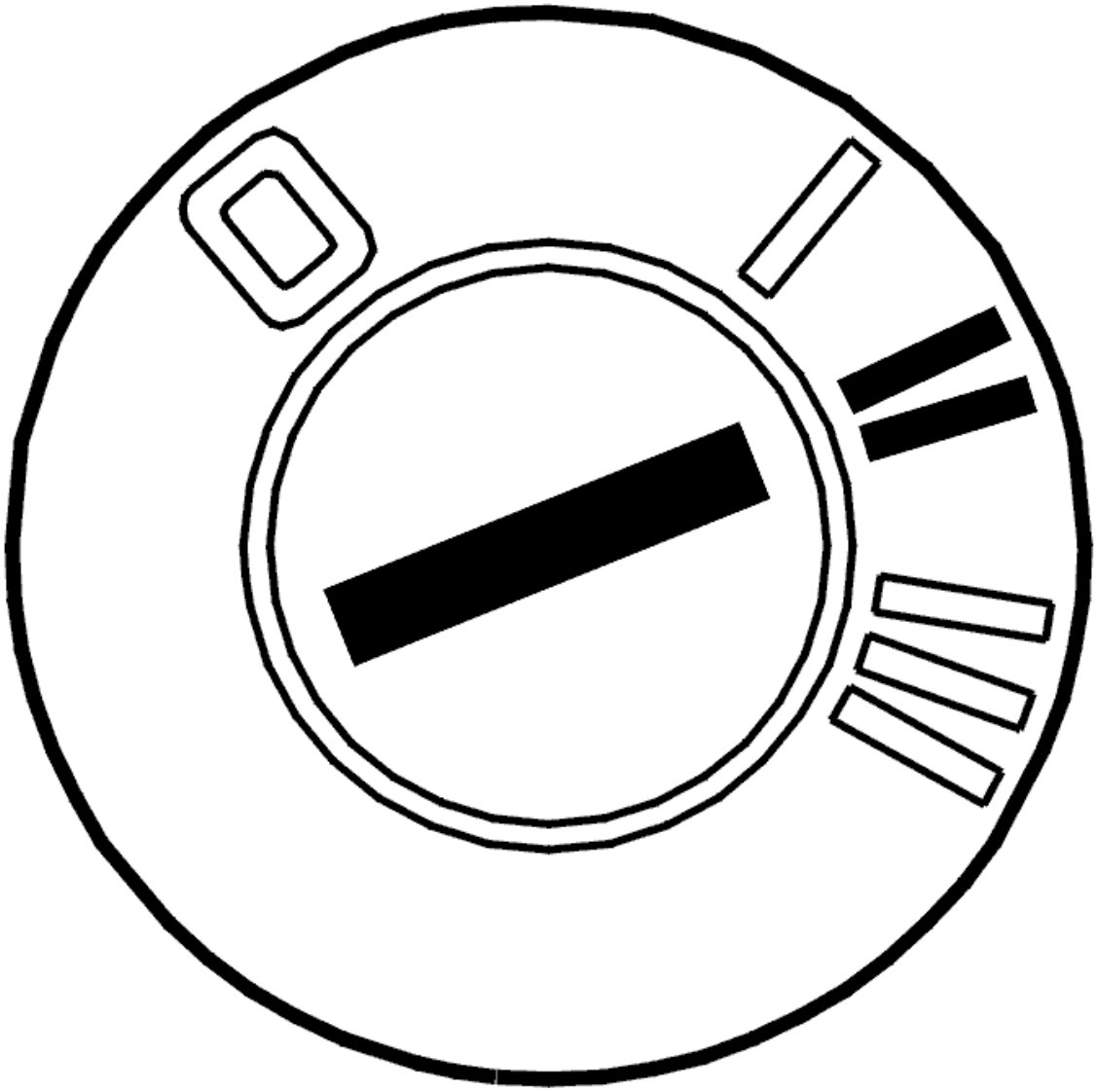

Fig. 235: Identifying Ignition ON
Courtesy of VOLVO CARS CORPORATION

- Ignition on, wait for at least 15 seconds to perform the diagnosis.

  Read the diagnostic status and fault status for the diagnostic trouble code by selecting the diagnostic trouble code in the list.

  Check if the malfunction is permanent or intermittent by reading off the diagnostic trouble code's status when the diagnostic status is "Implemented".

  If the trouble status is "Malfunction found", this indicates that the malfunction is permanent. If the trouble status is "No malfunction found", this indicates that the malfunction is intermittent and not active right now.

  NOTE: Trouble status cannot go from "Malfunction found" to "No malfunction

found" in the same operating cycle.

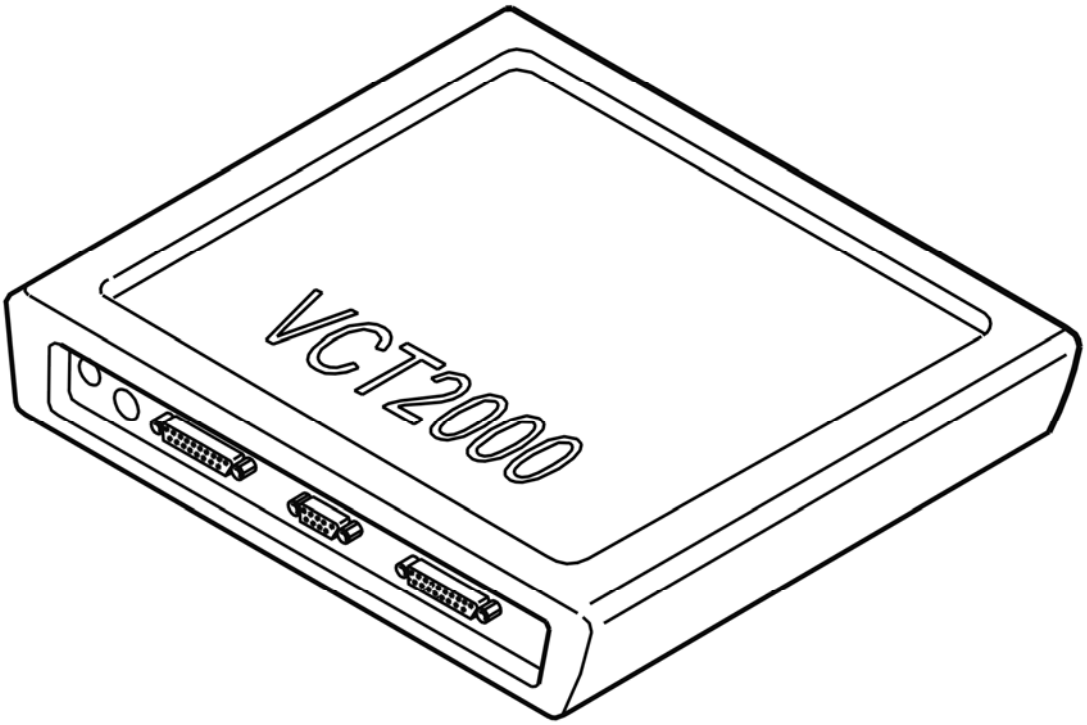

Fig. 236: Identifying VCT2000 Diagnostic Tool Symbol In VIDA
Courtesy of VOLVO CARS CORPORATION

- **Continue**

  Refer to **REPLACING THE COMPONENT**

REPLACING THE COMPONENT

The engine control module (ECM) has registered an internal fault.

If the fault is intermittent, it has been registered previously but no longer remains. Intermittent faults can be due to disruption when the engine control module (ECM) started or can be another type of fault that may recur at different instances. The fault is assessed on a case by case basis. If the fault recurs, replace the engine control module (ECM).

In the event of a permanent fault, replace the engine control module (ECM).

Remedy as necessary.

Other information

- see **ENGINE CONTROL MODULE (ECM), REPLACING**

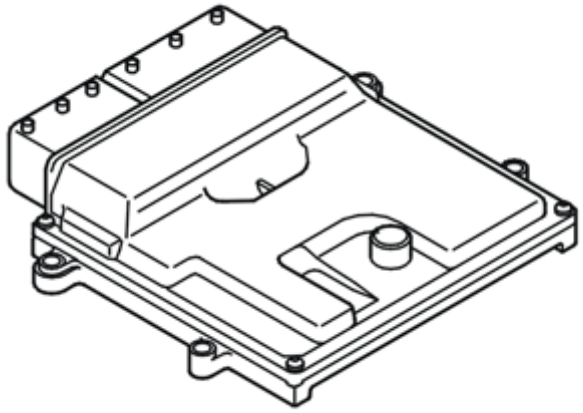

Fig. 237: Identifying Engine Control Module (ECM)
Courtesy of VOLVO CARS CORPORATION

- **Continue**

  Refer to **INFORMATION**

INFORMATION

FAULT-TRACING INFORMATION

In case of this defect, troubleshooting is not followed by verification.

The information can be displayed again or the fault-tracing for this fault can be interrupted.

ECM-P057500: CRUISE CONTROL INPUT CIRCUIT. GENERAL FAILURE INFORMATION. NO SUB TYPE INFORMATION (B6324S; 2007-2010)

DIAGNOSTIC TROUBLE CODE (DTC) INFORMATION ECM-P057500

Condition

The Central electronic module (CEM) receives and checks the signals from the steering wheel buttons for cruise control. The information is transmitted via CAN to the Engine control module (ECM).

The Engine control module (ECM) checks the received information.

The diagnostic trouble code (DTC) is stored if the control module detects that:

- The information means that any of the steering wheel buttons have been depressed longer than 180

seconds.

The control module's test for the diagnostic trouble code (DTC) starts in the event of:

- Engine running.

NOTE: The control module can only detect the fault once the test has been started and the diagnostic trouble code (DTC) is stored when the conditions are met.

Substitute Value

- Cruise control is disengaged when the fault is active.

Possible Source

- Steering wheel button stuck in depressed position.
- Damaged steering wheel keypad.

Fault symptom[s]

- Cruise control does not operate

FAULT-TRACING

see **FAULT-TRACING**

ECM-P057500: CRUISE CONTROL INPUT CIRCUIT. GENERAL FAILURE INFORMATION. NO SUB TYPE INFORMATION (B6324S5; 2011-2012)

DIAGNOSTIC TROUBLE CODE (DTC) INFORMATION ECM-P057500

see **DIAGNOSTIC TROUBLE CODE (DTC) INFORMATION ECM-P057500**

FAULT-TRACING

see **FAULT-TRACING**

ECM-P060300: INTERNAL CONTROL MODULE KEEP ALIVE MEMORY (KAM) ERROR. GENERAL FAILURE INFORMATION. NO SUB TYPE INFORMATION (B6324S; 2007-2010)

DIAGNOSTIC TROUBLE CODE (DTC) INFORMATION ECM-P060300

Condition

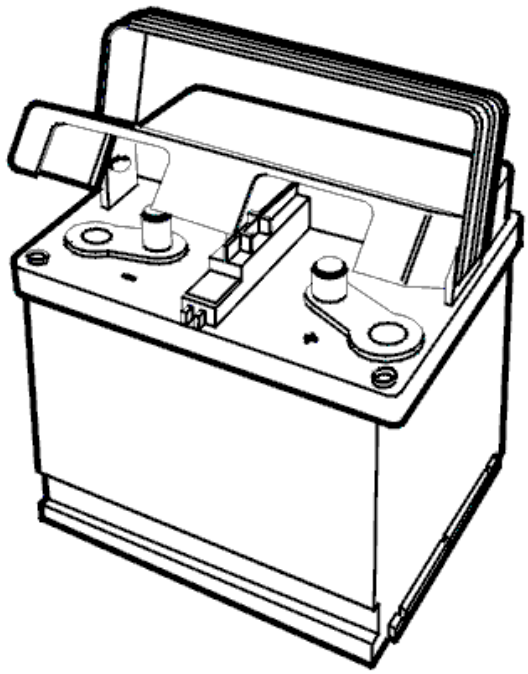

Fig. 238: Identifying Battery
Courtesy of VOLVO CARS CORPORATION

When ignition is turned on, 12 volt feed to the engine control module (ECM) is checked.

If voltage is missing, the diagnostic trouble code is generated.

The diagnostic trouble code can be diagnosed when the ignition is turned on.

Substitute Value

- Nothing.

Possible Source

- Damaged fuse for voltage feed.
- Open circuit on the voltage cable.

Fault symptom[s]

- Malfunction indicator lamp (MIL) lit.

FAULT-TRACING

CHECKING THE COMPONENTS AND WIRING

Fig. 239: Identifying Ignition In Off Position
Courtesy of VOLVO CARS CORPORATION

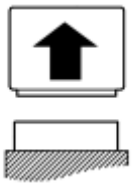

Fig. 240: Identifying Microphone Connectors
Courtesy of VOLVO CARS CORPORATION

- Ignition off.

  Check the cable between the Engine Control Module (ECM) #B54 (#C54) and battery for open circuit, contact resistance or oxidation.

  Remedy as necessary.

  Other information

  - see **CONNECTING THE BREAKOUT BOX**
  - see **SIGNAL SPECIFICATION**
  - see **ENGINE CONTROL MODULE (ECM)**
  - see **CHECKING WIRING AND TERMINALS**

- **Continue**

  Refer to **VERIFICATION**

INFORMATION

FAULT-TRACING INFORMATION

The fault should have been detected and remedied. As this is not the case fault-tracing has failed.

Exit fault-tracing for this diagnostic trouble code (DTC) or make another attempt.

VERIFICATION

VERIFICATION

HINT: After carrying out the repair, check that the fault has been remedied.

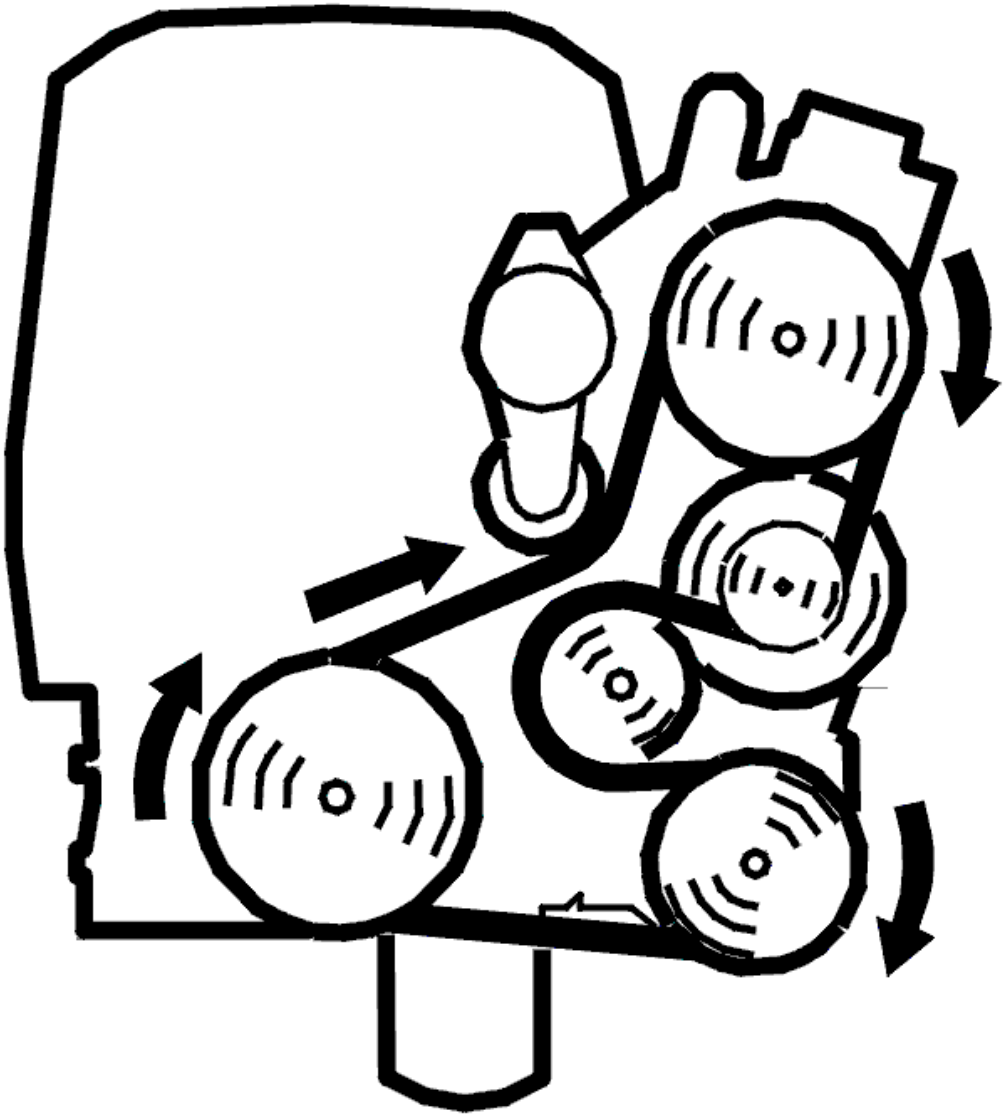

Fig. 241: Belt Routing / Engine Idling - Volvo
Courtesy of VOLVO CARS CORPORATION

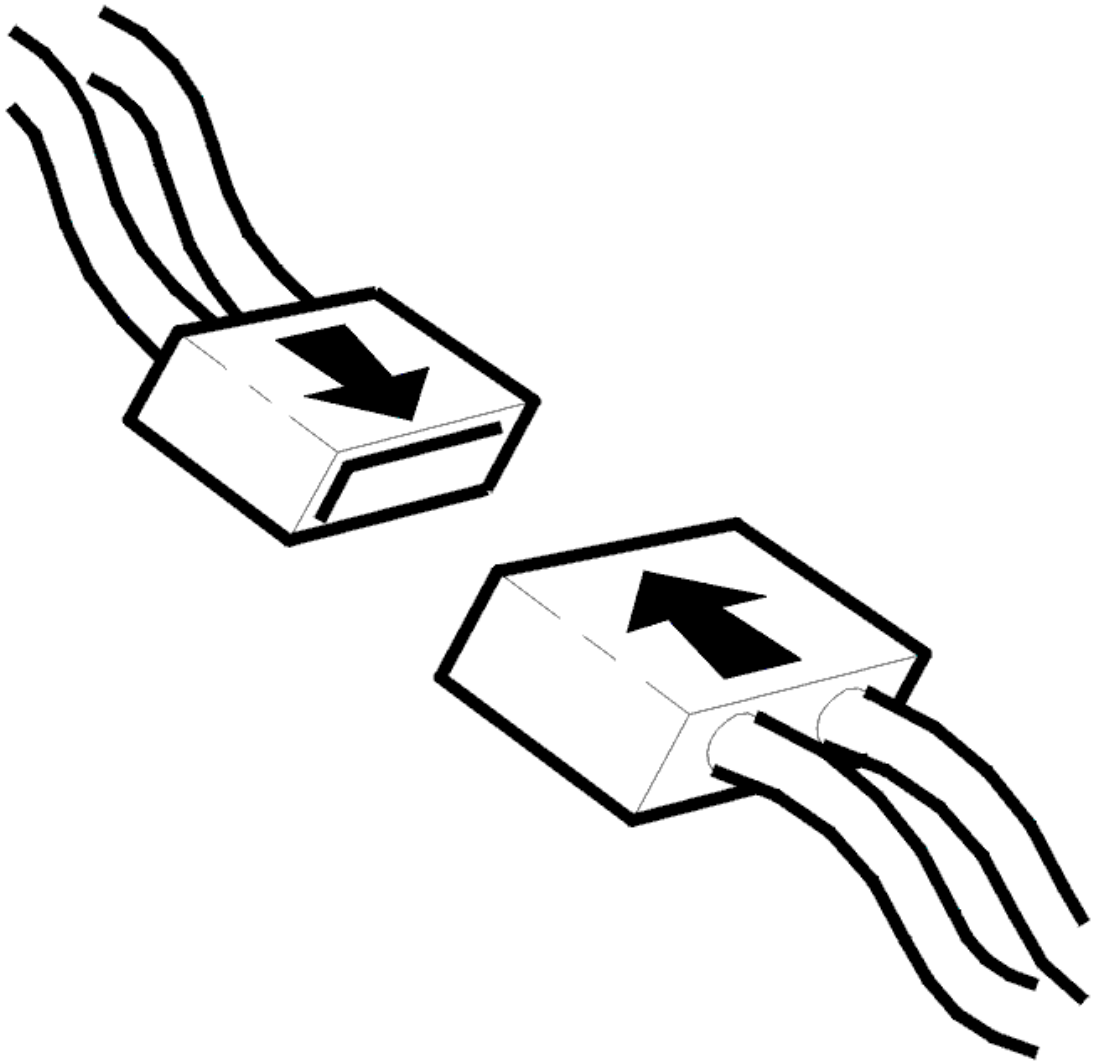

Fig. 242: Connecting Connector
Courtesy of VOLVO CARS CORPORATION

- Ignition off
- Reinstall the connectors, components etc.
- Start the engine.

  Read off the battery voltage.

  Check the battery voltage, battery voltage shall be 13.5 V-14 V.

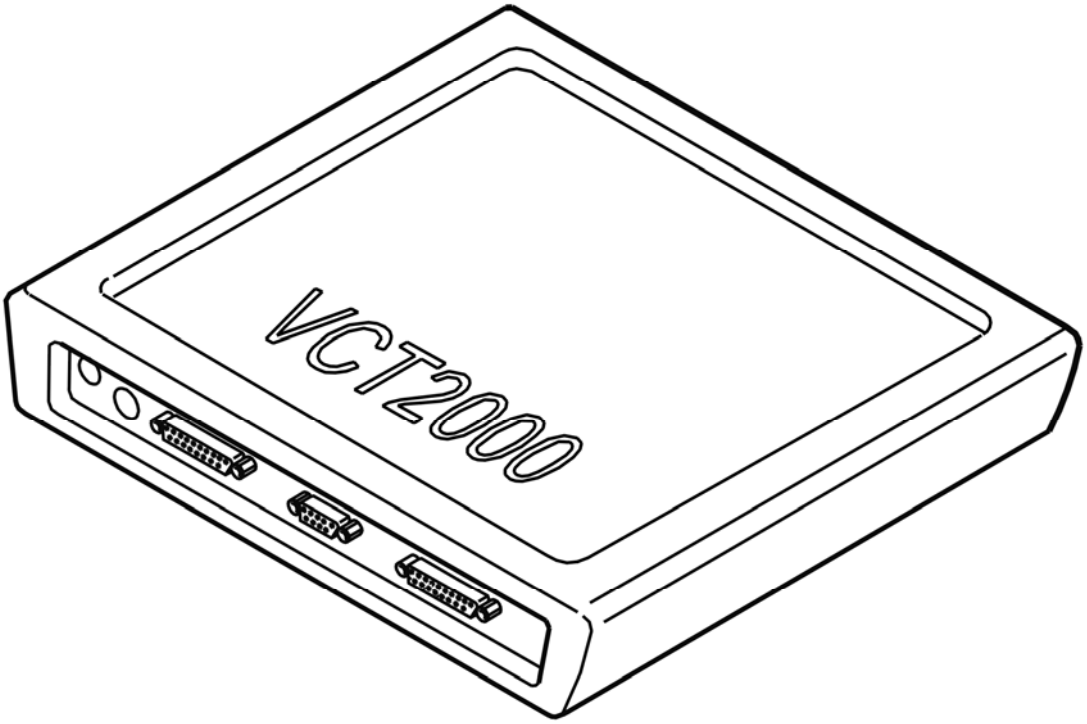

Fig. 243: Identifying VCT2000 Diagnostic Tool Symbol In VIDA
Courtesy of VOLVO CARS CORPORATION

Is the function OK?

- **YES**

  VERIFIED: Troubleshooting has been completed.

- **NO**

  Refer to **INFORMATION**

ECM-P060300: INTERNAL CONTROL MODULE KEEP ALIVE MEMORY (KAM) ERROR. GENERAL FAILURE INFORMATION. NO SUB TYPE INFORMATION (B6324S5; 2011-2012)

DIAGNOSTIC TROUBLE CODE (DTC) INFORMATION ECM-P060300

see **DIAGNOSTIC TROUBLE CODE (DTC) INFORMATION ECM-P060300**

FAULT-TRACING

see **FAULT-TRACING**

ECM-P060300: INTERNAL MALFUNCTION IN CONTROL MODULE (KAM). GENERAL MALFUNCTION INFORMATION. NO INFORMATION ON MALFUNCTION TYPE (B8444S; 2005-2011)

DIAGNOSTIC TROUBLE CODE (DTC) INFORMATION ECM-P060300

Condition

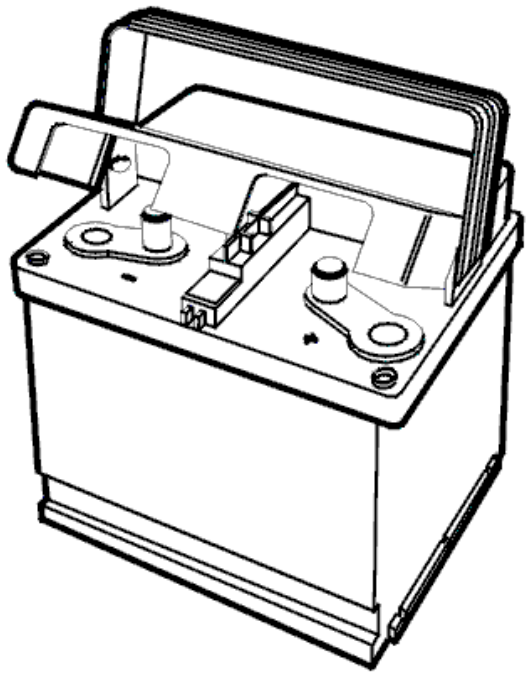

Fig. 244: Identifying Battery
Courtesy of VOLVO CARS CORPORATION

When ignition is turned on, 12 volt feed to the engine control module (ECM) is checked.

If voltage is missing, the diagnostic trouble code is generated.

The diagnostic trouble code can be diagnosed when the ignition is turned on.

Substitute Value

- Nothing.

Possible Source

- Damaged fuse for voltage feed.
- Open circuit on the voltage cable.

Fault symptom[s]

- Malfunction indicator lamp (MIL) lit.

FAULT-TRACING INFORMATION ECM-P060300

CHECKING THE COMPONENTS AND WIRING

Fig. 245: Identifying Ignition In Off Position
Courtesy of VOLVO CARS CORPORATION

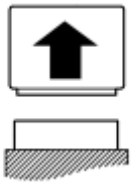

Fig. 246: Identifying Microphone Connectors
Courtesy of VOLVO CARS CORPORATION

- Ignition off.

  Check the cable between the Engine Control Module (ECM) #B54 (#C54) and battery for open circuit, contact resistance or oxidation.

  Remedy as necessary.

  Other information

  - see **CONNECTING THE BREAKOUT BOX**
  - see **SIGNAL SPECIFICATION, ENGINE CONTROL MODULE (ECM)**
  - see **ENGINE CONTROL MODULE (ECM), REPLACING**
  - see **CHECKING WIRING AND TERMINALS**

- **Continue**

  Refer to **VERIFICATION**

INFORMATION

FAULT-TRACING INFORMATION

The fault should have been detected and remedied. As this is not the case fault-tracing has failed.

Exit fault-tracing for this diagnostic trouble code (DTC) or make another attempt.

VERIFICATION

VERIFICATION

HINT: After carrying out the repair, check that the fault has been remedied.

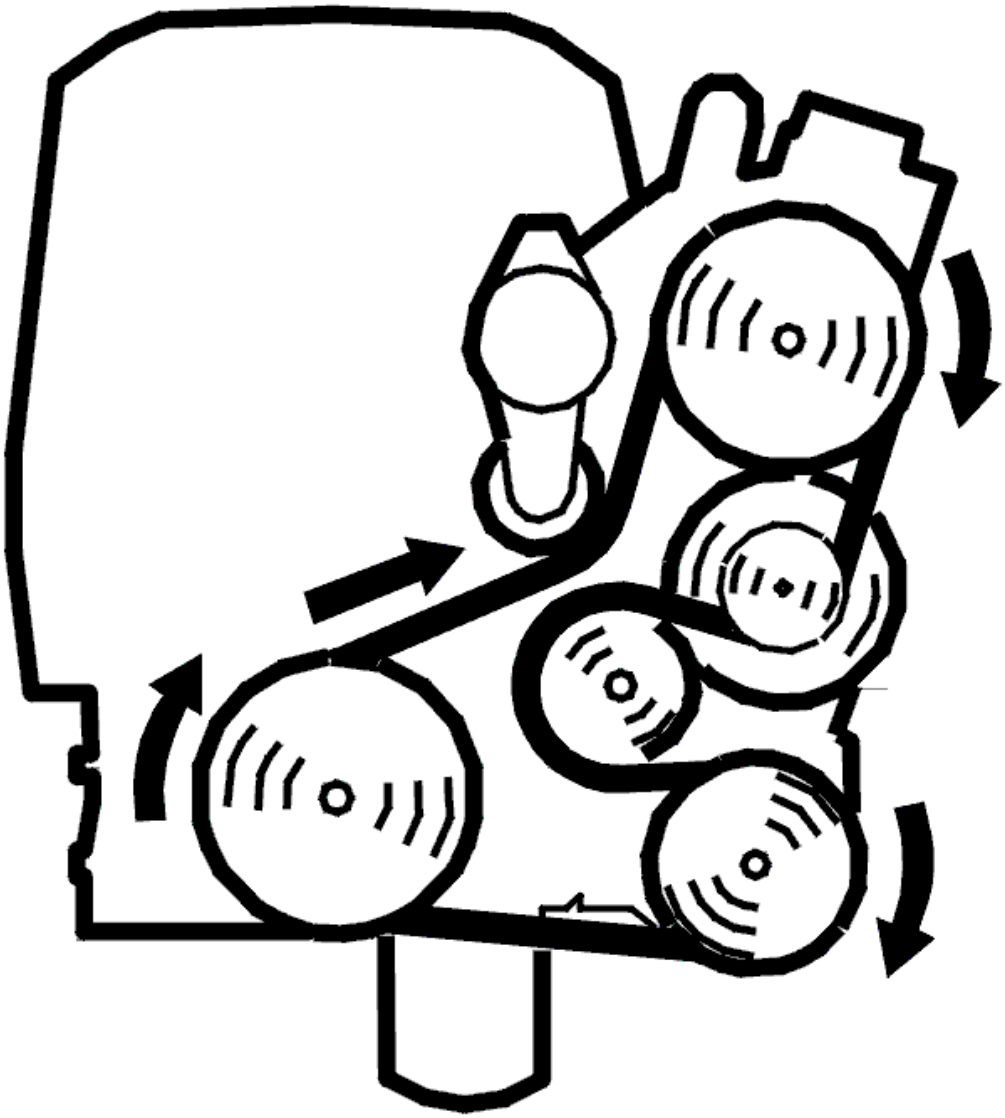

Fig. 247: Belt Routing / Engine Idling - Volvo
Courtesy of VOLVO CARS CORPORATION

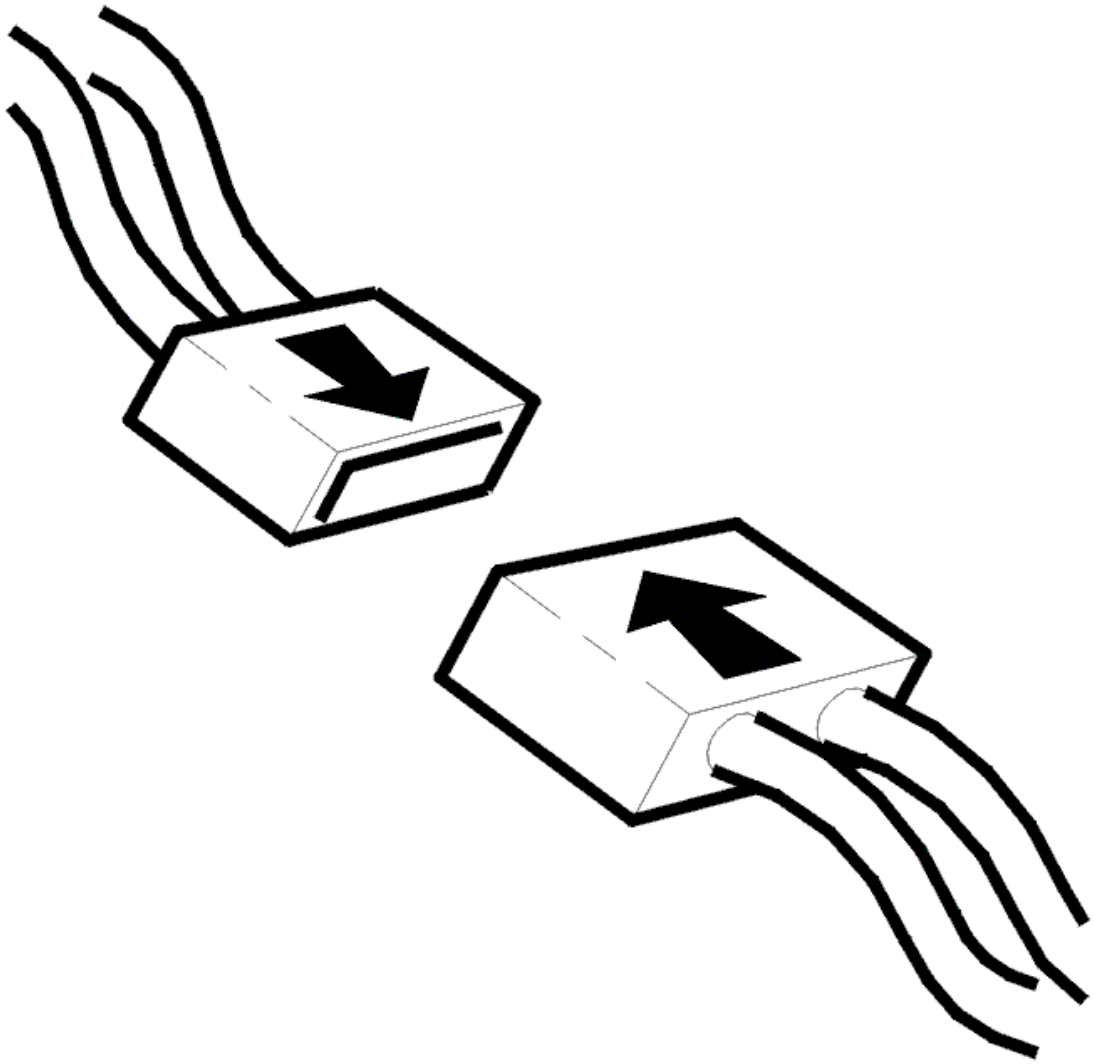

Fig. 248: Connecting Connector
Courtesy of VOLVO CARS CORPORATION

- Ignition off
- Reinstall the connectors, components etc.
- Start the engine.

  Read off the battery voltage.

  Check the battery voltage, battery voltage shall be 13.5 V-14 V.

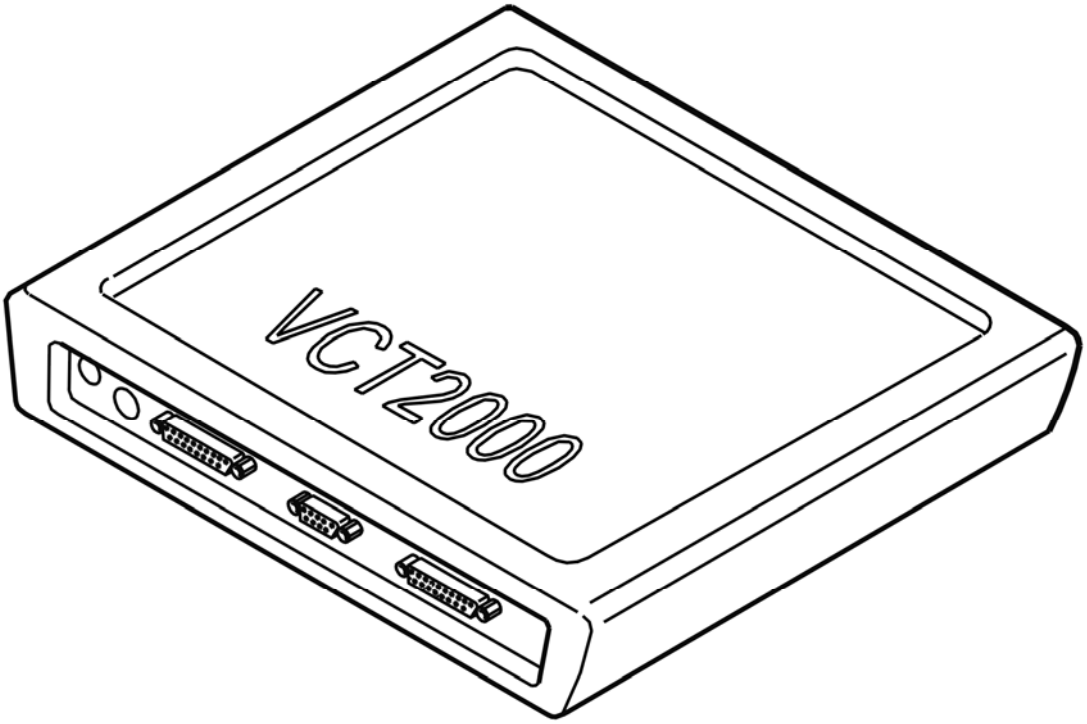

Fig. 249: Identifying VCT2000 Diagnostic Tool Symbol In VIDA
Courtesy of VOLVO CARS CORPORATION

Is the function OK?

- **YES**

  VERIFIED: Troubleshooting has been completed.

- **NO**

  Refer to **INFORMATION**

ECM-P060661: CONTROL MODULE PROCESSOR. ALGORITHM BASED FAILURES. SIGNAL CALCULATION FAILURE (B6324S5; 2011-2012)

DIAGNOSTIC TROUBLE CODE (DTC) INFORMATION ECM-P060661

Condition

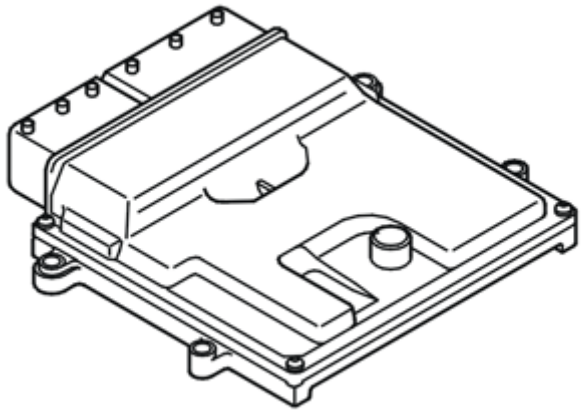

Fig. 250: Identifying Engine Control Module (ECM)
Courtesy of VOLVO CARS CORPORATION

The Engine control module (ECM) continuously monitors a number of internal signals through calculations and compares them. The aim is to ensure reliability during operation.

The diagnostic trouble code (DTC) is stored if the control module detects that:

- Internal checks give unacceptable results.

The control module's test for the diagnostic trouble code (DTC) starts in the event of:

- Engine running.

Substitute Value

- Various internal signals in the engine control module (ECM) are replaced with default values.

Possible Source

- Poorly charged battery or corroded connecting wiring.
- Damaged software in the engine control module (ECM).
- Damaged engine control module (ECM).

Fault symptom[s]

- Warning lights and chimes/Malfunction Indicator Light ("Check engine" light) indication/no indication
- Driving/Poor performance/lacks power
- Driving/Poor performance/lacks power/At take off
- Driving/Hesitates/surges/Unsure when/at all times
- Driving/Hesitates/surges/During acceleration

- Driving/Hesitates/surges/During deceleration
- Driving/Hesitates/surges/At steady speed

FAULT TRACING

CHECKING THE STATUS

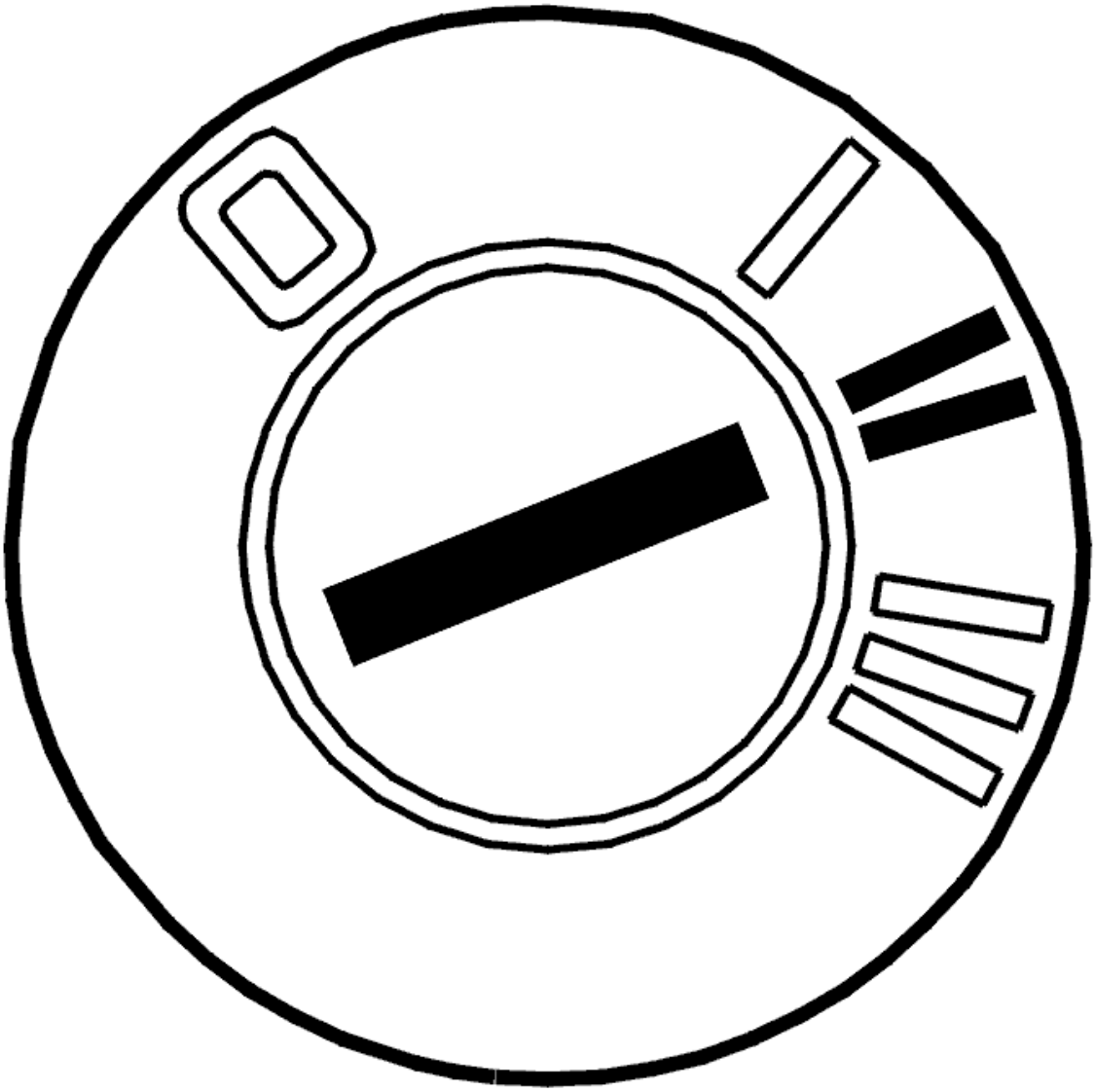

Fig. 251: Identifying Ignition ON
Courtesy of VOLVO CARS CORPORATION

- Engine idling.

  Read the diagnostic status and fault status for the diagnostic trouble code by selecting the diagnostic trouble code in the list.

Check if the malfunction is permanent or intermittent by reading off the diagnostic trouble code's status when the diagnostic status is "Implemented".

If the trouble status is "Malfunction found", this indicates that the malfunction is permanent. If the trouble status is "No malfunction found", this indicates that the malfunction is intermittent and not active right now.

NOTE: Trouble status cannot go from "Malfunction found" to "No malfunction found" in the same operating cycle.

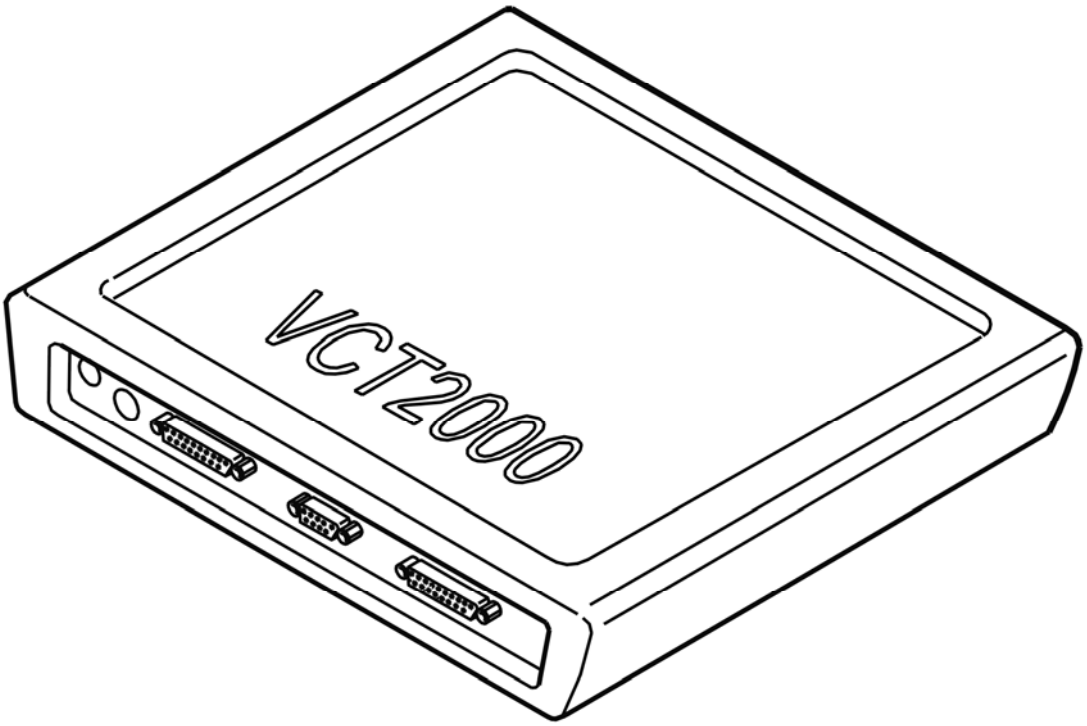

Fig. 252: Identifying VCT2000 Diagnostic Tool Symbol In VIDA
Courtesy of VOLVO CARS CORPORATION

- **Continue**

Refer to **CHECKING THE BATTERY AND CONNECTIONS**

REPLACING THE COMPONENT

The engine control module (ECM) has registered an internal fault.

If the fault is intermittent, it has been registered previously but is no longer present. Intermittent faults may be due to interference at start or may be a different type of fault that occurs on different occasions. The fault is evaluated depending on how it occurs.

Ensure that the software in the Engine control module (ECM) is correct by downloading it again.

If the fault recurs, replace the control module.

In the event of a permanent fault, replace the engine control module (ECM).

Remedy as necessary.

Other information

- see **ENGINE CONTROL MODULE (ECM)**

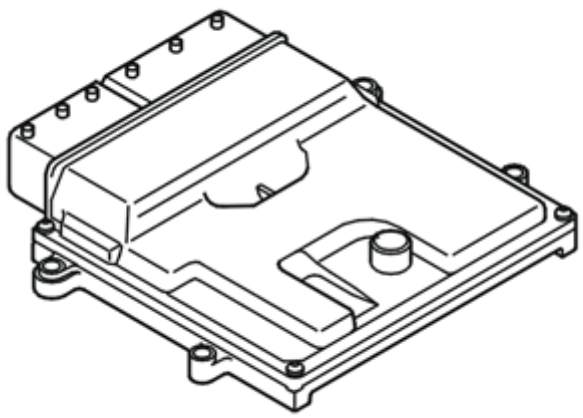

Fig. 253: Identifying Engine Control Module (ECM)
Courtesy of VOLVO CARS CORPORATION

- **Continue**

  Refer to **INFORMATION**

CHECKING THE BATTERY AND CONNECTIONS

Check the battery.

Check the battery terminals and the engine control module (ECM) connector. Check for contact resistance, play and oxidation.

- **Continue**

  Refer to **REPLACING THE COMPONENT**

INFORMATION

FAULT-TRACING INFORMATION

In case of this defect, troubleshooting is not followed by verification.

The information can be displayed again or the fault-tracing for this fault can be interrupted.

ECM-P060662: CONTROL MODULE PROCESSOR. ALGORITHM BASED FAILURES. SIGNAL COMPARE FAILURE (B6324S5; 2011-2012)

DIAGNOSTIC TROUBLE CODE (DTC) INFORMATION ECM-P060662

Condition

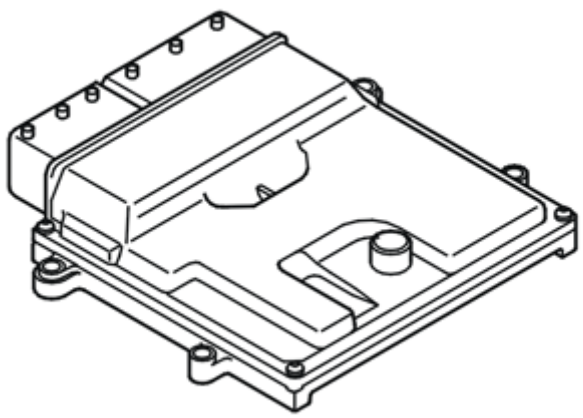

Fig. 254: Identifying Engine Control Module (ECM)
Courtesy of VOLVO CARS CORPORATION

The Engine control module (ECM) continuously monitors a number of internal signals through calculations and compares them. The aim is to ensure reliability during operation.

The diagnostic trouble code (DTC) is stored if the control module detects that:

- Internal checks give unacceptable results.

The control module's test for the diagnostic trouble code (DTC) starts in the event of:

- Engine running.

Substitute Value

- Various internal signals in the engine control module (ECM) are replaced with default values.

Possible Source

- Sequential fault related to throttle. Therefore fault-trace for another diagnostic trouble code (DTC).
- Poorly charged battery or corroded connecting wiring.
- Damaged software in the engine control module (ECM).
- Damaged engine control module (ECM).

Fault symptom[s]

- Warning lights and chimes/Malfunction Indicator Light ("Check engine" light) indication/no indication
- Driving/Poor performance/lacks power
- Driving/Poor performance/lacks power/At take off
- Driving/Hesitates/surges/Unsure when/at all times
- Driving/Hesitates/surges/During acceleration
- Driving/Hesitates/surges/During deceleration
- Driving/Hesitates/surges/At steady speed

FAULT TRACING

see **FAULT TRACING**

ECM-P060696: CONTROL MODULE PROCESSOR. COMPONENT FAILURES. COMPONENT INTERNAL FAILURE (B6324S5; 2011-2012)

DIAGNOSTIC TROUBLE CODE (DTC) INFORMATION ECM-P060696

Condition

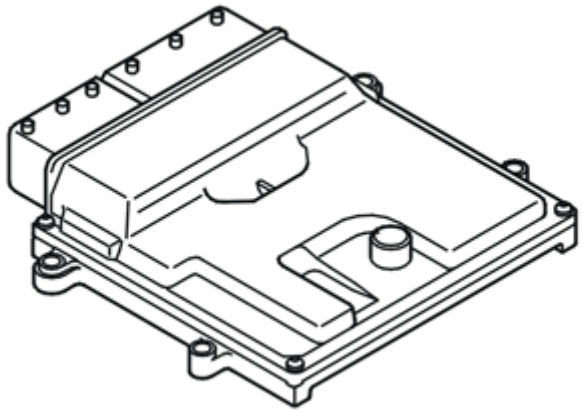

Fig. 255: Identifying Engine Control Module (ECM)
Courtesy of VOLVO CARS CORPORATION

The Engine control module (ECM) continuously monitors a number of internal signals through calculations and compares them. The aim is to ensure reliability during operation.

The diagnostic trouble code (DTC) is stored if the control module detects that:

- Internal checks give unacceptable results.

The control module's test for the diagnostic trouble code (DTC) starts in the event of:

- Ignition on.

Substitute Value

- Various internal signals in the engine control module (ECM) are replaced with default values.

Possible Source

- Poorly charged battery or corroded connecting wiring.
- Damaged software in the engine control module (ECM).
- Damaged engine control module (ECM).

Fault symptom[s]

- Warning lights and chimes/Malfunction Indicator Light ("Check engine" light) indication/no indication
- Driving/Poor performance/lacks power
- Driving/Poor performance/lacks power/At take off
- Driving/Hesitates/surges/Unsure when/at all times
- Driving/Hesitates/surges/During acceleration
- Driving/Hesitates/surges/During deceleration
- Driving/Hesitates/surges/At steady speed

FAULT TRACING

CHECKING THE STATUS

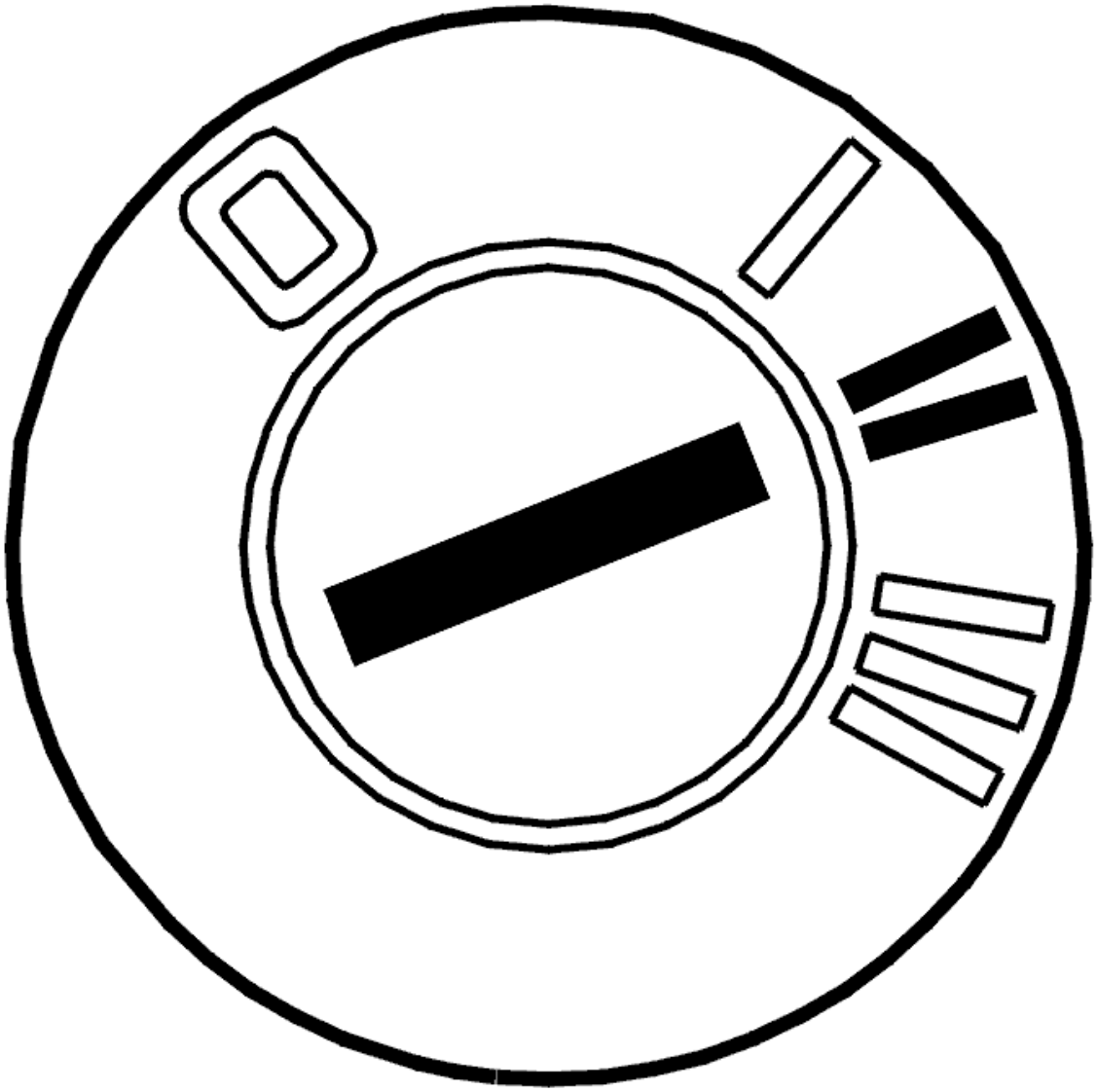

Fig. 256: Identifying Ignition ON
Courtesy of VOLVO CARS CORPORATION

- Ignition on, wait for at least 15 seconds to perform the diagnosis.

  Read the diagnostic status and fault status for the diagnostic trouble code by selecting the diagnostic trouble code in the list.

  Check if the malfunction is permanent or intermittent by reading off the diagnostic trouble code's status when the diagnostic status is "Implemented".

  If the trouble status is "Malfunction found", this indicates that the malfunction is permanent. If the trouble status is "No malfunction found", this indicates that the malfunction is intermittent and not active right now.

NOTE: Trouble status cannot go from "Malfunction found" to "No malfunction

found" in the same operating cycle.

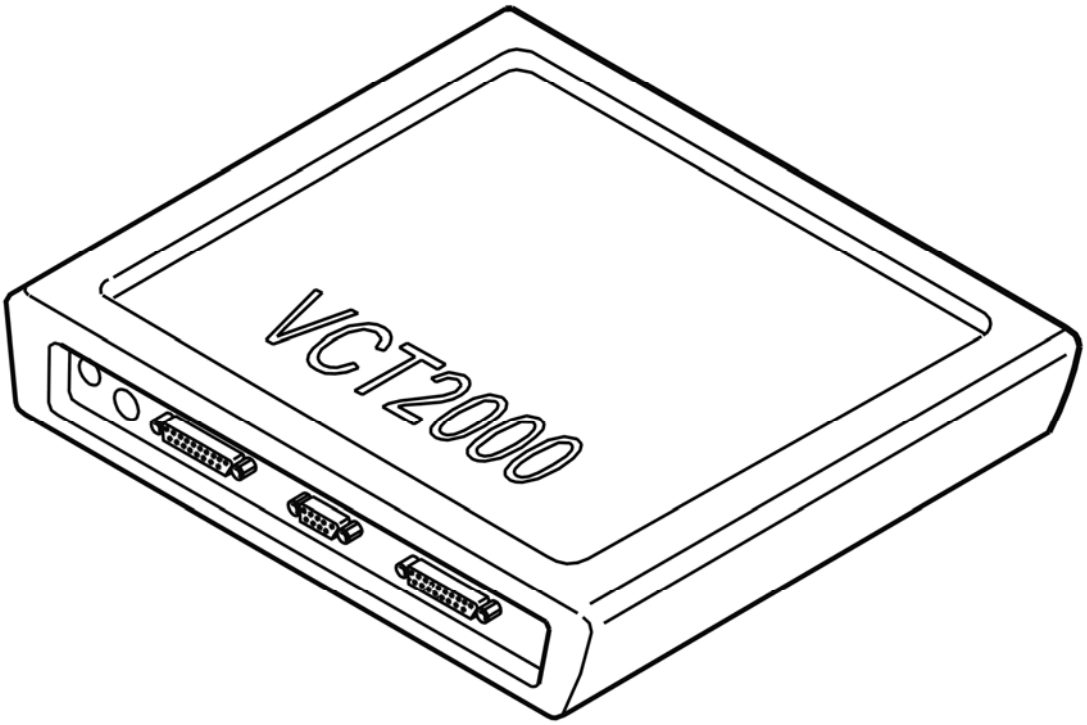

Fig. 257: Identifying VCT2000 Diagnostic Tool Symbol In VIDA
Courtesy of VOLVO CARS CORPORATION

- **Continue**

  Refer to **REPLACING THE COMPONENT**

REPLACING THE COMPONENT

The engine control module (ECM) has registered an internal fault.

If the fault is intermittent, it has been registered previously but no longer remains. Intermittent faults can be due to disruption when the engine control module (ECM) started or can be another type of fault that may recur at different instances. The fault is assessed on a case by case basis. If the fault recurs, replace the engine control module (ECM).

In the event of a permanent fault, replace the engine control module (ECM).

Remedy as necessary.

Other information

- see **ENGINE CONTROL MODULE (ECM)**

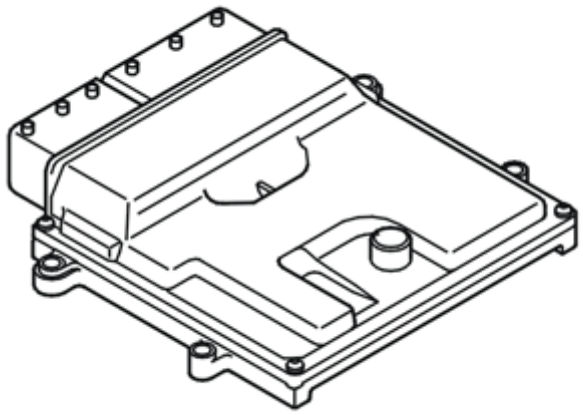

Fig. 258: Identifying Engine Control Module (ECM)
Courtesy of VOLVO CARS CORPORATION

- **Continue**

  Refer to **INFORMATION**

INFORMATION

FAULT-TRACING INFORMATION

In case of this defect, troubleshooting is not followed by verification.

The information can be displayed again or the fault-tracing for this fault can be interrupted.

ECM-P060700: CONTROL MODULE PERFORMANCE. GENERAL FAULT INFORMATION. NO INFORMATION ABOUT FAULT TYPE (B8444S; 2005-2011)

DIAGNOSTIC TROUBLE CODE (DTC) INFORMATION ECM-P060700

Condition

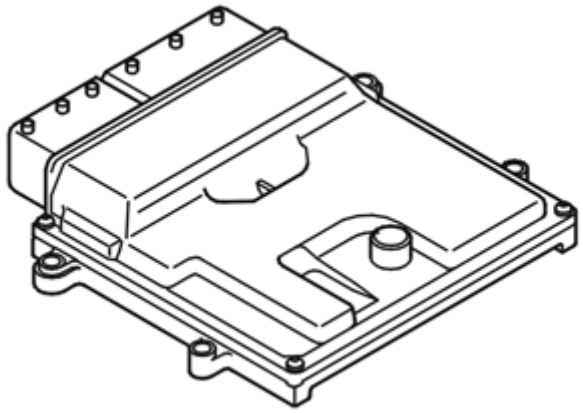

Fig. 259: Identifying Engine Control Module (ECM)
Courtesy of VOLVO CARS CORPORATION

The diagnostic trouble code (DTC) is stored if the engine control module (ECM) registers an internal fault

The diagnostic trouble code can be diagnosed when the ignition is on.

Substitute Value

- Various internal signals in the engine control module (ECM) are replaced with default values.
- Cruise control turned off when the fault is active.
- The electronic throttle module (ETM) follows the pulse width modulated accelerator pedal signal directly.

Possible Source

- Poorly charged battery or corroded connecting wiring.
- Damaged software in the engine control module (ECM).
- Damaged engine control module (ECM).

Fault symptom[s]

- Malfunction indicator lamp (MIL) lit
- Engine misfires.
- Cruise control does not function at all.

FAULT TRACING

see **FAULT TRACING**

ECM-P060704: CONTROL MODULE PERFORMANCE. GENERAL FAILURE

INFORMATION. SYSTEM INTERNAL FAILURES (B6324S; 2007-2010)

DIAGNOSTIC TROUBLE CODE (DTC) INFORMATION

Condition

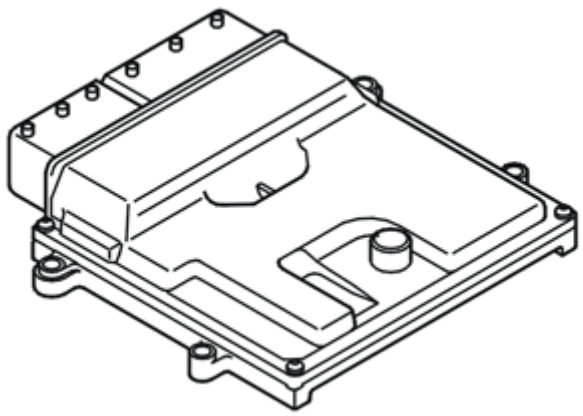

Fig. 260: Identifying Engine Control Module (ECM)
Courtesy of VOLVO CARS CORPORATION

The diagnostic trouble code (DTC) is stored if the engine control module (ECM) registers an internal fault

The diagnostic trouble code can be diagnosed when the ignition is on.

Substitute Value

- Various internal signals in the engine control module (ECM) are replaced with default values.

Possible Source

- Poorly charged battery or corroded connecting wiring.
- Damaged software in the engine control module (ECM).
- Damaged engine control module (ECM).

Fault symptom[s]

- Malfunction indicator lamp (MIL) lit

FAULT TRACING

see **FAULT TRACING**

ECM-P060704: CONTROL MODULE PERFORMANCE. GENERAL FAILURE INFORMATION. SYSTEM INTERNAL FAILURES (B6324S5; 2011-2012)

DIAGNOSTIC TROUBLE CODE (DTC) INFORMATION

see **DIAGNOSTIC TROUBLE CODE (DTC) INFORMATION**

FAULT TRACING

see **FAULT TRACING**

ECM-P060C68 INTERNAL CONTROL MODULE MAIN PROCESSOR PERFORMANCE. ALGORITHM BASED FAILURES. EVENT INFORMATION (B6324S5; 2011-2012)

DIAGNOSTIC TROUBLE CODE (DTC) INFORMATION ECM-P060C68

Condition

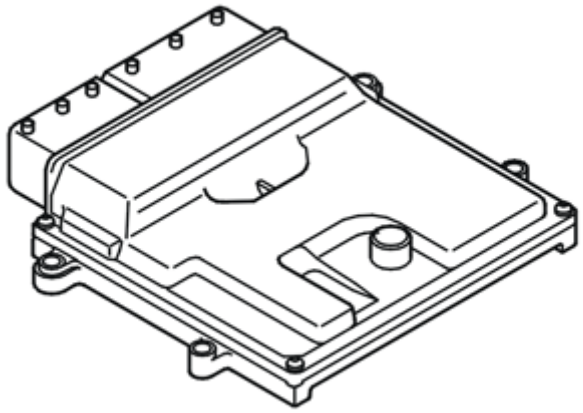

Fig. 261: Identifying Engine Control Module (ECM)
Courtesy of VOLVO CARS CORPORATION

NOTE: **This diagnostic trouble code (DTC) status is an event controlled diagnostic trouble code (DTC). An event controlled diagnostic trouble code (DTC) does not mean that there is a fault in the control module when it is active, but is designed as information.**

The Engine control module (ECM) continuously monitors a number of internal signals through calculations and compares them. The aim is to ensure reliability during operation.

The diagnostic trouble code (DTC) is stored if the control module detects that:

- Internal checks give unacceptable results.

The control module's test for the diagnostic trouble code (DTC) starts in the event of:

- Engine running.

Substitute Value

- None.

Possible Source

- This diagnostic trouble code (DTC) is not caused by a fault that needs to be remedied.

Fault symptom[s]

- None.

FAULT-TRACING INFORMATION

see **FAULT-TRACING INFORMATION**

ECM-P061500: STARTER RELAY CIRCUIT. GENERAL FAULT INFORMATION. TYPE OF FAULT NOT SPECIFIED. (B8444S; 2005-2011)

DIAGNOSTIC TROUBLE CODE (DTC) INFORMATION ECM-P061500

Condition

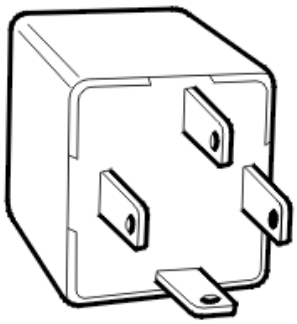

Fig. 262: Identifying Main Relay
Courtesy of VOLVO CARS CORPORATION

The engine control module (ECM) checks the signal of the starter motor relay coil.

The diagnostic trouble code is generated if the engine control module (ECM) detects that there is no signal from the starter relay.

Substitute Value

- Nothing.

Possible Source

- Open-circuit on the signal cable.

Fault symptom[s]

- The starter motor does not operate.

TROUBLESHOOTING ECM-P061500

CHECKING COMPONENTS AND WIRING

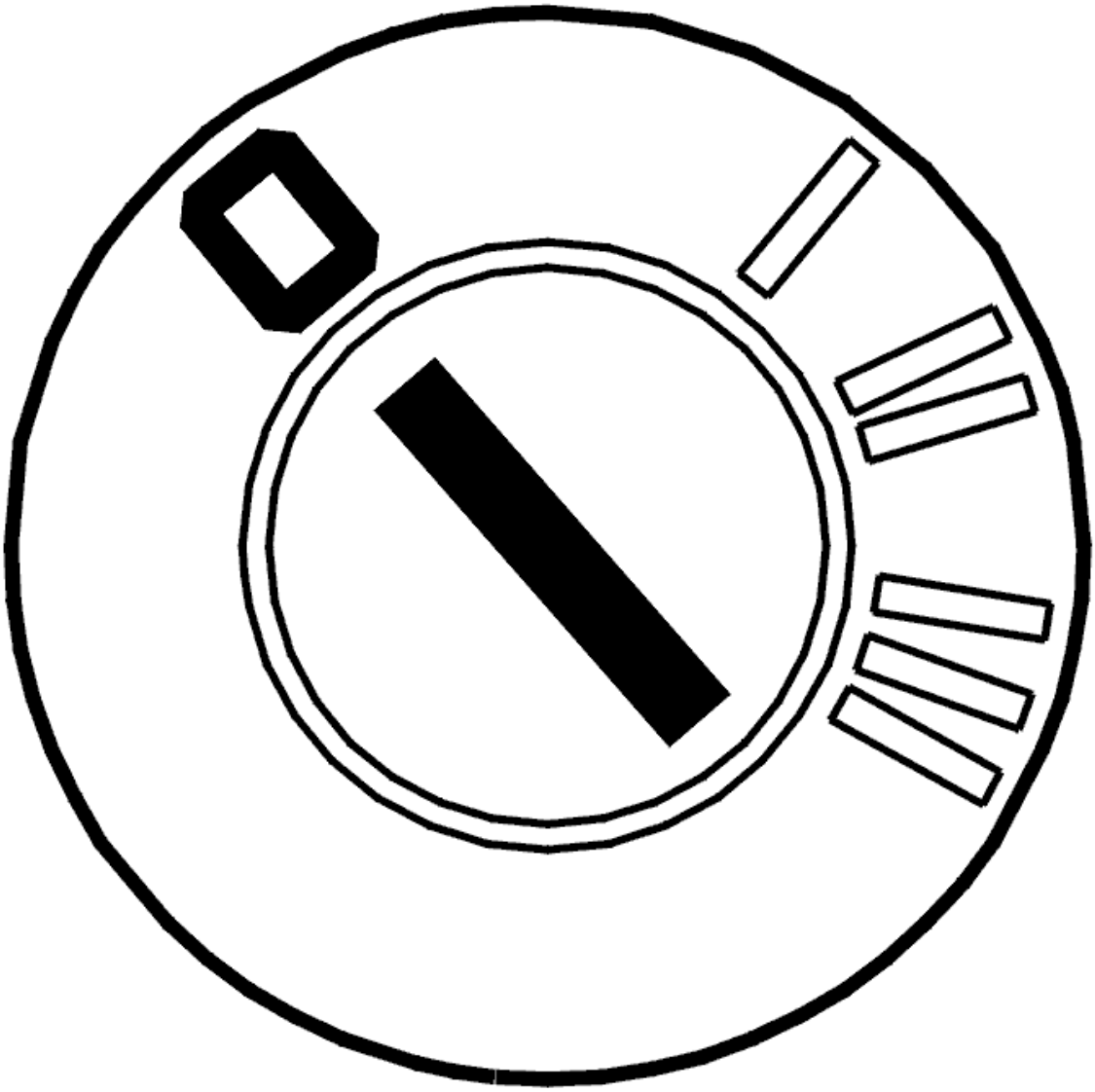

Fig. 263: Identifying Ignition OFF
Courtesy of VOLVO CARS CORPORATION

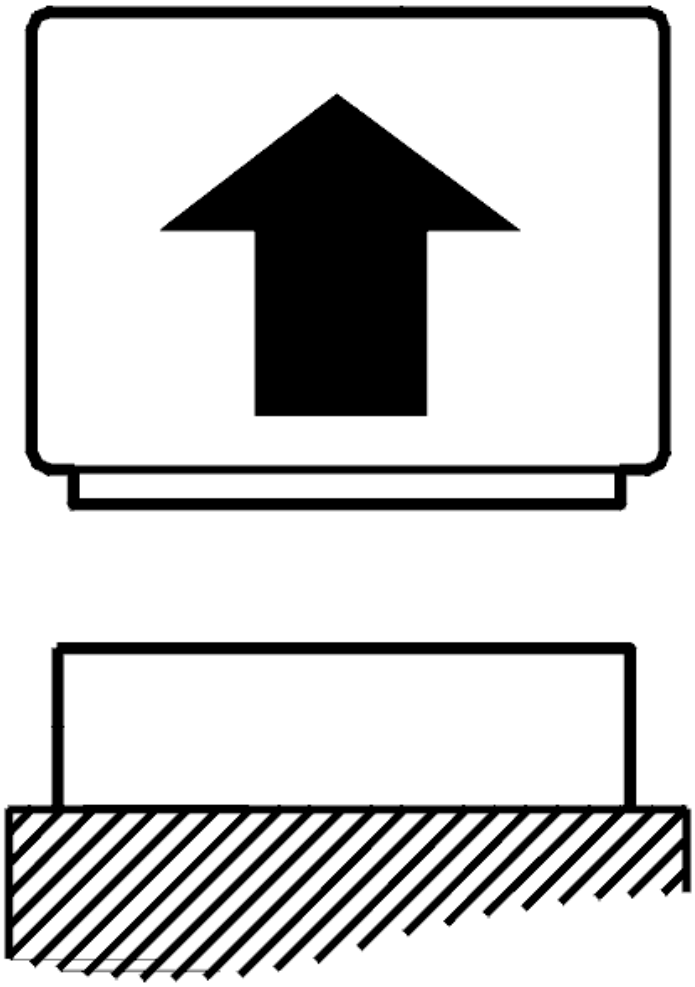

Fig. 264: Disconnecting Connector
Courtesy of VOLVO CARS CORPORATION

- Ignition off

  Disconnect the engine control module (ECM).

  Check the signal cables for start relay for open circuit to ground.

  Measure between:

  - Control module #B11 (#C11) and start relay.
  - Control module #B51 (#C51) and start relay.

  Remedy as necessary.

Other information

- see **CONNECTING THE BREAKOUT BOX**
- see **SIGNAL SPECIFICATION, ENGINE CONTROL MODULE (ECM)**
- see **LOCATION OF COMPONENTS, ENGINE COMPARTMENT**
- see **COMPONENT SPECIFICATIONS**
- see **CHECKING WIRING AND TERMINALS**

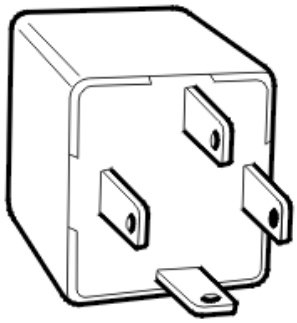

Fig. 265: Identifying Main Relay
Courtesy of VOLVO CARS CORPORATION

- **Continue**

  Refer to **VERIFICATION**

VERIFICATION

VERIFICATION

HINT: After carrying out the repair, check that the fault has been remedied.

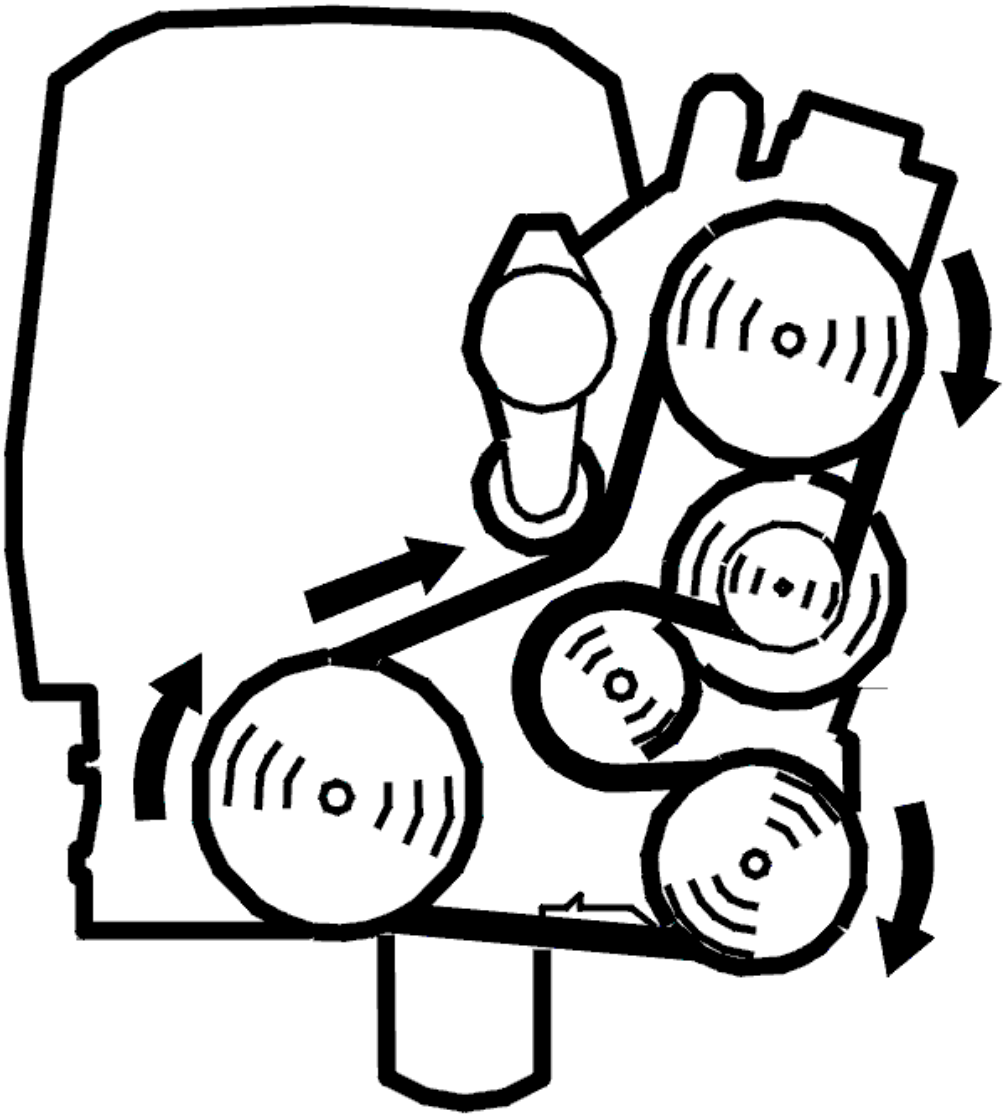

Fig. 266: Belt Routing / Engine Idling - Volvo
Courtesy of VOLVO CARS CORPORATION

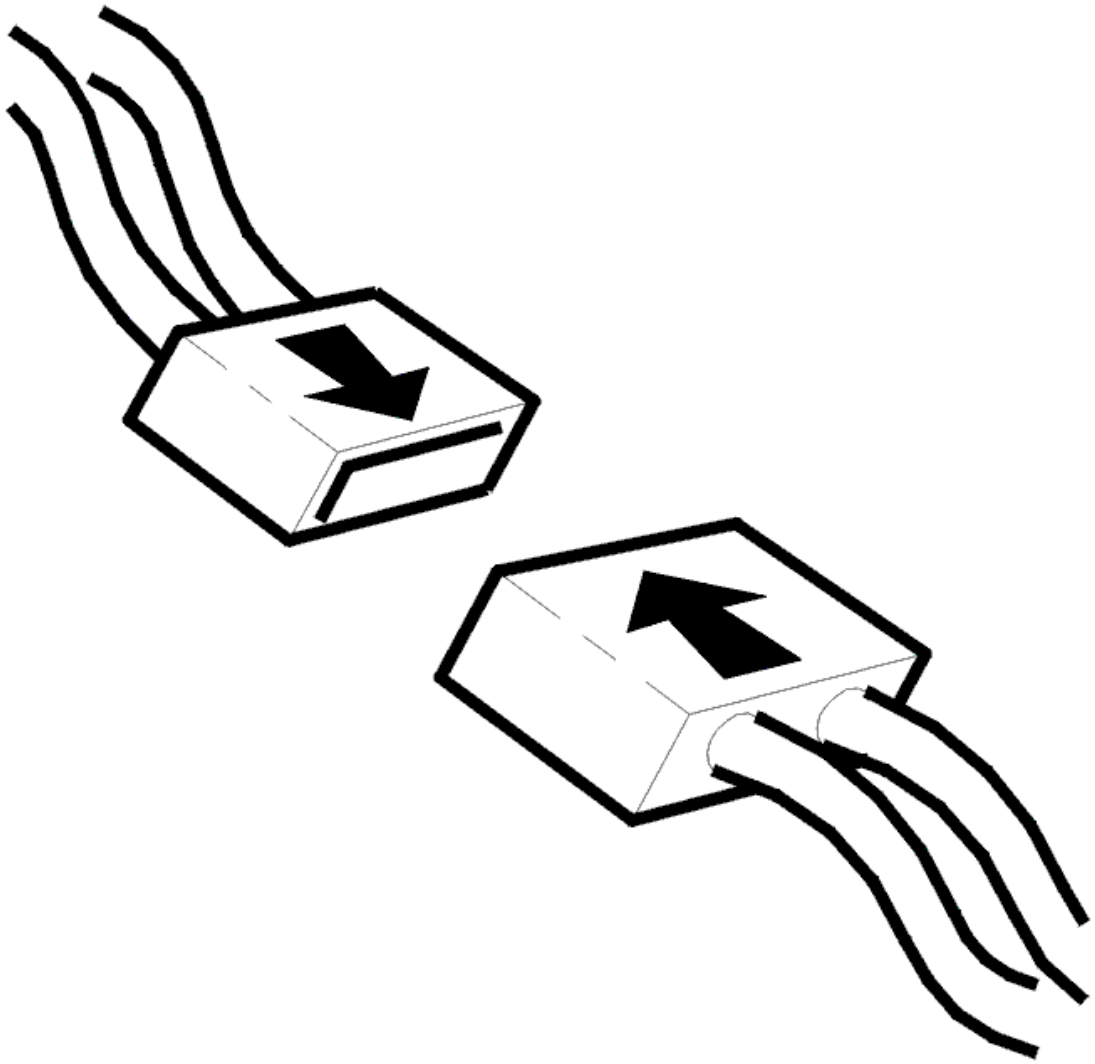

Fig. 267: Connecting Connector
Courtesy of VOLVO CARS CORPORATION

- Ignition off
- Reconnect the connectors, components, etc.
- Run the starter motor/start the engine.
- Allow the engine to idle if it starts.
- Read the diagnostic status and fault status for the diagnostic trouble code by selecting the diagnostic trouble code in the list.

  Check the fault status for the diagnostic trouble code when the scan is "Implemented". When the function is correct the fault status should be "No fault found" when the scan is implemented.

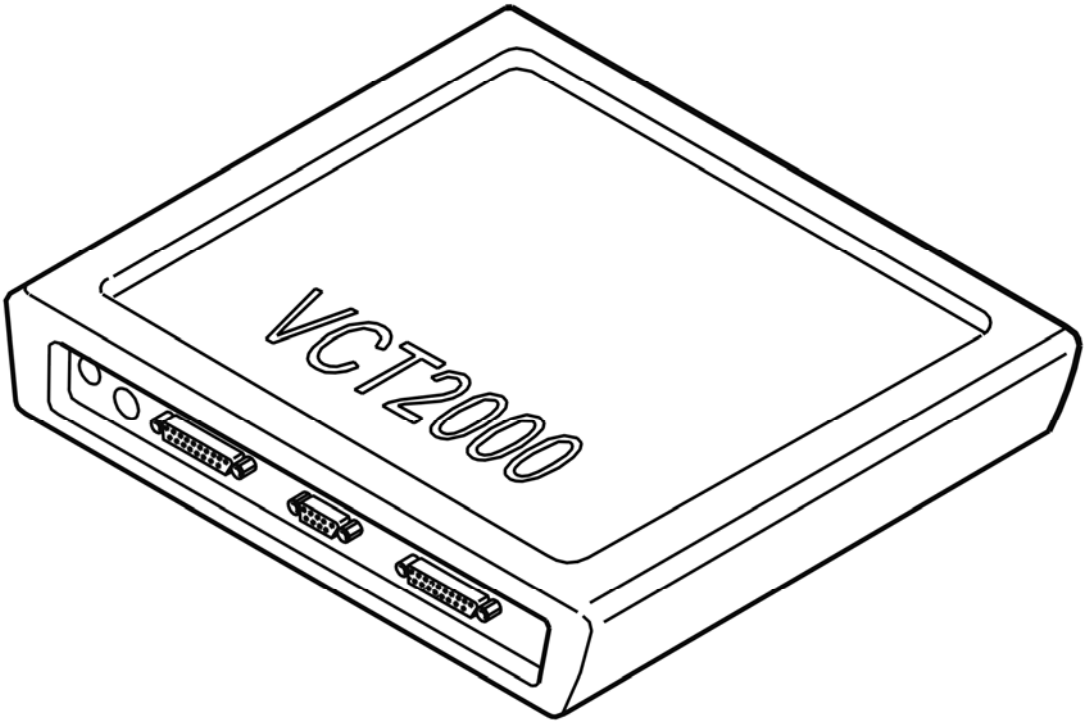

Fig. 268: Identifying VCT2000 Diagnostic Tool Symbol In VIDA
Courtesy of VOLVO CARS CORPORATION

Is the function OK?

- **YES**

  VERIFIED: Troubleshooting has been completed.

- **NO**

  Refer to **INFORMATION**

INFORMATION

FAULT-TRACING INFORMATION

The fault should have been detected and remedied. As this is not the case fault-tracing has failed.

Exit fault-tracing for this diagnostic trouble code (DTC) or make another attempt.

ECM-P061511: STARTER RELAY CIRCUIT. GENERAL ELECTRICAL FAILURES. CIRCUIT SHORT TO GROUND (B6324S; 2007-2010)

DIAGNOSTIC TROUBLE CODE (DTC) INFORMATION ECM-P061511

Condition

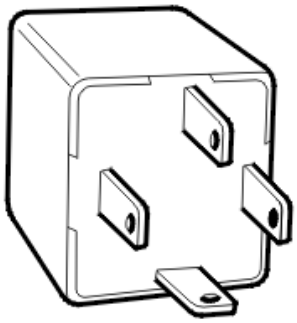

Fig. 269: Identifying Main Relay
Courtesy of VOLVO CARS CORPORATION

The engine control module (ECM) checks the signal of the starter motor relay coil. The diagnostic trouble code (DTC) is stored if the engine control module (ECM) detects that the signal is low despite the ignition switch being in position III (start position).

The diagnostic trouble code can be diagnosed when the engine is started.

Substitute Value

- Nothing.

Possible Source

- The signal cable is short-circuited to ground.
- Open-circuit on the signal cable.
- Damaged starter motor relay.
- Open-circuit on the power supply to the starter motor.

Fault symptom[s]

- The starter motor does not operate.

FAULT-TRACING

CHECKING COMPONENTS AND WIRING

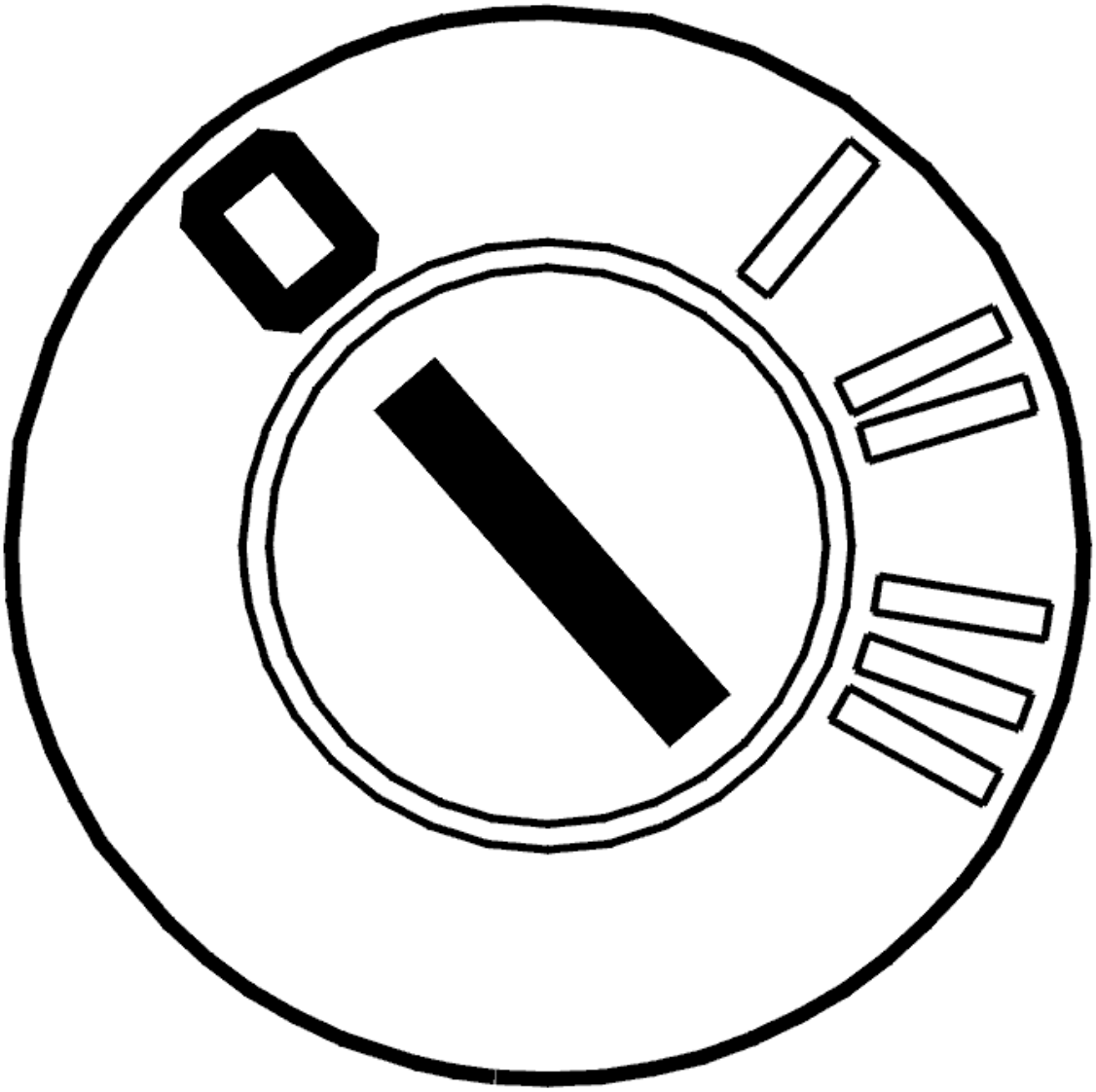

Fig. 270: Identifying Ignition OFF
Courtesy of VOLVO CARS CORPORATION

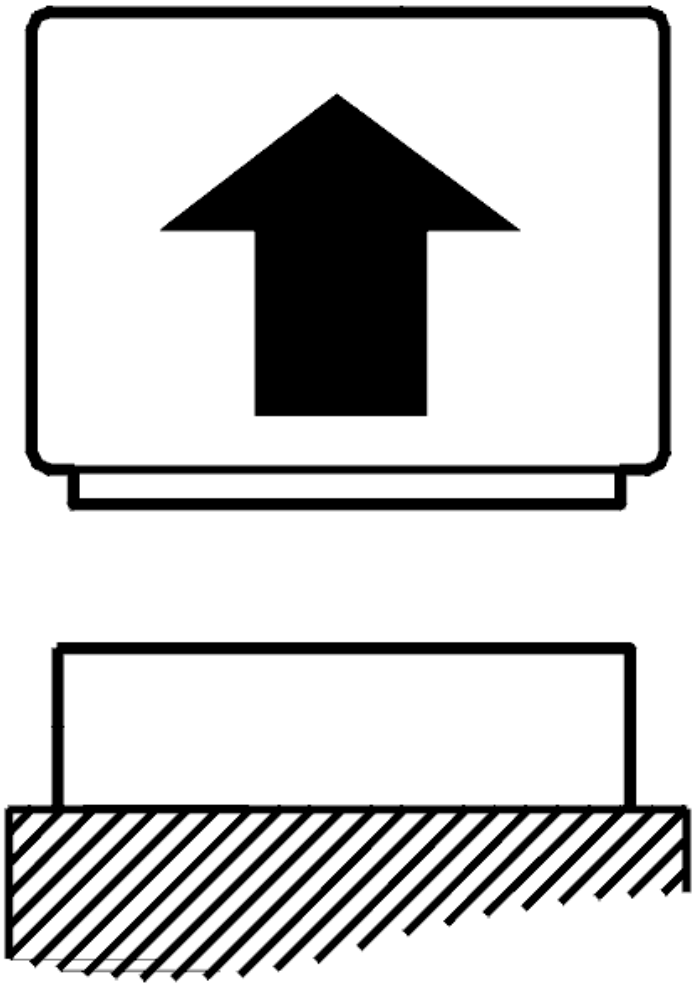

Fig. 271: Disconnecting Connector
Courtesy of VOLVO CARS CORPORATION

- Ignition off

  Disconnect the engine control module (ECM).

  Check the signal wiring for the starter relay. Check for an open-circuit. Check for a short-circuit to ground.

  Measure between:

  - Engine control module (ECM) #B11 (#C11) and starter relay.
  - Engine control module (ECM) #B51 (#C51) and starter relay.

  Check the supply cable from the starter relay to the starter motor. Check for an open-circuit.

Remedy as necessary.

Other information

- see **CONNECTING THE BREAKOUT BOX**
- see **SIGNAL SPECIFICATION**
- see **COMPONENT SPECIFICATIONS**
- see **LOCATION OF COMPONENTS**
- see **CHECKING WIRING AND TERMINALS**

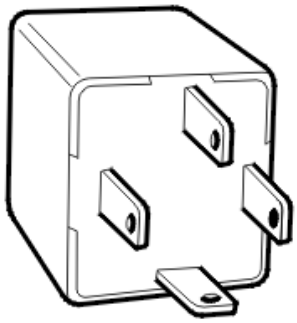

Fig. 272: Identifying Main Relay
Courtesy of VOLVO CARS CORPORATION

- **Continue**

  Refer to **VERIFICATION**

INFORMATION

FAULT-TRACING INFORMATION

The fault should have been detected and remedied. As this is not the case fault-tracing has failed.

Exit fault-tracing for this diagnostic trouble code (DTC) or make another attempt.

VERIFICATION

VERIFICATION

HINT: After carrying out the repair, check that the fault has been remedied.

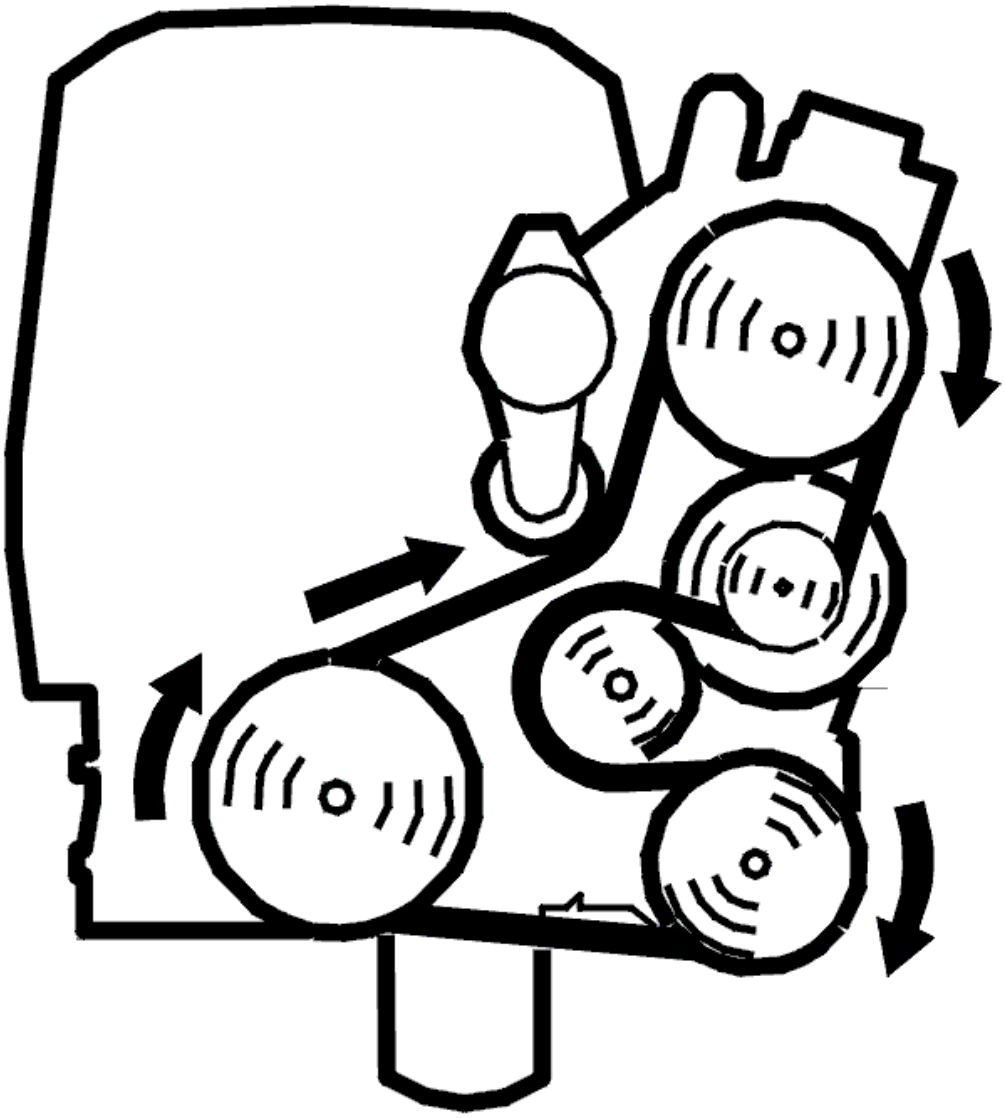

Fig. 273: Belt Routing / Engine Idling - Volvo
Courtesy of VOLVO CARS CORPORATION

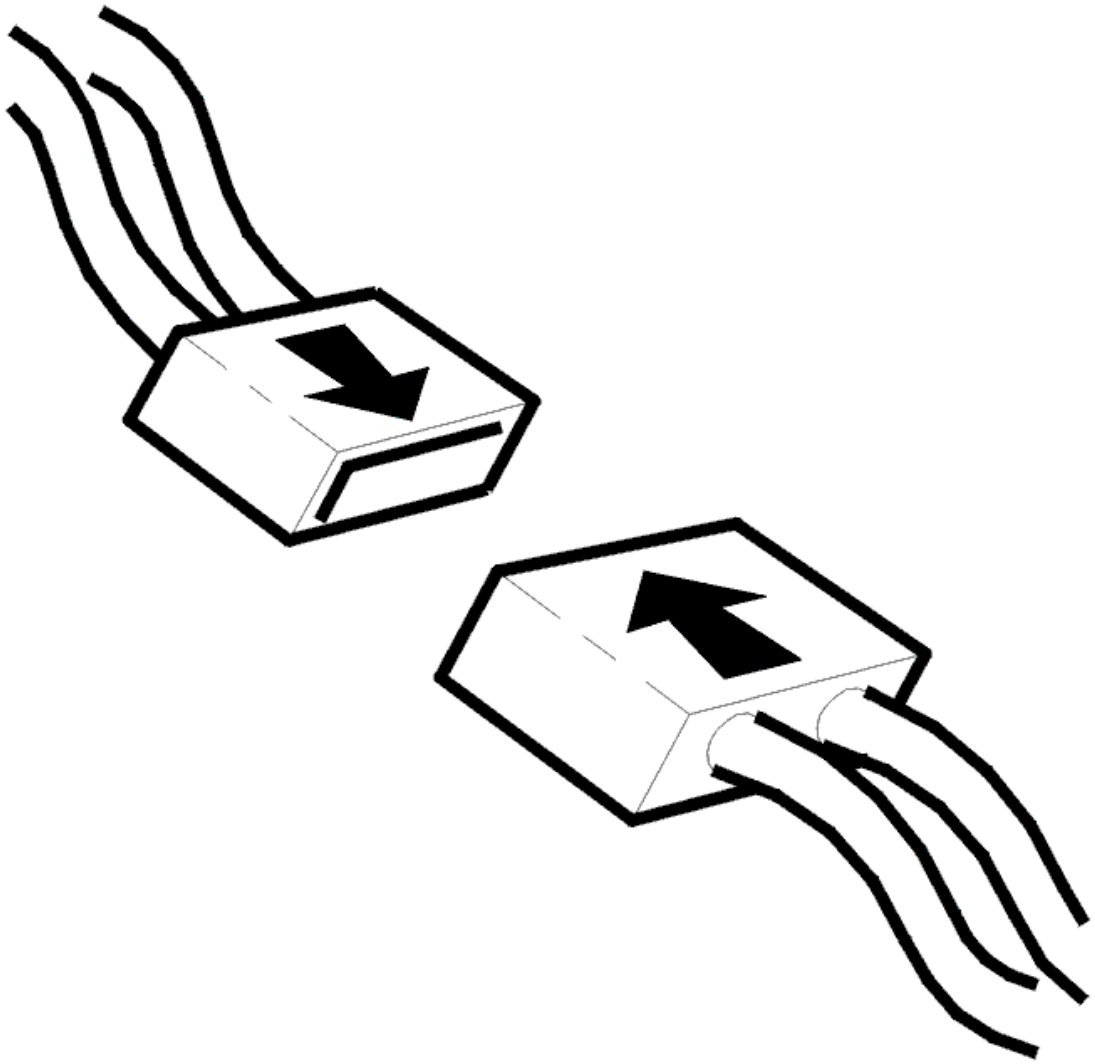

Fig. 274: Connecting Connector
Courtesy of VOLVO CARS CORPORATION

- Ignition off
- Reconnect the connectors, components, etc.
- Run the starter motor/start the engine.
- Allow the engine to idle if it starts.
- Read the diagnostic status and fault status for the diagnostic trouble code by selecting the diagnostic trouble code in the list.

  Check the fault status for the diagnostic trouble code when the scan is "Implemented". When the function is correct the fault status should be "No fault found" when the scan is implemented.

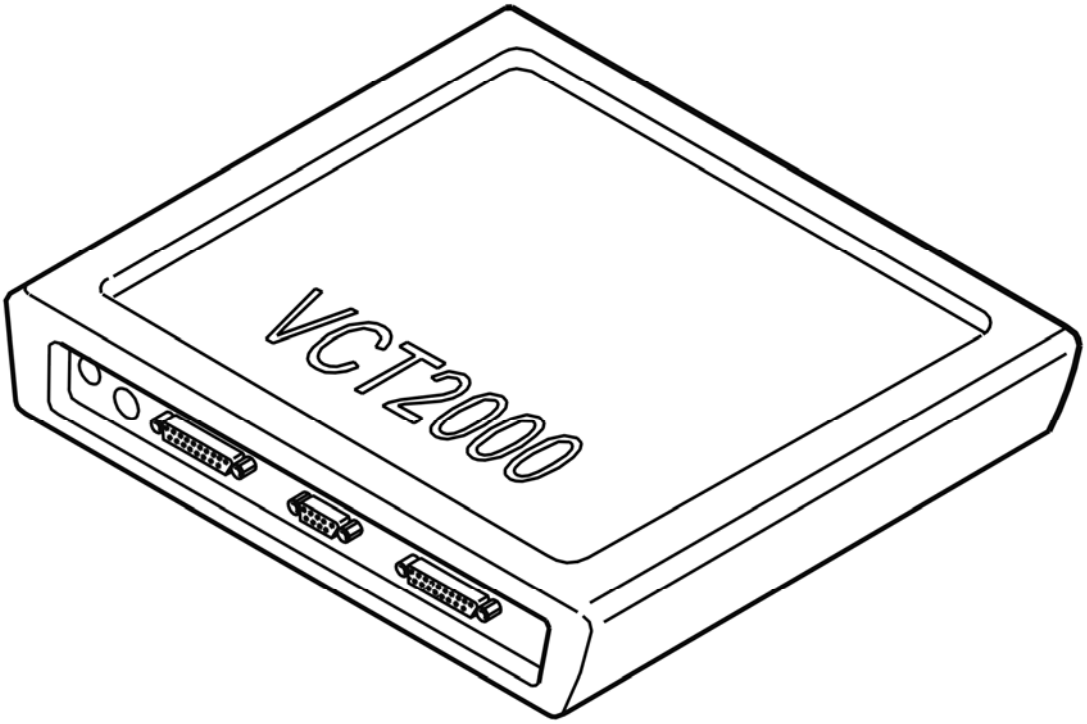

Fig. 275: Identifying VCT2000 Diagnostic Tool Symbol In VIDA
Courtesy of VOLVO CARS CORPORATION

Is the function OK?

- **YES**

  VERIFIED: Troubleshooting has been completed.

- **NO**

  Refer to **INFORMATION**

ECM-P061511: STARTER RELAY CIRCUIT. GENERAL ELECTRICAL FAILURES. CIRCUIT SHORT TO GROUND (B6324S5; 2011-2012)

DIAGNOSTIC TROUBLE CODE (DTC) INFORMATION ECM-P061511

see **DIAGNOSTIC TROUBLE CODE (DTC) INFORMATION ECM-P061511**

FAULT-TRACING

see **FAULT-TRACING**

ECM-P061512: STARTER RELAY CIRCUIT. GENERAL ELECTRICAL FAILURES. CIRCUIT SHORT TO BATTERY (B6324S; 2007-2010)

DIAGNOSTIC TROUBLE CODE (DTC) INFORMATION ECM-P061512

Condition

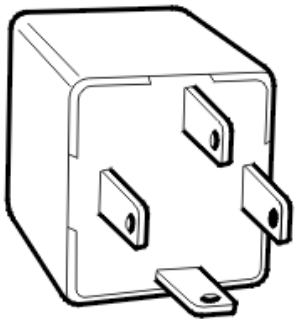

Fig. 276: Identifying Main Relay
Courtesy of VOLVO CARS CORPORATION

The engine control module (ECM) checks the signal of the starter motor relay coil. The diagnostic trouble code (DTC) is stored if the engine control module (ECM) detects that the signal is high despite the ignition switch being in position II (ignition position).

The diagnostic trouble code can be diagnosed when the ignition is on.

Substitute Value

- Nothing.

Possible Source

- The signal cable is short-circuited to voltage.
- Damaged starter motor relay.

Fault symptom[s]

- Nothing

FAULT-TRACING

CHECKING COMPONENTS AND WIRING

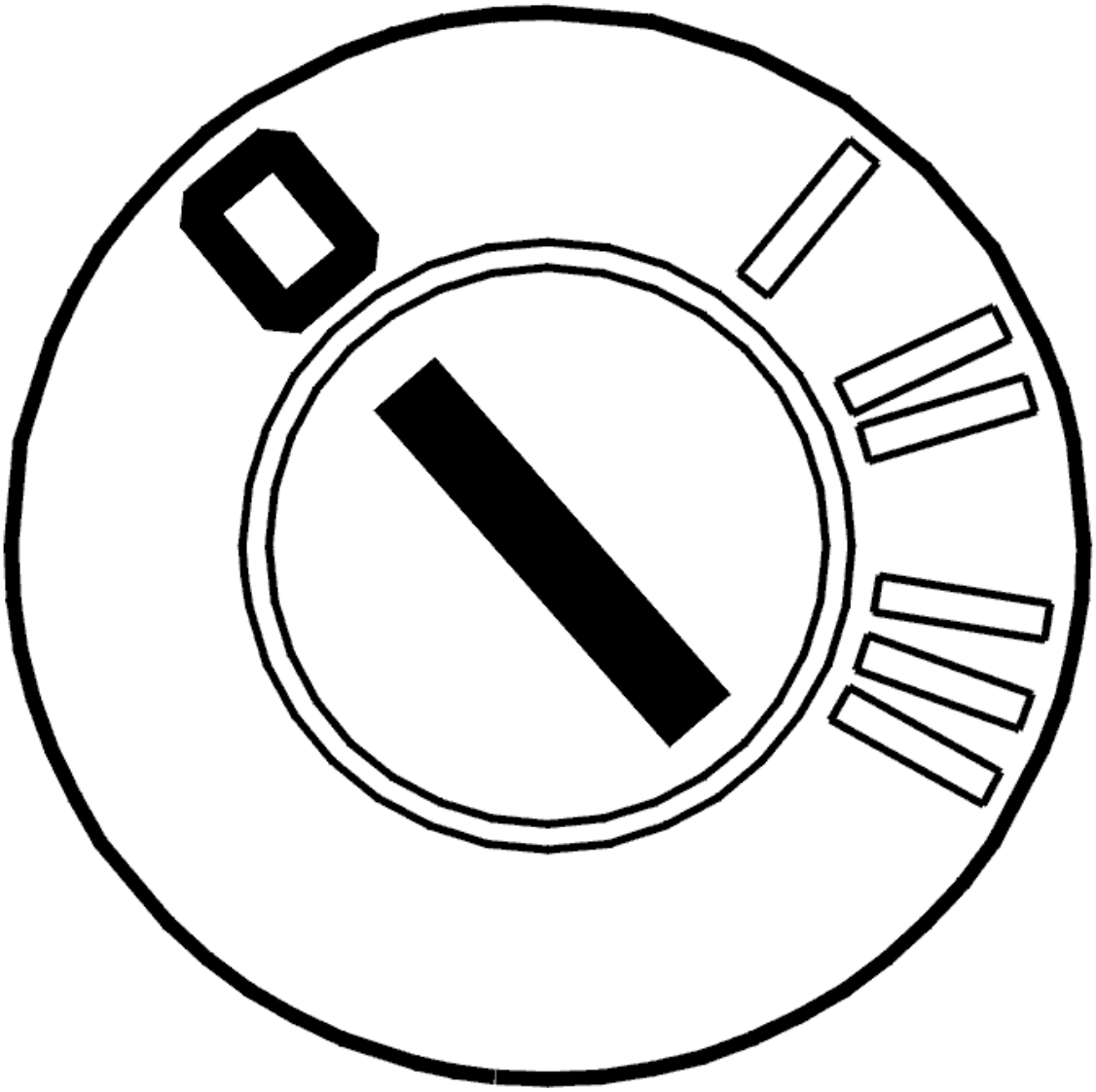

Fig. 277: Identifying Ignition OFF
Courtesy of VOLVO CARS CORPORATION

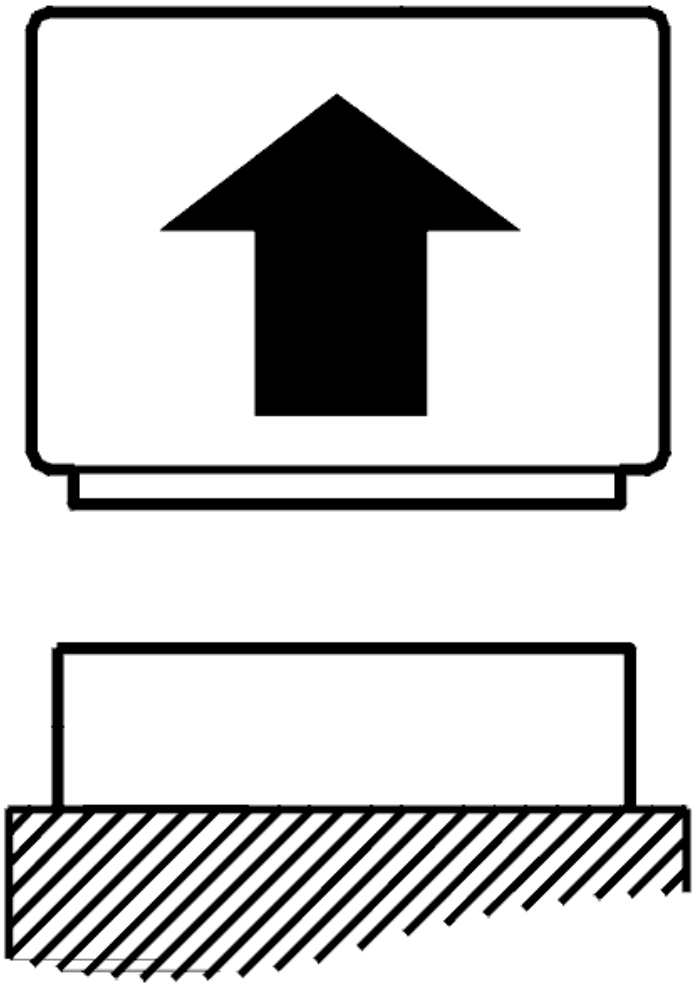

Fig. 278: Disconnecting Connector
Courtesy of VOLVO CARS CORPORATION

- Ignition off

  Disconnect the engine control module (ECM).

  Check the signal wiring for the starter relay. Check for a short-circuit to supply.

  Measure between:

  - Control module terminal #B11 (#C11) and starter relay.
  - Control module terminal #B51 (#C51) and starter relay.

  Remedy as necessary.

Other information

- see **CONNECTING THE BREAKOUT BOX**
- see **SIGNAL SPECIFICATION**
- see **COMPONENT SPECIFICATIONS**
- see **LOCATION OF COMPONENTS**
- see **CHECKING WIRING AND TERMINALS**

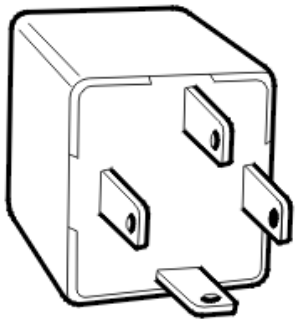

Fig. 279: Identifying Main Relay
Courtesy of VOLVO CARS CORPORATION

- **Continue**

  Refer to **VERIFICATION**

INFORMATION

FAULT-TRACING INFORMATION

The fault should have been detected and remedied. As this is not the case fault-tracing has failed.

Exit fault-tracing for this diagnostic trouble code (DTC) or make another attempt.

VERIFICATION

VERIFICATION

HINT: After carrying out the repair, check that the fault has been remedied.

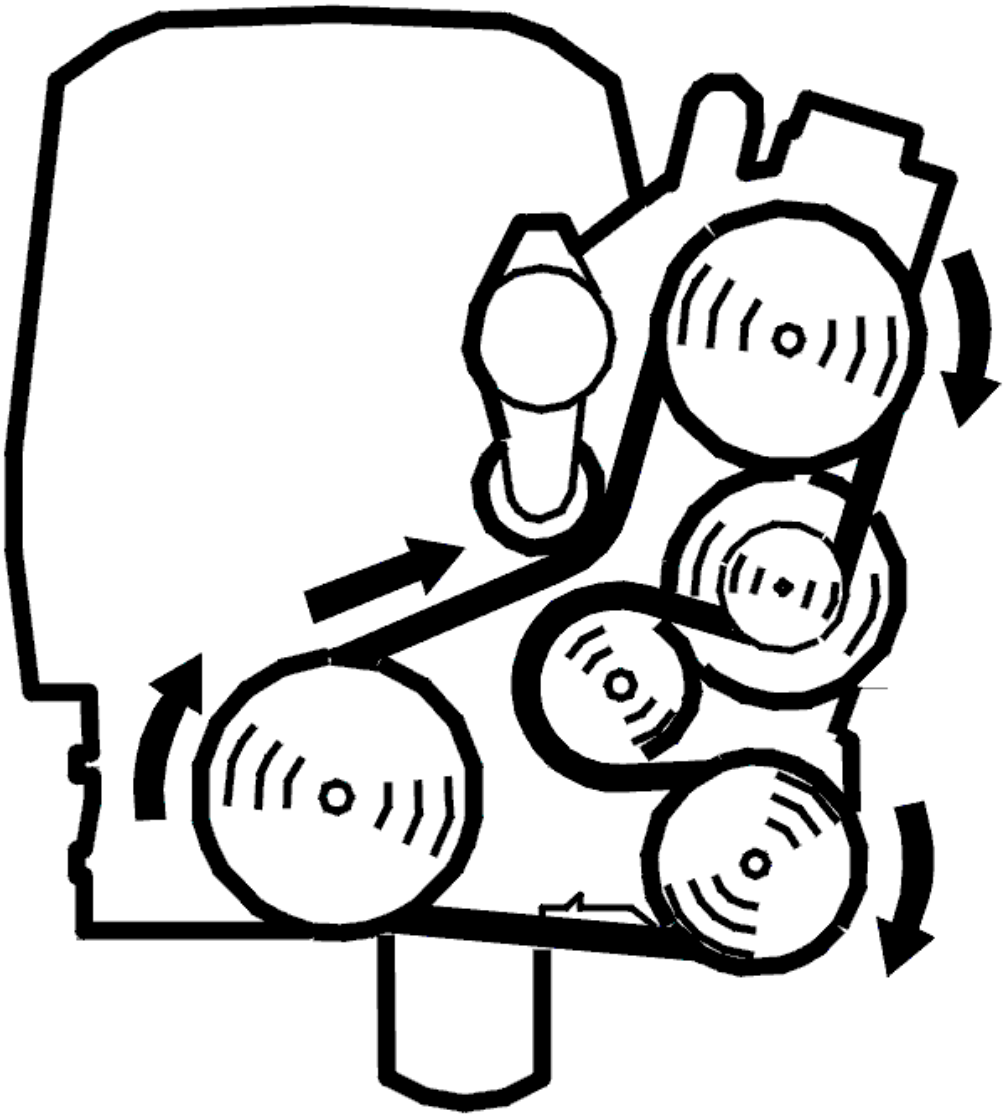

Fig. 280: Belt Routing / Engine Idling - Volvo
Courtesy of VOLVO CARS CORPORATION

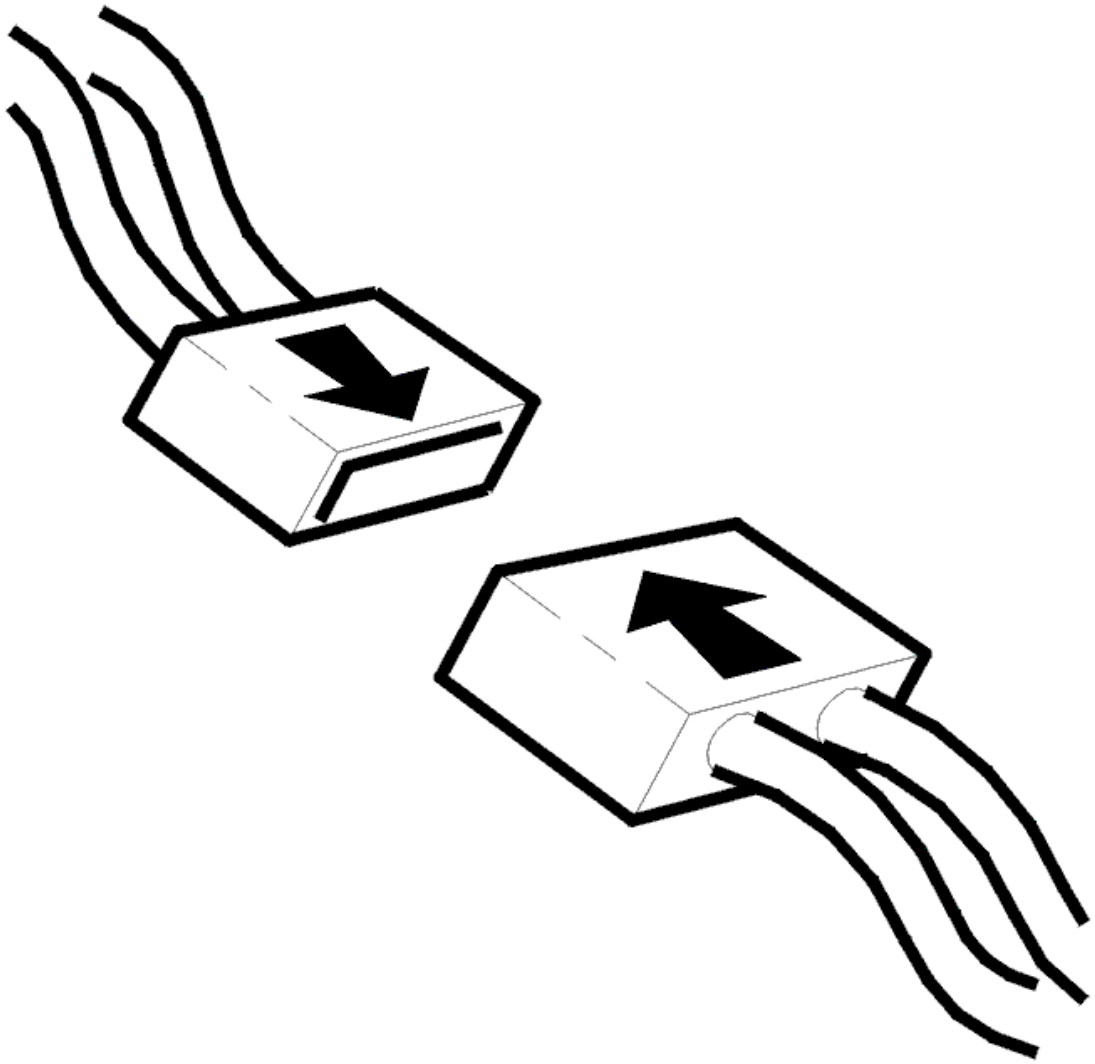

Fig. 281: Connecting Connector
Courtesy of VOLVO CARS CORPORATION

- Ignition off
- Reconnect the connectors, components, etc.
- Run the starter motor/start the engine.
- Allow the engine to idle if it starts.
- Read the diagnostic status and fault status for the diagnostic trouble code by selecting the diagnostic trouble code in the list.

  Check the fault status for the diagnostic trouble code when the scan is "Implemented". When the function is correct the fault status should be "No fault found" when the scan is implemented.

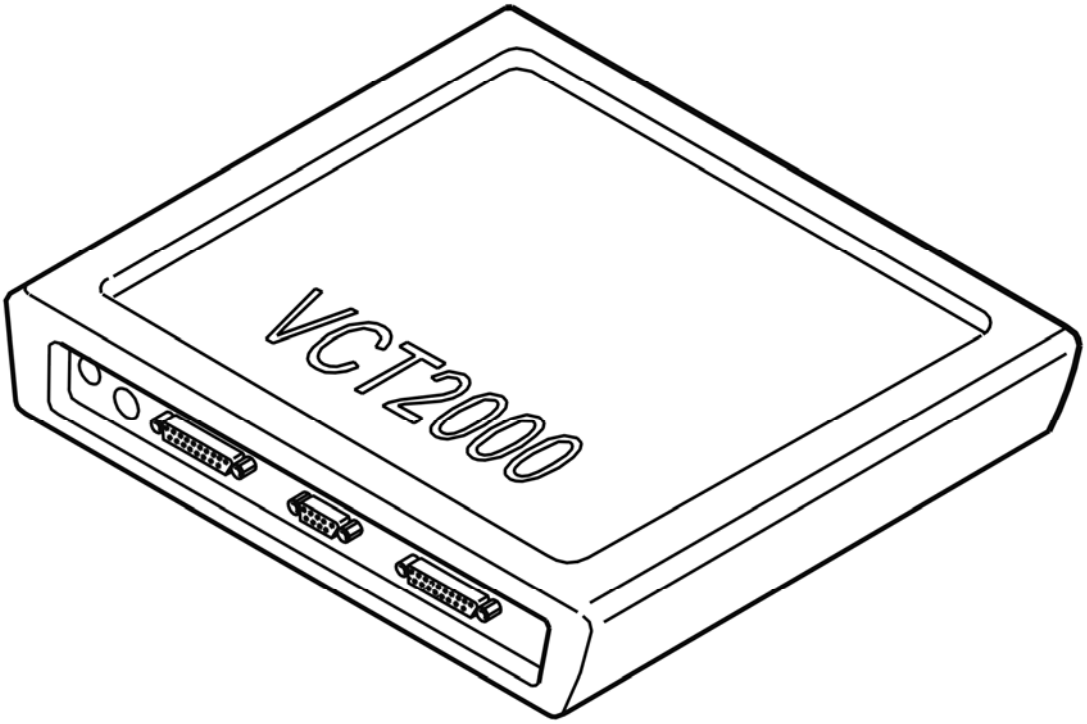

Fig. 282: Identifying VCT2000 Diagnostic Tool Symbol In VIDA
Courtesy of VOLVO CARS CORPORATION

Is the function OK?

- **YES**

  VERIFIED: Troubleshooting has been completed.

- **NO**

  Refer to **INFORMATION**

ECM-P061512: STARTER RELAY CIRCUIT. GENERAL ELECTRICAL FAILURES. CIRCUIT SHORT TO BATTERY (B6324S5; 2011-2012)

DIAGNOSTIC TROUBLE CODE (DTC) INFORMATION ECM-P061512

see **DIAGNOSTIC TROUBLE CODE (DTC) INFORMATION ECM-P061512**

FAULT-TRACING

see **FAULT-TRACING**

ECM-P061513: STARTER RELAY CIRCUIT. GENERAL ELECTRICAL FAILURES. CIRCUIT OPEN (B6324S; 2007-2010)

DIAGNOSTIC TROUBLE CODE (DTC) INFORMATION ECM-P061513

Condition

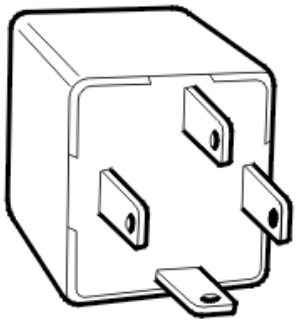

Fig. 283: Identifying Main Relay
Courtesy of VOLVO CARS CORPORATION

The engine control module (ECM) checks the signal of the starter motor relay coil.

The diagnostic trouble code is generated if the engine control module (ECM) detects that there is no signal from the starter relay.

Substitute Value

- Nothing.

Possible Source

- Open-circuit on the signal cable.

Fault symptom[s]

- The starter motor does not operate.

FAULT-TRACING

CHECKING COMPONENTS AND WIRING

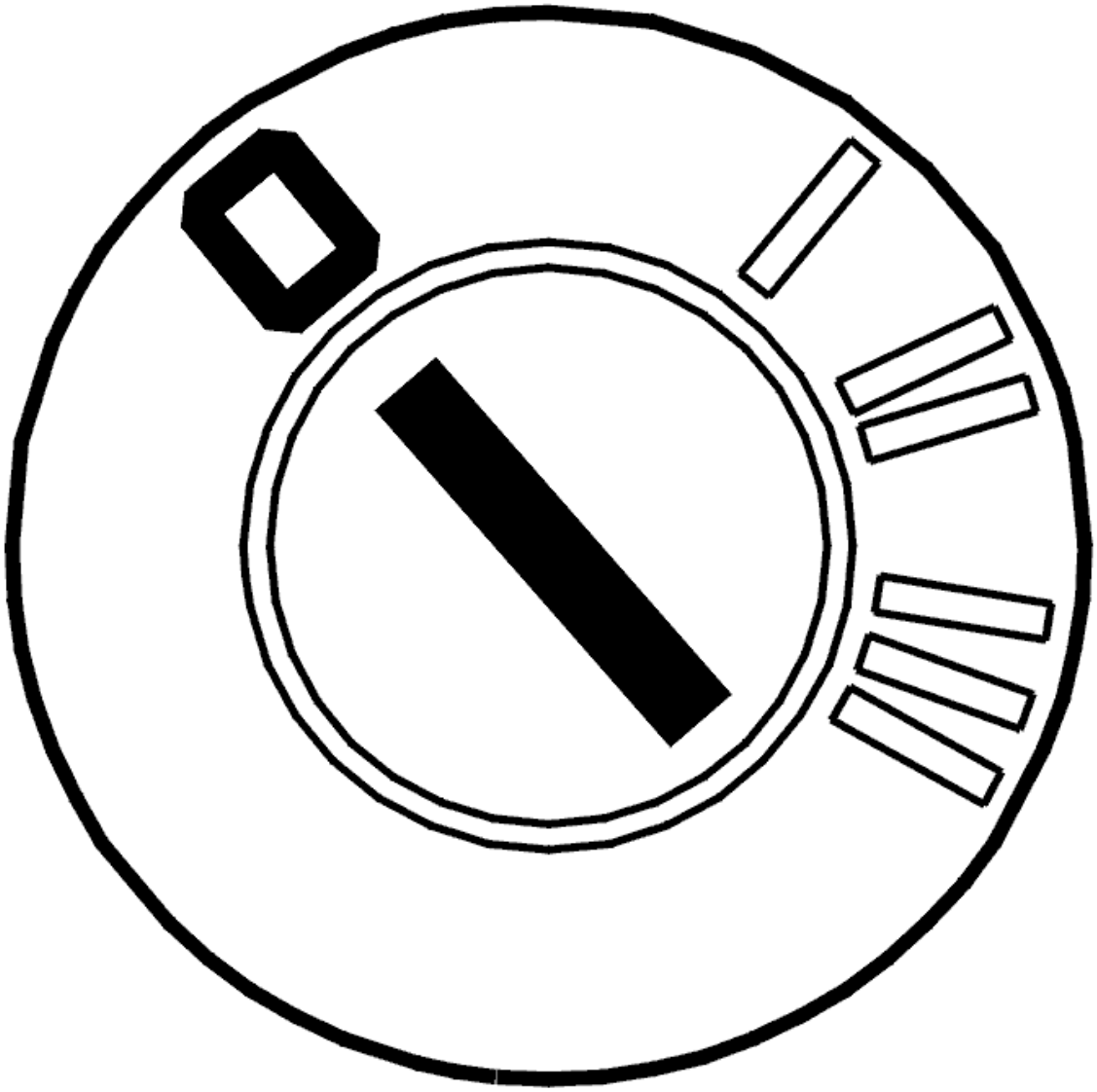

Fig. 284: Identifying Ignition OFF
Courtesy of VOLVO CARS CORPORATION

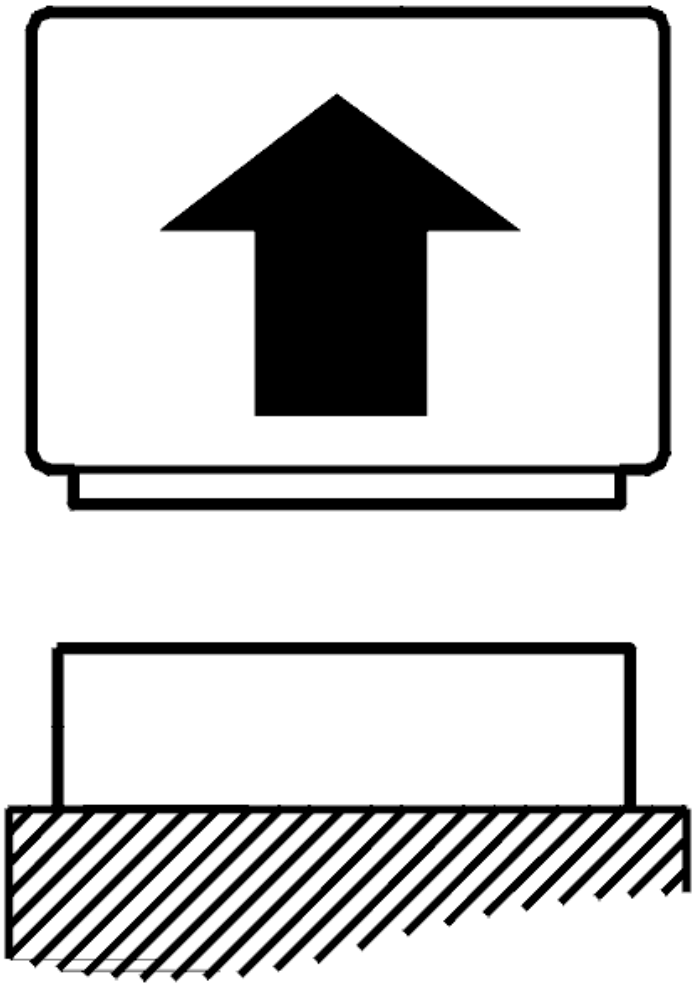

Fig. 285: Disconnecting Connector
Courtesy of VOLVO CARS CORPORATION

- Ignition off

  Disconnect the engine control module (ECM).

  Check the signal cables for start relay for open circuit to ground.

  Measure between:

  - Control module #B11 (#C11) and start relay.
  - Control module #B51 (#C51) and start relay.

  Remedy as necessary.

Other information

- see **CONNECTING THE BREAKOUT BOX**
- see **SIGNAL SPECIFICATION**
- see **COMPONENT SPECIFICATIONS**
- see **LOCATION OF COMPONENTS**
- see **CHECKING WIRING AND TERMINALS**

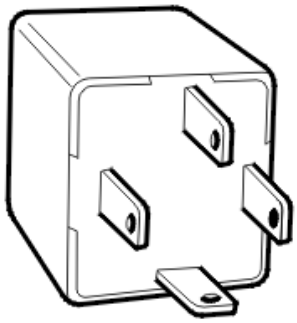

Fig. 286: Identifying Main Relay
Courtesy of VOLVO CARS CORPORATION

- **Continue**

  Refer to **VERIFICATION**

INFORMATION

FAULT-TRACING INFORMATION

The fault should have been detected and remedied. As this is not the case fault-tracing has failed.

Exit fault-tracing for this diagnostic trouble code (DTC) or make another attempt.

VERIFICATION

VERIFICATION

HINT: After carrying out the repair, check that the fault has been remedied.

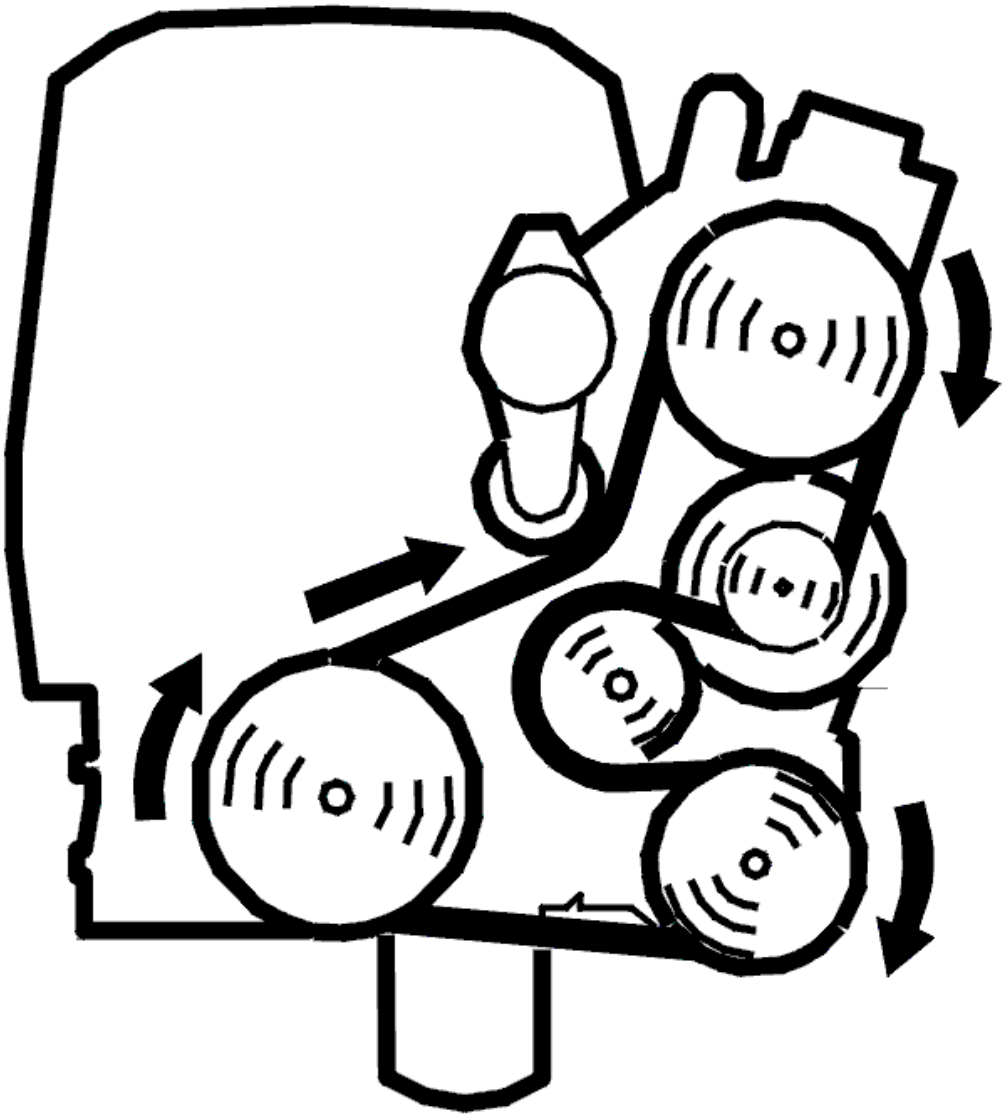

Fig. 287: Belt Routing / Engine Idling - Volvo
Courtesy of VOLVO CARS CORPORATION

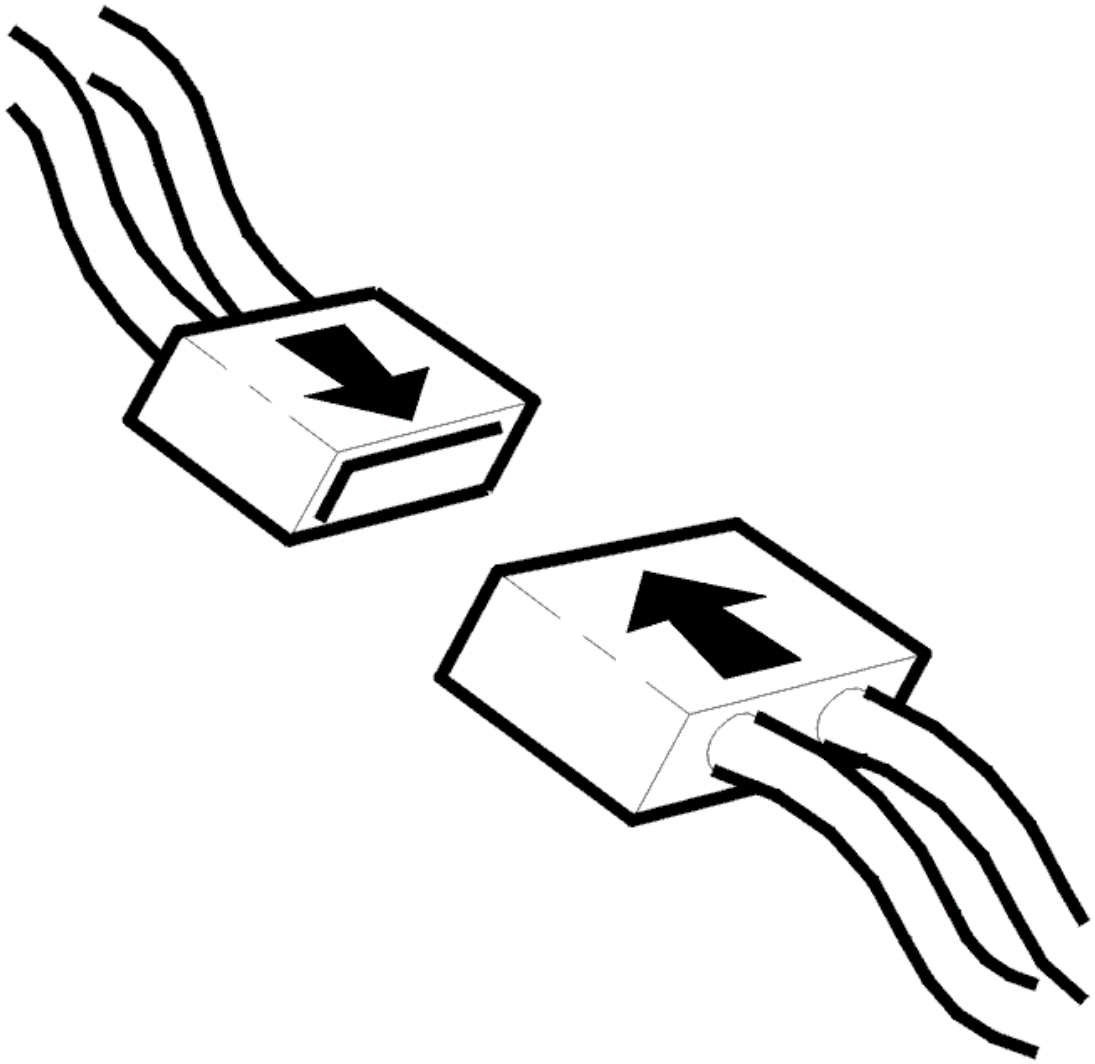

Fig. 288: Connecting Connector
Courtesy of VOLVO CARS CORPORATION

- Ignition off
- Reconnect the connectors, components, etc.
- Run the starter motor/start the engine.
- Allow the engine to idle if it starts.
- Read the diagnostic status and fault status for the diagnostic trouble code by selecting the diagnostic trouble code in the list.

  Check the fault status for the diagnostic trouble code when the scan is "Implemented". When the function is correct the fault status should be "No fault found" when the scan is implemented.

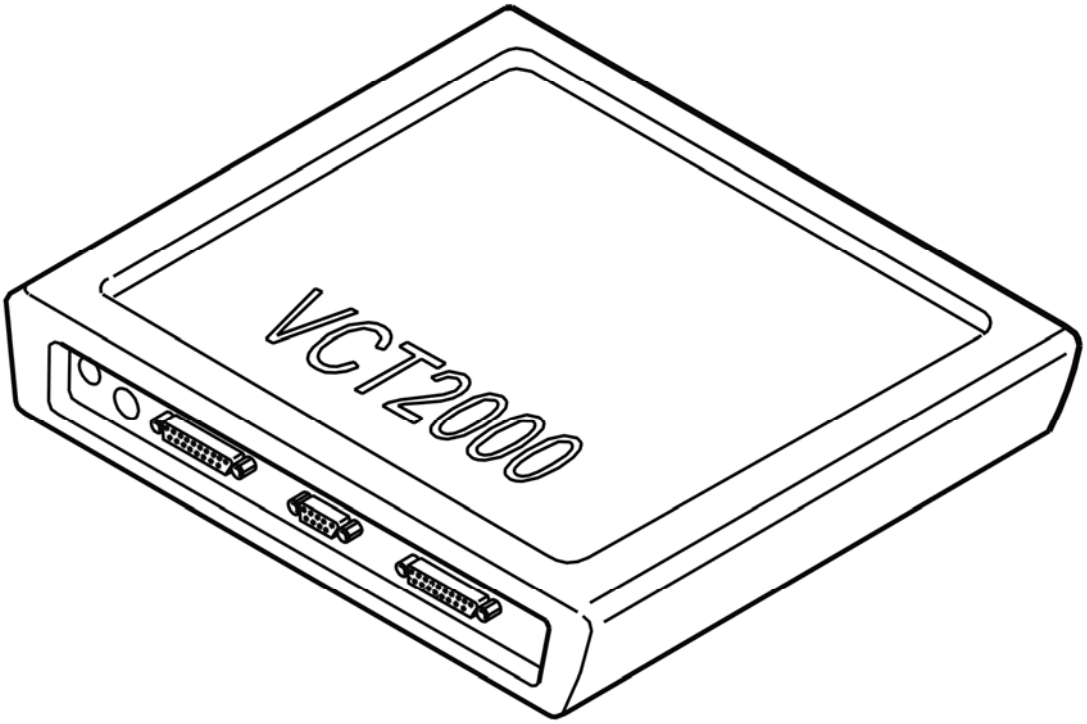

Fig. 289: Identifying VCT2000 Diagnostic Tool Symbol In VIDA
Courtesy of VOLVO CARS CORPORATION

Is the function OK?

- **YES**

  VERIFIED: Troubleshooting has been completed.

- **NO**

  Refer to **INFORMATION**

ECM-P061513: STARTER RELAY CIRCUIT. GENERAL ELECTRICAL FAILURES. CIRCUIT OPEN (B6324S5; 2011-2012)

DIAGNOSTIC TROUBLE CODE (DTC) INFORMATION ECM-P061513

see **DIAGNOSTIC TROUBLE CODE (DTC) INFORMATION ECM-P061513**

FAULT-TRACING

see **FAULT-TRACING**

ECM-P061600: STARTER RELAY CIRCUIT LOW. GENERAL FAULT INFORMATION. TYPE OF FAULT NOT SPECIFIED. (B8444S; 2005-2011)

DIAGNOSTIC TROUBLE CODE (DTC) INFORMATION ECM-P061600

Condition

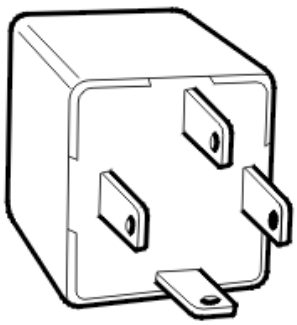

Fig. 290: Identifying Main Relay
Courtesy of VOLVO CARS CORPORATION

The engine control module (ECM) checks the signal of the starter motor relay coil. The diagnostic trouble code is generated if the engine control module (ECM) detects that the signal is low even though the ignition switch is in position II (start position).

The diagnostic trouble code can be diagnosed when the engine is started.

Substitute Value

- Nothing.

Possible Source

- The signal cable is short-circuited to ground.
- Open-circuit on the signal cable.
- Damaged starter motor relay.
- Open-circuit on the power supply to the starter motor.

Fault symptom[s]

- The starter motor does not operate.

FAULT TRACING ECM-P061600

CHECKING COMPONENTS AND WIRING

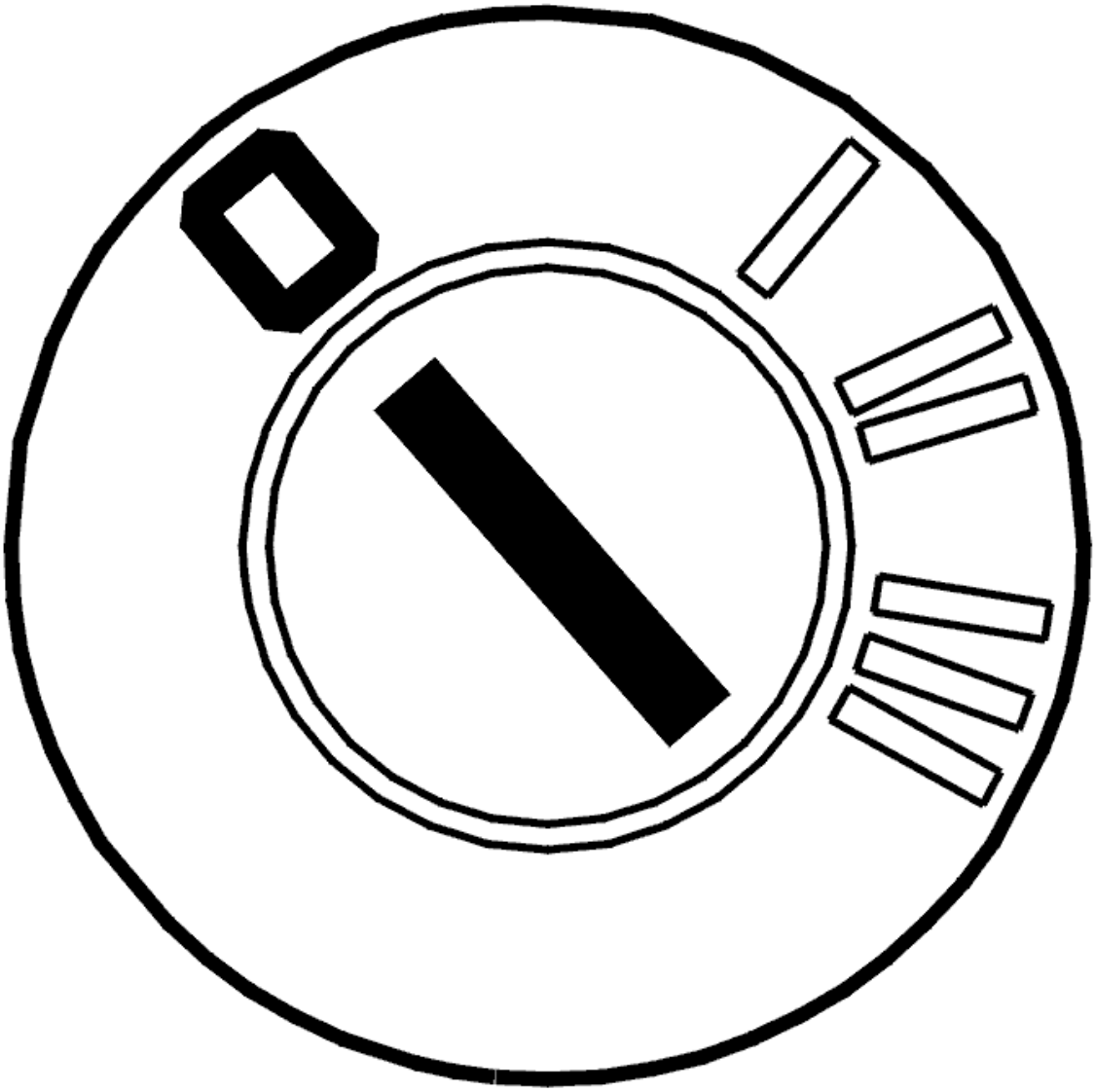

Fig. 291: Identifying Ignition OFF
Courtesy of VOLVO CARS CORPORATION

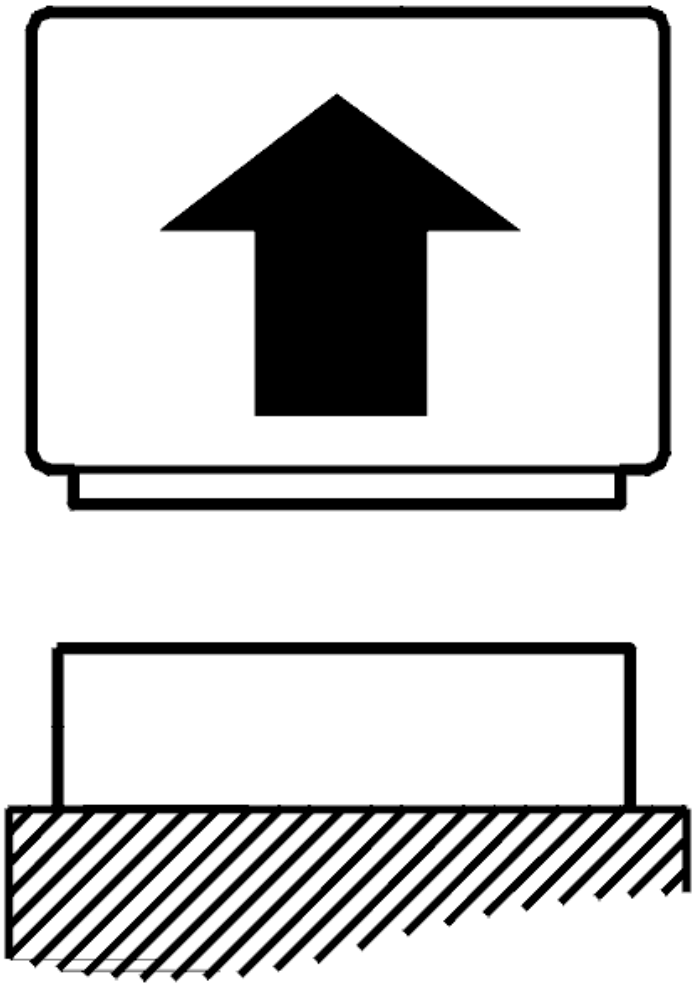

Fig. 292: Disconnecting Connector
Courtesy of VOLVO CARS CORPORATION

- Ignition off

  Disconnect the engine control module (ECM).

  Check the signal wiring for the starter relay. Check for an open-circuit. Check for a short-circuit to ground.

  Measure between:

  - Engine control module (ECM) #B11 (#C11) and starter relay.
  - Engine control module (ECM) #B51 (#C51) and starter relay.

  Check the supply cable from the starter relay to the starter motor. Check for an open-circuit.

Remedy as necessary.

Other information

- see **CONNECTING THE BREAKOUT BOX**
- see **SIGNAL SPECIFICATION, ENGINE CONTROL MODULE (ECM)**
- see **LOCATION OF COMPONENTS, ENGINE COMPARTMENT**
- see **COMPONENT SPECIFICATIONS**
- see **CHECKING WIRING AND TERMINALS**

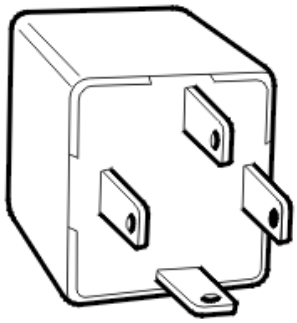

Fig. 293: Identifying Main Relay
Courtesy of VOLVO CARS CORPORATION

- **Continue**

  Refer to **VERIFICATION**

VERIFICATION

VERIFICATION

HINT: After carrying out the repair, check that the fault has been remedied.

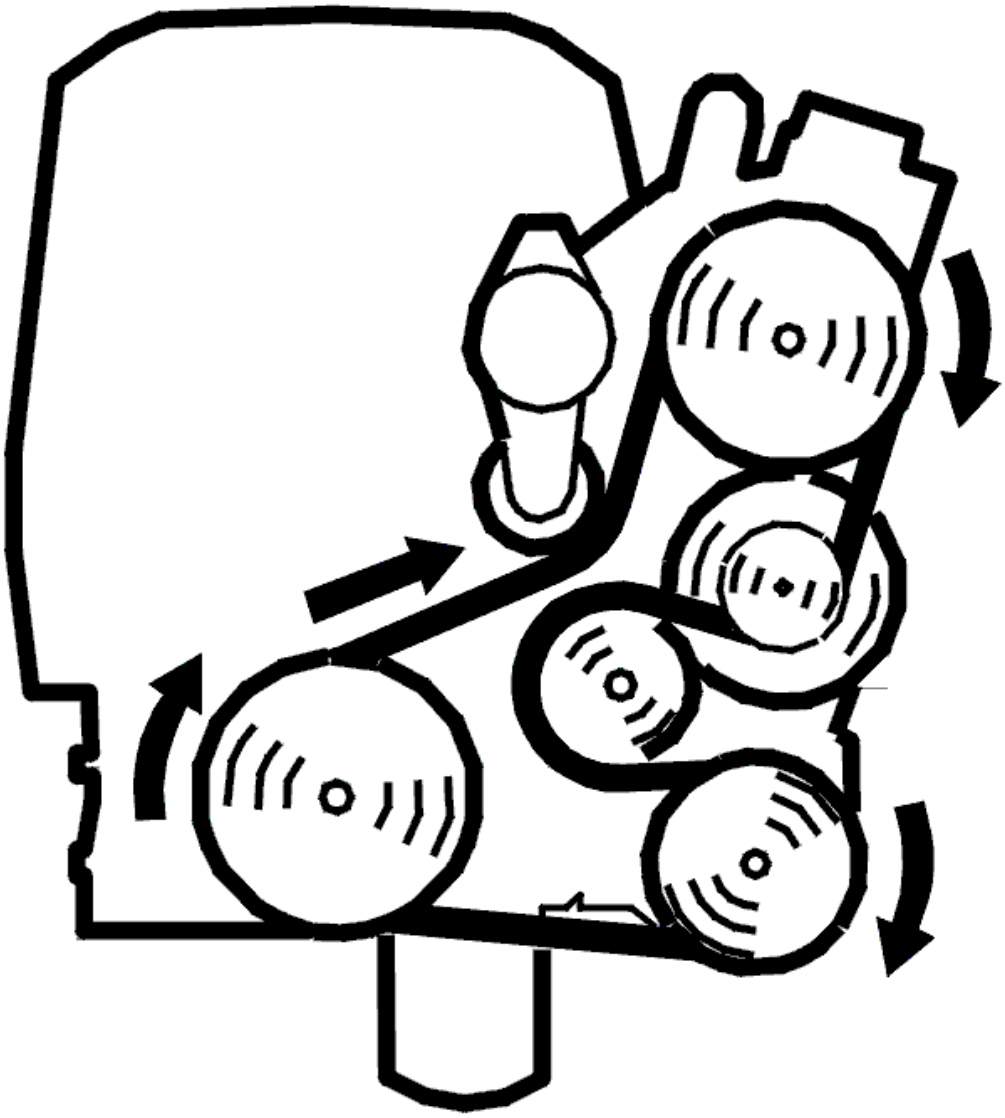

Fig. 294: Belt Routing / Engine Idling - Volvo
Courtesy of VOLVO CARS CORPORATION

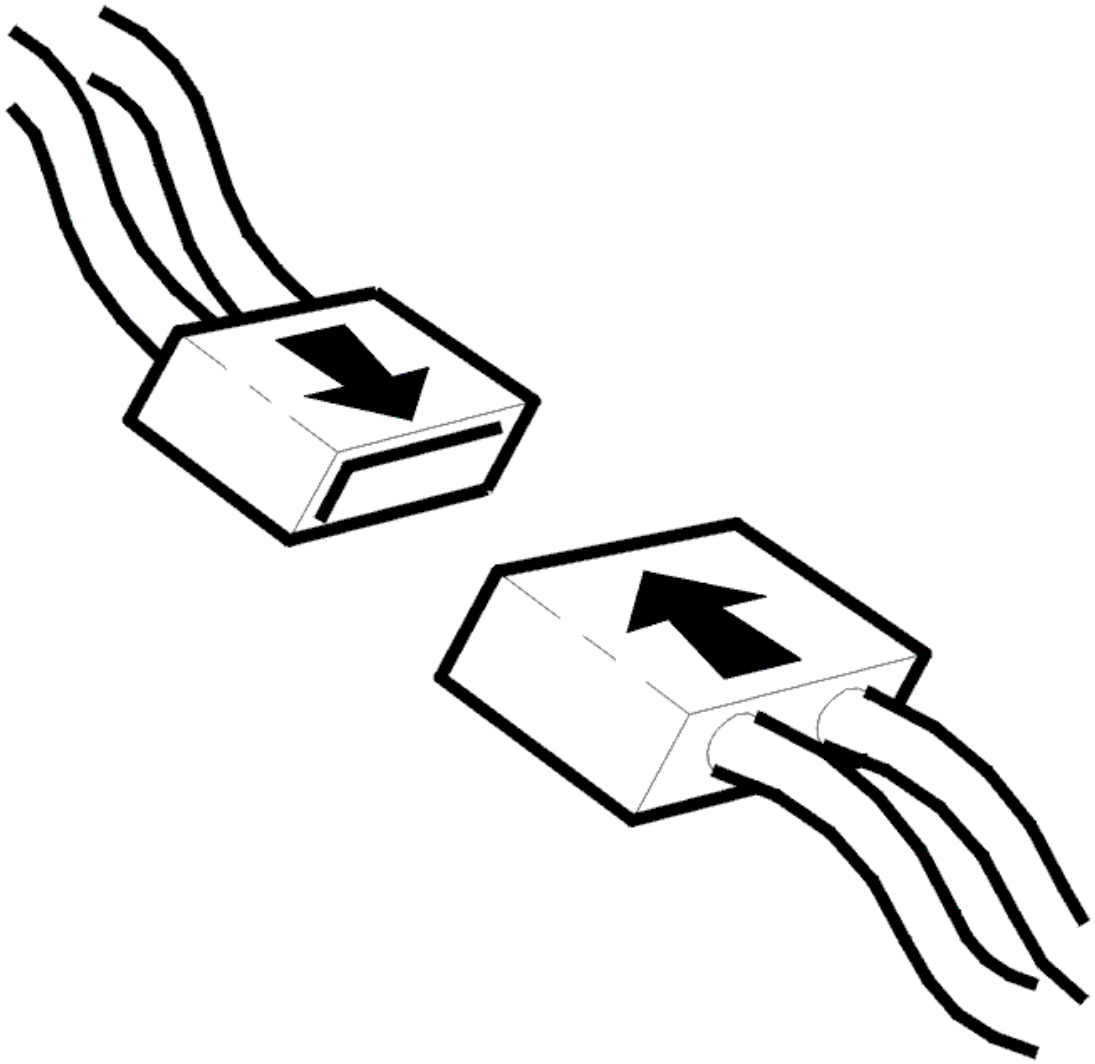

Fig. 295: Connecting Connector
Courtesy of VOLVO CARS CORPORATION

- Ignition off
- Reconnect the connectors, components, etc.
- Run the starter motor/start the engine.
- Allow the engine to idle if it starts.
- Read the diagnostic status and fault status for the diagnostic trouble code by selecting the diagnostic trouble code in the list.

  Check the fault status for the diagnostic trouble code when the scan is "Implemented". When the function is correct the fault status should be "No fault found" when the scan is implemented.

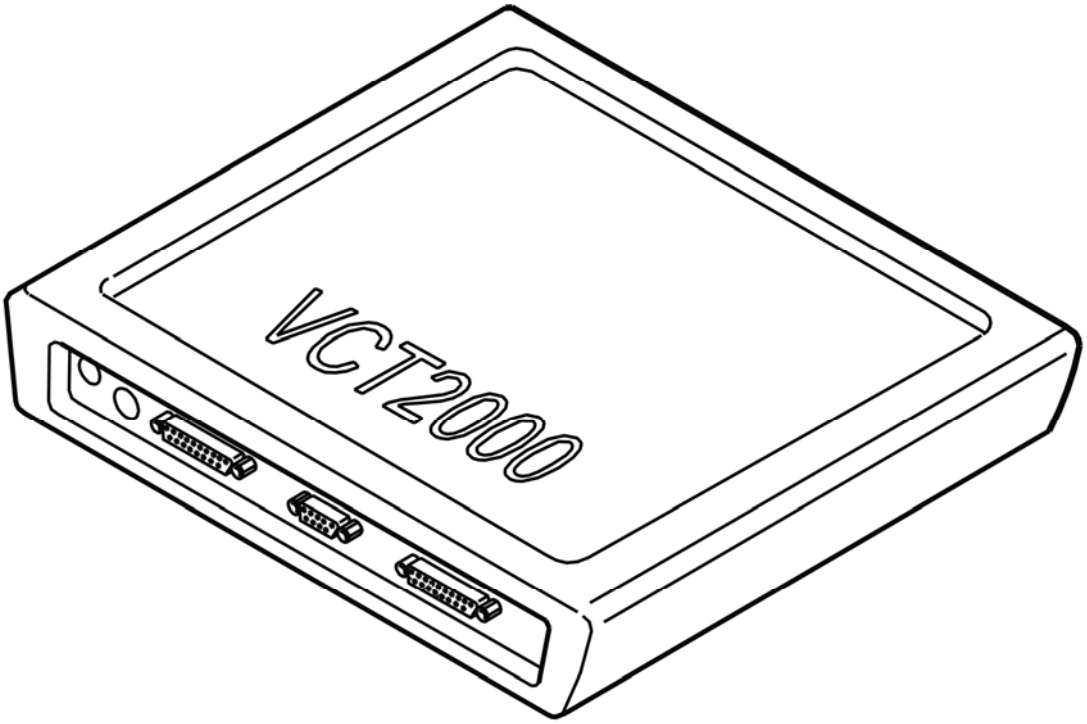

Fig. 296: Identifying VCT2000 Diagnostic Tool Symbol In VIDA
Courtesy of VOLVO CARS CORPORATION

Is the function OK?

- **YES**

  VERIFIED: Troubleshooting has been completed.

- **NO**

  Refer to **INFORMATION**

INFORMATION

FAULT-TRACING INFORMATION

The fault should have been detected and remedied. As this is not the case fault-tracing has failed.

Exit fault-tracing for this diagnostic trouble code (DTC) or make another attempt.

ECM-P061700: STARTER RELAY CIRCUIT HIGH. GENERAL FAULT INFORMATION. TYPE OF FAULT NOT SPECIFIED. (B8444S; 2005-2011)

DIAGNOSTIC TROUBLE CODE (DTC) INFORMATION ECM-P061700

Condition

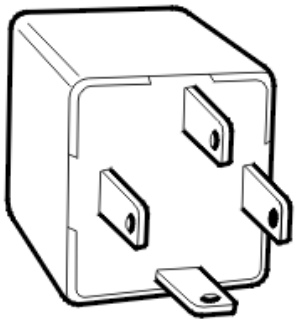

Fig. 297: Identifying Main Relay
Courtesy of VOLVO CARS CORPORATION

The engine control module (ECM) checks the signal of the starter motor relay coil. The diagnostic trouble code is generated if the engine control module (ECM) detects that the signal is high even though the ignition switch is in position II (start position).

The diagnostic trouble code can be diagnosed when the ignition is on.

Substitute Value

- Nothing.

Possible Source

- The signal cable is short-circuited to voltage.
- Damaged starter motor relay.

Fault symptom[s]

- Nothing

FAULT TRACING ECM-P061700

CHECKING COMPONENTS AND WIRING

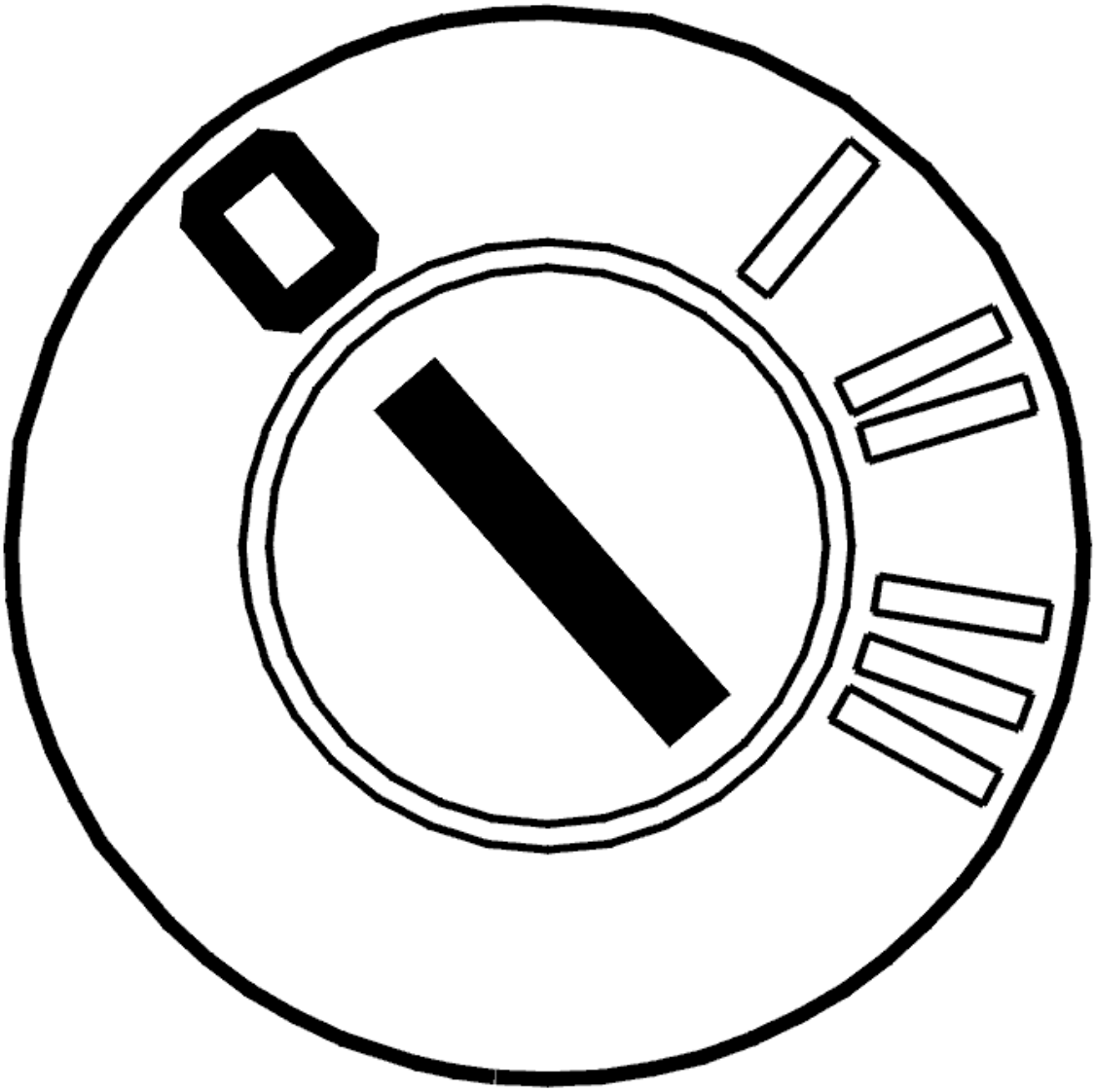

Fig. 298: Identifying Ignition OFF
Courtesy of VOLVO CARS CORPORATION

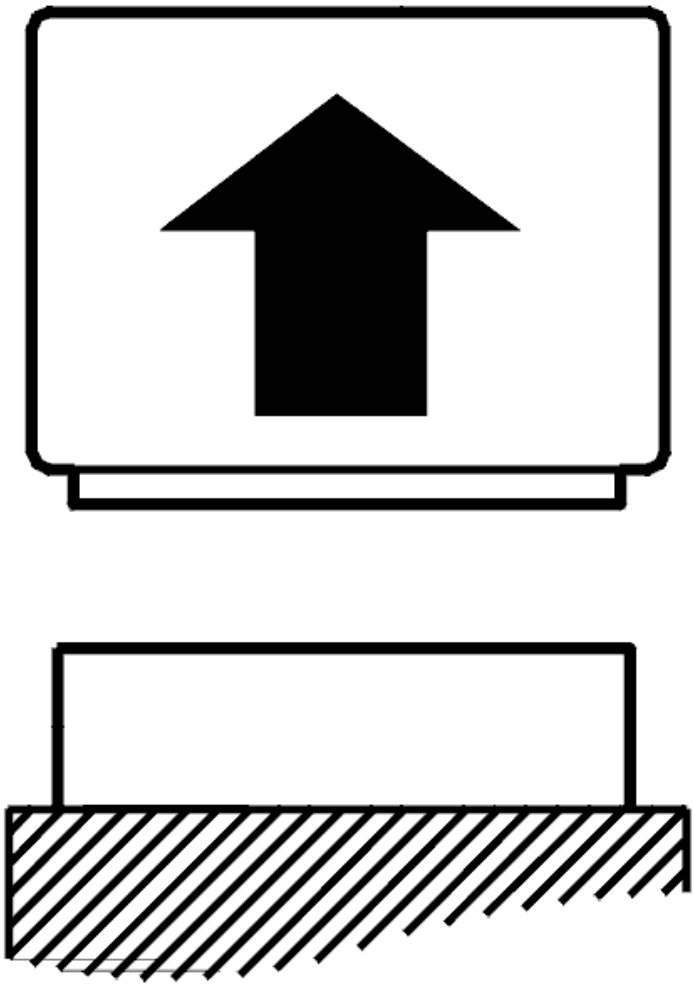

Fig. 299: Disconnecting Connector
Courtesy of VOLVO CARS CORPORATION

- Ignition off

  Disconnect the engine control module (ECM).

  Check the signal wiring for the starter relay. Check for a short-circuit to supply.

  Measure between:

  - Control module terminal #B11 (#C11) and starter relay.
  - Control module terminal #B51 (#C51) and starter relay.

  Remedy as necessary.

Other information

- see **CONNECTING THE BREAKOUT BOX**
- see **SIGNAL SPECIFICATION, ENGINE CONTROL MODULE (ECM)**
- see **LOCATION OF COMPONENTS, ENGINE COMPARTMENT**
- see **COMPONENT SPECIFICATIONS**
- see **CHECKING WIRING AND TERMINALS**

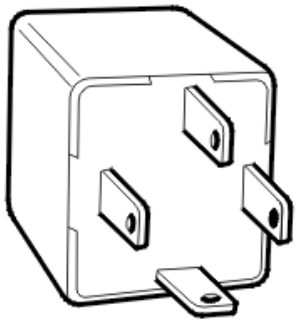

Fig. 300: Identifying Main Relay
Courtesy of VOLVO CARS CORPORATION

- **Continue**

  Refer to **VERIFICATION**

VERIFICATION

VERIFICATION

HINT: After carrying out the repair, check that the fault has been remedied.

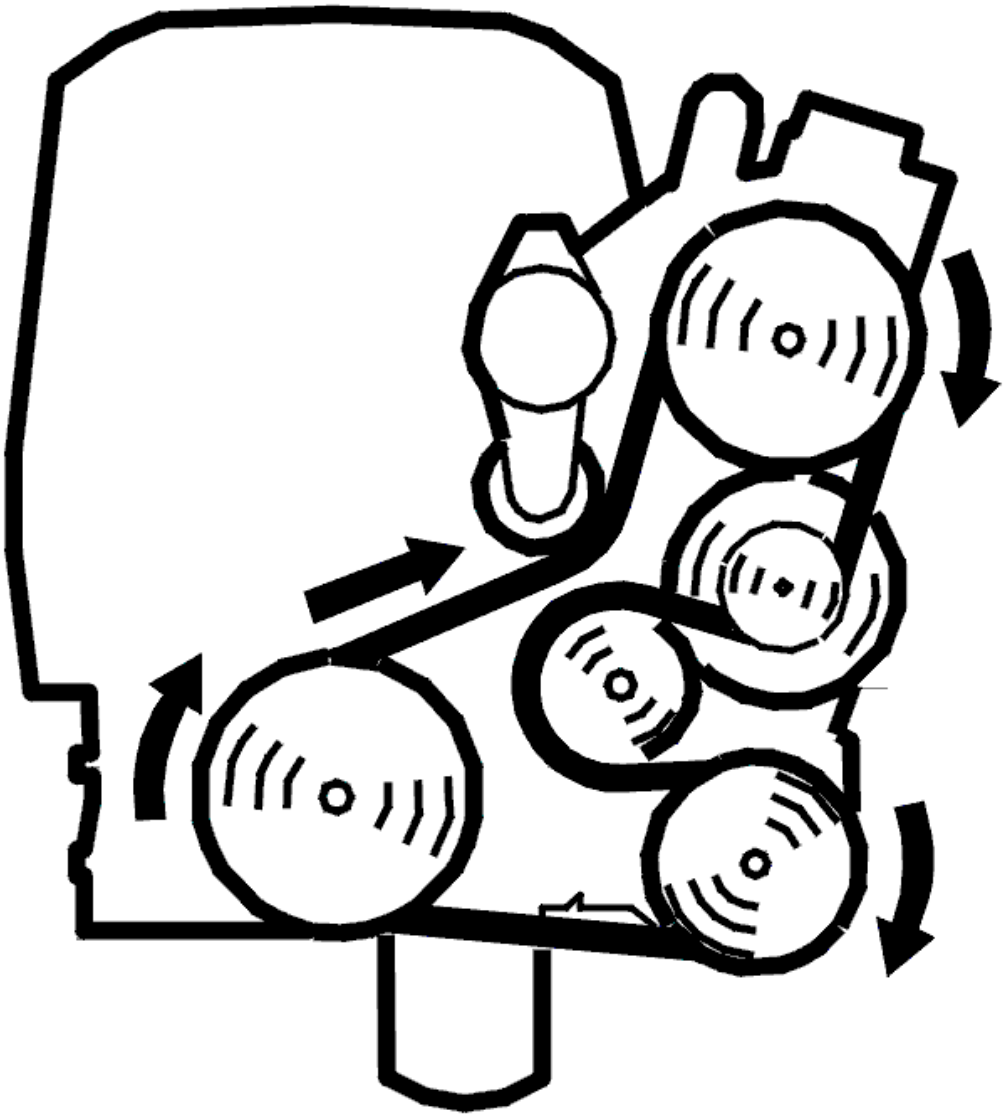

Fig. 301: Belt Routing / Engine Idling - Volvo
Courtesy of VOLVO CARS CORPORATION

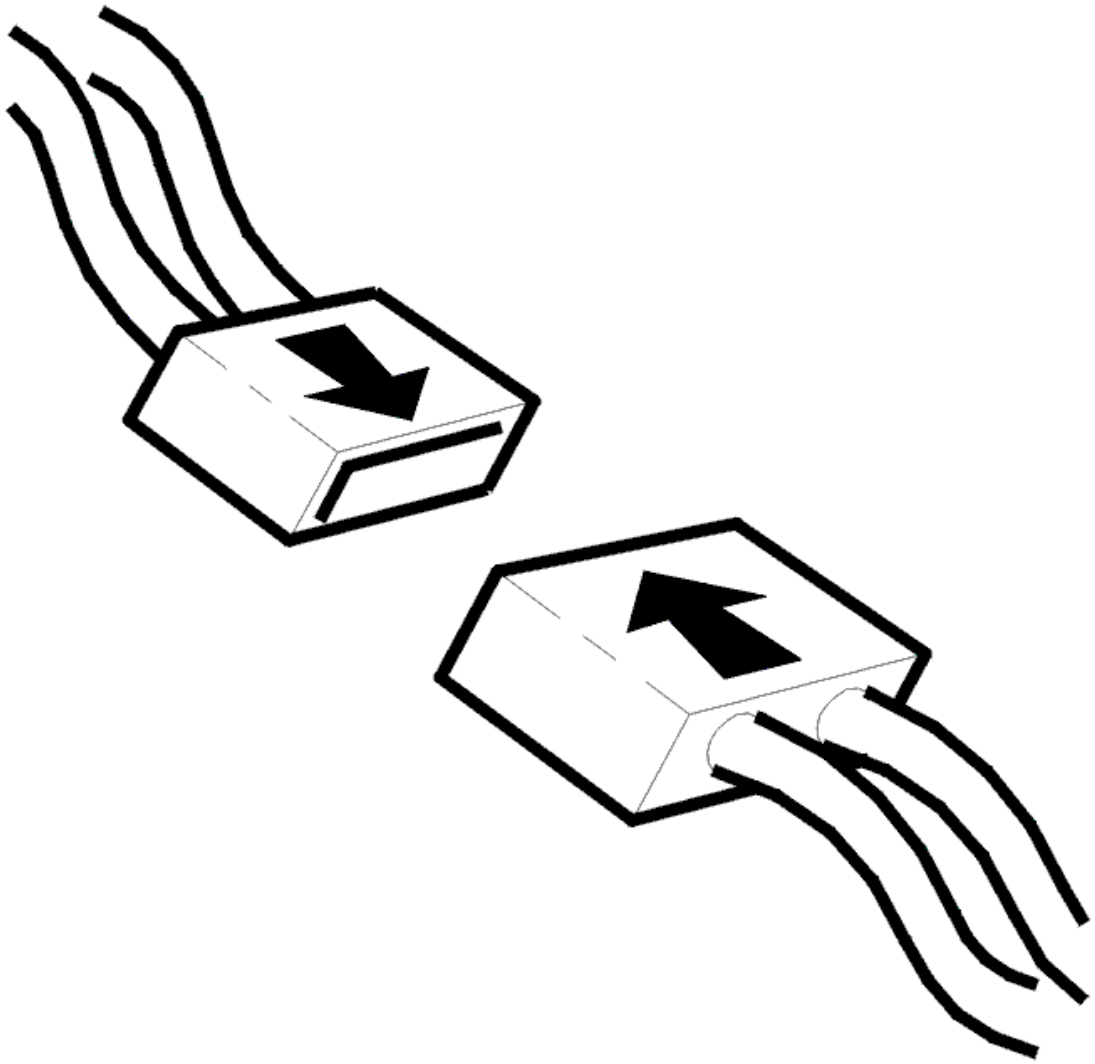

Fig. 302: Connecting Connector
Courtesy of VOLVO CARS CORPORATION

- Ignition off
- Reconnect the connectors, components, etc.
- Run the starter motor/start the engine.
- Allow the engine to idle if it starts.
- Read the diagnostic status and fault status for the diagnostic trouble code by selecting the diagnostic trouble code in the list.

  Check the fault status for the diagnostic trouble code when the scan is "Implemented". When the function is correct the fault status should be "No fault found" when the scan is implemented.

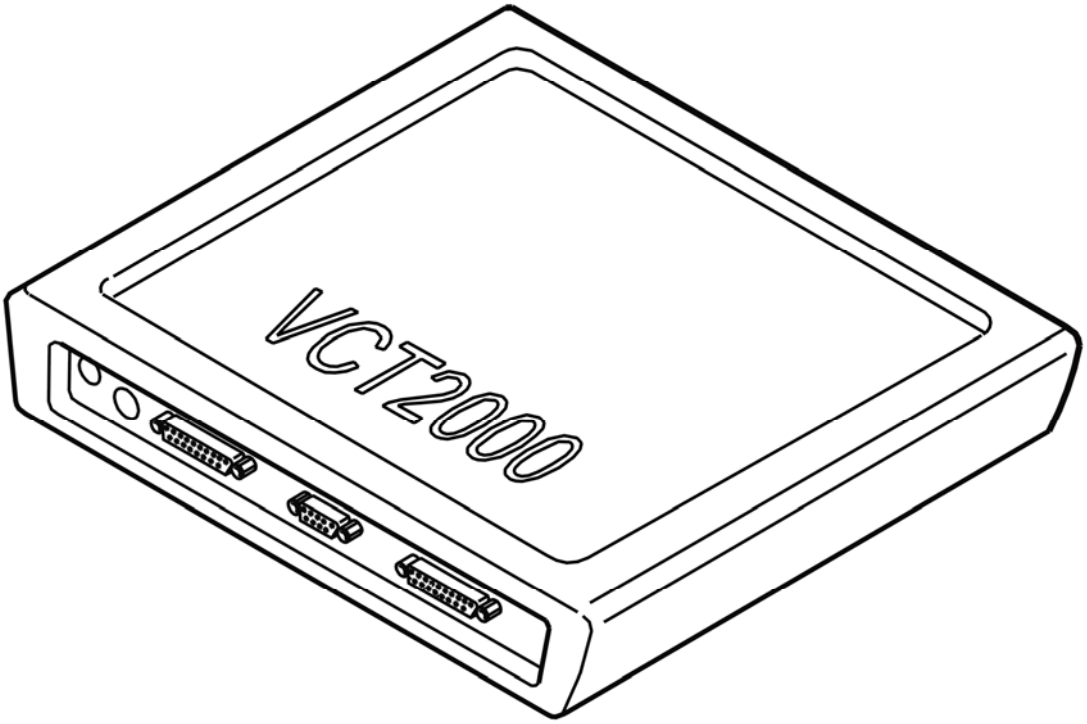

Fig. 303: Identifying VCT2000 Diagnostic Tool Symbol In VIDA
Courtesy of VOLVO CARS CORPORATION

Is the function OK?

- **YES**

  VERIFIED: Troubleshooting has been completed.

- **NO**

  Refer to **INFORMATION**

INFORMATION

FAULT-TRACING INFORMATION

The fault should have been detected and remedied. As this is not the case fault-tracing has failed.

Exit fault-tracing for this diagnostic trouble code (DTC) or make another attempt.

ECM-P061A00 INTERNAL CONTROL MODULE TORQUE PERFORMANCE. GENERAL FAILURE INFORMATION. NO SUB TYPE INFORMATION

(B6324S; 2007-2010)

DIAGNOSTIC TROUBLE CODE (DTC) INFORMATION

Condition

Engine Control Module (ECM) monitors the torque in the engine by reading and interpreting signals from mass air flow sensor, electronic throttle unit and air pressure sensor in the inlet manifold.

The diagnostic trouble code (DTC) is stored if the measured torque exceeds the requested torque, based on the pedal position and the engine speed (RPM).

The diagnostic trouble code (DTC) can be diagnosed in specific driving conditions.

Substitute Value

- The engine torque is limited by the throttle position (maximum permitted torque depends on accelerator pedal position).

Possible Source

- Air leakage in the intake manifold (downstream of the mass air flow (MAF) sensor and electronic throttle unit).
- Damaged throttle unit.
- Damaged mass air flow (MAF) sensor.
- Damaged engine coolant temperature (ECT) sensor.
- Damaged flywheel sensor.
- Damaged air pressure sensor in the inlet manifold.
- Damaged camshaft reset valve.
- Damaged VVT-unit.
- Damaged engine control module (ECM).

Fault symptom[s]

- Jerky running

FAULT-TRACING

INFORMATION

The diagnostic trouble code is stored since another diagnostic function has been close to or above the malfunction limit. Likely, this diagnostic trouble code is stored together with the diagnostic trouble code for the basic problem. Therefore fault-trace for another diagnostic trouble code (DTC).

For further information on this diagnostic trouble code, see Diagnostic trouble code (DTC) information.

ECM-P061A00 INTERNAL CONTROL MODULE TORQUE PERFORMANCE. GENERAL FAILURE INFORMATION. NO SUB TYPE INFORMATION (B6324S5; 2011-2012)

DIAGNOSTIC TROUBLE CODE (DTC) INFORMATION

see **DIAGNOSTIC TROUBLE CODE (DTC) INFORMATION**

FAULT-TRACING

see **FAULT-TRACING**

ECM-P061A62 INTERNAL CONTROL MODULE TORQUE PERFORMANCE. ALGORITHM BASED FAILURES. SIGNAL COMPARE FAILURE (B8444S; 2005-2011)

DIAGNOSTIC TROUBLE CODE (DTC) INFORMATION

Condition

Engine Control Module (ECM) monitors the torque in the engine by reading and interpreting signals from mass air flow sensor, electronic throttle unit and air pressure sensor in the inlet manifold.

The diagnostic trouble code (DTC) is stored if the measured torque exceeds the requested torque, based on the pedal position and the engine speed (RPM).

The diagnostic trouble code (DTC) can be diagnosed in specific driving conditions.

Substitute Value

- Cruise control is disengaged when the fault is active.
- The engine torque is limited using fuel shut-off (maximum permitted torque depends on accelerator pedal position).

Possible Source

- Air leak downstream of the mass air flow (MAF) sensor.
- Damaged throttle unit.
- Damaged mass air flow (MAF) sensor.
- Damaged engine coolant temperature (ECT) sensor.
- Damaged flywheel sensor.
- Damaged air pressure sensor in the inlet manifold.
- Damaged camshaft reset valve.
- Damaged VVT-unit.

- Damaged engine control module (ECM).

Fault symptom[s]

- Jerky running

FAULT-TRACING INFORMATION

INFORMATION

The diagnostic trouble code is stored since another diagnostic function has been close to or above the malfunction limit. Likely, this diagnostic trouble code is stored together with the diagnostic trouble code for the basic problem. Therefore fault-trace for another diagnostic trouble code (DTC).

For further information on this diagnostic trouble code, see Diagnostic trouble code (DTC) information.

HINT:

ECM-P061A68 INTERNAL CONTROL MODULE TORQUE PERFORMANCE. ALGORITHM BASED FAILURES. EVENT INFORMATION (B6324S; 2008-2010)

DIAGNOSTIC TROUBLE CODE (DTC) INFORMATION ECM-P061A68

Condition

NOTE: **This diagnostic trouble code (DTC) status is an event controlled diagnostic trouble code (DTC). An event controlled diagnostic trouble code (DTC) does not mean that there is a fault in the control module when it is active, but is designed as information.**

Engine Control Module (ECM) monitors the torque in the engine by reading and interpreting signals from mass air flow sensor, electronic throttle unit and air pressure sensor in the inlet manifold. The diagnostic trouble code (DTC) is stored if the measured torque exceeds the requested torque, based on the pedal position and the engine speed (RPM).

The diagnostic trouble code (DTC) can be diagnosed in specific driving conditions.

Substitute Value

- Nothing.

Possible Source

- This diagnostic trouble code (DTC) is not caused by a fault that needs to be remedied.

Fault symptom[s]

- None.

FAULT-TRACING INFORMATION

see **FAULT-TRACING INFORMATION**

ECM-P061A68 INTERNAL CONTROL MODULE TORQUE PERFORMANCE. ALGORITHM BASED FAILURES. EVENT INFORMATION (B6324S5; 2011-2012)

DIAGNOSTIC TROUBLE CODE (DTC) INFORMATION ECM-P061A68

see **DIAGNOSTIC TROUBLE CODE (DTC) INFORMATION ECM-P061A68**

FAULT-TRACING INFORMATION

see **FAULT-TRACING INFORMATION**

ECM-P061B64 INTERNAL CONTROL MODULE TORQUE CALCULATION PERFORMANCE. ALGORITHM BASED FAILURES. SIGNAL PLAUSIBILITY FAILURE (B6324S; 2007-2010)

DIAGNOSTIC TROUBLE CODE (DTC) INFORMATION ECM-P061B64

Condition

Engine Control Module (ECM) monitors the torque in the engine by reading and interpreting signals from mass air flow sensor, electronic throttle unit and air pressure sensor in the inlet manifold.

Torque is calculated according to two separate methods. The control module checks and compares both results of the calculation.

The diagnostic trouble code (DTC) is stored if the engine control module (ECM) detects that both results of the calculations deviate too much from each other.

The diagnostic trouble code (DTC) can be diagnosed in specific driving conditions.

Substitute Value

- The engine torque is limited by the throttle position (maximum permitted torque depends on accelerator pedal position).

Possible Source

- Air leakage in the intake manifold (downstream of the mass air flow (MAF) sensor and electronic throttle unit).
- Damaged throttle unit.
- Damaged mass air flow (MAF) sensor.
- Damaged engine coolant temperature (ECT) sensor.
- Damaged flywheel sensor.
- Damaged air pressure sensor in the inlet manifold.
- Damaged camshaft reset valve.
- Damaged VVT-unit.
- Damaged engine control module (ECM).

Fault symptom[s]

- Message in information display

FAULT-TRACING

see **FAULT-TRACING**

ECM-P061B64 INTERNAL CONTROL MODULE TORQUE CALCULATION PERFORMANCE. ALGORITHM BASED FAILURES. SIGNAL PLAUSIBILITY FAILURE (B6324S5; 2011-2012)

DIAGNOSTIC TROUBLE CODE (DTC) INFORMATION ECM-P061B64

see **DIAGNOSTIC TROUBLE CODE (DTC) INFORMATION ECM-P061B64**

FAULT-TRACING

see **FAULT-TRACING**

ECM-P061B68 INTERNAL CONTROL MODULE TORQUE CALCULATION PERFORMANCE. ALGORITHM BASED FAILURES. EVENT INFORMATION (B6324S; 2007-2010)

DIAGNOSTIC TROUBLE CODE (DTC) INFORMATION ECM-P061B68

Condition

NOTE: **This diagnostic trouble code (DTC) status is an event controlled diagnostic trouble code (DTC). An event controlled diagnostic trouble code (DTC) does not mean that there is a fault in the control module when it is active, but is designed as information.**

Engine control module (ECM) monitors the torque model internally in the control module. If the control module detects that the torque model has been outside the limit value for a certain time, the diagnostic trouble code is generated.

The diagnostic trouble code (DTC) can be diagnosed when the engine is running.

Substitute Value

- Nothing.

Possible Source

- This diagnostic trouble code (DTC) is not caused by a fault that needs to be remedied.

Fault symptom[s]

- None.

FAULT-TRACING INFORMATION

see **FAULT-TRACING INFORMATION**

ECM-P061B68 INTERNAL CONTROL MODULE TORQUE CALCULATION PERFORMANCE. ALGORITHM BASED FAILURES. EVENT INFORMATION (B6324S5; 2011-2012)

DIAGNOSTIC TROUBLE CODE (DTC) INFORMATION ECM-P061B68

see **DIAGNOSTIC TROUBLE CODE (DTC) INFORMATION ECM-P061B68**

FAULT-TRACING INFORMATION

see **FAULT-TRACING INFORMATION**

ECM-P062001: GENERATOR CONTROL CIRCUIT. GENERAL FAILURE INFORMATION. GENERAL ELECTRICAL FAILURE (B6324S; 2007-2010)

DIAGNOSTIC TROUBLE CODE (DTC) INFORMATION ECM-P062001

Condition

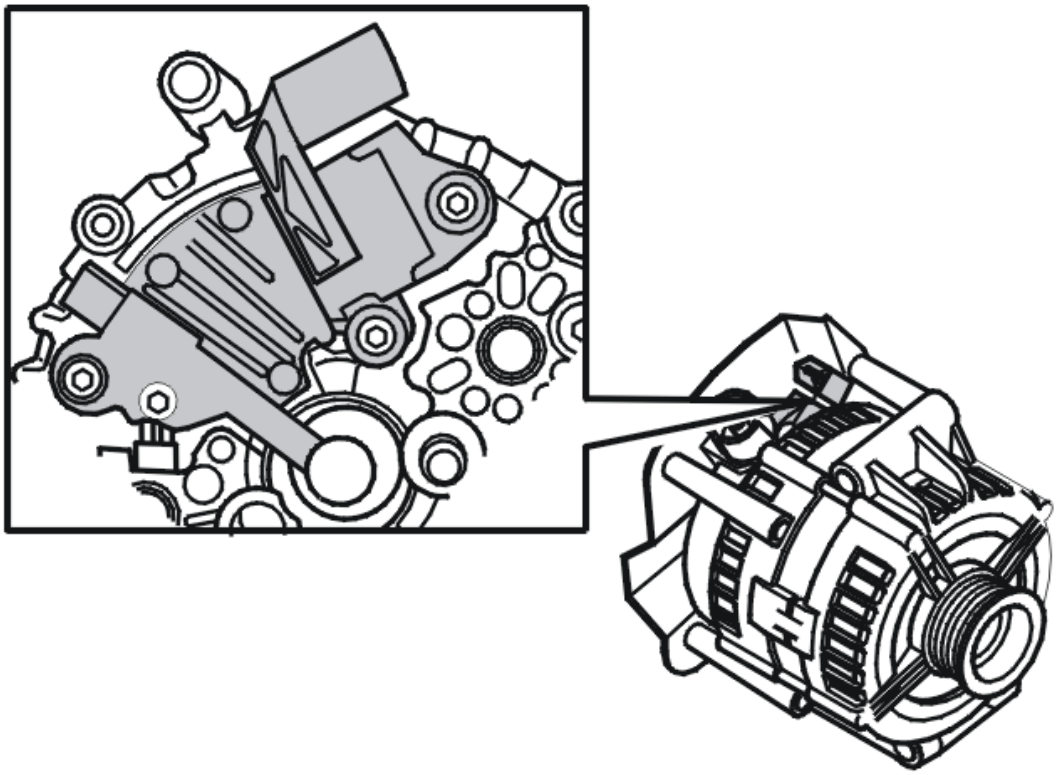

Fig. 304: Locating Alternator Control Module (Charge Regulator)
Courtesy of VOLVO CARS CORPORATION

The engine control module (ECM) regulates the alternator charge voltage (via LIN communication) on request of the central electronic module (CEM) (via CAN communication). The alternator control module (ACM) sends information on the fault to the engine control module (ECM) (via LIN communication). The diagnostic trouble code is generated if the alternator control module (ACM) sends the engine control module (ECM) information on an electrical fault in the alternator.

The diagnostic trouble code can be diagnosed when the engine is running.

Substitute Value

- The alternator control module (ACM) (charge regulator) charges with a fixed voltage of 13.8 V.

Possible Source

- A battery charger with high charging voltage was connected previously.
- Worn carbon brushes.
- Damaged alternator control module (ACM) (charge regulator).
- Damaged alternator.

Fault symptom[s]

- Battery discharged.

FAULT-TRACING

CHECKING COMPONENTS AND WIRING

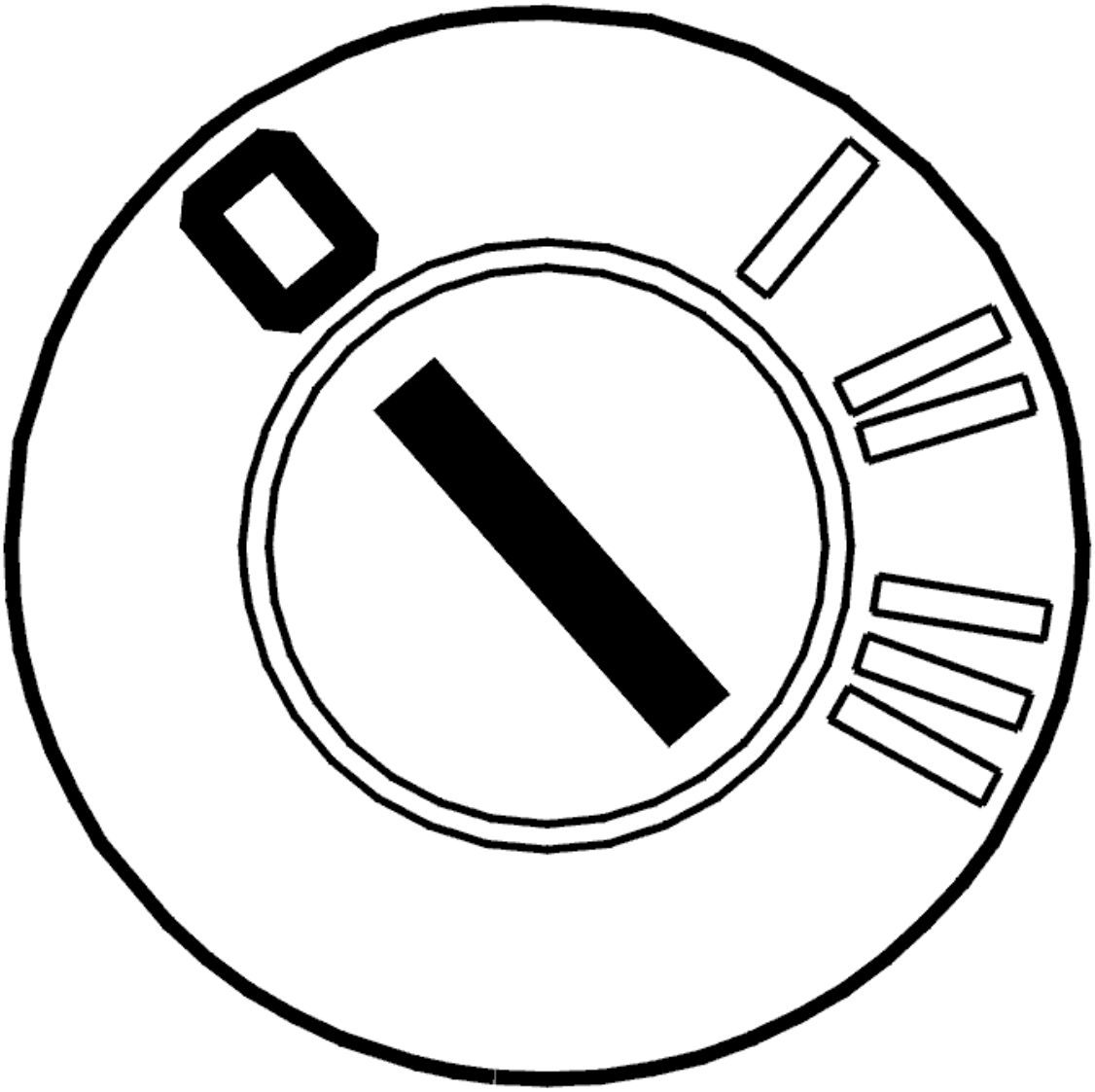

Fig. 305: Identifying Ignition OFF
Courtesy of VOLVO CARS CORPORATION

- Ignition off

  HINT: This diagnostic trouble code (DTC) can be stored if a battery charger with too high charge voltage has been connected.

  Check the generator (GEN) brushes (carbon). Check that the brushes can move in the regulator housing. The brushes are lightly sprung. Also check the slip rings.

If the brushes and slip rings appear to be OK, try a new alternator control module (ACM) (charge regulator).

Remedy as necessary.

Other information

- see **GENERATOR (2007, 2008)**
- see **CHARGE REGULATOR**
- see **CHECKING WIRING AND TERMINALS**

- **Continue**

Refer to **VERIFICATION**

VERIFICATION

VERIFICATION

HINT: After carrying out the repair, check that the fault has been remedied.

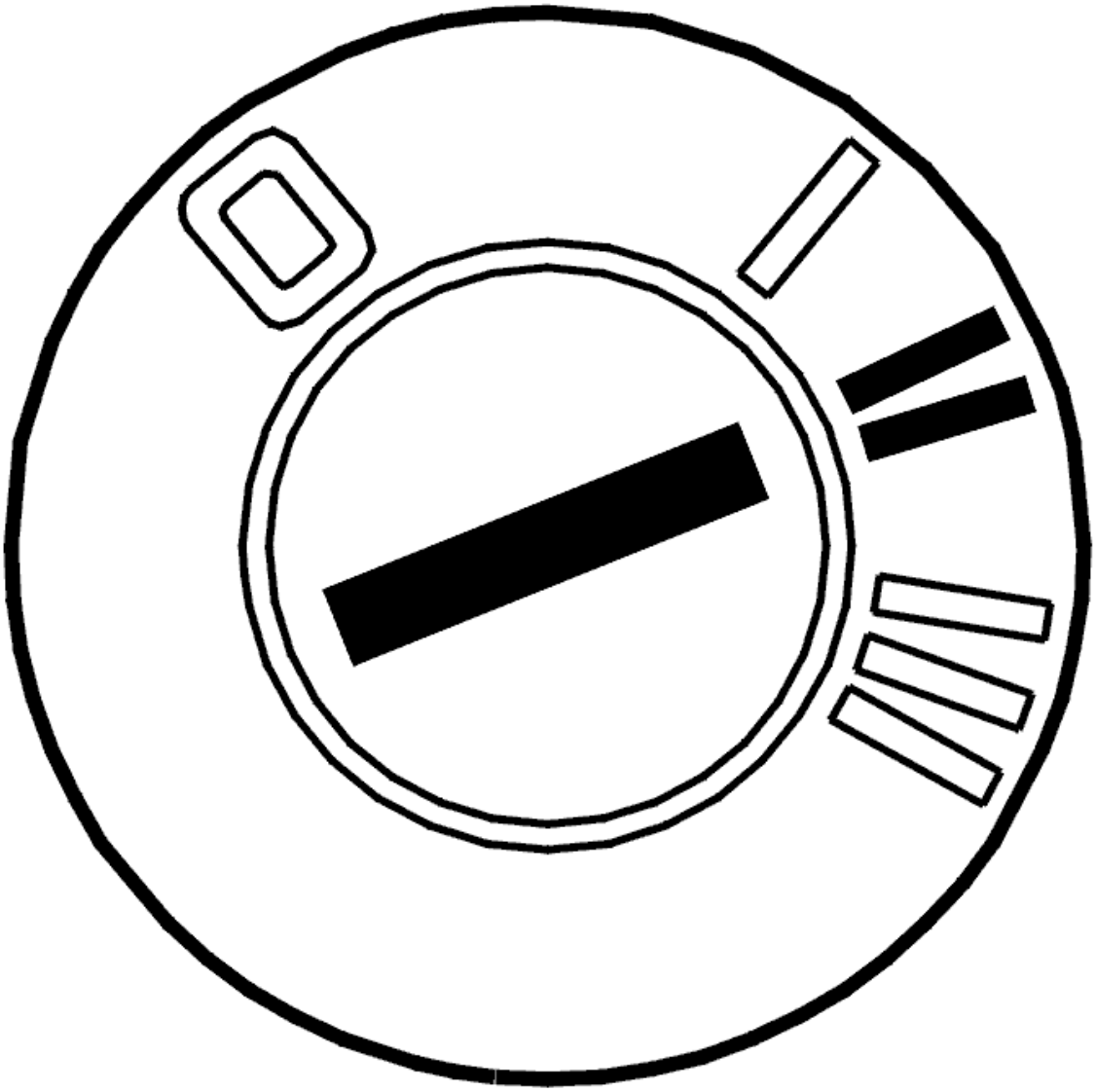

Fig. 306: Identifying Ignition ON
Courtesy of VOLVO CARS CORPORATION

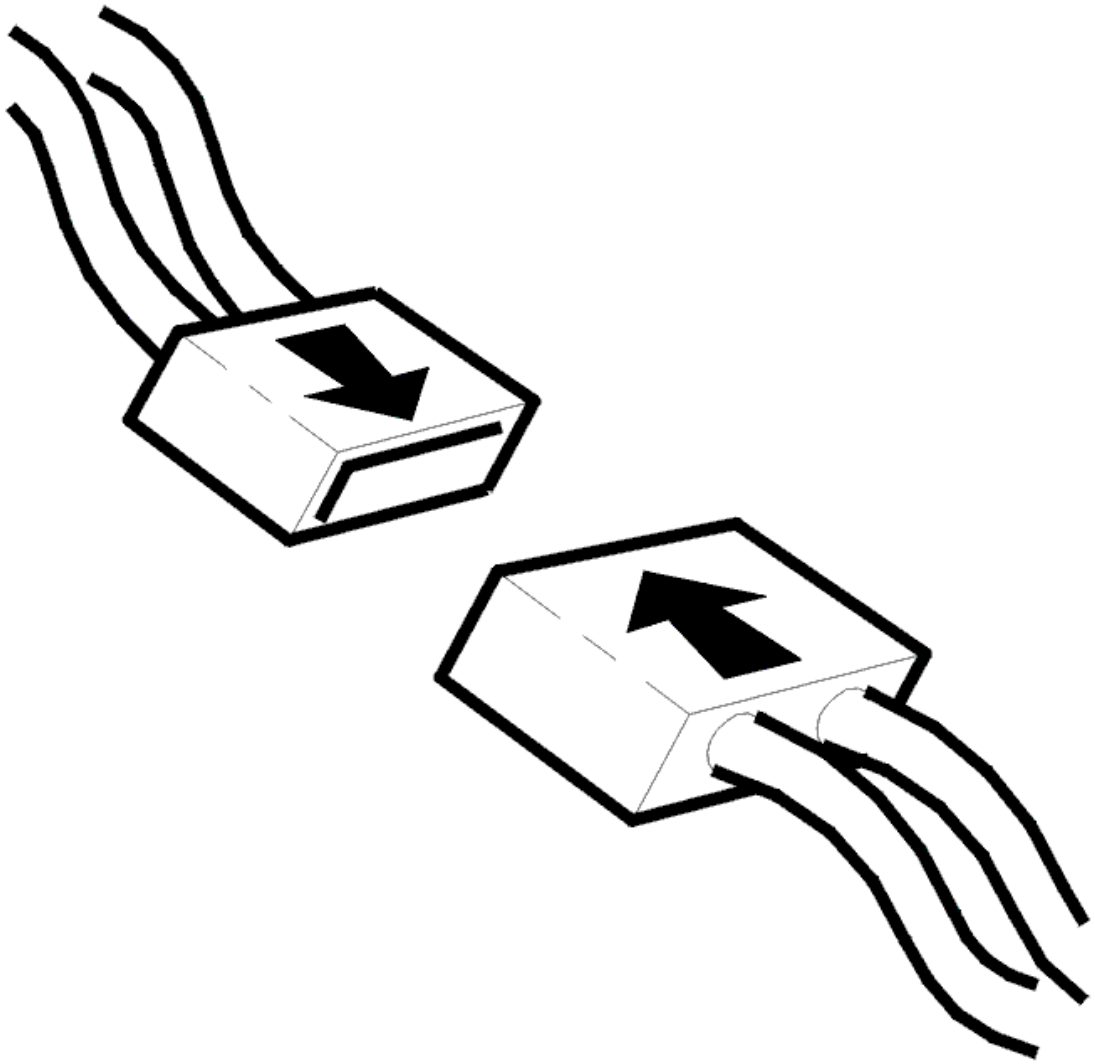

Fig. 307: Connecting Connector
Courtesy of VOLVO CARS CORPORATION

- Ignition off
- Reinstall the connectors, components etc.
- Start the engine.
- Read off the battery voltage.
- Load the battery by switching on several power consumers with a high power consumption, for example, the blower, main beam, etc.

  Read off the battery voltage using the VCT2000 (or appropriate scan tool).

  Check that the battery voltage is correct, battery voltage shall be approx. 13-14 V. Test at different engine speeds.

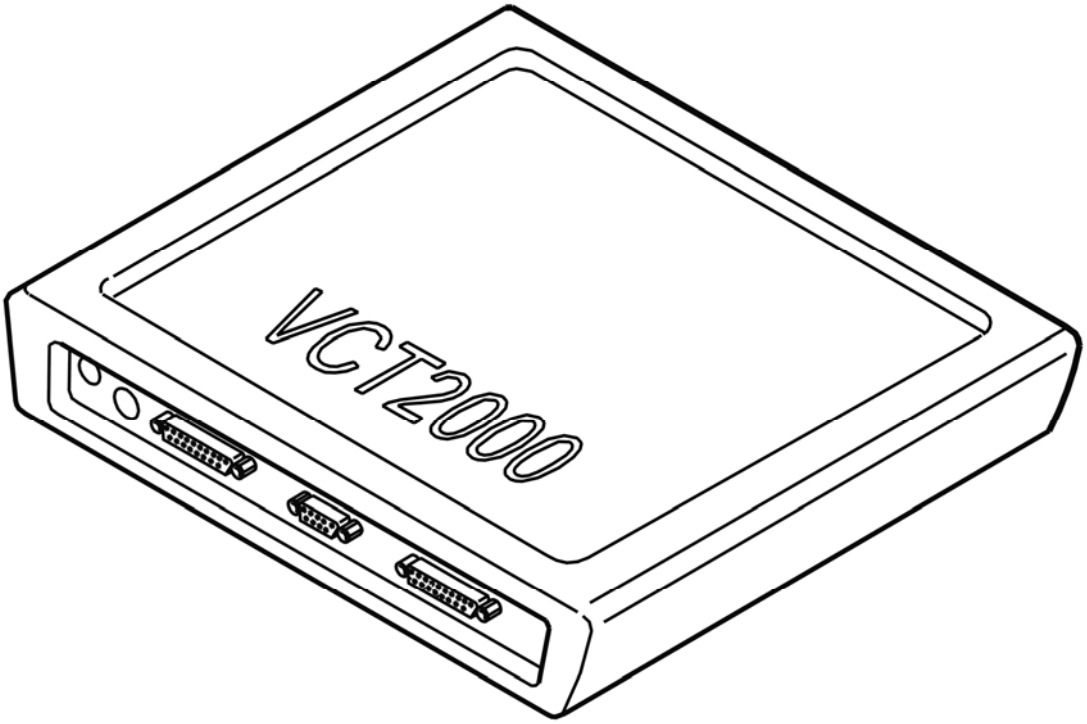

Fig. 308: Identifying VCT2000 Diagnostic Tool Symbol In VIDA
Courtesy of VOLVO CARS CORPORATION

Is the function OK?

- **YES**

  VERIFIED: Troubleshooting has been completed.

- **NO**

  Refer to **INFORMATION**

INFORMATION

FAULT-TRACING INFORMATION

The fault should have been detected and remedied. As this is not the case fault-tracing has failed.

Exit fault-tracing for this diagnostic trouble code (DTC) or make another attempt.

ECM-P062001: GENERATOR CONTROL CIRCUIT. GENERAL FAILURE INFORMATION. GENERAL ELECTRICAL FAILURE (B6324S5; 2011-2012)

DIAGNOSTIC TROUBLE CODE (DTC) INFORMATION ECM-P062001

see **DIAGNOSTIC TROUBLE CODE (DTC) INFORMATION ECM-P062001**

FAULT-TRACING

see **FAULT-TRACING**

ECM-P062001: GENERATOR CONTROL CIRCUIT. GENERAL FAILURE INFORMATION. GENERAL ELECTRICAL FAILURE (B8444S; 2005-2011)

DIAGNOSTIC TROUBLE CODE (DTC) INFORMATION ECM-P062001

Condition

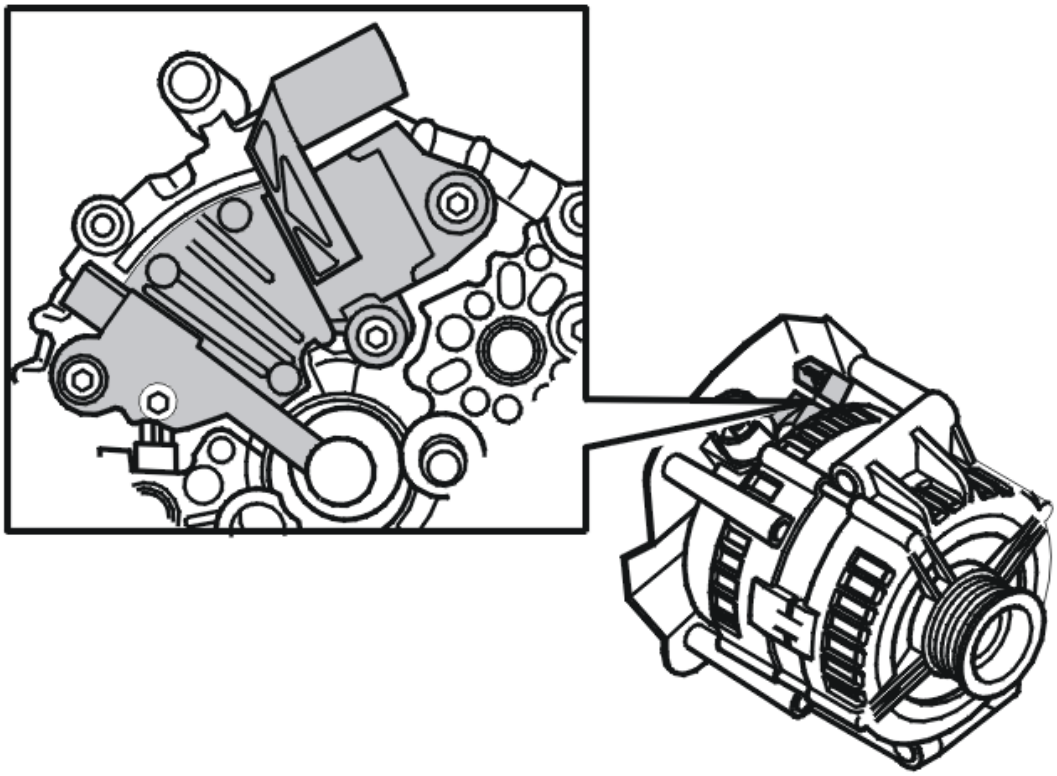

Fig. 309: Locating Alternator Control Module (Charge Regulator)
Courtesy of VOLVO CARS CORPORATION

The engine control module (ECM) regulates the alternator charge voltage (via LIN communication) on request of the central electronic module (CEM) (via CAN communication). The alternator control module (ACM) sends information on the fault to the engine control module (ECM) (via LIN communication). The diagnostic trouble code is generated if the alternator control module (ACM) sends the engine control module (ECM) information on an electrical fault in the alternator.

The diagnostic trouble code can be diagnosed when the engine is running.

Substitute Value

- The alternator control module (ACM) (charge regulator) charges with a fixed voltage of 13.8 V.

Possible Source

- A battery charger with high charging voltage was connected previously.
- Worn carbon brushes.
- Damaged alternator control module (ACM) (charge regulator).
- Damaged alternator.

Fault symptom[s]

- Battery discharged.

FAULT TRACING ECM-P062001

CHECKING COMPONENTS AND WIRING

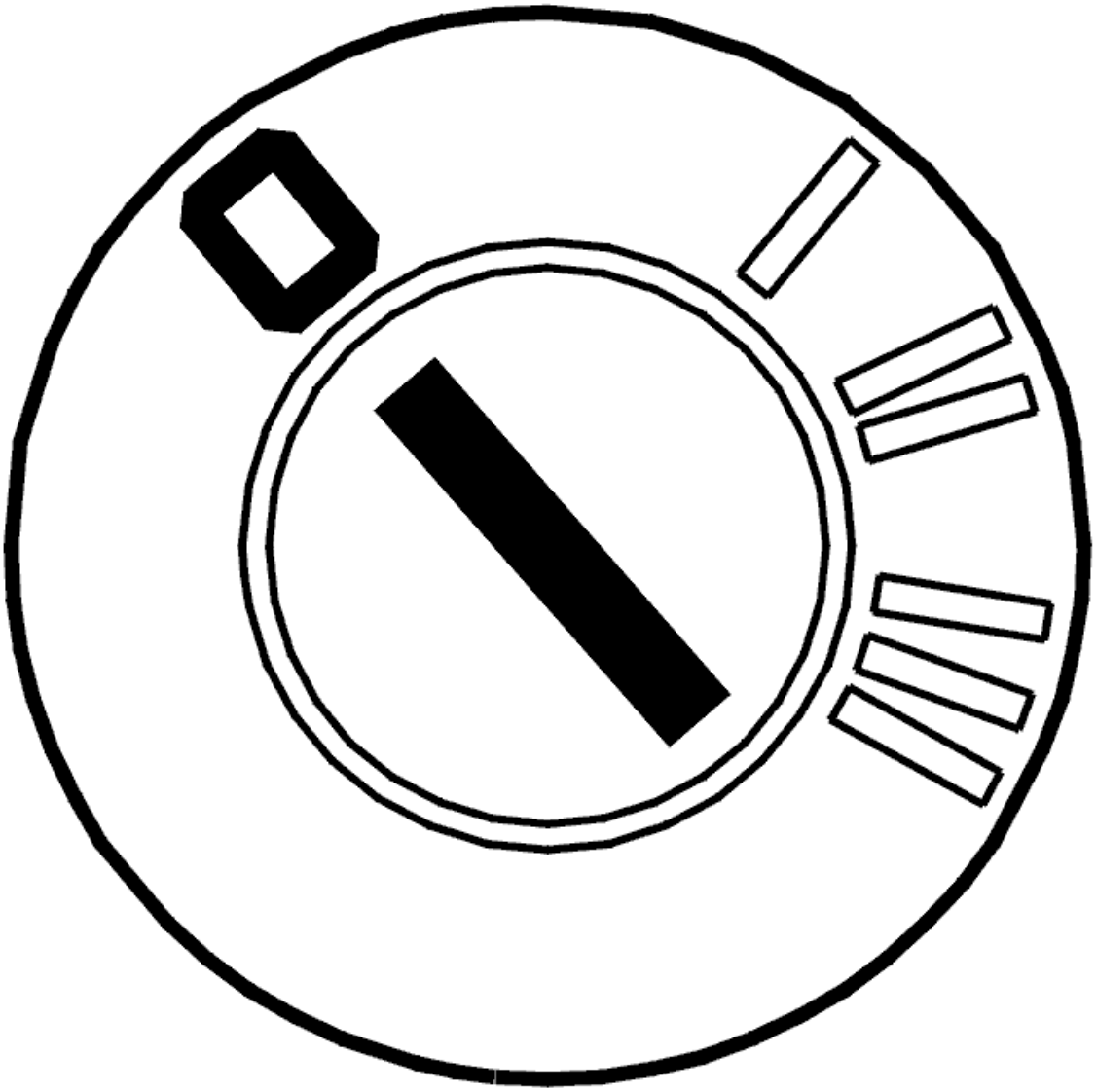

Fig. 310: Identifying Ignition OFF
Courtesy of VOLVO CARS CORPORATION

- Ignition off

  HINT: This diagnostic trouble code (DTC) can be stored if a battery charger with too high charge voltage has been connected.

  Check the generator (GEN) brushes (carbon). Check that the brushes can move in the regulator housing. The brushes are lightly sprung. Also check the slip rings.

  If the brushes and slip rings appear to be OK, try a new alternator control module (ACM) (charge regulator).

  Remedy as necessary.

Other information

- see **ALTERNATOR AND REGULATOR - REMOVAL, REPLACEMENT AND INSTALLATION**
- see **CHECKING WIRING AND TERMINALS**

- **Continue**

  Refer to **VERIFICATION**

VERIFICATION

VERIFICATION

HINT: After carrying out the repair, check that the fault has been remedied.

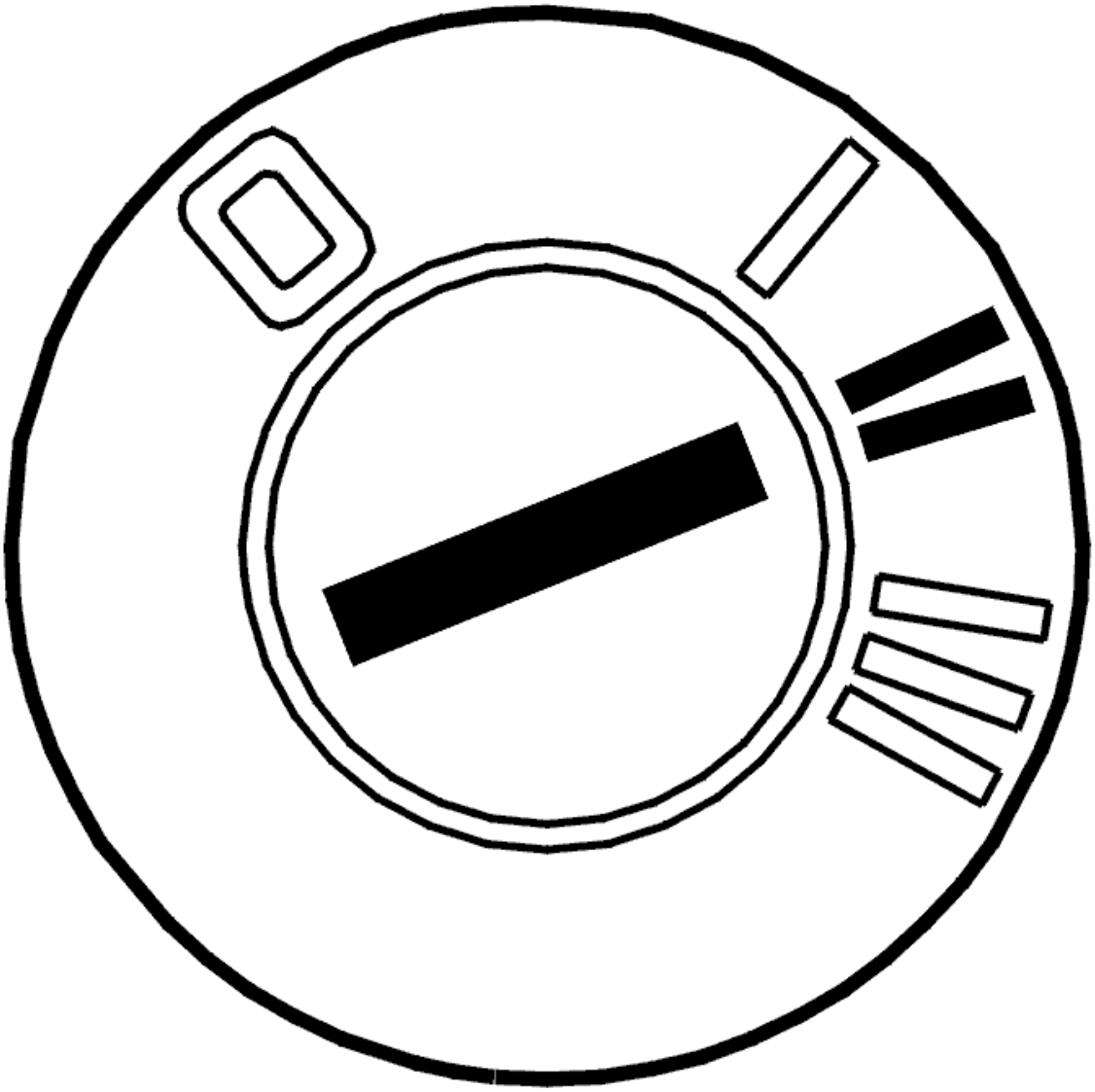

Fig. 311: Identifying Ignition ON
Courtesy of VOLVO CARS CORPORATION

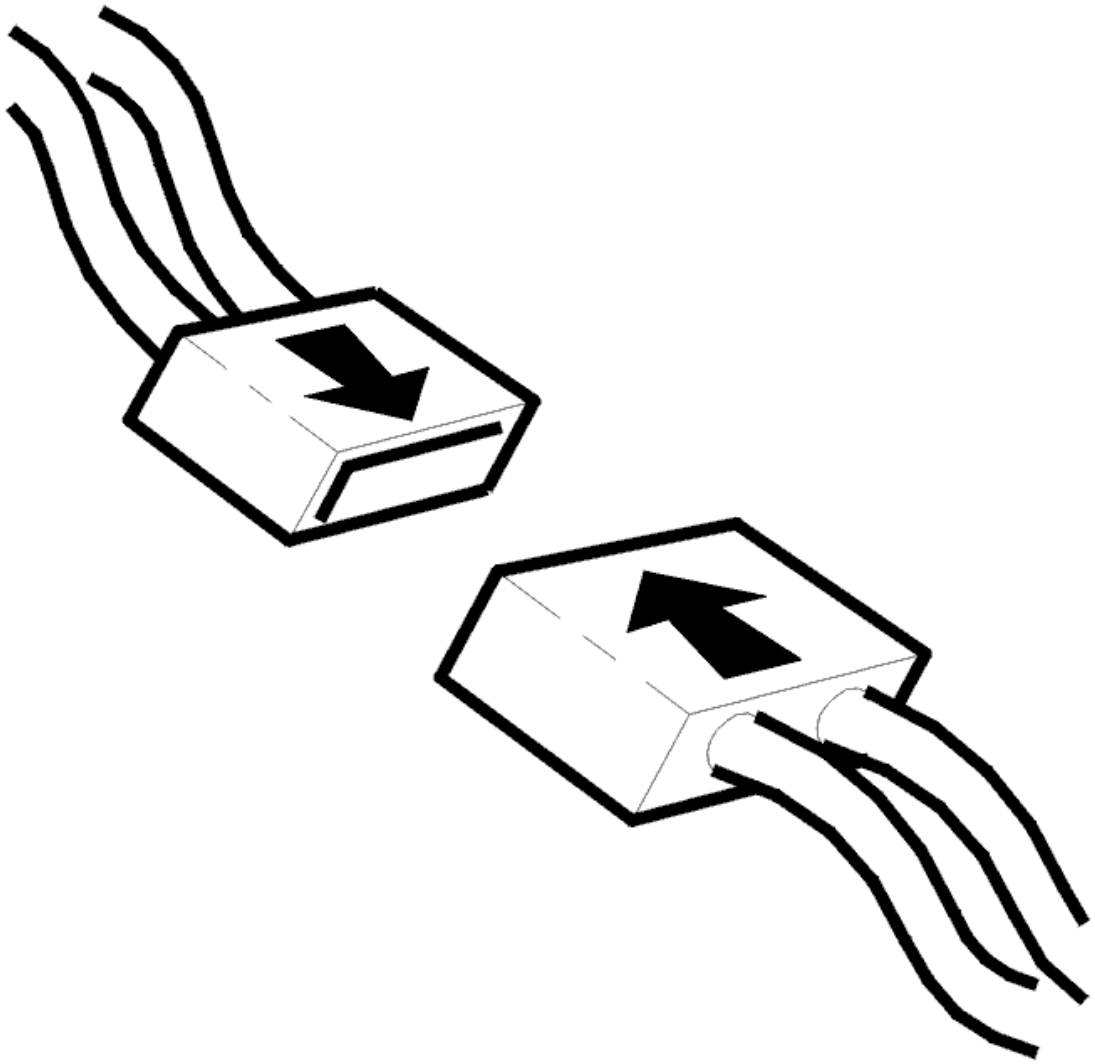

Fig. 312: Connecting Connector
Courtesy of VOLVO CARS CORPORATION

- Ignition off
- Reinstall the connectors, components etc.
- Start the engine.
- Read off the battery voltage.
- Load the battery by switching on several power consumers with a high power consumption, for example, the blower, main beam, etc.

  Read off the battery voltage using the VCT2000 (or appropriate scan tool).

Check that the battery voltage is correct, battery voltage shall be approx. 13-14 V. Test at different engine speeds.

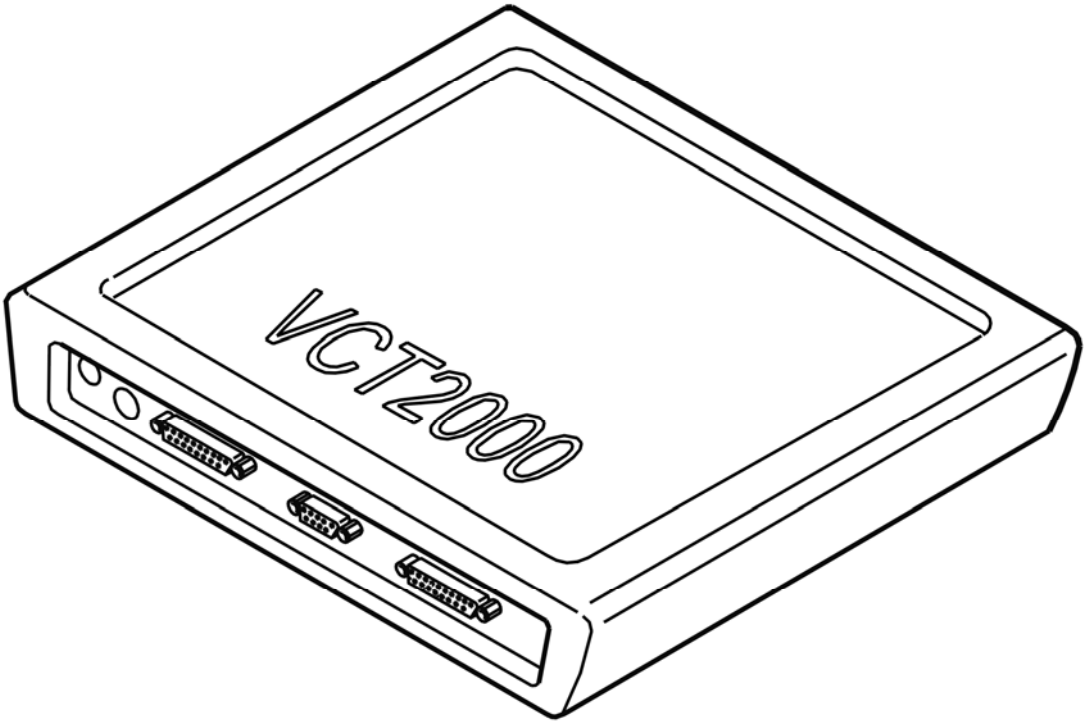

Fig. 313: Identifying VCT2000 Diagnostic Tool Symbol In VIDA
Courtesy of VOLVO CARS CORPORATION

Is the function OK?

- **YES**

  VERIFIED: Troubleshooting has been completed.

- **NO**

  Refer to **INFORMATION**

INFORMATION

FAULT-TRACING INFORMATION

The fault should have been detected and remedied. As this is not the case fault-tracing has failed.

Exit fault-tracing for this diagnostic trouble code (DTC) or make another attempt.

ECM-P06204B: GENERATOR CONTROL CIRCUIT. SYSTEM INTERNAL FAILURES. OVER TEMPERATURE (B6324S; 2007-2010)

DIAGNOSTIC TROUBLE CODE (DTC) INFORMATION ECM-P06204B

Condition

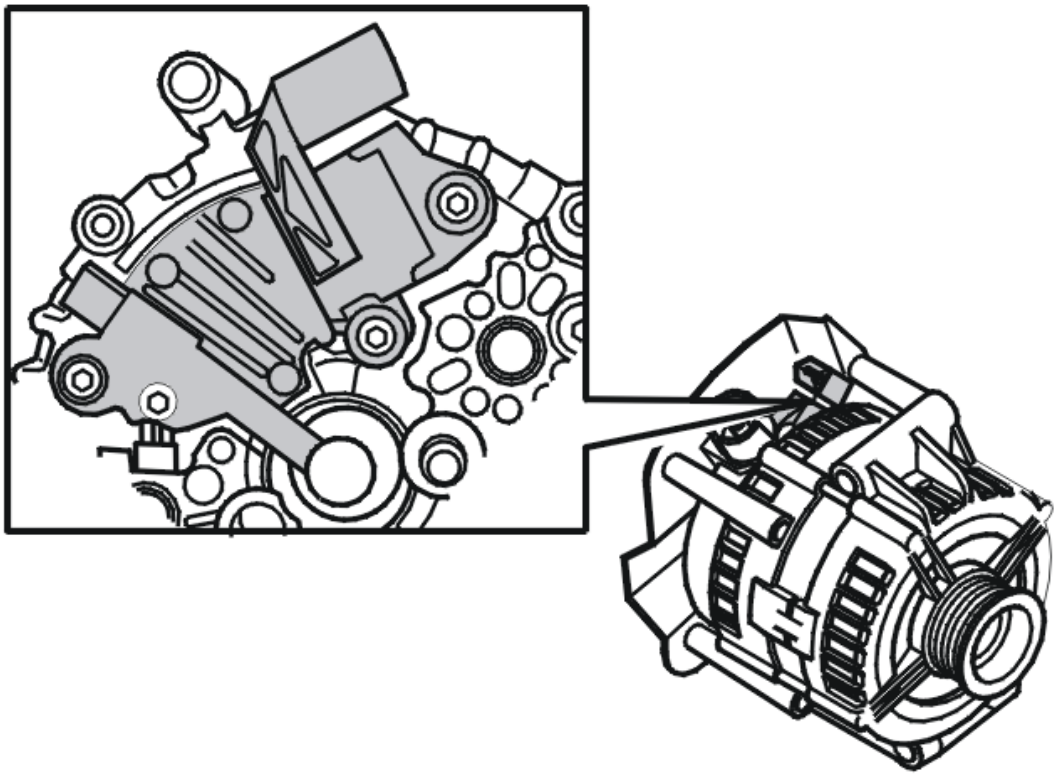

Fig. 314: Locating Alternator Control Module (Charge Regulator)
Courtesy of VOLVO CARS CORPORATION

The engine control module (ECM) regulates the alternator charge voltage (via LIN communication) on request of the central electronic module (CEM) (via CAN communication). The alternator control module (ACM) sends information on the fault to the engine control module (ECM) (via LIN communication). The diagnostic trouble code is generated if the alternator control module (ACM) sends the engine control module (ECM) information indicating that the alternator temperature exceeds a certain value.

The diagnostic trouble code can be diagnosed when the engine is running.

Substitute Value

- The alternator control module (ACM) (charge regulator) charges with a fixed voltage of 13.8 V.

Possible Source

- Air intake and/or outlet of alternator is blocked.
- Damaged alternator.

Fault symptom[s]

- The cooling fan runs constantly while the engine is running.

FAULT-TRACING

CHECKING COMPONENTS AND WIRING

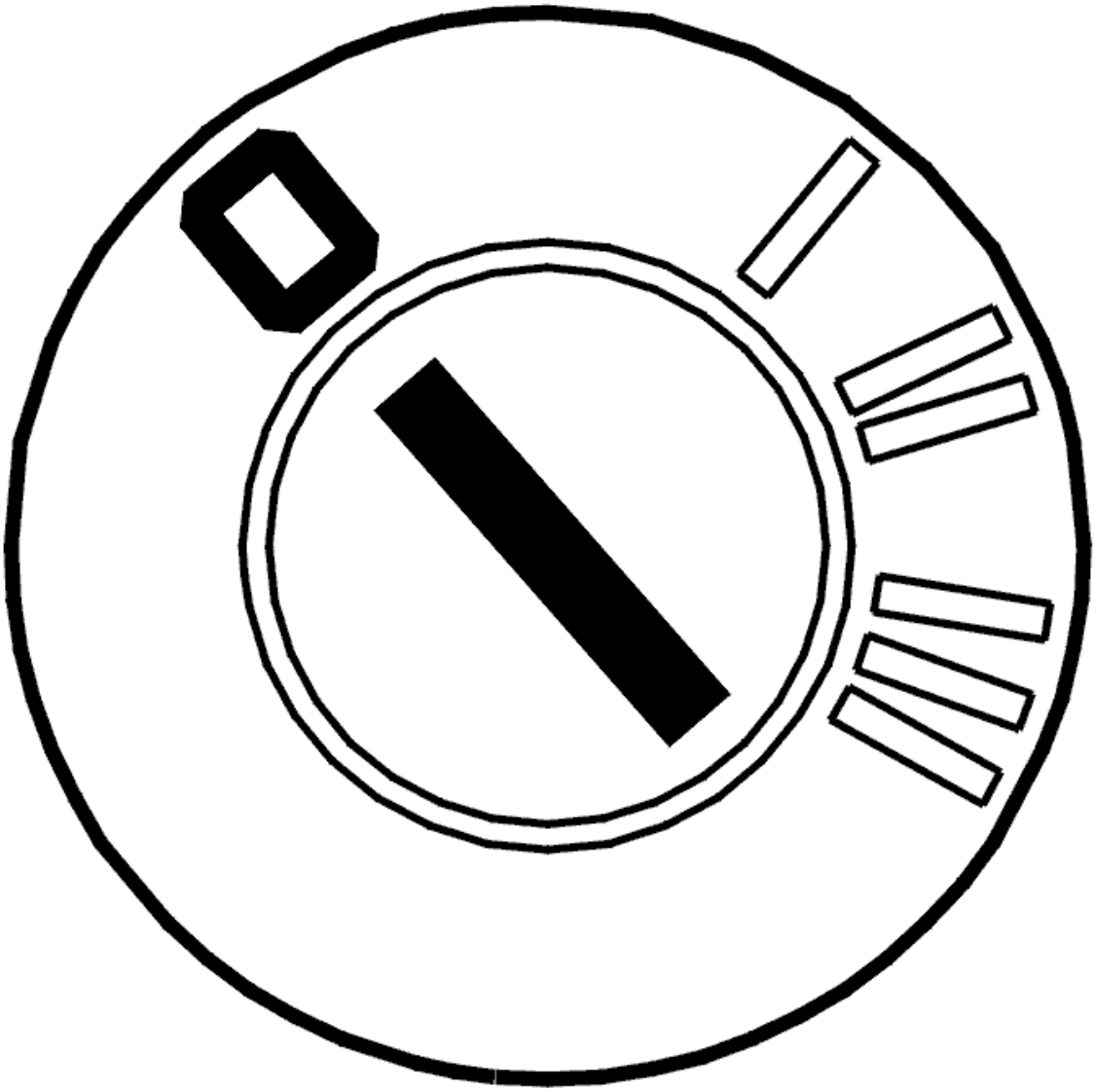

Fig. 315: Identifying Ignition OFF
Courtesy of VOLVO CARS CORPORATION

- Ignition off

Make sure that the air intake and/or outlet of the alternator is not blocked.

HINT: If the diagnostic trouble code recurs after operation, try a new alternator.

- **Continue**

  Refer to **VERIFICATION**

VERIFICATION

VERIFICATION

HINT: After carrying out the repair, check that the fault has been remedied.

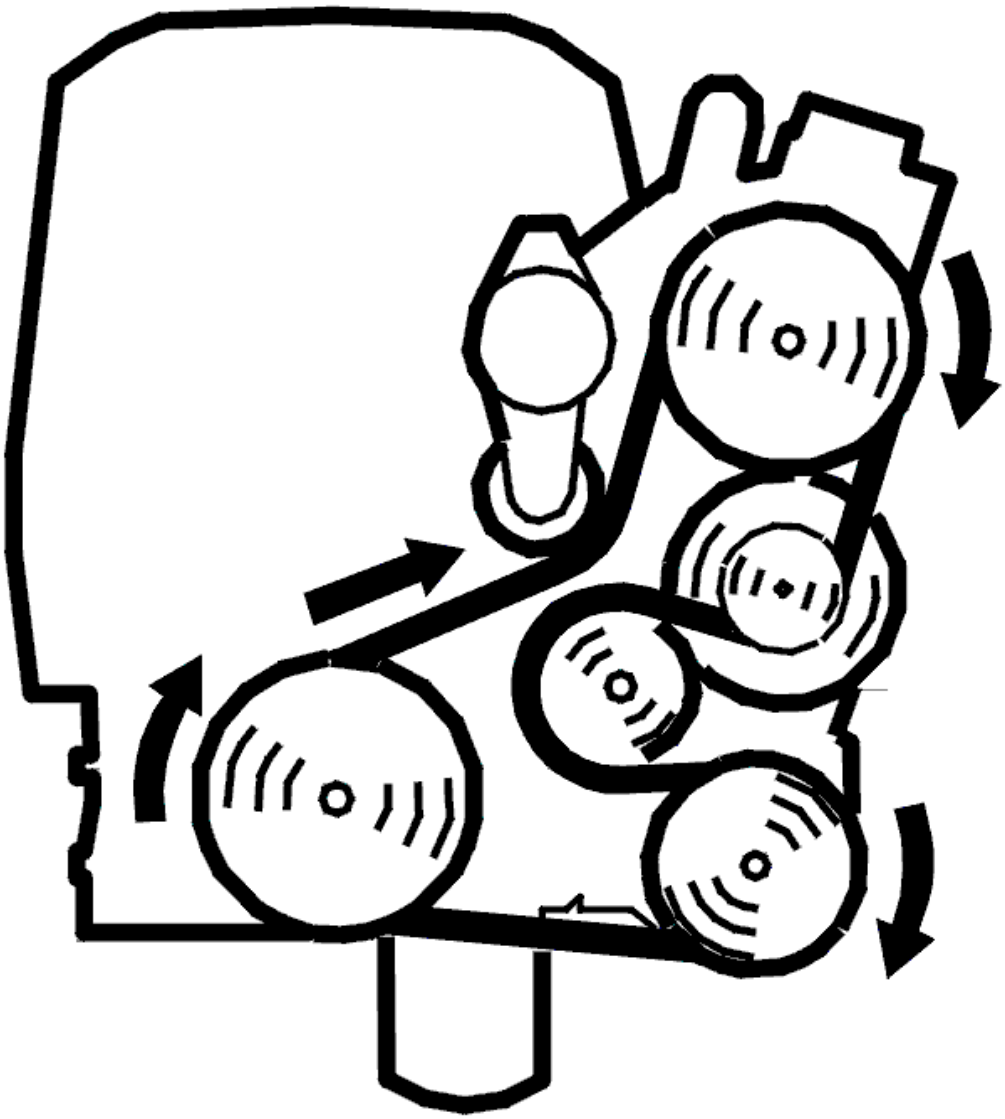

Fig. 316: Belt Routing / Engine Idling - Volvo
Courtesy of VOLVO CARS CORPORATION

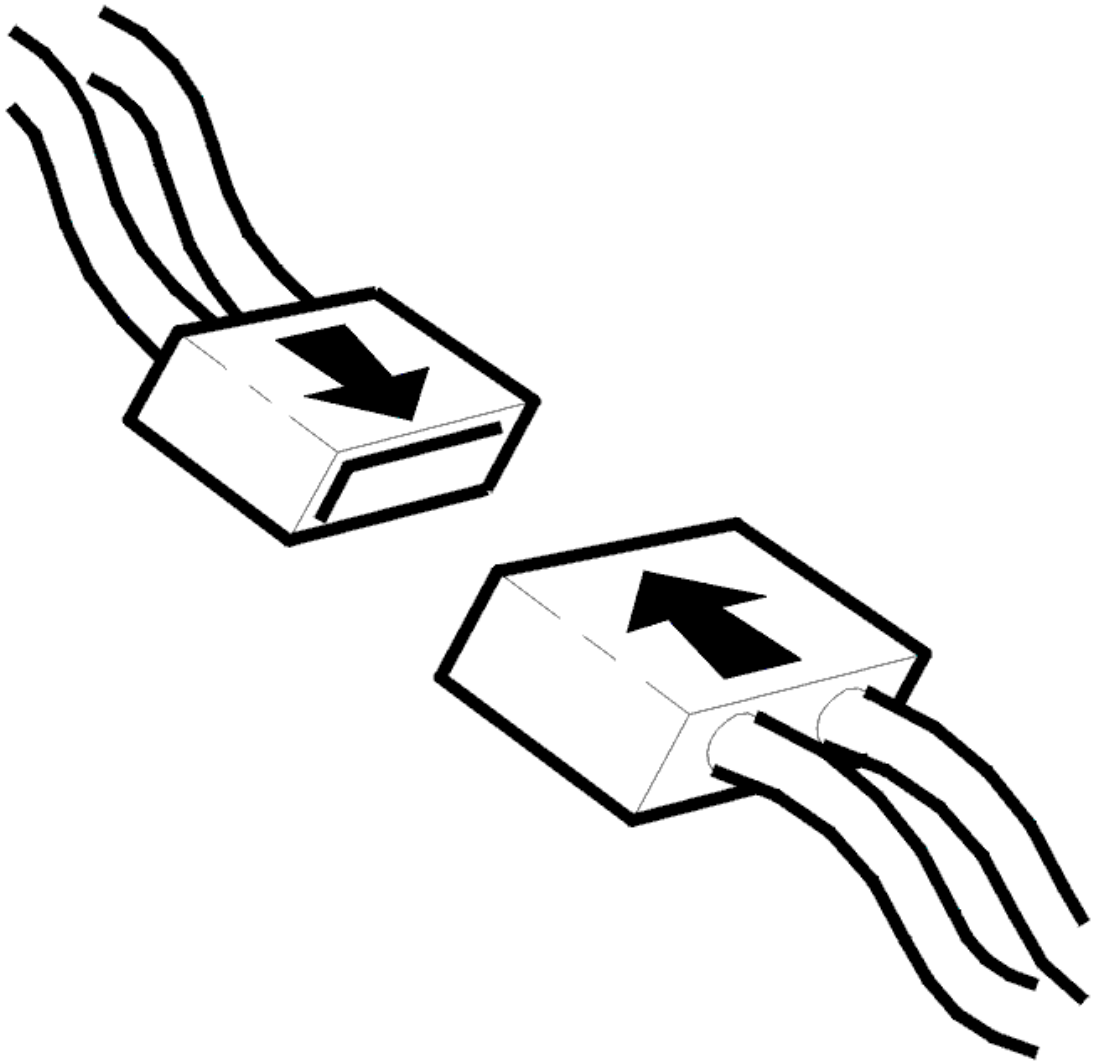

Fig. 317: Connecting Connector
Courtesy of VOLVO CARS CORPORATION

- Ignition off
- Reconnect the connectors, components, etc.
- Start the engine.
- Read the diagnostic status and fault status for the diagnostic trouble code by selecting the diagnostic trouble code in the list.

  Increase the engine speed a few times until the scan is "Implemented".

  Check the fault status for the diagnostic trouble code when the scan is "Implemented". When the function is correct the fault status should be "No fault found" when the scan is implemented.

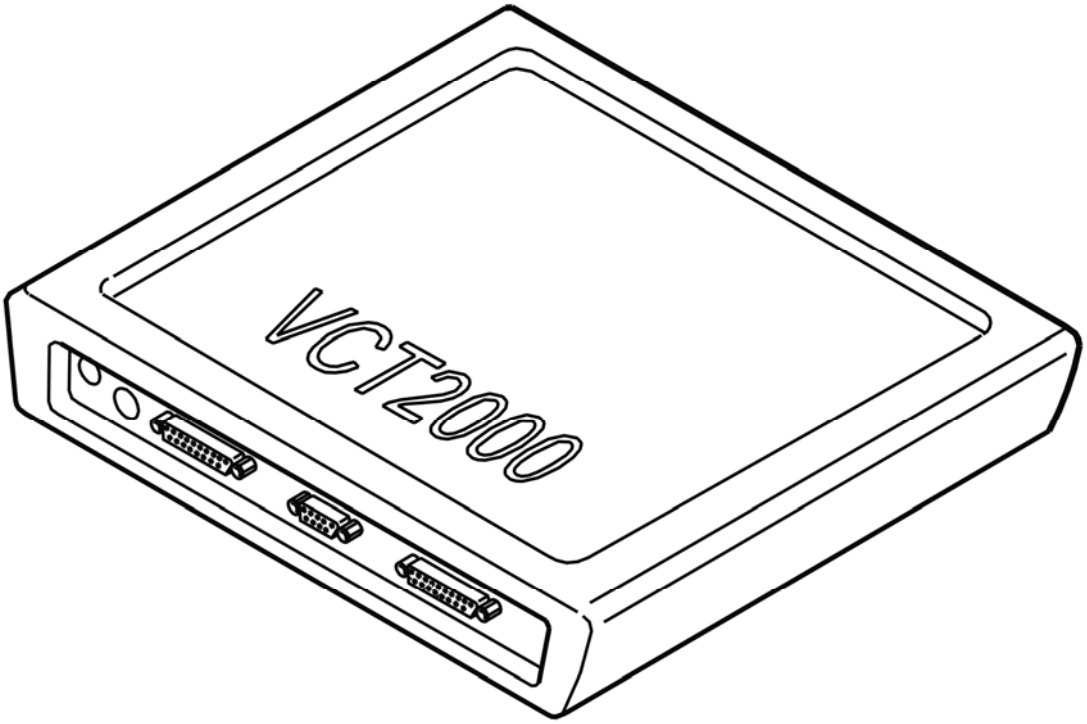

Fig. 318: Identifying VCT2000 Diagnostic Tool Symbol In VIDA
Courtesy of VOLVO CARS CORPORATION

Is the function OK?

- **YES**

  VERIFIED: Troubleshooting has been completed.

- **NO**

  Refer to **INFORMATION**

INFORMATION

FAULT-TRACING INFORMATION

The fault should have been detected and remedied. As this is not the case fault-tracing has failed.

Exit fault-tracing for this diagnostic trouble code (DTC) or make another attempt.

ECM-P06204B: GENERATOR CONTROL CIRCUIT. SYSTEM INTERNAL FAILURES. OVER TEMPERATURE (B6324S5; 2011-2012)

DIAGNOSTIC TROUBLE CODE (DTC) INFORMATION ECM-P06204B

see **DIAGNOSTIC TROUBLE CODE (DTC) INFORMATION ECM-P06204B**

FAULT-TRACING

see **FAULT-TRACING**

ECM-P06204B: GENERATOR CONTROL CIRCUIT. SYSTEM INTERNAL FAILURES. OVER TEMPERATURE (B8444S; 2005-2011)

DIAGNOSTIC TROUBLE CODE (DTC) INFORMATION ECM-P06204B

Condition

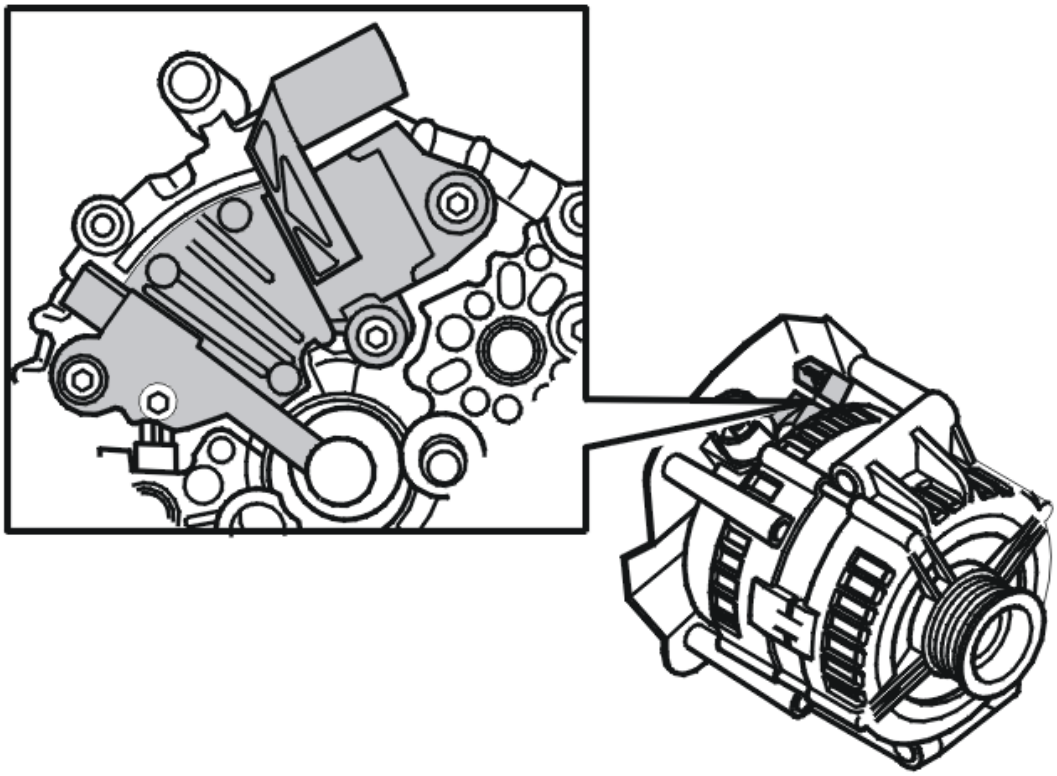

Fig. 319: Locating Alternator Control Module (Charge Regulator)
Courtesy of VOLVO CARS CORPORATION

The engine control module (ECM) regulates the alternator charge voltage (via LIN communication) on request of the central electronic module (CEM) (via CAN communication). The alternator control module (ACM) sends information on the fault to the engine control module (ECM) (via LIN communication). The diagnostic trouble code is generated if the alternator control module (ACM) sends the engine control module (ECM) information indicating that the alternator temperature exceeds a certain value.

The diagnostic trouble code can be diagnosed when the engine is running.

Substitute Value

- The alternator control module (ACM) (charge regulator) charges with a fixed voltage of 13.8 V.

Possible Source

- Air intake and/or outlet of alternator is blocked.
- Damaged alternator.

Fault symptom[s]

- The cooling fan runs constantly while the engine is running.

FAULT TRACING ECM-P06204B

CHECKING COMPONENTS AND WIRING

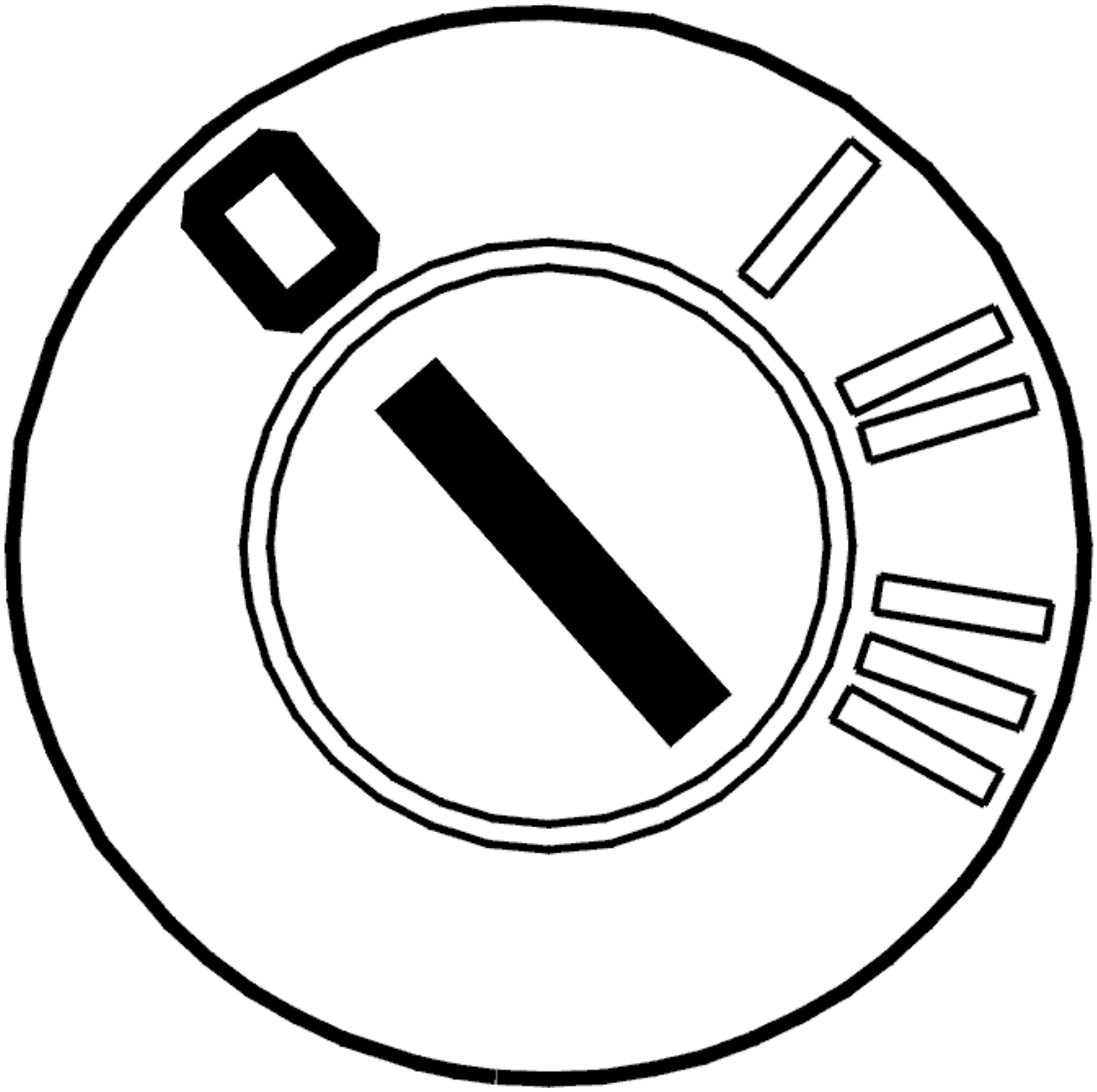

Fig. 320: Identifying Ignition OFF
Courtesy of VOLVO CARS CORPORATION

- Ignition off

  Make sure that the air intake and/or outlet of the alternator is not blocked.

  HINT: If the diagnostic trouble code recurs after operation, try a new alternator.

- **Continue**

  Refer to **VERIFICATION**

VERIFICATION

VERIFICATION

HINT: After carrying out the repair, check that the fault has been remedied.

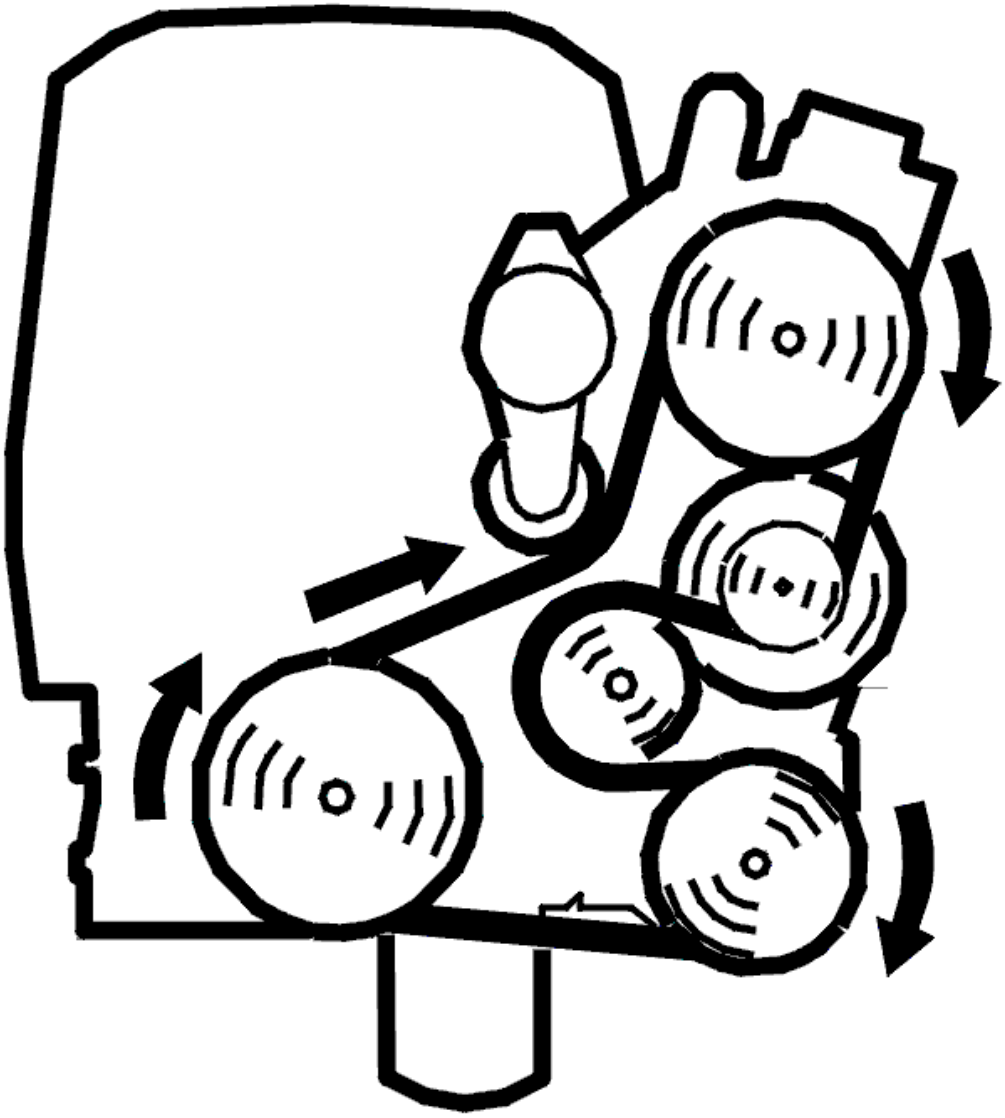

Fig. 321: Belt Routing / Engine Idling - Volvo
Courtesy of VOLVO CARS CORPORATION

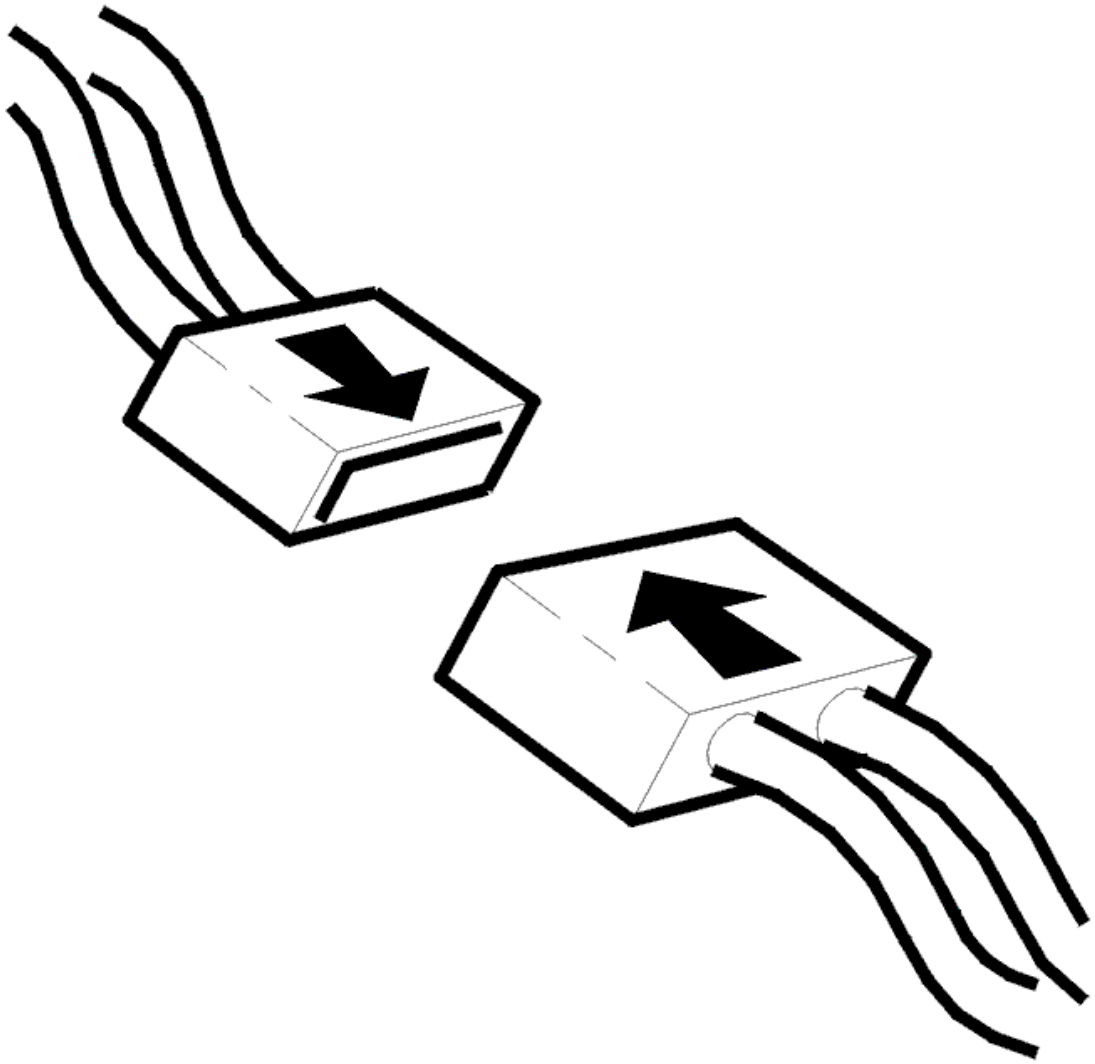

Fig. 322: Connecting Connector
Courtesy of VOLVO CARS CORPORATION

- Ignition off
- Reconnect the connectors, components, etc.
- Start the engine.
- Read the diagnostic status and fault status for the diagnostic trouble code by selecting the diagnostic trouble code in the list.

  Increase the engine speed a few times until the scan is "Implemented".

  Check the fault status for the diagnostic trouble code when the scan is "Implemented". When the function is correct the fault status should be "No fault found" when the scan is implemented.

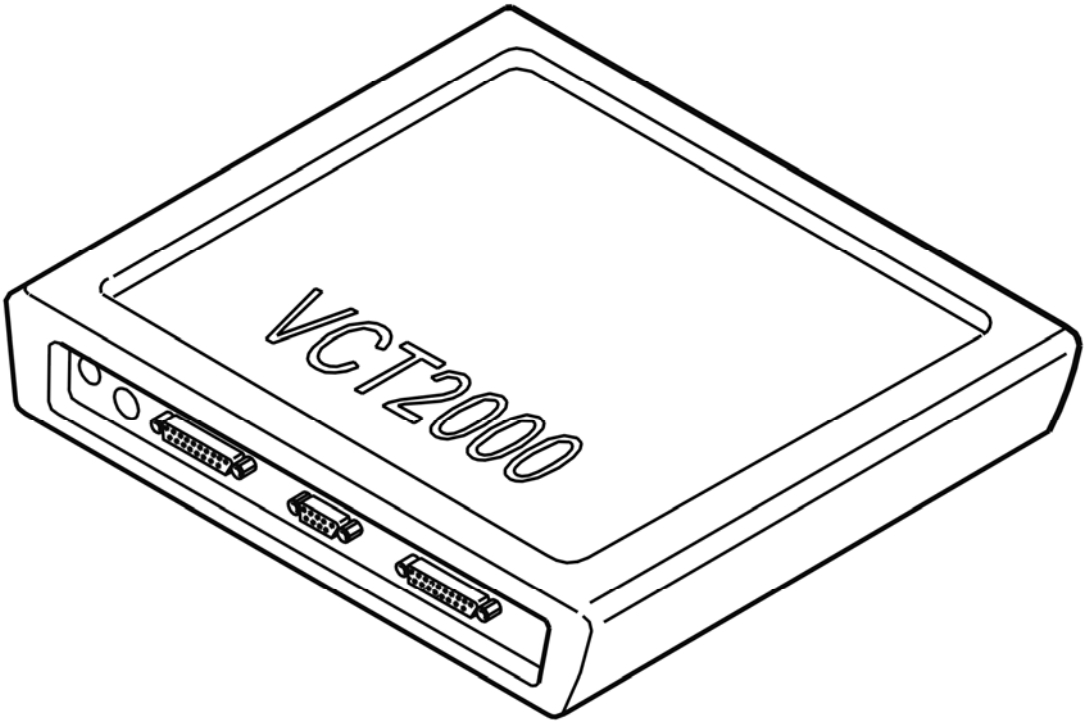

Fig. 323: Identifying VCT2000 Diagnostic Tool Symbol In VIDA
Courtesy of VOLVO CARS CORPORATION

Is the function OK?

- **YES**

  VERIFIED: Troubleshooting has been completed.

- **NO**

  Refer to **INFORMATION**

INFORMATION

FAULT-TRACING INFORMATION

The fault should have been detected and remedied. As this is not the case fault-tracing has failed.

Exit fault-tracing for this diagnostic trouble code (DTC) or make another attempt.

ECM-P062074: GENERATOR CONTROL CIRCUIT. MECHANICAL FAILURES. ACTUATOR SLIPPING (B6324S; 2007-2010)

DIAGNOSTIC TROUBLE CODE (DTC) INFORMATION ECM-P062074

Condition

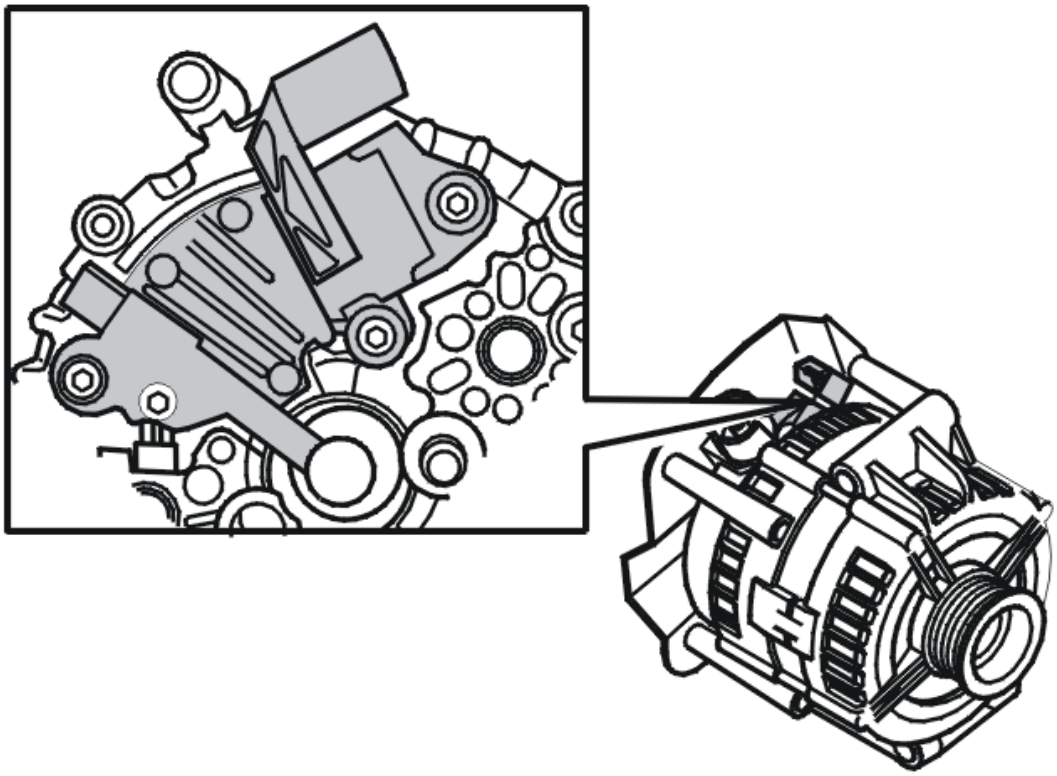

Fig. 1: Locating Alternator Control Module (Charge Regulator)
Courtesy of VOLVO CARS CORPORATION

The engine control module (ECM) regulates the alternator charge voltage (via LIN communication) on request of the central electronic module (CEM) (via CAN communication). The alternator control module (ACM) sends information on the fault to the engine control module (ECM) (via LIN communication). The diagnostic trouble code is generated if the alternator control module (ACM) sends the engine control module (ECM) information on a mechanical fault in the alternator (engine speed exceeds a certain value but the alternator is not operating).

The diagnostic trouble code can be diagnosed when the engine is running.

Substitute Value

- The alternator control module (ACM) (charge regulator) charges with a fixed voltage of 13.8 V.

Possible Source

- Damaged auxiliaries belt and belt tensioner.
- Damaged freewheel.
- Damaged alternator.

Fault symptom[s]

- Battery discharged.
- Low starter motor RPM.
- Noise from alternator.
- The engine judders under acceleration

FAULT-TRACING

CHECKING COMPONENTS AND WIRING

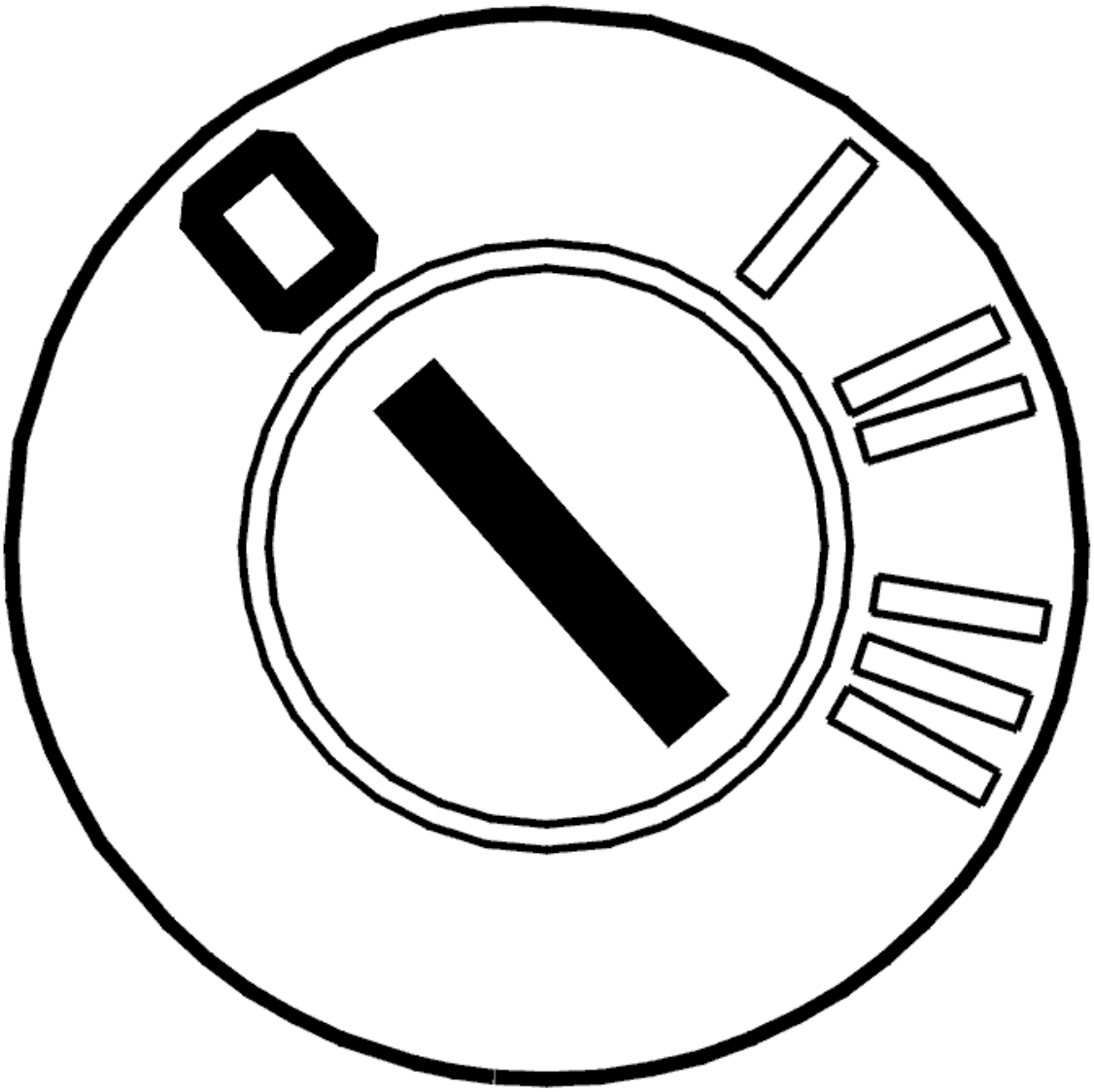

Fig. 2: Identifying Ignition OFF
Courtesy of VOLVO CARS CORPORATION

- Ignition off

  Check the auxiliaries belt and belt tensioner for damage.

  Check the function of the alternator freewheel. A fault-free freewheel pulls around the alternator rotor shaft in one direction but not the other.

  HINT: If the diagnostic trouble code recurs after operation, try a new alternator.

- **Continue**

  Refer to **VERIFICATION**

VERIFICATION

VERIFICATION

HINT: After carrying out the repair, check that the fault has been remedied.

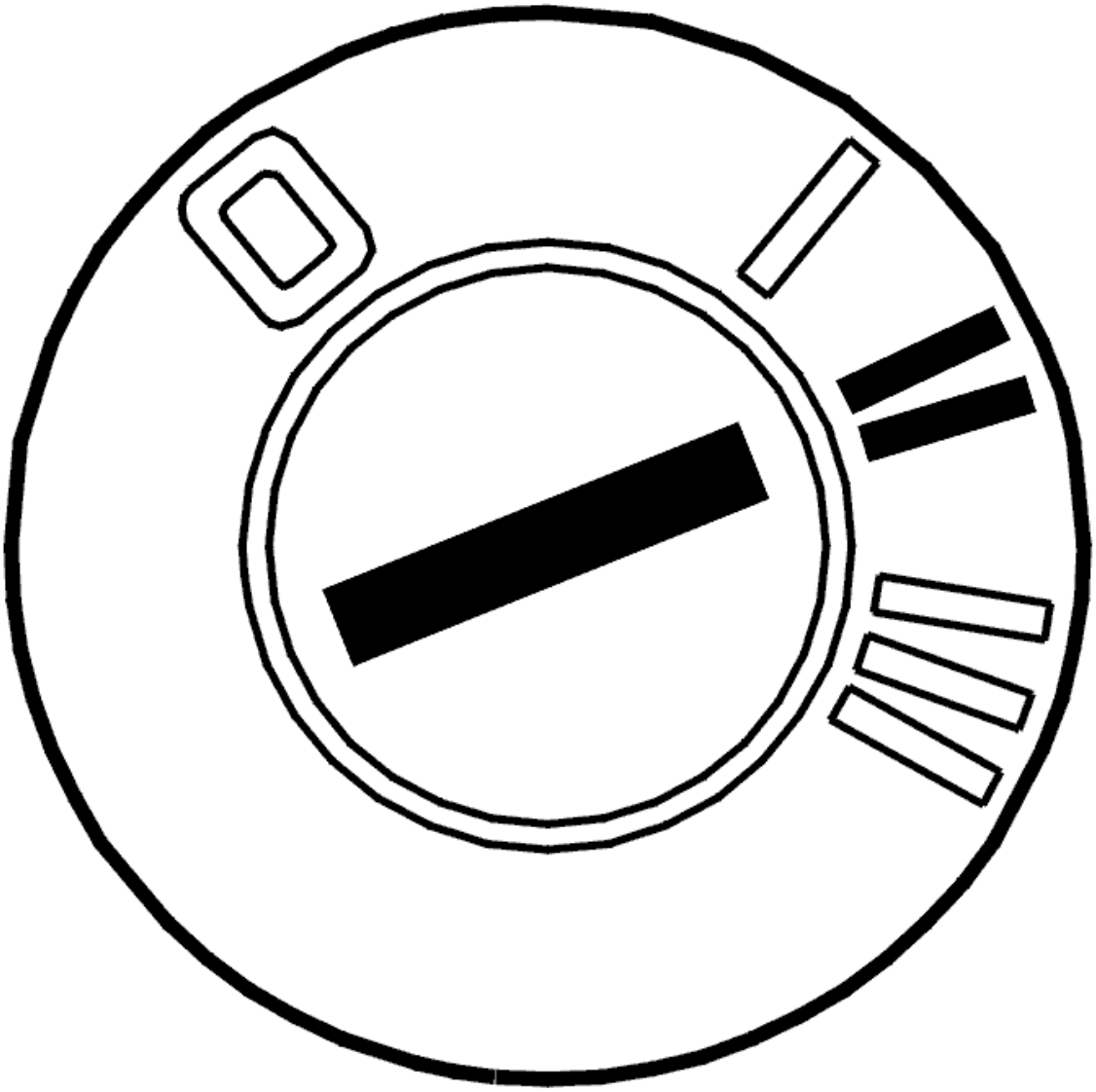

Fig. 3: Identifying Ignition ON
Courtesy of VOLVO CARS CORPORATION

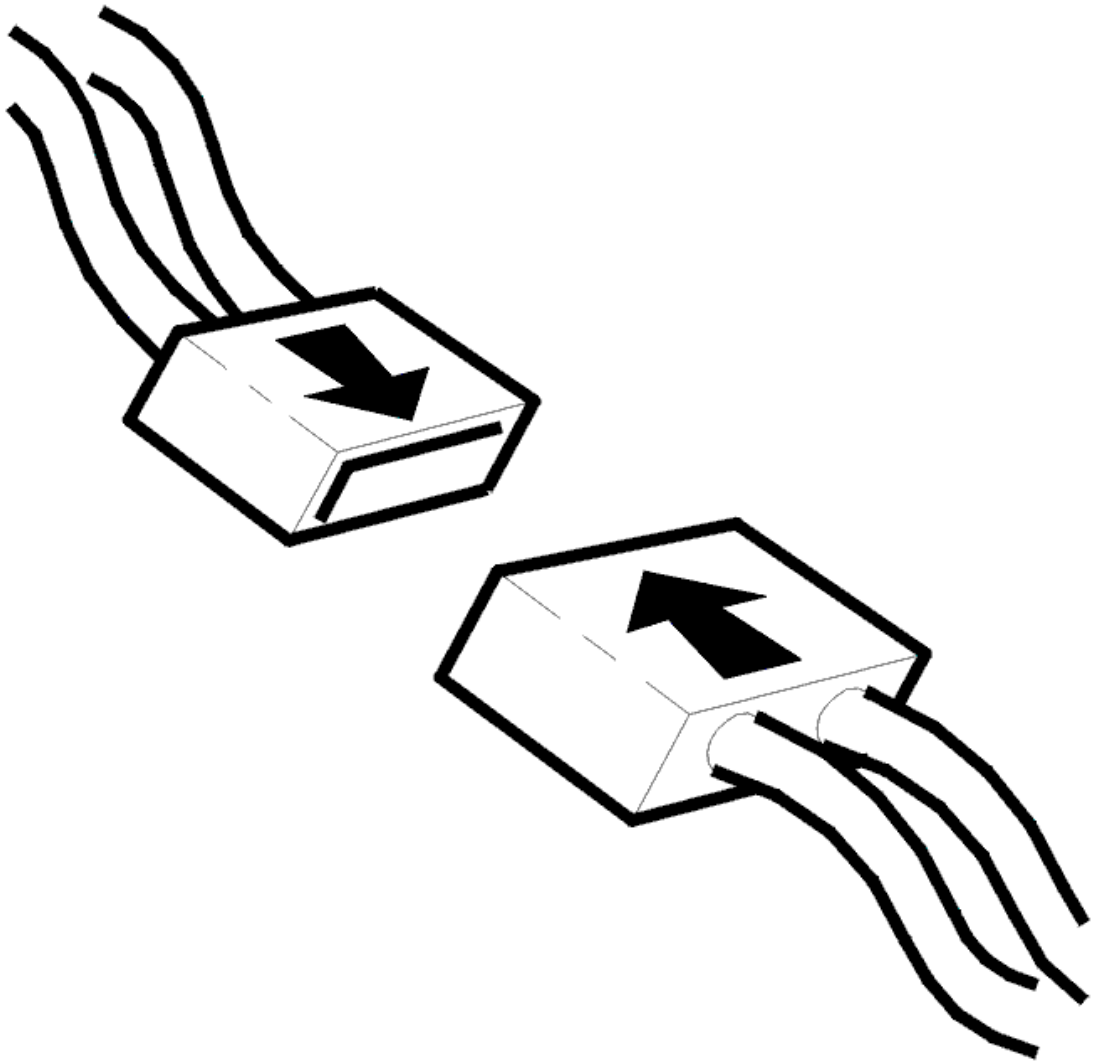

Fig. 4: Connecting Connector
Courtesy of VOLVO CARS CORPORATION

- Ignition off
- Reinstall the connectors, components etc.
- Start the engine.
- Read off the battery voltage.
- Load the battery by switching on several power consumers with a high power consumption, for example, the blower, main beam, etc.

  Read off the battery voltage using the VCT2000 (or appropriate scan tool).

  Check that the battery voltage is correct, battery voltage shall be approx. 13-14 V. Test at different engine speeds.

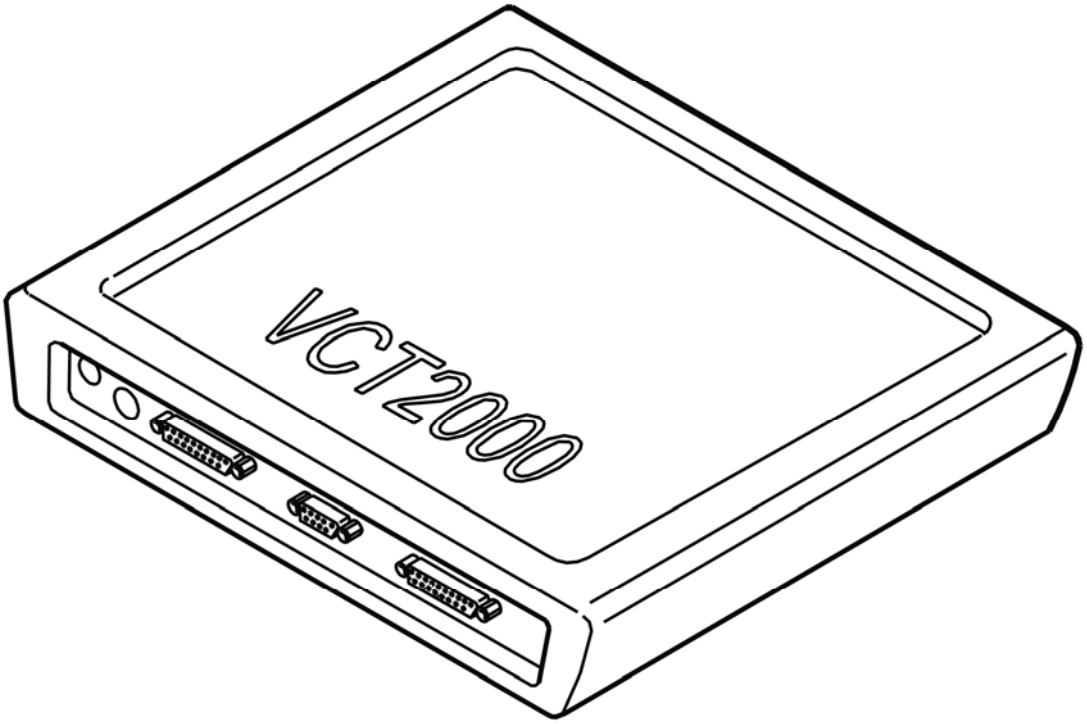

Fig. 5: Identifying VCT2000 Diagnostic Tool Symbol In VIDA
Courtesy of VOLVO CARS CORPORATION

Is the function OK?

- **YES**

  VERIFIED: Troubleshooting has been completed.

- **NO**

  Refer to **INFORMATION**

INFORMATION

FAULT-TRACING INFORMATION

The fault should have been detected and remedied. As this is not the case fault-tracing has failed.

Exit fault-tracing for this diagnostic trouble code (DTC) or make another attempt.

ECM-P062074: GENERATOR CONTROL CIRCUIT. MECHANICAL FAILURES. ACTUATOR SLIPPING (B6324S5; 2011-2012)

DIAGNOSTIC TROUBLE CODE (DTC) INFORMATION ECM-P062074

see **DIAGNOSTIC TROUBLE CODE (DTC) INFORMATION ECM-P062074**

FAULT-TRACING

see **FAULT-TRACING**

ECM-P062074: GENERATOR CONTROL CIRCUIT. MECHANICAL FAILURES. ACTUATOR SLIPPING (B8444S; 2005-2011)

DIAGNOSTIC TROUBLE CODE (DTC) INFORMATION ECM-P062074

Condition

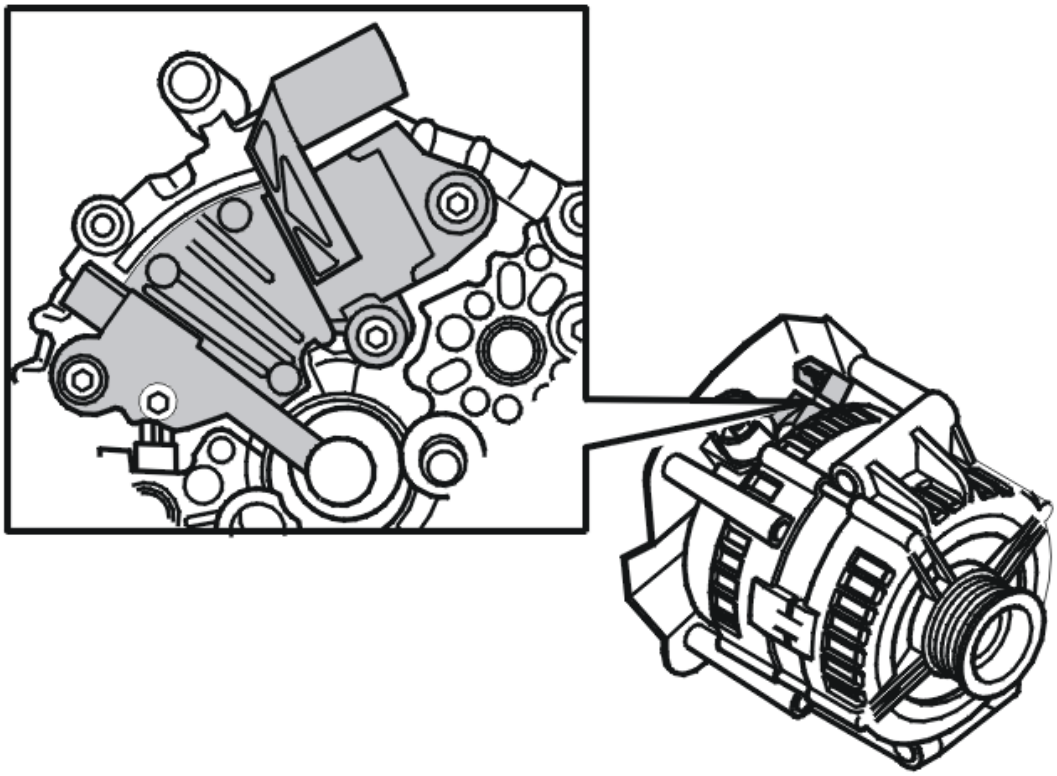

Fig. 6: Locating Alternator Control Module (Charge Regulator)
Courtesy of VOLVO CARS CORPORATION

The engine control module (ECM) regulates the alternator charge voltage (via LIN communication) on request of the central electronic module (CEM) (via CAN communication). The alternator control module (ACM) sends information on the fault to the engine control module (ECM) (via LIN communication). The diagnostic trouble code is generated if the alternator control module (ACM) sends the engine control module (ECM) information on a mechanical fault in the alternator (engine speed exceeds a certain value but the alternator is not operating).

The diagnostic trouble code can be diagnosed when the engine is running.

Substitute Value

- The alternator control module (ACM) (charge regulator) charges with a fixed voltage of 13.8 V.

Possible Source

- Damaged auxiliaries belt and belt tensioner.
- Damaged freewheel.
- Damaged alternator.

Fault symptom[s]

- Battery discharged.
- Low starter motor RPM.
- Noise from alternator.
- The engine judders under acceleration

FAULT TRACING ECM-P062074

CHECKING COMPONENTS AND WIRING

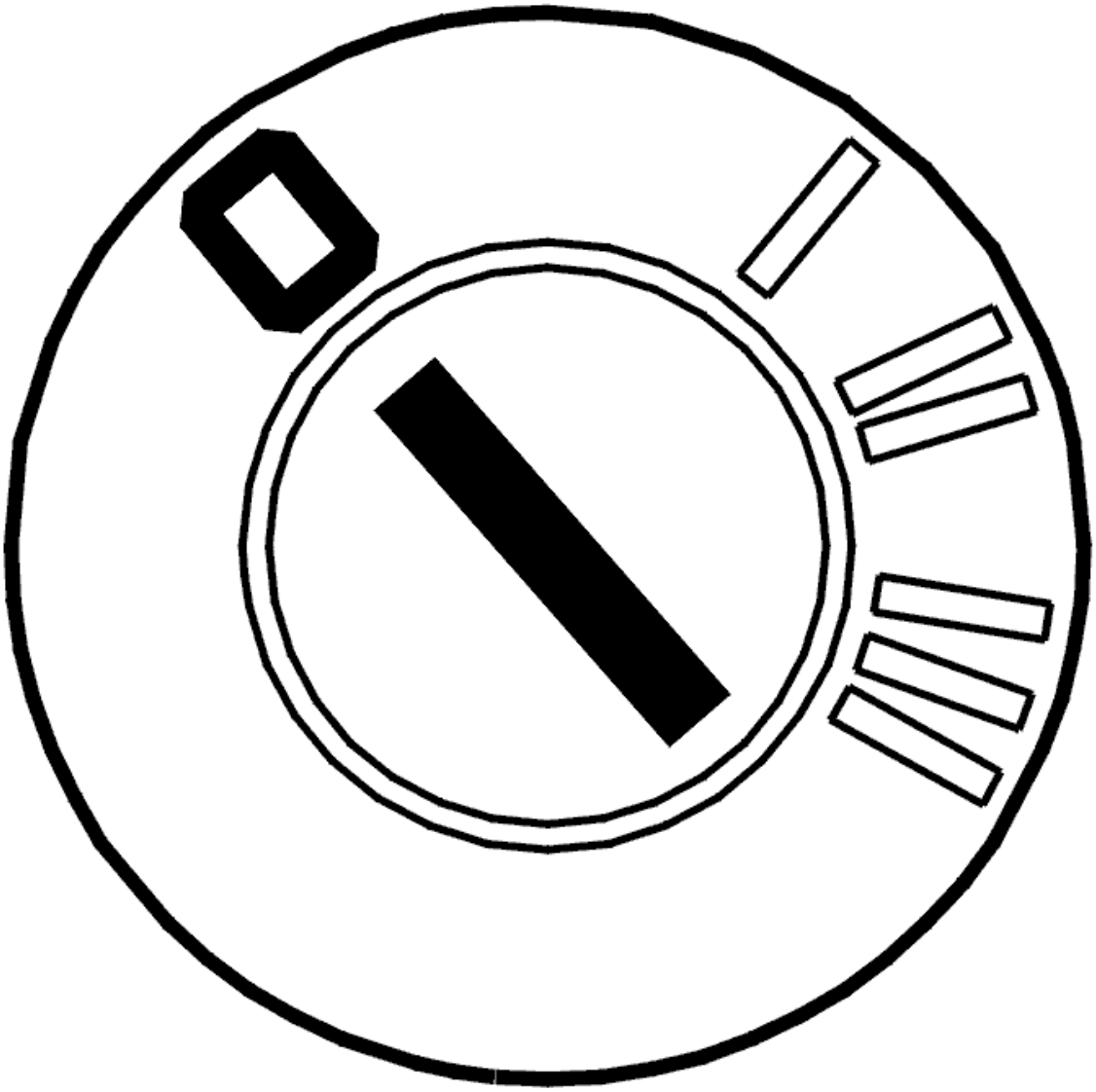

Fig. 7: Identifying Ignition OFF
Courtesy of VOLVO CARS CORPORATION

- Ignition off

  Check the auxiliaries belt and belt tensioner for damage.

  Check the function of the alternator freewheel. A fault-free freewheel pulls around the alternator rotor shaft in one direction but not the other.

  HINT: If the diagnostic trouble code recurs after operation, try a new alternator.

- **Continue**

  Refer to **VERIFICATION**

VERIFICATION

VERIFICATION

HINT: After carrying out the repair, check that the fault has been remedied.

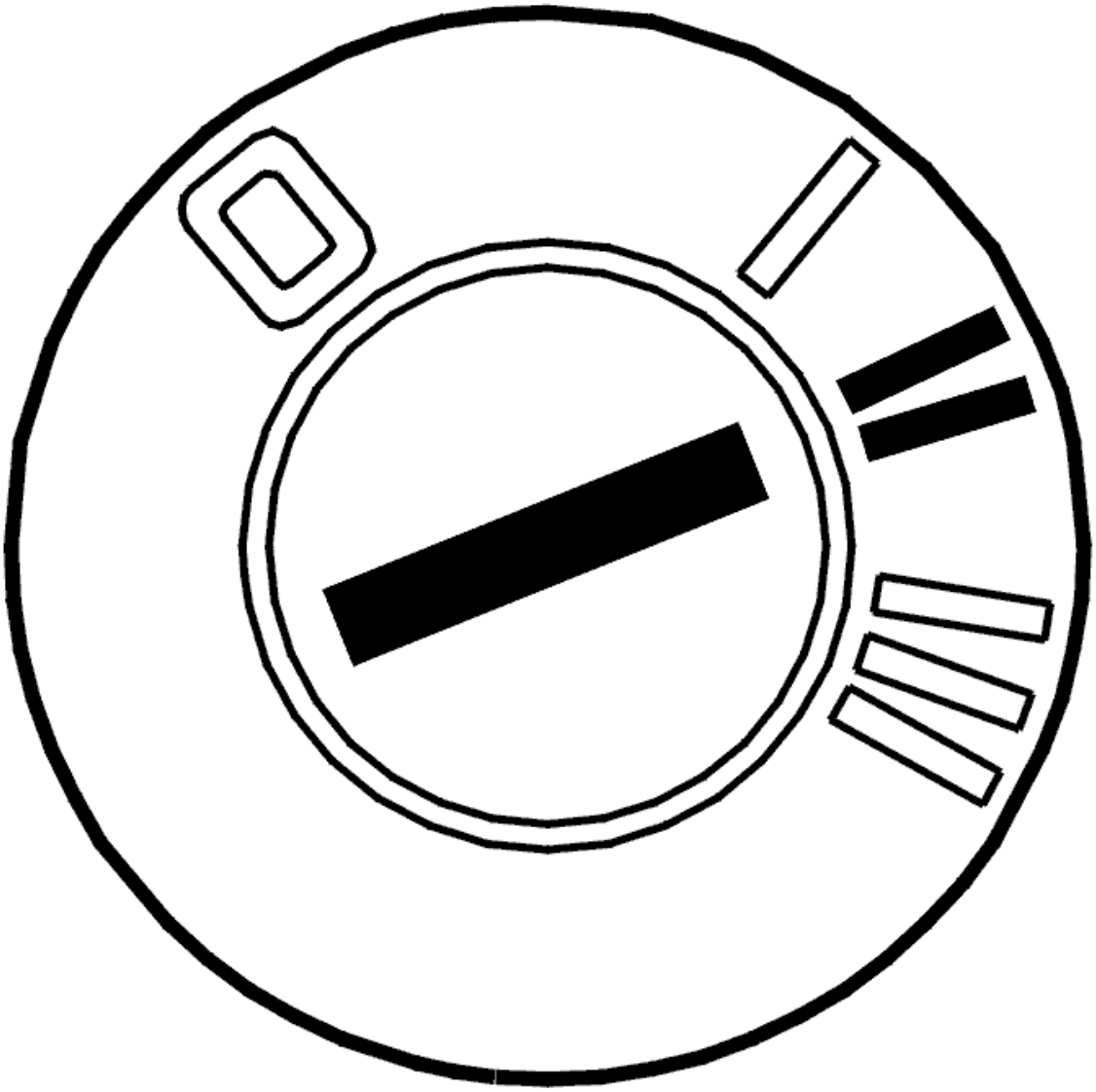

Fig. 8: Identifying Ignition ON
Courtesy of VOLVO CARS CORPORATION

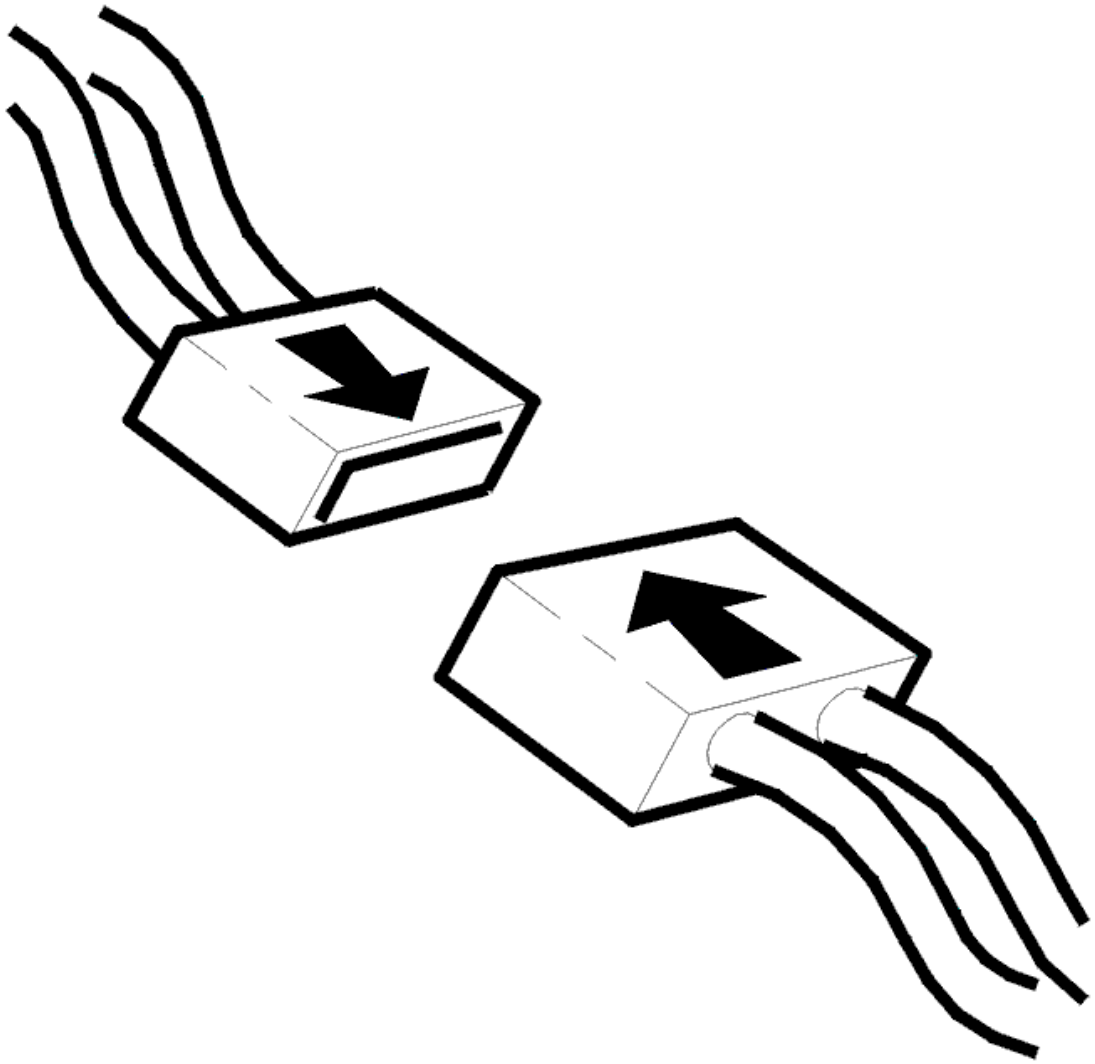

Fig. 9: Connecting Connector
Courtesy of VOLVO CARS CORPORATION

- Ignition off
- Reinstall the connectors, components etc.
- Start the engine.
- Read off the battery voltage.
- Load the battery by switching on several power consumers with a high power consumption, for example, the blower, main beam, etc.

  Read off the battery voltage using the VCT2000 (or appropriate scan tool).

  Check that the battery voltage is correct, battery voltage shall be approx. 13-14 V. Test at different engine speeds.

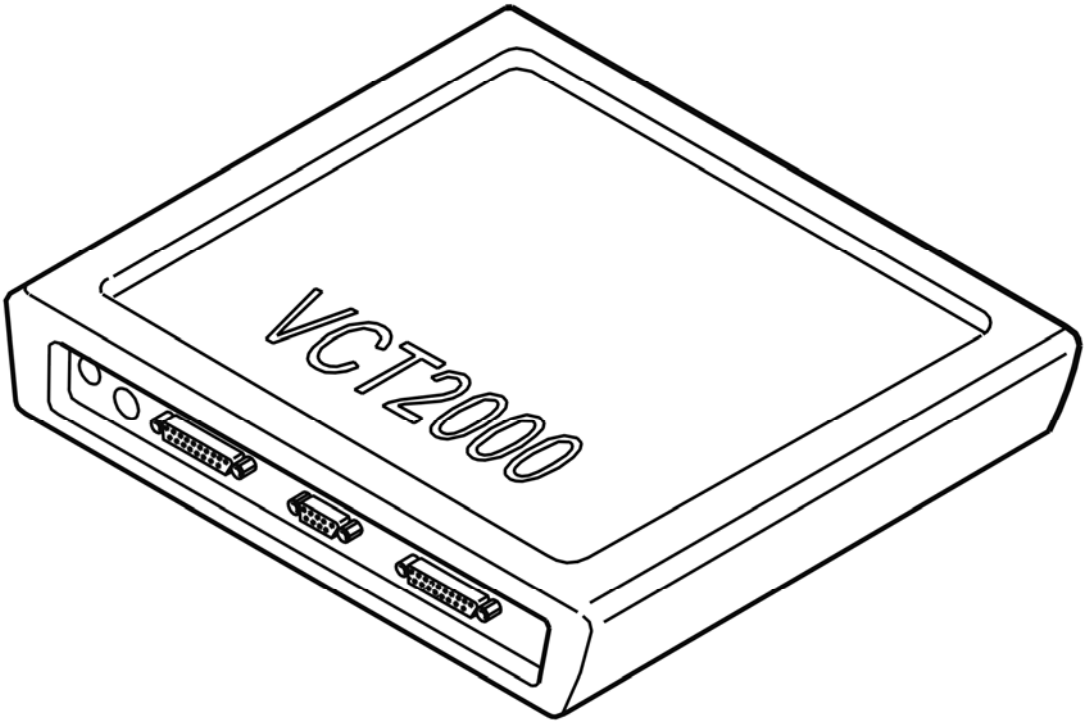

Fig. 10: Identifying VCT2000 Diagnostic Tool Symbol In VIDA
Courtesy of VOLVO CARS CORPORATION

Is the function OK?

- **YES**

  VERIFIED: Troubleshooting has been completed.

- **NO**

  Refer to **INFORMATION**

INFORMATION

FAULT-TRACING INFORMATION

The fault should have been detected and remedied. As this is not the case fault-tracing has failed.

Exit fault-tracing for this diagnostic trouble code (DTC) or make another attempt.

ECM-P062800: FUEL PUMP A CONTROL CIRCUIT LOW. GENERAL FAILURE INFORMATION. NO SUB TYPE INFORMATION (B6324S; 2007-

2010)

DIAGNOSTIC TROUBLE CODE (DTC) INFORMATION ECM-P062800

Condition

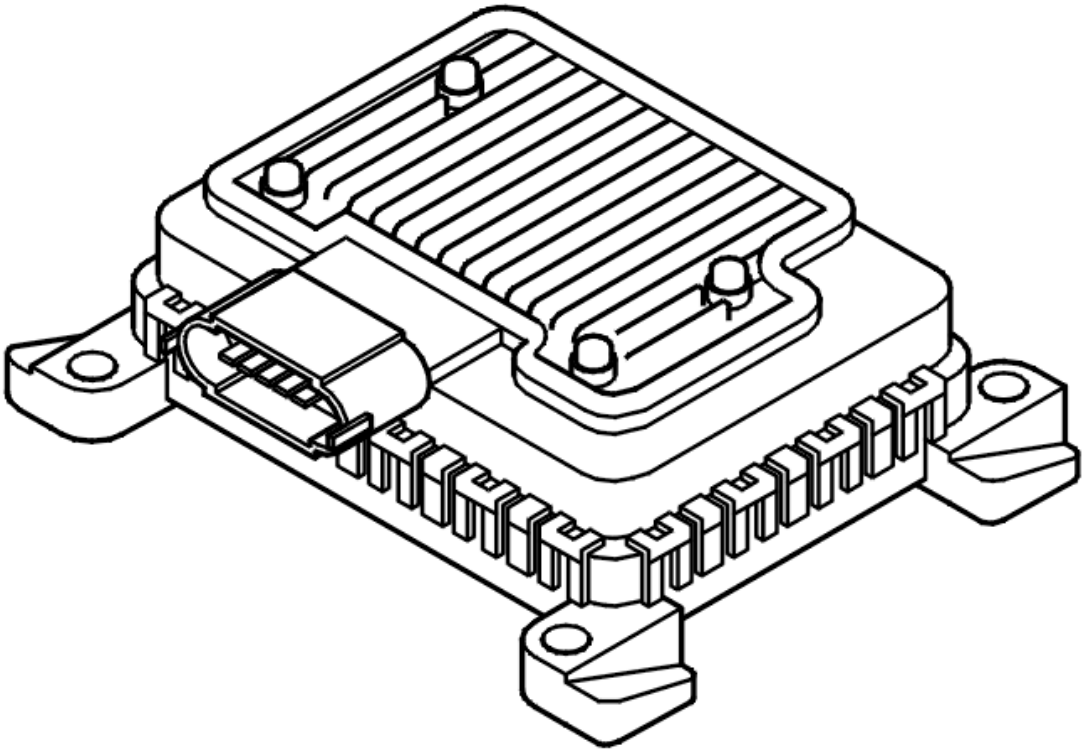

Fig. 11: Identifying Fuel Pump (FP) Control Module
Courtesy of VOLVO CARS CORPORATION

The engine control module (ECM) checks the control signal to the fuel pump.

The diagnostic trouble code (DTC) is stored if the control module registers a fault in the control signal to the fuel pump.

The diagnostic trouble code (DTC) can be diagnosed when the engine is running.

Substitute Value

- Nothing.

Possible Source

- Fault registered by the central electronic module (CEM)

- Short-circuit to ground in the signal cable.
- Damaged fuel pump (FP) control module.

Fault symptom[s]

- The starter motor turns but the engine does not start.
- Engine stops.

FAULT-TRACING

see **FAULT-TRACING**

ECM-P062800: FUEL PUMP A CONTROL CIRCUIT LOW. GENERAL FAILURE INFORMATION. NO SUB TYPE INFORMATION (B6324S5; 2011-2012)

DIAGNOSTIC TROUBLE CODE (DTC) INFORMATION ECM-P062800

see **DIAGNOSTIC TROUBLE CODE (DTC) INFORMATION ECM-P062800**

FAULT-TRACING

see **FAULT-TRACING**

ECM-P062800: FUEL PUMP A CONTROL CIRCUIT LOW. GENERAL FAULT INFORMATION. NO INFORMATION ABOUT FAULT TYPE (B8444S; 2005-2011)

DIAGNOSTIC TROUBLE CODE (DTC) INFORMATION ECM-P062800

Condition

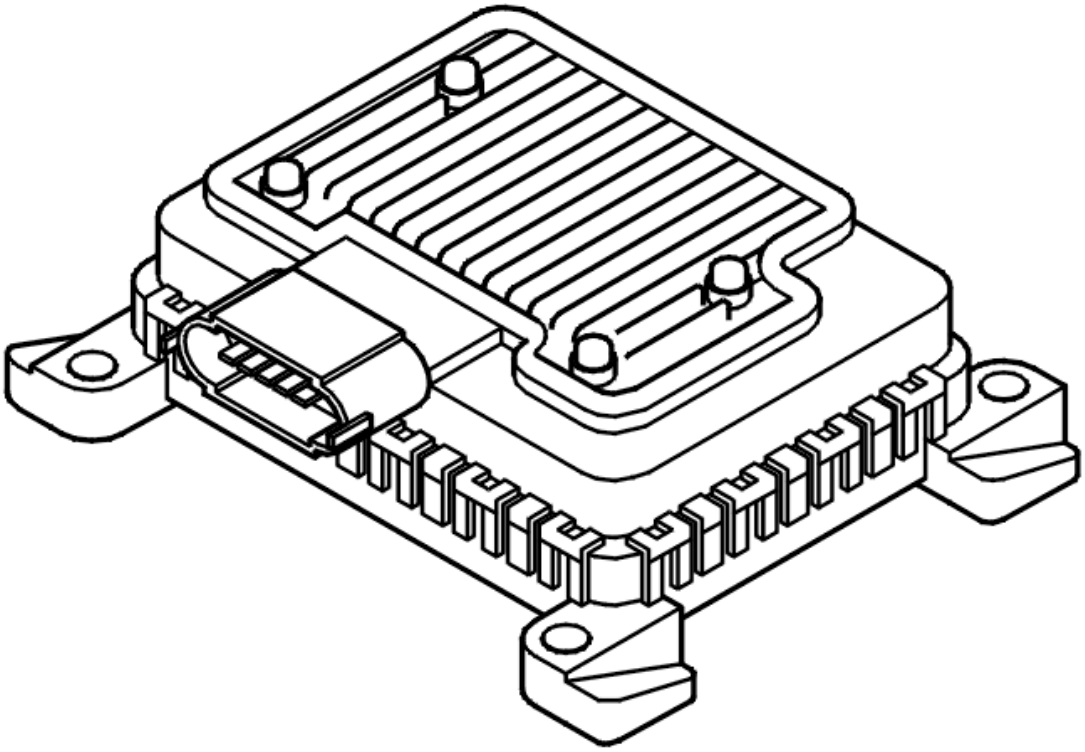

Fig. 12: Identifying Fuel Pump (FP) Control Module
Courtesy of VOLVO CARS CORPORATION

The engine control module (ECM) checks the control signal to the fuel pump.

The diagnostic trouble code (DTC) is stored if the control module registers a fault in the control signal to the fuel pump.

The diagnostic trouble code (DTC) can be diagnosed when the engine is running.

Substitute Value

- Nothing.

Possible Source

- Fault registered by the central electronic module (CEM)
- Short-circuit to ground in the signal cable.
- Damaged fuel pump (FP) control module.

Fault symptom[s]

- The starter motor turns but the engine does not start.

- Engine stops.

TROUBLESHOOTING ECM-P062800 (2005)

CHECKING THE STATUS

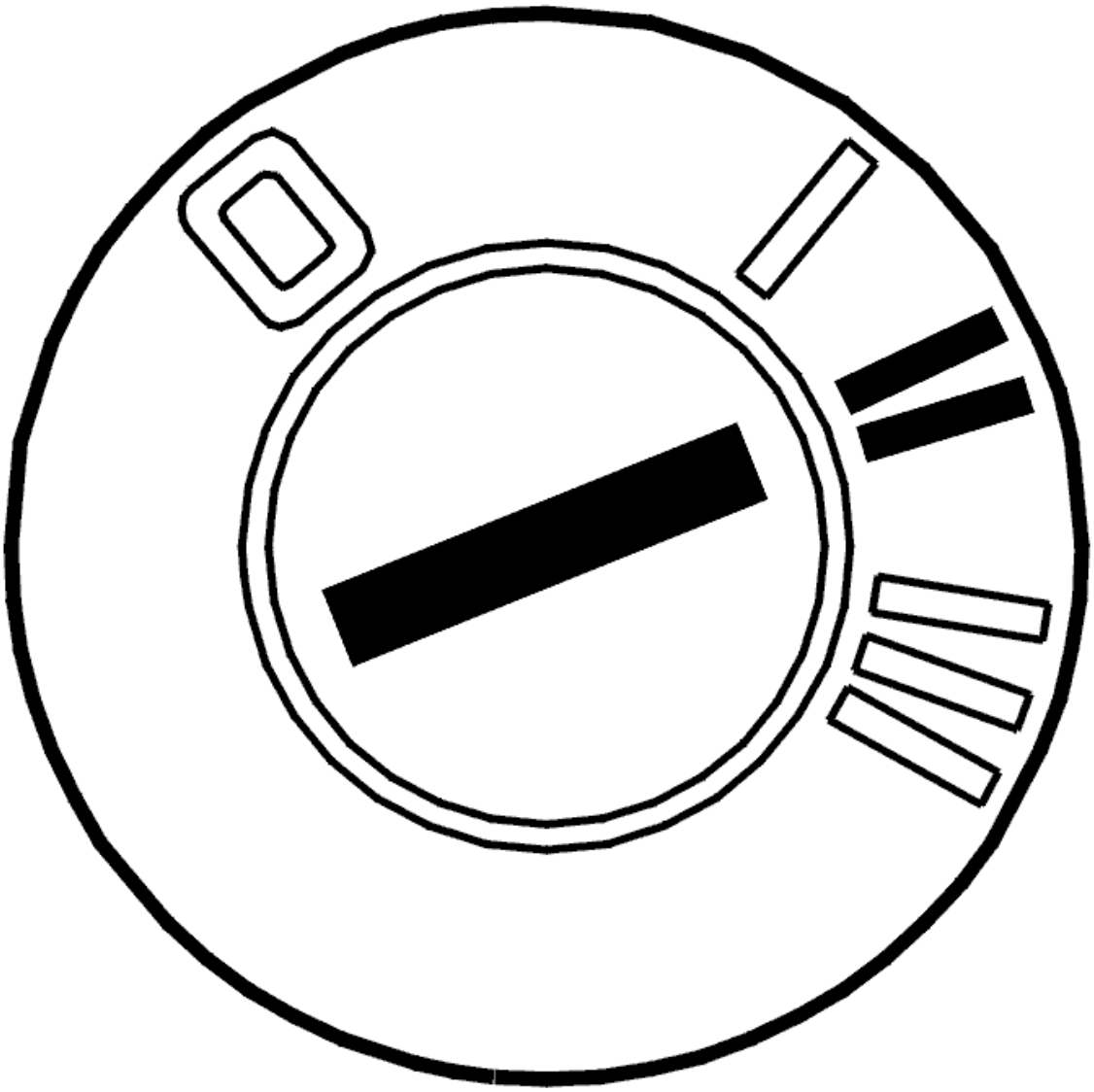

Fig. 13: Identifying Ignition ON
Courtesy of VOLVO CARS CORPORATION

- Ignition on, wait for at least 15 seconds to perform the diagnosis.

  Read the diagnostic status and fault status for the diagnostic trouble code by selecting the diagnostic trouble code in the list.

  Check if the malfunction is permanent or intermittent by reading off the diagnostic trouble code's status when the diagnostic status is "Implemented".

If the trouble status is "Malfunction found", this indicates that the malfunction is permanent. If the trouble status is "No malfunction found", this indicates that the malfunction is intermittent and not active right now.

NOTE: Trouble status cannot go from "Malfunction found" to "No malfunction found" in the same operating cycle.

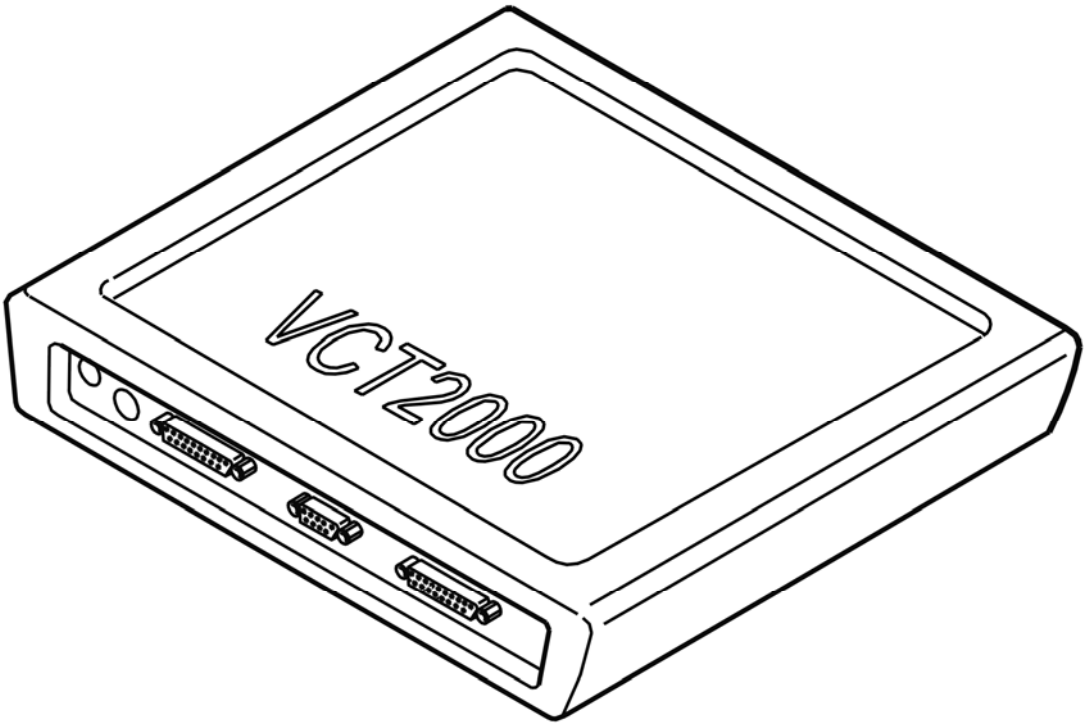

Fig. 14: Identifying VCT2000 Diagnostic Tool Symbol In VIDA
Courtesy of VOLVO CARS CORPORATION

- **Continue**

Refer to **CHECKING THE DIAGNOSTIC TROUBLE CODES (DTCS)**

CHECKING THE DIAGNOSTIC TROUBLE CODES (DTCS)

HINT: This diagnostic trouble code may be generated for malfunctions detected by the central electronic module (CEM).

NOTE: If there are diagnostic trouble codes stored in the central electronic module (CEM) for fuel pump or relay for fuel pump, then troubleshoot and remedy these first.

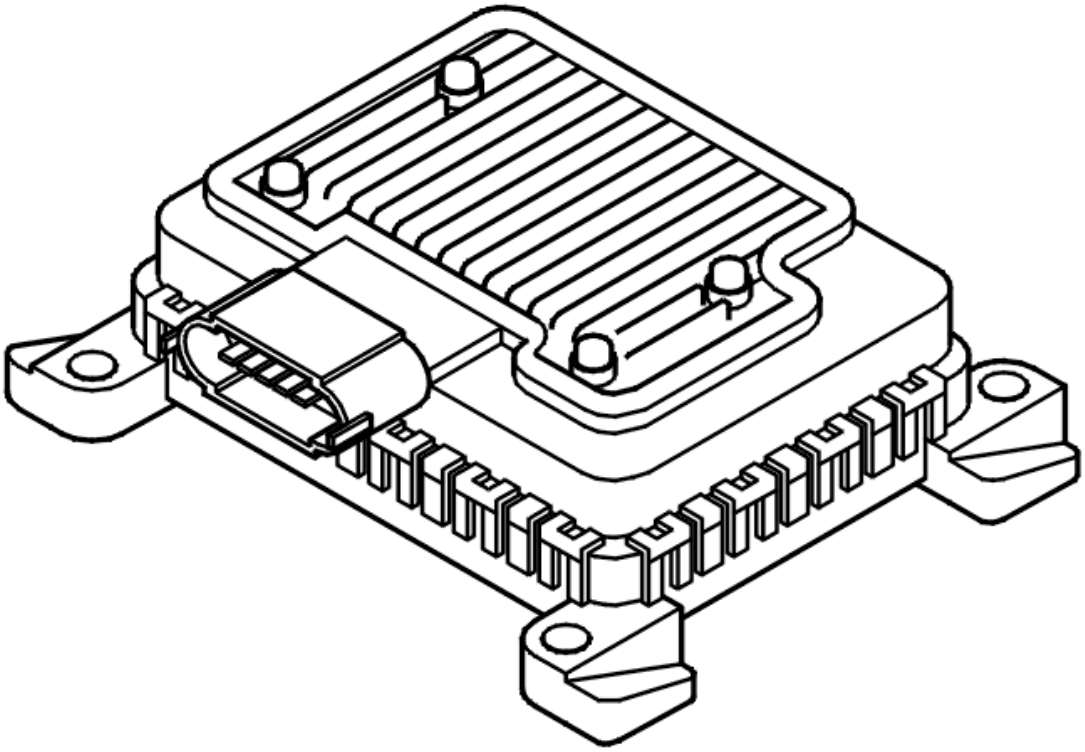

Fig. 15: Identifying Fuel Pump (FP) Control Module
Courtesy of VOLVO CARS CORPORATION

- **Continue**

  Refer to **CHECKING COMPONENTS AND WIRING**

CHECKING COMPONENTS AND WIRING

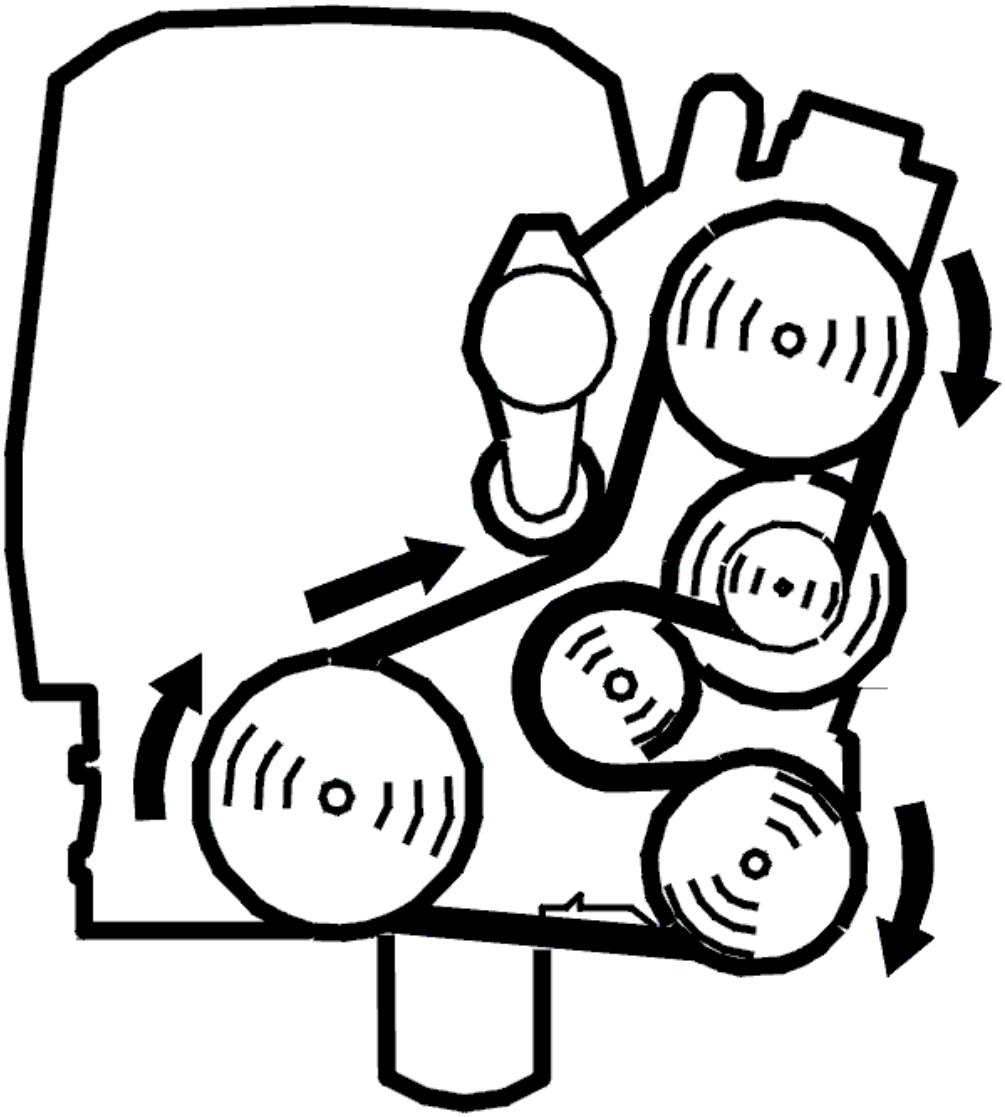

Fig. 16: Belt Routing / Engine Idling - Volvo
Courtesy of VOLVO CARS CORPORATION

- Start and warm up the engine.

  Read off the fuel pump's load (signal from engine control module (ECM) to fuel pump module).

  Check that the signal is approx. 50 % (±10 %) for idling, warm engine.

  Check the cable between engine control module (ECM) #B20 (#C20) and fuel pump module #1 for short-circuit to ground, as well as open circuit.

  Remedy as necessary.

  Other information

- see **CONNECTING THE BREAKOUT BOX**
- see **SIGNAL SPECIFICATION, ENGINE CONTROL MODULE (ECM)**
- see **FUEL PUMP DRIVER MODULE**
- see **CHECKING WIRING AND TERMINALS**

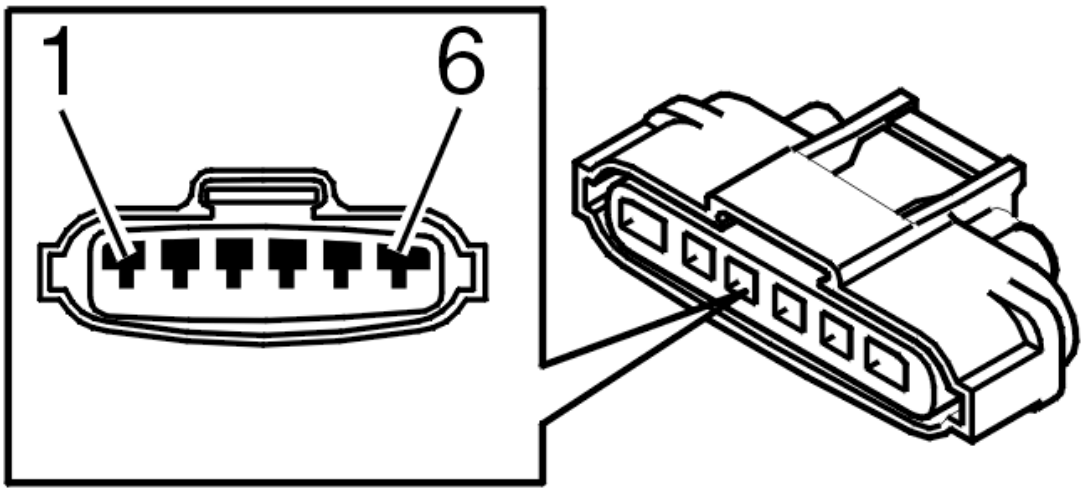

Fig. 17: Identifying 6-Bit Connector
Courtesy of VOLVO CARS CORPORATION

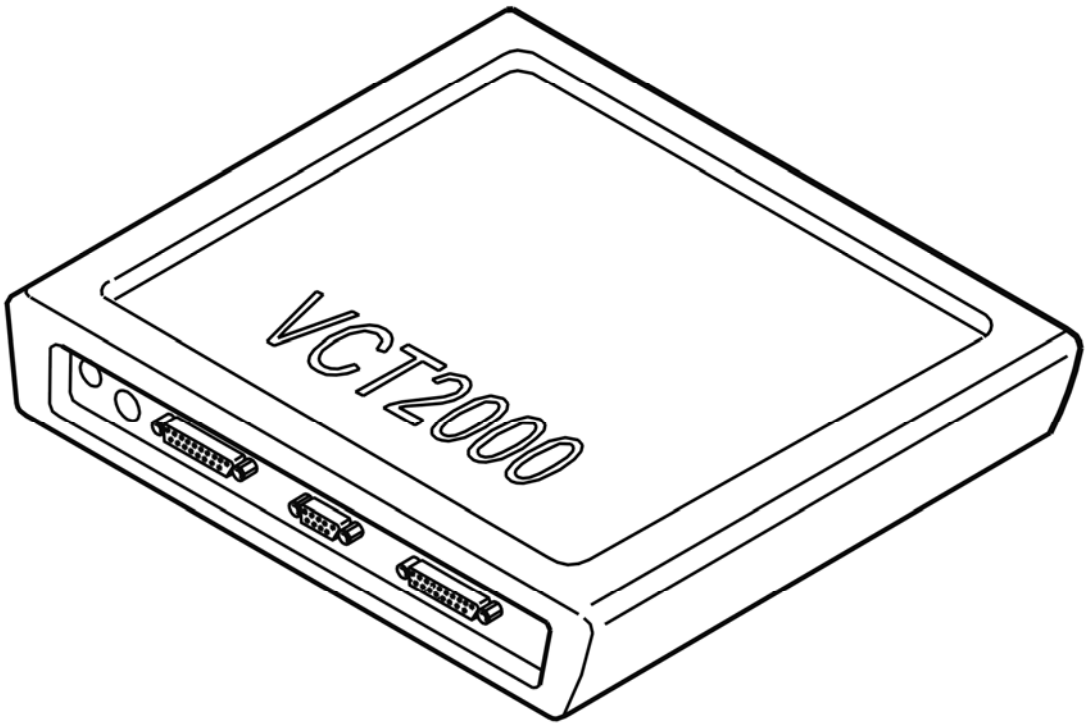

Fig. 18: Identifying VCT2000 Diagnostic Tool Symbol In VIDA
Courtesy of VOLVO CARS CORPORATION

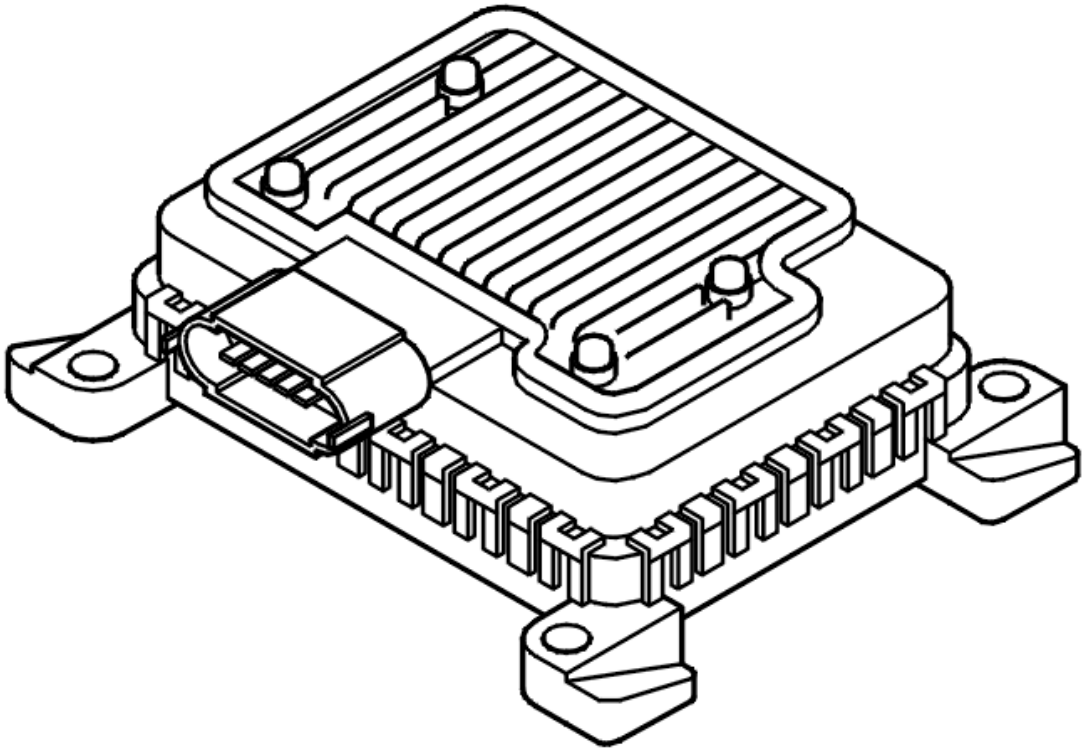

Fig. 19: Identifying Fuel Pump (FP) Control Module
Courtesy of VOLVO CARS CORPORATION

- **Continue**

  Refer to **VERIFICATION**

VERIFICATION

VERIFICATION

HINT: After carrying out the repair, check that the fault has been remedied.

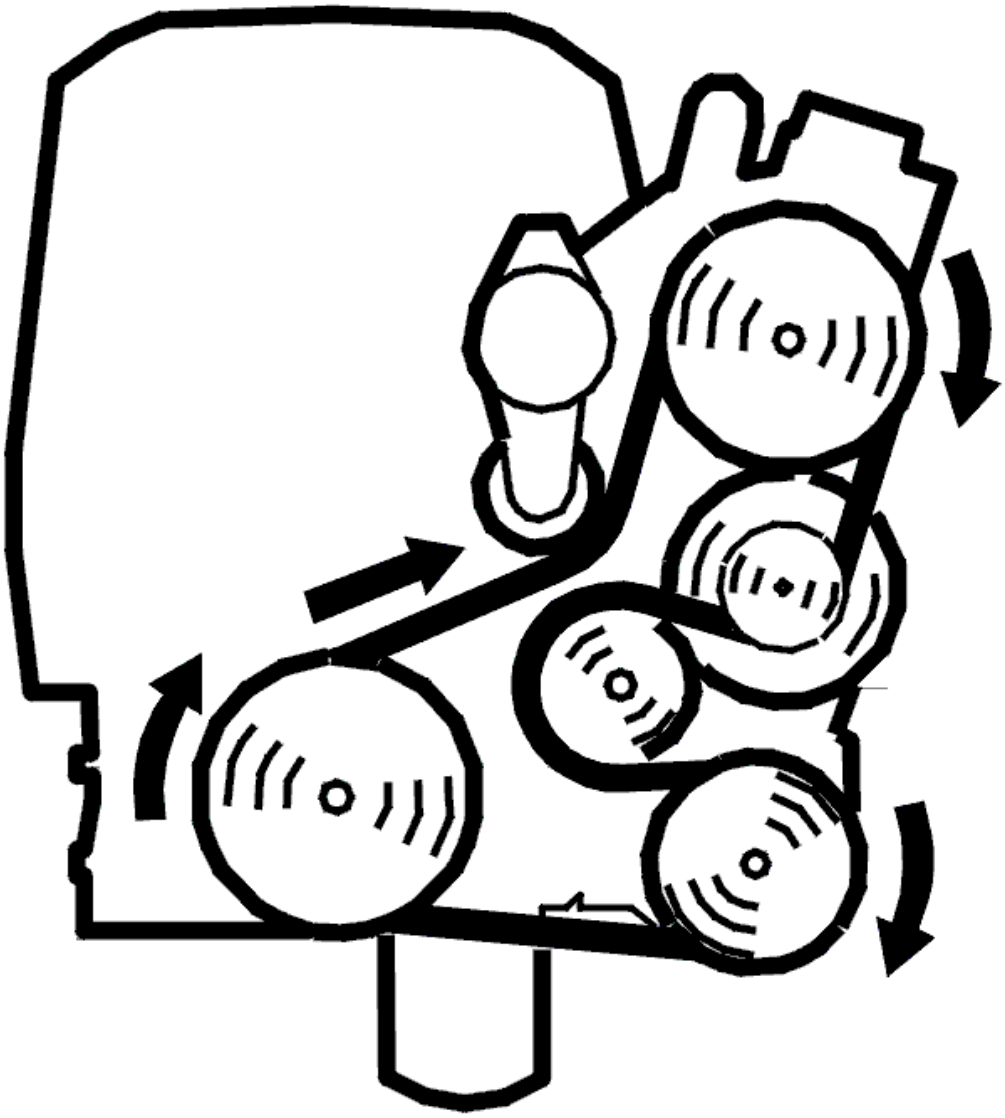

Fig. 20: Belt Routing / Engine Idling - Volvo
Courtesy of VOLVO CARS CORPORATION

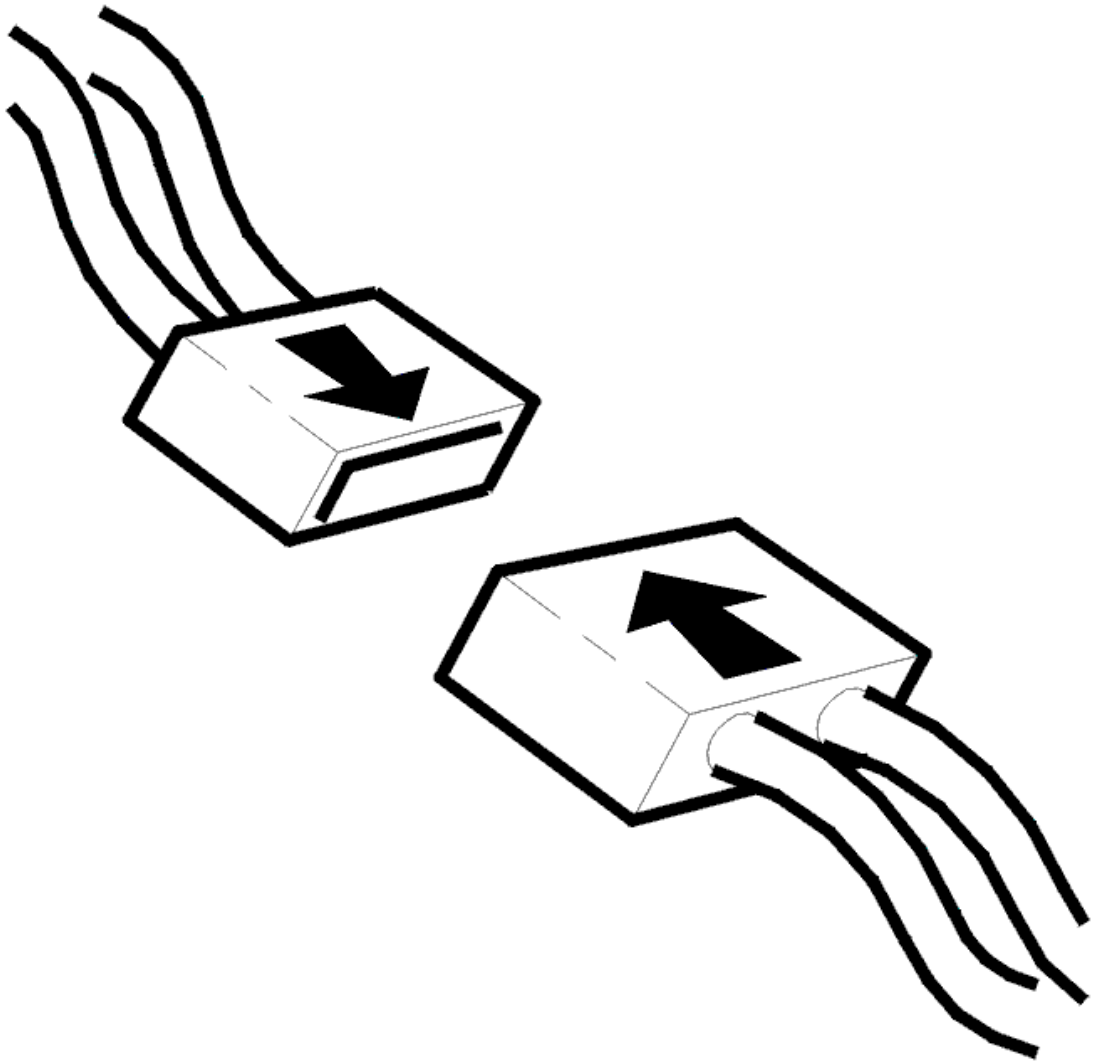

Fig. 21: Connecting Connector
Courtesy of VOLVO CARS CORPORATION

- Reinstall the connectors, components etc.
- Start and warm up the engine.

  Read off the fuel pump's load (signal from engine control module (ECM) to fuel pump module).

  Check that the signal is approx. 50 % (±10 %) for idling, warm engine.

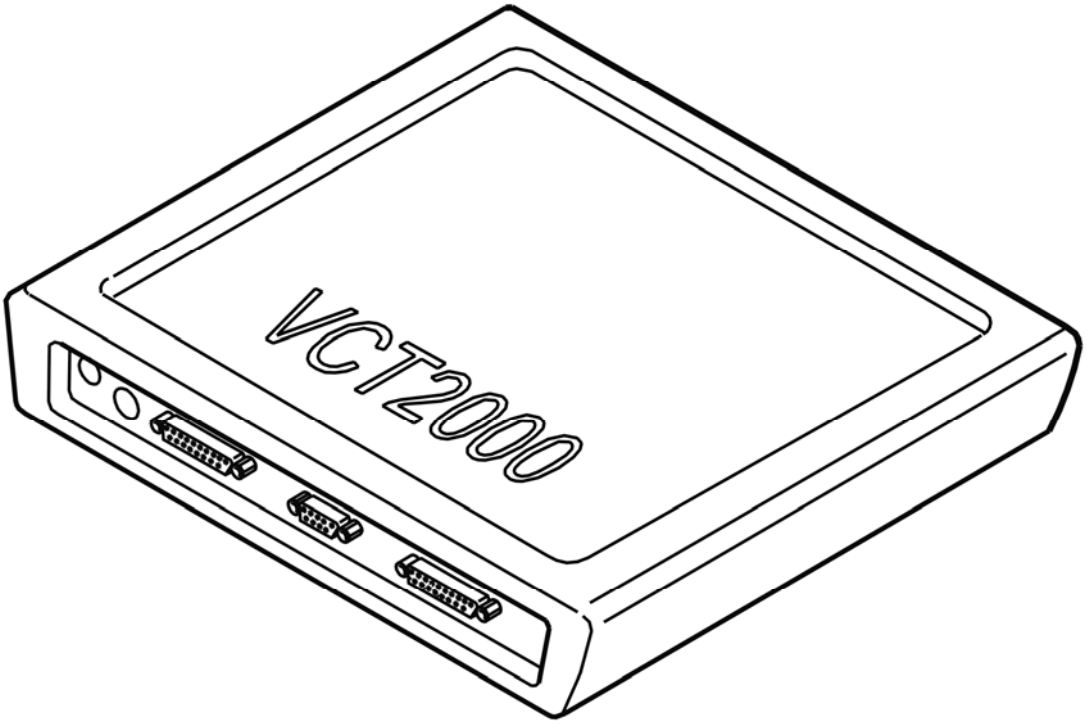

Fig. 22: Identifying VCT2000 Diagnostic Tool Symbol In VIDA
Courtesy of VOLVO CARS CORPORATION

Is the signal reasonable?

- **YES**

  VERIFIED: Troubleshooting has been completed.

- **NO**

  Refer to **INFORMATION**

INFORMATION

FAULT-TRACING INFORMATION

The fault should have been detected and remedied. As this is not the case fault-tracing has failed.

Exit fault-tracing for this diagnostic trouble code (DTC) or make another attempt.

TROUBLESHOOTING ECM-P062800 (2006-2011)

CHECKING THE STATUS

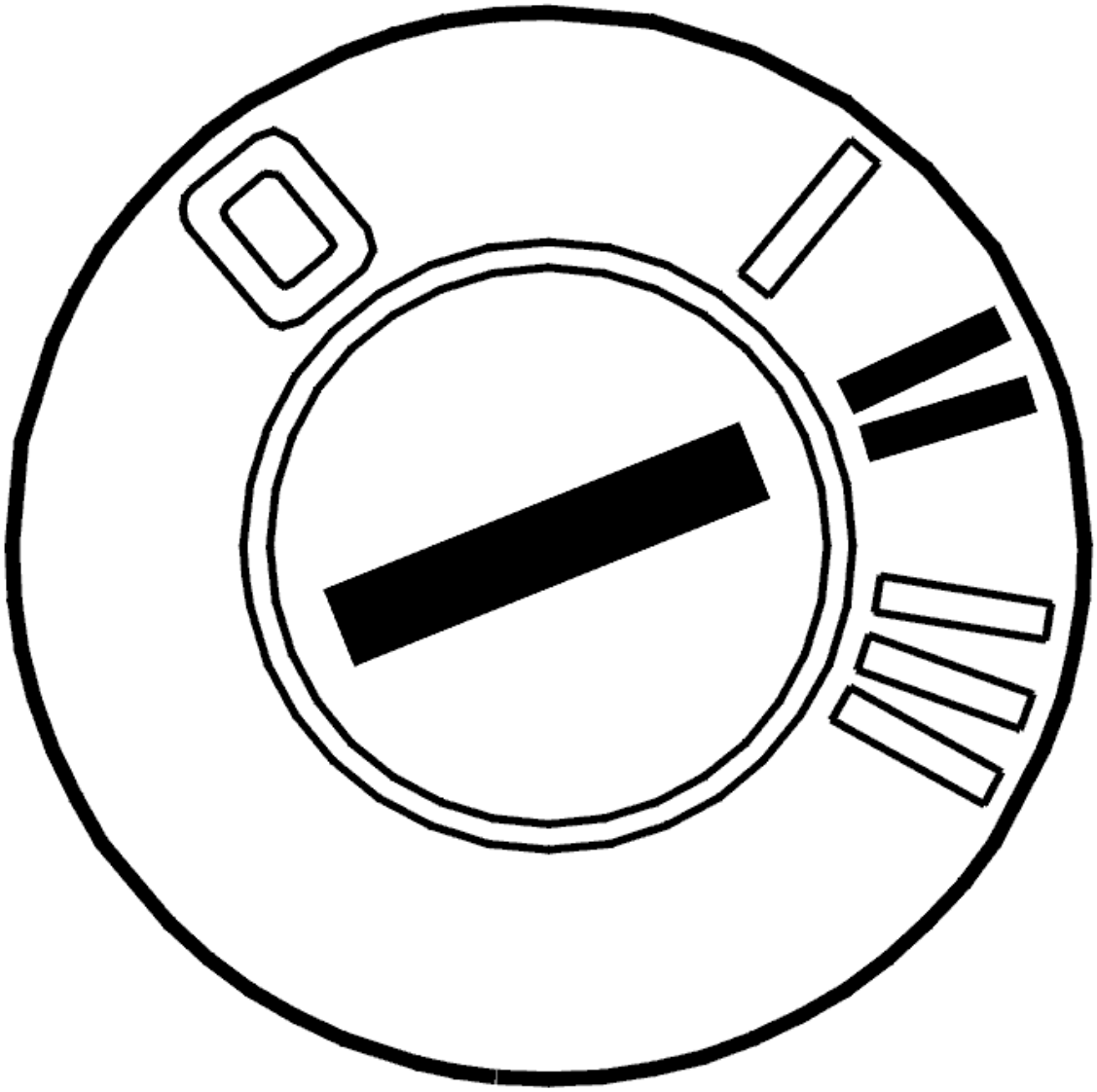

Fig. 23: Identifying Ignition ON
Courtesy of VOLVO CARS CORPORATION

- Ignition on, wait for at least 15 seconds to perform the diagnosis.

  Read the diagnostic status and fault status for the diagnostic trouble code by selecting the diagnostic trouble code in the list.

  Check if the malfunction is permanent or intermittent by reading off the diagnostic trouble code's status when the diagnostic status is "Implemented".

  If the trouble status is "Malfunction found", this indicates that the malfunction is permanent. If the trouble status is "No malfunction found", this indicates that the malfunction is intermittent and not active right now.

NOTE: Trouble status cannot go from "Malfunction found" to "No malfunction

found" in the same operating cycle.

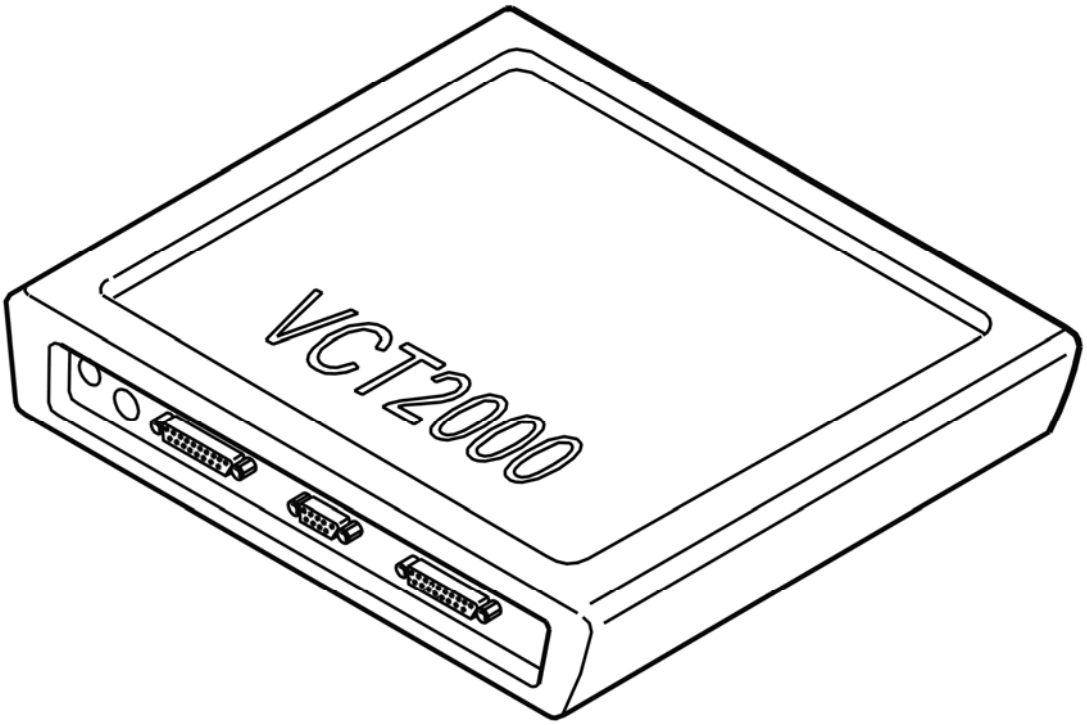

Fig. 24: Identifying VCT2000 Diagnostic Tool Symbol In VIDA
Courtesy of VOLVO CARS CORPORATION

- **Continue**

Refer to **CHECKING THE DIAGNOSTIC TROUBLE CODES (DTCS)**

CHECKING THE DIAGNOSTIC TROUBLE CODES (DTCS)

HINT: This diagnostic trouble code may be generated for malfunctions detected by the central electronic module (CEM).

NOTE: **If there are diagnostic trouble codes stored in the central electronic module (CEM) for fuel pump or relay for fuel pump, then troubleshoot and remedy these first.**

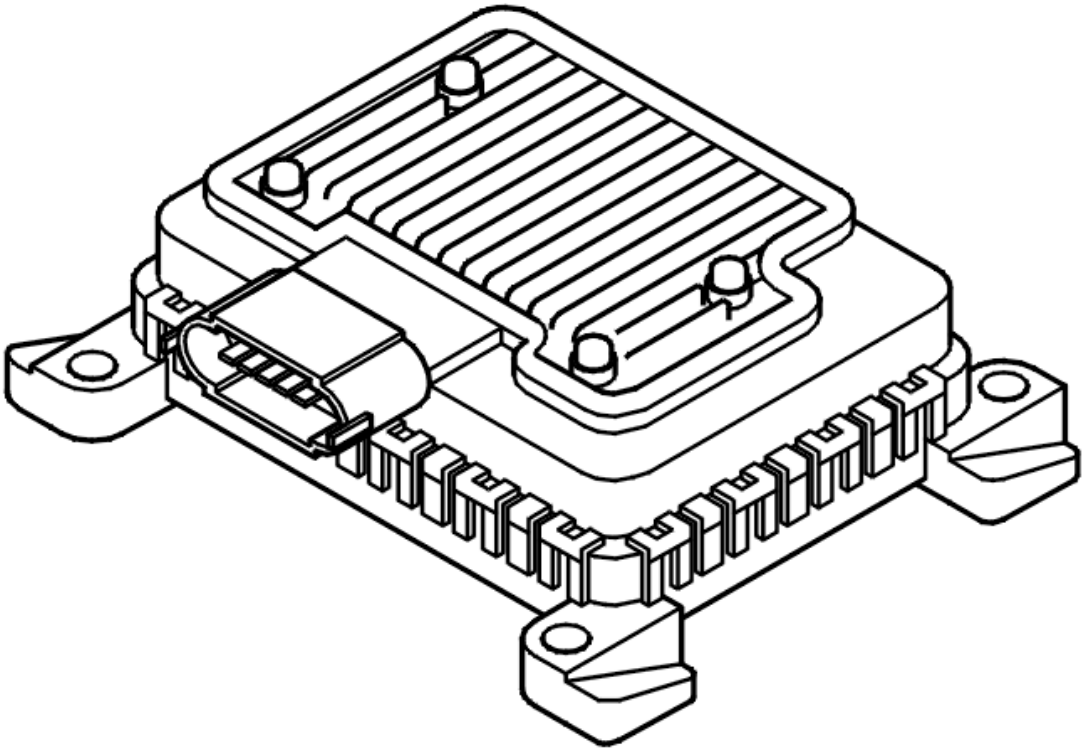

Fig. 25: Identifying Fuel Pump (FP) Control Module
Courtesy of VOLVO CARS CORPORATION

- **Continue**

  Refer to **CHECKING COMPONENTS AND WIRING**

CHECKING COMPONENTS AND WIRING

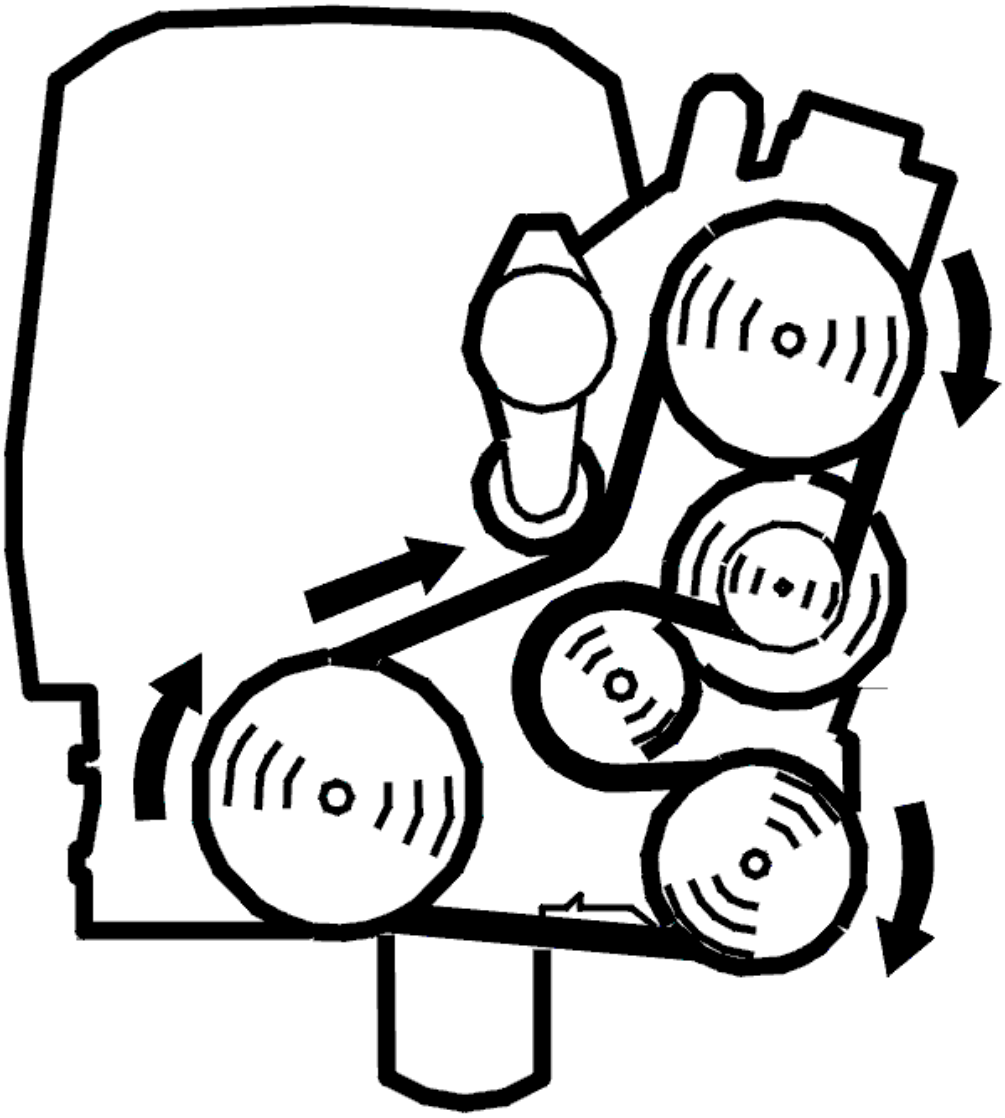

Fig. 26: Belt Routing / Engine Idling - Volvo
Courtesy of VOLVO CARS CORPORATION

- Start and warm up the engine.

  Read off the fuel pump's load (signal from engine control module (ECM) to fuel pump module).

  Check that the signal is approx. 50 % (±10 %) for idling, warm engine.

  Check the cable between engine control module (ECM) #B20 (#C20) and fuel pump module #1 for short-circuit to ground, as well as open circuit.

  Remedy as necessary.

  Other information

- see **CONNECTING THE BREAKOUT BOX**
- see **SIGNAL SPECIFICATION, ENGINE CONTROL MODULE (ECM)**
- see **CONTROL MODULE FUEL PUMP (FP), REPLACING**
- see **CHECKING WIRING AND TERMINALS**

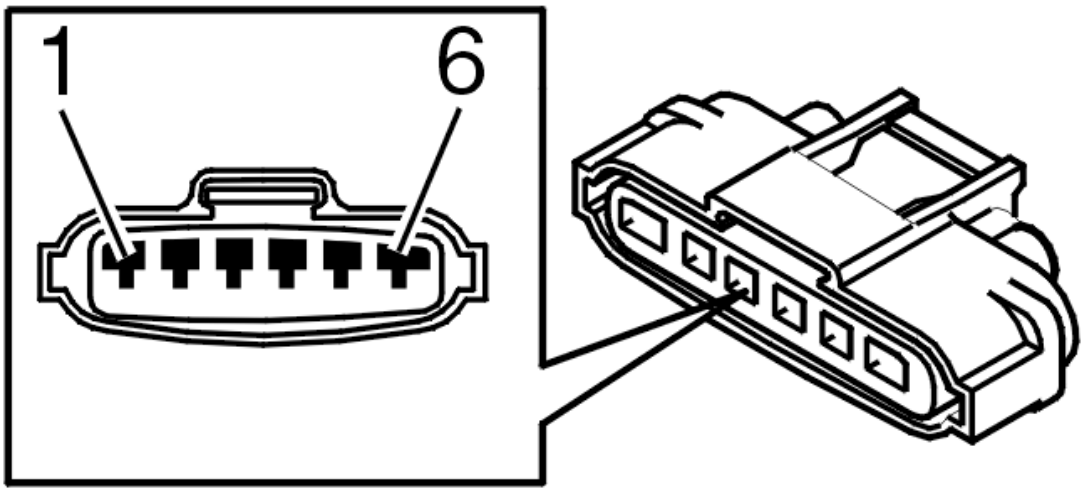

Fig. 27: Identifying 6-Bit Connector
Courtesy of VOLVO CARS CORPORATION

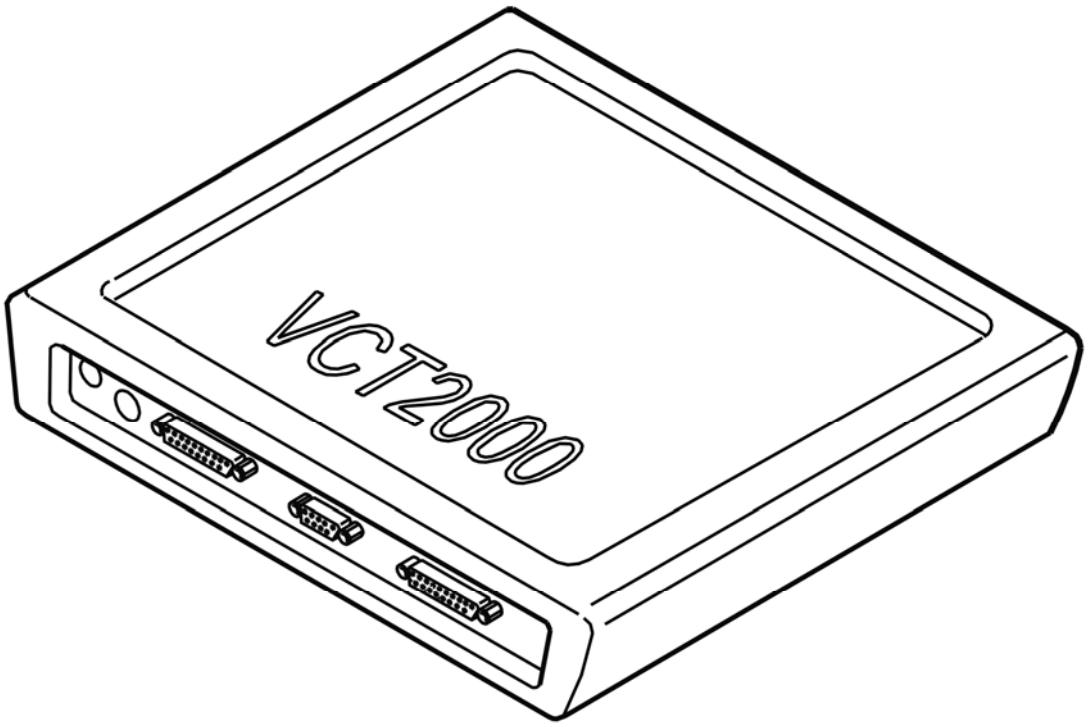

Fig. 28: Identifying VCT2000 Diagnostic Tool Symbol In VIDA
Courtesy of VOLVO CARS CORPORATION

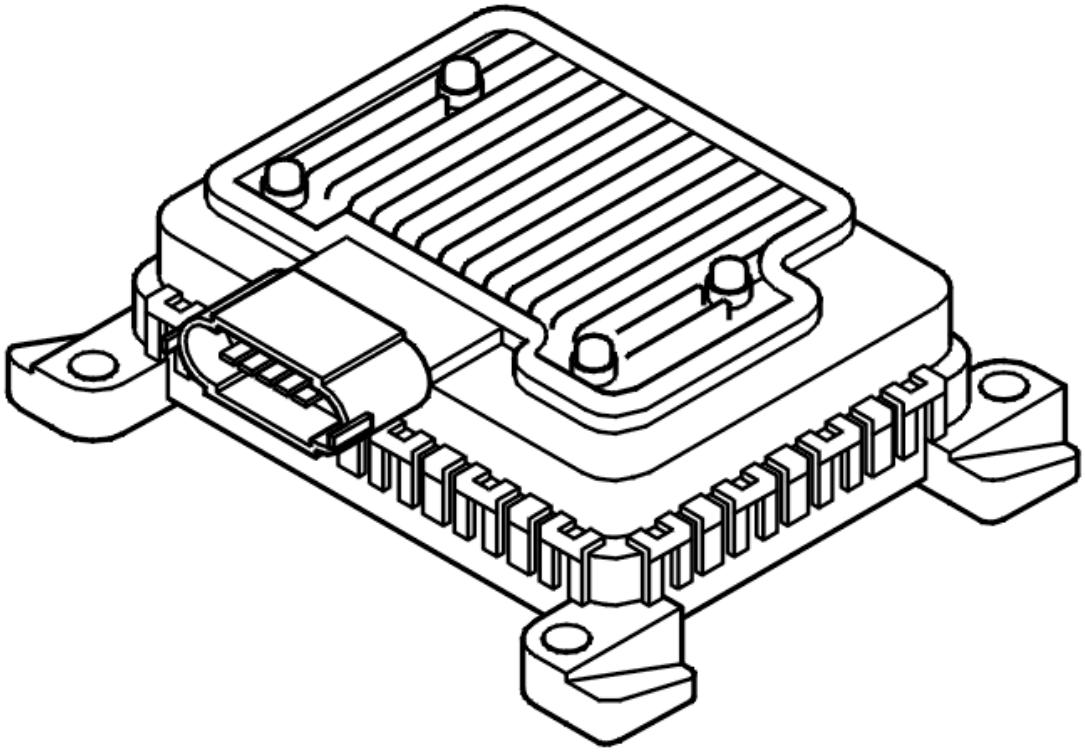

Fig. 29: Identifying Fuel Pump (FP) Control Module
Courtesy of VOLVO CARS CORPORATION

- **Continue**

  Refer to **VERIFICATION**

VERIFICATION

VERIFICATION

HINT: After carrying out the repair, check that the fault has been remedied.

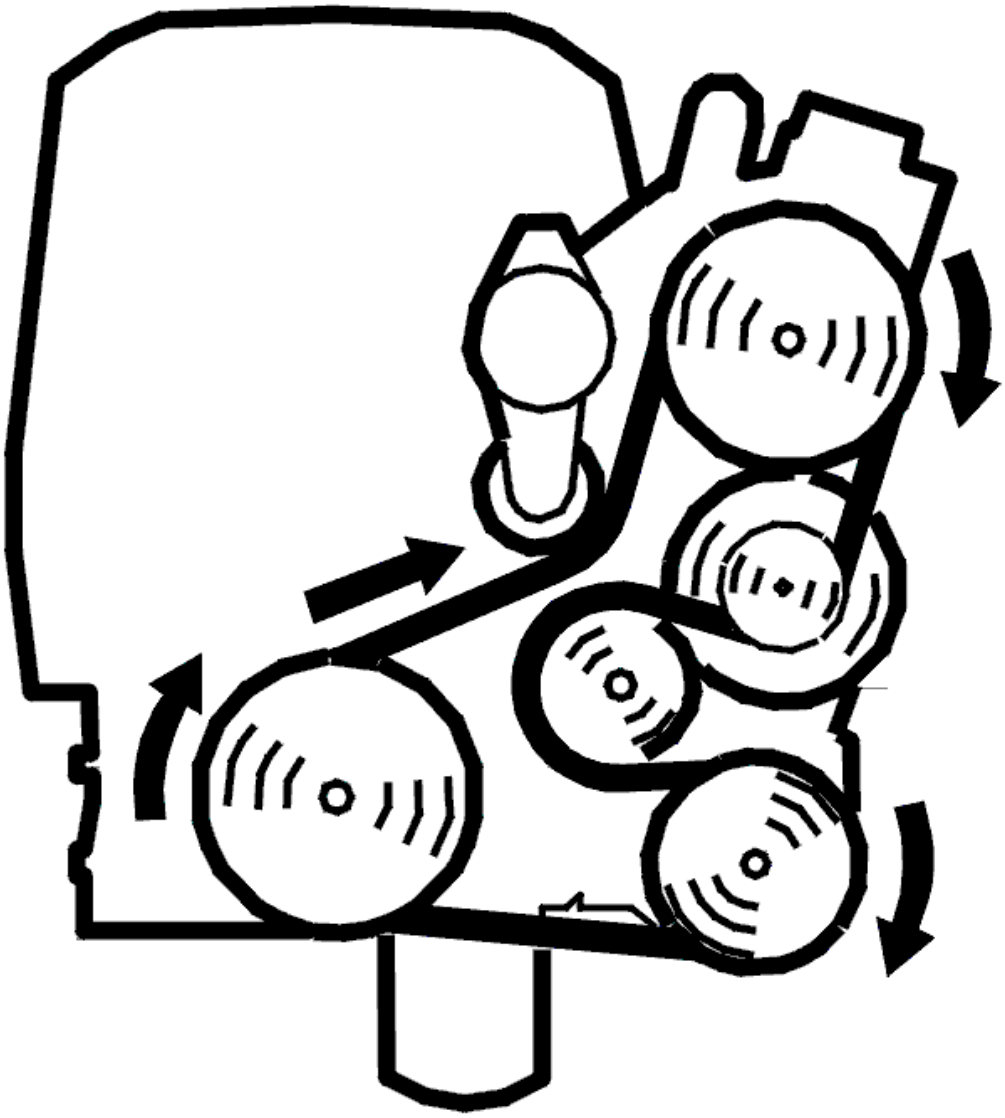

Fig. 30: Belt Routing / Engine Idling - Volvo
Courtesy of VOLVO CARS CORPORATION

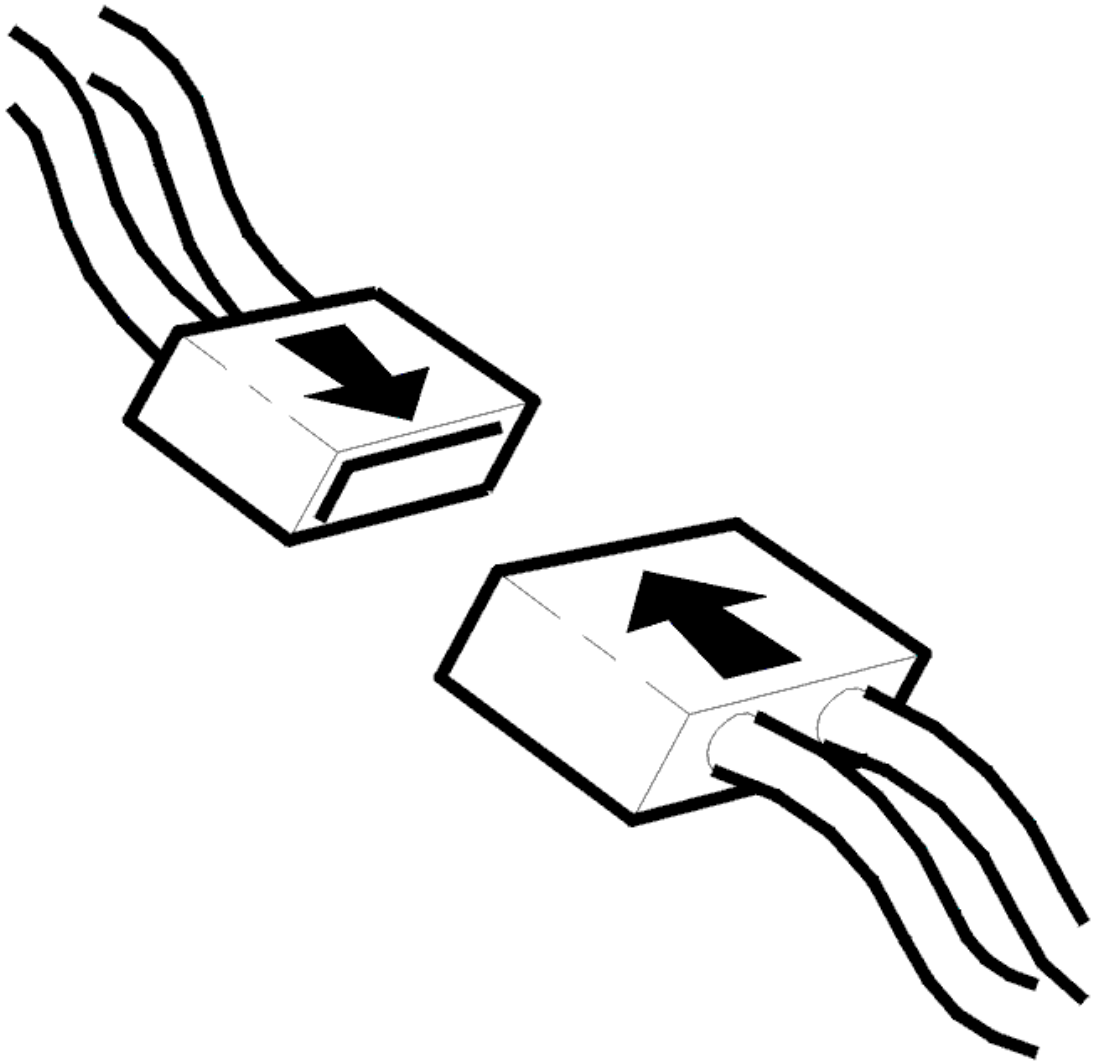

Fig. 31: Connecting Connector
Courtesy of VOLVO CARS CORPORATION

- Reinstall the connectors, components etc.
- Start and warm up the engine.

  Read off the fuel pump's load (signal from engine control module (ECM) to fuel pump module).

  Check that the signal is approx. 50 % (±10 %) for idling, warm engine.

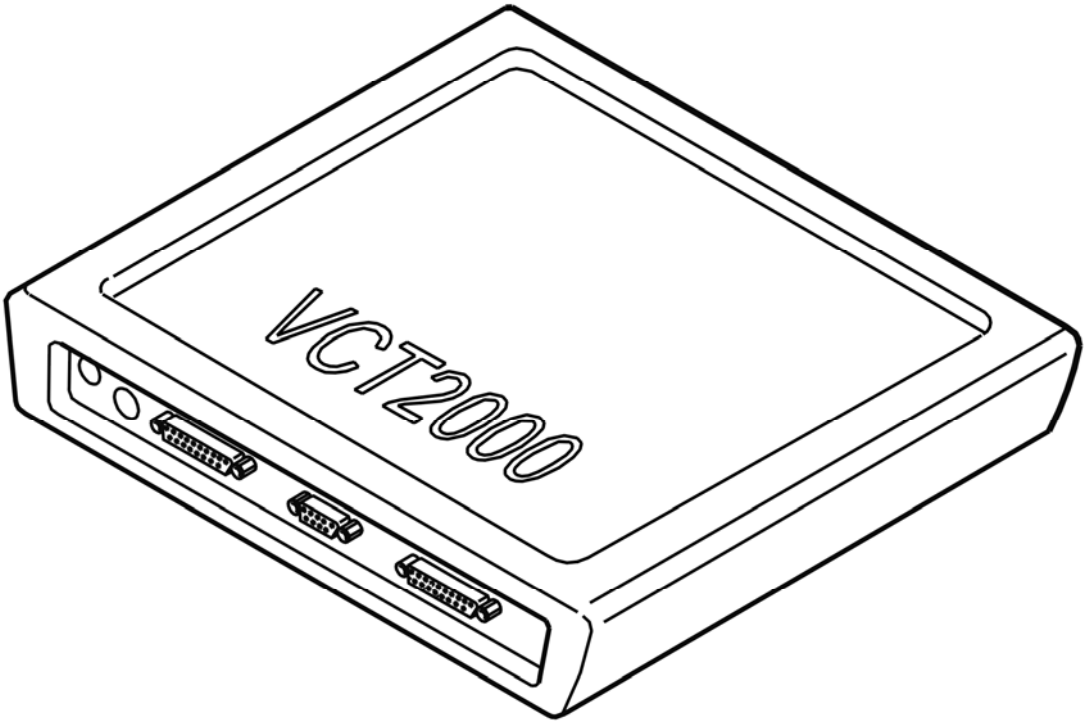

Fig. 32: Identifying VCT2000 Diagnostic Tool Symbol In VIDA
Courtesy of VOLVO CARS CORPORATION

Is the signal reasonable?

- **YES**

  VERIFIED: Troubleshooting has been completed.

- **NO**

  Refer to **INFORMATION**

INFORMATION

FAULT-TRACING INFORMATION

The fault should have been detected and remedied. As this is not the case fault-tracing has failed.

Exit fault-tracing for this diagnostic trouble code (DTC) or make another attempt.

ECM-P062900: FUEL PUMP A CONTROL CIRCUIT HIGH. GENERAL FAILURE INFORMATION. NO SUB TYPE INFORMATION (B6324S; 2007-

2010)

DIAGNOSTIC TROUBLE CODE (DTC) INFORMATION ECM-P062900

Condition

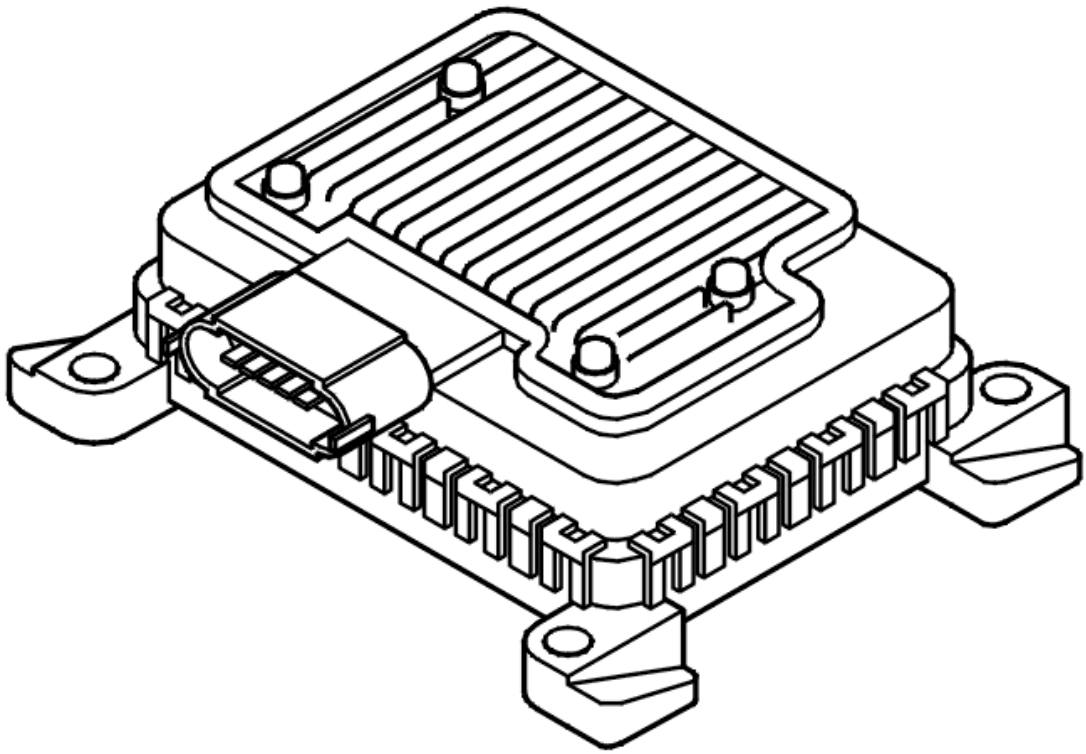

Fig. 33: Identifying Fuel Pump (FP) Control Module
Courtesy of VOLVO CARS CORPORATION

The engine control module (ECM) checks the control signal to the fuel pump.

The diagnostic trouble code (DTC) is stored if the control module registers a fault in the control signal to the fuel pump.

The diagnostic trouble code (DTC) can be diagnosed when the engine is running.

Substitute Value

- Nothing.

Possible Source

- Fault registered by the central electronic module (CEM)

- Short-circuit to supply voltage in the signal cable.
- Damaged fuel pump (FP) control module.

Fault symptom[s]

- The starter motor turns but the engine does not start.
- Engine stops.

FAULT-TRACING

see **FAULT-TRACING**

ECM-P062900: FUEL PUMP A CONTROL CIRCUIT HIGH. GENERAL FAILURE INFORMATION. NO SUB TYPE INFORMATION (B6324S5; 2011-2012)

DIAGNOSTIC TROUBLE CODE (DTC) INFORMATION ECM-P062900

see **DIAGNOSTIC TROUBLE CODE (DTC) INFORMATION ECM-P062900**

FAULT-TRACING

see **FAULT-TRACING**

ECM-P062900: FUEL PUMP A CONTROL CIRCUIT HIGH. GENERAL FAULT INFORMATION. NO INFORMATION ABOUT FAULT TYPE (B8444S; 2005-2011)

DIAGNOSTIC TROUBLE CODE (DTC) INFORMATION ECM-P062900

Condition

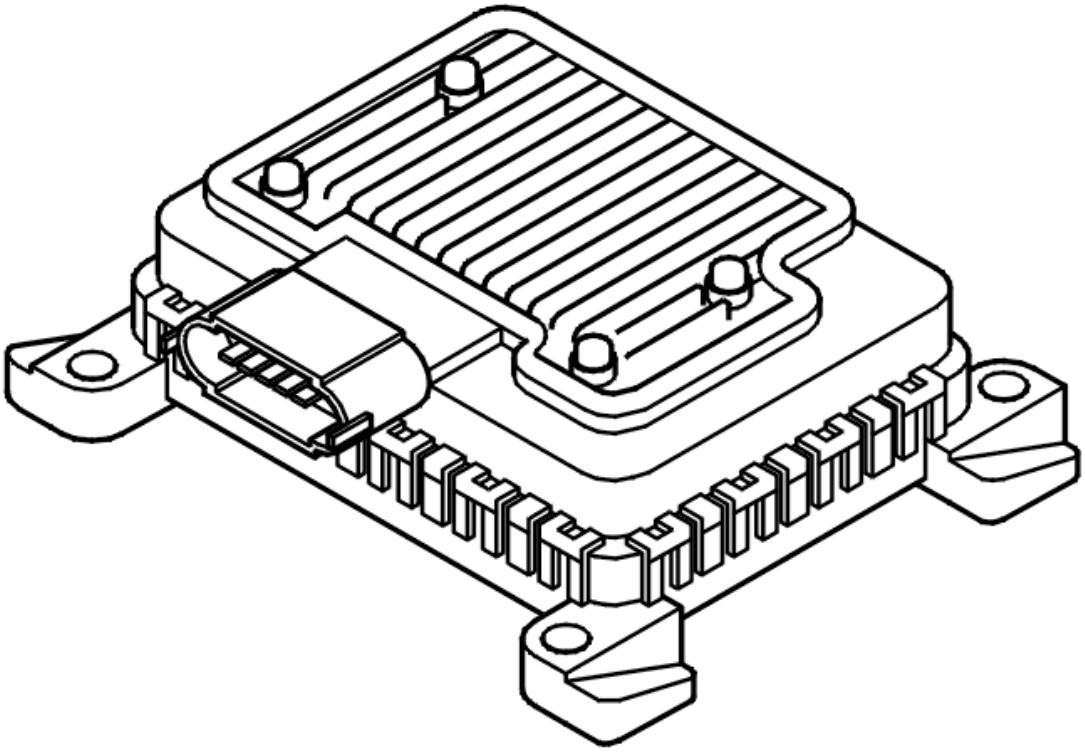

Fig. 34: Identifying Fuel Pump (FP) Control Module
Courtesy of VOLVO CARS CORPORATION

The engine control module (ECM) checks the control signal to the fuel pump.

The diagnostic trouble code (DTC) is stored if the control module registers a fault in the control signal to the fuel pump.

The diagnostic trouble code (DTC) can be diagnosed when the engine is running.

Substitute Value

- Nothing.

Possible Source

- Fault registered by the central electronic module (CEM)
- Short-circuit to supply voltage in the signal cable.
- Damaged fuel pump (FP) control module.

Fault symptom[s]

- The starter motor turns but the engine does not start.

- Engine stops.

TROUBLESHOOTING ECM-P062900 (2005)

CHECKING THE STATUS

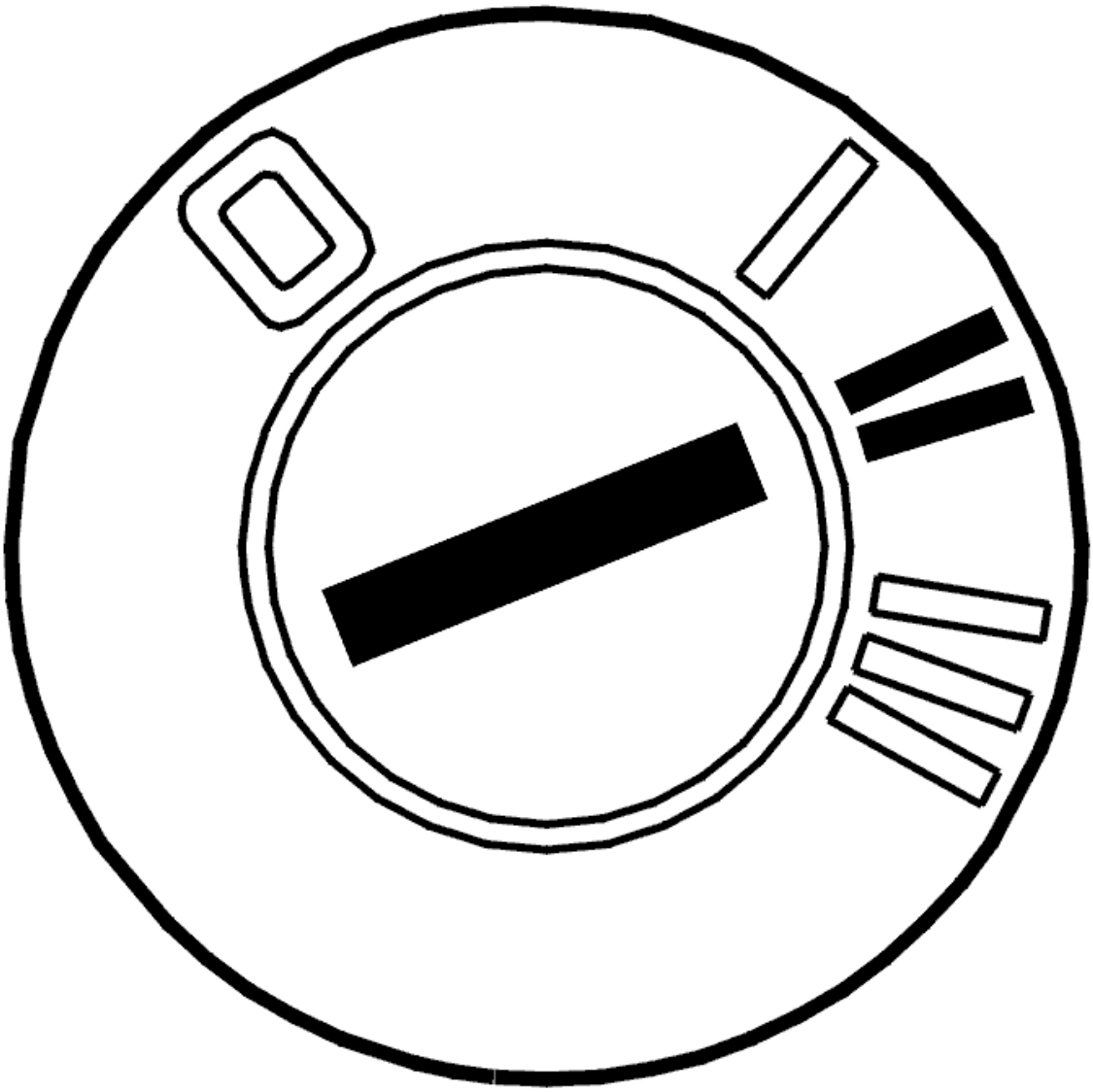

Fig. 35: Identifying Ignition ON
Courtesy of VOLVO CARS CORPORATION

- Ignition on, wait for at least 15 seconds to perform the diagnosis.

  Read the diagnostic status and fault status for the diagnostic trouble code by selecting the diagnostic trouble code in the list.

  Check if the malfunction is permanent or intermittent by reading off the diagnostic trouble code's status when the diagnostic status is "Implemented".

If the trouble status is "Malfunction found", this indicates that the malfunction is permanent. If the trouble status is "No malfunction found", this indicates that the malfunction is intermittent and not active right now.

NOTE: Trouble status cannot go from "Malfunction found" to "No malfunction found" in the same operating cycle.

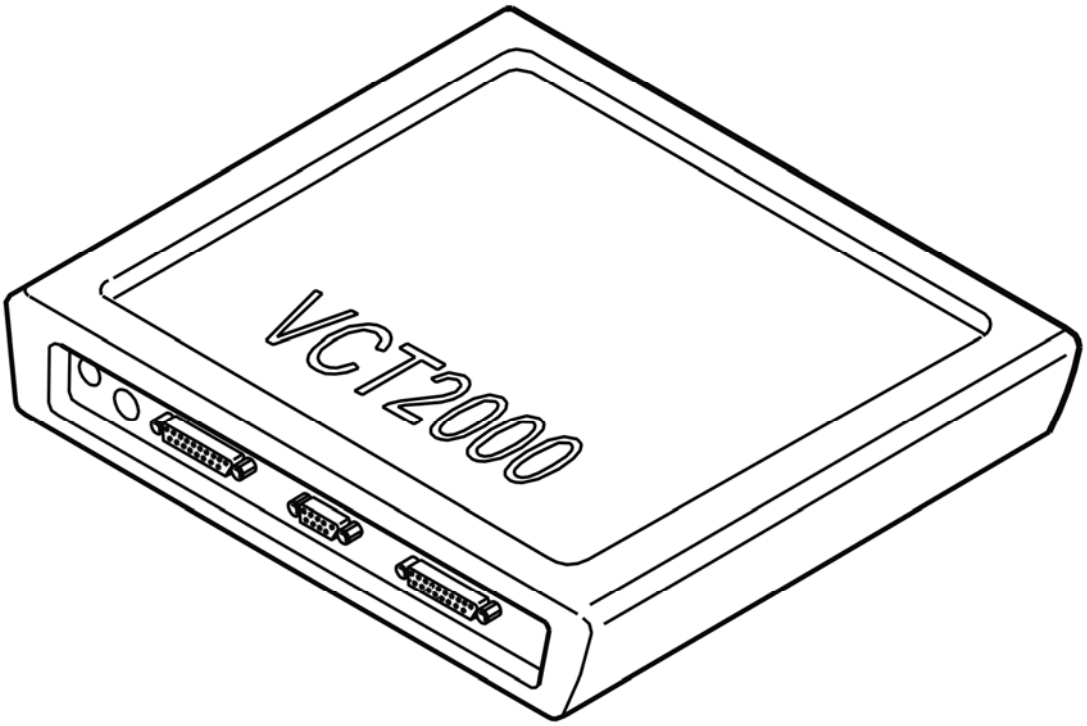

Fig. 36: Identifying VCT2000 Diagnostic Tool Symbol In VIDA
Courtesy of VOLVO CARS CORPORATION

- **Continue**

Refer to **CHECKING THE DIAGNOSTIC TROUBLE CODES (DTCS)**

CHECKING THE DIAGNOSTIC TROUBLE CODES (DTCS)

HINT: This diagnostic trouble code may be generated for malfunctions detected by the central electronic module (CEM).

NOTE: If there are diagnostic trouble codes stored in the central electronic module (CEM) for fuel pump or relay for fuel pump, then troubleshoot and remedy these first.

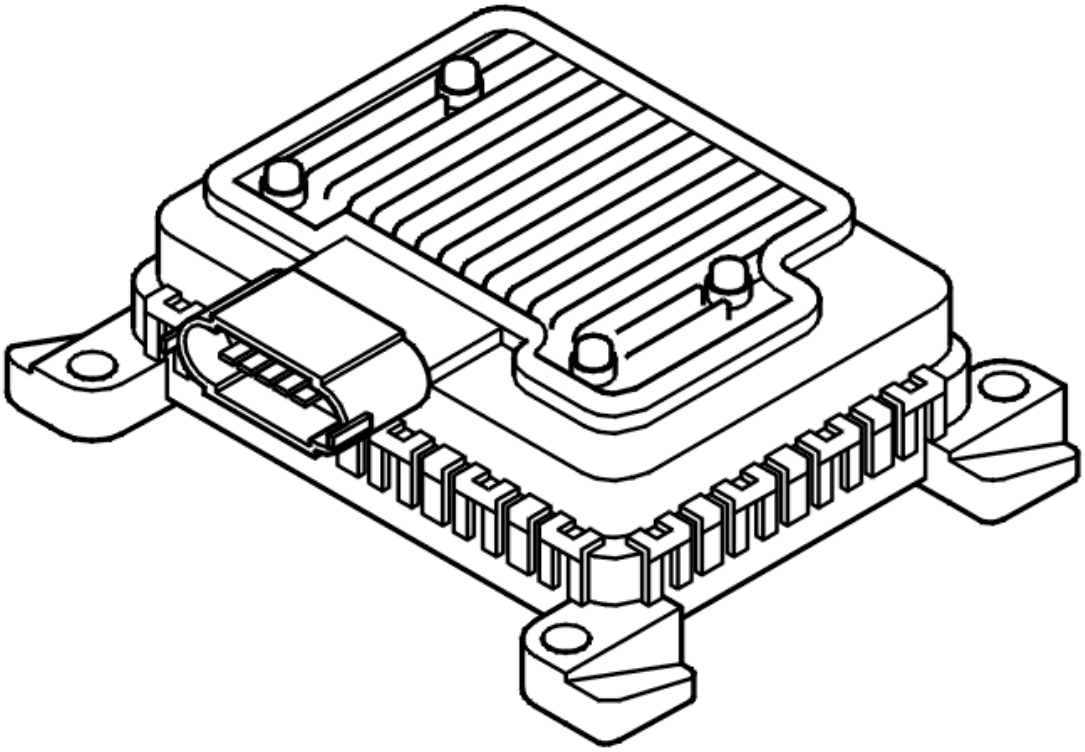

Fig. 37: Identifying Fuel Pump (FP) Control Module
Courtesy of VOLVO CARS CORPORATION

- **Continue**

  Refer to **CHECKING COMPONENTS AND WIRING**

CHECKING COMPONENTS AND WIRING

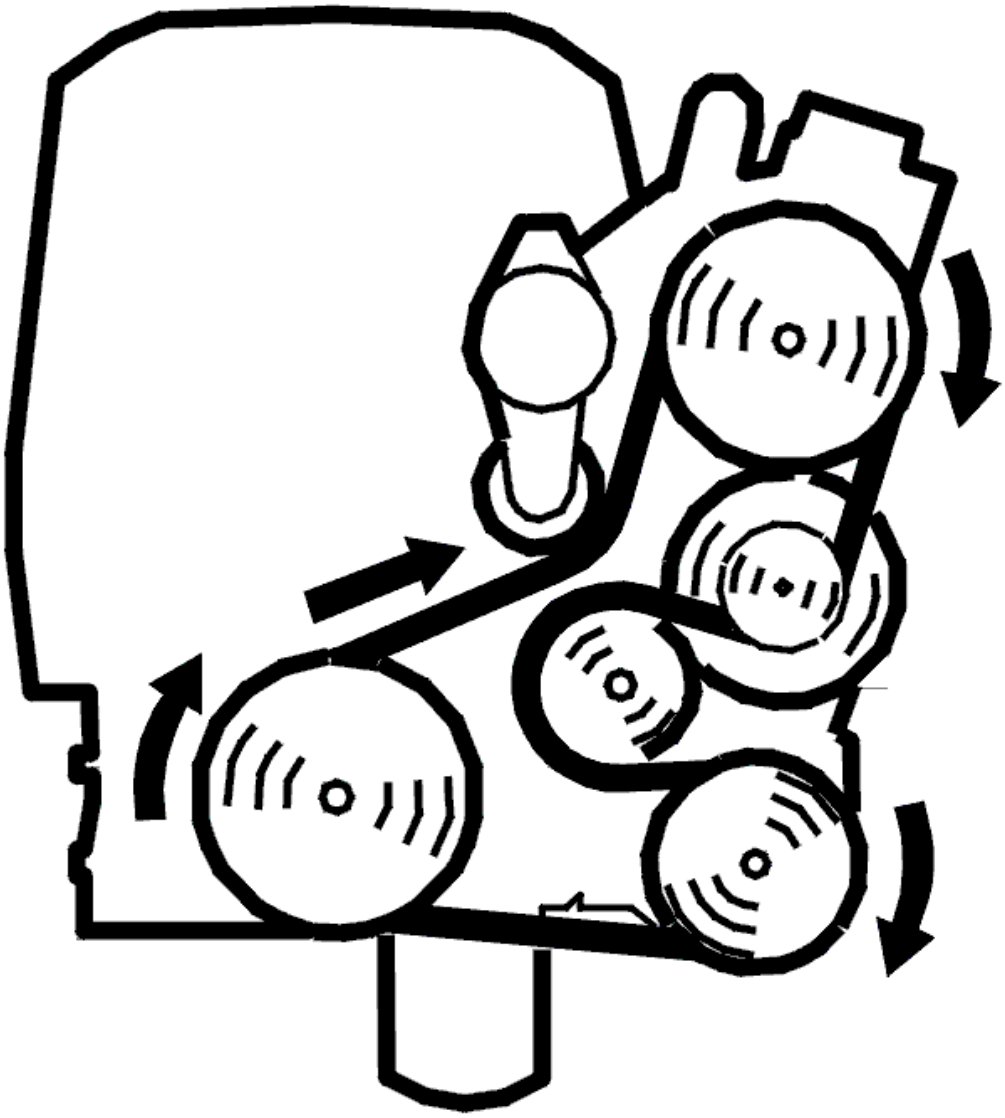

Fig. 38: Belt Routing / Engine Idling - Volvo
Courtesy of VOLVO CARS CORPORATION

- Start and warm up the engine.

  Read off the fuel pump's load (signal from engine control module (ECM) to fuel pump module).

  Check that the signal is approx. 50 % (±10 %) for idling, warm engine.

  Check the cable between engine control module (ECM) #B20 (#C20) and fuel pump module #1 for short-circuit to voltage.

  Remedy as necessary.

  Other information

- see **CONNECTING THE BREAKOUT BOX**
- see **SIGNAL SPECIFICATION, ENGINE CONTROL MODULE (ECM)**
- see **FUEL PUMP DRIVER MODULE**
- see **CHECKING WIRING AND TERMINALS**

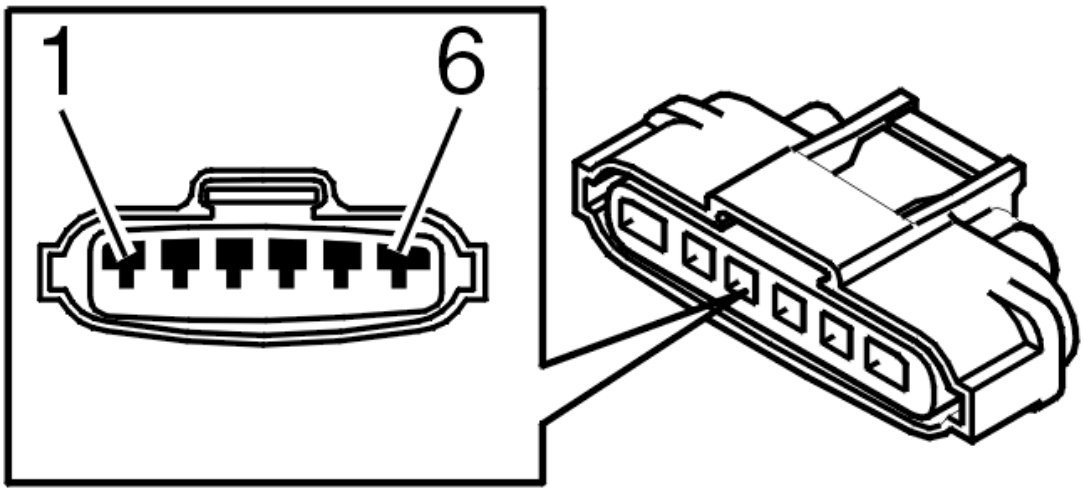

Fig. 39: Identifying 6-Bit Connector
Courtesy of VOLVO CARS CORPORATION

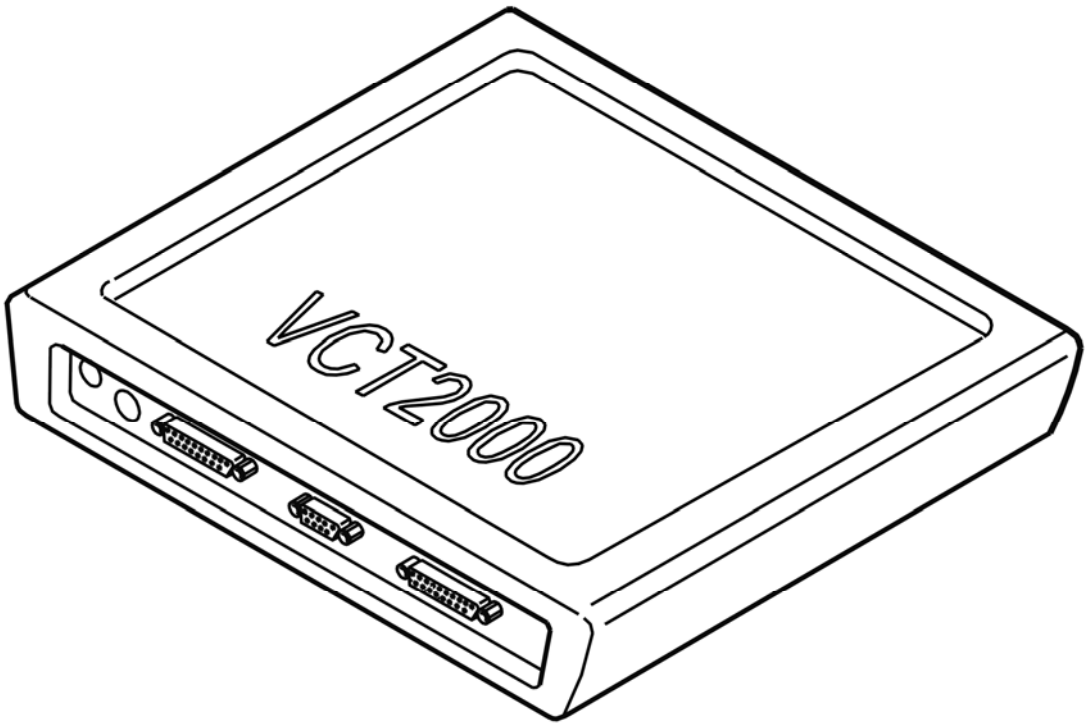

Fig. 40: Identifying VCT2000 Diagnostic Tool Symbol In VIDA
Courtesy of VOLVO CARS CORPORATION

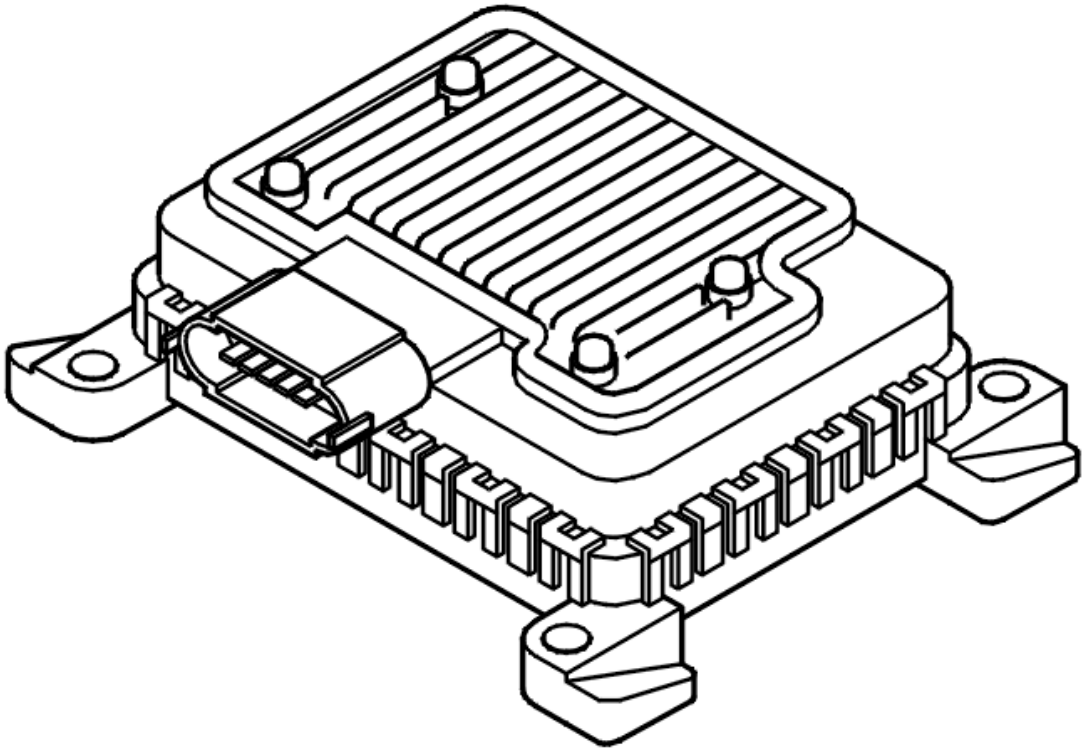

Fig. 41: Identifying Fuel Pump (FP) Control Module
Courtesy of VOLVO CARS CORPORATION

- **Continue**

  Refer to **VERIFICATION**

VERIFICATION

VERIFICATION

HINT: After carrying out the repair, check that the fault has been remedied.

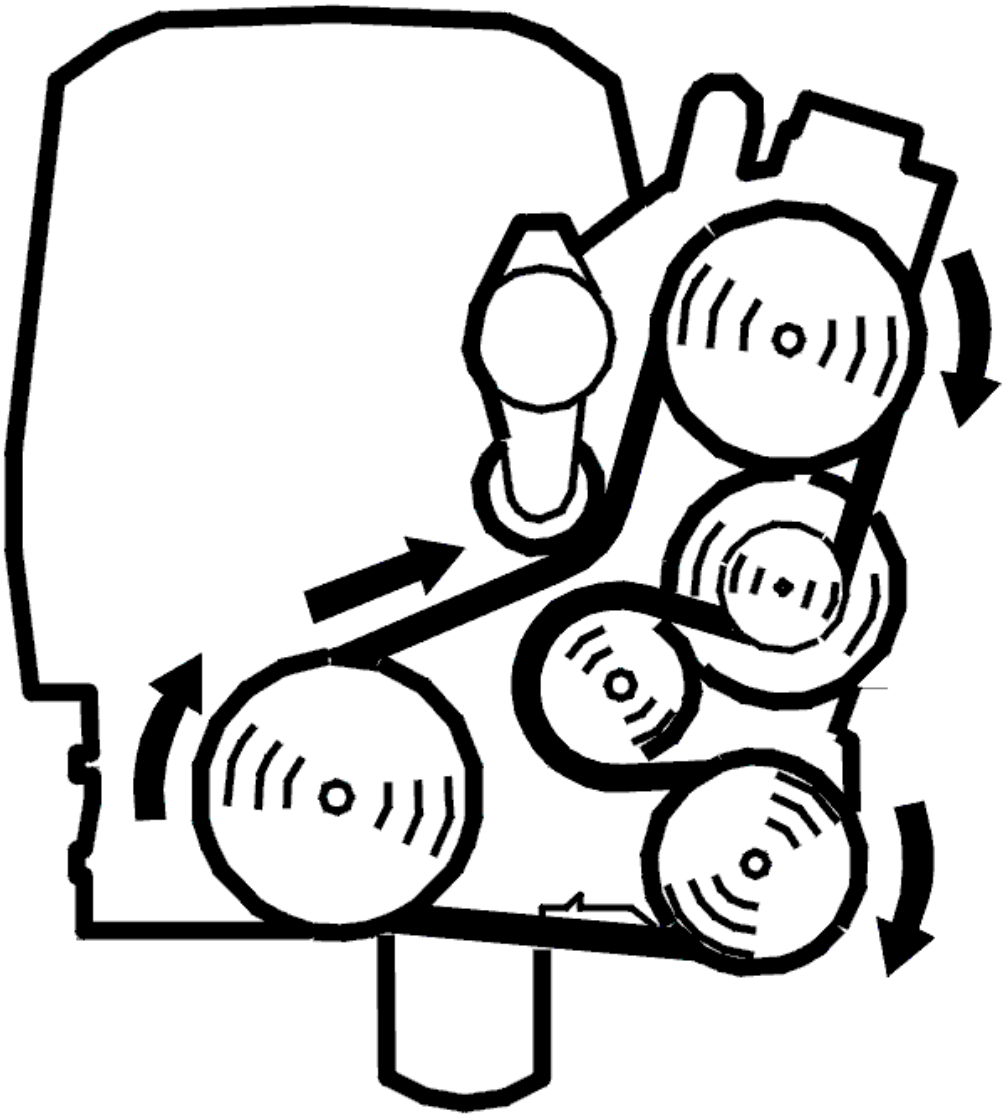

Fig. 42: Belt Routing / Engine Idling - Volvo
Courtesy of VOLVO CARS CORPORATION

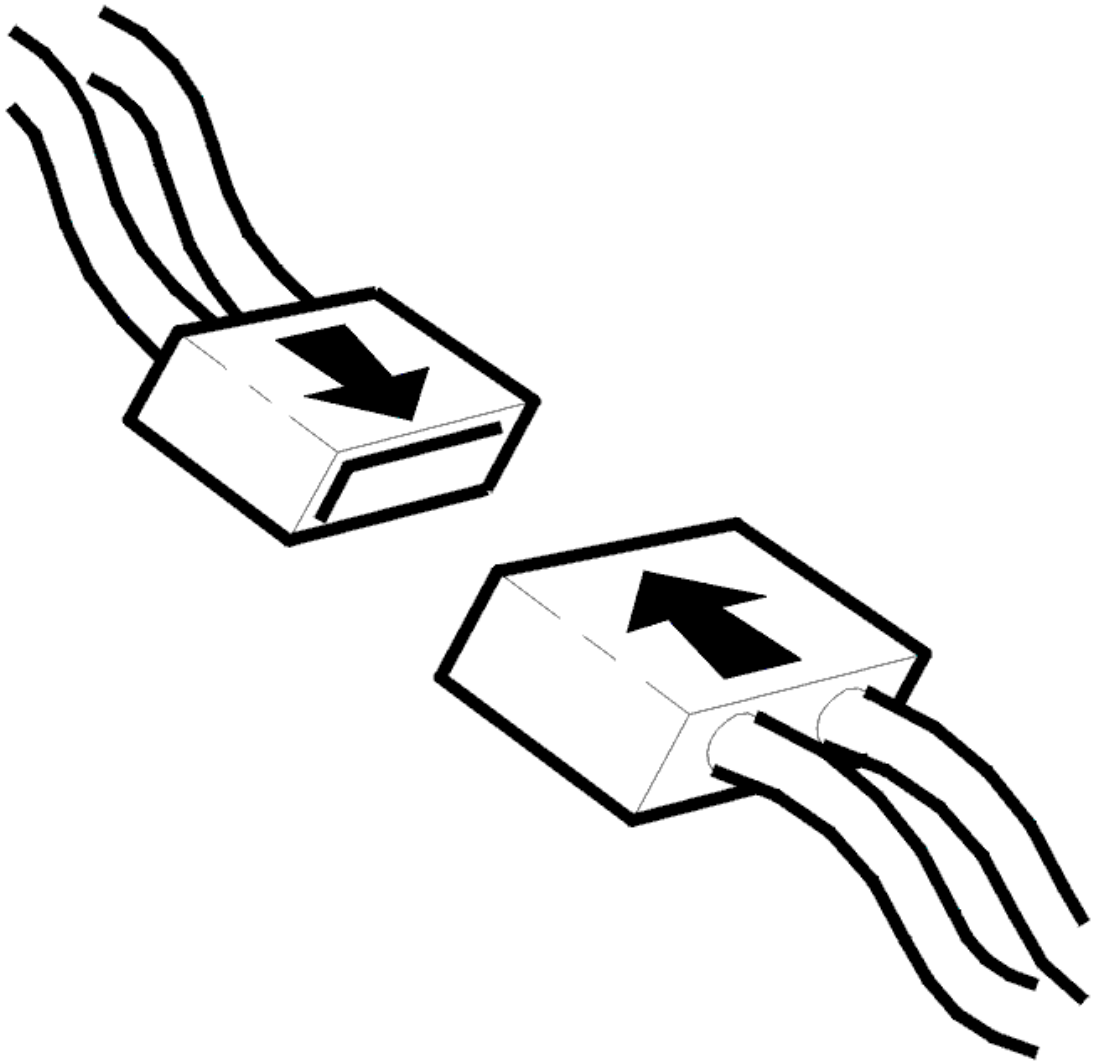

Fig. 43: Connecting Connector
Courtesy of VOLVO CARS CORPORATION

- Reinstall the connectors, components etc.
- Start and warm up the engine.

  Read off the fuel pump's load (signal from engine control module (ECM) to fuel pump module).

  Check that the signal is approx. 50 % (±10 %) for idling, warm engine.

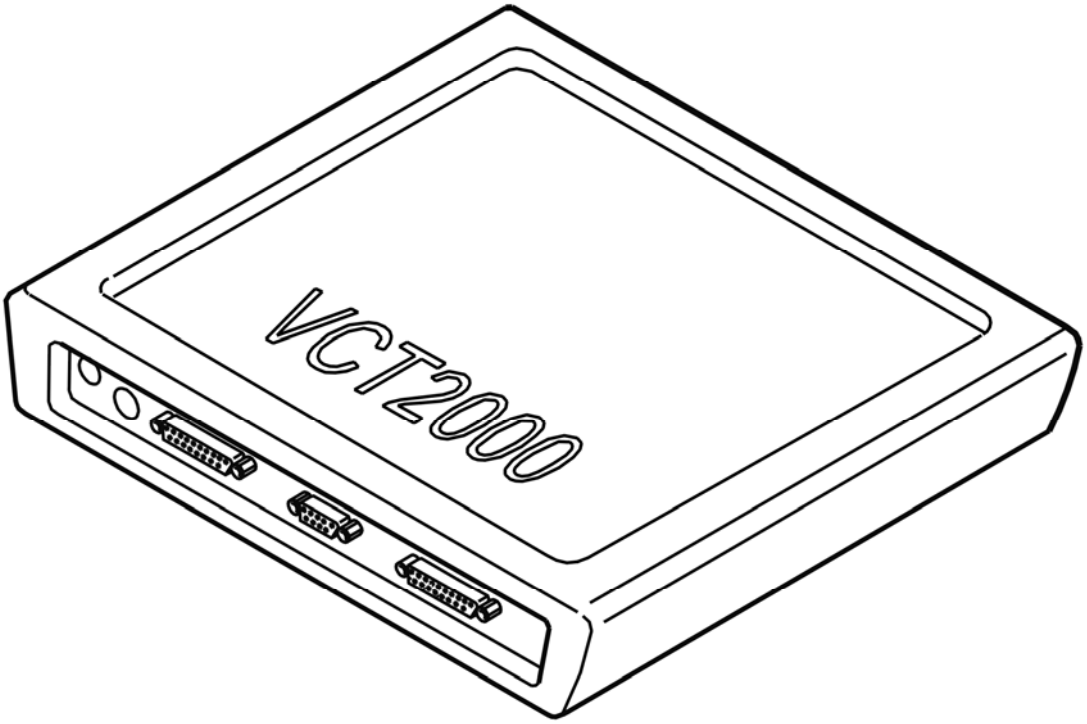

Fig. 44: Identifying VCT2000 Diagnostic Tool Symbol In VIDA
Courtesy of VOLVO CARS CORPORATION

Is the signal reasonable?

- **YES**

  VERIFIED: Troubleshooting has been completed.

- **NO**

  Refer to **INFORMATION**

INFORMATION

FAULT-TRACING INFORMATION

The fault should have been detected and remedied. As this is not the case fault-tracing has failed.

Exit fault-tracing for this diagnostic trouble code (DTC) or make another attempt.

TROUBLESHOOTING ECM-P062900 (2006-2011)

CHECKING THE STATUS

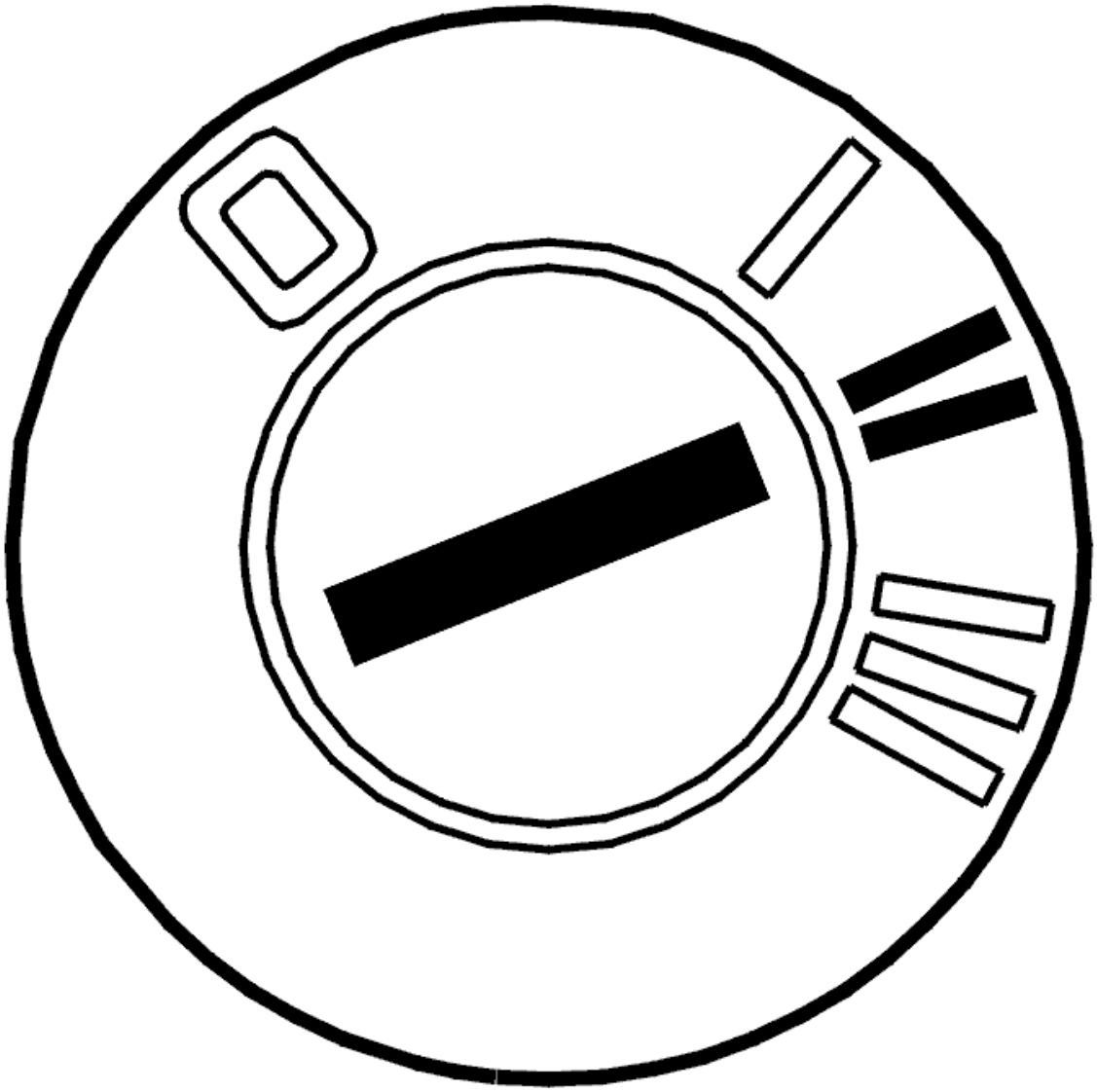

Fig. 45: Identifying Ignition ON
Courtesy of VOLVO CARS CORPORATION

- Ignition on, wait for at least 15 seconds to perform the diagnosis.

  Read the diagnostic status and fault status for the diagnostic trouble code by selecting the diagnostic trouble code in the list.

  Check if the malfunction is permanent or intermittent by reading off the diagnostic trouble code's status when the diagnostic status is "Implemented".

  If the trouble status is "Malfunction found", this indicates that the malfunction is permanent. If the trouble status is "No malfunction found", this indicates that the malfunction is intermittent and not active right now.

NOTE: Trouble status cannot go from "Malfunction found" to "No malfunction

found" in the same operating cycle.

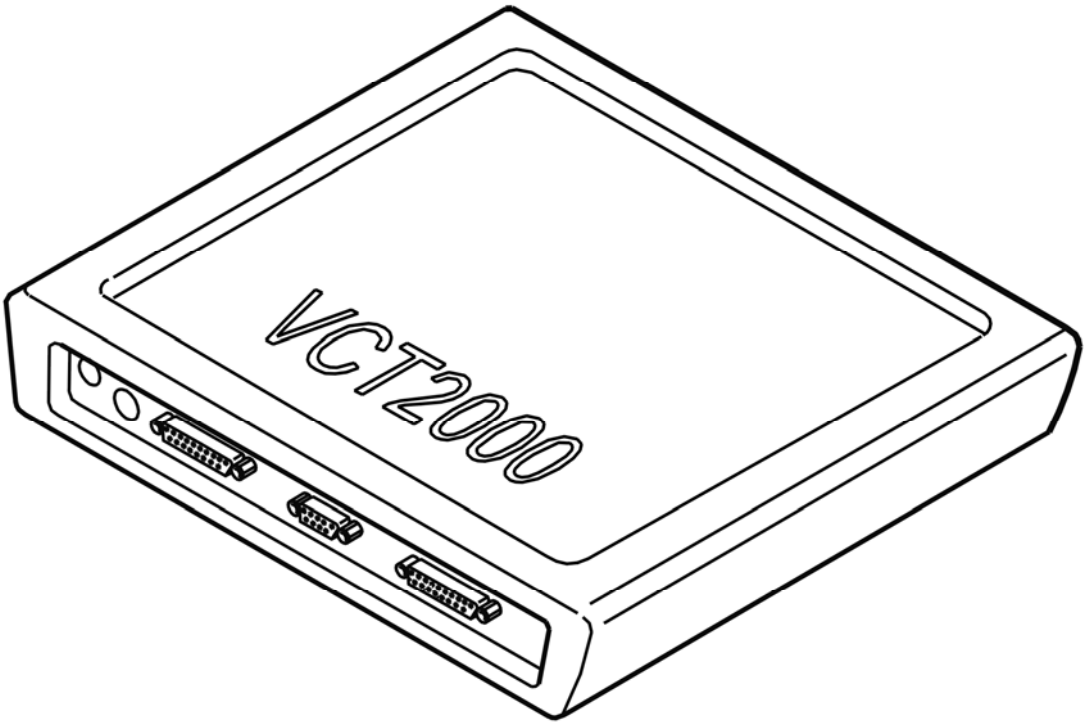

Fig. 46: Identifying VCT2000 Diagnostic Tool Symbol In VIDA
Courtesy of VOLVO CARS CORPORATION

- **Continue**

Refer to **CHECKING THE DIAGNOSTIC TROUBLE CODES (DTCS)**

CHECKING THE DIAGNOSTIC TROUBLE CODES (DTCS)

HINT: This diagnostic trouble code may be generated for malfunctions detected by the central electronic module (CEM).

NOTE: **If there are diagnostic trouble codes stored in the central electronic module (CEM) for fuel pump or relay for fuel pump, then troubleshoot and remedy these first.**

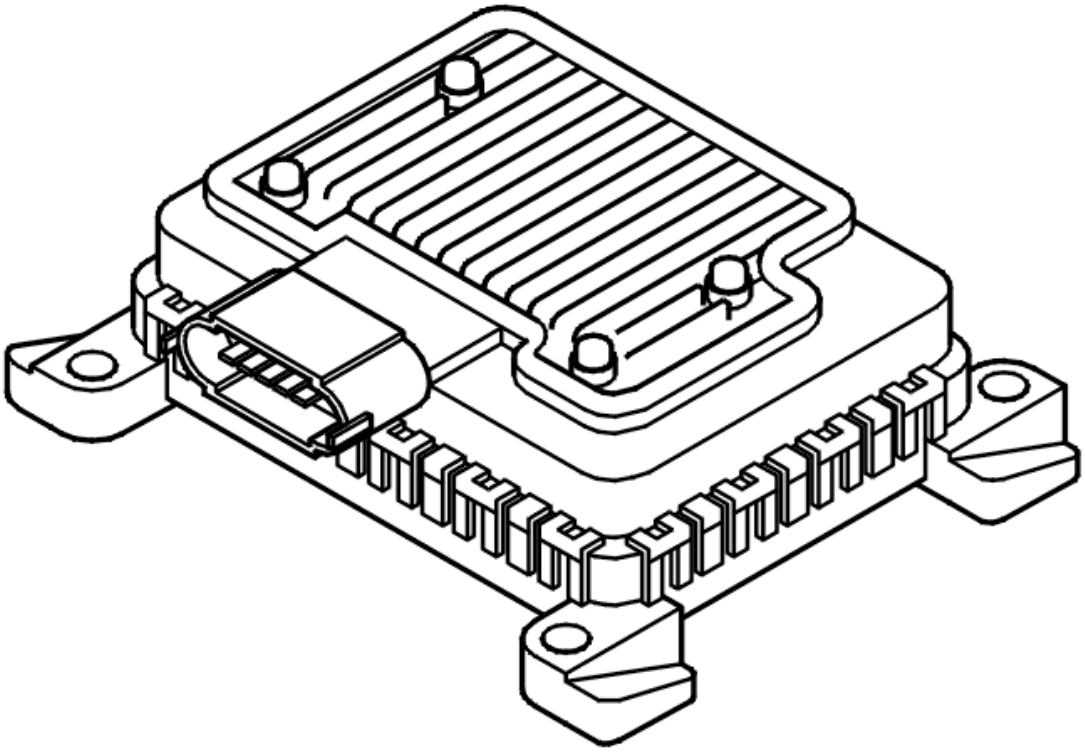

Fig. 47: Identifying Fuel Pump (FP) Control Module
Courtesy of VOLVO CARS CORPORATION

- **Continue**

  Refer to **CHECKING COMPONENTS AND WIRING**

CHECKING COMPONENTS AND WIRING

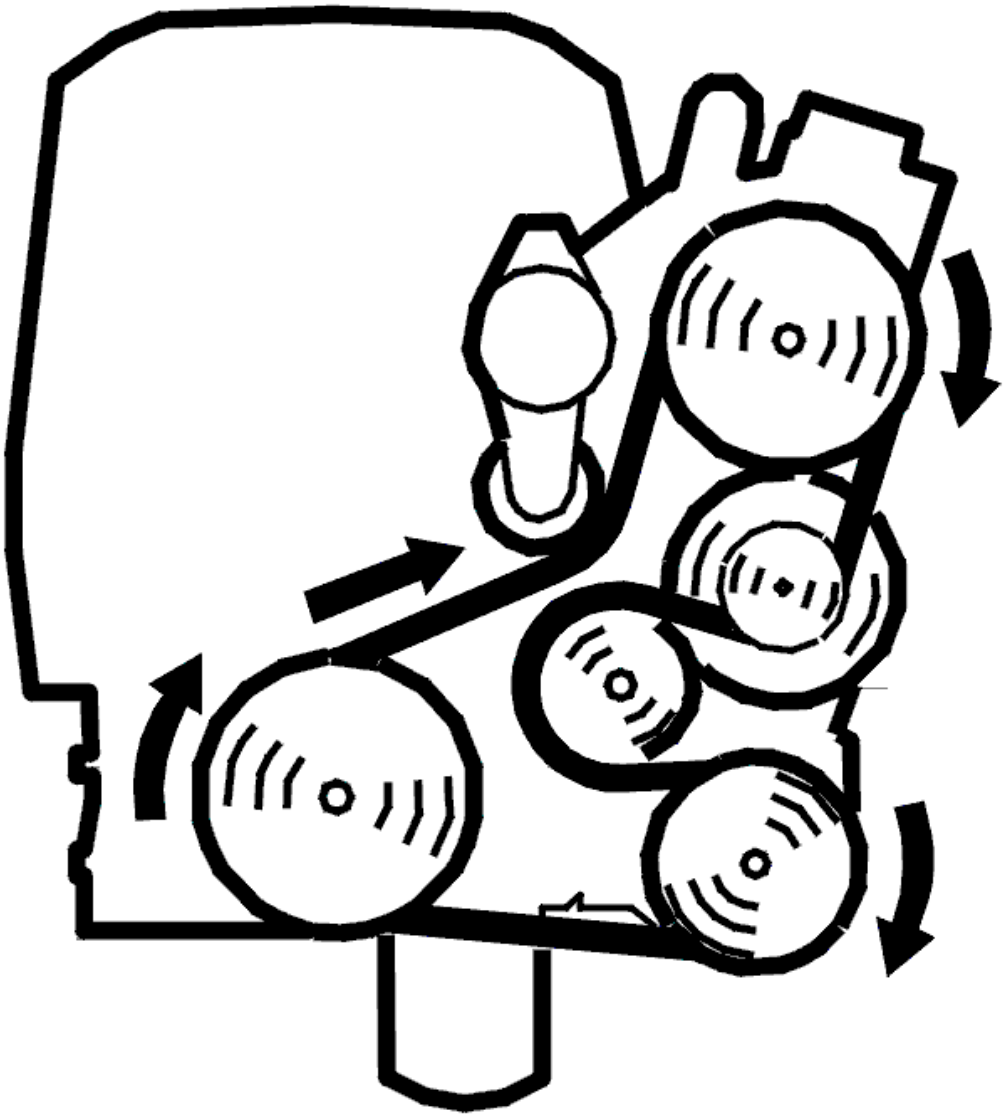

Fig. 48: Belt Routing / Engine Idling - Volvo
Courtesy of VOLVO CARS CORPORATION

- Start and warm up the engine.

  Read off the fuel pump's load (signal from engine control module (ECM) to fuel pump module).

  Check that the signal is approx. 50 % (±10 %) for idling, warm engine.

  Check the cable between engine control module (ECM) #B20 (#C20) and fuel pump module #1 for short-circuit to voltage.

  Remedy as necessary.

  Other information

- see **CONNECTING THE BREAKOUT BOX**
- see **SIGNAL SPECIFICATION, ENGINE CONTROL MODULE (ECM)**
- see **CONTROL MODULE FUEL PUMP (FP), REPLACING**
- see **CHECKING WIRING AND TERMINALS**

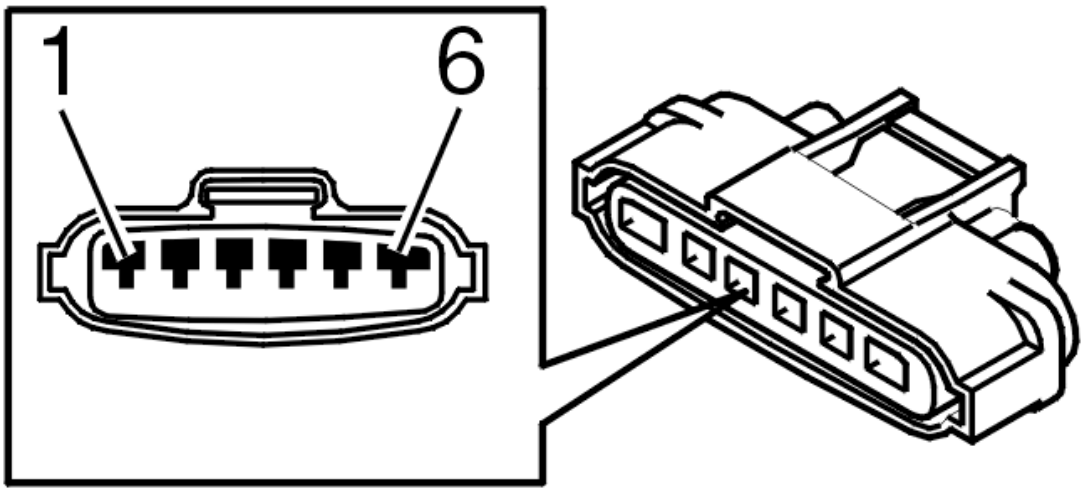

Fig. 49: Identifying 6-Bit Connector
Courtesy of VOLVO CARS CORPORATION

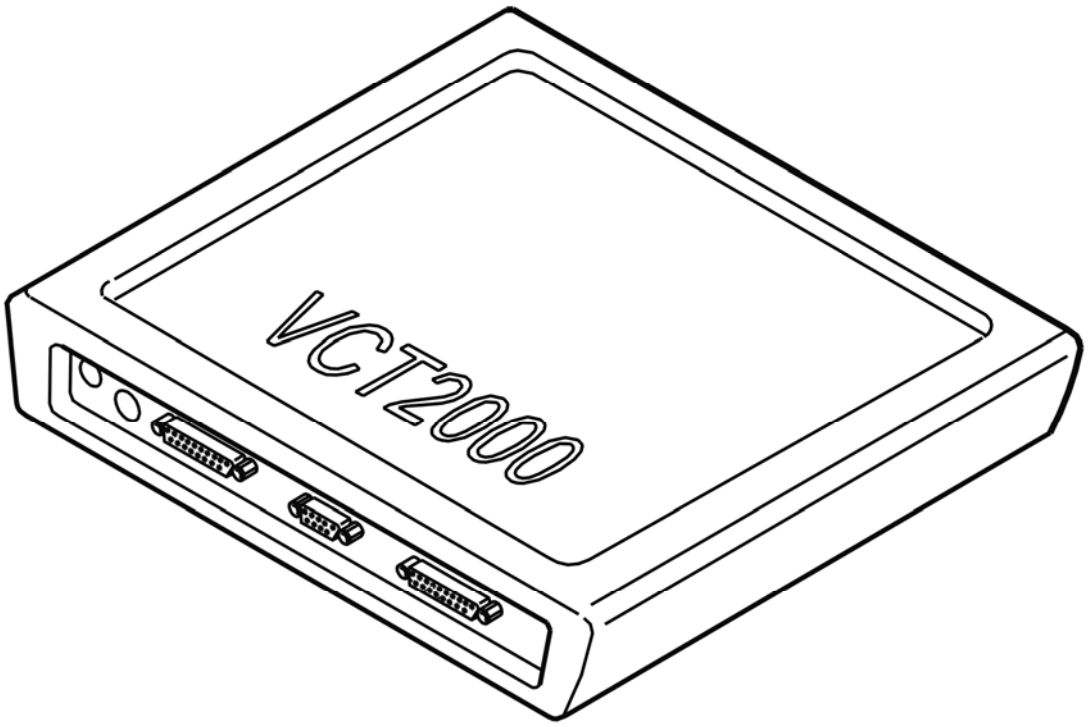

Fig. 50: Identifying VCT2000 Diagnostic Tool Symbol In VIDA
Courtesy of VOLVO CARS CORPORATION

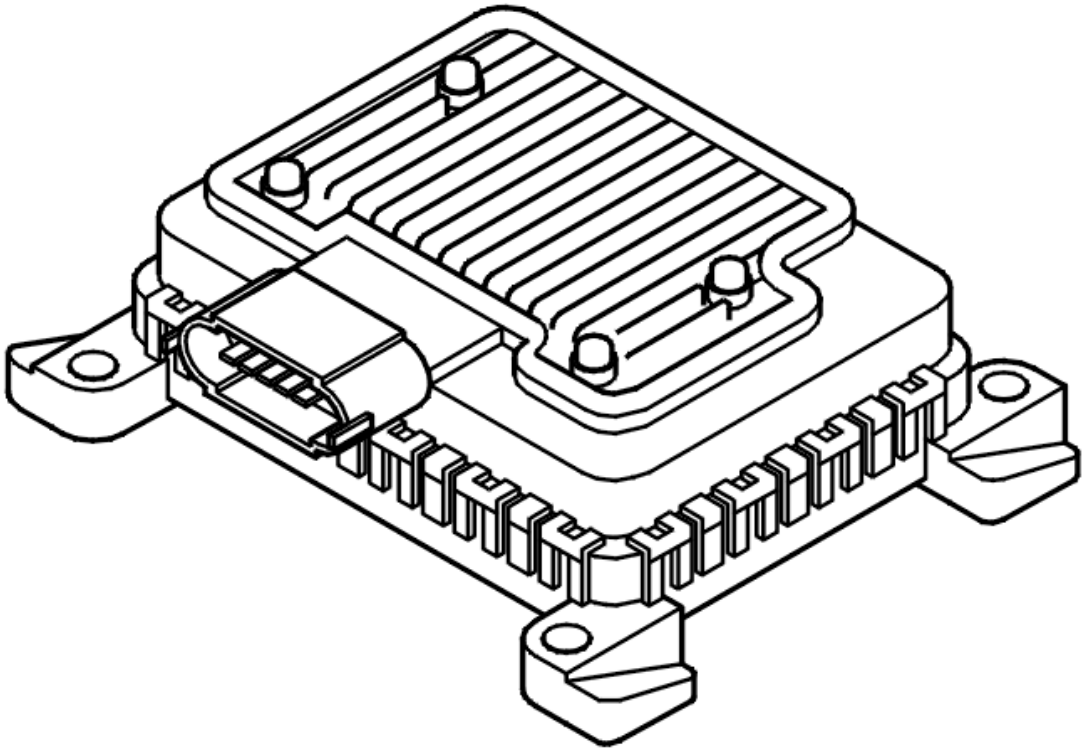

Fig. 51: Identifying Fuel Pump (FP) Control Module
Courtesy of VOLVO CARS CORPORATION

- **Continue**

  Refer to **VERIFICATION**

VERIFICATION

VERIFICATION

HINT: After carrying out the repair, check that the fault has been remedied.

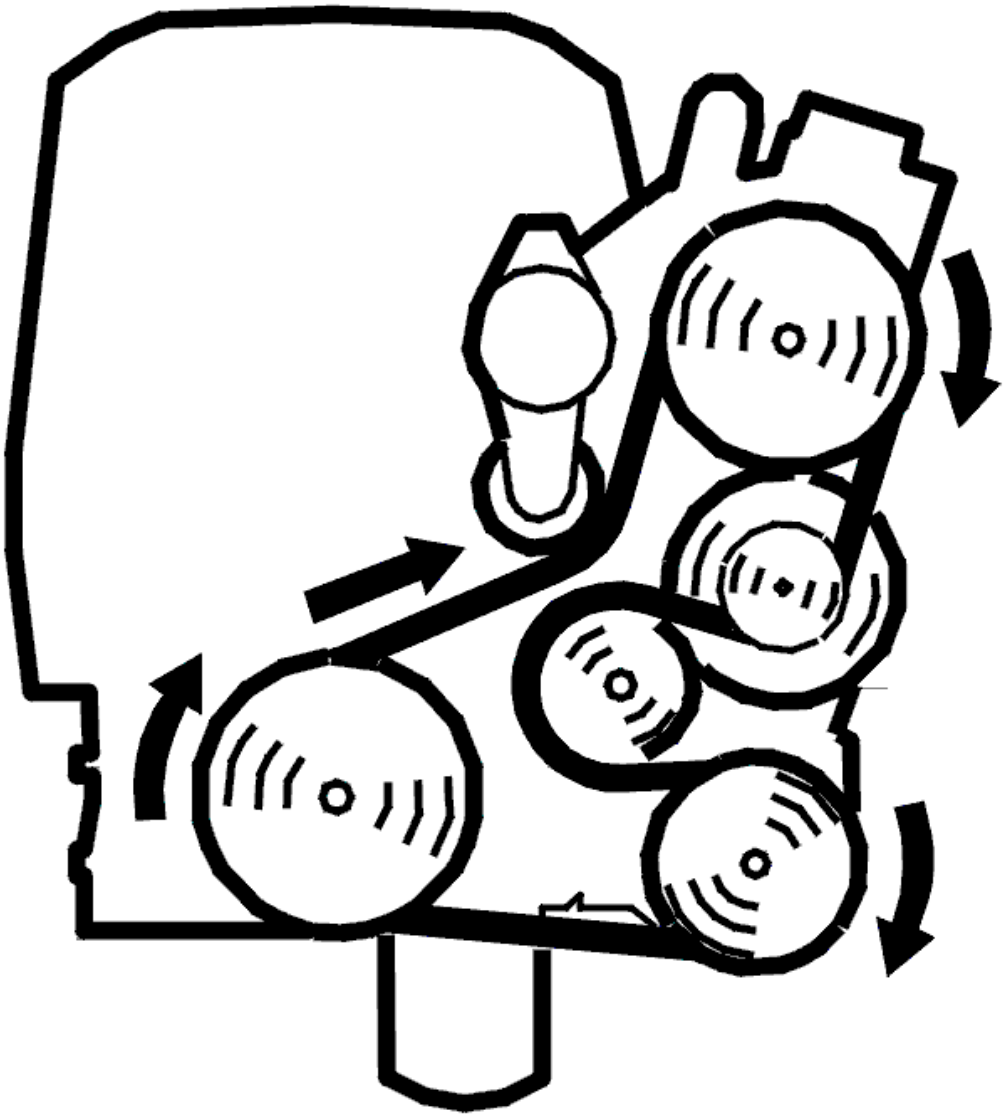

Fig. 52: Belt Routing / Engine Idling - Volvo
Courtesy of VOLVO CARS CORPORATION

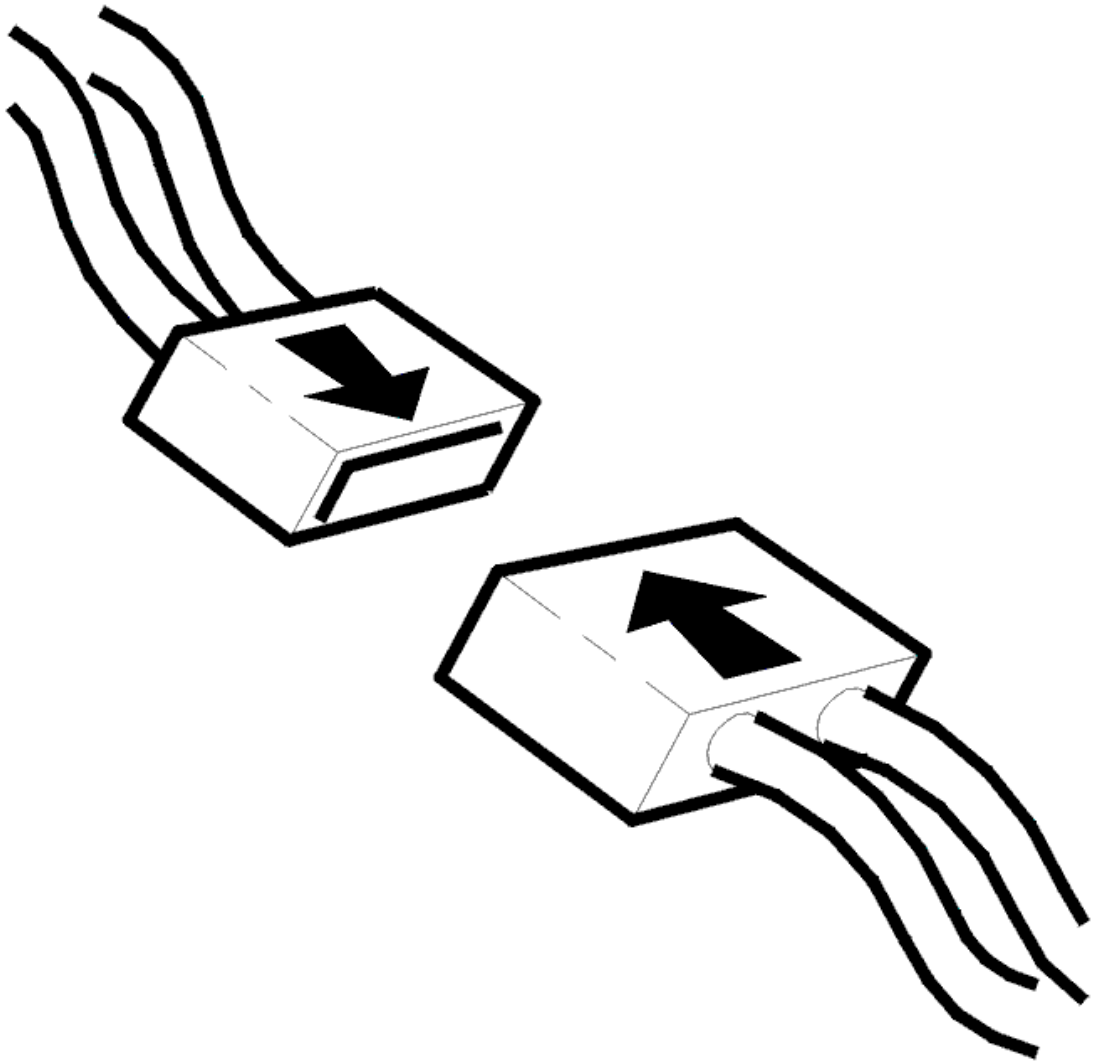

Fig. 53: Connecting Connector
Courtesy of VOLVO CARS CORPORATION

- Reinstall the connectors, components etc.
- Start and warm up the engine.

  Read off the fuel pump's load (signal from engine control module (ECM) to fuel pump module).

  Check that the signal is approx. 50 % (±10 %) for idling, warm engine.

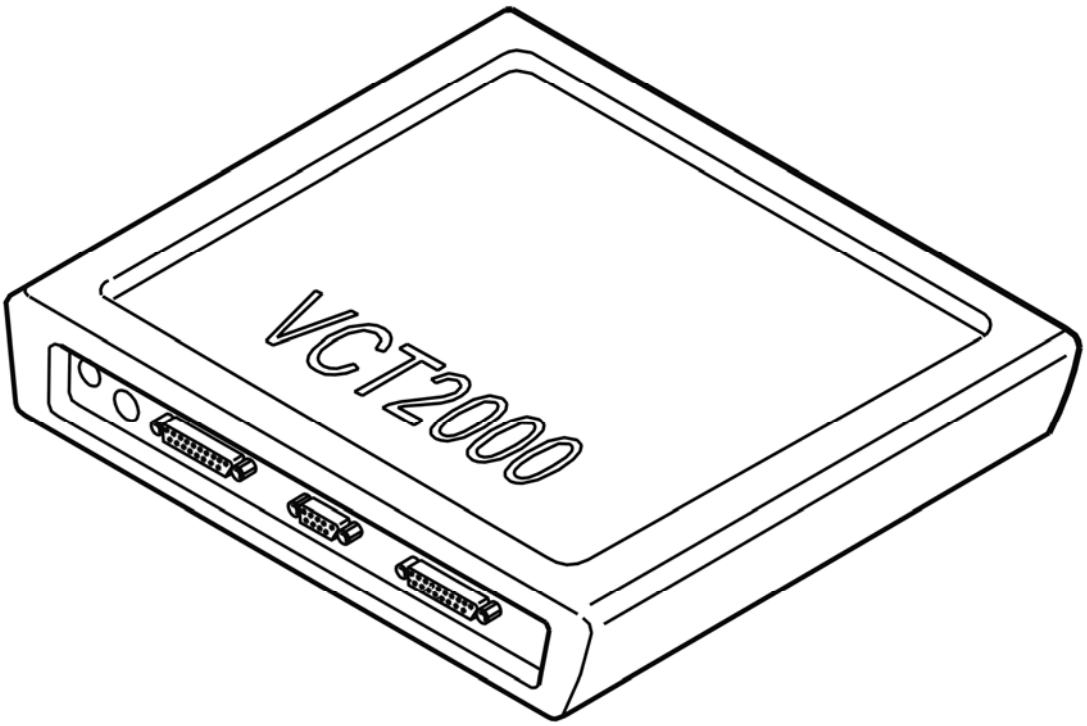

Fig. 54: Identifying VCT2000 Diagnostic Tool Symbol In VIDA
Courtesy of VOLVO CARS CORPORATION

Is the signal reasonable?

- **YES**

  VERIFIED: Troubleshooting has been completed.

- **NO**

  Refer to **INFORMATION**

INFORMATION

FAULT-TRACING INFORMATION

The fault should have been detected and remedied. As this is not the case fault-tracing has failed.

Exit fault-tracing for this diagnostic trouble code (DTC) or make another attempt.

ECM-P063400: PCM / ECM / TCM INTERNAL TEMPERATURE TOO HIGH. GENERAL FAILURE INFORMATION. NO SUB TYPE INFORMATION

(B6324S; 2007-2010)

DIAGNOSTIC TROUBLE CODE (DTC) INFORMATION ECM-P063400

Condition

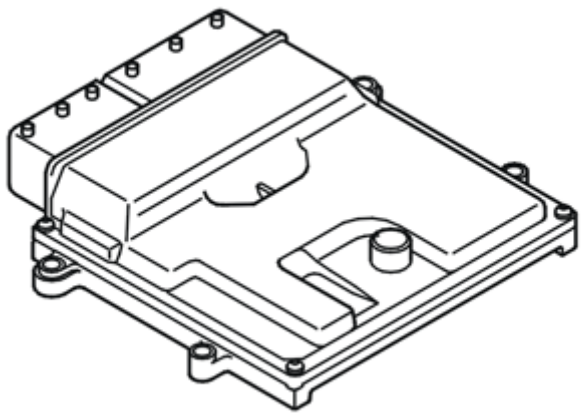

Fig. 55: Identifying Engine Control Module (ECM)
Courtesy of VOLVO CARS CORPORATION

If engine control module (ECM) registers that internal temperature in engine control module (ECM) has exceeded 120 °C for longer than 60 seconds, the diagnostic trouble code is generated.

The diagnostic trouble code can be diagnosed when the engine is running.

Substitute Value

- Engine cooling fan is activated according to predefined speed.

Possible Source

- Extreme weather conditions.

Fault symptom[s]

- Nothing.

FAULT-TRACING INFORMATION

see **FAULT-TRACING INFORMATION**

ECM-P063400: PCM / ECM / TCM INTERNAL TEMPERATURE TOO HIGH.

GENERAL FAILURE INFORMATION. NO SUB TYPE INFORMATION (B6324S5; 2011-2012)

DIAGNOSTIC TROUBLE CODE (DTC) INFORMATION ECM-P063400

see **DIAGNOSTIC TROUBLE CODE (DTC) INFORMATION ECM-P063400**

FAULT-TRACING INFORMATION

see **FAULT-TRACING INFORMATION**

ECM-P063400: PCM/ECM/TCM INTERNAL TEMPERATURE TOO HIGH. GENERAL MALFUNCTION INFORMATION. NO INFORMATION ON MALFUNCTION TYPE (B8444S; 2005-2011)

DIAGNOSTIC TROUBLE CODE (DTC) INFORMATION ECM-P063400

Condition

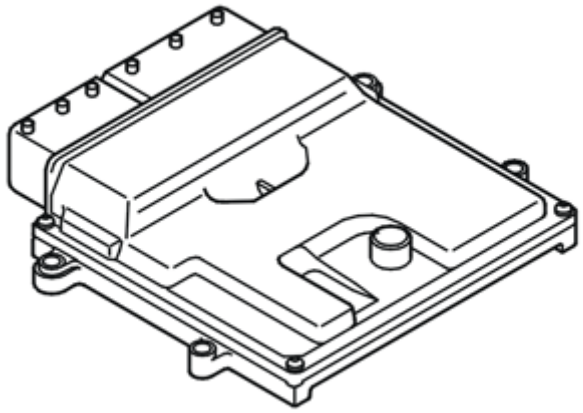

Fig. 56: Identifying Engine Control Module (ECM)
Courtesy of VOLVO CARS CORPORATION

If engine control module (ECM) registers that internal temperature in engine control module (ECM) has exceeded 120 °C for longer than 60 seconds, the diagnostic trouble code is generated.

The diagnostic trouble code can be diagnosed when the engine is running.

Substitute Value

- Engine cooling fan is activated according to predefined speed.

Possible Source

- Extreme weather conditions.

Fault symptom[s]

- Nothing.

FAULT-TRACING INFORMATION

see **FAULT-TRACING INFORMATION**

ECM-P06344B: PCM / ECM / TCM INTERNAL TEMPERATURE TOO HIGH. SYSTEM INTERNAL FAILURES. OVER TEMPERATURE (B6324S; 2007-2010)

DIAGNOSTIC TROUBLE CODE (DTC) INFORMATION ECM-P06344B

Condition

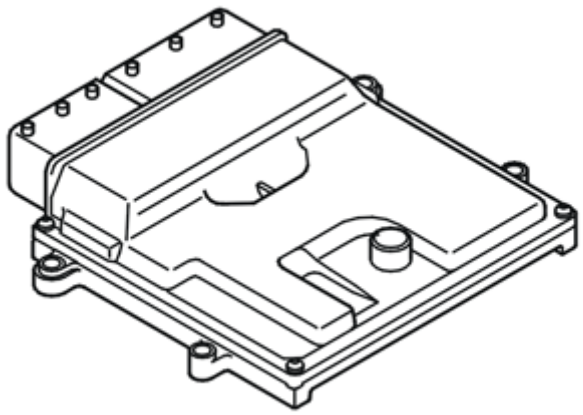

Fig. 57: Identifying Engine Control Module (ECM)
Courtesy of VOLVO CARS CORPORATION

If engine control module (ECM) registers that internal temperature in engine control module (ECM) has exceeded 105 °C for longer than 60 seconds, the diagnostic trouble code is generated.

The diagnostic trouble code can be diagnosed when the engine is running.

Substitute Value

- Engine cooling fan is activated according to predefined speed.

Possible Source

- Extreme weather conditions.

Fault symptom[s]

- Nothing.

FAULT-TRACING INFORMATION

see **FAULT-TRACING INFORMATION**

ECM-P06344B: PCM / ECM / TCM INTERNAL TEMPERATURE TOO HIGH. SYSTEM INTERNAL FAILURES. OVER TEMPERATURE (B6324S5; 2011-2012)

DIAGNOSTIC TROUBLE CODE (DTC) INFORMATION ECM-P06344B

see **DIAGNOSTIC TROUBLE CODE (DTC) INFORMATION ECM-P06344B**

FAULT-TRACING INFORMATION

see **FAULT-TRACING INFORMATION**

ECM-P063498: PCM / ECM / TCM INTERNAL TEMPERATURE TOO HIGH. COMPONENT FAILURES. COMPONENT OR SYSTEM OVER TEMPERATURE (B6324S; 2007-2010)

DIAGNOSTIC TROUBLE CODE (DTC) INFORMATION ECM-P063498

Condition

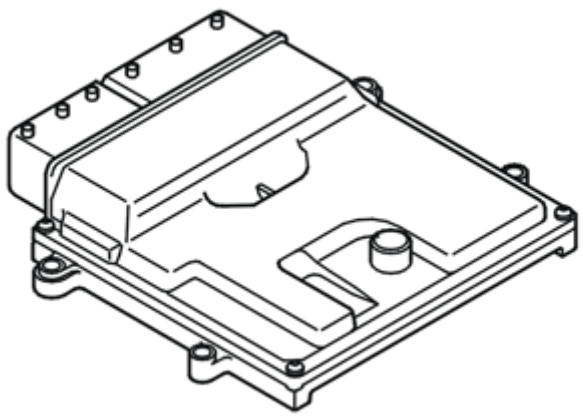

Fig. 58: Identifying Engine Control Module (ECM)
Courtesy of VOLVO CARS CORPORATION

If engine control module (ECM) registers that the accumulated internal temperature in engine control module (ECM) has exceeded 105 °C for longer than a certain time, the diagnostic trouble code is generated.

The diagnostic trouble code can be diagnosed when the engine is running.

Substitute Value

- Engine cooling fan is activated according to predefined speed.

Possible Source

- Extreme weather conditions.

Fault symptom[s]

- Nothing.

FAULT-TRACING INFORMATION

see **FAULT-TRACING INFORMATION**

ECM-P063498: PCM / ECM / TCM INTERNAL TEMPERATURE TOO HIGH. COMPONENT FAILURES. COMPONENT OR SYSTEM OVER TEMPERATURE (B6324S5; 2011-2012)

DIAGNOSTIC TROUBLE CODE (DTC) INFORMATION ECM-P063498

see **DIAGNOSTIC TROUBLE CODE (DTC) INFORMATION ECM-P063498**

FAULT-TRACING INFORMATION

see **FAULT-TRACING INFORMATION**

ECM-P064100: SENSOR REFERENCE VOLTAGE A OPEN CIRCUIT. GENERAL MALFUNCTION INFORMATION. NO INFORMATION ON MALFUNCTION TYPE (B8444S; 2005-2011)

DIAGNOSTIC TROUBLE CODE (DTC) INFORMATION ECM-P064100

Condition

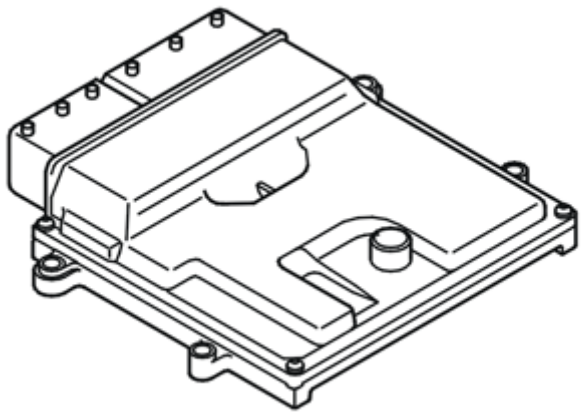

Fig. 59: Identifying Engine Control Module (ECM)
Courtesy of VOLVO CARS CORPORATION

Engine control module motor (ECM) checks the internal end-stage for 5 volt feed.

If voltage becomes too high or too low, the diagnostic trouble code is generated.

The diagnostic trouble code can be diagnosed when the ignition is on.

Substitute Value

- Nothing

Possible Source

- Signal cable for connected component short-circuited to voltage
- Open circuit on signal cable for connected component.
- Signal cable for connected component short-circuited to ground.
- Damaged engine control module (ECM).

Fault symptom[s]

- Uneven idle.
- Increased emissions.
- Poor performance.
- Engine stops while driving.

FAULT TRACING

CHECKING THE STATUS

NOTE: **Trouble status cannot go from "Malfunction found" to "No malfunction found" in the same operating cycle.**

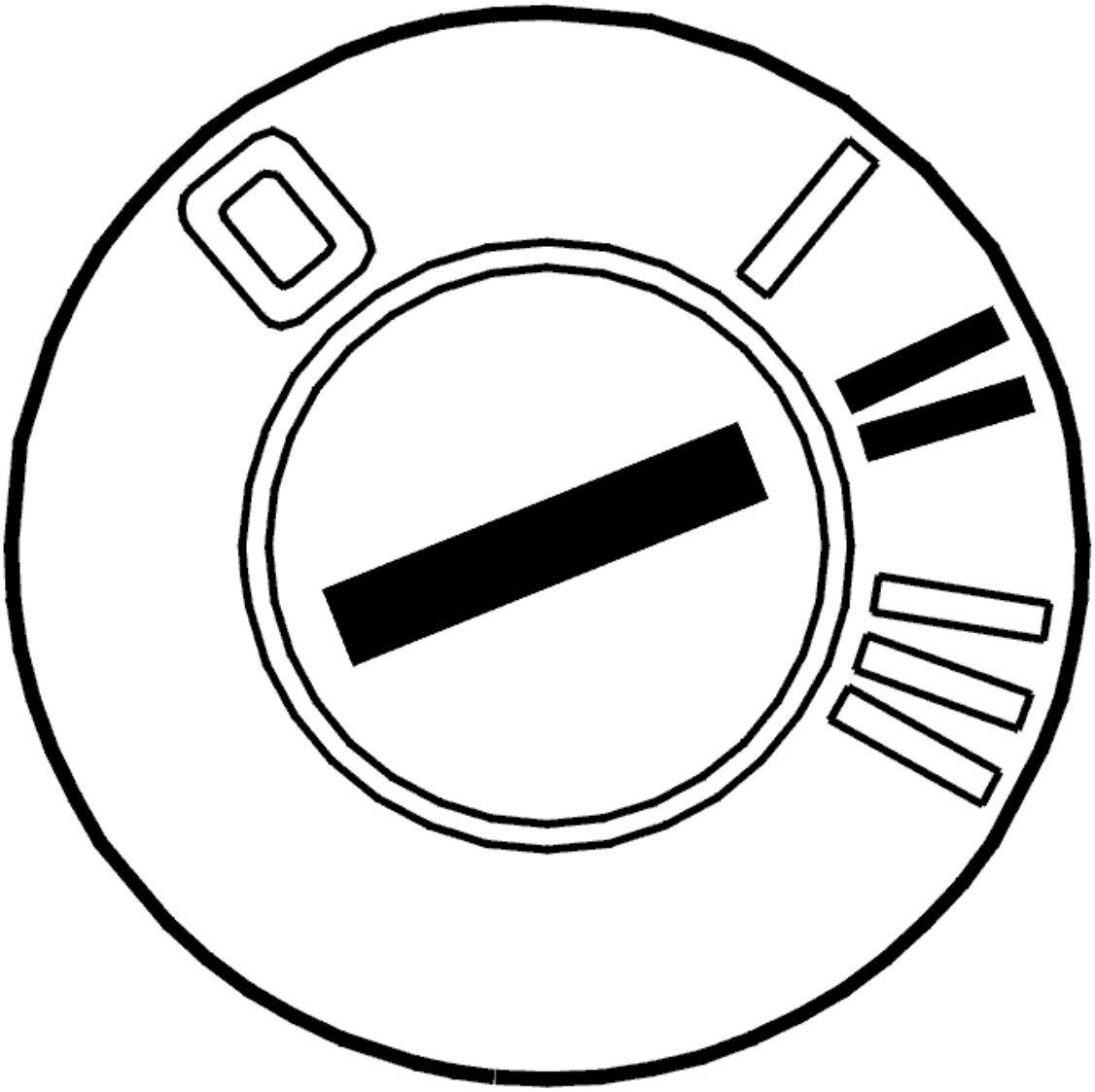

Fig. 60: Identifying Ignition ON
Courtesy of VOLVO CARS CORPORATION

- Ignition on, wait for at least 15 seconds to perform the diagnosis.

  Read the diagnostic status and fault status for the diagnostic trouble code by selecting the diagnostic trouble code in the list.

  Check if the malfunction is permanent or intermittent by reading off the diagnostic trouble code's status when the diagnostic status is "Implemented".

  If the trouble status is "Malfunction found", this indicates that the malfunction is permanent. If the trouble status is "No malfunction found", this indicates that the malfunction is intermittent and not active right

now.

NOTE: Trouble status cannot go from "Malfunction found" to "No malfunction found" in the same operating cycle.

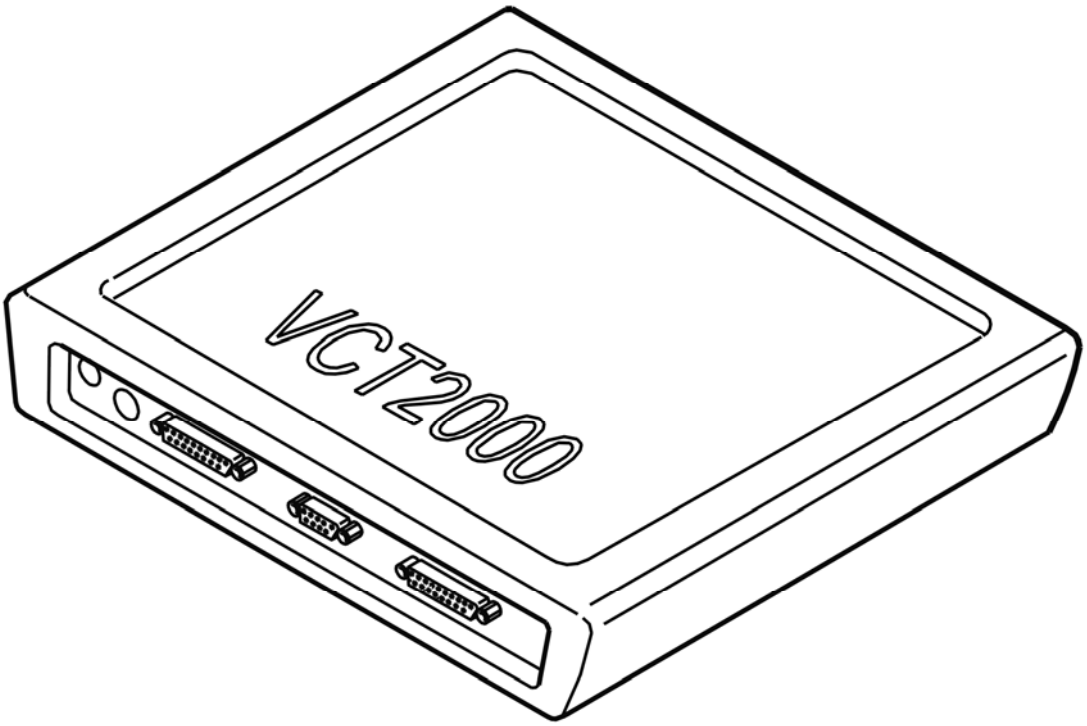

Fig. 61: Identifying VCT2000 Diagnostic Tool Symbol In VIDA
Courtesy of VOLVO CARS CORPORATION

- **Continue**

Refer to **REPLACING THE COMPONENT**

REPLACING THE COMPONENT

The engine control module (ECM) has registered an internal fault.

If the fault is intermittent, it has been registered previously but no longer remains. Intermittent faults can be due to disruption when the engine control module (ECM) started or can be another type of fault that may recur at different instances. The fault is assessed on a case by case basis. If the fault recurs, replace the engine control module (ECM).

In the event of a permanent fault, replace the engine control module (ECM).

Remedy as necessary.

Other information

- see **ENGINE CONTROL MODULE (ECM), REPLACING**

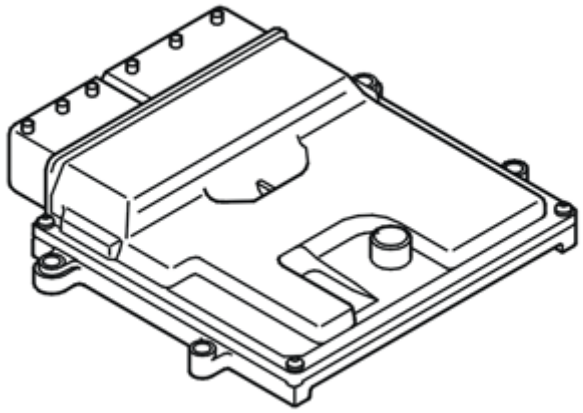

Fig. 62: Identifying Engine Control Module (ECM)
Courtesy of VOLVO CARS CORPORATION

- **Continue**

  Refer to **INFORMATION**

INFORMATION

FAULT-TRACING INFORMATION

In case of this defect, troubleshooting is not followed by verification.

The information can be displayed again or the fault-tracing for this fault can be interrupted.

ECM-P064200: SENSOR REFERENCE VOLTAGE A CIRCUIT LOW. GENERAL FAILURE INFORMATION. NO SUB TYPE INFORMATION (B6324S; 2007-2010)

DIAGNOSTIC TROUBLE CODE (DTC) INFORMATION

Condition

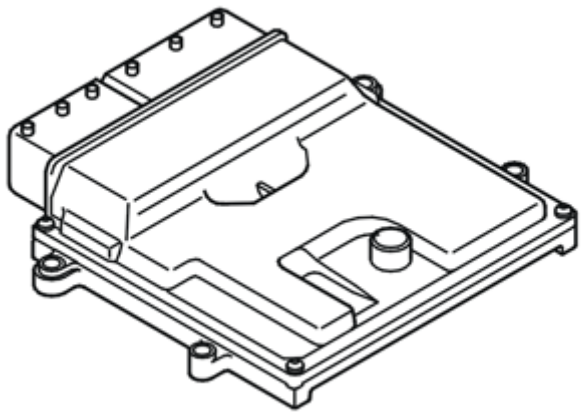

Fig. 63: Identifying Engine Control Module (ECM)
Courtesy of VOLVO CARS CORPORATION

Engine control module motor (ECM) checks the internal end-stage for 5 volt feed.

If voltage becomes too high or too low, the diagnostic trouble code is generated.

The diagnostic trouble code can be diagnosed when the ignition is on.

Substitute Value

- Nothing

Possible Source

- Signal cable for connected component short-circuited to voltage
- Open circuit on signal cable for connected component.
- Signal cable for connected component short-circuited to ground.
- Damaged engine control module (ECM).

Fault symptom[s]

- Uneven idle.
- High emissions
- Poor performance.
- Engine stops while driving.

FAULT-TRACING

see **FAULT-TRACING**

ECM-P064200: SENSOR REFERENCE VOLTAGE A CIRCUIT LOW. GENERAL FAILURE INFORMATION. NO SUB TYPE INFORMATION (B6324S5; 2011-2012)

DIAGNOSTIC TROUBLE CODE (DTC) INFORMATION

see **DIAGNOSTIC TROUBLE CODE (DTC) INFORMATION**

FAULT-TRACING

see **FAULT-TRACING**

ECM-P064500: A/C CLUTCH RELAY CONTROL CIRCUIT. GENERAL FAILURE INFORMATION. NO SUB TYPE INFORMATION (B6324S; 2007-2010)

DIAGNOSTIC TROUBLE CODE (DTC) INFORMATION ECM-P064500

Condition

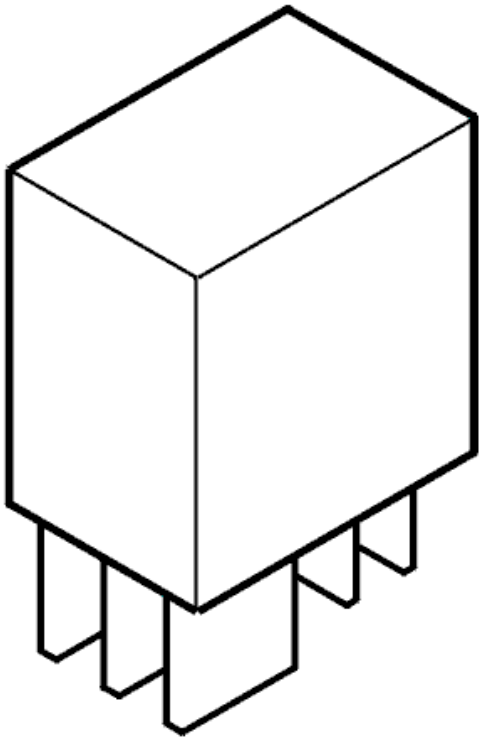

Fig. 64: Identifying A/C Relay
Courtesy of VOLVO CARS CORPORATION

Engine control module (ECM) checks the signal for controlling the A/C relay. If engine control module (ECM) detects a signal that is too low, the control module interprets this as a malfunction and the diagnostic trouble code is generated.

The diagnostic trouble code can be diagnosed when the ignition is on.

Substitute Value

- Nothing.

Possible Source

- Open circuit on the voltage feed.
- Open circuit on the signal cable.
- Damaged A/C relay.

Fault symptom[s]

- A/C system does not work.

FAULT-TRACING

see **FAULT-TRACING**

ECM-P064500: A/C CLUTCH RELAY CONTROL CIRCUIT. GENERAL FAILURE INFORMATION. NO SUB TYPE INFORMATION (B6324S5; 2011-2012)

DIAGNOSTIC TROUBLE CODE (DTC) INFORMATION ECM-P064500

see **DIAGNOSTIC TROUBLE CODE (DTC) INFORMATION ECM-P064500**

FAULT-TRACING

see **FAULT-TRACING**

ECM-P064500: A/C CONNECTION RELAY CONTROL CIRCUIT. GENERAL MALFUNCTION INFORMATION. NO INFORMATION ON MALFUNCTION TYPE (B8444S; 2005-2011)

DIAGNOSTIC TROUBLE CODE (DTC) INFORMATION ECM-P064500

Condition

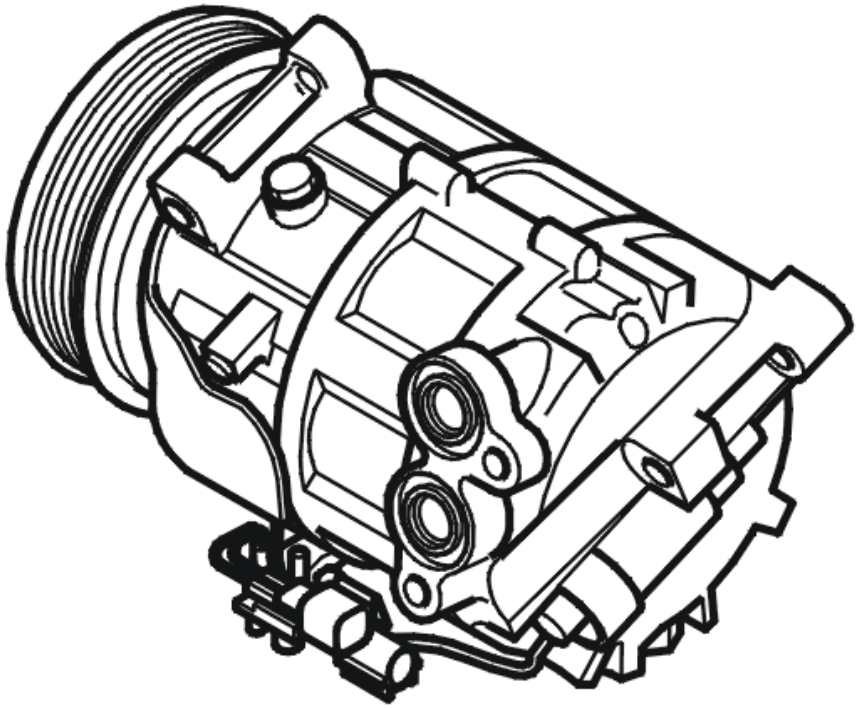

Fig. 65: Identifying A/C Compressor
Courtesy of VOLVO CARS CORPORATION

Engine control module (ECM) checks the signal for controlling the control valve (solenoid). If engine control module (ECM) detects an incorrect signal, the control module interprets this as a malfunction and the diagnostic trouble code is generated.

The diagnostic trouble code can be diagnosed with the engine running and the A/C control active.

Substitute Value

- Nothing.

Possible Source

- The signal cable is short-circuited to voltage.
- The signal cable is short-circuited to ground.
- Open circuit on the voltage feed.
- Damaged control valve (solenoid).

Fault symptom[s]

- A/C system does not work.

TROUBLESHOOTING ECM-P064500

CHECKING THE STATUS

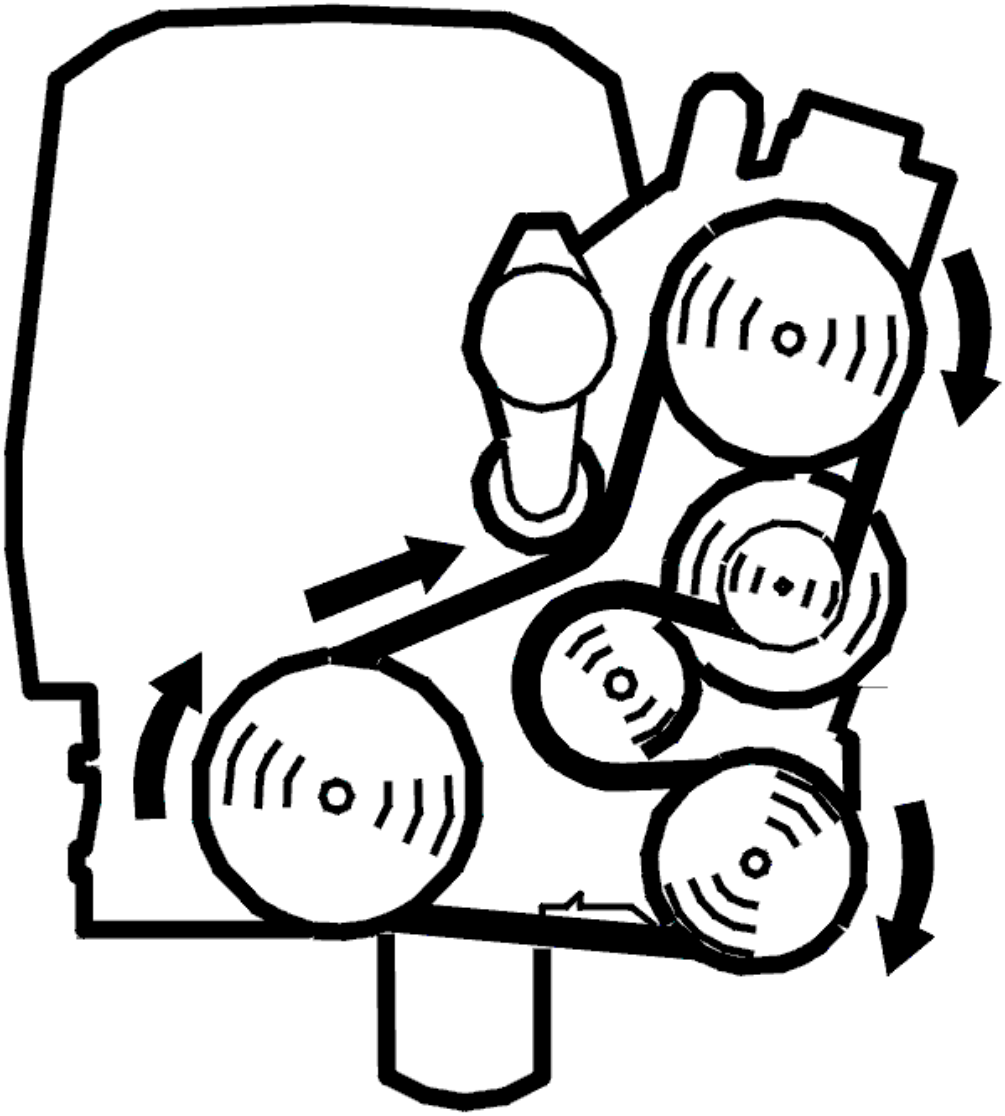

Fig. 66: Belt Routing / Engine Idling - Volvo
Courtesy of VOLVO CARS CORPORATION

- Start the engine.
- A/C on.

  Read the diagnostic status and trouble status for the diagnostic trouble code by selecting the diagnostic trouble code in the list.

  Check if the malfunction is permanent or intermittent by reading off the diagnostic trouble code's status when the diagnostic status is "Implemented".

If the trouble status is "Malfunction found", this indicates that the malfunction is permanent. If the trouble status is "No malfunction found", this indicates that the malfunction is intermittent and not active right now.

NOTE: **Trouble status cannot go from "Malfunction found" to "No malfunction found" in the same operating cycle.**

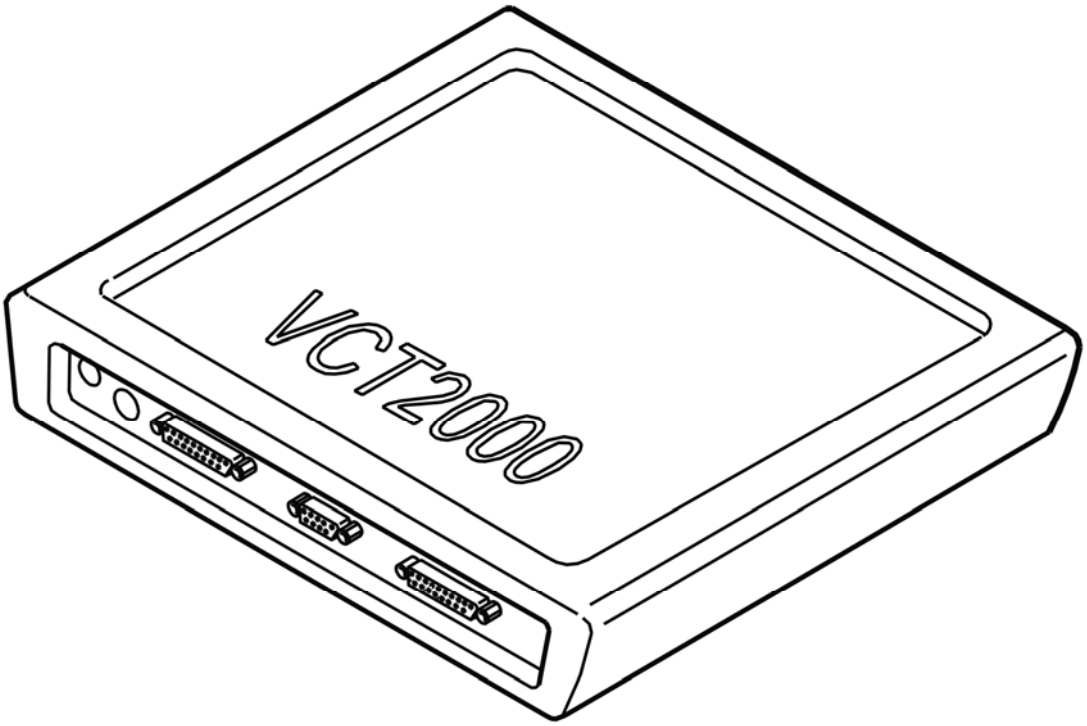

Fig. 67: Identifying VCT2000 Diagnostic Tool Symbol In VIDA
Courtesy of VOLVO CARS CORPORATION

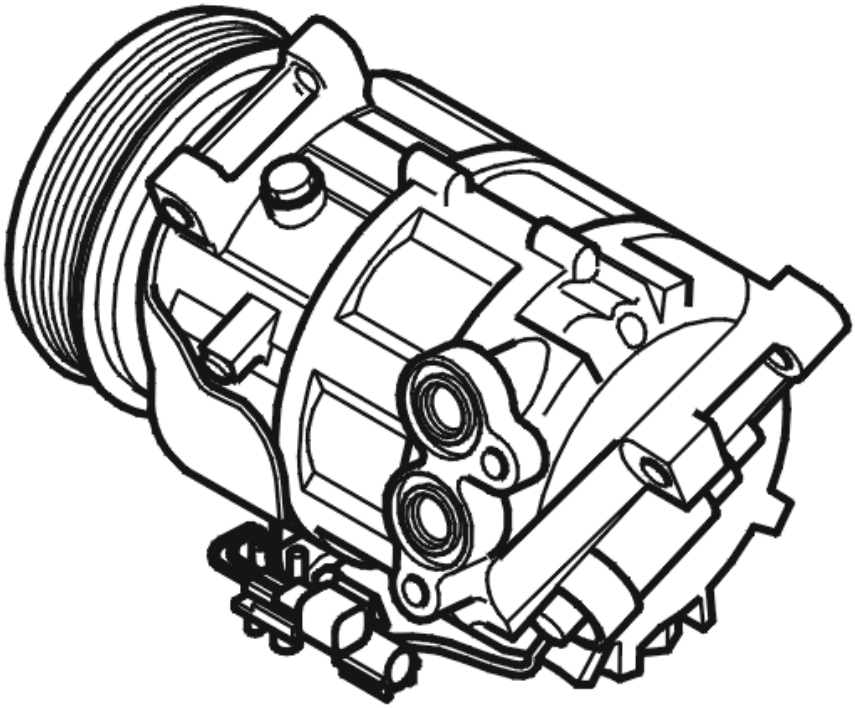

Fig. 68: Identifying A/C Compressor
Courtesy of VOLVO CARS CORPORATION

- **Continue**

Refer to **CHECKING COMPONENT AND CABLES**

CHECKING COMPONENT AND CABLES

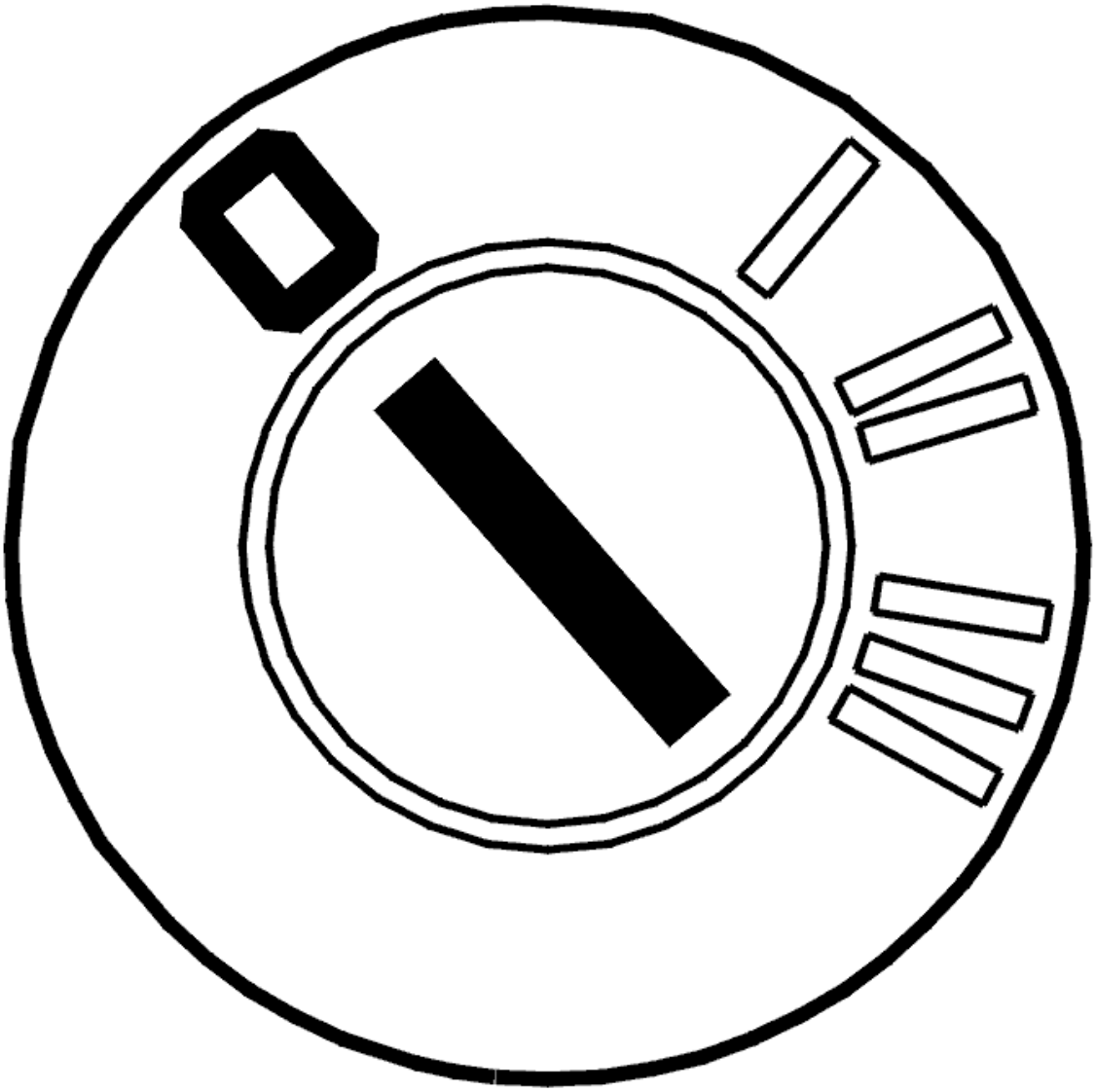

Fig. 69: Identifying Ignition OFF
Courtesy of VOLVO CARS CORPORATION

- Ignition off

  Check the signal cables for short-circuit to voltage, short-circuit to ground, and open circuit.

  Check between:

  - Engine control module (ECM) #A49 (#A49) and the control valve's (solenoid's) connector #2, signal cable (+).

  HINT: The control valve with solenoid is located on the underside of the A/C compressor.

  Remedy as necessary.

Other information

- see **CONNECTING THE BREAKOUT BOX**
- see **SIGNAL SPECIFICATION, ENGINE CONTROL MODULE (ECM)**
- see **SOLENOID VALVE COMPRESSOR, REPLACING**
- see **CHECKING WIRING AND TERMINALS**

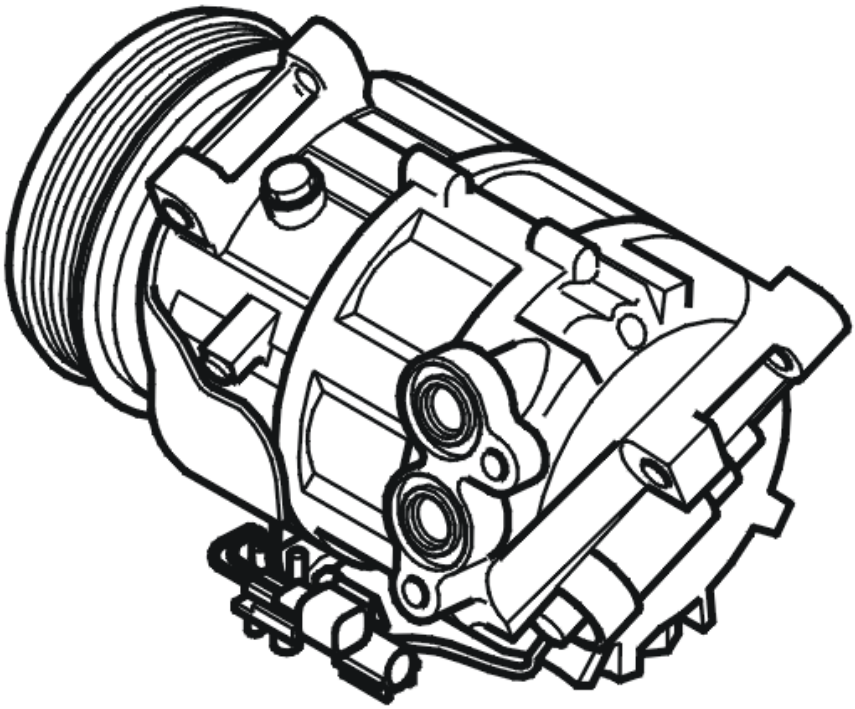

Fig. 70: Identifying A/C Compressor
Courtesy of VOLVO CARS CORPORATION

- **Continue**

  Refer to **VERIFICATION**

VERIFICATION

VERIFICATION

HINT: After repairing, it is necessary to check that the malfunction has been fixed.

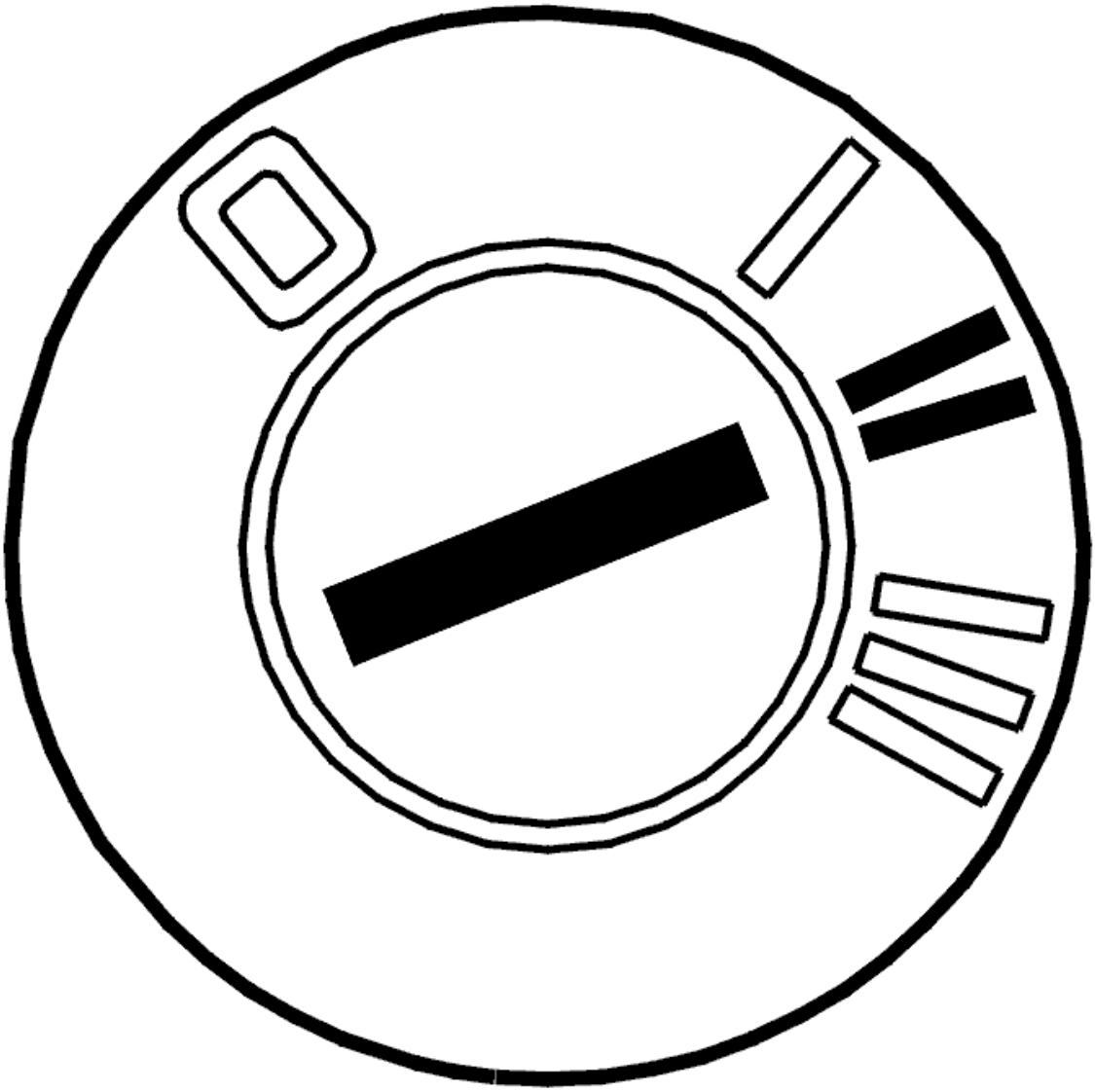

Fig. 71: Identifying Ignition ON
Courtesy of VOLVO CARS CORPORATION

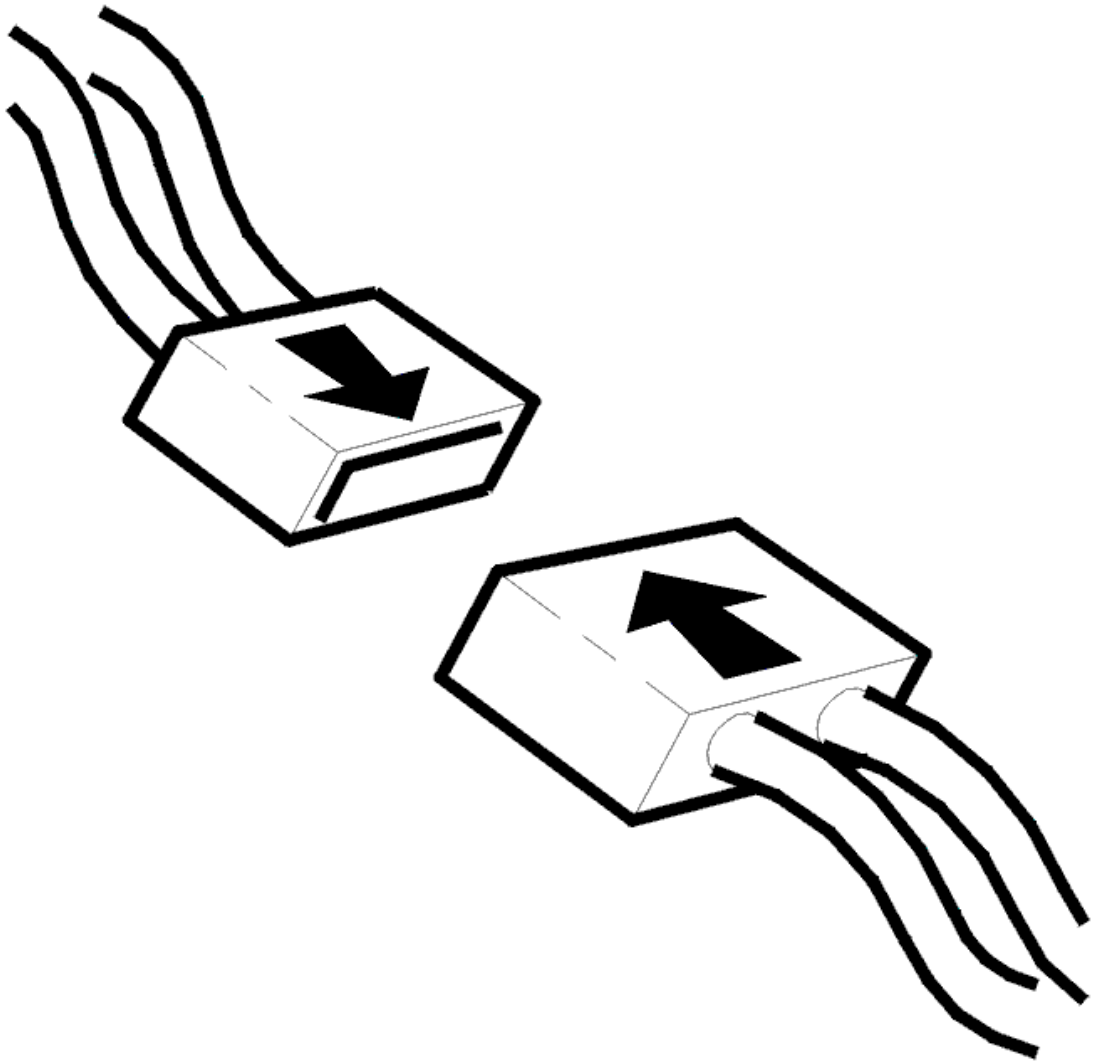

Fig. 72: Connecting Connector
Courtesy of VOLVO CARS CORPORATION

- Ignition off
- Reconnect the connectors, components, etc.
- Ignition on
- Read the diagnostic status and trouble status for the diagnostic trouble code by selecting the diagnostic trouble code in the list.

  Check the trouble status for the diagnostic trouble code when the diagnosis is "Implemented". When the function is correct the trouble status should be "No malfunction found" when the diagnosis is implemented.

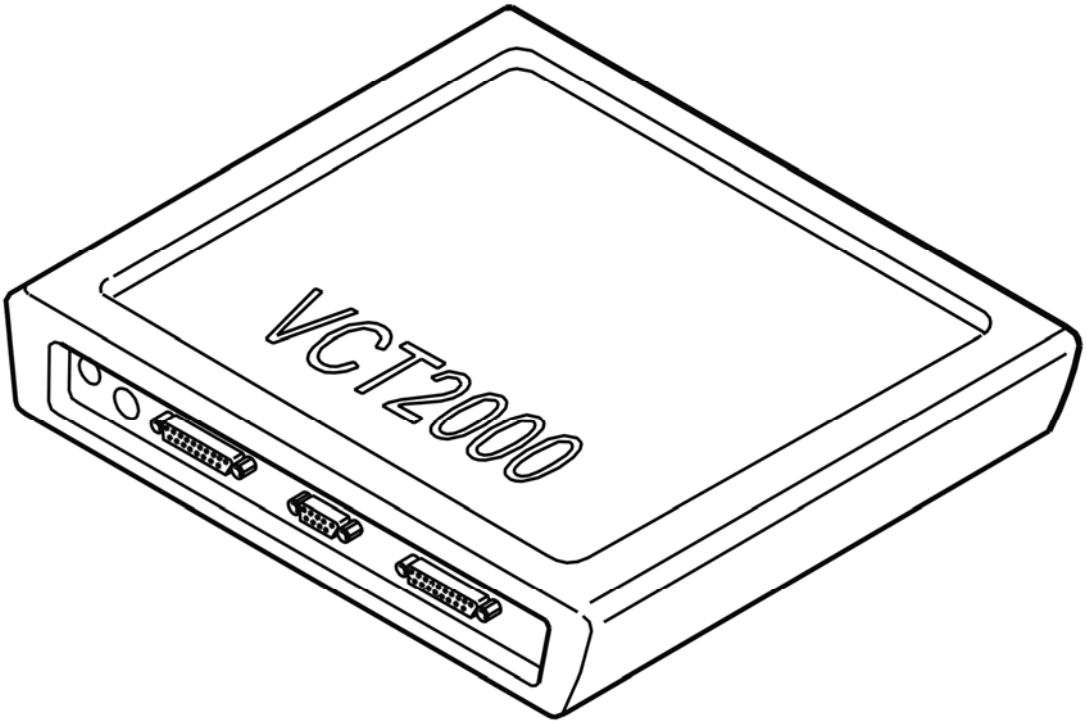

Fig. 73: Identifying VCT2000 Diagnostic Tool Symbol In VIDA
Courtesy of VOLVO CARS CORPORATION

Is the function OK?

- **YES**

  VERIFIED: Troubleshooting has been completed.

- **NO**

  Refer to **INFORMATION**

INFORMATION

FAULT-TRACING INFORMATION

The fault should have been detected and remedied. As this is not the case fault-tracing has failed.

Exit fault-tracing for this diagnostic trouble code (DTC) or make another attempt.

ECM-P064600: A/C CLUTCH RELAY CONTROL CIRCUIT LOW. GENERAL FAILURE INFORMATION. NO SUB TYPE INFORMATION (B6324S; 2007-

2010)

DIAGNOSTIC TROUBLE CODE (DTC) INFORMATION ECM-P064600

Condition

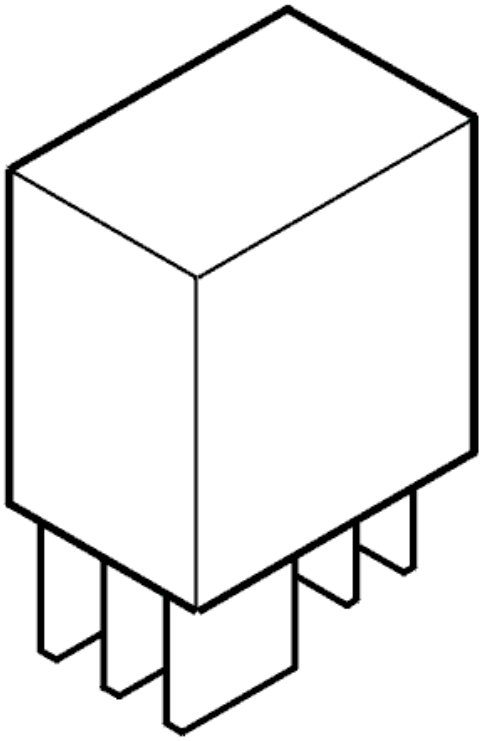

Fig. 74: Identifying A/C Relay
Courtesy of VOLVO CARS CORPORATION

Engine control module (ECM) checks the signal for controlling the A/C relay. If engine control module (ECM) detects a signal that is too low, the control module interprets this as a malfunction and the diagnostic trouble code is generated.

The diagnostic trouble code can be diagnosed when the ignition is on.

Substitute Value

- Nothing.

Possible Source

- Short-circuit to ground in the signal cable.
- Open circuit on the voltage feed.

- Open circuit on the signal cable.
- Damaged A/C relay.

Fault symptom[s]

- A/C system does not work.

FAULT-TRACING

see **FAULT-TRACING**

ECM-P064600: A/C CLUTCH RELAY CONTROL CIRCUIT LOW. GENERAL FAILURE INFORMATION. NO SUB TYPE INFORMATION (B6324S5; 2011-2012)

DIAGNOSTIC TROUBLE CODE (DTC) INFORMATION ECM-P064600

see **DIAGNOSTIC TROUBLE CODE (DTC) INFORMATION ECM-P064600**

FAULT-TRACING

see **FAULT-TRACING**

ECM-P064600: A/C CONNECTION RELAY CONTROL CIRCUIT LOW. GENERAL MALFUNCTION INFORMATION. NO INFORMATION ON MALFUNCTION TYPE (B8444S; 2005-2011)

DIAGNOSTIC TROUBLE CODE (DTC) INFORMATION ECM-P064600

Condition

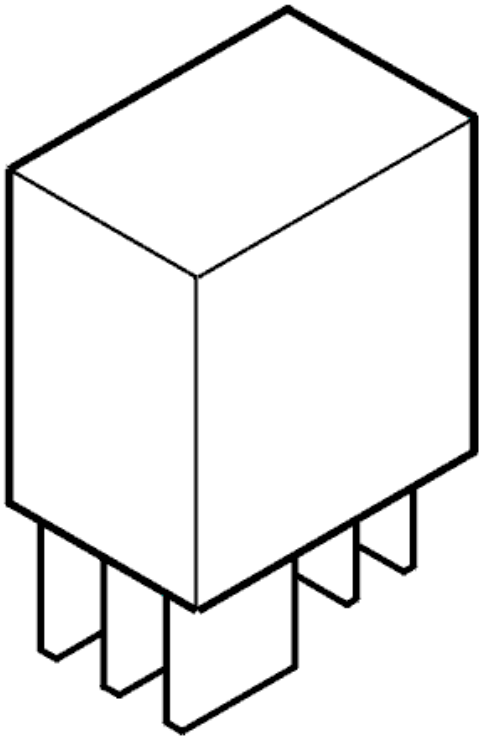

Fig. 75: Identifying A/C Relay
Courtesy of VOLVO CARS CORPORATION

Engine control module (ECM) checks the signal for controlling the A/C relay. If engine control module (ECM) detects a signal that is too low, the control module interprets this as a malfunction and the diagnostic trouble code is generated.

The diagnostic trouble code can be diagnosed when the ignition is on.

Substitute Value

- Nothing.

Possible Source

- The signal cable is short-circuited to ground.
- Open circuit on the voltage feed.
- Open circuit on the signal cable.
- Damaged A/C relay.

Fault symptom[s]

- A/C system does not work.

TROUBLESHOOTING ECM-P064600

CHECKING THE STATUS

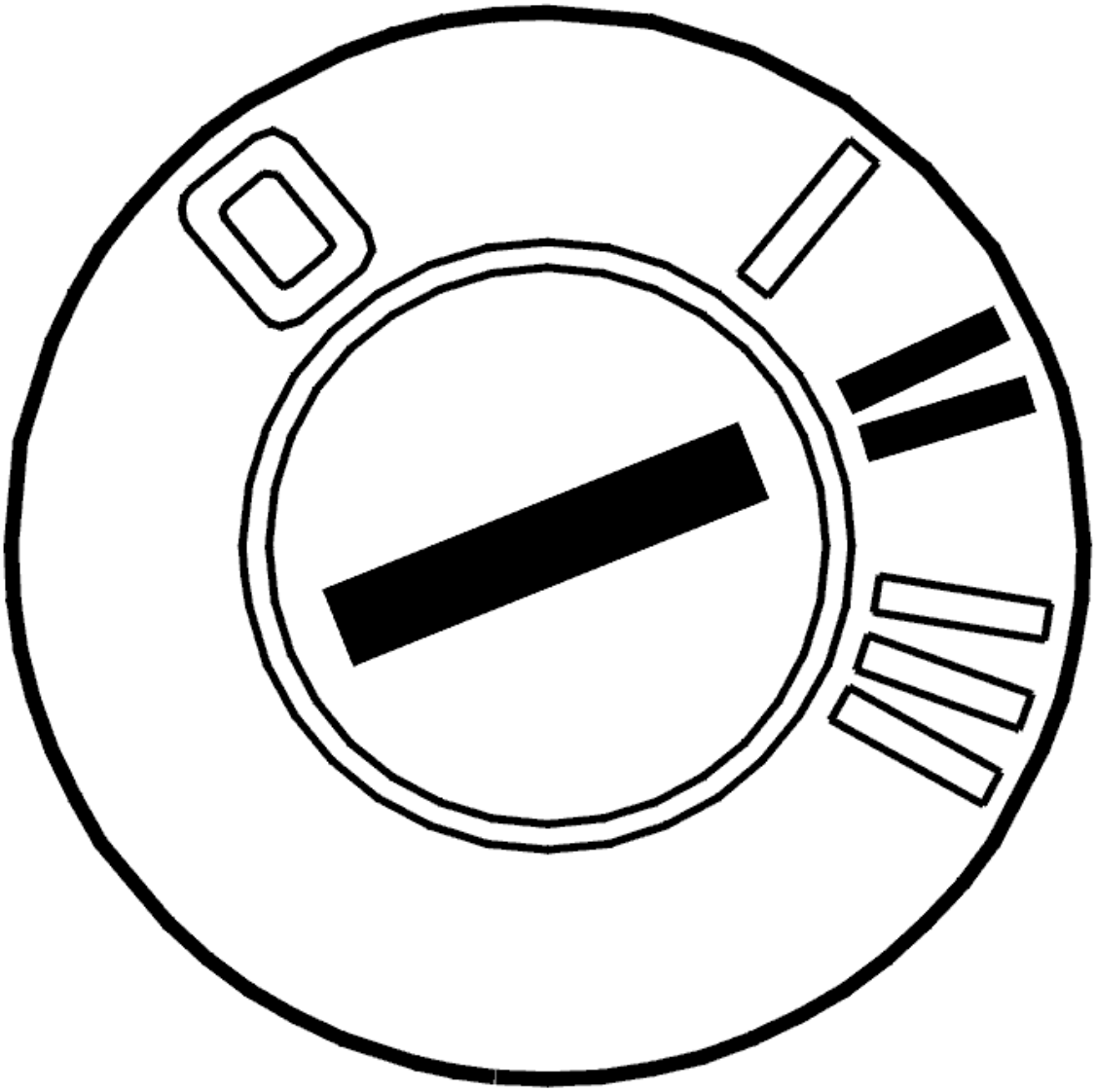

Fig. 76: Identifying Ignition ON
Courtesy of VOLVO CARS CORPORATION

- Ignition on

  Read the diagnostic status and trouble status for the diagnostic trouble code by selecting the diagnostic trouble code in the list.

  Check if the malfunction is permanent or intermittent by reading off the diagnostic trouble code's status when the diagnostic status is "Implemented".

  If the trouble status is "Malfunction found", this indicates that the malfunction is permanent. If the trouble

status is "No malfunction found", this indicates that the malfunction is intermittent and not active right now.

NOTE: Trouble status cannot go from "Malfunction found" to "No malfunction found" in the same operating cycle.

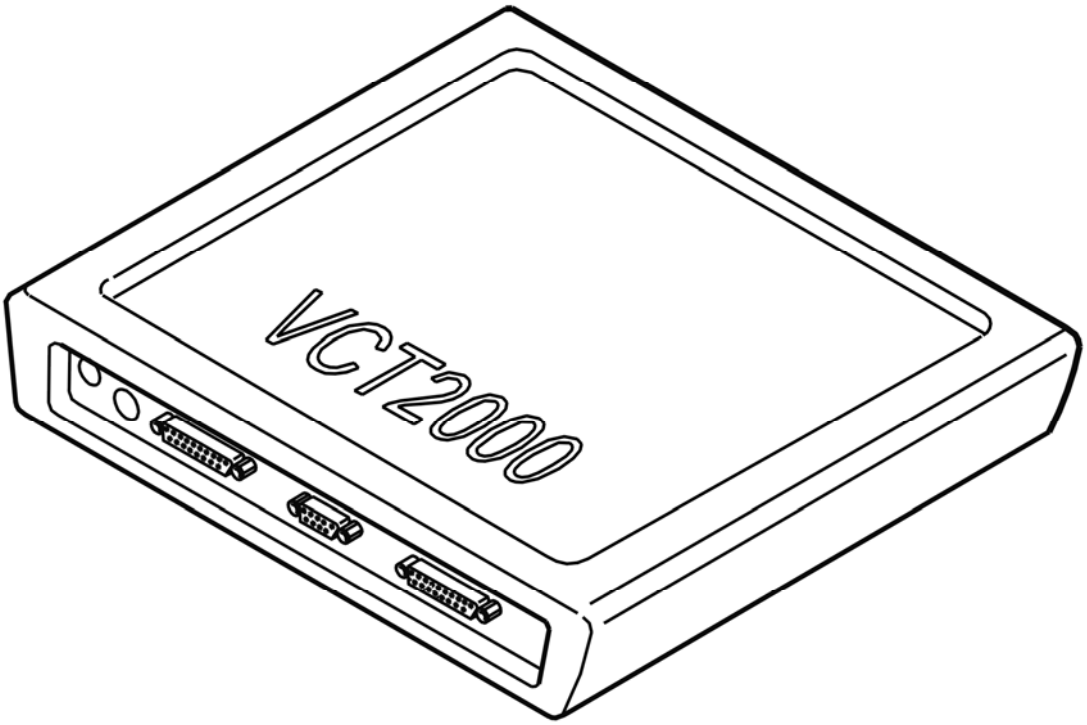

Fig. 77: Identifying VCT2000 Diagnostic Tool Symbol In VIDA
Courtesy of VOLVO CARS CORPORATION

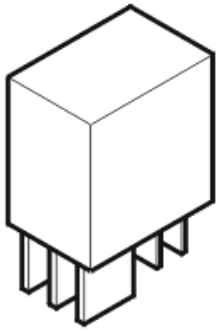

Fig. 78: Air Conditioning Relay
Courtesy of VOLVO CARS CORPORATION

- **Continue**

  Refer to **CHECKING COMPONENT AND CABLES**

CHECKING COMPONENT AND CABLES

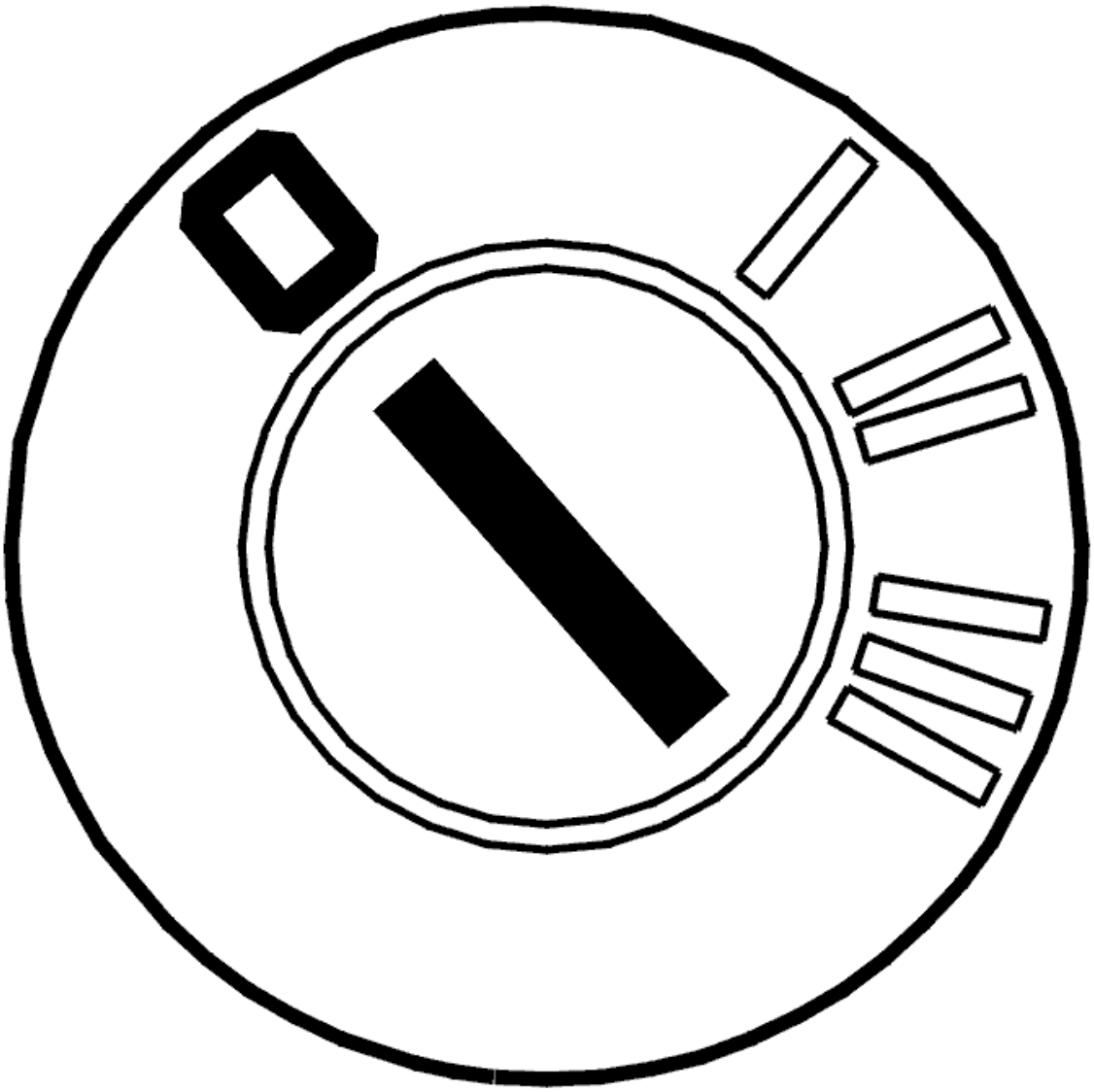

Fig. 79: Identifying Ignition OFF
Courtesy of VOLVO CARS CORPORATION

- Ignition off

  Check the signal cable for short-circuit to ground and open circuit.

  Check between engine control module (ECM) #B53 (#C53) and A/C relay's connector #4, signal cable (+).

Remedy as necessary.

Other information

- see **CONNECTING THE BREAKOUT BOX**
- see **SIGNAL SPECIFICATION, ENGINE CONTROL MODULE (ECM)**
- see **CHECKING WIRING AND TERMINALS**

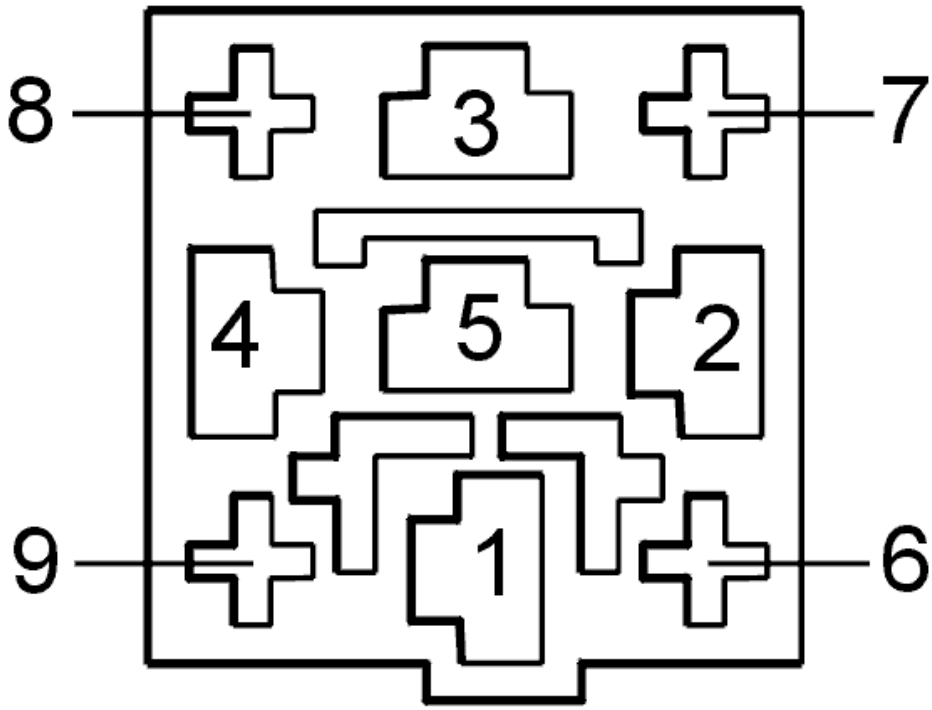

Fig. 80: Identifying Connector Terminals
Courtesy of VOLVO CARS CORPORATION

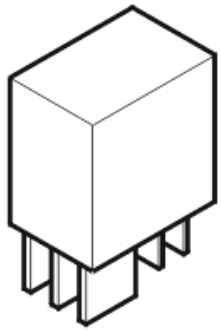

Fig. 81: Air Conditioning Relay
Courtesy of VOLVO CARS CORPORATION

- **Continue**

  Refer to **VERIFICATION**

VERIFICATION

VERIFICATION

HINT: After repairing, it is necessary to check that the malfunction has been fixed.

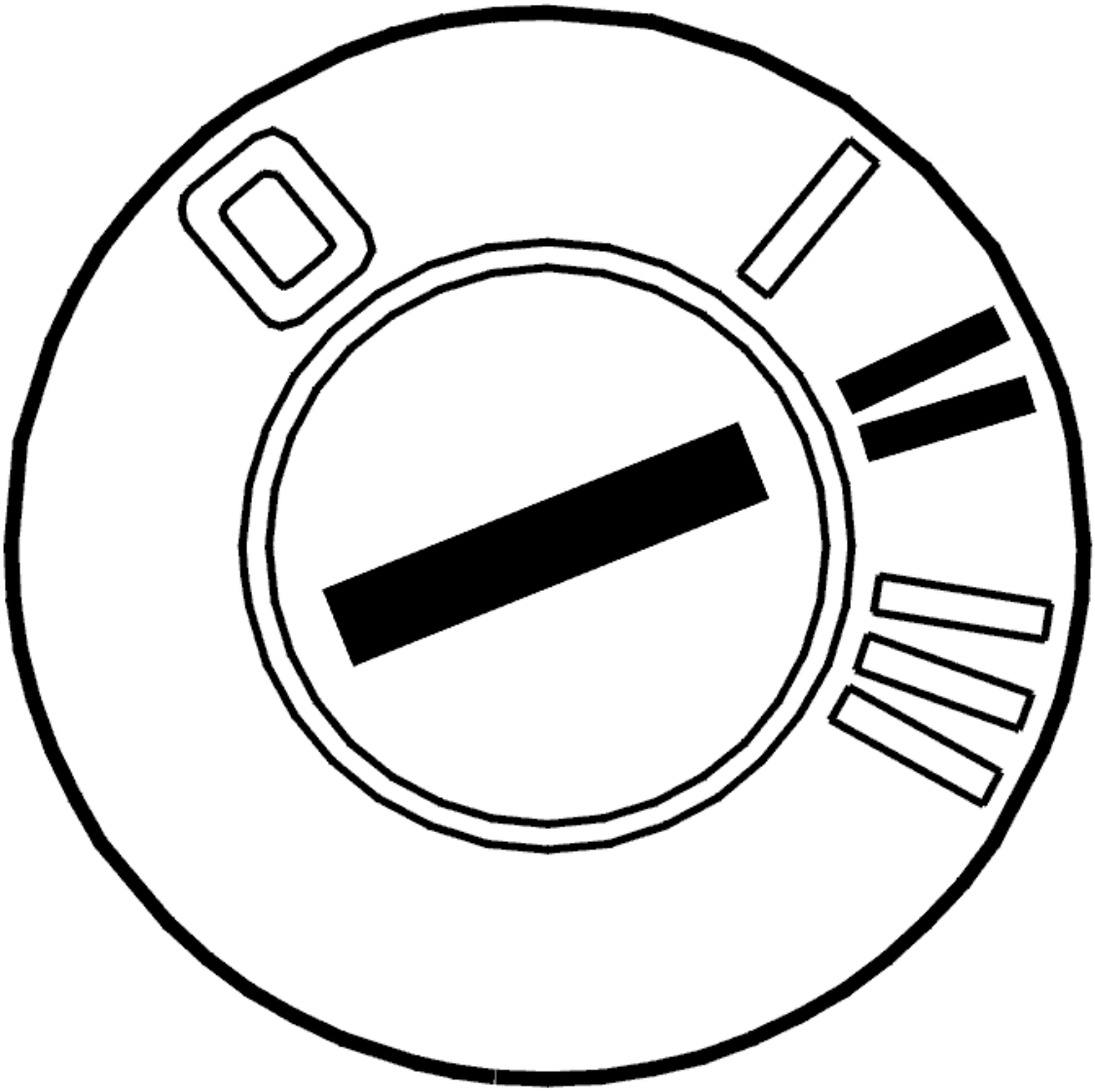

Fig. 82: Identifying Ignition ON
Courtesy of VOLVO CARS CORPORATION

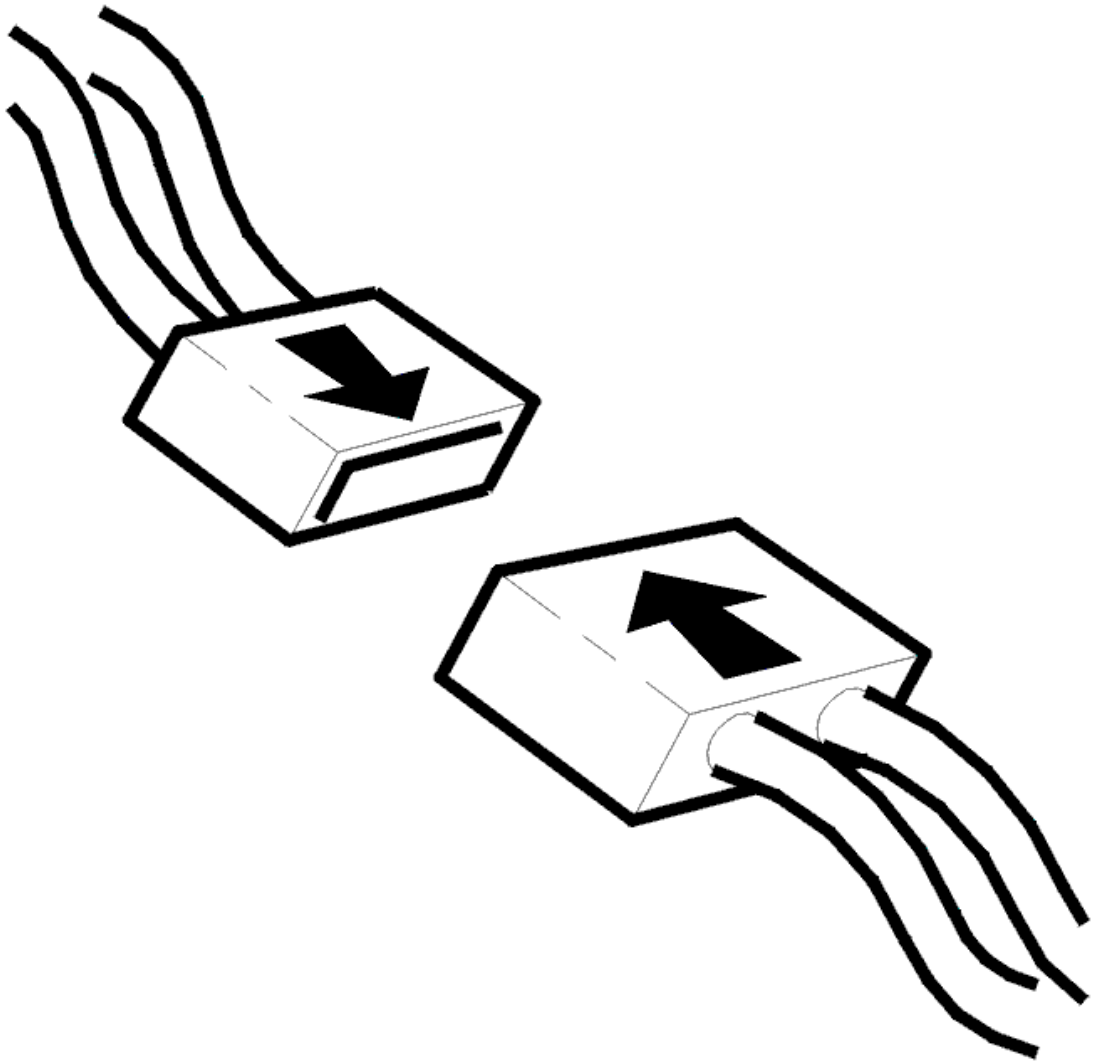

Fig. 83: Connecting Connector
Courtesy of VOLVO CARS CORPORATION

- Ignition off
- Reconnect the connectors, components, etc.
- Ignition on
- Read the diagnostic status and trouble status for the diagnostic trouble code by selecting the diagnostic trouble code in the list.

  Check the trouble status for the diagnostic trouble code when the diagnosis is "Implemented". When the function is correct the trouble status should be "No malfunction found" when the diagnosis is implemented.

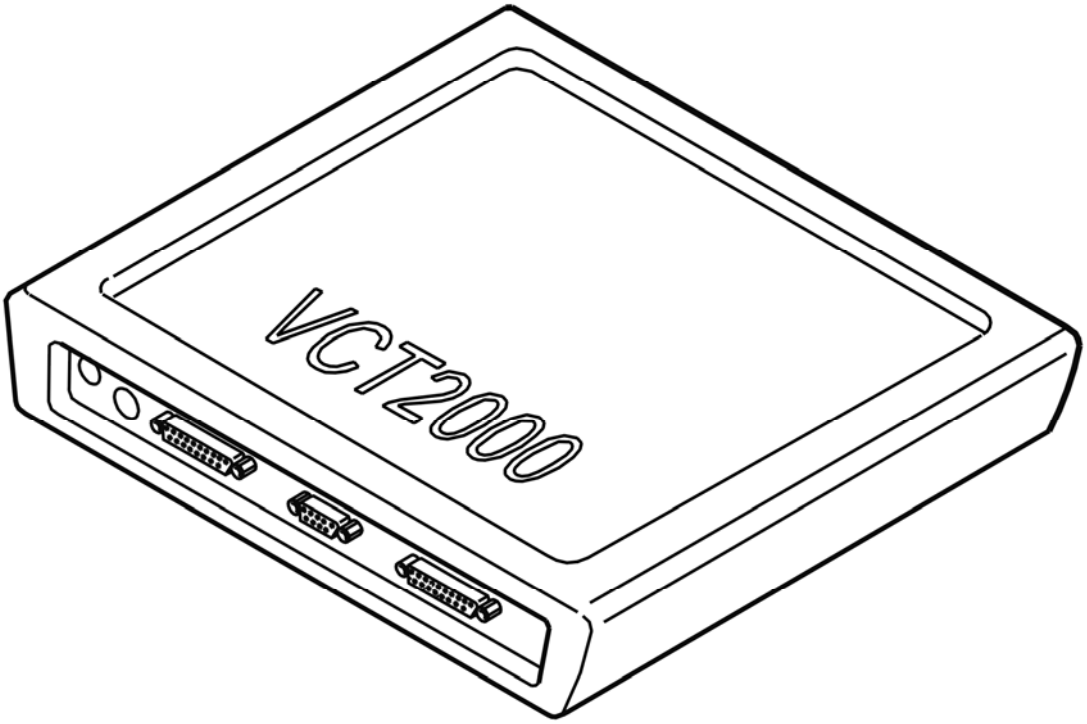

Fig. 84: Identifying VCT2000 Diagnostic Tool Symbol In VIDA
Courtesy of VOLVO CARS CORPORATION

Is the function OK?

- **YES**

  VERIFIED: Troubleshooting has been completed.

- **NO**

  Refer to **INFORMATION**

INFORMATION

FAULT-TRACING INFORMATION

The fault should have been detected and remedied. As this is not the case fault-tracing has failed.

Exit fault-tracing for this diagnostic trouble code (DTC) or make another attempt.

ECM-P064700: A/C CONNECTION RELAY CONTROL CIRCUIT HIGH. GENERAL MALFUNCTION INFORMATION. NO INFORMATION ON

MALFUNCTION TYPE (B6324S; 2007-2010)

DIAGNOSTIC TROUBLE CODE (DTC) INFORMATION ECM-P064700

Condition

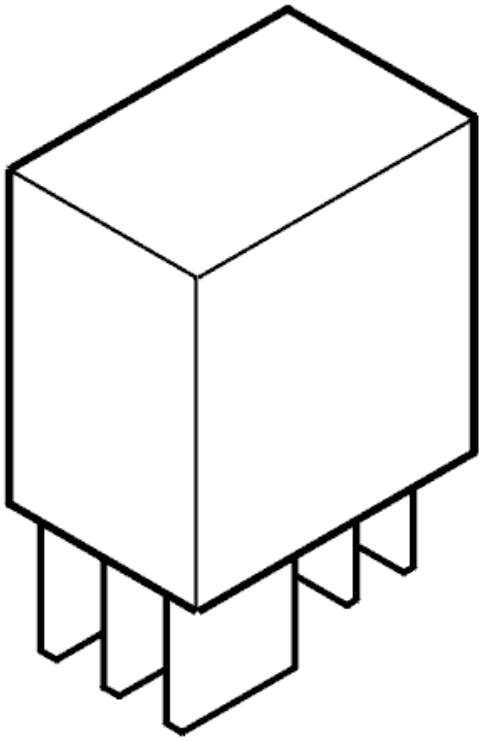

Fig. 85: Identifying A/C Relay
Courtesy of VOLVO CARS CORPORATION

Engine control module (ECM) checks the signal for controlling the A/C relay. If engine control module (ECM) detects a signal that is too high, the control module interprets this as a malfunction and the diagnostic trouble code is generated.

The diagnostic trouble code can be diagnosed when the ignition is on.

Substitute Value

- Nothing.

Possible Source

- The signal cable is short-circuited to voltage.
- Damaged air conditioning (A/C) relay.

Fault symptom[s]

- A/C system does not work.

FAULT-TRACING

see **FAULT-TRACING**

ECM-P064700: A/C CONNECTION RELAY CONTROL CIRCUIT HIGH. GENERAL MALFUNCTION INFORMATION. NO INFORMATION ON MALFUNCTION TYPE (B6324S5; 2011-2012)

DIAGNOSTIC TROUBLE CODE (DTC) INFORMATION ECM-P064700

see **DIAGNOSTIC TROUBLE CODE (DTC) INFORMATION ECM-P064700**

FAULT-TRACING

see **FAULT-TRACING**

ECM-P064700: A/C CONNECTION RELAY CONTROL CIRCUIT HIGH. GENERAL MALFUNCTION INFORMATION. NO INFORMATION ON MALFUNCTION TYPE (B8444S; 2005-2011)

DIAGNOSTIC TROUBLE CODE (DTC) INFORMATION ECM-P064700

Condition

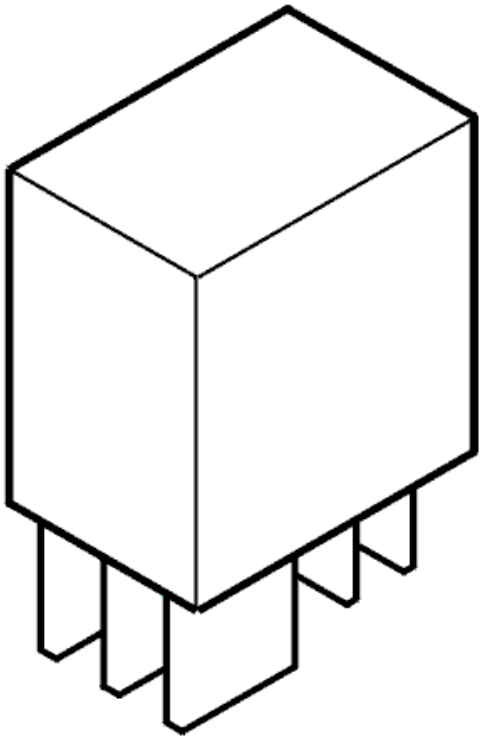

Fig. 86: Identifying A/C Relay
Courtesy of VOLVO CARS CORPORATION

Engine control module (ECM) checks the signal for controlling the A/C relay. If engine control module (ECM) detects a signal that is too high, the control module interprets this as a malfunction and the diagnostic trouble code is generated.

The diagnostic trouble code can be diagnosed when the ignition is on.

Substitute Value

- Nothing.

Possible Source

- The signal cable is short-circuited to voltage.
- Damaged air conditioning (A/C) relay.

Fault symptom[s]

- A/C system does not work.

TROUBLESHOOTING ECM-P064700

CHECKING THE STATUS

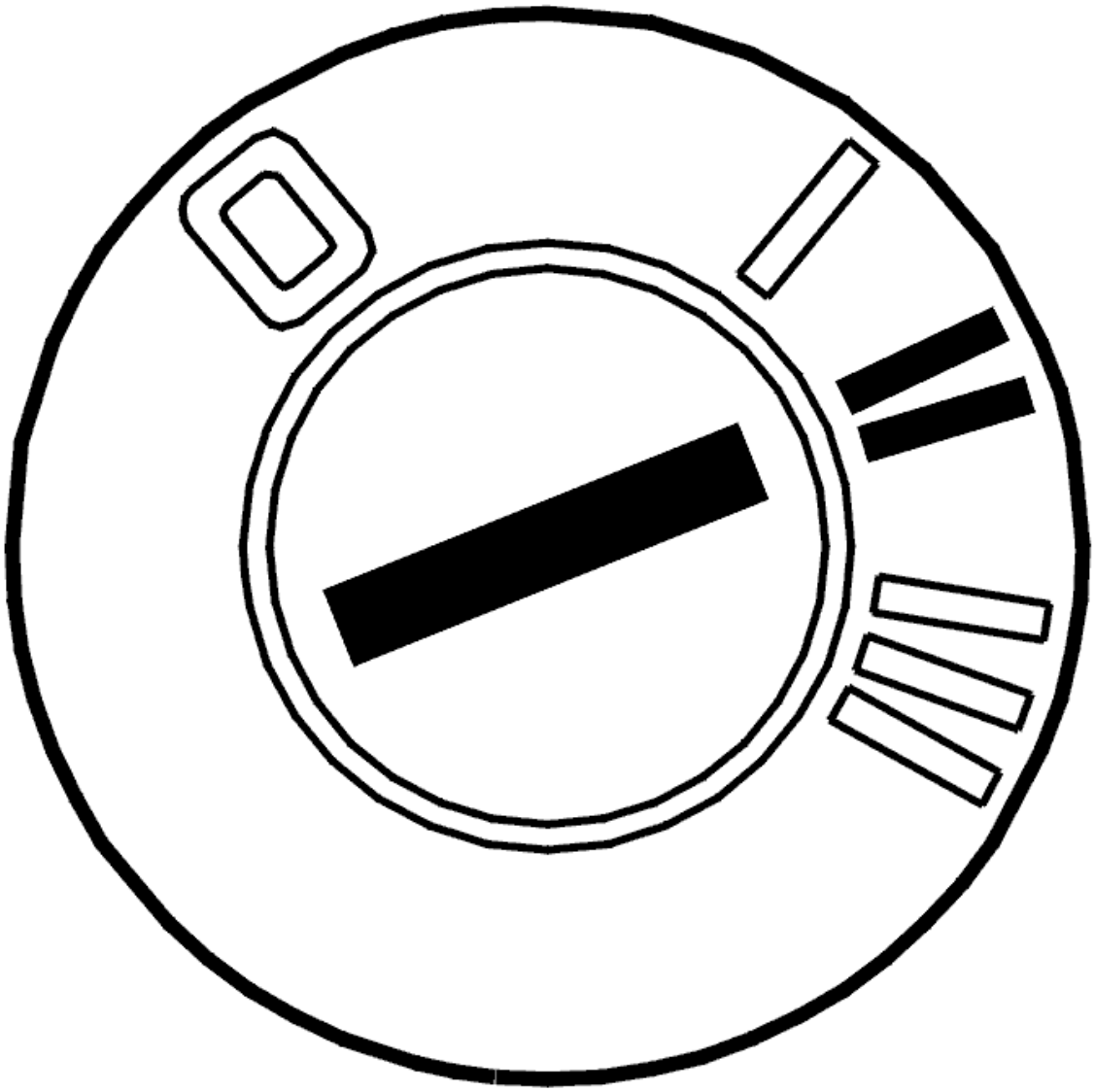

Fig. 87: Identifying Ignition ON
Courtesy of VOLVO CARS CORPORATION

- Ignition on

  Read the diagnostic status and fault status for the diagnostic trouble code by selecting the diagnostic trouble code in the list.

  Check if the malfunction is permanent or intermittent by reading off the diagnostic trouble code's status when the diagnostic status is "Implemented".

  If the trouble status is "Malfunction found", this indicates that the malfunction is permanent. If the trouble status is "No malfunction found", this indicates that the malfunction is intermittent and not active right now.

NOTE: **Trouble status cannot go from "Malfunction found" to "No malfunction found" in the same operating cycle.**

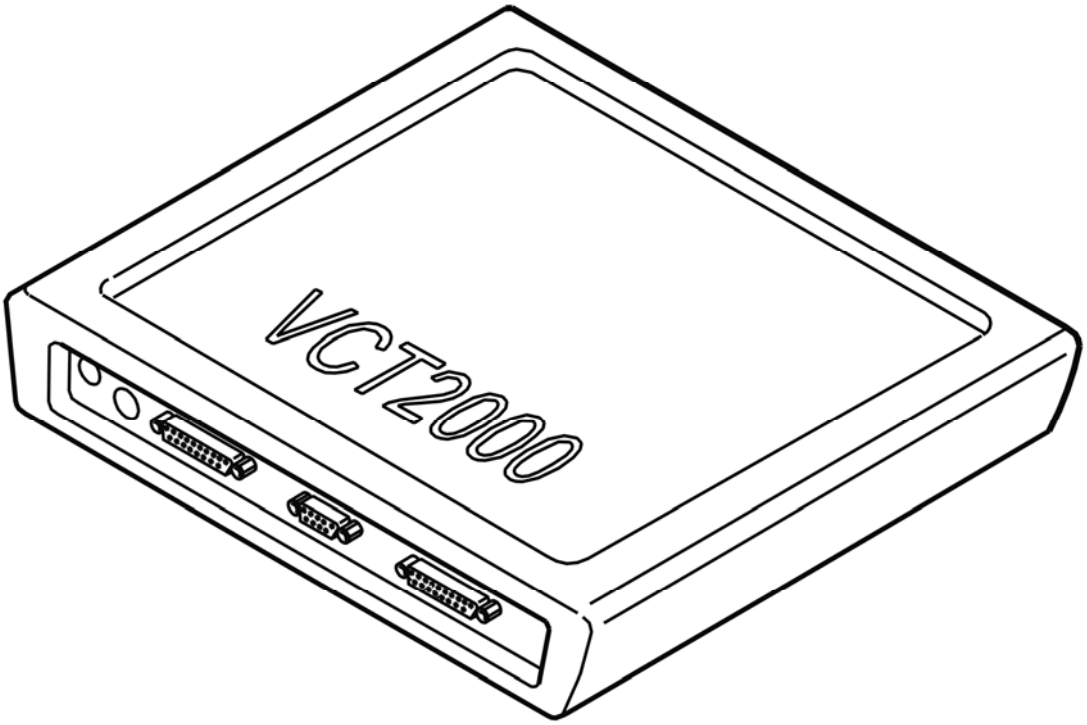

Fig. 88: Identifying VCT2000 Diagnostic Tool Symbol In VIDA
Courtesy of VOLVO CARS CORPORATION

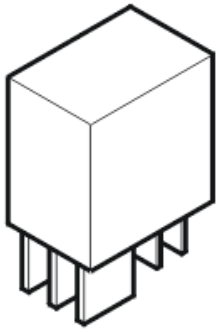

Fig. 89: Air Conditioning Relay
Courtesy of VOLVO CARS CORPORATION

- **Continue**

Refer to **CHECKING COMPONENTS AND WIRING**

CHECKING COMPONENTS AND WIRING

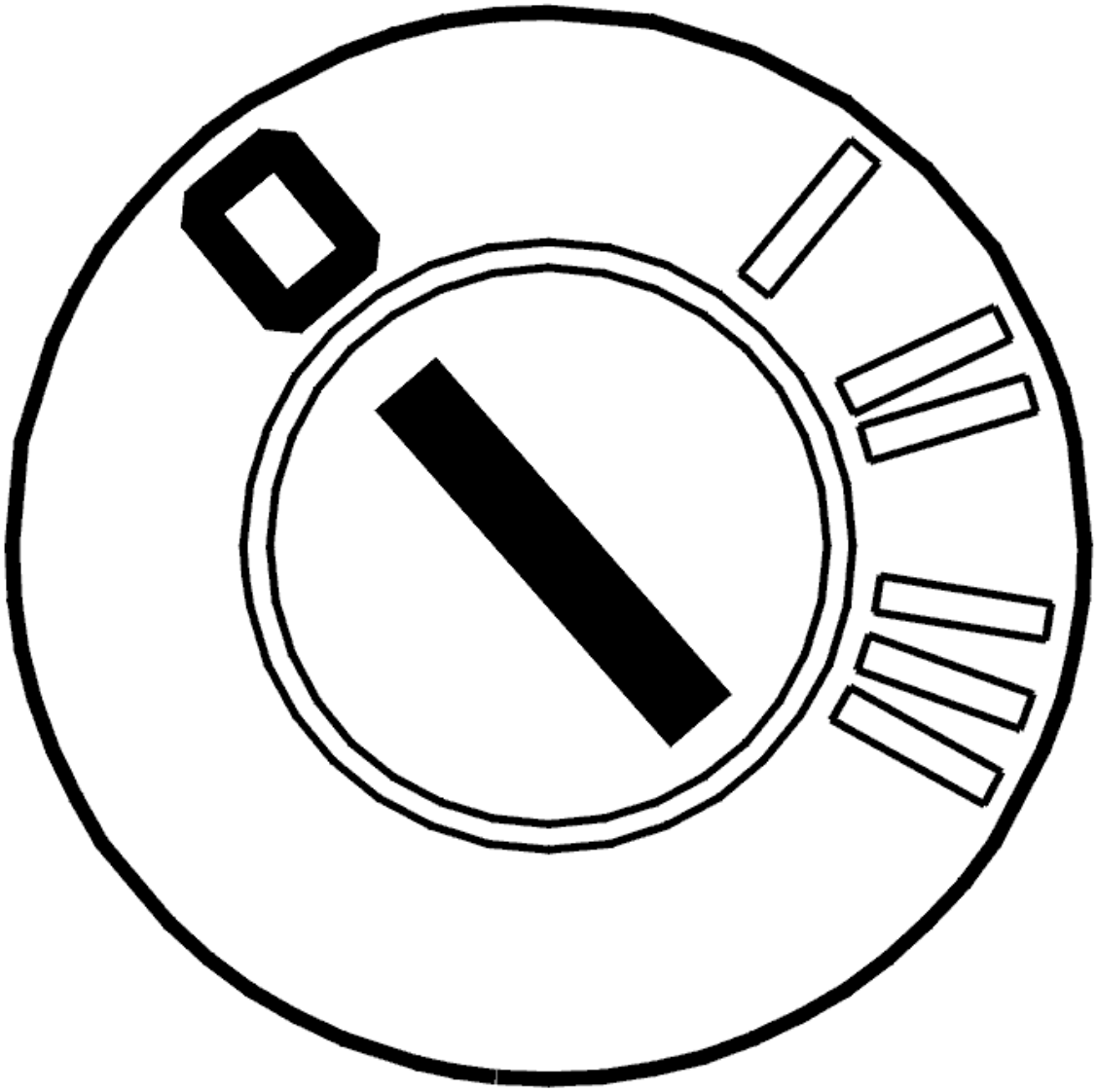

Fig. 90: Identifying Ignition OFF
Courtesy of VOLVO CARS CORPORATION

- Ignition off

  Check the signal cable for short-circuit to voltage.

  Check between:

  - Engine control module (ECM) #B53 (#C53) and A/C relay's connector #4, signal cable (+).

  Remedy as necessary.

Other information

- see **CONNECTING THE BREAKOUT BOX**
- see **SIGNAL SPECIFICATION, ENGINE CONTROL MODULE (ECM)**
- see **CHECKING WIRING AND TERMINALS**

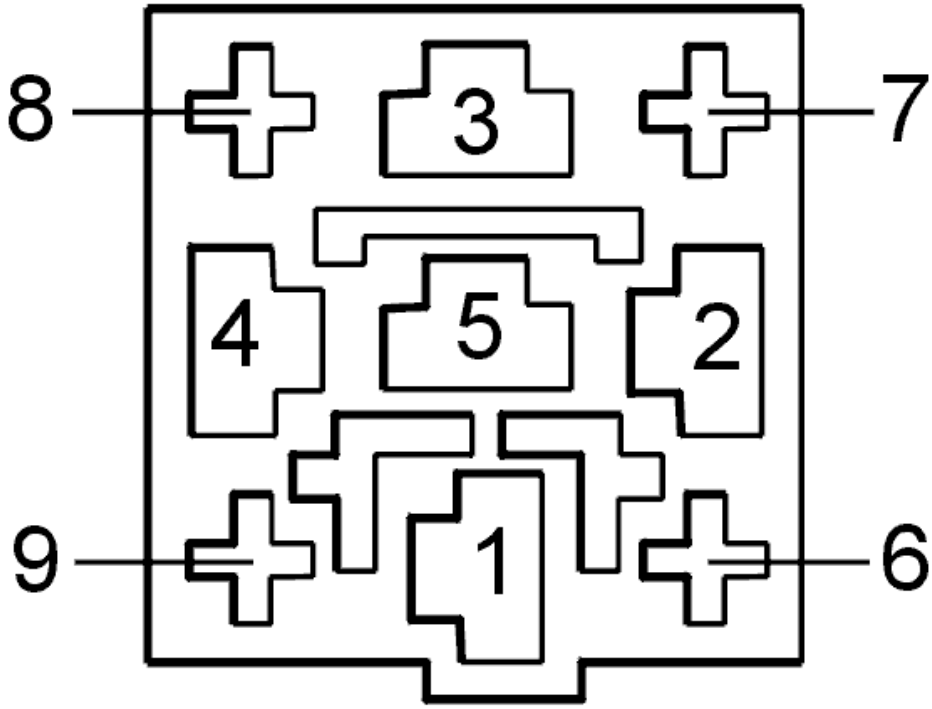

Fig. 91: Identifying Connector Terminals
Courtesy of VOLVO CARS CORPORATION

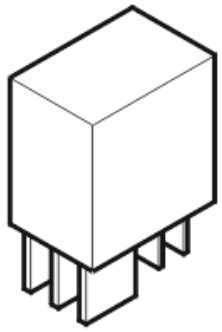

Fig. 92: Air Conditioning Relay
Courtesy of VOLVO CARS CORPORATION

- **Continue**

  Refer to **VERIFICATION**

VERIFICATION

VERIFICATION

HINT: After repairing, it is necessary to check that the malfunction has been fixed.

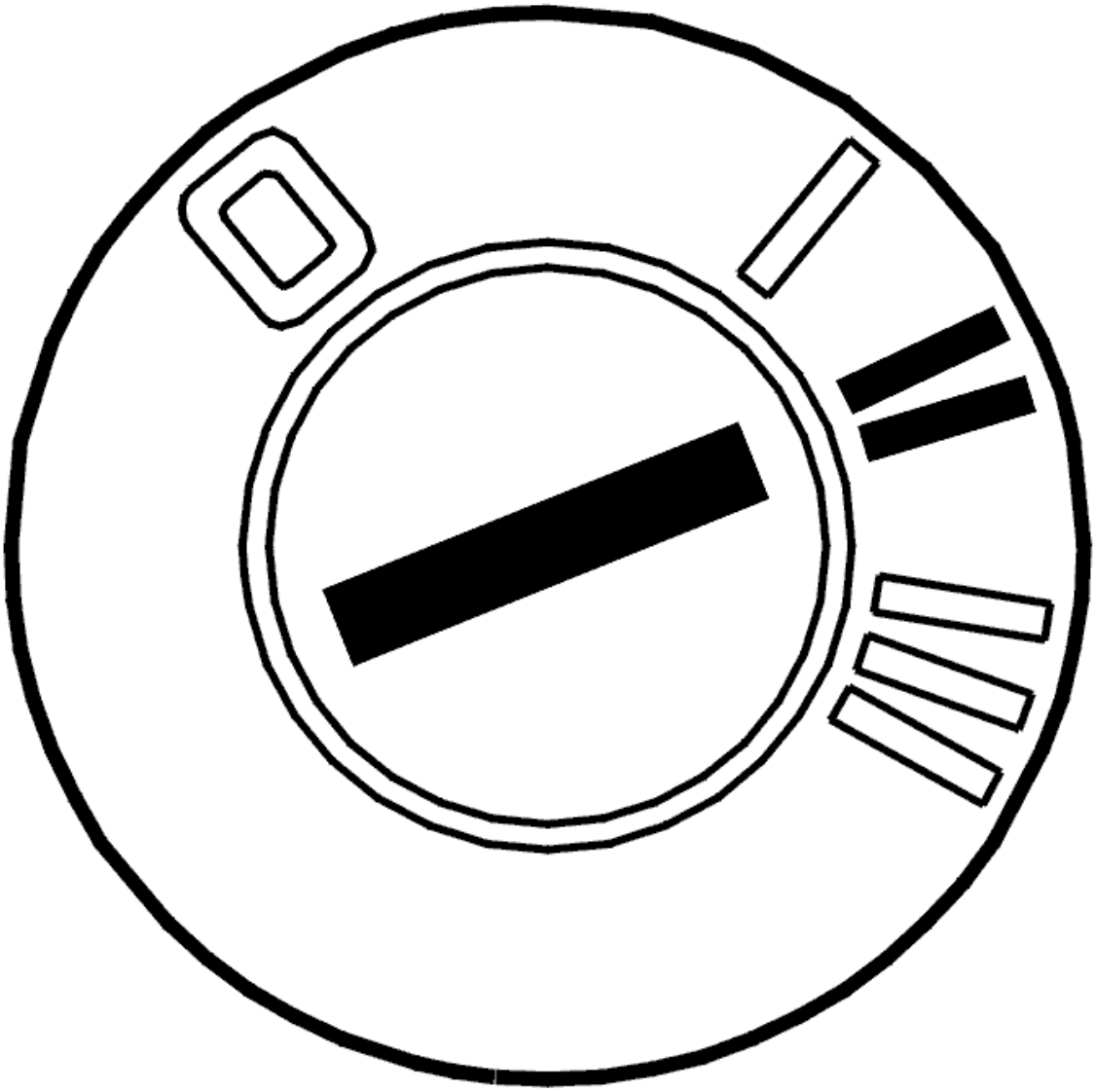

Fig. 93: Identifying Ignition ON
Courtesy of VOLVO CARS CORPORATION

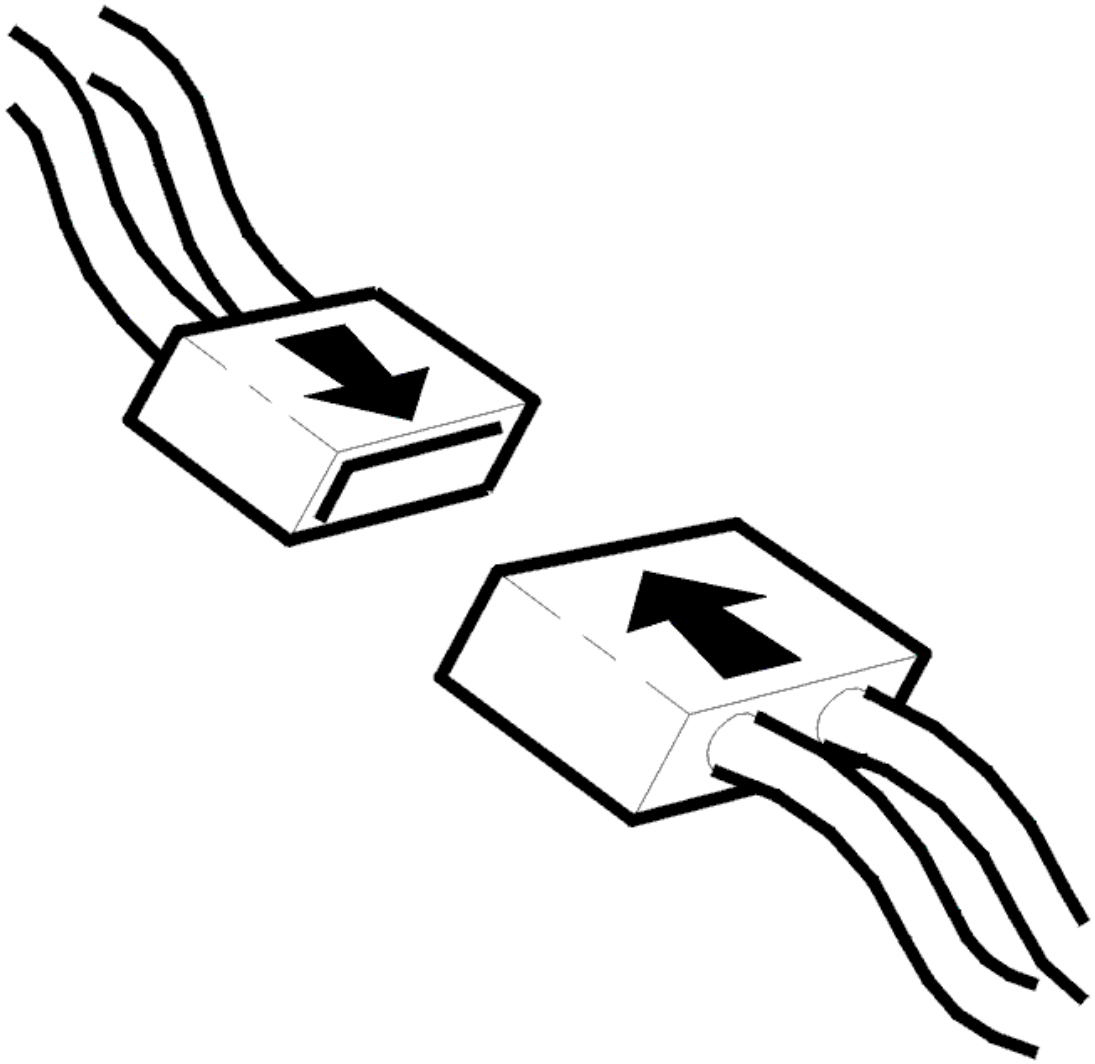

Fig. 94: Connecting Connector
Courtesy of VOLVO CARS CORPORATION

- Ignition off
- Reconnect the connectors, components, etc.
- Ignition on
- Read the diagnostic status and trouble status for the diagnostic trouble code by selecting the diagnostic trouble code in the list.

  Check the trouble status for the diagnostic trouble code when the diagnosis is "Implemented". When the function is correct the trouble status should be "No malfunction found" when the diagnosis is implemented.

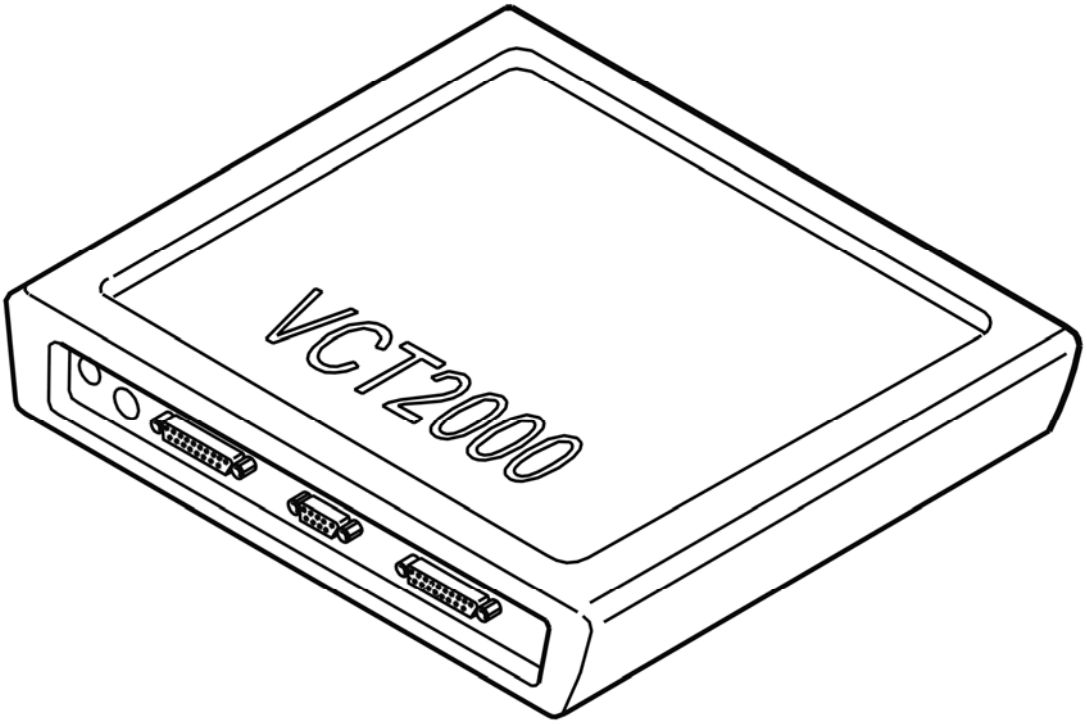

Fig. 95: Identifying VCT2000 Diagnostic Tool Symbol In VIDA
Courtesy of VOLVO CARS CORPORATION

Is the function OK?

- **YES**

  VERIFIED: Troubleshooting has been completed.

- **NO**

  Refer to **INFORMATION**

INFORMATION

FAULT-TRACING INFORMATION

The fault should have been detected and remedied. As this is not the case fault-tracing has failed.

Exit fault-tracing for this diagnostic trouble code (DTC) or make another attempt.

ECM-P064D00 INTERNAL CONTROL MODULE O2 SENSOR PROCESSOR PERFORMANCE - BANK 1. GENERAL FAILURE INFORMATION. NO SUB

TYPE INFORMATION (B6324S; 2007)

DIAGNOSTIC TROUBLE CODE (DTC) INFORMATION

Condition

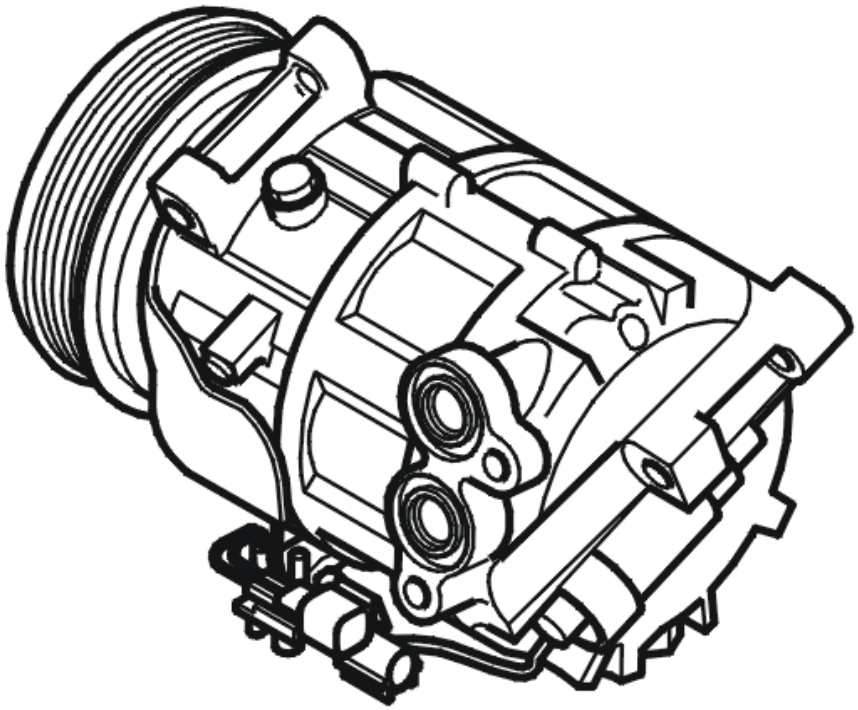

Fig. 96: Identifying A/C Compressor
Courtesy of VOLVO CARS CORPORATION

Engine control module (ECM) checks the signal for controlling the control valve (solenoid). If engine control module (ECM) detects an incorrect signal, the control module interprets this as a malfunction and the diagnostic trouble code is generated.

The diagnostic trouble code can be diagnosed with the engine running and the A/C control active.

Substitute Value

- Nothing.

Possible Source

- Open-circuit in the signal cable.
- Open circuit on the voltage feed.

- Damaged control valve (solenoid).

Fault symptom[s]

- A/C system does not work.

FAULT-TRACING

see **FAULT-TRACING**

ECM-P064D68 INTERNAL CONTROL MODULE O2 SENSOR PROCESSOR PERFORMANCE - BANK 1. ALGORITHM BASED FAILURES. EVENT INFORMATION (B6324S; 2007-2010)

DIAGNOSTIC TROUBLE CODE (DTC) INFORMATION ECM-P064D68

Condition

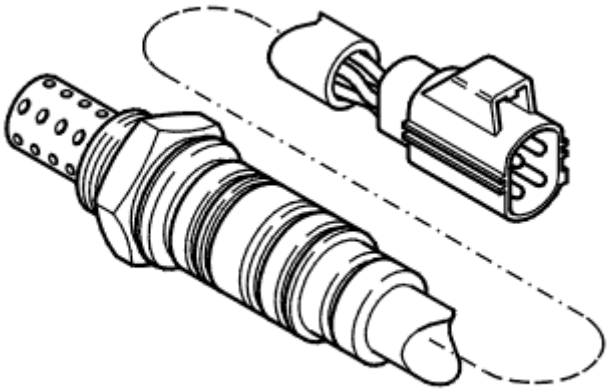

Fig. 97: Identifying Rear Heated Oxygen Sensor (HO2S)
Courtesy of VOLVO CARS CORPORATION

NOTE: **This diagnostic trouble code (DTC) status is an event controlled diagnostic trouble code (DTC). An event controlled diagnostic trouble code (DTC) does not mean that there is a fault in the control module when it is active, but is designed as information.**

The engine control module (ECM) compares the front and rear heated oxygen sensor (HO2S) adaptation values. In order to check front oxygen sensor regulation, check the engine control module (ECM) output signals from the rear oxygen sensor. If the control system for the heated oxygen sensors is working correctly, the control signals from the rear oxygen sensor must be within a predefined statistical interval.

The diagnostic trouble code (DTC) is stored if the control module detects that:

- The measured signals from the rear oxygen sensor (bank 1) is over or under the permissible range for a long period of time.

  The diagnostic trouble code can be generated after 35 minutes of normal driving (not with heavy load).

The control module's test for the diagnostic trouble code (DTC) starts in the event of:

- Engine running.

NOTE: This diagnostic trouble code (DTC) is primarily used for development purposes and has little or no information value during fault-tracing.

Substitute Value

- None.

Possible Source

- Leakage in the exhaust system.
- Contact resistance in the terminals.
- Damaged cable harness.
- Damaged heated oxygen sensor (HO2S).

Fault symptom[s]

- None

FAULT-TRACING INFORMATION

see **FAULT-TRACING INFORMATION**

ECM-P064D68 INTERNAL CONTROL MODULE O2 SENSOR PROCESSOR PERFORMANCE - BANK 1. ALGORITHM BASED FAILURES. EVENT INFORMATION (B6324S5; 2011-2012)

DIAGNOSTIC TROUBLE CODE (DTC) INFORMATION ECM-P064D68

see **DIAGNOSTIC TROUBLE CODE (DTC) INFORMATION ECM-P064D68**

FAULT-TRACING INFORMATION

see **FAULT-TRACING INFORMATION**

ECM-P064E00 INTERNAL CONTROL MODULE O2 SENSOR PROCESSOR PERFORMANCE - BANK 2. GENERAL FAILURE INFORMATION. NO SUB

TYPE INFORMATION (B6324S; 2007)

DIAGNOSTIC TROUBLE CODE (DTC) INFORMATION

Condition

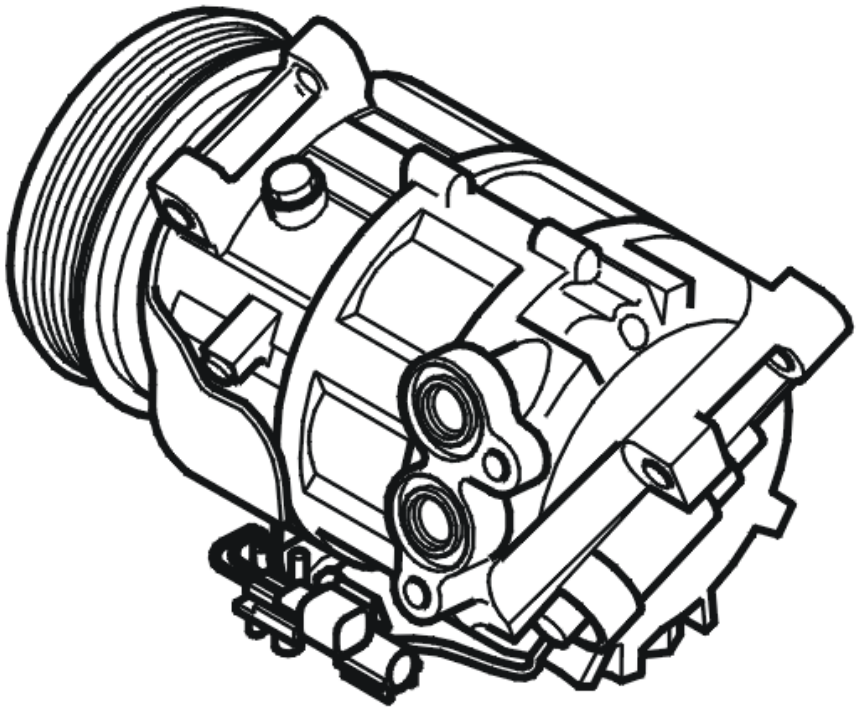

Fig. 98: Identifying A/C Compressor
Courtesy of VOLVO CARS CORPORATION

Engine control module (ECM) checks the signal for controlling the control valve (solenoid). If engine control module (ECM) detects an incorrect signal, the control module interprets this as a malfunction and the diagnostic trouble code is generated.

The diagnostic trouble code can be diagnosed with the engine running and the A/C control active.

Substitute Value

- Nothing.

Possible Source

- The signal cable is short-circuited to voltage.
- Damaged control valve (solenoid).

Fault symptom[s]

- A/C system does not work.

FAULT-TRACING

see **FAULT-TRACING**

ECM-P064E68 INTERNAL CONTROL MODULE O2 SENSOR PROCESSOR PERFORMANCE - BANK 2. ALGORITHM BASED FAILURES. EVENT INFORMATION (B6324S; 2007-2010)

DIAGNOSTIC TROUBLE CODE (DTC) INFORMATION ECM-P064E68

Condition

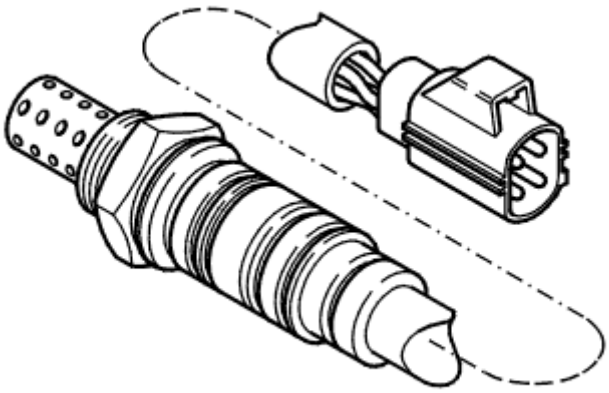

Fig. 99: Identifying Rear Heated Oxygen Sensor (HO2S)
Courtesy of VOLVO CARS CORPORATION

NOTE: **This diagnostic trouble code (DTC) status is an event controlled diagnostic trouble code (DTC). An event controlled diagnostic trouble code (DTC) does not mean that there is a fault in the control module when it is active, but is designed as information.**

The engine control module (ECM) compares the front and rear heated oxygen sensor (HO2S) adaptation values. In order to check front oxygen sensor regulation, check the engine control module (ECM) output signals from the rear oxygen sensor. If the control system for the heated oxygen sensors is working correctly, the control signals from the rear oxygen sensor must be within a predefined statistical interval.

The diagnostic trouble code (DTC) is stored if the control module detects that:

- The measured signals from the rear oxygen sensor (bank 2) is over or under the permissible range for a

long period of time.

The diagnostic trouble code can be generated after 35 minutes of normal driving (not with heavy load).

The control module's test for the diagnostic trouble code (DTC) starts in the event of:

- Engine running.

NOTE: This diagnostic trouble code (DTC) is primarily used for development purposes and has little or no information value during fault-tracing.

Substitute Value

- None.

Possible Source

- Leakage in the exhaust system.
- Contact resistance in the terminals.
- Damaged cable harness.
- Damaged heated oxygen sensor (HO2S).

Fault symptom[s]

- None

FAULT-TRACING INFORMATION

see **FAULT-TRACING INFORMATION**

ECM-P064E68 INTERNAL CONTROL MODULE O2 SENSOR PROCESSOR PERFORMANCE - BANK 2. ALGORITHM BASED FAILURES. EVENT INFORMATION (B6324S5; 2011-2012)

DIAGNOSTIC TROUBLE CODE (DTC) INFORMATION ECM-P064E68

see **DIAGNOSTIC TROUBLE CODE (DTC) INFORMATION ECM-P064E68**

FAULT-TRACING INFORMATION

see **FAULT-TRACING INFORMATION**

ECM-P064F00 UNAUTHORIZED SOFTWARE/CALIBRATION DETECTED. GENERAL FAILURE INFORMATION. NO SUB TYPE INFORMATION (B6324S; 2007)

DIAGNOSTIC TROUBLE CODE (DTC) INFORMATION

Condition

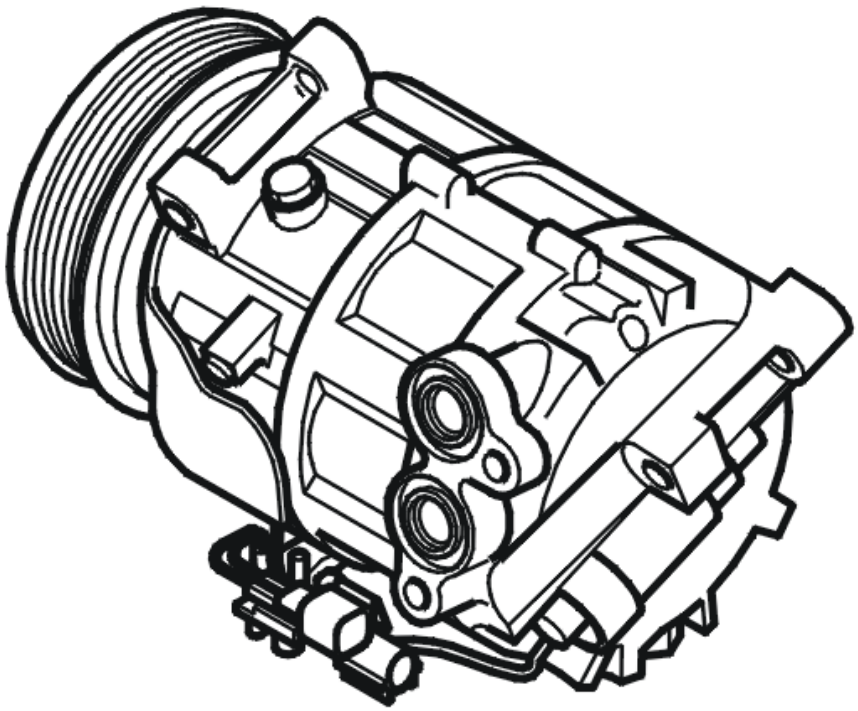

Fig. 100: Identifying A/C Compressor
Courtesy of VOLVO CARS CORPORATION

Engine control module (ECM) checks the signal for controlling the control valve (solenoid). If engine control module (ECM) detects an incorrect signal, the control module interprets this as a malfunction and the diagnostic trouble code is generated.

The diagnostic trouble code can be diagnosed with the engine running and the A/C control active.

Substitute Value

- Nothing.

Possible Source

- The signal cable is short-circuited to ground.
- Open circuit on the voltage feed.
- Damaged control valve (solenoid).

Fault symptom[s]

- A/C system does not work.

FAULT-TRACING

see **FAULT-TRACING**

ECM-P066100: INTAKE MANIFOLD TUNING VALVE CONTROL CIRCUIT LOW - BANK 1. GENERAL FAILURE INFORMATION. NO SUB TYPE INFORMATION (B6324S; 2007-2010)

DIAGNOSTIC TROUBLE CODE (DTC) INFORMATION

Condition

The engine control module regulates the variable intake system) via the electric throttle unit.

The engine control module (ECM) monitors the control signal for the throttle unit.

The diagnostic trouble code (DTC) is stored if the control module detects that:

- Signal missing.
- Control signal is too low.

The control module's test for the diagnostic trouble code (DTC) starts in the event of:

- Ignition switch position II.
- Battery voltage higher than 10.5 V.

NOTE: The control module can only detect the fault once the test has been started and the diagnostic trouble code (DTC) is stored when the conditions are met.

Substitute Value

- None.

Possible Source

- Contact resistance or oxidation in the connectors.
- Open circuit on signal cable.
- Open-circuit in the power supply cable.
- Open-circuit in the ground lead.
- The signal cable is short-circuited to ground.

- Short-circuit to ground in the power supply cable.
- Damaged throttle unit.

Fault symptom[s]

- Malfunction indicator light (MIL), on
- Poor performance

FAULT-TRACING

see **FAULT-TRACING**

ECM-P066100: INTAKE MANIFOLD TUNING VALVE CONTROL CIRCUIT LOW - BANK 1. GENERAL FAILURE INFORMATION. NO SUB TYPE INFORMATION (B6324S5; 2011-2012)

DIAGNOSTIC TROUBLE CODE (DTC) INFORMATION

see **DIAGNOSTIC TROUBLE CODE (DTC) INFORMATION**

FAULT-TRACING

see **FAULT-TRACING**

ECM-P066100: INTAKE MANIFOLD CONTROL VALVE CONTROL CIRCUIT LOW - BANK 1. GENERAL FAULT INFORMATION. NO INFORMATION ABOUT FAULT TYPE (B8444S; 2005-2011)

DIAGNOSTIC TROUBLE CODE (DTC) INFORMATION ECM-P066100

Condition

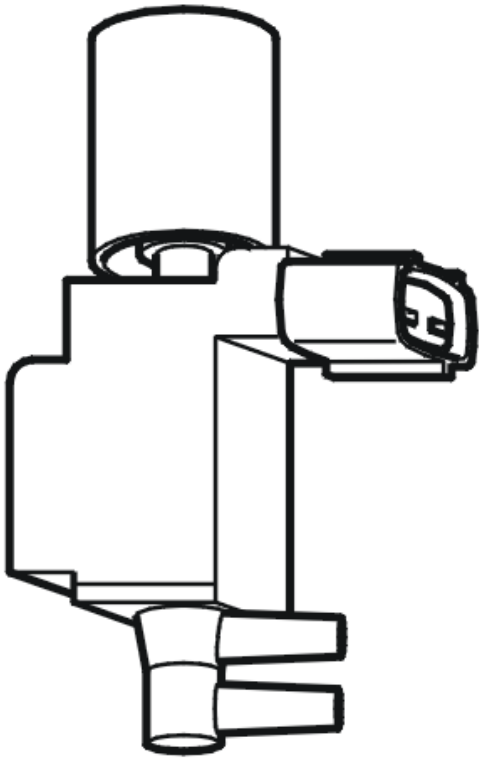

Fig. 101: Identifying Intake Manifold Control Valve
Courtesy of VOLVO CARS CORPORATION

The Engine control module checks the damper in the (VIS) by regulating the valve for the damper's vacuum motor. The diagnostic trouble code (DTC) is stored if the control module detects that the control signal for the control valve is too low.

The diagnostic trouble code can be diagnosed when the ignition is on.

Substitute Value

- Nothing.

Possible Source

- Contact resistance in the connectors.
- Open circuit on signal cable.
- Open circuit in the voltage supply cable.
- Short-circuit to ground in the signal cable.
- Short-circuit to ground in the voltage supply cable.
- Damaged control valve.

Fault symptom[s]

- Malfunction indicator lamp (MIL) lit.

FAULT TRACING ECM-P066100

CHECKING THE STATUS

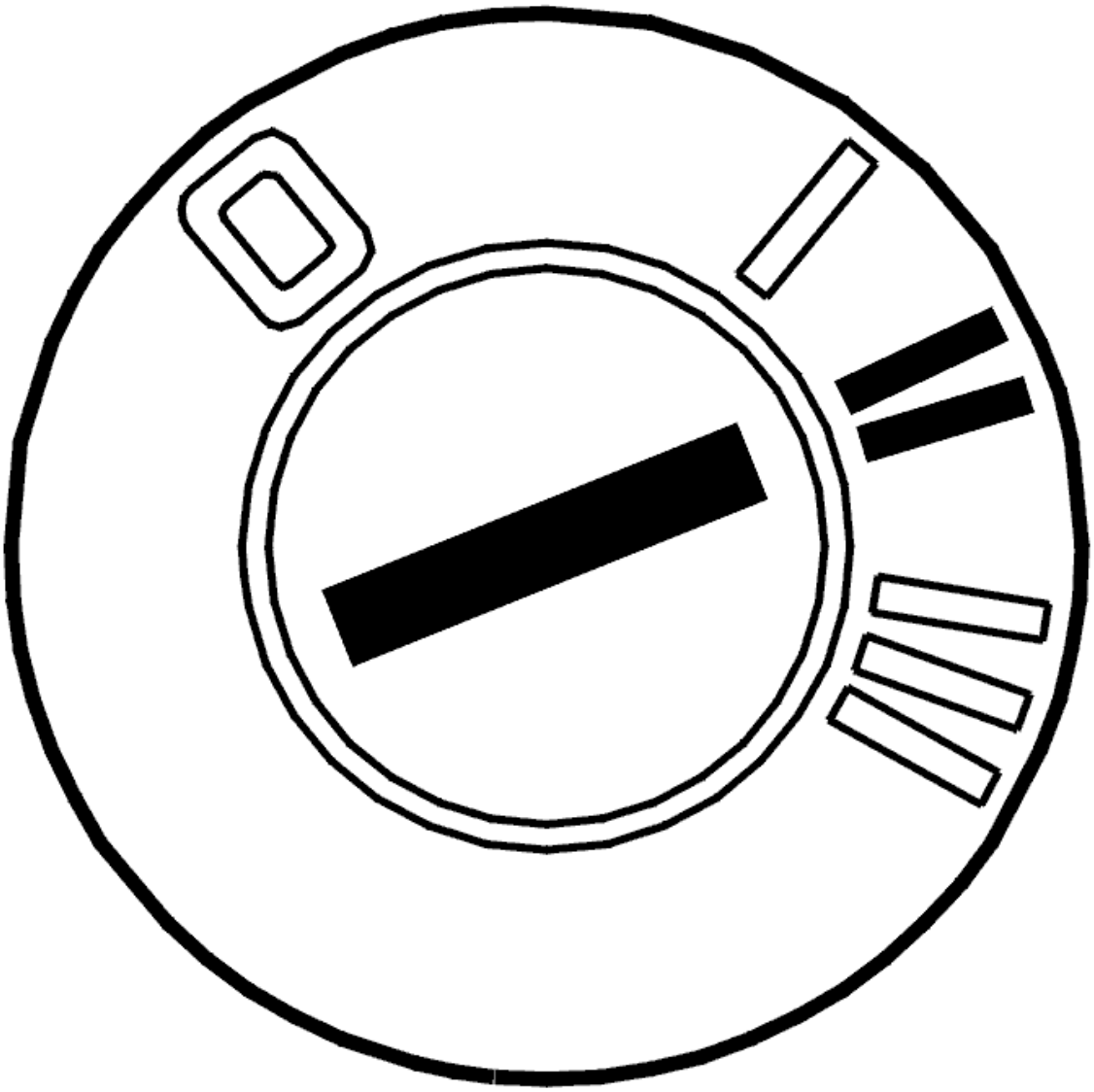

Fig. 102: Identifying Ignition ON
Courtesy of VOLVO CARS CORPORATION

- Ignition on

  Activate the control valve for variable intake.

  Check if the fault is permanent or intermittent.

A clicking noise is heard from the valve at activation.

The fault is permanent if the valve does not activate. If the valve activates this indicates that the fault is intermittent and not presently active.

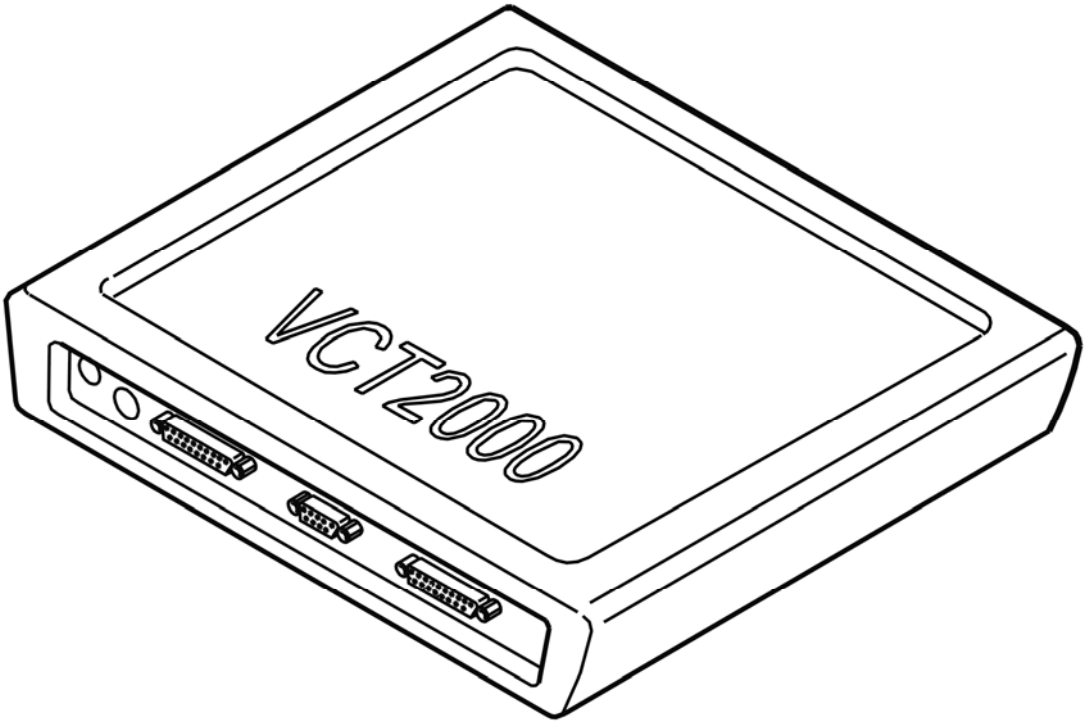

Fig. 103: Identifying VCT2000 Diagnostic Tool Symbol In VIDA
Courtesy of VOLVO CARS CORPORATION

- **Continue**

Refer to **CHECKING COMPONENTS AND WIRING**

CHECKING COMPONENTS AND WIRING

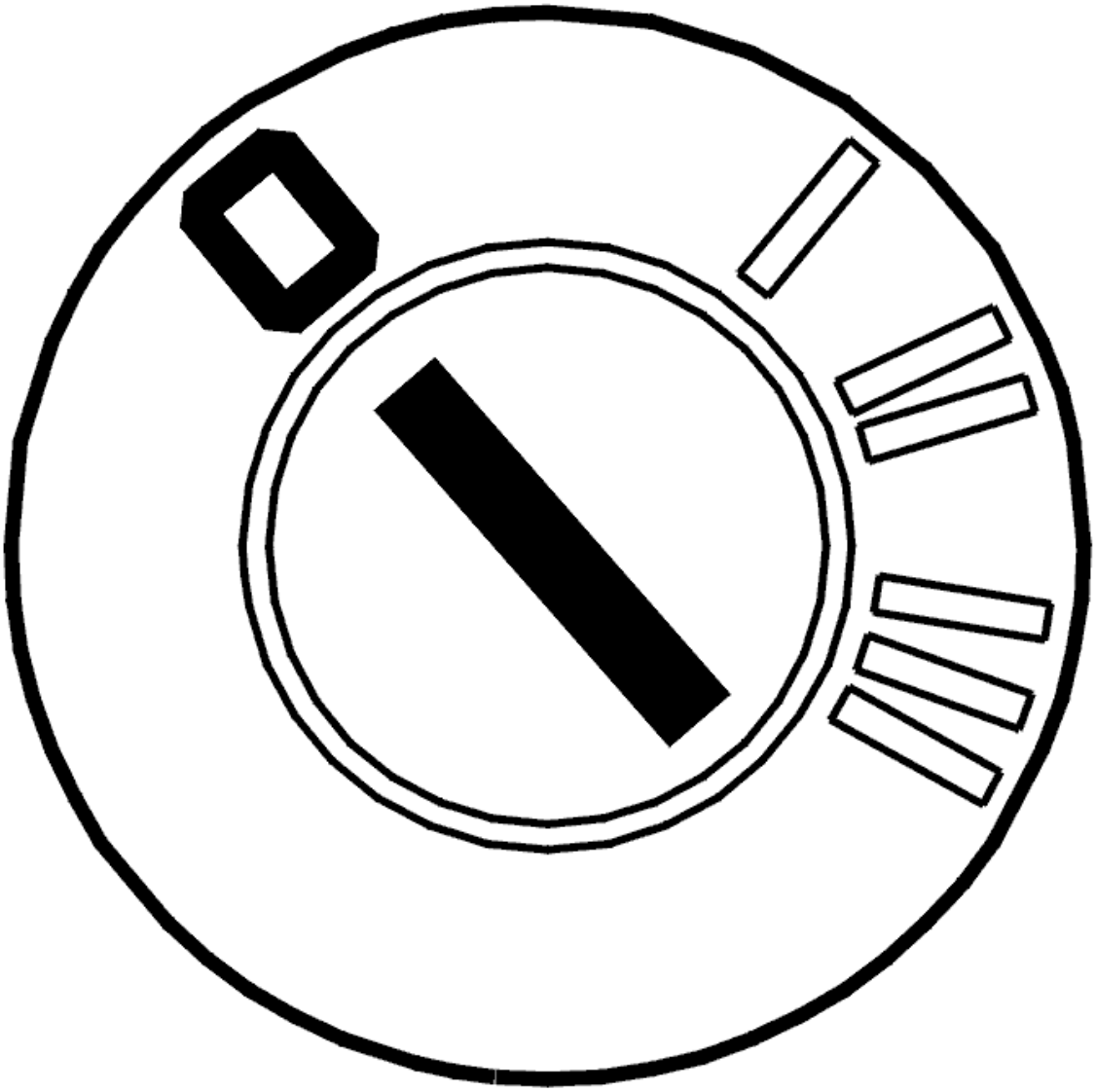

Fig. 104: Identifying Ignition OFF
Courtesy of VOLVO CARS CORPORATION

- Ignition off

  Check the control valve connector and terminals. Check for contact resistance and oxidation.

  Check the control valve between control valve terminals #1 and #2. Check the resistance.

  Disconnect the engine control module (ECM).

  Check the signal cable for the control valve. Check for a short-circuit to ground. Check for an open-circuit.

  Take readings between control module terminal #A95 (#B35) and control valve terminal #2.

Check the supply cable for the control valve. Check for an open-circuit.

Take readings between control module terminal #B04 (#C04) and control valve terminal #1.

Remedy as necessary.

Other information

- see **CONNECTING THE BREAKOUT BOX**
- see **SIGNAL SPECIFICATION, ENGINE CONTROL MODULE (ECM)**
- see **COMPONENT SPECIFICATIONS**
- see **CHECKING WIRING AND TERMINALS**

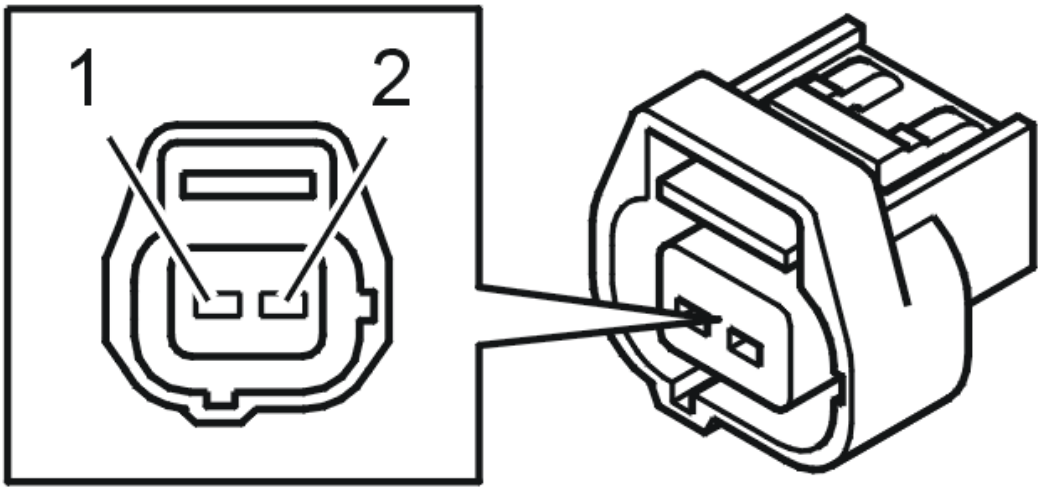

Fig. 105: Identifying Connector Terminals
Courtesy of VOLVO CARS CORPORATION

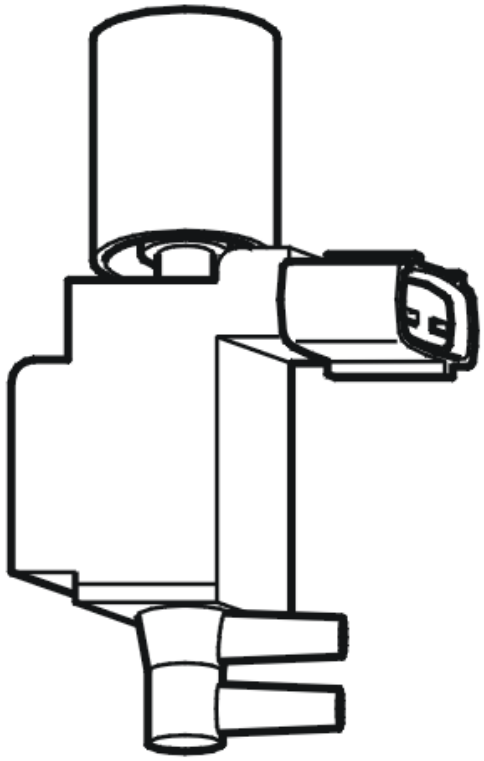

Fig. 106: Identifying Intake Manifold Control Valve
Courtesy of VOLVO CARS CORPORATION

- **Continue**

  Refer to **VERIFICATION**

VERIFICATION

VERIFICATION

HINT: After carrying out the repair, check that the fault has been remedied.

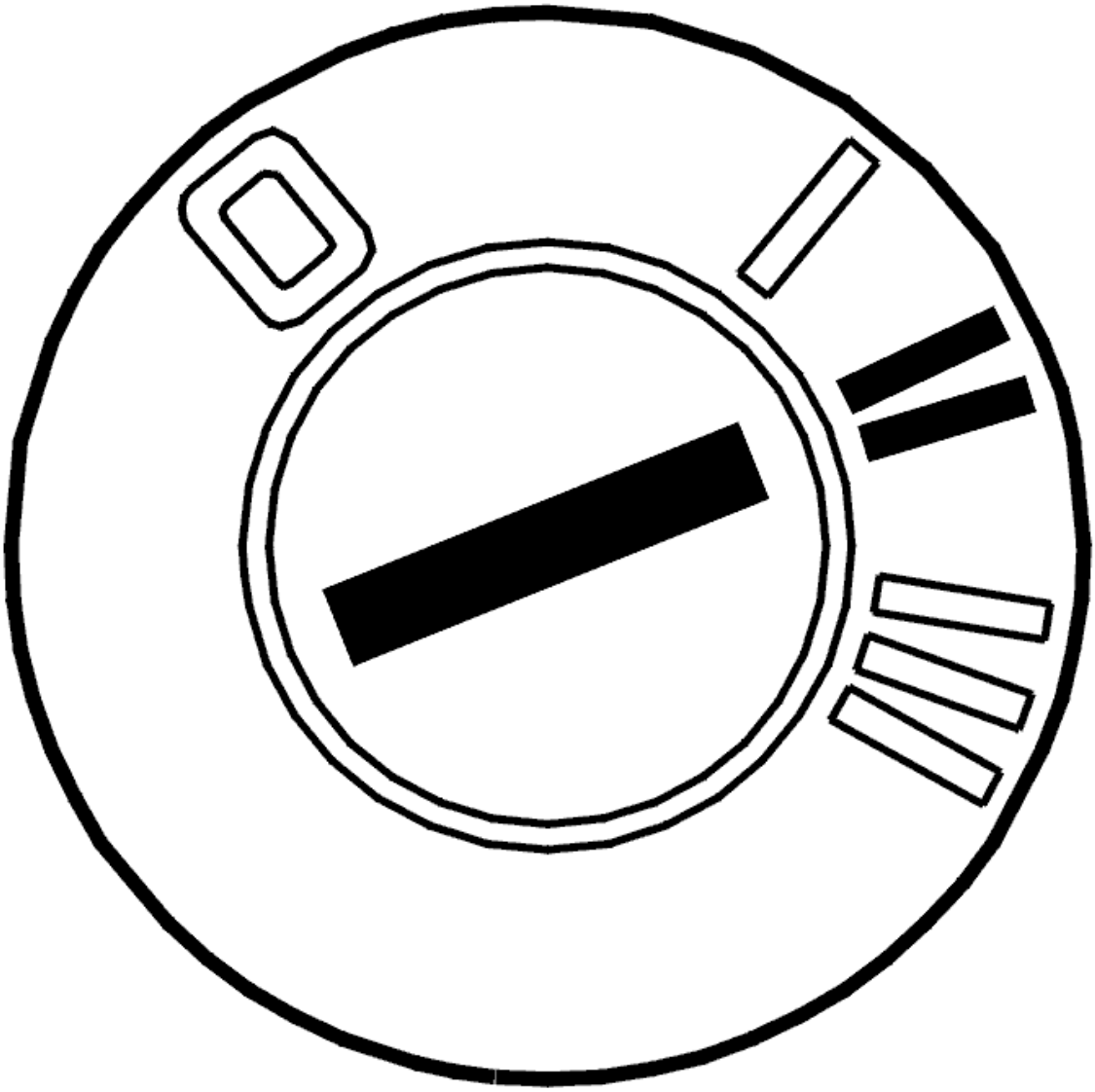

Fig. 107: Identifying Ignition ON
Courtesy of VOLVO CARS CORPORATION

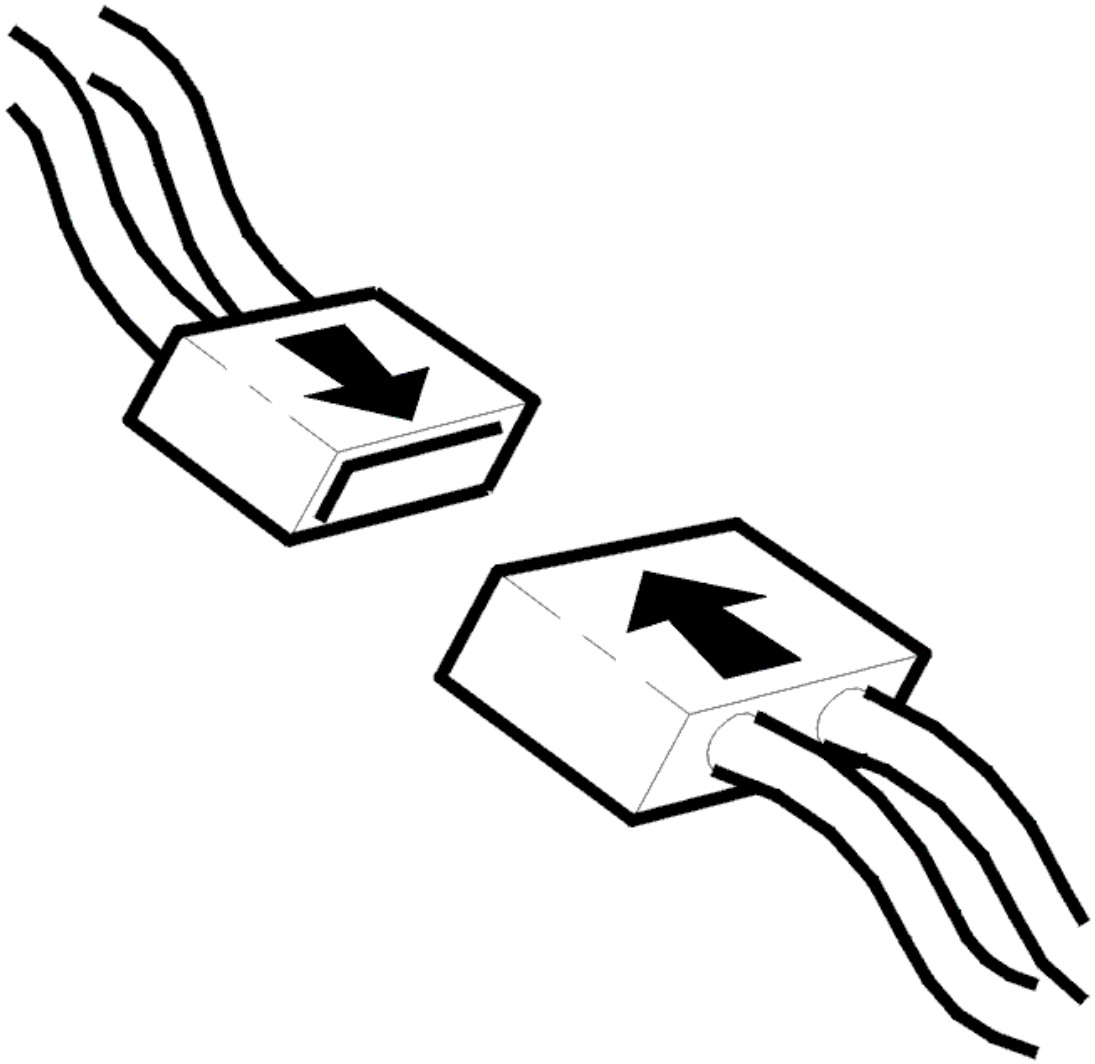

Fig. 108: Connecting Connector
Courtesy of VOLVO CARS CORPORATION

- Ignition off
- Reconnect the connectors, components, etc.
- Ignition on
- Use the VCT2000 (or appropriate scan tool) to activate the control valve.

  Check that the control valve clicks at activation

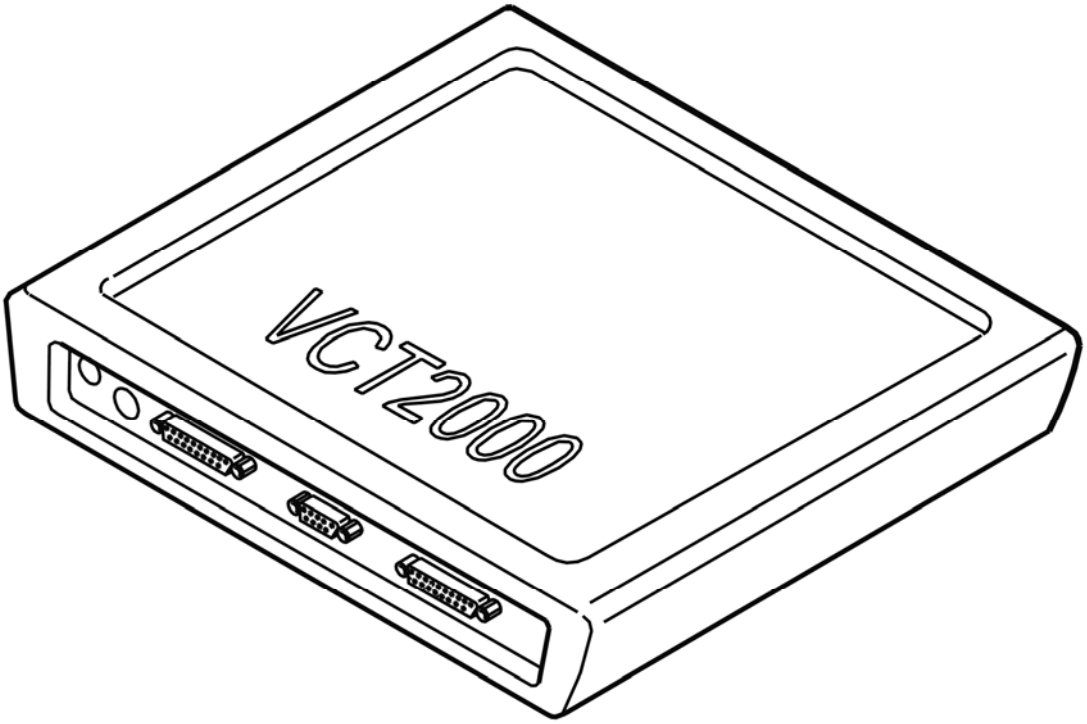

Fig. 109: Identifying VCT2000 Diagnostic Tool Symbol In VIDA
Courtesy of VOLVO CARS CORPORATION

Is the function OK?

- **YES**

  VERIFIED: Troubleshooting has been completed.

- **NO**

  Refer to **INFORMATION**

INFORMATION

FAULT-TRACING INFORMATION

The fault should have been detected and remedied. As this is not the case fault-tracing has failed.

Exit fault-tracing for this diagnostic trouble code (DTC) or make another attempt.

ECM-P066200: INTAKE MANIFOLD TUNING VALVE CONTROL CIRCUIT HIGH - BANK 1. GENERAL FAILURE INFORMATION. NO SUB TYPE

INFORMATION (B6324S; 2007-2010)

DIAGNOSTIC TROUBLE CODE (DTC) INFORMATION

Condition

The engine control module regulates the variable intake system) via the electric throttle unit.

The engine control module (ECM) monitors the control signal for the throttle unit.

The diagnostic trouble code (DTC) is stored if the control module detects that:

- Control signal is too high.

The control module's test for the diagnostic trouble code (DTC) starts in the event of:

- Ignition switch position II.
- Battery voltage higher than 10.5 V.

NOTE: The control module can only detect the fault once the test has been started and the diagnostic trouble code (DTC) is stored when the conditions are met.

Substitute Value

- None.

Possible Source

- Short-circuit to supply voltage in the signal cable.
- Damaged throttle unit.

Fault symptom[s]

- Malfunction indicator light (MIL), on
- Poor performance

FAULT-TRACING

see **FAULT-TRACING**

ECM-P066200: INTAKE MANIFOLD TUNING VALVE CONTROL CIRCUIT HIGH - BANK 1. GENERAL FAILURE INFORMATION. NO SUB TYPE INFORMATION (B6324S5; 2011-2012)

DIAGNOSTIC TROUBLE CODE (DTC) INFORMATION

see **DIAGNOSTIC TROUBLE CODE (DTC) INFORMATION**

FAULT-TRACING

see **FAULT-TRACING**

ECM-P066200: INTAKE MANIFOLD CONTROL VALVE CONTROL CIRCUIT HIGH - BANK 1. GENERAL FAULT INFORMATION. NO INFORMATION ABOUT FAULT TYPE (B8444S; 2005-2011)

DIAGNOSTIC TROUBLE CODE (DTC) INFORMATION ECM-P066200

Condition

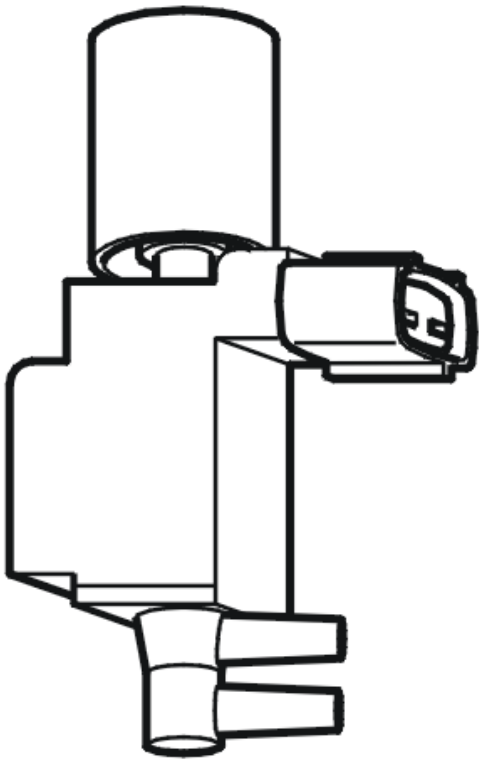

Fig. 110: Identifying Intake Manifold Control Valve
Courtesy of VOLVO CARS CORPORATION

The engine control module (ECM) regulates the damper in the Variable intake system (VIS) by controlling the control valve for the damper vacuum motor. The diagnostic trouble code (DTC) is stored if the control module detects that the control signal for the control valve is too high.

The diagnostic trouble code can be diagnosed when the ignition is on.

Substitute Value

- Nothing.

Possible Source

- Short-circuit to supply voltage in the signal cable.
- Damaged control valve.

Fault symptom[s]

- Malfunction indicator lamp (MIL) lit.

FAULT TRACING ECM-P066200

CHECKING THE STATUS

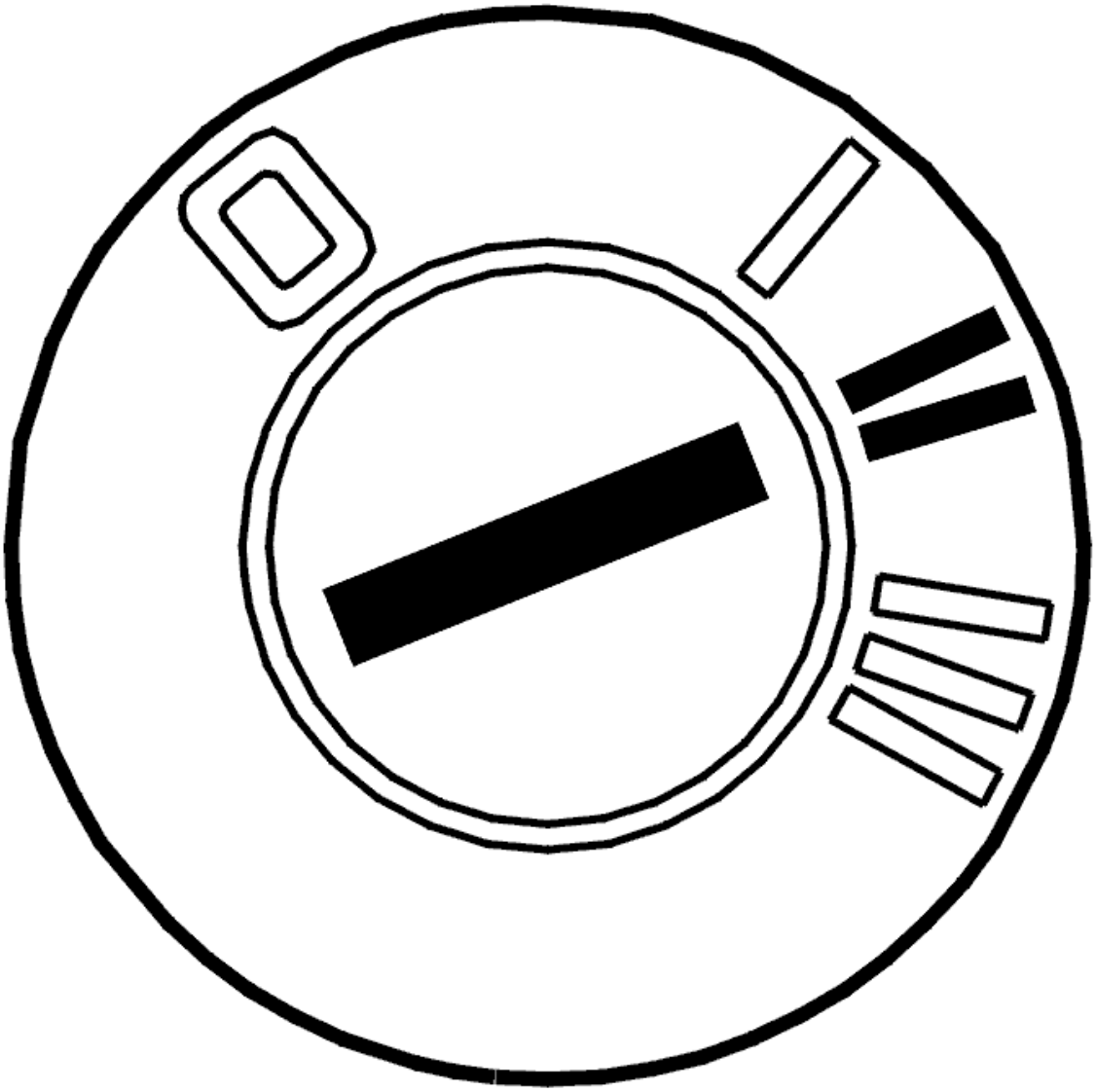

Fig. 111: Identifying Ignition ON
Courtesy of VOLVO CARS CORPORATION

- Ignition on

  Activate the control valve for variable intake.

  Check if the fault is permanent or intermittent.

  A clicking noise is heard from the valve at activation.

  The fault is permanent if the valve does not activate. If the valve activates this indicates that the fault is intermittent and not presently active.

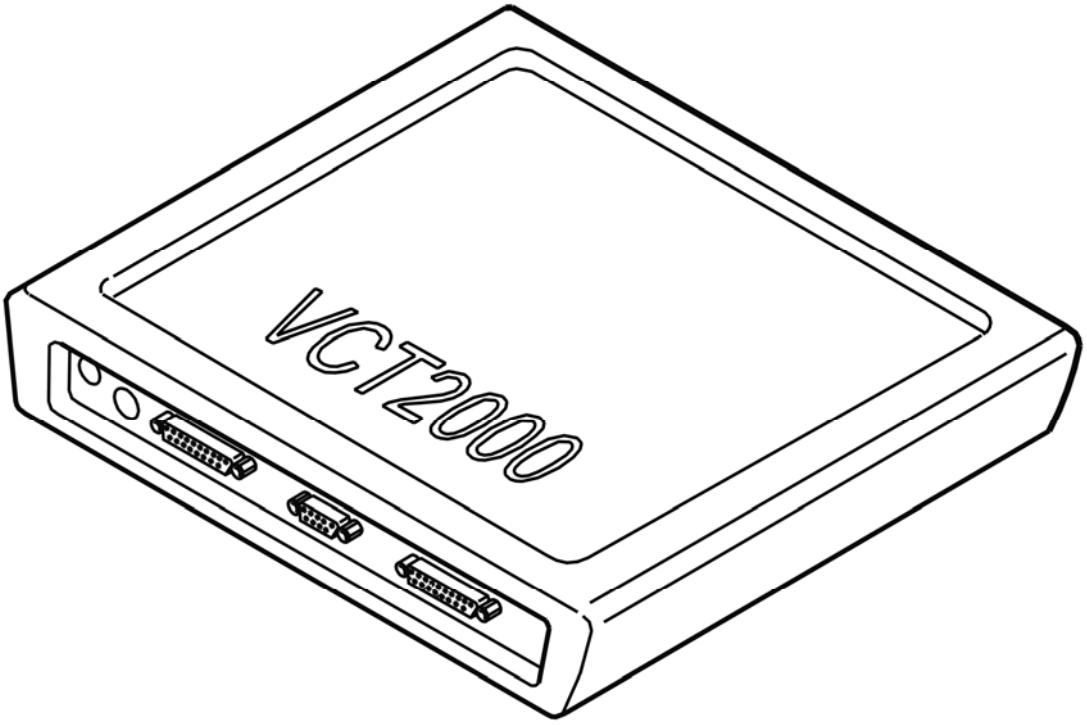

Fig. 112: Identifying VCT2000 Diagnostic Tool Symbol In VIDA
Courtesy of VOLVO CARS CORPORATION

- **Continue**

  Refer to **CHECKING COMPONENTS AND WIRING**

CHECKING COMPONENTS AND WIRING

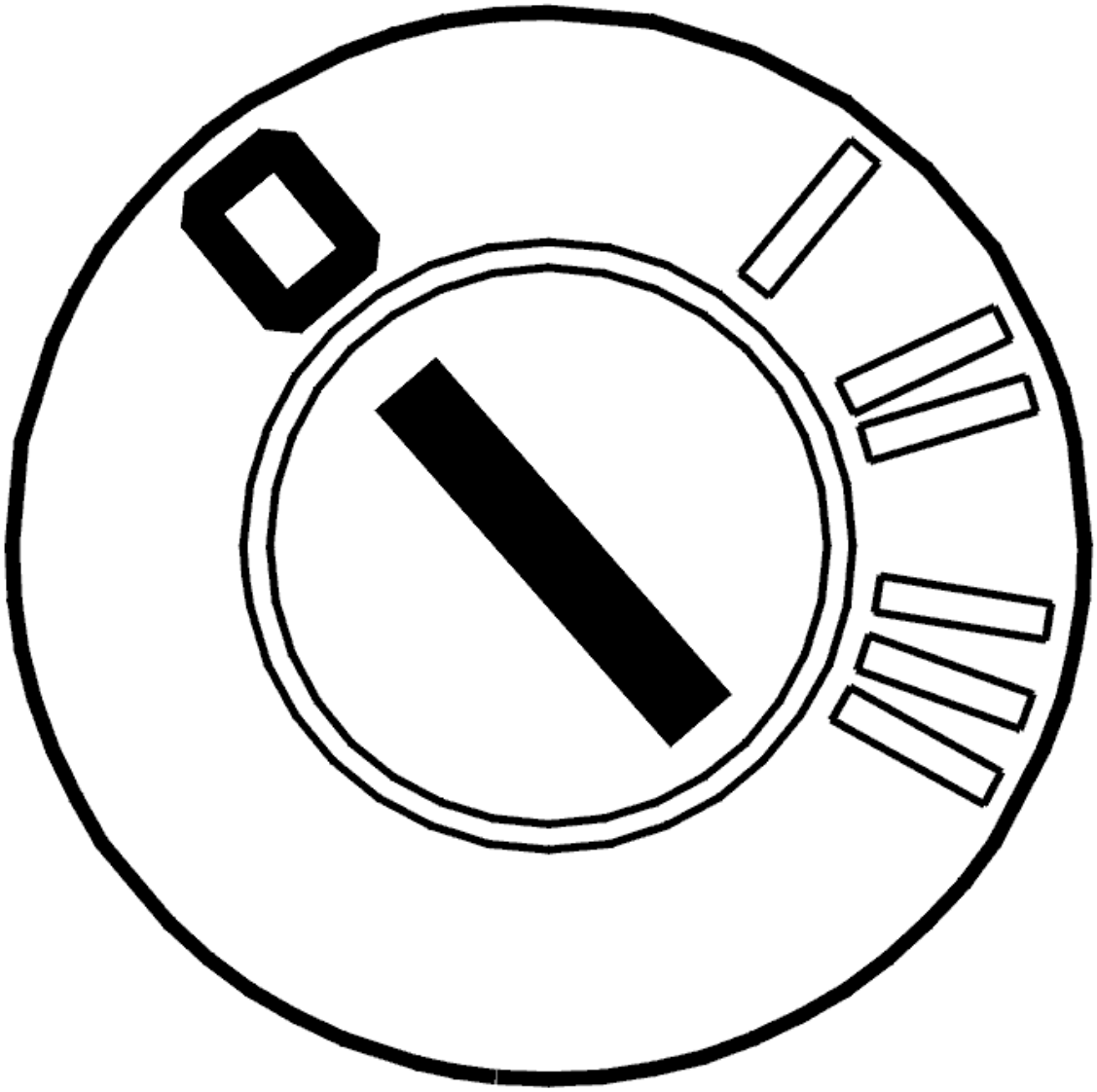

Fig. 113: Identifying Ignition OFF
Courtesy of VOLVO CARS CORPORATION

- Ignition off

  Check the control valve between control valve terminals #1 and #2. Check the resistance.

  Disconnect the engine control module (ECM).

  Check the signal cable for the control valve. Check for a short-circuit to supply.

  Take readings between control module terminal #A95 (#B35) and control valve terminal #2.

  Remedy as necessary.

  Other information

- see **CONNECTING THE BREAKOUT BOX**
- see **SIGNAL SPECIFICATION, ENGINE CONTROL MODULE (ECM)**
- see **COMPONENT SPECIFICATIONS**
- see **CHECKING WIRING AND TERMINALS**

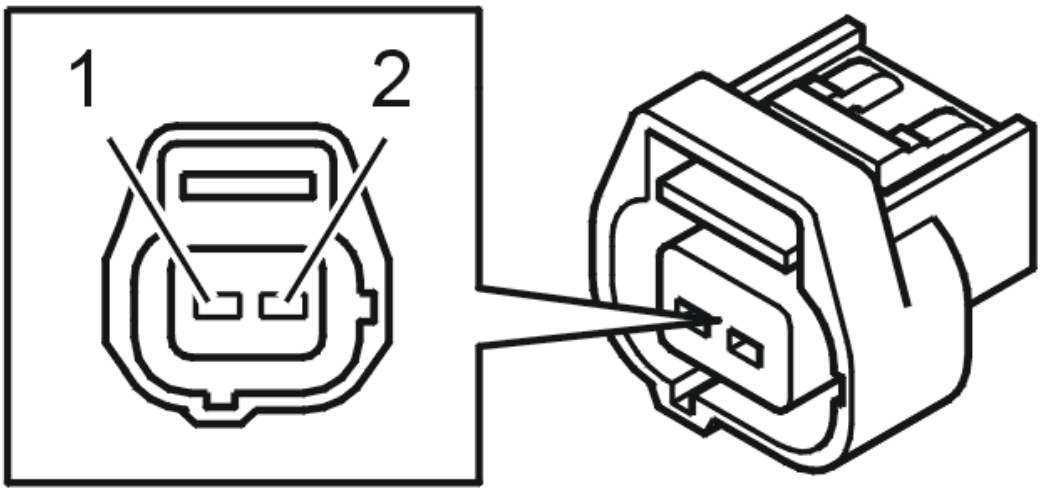

Fig. 114: Identifying Connector Terminals
Courtesy of VOLVO CARS CORPORATION

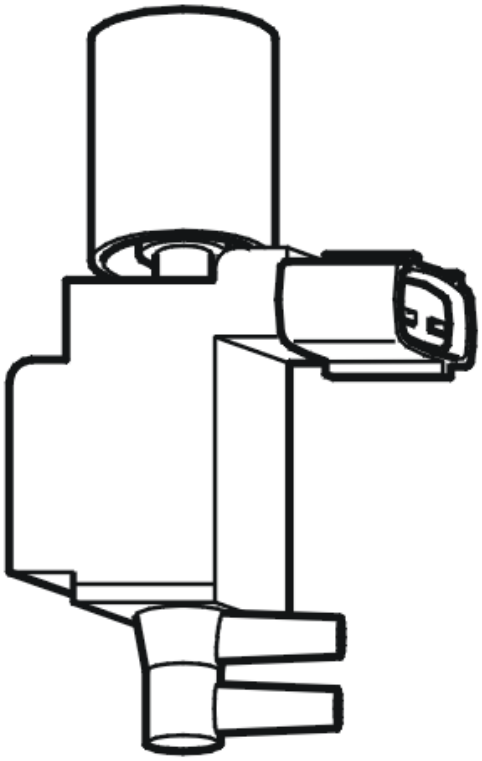

Fig. 115: Identifying Intake Manifold Control Valve
Courtesy of VOLVO CARS CORPORATION

- **Continue**

  Refer to **VERIFICATION**

VERIFICATION

VERIFICATION

HINT: After carrying out the repair, check that the fault has been remedied.

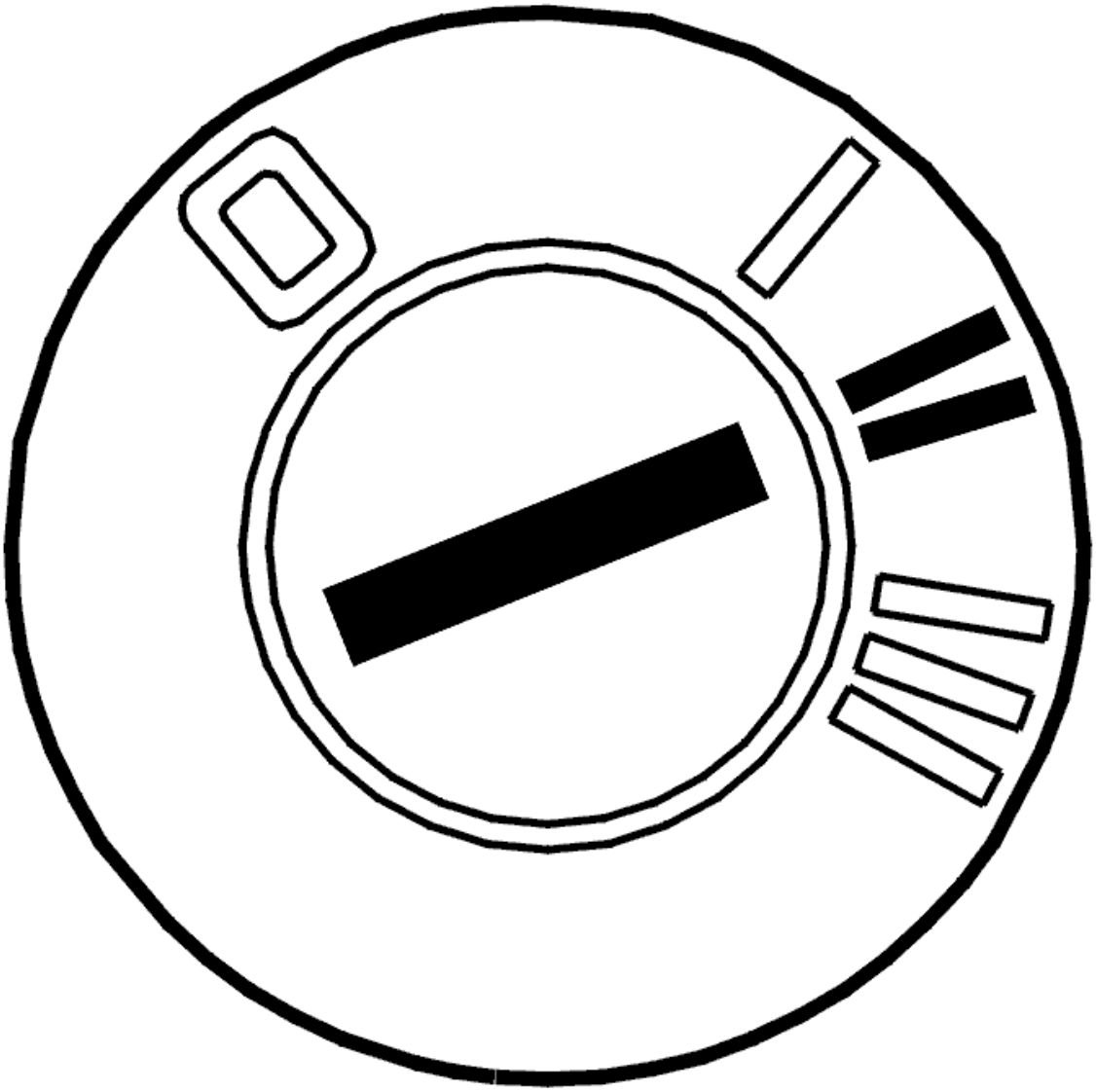

Fig. 116: Identifying Ignition ON
Courtesy of VOLVO CARS CORPORATION

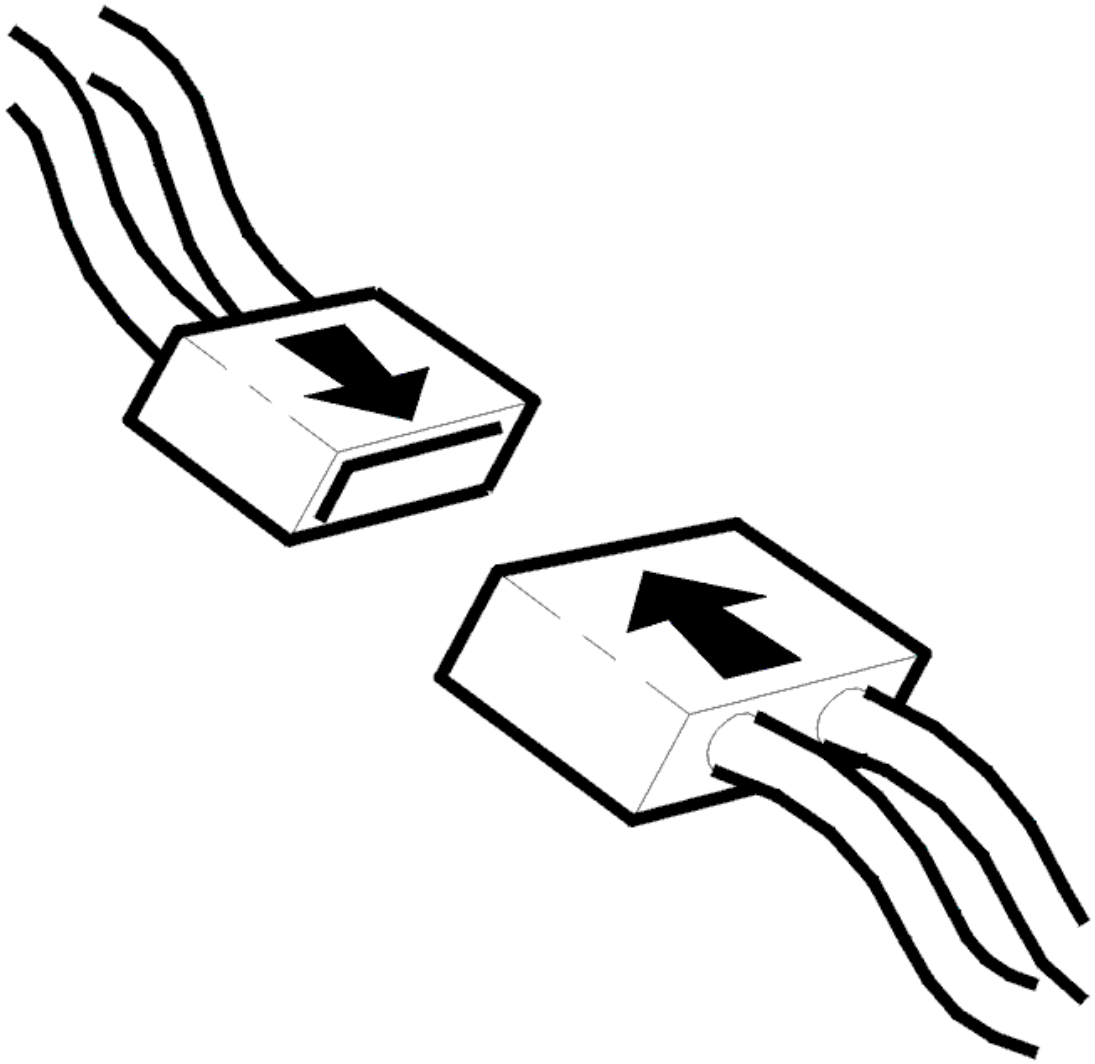

Fig. 117: Connecting Connector
Courtesy of VOLVO CARS CORPORATION

- Ignition off
- Reconnect the connectors, components, etc.
- Ignition on
- Use the VCT2000 (or appropriate scan tool) to activate the control valve.

  Check that the control valve clicks at activation

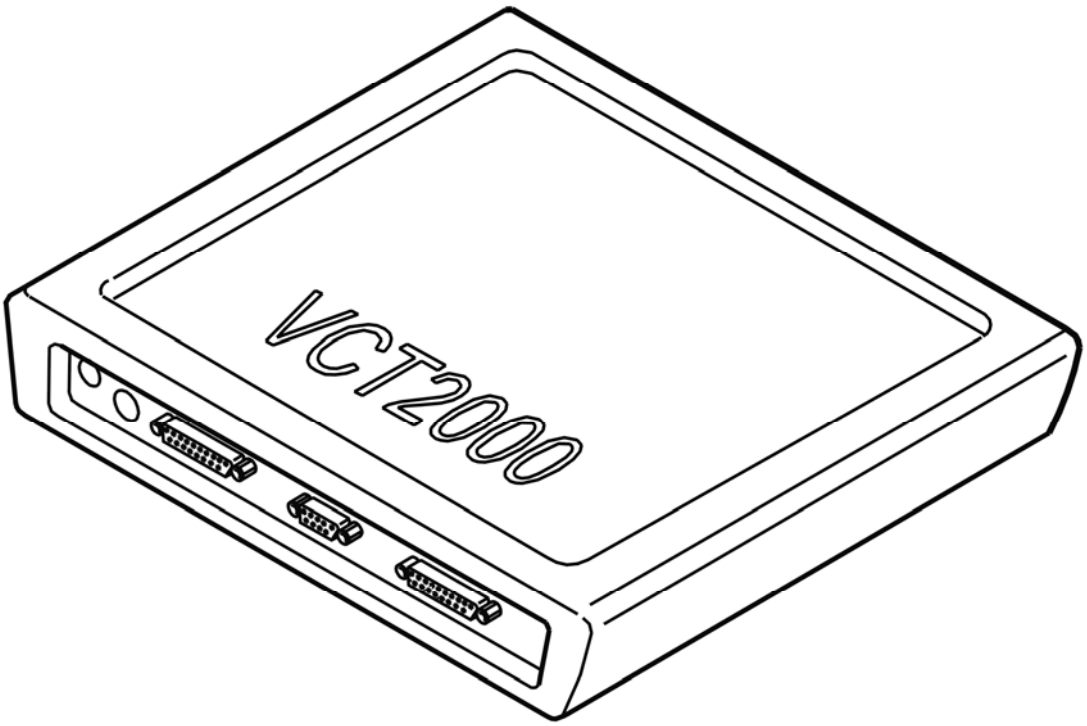

Fig. 118: Identifying VCT2000 Diagnostic Tool Symbol In VIDA
Courtesy of VOLVO CARS CORPORATION

Is the function OK?

- **YES**

  VERIFIED: Troubleshooting has been completed.

- **NO**

  Refer to **INFORMATION**

INFORMATION

FAULT-TRACING INFORMATION

The fault should have been detected and remedied. As this is not the case fault-tracing has failed.

Exit fault-tracing for this diagnostic trouble code (DTC) or make another attempt.

ECM-P066800: PCM / ECM / TCM INTERNAL TEMPERATURE SENSOR CIRCUIT LOW. GENERAL FAILURE INFORMATION. NO SUB TYPE

INFORMATION (B6324S; 2007-2010)

DIAGNOSTIC TROUBLE CODE (DTC) INFORMATION ECM-P066800

Condition

Engine control module (ECM) measures the temperature internally in the control module using a temperature sensor. The control module checks the direct voltage from the sensor.

NOTE: The temperature sensor is integrated in the Engine control module (ECM).

The diagnostic trouble code (DTC) is stored if the control module detects that:

- The direct voltage is lower than 0.112 V.
- Incorrect value runs longer than 10 seconds.
- Incorrect value lasts for 2 or more subsequent driving cycles.

The control module's test for the diagnostic trouble code (DTC) starts in the event of:

- Ignition switch position II.

NOTE: The control module can only detect the fault once the test has been started and the diagnostic trouble code (DTC) is stored when the conditions are met.

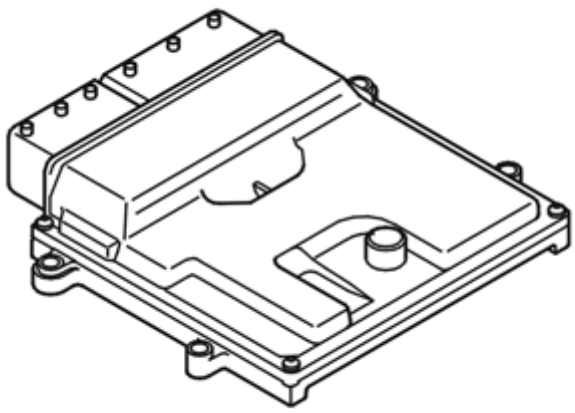

Fig. 119: Identifying Engine Control Module (ECM)
Courtesy of VOLVO CARS CORPORATION

Substitute Value

- The control module uses a constant internal temperature, +60 °C.
- The control module controls the cooling fan (FC) according to pre-defined speed.

Possible Source

- Damaged engine control module (ECM).

Fault symptom[s]

- None

FAULT-TRACING

see **FAULT-TRACING**

ECM-P066800: PCM / ECM / TCM INTERNAL TEMPERATURE SENSOR CIRCUIT LOW. GENERAL FAILURE INFORMATION. NO SUB TYPE INFORMATION (B6324S5; 2011-2012)

DIAGNOSTIC TROUBLE CODE (DTC) INFORMATION ECM-P066800

see **DIAGNOSTIC TROUBLE CODE (DTC) INFORMATION ECM-P066800**

FAULT-TRACING

see **FAULT-TRACING**

ECM-P066800PCM/ECM/TCM INTERNAL TEMPERATURE SENSOR CIRCUIT LOW. GENERAL MALFUNCTION INFORMATION. NO INFORMATION ON MALFUNCTION TYPE (B8444S; 2005-2011)

DIAGNOSTIC TROUBLE CODE (DTC) INFORMATION

Condition

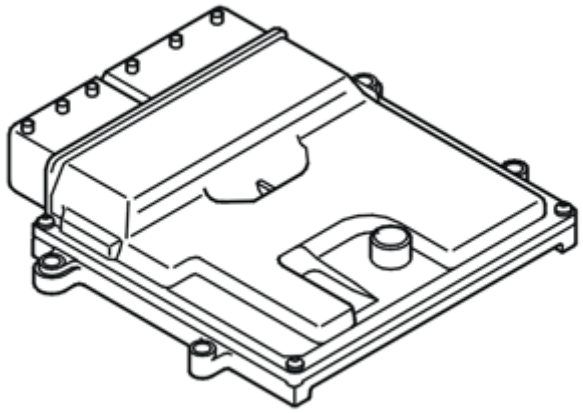

Fig. 120: Identifying Engine Control Module (ECM)
Courtesy of VOLVO CARS CORPORATION

If engine control module (ECM) registers malfunction on temperature sensor's circuit internally in control module, the diagnostic trouble code is generated.

The diagnostic trouble code can be diagnosed with the ignition on.

Substitute Value

- Engine cooling fan is activated according to predefined speed.
- Temperature assumed to be 60 °C.

Possible Source

- Damaged engine control module (ECM).

Fault symptom[s]

- Nothing.

TROUBLESHOOTING

CHECKING THE STATUS

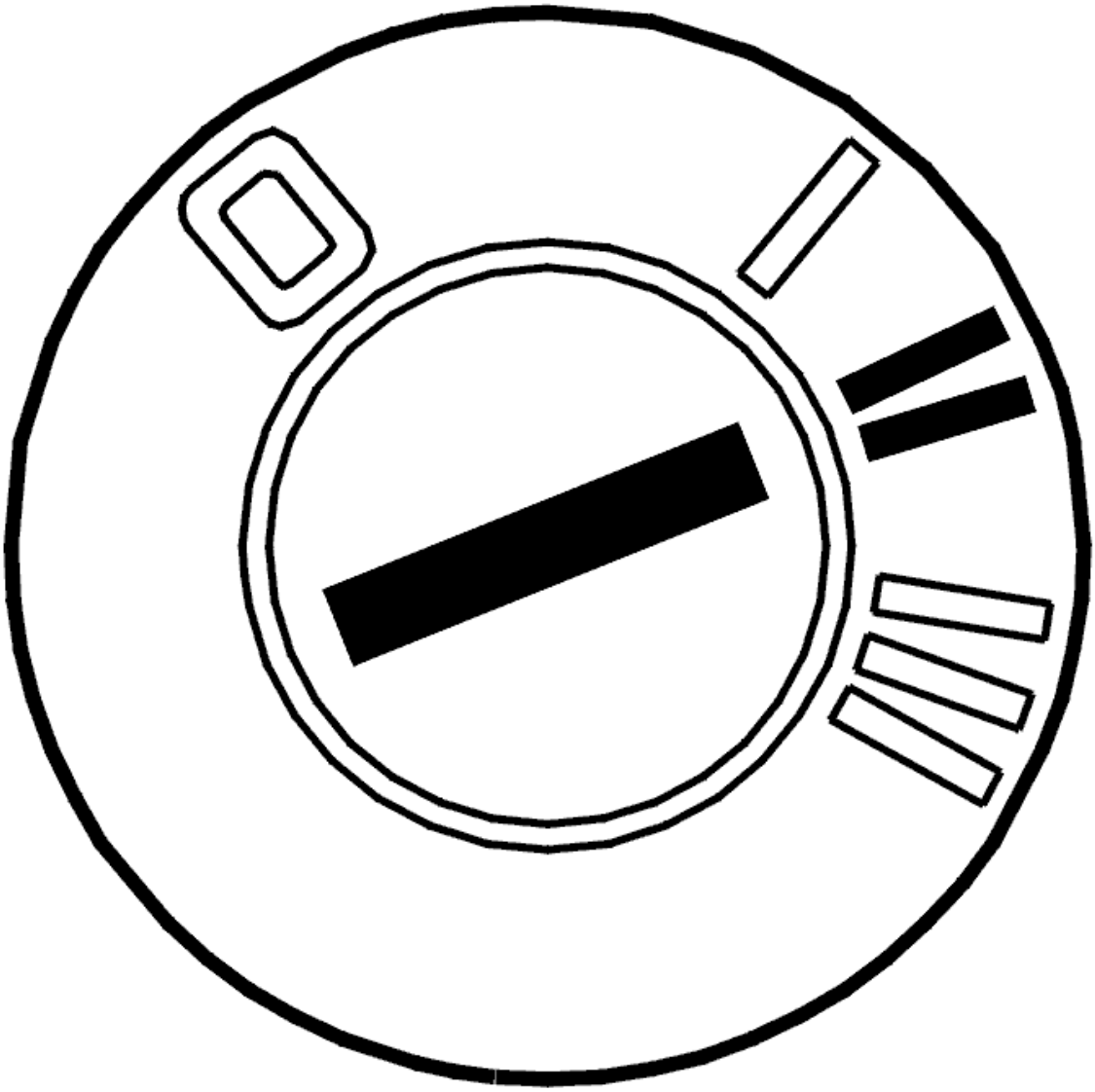

Fig. 121: Identifying Ignition ON
Courtesy of VOLVO CARS CORPORATION

- Ignition on, wait for at least 15 seconds to perform the diagnosis.

  Read off diagnostic trouble code status.

  Check if the malfunction is permanent or intermittent by reading off the diagnostic trouble code's status when the diagnostic status is "Implemented".

  If the trouble status is "Malfunction found", this indicates that the malfunction is permanent. If the trouble status is "No malfunction found", this indicates that the malfunction is intermittent.

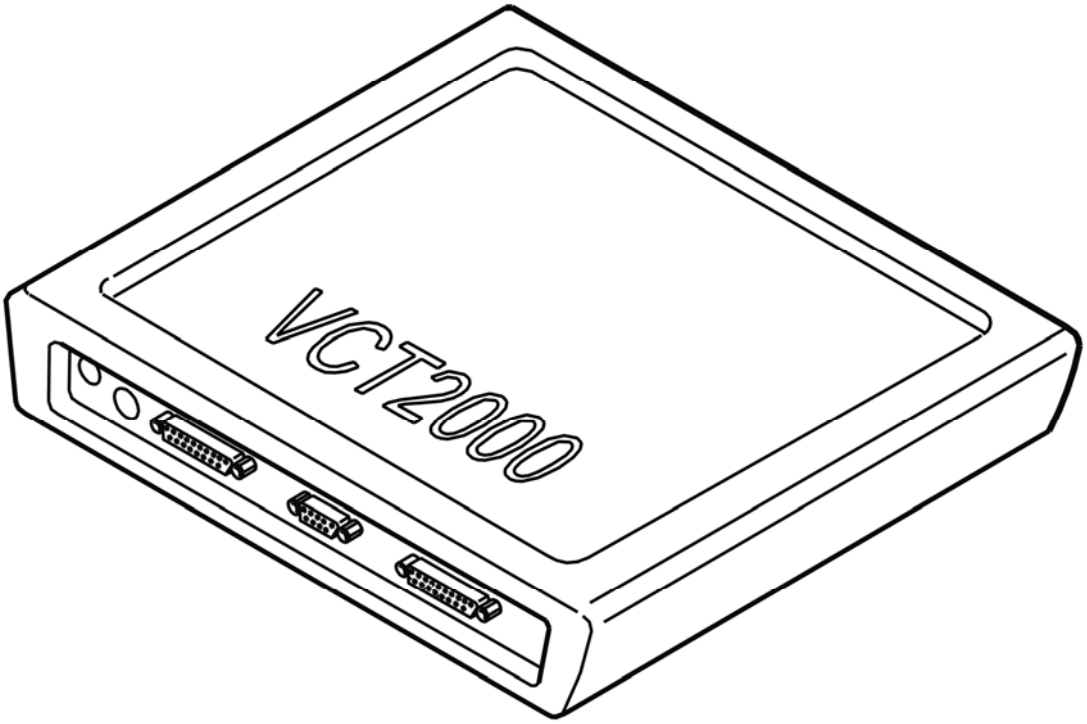

Fig. 122: Identifying VCT2000 Diagnostic Tool Symbol In VIDA
Courtesy of VOLVO CARS CORPORATION

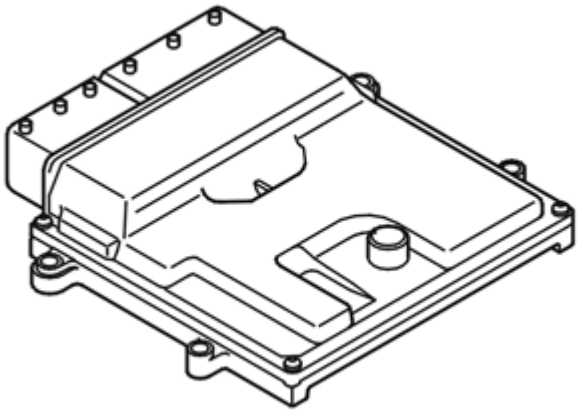

Fig. 123: Identifying Engine Control Module (ECM)
Courtesy of VOLVO CARS CORPORATION

- **Continue**

Refer to **REPLACING THE COMPONENT**

REPLACING THE COMPONENT

The engine control module (ECM) has registered an internal malfunction.

If the malfunction is intermittent, it has been registered previously but no longer remains. Intermittent malfunctions can be due to disruption when the engine control module (ECM) started or can be another type of malfunction that may recur at different instances. The malfunction is assessed on a case by case basis. If the malfunction recurs, replace the engine control module (ECM).

In case of permanent malfunction, replace the engine control module (ECM).

Remedy as necessary.

Other information

- see **ENGINE CONTROL MODULE (ECM), REPLACING**

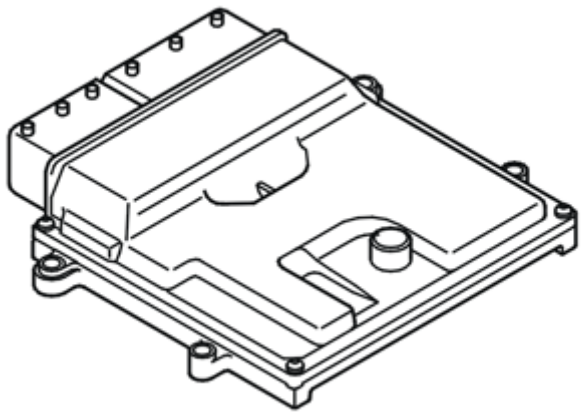

Fig. 124: Identifying Engine Control Module (ECM)
Courtesy of VOLVO CARS CORPORATION

- **Continue**

  Refer to **INFORMATION**

INFORMATION

FAULT-TRACING INFORMATION

In case of this defect, troubleshooting is not followed by verification.

The information can be displayed again or the fault-tracing for this fault can be interrupted.

ECM-P066900: PCM / ECM / TCM INTERNAL TEMPERATURE SENSOR CIRCUIT HIGH. GENERAL FAILURE INFORMATION. NO SUB TYPE INFORMATION (B6324S; 2007-2010)

DIAGNOSTIC TROUBLE CODE (DTC) INFORMATION ECM-P066900

Condition

Engine control module (ECM) measures the temperature internally in the control module using a temperature sensor. The control module checks the direct voltage from the sensor.

NOTE: The temperature sensor is integrated in the Engine control module (ECM).

The diagnostic trouble code (DTC) is stored if the control module detects that:

- The direct voltage is higher than 4.496 V.
- Incorrect value runs longer than 10 seconds.
- Incorrect value lasts for 2 or more subsequent driving cycles.

The control module's test for the diagnostic trouble code (DTC) starts in the event of:

- Ignition switch position II.

NOTE: The control module can only detect the fault once the test has been started and the diagnostic trouble code (DTC) is stored when the conditions are met.

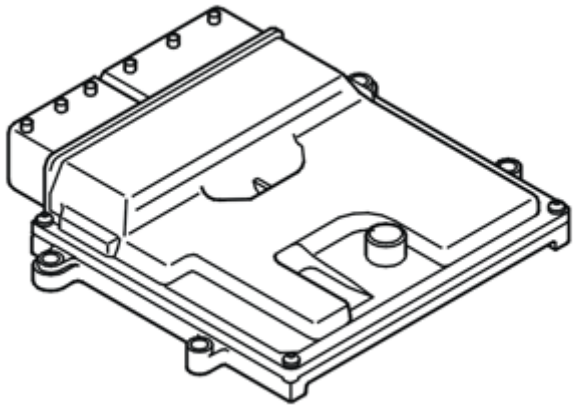

Fig. 125: Identifying Engine Control Module (ECM)
Courtesy of VOLVO CARS CORPORATION

Substitute Value

- The control module uses a constant internal temperature, +60 °C.
- The control module controls the cooling fan (FC) according to pre-defined speed.

Possible Source

- Damaged engine control module (ECM).

Fault symptom[s]

- None

FAULT-TRACING

see **FAULT-TRACING**

ECM-P066900: PCM / ECM / TCM INTERNAL TEMPERATURE SENSOR CIRCUIT HIGH. GENERAL FAILURE INFORMATION. NO SUB TYPE INFORMATION (B6324S5; 2011-2012)

DIAGNOSTIC TROUBLE CODE (DTC) INFORMATION ECM-P066900

see **DIAGNOSTIC TROUBLE CODE (DTC) INFORMATION ECM-P066900**

FAULT-TRACING

see **FAULT-TRACING**

ECM-P068500: ECM/PCM POWER RELAY CONTROL CIRCUIT/OPEN CIRCUIT. GENERAL MALFUNCTION INFORMATION. NO INFORMATION ON MALFUNCTION TYPE (B8444S; 2005-2011)

DIAGNOSTIC TROUBLE CODE (DTC) INFORMATION ECM-P068500

Condition

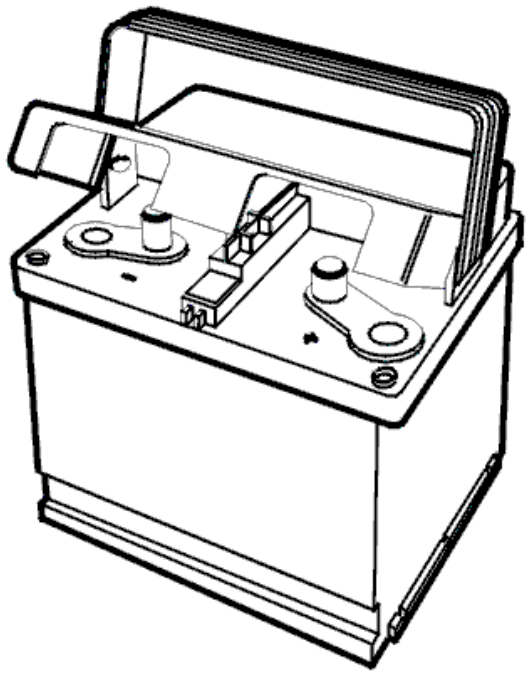

Fig. 126: Identifying Battery
Courtesy of VOLVO CARS CORPORATION

After the ignition has been turned off the engine control module (ECM) performs internal checks. Within 10 minutes the checks are completed. Then the control module cuts off the activation to the system relay's winding.

If the control module registers that the system relay still is active after activation has been cut off, the diagnostic trouble code is generated.

Substitute Value

- Nothing.

Possible Source

- Short-circuit to ground in the signal cable.
- The signal cable is short-circuited to voltage.
- Damaged system relay.

Fault symptom[s]

- Nothing.

FAULT-TRACING ECM-P068500

CHECKING THE COMPONENT AND WIRING

Fig. 127: Identifying Ignition In Off Position
Courtesy of VOLVO CARS CORPORATION

- Ignition off.
- Remove the system relay.

  Check the relay for short-circuiting between #30(1) and #86(2).

  HINT: When the relay is not drawn, there shall be open circuit between the system relay's #30(1) and #86(2). If not open circuit, the relay is damaged.

  Check the signal cable between the system relay's socket #85(4) and Engine Control Module (ECM) #B16 (#C16) for short-circuiting to ground.

  HINT: The system relay winding #86(2) is connected to kl:30 and #85(4) is connected to Engine Control Module (ECM) #B16 (#C6) and actively low.

  Remedy as necessary.

  Other information

  - see **CONNECTING THE BREAKOUT BOX**
  - see **SIGNAL SPECIFICATION, ENGINE CONTROL MODULE (ECM)**
  - see **REPLACING RELAYS IN THE MAIN FUSE BOX AND OTHER RELAYS IN THE ENGINE COMPARTMENT**

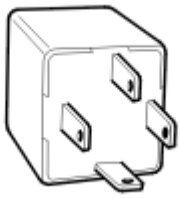

Fig. 128: Identifying Starter Motor Relay #2

Courtesy of VOLVO CARS CORPORATION

Has the fault been remedied?

- **YES**

  Refer to **VERIFICATION**

- **NO**

  Refer to **CHECKING THE COMPONENT AND WIRING**

CHECKING THE COMPONENT AND WIRING

Fig. 129: Identifying Ignition In Off Position
Courtesy of VOLVO CARS CORPORATION

Check if there is voltage in the system relay's socket #87(3). System relay's socket #87(3) shall be without voltage.

If there is voltage on the system relay's socket #87(3), then check connections and branchings from the socket's #87(3) for short-circuiting to voltage.

HINT: The system relay #30(1) is connected to kl:30 and #87(3) is the output.

Remedy as necessary.

Other information

- see **CONNECTING THE BREAKOUT BOX**
- see **SIGNAL SPECIFICATION, ENGINE CONTROL MODULE (ECM)**
- see **REPLACING RELAYS IN THE MAIN FUSE BOX AND OTHER RELAYS IN THE ENGINE COMPARTMENT**

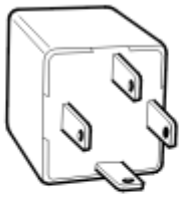

Fig. 130: Identifying Starter Motor Relay #2
Courtesy of VOLVO CARS CORPORATION

- **Continue**

  Refer to **VERIFICATION**

VERIFICATION

VERIFICATION, CONTINUED

HINT: After carrying out the repair, check that the fault has been remedied.

Fig. 131: Identifying Ignition In Off Position
Courtesy of VOLVO CARS CORPORATION

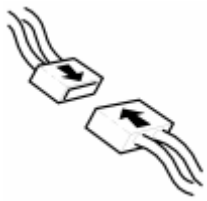

Fig. 132: Identifying Connector(s) Reinstallation
Courtesy of VOLVO CARS CORPORATION

- Ignition off.
- Reinstall the connectors, components etc.

- Ignition on.
- Loosen the connector for the mass air flow sensor. Check the voltage on the mass air flow sensor's connector #1. The voltage must be approximately battery voltage.
- Ignition off.

  Check the system relay when it releases (approx. 2-10 min after ignition off).

  Check the voltage on the mass air flow sensor's connector #1. There shall be no voltage when the system relay is not drawn.

Is the function OK?

- **YES**

  VERIFIED: Troubleshooting has been completed.

- **NO**

  Refer to **INFORMATION**

INFORMATION

FAULT-TRACING INFORMATION

The fault should have been detected and remedied. As this is not the case fault-tracing has failed.

Exit fault-tracing for this diagnostic trouble code (DTC) or make another attempt.

REPLACING RELAYS IN THE MAIN FUSE BOX AND OTHER RELAYS IN THE ENGINE COMPARTMENT

REMOVING

Remove:

- battery negative lead.
- relay. Position of relays according to: **INSTALLING** .

INSTALLING

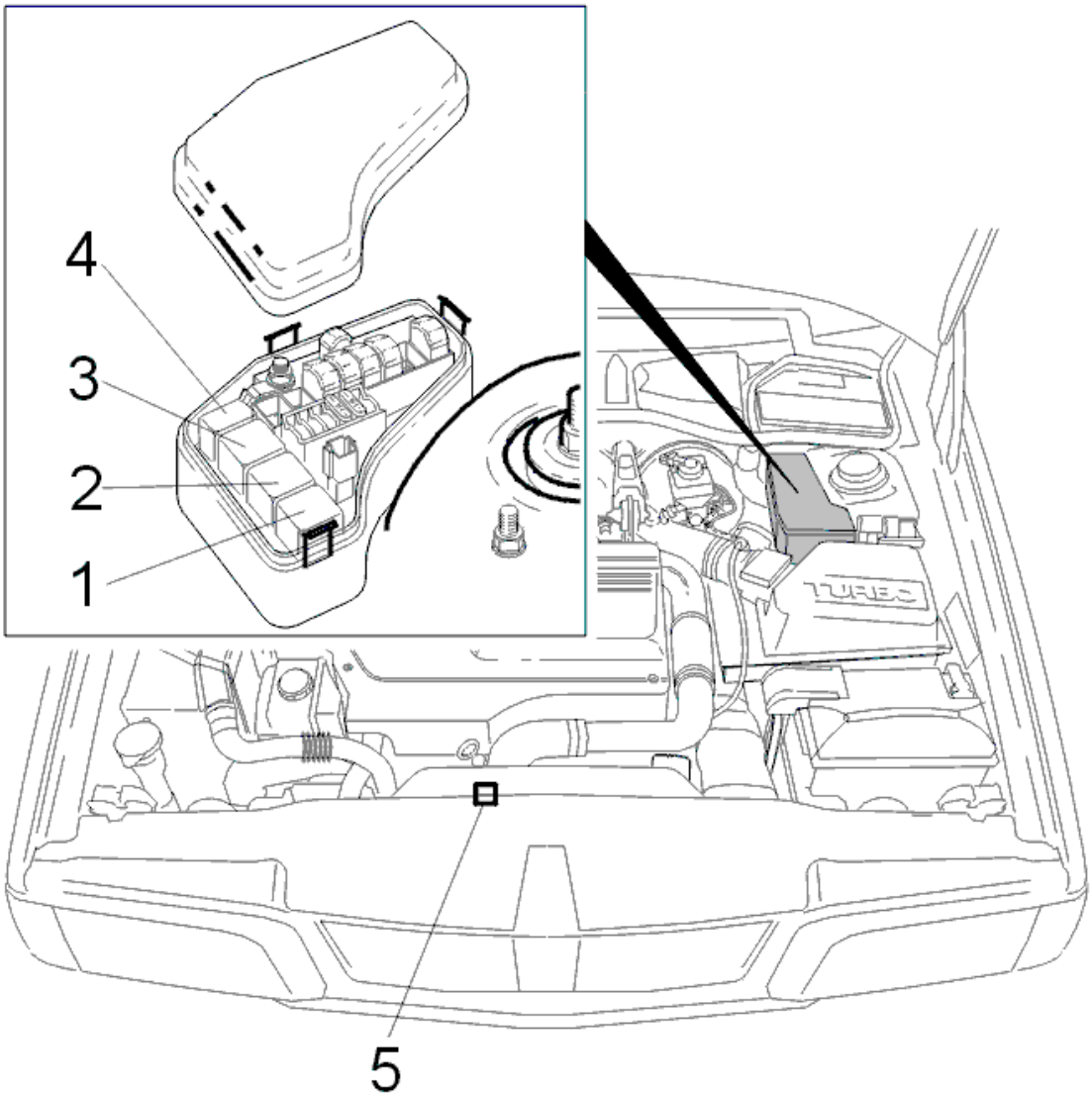

Fig. 133: Identifying Fuse Box
Courtesy of VOLVO CARS CORPORATION

Install relay.

Connect battery negative lead.

- Test relay function.

Relay position, engine compartment:

- 1) Main relay.
- 2) Pulsed secondary air injection system (PAIR) pump.
- 3) Starter relay.
- 4) Air conditioning (A/C) relay.

- 5) Engine cooling fan (FC).

ECM-P068B00 CONTROL MODULE INTERNAL POWER +5V. GENERAL FAILURE INFORMATION. NO SUB TYPE INFORMATION (B6324S; 2007-2010)

DIAGNOSTIC TROUBLE CODE (DTC) INFORMATION ECM-P068B00

Condition

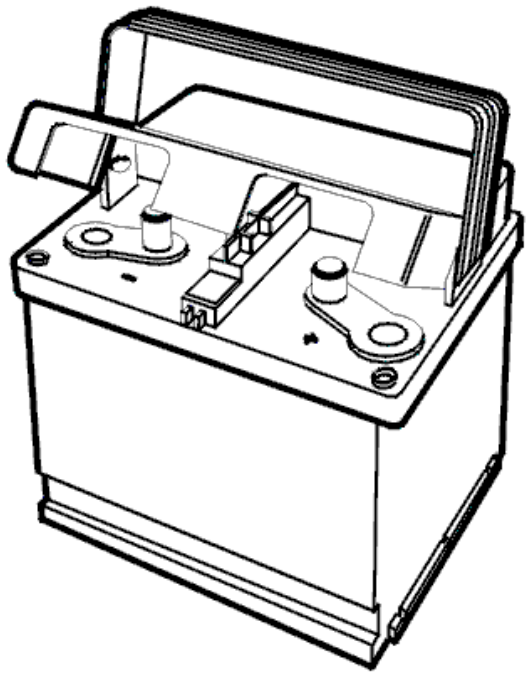

Fig. 134: Identifying Battery
Courtesy of VOLVO CARS CORPORATION

After the ignition has been turned off the engine control module (ECM) performs internal checks. Within 10 minutes the checks are completed. Then the control module cuts off the activation to the system relay's winding.

If the control module registers that the system relay still is active after activation has been cut off, the diagnostic trouble code is generated.

Substitute Value

- Nothing.

Possible Source

- Short-circuit to ground in the signal cable.

- The signal cable is short-circuited to voltage.
- Damaged system relay.

Fault symptom[s]

- Nothing.

FAULT-TRACING

CHECKING THE COMPONENT AND WIRING

Fig. 135: Identifying Ignition In Off Position
Courtesy of VOLVO CARS CORPORATION

- Ignition off.
- Remove the system relay.

  Check the relay for short-circuiting between #30(3) and #86(1).

  HINT: When the relay is not drawn, there shall be open circuit between the system relay's #30(3) and #86(1). If not open circuit, the relay is damaged.

  Check the signal cable between the system relay's socket #85(2) and Engine Control Module (ECM) #B16 (#C16) for short-circuiting to ground.

  HINT: Check the signal cable between the system relay's socket #85(2) and Engine Control Module (ECM) #B16 (#C16) for short-circuiting to ground.

  Remedy as necessary.

  Other information

  - see **CONNECTING THE BREAKOUT BOX**
  - see **SIGNAL SPECIFICATION**
  - see **CENTRAL ELECTRICAL UNIT ENGINE COMPARTMENT, REPLACING**

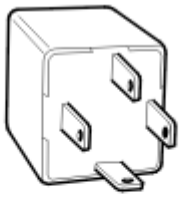

Fig. 136: Identifying Starter Motor Relay #2
Courtesy of VOLVO CARS CORPORATION

Has the fault been remedied?

- **YES**

  Refer to **VERIFICATION**

- **NO**

  Refer to **CHECKING THE COMPONENT AND WIRING**

CHECKING THE COMPONENT AND WIRING

Fig. 137: Identifying Ignition In Off Position
Courtesy of VOLVO CARS CORPORATION

Check if there is voltage in the system relay's socket #87(5). System relay's socket #87(5) should not be voltage fed.

If there is voltage on the system relay's socket #87(5), check connections and branchings from the socket's #87 (5) for short-circuiting to voltage.

HINT: The system relay #30(3) is connected to kl:30 and #87(5) is the output.

Remedy as necessary.

Other information

- see **CONNECTING THE BREAKOUT BOX**
- see **SIGNAL SPECIFICATION**
- see **CENTRAL ELECTRICAL UNIT ENGINE COMPARTMENT, REPLACING**

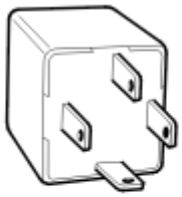

Fig. 138: Identifying Starter Motor Relay #2
Courtesy of VOLVO CARS CORPORATION

- **Continue**

  Refer to **VERIFICATION**

INFORMATION

FAULT-TRACING INFORMATION

The fault should have been detected and remedied. As this is not the case fault-tracing has failed.

Exit fault-tracing for this diagnostic trouble code (DTC) or make another attempt.

VERIFICATION

VERIFICATION, CONTINUED

HINT: After carrying out the repair, check that the fault has been remedied.

Fig. 139: Identifying Ignition In Off Position
Courtesy of VOLVO CARS CORPORATION

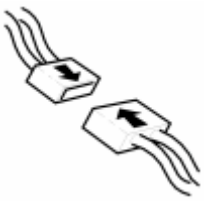

Fig. 140: Identifying Connector(s) Reinstallation
Courtesy of VOLVO CARS CORPORATION

- Ignition off.
- Reinstall the connectors, components etc.
- Ignition on.
- Loosen the connector for the mass air flow sensor. Check the voltage on the mass air flow sensor's connector #1. The voltage must be approximately battery voltage.
- Ignition off.

  Check the system relay when it releases (approx. 2-10 min after ignition off).

  Check the voltage on the mass air flow sensor's connector #1. There shall be no voltage when the system relay is not drawn.

Is the function OK?

- **YES**

  VERIFIED: Troubleshooting has been completed.

- **NO**

  Refer to **INFORMATION**

ECM-P068B00 CONTROL MODULE INTERNAL POWER +5V. GENERAL FAILURE INFORMATION. NO SUB TYPE INFORMATION (B6324S5; 2011-2012)

DIAGNOSTIC TROUBLE CODE (DTC) INFORMATION ECM-P068B00

see **DIAGNOSTIC TROUBLE CODE (DTC) INFORMATION ECM-P068B00**

FAULT-TRACING

see **FAULT-TRACING**

ECM-P069100: FAN 1 CONTROL CIRCUIT LOW. GENERAL FAILURE INFORMATION. NO SUB TYPE INFORMATION (B6324S; 2007-2010)

DIAGNOSTIC TROUBLE CODE (DTC) INFORMATION ECM-P069100

Condition

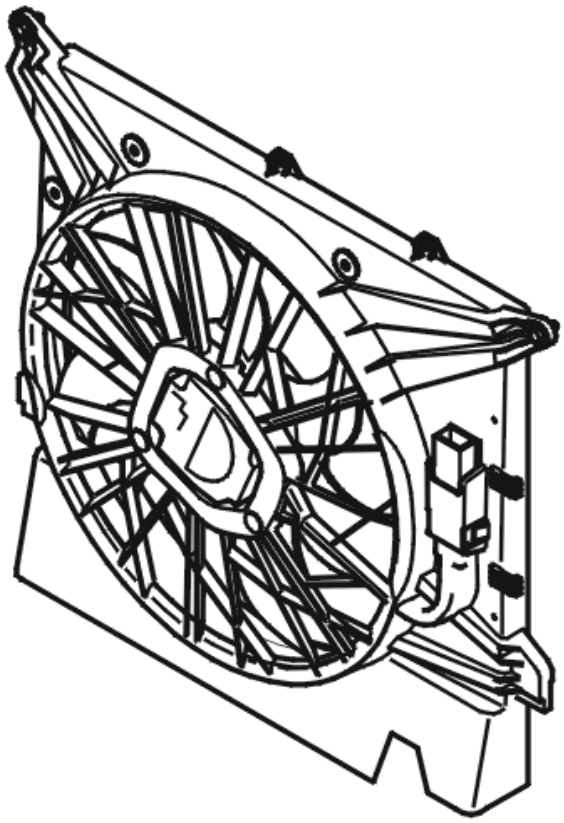

Fig. 141: Identifying Engine Cooling Fan
Courtesy of VOLVO CARS CORPORATION

The engine control module (ECM) sends a signal (speed request to the cooling fan) to the cooling fan module. The cooling fan module then regulates voltage to the fan motor at an infinitely variable rate. The diagnostic trouble code is generated if the engine control module (ECM) detects that the control signal between the cooling fan module and the engine control module (ECM) is too low.

The diagnostic trouble code can be diagnosed when the engine is running.

NOTE: **The electric cooling fan may have a post-running time of up to approx. 6 minutes after the engine has been shut off. The time for the electric cooling fan's post-running depends on the engine's temperature, temperature in the engine compartment as well as the pressure level in the AC system.**

Substitute Value

- Cooling fan off.

Possible Source

- The signal cable is short-circuited to ground.
- Open circuit on signal cable.
- Damaged cooling fan module.

Fault symptom[s]

- Overheated engine.
- Electric cooling fan does not operate

FAULT-TRACING

see **FAULT-TRACING**

ECM-P069100: FAN 1 CONTROL CIRCUIT LOW. GENERAL FAILURE INFORMATION. NO SUB TYPE INFORMATION (B6324S5; 2011-2012)

DIAGNOSTIC TROUBLE CODE (DTC) INFORMATION ECM-P069100

see **DIAGNOSTIC TROUBLE CODE (DTC) INFORMATION ECM-P069100**

FAULT-TRACING

see **FAULT-TRACING**

ECM-P069100: FAN 1 CONTROL CIRCUIT LOW. GENERAL FAULT INFORMATION. TYPE OF FAULT NOT SPECIFIED. (B8444S; 2005-2011)

DIAGNOSTIC TROUBLE CODE (DTC) INFORMATION ECM-P069100

Condition

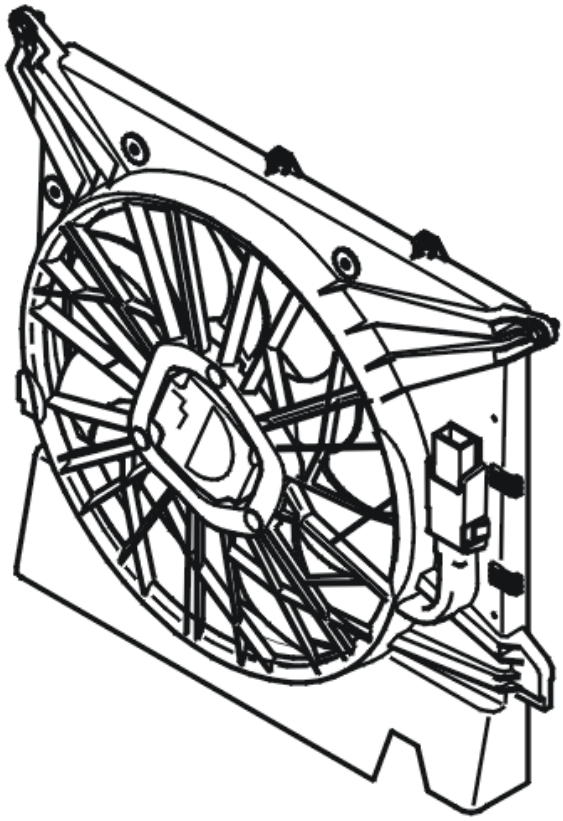

Fig. 142: Identifying Engine Cooling Fan
Courtesy of VOLVO CARS CORPORATION

The engine control module (ECM) sends a signal (speed request to the cooling fan) to the cooling fan module. The cooling fan module then regulates voltage to the fan motor at an infinitely variable rate. The diagnostic trouble code is generated if the engine control module (ECM) detects that the control signal between the cooling fan module and the engine control module (ECM) is too low.

The diagnostic trouble code can be diagnosed when the engine is running.

NOTE: **The electric cooling fan may have a post-running time of up to approx. 6 minutes after the engine has been shut off. The time for the electric cooling fan's post-running depends on the engine's temperature, temperature in the engine compartment as well as the pressure level in the AC system.**

Substitute Value

- Cooling fan off.

Possible Source

- The signal cable is short-circuited to ground.
- Open circuit on signal cable.

- Damaged cooling fan module.

Fault symptom[s]

- Overheated engine.
- Electric cooling fan does not operate

FAULT TRACING ECM-P069100

CHECKING COMPONENTS AND WIRING

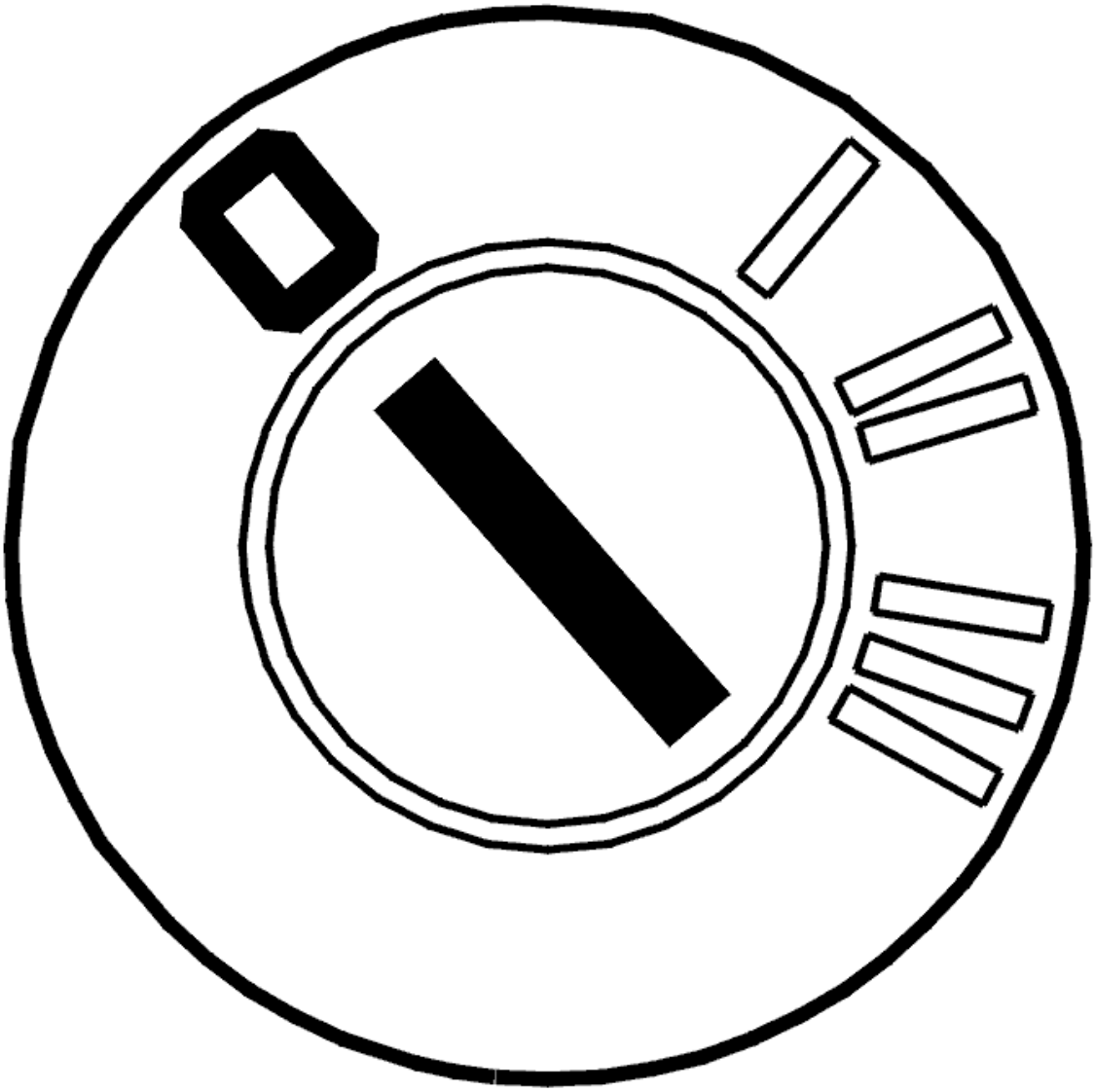

Fig. 143: Identifying Ignition OFF
Courtesy of VOLVO CARS CORPORATION

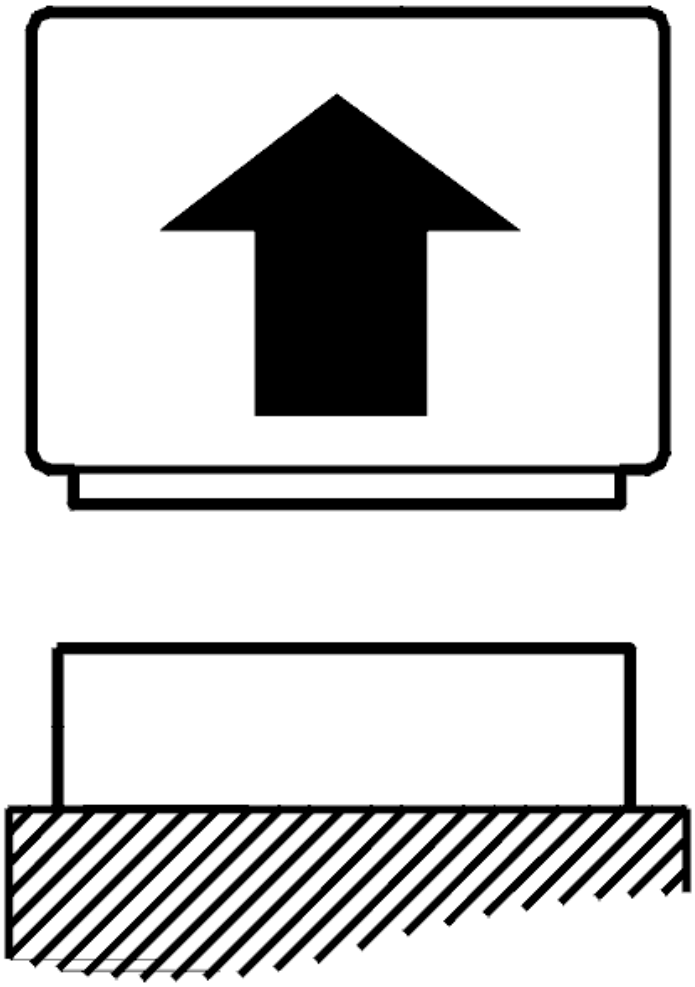

Fig. 144: Disconnecting Connector
Courtesy of VOLVO CARS CORPORATION

- Ignition off
- Disconnect the engine control module (ECM).

  Check the signal cable. Check for a short-circuit to ground. Check for an open-circuit.

  Check between:

  - Control module #B49 (#B59) and engine cooling fan #4.

  Activate the engine cooling fan using the VCT2000 (or appropriate scan tool).

  Remedy as necessary.

Other information

- see **CONNECTING THE BREAKOUT BOX**
- see **SIGNAL SPECIFICATION, ENGINE CONTROL MODULE (ECM)**
- see **CHECKING WIRING AND TERMINALS**

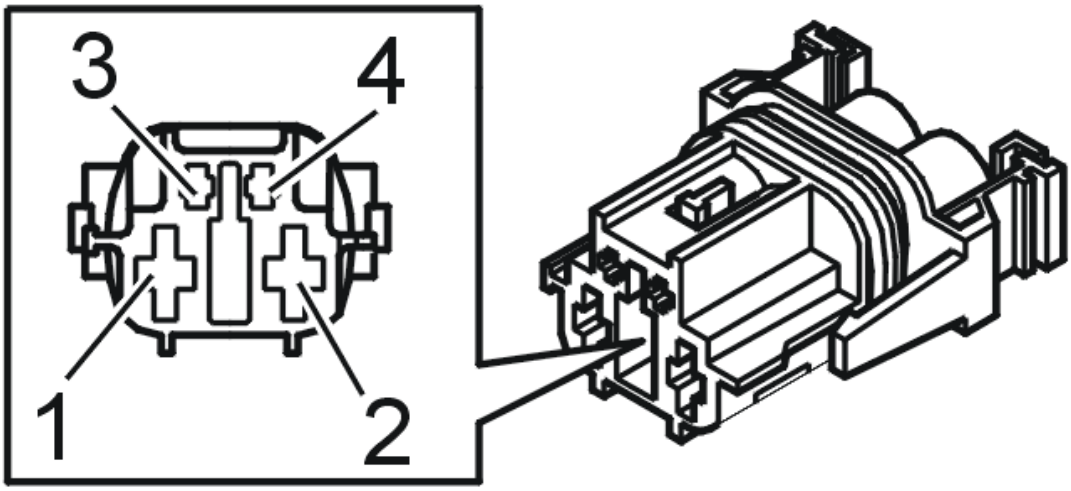

Fig. 145: Identifying Connector Terminals
Courtesy of VOLVO CARS CORPORATION

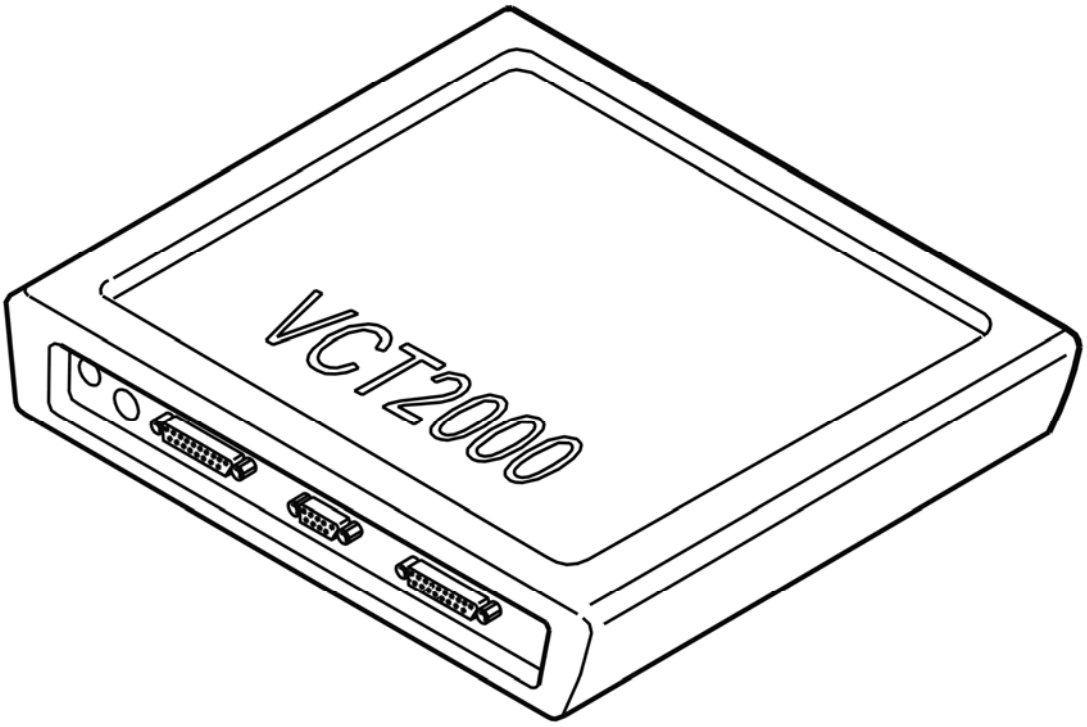

Fig. 146: Identifying VCT2000 Diagnostic Tool Symbol In VIDA
Courtesy of VOLVO CARS CORPORATION

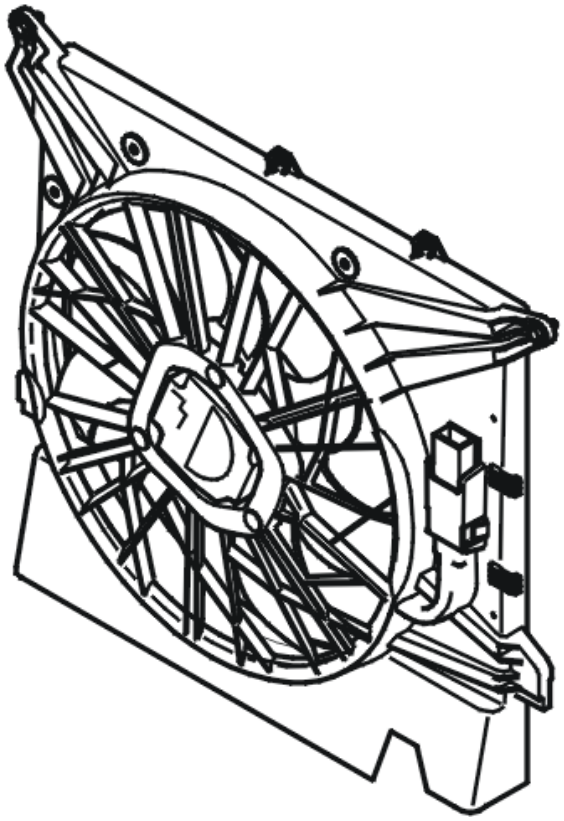

Fig. 147: Identifying Engine Cooling Fan
Courtesy of VOLVO CARS CORPORATION

- **Continue**

  Refer to **VERIFICATION**

VERIFICATION

VERIFICATION

HINT: After carrying out the repair, check that the fault has been remedied.

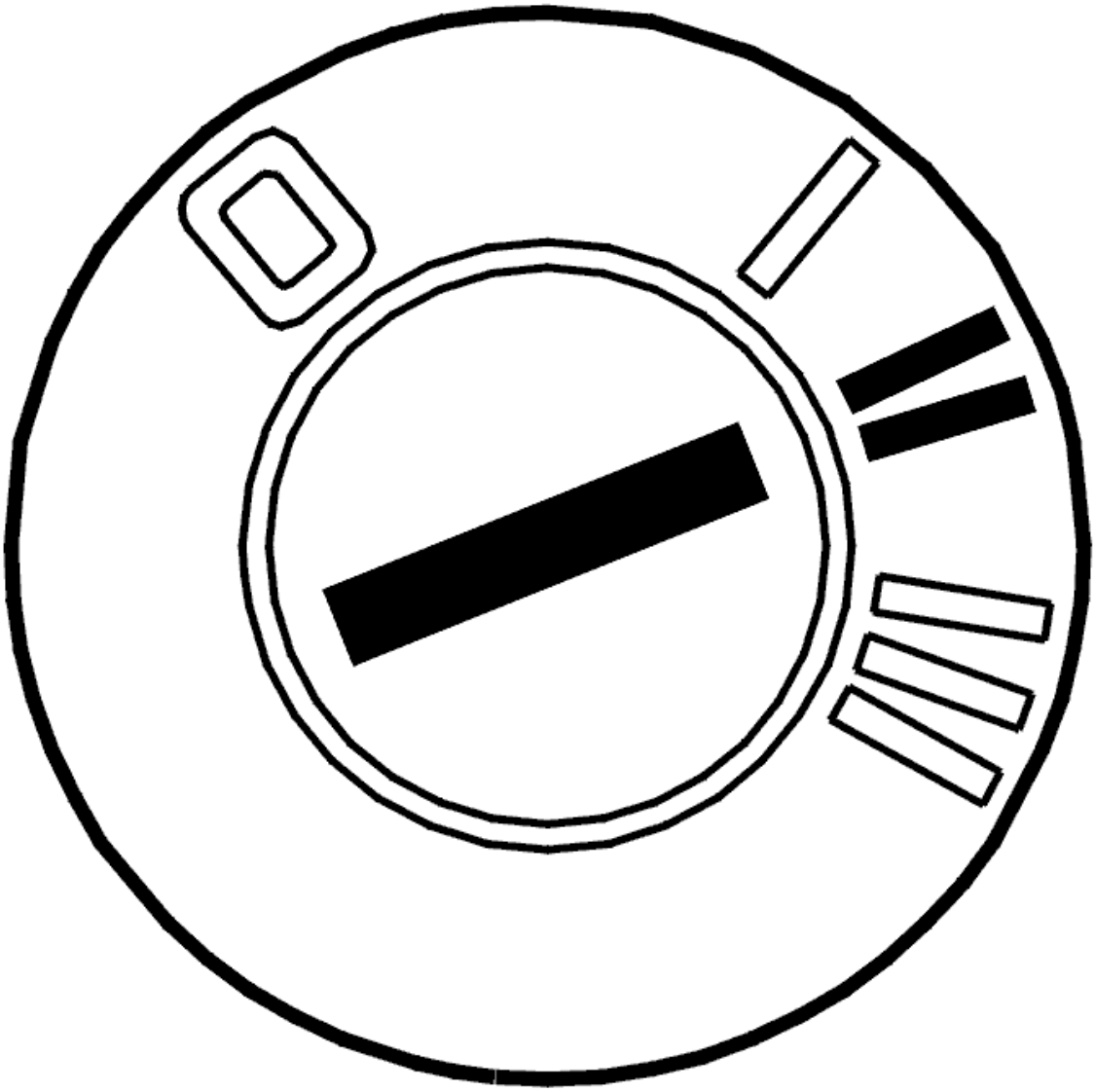

Fig. 148: Identifying Ignition ON
Courtesy of VOLVO CARS CORPORATION

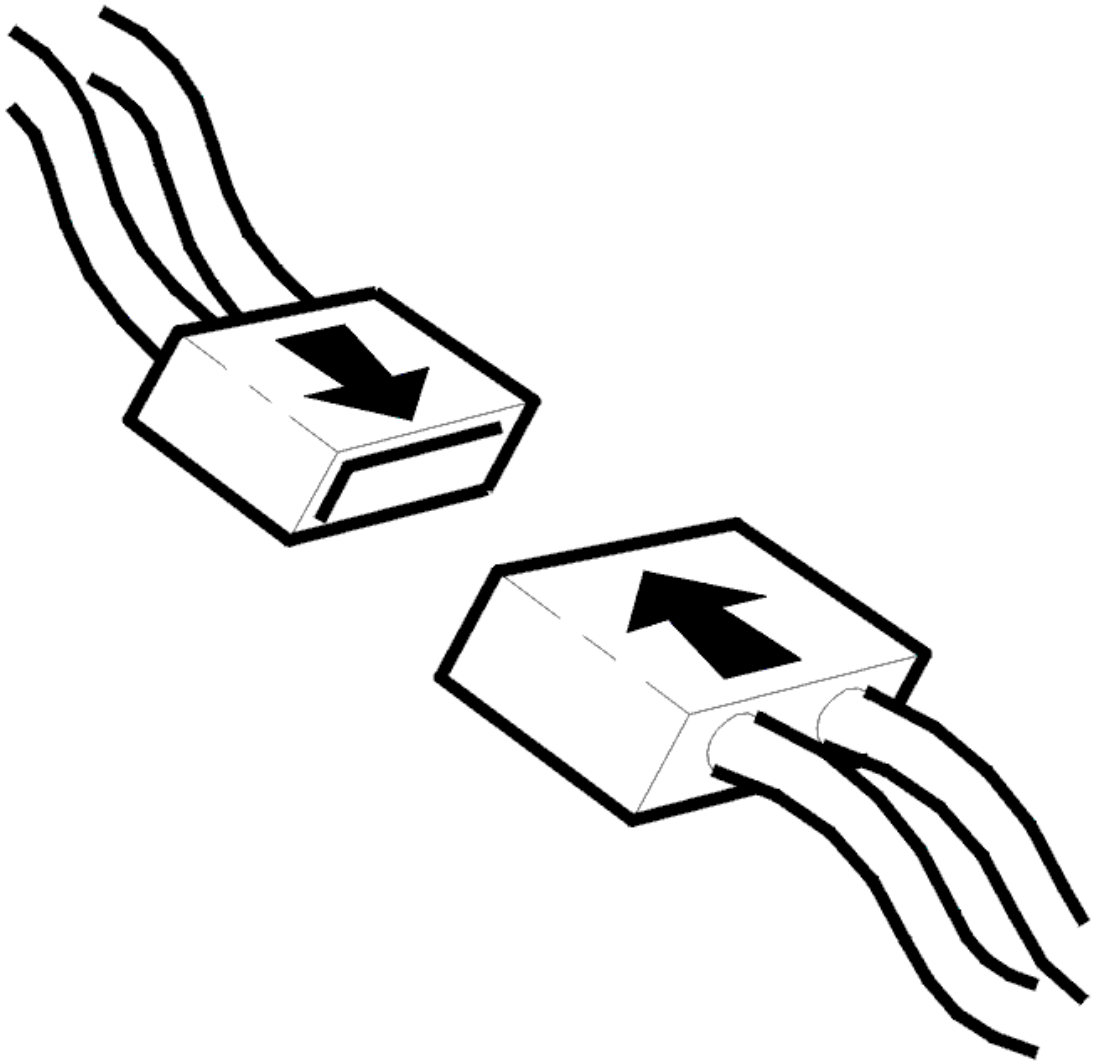

Fig. 149: Connecting Connector
Courtesy of VOLVO CARS CORPORATION

- Ignition off
- Reinstall the connectors, components etc.
- Ignition on

  Activate the engine cooling fan using the VCT2000 (or appropriate scan tool).

  Check that the engine cooling fan (FC) starts when activated.

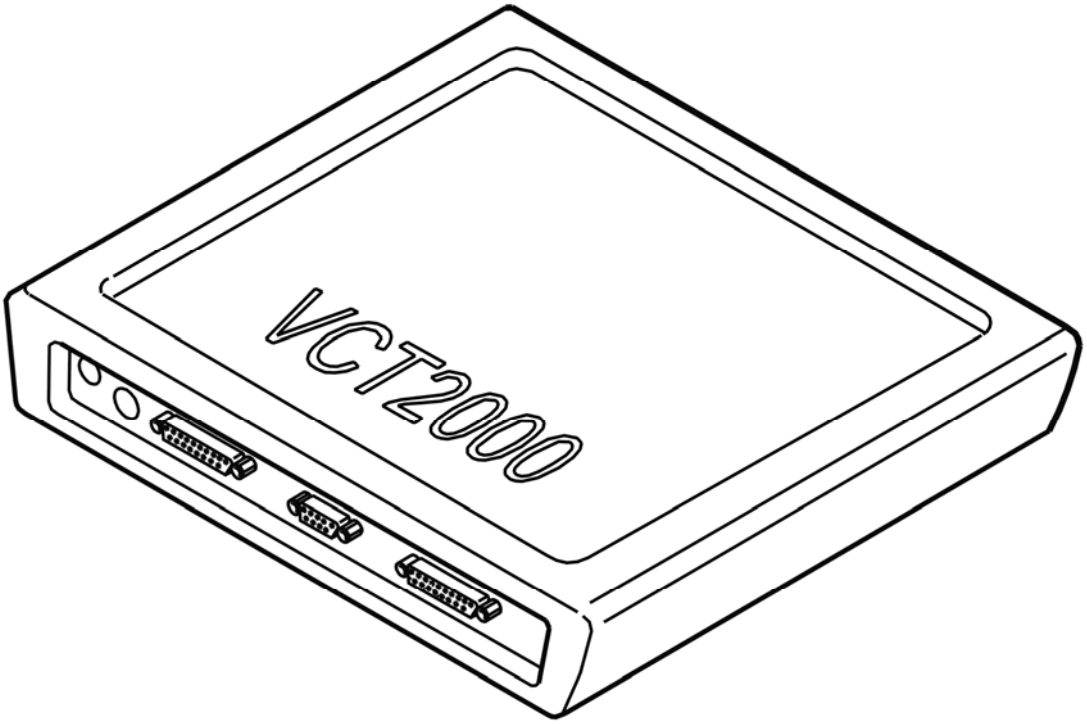

Fig. 150: Identifying VCT2000 Diagnostic Tool Symbol In VIDA
Courtesy of VOLVO CARS CORPORATION

Is the function OK?

- **YES**

  VERIFIED: Troubleshooting has been completed.

- **NO**

  Refer to **INFORMATION**

INFORMATION

FAULT-TRACING INFORMATION

The fault should have been detected and remedied. As this is not the case fault-tracing has failed.

Exit fault-tracing for this diagnostic trouble code (DTC) or make another attempt.

ECM-P069200: FAN 1 CONTROL CIRCUIT HIGH. GENERAL FAILURE INFORMATION. NO SUB TYPE INFORMATION (B6324S; 2007-2010)

DIAGNOSTIC TROUBLE CODE (DTC) INFORMATION ECM-P069200

Condition

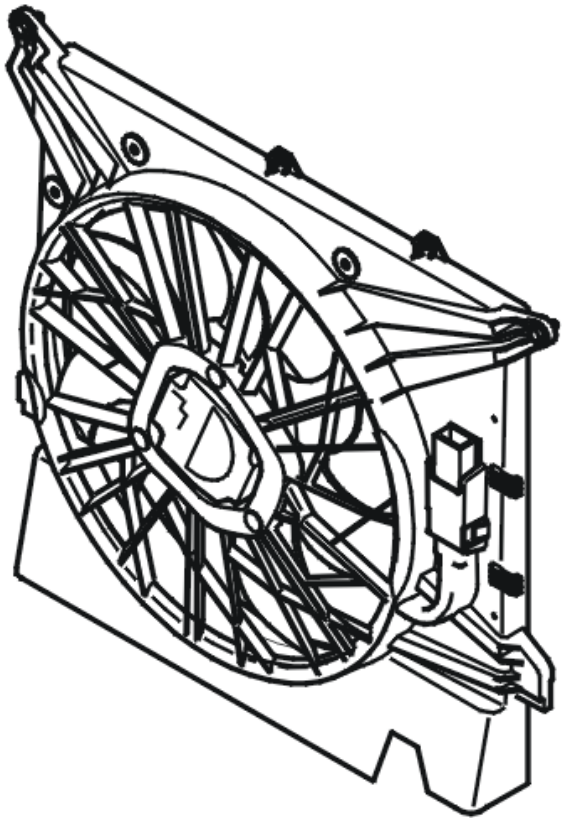

Fig. 151: Identifying Engine Cooling Fan
Courtesy of VOLVO CARS CORPORATION

The engine control module (ECM) sends a signal (speed request to the cooling fan) to the cooling fan module. The cooling fan module then regulates voltage to the fan motor at an infinitely variable rate. The diagnostic trouble code is generated if the engine control module (ECM) detects that the control signal between the cooling fan module and the engine control module (ECM) is too high.

The diagnostic trouble code can be diagnosed when the engine is running.

NOTE: **The electric cooling fan may have a post-running time of up to approx. 6 minutes after the engine has been shut off. The time for the electric cooling fan's post-running depends on the engine's temperature, temperature in the engine compartment as well as the pressure level in the AC system.**

Substitute Value

- Cooling fan off.

Possible Source

- The signal cable is short-circuited to supply voltage.
- Damaged cooling fan module.

Fault symptom[s]

- Overheated engine.
- Electric cooling fan does not operate

FAULT-TRACING

see **FAULT-TRACING**

ECM-P069200: FAN 1 CONTROL CIRCUIT HIGH. GENERAL FAILURE INFORMATION. NO SUB TYPE INFORMATION (B6324S5; 2011-2012)

DIAGNOSTIC TROUBLE CODE (DTC) INFORMATION ECM-P069200

see **DIAGNOSTIC TROUBLE CODE (DTC) INFORMATION ECM-P069200**

FAULT-TRACING

see **FAULT-TRACING**

ECM-P069200: FAN 1 CONTROL CIRCUIT HIGH. GENERAL FAULT INFORMATION. TYPE OF FAULT NOT SPECIFIED. (B8444S; 2005-2011)

DIAGNOSTIC TROUBLE CODE (DTC) INFORMATION ECM-P069200

Condition

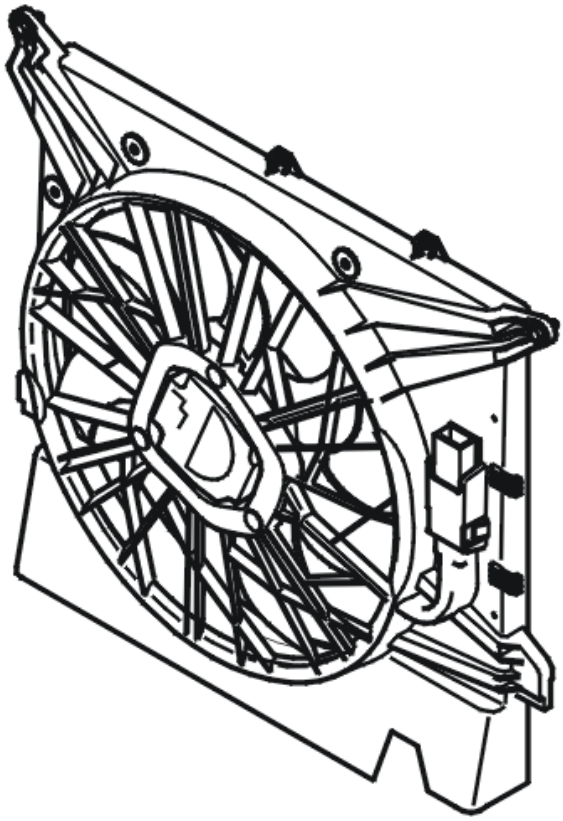

Fig. 152: Identifying Engine Cooling Fan
Courtesy of VOLVO CARS CORPORATION

The engine control module (ECM) sends a signal (speed request to the cooling fan) to the cooling fan module. The cooling fan module then regulates voltage to the fan motor at an infinitely variable rate. The diagnostic trouble code is generated if the engine control module (ECM) detects that the control signal between the cooling fan module and the engine control module (ECM) is too high.

The diagnostic trouble code can be diagnosed when the engine is running.

NOTE: **The electric cooling fan may have a post-running time of up to approx. 6 minutes after the engine has been shut off. The time for the electric cooling fan's post-running depends on the engine's temperature, temperature in the engine compartment as well as the pressure level in the AC system.**

Substitute Value

- Cooling fan off.

Possible Source

- The signal cable is short-circuited to supply voltage.
- Damaged cooling fan module.

Fault symptom[s]

- Overheated engine.
- Electric cooling fan does not operate

FAULT TRACING ECM-P069200

CHECKING COMPONENTS AND WIRING

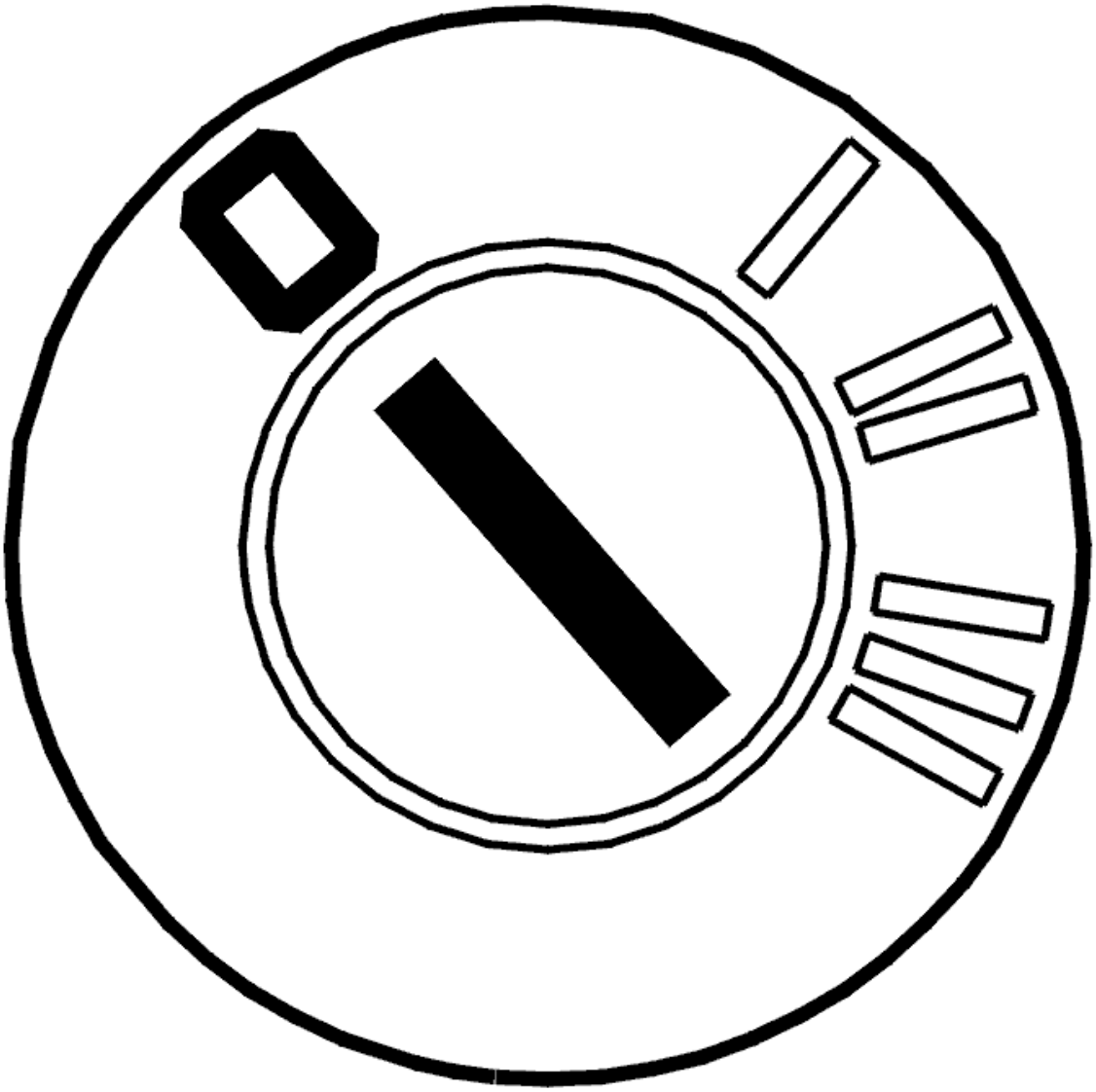

Fig. 153: Identifying Ignition OFF
Courtesy of VOLVO CARS CORPORATION

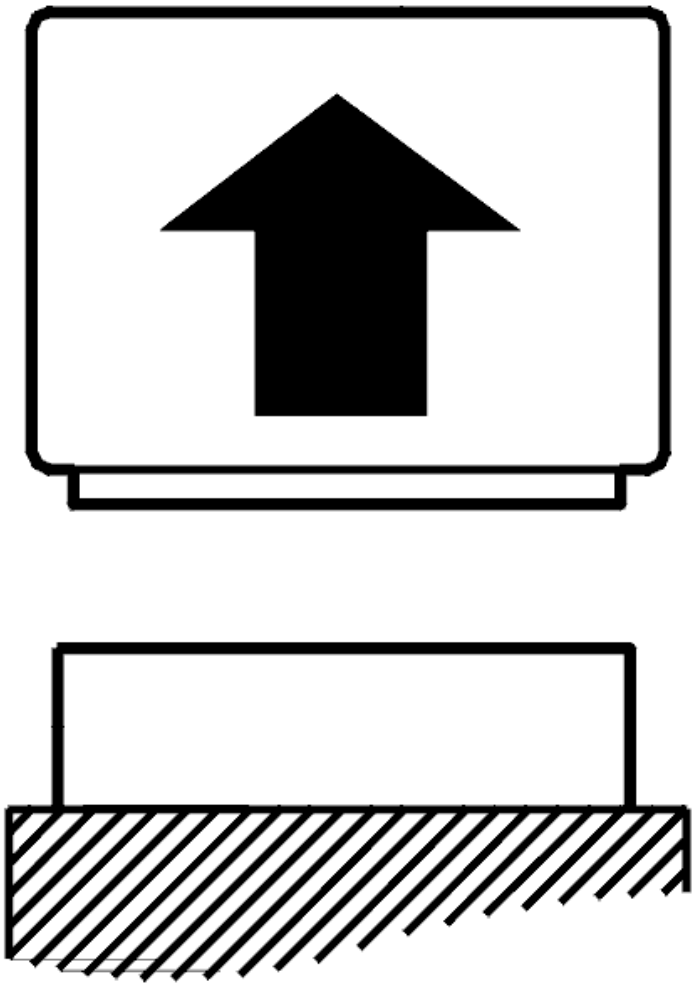

Fig. 154: Disconnecting Connector
Courtesy of VOLVO CARS CORPORATION

- Ignition off
- Disconnect the engine control module (ECM).

  Check the signal cable. Check for a short-circuit to supply voltage.

  Check between:

  - Control module #B49 (#B59) and engine cooling fan #4.

  Activate the engine cooling fan using the VCT2000 (or appropriate scan tool).

  Remedy as necessary.

Other information

- see **CONNECTING THE BREAKOUT BOX**
- see **SIGNAL SPECIFICATION, ENGINE CONTROL MODULE (ECM)**
- see **CHECKING WIRING AND TERMINALS**

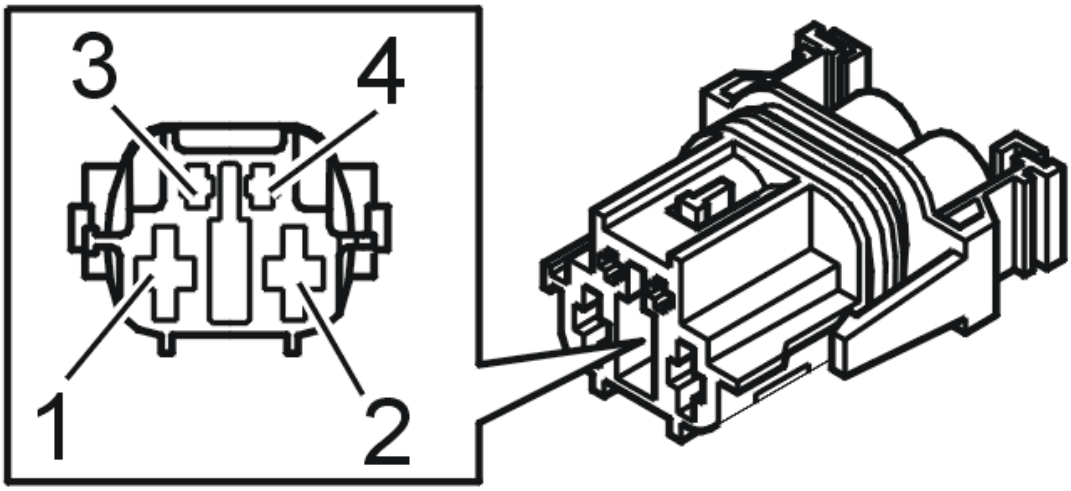

Fig. 155: Identifying Connector Terminals
Courtesy of VOLVO CARS CORPORATION

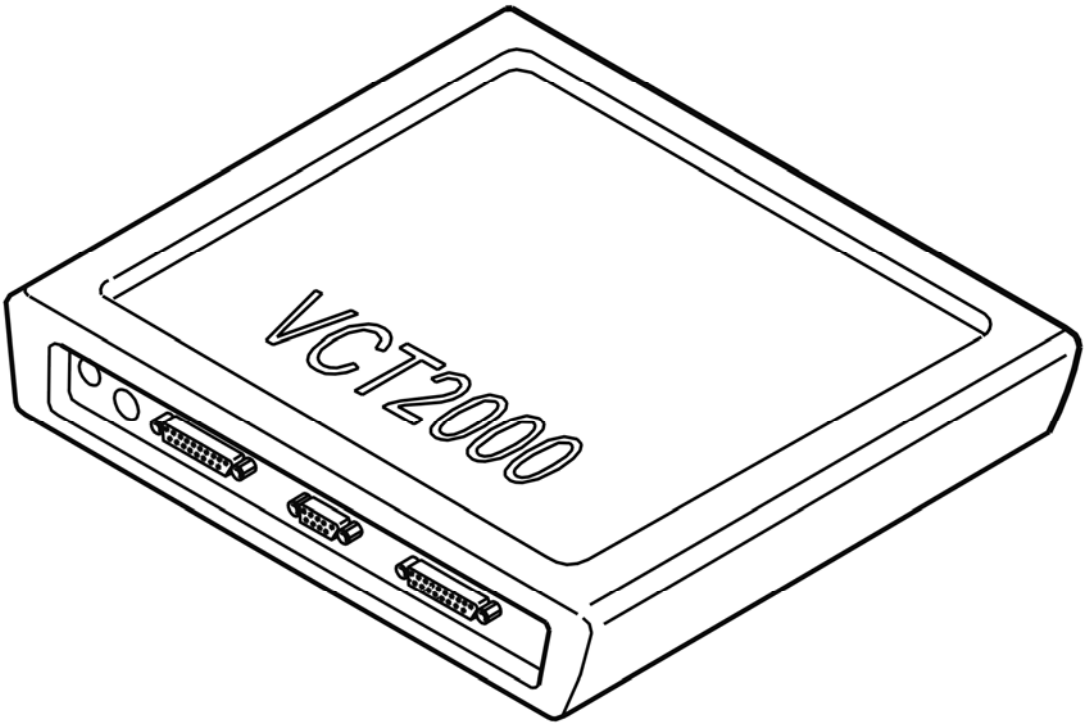

Fig. 156: Identifying VCT2000 Diagnostic Tool Symbol In VIDA
Courtesy of VOLVO CARS CORPORATION

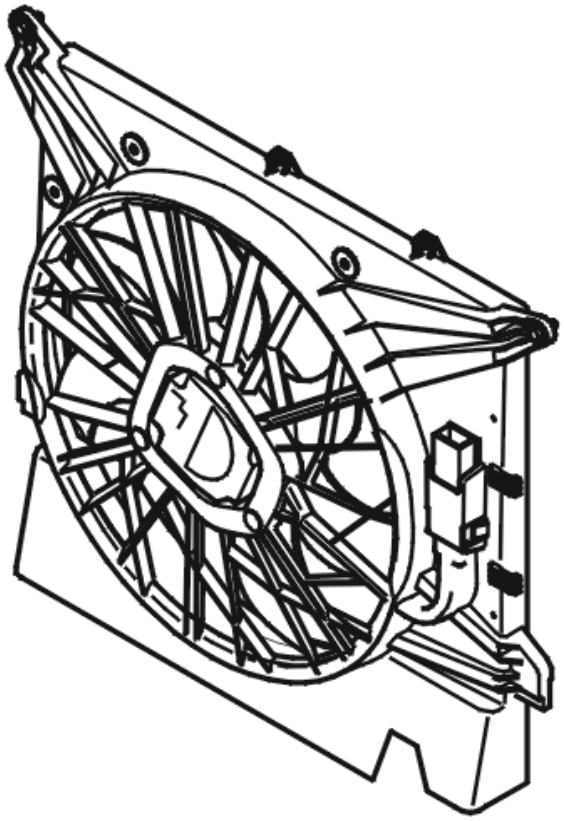

Fig. 157: Identifying Engine Cooling Fan
Courtesy of VOLVO CARS CORPORATION

- **Continue**

  Refer to **VERIFICATION**

VERIFICATION

VERIFICATION

HINT: After carrying out the repair, check that the fault has been remedied.

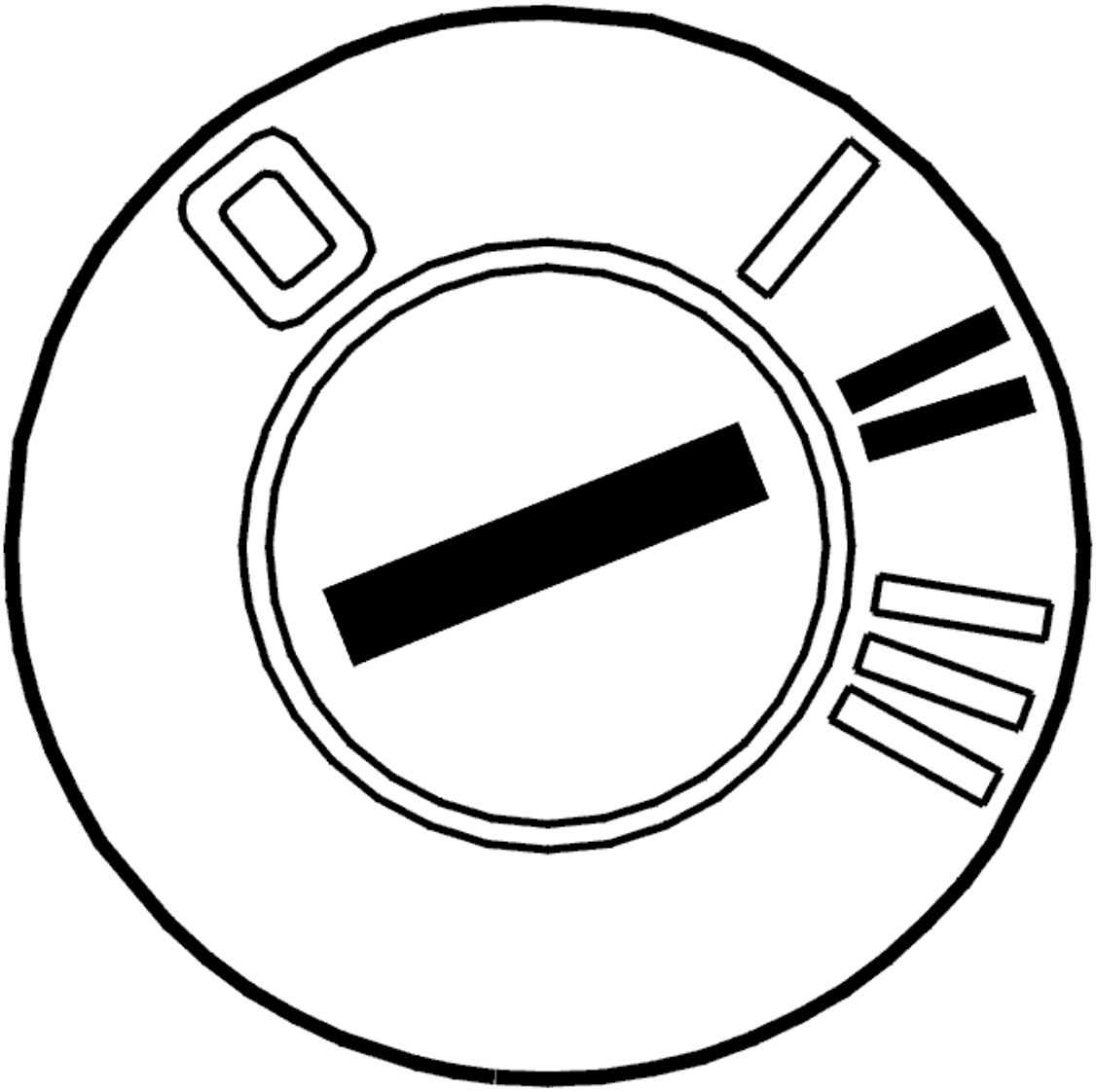

Fig. 158: Identifying Ignition ON
Courtesy of VOLVO CARS CORPORATION

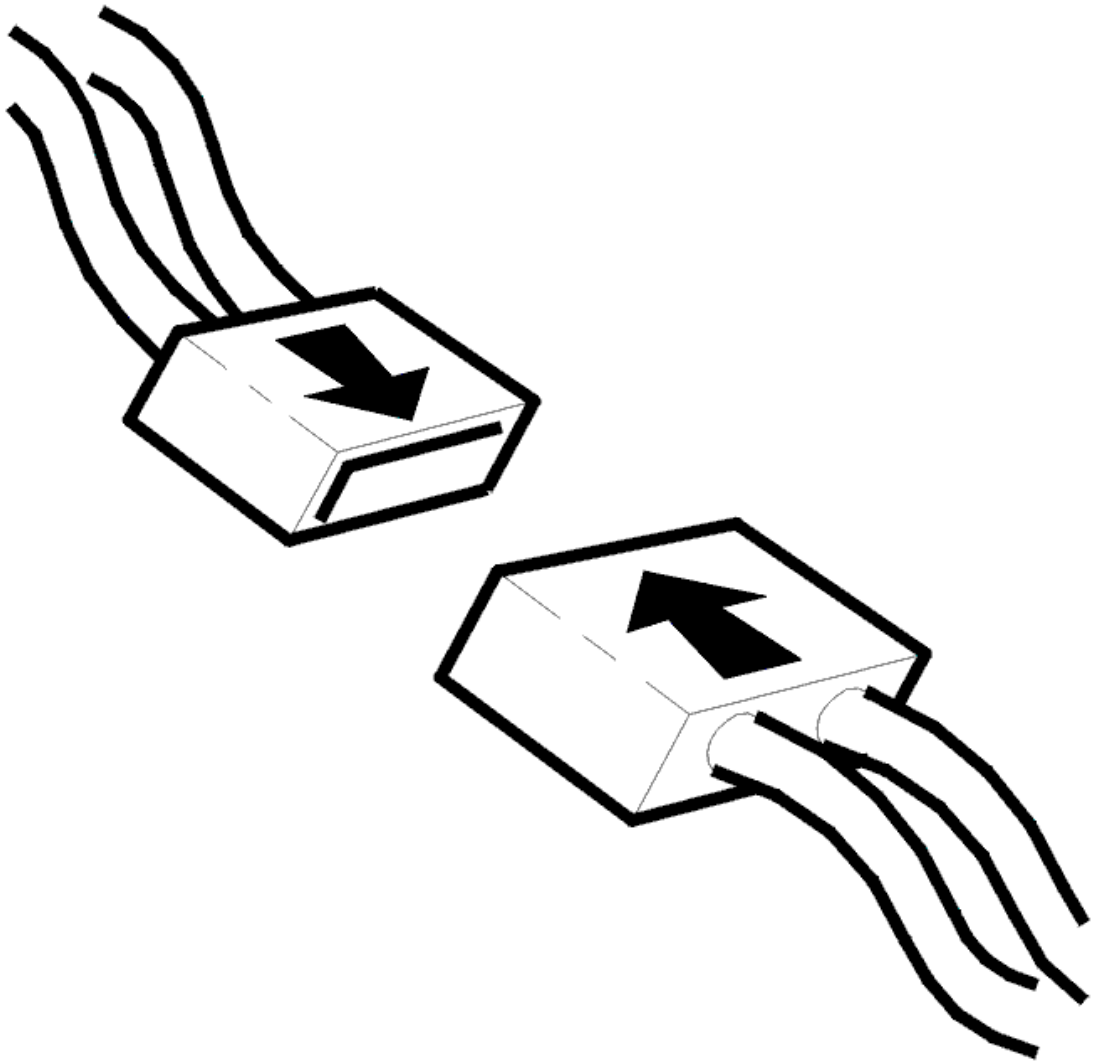

Fig. 159: Connecting Connector
Courtesy of VOLVO CARS CORPORATION

- Ignition off
- Reinstall the connectors, components etc.
- Ignition on

  Activate the engine cooling fan using the VCT2000 (or appropriate scan tool).

  Check that the engine cooling fan (FC) starts when activated.

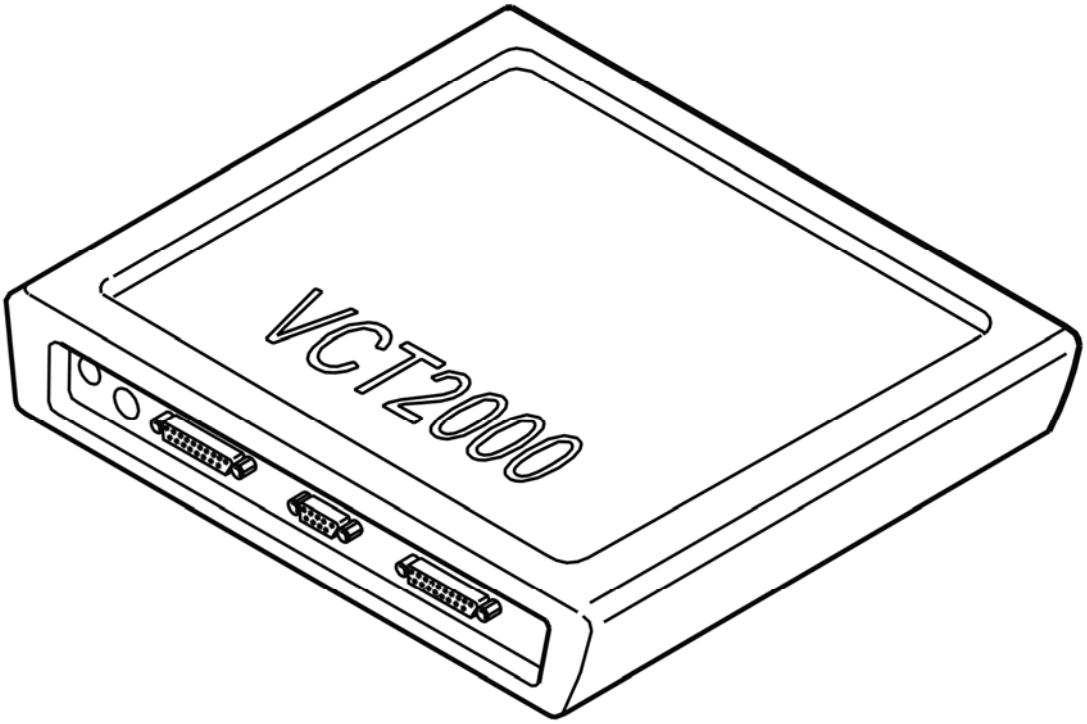

Fig. 160: Identifying VCT2000 Diagnostic Tool Symbol In VIDA
Courtesy of VOLVO CARS CORPORATION

Is the function OK?

- **YES**

  VERIFIED: Troubleshooting has been completed.

- **NO**

  Refer to **INFORMATION**

INFORMATION

FAULT-TRACING INFORMATION

The fault should have been detected and remedied. As this is not the case fault-tracing has failed.

Exit fault-tracing for this diagnostic trouble code (DTC) or make another attempt.

ECM-P06A000 VARIABLE A/C COMPRESSOR CONTROL CIRCUIT. GENERAL FAILURE INFORMATION. NO SUB TYPE INFORMATION

(B6324S; 2008-2010)

DIAGNOSTIC TROUBLE CODE (DTC) INFORMATION

see **DIAGNOSTIC TROUBLE CODE (DTC) INFORMATION**

FAULT-TRACING

see **FAULT-TRACING**

ECM-P06A000 VARIABLE A/C COMPRESSOR CONTROL CIRCUIT. GENERAL FAILURE INFORMATION. NO SUB TYPE INFORMATION (B6324S5; 2011-2012)

DIAGNOSTIC TROUBLE CODE (DTC) INFORMATION

see **DIAGNOSTIC TROUBLE CODE (DTC) INFORMATION**

FAULT-TRACING

see **FAULT-TRACING**

ECM-P06A100 VARIABLE A/C COMPRESSOR CONTROL CIRCUIT LOW. GENERAL FAILURE INFORMATION. NO SUB TYPE INFORMATION (B6324S; 2008-2010)

DIAGNOSTIC TROUBLE CODE (DTC) INFORMATION

see **DIAGNOSTIC TROUBLE CODE (DTC) INFORMATION**

FAULT-TRACING

see **FAULT-TRACING**

ECM-P06A100 VARIABLE A/C COMPRESSOR CONTROL CIRCUIT LOW. GENERAL FAILURE INFORMATION. NO SUB TYPE INFORMATION (B6324S5; 2011-2012)

DIAGNOSTIC TROUBLE CODE (DTC) INFORMATION

see **DIAGNOSTIC TROUBLE CODE (DTC) INFORMATION**

FAULT-TRACING

see **FAULT-TRACING**

ECM-P06A200 VARIABLE A/C COMPRESSOR CONTROL CIRCUIT HIGH. GENERAL FAILURE INFORMATION. NO SUB TYPE INFORMATION (B6324S; 2008-2010)

DIAGNOSTIC TROUBLE CODE (DTC) INFORMATION

see **DIAGNOSTIC TROUBLE CODE (DTC) INFORMATION**

FAULT-TRACING

see **FAULT-TRACING**

ECM-P06A200 VARIABLE A/C COMPRESSOR CONTROL CIRCUIT HIGH. GENERAL FAILURE INFORMATION. NO SUB TYPE INFORMATION (B6324S5; 2011-2012)

DIAGNOSTIC TROUBLE CODE (DTC) INFORMATION

see **DIAGNOSTIC TROUBLE CODE (DTC) INFORMATION**

FAULT-TRACING

see **FAULT-TRACING**

ECM-P070000: TRANSMISSION CONTROL SYSTEM (MIL REQUEST). GENERAL FAILURE INFORMATION. NO SUB TYPE INFORMATION (B6324S; 2007-2010)

DIAGNOSTIC TROUBLE CODE (DTC) INFORMATION ECM-P070000

Condition

This diagnostic trouble code is only for the purpose of indicating that there is one or several diagnostic trouble codes that affect the emissions registered in the transmission control module (TCM). If transmission control module (TCM) requests that engine control module (ECM) shall activate the malfunction indicator light, the diagnostic trouble code is generated in engine control module (ECM).

Substitute Value

- Nothing.

Possible Source

- One or several diagnostic trouble codes registered in transmission control module (TCM).

Fault symptom[s]

- Malfunction indicator lamp (MIL) lit.

FAULT-TRACING

INFORMATION

No fault-tracing has been developed for this diagnostic trouble code (DTC).

The diagnostic trouble code (DTC) for this fault is first stored in the Transmission control module (TCM), then in the Engine control module (ECM). This diagnostic trouble code (DTC) can first be erased when the root fault has been remedied and the diagnostic trouble code (DTC) for the root fault has been erased.

For further information on this diagnostic trouble code, see Diagnostic trouble code (DTC) information.

ECM-P070000: TRANSMISSION CONTROL SYSTEM (MIL REQUEST). GENERAL FAILURE INFORMATION. NO SUB TYPE INFORMATION (B6324S5; 2011-2012)

DIAGNOSTIC TROUBLE CODE (DTC) INFORMATION ECM-P070000

see **DIAGNOSTIC TROUBLE CODE (DTC) INFORMATION ECM-P070000**

FAULT-TRACING

see **FAULT-TRACING**

ECM-P073700: TCM ENGINE RPM OUTPUT CIRCUIT. GENERAL MALFUNCTION INFORMATION. NO INFORMATION ON MALFUNCTION TYPE (B8444S; 2005-2011)

DIAGNOSTIC TROUBLE CODE (DTC) INFORMATION ECM-P073700

Condition

Transmission control module (TCM) can request increased RPM before a downshift. Request is sent to engine control module (ECM) via the CAN-network.

If engine control module (ECM) for some reason does not allow this RPM increase, e. g., vehicle speed too low, the diagnostic trouble code is generated.

The diagnostic trouble code is only an information code, confirming that engine control module (ECM) has denied requested RPM increase.

Substitute Value

- Nothing.

Possible Source

- None.

Fault symptom[s]

- Poor gear shifting quality

FAULT-TRACING INFORMATION

see **FAULT-TRACING INFORMATION**

ECM-P073768: TCM ENGINE SPEED OUTPUT CIRCUIT. ALGORITHM BASED FAILURES. EVENT INFORMATION (B6324S; 2007-2010)

DIAGNOSTIC TROUBLE CODE (DTC) INFORMATION ECM-P073768

Condition

Transmission control module (TCM) can request increased RPM before a downshift. Request is sent to engine control module (ECM) via the CAN-network.

If engine control module (ECM) for some reason does not allow this RPM increase, e. g., vehicle speed too low, the diagnostic trouble code is generated.

The diagnostic trouble code is only an information code, confirming that engine control module (ECM) has denied requested RPM increase.

Substitute Value

- Nothing.

Possible Source

- None.

Fault symptom[s]

- Poor gear shifting quality

FAULT-TRACING INFORMATION

see **FAULT-TRACING INFORMATION**

ECM-P073768: TCM ENGINE SPEED OUTPUT CIRCUIT. ALGORITHM BASED FAILURES. EVENT INFORMATION (B6324S5; 2011-2012)

DIAGNOSTIC TROUBLE CODE (DTC) INFORMATION ECM-P073768

see **DIAGNOSTIC TROUBLE CODE (DTC) INFORMATION ECM-P073768**

FAULT-TRACING INFORMATION

see **FAULT-TRACING INFORMATION**

ECM-P085023: PARK / NEUTRAL SWITCH INPUT CIRCUIT. GENERAL SIGNAL FAILURES. SIGNAL STUCK LOW (B6324S; 2007-2010)

DIAGNOSTIC TROUBLE CODE (DTC) INFORMATION ECM-P085023

Condition

Engine control module (ECM) uses signals from Transmission control module (TCM) to decide which position the gear selector is in.

This is done so that Engine control module (ECM) can decide if engine start is permitted or not.

Engine control module (ECM) checks the CAN-signal from transmission control module (TCM) compared to the signal that passes via the direct-connected cable from the gear selector.

The diagnostic trouble code (DTC) is stored if the control module detects that:

- The signal on the direct-connected cable indicates that start is allowed, but the signal coming via CAN indicates the opposite.

The control module's test for the diagnostic trouble code (DTC) starts in the event of:

- Ignition switch position II.

NOTE: **The control module can only detect the fault once the test has been started and the diagnostic trouble code (DTC) is stored when the conditions are met.**

Substitute Value

- The signal coming via CAN is used.

Possible Source

- Trace the cause of the fault in the Transmission Control Module (TCM).

Fault symptom[s]

- Autostart; No Functionality
- Activation of starter engine; Delayed

FAULT-TRACING

see **FAULT-TRACING**

ECM-P085023: PARK / NEUTRAL SWITCH INPUT CIRCUIT. GENERAL SIGNAL FAILURES. SIGNAL STUCK LOW (B6324S5; 2011-2012)

DIAGNOSTIC TROUBLE CODE (DTC) INFORMATION ECM-P085023

see **DIAGNOSTIC TROUBLE CODE (DTC) INFORMATION ECM-P085023**

FAULT-TRACING

see **FAULT-TRACING**

ECM-P085024: PARK / NEUTRAL SWITCH INPUT CIRCUIT. GENERAL SIGNAL FAILURES. SIGNAL STUCK HIGH (B6324S; 2007-2010)

DIAGNOSTIC TROUBLE CODE (DTC) INFORMATION ECM-P085024

Condition

Engine control module (ECM) uses signals from Transmission control module (TCM) to decide which position the gear selector is in.

This is done so that Engine control module (ECM) can decide if engine start is permitted or not.

Engine control module (ECM) checks the CAN-signal from transmission control module (TCM) compared to the signal that passes via the direct-connected cable from the gear selector.

The diagnostic trouble code (DTC) is stored if the control module detects that:

- The signal coming via CAN indicates that start is allowed, but the signal on the direct-connected cable indicates the opposite.

The control module's test for the diagnostic trouble code (DTC) starts in the event of:

- Ignition switch position II.

NOTE: The control module can only detect the fault once the test has been started and the diagnostic trouble code (DTC) is stored when the conditions are met.

Substitute Value

- The signal coming via CAN is used.

Possible Source

- Trace the cause of the fault in the Transmission Control Module (TCM).

Fault symptom[s]

- Autostart; No Functionality
- Activation of starter engine; Delayed

FAULT-TRACING

see **FAULT-TRACING**

ECM-P085024: PARK / NEUTRAL SWITCH INPUT CIRCUIT. GENERAL SIGNAL FAILURES. SIGNAL STUCK HIGH (B6324S5; 2011-2012)

DIAGNOSTIC TROUBLE CODE (DTC) INFORMATION ECM-P085024

see **DIAGNOSTIC TROUBLE CODE (DTC) INFORMATION ECM-P085024**

FAULT-TRACING

see **FAULT-TRACING**

ECM-P085086: PARK / NEUTRAL SWITCH INPUT CIRCUIT. BUS SIGNAL / MESSAGE FAILURES. SIGNAL INVALID (B6324S; 2007-2010)

DIAGNOSTIC TROUBLE CODE (DTC) INFORMATION ECM-P085086

Condition

Engine control module (ECM) uses signals from Transmission control module (TCM) to decide which position the gear selector is in.

This is done so that Engine control module (ECM) can decide if engine start is permitted or not.

The diagnostic trouble code (DTC) is stored if the control module detects that:

- The quality of the signal coming via CAN is too low.

The control module's test for the diagnostic trouble code (DTC) starts in the event of:

- Ignition switch position II.

NOTE: **The control module can only detect the fault once the test has been started and the diagnostic trouble code (DTC) is stored when the conditions are met.**

Substitute Value

- None.

Possible Source

- Trace the cause of the fault in the Transmission Control Module (TCM).

Fault symptom[s]

- Starter motor does not operate

FAULT-TRACING

see **FAULT-TRACING**

ECM-P085086: PARK / NEUTRAL SWITCH INPUT CIRCUIT. BUS SIGNAL / MESSAGE FAILURES. SIGNAL INVALID (B6324S5; 2011-2012)

DIAGNOSTIC TROUBLE CODE (DTC) INFORMATION ECM-P085086

see **DIAGNOSTIC TROUBLE CODE (DTC) INFORMATION ECM-P085086**

FAULT-TRACING

see **FAULT-TRACING**

ECM-P0A0F68 ENGINE FAILED TO START. ALGORITHM BASED FAILURES. EVENT INFORMATION (B6324S; 2007-2010)

DIAGNOSTIC TROUBLE CODE (DTC) INFORMATION ECM-P0A0F68

Condition

NOTE: **This diagnostic trouble code (DTC) status is an event controlled diagnostic trouble code (DTC). An event controlled diagnostic trouble code (DTC) does not mean that there is a fault in the control module when it is active, but is designed as information.**

Engine control module (ECM) monitors the time it takes for the engine to start. If the control module detects

that the start time has been outside the limit value for a certain time, the diagnostic trouble code is generated.

The diagnostic trouble code can be diagnosed at engine start.

Substitute Value

- Nothing.

Possible Source

- This diagnostic trouble code (DTC) is not caused by a fault that needs to be remedied.

Fault symptom[s]

- None.

FAULT-TRACING INFORMATION

see **FAULT-TRACING INFORMATION**

ECM-P0A0F68 ENGINE FAILED TO START. ALGORITHM BASED FAILURES. EVENT INFORMATION (B6324S5; 2011-2012)

DIAGNOSTIC TROUBLE CODE (DTC) INFORMATION ECM-P0A0F68

see **DIAGNOSTIC TROUBLE CODE (DTC) INFORMATION ECM-P0A0F68**

FAULT-TRACING INFORMATION

see **FAULT-TRACING INFORMATION**

ECM-P112600: THROTTLE POSITION (NARROW RANGE) SENSOR CIRCUIT. GENERAL FAILURE INFORMATION. NO SUB TYPE INFORMATION (B8444S; 2005-2011)

DIAGNOSTIC TROUBLE CODE (DTC) INFORMATION ECM-P112600

Condition

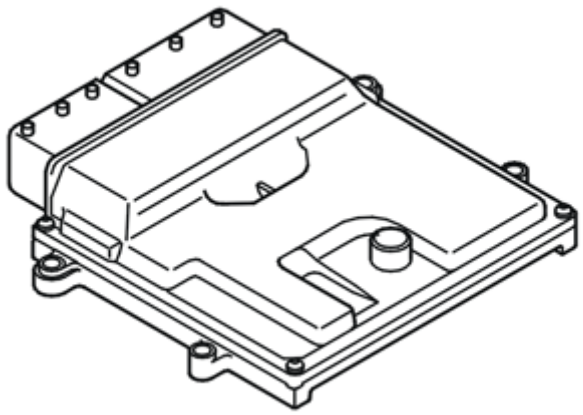

Fig. 161: Identifying Engine Control Module (ECM)
Courtesy of VOLVO CARS CORPORATION

If engine control module (ECM) registers an internal malfunction, the diagnostic trouble code is generated.

The diagnostic trouble code can be diagnosed when the ignition is on.

Substitute Value

- Nothing.

Possible Source

- Poorly charged battery or corroded connection cables.
- Damaged engine control module (ECM).

Fault symptom[s]

- Rough idling
- Message in the display.

FAULT TRACING

see **FAULT TRACING**

ECM-P112662: THROTTLE POSITION (NARROW RANGE) SENSOR CIRCUIT. ALGORITHM BASED FAILURES. SIGNAL COMPARE FAILURE (B6324S; 2007-2010)

DIAGNOSTIC TROUBLE CODE (DTC) INFORMATION ECM-P112662

Condition

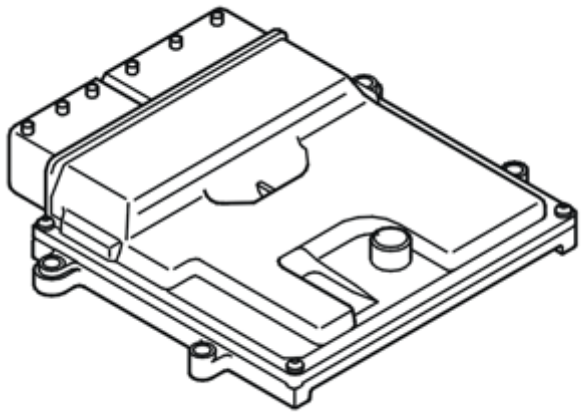

Fig. 162: Identifying Engine Control Module (ECM)
Courtesy of VOLVO CARS CORPORATION

If engine control module (ECM) registers an internal malfunction, the diagnostic trouble code is generated.

The diagnostic trouble code can be diagnosed when the ignition is on.

Substitute Value

- Nothing.

Possible Source

- Poorly charged battery or corroded connection cables.
- Damaged engine control module (ECM).

Fault symptom[s]

- Rough idling
- Message in the display.

FAULT TRACING

see **FAULT TRACING**

ECM-P112662: THROTTLE POSITION (NARROW RANGE) SENSOR CIRCUIT. ALGORITHM BASED FAILURES. SIGNAL COMPARE FAILURE (B6324S5; 2011-2012)

DIAGNOSTIC TROUBLE CODE (DTC) INFORMATION ECM-P112662

see **DIAGNOSTIC TROUBLE CODE (DTC) INFORMATION ECM-P112662**

FAULT TRACING

see **FAULT TRACING**

ECM-P113700: LACK OF HO2S12 SWITCHES - SENSOR INDICATES LEAN. GENERAL FAILURE INFORMATION. NO SUB TYPE INFORMATION (B6324S; 2007-2008)

DIAGNOSTIC TROUBLE CODE (DTC) INFORMATION

Condition

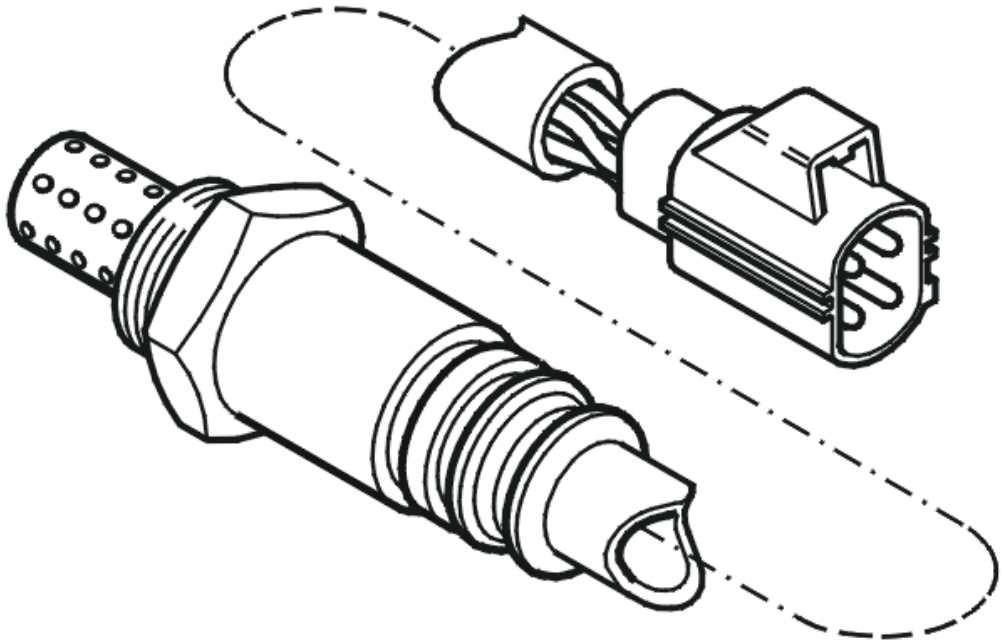

Fig. 163: Identifying Heated Oxygen Sensor
Courtesy of VOLVO CARS CORPORATION

The engine control module (ECM) continuously detects the voltage of the rear lambda probe (bank 1).

The engine's cylinders are counted starting with the cylinder farthest from the engine's flywheel.

If engine control module (ECM) detects that the voltage is not below or above a certain value, the engine control module (ECM) interprets this as a malfunction and generates diagnostic trouble code.

The diagnostic trouble code can be diagnosed after approx. 3-5 minutes with the engine running.

Substitute Value

- Rear heated oxygen sensor control is shut off.

Possible Source

- Contact resistance and oxidation in connections.
- The signal cable is short-circuited to ground.
- Open circuit on signal cable.
- Damaged rear heated oxygen sensor (HO2S).

Fault symptom[s]

- Malfunction indicator light (MIL) on.

FAULT-TRACING

CHECKING THE STATUS

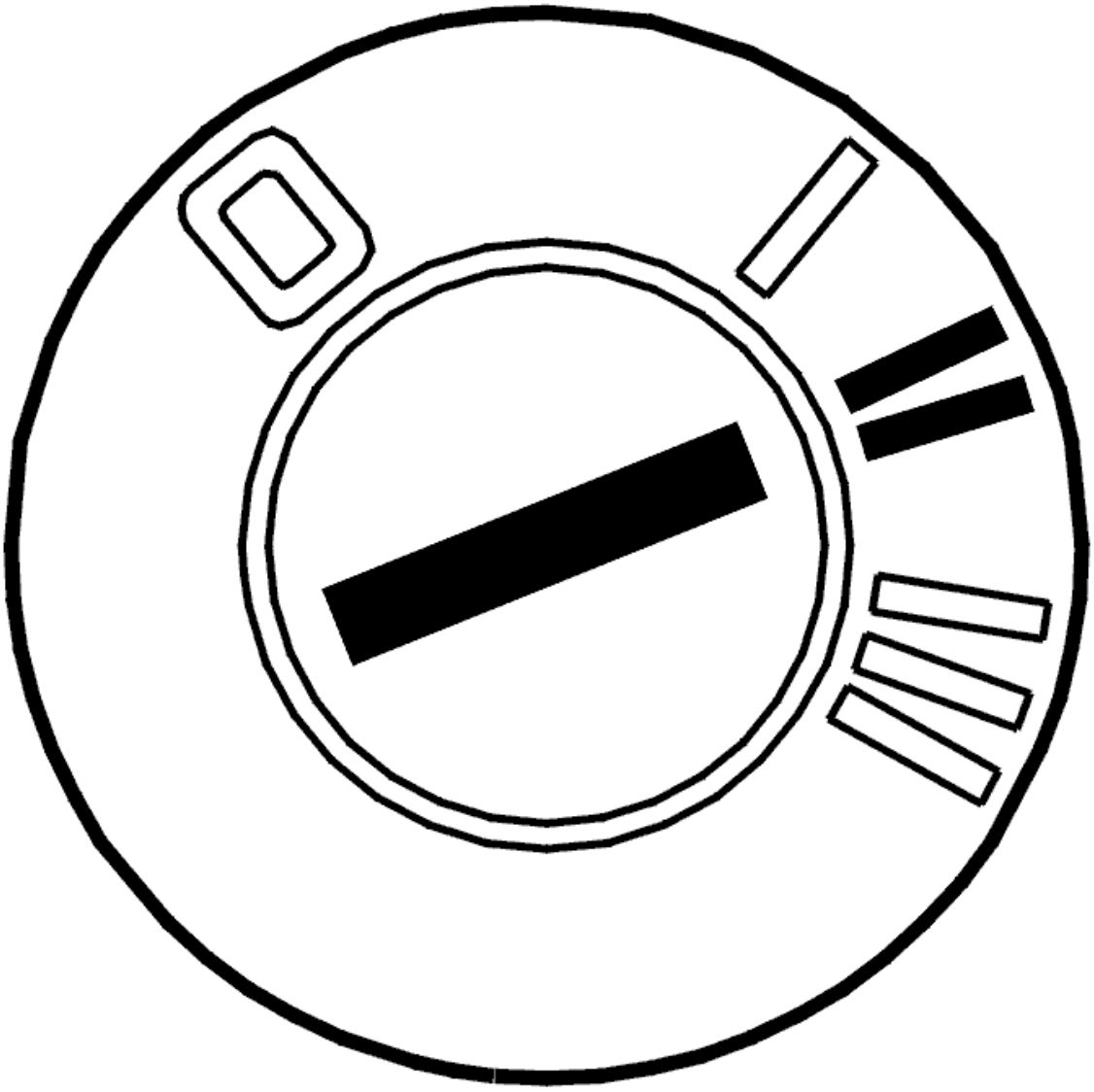

Fig. 164: Identifying Ignition ON
Courtesy of VOLVO CARS CORPORATION

- Start the engine and let it idle for approx. 3-5 minutes to perform the diagnosis.

  Check if the malfunction is permanent or intermittent by reading off the diagnostic trouble code's status when the diagnostic status is "Implemented".

  If the trouble status is "Malfunction found", this indicates that the malfunction is permanent. If the trouble status is "No malfunction found", this indicates that the malfunction is intermittent.

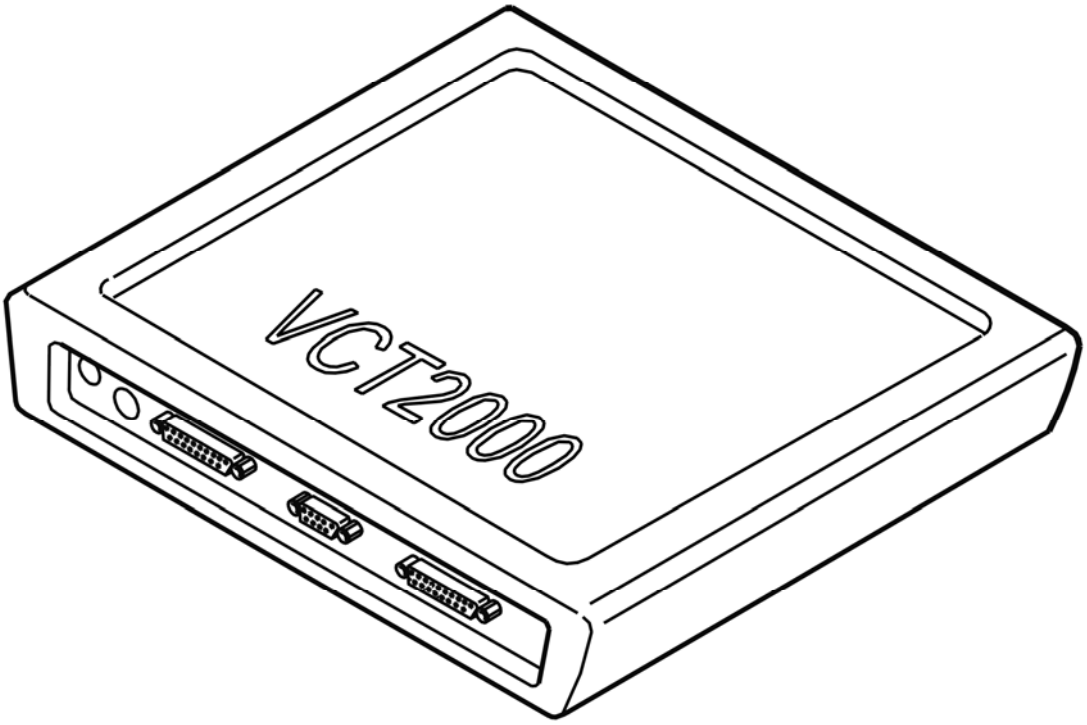

Fig. 165: Identifying VCT2000 Diagnostic Tool Symbol In VIDA
Courtesy of VOLVO CARS CORPORATION

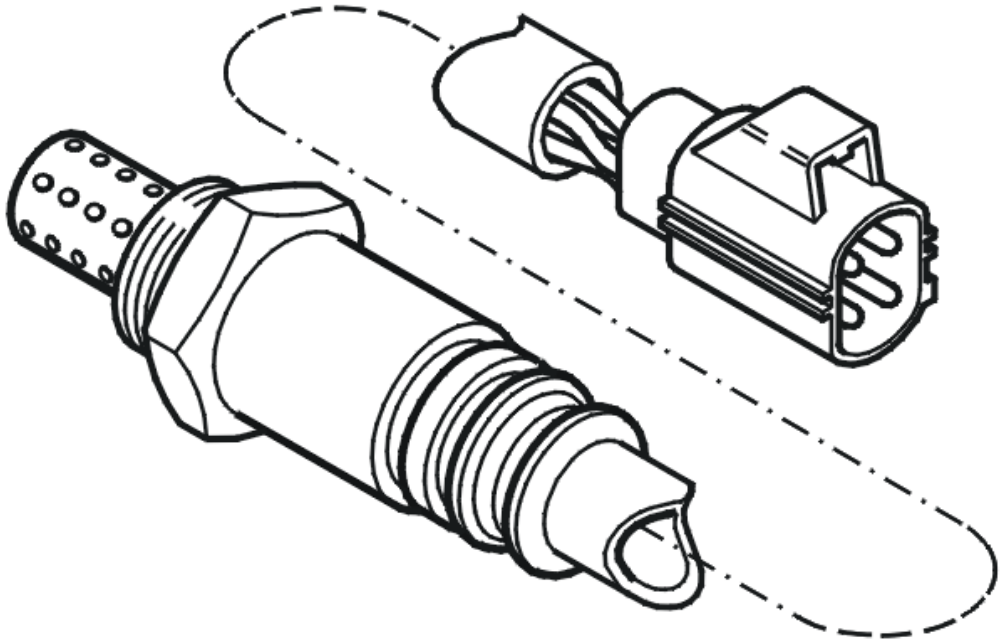

Fig. 166: Identifying Heated Oxygen Sensor
Courtesy of VOLVO CARS CORPORATION

- **Continue**

  Refer to **CHECKING COMPONENTS**

CHECKING COMPONENTS

CAUTION: Do not apply rust solvent spray or grease to the heated oxygen sensor's (HO2S) connector.

Check the rear heated oxygen sensor connector (bank 1). Check for contact resistance and oxidation.

Check the signal cable between engine control module (ECM) and rear heated oxygen sensor for contact resistance and oxidation in the connections, open circuit and short-circuit to ground.

If the above troubleshooting does not solve the problem, try a new heated oxygen sensor.

Remedy as necessary.

Other information

- see **CONNECTING THE BREAKOUT BOX**
- see **SIGNAL SPECIFICATION**
- see **OXYGEN SENSOR (CATALYST MONITOR SENSOR)**
- see **CHECKING WIRING AND TERMINALS**

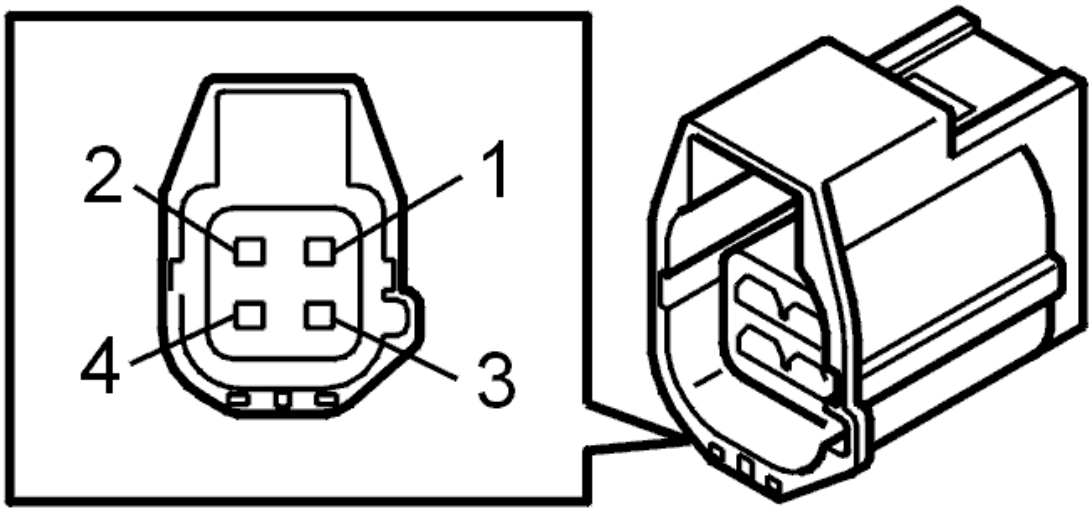

Fig. 167: Identifying 4-Bit Connector
Courtesy of VOLVO CARS CORPORATION

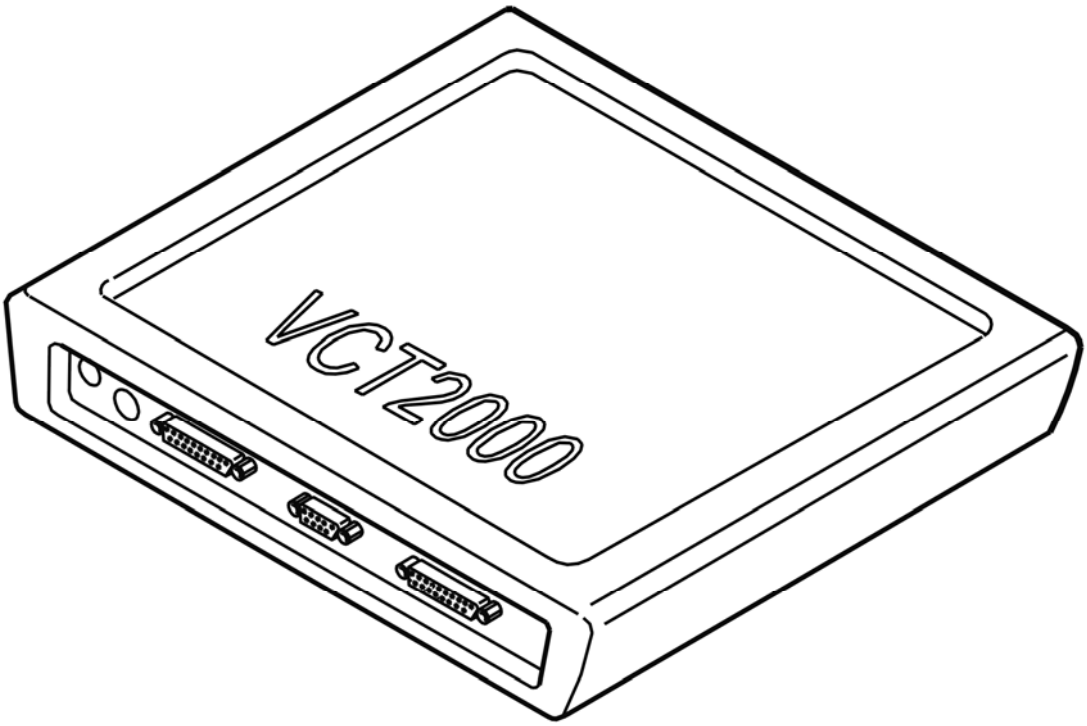

Fig. 168: Identifying VCT2000 Diagnostic Tool Symbol In VIDA
Courtesy of VOLVO CARS CORPORATION

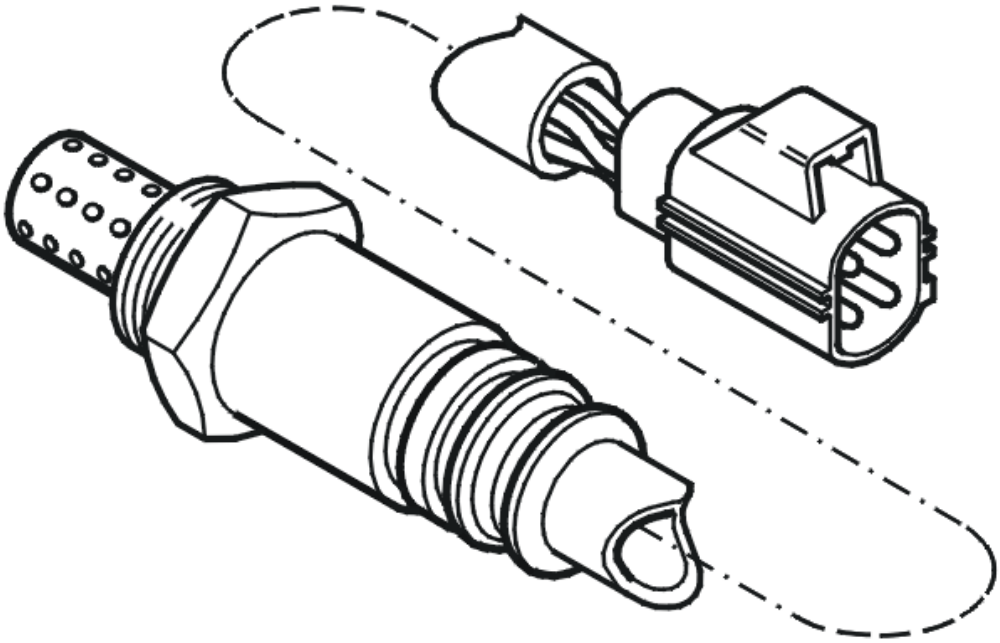

Fig. 169: Identifying Heated Oxygen Sensor
Courtesy of VOLVO CARS CORPORATION

- **Continue**

  Refer to **VERIFICATION**

INFORMATION

FAULT-TRACING INFORMATION

The fault should have been detected and remedied. As this is not the case fault-tracing has failed.

Exit fault-tracing for this diagnostic trouble code (DTC) or make another attempt.

VERIFICATION

VERIFICATION

HINT: After repairing, it is necessary to check that the malfunction has been fixed.

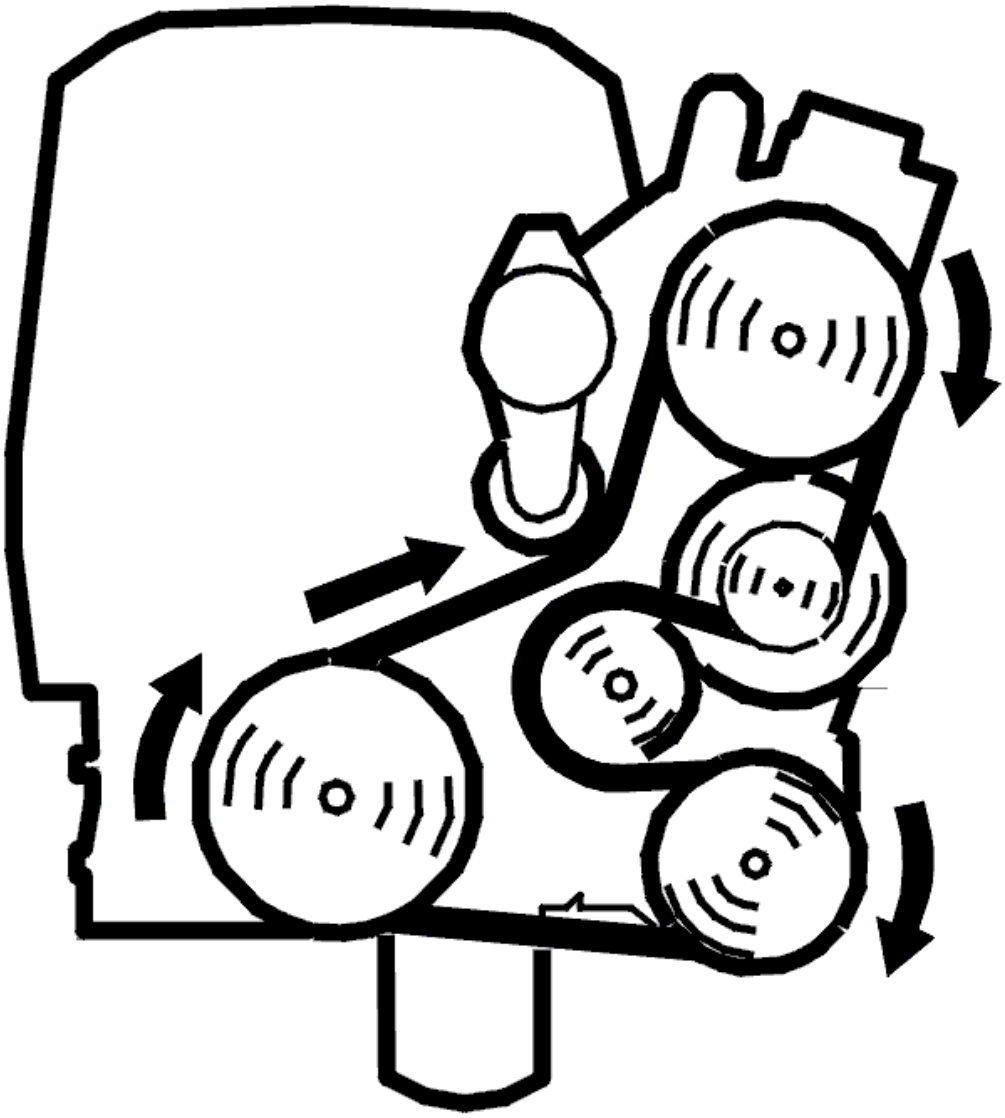

Fig. 170: Belt Routing / Engine Idling - Volvo
Courtesy of VOLVO CARS CORPORATION

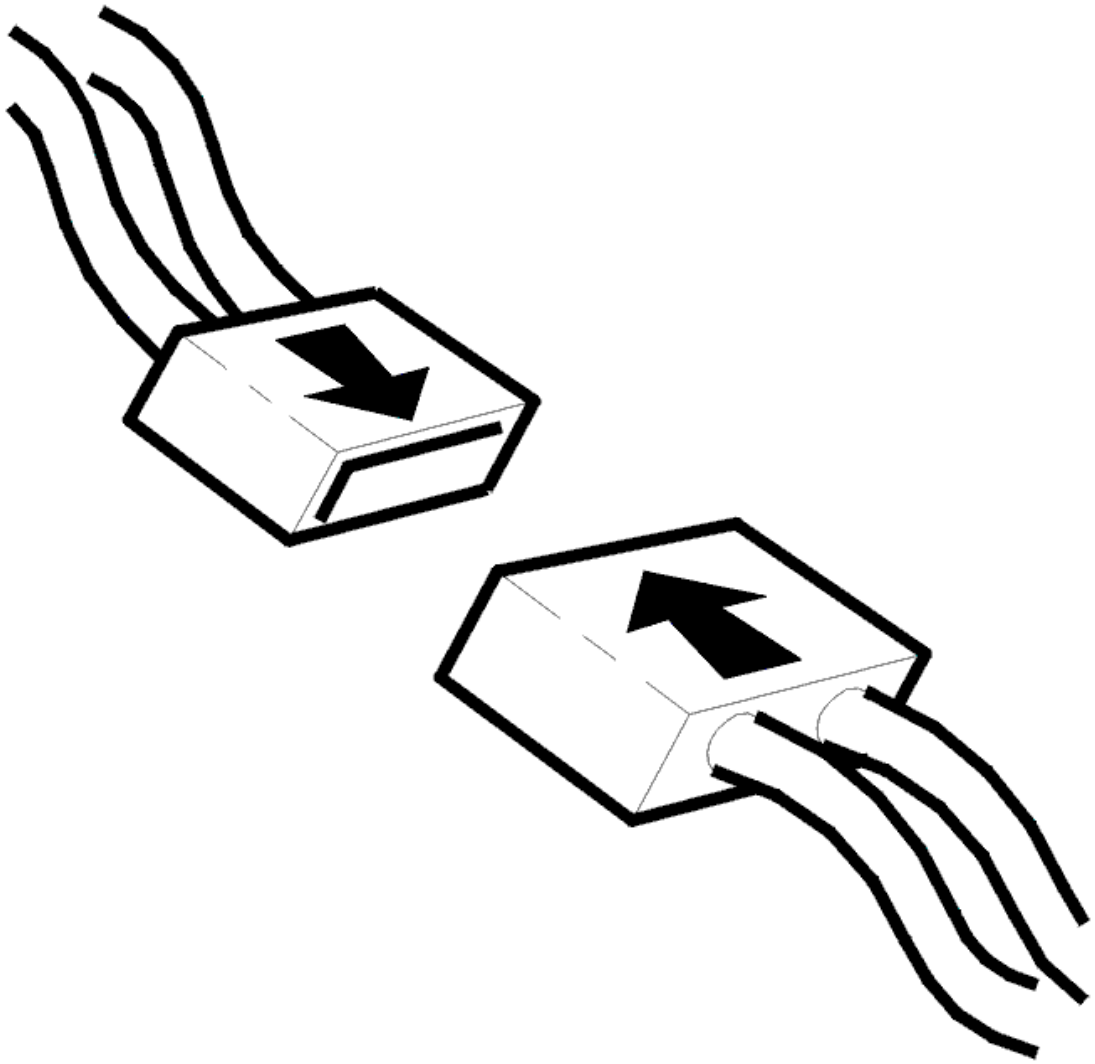

Fig. 171: Connecting Connector
Courtesy of VOLVO CARS CORPORATION

- Ignition off
- Reinstall the connectors, components etc.
- Start the engine to perform the diagnosis.

  Read off the diagnostic status and trouble status for the diagnostic trouble code.

  Check that the diagnosis is "Implemented" and that the trouble status is "No malfunction found". If the trouble status is "Malfunction found", this indicates defective function.

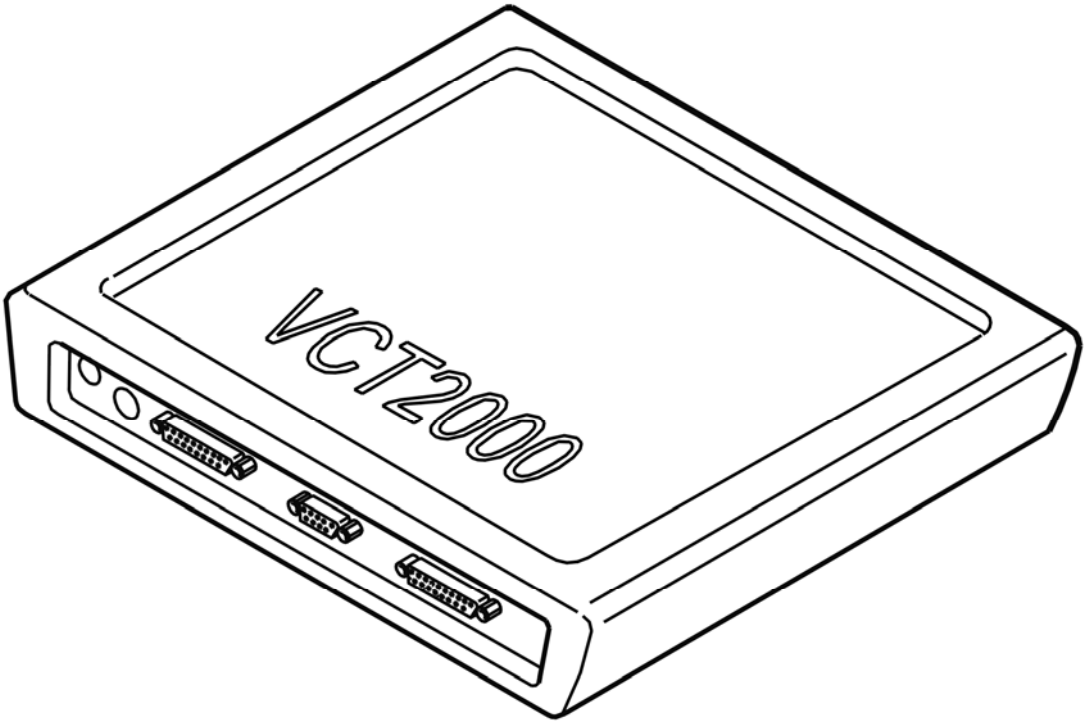

Fig. 172: Identifying VCT2000 Diagnostic Tool Symbol In VIDA
Courtesy of VOLVO CARS CORPORATION

Trouble status shows "No malfunction found"?

- **YES**

  VERIFIED: Troubleshooting has been completed.

- **NO**

  Refer to **INFORMATION**

ECM-P113700: LACK OF HO2S12 SWITCHES - SENSOR INDICATES LEAN. GENERAL FAILURE INFORMATION. NO SUB TYPE INFORMATION (B8444S; 2005-2007)

DIAGNOSTIC TROUBLE CODE (DTC) INFORMATION

Condition

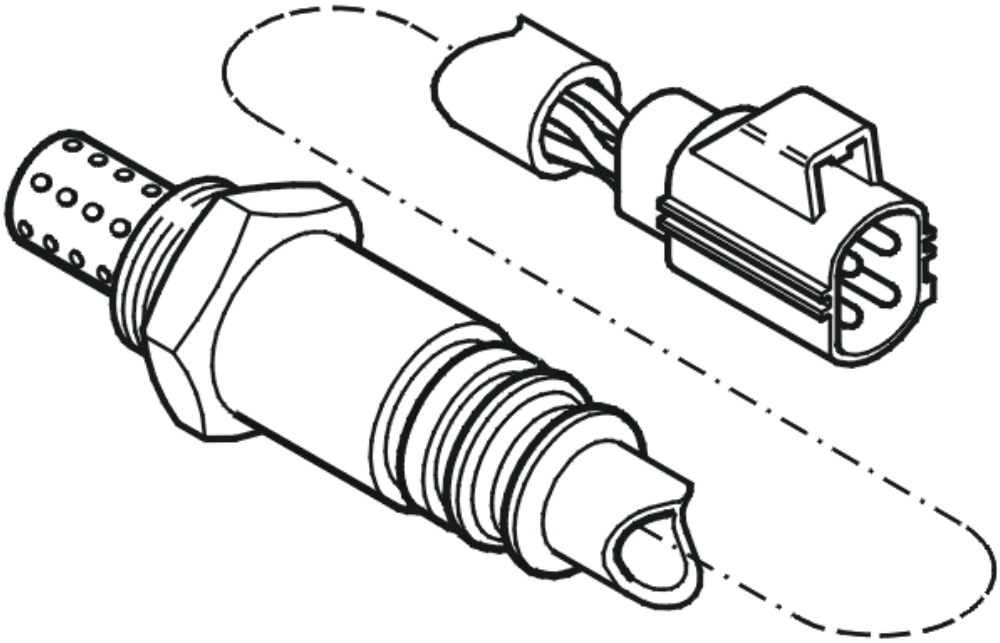

Fig. 173: Identifying Heated Oxygen Sensor
Courtesy of VOLVO CARS CORPORATION

The engine control module (ECM) continuously detects the voltage of the rear lambda probe (bank 1).

The engine's cylinders are counted starting with the cylinder farthest from the engine's flywheel.

- Bank 1 (cylinder row nearest the front): cylinders 1, 3, 5 and 7.
- Bank 2 (cylinder row furthest to the rear, nearest the passenger compartment): cylinders 2, 4, 6, and 8.

If engine control module (ECM) detects that the voltage is not below or above a certain value, the engine control module (ECM) interprets this as a malfunction and generates diagnostic trouble code.

The diagnostic trouble code can be diagnosed after approx. 3-5 minutes with the engine running.

Substitute Value

- Rear heated oxygen sensor control is shut off.

Possible Source

- Contact resistance and oxidation in connections.
- The signal cable is short-circuited to ground.

- Open circuit on signal cable.
- Damaged rear heated oxygen sensor (HO2S).

Fault symptom[s]

- Malfunction indicator light (MIL) on.

FAULT-TRACING

CHECKING THE STATUS

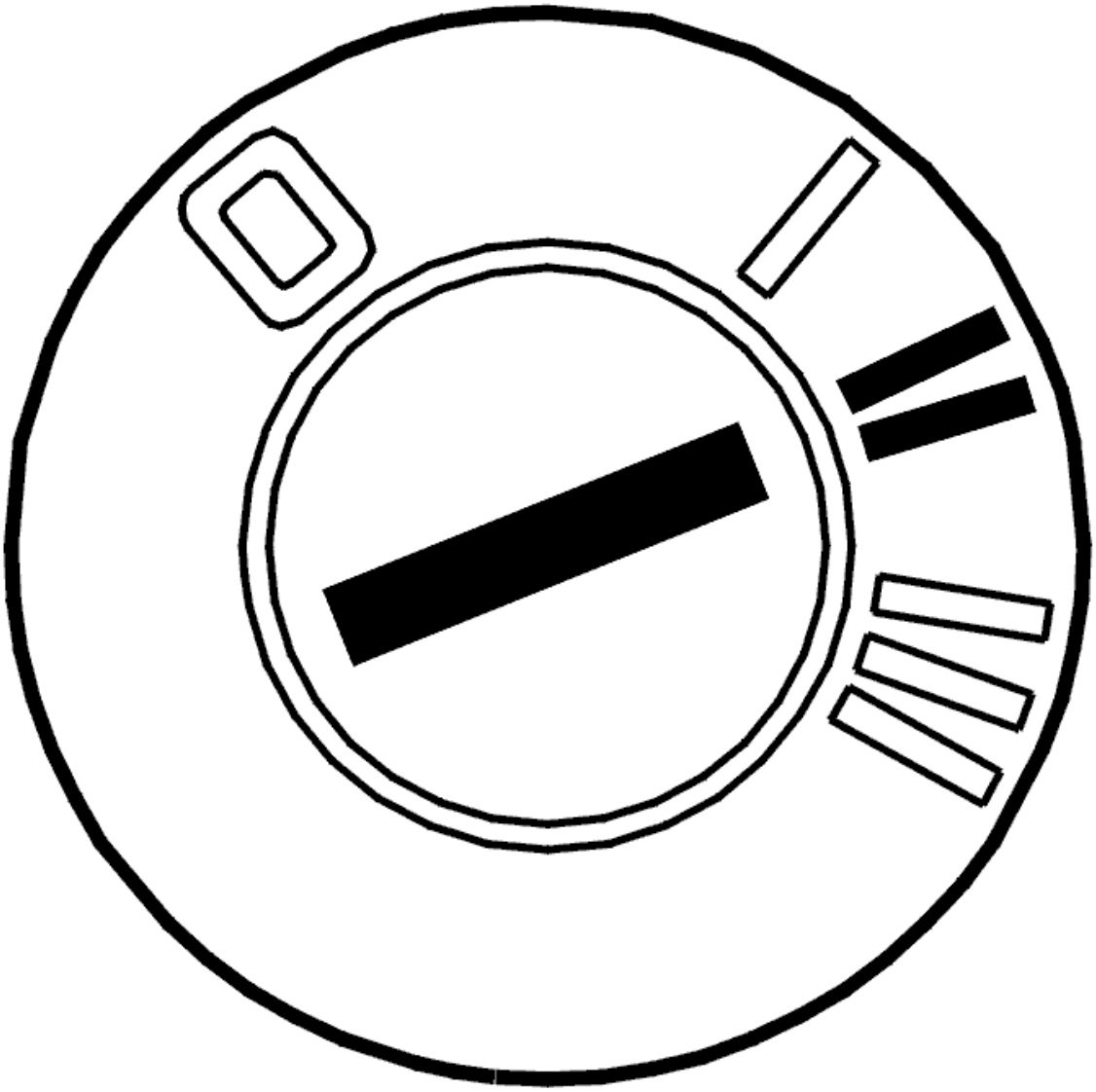

Fig. 174: Identifying Ignition ON
Courtesy of VOLVO CARS CORPORATION

- Start the engine and let it idle for approx. 3-5 minutes to perform the diagnosis.

Check if the malfunction is permanent or intermittent by reading off the diagnostic trouble code's status when the diagnostic status is "Implemented".

If the trouble status is "Malfunction found", this indicates that the malfunction is permanent. If the trouble status is "No malfunction found", this indicates that the malfunction is intermittent.

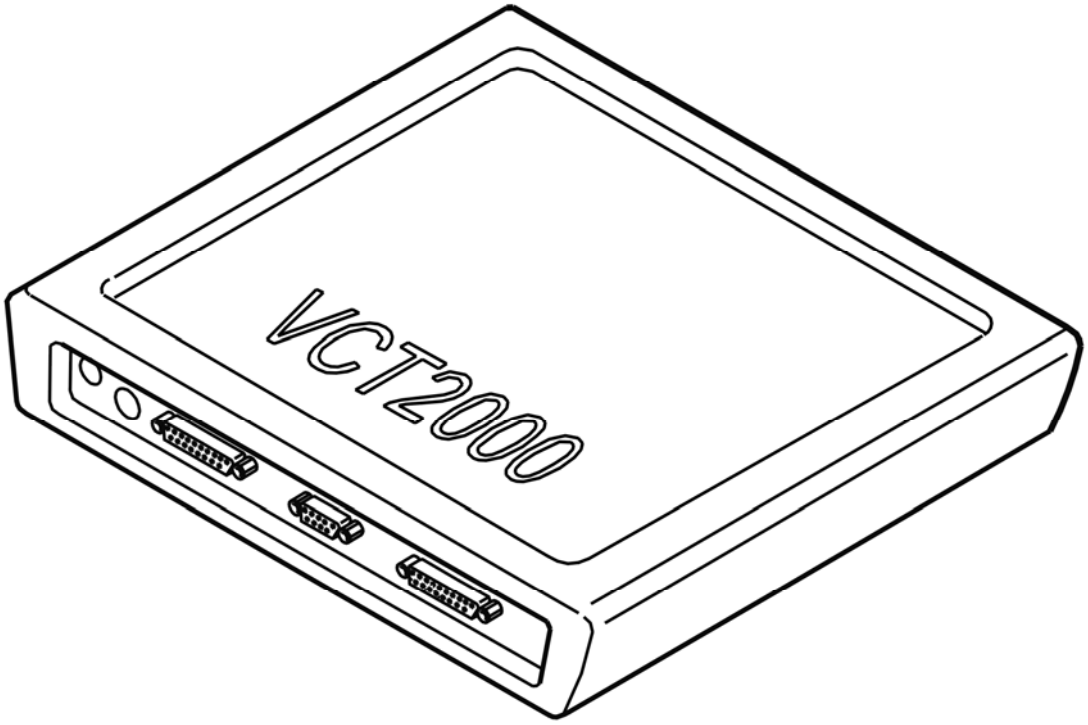

Fig. 175: Identifying VCT2000 Diagnostic Tool Symbol In VIDA
Courtesy of VOLVO CARS CORPORATION

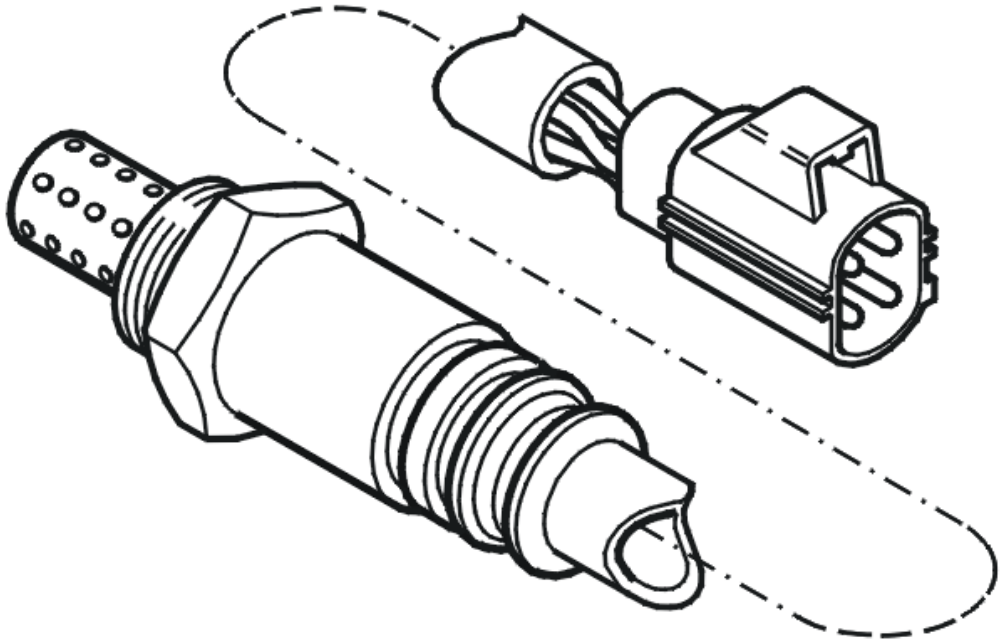

Fig. 176: Identifying Heated Oxygen Sensor
Courtesy of VOLVO CARS CORPORATION

- **Continue**

  Refer to **CHECKING COMPONENTS**

CHECKING COMPONENTS

CAUTION: Do not apply rust solvent spray or grease to the heated oxygen sensor's (HO2S) connector.

Check the rear heated oxygen sensor connector (bank 1). Check for contact resistance and oxidation.

Check the cable between Engine Control Module (ECM) #A41 (#A41) and heated oxygen sensor #4 for contact resistance and oxidation in connections, open circuit and short-circuit to ground.

If the above troubleshooting does not solve the problem, try a new heated oxygen sensor.

Remedy as necessary.

Other information

- see **CONNECTING THE BREAKOUT BOX**
- see **SIGNAL SPECIFICATION, ENGINE CONTROL MODULE (ECM)**
- see **HEATED OXYGEN SENSOR (HO2S), REPLACING**
- see **CHECKING WIRING AND TERMINALS**

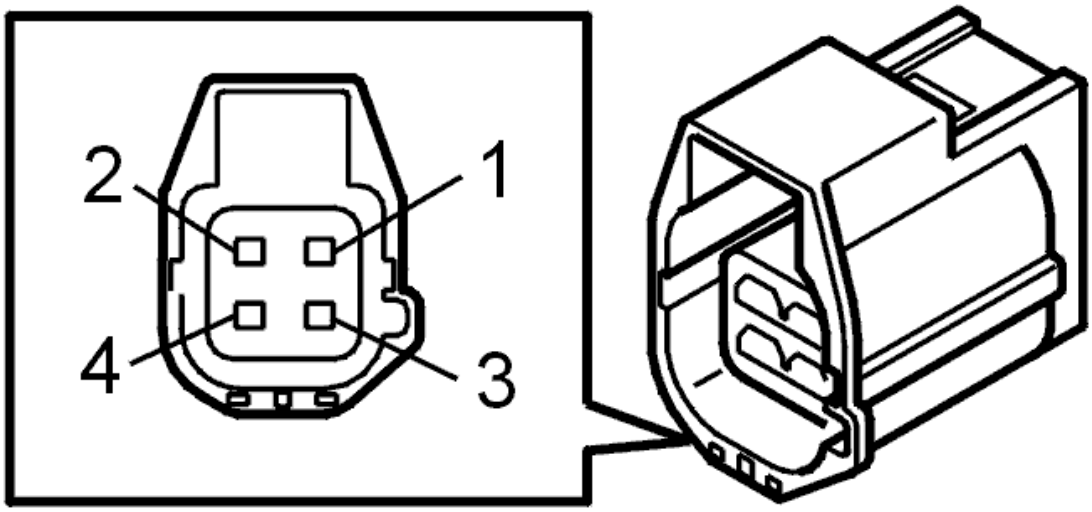

Fig. 177: Identifying 4-Bit Connector
Courtesy of VOLVO CARS CORPORATION

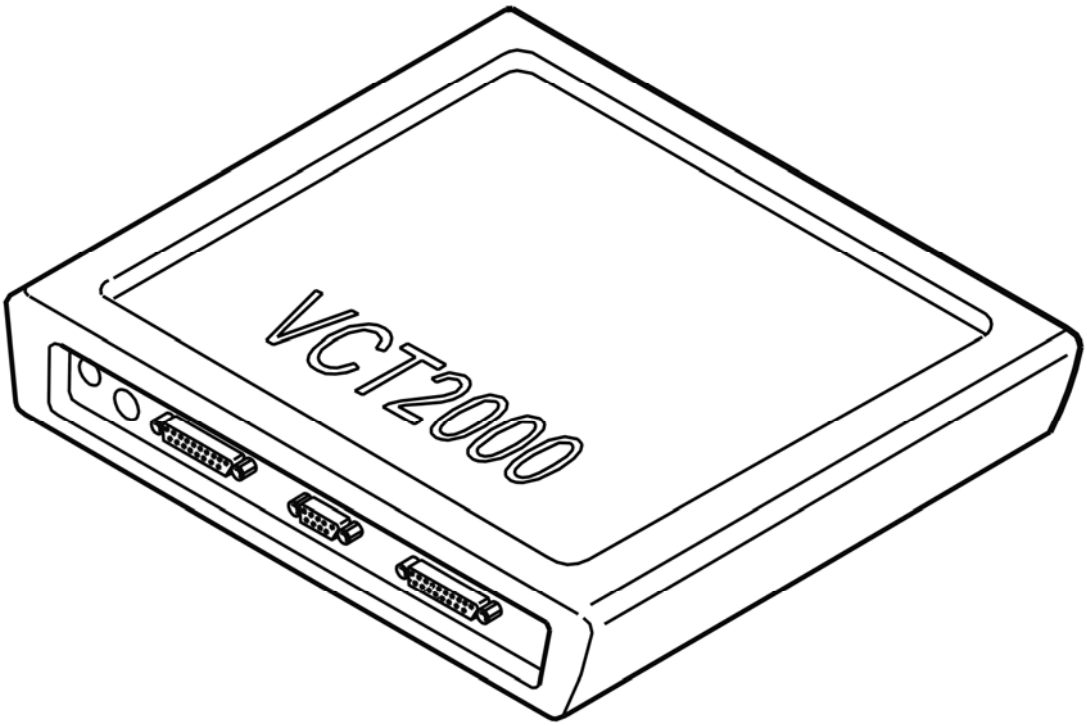

Fig. 178: Identifying VCT2000 Diagnostic Tool Symbol In VIDA
Courtesy of VOLVO CARS CORPORATION

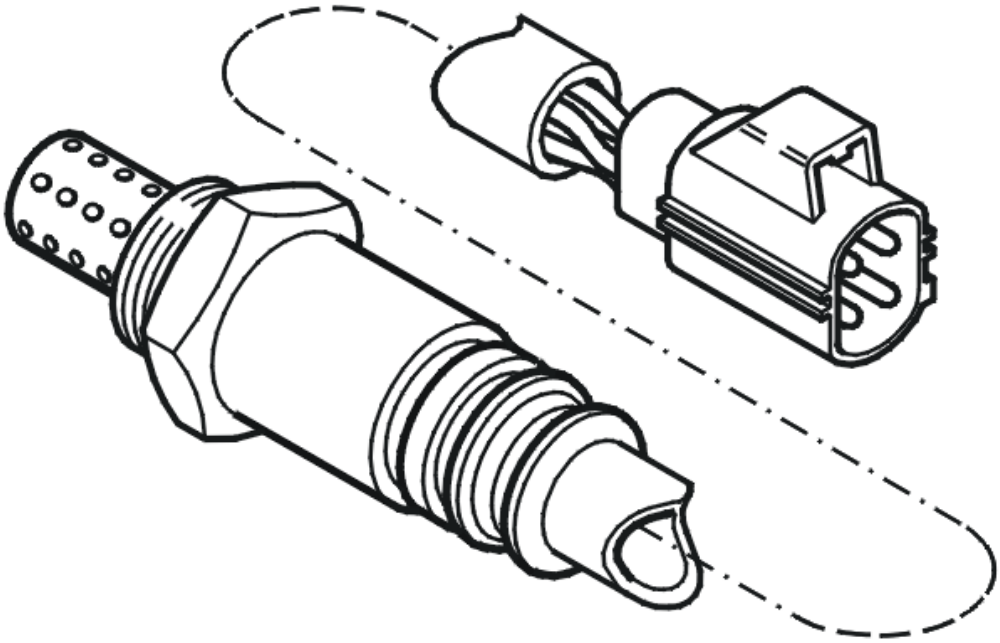

Fig. 179: Identifying Heated Oxygen Sensor
Courtesy of VOLVO CARS CORPORATION

- **Continue**

  Refer to **VERIFICATION**

VERIFICATION

VERIFICATION

HINT: After repairing, it is necessary to check that the malfunction has been fixed.

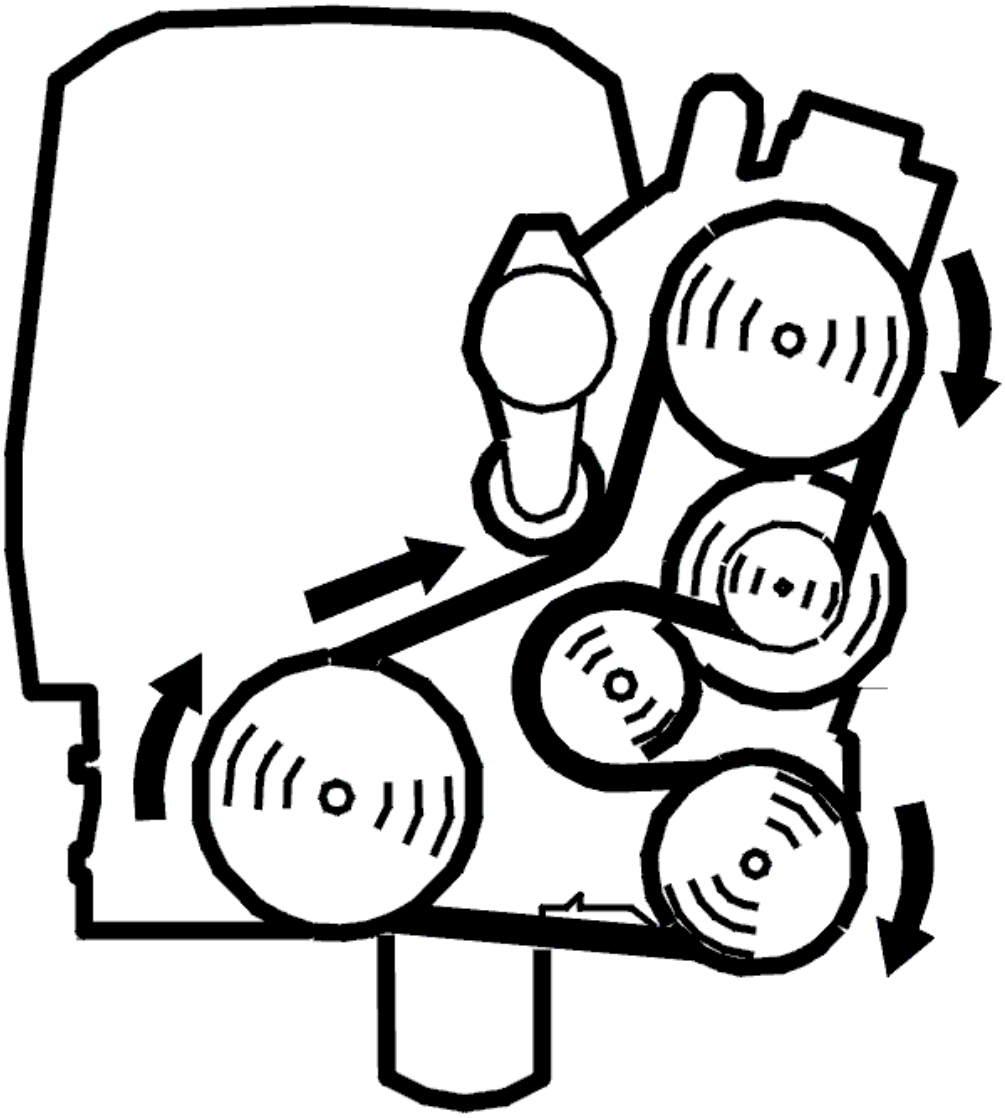

Fig. 180: Belt Routing / Engine Idling - Volvo
Courtesy of VOLVO CARS CORPORATION

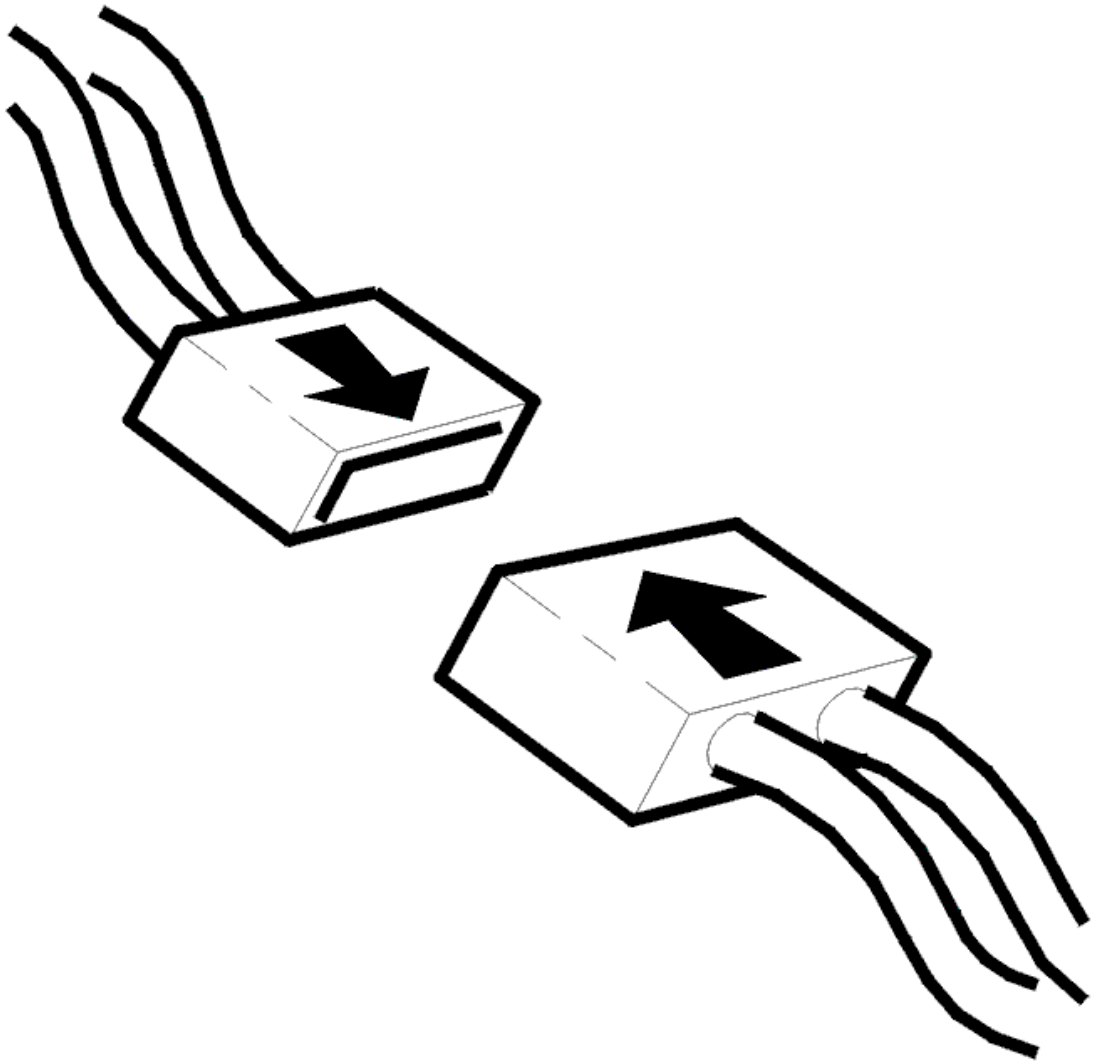

Fig. 181: Connecting Connector
Courtesy of VOLVO CARS CORPORATION

- Ignition off
- Reinstall the connectors, components etc.
- Start the engine to perform the diagnosis.

  Read off the diagnostic status and trouble status for the diagnostic trouble code.

  Check that the diagnosis is "Implemented" and that the trouble status is "No malfunction found". If the trouble status is "Malfunction found", this indicates defective function.

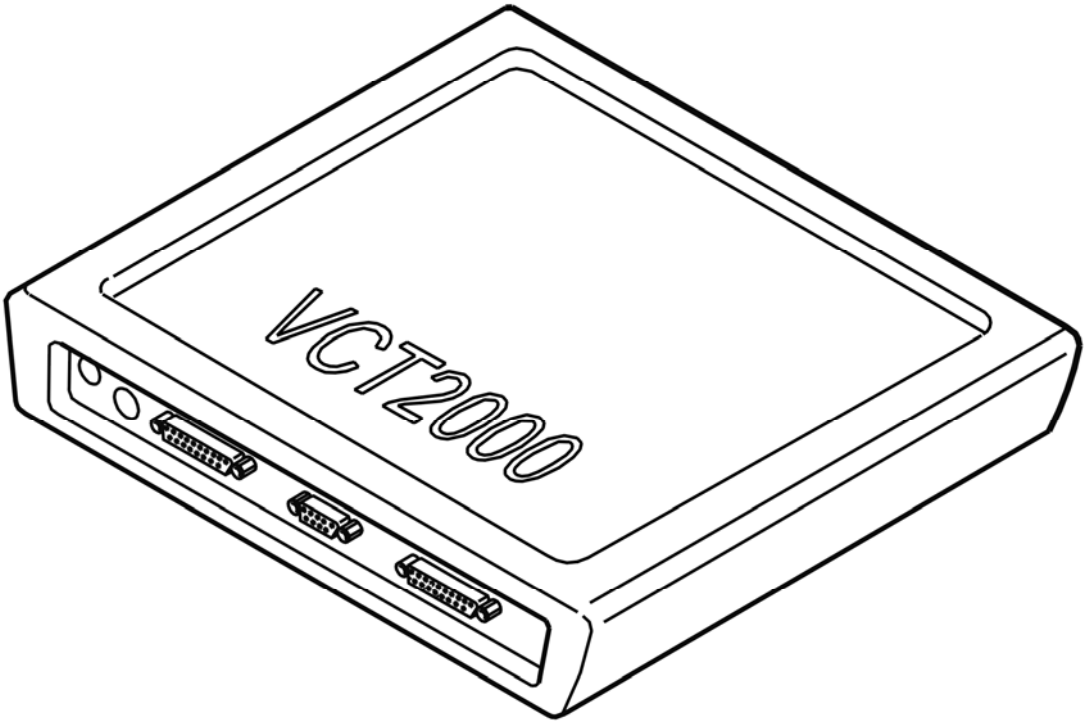

Fig. 182: Identifying VCT2000 Diagnostic Tool Symbol In VIDA
Courtesy of VOLVO CARS CORPORATION

Trouble status shows "No malfunction found"?

- **YES**

  VERIFIED: Troubleshooting has been completed.

- **NO**

  Refer to **INFORMATION**

INFORMATION

FAULT-TRACING INFORMATION

The fault should have been detected and remedied. As this is not the case fault-tracing has failed.

Exit fault-tracing for this diagnostic trouble code (DTC) or make another attempt.

ECM-P113800: LACK OF HO2S12 SWITCHES - SENSOR INDICATES RICH. GENERAL FAILURE INFORMATION. NO SUB TYPE INFORMATION

(B6324S; 2007-2008)

DIAGNOSTIC TROUBLE CODE (DTC) INFORMATION

Condition

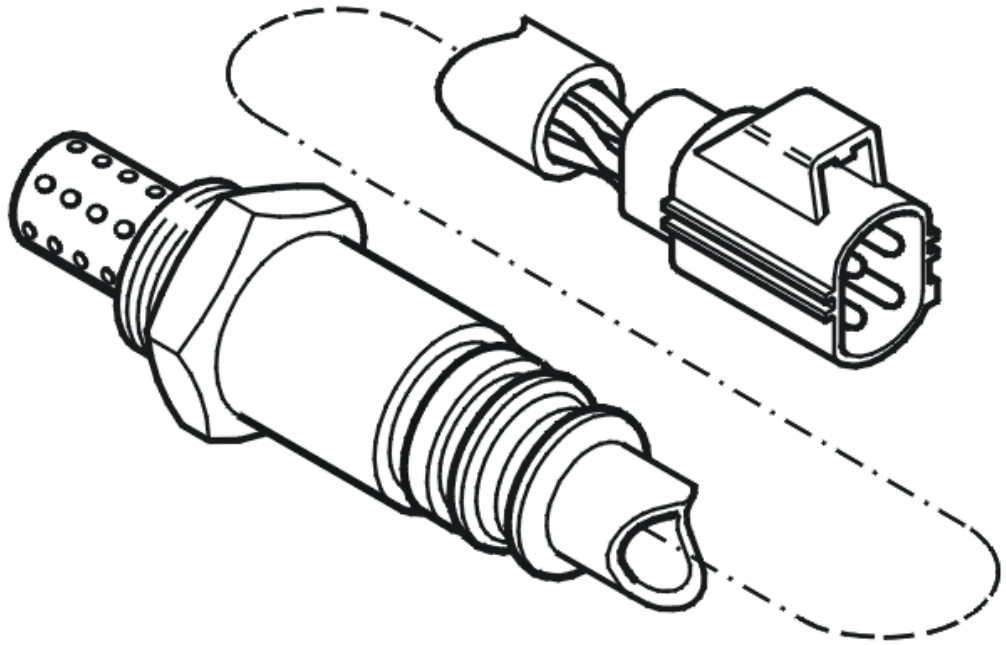

Fig. 183: Identifying Heated Oxygen Sensor
Courtesy of VOLVO CARS CORPORATION

The engine control module (ECM) continuously detects the voltage of the rear lambda probe (bank 1).

The engine's cylinders are counted starting with the cylinder farthest from the engine's flywheel.

If engine control module (ECM) detects that the voltage is not below or above a certain value, the engine control module (ECM) interprets this as a malfunction and generates diagnostic trouble code.

The diagnostic trouble code can be diagnosed after approx. 3-5 minutes with the engine running.

Substitute Value

- Rear heated oxygen sensor control is shut off.

Possible Source

- The signal cable is short-circuited to voltage.

Fault symptom[s]

- Malfunction indicator light (MIL) on.

FAULT-TRACING

CHECKING THE STATUS

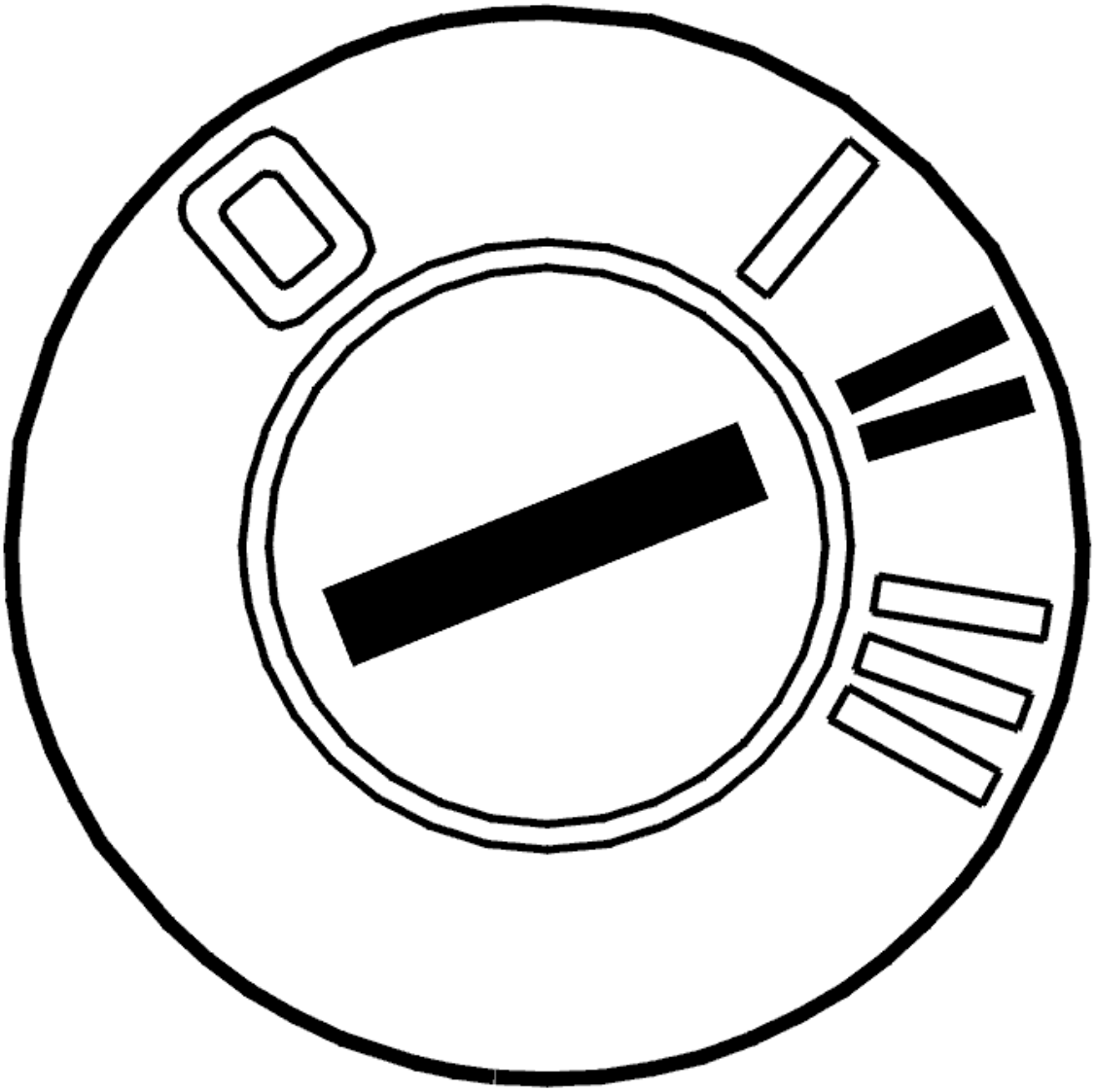

Fig. 184: Identifying Ignition ON
Courtesy of VOLVO CARS CORPORATION

- Start the engine and let it idle for approx. 3-5 minutes to perform the diagnosis.

  Check if the malfunction is permanent or intermittent by reading off the diagnostic trouble code's status

when the diagnostic status is "Implemented".

If the trouble status is "Malfunction found", this indicates that the malfunction is permanent. If the trouble status is "No malfunction found", this indicates that the malfunction is intermittent.

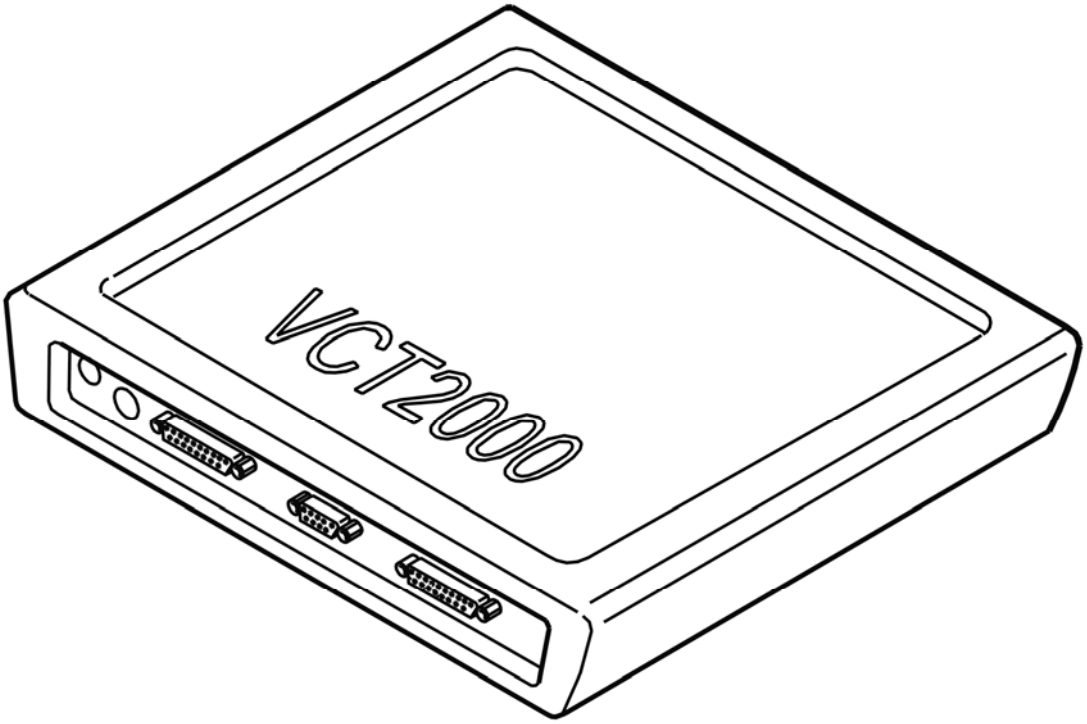

Fig. 185: Identifying VCT2000 Diagnostic Tool Symbol In VIDA
Courtesy of VOLVO CARS CORPORATION

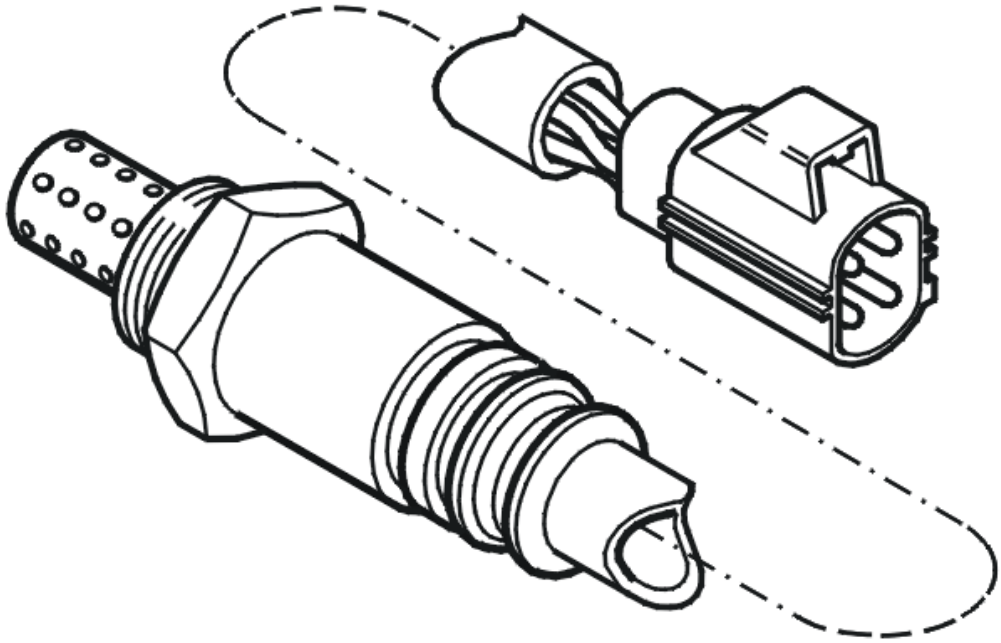

Fig. 186: Identifying Heated Oxygen Sensor
Courtesy of VOLVO CARS CORPORATION

- **Continue**

  Refer to **CHECKING COMPONENTS**

CHECKING COMPONENTS

CAUTION: Do not apply rust solvent spray or grease to the heated oxygen sensor's (HO2S) connector.

Check the signal cable between the Engine Control Module (ECM) and rear heated oxygen sensor for short-circuiting to voltage.

If the above troubleshooting does not solve the problem, try a new heated oxygen sensor.

Remedy as necessary.

Other information

- see **CONNECTING THE BREAKOUT BOX**
- see **SIGNAL SPECIFICATION**

- see **OXYGEN SENSOR (CATALYST MONITOR SENSOR)**
- see **CHECKING WIRING AND TERMINALS**

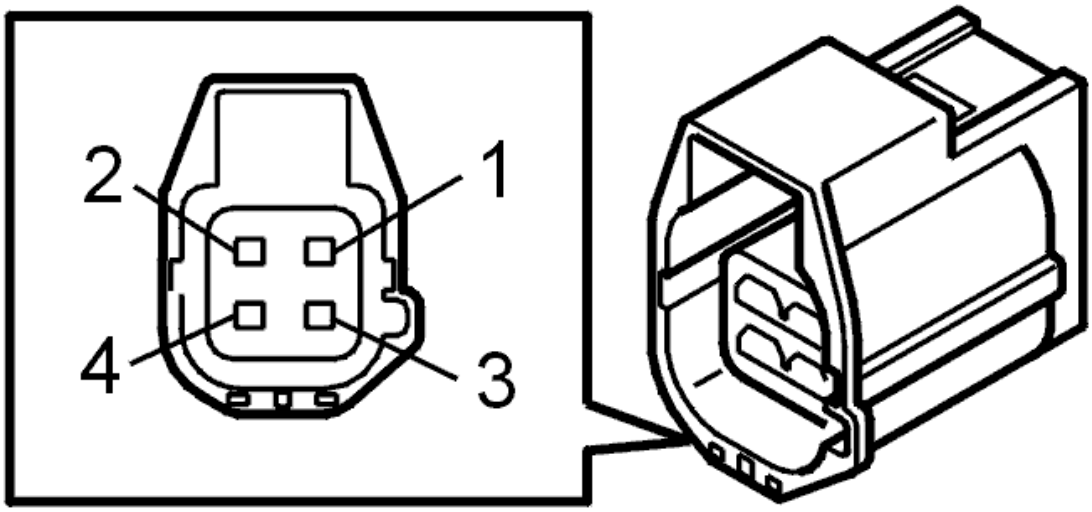

Fig. 187: Identifying 4-Bit Connector
Courtesy of VOLVO CARS CORPORATION

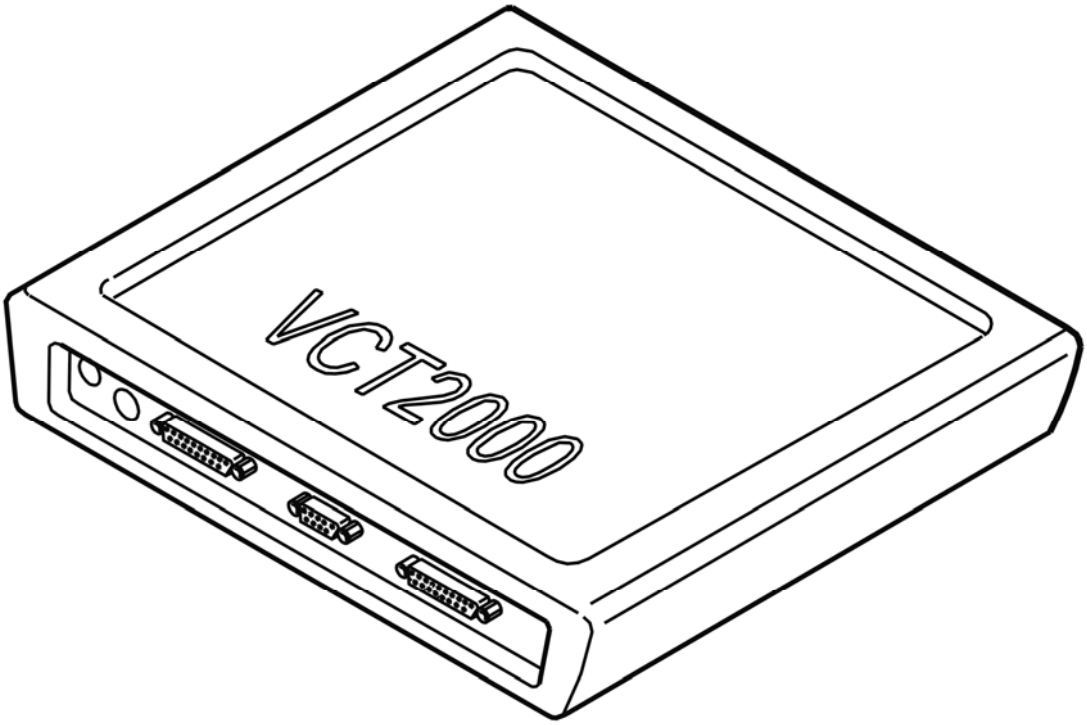

Fig. 188: Identifying VCT2000 Diagnostic Tool Symbol In VIDA
Courtesy of VOLVO CARS CORPORATION

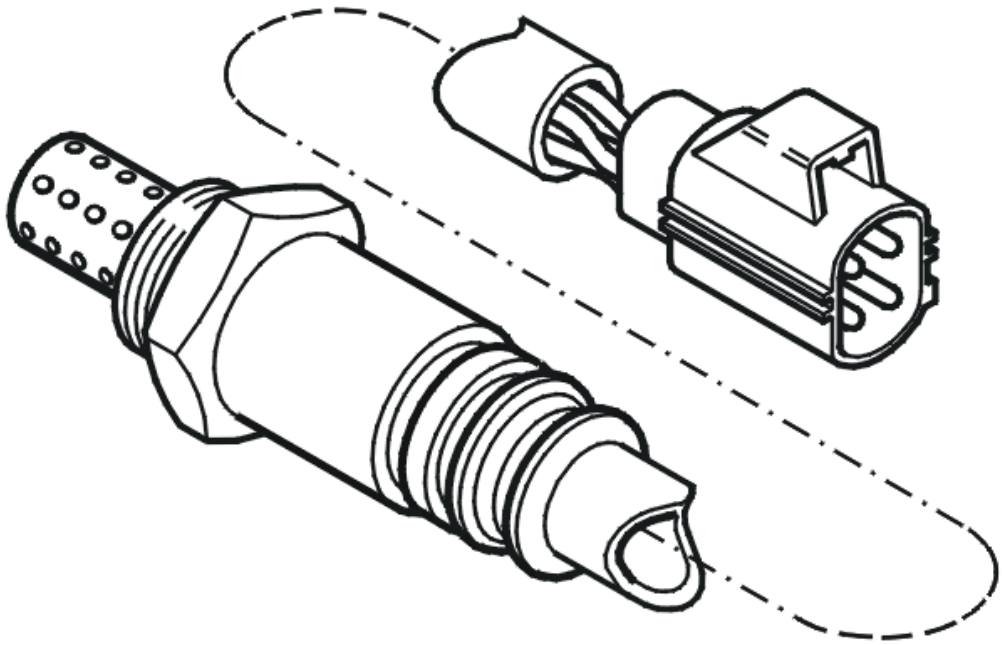

Fig. 189: Identifying Heated Oxygen Sensor
Courtesy of VOLVO CARS CORPORATION

- **Continue**

  Refer to **VERIFICATION**

INFORMATION

FAULT-TRACING INFORMATION

The fault should have been detected and remedied. As this is not the case fault-tracing has failed.

Exit fault-tracing for this diagnostic trouble code (DTC) or make another attempt.

VERIFICATION

VERIFICATION

HINT: After repairing, it is necessary to check that the malfunction has been fixed.

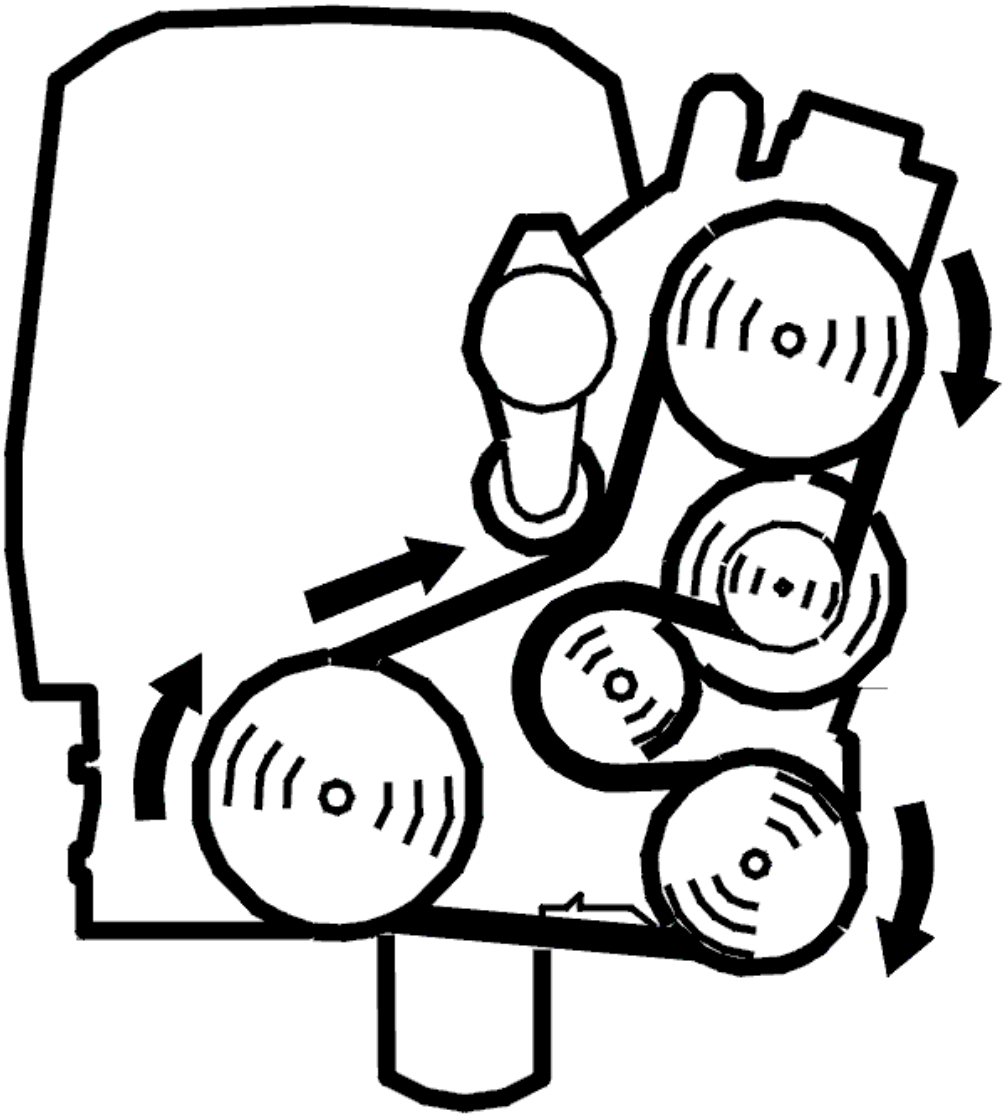

Fig. 190: Belt Routing / Engine Idling - Volvo
Courtesy of VOLVO CARS CORPORATION

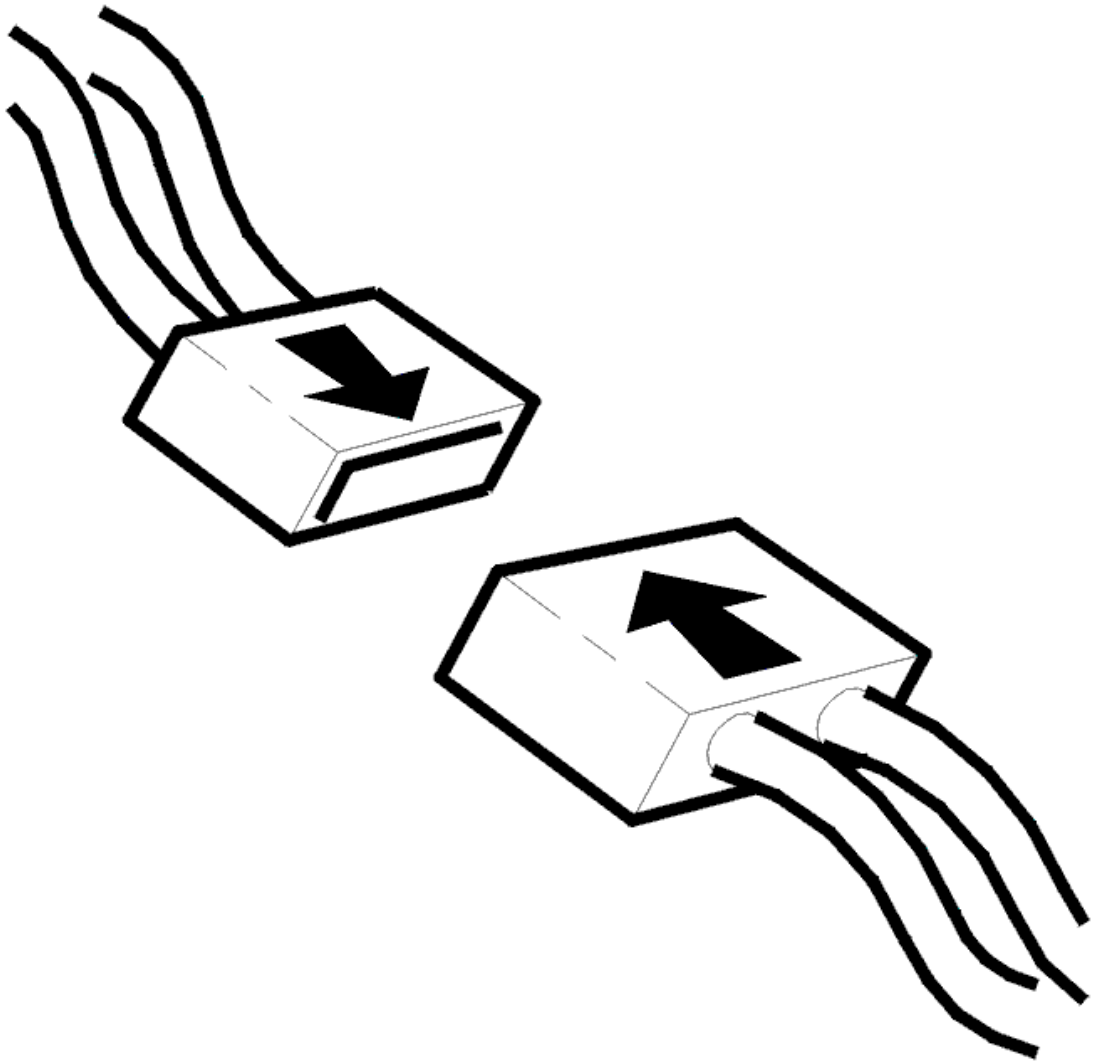

Fig. 191: Connecting Connector
Courtesy of VOLVO CARS CORPORATION

- Ignition off
- Reinstall the connectors, components etc.
- Start the engine to perform the diagnosis.

  Read off the diagnostic status and trouble status for the diagnostic trouble code.

  Check that the diagnosis is "Implemented" and that the trouble status is "No malfunction found". If the trouble status is "Malfunction found", this indicates defective function.

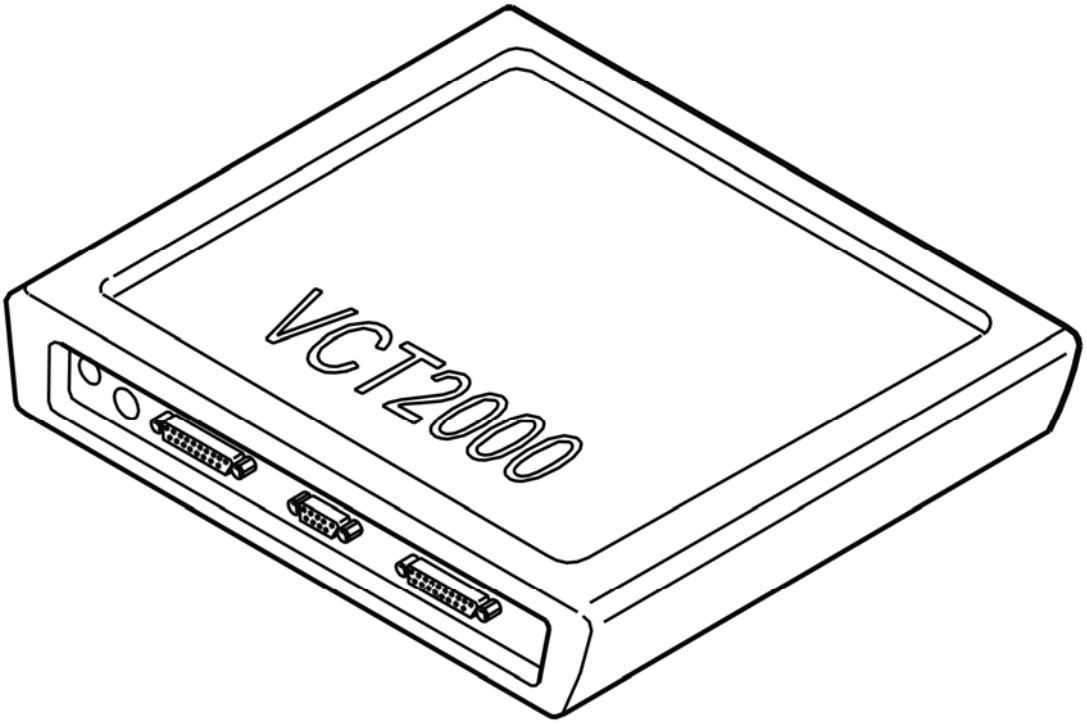

Fig. 192: Identifying VCT2000 Diagnostic Tool Symbol In VIDA
Courtesy of VOLVO CARS CORPORATION

Trouble status shows "No malfunction found"?

- **YES**

  VERIFIED: Troubleshooting has been completed.

- **NO**

  Refer to **INFORMATION**

ECM-P113800: LACK OF HO2S12 SWITCHES - SENSOR INDICATES RICH. GENERAL FAILURE INFORMATION. NO SUB TYPE INFORMATION (B8444S; 2005-2007)

DIAGNOSTIC TROUBLE CODE (DTC) INFORMATION

Condition

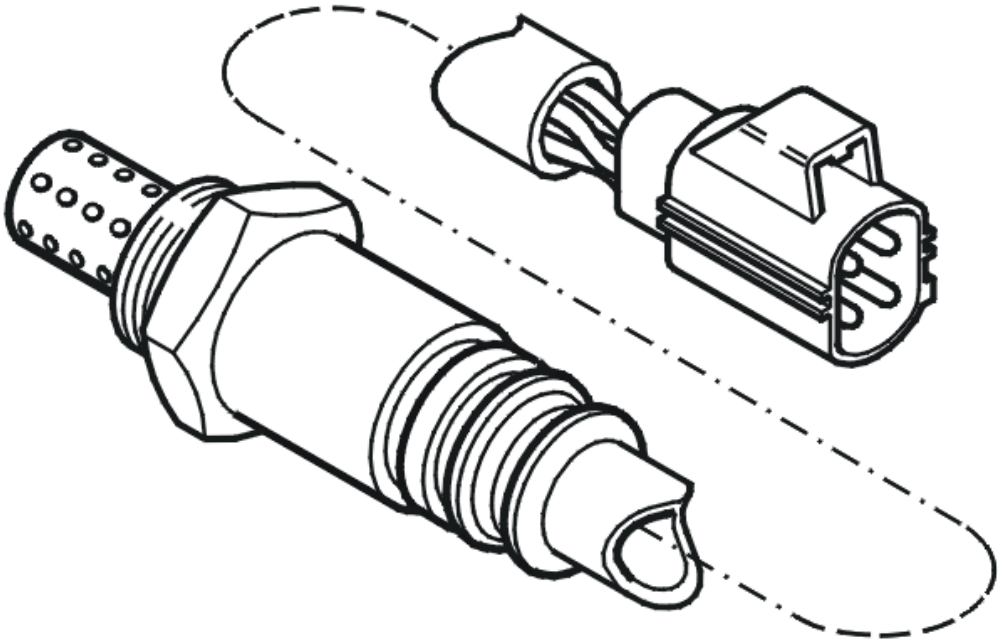

Fig. 193: Identifying Heated Oxygen Sensor
Courtesy of VOLVO CARS CORPORATION

The engine control module (ECM) continuously detects the voltage of the rear lambda probe (bank 1).

The engine's cylinders are counted starting with the cylinder farthest from the engine's flywheel.

- Bank 1 (cylinder row nearest the front): cylinders 1, 3, 5 and 7.
- Bank 2 (cylinder row furthest to the rear, nearest the passenger compartment): cylinders 2, 4, 6, and 8.

If engine control module (ECM) detects that the voltage is not below or above a certain value, the engine control module (ECM) interprets this as a malfunction and generates diagnostic trouble code.

The diagnostic trouble code can be diagnosed after approx. 3-5 minutes with the engine running.

Substitute Value

- Rear heated oxygen sensor control is shut off.

Possible Source

- The signal cable is short-circuited to voltage.

Fault symptom[s]

- Malfunction indicator light (MIL) on.

FAULT-TRACING

CHECKING THE STATUS

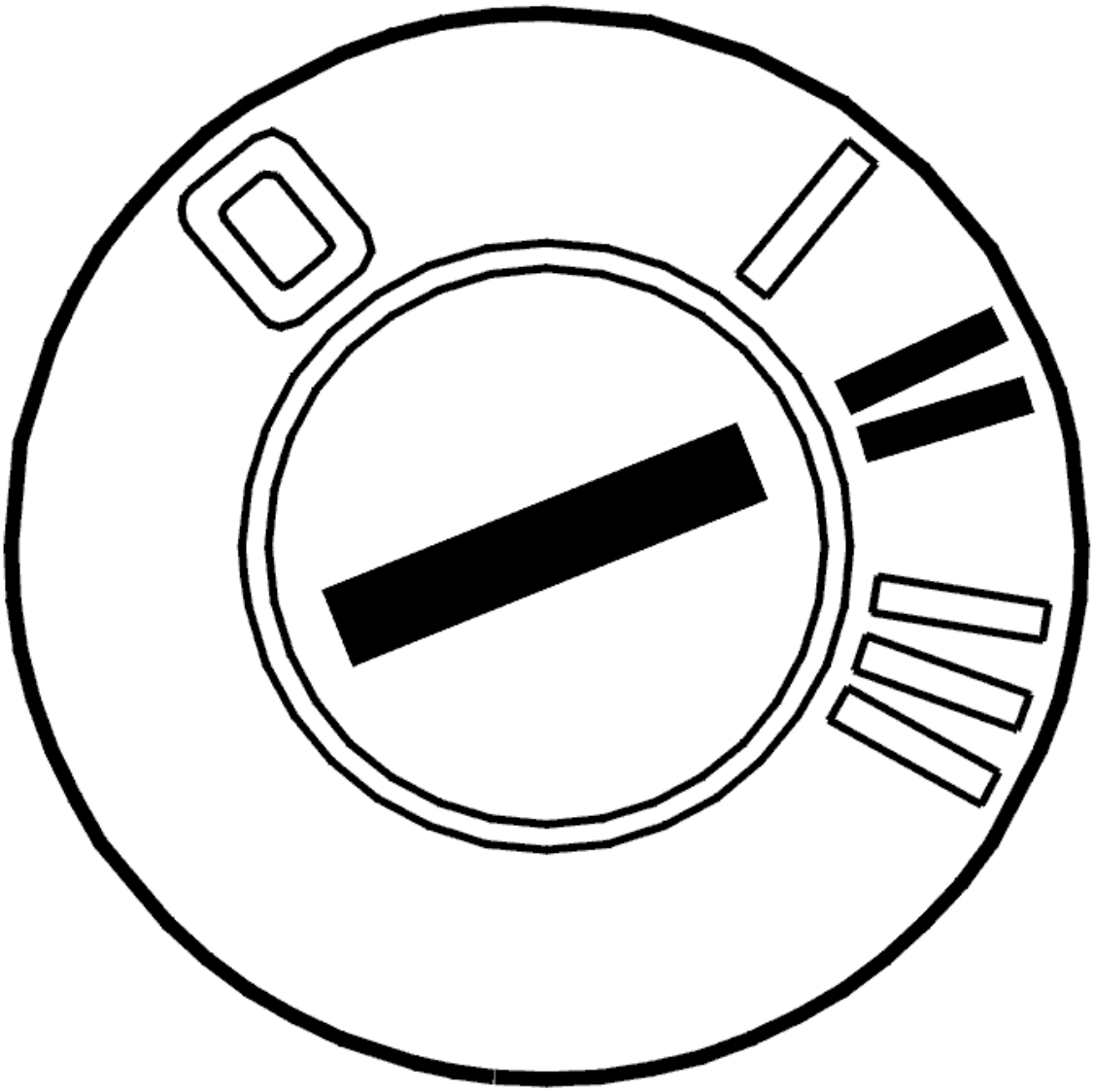

Fig. 194: Identifying Ignition ON
Courtesy of VOLVO CARS CORPORATION

- Start the engine and let it idle for approx. 3-5 minutes to perform the diagnosis.

  Check if the malfunction is permanent or intermittent by reading off the diagnostic trouble code's status when the diagnostic status is "Implemented".

If the trouble status is "Malfunction found", this indicates that the malfunction is permanent. If the trouble status is "No malfunction found", this indicates that the malfunction is intermittent.

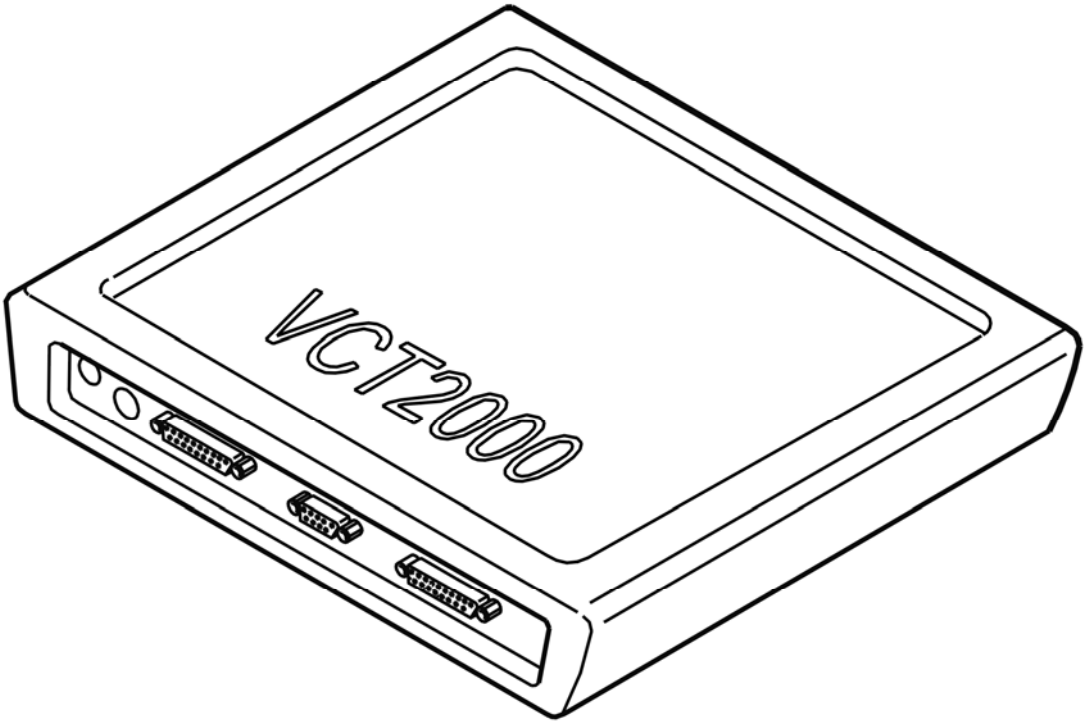

Fig. 195: Identifying VCT2000 Diagnostic Tool Symbol In VIDA
Courtesy of VOLVO CARS CORPORATION

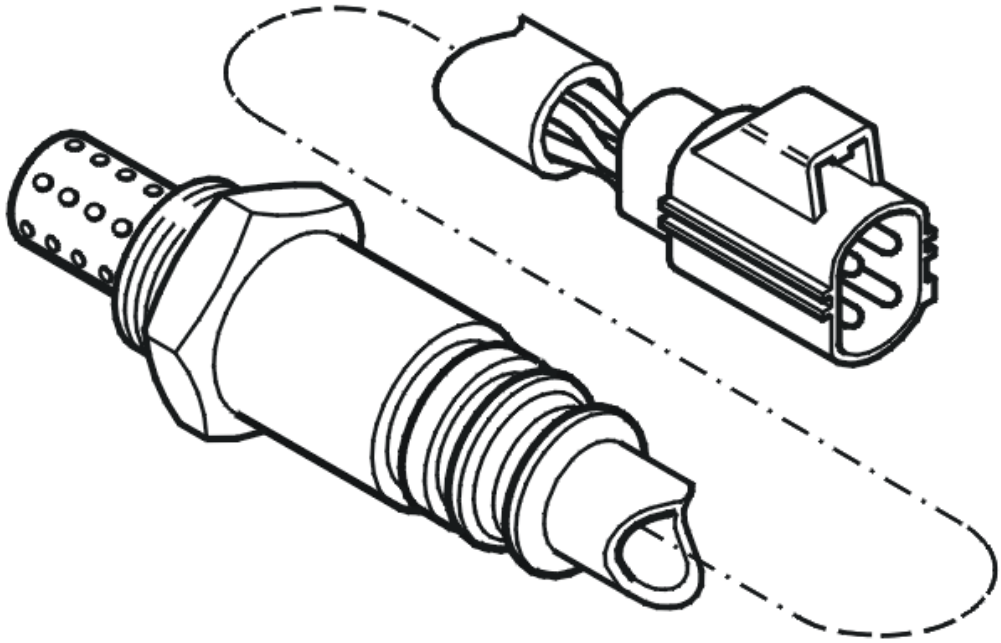

Fig. 196: Identifying Heated Oxygen Sensor
Courtesy of VOLVO CARS CORPORATION

- **Continue**

  Refer to **CHECKING COMPONENTS**

CHECKING COMPONENTS

CAUTION: Do not apply rust solvent spray or grease to the heated oxygen sensor's (HO2S) connector.

Check the cable between the Engine Control Module (ECM) terminal #A41 (#A41) and heated oxygen sensor terminal #4 (bank 1). Check for a short-circuit to supply voltage.

If the above troubleshooting does not solve the problem, try a new heated oxygen sensor.

Remedy as necessary.

Other information

- see **CONNECTING THE BREAKOUT BOX**
- see **SIGNAL SPECIFICATION, ENGINE CONTROL MODULE (ECM)**

- see **HEATED OXYGEN SENSOR (HO2S), REPLACING**
- see **CHECKING WIRING AND TERMINALS**

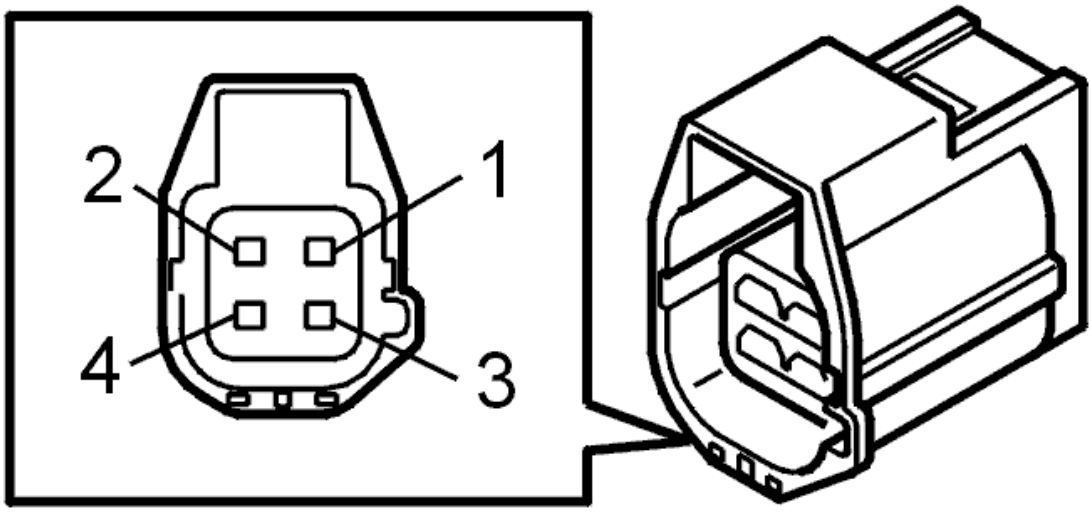

Fig. 197: Identifying 4-Bit Connector
Courtesy of VOLVO CARS CORPORATION

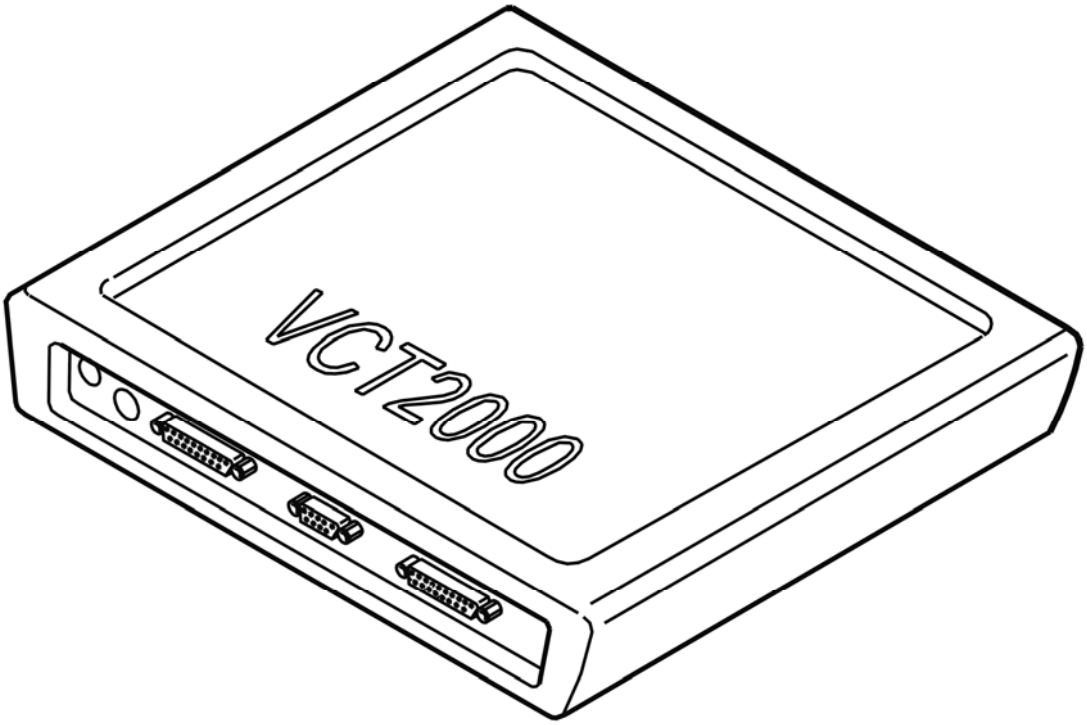

Fig. 198: Identifying VCT2000 Diagnostic Tool Symbol In VIDA
Courtesy of VOLVO CARS CORPORATION

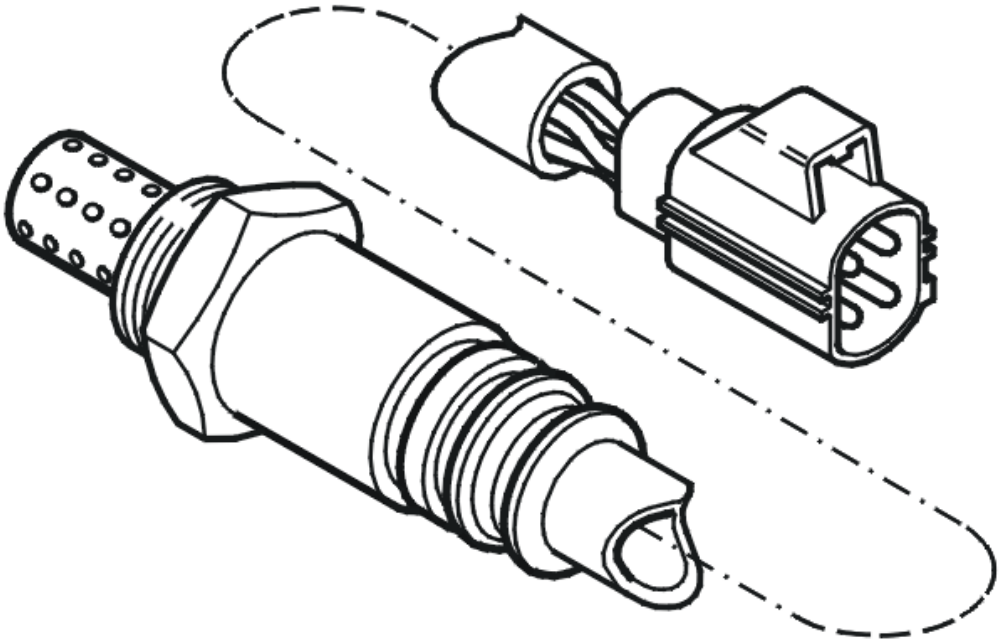

Fig. 199: Identifying Heated Oxygen Sensor
Courtesy of VOLVO CARS CORPORATION

- **Continue**

  Refer to **VERIFICATION**

VERIFICATION

VERIFICATION

HINT: After repairing, it is necessary to check that the malfunction has been fixed.

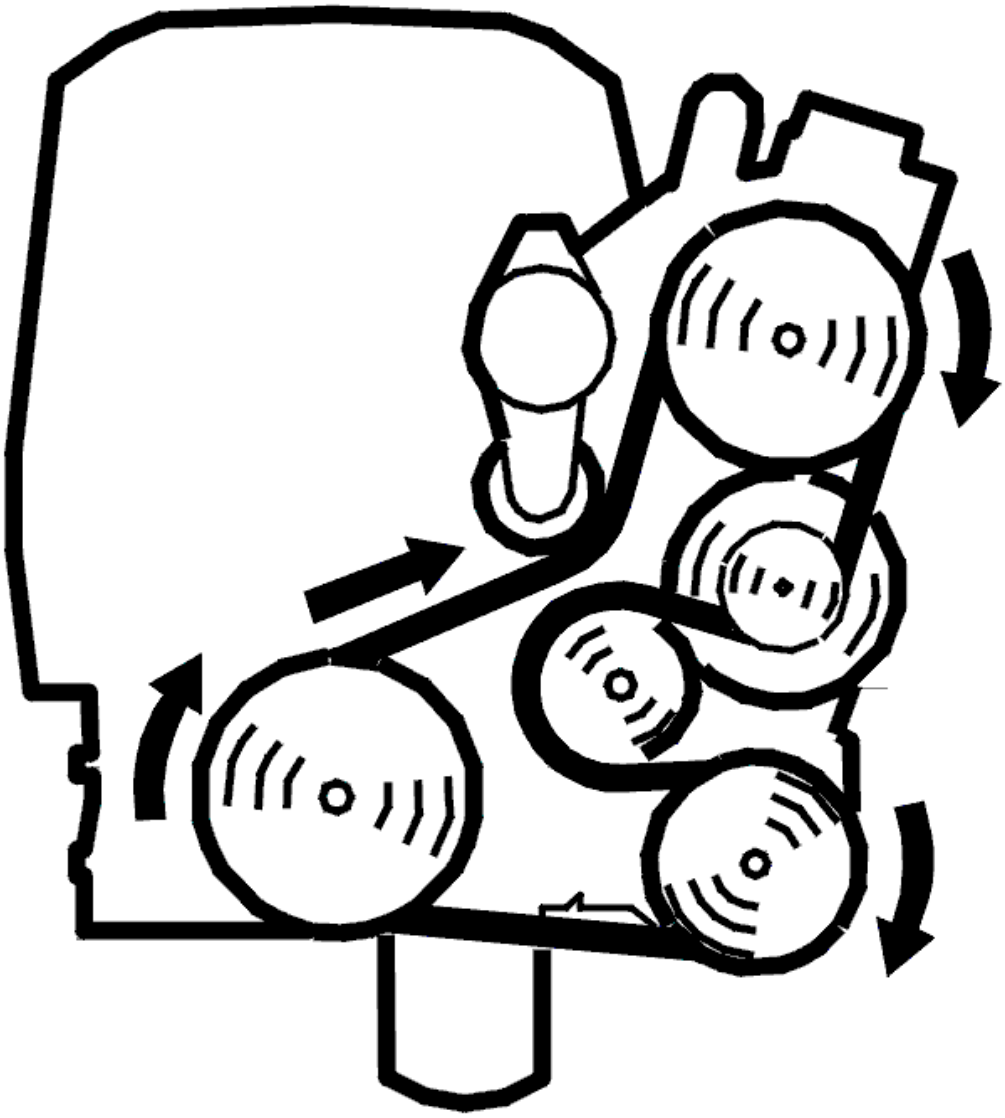

Fig. 200: Belt Routing / Engine Idling - Volvo
Courtesy of VOLVO CARS CORPORATION

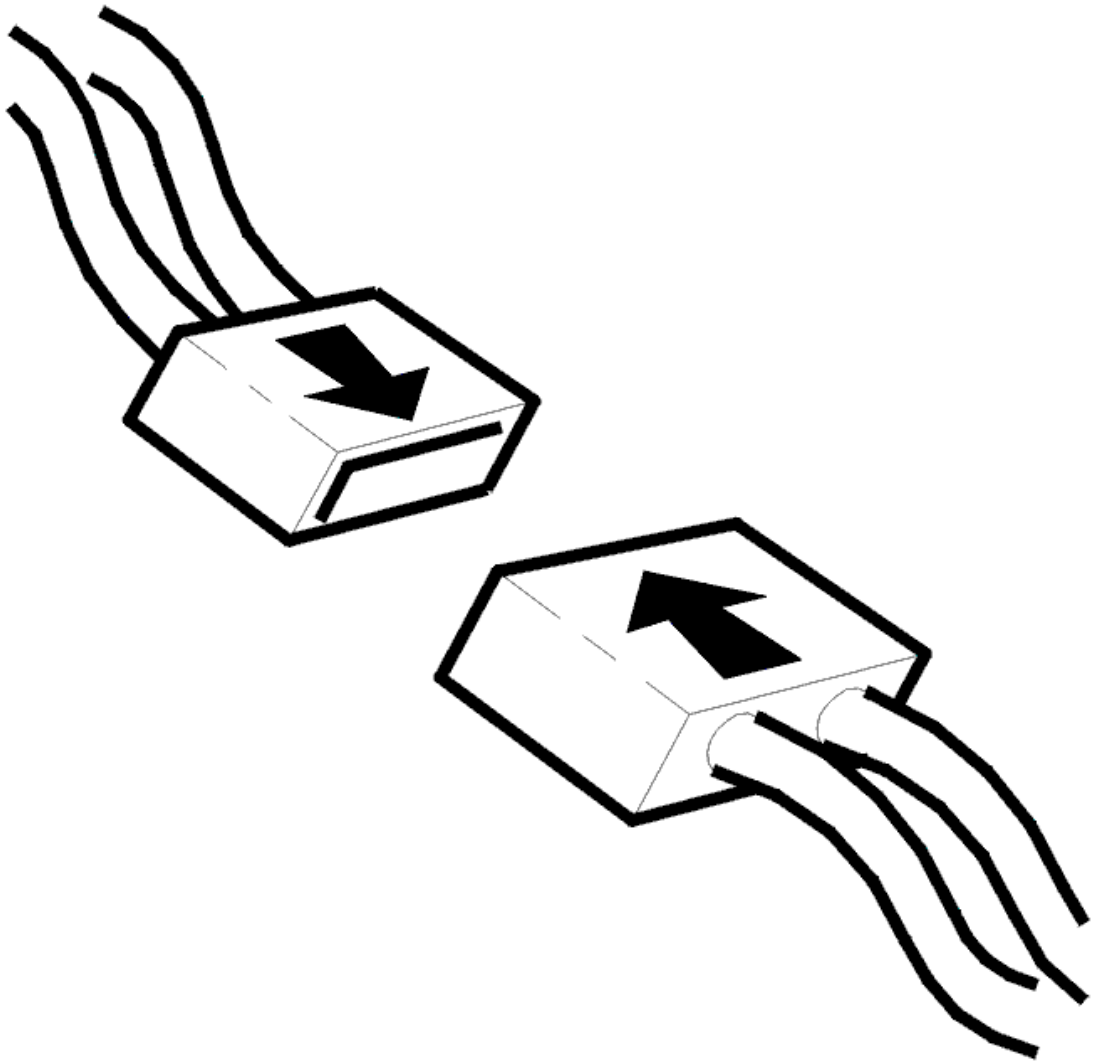

Fig. 201: Connecting Connector
Courtesy of VOLVO CARS CORPORATION

- Ignition off
- Reinstall the connectors, components etc.
- Start the engine to perform the diagnosis.

  Read off the diagnostic status and trouble status for the diagnostic trouble code.

  Check that the diagnosis is "Implemented" and that the trouble status is "No malfunction found". If the trouble status is "Malfunction found", this indicates defective function.

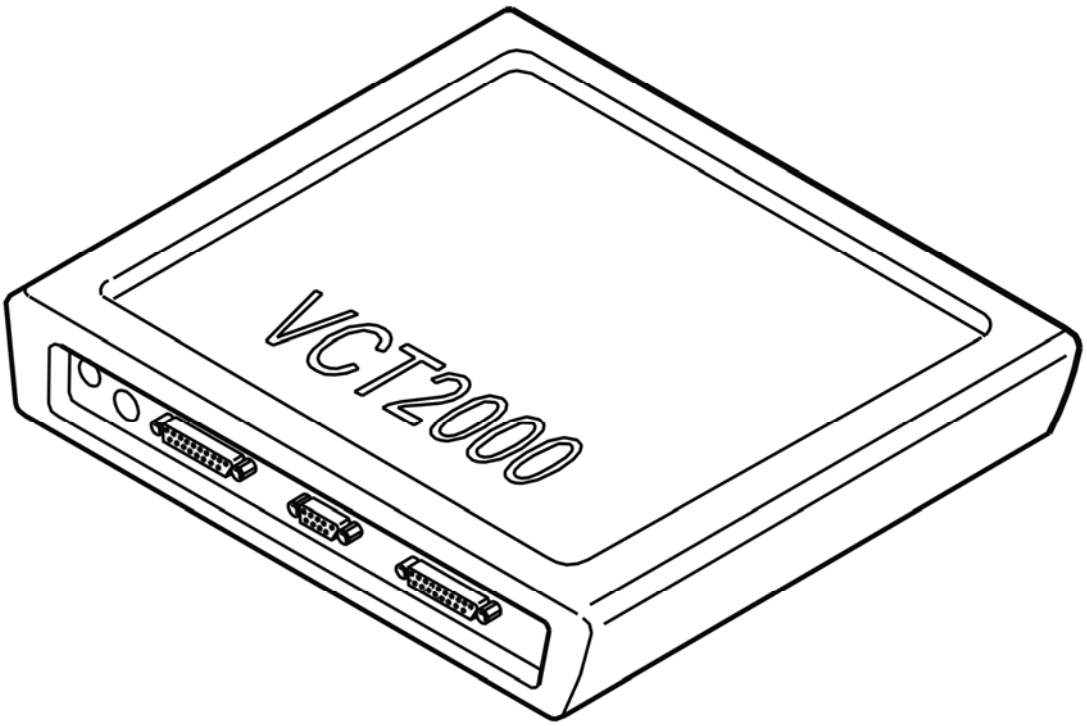

Fig. 202: Identifying VCT2000 Diagnostic Tool Symbol In VIDA
Courtesy of VOLVO CARS CORPORATION

Trouble status shows "No malfunction found"?

- **YES**

  VERIFIED: Troubleshooting has been completed.

- **NO**

  Refer to **INFORMATION**

INFORMATION

FAULT-TRACING INFORMATION

The fault should have been detected and remedied. As this is not the case fault-tracing has failed.

Exit fault-tracing for this diagnostic trouble code (DTC) or make another attempt.

ECM-P115700: LACK OF HO2S22 SWITCHES - SENSOR INDICATES LEAN. GENERAL FAILURE INFORMATION. NO SUB TYPE INFORMATION

(B6324S; 2007-2008)

DIAGNOSTIC TROUBLE CODE (DTC) INFORMATION

Condition

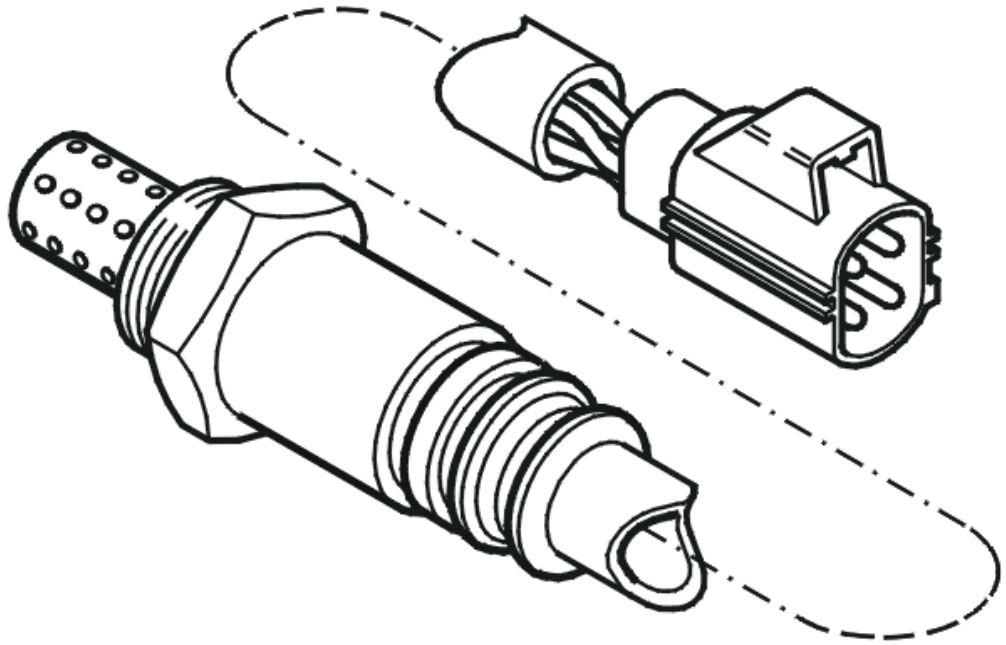

Fig. 203: Identifying Heated Oxygen Sensor
Courtesy of VOLVO CARS CORPORATION

The engine control module (ECM) continuously detects the voltage of the rear lambda probe (bank 2).

The engine's cylinders are counted starting with the cylinder farthest from the engine's flywheel.

If engine control module (ECM) detects that the voltage is not below or above a certain value, the engine control module (ECM) interprets this as a malfunction and generates diagnostic trouble code.

The diagnostic trouble code can be diagnosed after approx. 3-5 minutes with the engine running.

Substitute Value

- Rear heated oxygen sensor control is shut off.

Possible Source

- Contact resistance and oxidation in connections.
- The signal cable is short-circuited to ground.
- Open circuit on signal cable.
- Damaged rear heated oxygen sensor (HO2S).

Fault symptom[s]

- Malfunction indicator light (MIL) on.

FAULT-TRACING

CHECKING THE STATUS

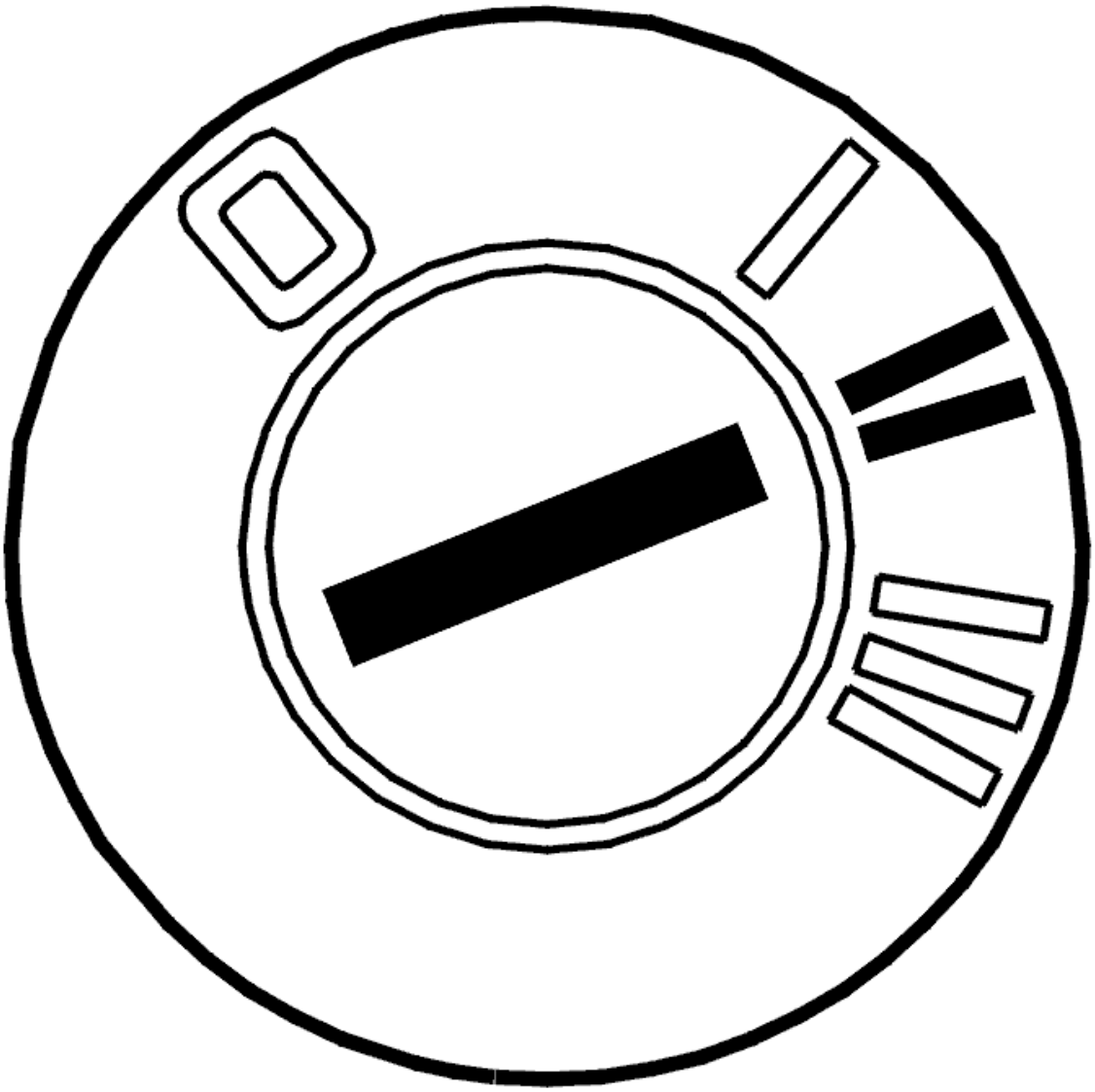

Fig. 204: Identifying Ignition ON
Courtesy of VOLVO CARS CORPORATION

- Start the engine and allow it to idle for 5 minutes.

  Check whether the fault is permanent or intermittent. Read off the diagnostic trouble code (DTC) fault status when the diagnostic status is "Completed".

  The fault is permanent if the fault status is "Fault found". If the status is "No fault found" this indicates that the fault is intermittent.

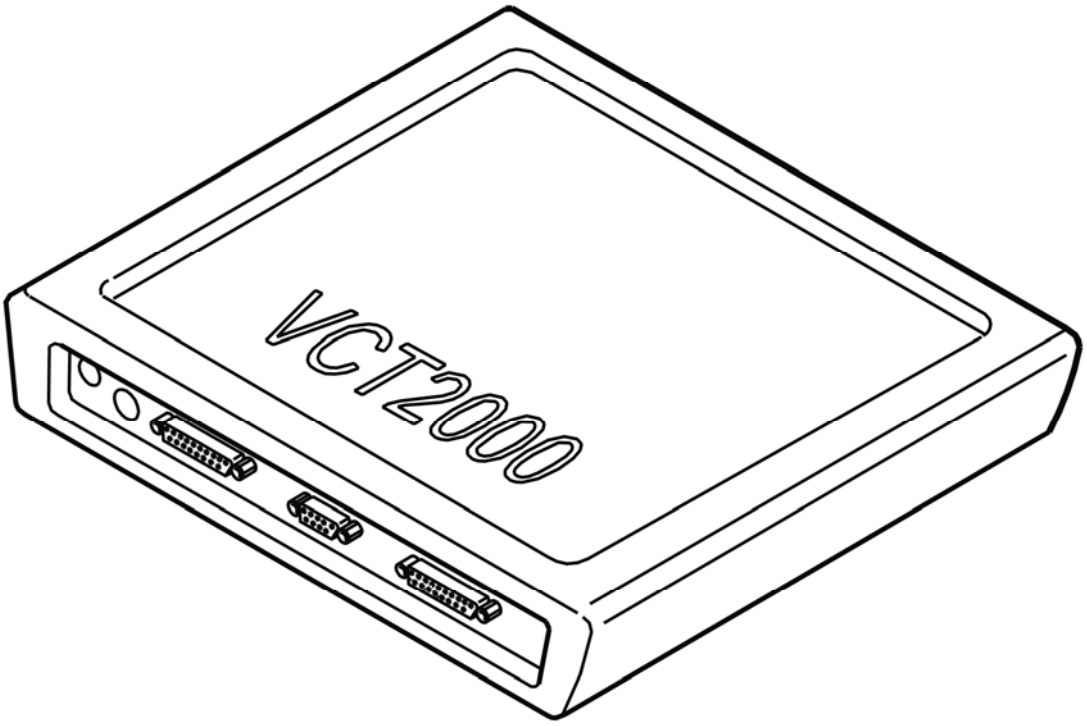

Fig. 205: Identifying VCT2000 Diagnostic Tool Symbol In VIDA
Courtesy of VOLVO CARS CORPORATION

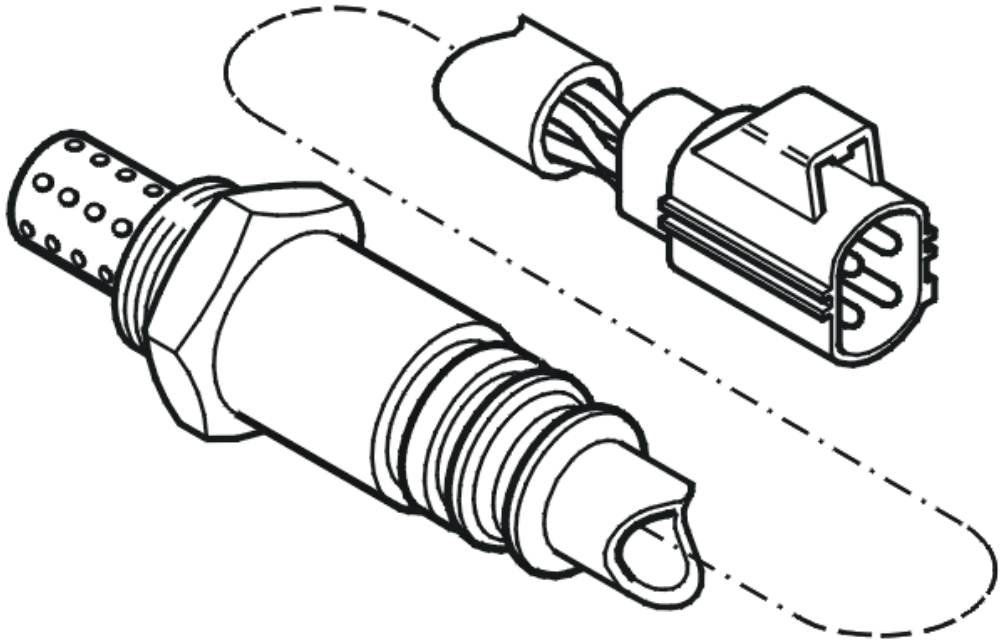

Fig. 206: Identifying Heated Oxygen Sensor
Courtesy of VOLVO CARS CORPORATION

- **Continue**

  Refer to **CHECKING COMPONENTS**

CHECKING COMPONENTS

CAUTION: Do not apply rust solvent spray or grease to the heated oxygen sensor (HO2S) connector.

Check the connector for the rear heated oxygen sensor (bank 2) for contact resistance and oxidation.

Check the signal cable between engine control module (ECM) and rear heated oxygen sensor for contact resistance and oxidation in the connections, open circuit and short-circuit to ground.

Try a new heated oxygen sensor (HO2S) if the above fault-tracing does not remedy the fault.

Remedy as necessary.

Other information

- see **CONNECTING THE BREAKOUT BOX**
- see **SIGNAL SPECIFICATION**
- see **OXYGEN SENSOR (CATALYST MONITOR SENSOR)**
- see **CHECKING WIRING AND TERMINALS**

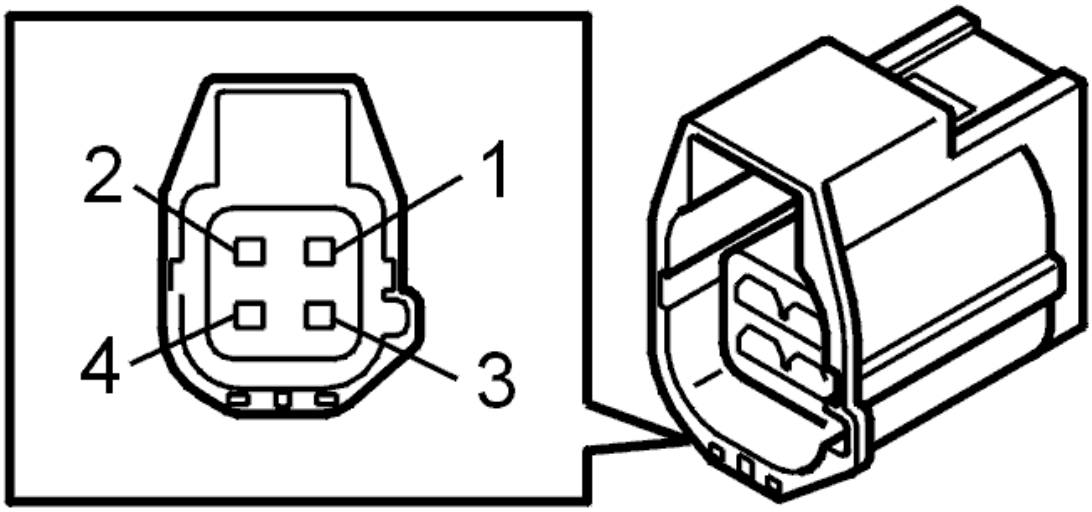

Fig. 207: Identifying 4-Bit Connector
Courtesy of VOLVO CARS CORPORATION

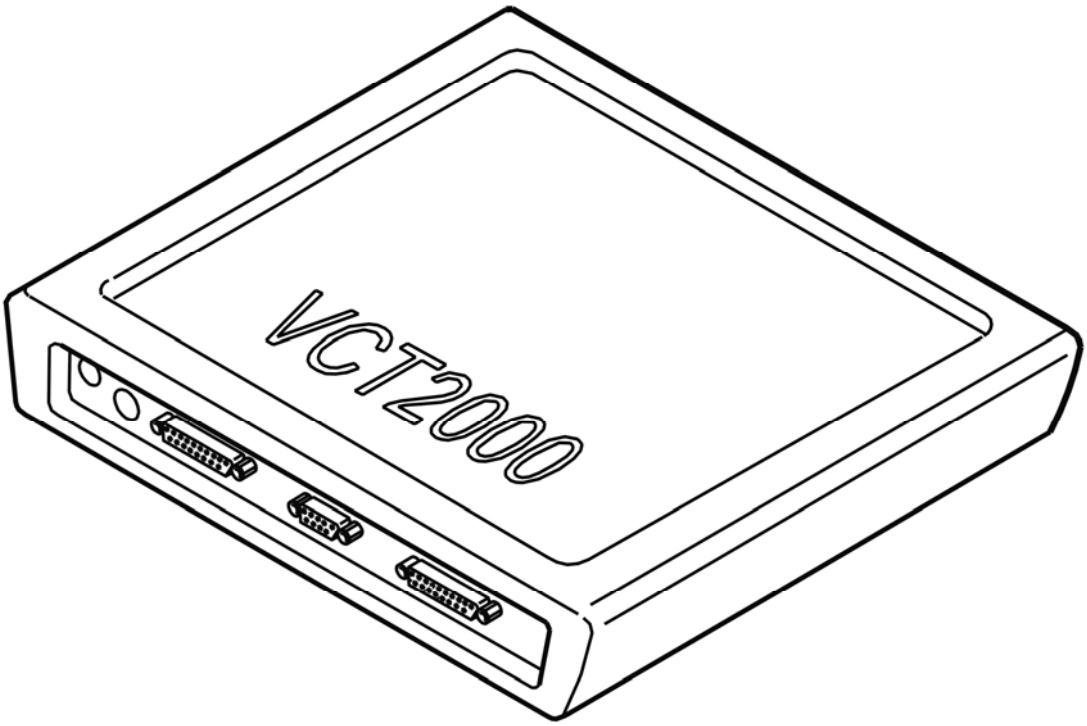

Fig. 208: Identifying VCT2000 Diagnostic Tool Symbol In VIDA
Courtesy of VOLVO CARS CORPORATION

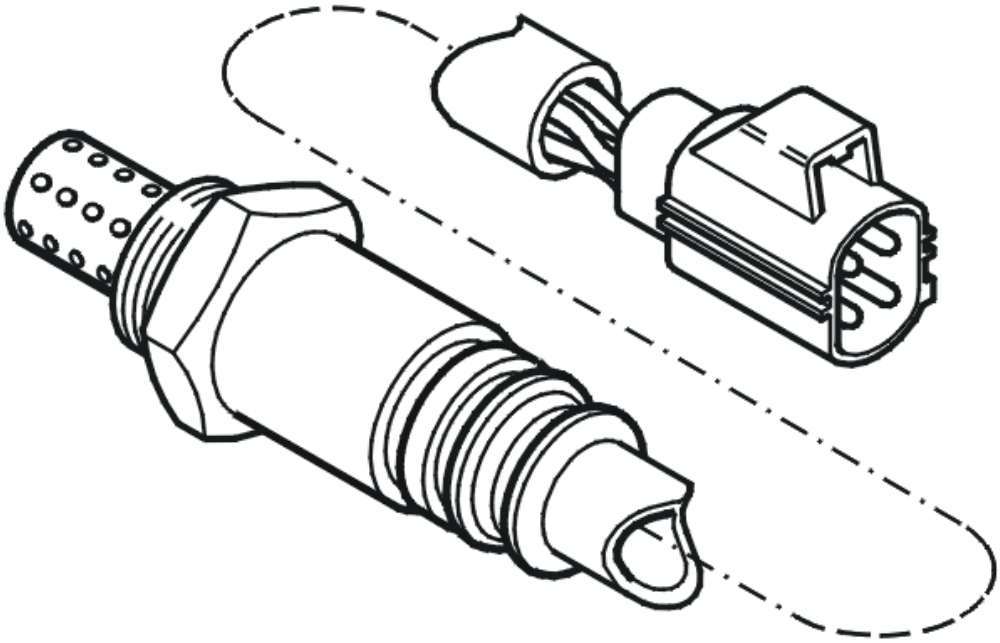

Fig. 209: Identifying Heated Oxygen Sensor
Courtesy of VOLVO CARS CORPORATION

- **Continue**

  Refer to **VERIFICATION**

INFORMATION

FAULT-TRACING INFORMATION

The fault should have been detected and remedied. As this is not the case fault-tracing has failed.

Exit fault-tracing for this diagnostic trouble code (DTC) or make another attempt.

VERIFICATION

VERIFICATION

HINT: After repairing, it is necessary to check that the malfunction has been fixed.

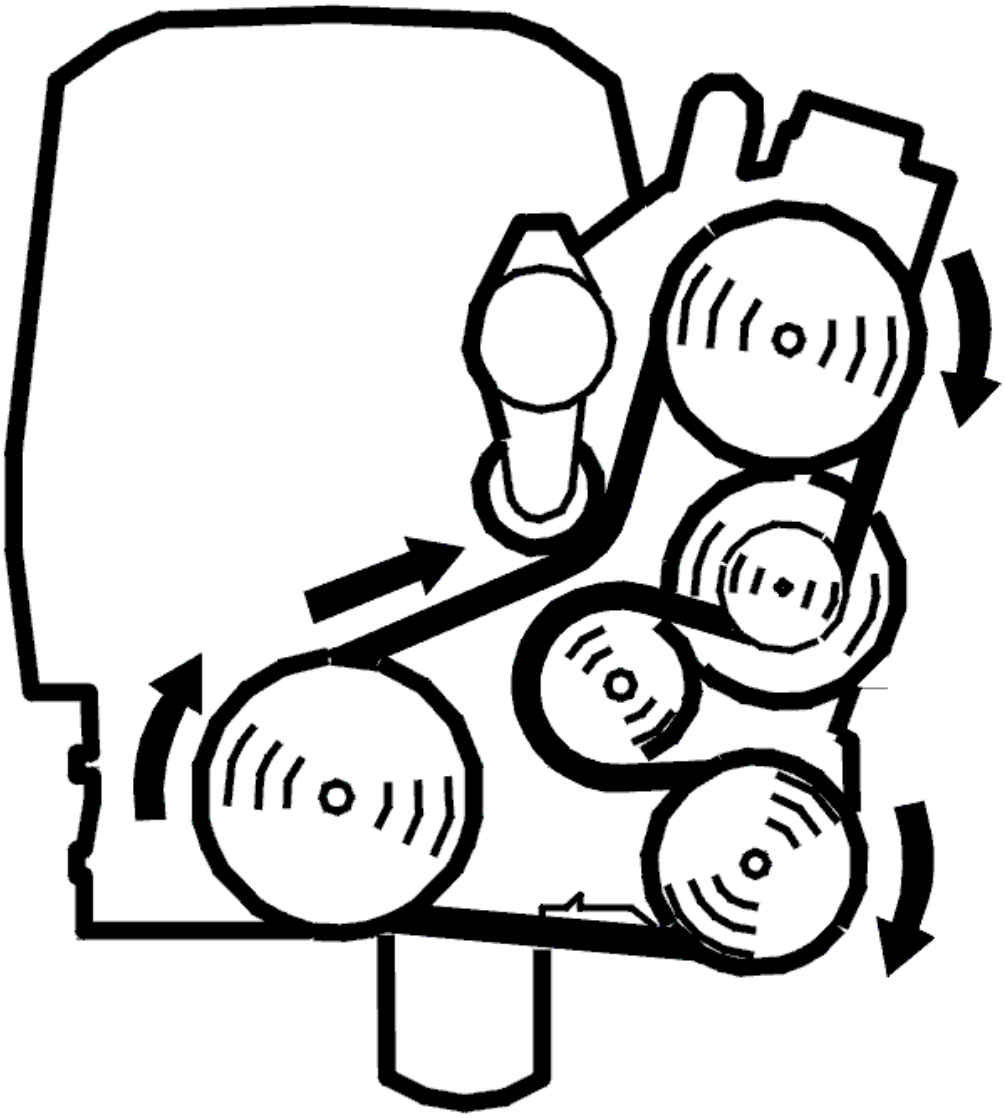

Fig. 210: Belt Routing / Engine Idling - Volvo
Courtesy of VOLVO CARS CORPORATION

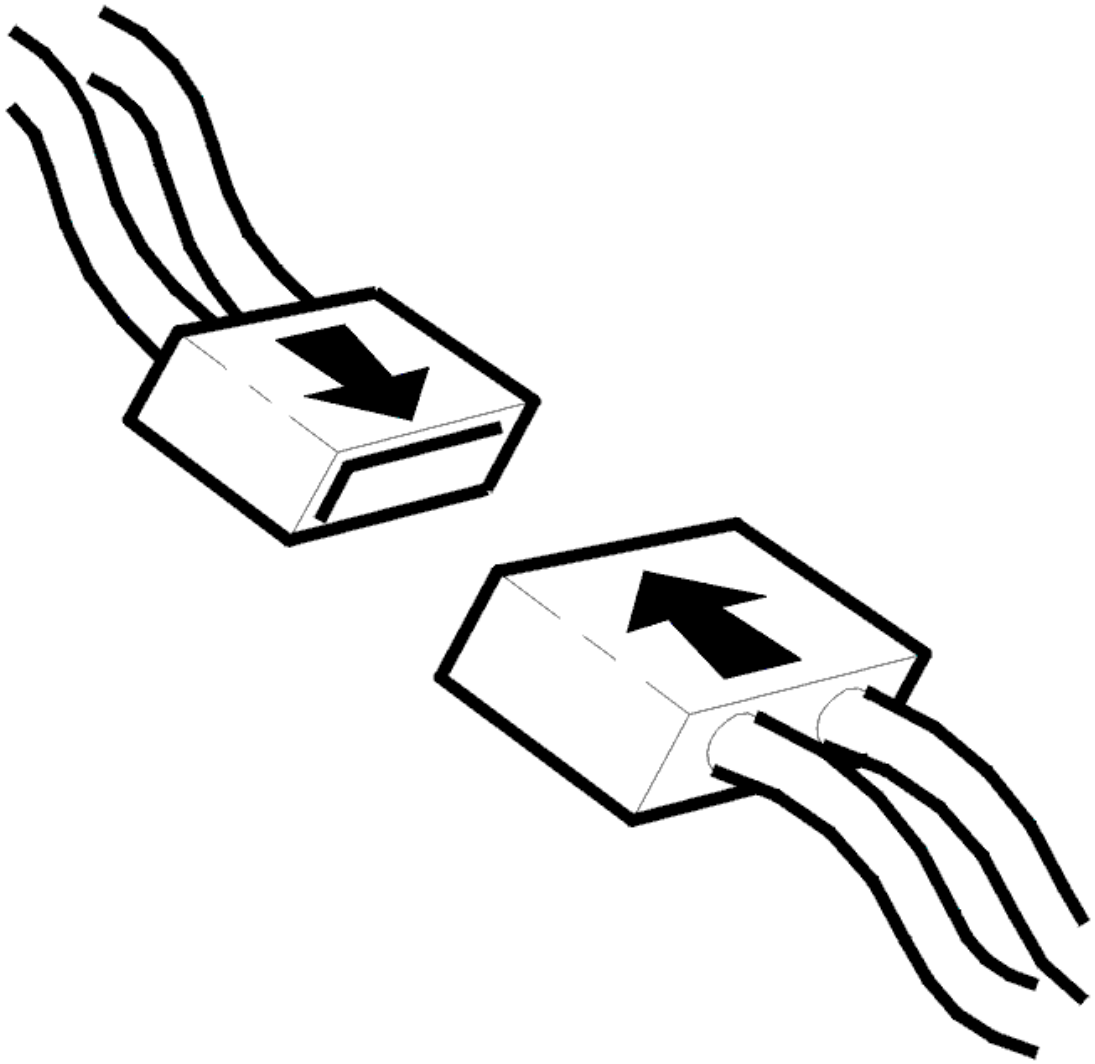

Fig. 211: Connecting Connector
Courtesy of VOLVO CARS CORPORATION

- Ignition off
- Reinstall the connectors, components etc.
- Start the engine to perform the diagnosis.

  Read off the diagnostic status and trouble status for the diagnostic trouble code.

  Check that the diagnosis is "Implemented" and that the trouble status is "No malfunction found". If the trouble status is "Malfunction found", this indicates defective function.

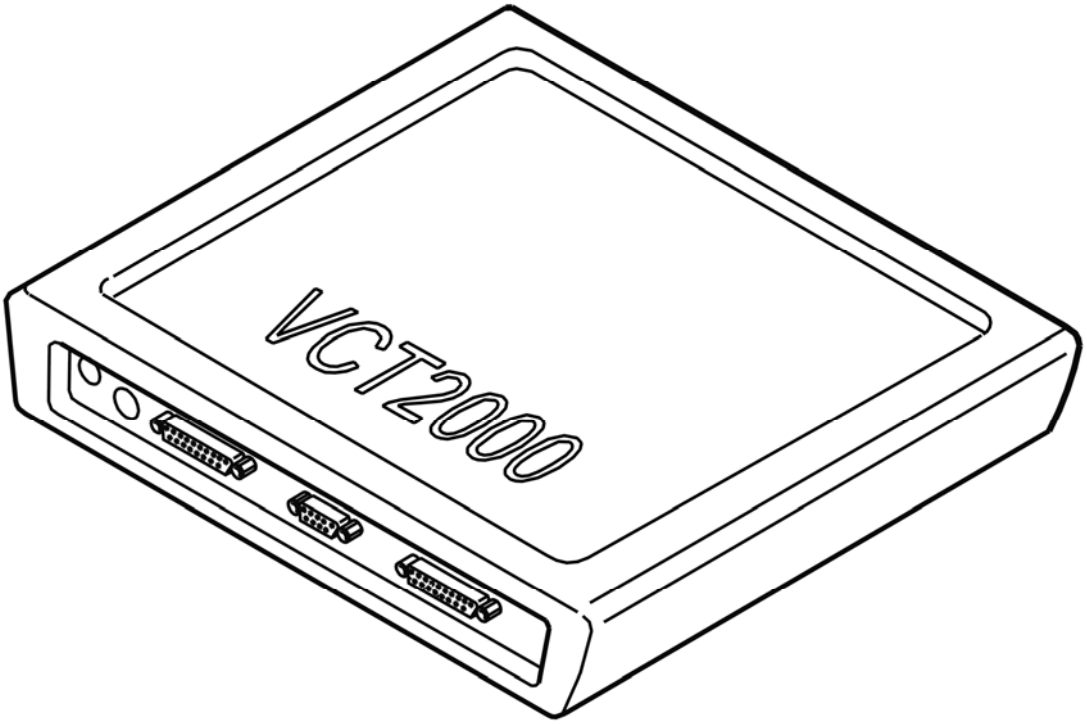

Fig. 212: Identifying VCT2000 Diagnostic Tool Symbol In VIDA
Courtesy of VOLVO CARS CORPORATION

Trouble status shows "No malfunction found"?

- **YES**

  VERIFIED: Troubleshooting has been completed.

- **NO**

  Refer to **INFORMATION**

ECM-P115700: LACK OF HO2S22 SWITCHES - SENSOR INDICATES LEAN. GENERAL FAILURE INFORMATION. NO SUB TYPE INFORMATION (B8444S; 2005-2007)

DIAGNOSTIC TROUBLE CODE (DTC) INFORMATION

Condition

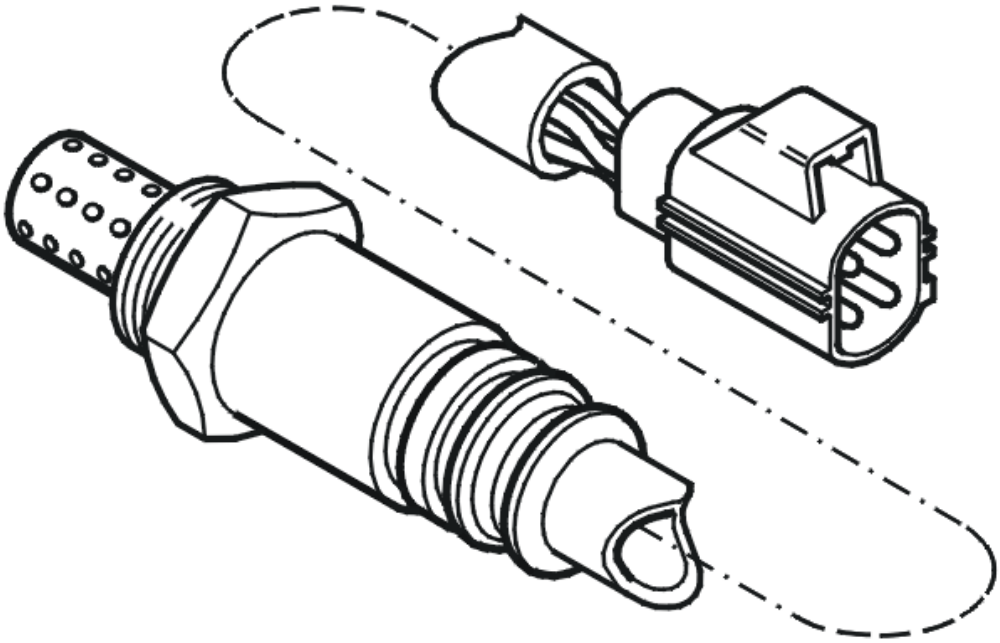

Fig. 213: Identifying Heated Oxygen Sensor
Courtesy of VOLVO CARS CORPORATION

The engine control module (ECM) continuously detects the voltage of the rear lambda probe (bank 2).

The engine's cylinders are counted starting with the cylinder farthest from the engine's flywheel.

- Bank 1 (cylinder row nearest the front): cylinders 1, 3, 5 and 7.
- Bank 2 (cylinder row furthest to the rear, nearest the passenger compartment): cylinders 2, 4, 6, and 8.

If engine control module (ECM) detects that the voltage is not below or above a certain value, the engine control module (ECM) interprets this as a malfunction and generates diagnostic trouble code.

The diagnostic trouble code can be diagnosed after approx. 3-5 minutes with the engine running.

Substitute Value

- Rear heated oxygen sensor control is shut off.

Possible Source

- Contact resistance and oxidation in connections.
- The signal cable is short-circuited to ground.

- Open circuit on signal cable.
- Damaged rear heated oxygen sensor (HO2S).

Fault symptom[s]

- Malfunction indicator light (MIL) on.

FAULT-TRACING

CHECKING THE STATUS

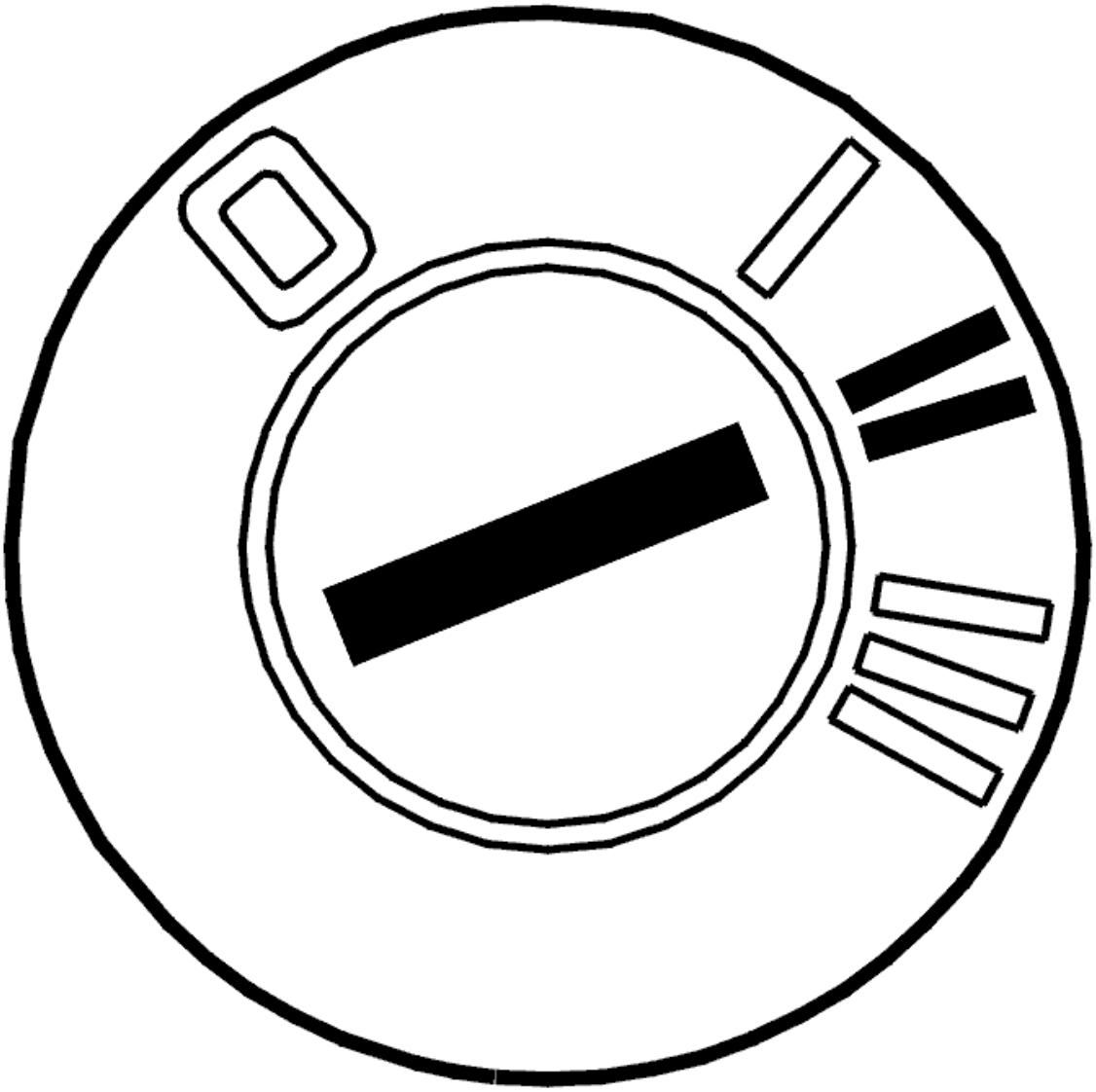

Fig. 214: Identifying Ignition ON
Courtesy of VOLVO CARS CORPORATION

- Start the engine and let it idle for approx. 3-5 minutes to perform the diagnosis.

Check if the malfunction is permanent or intermittent by reading off the diagnostic trouble code's status when the diagnostic status is "Implemented".

If the trouble status is "Malfunction found", this indicates that the malfunction is permanent. If the trouble status is "No malfunction found", this indicates that the malfunction is intermittent.

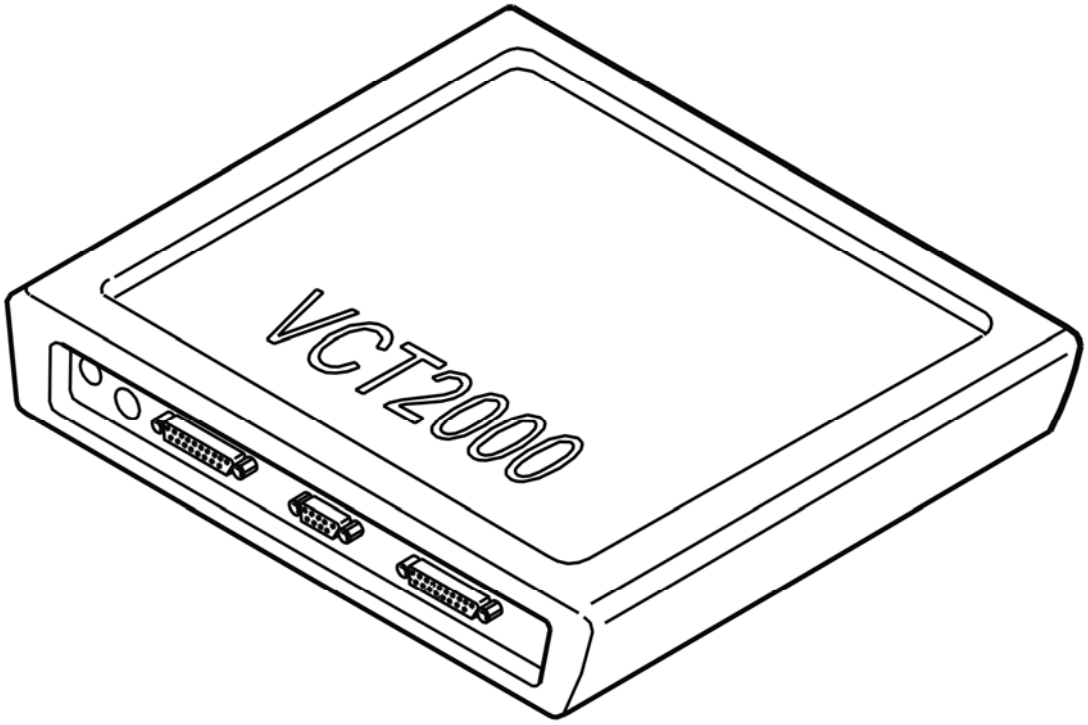

Fig. 215: Identifying VCT2000 Diagnostic Tool Symbol In VIDA
Courtesy of VOLVO CARS CORPORATION

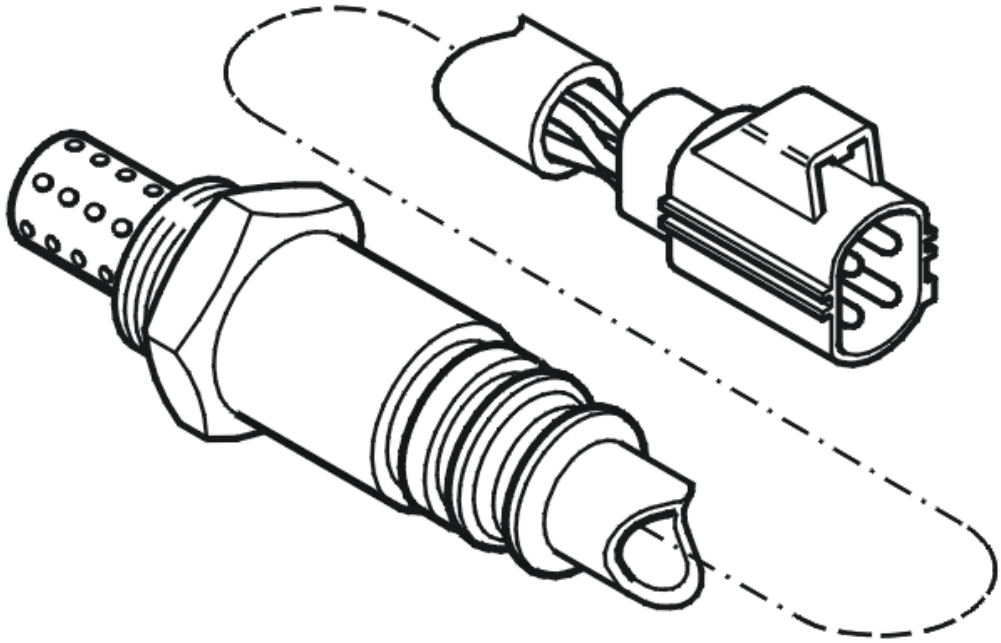

Fig. 216: Identifying Heated Oxygen Sensor
Courtesy of VOLVO CARS CORPORATION

- **Continue**

  Refer to **CHECKING COMPONENTS**

CHECKING COMPONENTS

CAUTION: Do not apply rust solvent spray or grease to the heated oxygen sensor's (HO2S) connector.

Check the connector for the rear heated oxygen sensor (bank 2) for contact resistance and oxidation.

Check the cable between Engine Control Module (ECM) #A40 (#A40) and heated oxygen sensor #4 for contact resistance and oxidation in connections, open circuit and short-circuit to ground.

If the above troubleshooting does not solve the problem, try a new heated oxygen sensor.

Remedy as necessary.

Other information

- see **CONNECTING THE BREAKOUT BOX**
- see **SIGNAL SPECIFICATION, ENGINE CONTROL MODULE (ECM)**
- see **HEATED OXYGEN SENSOR (HO2S), REPLACING**
- see **CHECKING WIRING AND TERMINALS**

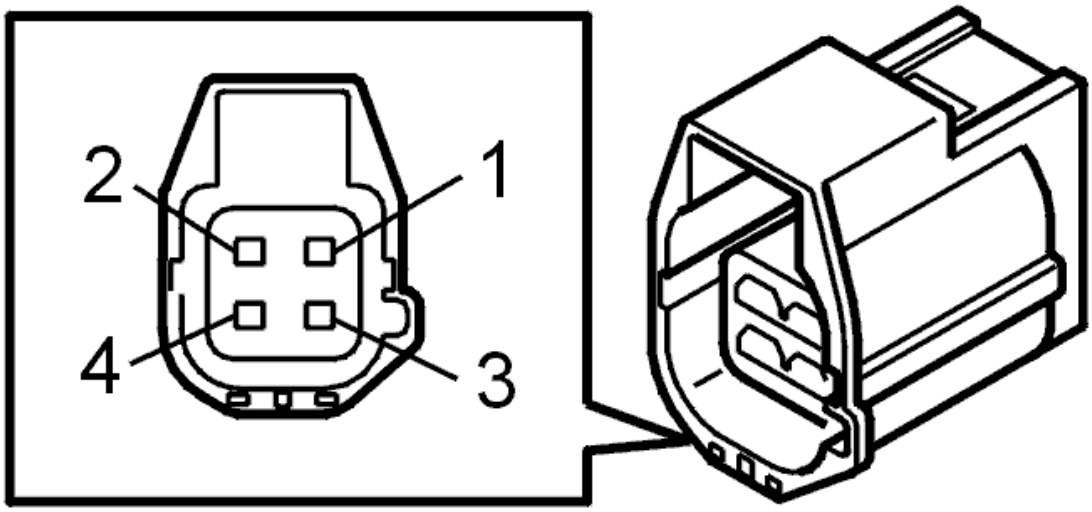

Fig. 217: Identifying 4-Bit Connector
Courtesy of VOLVO CARS CORPORATION

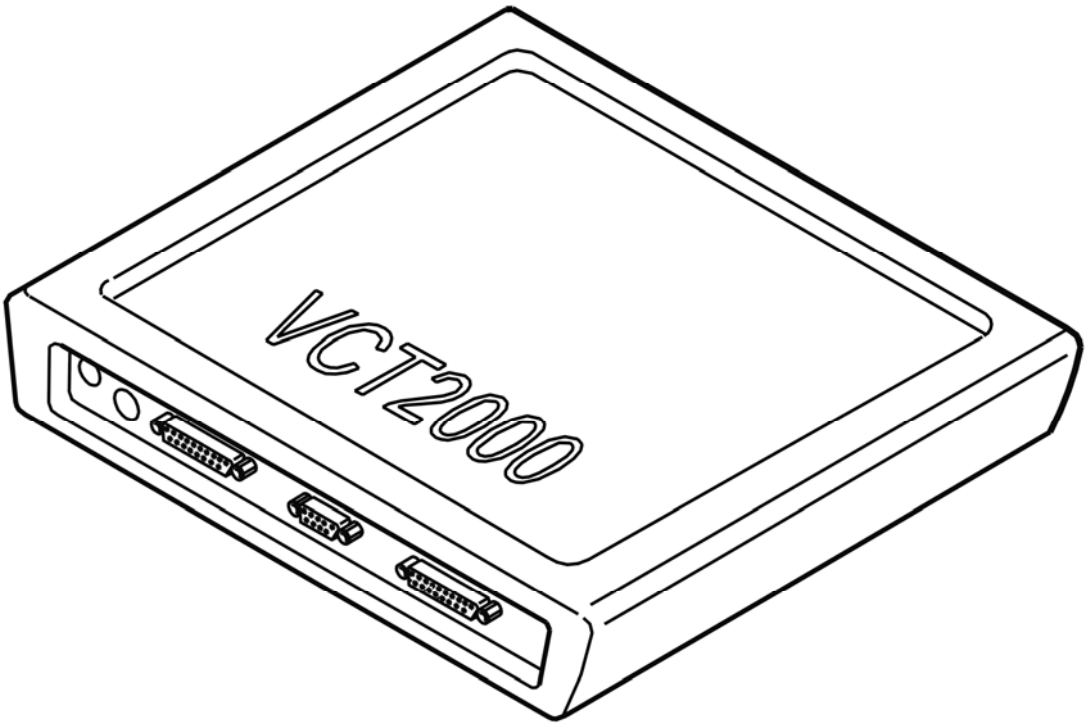

Fig. 218: Identifying VCT2000 Diagnostic Tool Symbol In VIDA
Courtesy of VOLVO CARS CORPORATION

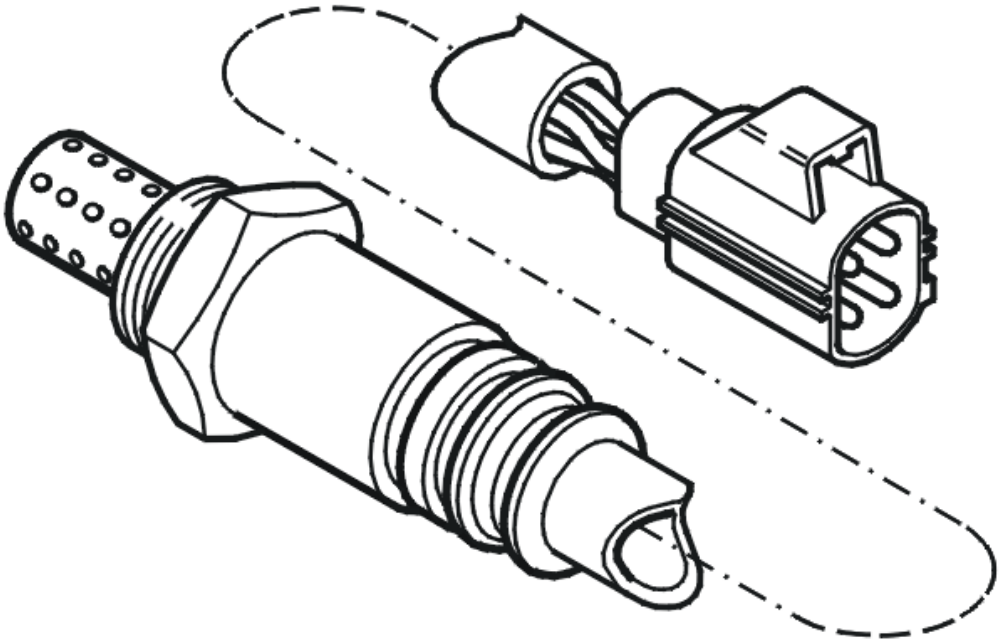

Fig. 219: Identifying Heated Oxygen Sensor
Courtesy of VOLVO CARS CORPORATION

- **Continue**

  Refer to **VERIFICATION**

VERIFICATION

VERIFICATION

HINT: After repairing, it is necessary to check that the malfunction has been fixed.

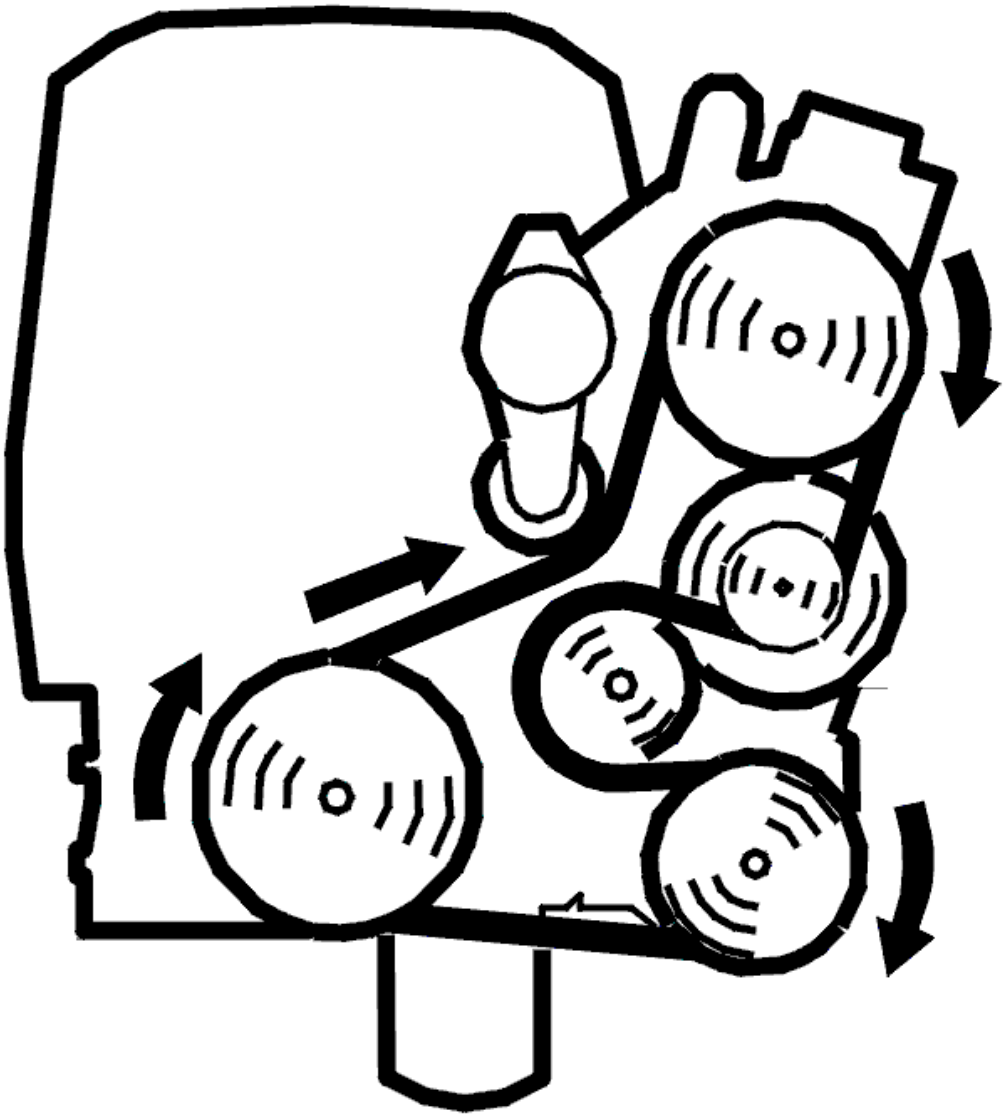

Fig. 220: Belt Routing / Engine Idling - Volvo
Courtesy of VOLVO CARS CORPORATION

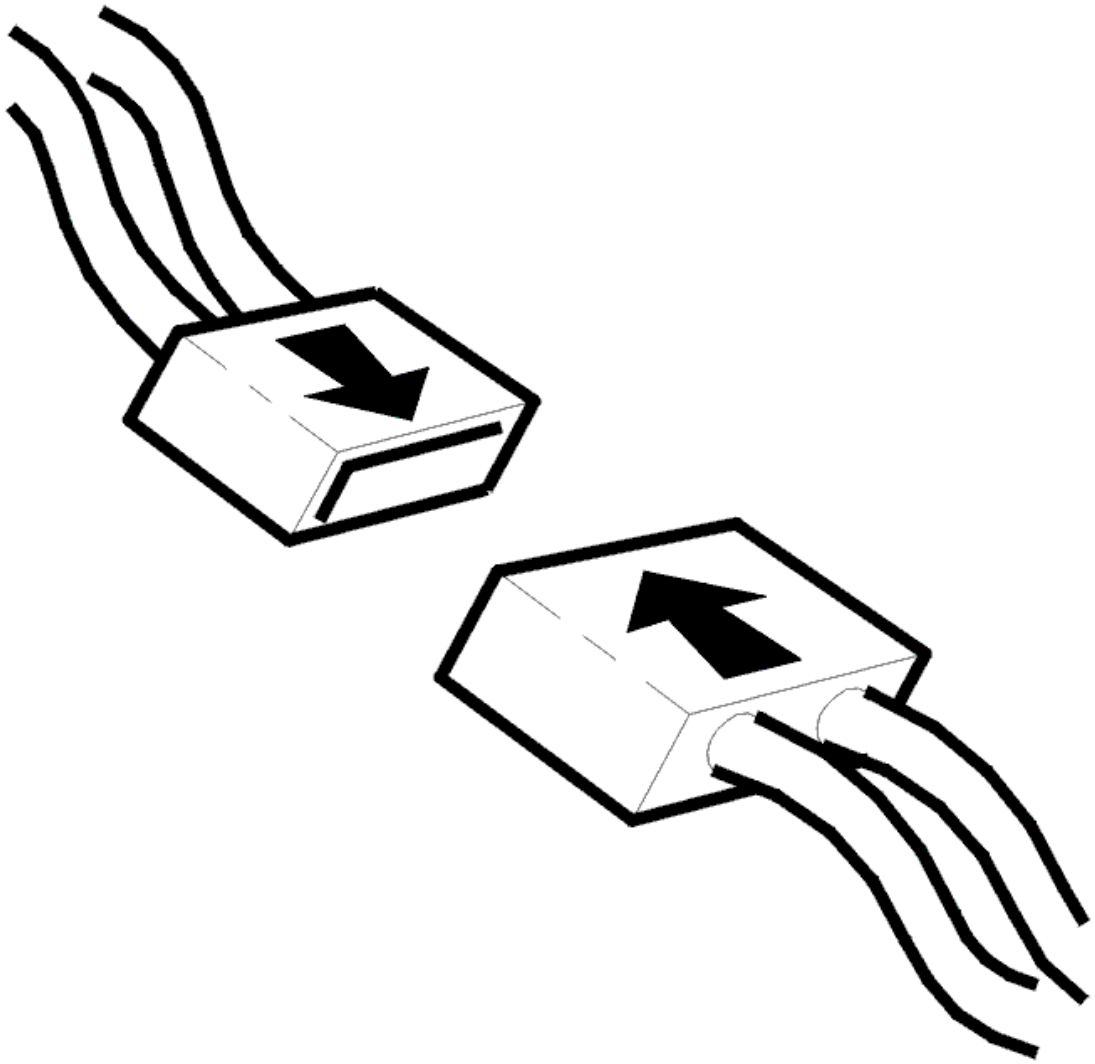

Fig. 221: Connecting Connector
Courtesy of VOLVO CARS CORPORATION

- Ignition off
- Reinstall the connectors, components etc.
- Start the engine to perform the diagnosis.

  Read off the diagnostic status and trouble status for the diagnostic trouble code.

  Check that the diagnosis is "Implemented" and that the trouble status is "No malfunction found". If the trouble status is "Malfunction found", this indicates defective function.

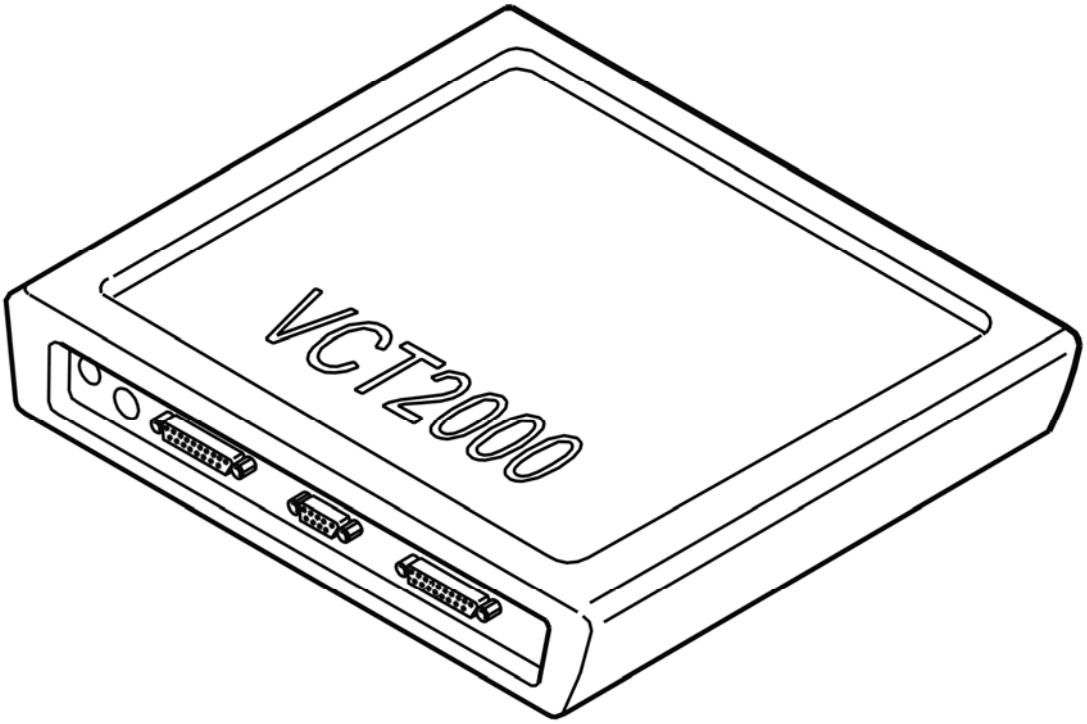

Fig. 222: Identifying VCT2000 Diagnostic Tool Symbol In VIDA
Courtesy of VOLVO CARS CORPORATION

Trouble status shows "No malfunction found"?

- **YES**

  VERIFIED: Troubleshooting has been completed.

- **NO**

  Refer to **INFORMATION**

INFORMATION

FAULT-TRACING INFORMATION

The fault should have been detected and remedied. As this is not the case fault-tracing has failed.

Exit fault-tracing for this diagnostic trouble code (DTC) or make another attempt.

ECM-P115800: LACK OF HO2S22 SWITCHES - SENSOR INDICATES RICH. GENERAL FAILURE INFORMATION. NO SUB TYPE INFORMATION

(B6324S; 2007-2008)

DIAGNOSTIC TROUBLE CODE (DTC) INFORMATION

Condition

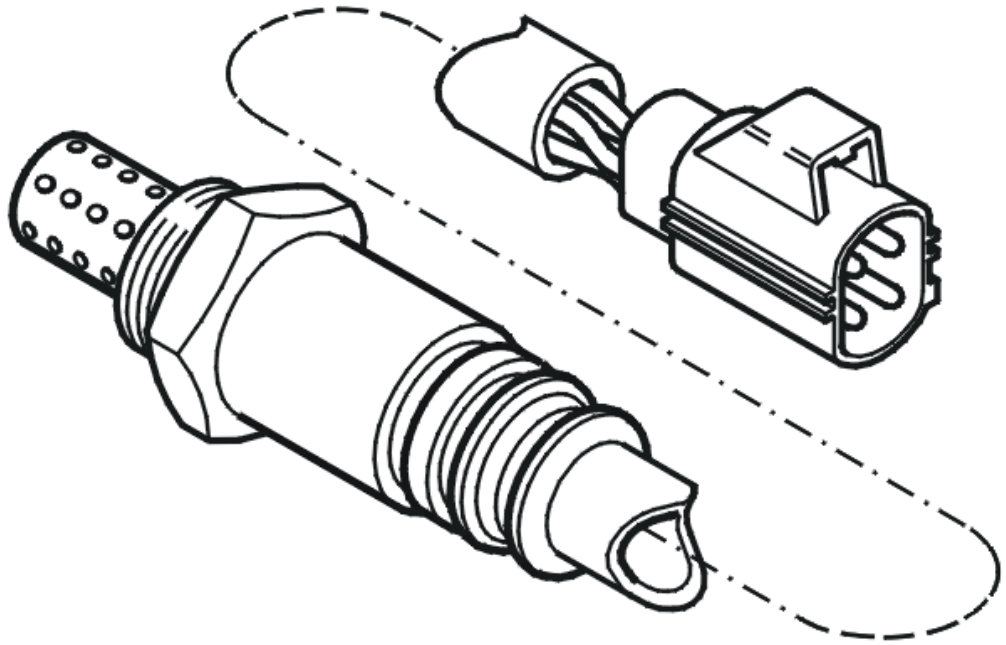

Fig. 223: Identifying Heated Oxygen Sensor
Courtesy of VOLVO CARS CORPORATION

The engine control module (ECM) continuously detects the voltage of the rear lambda probe (bank 2).

The engine's cylinders are counted starting with the cylinder farthest from the engine's flywheel.

If engine control module (ECM) detects that the voltage is not below or above a certain value, the engine control module (ECM) interprets this as a malfunction and generates diagnostic trouble code.

The diagnostic trouble code can be diagnosed after approx. 3-5 minutes with the engine running.

Substitute Value

- Rear heated oxygen sensor control is shut off.

Possible Source

- The signal cable is short-circuited to voltage.

Fault symptom[s]

- Malfunction indicator light (MIL) on.

FAULT-TRACING

CHECKING THE STATUS

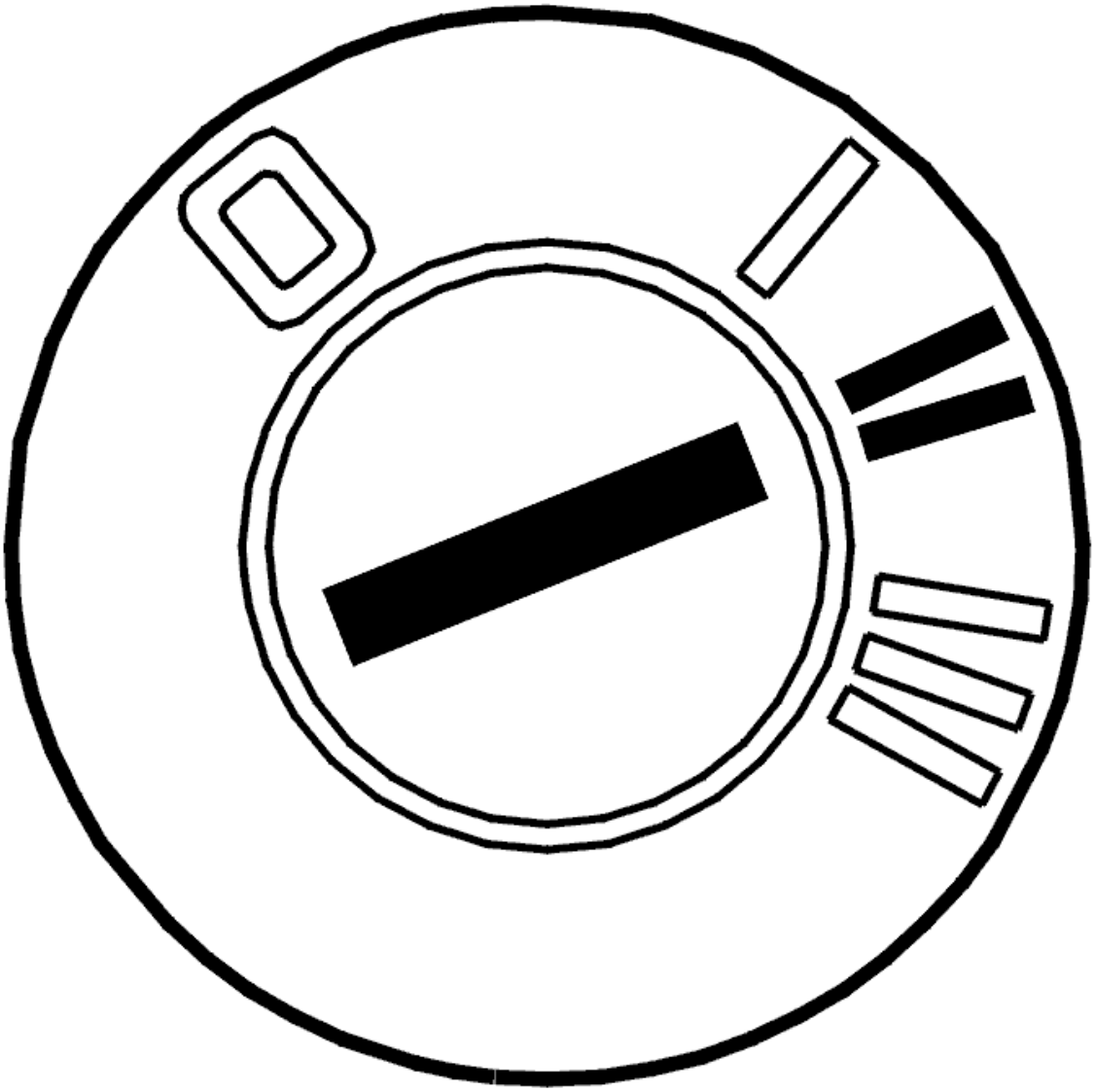

Fig. 224: Identifying Ignition ON
Courtesy of VOLVO CARS CORPORATION

- Start the engine and let it idle for approx. 3-5 minutes to perform the diagnosis.

  Check if the malfunction is permanent or intermittent by reading off the diagnostic trouble code's status

when the diagnostic status is "Implemented".

If the trouble status is "Malfunction found", this indicates that the malfunction is permanent. If the trouble status is "No malfunction found", this indicates that the malfunction is intermittent.

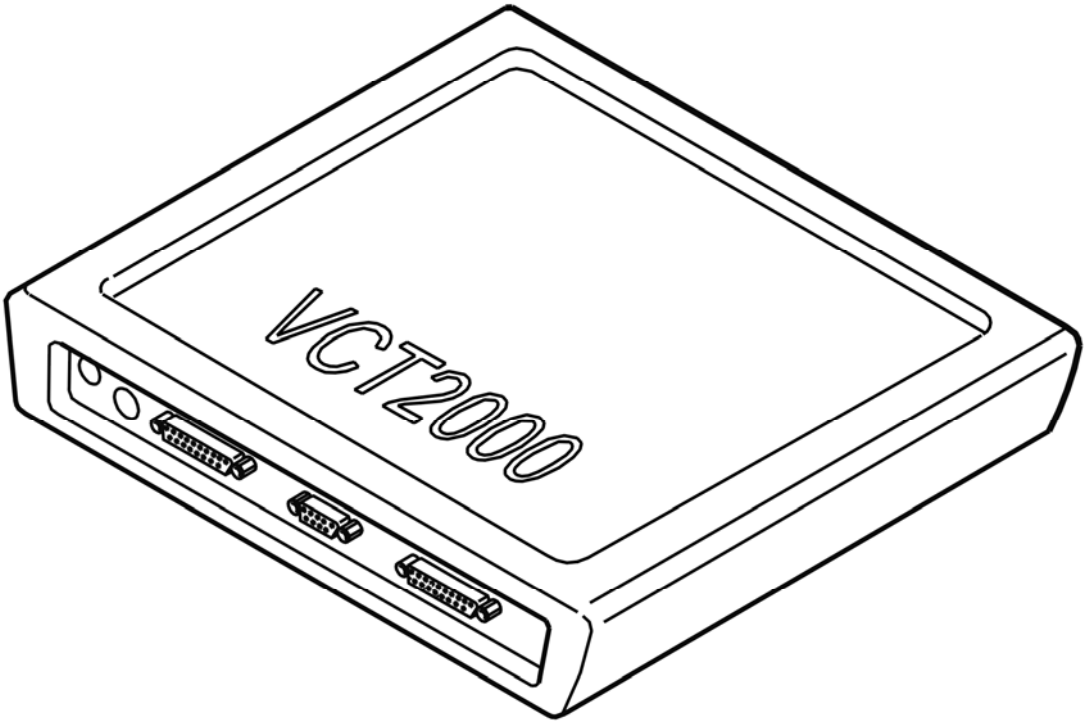

Fig. 225: Identifying VCT2000 Diagnostic Tool Symbol In VIDA
Courtesy of VOLVO CARS CORPORATION

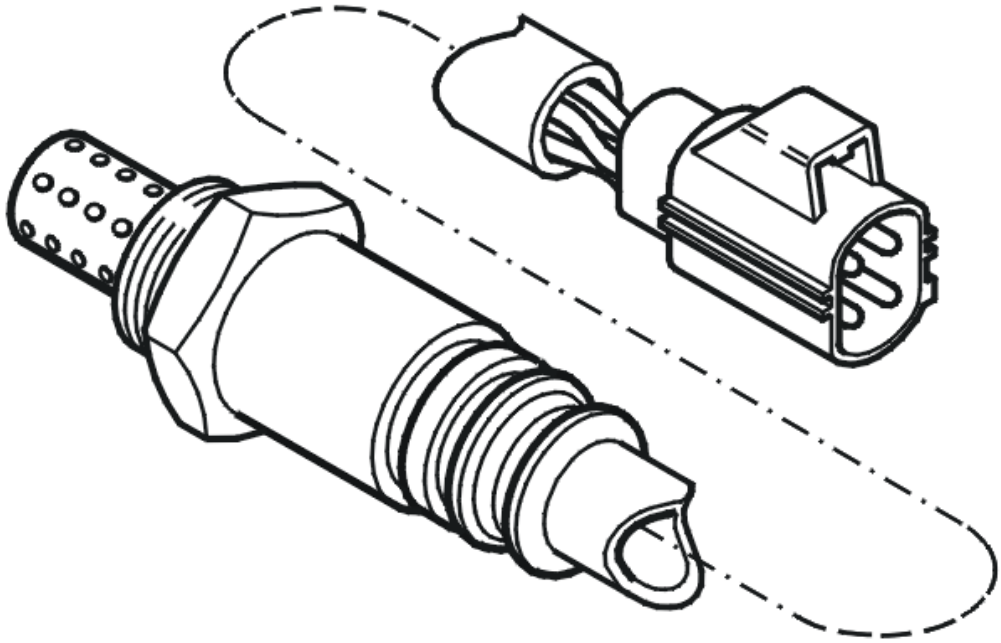

Fig. 226: Identifying Heated Oxygen Sensor
Courtesy of VOLVO CARS CORPORATION

- **Continue**

  Refer to **CHECKING COMPONENTS**

CHECKING COMPONENTS

CAUTION: Do not apply rust solvent spray or grease to the heated oxygen sensor's (HO2S) connector.

Check the signal cable between the Engine Control Module (ECM) and rear heated oxygen sensor for short-circuiting to voltage.

If the above troubleshooting does not solve the problem, try a new heated oxygen sensor.

Remedy as necessary.

Other information

- see **CONNECTING THE BREAKOUT BOX**
- see **SIGNAL SPECIFICATION**

- see **OXYGEN SENSOR (CATALYST MONITOR SENSOR)**
- see **CHECKING WIRING AND TERMINALS**

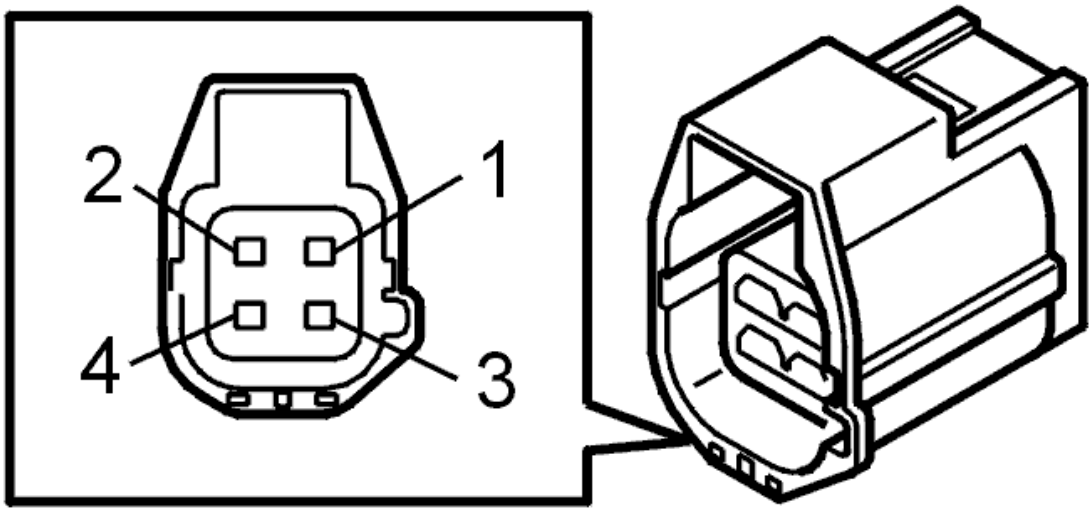

Fig. 227: Identifying 4-Bit Connector
Courtesy of VOLVO CARS CORPORATION

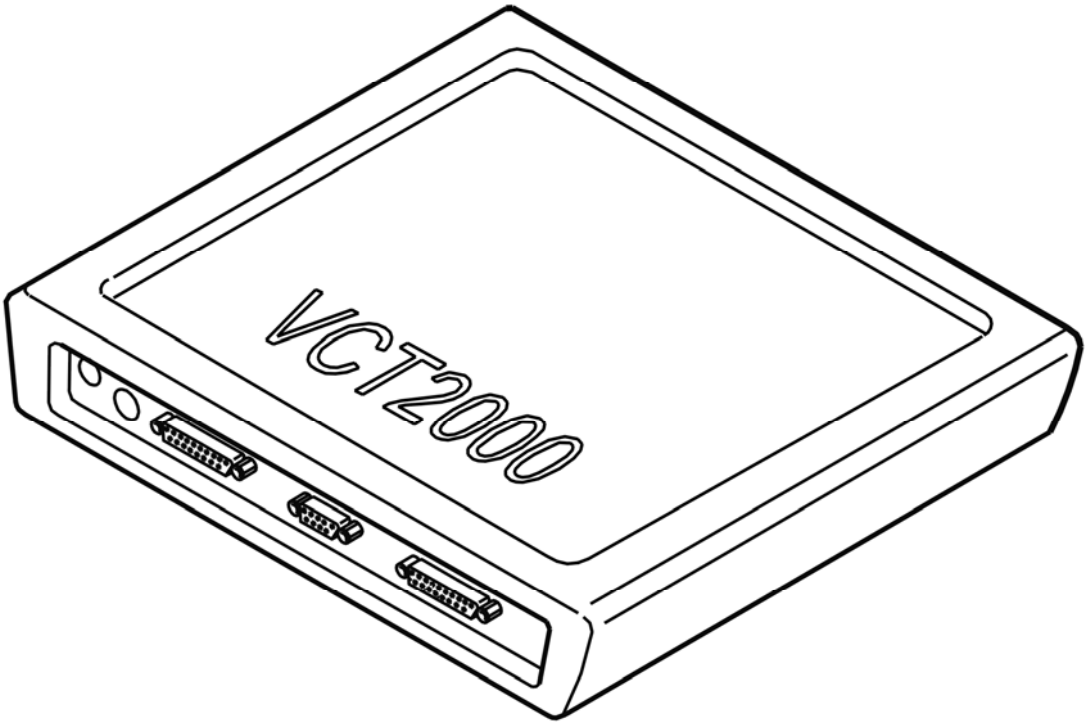

Fig. 228: Identifying VCT2000 Diagnostic Tool Symbol In VIDA
Courtesy of VOLVO CARS CORPORATION

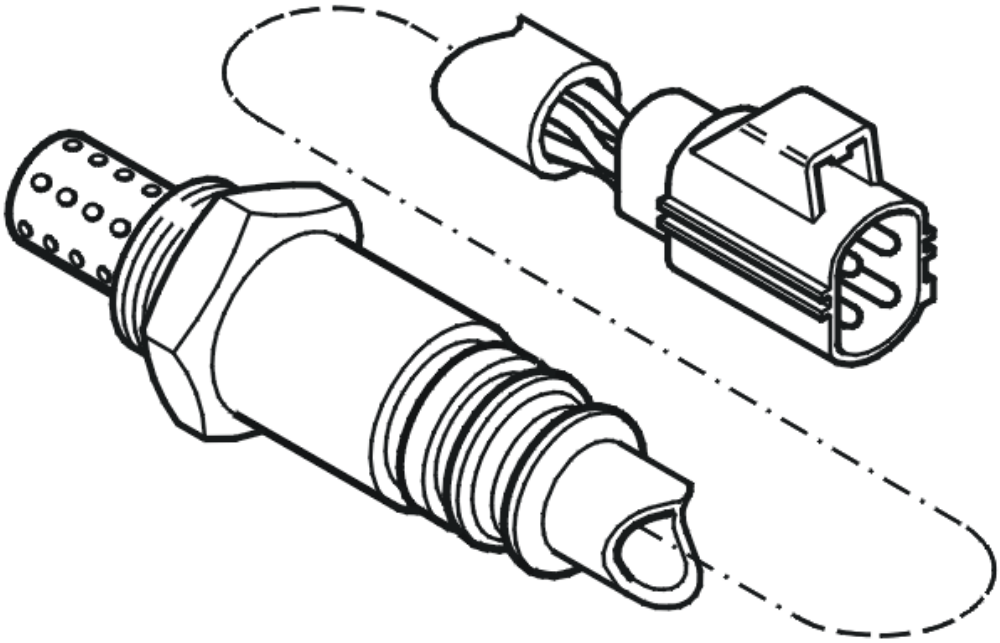

Fig. 229: Identifying Heated Oxygen Sensor
Courtesy of VOLVO CARS CORPORATION

- **Continue**

  Refer to **VERIFICATION**

INFORMATION

FAULT-TRACING INFORMATION

The fault should have been detected and remedied. As this is not the case fault-tracing has failed.

Exit fault-tracing for this diagnostic trouble code (DTC) or make another attempt.

VERIFICATION

VERIFICATION

HINT: After repairing, it is necessary to check that the malfunction has been fixed.

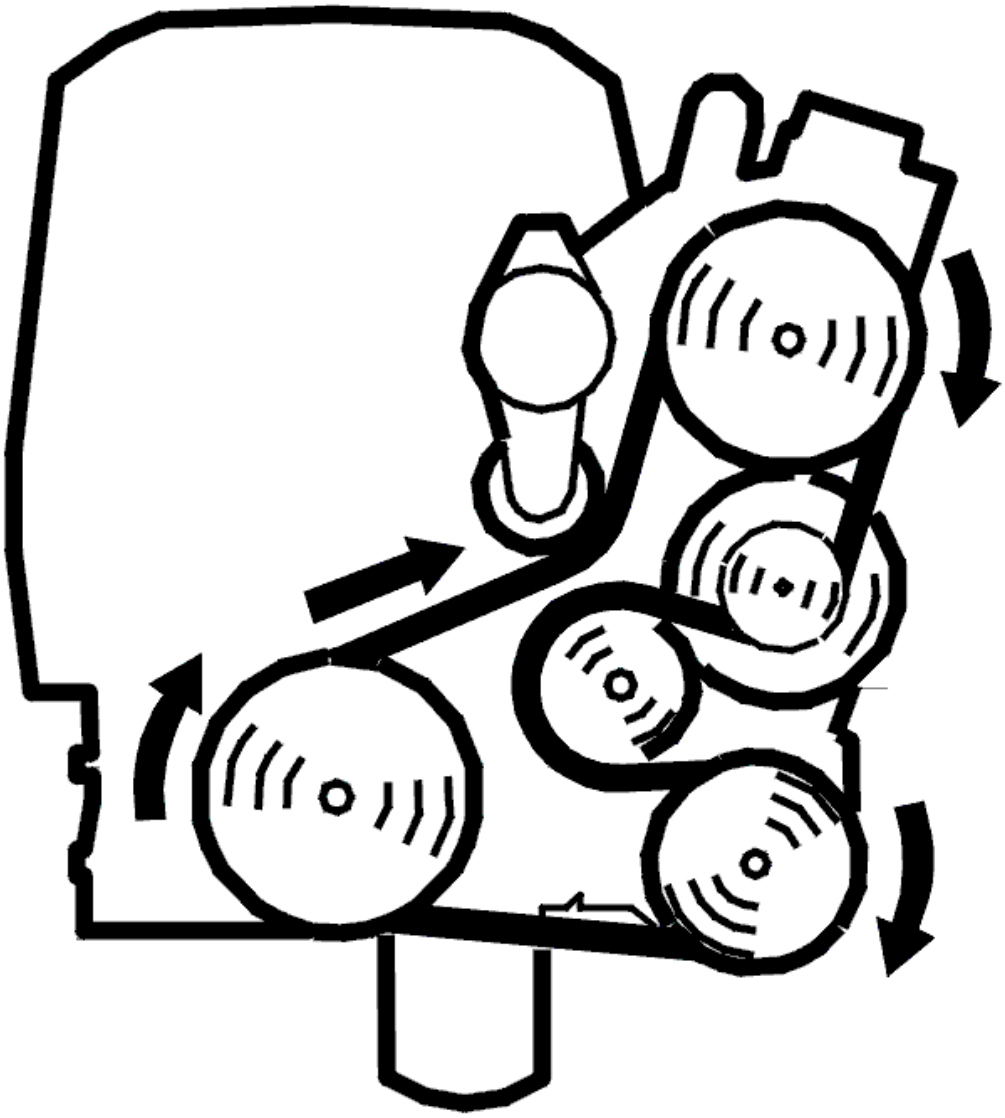

Fig. 230: Belt Routing / Engine Idling - Volvo
Courtesy of VOLVO CARS CORPORATION

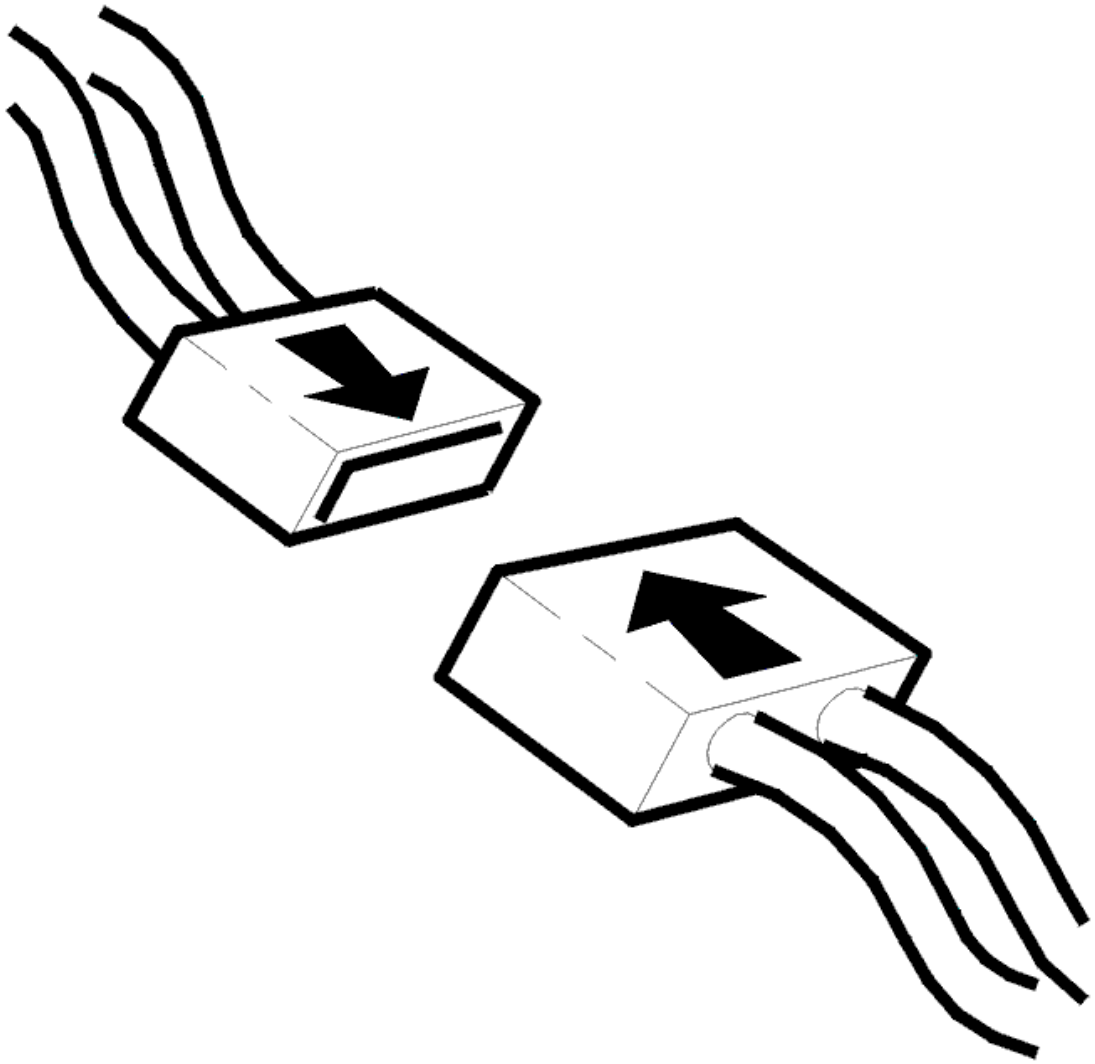

Fig. 231: Connecting Connector
Courtesy of VOLVO CARS CORPORATION

- Ignition off
- Reinstall the connectors, components etc.
- Start the engine to perform the diagnosis.

  Read off the diagnostic status and trouble status for the diagnostic trouble code.

  Check that the diagnosis is "Implemented" and that the trouble status is "No malfunction found". If the trouble status is "Malfunction found", this indicates defective function.

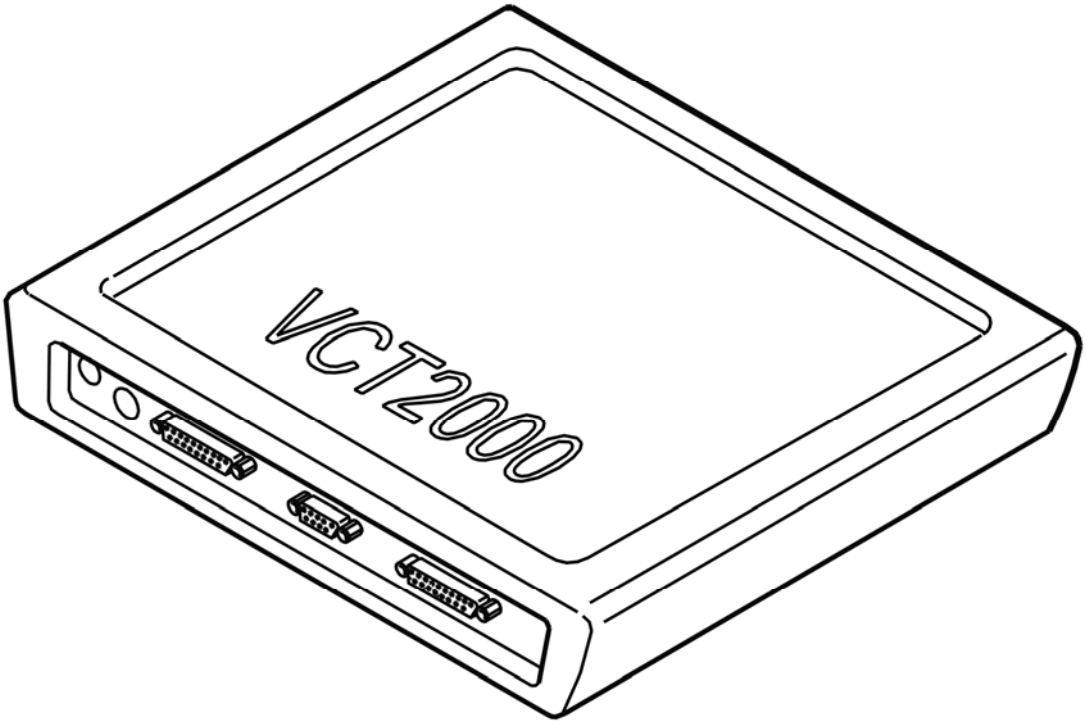

Fig. 232: Identifying VCT2000 Diagnostic Tool Symbol In VIDA
Courtesy of VOLVO CARS CORPORATION

Trouble status shows "No malfunction found"?

- **YES**

  VERIFIED: Troubleshooting has been completed.

- **NO**

  Refer to **INFORMATION**

ECM-P115800: LACK OF HO2S22 SWITCHES - SENSOR INDICATES RICH. GENERAL FAILURE INFORMATION. NO SUB TYPE INFORMATION (B8444S; 2005-2007)

DIAGNOSTIC TROUBLE CODE (DTC) INFORMATION

Condition

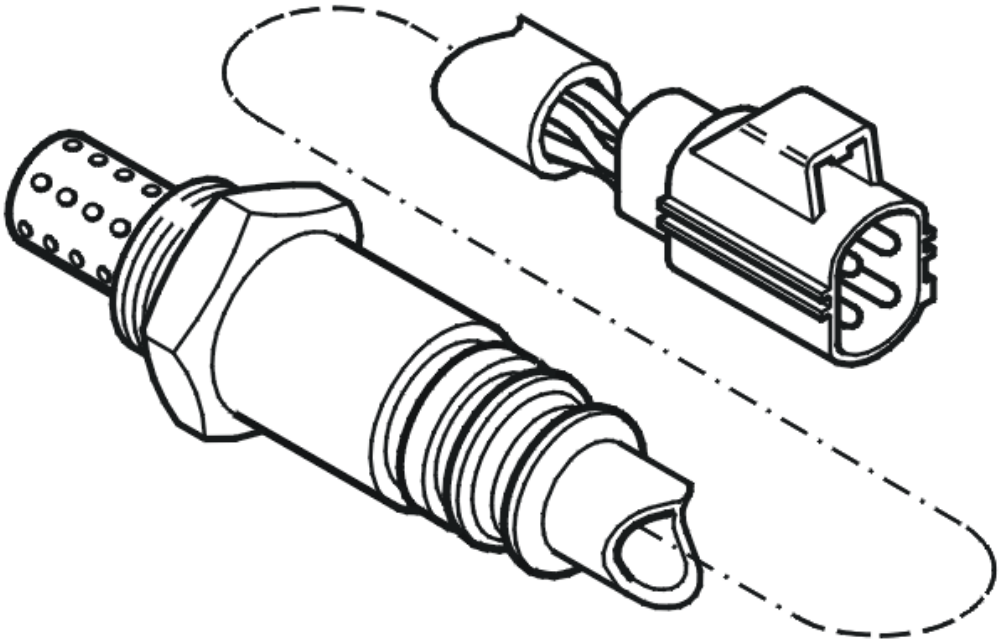

Fig. 233: Identifying Heated Oxygen Sensor
Courtesy of VOLVO CARS CORPORATION

The engine control module (ECM) continuously detects the voltage of the rear lambda probe (bank 2).

The engine's cylinders are counted starting with the cylinder farthest from the engine's flywheel.

- Bank 1 (cylinder row nearest the front): cylinders 1, 3, 5 and 7.
- Bank 2 (cylinder row furthest to the rear, nearest the passenger compartment): cylinders 2, 4, 6, and 8.

If engine control module (ECM) detects that the voltage is not below or above a certain value, the engine control module (ECM) interprets this as a malfunction and generates diagnostic trouble code.

The diagnostic trouble code can be diagnosed after approx. 3-5 minutes with the engine running.

Substitute Value

- Rear heated oxygen sensor control is shut off.

Possible Source

- The signal cable is short-circuited to voltage.

Fault symptom[s]

- Malfunction indicator light (MIL) on.

FAULT-TRACING

CHECKING THE STATUS

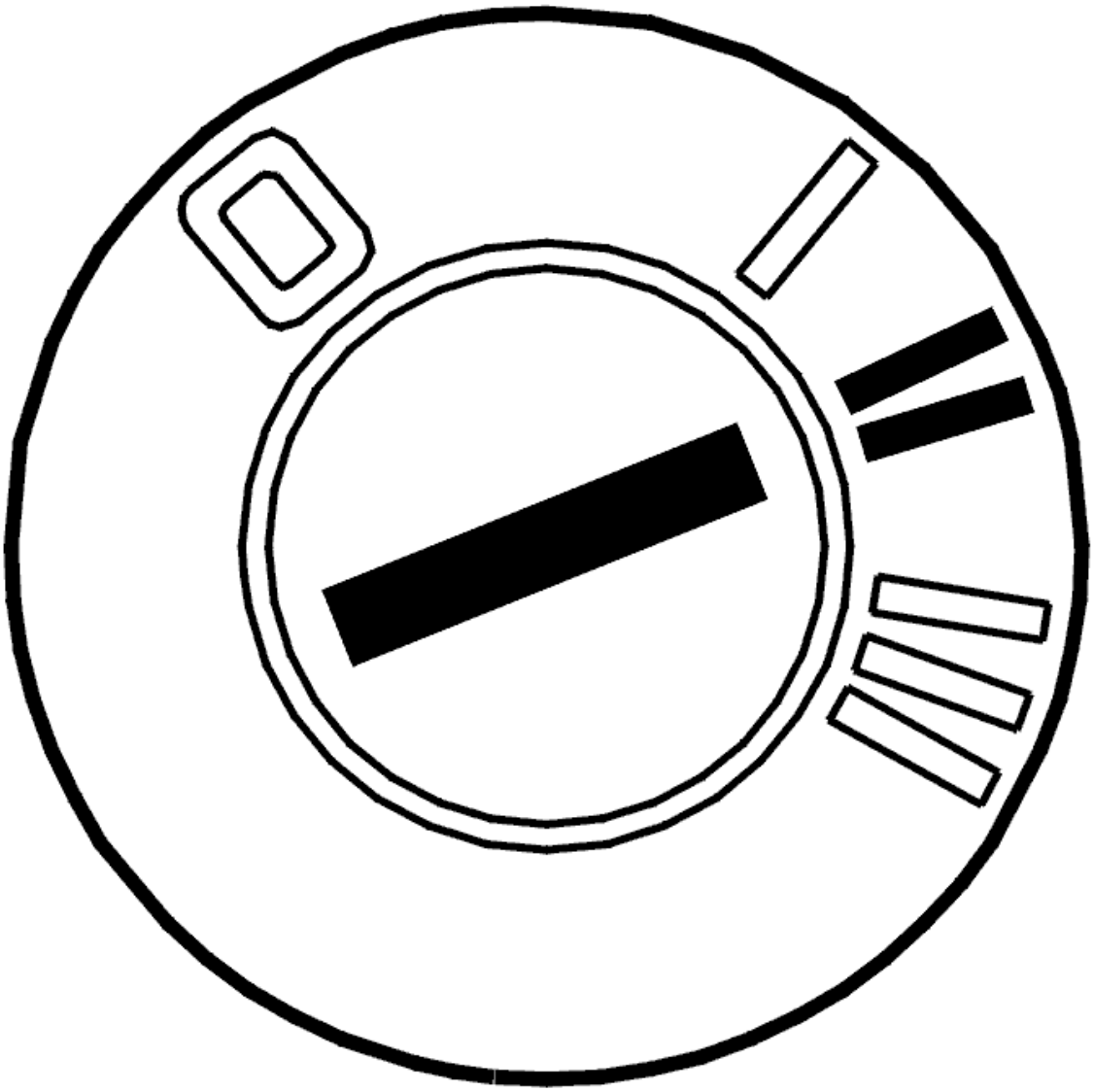

Fig. 234: Identifying Ignition ON
Courtesy of VOLVO CARS CORPORATION

- Start the engine and let it idle for approx. 3-5 minutes to perform the diagnosis.

  Check if the malfunction is permanent or intermittent by reading off the diagnostic trouble code's status when the diagnostic status is "Implemented".

If the trouble status is "Malfunction found", this indicates that the malfunction is permanent. If the trouble status is "No malfunction found", this indicates that the malfunction is intermittent.

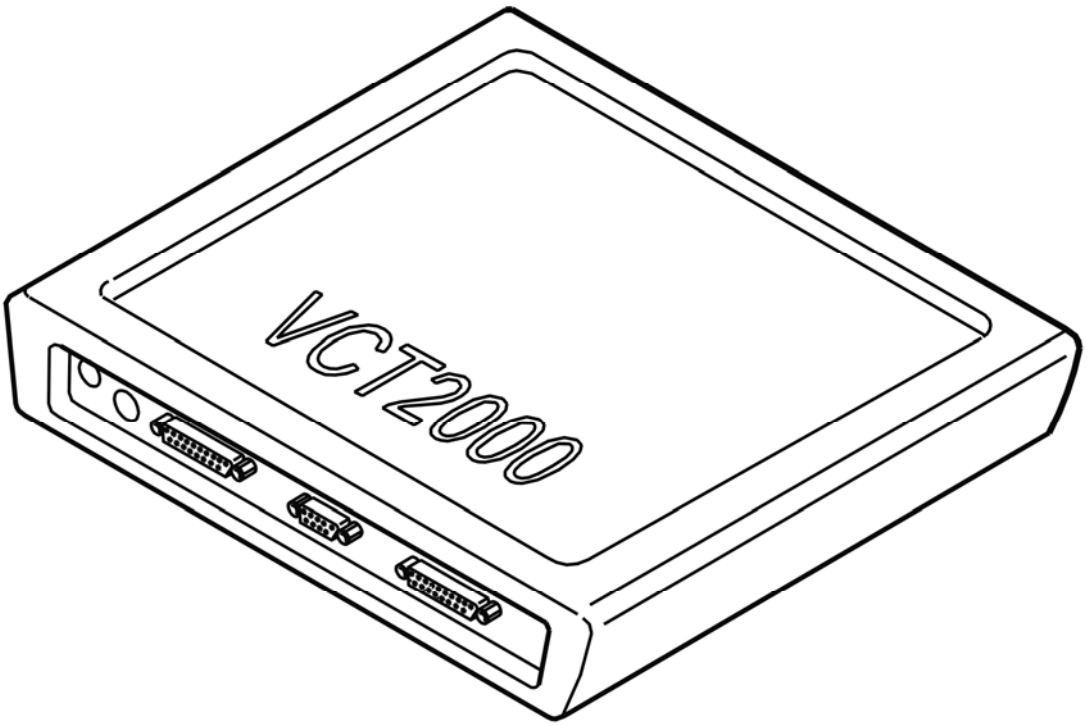

Fig. 235: Identifying VCT2000 Diagnostic Tool Symbol In VIDA
Courtesy of VOLVO CARS CORPORATION

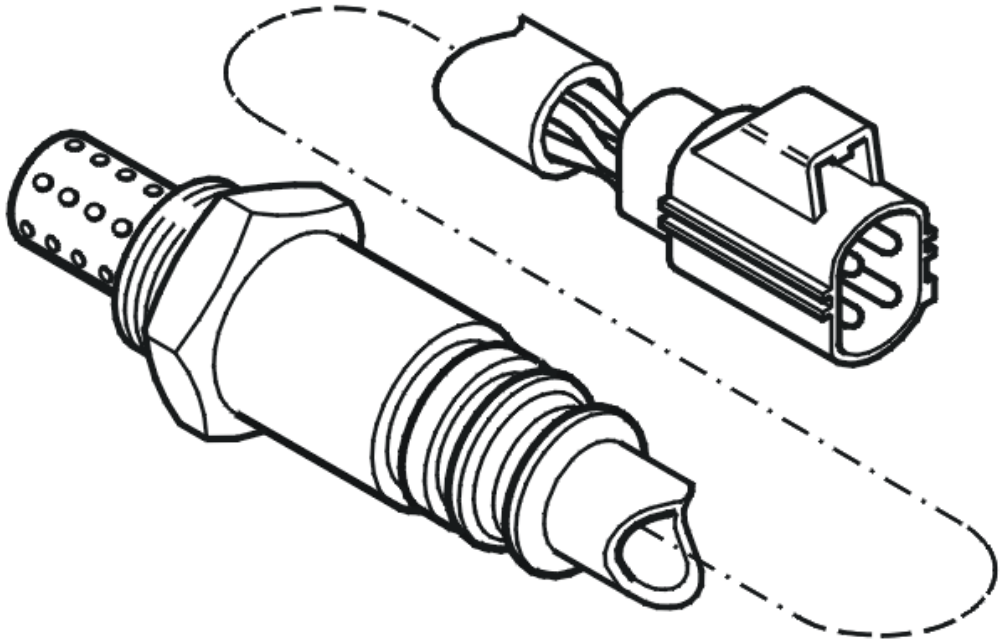

Fig. 236: Identifying Heated Oxygen Sensor
Courtesy of VOLVO CARS CORPORATION

- **Continue**

  Refer to **CHECKING COMPONENTS**

CHECKING COMPONENTS

CAUTION: Do not apply rust solvent spray or grease to the heated oxygen sensor's (HO2S) connector.

Check the cable between the Engine Control Module (ECM) terminal #A40 (#A40) and rear heated oxygen sensor terminal #4 (bank 2). Check for a short-circuit to supply voltage.

If the above troubleshooting does not solve the problem, try a new heated oxygen sensor.

Remedy as necessary.

Other information

- see **CONNECTING THE BREAKOUT BOX**
- see **SIGNAL SPECIFICATION, ENGINE CONTROL MODULE (ECM)**

- see **HEATED OXYGEN SENSOR (HO2S), REPLACING**
- see **CHECKING WIRING AND TERMINALS**

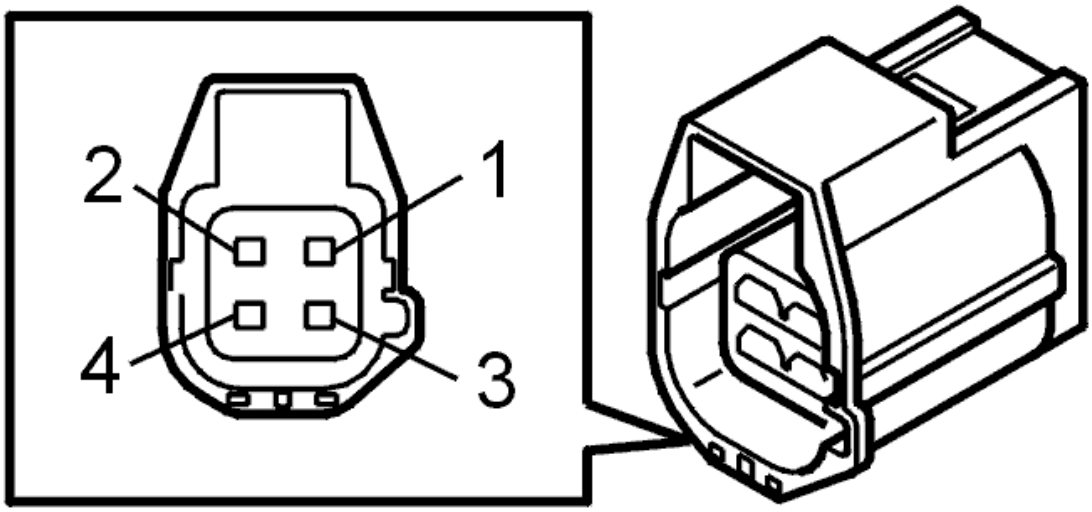

Fig. 237: Identifying 4-Bit Connector
Courtesy of VOLVO CARS CORPORATION

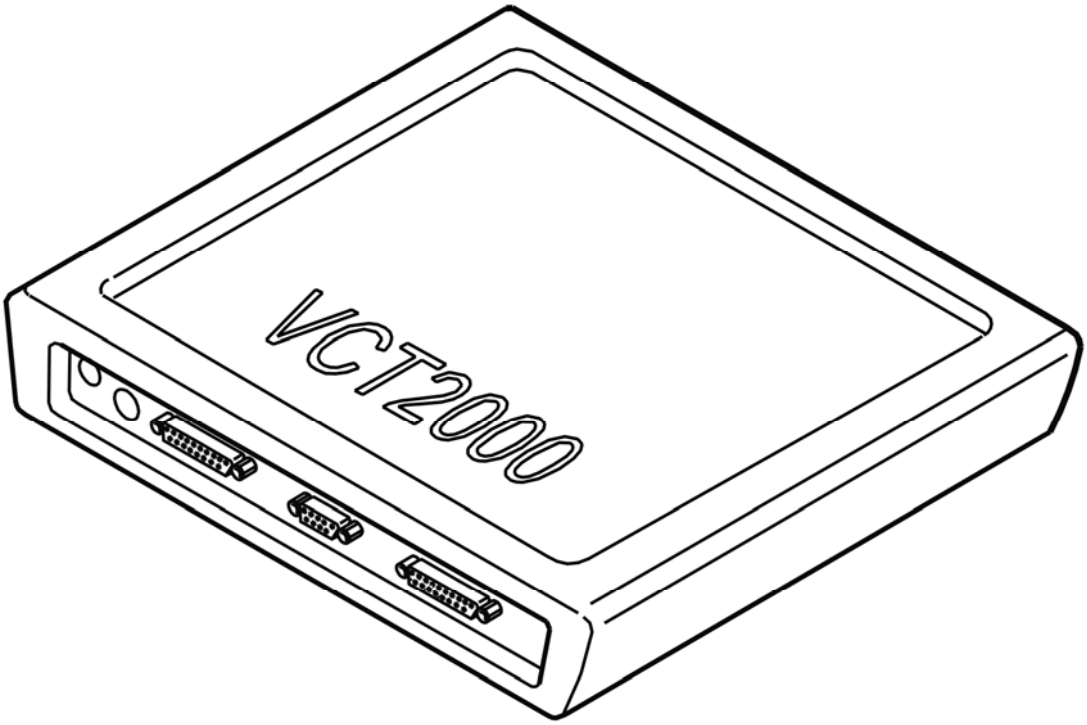

Fig. 238: Identifying VCT2000 Diagnostic Tool Symbol In VIDA
Courtesy of VOLVO CARS CORPORATION

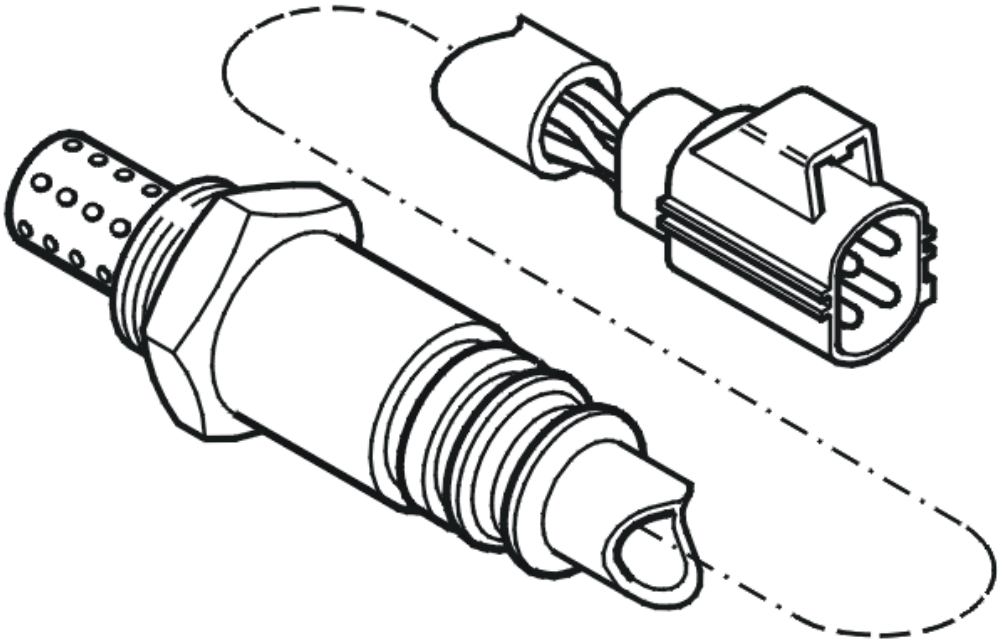

Fig. 239: Identifying Heated Oxygen Sensor
Courtesy of VOLVO CARS CORPORATION

- **Continue**

  Refer to **VERIFICATION**

VERIFICATION

VERIFICATION

HINT: After repairing, it is necessary to check that the malfunction has been fixed.

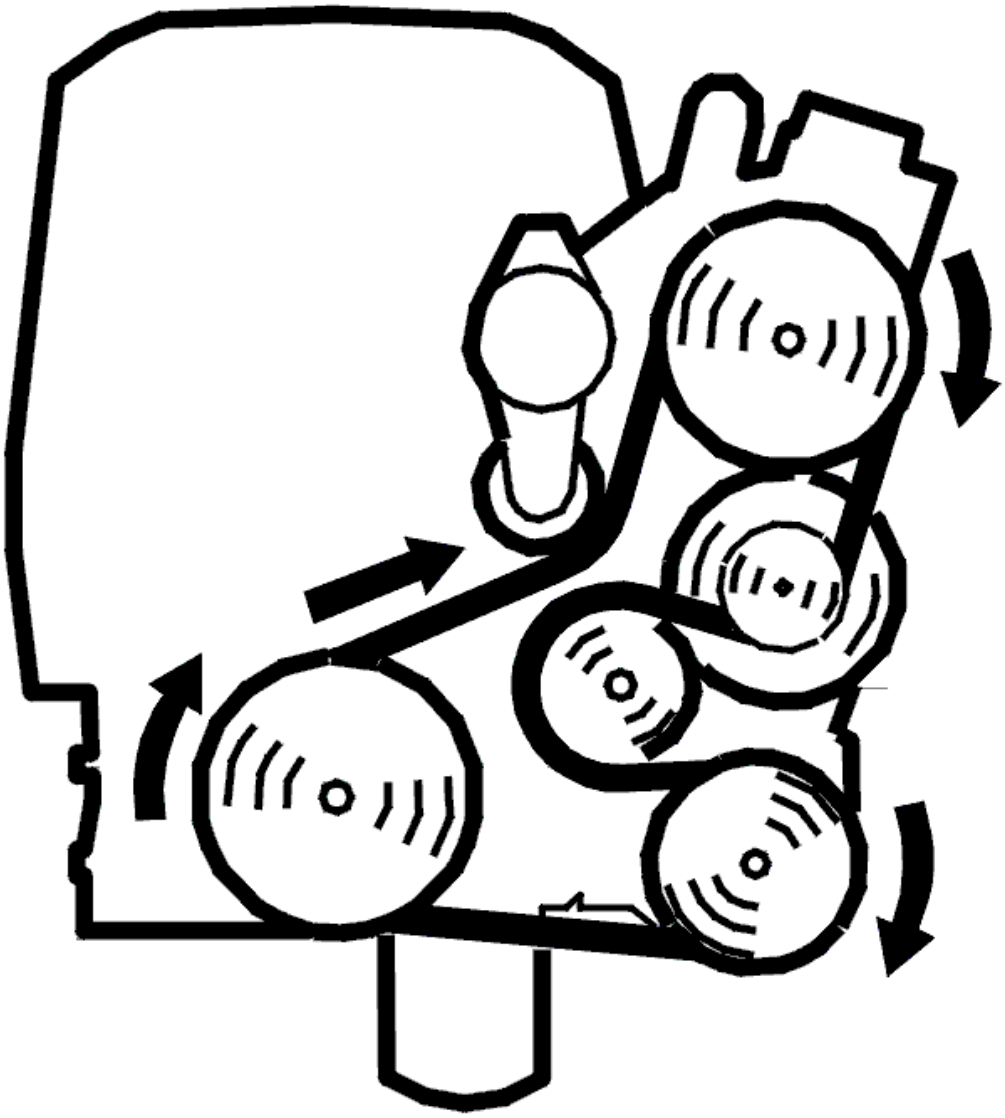

Fig. 240: Belt Routing / Engine Idling - Volvo
Courtesy of VOLVO CARS CORPORATION

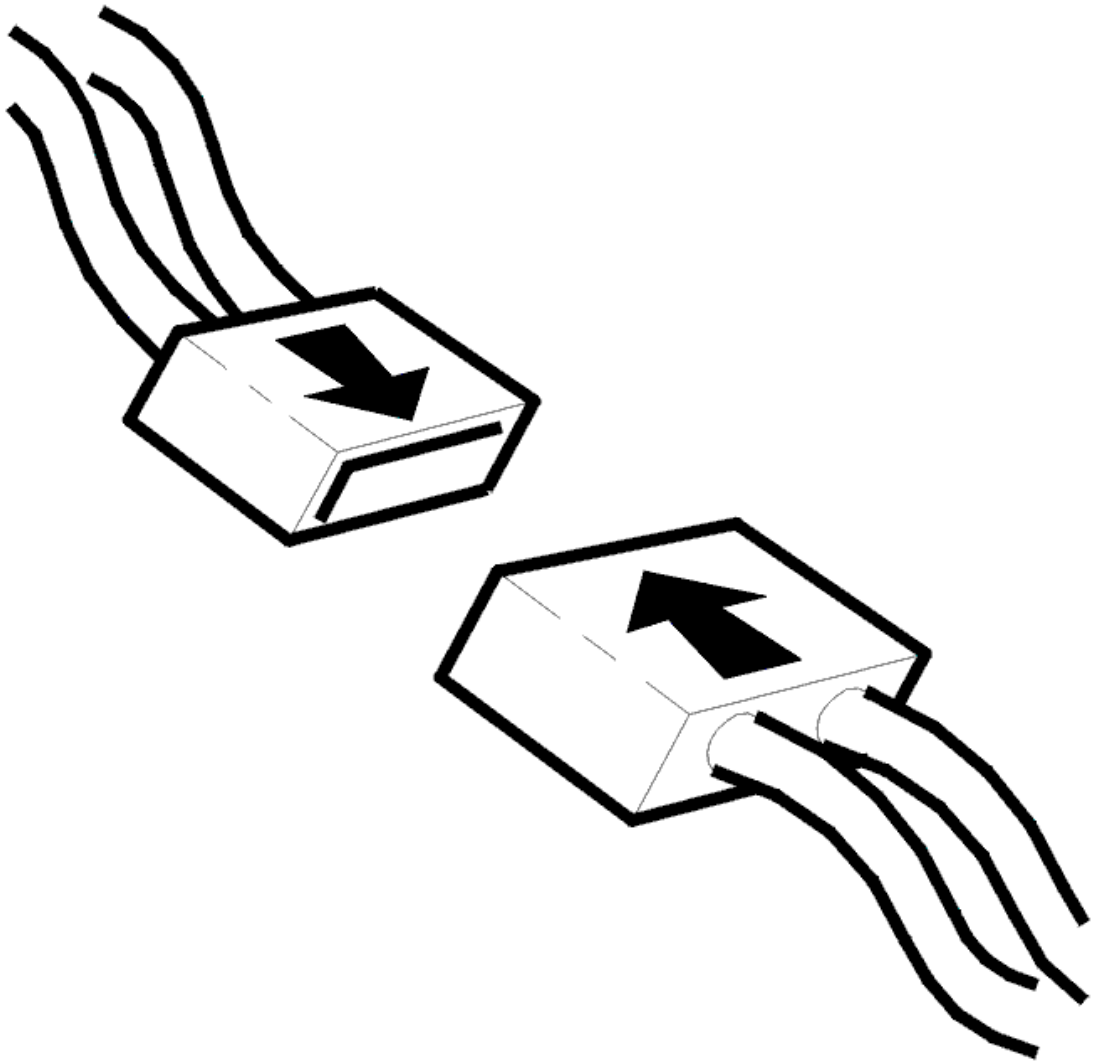

Fig. 241: Connecting Connector
Courtesy of VOLVO CARS CORPORATION

- Ignition off
- Reinstall the connectors, components etc.
- Start the engine to perform the diagnosis.

  Read off the diagnostic status and trouble status for the diagnostic trouble code.

  Check that the diagnosis is "Implemented" and that the trouble status is "No malfunction found". If the trouble status is "Malfunction found", this indicates defective function.

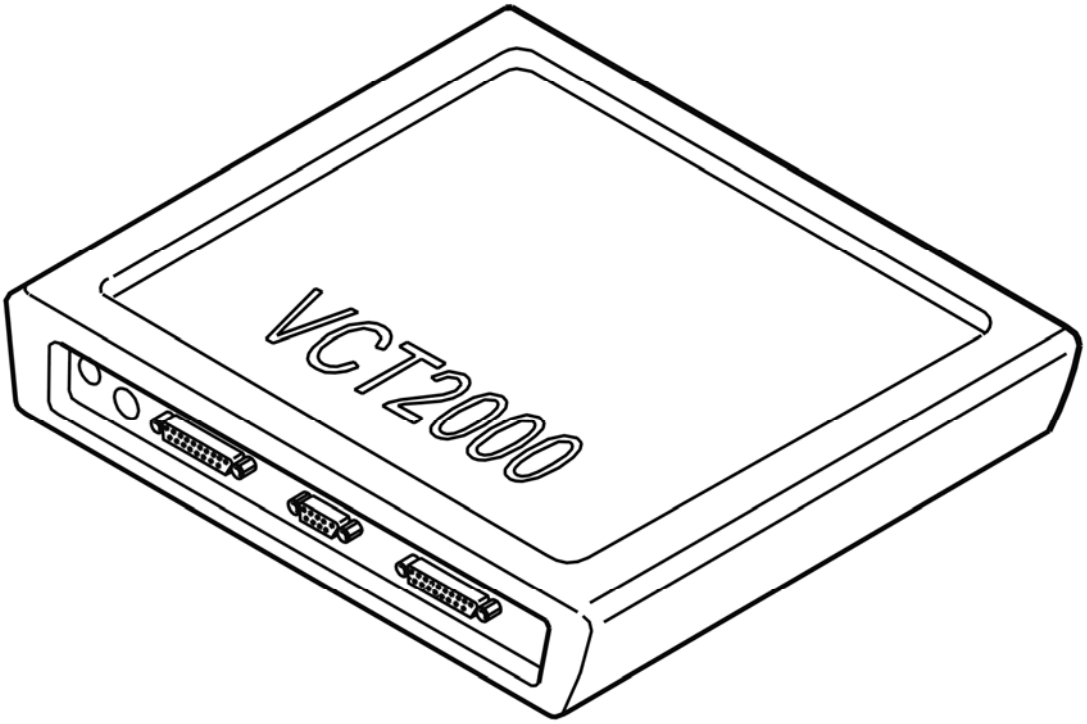

Fig. 242: Identifying VCT2000 Diagnostic Tool Symbol In VIDA
Courtesy of VOLVO CARS CORPORATION

Trouble status shows "No malfunction found"?

- **YES**

  VERIFIED: Troubleshooting has been completed.

- **NO**

  Refer to **INFORMATION**

INFORMATION

FAULT-TRACING INFORMATION

The fault should have been detected and remedied. As this is not the case fault-tracing has failed.

Exit fault-tracing for this diagnostic trouble code (DTC) or make another attempt.

ECM-P117068: ENGINE SHUT OFF SOLENOID. ALGORITHM BASED FAILURES. EVENT INFORMATION (B6324S; 2007-2010)

DIAGNOSTIC TROUBLE CODE (DTC) INFORMATION ECM-P117068

Condition

NOTE: **This diagnostic trouble code (DTC) status is an event controlled diagnostic trouble code (DTC). An event controlled diagnostic trouble code (DTC) does not mean that there is a fault in the control module when it is active, but is designed as information.**

Engine Control Module (ECM) monitors the front heated oxygen sensor (bank 1). If the control module detects that the heated oxygen sensor value is below or above a certain level for a certain time, the diagnostic trouble code is generated.

The diagnostic trouble code (DTC) can be diagnosed when the engine is running.

Substitute Value

- Nothing.

Possible Source

- This diagnostic trouble code (DTC) is not caused by a fault that needs to be remedied.

Fault symptom[s]

- None.

FAULT-TRACING INFORMATION

see **FAULT-TRACING INFORMATION**

ECM-P117068: ENGINE SHUT OFF SOLENOID. ALGORITHM BASED FAILURES. EVENT INFORMATION (B6324S5; 2011-2012)

DIAGNOSTIC TROUBLE CODE (DTC) INFORMATION ECM-P117068

see **DIAGNOSTIC TROUBLE CODE (DTC) INFORMATION ECM-P117068**

FAULT-TRACING INFORMATION

see **FAULT-TRACING INFORMATION**

ECM-P117368: ROTOR CALIBRATION. ALGORITHM BASED FAILURES. EVENT INFORMATION (B6324S; 2007-2010)

DIAGNOSTIC TROUBLE CODE (DTC) INFORMATION ECM-P117368

Condition

NOTE: **This diagnostic trouble code (DTC) status is an event controlled diagnostic trouble code (DTC). An event controlled diagnostic trouble code (DTC) does not mean that there is a fault in the control module when it is active, but is designed as information.**

Engine Control Module (ECM) monitors the front heated oxygen sensor (bank 2). If the control module detects that the heated oxygen sensor value is below or above a certain level for a certain time, the diagnostic trouble code is generated.

The diagnostic trouble code (DTC) can be diagnosed when the engine is running.

Substitute Value

- Nothing.

Possible Source

- This diagnostic trouble code (DTC) is not caused by a fault that needs to be remedied.

Fault symptom[s]

- None.

FAULT-TRACING INFORMATION

see **FAULT-TRACING INFORMATION**

ECM-P117368: ROTOR CALIBRATION. ALGORITHM BASED FAILURES. EVENT INFORMATION (B6324S5; 2011-2012)

DIAGNOSTIC TROUBLE CODE (DTC) INFORMATION ECM-P117368

see **DIAGNOSTIC TROUBLE CODE (DTC) INFORMATION ECM-P117368**

FAULT-TRACING INFORMATION

see **FAULT-TRACING INFORMATION**

ECM-P122400: THROTTLE POSITION SENSOR B OUT OF SELF TEST RANGE. GENERAL FAILURE INFORMATION. NO SUB TYPE INFORMATION (B8444S; 2005-2011)

DIAGNOSTIC TROUBLE CODE (DTC) INFORMATION ECM-P122400

Condition

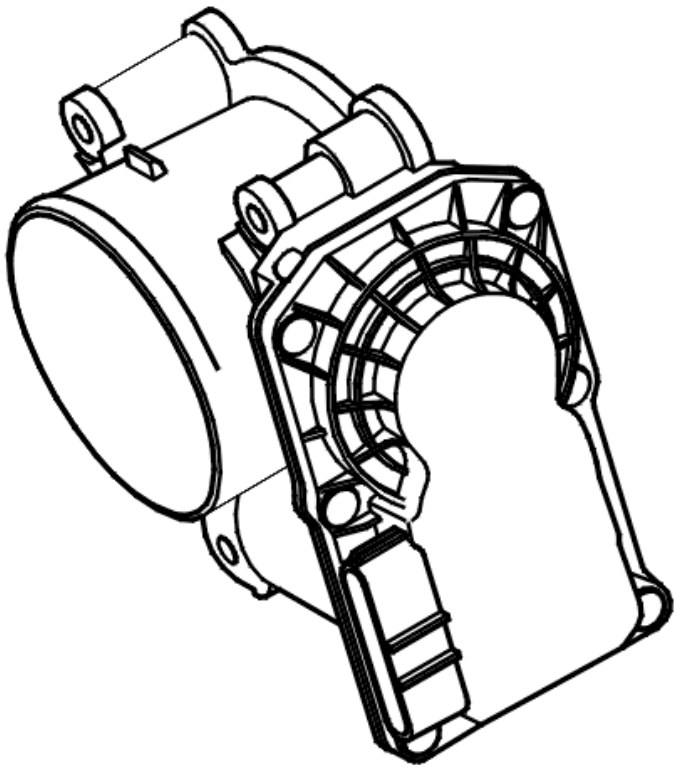

Fig. 243: Identifying Electronic Throttle Unit
Courtesy of VOLVO CARS CORPORATION

Engine control module (ECM) checks that the electronic throttle unit follows the requested throttle angle from engine control module (ECM).

If engine control module (ECM) detects that the current throttle angle deviates from the requested, the diagnostic trouble code is generated.

The diagnostic trouble code can be diagnosed in specific operation situations.

Substitute Value

- Nothing.

Possible Source

- The throttle binds or is blocked (for example, dirt, ice, etc.)
- Damaged electronic throttle unit.

Fault symptom[s]

- Poor performance.
- Uneven idle.

FAULT-TRACING ECM-P122400

CHECKING COMPONENTS AND CONNECTIONS

Fig. 244: Identifying Ignition In Off Position
Courtesy of VOLVO CARS CORPORATION

- Engine idling
- Activate read-out of the throttle damper's current position and the throttle damper's reference value.
- Check that both signals follow each other at different RPM and movements of the throttle disc.
- Ignition off.

  Check if the throttle unit is blocked. Press the throttle disc to check for jamming.

  Clean the throttle unit if necessary.

  Other information

  - see **THROTTLE BODY (TB), CLEANING**
  - see **THROTTLE BODY (ELECTRONIC THROTTLE MODULE (ETM)), REPLACING**

Fig. 245: Identifying VCT2000 Diagnostic Tool Symbol In VIDA
Courtesy of VOLVO CARS CORPORATION

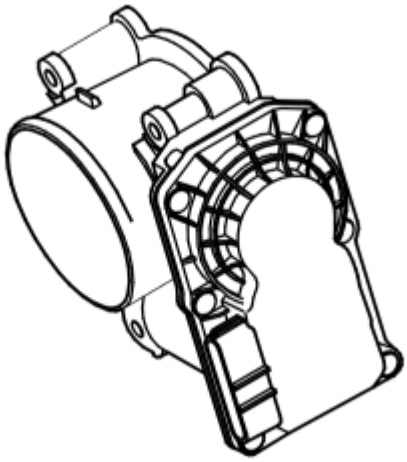

Fig. 246: Identifying Throttle Body
Courtesy of VOLVO CARS CORPORATION

- **Continue**

  Refer to **VERIFICATION**

VERIFICATION

VERIFICATION

HINT: After carrying out the repair, check that the fault has been remedied.

Fig. 247: Checking Traffic Load On CAN Cables
Courtesy of VOLVO CARS CORPORATION

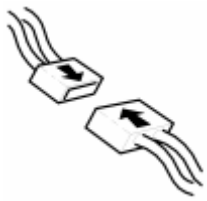

Fig. 248: Identifying Connector(s) Reinstallation
Courtesy of VOLVO CARS CORPORATION

- Engine idling
- Reinstall the connectors, components etc.

- Ignition on.

  Activate read-out of the throttle damper's current position and the throttle damper's reference value.

  Check that both signals follow each other at different RPM and movements of the throttle disc.

Fig. 249: Identifying VCT2000 Diagnostic Tool Symbol In VIDA
Courtesy of VOLVO CARS CORPORATION

Do the signals follow each other?

- **YES**

  VERIFIED: Troubleshooting has been completed.

- **NO**

  Refer to **INFORMATION**

INFORMATION

FAULT-TRACING INFORMATION

The fault should have been detected and remedied. As this is not the case fault-tracing has failed.

Exit fault-tracing for this diagnostic trouble code (DTC) or make another attempt.

ECM-P122477: THROTTLE POSITION SENSOR B OUT OF SELF TEST RANGE. MECHANICAL FAILURES. COMMANDED POSITION NOT REACHABLE (B6324S; 2007-2010)

DIAGNOSTIC TROUBLE CODE (DTC) INFORMATION ECM-P122477

Condition

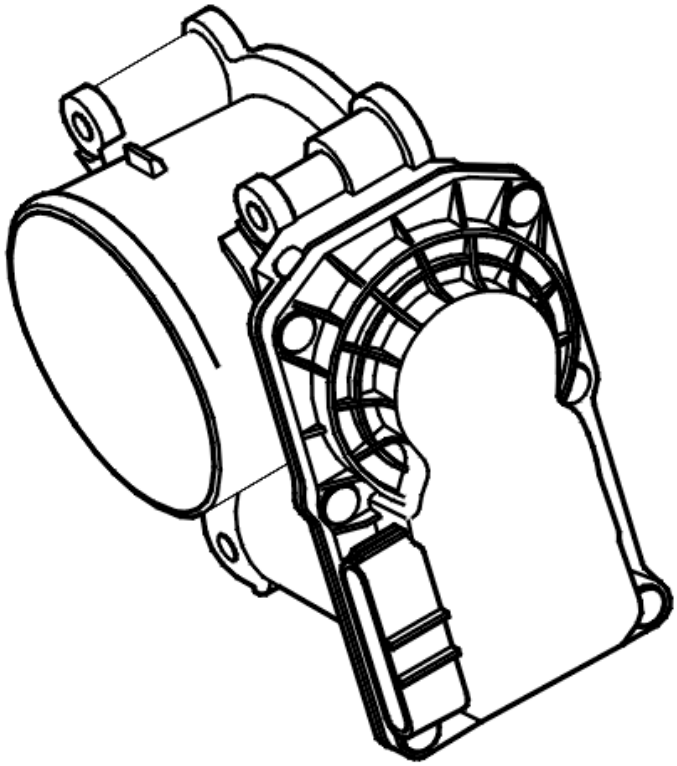

Fig. 250: Identifying Electronic Throttle Unit
Courtesy of VOLVO CARS CORPORATION

Engine control module (ECM) checks that the electronic throttle unit follows the requested throttle angle from engine control module (ECM).

If engine control module (ECM) detects that the current throttle angle deviates from the requested, the diagnostic trouble code is generated.

The diagnostic trouble code can be diagnosed in specific operation situations.

Substitute Value

- Nothing.

Possible Source

- The throttle binds or is blocked (for example, dirt, ice, etc.)
- Damaged electronic throttle unit.

Fault symptom[s]

- Poor performance.

- Uneven idle.

FAULT-TRACING

CHECKING COMPONENTS AND CONNECTIONS

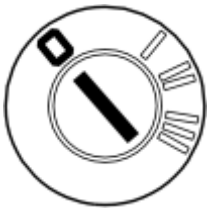

Fig. 251: Identifying Ignition In Off Position
Courtesy of VOLVO CARS CORPORATION

- Engine idling
- Activate read-out of the throttle damper's current position and the throttle damper's reference value.
- Check that both signals follow each other at different RPM and movements of the throttle disc.
- Ignition off.

  Check if the throttle unit is blocked. Press the throttle disc to check for jamming.

  Clean the throttle unit if necessary.

  Other information

  - see **THROTTLE BODY**

Fig. 252: Identifying VCT2000 Diagnostic Tool Symbol In VIDA
Courtesy of VOLVO CARS CORPORATION

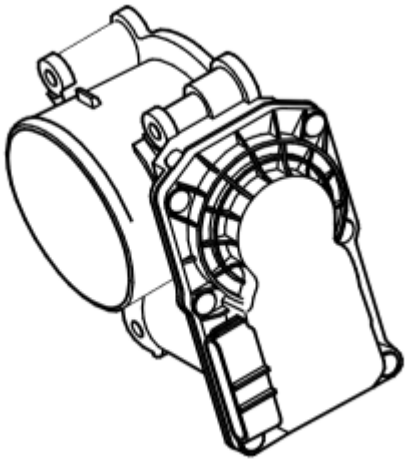

Fig. 253: Identifying Throttle Body
Courtesy of VOLVO CARS CORPORATION

- **Continue**

  Refer to **VERIFICATION**

INFORMATION

FAULT-TRACING INFORMATION

The fault should have been detected and remedied. As this is not the case fault-tracing has failed.

Exit fault-tracing for this diagnostic trouble code (DTC) or make another attempt.

VERIFICATION

VERIFICATION

HINT: After carrying out the repair, check that the fault has been remedied.

Fig. 254: Checking Traffic Load On CAN Cables
Courtesy of VOLVO CARS CORPORATION

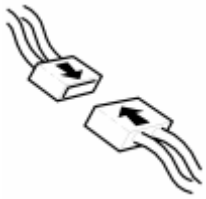

Fig. 255: Identifying Connector(s) Reinstallation
Courtesy of VOLVO CARS CORPORATION

- Engine idling
- Reinstall the connectors, components etc.
- Ignition on.

  Activate read-out of the throttle damper's current position and the throttle damper's reference value.

  Check that both signals follow each other at different RPM and movements of the throttle disc.

Fig. 256: Identifying VCT2000 Diagnostic Tool Symbol In VIDA
Courtesy of VOLVO CARS CORPORATION

Do the signals follow each other?

- **YES**

  VERIFIED: Troubleshooting has been completed.

- **NO**

  Refer to **INFORMATION**

ECM-P122477: THROTTLE POSITION SENSOR B OUT OF SELF TEST RANGE. MECHANICAL FAILURES. COMMANDED POSITION NOT REACHABLE (B6324S5; 2011-2012)

DIAGNOSTIC TROUBLE CODE (DTC) INFORMATION ECM-P122477

see **DIAGNOSTIC TROUBLE CODE (DTC) INFORMATION ECM-P122477**

FAULT-TRACING

see **FAULT-TRACING**

ECM-P125000: THROTTLE VALVE SPRING. GENERAL FAILURE INFORMATION. NO SUB TYPE INFORMATION (B6324S; 2007-2010)

DIAGNOSTIC TROUBLE CODE (DTC) INFORMATION ECM-P125000

Condition

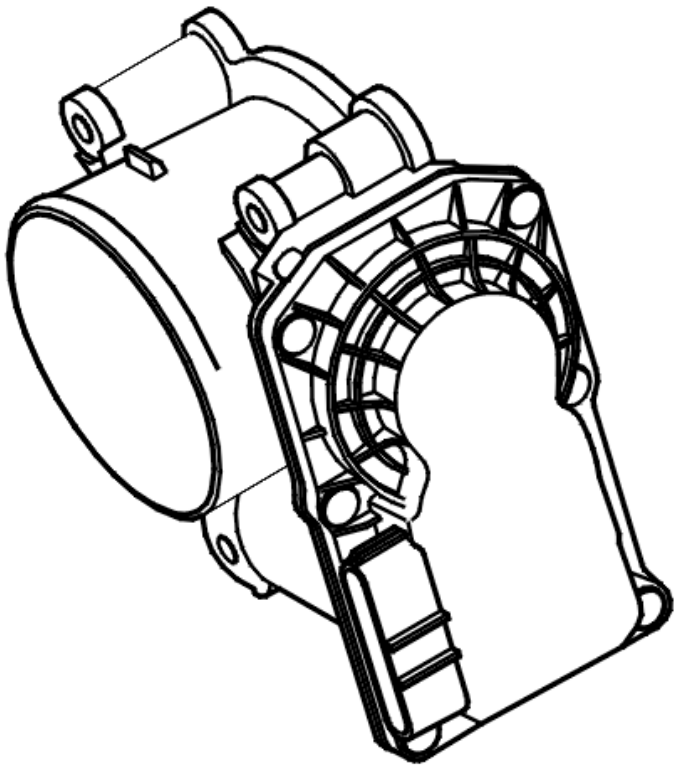

Fig. 257: Identifying Electronic Throttle Unit
Courtesy of VOLVO CARS CORPORATION

The engine control module (ECM) checks the function in the throttle unit. When switching off the engine a mechanical function check of the electronic throttle module (ETM) is carried out where the throttle disc spring is moved to the open position (open throttle). When control has finished, the time it takes for the damper to return to the return rest position is measured.

If Engine Control Module (ECM) detects that the throttle movement does not take place within reasonable time, the diagnostic trouble code is generated.

The diagnostic trouble code can be diagnosed when function check is performed.

Substitute Value

- Nothing.

Possible Source

- The throttle binds or is blocked (for example, dirt, ice, etc.)
- Damaged electronic throttle unit.

Fault symptom[s]

- Poor performance.
- Uneven idle.
- Message in information display

FAULT-TRACING

see **FAULT-TRACING**

ECM-P125000: THROTTLE VALVE SPRING. GENERAL FAILURE INFORMATION. NO SUB TYPE INFORMATION (B6324S5; 2011-2012)

DIAGNOSTIC TROUBLE CODE (DTC) INFORMATION ECM-P125000

see **DIAGNOSTIC TROUBLE CODE (DTC) INFORMATION ECM-P125000**

FAULT-TRACING

see **FAULT-TRACING**

ECM-P125000: THROTTLE VALVE SPRING. GENERAL FAILURE INFORMATION. NO SUB TYPE INFORMATION (B8444S; 2005-2011)

DIAGNOSTIC TROUBLE CODE (DTC) INFORMATION ECM-P125000

Condition

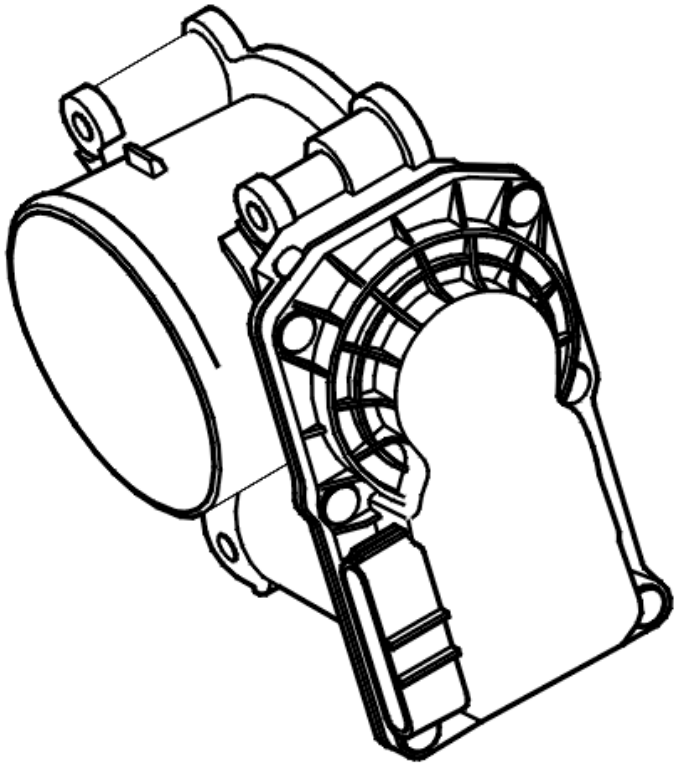

Fig. 258: Identifying Electronic Throttle Unit
Courtesy of VOLVO CARS CORPORATION

The engine control module (ECM) checks the function in the throttle unit. When switching off the engine a mechanical function check of the electronic throttle module (ETM) is carried out where the throttle disc spring is moved to the open position (open throttle). When control has finished, the time it takes for the damper to return to the return rest position is measured.

If Engine Control Module (ECM) detects that the throttle movement does not take place within reasonable time, the diagnostic trouble code is generated.

The diagnostic trouble code can be diagnosed when function check is performed.

Substitute Value

- Nothing.

Possible Source

- The throttle binds or is blocked (for example, dirt, ice, etc.)
- Damaged electronic throttle unit.

Fault symptom[s]

- Poor performance.
- Uneven idle.
- Message in information display

FAULT-TRACING

see **FAULT-TRACING**

ECM-P126000: THEFT DETECTED, VEHICLE IMMOBILIZED. GENERAL FAILURE INFORMATION. NO SUB TYPE INFORMATION (B6324S; 2007-2010)

DIAGNOSTIC TROUBLE CODE (DTC) INFORMATION ECM-P126000

Condition

The Engine control module and the Central electronic module contain a code for the which is unique to each vehicle. In addition to this, each key for the vehicle is electronically coded for the intended vehicle only. Internal checks are made at the start to check that the key is the correct one for the vehicle and that the codes in the Engine control module (ECM) and Central electronic module (CEM) correspond.

The diagnostic trouble code is stored if the engine control module (ECM) registers that voltage feed for engine control module (ECM) as well as central electronic module is lost before codes are verified.

The diagnostic trouble code (DTC) can be diagnosed when the ignition is switched on.

Substitute Value

- None.

Possible Source

- Loose connections to the battery.

Fault symptom[s]

- Engine fails to start
- Message in information display

FAULT-TRACING INFORMATION

see **FAULT-TRACING INFORMATION**

ECM-P126000: THEFT DETECTED, VEHICLE IMMOBILIZED. GENERAL FAILURE INFORMATION. NO SUB TYPE INFORMATION (B6324S5; 2011-

2012)

DIAGNOSTIC TROUBLE CODE (DTC) INFORMATION ECM-P126000

see **DIAGNOSTIC TROUBLE CODE (DTC) INFORMATION ECM-P126000**

FAULT-TRACING INFORMATION

see **FAULT-TRACING INFORMATION**

ECM-P126000: THEFT REGISTERED, VEHICLE IMMOBILIZED. GENERAL MALFUNCTION INFORMATION. NO INFORMATION ON MALFUNCTION TYPE (B8444S; 2005-2011)

DIAGNOSTIC TROUBLE CODE (DTC) INFORMATION ECM-P126000

Condition

The Engine control module and the Central electronic module contain a code for the which is unique to each vehicle. In addition to this, each key for the vehicle is electronically coded for the intended vehicle only. Internal checks are made at the start to check that the key is the correct one for the vehicle and that the codes in the Engine control module (ECM) and Central electronic module (CEM) correspond.

The diagnostic trouble code is stored if the engine control module (ECM) registers that voltage feed for engine control module (ECM) as well as central electronic module is lost before codes are verified.

The diagnostic trouble code can be diagnosed when the ignition is on.

Substitute Value

- Nothing.

Possible Source

- Loose connections to the battery.

Fault symptom[s]

- The engine does not start.
- Message in the display.

FAULT-TRACING INFORMATION

see **FAULT-TRACING INFORMATION**

ECM-P127000: ENGINE RPM OR SPEED LIMITATION REACHED. GENERAL

MALFUNCTION INFORMATION. NO INFORMATION ON MALFUNCTION TYPE (B8444S; 2005-2011)

DIAGNOSTIC TROUBLE CODE (DTC) INFORMATION ECM-P127000

Condition

If engine control module (ECM) detects that an earlier registered malfunction of safety-related components has not been remedied in reasonable time, performance-limiting actions are taken and the diagnostic trouble code is generated.

The diagnostic trouble code confirms that engine control module (ECM) has been generated in degraded status.

Substitute Value

- Maximum vehicle speed is limited to 50 km/h.

Possible Source

- Malfunction that was detected by another diagnostic function in engine control module (ECM).

Fault symptom[s]

- Message in the display.
- Limited maximum vehicle speed.

FAULT-TRACING INFORMATION

INFORMATION

The diagnostic trouble code (DTC) is an information trouble code and never occurs alone. Therefore fault-trace for another diagnostic trouble code (DTC).

ECM-P134600: FUEL LEVEL SENSOR B CIRCUIT. GENERAL FAILURE INFORMATION. NO SUB TYPE INFORMATION (B6324S; 2007-2010)

DIAGNOSTIC TROUBLE CODE (DTC) INFORMATION ECM-P134600

Condition

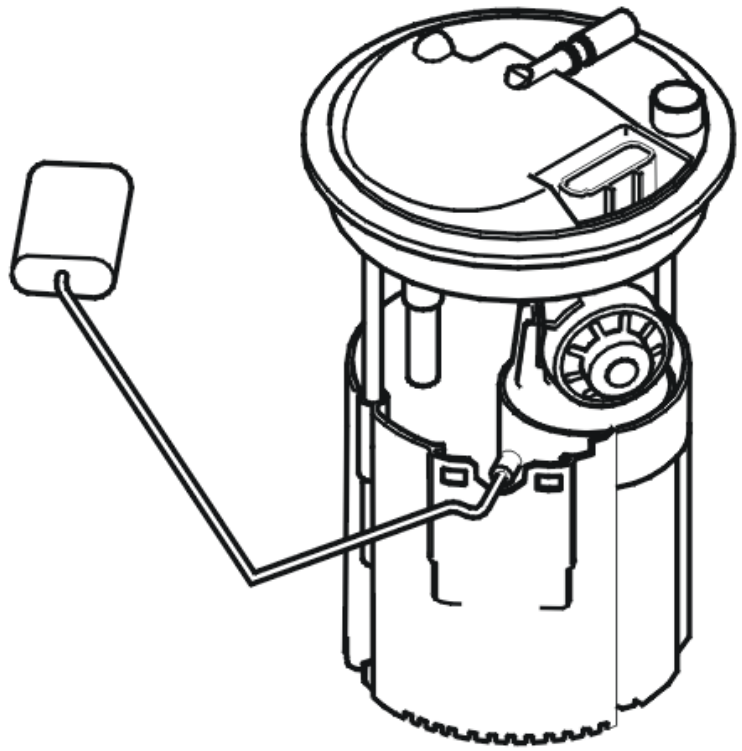

Fig. 259: Identifying Fuel Level Sensor
Courtesy of VOLVO CARS CORPORATION

If a malfunction of the fuel level sensor's ejector part is detected by central electronic module (CEM), a malfunction message is sent to engine control module (ECM) and the diagnostic trouble code is generated.

The diagnostic trouble code can be diagnosed when the ignition is on.

Substitute Value

- Nothing.

Possible Source

- Look for the cause of the malfunction in central electronic module (CEM).

Fault symptom[s]

- Nothing.

FAULT-TRACING

see **FAULT-TRACING**

ECM-P134600: FUEL LEVEL SENSOR B CIRCUIT. GENERAL FAILURE INFORMATION. NO SUB TYPE INFORMATION (B6324S5; 2011-2012)

DIAGNOSTIC TROUBLE CODE (DTC) INFORMATION ECM-P134600

see **DIAGNOSTIC TROUBLE CODE (DTC) INFORMATION ECM-P134600**

FAULT-TRACING

see **FAULT-TRACING**

ECM-P145C68 FAN SYSTEM COMPONENT ERROR A. ALGORITHM BASED FAILURES. EVENT INFORMATION (B6324S; 2007-2010)

DIAGNOSTIC TROUBLE CODE (DTC) INFORMATION ECM-P145C68

Condition

NOTE: **This diagnostic trouble code (DTC) status is an event controlled diagnostic trouble code (DTC). An event controlled diagnostic trouble code (DTC) does not mean that there is a fault in the control module when it is active, but is designed as information.**

Engine control module (ECM) monitors the engine's cooling system. The diagnostic trouble code (DTC) is stored if the control module detects that:

- The temperature in the electric cooling fan module exceeds a specific value.

The diagnostic trouble code (DTC) can be diagnosed when the engine is running.

Substitute Value

- The fan is turned off until the temperature is below a specific value.

Possible Source

- This diagnostic trouble code (DTC) is not caused by a fault that needs to be remedied.

Fault symptom[s]

- None.

FAULT-TRACING INFORMATION

see **FAULT-TRACING INFORMATION**

ECM-P145C68 FAN SYSTEM COMPONENT ERROR A. ALGORITHM BASED FAILURES. EVENT INFORMATION (B6324S5; 2011-2012)

DIAGNOSTIC TROUBLE CODE (DTC) INFORMATION ECM-P145C68

see **DIAGNOSTIC TROUBLE CODE (DTC) INFORMATION ECM-P145C68**

FAULT-TRACING INFORMATION

see **FAULT-TRACING INFORMATION**

ECM-P145D68 FAN SYSTEM COMPONENT ERROR B. ALGORITHM BASED FAILURES. EVENT INFORMATION (B6324S; 2007-2010)

DIAGNOSTIC TROUBLE CODE (DTC) INFORMATION ECM-P145D68

Condition

NOTE: **This diagnostic trouble code (DTC) status is an event controlled diagnostic trouble code (DTC). An event controlled diagnostic trouble code (DTC) does not mean that there is a fault in the control module when it is active, but is designed as information.**

Engine control module (ECM) monitors the engine's cooling system. The diagnostic trouble code (DTC) is stored if the control module detects that:

- The temperature in the electric cooling fan module exceeds a specific value.

The diagnostic trouble code (DTC) can be diagnosed when the engine is running.

Substitute Value

- None.

Possible Source

- This diagnostic trouble code (DTC) is not caused by a fault that needs to be remedied.

Fault symptom[s]

- None.

FAULT-TRACING INFORMATION

see **FAULT-TRACING INFORMATION**

ECM-P145D68 FAN SYSTEM COMPONENT ERROR B. ALGORITHM BASED FAILURES. EVENT INFORMATION (B6324S5; 2011-2012)

DIAGNOSTIC TROUBLE CODE (DTC) INFORMATION ECM-P145D68

see **DIAGNOSTIC TROUBLE CODE (DTC) INFORMATION ECM-P145D68**

FAULT-TRACING INFORMATION

see **FAULT-TRACING INFORMATION**

ECM-P151B68 IDLE SPEED CONTROL - RPM LOWER THAN EXPECTED. ALGORITHM BASED FAILURES. EVENT INFORMATION (B6324S; 2007-2010)

DIAGNOSTIC TROUBLE CODE (DTC) INFORMATION ECM-P151B68

Condition

NOTE: **This diagnostic trouble code (DTC) status is an event controlled diagnostic trouble code (DTC). An event controlled diagnostic trouble code (DTC) does not mean that there is a fault in the control module when it is active, but is designed as information.**

The Engine Control Module (ECM) monitors the engine's speed. If the control module detects that the engine RPM has been outside the limit value for engine stop, the diagnostic trouble code is generated.

The diagnostic trouble code (DTC) can be diagnosed when the engine is running.

Substitute Value

- Nothing.

Possible Source

- This diagnostic trouble code (DTC) is not caused by a fault that needs to be remedied.

Fault symptom[s]

- None.

FAULT-TRACING INFORMATION

see **FAULT-TRACING INFORMATION**

ECM-P151B68 IDLE SPEED CONTROL - RPM LOWER THAN EXPECTED. ALGORITHM BASED FAILURES. EVENT INFORMATION (B6324S5; 2011-2012)

DIAGNOSTIC TROUBLE CODE (DTC) INFORMATION ECM-P151B68

see **DIAGNOSTIC TROUBLE CODE (DTC) INFORMATION ECM-P151B68**

FAULT-TRACING INFORMATION

see **FAULT-TRACING INFORMATION**

ECM-P151C68 IDLE SPEED CONTROL - RPM HIGHER THAN EXPECTED. ALGORITHM BASED FAILURES. EVENT INFORMATION (B6324S; 2007-2010)

DIAGNOSTIC TROUBLE CODE (DTC) INFORMATION ECM-P151C68

Condition

NOTE: **This diagnostic trouble code (DTC) status is an event controlled diagnostic trouble code (DTC). An event controlled diagnostic trouble code (DTC) does not mean that there is a fault in the control module when it is active, but is designed as information.**

The Engine Control Module (ECM) monitors the engine's start RPM. If the control module detects that the start RPM has been outside the limit value for a certain time, the diagnostic trouble code is generated.

The diagnostic trouble code (DTC) can be diagnosed when the engine is running.

Substitute Value

- Nothing.

Possible Source

- This diagnostic trouble code (DTC) is not caused by a fault that needs to be remedied.

Fault symptom[s]

- None.

FAULT-TRACING INFORMATION

see **FAULT-TRACING INFORMATION**

ECM-P151C68 IDLE SPEED CONTROL - RPM HIGHER THAN EXPECTED. ALGORITHM BASED FAILURES. EVENT INFORMATION (B6324S5; 2011-2012)

DIAGNOSTIC TROUBLE CODE (DTC) INFORMATION ECM-P151C68

see **DIAGNOSTIC TROUBLE CODE (DTC) INFORMATION ECM-P151C68**

FAULT-TRACING INFORMATION

see **FAULT-TRACING INFORMATION**

ECM-P157200: BAKE PEDAL SWITCH CIRCUIT. GENERAL FAULT INFORMATION. TYPE OF FAULT NOT SPECIFIED. (B8444S; 2005-2011)

DIAGNOSTIC TROUBLE CODE (DTC) INFORMATION ECM-P157200

Condition

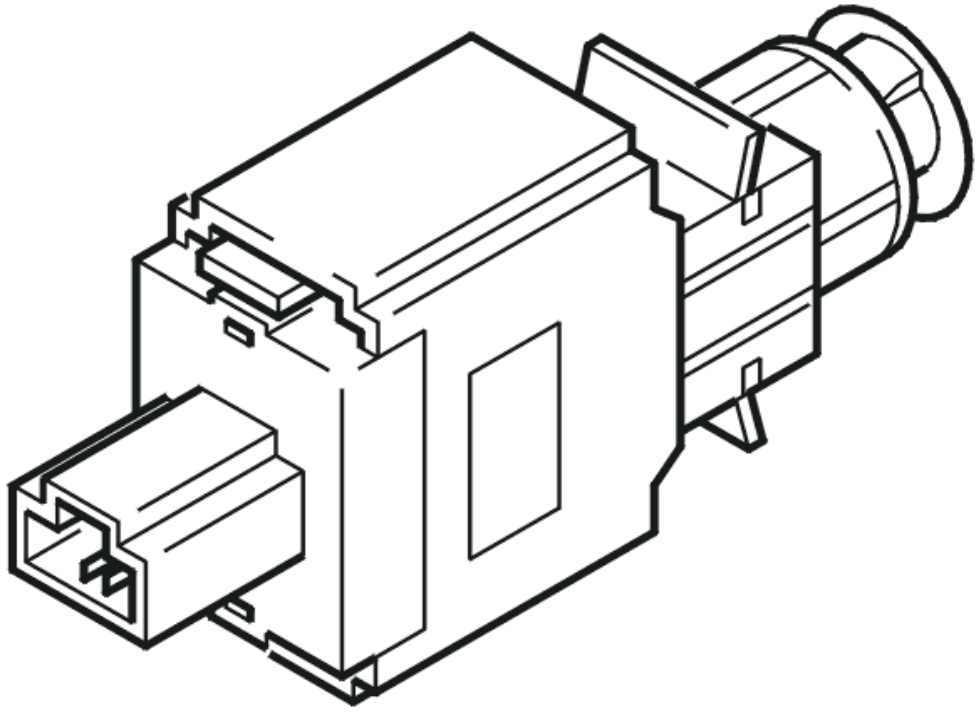

Fig. 260: Identifying Brake Pedal Switch
Courtesy of VOLVO CARS CORPORATION

The engine control module (ECM) checks the signal from the brake light contact by comparing it with the brake pedal position. The brake control module (BCM) transmits information on brake pedal position to the engine control module (ECM) via the CAN network.

The diagnostic trouble code is generated if the engine control module registers that the signal from the brake light contact indicates that the brake pedal is not depressed while the signal from the brake pedal position sensor indicates that the pedal is depressed.

The diagnostic trouble code can be diagnosed when the ignition is on and the brake pedal is depressed.

Substitute Value

- Cruise control turned off when fault is active.

Possible Source

- Contact resistance or oxidation in brake light contact connections.
- Contact resistance or oxidation in brake pedal position sensor connections.
- Open-circuit or short-circuit to ground on brake light contact cables.
- Damaged brake light contact.
- Damaged brake position sensor.

Fault symptom[s]

- Cruise control does not function at all.

TROUBLESHOOTING ECM-P157200

CHECKING THE STATUS

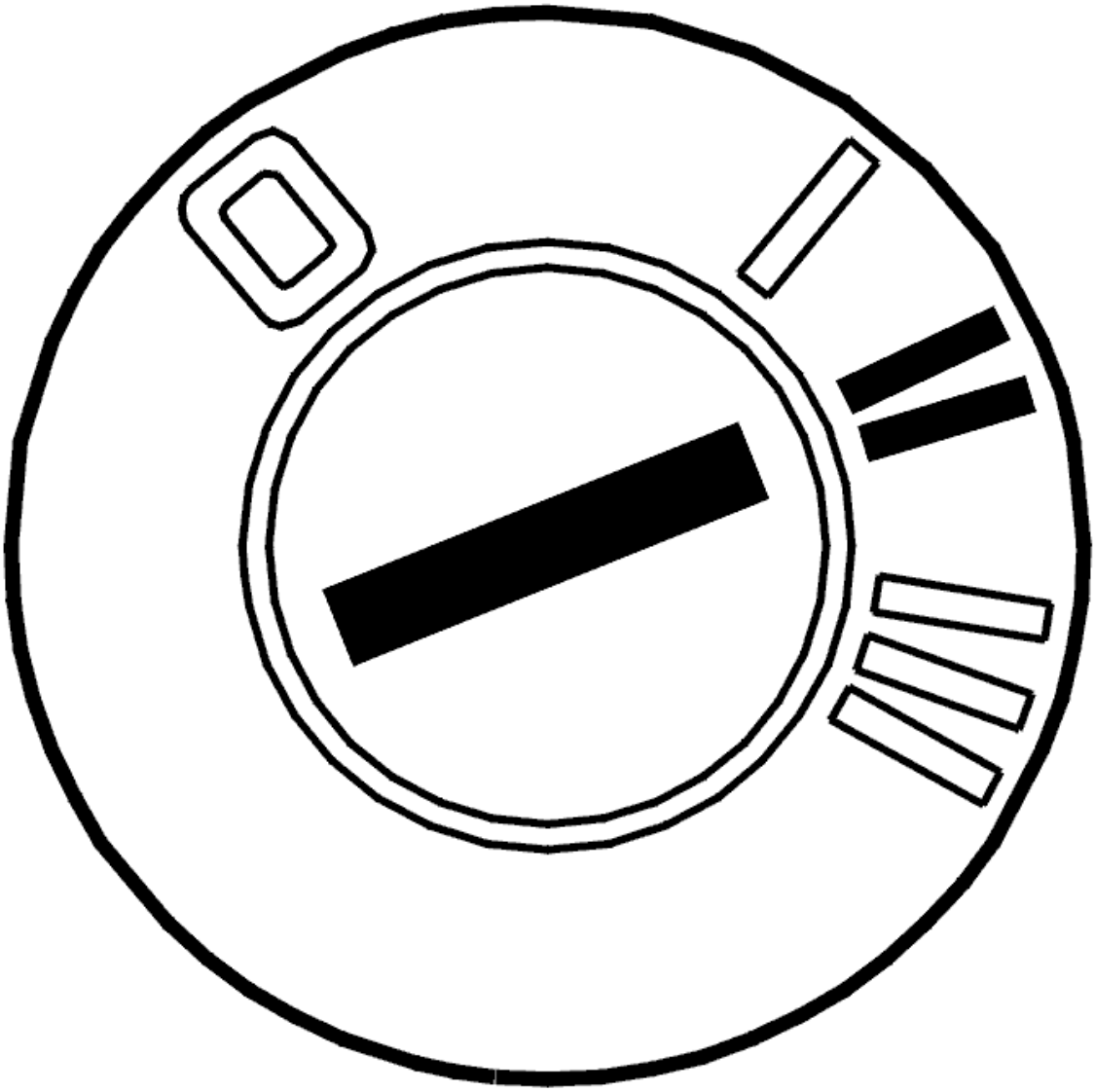

Fig. 261: Identifying Ignition ON
Courtesy of VOLVO CARS CORPORATION

- Ignition on

  Check if the malfunction is permanent or intermittent by activating readout of brake pedal position (via CAN) and position of the brake light switch.

  Check that the parameters match. Pressed brake pedal shall activate the signal from the brake light switch.

  If the signals do not match, this indicates that the malfunction is permanent. If the signals match, this indicates that the malfunction is intermittent and not active right now.

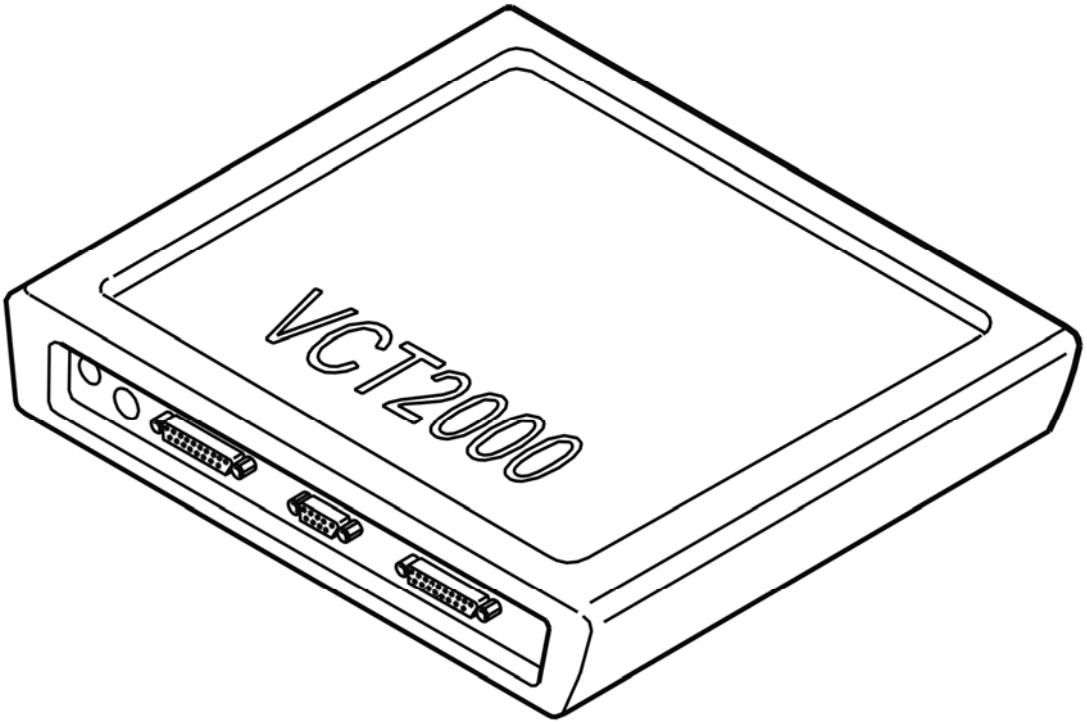

Fig. 262: Identifying VCT2000 Diagnostic Tool Symbol In VIDA
Courtesy of VOLVO CARS CORPORATION

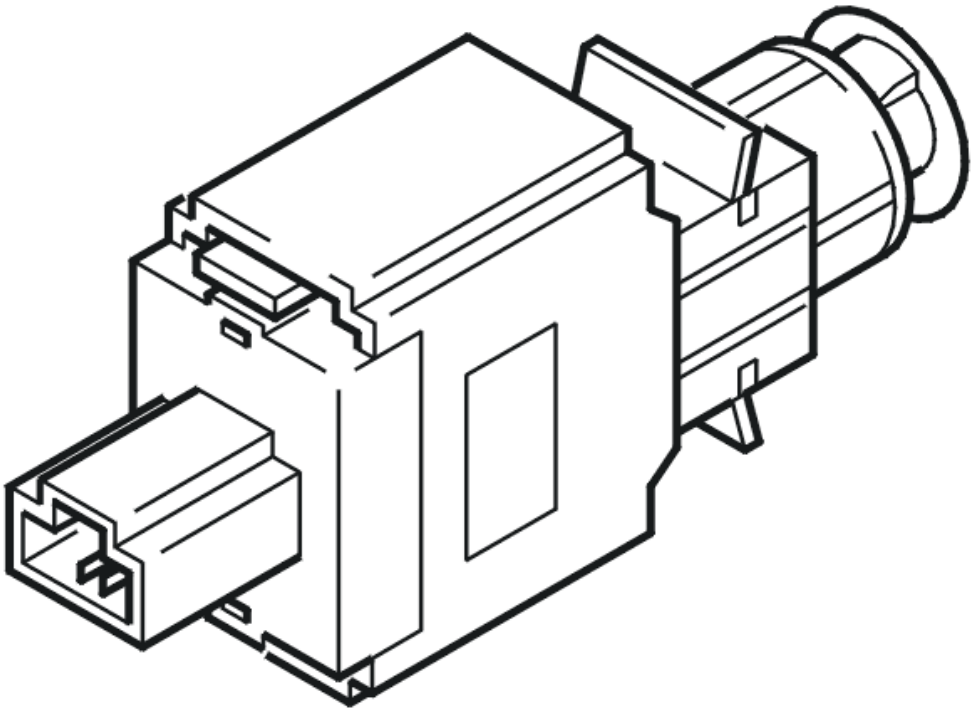

Fig. 263: Identifying Brake Pedal Switch
Courtesy of VOLVO CARS CORPORATION

- **Continue**

  Refer to **CHECKING COMPONENTS AND WIRING**

CHECKING COMPONENTS AND WIRING

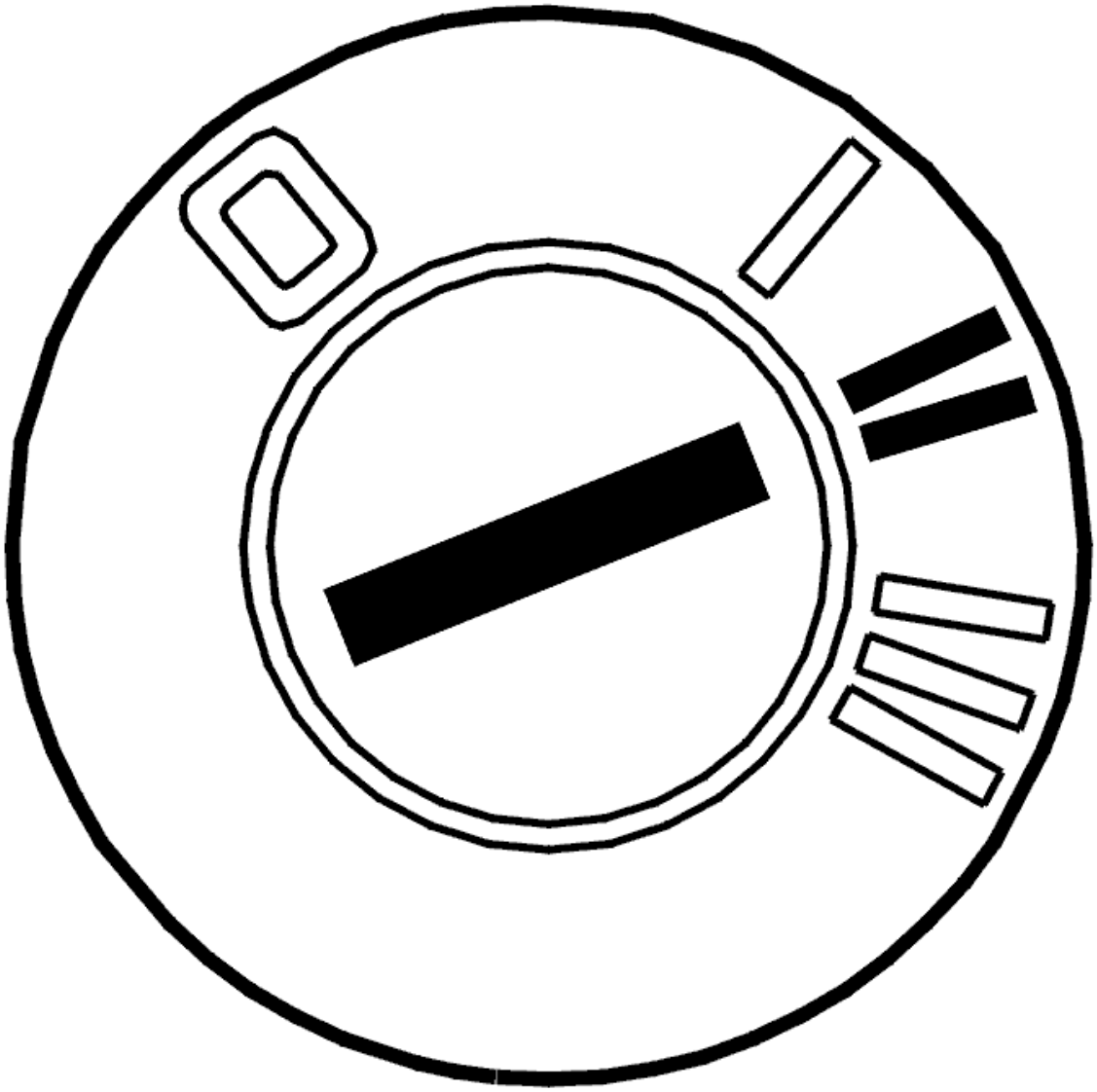

Fig. 264: Identifying Ignition ON
Courtesy of VOLVO CARS CORPORATION

- Ignition on

  Activate readout of brake pedal position (via CAN) and position of the brake light switch.

  Check that the value for brake pedal position at unaffected brake pedal is approx. 0 % and when the pedal is fully pressed down approx. 55 % when the engine is running.

  Also check that the brake light switch is activated when the pedal is pressed down.

  Check the connector for the brake pedal position sensor and the brake light switch for contact resistance, loose connections and oxidation.

  Check the ground cable between brake light switch and engine control module (ECM) #B41 (#C41) for

short-circuit to ground, as well as open circuit.

HINT: The brake pedal position sensor's signal is sent to engine control module (ECM) from brake control module (BCM) via CAN.

Remedy as necessary.

Other information

- see **CONNECTING THE BREAKOUT BOX**
- see **SIGNAL SPECIFICATION, ENGINE CONTROL MODULE (ECM)**
- see **PEDAL POSITION SENSOR, REPLACING**
- see **STOP LAMP SWITCH, REPLACING**
- see **CHECKING WIRING AND TERMINALS**

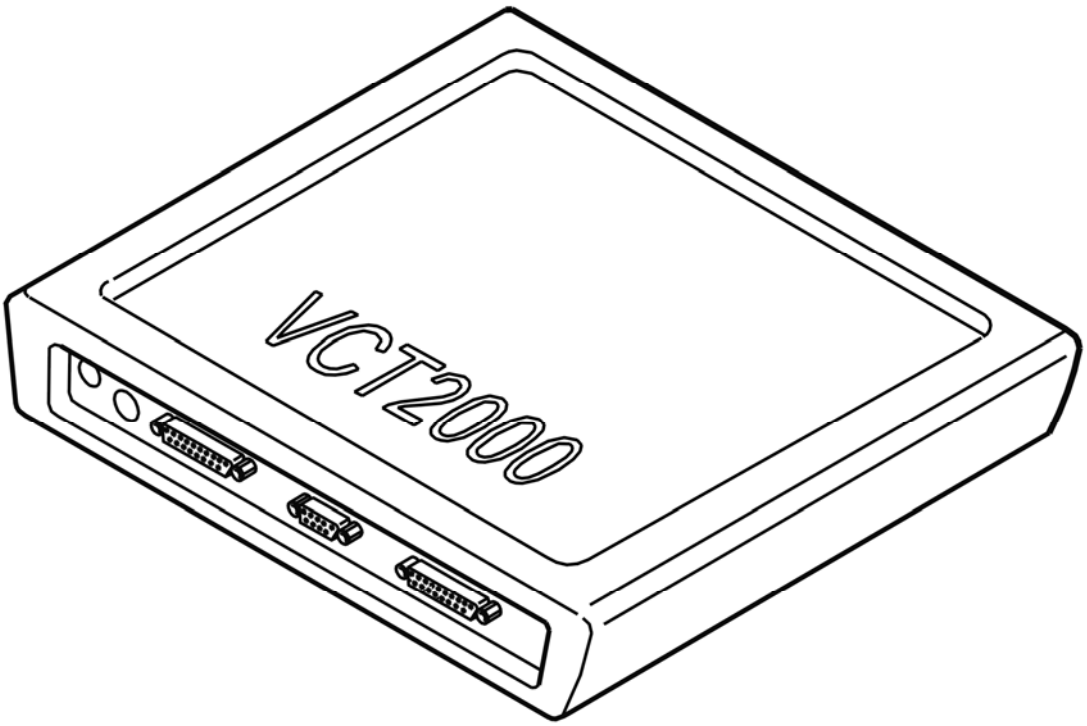

Fig. 265: Identifying VCT2000 Diagnostic Tool Symbol In VIDA
Courtesy of VOLVO CARS CORPORATION

- **Continue**

  Refer to **VERIFICATION**

VERIFICATION

VERIFICATION

HINT: After carrying out the repair, check that the fault has been remedied.

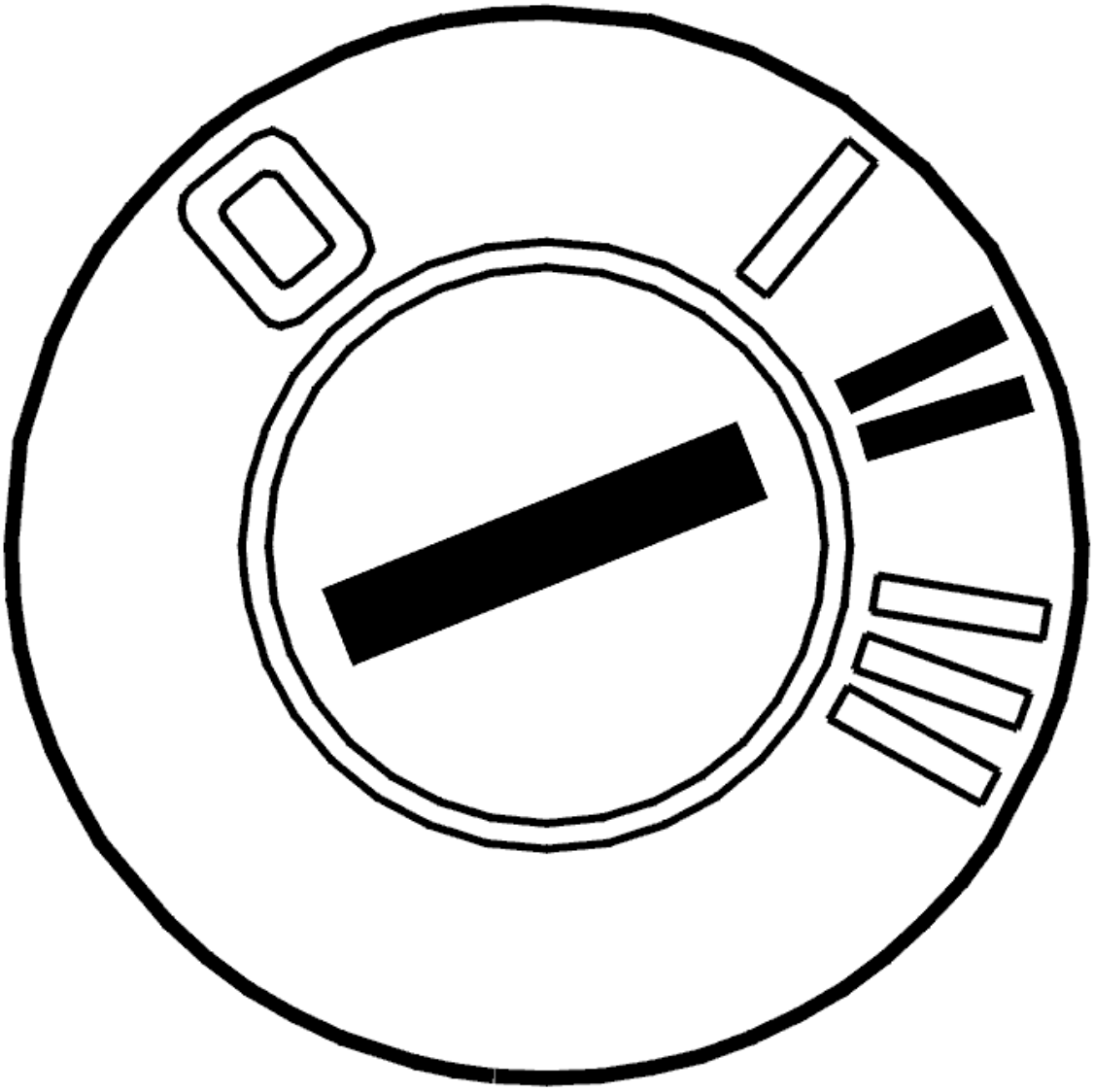

Fig. 266: Identifying Ignition ON
Courtesy of VOLVO CARS CORPORATION

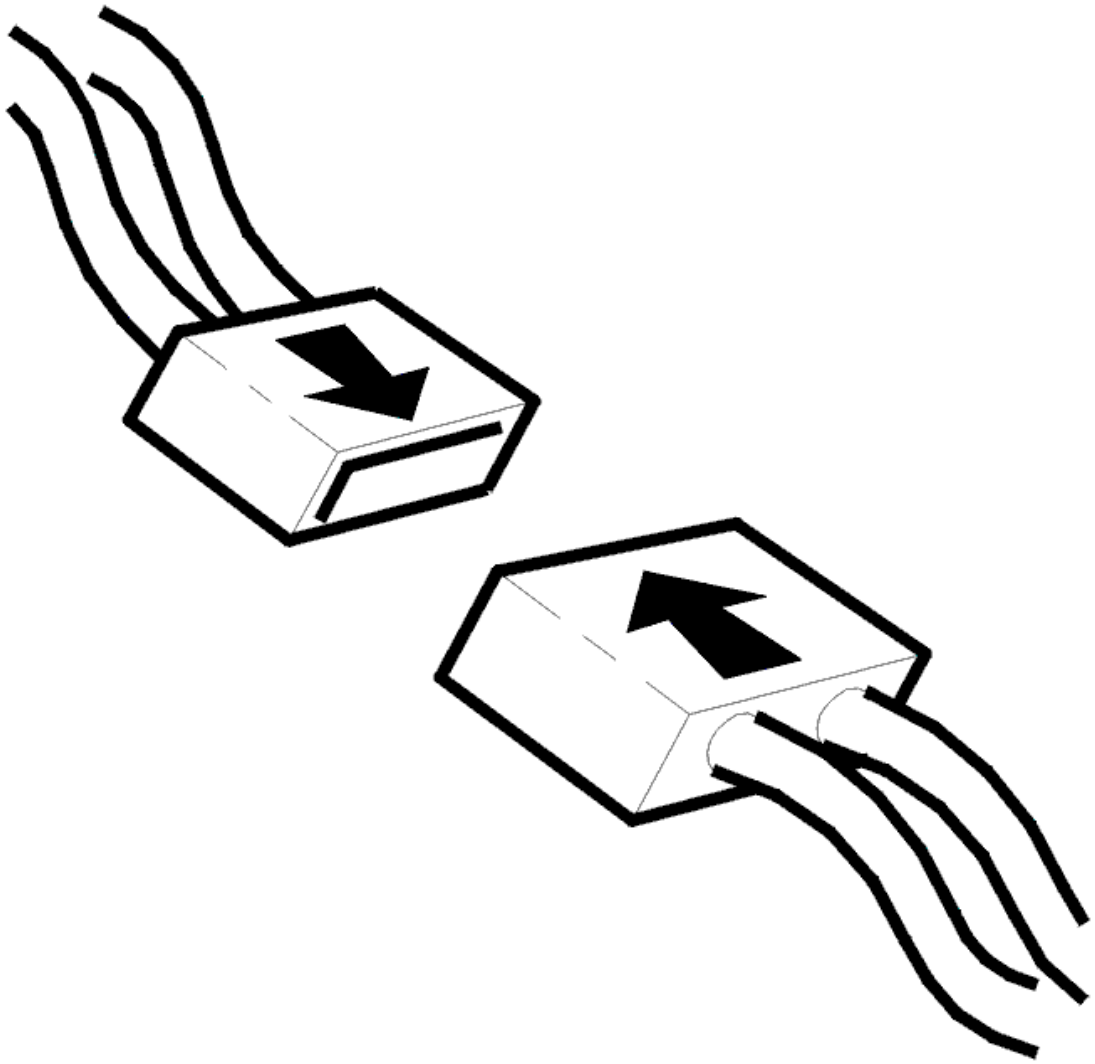

Fig. 267: Connecting Connector
Courtesy of VOLVO CARS CORPORATION

- Ignition off
- Reinstall the connectors, components etc.
- Ignition on

  Activate readout of brake pedal position (via CAN) and the brake light switch signal.

  Check that the value for brake pedal position at unaffected brake pedal is approx. 0 % and when the pedal is fully pressed down approx. 55 % when the engine is running.

  Also check that the brake light switch is activated when the pedal is pressed down.

  HINT: The brake pedal position sensor's signal is sent to engine control module (ECM) from brake

control module (BCM) via CAN.

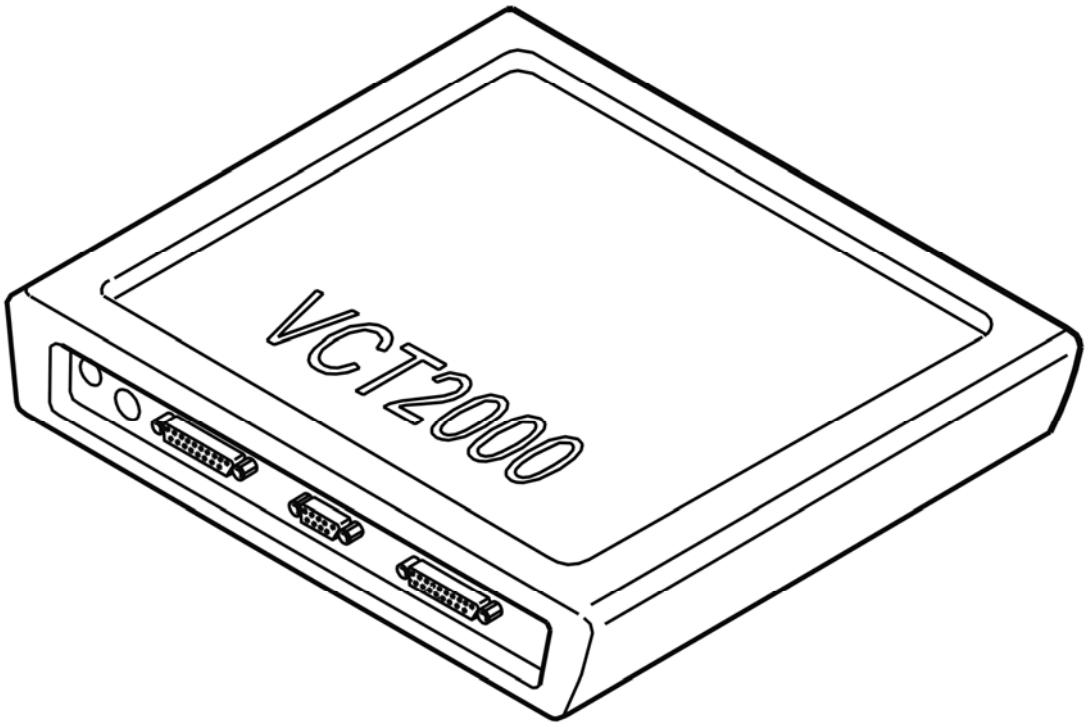

Fig. 268: Identifying VCT2000 Diagnostic Tool Symbol In VIDA
Courtesy of VOLVO CARS CORPORATION

Do the values match?

- **YES**

  VERIFIED: Troubleshooting has been completed.

- **NO**

  Refer to **INFORMATION**

INFORMATION

FAULT-TRACING INFORMATION

The fault should have been detected and remedied. As this is not the case fault-tracing has failed.

Exit fault-tracing for this diagnostic trouble code (DTC) or make another attempt.

ECM-P157281: BRAKE PEDAL SWITCH CIRCUIT. BUS SIGNAL / MESSAGE

FAILURES. INVALID SERIAL DATA RECEIVED (B6324S; 2007-2010)

DIAGNOSTIC TROUBLE CODE (DTC) INFORMATION

Condition

The control module is continuously supplied with information about the position and status of the brake pedal switch from the brake control module (BCM) via CAN communication.

The control module checks the communication with the Brake control module (BCM).

The diagnostic trouble code (DTC) is stored if the control module detects that:

- Information from Brake control module (BCM) is incorrect/unreasonable.

The control module's test for the diagnostic trouble code (DTC) starts in the event of:

- Ignition switch position II.

NOTE: The control module can only detect the fault once the test has been started and the diagnostic trouble code (DTC) is stored when the conditions are met.

Substitute Value

- Cruise control is disengaged when the fault is active.

Possible Source

- Look for the cause of the fault in the brake control module (BCM).

Fault symptom[s]

- Cruise control does not operate

FAULT-TRACING

see **FAULT-TRACING**

ECM-P157281: BRAKE PEDAL SWITCH CIRCUIT. BUS SIGNAL / MESSAGE FAILURES. INVALID SERIAL DATA RECEIVED (B6324S5; 2011-2012)

DIAGNOSTIC TROUBLE CODE (DTC) INFORMATION

see **DIAGNOSTIC TROUBLE CODE (DTC) INFORMATION**

FAULT-TRACING

see **FAULT-TRACING**

ECM-P157282: BRAKE PEDAL SWITCH CIRCUIT. BUS SIGNAL / MESSAGE FAILURES. ALIVE / SEQUENCE COUNTER INCORRECT / NOT UPDATED (B6324S; 2007-2010)

DIAGNOSTIC TROUBLE CODE (DTC) INFORMATION ECM-P157282

Condition

The control module is continuously supplied with information about the position and status of the brake pedal switch from the brake control module (BCM) via CAN communication.

The control module checks the communication with the Brake control module (BCM).

The diagnostic trouble code (DTC) is stored if the control module detects that:

- Information from Brake control module (BCM) is incorrect/unreasonable.

The control module's test for the diagnostic trouble code (DTC) starts in the event of:

- Ignition switch position II.

NOTE: The control module can only detect the fault once the test has been started and the diagnostic trouble code (DTC) is stored when the conditions are met.

Substitute Value

- Cruise control is disengaged when the fault is active.

Possible Source

- Open-circuit in the communication cable.
- Short-circuit to ground in the communication cable.
- Short-circuit to supply voltage in the communication cable.
- Contact resistance or oxidation in the terminals.
- Open-circuit in terminals.
- Short-circuit in connections.

Fault symptom[s]

- Cruise control does not operate

FAULT-TRACING

see **FAULT-TRACING**

ECM-P157282: BRAKE PEDAL SWITCH CIRCUIT. BUS SIGNAL / MESSAGE FAILURES. ALIVE / SEQUENCE COUNTER INCORRECT / NOT UPDATED (B6324S5; 2011-2012)

DIAGNOSTIC TROUBLE CODE (DTC) INFORMATION ECM-P157282

see **DIAGNOSTIC TROUBLE CODE (DTC) INFORMATION ECM-P157282**

FAULT-TRACING

see **FAULT-TRACING**

ECM-P157287: BRAKE PEDAL SWITCH CIRCUIT. BUS SIGNAL / MESSAGE FAILURES. MISSING MESSAGE (B6324S; 2007-2010)

DIAGNOSTIC TROUBLE CODE (DTC) INFORMATION ECM-P157287

Condition

The control module is continuously supplied with information about the position and status of the brake pedal switch from the brake control module (BCM) via CAN communication.

The control module checks the communication with the Brake control module (BCM).

The diagnostic trouble code (DTC) is stored if the control module detects that:

- No communication with the Brake control module (BCM).

The control module's test for the diagnostic trouble code (DTC) starts in the event of:

- Ignition switch position II.

NOTE: The control module can only detect the fault once the test has been started and the diagnostic trouble code (DTC) is stored when the conditions are met.

Substitute Value

- Cruise control is disengaged when the fault is active.

Possible Source

- Open-circuit in the communication cable.
- Short-circuit to ground in the communication cable.

- Short-circuit to supply voltage in the communication cable.
- Contact resistance or oxidation in the terminals.
- Open-circuit in terminals.
- Short-circuit in connections.

Fault symptom[s]

- Cruise control does not operate

FAULT-TRACING

see **FAULT-TRACING**

ECM-P157287: BRAKE PEDAL SWITCH CIRCUIT. BUS SIGNAL / MESSAGE FAILURES. MISSING MESSAGE (B6324S5; 2011-2012)

DIAGNOSTIC TROUBLE CODE (DTC) INFORMATION ECM-P157287

see **DIAGNOSTIC TROUBLE CODE (DTC) INFORMATION ECM-P157287**

FAULT-TRACING

see **FAULT-TRACING**

ECM-P157300: THROTTLE POSITION NOT AVAILABLE. GENERAL FAILURE INFORMATION. NO SUB TYPE INFORMATION (B6324S; 2007-2010)

DIAGNOSTIC TROUBLE CODE (DTC) INFORMATION ECM-P157300

Condition

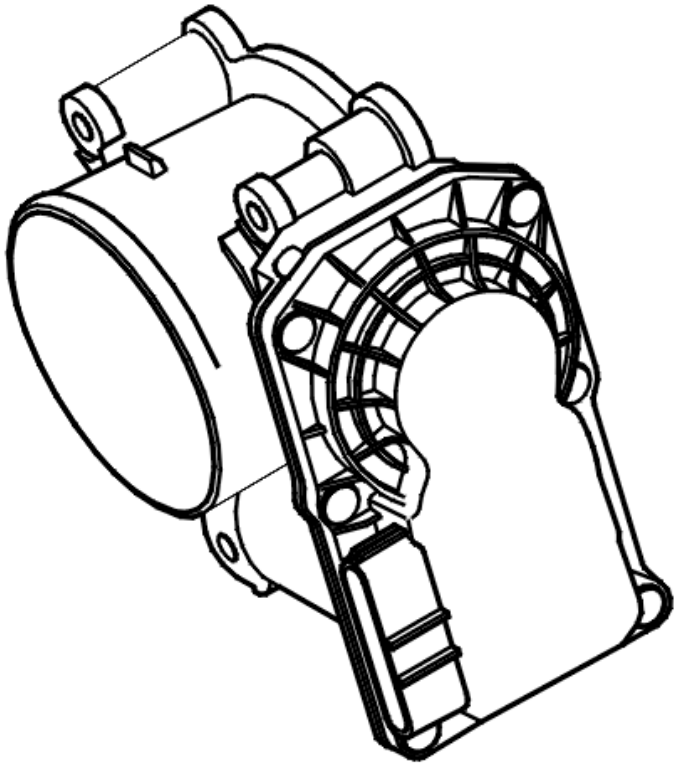

Fig. 269: Identifying Electronic Throttle Unit
Courtesy of VOLVO CARS CORPORATION

Engine control module (ECM) checks the signals from the electronic throttle unit's two position sensors.

The diagnostic trouble code (DTC) is stored if the engine control module (ECM) detects a fault in both sensors.

The diagnostic trouble code can be diagnosed when the ignition is on.

Substitute Value

- Supply to the damper motor for the electronic throttle unit is shut off. The throttle will set itself in the return position.
- Cruise control turned off when malfunction is active.

Possible Source

- Fault-trace through another stored diagnostic trouble code (DTC) for throttle position (TP) sensor in the engine control module (ECM).

Fault symptom[s]

- Poor performance.

- Cruise control does not function at all.

FAULT-TRACING INFORMATION

INFORMATION

The diagnostic trouble code (DTC) is an information trouble code and never occurs alone. Therefore fault-trace for another diagnostic trouble code (DTC).

ECM-P157300: THROTTLE POSITION NOT AVAILABLE. GENERAL FAILURE INFORMATION. NO SUB TYPE INFORMATION (B6324S5; 2011-2012)

DIAGNOSTIC TROUBLE CODE (DTC) INFORMATION ECM-P157300

see **DIAGNOSTIC TROUBLE CODE (DTC) INFORMATION ECM-P157300**

FAULT-TRACING INFORMATION

see **FAULT-TRACING INFORMATION**

ECM-P157400: THROTTLE POSITION SENSOR OUTPUT SIGNALS ARE NOT CORRECT. GENERAL MALFUNCTION INFORMATION. NO INFORMATION ON MALFUNCTION TYPE (B8444S; 2005-2011)

DIAGNOSTIC TROUBLE CODE (DTC) INFORMATION ECM-P157400

Condition

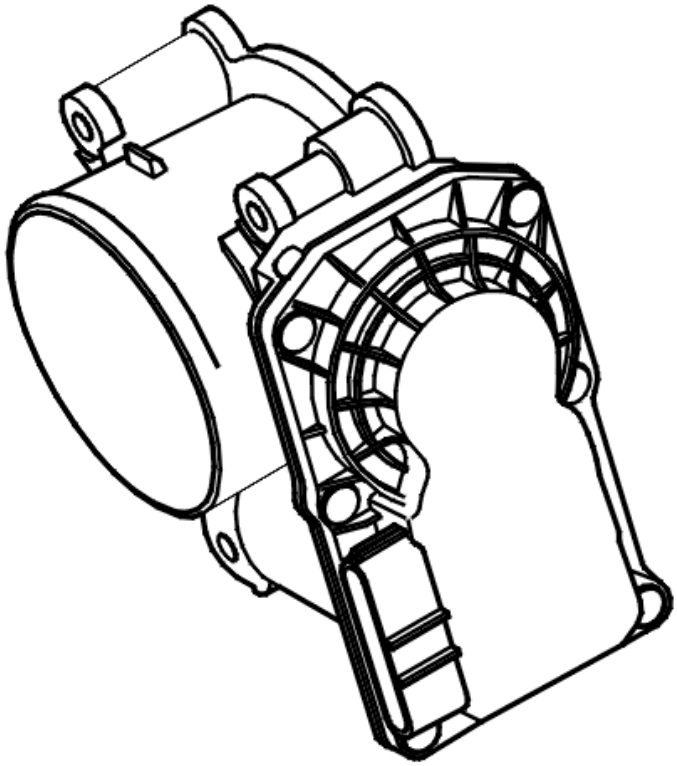

Fig. 270: Identifying Electronic Throttle Unit
Courtesy of VOLVO CARS CORPORATION

Engine control module (ECM) checks the signals from the electronic throttle unit's two position sensors.

If engine control module (ECM) detects that the difference between both sensors' signals is too great, the diagnostic trouble code is generated.

The diagnostic trouble code can be diagnosed when the ignition is on.

Substitute Value

- In case a defective signal is detected, the other signal is used.
- Cruise control turned off when malfunction is active.

Possible Source

- Contact resistance or oxidation in the connections.
- Damaged electronic throttle unit.

Fault symptom[s]

- Poor performance.

- Cruise control does not function at all.

TROUBLESHOOTING ECM-P157400

CHECKING THE STATUS

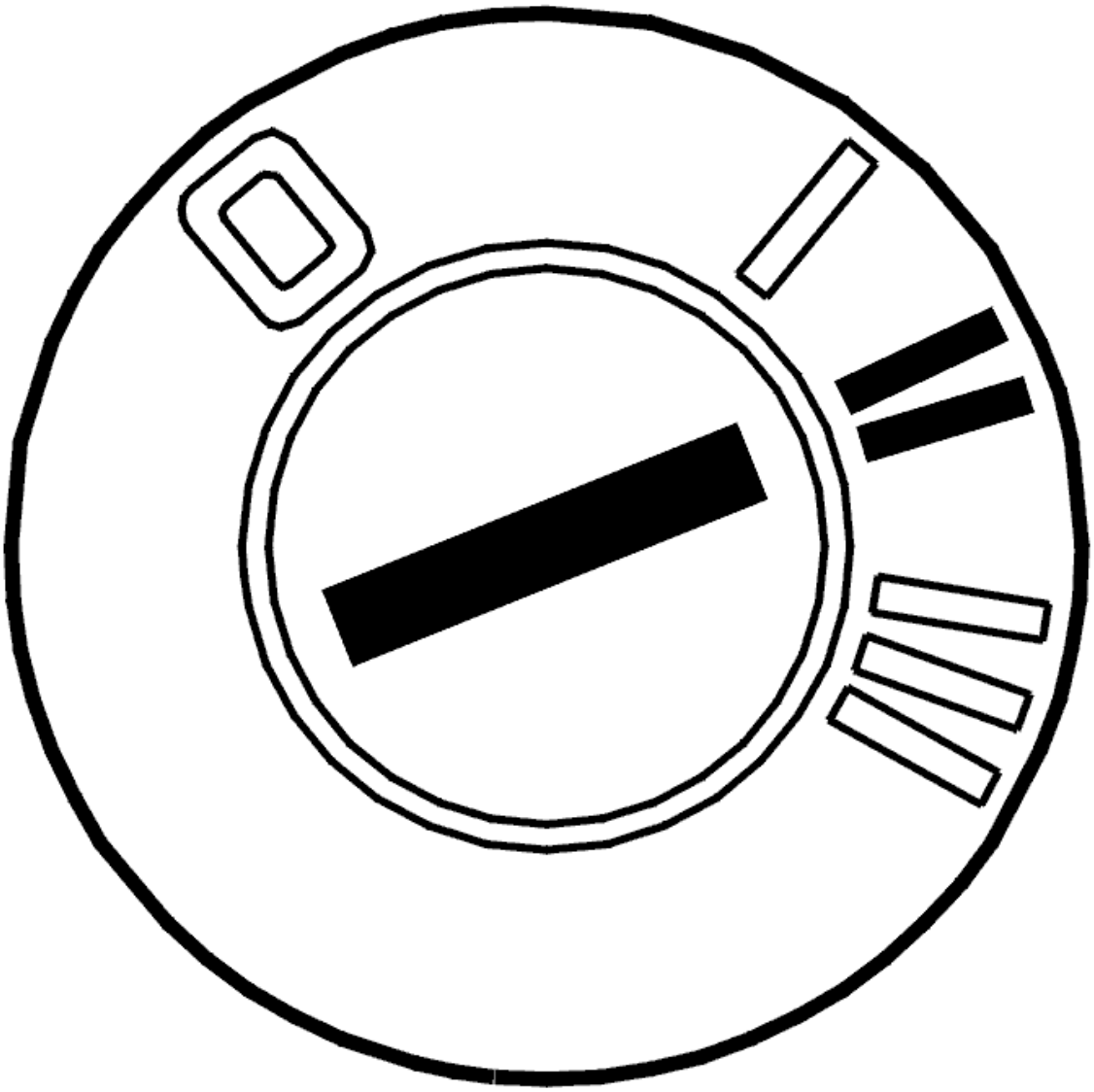

Fig. 271: Identifying Ignition ON
Courtesy of VOLVO CARS CORPORATION

- Ignition on

  Read the diagnostic status and fault status for the diagnostic trouble code by selecting the diagnostic trouble code in the list.

  Check if the malfunction is permanent or intermittent by reading off the diagnostic trouble code's status when the diagnostic status is "Implemented".

If the trouble status is "Malfunction found", this indicates that the malfunction is permanent. If the trouble status is "No malfunction found", this indicates that the malfunction is intermittent and not active right now.

NOTE: **Trouble status cannot go from "Malfunction found" to "No malfunction found" in the same operating cycle.**

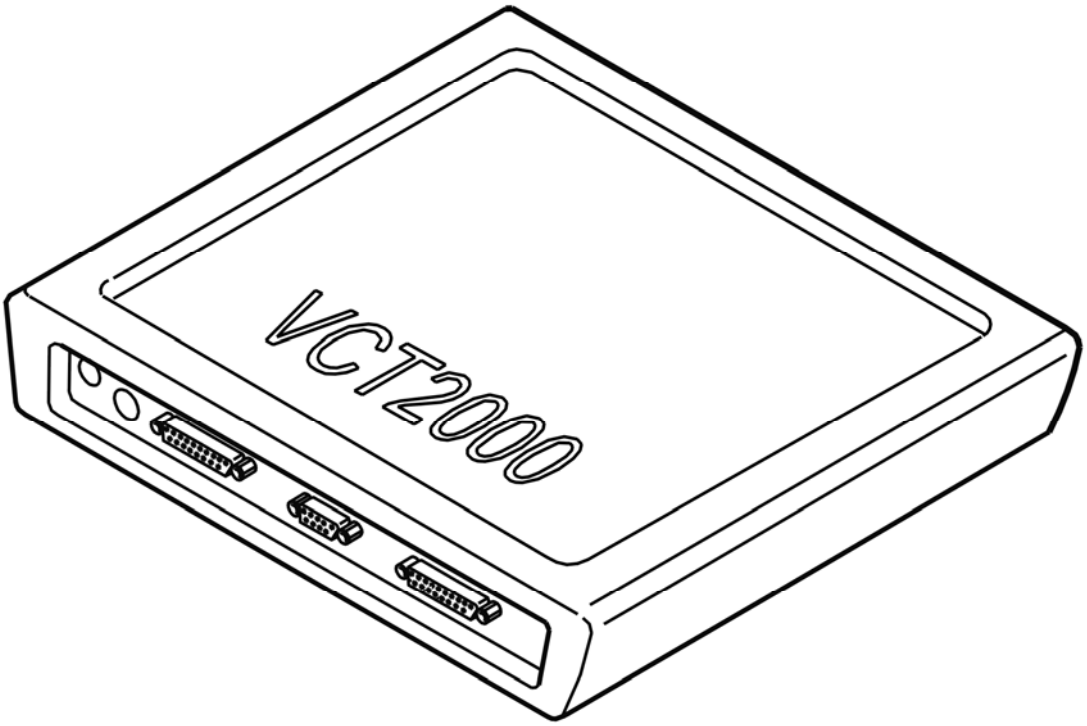

Fig. 272: Identifying VCT2000 Diagnostic Tool Symbol In VIDA
Courtesy of VOLVO CARS CORPORATION

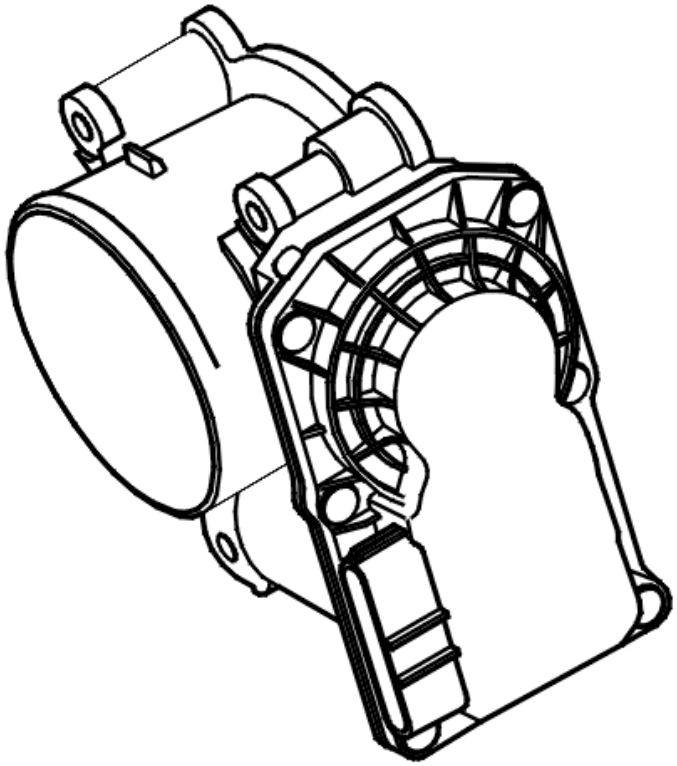

Fig. 273: Identifying Electronic Throttle Unit
Courtesy of VOLVO CARS CORPORATION

- **Continue**

  Refer to **CHECKING COMPONENTS AND WIRING**

CHECKING COMPONENTS AND WIRING

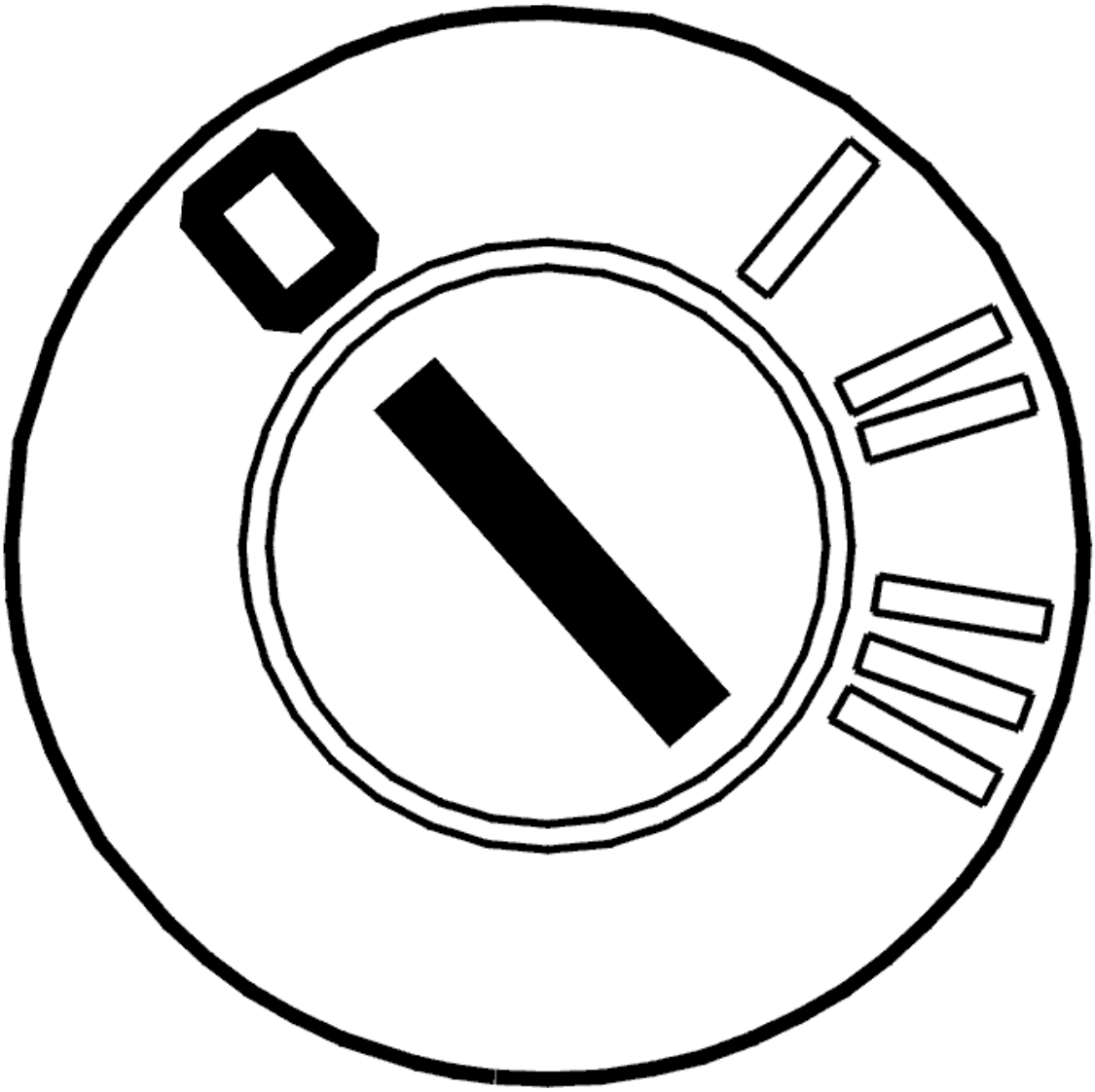

Fig. 274: Identifying Ignition OFF
Courtesy of VOLVO CARS CORPORATION

- Ignition off

  Check engine control module ECM) and the electronic throttle unit's connector for contact resistance and oxidation.

  Remedy as necessary.

  Other information

  - see **CONNECTING THE BREAKOUT BOX**
  - see **SIGNAL SPECIFICATION, ENGINE CONTROL MODULE (ECM)**
  - see **THROTTLE BODY (ELECTRONIC THROTTLE MODULE (ETM)), REPLACING**

- see **CHECKING WIRING AND TERMINALS**

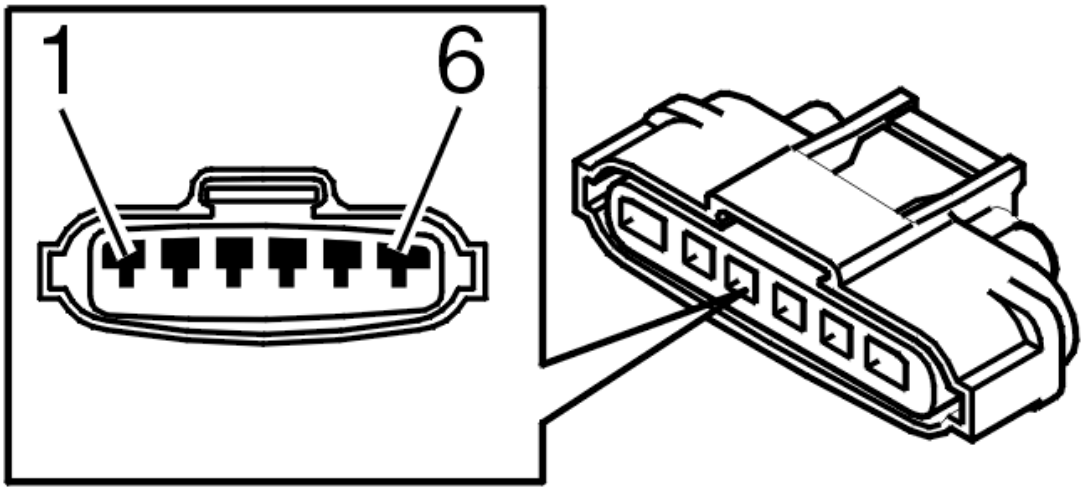

Fig. 275: Identifying 6-Bit Connector
Courtesy of VOLVO CARS CORPORATION

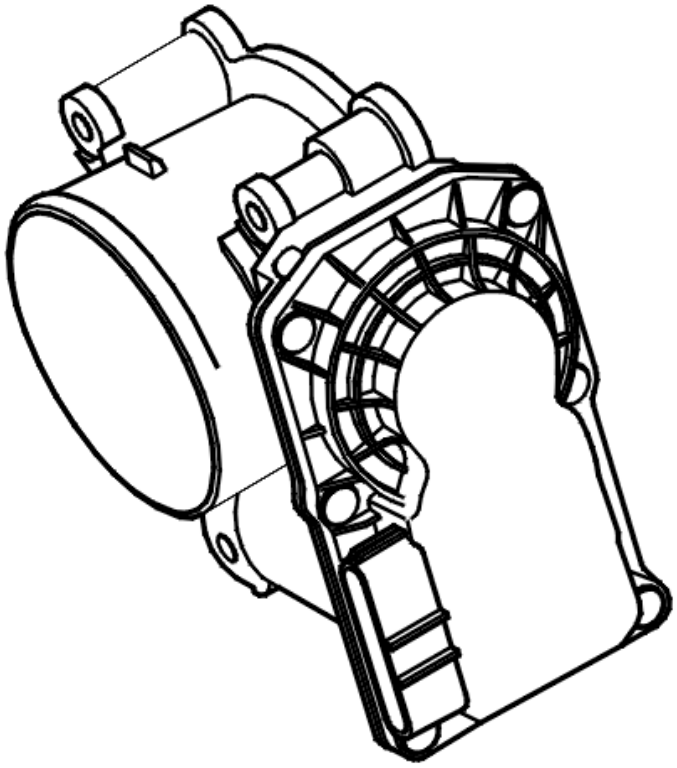

Fig. 276: Identifying Electronic Throttle Unit
Courtesy of VOLVO CARS CORPORATION

- **Continue**

Refer to **VERIFICATION**

VERIFICATION

VERIFICATION

HINT: After carrying out the repair, check that the fault has been remedied.

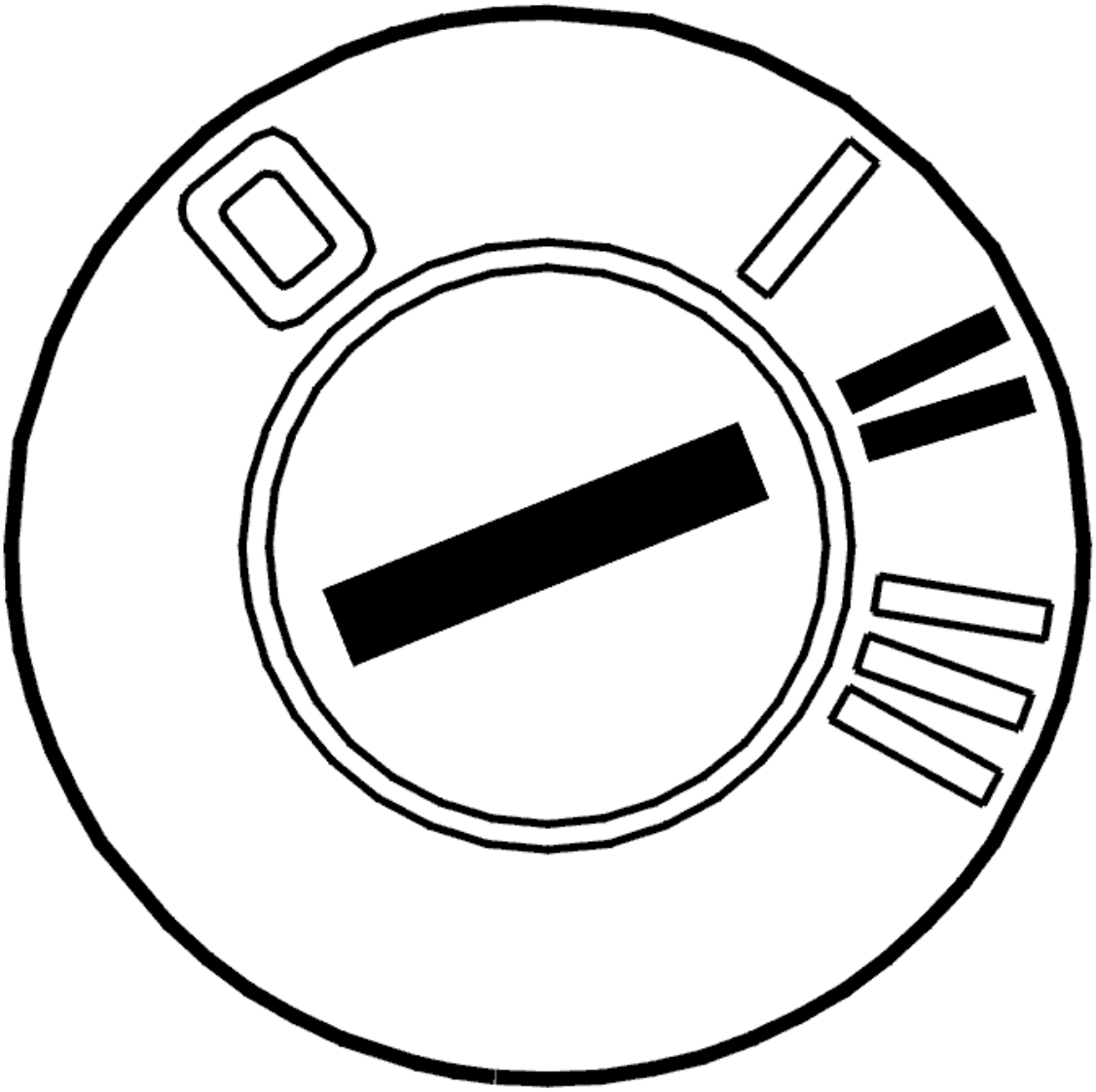

Fig. 277: Identifying Ignition ON
Courtesy of VOLVO CARS CORPORATION

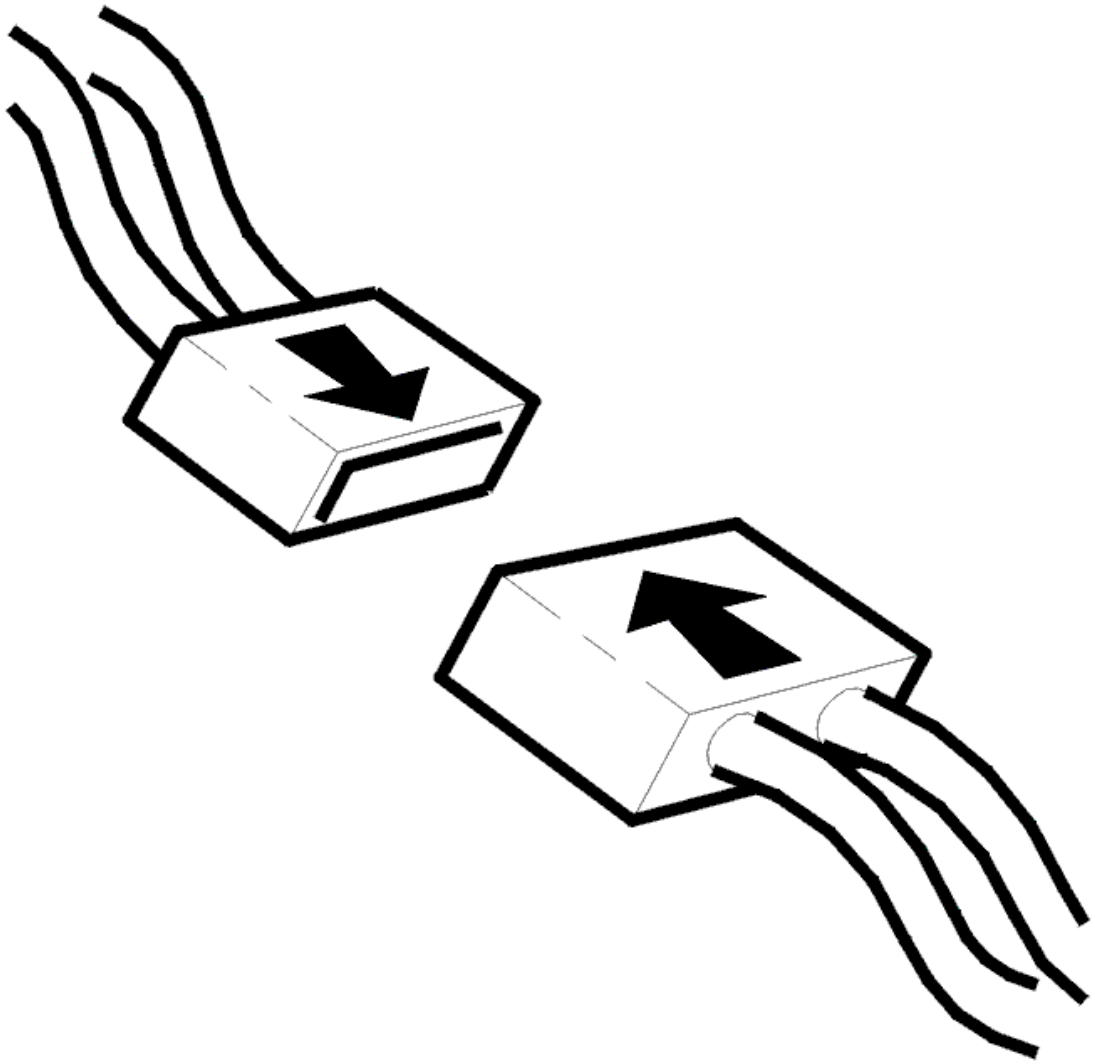

Fig. 278: Connecting Connector
Courtesy of VOLVO CARS CORPORATION

- Ignition off
- Reinstall the connectors, components etc.
- Ignition on

  Activate throttle position read off.

  Check that the throttle angle and both sensor values correspond.

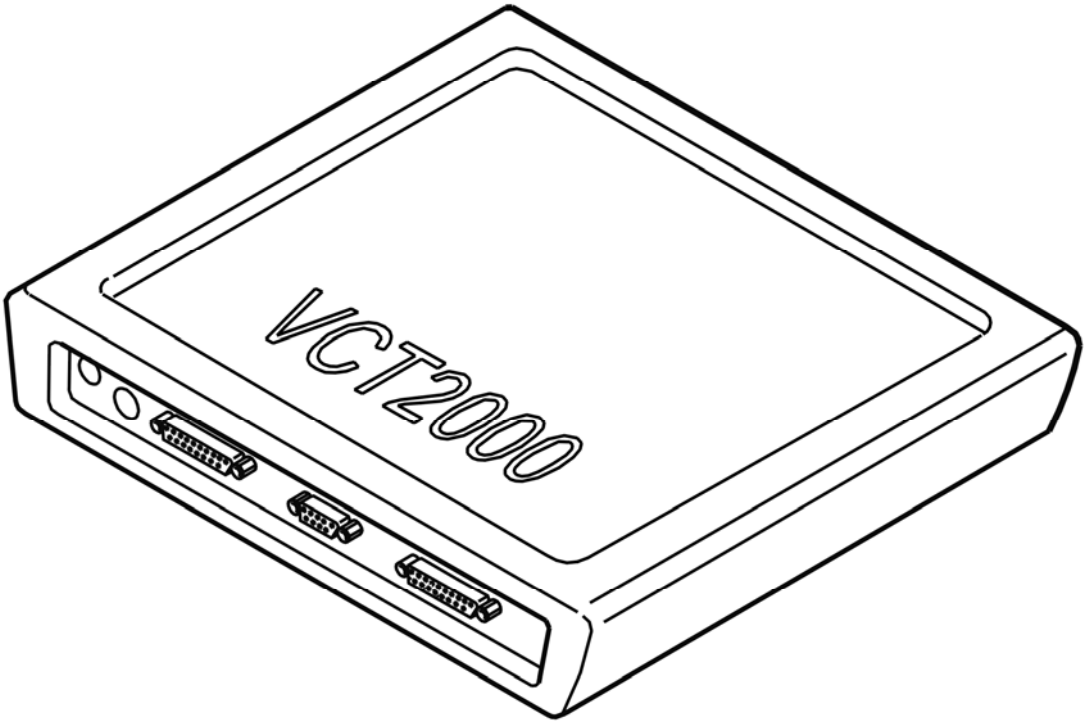

Fig. 279: Identifying VCT2000 Diagnostic Tool Symbol In VIDA
Courtesy of VOLVO CARS CORPORATION

Are the values within their permitted range?

- **YES**

  VERIFIED: Troubleshooting has been completed.

- **NO**

  Refer to **INFORMATION**

INFORMATION

FAULT-TRACING INFORMATION

The fault should have been detected and remedied. As this is not the case fault-tracing has failed.

Exit fault-tracing for this diagnostic trouble code (DTC) or make another attempt.

ECM-P157462: THROTTLE POSITION SENSOR OUTPUTS DISAGREE. ALGORITHM BASED FAILURES. SIGNAL COMPARE FAILURE (B6324S;

2007-2010)

DIAGNOSTIC TROUBLE CODE (DTC) INFORMATION ECM-P157462

Condition

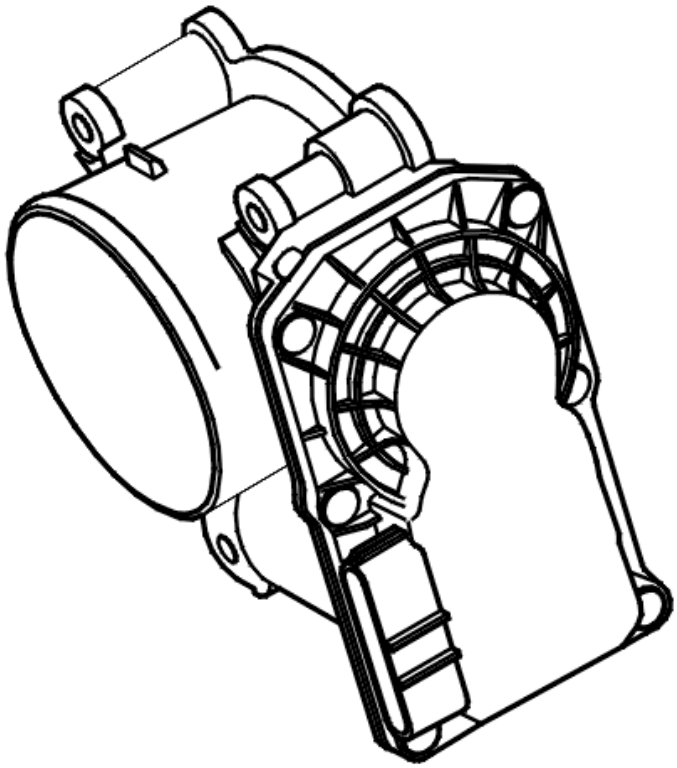

Fig. 280: Identifying Electronic Throttle Unit
Courtesy of VOLVO CARS CORPORATION

Engine control module (ECM) checks the signals from the electronic throttle unit's two position sensors.

If engine control module (ECM) detects that the difference between both sensors' signals is too great, the diagnostic trouble code is generated.

The diagnostic trouble code can be diagnosed when the ignition is on.

Substitute Value

- In case a defective signal is detected, the other signal is used.
- Cruise control turned off when malfunction is active.

Possible Source

- Contact resistance or oxidation in the connections.
- Damaged electronic throttle unit.

Fault symptom[s]

- Poor performance.
- Cruise control does not function at all.

FAULT-TRACING

CHECKING THE STATUS

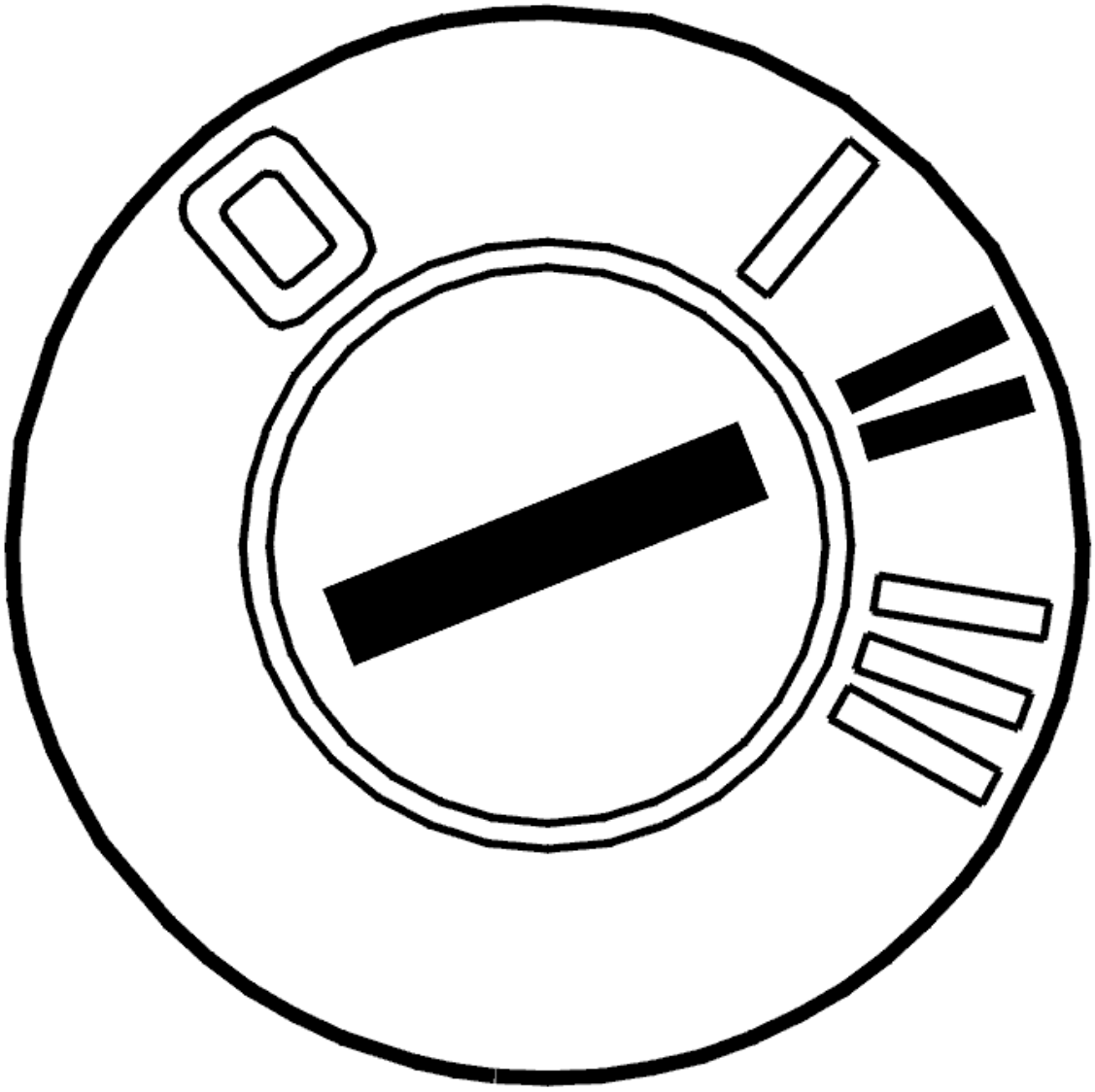

Fig. 281: Identifying Ignition ON
Courtesy of VOLVO CARS CORPORATION

- Ignition on

  Read the diagnostic status and fault status for the diagnostic trouble code by selecting the diagnostic trouble code in the list.

  Check if the malfunction is permanent or intermittent by reading off the diagnostic trouble code's status when the diagnostic status is "Implemented".

  If the trouble status is "Malfunction found", this indicates that the malfunction is permanent. If the trouble status is "No malfunction found", this indicates that the malfunction is intermittent and not active right now.

  NOTE: Trouble status cannot go from "Malfunction found" to "No malfunction found" in the same operating cycle.

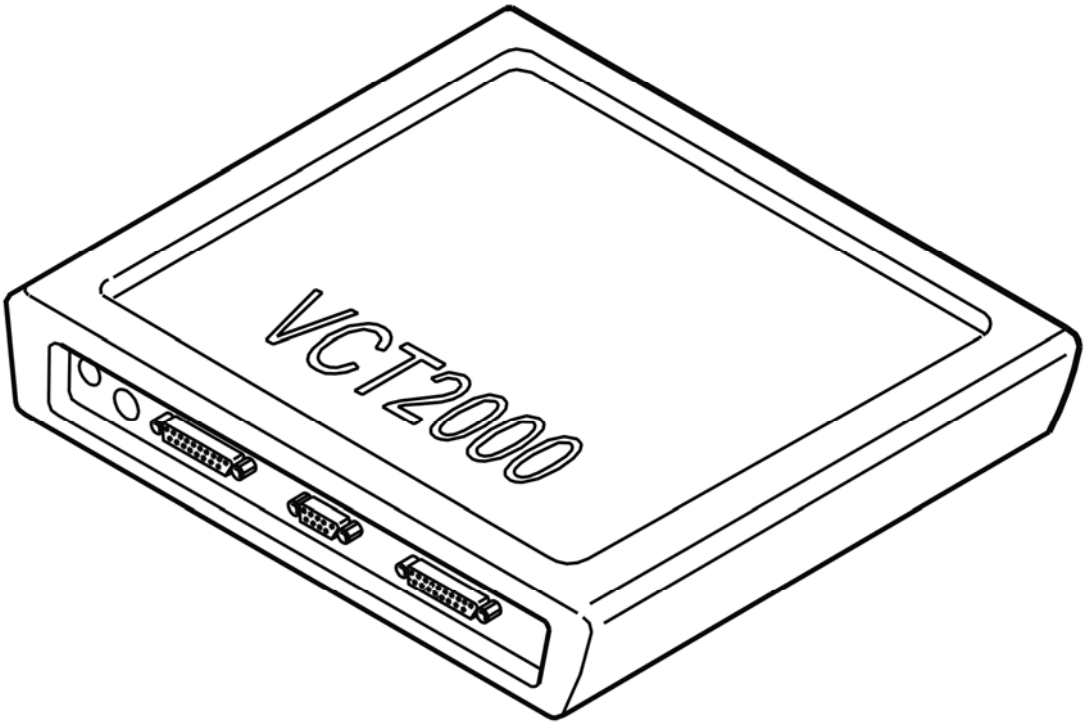

Fig. 282: Identifying VCT2000 Diagnostic Tool Symbol In VIDA
Courtesy of VOLVO CARS CORPORATION

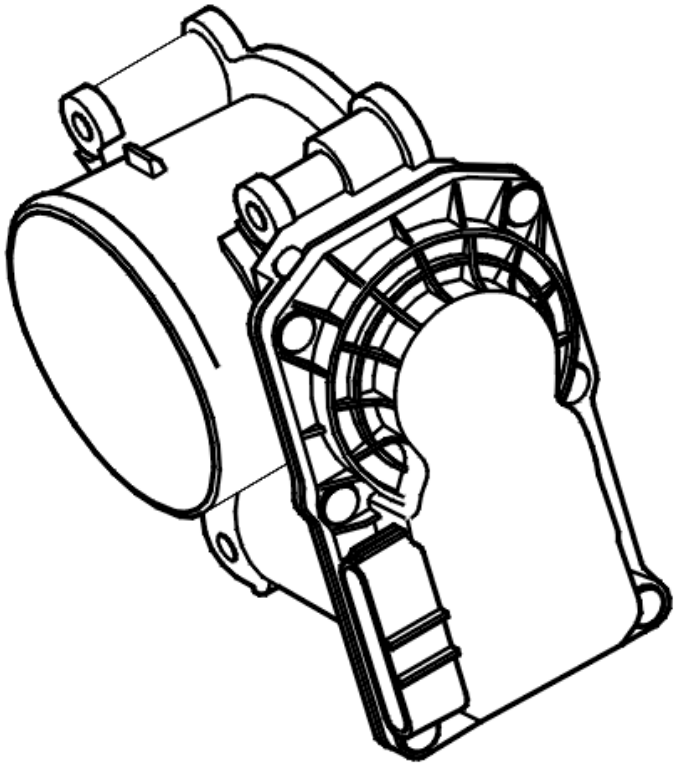

Fig. 283: Identifying Electronic Throttle Unit
Courtesy of VOLVO CARS CORPORATION

- **Continue**

  Refer to **CHECKING COMPONENTS AND WIRING**

CHECKING COMPONENTS AND WIRING

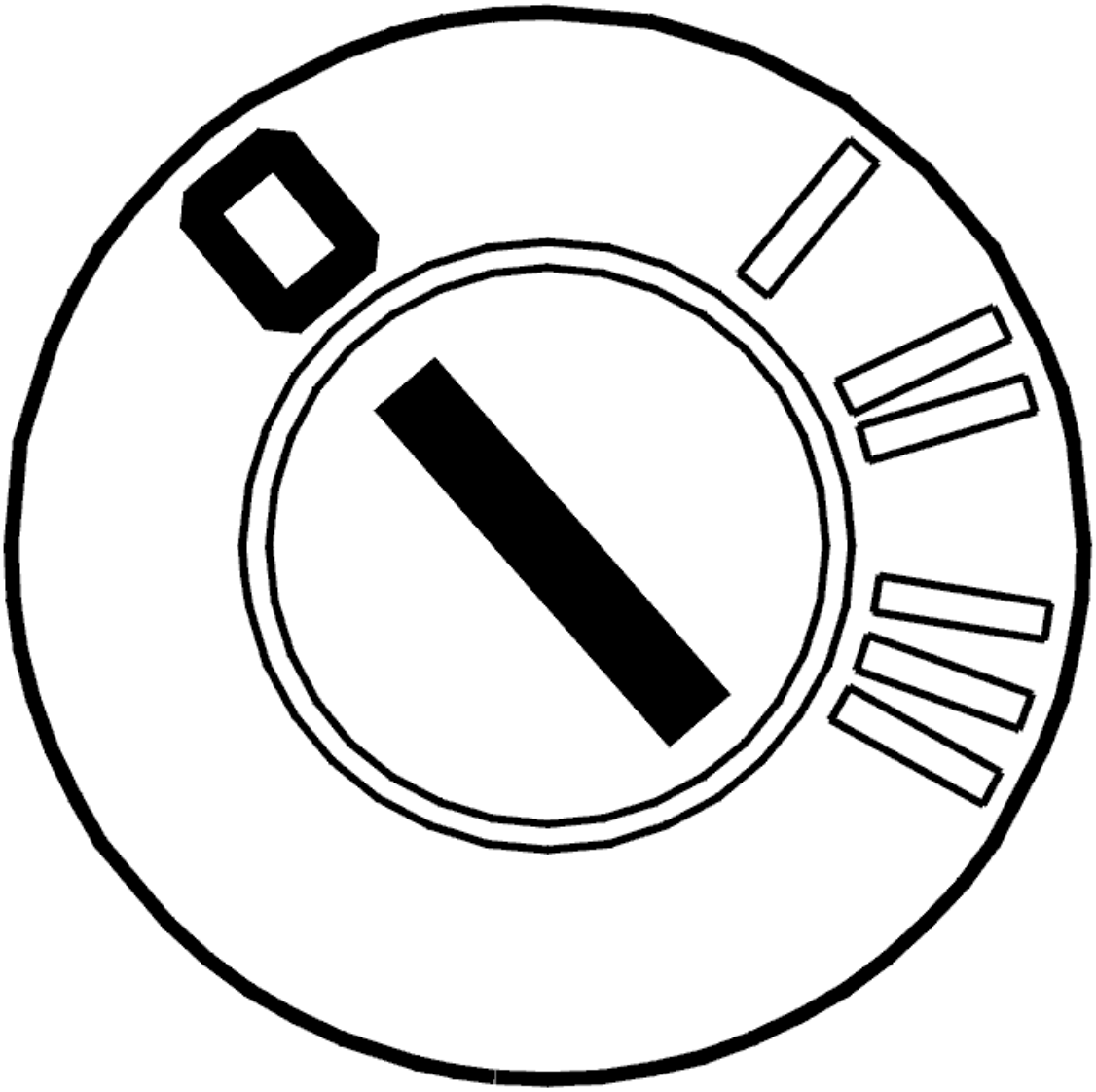

Fig. 284: Identifying Ignition OFF
Courtesy of VOLVO CARS CORPORATION

- Ignition off

  Check engine control module ECM) and the electronic throttle unit's connector for contact resistance and oxidation.

  Remedy as necessary.

  Other information

  - see **CONNECTING THE BREAKOUT BOX**
  - see **SIGNAL SPECIFICATION**
  - see **THROTTLE BODY**

- see **CHECKING WIRING AND TERMINALS**

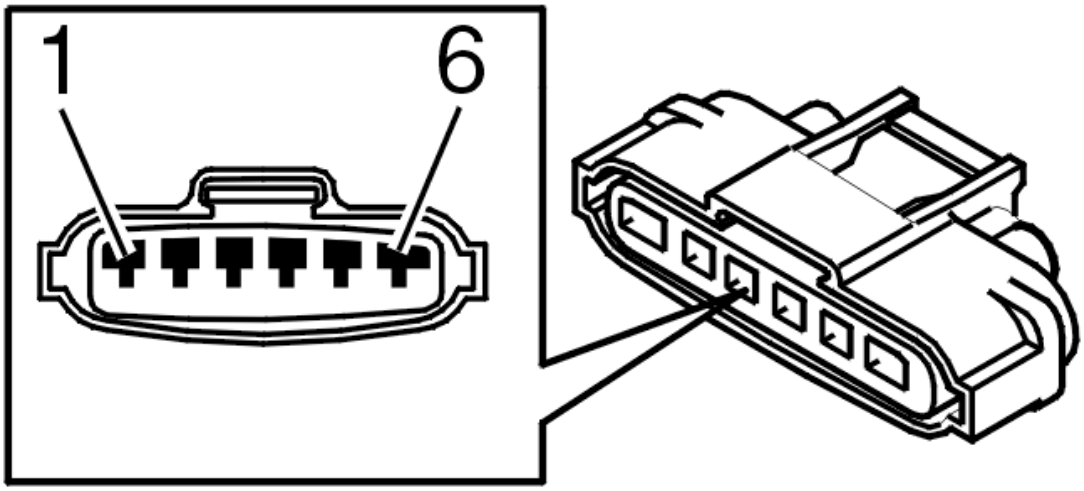

Fig. 285: Identifying 6-Bit Connector
Courtesy of VOLVO CARS CORPORATION

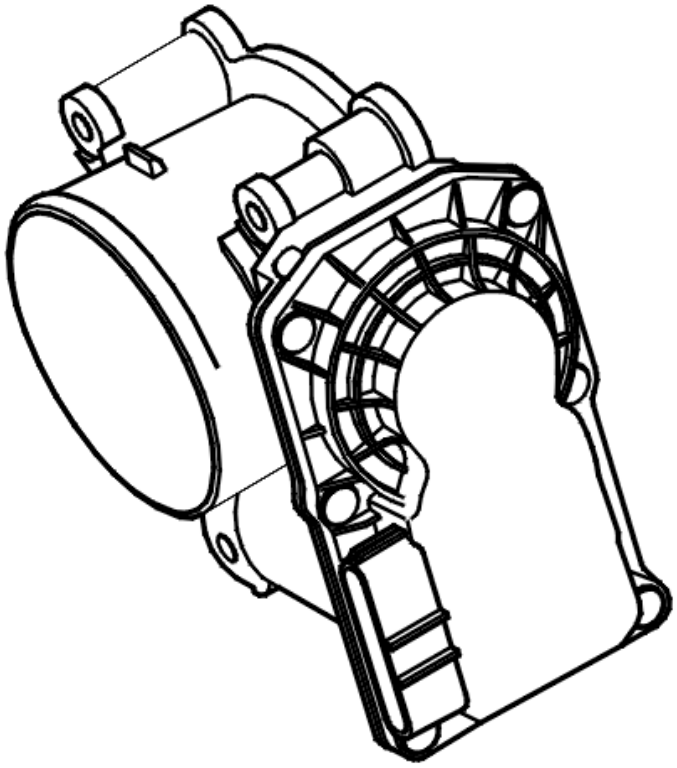

Fig. 286: Identifying Electronic Throttle Unit
Courtesy of VOLVO CARS CORPORATION

- **Continue**

Refer to **VERIFICATION**

INFORMATION

FAULT-TRACING INFORMATION

The fault should have been detected and remedied. As this is not the case fault-tracing has failed.

Exit fault-tracing for this diagnostic trouble code (DTC) or make another attempt.

VERIFICATION

VERIFICATION

HINT: After carrying out the repair, check that the fault has been remedied.

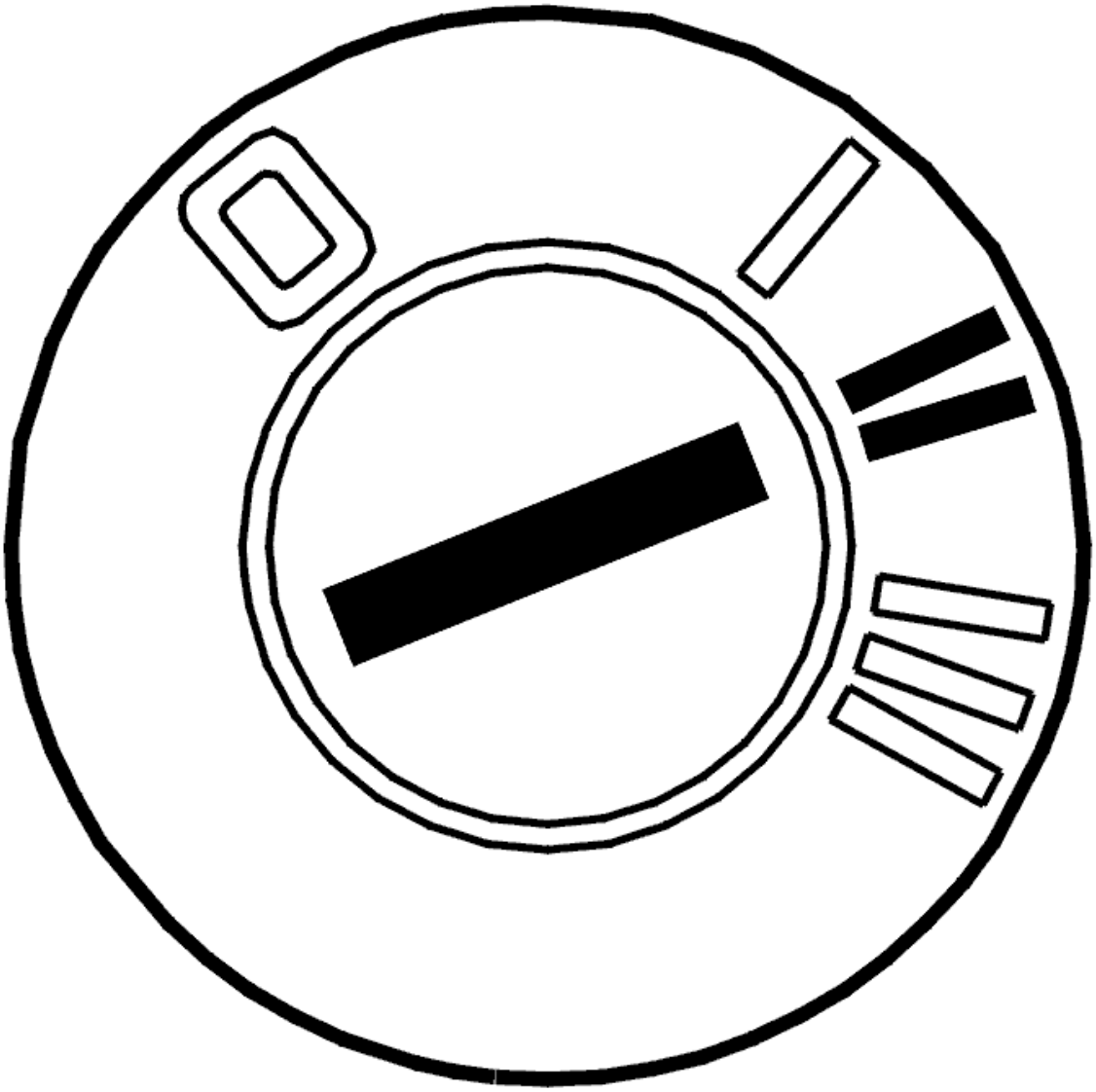

Fig. 287: Identifying Ignition ON
Courtesy of VOLVO CARS CORPORATION

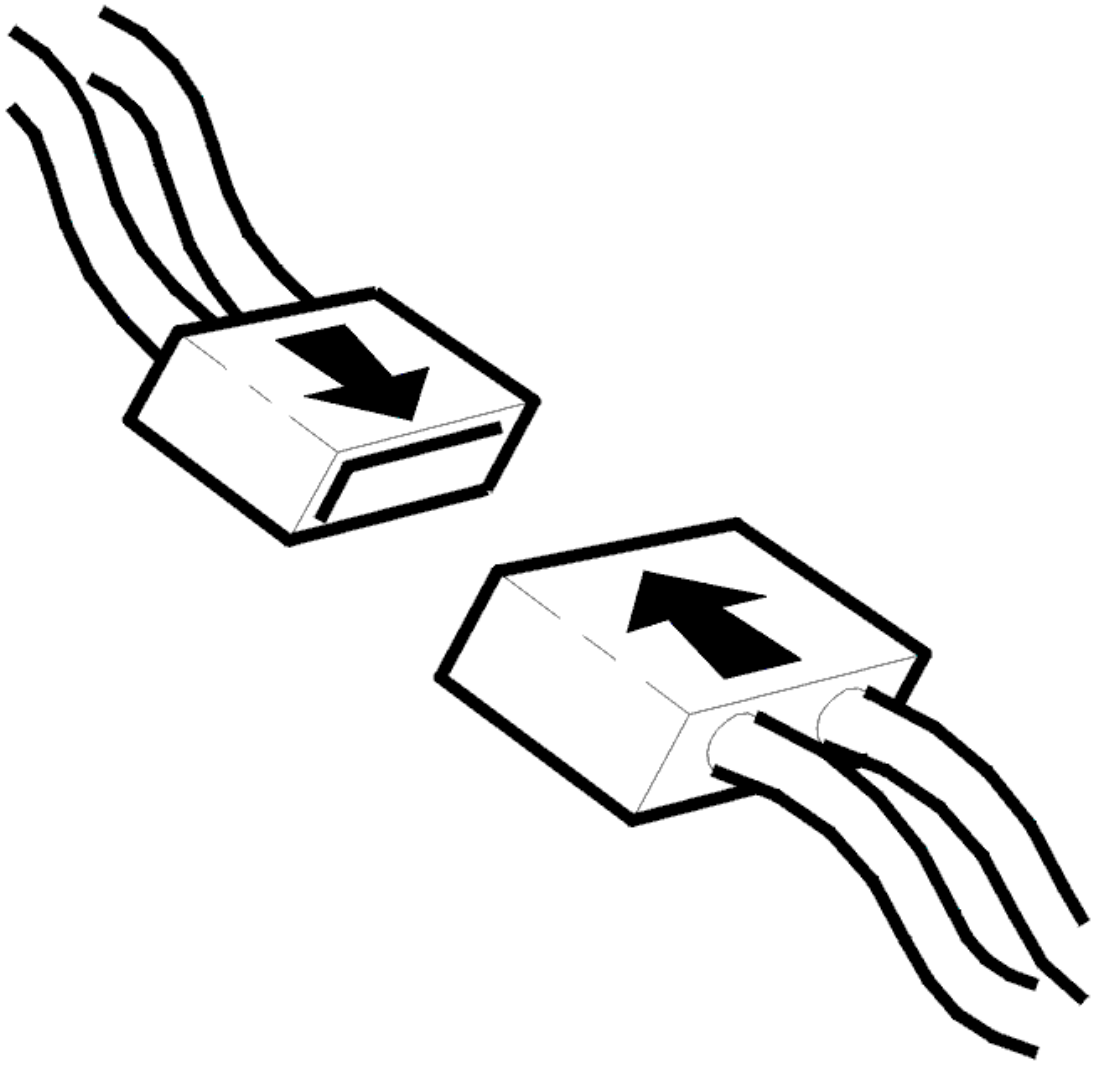

Fig. 288: Connecting Connector
Courtesy of VOLVO CARS CORPORATION

- Ignition off
- Reinstall the connectors, components etc.
- Ignition on

  Activate throttle position read off.

  Check that the throttle angle and both sensor values correspond.

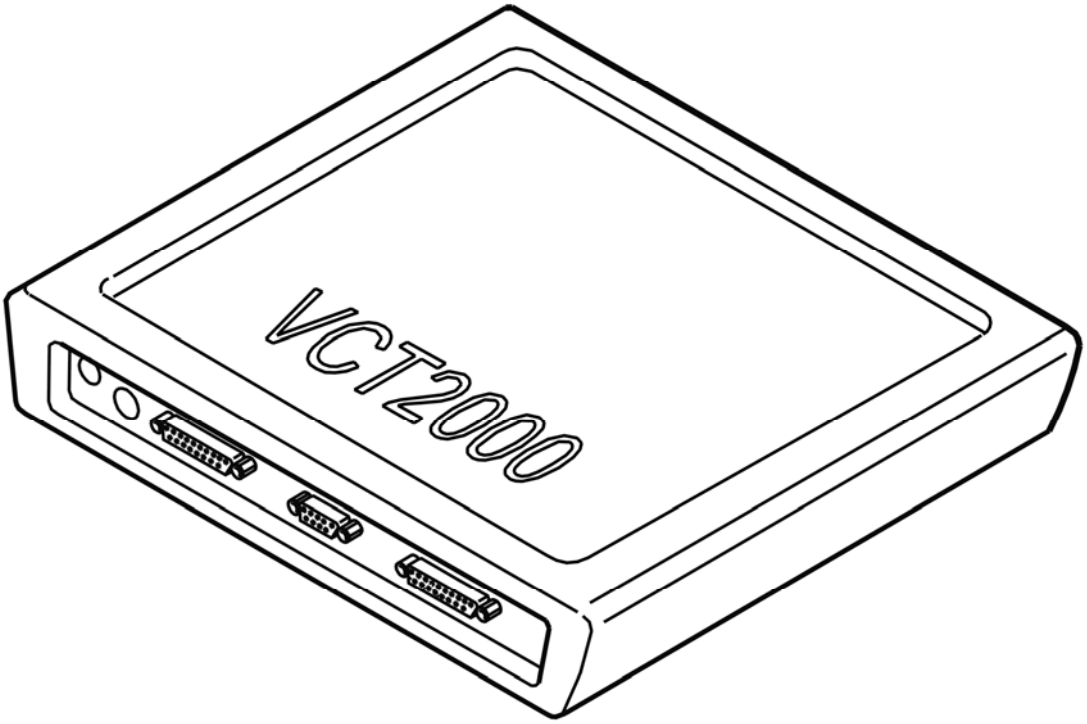

Fig. 289: Identifying VCT2000 Diagnostic Tool Symbol In VIDA
Courtesy of VOLVO CARS CORPORATION

Are the values within their permitted range?

- **YES**

  VERIFIED: Troubleshooting has been completed.

- **NO**

  Refer to **INFORMATION**

ECM-P157462: THROTTLE POSITION SENSOR OUTPUTS DISAGREE. ALGORITHM BASED FAILURES. SIGNAL COMPARE FAILURE (B6324S5; 2011-2012)

DIAGNOSTIC TROUBLE CODE (DTC) INFORMATION ECM-P157462

see **DIAGNOSTIC TROUBLE CODE (DTC) INFORMATION ECM-P157462**

FAULT-TRACING

see **FAULT-TRACING**

ECM-P158900: THROTTLE CONTROL UNABLE TO CONTROL TO DESIRED THROTTLE ANGLE. GENERAL FAILURE INFORMATION. NO SUB TYPE INFORMATION (B6324S; 2007-2010)

DIAGNOSTIC TROUBLE CODE (DTC) INFORMATION ECM-P158900

Condition

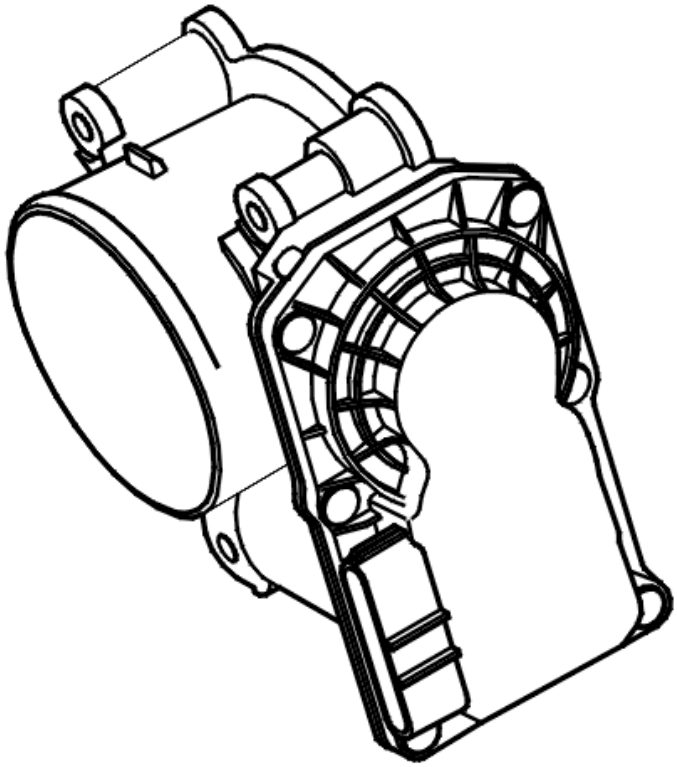

Fig. 290: Identifying Electronic Throttle Unit
Courtesy of VOLVO CARS CORPORATION

Engine control module (ECM) checks the signals from the electronic throttle unit.

If engine control module (ECM) detects that feedback throttle position does not change, despite adjustment being performed, the diagnostic trouble code is generated.

The diagnostic trouble code can be diagnosed in specific operation situations.

Substitute Value

- Cruise control turned off when malfunction is active.

- Feed to the electronic throttle unit shuts off, so that the throttle disc is turned to return position.

Possible Source

- The throttle binds or is blocked (for example, oil film, dust, ice, etc.)
- Incorrectly adapted electronic throttle unit.
- Damaged electronic throttle unit.
- Damaged engine control module (ECM).

Fault symptom[s]

- Message in information display
- Poor performance.
- High idle RPM.
- The cruise control does not function at all

FAULT-TRACING

CHECKING COMPONENTS AND CONNECTIONS

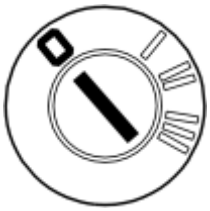

Fig. 291: Identifying Ignition In Off Position
Courtesy of VOLVO CARS CORPORATION

- Ignition on.
- Activate reading off the position of the throttle.
- Check that read-off throttle position shows reasonable values at different deployments.
- Ignition off.

  Check if the throttle unit is blocked. Press the throttle disc to check for jamming.

  Clean the throttle unit if necessary.

  HINT: The diagnostic trouble code (DTC) can be stored as the adaptation value for the throttle unit is incorrect. To reset this adaptation, lift the battery pole for a few seconds, refit it and turn the ignition to ignition position II for at least 5 seconds.

  Other information

  - see **THROTTLE BODY**

- see **ENGINE CONTROL MODULE (ECM)**

Fig. 292: Identifying VCT2000 Diagnostic Tool Symbol In VIDA
Courtesy of VOLVO CARS CORPORATION

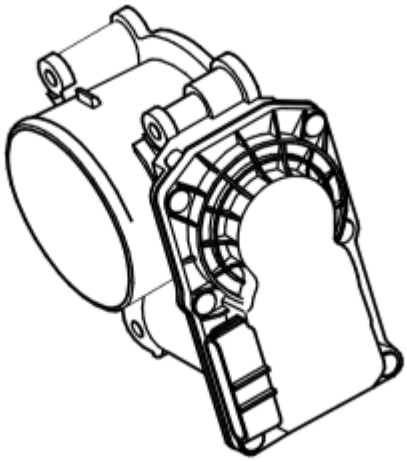

Fig. 293: Identifying Throttle Body
Courtesy of VOLVO CARS CORPORATION

- **Continue**

  Refer to **VERIFICATION**

INFORMATION

FAULT-TRACING INFORMATION

The fault should have been detected and remedied. As this is not the case fault-tracing has failed.

Exit fault-tracing for this diagnostic trouble code (DTC) or make another attempt.

VERIFICATION

VERIFICATION

HINT: After carrying out the repair, check that the fault has been remedied.

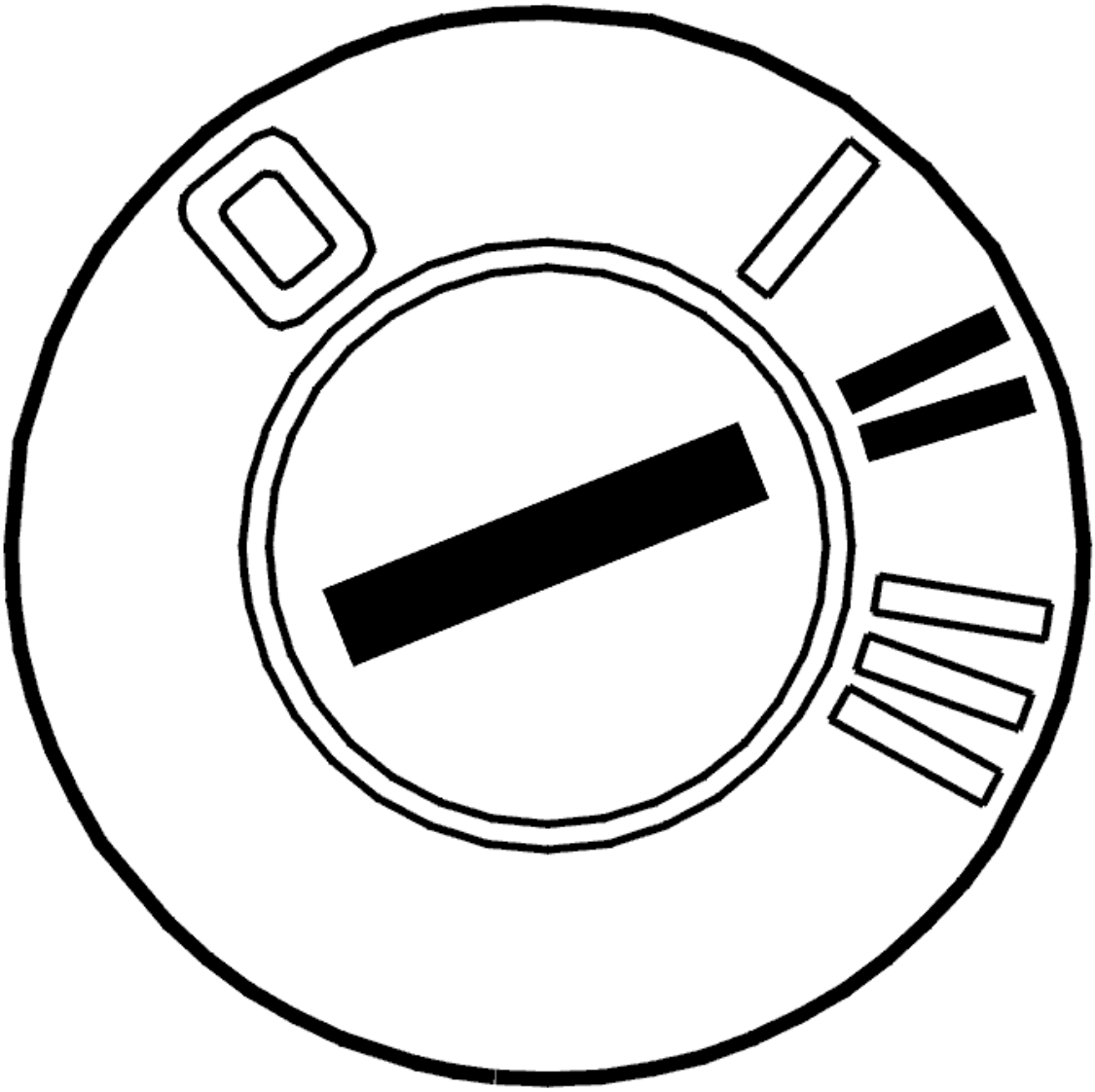

Fig. 294: Identifying Ignition ON
Courtesy of VOLVO CARS CORPORATION

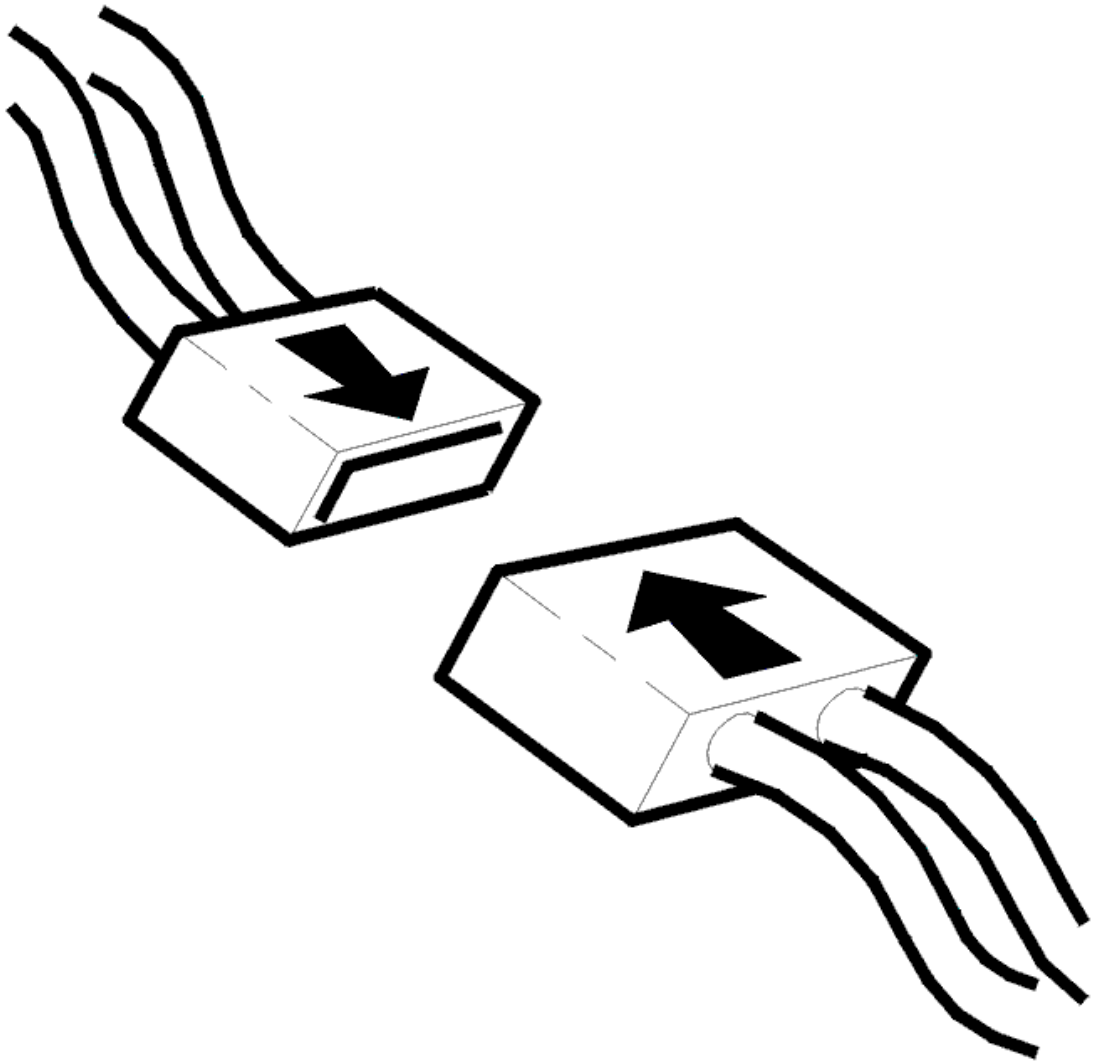

Fig. 295: Connecting Connector
Courtesy of VOLVO CARS CORPORATION

- Ignition off
- Reinstall the connectors, components etc.
- Ignition on

  Activate readout of electronic throttle unit's position.

  Check that read-off throttle position shows reasonable values at different deployments.

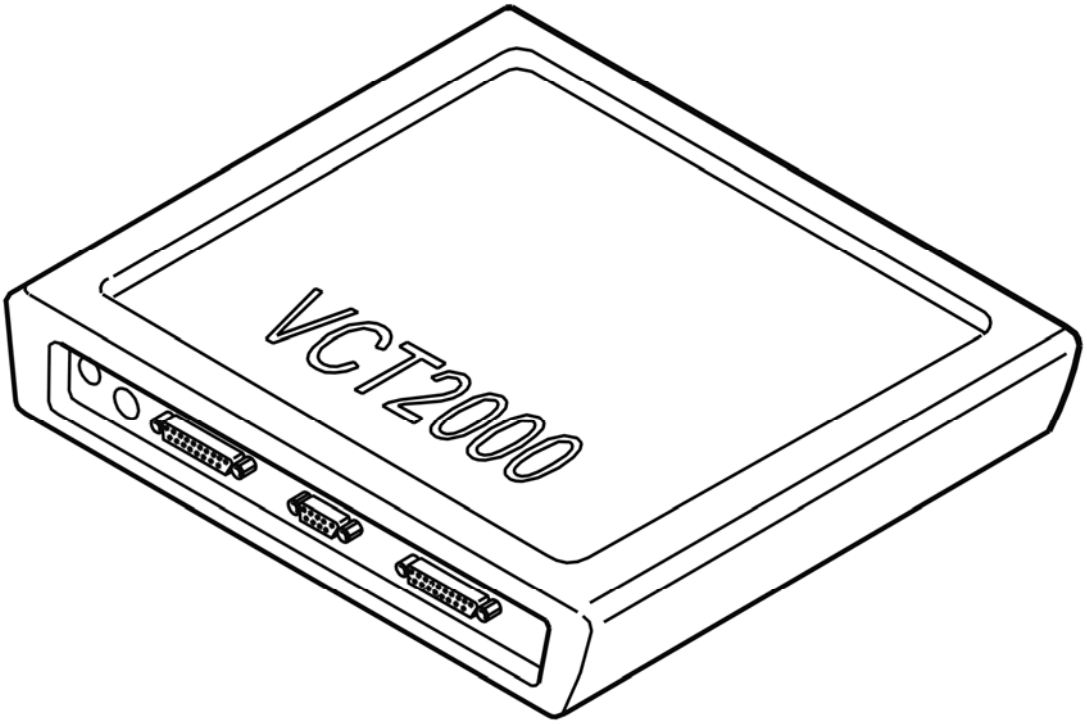

Fig. 296: Identifying VCT2000 Diagnostic Tool Symbol In VIDA
Courtesy of VOLVO CARS CORPORATION

Are these values within their permitted ranges?

- **YES**

  VERIFIED: Troubleshooting has been completed.

- **NO**

  Refer to **INFORMATION**

ECM-P158900: THROTTLE CONTROL UNABLE TO CONTROL TO DESIRED THROTTLE ANGLE. GENERAL FAILURE INFORMATION. NO SUB TYPE INFORMATION (B6324S5; 2011-2012)

DIAGNOSTIC TROUBLE CODE (DTC) INFORMATION ECM-P158900

see **DIAGNOSTIC TROUBLE CODE (DTC) INFORMATION ECM-P158900**

FAULT-TRACING

see **FAULT-TRACING**

ECM-P158900: THROTTLE CONTROL UNABLE TO CONTROL TO DESIRED THROTTLE ANGLE. GENERAL FAILURE INFORMATION. NO SUB TYPE INFORMATION (B8444S; 2005-2011)

DIAGNOSTIC TROUBLE CODE (DTC) INFORMATION ECM-P158900

Condition

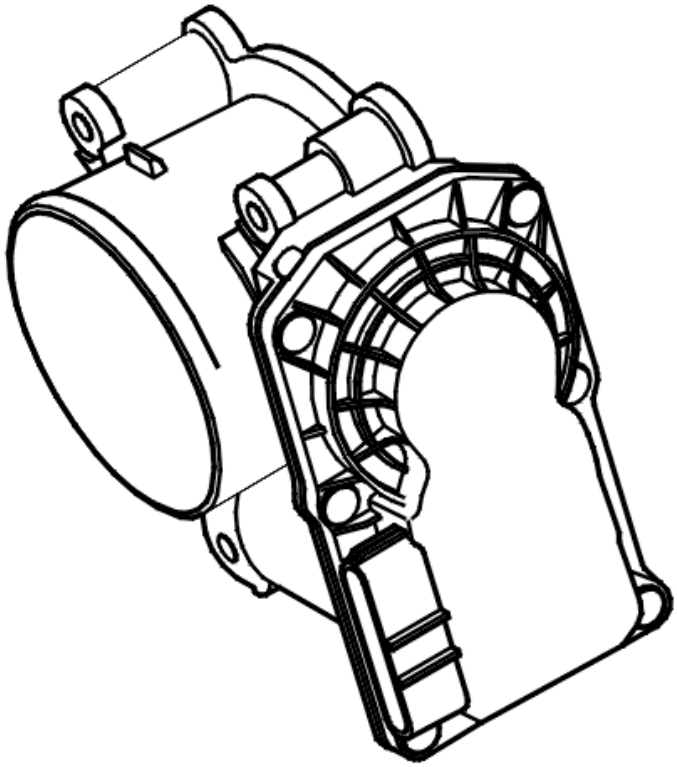

Fig. 297: Identifying Electronic Throttle Unit
Courtesy of VOLVO CARS CORPORATION

Engine control module (ECM) checks the signals from the electronic throttle unit.

If engine control module (ECM) detects that feedback throttle position does not change, despite adjustment being performed, the diagnostic trouble code is generated.

The diagnostic trouble code can be diagnosed in specific operation situations.

Substitute Value

- Cruise control turned off when malfunction is active.

- Feed to the electronic throttle unit shuts off, so that the throttle disc is turned to return position.

Possible Source

- The throttle binds or is blocked (for example, oil film, dust, ice, etc.)
- Incorrectly adapted electronic throttle unit.
- Damaged electronic throttle unit.
- Damaged engine control module (ECM).

Fault symptom[s]

- Message in information display
- Poor performance.
- High idle RPM.
- The cruise control does not function at all

FAULT-TRACING ECM-P158900

CHECKING COMPONENTS AND CONNECTIONS

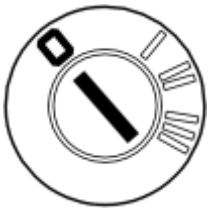

Fig. 298: Identifying Ignition In Off Position
Courtesy of VOLVO CARS CORPORATION

- Ignition on.
- Activate reading off the position of the throttle.
- Check that read-off throttle position shows reasonable values at different deployments.
- Ignition off.

  Check if the throttle unit is blocked. Press the throttle disc to check for jamming.

  Clean the throttle unit if necessary.

  HINT: The diagnostic trouble code (DTC) can be stored as the adaptation value for the throttle unit is incorrect. To reset this adaptation, lift the battery pole for a few seconds, refit it and turn the ignition to ignition position II for at least 5 seconds.

  Other information

  - see **THROTTLE BODY (TB), CLEANING**

- see **THROTTLE BODY (ELECTRONIC THROTTLE MODULE (ETM)), REPLACING**
- see **ENGINE CONTROL MODULE (ECM), REPLACING**

Fig. 299: Identifying VCT2000 Diagnostic Tool Symbol In VIDA
Courtesy of VOLVO CARS CORPORATION

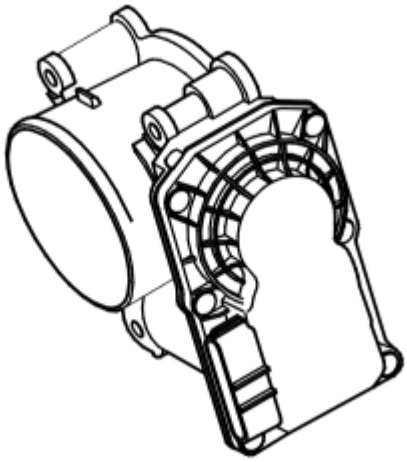

Fig. 300: Identifying Throttle Body
Courtesy of VOLVO CARS CORPORATION

- **Continue**

  Refer to **VERIFICATION**

VERIFICATION

VERIFICATION

HINT: After carrying out the repair, check that the fault has been remedied.

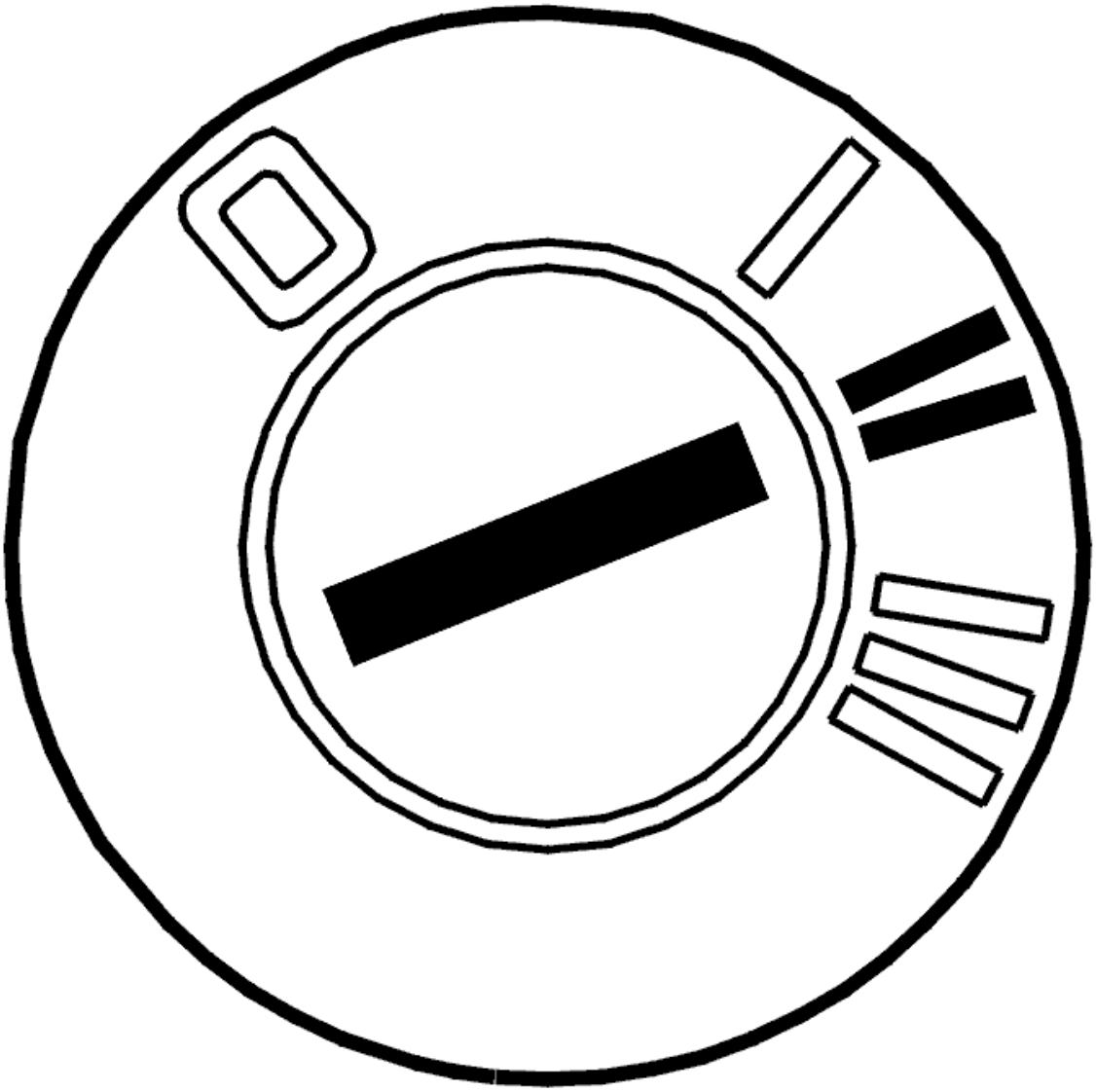

Fig. 301: Identifying Ignition ON
Courtesy of VOLVO CARS CORPORATION

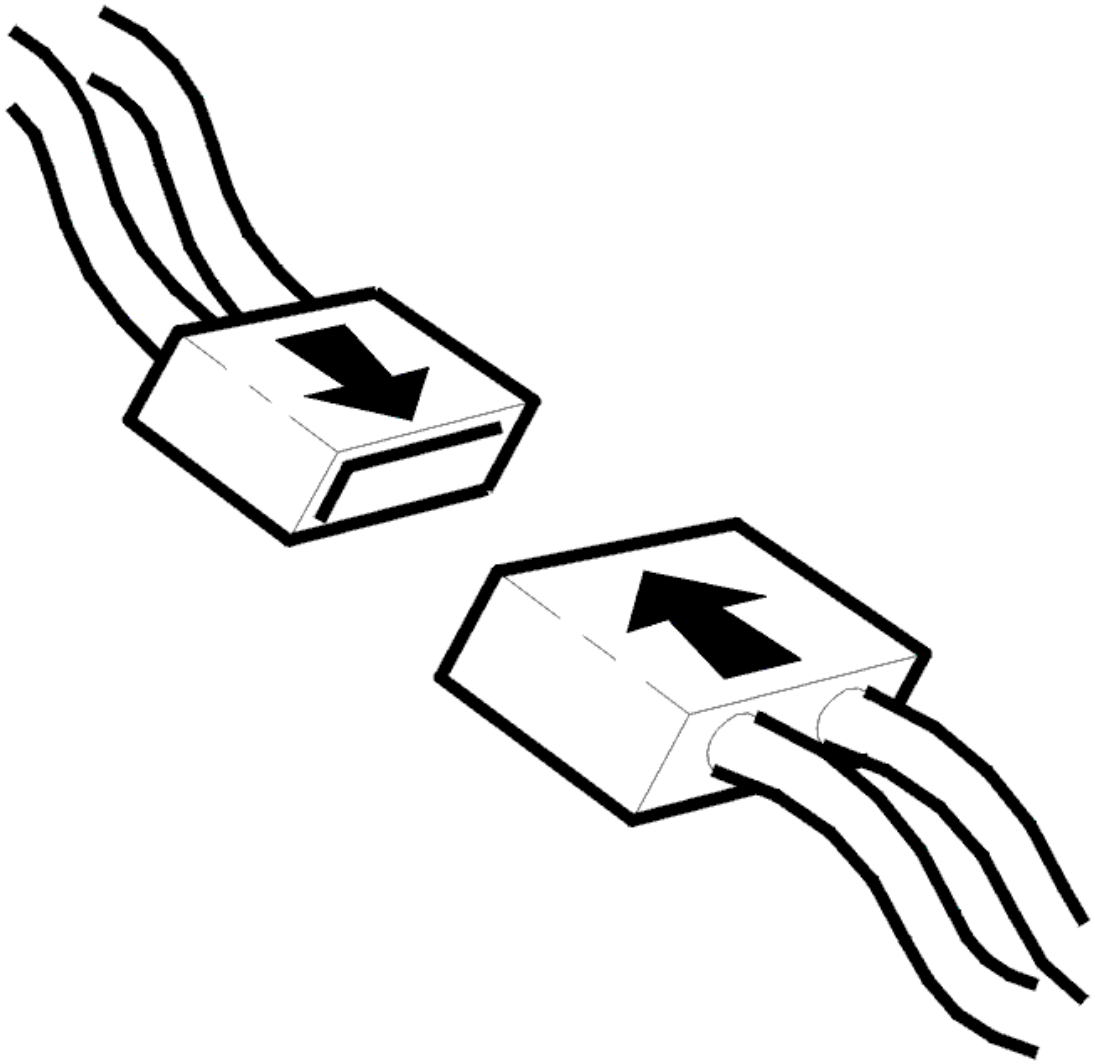

Fig. 302: Connecting Connector
Courtesy of VOLVO CARS CORPORATION

- Ignition off
- Reinstall the connectors, components etc.
- Ignition on

  Activate readout of electronic throttle unit's position.

  Check that read-off throttle position shows reasonable values at different deployments.

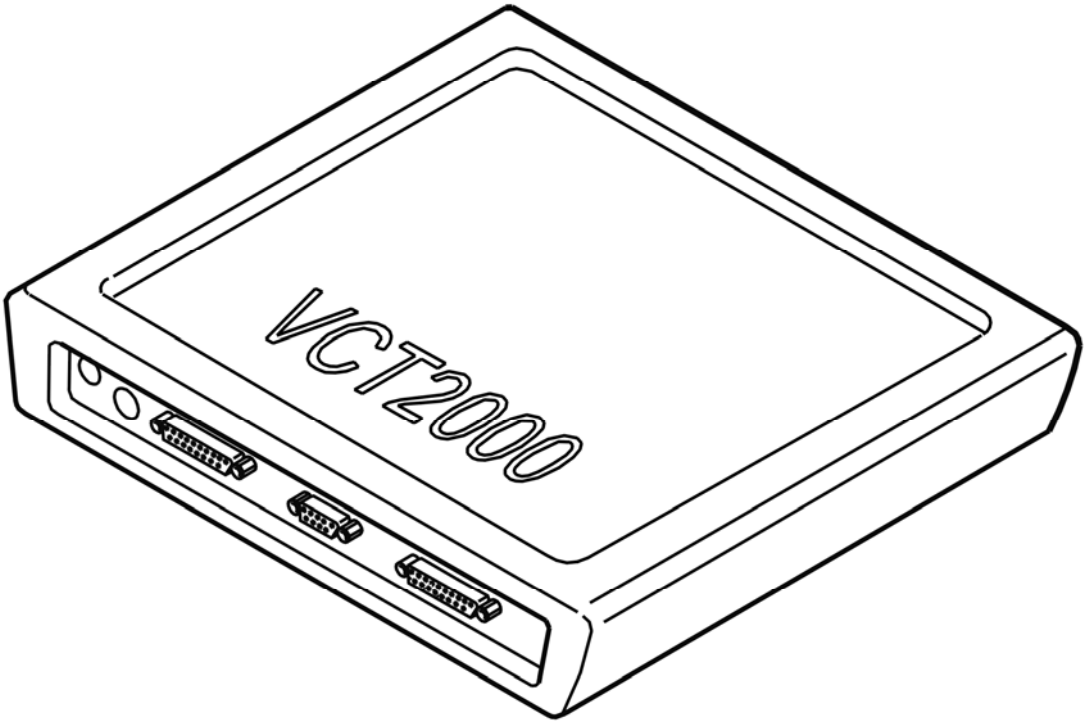

Fig. 303: Identifying VCT2000 Diagnostic Tool Symbol In VIDA
Courtesy of VOLVO CARS CORPORATION

Are these values within their permitted ranges?

- **YES**

  VERIFIED: Troubleshooting has been completed.

- **NO**

  Refer to **INFORMATION**

INFORMATION

FAULT-TRACING INFORMATION

The fault should have been detected and remedied. As this is not the case fault-tracing has failed.

Exit fault-tracing for this diagnostic trouble code (DTC) or make another attempt.

ECM-P160200: IMMOBILIZER/ECM COMMUNICATION ERROR. GENERAL MALFUNCTION INFORMATION. NO INFORMATION ON MALFUNCTION

TYPE (B8444S; 2005-2011)

DIAGNOSTIC TROUBLE CODE (DTC) INFORMATION ECM-P160200

Condition

Engine control module (ECM) as well as central electronic module (CEM) contain a unique code for every vehicle for electronic immobilizer. In addition to this, each key for the vehicle is electronically coded to only fit in the intended vehicle. At start, internal checks are performed that the key is correct for the vehicle and that the immobilizer codes in the engine control module (ECM) and central electronic module (CEM) match.

If engine control module (ECM) registers that communication between engine control module (ECM) and central electronic module (CEM) (via CAN) is missing, the diagnostic trouble code is generated.

The diagnostic trouble code can be diagnosed when the ignition is on.

Substitute Value

Nothing.

Possible Source

- Open circuit on one of the CAN-cables.
- Short-circuit between CAN-cables.
- Damaged engine control module (ECM).

Fault symptom[s]

- The engine does not start.
- Message in the display.

TROUBLESHOOTING ECM-P160200

INFORMATION

The diagnostic trouble code indicates that CAN-communication between engine control module (ECM) and central electronic module (CEM) is missing.

Among others, the code may be caused by:

- Engine control module (ECM) or central electronic module (CEM) contains no software for this vehicle.
- Open circuit in CAN-communication between central electronic module (CEM) and engine control module (ECM)
- Programmed engine control module (ECM) or central electronic module (CEM) has been moved from one vehicle to another.

HINT: Read off diagnostic trouble codes in central electronic module (CEM).

- **Continue**

  Refer to **VERIFICATION**

VERIFICATION

HINT: After repairing, it is necessary to check that the malfunction has been fixed.

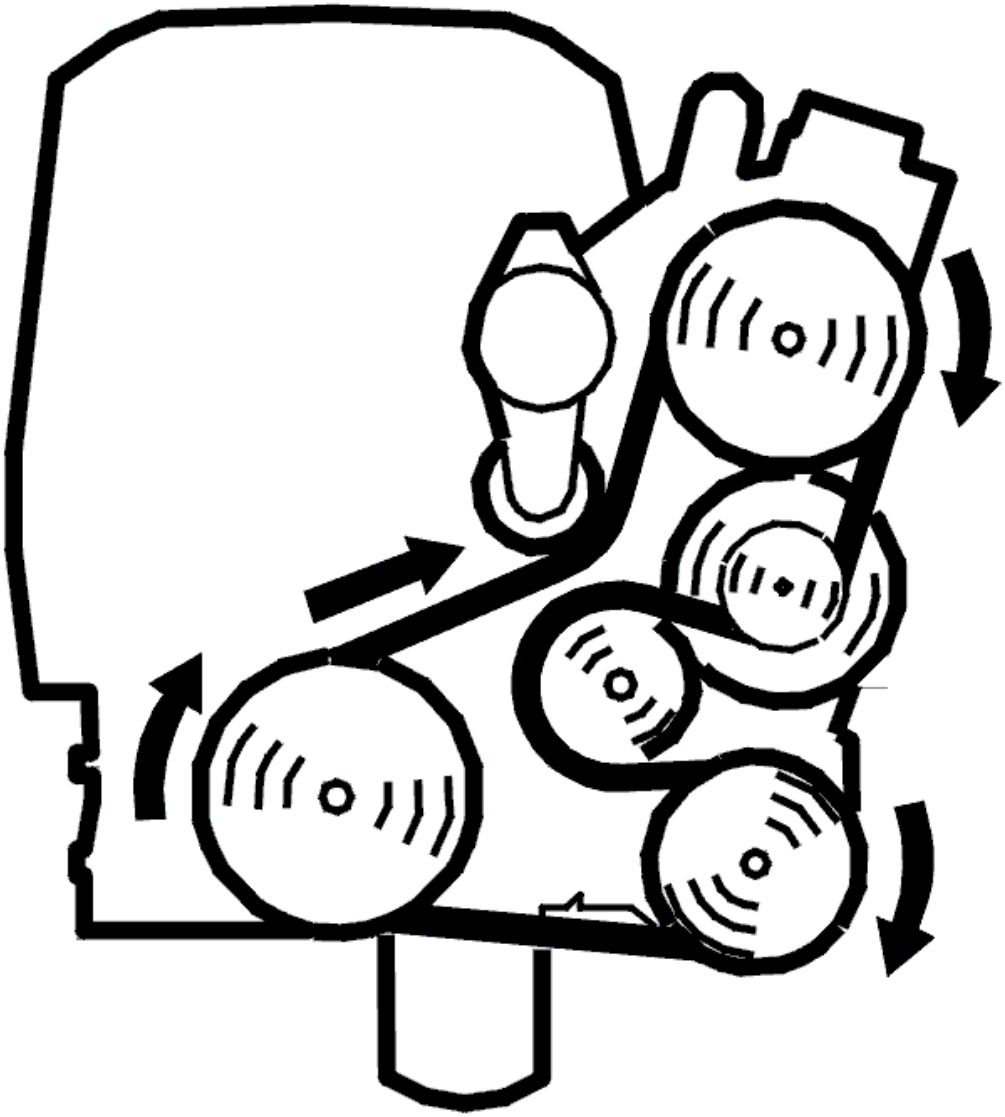

Fig. 304: Belt Routing / Engine Idling - Volvo
Courtesy of VOLVO CARS CORPORATION

- Ignition off
- Reinstall connector, components, etc.

- Start the engine.

Did engine start?

- **YES**

  OKAY: Troubleshooting has been completed.

- **NO**

  Refer to **INFORMATION**

INFORMATION

FAULT-TRACING INFORMATION

The fault should have been detected and remedied. As this is not the case fault-tracing has failed.

Exit fault-tracing for this diagnostic trouble code (DTC) or make another attempt.

ECM-P163800: CAN-LINK ECM/INSTM CIRCUIT/NETWORK. GENERAL MALFUNCTION INFORMATION. NO INFORMATION ON MALFUNCTION TYPE (B8444S; 2005-2011)

DIAGNOSTIC TROUBLE CODE (DTC) INFORMATION ECM-P163800

Condition

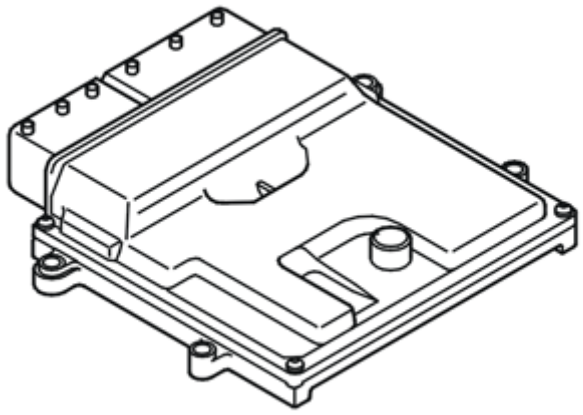

Fig. 305: Identifying Engine Control Module (ECM)
Courtesy of VOLVO CARS CORPORATION

If engine control module (ECM) registers that internal temperature in engine control module (ECM) has exceeded 105 °C for longer than 60 seconds, the diagnostic trouble code is generated.

The diagnostic trouble code can be diagnosed when the engine is running.

Substitute Value

- Engine cooling fan is activated according to predefined speed.

Possible Source

- Extreme weather conditions.

Fault symptom[s]

- Nothing.

FAULT-TRACING INFORMATION

see **FAULT-TRACING INFORMATION**

ECM-P170900: PARKING/NEUTRAL POSITION SWITCH OUTSIDE SELF-TEST RANGE. GENERAL MALFUNCTION INFORMATION. NO INFORMATION ON MALFUNCTION TYPE (B8444S; 2005-2011)

DIAGNOSTIC TROUBLE CODE (DTC) INFORMATION ECM-P170900

Condition

Fig. 306: Identifying Automatic Transmission Gear Shifter With Manual Gear Change
Courtesy of VOLVO CARS CORPORATION

Engine control module (ECM) checks the signals for the gear position sensor's position, the signal via direct-connected cable from the transmission control module (TCM) and the signal via CAN-communication from the transmission control module (TCM).

If the transmission control module (TCM) detects a malfunction of the gear position selector, then information about this is sent via CAN-communication to the engine control module (ECM) and the diagnostic trouble code is stored.

If engine control module (ECM) detects difference between the signals via CAN-communication and the signal via direct-connected cable, the diagnostic trouble code is generated.

The diagnostic trouble code can be diagnosed when the ignition is on.

Substitute Value

- Nothing.

Possible Source

- Look for the cause of the malfunction in the transmission control module (TCM).

- Contact resistance in connector.
- Cable between gear position selector and engine control module (ECM) short-circuited to voltage.
- Open circuit on cable between gear position selector and engine control module (ECM).
- Cable between gear position selector and engine control module (ECM) short-circuited to ground.

Fault symptom[s]

- The engine does not start.
- Message in the display.

TROUBLESHOOTING ECM-P170900

CHECKING COMPONENTS AND WIRING

HINT: If diagnostic trouble code for gear position sensor is stored in transmission control module (TCM), then troubleshoot this diagnostic trouble code first.

- Check transmission control module (TCM) connector for contact resistance and oxidation.

  Check the signal cable for open circuit, short-circuit to voltage and short-circuit to ground.

  Measure between engine control module (ECM) #B15 (#C15) and transmission control module (TCM) #5.

  Remedy as necessary.

  HINT: Read off the gear position sensor's signals using the VCT2000 (or appropriate scan tool).

  Other information

  - see **CONNECTING THE BREAKOUT BOX**
  - see **SIGNAL SPECIFICATION, ENGINE CONTROL MODULE (ECM)**
  - see **CHECKING WIRING AND TERMINALS**

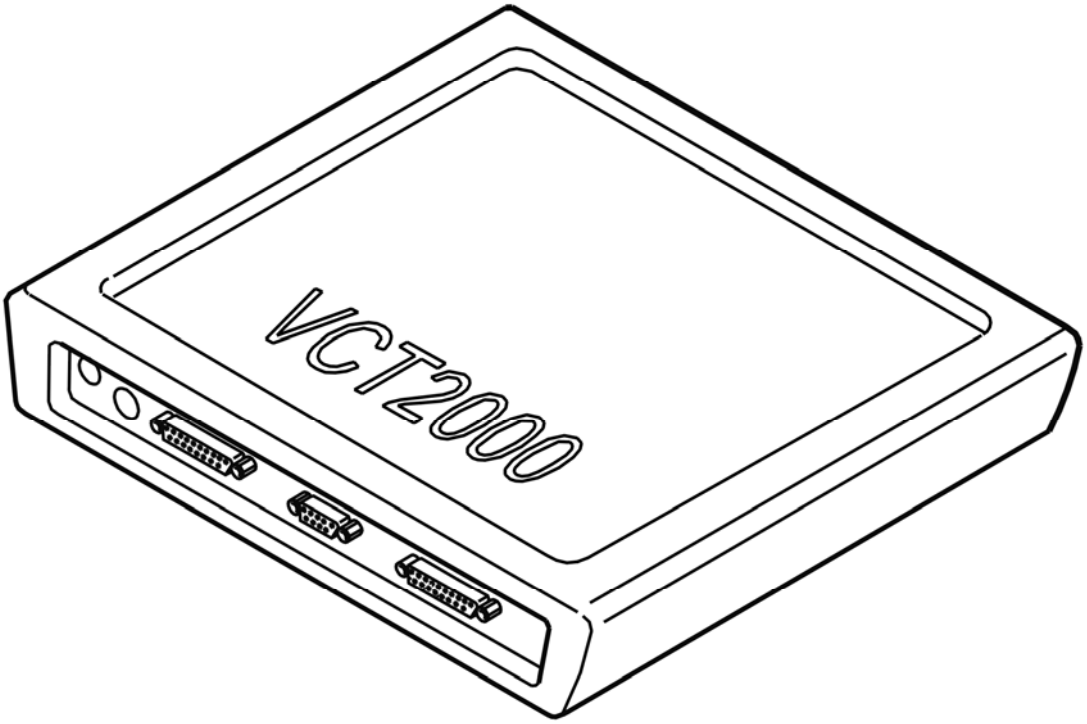

Fig. 307: Identifying VCT2000 Diagnostic Tool Symbol In VIDA
Courtesy of VOLVO CARS CORPORATION

Fig. 308: Identifying Automatic Transmission Gear Shifter With Manual Gear Change
Courtesy of VOLVO CARS CORPORATION

- **Continue**

  Refer to **VERIFICATION**

VERIFICATION

VERIFICATION

HINT: After carrying out the repair, check that the fault has been remedied.

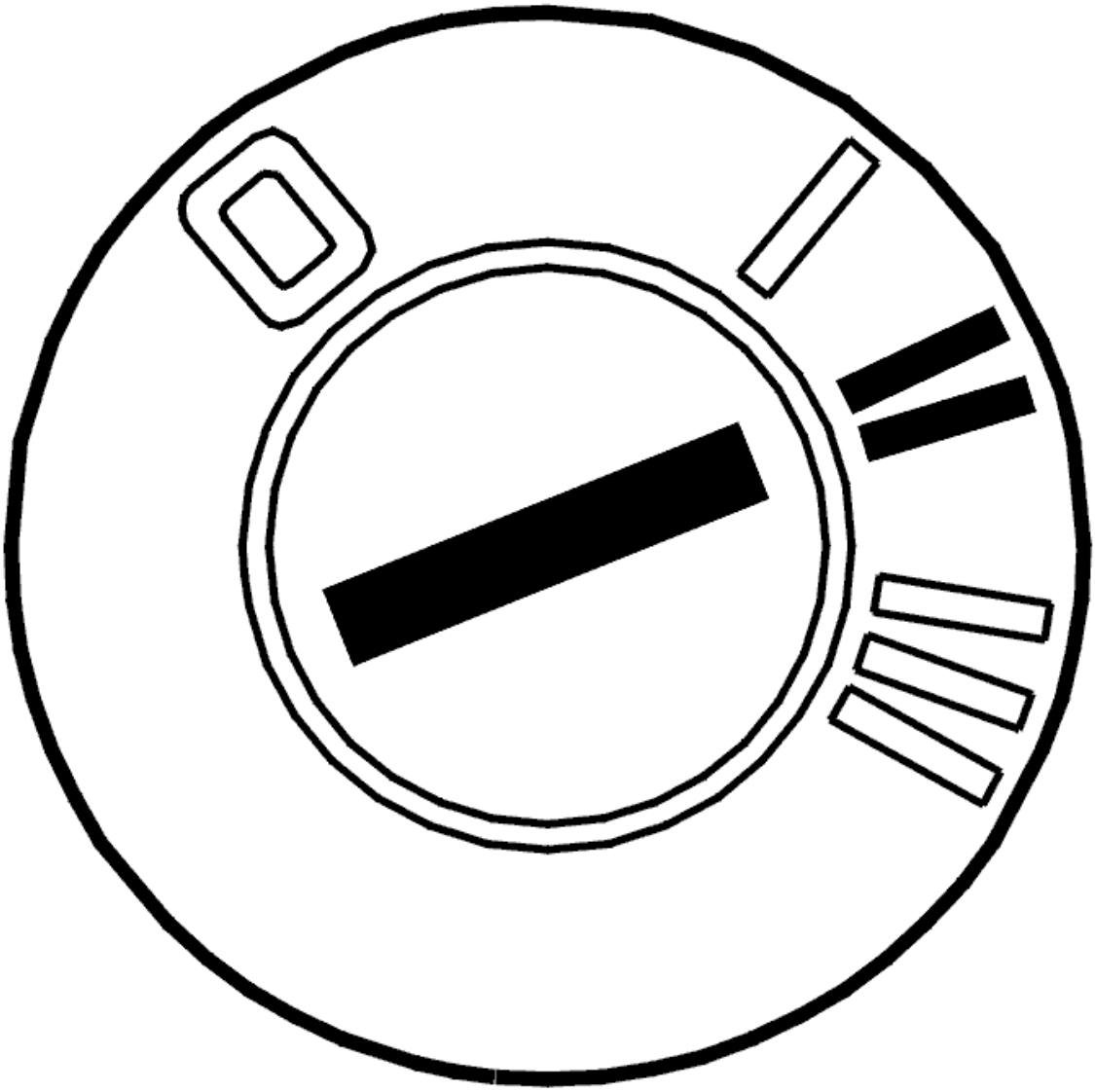

Fig. 309: Identifying Ignition ON
Courtesy of VOLVO CARS CORPORATION

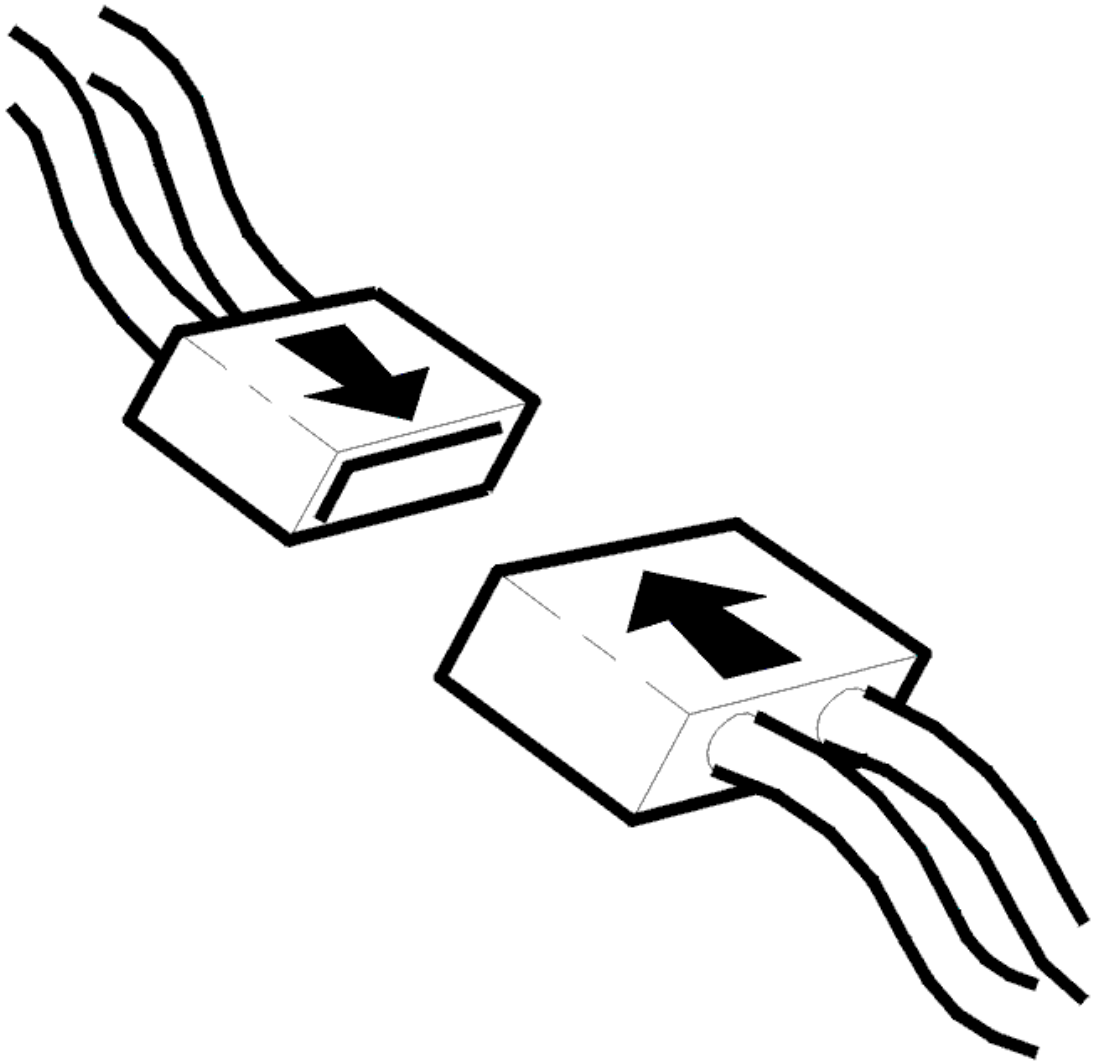

Fig. 310: Connecting Connector
Courtesy of VOLVO CARS CORPORATION

- Ignition off
- Reconnect the connectors, components, etc.
- Ignition on
- Read off the gear position sensor's signals.

  Check that the gear position sensor's signals are correct.

  Signal via direct-connected cable and signal via CAN-communication shall match each other as well as with selected gear position.

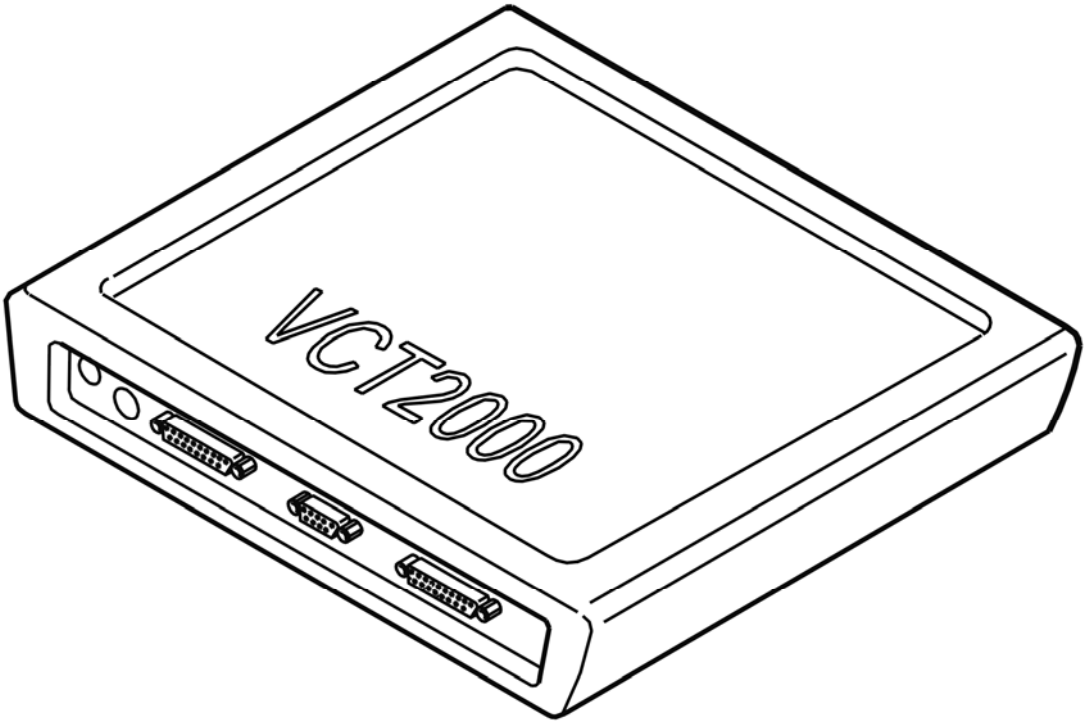

Fig. 311: Identifying VCT2000 Diagnostic Tool Symbol In VIDA
Courtesy of VOLVO CARS CORPORATION

Is the function OK?

- **YES**

  VERIFIED: Troubleshooting has been completed.

- **NO**

  Refer to **INFORMATION**

INFORMATION

FAULT-TRACING INFORMATION

The fault should have been detected and remedied. As this is not the case fault-tracing has failed.

Exit fault-tracing for this diagnostic trouble code (DTC) or make another attempt.

ECM-P177100: THROTTLE POSITION SENSOR CIRCUIT HIGH INPUT. GENERAL FAILURE INFORMATION. NO SUB TYPE INFORMATION

(B6324S; 2007-2010)

DIAGNOSTIC TROUBLE CODE (DTC) INFORMATION ECM-P177100

Condition

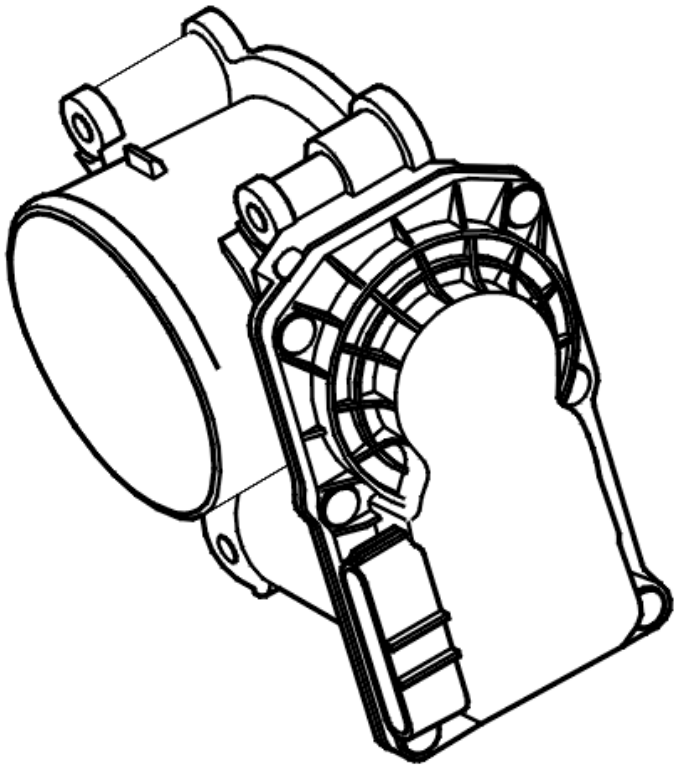

Fig. 312: Identifying Electronic Throttle Unit
Courtesy of VOLVO CARS CORPORATION

Engine control module (ECM) checks the signals from the electronic throttle unit's two position sensors.

If engine control module (ECM) detects unreasonably high signal from any of the sensors, the diagnostic trouble code is generated.

The diagnostic trouble code can be diagnosed when the ignition is on.

Substitute Value

- In case a defective signal is detected, the other signal is used.
- Cruise control turned off when malfunction is active.

Possible Source

- Contact resistance or oxidation in the terminals
- Signal cables short-circuited to voltage.
- Voltage feed short-circuited to battery voltage.
- Open circuit in ground cable.
- Ground cable short-circuited to voltage.
- Damaged electronic throttle unit.

Fault symptom[s]

- Poor performance.
- Cruise control does not function at all.

FAULT-TRACING

see **FAULT-TRACING**

ECM-P177100: THROTTLE POSITION SENSOR CIRCUIT HIGH INPUT. GENERAL FAILURE INFORMATION. NO SUB TYPE INFORMATION (B6324S5; 2011-2012)

DIAGNOSTIC TROUBLE CODE (DTC) INFORMATION ECM-P177100

see **DIAGNOSTIC TROUBLE CODE (DTC) INFORMATION ECM-P177100**

FAULT-TRACING

see **FAULT-TRACING**

ECM-P177100: THROTTLE POSITION SENSOR CIRCUIT HIGH INPUT. GENERAL FAILURE INFORMATION. NO SUB TYPE INFORMATION (B8444S; 2005-2011)

DIAGNOSTIC TROUBLE CODE (DTC) INFORMATION ECM-P177100

Condition

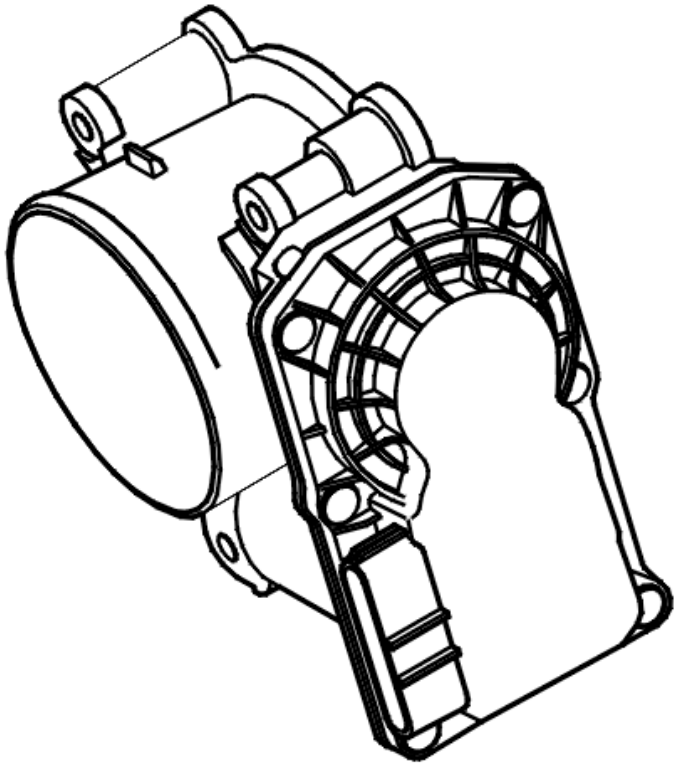

Fig. 313: Identifying Electronic Throttle Unit
Courtesy of VOLVO CARS CORPORATION

Engine control module (ECM) checks the signals from the electronic throttle unit's two position sensors.

If engine control module (ECM) detects unreasonably high signal from any of the sensors, the diagnostic trouble code is generated.

The diagnostic trouble code can be diagnosed when the ignition is on.

Substitute Value

- In case a defective signal is detected, the other signal is used.
- Cruise control turned off when malfunction is active.

Possible Source

- Contact resistance or oxidation in the terminals
- Signal cables short-circuited to voltage.
- Voltage feed short-circuited to battery voltage.
- Open circuit in ground cable.
- Ground cable short-circuited to voltage.

- Damaged electronic throttle unit.

Fault symptom[s]

- Poor performance.
- Cruise control does not function at all.

TROUBLESHOOTING ECM-P177100

CHECKING THE STATUS

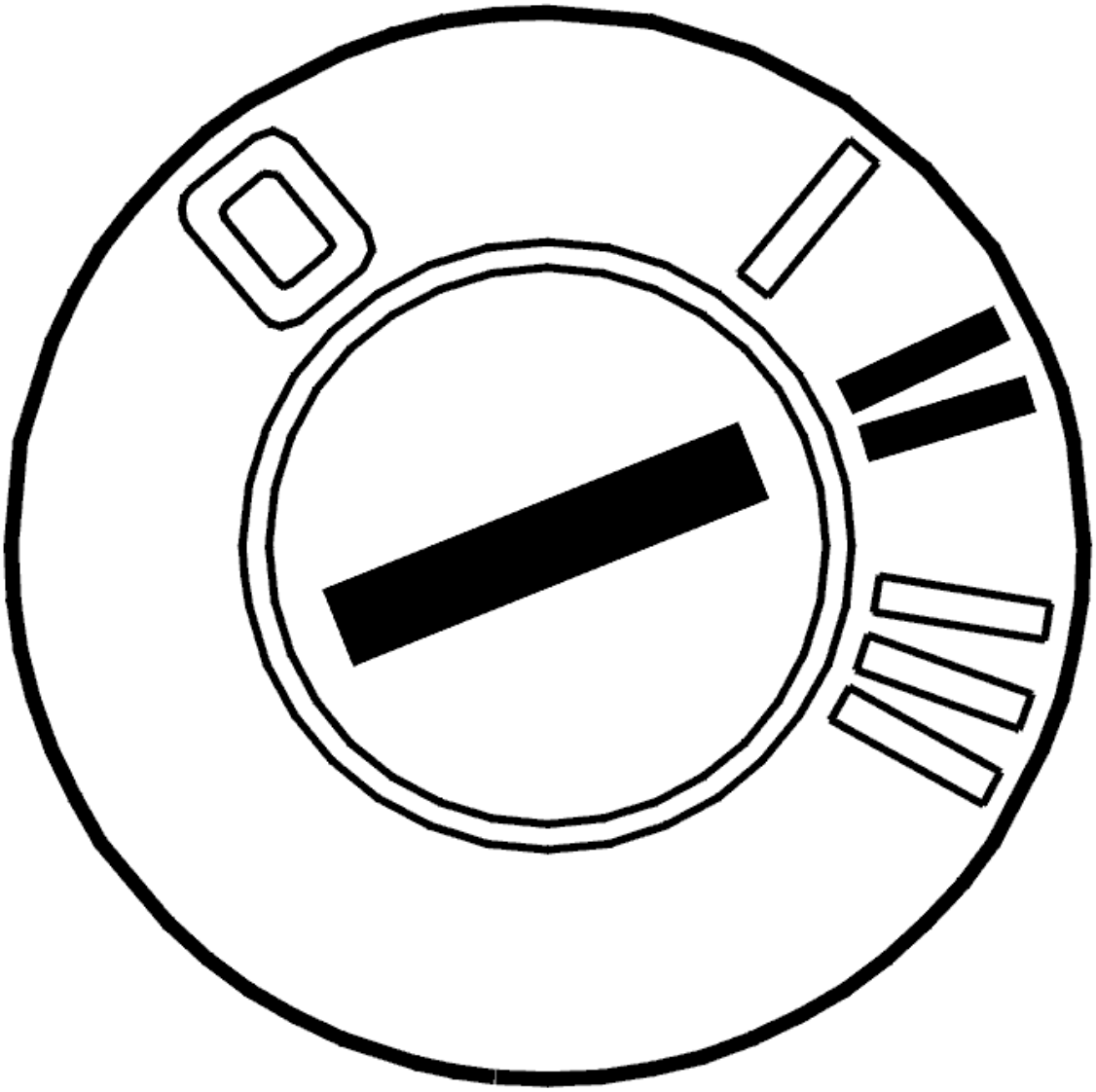

Fig. 314: Identifying Ignition ON
Courtesy of VOLVO CARS CORPORATION

- Ignition on

Read the diagnostic status and fault status for the diagnostic trouble code by selecting the diagnostic trouble code in the list.

Check if the malfunction is permanent or intermittent by reading off the diagnostic trouble code's status when the diagnostic status is "Implemented".

If the trouble status is "Malfunction found", this indicates that the malfunction is permanent. If the trouble status is "No malfunction found", this indicates that the malfunction is intermittent and not active right now.

NOTE: Trouble status cannot go from "Malfunction found" to "No malfunction found" in the same operating cycle.

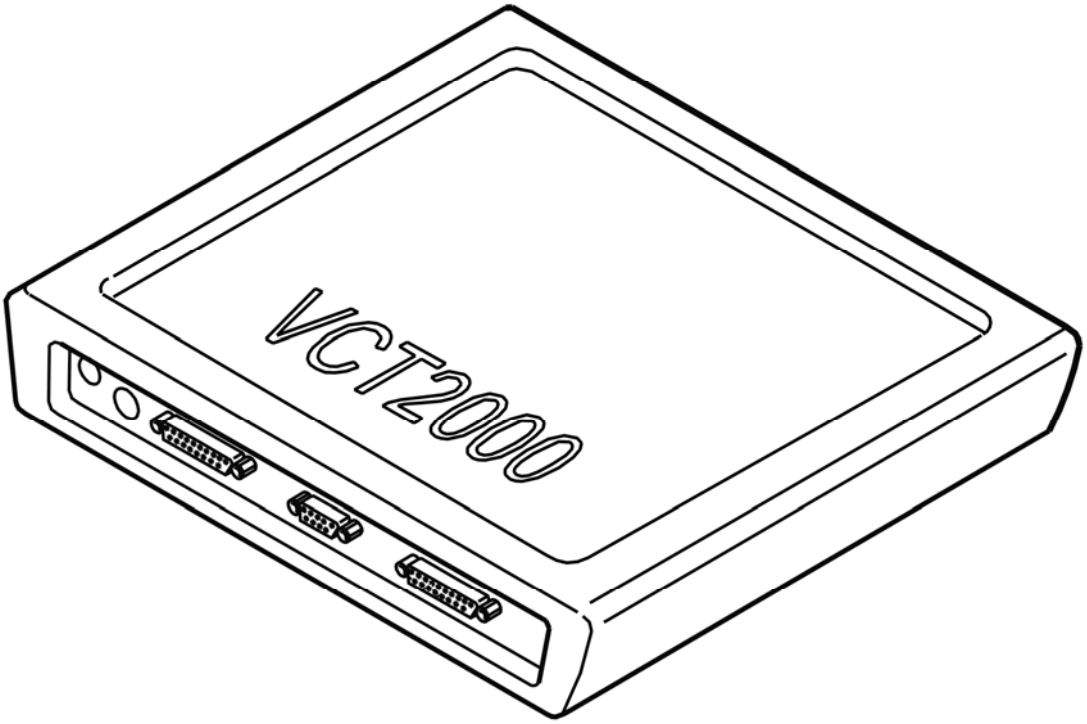

Fig. 315: Identifying VCT2000 Diagnostic Tool Symbol In VIDA
Courtesy of VOLVO CARS CORPORATION

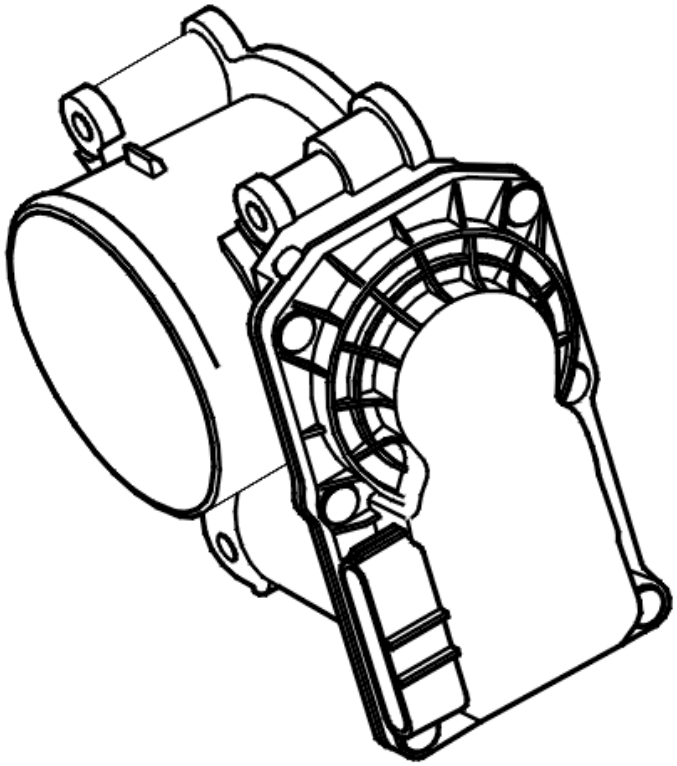

Fig. 316: Identifying Electronic Throttle Unit
Courtesy of VOLVO CARS CORPORATION

- **Continue**

  Refer to **CHECKING COMPONENTS AND WIRING**

CHECKING COMPONENTS AND WIRING

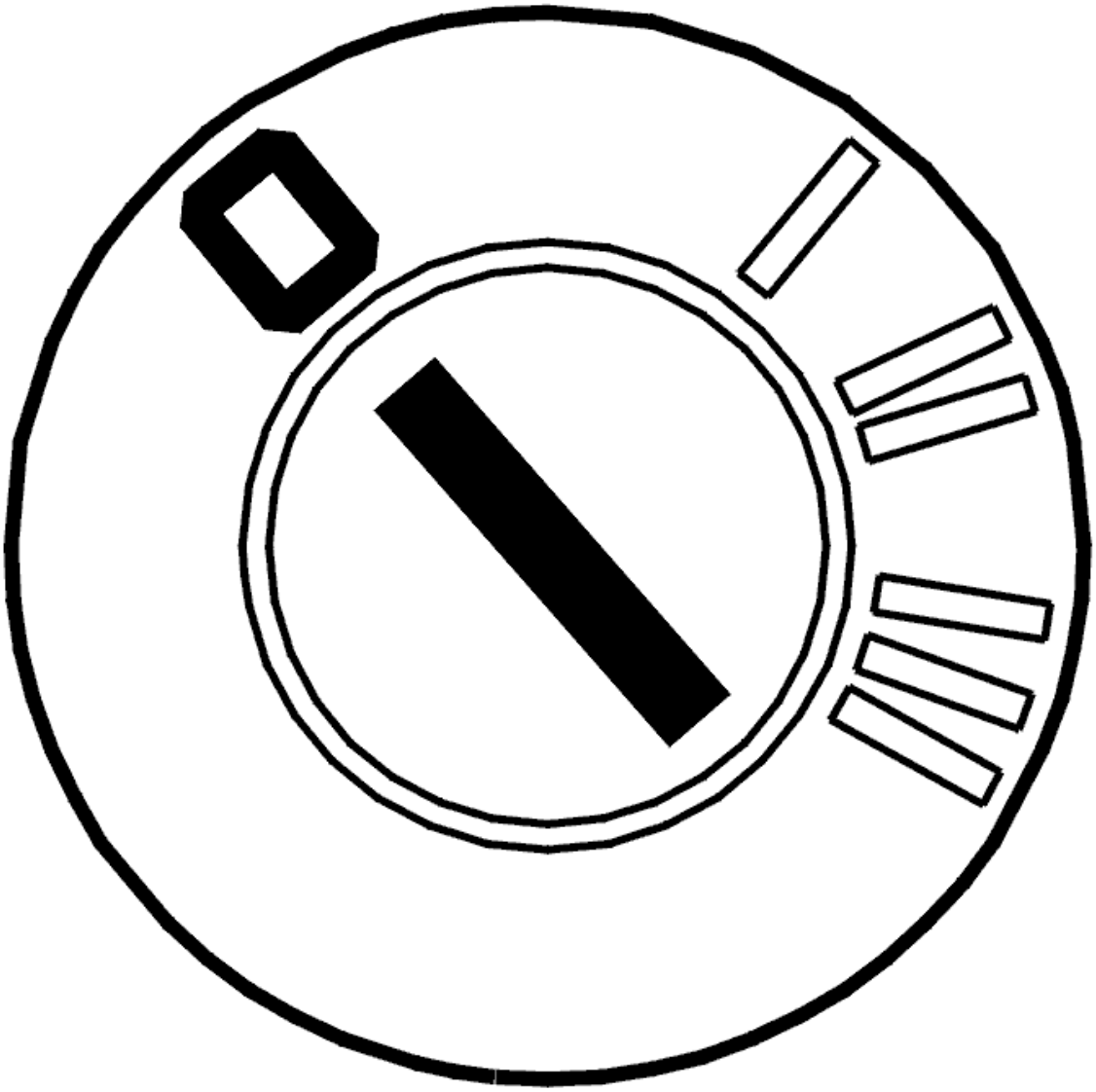

Fig. 317: Identifying Ignition OFF
Courtesy of VOLVO CARS CORPORATION

- Ignition off

  Check relevant connectors for loose connections, contact resistance and oxidation.

  Check the signal cables and the ground cable for short-circuit to voltage and open circuit.

  Check between:

  - The control module #B5 (#A65) and electronic throttle unit's connector #6, signal cable position sensor 1.
  - The control module #B7 (#A67) and electronic throttle unit's connector #4, signal cable position sensor 2.

- The control module #A11 (#A11) and electronic throttle unit's connector #3, ground.

Remedy as necessary.

Other information

- see **CONNECTING THE BREAKOUT BOX**
- see **SIGNAL SPECIFICATION, ENGINE CONTROL MODULE (ECM)**
- see **THROTTLE BODY (ELECTRONIC THROTTLE MODULE (ETM)), REPLACING**
- see **CHECKING WIRING AND TERMINALS**

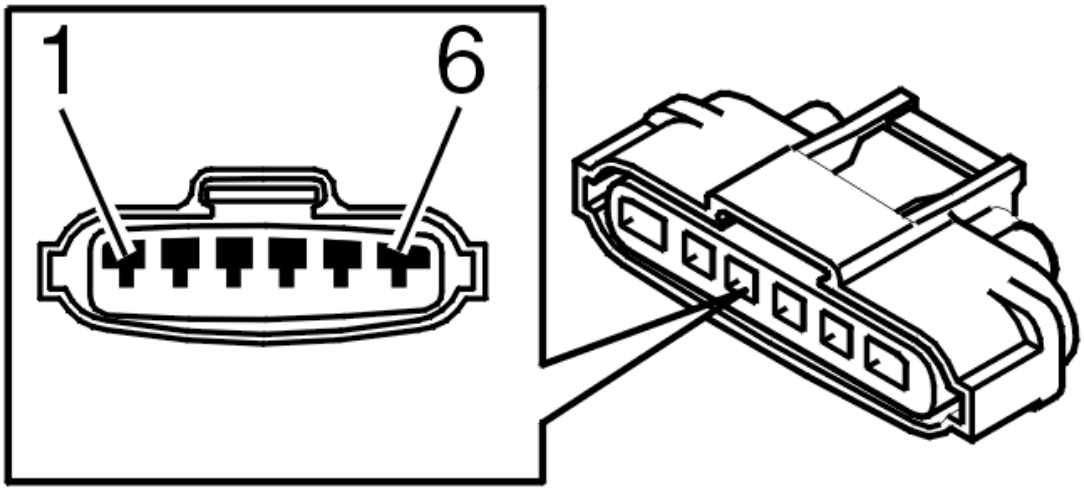

Fig. 318: Identifying 6-Bit Connector
Courtesy of VOLVO CARS CORPORATION

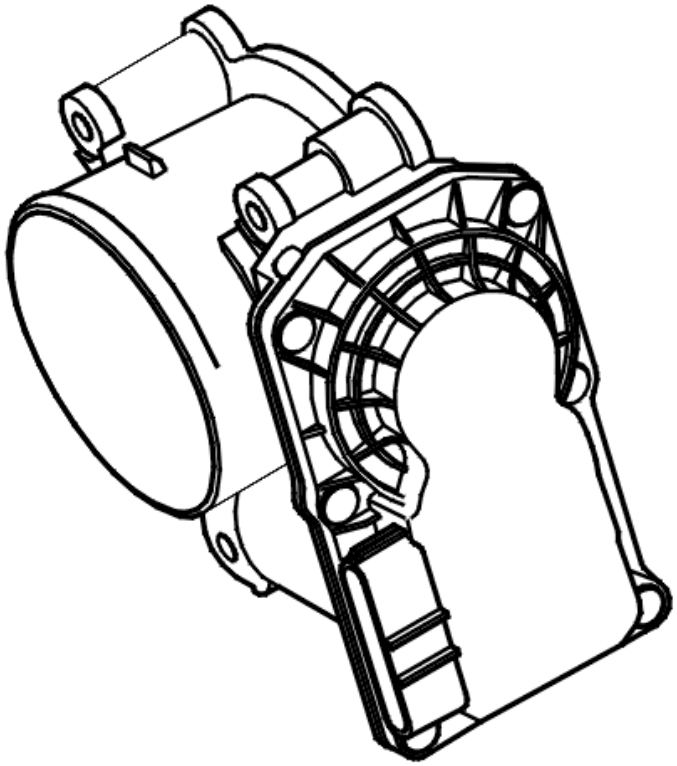

Fig. 319: Identifying Electronic Throttle Unit
Courtesy of VOLVO CARS CORPORATION

- **Continue**

  Refer to **VERIFICATION**

VERIFICATION

VERIFICATION

HINT: After carrying out the repair, check that the fault has been remedied.

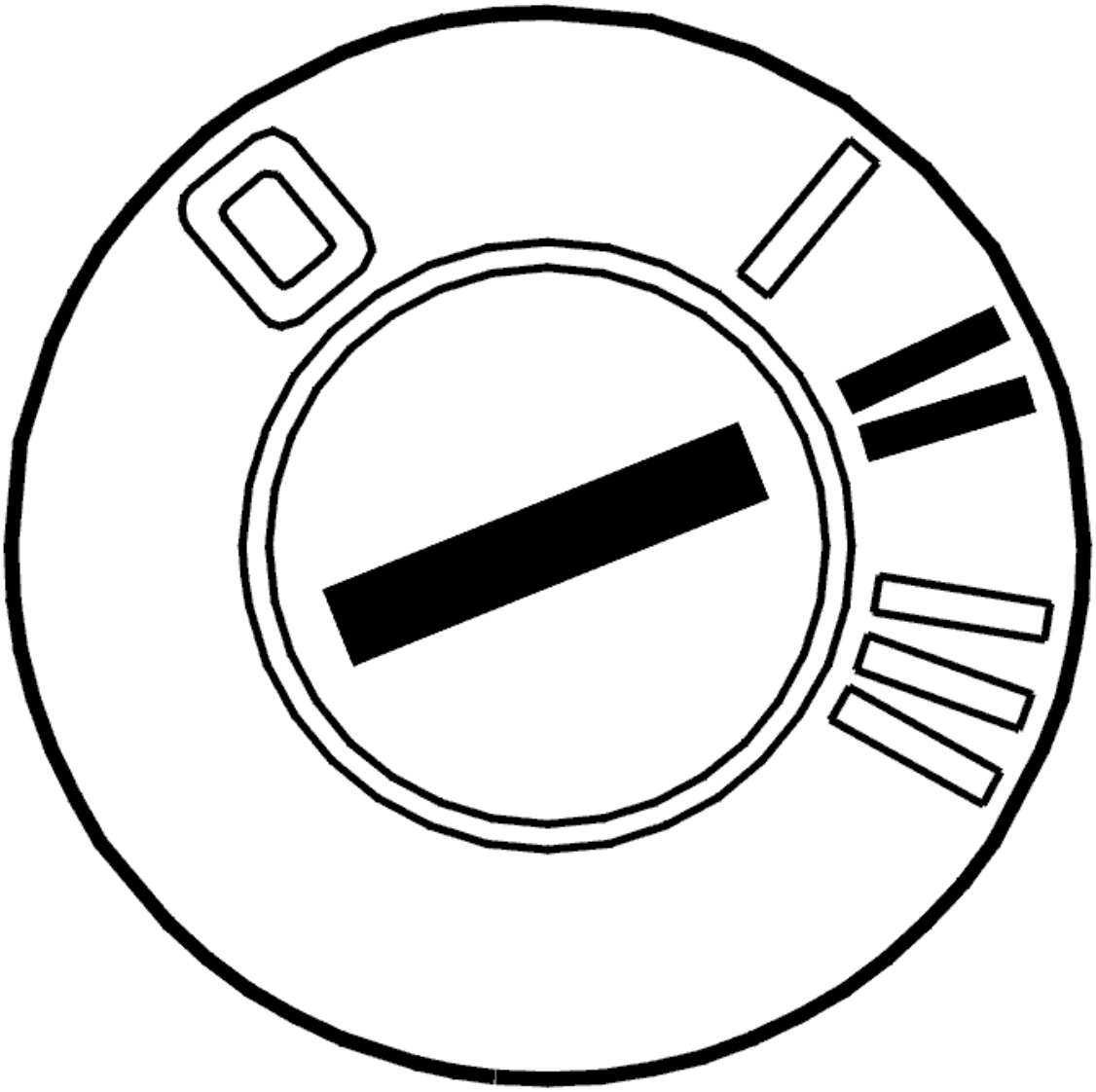

Fig. 320: Identifying Ignition ON
Courtesy of VOLVO CARS CORPORATION

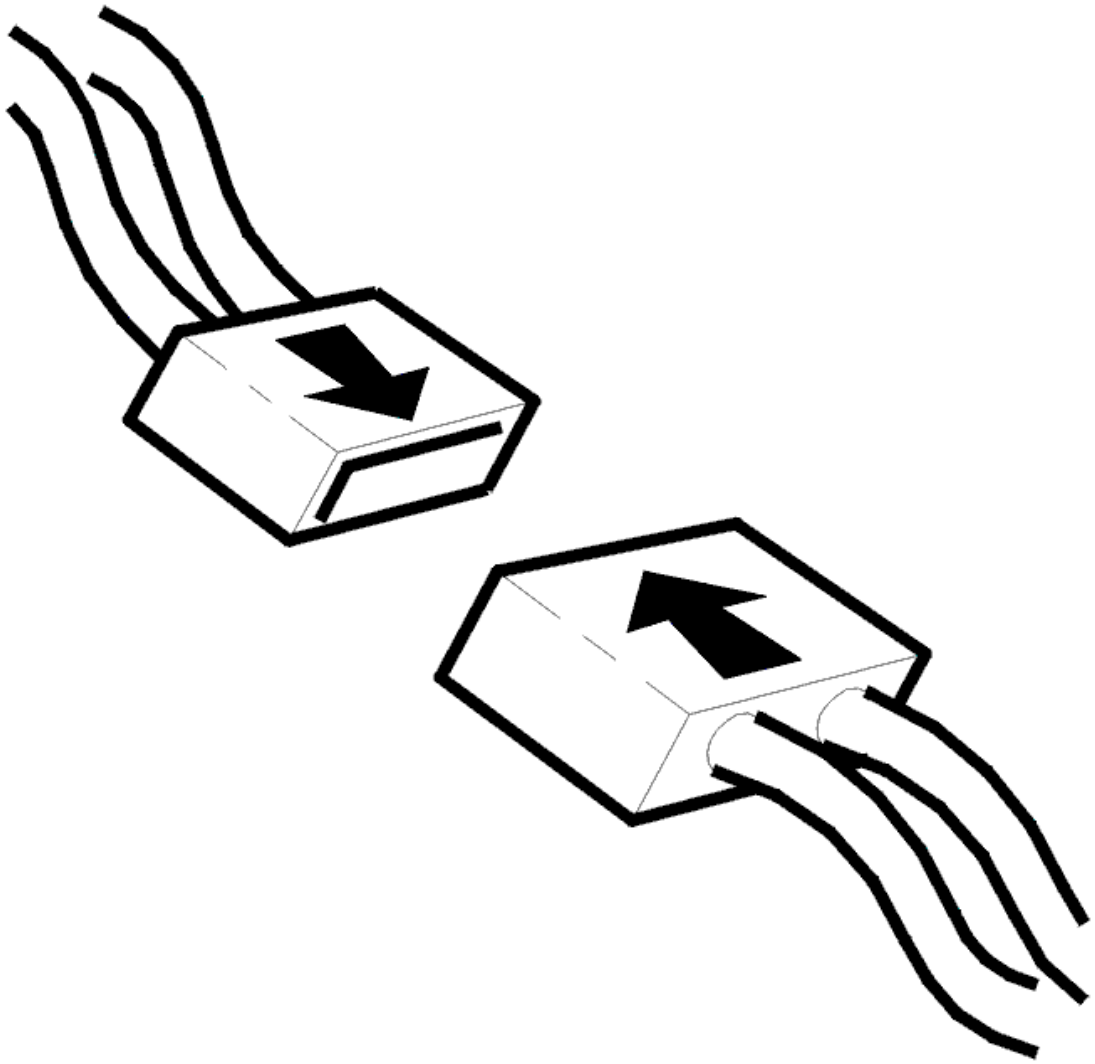

Fig. 321: Connecting Connector
Courtesy of VOLVO CARS CORPORATION

- Ignition off
- Reinstall the connectors, components etc.
- Ignition on

  Activate throttle position read off.

  Check that the throttle angle and both sensor values correspond.

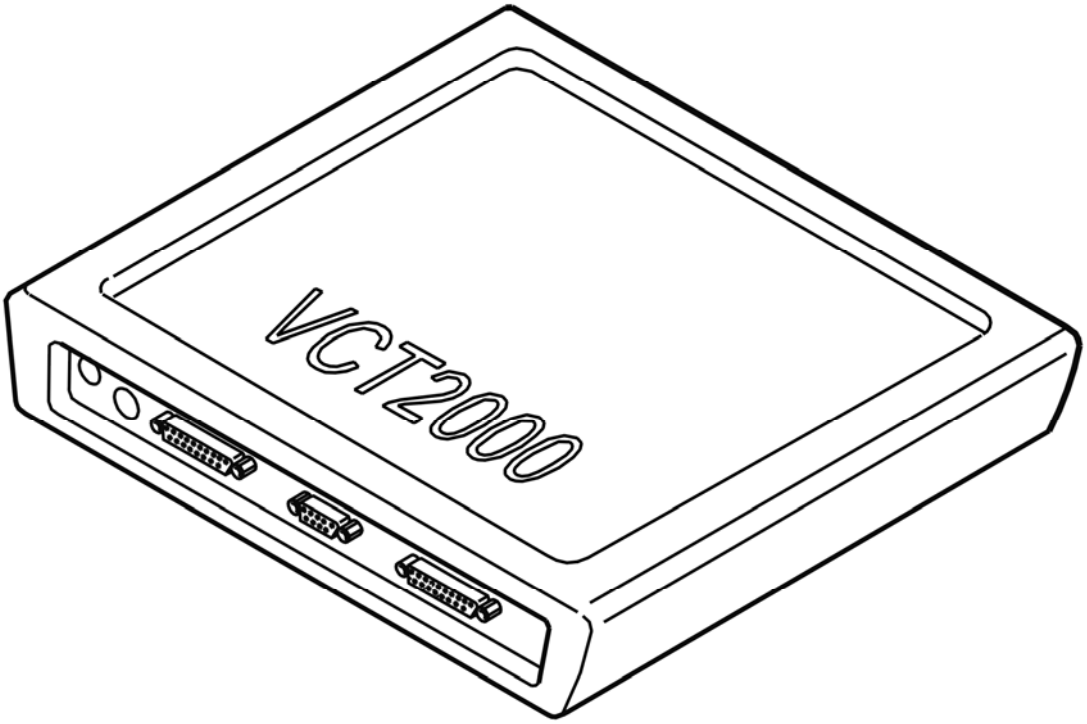

Fig. 322: Identifying VCT2000 Diagnostic Tool Symbol In VIDA
Courtesy of VOLVO CARS CORPORATION

Are the values within their permitted range?

- **YES**

  VERIFIED: Troubleshooting has been completed.

- **NO**

  Refer to **INFORMATION**

INFORMATION

FAULT-TRACING INFORMATION

The fault should have been detected and remedied. As this is not the case fault-tracing has failed.

Exit fault-tracing for this diagnostic trouble code (DTC) or make another attempt.

ECM-P177200: THROTTLE POSITION SENSOR CIRCUIT LOW INPUT. GENERAL FAILURE INFORMATION. NO SUB TYPE INFORMATION

(B6324S; 2007-2010)

DIAGNOSTIC TROUBLE CODE (DTC) INFORMATION ECM-P177200

Condition

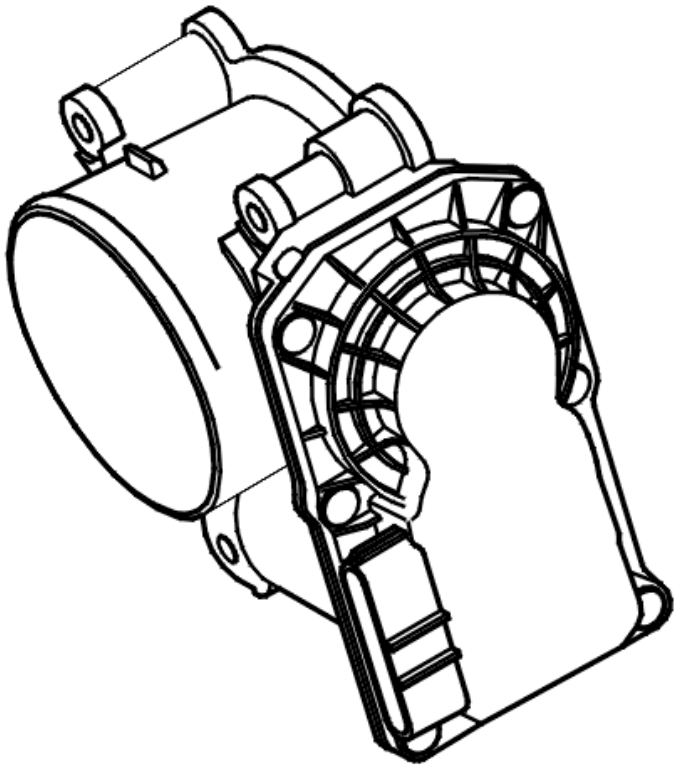

Fig. 323: Identifying Electronic Throttle Unit
Courtesy of VOLVO CARS CORPORATION

Engine control module (ECM) checks the signals from the electronic throttle unit's two position sensors.

If engine control module (ECM) detects unreasonably low signal from any of the sensors, the diagnostic trouble code is generated.

The diagnostic trouble code can be diagnosed when the ignition is on.

Substitute Value

- In case a defective signal is detected, the other signal is used.
- Cruise control turned off when malfunction is active.

Possible Source

- Contact resistance or oxidation in the terminals
- Signal cables short-circuited to ground.
- Open circuit on signal cables.
- Voltage feed short-circuited to ground.
- Open circuit on voltage feed.
- Damaged electronic throttle unit.

Fault symptom[s]

- Poor performance.
- Cruise control does not function at all.

FAULT-TRACING

see **FAULT-TRACING**

ECM-P177200: THROTTLE POSITION SENSOR CIRCUIT LOW INPUT. GENERAL FAILURE INFORMATION. NO SUB TYPE INFORMATION (B6324S5; 2011-2012)

DIAGNOSTIC TROUBLE CODE (DTC) INFORMATION ECM-P177200

see **DIAGNOSTIC TROUBLE CODE (DTC) INFORMATION ECM-P177200**

FAULT-TRACING

see **FAULT-TRACING**

ECM-P177200: ELECTRONIC THROTTLE UNIT LOW INPUT SIGNAL. GENERAL MALFUNCTION INFORMATION. NO INFORMATION ON MALFUNCTION TYPE (B8444S; 2005-2011)

DIAGNOSTIC TROUBLE CODE (DTC) INFORMATION ECM-P177200

Condition

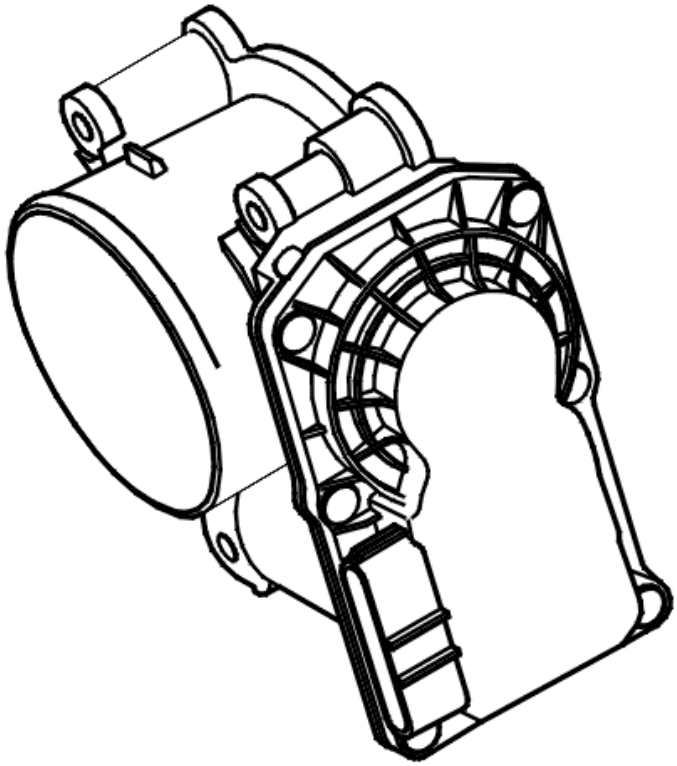

Fig. 324: Identifying Electronic Throttle Unit
Courtesy of VOLVO CARS CORPORATION

Engine control module (ECM) checks the signals from the electronic throttle unit's two position sensors.

If engine control module (ECM) detects unreasonably low signal from any of the sensors, the diagnostic trouble code is generated.

The diagnostic trouble code can be diagnosed when the ignition is on.

Substitute Value

- In case a defective signal is detected, the other signal is used.
- Cruise control turned off when malfunction is active.

Possible Source

- Contact resistance or oxidation in the terminals
- Signal cables short-circuited to ground.
- Open circuit on signal cables.
- Voltage feed short-circuited to ground.
- Open circuit on voltage feed.

- Damaged electronic throttle unit.

Fault symptom[s]

- Poor performance.
- Cruise control does not function at all.

TROUBLESHOOTING ECM-P177200

CHECKING THE STATUS

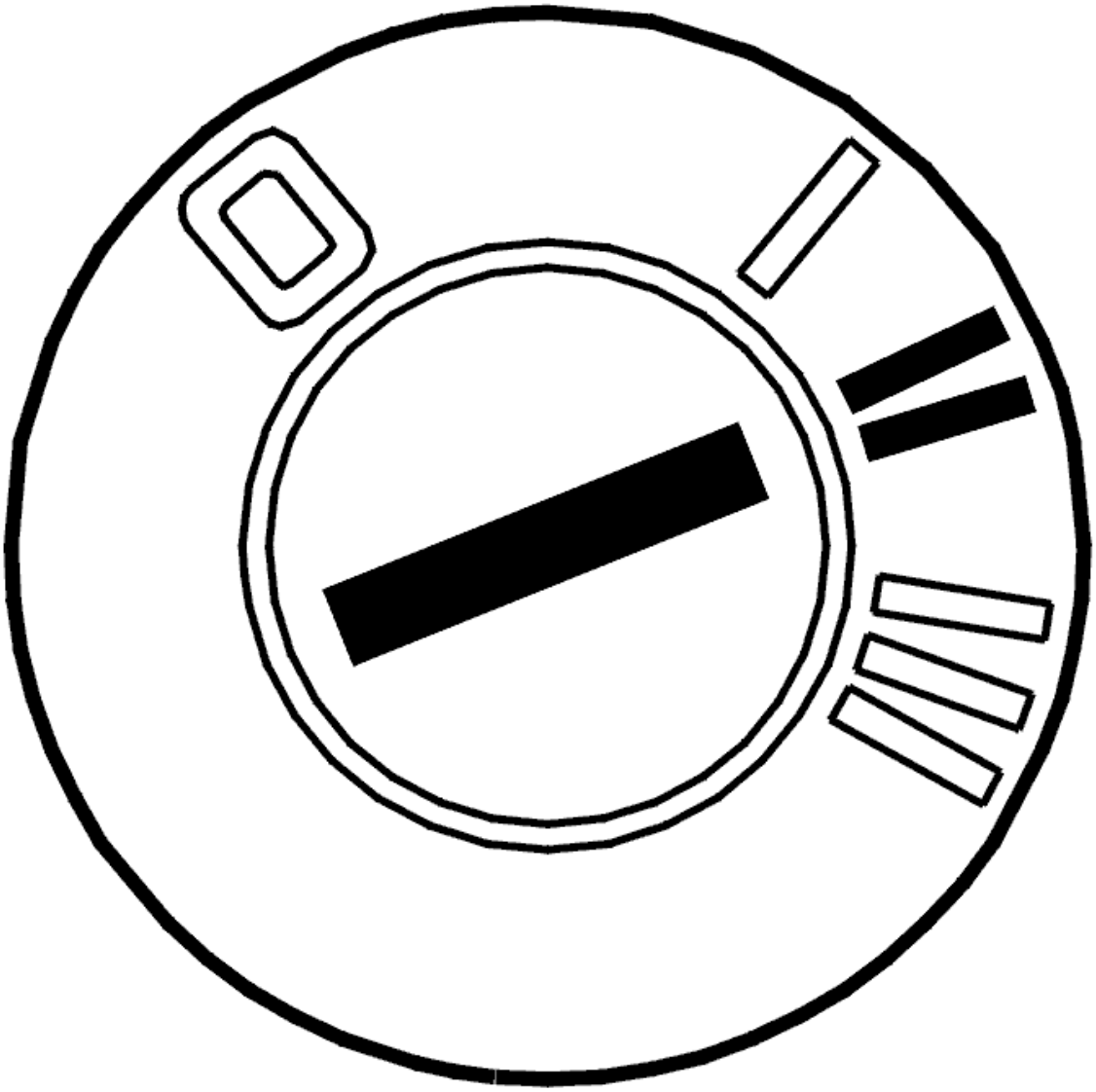

Fig. 325: Identifying Ignition ON
Courtesy of VOLVO CARS CORPORATION

- Ignition on

Read the diagnostic status and fault status for the diagnostic trouble code by selecting the diagnostic trouble code in the list.

Check if the malfunction is permanent or intermittent by reading off the diagnostic trouble code's status when the diagnostic status is "Implemented".

If the trouble status is "Malfunction found", this indicates that the malfunction is permanent. If the trouble status is "No malfunction found", this indicates that the malfunction is intermittent and not active right now.

NOTE: Trouble status cannot go from "Malfunction found" to "No malfunction found" in the same operating cycle.

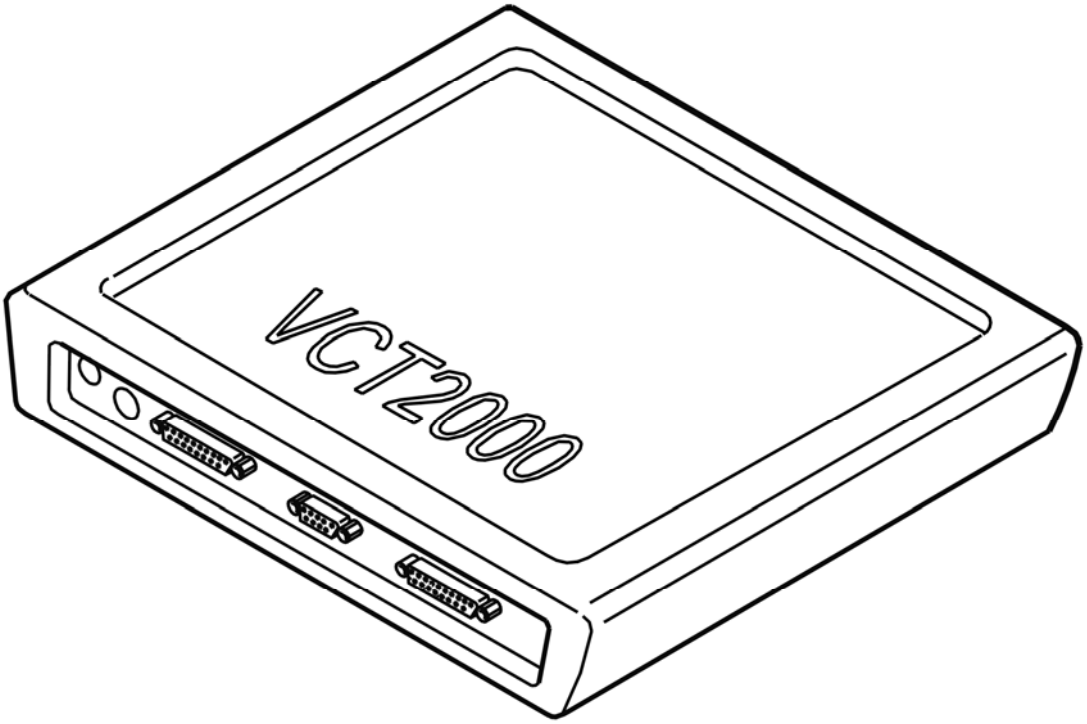

Fig. 326: Identifying VCT2000 Diagnostic Tool Symbol In VIDA
Courtesy of VOLVO CARS CORPORATION

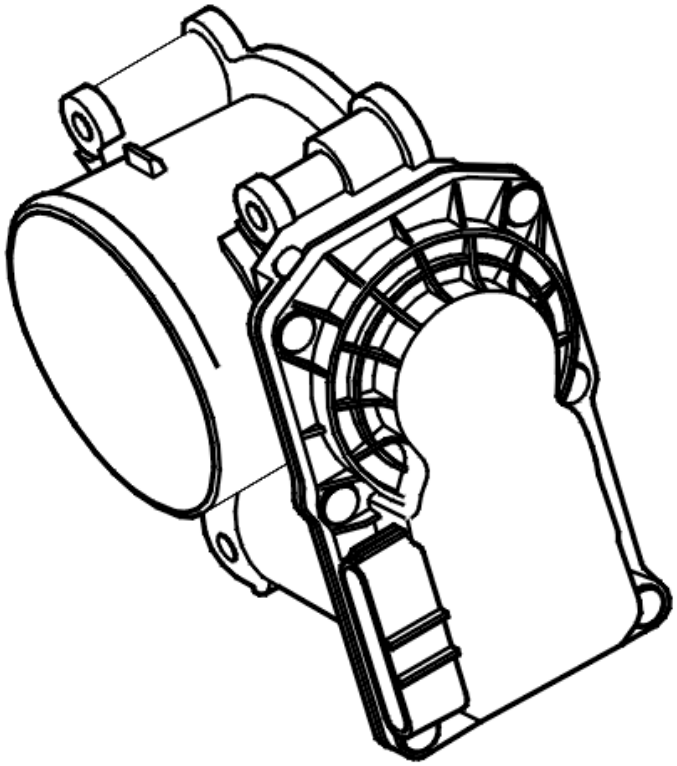

Fig. 327: Identifying Electronic Throttle Unit
Courtesy of VOLVO CARS CORPORATION

- **Continue**

  Refer to **CHECKING COMPONENTS AND WIRING**

CHECKING COMPONENTS AND WIRING

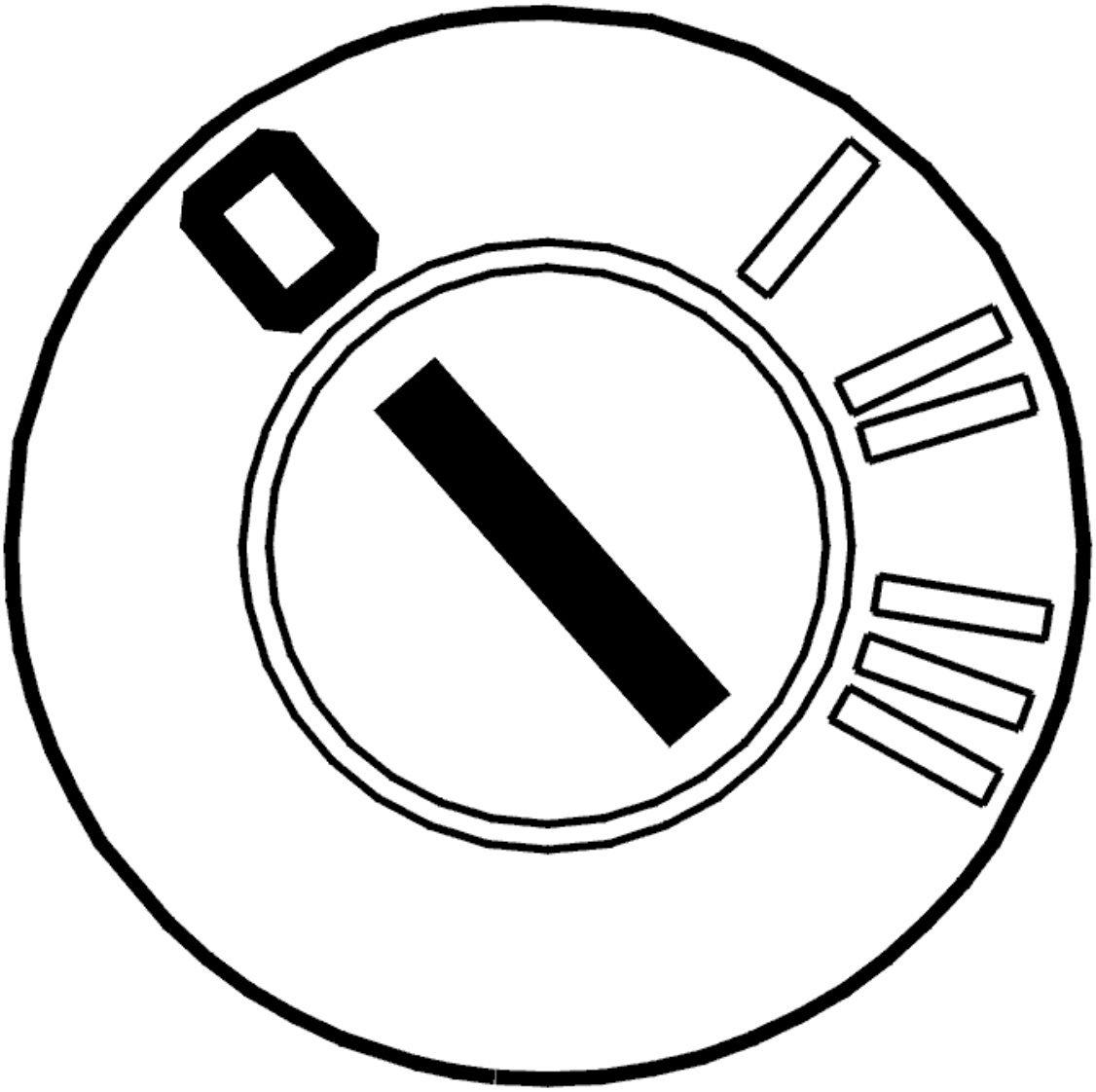

Fig. 328: Identifying Ignition OFF
Courtesy of VOLVO CARS CORPORATION

- Ignition off

  Check relevant connectors for loose connections, contact resistance and oxidation.

  Check the signal cables for short-circuit to ground as well as open circuit.

  Check the voltage feed for short-circuit to ground.

  Check between:

  - The control module #B5 (#A65) and electronic throttle unit's connector #6, signal cable position sensor 1.
  - The control module #B7 (#A67) and electronic throttle unit's connector #4, signal cable position

sensor 2.
- The control module #A11 (#A11) and electronic throttle unit's connector #3, ground.
- The control module #A24 (#A24) and electronic throttle unit's connector #5, voltage feed.

Remedy as necessary.

Other information

- see **CONNECTING THE BREAKOUT BOX**
- see **SIGNAL SPECIFICATION, ENGINE CONTROL MODULE (ECM)**
- see **THROTTLE BODY (ELECTRONIC THROTTLE MODULE (ETM)), REPLACING**
- see **CHECKING WIRING AND TERMINALS**

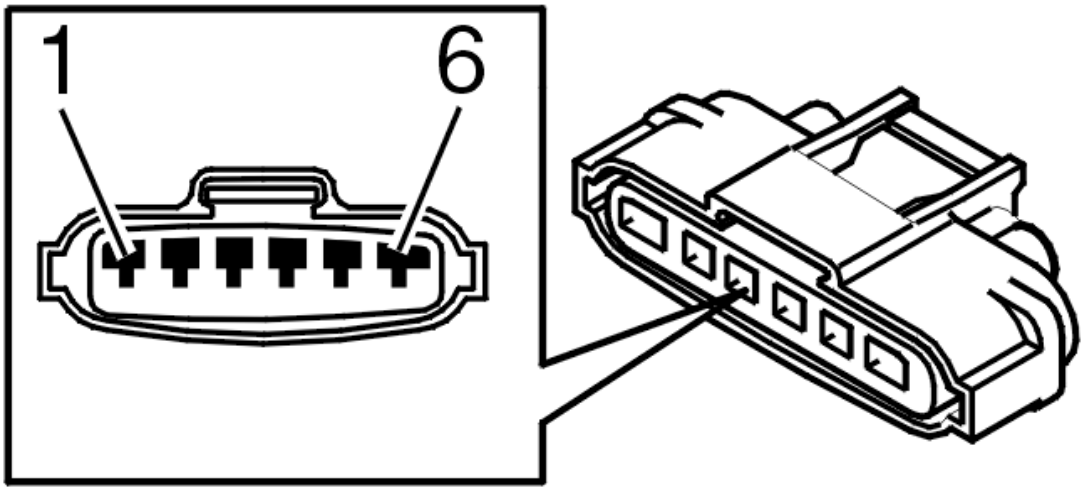

Fig. 329: Identifying 6-Bit Connector
Courtesy of VOLVO CARS CORPORATION

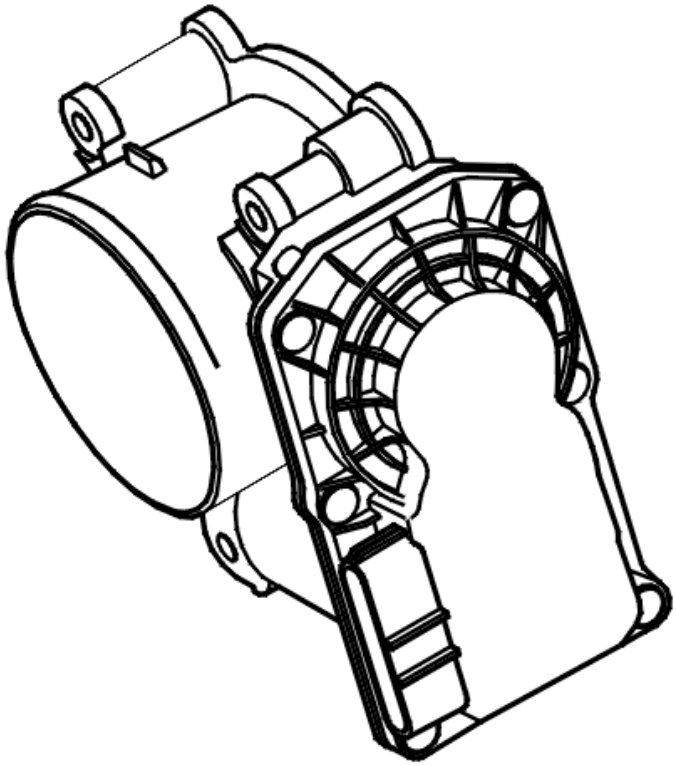

Fig. 330: Identifying Electronic Throttle Unit
Courtesy of VOLVO CARS CORPORATION

- **Continue**

  Refer to **VERIFICATION**

VERIFICATION

VERIFICATION

HINT: After carrying out the repair, check that the fault has been remedied.

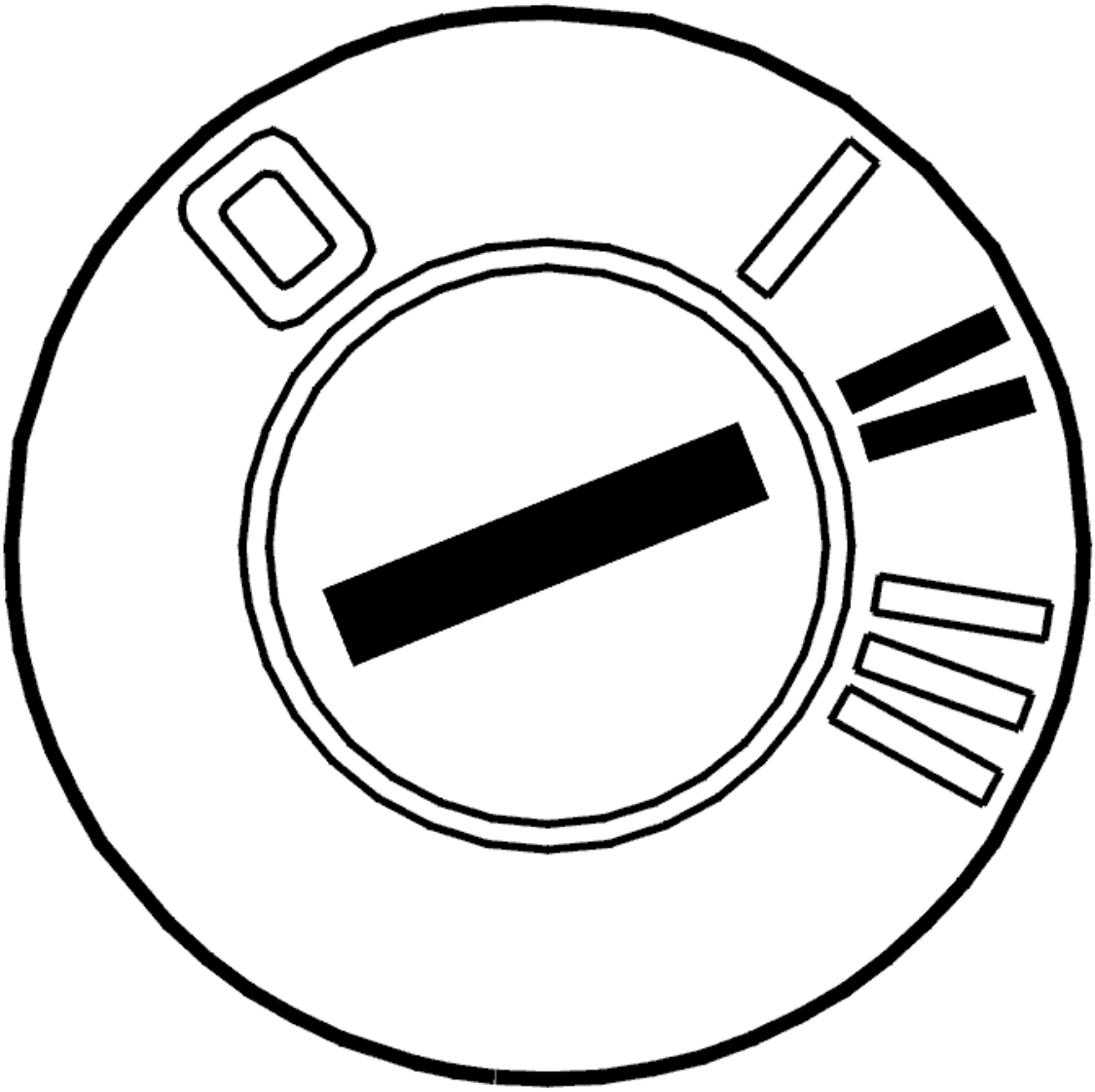

Fig. 331: Identifying Ignition ON
Courtesy of VOLVO CARS CORPORATION

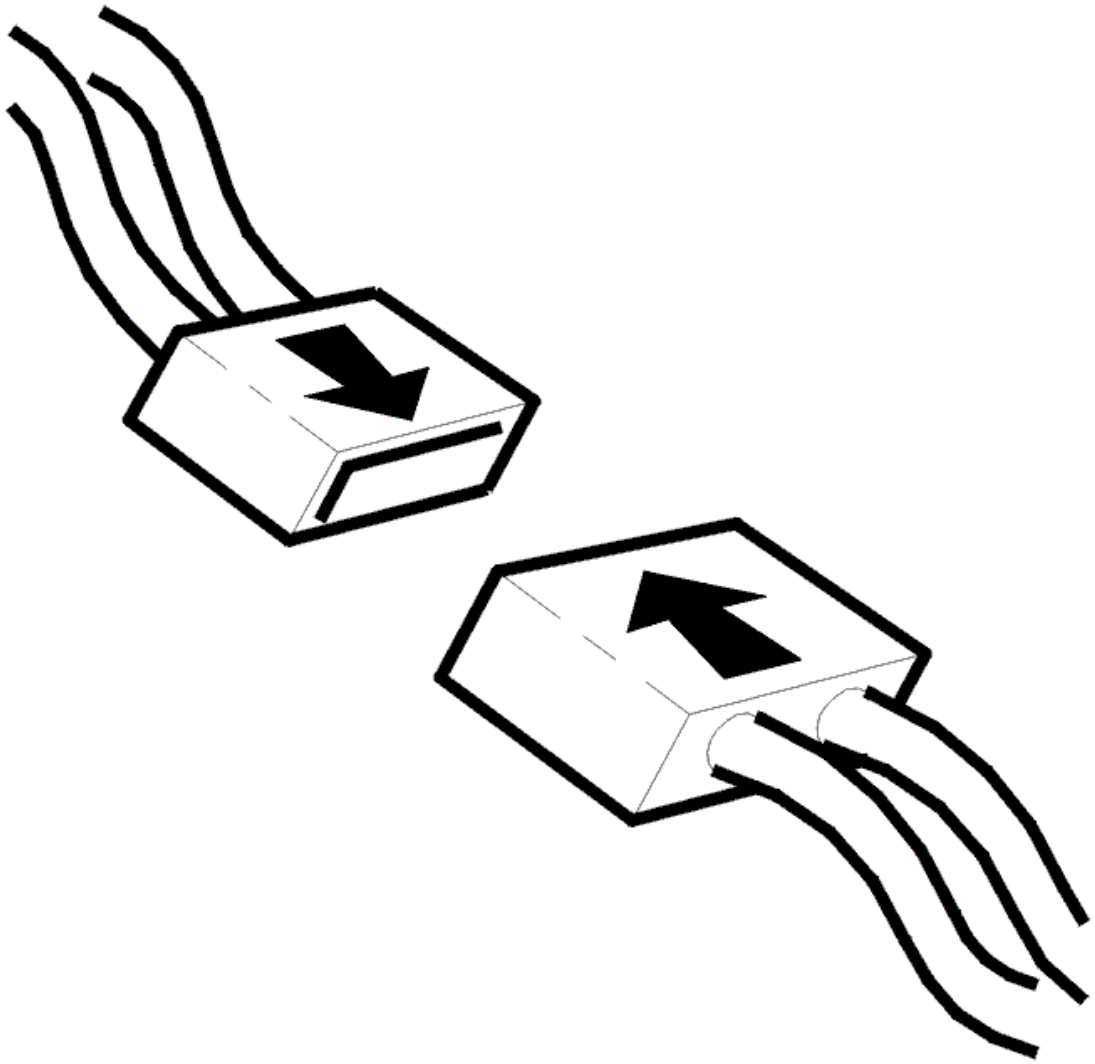

Fig. 332: Connecting Connector
Courtesy of VOLVO CARS CORPORATION

- Ignition off
- Reinstall the connectors, components etc.
- Ignition on

  Activate throttle position read off.

  Check that the throttle angle and both sensor values correspond.

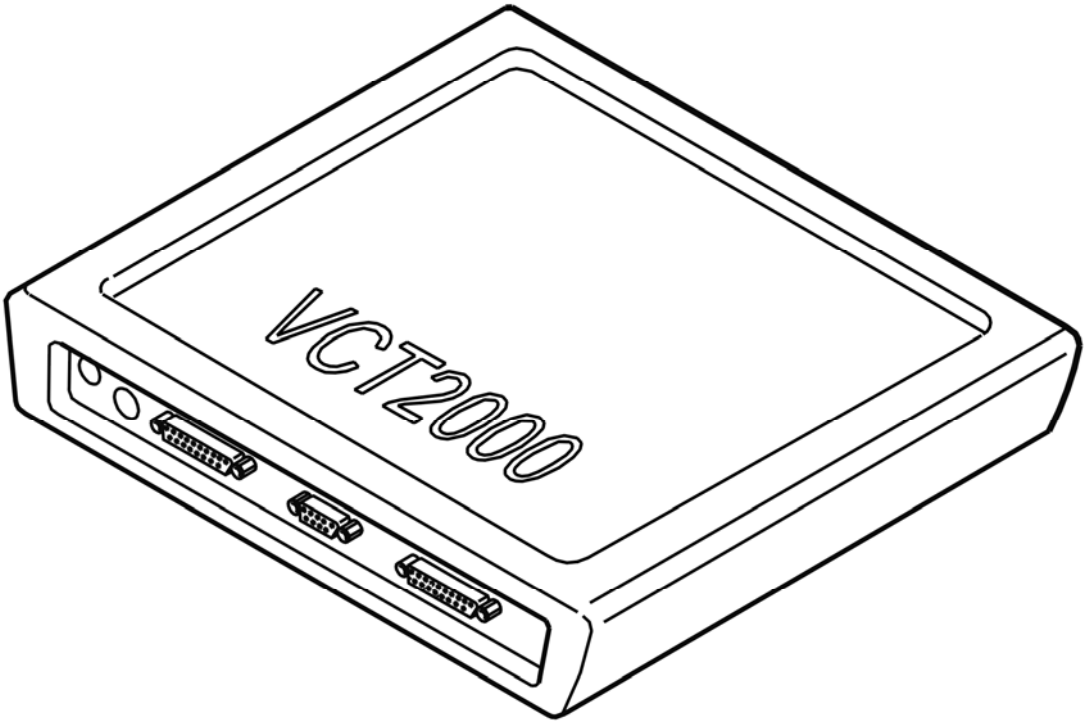

Fig. 333: Identifying VCT2000 Diagnostic Tool Symbol In VIDA
Courtesy of VOLVO CARS CORPORATION

Are the values within their permitted range?

- **YES**

  VERIFIED: Troubleshooting has been completed.

- **NO**

  Refer to **INFORMATION**

INFORMATION

FAULT-TRACING INFORMATION

The fault should have been detected and remedied. As this is not the case fault-tracing has failed.

Exit fault-tracing for this diagnostic trouble code (DTC) or make another attempt.

ECM-P193400: VEHICLE SPEED SIGNAL. GENERAL FAILURE INFORMATION. NO SUB TYPE INFORMATION (B6324S; 2007-2010)

DIAGNOSTIC TROUBLE CODE (DTC) INFORMATION ECM-P193400

Condition

If a malfunction of the speed signal is detected in the brake control module (BCM), a malfunction message is sent to engine control module (ECM) and a diagnostic trouble code is stored in the engine control module (ECM).

Diagnostic trouble codes (DTCs) for the vehicle speed sensor (VSS) signal are stored in the brake control module (BCM).

Substitute Value

- Cruise control is disengaged when the fault is active.
- The speed signal from the transmission control module (TCM) is used, automatic transmission.
- The speed signal from the brake control module (BCM) is set to 6 km/h, manual transmission.

Possible Source

- Look for the cause of the fault in the brake control module (BCM).

Fault symptom[s]

- Malfunction indicator light (MIL), on
- Cruise control does not operate

FAULT-TRACING

see **FAULT-TRACING**

ECM-P193400: VEHICLE SPEED SIGNAL. GENERAL FAILURE INFORMATION. NO SUB TYPE INFORMATION (B6324S5; 2011-2012)

DIAGNOSTIC TROUBLE CODE (DTC) INFORMATION ECM-P193400

see **DIAGNOSTIC TROUBLE CODE (DTC) INFORMATION ECM-P193400**

FAULT-TRACING

see **FAULT-TRACING**

ECM-P193400: SPEED SIGNAL VEHICLE. GENERAL MALFUNCTION INFORMATION. NO INFORMATION ON MALFUNCTION TYPE (B8444S; 2005-2011)

DIAGNOSTIC TROUBLE CODE (DTC) INFORMATION ECM-P193400

Condition

If a malfunction of the speed signal is detected in the brake control module (BCM), a malfunction message is sent to engine control module (ECM) and a diagnostic trouble code is stored in the engine control module (ECM).

Diagnostic trouble codes (DTCs) for the vehicle speed sensor (VSS) signal are stored in the brake control module (BCM).

Substitute Value

- Cruise control shut off.
- The speed signal from the transmission control module (TCM) is used, automatic transmission.
- The speed signal from the brake control module (BCM) is set to 6 km/h, manual transmission.

Possible Source

- Look for the cause of the fault in the brake control module (BCM).

Fault symptom[s]

- Malfunction indicator light (MIL), on
- Cruise control does not operate

FAULTY SIGNAL

INFORMATION

No fault-tracing has been developed for this diagnostic trouble code (DTC). The diagnostic trouble code (DTC) for this fault is stored first in the brake control module (BCM), then in the engine control module (ECM). This diagnostic trouble code (DTC) cannot be erased before the diagnostic trouble code (DTC) in the brake control module (BCM) has been remedied and erased.

First read off the diagnostic trouble codes (DTCs) in the brake control module (BCM). Fault-trace and remedy as necessary. This diagnostic trouble code (DTC) can then be erased.

ECM-P200400: INTAKE MANIFOLD RUNNER CONTROL STUCK OPEN (BANK 1). GENERAL FAILURE INFORMATION. NO SUB TYPE INFORMATION (B6324S; 2007-2010)

DIAGNOSTIC TROUBLE CODE (DTC) INFORMATION ECM-P200400

Condition

The Engine control module (ECM) checks the function of the variable intake system (VIS) that affects the air flow in the intake system.

The function can be checked by checking the difference between the measured air flow and the expected air flow.

Expected air flow based on requested position of the actuator.

The control module's test for the diagnostic trouble code (DTC) starts in the event of:

- The actual air flow differs from the expected air flow, the primary throttle unit (upper) is detected to be open.

The control module's test for the diagnostic trouble code (DTC) starts in the event of:

- Less than 2500 meters above sea level.
- Fully open throttle.
- Engine speed 2300-3500 RPM.

NOTE: The control module can only detect the fault once the test has been started and the diagnostic trouble code (DTC) is stored when the conditions are met.

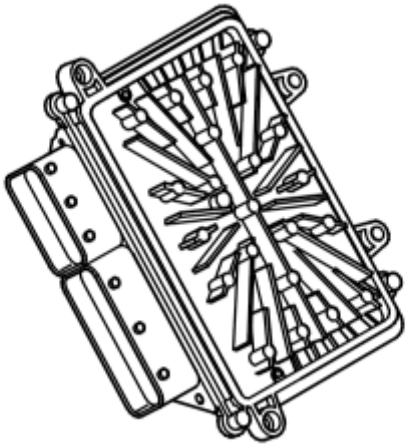

Fig. 334: Identifying Atmospheric Pressure Sensor
Courtesy of VOLVO CARS CORPORATION

Substitute Value

- None.

Possible Source

- Damaged primary throttle unit (upper).

Fault symptom[s]

- Poor performance

FAULT-TRACING

CHECKING THE STATUS

Fig. 335: Checking Traffic Load On CAN Cables
Courtesy of VOLVO CARS CORPORATION

- Ignition on.

  Activate the upper primary actuator.

  Check if the fault is permanent or intermittent.

  Check that the throttle unit is activated.

  HINT: It may be necessary to remove the throttle unit from the induction pipe to ensure proper functionality.

  The fault is permanent if the function is faulty.

  If the function is correct, this is an indication that the fault was present previously but is not active at the moment, i. e. an intermittent fault.

Fig. 336: Identifying VCT2000 Diagnostic Tool Symbol In VIDA
Courtesy of VOLVO CARS CORPORATION

- **Continue**

  Refer to **CHECKING THE COMPONENT AND WIRING**

CHECKING THE COMPONENT AND WIRING

Check the voltage on throttle unit connector #3 to the system relay. The voltage must be approximately battery voltage when the ignition is on.

Check signal cable for an open-circuit and short-circuit to supply voltage.

Take readings between:

- Engine control module (ECM) terminal #A38 (#A38) and throttle unit terminal #1.

Remedy as necessary.

Other information

- see **CHECKING WIRING AND TERMINALS**
- **Continue**

  Refer to **VERIFICATION**

INFORMATION

FAULT-TRACING INFORMATION

The fault should have been detected and remedied. As this is not the case fault-tracing has failed.

Exit fault-tracing for this diagnostic trouble code (DTC) or make another attempt.

VERIFICATION

VERIFICATION

HINT: After carrying out the repair, check that the fault has been remedied.

Fig. 337: Checking Traffic Load On CAN Cables
Courtesy of VOLVO CARS CORPORATION

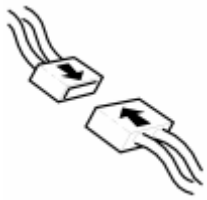

Fig. 338: Identifying Connector(s) Reinstallation
Courtesy of VOLVO CARS CORPORATION

- Ignition off.
- Reinstall the connectors, components etc.
- Ignition on.

  Activate the upper primary actuator.

  Check that the throttle unit is activated.

  HINT: It may be necessary to remove the throttle unit from the induction pipe to ensure proper functionality.

Fig. 339: Identifying VCT2000 Diagnostic Tool Symbol In VIDA
Courtesy of VOLVO CARS CORPORATION

Is the function OK?

- **YES**

  VERIFIED: Troubleshooting has been completed.

- **NO**

  Refer to **INFORMATION**

ECM-P200400: INTAKE MANIFOLD RUNNER CONTROL STUCK OPEN (BANK 1). GENERAL FAILURE INFORMATION. NO SUB TYPE INFORMATION (B6324S5; 2011-2012)

DIAGNOSTIC TROUBLE CODE (DTC) INFORMATION ECM-P200400

see **DIAGNOSTIC TROUBLE CODE (DTC) INFORMATION ECM-P200400**

FAULT-TRACING

see **FAULT-TRACING**

ECM-P200400: INTAKE MANIFOLD RUNNER CONTROL STUCK OPEN

(BANK 1). GENERAL FAILURE INFORMATION. NO SUB TYPE INFORMATION (B8444S; 2005-2011)

DIAGNOSTIC TROUBLE CODE (DTC) INFORMATION ECM-P200400

Condition

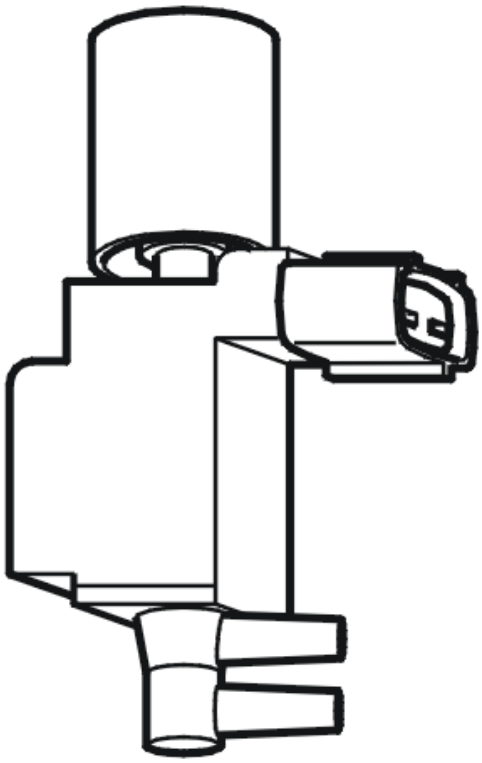

Fig. 340: Identifying Intake Manifold Control Valve
Courtesy of VOLVO CARS CORPORATION

The Engine control module checks the damper in the (VIS) by regulating the valve for the damper's vacuum motor. The function of the system can be diagnosed by interpreting the signal from the manifold absolute pressure (MAP) sensor.

A diagnostic trouble code (DTC) is stored if the control module detects:

- That the damper for the variable intake system has jammed in the open position.

The control module's test for the diagnostic trouble code (DTC) starts in the event of:

- The engine RPM is greater than a certain value.

Substitute Value

- None.

Possible Source

- Damaged control valve.
- Sticking damper.
- Damaged vacuum motor.

Fault symptom[s]

- Poor performance

FAULT-TRACING ECM-P200400

CHECKING THE COMPONENT AND WIRING

Check the function of the control valve (2) by activating it. The valve should click on activation.

Connect a vacuum pump to the control valve's terminal (for hose connected to the intake manifold) and pump to create a vacuum. Listen for leakage and check the pump's gauge for stable pressure. If the pressure drops, this means a leaking valve.

Check that the dampers (4) can move freely and that nothing is obstructing them.

HINT: Check the function by pumping a vacuum to the vacuum motor.

Remedy as necessary.

Other information

- For control valve replacement:**DISTRIBUTION DAMPER INTAKE PIPE, REPLACING**

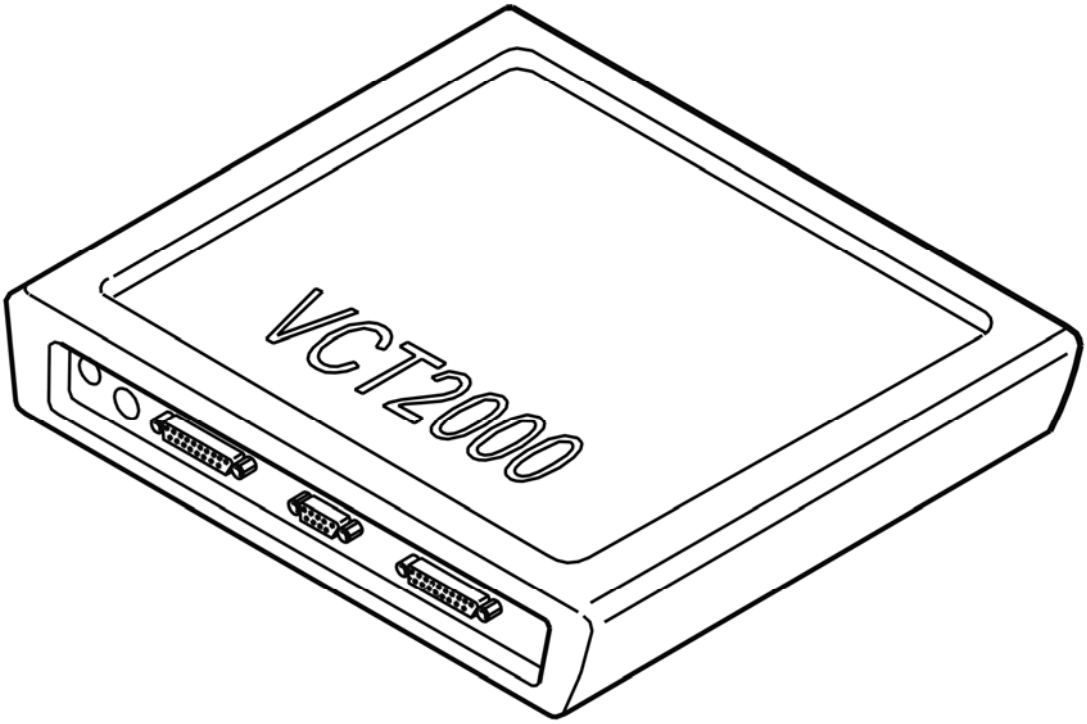

Fig. 341: Identifying VCT2000 Diagnostic Tool Symbol In VIDA
Courtesy of VOLVO CARS CORPORATION

- **Continue**

  Refer to **VERIFICATION**

VERIFICATION

VERIFICATION

HINT: After carrying out the repair, check that the fault has been remedied.

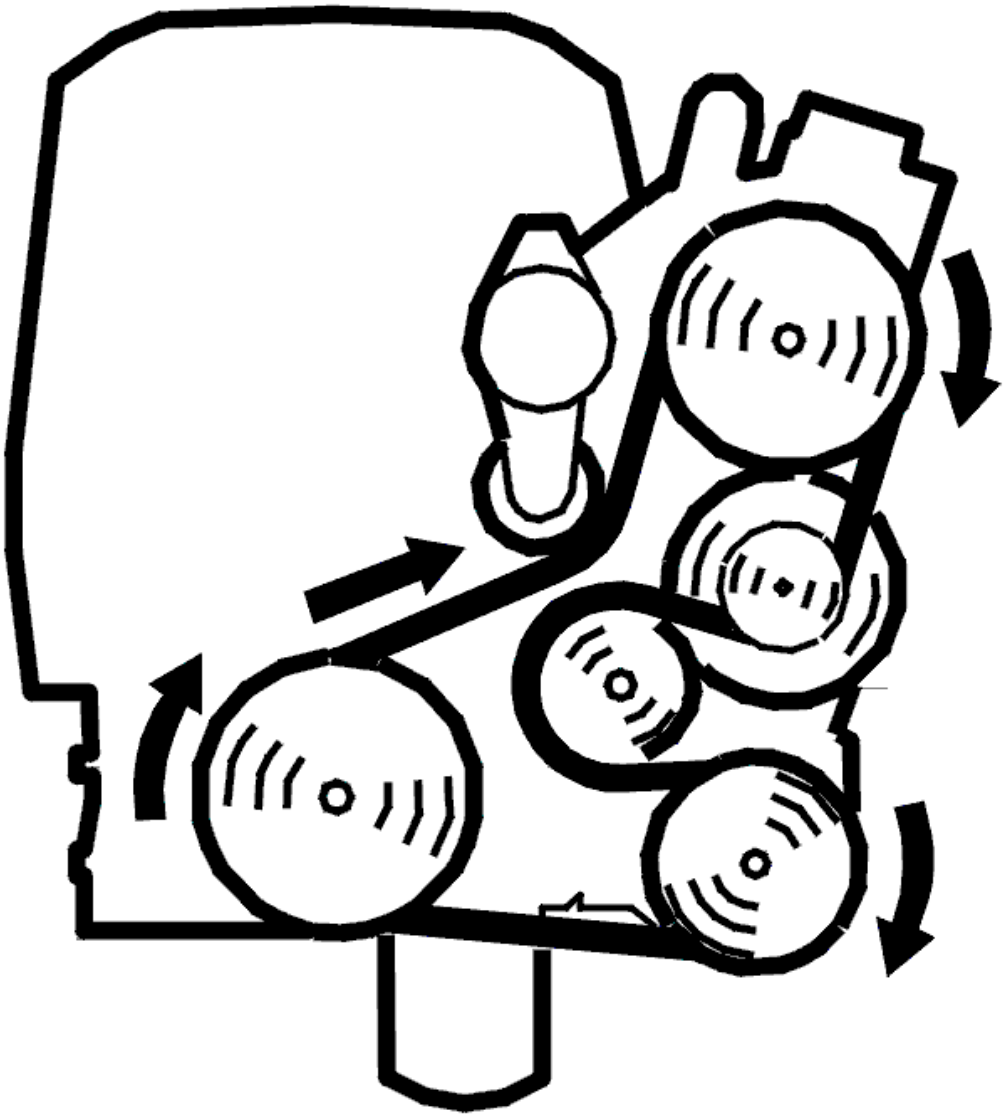

Fig. 342: Belt Routing / Engine Idling - Volvo
Courtesy of VOLVO CARS CORPORATION

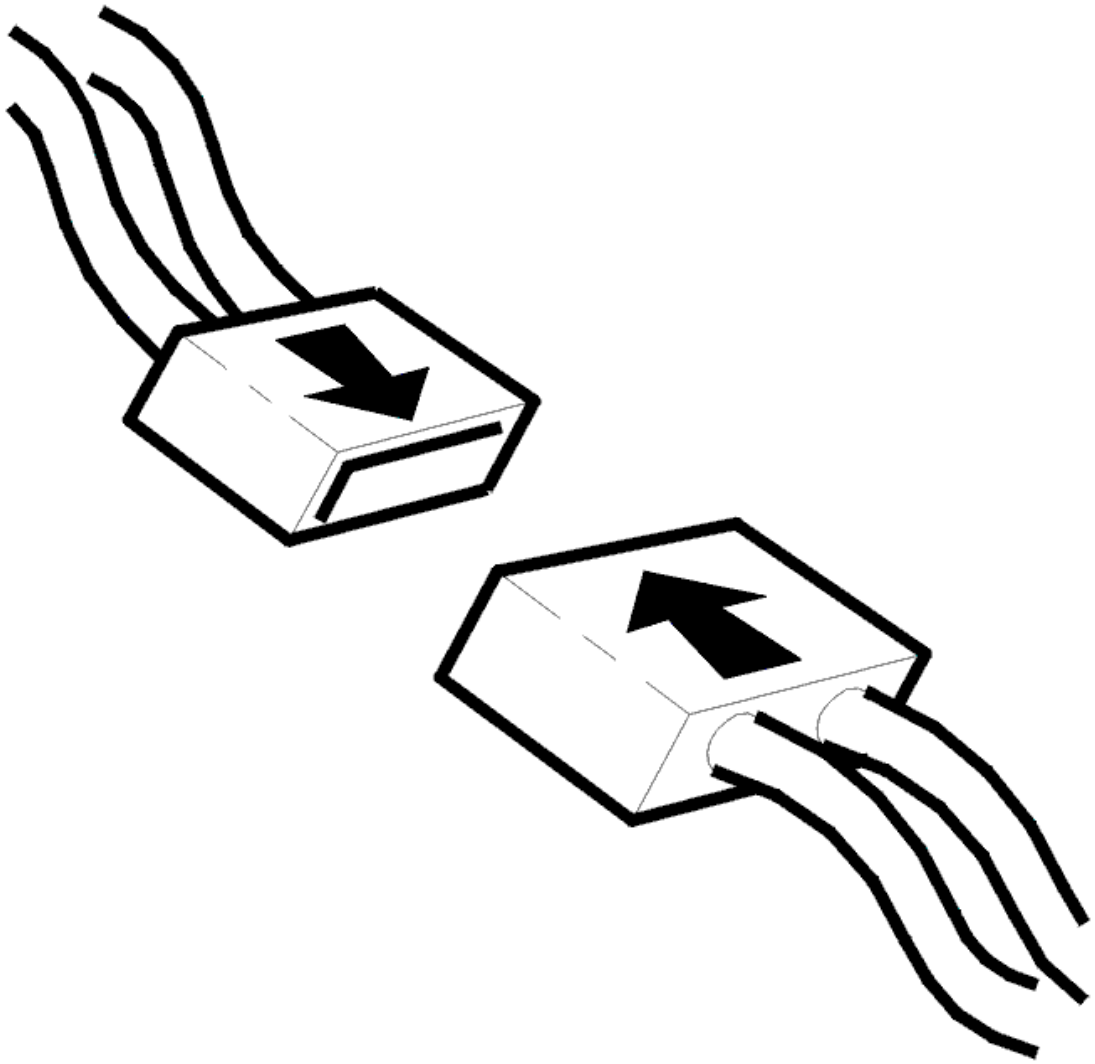

Fig. 343: Connecting Connector
Courtesy of VOLVO CARS CORPORATION

- Ignition off
- Reconnect the connectors, components, etc.
- Start the engine.
- Test drive the car on the road with smooth acceleration so that the engine speed (RPM) exceeds 3500 RPM. Repeat the procedure a couple of times so that the engine control module (ECM) can carry out diagnostics.
- Connect the VCT2000 (or appropriate scan tool) to the data link connector **without switching off the engine.**
- Read the diagnostic status and fault status for the diagnostic trouble code by selecting the diagnostic trouble code in the list.

NOTE: **If the engine is switched off, the stored fault status will be erased and the test drive will have to be repeated.**

Check the fault status for the diagnostic trouble code when the scan is "Implemented". When the function is correct the fault status should be "No fault found" when the scan is implemented.

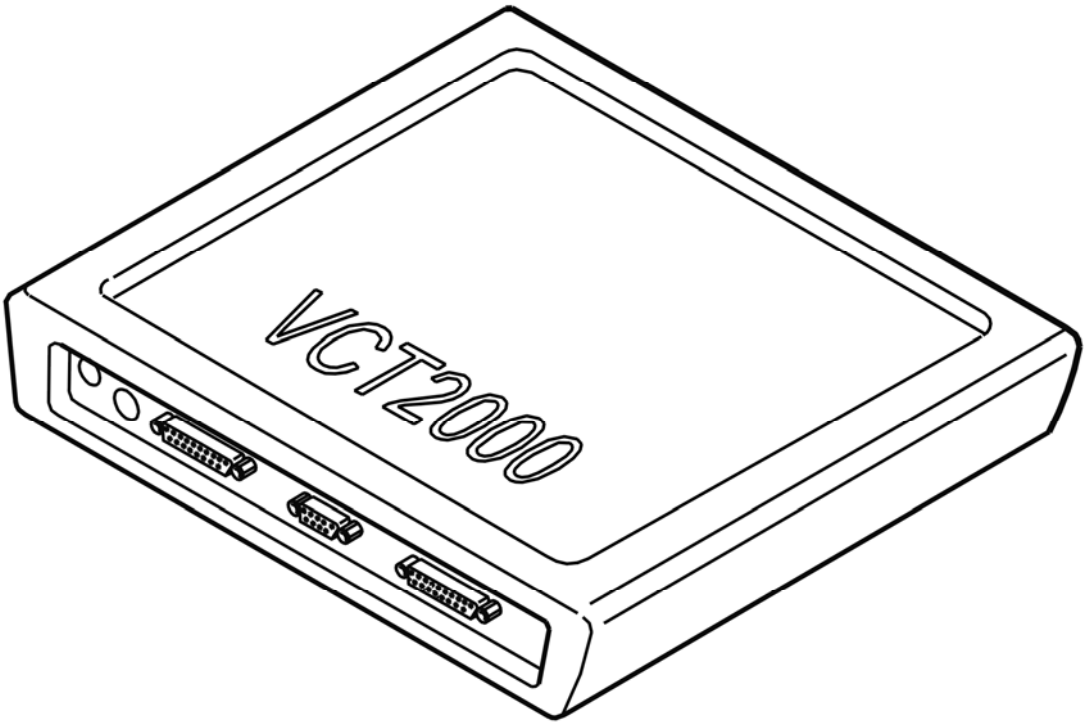

Fig. 344: Identifying VCT2000 Diagnostic Tool Symbol In VIDA
Courtesy of VOLVO CARS CORPORATION

Is the function OK?

- **YES**

  VERIFIED: Troubleshooting has been completed.

- **NO**

  Refer to **INFORMATION**

INFORMATION

FAULT-TRACING INFORMATION

The fault should have been detected and remedied. As this is not the case fault-tracing has failed.

Exit fault-tracing for this diagnostic trouble code (DTC) or make another attempt.

ECM-P200500: INTAKE MANIFOLD RUNNER CONTROL STUCK OPEN (BANK 2). GENERAL FAILURE INFORMATION. NO SUB TYPE INFORMATION (B6324S; 2007-2010)

DIAGNOSTIC TROUBLE CODE (DTC) INFORMATION ECM-P200500

Condition

The Engine control module (ECM) checks the function of the variable intake system (VIS) that affects the air flow in the intake system.

The function can be checked by checking the difference between the measured air flow and the expected air flow.

Expected air flow based on requested position of the actuator.

The control module's test for the diagnostic trouble code (DTC) starts in the event of:

- The actual air flow differs from the expected air flow; the secondary throttle unit (lower) is detected to be open.

The control module's test for the diagnostic trouble code (DTC) starts in the event of:

- Less than 2500 meters above sea level.
- Fully open throttle.
- Engine speed 3400-5500 RPM.

NOTE: **The control module can only detect the fault once the test has been started and the diagnostic trouble code (DTC) is stored when the conditions are met.**

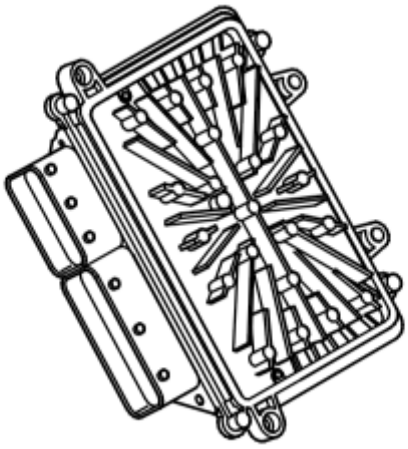

Fig. 345: Identifying Atmospheric Pressure Sensor
Courtesy of VOLVO CARS CORPORATION

Substitute Value

- None.

Possible Source

- Damaged secondary throttle unit (lower).

Fault symptom[s]

- Poor performance

FAULT-TRACING

CHECKING THE STATUS

Fig. 346: Checking Traffic Load On CAN Cables
Courtesy of VOLVO CARS CORPORATION

- Ignition on.

  Activate the lower secondary actuator.

  Check if the fault is permanent or intermittent.

  Check that the throttle unit is activated.

  HINT: It may be necessary to remove the throttle unit from the induction pipe to ensure proper functionality.

  The fault is permanent if the function is faulty.

  If the function is correct, this is an indication that the fault was present previously but is not active at the moment, i. e. an intermittent fault.

Fig. 347: Identifying VCT2000 Diagnostic Tool Symbol In VIDA
Courtesy of VOLVO CARS CORPORATION

- **Continue**

  Refer to **CHECKING THE COMPONENT AND WIRING**

CHECKING THE COMPONENT AND WIRING

Check the voltage on throttle unit connector #3 to the system relay. The voltage must be approximately battery voltage when the ignition is on.

Check signal cable for an open-circuit and short-circuit to supply voltage.

Take readings between:

- Engine control module (ECM) terminal #A39 (#A39) and throttle unit terminal #1.

Remedy as necessary.

Other information

- see **CHECKING WIRING AND TERMINALS**
- **Continue**

  Refer to **VERIFICATION**

INFORMATION

FAULT-TRACING INFORMATION

The fault should have been detected and remedied. As this is not the case fault-tracing has failed.

Exit fault-tracing for this diagnostic trouble code (DTC) or make another attempt.

VERIFICATION

VERIFICATION

HINT: After carrying out the repair, check that the fault has been remedied.

Fig. 348: Checking Traffic Load On CAN Cables
Courtesy of VOLVO CARS CORPORATION

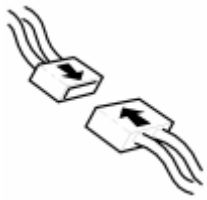

Fig. 349: Identifying Connector(s) Reinstallation
Courtesy of VOLVO CARS CORPORATION

- Ignition off.
- Reinstall the connectors, components etc.
- Ignition on.

  Activate the lower secondary actuator.

  Check that the throttle unit is activated.

  HINT: It may be necessary to remove the throttle unit from the induction pipe to ensure proper functionality.

Fig. 350: Identifying VCT2000 Diagnostic Tool Symbol In VIDA
Courtesy of VOLVO CARS CORPORATION

Is the function OK?

- **YES**

  VERIFIED: Troubleshooting has been completed.

- **NO**

  Refer to **INFORMATION**

ECM-P200500: INTAKE MANIFOLD RUNNER CONTROL STUCK OPEN (BANK 2). GENERAL FAILURE INFORMATION. NO SUB TYPE INFORMATION (B6324S5; 2011-2012)

DIAGNOSTIC TROUBLE CODE (DTC) INFORMATION ECM-P200500

see **DIAGNOSTIC TROUBLE CODE (DTC) INFORMATION ECM-P200500**

FAULT-TRACING

see **FAULT-TRACING**

ECM-P200600: INTAKE MANIFOLD RUNNER CONTROL STUCK CLOSED (BANK 1). GENERAL FAILURE INFORMATION. NO SUB TYPE INFORMATION (B6324S; 2007-2010)

DIAGNOSTIC TROUBLE CODE (DTC) INFORMATION ECM-P200600

Condition

The Engine control module (ECM) checks the function of the variable intake system (VIS) that affects the air flow in the intake system.

The function can be checked by checking the difference between the measured air flow and the expected air flow.

Expected air flow based on requested position of the actuator.

The control module's test for the diagnostic trouble code (DTC) starts in the event of:

- The actual air flow differs from the expected air flow, the primary throttle unit (upper) is detected to be closed.

The control module's test for the diagnostic trouble code (DTC) starts in the event of:

- Less than 2500 meters above sea level.
- Fully open throttle.
- Engine speed 4400-5500 RPM.

NOTE: **The control module can only detect the fault once the test has been started and the diagnostic trouble code (DTC) is stored when the conditions are met.**

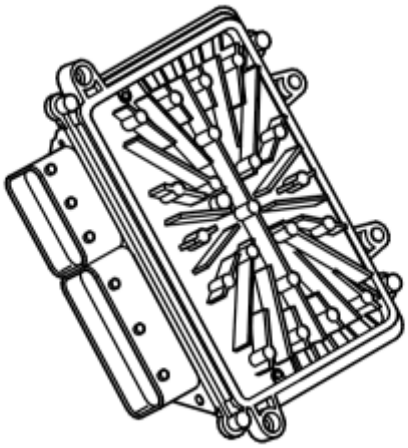

Fig. 351: Identifying Atmospheric Pressure Sensor
Courtesy of VOLVO CARS CORPORATION

Substitute Value

- None.

Possible Source

- Damaged primary throttle unit (upper).

Fault symptom[s]

- Poor performance

FAULT-TRACING

see **FAULT-TRACING**

ECM-P200600: INTAKE MANIFOLD RUNNER CONTROL STUCK CLOSED (BANK 1). GENERAL FAILURE INFORMATION. NO SUB TYPE INFORMATION (B6324S5; 2011-2012)

DIAGNOSTIC TROUBLE CODE (DTC) INFORMATION ECM-P200600

see **DIAGNOSTIC TROUBLE CODE (DTC) INFORMATION ECM-P200600**

FAULT-TRACING

see **FAULT-TRACING**

ECM-P200600: VARIABLE INTAKE STUCK IN CLOSED POSITION (BANK 1).

GENERAL FAULT INFORMATION. NO INFORMATION ABOUT FAULT TYPE (B8444S; 2005-2011)

DIAGNOSTIC TROUBLE CODE (DTC) INFORMATION ECM-P200600

Condition

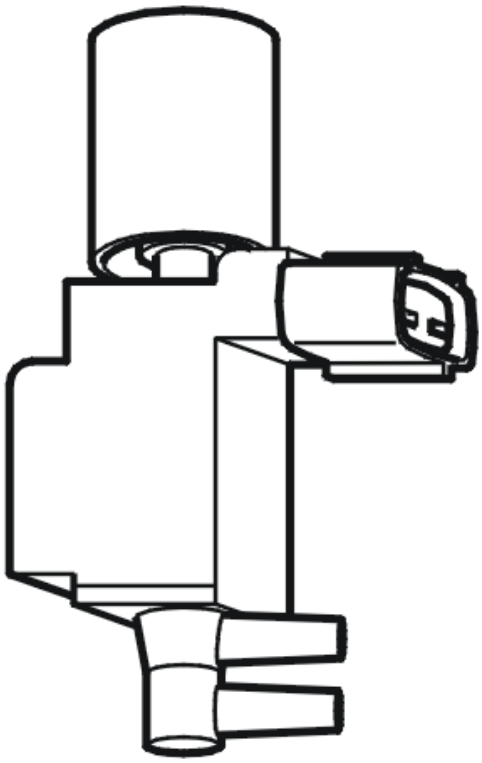

Fig. 352: Identifying Intake Manifold Control Valve
Courtesy of VOLVO CARS CORPORATION

The Engine control module checks the damper in the (VIS) by regulating the valve for the damper's vacuum motor. The function of the system can be diagnosed by interpreting the signal from the manifold absolute pressure (MAP) sensor.

A diagnostic trouble code (DTC) is stored if the control module detects:

- That the damper for the variable intake system has jammed in the open position.

The control module's test for the diagnostic trouble code (DTC) starts in the event of:

- The engine RPM is greater than a certain value.

Substitute Value

- None.

Possible Source

- Damaged control valve.
- Vacuum hoses disconnected from terminals.
- Leakage vacuum hoses.
- Blocked vacuum hoses.
- Sticking damper.
- Damaged vacuum motor.

Fault symptom[s]

- Poor performance

FAULT-TRACING ECM-P200600

CHECKING COMPONENTS AND WIRING

Activate the control valve (2) to check its function. The valve must click at activation.

Connect a vacuum pump to the control valve terminal (for hoses connected to the intake manifold) and pump a vacuum. Listen for leakage. Check the stability of the pressure on the gauge. The valve is leaking if the pressure drops.

Check the vacuum hoses for leakage and blockages between:

- the intake manifold and the vacuum tank (1)
- the vacuum tank (1) and the control valve(2)
- the control valve (2) and the vacuum motor (3)

Check that all vacuum hoses are correctly connected on the above components.

Check that the dampers (4) can move freely and that nothing is obstructing them.

HINT: Check the function by pumping a vacuum to the vacuum motor.

Remedy as necessary.

Other information

- For control valve replacement:**DISTRIBUTION DAMPER INTAKE PIPE, REPLACING**

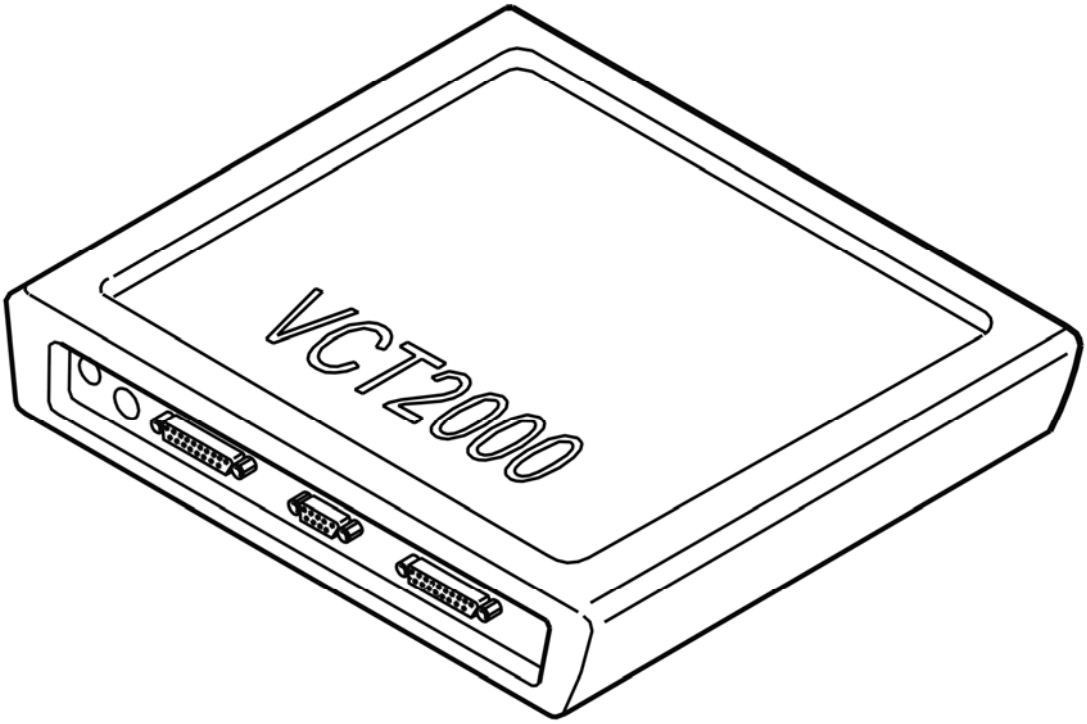

Fig. 353: Identifying VCT2000 Diagnostic Tool Symbol In VIDA
Courtesy of VOLVO CARS CORPORATION

- **Continue**

  Refer to **VERIFICATION**

VERIFICATION

VERIFICATION

HINT: After carrying out the repair, check that the fault has been remedied.

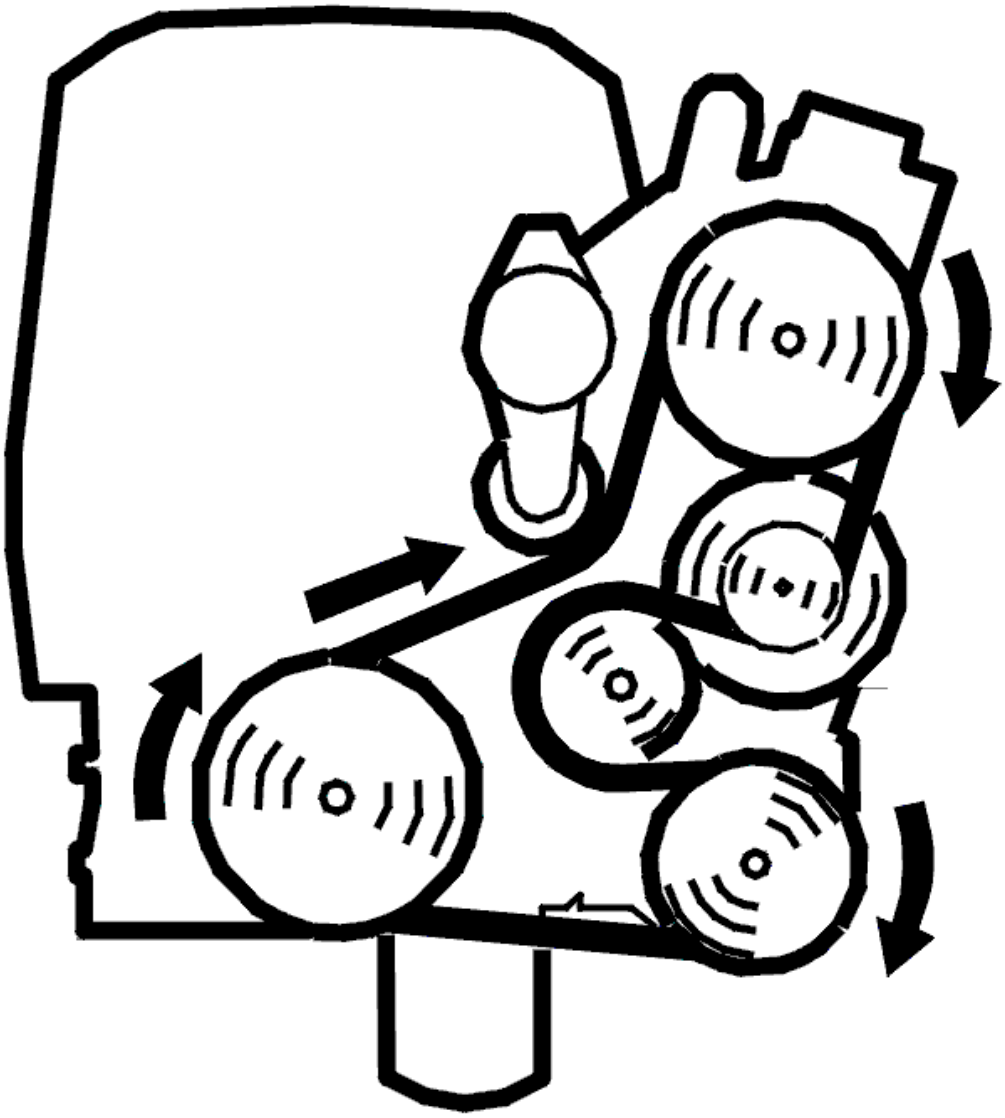

Fig. 354: Belt Routing / Engine Idling - Volvo
Courtesy of VOLVO CARS CORPORATION

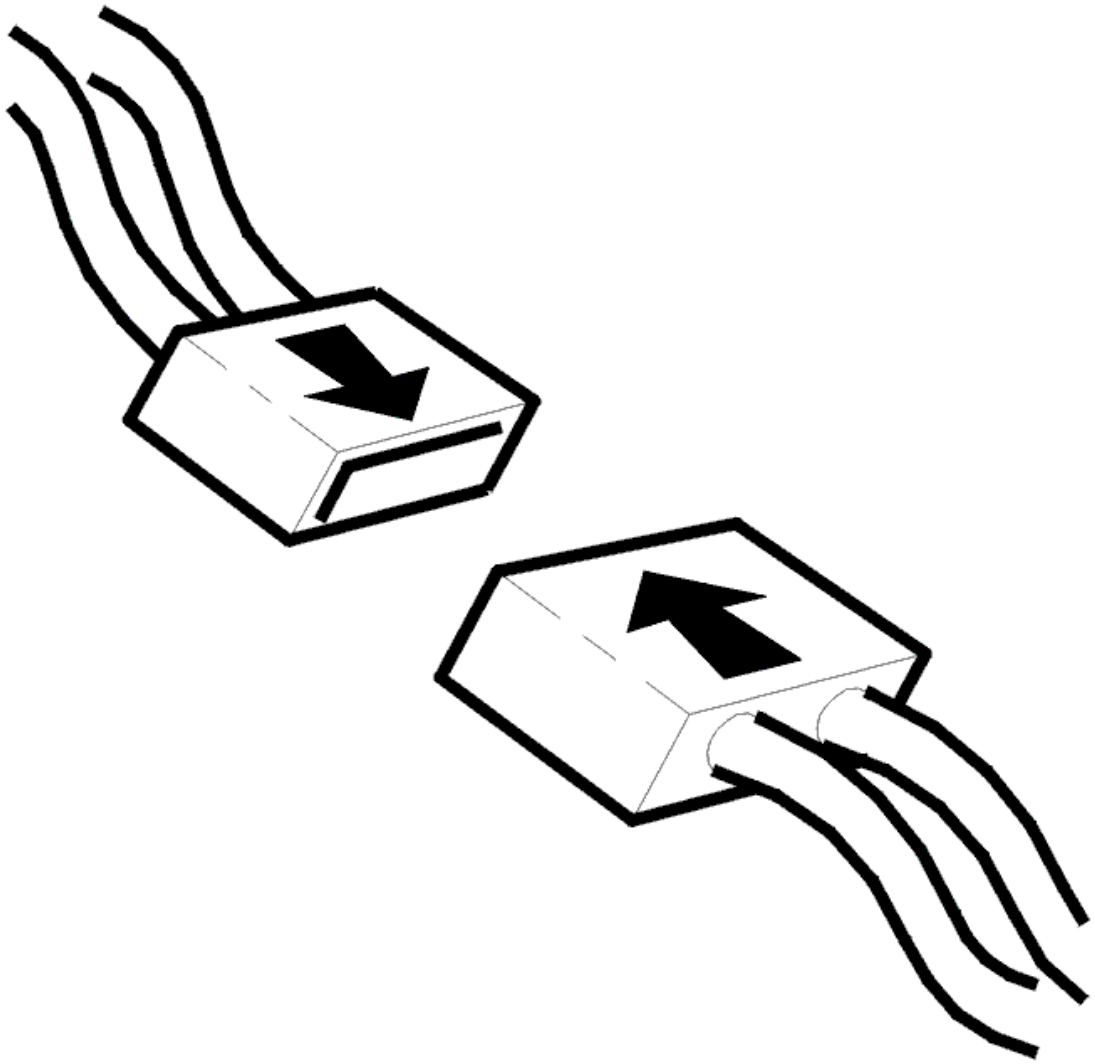

Fig. 355: Connecting Connector
Courtesy of VOLVO CARS CORPORATION

- Ignition off
- Reconnect the connectors, components, etc.
- Start the engine.
- Test drive the car on the road with smooth acceleration so that the engine speed (RPM) exceeds 3500 RPM. Repeat the procedure a couple of times so that the engine control module (ECM) can carry out diagnostics.
- Connect the VCT2000 (or appropriate scan tool) to the data link connector **without switching off the engine.**
- Read the diagnostic status and fault status for the diagnostic trouble code by selecting the diagnostic trouble code in the list.

NOTE: **If the engine is switched off, the stored fault status will be erased and the test drive will have to be repeated.**

Check the fault status for the diagnostic trouble code when the scan is "Implemented". When the function is correct the fault status should be "No fault found" when the scan is implemented.

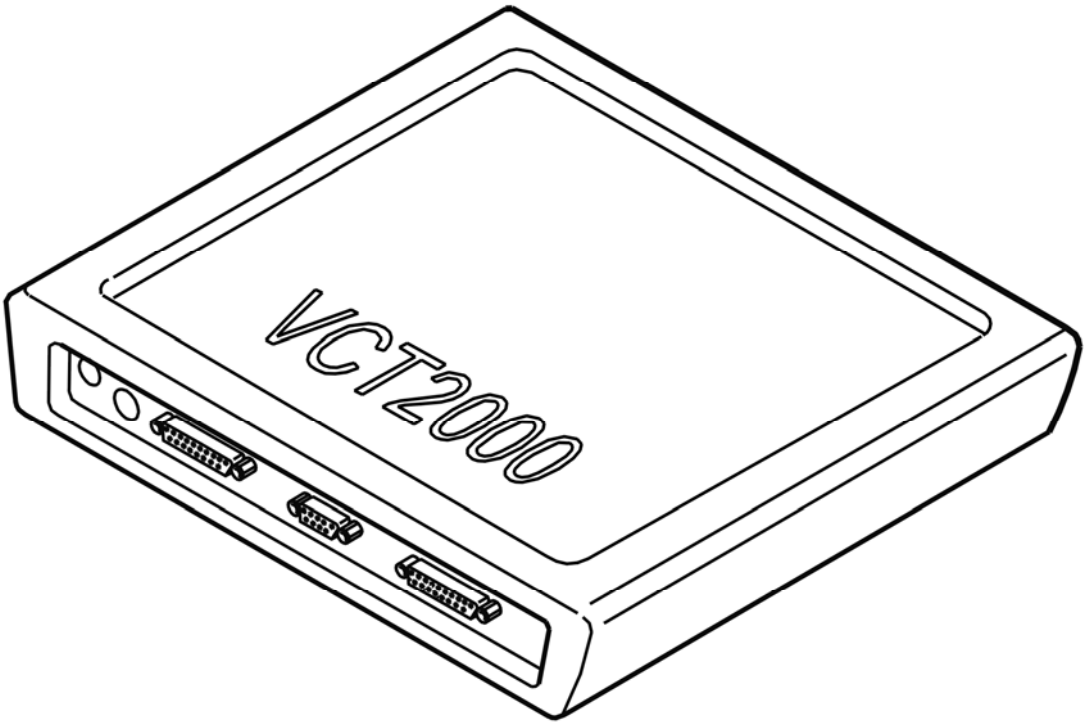

Fig. 356: Identifying VCT2000 Diagnostic Tool Symbol In VIDA
Courtesy of VOLVO CARS CORPORATION

Is the function OK?

- **YES**

  VERIFIED: Troubleshooting has been completed.

- **NO**

  Refer to **INFORMATION**

INFORMATION

FAULT-TRACING INFORMATION

The fault should have been detected and remedied. As this is not the case fault-tracing has failed.

Exit fault-tracing for this diagnostic trouble code (DTC) or make another attempt.

ECM-P200700: INTAKE MANIFOLD RUNNER CONTROL STUCK CLOSED (BANK 2). GENERAL FAILURE INFORMATION. NO SUB TYPE INFORMATION (B6324S; 2007-2010)

DIAGNOSTIC TROUBLE CODE (DTC) INFORMATION ECM-P200700

Condition

The Engine control module (ECM) checks the function of the variable intake system (VIS) that affects the air flow in the intake system.

The function can be checked by checking the difference between the measured air flow and the expected air flow.

Expected air flow based on requested position of the actuator.

The control module's test for the diagnostic trouble code (DTC) starts in the event of:

- The actual air flow differs from the expected air flow, the secondary throttle unit (lower) is detected to be closed.

The control module's test for the diagnostic trouble code (DTC) starts in the event of:

- Less than 2500 meters above sea level.
- Fully open throttle.
- Engine speed 3400-4500 RPM.

NOTE: **The control module can only detect the fault once the test has been started and the diagnostic trouble code (DTC) is stored when the conditions are met.**

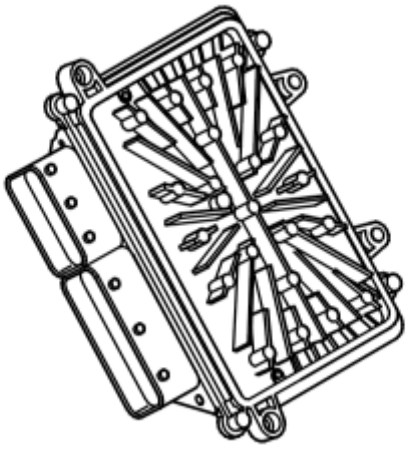

Fig. 357: Identifying Atmospheric Pressure Sensor
Courtesy of VOLVO CARS CORPORATION

Substitute Value

- None.

Possible Source

- Damaged secondary throttle unit (lower).

Fault symptom[s]

- Poor performance

FAULT-TRACING

see **FAULT-TRACING**

ECM-P200700: INTAKE MANIFOLD RUNNER CONTROL STUCK CLOSED (BANK 2). GENERAL FAILURE INFORMATION. NO SUB TYPE INFORMATION (B6324S5; 2011-2012)

DIAGNOSTIC TROUBLE CODE (DTC) INFORMATION ECM-P200700

see **DIAGNOSTIC TROUBLE CODE (DTC) INFORMATION ECM-P200700**

FAULT-TRACING

see **FAULT-TRACING**

ECM-P206700: FUEL LEVEL SENSOR B CIRCUIT LOW. GENERAL MALFUNCTION INFORMATION. NO INFORMATION ON MALFUNCTION TYPE (B8444S; 2005-2011)

DIAGNOSTIC TROUBLE CODE (DTC) INFORMATION ECM-P206700

Condition

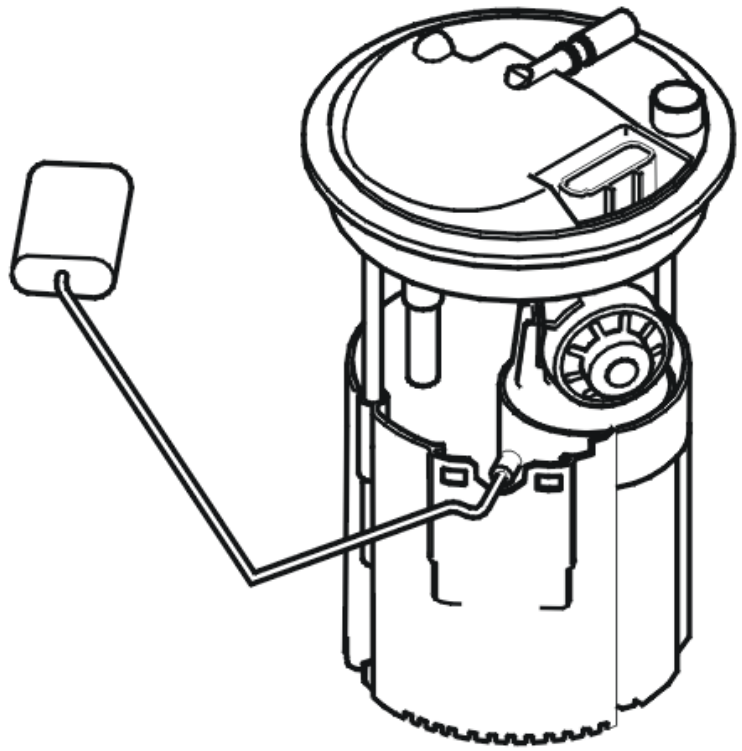

Fig. 358: Identifying Fuel Level Sensor
Courtesy of VOLVO CARS CORPORATION

If a malfunction of the fuel level sensor's ejector part is detected by central electronic module (CEM), a malfunction message is sent to engine control module (ECM) and the diagnostic trouble code is generated.

The diagnostic trouble code can be diagnosed when the ignition is on.

Substitute Value

- Nothing.

Possible Source

- Look for the cause of the malfunction in central electronic module (CEM).

Fault symptom[s]

- Nothing.

FAULTY SIGNAL

INFORMATION

No fault-tracing has been developed for this diagnostic trouble code (DTC). The diagnostic trouble code (DTC) for this fault is stored first in the central electronic module (CEM), then in the engine control module (ECM). This diagnostic trouble code (DTC) can not be erased before the diagnostic trouble codes (DTC) in the central electronic module (CEM) has been remedied and erased.

First read off the diagnostic trouble codes (DTCs) in the central electronic module (CEM). Fault-trace and remedy as necessary. This diagnostic trouble code (DTC) can then be erased.

ECM-P209600: POST CATALYST FUEL TRIM SYSTEM TOO LEAN BANK 1. GENERAL FAILURE INFORMATION. NO SUB TYPE INFORMATION (B8444S; 2008-2011)

DIAGNOSTIC TROUBLE CODE (DTC) INFORMATION

Condition

Engine Control Module (ECM) receives information from the rear heated oxygen sensor about fuel/air mixture in different load areas. Internal functions in the control module detect faults in the lambda control.

The diagnostic trouble code (DTC) is stored if the control module detects that:

- Large differences have been measured in fuel/air mixture between the front and rear heated oxygen sensors (HO2S). So large that the trims for the rear heated oxygen sensor are in one of their limit positions.

The control module's test for the diagnostic trouble code (DTC) starts in the event of:

- Run the engine to operating temperature (coolant temperature greater than 80 °C).
- Normal load at engine speeds between 1500-2000 RPM in 20-30 minutes.

NOTE: The control module can only detect the fault once the test has been started and the diagnostic trouble code (DTC) is stored when the conditions are met.

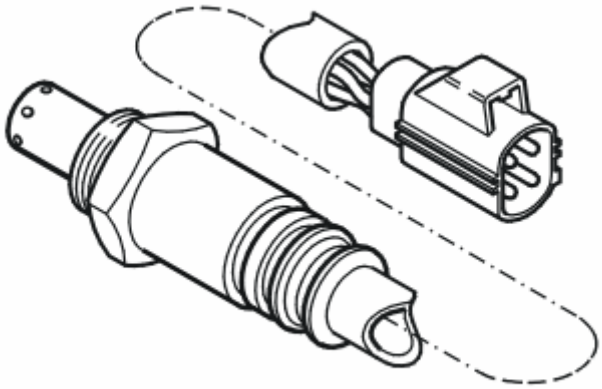

Fig. 359: Identifying Heated Oxygen Sensor
Courtesy of VOLVO CARS CORPORATION

Substitute Value

- None.

Possible Source

- Contact resistance, oxidation or poor contact in connections.
- Air leakage in the exhaust system.
- Damaged front heated oxygen sensor (HO2S).
- Damaged rear heated oxygen sensor (HO2S).

Fault symptom[s]

- Malfunction indicator light (MIL), on

FAULT-TRACING

CHECKING COMPONENTS

Check relevant connectors for contact resistance and corrosion.

Check the exhaust system for air leakage.

HINT: Both a damaged front and/or a damaged rear heated oxygen sensor may be the cause of the stored diagnostic trouble code (DTC).

HINT: Check other stored DTCs to draw relevant conclusions about which heat oxygen sensor(s) should be replaced, this is to avoid incorrect replacement of components.

Remedy as necessary.

Other information

- see **CHECKING FOR AIR LEAKAGE IN THE EXHAUST SYSTEM**
- see **HEATED OXYGEN SENSOR (HO2S), REPLACING**

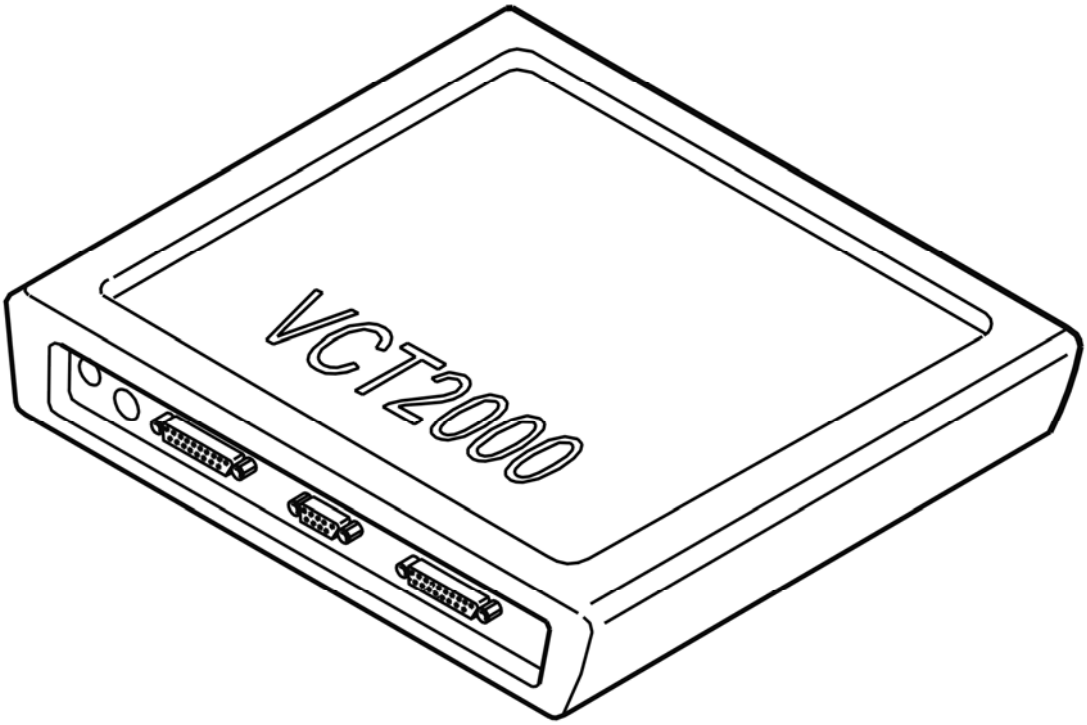

Fig. 360: Identifying VCT2000 Diagnostic Tool Symbol In VIDA
Courtesy of VOLVO CARS CORPORATION

- **Continue**

  Refer to **VERIFICATION**

VERIFICATION

VERIFICATION

HINT: After carrying out the repair, check that the fault has been remedied.

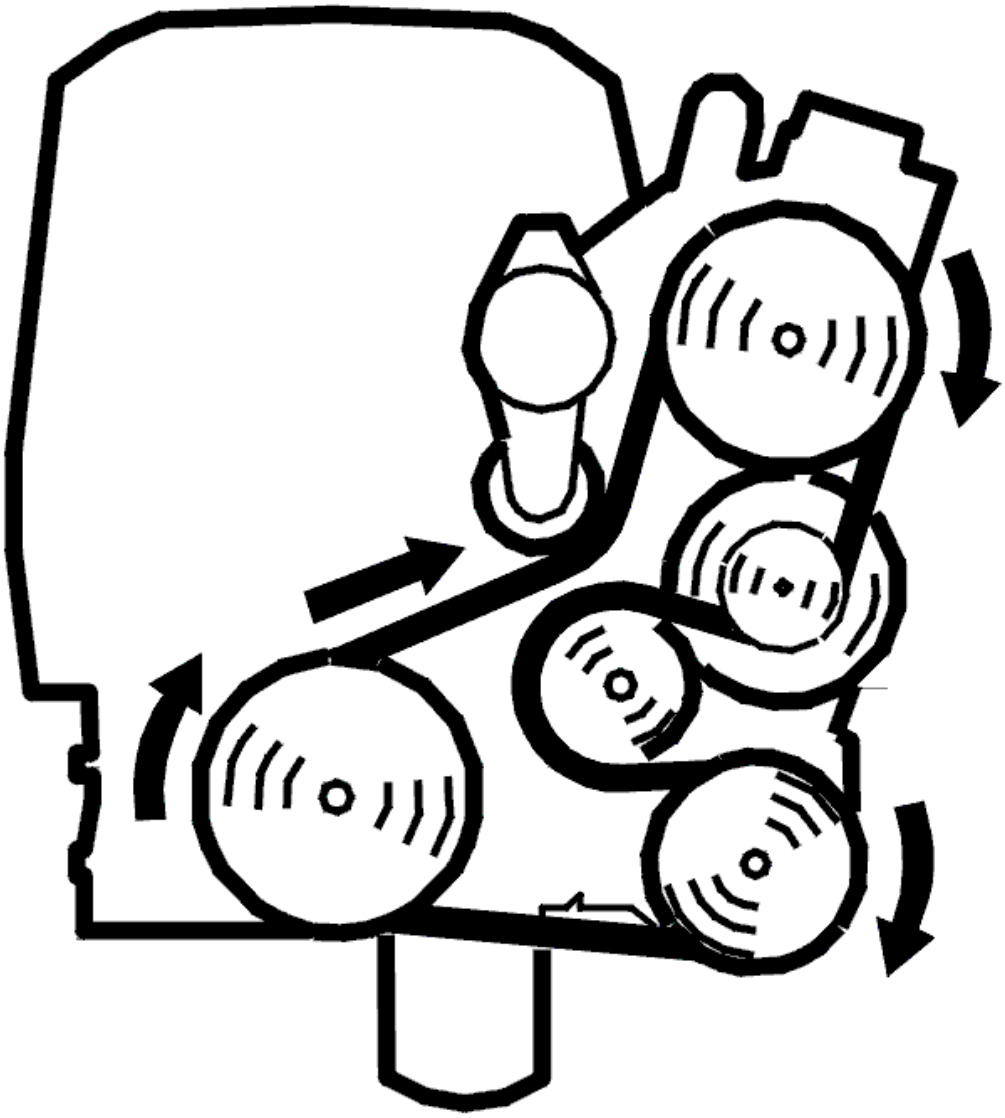

Fig. 361: Belt Routing / Engine Idling - Volvo
Courtesy of VOLVO CARS CORPORATION

- Read off the diagnostic status and the fault status for the diagnostic trouble code (DTC).
- Check that the diagnosis is Performed.

  HINT: To enable performing diagnostic status, special conditions must be fulfilled. These conditions are described in diagnostic trouble code (DTC) information for each diagnostic trouble code (DTC).

  If the function is correct, the fault status must be No fault found when the diagnostic is complete.

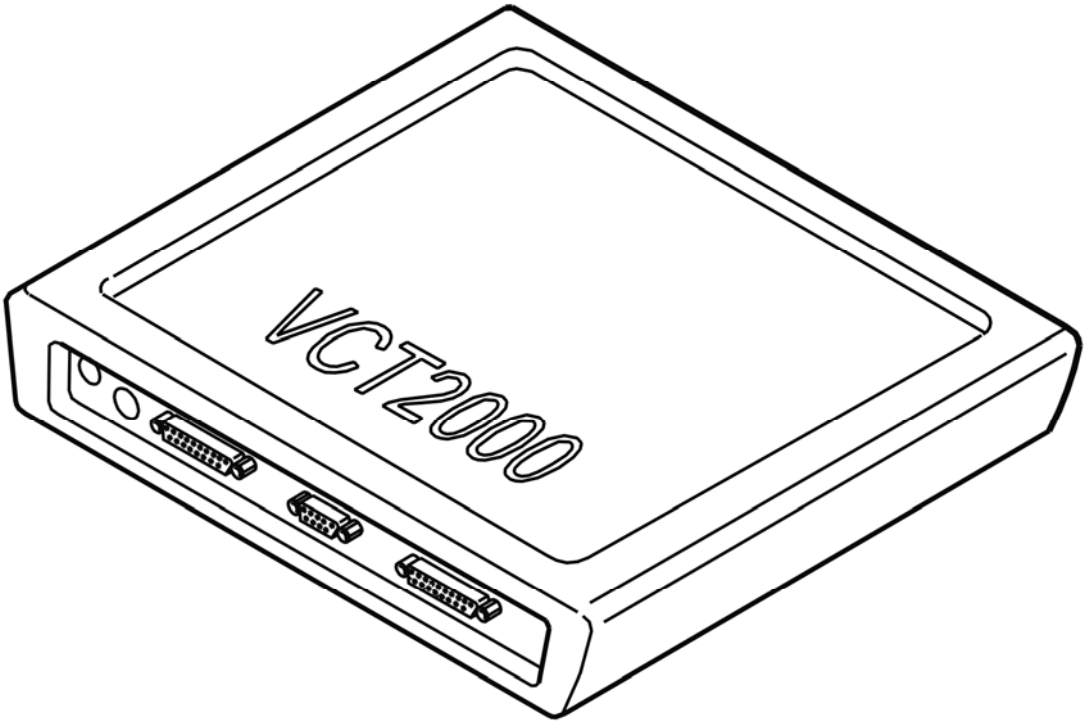

Fig. 362: Identifying VCT2000 Diagnostic Tool Symbol In VIDA
Courtesy of VOLVO CARS CORPORATION

Is the function OK?

- **YES**

  VERIFIED: Troubleshooting has been completed.

- **NO**

  Refer to **INFORMATION**

INFORMATION

FAULT-TRACING INFORMATION

The fault should have been detected and remedied. As this is not the case fault-tracing has failed.

Exit fault-tracing for this diagnostic trouble code (DTC) or make another attempt.

ECM-P210600: THROTTLE ACTUATOR CONTROL SYSTEM - FORCED LIMITED POWER. GENERAL FAILURE INFORMATION. NO SUB TYPE

INFORMATION (B6324S; 2007-2010)

DIAGNOSTIC TROUBLE CODE (DTC) INFORMATION ECM-P210600

Condition

Diagnostic functions in the engine control module (ECM) have activated substitute values that result in fuel shut-off. If Engine Control Module (ECM) detects that fuel shut-off is activated by diagnostic function to such an extent that emissions can be affected negatively, the diagnostic trouble code is stored in the control module.

The diagnostic trouble code (DTC) can be diagnosed in specific driving conditions.

Substitute Value

- None.

Possible Source

- Faults that are detected by another diagnostic function and whose substitute values result in fuel shut-off.

Fault symptom[s]

- Malfunction indicator light (MIL), on

FAULT-TRACING

see **FAULT-TRACING**

ECM-P210600: THROTTLE ACTUATOR CONTROL SYSTEM - FORCED LIMITED POWER. GENERAL FAILURE INFORMATION. NO SUB TYPE INFORMATION (B6324S5; 2011-2012)

DIAGNOSTIC TROUBLE CODE (DTC) INFORMATION ECM-P210600

see **DIAGNOSTIC TROUBLE CODE (DTC) INFORMATION ECM-P210600**

FAULT-TRACING

see **FAULT-TRACING**

ECM-P210600: THROTTLE ACTUATOR CONTROL SYSTEM - FORCED LIMITED POWER. GENERAL FAILURE INFORMATION. NO SUB TYPE INFORMATION (B8444S; 2005-2011)

DIAGNOSTIC TROUBLE CODE (DTC) INFORMATION ECM-P210600

Condition

Diagnostic functions in the engine control module (ECM) have activated substitute values that result in fuel shut-off. If Engine Control Module (ECM) detects that fuel shut-off is activated by diagnostic function to such an extent that emissions can be affected negatively, the diagnostic trouble code is stored in the control module.

The diagnostic trouble code (DTC) can be diagnosed in specific driving conditions.

Substitute Value

- None.

Possible Source

- Faults that are detected by another diagnostic function and whose substitute values result in fuel shut-off.

Fault symptom[s]

- Malfunction indicator light (MIL), on

FAULT-TRACING INFORMATION

see **FAULT-TRACING INFORMATION**

ECM-P211100: THROTTLE ACTUATOR CONTROL SYSTEM - STUCK OPEN. GENERAL FAILURE INFORMATION. NO SUB TYPE INFORMATION (B6324S; 2007-2010)

DIAGNOSTIC TROUBLE CODE (DTC) INFORMATION ECM-P211100

Condition

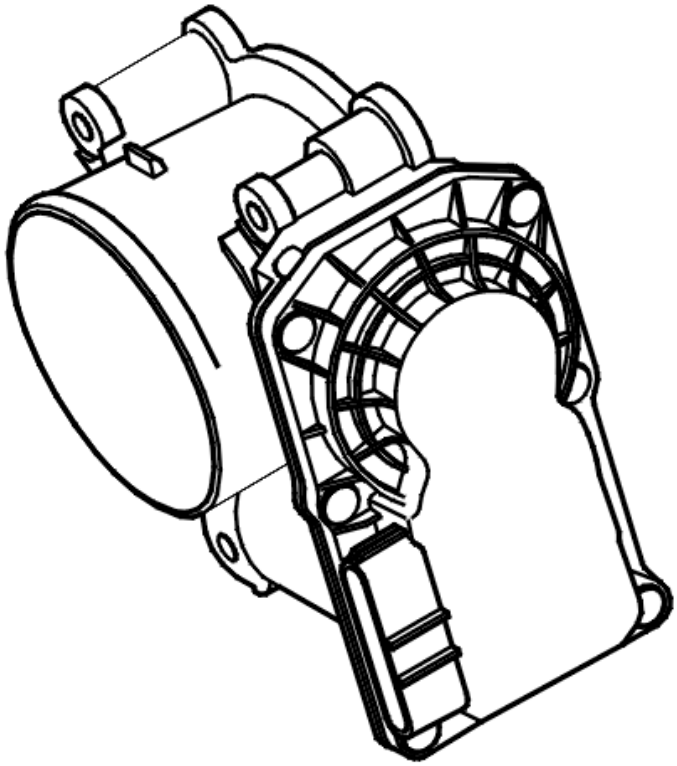

Fig. 363: Identifying Electronic Throttle Unit
Courtesy of VOLVO CARS CORPORATION

Engine control module (ECM) checks the difference in requested electronic throttle unit position from actual position.

If engine control module (ECM) detects that the electronic throttle unit cannot close, and jams in open position, which gives reduced brake vacuum, the diagnostic trouble code is generated.

The diagnostic trouble code can be diagnosed when the engine is running.

Substitute Value

- The vehicle's max. speed is limited.

Possible Source

- Object is blocking the throttle plate (oil film, dust, etc.)
- Damaged electronic throttle unit.

Fault symptom[s]

- Poor braking power

- Message in the display.
- The vehicle's max. speed is reduced.

FAULT-TRACING INFORMATION

see **FAULT-TRACING INFORMATION**

ECM-P211100: THROTTLE ACTUATOR CONTROL SYSTEM - STUCK OPEN. GENERAL FAILURE INFORMATION. NO SUB TYPE INFORMATION (B6324S5; 2011-2012)

DIAGNOSTIC TROUBLE CODE (DTC) INFORMATION ECM-P211100

see **DIAGNOSTIC TROUBLE CODE (DTC) INFORMATION ECM-P211100**

FAULT-TRACING INFORMATION

see **FAULT-TRACING INFORMATION**

ECM-P211100: ELECTRONIC THROTTLE UNIT CONTROL SYSTEM - JAMMED IN OPEN POSITION. GENERAL MALFUNCTION INFORMATION. NO INFORMATION ON MALFUNCTION TYPE (B8444S; 2005-2011)

DIAGNOSTIC TROUBLE CODE (DTC) INFORMATION ECM-P211100

Condition

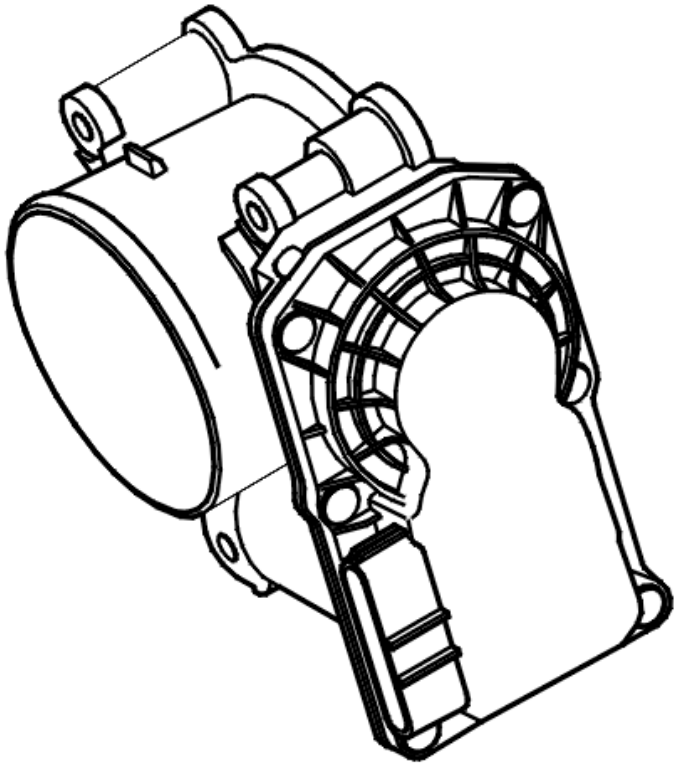

Fig. 364: Identifying Electronic Throttle Unit
Courtesy of VOLVO CARS CORPORATION

Engine control module (ECM) checks the difference in requested electronic throttle unit position from actual position.

If engine control module (ECM) detects that the electronic throttle unit cannot close, and jams in open position, which gives reduced brake vacuum, the diagnostic trouble code is generated.

The diagnostic trouble code can be diagnosed when the engine is running.

Substitute Value

- The vehicle's max. speed is limited.

Possible Source

- Object is blocking the throttle plate (oil film, dust, etc.)
- Damaged electronic throttle unit.

Fault symptom[s]

- Reduced braking performance.

- Message in the display.
- The vehicle's max. speed is reduced.

FAULT-TRACING INFORMATION

see **FAULT-TRACING INFORMATION**

ECM-P211800: THROTTLE ACTUATOR CONTROL MOTOR CURRENT RANGE/PERFORMANCE. GENERAL FAILURE INFORMATION. NO SUB TYPE INFORMATION (B6324S; 2007-2010)

DIAGNOSTIC TROUBLE CODE (DTC) INFORMATION ECM-P211800

Condition

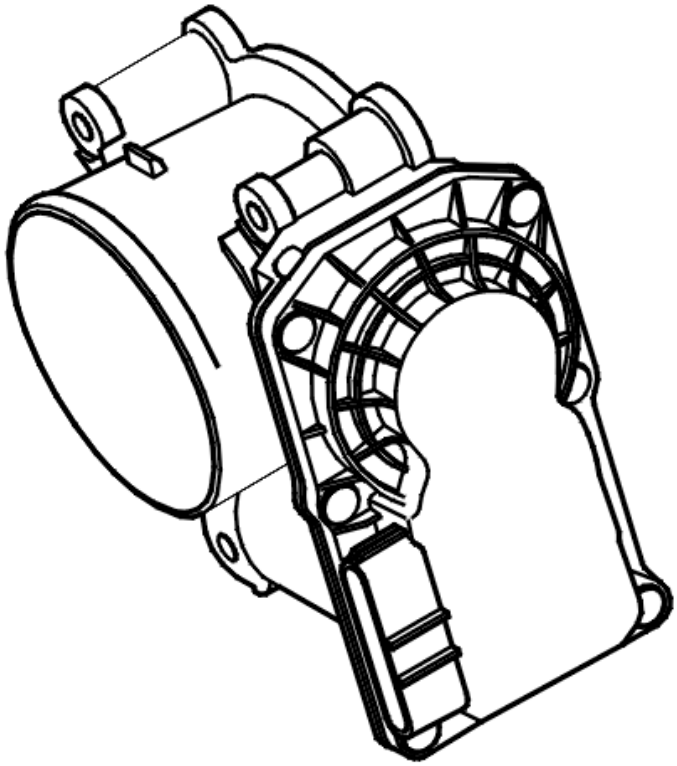

Fig. 365: Identifying Electronic Throttle Unit
Courtesy of VOLVO CARS CORPORATION

Engine control module (ECM) checks the signals from the electronic throttle unit.

If engine control module (ECM) detects electrical malfunction of the electronic throttle unit, the diagnostic trouble code is generated.

The diagnostic trouble code can be diagnosed with the ignition on.

Substitute Value

- Cruise control turned off when malfunction is active.
- Feed to the electronic throttle unit shuts off, so that the throttle disc is turned to return position.

Possible Source

- Cables to the electronic throttle unit short-circuited to voltage or ground.
- Electrical malfunction of electronic throttle unit (Damaged electronic throttle unit.)
- Damaged engine control module (ECM).

Fault symptom[s]

- Poor performance.
- Uneven idle.
- The cruise control does not function at all
- Message in information display

FAULT-TRACING

CHECKING COMPONENTS AND CONNECTIONS

Fig. 366: Identifying Ignition In Off Position
Courtesy of VOLVO CARS CORPORATION

- Ignition on.
- Activate reading off the position of the throttle.
- Check that read-off throttle position shows reasonable values at different deployments.
- Ignition off.

  Check cables between Engine Control Module (ECM) and Throttle Module for short-circuit to voltage or ground.

  Check the Throttle Module electrically by measuring between casing and connector.

  Remedy as necessary.

Other information

- see **CONNECTING THE BREAKOUT BOX**
- see **SIGNAL SPECIFICATION**
- see **THROTTLE BODY**
- see **ENGINE CONTROL MODULE (ECM)**
- see **CHECKING WIRING AND TERMINALS**

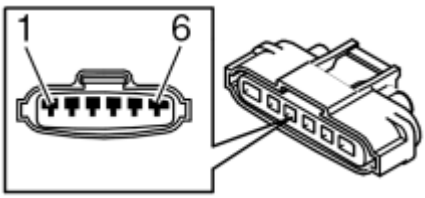

Fig. 367: Identifying Connector Terminals
Courtesy of VOLVO CARS CORPORATION

Fig. 368: Identifying VCT2000 Diagnostic Tool Symbol In VIDA
Courtesy of VOLVO CARS CORPORATION

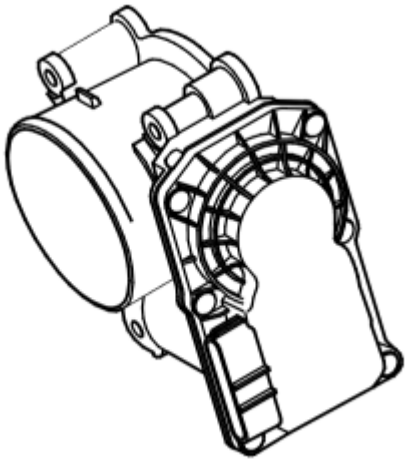

Fig. 369: Identifying Throttle Body
Courtesy of VOLVO CARS CORPORATION

- **Continue**

  Refer to **VERIFICATION**

INFORMATION

FAULT-TRACING INFORMATION

The fault should have been detected and remedied. As this is not the case fault-tracing has failed.

Exit fault-tracing for this diagnostic trouble code (DTC) or make another attempt.

VERIFICATION

VERIFICATION

HINT: After carrying out the repair, check that the fault has been remedied.

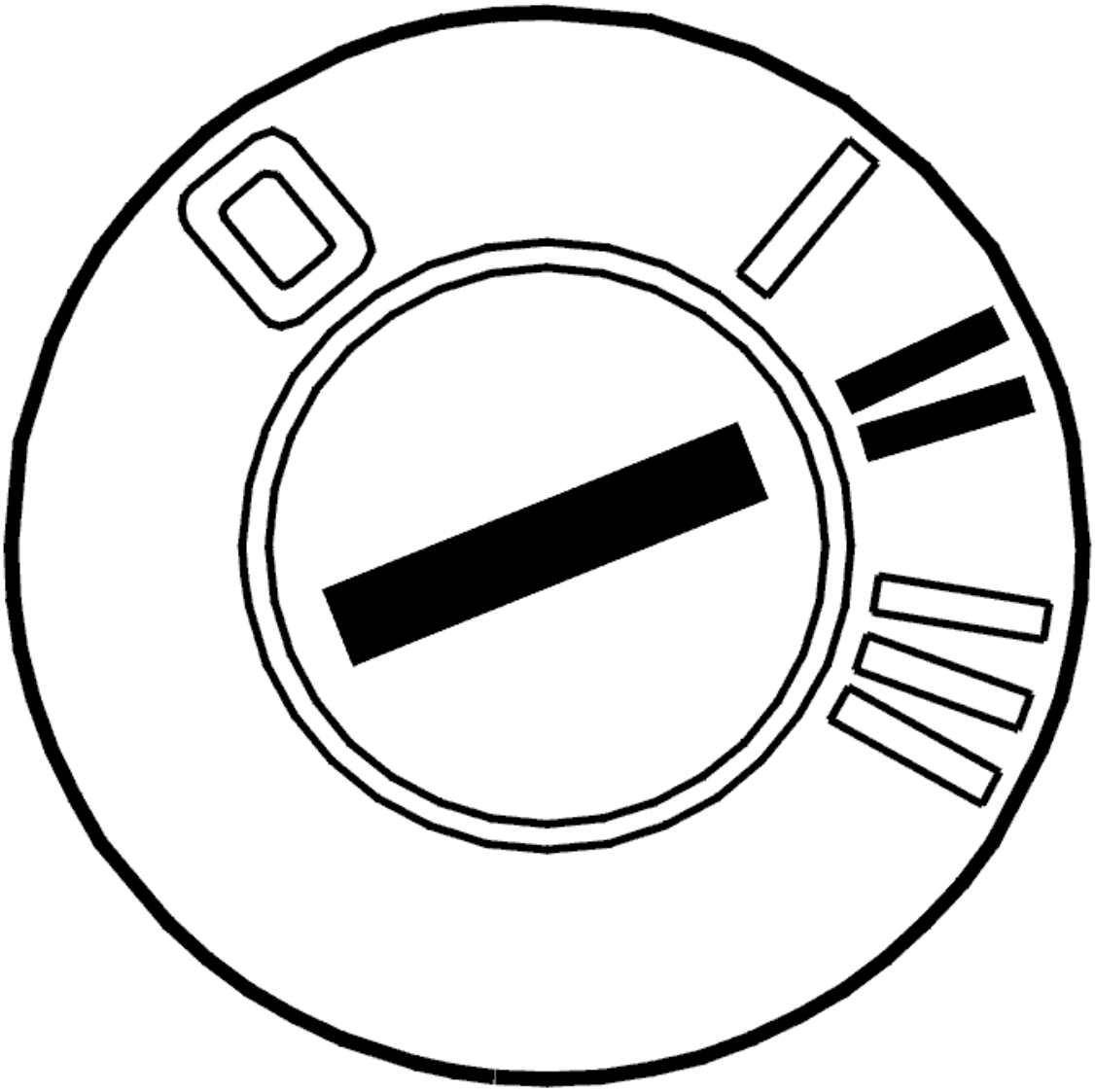

Fig. 370: Identifying Ignition ON
Courtesy of VOLVO CARS CORPORATION

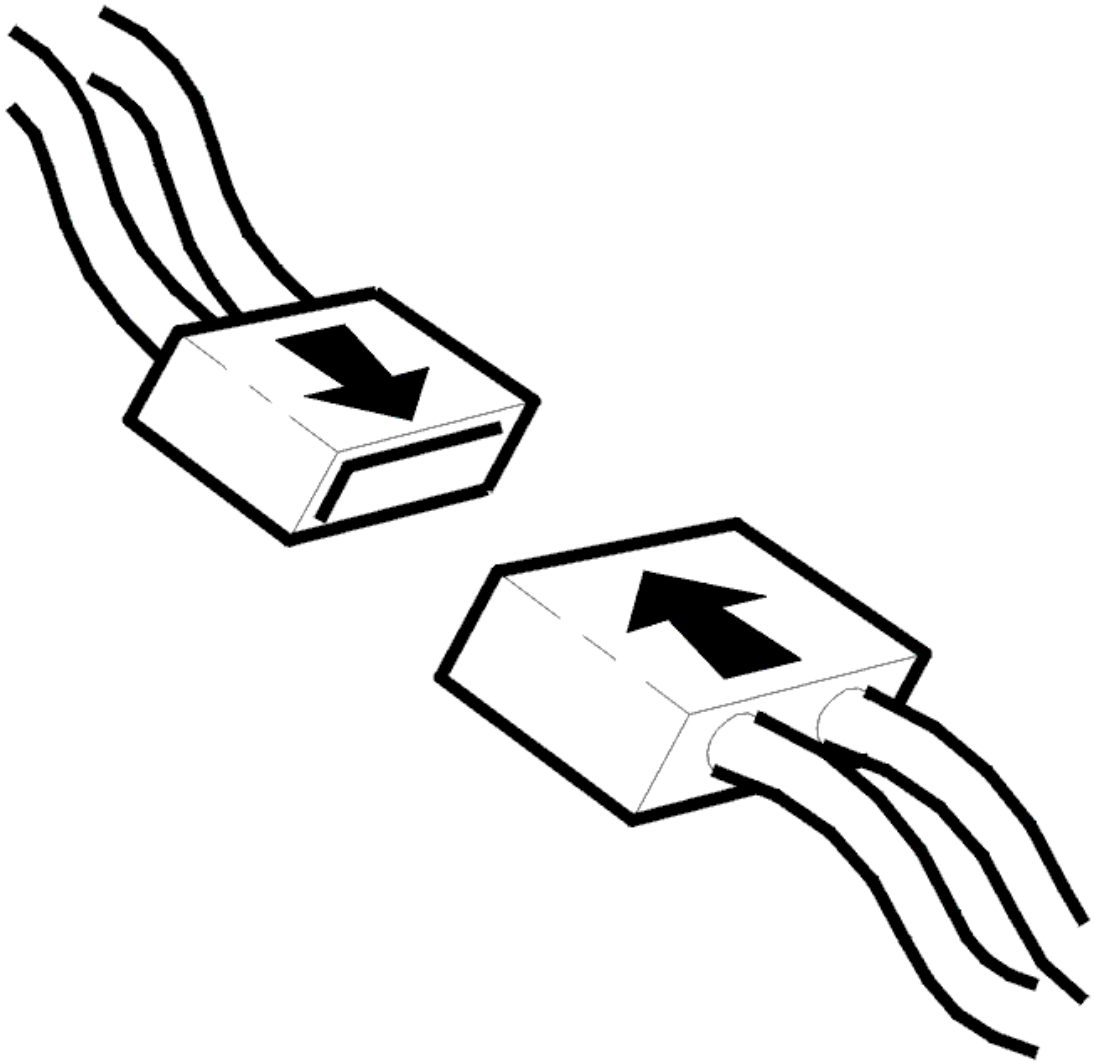

Fig. 371: Connecting Connector
Courtesy of VOLVO CARS CORPORATION

- Ignition off
- Reinstall the connectors, components etc.
- Ignition on

  Activate readout of electronic throttle unit's position.

  Check that read-off throttle position shows reasonable values at different deployments.

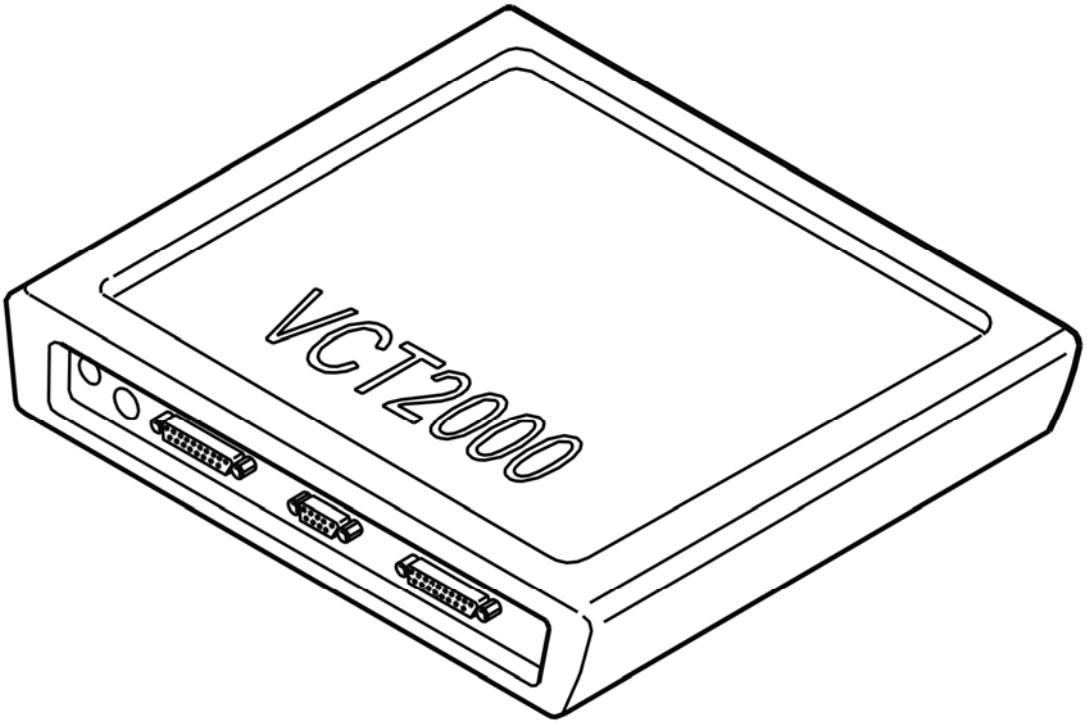

Fig. 372: Identifying VCT2000 Diagnostic Tool Symbol In VIDA
Courtesy of VOLVO CARS CORPORATION

Are these values within their permitted ranges?

- **YES**

  VERIFIED: Troubleshooting has been completed.

- **NO**

  Refer to **INFORMATION**

ECM-P211800: THROTTLE ACTUATOR CONTROL MOTOR CURRENT RANGE/PERFORMANCE. GENERAL FAILURE INFORMATION. NO SUB TYPE INFORMATION (B6324S5; 2011-2012)

DIAGNOSTIC TROUBLE CODE (DTC) INFORMATION ECM-P211800

see **DIAGNOSTIC TROUBLE CODE (DTC) INFORMATION ECM-P211800**

FAULT-TRACING

see **FAULT-TRACING**

ECM-P211800: THROTTLE ACTUATOR CONTROL MOTOR CURRENT RANGE/PERFORMANCE. GENERAL FAILURE INFORMATION. NO SUB TYPE INFORMATION (B8444S; 2005-2011)

DIAGNOSTIC TROUBLE CODE (DTC) INFORMATION ECM-P211800

Condition

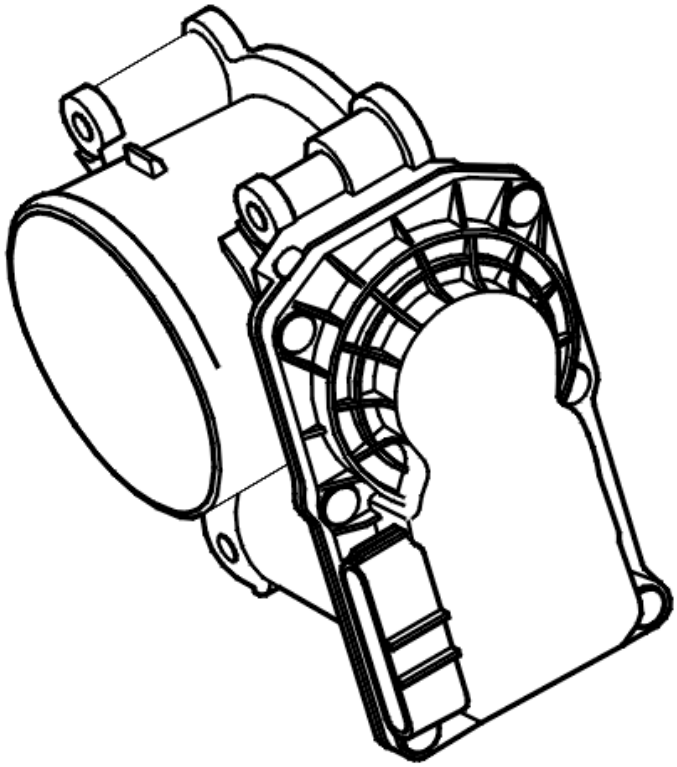

Fig. 373: Identifying Electronic Throttle Unit
Courtesy of VOLVO CARS CORPORATION

Engine control module (ECM) checks the signals from the electronic throttle unit.

If engine control module (ECM) detects electrical malfunction of the electronic throttle unit, the diagnostic trouble code is generated.

The diagnostic trouble code can be diagnosed with the ignition on.

Substitute Value

- Cruise control turned off when malfunction is active.

- Feed to the electronic throttle unit shuts off, so that the throttle disc is turned to return position.

Possible Source

- Cables to the electronic throttle unit short-circuited to voltage or ground.
- Electrical malfunction of electronic throttle unit (Damaged electronic throttle unit.)
- Damaged engine control module (ECM).

Fault symptom[s]

- Poor performance.
- Uneven idle.
- The cruise control does not function at all
- Message in information display

FAULT-TRACING ECM-P211800

CHECKING COMPONENTS AND CONNECTIONS

Fig. 374: Identifying Ignition In Off Position
Courtesy of VOLVO CARS CORPORATION

- Ignition on.
- Activate reading off the position of the throttle.
- Check that read-off throttle position shows reasonable values at different deployments.
- Ignition off.

  Check cables between Engine Control Module (ECM) and Throttle Module for short-circuit to voltage or ground.

  Check the Throttle Module electrically by measuring between casing and connector.

  Remedy as necessary.

  Other information

  - see **CONNECTING THE BREAKOUT BOX**
  - see **SIGNAL SPECIFICATION, ENGINE CONTROL MODULE (ECM)**
  - see **THROTTLE BODY (ELECTRONIC THROTTLE MODULE (ETM)), REPLACING**

- see **ENGINE CONTROL MODULE (ECM), REPLACING**
- see **CHECKING WIRING AND TERMINALS**

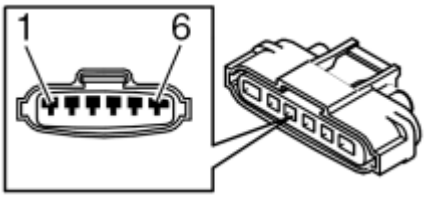

Fig. 375: Identifying Connector Terminals
Courtesy of VOLVO CARS CORPORATION

Fig. 376: Identifying VCT2000 Diagnostic Tool Symbol In VIDA
Courtesy of VOLVO CARS CORPORATION

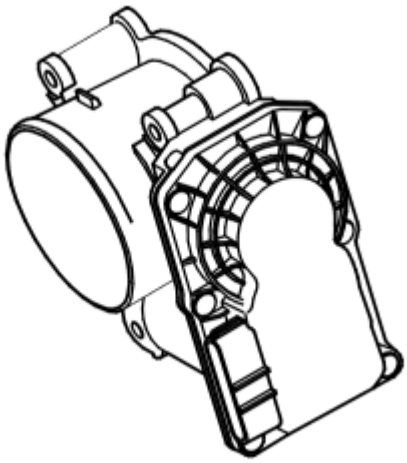

Fig. 377: Identifying Throttle Body
Courtesy of VOLVO CARS CORPORATION

- **Continue**

  Refer to **VERIFICATION**

VERIFICATION

VERIFICATION

HINT: After carrying out the repair, check that the fault has been remedied.

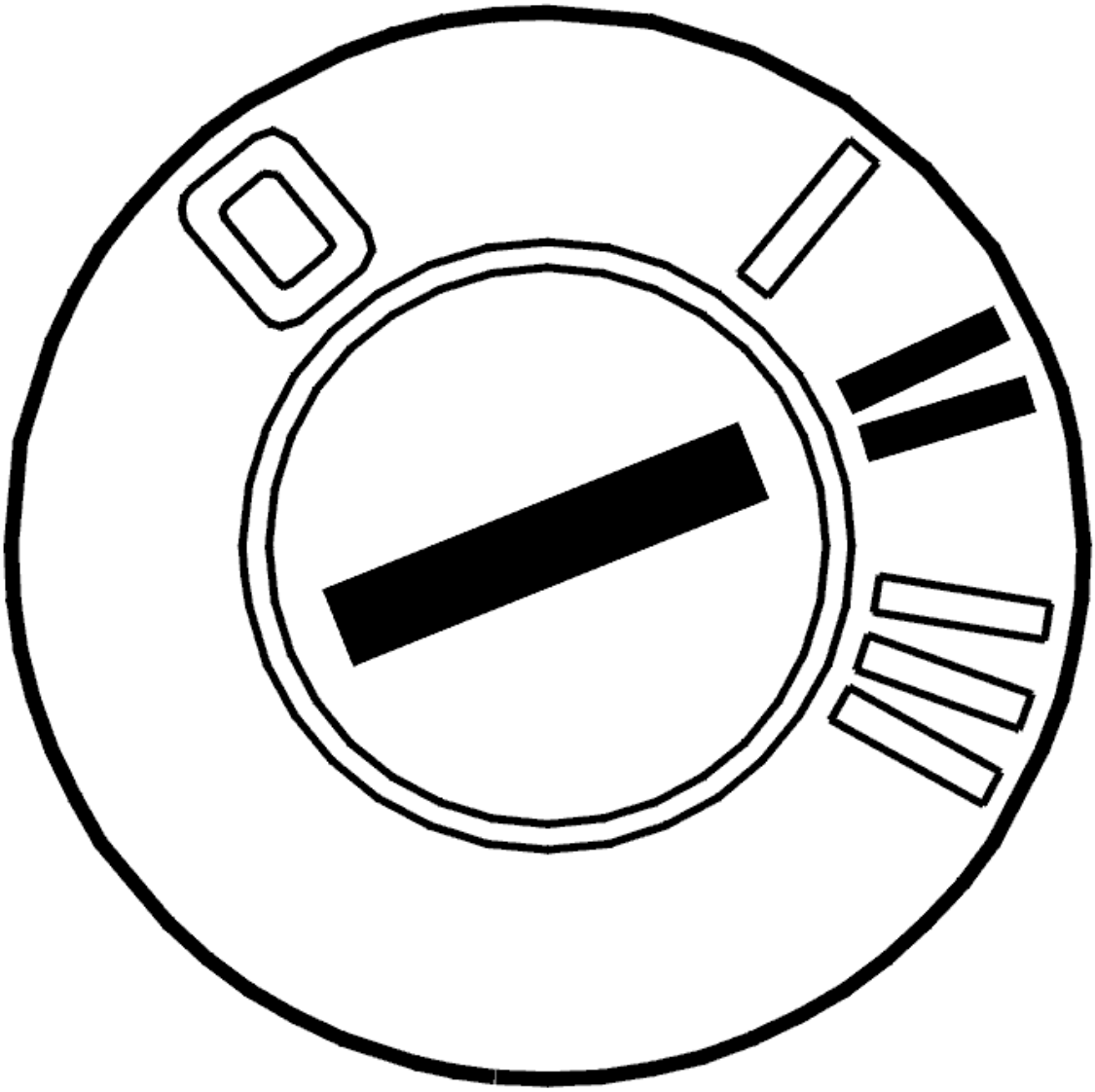

Fig. 378: Identifying Ignition ON
Courtesy of VOLVO CARS CORPORATION

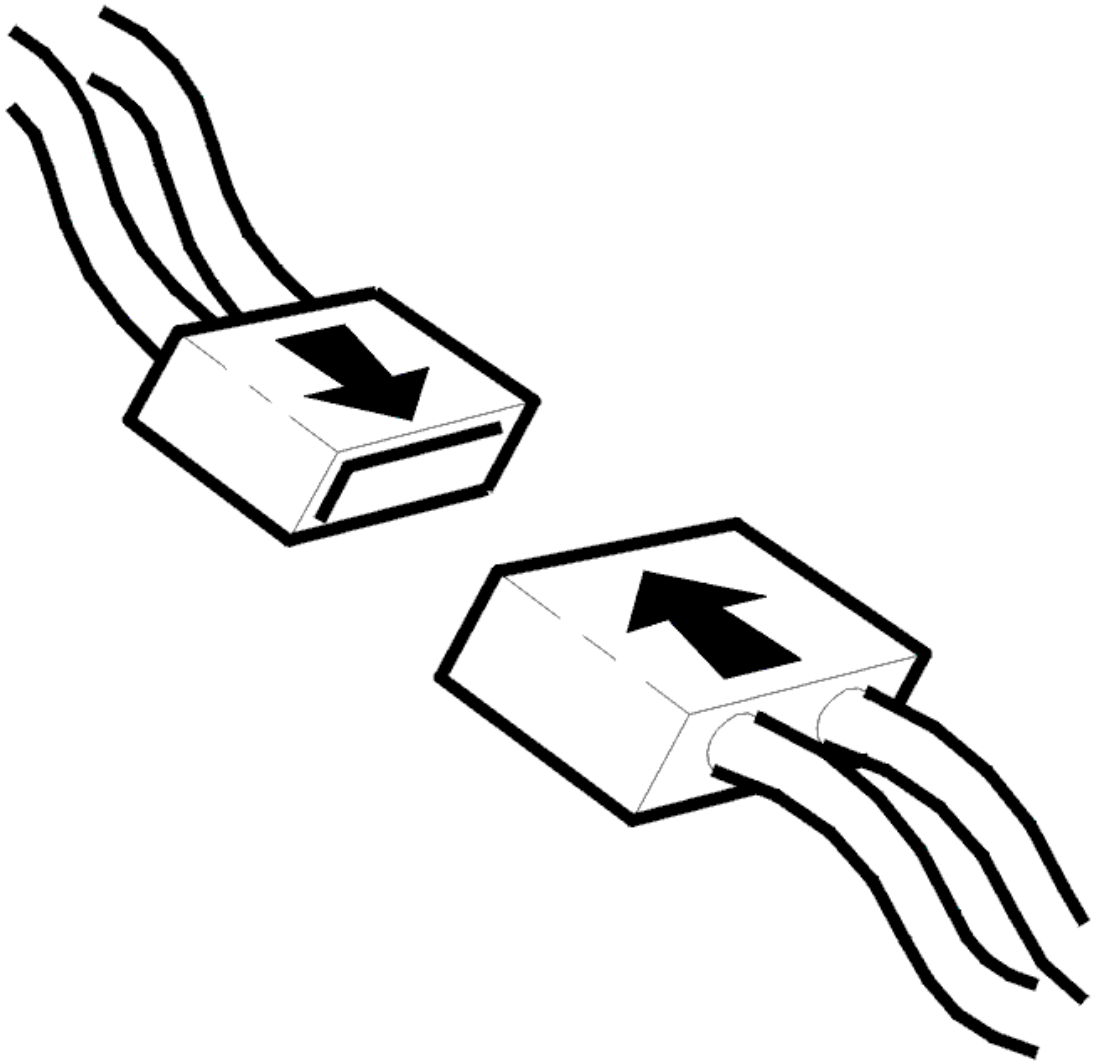

Fig. 379: Connecting Connector
Courtesy of VOLVO CARS CORPORATION

- Ignition off
- Reinstall the connectors, components etc.
- Ignition on

  Activate readout of electronic throttle unit's position.

  Check that read-off throttle position shows reasonable values at different deployments.

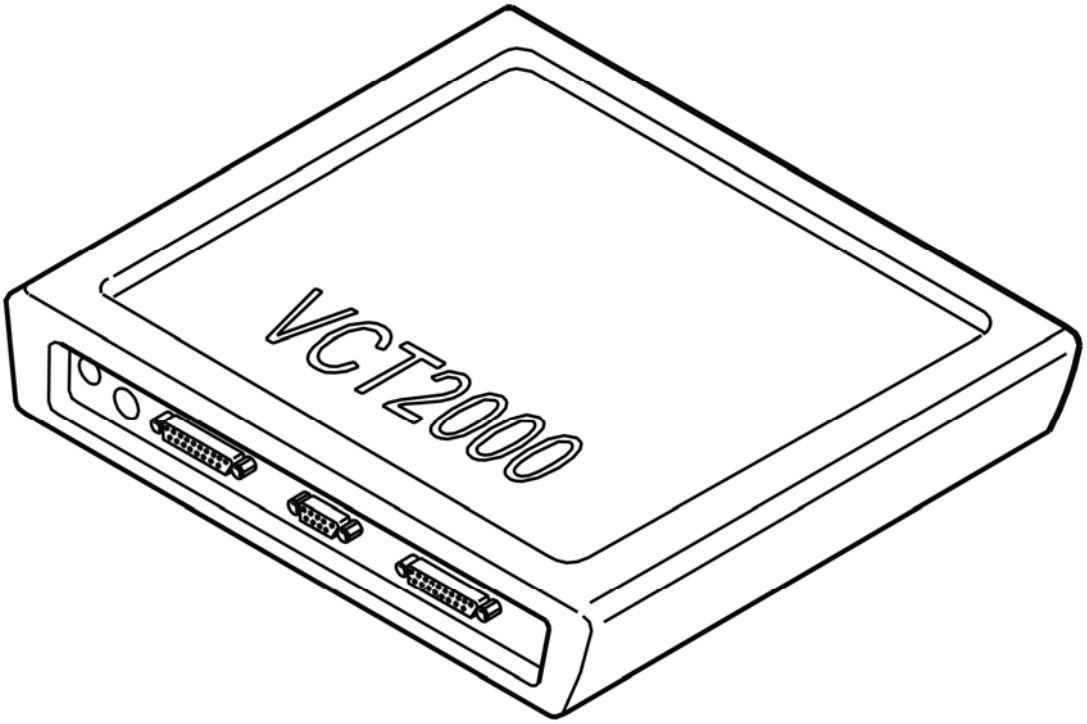

Fig. 380: Identifying VCT2000 Diagnostic Tool Symbol In VIDA
Courtesy of VOLVO CARS CORPORATION

Are these values within their permitted ranges?

- **YES**

  VERIFIED: Troubleshooting has been completed.

- **NO**

  Refer to **INFORMATION**

INFORMATION

FAULT-TRACING INFORMATION

The fault should have been detected and remedied. As this is not the case fault-tracing has failed.

Exit fault-tracing for this diagnostic trouble code (DTC) or make another attempt.

ECM-P213500: THROTTLE/PEDAL POSITION SENSOR/CONTACT A/B VOLTAGE CORRELATION. GENERAL FAULT INFORMATION. TYPE OF

FAULT NOT SPECIFIED. (B8444S; 2005-2011)

DIAGNOSTIC TROUBLE CODE (DTC) INFORMATION ECM-P213500

Condition

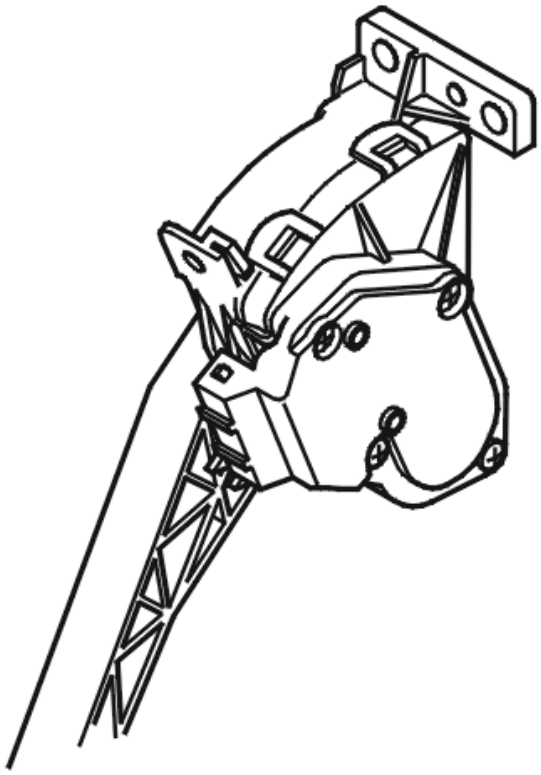

Fig. 381: Identifying Accelerator Pedal Position Sensor
Courtesy of VOLVO CARS CORPORATION

The engine control module (ECM) receives a pulse width modulation (PWM) signal and an analog signal from the accelerator pedal position sensor. In a fault-free system, the analog signal is used to determine the position of the accelerator pedal (AP).

The diagnostic trouble code (DTC) is stored if the engine control module (ECM) registers that the signals deviate too much from each other.

The diagnostic trouble code can be diagnosed when the ignition is on.

Substitute Value

- Acceleration is ignored when braking.
- The lowest value input signal from the accelerator pedal position sensor is used.

Possible Source

- Loose connections or contact resistance in the connections on the analog signal cable.
- Fault in the power supply to the analog signal.
- Fault in the analog signal ground.
- Fault in the pulse width modulation (PWM) signal between the engine control module (ECM) and the electronic throttle module (ETM).
- Damaged accelerator pedal (AP) position sensor.

Fault symptom[s]

- Message in the display.
- Poor response from the accelerator pedal.
- Accelerator pedal (AP) is ignored when braking.
- Maximum vehicle speed reduced.

TROUBLESHOOTING ECM-P213500

CHECKING THE STATUS

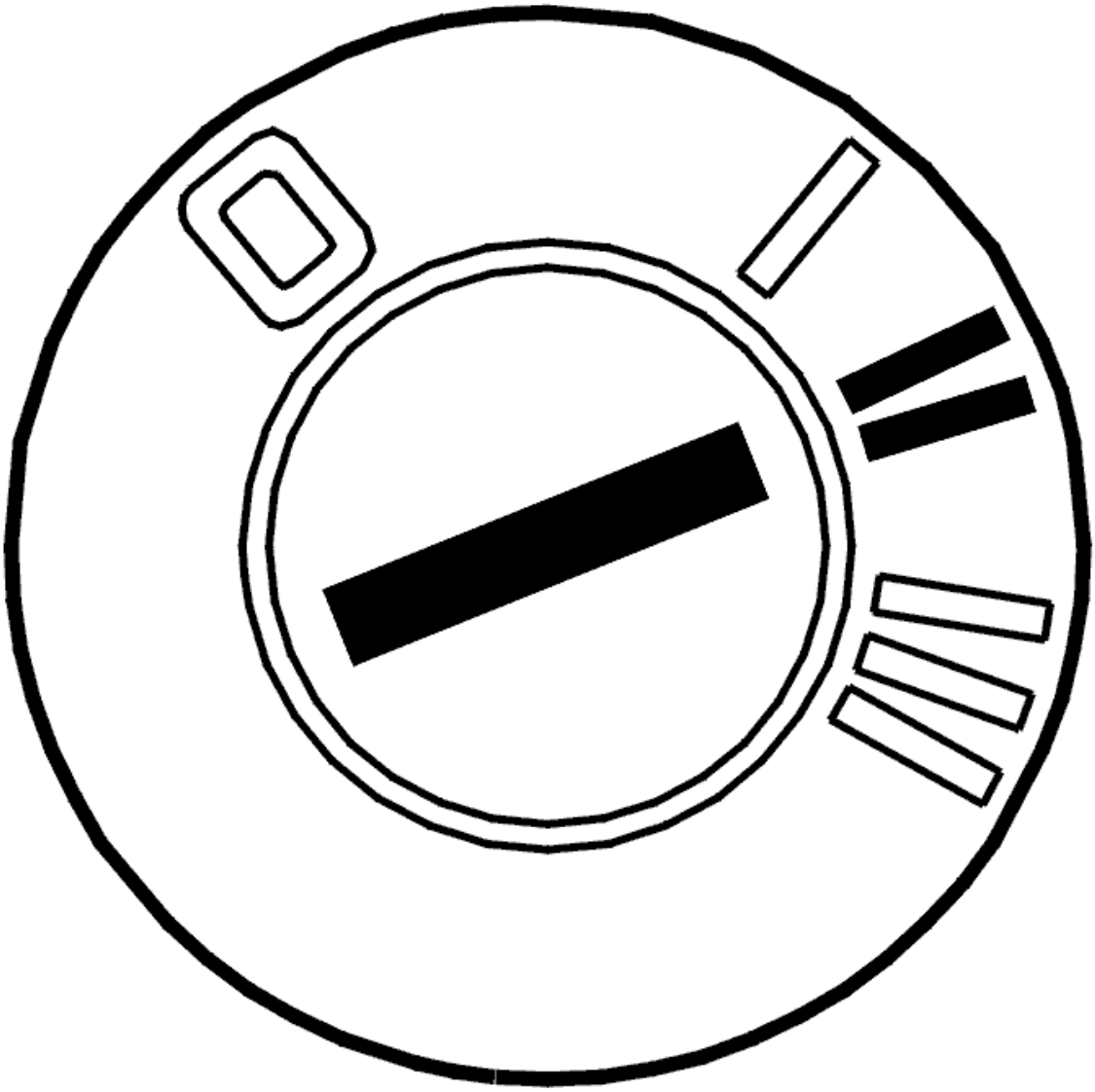

Fig. 382: Identifying Ignition ON
Courtesy of VOLVO CARS CORPORATION

- Ignition on

  Check if the malfunction is permanent or intermittent by activating readout of the accelerator pedal position sensor's signals.

  Check that the value for both signals at unaffected accelerator pedal is approx. 8% and when the pedal is fully pressed down approx. 82%.

  If the signal is incorrect, this indicates that the malfunction is permanent. If the signal is correct, this indicates that the malfunction is intermittent and not active right now.

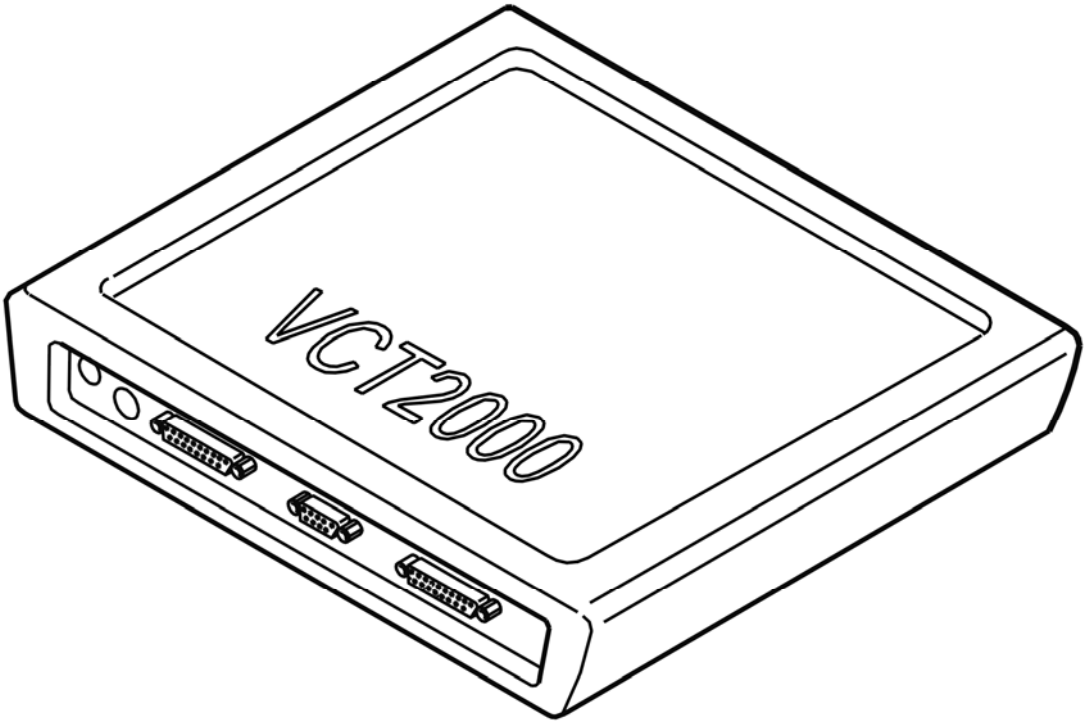

Fig. 383: Identifying VCT2000 Diagnostic Tool Symbol In VIDA
Courtesy of VOLVO CARS CORPORATION

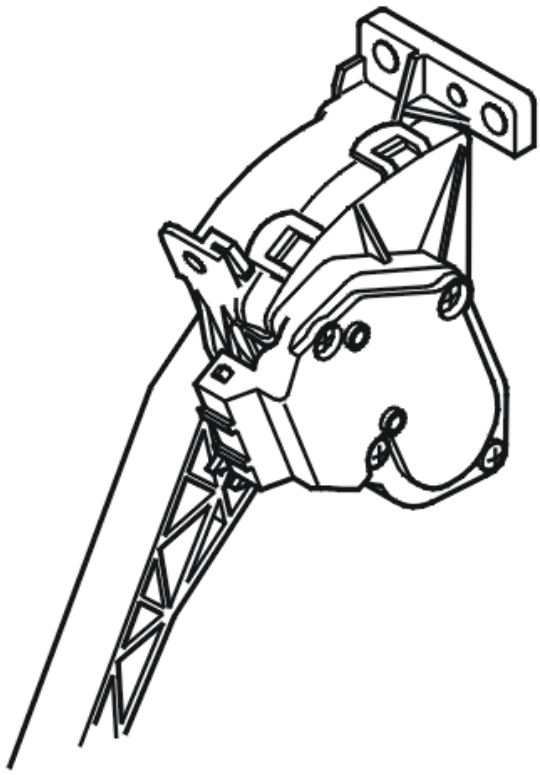

Fig. 384: Identifying Accelerator Pedal Position Sensor
Courtesy of VOLVO CARS CORPORATION

- **Continue**

  Refer to **CHECKING COMPONENTS AND WIRING**

CHECKING COMPONENTS AND WIRING

Check connector for contact resistance and oxidation.

Check voltage feed between engine control module (ECM) #B32 (#C32) and accelerator pedal position sensor #6.

Check the ground cable between engine control module (ECM) #B7 (#C7) and accelerator pedal position sensor #4.

Check the cable between engine control module (ECM) #B28 (#C28) and accelerator pedal position sensor #2.

Remedy as necessary.

Other information

- see **CONNECTING THE BREAKOUT BOX**

- see **SIGNAL SPECIFICATION, ENGINE CONTROL MODULE (ECM)**
- For replacing accelerator pedal position sensor: **ACCELERATOR PEDAL (AP), REPLACING**
- see **CHECKING WIRING AND TERMINALS**

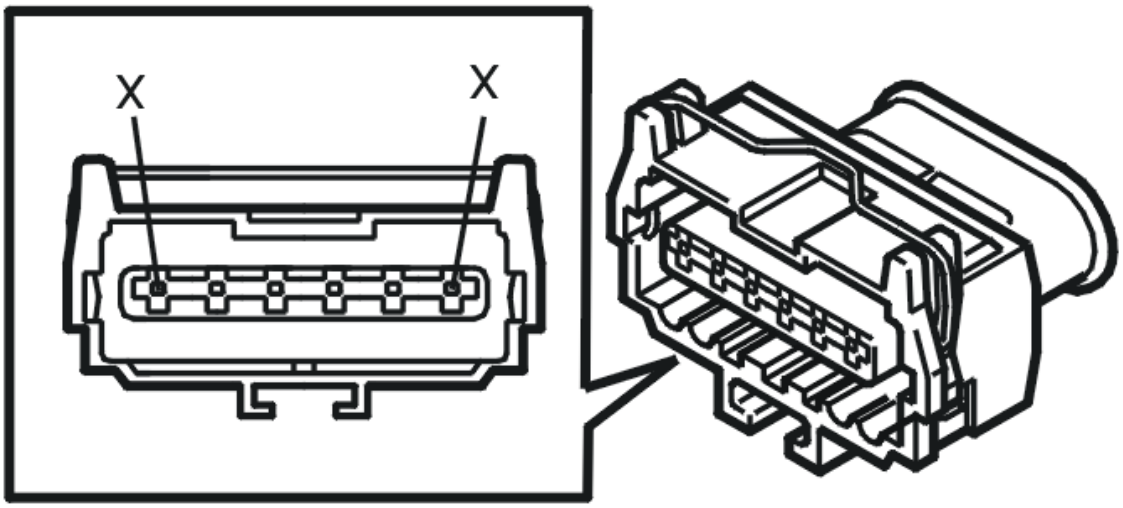

Fig. 385: Connector End View
Courtesy of VOLVO CARS CORPORATION

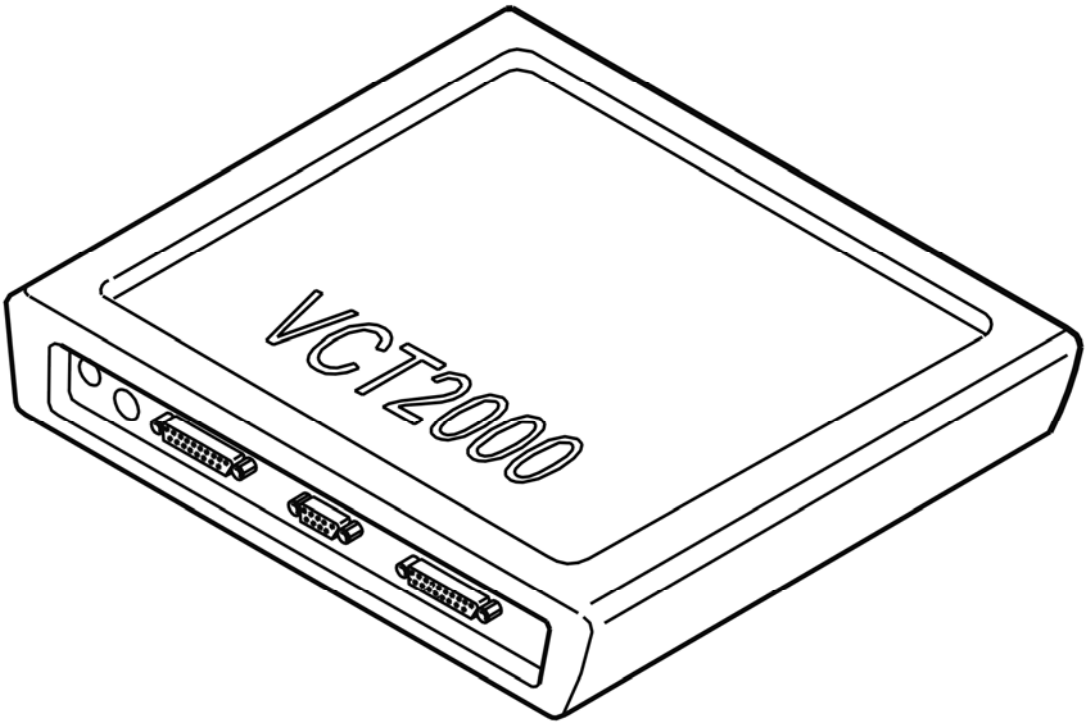

Fig. 386: Identifying VCT2000 Diagnostic Tool Symbol In VIDA

Courtesy of VOLVO CARS CORPORATION

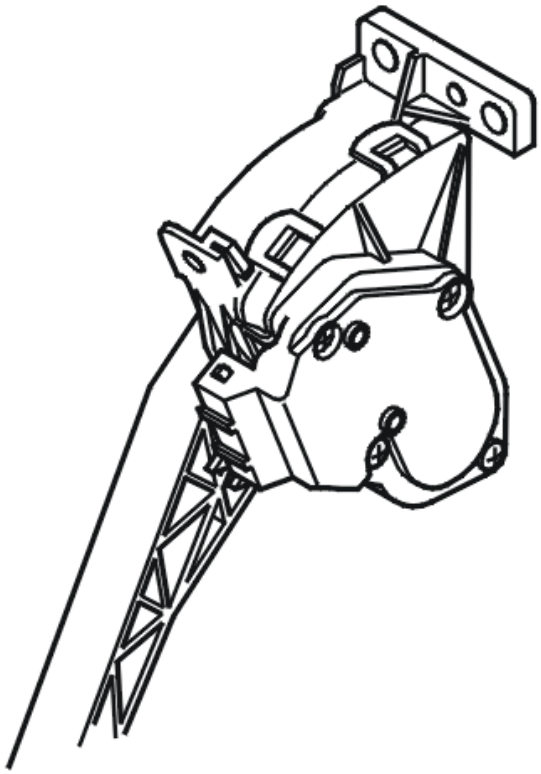

Fig. 387: Identifying Accelerator Pedal Position Sensor
Courtesy of VOLVO CARS CORPORATION

- **Continue**

  Refer to **VERIFICATION**

VERIFICATION

VERIFICATION

HINT: After carrying out the repair, check that the fault has been remedied.

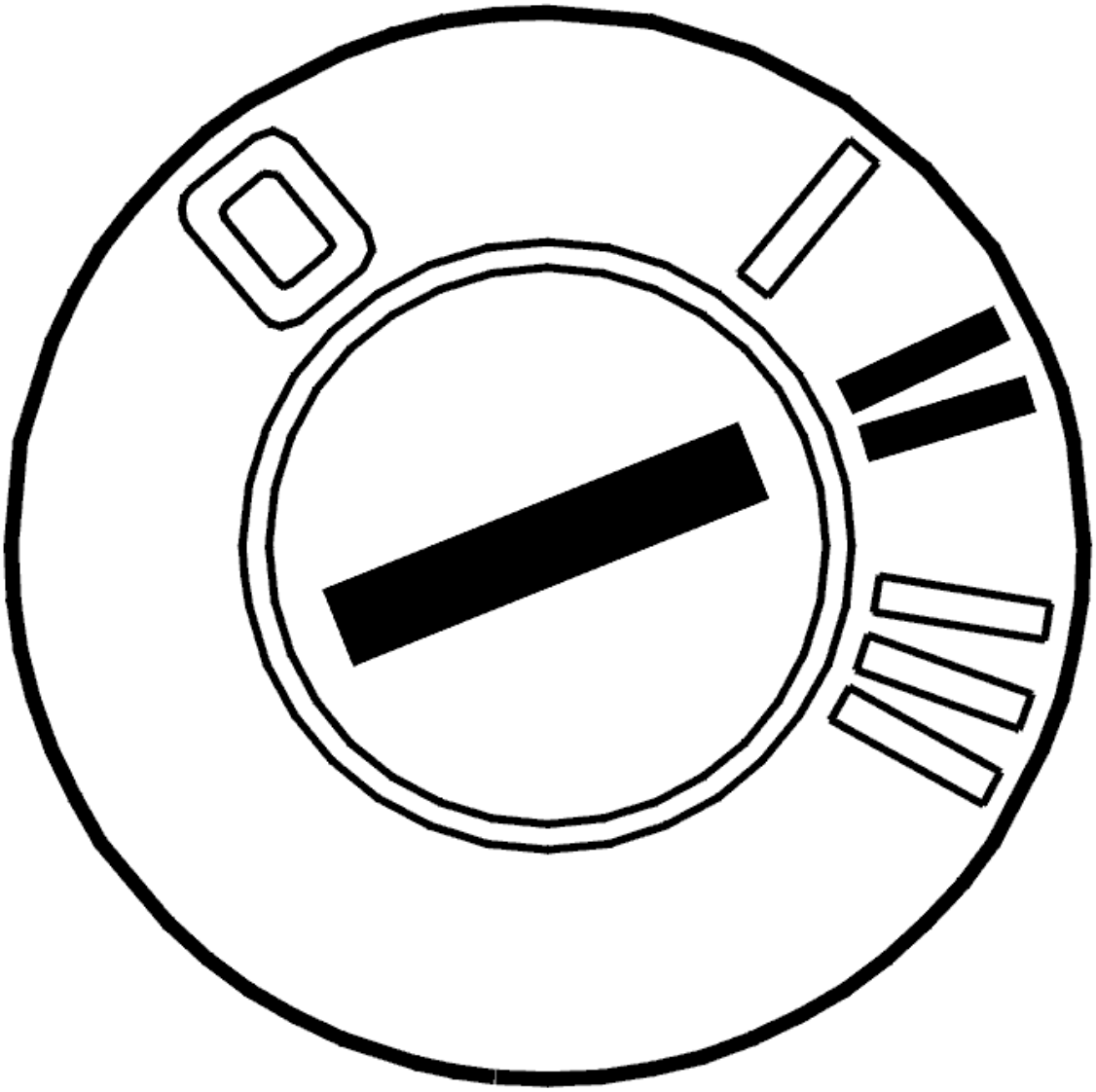

Fig. 388: Identifying Ignition ON
Courtesy of VOLVO CARS CORPORATION

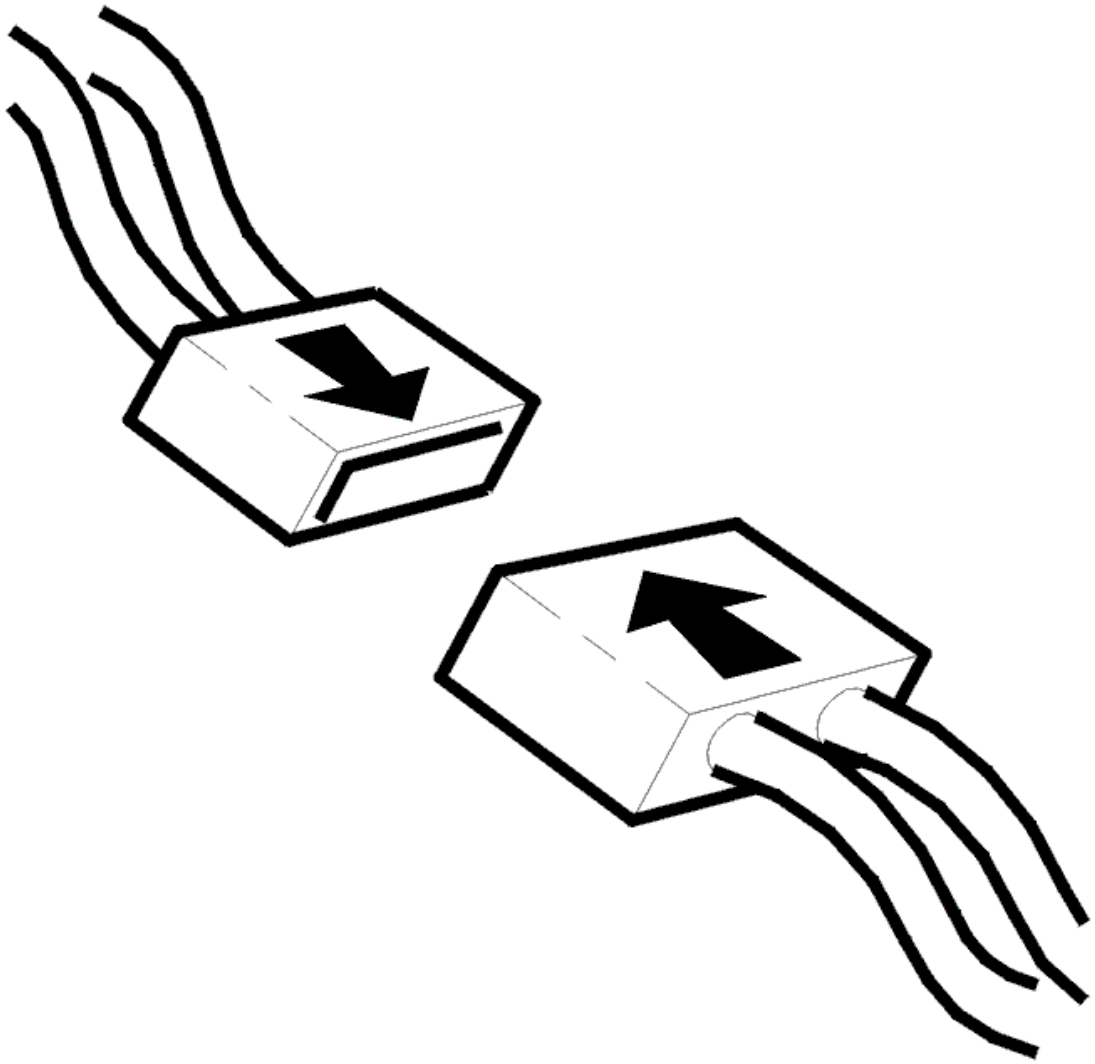

Fig. 389: Connecting Connector
Courtesy of VOLVO CARS CORPORATION

- Ignition off
- Reinstall the connectors, components etc.
- Ignition on

  Activate readout of the accelerator pedal position sensor's signals.

  Check that the value for both signals at unaffected accelerator pedal is approx. 8% and when the pedal is fully pressed down approx. 82%.

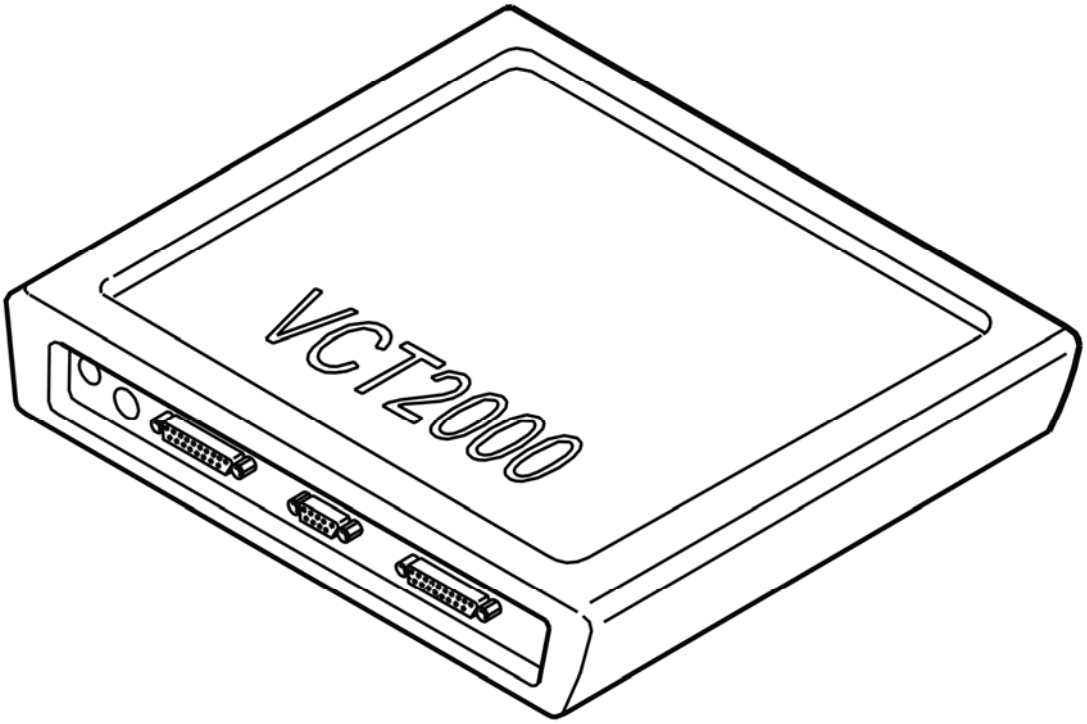

Fig. 390: Identifying VCT2000 Diagnostic Tool Symbol In VIDA
Courtesy of VOLVO CARS CORPORATION

Is the function OK?

- **YES**

  VERIFIED: Troubleshooting has been completed.

- **NO**

  Refer to **INFORMATION**

INFORMATION

FAULT-TRACING INFORMATION

The fault should have been detected and remedied. As this is not the case fault-tracing has failed.

Exit fault-tracing for this diagnostic trouble code (DTC) or make another attempt.

ECM-P213562: THROTTLE/PEDAL POSITION SENSOR/SWITCH A / B VOLTAGE CORRELATION. ALGORITHM BASED FAILURES. SIGNAL

COMPARE FAILURE (B6324S; 2007-2010)

DIAGNOSTIC TROUBLE CODE (DTC) INFORMATION ECM-P213562

Condition

The engine control module (ECM) checks the pulse width modulation (PWM) signal and the analog signal from the accelerator pedal (AP) position sensor. The analog signal is directly connected to the Central electronic module (CEM) and the signal is transmitted via CAN communication to the Engine control module (ECM). The pulse width modulation (PWM) signal is directly connected to the engine control module (ECM).

The PWM signal is used to determine the current accelerator pedal position in a fault free system.

The Engine control module (ECM) compares both the signals to each other.

The diagnostic trouble code (DTC) is stored if the control module detects that:

- Difference between PWM signal and analog signal (via CAN) is too great.
- Incorrect value lasts longer than 16 seconds.

The control module's test for the diagnostic trouble code (DTC) starts in the event of:

- Ignition switch position II.

NOTE: The control module can only detect the fault once the test has been started and the diagnostic trouble code (DTC) is stored when the conditions are met.

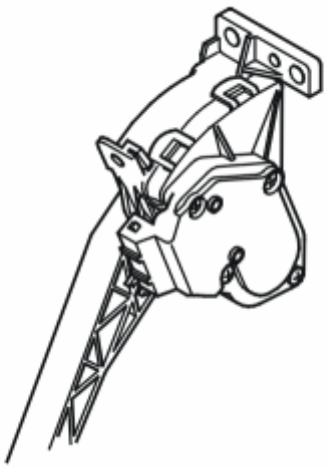

Fig. 391: Identifying Accelerator Pedal Position Sensor
Courtesy of VOLVO CARS CORPORATION

Substitute Value

- The control module uses the input signal that gives the lowest accelerator pedal position.
- The control module uses the accelerator pedal position corresponding to the released position when the brake pedal is depressed at the same time.

Possible Source

- Fault-trace the central electronic module (CEM).
- Contact resistance and oxidation in the terminals.
- Damaged signal cable between the Engine control module (ECM) and the accelerator position sensor.
- Short-circuit in connections.

Fault symptom[s]

- Message in information display
- Accelerator pedal ignored during braking

FAULT-TRACING

see **FAULT-TRACING**

ECM-P213562: THROTTLE/PEDAL POSITION SENSOR/SWITCH A / B VOLTAGE CORRELATION. ALGORITHM BASED FAILURES. SIGNAL COMPARE FAILURE (B6324S5; 2011-2012)

DIAGNOSTIC TROUBLE CODE (DTC) INFORMATION ECM-P213562

see **DIAGNOSTIC TROUBLE CODE (DTC) INFORMATION ECM-P213562**

FAULT-TRACING

see **FAULT-TRACING**

ECM-P215886: VEHICLE SPEED SENSOR B. BUS SIGNAL / MESSAGE FAILURES. SIGNAL INVALID (B8444S; 2008-2011)

DIAGNOSTIC TROUBLE CODE (DTC) INFORMATION

Condition

If a malfunction of the speed signal is detected in the Transmission control module (TCM), a malfunction message is sent to engine control module (ECM) and a diagnostic trouble code is stored in the engine control module (ECM).

Diagnostic trouble code for the speed sensor's signal is stored in the Transmission control module (TCM).

Substitute Value

- None.

Possible Source

- Trace the cause of the fault in the Transmission Control Module (TCM).

Fault symptom[s]

- Cruise control does not operate

TROUBLESHOOTING INFORMATION

see **TROUBLESHOOTING INFORMATION**

ECM-P216200: SPEED SENSOR A/B CORRELATION. GENERAL MALFUNCTION INFORMATION. NO INFORMATION ON MALFUNCTION TYPE (B8444S; 2005-2011)

DIAGNOSTIC TROUBLE CODE (DTC) INFORMATION ECM-P216200

Condition

Information about vehicle speed is sent on the CAN-network from brake control module (BCM) and from transmission control module (TCM) to engine control module (ECM). If engine control module (ECM) detects a deviation between the speed signals from brake control module (BCM) and transmission control module (TCM), the diagnostic trouble code is stored.

Substitute Value

- Cruise control shuts off.

Possible Source

- Incorrect speed signal to brake control module (BCM).

  Look for the cause of the malfunction in the brake control module (BCM).

- Incorrect speed signal to transmission control module (TCM).

  Look for the cause of the malfunction in the transmission control module (TCM).

- Contact resistance in CAN-connections.
- Open circuit on one or both CAN-cables.
- Damaged Brake Control Module (BCM).

- Damaged transmission control module (TCM).

Fault symptom[s]

- The cruise control does not function at all
- Message in the display.

FAULT-TRACING INFORMATION

see **FAULT-TRACING INFORMATION**

ECM-P216262: VEHICLE SPEED SENSOR A / B CORRELATION. ALGORITHM BASED FAILURES. SIGNAL COMPARE FAILURE (B6324S; 2007-2010)

DIAGNOSTIC TROUBLE CODE (DTC) INFORMATION ECM-P216262

Condition

Information about vehicle speed is sent on the CAN-network from brake control module (BCM) and from transmission control module (TCM) to engine control module (ECM). If engine control module (ECM) detects a deviation between the speed signals from brake control module (BCM) and transmission control module (TCM), the diagnostic trouble code is stored.

Substitute Value

- Cruise control shuts off.

Possible Source

- Incorrect speed signal to brake control module (BCM).

  Look for the cause of the malfunction in the brake control module (BCM).

- Incorrect speed signal to transmission control module (TCM).

  Look for the cause of the malfunction in the transmission control module (TCM).

- Contact resistance in CAN-connections.
- Open circuit on one or both CAN-cables.
- Damaged Brake Control Module (BCM).
- Damaged transmission control module (TCM).

Fault symptom[s]

- The cruise control does not function at all
- Message in the display.

FAULT-TRACING

see **FAULT-TRACING**

ECM-P216262: VEHICLE SPEED SENSOR A / B CORRELATION. ALGORITHM BASED FAILURES. SIGNAL COMPARE FAILURE (B6324S5; 2011-2012)

DIAGNOSTIC TROUBLE CODE (DTC) INFORMATION ECM-P216262

see **DIAGNOSTIC TROUBLE CODE (DTC) INFORMATION ECM-P216262**

FAULT-TRACING

see **FAULT-TRACING**

ECM-P217500: ELECTRONIC THROTTLE UNIT CONTROL SYSTEM - LOW AIR FLOW REGISTERED. GENERAL MALFUNCTION INFORMATION. NO INFORMATION ON MALFUNCTION TYPE (B8444S; 2005-2011)

DIAGNOSTIC TROUBLE CODE (DTC) INFORMATION ECM-P217500

Condition

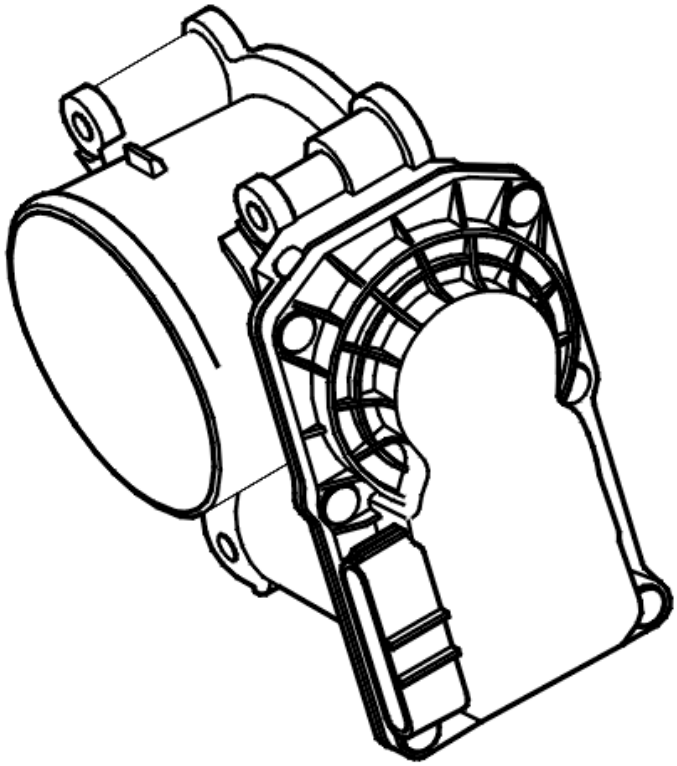

Fig. 392: Identifying Electronic Throttle Unit
Courtesy of VOLVO CARS CORPORATION

Engine control module (ECM) checks the difference in requested electronic throttle unit position from actual position.

If engine control module (ECM) registers that the difference has been sufficiently great during warming of the catalytic converter, to give effect on emissions, the diagnostic trouble code is generated.

The diagnostic trouble code can be diagnosed when the engine is running and warming of the catalytic converter.

Substitute Value

- Nothing.

Possible Source

- Other diagnostic trouble codes stored in engine control module (ECM).
- Contact resistance or oxidation in connections between electronic throttle unit and engine control module (ECM).
- Damaged electronic throttle unit.

Fault symptom[s]

- Malfunction indicator lamp (MIL) lit.

TROUBLESHOOTING ECM-P217500

CHECKING COMPONENT AND CONNECTIONS

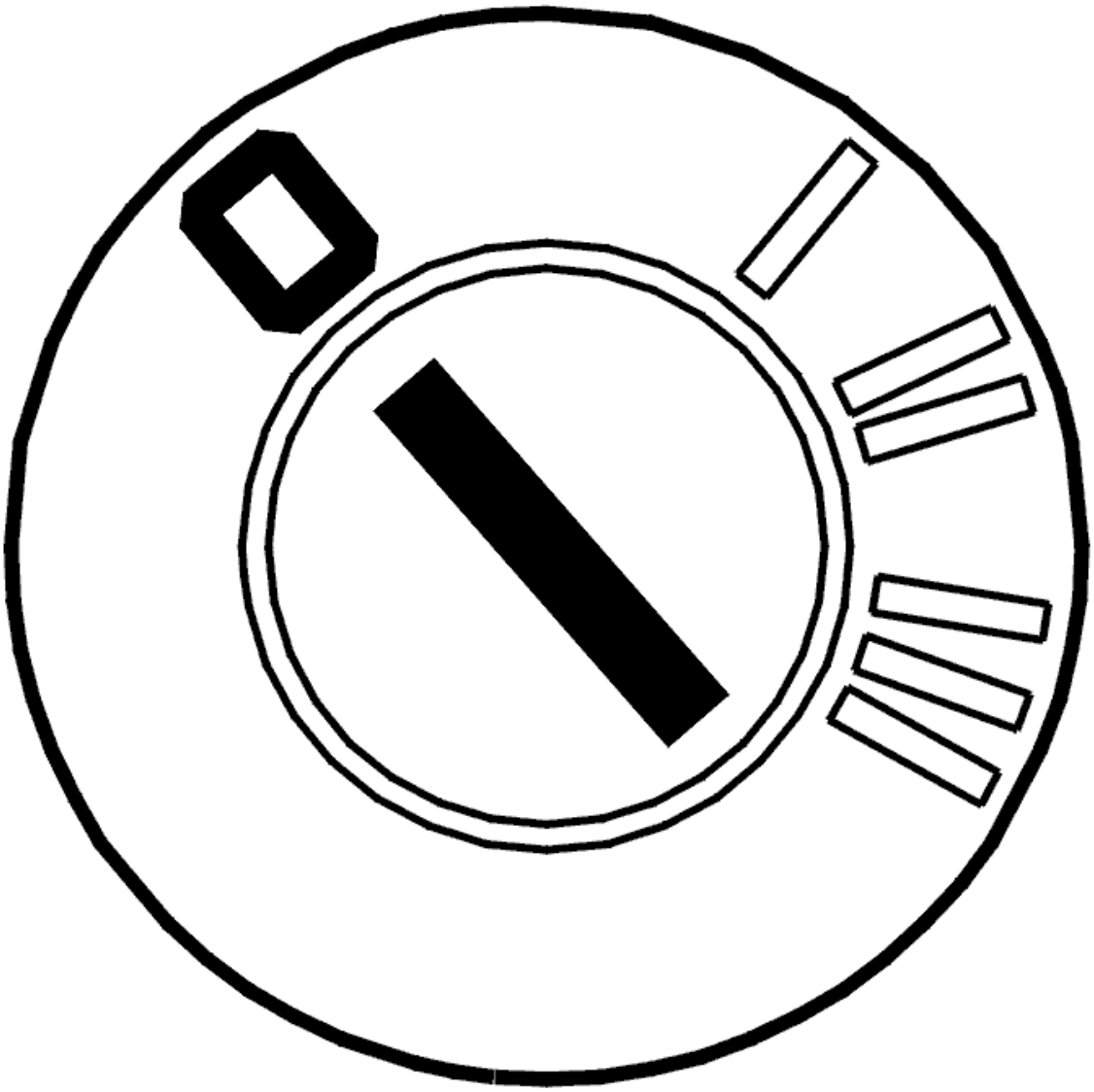

Fig. 393: Identifying Ignition OFF
Courtesy of VOLVO CARS CORPORATION

- Ignition on
- Activate readout of electronic throttle unit's position.
- Check that read-off throttle position shows reasonable values at different deployments.
- Ignition off

Check engine control module ECM) and the electronic throttle unit's connector for contact resistance and oxidation.

Check if the electronic throttle unit is blocked by an object and press on the throttle disc to, see if it binds.

Clean the electronic throttle unit if needed.

Other information

- see **CONNECTING THE BREAKOUT BOX**
- see **SIGNAL SPECIFICATION, ENGINE CONTROL MODULE (ECM)**
- see **THROTTLE BODY (TB), CLEANING**
- see **THROTTLE BODY (ELECTRONIC THROTTLE MODULE (ETM)), REPLACING**
- see **CHECKING WIRING AND TERMINALS**

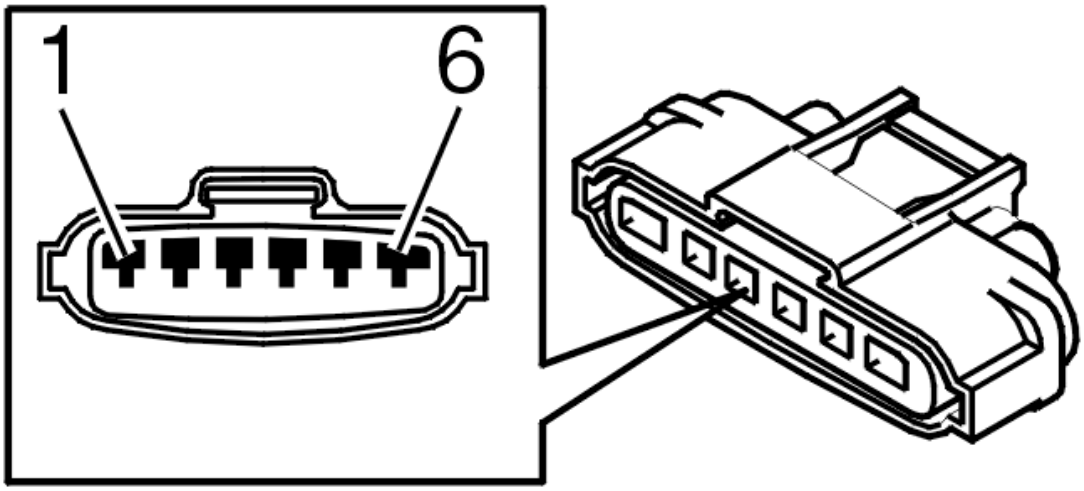

Fig. 394: Identifying 6-Bit Connector
Courtesy of VOLVO CARS CORPORATION

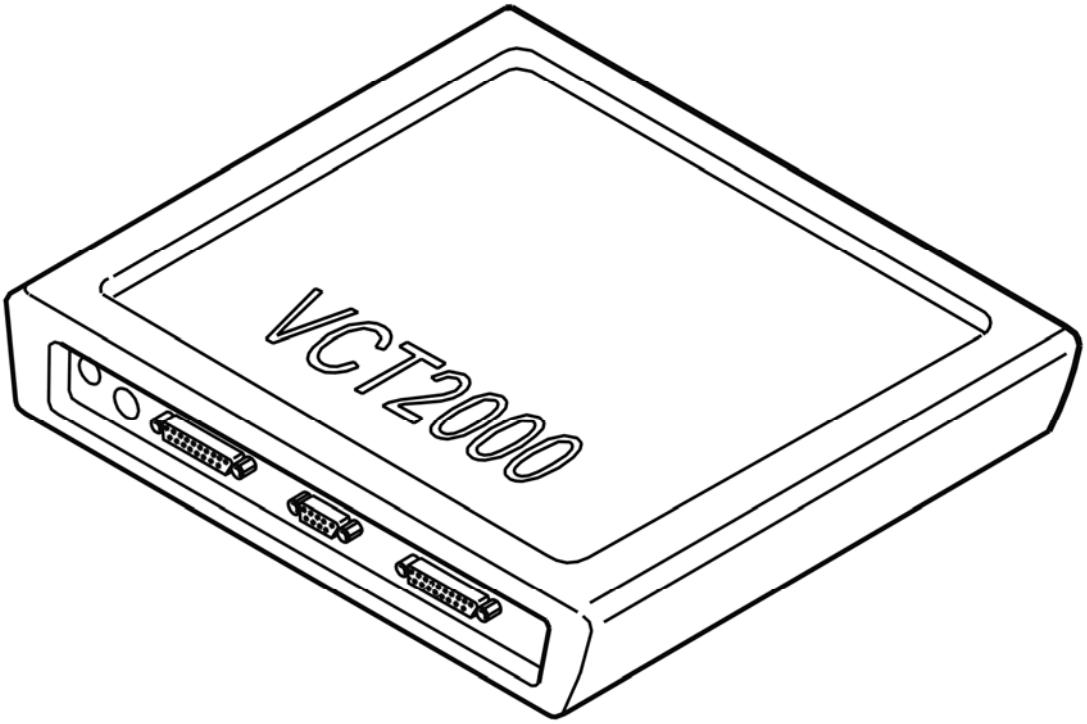

Fig. 395: Identifying VCT2000 Diagnostic Tool Symbol In VIDA
Courtesy of VOLVO CARS CORPORATION

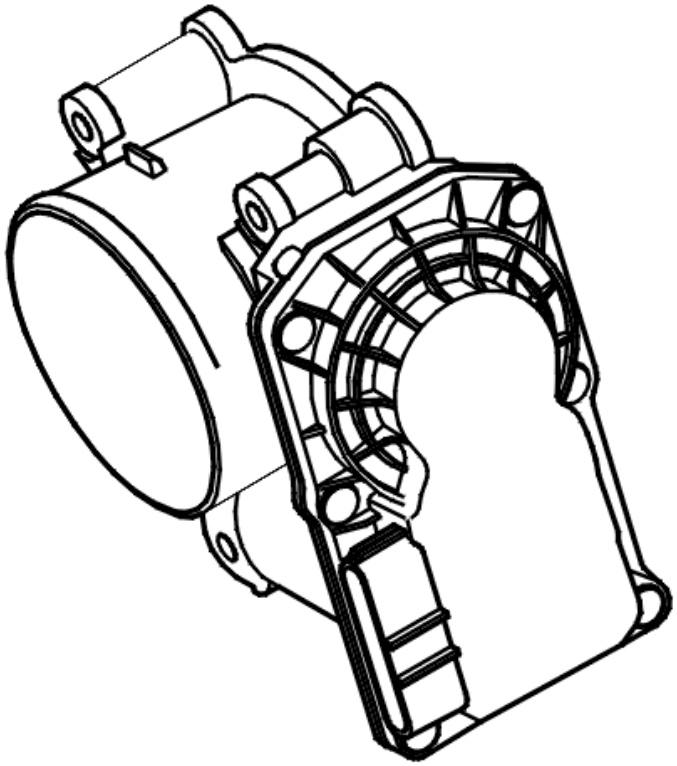

Fig. 396: Identifying Electronic Throttle Unit
Courtesy of VOLVO CARS CORPORATION

- **Continue**

  Refer to **VERIFICATION**

VERIFICATION

VERIFICATION

HINT: After carrying out the repair, check that the fault has been remedied.

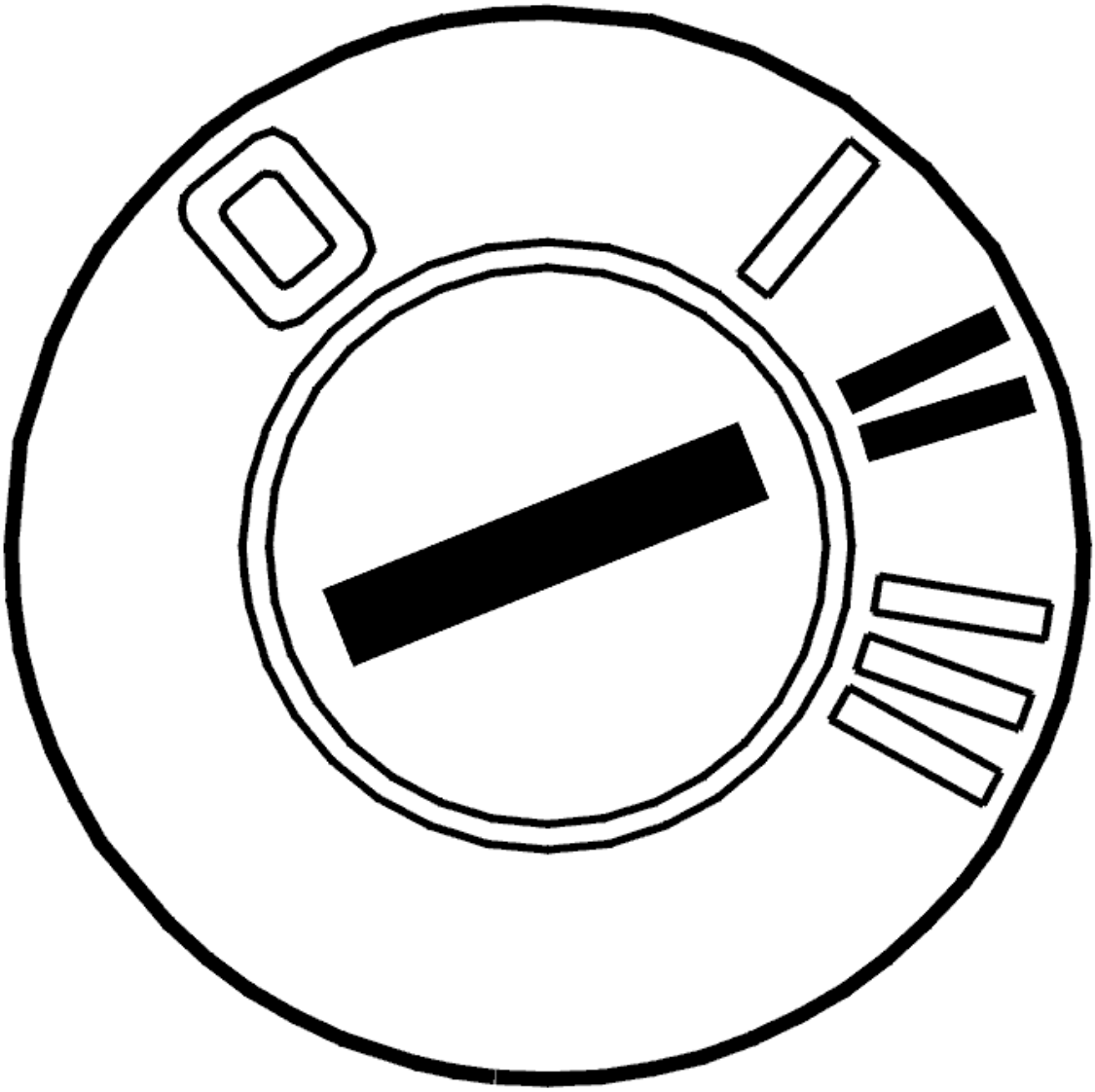

Fig. 397: Identifying Ignition ON
Courtesy of VOLVO CARS CORPORATION

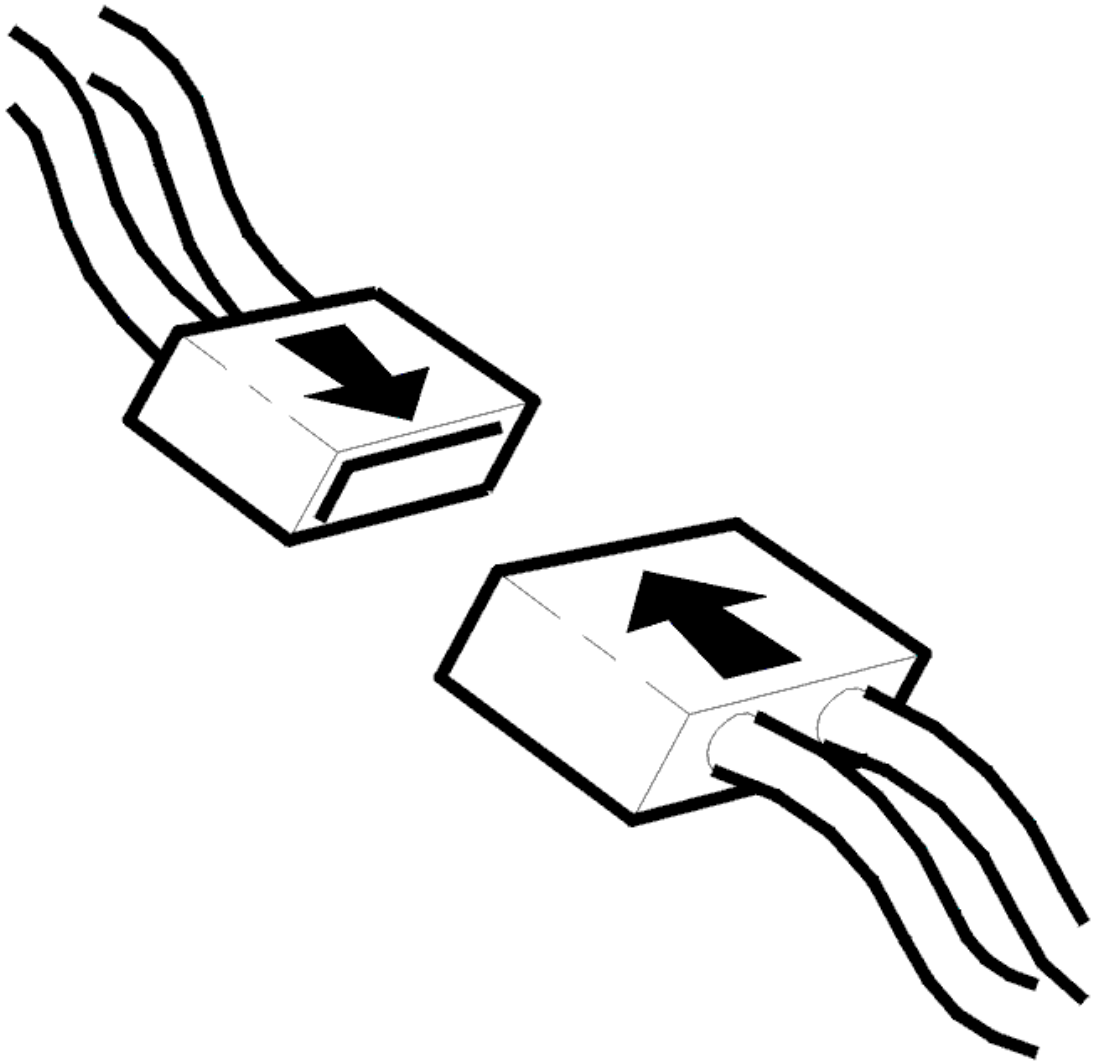

Fig. 398: Connecting Connector
Courtesy of VOLVO CARS CORPORATION

- Ignition off
- Reinstall the connectors, components etc.
- Ignition on

  Activate readout of electronic throttle unit's position.

  Check that read-off throttle position shows reasonable values at different deployments.

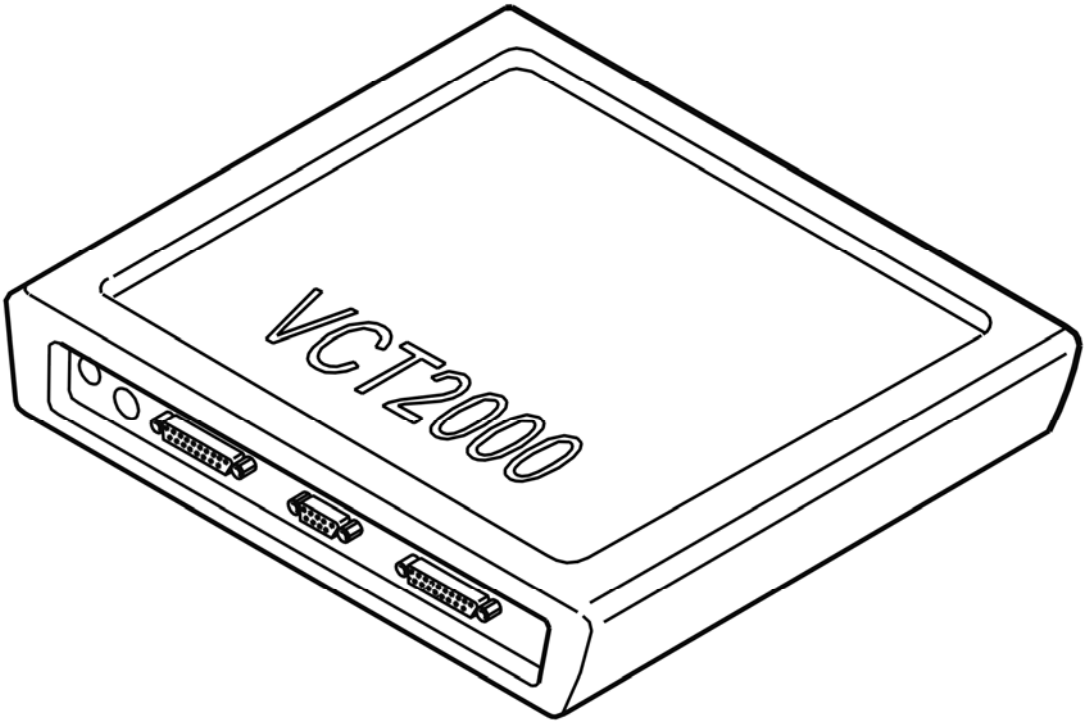

Fig. 399: Identifying VCT2000 Diagnostic Tool Symbol In VIDA
Courtesy of VOLVO CARS CORPORATION

Are these values within their permitted ranges?

- **YES**

  VERIFIED: Troubleshooting has been completed.

- **NO**

  Refer to **INFORMATION**

INFORMATION

FAULT-TRACING INFORMATION

The fault should have been detected and remedied. As this is not the case fault-tracing has failed.

Exit fault-tracing for this diagnostic trouble code (DTC) or make another attempt.

ECM-P222600: BAROMETRIC PRESSURE CIRCUIT. GENERAL FAILURE INFORMATION. NO SUB TYPE INFORMATION (B6324S; 2007-2010)

DIAGNOSTIC TROUBLE CODE (DTC) INFORMATION ECM-P222600

Condition

The Engine control module (ECM) measures the atmospheric pressure using an atmospheric pressure sensor. The control module checks the direct voltage from the sensor.

NOTE: The atmospheric pressure sensor is integrated in the Engine control module (ECM).

The diagnostic trouble code (DTC) is stored if the control module detects that:

- The direct voltage is lower than approximately 0.01 V.
- The direct voltage is higher than approximately 6 V.
- Incorrect value lasts longer than 9 seconds.
- Incorrect value lasts for 2 or more subsequent driving cycles.

The control module's test for the diagnostic trouble code (DTC) starts in the event of:

- Ignition switch position II.

NOTE: The control module can only detect the fault once the test has been started and the diagnostic trouble code (DTC) is stored when the conditions are met.

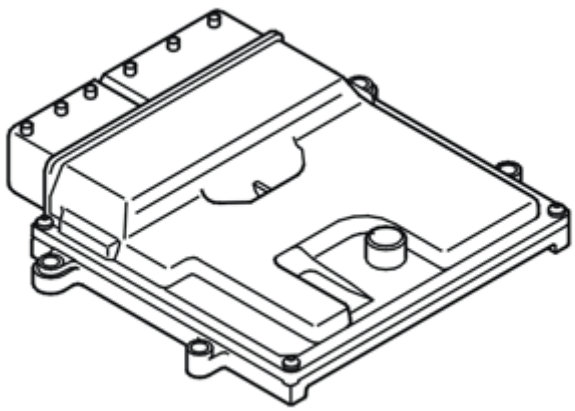

Fig. 400: Identifying Engine Control Module (ECM)
Courtesy of VOLVO CARS CORPORATION

Substitute Value

- The control module uses a value for atmospheric pressure that is calculated based on the air pressure in the inlet manifold.

- If a malfunction has been detected on the air pressure sensor, the control module uses a constant atmospheric pressure, 100 kPa (corresponds to sea level).

Possible Source

- Damaged engine control module (ECM).

NOTE: The diagnostic trouble code can be generated as a subsequent malfunction to a detected problem with the air pressure sensor in the inlet manifold.

Fault symptom[s]

- Malfunction indicator light (MIL), on

FAULT-TRACING

see **FAULT-TRACING**

ECM-P222600: BAROMETRIC PRESSURE CIRCUIT. GENERAL FAILURE INFORMATION. NO SUB TYPE INFORMATION (B6324S5; 2011-2012)

DIAGNOSTIC TROUBLE CODE (DTC) INFORMATION ECM-P222600

see **DIAGNOSTIC TROUBLE CODE (DTC) INFORMATION ECM-P222600**

FAULT-TRACING

see **FAULT-TRACING**

ECM-P222700: BAROMETRIC PRESSURE CIRCUIT HIGH INPUT. GENERAL FAILURE INFORMATION. NO SUB TYPE INFORMATION (B8444S; 2005-2011)

DIAGNOSTIC TROUBLE CODE (DTC) INFORMATION ECM-P222700

Condition

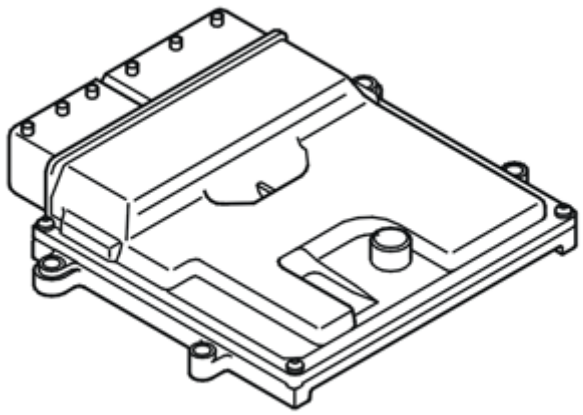

Fig. 401: Identifying Engine Control Module (ECM)
Courtesy of VOLVO CARS CORPORATION

The engine control module (ECM) compares the filtered signal from the pressure sensor in the intake manifold with the signal from the atmospheric pressure sensor in the engine control module (ECM).

The diagnostic trouble code is generated if the control module registers that the deviation is greater than 100 hPa.

The diagnostic trouble code can be diagnosed 15 seconds after the ignition is switched.

Substitute Value

- If the pressure sensor in the intake manifold is OK, a filtered value from such is used. Otherwise, the value 1000 hPa is set (corresponds to sea level).

Possible Source

- Damaged manifold absolute pressure sensor (MAP).
- Damaged engine control module (ECM).

Fault symptom[s]

- Malfunction indicator lamp (MIL) lit.

FAULT-TRACING ECM-P222700

CHECKING THE COMPONENTS AND WIRING

NOTE: Check if other diagnostic trouble codes (DTCs) are stored for the internal atmospheric pressure sensor or if diagnostic trouble codes (DTCs) for the air pressure sensor in the inlet manifold are stored in the Engine Control Module

(ECM). These diagnostic trouble codes (DTCs) must be fault-traced and any faults remedied first.

Fig. 402: Checking Traffic Load On CAN Cables
Courtesy of VOLVO CARS CORPORATION

- Ignition on.

  Activate reading the value from the manifold absolute pressure (MAP) sensor and the atmospheric pressure sensor.

  Check the difference between pressures, the difference shall not be greater than 70 hPa.

  HINT: Normal atmospheric pressure is 1013 hPa.

  Check cables and connectors to the air pressure sensor inlet for contact resistance or oxidation, short-circuit to ground and voltage as well as open circuit.

  Remedy as necessary.

  Try with a new air pressure sensor. Check the difference between pressures, the difference shall not be greater than 70 hPa.

  When the difference between the pressures is greater than 70 hPa this indicates that the internal atmospheric pressure sensor in the engine control module (ECM) is damaged. The atmospheric pressure sensor is built into the engine control module (ECM) and therefore cannot be replaced as a separate item.

  Remedy as necessary.

  Other information

  - see **CONNECTING THE BREAKOUT BOX**
  - see **SIGNAL SPECIFICATION, ENGINE CONTROL MODULE (ECM)**
  - see **LOCATION OF COMPONENTS, ENGINE COMPARTMENT**
  - see **CHECKING WIRING AND TERMINALS**
  - see **ENGINE CONTROL MODULE (ECM), REPLACING**

Fig. 403: Identifying VCT2000 Diagnostic Tool Symbol In VIDA
Courtesy of VOLVO CARS CORPORATION

- **Continue**

  Refer to **VERIFICATION**

VERIFICATION

VERIFICATION

HINT: After carrying out the repair, check that the fault has been remedied.

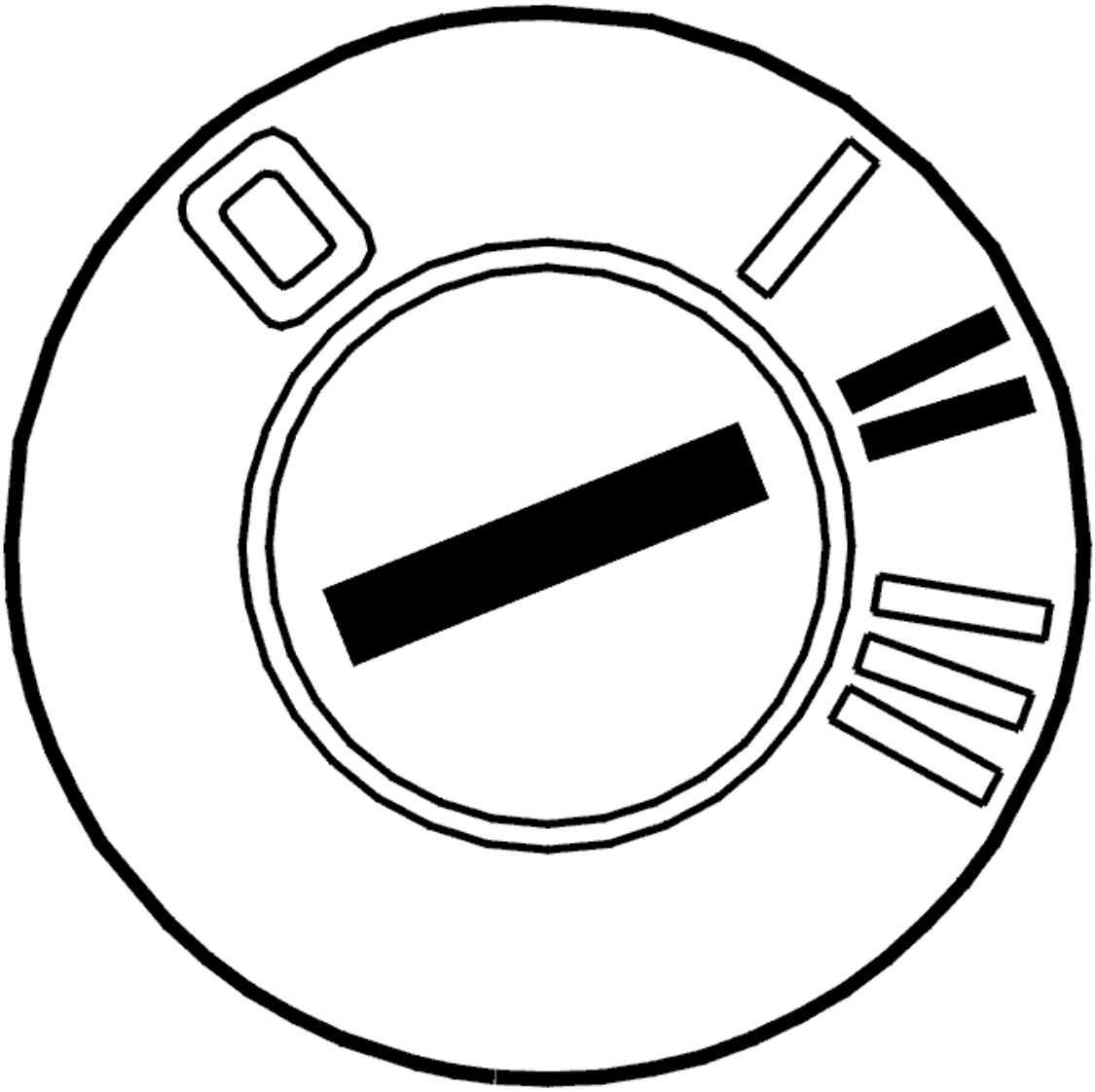

Fig. 404: Identifying Ignition ON
Courtesy of VOLVO CARS CORPORATION

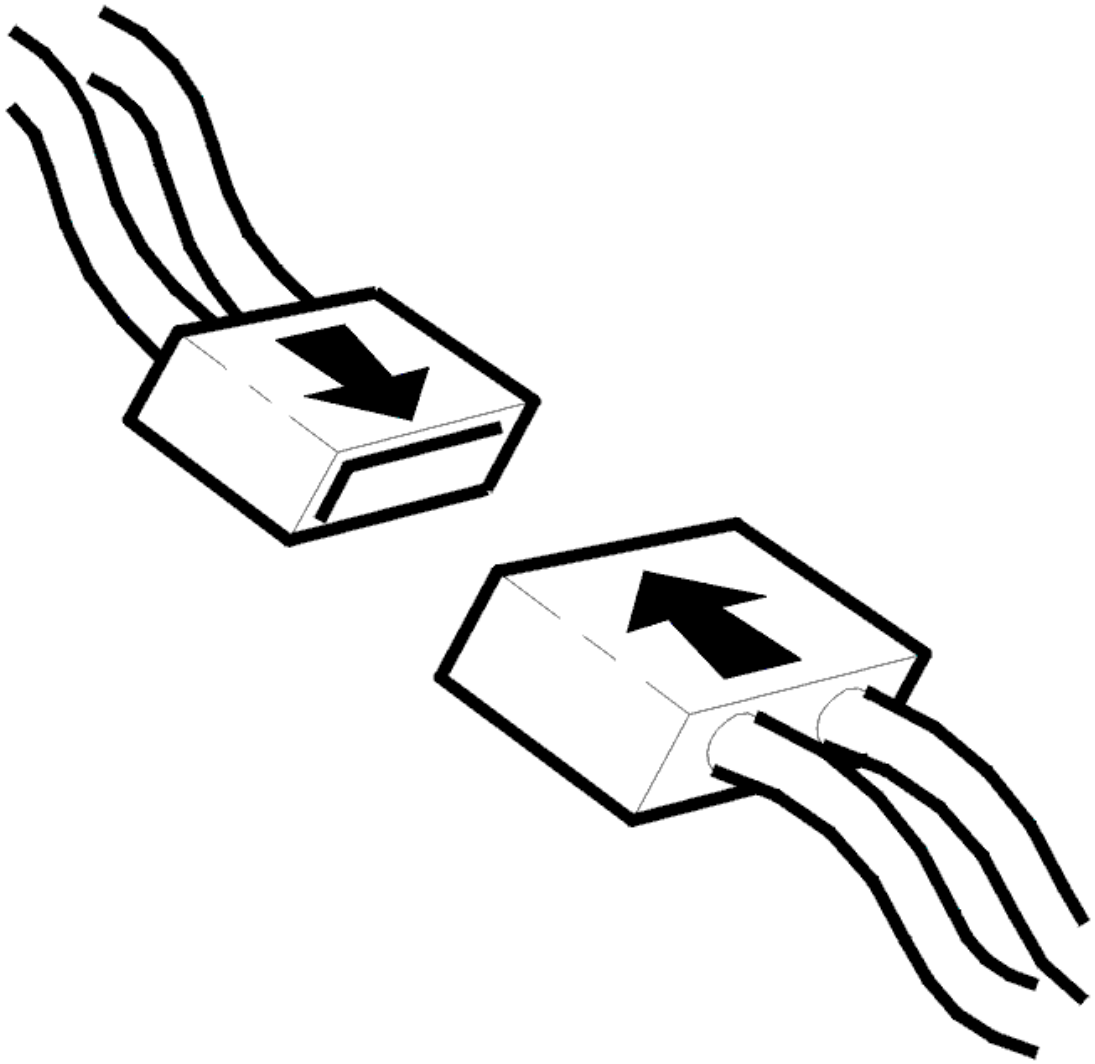

Fig. 405: Connecting Connector
Courtesy of VOLVO CARS CORPORATION

- Ignition off
- Reinstall the connectors, components etc.
- Ignition on

  Read off the pressure sensor signal for intake pressure and the atmospheric pressure sensor signal using the VCT2000 (or appropriate scan tool).

  Check that the values correspond. The atmospheric pressure sensor signal is used as a reference value in this check.

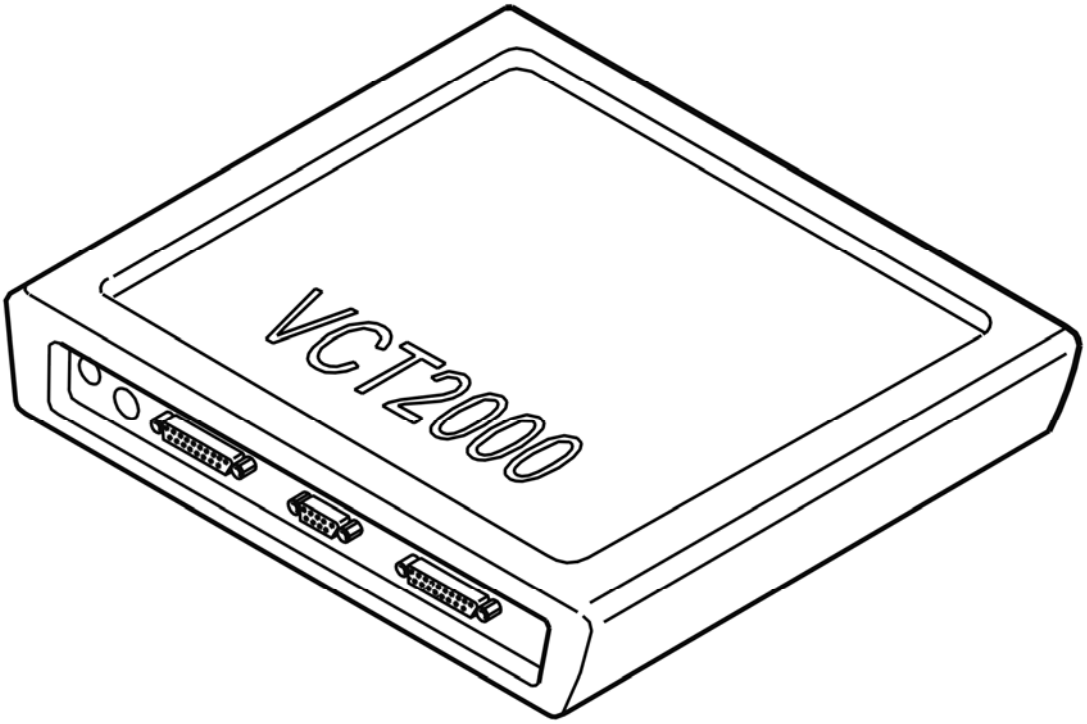

Fig. 406: Identifying VCT2000 Diagnostic Tool Symbol In VIDA
Courtesy of VOLVO CARS CORPORATION

Is the value within its permitted range?

- **YES**

  VERIFIED: Troubleshooting has been completed.

- **NO**

  Refer to **INFORMATION**

INFORMATION

FAULT-TRACING INFORMATION

The fault should have been detected and remedied. As this is not the case fault-tracing has failed.

Exit fault-tracing for this diagnostic trouble code (DTC) or make another attempt.

ECM-P222700: BAROMETRIC PRESSURE CIRCUIT RANGE/PERFORMANCE. GENERAL FAILURE INFORMATION. NO SUB

TYPE INFORMATION (B6324S; 2007-2010)

DIAGNOSTIC TROUBLE CODE (DTC) INFORMATION ECM-P222700

Condition

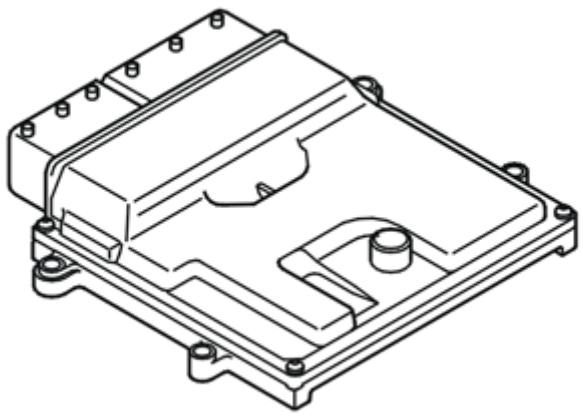

Fig. 407: Identifying Engine Control Module (ECM)
Courtesy of VOLVO CARS CORPORATION

The engine control module (ECM) compares the filtered signal from the pressure sensor in the intake manifold with the signal from the atmospheric pressure sensor in the engine control module (ECM).

The diagnostic trouble code is generated if the control module registers that the deviation is greater than 100 hPa.

The diagnostic trouble code can be diagnosed 15 seconds after the ignition is switched.

Substitute Value

- If the pressure sensor in the intake manifold is OK, a filtered value from such is used. Otherwise, the value 1000 hPa is set (corresponds to sea level).

Possible Source

- Damaged manifold absolute pressure sensor (MAP).
- Damaged engine control module (ECM).

Fault symptom[s]

- Malfunction indicator lamp (MIL) lit.

FAULT-TRACING ECM-P222700

CHECKING THE COMPONENTS AND WIRING

NOTE: Check if other diagnostic trouble codes (DTCs) are stored for the internal atmospheric pressure sensor or if diagnostic trouble codes (DTCs) for the air pressure sensor in the inlet manifold are stored in the Engine Control Module (ECM). These diagnostic trouble codes (DTCs) must be fault-traced and any faults remedied first.

Fig. 408: Checking Traffic Load On CAN Cables
Courtesy of VOLVO CARS CORPORATION

- Ignition on.

  Activate reading the value from the manifold absolute pressure (MAP) sensor and the atmospheric pressure sensor.

  Check the difference between pressures, the difference shall not be greater than 70 hPa.

  HINT: Normal atmospheric pressure is 1013 hPa.

  Check cables and connectors to the air pressure sensor inlet for contact resistance or oxidation, short-circuit to ground and voltage as well as open circuit.

  Remedy as necessary.

  Try with a new air pressure sensor. Check the difference between pressures, the difference shall not be greater than 70 hPa.

  When the difference between the pressures is greater than 70 hPa this indicates that the internal atmospheric pressure sensor in the engine control module (ECM) is damaged. The atmospheric pressure sensor is built into the engine control module (ECM) and therefore cannot be replaced as a separate item.

  Remedy as necessary.

  Other information

  - see **CONNECTING THE BREAKOUT BOX**
  - see **SIGNAL SPECIFICATION**
  - see **LOCATION OF COMPONENTS**
  - see **CHECKING WIRING AND TERMINALS**

- see **ENGINE CONTROL MODULE (ECM), REPLACING**

Fig. 409: Identifying VCT2000 Diagnostic Tool Symbol In VIDA
Courtesy of VOLVO CARS CORPORATION

- **Continue**

  Refer to **VERIFICATION**

VERIFICATION

VERIFICATION

HINT: After carrying out the repair, check that the fault has been remedied.

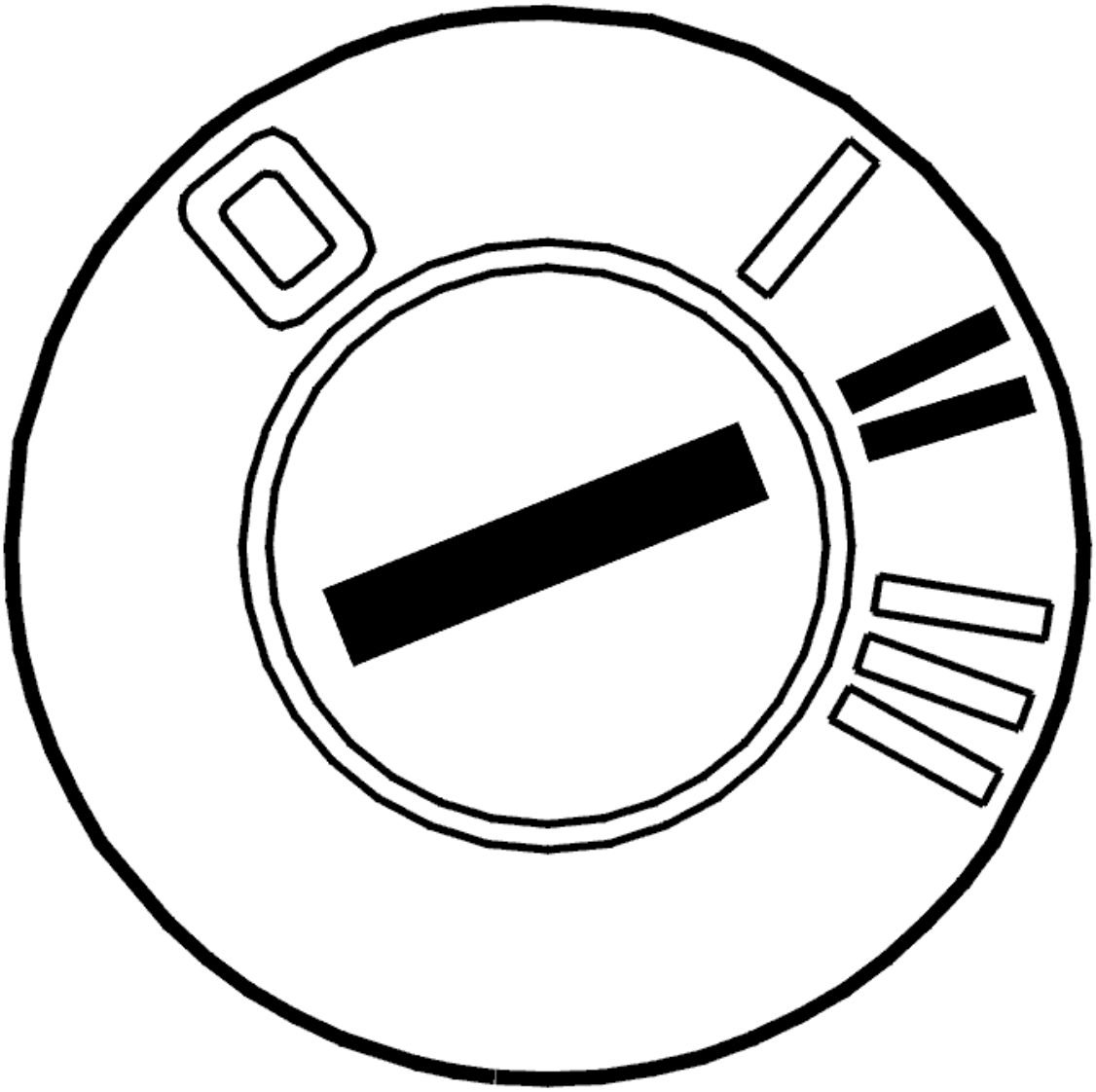

Fig. 410: Identifying Ignition ON
Courtesy of VOLVO CARS CORPORATION

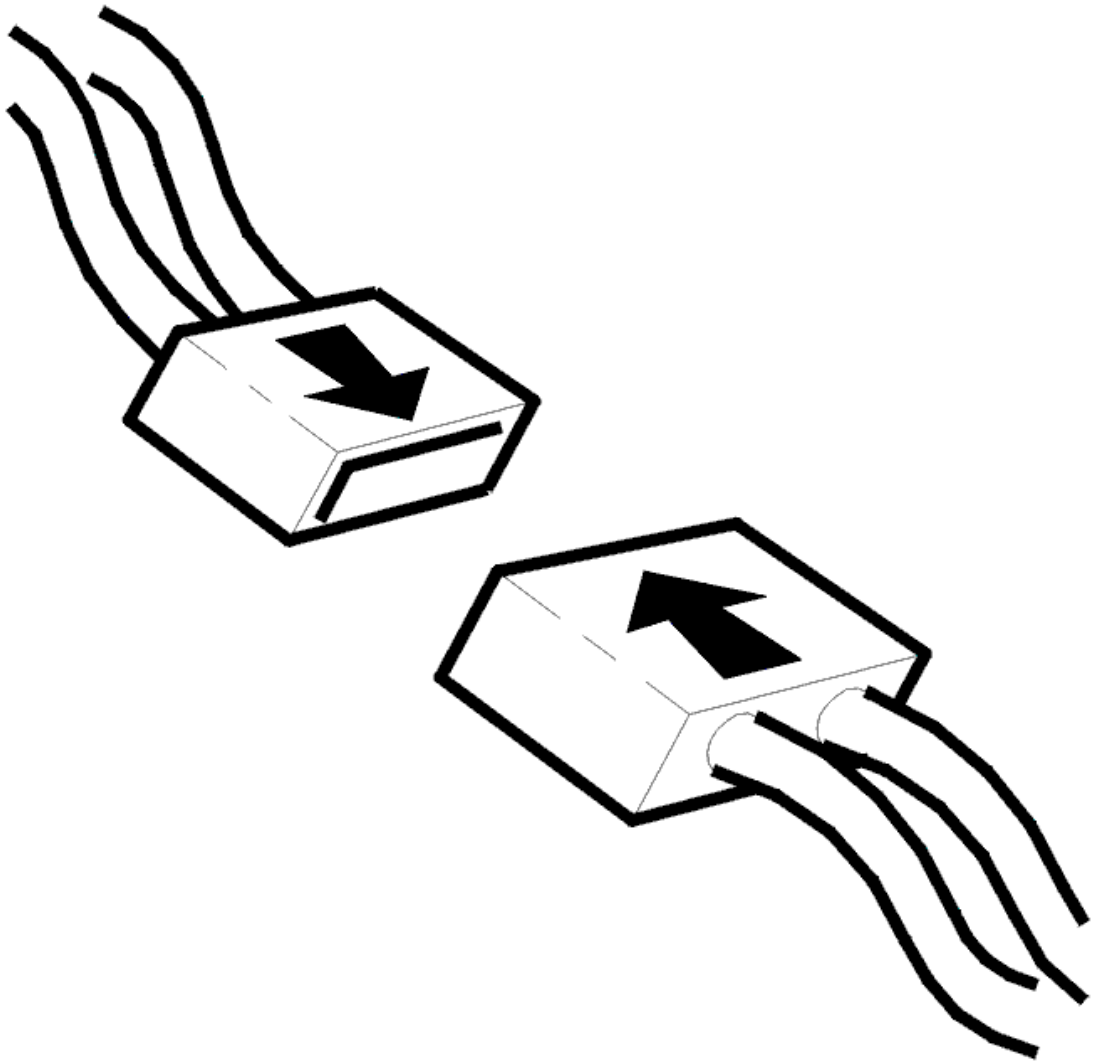

Fig. 411: Connecting Connector
Courtesy of VOLVO CARS CORPORATION

- Ignition off
- Reinstall the connectors, components etc.
- Ignition on

  Read off the pressure sensor signal for intake pressure and the atmospheric pressure sensor signal using the VCT2000 (or appropriate scan tool).

  Check that the values correspond. The atmospheric pressure sensor signal is used as a reference value in this check.

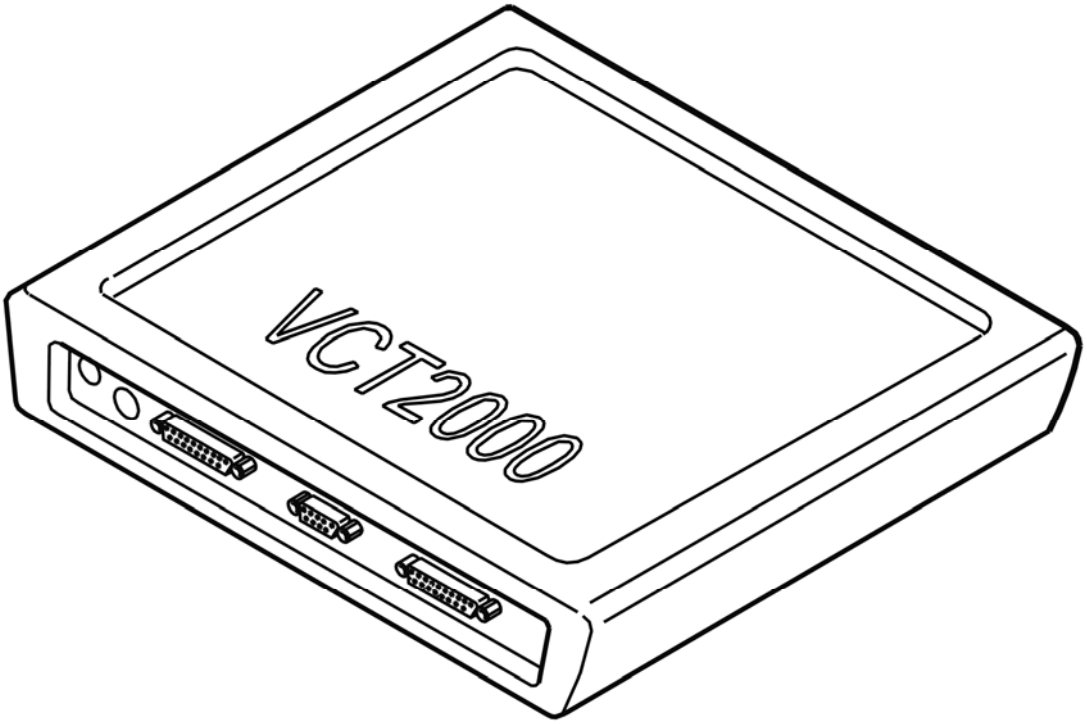

Fig. 412: Identifying VCT2000 Diagnostic Tool Symbol In VIDA
Courtesy of VOLVO CARS CORPORATION

Is the value within its permitted range?

- **YES**

  VERIFIED: Troubleshooting has been completed.

- **NO**

  Refer to **INFORMATION**

INFORMATION

FAULT-TRACING INFORMATION

The fault should have been detected and remedied. As this is not the case fault-tracing has failed.

Exit fault-tracing for this diagnostic trouble code (DTC) or make another attempt.

ECM-P222700: BAROMETRIC PRESSURE CIRCUIT RANGE/PERFORMANCE. GENERAL FAILURE INFORMATION. NO SUB

TYPE INFORMATION (B6324S5; 2011-2012)

DIAGNOSTIC TROUBLE CODE (DTC) INFORMATION ECM-P222700

see **DIAGNOSTIC TROUBLE CODE (DTC) INFORMATION ECM-P222700**

FAULT-TRACING ECM-P222700

see **FAULT-TRACING ECM-P222700**

ENGINE PERFORMANCE

Ignition And Control Systems - Diagnostic Trouble Codes and Associated Procedures

ECM-P222800: BAROMETRIC PRESSURE CIRCUIT LOW INPUT. GENERAL FAILURE INFORMATION. NO SUB TYPE INFORMATION (B6324S; 2007-2010)

DIAGNOSTIC TROUBLE CODE (DTC) INFORMATION ECM-P222800

Condition

The Engine control module (ECM) measures the atmospheric pressure using an atmospheric pressure sensor. The control module checks the direct voltage from the sensor.

NOTE: The atmospheric pressure sensor is integrated in the Engine control module (ECM).

The diagnostic trouble code (DTC) is stored if the control module detects that:

- The direct voltage is lower than 0.098 V.
- Incorrect value lasts longer than 9 seconds.
- Incorrect value lasts for 2 or more subsequent driving cycles.

The control module's test for the diagnostic trouble code (DTC) starts in the event of:

- Ignition switch position II.

NOTE: The control module can only detect the fault once the test has been started and the diagnostic trouble code (DTC) is stored when the conditions are met.

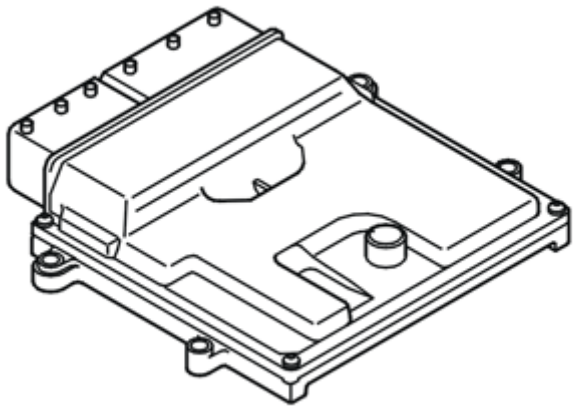

Fig. 1: Identifying Engine Control Module (ECM)
Courtesy of VOLVO CARS CORPORATION

Substitute Value

- The control module uses a value for atmospheric pressure that is calculated based on the air pressure in the inlet manifold.
- If a malfunction has been detected on the air pressure sensor, the control module uses a constant atmospheric pressure, 100 kPa (corresponds to sea level).

Possible Source

- Damaged engine control module (ECM).

NOTE: **The diagnostic trouble code can be generated as a subsequent malfunction to a detected problem with the air pressure sensor in the inlet manifold.**

Fault symptom[s]

- Malfunction indicator light (MIL), on

FAULT-TRACING

see **FAULT-TRACING**

ECM-P222800: BAROMETRIC PRESSURE CIRCUIT LOW INPUT. GENERAL FAILURE INFORMATION. NO SUB TYPE INFORMATION (B6324S5; 2011-2012)

DIAGNOSTIC TROUBLE CODE (DTC) INFORMATION ECM-P222800

see **DIAGNOSTIC TROUBLE CODE (DTC) INFORMATION ECM-P222800**

FAULT-TRACING

see **FAULT-TRACING**

ECM-P222800: ATMOSPHERIC PRESSURE CIRCUIT LOW INPUT SIGNAL. GENERAL FAULT INFORMATION. TYPE OF FAULT NOT SPECIFIED. (B8444S; 2005-2011)

DIAGNOSTIC TROUBLE CODE (DTC) INFORMATION

Condition

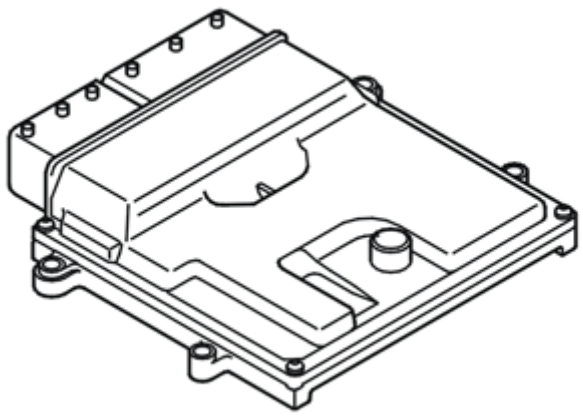

Fig. 2: Identifying Engine Control Module (ECM)
Courtesy of VOLVO CARS CORPORATION

The diagnostic trouble code is generated if the engine control module (ECM) registers an internal fault that indicates that the signal from the internal atmospheric pressure sensor is faulty.

The diagnostic trouble code can be diagnosed when the ignition has been switched on for at least 15 seconds.

Substitute Value

- If the pressure sensor in the intake manifold is OK, a filtered value from such is used. Otherwise, the value 1000 hPa is set (corresponds to sea level).

Possible Source

- Damaged engine control module (ECM).

Fault symptom[s]

- Malfunction indicator lamp (MIL) lit.

FAULT TRACING

CHECKING THE STATUS

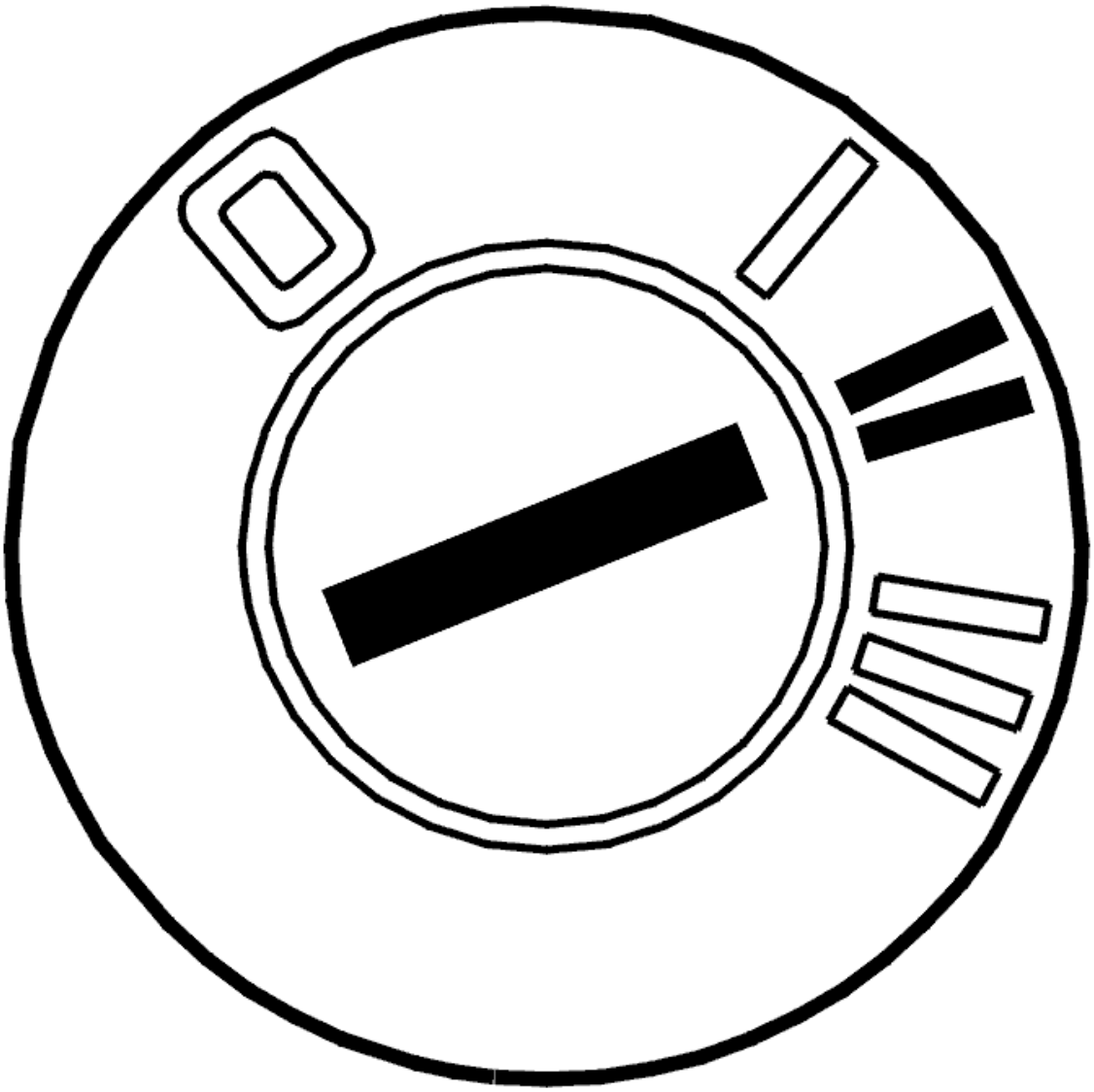

Fig. 3: Identifying Ignition ON
Courtesy of VOLVO CARS CORPORATION

- Ignition on, wait for at least 15 seconds to carry out diagnostics.

  Read the diagnostic status and fault status for the diagnostic trouble code by selecting the diagnostic trouble code in the list.

Check whether the fault is permanent or intermittent. Read off the diagnostic trouble code (DTC) fault status when the diagnostic status is "Completed".

The fault is permanent if the fault status is "Fault found". If the fault status is "No fault found" the fault is intermittent and not presently active.

NOTE: The fault status cannot change from "Fault found" to "No fault found" in the same operating cycle.

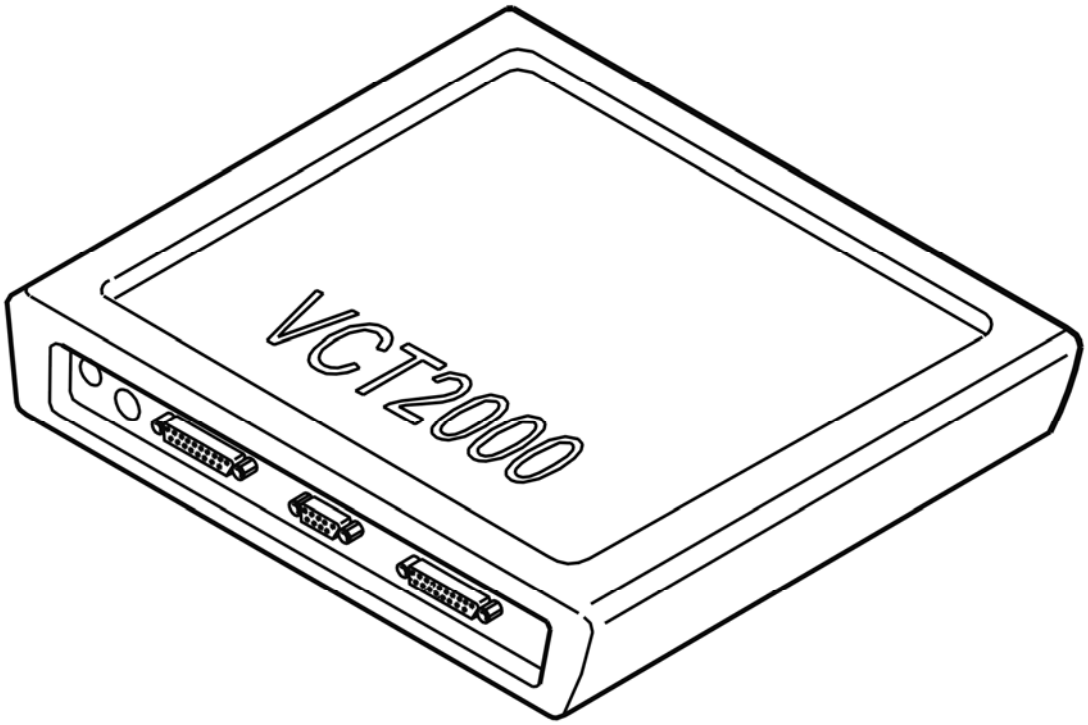

Fig. 4: Identifying VCT2000 Diagnostic Tool Symbol In VIDA
Courtesy of VOLVO CARS CORPORATION

- **Continue**

Refer to **REPLACING THE COMPONENT**

REPLACING THE COMPONENT

The engine control module (ECM) has registered an internal fault in the atmospheric pressure sensor in the control module.

If the fault is intermittent, it has been registered previously but no longer remains. Intermittent faults can be due to disruption when the engine control module (ECM) started or can be another type of fault that may recur at different instances. The fault is assessed on a case by case basis. If the fault recurs, replace the engine control

module (ECM).

In the event of a permanent fault, replace the engine control module (ECM).

Remedy as necessary.

Other information

- see **ENGINE CONTROL MODULE (ECM), REPLACING**

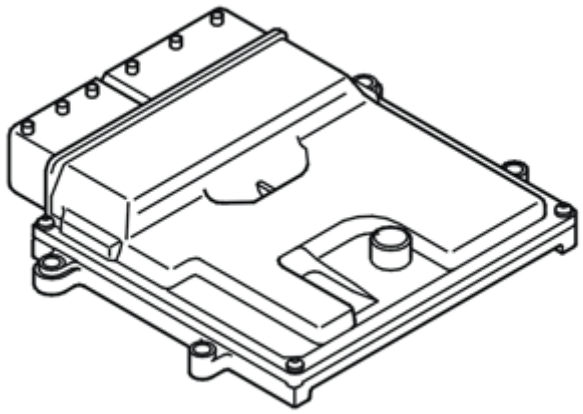

Fig. 5: Identifying Engine Control Module (ECM)
Courtesy of VOLVO CARS CORPORATION

- **Continue**

  Refer to **INFORMATION**

INFORMATION

FAULT-TRACING INFORMATION

In case of this defect, troubleshooting is not followed by verification.

The information can be displayed again or the fault-tracing for this fault can be interrupted.

ECM-P222900: BAROMETRIC PRESSURE CIRCUIT HIGH INPUT. GENERAL FAILURE INFORMATION. NO SUB TYPE INFORMATION (B6324S; 2007-2010)

DIAGNOSTIC TROUBLE CODE (DTC) INFORMATION ECM-P222900

Condition

The Engine control module (ECM) measures the atmospheric pressure using an atmospheric pressure sensor. The control module checks the direct voltage from the sensor.

NOTE: The atmospheric pressure sensor is integrated in the Engine control module (ECM).

The diagnostic trouble code (DTC) is stored if the control module detects that:

- The direct voltage is higher than 4.526 V.
- Incorrect value lasts longer than 9 seconds.
- Incorrect value lasts for 2 or more subsequent driving cycles.

The control module's test for the diagnostic trouble code (DTC) starts in the event of:

- Ignition switch position II.

NOTE: The control module can only detect the fault once the test has been started and the diagnostic trouble code (DTC) is stored when the conditions are met.

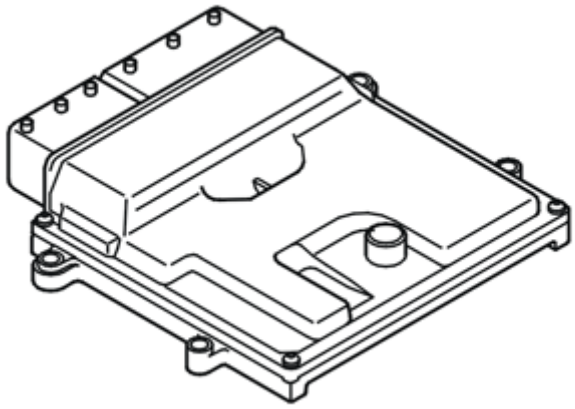

Fig. 6: Identifying Engine Control Module (ECM)
Courtesy of VOLVO CARS CORPORATION

Substitute Value

- The control module uses a value for atmospheric pressure that is calculated based on the air pressure in the inlet manifold.
- If a malfunction has been detected on the air pressure sensor, the control module uses a constant atmospheric pressure, 100 kPa (corresponds to sea level).

Possible Source

- Damaged engine control module (ECM).

NOTE: **The diagnostic trouble code can be generated as a subsequent malfunction to a detected problem with the air pressure sensor in the inlet manifold.**

Fault symptom[s]

- Malfunction indicator light (MIL), on

FAULT-TRACING

see **FAULT-TRACING**

ECM-P222900: BAROMETRIC PRESSURE CIRCUIT HIGH INPUT. GENERAL FAILURE INFORMATION. NO SUB TYPE INFORMATION (B6324S5; 2011-2012)

DIAGNOSTIC TROUBLE CODE (DTC) INFORMATION ECM-P222900

see **DIAGNOSTIC TROUBLE CODE (DTC) INFORMATION ECM-P222900**

FAULT-TRACING

see **FAULT-TRACING**

ECM-P227000: O2 SENSOR SIGNAL STUCK LEAN - BANK 1, SENSOR 2. GENERAL FAILURE INFORMATION. NO SUB TYPE INFORMATION (B6324S; 2008-2010)

DIAGNOSTIC TROUBLE CODE (DTC) INFORMATION

Condition

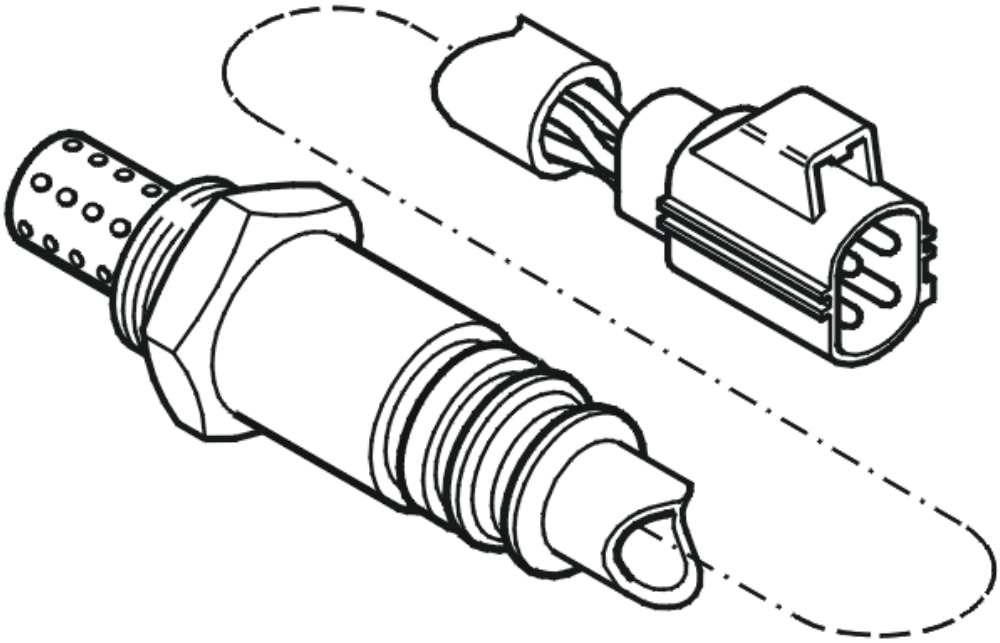

Fig. 7: Identifying Heated Oxygen Sensor
Courtesy of VOLVO CARS CORPORATION

The engine control module (ECM) continuously detects the voltage of the rear lambda probe (bank 1).

The engine's cylinders are counted starting with the cylinder farthest from the engine's flywheel.

If engine control module (ECM) detects that the voltage is not below or above a certain value, the engine control module (ECM) interprets this as a malfunction and generates diagnostic trouble code.

The diagnostic trouble code can be diagnosed after approx. 3-5 minutes with the engine running.

Substitute Value

- Rear heated oxygen sensor control is shut off.

Possible Source

- Contact resistance and oxidation in connections.
- The signal cable is short-circuited to ground.
- Open circuit on signal cable.
- Damaged rear heated oxygen sensor (HO2S).

Fault symptom[s]

- Malfunction indicator light (MIL) on.

FAULT-TRACING

see **FAULT-TRACING**

ECM-P227000: O2 SENSOR SIGNAL STUCK LEAN - BANK 1, SENSOR 2. GENERAL FAILURE INFORMATION. NO SUB TYPE INFORMATION (B6324S5; 2011-2012)

DIAGNOSTIC TROUBLE CODE (DTC) INFORMATION

Condition

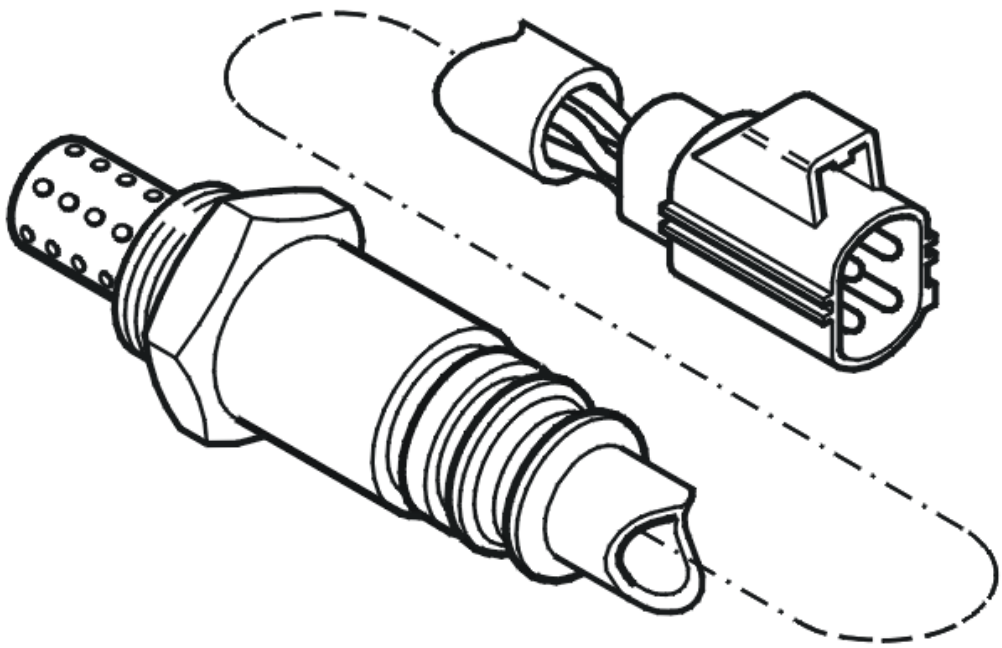

Fig. 8: Identifying Heated Oxygen Sensor
Courtesy of VOLVO CARS CORPORATION

The engine control module (ECM) continuously detects the voltage of the rear lambda probe (bank 1).

The engine's cylinders are counted starting with the cylinder farthest from the engine's flywheel.

If engine control module (ECM) detects that the voltage is not below or above a certain value, the engine control module (ECM) interprets this as a malfunction and generates diagnostic trouble code.

The diagnostic trouble code can be diagnosed after approx. 3-5 minutes with the engine running.

Substitute Value

- Rear heated oxygen sensor control is shut off.

Possible Source

- Contact resistance and oxidation in connections.
- The signal cable is short-circuited to ground.
- Open circuit on signal cable.
- Damaged rear heated oxygen sensor (HO2S).

Fault symptom[s]

- Malfunction indicator light (MIL) on.

FAULT-TRACING

see **FAULT-TRACING**

ECM-P227000: O2 SENSOR SIGNAL STUCK LEAN - BANK 1, SENSOR 2. GENERAL FAILURE INFORMATION. NO SUB TYPE INFORMATION (B8444S; 2008-2011)

DIAGNOSTIC TROUBLE CODE (DTC) INFORMATION

Condition

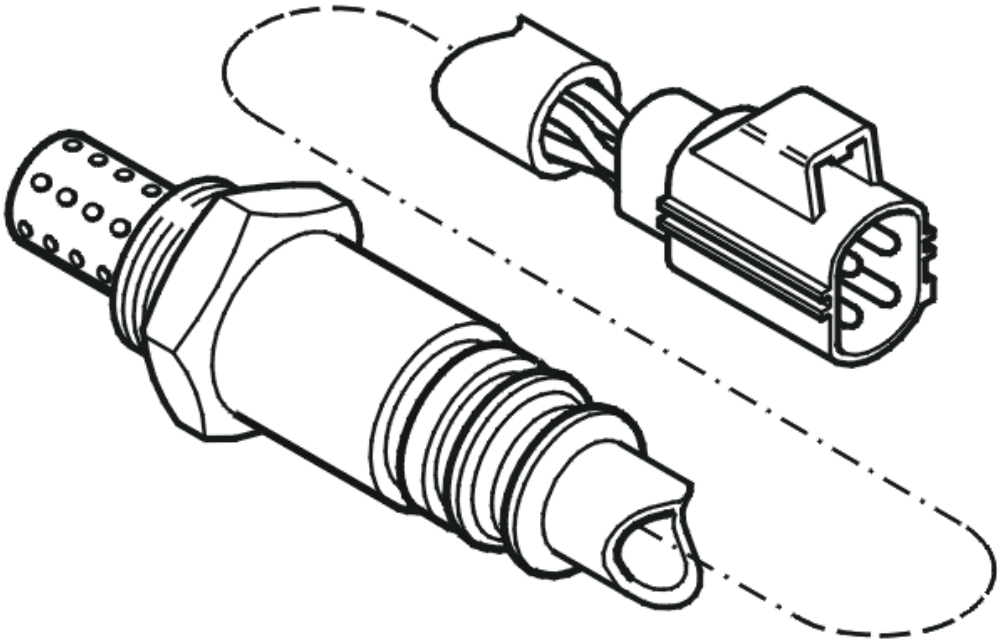

Fig. 9: Identifying Heated Oxygen Sensor
Courtesy of VOLVO CARS CORPORATION

The engine control module (ECM) continuously detects the voltage of the rear lambda probe (bank 1).

The engine's cylinders are counted starting with the cylinder farthest from the engine's flywheel.

- Bank 1 (cylinder row nearest the front): cylinders 1, 3, 5 and 7.
- Bank 2 (cylinder row furthest to the rear, nearest the passenger compartment): cylinders 2, 4, 6, and 8.

If engine control module (ECM) detects that the voltage is not below or above a certain value, the engine control module (ECM) interprets this as a malfunction and generates diagnostic trouble code.

The diagnostic trouble code can be diagnosed after approx. 3-5 minutes with the engine running.

Substitute Value

- Rear heated oxygen sensor control is shut off.

Possible Source

- Contact resistance and oxidation in connections.
- The signal cable is short-circuited to ground.

- Open circuit on signal cable.
- Damaged rear heated oxygen sensor (HO2S).

Fault symptom[s]

- Malfunction indicator light (MIL) on.

FAULT-TRACING

see **FAULT-TRACING**

ECM-P227100: O2 SENSOR SIGNAL STUCK RICH - BANK 1, SENSOR 2. GENERAL FAILURE INFORMATION. NO SUB TYPE INFORMATION (B6324S; 2008-2010)

DIAGNOSTIC TROUBLE CODE (DTC) INFORMATION

Condition

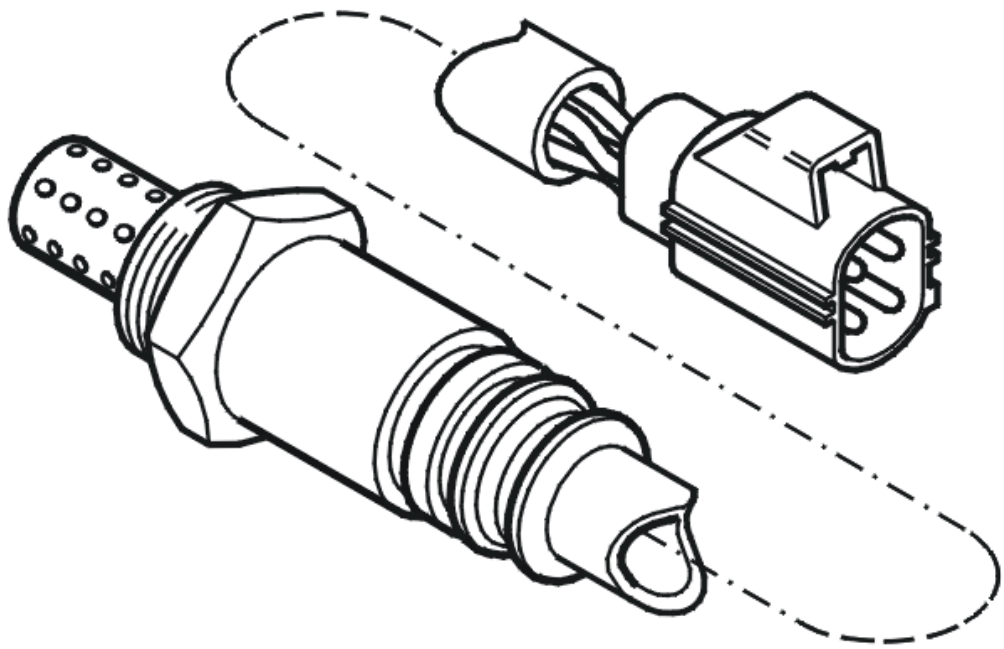

Fig. 10: Identifying Heated Oxygen Sensor
Courtesy of VOLVO CARS CORPORATION

The engine control module (ECM) continuously detects the voltage of the rear lambda probe (bank 1).

The engine's cylinders are counted starting with the cylinder farthest from the engine's flywheel.

If engine control module (ECM) detects that the voltage is not below or above a certain value, the engine control module (ECM) interprets this as a malfunction and generates diagnostic trouble code.

The diagnostic trouble code can be diagnosed after approx. 3-5 minutes with the engine running.

Substitute Value

- Rear heated oxygen sensor control is shut off.

Possible Source

- The signal cable is short-circuited to voltage.

Fault symptom[s]

- Malfunction indicator light (MIL) on.

FAULT-TRACING

see **FAULT-TRACING**

ECM-P227100: O2 SENSOR SIGNAL STUCK RICH - BANK 1, SENSOR 2. GENERAL FAILURE INFORMATION. NO SUB TYPE INFORMATION (B6324S5; 2011-2012)

DIAGNOSTIC TROUBLE CODE (DTC) INFORMATION

Condition

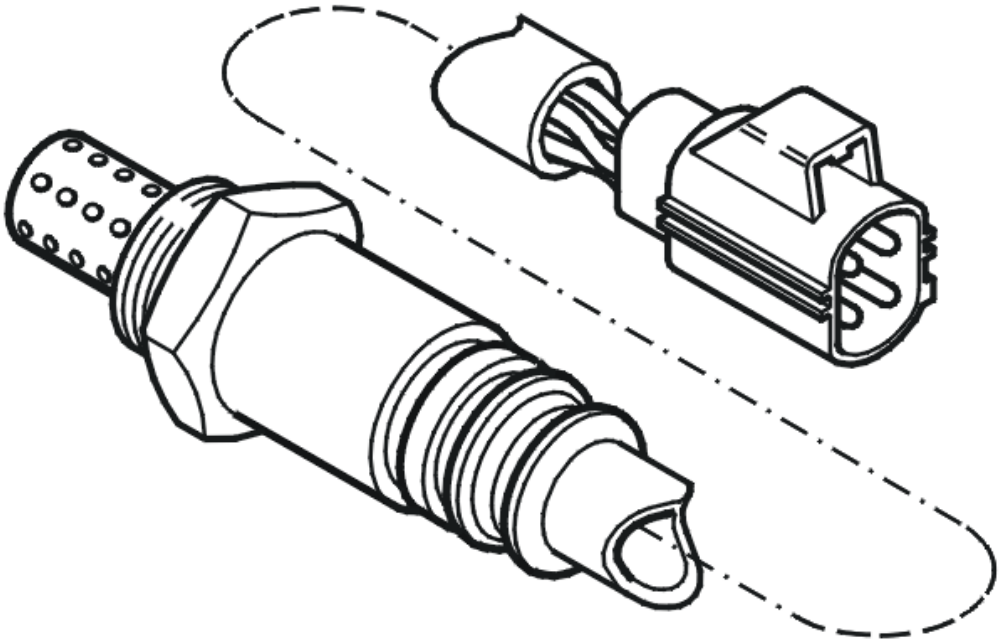

Fig. 11: Identifying Heated Oxygen Sensor
Courtesy of VOLVO CARS CORPORATION

The engine control module (ECM) continuously detects the voltage of the rear lambda probe (bank 1).

The engine's cylinders are counted starting with the cylinder farthest from the engine's flywheel.

If engine control module (ECM) detects that the voltage is not below or above a certain value, the engine control module (ECM) interprets this as a malfunction and generates diagnostic trouble code.

The diagnostic trouble code can be diagnosed after approx. 3-5 minutes with the engine running.

Substitute Value

- Rear heated oxygen sensor control is shut off.

Possible Source

- The signal cable is short-circuited to voltage.

Fault symptom[s]

- Malfunction indicator light (MIL) on.

FAULT-TRACING

see **FAULT-TRACING**

ECM-P227100: O2 SENSOR SIGNAL STUCK RICH - BANK 1, SENSOR 2. GENERAL FAILURE INFORMATION. NO SUB TYPE INFORMATION (B8444S; 2008-2011)

DIAGNOSTIC TROUBLE CODE (DTC) INFORMATION

Condition

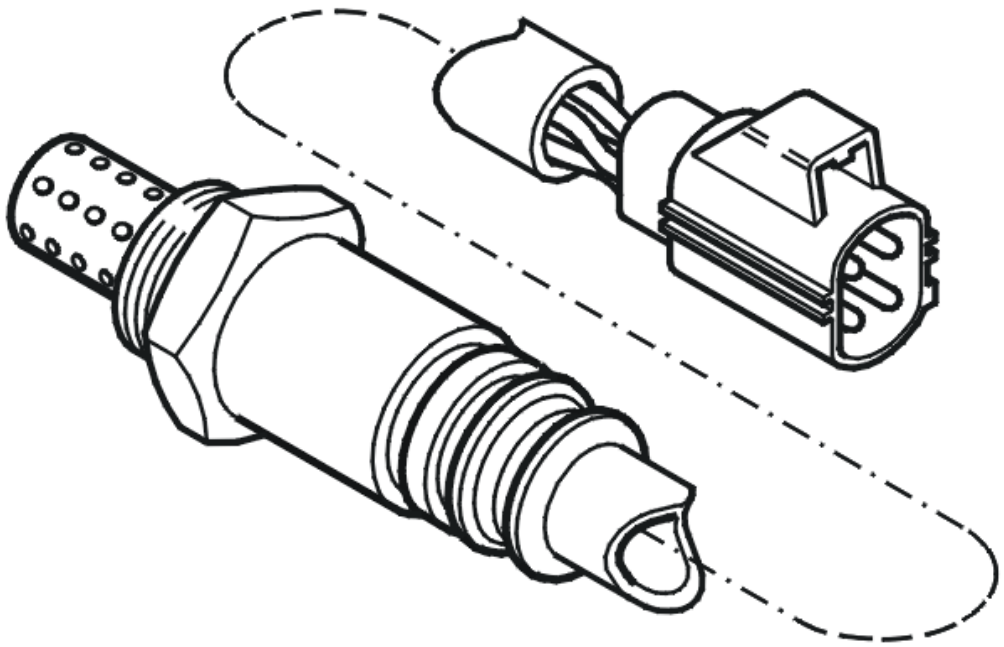

Fig. 12: Identifying Heated Oxygen Sensor
Courtesy of VOLVO CARS CORPORATION

The engine control module (ECM) continuously detects the voltage of the rear lambda probe (bank 1).

The engine's cylinders are counted starting with the cylinder farthest from the engine's flywheel.

- Bank 1 (cylinder row nearest the front): cylinders 1, 3, 5 and 7.
- Bank 2 (cylinder row furthest to the rear, nearest the passenger compartment): cylinders 2, 4, 6, and 8.

If engine control module (ECM) detects that the voltage is not below or above a certain value, the engine

control module (ECM) interprets this as a malfunction and generates diagnostic trouble code.

The diagnostic trouble code can be diagnosed after approx. 3-5 minutes with the engine running.

Substitute Value

- Rear heated oxygen sensor control is shut off.

Possible Source

- The signal cable is short-circuited to voltage.

Fault symptom[s]

- Malfunction indicator light (MIL) on.

FAULT-TRACING

see **FAULT-TRACING**

ECM-P227200: O2 SENSOR SIGNAL STUCK LEAN - BANK 2, SENSOR 2. GENERAL FAILURE INFORMATION. NO SUB TYPE INFORMATION (B6324S; 2008-2010)

DIAGNOSTIC TROUBLE CODE (DTC) INFORMATION

Condition

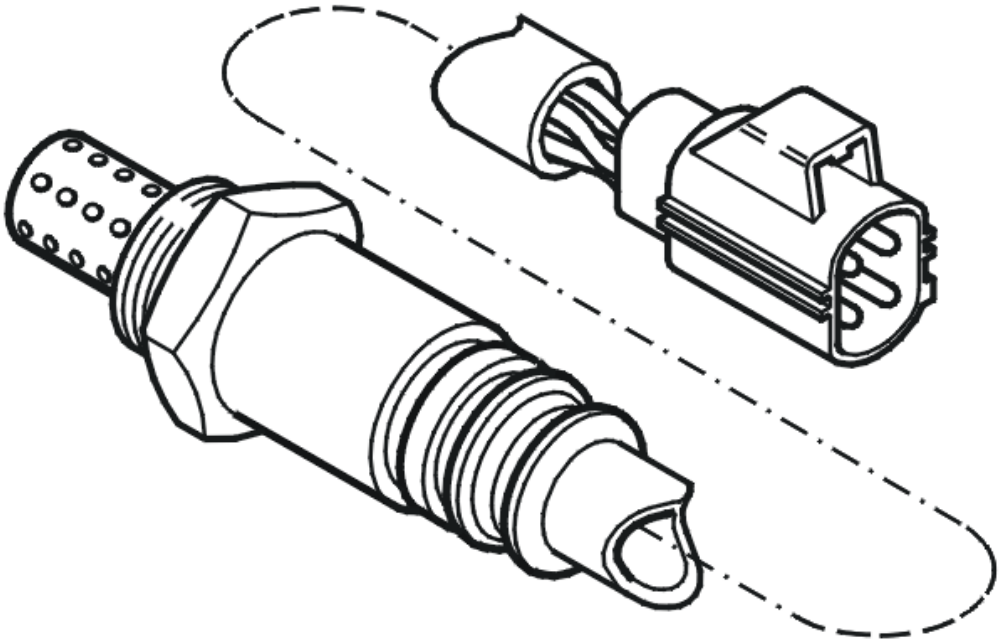

Fig. 13: Identifying Heated Oxygen Sensor
Courtesy of VOLVO CARS CORPORATION

The engine control module (ECM) continuously detects the voltage of the rear lambda probe (bank 2).

The engine's cylinders are counted starting with the cylinder farthest from the engine's flywheel.

If engine control module (ECM) detects that the voltage is not below or above a certain value, the engine control module (ECM) interprets this as a malfunction and generates diagnostic trouble code.

The diagnostic trouble code can be diagnosed after approx. 3-5 minutes with the engine running.

Substitute Value

- Rear heated oxygen sensor control is shut off.

Possible Source

- Contact resistance and oxidation in connections.
- The signal cable is short-circuited to ground.
- Open circuit on signal cable.
- Damaged rear heated oxygen sensor (HO2S).

Fault symptom[s]

- Malfunction indicator light (MIL) on.

FAULT-TRACING

see **FAULT-TRACING**

ECM-P227200: O2 SENSOR SIGNAL STUCK LEAN - BANK 2, SENSOR 2. GENERAL FAILURE INFORMATION. NO SUB TYPE INFORMATION (B6324S5; 2011-2012)

DIAGNOSTIC TROUBLE CODE (DTC) INFORMATION

Condition

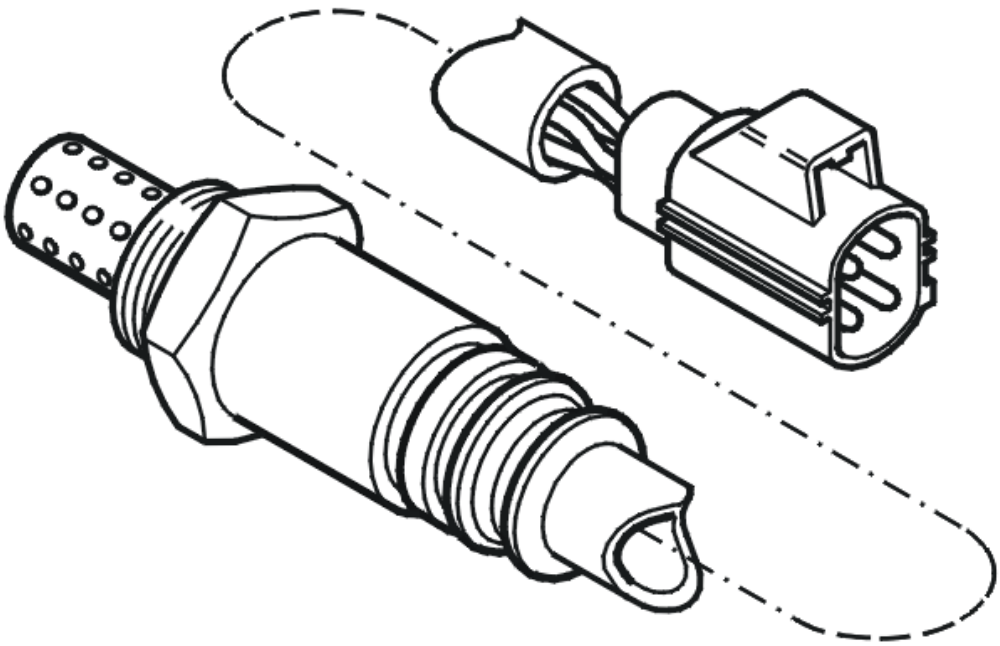

Fig. 14: Identifying Heated Oxygen Sensor
Courtesy of VOLVO CARS CORPORATION

The engine control module (ECM) continuously detects the voltage of the rear lambda probe (bank 2).

The engine's cylinders are counted starting with the cylinder farthest from the engine's flywheel.

If engine control module (ECM) detects that the voltage is not below or above a certain value, the engine control module (ECM) interprets this as a malfunction and generates diagnostic trouble code.

The diagnostic trouble code can be diagnosed after approx. 3-5 minutes with the engine running.

Substitute Value

- Rear heated oxygen sensor control is shut off.

Possible Source

- Contact resistance and oxidation in connections.
- The signal cable is short-circuited to ground.
- Open circuit on signal cable.
- Damaged rear heated oxygen sensor (HO2S).

Fault symptom[s]

- Malfunction indicator light (MIL) on.

FAULT-TRACING

see **FAULT-TRACING**

ECM-P227200: O2 SENSOR SIGNAL STUCK LEAN - BANK 2, SENSOR 2. GENERAL FAILURE INFORMATION. NO SUB TYPE INFORMATION (B8444S; 2008-2011)

DIAGNOSTIC TROUBLE CODE (DTC) INFORMATION

Condition

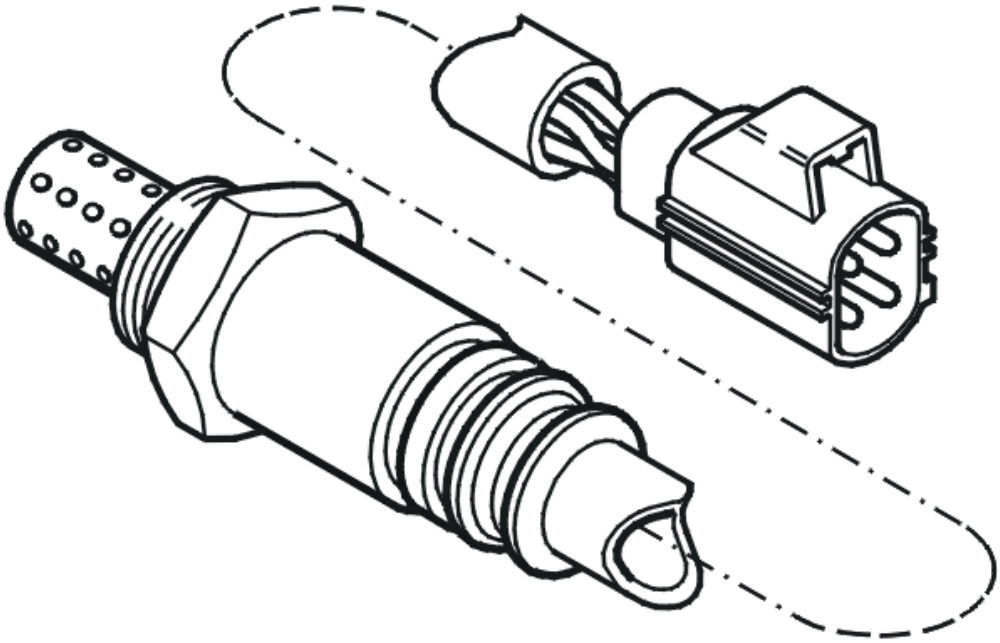

Fig. 15: Identifying Heated Oxygen Sensor
Courtesy of VOLVO CARS CORPORATION

The engine control module (ECM) continuously detects the voltage of the rear lambda probe (bank 2).

The engine's cylinders are counted starting with the cylinder farthest from the engine's flywheel.

- Bank 1 (cylinder row nearest the front): cylinders 1, 3, 5 and 7.
- Bank 2 (cylinder row furthest to the rear, nearest the passenger compartment): cylinders 2, 4, 6, and 8.

If engine control module (ECM) detects that the voltage is not below or above a certain value, the engine control module (ECM) interprets this as a malfunction and generates diagnostic trouble code.

The diagnostic trouble code can be diagnosed after approx. 3-5 minutes with the engine running.

Substitute Value

- Rear heated oxygen sensor control is shut off.

Possible Source

- Contact resistance and oxidation in connections.
- The signal cable is short-circuited to ground.

- Open circuit on signal cable.
- Damaged rear heated oxygen sensor (HO2S).

Fault symptom[s]

- Malfunction indicator light (MIL) on.

FAULT-TRACING

see **FAULT-TRACING**

ECM-P227300: O2 SENSOR SIGNAL STUCK RICH - BANK 2, SENSOR 2. GENERAL FAILURE INFORMATION. NO SUB TYPE INFORMATION (B6324S; 2008-2010)

DIAGNOSTIC TROUBLE CODE (DTC) INFORMATION

Condition

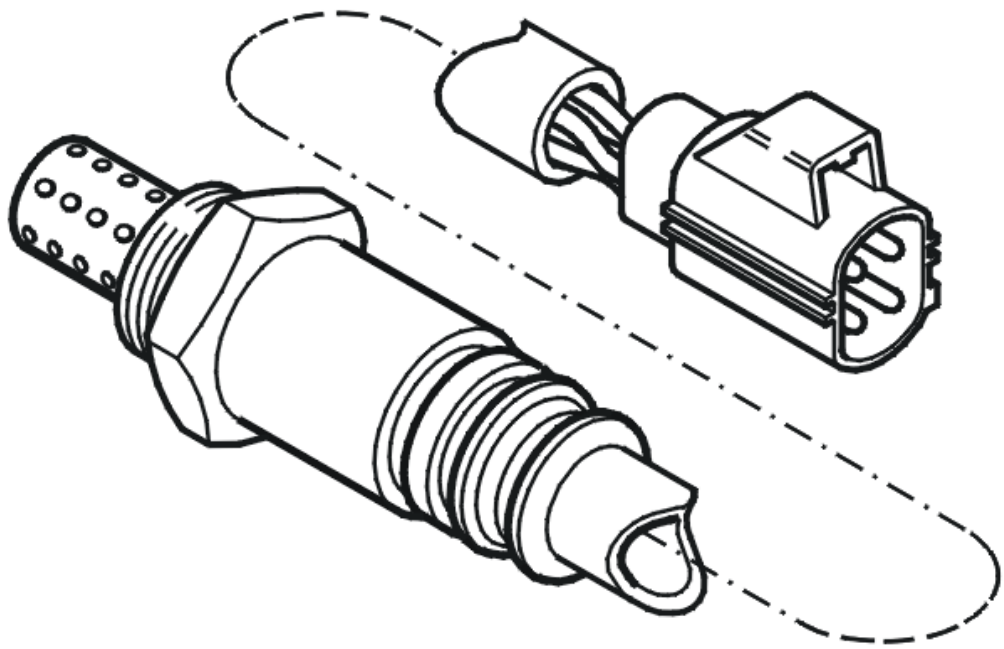

Fig. 16: Identifying Heated Oxygen Sensor
Courtesy of VOLVO CARS CORPORATION

The engine control module (ECM) continuously detects the voltage of the rear lambda probe (bank 2).

The engine's cylinders are counted starting with the cylinder farthest from the engine's flywheel.

If engine control module (ECM) detects that the voltage is not below or above a certain value, the engine control module (ECM) interprets this as a malfunction and generates diagnostic trouble code.

The diagnostic trouble code can be diagnosed after approx. 3-5 minutes with the engine running.

Substitute Value

- Rear heated oxygen sensor control is shut off.

Possible Source

- The signal cable is short-circuited to voltage.

Fault symptom[s]

- Malfunction indicator light (MIL) on.

FAULT-TRACING

see **FAULT-TRACING**

ECM-P227300: O2 SENSOR SIGNAL STUCK RICH - BANK 2, SENSOR 2. GENERAL FAILURE INFORMATION. NO SUB TYPE INFORMATION (B6324S5; 2011-2012)

DIAGNOSTIC TROUBLE CODE (DTC) INFORMATION

Condition

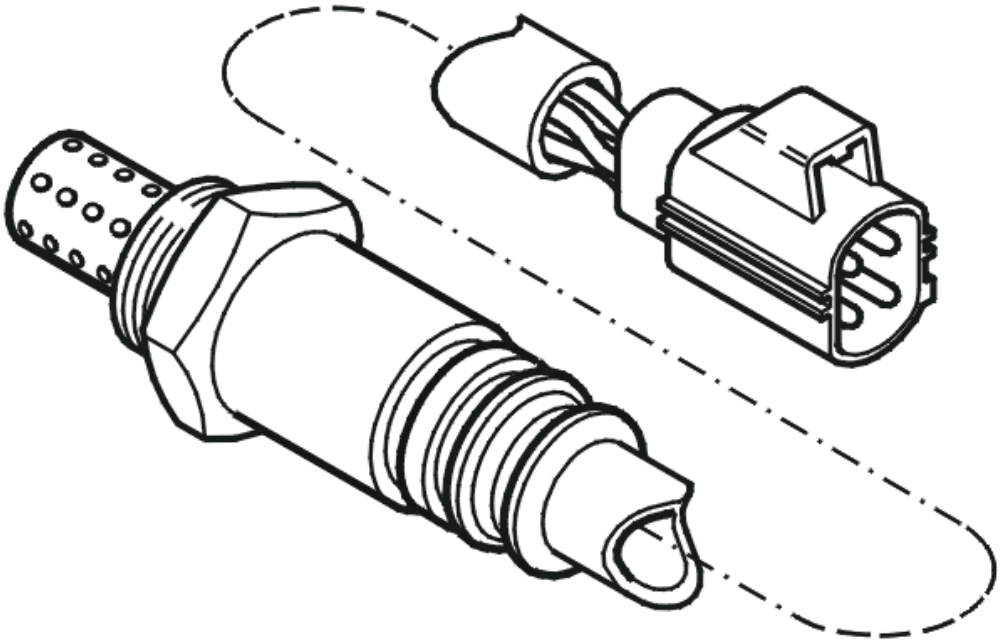

Fig. 17: Identifying Heated Oxygen Sensor
Courtesy of VOLVO CARS CORPORATION

The engine control module (ECM) continuously detects the voltage of the rear lambda probe (bank 2).

The engine's cylinders are counted starting with the cylinder farthest from the engine's flywheel.

If engine control module (ECM) detects that the voltage is not below or above a certain value, the engine control module (ECM) interprets this as a malfunction and generates diagnostic trouble code.

The diagnostic trouble code can be diagnosed after approx. 3-5 minutes with the engine running.

Substitute Value

- Rear heated oxygen sensor control is shut off.

Possible Source

- The signal cable is short-circuited to voltage.

Fault symptom[s]

- Malfunction indicator light (MIL) on.

FAULT-TRACING

see **FAULT-TRACING**

ECM-P227300: O2 SENSOR SIGNAL STUCK RICH - BANK 2, SENSOR 2. GENERAL FAILURE INFORMATION. NO SUB TYPE INFORMATION (B8444S; 2008-2011)

DIAGNOSTIC TROUBLE CODE (DTC) INFORMATION

Condition

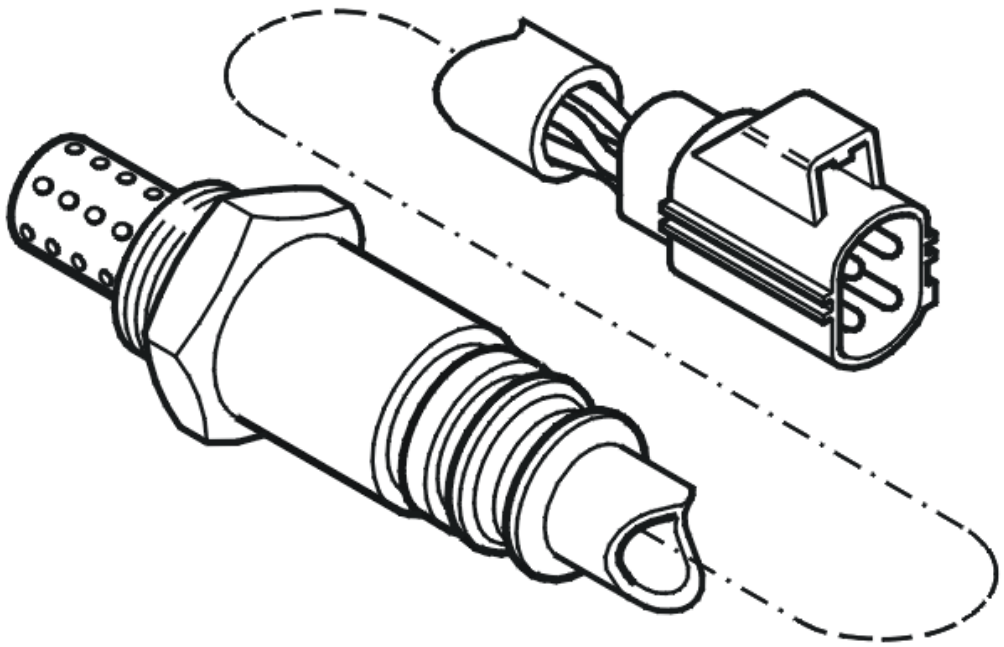

Fig. 18: Identifying Heated Oxygen Sensor
Courtesy of VOLVO CARS CORPORATION

The engine control module (ECM) continuously detects the voltage of the rear lambda probe (bank 2).

The engine's cylinders are counted starting with the cylinder farthest from the engine's flywheel.

- Bank 1 (cylinder row nearest the front): cylinders 1, 3, 5 and 7.
- Bank 2 (cylinder row furthest to the rear, nearest the passenger compartment): cylinders 2, 4, 6, and 8.

If engine control module (ECM) detects that the voltage is not below or above a certain value, the engine

control module (ECM) interprets this as a malfunction and generates diagnostic trouble code.

The diagnostic trouble code can be diagnosed after approx. 3-5 minutes with the engine running.

Substitute Value

- Rear heated oxygen sensor control is shut off.

Possible Source

- The signal cable is short-circuited to voltage.

Fault symptom[s]

- Malfunction indicator light (MIL) on.

FAULT-TRACING

see **FAULT-TRACING**

ECM-P240100: EVAPORATIVE EMISSION SYSTEM LEAK DETECTION PUMP CONTROL CIRCUIT LOW. GENERAL FAILURE INFORMATION. NO SUB TYPE INFORMATION (B6324S; 2007-2010)

DIAGNOSTIC TROUBLE CODE (DTC) INFORMATION ECM-P240100

Condition

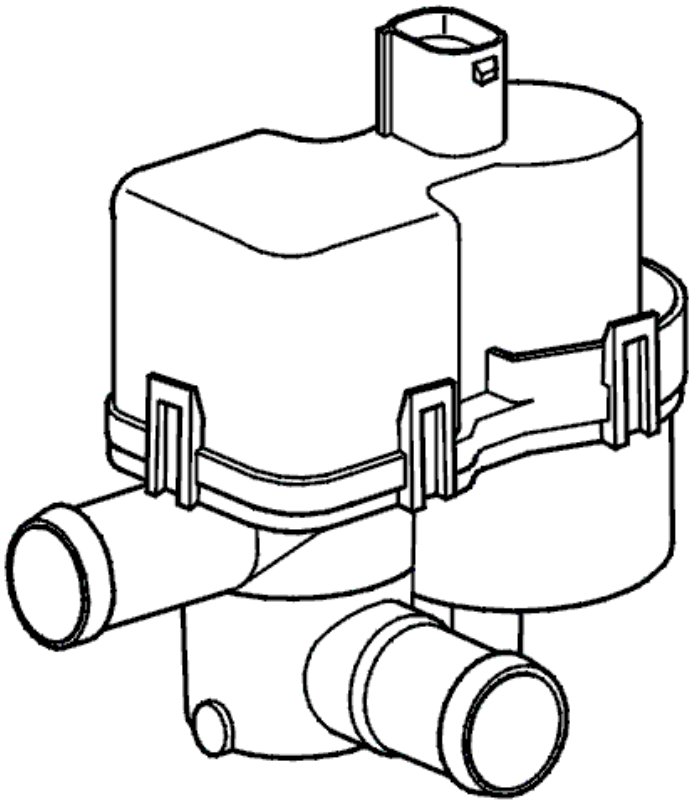

Fig. 19: Identifying Leak Diagnostic Pump
Courtesy of VOLVO CARS CORPORATION

The engine control module (ECM) checks the control signal to the leakage diagnosis pump.

The diagnostic trouble code is generated if the control module registers a fault in the control signal to the leakage diagnosis pump.

The diagnostic trouble code can be diagnosed when the ignition is on.

Substitute Value

- Leakage diagnosis interrupted.

Possible Source

- Short-circuit to ground in the signal cable.
- Open circuit on signal cable.
- Damage leakage diagnosis pump.

Fault symptom[s]

- Malfunction indicator lamp (MIL) lit.

FAULT-TRACING

see **FAULT-TRACING**

ECM-P240100: EVAPORATIVE EMISSION SYSTEM LEAK DETECTION PUMP CONTROL CIRCUIT LOW. GENERAL FAILURE INFORMATION. NO SUB TYPE INFORMATION (B6324S5; 2011-2012)

DIAGNOSTIC TROUBLE CODE (DTC) INFORMATION ECM-P240100

see **DIAGNOSTIC TROUBLE CODE (DTC) INFORMATION ECM-P240100**

FAULT-TRACING

see **FAULT-TRACING**

ECM-P240100: EVAP EMISSION SYSTEM, LEAKAGE DIAGNOSIS PUMP CONTROL CIRCUIT LOW. GENERAL FAULT INFORMATION. TYPE OF FAULT NOT SPECIFIED. (B8444S; 2005-2011)

DIAGNOSTIC TROUBLE CODE (DTC) INFORMATION ECM-P240100

Condition

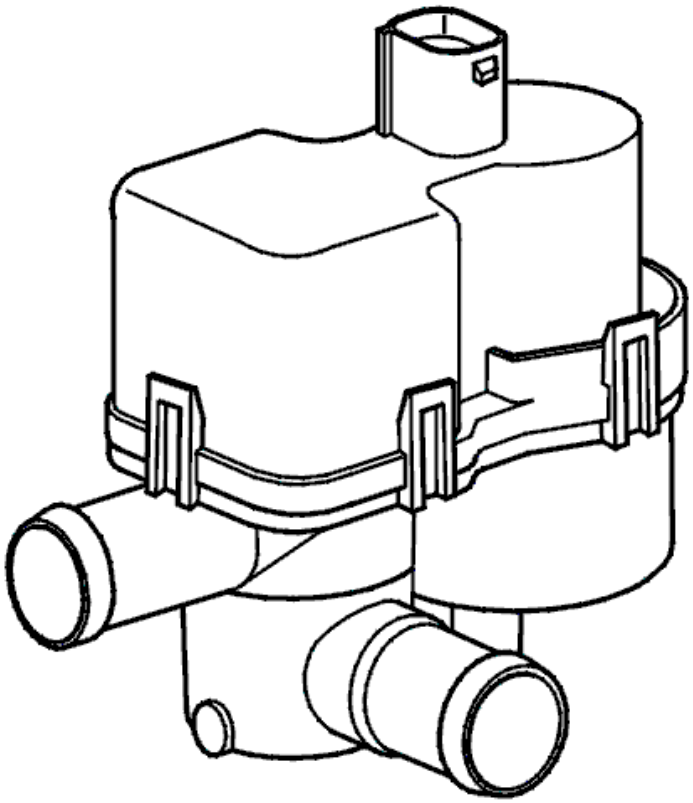

Fig. 20: Identifying Leak Diagnostic Pump
Courtesy of VOLVO CARS CORPORATION

The engine control module (ECM) checks the control signal to the leakage diagnosis pump.

The diagnostic trouble code is generated if the control module registers a fault in the control signal to the leakage diagnosis pump.

The diagnostic trouble code can be diagnosed when the ignition is on.

Substitute Value

- Leakage diagnosis interrupted.

Possible Source

- Short-circuit to ground in the signal cable.
- Open circuit on signal cable.
- Damage leakage diagnosis pump.

Fault symptom[s]

- Malfunction indicator lamp (MIL) lit.

TROUBLESHOOTING ECM-P240100

CHECKING THE STATUS

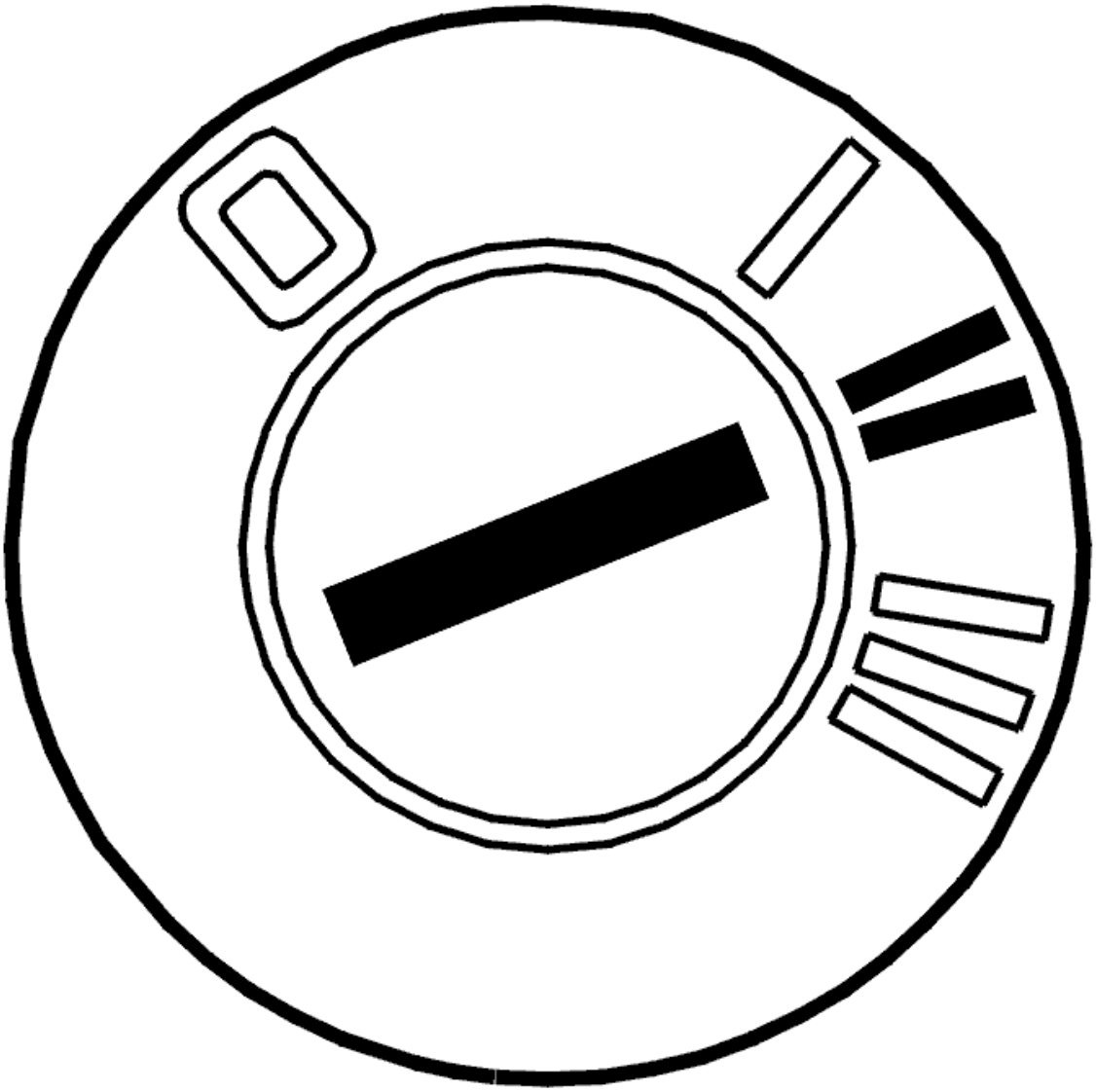

Fig. 21: Identifying Ignition ON
Courtesy of VOLVO CARS CORPORATION

- Ignition on

  Read the diagnostic status and trouble status for the diagnostic trouble code by selecting the diagnostic trouble code in the list.

  Check if the malfunction is permanent or intermittent by reading off the diagnostic trouble code's status when the diagnostic status is "Implemented".

  If the trouble status is "Malfunction found", this indicates that the malfunction is permanent. If the trouble

status is "No malfunction found", this indicates that the malfunction is intermittent and not active right now.

NOTE: Trouble status cannot go from "Malfunction found" to "No malfunction found" in the same operating cycle.

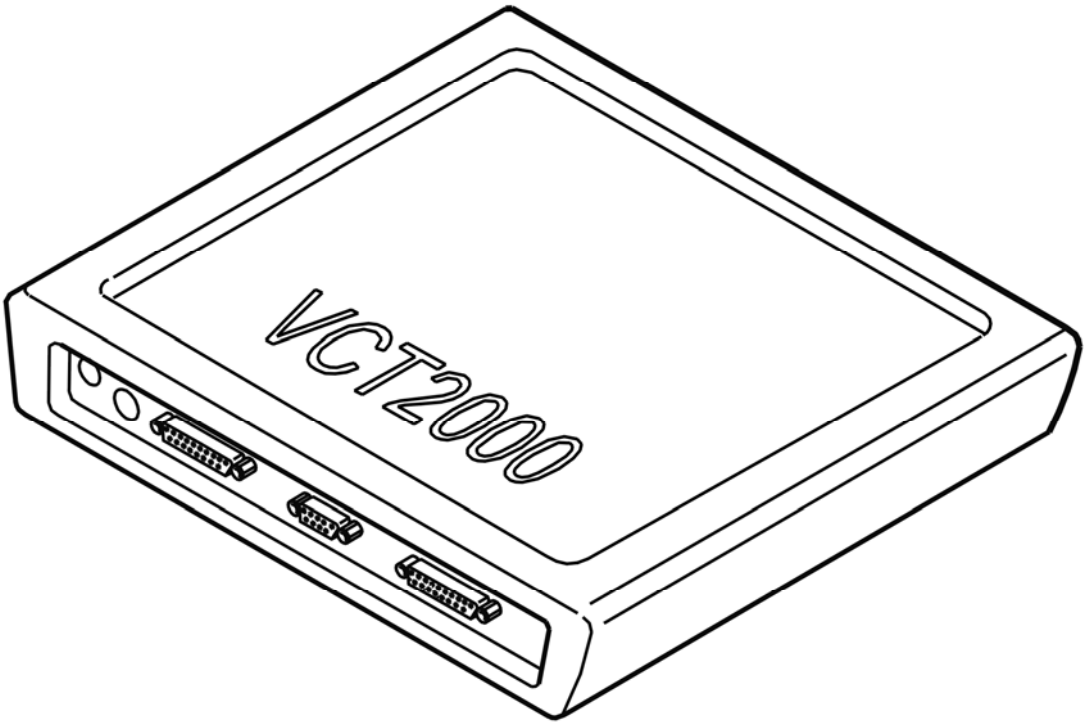

Fig. 22: Identifying VCT2000 Diagnostic Tool Symbol In VIDA
Courtesy of VOLVO CARS CORPORATION

- **Continue**

  Refer to **CHECKING COMPONENT AND CABLES**

CHECKING COMPONENT AND CABLES

Check the leakage diagnostics unit's connector for contact resistance and oxidation.

Check the cable between engine control module (ECM) #B33 (#C33) and the leakage diagnostics unit #1 for short-circuit to ground, as well as open circuit.

Remedy as necessary.

Other information

- see **CONNECTING THE BREAKOUT BOX**
- see **SIGNAL SPECIFICATION, ENGINE CONTROL MODULE (ECM)**
- see **LEAK DIAGNOSTIC PUMP, REPLACING**
- see **CONTENTS**

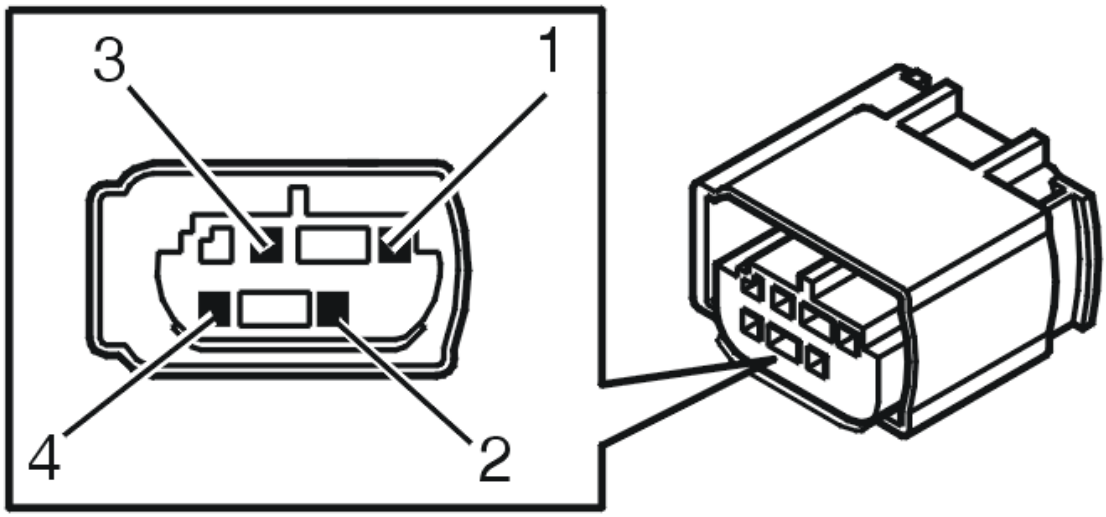

Fig. 23: Identifying Leak Diagnostic Unit Connector Terminals
Courtesy of VOLVO CARS CORPORATION

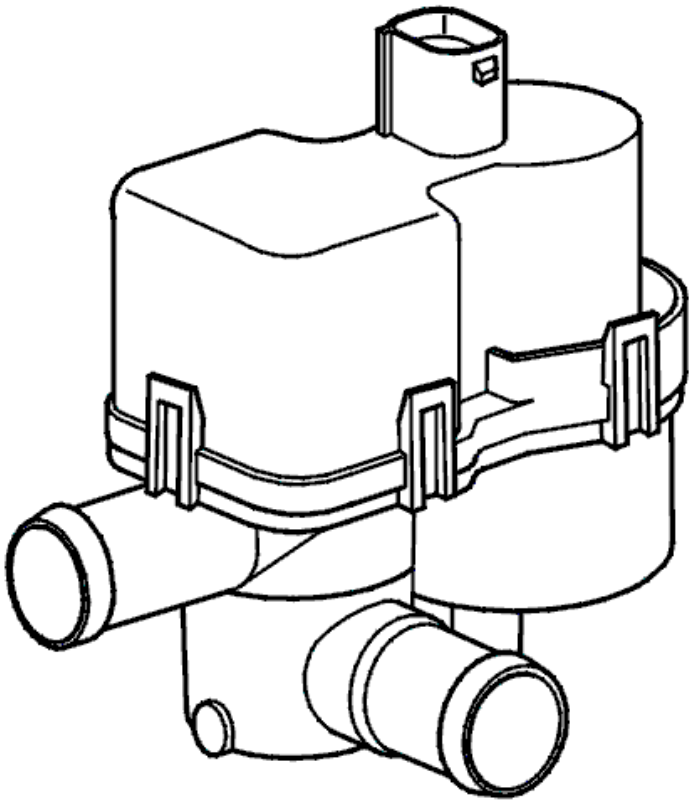

Fig. 24: Identifying Leak Diagnostic Pump
Courtesy of VOLVO CARS CORPORATION

- **Continue**

  Refer to **VERIFICATION**

VERIFICATION

VERIFICATION

HINT: After carrying out the repair, check that the fault has been remedied.

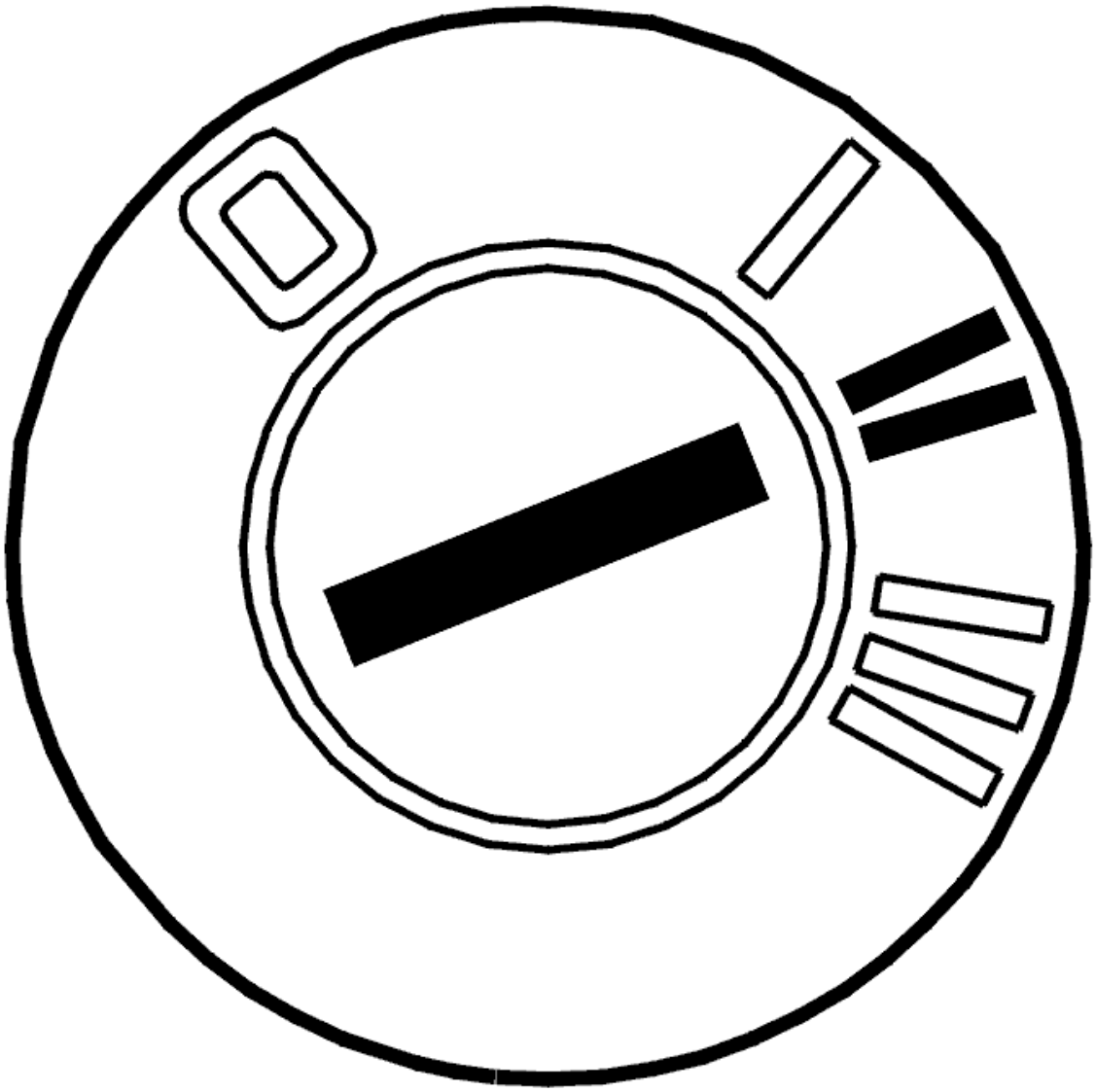

Fig. 25: Identifying Ignition ON
Courtesy of VOLVO CARS CORPORATION

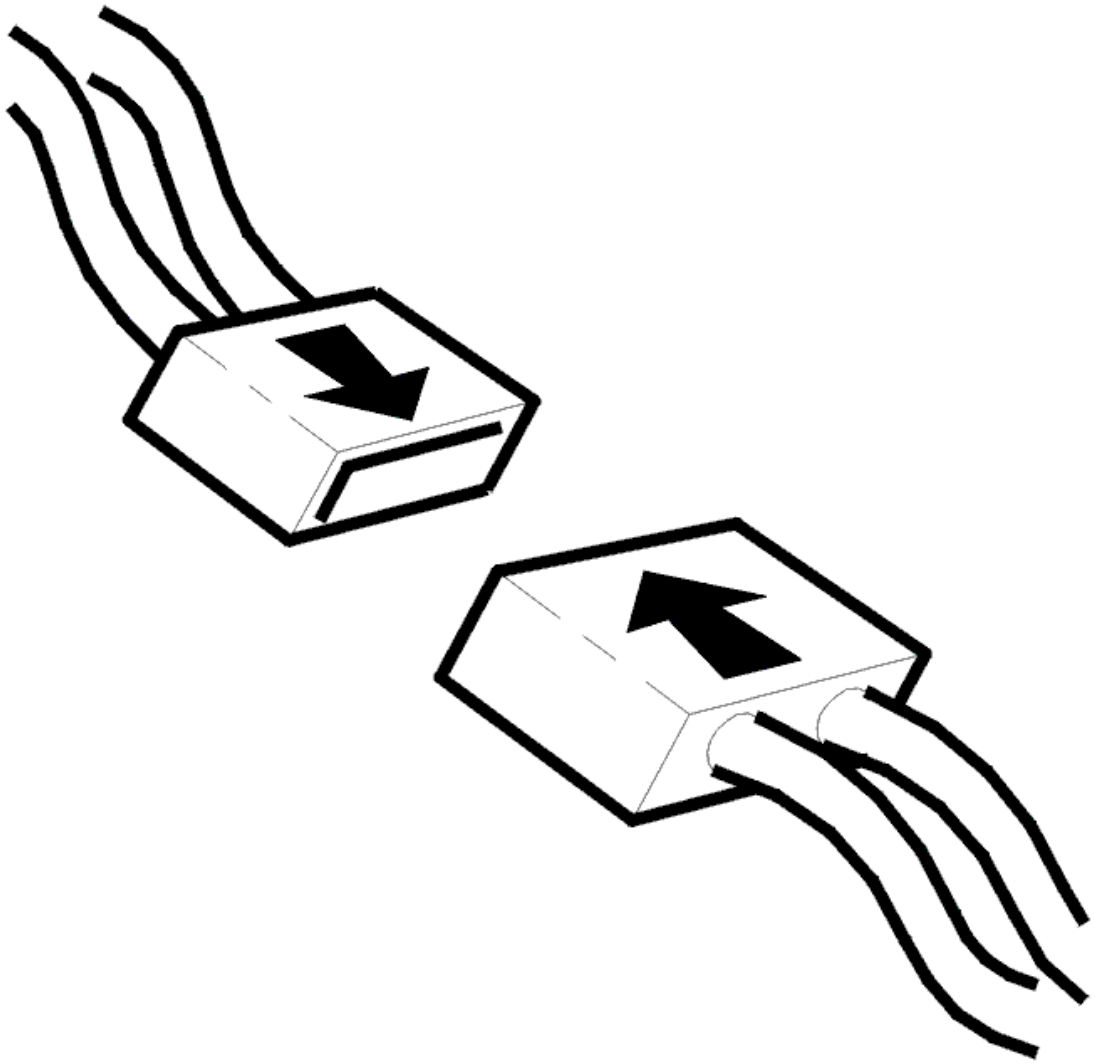

Fig. 26: Identifying Connector(s) Reinstallation
Courtesy of VOLVO CARS CORPORATION

- Ignition off
- Reconnect the connectors, components, etc.
- Ignition on
- Read the diagnostic status and fault status for the diagnostic trouble code by selecting the diagnostic trouble code in the list.

  Check the fault status for the diagnostic trouble code when the scan is "Implemented". When the function is correct the fault status should be "No fault found" when the scan is implemented.

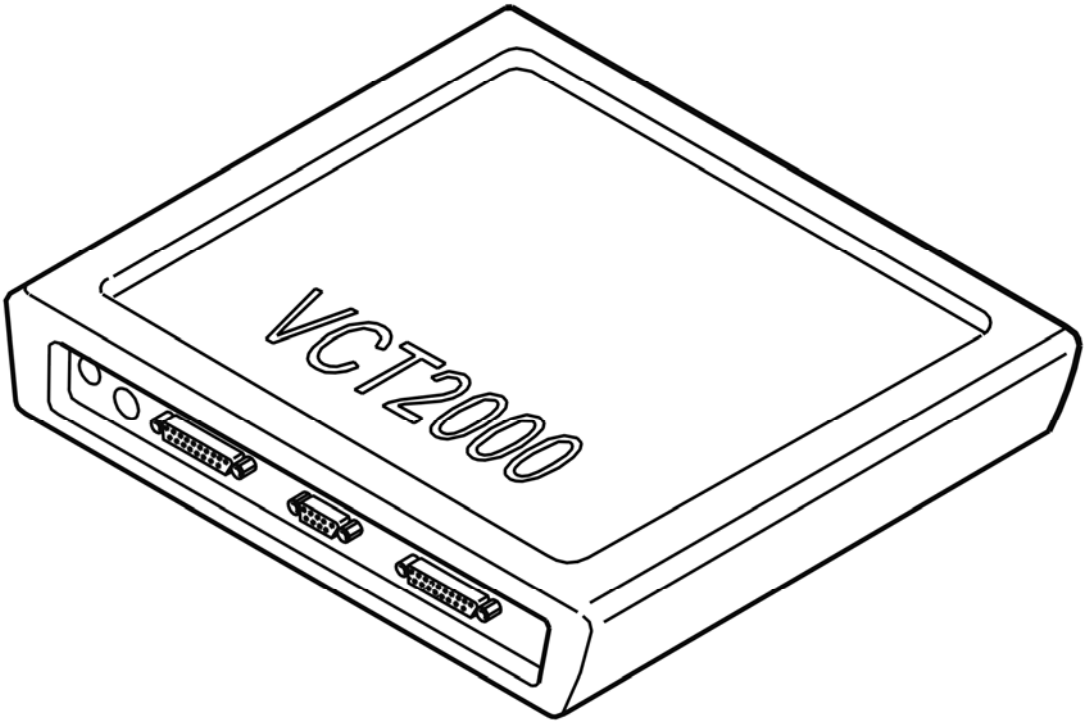

Fig. 27: Identifying VCT2000 Diagnostic Tool Symbol In VIDA
Courtesy of VOLVO CARS CORPORATION

Is the function OK?

- **YES**

  VERIFIED: Troubleshooting has been completed.

- **NO**

  Refer to **INFORMATION**

INFORMATION

FAULT-TRACING INFORMATION

The fault should have been detected and remedied. As this is not the case fault-tracing has failed.

Exit fault-tracing for this diagnostic trouble code (DTC) or make another attempt.

ECM-P240200: EVAPORATIVE EMISSION SYSTEM LEAK DETECTION PUMP CONTROL CIRCUIT HIGH. GENERAL FAILURE INFORMATION. NO

SUB TYPE INFORMATION (B6324S; 2007-2010)

DIAGNOSTIC TROUBLE CODE (DTC) INFORMATION ECM-P240200

Condition

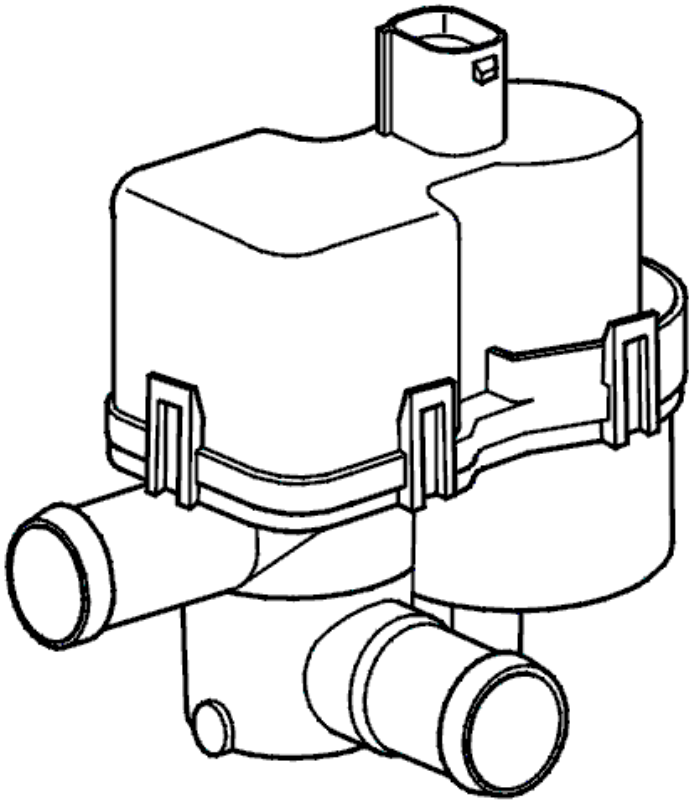

Fig. 28: Identifying Leak Diagnostic Pump
Courtesy of VOLVO CARS CORPORATION

The engine control module (ECM) checks the control signal to the leakage diagnosis pump.

The diagnostic trouble code is generated if the control module registers a fault in the control signal to the leakage diagnosis pump.

The diagnostic trouble code can be diagnosed when the ignition is on.

Substitute Value

- Leakage diagnosis interrupted.

Possible Source

- The signal cable is short-circuited to supply voltage

- Damage leakage diagnosis pump.

Fault symptom[s]

- Malfunction indicator lamp (MIL) lit.

FAULT-TRACING

see **FAULT-TRACING**

ECM-P240200: EVAPORATIVE EMISSION SYSTEM LEAK DETECTION PUMP CONTROL CIRCUIT HIGH. GENERAL FAILURE INFORMATION. NO SUB TYPE INFORMATION (B6324S5; 2011-2012)

DIAGNOSTIC TROUBLE CODE (DTC) INFORMATION ECM-P240200

see **DIAGNOSTIC TROUBLE CODE (DTC) INFORMATION ECM-P240200**

FAULT-TRACING

see **FAULT-TRACING**

ECM-P240200: EVAP EMISSION SYSTEM, LEAKAGE DIAGNOSIS PUMP CONTROL CIRCUIT HIGH. GENERAL FAULT INFORMATION. TYPE OF FAULT NOT SPECIFIED. (B8444S; 2005-2011)

DIAGNOSTIC TROUBLE CODE (DTC) INFORMATION ECM-P240200

Condition

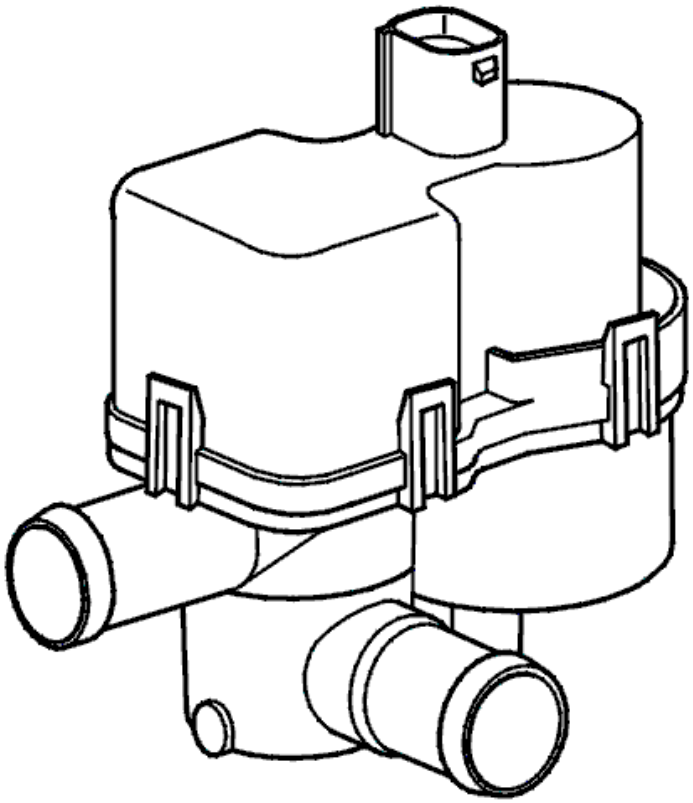

Fig. 29: Identifying Leak Diagnostic Pump
Courtesy of VOLVO CARS CORPORATION

The engine control module (ECM) checks the control signal to the leakage diagnosis pump.

The diagnostic trouble code is generated if the control module registers a fault in the control signal to the leakage diagnosis pump.

The diagnostic trouble code can be diagnosed when the ignition is on.

Substitute Value

- Leakage diagnosis interrupted.

Possible Source

- The signal cable is short-circuited to supply voltage
- Damage leakage diagnosis pump.

Fault symptom[s]

- Malfunction indicator lamp (MIL) lit.

TROUBLESHOOTING ECM-P240200

CHECKING THE STATUS

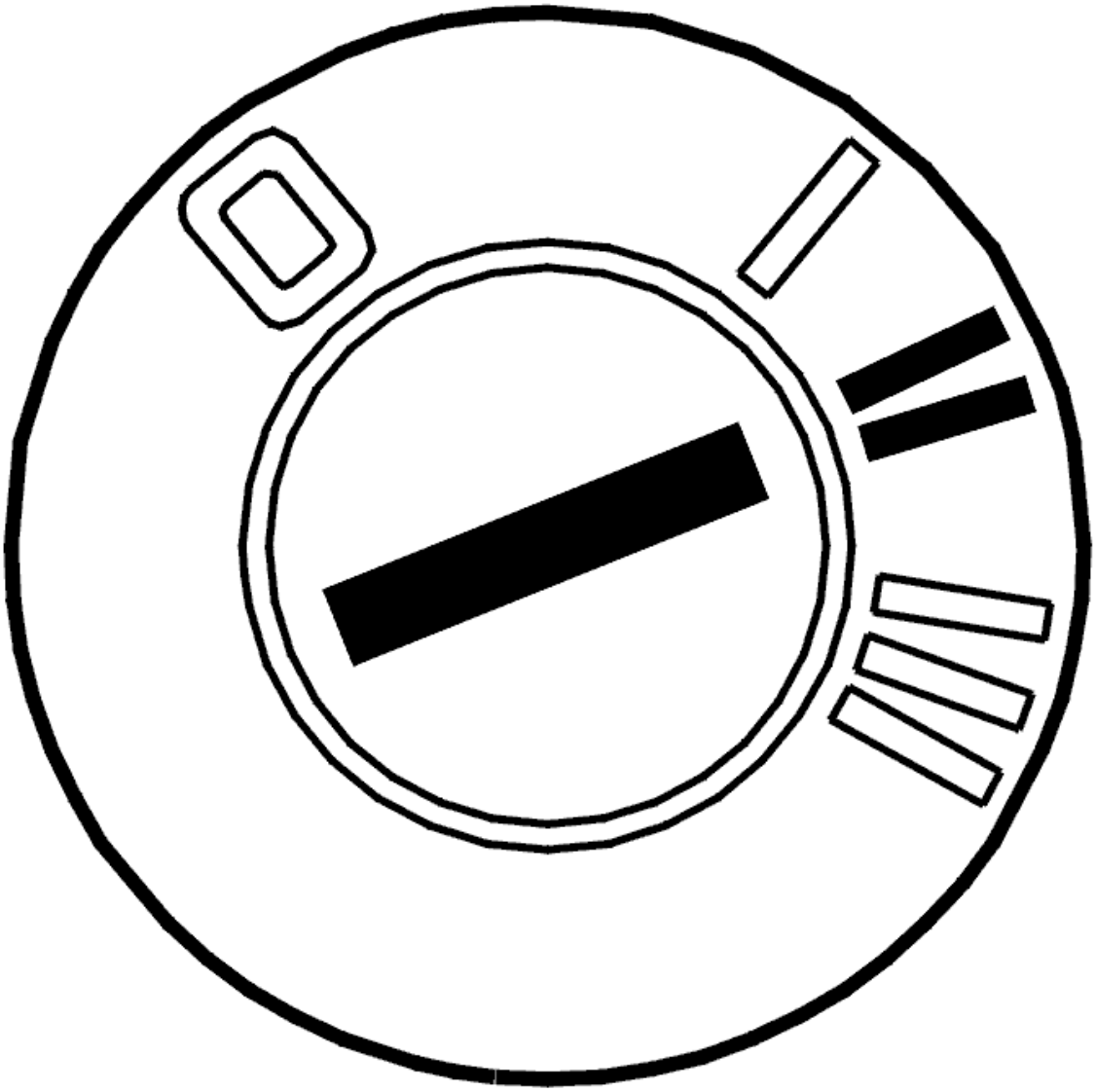

Fig. 30: Identifying Ignition ON
Courtesy of VOLVO CARS CORPORATION

- Ignition on

  Read the diagnostic status and trouble status for the diagnostic trouble code by selecting the diagnostic trouble code in the list.

  Check if the malfunction is permanent or intermittent by reading off the diagnostic trouble code's status when the diagnostic status is "Implemented".

  If the trouble status is "Malfunction found", this indicates that the malfunction is permanent. If the trouble

status is "No malfunction found", this indicates that the malfunction is intermittent and not active right now.

NOTE: Trouble status cannot go from "Malfunction found" to "No malfunction found" in the same operating cycle.

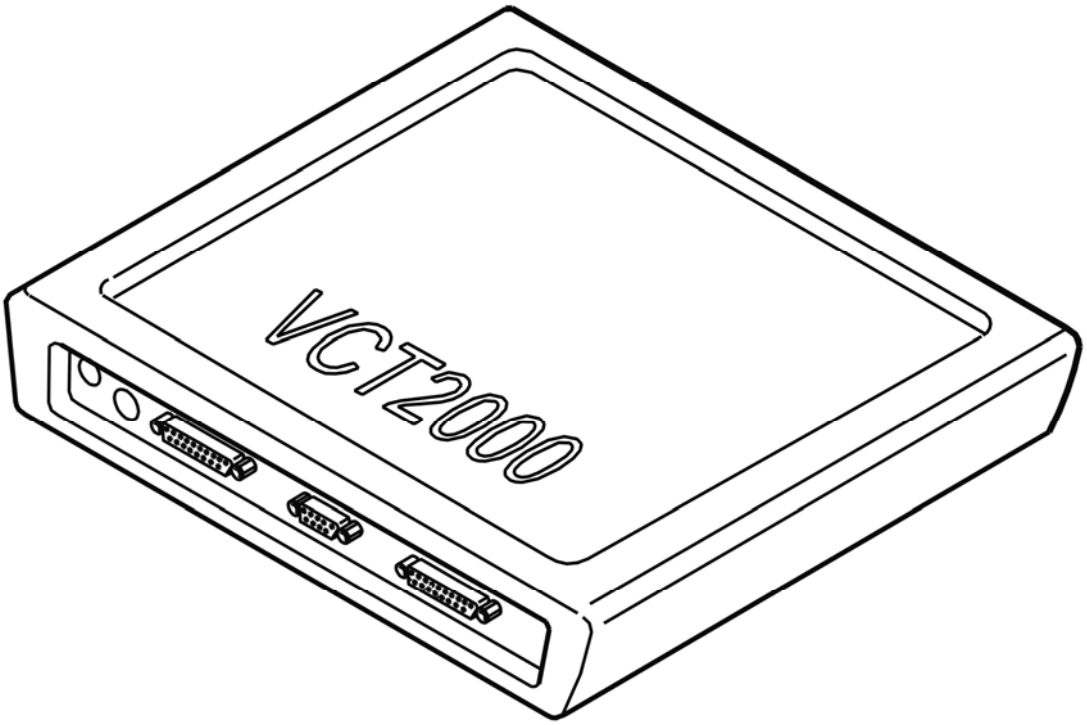

Fig. 31: Identifying VCT2000 Diagnostic Tool Symbol In VIDA
Courtesy of VOLVO CARS CORPORATION

- **Continue**

  Refer to **CHECKING COMPONENT AND CABLES**

CHECKING COMPONENT AND CABLES

Check the leakage diagnostics unit's connector for contact resistance and oxidation.

Check the cable between engine control module (ECM) #B33 (#C33) and the leakage diagnostics unit #1 for short-circuit to voltage.

Remedy as necessary.

Other information

- see **CONNECTING THE BREAKOUT BOX**
- see **SIGNAL SPECIFICATION, ENGINE CONTROL MODULE (ECM)**
- see **LEAK DIAGNOSTIC PUMP, REPLACING**
- see **CONTENTS**

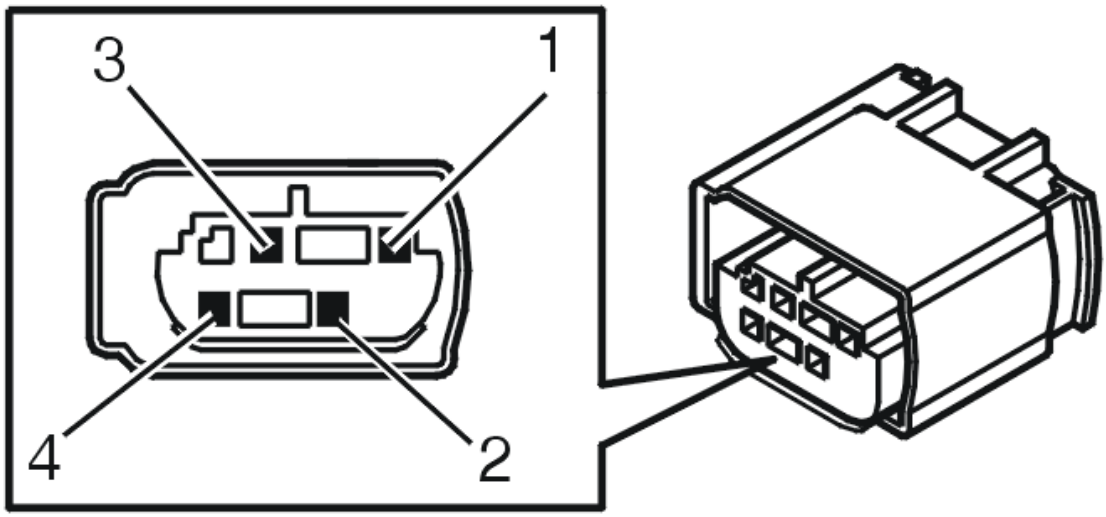

Fig. 32: Identifying Leak Diagnostic Unit Connector Terminals
Courtesy of VOLVO CARS CORPORATION

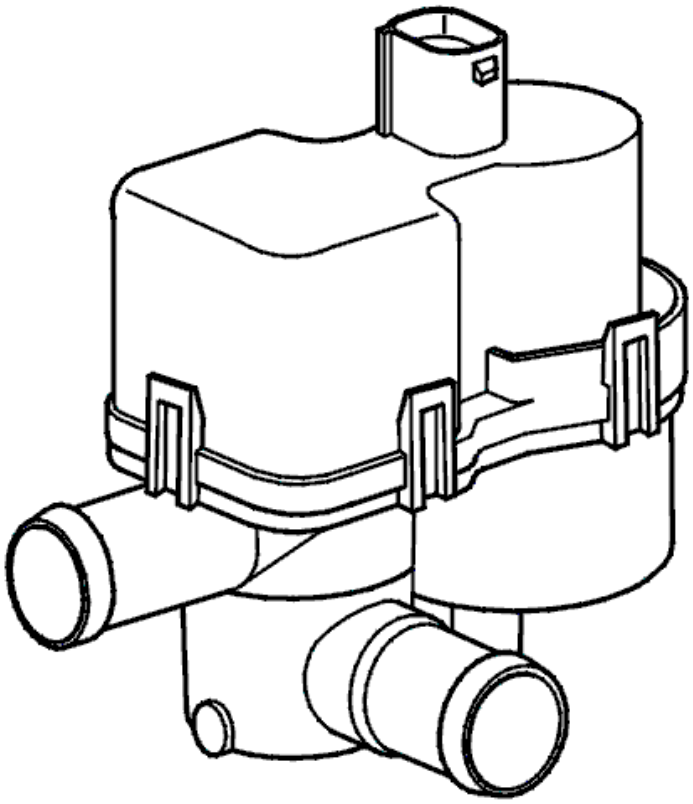

Fig. 33: Identifying Leak Diagnostic Pump
Courtesy of VOLVO CARS CORPORATION

- **Continue**

  Refer to **VERIFICATION**

VERIFICATION

VERIFICATION

HINT: After carrying out the repair, check that the fault has been remedied.

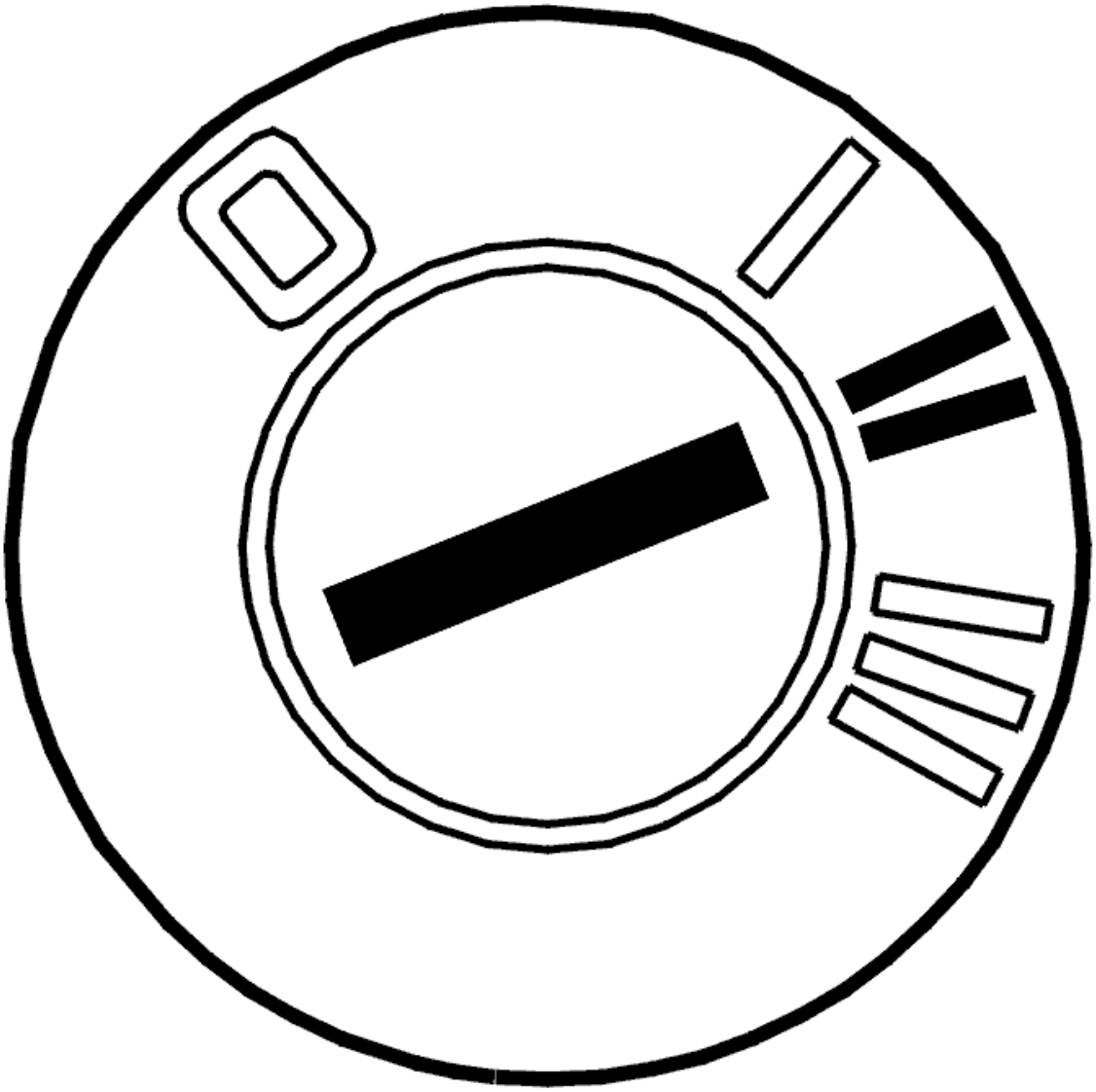

Fig. 34: Identifying Ignition ON
Courtesy of VOLVO CARS CORPORATION

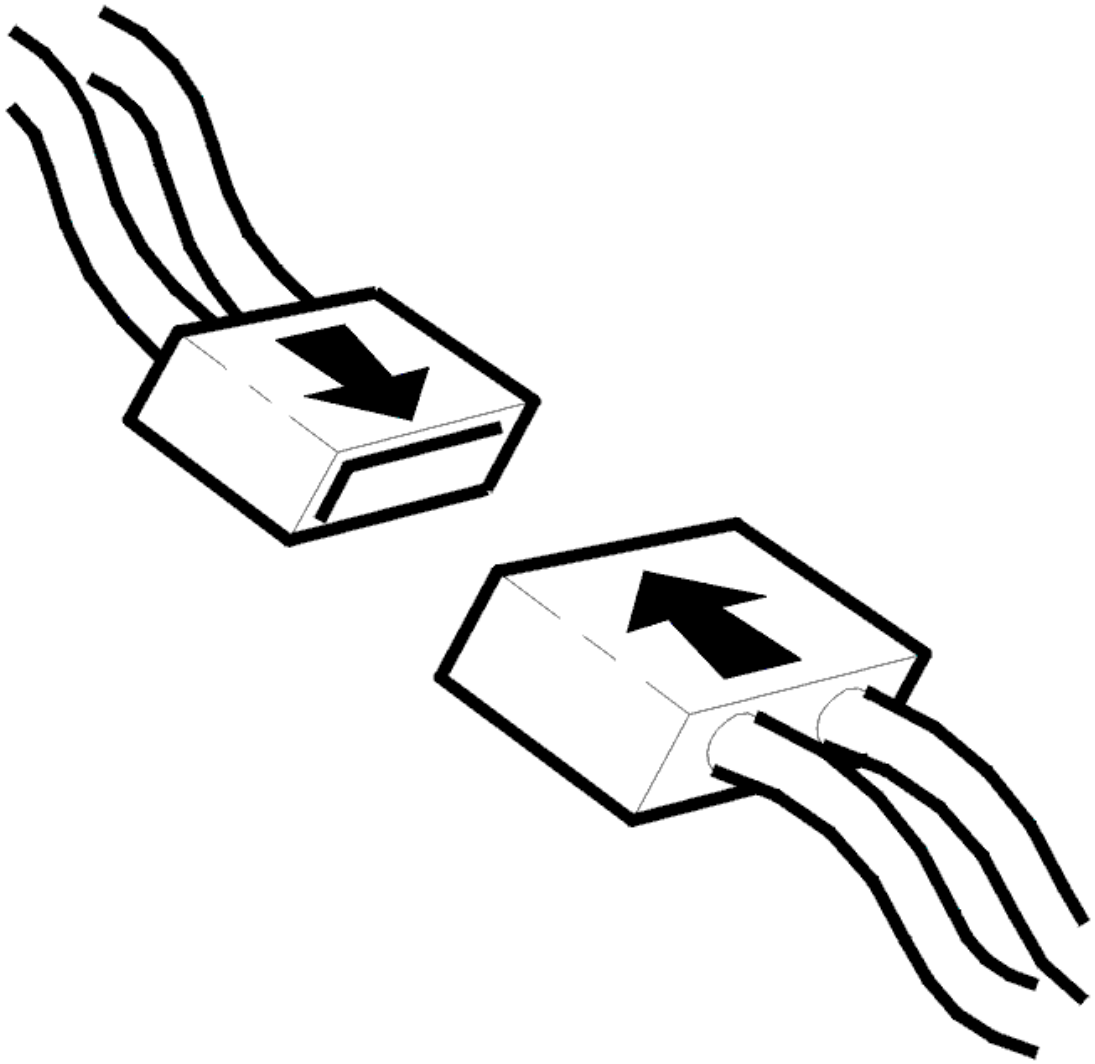

Fig. 35: Identifying Connector(s) Reinstallation
Courtesy of VOLVO CARS CORPORATION

- Ignition off
- Reconnect the connectors, components, etc.
- Ignition on
- Read the diagnostic status and fault status for the diagnostic trouble code by selecting the diagnostic trouble code in the list.

  Check the fault status for the diagnostic trouble code when the scan is "Implemented". When the function is correct the fault status should be "No fault found" when the scan is implemented.

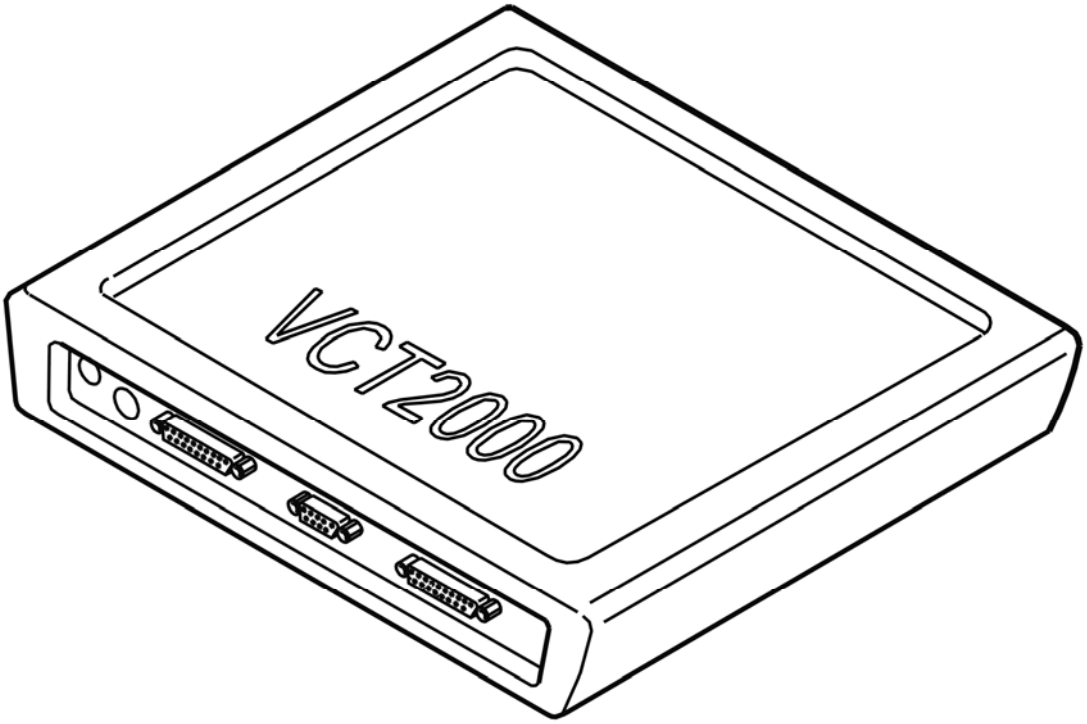

Fig. 36: Identifying VCT2000 Diagnostic Tool Symbol In VIDA
Courtesy of VOLVO CARS CORPORATION

Is the function OK?

- **YES**

  VERIFIED: Troubleshooting has been completed.

- **NO**

  Refer to **INFORMATION**

INFORMATION

FAULT-TRACING INFORMATION

The fault should have been detected and remedied. As this is not the case fault-tracing has failed.

Exit fault-tracing for this diagnostic trouble code (DTC) or make another attempt.

ECM-P240700: EVAPORATIVE EMISSION SYSTEM LEAK DETECTION PUMP SENSE CIRCUIT INTERMITTENT/ERRATIC. GENERAL FAILURE

INFORMATION. NO SUB TYPE INFORMATION (B6324S; 2007-2010)

DIAGNOSTIC TROUBLE CODE (DTC) INFORMATION ECM-P240700

Condition

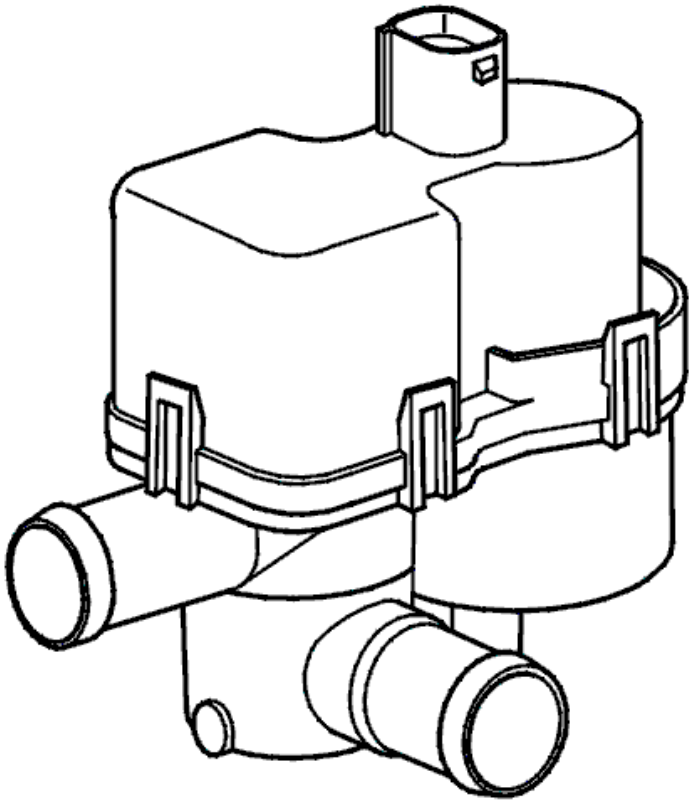

Fig. 37: Identifying Leak Diagnostic Pump
Courtesy of VOLVO CARS CORPORATION

The engine control module (ECM) checks the function of the leakage diagnosis unit by measuring the current through the leakage diagnosis pump.

If the Engine control module (ECM) registers that the current curve is unreasonably noisy, the control module interprets that the reference measurement has produced a faulty result and the diagnostic trouble code is generated.

The diagnostic trouble code can be diagnosed when leakage diagnosis is running.

Substitute Value

- Leakage diagnosis is interrupted.

Possible Source

- Dirt or moisture in the pump.
- Damaged heating element in the pump.
- Damage leakage diagnosis pump.

Fault symptom[s]

- Malfunction indicator lamp (MIL) lit.

FAULT-TRACING

see **FAULT-TRACING**

ECM-P240700: EVAPORATIVE EMISSION SYSTEM LEAK DETECTION PUMP SENSE CIRCUIT INTERMITTENT/ERRATIC. GENERAL FAILURE INFORMATION. NO SUB TYPE INFORMATION (B6324S5; 2011-2012)

DIAGNOSTIC TROUBLE CODE (DTC) INFORMATION ECM-P240700

see **DIAGNOSTIC TROUBLE CODE (DTC) INFORMATION ECM-P240700**

FAULT-TRACING

see **FAULT-TRACING**

ECM-P240800: FUEL CAP SENSOR/SWITCH CIRCUIT. GENERAL FAILURE INFORMATION. NO SUB TYPE INFORMATION (B6324S; 2007-2010)

DIAGNOSTIC TROUBLE CODE (DTC) INFORMATION ECM-P240800

Condition

The engine control module (ECM) receives confirmation from the central electronic module (CEM) as to whether the request for tank flap locking was sent to the locking relay.

Locking should occur at 17 km/h. The diagnostic trouble code is generated if the engine control module (ECM) registers that vehicle speed has exceeded 17 km/h for at least 10 seconds without receipt of the central electronic module (CEM) signal.

Substitute Value

- Nothing.

Possible Source

- Loose connections or contact resistance in CAN connections.

- Damaged CAN cables.
- Disruptions on CAN signal cables.
- Another node in the HS-CAN network is damaged.

Fault symptom[s]

- Nothing.

FAULT-TRACING

GENERAL INFORMATION

The diagnostic trouble code (DTC) is stored in the event of communication faults on the high speed side of the control area network (CAN). There can be a number of causes for faults in the communication:

- Intermittent open-circuit in one or both CAN cables in part of the network
- Intermittent short-circuits between the CAN cables
- Intermittent short-circuits between one of the CAN cables and ground or supply voltage
- Fault in the communication circuit in one or more control modules
- Internal fault in a control module on the CAN network that results in the control module transmitting faulty messages on the CAN network.

In the event of a diagnostic trouble code (DTC) for a communication fault in the relevant control module, any diagnostic trouble codes (DTCs) in the central electronic module (CEM) must also be checked. The central electronic module (CEM) monitors the voltage level in the CAN cables. The central electronic module (CEM) is the only control module that can directly store a diagnostic trouble code (DTC) for a short-circuit in one of the cables for ground or supply voltage. Do not replace the central electronic module (CEM) in the event of a CAN fault unless fault-tracing has indicated that the central electronic module (CEM) has an internal fault.

In order to check the control area network (CAN) cables, the resistance in the network must be measured.

Other information

- see **GENERAL INFORMATION ABOUT FAULT-TRACING IN THE CAN NETWORK (2005-2012)**

- **Continue**

  Refer to **TAKING READING ON CABLE IN THE CAN NETWORK (HS-CAN)**

TAKING READING ON CABLE IN THE CAN NETWORK (HS-CAN)

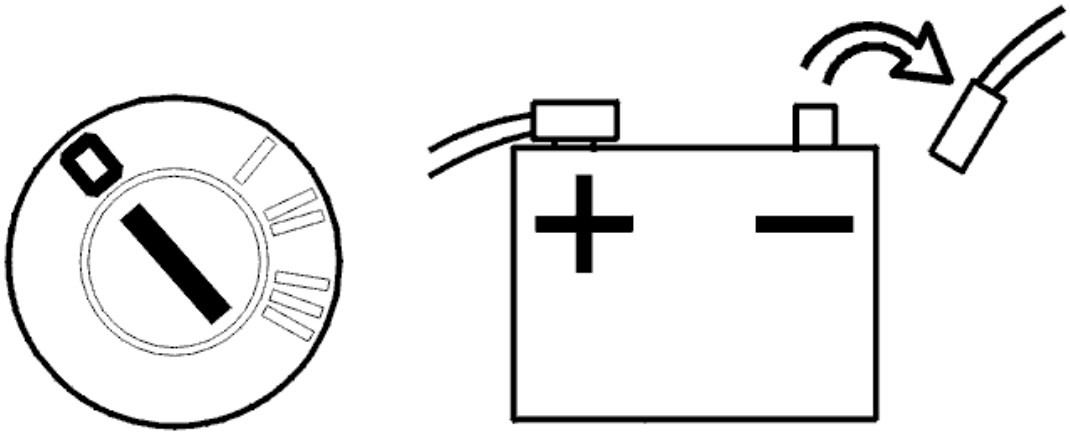

Fig. 38: Identifying Ignition In Off Position And Disconnecting Negative Cable From Battery
Courtesy of VOLVO CARS CORPORATION

- Disconnect the battery negative lead.
- Remove the central electronic module (CEM)
- Connect the breakout box to the cable harness for the central electronic module (CEM). Do not connect the central electronic module (CEM).

  HINT: Where a breakout box cannot be used, take readings from the rear of the affected connectors if possible. This prevents terminal pins and socket housings being damaged.

  Disconnect the CAN network to make it easier to locate a fault. A suitable point to disconnect the network is at the central electronic module (CEM). Fault-tracing therefore starts from the central electronic module (CEM).

  Take resistance readings across the following terminals. Various readings will be obtained due to the structure of the network. Twist the cable harness and work the connectors at accessible points along the cable harness in order to check whether the resistance changes during each measurement. This method can be used to detect intermittent short-circuits or open-circuits.

  NOTE: The following resistance readings only measure the main arteries in the high speed network, not the junctions that exist for some control modules. If an open-circuit is suspected in a cable, or a short-circuit is suspected in one of its junctions, the connector at the control module for this junction must be disconnected and the reading taken from there.

  Take the following readings

  - Resistance between C3:47 and C3:48. Resistance should be 120 ohms.

NOTE: **Measuring will only give value 120 ohms if the main circuit in the CAN-net is intact. If there is a short-circuit somewhere in the CAN-net (either main circuit or other branching) the resistance will be 0 ohms.**

- The resistance between C3:48 and a connection to voltage as well as between C3:48 and a short-circuit to ground. The resistance shall be very high (more than 1 Mohms).
- The resistance between C3:47 and a connection to voltage as well as between C3:47 and a short-circuit to ground. The resistance shall be very high (more than 1 Mohms).

HINT: Any short-circuit detected on the CAN-net may be on the main circuit or on any branching running out to some control modules. If a fault is found, try to disconnect the junction with the fault at a point further forward. Try to locate the fault in this way.

Remedy as necessary.

Other information

- see **BATTERY, DISCONNECTING**
- see **CONNECTING THE BREAKOUT BOX**
- see **SIGNAL SPECIFICATION**
- see **CHECKING WIRING AND TERMINALS**

Was a fault detected?

- **YES**

  Refer to **VERIFICATION**

- **NO**

  Refer to **CHECKING THE TRAFFIC LOAD ON THE CAN CABLES**

CHECKING THE TRAFFIC LOAD ON THE CAN CABLES

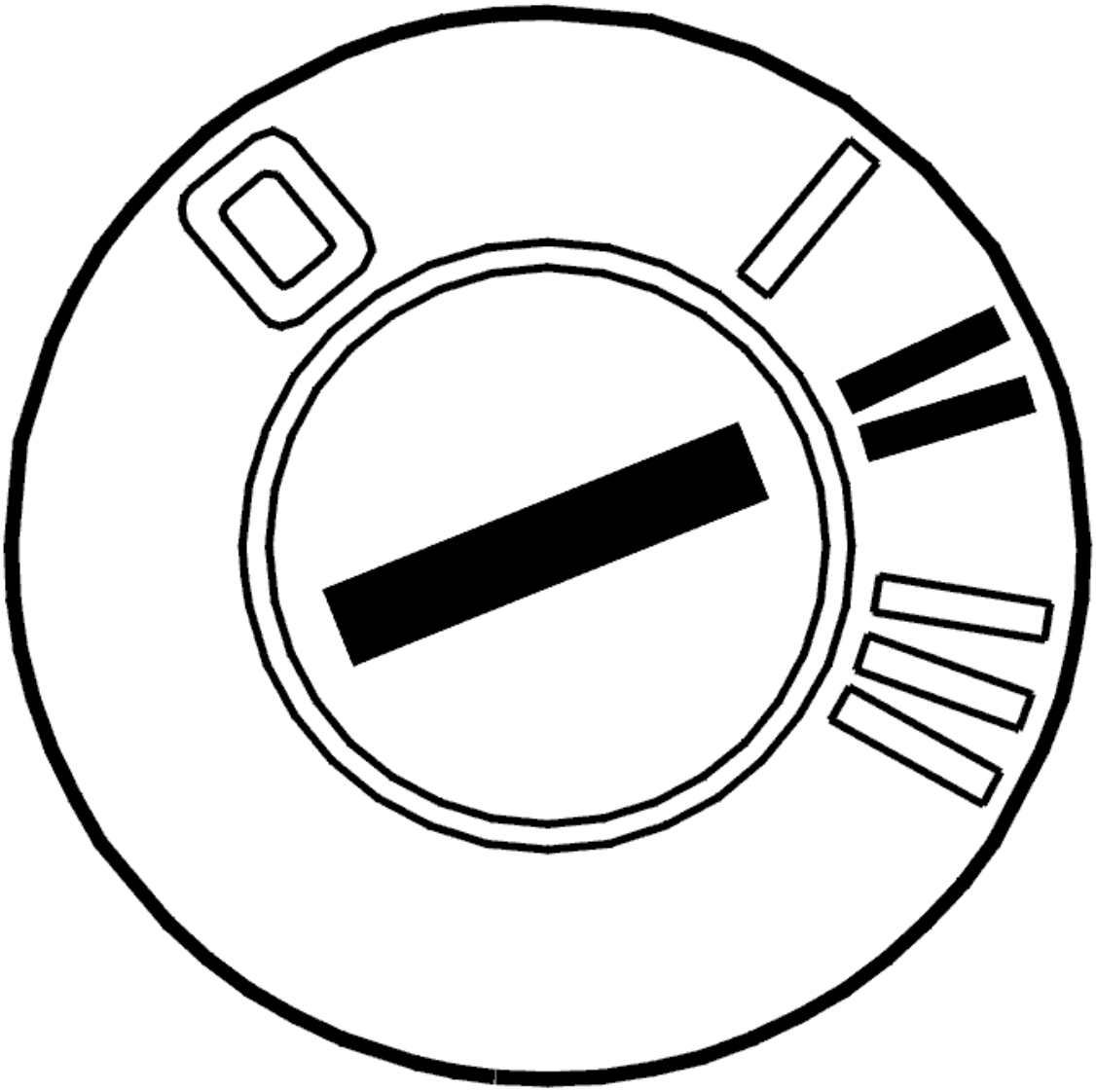

Fig. 39: Identifying Ignition ON
Courtesy of VOLVO CARS CORPORATION

- Connect the central electronic module (CEM) to the breakout box
- Connect the battery.
- Ignition on.

NOTE: **When the adapter cable harness and the central electronic module (CEM) have been connected, there is access to both sides of the CAN network (both LS-CAN and HS-CAN). There will also be traffic on both networks. Be careful to check the terminals between which the readings are to be taken so that the intended reading is not taken on the wrong network.**

Faults in the CAN network may be due to a control module sending faulty messages that disrupt normal communication. When messages are sent incorrectly, this results in a considerable increase in the amount

of traffic on the CAN network. Check the load by measuring the average voltage value on the CAN cables in relation to ground.

Check as follows:

- Measure the voltage between C3:48 and ground. The voltage shall be approx. 2.3 V.
- Measure the voltage between C3:47 and ground. The voltage shall be approx. 2.8 V.

Other information

- see **BATTERY, DISCONNECTING**

Is the value OK?

- **YES**

  Refer to **INFORMATION**

- **NO**

  Refer to **IDENTIFYING A CONTROL MODULE IN THE CAN NETWORK**

IDENTIFYING A CONTROL MODULE IN THE CAN NETWORK

If the load on the CAN network is too high, this may be due to a control module sending faulty messages on the CAN network (known as a disruptive control module). The fault may also be due to an intermittent short-circuit to supply voltage or ground in one of the CAN cables. This results in the control modules on the CAN network starting to send faulty messages. The faults can occur without a diagnostic trouble code (DTC) being stored by the control modules. The voltage can be measured between the CAN cables in order to check the load on the CAN network.

- Check communication/load on HS-CAN by measuring voltage between C3:48 and C3:47. The voltage's average value shall be approx. 0.5 V (permitted is 0.4 to 0.6 V). In case of communication error, the voltage is approx. 0.7 V and higher.

In order to identify which control module is communicating incorrectly, cut the power supply to one control module at a time. Check the voltage in the CAN cables again. The easiest way to cut the power supply is to remove the fuse(s) for the relevant control module. Continue until the voltage between the CAN cables drops to approximately 0.5 V.

HINT: When the suspected control module has been identified, connect and disconnect the supply voltage to the control module a number of times to verify that the fault appears and disappears. Ignition off between each check.

NOTE: Do not cut the power to the central electronic module (CEM) unless it is the last control module left to check.

A control module that is communicating incorrectly must be replaced. Remedy as necessary.

NOTE: **Following a fault involving control modules that disrupt communication, other control modules may operate in Limp-Home mode (i. e. they work but with limited functionality) even after switching the ignition off and on a number of times. To remedy this, disconnect and reconnect the battery negative terminal to restore the control modules to normal function.**

NOTE: **A faulty control module that disrupts communication can place other control modules in Limp-Home mode (i. e. they work but with limited functionality) even after switching the ignition off and on a number of times. To remedy this, disconnect and reconnect the battery negative terminal to restore the control modules to normal function.**

- **Continue**

  Refer to **VERIFICATION**

VERIFICATION

HINT: Once a fault has been repaired, conduct a verification to check that the fault has been remedied.

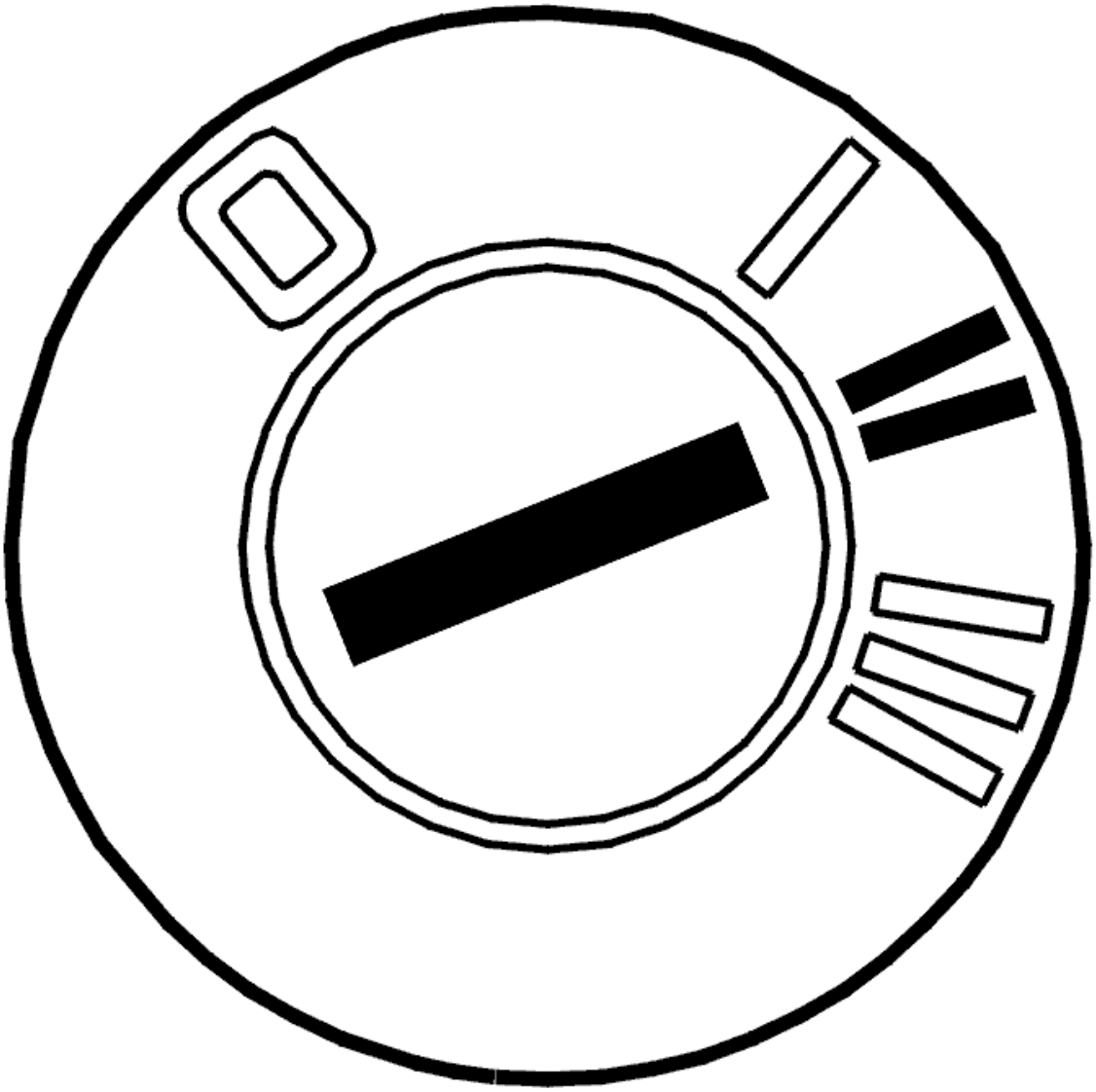

Fig. 40: Identifying Ignition ON
Courtesy of VOLVO CARS CORPORATION

- Reinstall the connectors, components etc.
- Ignition on
- Erase diagnostic trouble codes (DTCs) in all control modules
- Start the vehicle. Allow the vehicle to run for 10 minutes.

  Read out the diagnostic trouble codes in the vehicle via the DIAGNOSTICS tab.

Does the diagnostic trouble code (DTC) for faulty communication return?

- **YES**

  Refer to **INFORMATION**

- **NO**

  OKAY: Troubleshooting has been completed.

INFORMATION

FAULT-TRACING INFORMATION

The fault should have been detected and remedied. As this is not the case fault-tracing has failed.

Exit fault-tracing for this diagnostic trouble code (DTC) or make another attempt.

INFORMATION

FAULT-TRACING INFORMATION

Verification shows that the fault is no longer present. The diagnostic trouble code (DTC) was probably caused by an intermittent fault.

Fault-tracing for this diagnostic trouble code (DTC) is not followed by a verification.

You can view the information again or exit fault-tracing for this diagnostic trouble code (DTC).

ECM-P240800: FUEL CAP SENSOR/SWITCH CIRCUIT. GENERAL FAILURE INFORMATION. NO SUB TYPE INFORMATION (B6324S5; 2011-2012)

DIAGNOSTIC TROUBLE CODE (DTC) INFORMATION ECM-P240800

see **DIAGNOSTIC TROUBLE CODE (DTC) INFORMATION ECM-P240800**

FAULT-TRACING

see **FAULT-TRACING**

ECM-P240800: TANK CAP SENSOR/CONTACT CIRCUIT. GENERAL FAULT INFORMATION. TYPE OF FAULT NOT SPECIFIED. (B8444S; 2005-2011)

DIAGNOSTIC TROUBLE CODE (DTC) INFORMATION ECM-P240800

Condition

The engine control module (ECM) receives confirmation from the central electronic module (CEM) as to whether the request for tank flap locking was sent to the locking relay.

Locking should occur at 17 km/h. The diagnostic trouble code is generated if the engine control module (ECM) registers that vehicle speed has exceeded 17 km/h for at least 10 seconds without receipt of the central

electronic module (CEM) signal.

Substitute Value

- Nothing.

Possible Source

- Loose connections or contact resistance in CAN connections.
- Damaged CAN cables.
- Disruptions on CAN signal cables.
- Another node in the HS-CAN network is damaged.

Fault symptom[s]

- Nothing.

FAULT-TRACING INFORMATION

see **FAULT-TRACING INFORMATION**

ECM-P240B00 EVAPORATIVE EMISSION SYSTEM LEAK DETECTION PUMP HEATER CIRCUIT LOW. GENERAL FAILURE INFORMATION. NO SUB TYPE INFORMATION (B6324S; 2007-2010)

DIAGNOSTIC TROUBLE CODE (DTC) INFORMATION ECM-P240B00

Condition

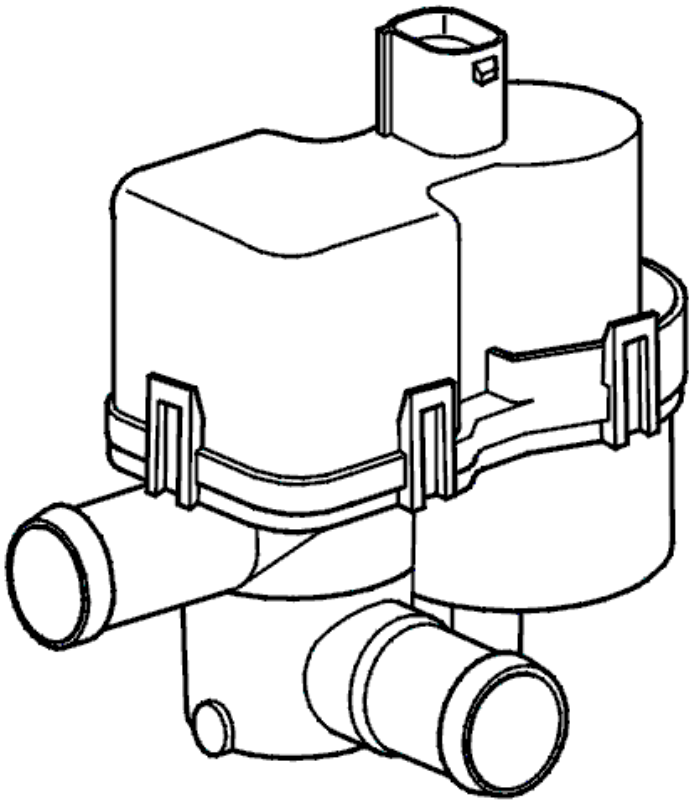

Fig. 41: Identifying Leak Diagnostic Pump
Courtesy of VOLVO CARS CORPORATION

The engine control module (EM) checks the control signal to the heating element in the leakage diagnosis pump.

The diagnostic trouble code is generated if the control module registers a fault in the control signal.

The diagnostic trouble code can be diagnosed when the ignition is on.

Substitute Value

- Nothing.

Possible Source

- Short-circuit to ground in the signal cable.
- Damage leakage diagnosis pump.

Fault symptom[s]

- Malfunction indicator lamp (MIL) lit.

FAULT-TRACING

see **FAULT-TRACING**

ECM-P240B00 EVAPORATIVE EMISSION SYSTEM LEAK DETECTION PUMP HEATER CIRCUIT LOW. GENERAL FAILURE INFORMATION. NO SUB TYPE INFORMATION (B6324S5; 2011-2012)

DIAGNOSTIC TROUBLE CODE (DTC) INFORMATION ECM-P240B00

see **DIAGNOSTIC TROUBLE CODE (DTC) INFORMATION ECM-P240B00**

FAULT-TRACING

see **FAULT-TRACING**

ECM-P240B00 EVAP EMISSION SYSTEM, LEAKAGE DIAGNOSIS PUMP HEATING CIRCUIT LOW. GENERAL FAULT INFORMATION. TYPE OF FAULT NOT SPECIFIED. (B8444S; 2005-2011)

DIAGNOSTIC TROUBLE CODE (DTC) INFORMATION ECM-P240B00

Condition

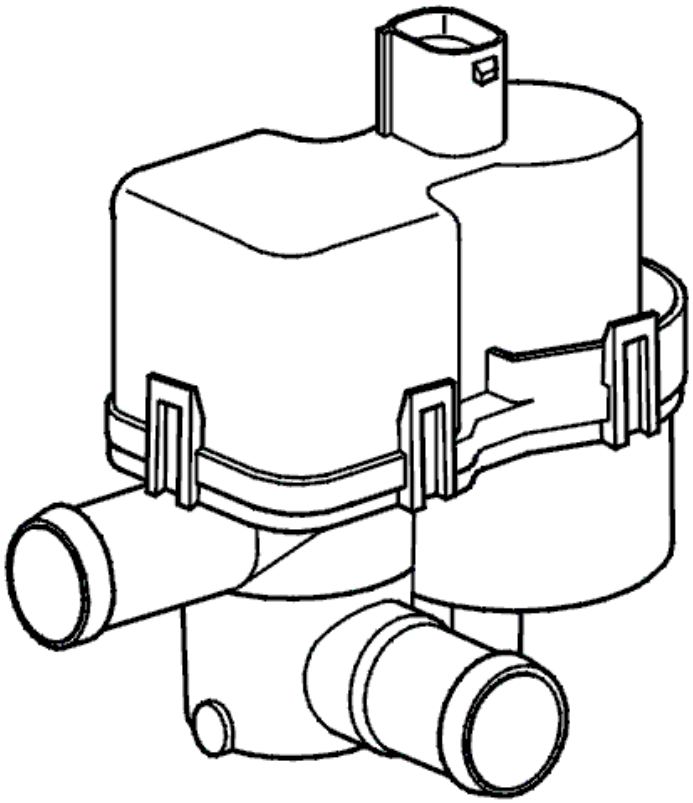

Fig. 42: Identifying Leak Diagnostic Pump
Courtesy of VOLVO CARS CORPORATION

The engine control module (EM) checks the control signal to the heating element in the leakage diagnosis pump.

The diagnostic trouble code is generated if the control module registers a fault in the control signal.

The diagnostic trouble code can be diagnosed when the ignition is on.

Substitute Value

- Nothing.

Possible Source

- Short-circuit to ground in the signal cable.
- Damage leakage diagnosis pump.

Fault symptom[s]

- Malfunction indicator lamp (MIL) lit.

TROUBLESHOOTING ECM-P240C00

CHECKING THE STATUS

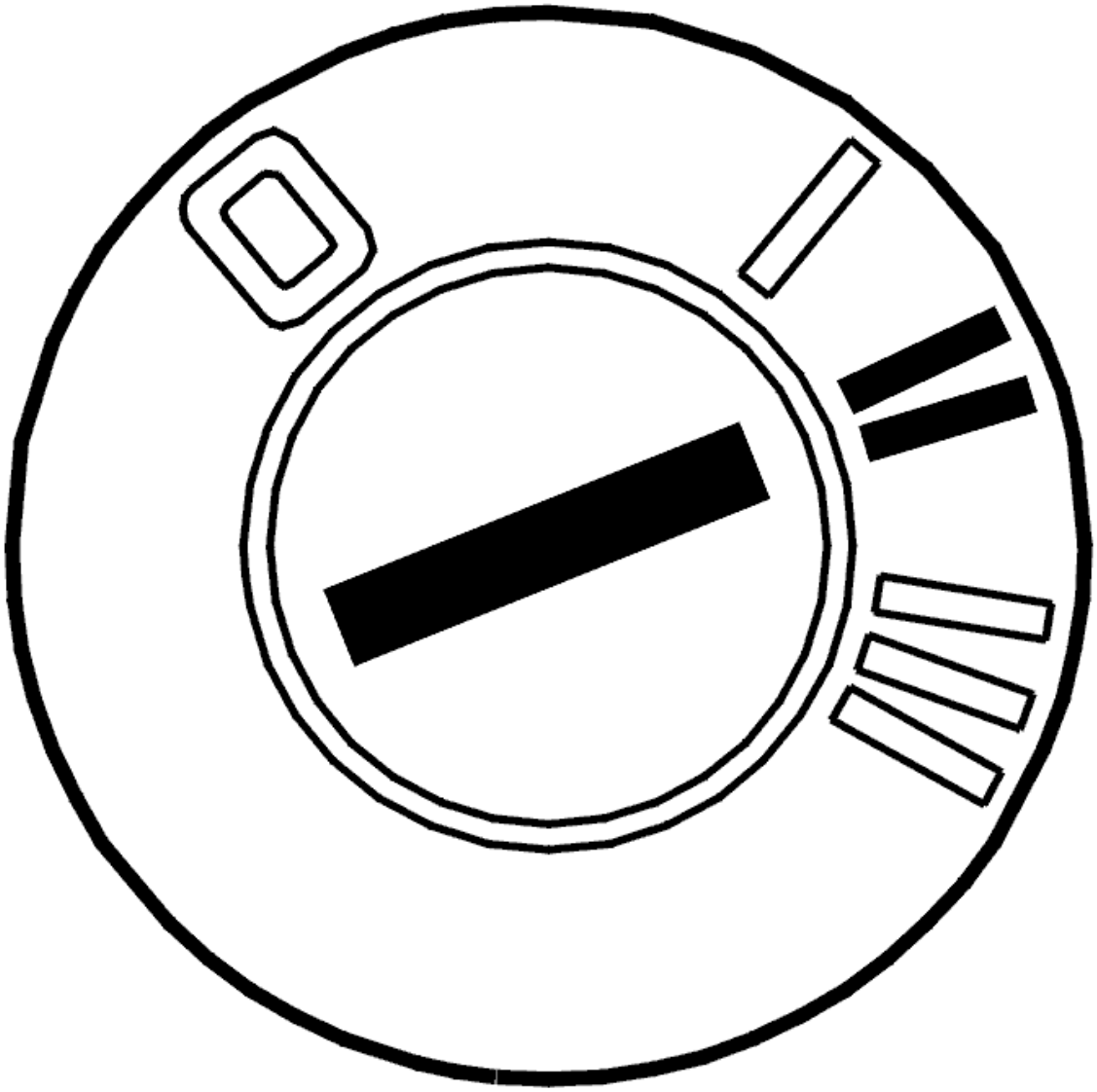

Fig. 43: Identifying Ignition ON
Courtesy of VOLVO CARS CORPORATION

- Ignition on

  Read the diagnostic status and trouble status for the diagnostic trouble code by selecting the diagnostic trouble code in the list.

  Check if the malfunction is permanent or intermittent by reading off the diagnostic trouble code's status when the diagnostic status is "Implemented".

  If the trouble status is "Malfunction found", this indicates that the malfunction is permanent. If the trouble

status is "No malfunction found", this indicates that the malfunction is intermittent and not active right now.

NOTE: Trouble status cannot go from "Malfunction found" to "No malfunction found" in the same operating cycle.

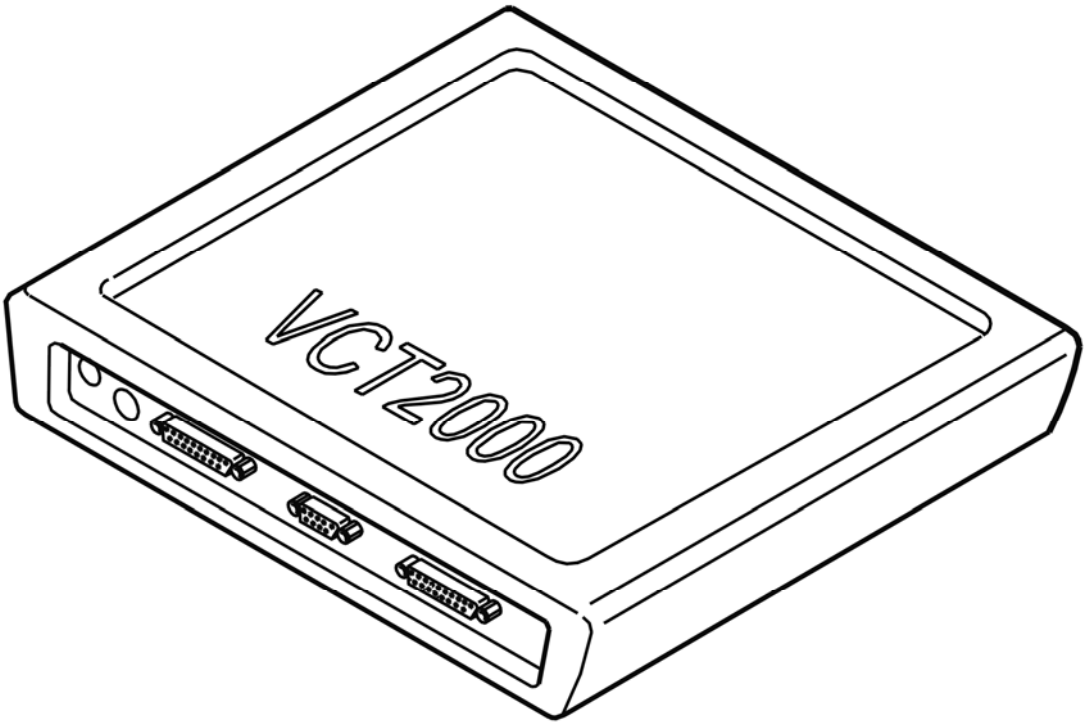

Fig. 44: Identifying VCT2000 Diagnostic Tool Symbol In VIDA
Courtesy of VOLVO CARS CORPORATION

- **Continue**

  Refer to **CHECKING COMPONENT AND CABLES**

CHECKING COMPONENT AND CABLES

Check the leakage diagnostics unit's connector for contact resistance and oxidation.

Check the cable between engine control module (ECM) #B23 (#C23) and the leakage diagnostics unit #2 for short-circuit to voltage.

Remedy as necessary.

Other information

- see **CONNECTING THE BREAKOUT BOX**
- see **SIGNAL SPECIFICATION, ENGINE CONTROL MODULE (ECM)**
- see **LEAK DIAGNOSTIC PUMP, REPLACING**
- see **CONTENTS**

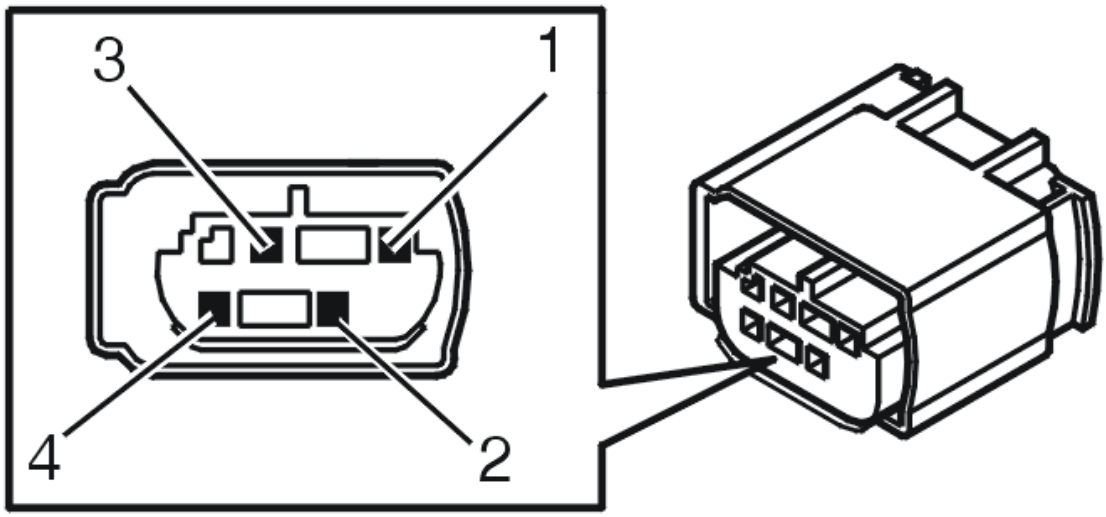

Fig. 45: Identifying Leak Diagnostic Unit Connector Terminals
Courtesy of VOLVO CARS CORPORATION

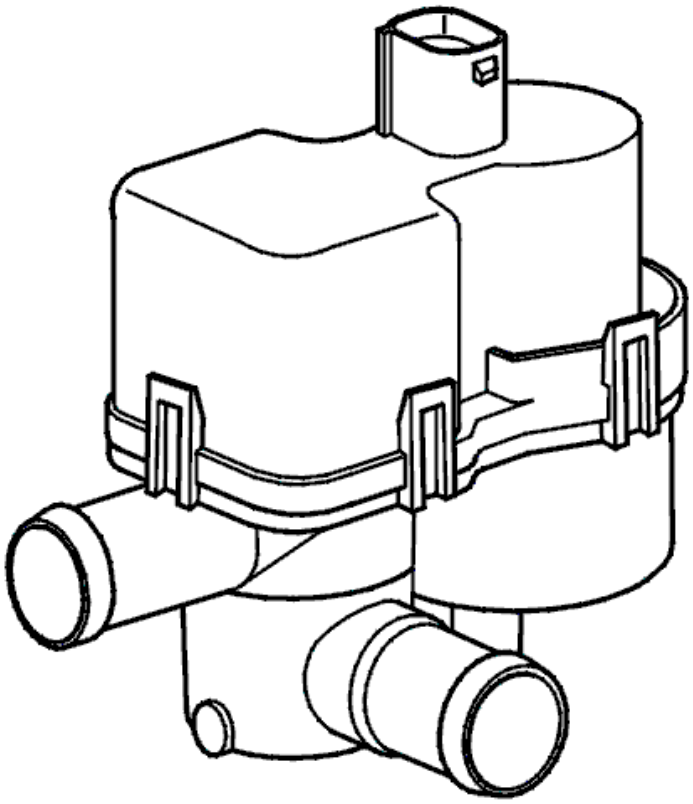

Fig. 46: Identifying Leak Diagnostic Pump
Courtesy of VOLVO CARS CORPORATION

- **Continue**

  Refer to **VERIFICATION**

VERIFICATION

VERIFICATION

HINT: After carrying out the repair, check that the fault has been remedied.

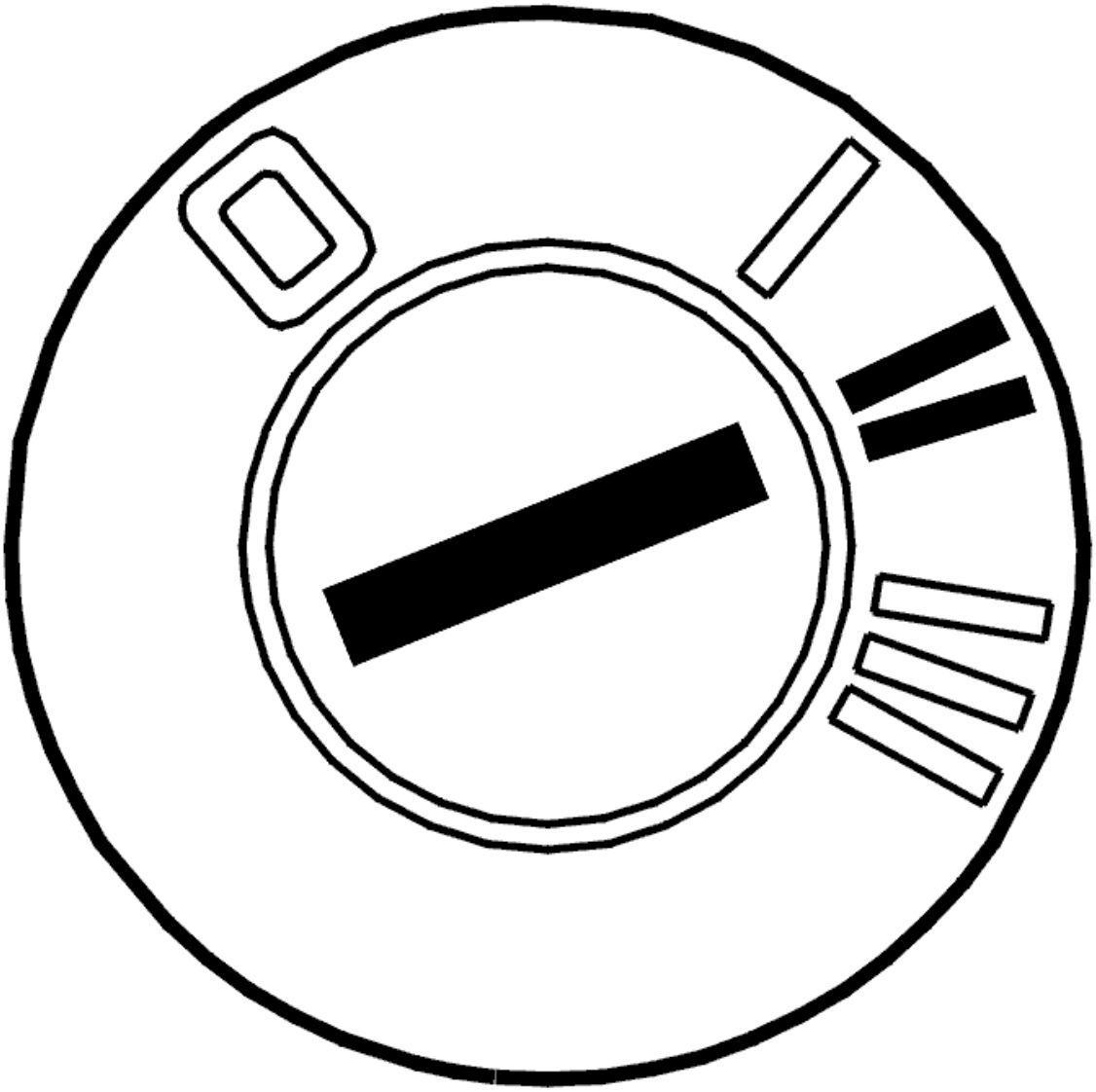

Fig. 47: Identifying Ignition ON
Courtesy of VOLVO CARS CORPORATION

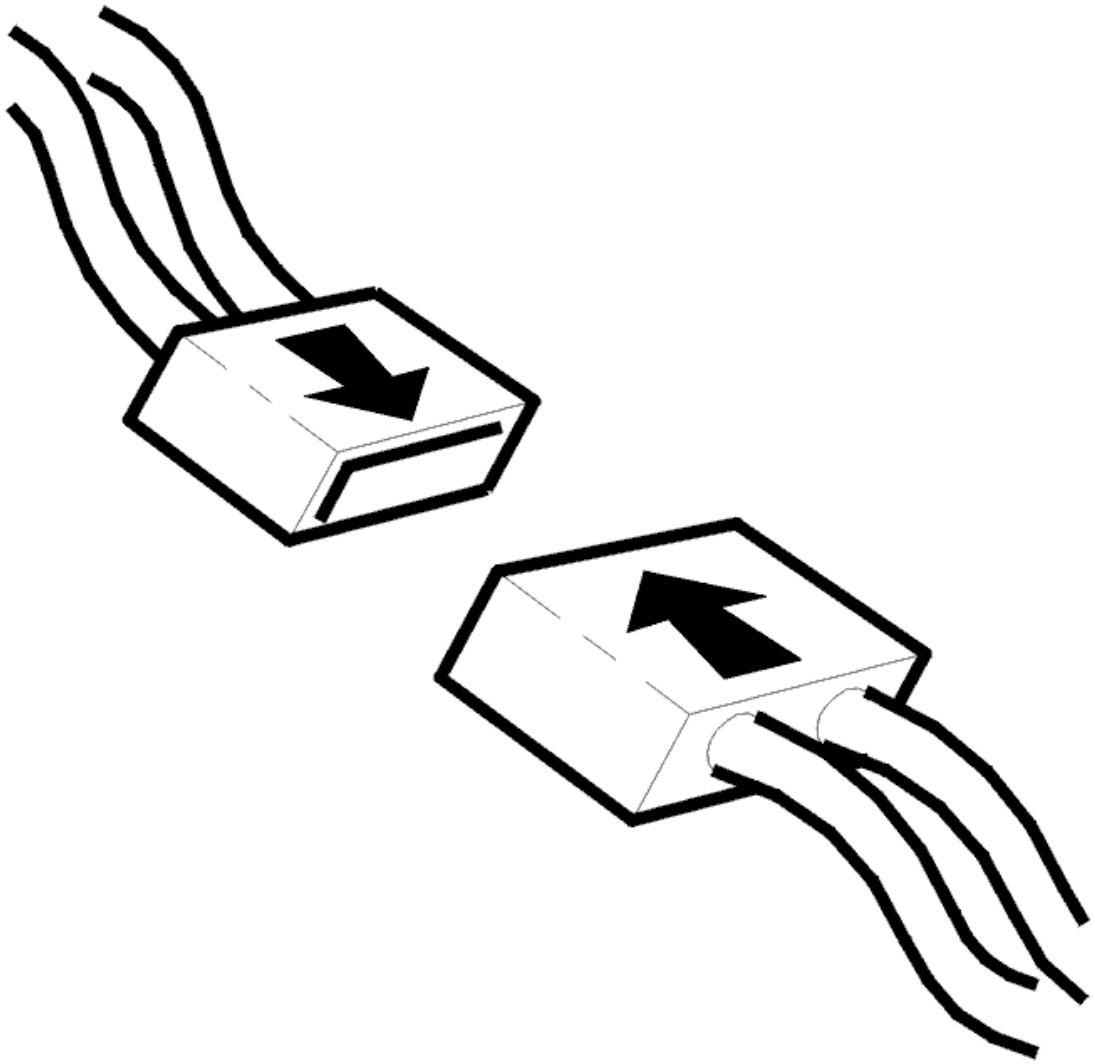

Fig. 48: Identifying Connector(s) Reinstallation
Courtesy of VOLVO CARS CORPORATION

- Ignition off
- Reconnect the connectors, components, etc.
- Ignition on
- Read the diagnostic status and fault status for the diagnostic trouble code by selecting the diagnostic trouble code in the list.

  Check the fault status for the diagnostic trouble code when the scan is "Implemented". When the function is correct the fault status should be "No fault found" when the scan is implemented.

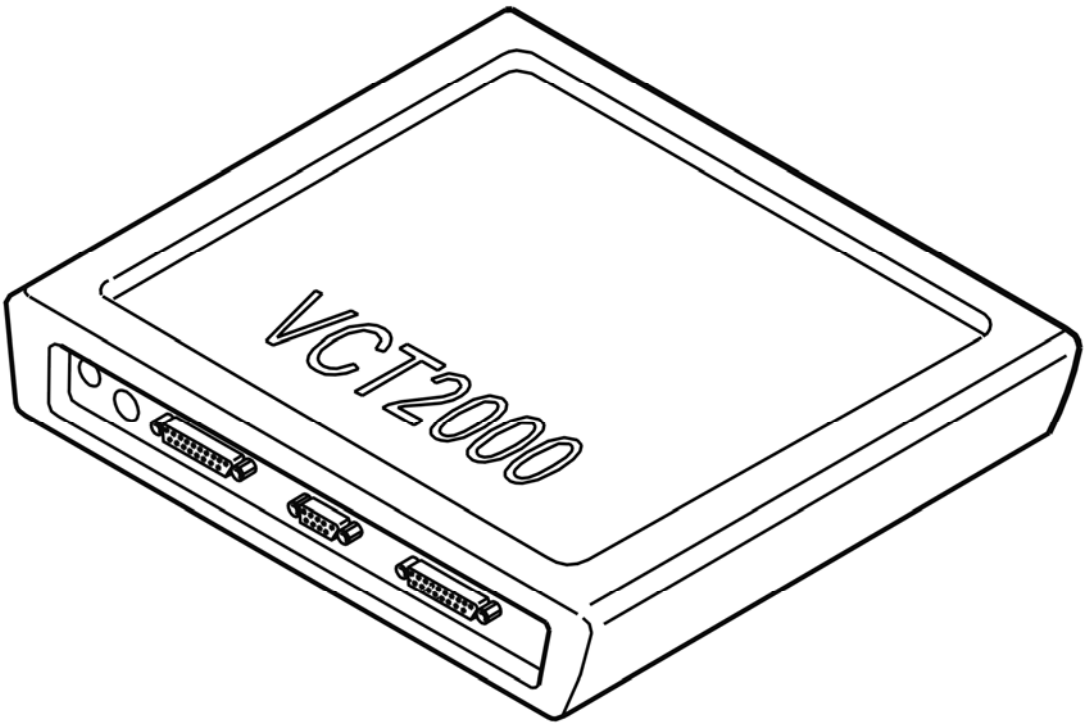

Fig. 49: Identifying VCT2000 Diagnostic Tool Symbol In VIDA
Courtesy of VOLVO CARS CORPORATION

Is the function OK?

- **YES**

  VERIFIED: Troubleshooting has been completed.

- **NO**

  Refer to **INFORMATION**

INFORMATION

FAULT-TRACING INFORMATION

The fault should have been detected and remedied. As this is not the case fault-tracing has failed.

Exit fault-tracing for this diagnostic trouble code (DTC) or make another attempt.

ECM-P240C00 EVAPORATIVE EMISSION SYSTEM LEAK DETECTION PUMP HEATER CIRCUIT HIGH. GENERAL FAILURE INFORMATION. NO SUB TYPE

INFORMATION (B6324S; 2007-2010)

DIAGNOSTIC TROUBLE CODE (DTC) INFORMATION ECM-P240C00

Condition

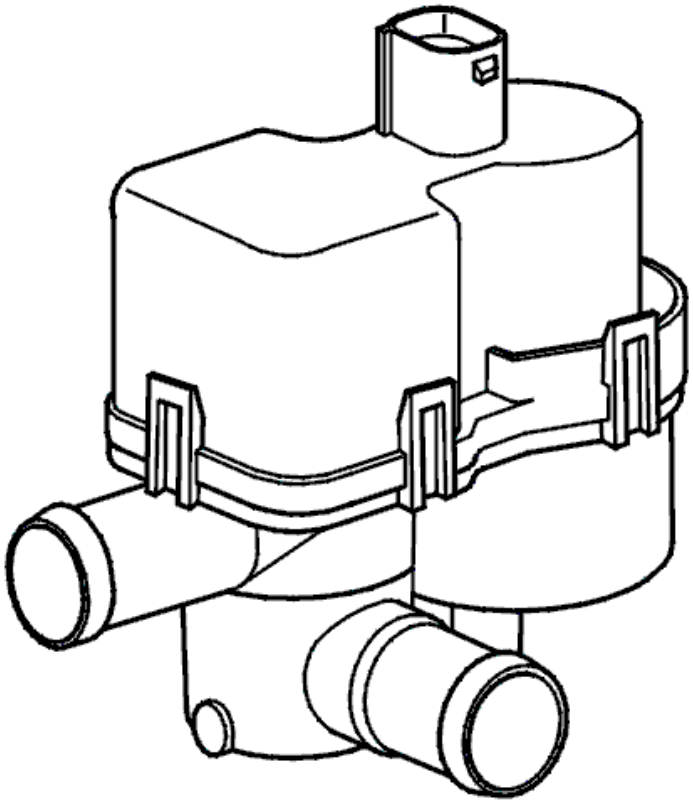

Fig. 50: Identifying Leak Diagnostic Pump
Courtesy of VOLVO CARS CORPORATION

The engine control module (EM) checks the control signal to the heating element in the leakage diagnosis pump.

The diagnostic trouble code is generated if the control module registers a fault in the control signal.

The diagnostic trouble code can be diagnosed when the ignition is on.

Substitute Value

- Nothing.

Possible Source

- The signal cable is short-circuited to supply voltage

- Open circuit on signal cable.
- Damage leakage diagnosis pump.

Fault symptom[s]

- Malfunction indicator lamp (MIL) lit.

FAULT-TRACING

see **FAULT-TRACING**

ECM-P240C00 EVAPORATIVE EMISSION SYSTEM LEAK DETECTION PUMP HEATER CIRCUIT HIGH. GENERAL FAILURE INFORMATION. NO SUB TYPE INFORMATION (B6324S5; 2011-2012)

DIAGNOSTIC TROUBLE CODE (DTC) INFORMATION ECM-P240C00

see **DIAGNOSTIC TROUBLE CODE (DTC) INFORMATION ECM-P240C00**

FAULT-TRACING

see **FAULT-TRACING**

ECM-P240C00 EVAP EMISSION SYSTEM, LEAKAGE DIAGNOSIS PUMP HEATING CIRCUIT HIGH. GENERAL FAULT INFORMATION. TYPE OF FAULT NOT SPECIFIED. (B8444S; 2005-2011)

DIAGNOSTIC TROUBLE CODE (DTC) INFORMATION ECM-P240C00

Condition

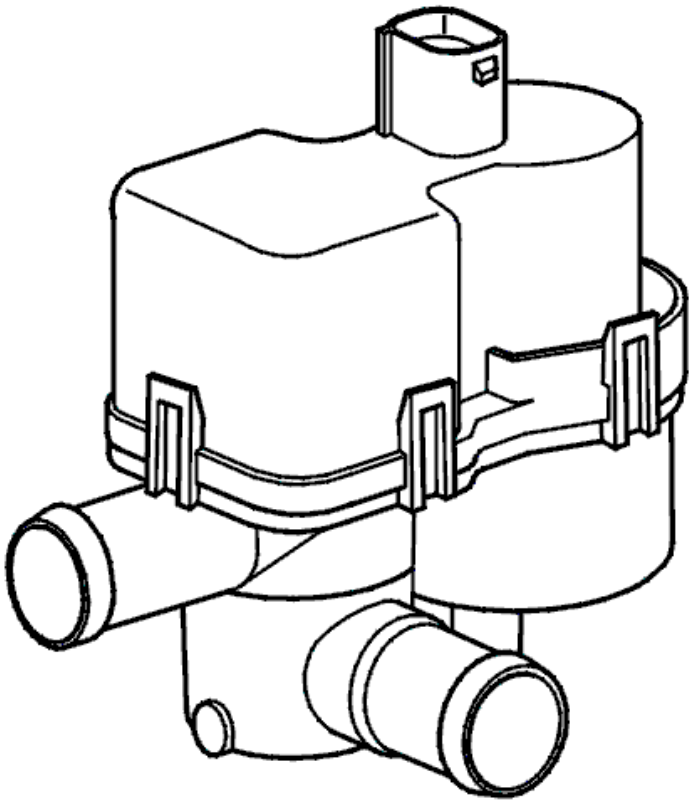

Fig. 51: Identifying Leak Diagnostic Pump
Courtesy of VOLVO CARS CORPORATION

The engine control module (EM) checks the control signal to the heating element in the leakage diagnosis pump.

The diagnostic trouble code is generated if the control module registers a fault in the control signal.

The diagnostic trouble code can be diagnosed when the ignition is on.

Substitute Value

- Nothing.

Possible Source

- The signal cable is short-circuited to supply voltage
- Open circuit on signal cable.
- Damage leakage diagnosis pump.

Fault symptom[s]

- Malfunction indicator lamp (MIL) lit.

TROUBLESHOOTING ECM-P240B00

CHECKING THE STATUS

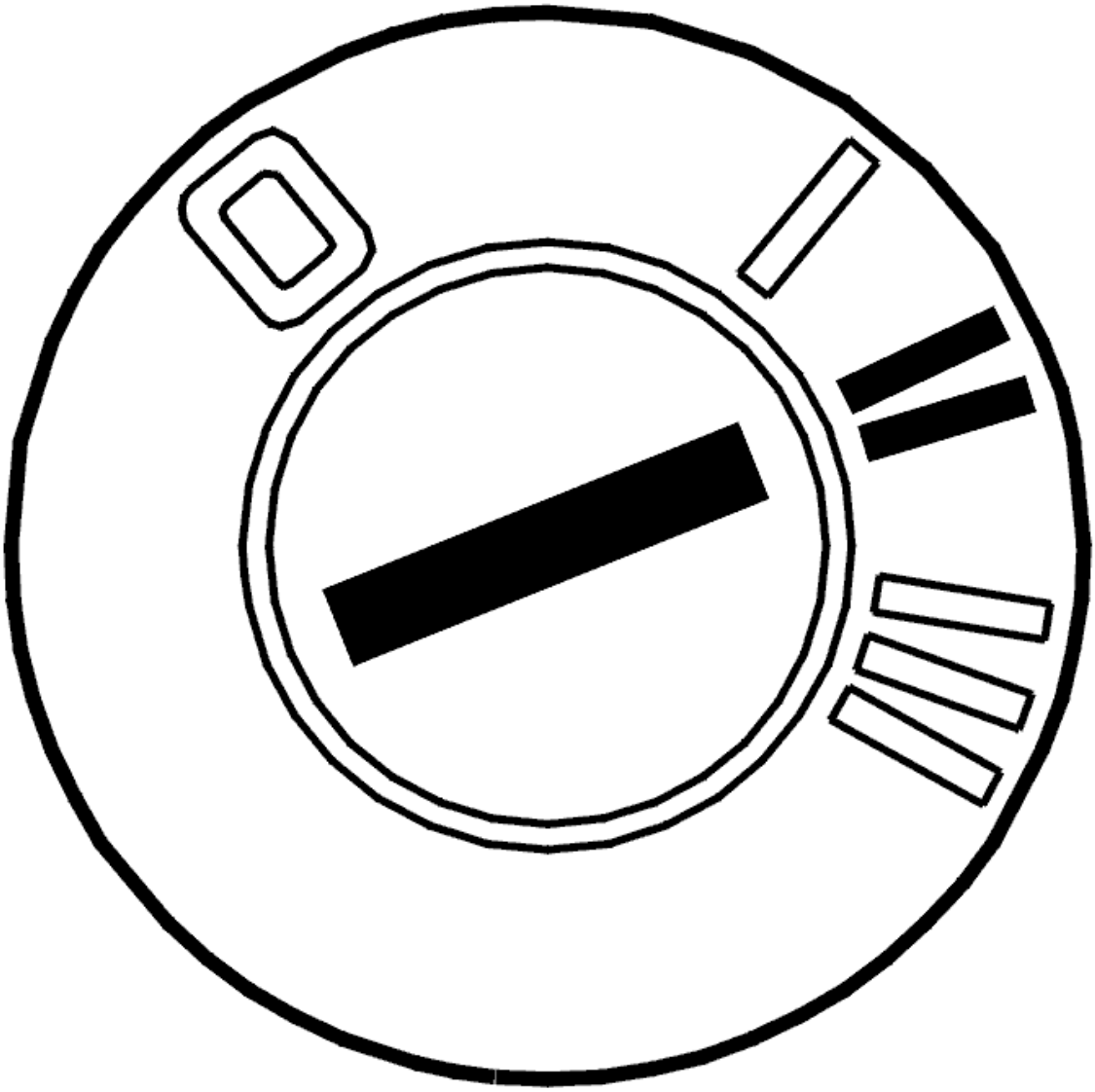

Fig. 52: Identifying Ignition ON
Courtesy of VOLVO CARS CORPORATION

- Ignition on

  Read the diagnostic status and trouble status for the diagnostic trouble code by selecting the diagnostic trouble code in the list.

  Check if the malfunction is permanent or intermittent by reading off the diagnostic trouble code's status when the diagnostic status is "Implemented".

  If the trouble status is "Malfunction found", this indicates that the malfunction is permanent. If the trouble

status is "No malfunction found", this indicates that the malfunction is intermittent and not active right now.

NOTE: Trouble status cannot go from "Malfunction found" to "No malfunction found" in the same operating cycle.

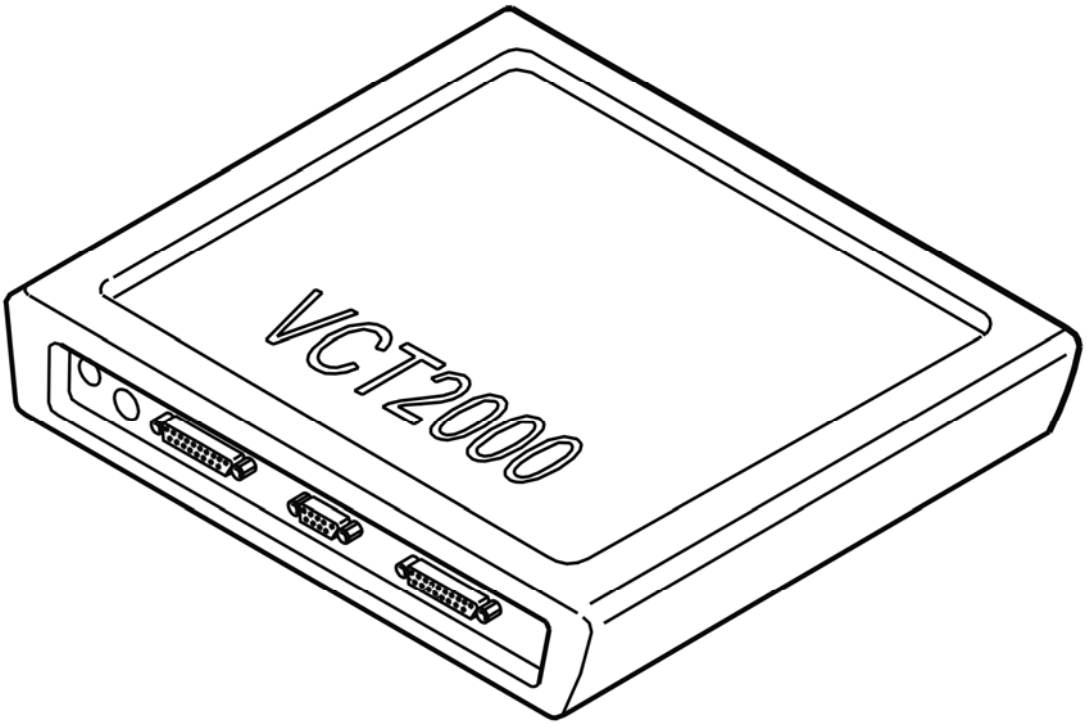

Fig. 53: Identifying VCT2000 Diagnostic Tool Symbol In VIDA
Courtesy of VOLVO CARS CORPORATION

- **Continue**

  Refer to **CHECKING COMPONENT AND CABLES**

CHECKING COMPONENT AND CABLES

Check the leakage diagnostics unit's connector for contact resistance and oxidation.

Check the cable between engine control module (ECM) #B23 (#C23) and the leakage diagnostics unit #2 for short-circuit to ground, as well as open circuit.

Remedy as necessary.

Other information

- see **CONNECTING THE BREAKOUT BOX**
- see **SIGNAL SPECIFICATION, ENGINE CONTROL MODULE (ECM)**
- see **LEAK DIAGNOSTIC PUMP, REPLACING**
- see **CONTENTS**

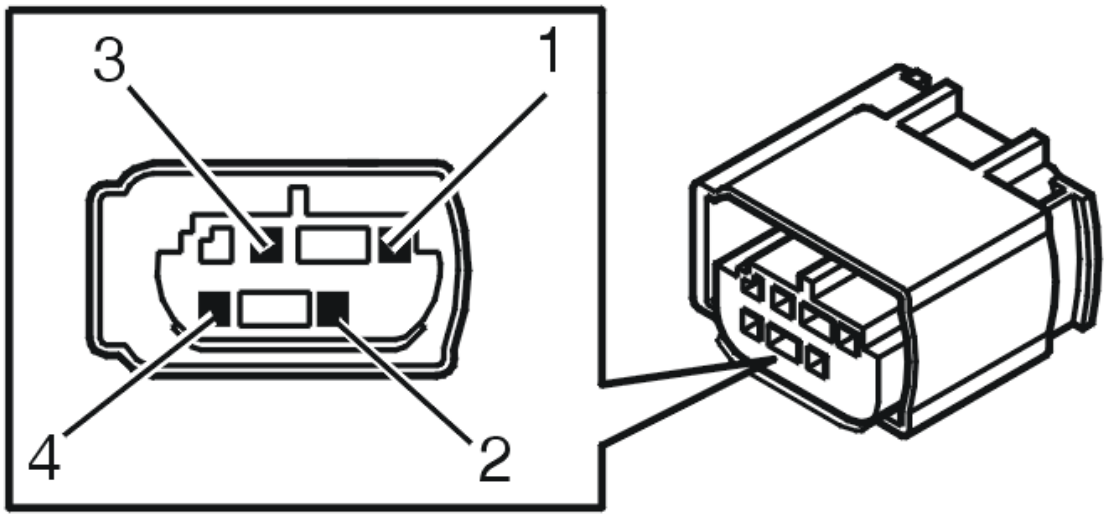

Fig. 54: Identifying Leak Diagnostic Unit Connector Terminals
Courtesy of VOLVO CARS CORPORATION

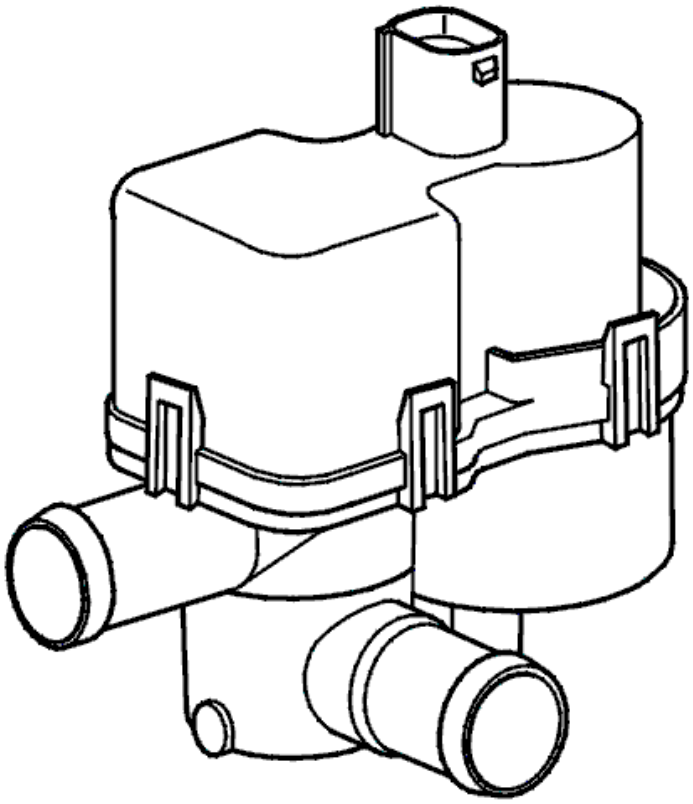

Fig. 55: Identifying Leak Diagnostic Pump
Courtesy of VOLVO CARS CORPORATION

- **Continue**

  Refer to **VERIFICATION**

VERIFICATION

VERIFICATION

HINT: After carrying out the repair, check that the fault has been remedied.

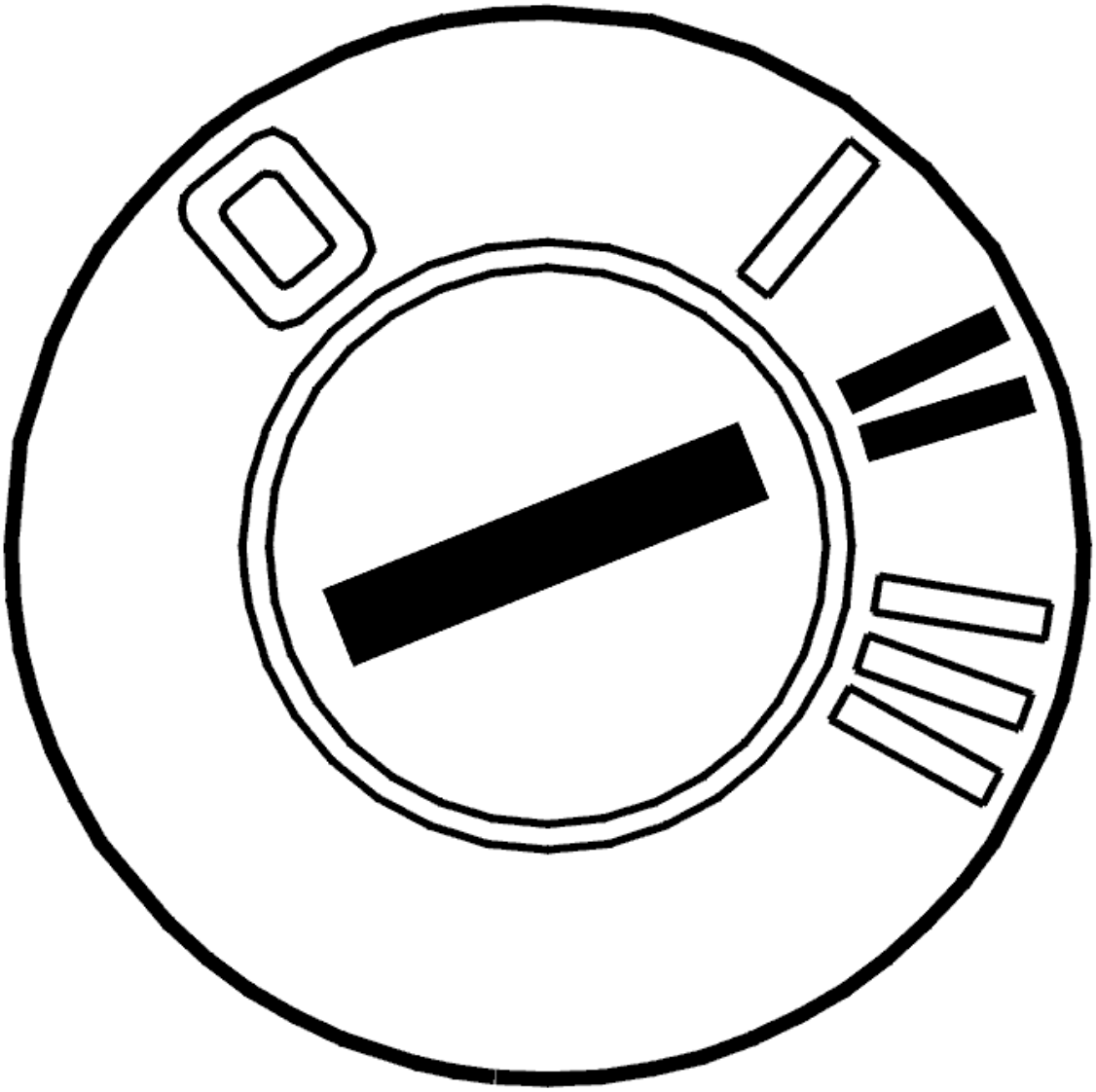

Fig. 56: Identifying Ignition ON
Courtesy of VOLVO CARS CORPORATION

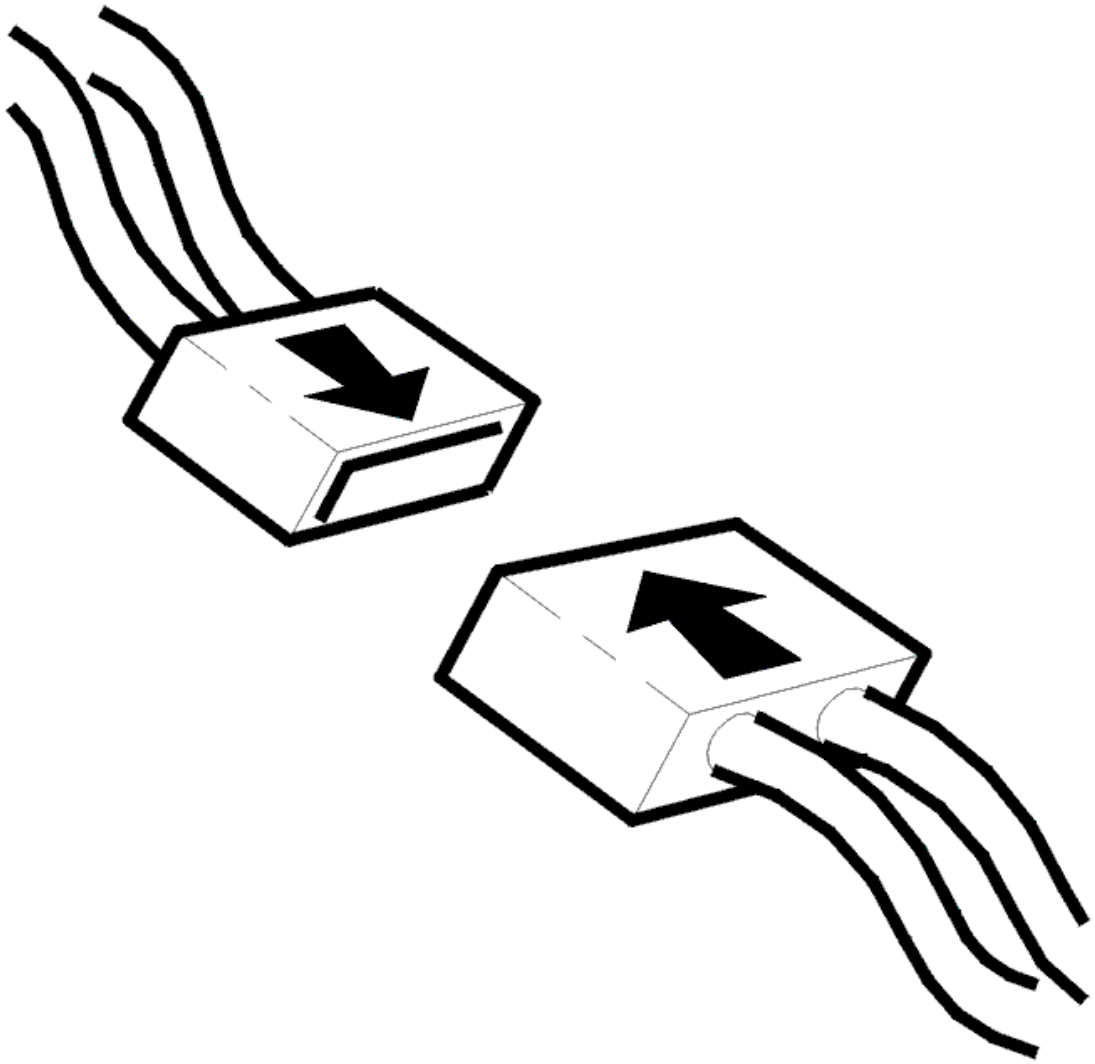

Fig. 57: Identifying Connector(s) Reinstallation
Courtesy of VOLVO CARS CORPORATION

- Ignition off
- Reconnect the connectors, components, etc.
- Ignition on
- Read the diagnostic status and fault status for the diagnostic trouble code by selecting the diagnostic trouble code in the list.

  Check the fault status for the diagnostic trouble code when the scan is "Implemented". When the function is correct the fault status should be "No fault found" when the scan is implemented.

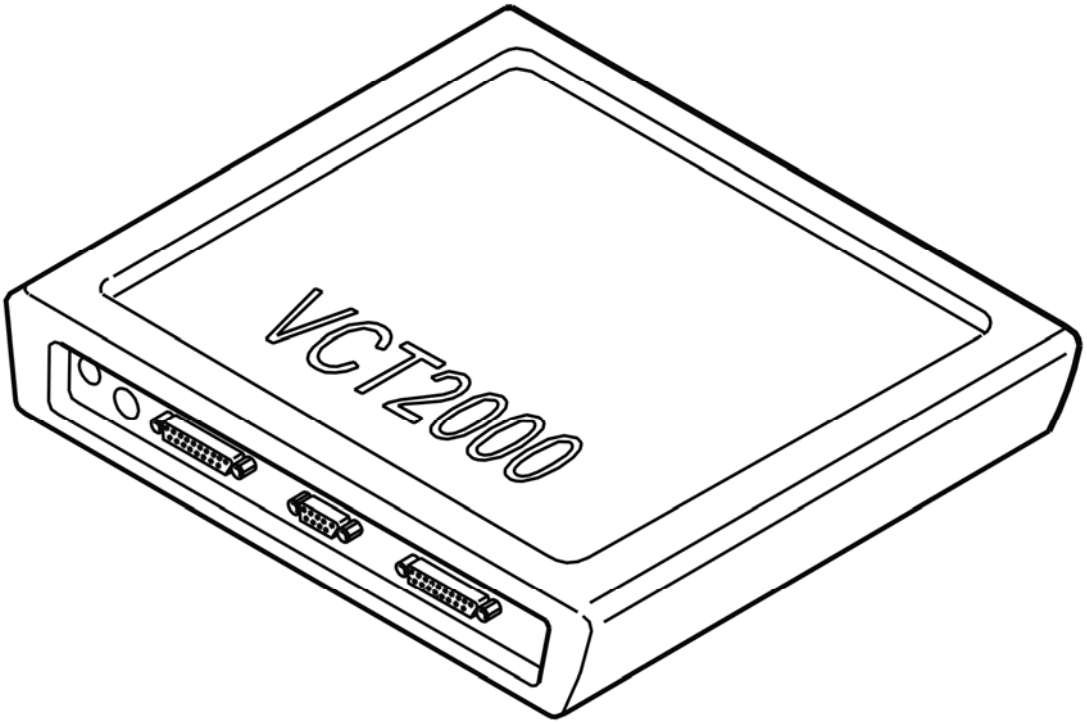

Fig. 58: Identifying VCT2000 Diagnostic Tool Symbol In VIDA
Courtesy of VOLVO CARS CORPORATION

Is the function OK?

- **YES**

  VERIFIED: Troubleshooting has been completed.

- **NO**

  Refer to **INFORMATION**

INFORMATION

FAULT-TRACING INFORMATION

The fault should have been detected and remedied. As this is not the case fault-tracing has failed.

Exit fault-tracing for this diagnostic trouble code (DTC) or make another attempt.

ECM-P241900: EVAPORATIVE EMISSION CONTROL SYSTEM SWITCHING VALVE CONTROL CIRCUIT LOW. GENERAL FAILURE INFORMATION. NO

SUB TYPE INFORMATION (B6324S; 2007-2010)

DIAGNOSTIC TROUBLE CODE (DTC) INFORMATION ECM-P241900

Condition

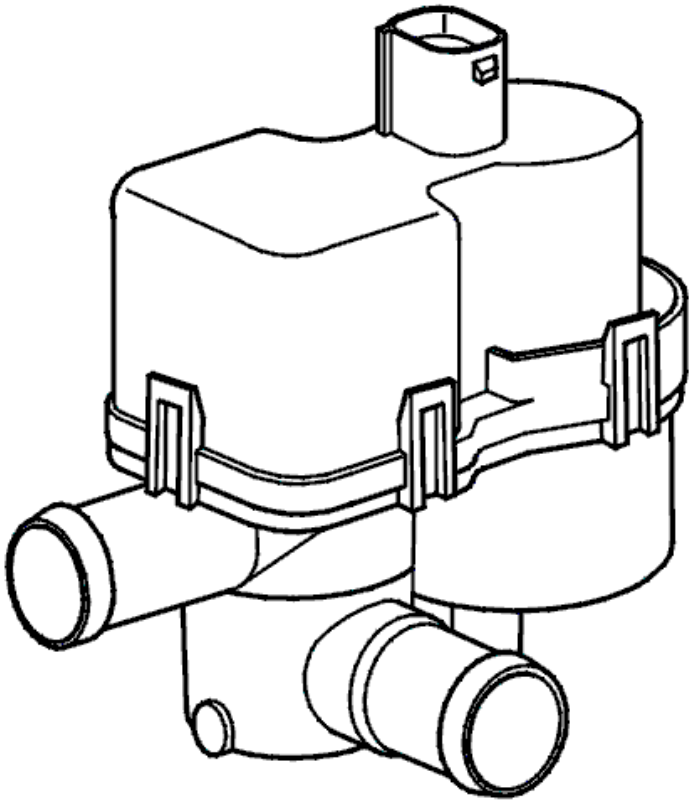

Fig. 59: Identifying Leak Diagnostic Pump
Courtesy of VOLVO CARS CORPORATION

The engine control module (EM) checks the control signal to the changeover valve in the leakage diagnosis pump.

The diagnostic trouble code is generated if the control module registers a fault in the control signal.

The diagnostic trouble code can be diagnosed when the ignition is on.

Substitute Value

- Leakage diagnosis interrupted.

Possible Source

- Short-circuit to ground in the signal cable.

- Open circuit on signal cable.
- Damage leakage diagnosis pump.

Fault symptom[s]

- Malfunction indicator lamp (MIL) lit.

FAULT-TRACING

see **FAULT-TRACING**

ECM-P241900: EVAPORATIVE EMISSION CONTROL SYSTEM SWITCHING VALVE CONTROL CIRCUIT LOW. GENERAL FAILURE INFORMATION. NO SUB TYPE INFORMATION (B6324S5; 2011-2012)

DIAGNOSTIC TROUBLE CODE (DTC) INFORMATION ECM-P241900

see **DIAGNOSTIC TROUBLE CODE (DTC) INFORMATION ECM-P241900**

FAULT-TRACING

see **FAULT-TRACING**

ECM-P241900: TANK VENTILATION SYSTEM CHANGEOVER VALVE CONTROL CIRCUIT LOW. GENERAL FAULT INFORMATION. TYPE OF FAULT NOT SPECIFIED. (B8444S; 2005-2011)

DIAGNOSTIC TROUBLE CODE (DTC) INFORMATION ECM-P241900

Condition

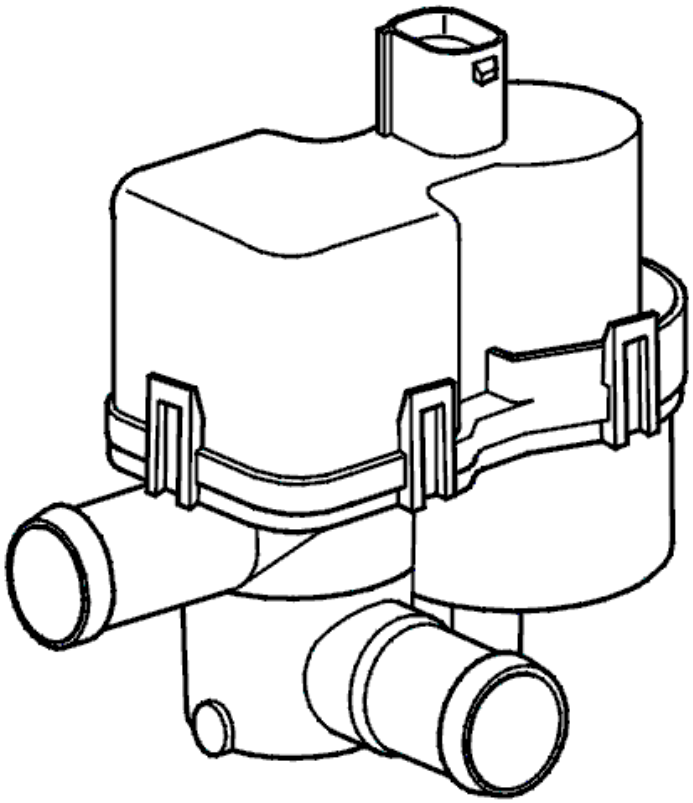

Fig. 60: Identifying Leak Diagnostic Pump
Courtesy of VOLVO CARS CORPORATION

The engine control module (EM) checks the control signal to the changeover valve in the leakage diagnosis pump.

The diagnostic trouble code is generated if the control module registers a fault in the control signal.

The diagnostic trouble code can be diagnosed when the ignition is on.

Substitute Value

- Leakage diagnosis interrupted.

Possible Source

- Short-circuit to ground in the signal cable.
- Open circuit on signal cable.
- Damage leakage diagnosis pump.

Fault symptom[s]

- Malfunction indicator lamp (MIL) lit.

TROUBLESHOOTING ECM-P241900

CHECKING THE STATUS

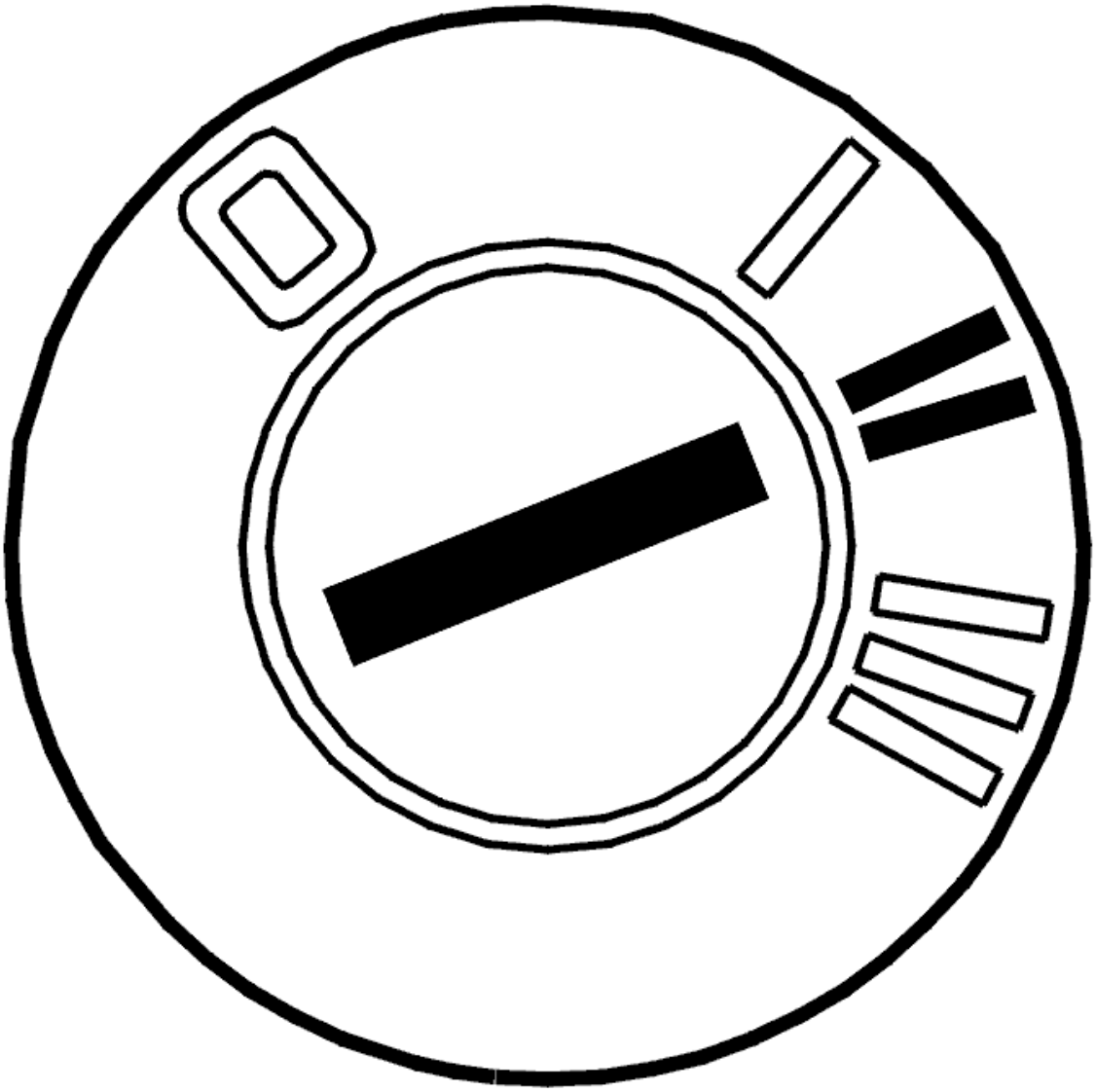

Fig. 61: Identifying Ignition ON
Courtesy of VOLVO CARS CORPORATION

- Ignition on

  Check if the malfunction is permanent or intermittent by opening and closing the valve in the leakage diagnostics unit. Listen for a clicking sound when the valve opens/closes.

  If the valve is not heard, this indicates a permanent malfunction. If the valve can be heard, this indicates that the malfunction is intermittent and not active right now.

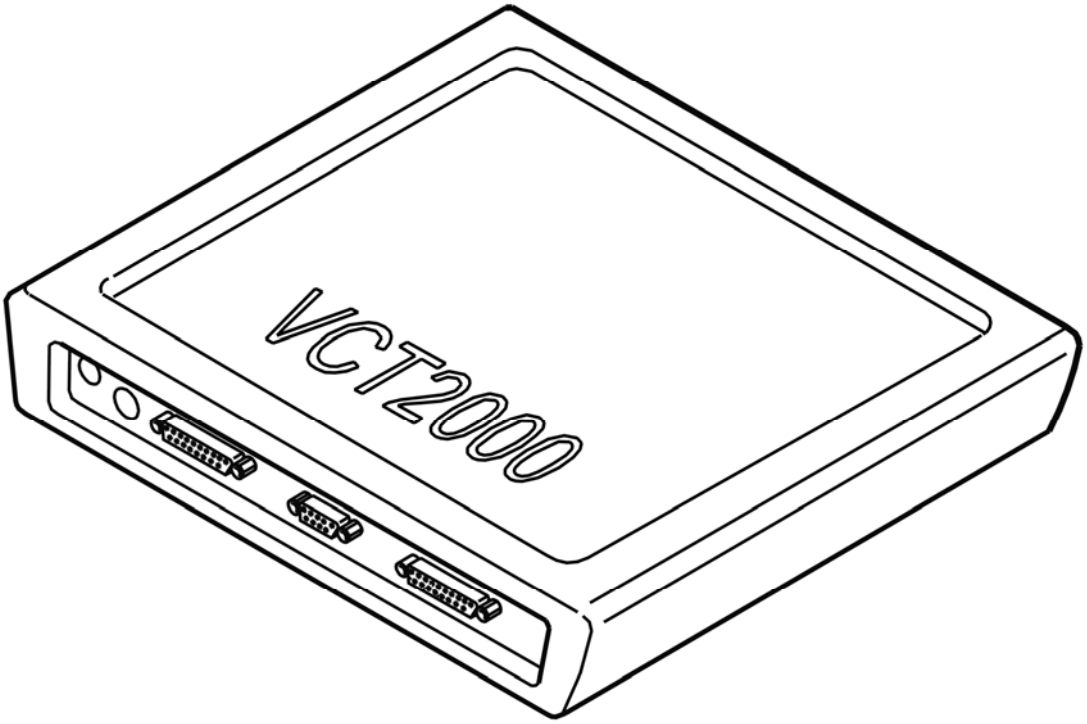

Fig. 62: Identifying VCT2000 Diagnostic Tool Symbol In VIDA
Courtesy of VOLVO CARS CORPORATION

- **Continue**

  Refer to **CHECKING COMPONENT AND CABLES**

CHECKING COMPONENT AND CABLES

Check the leakage diagnostics unit's connector for contact resistance and oxidation.

Check the valve's resistance between the leakage diagnostics unit's connector #3 and #4.

Check the cable between engine control module (ECM) #B48 (#C48) and the leakage diagnostics unit #2 for short-circuit to ground, as well as open circuit.

Remedy as necessary.

Other information

- see **CONNECTING THE BREAKOUT BOX**
- see **SIGNAL SPECIFICATION, ENGINE CONTROL MODULE (ECM)**
- see **LEAK DIAGNOSTIC PUMP, REPLACING**

- see **CONTENTS**

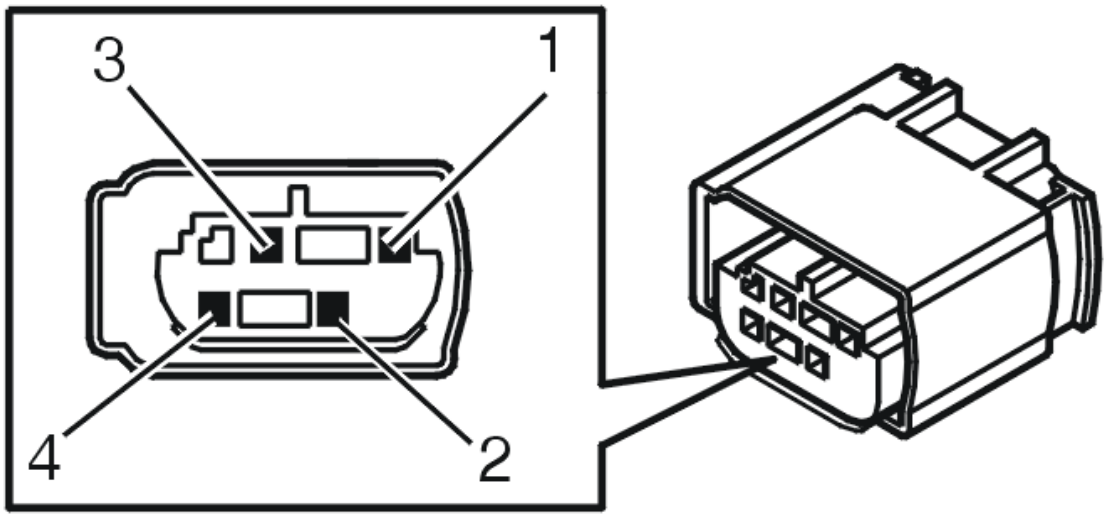

Fig. 63: Identifying Leak Diagnostic Unit Connector Terminals
Courtesy of VOLVO CARS CORPORATION

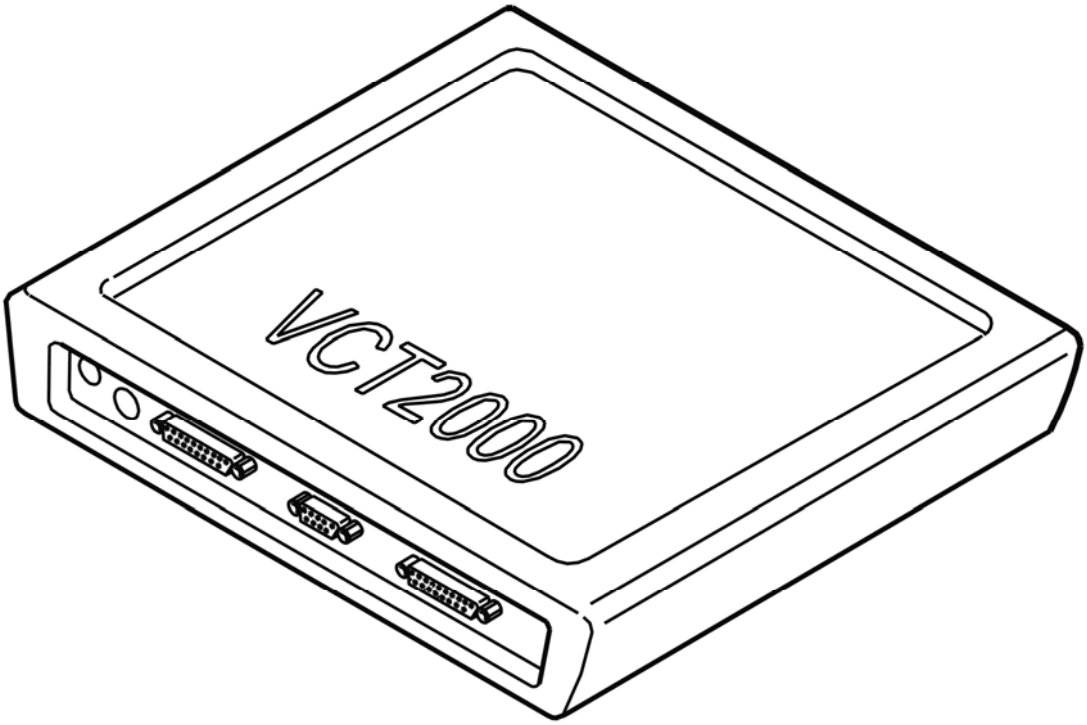

Fig. 64: Identifying VCT2000 Diagnostic Tool Symbol In VIDA
Courtesy of VOLVO CARS CORPORATION

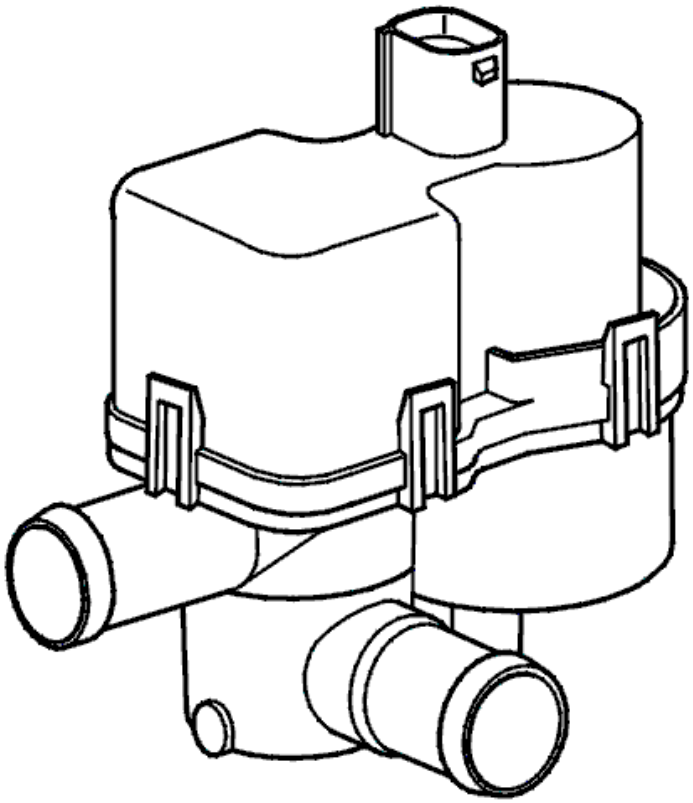

Fig. 65: Identifying Leak Diagnostic Pump
Courtesy of VOLVO CARS CORPORATION

- **Continue**

  Refer to **VERIFICATION**

VERIFICATION

VERIFICATION

HINT: After repairing, it is necessary to check that the malfunction has been fixed.

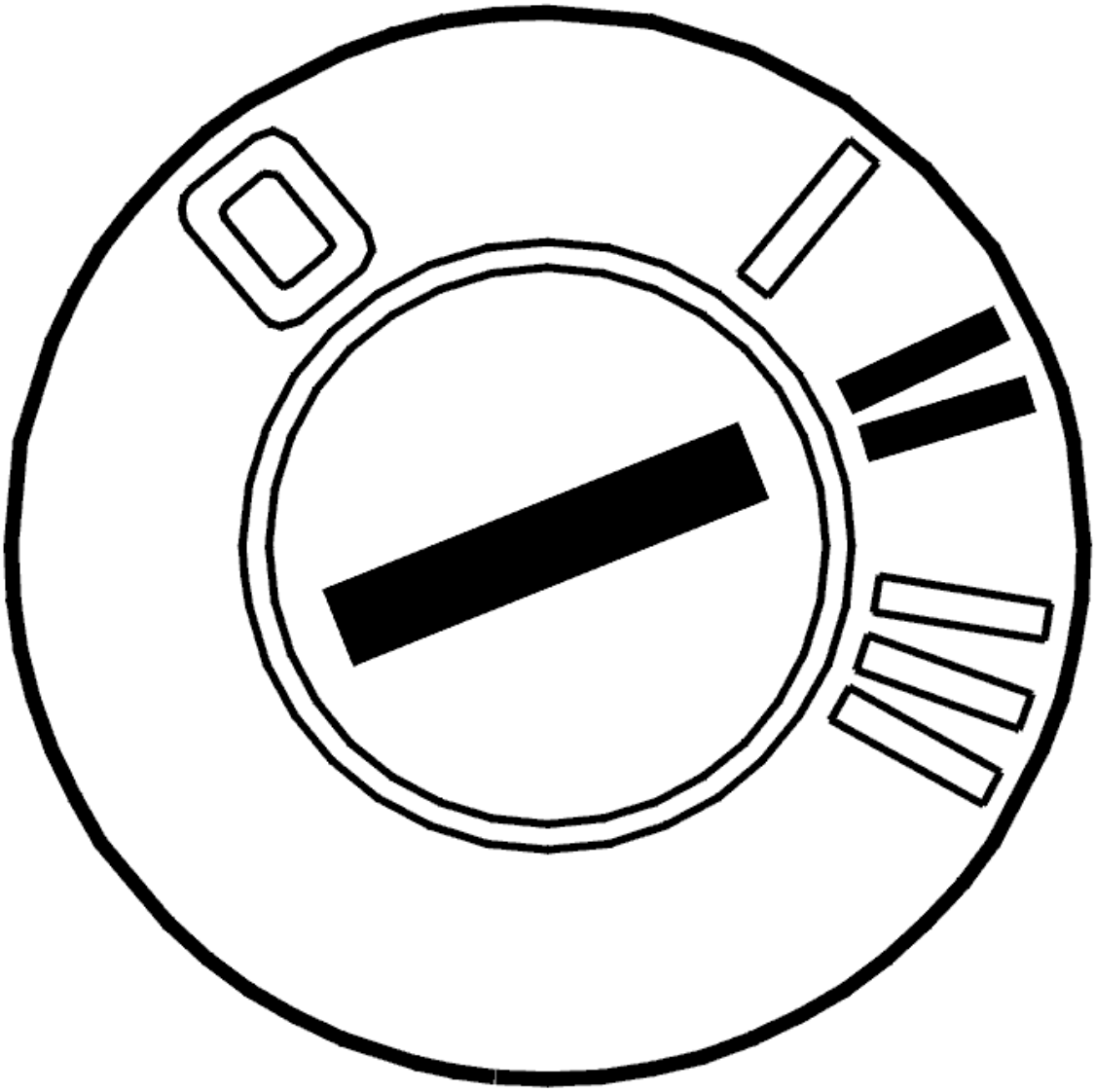

Fig. 66: Identifying Ignition ON
Courtesy of VOLVO CARS CORPORATION

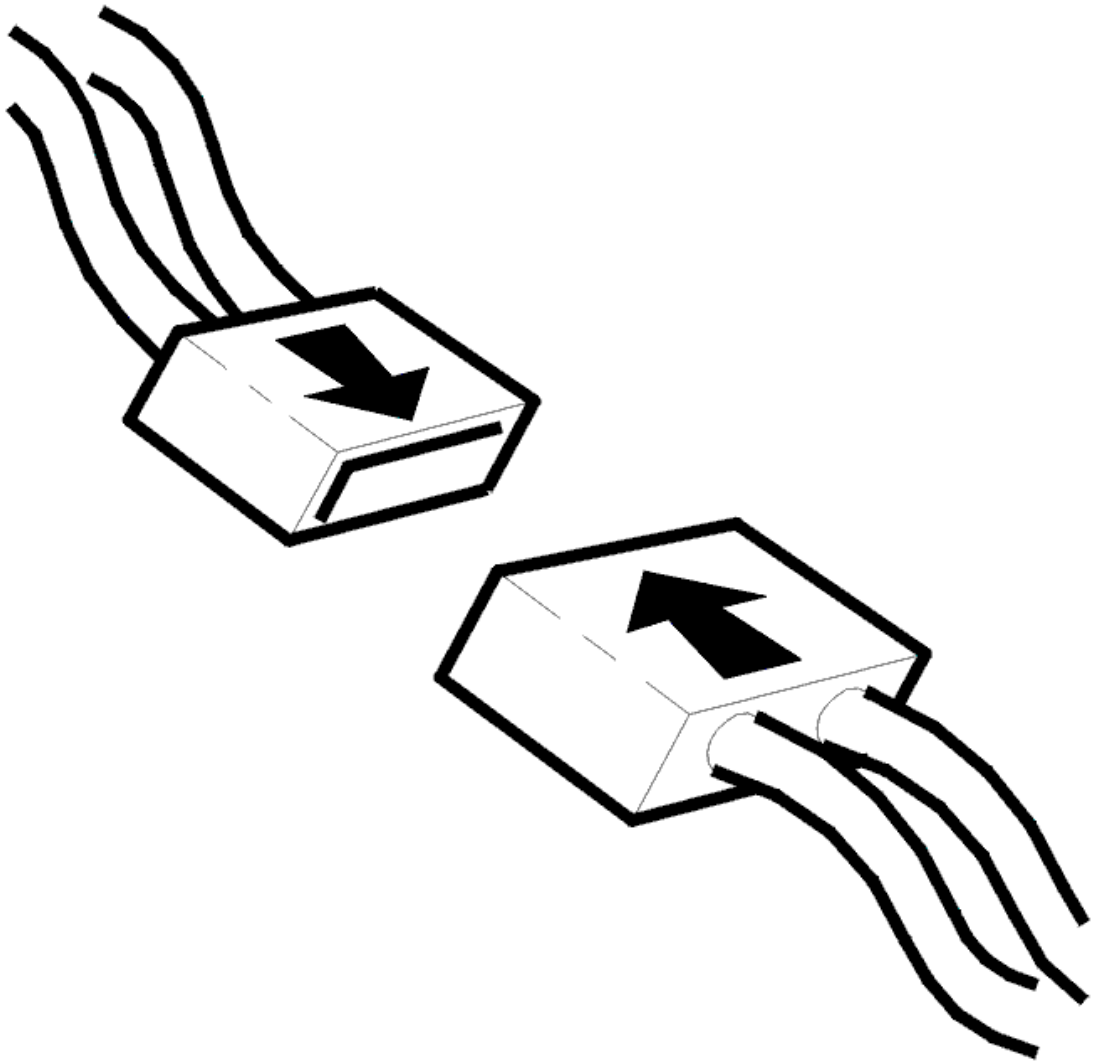

Fig. 67: Identifying Connector(s) Reinstallation
Courtesy of VOLVO CARS CORPORATION

- Ignition off
- Reconnect the connectors, components, etc.
- Ignition on
- Start activation of the valve in the leakage diagnostics unit.

  Listen for a clicking sound when the valve opens/closes.

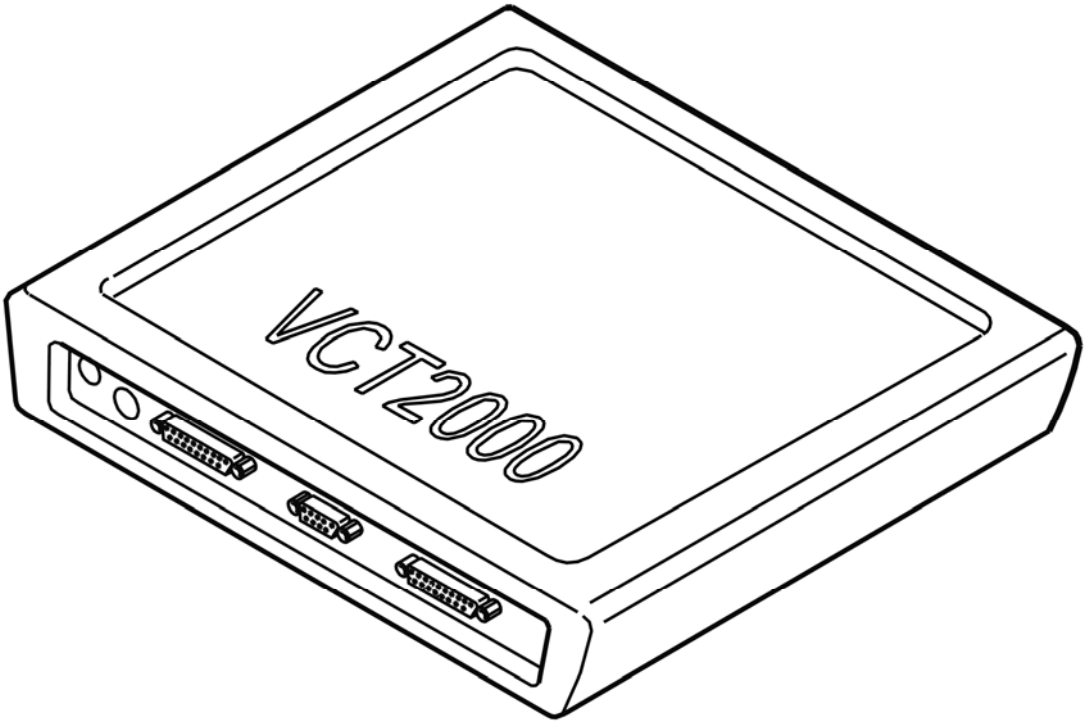

Fig. 68: Identifying VCT2000 Diagnostic Tool Symbol In VIDA
Courtesy of VOLVO CARS CORPORATION

Is the function OK?

- **YES**

  VERIFIED: Troubleshooting has been completed.

- **NO**

  Refer to **INFORMATION**

INFORMATION

FAULT-TRACING INFORMATION

The fault should have been detected and remedied. As this is not the case fault-tracing has failed.

Exit fault-tracing for this diagnostic trouble code (DTC) or make another attempt.

ECM-P242000: EVAPORATIVE EMISSION CONTROL SYSTEM SWITCHING VALVE CONTROL CIRCUIT HIGH. GENERAL FAILURE INFORMATION. NO

SUB TYPE INFORMATION (B6324S; 2007-2010)

DIAGNOSTIC TROUBLE CODE (DTC) INFORMATION ECM-P242000

Condition

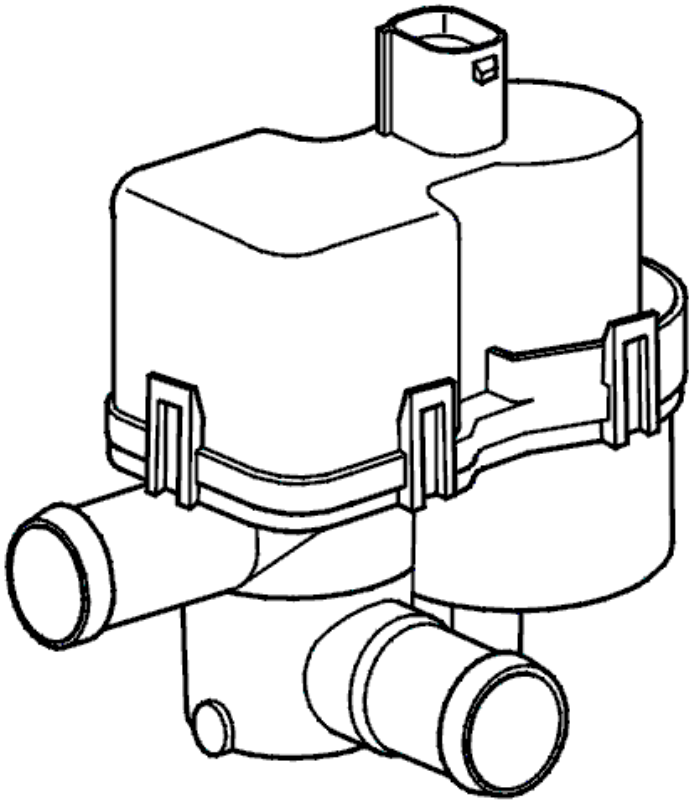

Fig. 69: Identifying Leak Diagnostic Pump
Courtesy of VOLVO CARS CORPORATION

The engine control module (EM) checks the control signal to the changeover valve in the leakage diagnosis pump.

The diagnostic trouble code is generated if the control module registers a fault in the control signal.

The diagnostic trouble code can be diagnosed when the ignition is on.

Substitute Value

- Leakage diagnosis interrupted.

Possible Source

- The signal cable is short-circuited to supply voltage

- Damage leakage diagnosis pump.

Fault symptom[s]

- Malfunction indicator lamp (MIL) lit.

FAULT-TRACING

see **FAULT-TRACING**

ECM-P242000: EVAPORATIVE EMISSION CONTROL SYSTEM SWITCHING VALVE CONTROL CIRCUIT HIGH. GENERAL FAILURE INFORMATION. NO SUB TYPE INFORMATION (B6324S5; 2011-2012)

DIAGNOSTIC TROUBLE CODE (DTC) INFORMATION ECM-P242000

see **DIAGNOSTIC TROUBLE CODE (DTC) INFORMATION ECM-P242000**

FAULT-TRACING

see **FAULT-TRACING**

ECM-P242000: TANK VENTILATION SYSTEM CHANGEOVER VALVE CONTROL CIRCUIT LOW. GENERAL FAULT INFORMATION. TYPE OF FAULT NOT SPECIFIED. (B8444S; 2005-2011)

DIAGNOSTIC TROUBLE CODE (DTC) INFORMATION ECM-P242000

Condition

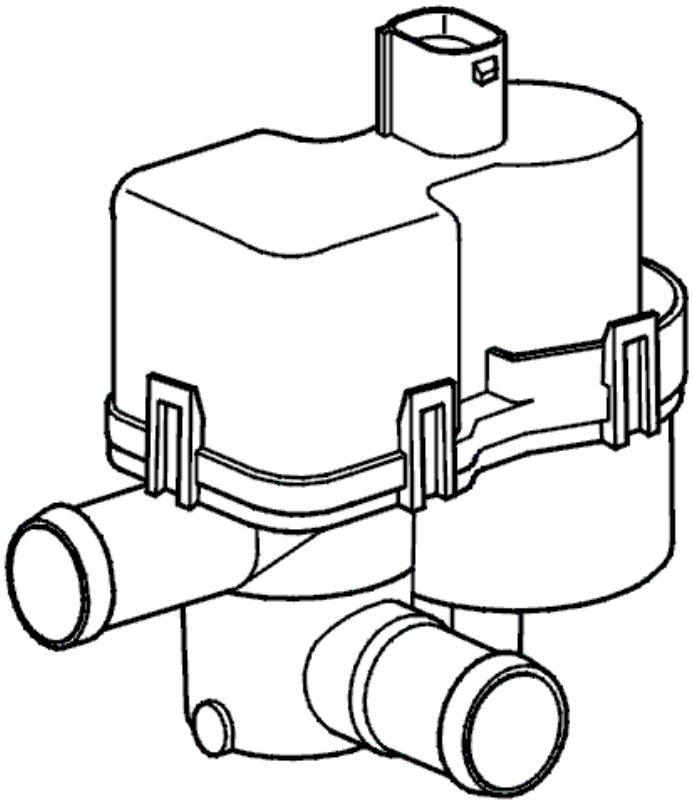

Fig. 70: Identifying Leak Diagnostic Pump
Courtesy of VOLVO CARS CORPORATION

The engine control module (EM) checks the control signal to the changeover valve in the leakage diagnosis pump.

The diagnostic trouble code is generated if the control module registers a fault in the control signal.

The diagnostic trouble code can be diagnosed when the ignition is on.

Substitute Value

- Leakage diagnosis interrupted.

Possible Source

- The signal cable is short-circuited to supply voltage
- Damage leakage diagnosis pump.

Fault symptom[s]

- Malfunction indicator lamp (MIL) lit.

TROUBLESHOOTING ECM-P242000

CHECKING THE STATUS

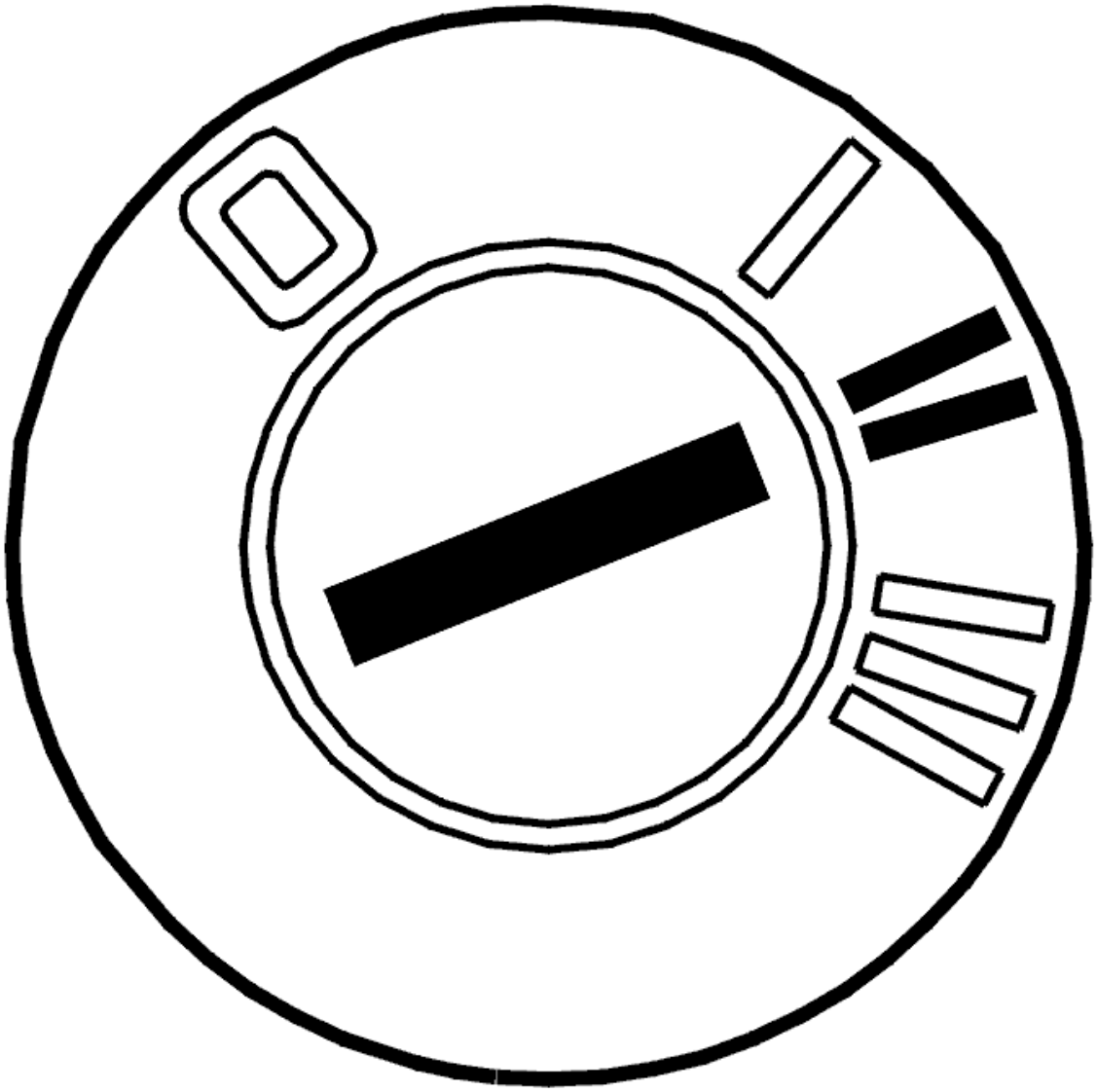

Fig. 71: Identifying Ignition ON
Courtesy of VOLVO CARS CORPORATION

- Ignition on

  Check if the malfunction is permanent or intermittent by opening and closing the valve in the leakage diagnostics unit. Listen for a clicking sound when the valve opens/closes.

  If the valve is not heard, this indicates a permanent malfunction. If the valve can be heard, this indicates that the malfunction is intermittent and not active right now.

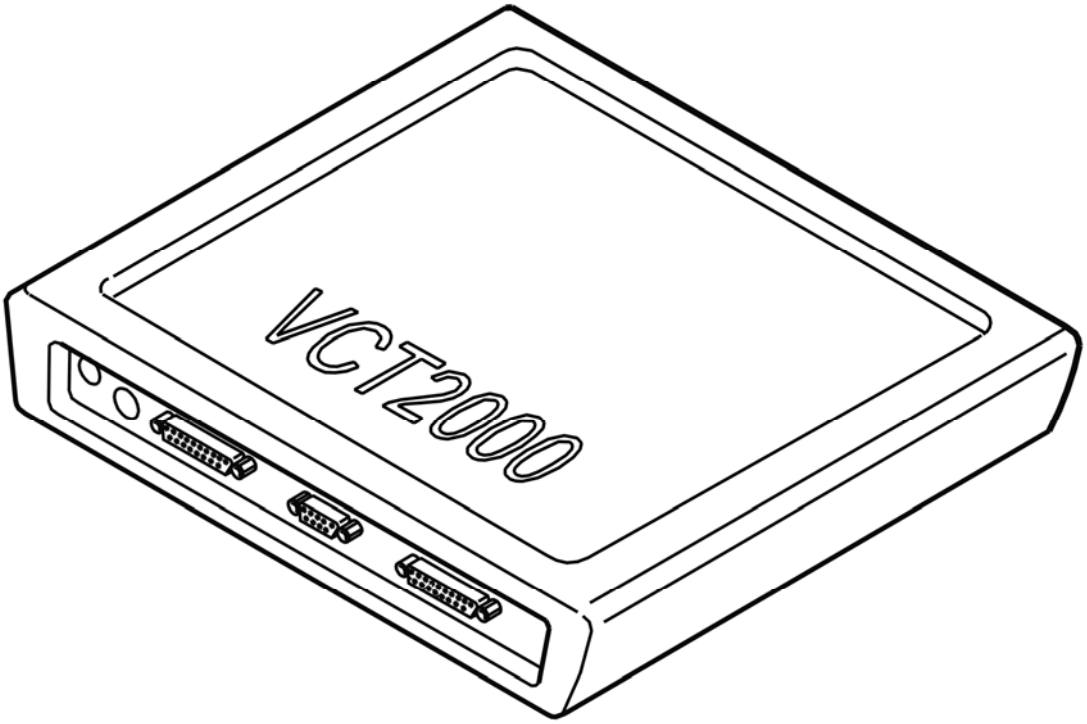

Fig. 72: Identifying VCT2000 Diagnostic Tool Symbol In VIDA
Courtesy of VOLVO CARS CORPORATION

- **Continue**

  Refer to **CHECKING COMPONENT AND CABLES**

CHECKING COMPONENT AND CABLES

Check the leakage diagnostics unit's connector for contact resistance and oxidation.

Check the valve's resistance between the leakage diagnostics unit's connector #3 and #4.

Check the cable between engine control module (ECM) #B48 (#C48) and the leakage diagnostics unit #2 for short-circuit to voltage.

Remedy as necessary.

Other information

- see **FUEL SYSTEM, DRAINING**
- see **SIGNAL SPECIFICATION, ENGINE CONTROL MODULE (ECM)**
- see **LEAK DIAGNOSTIC PUMP, REPLACING**

- see **CONTENTS**

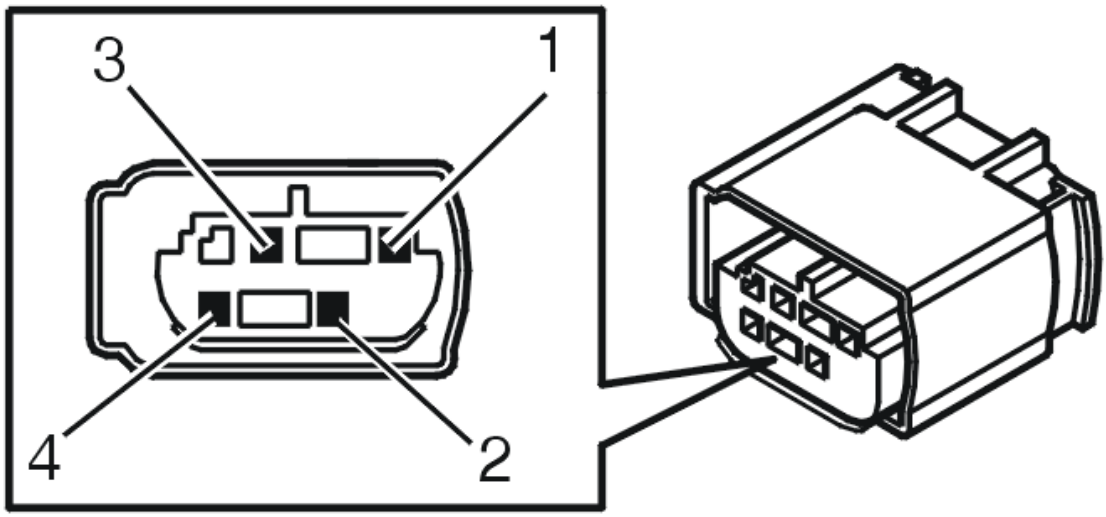

Fig. 73: Identifying Leak Diagnostic Unit Connector Terminals
Courtesy of VOLVO CARS CORPORATION

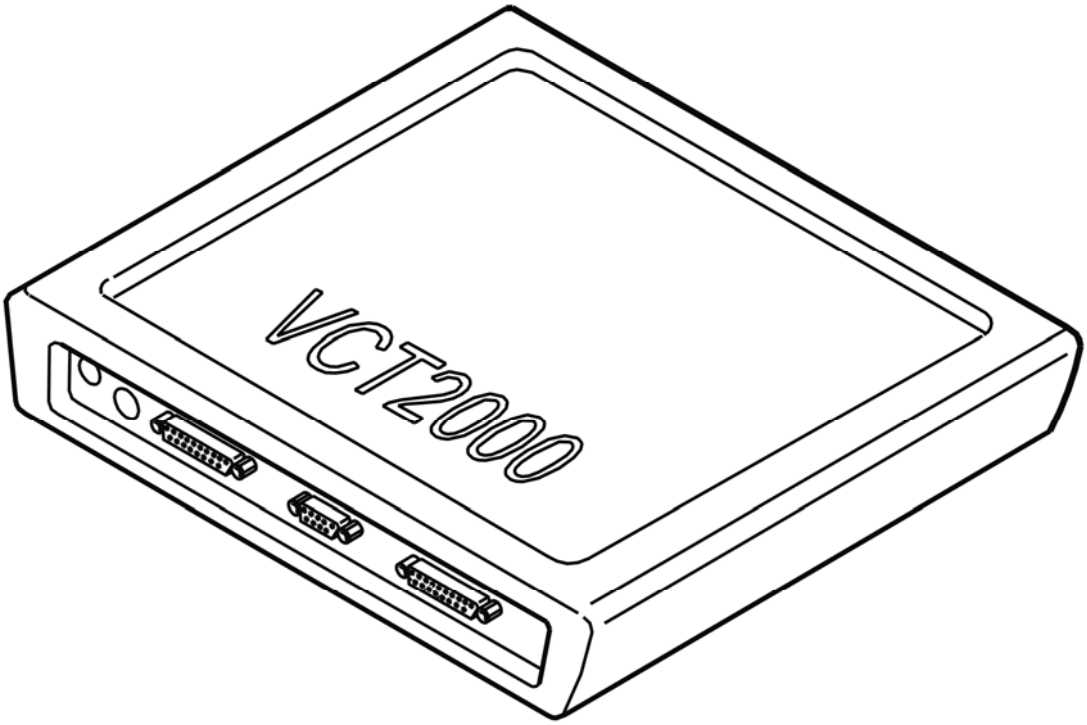

Fig. 74: Identifying VCT2000 Diagnostic Tool Symbol In VIDA
Courtesy of VOLVO CARS CORPORATION

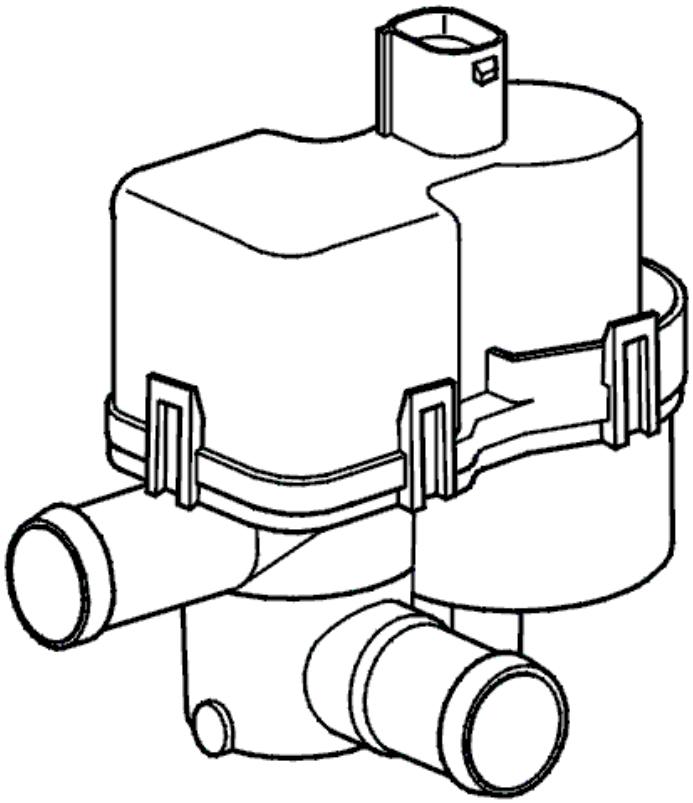

Fig. 75: Identifying Leak Diagnostic Pump
Courtesy of VOLVO CARS CORPORATION

- **Continue**

  Refer to **VERIFICATION**

VERIFICATION

VERIFICATION

HINT: After repairing, it is necessary to check that the malfunction has been fixed.

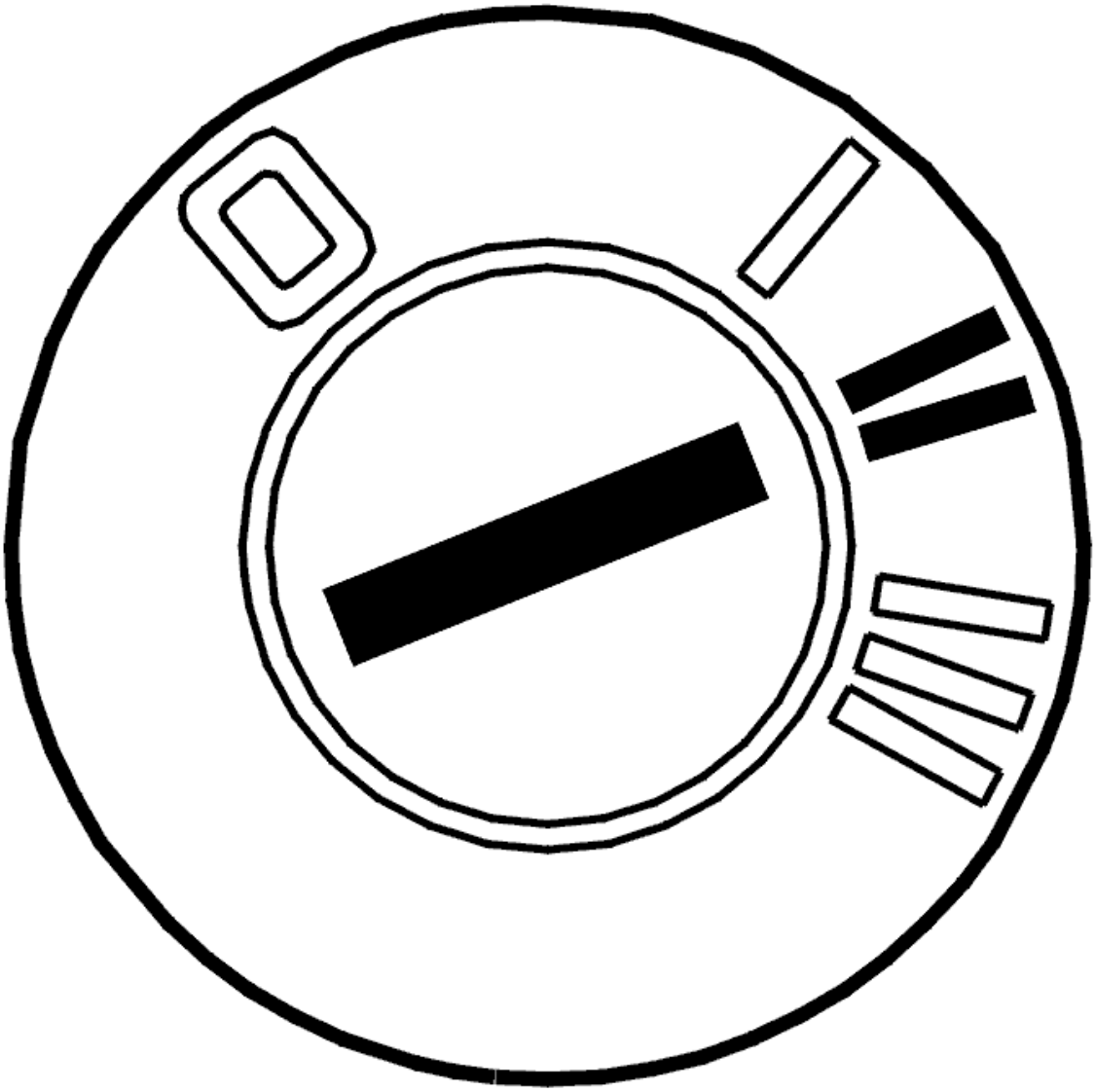

Fig. 76: Identifying Ignition ON
Courtesy of VOLVO CARS CORPORATION

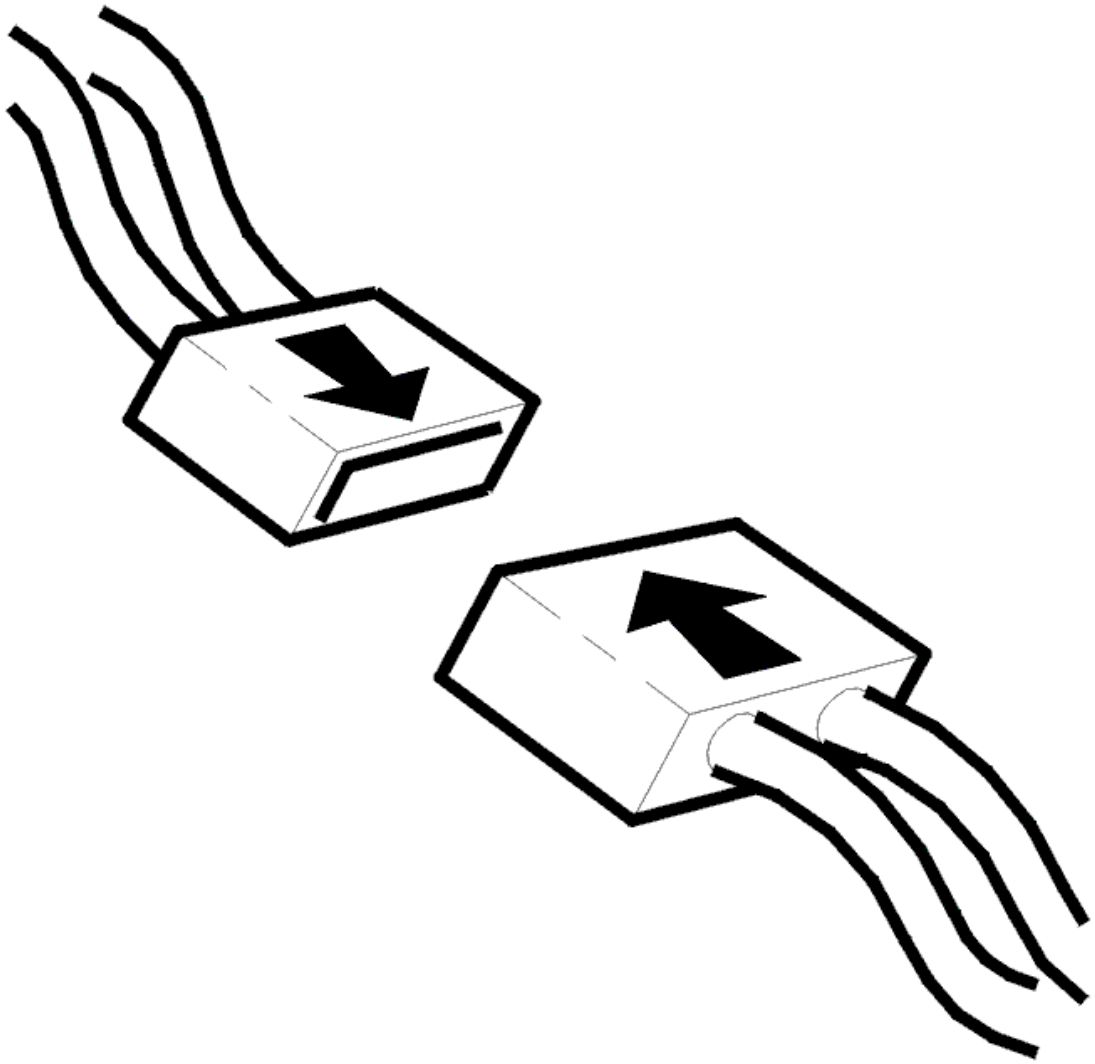

Fig. 77: Identifying Connector(s) Reinstallation
Courtesy of VOLVO CARS CORPORATION

- Ignition off
- Reconnect the connectors, components, etc.
- Ignition on
- Start activation of the valve in the leakage diagnostics unit.

  Listen for a clicking sound when the valve opens/closes.

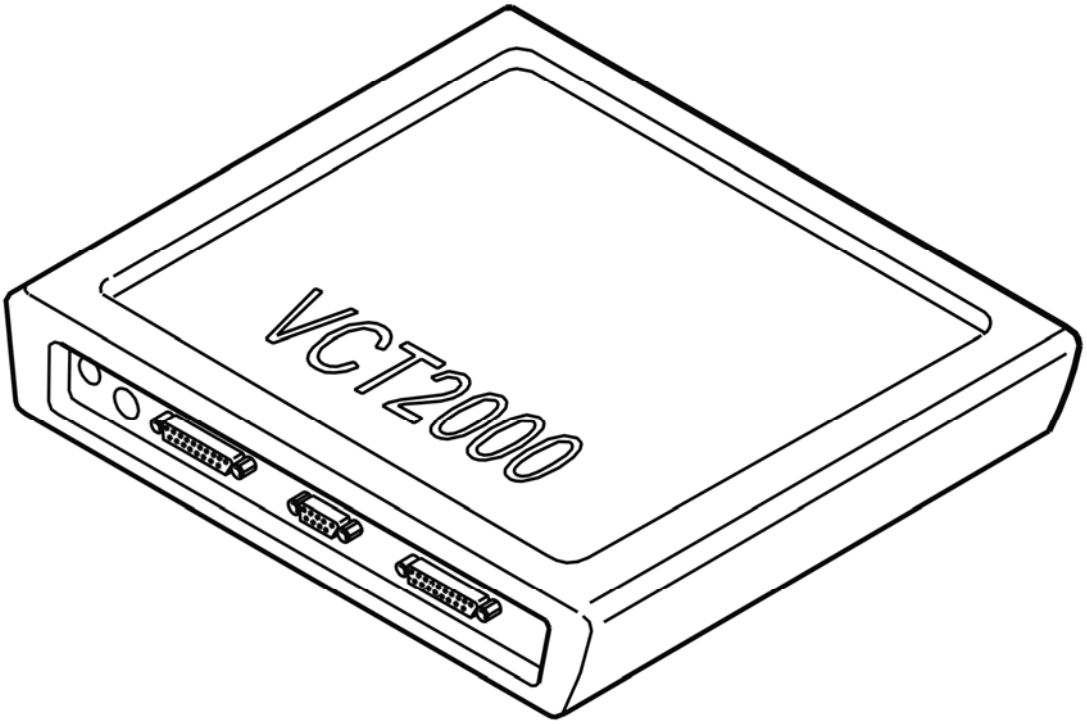

Fig. 78: Identifying VCT2000 Diagnostic Tool Symbol In VIDA
Courtesy of VOLVO CARS CORPORATION

Is the function OK?

- **YES**

  VERIFIED: Troubleshooting has been completed.

- **NO**

  Refer to **INFORMATION**

INFORMATION

FAULT-TRACING INFORMATION

The fault should have been detected and remedied. As this is not the case fault-tracing has failed.

Exit fault-tracing for this diagnostic trouble code (DTC) or make another attempt.

ECM-P242100: EVAPORATIVE EMISSION CONTROL SYSTEM VENT VALVE STUCK OPEN. GENERAL FAILURE INFORMATION. NO SUB TYPE

INFORMATION (B6324S; 2007-2010)

DIAGNOSTIC TROUBLE CODE (DTC) INFORMATION ECM-P242100

Condition

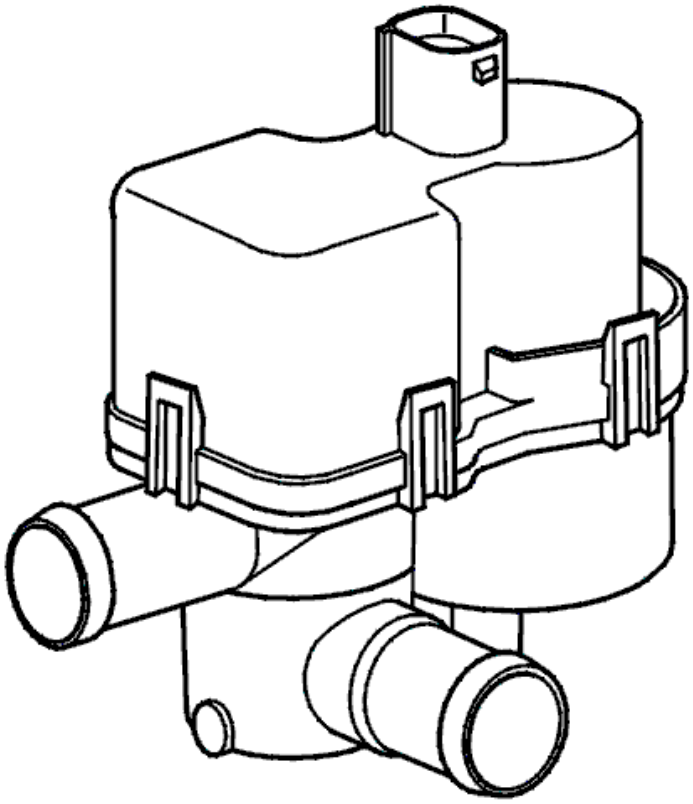

Fig. 79: Identifying Leak Diagnostic Pump
Courtesy of VOLVO CARS CORPORATION

The engine control module (ECM) checks the function of the valve in the leakage diagnosis unit pump by measuring the current through the leakage diagnosis pump.

After the initial reference phase of leakage diagnosis, the airflow is guided from the reference leak to the tank system and begins to pressurize it. During this shift, there is a short drop in current consumption before pressure is built up in the tank system. The control module registers that current consumption drops too slowly or not at all, it takes it as an indication that the valve in the pump is damaged and the diagnostic trouble code is generated.

The diagnostic trouble code can be diagnosed when leakage diagnosis is running.

Substitute Value

- Leakage diagnosis interrupted.

Possible Source

- Dirt or moisture in the pump.
- The pump valve has seized.
- Damage leakage diagnosis pump.

Fault symptom[s]

- Malfunction indicator lamp (MIL) lit.

FAULT-TRACING

see **FAULT-TRACING**

ECM-P242100: EVAPORATIVE EMISSION CONTROL SYSTEM VENT VALVE STUCK OPEN. GENERAL FAILURE INFORMATION. NO SUB TYPE INFORMATION (B6324S5; 2011-2012)

DIAGNOSTIC TROUBLE CODE (DTC) INFORMATION ECM-P242100

see **DIAGNOSTIC TROUBLE CODE (DTC) INFORMATION ECM-P242100**

FAULT-TRACING

see **FAULT-TRACING**

ECM-P242100: EVAPORATIVE EMISSION CONTROL SYSTEM VENT VALVE STUCK OPEN. GENERAL FAILURE INFORMATION. NO SUB TYPE INFORMATION (B8444S; 2005-2011)

DIAGNOSTIC TROUBLE CODE (DTC) INFORMATION ECM-P242100

Condition

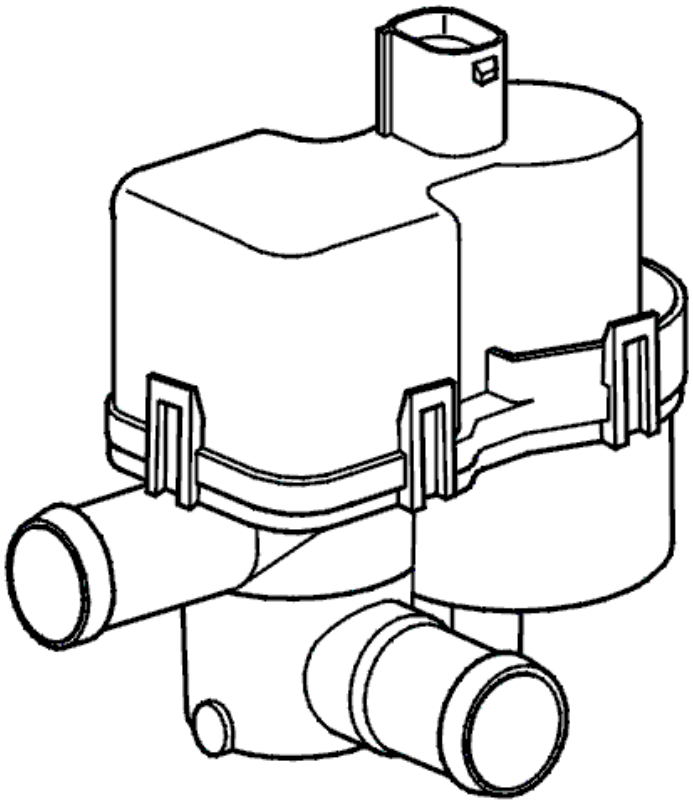

Fig. 80: Identifying Leak Diagnostic Pump
Courtesy of VOLVO CARS CORPORATION

The engine control module (ECM) checks the function of the valve in the leakage diagnosis unit pump by measuring the current through the leakage diagnosis pump.

After the initial reference phase of leakage diagnosis, the airflow is guided from the reference leak to the tank system and begins to pressurize it. During this shift, there is a short drop in current consumption before pressure is built up in the tank system. The control module registers that current consumption drops too slowly or not at all, it takes it as an indication that the valve in the pump is damaged and the diagnostic trouble code is generated.

The diagnostic trouble code can be diagnosed when leakage diagnosis is running.

Substitute Value

- Leakage diagnosis interrupted.

Possible Source

- Dirt or moisture in the pump.
- The pump valve has seized.
- Damage leakage diagnosis pump.

Fault symptom[s]

- Malfunction indicator lamp (MIL) lit.

FAULT-TRACING

see **FAULT-TRACING**

ECM-P242200: EVAPORATIVE EMISSION CONTROL SYSTEM VENT VALVE STUCK CLOSED. GENERAL FAILURE INFORMATION. NO SUB TYPE INFORMATION (B6324S; 2007-2010)

DIAGNOSTIC TROUBLE CODE (DTC) INFORMATION ECM-P242200

Condition

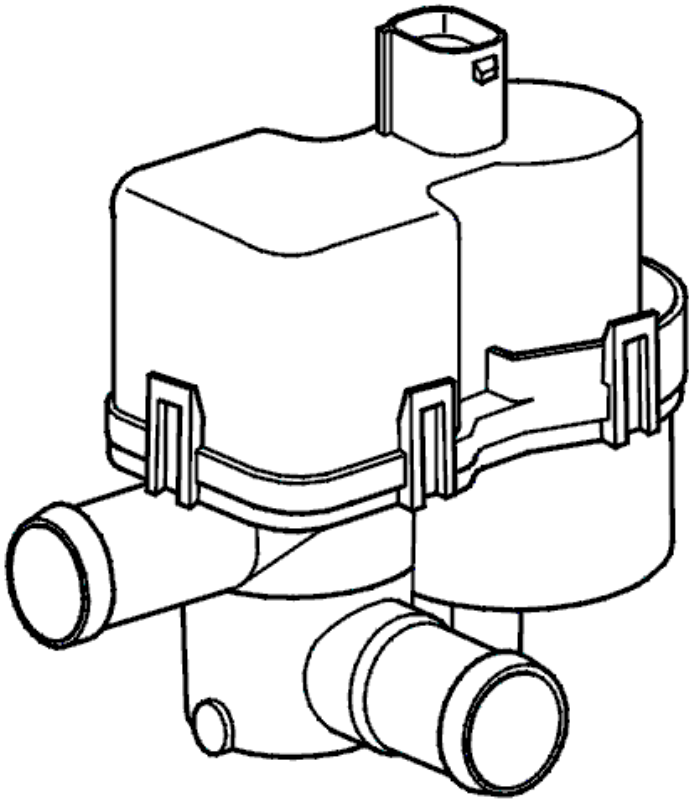

Fig. 81: Identifying Leak Diagnostic Pump
Courtesy of VOLVO CARS CORPORATION

The engine control module (ECM) checks the function of the valve in the leakage diagnosis unit pump by measuring the current through the leakage diagnosis pump.

After the initial reference phase in the leakage diagnosis, the air flow is directed over from the reference leak to

the tank system and starts to pressurize it. If the control module registers that power consumption during the reference phase is unreasonable, it interprets this as the valve in the pump being damaged and the diagnostic trouble code is generated.

The diagnostic trouble code can be diagnosed when leakage diagnosis is running.

Substitute Value

- Leakage diagnosis interrupted.

Possible Source

- Dirt or moisture in the pump.
- The pump valve has seized.
- Damage leakage diagnosis pump.

Fault symptom[s]

- Malfunction indicator lamp (MIL) lit.

FAULT-TRACING

see **FAULT-TRACING**

ECM-P242200: EVAPORATIVE EMISSION CONTROL SYSTEM VENT VALVE STUCK CLOSED. GENERAL FAILURE INFORMATION. NO SUB TYPE INFORMATION (B6324S5; 2011-2012)

DIAGNOSTIC TROUBLE CODE (DTC) INFORMATION ECM-P242200

see **DIAGNOSTIC TROUBLE CODE (DTC) INFORMATION ECM-P242200**

FAULT-TRACING

see **FAULT-TRACING**

ECM-P242200: EVAPORATIVE EMISSION CONTROL SYSTEM VENT VALVE STUCK CLOSED. GENERAL FAILURE INFORMATION. NO SUB TYPE INFORMATION (B8444S; 2005-2011)

DIAGNOSTIC TROUBLE CODE (DTC) INFORMATION ECM-P242200

Condition

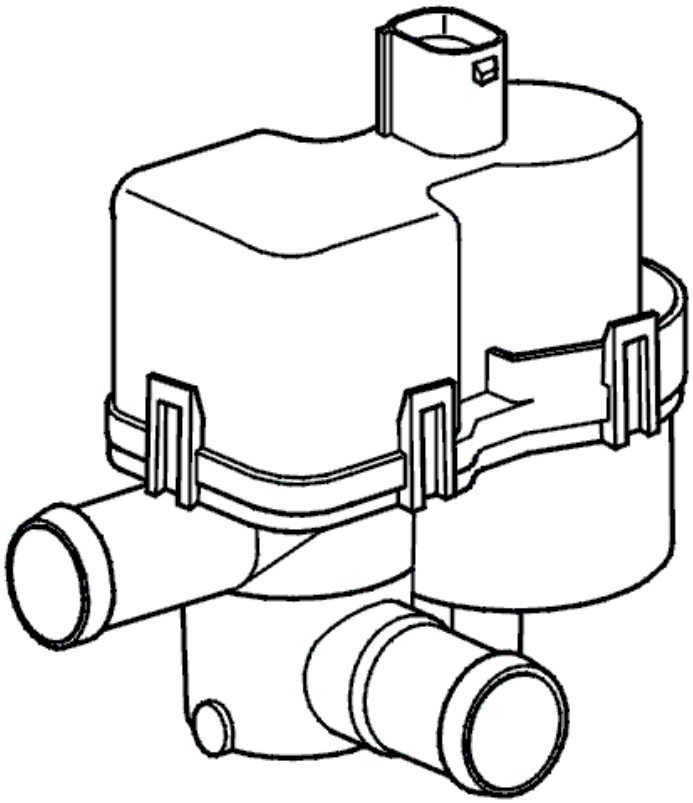

Fig. 82: Identifying Leak Diagnostic Pump
Courtesy of VOLVO CARS CORPORATION

The engine control module (ECM) checks the function of the valve in the leakage diagnosis unit pump by measuring the current through the leakage diagnosis pump.

After the initial reference phase in the leakage diagnosis, the air flow is directed over from the reference leak to the tank system and starts to pressurize it. If the control module registers that power consumption during the reference phase is unreasonable, it interprets this as the valve in the pump being damaged and the diagnostic trouble code is generated.

The diagnostic trouble code can be diagnosed when leakage diagnosis is running.

Substitute Value

- Leakage diagnosis interrupted.

Possible Source

- Dirt or moisture in the pump.
- The pump valve has seized.
- Damage leakage diagnosis pump.

Fault symptom[s]

- Malfunction indicator lamp (MIL) lit.

FAULT-TRACING

see **FAULT-TRACING**

ECM-P250C00 OIL LEVEL SENSOR CIRCUIT LOW. GENERAL FAULT INFORMATION. TYPE OF FAULT NOT SPECIFIED. (B8444S; 2005-2011)

DIAGNOSTIC TROUBLE CODE (DTC) INFORMATION ECM-P250C00

Condition

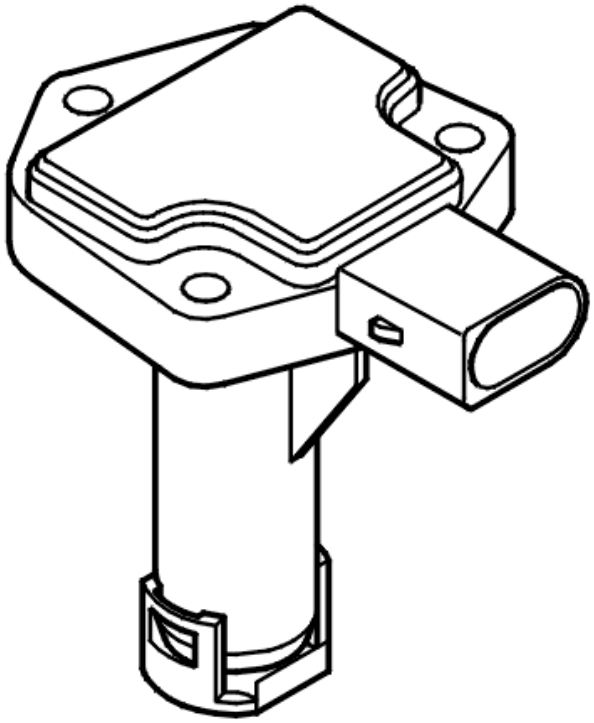

Fig. 83: Identifying Oil Level Sensor
Courtesy of VOLVO CARS CORPORATION

The oil level sensor is housed in the oil pan and sends information on engine oil level and quality to the engine control module (ECM). The diagnostic trouble code is generated if the engine control module (ECM) detects that the oil level signal is abnormally low.

The diagnostic trouble code can be diagnosed when the engine is running.

Substitute Value

- Nothing.

Possible Source

- Extremely low oil level.
- Damaged oil level sensor.

Fault symptom[s]

- Nothing.

FAULT TRACING

CHECKING COMPONENTS AND WIRING

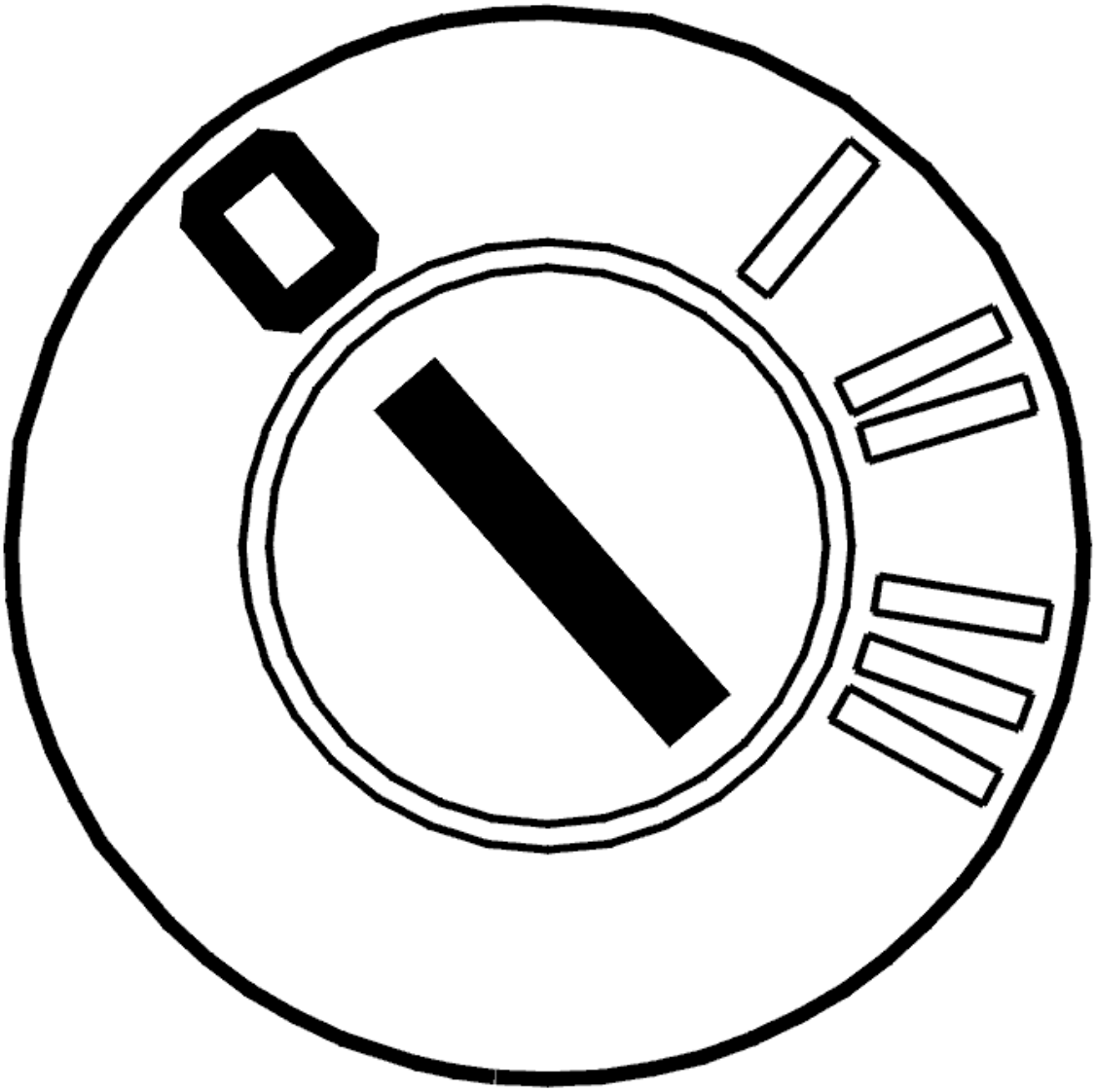

Fig. 84: Identifying Ignition OFF
Courtesy of VOLVO CARS CORPORATION

- Ignition off

  Check the level of the engine oil.

  Remedy as necessary.

  Other information

  - see **CONNECTING THE BREAKOUT BOX**
  - see **SIGNAL SPECIFICATION, ENGINE CONTROL MODULE (ECM)**
  - see **OIL LEVEL SENSOR, REPLACING**

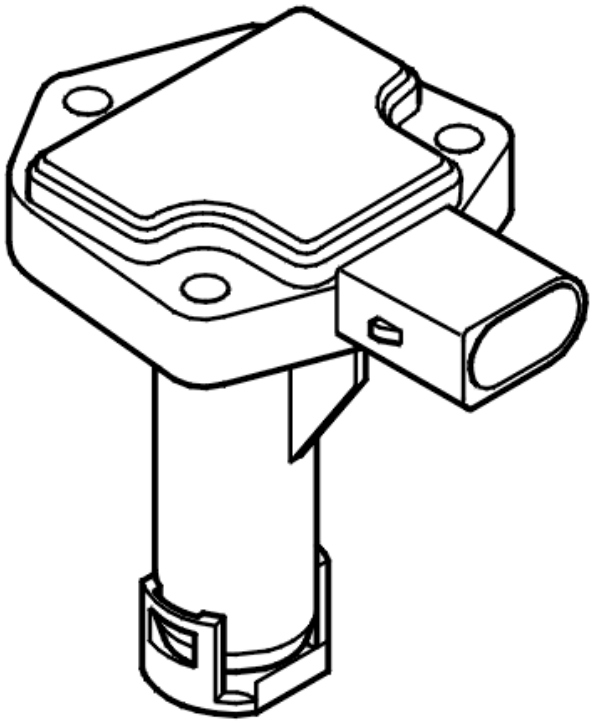

Fig. 85: Identifying Oil Level Sensor
Courtesy of VOLVO CARS CORPORATION

- **Continue**

  Refer to **VERIFICATION**

VERIFICATION

VERIFICATION

HINT: After carrying out the repair, check that the fault has been remedied.

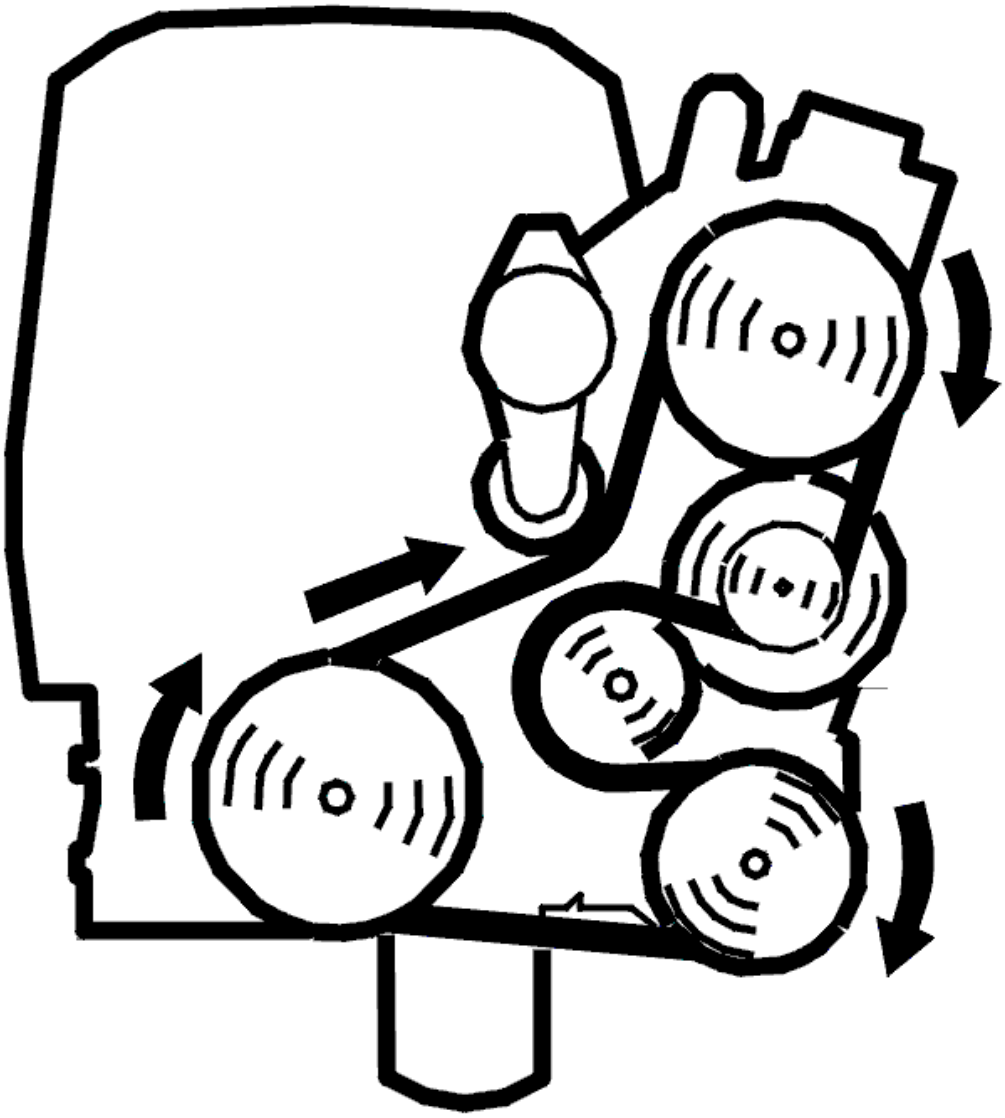

Fig. 86: Identifying Belt Routing
Courtesy of VOLVO CARS CORPORATION

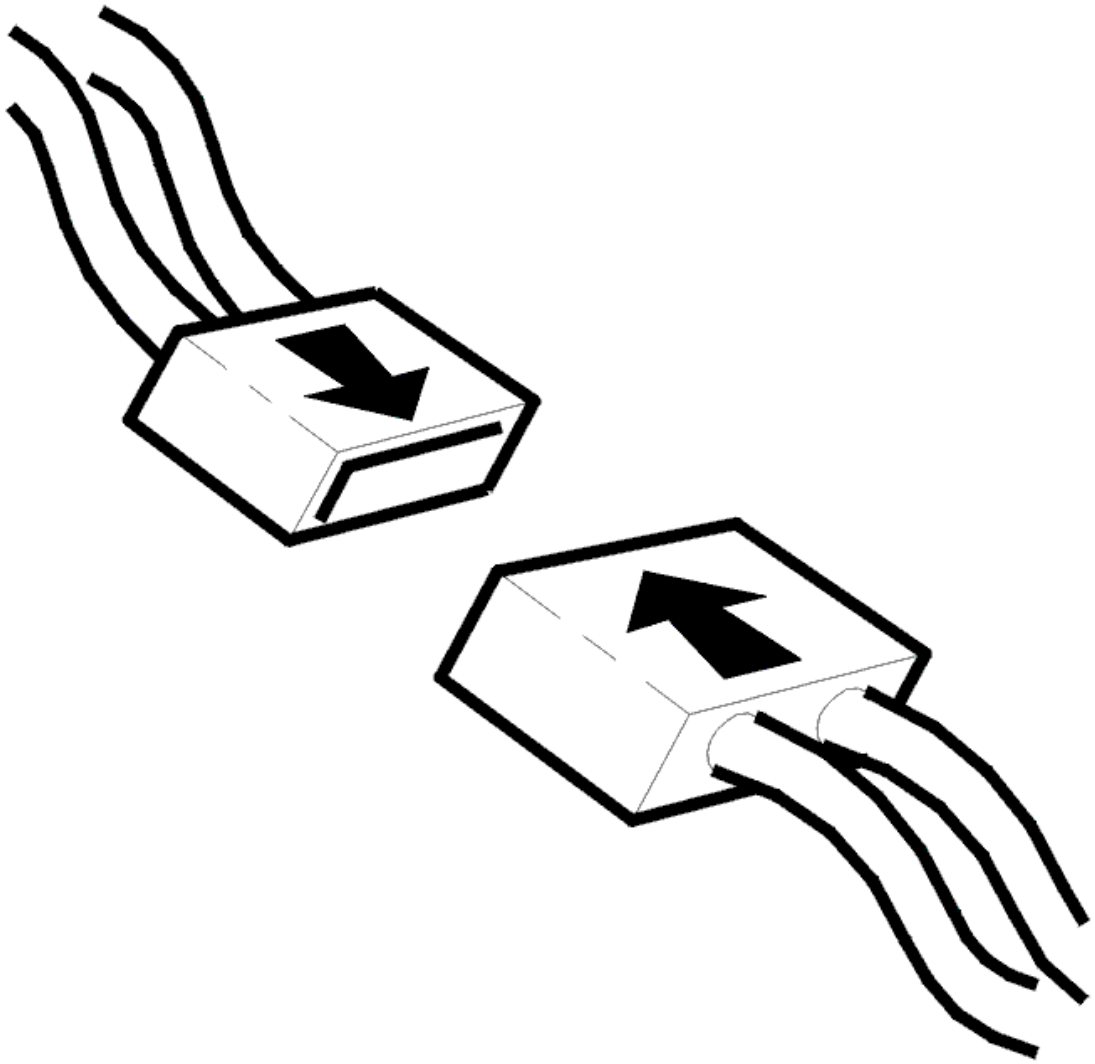

Fig. 87: Identifying Connector(s) Reinstallation
Courtesy of VOLVO CARS CORPORATION

- Ignition off
- Reconnect the connectors, components, etc.
- Start the engine.
- Read the diagnostic status and fault status for the diagnostic trouble code by selecting the diagnostic trouble code in the list.

  Increase the engine speed a few times until the scan is "Implemented".

  Check the fault status for the diagnostic trouble code when the scan is "Implemented". When the function is correct the fault status should be "No fault found" when the scan is implemented.

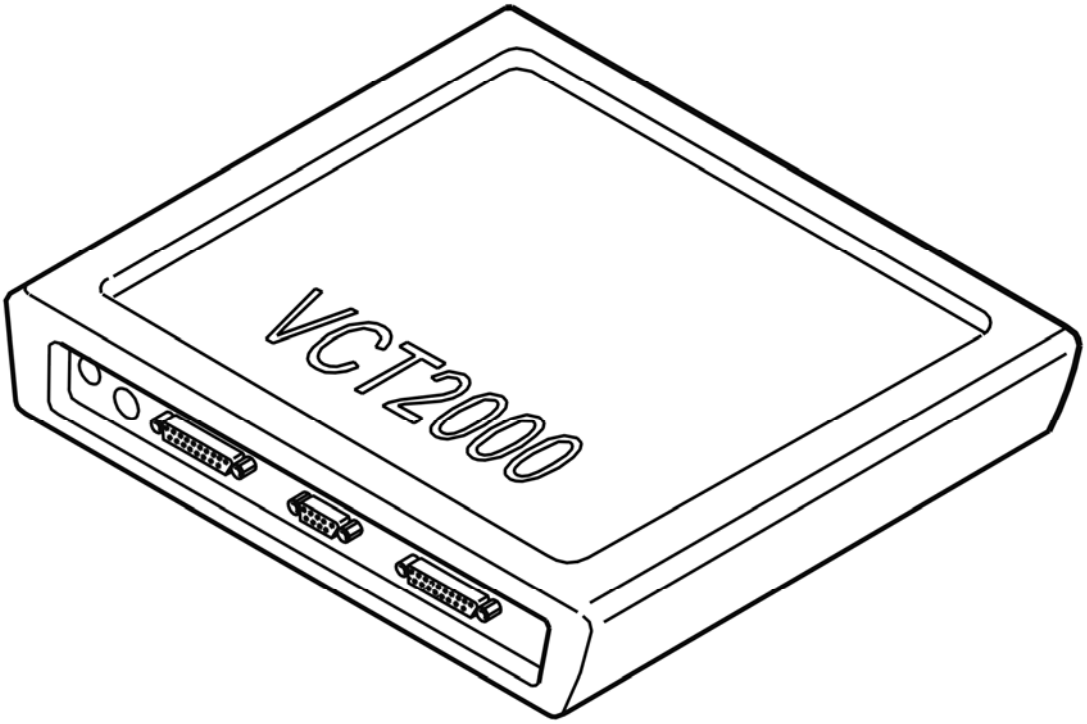

Fig. 88: Identifying VCT2000 Diagnostic Tool Symbol In VIDA
Courtesy of VOLVO CARS CORPORATION

Is the function OK?

- **YES**

  VERIFIED: Troubleshooting has been completed.

- **NO**

  Refer to **INFORMATION**

INFORMATION

FAULT-TRACING INFORMATION

The fault should have been detected and remedied. As this is not the case fault-tracing has failed.

Exit fault-tracing for this diagnostic trouble code (DTC) or make another attempt.

ECM-P250D00 OIL LEVEL SENSOR CIRCUIT HIGH. GENERAL FAULT INFORMATION. TYPE OF FAULT NOT SPECIFIED. (B8444S; 2005-2011)

DIAGNOSTIC TROUBLE CODE (DTC) INFORMATION ECM-P250D00

Condition

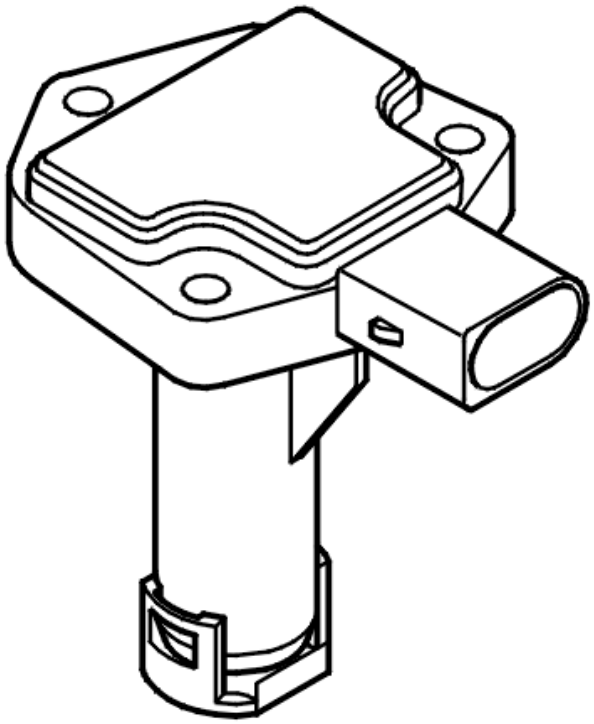

Fig. 89: Identifying Oil Level Sensor
Courtesy of VOLVO CARS CORPORATION

The oil level sensor is housed in the oil pan and sends information on engine oil level and quality to the engine control module (ECM). The diagnostic trouble code is generated if the engine control module (ECM) detects that the oil level signal is abnormally high.

The diagnostic trouble code can be diagnosed when the engine is running.

Substitute Value

- Nothing.

Possible Source

- Extremely high oil level.
- Damaged oil level sensor.

Fault symptom[s]

- Nothing.

FAULT TRACING

see **FAULT TRACING**

ECM-P250E00 OIL LEVEL SENSOR CIRCUIT INTERMITTENT/IRREGULAR. GENERAL FAULT INFORMATION. TYPE OF FAULT NOT SPECIFIED. (B8444S; 2005-2011)

DIAGNOSTIC TROUBLE CODE (DTC) INFORMATION ECM-P250E00

Condition

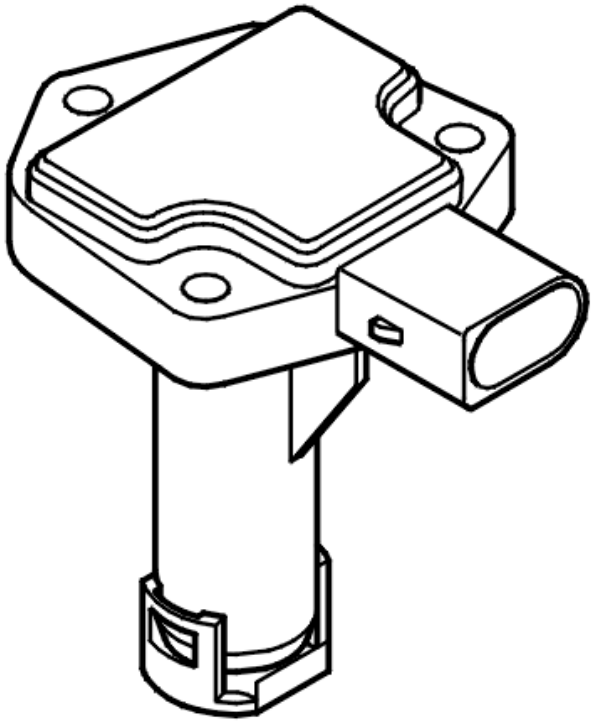

Fig. 90: Identifying Oil Level Sensor
Courtesy of VOLVO CARS CORPORATION

The oil level sensor is housed in the oil pan and sends information on engine oil level and quality to the engine control module (ECM). The diagnostic trouble code is generated if the engine control module (ECM) detects disruptions in the oil level signal or that there are many oil level changes.

The diagnostic trouble code can be diagnosed during a road test when a number of different criteria (engine speed, vehicle speed, etc) have been fulfilled.

Substitute Value

- Nothing.

Possible Source

- Rapid oil level change (oil leak).
- Loose connections, contact resistance or oxidation in the connections.
- Damaged oil level sensor.

Fault symptom[s]

- Nothing.

FAULT-TRACING ECM-P250E00

CHECKING COMPONENTS AND WIRING

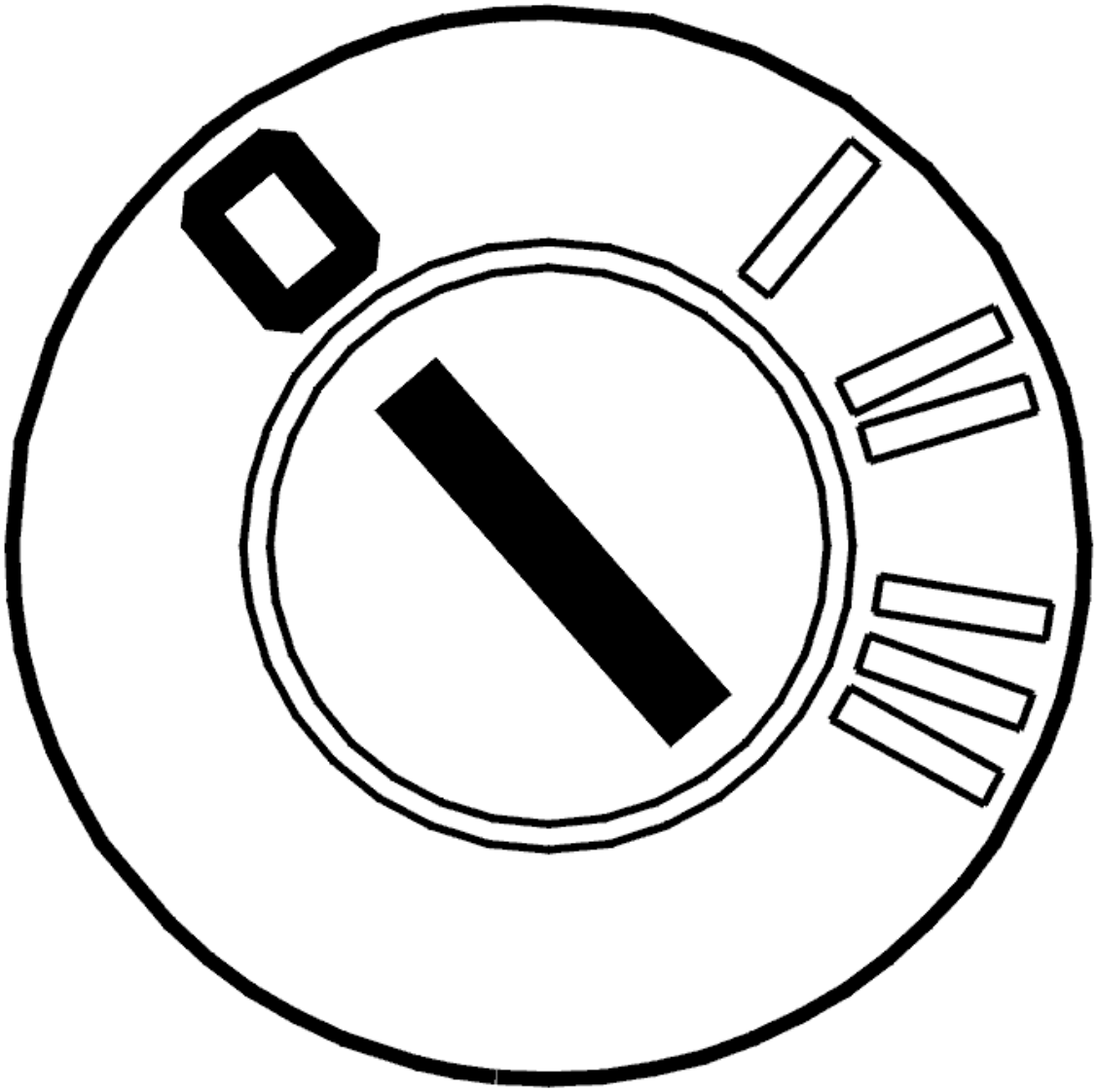

Fig. 91: Identifying Ignition OFF
Courtesy of VOLVO CARS CORPORATION

- Ignition off

  Check the engine for heavy oil leakage.

  Check the level of the engine oil.

  Check the oil level sensor connector and terminals. Check for contact resistance and oxidation.

  Remedy as necessary.

  Other information

  - see **OIL LEVEL SENSOR, REPLACING**

- see **CONTENTS**

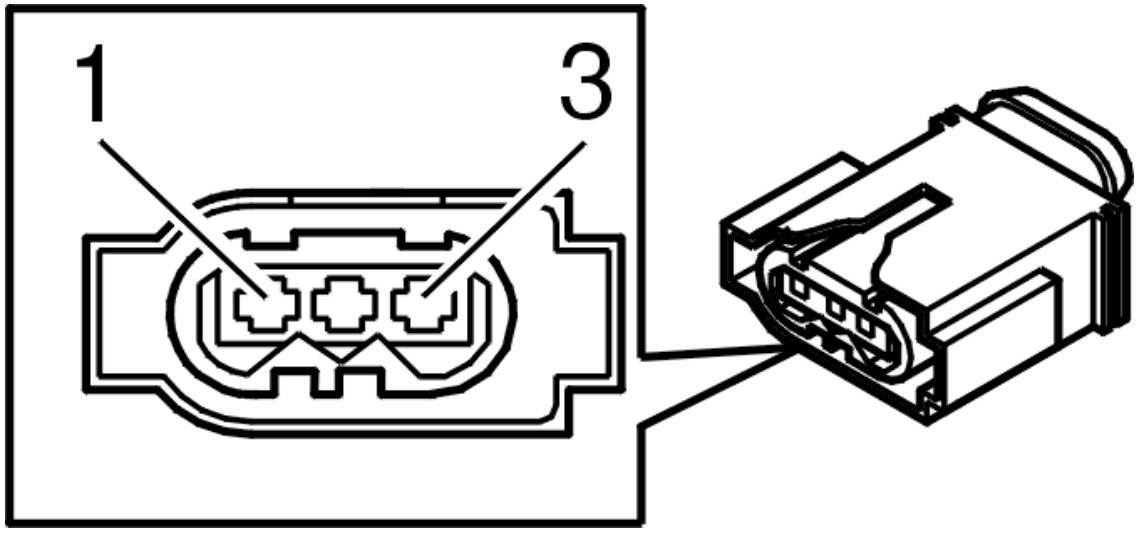

Fig. 92: Identifying Oil Level Sensor Connector Terminals
Courtesy of VOLVO CARS CORPORATION

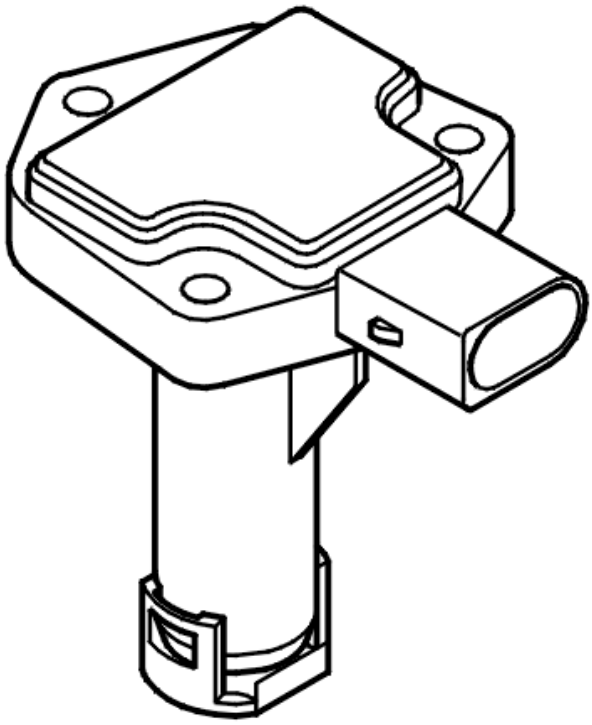

Fig. 93: Identifying Oil Level Sensor
Courtesy of VOLVO CARS CORPORATION

- **Continue**

Refer to **VERIFICATION**

VERIFICATION

VERIFICATION

HINT: After carrying out the repair, check that the fault has been remedied.

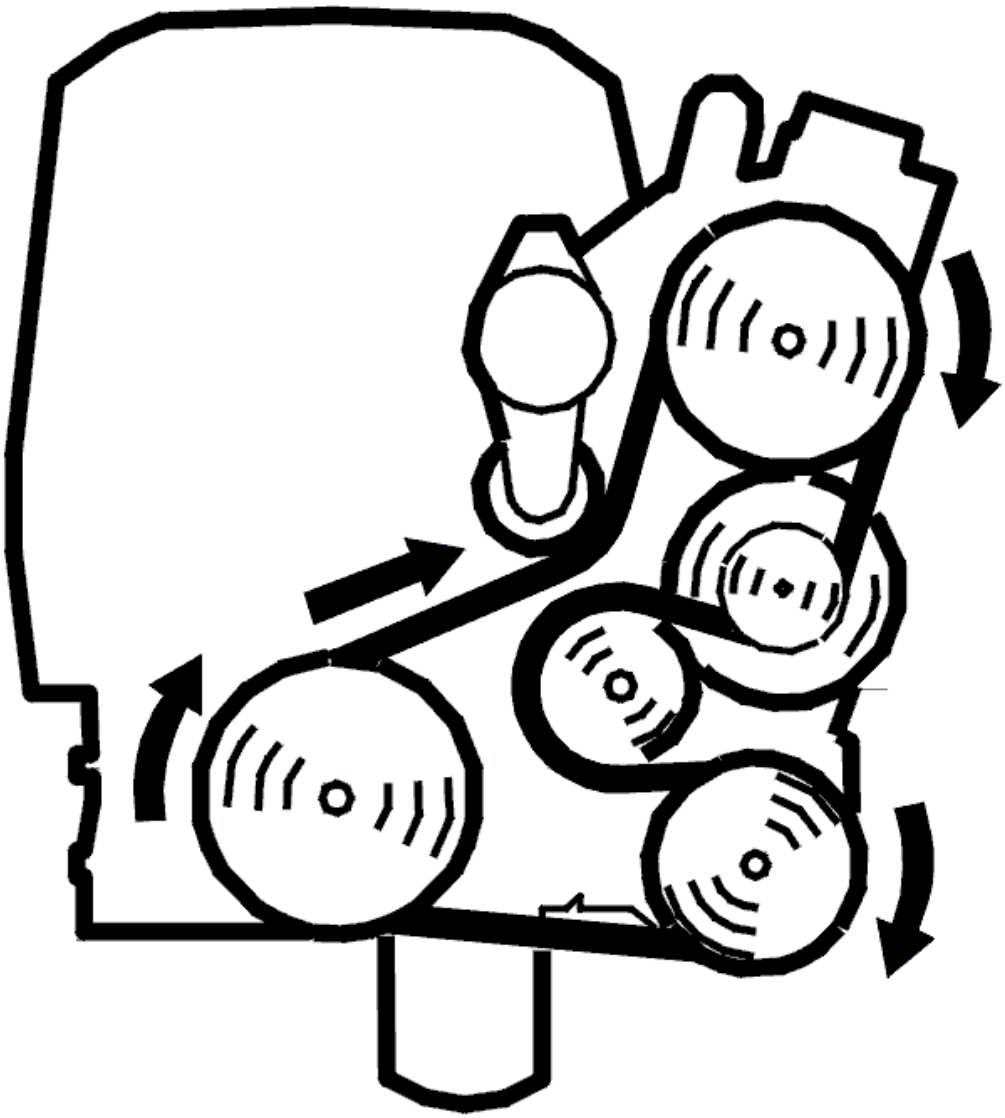

Fig. 94: Identifying Belt Routing
Courtesy of VOLVO CARS CORPORATION

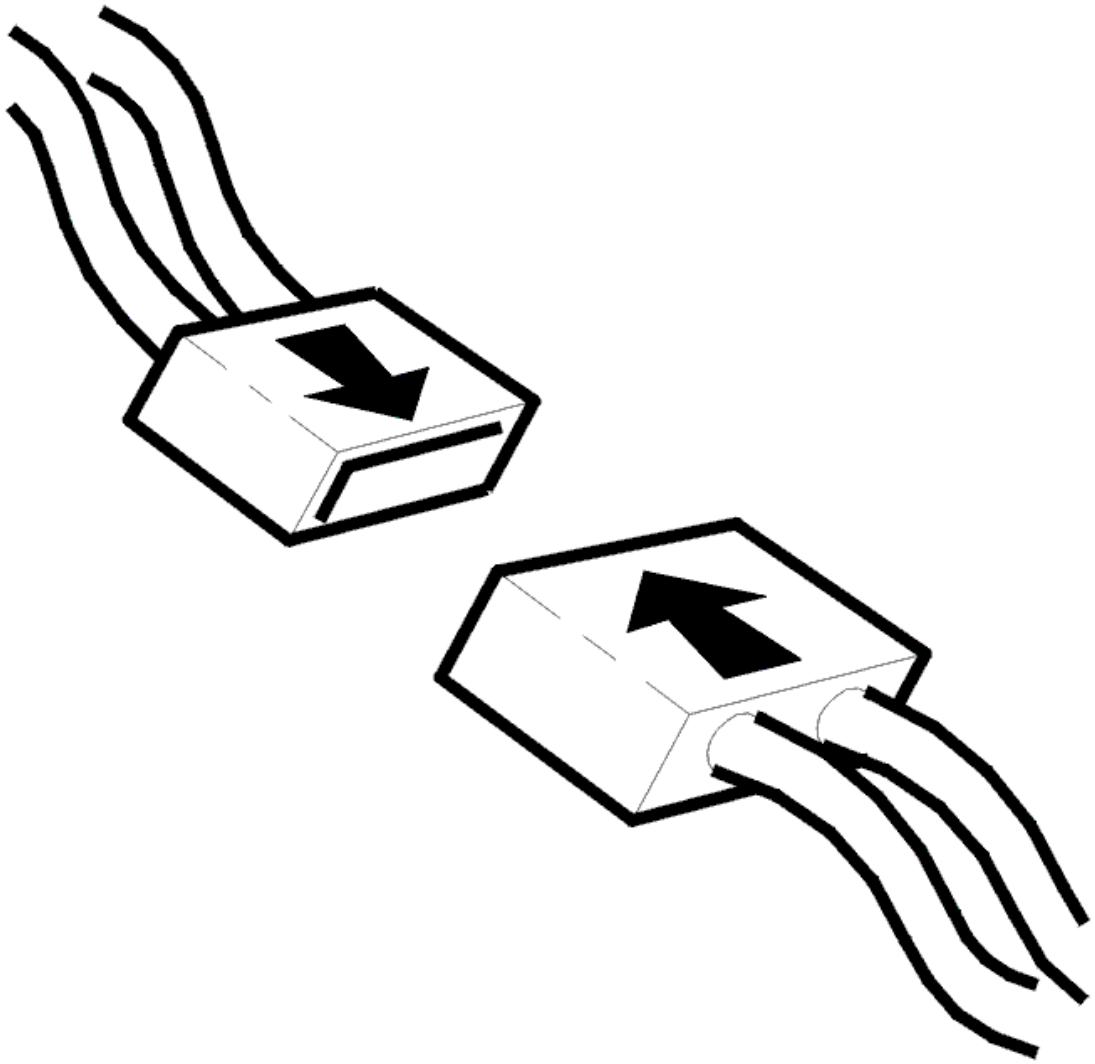

Fig. 95: Identifying Connector(s) Reinstallation
Courtesy of VOLVO CARS CORPORATION

- Ignition off
- Reconnect the connectors, components, etc.
- Start the engine.
- Read the diagnostic status and fault status for the diagnostic trouble code by selecting the diagnostic trouble code in the list.

  Increase the engine speed a few times until the scan is "Implemented".

  Check the fault status for the diagnostic trouble code when the scan is "Implemented". When the function is correct the fault status should be "No fault found" when the scan is implemented.

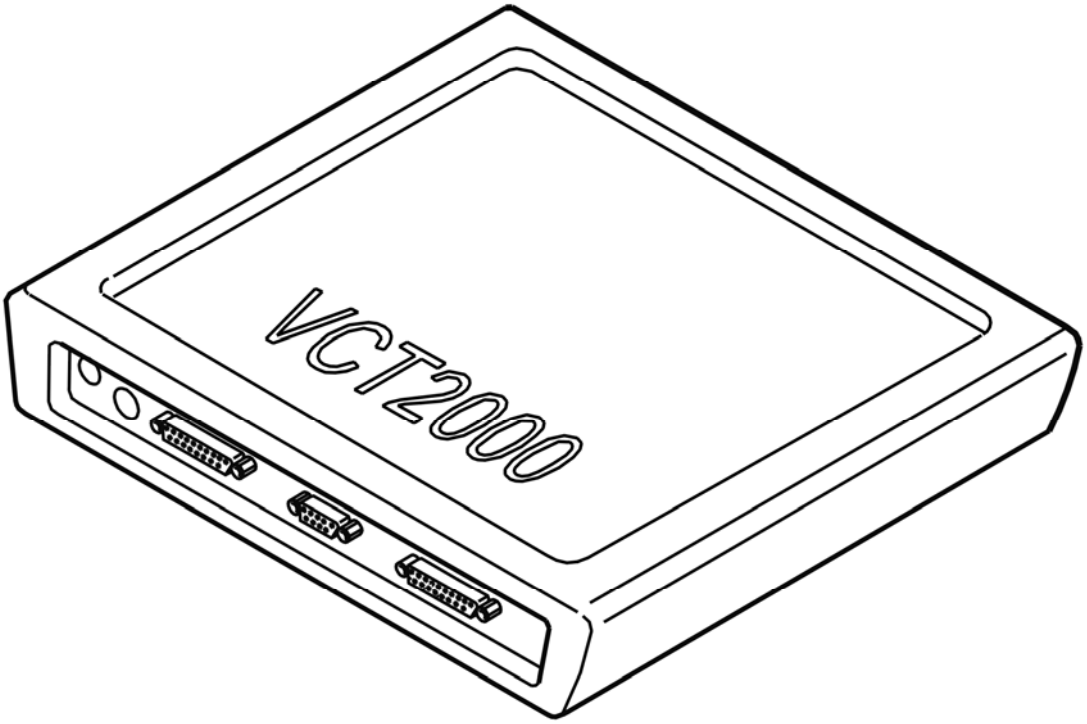

Fig. 96: Identifying VCT2000 Diagnostic Tool Symbol In VIDA
Courtesy of VOLVO CARS CORPORATION

Is the function OK?

- **YES**

  VERIFIED: Troubleshooting has been completed.

- **NO**

  Refer to **INFORMATION**

INFORMATION

FAULT-TRACING INFORMATION

The fault should have been detected and remedied. As this is not the case fault-tracing has failed.

Exit fault-tracing for this diagnostic trouble code (DTC) or make another attempt.

ECM-P252B00 OIL QUALITY SENSOR CIRCUIT WITHIN/EXCEEDING LIMIT VALUES. GENERAL FAULT INFORMATION. TYPE OF FAULT NOT

SPECIFIED. (B8444S; 2005-2011)

DIAGNOSTIC TROUBLE CODE (DTC) INFORMATION ECM-P252B00

Condition

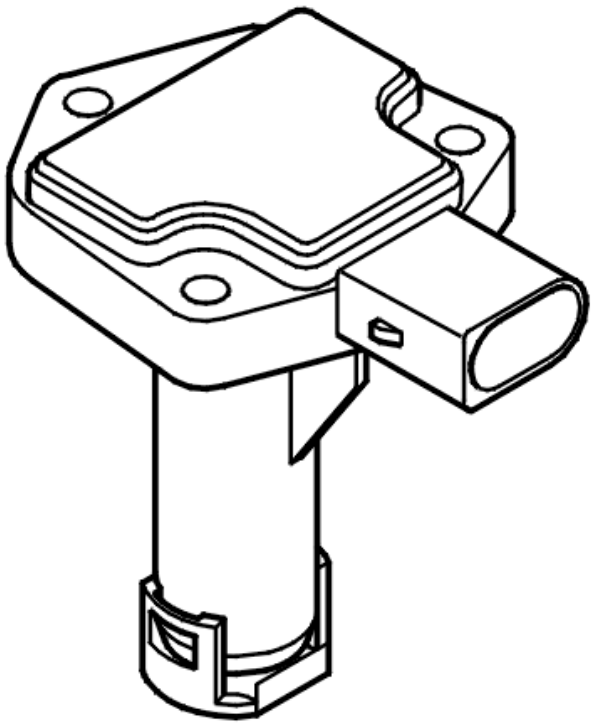

Fig. 97: Identifying Oil Level Sensor
Courtesy of VOLVO CARS CORPORATION

The oil level sensor sends information on engine oil level and quality to the engine control module (ECM). The diagnostic trouble code is generated if the control module detects that the oil quality signal is faulty.

The diagnostic trouble code can be diagnosed when the engine is running.

Substitute Value

- Nothing.

Possible Source

- Contact resistance or oxidation in the connections.
- Open-circuit on the signal cable.
- Interruption of power supply.

- Damaged oil level sensor.

Fault symptom[s]

- Nothing.

FAULT TRACING ECM-P252B00

CHECKING COMPONENTS AND WIRING

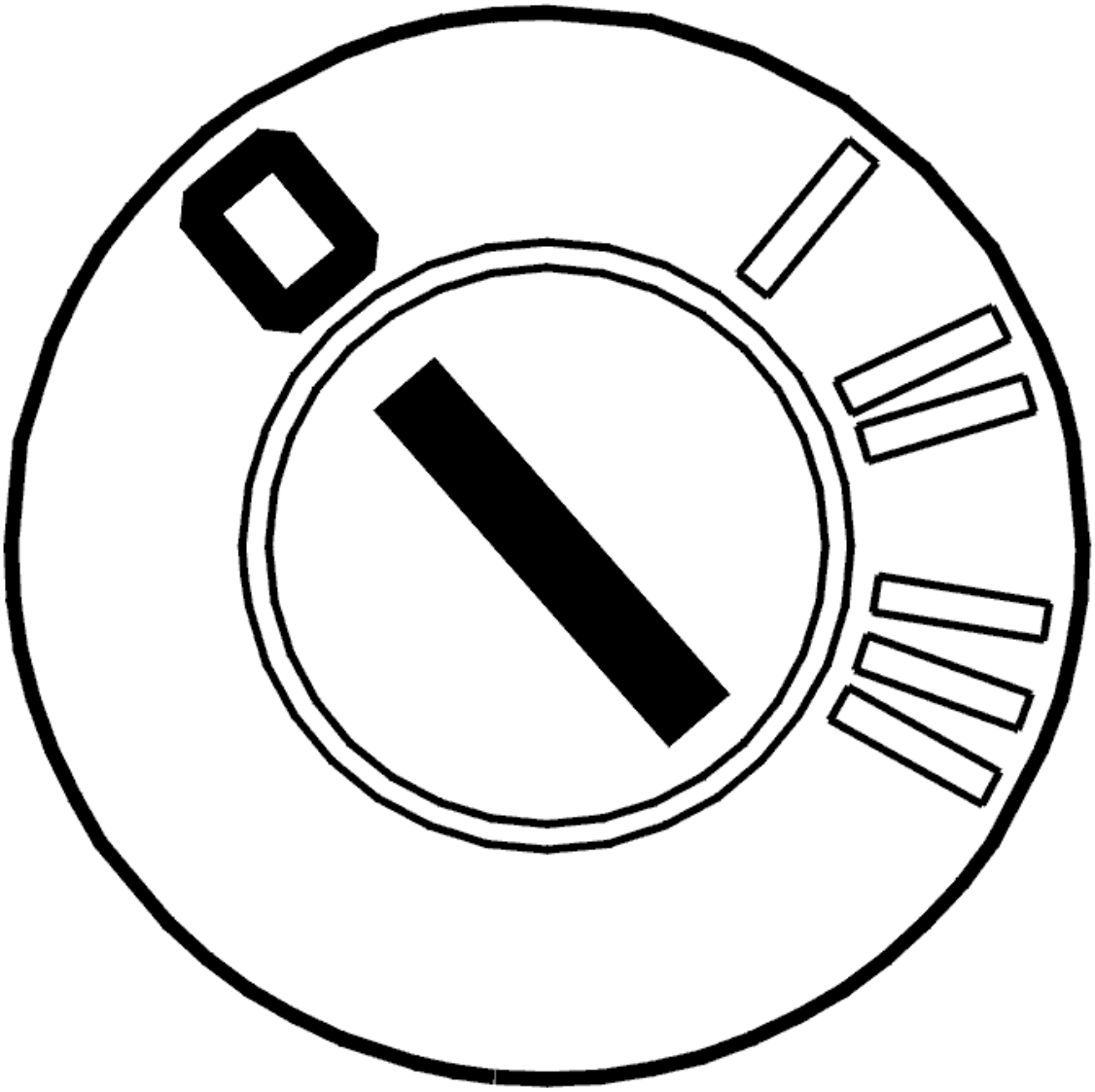

Fig. 98: Identifying Ignition OFF
Courtesy of VOLVO CARS CORPORATION

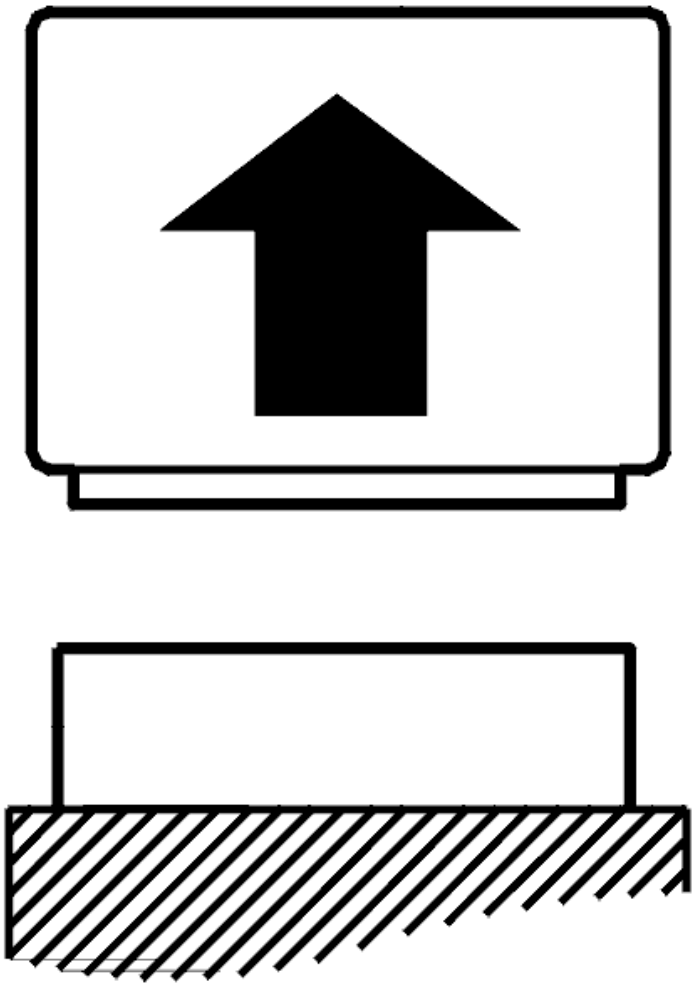

Fig. 99: Identifying Control Module Disconnected
Courtesy of VOLVO CARS CORPORATION

- Ignition off

  Check the oil level sensor connector for contact resistance and oxidation.

  Disconnect the engine control module (ECM).

  Check the power cable for open-circuit. Measure between control module terminal #A47 (#A47) and oil level sensor terminal #3.

  Check the signal cable for open-circuit. Measure between control module terminal #A63 (#B3) and oil level sensor terminal #1.

  Remedy as necessary.

Other information

- see **CONNECTING THE BREAKOUT BOX**
- see **SIGNAL SPECIFICATION, ENGINE CONTROL MODULE (ECM)**
- see **OIL LEVEL SENSOR, REPLACING**
- see **CONTENTS**

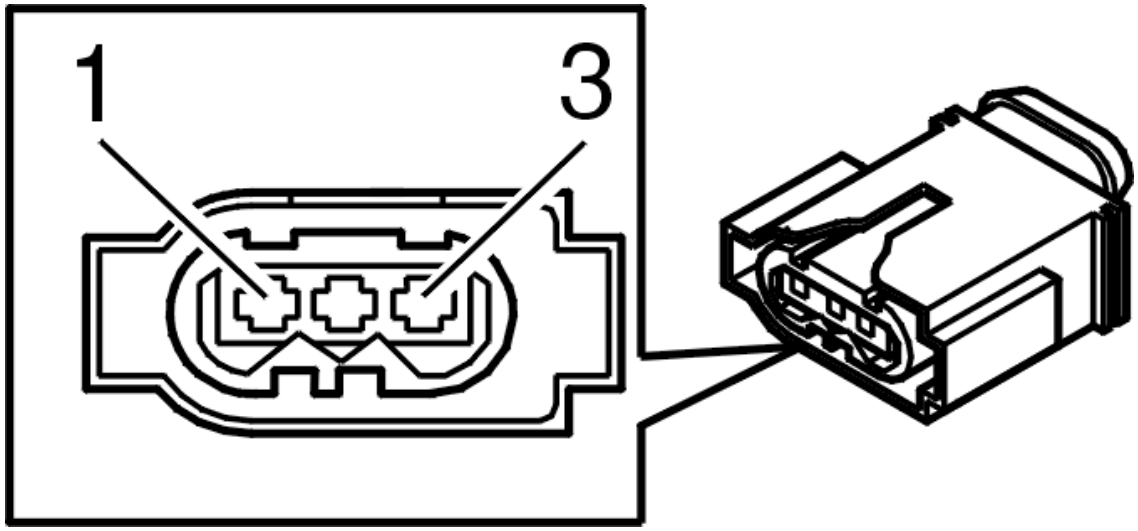

Fig. 100: Identifying Oil Level Sensor Connector Terminals
Courtesy of VOLVO CARS CORPORATION

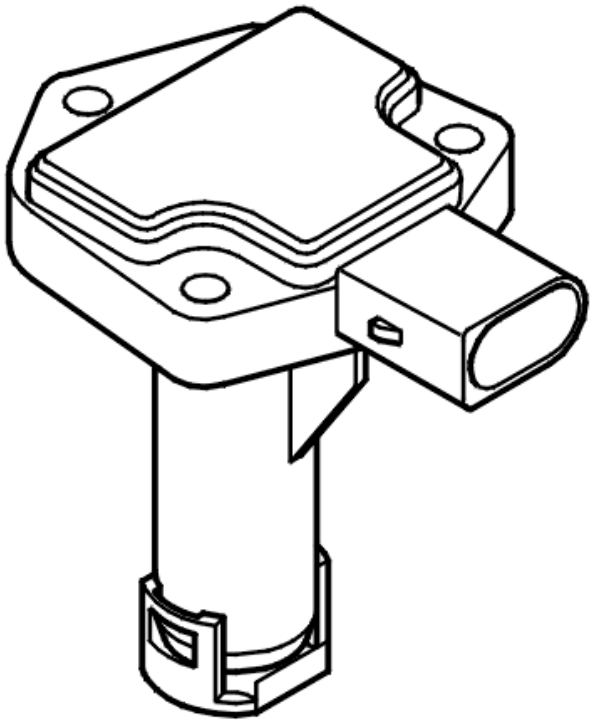

Fig. 101: Identifying Oil Level Sensor
Courtesy of VOLVO CARS CORPORATION

- **Continue**

  Refer to **VERIFICATION**

VERIFICATION

VERIFICATION

HINT: After carrying out the repair, check that the fault has been remedied.

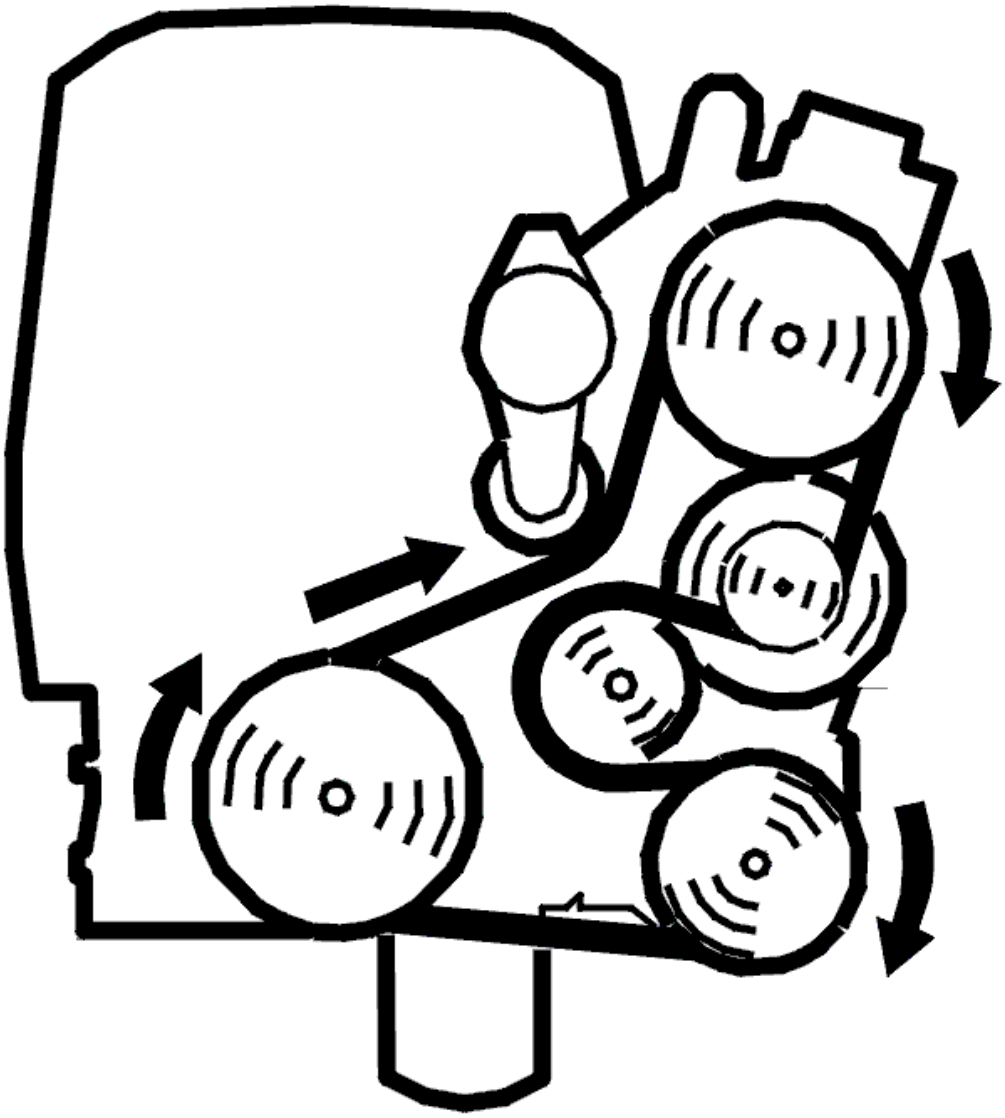

Fig. 102: Identifying Belt Routing
Courtesy of VOLVO CARS CORPORATION

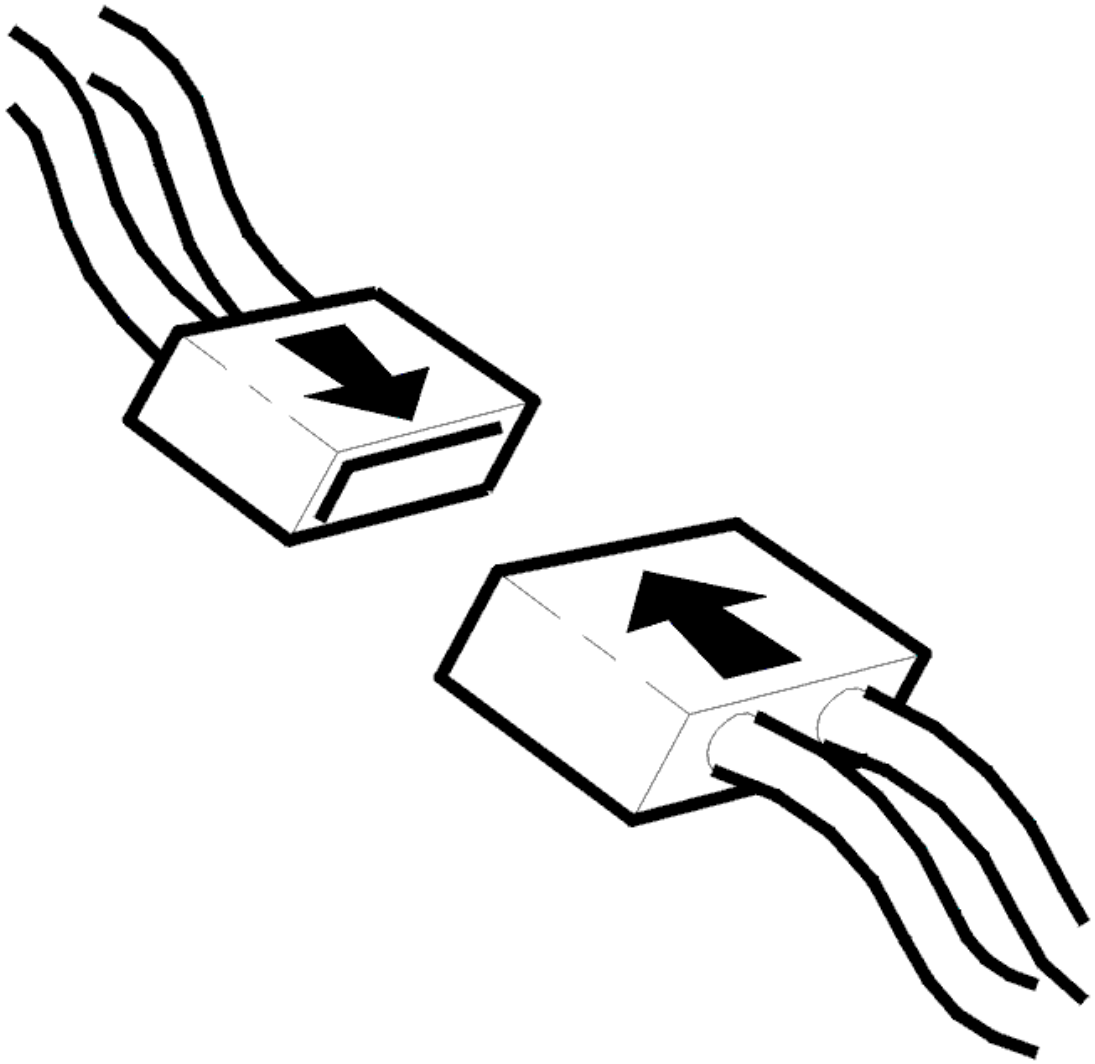

Fig. 103: Identifying Connector(s) Reinstallation
Courtesy of VOLVO CARS CORPORATION

- Ignition off
- Reconnect the connectors, components, etc.
- Start the engine.
- Read the diagnostic status and fault status for the diagnostic trouble code by selecting the diagnostic trouble code in the list.

  Increase the engine speed a few times until the scan is "Implemented".

  Check the fault status for the diagnostic trouble code when the scan is "Implemented". When the function is correct the fault status should be "No fault found" when the scan is implemented.

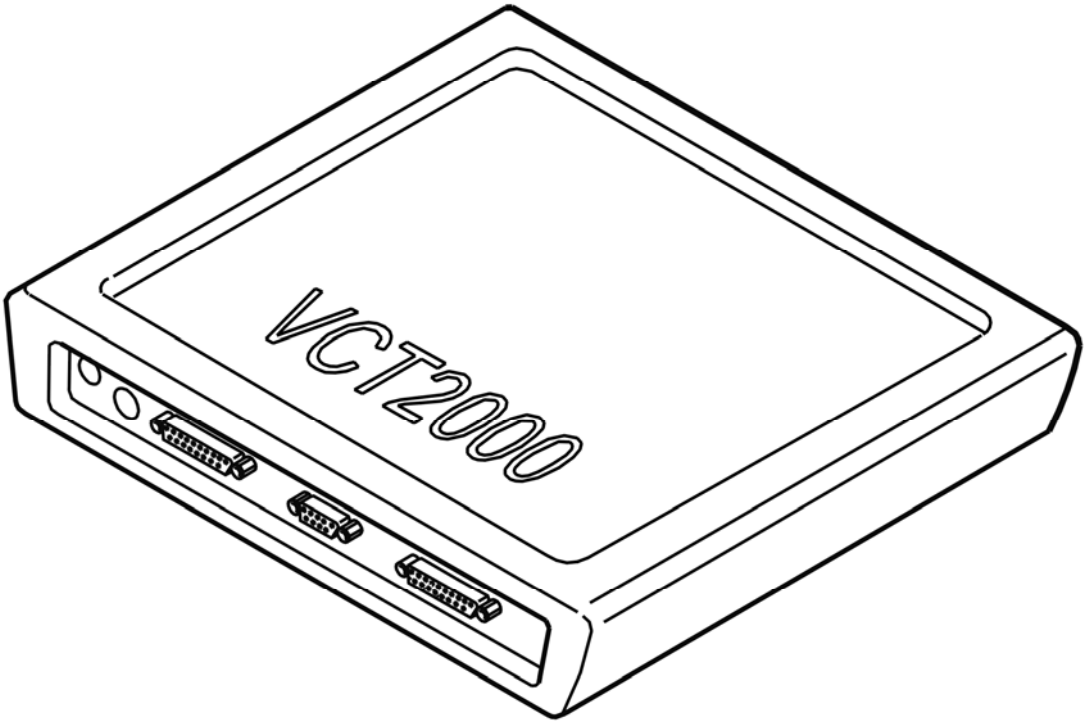

Fig. 104: Identifying VCT2000 Diagnostic Tool Symbol In VIDA
Courtesy of VOLVO CARS CORPORATION

Is the function OK?

- **YES**

  VERIFIED: Troubleshooting has been completed.

- **NO**

  Refer to **INFORMATION**

INFORMATION

FAULT-TRACING INFORMATION

The fault should have been detected and remedied. As this is not the case fault-tracing has failed.

Exit fault-tracing for this diagnostic trouble code (DTC) or make another attempt.

ECM-P252C00 ENGINE OIL QUALITY SENSOR CIRCUIT LOW. GENERAL FAILURE INFORMATION. NO SUB TYPE INFORMATION (B6324S; 2007-

2010)

DIAGNOSTIC TROUBLE CODE (DTC) INFORMATION ECM-P252C00

Condition

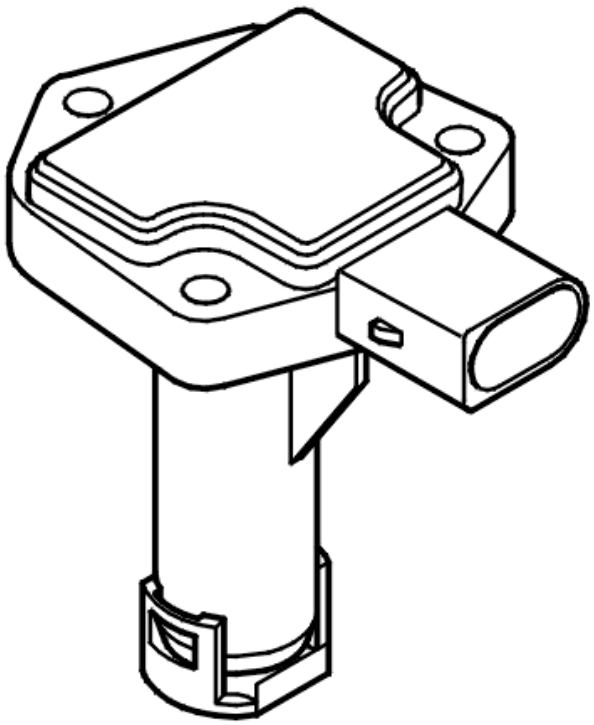

Fig. 105: Identifying Oil Level Sensor
Courtesy of VOLVO CARS CORPORATION

The oil level sensor sends information on engine oil level and quality to the engine control module (ECM). The diagnostic trouble code is generated if the control module detects that the oil quality signal is too low.

The diagnostic trouble code can be diagnosed when the engine is running.

Substitute Value

- Nothing.

Possible Source

- The signal cable is short-circuited to ground.
- Damaged oil level sensor.

Fault symptom[s]

- Nothing.

FAULT-TRACING

see **FAULT-TRACING**

ECM-P252C00 ENGINE OIL QUALITY SENSOR CIRCUIT LOW. GENERAL FAILURE INFORMATION. NO SUB TYPE INFORMATION (B6324S5; 2011-2012)

DIAGNOSTIC TROUBLE CODE (DTC) INFORMATION ECM-P252C00

see **DIAGNOSTIC TROUBLE CODE (DTC) INFORMATION ECM-P252C00**

FAULT-TRACING

see **FAULT-TRACING**

ECM-P252C00 OIL QUALITY SENSOR CIRCUIT LOW. GENERAL FAULT INFORMATION. TYPE OF FAULT NOT SPECIFIED. (B8444S; 2005-2011)

DIAGNOSTIC TROUBLE CODE (DTC) INFORMATION ECM-P252C00

Condition

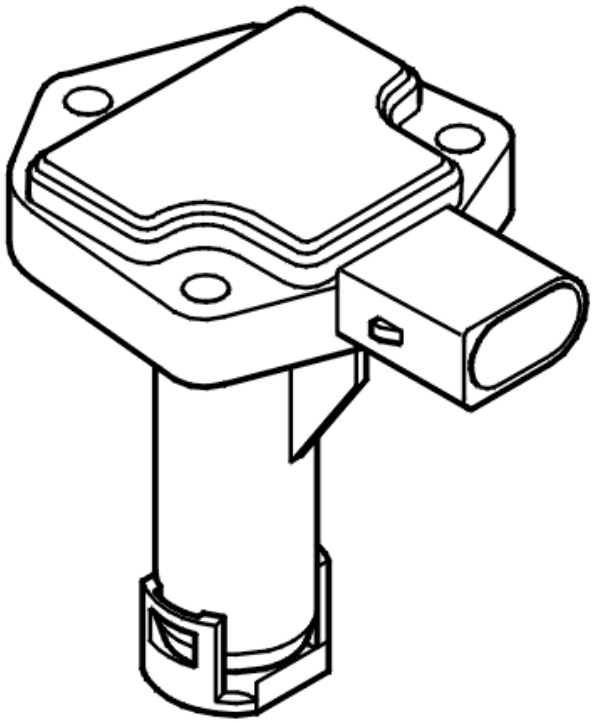

Fig. 106: Identifying Oil Level Sensor
Courtesy of VOLVO CARS CORPORATION

The oil level sensor sends information on engine oil level and quality to the engine control module (ECM). The diagnostic trouble code is generated if the control module detects that the oil quality signal is too low.

The diagnostic trouble code can be diagnosed when the engine is running.

Substitute Value

- Nothing.

Possible Source

- The signal cable is short-circuited to ground.
- Damaged oil level sensor.

Fault symptom[s]

- Nothing.

FAULT TRACING ECM-P252C00

CHECKING COMPONENTS AND WIRING

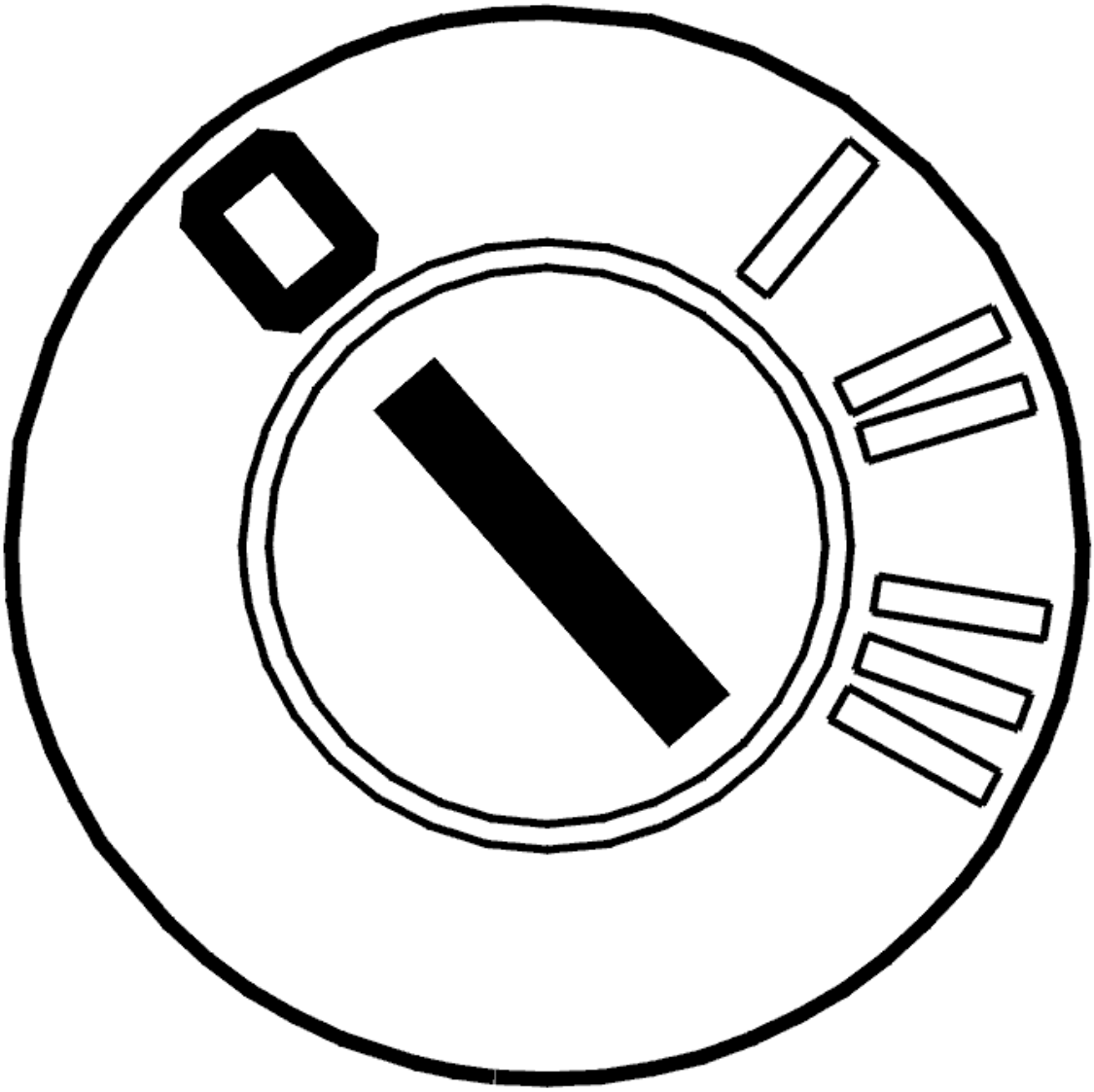

Fig. 107: Identifying Ignition OFF
Courtesy of VOLVO CARS CORPORATION

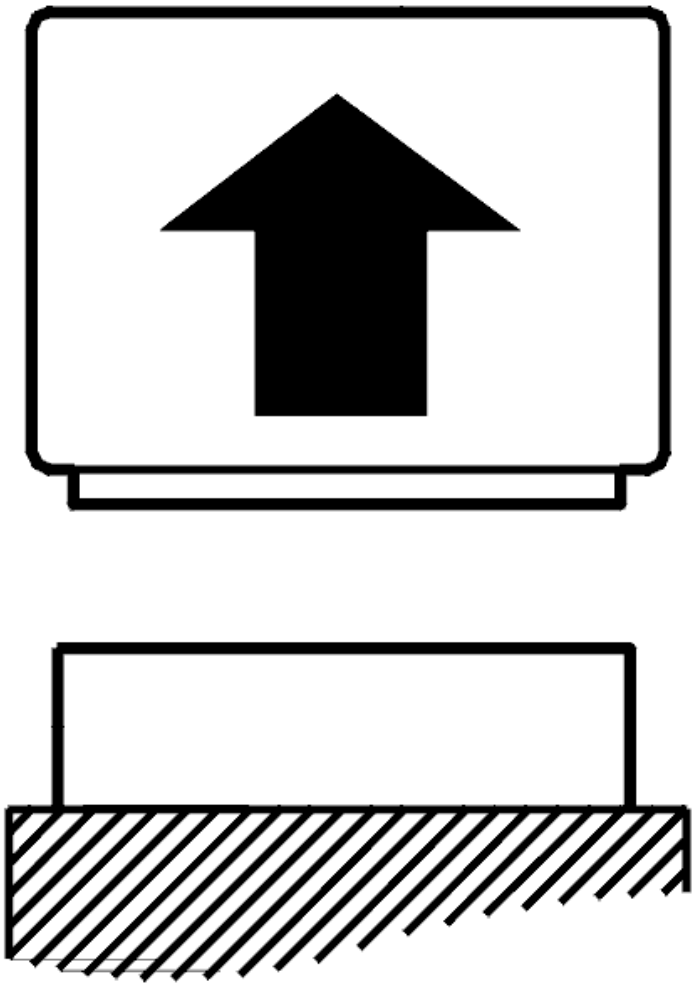

Fig. 108: Identifying Control Module Disconnected
Courtesy of VOLVO CARS CORPORATION

- Ignition off
- Disconnect the engine control module (ECM).

  Check the signal cable for short-circuit to ground. Measure between control module terminal #A63 (#B3) and oil level sensor terminal #1.

  Remedy as necessary.

  Other information

  - see **CONNECTING THE BREAKOUT BOX**
  - see **SIGNAL SPECIFICATION, ENGINE CONTROL MODULE (ECM)**

- see **OIL LEVEL SENSOR, REPLACING**
- see **CONTENTS**

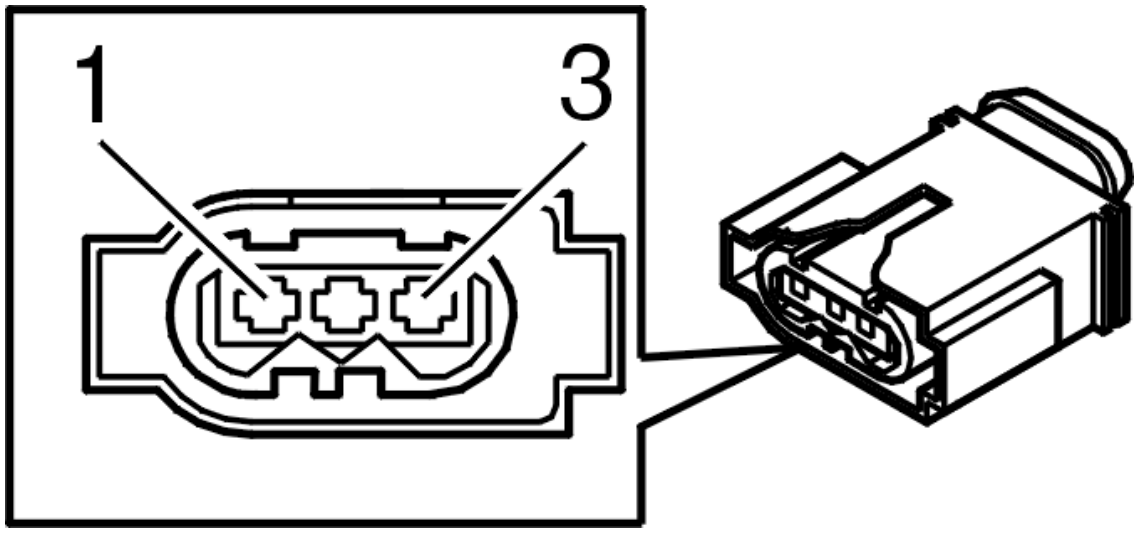

Fig. 109: Identifying Oil Level Sensor Connector Terminals
Courtesy of VOLVO CARS CORPORATION

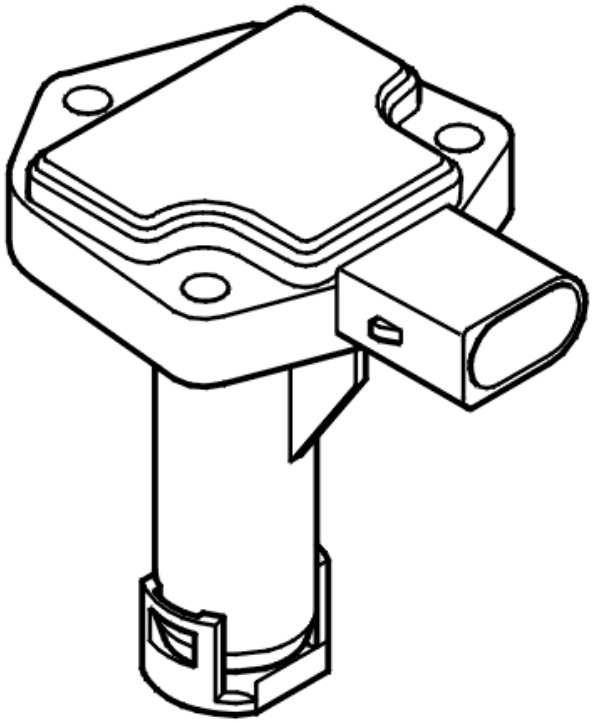

Fig. 110: Identifying Oil Level Sensor
Courtesy of VOLVO CARS CORPORATION

- **Continue**

  Refer to **VERIFICATION**

VERIFICATION

VERIFICATION

HINT: After carrying out the repair, check that the fault has been remedied.

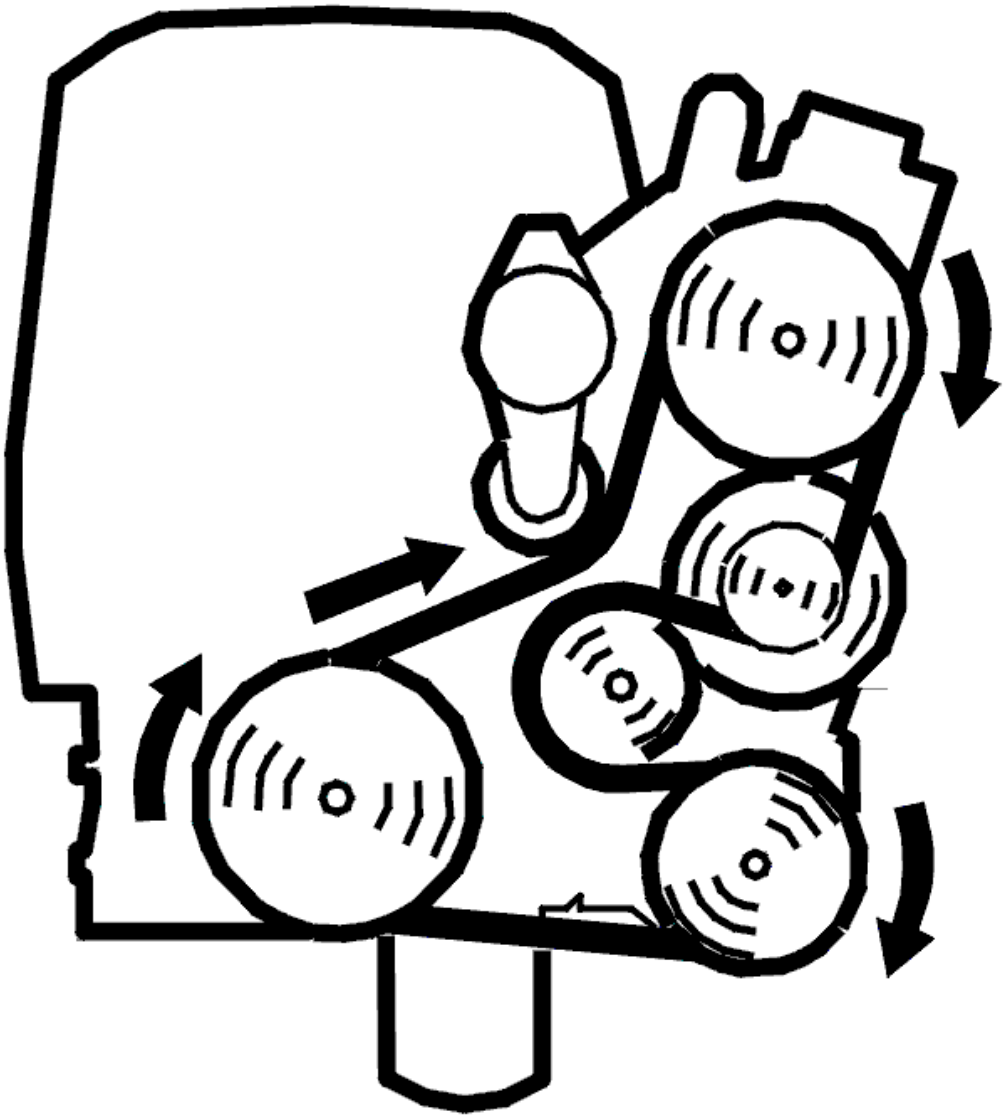

Fig. 111: Identifying Belt Routing
Courtesy of VOLVO CARS CORPORATION

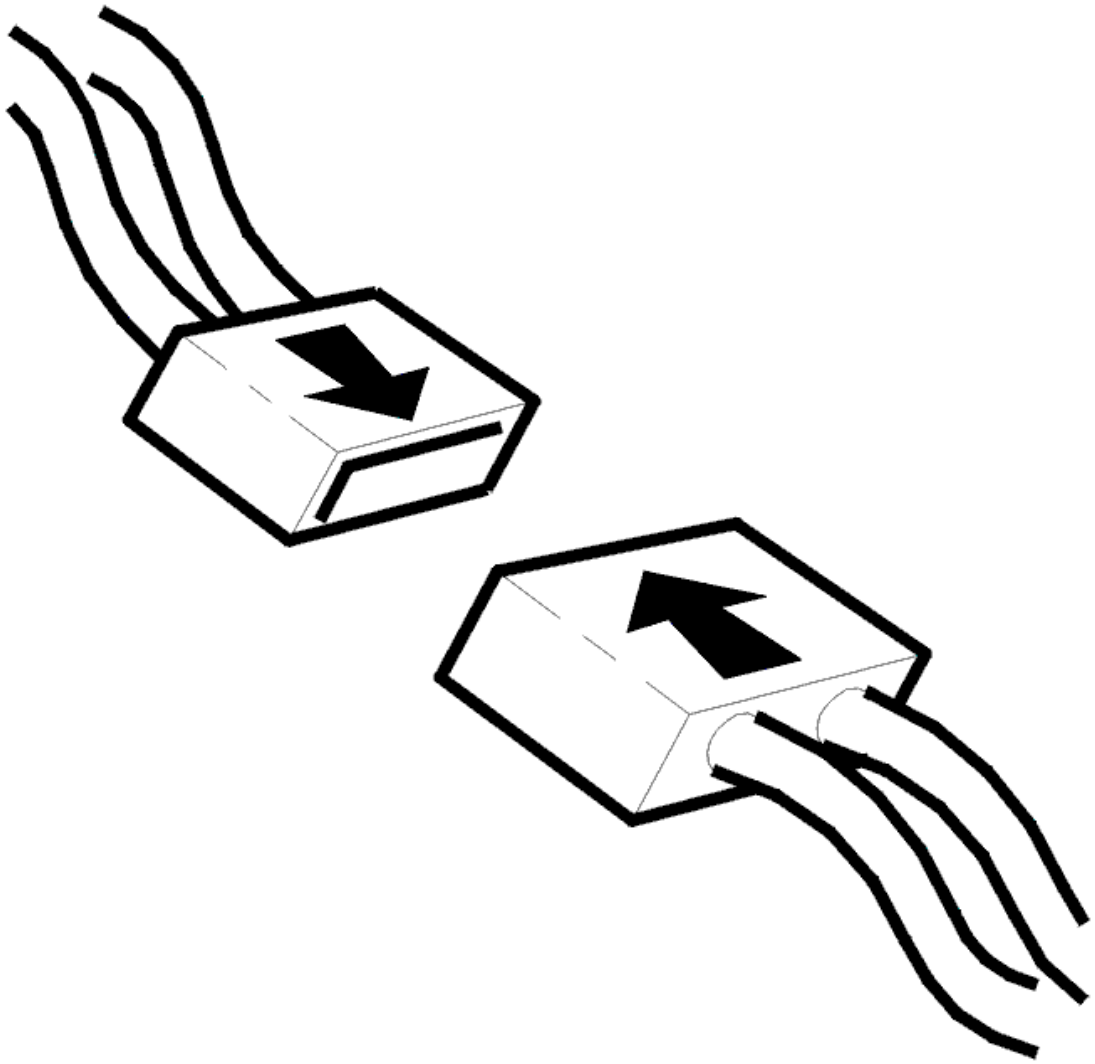

Fig. 112: Identifying Connector(s) Reinstallation
Courtesy of VOLVO CARS CORPORATION

- Ignition off
- Reconnect the connectors, components, etc.
- Start the engine.
- Read the diagnostic status and fault status for the diagnostic trouble code by selecting the diagnostic trouble code in the list.

  Increase the engine speed a few times until the scan is "Implemented".

  Check the fault status for the diagnostic trouble code when the scan is "Implemented". When the function is correct the fault status should be "No fault found" when the scan is implemented.

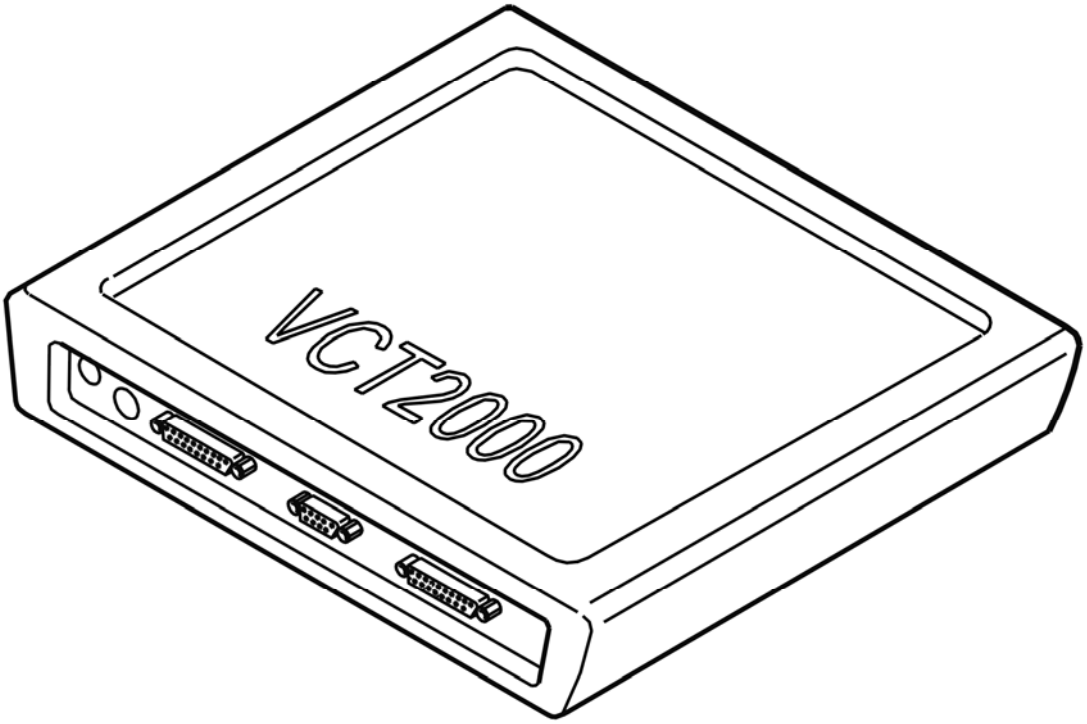

Fig. 113: Identifying VCT2000 Diagnostic Tool Symbol In VIDA
Courtesy of VOLVO CARS CORPORATION

Is the function OK?

- **YES**

  VERIFIED: Troubleshooting has been completed.

- **NO**

  Refer to **INFORMATION**

INFORMATION

FAULT-TRACING INFORMATION

The fault should have been detected and remedied. As this is not the case fault-tracing has failed.

Exit fault-tracing for this diagnostic trouble code (DTC) or make another attempt.

ECM-P252D00 ENGINE OIL QUALITY SENSOR CIRCUIT HIGH. GENERAL FAILURE INFORMATION. NO SUB TYPE INFORMATION (B6324S; 2007-

2010)

DIAGNOSTIC TROUBLE CODE (DTC) INFORMATION ECM-P252D00

Condition

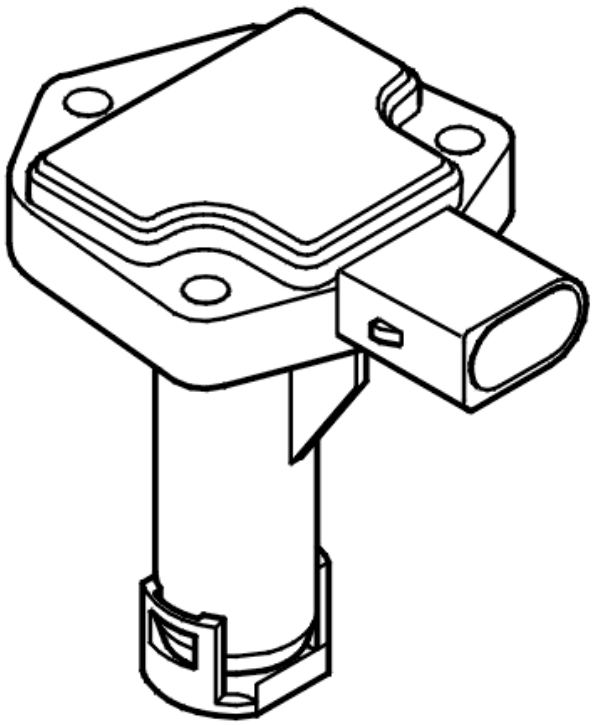

Fig. 114: Identifying Oil Level Sensor
Courtesy of VOLVO CARS CORPORATION

The oil level sensor sends information on engine oil level and quality to the engine control module (ECM). The diagnostic trouble code is generated if the control module detects that the oil quality signal is too high.

The diagnostic trouble code can be diagnosed when the engine is running.

Substitute Value

- Nothing.

Possible Source

- The signal cable is short-circuited to supply voltage.
- Damaged oil level sensor.

Fault symptom[s]

- Nothing.

FAULT-TRACING

see **FAULT-TRACING**

ECM-P252D00 ENGINE OIL QUALITY SENSOR CIRCUIT HIGH. GENERAL FAILURE INFORMATION. NO SUB TYPE INFORMATION (B6324S5; 2011-2012)

DIAGNOSTIC TROUBLE CODE (DTC) INFORMATION ECM-P252D00

see **DIAGNOSTIC TROUBLE CODE (DTC) INFORMATION ECM-P252D00**

FAULT-TRACING

see **FAULT-TRACING**

ECM-P252D00 OIL QUALITY SENSOR CIRCUIT HIGH. GENERAL FAULT INFORMATION. TYPE OF FAULT NOT SPECIFIED. (B8444S; 2005-2011)

DIAGNOSTIC TROUBLE CODE (DTC) INFORMATION ECM-P252D00

Condition

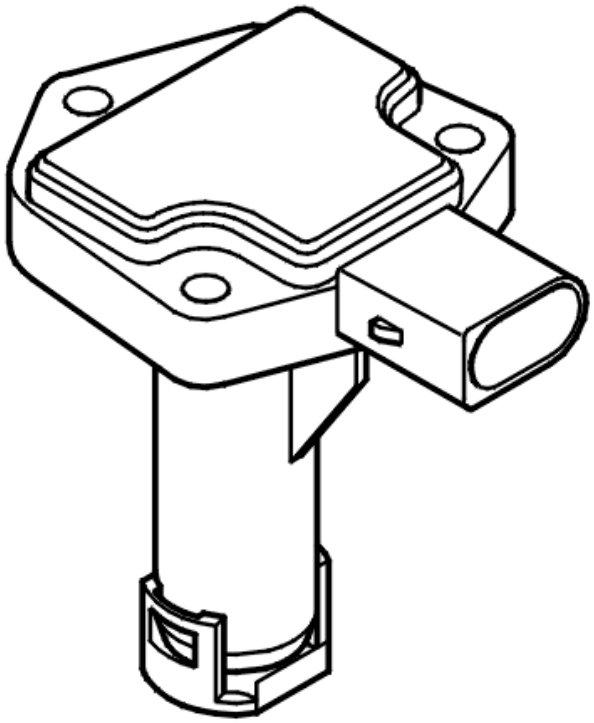

Fig. 115: Identifying Oil Level Sensor
Courtesy of VOLVO CARS CORPORATION

The oil level sensor sends information on engine oil level and quality to the engine control module (ECM). The diagnostic trouble code is generated if the control module detects that the oil quality signal is too high.

The diagnostic trouble code can be diagnosed when the engine is running.

Substitute Value

- Nothing.

Possible Source

- The signal cable is short-circuited to supply voltage.
- Damaged oil level sensor.

Fault symptom[s]

- Nothing.

FAULT TRACING ECM-P252D00

CHECKING COMPONENTS AND WIRING

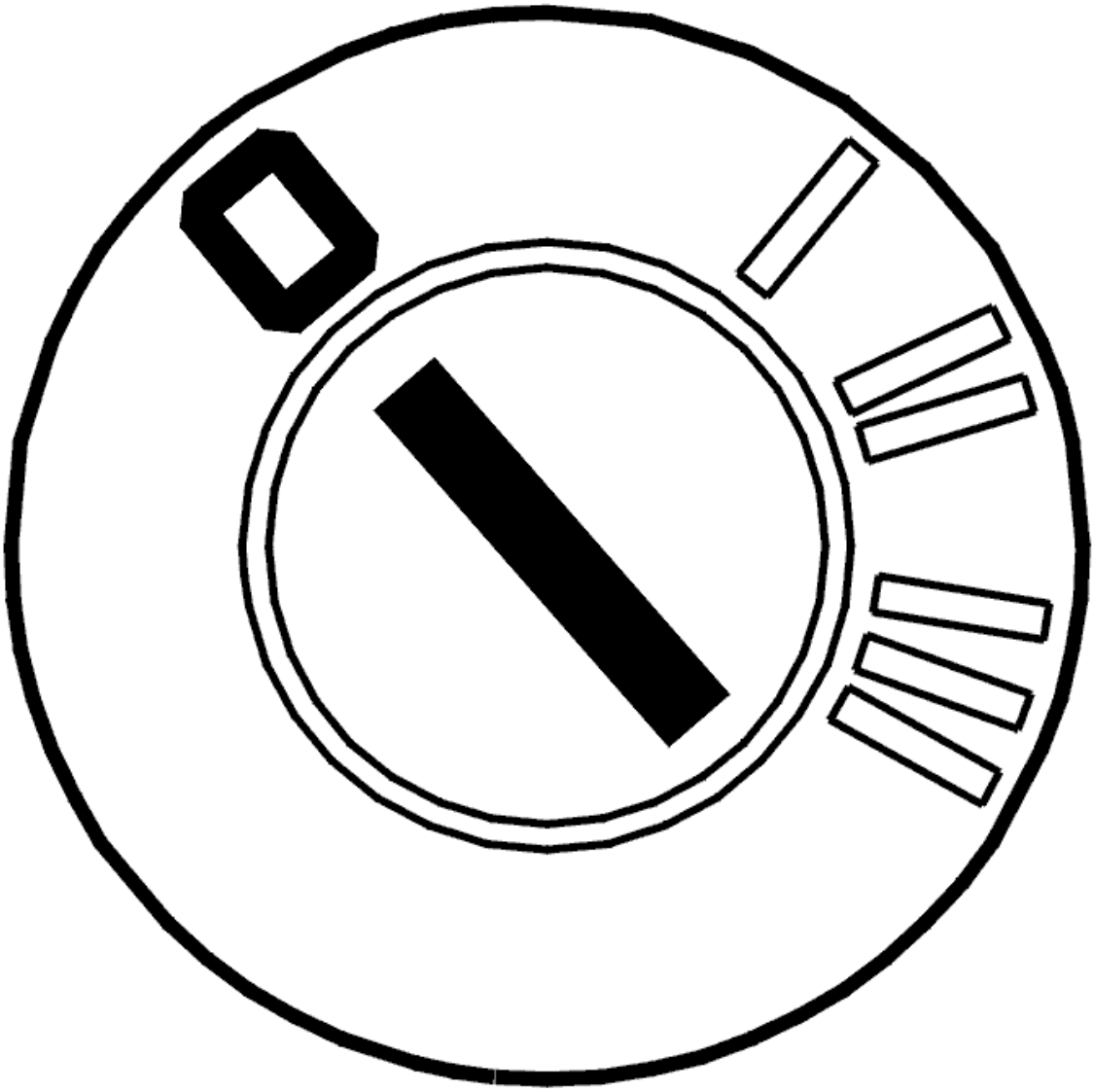

Fig. 116: Identifying Ignition OFF
Courtesy of VOLVO CARS CORPORATION

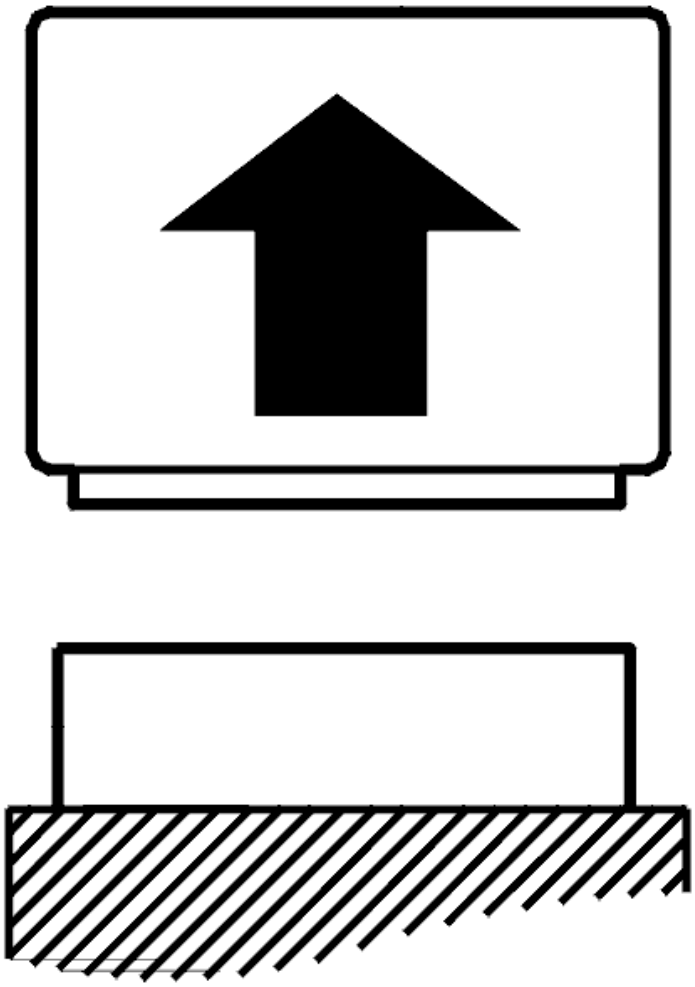

Fig. 117: Identifying Control Module Disconnected
Courtesy of VOLVO CARS CORPORATION

- Ignition off
- Disconnect the engine control module (ECM) connector.

  Check the signal cable for short-circuit to supply voltage. Measure between control module terminal #A63 (#B3) and oil level sensor terminal #1.

  Remedy as necessary.

  Other information

  - see **CONNECTING THE BREAKOUT BOX**
  - see **SIGNAL SPECIFICATION, ENGINE CONTROL MODULE (ECM)**

- see **OIL LEVEL SENSOR, REPLACING**
- see **CONTENTS**

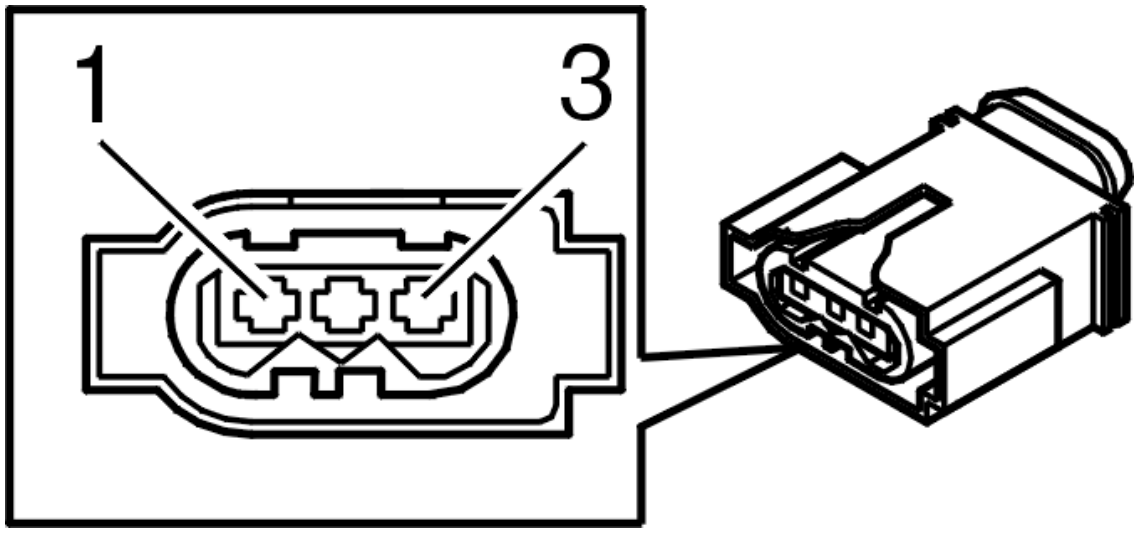

Fig. 118: Identifying Oil Level Sensor Connector Terminals
Courtesy of VOLVO CARS CORPORATION

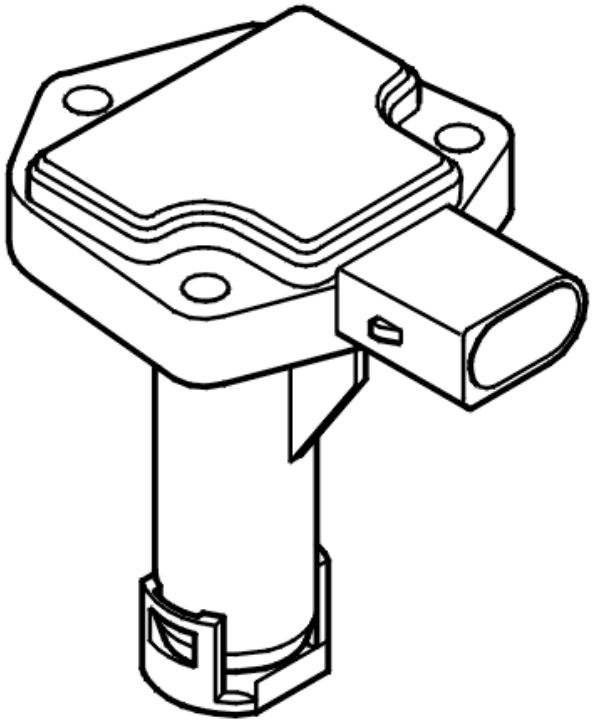

Fig. 119: Identifying Oil Level Sensor
Courtesy of VOLVO CARS CORPORATION

- **Continue**

  Refer to **VERIFICATION**

VERIFICATION

VERIFICATION

HINT: After carrying out the repair, check that the fault has been remedied.

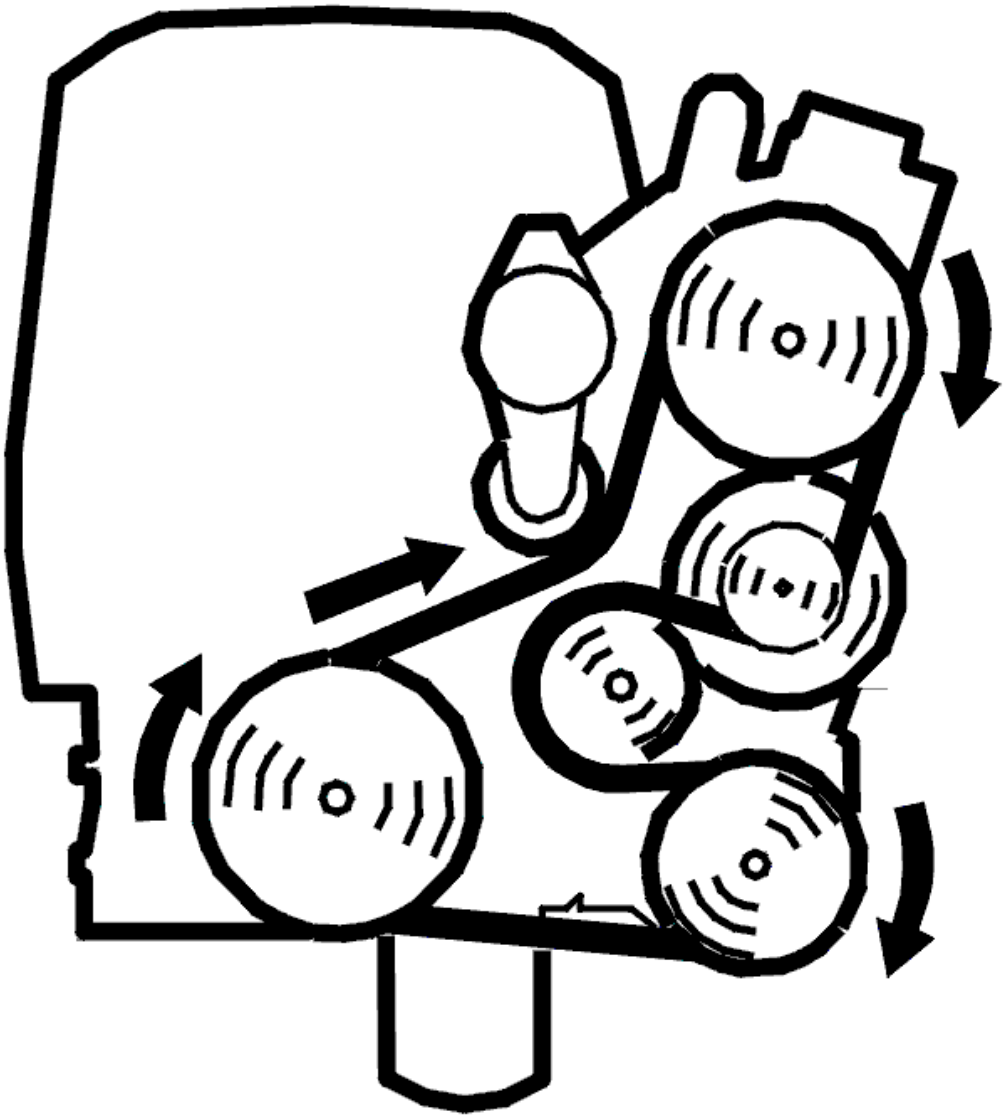

Fig. 120: Identifying Belt Routing
Courtesy of VOLVO CARS CORPORATION

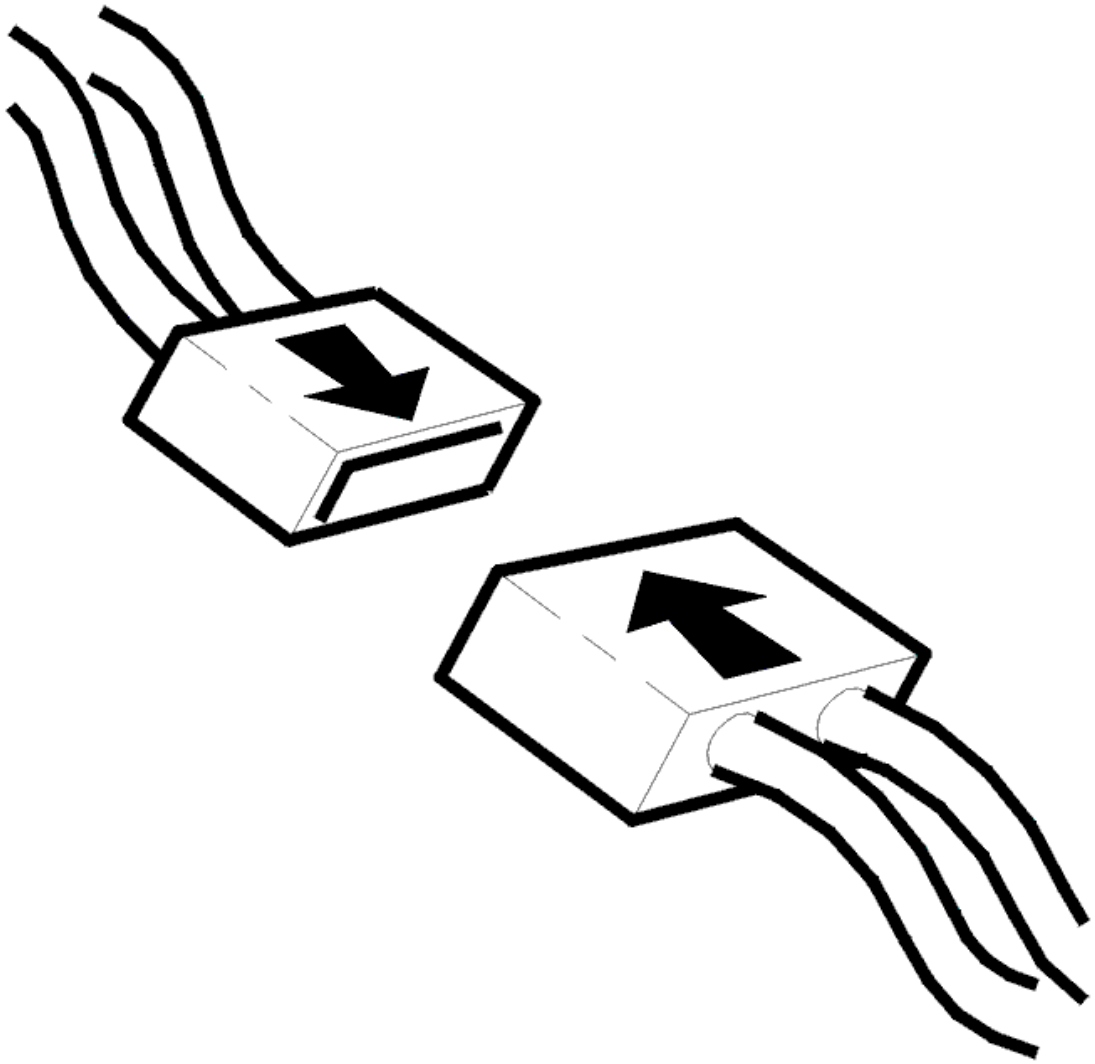

Fig. 121: Identifying Connector(s) Reinstallation
Courtesy of VOLVO CARS CORPORATION

- Ignition off
- Reconnect the connectors, components, etc.
- Start the engine.
- Read the diagnostic status and fault status for the diagnostic trouble code by selecting the diagnostic trouble code in the list.

  Increase the engine speed a few times until the scan is "Implemented".

  Check the fault status for the diagnostic trouble code when the scan is "Implemented". When the function is correct the fault status should be "No fault found" when the scan is implemented.

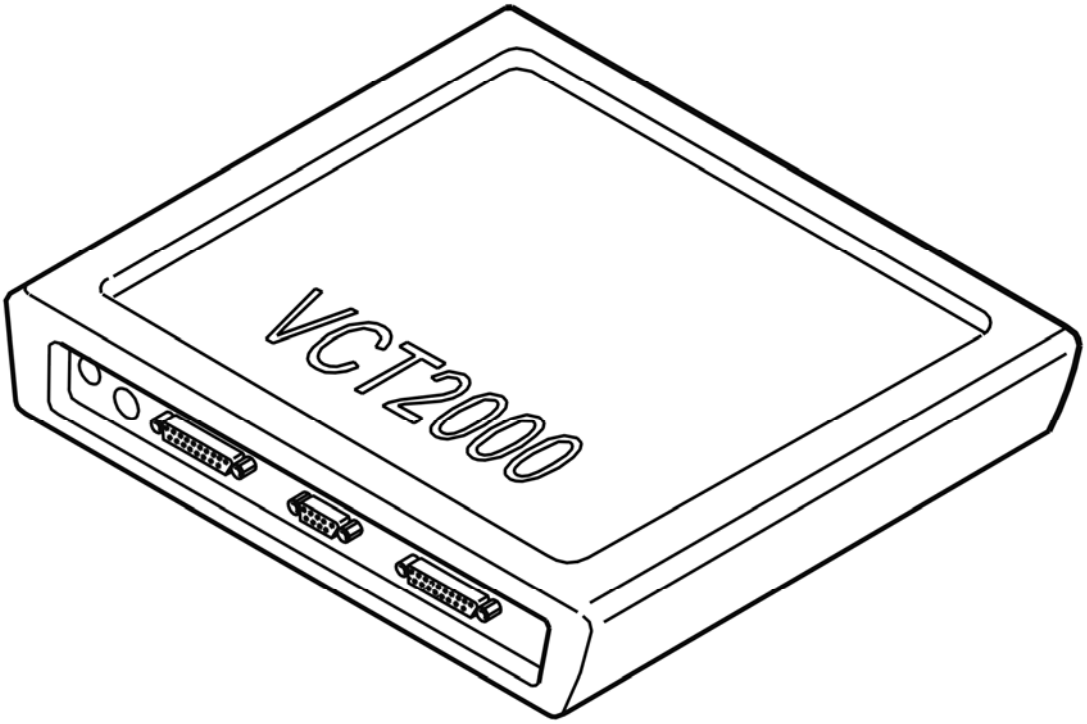

Fig. 122: Identifying VCT2000 Diagnostic Tool Symbol In VIDA
Courtesy of VOLVO CARS CORPORATION

Is the function OK?

- **YES**

  VERIFIED: Troubleshooting has been completed.

- **NO**

  Refer to **INFORMATION**

INFORMATION

FAULT-TRACING INFORMATION

The fault should have been detected and remedied. As this is not the case fault-tracing has failed.

Exit fault-tracing for this diagnostic trouble code (DTC) or make another attempt.

ECM-P258382: CRUISE CONTROL FRONT DISTANCE RANGE SENSOR. BUS SIGNAL / MESSAGE FAILURES. ALIVE / SEQUENCE COUNTER

INCORRECT / NOT UPDATED (B6324S; 2007-2010)

DIAGNOSTIC TROUBLE CODE (DTC) INFORMATION ECM-P258382

Condition

The control module is continually supplied with necessary information from the Forward Sensing Module (FSM) via CAN communication.

The control module checks the communication with the Forward Sensing Module (FSM).

The diagnostic trouble code (DTC) is stored if the control module detects that:

- No communication with the Forward Sensing Module (FSM).

The control module's test for the diagnostic trouble code (DTC) starts in the event of:

- Ignition switch position II.

NOTE: The control module can only detect the fault once the test has been started and the diagnostic trouble code (DTC) is stored when the conditions are met.

Substitute Value

- Cruise control is disengaged when the fault is active.

Possible Source

- Open-circuit in the communication cable.
- Short-circuit to ground in the communication cable.
- Short-circuit to supply voltage in the communication cable.
- Contact resistance or oxidation in the terminals.
- Open-circuit in terminals.
- Short-circuit in connections.

Fault symptom[s]

- Cruise control does not operate

FAULT-TRACING

see **FAULT-TRACING**

ECM-P258382: CRUISE CONTROL FRONT DISTANCE RANGE SENSOR. BUS SIGNAL / MESSAGE FAILURES. ALIVE / SEQUENCE COUNTER

INCORRECT / NOT UPDATED (B6324S5; 2011-2012)

DIAGNOSTIC TROUBLE CODE (DTC) INFORMATION ECM-P258382

see **DIAGNOSTIC TROUBLE CODE (DTC) INFORMATION ECM-P258382**

FAULT-TRACING

see **FAULT-TRACING**

ECM-P261000: ECM/PCM INTERNAL ENGINE SHUT-DOWN TIMER PERFORMANCE. GENERAL MALFUNCTION INFORMATION. NO INFORMATION ON MALFUNCTION TYPE (B8444S; 2005-2011)

DIAGNOSTIC TROUBLE CODE (DTC) INFORMATION ECM-P261000

Condition

Central electronic module (CEM) sends, via the CAN-network, information about how long time has elapsed since the engine was turned off the last time. Engine control module (ECM) receives the signal and compares it to its own calculated time (calculated from temperature changes of engine temperature and inlet temperature).

If engine control module (ECM) detects that the received time differs too much from the calculated time, the diagnostic trouble code is generated.

The diagnostic trouble code can be diagnosed when the ignition is on.

Substitute Value

- The calculated time is used.

Possible Source

- Malfunction detected by another diagnostic function (engine temperature sensor, air pressure sensor inlet) in engine control module (ECM).
- Malfunction detected by central electronic module (CEM).
- Open-circuit in the control area network (CAN) wiring.
- Short-circuit between the control area network (CAN) wiring.
- Internal malfunction in central electronic module (CEM).
- Internal fault in the engine control module (ECM).
- Internal fault in another control module in the same part of the control area network (CAN).

Fault symptom[s]

- Nothing.

FAULT-TRACING INFORMATION

see **FAULT-TRACING INFORMATION**

ECM-P261085: ECM/PCM INTERNAL ENGINE OFF TIMER PERFORMANCE. BUS SIGNAL / MESSAGE FAILURES. SIGNAL ABOVE ALLOWABLE RANGE (B6324S; 2007-2010)

DIAGNOSTIC TROUBLE CODE (DTC) INFORMATION

Condition

Central electronic module (CEM) sends, via the CAN-network, information about how long time has elapsed since the engine was turned off the last time. Engine control module (ECM) receives the signal and compares it to its own calculated time (calculated from temperature changes of engine temperature and inlet temperature).

If engine control module (ECM) detects that the received time differs too much from the calculated time, the diagnostic trouble code is generated.

The diagnostic trouble code can be diagnosed when the ignition is on.

Substitute Value

- The calculated time is used.

Possible Source

- Malfunction detected by another diagnostic function (engine temperature sensor, air pressure sensor inlet) in engine control module (ECM).
- Malfunction detected by central electronic module (CEM).
- Open-circuit in the control area network (CAN) wiring.
- Short-circuit between the control area network (CAN) wiring.
- Internal malfunction in central electronic module (CEM).
- Internal fault in the engine control module (ECM).
- Internal fault in another control module in the same part of the control area network (CAN).

Fault symptom[s]

- Nothing.

FAULT-TRACING

see **FAULT-TRACING**

ECM-P261085: ECM/PCM INTERNAL ENGINE OFF TIMER PERFORMANCE.

BUS SIGNAL / MESSAGE FAILURES. SIGNAL ABOVE ALLOWABLE RANGE (B6324S5; 2011-2012)

DIAGNOSTIC TROUBLE CODE (DTC) INFORMATION

see **DIAGNOSTIC TROUBLE CODE (DTC) INFORMATION**

FAULT-TRACING

see **FAULT-TRACING**

ECM-U000100: HIGH SPEED CAN COMMUNICATION BUS. GENERAL FAILURE INFORMATION. NO SUB TYPE INFORMATION (B6324S; 2007-2010)

DIAGNOSTIC TROUBLE CODE (DTC) INFORMATION ECM-U000100

Condition

The control modules transmit and receive information via a standardized serial communication method - CAN (Control Area Network). The diagnostic trouble code (DTC) is stored if the engine control module (ECM) registers serious interference (CAN communication blocked).

NOTE: **In case of system communication problems, it is not possible to communicate with the engine control module (ECM). Therefore it will only be possible to read off the diagnostic trouble code (DTC) if the malfunction is intermittent.**

Substitute Value

- Engine control module (ECM) stops communicating on the CAN-network "bus-off".

HINT: The engine control module (ECM) will remain off until the voltage feed is broken (15, 30, x-feed). When the voltage is switched on, the engine control module (ECM) will make a new attempt to communicate.

Possible Source

- Contact resistance or oxidation in the connections.
- Open circuit on one of the CAN-cables.
- Short-circuit between the control area network (CAN) wiring.
- Internal malfunction in engine control module (ECM).
- Internal malfunction in another control module in the same part of the CAN-network.

Fault symptom[s]

- General warning light on.
- The cruise control does not function at all
- The engine jerks at acceleration.
- The engine jerks heavily after engine braking.
- Rough idling.

FAULT-TRACING

see **FAULT-TRACING**

ECM-U000100: HIGH SPEED CAN COMMUNICATION BUS. GENERAL FAILURE INFORMATION. NO SUB TYPE INFORMATION (B6324S5; 2011-2012)

DIAGNOSTIC TROUBLE CODE (DTC) INFORMATION ECM-U000100

see **DIAGNOSTIC TROUBLE CODE (DTC) INFORMATION ECM-U000100**

FAULT-TRACING

see **FAULT-TRACING**

ECM-U000100: HS-CAN COMMUNICATION BUS. GENERAL MALFUNCTION INFORMATION. NO INFORMATION ON MALFUNCTION TYPE (B8444S; 2005-2011)

DIAGNOSTIC TROUBLE CODE (DTC) INFORMATION ECM-U000100

Condition

The control modules transmit and receive information via a standardized serial communication method - CAN (Control Area Network). The diagnostic trouble code (DTC) is stored if the engine control module (ECM) registers serious interference (CAN communication blocked).

NOTE: **In case of system communication problems, it is not possible to communicate with the engine control module (ECM). Therefore it will only be possible to read off the diagnostic trouble code (DTC) if the malfunction is intermittent.**

Substitute Value

- Engine control module (ECM) stops communicating on the CAN-network "bus-off".

HINT: The engine control module (ECM) will remain off until the voltage feed is broken (15, 30, x-feed). When the voltage is switched on, the engine control module (ECM) will make a new attempt to

communicate.

Possible Source

- Contact resistance or oxidation in the connections.
- Open circuit on one of the CAN-cables.
- Short-circuit between the control area network (CAN) wiring.
- Internal malfunction in engine control module (ECM).
- Internal malfunction in another control module in the same part of the CAN-network.

Fault symptom[s]

- General warning light on.
- The cruise control does not function at all
- The engine jerks at acceleration.
- The engine jerks heavily after engine braking.
- Rough idling.

TROUBLESHOOTING

GENERAL INFORMATION

HINT: For general information about troubleshooting in the Control Area Network (CAN), see the linked document below.

NOTE: When selecting the vehicle profile, the correct vehicle must be identified. Use the "Retrieve VIN" button. Troubleshooting may fail if this is not done.

In order to check the CAN cables, the resistance of the network must be measured. The resistance between the two high-speed CAN cables, with the network connected, must be 60 ohms. The acceptable range of this reading is approx. 55-65 ohms.

If the communication diagnostic trouble code can be read from the control module, the malfunction is probably intermittent.

An intermittent malfunction in the power supply to a control module is indicated by individual diagnostic trouble codes in the Central Electronic Module (CEM) (CEM-1A5X or CEM-1A6X, as appropriate). There is probably no diagnostic trouble code in the control module that the central electronic module (CEM) has generated, since the module cannot generate a diagnostic trouble code when it is not supplied with voltage.

Other information

- see **GENERAL INFORMATION ABOUT FAULT-TRACING IN THE CAN NETWORK**

- **Continue**

Refer to **MEASURING CABLES IN CAN-NETWORK (HS-CAN)**

MEASURING CABLES IN CAN-NETWORK (HS-CAN)

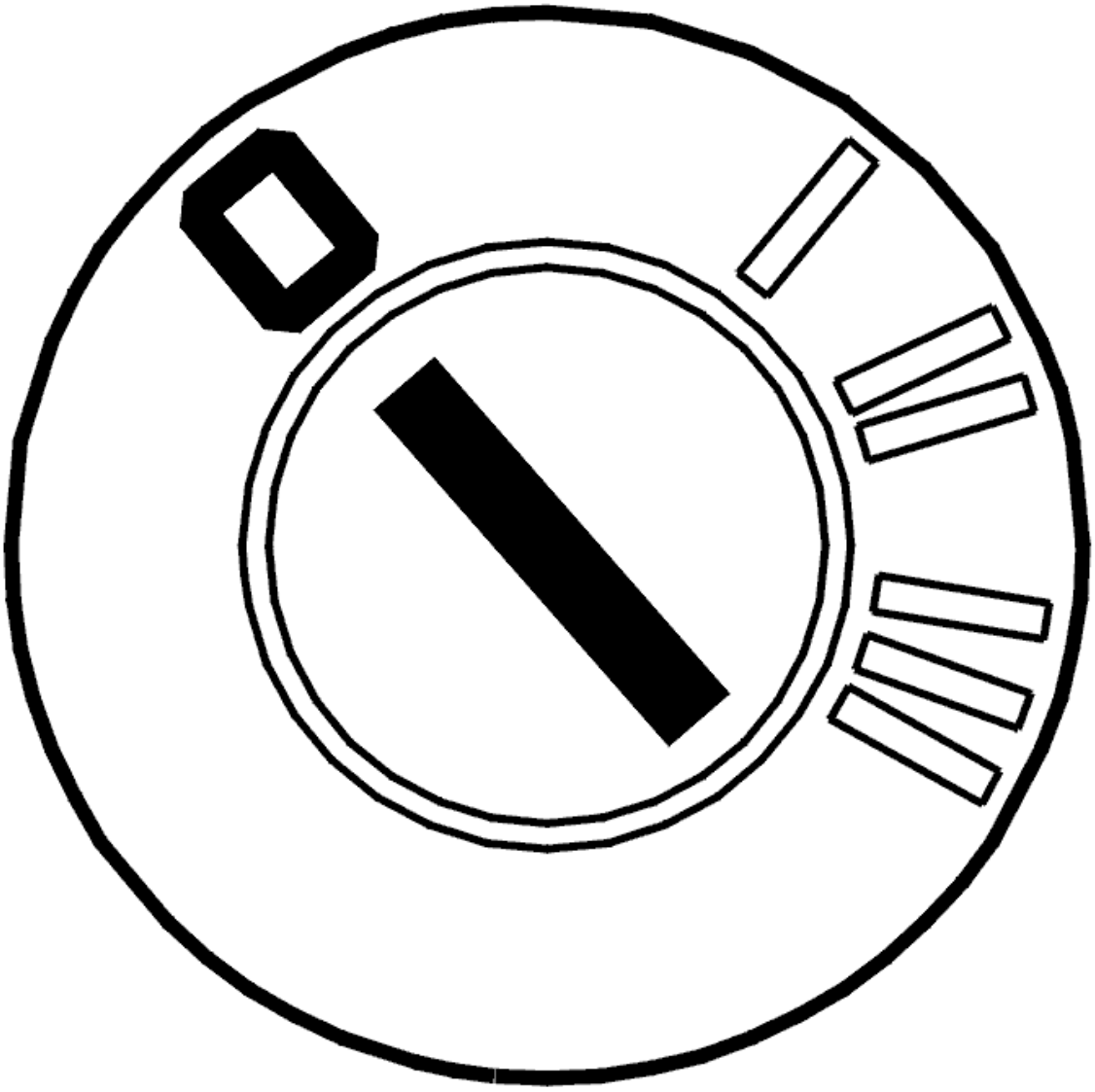

Fig. 123: Identifying Ignition OFF
Courtesy of VOLVO CARS CORPORATION

- Ignition off
- Disconnect the minus terminal on the battery.
- Connect a breakout box to the Engine Control Module (ECM).

NOTE: Also connect the engine control module (ECM) to the adapter cable harness, otherwise the measured values will be incorrect.

Measure the resistance between the connections below. Due to the network design, different measurement

values will be obtained. For each measurement, twist the cable harness and wiggle the connections, where accessible, to detect any intermittent short-circuits or open circuits.

NOTE: The following resistance measurements only measure the main paths in the high-speed network, not the junctions that exist for some control modules. An open circuit in one path cannot be detected by this measurement. However, a short-circuit in a branch can be detected.

Measure the resistance between #B58 (#C58) and #B45 (#C45). The resistance shall be approx. 60 ohms. Permitted values approx. 55-65 ohms.

Also measure the resistance between each connection and the voltage as well as ground. The resistance must be infinite or very large (more than 1 Mohms).

HINT: If a malfunction is detected, then try to separate the junction with the measured malfunction at an appropriate point further along the cable. Unplug any connector/control module nearest to the previous measurement point and measure again. In this manner, try to find the malfunction.

Remedy the cables as necessary.

Other information

- see **BATTERY, DISCONNECTING**
- see **CONNECTING THE BREAKOUT BOX**
- see **SIGNAL SPECIFICATION, ENGINE CONTROL MODULE (ECM)**
- see **CONTENTS**

Was a malfunction detected?

- **YES**

  Refer to **VERIFICATION**

- **NO**

  Refer to **CHECKING THE TRAFFIC LOAD ON THE CAN CABLES**

CHECKING THE TRAFFIC LOAD ON THE CAN CABLES

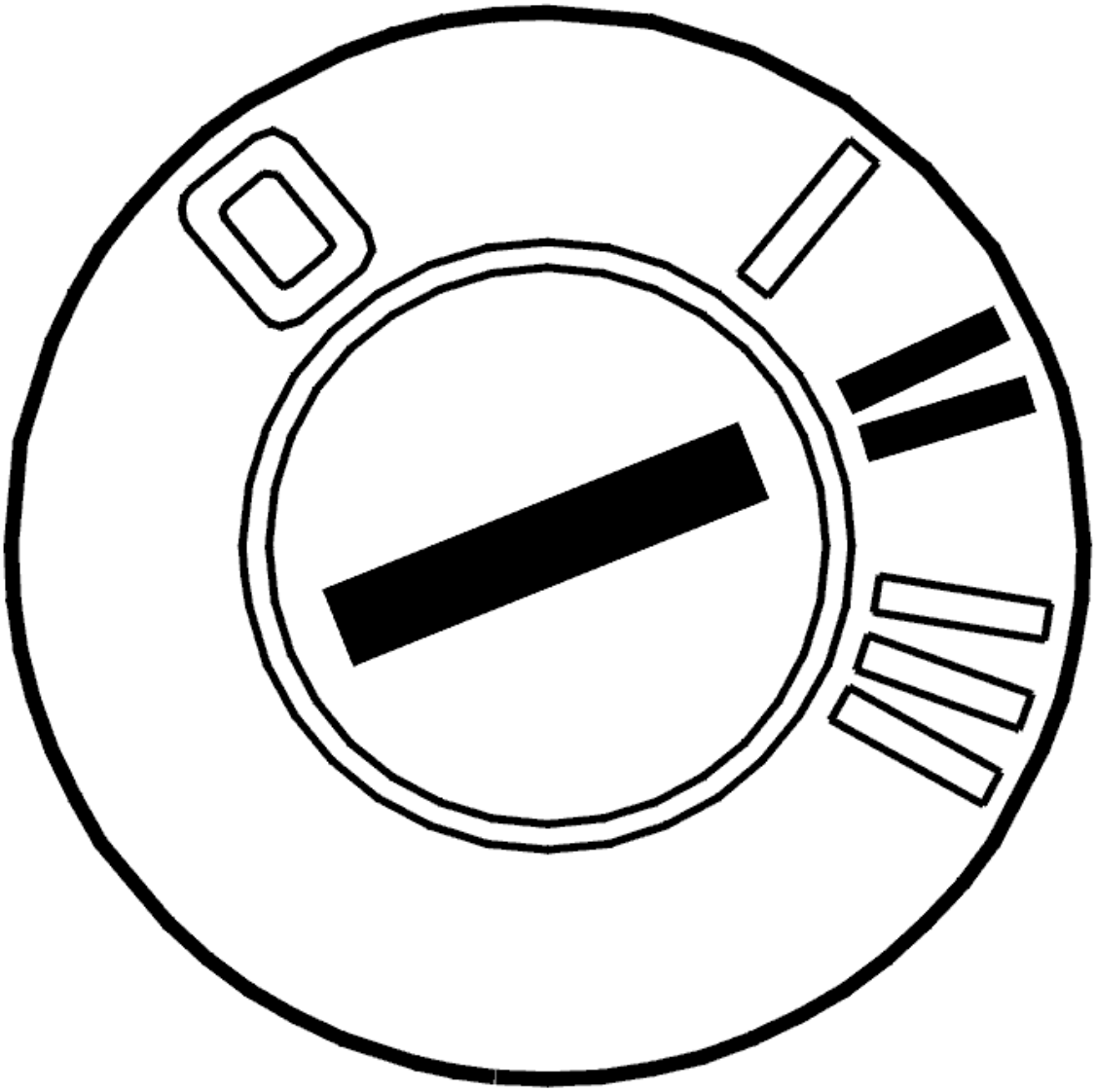

Fig. 124: Identifying Ignition ON
Courtesy of VOLVO CARS CORPORATION

- Connect the battery
- Ignition on

  Malfunctions in the Control Area Network (CAN) may be due to a control module sending incorrect messages that disrupt normal communication. When messages are sent incorrectly, this results in a considerable increase in the amount of traffic on the Control Area Network (CAN). Check the load by measuring the average voltage value on the network cables in relation to ground.

  Check in the following manner:

  - Measure the voltage between #B45 (#C45) (HS-CAN-L) and ground. The voltage shall be approx. 2.3 V.

- Measure the voltage between #B58 (#C58) (HS-CAN-H) and ground. The voltage shall be approx. 2.8 V.

Other information

- see **BATTERY, DISCONNECTING**

Is the value OK?

- **YES**

  Refer to **INFORMATION**

- **NO**

  Refer to **IDENTIFYING A CONTROL MODULE IN THE CAN-NETWORK**

IDENTIFYING A CONTROL MODULE IN THE CAN-NETWORK

If the load on the CAN network is too high, this may be due to a control module sending incorrect messages on the CAN network (known as a disruptive control module). The malfunction may also be due to an intermittent short-circuit to voltage or ground in one of the CAN-cables. This results in the control modules on the CAN-network starting to send incorrect messages. The malfunctions can occur without a diagnostic trouble code (DTC) being stored by the control modules. The voltage can be measured between the CAN-cables in order to check the load on the CAN-network.

NOTE: It is not necessarily the control module(s) that stored the diagnostic trouble code (DTC) that is communicating incorrectly. Incorrect messages can come from any control module in the same section of the CAN-network. However, incorrect communication in one network cannot affect the communication on the other network. In other words, incorrect communication on the LS-CAN cannot disrupt communication on the HS-CAN, and vice versa.

Check the communication/load on the CAN-network by measuring the voltage between #B45 (#C45) and #B58 (#C58). The average value of the voltage shall be approx. 0.5 V (0.4-0.6 V). In case of malfunctioning communication, the voltage is at approx. 0.7 V and above.

To identify which control module is responsible for the incorrect communication, one can disconnect the voltage feed to each control module in turn and re-check the voltage on the CAN-cables. The voltage feed is most easily disconnected by removing the fuse/fuses for the particular control module. Continue until the voltage between the CAN-cables drops to about 0.5 V.

NOTE: When connecting and disconnecting individual control modules, other diagnostic trouble codes (DTCs) may be stored in certain control modules.

HINT: When a suspected control module is identified, connect and disconnect the voltage feed several times to verify that the malfunction appears and disappears. Turn off the ignition between each check.

NOTE: **Do not cut the voltage to the central electronic module (CEM) unless it is the last control module left to check.**

A control module which communicates incorrectly must be replaced.

NOTE: **Following a malfunction involving control modules that disrupt communication, other control modules may remain in Limp-Home mode (that is, they work but with limited functionality) even after the ignition has been turned off and on a number of times. To remedy this, disconnect and reconnect the battery's minus terminal to restore the control modules to normal function.**

- **Continue**

  Refer to **VERIFICATION**

VERIFICATION

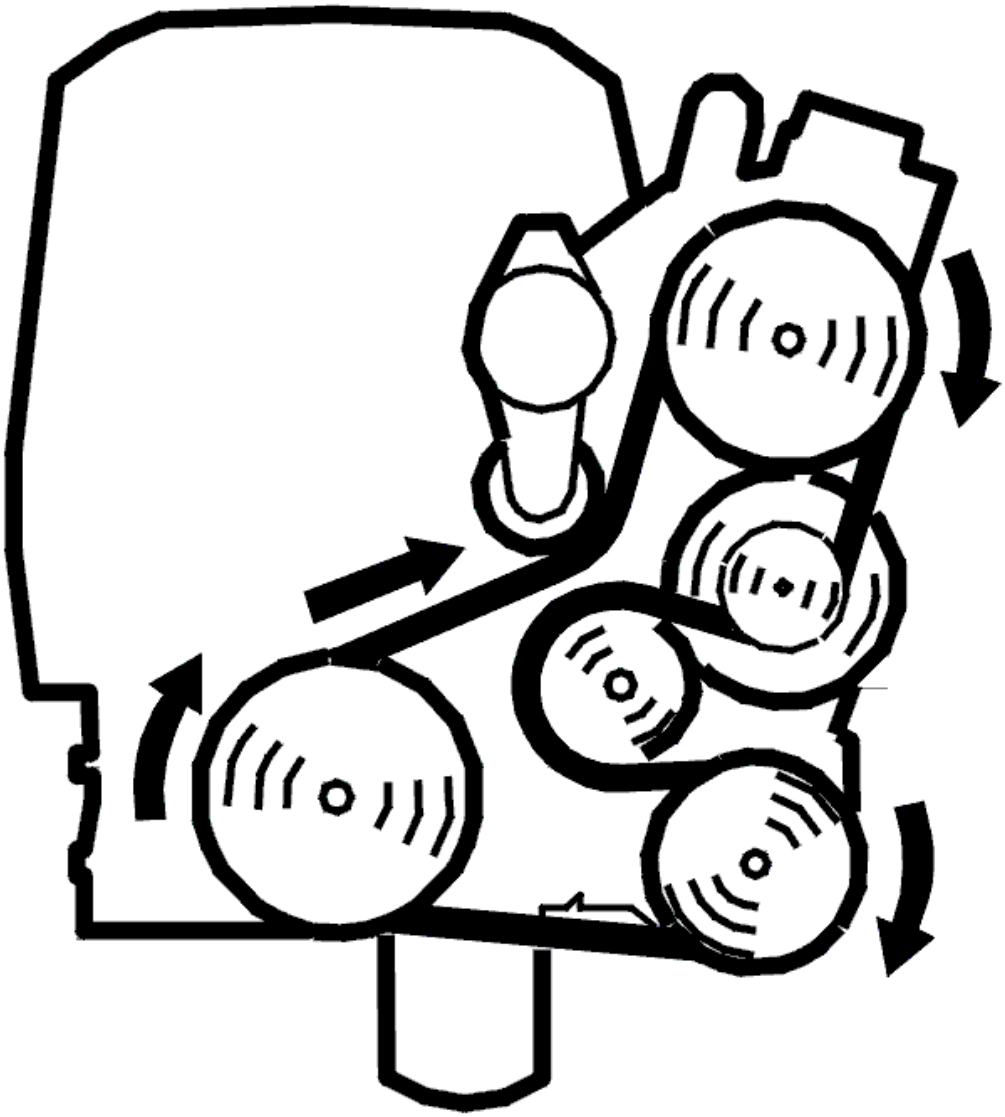

Fig. 125: Identifying Belt Routing
Courtesy of VOLVO CARS CORPORATION

- Erase diagnostic trouble codes via vehicle communication service.
- Start the engine and let it run for 10 minutes.
- Read out diagnostic trouble codes.

  Check to see if the communication diagnostic trouble code has been stored again.

Did the trouble code(s) return?

- **YES**

  Refer to **INFORMATION**

- **NO**

  OKAY: Troubleshooting has been completed.

INFORMATION

FAULT-TRACING INFORMATION

Verification shows that the fault is no longer present. The diagnostic trouble code (DTC) was probably caused by an intermittent fault.

Fault-tracing for this diagnostic trouble code (DTC) is not followed by a verification.

You can view the information again or exit fault-tracing for this diagnostic trouble code (DTC).

INFORMATION

FAULT-TRACING INFORMATION

The fault should have been detected and remedied. As this is not the case fault-tracing has failed.

Exit fault-tracing for this diagnostic trouble code (DTC) or make another attempt.

ECM-U010100: LOST COMMUNICATION WITH TRANSMISSION CONTROL MODULE. GENERAL FAILURE INFORMATION. NO SUB TYPE INFORMATION (B6324S; 2007-2010)

DIAGNOSTIC TROUBLE CODE (DTC) INFORMATION ECM-U010100

Condition

The control modules transmit and receive information via a standardized serial communication method - CAN (Control Area Network). If engine control module (ECM) registers a communication malfunction between transmission control module (TCM) and engine control module (ECM), the diagnostic trouble code is stored in engine control module (ECM).

Substitute Value

- Nothing.

Possible Source

- Open circuit on one of the CAN-cables.
- Short-circuit between the control area network (CAN) wiring.
- Internal malfunction in engine control module (ECM).
- Internal malfunction in another control module in the same part of the CAN-network.

Fault symptom[s]

- Harsh shifting.
- Malfunction indicator lamp (MIL) lit.

FAULT-TRACING

see **FAULT-TRACING**

ECM-U010100: LOST COMMUNICATION WITH TRANSMISSION CONTROL MODULE. GENERAL FAILURE INFORMATION. NO SUB TYPE INFORMATION (B6324S5; 2011-2012)

DIAGNOSTIC TROUBLE CODE (DTC) INFORMATION ECM-U010100

see **DIAGNOSTIC TROUBLE CODE (DTC) INFORMATION ECM-U010100**

FAULT-TRACING

see **FAULT-TRACING**

ECM-U010100: FAILED COMMUNICATION WITH TRANSMISSION CONTROL MODULE. GENERAL MALFUNCTION INFORMATION. NO INFORMATION ON MALFUNCTION TYPE (B8444S; 2005-2011)

DIAGNOSTIC TROUBLE CODE (DTC) INFORMATION ECM-U010100

Condition

The control modules transmit and receive information via a standardized serial communication method - CAN (Control Area Network). If engine control module (ECM) registers a communication malfunction between transmission control module (TCM) and engine control module (ECM), the diagnostic trouble code is stored in engine control module (ECM).

Substitute Value

- Nothing.

Possible Source

- Open circuit on one of the CAN-cables.
- Short-circuit between the control area network (CAN) wiring.
- Internal malfunction in engine control module (ECM).
- Internal malfunction in another control module in the same part of the CAN-network.

Fault symptom[s]

- Harsh shifting.
- Malfunction indicator lamp (MIL) lit.

FAULT-TRACING INFORMATION

see **FAULT-TRACING INFORMATION**

ECM-U010400: FAILED COMMUNICATION WITH CRUISE CONTROL MODULE. GENERAL FAULT INFORMATION. TYPE OF FAULT NOT SPECIFIED. (B8444S; 2005-2011)

DIAGNOSTIC TROUBLE CODE (DTC) INFORMATION ECM-U010400

Condition

The engine control module (ECM) checks the CAN communication to the steering wheel module (SWM).

The diagnostic trouble code (DTC) is stored if the engine control module (ECM) receives an incorrect check sum or if the update bit from the steering wheel module (SWM) is missing.

The diagnostic trouble code can be diagnosed when the engine is running.

Substitute Value

- Cruise control turned off when the fault is active.

Possible Source

- Open-circuit in the control area network (CAN) wiring.
- Short-circuit between the control area network (CAN) wiring.
- Internal fault in the engine control module (ECM).
- Internal fault in another control module in the same part of the control area network (CAN).

Fault symptom[s]

- Cruise control does not function at all.

FAULT-TRACING INFORMATION

see **FAULT-TRACING INFORMATION**

ECM-U010482: LOST COMMUNICATION WITH CRUISE CONTROL MODULE. BUS SIGNAL / MESSAGE FAILURES. SIGNAL COMPARE FAILURE

(B6324S; 2007-2010)

DIAGNOSTIC TROUBLE CODE (DTC) INFORMATION ECM-U010482

Condition

The control module is continually supplied with necessary information about the steering wheel buttons for cruise control from the Central electronic module (CEM) via CAN communication.

The control module checks the communication with the Central electronic module (CEM).

The diagnostic trouble code (DTC) is stored if the control module detects that:

- No communication with the Central electronic module (CEM).

The control module's test for the diagnostic trouble code (DTC) starts in the event of:

- Ignition switch position II.

NOTE: The control module can only detect the fault once the test has been started and the diagnostic trouble code (DTC) is stored when the conditions are met.

Substitute Value

- Cruise control is disengaged when the fault is active.

Possible Source

- Open-circuit in the communication cable.
- Short-circuit to ground in the communication cable.
- Short-circuit to supply voltage in the communication cable.
- Contact resistance or oxidation in the terminals.
- Open-circuit in terminals.
- Short-circuit in connections.

Fault symptom[s]

- Cruise control does not operate

FAULT-TRACING

see **FAULT-TRACING**

ECM-U010482: LOST COMMUNICATION WITH CRUISE CONTROL MODULE. BUS SIGNAL / MESSAGE FAILURES. SIGNAL COMPARE FAILURE

(B6324S5; 2011-2012)

DIAGNOSTIC TROUBLE CODE (DTC) INFORMATION ECM-U010482

see **DIAGNOSTIC TROUBLE CODE (DTC) INFORMATION ECM-U010482**

FAULT-TRACING

see **FAULT-TRACING**

ECM-U010700: LOST COMMUNICATION WITH THROTTLE ACTUATOR CONTROL MODULE. GENERAL FAILURE INFORMATION. NO SUB TYPE INFORMATION (B8444S; 2005-2011)

DIAGNOSTIC TROUBLE CODE (DTC) INFORMATION ECM-U010700

Condition

Engine control module (ECM) checks the difference between requested throttle position and actual throttle position.

The diagnostic trouble code (DTC) is stored if the control module detects that:

- The difference between requested position and actual position has been sufficiently great to give effect on emissions.

The control module's test for the diagnostic trouble code (DTC) starts in the event of:

- Engine running.

NOTE: **The control module can only detect the fault once the test has been started and the diagnostic trouble code (DTC) is stored when the conditions are met.**

Substitute Value

- Reduced throttle angle.

Possible Source

- Other diagnostic trouble codes are stored in engine control module (ECM).
- Throttle is sticking or is blocked (e. g. oil film, dust, icing).
- Contact resistance or oxidation in the terminals.
- Damaged throttle unit.

Fault symptom[s]

- Driving/Poor performance/lacks power/At take off
- Driving/Poor performance/lacks power
- Driving/Hesitates/surges/Unsure when/at all times
- Driving/Hesitates/surges/During acceleration
- Driving/Hesitates/surges/During deceleration
- Driving/Hesitates/surges/At steady speed
- Idling/Uneven idle

FAULT-TRACING

CHECKING COMPONENT AND CONNECTIONS

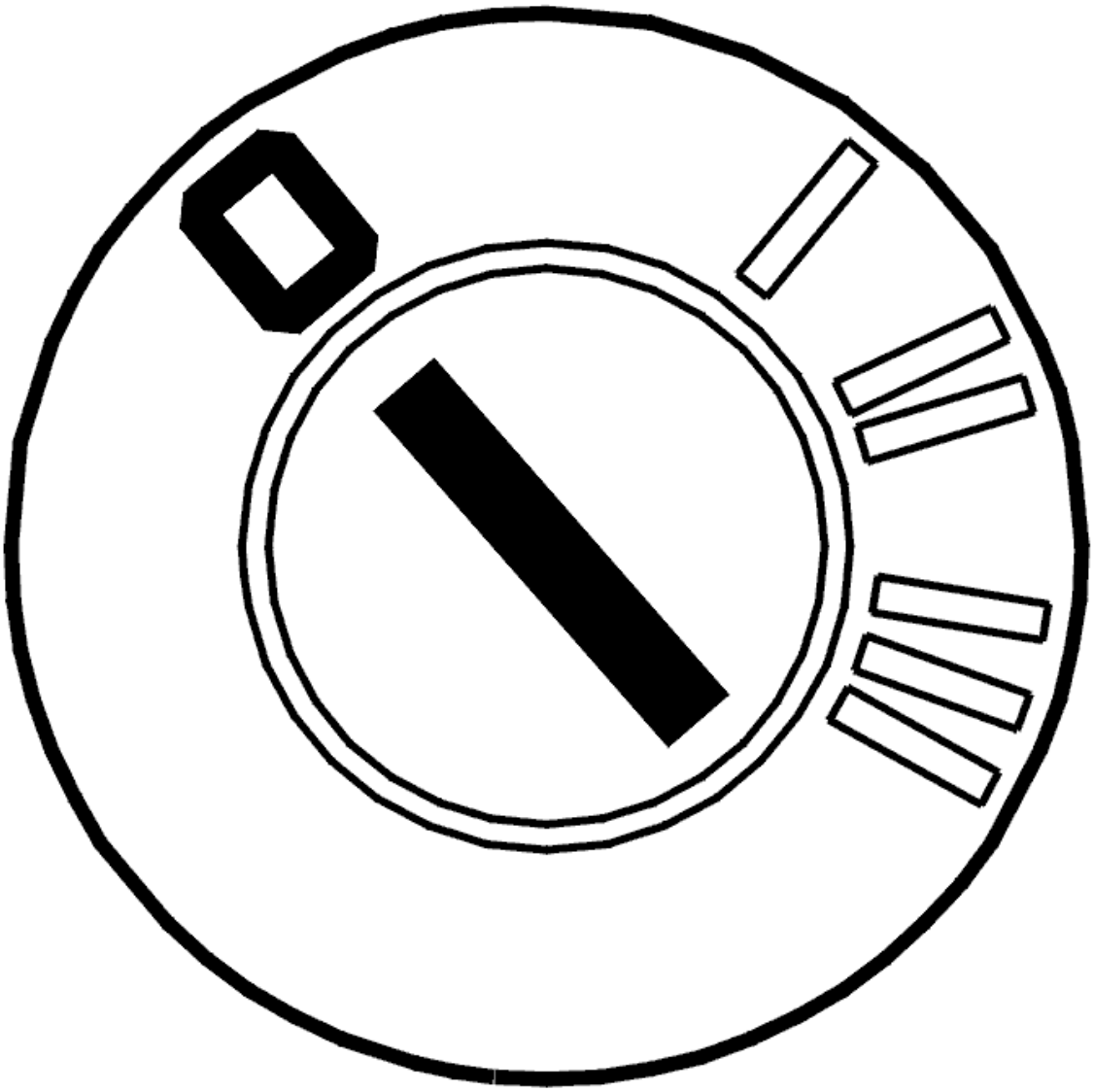

Fig. 126: Identifying Ignition OFF
Courtesy of VOLVO CARS CORPORATION

- Ignition on
- Activate readout of electronic throttle unit's position.
- Check that read-off throttle position shows reasonable values at different deployments.
- Ignition off

Check engine control module ECM) and the electronic throttle unit's connector for contact resistance and oxidation.

Check if the electronic throttle unit is blocked by an object and press on the throttle disc to, see if it binds.

Clean the electronic throttle unit if needed.

Other information

- see **CONNECTING THE BREAKOUT BOX**
- see **SIGNAL SPECIFICATION, ENGINE CONTROL MODULE (ECM)**
- see **THROTTLE BODY (ELECTRONIC THROTTLE MODULE (ETM), REPLACING**
- see **THROTTLE BODY (TB), CLEANING**
- see **CHECKING WIRING AND TERMINALS**

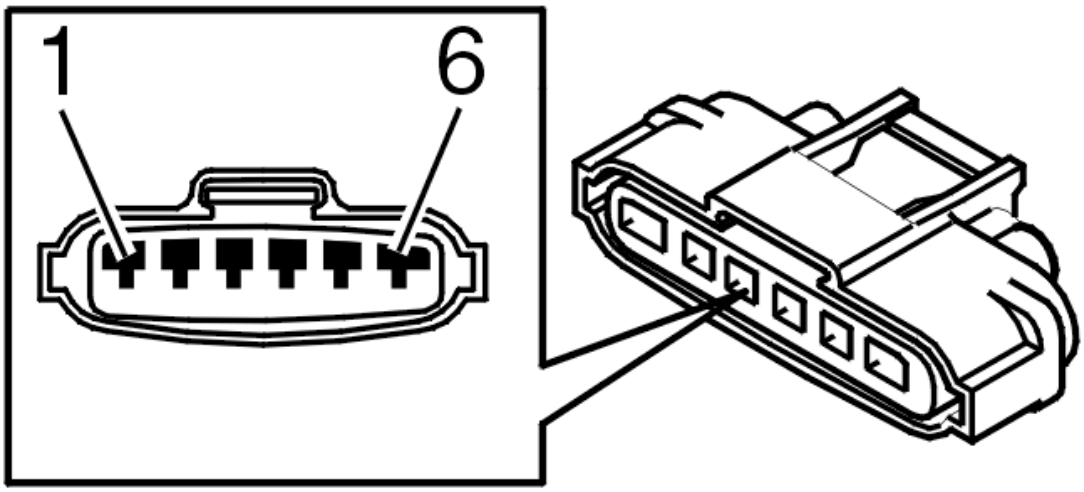

Fig. 127: Identifying 6-Bit Connector
Courtesy of VOLVO CARS CORPORATION

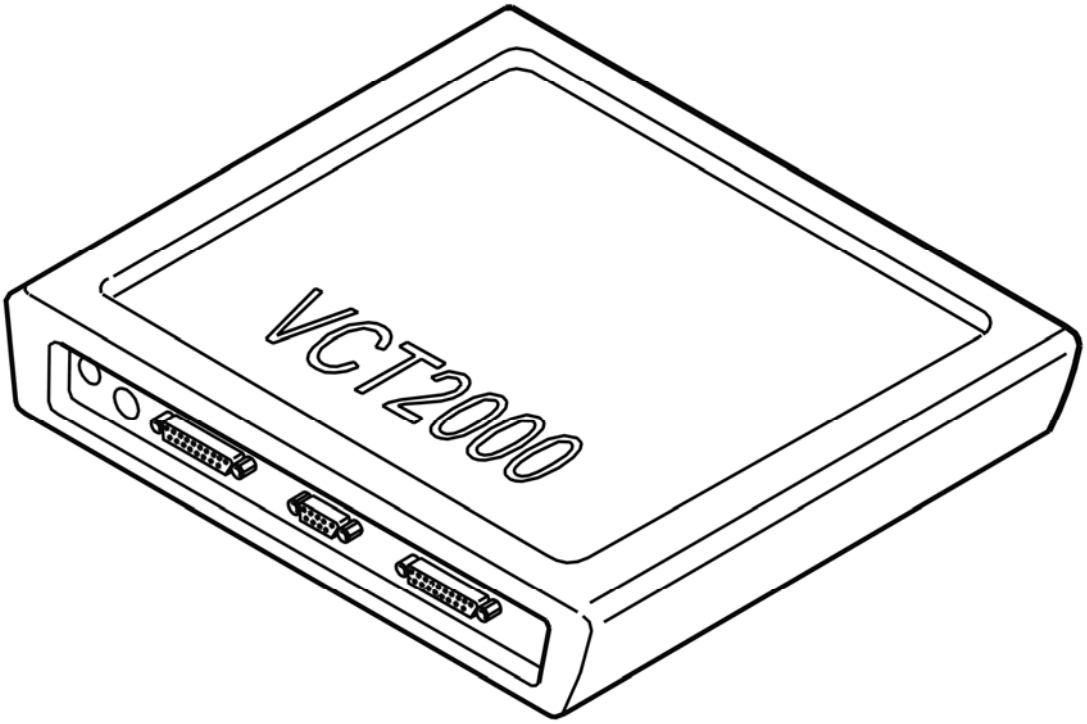

Fig. 128: Identifying VCT2000 Diagnostic Tool Symbol In VIDA
Courtesy of VOLVO CARS CORPORATION

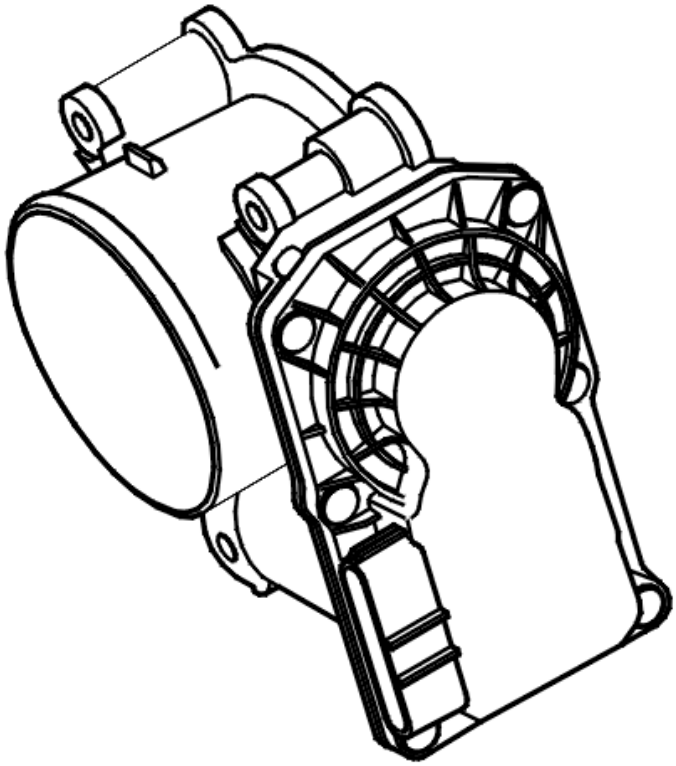

Fig. 129: Identifying Electronic Throttle Unit
Courtesy of VOLVO CARS CORPORATION

- **Continue**

  Refer to **VERIFICATION**

VERIFICATION

VERIFICATION

HINT: After carrying out the repair, check that the fault has been remedied.

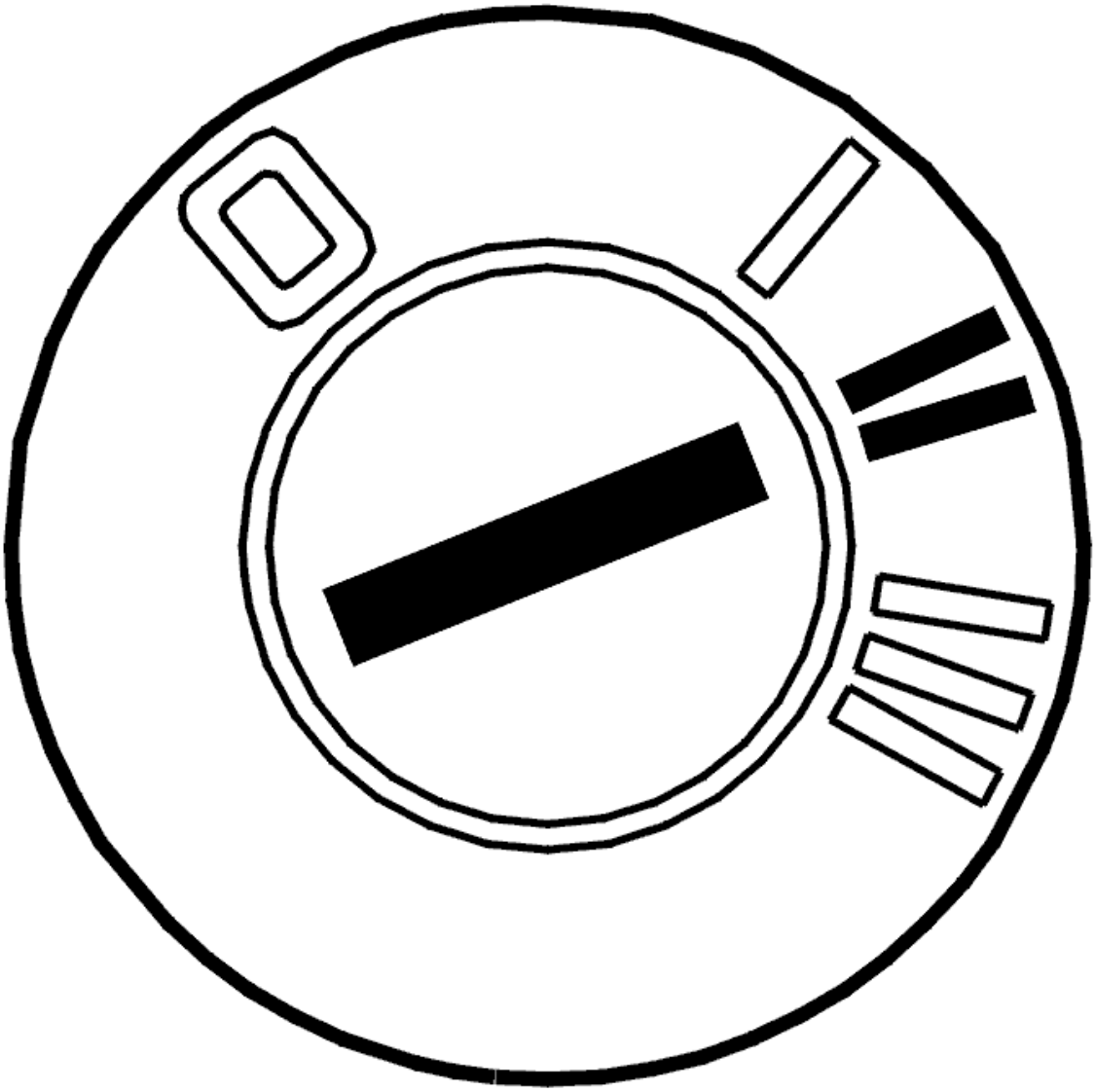

Fig. 130: Identifying Ignition ON
Courtesy of VOLVO CARS CORPORATION

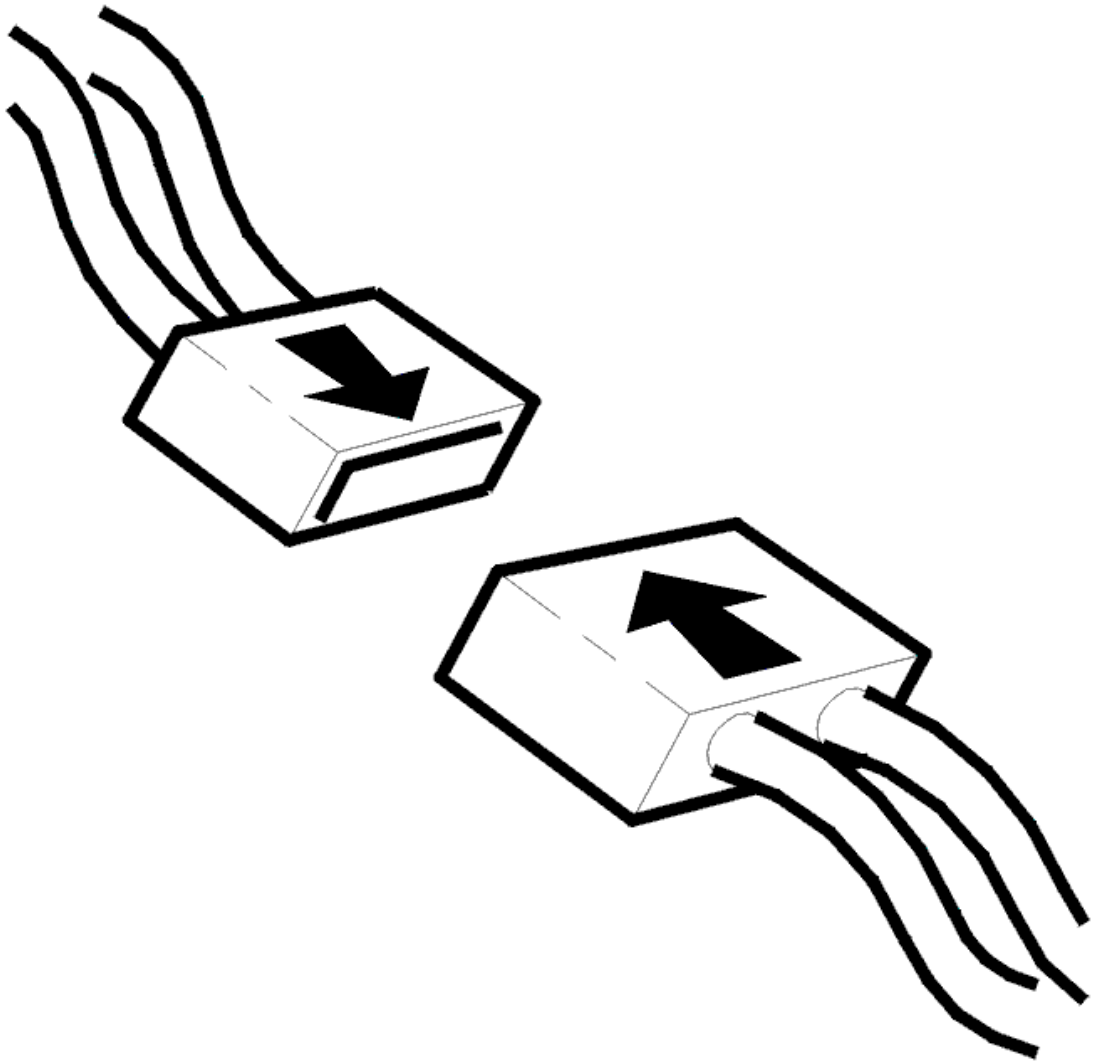

Fig. 131: Identifying Connector(s) Reinstallation
Courtesy of VOLVO CARS CORPORATION

- Ignition off
- Reinstall the connectors, components etc.
- Ignition on

  Activate readout of electronic throttle unit's position.

  Check that read-off throttle position shows reasonable values at different deployments.

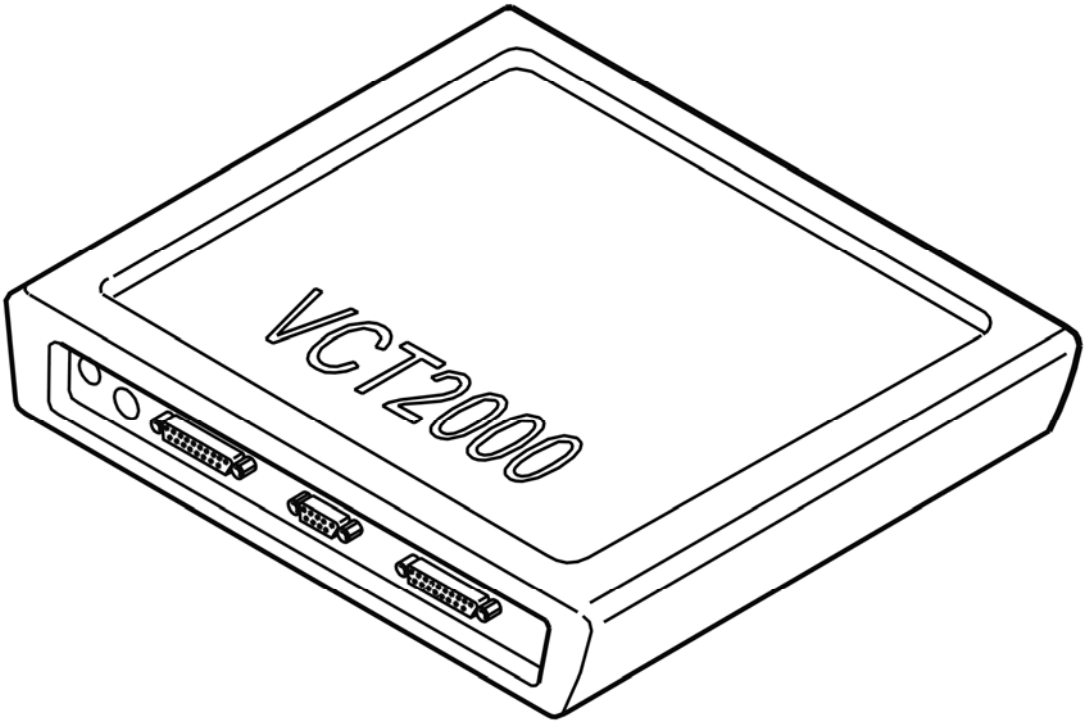

Fig. 132: Identifying VCT2000 Diagnostic Tool Symbol In VIDA
Courtesy of VOLVO CARS CORPORATION

Are these values within their permitted ranges?

- **YES**

  VERIFIED: Troubleshooting has been completed.

- **NO**

  Refer to **INFORMATION**

INFORMATION

FAULT-TRACING INFORMATION

The fault should have been detected and remedied. As this is not the case fault-tracing has failed.

Exit fault-tracing for this diagnostic trouble code (DTC) or make another attempt.

ECM-U012086: LOST COMMUNICATION WITH STARTER/ GENERATOR CONTROL MODULE. BUS SIGNAL / MESSAGE FAILURES. SIGNAL INVALID

(B6324S; 2007-2010)

DIAGNOSTIC TROUBLE CODE (DTC) INFORMATION ECM-U012086

Condition

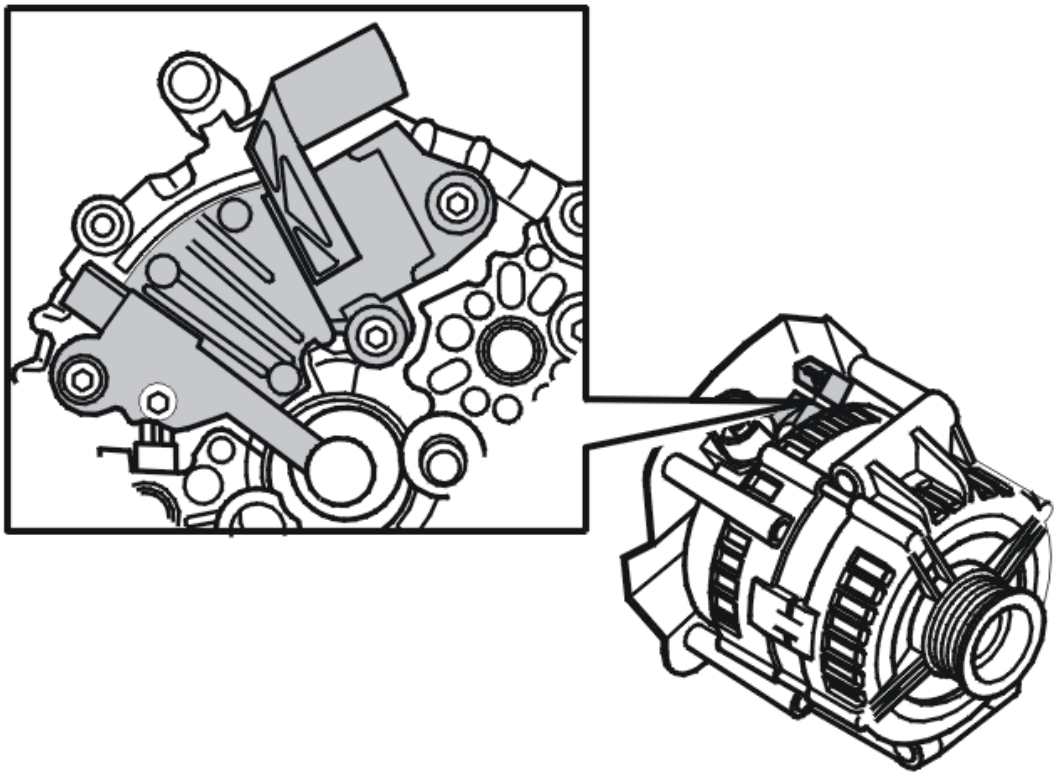

Fig. 133: Identifying Alternator Control Module (ACM)
Courtesy of VOLVO CARS CORPORATION

The engine control module (ECM) regulates the alternator charge voltage (via LIN communication) on request of the central electronic module (CEM) (via CAN communication). The diagnostic trouble code is generated if the engine control module (ECM) detects disrupted communication with the alternator control module (ACM).

The diagnostic trouble code can be diagnosed when the engine is running.

Substitute Value

- The alternator control module (ACM) (charge regulator) charges with a fixed voltage of 13.8 V.

Possible Source

- Internal fault in another control module in the same part of the LIN network.
- Damaged alternator control module (ACM) (charge regulator).

Fault symptom[s]

- Battery discharged.

FAULT-TRACING INFORMATION

see **FAULT-TRACING INFORMATION**

ECM-U012086: LOST COMMUNICATION WITH STARTER/ GENERATOR CONTROL MODULE. BUS SIGNAL / MESSAGE FAILURES. SIGNAL INVALID (B6324S5; 2011-2012)

DIAGNOSTIC TROUBLE CODE (DTC) INFORMATION ECM-U012086

see **DIAGNOSTIC TROUBLE CODE (DTC) INFORMATION ECM-U012086**

FAULT-TRACING INFORMATION

see **FAULT-TRACING INFORMATION**

ECM-U012086: LOST COMMUNICATION WITH STARTER/ GENERATOR CONTROL MODULE. BUS SIGNAL / MESSAGE FAILURES. SIGNAL INVALID (B8444S; 2005-2011)

DIAGNOSTIC TROUBLE CODE (DTC) INFORMATION ECM-U012086

Condition

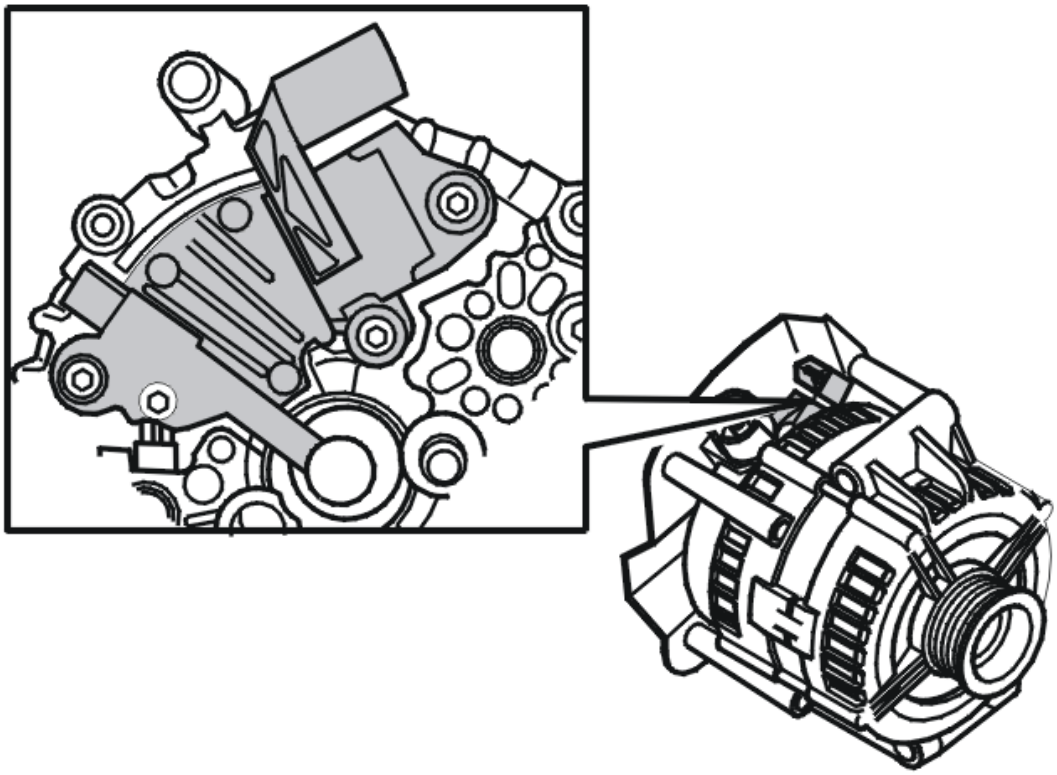

Fig. 134: Identifying Alternator Control Module (ACM)
Courtesy of VOLVO CARS CORPORATION

The engine control module (ECM) regulates the alternator charge voltage (via LIN communication) on request of the central electronic module (CEM) (via CAN communication). The diagnostic trouble code is generated if the engine control module (ECM) detects disrupted communication with the alternator control module (ACM).

The diagnostic trouble code can be diagnosed when the engine is running.

Substitute Value

- The alternator control module (ACM) (charge regulator) charges with a fixed voltage of 13.8 V.

Possible Source

- Internal fault in another control module in the same part of the LIN network.
- Damaged alternator control module (ACM) (charge regulator).

Fault symptom[s]

- Battery discharged.

FAULT-TRACING INFORMATION

see **FAULT-TRACING INFORMATION**

ECM-U012087: LOST COMMUNICATION WITH STARTER/ GENERATOR CONTROL MODULE. BUS SIGNAL / MESSAGE FAILURES. MISSING MESSAGE (B6324S; 2007-2010)

DIAGNOSTIC TROUBLE CODE (DTC) INFORMATION ECM-U012087

Condition

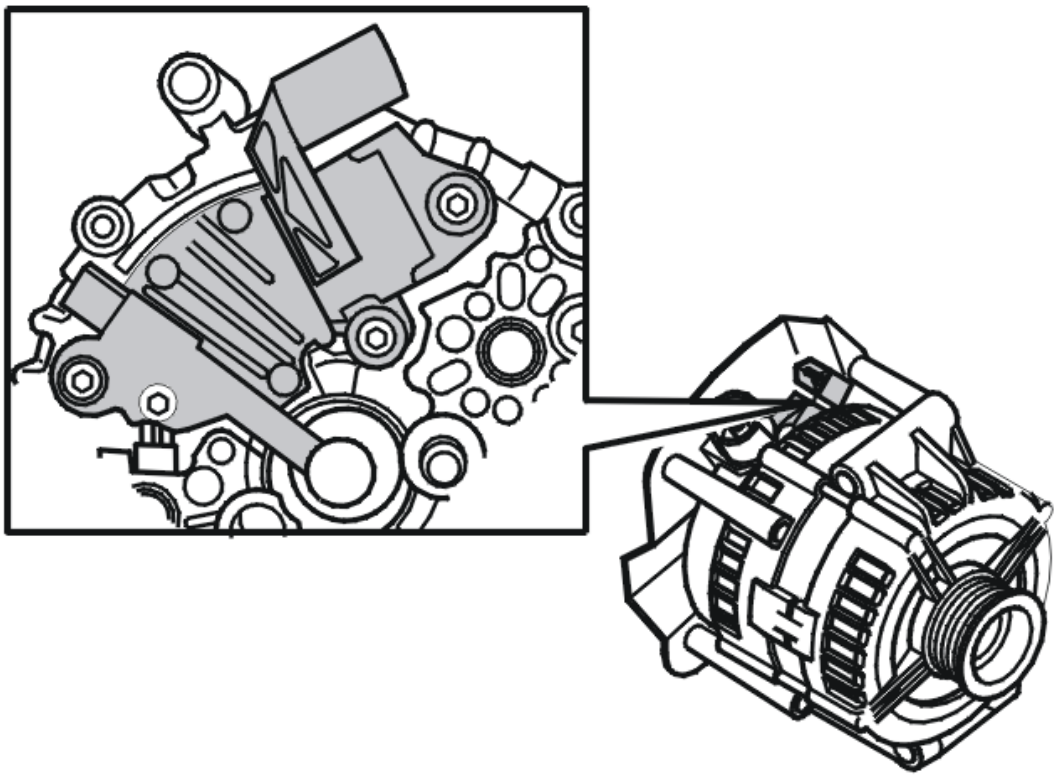

Fig. 135: Identifying Alternator Control Module (ACM)
Courtesy of VOLVO CARS CORPORATION

The engine control module (ECM) regulates the alternator charge voltage (via LIN communication) on request of the central electronic module (CEM) (via CAN communication). The diagnostic trouble code is generated if the engine control module (ECM) detects that there is no communication with the alternator control module (ACM).

The diagnostic trouble code can be diagnosed when the ignition is on.

Substitute Value

- The alternator control module (ACM) (charge regulator) charges with a fixed voltage of 13.8 V.

Possible Source

- Contact resistance or oxidation on connections
- Short-circuit between the LIN wiring
- Open-circuit in the LIN wiring
- Internal fault in another control module in the same part of the LIN network.
- Damaged alternator control module (ACM) (charge regulator).
- The alternator with charge regulator is not designed for LIN communication.

Fault symptom[s]

- Battery discharged.
- Low starter motor rpm.
- The engine judders under acceleration

FAULT-TRACING

CHECKING COMPONENTS AND WIRING

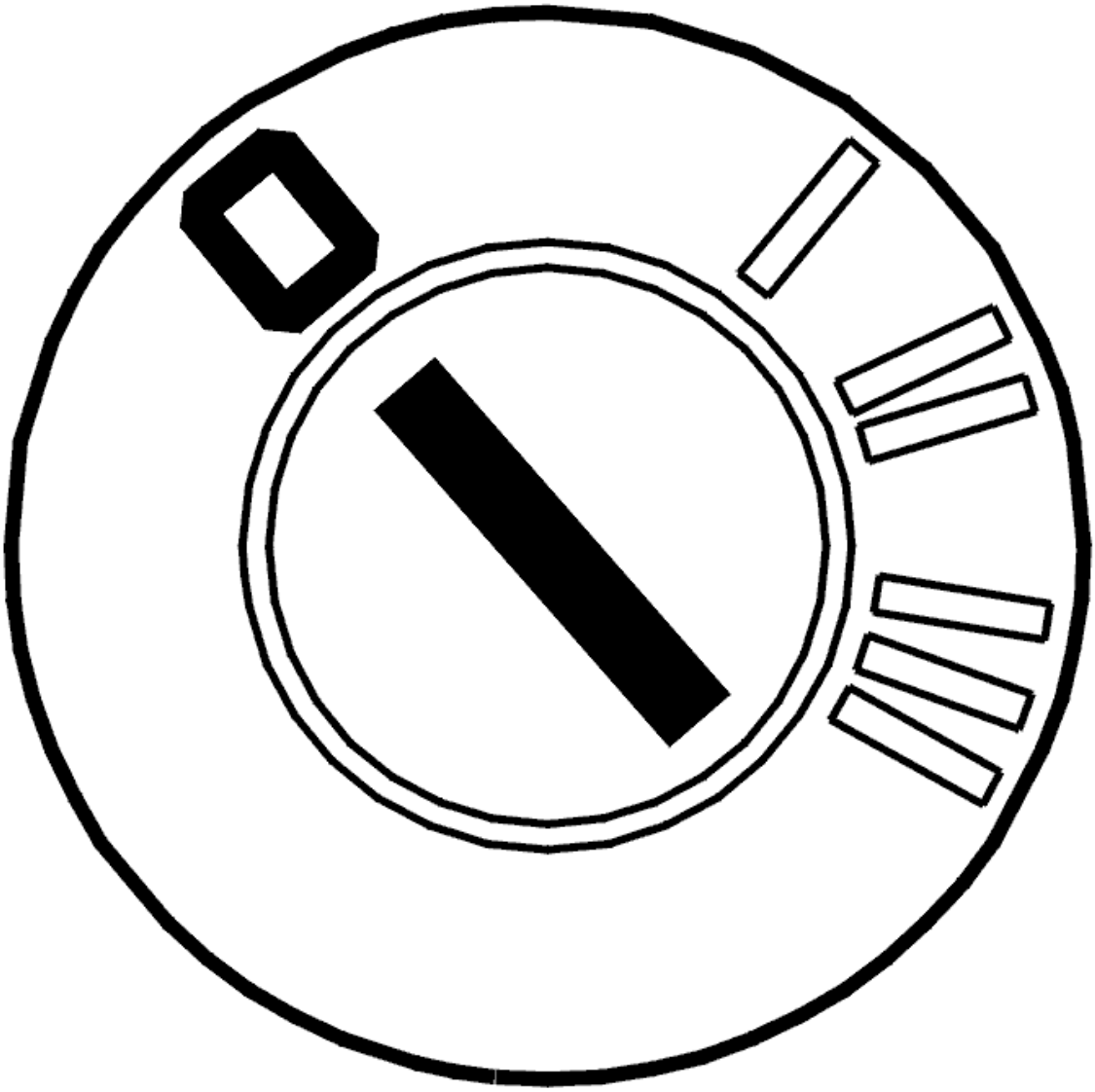

Fig. 136: Identifying Ignition OFF
Courtesy of VOLVO CARS CORPORATION

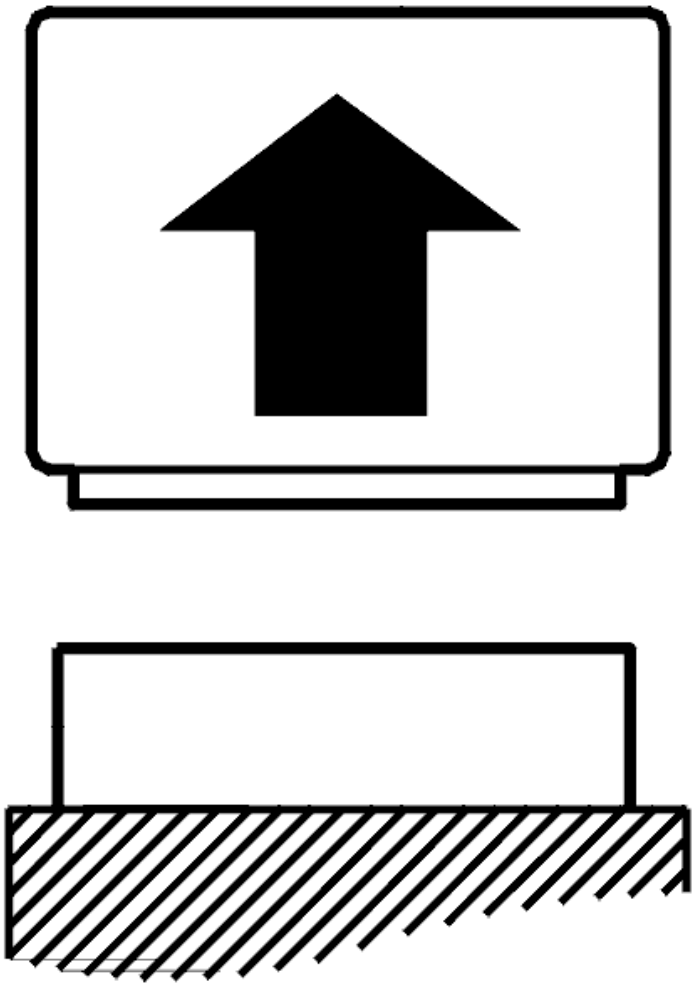

Fig. 137: Identifying Control Module Disconnected
Courtesy of VOLVO CARS CORPORATION

- Ignition off

  The diagnostic trouble code (DTC) is stored if there is no communication between the engine control module (ECM) and the alternator control module (ACM). This may be due to a fault in the signal cable between the control modules or a damaged communication device in one or all of the control modules.

  HINT: This diagnostic trouble code (DTC) can be stored if a generator (GEN) with a charge regulator not intended for LIN communication is installed.

  Check the connector on the alternator control module (ACM). Check for contact resistance and oxidation.

  Check the signal cable for open circuit, short circuit to ground and short circuit to supply voltage.

Take readings between engine control module (ECM) terminal #A25 (A#25) and the alternator control module (ACM).

Remedy as necessary.

Other information

- see **CONNECTING THE BREAKOUT BOX**
- see **SIGNAL SPECIFICATION**
- see **CHECKING WIRING AND TERMINALS**

- **Continue**

Refer to **VERIFICATION**

VERIFICATION

VERIFICATION

HINT: After carrying out the repair, check that the fault has been remedied.

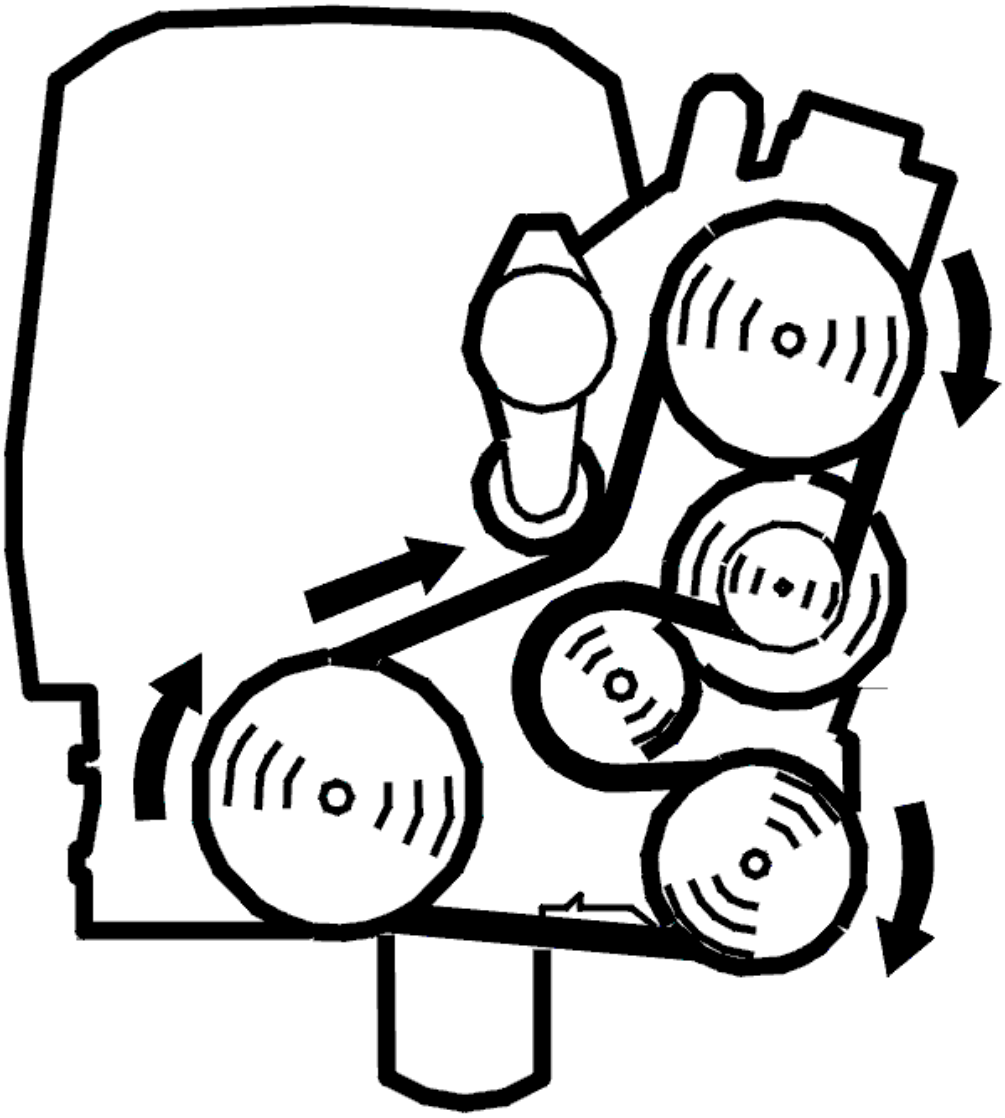

Fig. 138: Identifying Belt Routing
Courtesy of VOLVO CARS CORPORATION

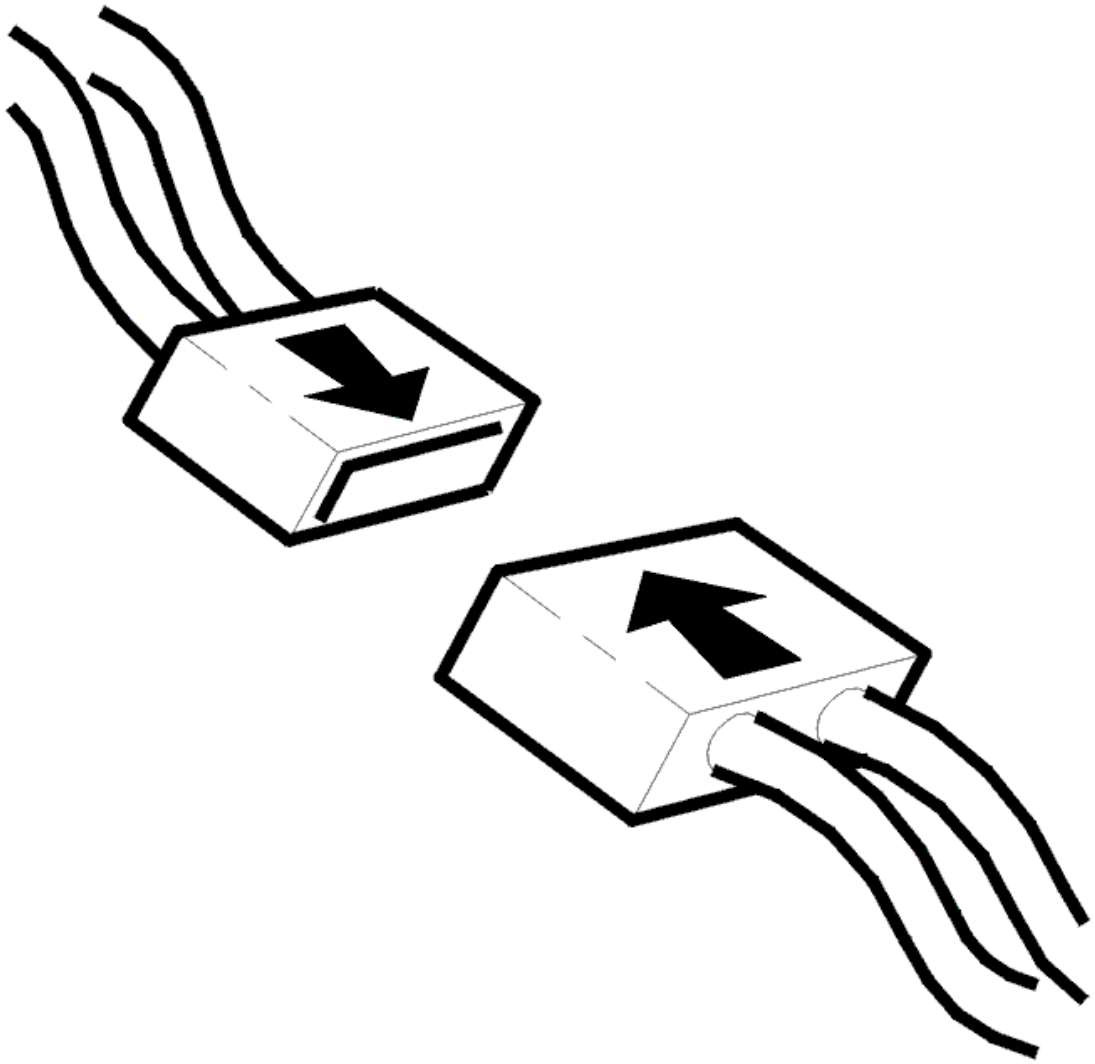

Fig. 139: Identifying Connector(s) Reinstallation
Courtesy of VOLVO CARS CORPORATION

- Ignition off
- Reconnect the connectors, components, etc.
- Start the engine.
- Read the diagnostic status and fault status for the diagnostic trouble code by selecting the diagnostic trouble code in the list.

  Increase the engine speed a few times until the scan is "Implemented".

  Check the fault status for the diagnostic trouble code when the scan is "Implemented". When the function is correct the fault status should be "No fault found" when the scan is implemented.

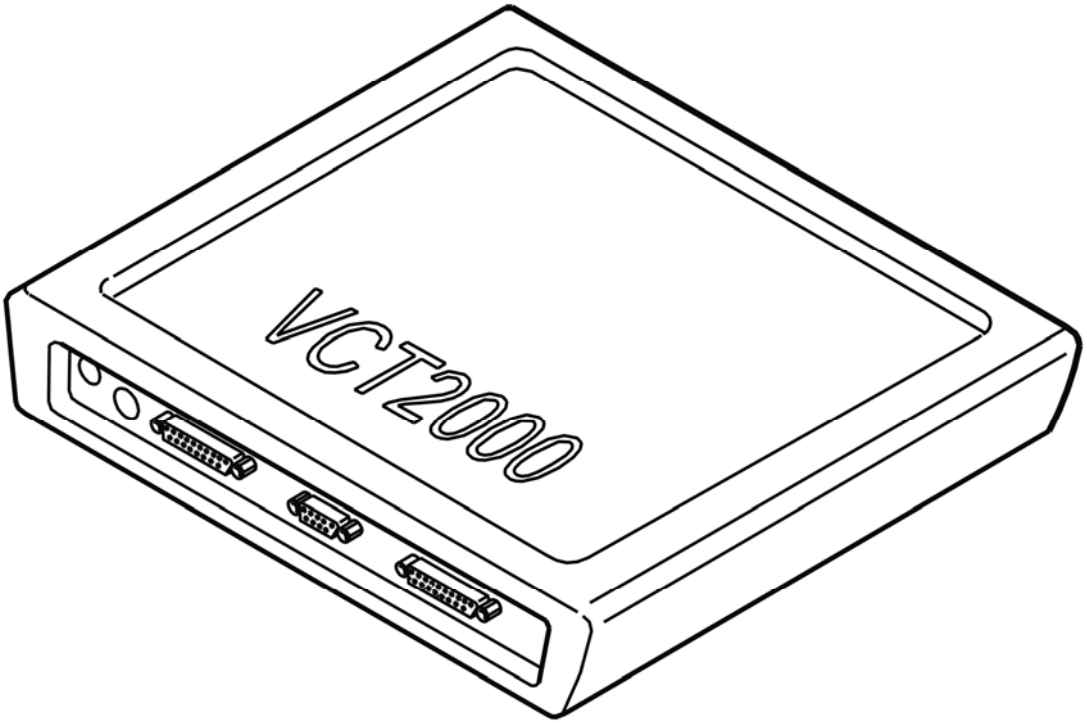

Fig. 140: Identifying VCT2000 Diagnostic Tool Symbol In VIDA
Courtesy of VOLVO CARS CORPORATION

Is the function OK?

- **YES**

  VERIFIED: Troubleshooting has been completed.

- **NO**

  Refer to **INFORMATION**

INFORMATION

FAULT-TRACING INFORMATION

The fault should have been detected and remedied. As this is not the case fault-tracing has failed.

Exit fault-tracing for this diagnostic trouble code (DTC) or make another attempt.

ECM-U012087: LOST COMMUNICATION WITH STARTER/ GENERATOR CONTROL MODULE. BUS SIGNAL / MESSAGE FAILURES. MISSING

MESSAGE (B6324S5; 2011-2012)

DIAGNOSTIC TROUBLE CODE (DTC) INFORMATION ECM-U012087

see **DIAGNOSTIC TROUBLE CODE (DTC) INFORMATION ECM-U012087**

FAULT-TRACING

see **FAULT-TRACING**

ECM-U012087: LOST COMMUNICATION WITH STARTER/ GENERATOR CONTROL MODULE. BUS SIGNAL / MESSAGE FAILURES. MISSING MESSAGE (B8444S; 2005-2011)

DIAGNOSTIC TROUBLE CODE (DTC) INFORMATION ECM-U012087

Condition

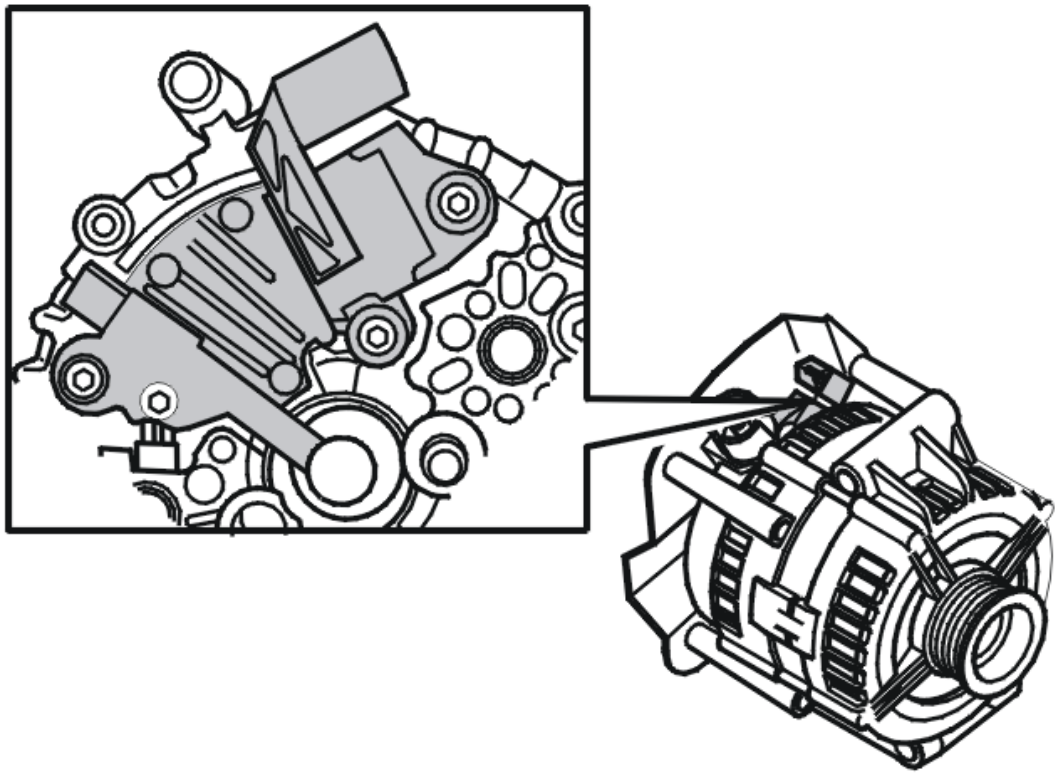

Fig. 141: Identifying Alternator Control Module (ACM)
Courtesy of VOLVO CARS CORPORATION

The engine control module (ECM) regulates the alternator charge voltage (via LIN communication) on request of the central electronic module (CEM) (via CAN communication). The diagnostic trouble code is generated if

the engine control module (ECM) detects that there is no communication with the alternator control module (ACM).

The diagnostic trouble code can be diagnosed when the ignition is on.

Substitute Value

- The alternator control module (ACM) (charge regulator) charges with a fixed voltage of 13.8 V.

Possible Source

- Contact resistance or oxidation on connections
- Short-circuit between the LIN wiring
- Open-circuit in the LIN wiring
- Internal fault in another control module in the same part of the LIN network.
- Damaged alternator control module (ACM) (charge regulator).
- The alternator with charge regulator is not designed for LIN communication.

Fault symptom[s]

- Battery discharged.
- Low starter motor rpm.
- The engine judders under acceleration

FAULT TRACING ECM-U012087

CHECKING COMPONENTS AND WIRING

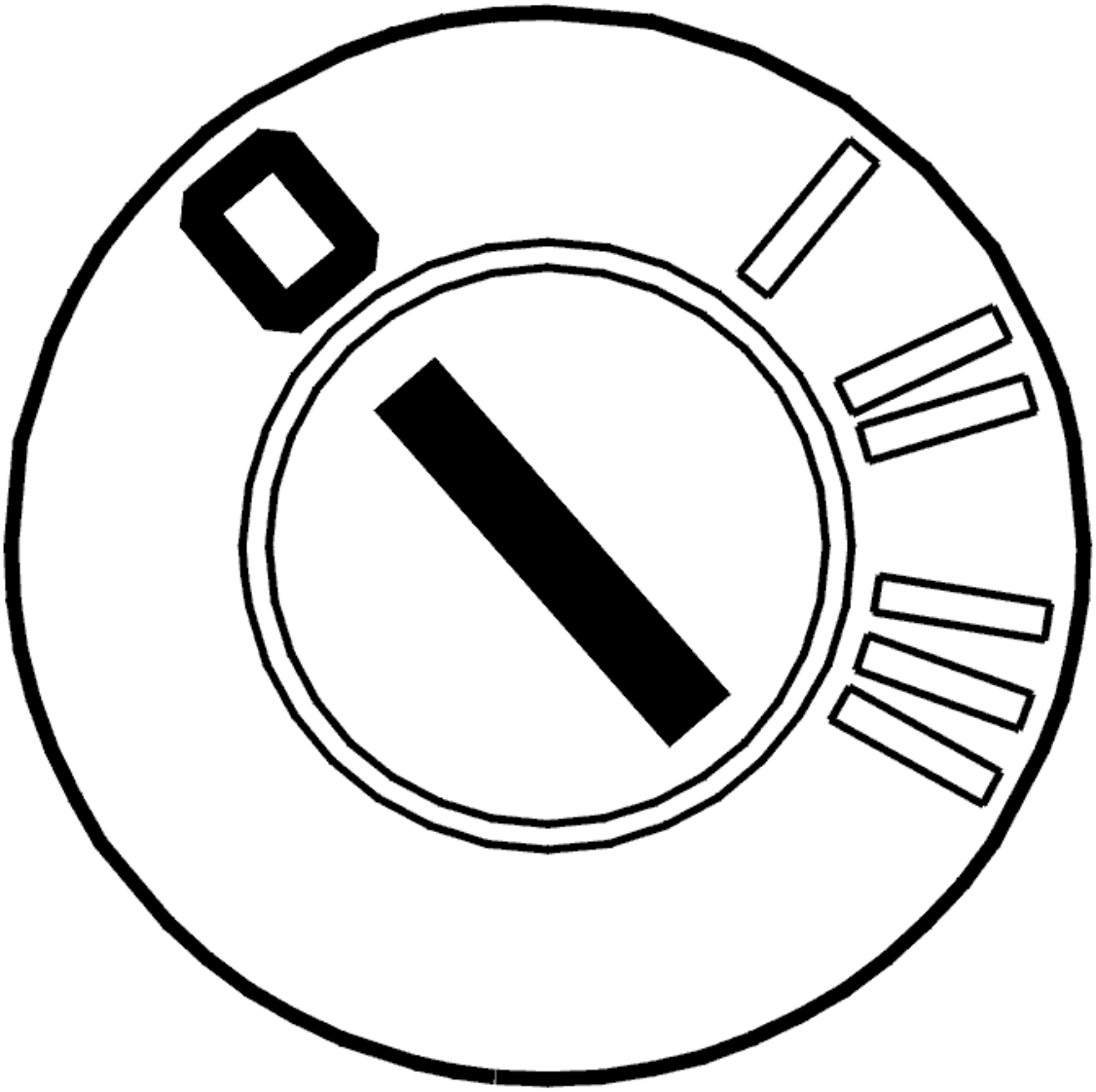

Fig. 142: Identifying Ignition OFF
Courtesy of VOLVO CARS CORPORATION

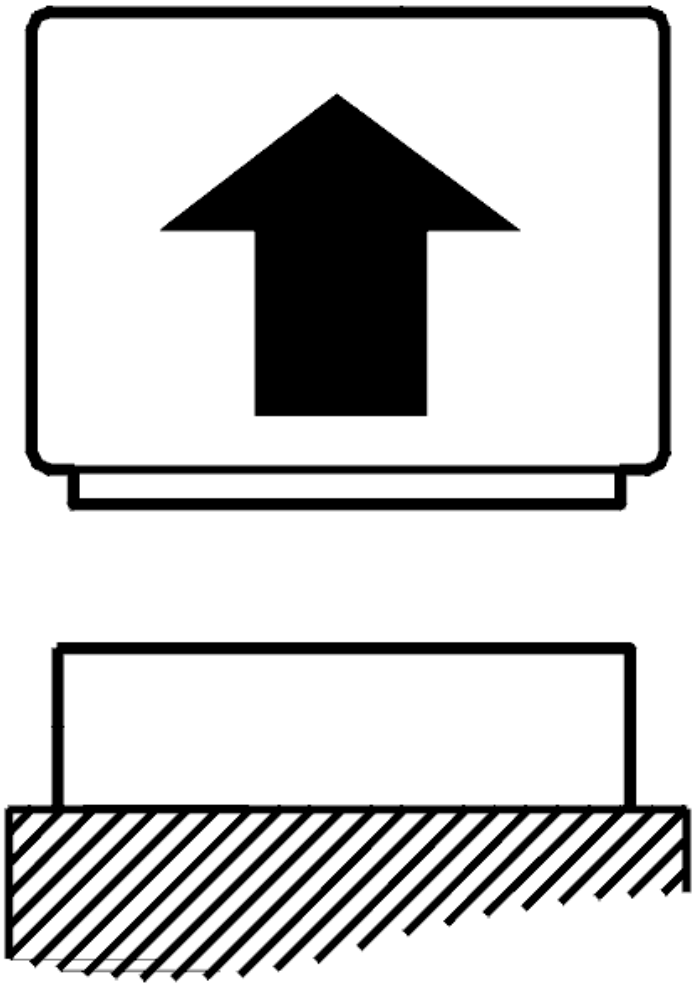

Fig. 143: Identifying Control Module Disconnected
Courtesy of VOLVO CARS CORPORATION

- Ignition off

  The diagnostic trouble code (DTC) is stored if there is no communication between the engine control module (ECM) and the alternator control module (ACM). This may be due to a fault in the signal cable between the control modules or a damaged communication device in one or all of the control modules.

  HINT: This diagnostic trouble code (DTC) can be stored if a generator (GEN) with a charge regulator not intended for LIN communication is installed.

  Check the connector on the alternator control module (ACM). Check for contact resistance and oxidation.

  Check the signal cable for open circuit, short circuit to ground and short circuit to supply voltage.

Take readings between engine control module (ECM) terminal #A25 (A#25) and the alternator control module (ACM).

Remedy as necessary.

Other information

- see **CONNECTING THE BREAKOUT BOX**
- see **SIGNAL SPECIFICATION, ENGINE CONTROL MODULE (ECM)**
- see **CONTENTS**

- **Continue**

Refer to **VERIFICATION**

VERIFICATION

VERIFICATION

HINT: After carrying out the repair, check that the fault has been remedied.

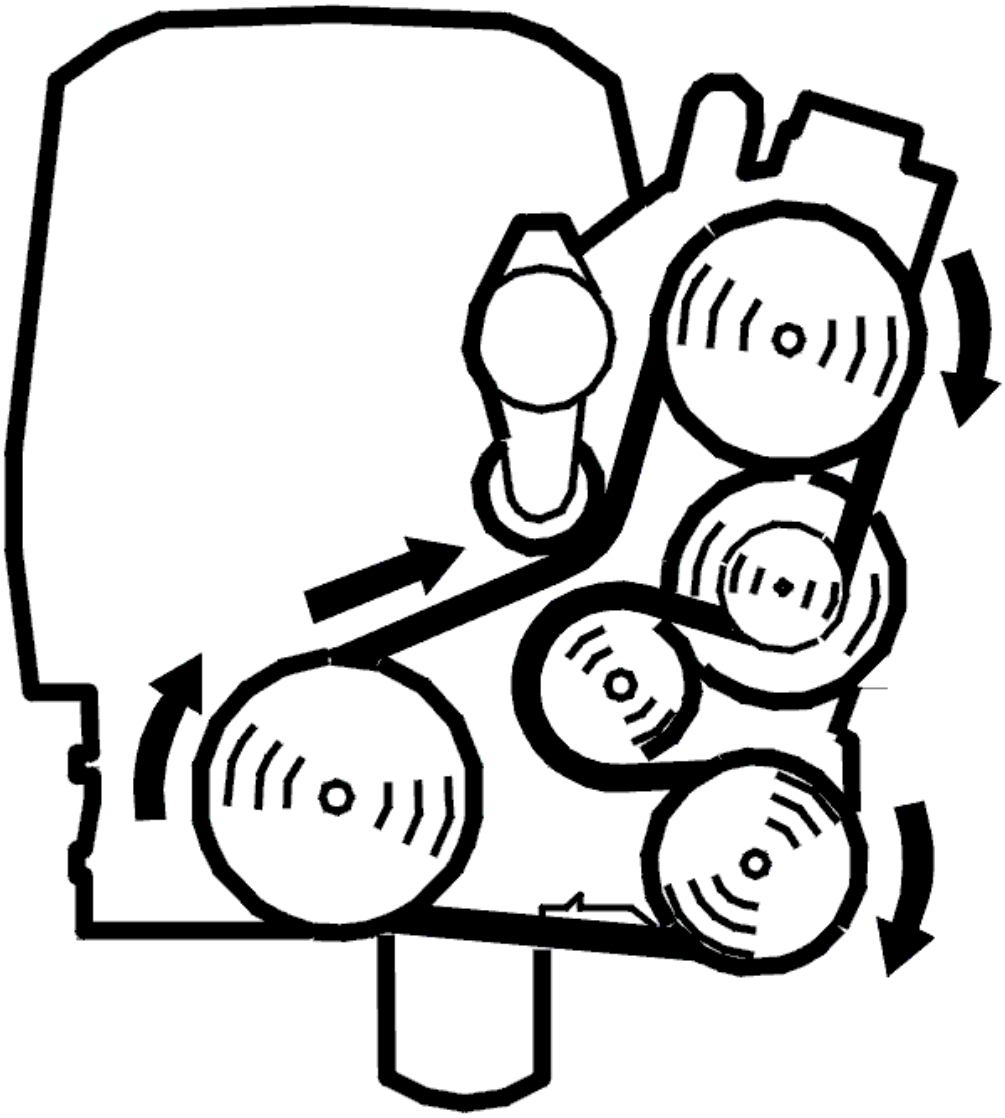

Fig. 144: Identifying Belt Routing
Courtesy of VOLVO CARS CORPORATION

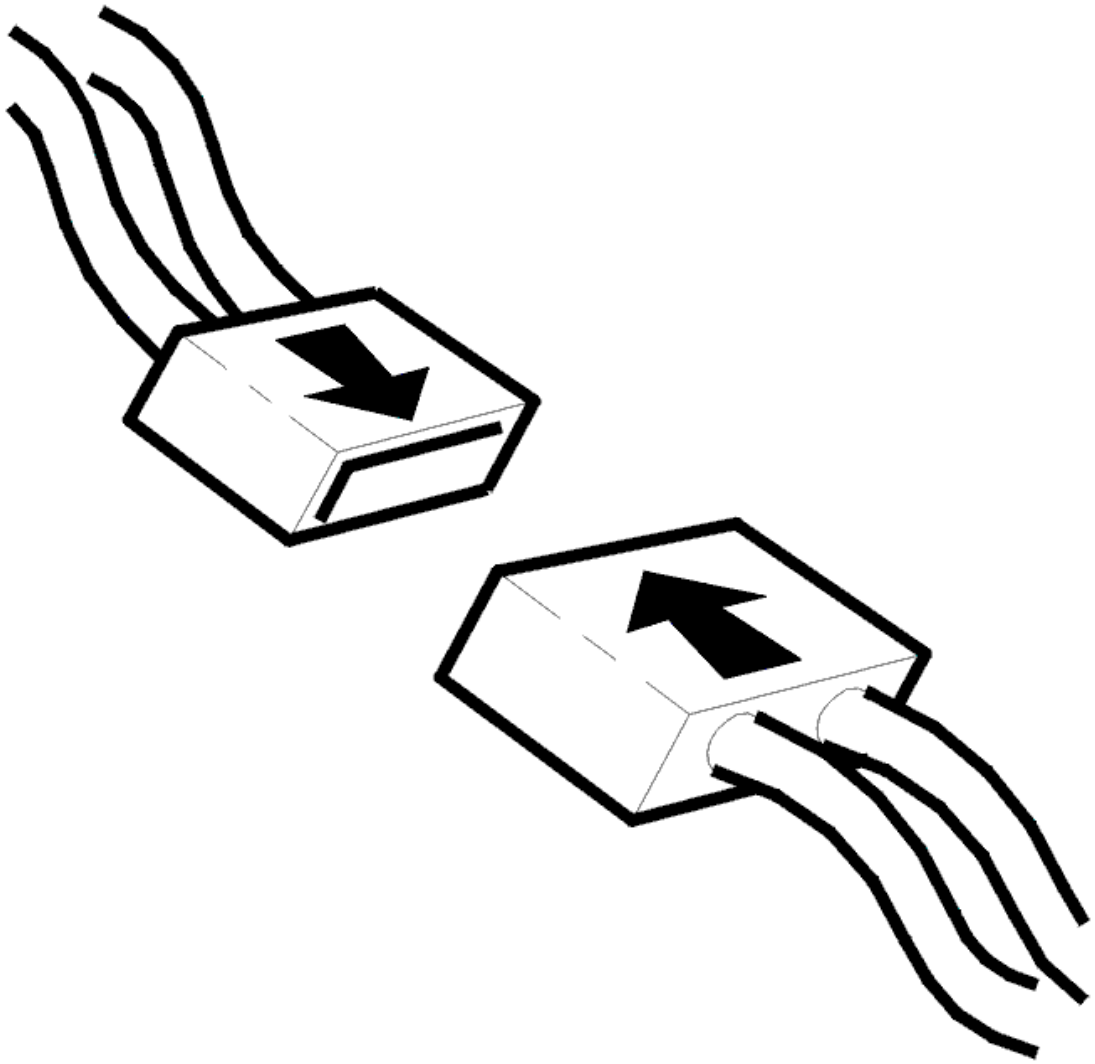

Fig. 145: Identifying Connector(s) Reinstallation
Courtesy of VOLVO CARS CORPORATION

- Ignition off
- Reconnect the connectors, components, etc.
- Start the engine.
- Read the diagnostic status and fault status for the diagnostic trouble code by selecting the diagnostic trouble code in the list.

  Increase the engine speed a few times until the scan is "Implemented".

  Check the fault status for the diagnostic trouble code when the scan is "Implemented". When the function is correct the fault status should be "No fault found" when the scan is implemented.

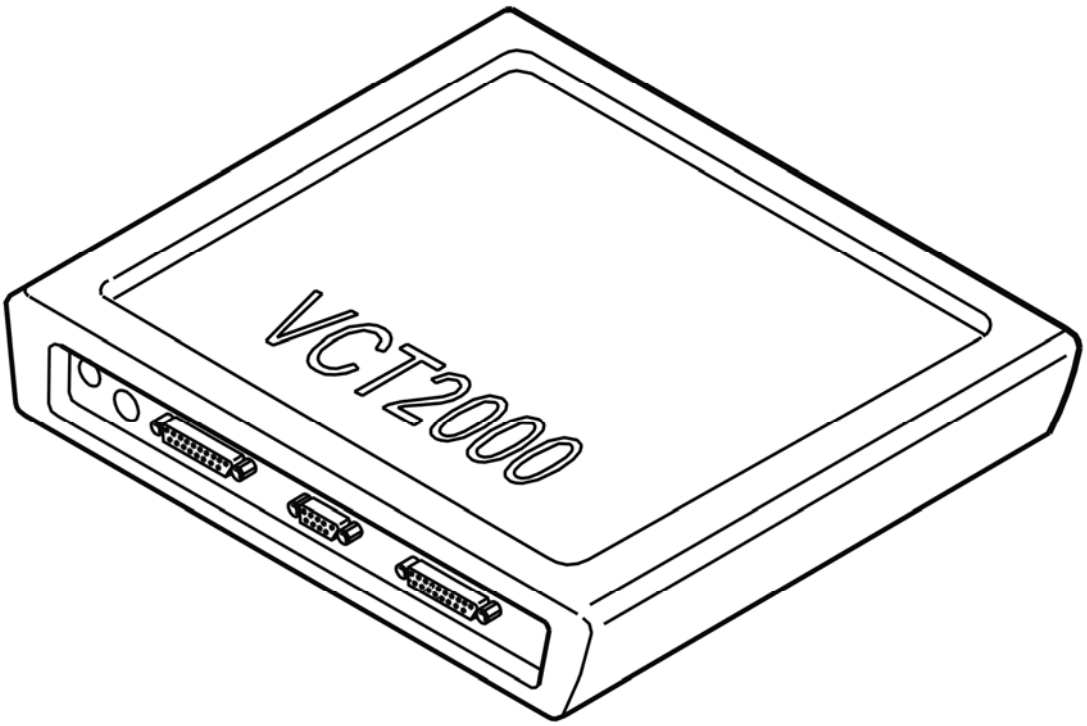

Fig. 146: Identifying VCT2000 Diagnostic Tool Symbol In VIDA
Courtesy of VOLVO CARS CORPORATION

Is the function OK?

- **YES**

  VERIFIED: Troubleshooting has been completed.

- **NO**

  Refer to **INFORMATION**

INFORMATION

FAULT-TRACING INFORMATION

The fault should have been detected and remedied. As this is not the case fault-tracing has failed.

Exit fault-tracing for this diagnostic trouble code (DTC) or make another attempt.

ECM-U012100: LOST COMMUNICATION WITH BRAKE CONTROL MODULE. GENERAL FAILURE INFORMATION. NO SUB TYPE INFORMATION

(B6324S; 2007-2010)

DIAGNOSTIC TROUBLE CODE (DTC) INFORMATION ECM-U012100

Condition

The control modules transmit and receive information via a standardized serial communication method - CAN (Control Area Network). If engine control module (ECM) registers a communication malfunction between brake control module (BCM) and engine control module (ECM), the diagnostic trouble code is stored in engine control module (ECM).

Substitute Value

- Nothing.

Possible Source

- Contact resistance or oxidation in the connections.
- Open circuit on one of the CAN-cables.
- Short-circuit between the control area network (CAN) wiring.
- Internal malfunction in engine control module (ECM).
- Internal malfunction in another control module in the same part of the CAN-network.

Fault symptom[s]

- Anti-spin is not operational.

FAULT-TRACING

see **FAULT-TRACING**

ECM-U012100: LOST COMMUNICATION WITH BRAKE CONTROL MODULE. GENERAL FAILURE INFORMATION. NO SUB TYPE INFORMATION (B6324S5; 2011-2012)

DIAGNOSTIC TROUBLE CODE (DTC) INFORMATION ECM-U012100

see **DIAGNOSTIC TROUBLE CODE (DTC) INFORMATION ECM-U012100**

FAULT-TRACING

see **FAULT-TRACING**

ECM-U012100: FAILED COMMUNICATION WITH BRAKE CONTROL MODULE. GENERAL MALFUNCTION INFORMATION. NO INFORMATION ON

MALFUNCTION TYPE (B8444S; 2005-2011)

DIAGNOSTIC TROUBLE CODE (DTC) INFORMATION ECM-U012100

Condition

The control modules transmit and receive information via a standardized serial communication method - CAN (Control Area Network). If engine control module (ECM) registers a communication malfunction between brake control module (BCM) and engine control module (ECM), the diagnostic trouble code is stored in engine control module (ECM).

Substitute Value

- Nothing.

Possible Source

- Contact resistance or oxidation in the connections.
- Open circuit on one of the CAN-cables.
- Short-circuit between the control area network (CAN) wiring.
- Internal malfunction in engine control module (ECM).
- Internal malfunction in another control module in the same part of the CAN-network.

Fault symptom[s]

- Anti-spin is not operational.

FAULT-TRACING INFORMATION

see **FAULT-TRACING INFORMATION**

ECM-U012900: LOST COMMUNICATION WITH BRAKE SYSTEM CONTROL MODULE. GENERAL FAILURE INFORMATION. NO SUB TYPE INFORMATION (B6324S; 2007-2010)

DIAGNOSTIC TROUBLE CODE (DTC) INFORMATION ECM-U012900

Condition

Engine control module (ECM) and Brake control module contain a code that is unique code for each vehicle for electronic immobilizer. In addition to this, each key for the vehicle is electronically coded for the intended vehicle only. Internal checks are made at the start to check that the key is the correct one for the vehicle and that the codes in the Engine control module (ECM) and Central electronic module (CEM) correspond.

The diagnostic trouble code (DTC) is stored if the control module detects that:

- If Engine control module (ECM) registers that communication between Engine control module (ECM) and Brake control module (BCM) (via CAN) is missing.

The control module's test for the diagnostic trouble code (DTC) starts in the event of:

- Ignition on.

NOTE: The control module can only detect the fault once the test has been started and the diagnostic trouble code (DTC) is stored when the conditions are met.

Substitute Value

- None.

Possible Source

- Open circuit on one of the CAN-cables.
- Short-circuit between CAN-cables.
- Damaged engine control module (ECM).

Fault symptom[s]

- The engine does not start.
- Message in the display.

FAULT-TRACING

INFORMATION

The diagnostic trouble code indicates that CAN-communication between engine control module (ECM) and Brake control module (BCM) is missing.

Among others, the code may be caused by:

- Engine control module (ECM) or Brake control module (BCM) contains no software for this vehicle.
- Open circuit on CAN-communication between Brake control module (BCM) and Engine control module (ECM).
- Programmed engine control module (ECM) or Brake control module (BCM) has been moved from one vehicle to another.

HINT: Read off the diagnostic trouble codes (DTCs) from the brake control module (BCM).

- **Continue**

  Refer to **VERIFICATION**

VERIFICATION

HINT: After repairing, it is necessary to check that the malfunction has been fixed.

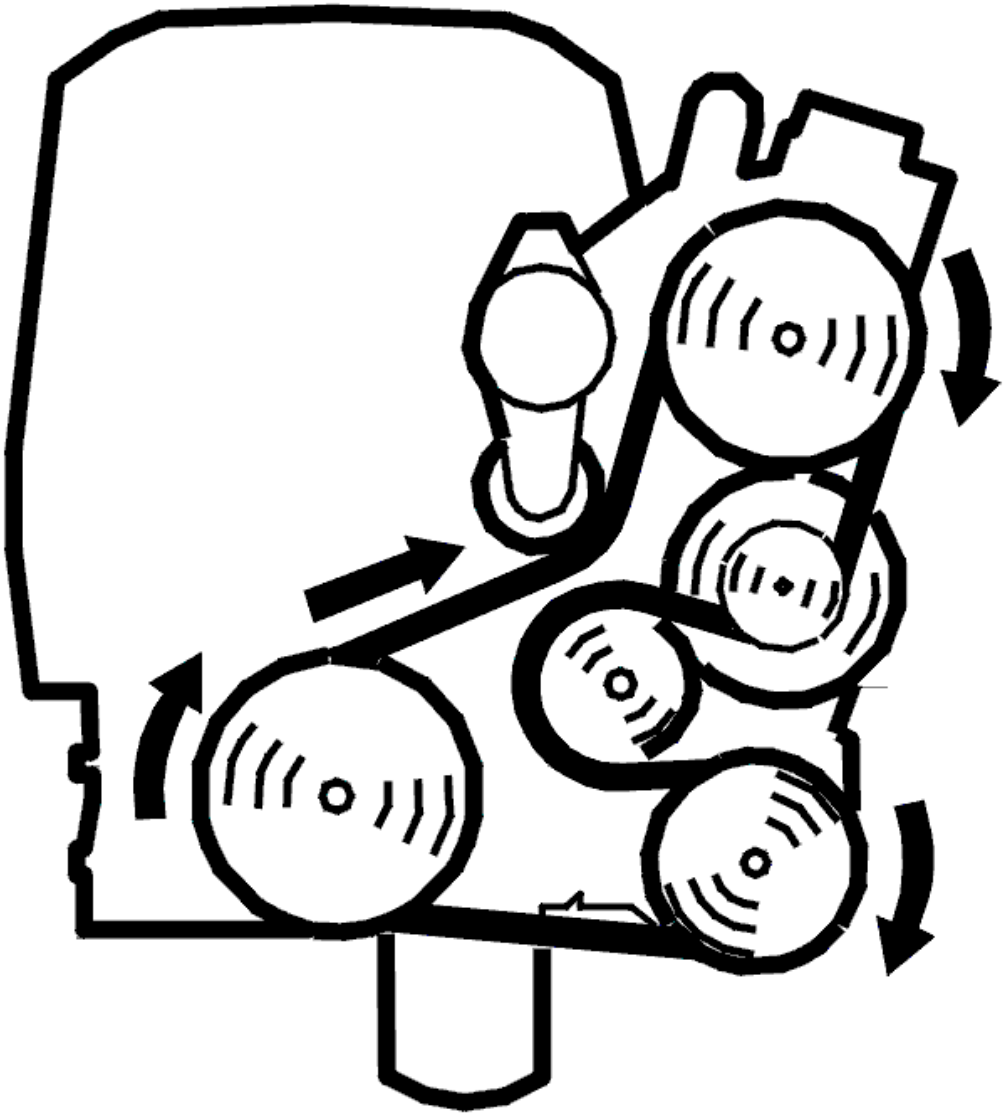

Fig. 147: Identifying Belt Routing
Courtesy of VOLVO CARS CORPORATION

- Ignition off
- Reinstall connector, components, etc.
- Start the engine.

Did engine start?

- **YES**

OKAY: Troubleshooting has been completed.

- **NO**

  Refer to **INFORMATION**

INFORMATION

FAULT-TRACING INFORMATION

The fault should have been detected and remedied. As this is not the case fault-tracing has failed.

Exit fault-tracing for this diagnostic trouble code (DTC) or make another attempt.

ECM-U012900: LOST COMMUNICATION WITH BRAKE SYSTEM CONTROL MODULE. GENERAL FAILURE INFORMATION. NO SUB TYPE INFORMATION (B6324S5; 2011-2012)

DIAGNOSTIC TROUBLE CODE (DTC) INFORMATION ECM-U012900

see **DIAGNOSTIC TROUBLE CODE (DTC) INFORMATION ECM-U012900**

FAULT-TRACING

see **FAULT-TRACING**

ECM-U012900: FAILED COMMUNICATION WITH BRAKE CONTROL MODULE (BCM). GENERAL FAULT INFORMATION. TYPE OF FAULT NOT SPECIFIED. (B8444S; 2005-2011)

DIAGNOSTIC TROUBLE CODE (DTC) INFORMATION ECM-U012900

Condition

Information about the brake pedal position is transmitted on the controller area network (CAN) from the brake control module (BCM) to the engine control module (ECM).

The diagnostic trouble code (DTC) is stored if communication between the brake control module (BCM) and the engine control module (ECM) is missing.

The diagnostic trouble code can be diagnosed when the ignition is on.

Substitute Value

- Cruise control turned off when the fault is active.

Possible Source

- Open-circuit in the control area network (CAN) wiring.
- Short-circuit between the control area network (CAN) wiring.
- Internal fault in brake control module (BCM).
- Internal fault in the engine control module (ECM).
- Internal fault in another control module in the same part of the control area network (CAN).

Fault symptom[s]

- Cruise control does not function at all.
- Message in the display.

FAULT-TRACING INFORMATION

see **FAULT-TRACING INFORMATION**

ECM-U014100: LOST COMMUNICATION WITH CENTRAL ELECTRONIC MODULE "A". GENERAL FAILURE INFORMATION. NO SUB TYPE INFORMATION (B6324S; 2007-2010)

DIAGNOSTIC TROUBLE CODE (DTC) INFORMATION ECM-U014100

Condition

The control modules transmit and receive information via a standardized serial communication method - CAN (Control Area Network). If engine control module (ECM) registers a communication malfunction between central electronic module (CEM) and engine control module (ECM), the diagnostic trouble code is stored in engine control module (ECM).

Substitute Value

- Nothing.

Possible Source

- Open circuit on one of the CAN-cables.
- Short-circuit between the control area network (CAN) wiring.
- Internal malfunction in another control module in the same part of the CAN-network.

Fault symptom[s]

- Nothing.

FAULT-TRACING

see **FAULT-TRACING**

ECM-U014100: LOST COMMUNICATION WITH CENTRAL ELECTRONIC MODULE "A". GENERAL FAILURE INFORMATION. NO SUB TYPE INFORMATION (B6324S5; 2011-2012)

DIAGNOSTIC TROUBLE CODE (DTC) INFORMATION ECM-U014100

see **DIAGNOSTIC TROUBLE CODE (DTC) INFORMATION ECM-U014100**

FAULT-TRACING

see **FAULT-TRACING**

ECM-U014100: FAILED COMMUNICATION WITH CENTRAL ELECTRONIC MODULE "A". GENERAL MALFUNCTION INFORMATION. NO INFORMATION ON MALFUNCTION TYPE (B8444S; 2005-2011)

DIAGNOSTIC TROUBLE CODE (DTC) INFORMATION ECM-U014100

Condition

The control modules transmit and receive information via a standardized serial communication method - CAN (Control Area Network). If engine control module (ECM) registers a communication malfunction between central electronic module (CEM) and engine control module (ECM), the diagnostic trouble code is stored in engine control module (ECM).

Substitute Value

- Nothing.

Possible Source

- Open circuit on one of the CAN-cables.
- Short-circuit between the control area network (CAN) wiring.
- Internal malfunction in another control module in the same part of the CAN-network.

Fault symptom[s]

- Nothing.

FAULT-TRACING INFORMATION

see **FAULT-TRACING INFORMATION**

ECM-U016700: LOST COMMUNICATION WITH VEHICLE IMMOBILIZER CONTROL MODULE. GENERAL FAILURE INFORMATION. NO SUB TYPE INFORMATION (B6324S; 2007-2010)

DIAGNOSTIC TROUBLE CODE (DTC) INFORMATION ECM-U016700

Condition

Engine control module (ECM) as well as central electronic module (CEM) contain a unique code for every vehicle for electronic immobilizer. In addition to this, each key for the vehicle is electronically coded to only fit in the intended vehicle. At start, internal checks are performed that the key is correct for the vehicle and that the immobilizer codes in the engine control module (ECM) and central electronic module (CEM) match.

If engine control module (ECM) registers that communication between engine control module (ECM) and central electronic module (CEM) (via CAN) is missing, the diagnostic trouble code is generated.

The diagnostic trouble code can be diagnosed when the ignition is on.

Substitute Value

- None.

Possible Source

- Open circuit on one of the CAN-cables.
- Short-circuit between CAN-cables.
- Damaged engine control module (ECM).

Fault symptom[s]

- The engine does not start.
- Message in the display.

FAULT-TRACING

INFORMATION

The diagnostic trouble code indicates that CAN-communication between engine control module (ECM) and central electronic module (CEM) is missing.

Among others, the code may be caused by:

- Engine control module (ECM) or central electronic module (CEM) contains no software for this vehicle.
- Open circuit in CAN-communication between central electronic module (CEM) and engine control module (ECM)

- Programmed engine control module (ECM) or central electronic module (CEM) has been moved from one vehicle to another.

HINT: Read off diagnostic trouble codes in central electronic module (CEM).

- **Continue**

  Refer to **VERIFICATION**

VERIFICATION

HINT: After repairing, it is necessary to check that the malfunction has been fixed.

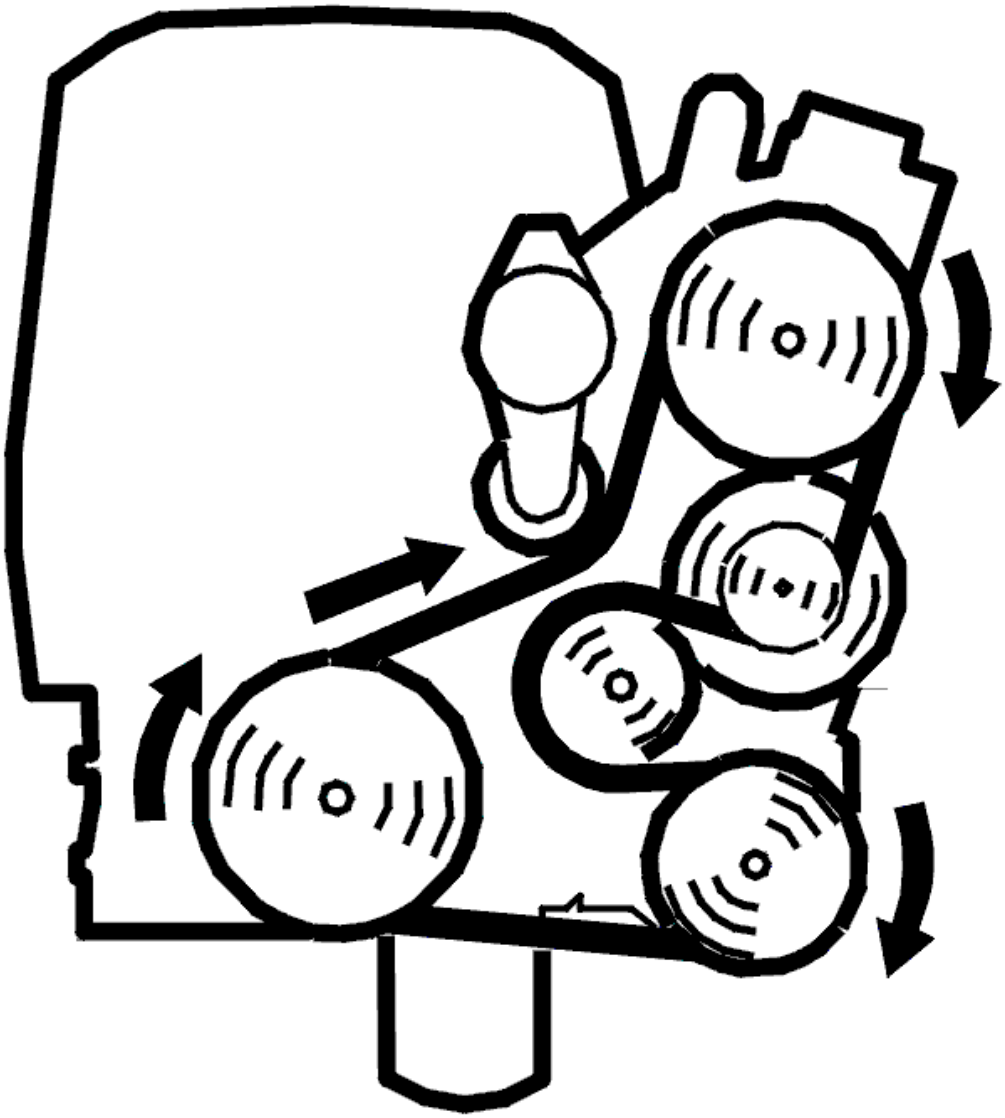

Fig. 148: Identifying Belt Routing
Courtesy of VOLVO CARS CORPORATION

- Ignition off
- Reinstall connector, components, etc.
- Start the engine.

Did engine start?

- **YES**

  OKAY: Troubleshooting has been completed.

- **NO**

  Refer to **INFORMATION**

INFORMATION

FAULT-TRACING INFORMATION

The fault should have been detected and remedied. As this is not the case fault-tracing has failed.

Exit fault-tracing for this diagnostic trouble code (DTC) or make another attempt.

ECM-U016700: LOST COMMUNICATION WITH VEHICLE IMMOBILIZER CONTROL MODULE. GENERAL FAILURE INFORMATION. NO SUB TYPE INFORMATION (B6324S5; 2011-2012)

DIAGNOSTIC TROUBLE CODE (DTC) INFORMATION ECM-U016700

see **DIAGNOSTIC TROUBLE CODE (DTC) INFORMATION ECM-U016700**

FAULT-TRACING

see **FAULT-TRACING**

ECM-U030000: INTERNAL CONTROL MODULE SOFTWARE INCOMPATIBILITY. GENERAL FAILURE INFORMATION. NO SUB TYPE INFORMATION (B6324S; 2007-2010)

DIAGNOSTIC TROUBLE CODE (DTC) INFORMATION ECM-U030000

Condition

Engine control module (ECM) compares its own configuration-ID with the ID of the signal configuration that the central electronic module (CEM) sends out as a message on the CAN-network. This message is sent at regular intervals. If the configuration-IDs do not match, the diagnostic trouble code is generated. The diagnostic

trouble code is also generated if communication between engine control module (ECM) and central electronic module (CEM) is or has been interrupted.

NOTE: **In case of an open circuit in both CAN-cables, it is not possible to communicate with the engine control module (ECM). Therefore it will only be possible to read out the diagnostic trouble code (DTC) if this type of malfunction is intermittent. When the diagnostic trouble code (DTC) is stored, the engine control module (ECM) responds to the diagnostic commands, however, normal CAN-communication Expulsion mode does not work.**

Substitute Value

- Nothing.

Possible Source

- An incorrect CAN configuration-ID (current engine control module (ECM) is not designed for the vehicle, for example, a used control module with different hardware/software).
- A break in the CAN leads between the engine control module (ECM) and the central electronic module (CEM).

Fault symptom[s]

- General warning light on.
- The cruise control does not function at all
- The engine jerks at acceleration.
- The engine jerks heavily after engine braking.
- Rough idling.

FAULT-TRACING

GENERAL INFORMATION

The diagnostic trouble code (DTC) is stored when the communication between the central electronic module (CEM) and the relevant control module has been interrupted. There can be a number of causes for interruptions in the communication:

- Faulty signal configuration in the control module that stored the diagnostic trouble code (DTC). The fault can be due to a customer or workshop replacing a control module without downloading new software for the replacement
- Intermittent open-circuit in one or both CAN cables in part of the network
- Intermittent short-circuits between the CAN cables
- Intermittent short-circuits between one of the CAN cables and ground or supply voltage
- Internal fault in the control module that stored the diagnostic trouble code (DTC).

The fault can also be due to faulty software in a control module, a hardware problem in the CAN network (faulty cables) or a fault in a control module.

NOTE: **If there is a diagnostic trouble code (DTC) for a communication fault in a control module, check whether diagnostic trouble codes (DTCs) have been stored in the central electronic module (CEM). The central electronic module (CEM) monitors the voltage level in the CAN cables and is the only control module that can directly store a diagnostic trouble code (DTC) for a short-circuit in one of the cables for ground or supply voltage. Do not replace the central electronic module (CEM) in the event of a CAN fault unless fault-tracing has indicated that the central electronic module (CEM) has an internal fault.**

Corrective actions

1. If this diagnostic trouble code (DTC) is the only communication diagnostic trouble code (DTC) stored in one of the control modules in the high speed network, try to remedy the fault by downloading new software for the control module that stored the diagnostic trouble code (DTC)
2. Check the cables in the CAN network according to the following fault-tracing
3. The control module should be replaced as a last resort.

Other information

- see **GENERAL INFORMATION ABOUT FAULT-TRACING IN THE CAN NETWORK**
- Go to the tab software and program the control module with the latest software.

- **Continue**

  Refer to **VERIFICATION**

VERIFICATION

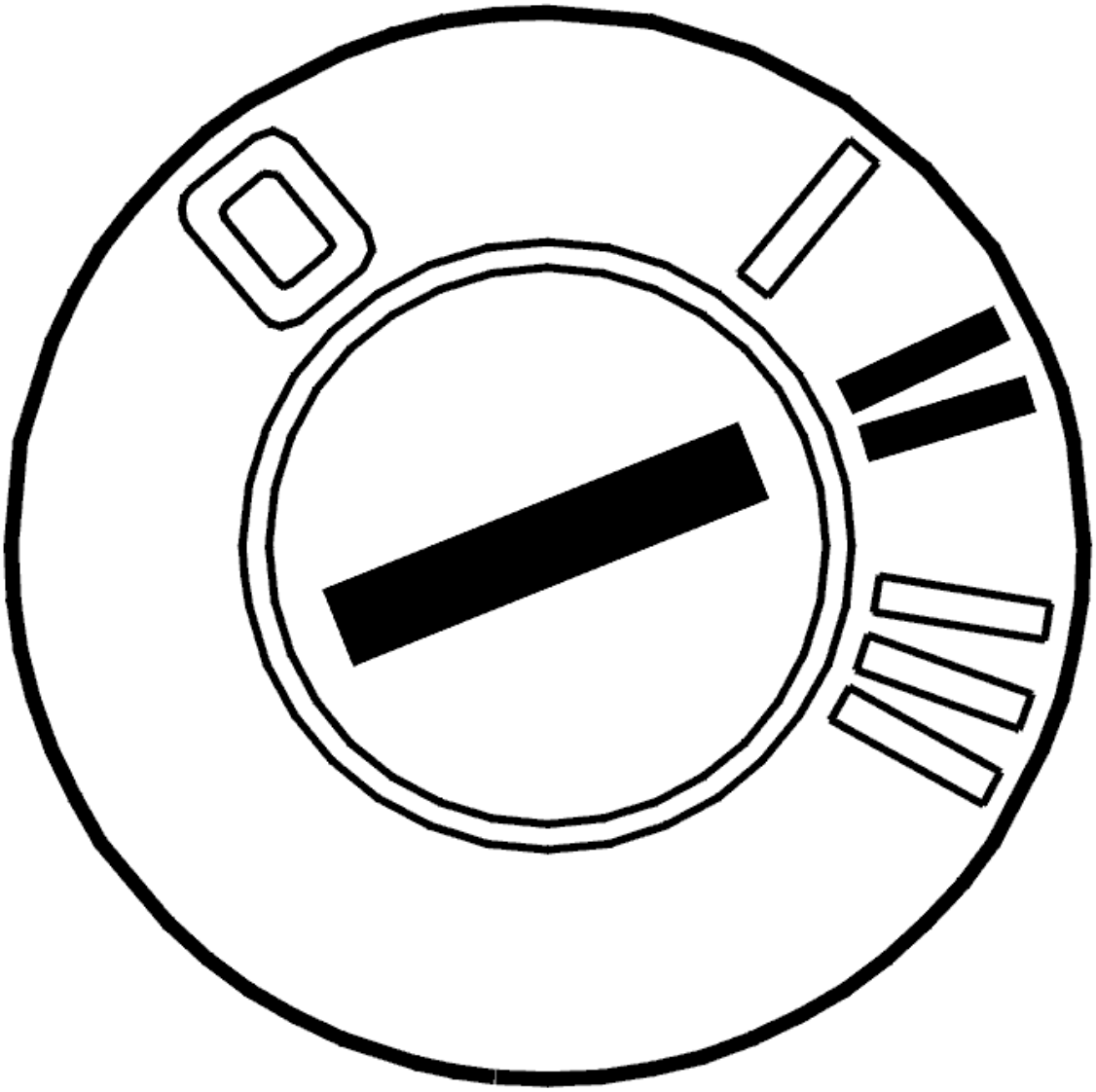

Fig. 149: Identifying Ignition ON
Courtesy of VOLVO CARS CORPORATION

- Ignition on
- Wait for 20 seconds.

NOTE: **This first verification assumes that download of new software was required in the control module that generated the diagnostic trouble code. If download of new software was not required: read out diagnostic trouble codes and check if the code status is permanent or intermittent to learn how difficult it will be to find the fault.**

Read out the diagnostic trouble codes in the vehicle via the DIAGNOSTICS tab.

Check that the diagnostic trouble code (DTC) for faulty communication is not stored again.

Has the fault been remedied?

- **YES**

  OKAY: Troubleshooting has been completed.

- **NO**

  Refer to **TAKING READING ON CABLE IN THE CAN NETWORK (HS-CAN)**

TAKING READING ON CABLE IN THE CAN NETWORK (HS-CAN)

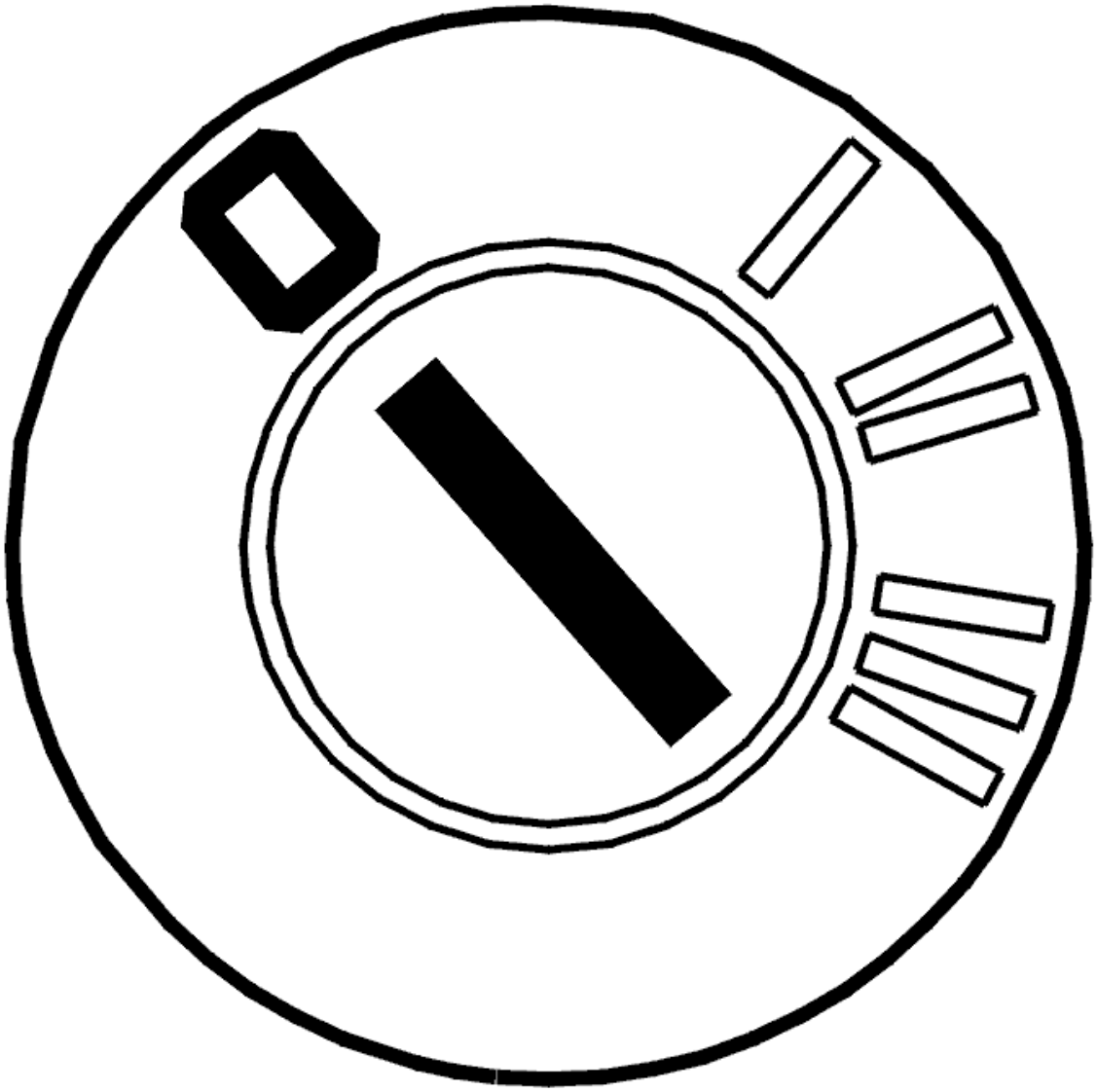

Fig. 150: Identifying Ignition OFF
Courtesy of VOLVO CARS CORPORATION

- Ignition off

- Disconnect the battery negative lead.
- Connect the breakout box with the engine control module (ECM) connected.

HINT: Where a breakout box cannot be used, take readings from the rear of the affected connectors if possible. This prevents terminal pins and socket housings being damaged.

Take resistance readings across the following terminals. Various readings will be obtained due to the structure of the network. Twist the cable harness and work the connectors at accessible points along the cable harness in order to check whether the resistance changes during each measurement. This method can be used to detect intermittent short-circuits or open-circuits.

NOTE: The following resistance readings only measure the main arteries in the high speed network, not the junctions that exist for some control modules. If an open-circuit is suspected in a cable, or a short-circuit is suspected in one of its junctions, the connector at the control module for this junction must be disconnected and the reading taken from there.

Take the following readings

- Measure the resistance between the terminals for HS CAN on the Engine control module (ECM). Resistance must be approximately 60 ohms. Permitted values are approximately 55 - 65 ohms.

  NOTE: If there is a short-circuit somewhere in the CAN-net the resistance will be 0 ohms.

- Also measure the resistance between each terminal and supply voltage and ground. The resistance shall be very high.

HINT: Any short-circuit detected on the CAN-net may be on the main circuit or on any branching running out to some control modules. If a fault is found, try to disconnect the junction with the fault at a point further forward. Try to locate the fault in this way.

Remedy as necessary.

Other information

- see **BATTERY, DISCONNECTING**
- see **CONNECTING THE BREAKOUT BOX**
- see **SIGNAL SPECIFICATION**
- see **CHECKING WIRING AND TERMINALS**

Was a fault detected?

- **YES**

Refer to **VERIFICATION**

- **NO**

  Refer to **CHECKING THE TRAFFIC LOAD ON THE CAN CABLES**

CHECKING THE TRAFFIC LOAD ON THE CAN CABLES

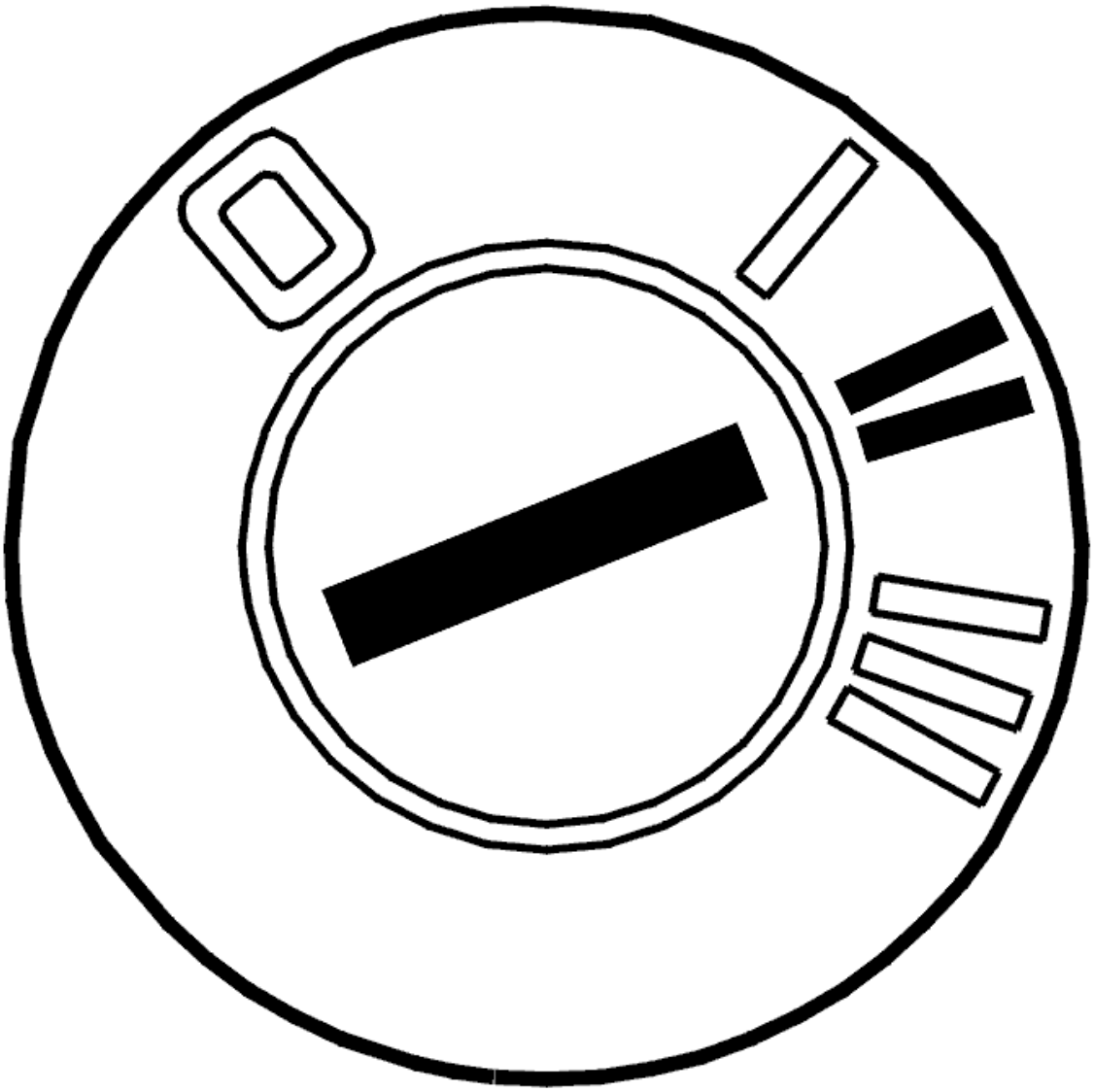

Fig. 151: Identifying Ignition ON
Courtesy of VOLVO CARS CORPORATION

- Connect the battery.
- Ignition on

  Faults in the CAN network may be due to a control module sending faulty messages that disrupt normal communication. When messages are sent incorrectly, this results in a considerable increase in the amount

of traffic on the CAN network. Check the load by measuring the average voltage value on the CAN cables in relation to ground.

Check as follows:

- Connect a voltmeter between CAN-L and ground. The voltage should be approx: V
- Connect a voltmeter between CAN-H and ground. The voltage should be approx: V

Other information

- see **BATTERY, DISCONNECTING**

Is the value OK?

- **YES**

  Refer to **INFORMATION**

- **NO**

  Refer to **IDENTIFYING A CONTROL MODULE IN THE CAN NETWORK**

IDENTIFYING A CONTROL MODULE IN THE CAN NETWORK

If the load on the CAN network is too high, this may be due to a control module sending faulty messages on the CAN network (known as a disruptive control module). The fault may also be due to an intermittent short-circuit to supply voltage or ground in one of the CAN cables. This results in the control modules on the CAN network starting to send faulty messages. The faults can occur without a diagnostic trouble code (DTC) being stored by the control modules. The voltage can be measured between the CAN cables in order to check the load on the CAN network.

NOTE: **It is not necessarily the control module(s) that stored the diagnostic trouble code (DTC) that is communicating faultily. Faulty messages can come from any control module in the same section of the CAN network. However, faulty communication in one network cannot affect the communication on the other network. In other words, faulty communication on the LS-CAN cannot disrupt communication on the HS-CAN and vice versa.**

Take the following readings

- Connect a voltmeter between the CAN cables. The average value of the voltage must be approximately 0.6-1.4 V. In case of a problem with communication the voltage is considerably higher.
- In order to identify which control module has faulty communication, cut the power supply to one control module at a time. Check the voltage in the CAN cables again. The easiest way to cut the power supply is to remove the fuse(s) for the relevant control module. Repeat until the voltage between the CAN wiring drops to the normal level.

NOTE: **When connecting and disconnecting certain control modules, diagnostic trouble codes (DTCs) may be stored in other control modules.**

HINT: When the suspected control module has been identified, connect and disconnect the supply voltage to the control module a number of times to verify that the fault appears and disappears. Ignition off between each check.

NOTE: **Do not cut the power to the central electronic module (CEM) unless it is the last control module left to check.**

The control module that is communicating incorrectly must be replaced.

NOTE: **A faulty control module that disrupts communication can place other control modules in Limp-Home mode (i. e. they work but with limited functionality) even after switching the ignition off and on a number of times. To remedy this, disconnect and reconnect the battery negative terminal to restore the control modules to normal function.**

Remedy as necessary.

- **Continue**

  Refer to **VERIFICATION**

VERIFICATION

HINT: Once a fault has been repaired, conduct a verification to check that the fault has been remedied.

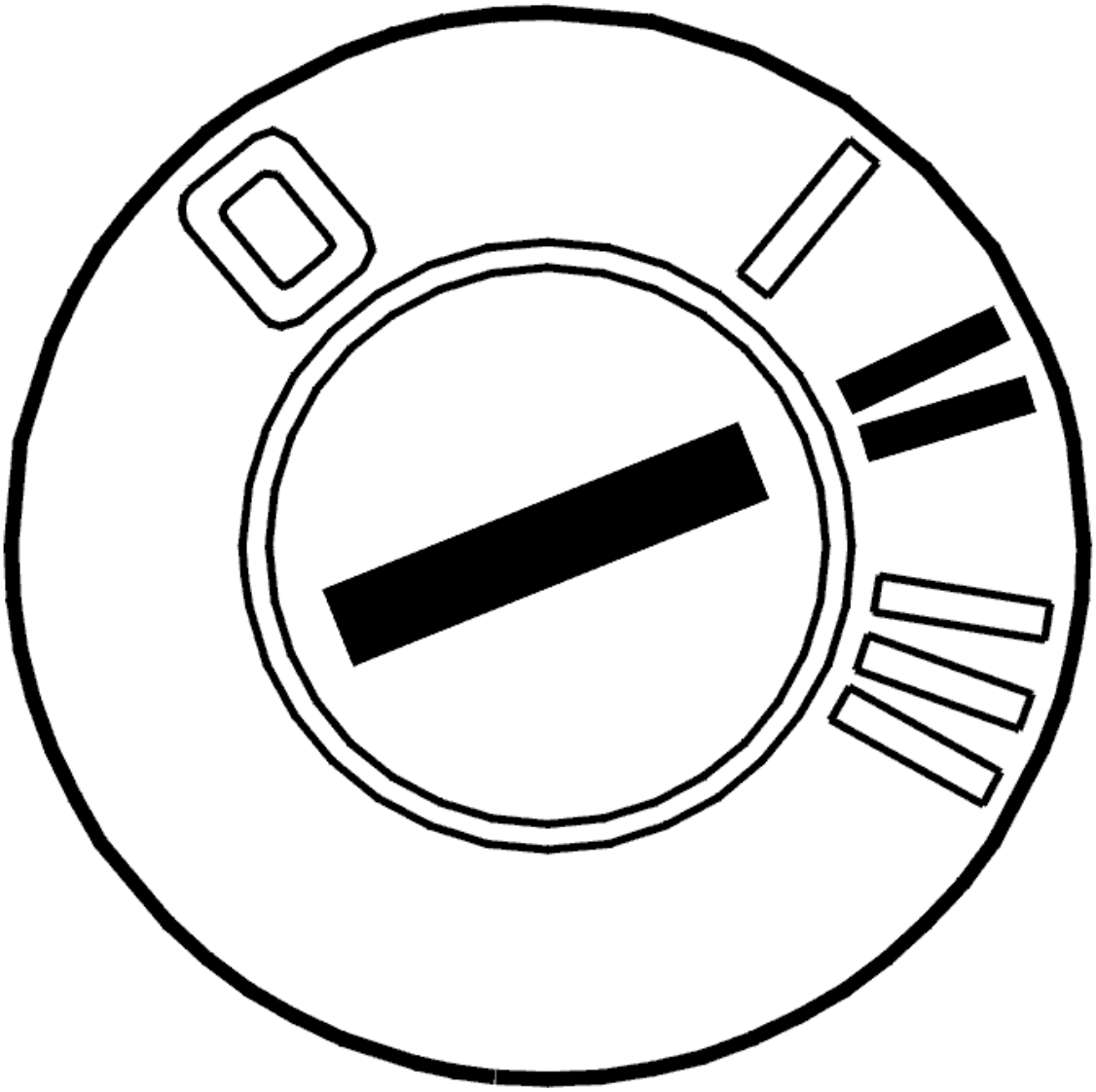

Fig. 152: Identifying Ignition ON
Courtesy of VOLVO CARS CORPORATION

- Reinstall the connectors, components etc.
- Ignition on
- Erase diagnostic trouble codes (DTCs) in all control modules
- Start the vehicle. Allow the vehicle to run for 10 minutes.

  Read out the diagnostic trouble codes in the vehicle via the DIAGNOSTICS tab.

Is the diagnostic trouble code for configuration fault regenerated?

- **YES**

  Refer to **INFORMATION**

- **NO**

  OKAY: Troubleshooting has been completed.

INFORMATION

FAULT-TRACING INFORMATION

The fault should have been detected and remedied. As this is not the case fault-tracing has failed.

Exit fault-tracing for this diagnostic trouble code (DTC) or make another attempt.

INFORMATION

FAULT-TRACING INFORMATION

Verification shows that the fault is no longer present. The diagnostic trouble code (DTC) was probably caused by an intermittent fault.

Fault-tracing for this diagnostic trouble code (DTC) is not followed by a verification.

You can view the information again or exit fault-tracing for this diagnostic trouble code (DTC).

ECM-U030000: INTERNAL CONTROL MODULE SOFTWARE INCOMPATIBILITY. GENERAL FAILURE INFORMATION. NO SUB TYPE INFORMATION (B6324S5; 2011-2012)

DIAGNOSTIC TROUBLE CODE (DTC) INFORMATION ECM-U030000

see **DIAGNOSTIC TROUBLE CODE (DTC) INFORMATION ECM-U030000**

FAULT-TRACING

see **FAULT-TRACING**

ECM-U032200: SOFTWARE INCOMPATIBILITY WITH BODY CONTROL MODULE. GENERAL FAILURE INFORMATION. NO SUB TYPE INFORMATION (B6324S; 2007-2010)

DIAGNOSTIC TROUBLE CODE (DTC) INFORMATION ECM-U032200

Condition

To check that the correct software is in the engine control module (ECM), the engine control module (ECM) calculates a checksum. This checksum shall also be stored in the central electronic module (CEM). When the ignition is turned on, a communication test is performed between the engine control module (ECM) and central

electronic module (CEM). During this test, the checksum is sent from the engine control module (ECM) to central electronic module (CEM).

If central electronic module (CEM) detects that the checksum that engine control module (ECM) calculates does not match the stored checksum in the central electronic module (CEM), the central electronic module (CEM) will store a diagnostic trouble code. For information purposes, the diagnostic trouble code is also stored in the engine control module (ECM).

The diagnostic trouble code can be diagnosed with the ignition on.

Substitute Value

- Nothing.

Possible Source

- One or several diagnostic trouble codes registered in central electronic module (CEM).

Fault symptom[s]

- Nothing.

FAULT-TRACING

see **FAULT-TRACING**

ECM-U032200: SOFTWARE INCOMPATIBILITY WITH BODY CONTROL MODULE. GENERAL FAILURE INFORMATION. NO SUB TYPE INFORMATION (B6324S5; 2011-2012)

DIAGNOSTIC TROUBLE CODE (DTC) INFORMATION ECM-U032200

see **DIAGNOSTIC TROUBLE CODE (DTC) INFORMATION ECM-U032200**

FAULT-TRACING

see **FAULT-TRACING**

ECM-U032200: SOFTWARE INCOMPATIBLE WITH BODY CONTROL MODULE. GENERAL MALFUNCTION INFORMATION. NO INFORMATION ON MALFUNCTION TYPE (B8444S; 2005-2011)

DIAGNOSTIC TROUBLE CODE (DTC) INFORMATION ECM-U032200

Condition

To check that the correct software is in the engine control module (ECM), the engine control module (ECM) calculates a checksum. This checksum shall also be stored in the central electronic module (CEM). When the ignition is turned on, a communication test is performed between the engine control module (ECM) and central electronic module (CEM). During this test, the checksum is sent from the engine control module (ECM) to central electronic module (CEM).

If central electronic module (CEM) detects that the checksum that engine control module (ECM) calculates does not match the stored checksum in the central electronic module (CEM), the central electronic module (CEM) will store a diagnostic trouble code. For information purposes, the diagnostic trouble code is also stored in the engine control module (ECM).

The diagnostic trouble code can be diagnosed with the ignition on.

Substitute Value

- Nothing.

Possible Source

- One or several diagnostic trouble codes registered in central electronic module (CEM).

Fault symptom[s]

- Nothing.

TROUBLESHOOTING ECM-U032200

INFORMATION

No troubleshooting has been developed for this diagnostic trouble code. The trouble code for this malfunction is first generated in the central electronic module (CEM) and then in the engine control module (ECM). This diagnostic trouble code cannot be erased until the trouble code in the central electronic module (CEM) has been remedied and erased.

For this reason, first read off the diagnostic trouble codes in the central electronic module (CEM) and then perform troubleshooting and take appropriate action. After that, this diagnostic trouble code can be erased.

ECM-U040000: INVALID DATA RECEIVED. GENERAL MALFUNCTION INFORMATION. NO INFORMATION ON MALFUNCTION TYPE (B8444S; 2005-2011)

DIAGNOSTIC TROUBLE CODE (DTC) INFORMATION ECM-U040000

Condition

Engine control module (ECM) compares its own configuration-ID with the ID of the signal configuration that the central electronic module (CEM) sends out as a message on the CAN-network. This message is sent at

regular intervals. If the configuration-IDs do not match, the diagnostic trouble code is generated. The diagnostic trouble code is also generated if communication between engine control module (ECM) and central electronic module (CEM) is or has been interrupted.

NOTE: **In case of an open circuit in both CAN-cables, it is not possible to communicate with the engine control module (ECM). Therefore it will only be possible to read out the diagnostic trouble code (DTC) if this type of malfunction is intermittent. When the diagnostic trouble code (DTC) is stored, the engine control module (ECM) responds to the diagnostic commands, however, normal CAN-communication Expulsion mode does not work.**

Substitute Value

- Nothing.

Possible Source

- An incorrect CAN configuration-ID (current engine control module (ECM) is not designed for the vehicle, for example, a used control module with different hardware/software).
- A break in the CAN leads between the engine control module (ECM) and the central electronic module (CEM).

Fault symptom[s]

- General warning light on.
- The cruise control does not function at all
- The engine jerks at acceleration.
- The engine jerks heavily after engine braking.
- Rough idling.

TROUBLESHOOTING

see **TROUBLESHOOTING**

ECM-U040500: INVALID DATA FROM CRUISE CONTROL MODULE. GENERAL FAULT INFORMATION. TYPE OF FAULT NOT SPECIFIED. (B8444S; 2005-2011)

DIAGNOSTIC TROUBLE CODE (DTC) INFORMATION ECM-U040500

Condition

The steering wheel module (SWM) checks the signals from the buttons on the cruise control.

The diagnostic trouble code (DTC) is stored in the engine control module (ECM) if the steering wheel module

(SWM) registers a fault in one of the signals from the cruise control buttons or if one of the buttons has been pressed in for too long.

The diagnostic trouble code can be diagnosed when the engine is running.

Substitute Value

- Cruise control turned off when the fault is active.

Possible Source

- Search for the cause of the fault in the steering wheel module (SWM).

Fault symptom[s]

- Cruise control does not function at all.

TROUBLESHOOTING INFORMATION

INFORMATION

No troubleshooting has been developed for this diagnostic trouble code. Diagnostic trouble code for this malfunction is first generated in the steering wheel module (SWM) then in the engine control module (ECM). This diagnostic trouble code cannot be erased until the diagnostic trouble code in the steering wheel module (SWM) is erased and remedied.

Therefore, first read off the diagnostic trouble codes in the steering wheel module (SWM), perform troubleshooting and take appropriate action. Then this diagnostic trouble code can be erased.

ECM-U040583: INVALID DATA RECEIVED FROM CRUISE CONTROL MODULE. BUS SIGNAL / MESSAGE FAILURES. VALUE OF SIGNAL PROTECTION CALCULATION INCORRECT (B6324S; 2007-2010)

DIAGNOSTIC TROUBLE CODE (DTC) INFORMATION ECM-U040583

Condition

The Central electronic module (CEM) receives and checks the signals from the steering wheel buttons for cruise control. The information is transmitted via CAN to the Engine control module (ECM).

The Engine control module (ECM) checks the received information.

The diagnostic trouble code (DTC) is stored if the control module detects that:

- The information from Central electronic module (CEM) is incorrect/invalid.

The control module's test for the diagnostic trouble code (DTC) starts in the event of:

- Engine running.

NOTE: The control module can only detect the fault once the test has been started and the diagnostic trouble code (DTC) is stored when the conditions are met.

Substitute Value

- Cruise control is disengaged when the fault is active.

Possible Source

- Fault-trace the central electronic module (CEM).

Fault symptom[s]

- Cruise control does not operate

FAULT-TRACING

see **FAULT-TRACING**

ECM-U040583: INVALID DATA RECEIVED FROM CRUISE CONTROL MODULE. BUS SIGNAL / MESSAGE FAILURES. VALUE OF SIGNAL PROTECTION CALCULATION INCORRECT (B6324S5; 2011-2012)

DIAGNOSTIC TROUBLE CODE (DTC) INFORMATION ECM-U040583

see **DIAGNOSTIC TROUBLE CODE (DTC) INFORMATION ECM-U040583**

FAULT-TRACING

see **FAULT-TRACING**

ECM-U04058F: INVALID DATA RECEIVED FROM CRUISE CONTROL MODULE. BUS SIGNAL / MESSAGE FAILURES. ERRATIC (B6324S; 2007-2010)

DIAGNOSTIC TROUBLE CODE (DTC) INFORMATION ECM-U04058F

Condition

The Central electronic module (CEM) receives and checks the signals from the steering wheel buttons for cruise control. The information is transmitted via CAN to the Engine control module (ECM). If the Central electronic module (CEM) detects a fault in the steering wheel buttons, this information is transmitted via CAN to the Engine control module (ECM).

The diagnostic trouble code (DTC) is stored if the control module detects that:

- The Central electronic module (CEM) has detected a fault.

The control module's test for the diagnostic trouble code (DTC) starts in the event of:

- Engine running.

NOTE: The control module can only detect the fault once the test has been started and the diagnostic trouble code (DTC) is stored when the conditions are met.

Substitute Value

- Cruise control is disengaged when the fault is active.

Possible Source

- Fault-trace the central electronic module (CEM).

Fault symptom[s]

- Cruise control does not operate

FAULT-TRACING

see **FAULT-TRACING**

ECM-U04058F: INVALID DATA RECEIVED FROM CRUISE CONTROL MODULE. BUS SIGNAL / MESSAGE FAILURES. ERRATIC (B6324S5; 2011-2012)

DIAGNOSTIC TROUBLE CODE (DTC) INFORMATION ECM-U04058F

see **DIAGNOSTIC TROUBLE CODE (DTC) INFORMATION ECM-U04058F**

FAULT-TRACING

see **FAULT-TRACING**

ECM-U041800: INVALID DATA RECEIVED FROM BRAKE CONTROL MODULE. GENERAL FAILURE INFORMATION. NO SUB TYPE INFORMATION (B6324S; 2007-2010)

DIAGNOSTIC TROUBLE CODE (DTC) INFORMATION ECM-U041800

Condition

Engine control module (ECM) and Brake control module contain a code that is unique code for each vehicle for electronic immobilizer. In addition to this, each key for the vehicle is electronically coded for the intended vehicle only. Internal checks are made at the start to check that the key is the correct one for the vehicle and that the codes in the Engine control module (ECM) and Central electronic module (CEM) correspond.

The diagnostic trouble code (DTC) is stored if the control module detects that:

- Engine control module (ECM) registers problems with reading out immobilizer codes.
- The immobilizer codes do not match.

NOTE: The control module can only detect the fault once the test has been started and the diagnostic trouble code (DTC) is stored when the conditions are met.

Substitute Value

- None.

Possible Source

- Engine control module (ECM) has incorrect code for electronic immobilizer.
- Brake control module (BCM) has incorrect code for electronic immobilizer.
- Damaged engine control module (ECM).

Fault symptom[s]

- The engine does not start.
- Message in the display.

FAULT-TRACING

INFORMATION

The diagnostic trouble code indicates that the immobilizer codes do not match between Engine control module (ECM) and Brake control module (BCM). The diagnostic trouble code is also generated if CAN-communication between engine control module (ECM) and Brake control module (BCM) is missing.

Among others, the code may be caused by:

- Engine control module (ECM) is not programmed or has incorrect code for immobilizer, that is, the code does not match the code stored in Brake control module (BCM).
- Brake control module (BCM) is not programmed or has incorrect code for immobilizer, that is, the code does not match the code stored in Engine control module (ECM).
- Open circuit on CAN-communication between Brake control module (BCM) and Engine control module (ECM).

- Programmed engine control module (ECM) or Brake control module (BCM) has been moved from one vehicle to another.

HINT: Read out diagnostic trouble codes in brake control module (BCM).

- **Continue**

  Refer to **VERIFICATION**

VERIFICATION

HINT: After repairing, it is necessary to check that the malfunction has been fixed.

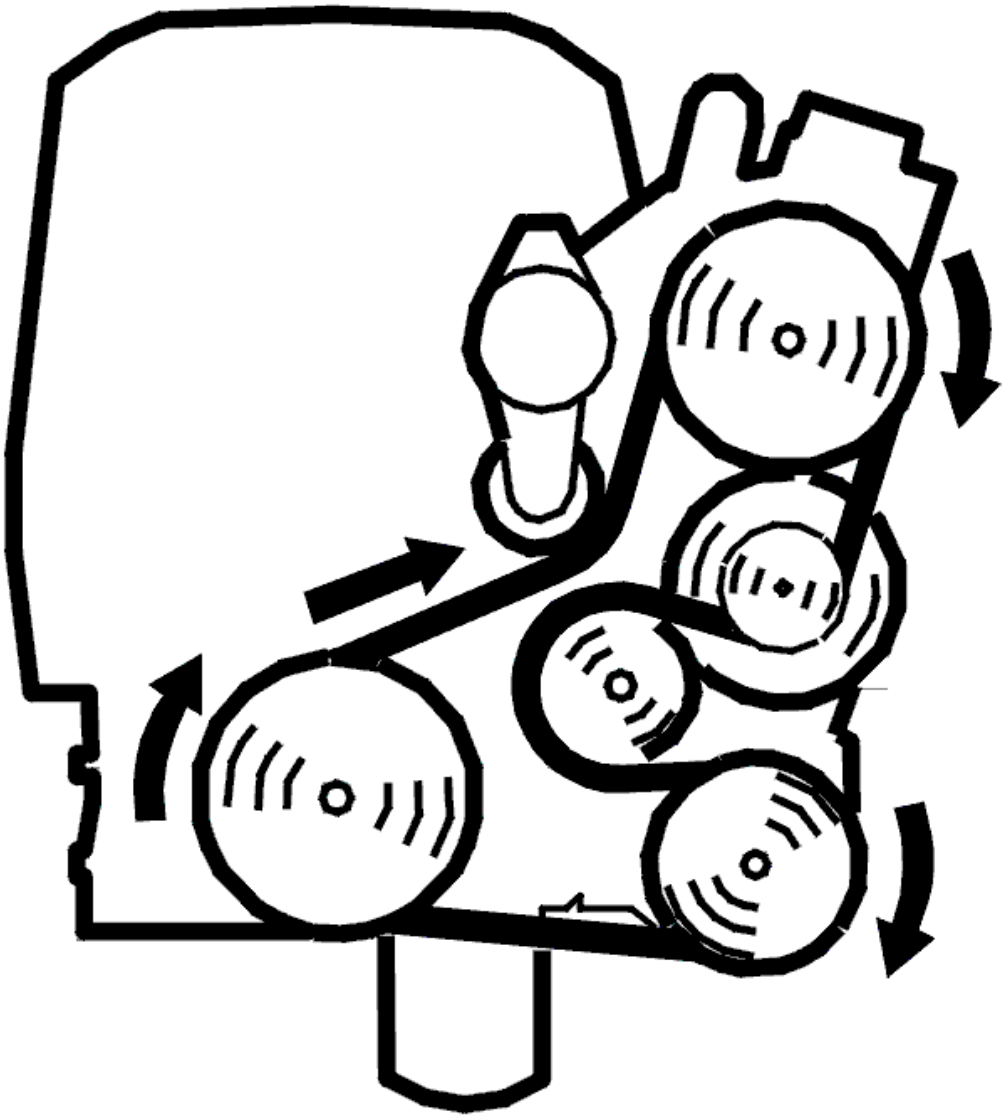

Fig. 153: Identifying Belt Routing
Courtesy of VOLVO CARS CORPORATION

- Ignition off
- Reinstall connector, components, etc.
- Start the engine.

Did engine start?

- **YES**

  OKAY: Troubleshooting has been completed.

- **NO**

  Refer to **INFORMATION**

INFORMATION

FAULT-TRACING INFORMATION

The fault should have been detected and remedied. As this is not the case fault-tracing has failed.

Exit fault-tracing for this diagnostic trouble code (DTC) or make another attempt.

ECM-U041800: INVALID DATA RECEIVED FROM BRAKE CONTROL MODULE. GENERAL FAILURE INFORMATION. NO SUB TYPE INFORMATION (B6324S5; 2011-2012)

DIAGNOSTIC TROUBLE CODE (DTC) INFORMATION ECM-U041800

see **DIAGNOSTIC TROUBLE CODE (DTC) INFORMATION ECM-U041800**

FAULT-TRACING

see **FAULT-TRACING**

ECM-U041823: INVALID DATA RECEIVED FROM BRAKE CONTROL MODULE. GENERAL SIGNAL FAILURES. SIGNAL STUCK LOW (B8444S; 2005-2011)

DIAGNOSTIC TROUBLE CODE (DTC) INFORMATION ECM-U041800

Condition

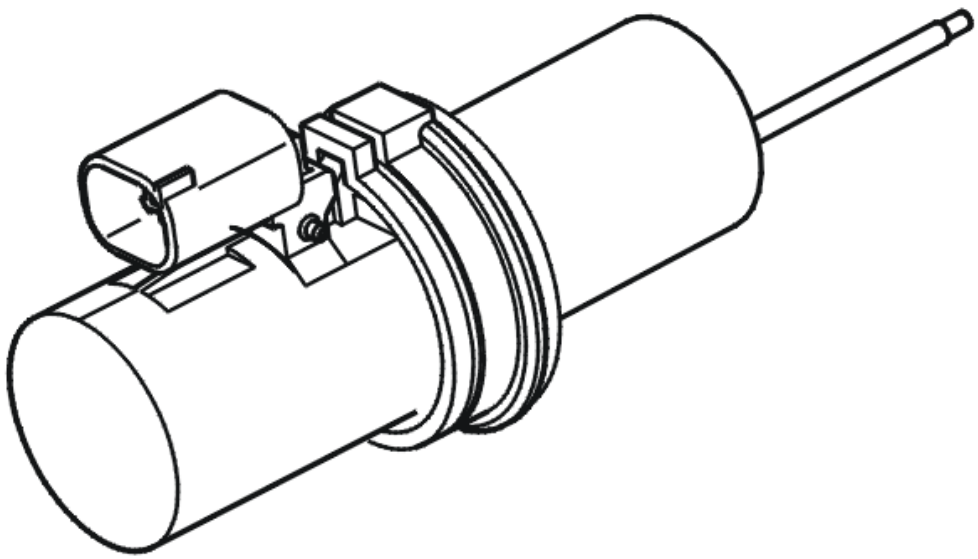

Fig. 154: Identifying Brake Pedal Position Sensor
Courtesy of VOLVO CARS CORPORATION

Information about the brake pedal position is transmitted on the controller area network (CAN) from the brake control module (BCM) to the engine control module (ECM).

The diagnostic trouble code (DTC) is stored and information about the fault is transmitted to the engine control module (ECM) if the brake control module (BCM) registers a fault on the brake pedal position sensor.

The diagnostic trouble code can be diagnosed when the ignition is on.

Substitute Value

- Cruise control turned off when the fault is active.

Possible Source

- Look for the cause of the fault in the brake control module (BCM).

Fault symptom[s]

- Cruise control does not function at all.
- Message in the display.

TROUBLESHOOTING INFORMATION

see **TROUBLESHOOTING INFORMATION**

ECM-U041886: INVALID DATA RECEIVED FROM BRAKE CONTROL MODULE. BUS SIGNAL / MESSAGE FAILURES. SIGNAL INVALID (B6324S; 2007-2010)

DIAGNOSTIC TROUBLE CODE (DTC) INFORMATION ECM-U041800ECM-U041886

Condition

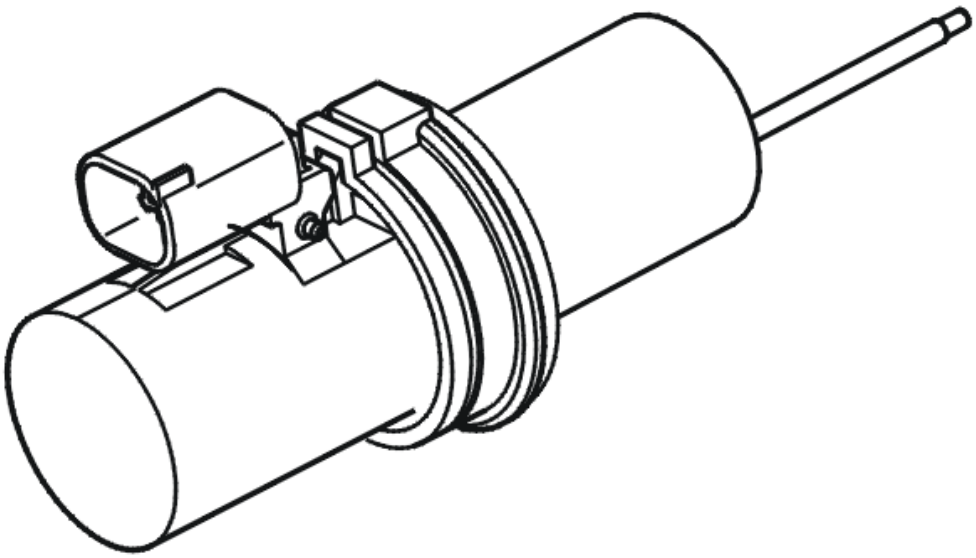

Fig. 155: Identifying Brake Pedal Position Sensor
Courtesy of VOLVO CARS CORPORATION

Information about the brake pedal position is transmitted on the controller area network (CAN) from the brake control module (BCM) to the engine control module (ECM).

The diagnostic trouble code (DTC) is stored and information about the fault is transmitted to the engine control module (ECM) if the brake control module (BCM) registers a fault on the brake pedal position sensor.

The diagnostic trouble code can be diagnosed when the ignition is on.

Substitute Value

- Cruise control turned off when the fault is active.

Possible Source

- Look for the cause of the fault in the brake control module (BCM).

Fault symptom[s]

- Cruise control does not function at all.
- Message in the display.

TROUBLESHOOTING INFORMATION

INFORMATION

No troubleshooting has been developed for this diagnostic trouble code (DTC). Diagnostic trouble code (DTC) for this malfunction is first stored in the brake control module (BCM), then in the engine control module (ECM). This diagnostic trouble code (DTC) cannot be erased before the diagnostic trouble code (DTC) in the brake control module (BCM) has been erased and remedied.

Therefore, first read off the diagnostic trouble codes in the brake control module (BCM), perform troubleshooting and take appropriate action. Then this diagnostic trouble code can be erased.

ECM-U041886: INVALID DATA RECEIVED FROM BRAKE CONTROL MODULE. BUS SIGNAL / MESSAGE FAILURES. SIGNAL INVALID (B6324S5; 2011-2012)

DIAGNOSTIC TROUBLE CODE (DTC) INFORMATION ECM-U041800ECM-U041886

see **DIAGNOSTIC TROUBLE CODE (DTC) INFORMATION ECM-U041800ECM-U041886**

TROUBLESHOOTING INFORMATION

see **TROUBLESHOOTING INFORMATION**

ECM-U042200: INVALID DATA RECEIVED FROM CENTRAL ELECTRONIC MODULE. GENERAL FAILURE INFORMATION. NO SUB TYPE INFORMATION (B6324S; 2007-2010)

DIAGNOSTIC TROUBLE CODE (DTC) INFORMATION ECM-U042200

Condition

The central electronic module (CEM) transmits the global time on the CAN network.

The diagnostic trouble code (DTC) is stored if the engine control module (ECM) registers that the signal is missing and interprets it as a fault.

The diagnostic trouble code can be diagnosed when the ignition is on.

Substitute Value

- Nothing.

Possible Source

- Open-circuit in the control area network (CAN) wiring.
- Short-circuit between the control area network (CAN) wiring.
- Internal fault in the engine control module (ECM).
- Internal fault in another control module in the same part of the control area network (CAN).

Fault symptom[s]

- None

FAULT-TRACING

see **FAULT-TRACING**

ECM-U042200: INVALID DATA RECEIVED FROM CENTRAL ELECTRONIC MODULE. GENERAL FAILURE INFORMATION. NO SUB TYPE INFORMATION (B6324S5; 2011-2012)

DIAGNOSTIC TROUBLE CODE (DTC) INFORMATION ECM-U042200

see **DIAGNOSTIC TROUBLE CODE (DTC) INFORMATION ECM-U042200**

FAULT-TRACING

see **FAULT-TRACING**

ECM-U042200: INVALID DATA RECEIVED FROM CENTRAL ELECTRONIC MODULE. GENERAL MALFUNCTION INFORMATION. NO INFORMATION ON MALFUNCTION TYPE (B8444S; 2005-2011)

DIAGNOSTIC TROUBLE CODE (DTC) INFORMATION ECM-U042200

Condition

The central electronic module (CEM) transmits the global time on the CAN network.

The diagnostic trouble code (DTC) is stored if the engine control module (ECM) registers that the signal is missing and interprets it as a fault.

The diagnostic trouble code can be diagnosed when the ignition is on.

Substitute Value

- Nothing.

Possible Source

- Open-circuit in the control area network (CAN) wiring.
- Short-circuit between the control area network (CAN) wiring.
- Internal fault in the engine control module (ECM).
- Internal fault in another control module in the same part of the control area network (CAN).

Fault symptom[s]

Nothing.

FAULT-TRACING INFORMATION

see **FAULT-TRACING INFORMATION**

ECM-U042600: INVALID DATA RECEIVED FROM VEHICLE IMMOBILIZER CONTROL MODULE. GENERAL MALFUNCTION INFORMATION. NO INFORMATION ON MALFUNCTION TYPE (B6324S; 2007-2010)

DIAGNOSTIC TROUBLE CODE (DTC) INFORMATION ECM-U042600

Condition

Engine control module (ECM) as well as central electronic module (CEM) contain a unique code for every vehicle for electronic immobilizer. In addition to this, each key for the vehicle is electronically coded to only fit in the intended vehicle. At start, internal checks are performed that the key is correct for the vehicle and that the immobilizer codes in the engine control module (ECM) and central electronic module (CEM) match.

If engine control module (ECM) registers problems with readout of the immobilizer codes or that the immobilizer codes do not match, the diagnostic trouble code is generated.

The diagnostic trouble code can be diagnosed when the ignition is on.

Substitute Value

- None.

Possible Source

- Engine control module (ECM) has incorrect code for electronic immobilizer.
- Central electronic module (CEM) has incorrect code for electronic immobilizer.
- Damaged engine control module (ECM).

Fault symptom[s]

- The engine does not start.
- Message in the display.

FAULT-TRACING

INFORMATION

The diagnostic trouble code indicates that the immobilizer codes do not match between the engine control module (ECM) and central electronic module (CEM). The code is also generated if CAN-communication between engine control module (ECM) and central electronic module (CEM) is missing.

Among others, the code may be caused by:

- Engine control module (ECM) is not programmed or has incorrect code for immobilizer, that is, the code does not match the code stored in central electronic module (CEM).
- Central electronic module (CEM) is not programmed or has incorrect code for immobilizer, that is, the code does not match the code stored in engine control module (ECM).
- Open circuit in CAN-communication between central electronic module (CEM) and engine control module (ECM)
- Programmed engine control module (ECM) or central electronic module (CEM) has been moved from one vehicle to another.

HINT: Read off diagnostic trouble codes in central electronic module (CEM).

- **Continue**

  Refer to **VERIFICATION**

VERIFICATION

HINT: After repairing, it is necessary to check that the malfunction has been fixed.

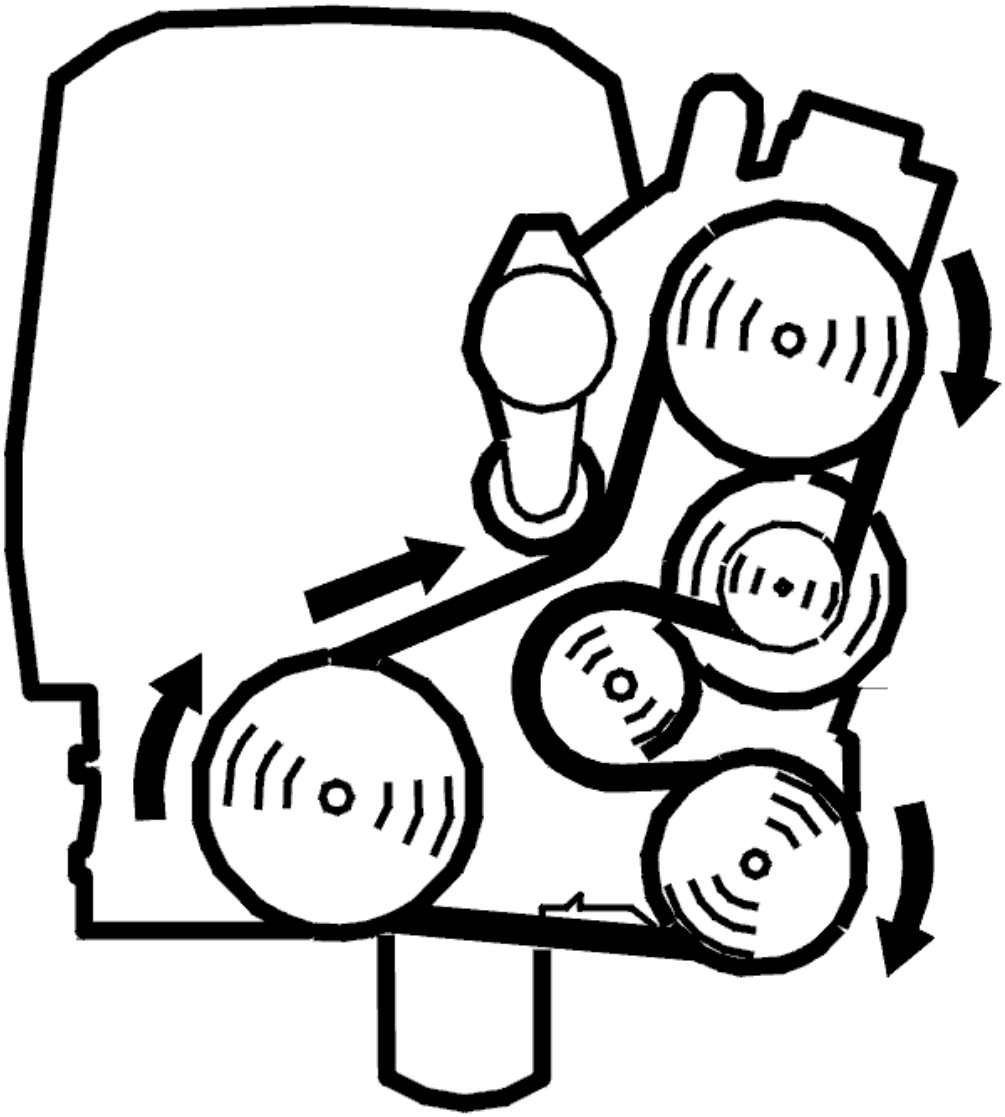

Fig. 156: Identifying Belt Routing
Courtesy of VOLVO CARS CORPORATION

- Ignition off
- Reinstall connector, components, etc.
- Start the engine.

Did engine start?

- **YES**

  OKAY: Troubleshooting has been completed.

- **NO**

Refer to **INFORMATION**

INFORMATION

FAULT-TRACING INFORMATION

The fault should have been detected and remedied. As this is not the case fault-tracing has failed.

Exit fault-tracing for this diagnostic trouble code (DTC) or make another attempt.

ECM-U042600: INVALID DATA RECEIVED FROM VEHICLE IMMOBILIZER CONTROL MODULE. GENERAL MALFUNCTION INFORMATION. NO INFORMATION ON MALFUNCTION TYPE (B6324S5; 2011-2012)

DIAGNOSTIC TROUBLE CODE (DTC) INFORMATION ECM-U042600

see **DIAGNOSTIC TROUBLE CODE (DTC) INFORMATION ECM-U042600**

FAULT-TRACING

see **FAULT-TRACING**

ECM-U042600: INVALID DATA RECEIVED FROM VEHICLE IMMOBILIZER CONTROL MODULE. GENERAL MALFUNCTION INFORMATION. NO INFORMATION ON MALFUNCTION TYPE (B8444S; 2005-2011)

DIAGNOSTIC TROUBLE CODE (DTC) INFORMATION ECM-U042600

Condition

Engine control module (ECM) as well as central electronic module (CEM) contain a unique code for every vehicle for electronic immobilizer. In addition to this, each key for the vehicle is electronically coded to only fit in the intended vehicle. At start, internal checks are performed that the key is correct for the vehicle and that the immobilizer codes in the engine control module (ECM) and central electronic module (CEM) match.

If engine control module (ECM) registers problems with readout of the immobilizer codes or that the immobilizer codes do not match, the diagnostic trouble code is generated.

The diagnostic trouble code can be diagnosed when the ignition is on.

Substitute Value

Nothing.

Possible Source

- Open circuit on one of the CAN-cables.
- Short-circuit between CAN-cables.

- Engine control module (ECM) has incorrect code for electronic immobilizer.
- Central electronic module (CEM) has incorrect code for electronic immobilizer.
- Damaged engine control module (ECM).

Fault symptom[s]

- The engine does not start.
- Message in the display.

TROUBLESHOOTING ECM-U042600

INFORMATION

The diagnostic trouble code indicates that the immobilizer codes do not match between the engine control module (ECM) and central electronic module (CEM). The code is also generated if CAN-communication between engine control module (ECM) and central electronic module (CEM) is missing.

Among others, the code may be caused by:

- Engine control module (ECM) is not programmed or has incorrect code for immobilizer, that is, the code does not match the code stored in central electronic module (CEM).
- Central electronic module (CEM) is not programmed or has incorrect code for immobilizer, that is, the code does not match the code stored in engine control module (ECM).
- Open circuit in CAN-communication between central electronic module (CEM) and engine control module (ECM)
- Programmed engine control module (ECM) or central electronic module (CEM) has been moved from one vehicle to another.

HINT: Read off diagnostic trouble codes in central electronic module (CEM).

- **Continue**

  Refer to **VERIFICATION**

VERIFICATION

HINT: After repairing, it is necessary to check that the malfunction has been fixed.

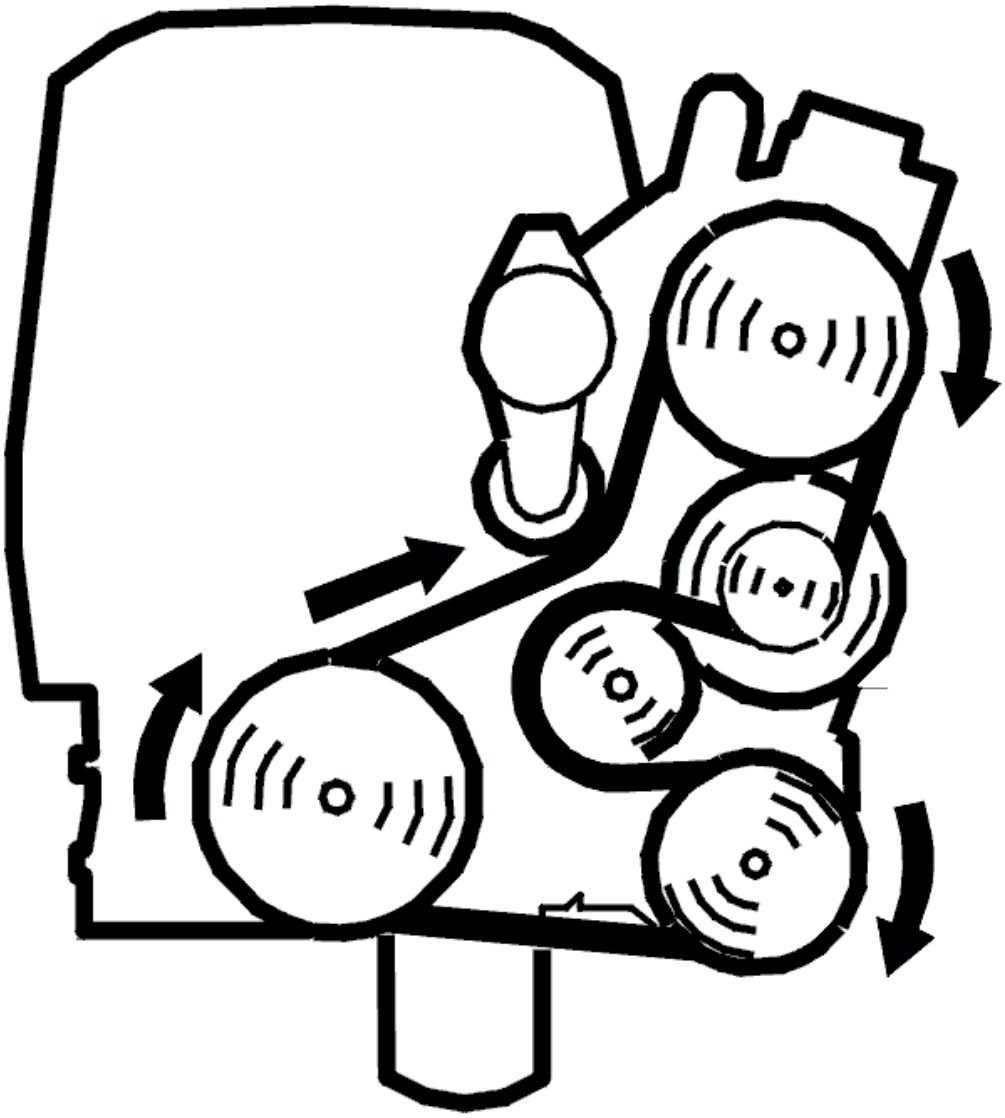

Fig. 157: Identifying Belt Routing
Courtesy of VOLVO CARS CORPORATION

- Ignition off
- Reinstall connector, components, etc.
- Start the engine.

Did engine start?

- **YES**

  OKAY: Troubleshooting has been completed.

- **NO**

Refer to **INFORMATION**

INFORMATION

FAULT-TRACING INFORMATION

The fault should have been detected and remedied. As this is not the case fault-tracing has failed.

Exit fault-tracing for this diagnostic trouble code (DTC) or make another attempt.

ECM-U210765: COLLISION MITIGATION BY BRAKING. ALGORITHM BASED FAILURES. SIGNAL HAS TOO FEW TRANSITIONS / EVENTS (B6324S; 2007-2010)

DIAGNOSTIC TROUBLE CODE (DTC) INFORMATION ECM-U210765

Condition

Engine control module (ECM) uses signals from Forward Sensing Module (FSM) to provide brake support in case of collision risk (included in adaptive cruise control function).

The diagnostic trouble code (DTC) is stored if the control module detects that:

- Request for adaptive cruise control is sent too often.

The control module's test for the diagnostic trouble code (DTC) starts in the event of:

- Ignition switch position II.

NOTE: The control module can only detect the fault once the test has been started and the diagnostic trouble code (DTC) is stored when the conditions are met.

Substitute Value

- None.

Possible Source

- Fault-trace the Forward Sensing Module (FSM).
- Fault-trace the central electronic module (CEM).

Fault symptom[s]

- Message in information display

FAULT-TRACING

INFORMATION

No fault-tracing has been developed for this diagnostic trouble code (DTC).

The diagnostic trouble code (DTC) for this fault is first stored in the Central electronic module (CEM) or in the Forward Sensing Module (FSM), then in the Engine control module (ECM). This diagnostic trouble code (DTC) can first be erased when the root fault has been remedied and the diagnostic trouble code (DTC) for the root fault has been erased.

ECM-U210765: COLLISION MITIGATION BY BRAKING. ALGORITHM BASED FAILURES. SIGNAL HAS TOO FEW TRANSITIONS / EVENTS (B6324S5; 2011-2012)

DIAGNOSTIC TROUBLE CODE (DTC) INFORMATION ECM-U210765

see **DIAGNOSTIC TROUBLE CODE (DTC) INFORMATION ECM-U210765**

FAULT-TRACING

see **FAULT-TRACING**

ECM-U210782: COLLISION MITIGATION BY BRAKING. BUS SIGNAL / MESSAGE FAILURES. ALIVE / SEQUENCE COUNTER INCORRECT / NOT UPDATED (B6324S; 2007-2010)

DIAGNOSTIC TROUBLE CODE (DTC) INFORMATION ECM-U210782

Condition

Engine control module (ECM) uses signals from Forward Sensing Module (FSM) to provide brake support in case of collision risk (included in adaptive cruise control function).

The diagnostic trouble code (DTC) is stored if the control module detects that:

- Central electronic module (CEM) does not permit lowering of the engine torque.

The control module's test for the diagnostic trouble code (DTC) starts in the event of:

- Ignition switch position II.

NOTE: The control module can only detect the fault once the test has been started and the diagnostic trouble code (DTC) is stored when the conditions are met.

Substitute Value

- None.

Possible Source

- Fault-trace the Forward Sensing Module (FSM).
- Fault-trace the central electronic module (CEM).

Fault symptom[s]

- Message in information display

FAULT-TRACING

see **FAULT-TRACING**

ECM-U210782: COLLISION MITIGATION BY BRAKING. BUS SIGNAL / MESSAGE FAILURES. ALIVE / SEQUENCE COUNTER INCORRECT / NOT UPDATED (B6324S5; 2011-2012)

DIAGNOSTIC TROUBLE CODE (DTC) INFORMATION ECM-U210782

see **DIAGNOSTIC TROUBLE CODE (DTC) INFORMATION ECM-U210782**

FAULT-TRACING

see **FAULT-TRACING**

ECM-U210800: ADAPTIVE CRUISE CONTROL. GENERAL FAILURE INFORMATION. NO SUB TYPE INFORMATION (B6324S; 2007-2010)

DIAGNOSTIC TROUBLE CODE (DTC) INFORMATION ECM-U210800

Condition

The control module is continually supplied with information about whether adaptive cruise control is permitted or not from the Central electronic module (CEM) and the Forward Sensing Module (FSM) via CAN communication.

The Engine control module (ECM) checks the received information.

The diagnostic trouble code (DTC) is stored if the control module detects that:

- Received information states that adaptive cruise control is not permitted.

The control module's test for the diagnostic trouble code (DTC) starts in the event of:

- Ignition switch position II.

NOTE: **The control module can only detect the fault once the test has been started and the diagnostic trouble code (DTC) is stored when the conditions are met.**

Substitute Value

- Cruise control is disengaged when the fault is active.

Possible Source

- Fault-trace the central electronic module (CEM).
- Fault-trace the Forward Sensing Module (FSM).

Fault symptom[s]

- Cruise control does not operate

FAULT-TRACING

see **FAULT-TRACING**

ECM-U210800: ADAPTIVE CRUISE CONTROL. GENERAL FAILURE INFORMATION. NO SUB TYPE INFORMATION (B6324S5; 2011-2012)

DIAGNOSTIC TROUBLE CODE (DTC) INFORMATION ECM-U210800

see **DIAGNOSTIC TROUBLE CODE (DTC) INFORMATION ECM-U210800**

FAULT-TRACING

see **FAULT-TRACING**

ECM-U210882: ADAPTIVE CRUISE CONTROL. BUS SIGNAL / MESSAGE FAILURES. ALIVE / SEQUENCE COUNTER INCORRECT / NOT UPDATED (B6324S; 2007-2010)

DIAGNOSTIC TROUBLE CODE (DTC) INFORMATION ECM-U210882

Condition

The control module is continually supplied with necessary information about the steering wheel buttons for adaptive cruise control from the Central electronic module (CEM) via CAN communication.

The control module checks the communication with the Central electronic module (CEM).

The diagnostic trouble code (DTC) is stored if the control module detects that:

- No communication with the Central electronic module (CEM).

The control module's test for the diagnostic trouble code (DTC) starts in the event of:

- Ignition switch position II.

NOTE: The control module can only detect the fault once the test has been started and the diagnostic trouble code (DTC) is stored when the conditions are met.

Substitute Value

- Cruise control is disengaged when the fault is active.

Possible Source

- Open-circuit in the communication cable.
- Short-circuit to ground in the communication cable.
- Short-circuit to supply voltage in the communication cable.
- Contact resistance or oxidation in the terminals.
- Open-circuit in terminals.
- Short-circuit in connections.

Fault symptom[s]

- Cruise control does not operate

FAULT-TRACING

see **FAULT-TRACING**

ECM-U210882: ADAPTIVE CRUISE CONTROL. BUS SIGNAL / MESSAGE FAILURES. ALIVE / SEQUENCE COUNTER INCORRECT / NOT UPDATED (B6324S5; 2011-2012)

DIAGNOSTIC TROUBLE CODE (DTC) INFORMATION ECM-U210882

see **DIAGNOSTIC TROUBLE CODE (DTC) INFORMATION ECM-U210882**

FAULT-TRACING

see **FAULT-TRACING**

ECM-U300192: CONTROL MODULE IMPROPER SHUTDOWN. COMPONENT FAILURES. PERFORMANCE OR INCORRECT OPERATION (B6324S5; 2011-

2012)

DIAGNOSTIC TROUBLE CODE (DTC) INFORMATION ECM-U300192

Condition

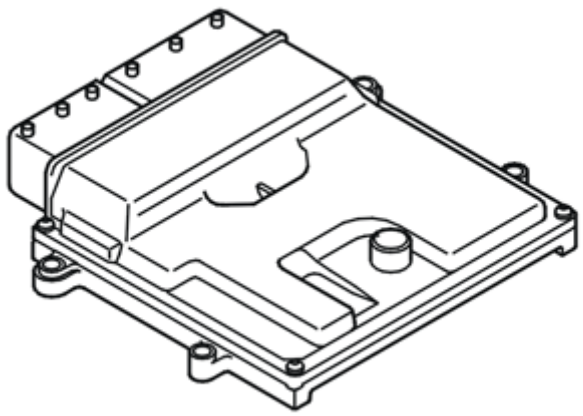

Fig. 158: Identifying Engine Control Module (ECM)
Courtesy of VOLVO CARS CORPORATION

The Engine control module (ECM) continuously monitors a number of internal signals through calculations and compares them. The aim is to ensure reliability during operation.

Some of the control module's internal checks are performed when the control module is switched off. i. e. after the engine has been switched off and the control module's run-on has ended.

The diagnostic trouble code (DTC) is stored if the control module detects that:

- Internal checks give unacceptable results.

The control module's test for the diagnostic trouble code (DTC) starts in the event of:

- Shutting off the control module.

Substitute Value

- Maximum vehicle speed limited.

Possible Source

- Sequential fault related to throttle. Therefore fault-trace for another diagnostic trouble code (DTC).
- Poorly charged battery or corroded connecting wiring.

- Damaged software in the engine control module (ECM).
- Damaged engine control module (ECM).

Fault symptom[s]

- Text window and warning symbol/Text message
- Driving/Poor performance/lacks power
- Driving/Hesitates/surges/Unsure when/at all times
- Driving/Hesitates/surges/During acceleration

FAULT TRACING

CHECKING THE BATTERY AND CONNECTIONS

Check the battery.

Check the battery terminals and the engine control module (ECM) connector. Check for contact resistance, play and oxidation.

- **Continue**

  Refer to **REPLACING THE COMPONENT**

REPLACING THE COMPONENT

The engine control module (ECM) has registered an internal fault.

If the fault is intermittent, it has been registered previously but is no longer present. Intermittent faults may be due to interference at start or may be a different type of fault that occurs on different occasions. The fault is evaluated depending on how it occurs.

Ensure that the software in the Engine control module (ECM) is correct by downloading it again.

If the fault recurs, replace the control module.

In the event of a permanent fault, replace the control module.

Remedy as necessary.

Other information

- see **ENGINE CONTROL MODULE (ECM)**

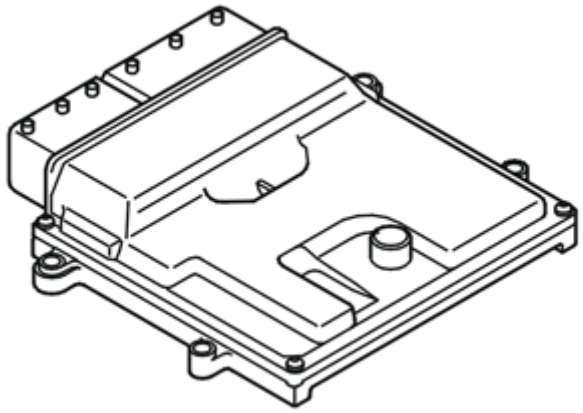

Fig. 159: Identifying Engine Control Module (ECM)
Courtesy of VOLVO CARS CORPORATION

- **Continue**

  Refer to **INFORMATION**

INFORMATION

FAULT-TRACING INFORMATION

In case of this defect, troubleshooting is not followed by verification.

The information can be displayed again or the fault-tracing for this fault can be interrupted.

ECM-XXXX: UNKNOWN DIAGNOSTIC TROUBLE CODE (DTC) FOR THE CURRENT CONTROL MODULE VERSION (B5254T2; 2003-2007)

UNKNOWN DIAGNOSTIC TROUBLE CODE (DTC) FOR THE CURRENT CONTROL MODULE VERSION

READING OFF DIAGNOSTIC TROUBLE CODES (DTCS)

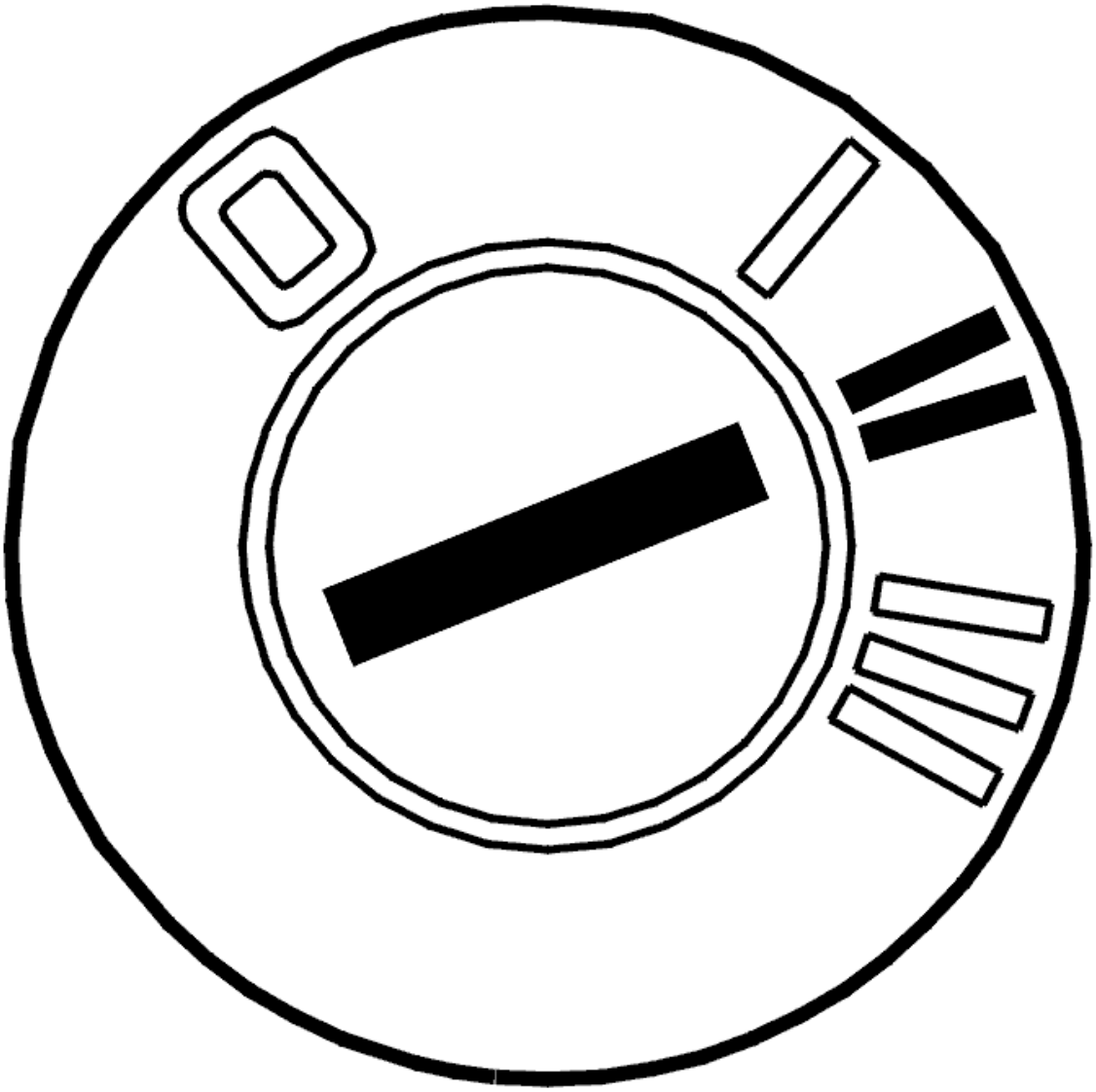

Fig. 160: Identifying Ignition ON
Courtesy of VOLVO CARS CORPORATION

- Ignition on.

  Read off the diagnostic trouble code (DTC) that is stored in the car.

  Make a note of the code. Report the code to VIDA customer support.

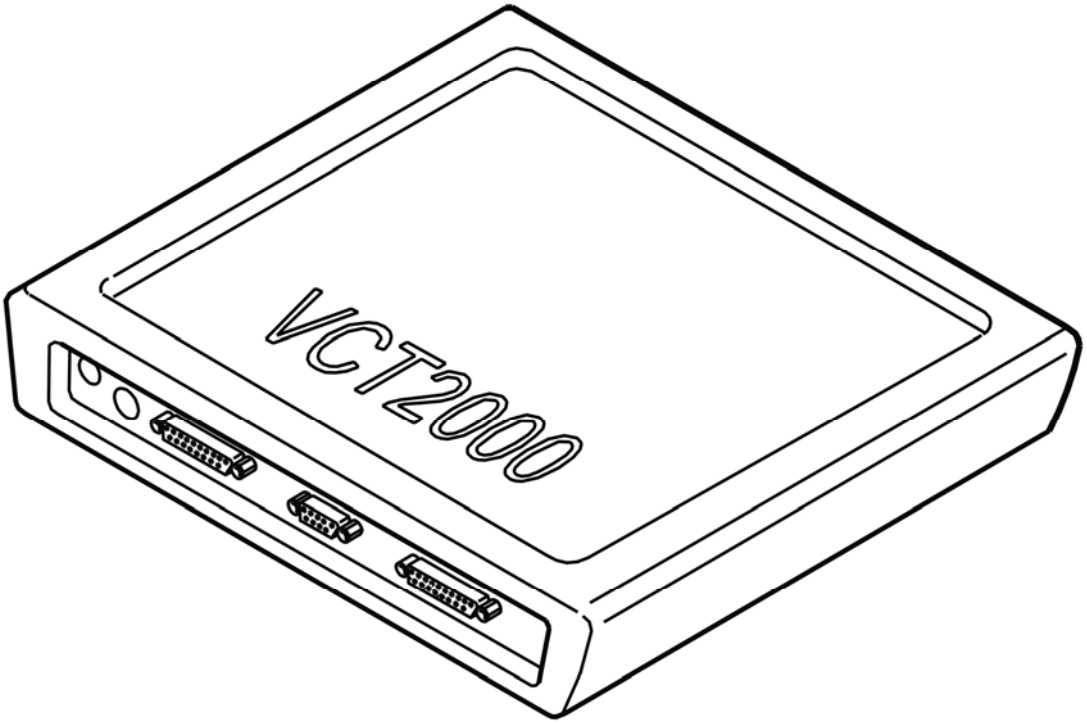

Fig. 161: Identifying VCT2000 Diagnostic Tool Symbol In VIDA
Courtesy of VOLVO CARS CORPORATION

ECM-XXXX: UNKNOWN DIAGNOSTIC TROUBLE CODE (DTC) FOR THE CURRENT CONTROL MODULE VERSION (B6294T; 2003-2006)

UNKNOWN DIAGNOSTIC TROUBLE CODE (DTC) FOR THE CURRENT CONTROL MODULE VERSION

see **UNKNOWN DIAGNOSTIC TROUBLE CODE (DTC) FOR THE CURRENT CONTROL MODULE VERSION**

ECM-XXXXXX: UNKNOWN DIAGNOSTIC TROUBLE CODE (DTC) FOR CURRENT CONTROL MODULE VERSION (B8444S; 2005-2011)

UNKNOWN DIAGNOSTIC TROUBLE CODE (DTC) FOR THE CURRENT CONTROL MODULE VERSION

READING OFF DIAGNOSTIC TROUBLE CODES (DTC)

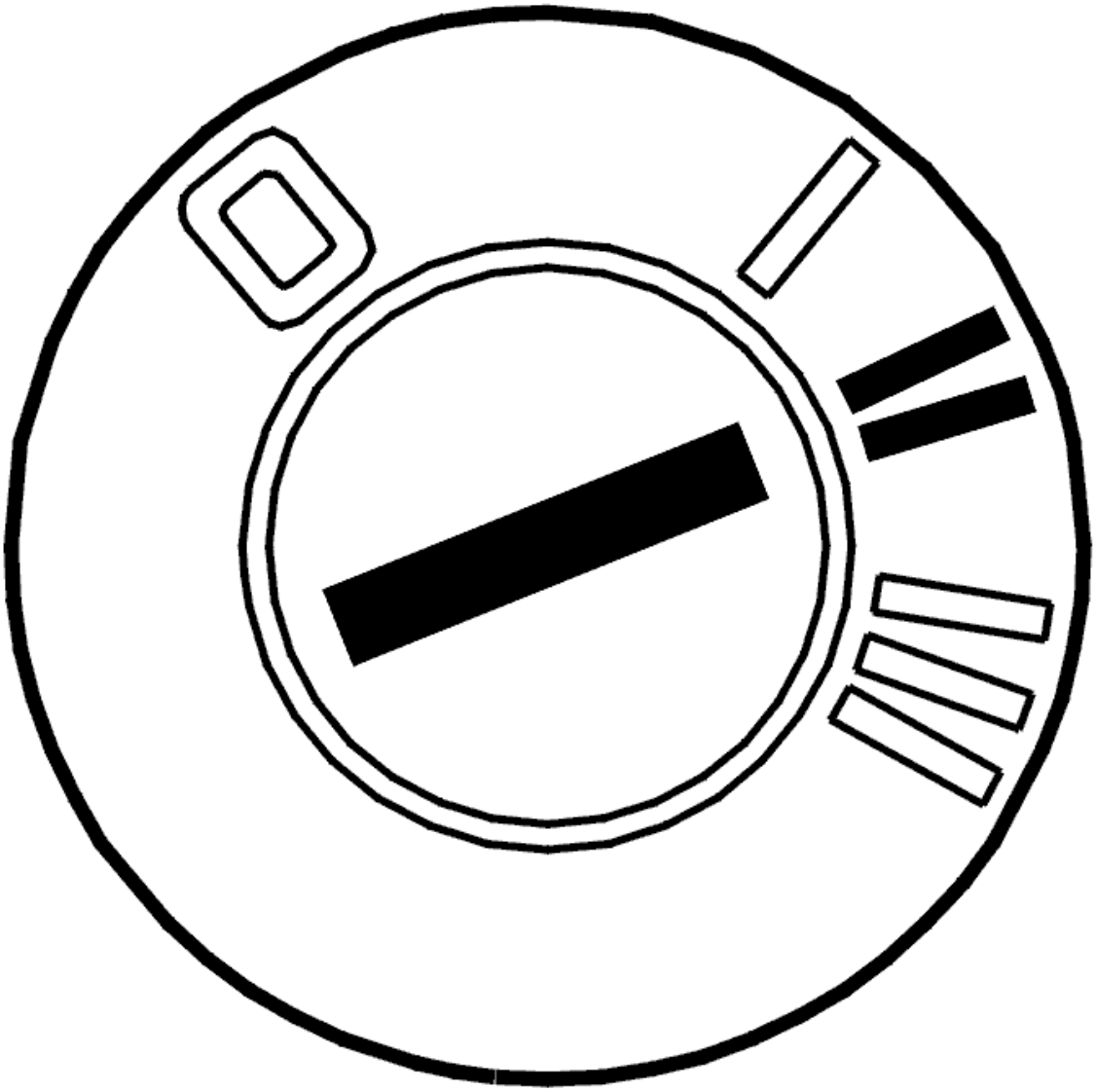

Fig. 162: Identifying Ignition ON
Courtesy of VOLVO CARS CORPORATION

- Ignition on

  Read the diagnostic trouble codes (DTCs) stored in the vehicle.

  Make a note of the figure group and advise customer support.

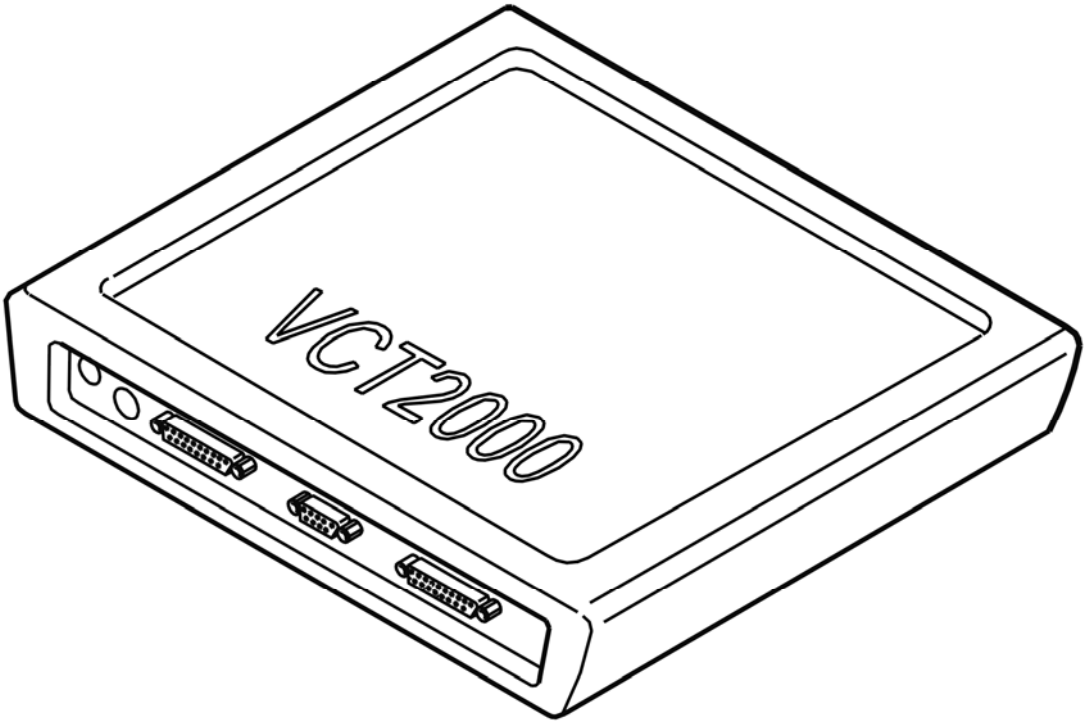

Fig. 163: Identifying VCT2000 Diagnostic Tool Symbol In VIDA
Courtesy of VOLVO CARS CORPORATION

ENGINE PERFORMANCE

Ignition And Control Systems - General Diagnostics and Tests

CHECKING POWER AND GROUND TERMINALS. ENGINE MANAGEMENT SYSTEM (B5254T2; 2005-2007)

CHECKING POWER SUPPLY AND GROUND TERMINAL, ENGINE CONTROL MODULE (ECM)

CHECKING POWER SUPPLY AND GROUND TERMINAL, ENGINE CONTROL MODULE (ECM)

Checking the power supply

- Check the fuse for power supply to engine control module (ECM) terminal #A17 (#A17).

  If the fuse is blown, check the circuit for a short-circuit to ground

- Check the fuse for power supply to engine control module (ECM) terminal #B11 (#B21).

  If the fuse is blown, check the circuit for a short-circuit to ground

- Check the power supply to engine control module (ECM) terminal #A17 (#A17). The voltage must be approximately battery voltage when the ignition is on.

  If the voltage is incorrect, check the cable between ignition switch terminal 30 and system relay terminal #3 and the cable between system relay terminal #5 and engine control module (ECM) terminal #A17 (#A17). Check for an open-circuit

- Check the power supply to engine control module (ECM) terminal #B11 (#B21). The voltage must be approximately battery voltage when the ignition is on.

  If the voltage is incorrect, check the cable between ignition switch terminal 30 and engine control module (ECM) terminal #B11 (#B21). Check for an open-circuit.

Checking ground terminal

- Check the ground leads between engine control module (ECM) terminals #A53 (#A53), #A54 (#A54), #A63 (#B3) and the common ground terminal in the body for the wiring. Check for an open-circuit
- Check the ground terminal in the body for the engine control module (ECM). Check for contact resistance and oxidation.

Remedy as necessary

Other information

- To connect the breakout box, see **CONNECTING THE BREAKOUT BOX**

- For information about signals on 5 cylinder engines, See **SIGNAL SPECIFICATION**
- For information about signals on 6 cylinder engines, see **SIGNAL SPECIFICATION**
- see **CHECKING WIRING AND TERMINALS**

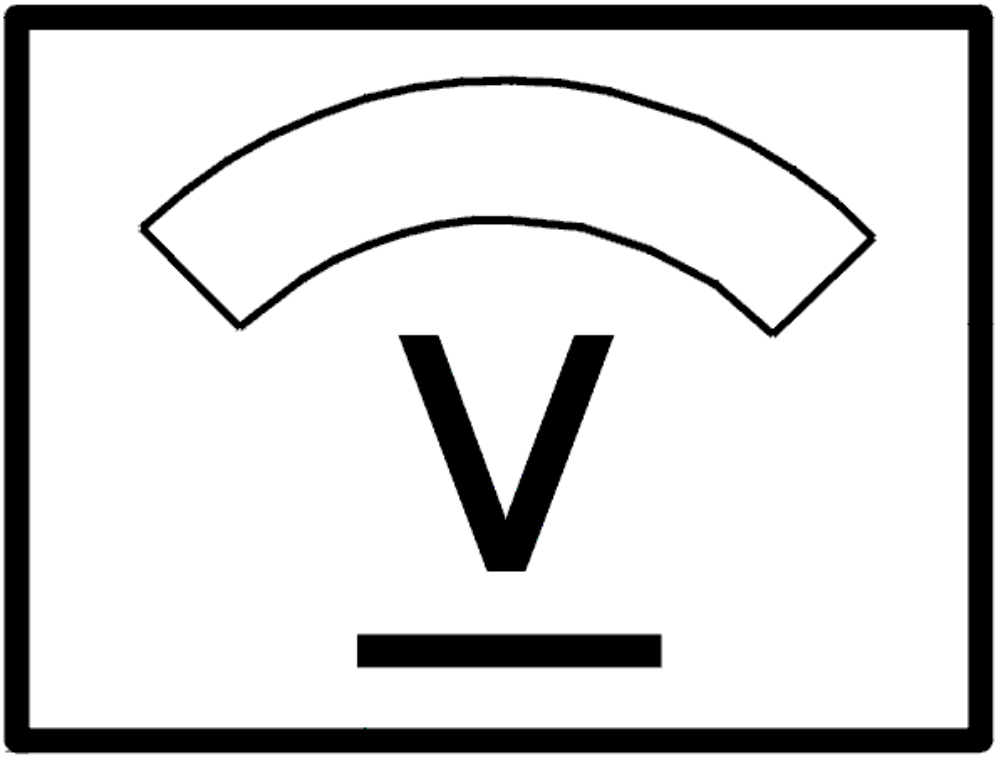

Fig. 1: Identifying Voltage Display
Courtesy of VOLVO CARS CORPORATION

CHECKING POWER AND GROUND TERMINALS. ENGINE MANAGEMENT SYSTEM (B6294T; 2005-2006)

CHECKING POWER SUPPLY AND GROUND TERMINAL, ENGINE CONTROL MODULE (ECM)

see **CHECKING POWER SUPPLY AND GROUND TERMINAL, ENGINE CONTROL MODULE (ECM)**

CHECKING THE SUPPLY VOLTAGE/GROUND TERMINAL, ENGINE CONTROL MODULE (ECM) (B6324S; 2007-2010)

CHECKING THE VOLTAGE / GROUND TERMINAL

POWER SUPPLY ENGINE CONTROL MODULE (ECM)

The engine control module (ECM) is supplied power via four voltage inputs on the control module.

With the ignition on, power is supplied to all voltage inputs and the engine control module (ECM) is in active mode.

1. Power input 1, terminal #B16 (#C16) is supplied with power via a fuse from the battery. This power input is used to power the memory in the Engine control module (ECM). In the event of an open-circuit, the engine control module (ECM) will be reset and adaptation values and diagnostic trouble codes (DTCs) and other information in the memory will disappear.
2. Voltage intake 2, #B15 (#C15) is supplied power from the ignition switch via the central electronic module (CEM). This power input is used to activate the system relay. The engine control module (ECM) will not be activated if there is an open-circuit.
3. Power input 3, terminal #B3 (#C3) is supplied with power via a fuse from the system relay. The system relay is activated by the engine control module (ECM). This power input governs the supply of power to the Engine control module (ECM).
4. Power input 4, terminal #B5 (#C5) is supplied with power via a fuse from the system relay. The system relay is activated by the engine control module (ECM). This power input governs the supply of power to the Engine control module (ECM).

Checking the power supply

Check the power supply cable from the battery to the Engine control module (ECM) terminal #B16 (#C16). Check for an open-circuit. Check for loose connections. Check for contact resistance. Check for oxidation. Check the fuse. The voltage must be approximately battery voltage.

Check the power supply cable from the start control module (SCU) to engine control module (ECM) terminal #B15 (#C15). Check for an open-circuit. Check for loose connections. Check for contact resistance. Check for oxidation. Check the fuse. The voltage must be approximately battery voltage.

Check the power supply from the system relay to engine control module (ECM) terminals #B3 (#C3) and #B5 (#C5). Check for an open-circuit. Check for loose connections. Check for contact resistance. Check for oxidation. Check the fuse. The voltage must be approximately battery voltage when the ignition is on.

Ground terminal engine control module (ECM)

Then engine control module (ECM) has three ground inputs. All ground inputs from the control module are connected via three separate ground leads to the same ground terminal in the car body.

1. Ground input 1, #B2 (#C2) is power ground and is connected to the ground terminal in the body.

2. Ground input terminal 2, #B4 (#C4), is power ground and is connected to the ground terminal in the car body.
3. Ground input terminal 3, #B6 (#C6), is power ground and is connected to the ground terminal in the car body.

Checking the ground terminal

Check the ground lead between engine control module (ECM) ground terminals #B2 (#C2), #B4 (#C4) and #B6 (#C6). Check for an open-circuit. Check for loose connections. Check for contact resistance. Check for oxidation. With the ignition on, the drop in voltage between the ground connection for the control module and the ground terminal must not be greater than 0.5 V.

Remedy as necessary.

Other information

- see **CONNECTING THE BREAKOUT BOX**
- see **SIGNAL SPECIFICATION**
- see **CHECKING WIRING AND TERMINALS**

CHECKING THE SUPPLY VOLTAGE/GROUND TERMINAL, ENGINE CONTROL MODULE (ECM) (B6324S5; 2011-2012)

CHECKING THE VOLTAGE / GROUND TERMINAL

see **CHECKING THE VOLTAGE / GROUND TERMINAL**

CHECKING THE SUPPLY VOLTAGE/GROUND TERMINAL, ENGINE CONTROL MODULE (ECM) (B8444S; 2005-2011)

CHECKING THE VOLTAGE / GROUND TERMINAL

CHECKING THE POWER SUPPLY AND GROUND TERMINALS

Power supply engine control module (ECM)

The engine control module (ECM) is powered via five power inputs on the control module.

With the ignition on, power is supplied to all voltage inputs and the engine control module (ECM) is in active mode.

1. Power input 1, terminal #B54 (#C54) is constantly supplied with power from the battery. This power input is used to power the memory in the Engine control module (ECM). In the event of an open-circuit, the engine control module (ECM) will be reset and adaptation values and diagnostic trouble codes (DTCs) and other information in the memory will disappear.

2. Power input 2, terminal #B27 (#C27) is temporarily supplied with power from the central electronic module (CEM) when the key is inserted in the ignition switch. This power input is used to prepare the engine for start-up, e. g. temporarily activates the system relay and the fuel pump. The engine control module (ECM) will not be activated if there is an open-circuit.
3. Power input 3, terminal #B30 (#C30) is supplied with power from the ignition switch via the central electronic module (CEM) with the ignition on. This power input is used to activate the system relay. The engine control module (ECM) will not be activated if there is an open-circuit.
4. Power input 4, terminal #B4 (#C4) is supplied with power from the system relay. The system relay is activated by the Engine control module (ECM) with the ignition on. This power input governs the supply of power to the Engine control module (ECM). The engine control module (ECM) will not be activated if there is an open-circuit.
5. Power input 5, terminal #B6 (#C6) is supplied with power from the system relay. The system relay is activated by the Engine control module (ECM) with the ignition on. This power input governs the supply of power to the throttle unit. In the event of an open-circuit, the engine control module (ECM) will be activated but the throttle unit will not be activated.

Checking the power supply

Check the power supply cable from the battery to the Engine control module (ECM) terminal #B54 (#C54). Check for an open-circuit. Check for loose connections. Check for contact resistance. Check for oxidation. The voltage must be approximately battery voltage.

Check the power supply cable from the Central electronic module (CEM) to the Engine control module (ECM) terminal #B30 (#C30). Check for an open-circuit. Check for loose connections. Check for contact resistance. Check for oxidation. The voltage must be battery voltage when the key is in the ignition switch.

Check the power supply from the system relay to the Engine control module (ECM) terminal #B30 (#C30), #B4 (#C4) and #B6 (#C6). Check for an open-circuit. Check for loose connections. Check for contact resistance. Check for oxidation. The voltage must be approximately battery voltage when the ignition is on.

Ground terminal engine control module (ECM)

The Engine control module (ECM) has four ground inputs that are all internally connected in the control module.

1. Ground input 1, #B1 (#C1) is power ground and is connected to the ground terminal in the body.
2. Ground input 2, #B2 (#C2) is power ground and is connected to the ground terminal in the body.
3. Ground input 3, #B3 (#C3) is power ground and is connected to the ground terminal in the body.
4. Ground input 4, #B5 (#C5) is power ground and is connected to the ground terminal in the body.

Checking the ground terminal

Check the ground cable between the Engine control module (ECM) terminal #B1 (#C1), #B2 (#C2), #B3 (#C3), #B5 (#C5) and the ground terminal. Check for an open-circuit. Check for loose connections. Check for contact resistance. Check for oxidation. With the ignition on, the drop in voltage between the ground connection for the control module and the ground terminal must not be greater than 0.5 V.

Remedy as necessary.

Other information

- see **CONNECTING THE BREAKOUT BOX**
- see **SIGNAL SPECIFICATION, ENGINE CONTROL MODULE (ECM)**
- see **CHECKING WIRING AND TERMINALS**

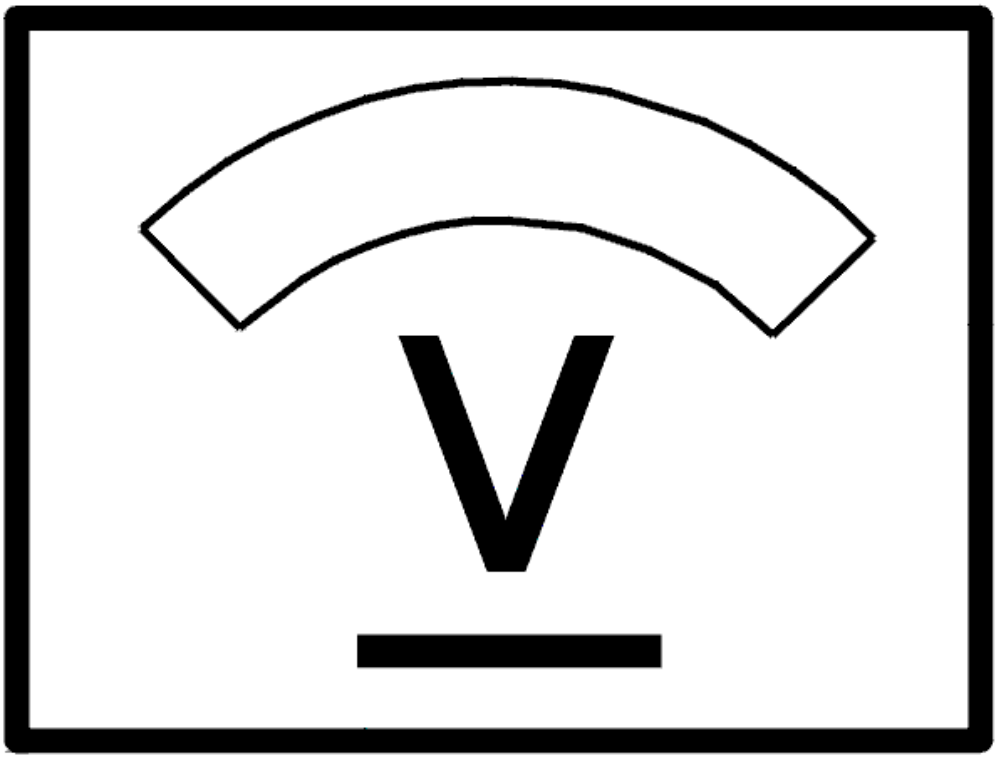

Fig. 2: Identifying Voltage Display
Courtesy of VOLVO CARS CORPORATION

CONNECTING THE BREAKOUT BOX, ENGINE CONTROL MODULE (ECM) (B6324S; 2007-2010)

CONNECTING THE BREAKOUT BOX

Special tools:

see **9512902**

see **9512974**

see **9511428**

see **9511499**

HINT: The breakout box is designed to facilitate the reading of control module input and output signals when the control module is connected as well as the resistance of cables and components when the control module is disconnected. Using the breakout box reduces the risk of unintentionally short-circuited cables or damaged connector pins.

CONTROL MODULE DISCONNECTION

- Wait 3 minutes after switching off the ignition before disconnecting the connectors from the engine control module (ECM). The system relay must be voltage free **before** the control module can be removed from the vehicle. If the engine cooling fan (FC) runs on after the ignition has been switched off, wait until it stops and then wait for a further 3 minutes.
- Remove the engine control module (ECM).

  see **ENGINE CONTROL MODULE (ECM)**

- Install the cover plate see **9512974** over the hole after the engine control module (ECM).

NOTE: Ensure that the cover plate is properly sealed

ADAPTER CONNECTION

- Check that no connector pins or sleeves are damaged.
- Check that the male and female terminals on the engine control module (ECM) are undamaged and secure (cannot be pressed in). Check that the cables to the female terminals are secured to the terminal pins.
- Carefully install the vehicle wiring harness on see **9512902** . Lock the connectors in position by pressing in the catches fully.

BREAKOUT BOX AND ENGINE CONTROL MODULE (ECM) CONNECTION

- Connect breakout box see **9511428** to the adapter via wiring harness see **9511499** .
- Carefully install the adapter on the engine control module (ECM). Lock the adapter in position by pressing in the catches fully.

REMOVING THE ADAPTER AND CONNECTORS

- Wait 3 minutes after the ignition has been switched off. The main relay must be voltage free **before** the

control module can be removed from the vehicle. If the engine cooling fan (FC) runs on after the ignition has been switched off, wait until it stops and then wait for a further 3 minutes.

NOTE: Do not touch the terminal pins of the engine control module (ECM) with your fingers. Engine control module (ECM) components can be damaged by static electricity.

- Carefully detach the engine control module (ECM) from the adapter wiring harness.
- Carefully detach the adapter from the vehicle wiring harness.
- Remove the cover plate.

CONTROL MODULE CONNECTION

- Check that no pins or sockets are damaged on the connector.
- Install the engine control module (ECM).

see **ENGINE CONTROL MODULE (ECM)**

CONNECTING THE BREAKOUT BOX, ENGINE CONTROL MODULE (ECM) (B6324S5; 2011-2012)

CONNECTING THE BREAKOUT BOX

see **CONNECTING THE BREAKOUT BOX**

CONNECTING THE BREAKOUT BOX, ENGINE CONTROL MODULE (ECM) (B8444S; 2005-2011)

CONNECTING THE BREAKOUT BOX

Special tools:

see **9512902**

see **9512974**

see **9511428**

see **9511499**

HINT: The breakout box is designed to facilitate the reading of control module input and output signals when the control module is connected as well as the resistance of cables and components when the control module is disconnected. Using the breakout box reduces the risk of unintentionally short-circuited cables or damaged connector pins.

CONTROL MODULE DISCONNECTION

- Wait 3 minutes after switching off the ignition before disconnecting the connectors from the engine control module (ECM). The system relay must be voltage free **before** the control module can be removed from the vehicle. If the engine cooling fan (FC) runs on after the ignition has been switched off, wait until it stops and then wait for a further 3 minutes.
- Remove the engine control module (ECM).

  see **ENGINE CONTROL MODULE (ECM), REPLACING**

- Install cover plate see **9512974** over the hole after the engine control module (ECM).

NOTE: Ensure that the cover plate is properly sealed

ADAPTER CONNECTION

- Check that no connector pins or sleeves are damaged.
- Check that the male and female terminals on the engine control module (ECM) are undamaged and secure (cannot be pressed in). Check that the cables to the female terminals are secured to the terminal pins.
- Carefully install the vehicle wiring harness on see **9512902** . Lock the connectors in position by pressing in the catches fully.

BREAKOUT BOX AND ENGINE CONTROL MODULE (ECM) CONNECTION

- Connect breakout box see **9511428** to the adapter via wiring harness see **9511499** .
- Carefully install the adapter on the engine control module (ECM). Lock the adapter in position by pressing in the catches fully.

REMOVING THE ADAPTER AND CONNECTORS

- Wait 3 minutes after the ignition has been switched off. The main relay must be voltage free **before** the control module can be removed from the vehicle. If the engine cooling fan (FC) runs on after the ignition has been switched off, wait until it stops and then wait for a further 3 minutes.

  NOTE: Do not touch the terminal pins of the engine control module (ECM) with your fingers. Engine control module (ECM) components can be damaged by static electricity.

- Carefully detach the engine control module (ECM) from the adapter wiring harness.
- Carefully detach the adapter from the vehicle wiring harness.
- Remove the cover plate.

CONTROL MODULE CONNECTION

- Check that no pins or sockets are damaged on the connector.

- Install the engine control module (ECM).

  see **ENGINE CONTROL MODULE (ECM), REPLACING**

CONNECTING THE TEST BOX (AW50/51 AWD; AW55-50/51SN; 2003-2004)

CONNECTING THE BREAKOUT BOX

Special tools:

see **9511504**

see **9511428**

see **9511499**

see **9995722**

REMOVING THE CONTROL MODULE

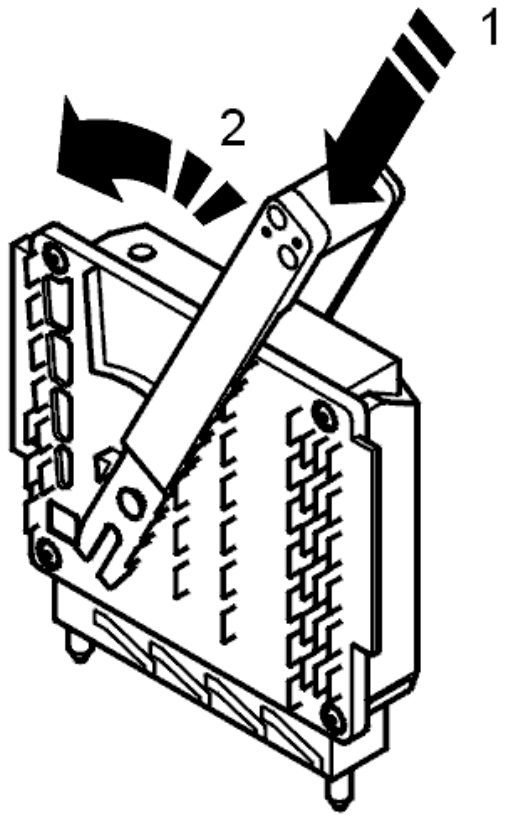

Fig. 3: Removing Engine Control Module
Courtesy of VOLVO CARS CORPORATION

- Wait 2 minutes after the ignition has been switched off. The main relay must be voltage free **before** the control module is removed from the car. If the engine cooling fan (FC) runs on after the ignition has been switched off, wait until it stops and then wait for a further 2 minutes
- Remove the cover over the control module box. Put the cover to one side.

NOTE: **Do not touch the control module terminal pins with your fingers. Static electricity may damage components in the control module.**

- Insert tool see **9995722** around the control module
- Move the upper section of the tool backwards as far as it will go. Pull up the tool
- Carefully pull up the control module.

CONNECTING THE ADAPTER

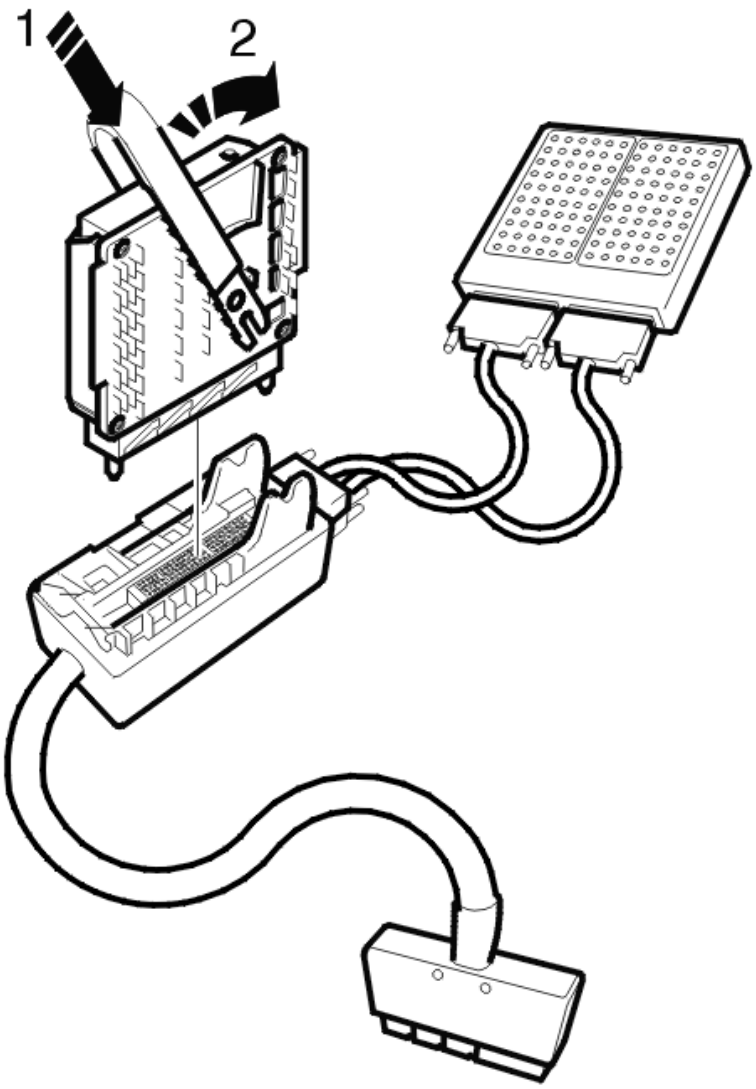

Fig. 4: Identifying Adapter

Courtesy of VOLVO CARS CORPORATION

- Check that no pins or sockets are damaged on the connector
- Gently press adapter see **9511504** down into the grooves inside the control module box. Press to the limit position!
- Insert tool see **9995722** around the adapter
- Move the upper section of the tool forwards as far as it will go. Pull the tool up.

CONNECTING THE BREAKOUT BOX

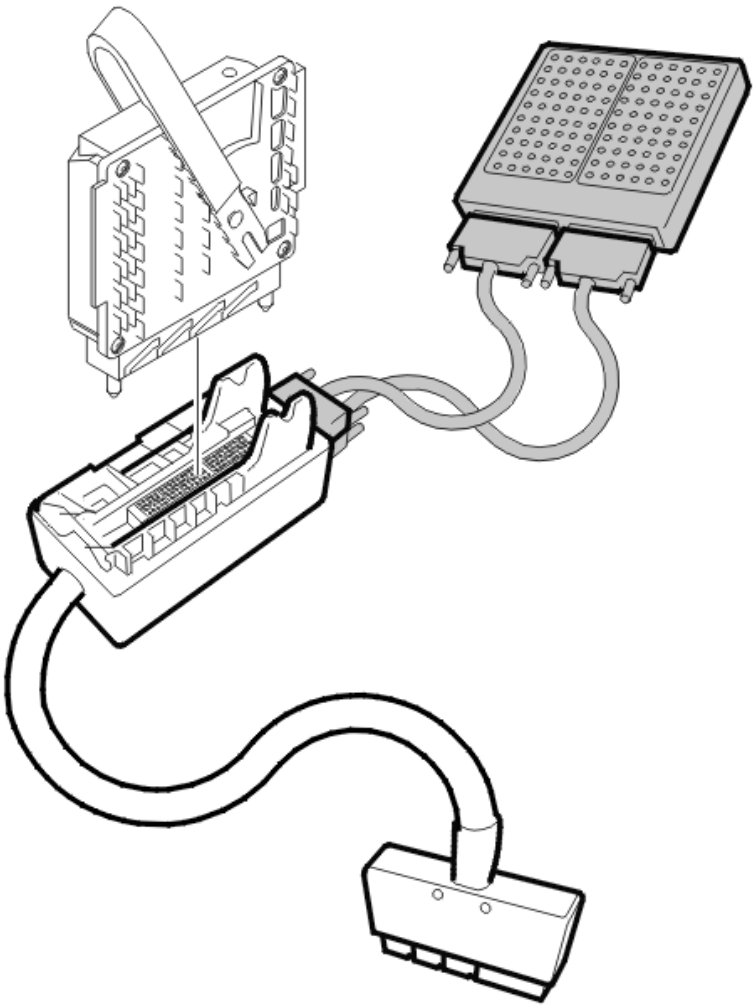

Fig. 5: Identifying Breakout Box
Courtesy of VOLVO CARS CORPORATION

- Check the control module and control module connectors to ensure that the male and female terminals are undamaged and secure (cannot be pressed in). Check that the cables to the female terminals are secured to

the terminal pins

- Connect adapter see **9511504** to the control module connector (wiring side). Connect breakout box see **9511428** to the adapter via wiring see **9511499**
- The breakout box is designed to facilitate reading off the control module input and output signals when the control module is connected; and the cable and component resistance when the control module is disconnected. The use of a breakout box reduces the risk of accidental short-circuits and damage to the connector pins.

REMOVING THE ADAPTER

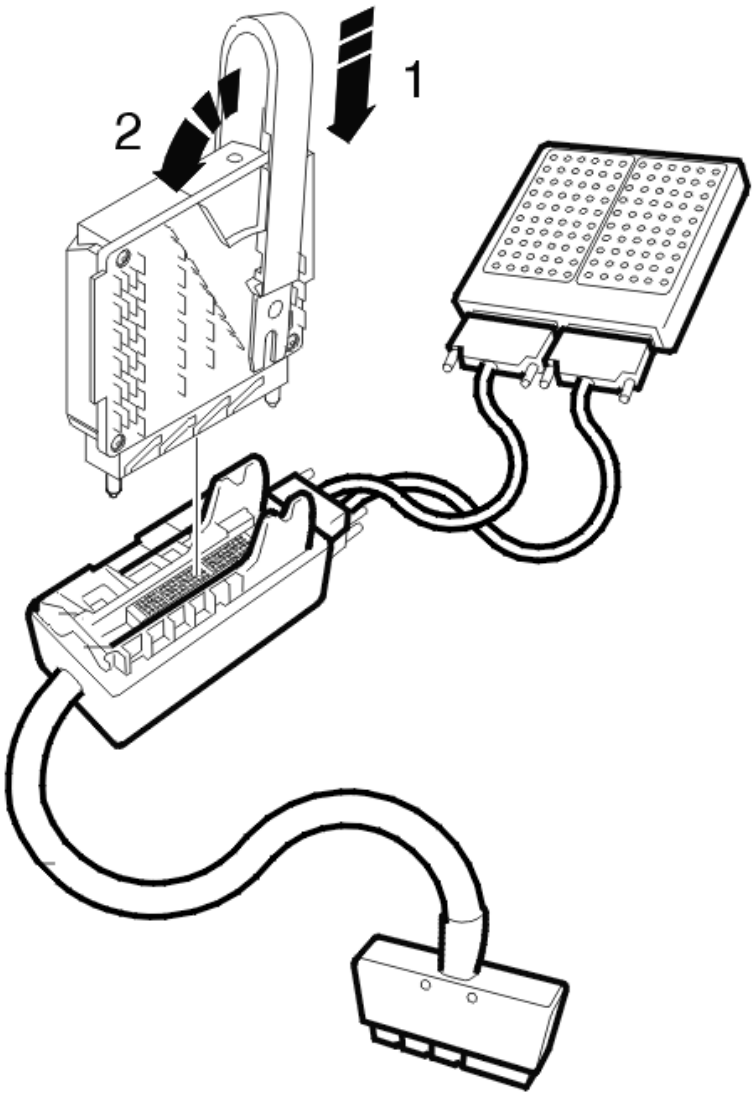

Fig. 6: Identifying Adapter
Courtesy of VOLVO CARS CORPORATION

- Wait 2 minutes after the ignition has been switched off. The main relay must be voltage free **before** removing the control module from the car. If the engine cooling fan (FC) runs on after the ignition has been switched off, wait until it stops and then wait for a further 2 minutes

NOTE: **Do not touch the control module terminal pins with your fingers. Static electricity may damage components in the control module.**

- Insert tool see **9995722** around the adapter
- Move the upper section of the tool backwards as far as it will go. Pull up the tool
- Carefully pull up the adapter.

INSTALLING THE CONTROL MODULE

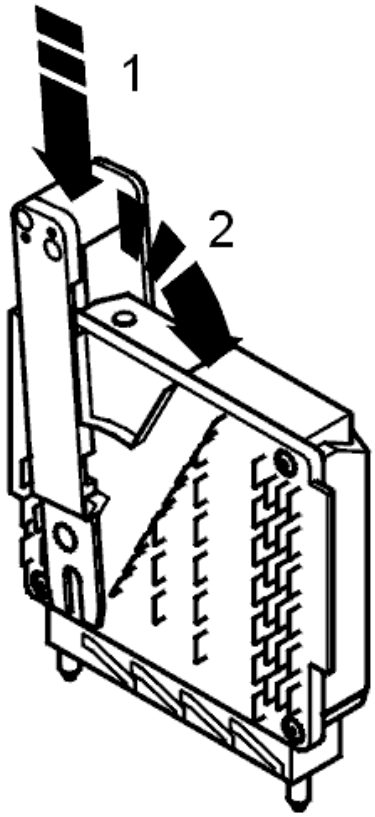

Fig. 7: Installing Engine Control Module
Courtesy of VOLVO CARS CORPORATION

- Check that no pins or sockets are damaged on the connector
- Gently press the control module down into the grooves inside the control module box. Press to the limit position!
- Insert tool see **9995722** around the control module
- Move the upper section of the tool forwards as far as it will go. Pull the tool up
- Press the cover into place over the control modules
- Check that the air ducts are correctly positioned.

CONNECTING THE TEST BOX (B5254T2; 2003-2007)

CONNECTING THE BREAKOUT BOX

see **CONNECTING THE BREAKOUT BOX**

CONNECTING THE TEST BOX (B6294T; 2003-2006)

CONNECTING THE BREAKOUT BOX

see **CONNECTING THE BREAKOUT BOX**

CONVERSION TABLE STANDARDIZED DIAGNOSTIC TROUBLE CODES/VOLVO DIAGNOSTIC TROUBLE CODES (B5254T2; 2005-2007)

CONVERSION TABLE STANDARDIZED DIAGNOSTIC TROUBLE CODES/VOLVO DIAGNOSTIC TROUBLE CODES

see **CONVERSION TABLE STANDARDIZED DIAGNOSTIC TROUBLE CODES/VOLVO DIAGNOSTIC TROUBLE CODES**

CONVERSION TABLE STANDARDIZED DIAGNOSTIC TROUBLE CODES/VOLVO DIAGNOSTIC TROUBLE CODES (B6294T; 2005-2006)

CONVERSION TABLE STANDARDIZED DIAGNOSTIC TROUBLE CODES/VOLVO DIAGNOSTIC TROUBLE CODES

see **CONVERSION TABLE STANDARDIZED DIAGNOSTIC TROUBLE CODES/VOLVO DIAGNOSTIC TROUBLE CODES**

MEASURING THE ETHANOL CONTENT (2005-2009)

MEASURING THE ETHANOL CONTENT

The method works for gasoline-ethanol fuel.

NOTE: **First read the safety instructions for handling fuel.**

Drain the fuel carefully from the vehicle.

NOTE: **The fuel should be drained from the fuel distribution pipe and not from the fuel filling pipe/tank.**

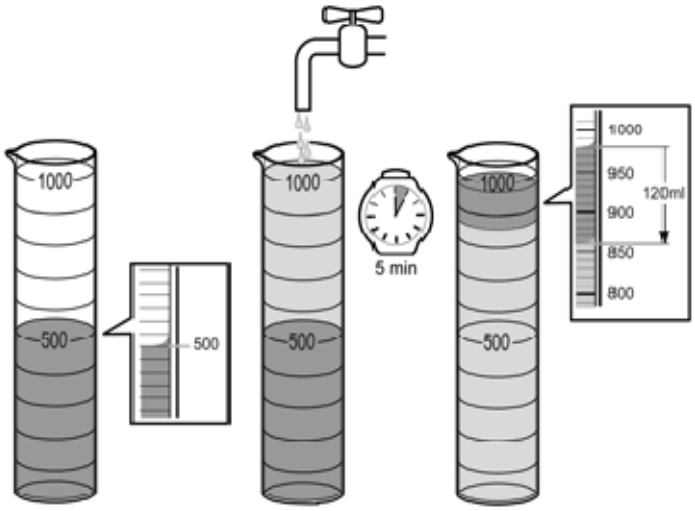

Fig. 8: Measuring Ethanol Content
Courtesy of VOLVO CARS CORPORATION

Mix equal parts of fuel and water in a graduated, transparent container. Let stand for at least 5 minutes. The ethanol dissolves in the water and the mixture separates into layers. Gasoline is the lightest and ends up at the top.

Read off the number of graduation steps of gasoline and compare to the number of graduation steps of fuel that has been added. Best accuracy is achieved with a long-narrow measuring glass. Suitable design of version measuring glass is total volume of 500 ml with markings for every 5 ml, or total volume of 1, 000 ml with markings for every 10 ml.

CAUTION: Measuring has to be accurate.

Example: Mix 500 ml fuel with approx. equal parts water. After the ethanol has dissolved we can assume that the measured amount of gasoline is 120 ml.

Gasoline content is then calculated to: 120 ml/500 ml = 0.24 = 24%

This, ethanol content is: 100%-24% = 76%

HINT: When the ethanol dissolves in the water the fluids' total volume is reduced. To facilitate read-off you can fill the container with more water. Note that this does not affect the calculations above, since this takes place in relation to the amount of added fuel.

MEASURING THE ETHANOL CONTENT (B8444S; 2010-2011)

MEASURING THE ETHANOL CONTENT

see **MEASURING THE ETHANOL CONTENT**

ENGINE PERFORMANCE

Ignition And Control Systems - General Information

CONTROL MODULE GENERAL INFORMATION

CONTROL MODULES

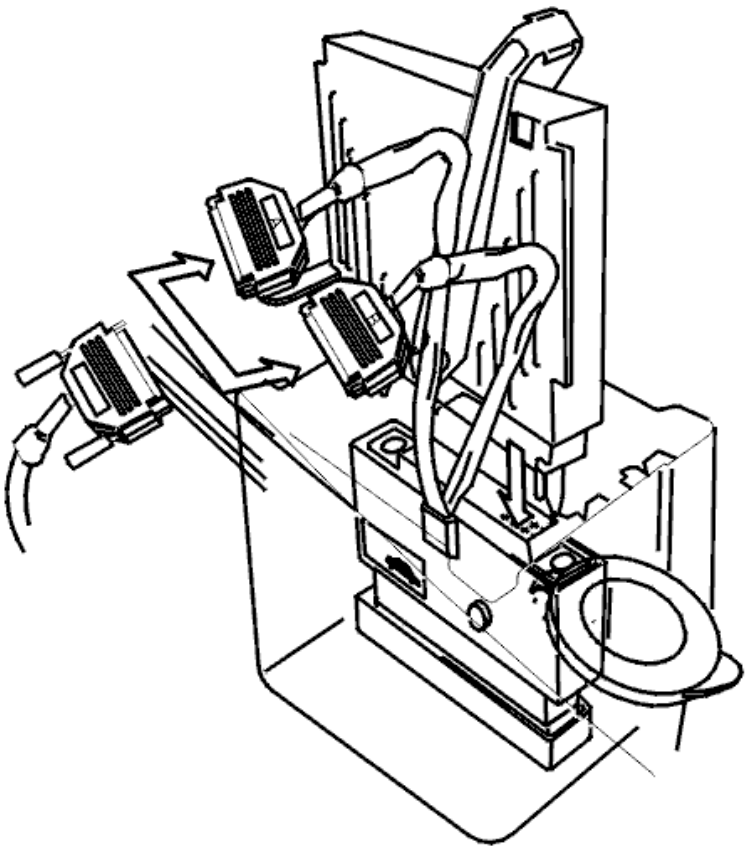

Fig. 1: Control Module And Connectors
Courtesy of VOLVO CARS CORPORATION

Connecting and disconnecting control modules

Always switch off the ignition before connecting and disconnecting control modules, connectors and the breakout box.

The ignition must be switched off when taking readings with an ohmmeter.

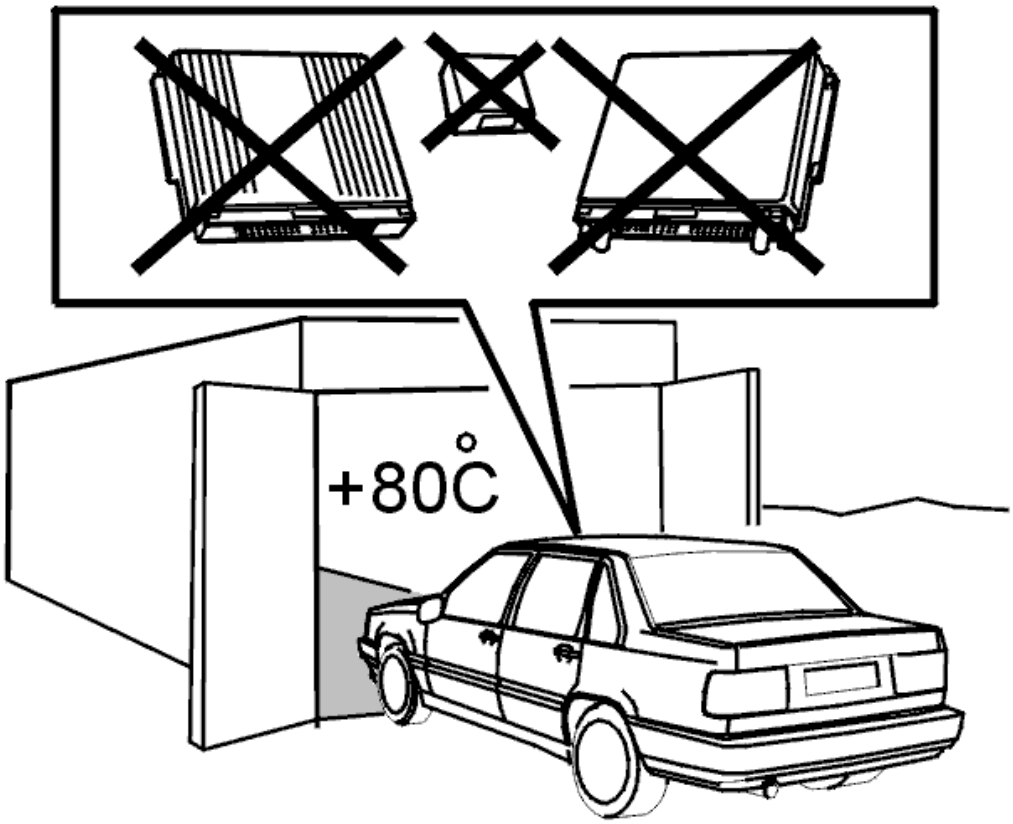

Fig. 2: Identifying Precaution For Storing Control Module In High Temperature
Courtesy of VOLVO CARS CORPORATION

Temperature

The control modules must not be heated to above 80°C. Remove control modules when stoving for example.

Arc welding

Always disconnect the battery negative lead to prevent a short-circuit.

Position the welding ground as close to the welding site as possible, otherwise different ground potentials may be generated in different components.

When welding close to an electronic module, the unit **must** be removed to avoid heat damage.

Replacement

Do not replace a control module without checking its wiring and components. Otherwise the new component may be damaged in the same way as the old one.

ENGINE PERFORMANCE

Ignition And Control Systems - General Safety Information

GENERAL SAFETY INFORMATION

BATTERY, CHARGING

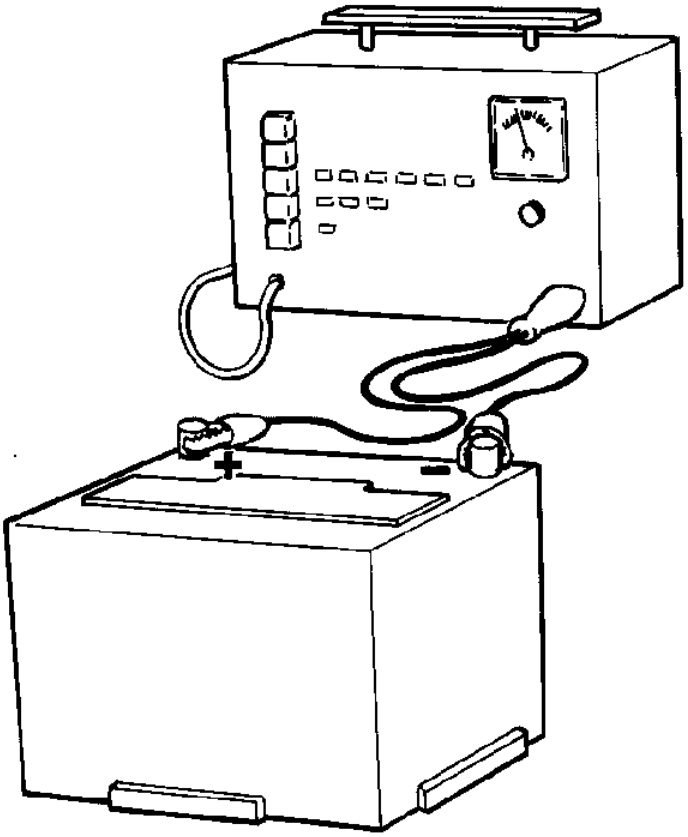

Fig. 1: Charging Battery
Courtesy of VOLVO CARS CORPORATION

It is important that the battery voltage is normal (approximately 12 V) when testing the car system components. If necessary a battery charger can be connected during the test.

Connect the battery charger to the battery terminals. Charge the battery for approximately 10 hours at the recommended current - maximum 6 A.

Example: If the battery is marked 520 A, the recommended charge current is 0.01x520 = 5.2 A.

A higher than recommended charge current may damage the battery.

NOTE: **Boost charging (with a high current or voltage above 16 V) will damage the battery and is prohibited.**

WARNING: Explosive oxyhydrogen accumulates when the battery charges. Smoking, welding, grinding or other activities involving sparks or naked flames are prohibited in the vicinity of a charging battery. Only charge the battery in a well ventilated area.

CLEANLINESS

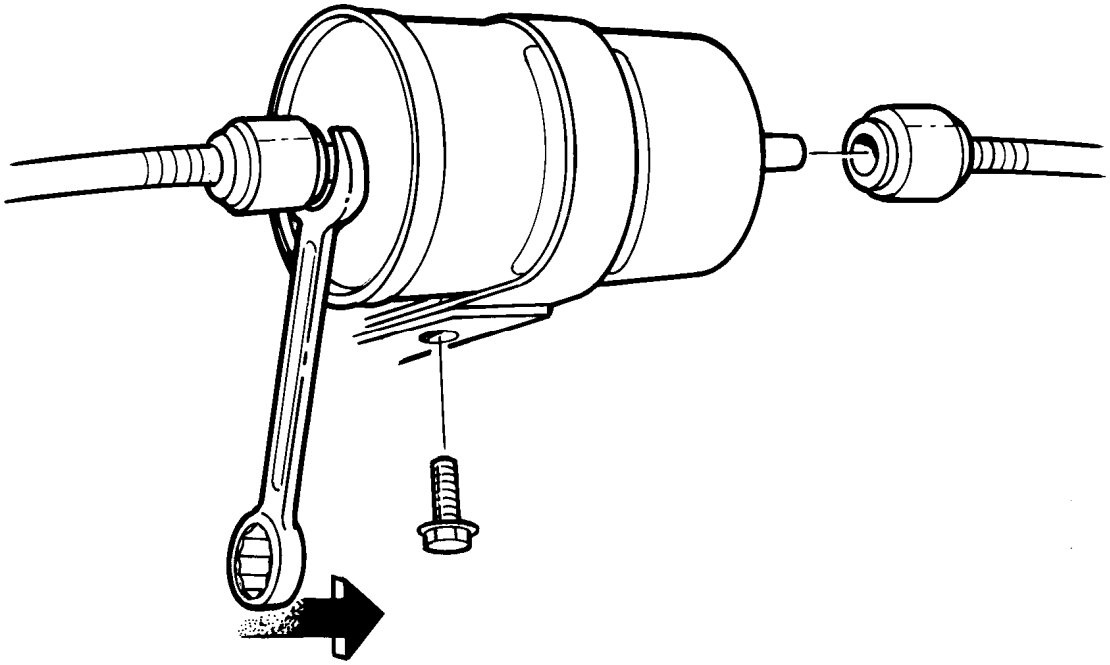

Fig. 2: Disconnecting/Connecting Fuel Line Connections
Courtesy of VOLVO CARS CORPORATION

Cleanliness is particularly important when working on the fuel system.

Clean the fuel line connections thoroughly before disconnecting them.

IGNITION AND HIGH VOLTAGE COMPONENTS

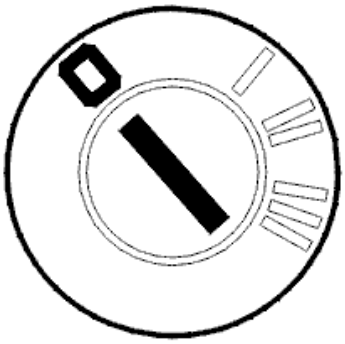

Fig. 3: Identifying Ignition In Off Position

Courtesy of VOLVO CARS CORPORATION

Switch off the ignition before:

- Connecting and disconnecting the test instruments
- Connecting and disconnecting the connectors
- Taking readings using an ohmmeter.

Fig. 4: Identifying Low & High Voltage Circuit Caution
Courtesy of VOLVO CARS CORPORATION

High voltage

There are dangerous voltages at all points in the ignition system, including the connectors etc.

WARNING: **The ignition system operates at high power and voltages. Contact with the high tension circuit - the ignition coil, spark plug caps and distributor cap - is dangerous.**

CAUTION: **Because of the fire hazard avoid sparking when working on the fuel system, especially when checking the injectors.**

WHEN COMPRESSION TESTING

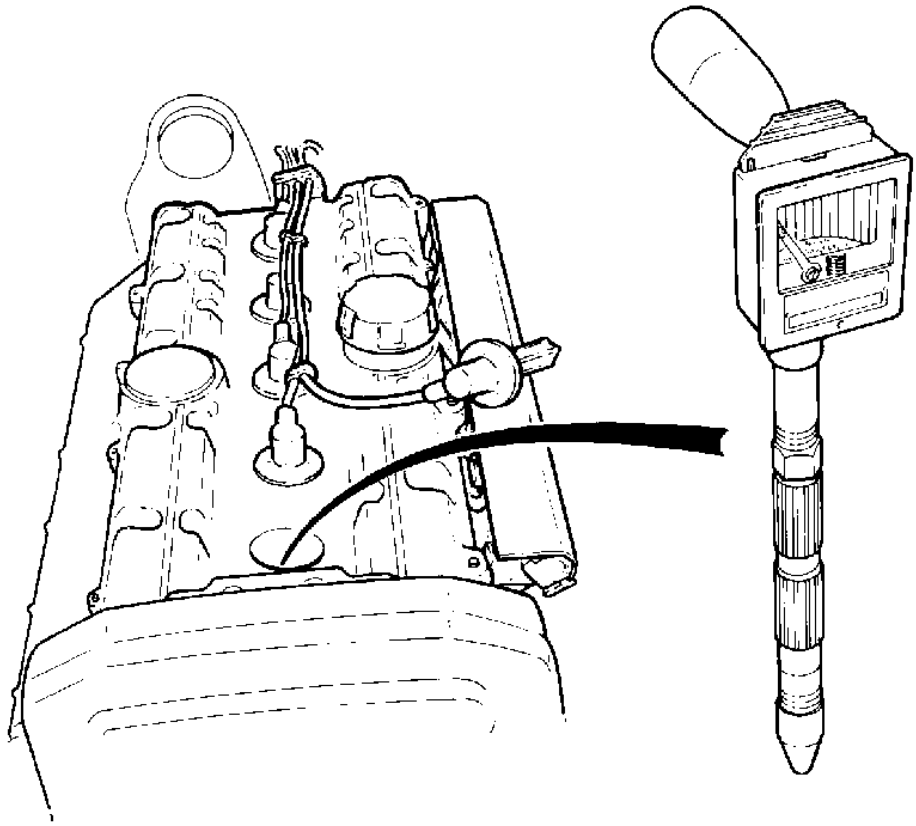

Fig. 5: Compression Testing
Courtesy of VOLVO CARS CORPORATION

- Disconnect engine speed (RPM) sensor before carrying out a compression test.
- The diagnostic trouble code (DTC) must be erased when the engine speed (RPM) sensor has been reconnected.

ENGINE PERFORMANCE

Ignition And Control Systems - Removal, replacement and installation

CONTROL SYSTEM, FUEL SUPPLY (B5254T2; 2003)

ENGINE CONTROL MODULE (ECM), REPLACING

see **ENGINE CONTROL MODULE (ECM), REPLACING**

FUEL PUMP DRIVER MODULE

see **FUEL PUMP DRIVER MODULE**

KNOCK SENSOR (KS), REPLACING

see **KNOCK SENSOR (KS), REPLACING**

REPLACING THE THERMOSTAT AND/OR ENGINE COOLANT TEMPERATURE SENSOR

see **REPLACING THE THERMOSTAT AND/OR ENGINE COOLANT TEMPERATURE SENSOR**

TEMPERATURE AND PRESSURE SENSORS, REPLACING

see **TEMPERATURE AND PRESSURE SENSORS, REPLACING**

CONTROL SYSTEM, FUEL SUPPLY (B5254T2; 2004)

ENGINE CONTROL MODULE (ECM), REPLACING

Special tools:

see **9995722**

POINTS TO OBSERVE WHEN REPLACING THE CONTROL MODULE

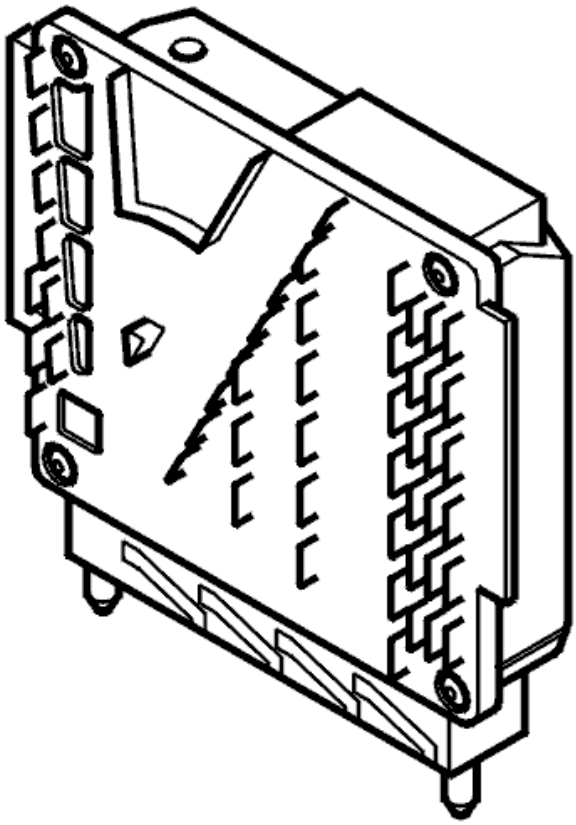

Fig. 1: Engine Control Module
Courtesy of VOLVO CARS CORPORATION

CAUTION: New software can only be ordered when the control module is installed in the vehicle. VIDA reads off the new control module identity which is required to order the correct software.

The software can only be ordered when the control module is installed in the car.

CAUTION: Wait 2 minutes after the ignition has been switched off. The main relay must be voltage-free before the control module can be removed from the car. If the engine cooling fan runs on after the ignition has been switched off, wait until it stops and then wait for another 2 minutes.

CAUTION: Always check that the control module and control module box connector pins and sleeves are not bent or damaged. This may have caused the fault.

REMOVING THE ENGINE CONTROL MODULE (ECM)

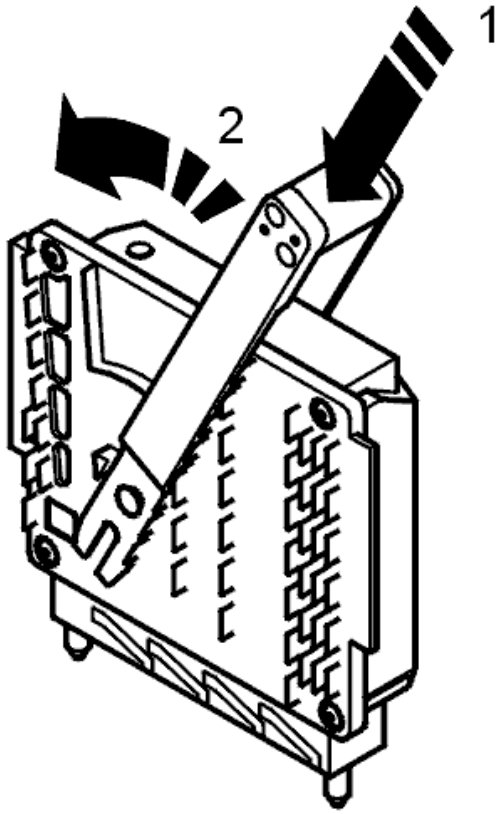

Fig. 2: Identifying Engine Control Module
Courtesy of VOLVO CARS CORPORATION

- Ignition off. Wait for 2 minutes
- Remove the cover over the control module box. Put the cover to one side

NOTE: **Do not touch the control module terminal pins with your fingers. Static electricity can damage control module components.**

-
- Insert tool see **9995722** around the control module.
- Move the upper section of the tool backwards as far as it will go. Pull up the tool
- Carefully pull up the control module.

INSTALLING THE ENGINE CONTROL MODULE (ECM)

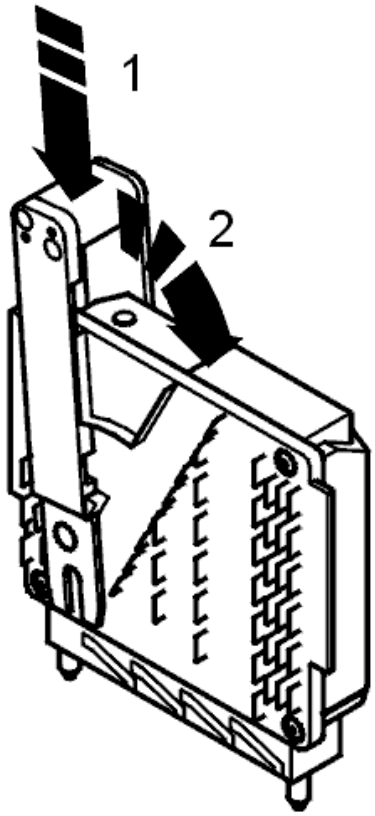

Fig. 3: Identifying Engine Control Module
Courtesy of VOLVO CARS CORPORATION

- Check that no pins or sockets are damaged on the connector.
- Carefully press the control module down into the grooves on the inside of the control module box. Press to the limit position
- Insert tool see **9995722** around the control module.
- Move the upper section of the tool forwards as far as it will go. Pull up the tool
- Press the cover into place over the control modules
- Check that the air ducts are correctly positioned.

ORDERING SOFTWARE

Order software according to the table below.

XC90	9438288

NOTE: **After downloading the software or replacing the engine control module (ECM), the throttle unit must be adapted according to vehicle communication input: "Adapting the throttle unit".**

FINISHING

Check that no diagnostic trouble codes have been stored during the repair.

Test drive the car. Check the function of the engine.

FUEL PRESSURE SENSOR, REPLACEMENT

REMOVAL AND INSTALLATION

NOTE: **As the illustrations in this service information are used for different model years and / or models, some variation may occur. However, the essential information in the illustrations is always correct.**

PREPARATION

Fig. 4: Engine Compartment Components
Courtesy of VOLVO CARS CORPORATION

Drain the fuel injection system. See **FUEL SYSTEM PRESSURE RELEASE**.

Remove the charge air pipe over the engine. Seal the openings.

Remove the cover over the fuel rail.

FUEL SYSTEM PRESSURE RELEASE

Operation Number(s):

Start the engine.

Remove the fuel pump fuse. Placement may vary between engine types and model year. See the Owner's manual or wiring diagram.

The engine will stop after approx. 20 seconds.

Turn over the engine 3-5 seconds.

Switch off the ignition.

Replace the fuse.

REMOVING THE FUEL PRESSURE SENSOR

Fig. 5: Fuel Pressure Sensor
Courtesy of VOLVO CARS CORPORATION

CAUTION: Collect any spill using paper or similar.

Remove:

- the tie strap for the cable for the sensor
- the screw for the sensor
- the sensor.

INSTALLING THE FUEL PRESSURE SENSOR

NOTE: For tightening torques, see TIGHTENING TORQUE .

Install:

- the sensor
- the screw for the sensor. Tighten
- the tie strap for the wiring. Connect the cable to the sensor
- the cover over the fuel rail.

Fig. 6: Engine Compartment Components
Courtesy of VOLVO CARS CORPORATION

Remove the seals from the charge air pipe. Reinstall the charge air pipe over the engine.

Start the engine. Check for fuel leakage.

FUEL PUMP DRIVER MODULE

Materials:	
Designation	**Part number**
Plug	974688
Control module	30769225
Cable harness	30724838

NOTE: Removal steps in this procedure may contain installation details.

VEHICLES WITH FUEL PUMP DRIVER MODULE LOCATED IN THE RIGHT-HAND REAR WHEEL HOUSING

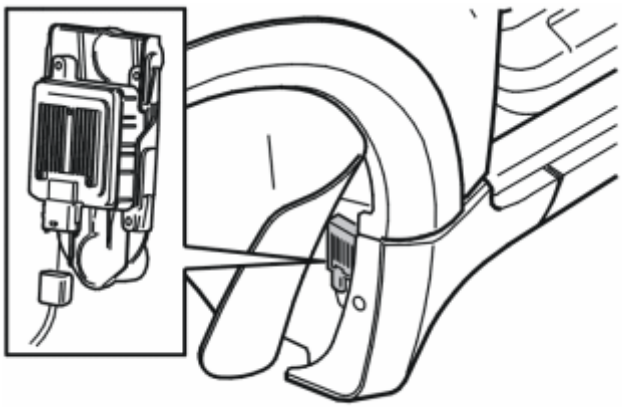

Fig. 7: Locating Pump Driver Module

Courtesy of VOLVO CARS CORPORATION

Fuel pump driver modules that are located under the inner fender on the right-hand side in the front part of the rear wheel housing are installed when replacing on the right-hand side under the rear bench

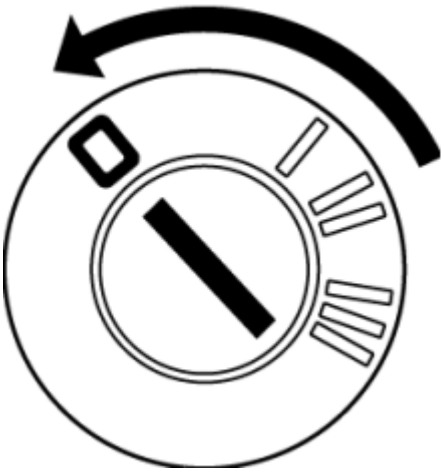

Fig. 8: Identifying Ignition Switch In OFF Position
Courtesy of VOLVO CARS CORPORATION

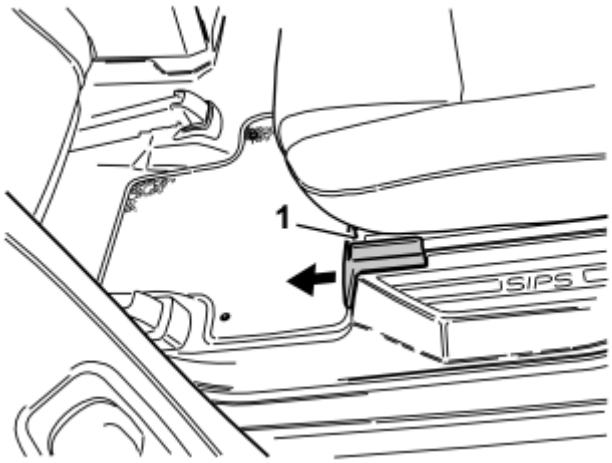

Fig. 9: Identifying Seat Rail Cover
Courtesy of VOLVO CARS CORPORATION

Remove:

- the covers over the seat rails
- screws for seat rails-body frame, 12 pcs

Lift out the seats.

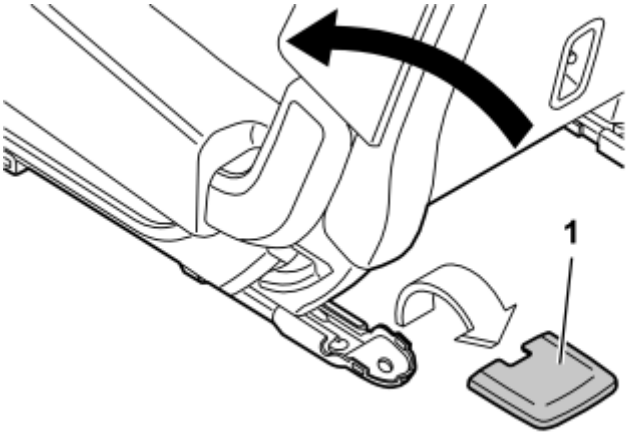

Fig. 10: Identifying Seat Rail Cover
Courtesy of VOLVO CARS CORPORATION

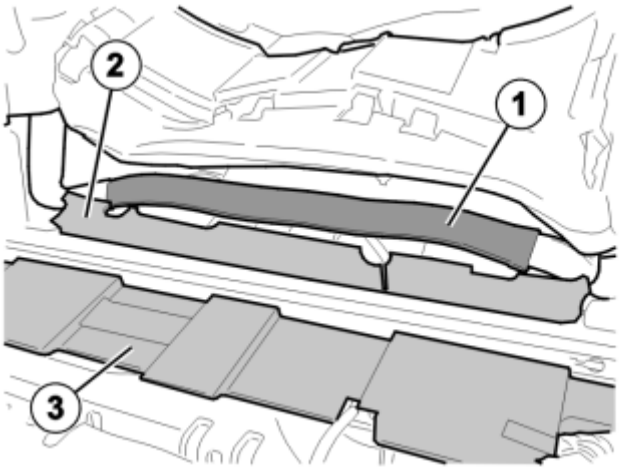

Fig. 11: Folding The Carpet Back
Courtesy of VOLVO CARS CORPORATION

Fold the carpet back

Remove:

1. ventilation pipe
2. the insulation block
3. the insulation block

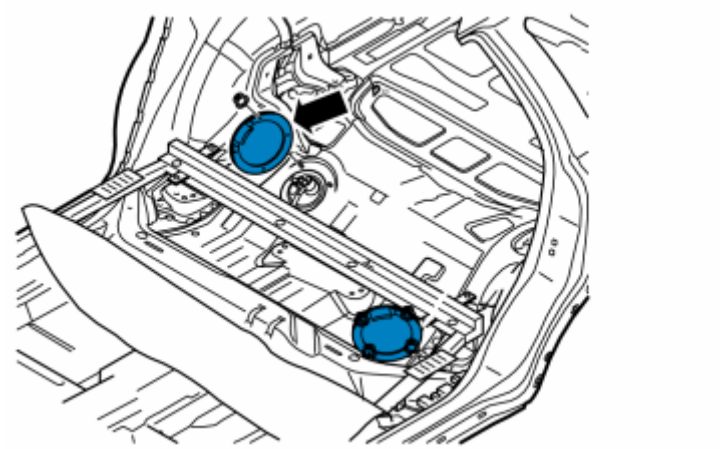

Fig. 12: Identifying Right-Hand Cover Over The Fuel Pump.
Courtesy of VOLVO CARS CORPORATION

Remove the cover on the right-hand side over the fuel pump.

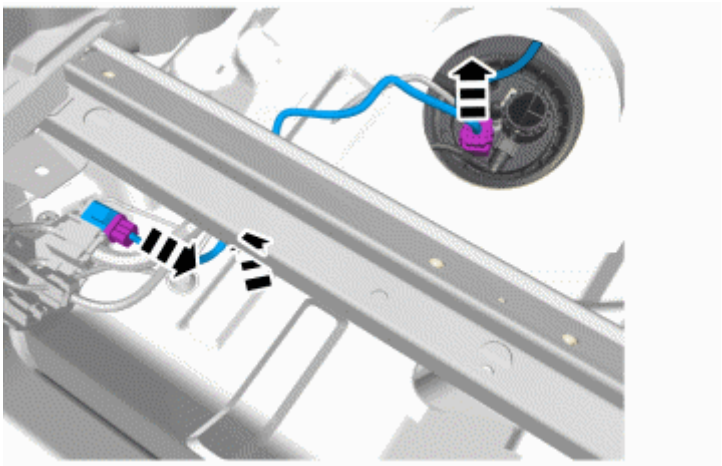

Fig. 13: Locating Cable Harness Connectors
Courtesy of VOLVO CARS CORPORATION

Remove:

- the cable harness connectors from the fuel pump
- connection to the sill
- the mounting on the floor for the cable harness

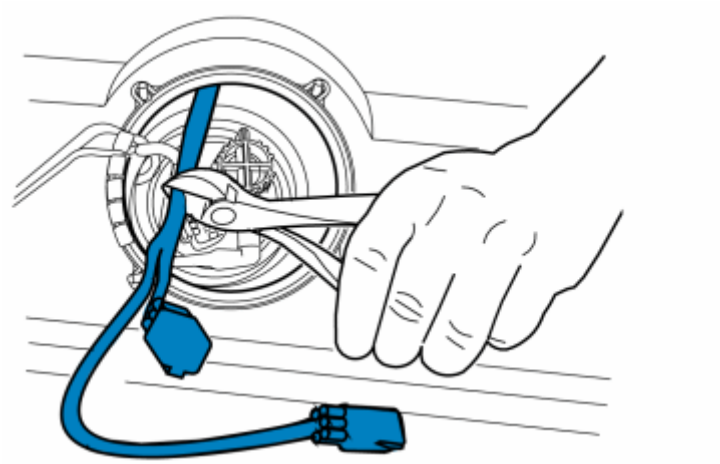

Fig. 14: Cutting Off The Removed Cable Connectors
Courtesy of VOLVO CARS CORPORATION

Cut off the removed cable so that both connectors can be removed. This is done so that the cable can be removed from underneath.

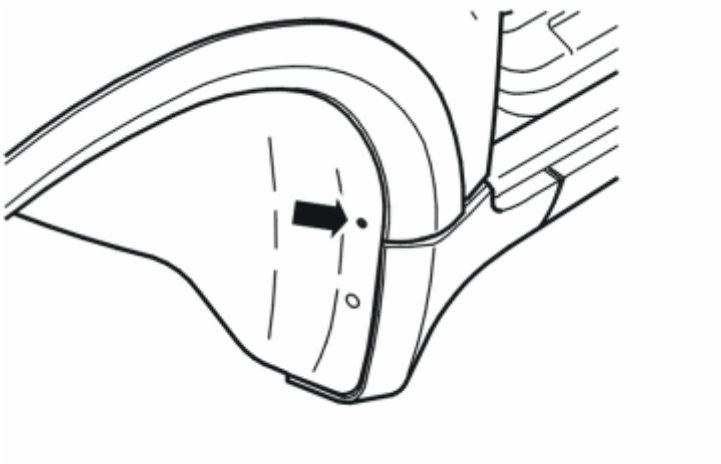

Fig. 15: Accessing Inner Fender
Courtesy of VOLVO CARS CORPORATION

Remove the right rear wheel.

Remove the rivet and plastic nuts for the inner fender.

Bend the fender liner out of the way.

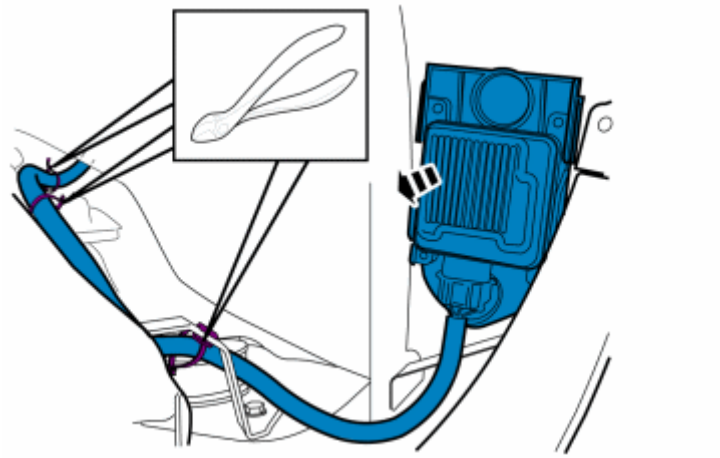

Fig. 16: Removing Module With Mounting
Courtesy of VOLVO CARS CORPORATION

Remove:

- the module from the wheel housing assembly with the mounting
- the cable harness with mountings

VEHICLES WITH FUEL PUMP DRIVER MODULE LOCATED UNDER THE RIGHT-HAND REAR BENCH SEAT.

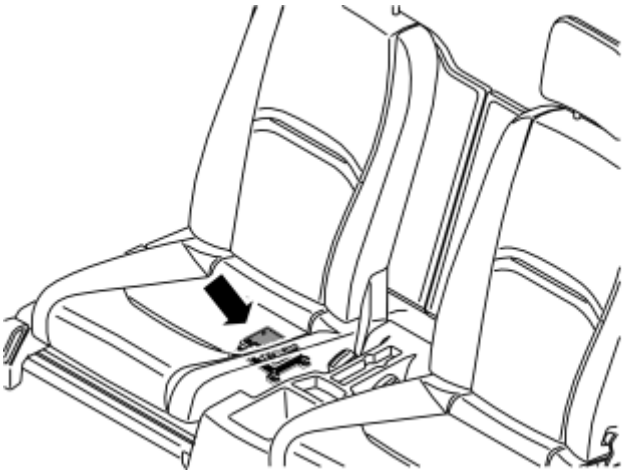

Fig. 17: Locating Fuel Pump Driver Module
Courtesy of VOLVO CARS CORPORATION

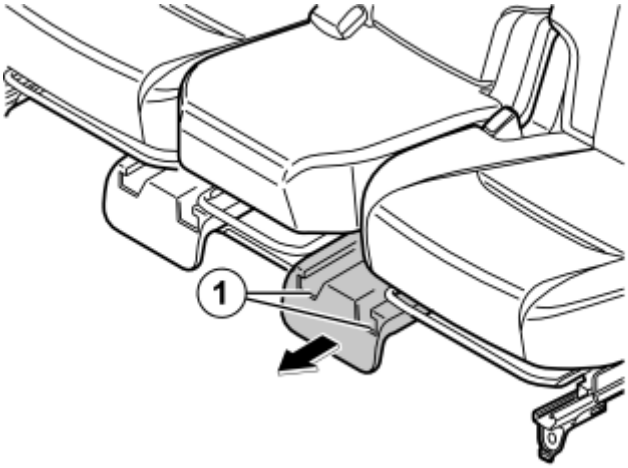

Fig. 18: Identifying Covers Over Seat Rails
Courtesy of VOLVO CARS CORPORATION

Remove:

- covers over seat rails
- the 4 screws

Lift out the seat on the right-hand side.

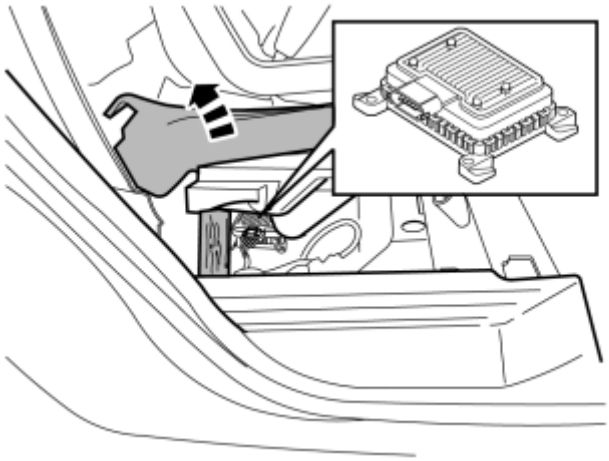

Fig. 19: Installing A New Module
Courtesy of VOLVO CARS CORPORATION

Fold up the carpet. Detach the sill trim panel slightly.

Carefully lift up the insulation block and place a block under the insulation block to access the module.

Install the new module and connect the cable connector.

Remove the block and fold the carpet back. Press the sill trim panel into place.

VEHICLES WITH FUEL PUMP DRIVER MODULE ORIGINALLY LOCATED IN THE RIGHT-HAND REAR WHEEL HOUSING

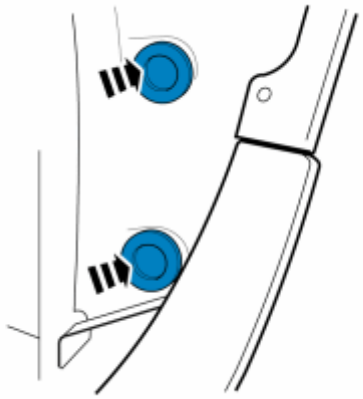

Fig. 20: Plug, 974688
Courtesy of VOLVO CARS CORPORATION

Install two rubber plugs for the wheel housing.

Use: Plug, 974688

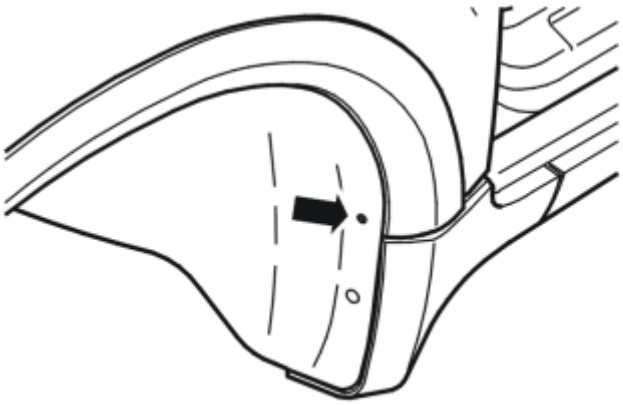

Fig. 21: Accessing Inner Fender
Courtesy of VOLVO CARS CORPORATION

Install the inner fender with plastic nuts and rivets

Install wheel. See **INSTALLING WHEELS**

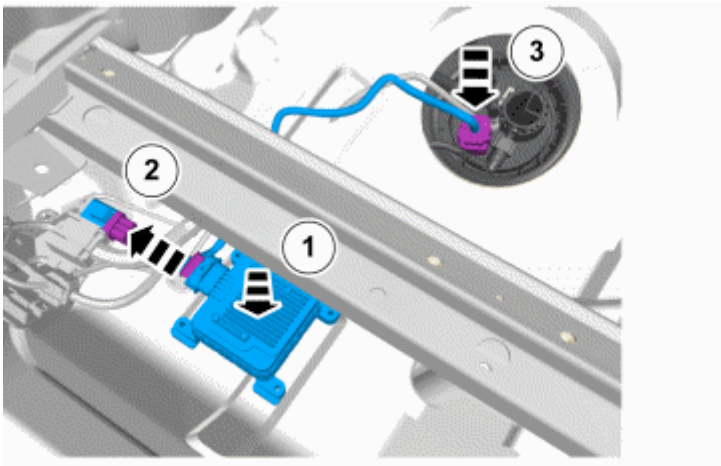

Fig. 22: Control module, 30769225
Courtesy of VOLVO CARS CORPORATION

Place the module on the two embossings in the floor leaving a clearance for the seat frame of at least 5 mm.

Use: Control module, 30769225

Remove the protective tape for the Velcro attachments and install the control module.

Install the cable mounting for the connection at the sill, fuel pump and module as well as the mounting in the floor.

Use: Cable harness, 30724838

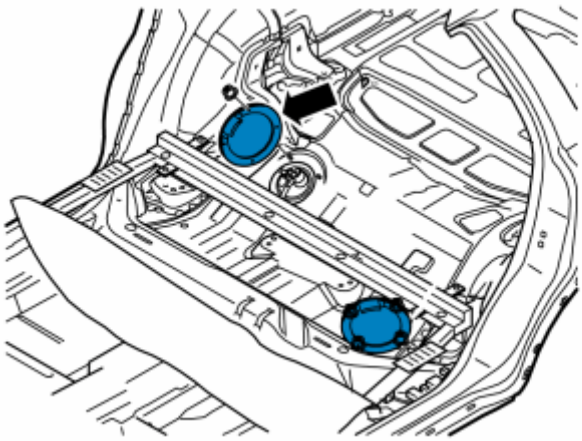

Fig. 23: Identifying Right-Hand Cover Over The Fuel Pump.
Courtesy of VOLVO CARS CORPORATION

Check the cover seal for faults and check that the cables are in the cut-outs.

Check that the plugs are in the seal.

Install the cover and tighten to 6 Nm.

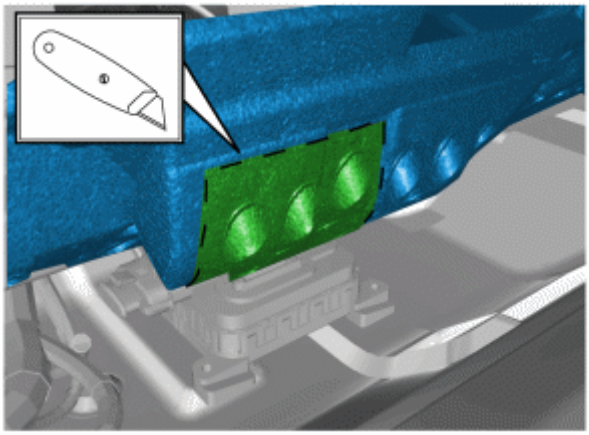

Fig. 24: Cutting A Hole In The Insulation
Courtesy of VOLVO CARS CORPORATION

Mark and make a hole for the module in the insulation block.

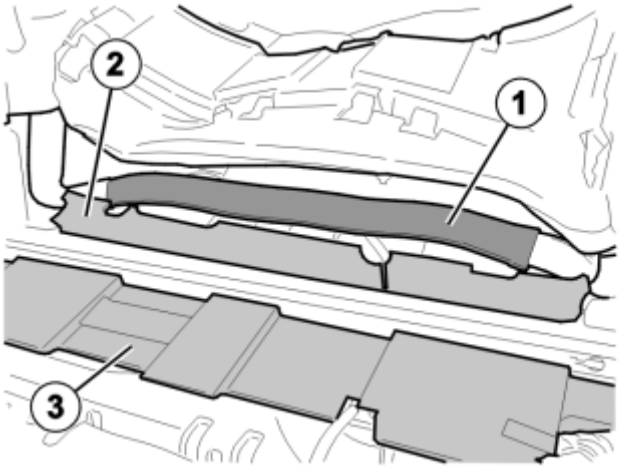

Fig. 25: Folding The Carpet Back
Courtesy of VOLVO CARS CORPORATION

Fold the carpet back

Install:

- ventilation pipe (1)
- the insulation block (2)
- the insulation block (3)

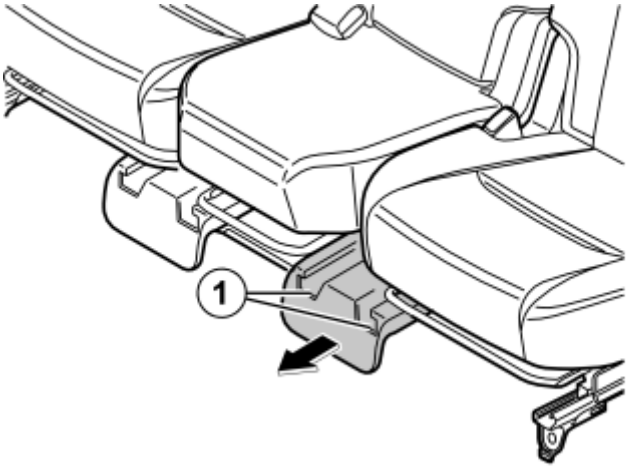

Fig. 26: Identifying Covers Over Seat Rails
Courtesy of VOLVO CARS CORPORATION

Install

- the seats. Use new screws, 12 x M10. Tighten to 50 Nm.
- the covers over the seat rails

VEHICLES WITH FUEL PUMP DRIVER MODULE ORIGINALLY LOCATED UNDER THE RIGHT-HAND REAR BENCH SEAT.

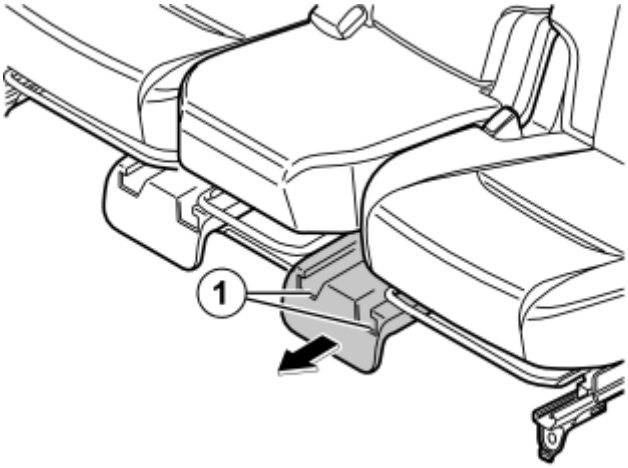

Fig. 27: Identifying Covers Over Seat Rails
Courtesy of VOLVO CARS CORPORATION

Install the seat. Use new screws, 4 x M10

Tighten to 50Nm

KNOCK SENSOR (KS), REPLACING

REMOVAL AND INSTALLATION

NOTE: **As the illustrations in this service information are used for different model years and / or models, some variation may occur. However, the essential information in the illustrations is always correct.**

REMOVING THE KNOCK SENSOR (KS)

Disconnect the battery negative lead. First read, see **BATTERY, DISCONNECTING** .

Fig. 28: Identifying Intake Manifold
Courtesy of VOLVO CARS CORPORATION

Remove the intake manifold and gasket. See **INTAKE PIPE/GASKET, REPLACEMENT** .

Remove:

- the screws for the knock sensors (KS)
- the tie strap at the connector. Pull the sensors downwards and past the starter motor bracket at the rear edge.

INSTALLING KNOCK SENSORS (KS)

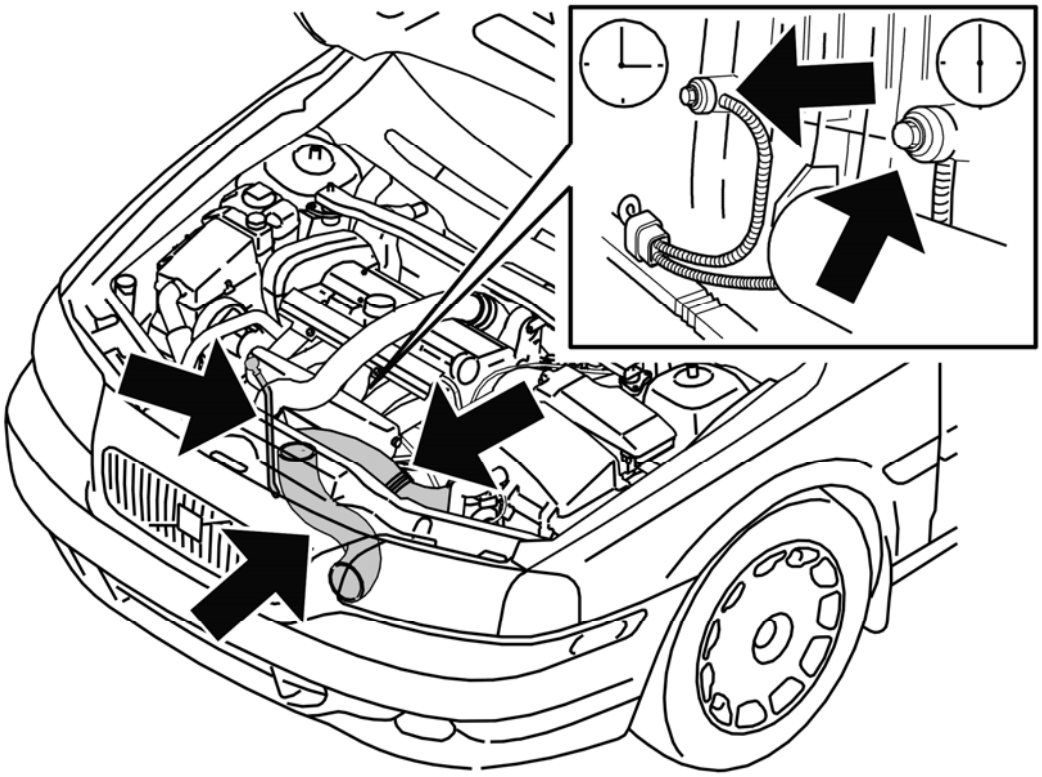

Fig. 29: Identifying Knock Sensors (KS) Orientation & Air Hoses
Courtesy of VOLVO CARS CORPORATION

CAUTION: Tighten to the correct torque. If the knock sensor is over-tightened it may deform. If it is too loose it may disrupt the function of the sensor.

- Install the new sensors using the screws in the cylinder block
- Route the cables on the outside of the starter motor bracket
- Align the sensors (looking from the front)
- The cable from the sensor at cylinder 3 = 3 o'clock and from the sensor for cylinder 5 = 6 o'clock
- Tighten the knock sensors. See **TIGHTENING TORQUE**
- Press the knock sensor (KS) connectors together. Check that the wiring is in the correct position. Use a clamp if necessary.

Install the intake manifold according to **INTAKE PIPE/GASKET, REPLACEMENT** .

Connect the battery lead. See **BATTERY, DISCONNECTING** .

REPLACING THE THERMOSTAT AND/OR ENGINE COOLANT TEMPERATURE SENSOR

see **REPLACING THE THERMOSTAT AND/OR ENGINE COOLANT TEMPERATURE SENSOR**

TEMPERATURE AND PRESSURE SENSORS, REPLACING

REMOVAL AND INSTALLATION

NOTE: As the illustrations in this service information are used for different model years and / or models, some variation may occur. However, the essential information in the illustrations is always correct.

REMOVING THE TEMPERATURE AND PRESSURE SENSORS

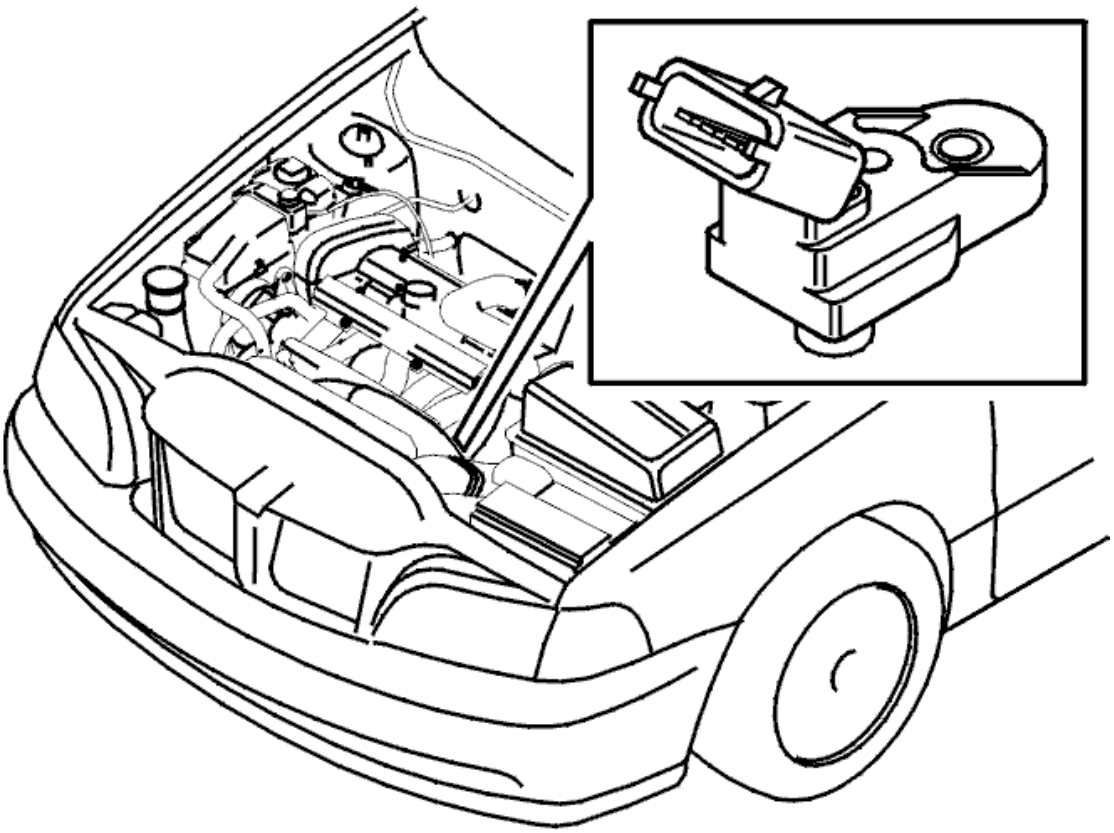

Fig. 30: Boost Pressure Sensor
Courtesy of VOLVO CARS CORPORATION

Remove the boost pressure sensor which is on the pipe coming from the charge air cooler (CAC).

INSTALLING THE TEMPERATURE AND PRESSURE SENSORS

Install a new sensor.

CONTROL SYSTEM, FUEL SUPPLY (B5254T2; 2005)

ENGINE CONTROL MODULE (ECM), REPLACING

see **ENGINE CONTROL MODULE (ECM), REPLACING**

FUEL PUMP DRIVER MODULE

see **FUEL PUMP DRIVER MODULE**

REPLACING KNOCK SENSORS (KS)

NOTE: As the illustrations in this service information are used for different model years and / or models, some variation may occur. However, the essential information is always correct.

REMOVING THE KNOCK SENSOR (KS)

Remove

- the cable from the battery negative terminal. First read, see **BATTERY, DISCONNECTING**
- the intake pipe between the front cover plate and the air cleaner (ACL)

  Detach the pipe from the charge air cooler at the throttle housing. Push the pipe to one side

- the dip stick and its holder
- the screws for the knock sensors (KS)
- the tie strap at the connector.

  Disconnect the connector. Pull the sensors downwards and past the rear edge of the starter motor bracket.

INSTALLING KNOCK SENSORS (KS)

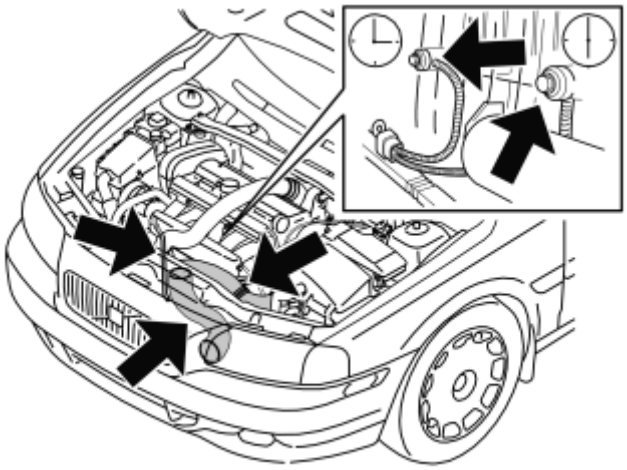

Fig. 31: Identifying Knock Sensors
Courtesy of VOLVO CARS CORPORATION

Install the new sensor. Tighten by hand.

Route the cables on the outside of the starter motor bracket.

Align the sensors. The cable from the sensor for cylinder 2 = 3 o'clock and from the sensor for cylinder 4 = 6 o'clock.

Tighten the knock sensors (KS) to **20 Nm** .

Connect the knock sensor (KS) connectors. Check that the wiring is in the correct position. Secure with a tie strap at the starter motor bracket.

Install

- the dip stick
- the pipe between the throttle body (TB) and the charge air cooler (CAC)
- the intake pipe between the front cover plate and the air cleaner (ACL)
- the negative battery cable. First read, see **BATTERY, DISCONNECTING** .

TEMPERATURE AND PRESSURE SENSORS, REPLACING

see **TEMPERATURE AND PRESSURE SENSORS, REPLACING**

THERMOSTAT / TEMPERATURE SENSOR, ENGINE COOLANT, REPLACING

see **THERMOSTAT / TEMPERATURE SENSOR, ENGINE COOLANT, REPLACING**

CONTROL SYSTEM, FUEL SUPPLY (B5254T2; 2006-2007)

ENGINE CONTROL MODULE (ECM), REPLACING

see **ENGINE CONTROL MODULE (ECM), REPLACING**

FUEL PUMP DRIVER MODULE

Operation Number(s):

NOTE: Removal steps in this procedure may contain installation details.

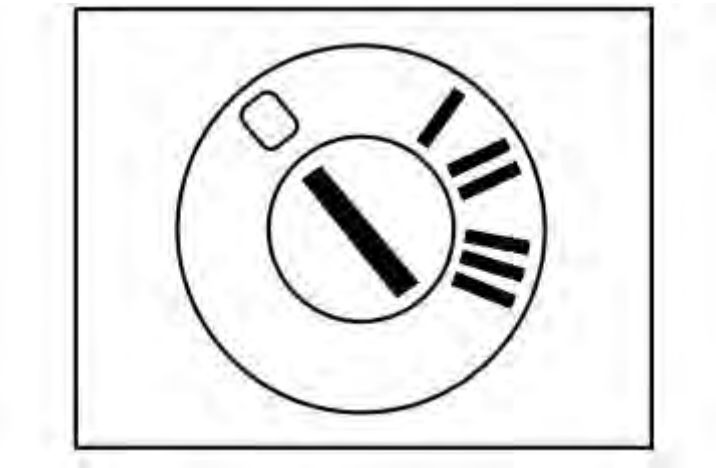

Fig. 32: Identifying Ignition In OFF Position
Courtesy of VOLVO CARS CORPORATION

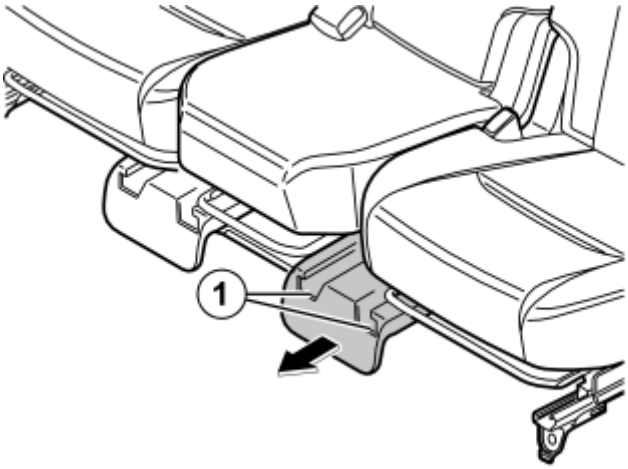

Fig. 33: Identifying Covers Over Seat Rails
Courtesy of VOLVO CARS CORPORATION

Remove:

- covers over seat rails
- screws, 4 pcs.

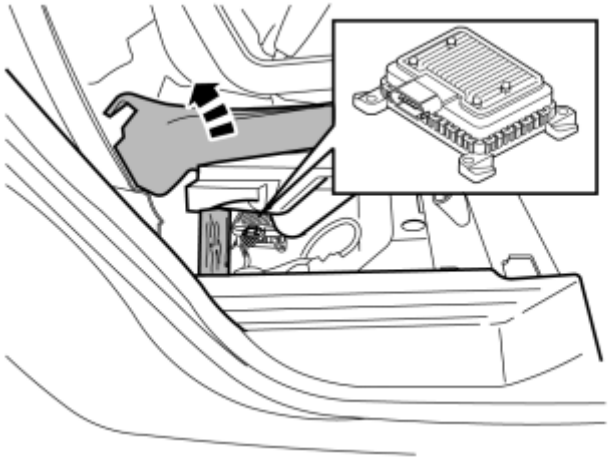

Fig. 34: Installing A New Module
Courtesy of VOLVO CARS CORPORATION

Fold up the carpet. Detach the sill trim panel slightly.

Carefully lift up the insulation block and place a block under the insulation block to access the module.

Install the new module and connect the cable connector.

Remove the block and fold the carpet back. Press the sill trim panel into place.

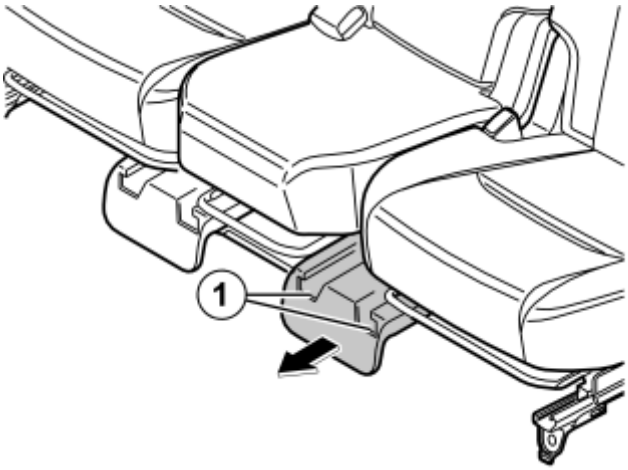

Fig. 35: Identifying Covers Over Seat Rails
Courtesy of VOLVO CARS CORPORATION

Install the seat. Use new screws, 4 x M10. Tighten to 50 Nm.

REPLACING KNOCK SENSORS (KS)

see **REPLACING KNOCK SENSORS (KS)**

TEMPERATURE AND PRESSURE SENSORS, REPLACING

see **TEMPERATURE AND PRESSURE SENSORS, REPLACING**

THERMOSTAT / TEMPERATURE SENSOR, ENGINE COOLANT, REPLACING

see **THERMOSTAT / TEMPERATURE SENSOR, ENGINE COOLANT, REPLACING**

CONTROL SYSTEM, FUEL SUPPLY (B6294T; 2006)

CONTROL MODULE FUEL PUMP (FP), REPLACING

NOTE: **The illustrations in this service information are used for different model years and/or models. Some variation may occur. However, the essential information in the illustrations is always correct.**

REMOVAL

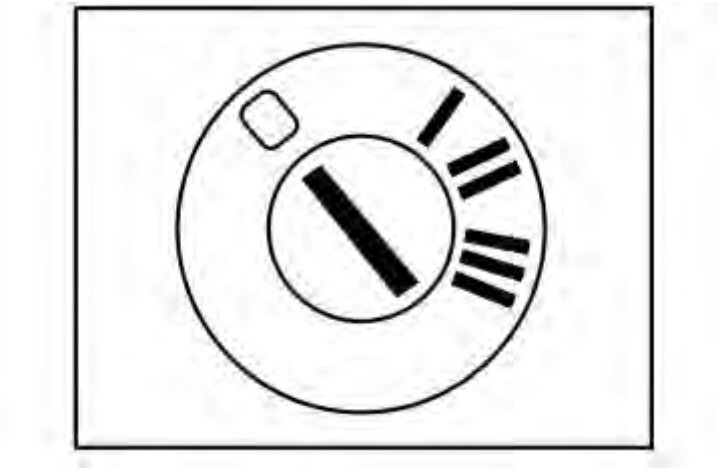

Fig. 36: Identifying Ignition In OFF Position
Courtesy of VOLVO CARS CORPORATION

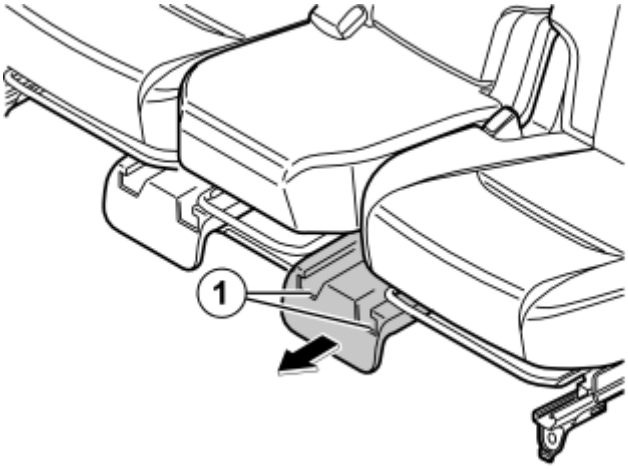

Fig. 37: Identifying Covers Over Seat Rails
Courtesy of VOLVO CARS CORPORATION

Remove:

- the covers over the seat rails
- screws, 4 pcs.

Lift out the seat on the right-hand side.

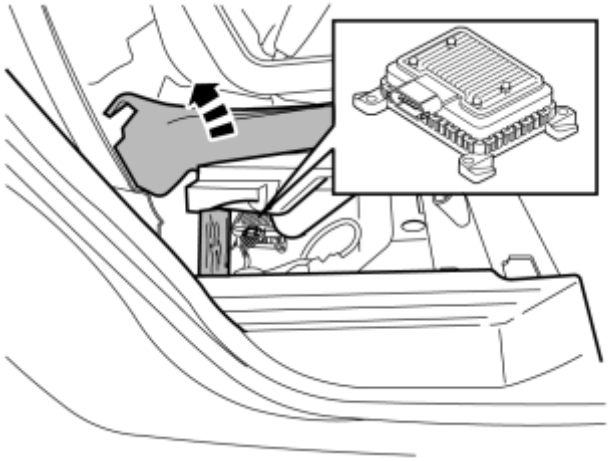

Fig. 38: Installing A New Module
Courtesy of VOLVO CARS CORPORATION

Fold up the carpet. Detach the sill trim panel slightly.

Carefully lift up the insulation block and place a block under the insulation block to access the module.

Disconnect the connector and remove the old module from the Velcro.

Remove the block and fold the carpet back. Press the sill trim panel into place.

INSTALLATION

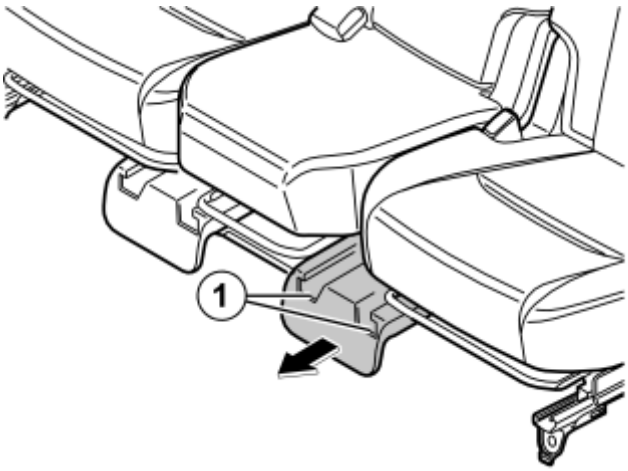

Fig. 39: Identifying Covers Over Seat Rails

Courtesy of VOLVO CARS CORPORATION

Install the seat. Use new screws, 4 x M10

Tighten to 50 Nm.

ENGINE CONTROL MODULE (ECM), REPLACING

see **ENGINE CONTROL MODULE (ECM), REPLACING**

ENGINE COOLANT TEMPERATURE (ECT) SENSOR, REPLACING

REMOVAL AND INSTALLATION

NOTE: **As the illustrations in this service information are used for different model years and / or models, some variation may occur. However, the essential information in the illustrations is always correct.**

REMOVING THE TEMPERATURE SENSOR

Remove the cap from the expansion tank.

Raise the car. Remove the lower splashguard.

Position a container under the engine drain cock. Drain the engine coolant.

Close the cock.

Install the lower splash guard.

Lower the car.

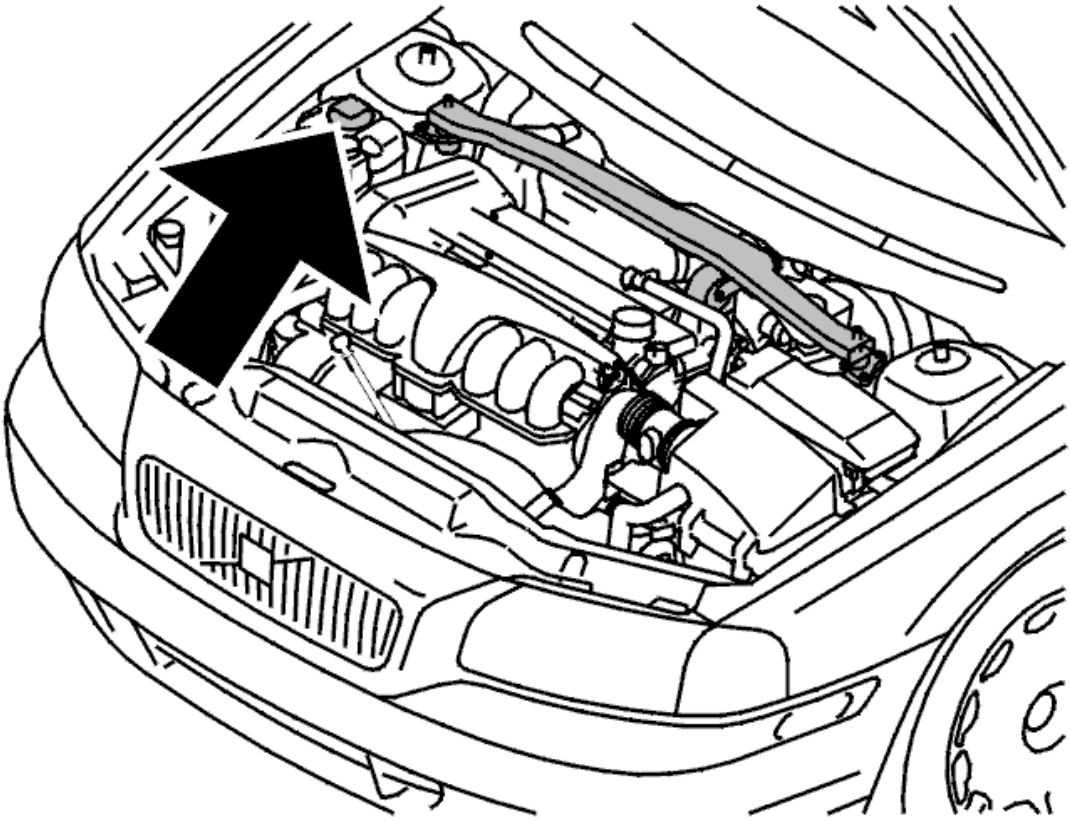

Fig. 40: Identifying Expansion Tank
Courtesy of VOLVO CARS CORPORATION

Remove the screw holding the engine stabilizer brace to the bracket on the engine.

Undo the clamp holding the return hose for the power steering.

Remove the cross stay.

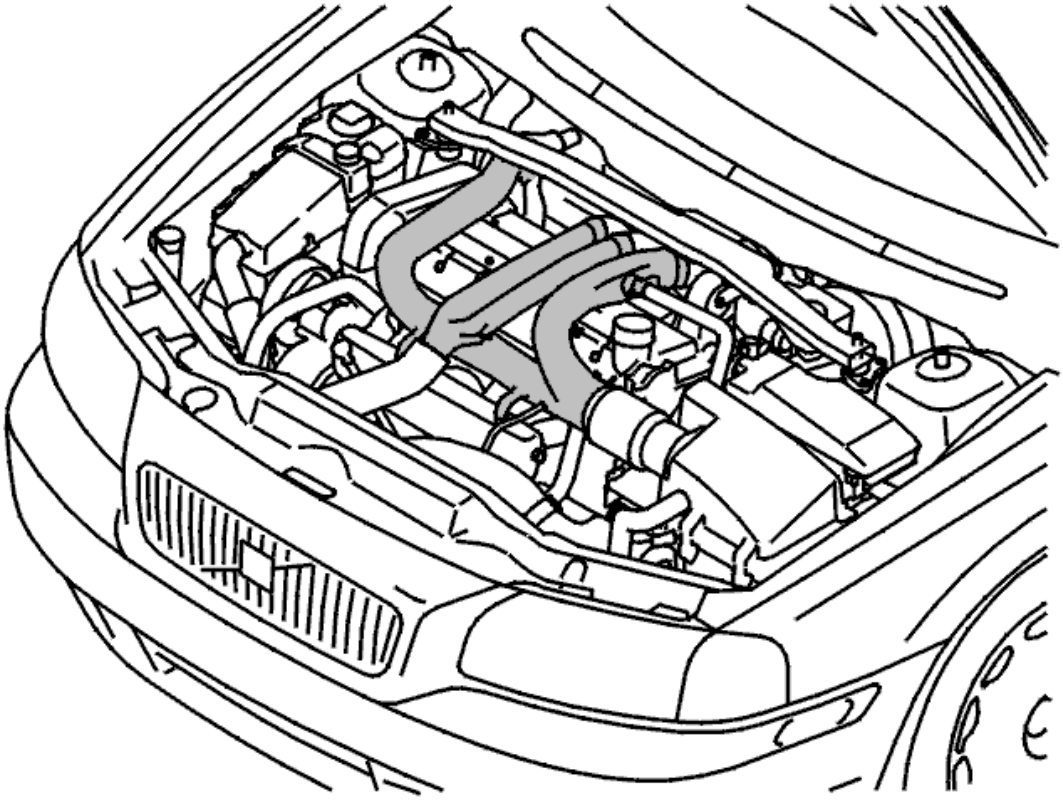

Fig. 41: Identifying Plastic Hoses Between Turbocharger, Charge Air Cooler & Air Cleaner/Turbocharger
Courtesy of VOLVO CARS CORPORATION

Remove the crankcase ventilation pipe from the intake manifold. Start with the cover.

Remove the plastic hoses between the turbocharger (TC) and the charge air cooler and between the air cleaner (ACL) and the turbocharger (TC).

Remove the clamp for the intake manifold at the turbocharger (TC) for cylinders 1, 2 and 3. Detach the upper section of the pipe by turning it towards the firewall.

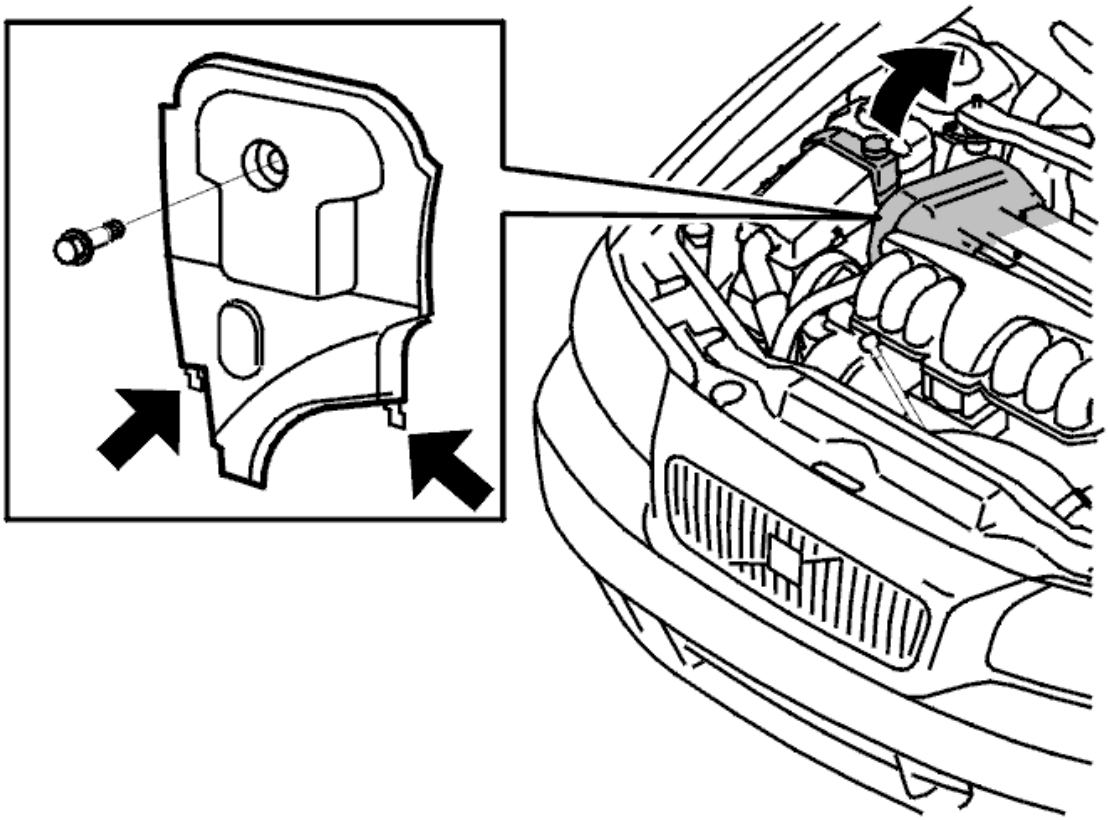

Fig. 42: Front Timing Belt Cover
Courtesy of VOLVO CARS CORPORATION

Remove:

- the upper timing belt cover.

  Lift up the servo reservoir and place it on top of the engine.

  WARNING: **Seal the cover for the servo reservoir. Check that no oil leaks out.**

  Servo oil is highly inflammable.

- the screw for the front timing belt cover.
- the timing belt cover.

  Disconnect the connector for the sensor cable.

Remove the variable valve timing solenoids and place them to one side.

Remove the screw for the cable duct.

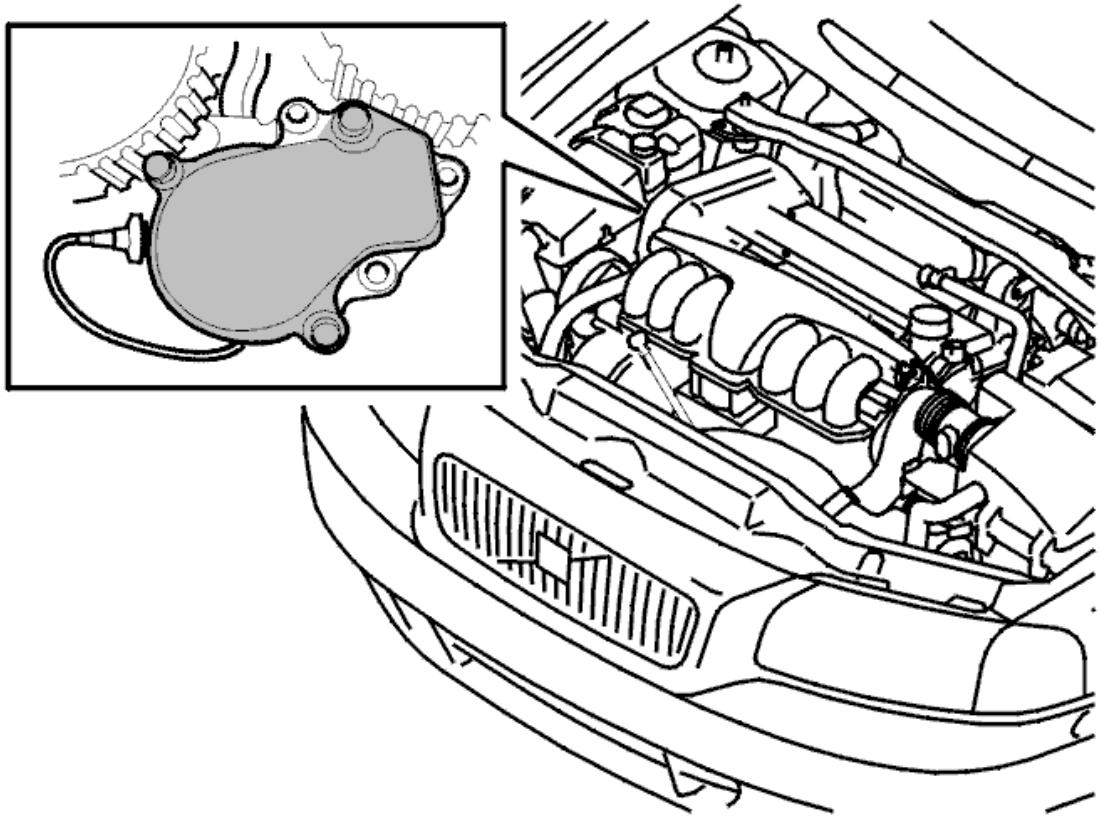

Fig. 43: Identifying Thermostat Housing & Cable Duct
Courtesy of VOLVO CARS CORPORATION

Remove the thermostat housing with the cable duct.

Clean the mating surfaces of the cylinder block. Ensure that no dirt enters the fluid ducts.

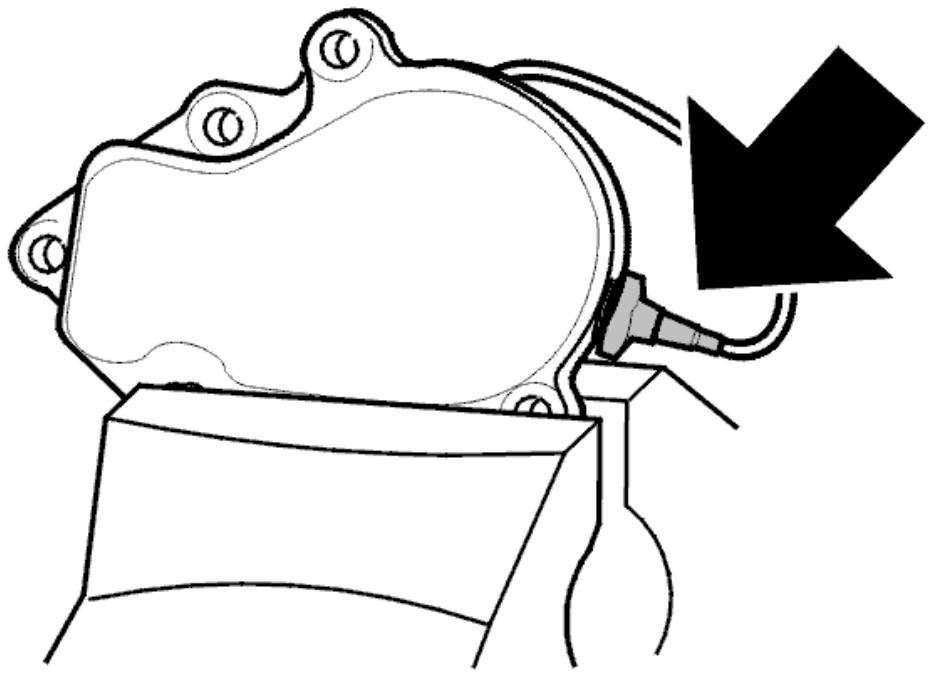

Fig. 44: Identifying Thermostat Housing And Sensor
Courtesy of VOLVO CARS CORPORATION

Secure the thermostat housing in a vise. Remove the sensor.

NOTE: Handle the thermostat housing carefully when securing it in the vise.

INSTALLING THE TEMPERATURE SENSOR

NOTE: For tightening torques, see TIGHTENING TORQUE .

Clean the thermostat housing mating surfaces. Ensure that there is no dirt left in the thermostat housing.

Install

- the new sensor. Use a **new gasket** . Tighten to **20 Nm** . Ensure that the sensor cable is correctly routed in the thermostat housing and in the cable duct
- the thermostat housing using a new gasket. Tighten to **17 Nm**
- the screw for the cable duct. Tighten to **10 Nm**
- the variable valve timing solenoids. Tighten to **10 Nm**
- the front timing belt cover. See **INSTALLING THE FRONT TIMING COVER** . The mudguard over the right drive shaft boot may come loose. If this happens, secure it from underneath

- the screw for the front timing belt cover. Tighten to **12 Nm**
- the servo reservoir. Check that the hoses are correctly positioned
- the upper timing belt cover.

Install the plastic hoses between the turbocharger (TC) and the charge air cooler and between the air cleaner (ACL) and the turbocharger (TC).

Install the crankcase ventilation pipe on the intake manifold.

Tighten all hose clamps.

Install

- the engine stabilizer brace. Tighten to **50 Nm**
- the torque rod on the bracket on the engine. Tighten to **80 Nm**
- the clamp holding the return hose for the power steering.

FUNCTION TEST

Fill with coolant.

Install the cap on the expansion tank.

Test drive the engine until the thermostat has opened.

Top up the coolant if necessary.

KNOCK SENSOR (KS), REPLACING

REMOVAL AND INSTALLATION

REMOVING THE KNOCK SENSOR (KS)

NOTE: **As the illustrations in this service information are used for different model years and / or models, some variation may occur. However, the essential information in the illustrations is always correct.**

Remove the cable from the battery negative terminal. First read, see **BATTERY, DISCONNECTING** .

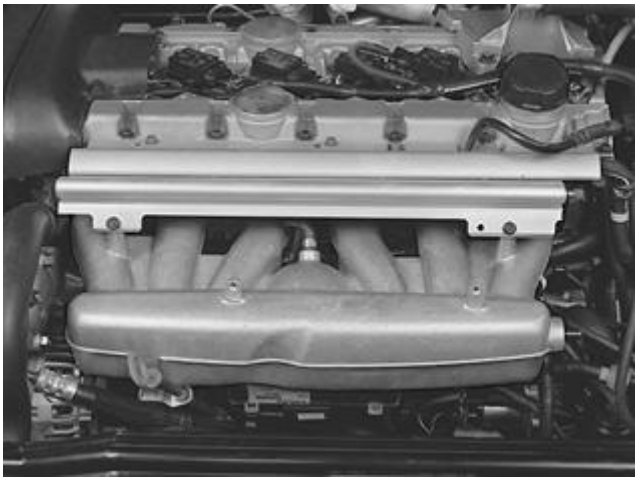

Fig. 45: Identifying Injector Connectors Cover
Courtesy of VOLVO CARS CORPORATION

The intake manifold. See **INTAKE MANIFOLD / GASKET, REPLACING** .

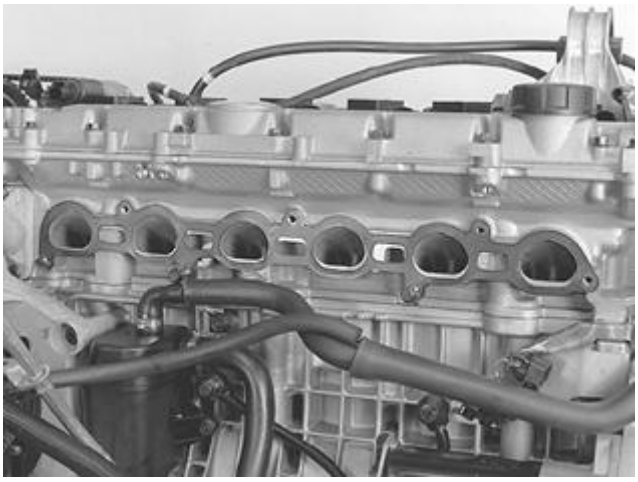

Fig. 46: Gasket
Courtesy of VOLVO CARS CORPORATION

Remove:

- the screws for the knock sensors (KS)
- the tie strap at the connector. Pull the sensors downwards and past the starter motor bracket at the rear edge.

INSTALLING KNOCK SENSORS (KS)

NOTE: For tightening torques, see TIGHTENING TORQUE

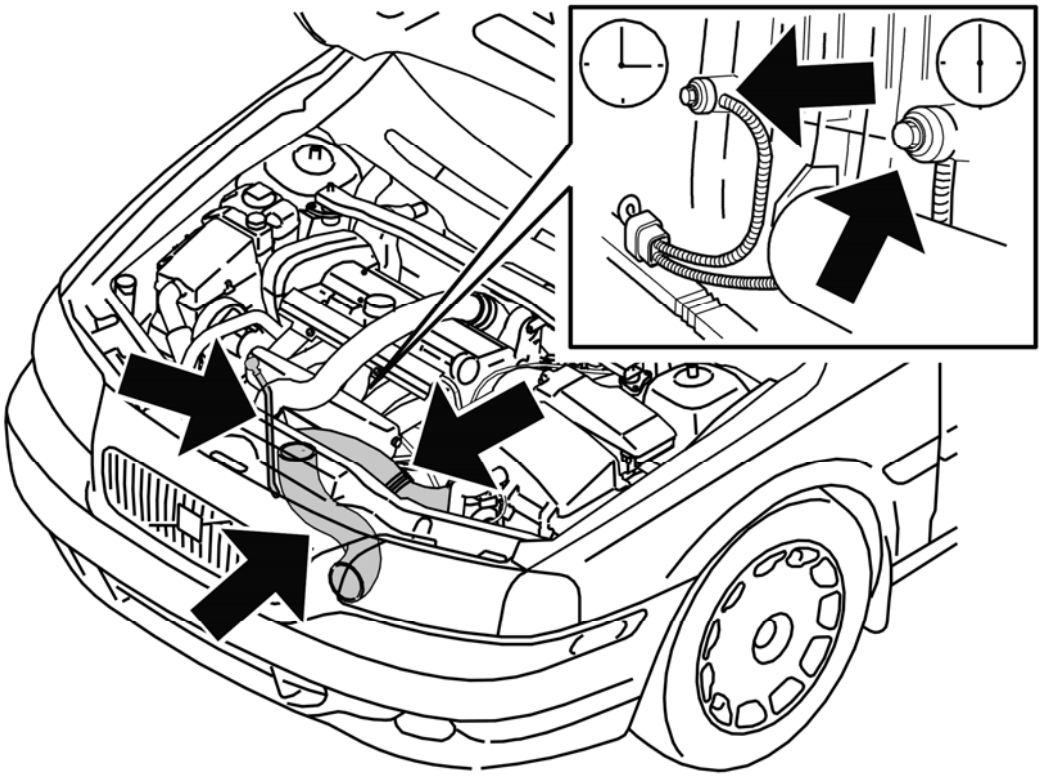

Fig. 47: Identifying Knock Sensors (KS) Orientation & Air Hoses
Courtesy of VOLVO CARS CORPORATION

CAUTION: Tighten to the correct torque. If the knock sensor is over-tightened it may deform. If it is too loose it may disrupt the function of the sensor.

- Install the new sensors using the screws in the cylinder block
- Route the cables on the outside of the starter motor bracket
- Align the sensor (looking from the front towards the rear)
- The cable from the sensor for cylinder **3 = 3 o'clock** and from the sensor for cylinder **5 = 6 o'clock** . Tighten the knock sensors. See **SUMMARY OF TIGHTENING TORQUES FOR SPECIFIC COMPONENTS** .

Press the knock sensor (KS) connectors together. Check that the wiring is in the correct position. Use a clamp if necessary.

Install:

- the intake manifold. See **INSTALLATION**
- the battery lead. First read, see **BATTERY, DISCONNECTING** .

TEMPERATURE AND PRESSURE SENSORS, REPLACING

see **TEMPERATURE AND PRESSURE SENSORS, REPLACING**

CONTROL SYSTEM, FUEL SUPPLY (B6294T; 2003-2005)

ENGINE CONTROL MODULE (ECM), REPLACING

see **ENGINE CONTROL MODULE (ECM), REPLACING**

ENGINE COOLANT TEMPERATURE (ECT) SENSOR, REPLACING

see **ENGINE COOLANT TEMPERATURE (ECT) SENSOR, REPLACING**

FUEL PUMP DRIVER MODULE

Materials:	
Designation	**Part number**
Plug	974688
Control module	30769225
Cable harness	30724838

NOTE: Removal steps in this procedure may contain installation details.

VEHICLES WITH FUEL PUMP DRIVER MODULE LOCATED IN THE RIGHT-HAND REAR WHEEL HOUSING

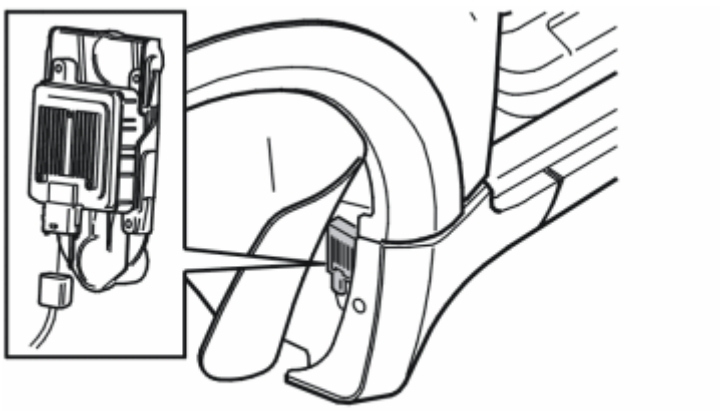

Fig. 48: Locating Pump Driver Module
Courtesy of VOLVO CARS CORPORATION

Fuel pump driver modules that are located under the inner fender on the right-hand side in the front part of the rear wheel housing are installed when replacing on the right-hand side under the rear bench

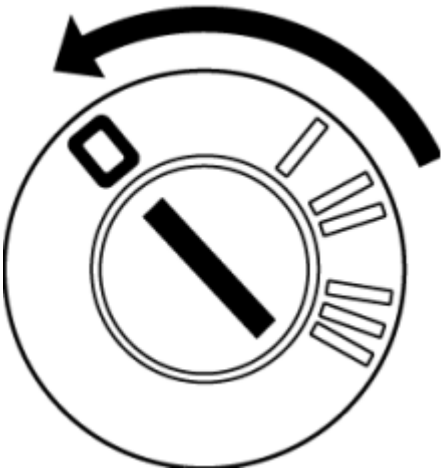

Fig. 49: Identifying Ignition Switch In OFF Position
Courtesy of VOLVO CARS CORPORATION

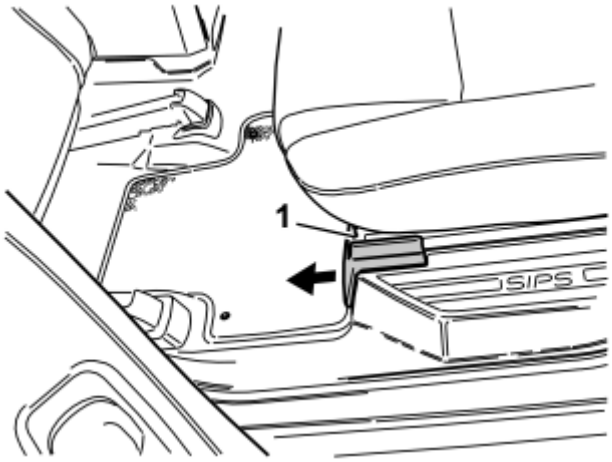

Fig. 50: Identifying Seat Rail Cover
Courtesy of VOLVO CARS CORPORATION

Remove:

- the covers over the seat rails
- screws for seat rails-body frame, 12 pcs

Lift out the seats.

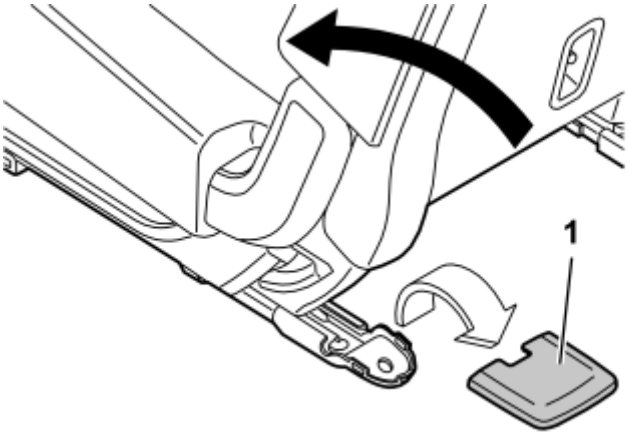

Fig. 51: Identifying Seat Rail Cover
Courtesy of VOLVO CARS CORPORATION

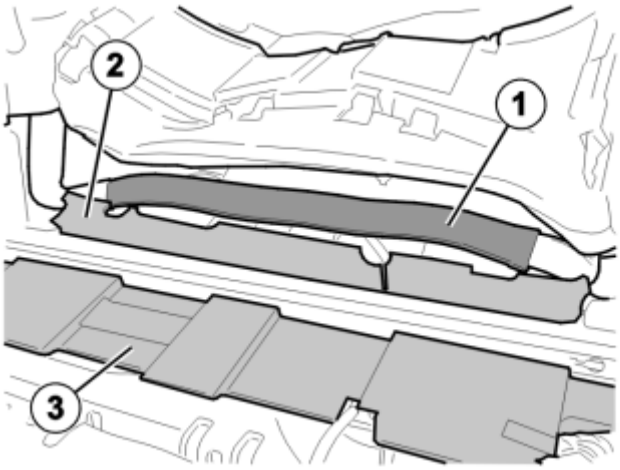

Fig. 52: Folding The Carpet Back
Courtesy of VOLVO CARS CORPORATION

Fold the carpet back

Remove:

1. ventilation pipe
2. the insulation block
3. the insulation block

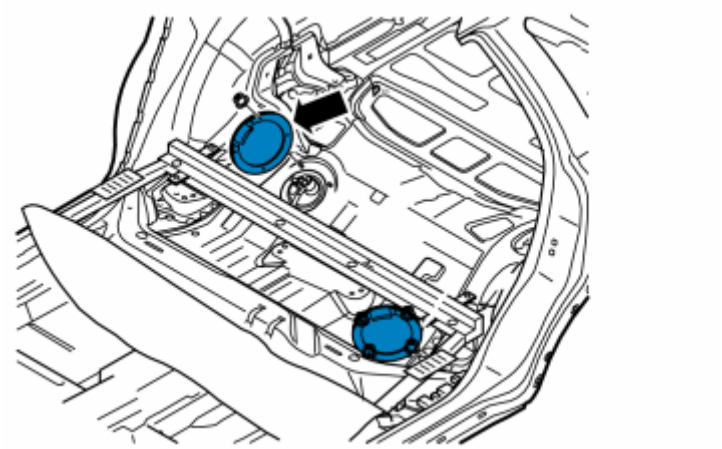

Fig. 53: Identifying Right-Hand Cover Over The Fuel Pump.
Courtesy of VOLVO CARS CORPORATION

Remove the cover on the right-hand side over the fuel pump.

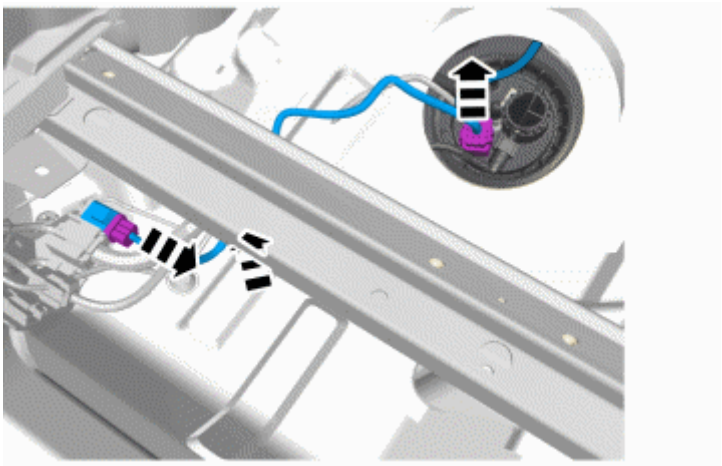

Fig. 54: Locating Cable Harness Connectors
Courtesy of VOLVO CARS CORPORATION

Remove:

- the cable harness connectors from the fuel pump
- connection to the sill
- the mounting on the floor for the cable harness

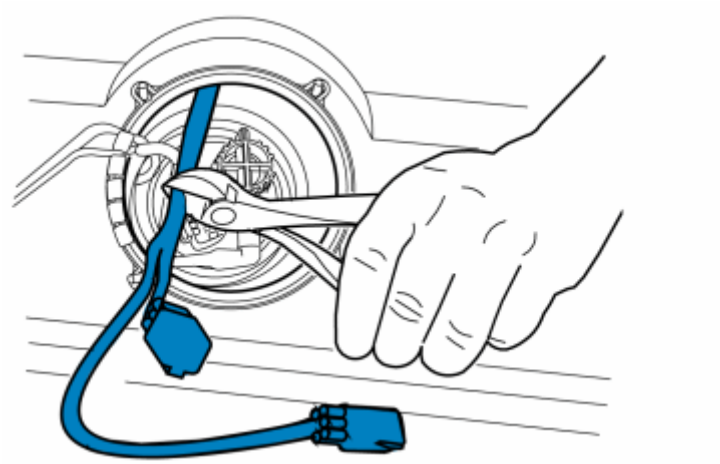

Fig. 55: Cutting Off The Removed Cable Connectors
Courtesy of VOLVO CARS CORPORATION

Cut off the removed cable so that both connectors can be removed. This is done so that the cable can be removed from underneath.

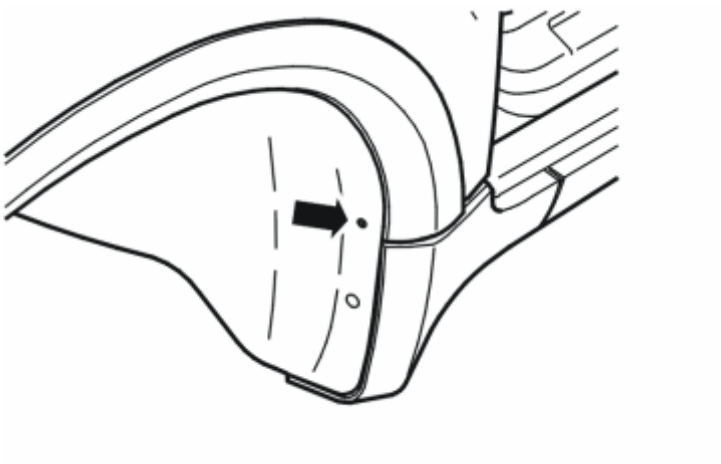

Fig. 56: Accessing Inner Fender
Courtesy of VOLVO CARS CORPORATION

Remove the right rear wheel.

Remove the rivet and plastic nuts for the inner fender.

Bend the fender liner out of the way.

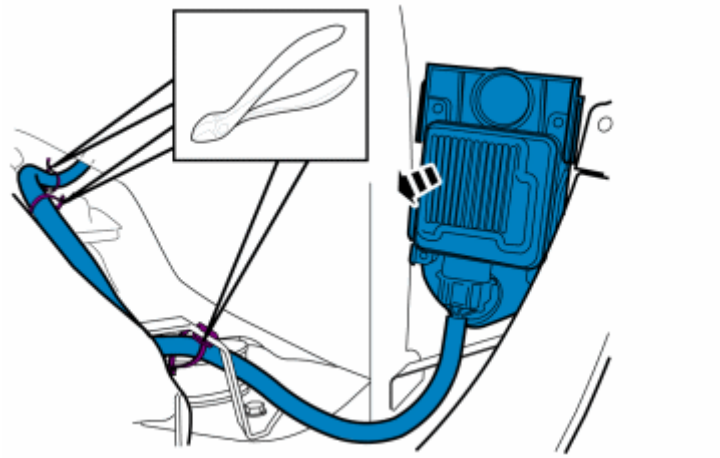

Fig. 57: Removing Module With Mounting
Courtesy of VOLVO CARS CORPORATION

Remove:

- the module from the wheel housing assembly with the mounting
- the cable harness with mountings

VEHICLES WITH FUEL PUMP DRIVER MODULE LOCATED UNDER THE RIGHT-HAND REAR BENCH SEAT.

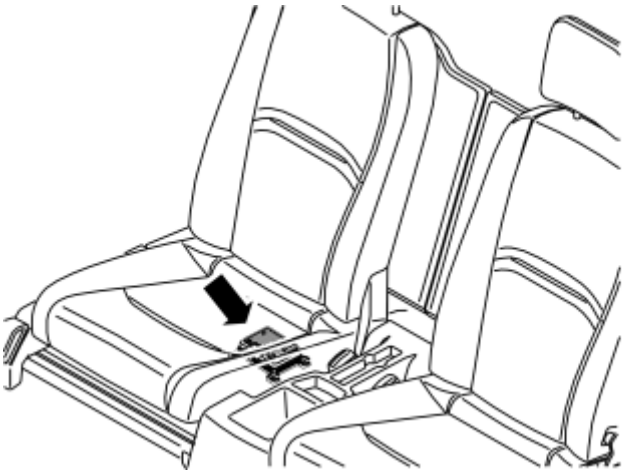

Fig. 58: Locating Fuel Pump Driver Module
Courtesy of VOLVO CARS CORPORATION

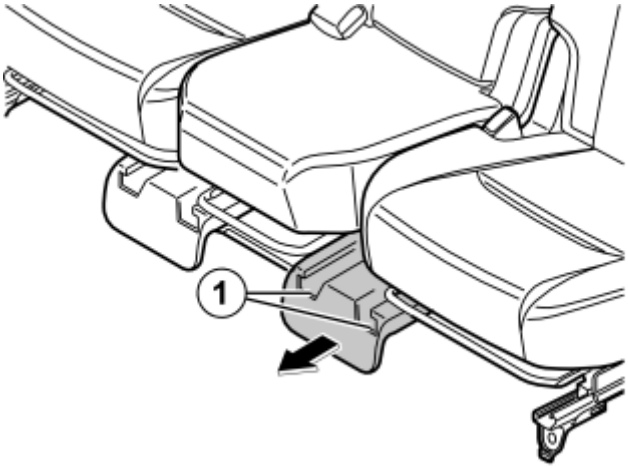

Fig. 59: Identifying Covers Over Seat Rails
Courtesy of VOLVO CARS CORPORATION

Remove:

- covers over seat rails
- the 4 screws

Lift out the seat on the right-hand side.

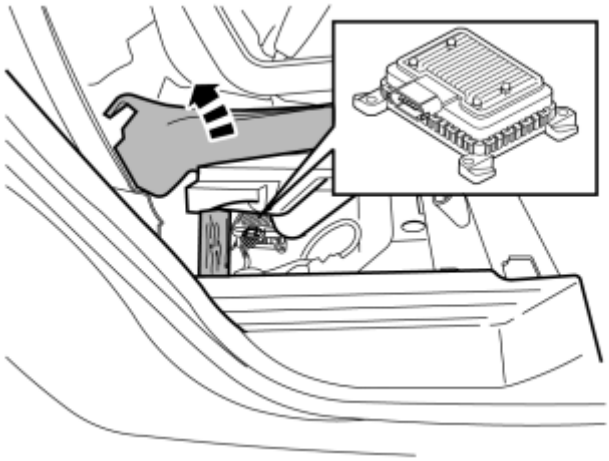

Fig. 60: Installing A New Module
Courtesy of VOLVO CARS CORPORATION

Fold up the carpet. Detach the sill trim panel slightly.

Carefully lift up the insulation block and place a block under the insulation block to access the module.

Install the new module and connect the cable connector.

Remove the block and fold the carpet back. Press the sill trim panel into place.

VEHICLES WITH FUEL PUMP DRIVER MODULE ORIGINALLY LOCATED IN THE RIGHT-HAND REAR WHEEL HOUSING

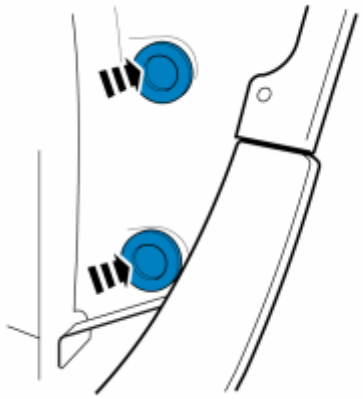

Fig. 61: Plug, 974688
Courtesy of VOLVO CARS CORPORATION

Install two rubber plugs for the wheel housing.

Use: Plug, 974688

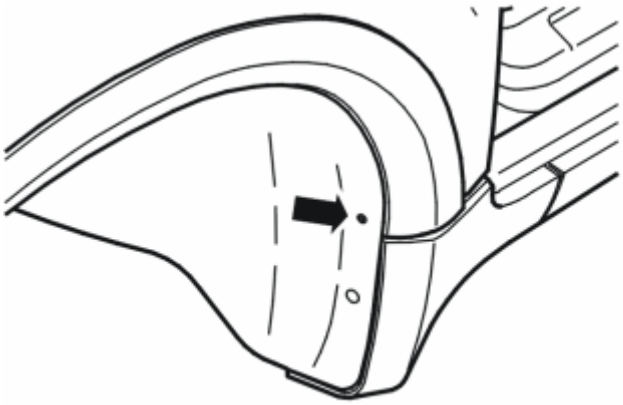

Fig. 62: Accessing Inner Fender
Courtesy of VOLVO CARS CORPORATION

Install the inner fender with plastic nuts and rivets

Install wheel. See **INSTALLING WHEELS**

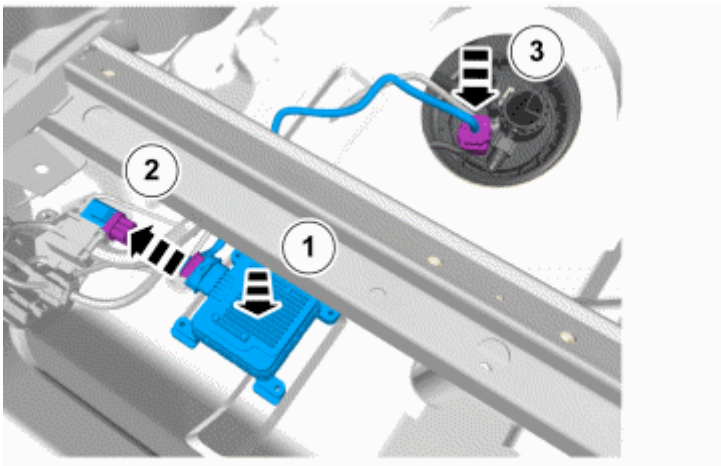

Fig. 63: Control module, 30769225
Courtesy of VOLVO CARS CORPORATION

Place the module on the two embossings in the floor leaving a clearance for the seat frame of at least 5 mm.

Use: Control module, 30769225

Remove the protective tape for the Velcro attachments and install the control module.

Install the cable mounting for the connection at the sill, fuel pump and module as well as the mounting in the floor.

Use: Cable harness, 30724838

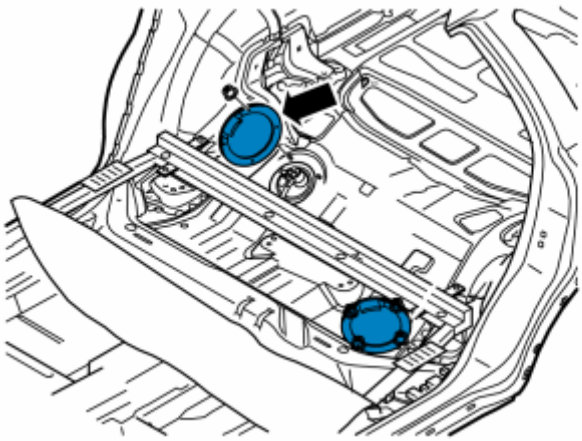

Fig. 64: Identifying Right-Hand Cover Over The Fuel Pump.
Courtesy of VOLVO CARS CORPORATION

Check the cover seal for faults and check that the cables are in the cut-outs.

Check that the plugs are in the seal.

Install the cover and tighten to 6 Nm.

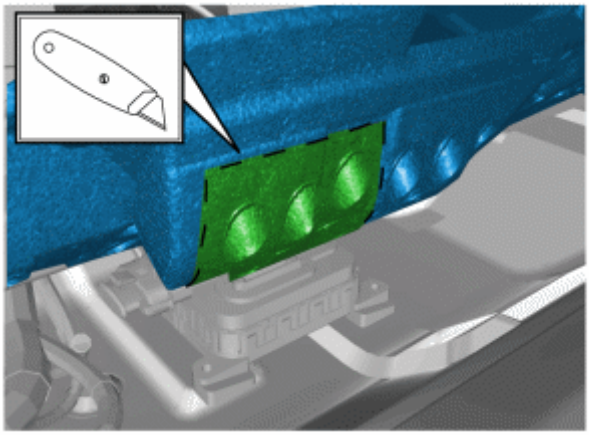

Fig. 65: Cutting A Hole In The Insulation
Courtesy of VOLVO CARS CORPORATION

Mark and make a hole for the module in the insulation block.

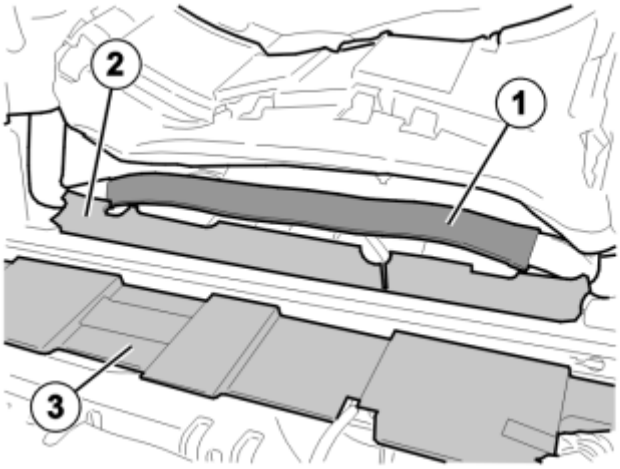

Fig. 66: Folding The Carpet Back
Courtesy of VOLVO CARS CORPORATION

Fold the carpet back

Install:

- ventilation pipe (1)
- the insulation block (2)
- the insulation block (3)

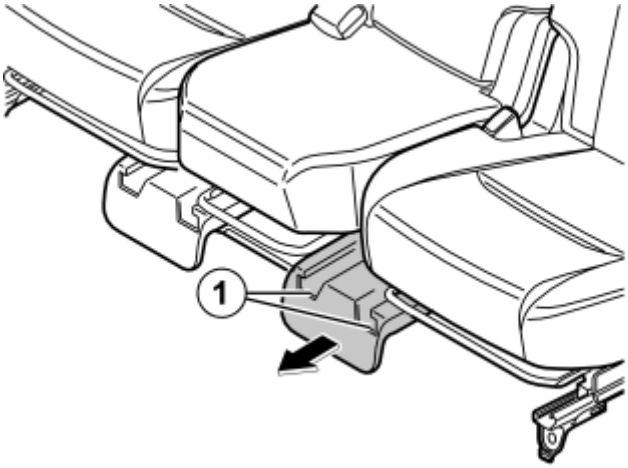

Fig. 67: Identifying Covers Over Seat Rails
Courtesy of VOLVO CARS CORPORATION

Install

- the seats. Use new screws, 12 x M10. Tighten to 50 Nm.
- the covers over the seat rails

VEHICLES WITH FUEL PUMP DRIVER MODULE ORIGINALLY LOCATED UNDER THE RIGHT-HAND REAR BENCH SEAT.

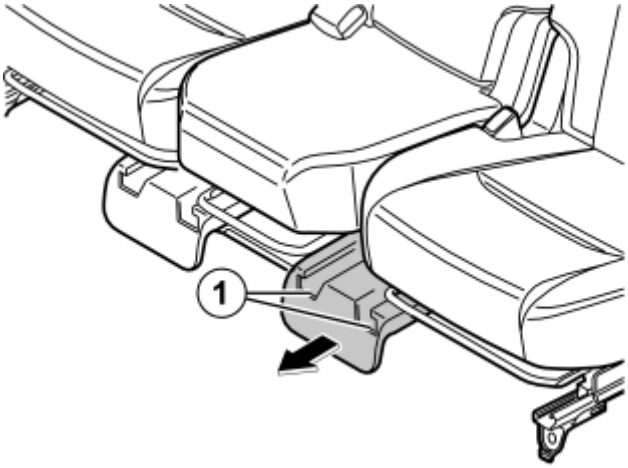

Fig. 68: Identifying Covers Over Seat Rails
Courtesy of VOLVO CARS CORPORATION

Install the seat. Use new screws, 4 x M10

Tighten to 50Nm

KNOCK SENSOR (KS), REPLACING

see **KNOCK SENSOR (KS), REPLACING**

TEMPERATURE AND PRESSURE SENSORS, REPLACING

see **TEMPERATURE AND PRESSURE SENSORS, REPLACING**

CONTROL SYSTEM, FUEL SUPPLY (B6324S/5; 2007-2012)

ENGINE CONTROL MODULE (ECM)

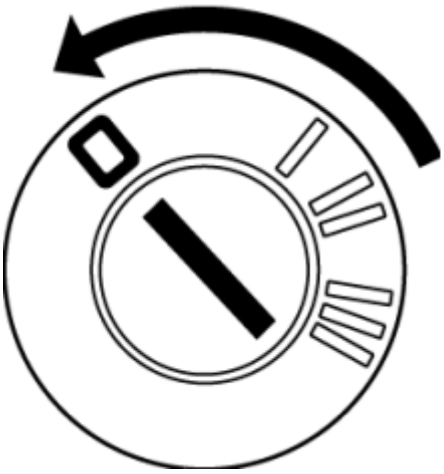

Fig. 69: Identifying Ignition Switch In OFF Position
Courtesy of VOLVO CARS CORPORATION

Fig. 70: Lifting the Cover
Courtesy of VOLVO CARS CORPORATION

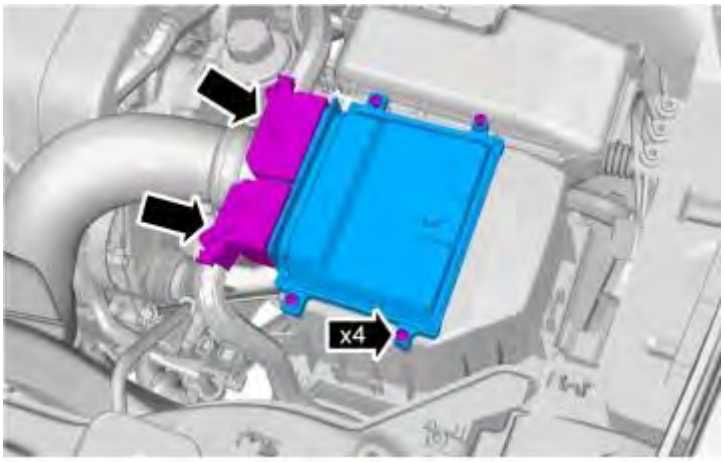

Fig. 71: Locating Engine Control Module (ECM)
Courtesy of VOLVO CARS CORPORATION

NOTE: Make sure that the component terminals are not bent or damaged.

NOTE: Make sure that the seal remains correctly located.

To install, reverse the removal procedure.

Order and download software 9438288 .

ENGINE COOLANT TEMPERATURE SENSOR (ECT)

Drain the cooling system. See **COOLING SYSTEM - DRAINING, CHARGING AND BLEEDING** .

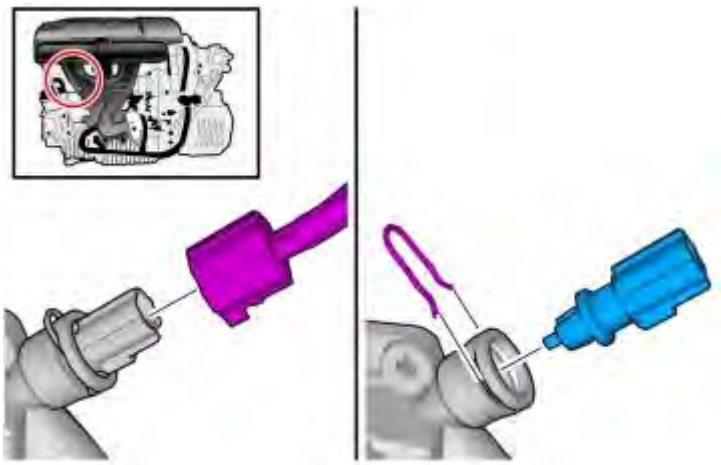

Fig. 72: Identifying Engine Coolant Temperature Sensor (ECT)
Courtesy of VOLVO CARS CORPORATION

Charge the cooling system. See **COOLING SYSTEM - DRAINING, CHARGING AND BLEEDING** .

KNOCK SENSOR (KS)

NOTE: Removal steps in this procedure may contain installation details.

Fig. 73: Identifying Engine Cover Removal
Courtesy of VOLVO CARS CORPORATION

Remove the intake manifold. See **INDUCTION PIPE** .

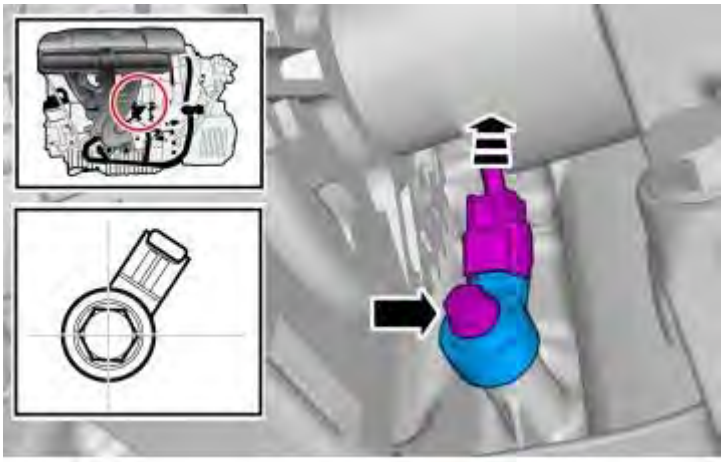

Fig. 74: Locating Knock Sensor
Courtesy of VOLVO CARS CORPORATION

Remove the oil cooler. See **OIL COOLER, ENGINE**

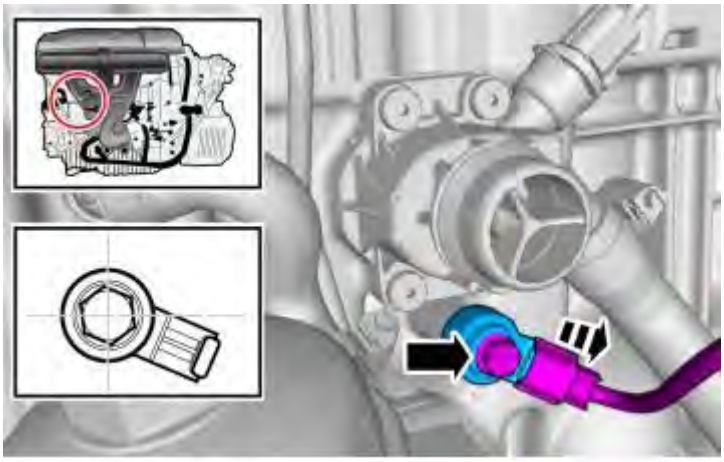

Fig. 75: Locating Knock Sensor
Courtesy of VOLVO CARS CORPORATION

Knock sensor. See **SUMMARY OF TIGHTENING TORQUES FOR SPECIFIC COMPONENTS**

To install, reverse the removal procedure

MANIFOLD ABSOLUTE PRESSURE (MAP) SENSOR

Fig. 76: Locating Engine Undercover And Clips
Courtesy of VOLVO CARS CORPORATION

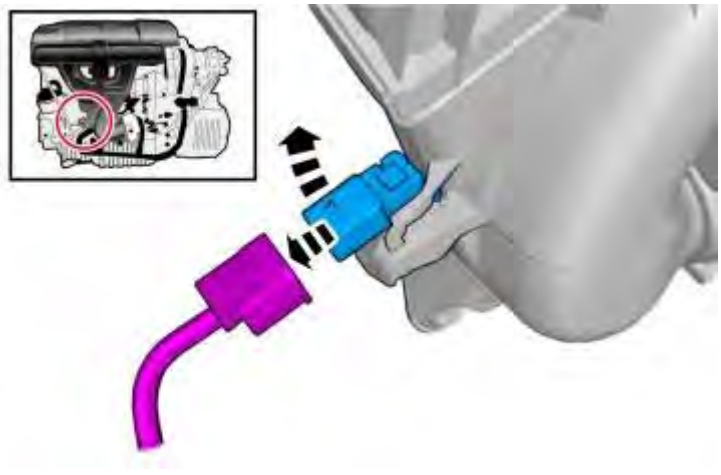

Fig. 77: Identifying Manifold Absolute Pressure (MAP) Sensor
Courtesy of VOLVO CARS CORPORATION

PRESSURE SENSOR, FUEL RAIL (FRP)

NOTE: Removal steps in this procedure may contain installation details.

Always read the safety precautions, see: **SAFETY INFORMATION GASOLINE**

Drain the fuel system. See **FUEL SYSTEM PRESSURE RELEASE**

Fig. 78: Identifying Engine Cover Removal
Courtesy of VOLVO CARS CORPORATION

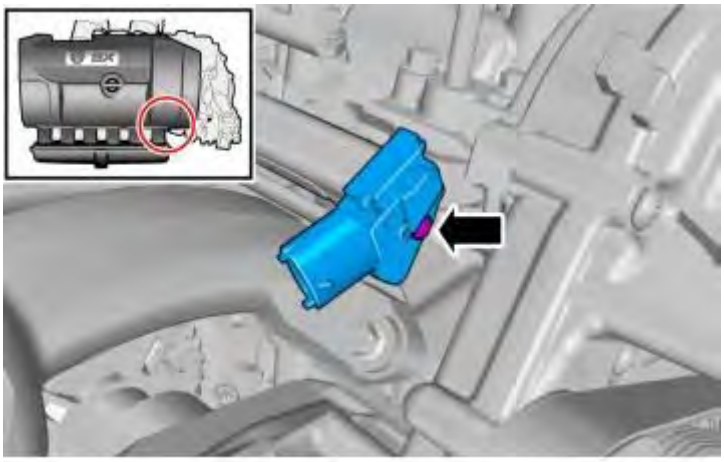

Fig. 79: Locating Fuel Rail Pressure Sensor (FRP)
Courtesy of VOLVO CARS CORPORATION

M5. See **TIGHTENING TORQUE**

SAFETY INFORMATION GASOLINE

WARNING: **Risk of explosion and fire.**

Make sure there are no open flames or sparks in the vicinity of fuel system components. It is possible that there is no obvious warning in the form of odor or irritation before a poisonous or hazardous situation arises. This could be immediate or delayed.

WARNING: **Gasoline for engine operation can contain considerable amounts of benzene, which is toxic if inhaled. The concentration of gasoline fumes must be kept very low. Make sure there is suitable ventilation when handling and using gasoline.**

The greatest of care must be taken to avoid the serious consequences of inhaling if there is fume build-up from spills in enclosed spaces.

High concentrations cause eye/nose/throat irritation, nausea, headaches, depression and signs of insobriety. Very high concentrations result in quick loss of consciousness.

Special methods are to be applied to clean and maintain gasoline storage tanks. Gasoline must not be used as a cleaner. Gasoline must not be taken into the mouth.

• In the event of skin contact: Take extreme care when handling hot fluids. Always wash spilled fluid off of exposed skin immediately.

• In the event of consumption: Consumption can result in mouth and skin

irritation and absorption from the stomach can result in drowsiness and loss of consciousness. Small amounts could be fatal to children.

• In the event of inhalation: Inhaling fluid into the lungs, through vomiting, is extremely dangerous. Gasoline dries out the skin. Long-term or repeated exposure can cause irritation and skin inflammation.

• In the event of contact with the eyes: Fluid in the eyes causes severe pain.

CAUTION: Fuel injection equipment is manufactured with extremely tight tolerances and minimum clearance.

CAUTION: It is vital that the utmost cleanliness is upheld when working with these components. Make sure the area around the vehicle is as clean and free of dust as possible.

CONTROL SYSTEM, FUEL SUPPLY (B8444S; 2005-2011)

CONTROL MODULE FUEL PUMP (FP), REPLACING

see **CONTROL MODULE FUEL PUMP (FP), REPLACING**

ENGINE CONTROL MODULE (ECM), REPLACING

NOTE: The illustrations in this service information are used for different model years and/or models. Some variation may occur. However, the essential information in the illustrations is always correct.

REMOVAL

PREPARATORY WORK

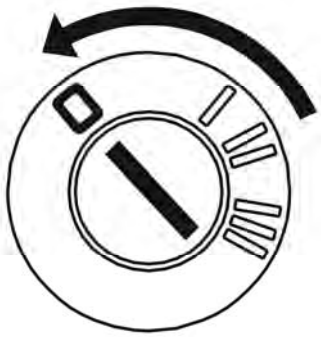

Fig. 80: Identifying Ignition In OFF Position
Courtesy of VOLVO CARS CORPORATION

Ignition off.

Disconnect the battery negative cable. See: **BATTERY, DISCONNECTING** .

REMOVING THE ENGINE CONTROL MODULE (ECM)

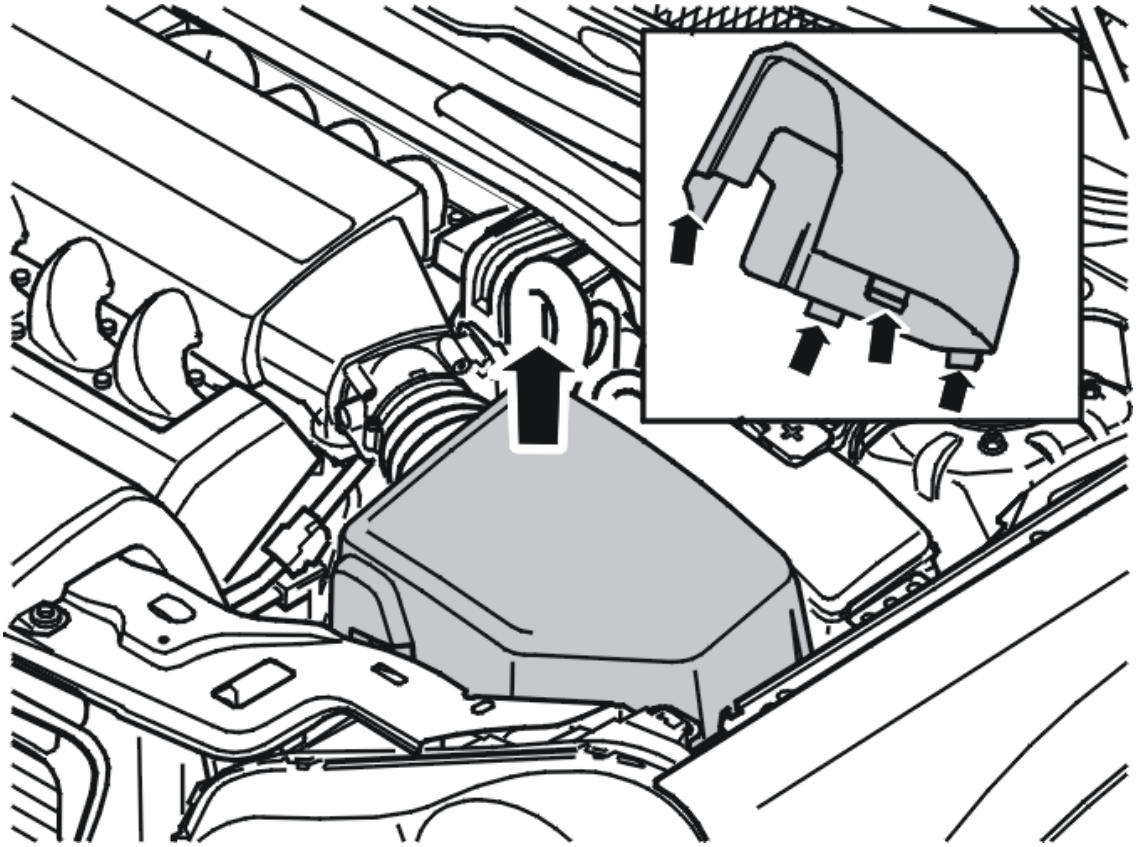

Fig. 81: Removing Cover
Courtesy of VOLVO CARS CORPORATION

Remove the cover by lifting it straight up.

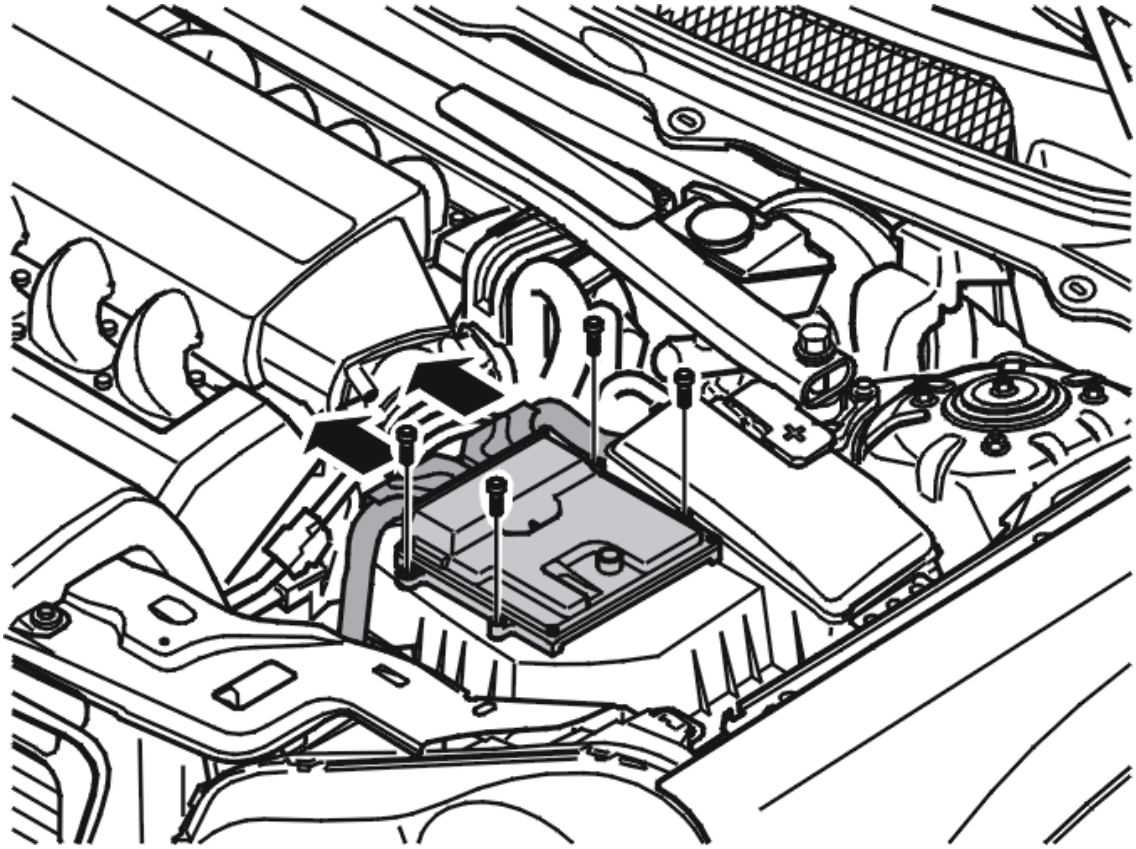

Fig. 82: Removing The Engine Control Module (ECM)
Courtesy of VOLVO CARS CORPORATION

Remove:

- the connectors, x2
- the bolts, x4
- the Engine Control Module (ECM).

INSTALLATION

INSTALLING THE ENGINE CONTROL MODULE (ECM)

NOTE: Ensure that the rubber seal is positioned correctly in its channel.

Install:

- the Engine Control Module (ECM)
- the bolts, x4
- the connectors, x2
- the cover
- the battery's negative cable in accordance with: **BATTERY, DISCONNECTING** .

ORDERING SOFTWARE

Order the software in accordance with: 9438288 .

FINISHING

Check that no diagnostic trouble codes (DTC) have been stored in the control module during the repair.

Test drive the vehicle and check the function of the engine.

FUEL PRESSURE AND TEMPERATURE SENSOR, REPLACING

NOTE: The illustrations in this service information are used for different model years and/or models. Some variation may occur. However, the essential information in the illustrations is always correct.

REMOVAL

DRAINING THE FUEL SYSTEM

Drain the fuel system. See: **FUEL SYSTEM, DRAINING** .

REMOVING THE UPPER CROSS STAY

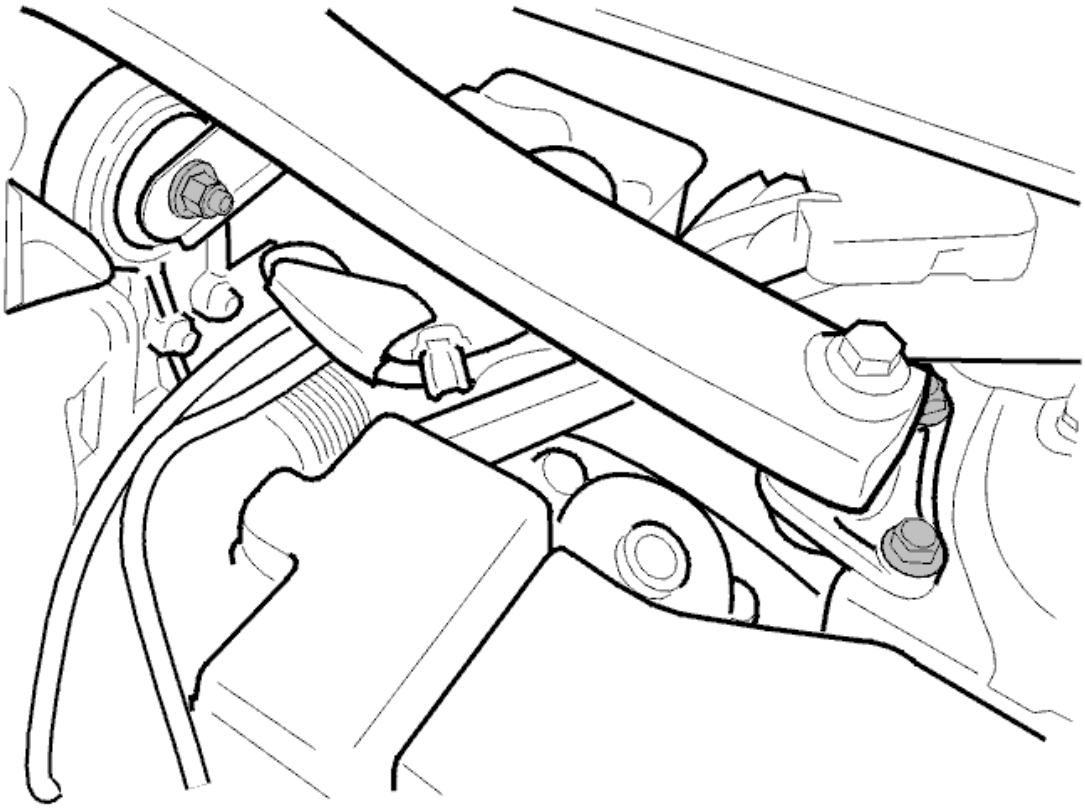

Fig. 83: Engine Stabilizer Brace
Courtesy of VOLVO CARS CORPORATION

Remove:

- the 4 screws at the suspension turrets
- the screws of the upper engine mount on the engine
- the upper cross stay.

REMOVING THE UPPER ENGINE MOUNT

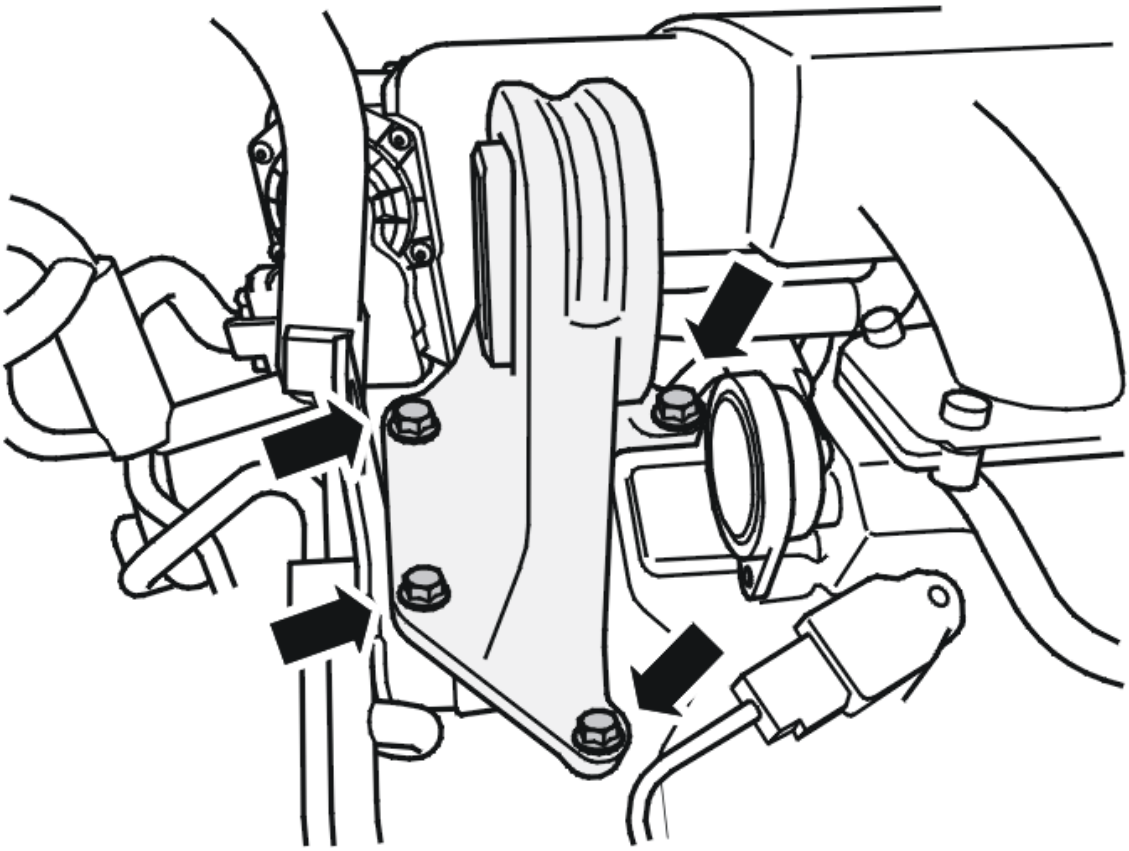

Fig. 84: Identifying Upper Engine Mount
Courtesy of VOLVO CARS CORPORATION

Remove:

- the 4 screws
- the upper engine mount.

REMOVAL OF UPPER ENGINE COVER OVER CYLINDER 2, 4, 6 AND 8 (BANK 2)

Remove the upper engine cover over cylinder 2, 4, 6 and 8 (bank 2) by pulling it straight up.

REMOVING THE VACUUM HOSE

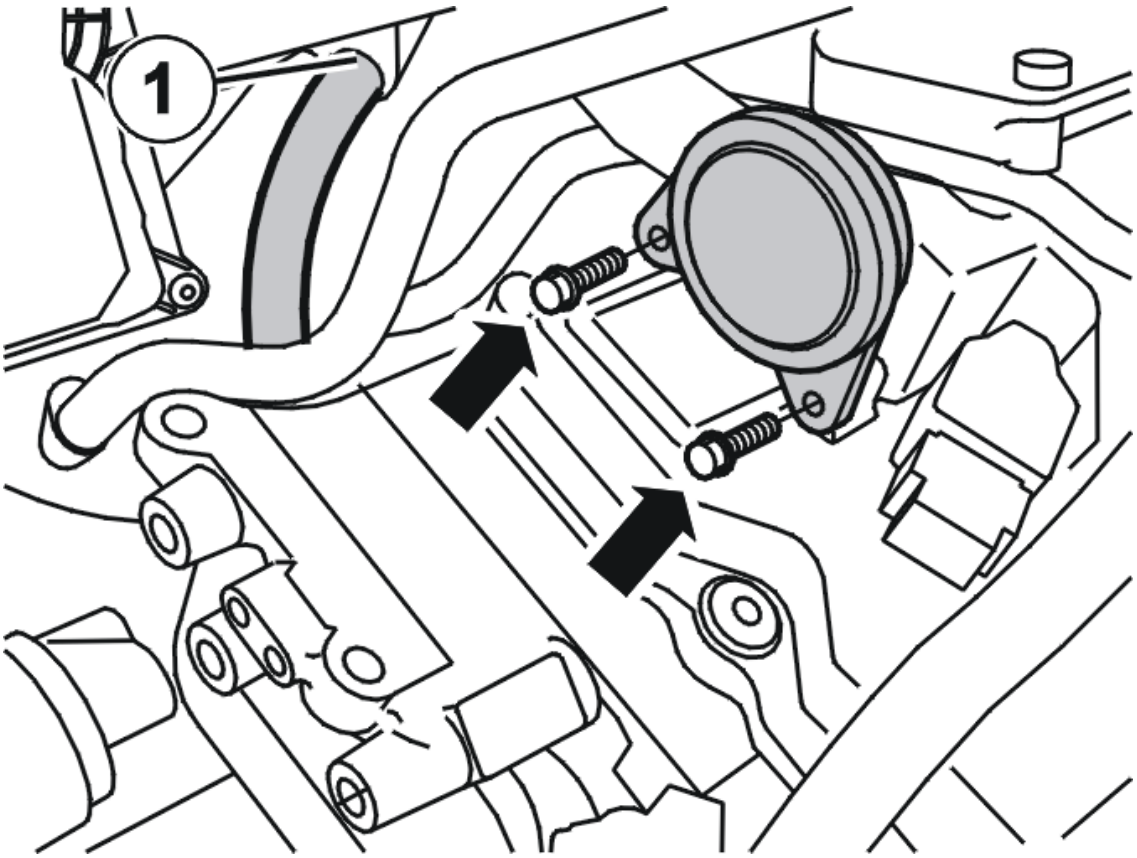

Fig. 85: Identifying Vacuum Hose (1)
Courtesy of VOLVO CARS CORPORATION

Remove:

- the hose clip on the vacuum hose (1)
- the vacuum hose (1).

REMOVAL OF FUEL PRESSURE AND TEMPERATURE SENSOR

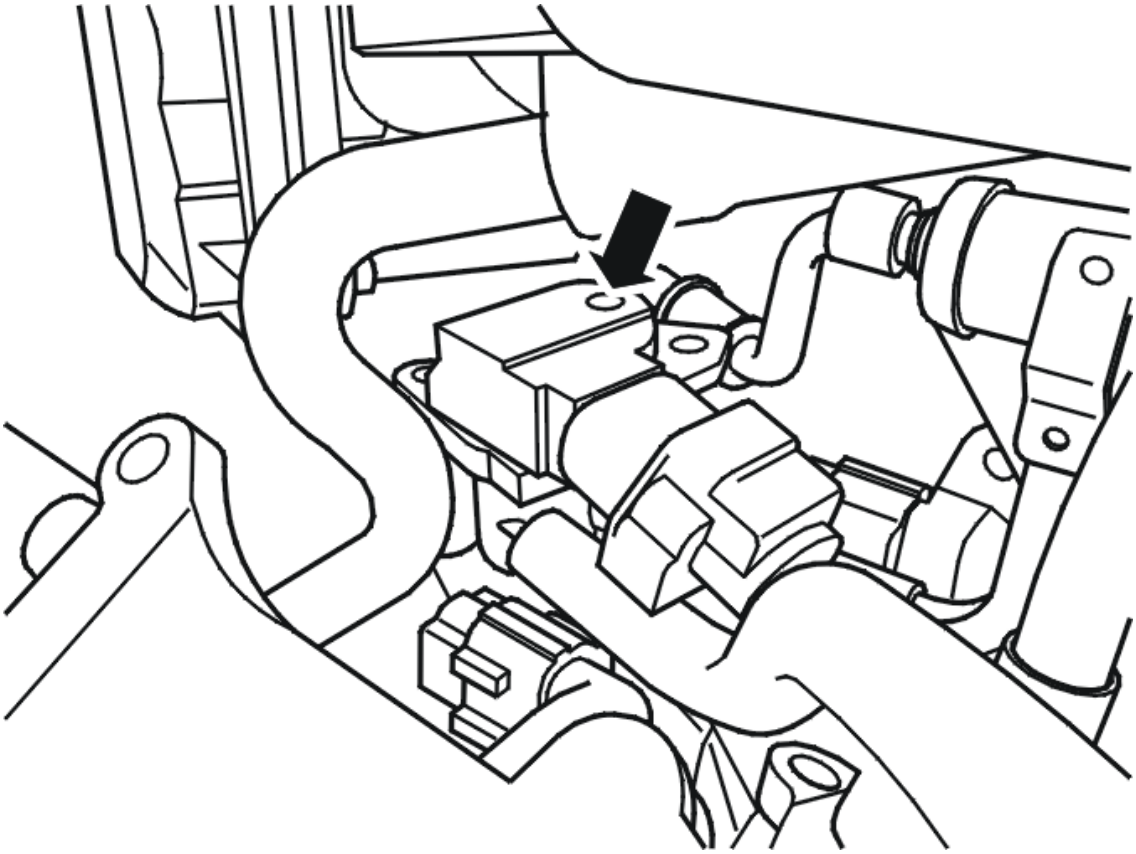

Fig. 86: Identifying Fuel Pressure And Temperature Sensor
Courtesy of VOLVO CARS CORPORATION

Remove:

- the connector for fuel pressure and temperature sensor
- the screw
- fuel pressure and temperature sensor.

INSTALLATION

NOTE: For tightening torques, see: TIGHTENING TORQUE .

INSTALLATION OF FUEL PRESSURE AND TEMPERATURE SENSOR

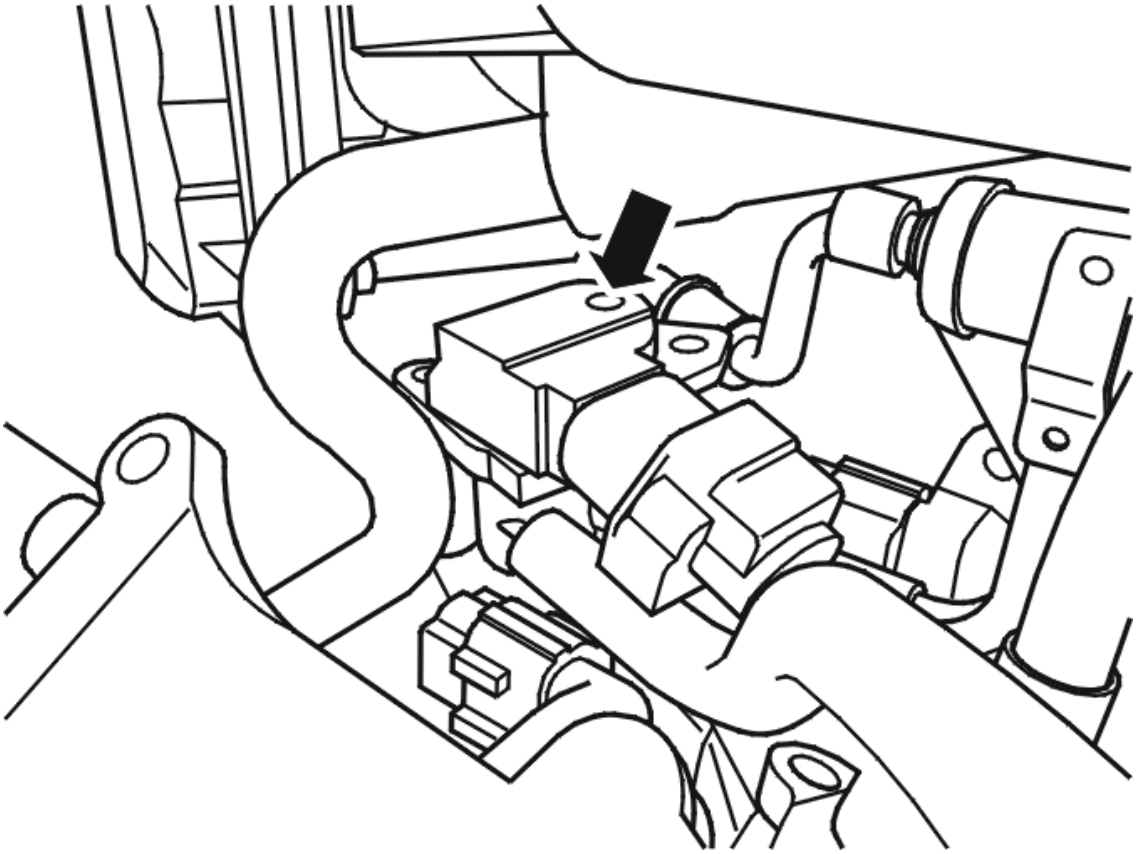

Fig. 87: Identifying Fuel Pressure And Temperature Sensor
Courtesy of VOLVO CARS CORPORATION

Install:

- fuel pressure and temperature sensor
- the screw; tighten
- the connector for fuel pressure and temperature sensor

INSTALLING THE VACUUM HOSE

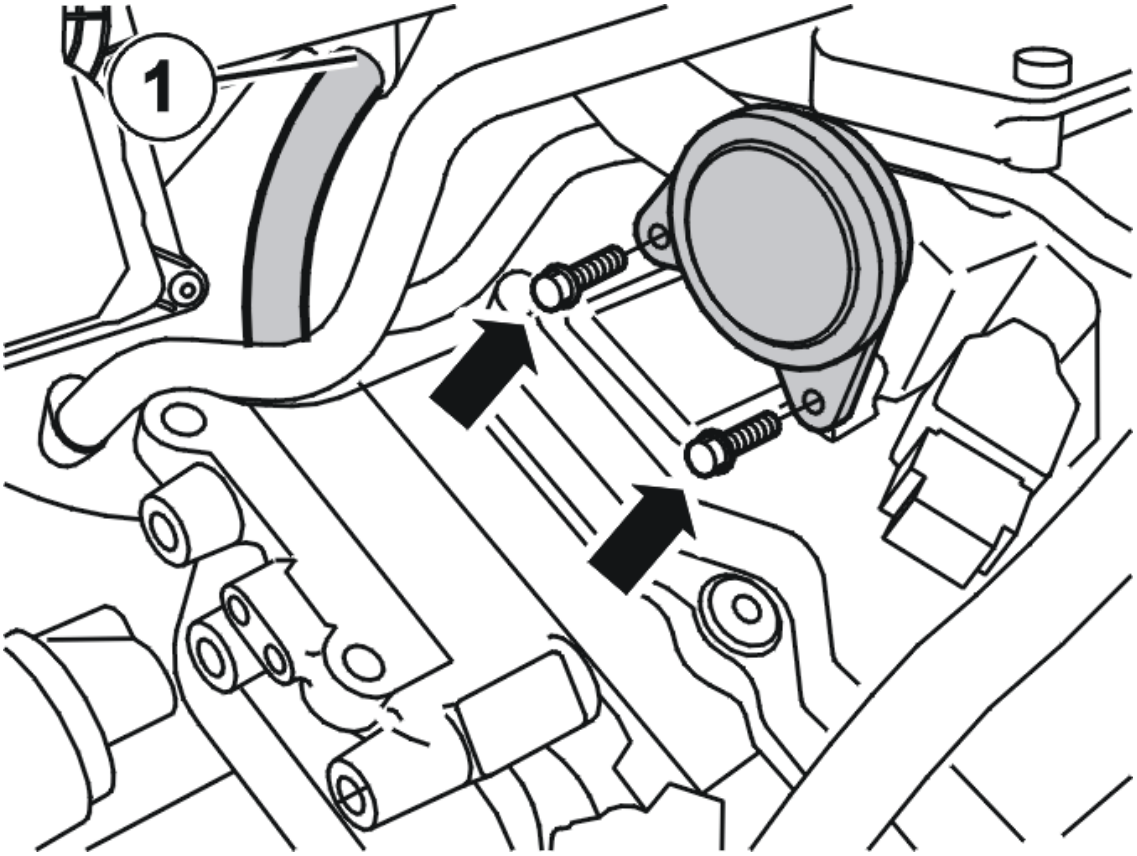

Fig. 88: Identifying Vacuum Hose (1)
Courtesy of VOLVO CARS CORPORATION

Install the vacuum hose (1); secure with the clamp.

INSTALLATION OF UPPER ENGINE COVER OVER CYLINDER 2, 4, 6 AND 8 (BANK 2)

Install the upper engine cover over cylinder 2, 4, 6 and 8 (bank 2)

INSTALLING THE UPPER ENGINE MOUNT

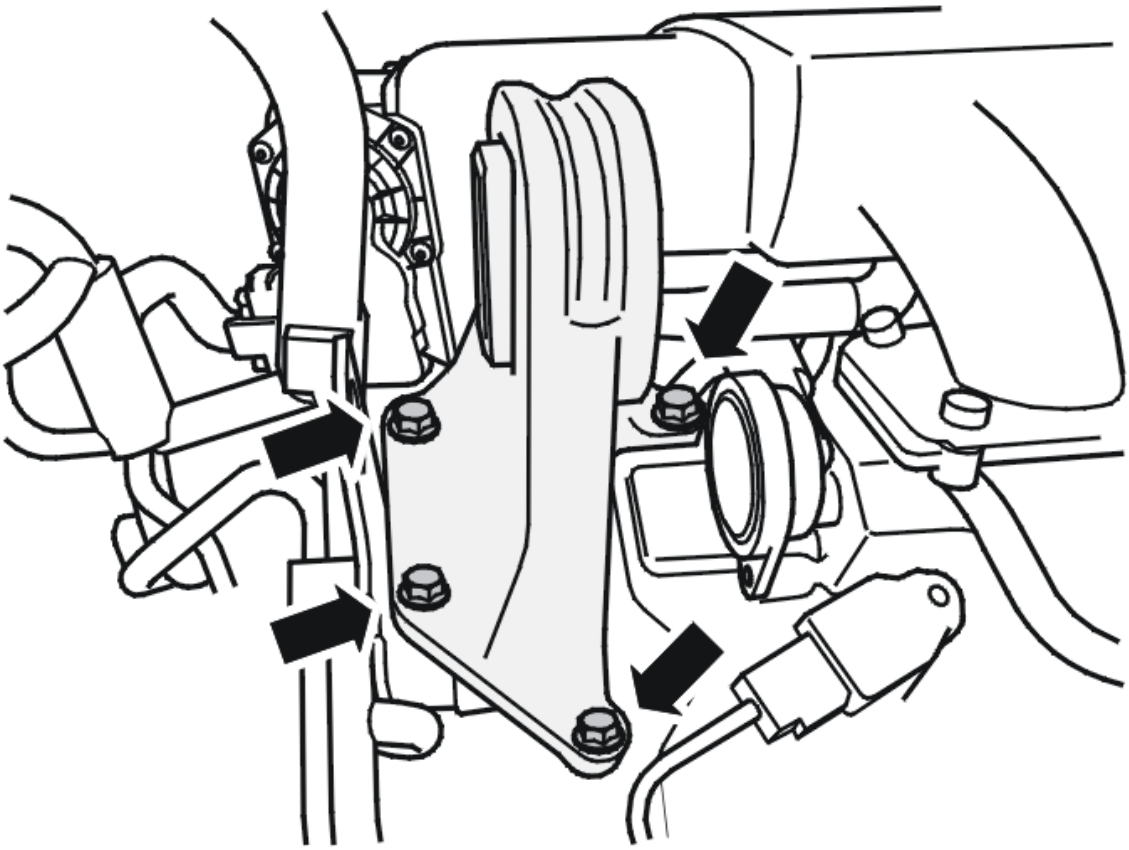

Fig. 89: Identifying Upper Engine Mount
Courtesy of VOLVO CARS CORPORATION

Install the upper engine mount. Tighten the 4 M10 screws.

INSTALLING THE UPPER CROSS STAY

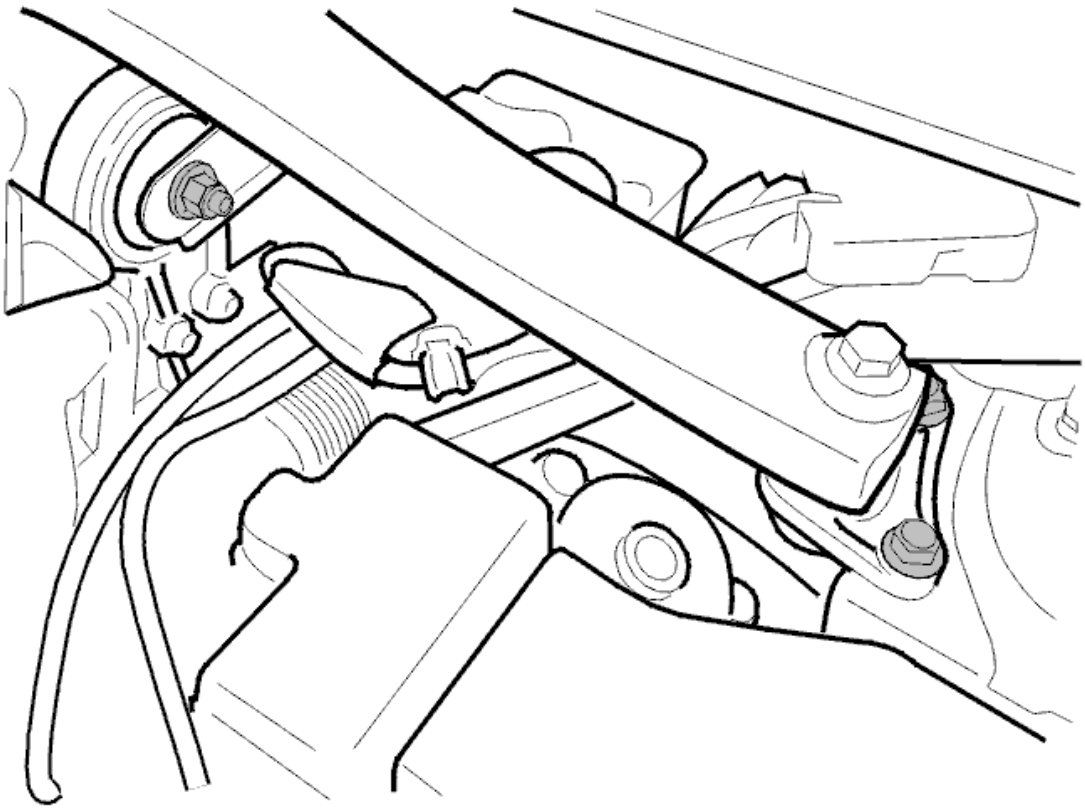

Fig. 90: Engine Stabilizer Brace
Courtesy of VOLVO CARS CORPORATION

Install:

- the upper cross stay between the suspension turrets
- the 4 screws in the suspension turrets; tighten
- the screw of the cross stay mount on the engine; tighten.

KNOCK SENSOR (KS), REPLACING

NOTE: The illustrations in this service information are used for different model years and/or models. Some variation may occur. However, the essential information in the illustrations is always correct.

REMOVAL

REMOVING THE INTAKE MANIFOLD

Remove the intake manifold. See **INTAKE MANIFOLD/GASKET, REPLACING** .

REMOVING THE KNOCK SENSOR

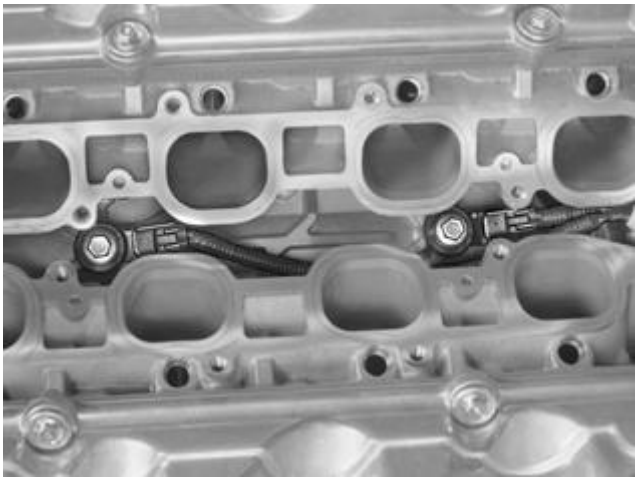

Fig. 91: Locating Knock Sensors
Courtesy of VOLVO CARS CORPORATION

Remove:

- the knock sensor screw
- the connector from the knock sensor
- the knock sensor.

INSTALLATION

INSTALLING THE KNOCK SENSOR

Install:

- the knock sensor.
- the screw; tighten as specified: **TIGHTENING TORQUE** .
- the connector to the knock sensor.

INSTALLING THE INTAKE MANIFOLD

Install the intake manifold. See **INTAKE MANIFOLD/GASKET, REPLACING** .

CHECK

Start the engine and check the function.

MANIFOLD ABSOLUTE PRESSURE (MAP) SENSOR, REPLACING

NOTE: The illustrations in this service information are used for different model years and/or models. Some variation may occur. However, the essential information in the illustrations is always correct.

REMOVAL

REMOVAL OF PRESSURE SENSOR INLET AIR

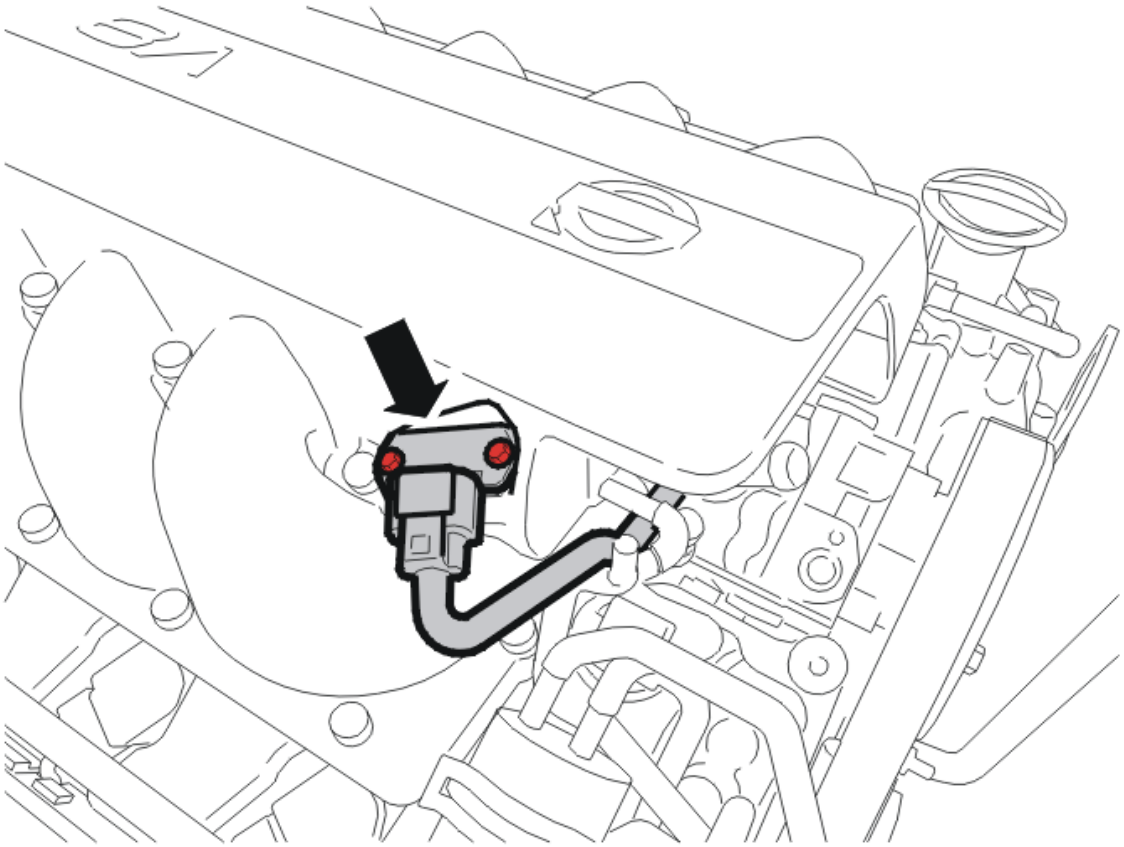

Fig. 92: Locating Pressure Sensor Inlet Air
Courtesy of VOLVO CARS CORPORATION

Remove:

- the connector from the sensor
- the 2 screws
- the sensor by pulling it straight up.

(In the illustration, the upper engine cover and torque arm are removed to better depict the location of the sensor.)

INSTALLATION

NOTE: For tightening torques, see: TIGHTENING TORQUE .

INSTALLATION OF PRESSURE SENSOR INLET AIR

Install:

- a new sensor
- the 2 screws; tighten
- the connector to the sensor.

CHECK

Start the engine and check the function.

TEMPERATURE SENSOR ENGINE COOLANT, REPLACING

Special tools:

see **9512885**

see **9512957**

see **9512953**

NOTE: **The illustrations in this service information are used for different model years and/or models. Some variation may occur. However, the essential information in the illustrations is always correct.**

REMOVAL

REMOVAL OF UPPER ENGINE COVER OVER CYLINDER 1, 3, 5 AND 7 (BANK 1)

Remove:

- the oil filler cap
- upper engine cover over cylinder 1, 3, 5 and 7 (bank 1) by pulling it straight up. Install the oil filler cap.

REMOVING THE AIR CLEANER INTAKE PIPE

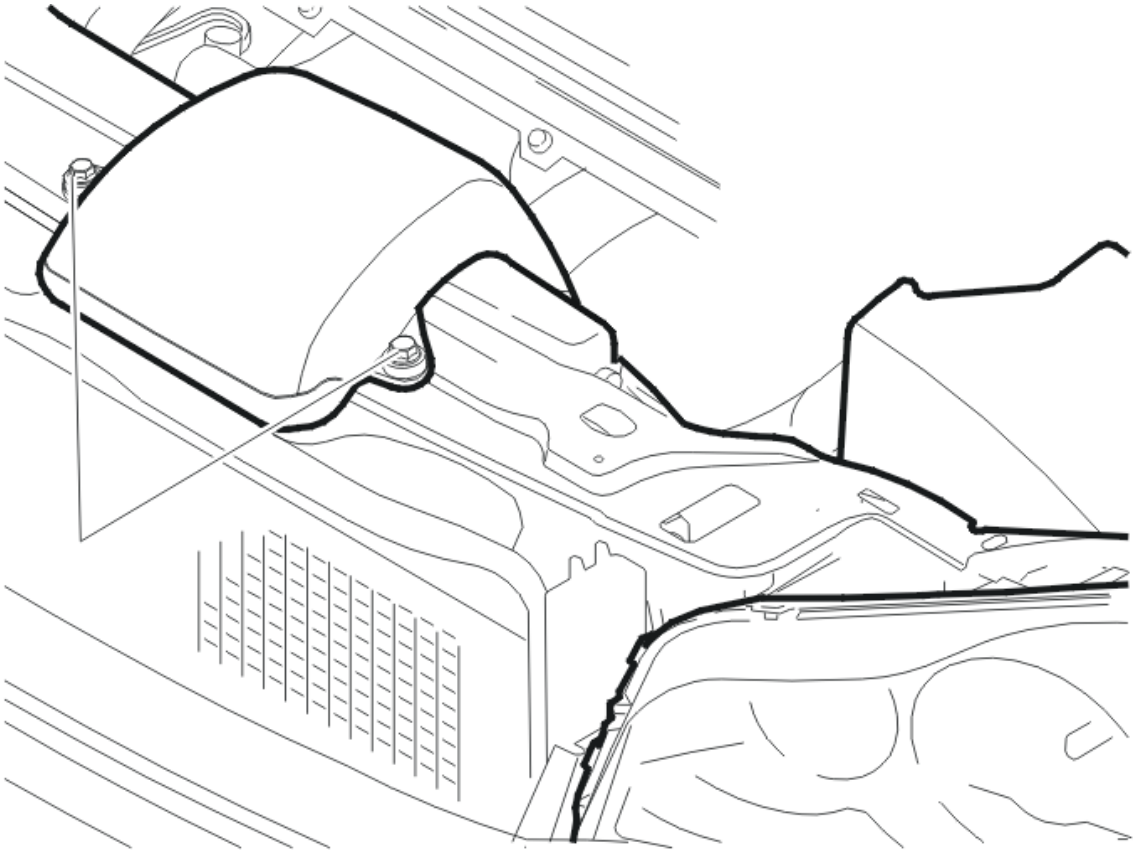

Fig. 93: Identifying Air Cleaner Intake
Courtesy of VOLVO CARS CORPORATION

Remove:

- the 2 screws
- the air cleaner intake pipe
- the expansion tank cap.

REMOVING PROTECTIVE PLATE

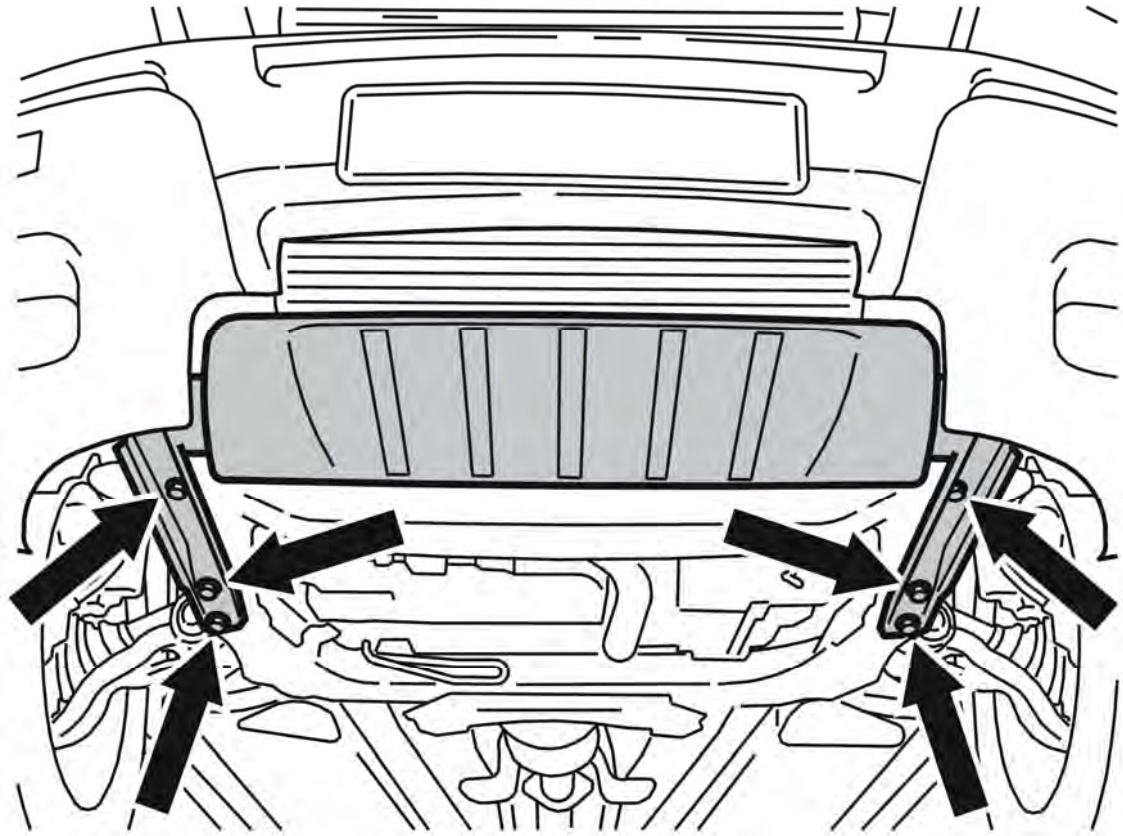

Fig. 94: Splash Guard. Protective Plate And Screws
Courtesy of VOLVO CARS CORPORATION

NOTE: There is a guide sleeve on the upper mounting for the plate. This must be lifted slightly so that the panel can be slid forward.

Remove the 6 screws.

Lift and slide the protective plate forward.

Remove the protective plate.

DRAINING COOLANT

Open the cock on the lower left edge of the radiator.

Drain the coolant into a clean receptacle.

Close the cock.

INSTALLING THE PROTECTIVE PLATE

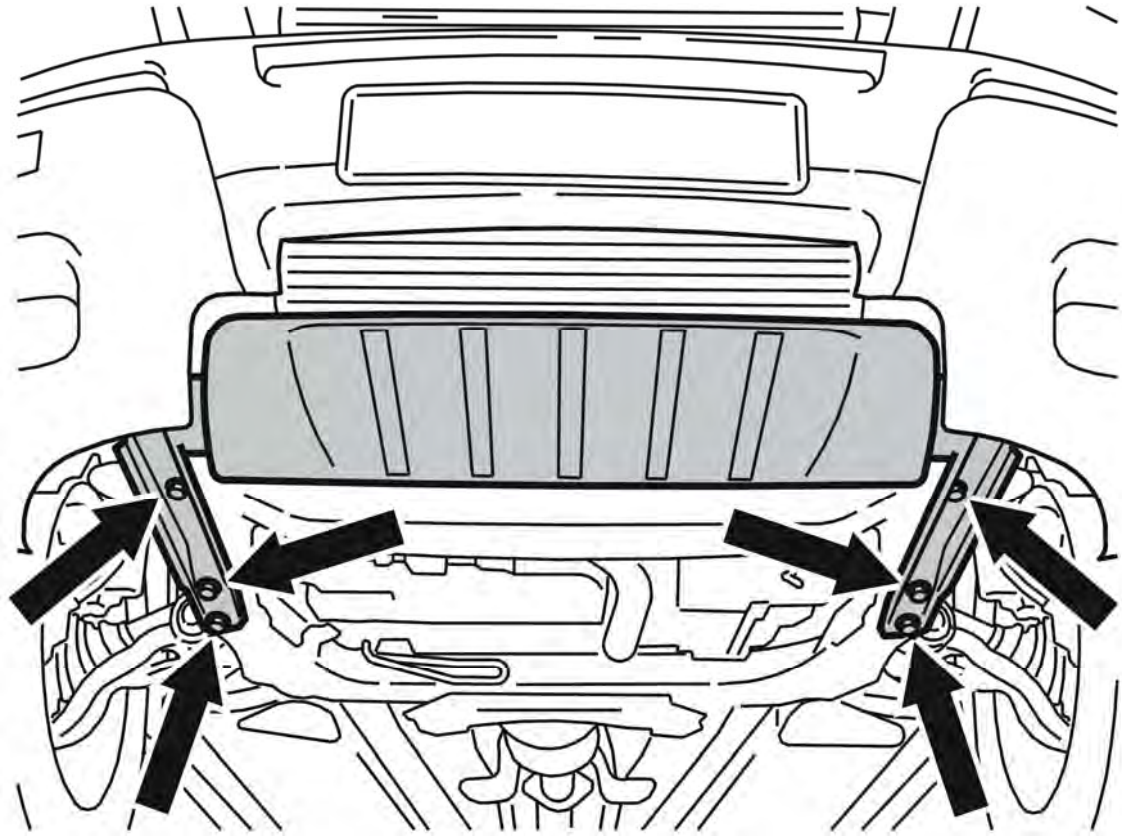

Fig. 95: Splash Guard. Protective Plate And Screws
Courtesy of VOLVO CARS CORPORATION

Install:

- the protective plate
- the 6 screws; tighten.

REMOVING CONNECTORS

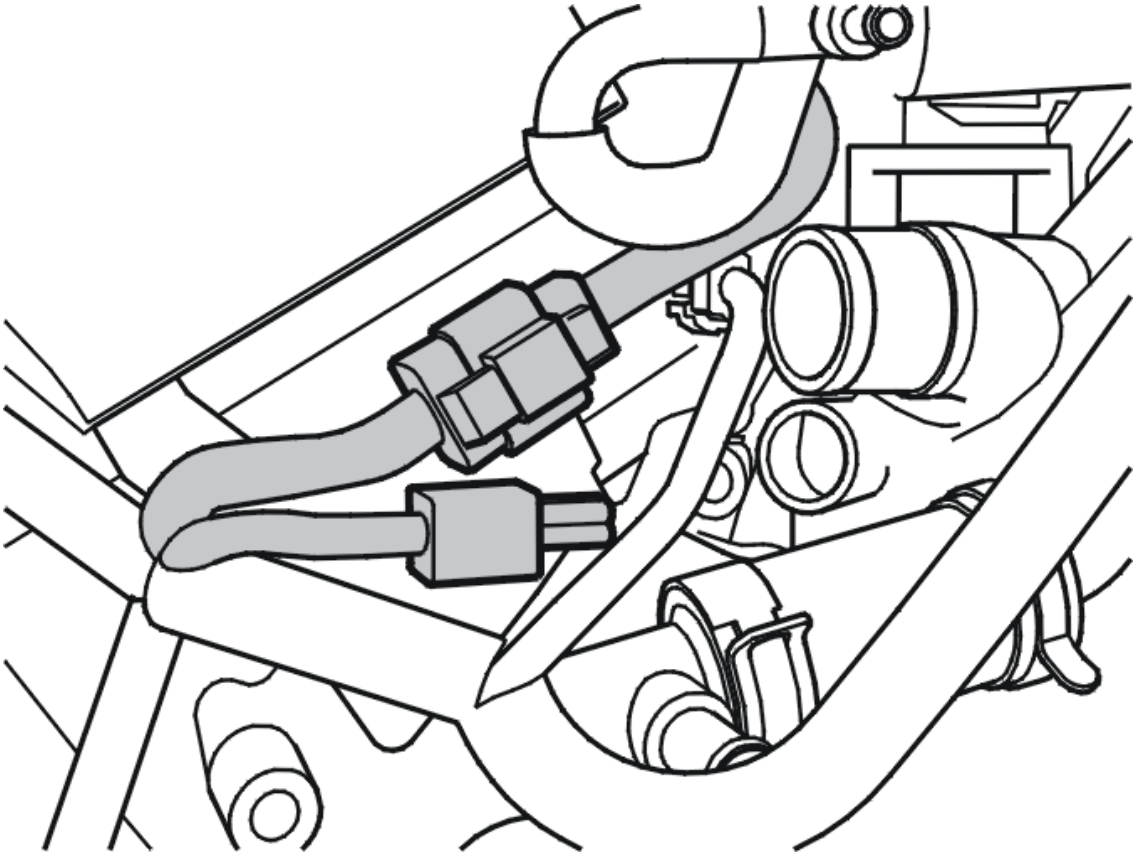

Fig. 96: Removing Connectors
Courtesy of VOLVO CARS CORPORATION

Remove:

- the connector of the injectors from the retainer
- the connector; bend aside
- the connector from the retainer; bend aside.

REMOVING THE COOLANT TEMPERATURE SENSOR

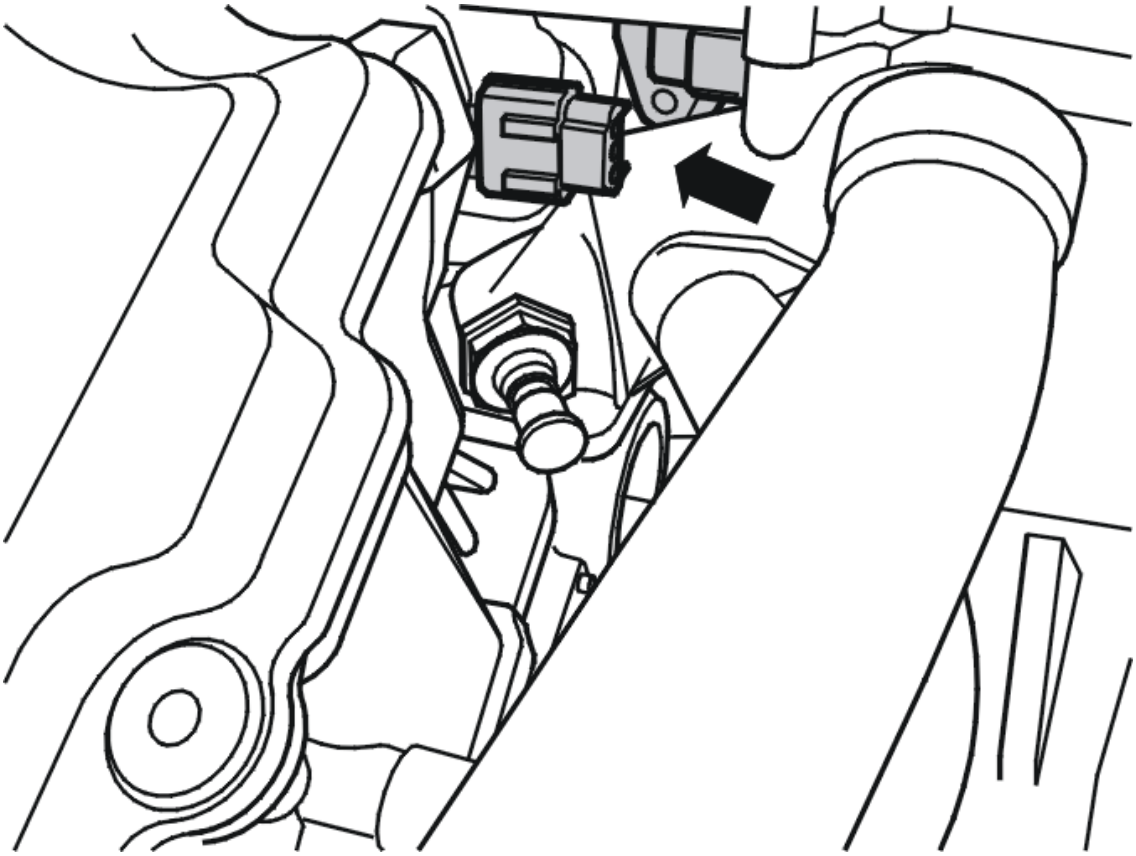

Fig. 97: Identifying Coolant Temperature Sensor
Courtesy of VOLVO CARS CORPORATION

Remove:

- the connector from the temperature sensor
- the temperature sensor using see **9512885** .

INSTALLATION

NOTE: For tightening torques, see: TIGHTENING TORQUE .

INSTALLING THE COOLANT TEMPERATURE SENSOR

Install:

- the temperature sensor using see **9512885** .
- the connector to the temperature sensor.

INSTALLING CONNECTORS

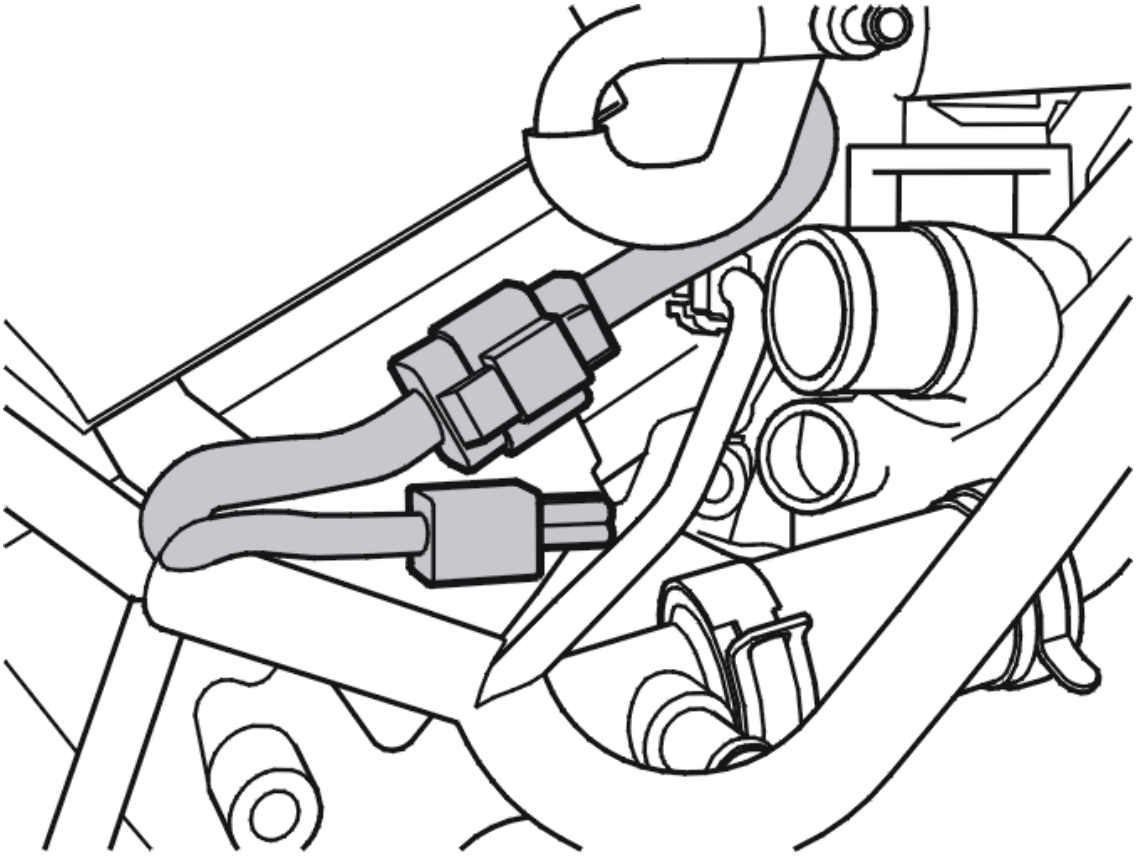

Fig. 98: Removing Connectors
Courtesy of VOLVO CARS CORPORATION

Install:

- the connector to the injectors
- the connector of the injectors in the retainer
- the connector in the retainer.

INSTALLING THE AIR CLEANER INTAKE PIPE

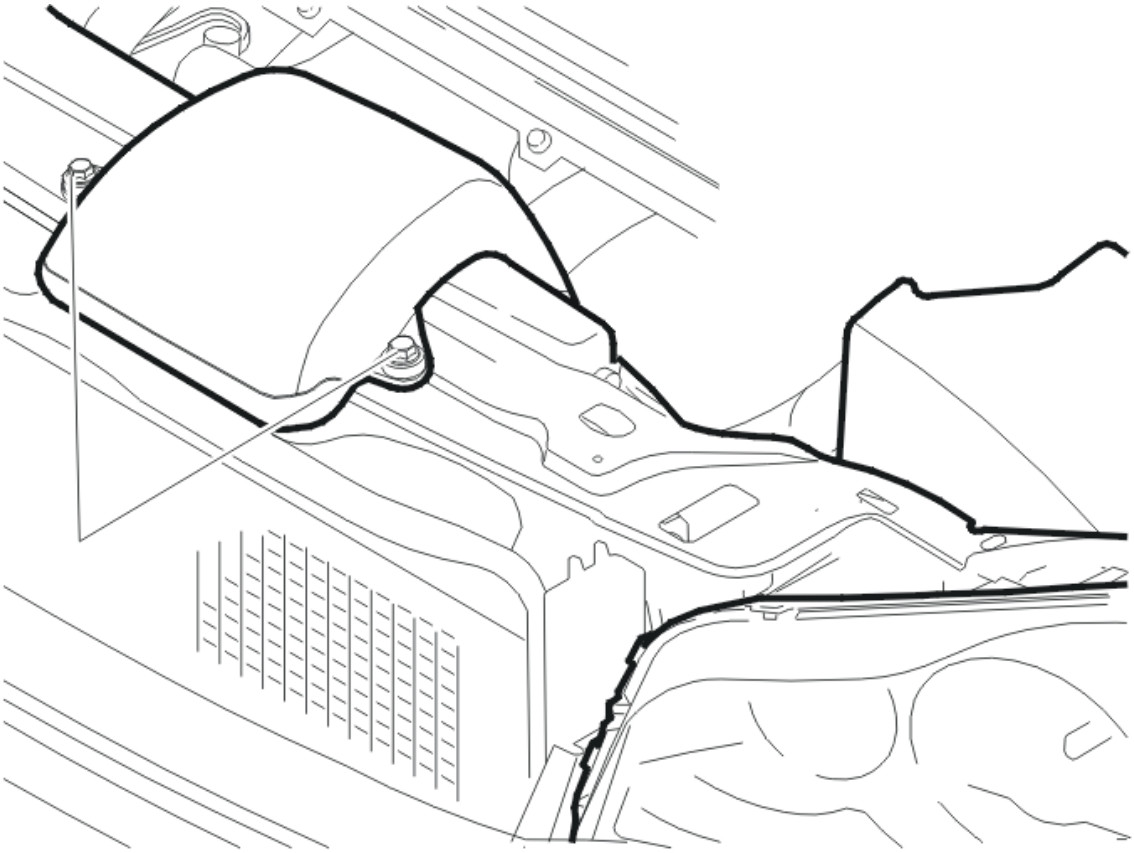

Fig. 99: Identifying Air Cleaner Intake
Courtesy of VOLVO CARS CORPORATION

Install:

- the air cleaner intake pipe
- the 2 M6 screws; tighten.

INSTALLATION OF UPPER ENGINE COVER OVER CYLINDER 1, 3, 5 AND 7 (BANK 1)

Remove the oil filler cap.

Install:

- upper engine cover over cylinder 1, 3, 5 and 7 (bank 1)
- the oil filler cap.

CHECK

CAUTION: Make sure the outlet hose of filling equipment is not blocked as this could damage the cooling system.

Fill with coolant using filling equipment see **9512957** and cover see **9512953** .

Check the oil level in the engine and transmission. Start the engine and allow it to warm to normal operating temperature. Check for leaks and proper function. Fill up fluids as necessary.

CONTROL SYSTEM, IGNITION (B5254T2; 2003-2007)

POSITION SENSOR CAMSHAFT, REPLACING

NOTE: The illustrations in this service information are used for different model years and/or models. Some variation may occur. However, the essential information in the illustrations is always correct.

REMOVING THE POSITION SENSOR

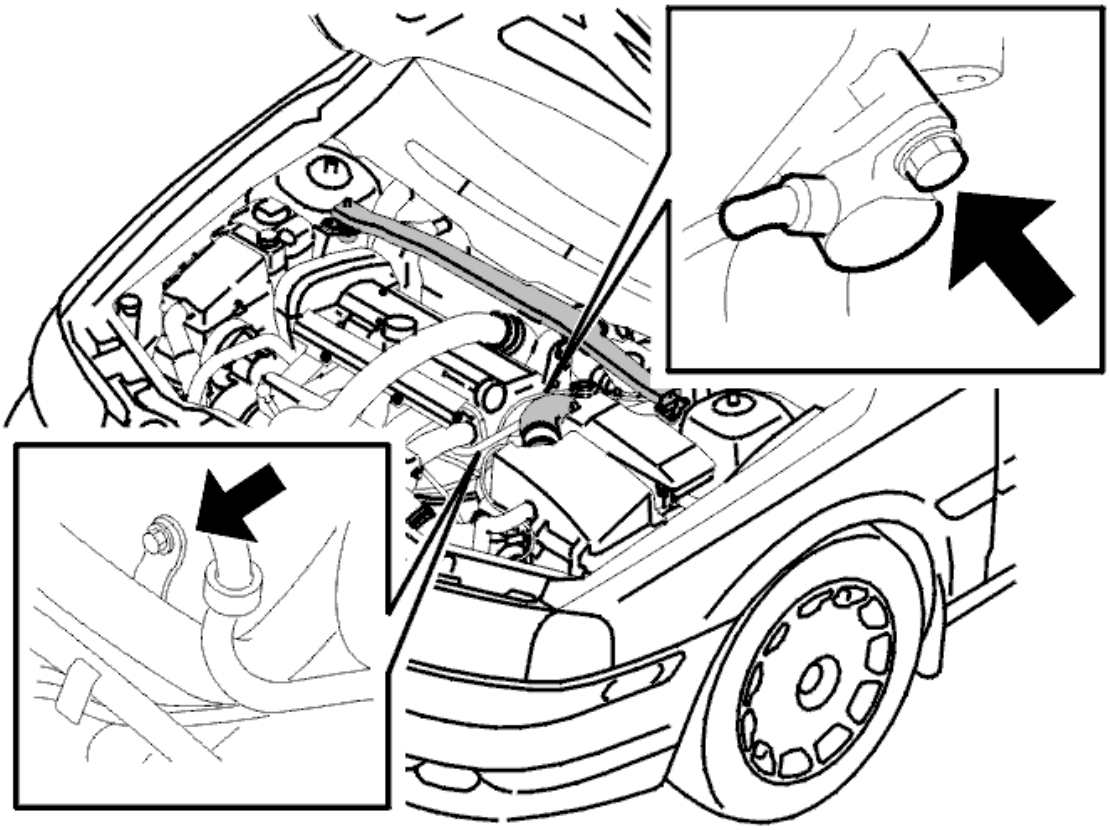

Fig. 100: Camshaft Position Sensor
Courtesy of VOLVO CARS CORPORATION

Disconnect the connector from the sensor.

Remove:

- the screw for the sensor
- the sensor.

INSTALLING THE POSITION SENSOR

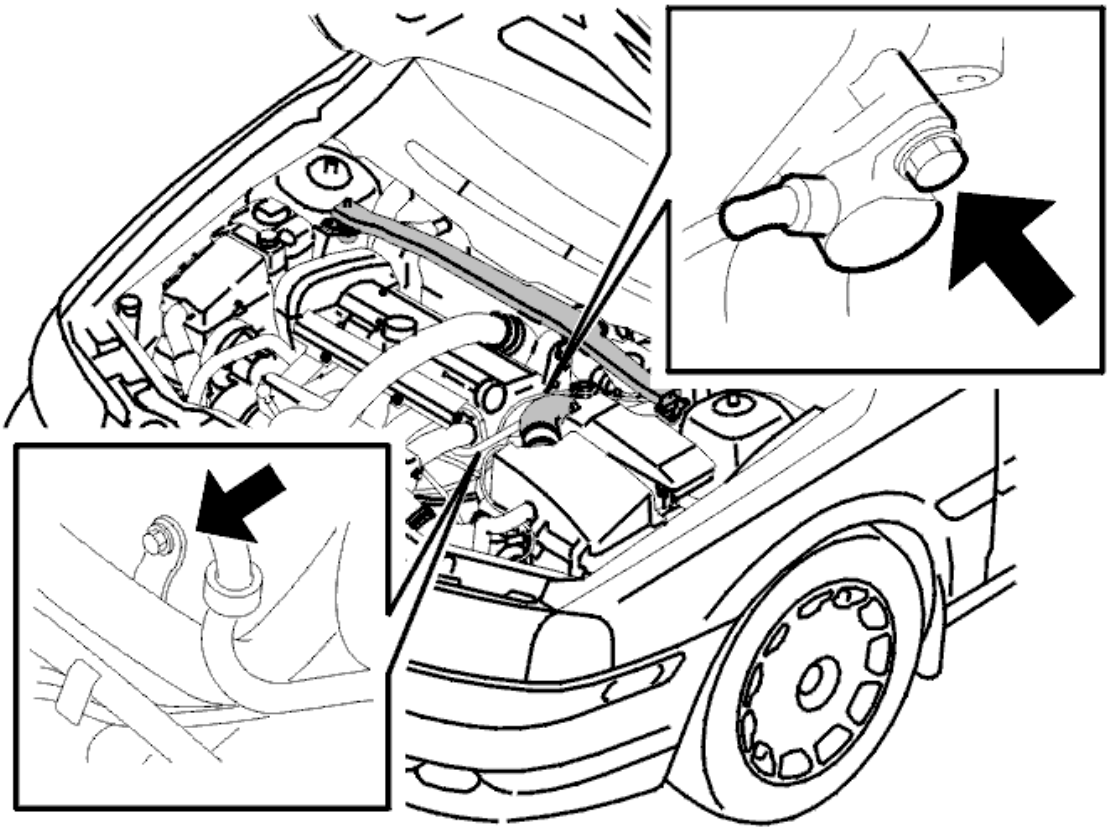

Fig. 101: Camshaft Position Sensor
Courtesy of VOLVO CARS CORPORATION

Install:

- the sensor
- screws. Tighten.

Connect the connector for the sensor.

FINISHING

Start the engine. Check the function.

REPLACING THE ENGINE SPEED (RPM) SENSOR

REMOVING THE ENGINE SPEED (RPM) SENSOR

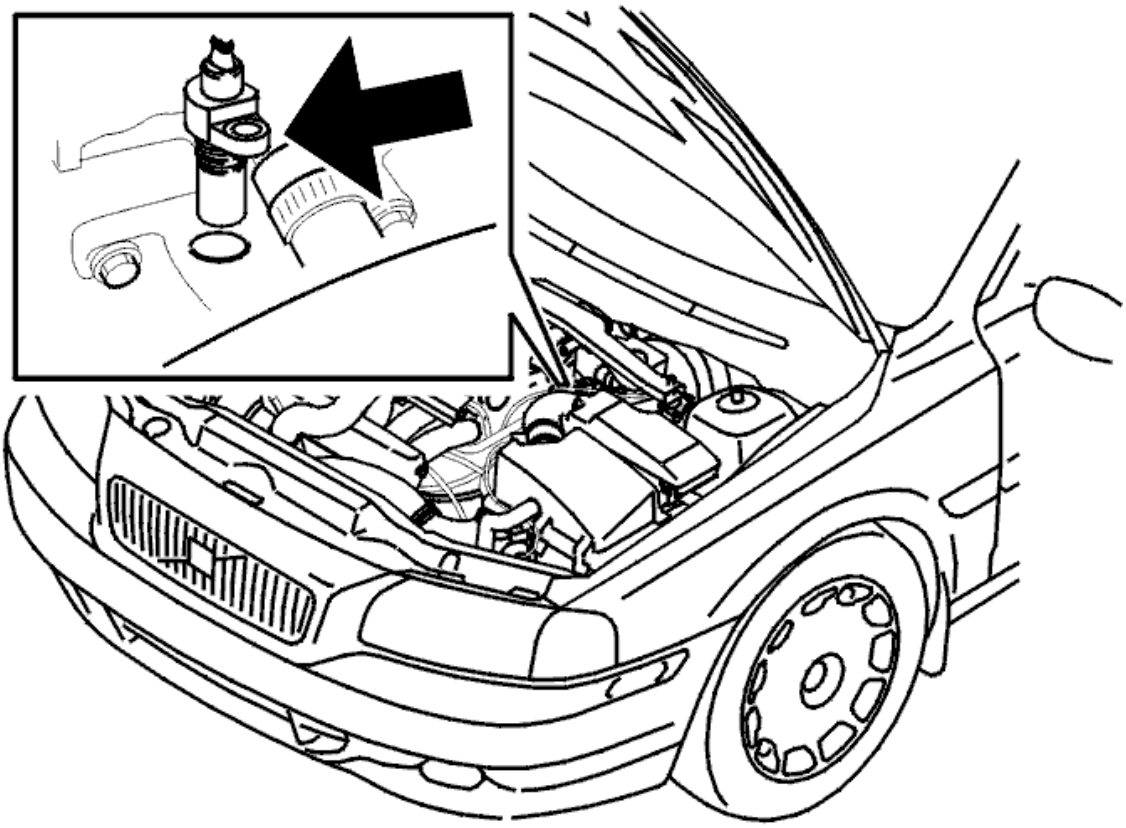

Fig. 102: Engine Speed Sensor
Courtesy of VOLVO CARS CORPORATION

Remove the tie strap from the torque rod.

Open the hose clamp.

Remove:

- the hoses
- the connector from the sensor
- the nut for the sensor
- the sensor.

INSTALLING THE ENGINE SPEED (RPM) SENSOR

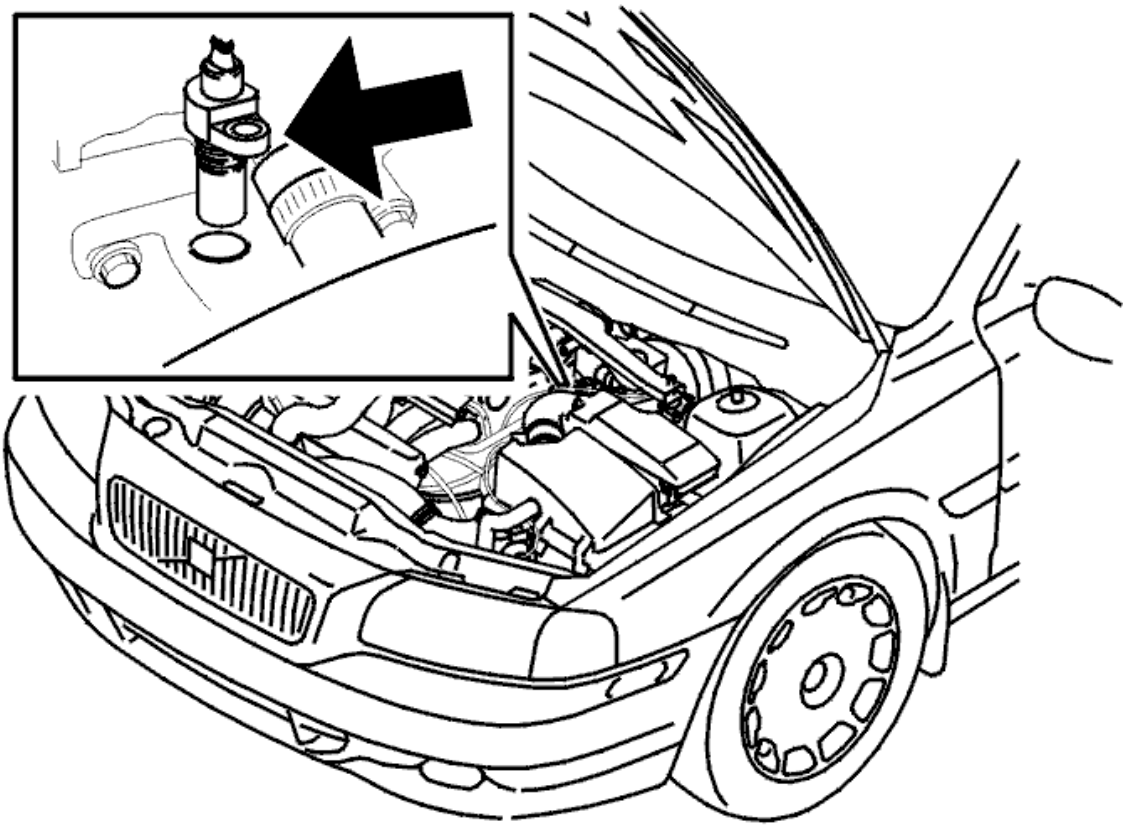

Fig. 103: Engine Speed Sensor
Courtesy of VOLVO CARS CORPORATION

Install

- the sensor. Use a **new** nut. Tighten to **10 Nm**
- the connector
- the hoses and close the clamp
- the tie strap on the torque rod.

CONTROL SYSTEM, IGNITION (B6294T; 2003-2006)

CAMSHAFT POSITION SENSOR (CMP), REPLACING

REMOVING CAMSHAFT POSITION (CMP) SENSOR

Remove the preheating pipe from the air cleaner (ACL):**Applies only to B6xx4S engines** .

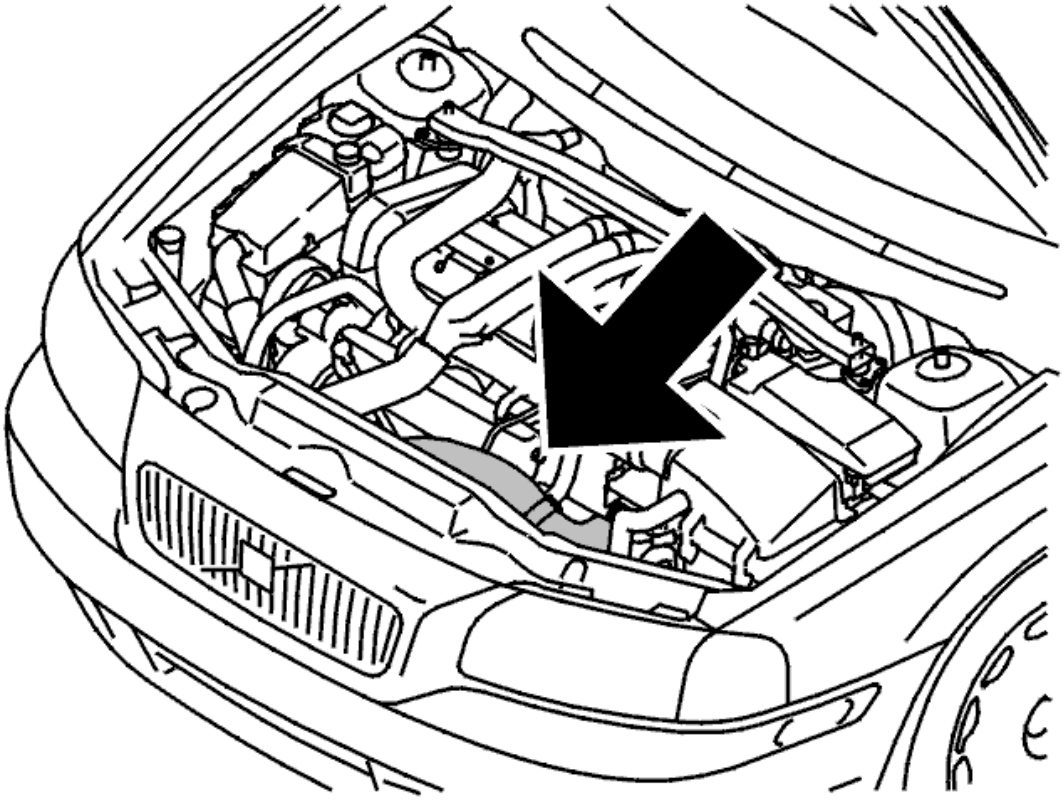

Fig. 104: Identifying Intake Manifold Between Front Cover Plate & Air Cleaner Housing
Courtesy of VOLVO CARS CORPORATION

Applies only to B6xx4T

- Remove the intake pipe between the front cover plate and the air cleaner (ACL).

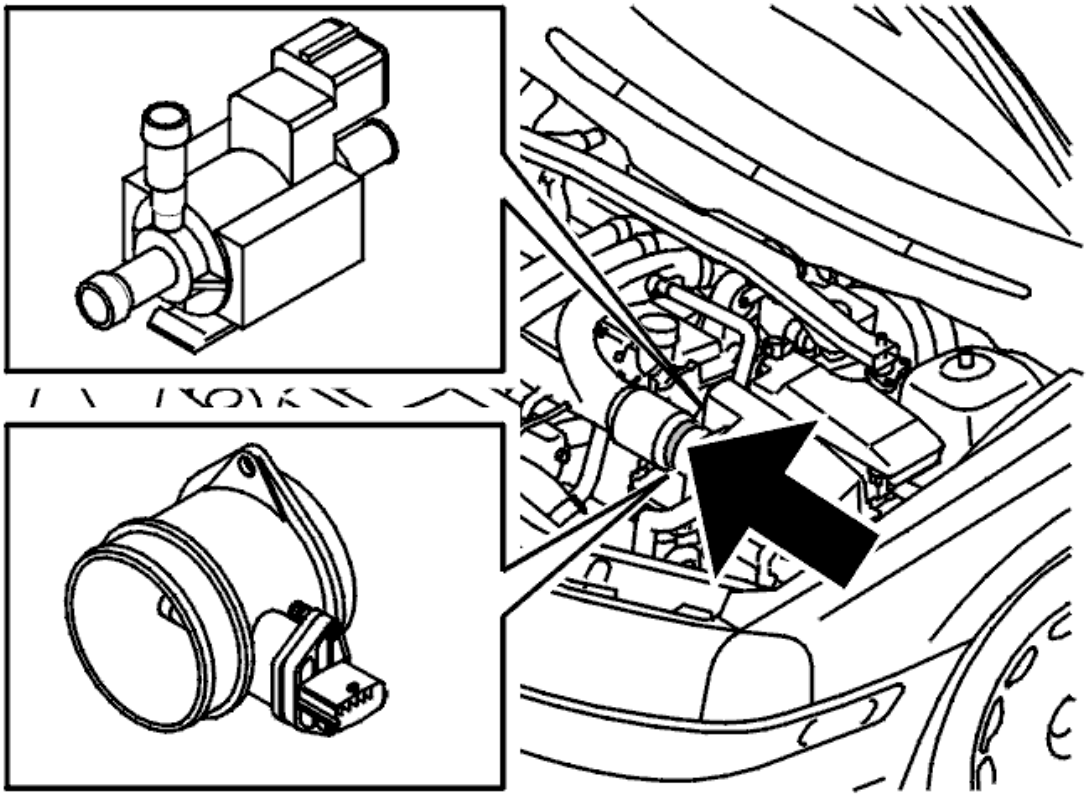

Fig. 105: Identifying Clamp On Hose Between Mass Air Flow Sensor And Pipe To Turbocharger
Courtesy of VOLVO CARS CORPORATION

- Remove the clamp on the hose between the mass air flow (MAF) sensor and the pipe to the turbocharger (TC)
- Remove the turbocharger (TC) control valve from the air cleaner (ACL) housing
- Disconnect the turbocharger (TC) control valve connector
- Remove the air cleaner (ACL) housing. Place it to one side
- Remove the hose clamp from the crankcase ventilation and the heater hose.

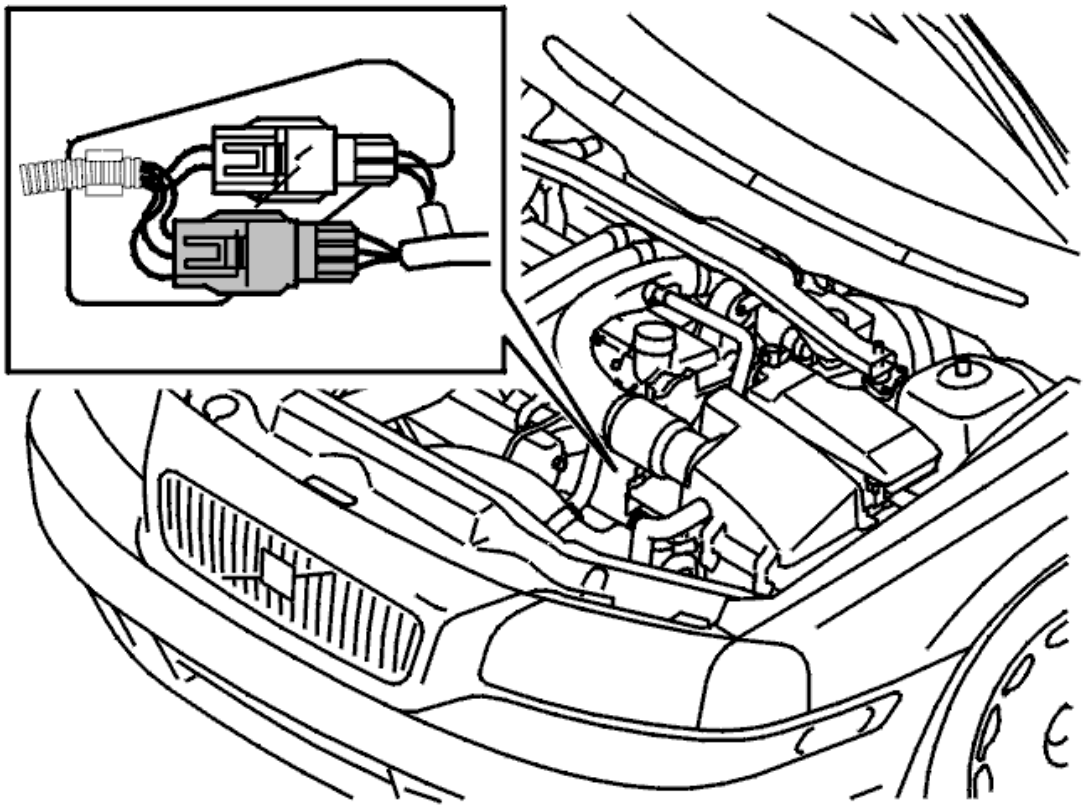

Fig. 106: Camshaft Position Sensor Connector
Courtesy of VOLVO CARS CORPORATION

Hose bracket.

Disconnect the connector at the bracket

Remove the cable from the clamp on the cylinder block.

Remove the camshaft position (CMP) sensor housing.**Applies only to B6xx4T engines** .

Remove the sensor mounting screw. Pull off sensor.

INSTALLING THE CAMSHAFT POSITION (CMP) SENSOR

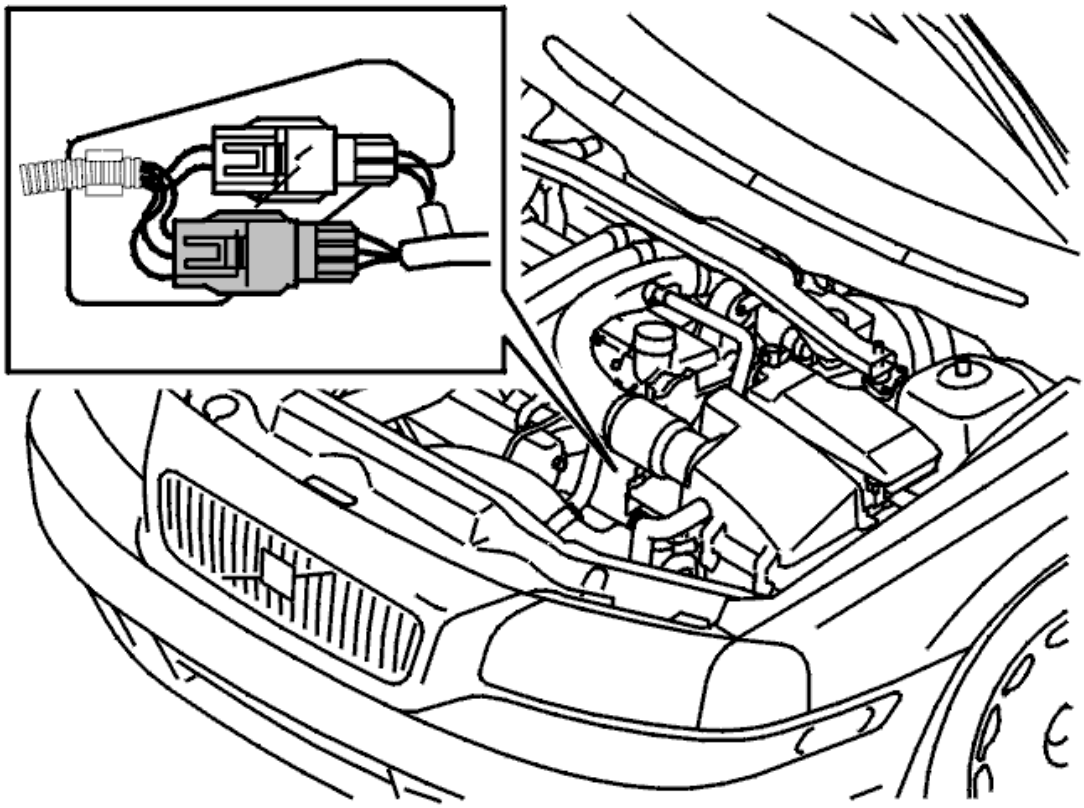

Fig. 107: Camshaft Position Sensor Connector
Courtesy of VOLVO CARS CORPORATION

Install

- **new sensor** . Tighten to **10 Nm**
- the camshaft position (CMP) sensor housing. Tighten to **17 Nm** .**Applies only to B6xx4T**
- the cable from the clamp on the cylinder block
- the connector on the bracket
- the hose bracket on the cylinder block.

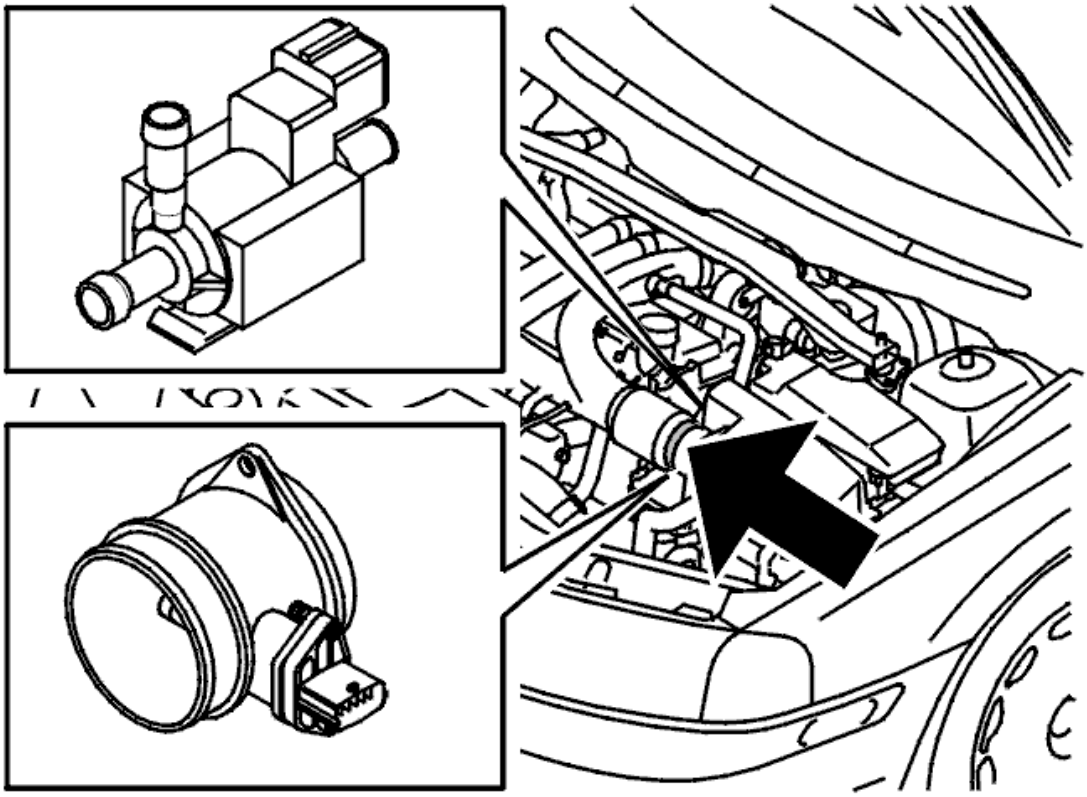

Fig. 108: Identifying Clamp On Hose Between Mass Air Flow Sensor And Pipe To Turbocharger
Courtesy of VOLVO CARS CORPORATION

Applies only to B6xx4T

- the crankcase ventilation pipe and the heater hose. Tighten the hose clamps
- air cleaner (ACL) housing
- the turbocharger (TC) control valve connector
- the turbocharger (TC) control valve from the air cleaner (ACL) housing
- the hose between the air cleaner (ACL) housing and turbocharger (TC). Tighten the hose clamp
- the intake manifold between the front cover plate and the air cleaner (ACL) housing.

Install the preheating pipe on the air cleaner (ACL):**Applies only to B6xx4S engines** .

ENGINE SPEED (RPM) SENSOR, REPLACING

REMOVING THE ENGINE SPEED (RPM) SENSOR

NOTE: **As the illustrations in this service information are used for different model years and / or models, some variation may occur. However, the essential information in the illustrations is always correct.**

Fig. 109: Engine And Stabilizer Brace
Courtesy of VOLVO CARS CORPORATION

Remove:

- the hose clamp for the air cleaner (ACL) / fresh air intake
- the air cleaner (ACL) in the intake pipe
- lift out the air cleaner (ACL).

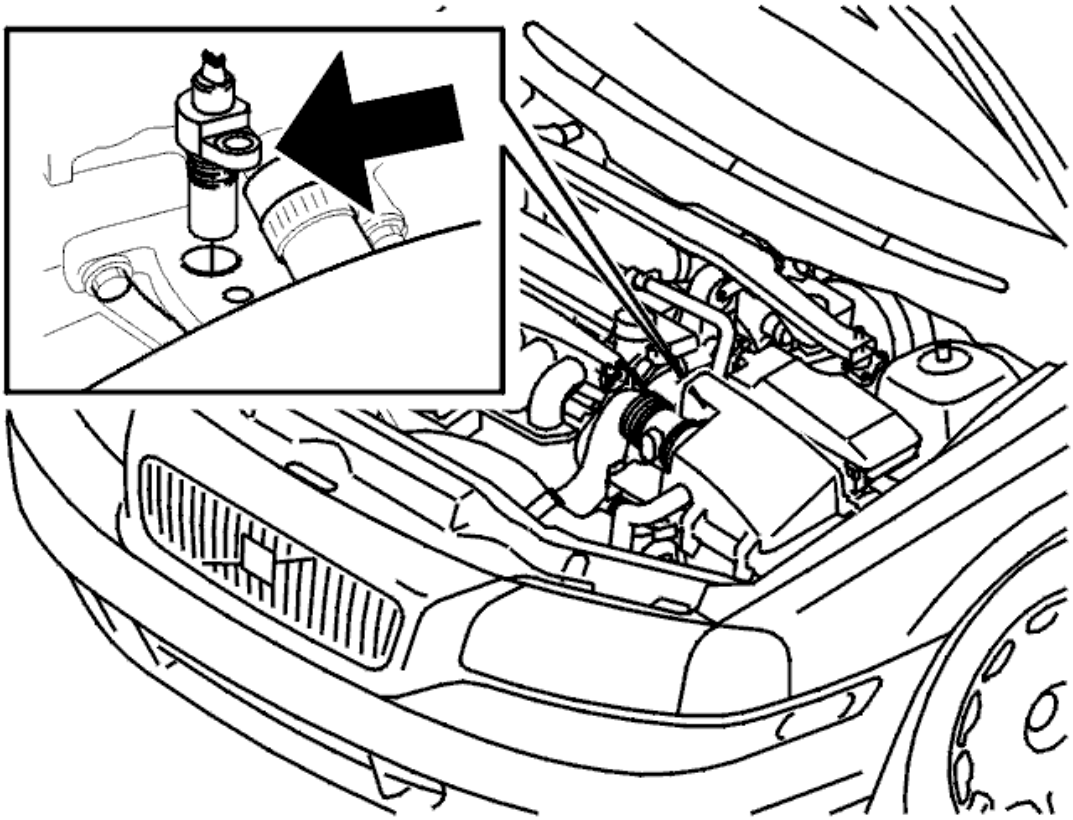

Fig. 110: Identifying Engine Speed (RPM) Sensor

Courtesy of VOLVO CARS CORPORATION

Remove the mounting nut for the sensor.

Pull up the sensor.

INSTALLING THE ENGINE SPEED (RPM) SENSOR

Install the sensor. Use a new nut. Tighten to **10 Nm** .

Install

- the air cleaner (ACL) housing and the hose clamp for the air cleaner (ACL) / fresh air intake
- the intake pipe.

CONTROL SYSTEM, IGNITION (B6324S/5; 2007-2012)

CAMSHAFT POSITION SENSOR (CMP)

NOTE: Removal steps in this procedure may contain installation details.

Fig. 111: Identifying Engine Cover Removal
Courtesy of VOLVO CARS CORPORATION

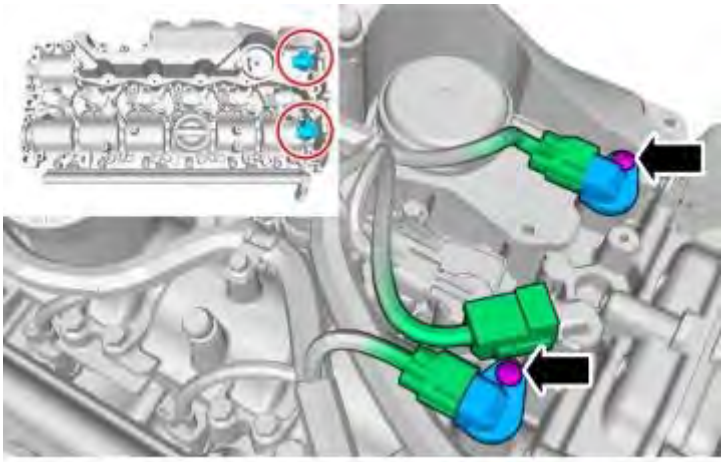

Fig. 112: Identifying Camshaft Position Sensors (CMP)
Courtesy of VOLVO CARS CORPORATION

M6. See **TIGHTENING TORQUE**

To install, reverse the removal procedure

CRANKSHAFT POSITION SENSOR (CKP)

NOTE: Removal steps in this procedure may contain installation details.

Fig. 113: Locating Engine Undercover And Clips
Courtesy of VOLVO CARS CORPORATION

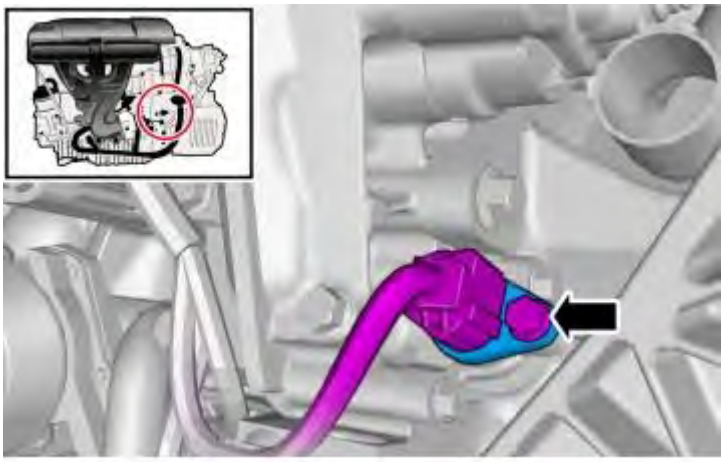

Fig. 114: Identifying Crankshaft Position Sensor (CKP)
Courtesy of VOLVO CARS CORPORATION

M6. See **TIGHTENING TORQUE**

To install, reverse the removal procedure

CONTROL SYSTEM, IGNITION (B8444S; 2005-2011)

ENGINE SPEED (RPM) SENSOR, REPLACING

NOTE: **The illustrations in this service information are used for different model years and/or models. Some variation may occur. However, the essential information in the illustrations is always correct.**

REMOVAL

REMOVING THE UPPER CROSS STAY

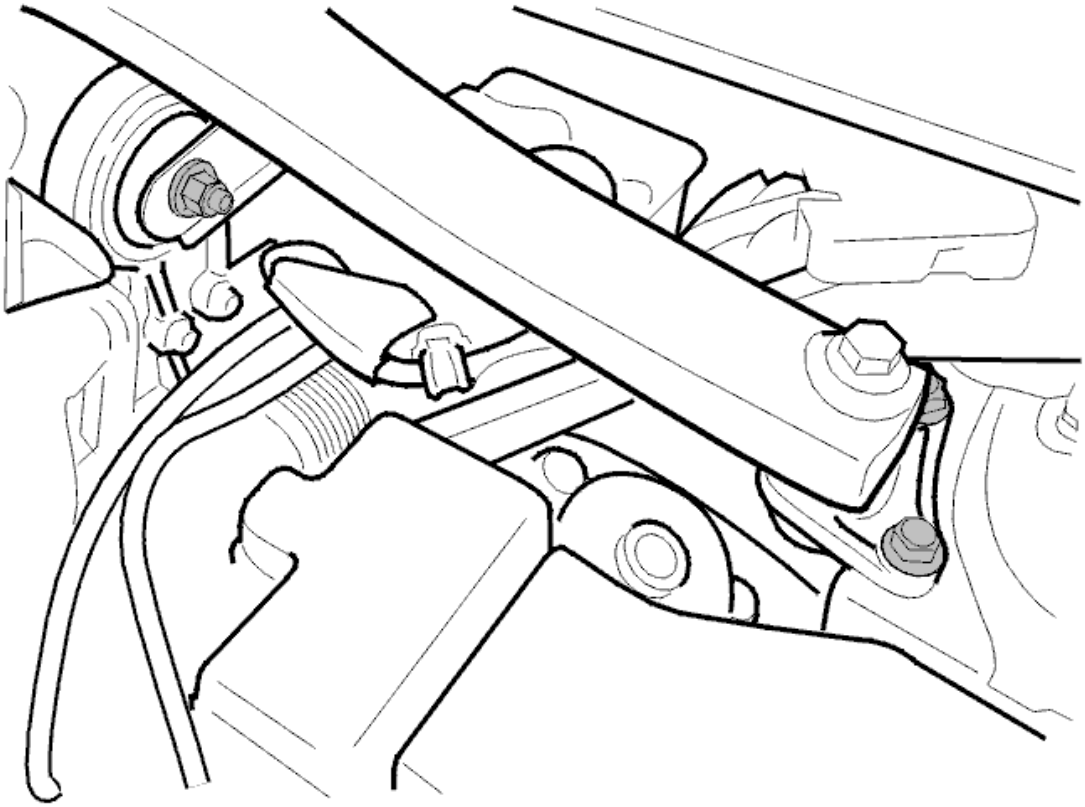

Fig. 115: Engine Stabilizer Brace
Courtesy of VOLVO CARS CORPORATION

Remove:

- the 4 screws at the suspension turrets
- the screws of the upper engine mount on the engine
- the upper cross stay.

REMOVING THE UPPER REAR ENGINE COVER

Remove the upper rear engine cover by pulling it straight up.

DISCONNECTING THE ENGINE SPEED SENSOR

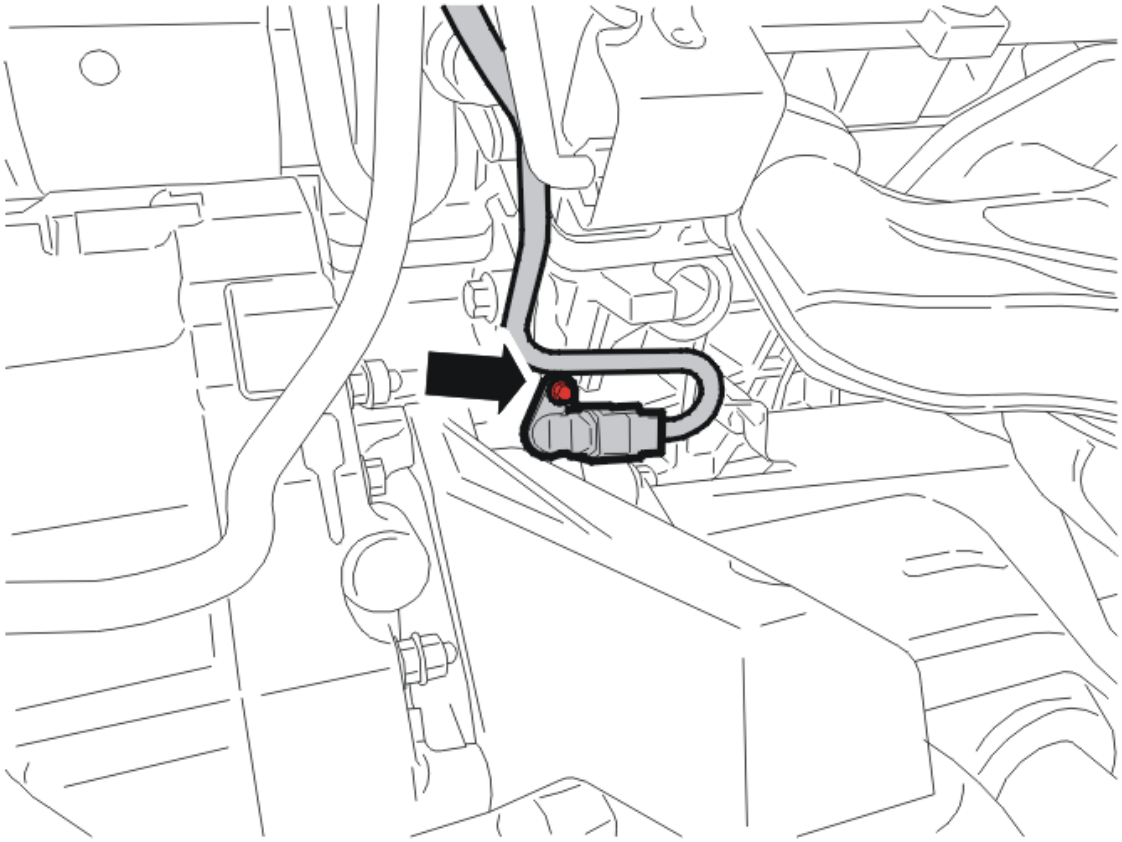

Fig. 116: Locating Engine Speed Sensor
Courtesy of VOLVO CARS CORPORATION

Remove:

- the 1 M6 screw of the engine speed sensor; pull out the sensor
- the connector from the engine speed sensor.

INSTALLATION

NOTE: For tightening torques, see: TIGHTENING TORQUE .

INSTALLING THE ENGINE SPEED SENSOR

Install:

- the engine speed sensor; tighten the screw
- the connector to the engine speed sensor.

INSTALLING THE UPPER REAR ENGINE COVER AND UPPER CROSS STAY

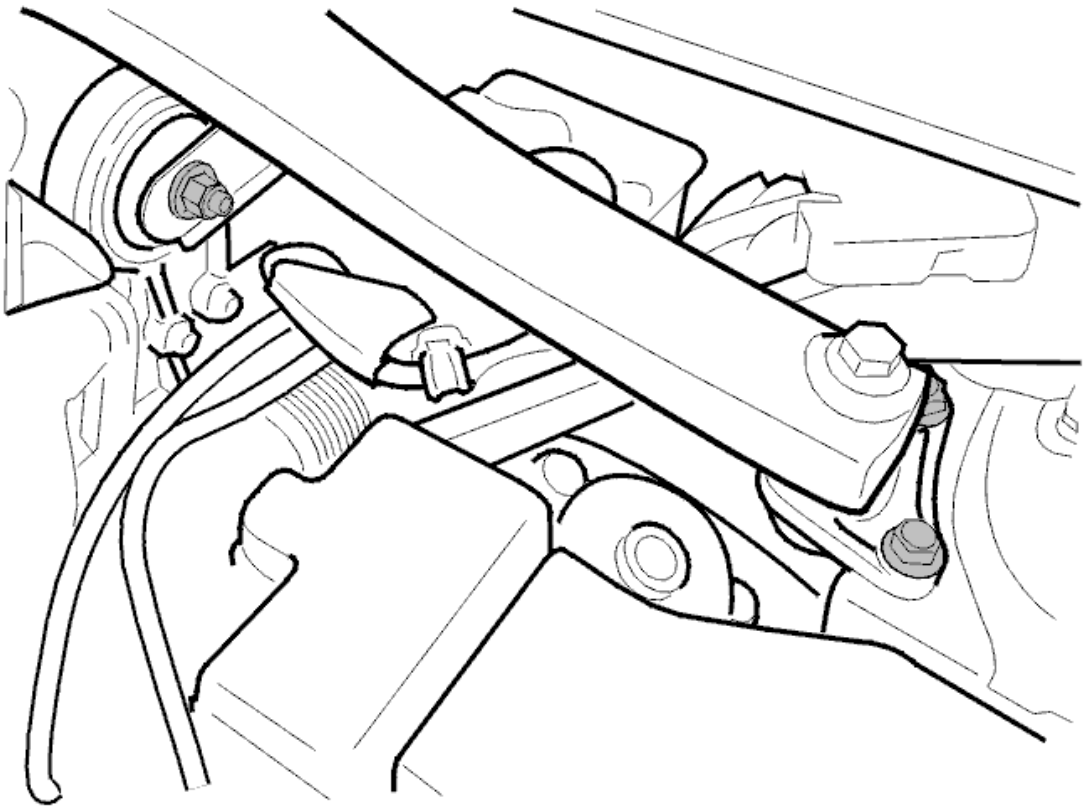

Fig. 117: Engine Stabilizer Brace
Courtesy of VOLVO CARS CORPORATION

Install:

- the upper engine cover; press it into the mountings
- the upper cross stay between the suspension turrets.
- the 4 screws at the suspension turrets; tighten
- the screw of the cross stay mount on the upper engine mount; tighten.

CHECK

Start the engine and check the function.

EXHAUST CAMSHAFT POSITION SENSOR, REPLACING

NOTE: **The illustrations in this service information are used for different model years and/or models. Some variation may occur. However, the essential information in the illustrations is always correct.**

REMOVAL OF POSITION SENSOR, CYLINDER 1, 3, 5 AND 7 (BANK 1)

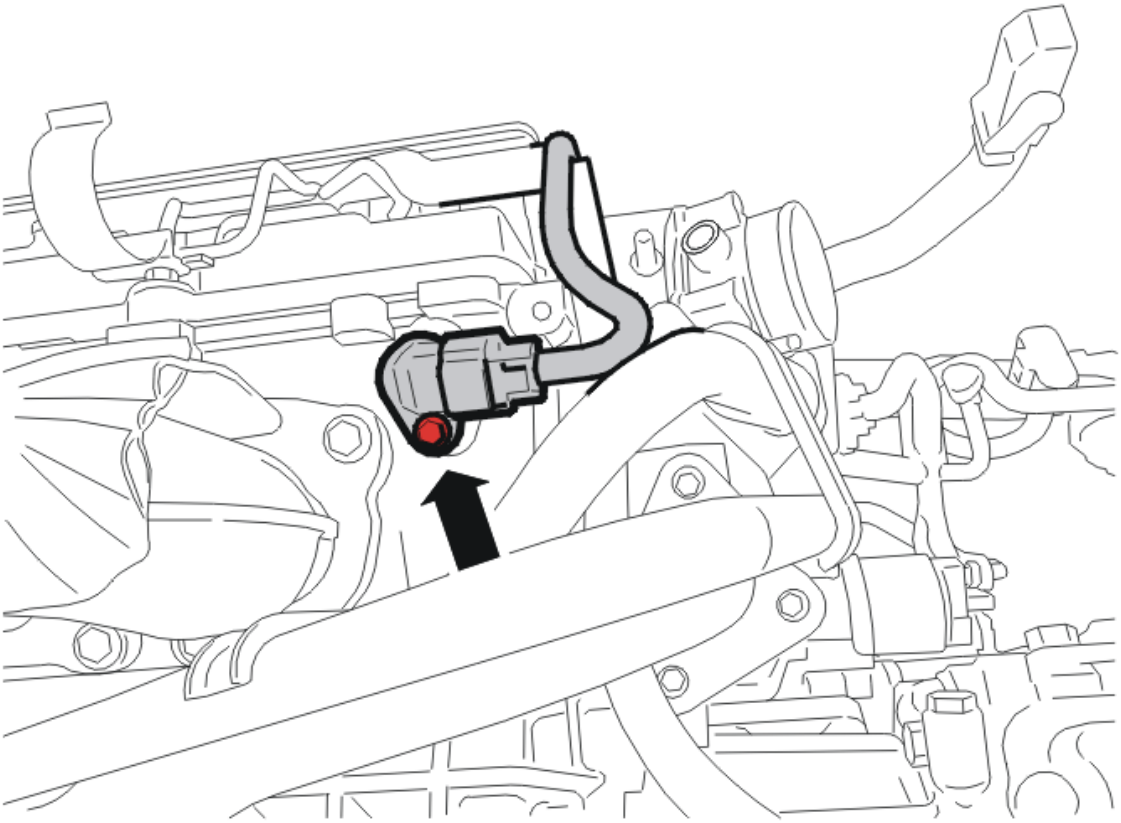

Fig. 118: Identifying Camshaft Position Sensor
Courtesy of VOLVO CARS CORPORATION

Lift the upper coolant hose out of its mounting and bend it aside.

Remove:

- the connector from the position sensor
- the 1 M6 screw
- the position sensor.

INSTALLATION OF POSITION SENSOR, CYLINDER 1, 3, 5 AND 7 (BANK 1)

NOTE: For tightening torques, see: TIGHTENING TORQUE .

Install:

- the position sensor; tighten the screw
- the connector for the position sensor
- the upper coolant hose in its mounting.

REMOVING THE UPPER CROSS STAY

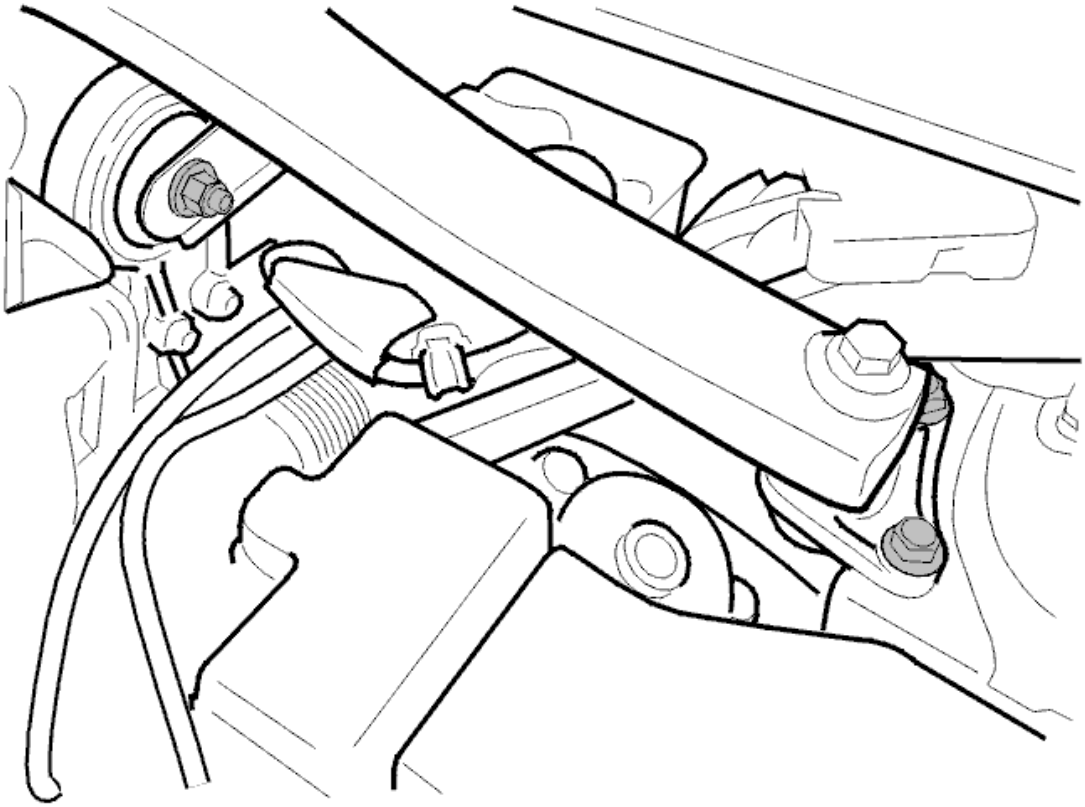

Fig. 119: Engine Stabilizer Brace
Courtesy of VOLVO CARS CORPORATION

Remove:

- the 4 screws at the suspension turrets
- the screws of the upper engine mount on the engine
- the upper cross stay.

REMOVING THE UPPER REAR ENGINE COVER

Remove the upper rear engine cover by pulling it straight up.

REMOVAL OF POSITION SENSOR, CYLINDER 2, 4, 6 AND 8 (BANK 2)

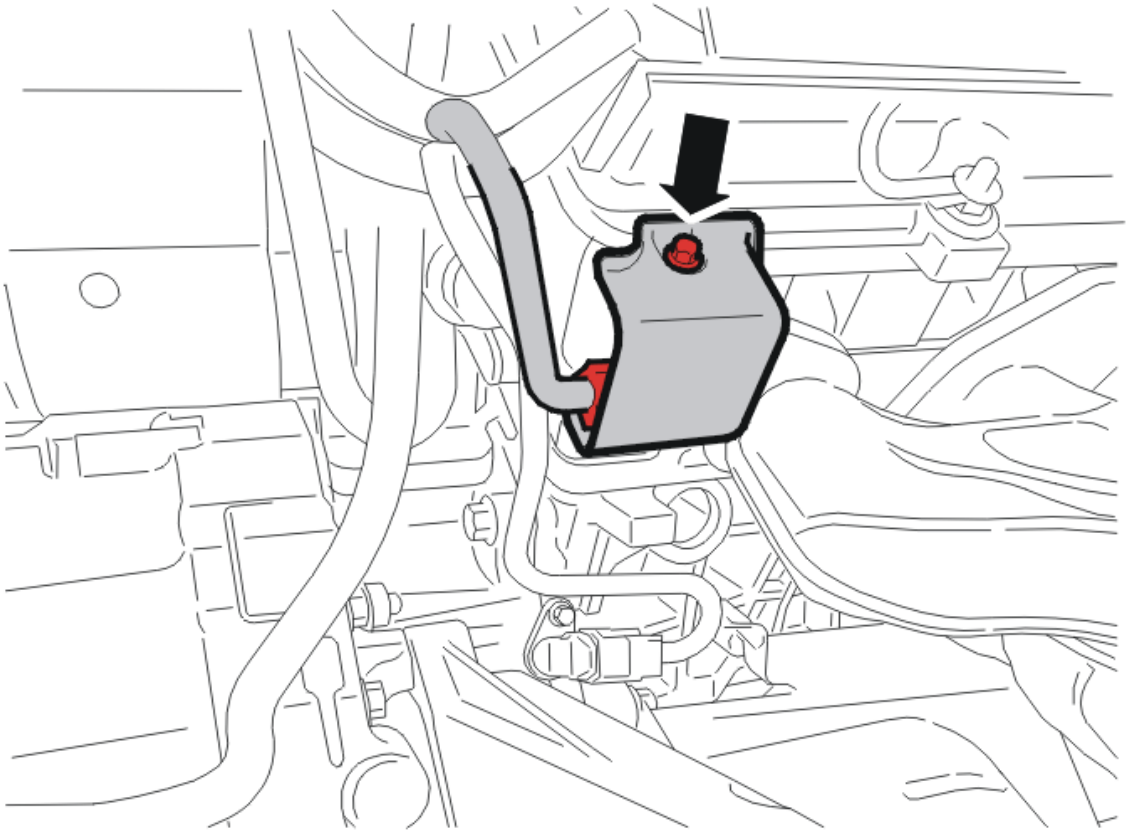

Fig. 120: Identifying Camshaft Position Sensor
Courtesy of VOLVO CARS CORPORATION

Remove:

- the M6 screw at the heat shield of the position sensor
- the connector from the position sensor
- the 1 M6 screw
- the position sensor.

INSTALLATION OF POSITION SENSOR, CYLINDER 2, 4, 6 AND 8 (BANK 2)

NOTE: For tightening torques, see: TIGHTENING TORQUE .

Install:

- the position sensor; tighten the screw
- the connector for the position sensor
- the heat shield of the position sensor; tighten the screw.

INSTALLING THE UPPER REAR ENGINE COVER

Position the upper rear engine cover and press it into place in the mountings.

INSTALLING THE UPPER CROSS STAY

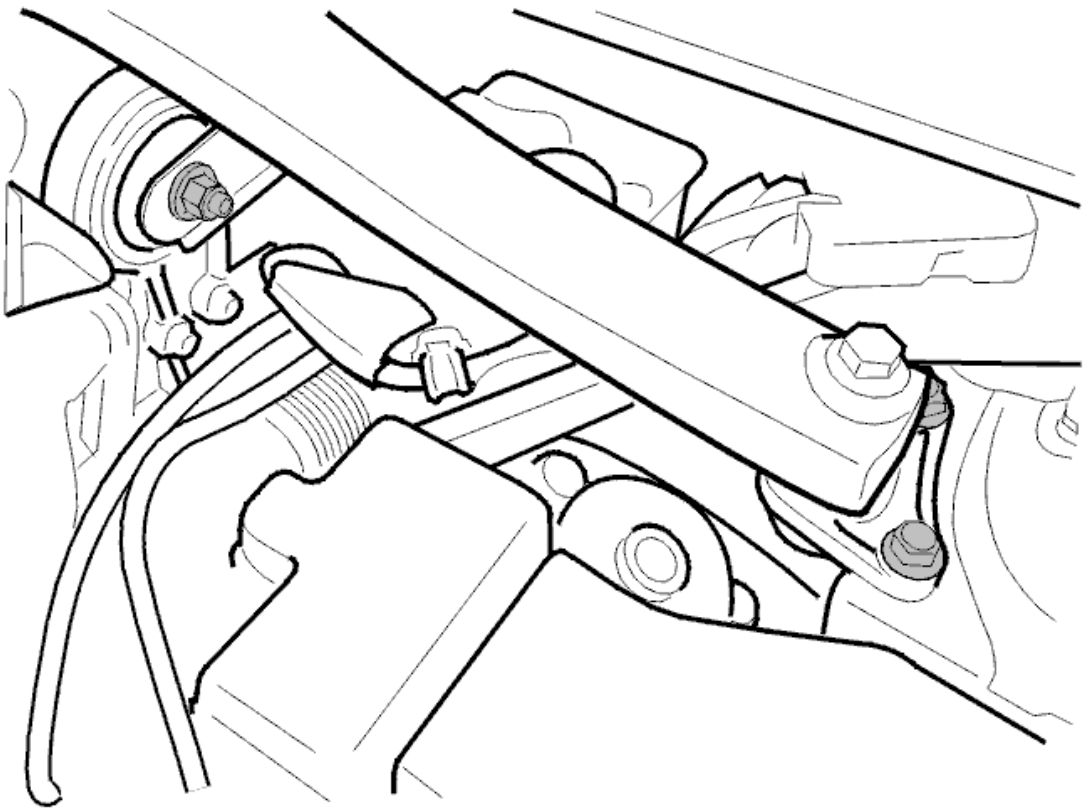

Fig. 121: Engine Stabilizer Brace
Courtesy of VOLVO CARS CORPORATION

Install:

- the cross stay between the suspension turrets
- the 4 screws in the suspension turrets; tighten
- the screw of the cross stay mount on the upper engine mount; tighten.

CHECK

Start the engine and check the function.

INTAKE CAMSHAFT POSITION SENSOR, REPLACING

NOTE: The illustrations in this service information are used for different model years and/or models. Some variation may occur. However, the essential information in the illustrations is always correct.

REMOVAL

REMOVING THE FUEL RAIL

Remove the fuel rail.

REMOVING THE INTAKE CAMSHAFT POSITION SENSOR

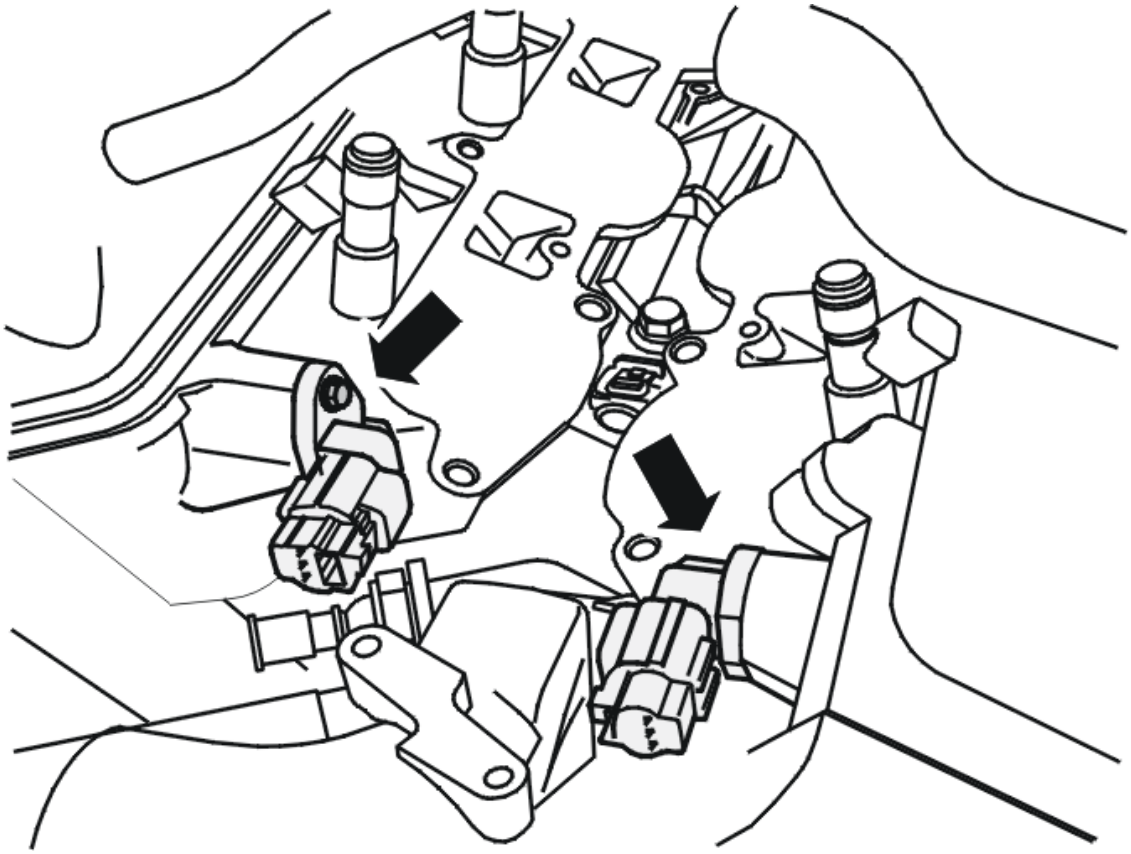

Fig. 122: Identifying Camshaft Position Sensor
Courtesy of VOLVO CARS CORPORATION

Remove:

- the connector from the position sensor
- the screw
- the intake camshaft position sensor.

INSTALLATION

NOTE: For tightening torques, see: TIGHTENING TORQUE .

INSTALLING THE INTAKE CAMSHAFT POSITION SENSOR

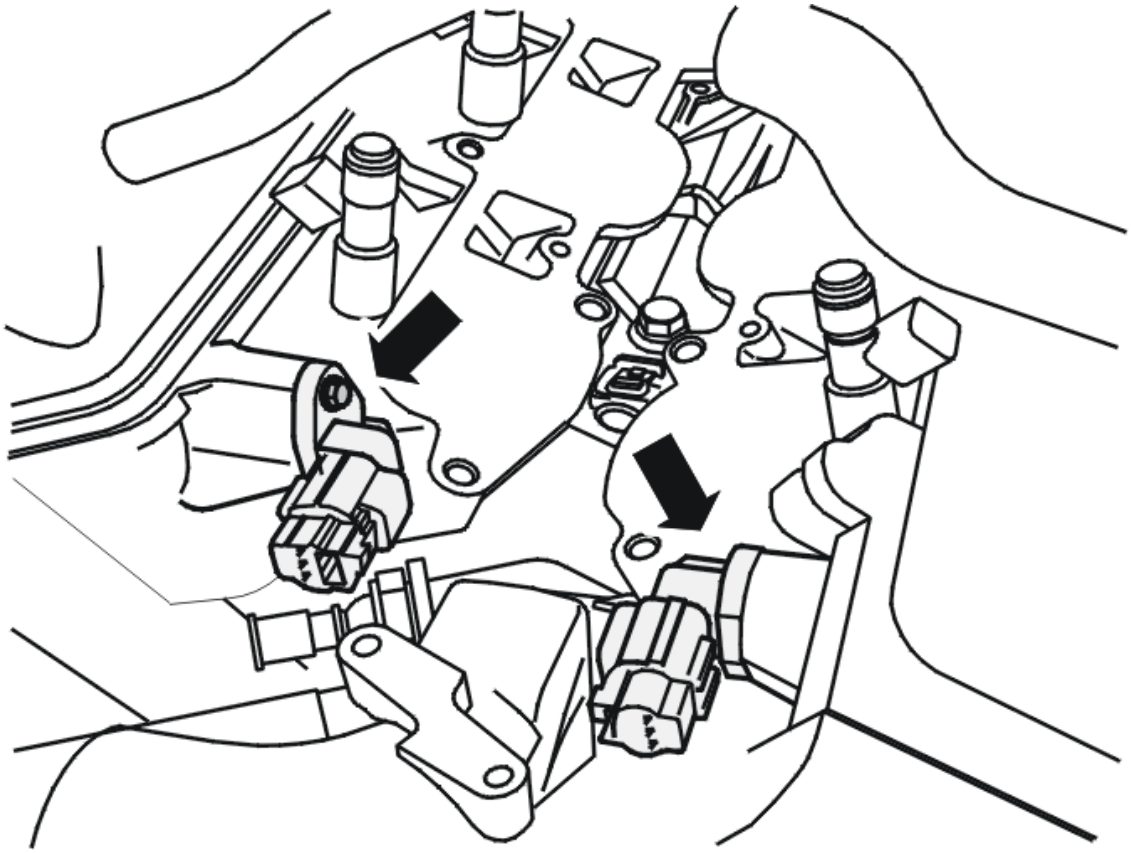

Fig. 123: Identifying Camshaft Position Sensor
Courtesy of VOLVO CARS CORPORATION

Install:

- the intake camshaft position sensor
- the screw
- the connector for the position sensor.

INSTALLING THE FUEL RAIL

Install the fuel rail.

IGNITION COIL, SPARK PLUG, IGNITION CABLE (B8444S; 2005-2011)

IGNITION COIL, REPLACING

NOTE: **The illustrations in this service information are used for different model years and/or models. Some variation may occur. However, the essential information in the illustrations is always correct.**

REMOVAL

REMOVING THE ENGINE COVERS

Remove the upper engine covers by pulling straight up.

REMOVAL OF IGNITION COILS, CYLINDER 1, 3, 5 AND 7 (BANK 1)

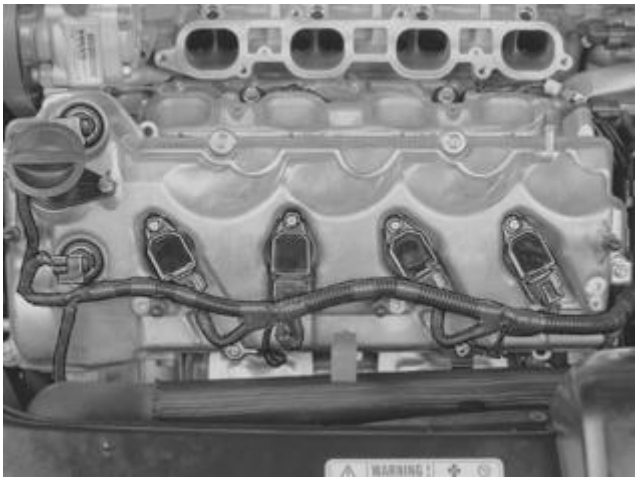

Fig. 124: Locating Ignition Coils
Courtesy of VOLVO CARS CORPORATION

Remove:

- the 4 connectors from the ignition coils
- the 4 screws of the ignition coils
- the 4 ignition coils of the cylinders.

REMOVAL OF IGNITION COILS, CYLINDER 2, 4, 6 AND 8 (BANK 2)

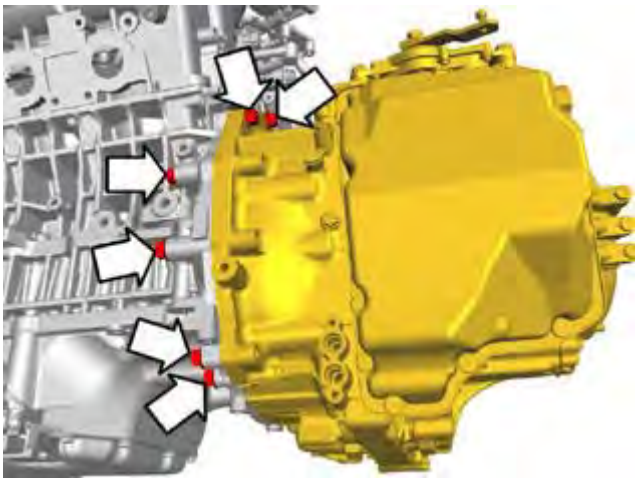

Fig. 125: Locating Ignition Coils
Courtesy of VOLVO CARS CORPORATION

Remove:

- the 2 screws of the cable harness
- the retaining screw of the upper engine cover.

Carefully bend aside the cable harness.

Remove:

- the 4 connectors from the ignition coils
- the 4 screws of the ignition coils
- the 4 ignition coils of the cylinders.

INSTALLATION

NOTE: For tightening torques, see: TIGHTENING TORQUE .

INSTALLATION OF IGNITION COILS, CYLINDER 1, 3, 5 AND 7 (BANK 1)

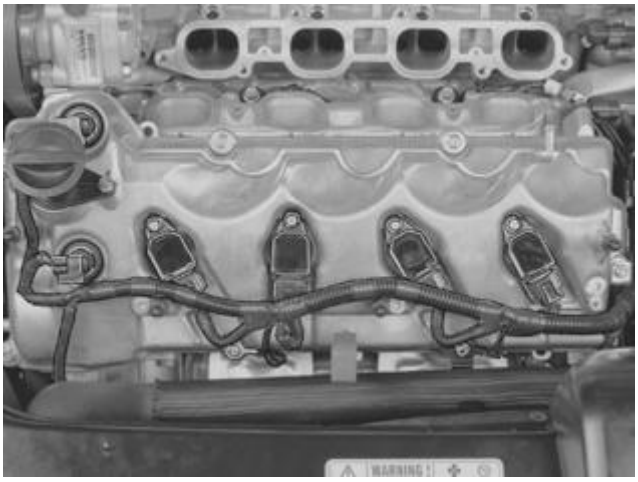

Fig. 126: Locating Ignition Coils
Courtesy of VOLVO CARS CORPORATION

Install:

- the 4 ignition coils of the cylinders
- the 4 screws of the ignition coils; tighten
- the 4 connectors to the ignition coils.

INSTALLATION OF IGNITION COILS, CYLINDER 2, 4, 6 AND 8 (BANK 2)

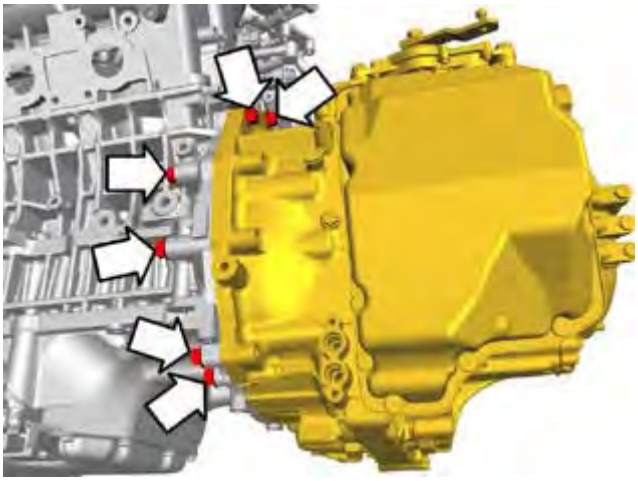

Fig. 127: Locating Ignition Coils
Courtesy of VOLVO CARS CORPORATION

Install:

- the 4 ignition coils of the cylinders
- the 4 screws of the ignition coils
- the 4 connectors to the ignition coils
- the 2 screws of the cable harness
- the retaining screw of the upper engine cover.

INSTALLING THE ENGINE COVERS

Install the engine covers over the front and rear cylinder bank.

IGNITION COIL, SPARK PLUGS, IGNITION LEADS (B5254T2; 2003-2007)

REPLACING IGNITION COILS

REMOVING IGNITION COILS

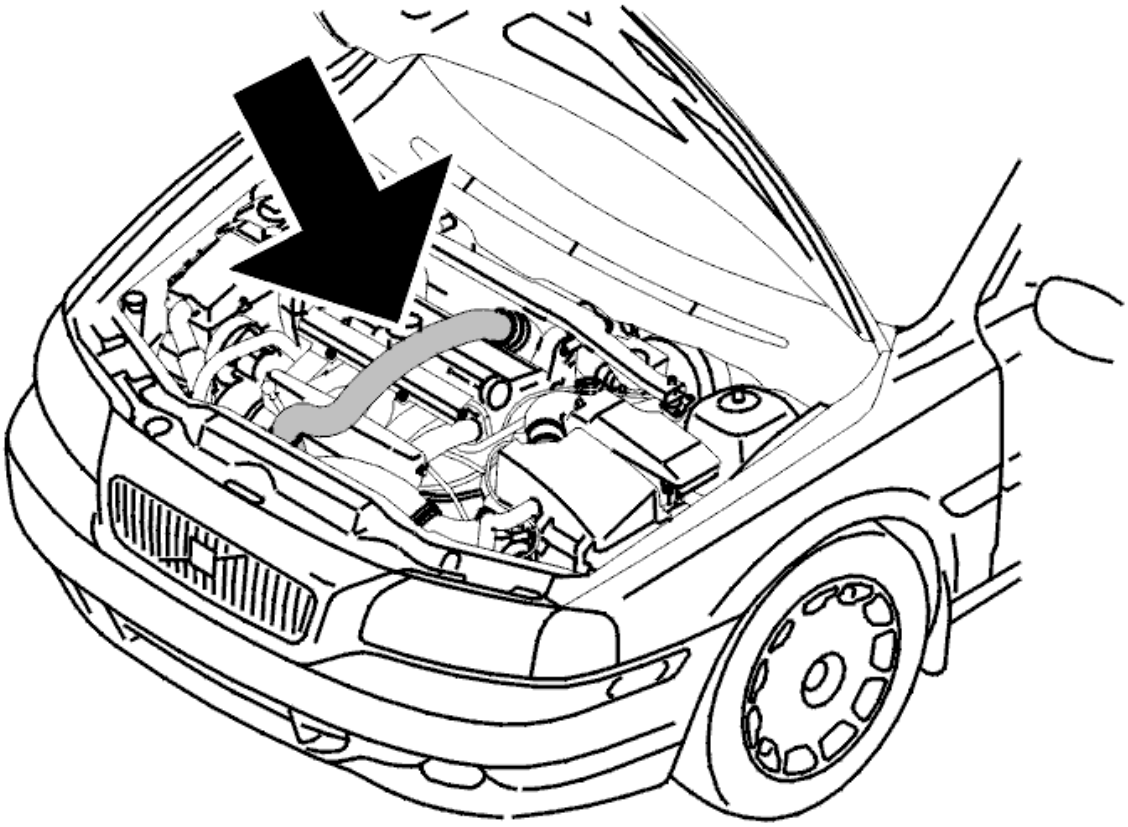

Fig. 128: Charge Air Pipe Over Engine
Courtesy of VOLVO CARS CORPORATION

Remove

- the charge air pipe over the engine.

  Seal the openings

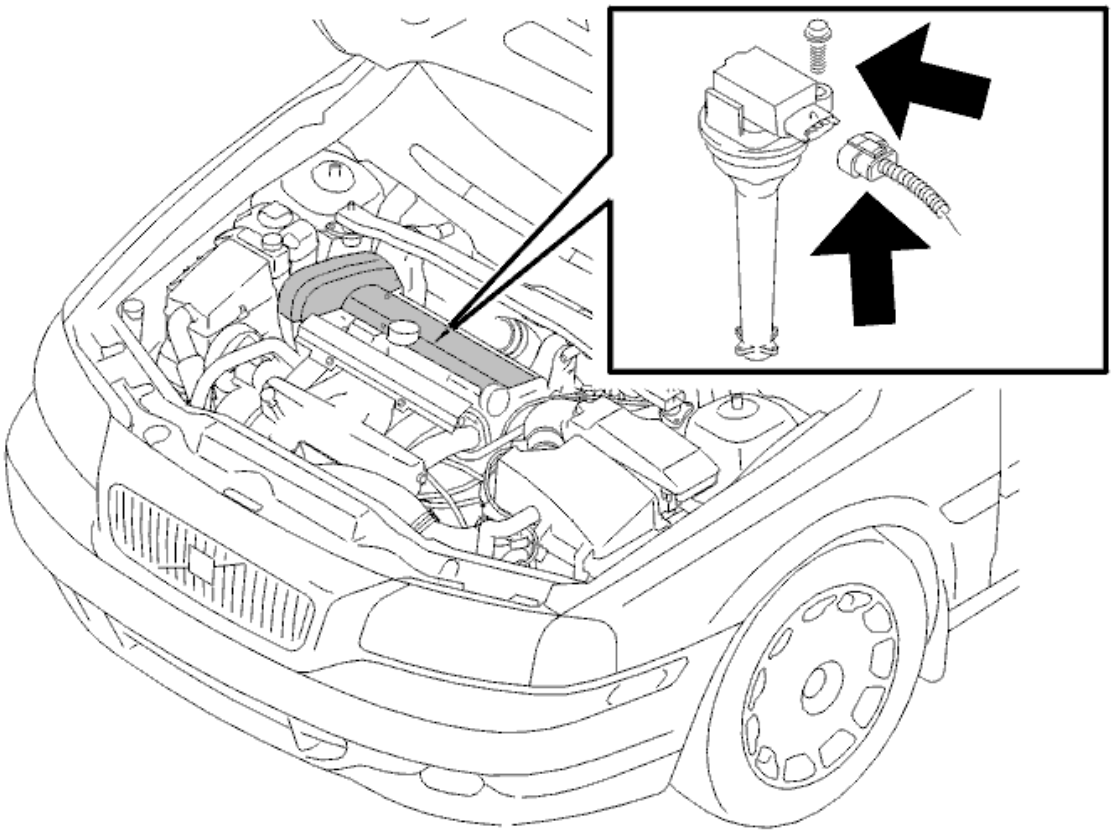

Fig. 129: Identifying Ignition Coil, Connector, And Screw
Courtesy of VOLVO CARS CORPORATION

- the upper timing belt cover
- the cover over the ignition coils

  Disconnect the ignition coil connector.

- the mounting screw. Pull the coil up.

INSTALLING IGNITION COILS

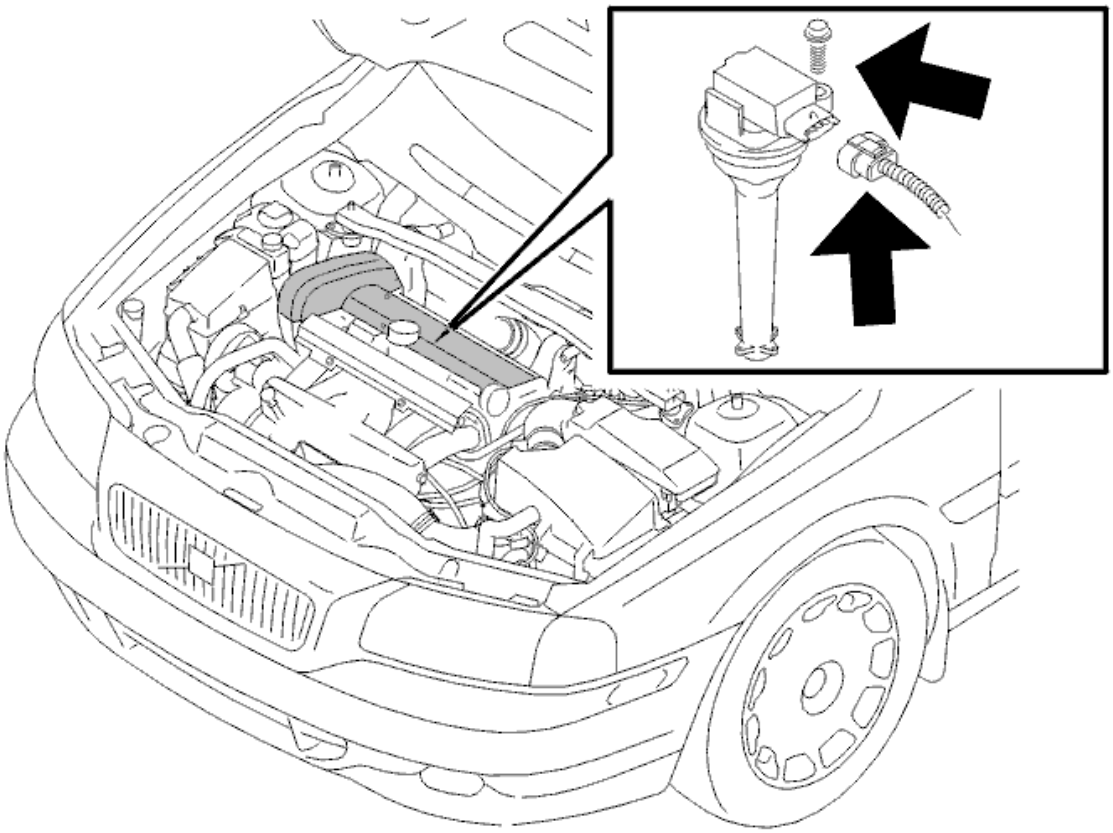

Fig. 130: Identifying Ignition Coil, Connector, And Screw
Courtesy of VOLVO CARS CORPORATION

Install the **new** coil.

Align the coil and press it down. Install the screw. Tighten to **10 Nm** .

Press in the connector until a clicking sound is heard.

Install the cover over the ignition coil.

Install the upper timing belt cover.

Remove the seals from the charge air pipe. Reinstall the charge air pipe over the engine.

IGNITION COIL, SPARK PLUGS, IGNITION LEADS (B6294T; 2003-2006)

REPLACING IGNITION COIL

REMOVING IGNITION COIL

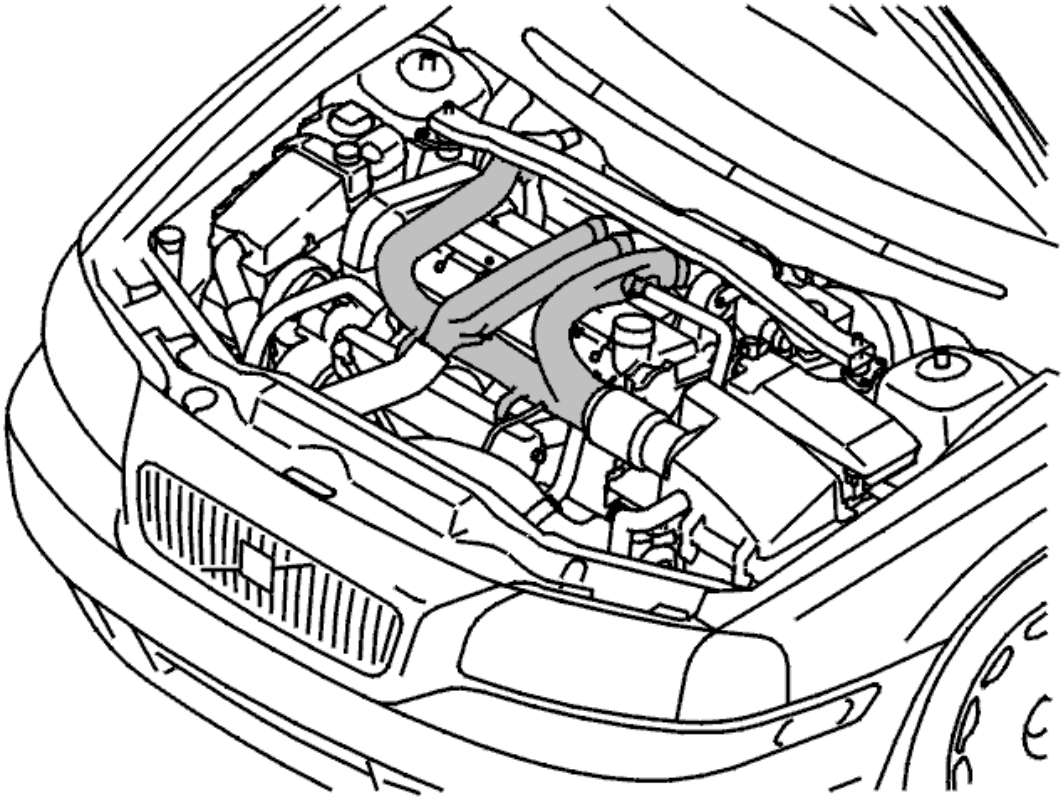

Fig. 131: Identifying Plastic Hoses Between Turbocharger, Charge Air Cooler & Air Cleaner/Turbocharger
Courtesy of VOLVO CARS CORPORATION

Remove

- plastic hoses turbocharger (TC)/charge air cooler (CAC) and air cleaner (ACL)/turbocharger (TC). Place them to one side. Seal the openings.**Applies only to B6xx4T**

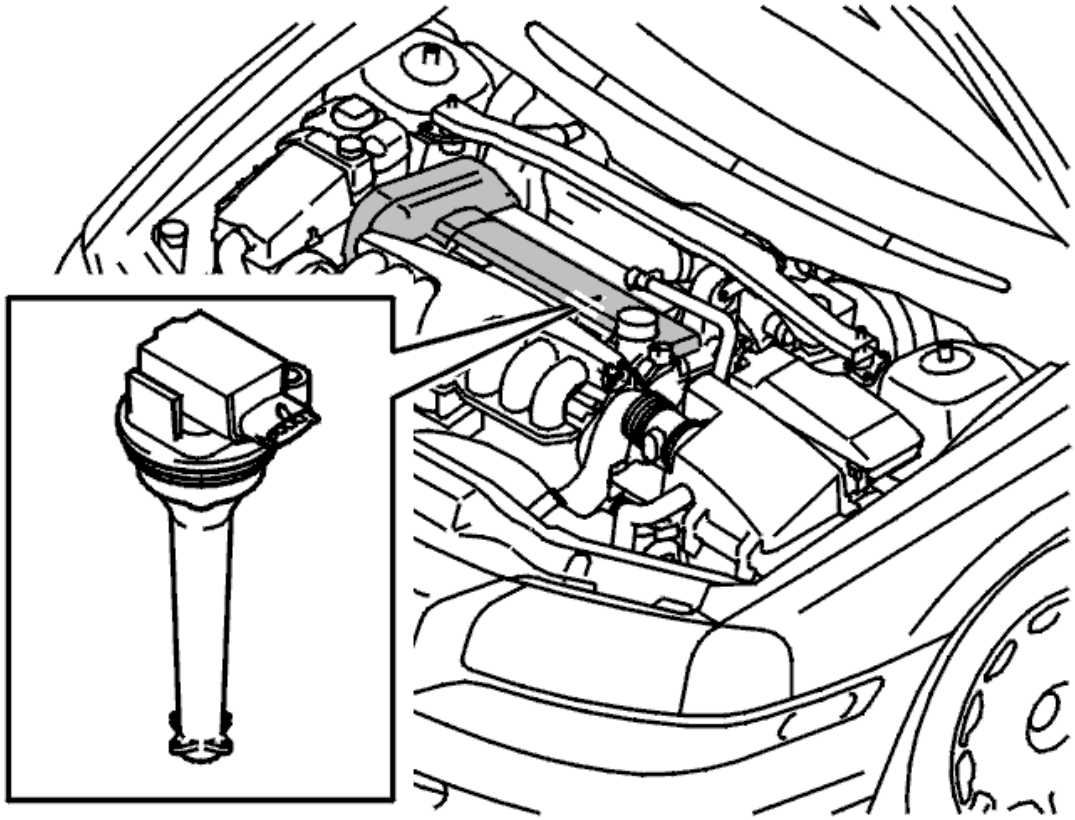

Fig. 132: Identifying Ignition Coil
Courtesy of VOLVO CARS CORPORATION

- upper camshaft belt cover
- the ignition coils cover
- the ignition coil connector
- mounting screw and pull up the coil.

INSTALLING IGNITION COIL

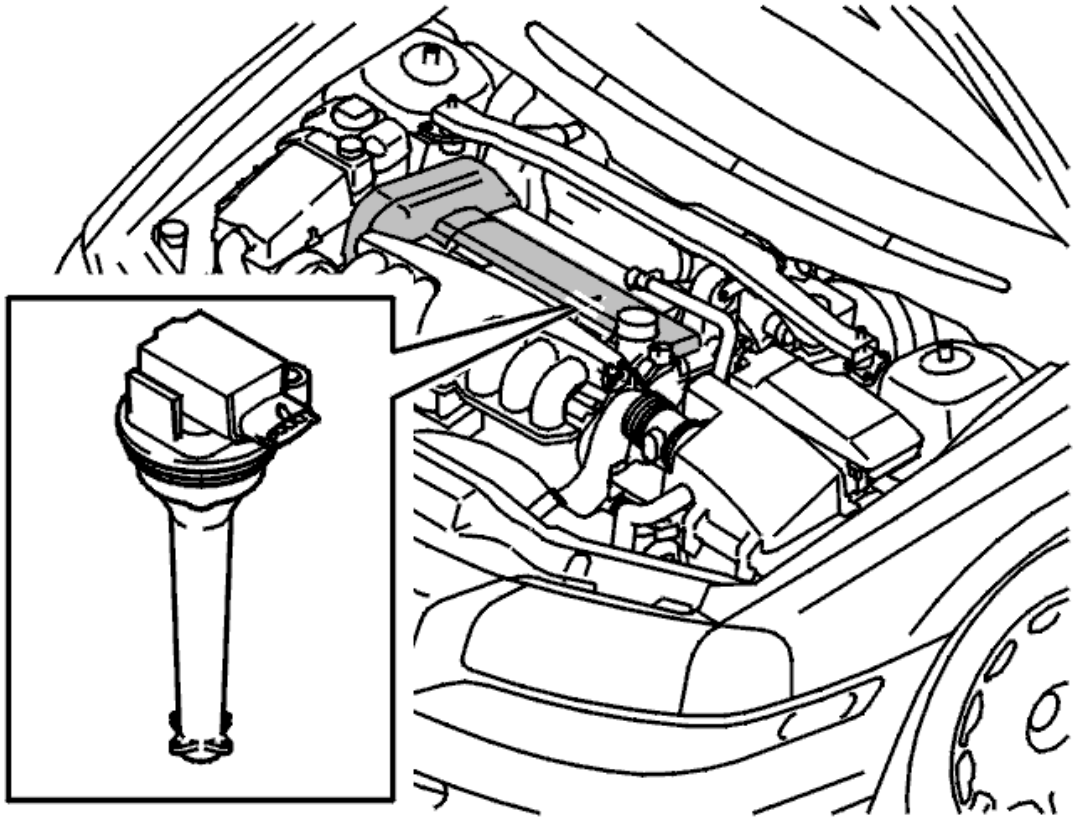

Fig. 133: Identifying Ignition Coil
Courtesy of VOLVO CARS CORPORATION

Install a new coil.

Align the coil and press down. Install the screw. Tighten to **10 Nm (7.4 lb. ft)** .

Press in the connector until a clicking sound is heard.

Install the ignition coil cover.

Install upper camshaft belt cover.

Applies only to B6xx4T

Remove the seals.

Install the plastic hoses between the turbocharger (TC)/charge air cooler and the air cleaner (ACL)/turbocharger (TC).

IGNITION COILS, SPARK PLUGS, IGNITION LEADS (B6324S; 2007-2010)

IGNITION COIL

NOTE: **Removal steps in this procedure may contain installation details.**

Fig. 134: Identifying Engine Cover Removal
Courtesy of VOLVO CARS CORPORATION

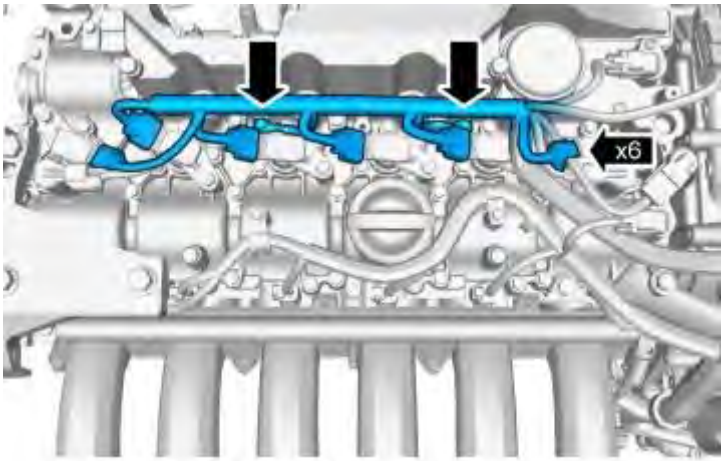

Fig. 135: Locating Ignition Coil Connectors
Courtesy of VOLVO CARS CORPORATION

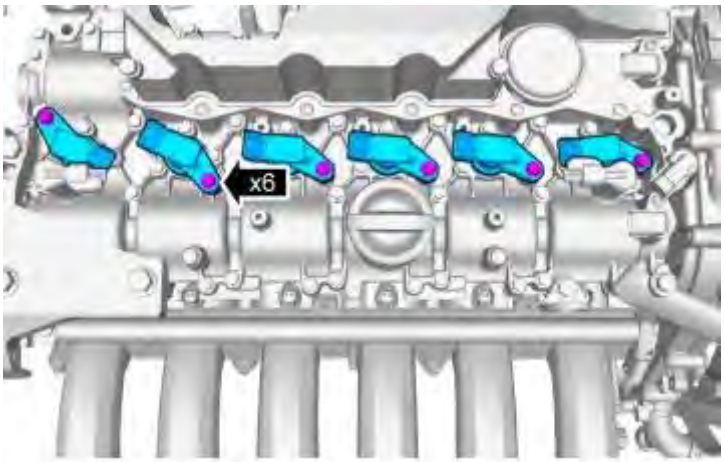

Fig. 136: Identifying Ignition Coils
Courtesy of VOLVO CARS CORPORATION

M6. See **TIGHTENING TORQUE**

To install, reverse the removal procedure

SPARK PLUGS

NOTE: Removal steps in this procedure may contain installation details.

Remove the ignition coils. See **IGNITION COIL**.

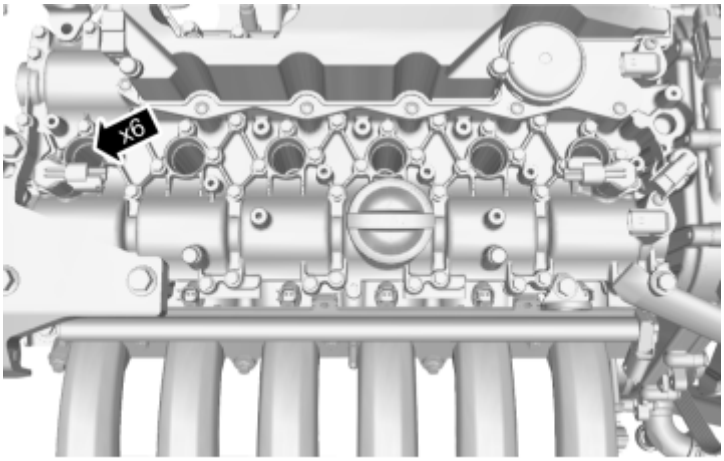

Fig. 137: Locating Spark Plugs
Courtesy of VOLVO CARS CORPORATION

Spark plugs. See **TIGHTENING TORQUE**

To install, reverse the removal procedure

IGNITION COILS, SPARK PLUGS, IGNITION LEADS (B6324S5; 2011-2012)

IGNITION COIL

see **IGNITION COIL**

SPARK PLUGS

see **SPARK PLUGS**

ENGINE PERFORMANCE

Ignition And Control Systems - Specifications, electrical/electronic

COMPONENT SPECIFICATIONS, ENGINE CONTROL MODULE (ECM) (B6324S; 2007-2010)

COMPONENT SPECIFICATIONS

The component specification gives the value of the component when the connector is disconnected. Where no value is given, it is not possible to measure a relevant value at the component.

Numbers in parenthesis indicate to which pin of the component the value corresponds.

Designation	Type	Supply voltage	Value	Other
Air conditioning (A/C) relay	Mechanical relay	12 V	92 ohms ± 10% at 23 °C	
System relay Starter relay	Mechanical relay	12 V	82ohms ± 10% at 23° C (coil)	
A/C pressure sensor	Absolute manifold absolute pressure (MAP) sensor	5 V (#3)		Air conditioning (A/C) high pressure
Brake light switch	Position switch	12 V (#1)	The switch is closed when the pedal is depressed (terminals #1-#5)	
Intake pressure sensor		5 V (#3)		
Fuel temperature sensor	NTC resistor	5 V (#3)	2500 ohms ± 6% at 20 °C (#1-#2)	Integrated in the fuel pressure sensor
Fuel pressure sensor	Piezo resistive pressure sensor	5 V (#3)		
Engine cooling fan (FC) control module	-	12 V (#2)		
Evaporative emission system (EVAP) valve	Electromagnetic valve	12 V (#1)	20, 5 ohms ± 1, 5 ohms	
Actuator variable intake	Actuator, DC motor 1&2	12 V (#1)	4 ohms	
Accelerator pedal (AP) position sensor	Electronic pedal sensor with two output signals, PWM and a linear analog signal	12 V (#1) power supply digital position sensor 5 V (#6) Power		

		supply analog position sensor		
Throttle unit	Electronic throttle module (ETM) with two integrated potentiometers and a throttle motor	5 V (#5)	1.2ohms (#1-#2 motor winding) at normal operating temperature.	-
Injector	Electromagnetic injector valve	12 V (#2)	Approximately 12 ohms at 20°C (terminal #1-#2)	
Camshaft sensor	Magneto-resistive sensor	5 V (#1)		
Knock sensor (KS)	Piezo electric component		Greater than 1 Mohms at 25 ± 10°C(#1-#2)	
Oil level and oil temperature sensor		5 V (#3)		
Ignition coil		12 v (#1)	Approximately 0.98 ohms (primary winding)	
Preheating, front heated oxygen sensor	PTC resistor	12 V (#3)	2.18 - 2.68 ohms at 20 °C (#1-#2)	
Preheating, rear heated oxygen sensor (HO2S)	PTC resistor	12 V (#1)	Approximately 13 ohms ± 1.3ohms (terminal #1-#2)	
Leak diagnostic unit	Consists of pump, electromagnetic valve and an internal heating element (PTC resistor)	12 V (#4)	118ohms (#1-#4 pump motor winding) 29.5ohms ± 10% (terminals #3-#4 Valve coil) 30ohms (#2-#4 Heating element)	
Engine coolant temperature (ECT) sensor	NTC resistor	5 V (#1)	15040 ohms at -20 °C 2450 ohms at 20 °C 318 ohms at 80 °C (#1- #2)	
Reset valve camshaft	Electromagnetic valve	12 V (#1)	7.4 ohms ± 0.5 ohms at 20 °C (#1-#2)	
Flywheel sensor	Induction sensor	-	125, 5 ohms ± 17 ohms(#1-#2)	
Outside temperature sensor	NTC resistor	5 V (#1)	18702 ohms at -20 °C 6318 ohms at 0 °C 2424 ohms at 20 °C 1034 ohms at 40 °C (#1- #3)	
Cam profile	Electromagnetic valve	12 V (#1)	8, 5 ohms ± 0, 5 ohms	

solenoid				

COMPONENT SPECIFICATIONS, ENGINE CONTROL MODULE (ECM) (B6324S5; 2011-2012)

COMPONENT SPECIFICATIONS

see **COMPONENT SPECIFICATIONS**

COMPONENT SPECIFICATIONS, ENGINE CONTROL MODULE (ECM) (B8444S; 2005-2011)

COMPONENT SPECIFICATIONS

The component specification gives the value of the component when the connector is disconnected. Where no value is given, it is not possible to measure a relevant value at the component.

Numbers in brackets indicate to which pin of the component the value corresponds.

Designation	Type	Supply voltage	Value	Other
Air conditioning (A/C) relay	Mechanical relay	12V	92 ohms± 10% at +23°C	
System relay Starter relay	Mechanical relay	12V	82ohms ± 10% at 23° C (coil)	
A/C pressure sensor	Absolute manifold absolute pressure (MAP) sensor	5 V (#3)		Air conditioning (A/C) high pressure
Stop lamp switch	Position switch	12 V (#1)	The switch is closed when the pedal is depressed (terminals #1-#5)	
Intake pressure sensor		5 V (#3)		
Fuel temperature sensor	NTC resistor	5V (#3)	2500ohms± 6% at 20°C (terminals #1-#2)	Integrated in the fuel pressure sensor
Fuel pressure sensor	Piezo resistive pressure sensor	5V (#3)		
Engine cooling fan (FC) control module	-	12 V (#2)		
Evaporative emission system (EVAP) valve	Electromagnetic valve	12 V (#1)	20.5ohms ± 1.5ohms	

Valve variable inlet	Electromagnetic valve	12 V (#1)	37-44 ohms	
Accelerator pedal (AP) position sensor	Electronic pedal sensor with two output signals, PWM and a linear analog signal	12 V (#1) voltage supply digital position sensor 5 V (#6) Voltage supply analog position sensor		
Throttle unit	Electronic throttle module (ETM) with two integrated potentiometers and a throttle motor	5 V (#5)	1.2ohms (#1-#2 motor winding) at normal operating temperature.	-
Injector	Electromagnetic injector valve	12 V (#2)	Approximately 12 ohms at 20°C (terminal #1-#2)	
Camshaft position (CMP) sensor	Magneto-resistive sensor	5 V (#1)		
Knock sensor (KS)	Piezo electric component		Greater than 1 Mohms at 25 ± 10°C (#1-#2)	
Oil quality sensor		5 V (#3)		
Ignition coil		12 v (#1)	Approximately 0.98ohms (primary winding)	
Coolant level sensor	Position switch	Ground connection (terminal #2)	Closed when the engine coolant level is normal	
Preheating front heated oxygen sensor (HO2S)	PTC resistor	12 V (#3)	2.18-2.68 ohms at 20°C (terminals #1-#2)	
Preheating, rear heated oxygen sensor (HO2S)	PTC resistor	12 V (#1)	Approximately 13 ohms ± 1.3ohms (terminal #1-#2)	
Leak diagnostic unit	Consists of pump, electromagnetic valve and an internal heating element (PTC resistor)	12 V (#4)	118ohms (#1-#4 pump motor winding) 29.5ohms ± 10% (terminals #3-#4 Valve coil) 30ohms (#2-#4 Heating element)	
Engine coolant temperature (ECT) sensor	NTC resistor	5 V (#1)	15040 ohms at -20°C 2450 ohms at 20°C 318 ohms at 80°C (#1- #2)	

Oil pressure sensor	Pressure switch (Pressostat)	Grounded in the engine block	Closed switch when the oil pressure is low	
Reset valve camshaft	Electromagnetic valve	12 V (#1)	7.4 ohms ± 0.5ohms at 20°C (terminals #1-#2)	
Flywheel sensor	Engine speed sensor	-	125, 5ohms ± 17ohms(#1-#2)	
Outside temperature sensor	NTC resistor	5 V (#1)	18702ohms at -20°C 6318ohms at 0°C 2424ohms at 20°C 1034ohms at 40°C (#1- #3)	

SIGNAL DESCRIPTION, ENGINE CONTROL MODULE (ECM) (B5254T2; 2003-2004)

SIGNAL DESCRIPTION

General

All values stated below are measured between each connection in column 1 (Conn. control module) and breakout box connection #B3 unless otherwise noted in column 6 (Other). The control module's connections #A1-#A70 correspond to #A1-#B10 on the breakout box, #B1-#B50 correspond to #B11- #B60 on the breakout box.

NOTE: **It is important to connect the breakout box and check the ground connections before starting to measure.**

HINT: If the numbering of the connector is different from the numbering on the breakout box, the connector number is given first, #A61, followed by the breakout box number in brackets, #B1. Example: #A61 (#B1).

U=	DC voltage in volts (V)	U_{AC} =	AC voltage in volts (V)
U_{bat} =	Battery voltage (V)	f =	Frequency in Hertz (Hz)
U_{low} =	Voltage approximately 0 V	% duty =	Duty cycle (pulse ratio) in percent (%)
t =	Time in milliseconds (ms)	I =	Current in amperes (A)

Control module terminal	Breakout box terminal	Signal type	Ignition on	Engine idling	Other
#A1	#A1	Signal electronic throttle module, potentiometer 1 (circuit 1)	Uapprox. 0.4 - 4 V	-	The voltage varies depending on the position of

					the throttle. U increases with increased throttle opening.
#A2	#A2	Fuel pressure sensor signal	-	350-400 kPa (absolute pressure) U = 1.8 - 2 V	The voltage increases with increased fuel pressure.
#A3	#A3	Fuel temperature sensor signal	-	Uapprox. 0.5 V-4.5 V	Voltage drops with increased fuel temperature. The fuel temperature sensor is integrated in the fuel pressure sensor.
#A4	#A4	Signal engine temperature sensor	-	(+30°C) U=1.22 V (+80°C) U=0.29 V (+100 °C) U=0.17 V	
#A5	#A5	Intake air temperature (IAT) sensor signal	-	(+20°C) U=3.50 V (+30°C) U=3.00 V (+40°C) U=2.50 V	Air temperature sensor inlet is integrated in boost pressure sensor.
#A6	#A6	Control signal preheating rear heated oxygen sensor	U = U_{bat}	Preheating of: U=U_{bat} Preheating on: U=U_{low}	
#A7	#A7	Engine cooling fan (FC) control signal	Pulse width modulation (PWM) signal U_{high} min. 70% of U_{bat} U_{low} =1.2 V f = 100 Hz Pulse ratio= 10-95%		
#A8	#A8	-	-	-	
#A9	#A9	Control signal EVAP-valve	U = U_{bat}	-	PWM signal during activation

					of the canister purge (CP) valve
#A10	#A10	-	-	-	
#A11	#A11	-	-	-	
#A12	#A12	-	-	-	
#A13	#A13	Control signal, intake camshaft reset valve	-	Pulse width modulation (PWM) signal U_{top} =U_{bat} f=250 Hz (±12.5 Hz) Pulse ratio 20-95%	Pulse ratio controls control of the camshaft
#A14	#A14	Control signal injector no. 5	U = U_{bat}	t = 2-3 ms	t increases with engine speed (RPM) and load
#A15	#A15	Control signal injector no. 3	U = U_{bat}	t = 2-3 ms	t increases with engine speed (RPM) and load
#A16	#A16	Control signal injector no. 1	U = U_{bat}	t = 2-3 ms	t increases with engine speed (RPM) and load
#A17	#A17	Power supply	U = U_{bat}	-	Supplied via system relay
#A18	#A18	Control signal preheating front heated oxygen sensor	U = U_{bat}	Preheating of: U=U_{bat} Preheating on: U=U_{low}	
#A19	#A19	Signal ground electronic throttle module, potentiometer 1 and 2	U=U_{low}	-	
#A20	#A20	Signal electronic throttle module, potentiometer 2 (circuit 2)	Uapprox.4-0.4 V	-	The voltage varies depending on the position of the throttle. U decreases with increasing throttle opening.
#A21	#A21	Exhaust camshaft reset valve control signal	-	Pulse width modulation (PWM) signal U_{top} =U_{bat} f=250 Hz (±12.5 Hz) Pulse ratio 20-	Pulse ratio controls control of the camshaft

				95%	
#A22	#A22	Mass air flow (MAF) sensor signal	U = 1 V	U=1.7 V	U increases with increasing air mass
#A23	#A23	Signal boost pressure sensor	U=1.96 V	-	U increases with increasing boost pressure.
#A24	#A24	Front heated oxygen sensor (HO2S), pump current	-	-	Pulsed current measurement, not measured
#A25	#A25	-	-	-	
#A26	#A26	Oil pressure switch signal	$U=U_{low}$	$U = U_{bat}$	
#A27	#A27	Signal camshaft sensor 2, camshaft exhaust	U=5 V	U= Pulsed signal U_{top} =5 V U_{offset} = 2.5 V	The frequency varies according to engine speed (RPM)
#A28	#A28	Front heated oxygen sensor (HO2S), calibration current	-	-	Not measured
#A29	#A29	Voltage feed 5 V camshaft sensor	U=5 V	-	
#A30	#A30	Control signal ignition coil no. 2	$U=U_{low}$	U=2.5 V t_{high} =2 ms	The frequency varies according to engine speed (RPM)
#A31	#A31	Control signal ignition coil no. 1	$U=U_{low}$	U=2.5 V t_{high} =2.5 ms	The frequency varies according to engine speed (RPM)
#A32	#A32	-	-	-	
#A33	#A33	Control signal injector no. 4	$U = U_{bat}$	t_{low} =2-3 ms	t increases with engine speed (RPM) and load
#A34	#A34	Control signal injector no. 2	$U = U_{bat}$	t_{low} =2-3 ms	t increases with engine speed (RPM) and load
#A35	#A35	Control signal (+) electronic throttle module's damper motor	-	Pulse width modulation (PWM) signal U_{top} =U_{bat} Pulse ratio 0-100% The polarity of the control	The damper motor is controlled using a PWM-signal from the integrated end-stage in the engine control module (ECM)

				signal switches when the damper motor is to be controlled in the opposite rotational direction.	measured to #A36 (#A36)
#A36	#A36	Control signal (-) electronic throttle module's damper motor	-	Pulse width modulation (PWM) signal $U_{top} = U_{bat}$ Pulse ratio 0-100% The polarity of the control signal switches when the damper motor is to be controlled in the opposite rotational direction.	The damper motor is controlled using a PWM-signal from the integrated end-stage in the engine control module (ECM) measured to #A35 (#A35)
#A37	#A37	-	-	-	
#A38	#A38	Control signal turbo control valve	$U = U_{bat}$	-	For turbo control: PWM-signal f=32 Hz
#A39	#A39	Voltage feed 5V boost pressure sensor, AC pressure sensor, mass airflow sensor	U=5 V	-	
#A40	#A40	-	-	-	
#A41	#A41	Signal (+) front heated oxygen sensor	-	-	Pulsed current signal, not measured
#A42	#A42	Signal (-) front heated oxygen sensor	-	-	Pulsed current signal, not measured
#A43	#A43	-	-	-	
#A44	#A44	-	-	-	
#A45	#A45	Signal (+) rear knock sensor	$U=U_{low}$	-	
#A46	#A46	Signal (+) front knock sensor	$U=U_{low}$	-	
#A47	#A47	Signal camshaft sensor 1,	U=5 V	U= Pulsed	The frequency

		camshaft intake		signal U_{top} =5 V U_{offset} = 2.5 V	varies according to engine speed (RPM)
#A48	#A48	Signal (+), flywheel sensor	U=2.5 V	U=sinus voltage U_{top} =5 V U_{offset} = 2.5 V	Measured to #A66 (#B6) The frequency increases with engine speed (RPM)
#A49	#A49	-	-	-	
#A50	#A50	Control signal ignition coil no. 3	$U=U_{low}$	U=2.5 V t_{high} =2 ms	The frequency varies according to engine speed (RPM)
#A51	#A51	Control signal ignition coil no. 5	$U=U_{low}$	U=2.5 V t_{high} =2 ms	The frequency varies according to engine speed (RPM)
#A52	#A52	Control signal ignition coil no. 4	$U=U_{low}$	U=2.5 V t_{high} =2 ms	The frequency varies according to engine speed (RPM)
#A53	#A53	Power ground 3	U_{low}	-	Grounding point, connected to chassis
#A54	#A54	Power ground 2	U_{low}	-	Grounding point, connected to chassis
#A55	#A55	-	-	-	
#A56	#A56	-	-	-	
#A57	#A57	-	-	-	
#A58	#A58	Signal ground mass airflow sensor	$U=U_{low}$	-	
#A59	#A59	Voltage feed 5 V electronic throttle module, potentiometer 1 and 2	U=5 V	-	
#A60	#A60	Signal ground AC pressure sensor, boost pressure sensor, engine temperature sensor	$U=U_{low}$	-	
#A61	#B1	Signal (+) rear heated oxygen sensor	Uapprox.0.50 V	Above 0.6 V or below 0.3 V	
#A62	#B2	Signal (-) rear heated oxygen sensor	$U=U_{low}$	$U=U_{low}$	

#A63	#B3	Signal ground	$U=U_{low}$	-	Grounding point, connected to chassis
#A64	#B4	Signal (-) front knock sensor	$U=U_{low}$	-	
#A65	#B5	Signal ground camshaft sensor	$U=U_{low}$	-	
#A66	#B6	Signal (-) flywheel sensor	U=2.5 V	U=sinus voltage U_{top} =5 V U_{offset} = 2.5 V	Measured to #A48 (#A48) The frequency increases with increasing engine speed
#A67	#B7	Signal (-) rear knock sensor	$U=U_{low}$	-	
#A68	#B8	Signal AC pressure sensor	U=0.9 V (at approximately 20° C)	-	U increases with increasing pressure in the AC-system
#A69	#B9	-	-	-	
#A70	#B10	-	-	-	

Control module terminal	**Breakout box terminal**	**Signal type**	**Ignition on**	**Engine idling**	**Other**
#B1	#B11	Control modules communication cable (CAN L)	-	-	
#B2	#B12	-	-	-	
#B3	#B13	-	-	-	
#B4	#B14	Signal ground clutch pedal sensor, outside temperature sensor	$U=U_{low}$	-	
#B5	#B15	Signal ground accelerator pedal sensor	$U=U_{low}$	-	
#B6	#B16	-	-	-	
#B7	#B17	Control signal, leak diagnostic unit, pump	Pump motor running: $U=U_{low}$ Pump motor not running: U = U_{bat}	-	
#B8	#B18	Signal, coolant level sensor	$U=U_{low}$	Low coolant level: $U=U_{bat}$	

				Normal coolant level: U=Ulow	
#B9	#B19	Power supply, 5 V accelerator pedal (AP) position sensor	U=5 V	-	
#B10	#B20	-	-	-	
#B11	#B21	30-supply (power supply from battery)	U = U_{bat}	U = U_{bat}	Ignition off: U = U_{bat}
#B12	#B22	-	-	-	
#B13	#B23	Communication cable control module (CAN H)	-	-	
#B14	#B24	-	-	-	
#B15	#B25	Clutch pedal sensor signal	Unaffected: U=3.3 V Fully depressed: 100 mm U=2.2 V	-	U varies depending on the position of the clutch pedal
#B16	#B26	-	-	-	
#B17	#B27	Signal, accelerator pedal (AP) position sensor	U=0.4±0.1 V for unaffected accelerator pedal U=2.5-4.4 V for fully depressed accelerator pedal On certain vehicles, the accelerator pedal's position is all the way down before the signal reaches 4.4 V.	-	U varies depending on the position of the accelerator pedal
#B18	#B28	-	-	-	
#B19	#B29	-	-	-	
#B20	#B30	-	-	-	
#B21	#B31	-	-	-	
#B22	#B32	Diagnostic lead C-link	U=90% of U_{bat}	-	Other values apply if a generic fault-tracing instrument is connected to the data link

					connector (DLC)
#B23	#B33	Signal crank, 50-supply	$U=U_{low}$	$U=U_{low}$	At crank: $U = U_{bat}$
#B24	#B34	-	-	-	
#B25	#B35	Signal, accelerator pedal (AP) position sensor	U_{top} =12 V t = 4 ms pulse ratio=8% ±2% for unaffected accelerator pedal and 50% - 90% for fully depressed accelerator pedal On certain vehicles, the accelerator pedal's position is all the way down before the signal reaches 90%.	-	PWM-signal from the accelerator pedal position sensor to the engine control module
#B26	#B36	Brake lamp switch signal	When brake pedal is actuated: $U=U_{bat}$ When brake pedal is not actuated $U=U_{low}$	-	
#B27	#B37	-	-	-	
#B28	#B38	-	-	-	
#B29	#B39	Signal, outside temperature sensor	(0° C) U=2.92 V (+10°C) U=2.40V (+20°C) U=1.90 V (+30°C) U =1.46 V	-	Temperature range: -40 to +30 °C
#B30	#B40	-	-	-	
#B31	#B41	-	-	-	
#B32	#B42	-	-	-	
#B33	#B43	-	-	-	

#B34	#B44	-	-	-	
#B35	#B45	-	-	-	
#B36	#B46	-	-	-	
#B37	#B47	Signal, ignition on, 15-supply	U = U_{bat}	U = U_{bat}	Ignition off: U=U_{low}
#B38	#B48	System relay, control signal	-	U=U_{low}	Relay activated: U=U_{low} Relay not activated: U=U_{bat} The system relay has post-run time (2-5 min.)
#B39	#B49	-	-	-	
#B40	#B50	Control signal, leak diagnostic unit, valve	-	-	Valve activated: U=U low Valve not activated: U=U bat
#B41	#B51	-	-	-	
#B42	#B52	-	-	-	
#B43	#B53	-	-	-	
#B44	#B54	Control signal, air conditioning (A/C) relay	-	-	AC-relay activated: U=U_{low} AC-relay not activated: U=U_{bat}
#B45	#B55	Fuel pump (FP) activation control signal	-	-	PWM signal to the central electronic module (CEM) to control the fuel pump (FP) relay
#B46	#B56	Malfunction indicator lamp (MIL) control signal	U=U_{low}	Not activated U=U_{bat} Activated: U=U_{low}	
#B47	#B57	-	-	-	
#B48	#B58	Control signal, engine cooling fan (FC), control modules	-	Not activated U=U_{bat} Activated:	The engine cooling fan (FC) is controlled by

				$U=U_{low}$	the engine control module (ECM)
#B49	#B59	-	-	-	
#B50	#B60	-	-	-	

SIGNAL SPECIFICATION

General

All values given below are between the terminals stated in column 1 and breakout box terminal in the Control unit) and breakout box terminal #B3 unless otherwise indicated in column 6 (Miscellaneous). Control module terminals #A1-#A70 correspond to terminals #A1-#B10 on the breakout box, terminals #B1-#B50 correspond to #B11 - #B60 on the breakout box.

NOTE: It is important to connect the breakout box and check the ground terminals before taking readings.

HINT: If the numbering of the connector is different from the numbering on the breakout box, the connector number is given first, terminal #A61, followed by the breakout box number in brackets, (#B1). Example: #A61 (#B1).

U=	DC voltage in volts (V)	U_{AC} =	AC voltage in volts (V)
U_{bat} =	Battery voltage (V)	f =	Frequency in Hertz (Hz)
U_{low} =	Voltage approximately 0 V	% duty =	Duty cycle (pulse ratio) as a percentage (%)
t =	Time in milliseconds (ms)	I =	Current in amperes (A)

Control module terminal	Breakout box terminal	Signal type	Ignition on	Engine idling	Other
#A1	#A1	Throttle unit signal, potentiometer 1 (circuit 1)	U approx. 0.4 -4 V	-	The voltage varies depending on the position of the throttle. U increases with throttle opening.
#A2	#A2	Fuel pressure sensor signal	-	350 - 400 kPa (absolute pressure) U=1.8-2 V	The voltage increases with increased fuel pressure.
#A3	#A3	Fuel temperature sensor signal	-	Uapprox. 0.5 V-4.5 V	The voltage falls with increased fuel temperature.

					The fuel temperature sensor is integrated in the fuel pressure sensor.
#A4	#A4	Engine coolant temperature (ECT) sensor signal	-	(+30°C) U=1.22 V (+80°C) U = 0.29 V (+100°C) U = 0.17 V	
#A5	#A5	Intake air temperature (IAT) sensor signal	-	(+20°C) U = 3.50 V (+30°C) U = 3.00 V (+40°C) U = 2.50 V	The intake air temperature (IAT) sensor is integrated in the boost pressure sensor.
#A6	#A6	Control signal, rear heated oxygen sensor (HO2S) preheating	$U = U_{bat}$	Preheating off: $U = U_{bat}$ Preheating on $U=U_{low}$	
#A7	#A7	Engine cooling fan (FC) control signal	Pulse width modulation (PWM) signal U_{high} at least 70% of U_{bat} U_{low} = 1.2 V f = 100 Hz Pulse ratio = 10-95%		
#A8	#A8	-	-	-	
#A9	#A9	Control signal, canister purge (CP) valve	$U = U_{bat}$	-	PWM signal during activation of the canister purge (CP) valve
#A10	#A10	-	-	-	
#A11	#A11	-	-	-	
#A12	#A12	-	-	-	
#A13	#A13	Control signal, intake camshaft reset valve	-	Pulse width modulation (PWM) signal $U_{top} = U_{bat}$	The pulse ratio governs control of the camshaft

				f=250 Hz (±12.5 Hz) Pulse ratio 20-95%	
#A14	#A14	Injector no. 5 control signal	U = U_{bat}	t= 2-3 ms	t increases with engine speed (RPM) and load
#A15	#A15	Injector no. 3 control signal	U = U_{bat}	t= 2-3 ms	t increases with engine speed (RPM) and load
#A16	#A16	Injector no. 1 control signal	U = U_{bat}	t= 2-3 ms	t increases with engine speed (RPM) and load
#A17	#A17	Power supply	U = U_{bat}	-	Supplied via the system relay
#A18	#A18	Control signal, front heated oxygen sensor (HO2S) preheating	U = U_{bat}	Preheating off: U = U_{bat} Preheating on: U=U_{low}	
#A19	#A19	Signal ground, throttle unit, potentiometers 1 and 2	U=U_{low}	-	
#A20	#A20	Throttle unit signal, potentiometer 2 (circuit 2)	U approx. 4 -0.4 V	-	The voltage varies depending on the position of the throttle. U decreases with increasing throttle opening.
#A21	#A21	Exhaust camshaft reset valve control signal	-	Pulse width modulation (PWM) signal U_{top} =U_{bat} f=250 Hz (±12.5 Hz) Pulse ratio 20-95%	The pulse ratio governs control of the camshaft
#A22	#A22	Mass air flow (MAF) sensor signal	U = 1 V	U = 1.7 V	U increases with increasing air mass
#A23	#A23	Boost pressure sensor signal	U = 1.96 V	-	U increases with increasing boost pressure.
#A24	#A24	Front heated oxygen	-	-	Pulsed current

		sensor (HO2S), pump current			supply, not measured
#A25	#A25	-	-	-	
#A26	#A26	Oil pressure switch signal	$U=U_{low}$	$U = U_{bat}$	
#A27	#A27	Signal camshaft position (CMP) sensor 2, exhaust camshaft	U =5 V	U = Pulsed signal U_{top} =5 V U_{offset} = 2.5 V	The frequency varies according to engine speed (RPM)
#A28	#A28	Front heated oxygen sensor (HO2S), calibration current	-	-	Not measured
#A29	#A29	Power supply, 5 V camshaft position (CMP) sensor	U =5 V	-	
#A30	#A30	Ignition coil no. 2 control signal	$U=U_{low}$	U=2.5 V t_{high} =2 ms	The frequency varies according to engine speed (RPM)
#A31	#A31	Ignition coil no. 1 control signal	$U=U_{low}$	U=2.5 V t_{high} =2.5 ms	The frequency varies according to engine speed (RPM)
#A32	#A32	-	-	-	
#A33	#A33	Injector no. 4 control signal	$U = U_{bat}$	t_{low} =2-3 ms	t increases with engine speed (RPM) and load
#A34	#A34	Injector no. 2 control signal	$U = U_{bat}$	t_{low} =2-3 ms	t increases with engine speed (RPM) and load
#A35	#A35	Control signal (+) damper motor for the throttle unit	-	Pulse width modulation (PWM) signal U_{top} =U_{bat} Pulse ratio 0-100% The polarity of the control signal changes when the damper motor is deployed against the direction of rotation.	The damper motor is controlled using a pulse width modulation (PWM) signal from the integrated power stage in the engine control module (ECM) measured to terminal #A36 (#A36)
#A36	#A36	Control signal (-) damper	-	Pulse width	The damper

		motor for the throttle unit		modulation (PWM) signal U_{top} =U_{bat} Pulse ratio 0-100% The polarity of the control signal changes when the damper motor is deployed against the direction of rotation.	motor is controlled using a pulse width modulation (PWM) signal from the integrated power stage in the engine control module (ECM) measured to terminal #A35 (#A35)
#A37	#A37	-	-	-	
#A38	#A38	Turbocharger (TC) control valve control signal	U = U_{bat}	-	During turbocharger (TC) control: Pulse width modulation (PWM) signal f = 32 Hz
#A39	#A39	Power supply 5 V boost pressure sensor, air conditioning (A/C) pressure sensor, mass air flow (MAF) sensor, oil level sensor, fuel pressure sensor	U =5 V	-	
#A40	#A40	Oil level sensor	-	Pulse width modulation (PWM) signal U_{top} =5 V Pulse ratio 17-83% T=120 ms Pulse train with three pulses, then pause for 1.2 seconds. Pulse no. 1= oil temperature. Pulse no. 2= oil level. Pulse no. 3= oil grade. The pulse ratio	The PWM signal is generated by the oil level sensor.

				for each pulse changes depending on the present: - oil temperature - oil level - oil grade.	
#A41	#A41	Signal (+), front heated oxygen sensor (HO2S)	-	-	Pulsed current signal, not measured
#A42	#A42	Signal (-), front heated oxygen sensor (HO2S)	-	-	Pulsed current signal, not measured
#A43	#A43	-	-	-	
#A44	#A44	-	-	-	
#A45	#A45	Signal (+), rear knock sensor (KS)	$U=U_{low}$	-	
#A46	#A46	Signal (+) front knock sensor (KS)	$U=U_{low}$	-	
#A47	#A47	Signal camshaft position (CMP) sensor 1, intake camshaft	U =5 V	U = Pulsed signal U_{top} =5 V U_{offset} = 2.5V	The frequency varies according to engine speed (RPM)
#A48	#A48	Signal (+), flywheel sensor	U=2.5 V	U= sine wave voltage U_{top} =5 V U_{offset} = 2.5 V	Measured to terminal #A66 #B6) The frequency increases with engine speed (RPM)
#A49	#A49	-	-	-	
#A50	#A50	Ignition coil no. 3 control signal	$U=U_{low}$	U=2.5 V t_{high} =2 ms	The frequency varies according to engine speed (RPM)
#A51	#A51	Ignition coil no. 5 control signal	$U=U_{low}$	U=2.5 V t_{high} =2 ms	The frequency varies according to engine speed (RPM)
#A52	#A52	Ignition coil no. 4 control signal	$U=U_{low}$	U=2.5 V t_{high} =2 ms	The frequency varies according to engine speed (RPM)
#A53	#A53	Power ground 3	U_{low}	-	Ground

					terminal, connected to the chassis
#A54	#A54	Power ground 2	U_{low}	-	Ground terminal, connected to the chassis
#A55	#A55	-	-	-	
#A56	#A56	-	-	-	
#A57	#A57	-	-	-	
#A58	#A58	Signal ground, mass air flow (MAF) sensor	$U=U_{low}$	-	
#A59	#A59	Power supply 5 V throttle unit, potentiometers 1 and 2	U =5 V	-	
#A60	#A60	Signal ground Air conditioning (A/C) pressure sensor, boost pressure sensor, engine coolant temperature (ECT) sensor, fuel pressure sensor, oil level sensor	$U=U_{low}$	-	
#A61	#B1	Signal (+), rear heated oxygen sensor (HO2S)	Uapprox.0.50 V	Above 0.6 V or below 0.3 V	
#A62	#B2	Signal (-), rear heated oxygen sensor (HO2S)	$U=U_{low}$	$U=U_{low}$	
#A63	#B3	Signal ground	$U=U_{low}$	-	Ground terminal, connected to the chassis
#A64	#B4	Signal (-) front knock sensor (KS)	$U=U_{low}$	-	
#A65	#B5	Camshaft position (CMP) sensor signal ground	$U=U_{low}$	-	
#A66	#B6	Signal (-) flywheel sensor	U=2.5 V	U = sine wave voltage U_{top} =5 V U_{offset} = 2.5 V	Measured to terminal #A48 (#A48) The frequency increases with engine speed (RPM)
#A67	#B7	Signal (-) rear knock sensor (KS)	$U=U_{low}$	-	
#A68	#B8	Signal air conditioning	U=0.9 V (at	-	U increases with

		(A/C) pressure sensor	approximately 20° C)		pressure in the air conditioning (A/C) system
#A69	#B9	-	-	-	
#A70	#B10	-	-	-	

Control module terminal	Breakout box terminal	Signal type	Ignition on	Engine idling	Other
#B1	#B11	Control modules communication cable (CAN L)	-	-	
#B2	#B12	-	-	-	
#B3	#B13	-	-	-	
#B4	#B14	Signal ground clutch pedal sensor, outside temperature sensor	$U=U_{low}$	-	
#B5	#B15	Signal ground, accelerator pedal (AP) position sensor	$U=U_{low}$	-	
#B6	#B16	-	-	-	
#B7	#B17	Control signal, leak diagnostic unit, pump	Pump motor running: $U=U_{low}$ Pump motor not running: $U = U_{bat}$	-	
#B8	#B18	Signal, coolant level sensor	$U=U_{low}$	Low engine coolant level: $U = U_{bat}$ Normal engine coolant level: U = Ulow	
#B9	#B19	Power supply, 5 V accelerator pedal (AP) position sensor	U =5 V	-	
#B10	#B20	-	-	-	
#B11	#B21	30-supply (Power supply from the battery)	$U = U_{bat}$	$U = U_{bat}$	Ignition off: $U = U_{bat}$
#B12	#B22	-	-	-	
#B13	#B23	Control module communication cable (CAN H)	-	-	
#B14	#B24	-	-	-	

#B15	#B25	Clutch pedal sensor signal	Unaffected: U=3.3 V Fully depressed: 100mm U = 2.2 V	-	U varies depending on the position of the clutch pedal
#B16	#B26	-	-	-	
#B17	#B27	Signal, accelerator pedal (AP) position sensor	U = 0.4±0.1 V with unaffected accelerator pedal (AP) U=2.5-4.4 V = the accelerator pedal (AP) fully depressed On certain vehicles the accelerator pedal (AP) will be at the limit position before the signal reaches 4.4 V.	-	U varies depending on the position of the accelerator pedal (AP)
#B18	#B28	-	-	-	
#B19	#B29	-	-	-	
#B20	#B30	-	-	-	
#B21	#B31	-	-	-	
#B22	#B32	Diagnostic lead C-link	U=90% of U_{bat}	-	Other values apply if a generic fault-tracing instrument is connected to the data link connector (DLC)
#B23	#B33	Signal crank, 50-supply	$U=U_{low}$	$U=U_{low}$	At crank: U = U_{bat}
#B24	#B34	-	-	-	
#B25	#B35	Signal, accelerator pedal (AP) position sensor	U_{top} =12 V t = 4 ms pulse ratio=8% ±2% with unaffected accelerator pedal (AP) and 50% - 90%	-	Pulse width modulation (PWM) signal from the accelerator pedal (AP) position sensor to the engine control

			with fully depressed accelerator pedal (AP) On certain vehicles the accelerator pedal (AP) will be at the limit before the signal reaches 90%.		module (ECM)
#B26	#B36	Stop lamp switch signal	When the brake pedal is depressed: U = U_{bat} When the brake pedal is not depressed U=U_{low}	-	
#B27	#B37	-	-	-	
#B28	#B38	-	-	-	
#B29	#B39	Signal, outside temperature sensor	(0° C) U=2.92 V (+10° C) U=2.40V (+20° C) U=1.90 V (+30°C) U = 1.46 V	-	Temperature range: -40 to +30°C
#B30	#B40	-	-	-	
#B31	#B41	-	-	-	
#B32	#B42	-	-	-	
#B33	#B43	-	-	-	
#B34	#B44	-	-	-	
#B35	#B45	-	-	-	
#B36	#B46	-	-	-	
#B37	#B47	Signal, ignition on, 15-supply	U = U_{bat}	U = U_{bat}	Ignition off: U=U_{low}
#B38	#B48	System relay control signal	-	U=U_{low}	Relay activated: U=U_{low} Relay not activated: U = U_{bat}

					The system relay runs on (2-5 minutes)
#B39	#B49	-	-	-	
#B40	#B50	Control signal, leak diagnostic unit, valve	-	-	Valve activated: U = Ulow Valve not activated: U = Ubat
#B41	#B51	-	-	-	
#B42	#B52	-	-	-	
#B43	#B53	-	-	-	
#B44	#B54	Control signal, air conditioning (A/C) relay	-	-	Air conditioning (A/C) relay activated: $U=U_{low}$ Air conditioning (A/C) relay not activated: U = U_{bat}
#B45	#B55	Fuel pump (FP) control signal, activation	-	-	PWM signal to the central electronic module (CEM) to control the fuel pump (FP) relay
#B46	#B56	Malfunction indicator lamp (MIL) control signal	$U=U_{low}$	Not activated $U=U_{bat}$ Activated: $U=U_{low}$	
#B47	#B57	Control signal, fuel pump (FP) control module	-	PWM signal pulse ratio 35% (+/-5%) engine at operating temperature	PWM signal transmitted by the engine control module (ECM) to the fuel pump (FP) control module. The pulse ratio varies with the requested fuel pressure.
#B48	#B58	Control signal, engine cooling fan (FC), control modules	-	Not activated $U=U_{bat}$ Activated:	The engine cooling fan (FC) is controlled by

				$U=U_{low}$	the engine control module (ECM)
#B49	#B59	-	-	-	
#B50	#B60	-	-	-	

SIGNAL SPECIFICATION, ENGINE CONTROL MODULE (ECM) (B5254T2; 2005-2007)

SIGNAL SPECIFICATION

General

All values given below are between the terminals stated in column 2 (Control module terminal) and breakout box terminal #B3 unless otherwise indicated in column 6 (Miscellaneous). Control module terminals #A1-#A70 correspond to terminals #A1-#B10 on the breakout box, terminals #B1-#B50 correspond to #B11 - #B60 on the breakout box.

NOTE: **It is important to connect the breakout box and check the ground terminals before taking readings.**

HINT: If the numbering of the connector is different from the numbering on the breakout box, the connector number is given first, terminal #A61, followed by the breakout box number in brackets, (#B1). Example: #A61 (#B1).

U=	DC voltage in volts (V)	U_{AC} =	AC voltage in volts (V)
U_{bat} =	Battery voltage (V)	f =	Frequency in Hertz (Hz)
U_{low} =	Voltage approximately 0 V	% duty =	Duty cycle (pulse ratio) as a percentage (%)
t =	Time in milliseconds (ms)	I =	Current in amperes (A)

CONNECTOR A

Breakout box terminal	Control module terminal	Signal type	Ignition on	Engine idling	Other
#A1	#A1	Throttle unit signal, potentiometer 1 (circuit 1)	Uapprox. 0.4 - 4 V	-	The voltage varies depending on the position of the throttle. U increases with throttle opening.
#A2	#A2	Fuel pressure sensor signal	-	350 - 400 kPa (absolute pressure)	The voltage increases with increased fuel

				U=1.8-2 V	pressure.
#A3	#A3	Fuel temperature sensor signal	-	Uapprox. 0.5 V- 4.5 V	The voltage falls with increased fuel temperature. The fuel temperature sensor is integrated in the fuel pressure sensor.
#A4	#A4	Engine coolant temperature (ECT) sensor signal	-	(+30°C) U=1.22 V (+80°C) U = 0.29 V (+100°C) U = 0.17 V	
#A5	#A5	Intake air temperature (IAT) sensor signal	-	(+20°C) U = 3.50 V (+30°C) U = 3.00 V (+40°C) U = 2.50 V	The intake air temperature (IAT) sensor is integrated in the boost pressure sensor.
#A6	#A6	Control signal, rear heated oxygen sensor (HO2S) preheating	$U=U_{bat}$	Preheating off: $U = U_{bat}$ Preheating on $U=U_{low}$	
#A7	#A7	Engine cooling fan (FC) control signal	Pulse width modulation (PWM) signal U_{high} at least 70% of U_{bat} U_{low} = 1.2 V f = 100 Hz Pulse ratio = 10-95%		
#A8	#A8	-	-	-	
#A9	#A9	Control signal, canister purge (CP) valve	$U=U_{bat}$	-	PWM signal during activation of the canister purge (CP) valve
#A10	#A10	-	-	-	
#A11	#A11	-	-	-	
#A12	#A12	-	-	-	

#A13	#A13	Control signal, intake camshaft reset valve	-	Pulse width modulation (PWM) signal U_{top} =U_{bat} f=250 Hz (±12.5 Hz) Pulse ratio 20-95%	The pulse ratio governs control of the camshaft
#A14	#A14	Injector no. 5 control signal	U=U_{bat}	t= 2-3 ms	t increases with engine speed (RPM) and load
#A15	#A15	Injector no. 3 control signal	U=U_{bat}	t= 2-3 ms	t increases with engine speed (RPM) and load
#A16	#A16	Injector no. 1 control signal	U=U_{bat}	t= 2-3 ms	t increases with engine speed (RPM) and load
#A17	#A17	Power supply	U=U_{bat}	-	Supplied via the system relay
#A18	#A18	Control signal, front heated oxygen sensor (HO2S) preheating	U=U_{bat}	Preheating off: U = U_{bat} Preheating on U=U_{low}	
#A19	#A19	Signal ground, throttle unit, potentiometers 1 and 2	U=U_{low}	-	
#A20	#A20	Throttle unit signal, potentiometer 2 (circuit 2)	Uapprox. 4-0.4 V	-	The voltage varies depending on the position of the throttle. U decreases with increasing throttle opening.
#A21	#A21	Exhaust camshaft reset valve control signal	-	Pulse width modulation (PWM) signal U_{top} =U_{bat} f=250 Hz (±12.5 Hz) Pulse ratio 20-95%	The pulse ratio governs control of the camshaft
#A22	#A22	Mass air flow (MAF) sensor signal	U = 1 V	U = 1.7 V	U increases with increasing air mass

#A23	#A23	Boost pressure sensor signal	U = 1.96 V	-	U increases with increasing boost pressure.
#A24	#A24	Front heated oxygen sensor (HO2S), pump current	-	-	Pulsed current supply, not measured
#A25	#A25	-	-	-	
#A26	#A26	Oil pressure switch signal	$U=U_{low}$	$U=U_{bat}$	
#A27	#A27	Signal camshaft position (CMP) sensor 2, exhaust camshaft	U =5 V	U = Pulsed signal U_{top} =5 V U_{offset} =2.5V	The frequency varies according to engine speed (RPM)
#A28	#A28	Front heated oxygen sensor (HO2S), calibration current	-	-	Not measured
#A29	#A29	Power supply, 5 V camshaft position (CMP) sensor	U =5 V	-	
#A30	#A30	Control signal ignition coil C, cylinder 4	$U=U_{low}$	U=2.5 V t_{high} =2 ms	The frequency varies according to engine speed (RPM)
#A31	#A31	Control signal ignition coil B, cylinder 2	$U=U_{low}$	U=2.5 V t_{high} =2.5 ms	The frequency varies according to engine speed (RPM)
#A32	#A32	-	-	-	
#A33	#A33	Injector no. 4 control signal	$U=U_{bat}$	t_{low} =2-3 ms	t increases with engine speed (RPM) and load
#A34	#A34	Injector no. 2 control signal	$U=U_{bat}$	t_{low} =2-3 ms	t increases with engine speed (RPM) and load
#A35	#A35	Control signal (+) damper motor for the throttle unit	-	Pulse width modulation (PWM) signal U_{top} =U_{bat} Pulse ratio 0-100% The polarity of the control signal changes when the damper motor is deployed	The damper motor is controlled using a pulse width modulation (PWM) signal from the integrated power stage in the engine control module (ECM)

				against the direction of rotation.	measured to terminal #A36 (#A36)
#A36	#A36	Control signal (-) damper motor for the throttle unit	-	Pulse width modulation (PWM) signal U_{top} =U_{bat} Pulse ratio 0-100% The polarity of the control signal changes when the damper motor is deployed against the direction of rotation.	The damper motor is controlled using a pulse width modulation (PWM) signal from the integrated power stage in the engine control module (ECM) measured to terminal #A35 (#A35)
#A37	#A37	-	-	-	
#A38	#A38	Turbocharger (TC) control valve control signal	U=U_{bat}	-	During turbocharger (TC) control: Pulse width modulation (PWM) signal f = 32 Hz
#A39	#A39	Sensor, power supply 5 V	U =5 V		See the relevant wiring diagram for information about connected sensors
#A40	#A40	Oil level sensor	-	Pulse width modulation (PWM) signal U_{top} =5 V Pulse ratio 17-83% T=120 ms Pulse train with three pulses, then pause for 1.2 seconds. Pulse no. 1= oil temperature. Pulse no. 2= oil level.	The PWM signal is generated by the oil level sensor.

				Pulse no. 3= oil grade. The pulse ratio for each pulse changes depending on the present: - oil temperature - oil level - oil grade.	
#A41	#A41	Signal (+), front heated oxygen sensor (HO2S)	-	-	Pulsed current signal, not measured
#A42	#A42	Signal (-), front heated oxygen sensor (HO2S)	-	-	Pulsed current signal, not measured
#A43	#A43	-	-	-	
#A44	#A44	-	-	-	
#A45	#A45	Signal (+), rear knock sensor (KS)	$U=U_{low}$	-	
#A46	#A46	Signal (+) front knock sensor (KS)	$U=U_{low}$	-	
#A47	#A47	Signal camshaft position (CMP) sensor 1, intake camshaft	U =5 V	U = Pulsed signal U_{top} =5 V U_{offset} = 2.5 V	The frequency varies according to engine speed (RPM)
#A48	#A48	Signal (+), flywheel sensor	U=2.5 V	U= sine wave voltage U_{top} =5 V U_{offset} =2.5V	Measured to terminal #A66 #B6) The frequency increases with engine speed (RPM)
#A49	#A49	-	-	-	
#A50	#A50	Control signal ignition coil A, cylinder 1	$U=U_{low}$	U=2.5 V t_{high} =2 ms	The frequency varies according to engine speed (RPM)
#A51	#A51	Control signal ignition coil E, cylinder 3	$U=U_{low}$	U=2.5 V t_{high} =2 ms	The frequency varies according to engine speed (RPM)
#A52	#A52	Control signal ignition coil D, cylinder 5	$U=U_{low}$	U=2.5 V t_{high} =2 ms	The frequency varies according

					to engine speed (RPM)
#A53	#A53	Power ground 3	U_{low}	-	Ground terminal, connected to the chassis
#A54	#A54	Power ground 2	U_{low}	-	Ground terminal, connected to the chassis
#A55	#A55	Control modules communication cable (CAN L)	-	-	-
#A56	#A56	-	-	-	
#A57	#A57	-	-	-	
#A58	#A58	Signal ground, mass air flow (MAF) sensor	$U=U_{low}$	-	
#A59	#A59	Power supply 5 V throttle unit, potentiometers 1 and 2	U =5 V	-	
#A60	#A60	Sensor, signal ground	$U=U_{low}$	-	See the relevant wiring diagram for information about connected sensors
#B1	#A61	Signal (+), rear heated oxygen sensor (HO2S)	Uapprox.0.50 V	Above 0.6 V or below 0.3 V	
#B2	#A62	Signal (-), rear heated oxygen sensor (HO2S)	$U=U_{low}$	$U=U_{low}$	
#B3	#A63	Signal ground	$U=U_{low}$	-	Ground terminal, connected to the chassis
#B4	#A64	Signal (-) front knock sensor (KS)	$U=U_{low}$	-	
#B5	#A65	Camshaft position (CMP) sensor signal ground	$U=U_{low}$	-	
#B6	#A66	Signal (-) flywheel sensor	U=2.5 V	U = sine wave voltage U_{top} =5 V U_{offset} =2.5V	Measured to terminal #A48 (#A48) The frequency increases with engine speed (RPM)
#B7	#A67	Signal (-) rear knock	$U=U_{low}$	-	

		sensor (KS)			
#B8	#A68	Signal air conditioning (A/C) pressure sensor	U=0.9 V (at approximately 20° C)	-	U increases with pressure in the air conditioning (A/C) system
#B9	#A69	-	-	-	
#B10	#A70	-	-	-	

CONNECTOR B

Breakout box terminal	Control module terminal	Signal type	Ignition on	Engine idling	Other
#B11	#B1	Control modules communication cable (CAN L)	-	-	-
#B12	#B2	-	-	-	
#B13	#B3	-	-	-	
#B14	#B4	Sensor, signal ground	$U=U_{low}$	-	See the relevant wiring diagram for information about connected sensors
#B15	#B5	Signal ground, accelerator pedal (AP) position sensor	$U=U_{low}$	-	
#B16	#B6	-	-	-	
#B17	#B7	Control signal, leak diagnostic unit, pump	Pump motor running: $U=U_{low}$ Pump motor not running: $U = U_{bat}$	-	
#B18	#B8	Signal, coolant level sensor	$U=U_{low}$	Low engine coolant level: $U = U_{bat}$ Normal engine coolant level: U = Ulow	
#B19	#B9	Power supply, 5 V accelerator pedal (AP) position sensor	U =5 V	-	
#B20	#B10	-	-	-	
#B21	#B11	30-supply (Power supply from the battery)	$U=U_{bat}$	$U=U_{bat}$	Ignition off: $U = U_{bat}$

#B22	#B12	-	-	-	
#B23	#B13	Control module communication cable (CAN H)	-	-	
#B24	#B14	-	-	-	
#B25	#B15	Clutch pedal sensor signal	Unaffected: U=3.3 V Fully depressed: 100mm U = 2.2 V	-	U varies depending on the position of the clutch pedal
#B26	#B16	-	-	-	
#B27	#B17	Signal, accelerator pedal (AP) position sensor	U = 0.4±0.1 V with unaffected accelerator pedal (AP) U=2.5-4.4 V = the accelerator pedal (AP) fully depressed On certain vehicles the accelerator pedal (AP) will be at the limit position before the signal reaches 4.4 V.	-	U varies depending on the position of the accelerator pedal (AP)
#B28	#B18	-	-	-	
#B29	#B19	-	-	-	
#B30	#B20	-	-	-	
#B31	#B21	-	-	-	
#B32	#B22	Diagnostic lead C-link	U=90% of U_{bat}	-	Other values apply if a generic fault-tracing instrument is connected to the data link connector (DLC)
#B33	#B23	Signal crank, 50-supply	$U=U_{low}$	$U=U_{low}$	At crank: U = U_{bat}
#B34	#B24	-	-	-	
#B35	#B25	Signal, accelerator pedal (AP) position sensor	U_{top} =12 V t = 4 ms	-	Pulse width modulation

			pulse ratio=8% ±2% with unaffected accelerator pedal (AP) and 50% - 90% with fully depressed accelerator pedal (AP) On certain vehicles the accelerator pedal (AP) will be at the limit before the signal reaches 90%.		(PWM) signal from the accelerator pedal (AP) position sensor to the engine control module (ECM)
#B36	#B26	Stop lamp switch signal	When the brake pedal is depressed: U = U_{bat} When the brake pedal is not depressed $U=U_{low}$	-	
#B37	#B27	-	-	-	
#B38	#B28	-	-	-	
#B39	#B29	Signal, outside temperature sensor	(0° C) U=2.92 V (+10° C) U=2.40V (+20° C) U=1.90 V (+30°C) U = 1.46 V	-	Temperature range: -40 to +30°C
#B40	#B30	-	-	-	
#B41	#B31	-	-	-	
#B42	#B32	-	-	-	
#B43	#B33	-	-	-	
#B44	#B34	Control signal, leak diagnostic unit, heater pad		-	Heating element activated: U = Ulow Heater pad not activated: U = Ubat
#B45	#B35	-	-	-	

#B46	#B36	-	-	-	
#B47	#B37	Signal, ignition on, 15-supply	$U=U_{bat}$	$U=U_{bat}$	Ignition off: $U=U_{low}$
#B48	#B38	System relay control signal	-	$U=U_{low}$	Relay activated: $U=U_{low}$ Relay not activated: $U = U_{bat}$ The system relay runs on (2-5 minutes)
#B49	#B39	-	-	-	
#B50	#B40	Control signal, leak diagnostic unit, valve	-	-	Valve activated: U = Ulow Valve not activated: U = Ubat
#B51	#B41	-	-	-	
#B52	#B42	-	-	-	
#B53	#B43	-	-	-	
#B54	#B44	Control signal, air conditioning (A/C) relay	-	-	Air conditioning (A/C) relay activated: $U=U_{low}$ Air conditioning (A/C) relay not activated: $U = U_{bat}$
#B55	#B45		-	-	
#B56	#B46	Malfunction indicator lamp (MIL) control signal	$U=U_{low}$	Not activated $U=U_{bat}$ Activated: $U=U_{low}$	
#B57	#B47	Control signal, fuel pump (FP) control module	-	PWM signal pulse ratio 35% (+/-5%) engine at operating temperature	Pulse width modulation (PWM) signal transmitted by the engine control module (ECM) to the fuel pump (FP) control module. The pulse ratio varies with the

					requested fuel pressure.
#B58	#B48	Control signal, engine cooling fan (FC), control modules	-	Not activated $U=U_{bat}$ Activated: $U=U_{low}$	The engine cooling fan (FC) is controlled by the engine control module (ECM).
#B59	#B49	-	-	-	
#B60	#B50	-	-	-	

SIGNAL SPECIFICATION, ENGINE CONTROL MODULE (ECM) (B6294T; 2005-2006)

SIGNAL SPECIFICATION

General

All values given below are between the terminals stated in column 2 (Control module terminal) and breakout box terminal #B3 unless otherwise indicated in column 6 (Miscellaneous). Control module terminals #A1-#A70 correspond to terminals #A1-#B10 on the breakout box, terminals #B1-#B50 correspond to #B11-#B60 on the breakout box.

NOTE: **It is important to connect the breakout box and check the ground terminals before taking readings.**

HINT: If the numbering of the connector is different from the numbering on the breakout box, the connector number is given first, terminal #A61, followed by the breakout box number in brackets, (#B1). Example: #A61 (#B1).

U=	DC voltage in volts (V)	U_{AC} =	AC voltage in volts (V)
U_{bat} =	Battery voltage (V)	f =	Frequency in Hertz (Hz)
U_{low} =	Voltage approximately 0 V	% duty =	Duty cycle (pulse ratio) as a percentage (%)
t =	Time in milliseconds (ms)	I =	Current in amperes (A)

CONNECTOR A

Breakout box terminal	Control module terminal	Signal type	Ignition on	Engine idling	Other
#A1	#A1	Throttle unit signal, potentiometer 1 (circuit 1)	Uapprox. 0.4-4 V	-	The voltage varies depending on the position of the throttle. U

					increases with throttle opening.
#A2	#A2	-	-	-	
#A3	#A3	-	-	-	
#A4	#A4	Engine coolant temperature (ECT) sensor signal	-	(+30°C) U=1.22 V (+80°C) U = 0.29 V (+100°C) U = 0.17 V	
#A5	#A5	Intake air temperature (IAT) sensor signal	-	(+20°C) U = 3.50 V (+30°C) U = 3.00 V (+40°C) U = 2.50 V	The intake air temperature (IAT) sensor is integrated in the boost pressure sensor.
#A6	#A6	Control signal, rear heated oxygen sensor (HO2S) preheating	U = Ubat	Preheating off: U = U_{bat} Preheating on U=U_{low}	
#A7	#A7	Engine cooling fan (FC) control signal	Pulse width modulation (PWM) signal U_{high} at least 70% of U_{bat} U_{low} =1.2V f = 100 Hz Pulse ratio = 10-95%	-	
#A8	#A8	Control signal, preheating, bank 2, rear heated oxygen sensor (HO2S)	U = Ubat	Preheating off: U=Ubat Preheating on: U=Ulow	Not connected on the XC90
#A9	#A9	Control signal, canister purge (CP) valve	U=U_{bat}		PWM signal during activation of the canister purge (CP) valve
#A10	#A10	Signal (+) rear heated oxygen sensor (HO2S), bank 2	-	-	Not connected on the XC90
#A11	#A11	Signal (-) rear heated oxygen sensor (HO2S), bank 2	-		Not connected on the XC90
#A12	#A12	-	-	-	

#A13	#A13	Control signal, intake camshaft reset valve	-	PWM signal U_{top} $=U_{bat}$ f=250Hz (±12.5 Hz) Pulse ratio 20-95%	The pulse ratio governs control of the camshaft
#A14	#A14	Injector no. 6 control signal	$U=U_{bat}$	t= 2-3 ms	t increases with engine speed (RPM) and load
#A15	#A15	Injector no. 2 control signal	$U=U_{bat}$	t= 2-3 ms	t increases with engine speed (RPM) and load
#A16	#A16	Injector no. 1 control signal	$U=U_{bat}$	t= 2-3 ms	t increases with engine speed (RPM) and load
#A17	#A17	Power supply	$U=U_{bat}$	-	Measured via the system relay
#A18	#A18	Control signal, preheating, bank 1, front heated oxygen sensor (HO2S)	$U=U_{bat}$	Preheating off: U = U_{bat} Preheating on $U=U_{low}$	
#A19	#A19	Signal ground, throttle unit, potentiometers 1 and 2	$U=U_{low}$	-	
#A20	#A20	Throttle unit signal, potentiometer 2 (circuit 2)	Uapprox. 4-0.4 V	-	The voltage varies depending on the position of the throttle. U decreases with increasing throttle opening
#A21	#A21	Exhaust camshaft reset valve control signal	-	Pulse width modulation (PWM) signal U_{top} $=U_{bat}$ f=250 Hz (±12.5 Hz) Pulse ratio 20-95%	The pulse ratio governs control of the camshaft
#A22	#A22	Mass air flow (MAF) sensor signal	U = 1 V	U = 1.7 V	U increases with increasing air mass
#A23	#A23	Boost pressure sensor signal	U = 1.96 V	-	U increases with increasing

					boost pressure
#A24	#A24	Front heated oxygen sensor (HO2S), bank 1, pump current	-	-	Pulsed current supply, not measured
#A25	#A25	Front heated oxygen sensor (HO2S), bank 2, pump current	-	-	Pulsed current supply, not measured
#A26	#A26	Oil pressure switch signal	$U=U_{low}$	$U=U_{bat}$	
#A27	#A27	Signal camshaft position (CMP) sensor 2, exhaust camshaft	U =5 V	U = Pulsed signal U_{top} =5 V Uoffset=2.5V	The frequency varies according to engine speed (RPM)
#A28	#A28	Front heated oxygen sensor (HO2S), bank 1, calibration current	-	-	Not measured
#A29	#A29	Power supply, 5 V camshaft position (CMP) sensor	U =5 V	-	
#A30	#A30	Ignition coil no. 5 control signal	$U=U_{low}$	U=2.5 V t_{high} =2 ms	The frequency varies according to engine speed (RPM)
#A31	#A31	Ignition coil no. 1 control signal	$U=U_{low}$	U=2.5 V t_{high} =2.5 ms	The frequency varies according to engine speed (RPM)
#A32	#A32	Injector no. 4 control signal	$U=U_{bat}$	t_{low} =2-3 ms	t increases with engine speed (RPM) and load
#A33	#A33	Injector no. 3 control signal	$U=U_{bat}$	t_{low} =2-3 ms	t increases with engine speed (RPM) and load
#A34	#A34	Injector no. 5 control signal	$U=U_{bat}$	t_{low} =2-3 ms	t increases with engine speed (RPM) and load
#A35	#A35	Control signal (+) damper motor for the throttle unit	-	Pulse width modulation (PWM) signal U_{top} =U_{bat} Pulse ratio 0-100%. The polarity of the control signal changes when the damper motor is	The damper motor is controlled from the integrated power stage in the engine control module (ECM) measured to terminal #A36 (#A36)

				deployed against the direction of rotation.	
#A36	#A36	Control signal (-) damper motor for the throttle unit	-	Pulse width modulation (PWM) signal U_{top} =U_{bat} Pulse ratio 0-100%. The polarity of the control signal changes when the damper motor is deployed against the direction of rotation.	The damper motor is controlled from the integrated power stage in the engine control module (ECM) measured to terminal #A35 (#A35)
#A37	#A37	Control modules communication cable (CAN H)			
#A38	#A38	Turbocharger (TC) control valve control signal	U=U_{bat}	-	During turbocharger (TC) control: Pulse width modulation (PWM) signal f = 32 Hz
#A39	#A39	Sensor, power supply 5 V	U =5 V		See the relevant wiring diagram for information about connected sensors
#A40	#A40	Oil level sensor, signal	U = Ulow	PWM signal Utop = 5 V Pulse ratio 17-83% T = 120ms Pulse train then a pause of 1.2 seconds. Pulse no. 1= oil temperature. Pulse no. 2= oil level. Pulse no. 3= oil grade. The pulse ratio for each pulse changes depending on the present: - oil	The PWM signal is generated by the oil level sensor

				temperature- oil level - oil quality.	
#A41	#A41	Signal (+), front heated oxygen sensor (HO2S) bank 1	-	-	Pulsed current signal, not measured
#A42	#A42	Signal (-), front heated oxygen sensor (HO2S) bank 1	-	-	Pulsed current signal, not measured
#A43	#A43	Signal (+), front heated oxygen sensor (HO2S) bank 2	-	-	Pulsed current signal, not measured
#A44	#A44	Signal (-), front heated oxygen sensor (HO2S) bank 2	-	-	Pulsed current signal, not measured
#A45	#A45	Signal (+), rear knock sensor (KS)	$U=U_{low}$	-	
#A46	#A46	Signal (+) front knock sensor (KS)	$U=U_{low}$	-	
#A47	#A47	Signal camshaft position (CMP) sensor 1, intake camshaft	U =5 V	U = Pulsed signal U_{top} =5 V U_{offset} =2.5V	The frequency varies according to engine speed (RPM)
#A48	#A48	Signal (+), flywheel sensor	U=2.5 V	U= sine wave voltage U_{top} =5 V U_{offset} =2.5V	Measured to terminal #A66 (#B6) The frequency increases with engine speed (RPM)
#A49	#A49	Ignition coil no. 4 control signal	$U=U_{low}$	U=2.5 V t_{high} =2 ms	The frequency varies according to engine speed (RPM)
#A50	#A50	Ignition coil no. 2 control signal	$U=U_{low}$	U=2.5 V t_{high} =2 ms	The frequency varies according to engine speed (RPM)
#A51	#A51	Ignition coil no. 6 control signal	$U=U_{low}$	U=2.5 V t_{high} =2 ms	The frequency varies according to engine speed (RPM)
#A52	#A52	Ignition coil no. 3 control signal	$U=U_{low}$	U=2.5 V t_{high} =2 ms	The frequency varies according to engine speed (RPM)
#A53	#A53	Power ground 3		-	Ground

			U_{low}		terminal connected to the chassis
#A54	#A54	Power ground 2	U_{low}	-	Ground terminal connected to the chassis
#A55	#A55	Control modules communication cable (CAN L)	-	-	-
#A56	#A56	-	-	-	
#A57	#A57	-	-	-	
#A58	#A58	Signal ground, mass air flow (MAF) sensor	$U=U_{low}$	-	
#A59	#A59	Power supply 5 V throttle unit, potentiometers 1 and 2	U =5 V	-	
#A60	#A60	Sensor, signal ground	$U=U_{low}$	-	See the relevant wiring diagram for information about connected sensors
#B1	#A61	Signal (+), rear heated oxygen sensor (HO2S)	Uapprox.0.50 V	Above 0.6 V or below 0.3 V	
#B2	#A62	Signal (-), rear heated oxygen sensor (HO2S)	$U=U_{low}$	$U=U_{low}$	
#B3	#A63	Signal ground	$U=U_{low}$	-	Ground terminal connected to the chassis
#B4	#A64	Signal (-) front knock sensor (KS)	$U=U_{low}$	$U=U_{low}$	
#B5	#A65	Camshaft position (CMP) sensor signal ground	$U=U_{low}$	-	
#B6	#A66	Signal (-) flywheel sensor	U=2.5 V	U = sine wave voltage U_{top} =5 V U_{offset} =2.5V	Measured to terminal #A48 (#A48) The frequency increases with engine speed (RPM)
#B7	#A67	Signal (-) rear knock sensor (KS)	$U=U_{low}$	-	
#B8	#A68	Air conditioning (A/C) pressure sensor signal	U=0.9 V (at 20° C)	-	U increases with pressure in

					the air conditioning (A/C) system
#B9	#A69	Front heated oxygen sensor (HO2S), bank 2, calibration current	-	-	Not measured
#B10	#A70	Control signal, preheating, bank 2, front heated oxygen sensor (HO2S)	$U=U_{bat}$	Preheating off: $U = U_{bat}$ Preheating on $U=U_{low}$	

CONNECTOR B

Breakout box terminal	Control module terminal	Signal type	Ignition on	Engine idling	Other
#B11	#B1	Control modules communication cable (CAN L)	-	-	-
#B12	#B2	-	-	-	
#B13	#B3	-	-	-	
#B14	#B4	Sensor, signal ground	$U=U_{low}$		See the relevant wiring diagram for information about connected sensors
#B15	#B5	Signal ground, accelerator pedal (AP) position sensor	$U=U_{low}$		
#B16	#B6	-	-	-	
#B17	#B7	Control signal, leak diagnostic unit, pump	Pump motor running: $U=U_{low}$ Pump motor not running: $U = U_{bat}$	-	
#B18	#B8	Signal, coolant level sensor	$U=U_{low}$	Low engine coolant level: $U = U_{bat}$ Normal engine coolant level: $U=U_{low}$	
#B19	#B9	Power supply, 5 V accelerator pedal (AP) position sensor	U =5 V	-	
#B20	#B10	-	-	-	

#B21	#B11	30-supply (Power supply from the battery)	$U=U_{bat}$	$U=U_{bat}$	Ignition off: $U = U_{bat}$
#B22	#B12	-	-	-	
#B23	#B13	Control module communication cable (CAN H)	-	-	-
#B24	#B14	-	-	-	
#B25	#B15	Clutch pedal sensor signal	Unaffected: U=3.3 V Fully depressed: 100 mm U=2.2 V	-	U varies depending on the position of the clutch pedal
#B26	#B16	-	-	-	
#B27	#B17	Signal, accelerator pedal (AP) position sensor	Unaffected: Uapprox. 0.4 V Fully depressed accelerator pedal (AP): Uapprox.4 V	-	U varies depending on the position of the accelerator pedal (AP)
#B28	#B18	-	-	-	
#B29	#B19	-	-	-	
#B30	#B20	-	-	-	
#B31	#B21	-	-	-	
#B32	#B22	Diagnostic lead C-link	U=90% of U_{bat}	-	Other values apply if a generic fault-tracing instrument is connected to the data link connector (DLC)
#B33	#B23	Signal crank, 50-supply	$U=U_{low}$	$U=U_{low}$	At crank: $U = U_{bat}$
#B34	#B24	-	-	-	
#B35	#B25	Signal, accelerator pedal (AP) position sensor	Pulse width modulation (PWM) signal $U_{top} =U_{bat}$ t=5 ms pulse ratio = 8-88%	-	The PWM signal from the accelerator pedal (AP) position sensor to the engine control module (ECM).
#B36	#B26	Stop lamp switch signal	When the brake pedal is depressed: $U = U_{bat}$	-	

			When the brake pedal is not depressed $U=U_{low}$		
#B37	#B27	-	-	-	
#B38	#B28	-	-	-	
#B39	#B29	Signal, outside temperature sensor	(0 °C) U=4.3 V (+20 °C) U=3.5 V (+25 °C) U=3.3 V (+30 °C) U =3.0 V	-	Temperature range: -40 to +30°C
#B40	#B30	-	-	-	
#B41	#B31	-	-	-	
#B42	#B32	-	-	-	
#B43	#B33	-	-	-	
#B44	#B34	Control signal, leak diagnostic unit, heater pad		-	Heating element activated: U = Ulow Heater pad not activated: U = Ubat
#B45	#B35	-	-	-	
#B46	#B36	-	-	-	
#B47	#B37	Signal, ignition on, 15-supply	$U=U_{bat}$	$U=U_{bat}$	Ignition off: $U=U_{low}$
#B48	#B38	System relay, control signal	-	$U=U_{low}$	Relay activated: $U=U_{low}$ Relay not activated: U = U_{bat} The system relay runs on (2-5 minutes)
#B49	#B39	-	-	-	
#B50	#B40	Control signal, leak diagnostic unit, valve	-		Valve activated: U = Ulow Valve not activated: U = Ubat
#B51	#B41	-	-	-	
#B52	#B42	-	-	-	
#B53	#B43	-	-	-	
#B54	#B44	Control signal, air	-	-	Air conditioning

		conditioning (A/C) relay			(A/C) relay activated: $U=U_{low}$ Air conditioning (A/C) relay not activated: $U = U_{bat}$
#B55	#B45	Fuel pump (FP) activation control signal	-	-	PWM signal to the central electronic module (CEM) to control the fuel pump (FP) relay
#B56	#B46	Malfunction indicator lamp (MIL) control signal	$U=U_{low}$	Not activated: $U = U_{bat}$ Activated: $U=U_{low}$	
#B57	#B47	-	-	-	
#B58	#B48	Control signal, engine cooling fan (FC), control modules	-	Not activated: $U = U_{bat}$ Activated: $U=U_{low}$	The engine cooling fan (FC) is controlled by the engine control module (ECM).
#B59	#B49	-	-	-	
#B60	#B50	-	-	-	

SIGNAL SPECIFICATION, ENGINE CONTROL MODULE (ECM) (B6324S; 2007-2010)

SIGNAL SPECIFICATION

All values indicated below are between respective connection in column 1 and #A C2 on the breakout box. If this is not the case, it is indicated within brackets.

Connector A (96-pin) corresponds to terminals #A1 - #B36 on the breakout box.

Connector B (58-pin engine side) corresponds to terminals #C1 - #58 on the breakout box.

NOTE: **Connect the breakout box and check the ground connections before starting to measure.**

CONNECTOR A

Breakout box terminal	Control module terminal	Signal type	Ignition on	Engine idling	Miscellaneous
#A1	#A1	-	-	-	
#A2	#A2	-	-	-	
#A3	#A3	-	-	-	
#A4	#A4	-	-	-	
#A5	#A5	-	-	-	
#A6	#A6	Impulse sensor, signal (-)	$U=U_{low}$		Measured to terminal #A30 (#A30).
#A7	#A7	Intake camshaft position (CMP) sensor, ground	$U=U_{low}$	$U=U_{low}$	
#A8	#A8	Exhaust camshaft position (CMP) sensor, ground	$U=U_{low}$	$U=U_{low}$	
#A9	#A9	Front heated oxygen sensor (HO2S), bank 1, signal (+)	-	lambda = 1 when current is 0 mA	Measurement range: 0 ± 12 mA. Negative current indicates a rich fuel/air mixture.
#A10	#A10	Front heated oxygen sensor (HO2S), bank 1, signal (-)	-	lambda = 1 when current is 0 mA	Measurement range: 0 ± 12 mA. Negative current indicates a rich fuel/air mixture.
#A11	#A11	Intake camshaft position (CMP) sensor, supply voltage	U=5 V	U=5 V	
#A12	#A12	Exhaust camshaft position (CMP) sensor, supply voltage	U=5 V	U=5 V	
#A13	#A13	Engine coolant temperature (ECT) sensor, signal	(+30 °C) U=1.22 V (+80 °C) U=0.29 V (+100 °C) U=0.17 V	(+30 °C) U=1.22 V (+80 °C) U=0.29 V (+100 °C) U=0.17 V	U drops with increased engine coolant temperature.
#A14	#A14	Mass air flow (MAF) sensor, signal ground	$U=U_{low}$	$U=U_{low}$	
#A15	#A15				
#A16	#A16				
#A17	#A17	Electronic throttle module (ETA),	$U=U_{low}$	$U=U_{low}$	

		ground			
#A18	#A18	Rear heated oxygen sensor (HO2S), bank 1, signal (-).			
#A19	#A19	Knock sensor (KS) bank 1, signal (-)	$U=U_{low}$		
#A20	#A20	Knock sensor (KS) bank 2, signal (-)	$U=U_{low}$		
#A21	#A21	Fuel temperature/fuel pressure sensor, ground	$U=U_{low}$	$U=U_{low}$	
#A22	#A22	Mass air flow (MAF) sensor, signal ground	$U=U_{low}$	$U=U_{low}$	
#A23	#A23	Manifold absolute pressure (MAP) sensor, ground	$U=U_{low}$	$U=U_{low}$	
#A24	#A24	Manifold absolute pressure (MAP) sensor, supply voltage	U=5 V		
#A25	#A25				
#A26	#A26				
#A27	#A27				
#A28	#A28				
#A29	#A29				
#A30	#A30	Impulse sensor, signal (+)	$U=U_{low}$	U=sinus voltage Uapprox.1.7 to 1.9 V	Measured to terminal #A6 (#A6). The voltage increases with increased engine speed (rpm).
#A31	#A31	Front heated oxygen sensor (HO2S), bank 2, signal (+)	-	lambda = when current is 0 mA	Measurement range: 0 ± 12 mA. Negative current indicates a rich fuel/air mixture.
#A32	#A32	Front heated oxygen sensor (HO2S), bank 2, signal (-)	-	lambda = when current is 0 mA	Measurement range: 0 ± 12 mA. Negative current indicates a rich fuel/air mixture.
#A33	#A33	Exhaust camshaft position (CMP) sensor, signal	U = 5 V or U_{low}	U= Pulsed signal $U_{max.}$ >4.5 V $U_{min.}$ <1 V	Measure against #A8 (#A8). The frequency varies with engine rpm. Measure with

					advanced measuring tool.
#A34	#A34	Intake camshaft position (CMP) sensor, signal	U = 5 V or U_{low}	U= Pulsed signal $U_{max.}$ >4.5 V $U_{min.}$ <1 V	Measure against #A7 (#A7). The frequency varies with engine rpm. Measure with advanced measuring tool.
#A35	#A35	-	-	-	
#A36	#A36	-	-	-	
#A37	#A37	-	-	-	
#A38	#A38	Actuator variable intake upper, control signal	-	-	
#A39	#A39	Actuator variable intake lower, control signal	-	-	
#A40	#A40	Rear heated oxygen sensor (HO2S), bank 1, signal (+)	-	lambda = 1 at approx. 700 mV lambda >1 at approx. 200 mV	
#A41	#A41	Rear heated oxygen sensor (HO2S), bank 2, signal (+)	-	lambda = 1 at approx. 700 mV lambda >1 at approx. 200 mV	
#A42	#A42	Knock sensor (KS) bank 1, signal (+)	U=2.5 V		Measured to terminal #A19 (#A19).
#A43	#A43	Knock sensor (KS) bank 2, signal (+)	U=2.5 V		Measured to terminal #A20 (#A20).
#A44	#A44	-			
#A45	#A45	Rear heated oxygen sensor (HO2S) bank 2, ground	U = Ulow	U = Ulow	
#A46	#A46	Fuel temperature sensor, signal			Measurement range: -40 to +130 °C.
#A47	#A47	Fuel temperature/fuel pressure sensor, supply voltage	U=5 V		
#A48	#A48	Electronic throttle module (ETA), voltage feed	U=5 V	U=5 V	
#A49	#A49				

#A50	#A50	-			
#A51	#A51	-			
#A52	#A52	-			
#A53	#A53	-			
#A54	#A54				
#A55	#A55				
#A56	#A56	Ignition coil cyl 4, control signal	$U=U_{low}$	U_{top} = 12 V pulse ratio 30% f=240 Hz	Pulse ratio and frequency increases with increased engine speed (rpm)
#A57	#A57	Ignition coil cyl 2, control signal	$U=U_{low}$	U_{top} = 12 V pulse ratio 30% f=240 Hz	Pulse ratio and frequency increases with increased engine speed (rpm)
#A58	#A58	Ignition coil cyl 6, control signal	$U=U_{low}$	U_{top} = 12 V pulse ratio 30% f=240 Hz	Pulse ratio and frequency increases with increased engine speed (rpm)
#A59	#A59	Ignition coil cyl 3, control signal	$U=U_{low}$	U_{top} = 12 V pulse ratio 30% f=240 Hz	Pulse ratio and frequency increases with increased engine speed (rpm)
#A60	#A60	Ignition coil cyl 5, control signal	$U=U_{low}$	U_{top} = 12 V pulse ratio 30% f=240 Hz	Pulse ratio and frequency increases with increased engine speed (rpm)
#B1	#A61	Ignition coil cyl 1, control signal	$U=U_{low}$	U_{top} = 12 V pulse ratio 30% f=240 Hz	Pulse ratio and frequency increases with increased engine speed (rpm)
#B2	#A62	Misfire signal			Pulse width modulation (PWM) signal, for ignition coil cyl. 1, 4, 6 and 7
#B3	#A63	Oil level and oil temperature sensor, signal			Pulse width modulation (PWM) signal
#B4	#A64				
#B5	#A65	Electronic throttle module (ETA), throttle position sensor circuit 1, signal	Unaffected: Uapprox.0.8 V Fully depressed accelerator pedal: Uapprox.4 V		Voltage varies depending on the position of the throttle. Voltage increases with increased throttle

					opening.
#B6	#A66	Intake air temperature (IAT) sensor signal	(+20 °C) U=3.50 V (+30 °C) U=3.00 V (+40 °C) U=2.50 V	(+20 °C) U=3.50 V (+30 °C) U=3.00 V (+40 °C) U=2.50 V	The intake air temperature (IAT) sensor is integrated in the mass air flow (MAF) sensor.
#B7	#A67	Electronic throttle module (ETA), throttle position sensor circuit 2, signal	Unaffected: Uapprox.1.7 V Fully depressed accelerator pedal: Uapprox.4.1 V		Voltage varies depending on the position of the throttle. Voltage increases with increased throttle opening.
#B8	#A68	Engine coolant temperature (ECT) sensor, signal	(+30 °C) U=1.22 V (+80 °C) U=0.29 V (+100 °C) U=0.17 V	(+30 °C) U=1.22 V (+80 °C) U=0.29 V (+100 °C) U=0.17 V	U drops with increased engine coolant temperature.
#B9	#A69	Manifold absolute pressure (MAP) sensor, signal	Uapprox.3.7 V at 1000 mbar		
#B10	#A70	Mass air flow (MAF) sensor, signal	Uapprox.0.6 V	Uapprox.1.4 V	U increases with increasing air mass
#B11	#A71	fuel pressure sensor, signal			
#B12	#A72				
#B13	#A73	Power supply from the system relay	$U = U_{bat}$	$U = U_{bat}$	
#B14	#A74	Electronic Throttle Module (ETA) engine, control signal (-)	Idle = -1.5 Wide open throttle (WOT) 2	Pulse width modulation (PWM) signal. $U_{top} = U_{bat}$ Pulse ratio 0-100% The polarity of the control signal switches when the damper motor is to be deployed in the opposite direction.	The damper motor is controlled using a pulse width modulation (PWM) signal from the integrated power stage in the engine control module (ECM) measured to terminal #A75.
#B15	#A75	Electronic Throttle Module (ETA)	Idle = -1.5 Wide open throttle	Pulse width modulation	The damper motor is controlled using a

		engine, control signal (+)	(WOT) 2	(PWM) signal. U_{top} =U_{bat} Pulse ratio 0-100% The polarity of the control signal switches when the damper motor is to be deployed in the opposite direction.	pulse width modulation (PWM) signal from the integrated power stage in the engine control module (ECM) measured to terminal #A74.
#B16	#A76	Front heated oxygen sensor (HO2S) bank 1 preheating, control signal		U_{top} = 12 V pulse ratio 30 - 60 % f=8 Hz	Pulsed 12 V-signal.
#B17	#A77	Front heated oxygen sensor (HO2S) bank 2 preheating, control signal		U_{top} = 12 V pulse ratio 30 - 60 % f=8 Hz	Pulsed 12 V-signal.
#B18	#A78	Injector 1, control signal	U = U_{bat}	t = 2-3 ms	t increases with engine speed and load
#B19	#A79	Injector 5, control signal	U = U_{bat}	t = 2-3 ms	t increases with engine speed and load
#B20	#A80	Injector 3, control signal	U = U_{bat}	t = 2-3 ms	t increases with engine speed and load
#B21	#A81	Injector 6, control signal	U = U_{bat}	t = 2-3 ms	t increases with engine speed and load
#B22	#A82	Injector 2, control signal	U = U_{bat}	t = 2-3 ms	t increases with engine speed and load
#B23	#A83	Injector 4, control signal	U = U_{bat}	t = 2-3 ms	t increases with engine speed and load
#B24	#A84	Evaporative emission system (EVAP) valve, control signal (signal ground)	U = U_{bat}		Pulse width modulation (PWM) signal during opening (control) of the evaporative emission system (EVAP) valve. The pulse ratio varies

					with regulating.
#B25	#A85	Variable A/C compressor, control signal		U_{top} = 12 V pulse ratio 30 - 75 % f=400 Hz	Pulsed 12 V-signal.
#B26	#A86	Reset valve camshaft intake (VVT), control signal	-	Pulse width modulation (PWM) signal U_{top} =U_{bat} f=300 Hz Pulse ratio 5%	The pulse ratio varies during regulation.
#B27	#A87				
#B28	#A88	Rear heated oxygen sensor preheating bank 1, control signal	-	U_{top} = 12 V pulse ratio 30 - 60 %	
#B29	#A89	Rear heated oxygen sensor preheating bank 2, control signal	-	U_{top} = 12 V pulse ratio 30 - 60 %	
#B30	#A90	Cam profile solenoid 1, control signal			
#B31	#A91	Cam profile solenoid 2, control signal			
#B32	#A92	LIN signal, generator			
#B33	#A93	-			
#B34	#A94	-			
#B35	#A95				
#B36	#A96	-			

CONNECTOR B

Breakout box terminal	Terminal Control module	Signal type	Ignition on	Engine idling	Miscellaneous
#C1	#B1				
#C2	#B2	Power ground	U=U_{low}		Ground terminal connected to chassis.
#C3	#B3	Power supply from the system relay	U = U_{bat}	U = U_{bat}	
#C4	#B4	Power ground	U = U_{bat}		Ground terminal connected to chassis.
#C5	#B5	Power supply from the system relay	U=U_{bat}	U = U_{bat}	
#C6	#B6	Power ground	U = U_{bat}		Ground terminal connected to chassis.
#C7	#B7	-	-	-	-

#C8	#B8	Engine cooling fan control module, control signal			Pulse width modulation (PWM) signal to engine cooling fan (FC) control module
#C9	#B9	Start relay, signal (-)			
#C10	#B10	Air conditioning (A/C) relay, control signal (signal ground)	-	-	
#C11	#B11	Starter relay, control signal (+)			
#C12	#B12	Engine coolant level sensor, signal			
#C13	#B13	Automatic: transmission control module (TCM), gear position signal. Manual: clutch pedal switch	With P/N connected: $U=U_{low}$ With P/N disconnected $U=U_{bat}$		Grounded in the transmission control module (TCM) when in P/N.
#C14	#B14	Power supply (wake up, 15-feed	$U = U_{bat}$	$U = U_{bat}$	
#C15	#B15	Start, signal 50-feed	$U = U_{bat}$	$U = U_{bat}$	Ignition off: $U=U_{low}$
#C16	#B16	Supply from B+			
#C17	#B17				
#C18	#B18	-	-	-	-
#C19	#B19			-	
#C20	#B20				
#C21	#B21	Fuel pump (FP) control module, control signal	-	-	Pulse width modulated (PWM) signal to the central electronic module (CEM) to control the fuel pump (FP) relay.
#C22	#B22	-	-	-	-
#C23	#B23	Leak diagnosis fuel pump, control signal	-	-	The pump activated: $U=U_{low}$ The pump not activated: $U=U_{bat}$ Certain markets only.
#C24	#B24	Warning lamp engine	-		-
#C25	#B25	-	-	-	-

#C26	#B26				
#C27	#B27	System relay, control signal		$U=U_{low}$	Engine control module (ECM) grounds with ignition on and releases after afterrun.
#C28	#B28				
#C29	#B29				
#C30	#B30	Brake light switch			
#C31	#B31	A/C high pressure sensor, power supply	U=5 V	-	-
#C32	#B32	Accelerator pedal (AP) position sensor, power supply	-	U=5 V	-
#C33	#B33				
#C34	#B34	Outside temperature sensor, ground	$U=U_{low}$	-	-
#C35	#B35	Outside temperature sensor, Signal	(0 °C) U=2.92 V (+10 °C) U=2.40 V (+20 °C) U=1.90 V (+30 °C) U =1.46 V		Temperature range: -40 to +30 °C ref: 2.87 V at 21 °C
#C36	#B36	-	-	-	-
#C37	#B37	-	-	-	-
#C38	#B38	-	-	-	-
#C39	#B39	-	-	-	-
#C40	#B40	-	-	-	-
#C41	#B41	Control modules communication cable (CAN L)			
#C42	#B42	-	-	-	-
#C43	#B43	-	-	-	-
#C44	#B44	-	-	-	-
#C45	#B45	Leak diagnostic unit, preheating, control signal			Heating element activated: $U=U_{low}$ Heating element not activated: $U=U_{bat}$ Certain markets only.
#C46	#B46	Leak diagnostic unit, valve, control signal			Valve activated: $U=U_{low}$ Valve not activated:

					$U=U_{bat}$ Certain markets only.
#C47	#B47	Accelerator pedal position sensor, ground	-	-	-
#C48	#B48	Accelerator pedal (AP) position sensor, signal			
#C49	#B49				
#C50	#B50	-	-	-	-
#C51	#B51	A/C high pressure sensor, signal		U=1.4 V	The voltage increases with increased pressure.
#C52	#B52	-	-	-	-
#C53	#B53	A/C high pressure sensor, ground	$U=U_{low}$		
#C54	#B54	Communication cable control module (CAN H)			
#C55	#B55	-		-	-
#C56	#B56	-	-		-
#C57	#B57	-	-	-	-
#C58	#B58				

SIGNAL SPECIFICATION, ENGINE CONTROL MODULE (ECM) (B6324S5; 2011-2012)

SIGNAL SPECIFICATION

see **SIGNAL SPECIFICATION**

SIGNAL SPECIFICATION, ENGINE CONTROL MODULE (ECM) (B8444S; 2005-2011)

SIGNAL SPECIFICATION, ENGINE CONTROL MODULE (ECM)

All values indicated below are between respective connection in column 1 and #A C2 on the breakout box. If this is not the case, it is indicated within brackets.

Connector A (96-pin) corresponds to terminals #A1 - #B36 on the breakout box.

Connector B (58-pin engine side) corresponds to terminals #C1 - #58 on the breakout box.

NOTE: **Connect the breakout box and check the ground connections before starting to measure.**

CONNECTOR A

Breakout box terminal	Control module terminal	Signal type	Ignition on	Engine idling	Miscellaneous
#A1	#A1	-	-	-	
#A2	#A2	-	-	-	
#A3	#A3	-	-	-	
#A4	#A4	-	-	-	
#A5	#A5	-	-	-	
#A6	#A6	Impulse sensor, signal (-)	$U=U_{low}$		Measured to terminal #A30 (#A30).
#A7	#A7	Camshaft sensor intake/exhaust bank 1/2, ground	$U=U_{low}$	$U=U_{low}$	
#A8	#A8	-	-	-	
#A9	#A9	-	-	-	
#A10	#A10	Signal ground, intake air temperature (IAT) sensor	$U=U_{low}$	$U=U_{low}$	The intake air temperature (IAT) sensor is integrated in the mass air flow (MAF) sensor.
#A11	#A11	Electronic throttle module (ETA), ground	$U=U_{low}$	$U=U_{low}$	
#A12	#A12	Engine coolant temperature (ECT) sensor, ground	$U=U_{low}$	$U=U_{low}$	
#A13	#A13	-			
#A14	#A14	Fuel temperature/fuel pressure sensor, ground	$U=U_{low}$	$U=U_{low}$	
#A15	#A15	Manifold absolute pressure (MAP) sensor, ground	$U=U_{low}$	$U=U_{low}$	
#A16	#A16	Oil pressure sensor	$U = U_{bat}$ Oil pressure warning lamp illuminates.	$U=U_{low}$	1.2 kohms to B+
#A17	#A17	Oil quality sensor, signal ground	$U=U_{low}$	$U=U_{low}$	

#A18	#A18	Mass air flow (MAF) sensor, signal ground	$U=U_{low}$	$U=U_{low}$	
#A19	#A19	Knock sensor (KS) bank 2, signal (-)	$U=U_{low}$		
#A20	#A20	Knock sensor (KS) bank 1, signal (-)	$U=U_{low}$		
#A21	#A21	-			
#A22	#A22	Rear heated oxygen sensor (HO2S) bank 2, ground	$U=U_{low}$	$U=U_{low}$	
#A23	#A23	-	-	-	
#A24	#A24	Electronic throttle module (ETA), voltage feed	U =5 V		
#A25	#A25	LIN A (Local interconnect network), alternator control module (ACM)	U=8 V	U=9 V	The voltage increases with increased alternator load
#A26	#A26	Front heated oxygen sensor (HO2S), bank 1, signal (+)	-	lambda=1 when current is 0 mA	Measurement range 0 ± 12mA. Negative current means rich fuel/air mixture
#A27	#A27	Front heated oxygen sensor (HO2S), bank 1, signal (-)	-	lambda=1 when current is 0 mA	Measurement range 0 ± 12mA. Negative current means rich fuel/air mixture
#A28	#A28	Front heated oxygen sensor (HO2S), bank 2, signal (+)	-	lambda=1 when current is 0 mA	Measurement range 0 ± 12mA. Negative current means rich fuel/air mixture
#A29	#A29	Front heated oxygen sensor (HO2S), bank 2, signal (-)	-	lambda=1 when current is 0 mA	Measurement range 0 ± 12mA. Negative current means rich fuel/air mixture
#A30	#A30	Impulse sensor, signal (+)	$U=U_{low}$	U = sine wave voltage Uapprox.1.7 to 1.9 V	Measured to terminal #A6 (#A6). The voltage increases with increased engine speed (RPM)
#A31	#A31	Camshaft position sensor exhaust bank 1, signal	U = 5 V or U_{low}	U= Pulsed signal $U_{max.}$ >4.5 V $U_{min.}$ <1 V	Measure against #A7 (#A7). The frequency varies with engine rpm. Measure with

					advanced measuring tool.
#A32	#A32	Camshaft position sensor exhaust bank 2, signal	U = 5 V or U_{low}	U= Pulsed signal $U_{max.}$ >4.5 V $U_{min.}$ <1 V	Measure against #A7 (#A7). The frequency varies with engine rpm. Measure with advanced measuring tool.
#A33	#A33	Camshaft position sensor intake bank 1, signal	U = 5 V or U_{low}	U= Pulsed signal $U_{max.}$ >4.5 V $U_{min.}$ <1 V	Measure against #A7 (#A7). The frequency varies with engine rpm. Measure with advanced measuring tool.
#A34	#A34	Camshaft position sensor intake bank 2, signal	U = 5 V or U_{low}	U= Pulsed signal $U_{max.}$ >4.5 V $U_{min.}$ <1 V	Measure against #A7 (#A7). The frequency varies with engine rpm. Measure with advanced measuring tool.
#A35	#A35	-	-	-	
#A36	#A36	-	-	-	
#A37	#A37	-	-	-	
#A38	#A38	-	-	-	
#A39	#A39	-	-	-	
#A40	#A40	Rear heated oxygen sensor (HO2S), bank 2, signal (+)	-	lambda=1 at approx. 700 mV lambda >1 at approx. 200 mV	
#A41	#A41	Rear heated oxygen sensor (HO2S), bank 1, signal (+)	-	lambda=1 at approx. 700 mV lambda >1 at approx. 200 mV	
#A42	#A42	Knock sensor (KS) bank 2, signal (+)	U=2.5 V		Measured to terminal #A19 (#A19).
#A43	#A43	Knock sensor (KS) bank 1, signal (+)	U=2.5 V		Measured to terminal #A20 (#A20).
#A44	#A44	-			
#A45	#A45	Rear heated oxygen sensor (HO2S), bank 1, signal (-)	-	-	

#A46	#A46	Fuel temperature sensor, signal			Measurement range: -40 to +130 °C.
#A47	#A47	Fuel temperature/fuel pressure sensor, supply voltage	U =5 V		
#A48	#A48	Manifold absolute pressure (MAP) sensor, supply voltage	U =5 V		
#A49	#A49	Variable A/C compressor, control signal		U_{top} =12 V pulse ratio 30-75% f=400 Hz	Pulsed 12 V-signal.
#A50	#A50	-			
#A51	#A51	-			
#A52	#A52	-			
#A53	#A53	-			
#A54	#A54	Ignition coil cyl 7, control signal	$U=U_{low}$	U_{top} =12 V pulse ratio 30% f=240 Hz	Pulse ratio and frequency increases with increased engine speed (RPM)
#A55	#A55	Ignition coil cyl 8, control signal	$U=U_{low}$	U_{top} =12 V pulse ratio 30% f=240 Hz	Pulse ratio and frequency increases with increased engine speed (RPM)
#A56	#A56	Ignition coil cyl 5, control signal	$U=U_{low}$	U_{top} =12 V pulse ratio 30% f=240 Hz	Pulse ratio and frequency increases with increased engine speed (RPM)
#A57	#A57	Ignition coil cyl 6, control signal	$U=U_{low}$	U_{top} =12 V pulse ratio 30% f=240 Hz	Pulse ratio and frequency increases with increased engine speed (RPM)
#A58	#A58	Ignition coil cyl 3, control signal	$U=U_{low}$	U_{top} =12 V pulse ratio 30% f=240 Hz	Pulse ratio and frequency increases with increased engine speed (RPM)
#A59	#A59	Ignition coil cyl 4, control signal	$U=U_{low}$	U_{top} =12 V pulse ratio 30% f=240 Hz	Pulse ratio and frequency increases with increased engine speed (RPM)

#A60	#A60	Ignition coil cyl 1, control signal	$U=U_{low}$	U_{top} =12 V pulse ratio 30% f=240 Hz	Pulse ratio and frequency increases with increased engine speed (RPM)
#B1	#A61	Ignition coil cyl 2, control signal	$U=U_{low}$	U_{top} =12 V pulse ratio 30% f=240 Hz	Pulse ratio and frequency increases with increased engine speed (RPM)
#B2	#A62	Misfire signal 1			Pulse width modulation (PWM) signal, for ignition coil cyl. 2, 3, 5 and 8
#B3	#A63	Oil quality sensor, signal			Pulse width modulation (PWM) signal
#B4	#A64	Misfire signal 2			Pulse width modulation (PWM) signal, for ignition coil cyl. 1, 4, 6 and 7
#B5	#A65	Electronic throttle module (ETA), throttle position sensor circuit 1, signal	Unaffected: Uapprox.0.8 V Fully depressed accelerator pedal: Uapprox.4 V		Voltage varies depending on the position of the throttle. Voltage increases with increased throttle opening.
#B6	#A66	Intake air temperature (IAT) sensor signal	(+20 °C) U=3.50 V (+30 °C) U=3.00 V (+40 °C) U=2.50 V	(+20 °C) U=3.50 V (+30 °C) U=3.00 V (+40 °C) U=2.50 V	Intake air temperature (IAT) sensor signal integrated in the mass air flow (MAF) sensor.
#B7	#A67	Electronic throttle module (ETA), throttle position sensor circuit 2, signal	Unaffected: Uapprox.1.7 V Fully depressed accelerator pedal: Uapprox.4.1 V		Voltage varies depending on the position of the throttle. Voltage increases with increased throttle opening.
#B8	#A68	Engine coolant temperature (ECT) sensor, signal	(+30 °C) U=1.22 V (+80 °C) U=0.29 V	(+30 °C) U=1.22 V (+80 °C) U=0.29 V	U drops with increased engine coolant temperature.

			(+100 °C) U=0.17 V	(+100 °C) U=0.17 V	
#B9	#A69	Manifold absolute pressure (MAP) sensor, signal	Uapprox.3.7 V at 1000 mbar		
#B10	#A70	Mass air flow (MAF) sensor, signal	Uapprox.0.6 V	Uapprox.1.4 V	U increases with increasing air mass
#B11	#A71	Fuel pressure sensor signal			
#B12	#A72	Camshaft sensor, supply voltage	U =5 V		CAM5
#B13	#A73	-			
#B14	#A74	Electronic Throttle Module (ETA) engine, control signal (-)	Idle = -1.5 Wide open throttle (WOT) 2	Pulse width modulation (PWM) signal. U_{top} =U_{bat} Pulse ratio 0-100% The polarity of the control signal switches when the damper motor is to be deployed in the opposite direction.	The damper motor is controlled using a pulse width modulation (PWM) signal from the integrated power stage in the engine control module (ECM) measured to terminal #A75.
#B15	#A75	Electronic Throttle Module (ETA) engine, control signal (+)	Idle = -1.5 Wide open throttle (WOT) 2	Pulse width modulation (PWM) signal. U_{top} =U_{bat} Pulse ratio 0-100% The polarity of the control signal switches when the damper motor is to be deployed in the opposite direction.	The damper motor is controlled using a pulse width modulation (PWM) signal from the integrated power stage in the engine control module (ECM) measured to terminal #A74.
#B16	#A76	Front heated oxygen sensor (HO2S) bank 2 preheating, control signal		U_{top} =12 V pulse ratio 30-60% f=8 Hz	Pulsed 12 V-signal.
#B17	#A77	Front heated oxygen sensor (HO2S) bank 1		U_{top} =12 V	Pulsed 12 V-signal.

		preheating, control signal		pulse ratio 30-60% f=8 Hz	
#B18	#A78	Injector 2, control signal	U = U_{bat}	t = 2-3 ms	t increases with engine speed and load
#B19	#A79	Injector 1, control signal	U = U_{bat}	t = 2-3 ms	t increases with engine speed and load
#B20	#A80	Injector 4, control signal	U = U_{bat}	t = 2-3 ms	t increases with engine speed and load
#B21	#A81	Injector 3, control signal	U = U_{bat}	t = 2-3 ms	t increases with engine speed and load
#B22	#A82	Injector 6, control signal	U = U_{bat}	t = 2-3 ms	t increases with engine speed and load
#B23	#A83	Injector 5, control signal	U = U_{bat}	t = 2-3 ms	t increases with engine speed and load
#B24	#A84	Injector 8, control signal	U = U_{bat}	t = 2-3 ms	t increases with engine speed and load
#B25	#A85	Injector 7, control signal	U = U_{bat}	t = 2-3 ms	t increases with engine speed and load
#B26	#A86	Reset valve camshaft inlet (VVT) bank 2, control signal	-	Pulse width modulation (PWM) signal U_{top} =U_{bat} f=300 Hz Pulse ratio 5%	The pulse ratio varies with regulating
#B27	#A87	Reset valve camshaft inlet (VVT) bank 1, control signal	-	Pulse width modulation (PWM) signal U_{top} =U_{bat} f=300 Hz Pulse ratio 5%	The pulse ratio varies with regulating
#B28	#A88	Rear heated oxygen sensor preheating bank 2, control signal	-	U_{top} =12 V pulse ratio 30-60%	
#B29	#A89	Rear heated oxygen sensor preheating bank 1, control signal	-	U_{top} =12 V pulse ratio 30-60%	

#B30	#A90	Reset valve camshaft exhaust (VVT) bank 2, control signal	-	Pulse width modulation (PWM) signal U_{top} =U_{bat} f=300 Hz Pulse ratio 5%	The pulse ratio varies with regulating
#B31	#A91	Reset valve camshaft exhaust (VVT) bank 1, control signal	-	Pulse width modulation (PWM) signal U_{top} =U_{bat} f=300 Hz Pulse ratio 5%	The pulse ratio varies with regulating
#B32	#A92	Evaporative emission system (EVAP) valve, control signal (signal ground)	U = U_{bat}		Pulse width modulation (PWM) signal during opening (control) of the evaporative emission system (EVAP) valve. The pulse ratio varies with regulating.
#B33	#A93	-			
#B34	#A94	-			
#B35	#A95	Valve variable inlet, control signal			
#B36	#A96	-			

CONNECTOR B

Breakout box terminal	Control module terminal	Signal type	Ignition on	Engine idling	Miscellaneous
#C1	#B1	Signal ground	U=U_{low}		Ground terminal connected to chassis
#C2	#B2	Power ground	U=U_{low}		Ground terminal connected to chassis
#C3	#B3	Power ground	U=U_{low}		Ground terminal connected to chassis
#C4	#B4	Voltage supply from system relay	U = U_{bat}		
#C5	#B5	Power ground	U=U_{low}		Ground terminal connected to chassis
#C6	#B6	Voltage supply from system relay	U = U_{bat}		
#C7	#B7	Accelerator pedal			

		(AP) position sensor, signal ground	$U=U_{low}$		
#C8	#B8	A/C linear pressure sensor, ground	$U=U_{low}$		
#C9	#B9	Outside temperature sensor, ground	$U=U_{low}$		
#C10	#B10	-	-	-	
#C11	#B11	Starter relay, control signal (+)			
#C12	#B12	A/C linear pressure sensor, signal		U=1.4 V	The voltage increases with increased pressure.
#C13	#B13	-	-	-	-
#C14	#B14	-	-	-	-
#C15	#B15	Transmission control module (TCM), signal gear position	With P/N connected: $U=U_{low}$ With P/N disconnected $U=U_{bat}$		Grounded in the transmission control module (TCM) when in P/N.
#C16	#B16	System relay, control signal		$U=U_{low}$	Engine control module (ECM) grounds with ignition on and releases after run on
#C17	#B17	Start, signal 50-supply		$U=U_{bat}$ at crank	The engine control module (ECM) requests engine starting via the central electronic module (CEM).
#C18	#B18	-	-	-	
#C19	#B19	Air conditioning (A/C) line pressure sensor, voltage supply	U =5 V	-	
#C20	#B20	Fuel pump activation, control signal	-	-	Pulse width modulated (PWM) signal to the central electronic module (CEM) to control the fuel pump (FP) relay.
#C21	#B21	-	-	-	-
#C22	#B22	-	-	-	-
#C23	#B23	Leak diagnostic unit,			Heating element

		preheating, control signal			activated: $U=U_{low}$ Heating element not activated: $U=U_{bat}$ Certain markets only.
#C24	#B24	Accelerator pedal (AP) position sensor, signal	Unaffected: Uapprox.0.4 V Fully depressed accelerator pedal: Uapprox.4.4 V		U varies depending on the position of the accelerator pedal
#C25	#B25	-	-	-	-
#C26	#B26	-	-	-	-
#C27	#B27	Voltage supply (wake up, 15-feed	$U = U_{bat}$	$U = U_{bat}$	
#C28	#B28	Accelerator pedal (AP) position sensor, pulse width modulation (PWM) signal	PWM signal $U_{top} =U_{bat}$ t=5 ms pulse ratio 8 - 88 %	PWM signal $U_{top} =U_{bat}$ t=5 ms pulse ratio 6 - 14 %	Pulse width modulation (PWM) signal from the accelerator pedal (AP) position sensor to the engine control module (ECM). The pulse ratio increases when the accelerator pedal (AP) is depressed.
#C29	#B29	Outside temperature sensor, Signal	(0 °C) U=2.92 V (+10 °C) U=2.40V (+20 °C) U=1.90 V (+30 °C) U =1.46 V		Temperature range: -40 to +30 °C. ref: 2.87 V at 21 °C
#C30	#B30	Signal ignition on, 15-supply	$U = U_{bat}$	$U = U_{bat}$	Ignition off: $U=U_{low}$
#C31	#B31	-	-	-	-
#C32	#B32	Accelerator pedal position sensor, voltage supply	U =5 V		
#C33	#B33	Leak diagnostic unit pump motor, voltage supply	Pump motor running: $U=U_{low}$ Pump motor not running: $U=U_{bat}$		Certain markets only.
#C34	#B34	-	-	-	-
#C35	#B35	-	-	-	-

#C36	#B36	-	-	-	-
#C37	#B37	-	-	-	-
#C38	#B38	-	-	-	-
#C39	#B39	-	-	-	-
#C40	#B40	-	-	-	-
#C41	#B41	Stop lamp switch, signal	When brake pedal is actuated: $U=U_{bat}$ When brake pedal is not actuated: $U=U_{low}$		Signal via the central electronic module (CEM).
#C42	#B42	-	-	-	-
#C43	#B43	Engine coolant level sensor, signal	$U=U_{low}$	Low coolant level: $U=U_{bat}$ Normal coolant level: $U=U_{low}$	
#C44	#B44	-	-	-	-
#C45	#B45	Communication lead, control modules (CAN L)			
#C46	#B46	-	-	-	-
#C47	#B47	-	-	-	-
#C48	#B48	Leak diagnostic unit valve, control signal			Valve activated: $U=U_{low}$ Valve not activated: $U=U_{bat}$ Certain markets only.
#C49	#B49	Cooling fan control module, control signal			Pulse width modulation (PWM) signal to engine cooling fan (FC) control module
#C50	#B50	-	-	-	-
#C51	#B51	Start relay, signal (-)			
#C52	#B52	-	-	-	-
#C53	#B53	Air conditioning (A/C) relay, control signal (signal ground)			
#C54	#B54	Voltage supply engine control module (ECM), 30 supply	$U = U_{bat}$	$U = U_{bat}$	

#C55	#B55	Malfunction indicator lamp (MIL), control signal	$U=U_{low}$	Not activated: $U=U_{low}$ Activated: $U=U_{bat}$	Directly connected to the driver information module (DIM)
#C56	#B56	-	-		-
#C57	#B57	-	-	-	-
#C58	#B58	Communication cable control module (CAN H)			

SIGNAL SPECIFICATIONS, ENGINE CONTROL MODULE (ECM) (B6294T; 2003-2004)

SIGNAL SPECIFICATION

General

All values listed below should be measured between the respective terminal in column 1 (control module terminal) and terminal #B3 unless stated otherwise in column 6 (Other). Control module terminals #A1-#A70 correspond to terminals #A1-#B10 on the breakout box, terminals #B1-#B50 correspond to #B11 - #B60 on the breakout box.

NOTE: **It is important to connect the breakout box and check the ground terminals before taking readings.**

HINT: If the numbering of the connector is different from the numbering on the breakout box, the connector number is given first, terminal #A61, followed by the breakout box number in brackets, (#B1). Example: #A61 (#B1).

U=	DC voltage in volts (V)	U_{AC} =	AC voltage in volts (V)
U_{bat} =	Battery voltage (V)	f =	Frequency in Hertz (Hz)
U_{low} =	Voltage approximately 0 V	% duty =	Duty cycle (pulse ratio) as a percentage (%)
t =	Time in milliseconds (ms)	I =	Current in amperes (A)

Control module terminal	Breakout box terminal	Signal type	Ignition on	Engine idling	Other
#A1	#A1	Throttle unit signal, potentiometer 1 (circuit 1)	U approx. 0.4 -4 V	-	The voltage varies depending on the position of the throttle. U increases with

					throttle opening.
#A2	#A2	-	-	-	
#A3	#A3	-	-	-	
#A4	#A4	Engine coolant temperature (ECT) sensor signal	-	(+30°C) U=1.22 V (+80°C) U = 0.29 V (+100°C) U = 0.17 V	
#A5	#A5	Intake air temperature (IAT) sensor signal	-	(+20°C) U = 3.50 V (+30°C) U = 3.00 V (+40°C) U = 2.50 V	The intake air temperature (IAT) sensor is integrated in the boost pressure sensor.
#A6	#A6	Control signal, rear heated oxygen sensor (HO2S) preheating	U = Ubat	Preheating off: U = U_{bat} Preheating on U=U_{low}	
#A7	#A7	Engine cooling fan (FC) control signal	Pulse width modulation (PWM) signal U_{high} at least 70% of U_{bat} U_{low} =1.2V f = 100 Hz Pulse ratio = 10-95%	-	
#A8	#A8	-	-	-	
#A9	#A9	Control signal, canister purge (CP) valve	U = U_{bat}		PWM signal during activation of the canister purge (CP) valve
#A10	#A10	-	-	-	
#A11	#A11	-	-	-	
#A12	#A12	-	-	-	
#A13	#A13	Control signal, intake camshaft reset valve	-	PWM signal U_{top} =U_{bat} f=250Hz (±12.5 Hz) Pulse ratio 20-95%	The pulse ratio governs control of the camshaft
#A14	#A14	Injector no. 6 control		t= 2-3 ms	t increases with

		signal	$U = U_{bat}$		engine speed (RPM) and load
#A15	#A15	Injector no. 2 control signal	$U = U_{bat}$	t= 2-3 ms	t increases with engine speed (RPM) and load
#A16	#A16	Injector no. 1 control signal	$U = U_{bat}$	t= 2-3 ms	t increases with engine speed (RPM) and load
#A17	#A17	Power supply	$U = U_{bat}$	-	Measured via the system relay
#A18	#A18	Control signal, preheating, bank 1, front heated oxygen sensor (HO2S)	$U = U_{bat}$	Preheating off: $U = U_{bat}$ Preheating on: $U=U_{low}$	
#A19	#A19	Signal ground, throttle unit, potentiometers 1 and 2	$U=U_{low}$	-	
#A20	#A20	Throttle unit signal, potentiometer 2 (circuit 2)	U approx. 4 -0.4 V	-	The voltage varies depending on the position of the throttle. U decreases with increasing throttle opening
#A21	#A21	Exhaust camshaft reset valve control signal	-	Pulse width modulation (PWM) signal $U_{top} = U_{bat}$ f=250 Hz (±12.5 Hz) Pulse ratio 20-95%	The pulse ratio governs control of the camshaft
#A22	#A22	Mass air flow (MAF) sensor signal	U = 1 V	U = 1.7 V	U increases with increasing air mass
#A23	#A23	Boost pressure sensor signal	U = 1.96 V	-	U increases with increasing boost pressure
#A24	#A24	Front heated oxygen sensor (HO2S), bank 1, pump current	-	-	Pulsed current supply, not measured
#A25	#A25	Front heated oxygen sensor (HO2S), bank 2, pump current	-	-	Pulsed current supply, not measured

#A26	#A26	Oil pressure switch signal	$U=U_{low}$	$U = U_{bat}$	
#A27	#A27	Signal camshaft position (CMP) sensor 2, exhaust camshaft	U =5 V	U = Pulsed signal U_{top} =5 V Uoffset=2.5V	The frequency varies according to engine speed (RPM)
#A28	#A28	Front heated oxygen sensor (HO2S), bank 1, calibration current	-	-	Not measured
#A29	#A29	Power supply, 5 V camshaft position (CMP) sensor	U =5 V	-	
#A30	#A30	Ignition coil no. 5 control signal	$U=U_{low}$	U=2.5 V t_{high} =2 ms	The frequency varies according to engine speed (RPM)
#A31	#A31	Ignition coil no. 1 control signal	$U=U_{low}$	U=2.5 V t_{high} =2.5 ms	The frequency varies according to engine speed (RPM)
#A32	#A32	Injector no. 4 control signal	$U = U_{bat}$	t_{low} =2-3 ms	t increases with engine speed (RPM) and load
#A33	#A33	Injector no. 3 control signal	$U = U_{bat}$	t_{low} =2-3 ms	t increases with engine speed (RPM) and load
#A34	#A34	Injector no. 5 control signal	$U = U_{bat}$	t_{low} =2-3 ms	t increases with engine speed (RPM) and load
#A35	#A35	Control signal (+) damper motor for the throttle unit	-	Pulse width modulation (PWM) signal U_{top} =U_{bat} Pulse ratio 0-100%. The polarity of the control signal changes when the damper motor is deployed against the direction of rotation.	The damper motor is controlled from the integrated power stage in the engine control module (ECM) measured to terminal #A36 (#A36)
#A36	#A36	Control signal (-) damper motor for the throttle unit	-	Pulse width modulation (PWM) signal U_{top} =U_{bat}	The damper motor is controlled from the integrated power stage in

				Pulse ratio 0-100%. The polarity of the control signal changes when the damper motor is deployed against the direction of rotation.	the engine control module (ECM) measured to terminal #A35 (#A35)
#A37	#A37	-	-	-	
#A38	#A38	Turbocharger (TC) control valve control signal	$U = U_{bat}$	-	During turbocharger (TC) control: Pulse width modulation (PWM) signal f = 32 Hz
#A39	#A39	Power supply 5 V boost pressure sensor, air conditioning (A/C) pressure sensor, mass air flow (MAF) sensor	U =5 V	-	
#A40	#A40	-	-	-	
#A41	#A41	Signal (+), front heated oxygen sensor (HO2S) bank 1	-	-	Pulsed current signal, not measured
#A42	#A42	Signal (-), front heated oxygen sensor (HO2S) bank 1	-	-	Pulsed current signal, not measured
#A43	#A43	Signal (+), front heated oxygen sensor (HO2S) bank 2	-	-	Pulsed current signal, not measured
#A44	#A44	Signal (-), front heated oxygen sensor (HO2S) bank 2	-	-	Pulsed current signal, not measured
#A45	#A45	Signal (+), rear knock sensor (KS)	$U=U_{low}$	-	
#A46	#A46	Signal (+) front knock sensor (KS)	$U=U_{low}$	-	
#A47	#A47	Signal camshaft position (CMP) sensor 1, intake camshaft	U =5 V	U = Pulsed signal U_{top} =5 V U_{offset} = 2.5 V	The frequency varies according to engine speed (RPM)
#A48	#A48	Signal (+), flywheel sensor	U=2.5 V	U= sine wave voltage U_{top} =5 V	Measured to terminal #A66 #B6)

				U_{offset} = 2.5 V	The frequency increases with engine speed (RPM)
#A49	#A49	Ignition coil no. 4 control signal	$U=U_{low}$	U=2.5 V t_{high} =2 ms	The frequency varies according to engine speed (RPM)
#A50	#A50	Ignition coil no. 2 control signal	$U=U_{low}$	U=2.5 V t_{high} =2 ms	The frequency varies according to engine speed (RPM)
#A51	#A51	Ignition coil no. 6 control signal	$U=U_{low}$	U=2.5 V t_{high} =2 ms	The frequency varies according to engine speed (RPM)
#A52	#A52	Ignition coil no. 3 control signal	$U=U_{low}$	U=2.5 V t_{high} =2 ms	The frequency varies according to engine speed (RPM)
#A53	#A53	Power ground 3	U_{low}	-	Ground terminal connected to the chassis
#A54	#A54	Power ground 2	U_{low}	-	Ground terminal connected to the chassis
#A55	#A55	-	-	-	
#A56	#A56	-	-	-	
#A57	#A57	-	-	-	
#A58	#A58	Signal ground, mass air flow (MAF) sensor	$U=U_{low}$	-	
#A59	#A59	Power supply 5 V throttle unit, potentiometers 1 and 2	U =5 V	-	
#A60	#A60	Signal ground Air conditioning (A/C) pressure sensor, boost pressure sensor, engine coolant temperature (ECT) sensor	$U=U_{low}$	-	
#A61	#B1	Signal (+), rear heated oxygen sensor (HO2S)	Uapprox.0.50 V	Above 0.6 V or below 0.3 V	
#A62	#B2	Signal (-), rear heated oxygen sensor (HO2S)	$U=U_{low}$	$U=U_{low}$	

#A63	#B3	Signal ground	$U=U_{low}$	-	Ground terminal connected to the chassis
#A64	#B4	Signal (-) front knock sensor (KS)	$U=U_{low}$	$U=U_{low}$	
#A65	#B5	Camshaft position (CMP) sensor signal ground	$U=U_{low}$	-	
#A66	#B6	Signal (-) flywheel sensor	U=2.5 V	U = sine wave voltage U_{top} =5 V U_{offset} = 2.5 V	Measured to terminal #A48 (#A48) The frequency increases with engine speed (RPM)
#A67	#B7	Signal (-) rear knock sensor (KS)	$U=U_{low}$	-	
#A68	#B8	Air conditioning (A/C) pressure sensor signal	U=0.9 V (at 20° C)	-	U increases with pressure in the air conditioning (A/C) system
#A69	#B9	Front heated oxygen sensor (HO2S), bank 2, calibration current	-	-	Not measured
#A70	#B10	Control signal, preheating, bank 2, front heated oxygen sensor (HO2S)	$U = U_{bat}$	Preheating off: $U = U_{bat}$ Preheating on: $U=U_{low}$	

Control module terminal	Breakout box terminal	Signal type	Ignition on	Engine idling	Other
#B1	#B11	Control modules communication cable (CAN L)	-	-	
#B2	#B12	-	-	-	
#B3	#B13	-	-	-	
#B4	#B14	Signal ground, clutch pedal position sensor, outside temperature sensor	$U=U_{low}$		
#B5	#B15	Signal ground, accelerator pedal (AP) position sensor	$U=U_{low}$		
#B6	#B16	-	-	-	
#B7	#B17	Control signal, leak	Pump motor	-	

		diagnostic unit, pump	running: $U=U_{low}$ Pump motor not running: $U = U_{bat}$		
#B8	#B18	Signal, coolant level sensor	$U=U_{low}$	Low engine coolant level: $U = U_{bat}$ Normal engine coolant level: $U=U_{low}$	
#B9	#B19	Power supply, 5 V accelerator pedal (AP) position sensor	U =5 V	-	
#B10	#B20	-	-	-	
#B11	#B21	30-supply (Power supply from the battery)	$U = U_{bat}$	$U = U_{bat}$	Ignition off: $U = U_{bat}$
#B12	#B22	-	-	-	
#B13	#B23	Control module communication cable (CAN H)	-	-	
#B14	#B24	-	-	-	
#B15	#B25	Clutch pedal sensor signal	Unaffected: U=3.3 V Fully depressed: 100 mm U=2.2 V	-	U varies depending on the position of the clutch pedal
#B16	#B26	-	-	-	
#B17	#B27	Signal, accelerator pedal (AP) position sensor	Unaffected: Uapprox.0.4 V Fully depressed accelerator pedal (AP): Uapprox.4 V	-	U varies depending on the position of the accelerator pedal (AP)
#B18	#B28	-	-	-	
#B19	#B29	-	-	-	
#B20	#B30	-	-	-	
#B21	#B31	-	-	-	
#B22	#B32	Diagnostic lead C-link	U=90% of U_{bat}	-	Other values apply if a generic fault-tracing instrument is connected to the data link

					connector (DLC)
#B23	#B33	Signal crank, 50-supply	$U=U_{low}$	$U=U_{low}$	At crank: $U = U_{bat}$
#B24	#B34	-	-	-	
#B25	#B35	Signal, accelerator pedal (AP) position sensor	Pulse width modulation (PWM) signal $U_{top} = U_{bat}$ t=5 ms pulse ratio = 8-88%	-	Pulse width modulation (PWM) signal from the accelerator pedal (AP) position sensor to the engine control module (ECM)
#B26	#B36	Stop lamp switch signal	When the brake pedal is depressed: $U = U_{bat}$ When the brake pedal is not depressed $U=U_{low}$	-	
#B27	#B37	-	-	-	
#B28	#B38	-	-	-	
#B29	#B39	Signal, outside temperature sensor	(0° C) U=2.92 V (+10° C) U=2.40V (+20° C) U=1.90 V (+30°C) U = 1.46 V	-	Temperature range: -40 to +30°C
#B30	#B40	-	-	-	
#B31	#B41	-	-	-	
#B32	#B42	-	-	-	
#B33	#B43	-	-	-	
#B34	#B44	-	-	-	
#B35	#B45	-	-	-	
#B36	#B46	-	-	-	
#B37	#B47	Signal, ignition on, 15-supply	$U = U_{bat}$	$U = U_{bat}$	Ignition off: $U=U_{low}$
#B38	#B48	System relay, control signal	-	$U=U_{low}$	Relay activated: $U=U_{low}$ Relay not activated: U =

					U_{bat} The system relay runs on (2-5 minutes)
#B39	#B49	-	-	-	
#B40	#B50	Control signal, leak diagnostic unit, valve	-		Valve activated: U = Ulow Valve not activated: U = Ubat
#B41	#B51	-	-	-	
#B42	#B52	-	-	-	
#B43	#B53	-	-	-	
#B44	#B54	Control signal, air conditioning (A/C) relay	-	-	Air conditioning (A/C) relay activated: $U=U_{low}$ Air conditioning (A/C) relay not activated: U = U_{bat}
#B45	#B55	Fuel pump (FP) activation control signal	-	-	Pulse width modulated (PWM) signal to the central electronic module (CEM) to control the fuel pump (FP) relay
#B46	#B56	Malfunction indicator lamp (MIL) control signal	$U=U_{low}$	Not activated: U = U_{bat} Activated: $U=U_{low}$	
#B47	#B57	-	-	-	
#B48	#B58	Control signal, engine cooling fan (FC), control modules	-	Not activated: U = U_{bat} Activated: $U=U_{low}$	The engine cooling fan (FC) is controlled by the engine control module (ECM)
#B49	#B59	-	-	-	
#B50	#B60	-	-	-	

SPECIFICATIONS, ENGINE MANAGEMENT SYSTEM (B5254T2; B6294T; 2003-2004)

COMPONENT SPECIFICATIONS

The component specification gives the value of the component when the connector is disconnected. Where no value is given, it is not possible to measure a relevant value at the component.

The figure within the brackets indicates the terminal pin on the component to which the value refers.

Designation	Type	Supply voltage	Value	Miscellaneous
Air conditioning (A/C) relay	Mechanical relay	12V (#1)	Approximately 96 ohms (coil)	-
A/C pressure sensor	Absolute pressure sensor	5 V (#3)	-	-
Brake lamp switch	Position switch	12 V (#1)	The switch is closed when the pedal is depressed (terminals #1-#5)	-
Fuel pump (FP) relay	Mechanical relay	-	Approximately 96 ohms (coil)	The relay is controlled by the central electronic module (CEM)
Engine cooling fan (FC) control module	-	-	-	There are different engine cooling fan control modules depending on the engine variant.
Canister purge (CP) valve	Electromagnetic valve	12 V (#1)	17-24 ohms at 20°C (terminals #1-#2)	-
Accelerator pedal (AP) position sensor	Electronic pedal sensor with 2 output signals, PWM and a linear analogue signal	12 V (terminal #1) 5 V (terminal #6) Power supply analogue position sensors	-	-
Throttle unit	Electronic throttle control module with two integrated potentiometers and a damper motor	5 V (#3)	1.2-3.5 ohms (terminals #1-#4 motor winding). 1000-1500 ohms (terminals #2-#3 Parallel connection of potentiometers 1 and 2). Approximately 820 ohms when the throttle is closed.	-

			Approximately 1580 ohms at wide open throttle (terminals #2-#6 potentiometer 1). Approximately 1480 ohms when the throttle is closed. Approximately 500 ohms at wide open throttle (terminals #2-#5 potentiometer 2)	
Fuel injector	Electromagnetic injector valve	12 V (#1)	Approximately 12 ohms at 20°C (terminal #1-#2)	-
Camshaft sensor	Magneto-resistive sensor	5 V (#1)	-	-
Knock sensor (KS)	Piezo electric component	-	Greater than 1 Mohms (terminal #1-#2 front knock sensor (KS). Greater than 1Mohms (terminals #3-#4 rear knock sensor (KS)	Separate signal ground for the knock sensors (KS)
Clutch pedal sensor	Slide potentiometer	5 V (#2)	Unaffected pedal: 1400-2400 ohms Fully depressed pedal: 200-800 ohms (#2-#4)	-
Engine cooling fan (FC) control modules	Fan motor	12 V (#1)	-	The engine cooling fan (FC) is controlled by the engine control module (ECM)
Coolant level sensor	Position switch	Connected to ground (terminal #2)	Closed when the engine coolant level is normal	-
Boost pressure sensor	Absolute pressure sensor	5 V (#3)	-	Turbocharged (TC) engines only
Preheating front heated oxygen sensor (HO2S)	PTC resistor	12 V (#3)	2.6-3.4 ohms at 20° C (terminals #3-#4)	-
Preheating, rear heated oxygen	PTC resistor	12 V (#1)	Approximately 9 ohms at 20°C	-

sensor (HO2S)			(terminal #1-#2)	
Mass air flow (MAF) sensor	-	12 V (#2) 5 V (#4)	-	-
Intake air temperature (IAT) sensor inlet	NTC resistor	Turbocharged engines: 5 V (#2) Naturally aspirated engines: 5 V (#1)	5886 ohms at 0°C 3791 ohms at 10°C 2510 ohms at 20°C 1715 ohms 30°C Turbocharged engines: (#1-#2). Naturally aspirated engines: (#1-#3)	Turbocharged engines: intake air temperature (IAT) sensor, integrated in the boost pressure sensor. Naturally aspirated engines: intake air temperature (IAT) sensor, integrated in the mass air flow (MAF) sensor
Leak diagnostic unit	Consists of an air pump, electromagnetic valve and an internal heating element (PTC resistor)	12 V (#4)	Approximately 118 ohms (terminals #1-#4 pump motor winding) 27.9 -34.1 ohms (terminals #3-#4 Valve coil)	The heating element for heating up the pulsed secondary air injection system (PAIR) pump is controlled by the central electronic module (CEM)
Engine coolant temperature (ECT) sensor	NTC resistor	5 V (#1)	15040 ohms at -20° C 2450 ohms at 20°C 318 ohms at 80°C (#1- #2)	-
PTC resistor air preheating	PTC resistor	12 V (#1)	Approximately 10 ohms at 20°C (#1-#2)	-
Oil pressure sensor	Pressure switch (Pressostat)	Grounded in the cylinder block	Closed switch when the oil pressure is low	-
Camshaft reset valve	Electromagnetic valve	12 V (#1)	3.7-11.1 ohms (#1-#2)	-
Flywheel sensor	Engine speed sensor	-	108.5-142.5 ohms at 20°C (terminals #1-#2)	-
System relay	Mechanical relay	12V (#1)	Approximately 80 ohms (coil)	-
Turbocharger (TC) control valve	Electromagnetic valve (3 way)	12 V (#1)	21.8-24.2 ohms at 20°C (terminals #1-#2)	Turbocharged (TC) engines only
Outer temperature sensor	NTC resistor	5 V (#2)	18702 ohms at -20 ° C	-

			6318 ohms at 0°C 2424 ohms at 20°C 1034 ohms at 40°C (#2- #3)	

SPECIFICATIONS, ENGINE MANAGEMENT SYSTEM (B5254T2; 2005-2007)

COMPONENT SPECIFICATIONS

The component specification gives the value of the component when the connector is disconnected. Where no value is given, it is not possible to measure a relevant value at the component.

The figure within the brackets indicates the terminal pin on the component to which the value refers.

Designation	Type	Supply voltage	Value	Miscellaneous
A/C-relay	Mechanical relay	12V (#1)	Approximately 96 ohms (coil)	
A/C pressure sensor	Absolute pressure sensor	5 V (#3)	-	
Brake lamp switch	Position switch	12 V (#1)	The switch is closed when the pedal is depreseed (terminals#1-#5)	
Fuel pump	Mechanical relay	-	Approximately 96 ohms (coil)	The relay is controlled by the central electronic module (CEM)
Male Temperature probe	NTC-resistance	5V (#3)	5896 ohms at 0°C 3792 ohms at 10°C 2500ohms at 20°C 1707ohms at 30°C 1175 ohms at 40°C (#1-#2)	Integrated in br?nsletryckgivare
Fuel pressure sensor	Piezoresistiv tryckgivare	5V (#3)	-	
Cooling fan controller	-	12 V (#2)	-	
EVAP-valve	Electromagnetic valve	12 V (#1)	17-24 ohms at 20°C (#1-#2)	
Accelerator pedal position sensor	Electronic pedal sensor with 2 output signals, PWM- and a linear analog signal	12 V (#1) 5 V (#6) Power supply analog position sensors	-	
Throttle unit	Electronic throttle control module with	5 V (#3)	1.2-3.5 ohms (#1-#4 motor winding).	-

	two integrated potentiometers and a damper motor		1000-1500 ohms (#2-#3 Parallel connection of potentiometers1 and 2). Approximately 820 ohms when the throttle is closed. Ca 1580 ohms at wide open throttle(#2-#6 potentiometer 1). Approximately 1480 ohms when the throttle is closed. Approximately 500 ohms at wide open throttle (#2-#5 potentiometer 2)	
Fuel injector	Electromagnetic injector valve	12 V (#1)	Approximately 12 ohms at 20°C (#1-#2)	
Camshaft sensor	Magneto-resistive sensor	5 V (#1)	-	
Knock sensor	Piezo electric component	-	Greater than 1 Mohms (#1-#2 front knock sensor). Greater than 1 Mohms (#3- #4 rear knock sensor)	Separate signal ground for knock sensors
Clutch pedal sensor	Slide potentiometer	5 V (#2)	Unaffected pedal: 1400-2400 ohms Fully depressed pedal: 200-800 ohms (#2-#4)	
Engine cooling fan control module	Fan motor	12 V (#1)	-	The engine cooling fan is controlled by the engine control module
Coolant level sensor	Position switch	Connected to ground (#2)	Closed when engine coolant level is normal	
Boost pressure sensor	Absolute pressure sensor	5 V (#3)	-	
Preheating front heated oxygen sensor	PTC resistor	12 V (#3)	2, 6-3, 4 ohms at 20° C (#3-#4)	

Preheating rear heated oxygen sensor	PTC resistor	12 V (#1)	Approximately 9 ohms at 20°C (#1-#2)	
Mass air flow sensor	-	12 V (#2) 5 V (#4)	-	
Intake air temperature sensor inlet	NTC resistor	5 V (#3)	5886 ohms at 0°C 3791 ohms at 10°C 2510 ohms at 20°C 1715 ohms at 30°C (#1-#2)	Integrated in the mass air flow sensor
Leak diagnostic unit	Consists of an air pump, electromagnetic valve and an internal heating element (PTC resistor	12 V (#4)	Approximately 118 ohms (#1-#4 pump motor winding) 27.9 -34.1 ohms (#3-#4 Valve coil)	The heating element for heating up the pulsed secondary air injection system pump is controlled by the central electronic module (CEM)
Engine coolant temperature sensor	NTC resistor	5 V (#1)	15040 ohms at -20°C 2450 ohms at 20°C 318 ohms at 80°C (#1- #2)	
PTC-resistor air preheating	PTC resistor	12 V (#1)	Approximately 10 ohms at 20°C	
Oil level sensor	Elektronisk givare med PTC-motst nd och kapacitiva m? telement	5 V (#3)	-	
Oil pressure sensor	Pressure switch (Pressostat)	Grounded in the cylinder	Closed switch when the oil pressure is low	
Camshaft reset valve	Electromagnetic valve	12 V (#1)	3.7-11.1 ohms (#1-#2)	
Flywheel sensor	Engine speed sensor	-	108.5-142.5 ohms at 20°C (#1-#2)	
System relay	Mechanical relay	12V (#1)	Approximately 80 ohms (coil)	
Turbocharger control valve	Electromagnetic valve (3-way)	12 V (#1)	21.8-24.2 ohms at 20° C (#1-#2)	
Outer temperature sensor	NTC resistor	5 V (#1)	18702 ohms at-20 °C 6318 ohms at 0°C 2424 ohms at 20°C 1034 ohms at 40°C (#1- #3)	

SPECIFICATIONS, ENGINE MANAGEMENT SYSTEM (B6294T; 2005-2006)

COMPONENT SPECIFICATIONS

see **Component Specifications**

ENGINE PERFORMANCE

Ignition And Control Systems - Specifications, other

VEHICLE COMMUNICATION INFORMATION, QUICK TEST OF THE FUEL TANK SYSTEM (B5254T2; 2005-2007)

DESCRIPTION OF PARAMETERS, QUICK TEST OF THE FUEL TANK SYSTEM

LEAK DIAGNOSTIC UNIT PUMP

Graphic display in the fuel tank system quick test.

Measurement range 0-400 mA.

The engine control module (ECM) calculates the value from the pump in the leak diagnostic unit.

The value varies depending on the pressure in the fuel tank system. Higher pressure results in increased power consumption.

BATTERY VOLTAGE

Measurement range 0-17.95 V.

The value indicates the voltage from the system relay to the engine control module (ECM).

The voltage must not be below 11 V when the quick test of the fuel tank system is run.

FUEL TANK SYSTEM QUICK TEST

In order for the quick test to start, the status of this parameter must be "Not completed".

- Completed = The engine control module (ECM) has completed the quick test / diagnostic of the fuel tank system during the present operating cycle
- Not completed = The engine control module (ECM) has not completed the quick test / diagnostic of the fuel tank system during the present operating cycle.

TEST PHASE

In order for the quick test to start, the status of this parameter must be "Not running".

The parameter indicates the phase of the test.

- Reference= Reference phase for leaks and function test of the leak diagnostic unit is running
- Fuel tank system = Diagnostics for major leak and minor leak running
- Not running = No quick test or diagnostic is running.

For more information about these parameters:

see **TEST PHASES, QUICK TEST FUEL TANK SYSTEM**

ECM-439C

The parameter indicates the result of the diagnostic for leakage in the fuel tank system. This diagnostic is run during the "Fuel tank system" test phase:

- No fault found= No leak corresponding to the definition of major leak detected by the engine control module (ECM)
- Fault found= Leakage > or = 1.0 mm detected by the engine control module (ECM). Diagnostic Trouble Code (DTC) ECM-439C will be set in the engine control module (ECM).

ECM-434C

The parameter indicates the result of the diagnostic for leakage in the fuel tank system. This diagnostic is run during the "Fuel tank system" test phase.

- No fault found= No leak corresponding to the definition of minor leak detected by the engine control module (ECM)
- Fault found= 1.0 mm > leakage > or = 0.5 is detected by the engine control module (ECM). Diagnostic Trouble Code (DTC) ECM-434C will be set in the engine control module (ECM).

ECM-4360

The parameter displays the result of the diagnostic for the function in the leak diagnostic unit corresponding to the diagnostic trouble code (DTC) ECM-4360. The diagnostic is run during "Reference" test phase.

- No fault found = No fault is detected by the engine control module (ECM)
- Fault found= Fault in the leak diagnostic unit detected by the engine control module (ECM). Diagnostic Trouble Code (DTC) ECM-4360 will be stored in the engine control module (ECM).

ECM-436B

The parameter displays the result of the diagnostic for the function in the leak diagnostic unit corresponding to the diagnostic trouble code (DTC) ECM-436B. The diagnostic is run during "Reference" test phase.

- No fault found = No fault is detected by the engine control module (ECM)
- Fault found= Fault in the leak diagnostic unit detected by the engine control module (ECM). Diagnostic Trouble Code (DTC) ECM-436B will be stored in the engine control module (ECM).

ECM-436C

The parameter displays the result of the diagnostic for the function in the leak diagnostic unit corresponding to the diagnostic trouble code (DTC) ECM-436C. The diagnostic is run during "Reference" test phase.

- No fault found = No fault is detected by the engine control module (ECM)
- Fault found= Fault in the leak diagnostic unit detected by the engine control module (ECM). Diagnostic Trouble Code (DTC) ECM-436C will be stored in the engine control module (ECM).

ECM-436D

The parameter displays the result of the diagnostic for the function in the leak diagnostic unit corresponding to the diagnostic trouble code (DTC) ECM-436D. The diagnostic is run during "Reference" test phase.

- No fault found = No fault is detected by the engine control module (ECM)
- Fault found= Fault in the leak diagnostic unit detected by the engine control module (ECM). Diagnostic Trouble Code (DTC) ECM-436D will be stored in the engine control module (ECM).

TEST PHASES, QUICK TEST FUEL TANK SYSTEM

REFERENCE

The reference phase for leaks and the function test of the leak diagnostic unit are running. If no faults are detected during this phase the leak test in the fuel tank system starts. If any faults are detected during the phase, the test is interrupted and the test result for the leak diagnostic unit (ECM-436X) will be "Fault found".

FUEL TANK SYSTEM

Testing for leakage in the fuel tank system is running. During the first half of the test, major leaks (leaks larger than 1.0 mm) can be detected. Diagnostic trouble code (DTC) is stored in the engine control module (ECM) if leakage is detected.

After a certain amount of time (time is dependent on the fuel level in the tank) the engine control module (ECM) assesses the seal of the fuel tank system. Assessment is made using the results of the calculations of time, measured reference power consumption of the pump, measured power consumption of the pump during the time of assessment and from the shape of the power supply curve and characteristics during pressurization. If the leak in the fuel tank system is larger than 0.5 mm but smaller than 1.0 mm a diagnostic trouble code (DTC) is stored for minor leakage in the engine control module (ECM).

NOT RUNNING

The leak diagnostic is not running, the quick test of the fuel tank system has not started or has finished.

VEHICLE COMMUNICATION INFORMATION, QUICK TEST OF THE FUEL TANK SYSTEM (B6294T; 2005-2006)

DESCRIPTION OF PARAMETERS, QUICK TEST OF THE FUEL TANK SYSTEM

see **DESCRIPTION OF PARAMETERS, QUICK TEST OF THE FUEL TANK SYSTEM**

TEST PHASES, QUICK TEST FUEL TANK SYSTEM

see **TEST PHASES, QUICK TEST FUEL TANK SYSTEM**

VEHICLE COMMUNICATION INFORMATION (B5254T2; B6294T; 2003-2004)

DESCRIPTION OF COMPONENT / FUNCTIONS ACTIVATION

Component	Function
Injector (1-6)	Injectors 1-6. The injectors open and close approximately 6 times per second. A clicking noise is heard from the injectors. The engine must be switched off.
A/C RELAY	A/C relay. Air conditioning A/C must be requested from the control panel. The air conditioning (A/C) relay and the magnetic clutch for the air conditioning (A/C) compressor click.
ENGINE COOLING FAN (FC) pulse width modulation (PWM) controlled 16-93 %	The speed of the engine cooling fan (FC) changes depending on which activation is selected. The fan can be heard.
MIL LAMP	Malfunction indicator lamp (MIL). The engine must be running and the lamp off before activation. The lamp lights when the start button is pressed and goes out when the stop button is pressed.
LEAK DIAGNOSTIC UNIT, VALVE	Certain markets only. A clicking noise is heard from the valve in the leak diagnostic unit at activation.
CANISTER PURGE (CP) VALVE	The EVAP canister purge valve opens and closes 5 times per second. The valve is activated by the start button and stopped using the stop button. The canister purge (CP) valve clicks.
COOLING FAN CONTROL MODULE	There is a buzzing noise from the cooling fan for the control modules at activation.
THROTTLE UNIT 50-100 %	The shutter in the throttle unit opens. The throttle unit opens to different positions depending on which activation is selected (50, 75 or 100 %) Read off "Throttle Position Sensor (TP) potentiometer 1" or "Throttle Position Sensor (TP) potentiometer 2" at activation to check the function. The engine must be switched off at activation.
TURBOCHARGER CONTROL VALVE	There is a clicking noise from the turbocharger (TC) control valve at activation. The engine must be switched off at activation.

DESCRIPTION OF PARAMETERS

HINT: Not all the parameters described need to be implemented in the control module. This varies between different systems and markets.

HINT: Bank 1: indicates cylinders 1-3 on 6 cylinder engines and all cylinders on 5-cylinder engines.

HINT: The rear heated oxygen sensor (HO2S) on vehicles with fuel trim using the Y-concept (two front heated oxygen sensors (HO2S) and one rear heated oxygen sensors (HO2S) is called "Bank 1".

HINT: Bank 2: indicates cylinders 4-6 on 6-cylinder engines.

ENGINE SPEED

Measurement range 0-10400 RPM.

The engine control module (ECM) derives the engine speed (RPM) from the engine speed (RPM) sensor signal.

The idle speed varies depending on the engine coolant temperature (ECT).

IDLE SPEED, DIFFERENCE DESIRED VALUE

Measurement range -1280-1270 RPM.

The value indicates the idle speed deviation from the control module desired value (target value).

ENGINE COOLANT TEMPERATURE (ECT)

Measurement range -48 to +143°C.

The engine control module (ECM) derives the temperature from the engine coolant temperature (ECT) sensor signal.

INTAKE AIR TEMPERATURE (IAT) INLET

Measurement range -48 to +143°C.

The engine control module (ECM) calculates the temperature from the temperature sensor for the intake air.

AMBIENT TEMPERATURE °C

Measurement range -40 to +110°C.

The engine control module (ECM) derives the temperature from the outside temperature sensor signal.

ATMOSPHERIC PRESSURE

Measurement range 0-5120 hPa.

The value indicates atmospheric pressure at the engine control module (ECM).

Normal value at sea level is 1, 013 hPa.

BOOST PRESSURE

Measurement range 0-2550 hPa.

The value indicates the pressure in the intake system downstream of the turbocharger (TC).

The engine control module (ECM) calculates the boost pressure from the boost pressure sensor. The pressure is relative to atmospheric pressure.

IGNITION ADVANCE

Measurement range -96 to +95.3° before top dead center (BTDC).

The value when idling varies depending on the engine coolant temperature (ECT).

AIR MASS

Measurement range 0-1020 kg/h.

The value indicates the mass air flow that passes through the mass air flow (MAF) sensor.

The engine control module (ECM) calculates the value based on the signal from the mass air flow (MAF) sensor.

Normal value with the engine at operating temperature and idling, neutral and air conditioning (A/C) switched off: approximately 14 kilograms per hour.

NOTE: Other values apply if the generator (GEN.) is under load, if for example, high beam is on, the heated rear windshield is on etc.

MASS AIR FLOW, CORRECTION VALUE

Measurement range 0-4.

The value is a stored average of the correction factor of the mass air flow that the engine draws in.

Mass air flow, correction factor= The control module's calculated desired value for the mass air flow divided by (/) the actual measured mass air flow.

Normal range: 1 (±0.1).

BATTERY VOLTAGE

Measurement range 0-17.95 V.

The normal value is 13.5-14.5 V when the generator (GEN.) is charging.

The value indicates the voltage from the system relay to engine control module (ECM) terminal #A17.

POWER SUPPLY, 5 V

Measurement range 0-5 V.

Normal value approximately 5 V.

The value indicates the voltage supplied to components from engine control module (ECM) terminal #A39.

ACCELERATOR PEDAL (AP) POSITION SENSOR, ANALOGUE

Measurement range 0-320 V.

Analogue signal from the accelerator pedal (AP) position sensor to the engine control module (ECM). The engine control module (ECM) derives the value from the analogue output for the accelerator pedal (AP) position sensor.

The value indicates the accelerator pedal (AP) position.

Approximately 0.5 V = the accelerator pedal (AP) completely released.

Approximately 4.0 V = the accelerator pedal (AP) completely depressed.

ACCELERATOR PEDAL (AP) POSITION SENSOR, PULSE WIDTH MODULATION (PWM) AVERAGE VOLTAGE

Measurement range 0-320 V.

The mean PWM signal voltage from the accelerator pedal (AP) position sensor to the engine control module (ECM). The engine control module (ECM) derives the value from the digital output for the accelerator pedal (AP) position sensor.

The value indicates the accelerator pedal (AP) position.

Approximately 0.5 V = the accelerator pedal (AP) completely released.

Approximately 4.0 V = the accelerator pedal (AP) completely depressed.

HINT: The value must follow the parameter "Accelerator pedal (AP) position sensor, analog".

ACCELERATOR PEDAL (AP) POSITION SENSOR, PULSE WIDTH MODULATION (PWM)

Measurement range 0-100 %.

The PWM signal from the accelerator pedal (AP) position sensor to the engine control module (ECM). The engine control module (ECM) derives the value from the digital output for the accelerator pedal (AP) position sensor.

The value indicates the accelerator pedal (AP) position.

Approximately 5 %= the accelerator pedal (AP) completely released.

Approximately 80 %= the accelerator pedal (AP) completely depressed.

THROTTLE ANGLE

Measurement range 0-100 %.

The engine control module (ECM) calculates the value from potentiometer 1 for the throttle position (TP) sensor. The value indicates the throttle opening.

If a fault is detected in the throttle position (TP) sensor, potentiometer 1 by the engine control module (ECM), the value from the throttle position (TP) sensor, potentiometer 2 will be used to represent the throttle angle. This presumes that the function of throttle position (TP) sensor, potentiometer 2 is OK.

0 % = throttle shut.

100 % = throttle fully open.

HINT: The value must follow the parameter "Throttle angle, desired value" when the accelerator pedal (AP) is affected.

THROTTLE ANGLE, DESIRED VALUE

Measurement range 0-100 %.

The engine control module (ECM) calculates a target value for the throttle opening (throttle angle) using the accelerator pedal (AP) position sensor signals.

The value indicates what the throttle angle should be.

0 % = throttle shut.

100% = throttle fully open.

THROTTLE POSITION (TP) SENSOR, POTENTIOMETER 1

Measurement range 0-80 V.

The engine control module (ECM) derives the value from potentiometer 1 for the throttle position (TP) sensor.

The value must increase with increased throttle angle.

Approximately 0.5 V = throttle closed.

Approximately 4.0 V = wide open throttle (WOT).

THROTTLE POSITION (TP) SENSOR, POTENTIOMETER 2

Measurement range 0-80 V.

The engine control module (ECM) derives the value from potentiometer 2 for the throttle position (TP) sensor.

The value must decrease with an increased throttle angle.

Approximately 4.0 V = throttle closed.

Approximately 0.5 V = wide open throttle (WOT).

THROTTLE UNIT ADAPTATION

If necessary the engine control module (ECM) runs an adaptation of the throttle unit by guiding the throttle to the limit positions (open/closed) so that it " learns" the parameters of that actual throttle unit.

The status indicates if the adaptation has been run or not.

OK = Adaptation of the throttle unit has run.

NOT OK = Adaptation of the throttle unit has not run.

NOTE: The basic conditions must be met before an adaptation of the throttle unit can be carried out.

LEAKAGE FLOW OVER THROTTLE

Measurement range 0-655 kg/h.

The value indicates how much air passes through the throttle at closed throttle position (CTP). The engine control module (ECM) calculates the value from the mass air flow (MAF) sensor and the throttle position (TP) sensor signals.

The normal value is approximately 5 ± 4 kg/h.

NOTE: Other values apply if there is air leakage on the intake system.

CLUTCH PEDAL POSITION

Measurement range 0-100 %.

The engine control module (ECM) calculates the value from the clutch pedal sensor signal.

The value indicates the clutch pedal position.

When the clutch pedal released the value is 60-70 %. The value decreases as the clutch pedal is depressed.

CLUTCH POSITION SENSOR

The engine control module (ECM) calculates the value from the clutch pedal sensor signal.

The value indicates how the engine control module (ECM) interprets the clutch pedal position.

Active = clutch pedal depressed.

Not active = clutch pedal released.

BRAKE PEDAL POSITION (VIA THE BRAKE CONTROL MODULE (BCM)

Measurement range 0-100 %.

The engine control module (ECM) receives the value from the brake control module (BCM) via the Control area network (CAN).

The value indicates the brake pedal position.

When the brake pedal is not affected the value is 0 %. The value increases when the brake pedal is depressed.

BRAKE LAMP SWITCH

The engine control module (ECM) calculates the value from the brake lamp switch signal.

ON = brake lamp switch on.

OFF = brake lamp switch unaffected.

AIR CONDITIONING (A/C) PRESSURE

Measurement range -176 to +3277 kPa.

The engine control module (ECM) calculates the value from the signal from the air conditioning (A/C) pressure sensor.

The value indicates the pressure at the high-pressure side of the air conditioning (A/C) system.

The engine control module (ECM) calculates the pressure based on the signal from the air conditioning (A/C) pressure sensor. The pressure is given as a value relative to the atmospheric pressure.

AIR CONDITIONING (A/C) COMPRESSOR, ACTIVE

The signal transmitted by the control module for activating the air conditioning (A/C) compressor relay.

OFF = The engine control module (ECM) does not activate the air conditioning (A/C) compressor relay.

ON = The engine control module (ECM) activates the air conditioning (A/C) compressor relay.

TURBOCHARGER (TC) CONTROL VALVE

Measurement range 0-100 %.

The value indicates the deployment signal from the control module for deploying the turbocharger (TC) control valve, the amount the turbocharger (TC) control valve opens to adjust the turbo pressure.

0 % = no control (turbocharger (TC) control valve closed).

100 % = full control (the turbocharger (TC) control valve opens completely).

CANISTER PURGE (CP) VALVE

Measurement range 0-100 %

The value indicates the deployment signal from the control module for deploying the EVAP canister purge valve (the amount the valve opens to empty the canister).

0 % = no control (EVAP canister purge valve closed).

100% = full control (EVAP canister purge valve opens completely).

CANISTER PURGE (CP) VALVE, FLOW

Measurement range 0-25 kg/h

The value indicates the flow through the evaporative emission system (EVAP) valve and increases with increased flow.

RESET VALVE CAMSHAFT, INTAKE/EXHAUST

Measurement range 0-100 %

The pulse ratio transmitted by the control module to control the camshaft reset valve.

The value indicates control of the camshaft reset valve to control the camshaft shift angle.

The normal value varies depending on how much the camshaft is controlled.

CAMSHAFT SHIFT ANGLE, INTAKE/EXHAUST

Measurement range between -256° to +256°.

The engine control module (ECM) derives the value by comparing the camshaft position with the crankshaft position.

The value indicates the offset of the camshaft position in relation to the crankshaft TDC (0). (The camshaft 0-position = the camshaft position set alignment with the crankshaft TDC).

CAMSHAFT SHIFT ANGLE LEEWAY, INTAKE/EXHAUST

Measurement range between -256° to +256°.

The value indicates the difference between the "Camshaft shift angle" (actual shift angle) and the desired value for the camshaft shift angle (target value for the engine control module (ECM).

Ensure that the camshaft is operated by checking that the value of the "Camshaft shift angle" changes. Changing the "Camshaft shift angle" is achieved by changing the engine speed (RPM)/load.

The normal value varies depending on how far the camshaft is operated and the temperature/grade of the engine oil, although the value must never be higher/lower than between +/-10° for longer than 4 seconds.

HINT: Check the camshaft control function by choosing "Quick test camshaft control" in vehicle communication.

ADAPTATION CAMSHAFT, INTAKE/EXHAUST

Measurement range between -511 to +511°.

The value indicates how much the engine control module (ECM) has adapted the camshaft position, i. e. the deviation from the basic camshaft position set at the factory.

Normal value is between -8 and +8°.

The value must be checked when idling and with the engine at operating temperature.

LEAK DIAGNOSTIC UNIT PUMP

Certain markets only.

Measurement range 0-400 mA.

The engine control module (ECM) calculates the value from the pump in the leak diagnostic unit.

The value varies depending on the pressure in the fuel tank system. Higher pressure results in increased power consumption.

INJECTION PERIOD, BANK X

Measurement range 0.0-150 ms.

The control module controlled signal for injection period.

Normal value when the engine is idling at operating temperature: 2.0-4.0 ms

SHORT-TERM FUEL TRIM, BANK X

Measurement range 0-2.

The value displays how much the injection period needs to be corrected (from the preprogrammed injection period in the control module) to reach lambda=1. If the engine runs lean or rich (lambda deviates from 1), the short-term fuel trim injection period is increased or decreased so that lambda; =1. The average value of this parameter from different engine speed and load ranges is used for the different fuel trim adaptations (idling, lower part load and upper part load) so that the short-term fuel trim is always around 1.

Short-term fuel trim = the actual injection period required to reach lambda=1, divided by (/) the injection period pre-programmed in the engine control module (ECM) to reach lambda=1.

The normal value oscillates around 1, when fuel trim for each engine speed (RPM) / load range is ready.

Value over 1: The engine control module (ECM) increases the injection period (to prevent a lean fuel / air mix).

Value under 1: The engine control module (ECM) decreases the injection period (to prevent a rich fuel / air mix).

The parameter must be checked under stable conditions, such as stable engine speed (RPM) and load.

HINT: When lambda deviates from 1, the short-term fuel trim initially compensates at every engine speed (RPM) / load range (idling speed, lower part load and upper part load). The diagnostic trouble codes (DTCs) are erased, the adaptation values are reset. This means fuel trim will be high or low when driving in the low engine speed/load ranges before the trim is complete.

LONG-TERM FUEL TRIM BANK X, IDLE SPEED

Measurement range from -72 to +72 %.

Additive fuel trim (correcting the injection period), trim that occurs at idle speed. The value indicates how much the fuel trim has been corrected at idle speed so that the fuel trim value can again oscillate around 1.

In the event of an air leakage for example, the value will increase at idle speed (= longer injection time). This is to compensate the fuel / air mix for air capacity. Regardless of the load /engine speed, the same injection time is added. This means that the parameter value does not significantly affect the fuel / air mix at higher loads / engine speeds.

Normal value when the engine is idling: 0 ± 5 %.

Value over 0 %: The engine control module (ECM) increases the injection period (to prevent a lean fuel / air mix).

Value under 0 %: The engine control module (ECM) decreases the injection period (to prevent a rich fuel / air mix).

HINT: When diagnostic trouble codes (DTCs) are erased, the "long-term fuel trim" returns to 0%.

LONG-TERM FUEL TRIM BANK X, LOWER PART LOAD

Measurement range 0-2.

Multiplicative fuel trim (correcting the injection period), trim that occurs at lower part load (normal road driving). The value stored in the Engine control module (ECM) indicates how much the fuel trim in the lower part load range has been corrected so that the short-term fuel trim value can again oscillate around 1 at the lower part load.

In the event of low fuel pressure for example, the value will increase (= longer injection time). This is to compensate the fuel/air mix for the lack of fuel.

Normal value 1± 0.1. The lower part load range of the engine must be reached for the value to be updated (normal road driving).

Approximately 30 minutes of driving in the lower part load may be required before fuel trim is complete (complete = fuel trim oscillates around 1 at lower part load).

Value over 1: The engine control module (ECM) increases the injection period (to prevent a lean fuel / air mix).

Value under 1: The engine control module (ECM) decreases the injection period (to prevent a rich fuel / air mix).

HINT: When diagnostic trouble codes (DTCs) are erased, the "long-term fuel trim" returns to 1.

LONG-TERM FUEL TRIM BANK X, UPPER PART LOAD

Measurement range 0-2.

Multiplicative adaptation of short-term fuel trim - adaptation occurs at upper partial load (high speed/acceleration on the road). The value stored in the Engine control module (ECM) indicates how much the short-term fuel trim has been corrected in the upper partial load range so that the short-term fuel trim value can once again be around 1 at upper partial load.

In the event of low fuel pressure for example, the value will increase (= longer injection time). This is to compensate the fuel/air mix for the lack of fuel.

Normal value 1 ± 0.1. The upper part load range of the engine must be reached for the value to be updated (accelerating road driving).

Approximately 30 minutes of driving in the lower part load may be required before the fuel trim is complete (complete = fuel trim oscillates around 1 at upper part load).

Value over 1: The engine control module (ECM) increases the injection period (to prevent a lean fuel / air mix).

Value under 1: The engine control module (ECM) decreases the injection period (to prevent a rich fuel / air mix).

HINT: When diagnostic trouble codes (DTCs) are erased, the "long-term fuel trim" returns to 1.

LONG-TERM FUEL TRIM, BANK X

C/L= Closed Loop, fuel trim is active

O/L = Open Loop, fuel trim is not active

FRONT HEATED OXYGEN SENSOR (HO2S), BANK X

Measurement range 0-16.

Normal value is lambda=1.

At rich mixture is lambda < 1.

At lean mixture is lambda > 1.

REAR HEATED OXYGEN SENSOR (HO2S), BANK X

Measurement range -0.2 to +1.13.

Signal from rear heated oxygen sensor (HO2S) to the engine control module (ECM).

Normal value when the engine is running at even load is approximately 0.6 V.

The voltage may vary between -0.2 and 0.9 V. The voltage may, during engine braking for example, drop to -0.2 V.

FUEL PUMP (FP) RELAY

OFF = The engine control module (ECM) does not activate the fuel pump (FP) relay.

ON = The engine control module (ECM) activates the fuel pump (FP) relay via the central electronic module (CEM).

VEHICLE SPEED

Measurement range 0-319 km/h

The value displays the vehicle speed.

ENGINE COOLING FAN (FC)

Measurement range 0-100%

Signals transmitted by the engine control module (ECM) to the engine cooling fan (FC) control module to activate the engine cooling fan (FC).

16%=step 1

25%=step 2

39%=step 3

61%=step 4

89%=step 5

93%=step 6

CRUISE CONTROL RESUME

The cruise control must be on when reading this parameter.

OFF= resume button unaffected.

ON = resume button activated.

CRUISE CONTROL SET+

The cruise control must be on when reading this parameter.

OFF= SET+ unaffected.

ON = SET+ affected.

CRUISE CONTROL SET-

The cruise control must be on when reading this parameter.

OFF= SET- unaffected.

ON = SET- affected.

BOOST PRESSURE (ACTUAL VALUE)

Measurement range: 0-2000 hPa, absolute pressure (boost pressure- absolute zero pressure(0 hPa).

The Engine control module (ECM) receives information about the current boost pressure via the boost pressure sensor.

The actual value must correspond to the desired value ± 50hPa.

BOOST PRESSURE (DESIRED VALUE)

Measurement range: 0-2000 hPa, absolute pressure (boost pressure- absolute zero pressure(0 hPa).

The engine control module (ECM) receives information about the current throttle angle via the throttle position

sensor, speed (RPM), engine load, knocks etc. These parameters are used to calculate the boost pressure that is permitted in various operating conditions.

VEHICLE COMMUNICATION INFORMATION, ENGINE CONTROL MODULE (ECM) (B5254T2; 2005-2007)

DESCRIPTION OF ACTIVATION

HINT: Not all the components/functions described need to be implemented in the control module. This varies between different systems and markets.

PARAMETERS, VALUE

THROTTLE POSITION (TP) SENSOR, POTENTIOMETER 1 (V)

The parameter can be read off to check the function when activating the "Throttle unit".

Measurement range: 0 - 80 V.

The engine control module (ECM) derives the value from potentiometer 1 for the throttle position (TP) sensor.

The value must increase with increased throttle angle.

Approximately 0.5 V = throttle closed.

Approximately 4.0 V = wide open throttle (WOT).

THROTTLE POSITION (TP) SENSOR, POTENTIOMETER 2 (V)

The parameter can be read off to check the function when activating the "Throttle unit".

Measurement range: 0-80 V.

The engine control module (ECM) derives the value from potentiometer 2 for the throttle position (TP) sensor.

The value must decrease with an increased throttle angle.

Approximately 4.0 V = throttle closed.

Approximately 0.5 V = wide open throttle (WOT).

COMPONENT / FUNCTION

INJECTOR X

The injector opens and closes at high frequency. A clicking or buzzing noise is heard from the valve.

The engine must be switched off at activation.

THROTTLE UNIT

The throttle in the throttle unit opens depending on which activation has been selected (50, 75 or 100 %).

Read off "Throttle position (TP) sensor, potentiometer 1" or "Throttle position (TP) sensor, potentiometer 2" to check the function.

The engine must be switched off at activation.

AIR CONDITIONING (A/C) RELAY

The air conditioning (A/C) relay is activated and powers the air conditioning (A/C) compressor magnetic clutch.

A clear click is heard from the air conditioning (A/C) relay and from the magnetic clutch for the air conditioning (A/C) compressor.

ENGINE COOLING FAN (FC)

The speed of the engine cooling fan (FC) changes depending on which activation is selected.

The fan can be heard.

LEAK DIAGNOSTIC UNIT, VALVE

Certain markets only.

A clicking noise is heard from the valve in the leak diagnostic unit at activation.

EVAPORATIVE EMISSION SYSTEM (EVAP) VALVE

The evaporative emission system (EVAP) valve opens and closes at a certain frequency.

There is a weak click from the EVAP valve.

TURBOCHARGER (TC) CONTROL VALVE

The turbocharger (TC) control valve opens and closes at a certain frequency.

There is a weak click from the turbocharger (TC) control valve.

DESCRIPTION OF DETAILED DIAGNOSTIC TROUBLE CODE INFORMATION READOUT

CONTENT

Select type of description:

- see **DESCRIPTION OF FROZEN VALUES**
- see **STATUS IDENTIFIER, DESCRIPTION**
- see **COUNTERS, DESCRIPTION**

DESCRIPTION OF FROZEN VALUES

EXPLANATION

HINT: Not all described parameters are implemented in the control module. This varies between systems and markets.

Bank 1: indicates cylinders 1-3 on 6-cylinder engines and all cylinders on 5-cylinder engines. The rear heated oxygen sensor of a vehicle with closed loop control following the Y concept (two front and one rear heated oxygen sensor) is designated "Bank 1".

Bank 2: indicates cylinders 4-6 on 6-cylinder engines.

ENGINE SPEED (RPM)

The engine control module (ECM) calculates engine speed from the impulse sensor signal.

BOOST PRESSURE (HPA)

The value is calculated from the boost pressure sensor and indicates the pressure in the induction system after the turbocharger but before the throttle.

The engine control module (ECM) calculates boost pressure from the boost pressure sensor. The pressure is relative to atmospheric pressure.

ENGINE TEMPERATURE (°C)

The engine control module (ECM) calculates temperature from the engine temperature sensor signal.

ENGINE TEMPERATURE, START (°C)

The engine control module (ECM) calculates temperature from the engine temperature sensor signal. The value indicates the temperature of the engine upon engine start in the operating cycle in which the diagnostic trouble code (DTC) was generated.

CALCULATED LOAD (%)

The value, calculated by the engine control module, indicates engine efficiency. The engine control module (ECM) calculates the value from air mass, engine speed, boost pressure, throttle angle, etc. A value over 100% indicates turbocharging (overpressure).

FUEL PRESSURE (PA)

The engine control module (ECM) calculates the pressure from the fuel pressure sensor signal.

The parameter indicates absolute pressure.

SPEED (KM/H)

The value indicates vehicle speed.

The engine control module (ECM) receives information on vehicle speed from the brake control module (BCM) via CAN communication.

IGNITION ANGLE (°BTDC)

The value indicates the ignition angle for cylinder 1.

ATMOSPHERIC PRESSURE (PA)

The value indicates atmospheric pressure at the engine control module (ECM).

The engine control module (ECM) calculates the value from the integrated atmospheric pressure sensor.

The normal value at 0 meters above sea level is 1013 hPa.

OUTSIDE TEMPERATURE (°C)

The engine control module (ECM) calculates the temperature from the outside temperature sensor signal.

INTAKE AIR TEMPERATURE (°C)

The engine control module (ECM) calculates the temperature from the intake air temperature sensor.

EVAP VALVE (%)

The value indicates the control module output signal for EVAP valve regulation, i. e. how much the EVAP valve should open to purge the canister.

0 % = no regulation (EVAP valve closed).

100 % = full regulation (EVAP valve fully open).

THROTTLE ANGLE (%)

The engine control module (ECM) calculates the value from the throttle position sensor. The value is calculated linearly from the throttle position sensor's output signal (0-5V) and indicates how much the throttle is open.

Approx. 6-14 % = idling (0% throttle angle, desired value).

Approx. 85-100 % = throttle fully open (100% throttle angle, desired value).

ACCELERATOR PEDAL POSITION SENSOR, PWM (%)

PWM signal from the accelerator pedal position sensor to the engine control module (ECM). The control module calculates the value from the accelerator pedal position sensor's digital output.

The value indicates the position of the accelerator pedal.

Approx. 8 % = accelerator pedal fully released.

Approx. 88 % = accelerator pedal fully depressed.

ACCELERATOR PEDAL POSITION SENSOR, ANALOG (%)

Analog signal from the accelerator pedal position sensor to the engine control module (ECM). The control module calculates the value from the accelerator pedal position sensor's analog output.

The value indicates the position of the accelerator pedal.

Approx. 8 % = accelerator pedal fully released.

Approx. 88 % = accelerator pedal fully depressed.

THROTTLE ANGLE, DESIRED VALUE (%)

The value indicates the engine control module (ECM) calculated value for throttle opening (throttle angle).

The parameter value cannot be directly compared to the actual value for the throttle angle.

0% = idling.

100% = throttle fully open.

FUEL TRIM, RAPID ADJUSTMENT, BANK X (%)

Rapid adjustment is the continual adaptation of the fuel/air mixture during operation.

Bank 2 only applies to 6-cylinder engines.

HINT: Fuel trim returns to 0% once diagnostic trouble codes (DTCs) have been cleared.

FUEL TRIM, SLOW ADJUSTMENT, BANK X (%)

Slow adjustment is the fuel trim value that adjusts the fuel/air mixture for a longer period of time and factors in component aging, tolerances, etc.

Bank 2 only applies to 6-cylinder engines.

HINT: Fuel trim returns to 0% once diagnostic trouble codes (DTCs) have been cleared.

POWER SUPPLY, ENGINE CONTROL MODULE (ECM) (V)

The value indicates the power supplied to the engine control module (ECM).

TIME AFTER ENGINE START (S)

The value indicates how much time has elapsed between engine start and diagnostic trouble code (DTC) generation.

DESCRIPTION OF PARAMETERS

HINT: Not all the parameters described need to be implemented in the control module. This varies between different systems and markets.

HINT: Bank 1: indicates cylinders 1-3 on 6 cylinder engines and all cylinders on 5 cylinder engines. The rear heated oxygen sensor (HO2S) on cars with fuel trim using the Y-concept (two front heated oxygen sensors (HO2S) and one rear heated oxygen sensors (HO2S) is called "Bank 1".

HINT: Bank 2: indicates cylinders 4-6 on 6-cylinder engines.

PARAMETERS, VALUE

ENGINE SPEED (RPM)

Measurement range: 0-10400 RPM.

The engine control module (ECM) derives the engine speed (RPM) from the engine speed (RPM) sensor signal.

The idle speed varies depending on the engine coolant temperature (ECT).

IDLING SPEED, DIFFERENCE DESIRED VALUE (RPM)

Measurement range: between -1280-1270 RPM.

The value indicates the idle speed deviation from the engine control module (ECM) desired value (target value).

BATTERY VOLTAGE (V)

Measurement range: 0-17.95 V.

The normal value is 13.5-14.5 V when the generator (GEN.) is charging.

The value indicates the voltage from the system relay to the engine control module (ECM).

ENGINE COOLANT TEMPERATURE (ECT) (°C)

Measurement range: -48 to +143 °C.

The engine control module (ECM) derives the temperature from the engine coolant temperature (ECT) sensor signal.

INTAKE AIR TEMPERATURE (IAT) (°C)

Measurement range: -48 to +143 °C.

The engine control module (ECM) calculates the temperature from the temperature sensor for the intake air.

The temperature sensor is integrated in the boost pressure sensor.

OUTSIDE TEMPERATURE (°C)

Measurement range: -40 to +110 °C.

The engine control module (ECM) derives the temperature from the outside temperature sensor signal.

ATMOSPHERIC PRESSURE (PA)

Measurement range: 0-5120 hPa.

The value indicates atmospheric pressure at the engine control module (ECM).

The sensor is integrated in the engine control module (ECM).

Normal value at sea level is 1, 013 hPa.

IGNITION ADVANCE (°BTDC)

Measurement range: -96 to +95.3° before top dead center (BTDC).

The value is calculated from the engine speed (RPM) sensor signal.

The value when idling varies depending on the engine coolant temperature (ECT).

BOOST PRESSURE (HPA)

Measurement range: 0-2550 hPA.

The value is calculated from the boost pressure. It indicates the pressure in the intake system downstream of the turbocharger (TC).

The engine control module (ECM) calculates the boost pressure from the boost pressure sensor. The pressure is relative to atmospheric pressure.

TURBOCHARGER (TC) CONTROL VALVE (%)

Measurement range: 0-100%.

The value indicates the deployment signal from the control module for deploying the turbocharger (TC) control valve, the amount the turbocharger (TC) control valve opens to adjust the turbo pressure.

0% = no control (turbocharger (TC) control valve closed).

100% = full control (the turbocharger (TC) control valve opens completely).

MASS AIR FLOW (KG/H)

Measurement range: 0-1020 kg/h.

The value indicates the mass air flow that passes through the mass air flow (MAF) sensor.

The engine control module (ECM) calculates the value based on the signal from the mass air flow (MAF) sensor.

Normal value with the engine at operating temperature and idling, neutral and air conditioning (A/C) switched off: approximately 12-20 kg/h.

NOTE: Other values apply if the generator (GEN.) is under load, if for example, high beam is on, the heated rear windshield is on etc.

MASS AIR FLOW, CORRECTION VALUE

Measurement range: 0-4.

The value is a stored average of the correction factor of the mass air flow that the engine draws in.

Mass air flow, correction factor= The control module's calculated desired value for the mass air flow divided by (/) the actual measured mass air flow.

Normal range: 1 (±0.2).

ACCELERATOR PEDAL (AP) POSITION SENSOR, ANALOG (V)

Measurement range: 0-320 V.

Analog signal from the accelerator pedal (AP) position sensor to the engine control module (ECM). The control module derives the value from the analog output for the accelerator pedal (AP) position sensor.

The value indicates the accelerator pedal (AP) position.

Approximately 0.5 V = the accelerator pedal (AP) completely released.

Approximately 4.0 V = the accelerator pedal (AP) completely depressed.

THROTTLE ANGLE (%)

Measurement range: 0-100%.

The engine control module (ECM) calculates the value from potentiometer 1 for the throttle position (TP)

sensor. The value indicates the throttle opening.

If a fault is detected in the throttle position (TP) sensor, potentiometer 1 by the engine control module (ECM), the value from the throttle position (TP) sensor potentiometer 2 will be used to represent the throttle angle.

0% = throttle shut.

100% = throttle fully open.

HINT: The value must follow the parameter "Throttle angle, desired value" when the accelerator pedal (AP) is affected.

ACCELERATOR PEDAL (AP) POSITION SENSOR, PULSE WIDTH MODULATION (PWM) (%)

Measurement range: 0-100%.

The PWM signal from the accelerator pedal (AP) position sensor to the engine control module (ECM). The control module derives the value from the digital output for the accelerator pedal (AP) position sensor.

The value indicates the accelerator pedal (AP) position.

Approximately 5% = the accelerator pedal (AP) is completely released.

Approximately 80% = the accelerator pedal (AP) is fully depressed.

THROTTLE ANGLE, DESIRED VALUE (%)

Measurement range: 0-100%.

The engine control module (ECM) calculates a target value for the throttle opening (throttle angle).

The value indicates what the throttle angle should be.

0% = throttle shut.

100% = throttle fully open.

THROTTLE POSITION (TP) SENSOR, POTENTIOMETER 1 (V)

Measurement range: 0-80 V.

The engine control module (ECM) derives the value from potentiometer 1 for the throttle position (TP) sensor.

The value must increase with increased throttle angle.

Approximately 0.5 V = throttle closed.

Approximately 4.0 V = wide open throttle (WOT).

THROTTLE POSITION (TP) SENSOR, POTENTIOMETER 2 (V)

Measurement range: 0-80 V.

The engine control module (ECM) derives the value from potentiometer 2 for the throttle position (TP) sensor.

The value must decrease with an increased throttle angle.

Approximately 4.0 V = throttle closed.

Approximately 0.5 V = wide open throttle (WOT).

LEAKAGE FLOW OVER THE THROTTLE (KG/H)

Measurement range: 0-655 kg/h.

The value indicates how much air passes through the throttle at closed throttle position (CTP). The engine control module (ECM) calculates the value from the mass air flow (MAF) sensor and the throttle position (TP) sensor signals.

AIR CONDITIONING (A/C) PRESSURE (KPA)

Measurement range: -176 to +3277 kPa.

The engine control module (ECM) calculates the value from the signal from the air conditioning (A/C) pressure sensor.

The value indicates the pressure at the high-pressure side of the air conditioning (A/C) system.

The engine control module (ECM) calculates the pressure based on the signal from the air conditioning (A/C) pressure sensor. The pressure is given as a value relative to the atmospheric pressure.

EVAPORATIVE EMISSION SYSTEM (EVAP) VALVE (%)

Measurement range: 0-100%.

The value indicates the deployment signal from the control module for deploying the evaporative emission system (EVAP) valve (the amount the valve opens to empty the canister).

0% = no control (Evaporative emission system (EVAP) valve closed).

100% = full control (Evaporative emission system (EVAP) valve opens completely).

EVAP, FLOW (KG/H)

Measurement range: 0-25 kg/h.

The engine control module (ECM) calculates the flow through the evaporative emission system (EVAP) valve.

This value increases with increased flow.

INJECTION PERIOD BANK X (MS)

Measurement range: 0.0-150 ms.

The signal transmitted by the engine control module (ECM) for injection period.

Normal value when the engine is idling at operating temperature: 1.0-3.0 ms

SHORT-TERM FUEL TRIM, BANK X

Measurement range: 0-2.

The value displays how much the injection period needs to be corrected (from the preprogrammed injection period in the control module) to reach lambda=1. If the engine runs lean or rich (lambda deviates from 1), the short-term fuel trim injection period is increased or decreased so that lambda=1. The average value of this parameter from different engine speed and load ranges is used for the different fuel trim adaptations (idling, lower partial load and upper partial load) so that the short-term fuel trim is always around 1.

Short-term fuel trim = the actual injection period required to reach lambda=1, divided by (/) the injection period in preprogrammed in the control module to reach lambda=1.

The normal value oscillates around 1, when the lambda adaptations for each engine speed (RPM) / load range are ready.

Value over 1: the control module increases the injection period (to prevent a lean fuel / air mix).

Value under 1: the control module decreases the injection period (to prevent a rich fuel air mix).

The parameter must be checked under stable conditions, such as stable engine speed (RPM) and load.

HINT: When lambda deviates from 1, the short-term fuel trim initially compensates at every engine speed (RPM) / load range (idle speed and load). When erasing the diagnostic trouble codes (DTCs), the adaptation values will be reset. This means the short-term fuel trim will be high or low when driving in the low engine speed/load ranges before the adaptations are ready.

LONG-TERM FUEL TRIM BANK X, IDLE SPEED (%)

Measurement range: between -72 and +72%.

Additive adaptation of the short-term fuel trim (correcting the injection period), adaptation that occurs at idle speed. The value indicates how much the short-term fuel trim has been corrected at idle speed so that the short-term fuel trim value can again oscillate around 1.

In the event of an air leakage for example, the value will increase at idle speed (= longer injection time). This is to compensate the fuel / air mix for air capacity. Regardless of the load /engine speed, the same injection time is added. This means that the parameter value does not significantly affect the fuel / air mix at higher loads /

engine speeds.

Normal value when the engine is idling: 0 ±5%.

Value over 0%: the control module increases the injection period (to prevent a lean fuel / air mix).

Value less than 0%: the control module decreases the injection period (to prevent a rich fuel air mix).

HINT: When diagnostic trouble codes (DTCs) are erased, the adaptation returns to 0%.

LONG-TERM FUEL TRIM BANK X, LOWER PART LOAD

Measurement range: 0-2.

Multiplicative adaptation of the short-term fuel trim (correcting the injection period), adaptation that occurs at lower part load (normal road driving). The value stored in the control module indicates how much the short-term fuel trim in the upper part load range has been corrected so that the short-term fuel trim value can again oscillate around 1 at the lower part load. In the event of low fuel pressure for example, the value will increase (= longer injection time). This is to compensate the fuel/air mix for the lack of fuel. Normal value 1±0.1. The lower part load range of the engine must be reached for the value to be updated (normal road driving). Approximately 30 minutes of driving in the lower part load may be required before the adaptation is complete (complete = short-term fuel trim oscillates around 1 at lower part load). Value over 1: the control module increases the injection period (to prevent a lean fuel / air mix). Value under 1: the control module decreases the injection period (to prevent a rich fuel air mix).

HINT: When diagnostic trouble codes (DTCs) are erased, the adaptation returns to 1.

LONG-TERM FUEL TRIM BANK X, UPPER PART LOAD

Measurement range: 0-2.

Multiplicative adaptation of the short-term fuel trim (correcting the injection period), adaptation that occurs at lower part load (normal road driving). The value stored in the control module indicates how much the short-term fuel trim in the upper part load range has been corrected so that the short-term fuel trim value can again oscillate around 1 at the lower part load. In the event of low fuel pressure for example, the value will increase (= longer injection time). This is to compensate the fuel/air mix for the lack of fuel. Normal value 1±0.1. The lower part load range of the engine must be reached for the value to be updated (normal road driving). Approximately 30 minutes of driving in the lower part load may be required before the adaptation is complete (complete = short-term fuel trim oscillates around 1 at lower part load). Value over 1: the control module increases the injection period (to prevent a lean fuel / air mix). Value under 1: the control module decreases the injection period (to prevent a rich fuel air mix).

HINT: When diagnostic trouble codes (DTCs) are erased, the adaptation returns to 1.

FRONT HEATED OXYGEN SENSOR (HO2S), BANK X (^)

Measurement range: 0-16.

Normal value is lambda=1.

If the mixture is rich, lambda is less than 1.

If the mixture is lean, lambda is greater than 1.

REAR HEATED OXYGEN SENSOR (HO2S), BANK X (V)

Measurement range: -0.2 to +1.13.

The signal from the rear heated oxygen sensor (HO2S) to the engine control module (ECM).

Normal value when the engine is running at even load is approximately 0.6 V.

The voltage may vary between -0.2 and 0.9 V. The voltage may, during engine braking for example, drop to -0.2 V.

FUEL PRESSURE (PA)

Measurement range: 50-4680 kPa.

The parameter indicates absolute pressure.

The engine control module (ECM) derives the pressure from the fuel pressure sensor signal. When idling, with the engine at operating temperature and in neutral, the value should be approximately 400 kPa.

HINT: The value must follow "Fuel pressure, desired value".

FUEL PRESSURE, DESIRED VALUE (PA)

Measurement range: 0-6553.5 kPa.

The parameter indicates absolute pressure.

The engine control module (ECM) calculates the target value for "Fuel pressure". The value indicates what the fuel pressure should be.

FUEL TEMPERATURE (°C)

Measurement range: -40 to +215 °C.

The engine control module (ECM) derives the temperature from the fuel temperature sensor signal. The fuel temperature sensor is integrated in the fuel pressure sensor.

FUEL PUMP (FP), WORKLOAD (%)

Measurement range: 0-100%.

The value shows the PWM signal between the engine control module (ECM) and the fuel pump (FP) control module. A higher pulse ratio gives a higher fuel pressure. At 400 kPa the pulse ratio must be approximately 35% (±5%). The values are not relevant if the battery voltage is too low.

OIL LEVEL (%)

Measurement range 0-100%.

The value indicates the oil level signal pulse ratio from the PWM signal generated by the oil level sensor. The signal passes between the engine control module (ECM) and the oil level sensor. The value must be between 17-83% depending on the oil level.

BRAKE PEDAL POSITION (VIA THE BRAKE CONTROL MODULE (BCM)

Measurement range 0-100%.

The engine control module (ECM) receives the value from the brake control module (BCM) via the Control area network (CAN). The value indicates the brake pedal position.

When the brake pedal is not affected the value is approximately 0%. The value increases as the brake pedal is pressed.

SPEED (KM/H)

Measurement range: 0-319 km/h

The vehicle speed is shown from the brake control module (BCM) via the controller area network (CAN).

ENGINE COOLING FAN (FC) (%)

Measurement range: 0-100%

Pulse width modulation (PWM) signals transmitted by the engine control module (ECM) to the engine cooling fan (FC) control module to control the speed of the engine cooling fan (FC).

RESET VALVE CAMSHAFT, INTAKE / EXHAUST (CA)

Measurement range: 0-100%

The pulse ratio transmitted by the engine control module (ECM) to control the camshaft reset valve.

The value indicates control of the camshaft reset valve to control the camshaft position (angle).

The normal value when the camshaft is deployed and in the fixed position is approximately 50%. The value increases/decreases depending on control of the camshaft.

CAMSHAFT SHIFT ANGLE, (INTAKE/ EXHAUST) (°)

Measurement range: between -256 CA and +256 CA.

The engine control module (ECM) calculates the value by comparing the position of the camshaft with the position of the crankshaft. The value indicates the angle of the camshaft. This is the offset of the camshaft 0 position in relation to the crankshaft TDC (0). (The camshaft 0-position = the set alignment of the camshaft position with the crankshaft.)

DESIRED VALUE FOR THE CAMSHAFT SHIFT ANGLE, INTAKE/EXHAUST

Measurement range: between -256 CA and +256 CA.

The value indicates the target value of the engine control module (ECM) for "Camshaft shift angle " (actual shift angle). The "Desired value for the camshaft shift angle" can be altered by changing the engine speed (RPM)/load.

CAMSHAFT SHIFT ANGLE LEEWAY, INTAKE/EXHAUST

Measurement range: between -256 CA and +256 CA.

The value indicates the difference between the "Camshaft shift angle" (actual shift angle) and the desired value for the camshaft shift angle (target value for the engine control module (ECM). Changing the "Camshaft shift angle" is achieved by changing the engine speed (RPM)/load. The normal value varies depending on how far the camshaft is operated and the temperature/grade of the engine oil, although the value must never deviate by more than between ± 10 degrees for longer than approximately 4 seconds.

CAMSHAFT ADAPTATION, INTAKE/EXHAUST (CA)

Measurement range: between -511 to +511 degrees.

The value indicates the camshaft deviation from the basic setting.

The value is 0 degrees when the camshaft position (angle) corresponds with the crankshaft position (angle). Normal value is 0 degrees ±8 degrees.

The value is updated following adaptation of the camshaft position (angle position). The adaptation is performed when the camshaft control is not active (fully returned camshaft).

MISFIRE COUNTER

The engine control module (ECM) calculates the overall total for the number of misfires affecting emissions or causing catalytic converter damage for all cylinders during a certain number of crankshaft revolutions.

The normal value is 0 (no misfiring).

MISFIRE COUNTER, CYL X

The value indicates the number of misfires for each cylinder during the present operating cycle.

The value is affected by misfires which affect emissions and cause catalytic converter damage.

The normal value is 0 (no misfiring).

The value is reset when the ignition is switched off.

PARAMETER, STATUS

COOLANT LEVEL SENSOR

The engine control module (ECM) calculates the status from the engine coolant level switch.

The status indicates the engine coolant level in the expansion tank.

THROTTLE UNIT ADAPTATION

If necessary the engine control module (ECM) runs an adaptation of the throttle unit by guiding the throttle to the limit positions (open/closed) so that it " learns" the parameters of that actual throttle unit.

The status indicates if the adaptation has been run or not.

OK = Adaptation of the throttle unit has run.

NOT OK = Adaptation of the throttle unit has not run.

NOTE: The basic conditions must be met before an adaptation of the throttle unit can be carried out.

AUTOMATIC TRANSMISSION

Only vehicles that have an automatic transmission.

The engine control module (ECM) calculates the status of the signal from the transmission control module (TCM) via CAN.

ON = the gear selector is in position "D" or another gear is selected.

OFF = the gear selector is in position "P" or "N"

CRUISE CONTROL RESUME

The cruise control must be on when reading this parameter.

OFF= resume button unaffected.

ON = resume button activated.

CRUISE CONTROL SET+

The cruise control must be on when reading this parameter.

OFF= SET+ unaffected.

ON = SET+ affected.

CRUISE CONTROL SET-

The cruise control must be on when reading this parameter.

OFF= SET- unaffected.

ON = SET- affected.

STOP LAMP SWITCH

The engine control module (ECM) calculates the value from the stop lamp switch.

ON = stop lamp switch on.

OFF = stop lamp switch unaffected.

AIR CONDITIONING (A/C) COMPRESSOR, ACTIVE

The signal transmitted by the engine control module (ECM) for activating the air conditioning (A/C) compressor relay.

OFF = The engine control module (ECM) does not activate the air conditioning (A/C) compressor relay.

ON = The engine control module (ECM) activates the air conditioning (A/C) compressor relay.

OIL PRESSURE SENSOR

The engine control module (ECM) calculates the value from the oil pressure switch signal.

ON = the oil pressure switch circuit is closed, signal to the driver information module (DIM) via CAN for lit oil pressure warning lamp.

OFF = the oil pressure switch circuit is open, signal to the driver information module (DIM) via CAN for oil pressure warning lamp not lit.

LONG-TERM FUEL TRIM, BANK X

C/L= Closed Loop, fuel trim is active

O/L = Open Loop, fuel trim is not active

FUEL PUMP (FP) RELAY

OFF = The engine control module (ECM) does not request fuel pump (FP) relay activation.

ON = The engine control module (ECM) requests fuel pump (FP) relay activation via CAN to the central electronic module (CEM).

BOOST PRESSURE (ACTUAL VALUE)

Measurement range: 0-2000 hPa, absolute pressure (boost pressure- absolute zero pressure (0 hPa).

The Engine control module (ECM) receives information about the current boost pressure via the boost pressure sensor.

The actual value must correspond to the desired value ± 50hPa.

BOOST PRESSURE (DESIRED VALUE)

Measurement range: 0-2000 hPa, absolute pressure (boost pressure- absolute zero pressure (0 hPa).

The engine control module (ECM) receives information about the current throttle angle via the throttle position sensor, speed (RPM), engine load, knocks etc. These parameters are used to calculate the boost pressure that is permitted in various operating conditions.

VEHICLE COMMUNICATION INFORMATION, ENGINE CONTROL MODULE (ECM) (B6294T; 2005-2006)

DESCRIPTION OF ACTIVATION

see **DESCRIPTION OF ACTIVATION**

DESCRIPTION OF DETAILED DIAGNOSTIC TROUBLE CODE INFORMATION READOUT

see **DESCRIPTION OF DETAILED DIAGNOSTIC TROUBLE CODE INFORMATION READOUT**

DESCRIPTION OF PARAMETERS

see **DESCRIPTION OF PARAMETERS**

VEHICLE COMMUNICATION INFORMATION, ENGINE CONTROL MODULE (ECM) (B6324S; 2007-2010)

DESCRIPTION OF ACTIVATIONS

HINT: Not all the components/functions described need to be implemented in the control module. This varies between different systems and markets.

PARAMETERS, VALUE

THROTTLE ANGLE (%)

Measurement range 0 - 100 %.

The engine control module (ECM) calculates the value from potentiometer 1 for the throttle position sensor. The value indicates the throttle opening. If the engine control module (ECM) detects a fault in the throttle position sensor potentiometer 1, the value from the throttle position sensor potentiometer 2 will be used to represent the throttle angle. This presumes that the function of throttle position sensor potentiometer 2 is OK.

0 % = throttle shut.

100 % = throttle fully open. This corresponds to an opening angle of approximately 84 degrees.

THROTTLE POSITION, CIRCUIT 1 (%)

Measurement range: -3 to +130 %.

Normal value: 0 - 100 %.

There is an electrical fault if the displayed value is outside the measurement range. The value must increase with increased throttle angle.

Approximately 0 % = throttle closed.

Approximately 100 % = wide open throttle (WOT). This corresponds to an opening angle of approximately 84 degrees.

THROTTLE POSITION, CIRCUIT 2 (%)

Measurement range: -4 to +140 %.

Normal value: 0 - 100 %.

There is an electrical fault if the displayed value is outside the measurement range. The value must increase with increased throttle angle.

Approximately 0 % = throttle closed.

Approximately 100 % = wide open throttle (WOT). This corresponds to an opening angle of approximately 84 degrees.

COMPONENT/FUNCTION

INJECTOR VALVES, CYLINDERS 1-6

Injector valves 1-6 open using the start button and close using the stop button.

Clicking heard from the injector valve.

The engine must be switched off.

AIR CONDITIONING (A/C) RELAY

Deactivated using the start button and activated using the stop button. Air conditioning A/C must be requested from the control panel.

A clicking noise is heard from the magnetic clutch for the air conditioning (A/C) compressor. If the temperature on the air conditioning (A/C) is set to cold, it will be switched off when the relay is deactivated.

ENGINE COOLING FAN (FC) 30/66/100 %

The fan is activated using the start button and stopped using the stop button.

There is audible fan noise.

LEAK DIAGNOSTIC UNIT, VALVE

Certain markets only.

A clicking noise is heard from the valve in the leak diagnostic unit at activation.

EVAPORATIVE EMISSION SYSTEM (EVAP) VALVE

The evaporative emission system (EVAP) valve opens and closes 5 times per second. Activated using the start button and stopped using the stop button.

There is an audible clicking sound from the EVAP valve.

THROTTLE UNIT 0/25/50/75/100%

Throttle in the throttle unit controlled.

The throttle opens to different positions depending on which activation is selected.

Read off "Throttle angle", "Throttle position, circuit 1" or "Throttle position, circuit 2" to check the function.

NOTE: The engine must be switched off at activation.

ACTUATOR VARIABLE INTAKE, UPPER

The throttle opens using the start button and closes using the stop button.

A noise is heard from the actuator.

ACTUATOR VARIABLE INTAKE, LOWER

The throttle opens using the start button and closes using the stop button.

A noise is heard from the actuator.

DESCRIPTION OF PARAMETERS

HINT: The engine cylinders are counted starting from the cylinder furthest from the flywheel (right-hand side of the vehicle in the direction of travel)

HINT: Bank 1: cylinder 1-3.

HINT: Bank 2: cylinder 4-6.

PARAMETERS, VALUE

ECU POWER SUPPLY (V)

Measurement range: 0 - 20 V.

The normal value is 13-14.5 V when the generator (GEN.) is charging.

The value indicates the voltage at the engine control module (ECM).

OUTSIDE TEMPERATURE (°C)

Measurement range: -40 to +120 °C.

The engine control module (ECM) derives the temperature from the outside temperature sensor signal.

ENGINE CONTROL MODULE (ECM), TEMPERATURE (°C)

Measurement range: -40 to +120 °C.

The engine control module (ECM) calculates the temperature from the internal temperature sensor signal in the control module.

AIR CONDITIONING (A/C) PRESSURE (PA)

Measurement range: 0 - 3100 kPa.

The value indicates the pressure at the high-pressure side of the air conditioning (A/C) system.

The engine control module (ECM) calculates the pressure based on the signal from the air conditioning (A/C) pressure sensor. The pressure is given as a value relative to the atmospheric pressure.

AIR CONDITIONING (A/C) COMPRESSOR, STATUS (%)

Measurement range: 0-100%.

The value shows the variable AC compressor's deployment (duty cycle).

ENGINE COOLANT TEMPERATURE (ECT) (°C)

Measurement range: -40 to +120 °C.

The engine control module (ECM) derives the temperature from the engine coolant temperature (ECT) sensor signal.

ATMOSPHERIC PRESSURE (PA)

Measurement range: 0 - 2267 hPa.

The value indicates atmospheric pressure at the engine control module (ECM).

Normal value at 0 meters above sea level is 1013 hPa.

INTAKE AIR TEMPERATURE (IAT) (°C)

Measurement range: -40 to +120 °C.

The engine control module (ECM) calculates the temperature from the temperature sensor for intake air (integrated in the mass air flow (MAF) sensor).

MANIFOLD ABSOLUTE PRESSURE (MAP) (PA)

Measurement range: 0 - 5000 hPa.

Normal pressure (atmospheric pressure at sea level) approximately 1013 hPa with ignition on (open throttle) and approximately 420 ± 30 hPa when idling (intake air temperature approximately 20 °C).

MASS AIR FLOW (G/S)

The value indicates the mass air flow that passes through the mass air flow (MAF) sensor.

The engine control module (ECM) calculates the value based on the signal from the mass air flow (MAF) sensor.

Normal value at idle is approx. 5-7 g/s.

FUEL TEMPERATURE (°C)

Measurement range: -40 to +120 °C.

The engine control module (ECM) derives the temperature from the fuel temperature sensor signal. The fuel temperature sensor is integrated in the fuel pressure sensor.

FUEL PRESSURE (PA)

The parameter indicates absolute pressure.

The engine control module (ECM) calculates the pressure from the fuel pressure sensor signal.

Normal value 480 ± 5 kPa when idling, in neutral and with the engine at operating temperature. The pressure falls with the ignition off.

FUEL PUMP (FP), WORKLOAD (%)

Measurement range: 0-100%.

Working range: 10 - 85 %.

Normal value: 50 % (± 10 %).

The value indicates the signal transmitted from the engine control module (ECM) to the fuel pump (FP) control module.

INJECTION TIME (MS)

Measurement range: 0 - 524 ms.

Engine control module (ECM) controlled signal for injection time.

EVAP VALVE, WORK LOAD (%)

Measurement range: 0-100%.

The value indicates the pulse width modulated (PWM) signal transmitted from the engine control module (ECM) to the evaporative emissions system (EVAP) valve.

0 % corresponds to closed valve, i. e. when there is no purging.

EVAPORATIVE EMISSIONS SYSTEM (EVAP) FLOW (G/S)

Measurement range: 0 - 0.85 g/s.

The value indicates the estimated flow through the evaporative emission system (EVAP) valve. Used as an input parameter during compensation for other parts of the system.

Normal value at idle is 0 g/s when there is no purging and 0.85 g/s during purging.

IGNITION ADVANCE (CA)

Measurement range: -20 to +62° CA BTDC.

Normal value when idling varies depending on the engine coolant temperature (ECT) etc.

VEHICLE SPEED

Measurement range: 0 - 255 km/h.

The value displays the vehicle speed.

HINT: in certain markets.

ENGINE SPEED (RPM)

Measurement range: 0-10, 400 RPM.

The engine control module (ECM) derives the engine speed (RPM) from the engine speed (RPM) sensor signal.

Idling speed varies depending on engine temperature. Normal value 650 ± 50 RPM with engine at operating temperature.

BRAKE PEDAL POSITION (VIA CAN) (%)

Measurement range: 0-100%.

The value indicates the position of the brake pedal, calculated from the signal transmitted from the brake control module (BCM).

When the brake pedal is not depressed the value is 0%. The value increases as the pedal is depressed.

ACCELERATOR PEDAL POSITION (VIA CAN) (%)

Measurement range: 0-100%.

Analog signal from the accelerator pedal (AP) position sensor to the engine control module (ECM).

The value indicates the accelerator pedal (AP) position.

Approximately 8 %= the accelerator pedal (AP) completely released.

Approximately 88 %= the accelerator pedal (AP) completely depressed.

The analog signal is usually used by the engine control module (ECM).

HINT: The value must follow the parameter "Accelerator pedal (AP), PWM.

ACCELERATOR PEDAL (AP) POSITION (%)

Measurement range: 0-100%.

PWM signal from the accelerator pedal (AP) position sensor to the engine control module (ECM).

The value indicates the accelerator pedal (AP) position.

Approximately 8 %= the accelerator pedal (AP) completely released.

Approximately 88 %= the accelerator pedal (AP) completely depressed.

The PWM signal is used if there is a fault with the analog signal.

HINT: The value must follow the parameter "Accelerator pedal (AP), analog.

THROTTLE POSITION, DESIRED VALUE (%)

Measurement range: 0-100%.

The value indicates the signal transmitted to the throttle unit from the engine control module (ECM).

0 % = throttle shut.

100 % = throttle fully open. This corresponds to an opening angle of approximately 84 degrees.

THROTTLE POSITION (%)

Measurement range: 0-100%.

The engine control module (ECM) calculates the value from potentiometer 1 for the throttle position sensor. The value indicates the throttle opening. If the engine control module (ECM) detects a fault in throttle position sensor potentiometer 1, the value from throttle position sensor potentiometer 2 will be used to represent the throttle angle. This presumes that the function of throttle position sensor potentiometer 2 is OK.

0 % = throttle shut.

100 % = throttle fully open. This corresponds to an opening angle of approximately 84 degrees.

HINT: Must follow the parameter "Throttle angle, desired value.

THROTTLE POSITION, CIRCUIT 1 (%)

Measurement range: -3 to +130 %.

Normal value 0 - 100 %.

There is an electrical fault if the displayed value is outside the measurement range. The value must increase with increased throttle angle.

Approximately 0 % = throttle closed.

Approximately 100 % = wide open throttle (WOT). This corresponds to an opening angle of approximately 84 degrees.

THROTTLE POSITION, CIRCUIT 2 (%)

Measurement range: -4 to +140 %.

Normal value 0 - 100 %.

There is an electrical fault if the displayed value is outside the measurement range. The value must increase with increased throttle angle.

Approximately 0 % = throttle closed.

Approximately 100 % = wide open throttle (WOT). This corresponds to an opening angle of approximately 84 degrees.

REAR HEATED OXYGEN SENSOR (HO2S), SIGNAL BANK X (V)

Measurement range: 0 - 5 V.

The signal from the rear heated oxygen sensor (HO2S) to the engine control module (ECM).

Normal value when the engine is running at even load is approximately 0.6 V.

FRONT HEATED OXYGEN SENSOR (HO2S), SIGNAL BANK X

Measurement range: 0 - 2.

Normal value is lambda=1.

At rich mixture is lambda < 1.

At lean mixture is lambda > 1.

FRONT LAMBDA CONTROL SLOW, BANK X

The parameter displays the adaptation factor of the lambda probe.

Measurement range: 0 - 2.

Compensates/multiplies the injection period at the relevant load so that the lambda value can be correctly reached.

Normal value 1.

There are 36 adaptation windows per bank. Which window is active depends on the load and the engine speed. Operates together with "Front heated oxygen sensor control fast, bank x".

FRONT LAMBDA CONTROL FAST, BANK X

The parameter displays the compensation factor of the lambda probe.

Measurement range: 0 - 2.

lambda value compensation increases or reduces the injection period depending on the deviation.

Normal value 1.

Works together with "Front lambda control slow, bank x".

ENGINE COOLING FAN (FC) (%)

Measurement range: 0-100%.

Engine control module (ECM) PWM signal to the engine cooling fan (FC) control module to activate the engine cooling fan (FC).

RESET VALVE CAMSHAFT, INLET BANK X/ EXHAUST BANK X (CA)

Measurement range: 0-100%.

The signal transmitted by the engine control module (ECM) to control the camshaft reset valve.

The value indicates the average current for the PWM signal through the camshaft reset valve for controlling the camshaft shift angle (angle position).

The normal value when the camshaft is deployed and in the fixed position is 400 - 900 mA. The value increases/decreases depending on control of the camshaft.

CAMSHAFT SHIFT ANGLE -INLET BANK X/ -EXHAUST BANK X (CA)

The engine control module (ECM) calculates the value using the signals from the engine speed (RPM) sensor (crankshaft position) and the camshaft position (CMP) sensor (camshaft position).

The value indicates how much the camshaft is deployed. When the camshaft is in its 0-position, the angle is 0° CA. When the camshaft is fully deployed, the angle is approx. 45° CA.

Normal value at idle, engine at operating temperature, approximately 0° CA.

CA = (crankshaft degrees)

HINT: The value must follow the parameter "Camshaft shift angle, inlet/exhaust, desired value".

CAMSHAFT SHIFT ANGLE -INLET/ -EXHAUST, DESIRED VALUE (CA)

The value indicates the engine control module (ECM) target value for "Camshaft shift angle -inlet bank x/ -exhaust bank x".

CAMSHAFT ADAPTION -INLET BANK X/ -EXHAUST BANK X (CA)

The value indicates the camshaft deviation from the basic setting by calculating the position of the camshaft in relation to the reference positions from the crankshaft.

The value is 0° when the camshaft position (angle) corresponds to the crankshaft position (angle).

Normal value for intake camshaft: 75° CA (+/- 8° CA)

Normal value for exhaust camshaft: 120° CA (+/- 8° CA)

The value is updated following adaptation of the camshaft position. The adaptation is carried out when the camshaft control is not active (fully returned camshaft).

MISFIRE COUNTER EMISSIONS IMPACT / CATALYTIC CONVERTER DAMAGE, TOTAL

The value indicates the number of misfires for all cylinders during the present operating cycle.

The value is reset with ignition off.

Normal value is 0 (= no misfire).

MISFIRE COUNTER, AVERAGE

The engine control module (ECM) calculates the average number of misfires in 10 operating cycles, all cylinders.

The value is affected by misfires which affect emissions and cause catalytic converter damage.

The value is reset when erasing diagnostic trouble codes.

Normal value is 0 (= no misfire).

MISFIRE COUNTER CYLINDER X, AVERAGE

The engine control module (ECM) calculates the average number of misfires in 10 operating cycles, each cylinder.

The value is affected by misfires which affect emissions and cause catalytic converter damage.

The value is reset when erasing diagnostic trouble codes.

Normal value is 0 (= no misfire).

PARAMETER, STATUS

GEAR POSITION

Only vehicles equipped with an automatic transmission.

The engine control module (ECM) calculates the status of the signal from the directly connected cable from the transmission control module (TCM).

P/N engaged = gear selector is in "Park" or "Neutral".

P/N disengaged = gear selector position is not in "Park" or "Neutral".

GEAR POSITION (VIA CAN)

Only vehicles equipped with an automatic transmission.

the engine control module (ECM) calculates the status of the signal from the transmission control module (TCM) via CAN.

P/N engaged = gear selector is in "Park" or "Neutral".

P/N disengaged = gear selector position is not in "Park" or "Neutral".

POWER SUPPLY MODE

The value indicates the status of the power supply mode.

- Key removed
- Key recently removed
- Key approved
- Ignition off after Accessory position
- Accessory position
- Accessory position after Ignition on
- Ignition on
- Running
- Start attempt

IGNITION SWITCH POSITION (VIA CAN)

The engine control module calculates the status of the signal from the central electronic module via CAN communication.

STARTER RELAY

The status indicates if the engine control module requested activation of the starter relay.

Active = Engine control module activates starter relay.

Not active = Engine control module does not activate starter relay.

CRUISE CONTROL,

Activated = on the cruise control keypad depressed.

Not activated = on the cruise control keypad not depressed.

CRUISE CONTROL,

Activated = on the cruise control keypad depressed.

Not activated = on the cruise control keypad not depressed.

CRUISE CONTROL, ON/OFF

Activated = on the cruise control keypad depressed.

Not activated = on the cruise control keypad not depressed.

CRUISE CONTROL,

Activated = on the cruise control keypad depressed.

Not activated = on the cruise control keypad not depressed.

CRUISE CONTROL,

Activated = on the cruise control keypad depressed.

Not activated = on the cruise control keypad not depressed.

BRAKE LIGHT SWITCH

The engine control module (ECM) calculates the value from the brake light switch signal.

Activated = brake light switch actuated.

Not activated = brake light switch unaffected.

DESCRIPTION OF READING OFF OF EXTENDED DIAGNOSTIC TROUBLE CODE (DTC) INFORMATION

see **DESCRIPTION OF FROZEN VALUES**

see **DESCRIPTION OF STATUS IDENTIFIER**

see **DESCRIPTION OF COUNTER**

VEHICLE COMMUNICATION INFORMATION, ENGINE CONTROL MODULE (ECM) (B6324S5; 2011-2012)

DESCRIPTION OF ACTIVATIONS

see **DESCRIPTION OF ACTIVATIONS**

DESCRIPTION OF PARAMETERS

see **DESCRIPTION OF PARAMETERS**

DESCRIPTION OF READING OFF OF EXTENDED DIAGNOSTIC TROUBLE CODE (DTC) INFORMATION

see **DESCRIPTION OF READING OFF OF EXTENDED DIAGNOSTIC TROUBLE CODE (DTC) INFORMATION**

VEHICLE COMMUNICATION INFORMATION, ENGINE CONTROL MODULE (ECM) (B8444S; 2005-2011)

DESCRIPTION OF ACTIVATIONS

HINT: Not all the components/functions described need to be implemented in the control module. This varies between different systems and markets.

PARAMETERS, VALUE

THROTTLE ANGLE (%)

Measurement range 0 -100%.

The engine control module (ECM) calculates the value from potentiometer 1 for the throttle position (TP) sensor. The value indicates the throttle opening. If a fault is detected in the throttle position (TP) sensor, potentiometer 1 by the engine control module (ECM), the value from the throttle position (TP) sensor, potentiometer 2 will be used to represent the throttle angle. This presumes that the function of throttle position (TP) sensor, potentiometer 2 is OK.

0% = throttle shut.

100% = wide open throttle (WOT). This corresponds to an opening angle of approximately 84 degrees.

THROTTLE POSITION, CIRCUIT 1 (%)

Measurement range -3 - +130%.

Normal value 0 - 100%.

There is an electrical fault if the displayed value is outside the measurement range. The value must increase with increased throttle angle.

Approximately 0% = throttle closed.

Approximately 100% = wide open throttle (WOT). This corresponds to an opening angle of approximately 84 degrees.

THROTTLE POSITION, CIRCUIT 2 (%)

Measurement range -4 - +140%.

Normal value 0 - 100%.

There is an electrical fault if the displayed value is outside the measurement range. The value must increase with increased throttle angle.

Approximately 0% = throttle closed.

Approximately 100% = wide open throttle (WOT). This corresponds to an opening angle of approximately 84 degrees.

COMPONENT/FUNCTION

INJECTOR VALVE, CYLINDER 1-8

Injector valve 1-8 opens using the start button and closes using the stop button.

Clicking heard from the injector valve.

The engine must be switched off.

AIR CONDITIONING (A/C) RELAY

Deactivated using the start button and activated using the stop button. Air conditioning A/C must be requested from the control panel.

A clicking noise is heard from the magnetic clutch for the air conditioning (A/C) compressor. If the temperature on the air conditioning (A/C) is set to cold, it will be switched off when the relay is deactivated.

ENGINE COOLING FAN (FC) 30/66/100 %

The fan is activated using the start button and stopped using the stop button.

There is audible fan noise.

LEAK DIAGNOSTIC UNIT, VALVE

Certain markets only.

A clicking noise is heard from the valve in the leak diagnostic unit at activation.

EVAPORATIVE EMISSION SYSTEM (EVAP) VALVE

The evaporative emission system (EVAP) valve opens and closes 5 times per second. Activated using the start button and stopped using the stop button.

There is an audible clicking sound from the EVAP valve.

THROTTLE UNIT 0/25/50/75/100%

Throttle in the throttle unit controlled.

The throttle opens to different positions depending on which activation is selected.

Read off "Throttle angle", "Throttle position, circuit 1" or "Throttle position, circuit 2" to check the function.

NOTE: The engine must be switched off at activation.

VALVE VARIABLE INLET

The valve opens using the start button and closes using the stop button.

A clicking noise is heard from the valve.

DESCRIPTION OF PARAMETERS

HINT: The engine cylinders are counted starting from the cylinder furthest from the flywheel (right-hand side of the vehicle in the direction of travel)

HINT: Bank 1 (cylinder row nearest the front): cylinders 1, 3, 5 and 7.

HINT: Bank 2 (cylinder row furthest to the rear, nearest the passenger compartment): cylinders 2, 4, 6, and 8.

PARAMETERS, VALUE

BATTERY VOLTAGE (V)

Measurement range 0-20 V.

The normal value is 13-14.5 V when the generator (GEN.) is charging.

The value indicates the voltage at the engine control module (ECM).

OUTSIDE TEMPERATURE (°C)

Measurement range -40 to +120 °C.

The engine control module (ECM) derives the temperature from the outside temperature sensor signal.

ENGINE CONTROL MODULE (ECM), TEMPERATURE (°C)

Measurement range -40 to +120 °C.

The engine control module (ECM) calculates the temperature from the internal temperature sensor signal in the control module.

AIR CONDITIONING (A/C) PRESSURE (PA)

Measurement range 0 to +3100 kPa.

The engine control module (ECM) calculates the value from the signal from the air conditioning (A/C) pressure sensor.

The value indicates the pressure at the high-pressure side of the air conditioning (A/C) system.

The engine control module (ECM) calculates the pressure based on the signal from the air conditioning (A/C) pressure sensor. The pressure is given as a value relative to the atmospheric pressure.

AIR CONDITIONING (A/C) COMPRESSOR, STATUS (%)

Measurement range 0 to 100%.

The value shows the variable AC compressor's deployment (duty cycle).

ENGINE COOLANT TEMPERATURE (ECT) (°C)

Measurement range -40 to +120 °C.

The engine control module (ECM) derives the temperature from the engine coolant temperature (ECT) sensor signal.

ATMOSPHERIC PRESSURE (PA)

Measurement range 0-2267 hPa.

The value indicates atmospheric pressure at the engine control module (ECM).

Normal value at 0 meters above sea level is 1013 hPa.

INTAKE AIR TEMPERATURE (IAT) (°C)

Measurement range -40 to +120 °C.

The engine control module (ECM) calculates the temperature from the temperature sensor for intake air (integrated in the mass air flow (MAF) sensor).

MANIFOLD ABSOLUTE PRESSURE (MAP) (PA)

Measurement range 0-5000 hPa.

Normal pressure (atmospheric pressure at sea level) approximately 1013 hPa with ignition on (open throttle) and approximately 420 ± 30 hPa when idling (intake air temperature approximately 20 °C).

MASS AIR FLOW (G/S)

The value indicates the mass air flow that passes through the mass air flow (MAF) sensor.

The engine control module (ECM) calculates the value based on the signal from the mass air flow (MAF) sensor.

FUEL TEMPERATURE (°C)

Measurement range -40 to +120 °C.

The engine control module (ECM) derives the temperature from the fuel temperature sensor signal. The fuel temperature sensor is integrated in the fuel pressure sensor.

FUEL PRESSURE (PA)

The parameter indicates absolute pressure.

The engine control module (ECM) calculates the pressure from the fuel pressure sensor signal.

Normal value 480 ± 5 kPa when idling, in neutral and with the engine at operating temperature. The pressure falls with the ignition off.

FUEL PUMP (FP), WORKLOAD (%)

Measurement range 0 -100 %.

Operating range 10 - 85 %. Normal value 50 % (±10 %).

The value indicates the signal transmitted from the engine control module (ECM) to the fuel pump (FP) control module.

EVAP VALVE (%)

Measurement range 0 -100 %.

The value indicates the pulse width modulated (PWM) signal transmitted from the engine control module (ECM) to the evaporative emissions system (EVAP) valve.

0 % corresponds to closed valve, i. e. when there is no purging.

EVAPORATIVE EMISSIONS SYSTEM (EVAP) FLOW (G/S)

Measurement range 0 - 0.85 g/s.

The value indicates the estimated flow through the evaporative emission system (EVAP) valve. Used as an input parameter during compensation for other parts of the system.

Normal value at idle is 0 g/s when there is no purging and 0.85g/s during purging.

IGNITION ADVANCE (CA)

Measurement range -20 to +62 CA BTDC.

Normal value when idling varies depending on the engine coolant temperature (ECT) etc.

VEHICLE SPEED (KM/H)

Measurement range 0 - 255 km/h.

The value displays the vehicle speed.

HINT: Miles per hour in certain markets.

ENGINE SPEED (RPM)

Measurement range 0-10400 RPM.

The engine control module (ECM) derives the engine speed (RPM) from the engine speed (RPM) sensor signal.

Idling speed varies depending on engine temperature. Normal value 650 ± 50 RPM with engine at operating temperature.

BRAKE PEDAL POSITION (VIA CAN) (%)

Measurement range 0 -100 %.

The value indicates the position of the brake pedal, calculated from the signal transmitted from the brake control module (BCM).

When the brake pedal is not depressed the value is 0%. The value increases as the pedal is depressed.

ANALOG ACCELERATOR PEDAL (AP) (%)

Measurement range 0 -100 %.

Analog signal from the accelerator pedal (AP) position sensor to the engine control module (ECM).

The value indicates the accelerator pedal (AP) position.

Approximately 8 %= the accelerator pedal (AP) completely released.

Approximately 88 %= the accelerator pedal (AP) completely depressed.

The analog signal is usually used by the engine control module (ECM).

HINT: The value must follow the parameter "Accelerator pedal (AP), PWM".

ACCELERATOR PEDAL POSITION, PWM (%)

Measurement range 0 -100 %.

PWM signal from the accelerator pedal (AP) position sensor to the engine control module (ECM).

The value indicates the accelerator pedal (AP) position.

Approximately 8 %= the accelerator pedal (AP) completely released.

Approximately 88 %= the accelerator pedal (AP) completely depressed.

The PWM signal is used if there is a fault with the analog signal.

HINT: The value must follow the parameter "Accelerator pedal (AP), analog".

THROTTLE ANGLE, DESIRED VALUE (%)

Measurement range 0 -100 %.

The value indicates the signal transmitted to the throttle unit from the engine control module (ECM).

0 % = throttle shut.

100 % = throttle fully open. This corresponds to an opening angle of approximately 84 degrees.

THROTTLE ANGLE (%)

Measurement range 0 -100 %.

The engine control module (ECM) calculates the value from potentiometer 1 for the throttle position (TP) sensor. The value indicates the throttle opening. If a fault is detected in the throttle position (TP) sensor, potentiometer 1 by the engine control module (ECM), the value from the throttle position (TP) sensor, potentiometer 2 will be used to represent the throttle angle. This presumes that the function of throttle position (TP) sensor, potentiometer 2 is OK.

0 % = throttle shut.

100 % = throttle fully open. This corresponds to an opening angle of approximately 84 degrees.

HINT: Must follow the parameter "Throttle angle, desired value".

THROTTLE POSITION, CIRCUIT 1 (%)

Measurement range -3 to +130 %.

Normal value 0 - 100 %.

There is an electrical fault if the displayed value is outside the measurement range. The value must increase with increased throttle angle.

Approximately 0 % = throttle closed.

Approximately 100 % = wide open throttle (WOT). This corresponds to an opening angle of approximately 84 degrees.

THROTTLE POSITION, CIRCUIT 2 (%)

Measurement range -4 to +140 %.

Normal value 0 - 100 %.

There is an electrical fault if the displayed value is outside the measurement range. The value must increase with increased throttle angle.

Approximately 0 % = throttle closed.

Approximately 100 % = wide open throttle (WOT). This corresponds to an opening angle of approximately 84 degrees.

REAR HEATED OXYGEN SENSOR (HO2S), SIGNAL BANK X (V)

Measurement range 0-5 V.

The signal from the rear heated oxygen sensor (HO2S) to the engine control module (ECM).

Normal value when the engine is running at even load is approximately 0.6 V.

FRONT HEATED OXYGEN SENSOR (HO2S), SIGNAL BANK X

Measurement range 0 - 2.

Normal value is lambda=1.

At rich mixture is lambda < 1.

At lean mixture is lambda>1.

LONG-TERM FUEL TRIM, BANK X

The parameter displays the adaptation factor of the lambda probe.

Measurement range 0 - 2.

Compensates/multiplies the injection period at the relevant load so that the lambda value can be correctly reached.

Normal value 1.

There are 36 adaptation windows per bank. Which window is active depends on the load and the engine speed. Operates together with "Short-term fuel trim, bank x".

SHORT-TERM FUEL TRIM, BANK X

The parameter displays the compensation factor of the lambda probe.

Measurement range 0 - 2.

lambda value compensation increases or reduces the injection period depending on the deviation.

Normal value 1.

Operates together with "Long-term fuel trim, bank x".

ENGINE COOLING FAN (FC) (%)

Measurement range 0 -100%

Engine control module (ECM) PWM signal to the engine cooling fan (FC) control module to activate the engine cooling fan (FC).

RESET VALVE CAMSHAFT, INLET BANK X/ EXHAUST BANK X (CA)

Measurement range 0 -100 %.

The signal transmitted by the engine control module (ECM) to control the camshaft reset valve.

The value indicates the average current for the PWM signal through the camshaft reset valve for controlling the camshaft shift angle (angle position).

The normal value when the camshaft is deployed and in the fixed position is 400 - 900 mA. The value increases/decreases depending on control of the camshaft.

CAMSHAFT SHIFT ANGLE -INLET BANK X/ -EXHAUST BANK X (CA)

The engine control module (ECM) calculates the value using the signals from the engine speed (RPM) sensor (crankshaft position) and the camshaft position (CMP) sensor (camshaft position).

The value indicates how much the camshaft is deployed. When the camshaft is in its 0-position (camshaft not deployed), the angle is 0 CA. When the camshaft is fully deployed, the angle is 45 CA.

Normal value at idle, engine at operating temperature, approximately 0 CA.

CA = Crank Angle. (crankshaft degrees)

HINT: The value must follow the parameter "Camshaft shift angle, inlet/exhaust, desired value".

CAMSHAFT SHIFT ANGLE -INLET/ -EXHAUST, DESIRED VALUE (CA)

The value indicates the engine control module (ECM) target value for "Camshaft shift angle -inlet bank x/ -exhaust bank x".

CAMSHAFT ADAPTION -INLET BANK X/ -EXHAUST BANK X (CA)

The value indicates the camshaft deviation from the basic setting by calculating the position of the camshaft in relation to the reference positions from the crankshaft.

The value is 0° when the camshaft position (angle) corresponds to the crankshaft position (angle).

The normal value is

- inlet camshaft: 75° CA (+/-8° CA)

- exhaust camshaft: 120° CA (+/-8° CA)

The value is updated following adaptation of the camshaft position. The adaptation is carried out when the camshaft control is not active (fully returned camshaft).

MISFIRE COUNTER EMISSIONS IMPACT / CATALYTIC CONVERTER DAMAGE, TOTAL

The value indicates the number of misfires for all cylinders during the present operating cycle.

The value is reset with ignition off.

Normal value is 0 (= no misfire).

MISFIRE COUNTER, AVERAGE

The engine control module (ECM) calculates the average number of misfires in 10 operating cycles, all cylinders.

The value is affected by misfires which affect emissions and cause catalytic converter damage.

The value is reset when erasing diagnostic trouble codes.

Normal value is 0 (= no misfire).

MISFIRE COUNTER CYLINDER X, AVERAGE

The engine control module (ECM) calculates the average number of misfires in 10 operating cycles, each cylinder.

The value is affected by misfires which affect emissions and cause catalytic converter damage.

The value is reset when erasing diagnostic trouble codes.

Normal value is 0.

OIL LEVEL SENSOR

Measurement range 0-100 %.

The value indicates the pulse ratio from the pulse width modulation signal generated by the oil level sensor sent to the engine control module.

The value must be between 17-83% depending on the oil level.

PARAMETER, STATUS

POSITION GEAR SELECTOR

Only vehicles equipped with an automatic transmission.

The engine control module calculates the status of the signal from the directly connected cable from the transmission control module.

P/N engaged = gear selector position is in "; "; or "; .

P/N disengaged = gear selector position is not in "; "; or "; .

POSITION GEAR SELECTOR

Only vehicles equipped with an automatic transmission.

the engine control module calculates the status of the signal from the transmission control module via CAN.

P/N engaged = gear selector position is in "; "; or "; .

P/N disengaged = gear selector position is not in "; "; or "; .

IGNITION SWITCH (VIA CAN)

The engine control module calculates the status of the signal from the central electronic module via CAN communication.

STARTER RELAY

The status indicates if the engine control module requested activation of the starter relay.

Active = Engine control module activates starter relay.

Not active = Engine control module does not activate starter relay.

IMMOBILIZER, START PERMITTED

YES = Immobilizer permits start.

No = Immobilizer does not permit start.

CRUISE CONTROL,

Activated = depressed on the keypad of cruise control.

Not activated = not depressed on the keypad of cruise control.

CRUISE CONTROL,

Activated = depressed on the keypad of cruise control.

Not activated = not depressed on the keypad of cruise control.

CRUISE CONTROL,

Activated = depressed on the keypad of cruise control.

Not activated = not depressed on the keypad of cruise control.

CRUISE CONTROL,

Activated = depressed on the keypad of cruise control.

Not activated = not depressed on the keypad of cruise control.

CRUISE CONTROL,

Activated = depressed on the keypad of cruise control.

Not activated = not depressed on the keypad of cruise control.

STOP LAMP SWITCH

The engine control module (ECM) calculates the value from the stop lamp switch signal.

Activated = stop lamp switch affected.

Not activated = brake light switch not actuated.

DESCRIPTION OF PARAMETERS, QUICK TEST OF THE FUEL TANK SYSTEM

CONDITIONS

ECU POWER SUPPLY (V)

The value indicates the voltage supply from the system relay to the engine control module (ECM).

ATMOSPHERIC PRESSURE (PA)

The value indicates the ambient pressure. The Engine control module (ECM) receives a signal from the atmospheric pressure sensor.

HINT: The sensor is integrated in the Engine control module (ECM).

FUEL LEVEL (L)

The value shows the fuel level in the tank. The Engine control module (ECM) receives a signal from fuel level sensor.

HINT: The sensor is connected to the Central electronic module (CEM) and information is sent to the Engine control module (ECM) via CAN.

AMBIENT TEMPERATURE (°C)

The value indicates the ambient temperature. The Engine control module (ECM) receives a signal from the outside temperature sensor.

HINT: The sensor is connected to the Central electronic module (CEM) and information is sent to the Engine control module (ECM) via CAN.

TEST STATUS

FUEL TANK SYSTEM QUICK TEST

Shows the current status of the quick test (In progress/Not in progress)

TEST PHASE

Shows the current phase of the leak diagnosis. For more information, see "Test phases, quick test tank system".

FUEL TANK PRESSURE (PA)

The value indicates the calculated tank pressure. The Engine control module (ECM) calculates the average pressure with the help of the measured power consumption on the leak diagnostic unit's pump. The pressure will

rise from 0 Pa to approx. 4500 Pa during the test.

HINT: The calculated pressure can differ from the measured pressure by ±15 %. This is normal.

TEST RESULT

DMTL, TEST RESULT

Shows the test result on the leak diagnostic unit (DMTL).

If "Fault found" is shown, the Engine control module (ECM) has generated a diagnostic trouble code (DTC) for the fault. Fault tracing should be started/continued.

TANK SYSTEM, TEST RESULT

Shows the test result for the fuel tank system.

If "Minor leak found" or "Major leak found" is shown the Engine control module (ECM) has generated a diagnostic trouble code (DTC) for the fault. Fault tracing should be started/continued.

ESTIMATED LEAK (MM)

The value shows the diameter of the leak. The Engine control module (ECM) calculates the diameter with the help of measurements made during testing.

HINT: The parameter should be used to get an understanding of how close to the diagnostic trouble code limit the system is. If the estimated size of the leak is very close to the diagnostic trouble code limit, fault tracing should probably be carried out despite the test result for the tank system showing "No leakage found", especially if the diagnostic trouble code (DTC) for leakage was initially generated.

DESCRIPTION OF READING OFF EXTENDED DIAGNOSTIC TROUBLE CODE INFORMATION

CONTENTS

Select type of description.

- see **DESCRIPTION OF STATUS IDENTIFIER**
- see **DESCRIPTION OF COUNTER**
- see **DESCRIPTION OF FROZEN VALUES**

TEST PHASES, QUICK TEST FUEL TANK SYSTEM

REFERENCE

Reference phase for leakage, and operating check of the leak diagnostic unit (DMTL), is in progress.

If no fault is detected during this phase, the check for major leakage starts.

If a fault is detected during this phase the test is stopped and the parameter "DMTL, test status" shows "Fault Found". The diagnostic trouble code (DTC) for the detect fault is stored in the Engine control module (ECM).

MAJOR LEAK

Investigation of the fuel tank system in progress.

If no fault is detected during this phase, the check for minor leakage starts.

If leakage is detected during this phase the test is stopped and the parameter "Tank system test result" shows "Major leak found". The diagnostic trouble code (DTC) is stored in the Engine control module (ECM).

MINOR LEAK

Investigation of the fuel tank system in progress.

If leakage is detected during this phase the test is stopped and the parameter "Tank system test result" shows "Minor leak found". The diagnostic trouble code (DTC) is stored in the Engine control module (ECM).

NOT IN PROGRESS

Leakage diagnosis not in progress. Quick-test tank system has not started, has been finished, or has been blocked.

ENGINE PERFORMANCE

Ignition And Control Systems - Symptom Related Diagnostic Procedures

CHECK FOR AIR LEAKS IN THE INTAKE SYSTEM (B5254T2; B6294T; 2003-2004)

CHECKING FOR AIR LEAKAGE IN THE INTAKE SYSTEM

CHECKING FOR AIR LEAKAGE

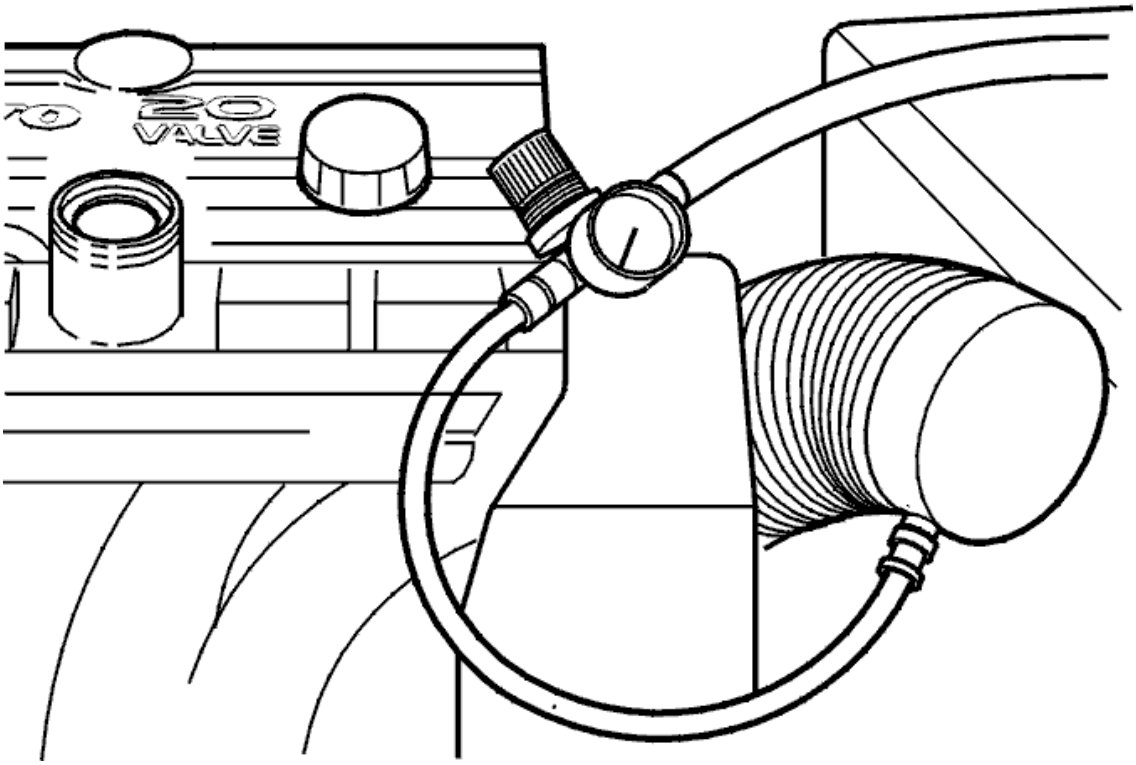

Fig. 1: Checking For Air Leakage
Courtesy of VOLVO CARS CORPORATION

Carry out check for air leakage according to **CHECK FOR AIR LEAKS IN THE INTAKE SYSTEM** .

CHECKING CAMSHAFT ADJUSTMENT (B5254T2; B6294T; 2003-2004)

CHECKING CAMSHAFT ADJUSTMENT

REMOVING COMPONENTS

Fig. 2: Identifying Underhood Components
Courtesy of VOLVO CARS CORPORATION

Remove:

- battery negative terminal.
- plastic hoses turbocharger (TC)/charge air cooler (CAC) and air cleaner (ACL)/turbocharger (TC)

  Remove the clamp to intake manifold at turbocharger (TC) 1, 2, 3 and turn the pipe upper section to the firewall.

  (Only B6284 T)

- plastic pipe over engine.

  (Only B52X4 T)

- cross member.
- right front wheel.
- plastic nuts for cover in fender liner.
- camshaft position sensor (CMP) housing and trigger wheel.
- camshaft rear edge cover.
- upper camshaft belt cover.

Lift up servo reservoir, place over engine.

NOTE: Ensure that the oil does not run out of the ventilation hole in the filler cap.

Remove:

- hose between expansion tank and water cooler by the reservoir. Seal the hose with lock grip pliers.
- auxiliaries belt.

- front camshaft belt cover.
- **Continue**

  Refer to **POSITION THE ENGINE ACCORDING TO MARKING**

POSITION THE ENGINE ACCORDING TO MARKING

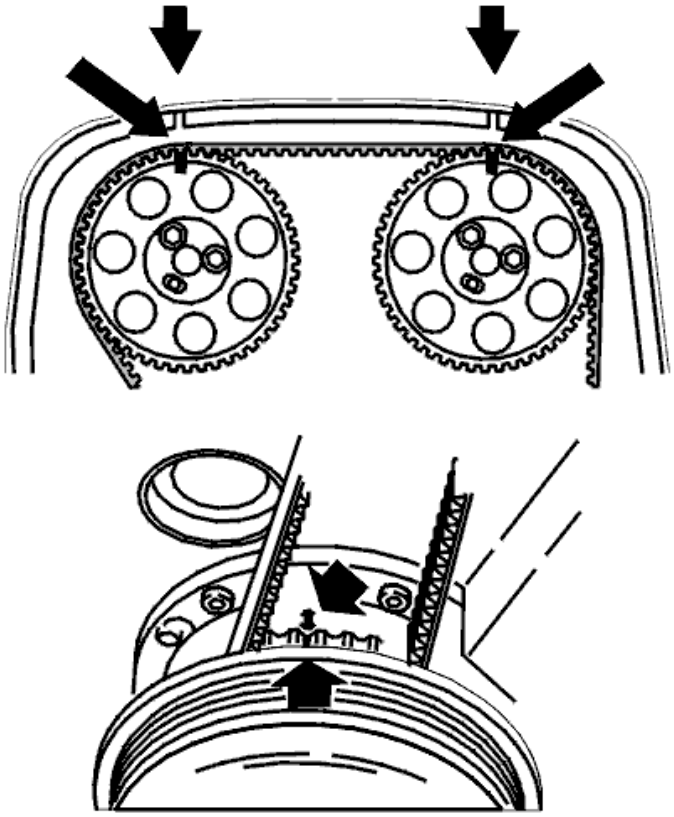

Fig. 3: Identifying Crankshaft And Camshaft Alignment Marks
Courtesy of VOLVO CARS CORPORATION

Place upper camshaft belt cover.

Turn crankshaft clockwise until the markings on the crankshaft and camshaft pulleys correspond.

Turn crankshaft a further 1/4 turn clockwise and then back again until the markings correspond.

Remove:

- upper camshaft belt cover.
- **Continue**

Refer to **INSTALLING CRANKSHAFT ADJUSTMENT TOOL**

INSTALLING CRANKSHAFT ADJUSTMENT TOOL

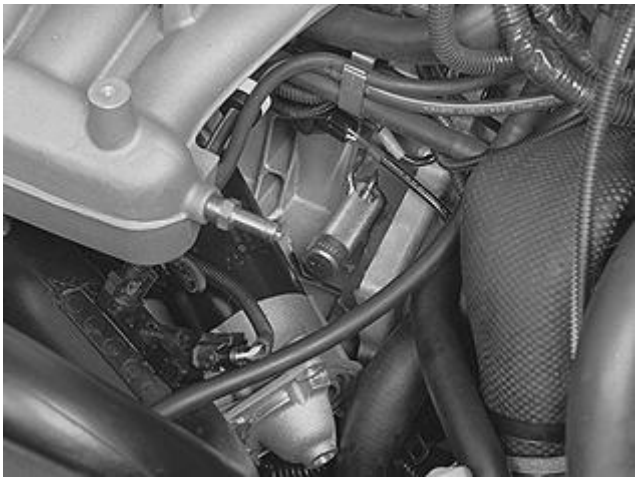

Fig. 4: Identifying Adjustment Special Tool 999 5451
Courtesy of VOLVO CARS CORPORATION

Remove:

- starter motor mounting screws.

Pull out the starter motor and put to one side.

Remove:

- blind cover plug for hole for adjustment tool.

Turn the crankshaft slightly clockwise. Install camshaft adjustment tool see **9995451** , ensure that it bottoms against the cylinder block.

Turn the crankshaft back counter-clockwise until it stops against the adjustment tool.

Check that the marking on the crankshaft timing gear pulley corresponds with the marking on the oil pump.

Select the appropriate engine variant:

1. B6304 S

   Refer to **INSTALLING CAMSHAFT ADJUSTMENT TOOL, B6304 S**

2. B52X4 T and B6284 T

   Refer to **INSTALLING CAMSHAFT ADJUSTMENT TOOL, B52X4 T AND B6284 T**

3. B52X4 S

   Refer to **INSTALLING CAMSHAFT ADJUSTMENT TOOL, B52X4 S**

INSTALLING CAMSHAFT ADJUSTMENT TOOL, B6304 S

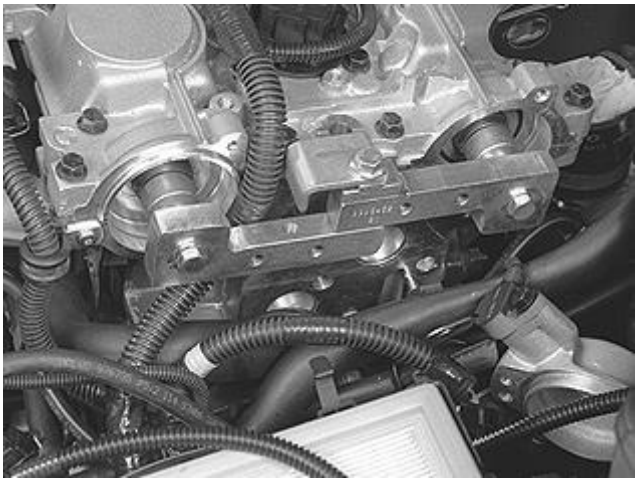

Fig. 5: Identifying Camshaft Adjustment Tool 9995452 Installed
Courtesy of VOLVO CARS CORPORATION

Install:

- camshaft adjustment tool see **9995452** at the rear edge of the camshafts.

Screw the section onto the intake side camshaft first.

Turn the intake side camshaft carefully clockwise with the camshaft adjustment tool until the exhaust side camshaft adjustment section can be held in place.

The tool sections should be parallel.

Are the tool sections parallel?

- **YES**

  OKAY: Troubleshooting has been completed.

- **NO**

  Refer to **ADJUSTING THE CAMSHAFT ADJUSTMENT LIGHT SWITCH**

INSTALLING CAMSHAFT ADJUSTMENT TOOL, B52X4 T AND B6284 T

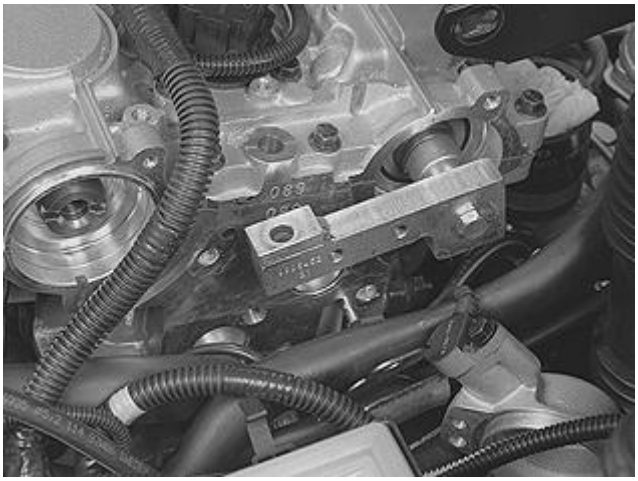

Fig. 6: Identifying Camshaft Adjustment Tool 9995452 Installed
Courtesy of VOLVO CARS CORPORATION

Install:

- camshaft adjustment tool see **9995452** at the rear edge of the camshafts.

Screw the section onto the exhaust side camshaft first.

Turn the exhaust side camshaft carefully clockwise with the camshaft adjustment tool until the intake side camshaft adjustment section can be held in place.

The tool sections should be parallel.

Are the tool sections parallel?

- **YES**

  OKAY: Troubleshooting has been completed.

- **NO**

  Refer to **ADJUSTING THE CAMSHAFT ADJUSTMENT LIGHT SWITCH**

INSTALLING CAMSHAFT ADJUSTMENT TOOL, B52X4 S

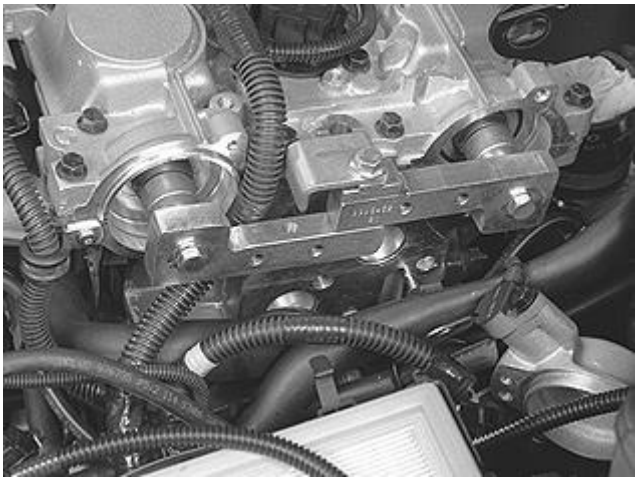

Fig. 7: Identifying Camshaft Adjustment Tool 9995452 Installed
Courtesy of VOLVO CARS CORPORATION

Screw the adjuster sections together to one section.

Hold camshaft adjustment tool see **9995452** at the rear edge of the camshafts.

Are the tool sections parallel?

- **YES**

  OKAY: Troubleshooting has been completed.

- **NO**

  Refer to **ADJUSTING THE CAMSHAFT ADJUSTMENT LIGHT SWITCH**

ADJUSTING THE CAMSHAFT ADJUSTMENT LIGHT SWITCH

For camshaft adjustment, see **REPLACING THE CAMSHAFT SEALS / VARIABLE VALVE TIMING (VVT) UNIT**

REPLACING THE CAMSHAFT SEALS / VARIABLE VALVE TIMING (VVT) UNIT

Special tools:

see **9512050**

see **9995450**

see **9995451**

see **9995452**

see **9995651**

see **9995718**

see **9995719**

see **9995919**

NOTE: **As the illustrations in the information are used for different model years and / or models, certain variations may occur. However, the essential information in the illustrations is always correct.**

REMOVING THE CAMSHAFT SEAL

Fig. 8: Identifying Underhood Components
Courtesy of VOLVO CARS CORPORATION

The abbreviation VVT stands for:

Variable

Valve

Timing.

NOTE: **Crankshaft or camshafts must not, under any circumstances , be rotated more than is listed below. Failure to follow these instructions may cause damage to the valves.**

Remove:

- the cable from the battery negative terminal. See **BATTERY, DISCONNECTING** .
- the charge air pipe over the engine.

Seal the openings.

- the upper camshaft belt cover.
- the cover over the ignition coils.
- lift the solenoid valves away from the air cleaner (ACL) cover.
- the air intake hose for the turbocharger (TC) from the air cleaner (ACL) cover.

Put to one side.

- the upper torque rod bracket.
- the camshaft position (CMP) sensor housing.
- the trigger wheel.
- the rear cover for the intake camshaft.
- the servo reservoir and the expansion tank.

Lift up and place on top of the engine.

NOTE: **Take care not to spill servo oil from the bleed hole in the cap.**

Place paper wipe around the reservoir and then cover with a plastic bag as protection.

Spilled servo oil is highly inflammable.

- 3 nuts for the cable duct at the right suspension turret.

Lift the duct away from the screws.

- the auxiliaries belt.
- the front camshaft belt cover.

POSITION THE ENGINE ACCORDING TO THE MARKING

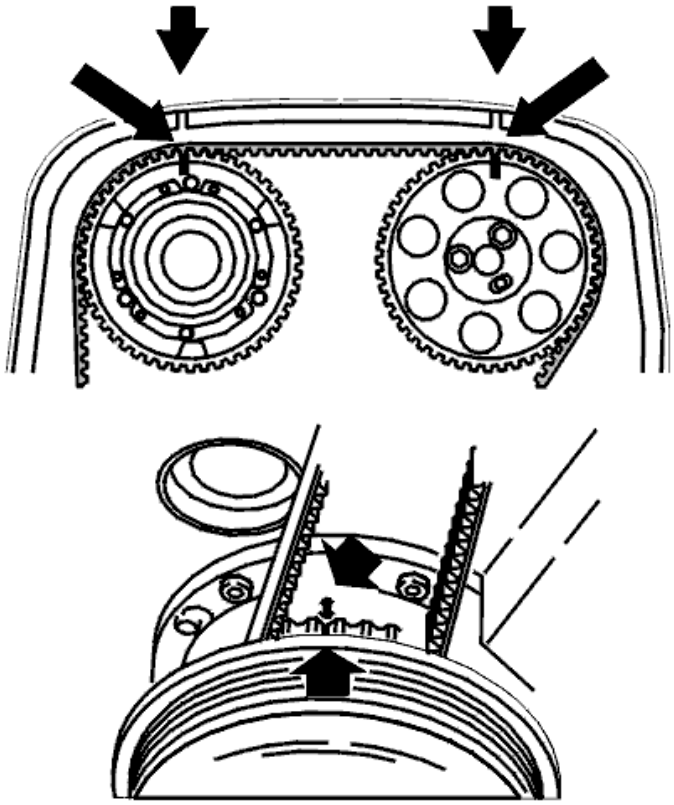

Fig. 9: Identifying Crankshaft And Camshafts Markings
Courtesy of VOLVO CARS CORPORATION

Raise the car.

Remove:

- the right front wheel.
- the nuts for the cover in the fender liner.

Install the upper camshaft belt cover.

Turn the crankshaft clockwise until the markings on the crankshaft and camshaft pulley correspond.

Turn the crankshaft a further 1/4 of a turn clockwise, then back counter-clockwise until the markings correspond.

The markings are shown in the illustration.

Remove the upper camshaft belt cover.

REMOVING THE CAMSHAFT BELT

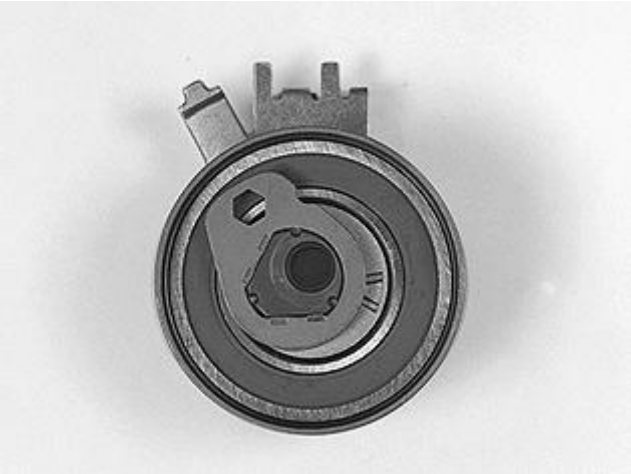

Fig. 10: Identifying Belt Tensioner
Courtesy of VOLVO CARS CORPORATION

Slacken off the belt tensioner.

Slacken off the belt tensioner center screw slightly.

Hold the center screw still and turn the tensioner eccentric clockwise with a 6 mm (15/64") Allen key to "10 o'clock".

Remove the camshaft belt from the belt tensioner, camshaft pulley and idler pulley.

REMOVING THE TIMING GEAR PULLEY WITH THE VARIABLE VALVE TIMING (VVT) UNIT

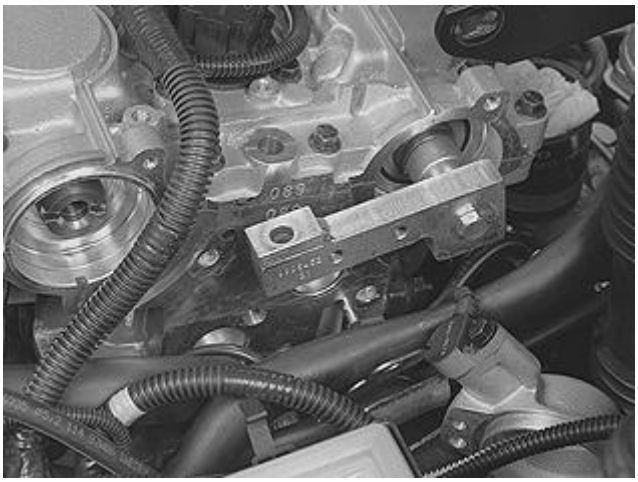

Fig. 11: Identifying Camshaft Adjustment Tool 9995452 Installed
Courtesy of VOLVO CARS CORPORATION

Use camshaft adjustment tool:

- Install camshaft adjustment tool see **9995452** at the rear edge of the camshafts.

First screw in the part of the tool intended for the exhaust camshaft.

INSTALL THE ADJUSTMENT TOOLS

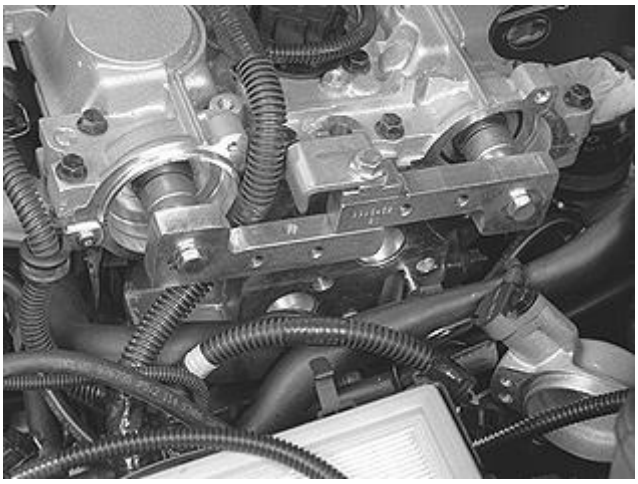

Fig. 12: Identifying Camshaft Adjustment Tool 9995452 Installed
Courtesy of VOLVO CARS CORPORATION

Screw the camshaft adjustment tools together

- Carefully turn the exhaust camshaft clockwise with the camshaft adjustment tool until the intake camshaft tool can be applied.
- Screw the camshaft adjustment tools together as shown in the illustration.

REMOVE THE TIMING GEAR PULLEY

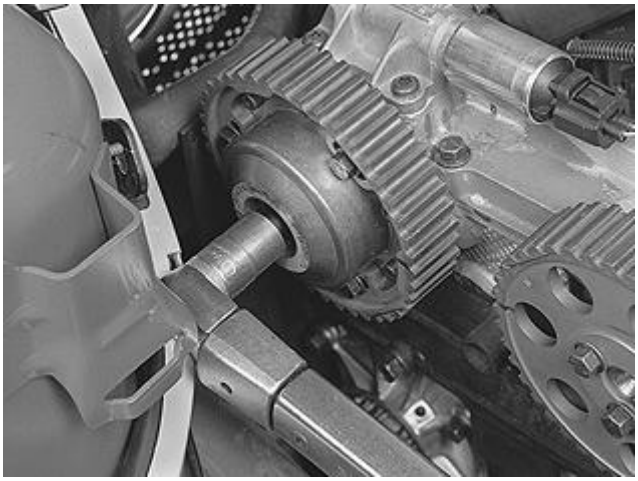

Fig. 13: Identifying Timing Gear Pulley, Center Screw And Plug
Courtesy of VOLVO CARS CORPORATION

Remove

- **Exhaust camshaft pulley:**

- The plug at the front edge of the variable valve timing (VVT) unit (TORX 55).

  The center screw from the variable valve timing (VVT) unit (TORX 55).

  Carefully pull out the timing gear pulley with the variable valve timing (VVT) unit.

Intake camshaft pulley:

Remove the screws and remove the timing gear pulley.

REPLACE THE CAMSHAFT SEAL

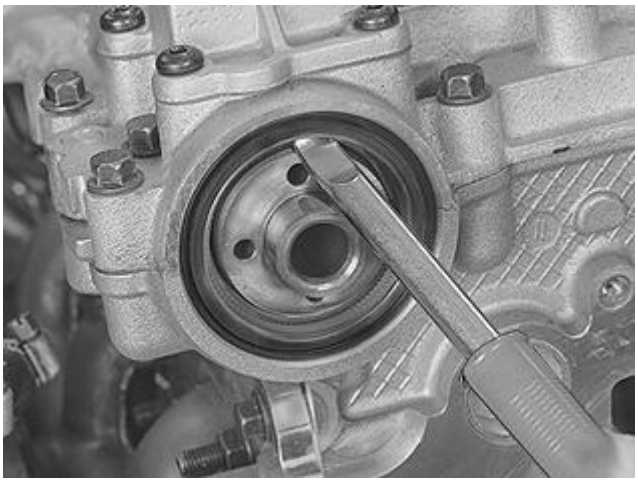

Fig. 14: Identifying Front Camshaft Seal And Special Tool 999 5651
Courtesy of VOLVO CARS CORPORATION

Replacing the camshaft seal:

- Carefully press in tool see **9995651** between the sealing ring and the camshaft.

  Carefully pry out the seals.

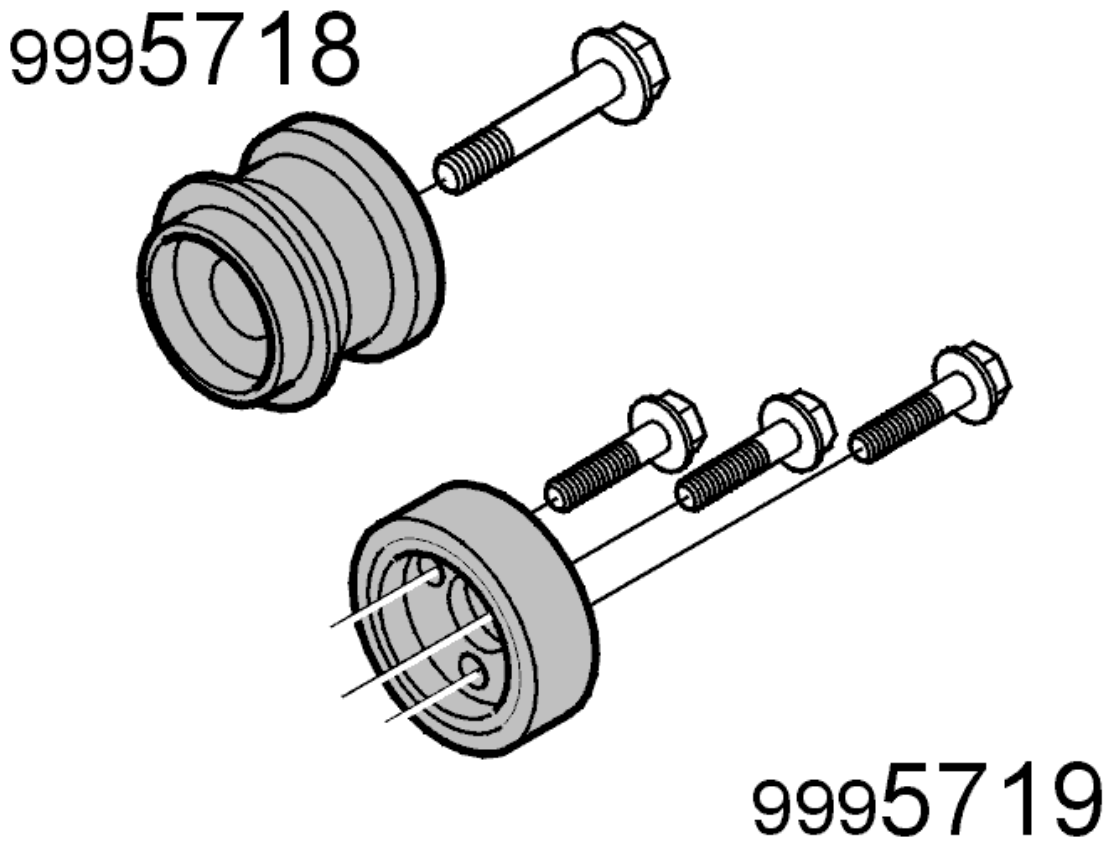

Fig. 15: Identifying Camshaft Special Tools 99 5718 And 999 5719
Courtesy of VOLVO CARS CORPORATION

Install a new seal:

- Grease the new seal.
- Install the new seal for the intake camshaft using drift see **9995719** .
- Install the new seal for the exhaust camshaft using drift see **9995718** .

REMOVE THE ENGINE COOLING FAN (FC)

Fig. 16: Identifying Air Intake Hose And Connector Disconnected
Courtesy of VOLVO CARS CORPORATION

Remove:

- detach the brake vacuum hose from the intake.
- the air duct for the control module box and the air cleaner (ACL) air intake hose.
- the connectors, relays and canister purge (CP) valve from the fan shroud.

  Place the wiring to one side.

- the screws for the fan shroud and the relay holder mounting.

Lift up the relay holder and remove the upper hose between the charge air cooler and the intake.

Seal the openings.

Slacken off the screw clip on the throttle body (TB) (electronic throttle module) so that the charge air pipe can be pressed backwards.

Press the charge air pipe backward and lift up the engine cooling fan (FC) with its cover.

As shown in the illustration.

SECURE THE CRANKSHAFT POSITION

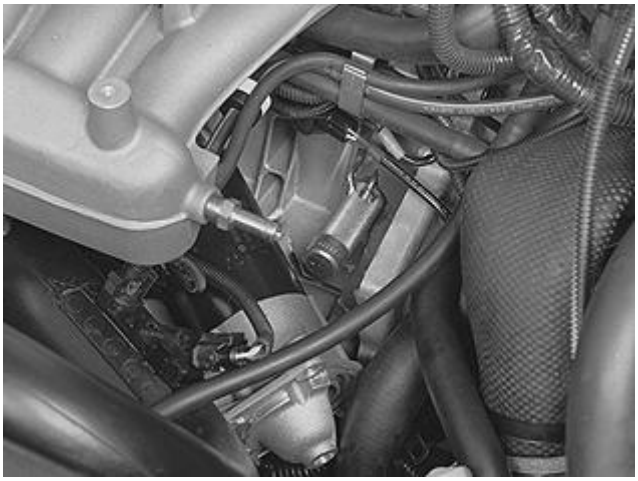

Fig. 17: Identifying Adjustment Special Tool 999 5451
Courtesy of VOLVO CARS CORPORATION

Install the adjustment tool.

Pull the charge air pipe forward

Remove the 3 starter motor screws for the starter motor mounting.

Place the starter motor to one side.

Remove the blind cover plug and the sealing washer.

Turn the crankshaft clockwise slightly to avoid the camshaft adjustment tool being in the wrong position.

Install camshaft adjustment tool: see **9995451** .

Ensure that the camshaft adjustment tool reaches down to the cylinder block.

Turn the crankshaft back counter-clockwise until it stops against the drift.

Check that the marking on the crankshaft timing gear pulley corresponds with the marking on the oil pump.

REINSTALL

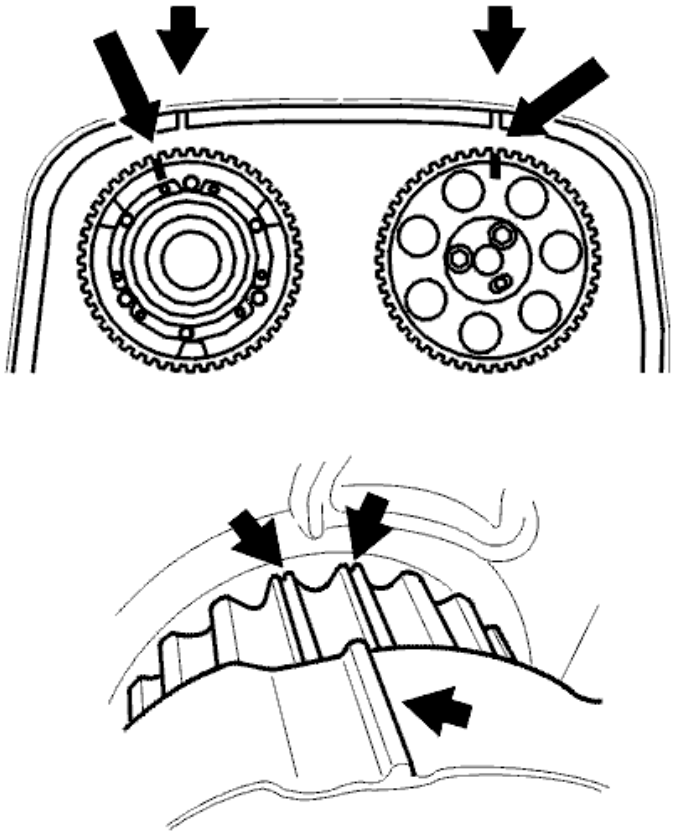

Fig. 18: Identifying Markings On Crankshaft Belt Pulley, Timing Belt Pulley, Oil Pump, And Upper Timing Belt Cover
Courtesy of VOLVO CARS CORPORATION

Install the variable valve timing (VVT) unit with the toothed belt pulley:

Slacken off, but do not remove, the screws which secure the timing gear pulley to the variable valve timing (VVT) unit.

Press the timing gear pulley and variable valve timing (VVT) unit on to the camshaft.

Install the center screw which secures the variable valve timing (VVT) unit to the camshaft.

NOTE: Do not tighten yet.

Install the upper camshaft belt cover.

Turn the timing gear pulley clockwise until the screws at the oval holes are in the limit position.

Continue turning clockwise until the timing gear pulley marking is 1 cog before the marking on the upper timing cover.

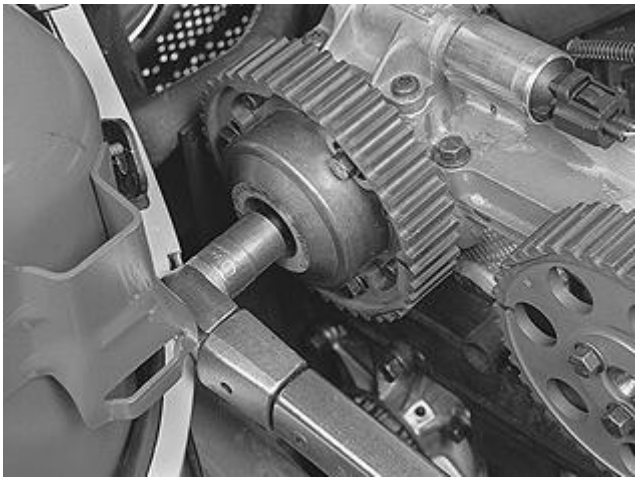

Fig. 19: Identifying Timing Gear Pulley, Center Screw And Plug
Courtesy of VOLVO CARS CORPORATION

Check that the timing gear pulley is still in the limit position in the oval holes.

Tighten the center screw in the variable valve timing (VVT) unit to **120 Nm (88 lb. ft)** .

Check that the variable valve timing (VVT) unit does not rotate when tightening.

Install the center plug. Tighten to **35 Nm (26 lb. ft)** .

Install the timing gear pulley on the intake camshaft:

Install the timing gear pulley on the intake camshaft with two screws, but **do not tighten** .

Check that the markings on the timing gear pulley and the upper timing cover correspond.

INSTALLING THE TIMING BELT

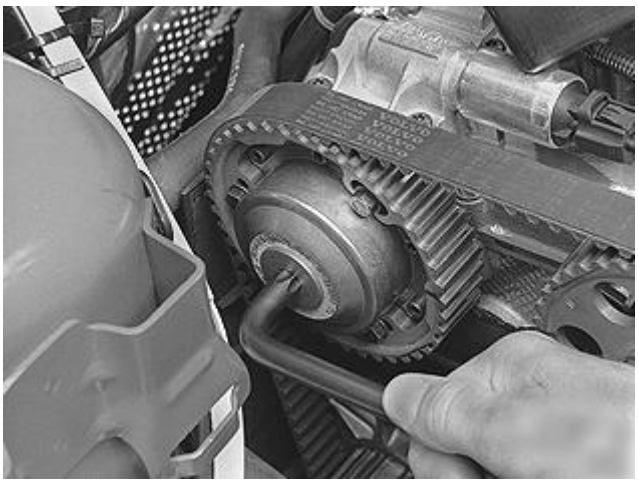

Fig. 20: Reinstalling Timing Belt
Courtesy of VOLVO CARS CORPORATION

Install the timing belt:

Tighten the center screw on the camshaft belt tensioner to **5 Nm (4 lb. ft)** .

Turn the variable valve timing (VVT) unit clockwise until stop.

Hold the variable valve timing (VVT) unit secure at the clockwise limit position when the belt is being installed.

As shown in the illustration.

Install the belt in the following order:

- Install the camshaft belt over the pulley on the crankshaft.

Then install the belt as follows

- 1. Idler pulley.
- 2. Intake cam pulley.
- 3. Exhaust cam pulley.
- 4. Water pump.
- 5. Belt tensioner.

NOTE: **Adjust the timing gear pulleys so that the screws are not at a limit position in the oval holes.**

TIGHTEN THE TIMING BELT

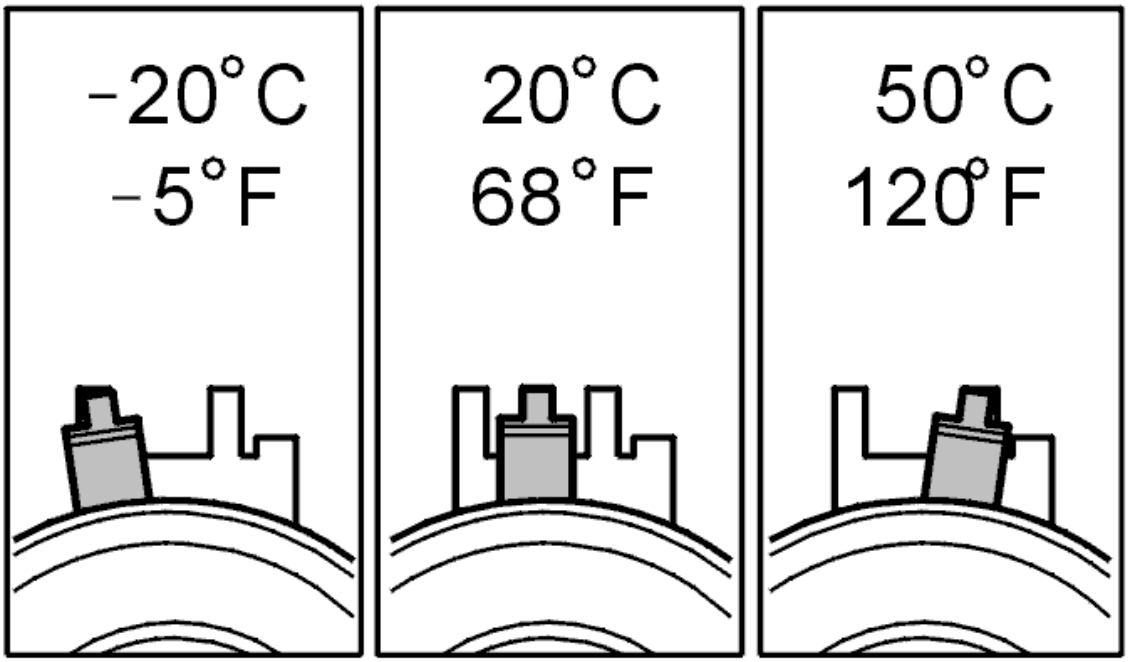

Fig. 21: Identifying Needle Position At Varying Temperatures
Courtesy of VOLVO CARS CORPORATION

Adjust the belt tensioner:

NOTE: **This adjustment is to be made with a cold engine.**

A suitable temperature is 20°C/68°F.

At a higher temperature, for example with a warm engine or a higher ambient temperature, the needle is further to the right.

The illustration shows the needle position when adjusting the camshaft belt tensioner at different engine temperatures.

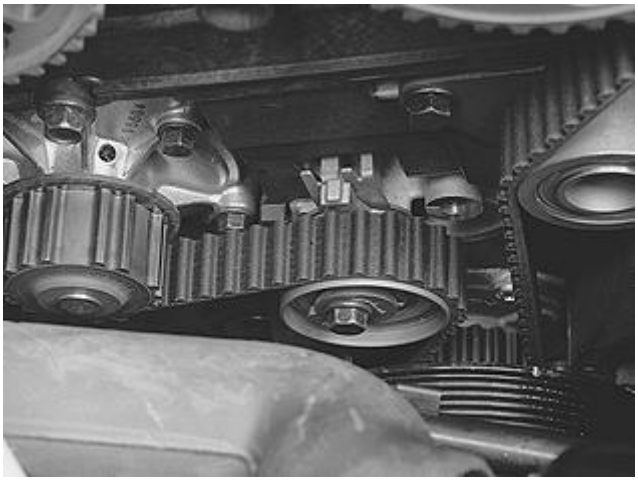

Fig. 22: Identifying Belt Between Intake Camshaft Pulley, Idler Pulley And Crankshaft
Courtesy of VOLVO CARS CORPORATION

Tighten the timing belt as follows:

Hold the belt tensioner center screw secure and turn the belt tensioner eccentric counter-clockwise until the tensioner indicator passes the marked position.

Tighten the screws on the exhaust camshaft timing gear pulley to **10 Nm (7.4 lb. ft)** .

Install the screw missing on the intake camshaft belt pulley.

Tighten the screws on the intake camshaft timing gear pulley to **20 Nm (15 lb. ft)** .

NOTE: The variable valve timing (VVT) unit must not be released from the limit position until after the timing gear pulleys have been tightened.

Then turn the eccentric back so that the needle reaches the marked position corresponding to the relevant temperature.

Remember to hold the center screw secure at the same time.

At 20°C the needle must be centered in the window.

See the illustration above.

Hold the eccentric secure and tighten the center screw to **20 Nm (15 lb. ft)** .

Check that the indicator is in the correct position.

As shown in the illustration.

If the indicator is not in the correct position, a new alignment must be carried out.

Remove:

- the camshaft adjustment tools.
- the crankshaft stopper.

  Install the plug with a new sealing washer.

  Tighten to **40 Nm (29 lb. ft)** .

CHECKING THE MARKINGS AND BELT TENSION

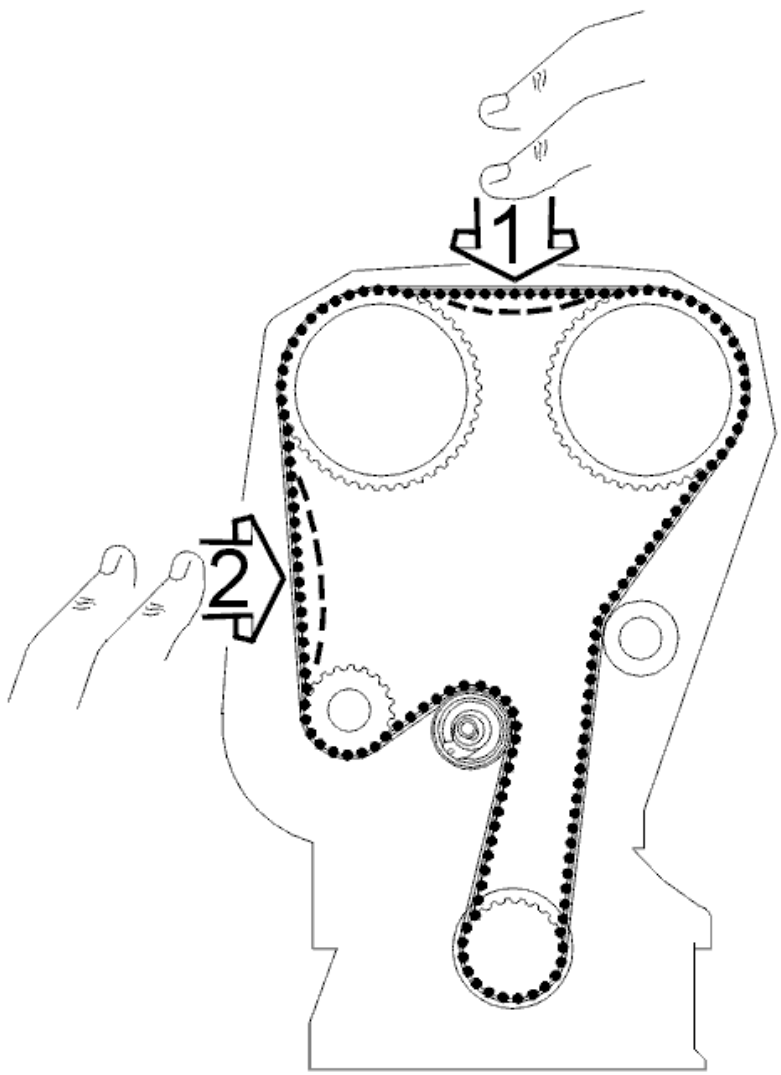

Fig. 23: Pressing Belt To Check That Indicator On Tensioner Moves Easily
Courtesy of VOLVO CARS CORPORATION

Check:

- Press the belt to check that the indicator on the tensioner moves easily.
- Install the upper timing belt cover.
- Turn the crankshaft two turns and check that the markings on the crankshaft and camshaft pulley correspond.
- Check that the indicator on the belt tensioner is within the marked area.

REINSTALL

Fig. 24: Identifying Underhood Components
Courtesy of VOLVO CARS CORPORATION

Install:

- the front camshaft belt cover.

  Tighten to **12 Nm (8.8 ft. lb)** .

- the upper camshaft belt cover.

  Tighten to **8 Nm (6 lb. ft)** .

- the auxiliaries belt.
- the cable duct. 3 nuts.
- the expansion tank.
- the servo reservoir.

  Wipe clean.

  Check the level and top up as necessary.

  NOTE: Check that the hoses are correctly positioned.

- the starter motor.

  Tighten the screws at the transmission to **40 Nm (29 lb. ft)** .

  Tighten the support bracket screw to **25 Nm (18 lb. ft)**

- the engine cooling fan (FC).
- the hose between the charge air cooler and the intake.

  Remove the seals.

  Tighten the clamp on the charge air pipe at the throttle body (TB).

- screw the relay bracket and the fan shroud into place.
- the canister purge (CP) valve, relays and connectors.
- the air ducts.
- the brake vacuum hose.
- the trigger wheel.

  Tighten to **17 Nm (12 lb. ft)** .

- the camshaft position (CMP) sensor housing and a new cover.

  Tighten the screws.

- the torque rod bracket.

  Tighten to **50 Nm (37 lb. ft)** .

- the upper torque rod.

  Tighten to **35 Nm (26 lb. ft)** . Angle-tighten **90 degrees** .

- the cover over the ignition coils.

  Tighten to **8 Nm (6 lb. ft)** .

- the charge air pipe over the engine.

  Remove the seals.

- the air cleaner (ACL) cover and the intake air hose.
- the solenoid valves on the air cleaner (ACL) cover.
- the cable to the battery negative terminal. See **BATTERY, DISCONNECTING** .
- The cover in the fender liner.

- The front wheel.

CHECKING WORK

Check the engine function by test driving the car.

Wipe clean and check the engine compartment.

Wipe the steering wheel and the gear selector lever.

REPLACING THE REAR SEAL

Fig. 25: Identifying Underhood Components
Courtesy of VOLVO CARS CORPORATION

The following components must be removed when replacing the rear seal:

- the solenoid valves.

  Lift out from the air cleaner (ACL) cover.

- the air hose from the air cleaner (ACL) to the turbocharger (TC). Place to one side.

  Seal the hose.

- place the air cleaner (ACL) cover to one side.
- the charge air pipe over the engine.

  Seal the openings.

- the cover over the ignition coils.
- the upper torque rod bracket.
- the camshaft position (CMP) sensor housing.

- the trigger wheel.

REPLACING THE REAR CAMSHAFT SEAL

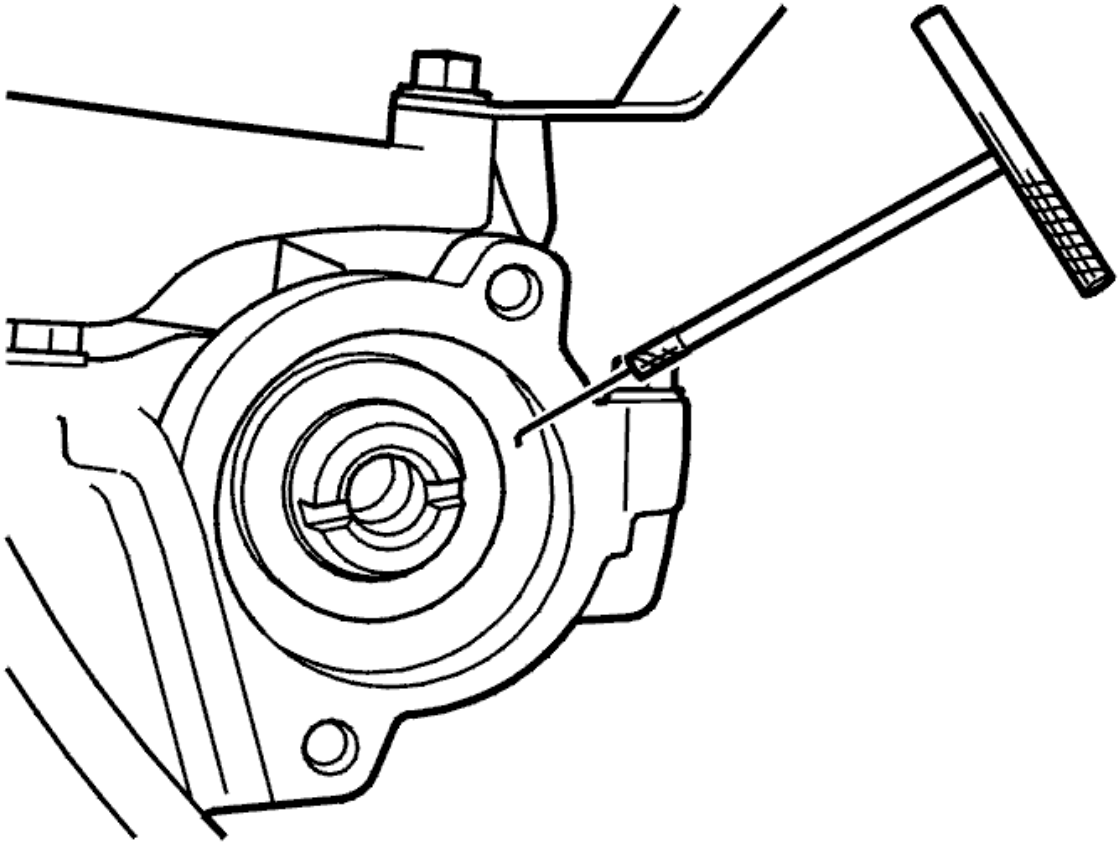

Fig. 26: Identifying Special Tool Extractor 999 5919
Courtesy of VOLVO CARS CORPORATION

Remove and replace the seal:

Carefully pull out the old seal.

Use extractor see **9995919** .

REPLACING THE REAR CAMSHAFT SEAL

Fig. 27: Identifying Drift
Courtesy of VOLVO CARS CORPORATION

Install new seals:

Grease and install the new seal.

Use drift see **9995450** .

NOTE: **The seal is normally pressed in so that it is level with the internal beveled edge.**

If the shaft journal is showing signs of wear, the seal can be pressed in 2 mm (0.079 in) deeper by turning the drift socket.

REINSTALL

Fig. 28: Identifying Underhood Components
Courtesy of VOLVO CARS CORPORATION

Install:

- the trigger wheel.

  Tighten to **17 Nm (12 lb. ft)** .

- the camshaft position (CMP) sensor housing and a new cover.

  Tighten to **10 Nm (7.4 lb. ft)** .

- the torque rod bracket.

  Tighten to **50 Nm (37 lb. ft)** .

- the upper torque rod.

  Tighten to **35 Nm (26 lb. ft)** . Angle-tighten **90 degrees** .

  Use bevel protractor: see **9512050**

- the cover over the ignition coils.

  Tighten to **8 Nm (6 lb. ft)** .

- the charge air pipe over the engine.

  Remove the seals.

- the air cleaner (ACL) cover and the intake air hose.
- the solenoid valves on the air cleaner (ACL) cover.
- connect the battery negative terminal. See **BATTERY, DISCONNECTING** .

Check the engine compartment and wipe it clean.

CHECKING THE ENGINE

Check the engine function by test driving the car.

Wipe the steering wheel and gear selector lever clean.

CHECKING COMPRESSION (B5254T2; B6294T; 2003-2004)

CHECKING COMPRESSION

CHECKING COMPRESSION

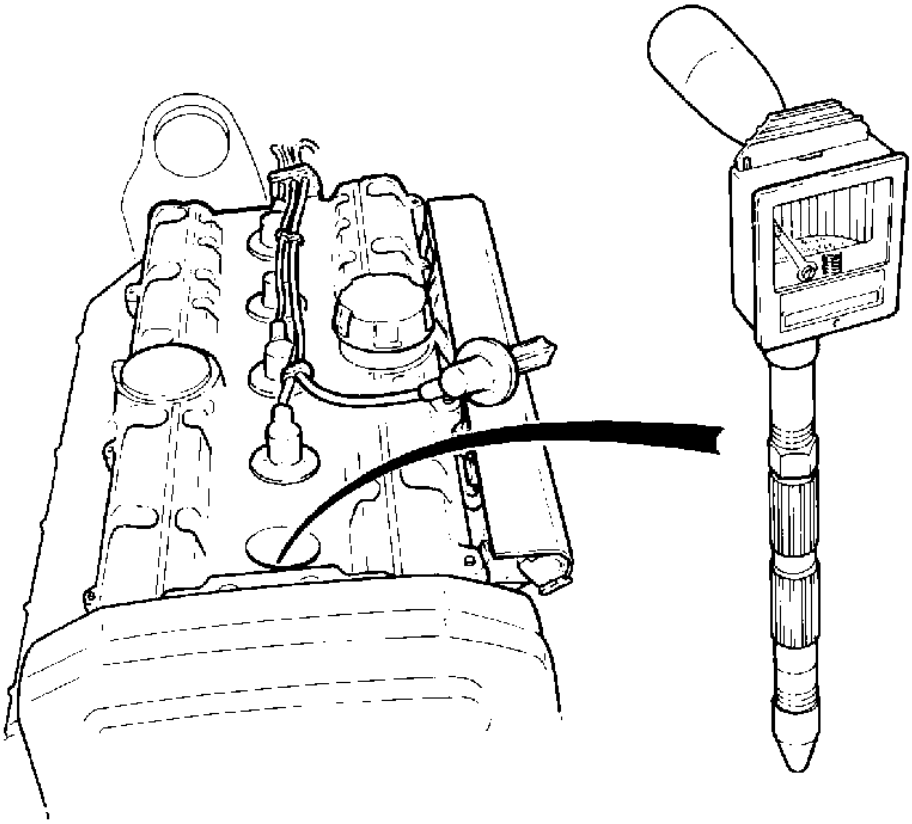

Fig. 29: Identifying Compression Testing
Courtesy of VOLVO CARS CORPORATION

Carry out a compression test according to **COMPRESSION TEST** .

CHECKING ENGINE COOLANT TEMPERATURE (ECT) SENSOR (B5254T2; B6294T; 2003-2004)

CHECKING THE ENGINE COOLANT TEMPERATURE (ECT) SENSOR

CHECKING THE ENGINE COOLANT TEMPERATURE (ECT) SENSOR

- Check that engine coolant temperature (ECT) sensor displays a temperature within its permitted range compared to the temperature which the engine is determined to have

  HINT: The comparison should be made both with the engine cold and with the engine at operating temperature. Or at the temperature where the problem occurs.

  HINT: Check the engine coolant temperature (ECT) sensor. Check for contact resistance and oxidation.

  Other information:

- For resistance values, see **COMPONENT SPECIFICATIONS**
- For information about signals on 5 cylinder engines, see **SIGNAL DESCRIPTION**
- For information about signals on 6 cylinder engines, see **SIGNAL SPECIFICATION**
- To access or replace the engine coolant temperature (ECT) sensor, see **ENGINE COOLANT TEMPERATURE (ECT) SENSOR, REPLACING**
- see **CHECKING WIRING AND TERMINALS** .

Remedy as necessary.

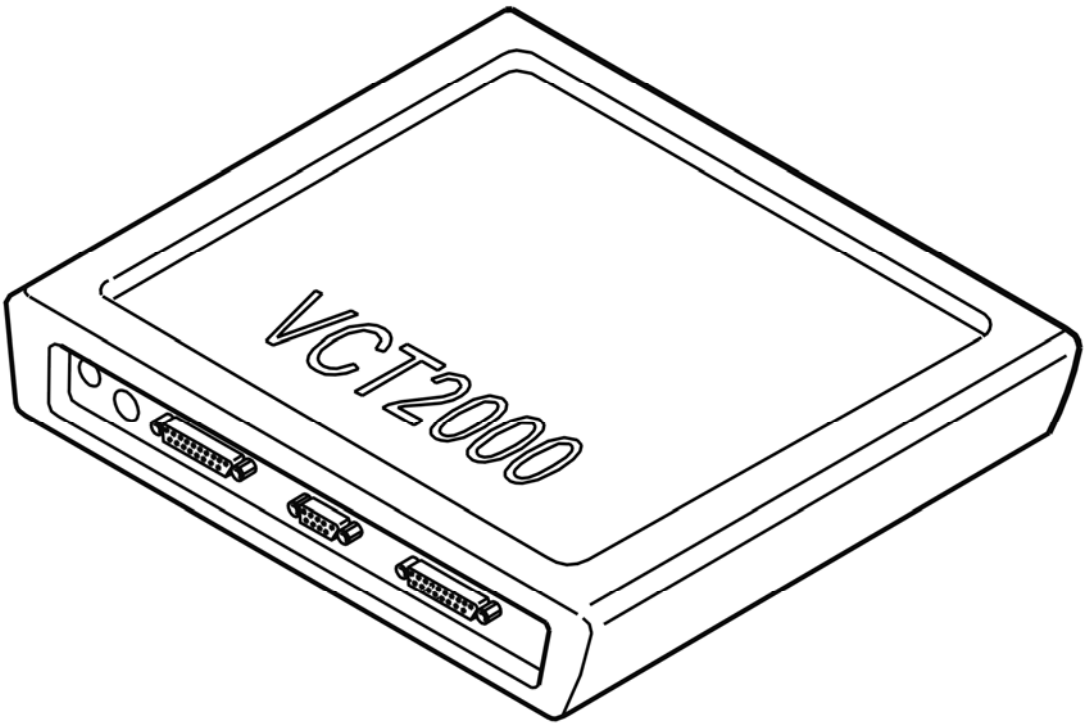

Fig. 30: Identifying VCT2000 Diagnostic Tool Symbol In VIDA
Courtesy of VOLVO CARS CORPORATION

CHECKING ENGINE SPEED (RPM) SENSOR INTERFERENCE (B5254T2; B6294T; 2003-2004)

CHECKING ENGINE SPEED (RPM) SENSOR INTERFERENCE

CHECKING ENGINE SPEED (RPM) SENSOR INTERFERENCE

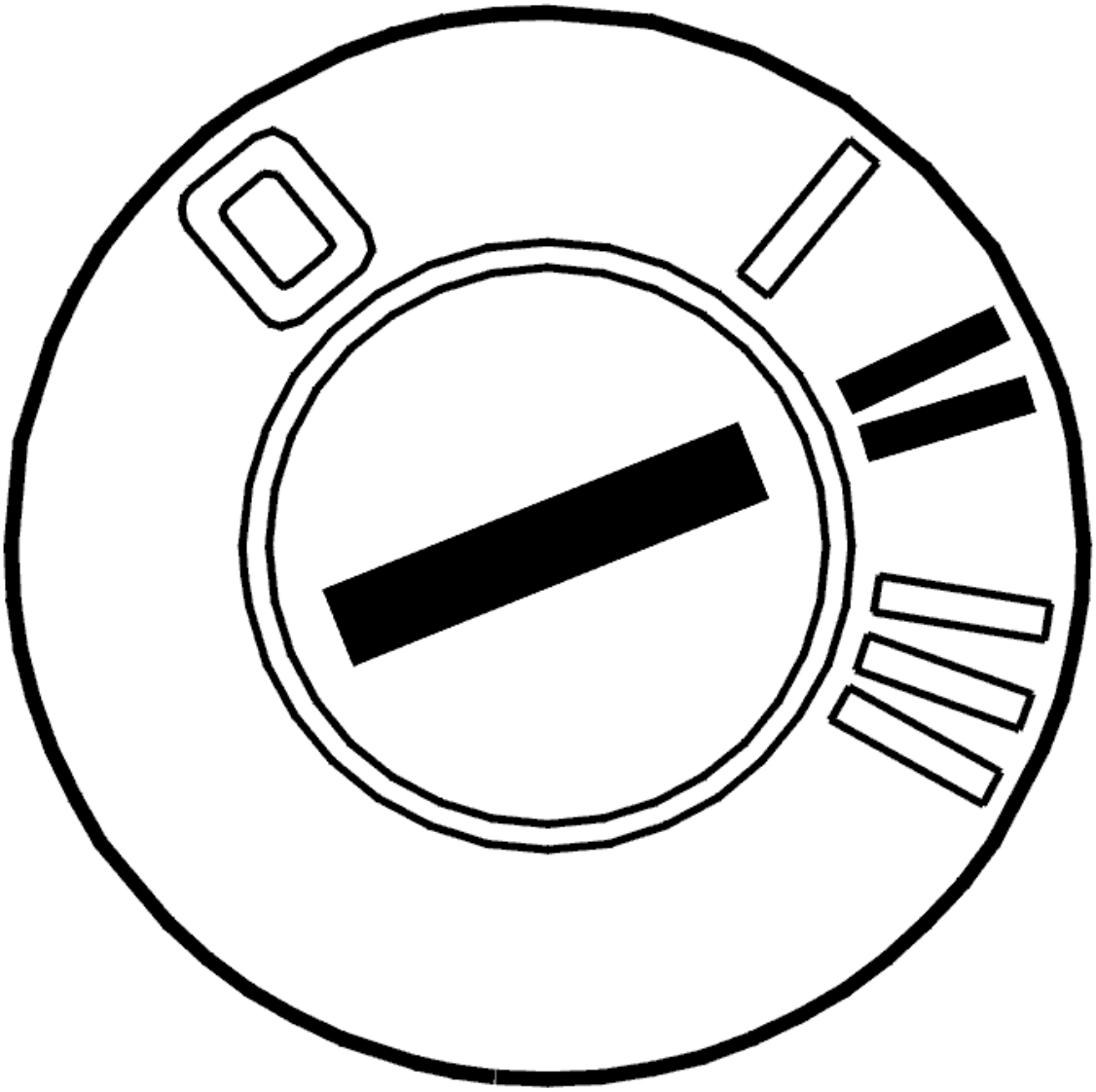

Fig. 31: Identifying Ignition ON
Courtesy of VOLVO CARS CORPORATION

The engine speed (RPM) sensor is sensitive to interference from surrounding power cables, for example the starter motor cable, or similar cables with high amperage. This occurs when starting the engine for example.

Interference can cause difficulty in starting the engine, the engine does not start at all, the tachometer flickers at start attempts etc.

Causes of interference can be:

- surrounding power cables, for example a faulty routed starter motor cable
- incorrectly routed transmission bolted joints for the engine.

Checking the power cable

Check for incorrectly routed power cables (routed too close to the engine speed (RPM) sensor).

Checking the bolted joints

When removing and installing the transmission it is important that all the bolts for the engine are correctly tightened. Incorrectly tightened bolts can cause poor ground connection and interfere with the engine speed (RPM) sensor. Check that all the bolts from the transmission to the engine are correctly tightened.

Remedy as necessary

CHECKING FOR AIR LEAKAGE IN THE EXHAUST SYSTEM (B5254T2; B6294T; 2003-2004)

CHECKING FOR AIR LEAKAGE IN THE EXHAUST SYSTEM

CHECKING FOR AIR LEAKAGE

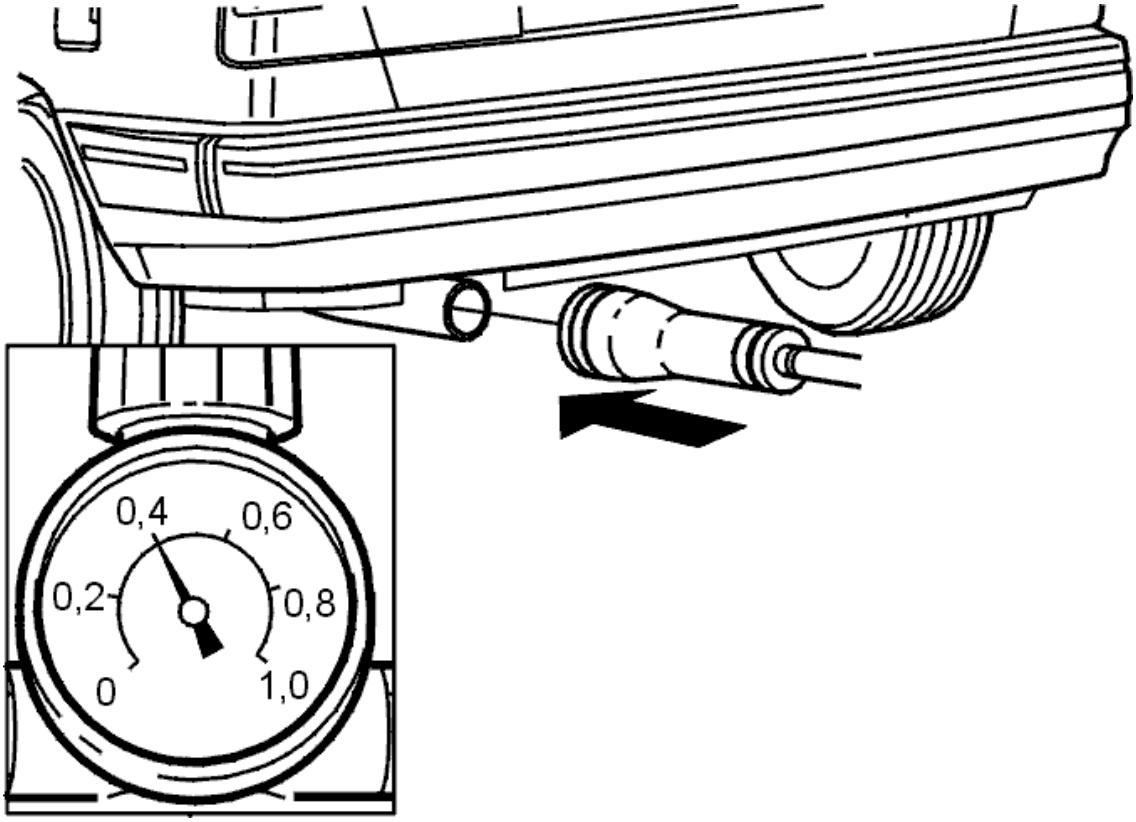

Fig. 32: Checking For Air Leakage In Exhaust System
Courtesy of VOLVO CARS CORPORATION

Carry out check for air leakage according to **CHECKING FOR AIR LEAKAGE IN THE EXHAUST SYSTEM** .

CHECKING FUEL AND RESIDUAL PRESSURES (B5254T2; 2003-2007)

CHECKING THE FUEL PRESSURE AND RESIDUAL PRESSURE IN THE WORKSHOP (2005-2007)

CHOOSING A METHOD FOR TAKING A READING

NOTE: For vehicles with demand activated fuel pumps (FP), perform Quick test of fuel pump (FP) using VIDA (Volvo scan tool).

The fuel pressure can be measured with the car stationary or while being driven. Residual pressure is measured with the car stationary.

When the car is being driven, see **TAKING FUEL PRESSURE READINGS WHILE DRIVING THE CAR** .

- **Continue**

  Refer to **MEASURING THE LINE PRESSURE**

MEASURING THE LINE PRESSURE

- Connect the pressure gauge according to **CONNECTING FUEL PRESSURE GAUGE**
- Remove the soundproofing panel
- Remove the fuel pump (FP) relay (CMI 12 in the passenger compartment)
- Connect a cable to the relay base as shown in the illustration.

  Read off the line pressure from the pressure gauge. The line pressure must be 375-395 kPa

  Check the residual pressure if the fuel pressure is OK.

  Remedy as necessary

  Other information

  - For the location of and to replace the fuel pump (FP) relay, For -2004, see **CENTRAL ELECTRONIC MODULE (CEM), REPLACING** or For 2005-, see **CENTRAL ELECTRONIC MODULE (CEM), REPLACING**
  - For the location of and to replace the fuel pump (FP), see **RIGHT SIDE FUEL PUMP WITH LEVEL SENSOR**
  - see **REPLACING THE FUEL FILTER**
  - To disconnect the pressure gauge, see **DISCONNECTING FUEL PRESSURE GAUGE** .

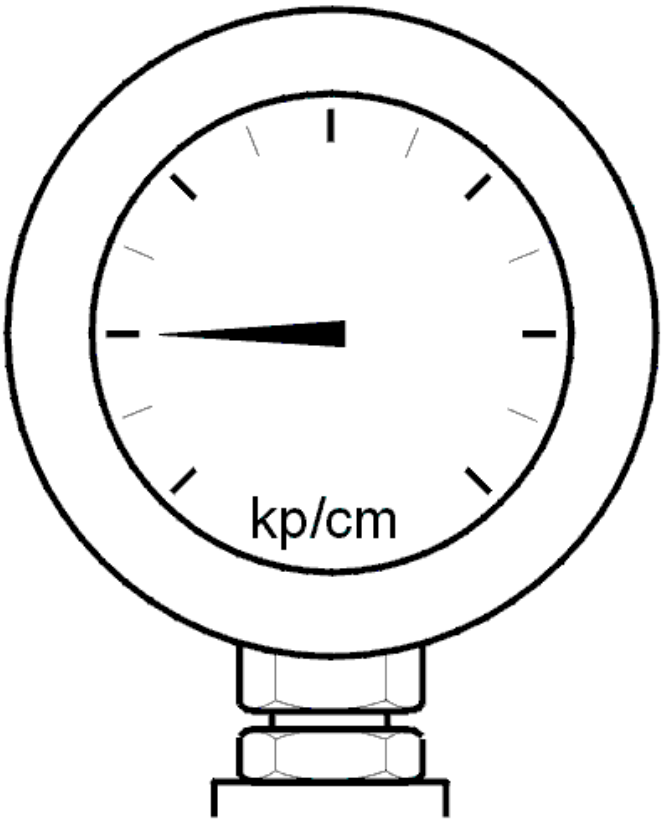

Fig. 33: Identifying Pressure Gauge
Courtesy of VOLVO CARS CORPORATION

Is the rest pressure to be checked?

- **YES**

  Refer to **CHECKING THE RESIDUAL PRESSURE**

- **NO**

  OKAY: Troubleshooting has been completed.

CHECKING THE RESIDUAL PRESSURE

- Switch off the ignition
- Disconnect the cable between the terminals on the relay base
- Reinstall the fuel pump (FP) relay.

  The line pressure must not fall below 200 kPa within 20 minutes of the fuel pump (FP) being shut-off.

  Remedy as necessary

Other information

- see **INJECTOR/PULSE DAMPER, REPLACEMENT**
- For the location of and to replace the fuel pump (FP) relay, For -2004, see **CENTRAL ELECTRONIC MODULE (CEM), REPLACING** or For 2005-, see **CENTRAL ELECTRONIC MODULE (CEM), REPLACING**
- For the location of and to replace the fuel pump (FP), see **RIGHT SIDE FUEL PUMP WITH LEVEL SENSOR**
- To disconnect the pressure gauge, see **DISCONNECTING FUEL PRESSURE GAUGE** .

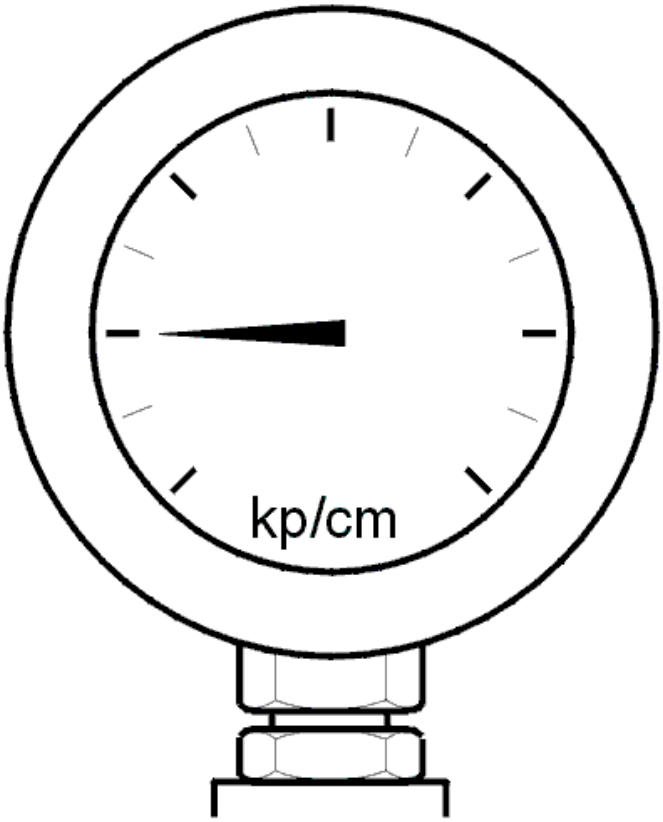

Fig. 34: Identifying Pressure Gauge
Courtesy of VOLVO CARS CORPORATION

CHECKING THE FUEL PRESSURE AND RESIDUAL PRESSURE IN THE WORKSHOP (2003, 2004)

CHOOSING A METHOD FOR TAKING A READING

NOTE: **For vehicles with demand activated fuel pumps (FP), perform Quick test of fuel pump (FP) using VIDA (Volvo scan tool).**

The fuel pressure can be measured with the car stationary or while being driven. Residual pressure is measured with the car stationary.

When the car is being driven, see **TAKING FUEL PRESSURE READINGS WHILE DRIVING THE CAR** .

- **Continue**

  Refer to **MEASURING THE LINE PRESSURE**

MEASURING THE LINE PRESSURE

- Connect the pressure gauge according to **CONNECTING FUEL PRESSURE GAUGE**
- Remove the soundproofing panel
- Remove the fuel pump (FP) relay (CMI 12 in the passenger compartment)
- Connect a cable to the relay base as shown in the illustration.

  Read off the line pressure from the pressure gauge. The line pressure must be 375-395 kPa

  Check the residual pressure if the fuel pressure is OK.

  Remedy as necessary

  Other information

  - For the location of and to replace the fuel pump (FP) relay, For -2004, see **CENTRAL ELECTRONIC MODULE (CEM), REPLACING** or For 2005-, see **CENTRAL ELECTRONIC MODULE (CEM), REPLACING**
  - For the location of and to replace the fuel pump (FP), see **RIGHT SIDE FUEL PUMP WITH LEVEL SENSOR**
  - see **REPLACING THE FUEL FILTER**
  - To disconnect the pressure gauge, see **DISCONNECTING FUEL PRESSURE GAUGE** .

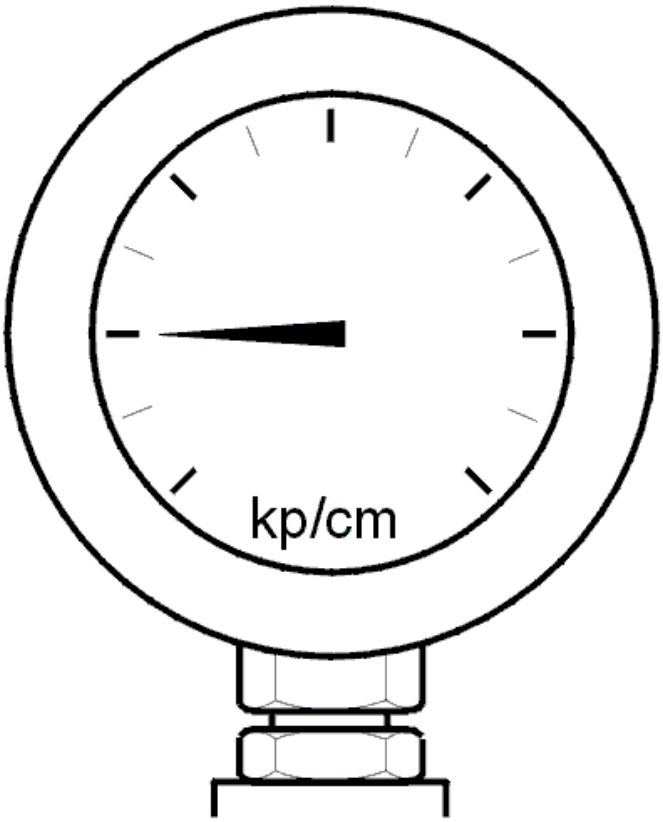

Fig. 35: Identifying Pressure Gauge
Courtesy of VOLVO CARS CORPORATION

Is the rest pressure to be checked?

- **YES**

  Refer to **CHECKING THE RESIDUAL PRESSURE**

- **NO**

  OKAY: Troubleshooting has been completed.

CHECKING THE RESIDUAL PRESSURE

- Switch off the ignition
- Disconnect the cable between the terminals on the relay base
- Reinstall the fuel pump (FP) relay.

  The line pressure must not fall below 200 kPa within 20 minutes of the fuel pump (FP) being shut-off.

  Remedy as necessary

Other information

- see **INJECTOR/PULSE DAMPER, REPLACEMENT**
- For the location of and to replace the fuel pump (FP) relay, For -2004, see **CENTRAL ELECTRONIC MODULE (CEM), REPLACING** or For 2005-, see **CENTRAL ELECTRONIC MODULE (CEM), REPLACING**
- For the location of and to replace the fuel pump (FP), see **RIGHT SIDE FUEL PUMP WITH LEVEL SENSOR**
- To disconnect the pressure gauge, see **DISCONNECTING FUEL PRESSURE GAUGE** .

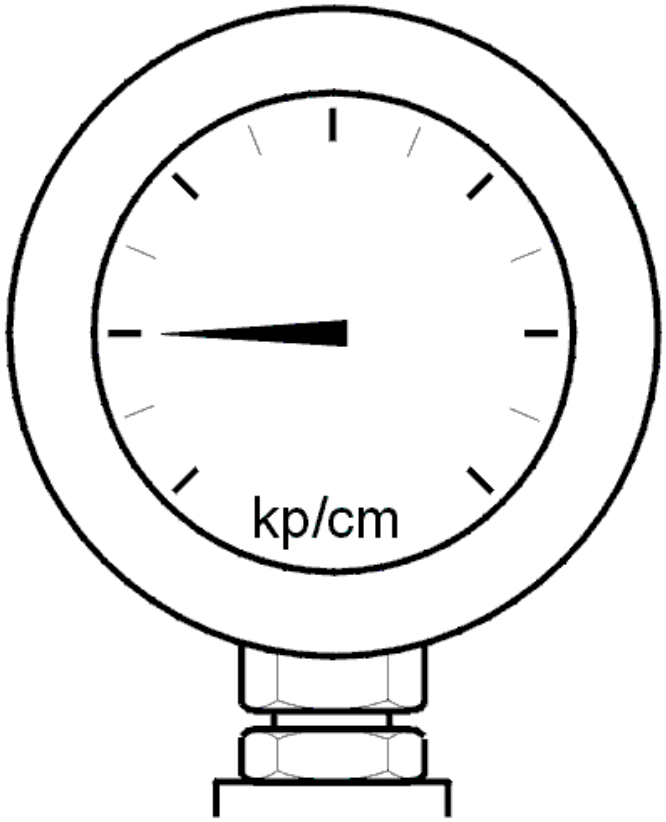

Fig. 36: Identifying Pressure Gauge
Courtesy of VOLVO CARS CORPORATION

CHECKING FUEL AND RESIDUAL PRESSURES (B6294T; 2003-2006)

CHECKING THE FUEL PRESSURE AND RESIDUAL PRESSURE IN THE WORKSHOP

CHOOSING A METHOD FOR TAKING A READING

NOTE: **For vehicles with demand activated fuel pumps (FP), perform Quick test of fuel pump (FP) using VIDA (Volvo scan tool).**

The fuel pressure can be measured with the car stationary or while being driven. Residual pressure is measured with the car stationary.

When the car is being driven, see **TAKING FUEL PRESSURE READINGS WHILE DRIVING THE CAR** .

- **Continue**

  Refer to **MEASURING THE LINE PRESSURE**

MEASURING THE LINE PRESSURE

- Connect the pressure gauge according to **CONNECTING FUEL PRESSURE GAUGE**
- Remove the soundproofing panel
- Remove the fuel pump (FP) relay (CMI 12 in the passenger compartment)
- Connect a cable to the relay base as shown in the illustration.

  Read off the line pressure from the pressure gauge. The line pressure must be 375-395 kPa

  Check the residual pressure if the fuel pressure is OK.

  Remedy as necessary

  Other information

  - For the location of and to replace the fuel pump (FP) relay, For -2004. See **CENTRAL ELECTRONIC MODULE (CEM), REPLACING** or For 2005-, see **CENTRAL ELECTRONIC MODULE (CEM), REPLACING**
  - For the location of and to replace the fuel pump (FP), see **RIGHT SIDE FUEL PUMP WITH LEVEL SENSOR**
  - see **REPLACING THE FUEL FILTER**
  - To disconnect the pressure gauge, see **DISCONNECTING FUEL PRESSURE GAUGE** .

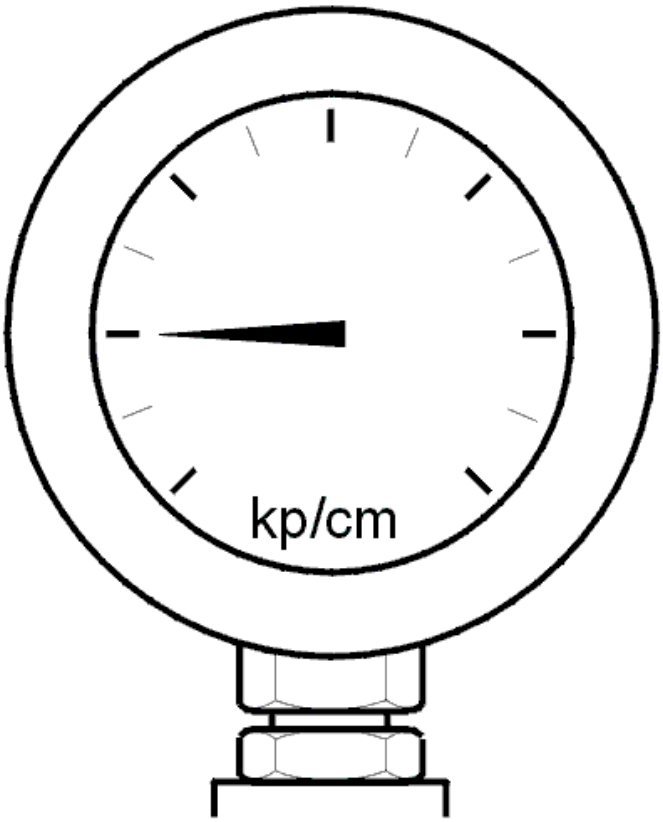

Fig. 37: Identifying Pressure Gauge
Courtesy of VOLVO CARS CORPORATION

Is the rest pressure to be checked?

- **YES**

  Refer to **CHECKING THE RESIDUAL PRESSURE**

- **NO**

  OKAY: Troubleshooting has been completed.

CHECKING THE RESIDUAL PRESSURE

- Switch off the ignition
- Disconnect the cable between the terminals on the relay base
- Reinstall the fuel pump (FP) relay.

  The line pressure must not fall below 200 kPa within 20 minutes of the fuel pump (FP) being shut-off.

  Remedy as necessary

Other information

- see **INJECTOR / PULSATION DAMPER, REPLACING**
- For the location of and to replace the fuel pump (FP) relay, For -2004, see **CENTRAL ELECTRONIC MODULE (CEM), REPLACING** or For 2005-, see **CENTRAL ELECTRONIC MODULE (CEM), REPLACING**
- For the location of and to replace the fuel pump (FP), see **RIGHT SIDE FUEL PUMP WITH LEVEL SENSOR**
- To disconnect the pressure gauge, see **DISCONNECTING FUEL PRESSURE GAUGE** .

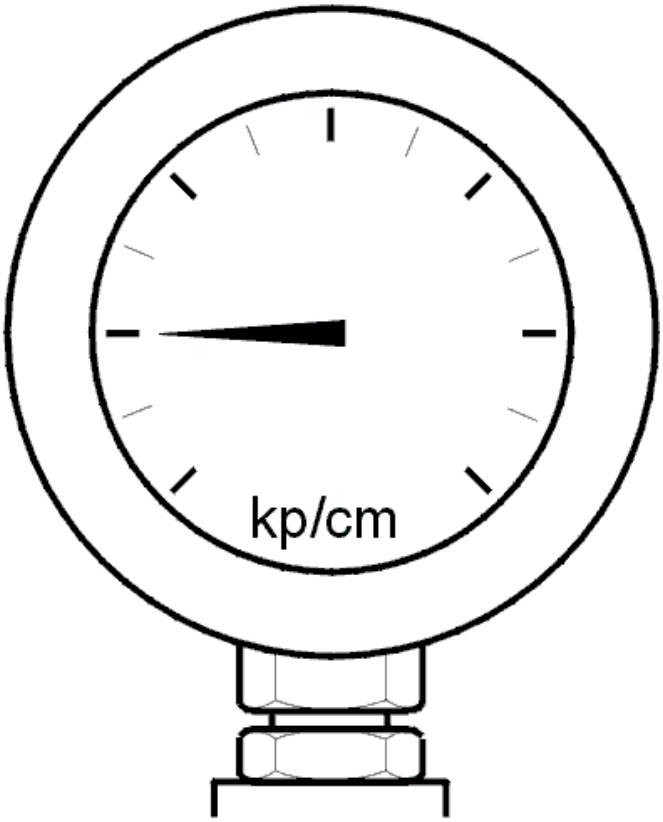

Fig. 38: Identifying Pressure Gauge
Courtesy of VOLVO CARS CORPORATION

CHECKING IGNITION SPARK (B5254T2; B6294T; 2003-2004)

CHECKING IGNITION SPARK

CHECKING IGNITION SPARK

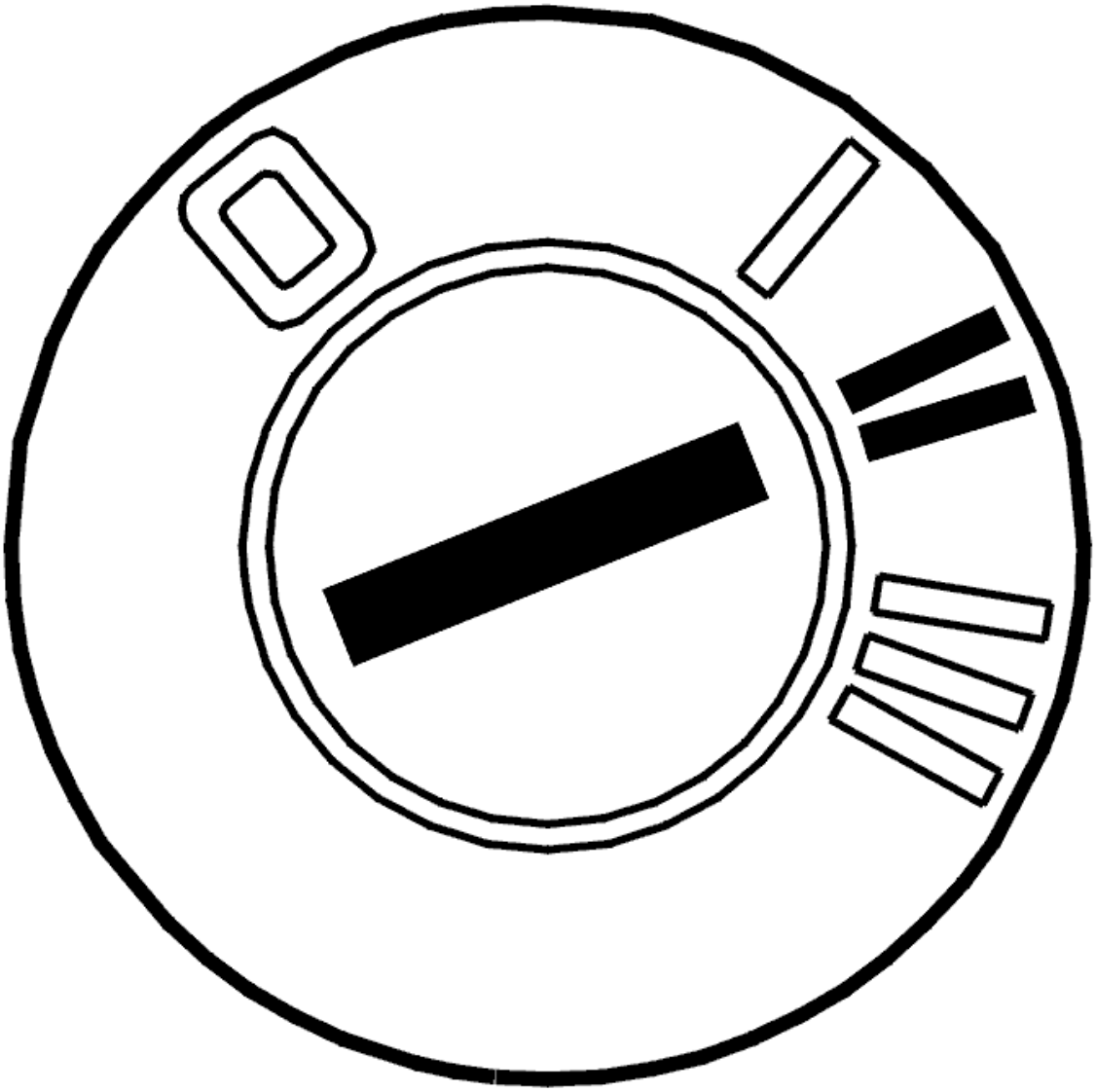

Fig. 39: Identifying Ignition ON
Courtesy of VOLVO CARS CORPORATION

- Ignition off
- Do not disconnect ignition coil, let wiring remain in place.
- Install a new spark plug in the ignition coil, place it against the engine.
- Ignition on

CAUTION: Never activate an ignition coil that is installed on the engine.

Engine damage may be caused if there is a fuel in the cylinder.

Check carefully that the coil that is removed is activated.

Cylinder order is calculated from the camshaft gears.

Activate the relevant ignition coil.

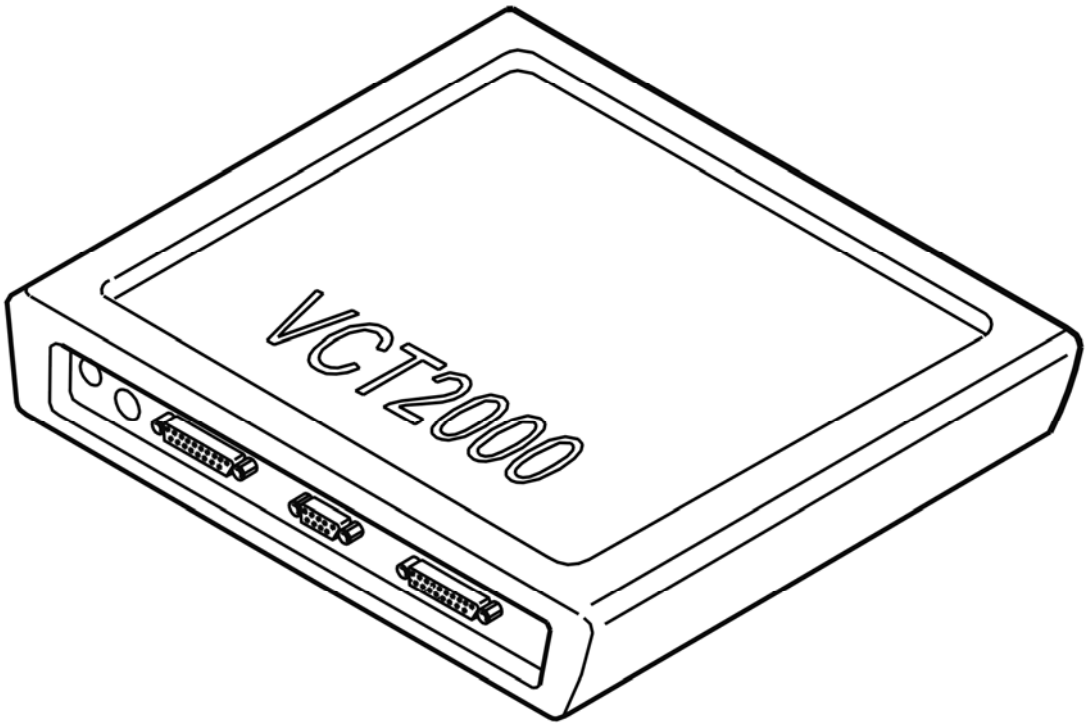

Fig. 40: Identifying VCT2000 Diagnostic Tool Symbol In VIDA
Courtesy of VOLVO CARS CORPORATION

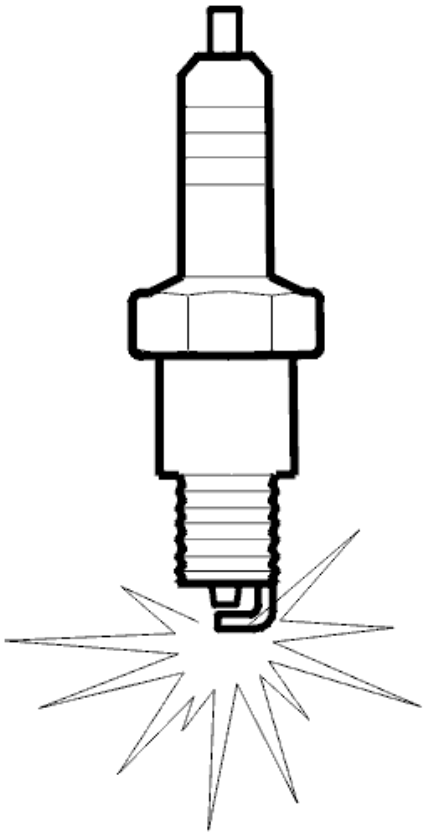

Fig. 41: Identifying Spark Plug
Courtesy of VOLVO CARS CORPORATION

Is there a spark?

- **YES**

  OKAY: Troubleshooting has been completed.

- **NO**

  Refer to **REPLACING COMPONENT**

REPLACING COMPONENT

CAUTION: Avoid touching the pins in the control module and the corresponding connector on the cable harness. There is a risk of static discharge which could damage the control module. Discharge yourself and tools to be used by holding the tool's metal part and touching a body part on the car just before starting to work.

Check the connectors to the ignition coil and Engine Control Module (ECM) for damage to pins and connections as well as for oxidation and contact resistance.

Check the voltage supply cable to the ignition coil's connector #4. The voltage must be battery voltage with the ignition on (ignition position II).

Check the ground cable between the ignition coil's connector #3 and ground connection. Check the cable for open circuit and short-circuit to voltage.

If no malfunction is found:

Try a new ignition coil.

Other information

- see **REPLACING IGNITION COILS**
- see **CHECKING WIRING AND TERMINALS**

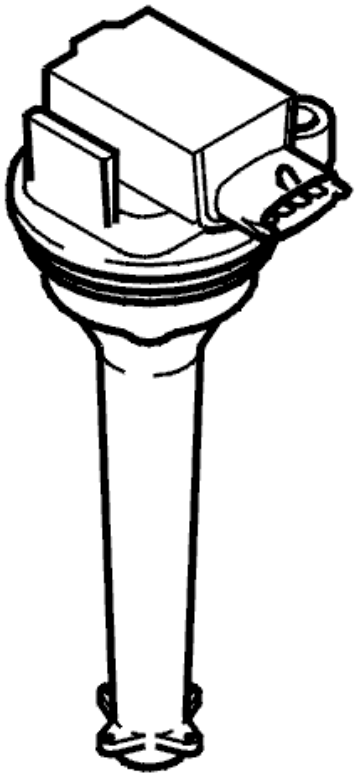

Fig. 42: Identifying Ignition Coil
Courtesy of VOLVO CARS CORPORATION

REPLACING IGNITION COILS

REMOVING IGNITION COILS

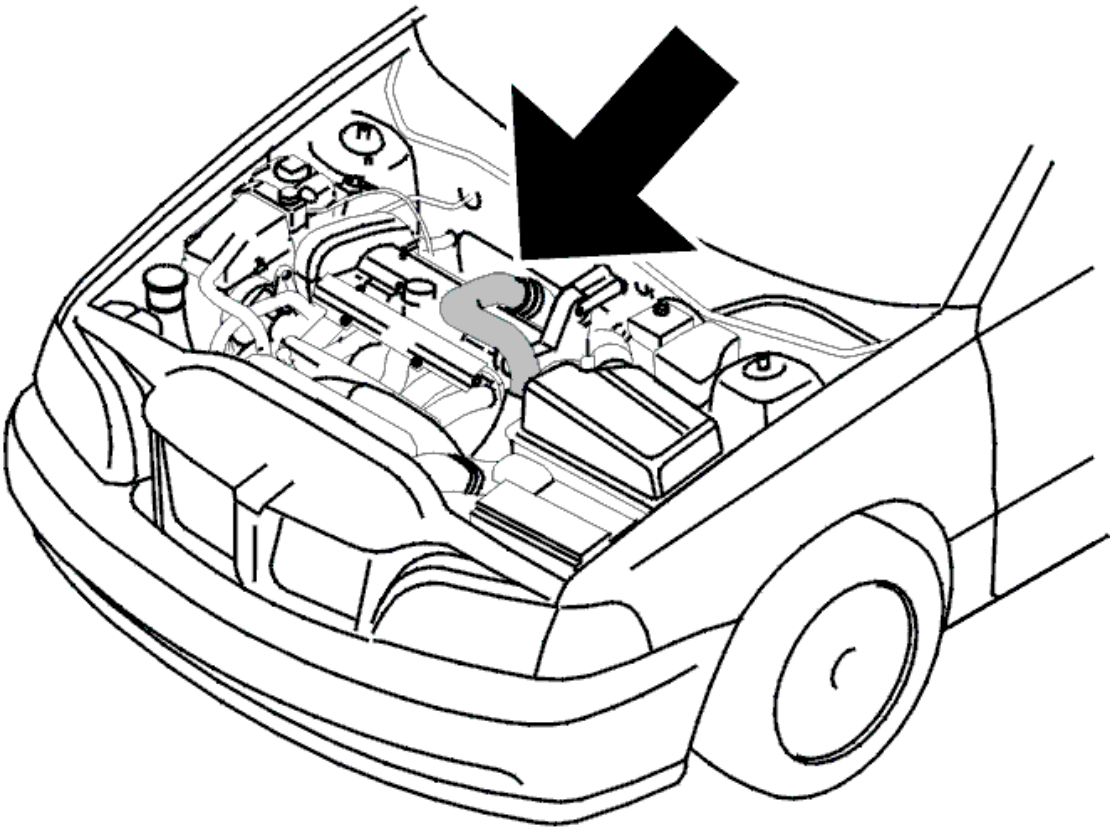

Fig. 43: Identifying Charge Air Pipe
Courtesy of VOLVO CARS CORPORATION

Remove

- the charge air pipe over the engine. Seal the openings.

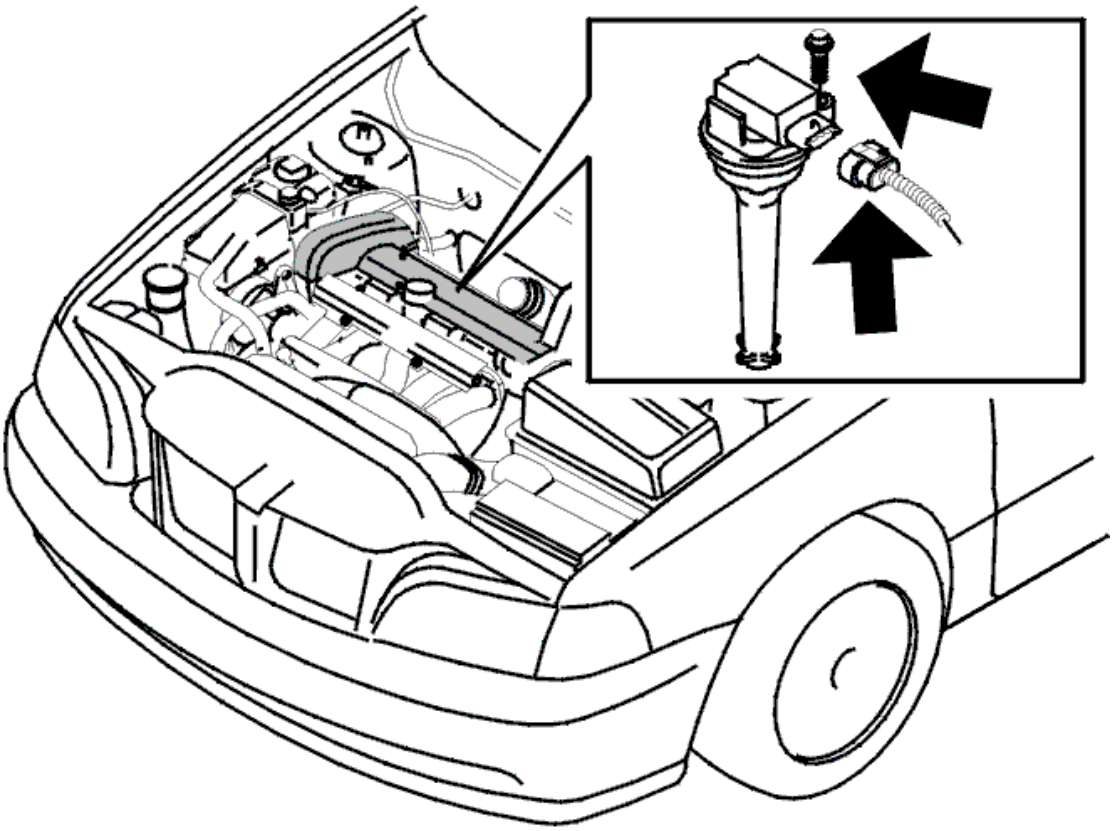

Fig. 44: Identifying Ignition Coils, Connector And Mounting Screw
Courtesy of VOLVO CARS CORPORATION

- the upper timing belt cover
- the cover over the ignition coils

  Disconnect the ignition coil connector

- the mounting screw. Pull up the coil.

INSTALLING IGNITION COILS

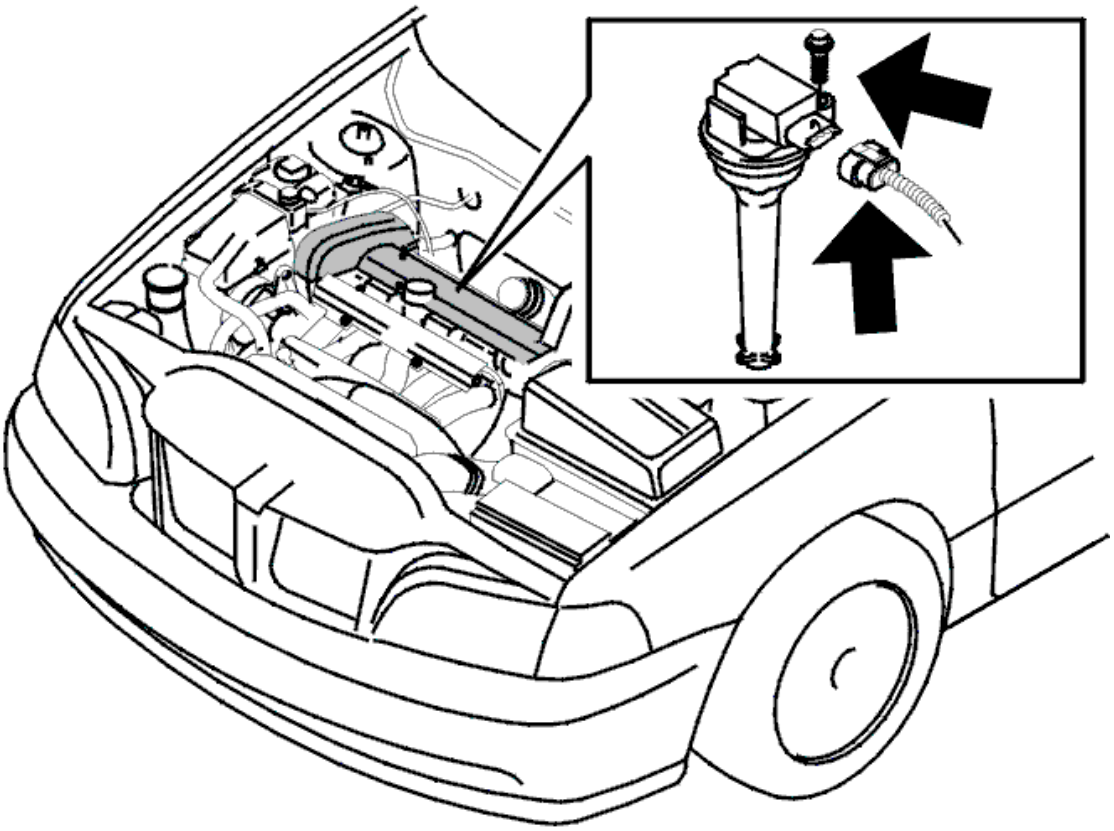

Fig. 45: Identifying Ignition Coils, Connector And Mounting Screw
Courtesy of VOLVO CARS CORPORATION

Install the new coil.

Align the coil and press it down. Install the screw. Tighten to **10 Nm** .

Press in the connector until a clicking sound is heard.

Install the cover over the ignition coil.

Install the upper timing belt cover.

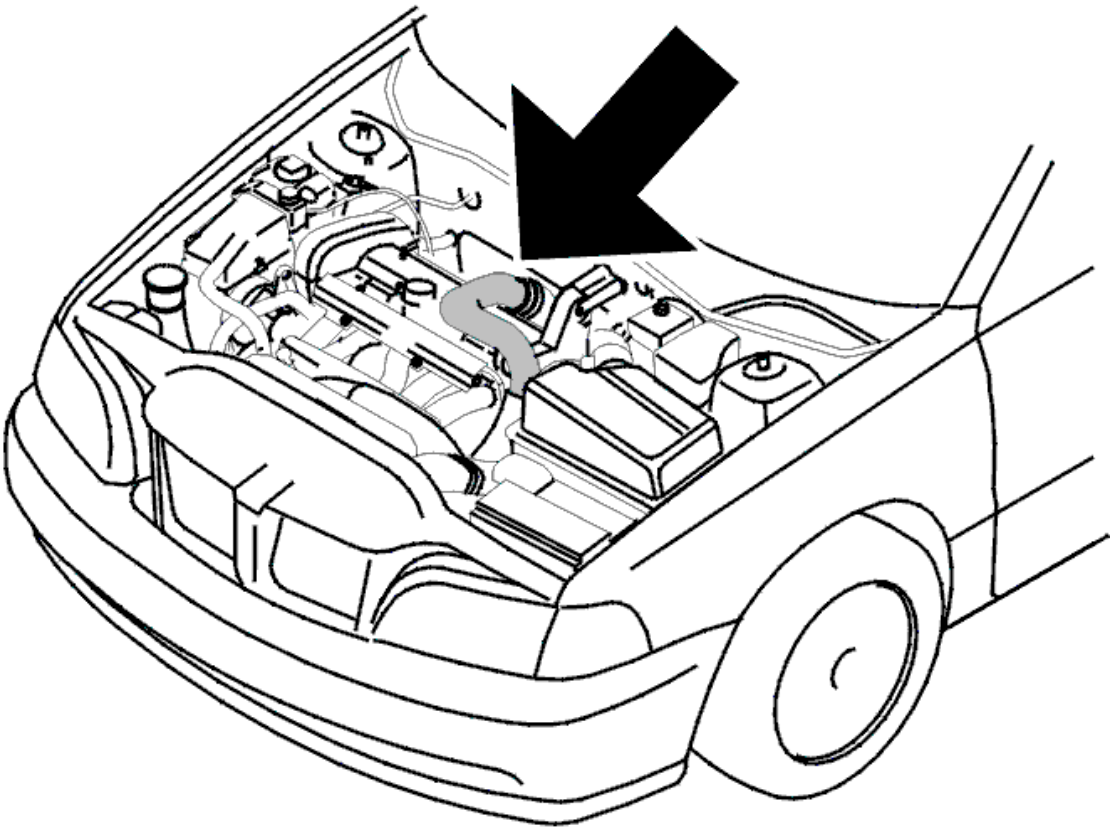

Fig. 46: Identifying Charge Air Pipe
Courtesy of VOLVO CARS CORPORATION

Remove the seals from the charge air pipe. Reinstall the charge air pipe over the engine.

CHECKING IGNITION SPARK (B6294T; 2003-2004)

CHECKING IGNITION SPARK

CHECKING IGNITION SPARK

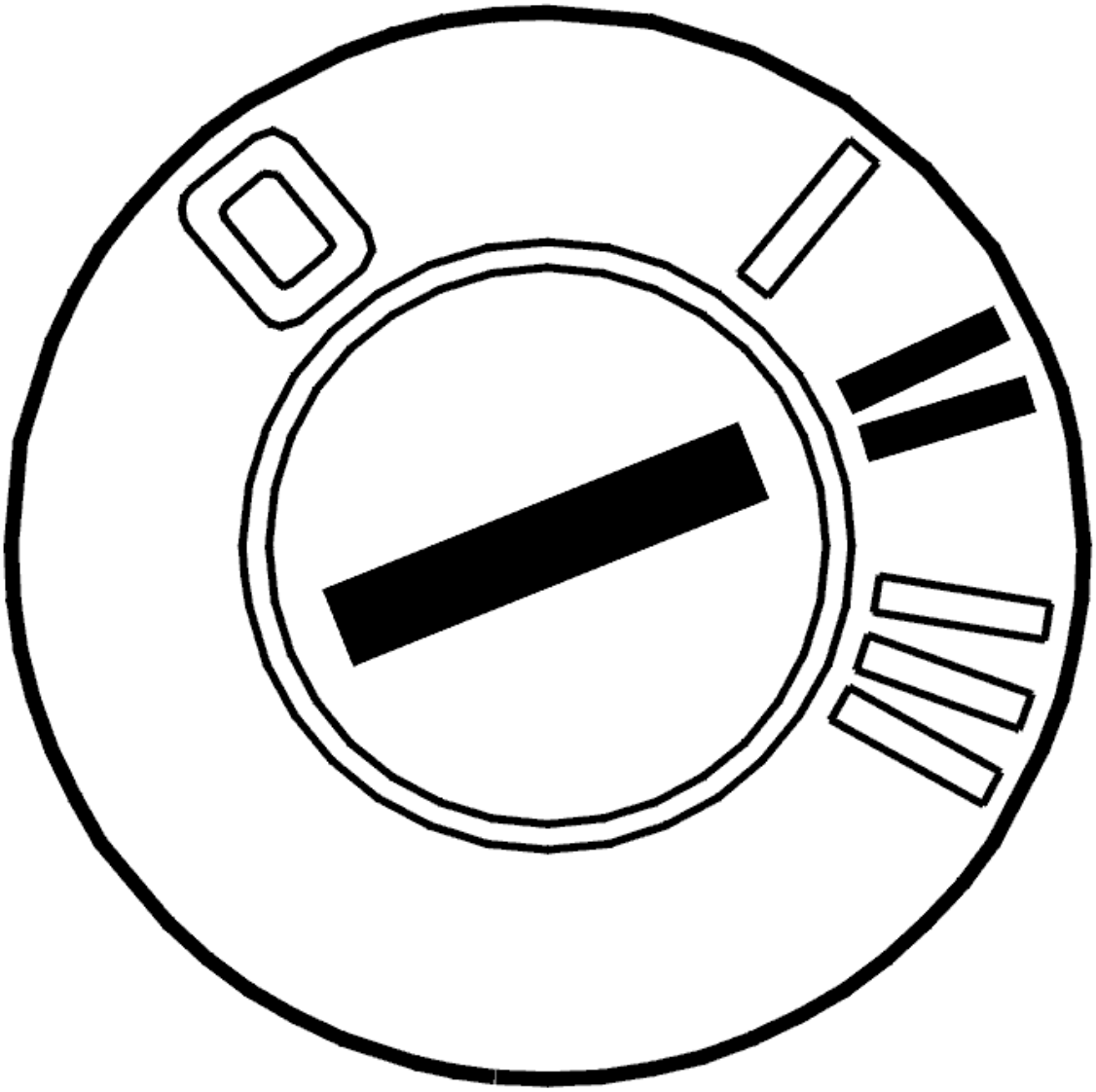

Fig. 47: Identifying Ignition ON
Courtesy of VOLVO CARS CORPORATION

- Ignition off
- Do not disconnect ignition coil, let wiring remain in place.
- Install a new spark plug in the ignition coil, place it against the engine.
- Ignition on

CAUTION: Never activate a ignition coil which is installed on the engine.

Engine damage may be caused if there is a fuel in the cylinder.

Check carefully that only the dismounted coil is activated.

Cylinder order is calculated from the camshaft gears.

Activate the relevant ignition coil.

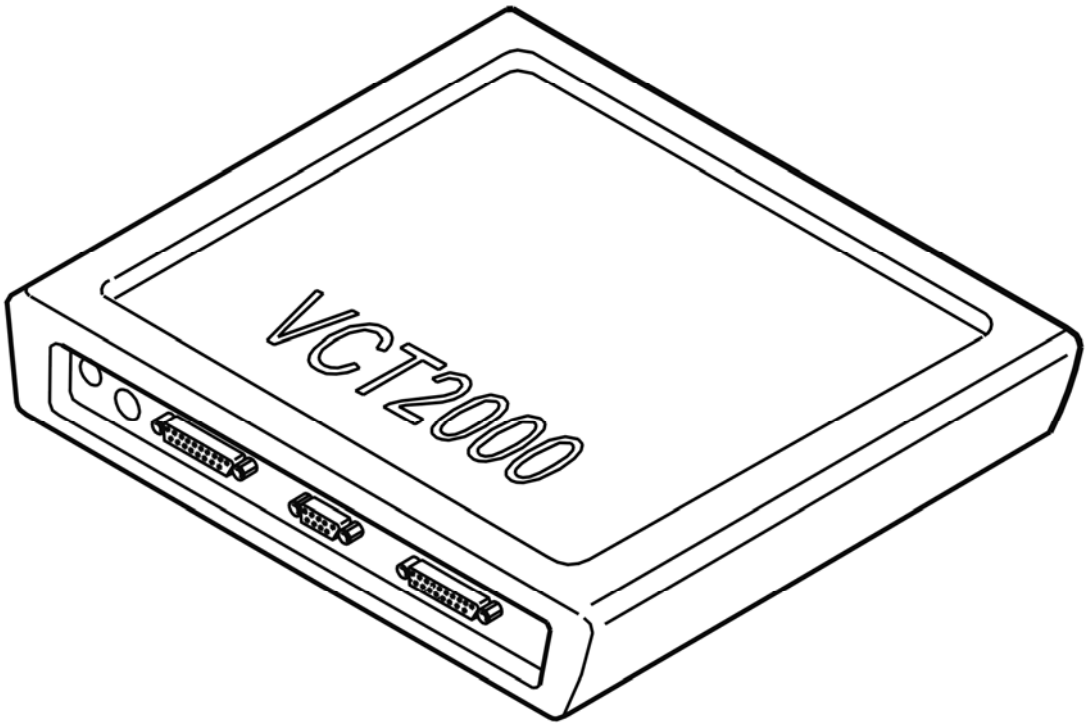

Fig. 48: Identifying VCT2000 Diagnostic Tool Symbol In VIDA
Courtesy of VOLVO CARS CORPORATION

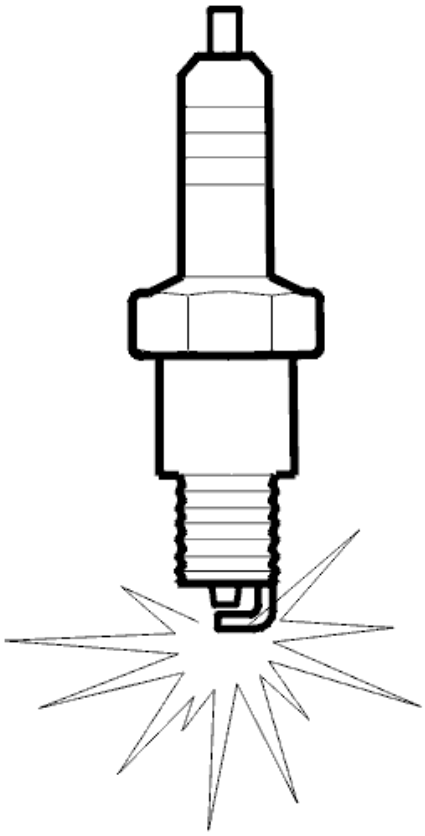

Fig. 49: Identifying Spark Plug
Courtesy of VOLVO CARS CORPORATION

Is there a spark?

- **YES**

  OKAY: Troubleshooting has been completed.

- **NO**

  Refer to **REPLACING COMPONENT**

REPLACING COMPONENT

Fig. 50: Identifying Ignition Coil
Courtesy of VOLVO CARS CORPORATION

Try a new ignition coil.

Other information:

- To replace the ignition coil, see **REPLACING IGNITION COIL** .

CHECKING INJECTORS (B5254T2; B6294T; 2003-2004)

CHECKING INJECTORS

CHECKING THE SPARK PLUGS

- Remove all spark plugs, note which cylinder each spark plug was removed from.

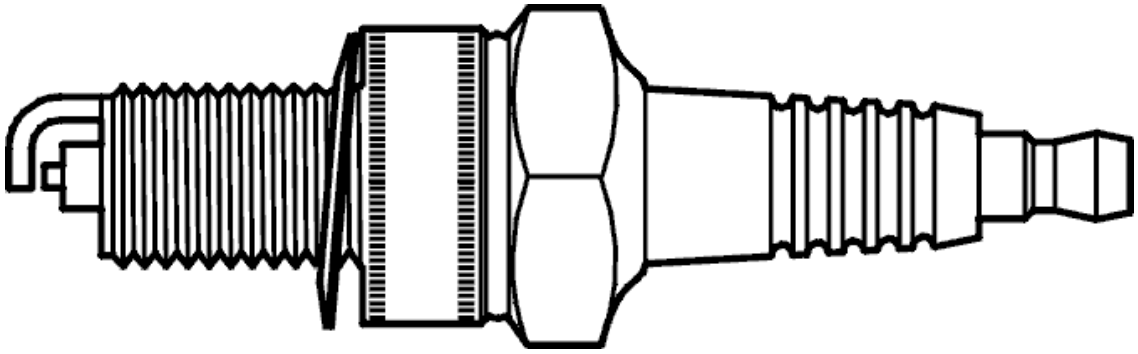

Fig. 51: Identifying Spark Plug
Courtesy of VOLVO CARS CORPORATION

Check the color of the spark plug

Other information:

- To remove the spark plugs, see **REPLACING SPARK PLUGS** .

Is any spark plug lighter than the others?

- **YES**

  Refer to **REPLACING THE COMPONENT**

- **NO**

  OKAY: Troubleshooting has been completed.

REPLACING THE COMPONENT

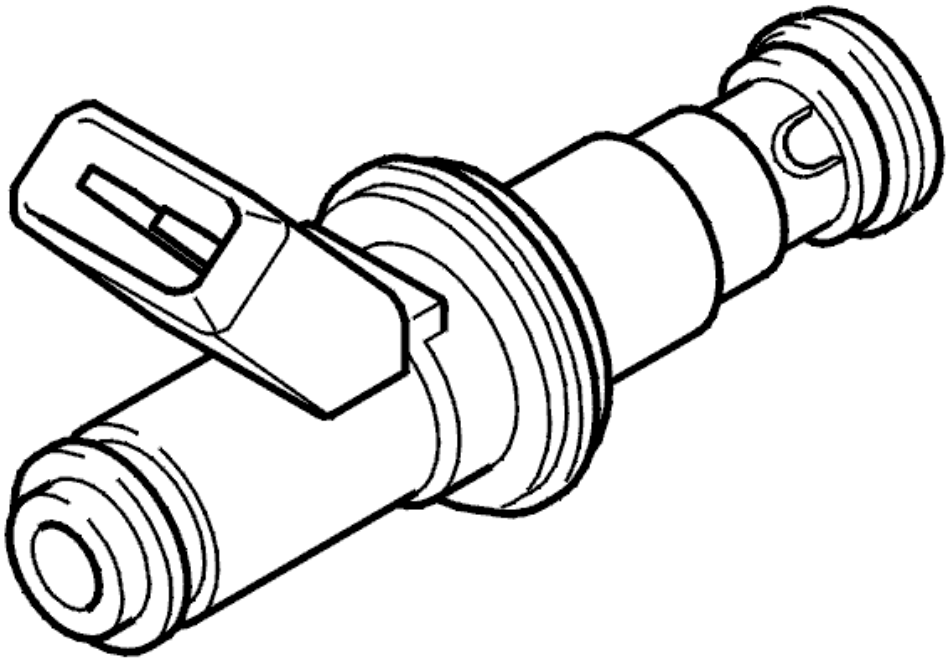

Fig. 52: Identifying Injector
Courtesy of VOLVO CARS CORPORATION

Try a new injector on the relevant cylinder.

- For B5xx4T, see **INJECTOR/PULSE DAMPER, REPLACEMENT**
- For B6xx4T, see **INJECTOR / PULSATION DAMPER, REPLACING** .

CHECKING SOFTWARE (B6324S, TF-80SC; B6324S, TF-80SC AWD; 2007)

CHECKING SOFTWARE

CHECKING SOFTWARE

HINT: Stated symptom can be solved by upgrading the software in Transmission Control Module (TCM), Engine control module (ECM), and Differential Electronic Module (DEM).

NOTE: If the control modules mentioned above contain diagnostic trouble codes that may cause a similar symptom, first troubleshoot and fix these diagnostic trouble codes.

Go to the tab SOFTWARE and order an upgrade for each software.

HINT: All three control modules can be upgraded at the same time, on the condition that they do not already contain the latest software.

Make sure that the new software solved the symptom using the relevant verification procedure.

CHECKING SPARK PLUGS (B5254T2; B6294T; 2003-2004)

CHECKING SPARK PLUGS

CHECKING SPARK PLUGS

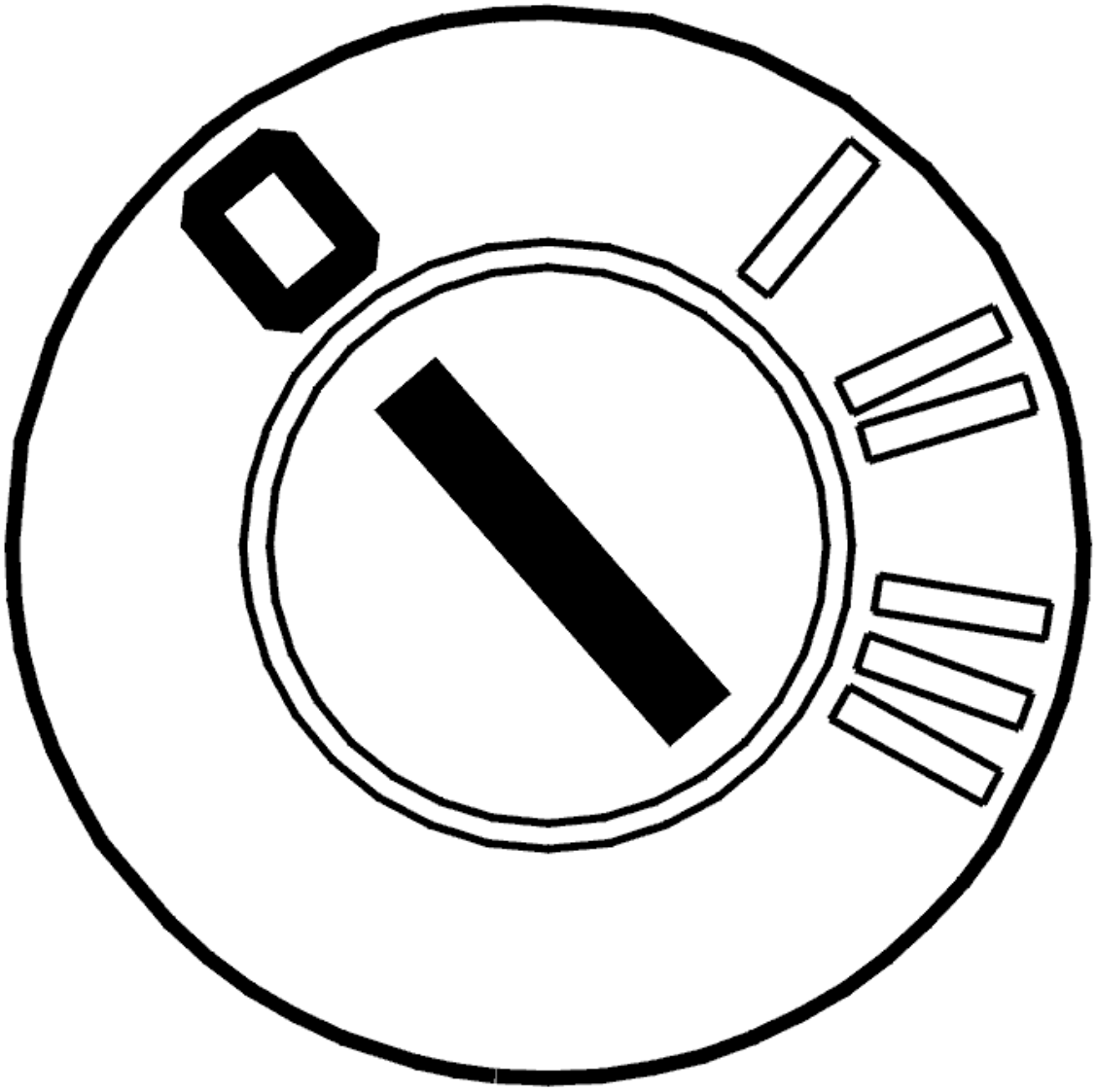

Fig. 53: Identifying Ignition OFF
Courtesy of VOLVO CARS CORPORATION

- Ignition off

- Remove all spark plugs

  Check the spark plugs for cracking in the porcelain, the spark gap and for carbon and other deposits if uncertain replace the spark plugs

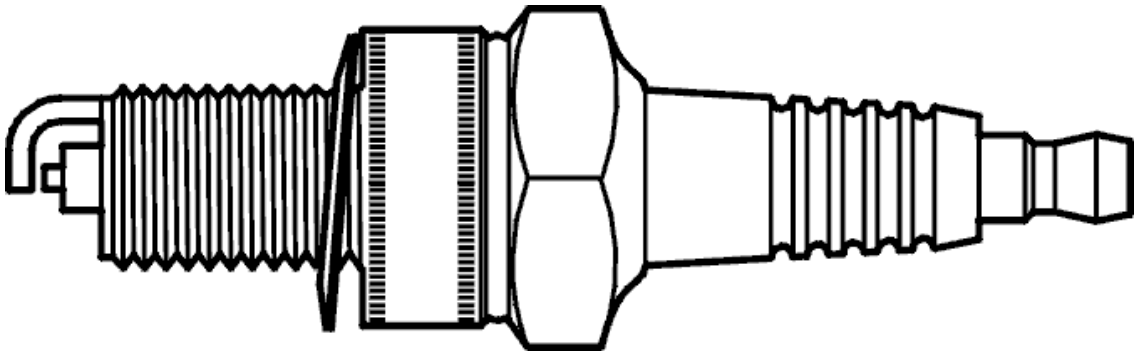

Fig. 54: Identifying Spark Plug
Courtesy of VOLVO CARS CORPORATION

Was a fault detected?

- **YES**

  Refer to **REPLACING COMPONENT**

- **NO**

  OKAY: Troubleshooting has been completed.

REPLACING COMPONENT

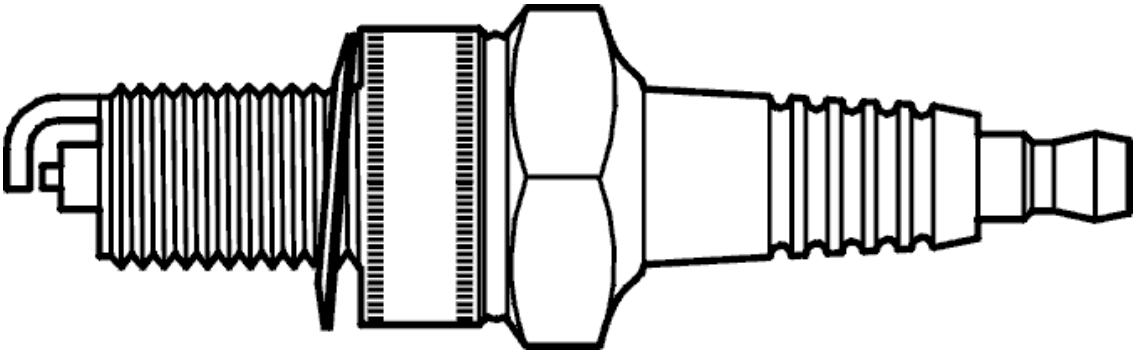

Fig. 55: Identifying Spark Plug
Courtesy of VOLVO CARS CORPORATION

Replace all spark plugs according to **REPLACING SPARK PLUGS** .

CHECKING THE AIR CONDITIONING (A/C) SYSTEM (B5254T2; B6294T; 2003-2004)

CHECKING THE AIR CONDITIONING (A/C) SYSTEM

CHECKING COMPONENTS AND WIRING

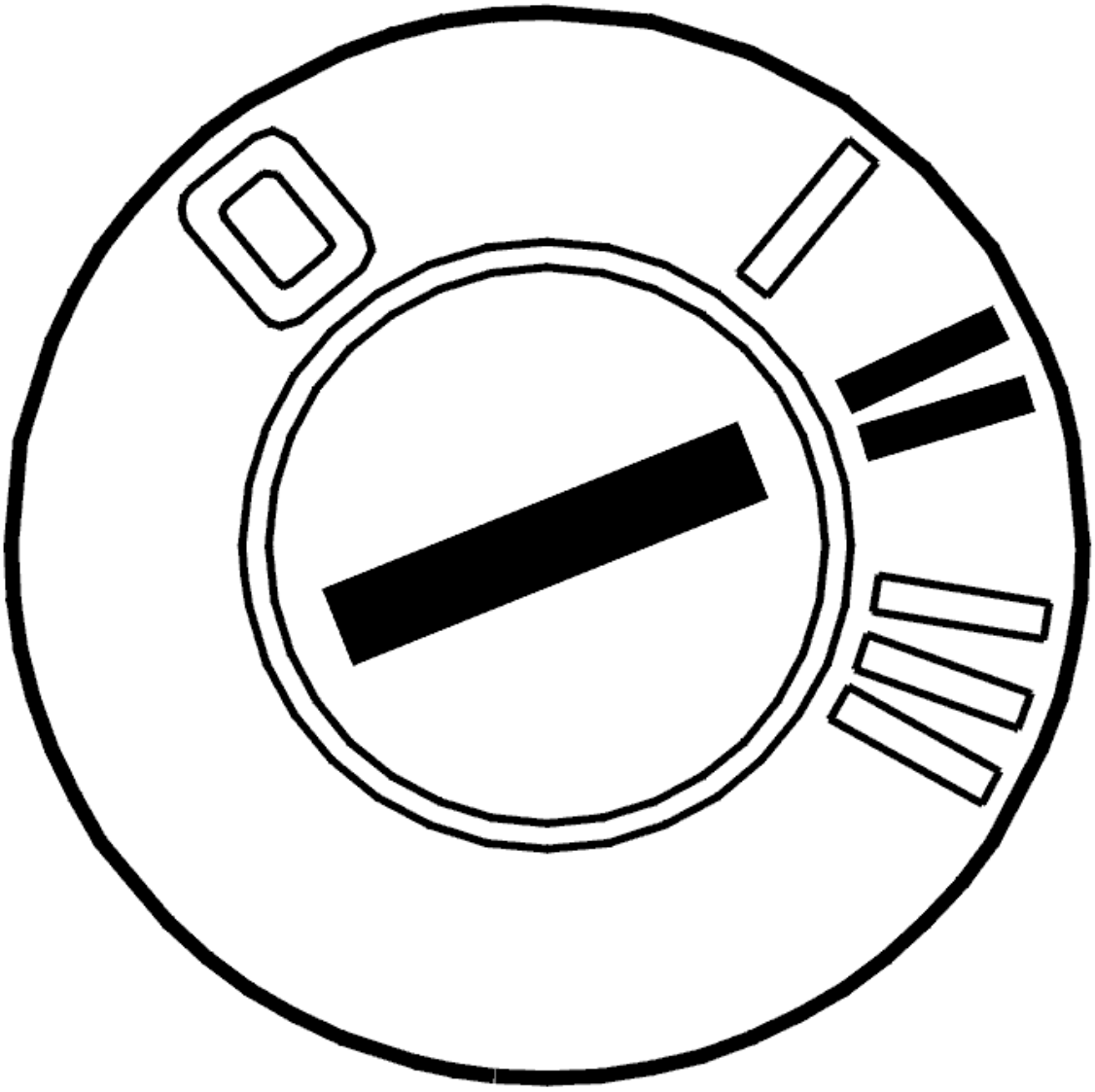

Fig. 56: Identifying Ignition ON
Courtesy of VOLVO CARS CORPORATION

- Ignition on
- Activate the air conditioning (A/C) relay

  Check that the magnetic clutch is activated, a noise from the magnetic clutch should be clearly heard.

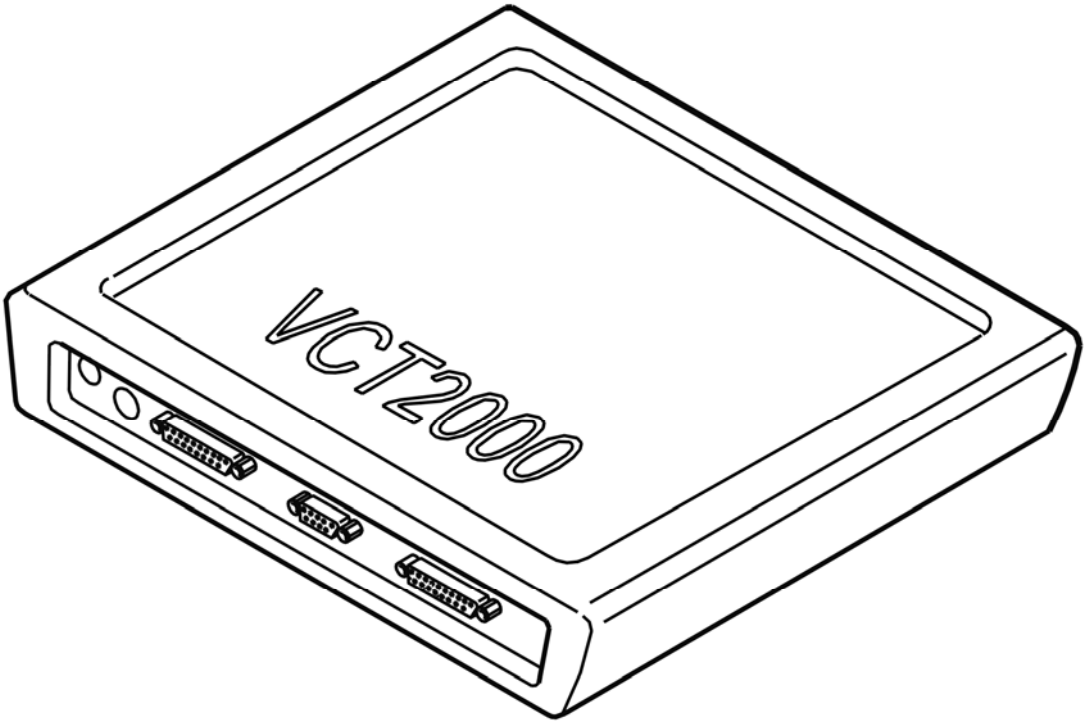

Fig. 57: Identifying VCT2000 Diagnostic Tool Symbol In VIDA
Courtesy of VOLVO CARS CORPORATION

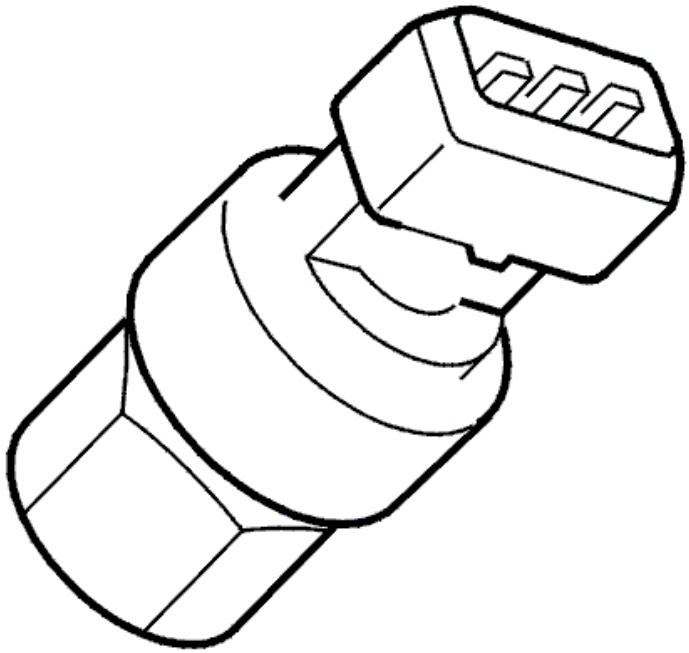

Fig. 58: Identifying A/C Pressure Sensor
Courtesy of VOLVO CARS CORPORATION

Was the magnetic clutch activated?

- **YES**

  Refer to **CHECKING COMPONENT**

- **NO**

  Refer to **CHECKING THE WIRING AND THE RELAY**

CHECKING COMPONENT

Try a new air conditioning (A/C) pressure sensor.

Check the compressor and magnetic clutch if the fault is not in the air conditioning (A/C) pressure sensor.

Other information:

- For information about signals on 5-cylinder engines, see **SIGNAL DESCRIPTION** .
- For information about signals on 6-cylinder engines, see **SIGNAL SPECIFICATION** .

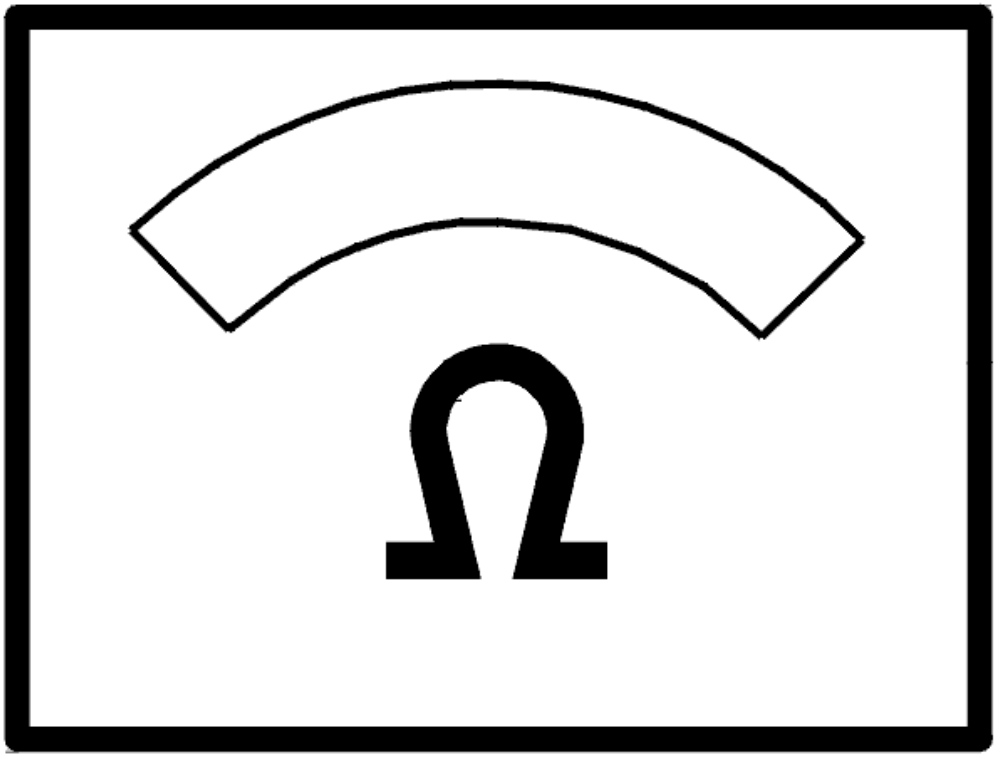

Fig. 59: Identifying Ohms Display
Courtesy of VOLVO CARS CORPORATION

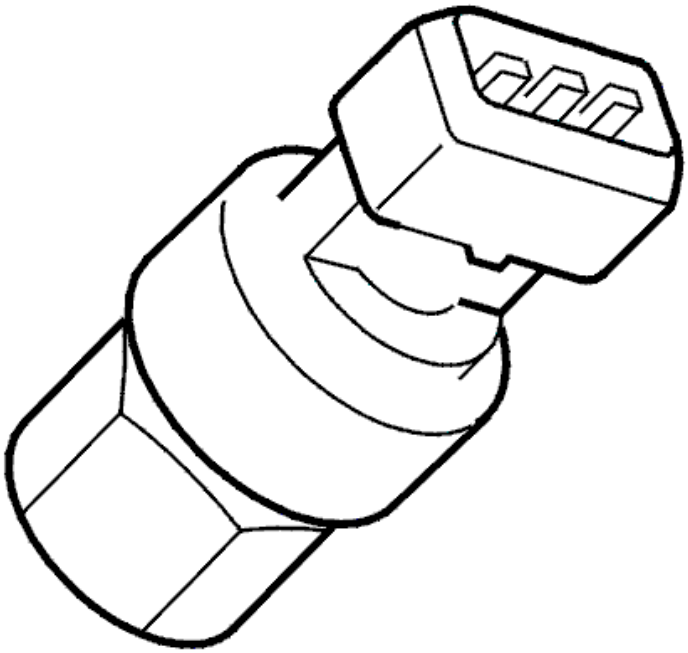

Fig. 60: Identifying A/C Pressure Sensor
Courtesy of VOLVO CARS CORPORATION

- **Continue**

  Refer to **VERIFICATION**

CHECKING THE WIRING AND THE RELAY

Check the cable between A/C relay base terminal 3 and the magnetic clutch for an open-circuit according to **OPEN-CIRCUIT, PERMANENT FAULTS**

HINT: With the ignition on and the cable connected between 1 and 3 in the A/C relay base, the magnetic clutch should be activated.

Other information:

- A/C relay base terminal 1 is supplied with power from the system relay via fuse 11B/16
- A/C relay base terminal 3 is connected to the magnetic clutch
- For information about signals on 5-cylinder engines, see **SIGNAL DESCRIPTION** .
- For information about signals on 6-cylinder engines, see **SIGNAL SPECIFICATION** .

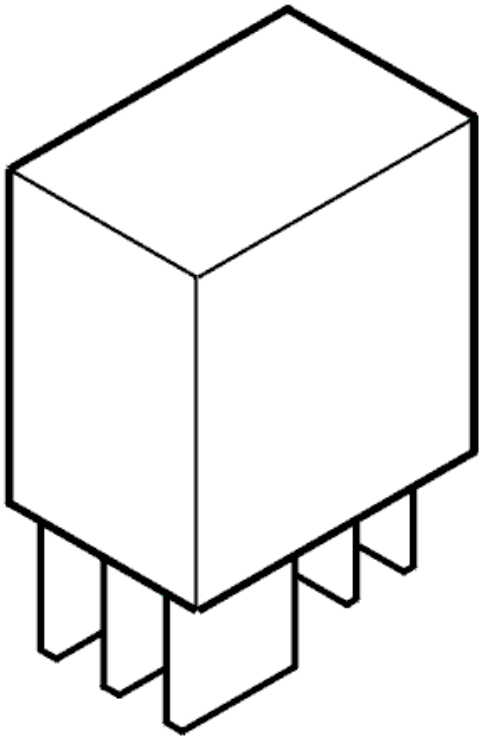

Fig. 61: Identifying A/C Relay
Courtesy of VOLVO CARS CORPORATION

- **Continue**

  Refer to **VERIFICATION**

VERIFICATION

VERIFICATION

HINT: After carrying out the repair, check that the fault has been remedied.

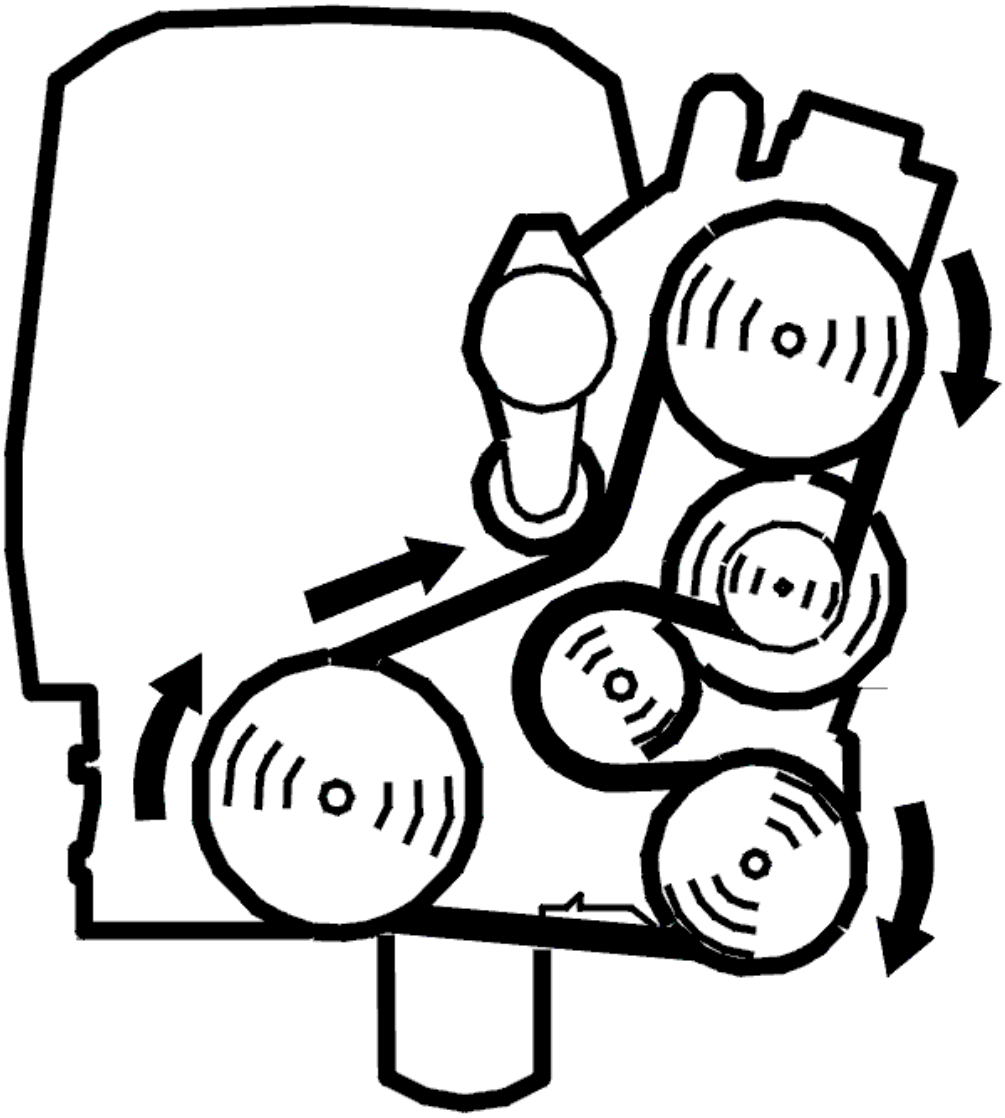

Fig. 62: Identifying Belt Routing
Courtesy of VOLVO CARS CORPORATION

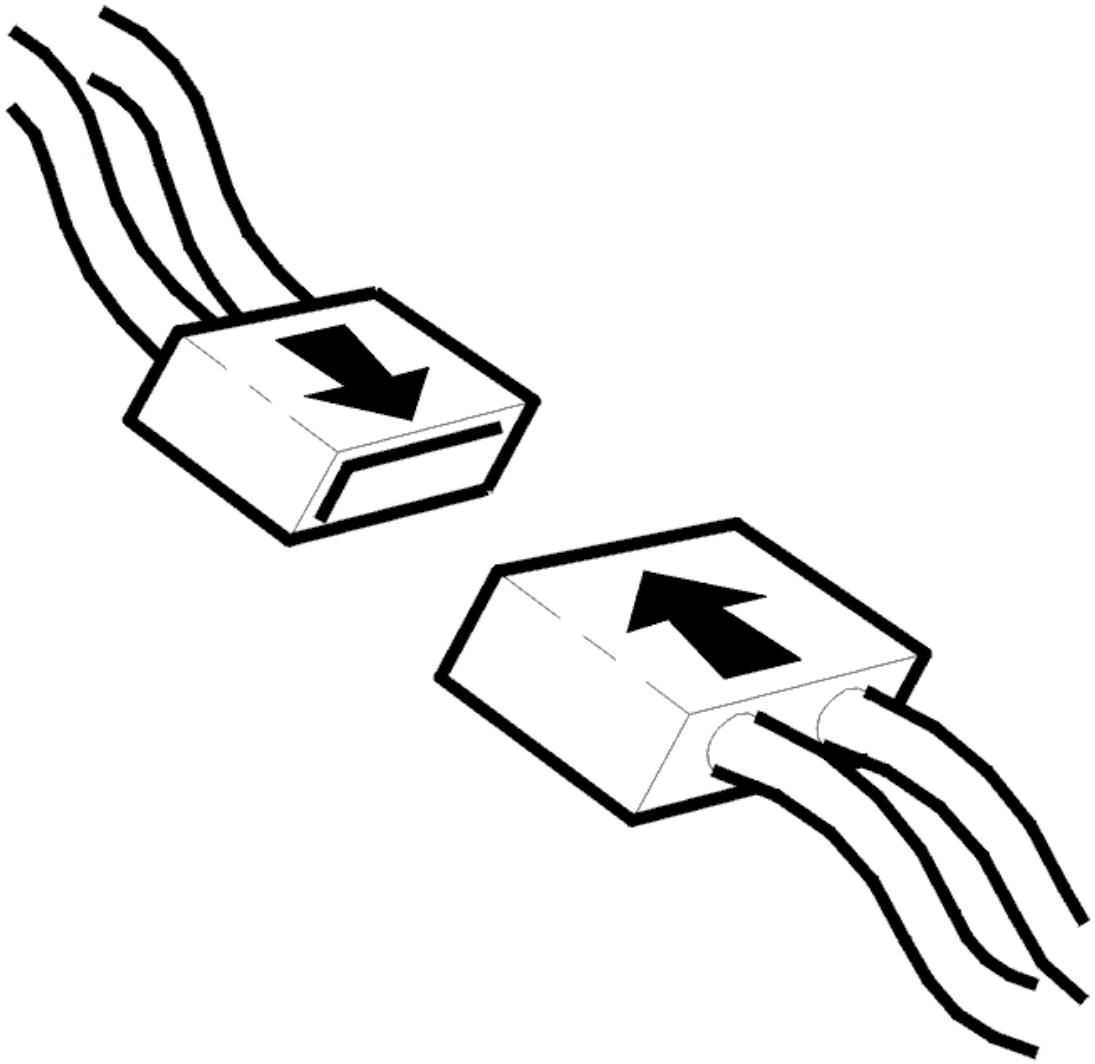

Fig. 63: Identifying Connector(s) Reinstallation
Courtesy of VOLVO CARS CORPORATION

- Ignition off.
- Reinstall connectors, components etc.
- Start the engine.
- Air conditioning (A/C) switch on
- Start the blower fan

Check that the pressure increases in the air conditioning (A/C) system when the air conditioning (A/C) compressor engages.

Also check if cold air blows into the passenger compartment when at the coolest setting.

NOTE: The air conditioning (A/C) pressure is given in volts for values, see

COMPONENT SPECIFICATIONS .

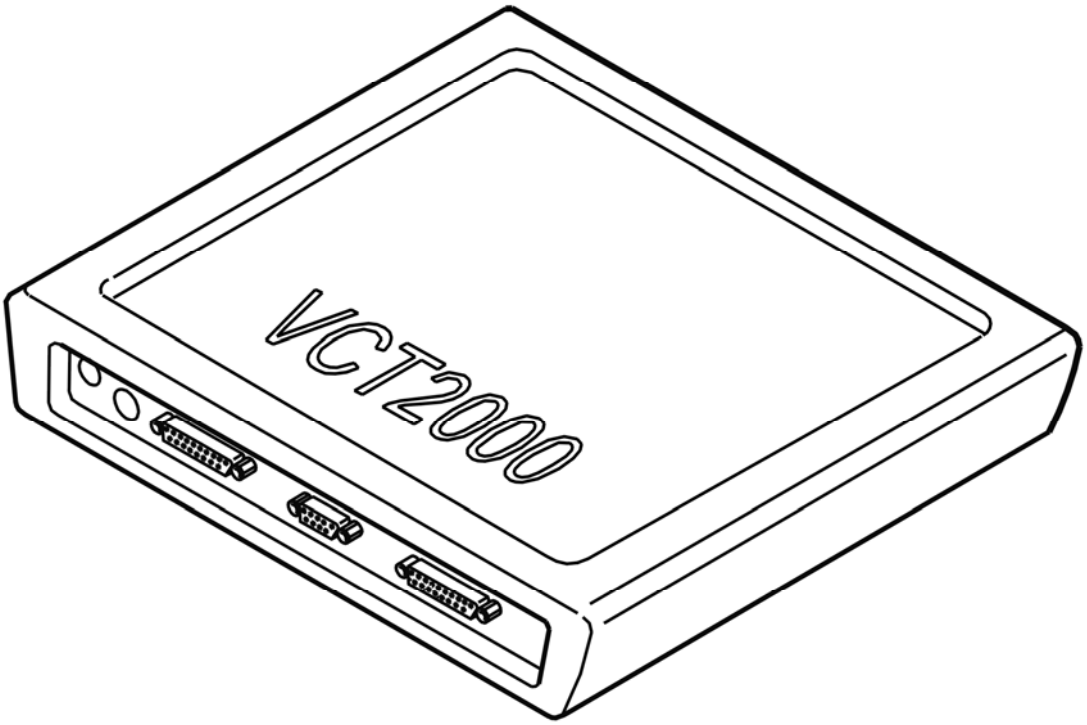

Fig. 64: Identifying VCT2000 Diagnostic Tool Symbol In VIDA
Courtesy of VOLVO CARS CORPORATION

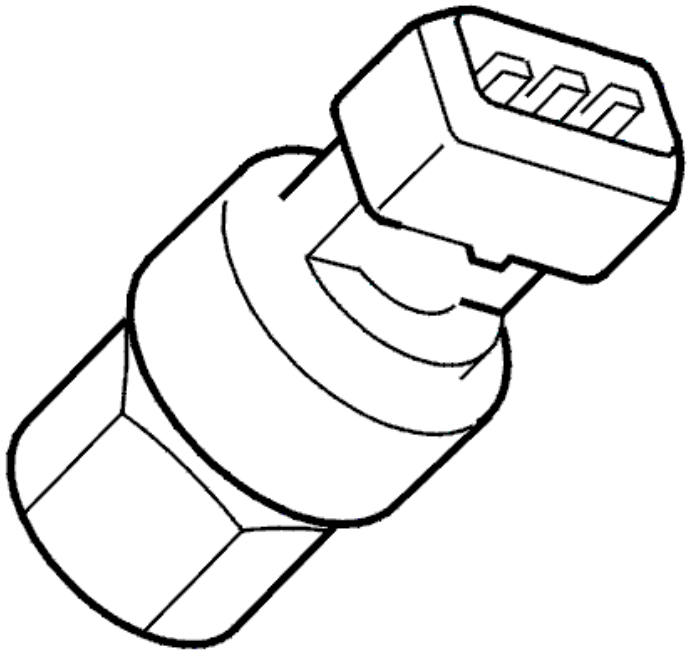

Fig. 65: Identifying A/C Pressure Sensor
Courtesy of VOLVO CARS CORPORATION

Does the pressure in air conditioning (A/C) system change?

- **YES**

  VERIFIED: Troubleshooting has been completed.

- **NO**

  Refer to **INFORMATION**

INFORMATION

FAULT-TRACING INFORMATION

The fault should have been detected and remedied. As this is not the case fault-tracing has failed.

Exit fault-tracing for this diagnostic trouble code (DTC) or make another attempt.

CHECKING THE ENGINE COOLING FAN (FC) AND COOLING SYSTEM (B5254T2; B6294T; 2003-2004)

CHECKING THE ENGINE COOLING FAN (FC) AND COOLING SYSTEM

CHECKING THE ENGINE COOLING FAN (FC) AND COOLING SYSTEM

Check the coolant level.

Missing coolant may be due to:

- leakage in the cooling system
- the coolant has boiled.

Leakage in the cooling system can be caused by:

- leakage in the radiator, heater unit, hoses etc.
- defective cylinder head gasket.

If the coolant has boiled it may be due to:

- a defective expansion tank cap
- defective thermostat
- a defective engine cooling fan (FC)
- a blocked radiator.

Checking the expansion tank cap

Disconnect the hose between the expansion tank and the radiator.

Pressure test the expansion tank. The pressure is given on the cap (normally 150 kPa).

Checking the thermostat

Start the engine. Allow the engine to idle. Read off the engine coolant temperature (ECT).

Check that the thermostat opens at approximately 90 °C. Hold the hose from the thermostat housing to the radiator, the hose at the radiator becomes hot when the thermostat is opened.

Remedy as necessary.

Other information:

- The cooling system boils at approximately 130 °C.

Was a fault detected?

- **YES**

OKAY: Troubleshooting has been completed.

- **NO**

  Refer to **CHECKING THE ENGINE COOLING FAN (FC)**

CHECKING THE ENGINE COOLING FAN (FC)

NOTE: **The electric cooling fan may have a post-running time of up to approx. 6 minutes after the engine has been shut off. The time for the electric cooling fan's post-running depends on the engine's temperature, temperature in the engine compartment as well as the pressure level in the AC system.**

Fig. 66: Identifying Ignition ON
Courtesy of VOLVO CARS CORPORATION

- Ignition on.
- Activate the engine cooling fan (FC) using the VCT2000 (or appropriate scan tool).

If the electric cooling fan cannot be activated in all selectable speeds:

- There is no malfunction in the electric cooling fan.
- Check the engine temperature sensor.
- Check the AC pressure sensor.

Remedy as necessary.

Other information

- The electric cooling fan can be activated at different speeds. Possible speeds for the electric cooling fan is dependent on model year and engine.

Fig. 67: Identifying VCT2000 Diagnostic Tool Symbol In VIDA
Courtesy of VOLVO CARS CORPORATION

Is the engine cooling fan (FC) working?

- **YES**

  OKAY: Troubleshooting has been completed.

- **NO**

  Refer to **CHECKING COMPONENTS AND CONNECTIONS**

CHECKING COMPONENTS AND CONNECTIONS

Fig. 68: Identifying Ignition ON
Courtesy of VOLVO CARS CORPORATION

- If the electric cooling fan cannot be activated in all selectable speeds:
- Check the fuse, power supply cable and ground lead for the engine cooling fan (FC).
- Check the wiring between the engine control module (ECM) and the engine cooling fan (FC) module. Check for damage.
- Check the connectors to the engine cooling fan (FC) control module and Engine Control Module (ECM). Check for damage to pins and connections.

Remedy as necessary.

Then check:

- Function of engine cooling fan.

- Ignition on.
- Activate the engine cooling fan (FC) using the VCT2000 (or appropriate scan tool).

Other information

- see **CHECKING WIRING AND TERMINALS**

Fig. 69: Identifying VCT2000 Diagnostic Tool Symbol In VIDA
Courtesy of VOLVO CARS CORPORATION

Is the engine cooling fan (FC) working?

- **YES**

  OKAY: Troubleshooting has been completed.

- **NO**

  Refer to **IF NO MALFUNCTION HAS BEEN FOUND**

IF NO MALFUNCTION HAS BEEN FOUND

If no malfunction has been found in any of the diagnostic tests, report the result of the troubleshooting to the sales company/importer according to normal report procedure.

CHECKING THE ON-BOARD REFUELING VAPOR RECOVERY VALVE (B5254T2; B6294T; 2003-2004)

CHECKING THE ON-BOARD REFUELING VAPOR RECOVERY VALVE

GENERAL INFORMATION ABOUT THE ON-BOARD REFUELING VAPOR RECOVERY VALVE

The on-board refueling vapor recovery valve closes the tank nozzle when the tank is being filled to prevent overfilling. When the fuel tank is filled and is full the on-board refueling vapor recovery valve changes position and creates a back pressure which stops the filling automatically.

If the on-board refueling vapor recovery valve sticks the fuel tank will overfill and then the evaporative emission system (EVAP) canister fills up. When the evaporative emission system (EVAP) canister is filled with fuel too much fuel will enter the engine when the evaporative emission system (EVAP) valve opens. The engine cannot compensate for the large fuel flow and the engine will stop. This occurs when idling.

The clearest symptom that the on-board refueling vapor recovery valve is sticking is that the engine stalls when idling after filling with fuel. This usually occurs for a short period after filling the tank and then the symptom decreases quickly. It can also cause uneven idling.

The corrective action in event of the on-board refueling vapor recovery valve sticking is to replace the fuel tank.

Checking the on-board refueling vapor recovery valve

The on-board refueling vapor recovery valve itself cannot be checked.

The check is made of the volumetric efficiency of the evaporative emission system (EVAP) canister.

If the evaporative emission system (EVAP) canister is full it can indicate that the on-board refueling vapor

recovery valve is sticking.

Checking the volumetric efficiency of the evaporative emission system (EVAP) canister

- Disconnect the hose from the fuel tank beside the evaporative emission system (EVAP) valve
- Pull the hose down level with the bottom of the engine
- Check if fuel comes out of hose.

If fuel comes from the hose it indicates that the evaporative emission system (EVAP) canister is over full.

Remedy as necessary.

Other information:

- To replace the fuel tank, see **FUEL TANK, REPLACING**.
- **Continue**

  Refer to **INFORMATION**

INFORMATION

FAULT-TRACING INFORMATION

In case of this defect, troubleshooting is not followed by verification.

The information can be displayed again or the fault-tracing for this fault can be interrupted.

FUEL TANK, REPLACING

- See **FUEL SYSTEM - REMOVAL, REPLACEMENT AND INSTALLATION**

CHECKING THE STATUS OF THE PEDAL POSITION SENSOR (B5254T2; 2003-2007)

CHECKING THE STATUS OF THE PEDAL POSITION SENSOR

CHECKING THE STATUS OF THE PEDAL POSITION SENSOR

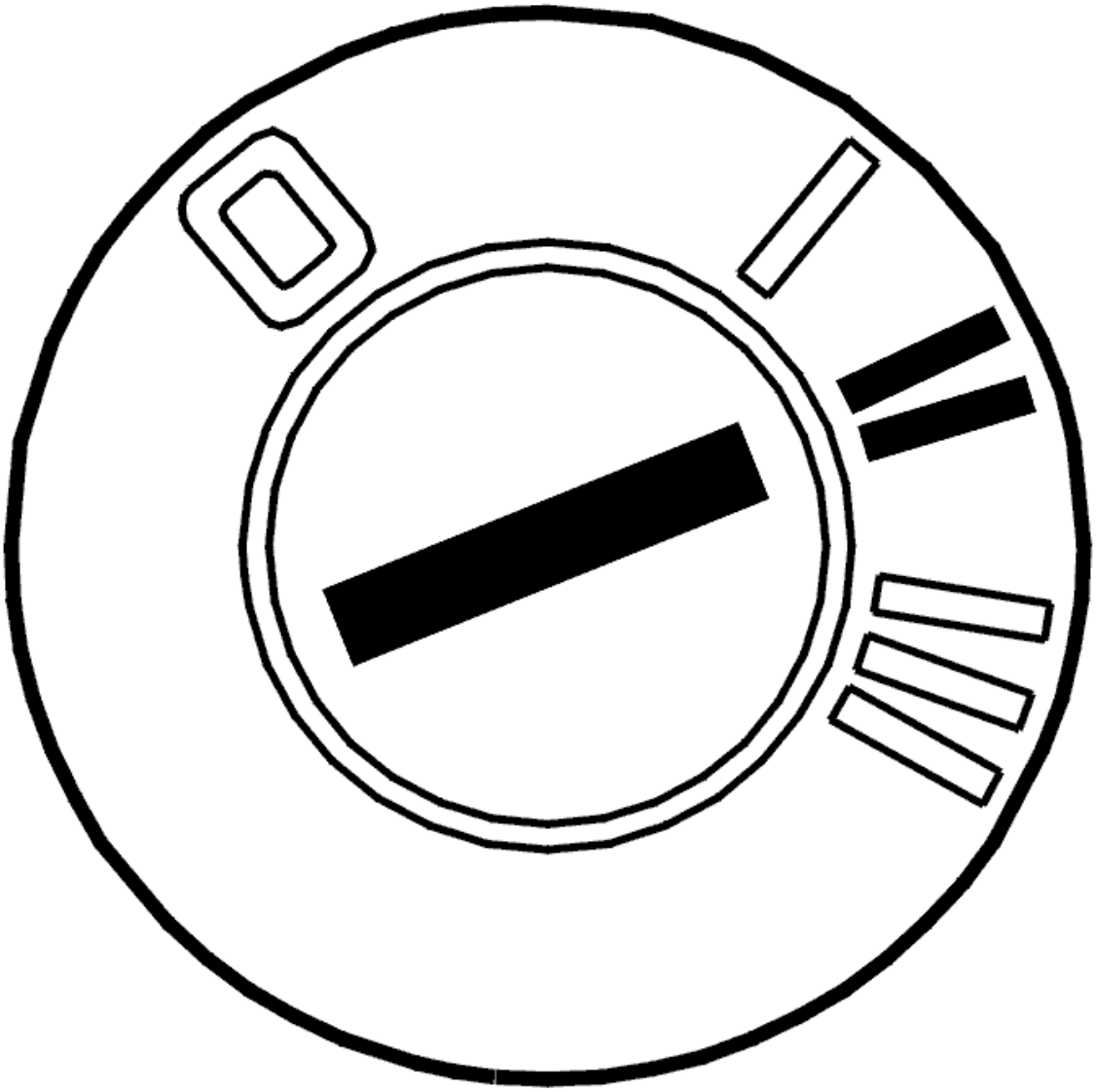

Fig. 70: Identifying Ignition ON
Courtesy of VOLVO CARS CORPORATION

A number conditions must be met for cruise control to be controlled by the engine control module (ECM). Some of these conditions are speed, the clutch and the brake pedal must not be depressed and certain diagnostic trouble codes (DTCs) must not be stored.

The clutch and brake pedal position sensors are checked to determine if they are in a position where the engine control module (ECM) allows cruise control.

NOTE: **On cars with automatic transmissions, the parameter for the brake pedal position sensor displays "Active" (the brake pedal position sensor allows the cruise control to function).**

- Ignition on

- Using the VCT2000 (or appropriate scan tool), check if the clutch pedal position sensor and the brake pedal position sensor are in the " Active" position when the pedals are in the unaffected positions.

Check that the status changes when the pedals are depressed.

The brake pedal and the clutch pedal must be in the "Active" position for the engine control module (ECM) to allow cruise control.

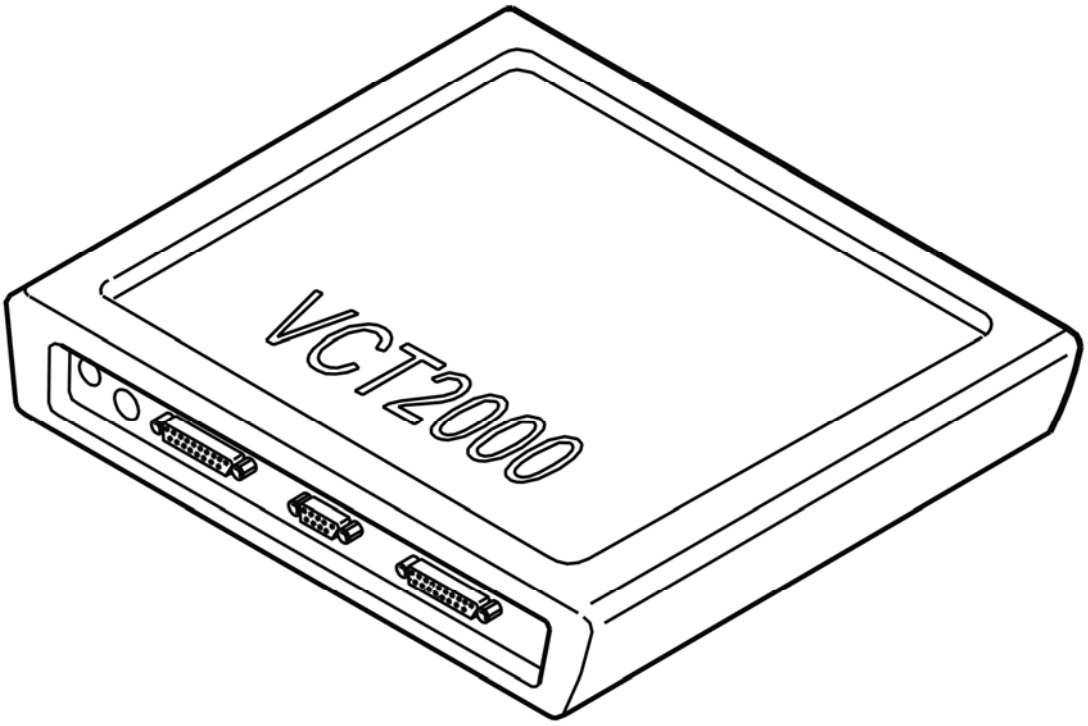

Fig. 71: Identifying VCT2000 Diagnostic Tool Symbol In VIDA
Courtesy of VOLVO CARS CORPORATION

CHECKING THE STATUS OF THE PEDAL POSITION SENSOR (B6294T; 2003-2006)

CHECKING THE STATUS OF THE PEDAL POSITION SENSOR

see **CHECKING THE STATUS OF THE PEDAL POSITION SENSOR**

CHECKING THE THERMOSTAT (B5254T2; B6294T; 2003-2004)

CHECKING THE THERMOSTAT

READING OFF THE ENGINE COOLANT TEMPERATURE (ECT)

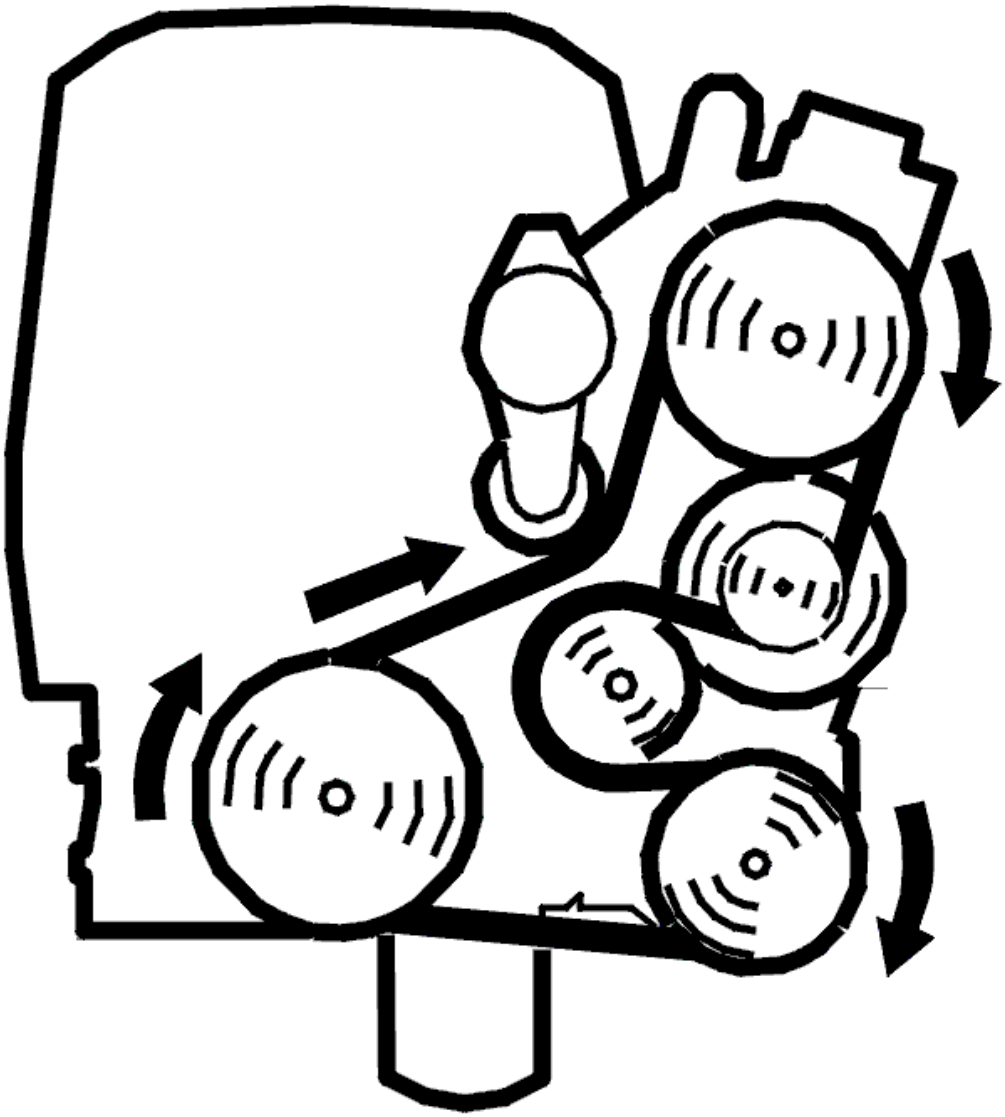

Fig. 72: Identifying Belt Routing
Courtesy of VOLVO CARS CORPORATION

- Start the engine. Run the engine until the engine coolant temperature (ECT) reaches approximately 100 ° C
- When the engine coolant temperature (ECT) is 100 °C, activate the engine cooling fan (FC) with the engine running
- Wait for 90 seconds
- Switch off the engine cooling fan (FC).

  Read off the engine coolant temperature (ECT). If it is 85 °C or lower when the fan stops, the thermostat is defective.

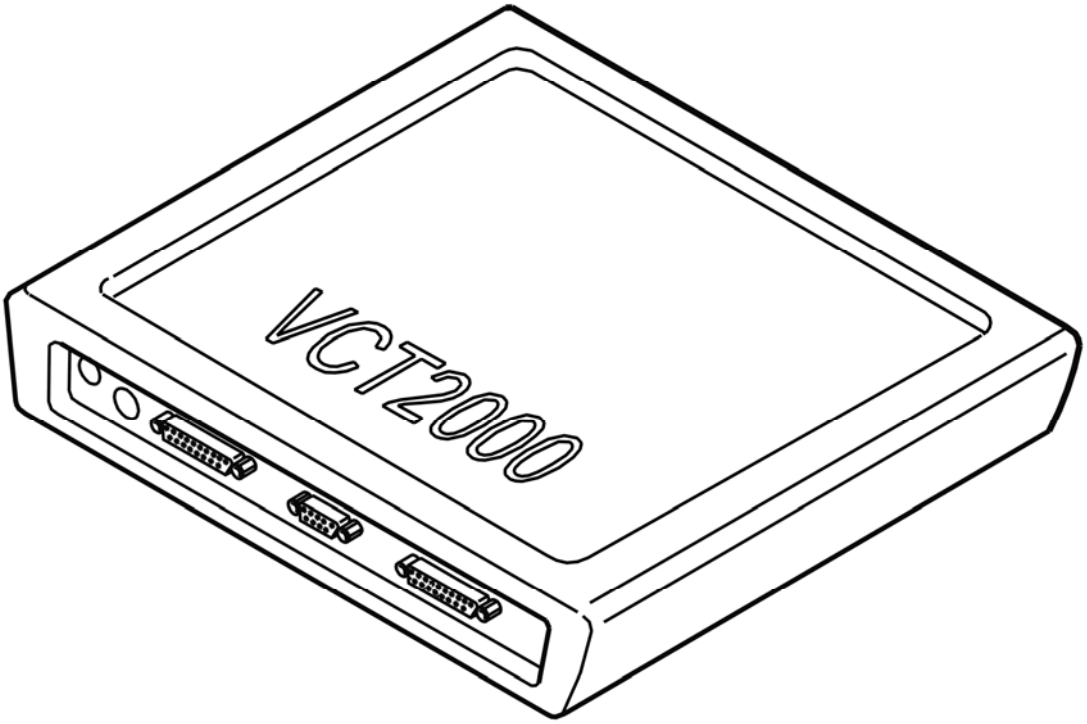

Fig. 73: Identifying VCT2000 Diagnostic Tool Symbol In VIDA
Courtesy of VOLVO CARS CORPORATION

Was a fault detected?

- **YES**

  Refer to **REPLACING THE COMPONENT**

- **NO**

  OKAY: Troubleshooting has been completed.

REPLACING THE COMPONENT

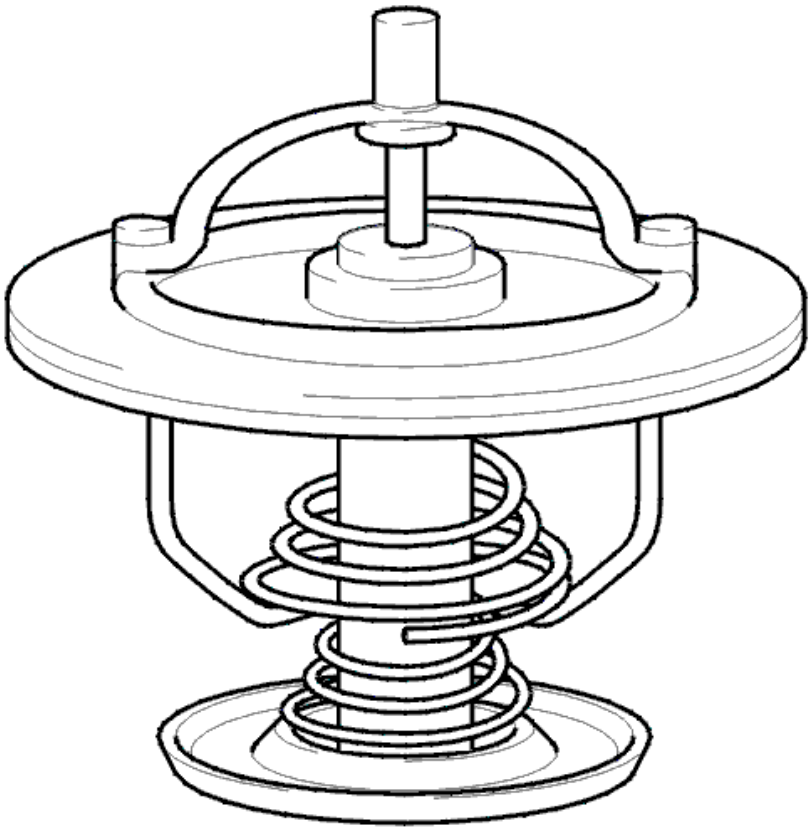

Fig. 74: Identifying Thermostat
Courtesy of VOLVO CARS CORPORATION

Replace the thermostat.

- For B5xx4Tx -2004, see **REPLACING THE THERMOSTAT AND/OR ENGINE COOLANT TEMPERATURE SENSOR**
- For B6xx4T, see **THERMOSTAT, REPLACING** .

CHECKING THREE-WAY CATALYTIC CONVERTER (TWC) AND EXHAUST SYSTEM (B5254T2; B6294T; 2003-2004)

CHECKING THE THREE-WAY CATALYTIC CONVERTER (TWC) AND EXHAUST SYSTEM

CHECKING THE THREE-WAY CATALYTIC CONVERTER (TWC) AND EXHAUST SYSTEM

- Check the three-way catalytic converter (TWC) and exhaust system for blocked components
- Replace blocked components if necessary.

READINESS CODE (B5254T2; 2003-2007)

READINESS CODE

READ THE READINESS CODE

Read off diagnostic trouble codes (DTCs) and the readiness status.

If readiness is "OK" and no diagnostic trouble codes are stored, two cycles have run, i. e. the system's diagnostic functions have run two times without detecting a fault.

HINT: Readiness is reset (to "NOT OK") when the diagnostic trouble codes are cleared or if power is cut off to the engine control module (ECM).

US government information (US only)

The United States Environmental Protection Agency (EPA) has issued a guidance letter, "Performing Onboard Diagnostic System checks as Part of a Vehicle Inspection and Maintenance Program" (EPA420-R-01-015 June 2001), that incorporates various implementation issues associated with OBD-I/M testing. One being that the EPA has revised the readiness criteria to allow states to not reject MY 1996-2000 vehicles with two or fewer unset readiness codes, or MY 2001 and newer vehicles with no more than one unset readiness code. As mentioned herein this is suggested practice. Each individual state may abide by this guidance or enforce state regulations suited to their individual environmental needs. Please consult your State Department of Motor Vehicle for your current I/M testing regulations and procedures.

Select the appropriate remedy depending on this status:

1. If diagnostic trouble codes (DTCs) are stored

   Refer to **DIAGNOSTIC TROUBLE CODE (DTC) STORED**

2. If readiness is "NOT OK".

   Refer to **READ THE DIAGNOSTIC STATUS FOR READINESS**

3. If readiness is "OK" and no diagnostic trouble codes (DTCs) are stored.

   OKAY: Troubleshooting has been completed.

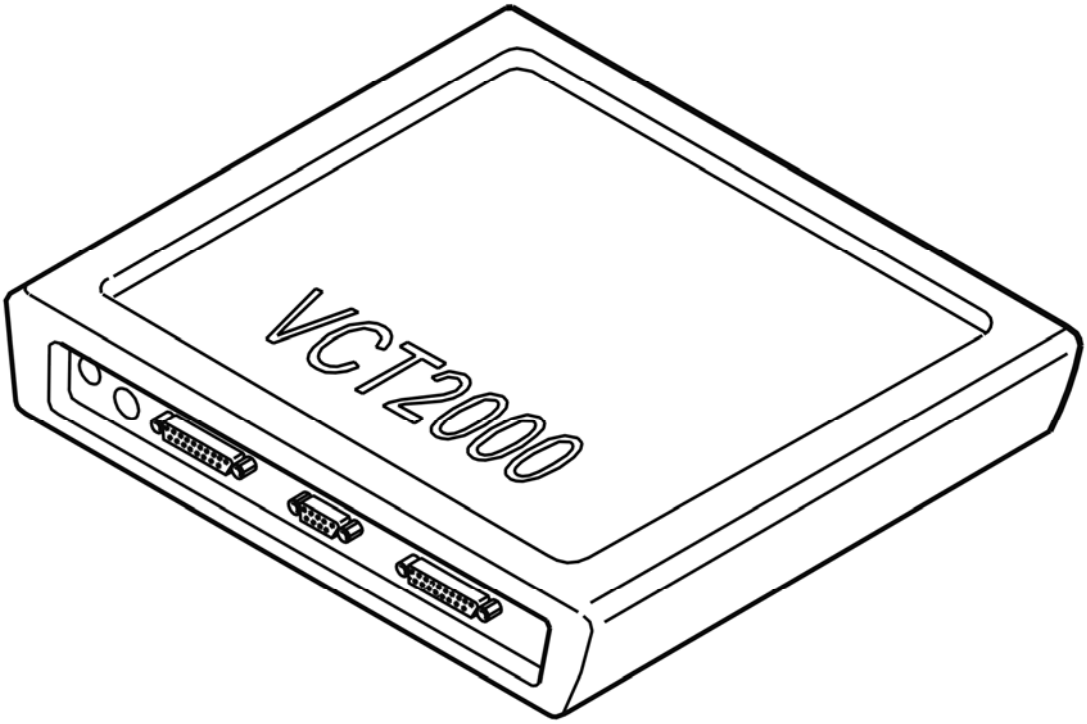

Fig. 75: Identifying VCT2000 Diagnostic Tool Symbol In VIDA
Courtesy of VOLVO CARS CORPORATION

READ THE DIAGNOSTIC STATUS FOR READINESS

Read off the status of the diagnostic functions.

Select the appropriate remedy depending on this status:

1. Readiness for probe diagnostics, diagnostics for heated oxygen sensor (HO2S) preheating three-way catalytic converter (TWC) diagnostics "NOT READY".

   Refer to **CARRY OUT TRIP**

2. Readiness for leak diagnostics "NOT READY".

   Refer to **QUICK TEST OF THE FUEL TANK SYSTEM**

HINT: The diagnostic for evaporative emission control is included in readiness for leak diagnostics.

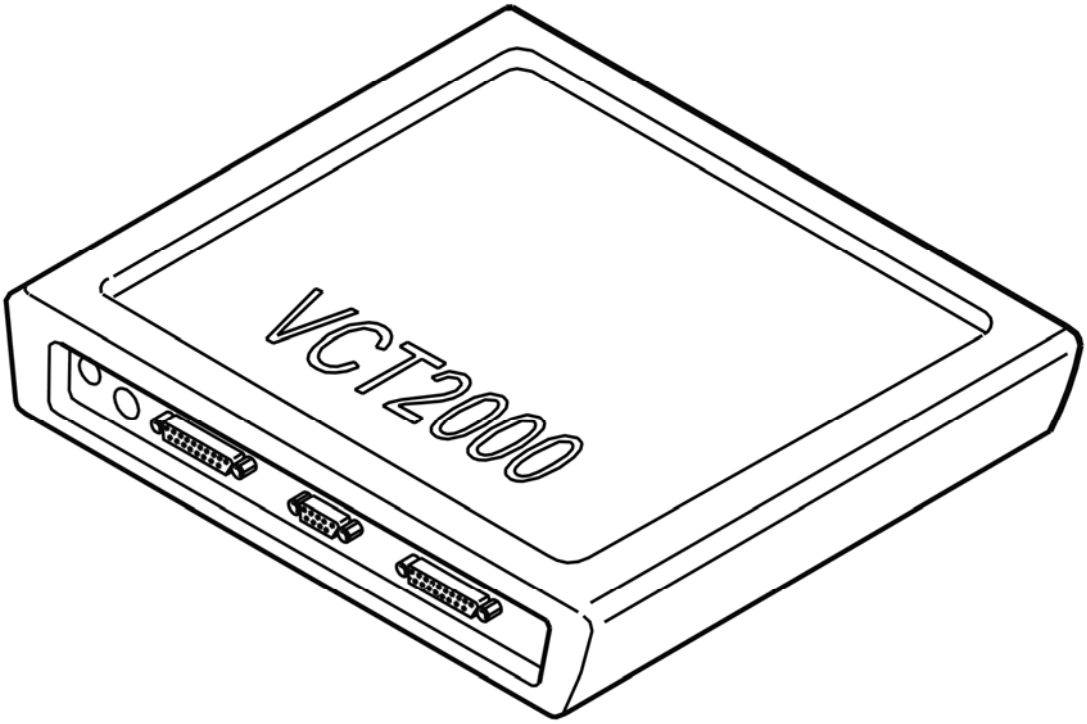

Fig. 76: Identifying VCT2000 Diagnostic Tool Symbol In VIDA
Courtesy of VOLVO CARS CORPORATION

CARRY OUT TRIP

Perform a TRIP following, see **VERIFYING REPAIRS** so that the engine control module (ECM) executes a diagnosis for diagnostic functions.

- **Continue**

  Refer to **READ THE READINESS CODE**

QUICK TEST OF THE FUEL TANK SYSTEM

Run a quick test of the fuel tank system via the vehicle communication socket.

The engine must be run to operating temperature and then left idling for a few minutes before the diagnostic function for EVAP control can be run.

DIAGNOSTIC TROUBLE CODE (DTC) STORED

Fault-trace and remedy stored diagnostic trouble codes (DTCs).

READINESS CODE (B6294T; 2003-2006)

READINESS CODE

see **READINESS CODE**

READING OUT PERMANENT DIAGNOSTIC TROUBLE CODES (B6324S5; 2011-2012)

READING OUT PERMANENT DIAGNOSTIC TROUBLE CODES (USA/CDN)

VISUAL CHECK OF MIL-LIGHT

NOTE: This service only applies to vehicles the USA and Canada, for model year 2010 and later, and only in certain versions.

Before read-out of permanent diagnostic trouble codes is started, Engine control module (ECM) and Transmission control module (TCM) shall be free from diagnostic trouble codes that activate the MIL-light.

Therefore, check if the MIL-light is on.

HINT: The MIL-light is always on at ignition on. Therefore, check with the engine idling.

NOTE: If the MIL-light is on, diagnostic trouble codes are stored. Remedy these diagnostic trouble codes (DTCs) first.

Select action depending on the MIL-light's status:

1. MIL-light on.

   OKAY: Troubleshooting has been completed.

2. MIL-light not on.

   Refer to **READING OUT PERMANENT DIAGNOSTIC TROUBLE CODES (USA/CDN)**

3. Information about permanent diagnostic trouble codes.

   Refer to **INFORMATION ABOUT PERMANENT DIAGNOSTIC TROUBLE CODES**

READING OUT PERMANENT DIAGNOSTIC TROUBLE CODES (USA/CDN)

- Ignition switch position II.

  Use the VCT2000 (or appropriate scan tool) to read-out permanent diagnostic trouble codes.

  NOTE: If any of the control modules have the status "Communication failure" it may be due to the control module not answering. Try to restart the read-

out. If this does not help, then normal trouble code read-out should be performed on all systems as well as troubleshooting according to standard procedures.

Select one of the following options:

1. Done

   OKAY: Troubleshooting has been completed.

2. Information about permanent diagnostic trouble codes.

   Refer to **INFORMATION ABOUT PERMANENT DIAGNOSTIC TROUBLE CODES**

Fig. 77: Identifying VCT2000 Diagnostic Tool Symbol In VIDA
Courtesy of VOLVO CARS CORPORATION

INFORMATION ABOUT PERMANENT DIAGNOSTIC TROUBLE CODES

INFORMATION ABOUT PERMANENT DIAGNOSTIC TROUBLE CODES

NOTE: This service only applies to vehicles the USA and Canada, for model year 2010 and later, and only in certain versions.

Problems that impact emissions, and that are found by the control module's diagnostic system, from model year 2010, generate extra diagnostic trouble codes in parallel with the traditional diagnostic trouble codes. The diagnostic trouble codes are called permanent diagnostic trouble codes, stored in a separate diagnostic trouble code memory and have the same designation as the traditional diagnostic trouble codes.

The difference between the permanent and the traditional diagnostic trouble codes is that the permanent cannot be erased with an external diagnostics tool, e. g., VIDA (Volvo scan tool). The permanent diagnostic trouble codes in the control module are erased automatically when the diagnostic system has performed relevant diagnoses, and ensured that there no longer are any emission-related malfunctions in the system.

The purpose of introducing permanent diagnostic trouble codes is to meet a government regulation. By this requirement you prevent that emission-related problems with their diagnostic trouble codes can be hidden temporarily, e. g., at an inspection, by only erasing diagnostic trouble codes and this also turning off the MIL-light.

Emission-related diagnoses are available in Engine control module (ECM) and in Transmission control module (TCM), and thus you can only find permanent diagnostic trouble codes in these two control modules.

Perform the following procedure in this order to ensure that emission-related problems have been solved correctly and that the diagnostics system is free from diagnostic trouble codes.

- Troubleshoot and solve and problems according to traditional procedure.
- Erase diagnostic trouble codes (DTCs).

NOTE: This erases the traditional trouble code memory and turns off the MIL-light. However, the permanent diagnostic trouble code remains.

- Make sure that the control module's diagnostic system can run the diagnosis/diagnoses again for relevant diagnostic trouble code.

  HINT: The requirements for running a diagnosis may vary between different diagnoses. Certain diagnoses only require ignition position II, while others require that the vehicle is driven on road according to a specific driving procedure. For detailed information on what is required for a certain diagnosis, see Diagnostic trouble code information for each trouble code.

Before the permanent diagnostic trouble code disappears from the diagnostic trouble code memory, the vehicle must have undergone a so-called simplified general drive cycle. This means the following:

- Engine idling for at least 2 minutes.
- Vehicle speed over 40 km/h (25 mph) for at least 5 minutes.
- Total time with engine on for at least 10 minutes.

NOTE: The above conditions also apply to diagnoses with simpler running conditions.

When the diagnosis has been run, the diagnostic system has either assessed the system as:

1. Trouble-free.

   The permanent diagnostic trouble code is now erased. The vehicle is ready for delivery to customer.

2. Incorrect.

   The permanent diagnostic trouble code remains. The traditional diagnostic trouble code is stored again. After another diagnosis has been run with problems, the MIL-light will turn on, however, first in the next driving cycle.

- **Continue**

  Refer to **READING OUT PERMANENT DIAGNOSTIC TROUBLE CODES (USA/CDN)**

READING OUT PERMANENT DIAGNOSTIC TROUBLE CODES (B8444S; 2010-2011)

READING OUT PERMANENT DIAGNOSTIC TROUBLE CODES (USA/CDN)

see **READING OUT PERMANENT DIAGNOSTIC TROUBLE CODES (USA/CDN)**

ENGINE PERFORMANCE

Ignition And Control Systems - Symptom Verification

INFORMATION AND VERIFICATION, CRUISE CONTROL

INFORMATION AND VERIFICATION, CRUISE CONTROL

SYMPTOM AND FUNCTION DESCRIPTION

The following conditions must be met before the engine control module will allow cruise control to be permitted.

- Speed above 30 km/h. Max 200 km/h.
- Cruise control switch on.
- The clutch and brake pedal must not be depressed.

Verification

To verify that the symptom is in the vehicle, test drive the vehicle and check that cruise control works properly.

When test driving, check:

- appears in the display on the combined instrument panel when the cruise control switch is on.
- That the speed locks when **+** or **-** are used and that then appears in the display on the combined instrument panel.
- Disengagement occurs correctly.

Temporary disengagement if:

- Depress the **0** button on the steering wheel.
- Depress the brake or clutch pedal.
- The speed decreases below 25-30 km/h on an upward slope.
- Gear selector in **N** .
- Wheel spin or wheel lock-up.
- Speed increase longer than 1 minute.

In the event of temporary disengagement, **CRUISE-ON** still appears in the combined instrument display.

To disengage cruise control, depress **0** button on the steering wheel or depress brake or clutch pedal then goes out in the display on the combined instrument panel.

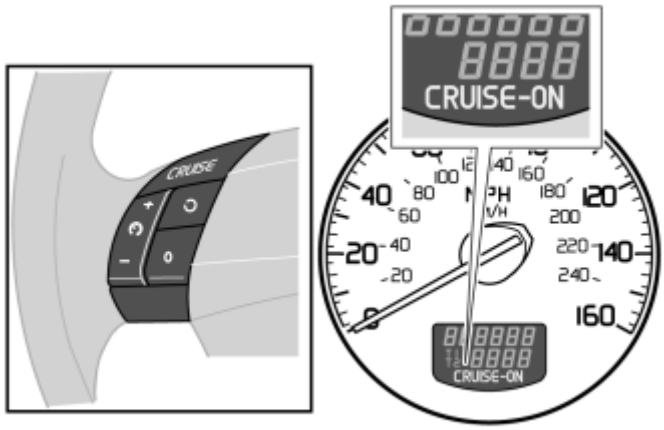

Fig. 1: Identifying Instrument Panel Display
Courtesy of VOLVO CARS CORPORATION

HVAC

Power transmission

HVAC

AC-SYSTEM, OIL, REFILLING

WARNING: Never mix different types of oils. Always use the correct type of compressor oil.

CAUTION: When installing a completely new air conditioning system: Check that there is oil in the compressor. The other components should contain no oil.

NOTE: Too much lubricating oil will impair refrigeration. Too little lubricating oil will damage the compressor.

OIL LEAKS

The oil must be topped up when repairing a leak or when replacing a component. The quantity required for the component in question will depend on whether leakage has taken place slowly or quickly.

Slow leakage (longer than 24 hours)

With a slow leak, there is normally minimal risk of oil loss.

Rapid leakage (e. g. hose rupture)

Rapid leakage often means that lubricating oil escapes with the refrigerant.

COMPRESSOR OIL, GENERAL INFORMATION

Frequent inspections or compressor oil changes do not normally have to be carried out if the above leak has not occurred or if the vehicle is used in professional circumstances.

The compressor oil absorbs moisture for as long as it is in contact with air.

Therefore, always use the necessary amount of oil and discard the remainder or close the oil reservoir tightly after use.

DRAINING/REFILLING OIL

When draining oil from the compressor, inspect for the following:

- the oil changes color to red

- the oil contains metal residues
- the clarity/translucency of the oil

Draining the oil on the air conditioning compressor without drain plug occurs via the pressure and intake side openings after the pulley and the clutch plate have been rotated 4-5 turns and with the openings facing downwards.

Filling oil in air conditioning compressors without drain plugs occurs via the pressure side's opening.

REPLACING OIL

Change the oil in the compressor (reusing the compressor) or replace with the same amount that was in the old one (new compressor) according to the tables below. Carry out a performance test of the air conditioning system. See **CLIMATE CONTROL SYSTEM, CHECK** .

When replacing components, the following oil volumes must be found in the new components or must be injected in the system through the service valve, except for the compressor (see service information for Compressor below):

Receiver drier (integrated with condenser)	0 cm^3
Evaporator	50 cm^3
Condenser	30 cm^3
Tube	10 cm^3
Hose	20 cm^3

Preparatory work for transferring the oil in the compressor:

- Measure the volume of the oil drained from the compressor
- Replace the volume of drained oil according to the tables below:

Reusing the compressor	
Drained oil	**Filling of oil**
> or =70 cm^3	Replace the volume of drained oil with the corresponding quantity
<70 cm^3 oil	fill with 70 cm^3 of oil.

New compressor	
Drained oil	**Filling of oil**
> or =70 cm^3	replace the drained oil volume with the same amount that was drained from the old compressor.
<70 cm^3 oil	fill with 70 cm^3 of oil.

NOTE: Filling/draining/vacuum pumping stations have a reservoir for injecting oil. This

can be used before filling with refrigerant and after vacuum pumping.

FAULT TRACING

Body and interior

FAULT TRACING

SIGNAL DESCRIPTION, CLIMATE CONTROL MODULE (CCM), CONNECTOR A

General

There may be several connections and connectors between the control module and components.

NOTE: **It is important to connect the breakout box and check the ground terminals before taking readings.**

U=	DC voltage in volts (V)	U_{AC} =	AC voltage in volts (V)
U_{bat} =	Battery voltage (V)	f =	Frequency in Hertz (Hz)
U_{low} =	Voltage approximately 0 V	% duty =	Duty cycle (pulse ratio) as a percentage (%)
t =	Time in milliseconds (ms)		

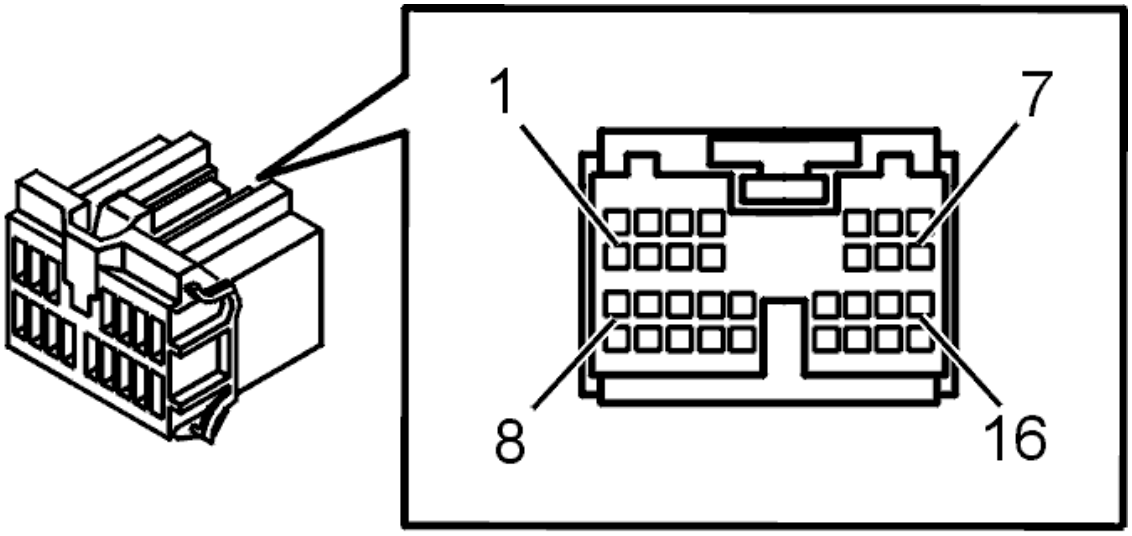

Fig. 1: Climate Control Module Connector

Courtesy of VOLVO CARS CORPORATION

Breakout box terminal	Control module terminal	Connecting the component	Signal type	Ignition on	Engine idling	Other
#25	#A1	splice 53/437-#1 relay central electronic module (CEM)	Signal, extended X-supply	U_{bat}	U_{bat}	
#26	#A2	terminal #A3 power unit	Diagnostic signal, blower fan motor	-	-	
#27	#A3	#A1 power unit	Control signal, blower fan motor	0-10 mA	0-10 mA	
#28	#A4	-	Signal ground	U_{low}	U_{low}	
#29	#A5	-	Signal ground	U_{low}	U_{low}	
#30	#A6	-	Signal ground	U_{low}	U_{low}	
#31	#A7	central electronic module (CEM)	Signal, alarm LED (in). Internally directly connected to terminal #B17	1.9 V 1 Hz 10% duty	1.9 V 1 Hz 10% duty	
#32	#A8	splice 53/425-fuse	30-supply, power supply climate control module (CCM)	U_{bat}	U_{bat}	
#33	#A9	-	Signal ground	U_{low}	U_{low}	
#34	#A10	-	Signal ground	U_{low}	U_{low}	
#35	#A11	Control area network (CAN) bus terminal #19 steering wheel module (SWM)	PCCAN L1	0-5 V	0-5 V	
#36	#A12	Control area network (CAN)-bus terminal #3 driver information module (DIM)	PCCAN L2	0-5 V	0-5 V	
#37	#A13	Control area network (CAN) bus terminal #9 steering wheel module (SWM)	PCCAN H1	0-5 V	0-5 V	
#38	#A14	Control area network (CAN)-bus terminal #2	PCCAN H2	0-5 V	0-5 V	

		driver information module (DIM)				
#39	#A15	-	Signal ground	U_{low}	U_{low}	
#40	#A16	splice 53/438-ground 2 A-post R	Power ground (measured to the battery negative terminal)	U_{low}	U_{low}	

SIGNAL DESCRIPTION, CLIMATE CONTROL MODULE (CCM), CONNECTOR B

General

There may be several connections and connectors between the control module and components.

NOTE: **It is important to connect the breakout box and check the ground terminals before taking readings.**

U=	DC voltage in volts (V)	U_{AC} =	AC voltage in volts (V)
U_{bat} =	Battery voltage (V)	f =	Frequency in Hertz (Hz)
U_{low} =	Voltage approximately 0 V	% duty =	Duty cycle (pulse ratio) as a percentage (%)
t =	Time in milliseconds (ms)		

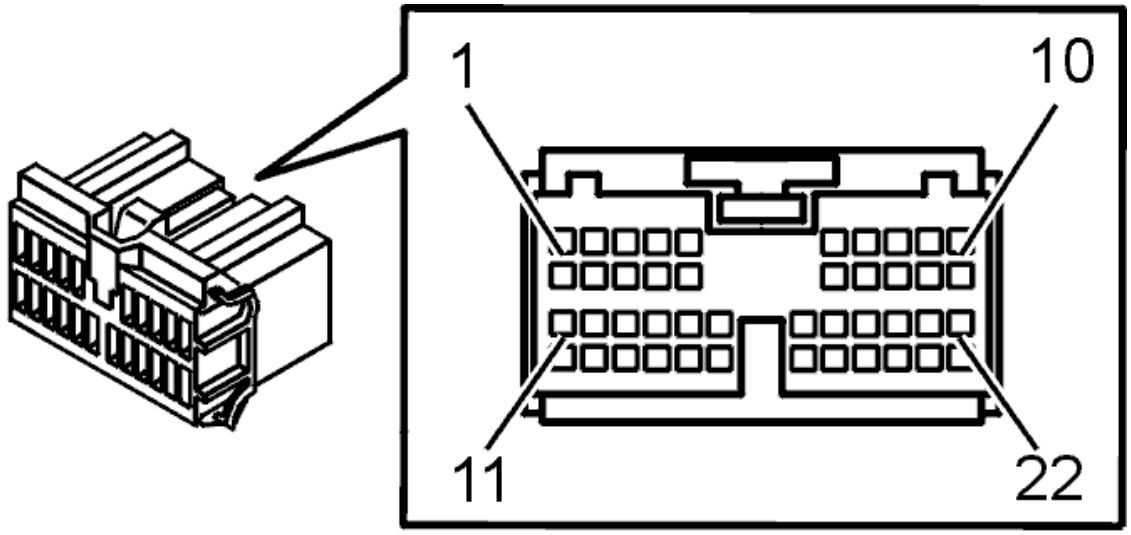

Fig. 2: Climate Control Module Connector
Courtesy of VOLVO CARS CORPORATION

Breakout box terminal	Terminal	Connecting the component	Signal type	Ignition on	Engine idling	Other
#1	#B1	terminal #2 evap	Signal, evaporator temperature sensor	0.1-4.85 V	0.1-4.85 V	ECC, MCC (U_{low} STD)
#2	#B2	-	-	-V	-	-
#3	#B3	terminal #3 air quality sensor	Signal, air quality sensor	Pulse width modulation (PWM) signal, 80 Hz. 0.4-12 V.	Pulse width modulation (PWM) signal, 80 Hz. 0.4-12 V.	ECC,
#4	#B4	terminal #1 sun sensor	Signal, sun sensor	0.78-4.62 V	0.78-4.62 V	ECC, MCC (U^{low} STD)
#5	#B5	terminal #5 sun sensor, terminal #5 air quality sensor	Signal ground, sun sensor, air quality sensor and alarm LED	U_{low}	U_{low}	Electronic climate control
#6	#B6	-	-	-	-	-
#7	#B7	-	-	-	-	-

#8	#B8	-	-			
#9	#B9	-	-			
#10	#B10	-	-			
#11	#B11	terminal #3 damper motors	Signal ground, damper motor control MA1+	~U_{low}	~U_{low}	
#12	#B12	terminal #4 damper motors	Signal ground, damper motor control MA1-	~U_{low}	~U_{low}	
#13	#B13	terminal #5 damper motors	Signal ground, damper motor control MA2+	~U_{low}	~U_{low}	
#14	#B14	terminal #6 damper motors	Signal ground, damper motor control MA2-	~U_{low}	~U_{low}	
#15	#B15	terminal #3 evap	Signal ground, evaporator temperature sensor	~U_{low}	~U_{low}	Electronic climate control (ECC), Manual climate control (MCC)
#16	#B16	terminal #1, air quality sensor	Power supply, air quality sensor	12 V	12 V	Electronic climate control
#17	#B17	terminal #3 sun sensor	Signal, alarm LED (out). Internally directly connected to terminal #A7.	1.9 V 1 Hz 10% duty	1.9 V 1 Hz 10% duty	Electronic climate control
#18	#B18	terminal #1 damper motor temp left	Signal, damper motor temperature left	0-U_{bat}	0-U_{bat}	Quadratic signal when the motor is running
#19	#B19	terminal #1 damper motor temp right	Signal, damper motor temperature right	0-U_{bat}	0-U_{bat}	Quadratic signal when the motor is running
#20	#B20	#1 damper motor def	Signal, damper motor, defroster	0-U_{bat}	0-U_{bat}	Quadratic signal when the motor is operating (ECC, MCC)
#21	#B21	terminal #1 damper motor rec	Signal, damper motor recirculation	0-U_{bat}	0-U_{bat}	Quadratic signal when the motor is

						running
#22	#B22	terminal #1 damper motor floor/vent (ECC) terminal #1 damper motor air distribution (MCC, STD)	Signal, damper motor floor/ventilation (ECC), air distribution (MCC, STD)	0-U_{bat}	0-U_{bat}	Quadratic signal when the motor is running

SIGNAL DESCRIPTION, CLIMATE CONTROL MODULE (CCM), CONNECTOR C

There is no breakout box for this connector.

NOTE: From and including w50 2001, the fan is connected directly to connector C with no wiring in-between.

U=	DC voltage in volts (V)	U_{AC} =	AC voltage in volts (V)
U_{bat} =	Battery voltage (V)	f =	Frequency in Hertz (Hz)
U_{low} =	Voltage approximately 0 V	% duty =	Duty cycle (pulse ratio) as a percentage (%)
t =	Time in milliseconds (ms)		

Control module terminal	Connecting the component	Signal type	Ignition on	Engine idling	Other
#C1	terminal #1 Hall sensor	Power supply (H+), Hall sensor	6.1-6.3 V	6.1-6.3 V	
#C2	terminal #2 Hall sensor	Signal (H1), Hall sensor	3.7 V	3.7 V	
#C3	terminal #3 fan motor passenger compartment temperature sensor	Signal, fan motor passenger compartment temperature sensor	1-5.2 V	1-5.2 V	Quadratic signal when the motor is running
#C4	terminal #4 fan motor passenger compartment temperature sensor	Signal, fan motor passenger compartment temperature sensor	1-5.2 V	1-5.2 V	Quadratic signal when the motor is running
#C5	terminal #5 Hall sensor	Signal ground (H-), Hall sensor	0.9-1.6 V	0.9-1.6 V	
#C6	terminal #6 Hall sensor	Signal (H2), Hall sensor	3.7 V	3.7 V	

SIGNAL SPECIFICATION

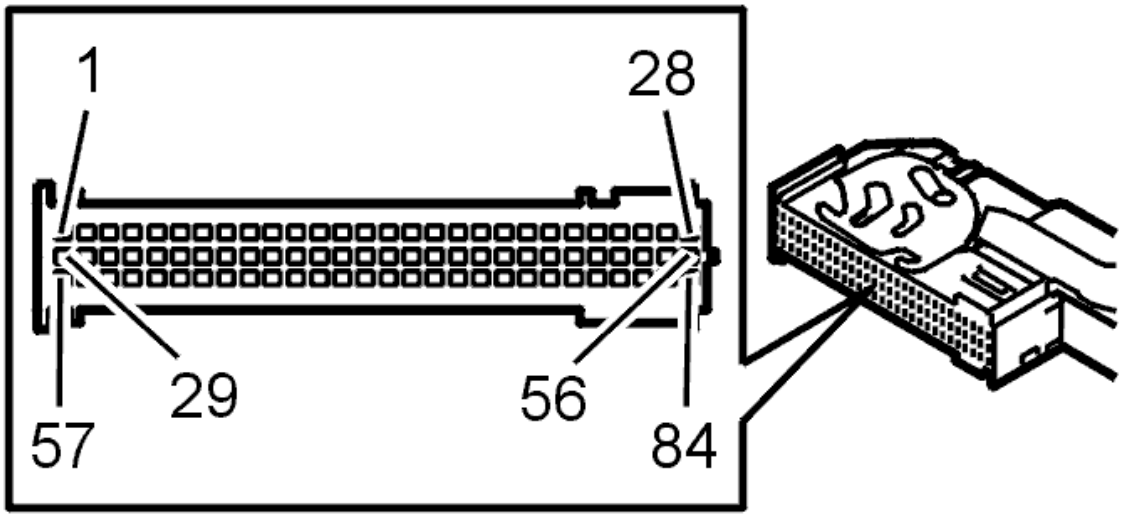

Fig. 3: Control Module Terminals
Courtesy of VOLVO CARS CORPORATION

NOTE: **It is important to connect the breakout box and check the ground terminals before taking readings.**

Two breakout boxes are required to take readings from the SRS control module.

NOTE: **The terminals for connector C are split between breakout boxes 1 and 2.**

From model year 2003, the connectors are numbered 1-84.

- Terminals #1A-#28A correspond to terminals #1-#28
- Terminals #1B-#28B correspond to terminals #29-#56
- #1C-#28C correspond to #57-#84

BREAKOUT BOX 1

Breakout box	Terminal control module -02	Terminal control module 03-	Function	Other
1	#1A	#1	Signal ground	-
2	#2A	#2	Signal ground	-
3	#3A	#3	Front left side impact protection (SIPS) bag (-)	Monitoring signal at normal status. Ignition pulse on deployment.
4	#4A	#4	Front left side impact protection (SIPS) bag (+)	Monitoring signal at normal status. Ignition pulse on deployment.
5	#5A		Front left seat belt	Monitoring signal at

		#5	tensioner (+)	normal status. Ignition pulse on deployment.
6	#6A	#6	Belt tensioner, front left (-)	Monitoring signal at normal status. Ignition pulse on deployment.
7	#7A	#7	-	-
8	#8A	#8	Side impact sensor, left front	-
9	#9A	#9	Side impact sensor, left front	-
10	#10A	#10	-	-
11	#11A	#11	-	-
12	#12A	#12	-	-
13	#13A	#13	-	-
14	#14A	#14	-	-
15	#15A	#15	Belt tensioner, rear left (-)	Monitoring signal at normal status. Ignition pulse on deployment.
16	#16A	#16	Belt tensioner, rear left (+)	Monitoring signal at normal status. Ignition pulse on deployment.
17	#17A	#17	Rear center seat belt tensioner (+)	Monitoring signal at normal status. Ignition pulse on deployment. Replaced by pin 24C from VIN 116811.
18	#18A	#18	Rear center seat belt tensioner (-)	Monitoring signal at normal position. Ignition pulse on deployment. Replaced by pin 23C from chassis number 116811 inclusive.
19	#19A	#19	-	-
20	#20A	#20	-	-
21	#21A	#21	Left inflatable curtain (+)	Monitoring signal at normal status. Ignition pulse on deployment.
22	#22A	#22	Left inflatable curtain (-)	Monitoring signal at normal status. Ignition pulse on deployment.
23	#23A	#23	-	-
24	#24A	#24	-	-
25	#25A	#25	-	-
26	#26A	#26	-	-

27	#27A	#27	Side impact sensor, rear left	-
28	#28A	#28	Side impact sensor, rear left	-
29	#1B	#29	-	-
30	#2B	#30	Collision signal	Signal to the central electronic module (CEM)
31	#3B	#31	-	-
32	#4B	#32	SRS warning lamp	Activated
33	#5B	#33	SRS warning lamp	Deactivated
34	#6B	#34	Switch (+)	-
35	#7B	#35	Driver airbag, stage 1 (-)	Monitoring signal at normal status. Ignition pulse on deployment.
36	#8B	#36	Driver airbag, stage 1 (+)	Monitoring signal at normal status. Ignition pulse on deployment.
37	#9B	#37	Driver airbag, stage 2 (+)	Monitoring signal at normal status. Ignition pulse on deployment.
38	#10B	#38	Driver airbag, stage 2 (-)	Monitoring signal at normal status. Ignition pulse on deployment.
39	#11B	#39	Passenger airbag, stage 1 (-)	Monitoring signal at normal status. Ignition pulse on deployment.
40	#12B	#40	Passenger airbag, stage 1 (+)	Monitoring signal at normal status. Ignition pulse on deployment.
41	#13B	#41	Passenger airbag, stage 2 (+)	Monitoring signal at normal status. Ignition pulse on deployment.
42	#14B	#42	Passenger airbag, stage 2 (-)	Monitoring signal at normal status. Ignition pulse on deployment.
43	#15B	#43	Switch (-)	-
44	#16B	#44	-	-
45	#17B	#45	-	-
46	#18B	#46	-	-
47	#19B	#47	-	-
48	#20B	#48	-	-
49	#21B	#49	-	-
50	#22B	#50	-	-

51	#23B	#51	Control modules communication cable (CAN H)	U=2.5-3.5 V
52	#24B	#52	Control modules communication cable (CAN H)	U=2.5-3.5 V
53	#25B	#53	Control modules communication cable (CAN L)	U=1.5-2.5 V
54	#26B	#54	Control modules communication cable (CAN L)	U=1.5-2.5 V
55	#27B	#55	X-feed voltage from the ignition switch (ignition switch pos. I and II)	Battery voltage approximately 12 V
56	#28B	#56	15-feed voltage (ignition switch pos. II and III)	Battery voltage approximately 12 V
57	#1C	#57	-	-
58	#2C	#58	-	-
59	#3C	#59	Side airbag, front right (-)	Monitoring signal at normal status. Ignition pulse on deployment.
60	#4C	#60	Front right side impact protection (SIPS) bag (+)	Monitoring signal at normal status. Ignition pulse on deployment.

BREAKOUT BOX 2

Breakout box	Terminal control module -02	Terminal control module 03-	Function	Other
1	#5C	#61	Front right seat belt tensioner (+)	Monitoring signal at normal status. Ignition pulse on deployment.
2	#6C	#62	Front right seat belt tensioner (-)	-
3	#7C	#63	-	-
4	#8C	#64	Side impact sensor, right front	-
5	#9C	#65	Side impact sensor, right front	-
6	#10C	#66	-	-
7	#11C	#67	-	-
8	#12C	#68	-	-
9	#13C	#69	-	-
10	#14C	#70	-	-

11	#15C	#71	Rear right seat belt tensioner (-)	Monitoring signal at normal status. Ignition pulse on deployment.
12	#16C	#72	Rear right seat belt tensioner (+)	Monitoring signal at normal status. Ignition pulse on deployment.
13	#17C	#73	-	-
14	#18C	#74	-	-
15	#19C	#75	-	-
16	#20C	#76	-	-
17	#21C	#77	Right inflatable curtain (+)	Monitoring signal at normal status. Ignition pulse on deployment.
18	#22C	#78	Right inflatable curtain (-)	Monitoring signal at normal status. Ignition pulse on deployment.
19	#23C	#79	Rear center seat belt tensioner (-)	Monitoring signal at normal status. Ignition pulse on deployment. Replaces pin 18A from VIN 116811.
20	#24C	#80	Rear center seat belt tensioner (+)	Monitoring signal at normal status. Ignition pulse on deployment. Replaces pin 17A from VIN 116811.
21	#25C	#81	-	-
22	#26C	#82	-	-
23	#27C	#83	Side impact sensor, right rear	-
24	#28C	#84	Side impact sensor, right rear	-

TROUBLESHOOTING USING DICE ERROR FRAME FINDER

TROUBLESHOOTING USING DICE ERROR FRAME FINDER

Interference, intermittent faults, wrong messages on CAN-net (chattering modules), ground faults, and loose connections, etc., are examples of faults that can be detected using the tool DiCE Error Frame Finder during troubleshooting. The tool registers fault messages used on the CAN-net. Fault messages may be caused by short intermittent malfunctions on the CAN-net or by a control module sending fault messages. DiCE Error Frame Finder can only be used to detect CAN-faults of intermittent nature. If network does not work, use a multimeter to measure. Typical behavior for DiCE Error Frame Finder when a problem has occurred is that the blue LED flashes several times with short pauses, and then stops and then starts flashing again.

- Ignition on.

- Insert special tool 951 3010 (memory card) in DiCE Error Frame Finder (Volvo diagnostic tool).
- Connect DiCE (Volvo diagnostic tool) to the diagnostics socket.
- Note the blue LED-indicator. The indicator flashes to show detection of fault messages.

NOTE: Certain interference may occur without any real fault

1. Firmwire status, green. When the green light flashes with 4 second intervals DiCE is in fault indication mode.
2. CAN HS, yellow. When the yellow light flashes or is on constantly there is a data flow on CAN HS.
3. Fault code indicator, blue. When the blue light flashes with brief flashes DiCE indicates that there are fault code signals on CAN LS or CAN HS.
4. CAN LS, red/orange. When the red/orange light flashes or is on constantly there is a data flow on CAN LS.

Cable fault

- Shake the cables lightly and pull lightly on the connections during the check to locate any fault. Note the blue LED-indicator.

"Chatting" control modules

- "Chatting" control modules may be difficult to find and troubleshooting may take time. Let the vehicle stand with DiCE connected for an extended time period. Afterwards, activate functions to provoke a malfunction. It may take up to several hours before the fault messages are sent. When the indicator starts to flash, remove the fuse for one control module at a time until the indicator stops flashing. When the indicator stops flashing, restore the fuse for the relevant control module and check that the indicator starts to flash again. Then it is likely that the problem is identified.

Remedy wiring as necessary.

Fig. 4: Identifying Buttons And Display Screen On DiCE Error Frame Finder

Courtesy of VOLVO CARS CORPORATION

HVAC

Body and interior

HVAC

AIR QUALITY SENSOR, REPLACING

As the illustrations in this service information are used for different model years and / or models, some variation may occur. However, the essential information in the illustrations is always correct.

PREPARATIONS

Remove the plenum chamber. See **COWL, REPLACING**

Open the damper for the air intake.

REMOVING THE AIR QUALITY SENSOR

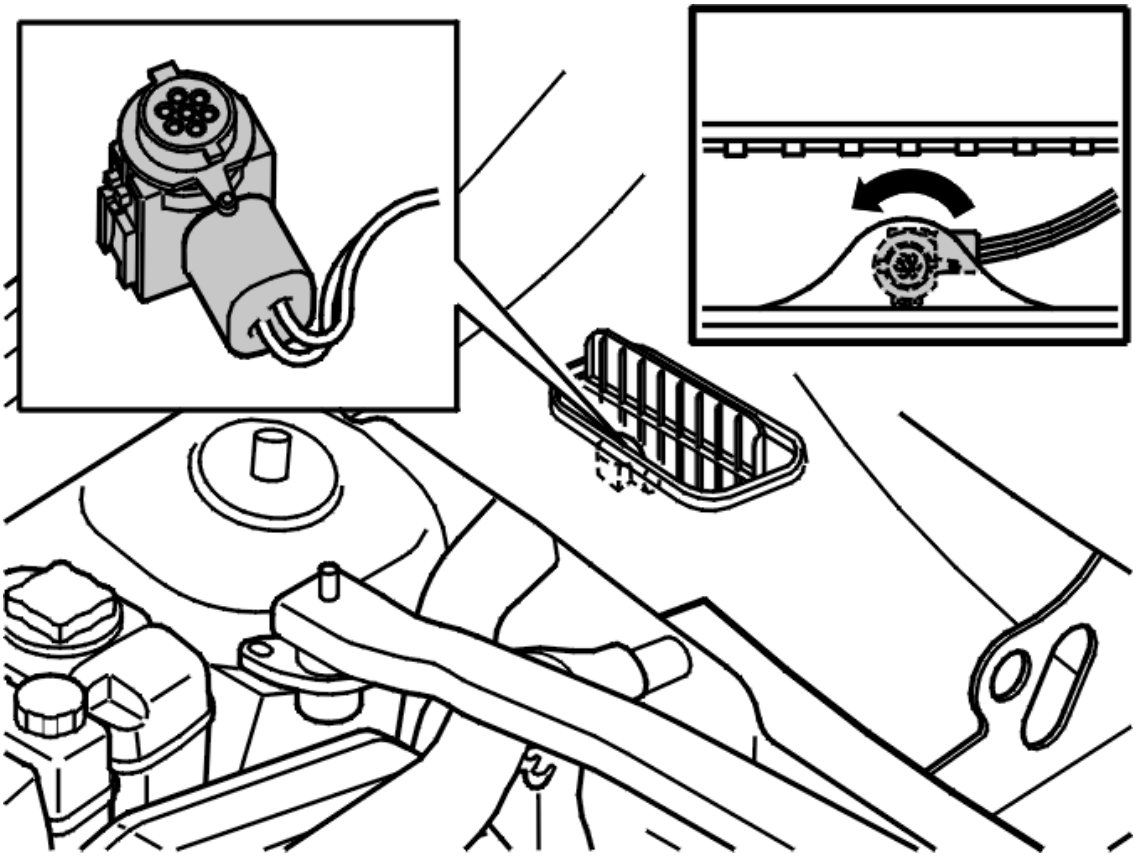

Fig. 1: Identifying Air Quality Sensor Removal
Courtesy of VOLVO CARS CORPORATION

Turn the sensor approximately 60° counter-clockwise (see the illustration).

Slightly pull out the sensor and cable to access the connector.

Disconnect the connector.

INSTALLING THE AIR QUALITY SENSOR

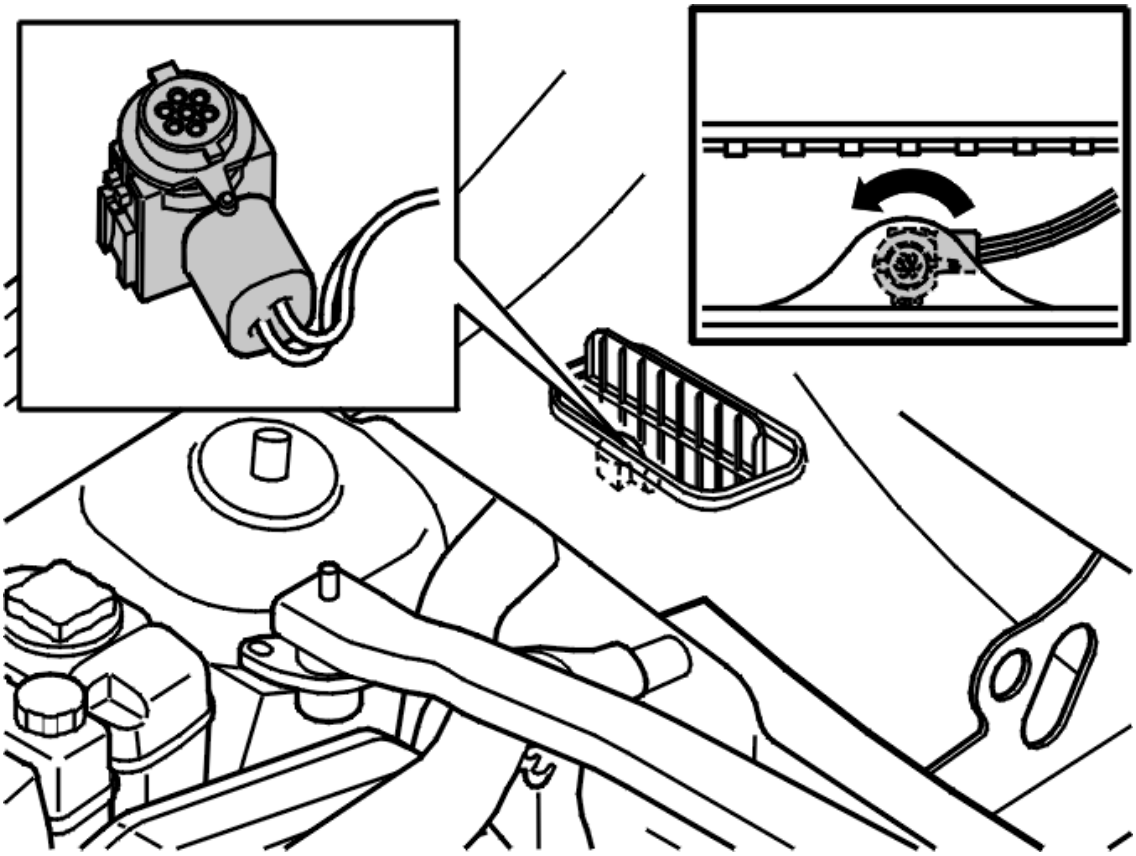

Fig. 2: Identifying Air Quality Sensor Removal
Courtesy of VOLVO CARS CORPORATION

Connect the connector.

Insert as much of the cable through the hole as possible.

Position the sensor and seal (the flat side must face upwards) in the groove. The sensor can only be positioned one way in the groove (see the illustration).

Turn the sensor approximately 60° clockwise until it will not turn any further. Check that the air quality sensor is securely in place.

Ensure that the cable is as far in as possible.

Close the damper for the air intake.

Install the plenum chamber. See **COWL, REPLACING** .

CABIN AIR FILTER

Volvo - S60, S80 (1999-06), V70 (2001-07), XC70 (2003-07) & XC90

REMOVAL & INSTALLATION

NOTE: **Manufacturer's terminology for this filter may be passenger compartment air cleaner, cabin air filter, particulate filter, pollen filter, or multi filter.**

CABIN AIR FILTER

Removal

1. Remove the soundproofing panel from under glove box. See **SOUNDPROOFING PANEL**.
2. Remove the screws for the passenger compartment air cleaner cover. See **Fig. 1**. Remove the cover.
3. Remove passenger compartment air cleaner by pulling downward and out.

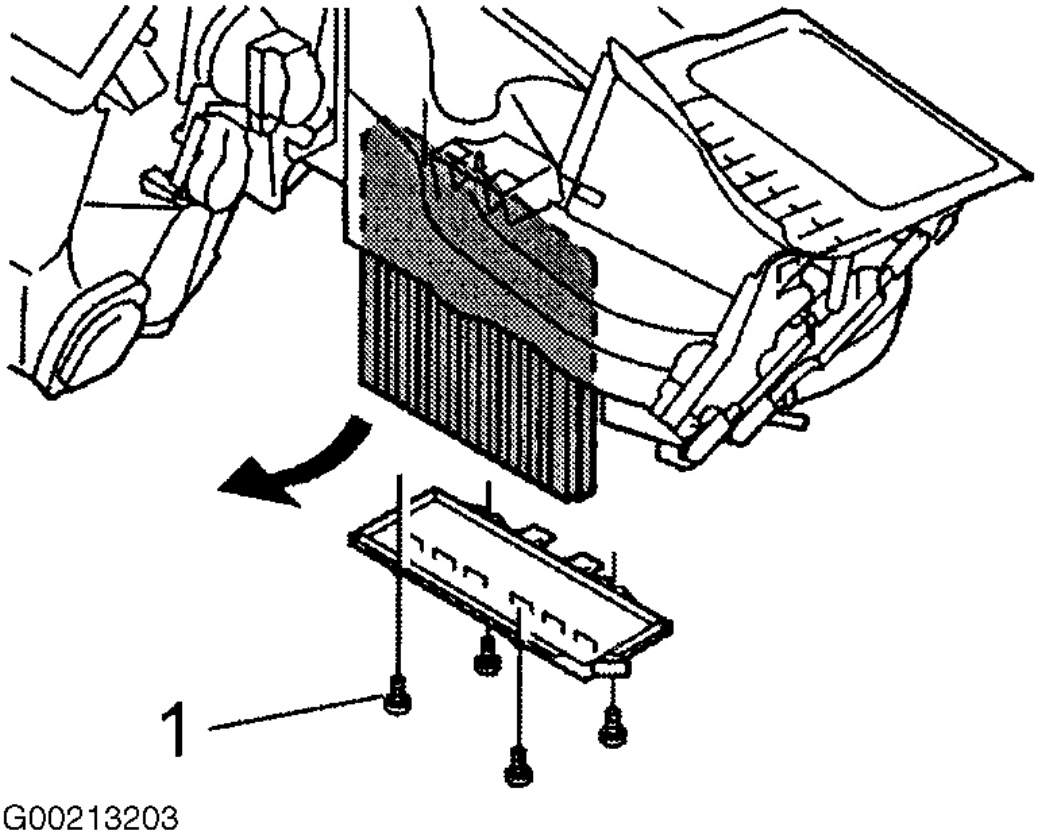

Fig. 1: Removing Passenger Compartment Air Cleaner

Courtesy of VOLVO CARS OF NORTH AMERICA.

Installation

NOTE: **There are 2 alternative positions for the air cleaner. See Fig. 2. The pollen filter (standard) must be installed in the smaller compartment (1). The multi filter (cars with an air quality sensor) must be installed in the wider compartment (2). Install either the pollen filter or the multi filter. Both filters must not be installed together.**

1. Install the passenger compartment air cleaner and cover. Install the screws. The front left screw must not be tightened to more than 7 INCH Lbs. (0.8 N.m).
2. Install the soundproofing panel.

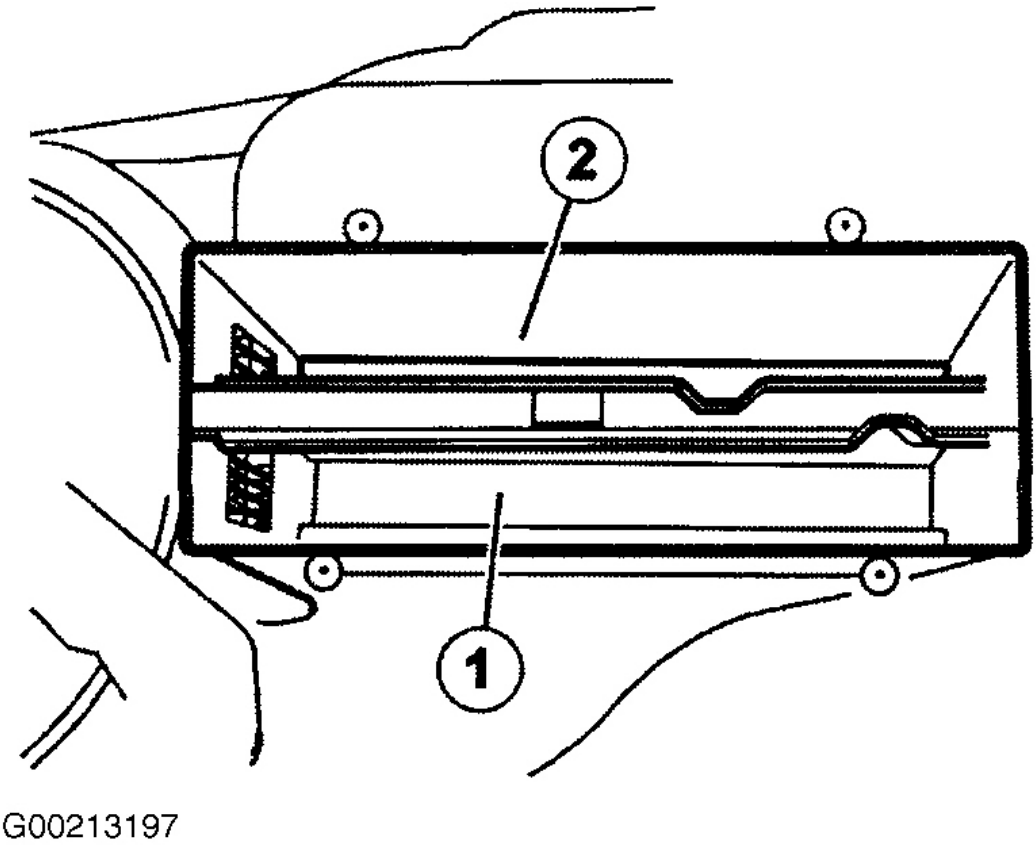

Fig. 2: Installing Passenger Compartment Air Cleaner
Courtesy of VOLVO CARS OF NORTH AMERICA.

SOUNDPROOFING PANEL

NOTE: **The back of the soundproofing panel is secured to the dashboard with clips and sits in a groove at the front.**

Removal & Installation, Except XC 90

1. Remove the 2 screws from soundproofing panel under glove box. Pull the clips straight down.
2. Pull the soundproofing panel backwards into the car.
3. Lift out the soundproofing panel. To install, reverse removal procedure.

Removal & Installation, XC 90

1. Remove the underdash side panel. See **Fig. 3**.
2. Remove the 2 screws.

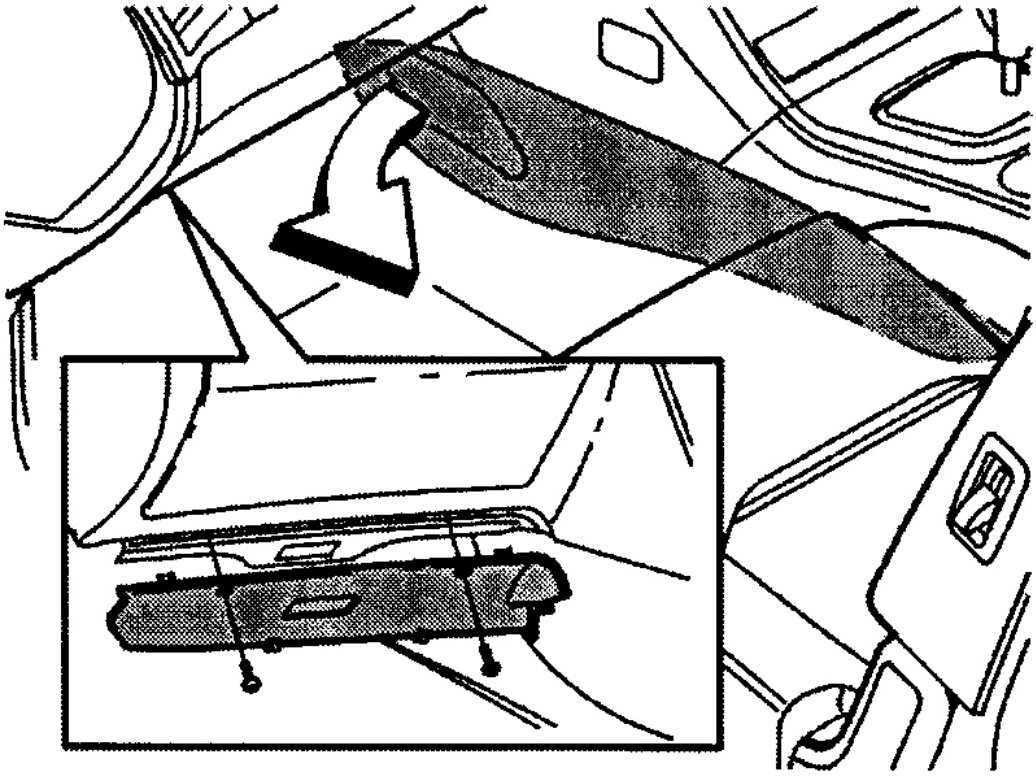

G00213204

Fig. 3: Removing Soundproofing Panel (XC 90)
Courtesy of VOLVO CARS OF NORTH AMERICA.

3. Remove the underdash soundproofing panel. To install, reverse removal procedure.

HVAC

Power transmission

HVAC

CLIMATE CONTROL SYSTEM, CHECK

CHECK

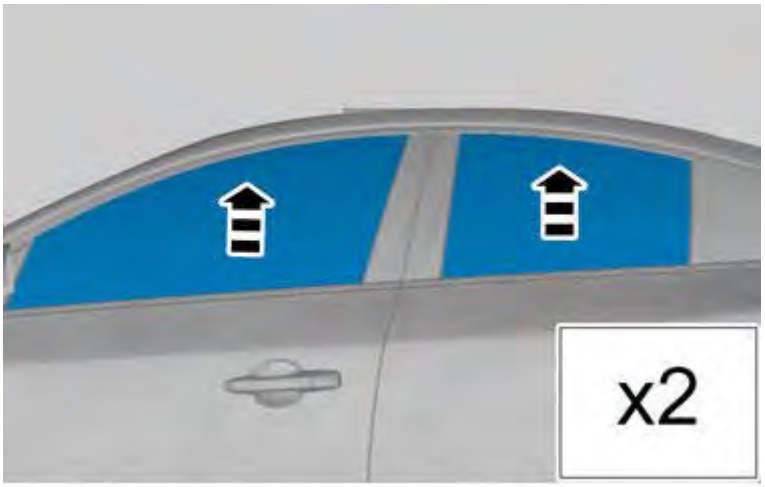

Fig. 1: Door Windows In Up Position
Courtesy of VOLVO CARS CORPORATION

Fig. 2: Identifying Vehicles Windows And Doors Are Closed For Checking
Courtesy of VOLVO CARS CORPORATION

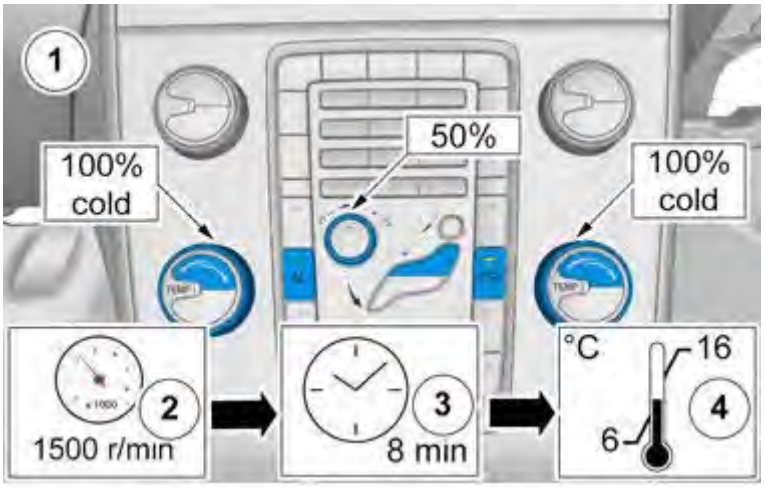

Fig. 3: Climate Control Mode/Temperature Selections
Courtesy of VOLVO CARS CORPORATION

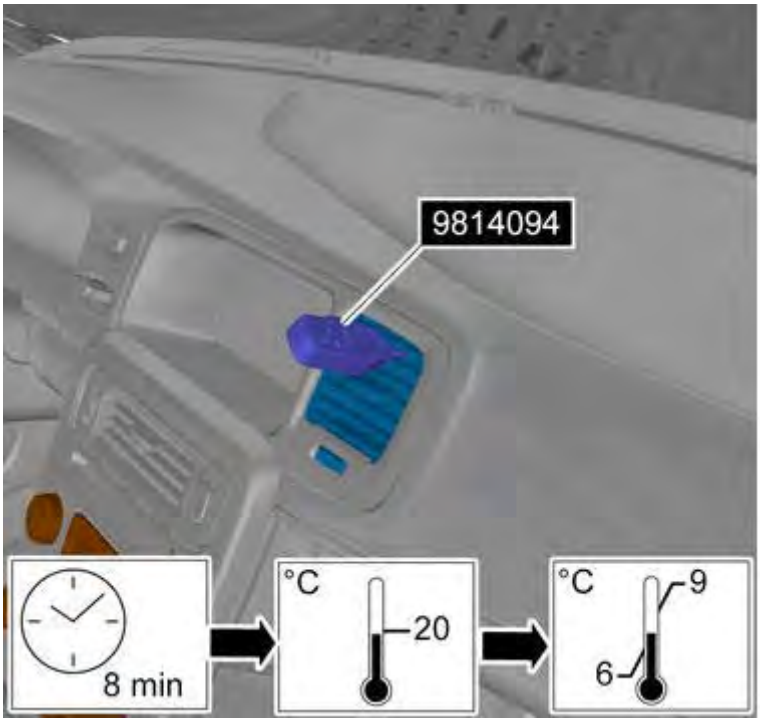

Fig. 4: Identifying Special Service Tool 9814094 And Temperature Reading (1 Of 3)
Courtesy of VOLVO CARS CORPORATION

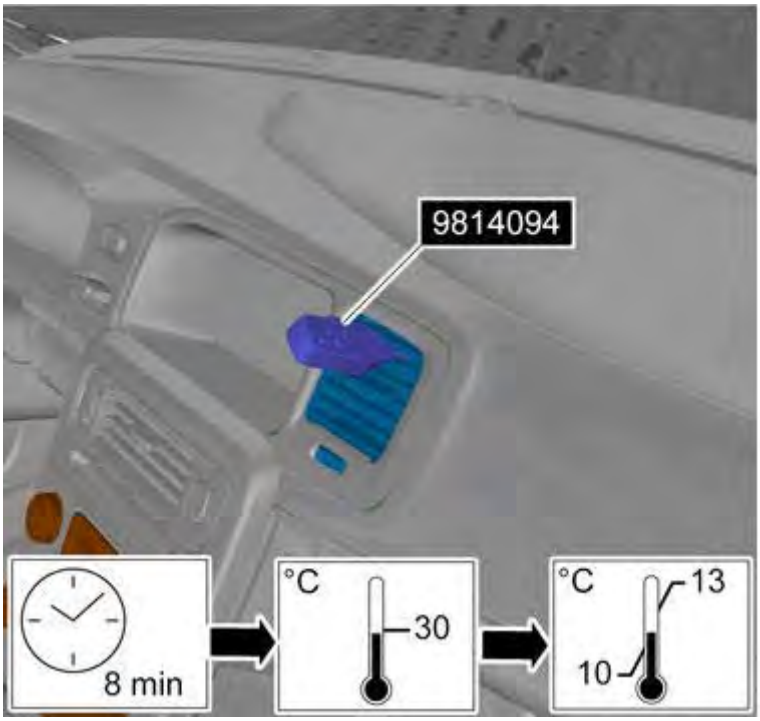

Fig. 5: Identifying Special Service Tool 9814094 And Temperature Reading (2 Of 3)
Courtesy of VOLVO CARS CORPORATION

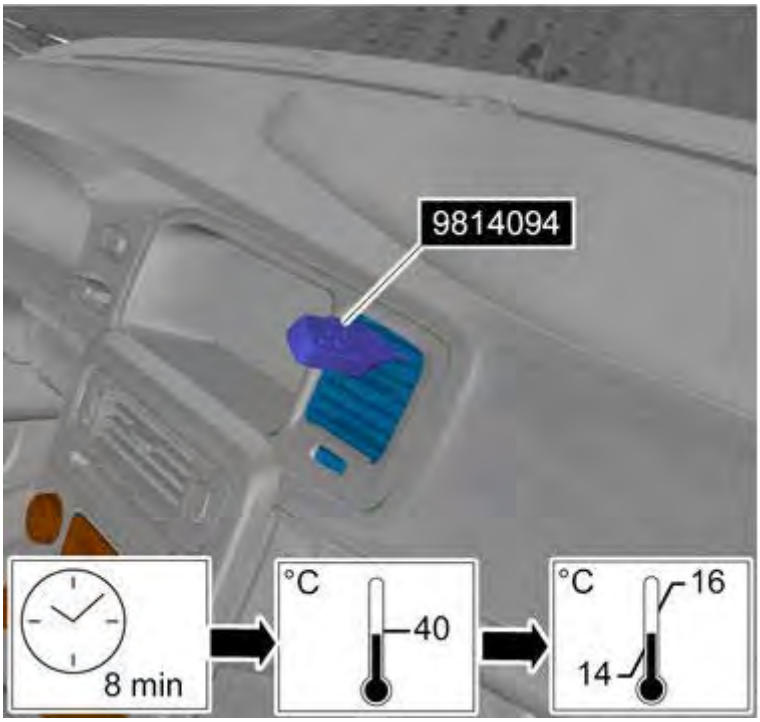

Fig. 6: Identifying Special Service Tool 9814094 And Temperature Reading (3 Of 3)
Courtesy of VOLVO CARS CORPORATION

HVAC

Climate Units - Cleaning, Inspection And Adjustment

CLIMATE UNITS (2003-12)

REFRIGERANT, FILLING

IMPORTANT INFORMATION ABOUT FILLING WITH REFRIGERANT

NOTE: **Refrigerant must only be filled via the service valve (TXV system) on the high pressure (HP) side.**

HINT: A specification decal in the engine compartment lists the refrigerant capacity of the air conditioning (A/C) system.

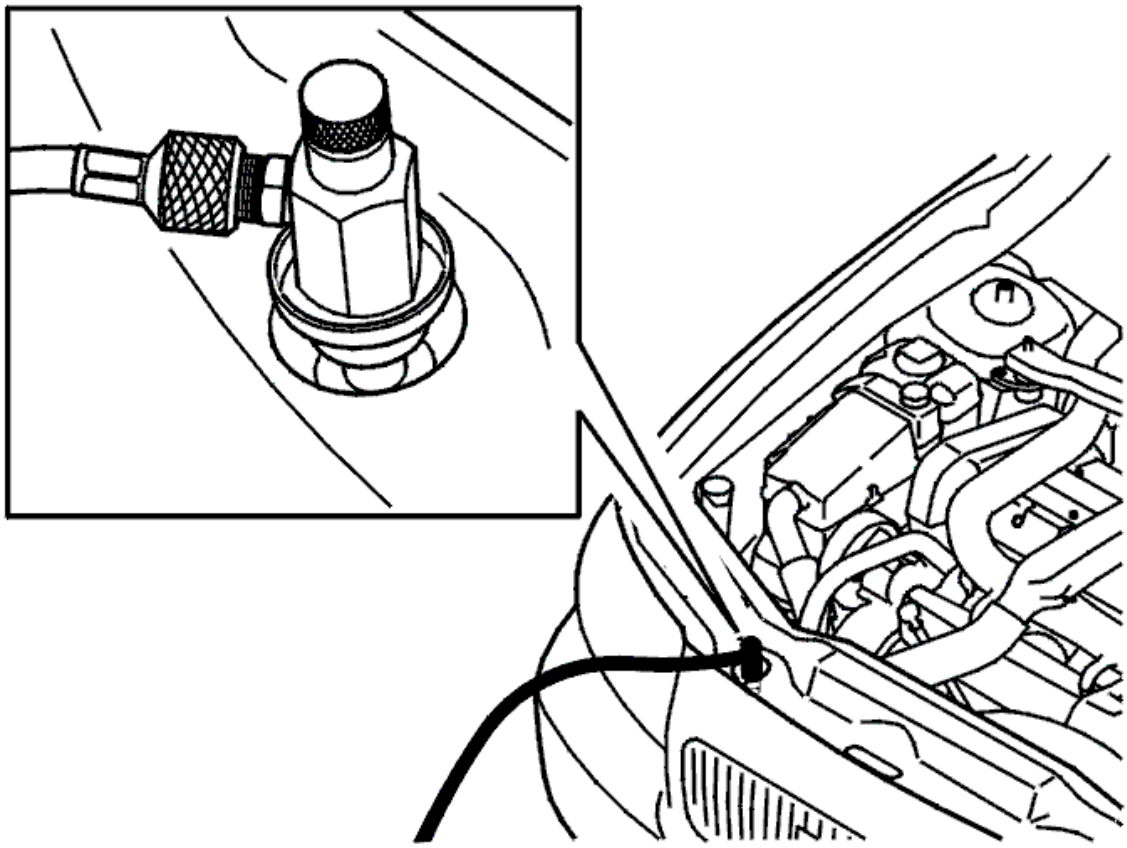

Fig. 1: Filling With Refrigerant
Courtesy of VOLVO CARS CORPORATION

NOTE: **The most common cause of failed filling on the high pressure side is incorrect vacuum pumping or because the pressure in the filling unit is not high enough, or a combination of these two.**

NOTE: **The filling unit should preferably have a heating unit for refrigerant. This is so that the pressure in the filling unit is higher than in the system that is to be filled.**

NOTE: **When filling with refrigerant, compensate for the volume in the filling hoses before closing the filler valve.**

AIR QUALITY SENSOR, CHECKING

NOTE: **As the graphics in this service information are used for different model years and / or models, some variation may occur. However, the essential information in the graphics is always correct.**

REMOVING THE AIR QUALITY SENSOR

Remove the plenum chamber. See **COWL, REPLACING** .

CHECKING THE AIR QUALITY SENSOR

Start the car engine with the ECC automatic button in the ON position.

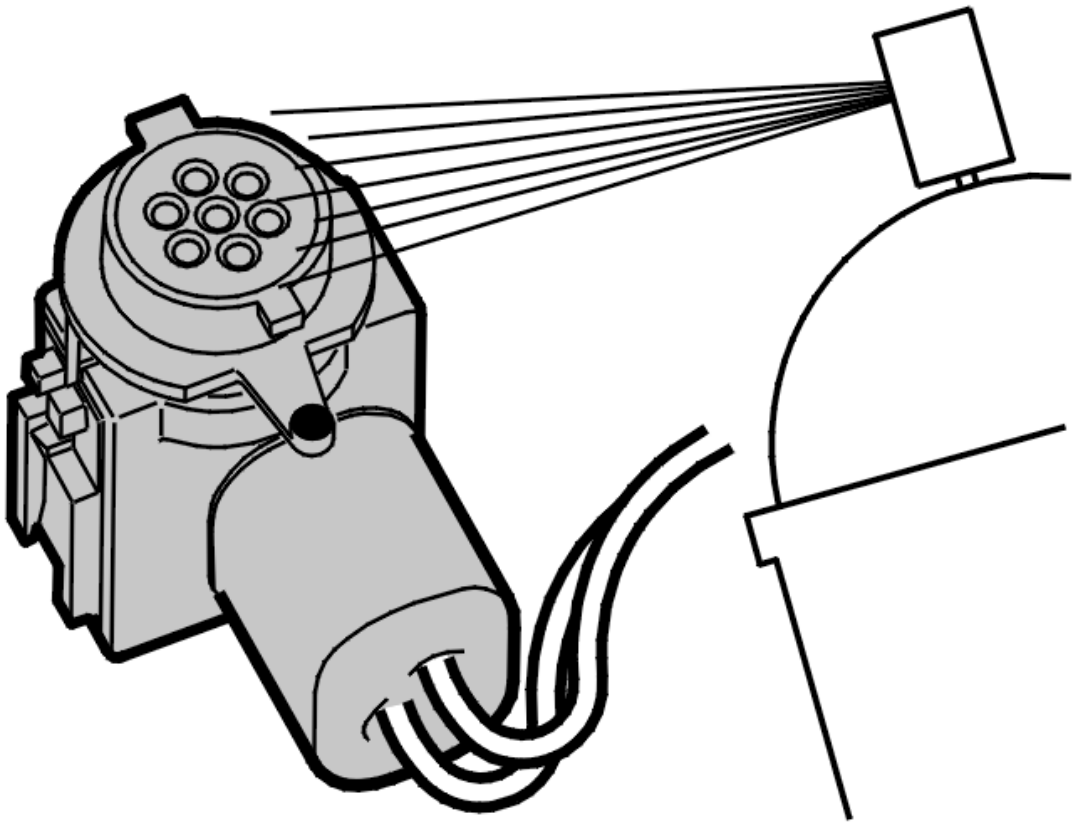

Fig. 2: Spraying Opening Of Air Quality Sensor
Courtesy of VOLVO CARS CORPORATION

Spray a little rust solvent or windshield washer fluid from a spray bottle into the opening for the air quality sensor.

NOTE: Use only a small amount of rust solvent or windshield washer fluid.

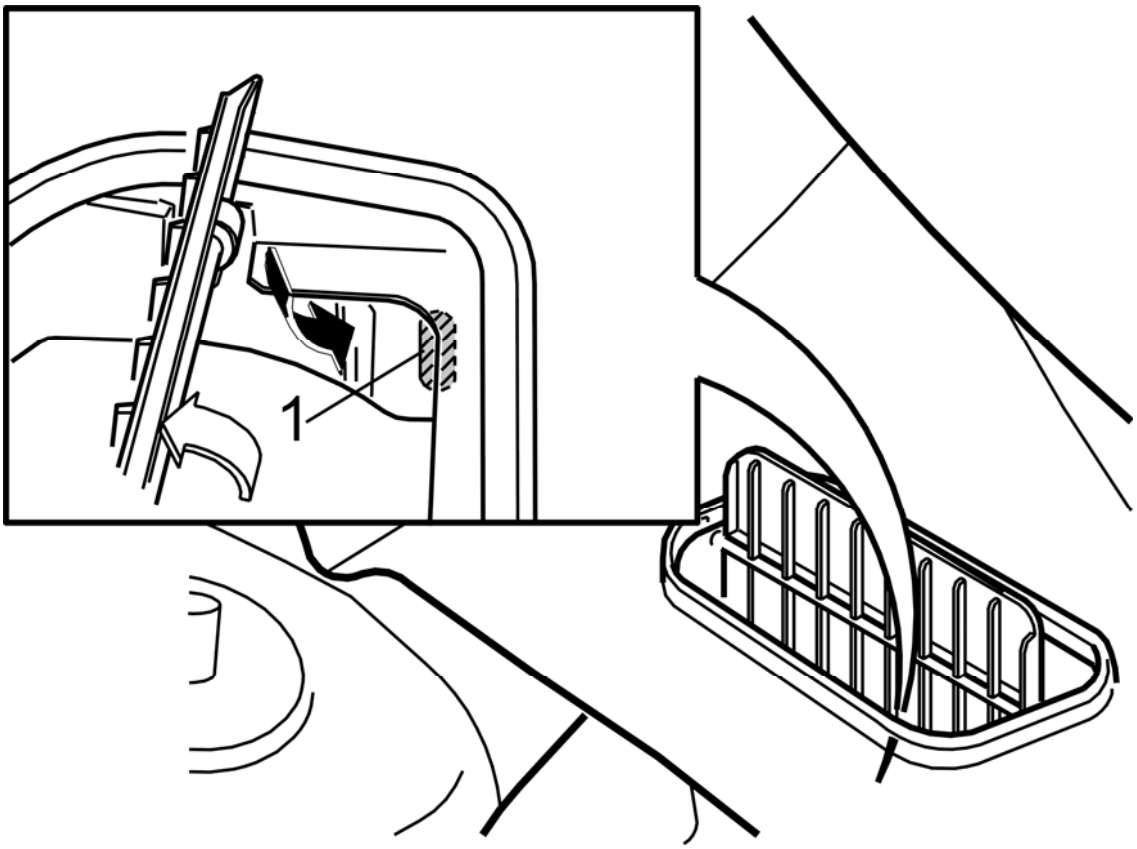

Fig. 3: Identifying Open Air Intake Damper
Courtesy of VOLVO CARS CORPORATION

If the air quality sensor and the other electronics are fault free, the damper for the air intake should close very soon.

If the air quality sensor is fault free, the damper for the air intake will gradually open after approximately 15 seconds.

INSTALLING THE AIR QUALITY SENSOR

Wipe away any excess rust solvent or windshield washer fluid around the sensor.

Install the plenum chamber. See **COWL, REPLACING** .

NOTE: Cover the air intake to the passenger compartment when the engine compartment or the car is being treated with wax or preserving agent.

CLIMATE SYSTEM, PERFORMANCE TEST

PERFORMANCE TEST

CONDITIONS

- Bonnet closed
- Doors and windows closed
- Start the engine.
- Engine speed 1500 RPM.

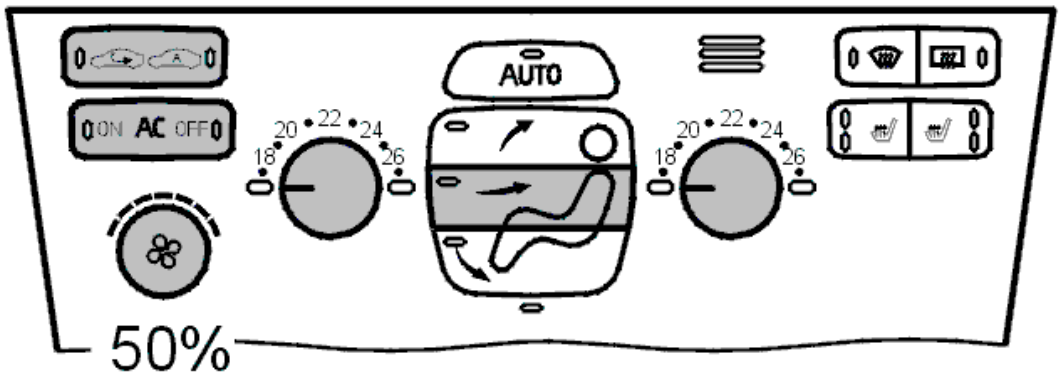

Fig. 4: Blower Switch Fan Set To 50%
Courtesy of VOLVO CARS CORPORATION

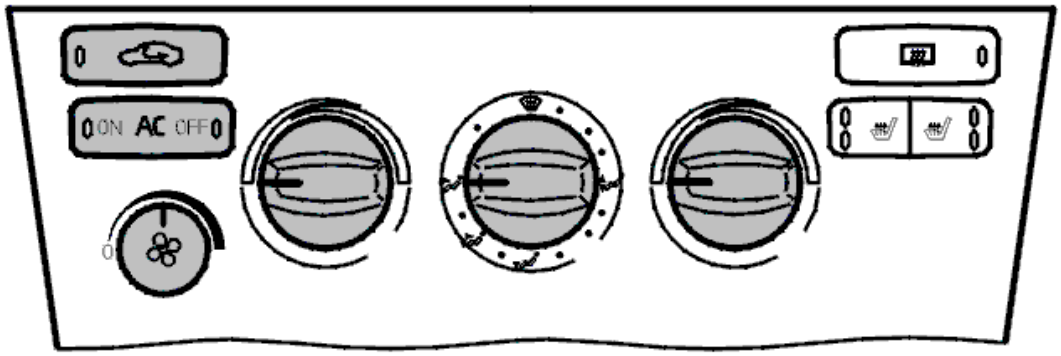

Fig. 5: Identifying Temperature Selectors For Maximum Cooling
Courtesy of VOLVO CARS CORPORATION

- Turn the temperature selector(s) to maximum cooling
- Set the air distribution selector to the **Ventilation** position
- Set the recirculation switch to the **On position**
- Set the air conditioning (A/C) button to the **On position**
- Set the blower fan switch to 50%.

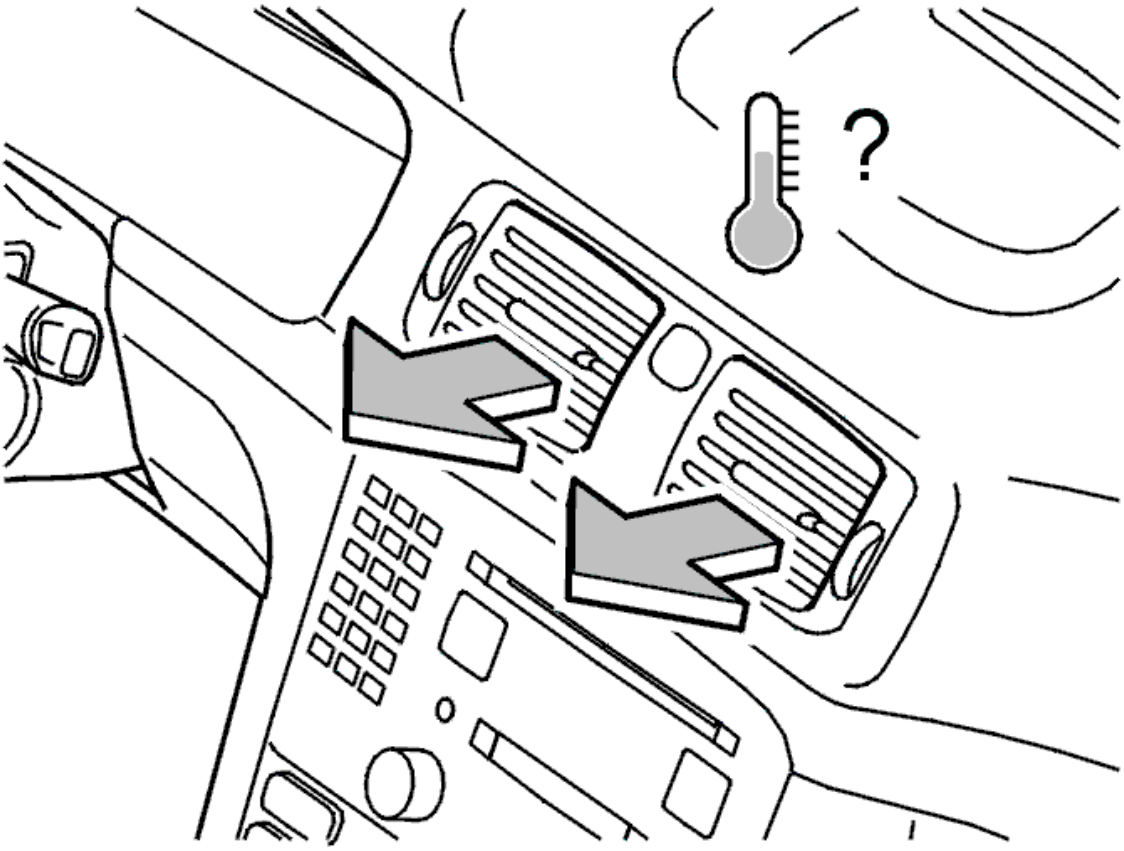

Fig. 6: Checking Temperature At Center Dashboard Vents
Courtesy of VOLVO CARS CORPORATION

- Position a thermometer at the center dashboard vents
- Allow the system to stabilize itself for at least 8 minutes.

Recorded operating conditions °C (°F)			
Ambient air temperature measured in front of the car	20°C (68°F)	30°C (86°F)	40°C (104°F)
Temperature of the expelled air measured at the center panel vents	6-9°C (43-48°F)	10-13°C (50-55°F)	14-16°C (57-60°F)

ENGINE COOLANT HEATER, TEST RUNNING

TEST DRIVING

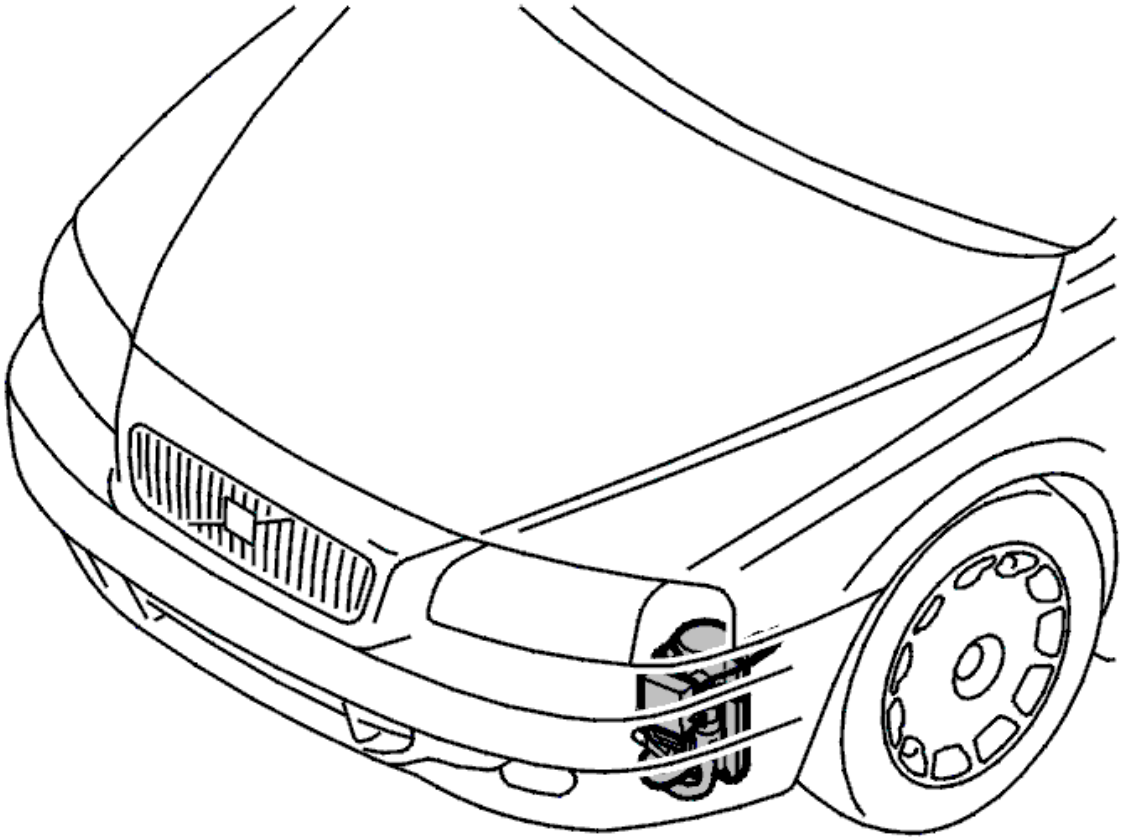

Fig. 7: Identifying Engine Coolant Heater
Courtesy of VOLVO CARS CORPORATION

NOTE: The additional heater will not start if the engine coolant temperature (ECT) is in excess of approximately 75°C.

Checking the quantity of fuel

Engine on: The heater always starts and the quantity of fuel in the tank is checked for 1 minute. If the quantity of fuel is greater than 4 liters the heater continues to run, otherwise it shuts down.

Engine off: The quantity of fuel is checked before starting.

Warning text in the driver information module

Warning text is displayed in the driver information module if:

the quantity of fuel is too low.

-the battery voltage is too low.

Conditions for starting:

- outside temperature < +3°C
- the engine is running
- quantity of fuel > 4 liters
- no diagnostic trouble codes (DTCs) stored that would prevent starting
- airbag not deployed.

Activate the heater.

When the heater is activated, allow it to run for a few minutes and check that:

- the heater starts and runs normally
- the heater does not smoke abnormally
- there is no mechanical noise from the fuel pump (FP), water pump or combustion fan
- there is no leakage from either the fuel lines and terminals or the coolant hoses and terminals
- the coolant hoses from the heater are warm.

Stop the heater.

In warm weather (above 20°C) the heater may run unevenly. This is due to the fuel vaporizing. The heater is not normally intended to operate in such high temperatures.

If the car is not equipped with the trip computer function the heater starts in VIDA Car communication Section 36 Engine coolant heater.

FUEL-POWERED PREHEATER, CHECKING

Special tools	
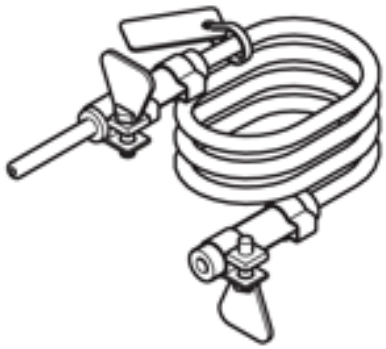	**T9997413 Fuel hose** **Tool number:** T9997413 **Tool description:** Fuel hose **Tool boards:**
	T9997412 Fuel hose **Tool number:** T9997412 **Tool description:** Fuel hose **Tool boards:**

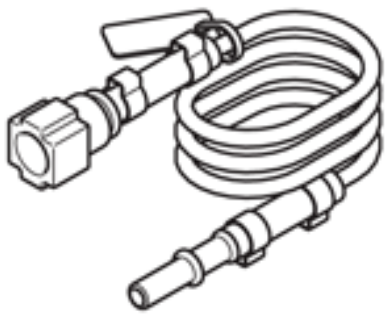

Materials	
Designation	**Part number**
Freeze spray	1161731
Hose clamp	978401
Universal oil	1161657

NOTE: **Some variation may occur. However, the essential information in the graphics is always correct.**

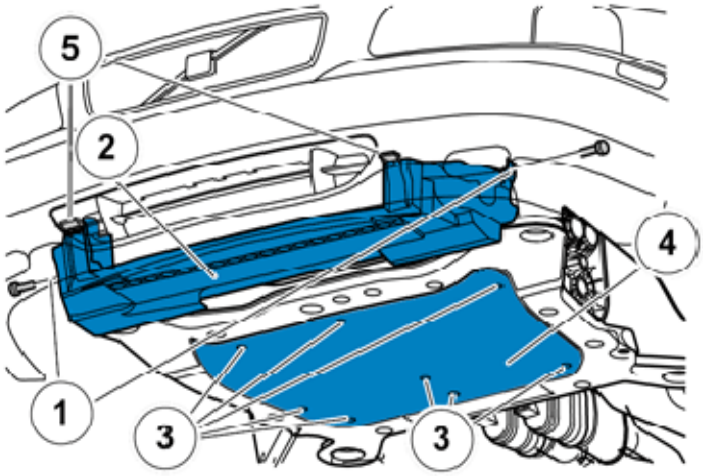

Fig. 8: Identifying Air Baffle & Splash Guard
Courtesy of VOLVO CARS CORPORATION

CHECK

Fig. 9: Freeze Spray, 1161731
Courtesy of VOLVO CARS CORPORATION

Look for signs of leakage on the connections for the fuel lines (2 and 3) between the fuel tank and additional heater.

HINT: Use: Freeze spray, 1161731 at the quick-release connections and start the additional heater to induce any leaks.

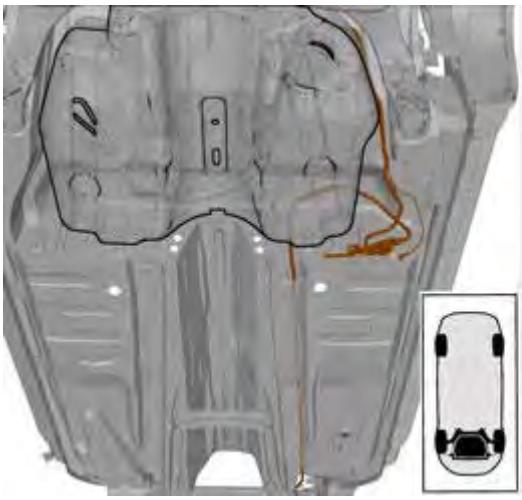

Fig. 10: Identifying Fuel Pump
Courtesy of VOLVO CARS CORPORATION

Look for signs of leakage around the fuel pump.

Remedy, if necessary, and continue to the next step.

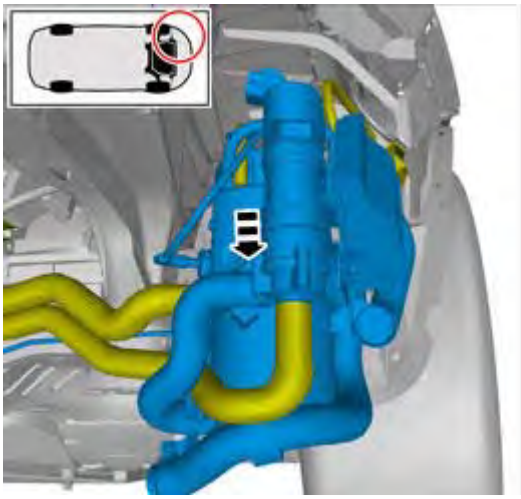

Fig. 11: Identifying Fuel-Powered Preheater
Courtesy of VOLVO CARS CORPORATION

Lower the additional heater. See **ENGINE COOLANT HEATER, REPLACING**

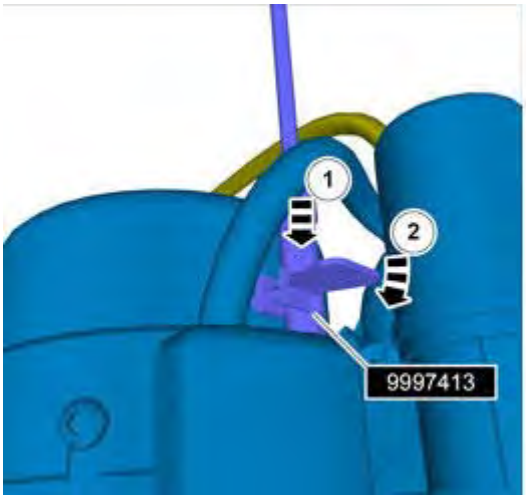

Fig. 12: Universal Oil, 1161657
Courtesy of VOLVO CARS CORPORATION

WARNING: **Be prepared to collect escaping fluid.**

see **9997413**

Install the rubber hose section in the car's fuel connection on the heater.

Slide it into the bottom so that it touches the internal nylon hose (1).

HINT: Use: Universal oil, 1161657 to facilitate the procedure.

Tighten the hose clamp 4-5 mm on the fuel hose (2). **Use:** Hose clamp, 978401

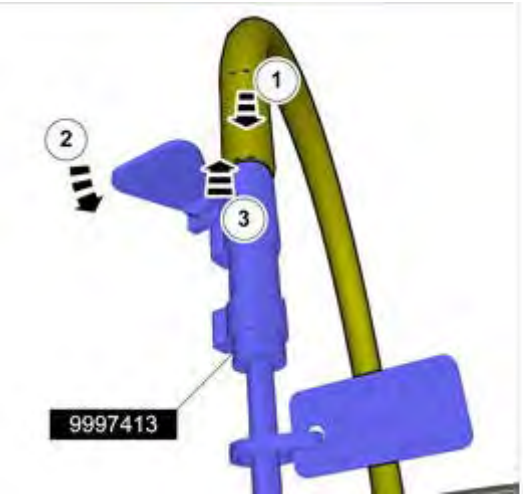

Fig. 13: Universal Oil, 1161657
Courtesy of VOLVO CARS CORPORATION

Install the opposite hose section in the car's fuel line that was on the heater.

Slide it in so that it touches the corresponding internal hose in the car's fuel hose, approx. 25 mm (1).

HINT: Use: Universal oil, 1161657 to facilitate the procedure.

Detach the hose clamp and move it over to the car's fuel line (2 and 3). **Use:** Hose clamp, 978401

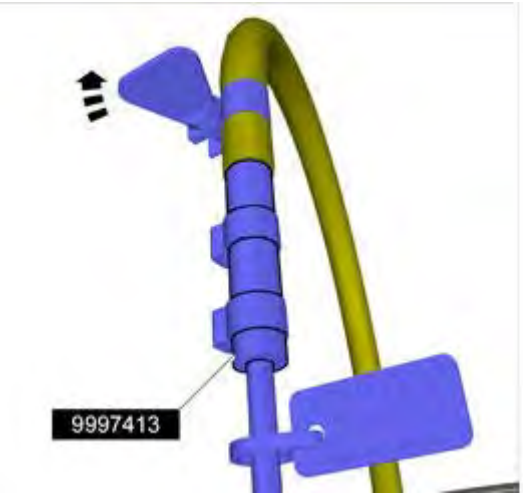

Fig. 14: Identifying Special Tool 9997413
Courtesy of VOLVO CARS CORPORATION

Tighten the hose clamp 15-20 mm on the fuel hose.

Run the additional heater. See **ENGINE COOLANT HEATER, TEST RUNNING**

In the event of air bubbles, see the next step.

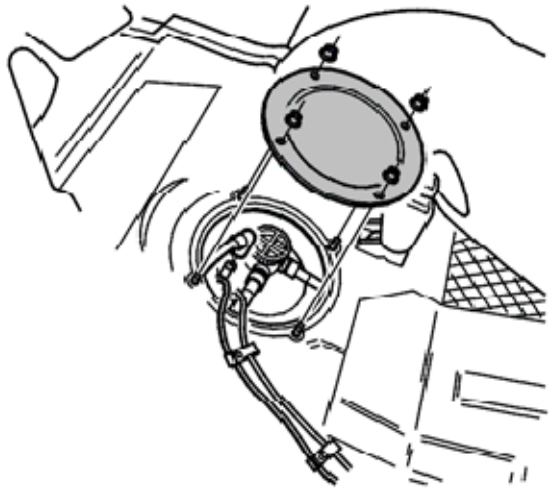

Fig. 15: Identifying Fuel Pump Inspection Hatch (1 Of 2)
Courtesy of VOLVO CARS CORPORATION

The fuel pump's inspection hatch is located under the vehicle's rear seat.

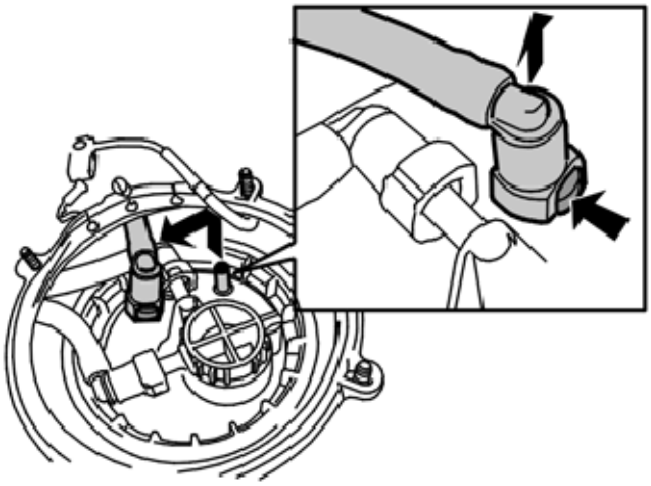

Fig. 16: Identifying Fuel Pump Inspection Hatch (2 Of 2)
Courtesy of VOLVO CARS CORPORATION

WARNING: **Be prepared to collect escaping fluid.**

Fig. 17: Identifying Special Tool 9997412
Courtesy of VOLVO CARS CORPORATION

see **9997412**

Run the additional heater. See **ENGINE COOLANT HEATER, TEST RUNNING**

In the event of air bubbles:

- Replace the suction pipe.
- Run the additional heater. See **ENGINE COOLANT HEATER, TEST RUNNING**

If there are **no** air bubbles, see the next step.

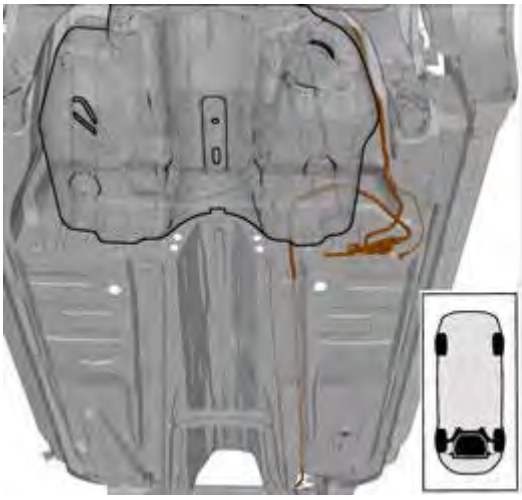

Fig. 18: Identifying Fuel Pump
Courtesy of VOLVO CARS CORPORATION

Check the connection at the additional heater fuel pump.

see **9997412**

Run the additional heater. See **ENGINE COOLANT HEATER, TEST RUNNING**

In the event of air bubbles:

- Replace the fuel line between the suction pipe and additional heater fuel pump.
- Run the additional heater. See **ENGINE COOLANT HEATER, TEST RUNNING**

If there are **no** air bubbles, see the next step.

- Continue to check the connections on the fuel line up to the additional heater.
- see **9997413**

LEAK TRACING, FLUORESCENT TRACING AGENT/UV LAMP

- Leak trace according to **LEAK TRACING, FLUORESCENT TRACING AGENT/UV LAMP**.

LEAK TRACING, FLUORESCENT TRACING AGENT/UV LAMP

REGULATIONS

Filling and leak tracing the climate control system using fluorescent tracing agent and a UV lamp.

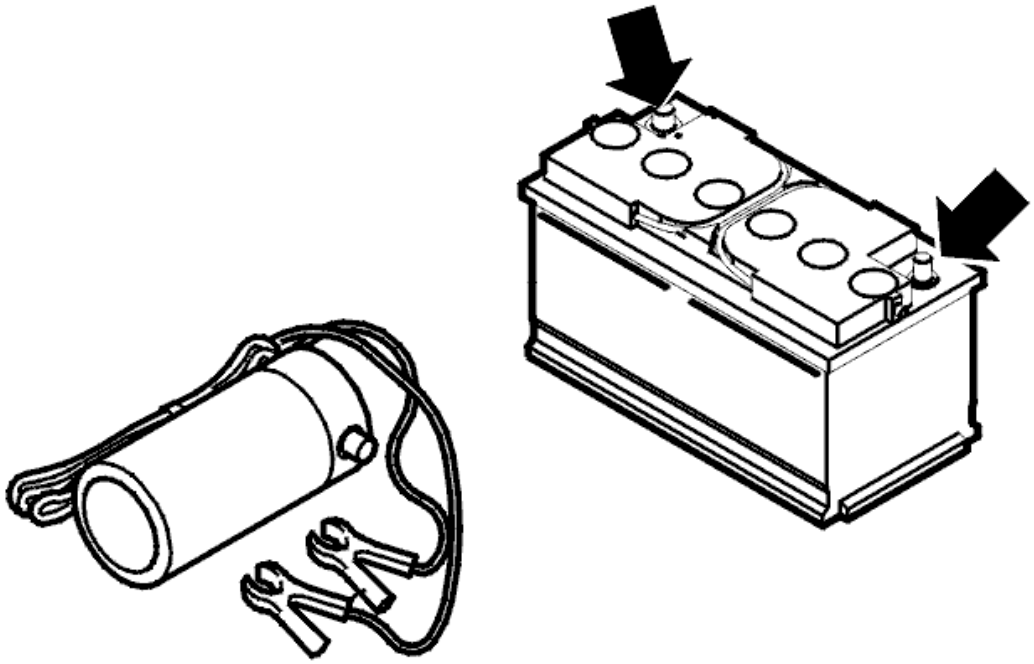

Fig. 19: Battery And Jumper Cables
Courtesy of VOLVO CARS CORPORATION

NOTE: **The coloring agent may discolor the car paintwork. Therefore extreme caution must be taken when handling the tracing agent.**

NOTE: **Carefully follow the manufacturers instructions when handling the UV lamp and the tracing agent.**

NOTE: **After filling with the tracing agent, the decal supplied by the manufacturer / supplier must be applied at the point indicated.**

NOTE: **When leak tracing, always use the protective goggles supplied with the equipment. The goggles make the color more visible.**

LEAK TRACING WITH A UV LAMP

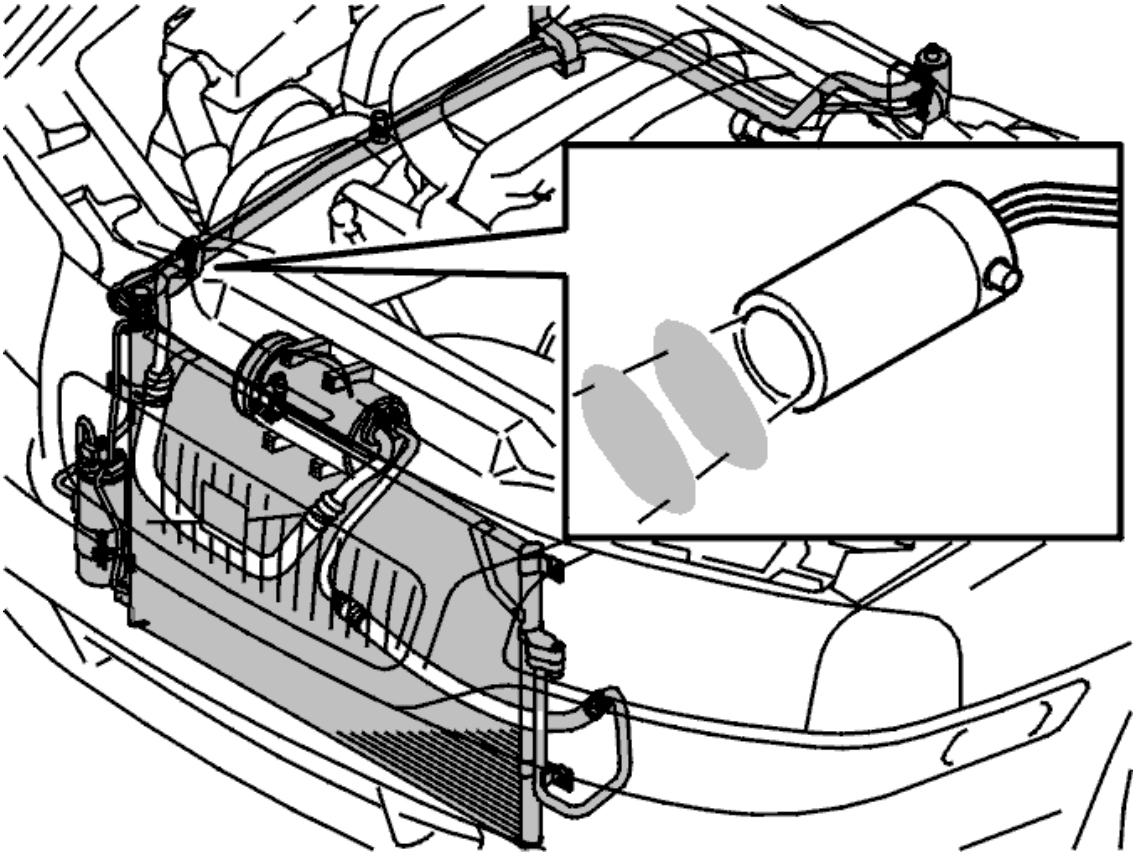

Fig. 20: Identifying Leak Trace Method With UV Lamp
Courtesy of VOLVO CARS CORPORATION

- Connect the UV lamp.
- Leak trace using the UV lamp
- The fluorescent tracing agent is green when leak tracing with a UV lamp.

NOTE: This light green color may be mistaken for leaked or spilled coolant which Volvo uses in its products.

The method for leak tracing using fluorescent tracing agent is the same for both factory filled and aftermarket filled climate control systems.

REFRIGERANT, DRAINING

NOTE: As the graphics in this service information are used for different model years and / or models, some variation may occur. However, the essential information in the graphics is always correct.

DRAINING REFRIGERANT

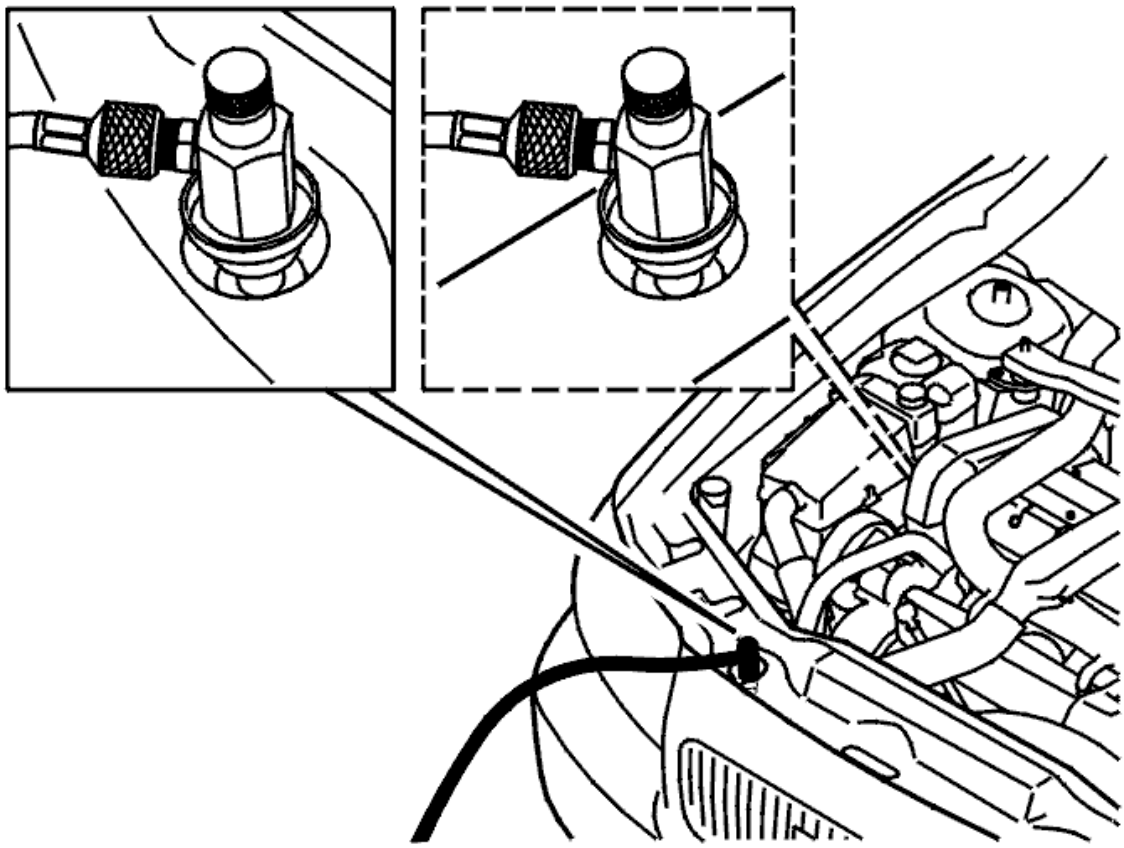

Fig. 21: Identifying Recycling Unit Attached To Service Valve
Courtesy of VOLVO CARS CORPORATION

NOTE: When draining the refrigerant from the air conditioning (A/C) system, the ambient temperature must be above 20°C

The engine must be switched off.

Connect the recycling unit to the service valves on both the high-pressure (HP) and low-pressure (LP) sides. This is the quickest way to drain the refrigerant.

Check the amount of oil (if any) that has run out when draining the refrigerant. The recycling unit must be equipped with an oil separator. The oil separator must be of a type that allows the amount of oil in the refrigerant to be measured.

VACUUM PUMPING

VACUUM PUMPING

VACUUM PUMPING REFRIGERANT

CAUTION: Check and, if necessary, top up with new compressor oil according to REFRIGERANT, SAFETY REGULATIONS before vacuum-pumping the car's

climate control system.

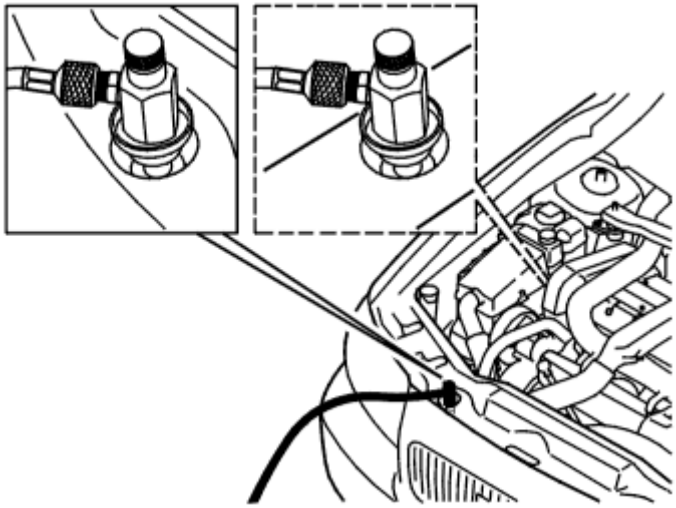

Fig. 22: Identifying Recycling Unit Attached To Service Valve
Courtesy of VOLVO CARS CORPORATION

- During vacuum pumping, the vacuum pump can be connected to the service valves for both the high pressure (HP) and low pressure (LP) sides
- Operate the vacuum pump for at least 50 minutes.

VACUUM TEST

The vacuum must be checked after vacuum pumping.

- The vacuum gauge's value may only increase by 0.2 mbar one dash (0.1-0.3 mbar) during a period of 4 minutes.

NOTE: The vacuum test is not a substitute for leak tracing.

CLIMATE UNITS (B5254T2; 2003-07)

FAULT TRACING CLIMATE UNITS

Special tools	
	T9814092 MANOMETER STAND **Tool number:** T9814092 **Tool description:** MANOMETER STAND **Tool boards:**

WARNING: Follow the safety instructions for work on the air conditioning system. See SAFETY INFORMATION AIR CONDITIONING SYSTEM

NOTE: First read the instructions covering slow and fast leaks. See OIL AIR CONDITIONING (A/C) SYSTEM, FILLING

See information about the A/C-system. See **AIR CONDITIONING (AC) SYSTEM, GENERAL INSTRUCTIONS**

NOTE: Always plug the pipes and connections when working on the climate control system.

OVERVIEW A/C COMPONENTS

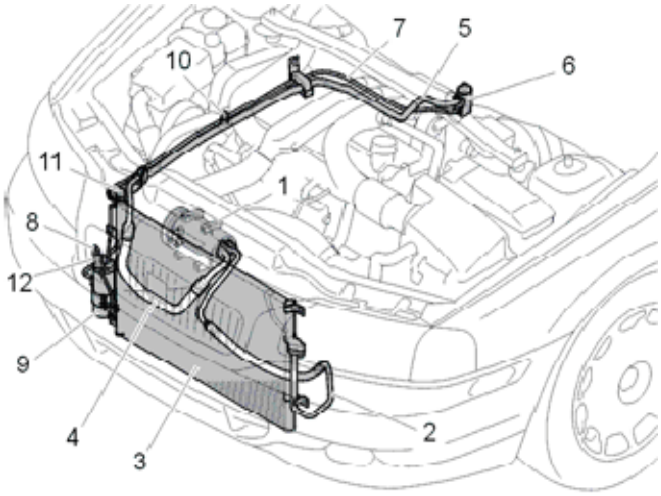

Fig. 23: Identifying Engine Compartment Components
Courtesy of VOLVO CARS CORPORATION

engine compartment

1. Compressor

2. Hose/pipe compressor-condenser
3. Condenser
4. Hose/pipe junction block side member-compressor
5. Pipe expansion valve-junction block side member
6. Expansion valve
7. Pipe accumulator-expansion valve
8. Intermediate pipe accumulator-member/expansion valve
9. Accumulator
10. Service valve, (LT)
11. Service valve, (HT)
12. Pressure sensor

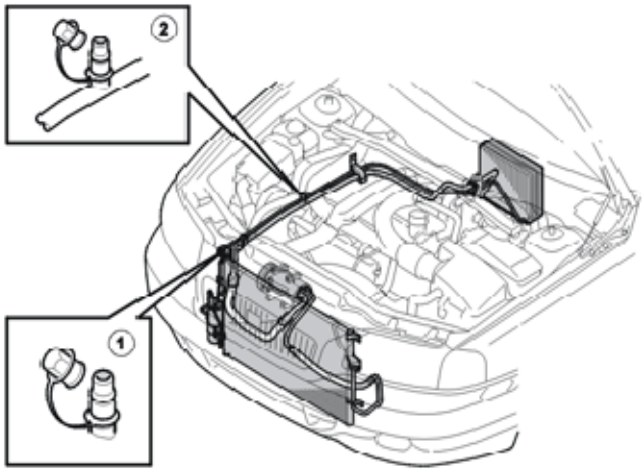

Fig. 24: Identifying High Pressure Side (HT) And Low Pressure Side (LT) Service Valves
Courtesy of VOLVO CARS CORPORATION

Service valves

1. High pressure side (HT) service valve

   Draining, vacuum-pumping, and filling

2. Low pressure side (LT) service valve

   - Draining, vacuum-pumping

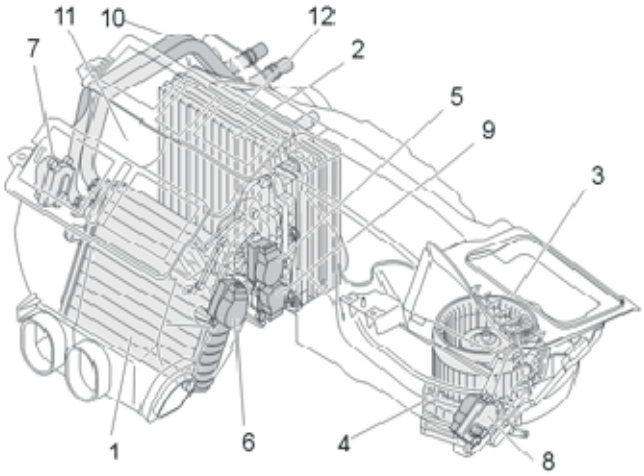

Fig. 25: Identifying Climate Control Unit Components
Courtesy of VOLVO CARS CORPORATION

Climate control unit

1. Heat exchanger
2. Evaporator
3. Fan motor
4. Power unit
5. Damper motor air distribution
6. Damper motor temperature right
7. Damper motor temperature left
8. Damper motor recirculation
9. Damper motor defroster (ECC)
10. Coolant pipe connection, to/from engine room
11. Temperature sensor evaporator (LHD)

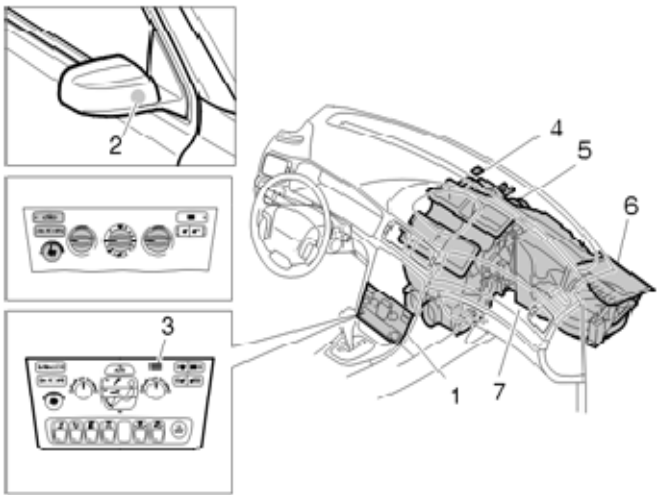

Fig. 26: Identifying Passenger Compartment/Door Mirror Components
Courtesy of VOLVO CARS CORPORATION

Passenger compartment/door mirror

1. Climate control unit
2. Ambient temperature sensor
3. Passenger compartment temperature sensor (ECC)
4. Sun sensor (ECC)
5. Climate control unit
6. Air quality sensor
7. Multifilter/filter

OVERVIEW OF THE A/C SYSTEM

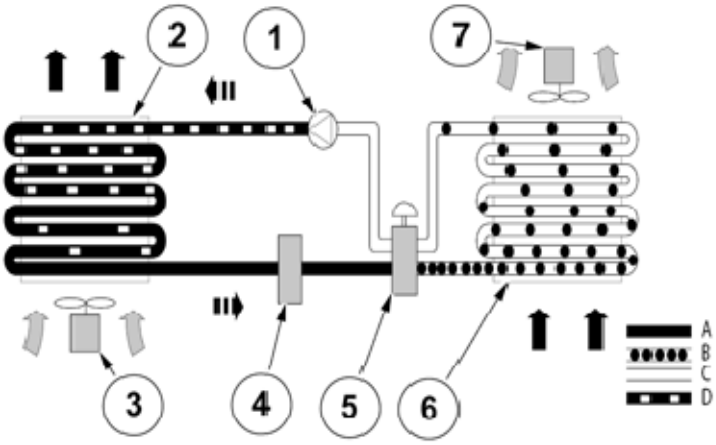

Fig. 27: Identifying Overview Of A/C System
Courtesy of VOLVO CARS CORPORATION

Refrigerant path

1. Compressor
2. Condenser
3. Cooling fan
4. Receiver drier
5. Expansion valve
6. Evaporator
7. Blower fan

Explanations:

- **A** - High pressure, hot liquid

- **B** - Low pressure, cold liquid
- **C** - Low pressure, cold gas
- **D** - High pressure, hot gas
- **Dark arrow** - Hot air
- **Light arrow** - Cold air

Troubleshooting consists of three sub procedures in total with a number of steps in each. Not all steps need to be performed if the fault has been rectified before.

FAULT TRACING STEP 1 OF 3

General check

1. Set the car to room temperature (approx. 20 C°).
2. Connect VIDA diagnostic and download the AC check software 30745960 and check:
    - Evaporator temperature sensor
    - Temperature sensor passenger compartment
    - Ambient temperature sensor
    - Sun sensor
3. Check the damper motors
    - manually - temperature/temperature sides, defroster, ventilation, floor & recirculation
    - with VIDA diagnosis
4. Check blower fan speeds.
5. Check passenger compartment filter cleanliness.
6. Check distance between drive plate and pulley.

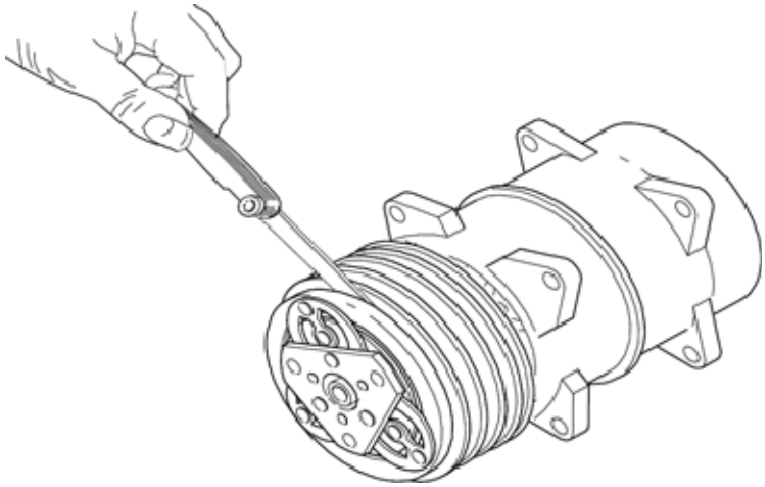

Fig. 28: Checking Distance Between Drive Plate And Pulley
Courtesy of VOLVO CARS CORPORATION

7. Check the drive/auxiliaries belt.

8. Check the cleanliness of the condenser.

FAULT TRACING STEP 2 OF 3

Carry out a performance test on the climate control system. See **CLIMATE SYSTEM, PERFORMANCE TEST**.

FAULT TRACING STEP 3 OF 3

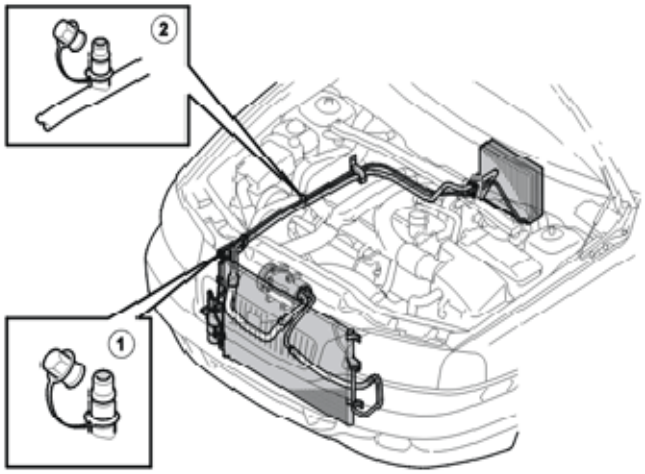

Fig. 29: Identifying High Pressure Side (HT) And Low Pressure Side (LT) Service Valves
Courtesy of VOLVO CARS CORPORATION

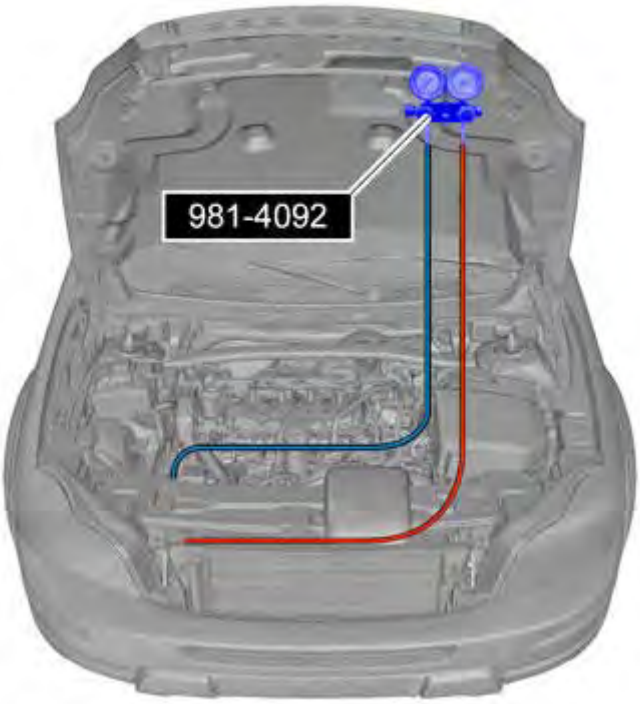

Fig. 30: Identifying Special Tool 9814092
Courtesy of VOLVO CARS CORPORATION

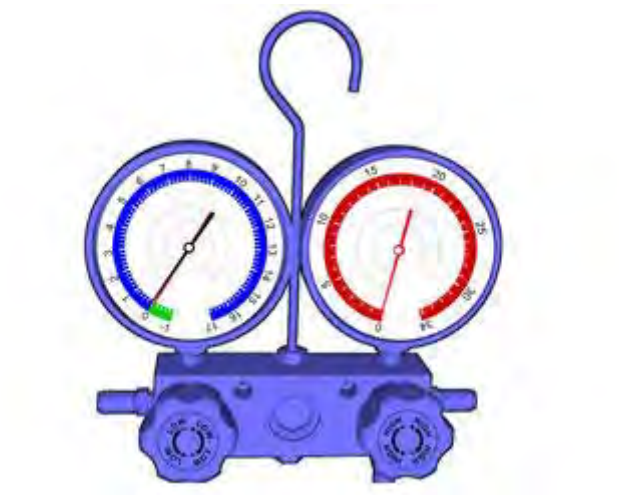

Fig. 31: Identifying Pressure Measurement Tool
Courtesy of VOLVO CARS CORPORATION

Pressure measurement

Use special tool: **T9814092**

- The pressure is measured on the high resp. low pressure side service valves.
- Before connecting the manometer to the car's service valves both the knobs must be turned clockwise (-) to the limit position.
- Connect the manometer to the service valves, hang from the bonnet opening, start and run the engine at idle.
- Inner adjustment of the climate control follows the same procedure as step 2 performance test.

Read off the values after the A/C has stabilized or after approx. 8 min.

XC90 ALL (EXCL. B6324S & B8444SX) A/C COMPRESSORS WITH CONSTANT STROKE VOLUME. TXV VALVE SYSTEM.

Outside temperature (C°)	Low pressure (LT) (bar)	High pressure (HT) (bar)	Panel temperature (C°)
15, 5	Min:0.5 Max:3.0	Min:8.5 Max:12.0	Approx. 6.0
21, 0	Min:0.5 Max:3.0	Min:10.5 Max:17.5	Approx. 8.0
26, 5	Min:0.5 Max:3.0	Min:12.5 Max:19.0	Approx. 9.0
32, 0	Min:0.5 Max:3.5	Min:14.0 Max:22.0	Approx. 11.0
38, 8	Min:0.5 Max:3.5	Min:16.0 Max:23.0	Approx. 14.0

XC90 (B6324SX & B8444SX) A/C COMPRESSORS WITH VARIABLE STROKE VOLUME. TXV VALVE SYSTEM.

Outside temperature (C°)	Low pressure (LT) (bar)	High pressure (HT) (bar)	Panel temperature (C°)
15, 5	Min:1.5 Max:2.3	Min:9.5 Max:13.0	Approx. 6.0
21, 0	Min:1.5 Max:2.3	Min:12.5 Max:17.5	Approx. 8.0
26, 5	Min:1.5 Max:2.3	Min:14.0 Max:20.5	Approx. 9.0

32, 0	Min:0.5 Max:3.5	Min:16.0 Max:24.0	Approx. 11.0
38, 8	Min:0.5 Max:3.5	Min:18.5 Max:25.5	Approx. 14.0

Explanations:

- If the pressure values are outside the stated values (see above) the reason must be established.
- **F** = Fixed displacement- resp. **V** = Variable displacement compressor
- 6 x tables represent all the different fault symptoms on Volvo Car Company A/C systems with two service valves, with tips, results and action in order of priority.

Table 1 Faults	Possible cause in order of priority
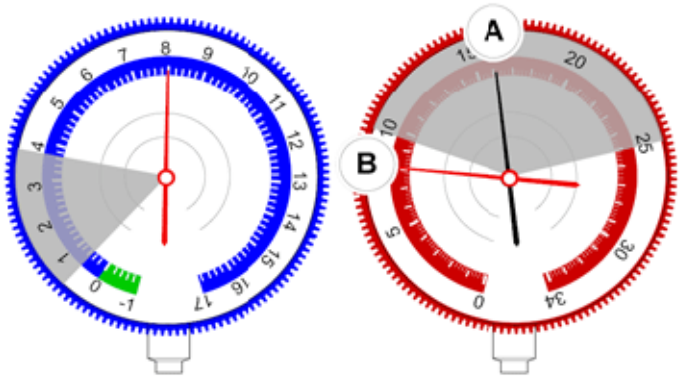	**All** 1. Compressor magnetic clutch slips or does not engage, adjust/replace magnetic clutch. See **MAGNET CLUTCH AC COMPRESSOR, REPLACING** 2. Expansion valve is blocked in open position, replace expansion valve. See **EXPANSION VALVE, REPLACING** 3. Compressor damaged, replace compressor. See **COMPRESSOR, REPLACING**

Table 2 Faults	Possible cause in order of priority
Low pressure (**LT**) too **low** High pressure (**HT**) **high** (**C**) or **normal** (	**1, 3, 4: "F", 2: All** 1. Evaporator temperature sensor defective, replace temperature sensor evaporator. See **TEMPERATURE SENSOR EVAPORATOR, REPLACING** 2. Receiver drier filled with moisture, replace receiver drier. See **RECEIVER DRIER, REPLACING** From and including chassis no 196988-:**RECEIVER DRIER, REPLACING** 3. Expansion valve is blocked in closed position, replace

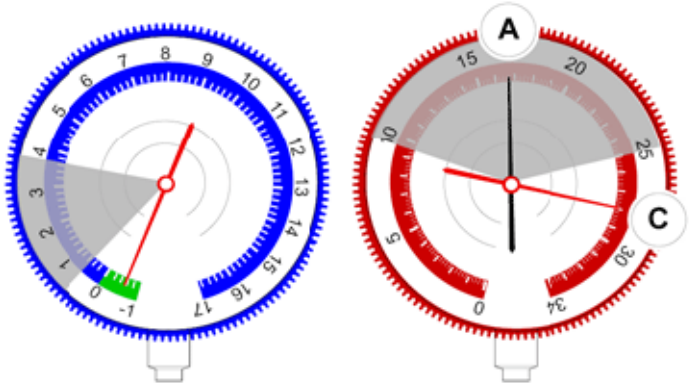 (**A**)	expansion valve. See **EXPANSION VALVE, REPLACING** 4. Blockage in refrigerant pipe/hose between receiver drier and expansion valve, remove the cause of the blockage (cleaning).

Table 3 Faults	Possible cause in order of priority
Low pressure (**LT**) **normal** (**A**) or too **low** (**B**) High pressure (**HT normal** 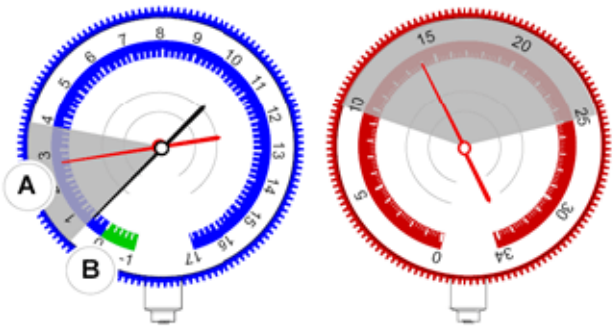	**All** 1. Inflow of warm air into evaporator (passenger compartment), defective temperature damper motor, replace damper motor. **L. H. D -2004** : **DAMPER MOTOR TEMPERATURE, REPLACING** Alternatively defective damper. See **DAMPER MOTOR MODULE (DMM) TEMPERATURE, REPLACING** 2. Inflow of warm air into evaporator (passenger compartment), defective recirculation damper motor, replace damper motor. For -2004, see **DAMPER MOTOR RECIRCULATION, REPLACING** For 2005- see **DAMPER MOTOR MODULE (DMM) RECIRCULATION, REPLACING**

Table 4 Faults	Possible cause in order of priority
Low pressure (**LT**) **high** (**C**) or **normal** (**A**)	**All** 1. Possible normal operating pressure at **high** ambient temperature above

High pressure (**HT**) too **high** 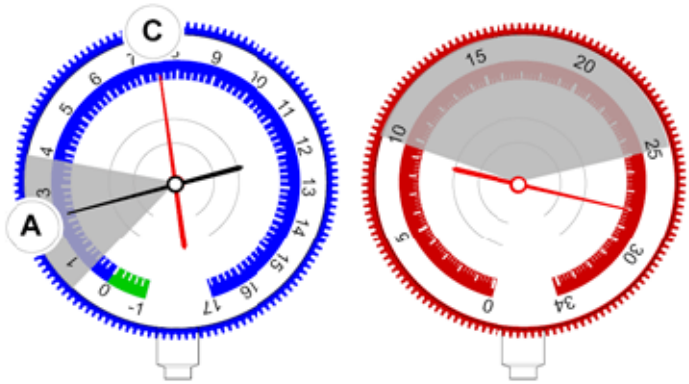 	43°C (109°F) 2. Impurities in the condenser, clean/vacuum/rinse impurities from the front. 3. Too much refrigerant (30-35% more than the prescribed amount), drain and refill. See **REFRIGERANT, DRAINING** 4. Blockage in refrigerant pipe/hose between A/C compressor, condenser and receiver drier, remove the cause of the blockage (cleaning) **NOTE:** **The blockage should only be in the area around the (HT) service connection.**

Table 5 Faults	Possible cause in order of priority
Low pressure (**LT**) **high** (**C**) or **normal** (**A**) High pressure (**HT**) too **high** 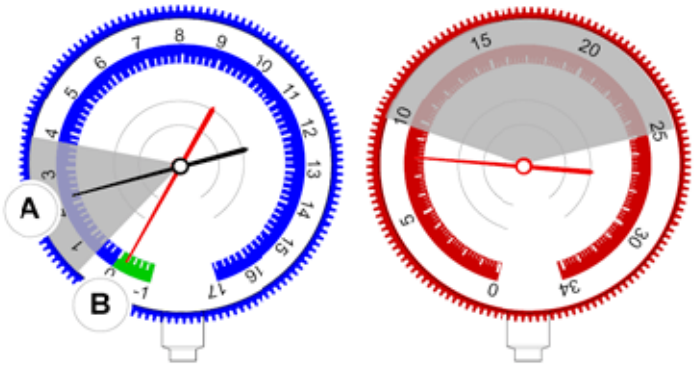 	**1-3: All, 4-5: "V"** 1. Possible normal operating pressure at **low** ambient temperature below 5 C° (41°F). 2. Too **little** refrigerant (below nominal amount), drain and refill. See **REFRIGERANT, DRAINING** 3. Blockage in refrigerant pipe/hose between A/C compressor and condenser or condenser and receiver drier, remove the cause of the blockage (cleaning). 4. Blockage in low or high pressure side between receiver drier and evaporator, remove the cause of the blockage (cleaning). 5. Expansion valve is blocked in closed position or blocked, replace expansion valve. See **EXPANSION VALVE, REPLACING**

Table 6 Faults	Possible cause in order of priority
Low pressure (**LT**) High pressure (**HT**) displays same values	**1.3: All, 2.4: "V"** 1. Car switched off, no A/C compressor work is

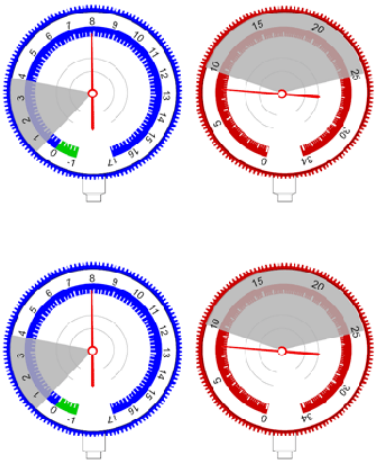	underway, system pressure/residual pressure. 2. A/C compressor not running 3. Compressor's magnetic clutch is defective replace magnetic clutch. See **MAGNETIC CLUTCH COMPRESSOR, REPLACING** 4. Compressor damaged, replace compressor. See **COMPRESSOR, REPLACING**

DAMPER MOTOR RECIRCULATION, REPLACING

NOTE: **As the graphics in this service information are used for different model years and / or models, some variation may occur. However, the essential information in the graphics is always correct.**

REMOVING THE RECIRCULATION DAMPER MOTOR

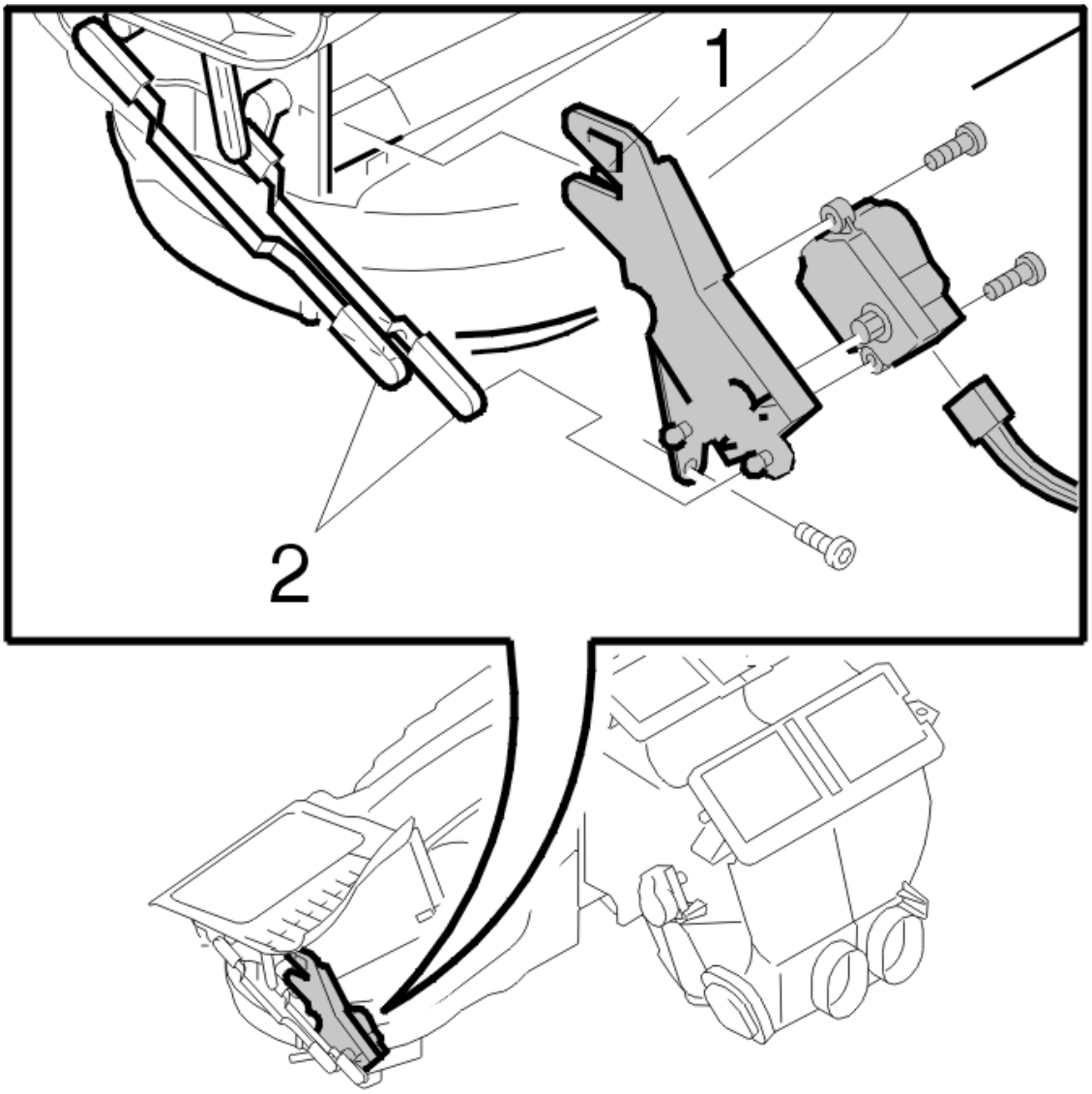

Fig. 32: Identifying Control Module Mechanism And Damper Arms
Courtesy of VOLVO CARS CORPORATION

Remove:

- the glove compartment. See **GLOVE COMPARTMENT, REPLACING**
- the screw from the bracket.

Remove:

- the bracket from the mounting by inserting the tip of a screwdriver between the mounting and the metal on the fan housing
- the lever from the motor. Ensure that the levers do not release from the heater unit.

Remove:

- the switch
- the motor.

INSTALLING THE RECIRCULATION DAMPER MOTOR

Position:

- the motor on the bracket
- the bracket and motor.

Press the upper mounting into place.

Install the screw for the bracket.

Place the arms from the heater unit onto the motor levers and press into place. Do not damage the arms.

Install:

- the switch
- the glove compartment. See **GLOVE COMPARTMENT, REPLACING** .

Carry out self-adjustment of the damper motor end positions. This is carried out via VIDA communication.

DAMPER MOTOR TEMPERATURE, REPLACING

NOTE: **As the graphics in this service information are used for different model years and / or models, some variation may occur. However, the essential information in the graphics is always correct.**

DAMPER MOTOR TEMPERATURE PASSENGER SIDE, REPLACING

REMOVING THE PASSENGER SIDE TEMPERATURE DAMPER MOTOR

Remove:

- the glove compartment. See **GLOVE COMPARTMENT, REPLACING**
- the screws
- the motor
- the switch.

INSTALLING THE PASSENGER SIDE TEMPERATURE DAMPER MOTOR

Position the motor.

Turn the shaft on the motor so that the motor can be positioned.

Install:

- the screws
- the switch.

Carry out self-adjustment of the damper motor end positions. This is carried out via VIDA communication.

Install the glove compartment. See **GLOVE COMPARTMENT, REPLACING** .

DAMPER MOTOR TEMPERATURE DRIVER'S SIDE, REPLACING

REMOVING THE DRIVER'S SIDE TEMPERATURE DAMPER MOTOR

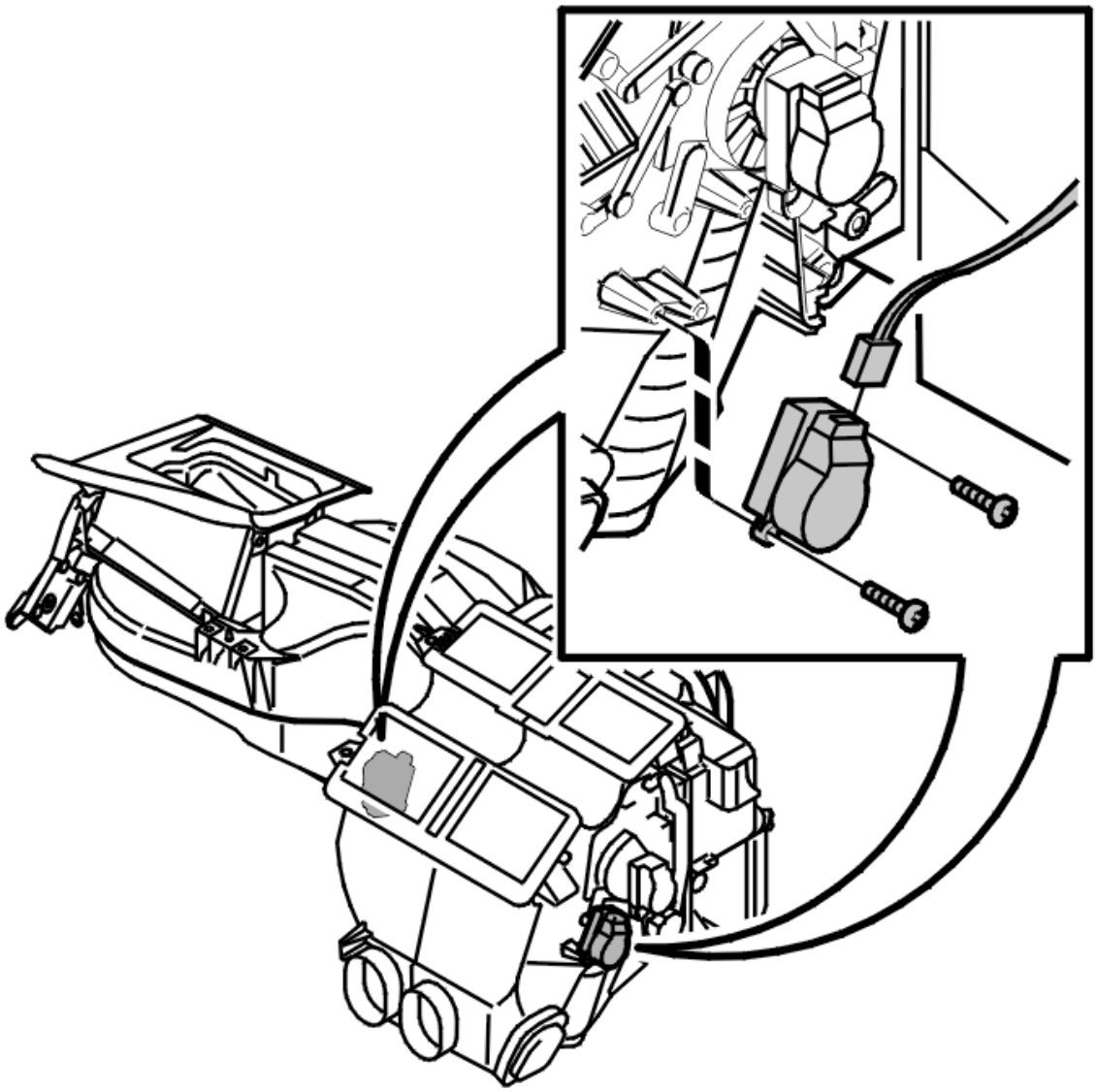

Fig. 33: Identifying Control Module And Screws
Courtesy of VOLVO CARS CORPORATION

Remove:

- the soundproofing panel. See **SOUNDPROOFING PANEL, REPLACING**
- the switch from the damper motor.

Slacken off the screws.

Pull out the damper motor slightly.

Position the point of a screwdriver between the arms on the lever control. Pry the arms away from the ball on the damper motor lever.

Remove the damper motor.

INSTALLING THE DRIVER'S SIDE TEMPERATURE DAMPER MOTOR

Position the damper motor.

Install the mechanism lever on the ball on the damper motor lever.

Insert the tip of a screwdriver behind the lever on the mechanism and the tip of, for example, a pair of round-nosed pliers behind the lever on the damper motor. Press the ball into place on the mechanism.

Position the damper motor. Tighten the screws.

Install:

- the switch
- the soundproofing panel. See **SOUNDPROOFING PANEL, REPLACING** .

Carry out self-adjustment of the damper motor end positions. This is carried out via VIDA communication.

FUEL PIPE, AUXILIARY HEATER, ADDITIONAL INSULATION

NOTE: The graphics in this service information are used for different model years and/or models. Some variation may occur. However, the essential information in the graphics is always correct.

PREPARATORY WORK

Remove:

- the splash guard under the engine
- the lower air guide on the bumper shell
- the splash guard (XC90 only).

REMOVING THE FUEL PIPE

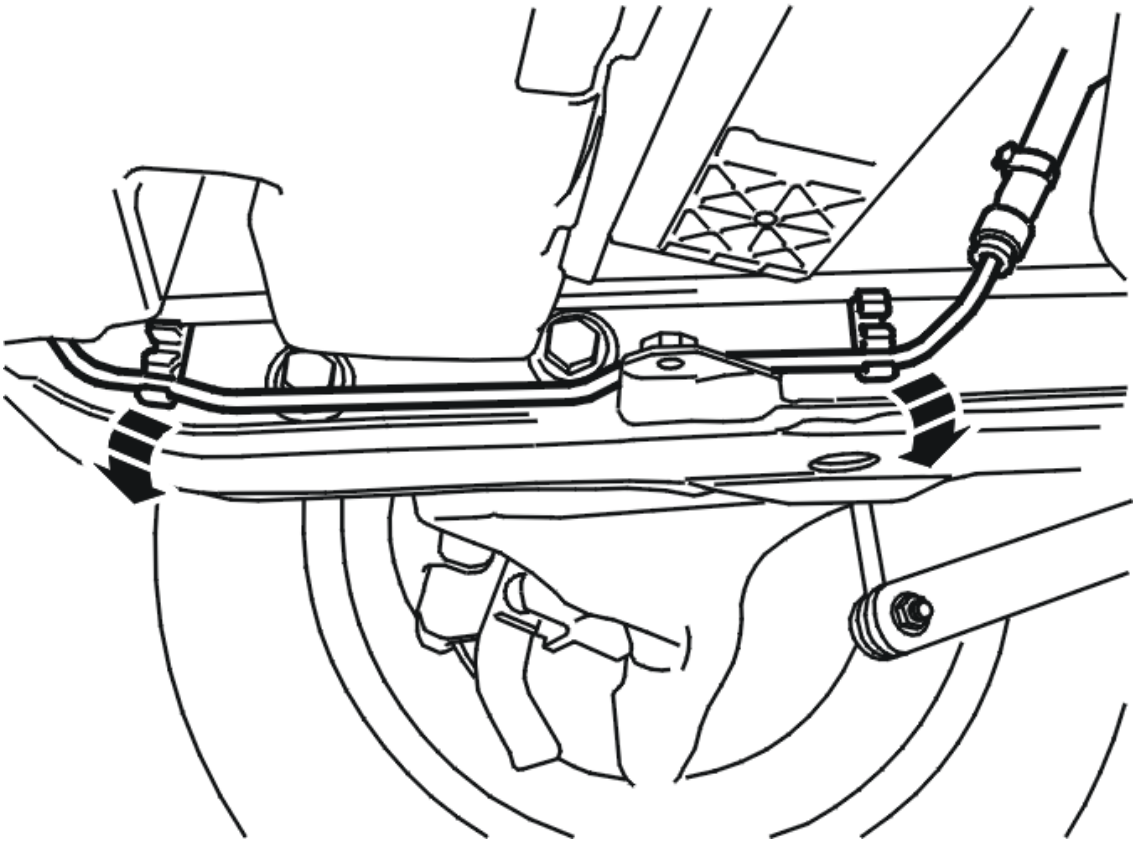

Fig. 34: Identifying Fuel Pipe And Clip On Inside Right Part Of Subframe
Courtesy of VOLVO CARS CORPORATION

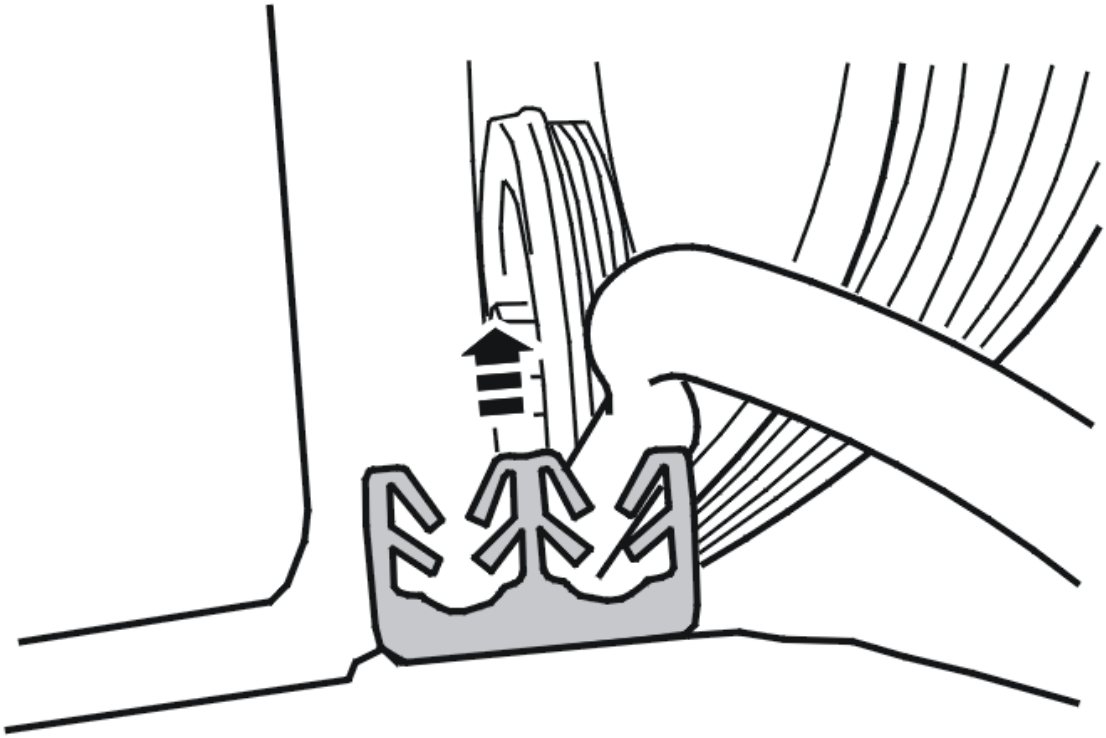

Fig. 35: Identifying Fuel Pipe Lifted Out Of Clip
Courtesy of VOLVO CARS CORPORATION

Lift the fuel pipe from the clip on the inside right part of the subframe and the top of the subframe below the belt pulley.

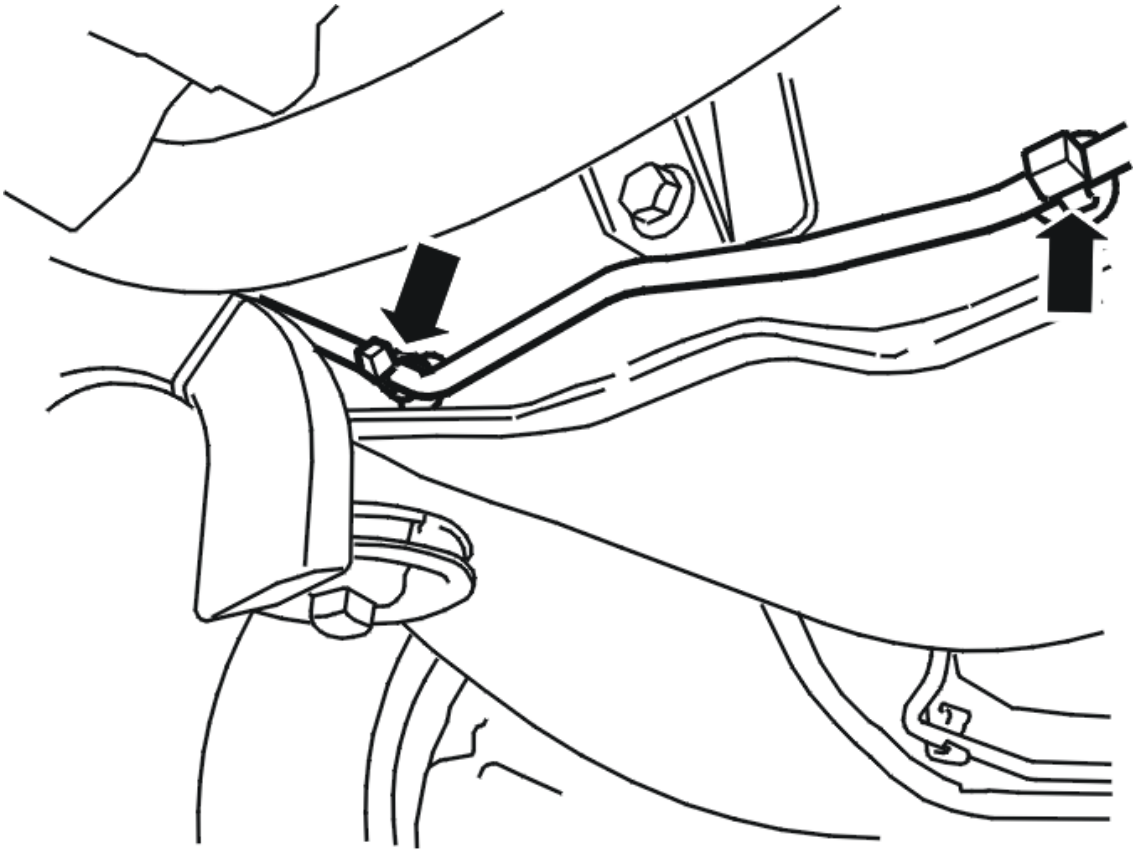

Fig. 36: Identifying Front Subframe Clips
Courtesy of VOLVO CARS CORPORATION

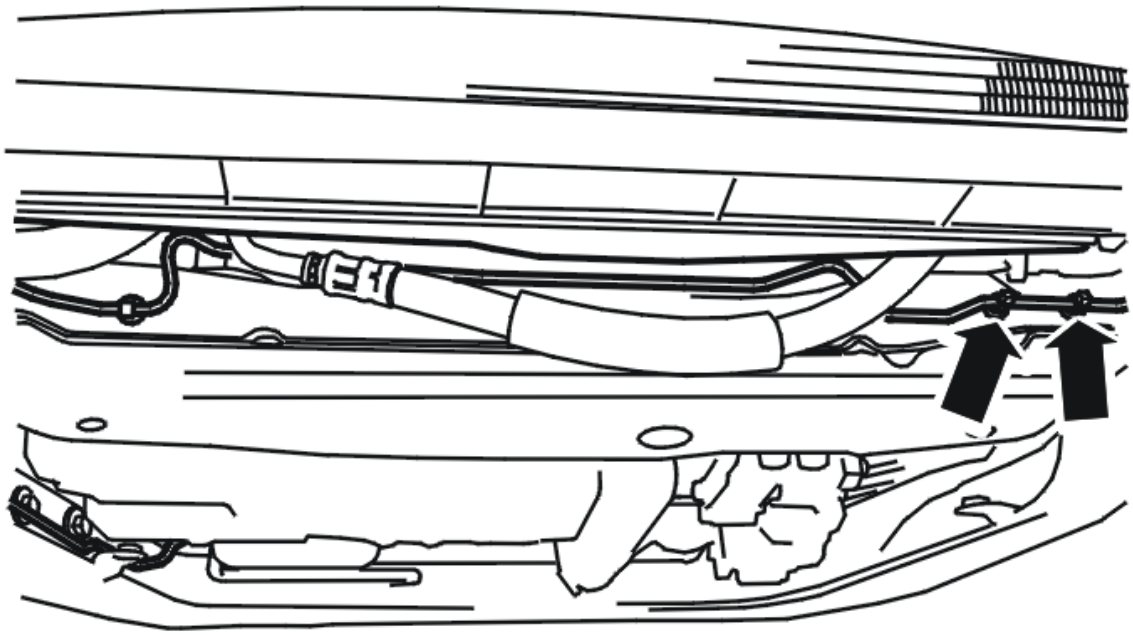

Fig. 37: Identifying Subframe Clips
Courtesy of VOLVO CARS CORPORATION

Cut off the 4 tie straps on the front of the subframe. Cut away the tie straps only. Leave the clips in place.

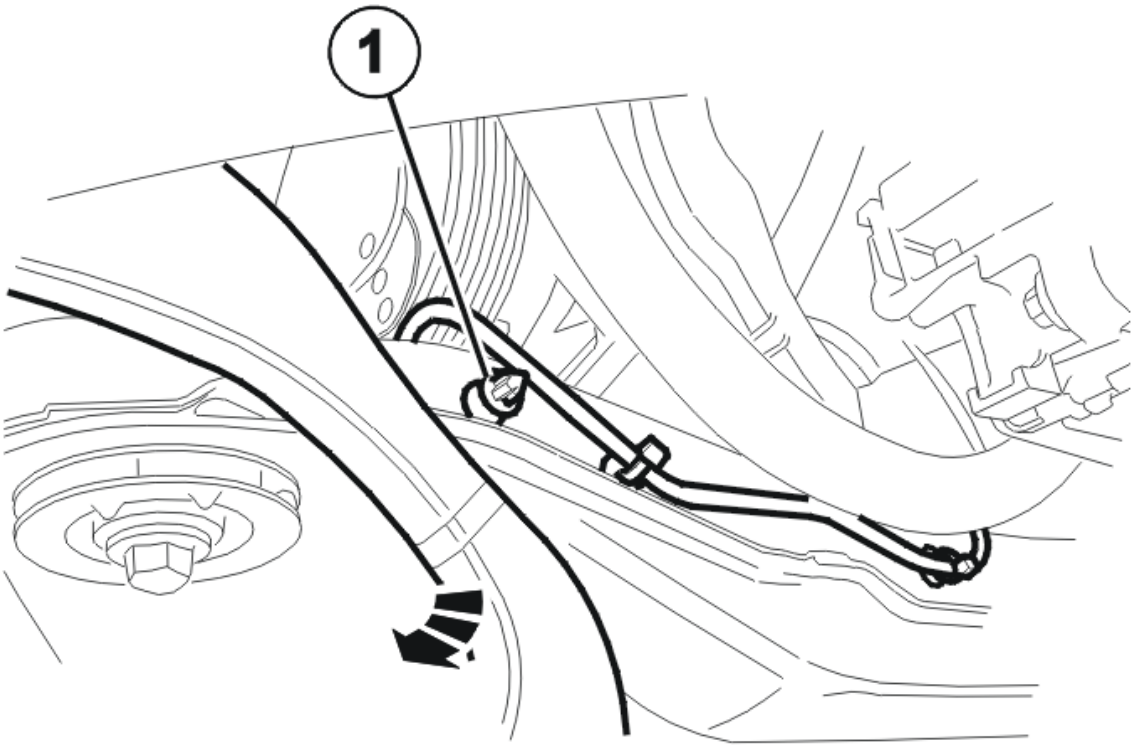

Fig. 38: Identifying Duct Released From Front Subframe
Courtesy of VOLVO CARS CORPORATION

On certain vehicles, the duct for cool air to the control module box must be released from the clip (1) on the front of the subframe.

INSTALLING ADDITIONAL INSULATION

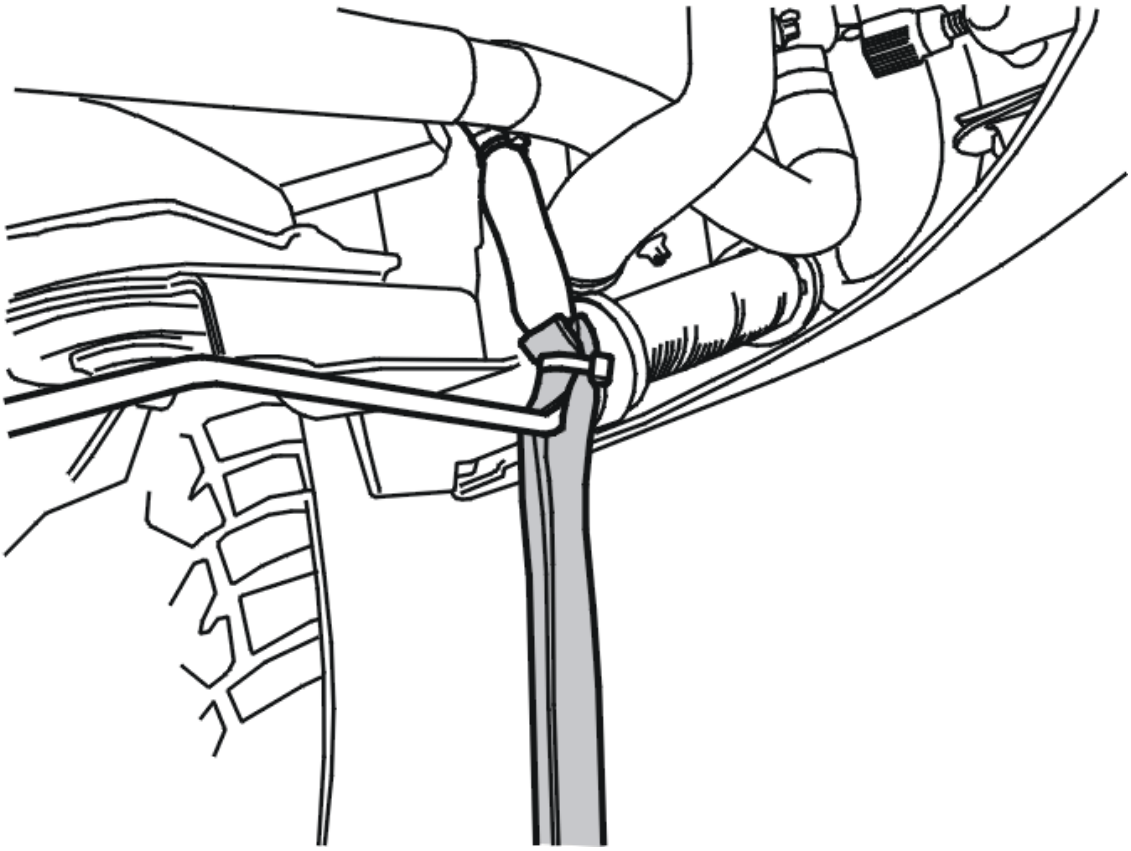

Fig. 39: Identifying Insulation Positioned At Fuel Heater Connection To Fuel Pipe
Courtesy of VOLVO CARS CORPORATION

Carefully pull down the fuel pipe at the auxiliary heater.

Position the insulation. Start at the fuel heater connection to the fuel pipe.

NOTE: Make sure that insulation seams lie back toward the subframe.

Do not overtighten the tie straps around the insulation.

Secure the insulation using tie straps.

Cut off any excess from the tie straps.

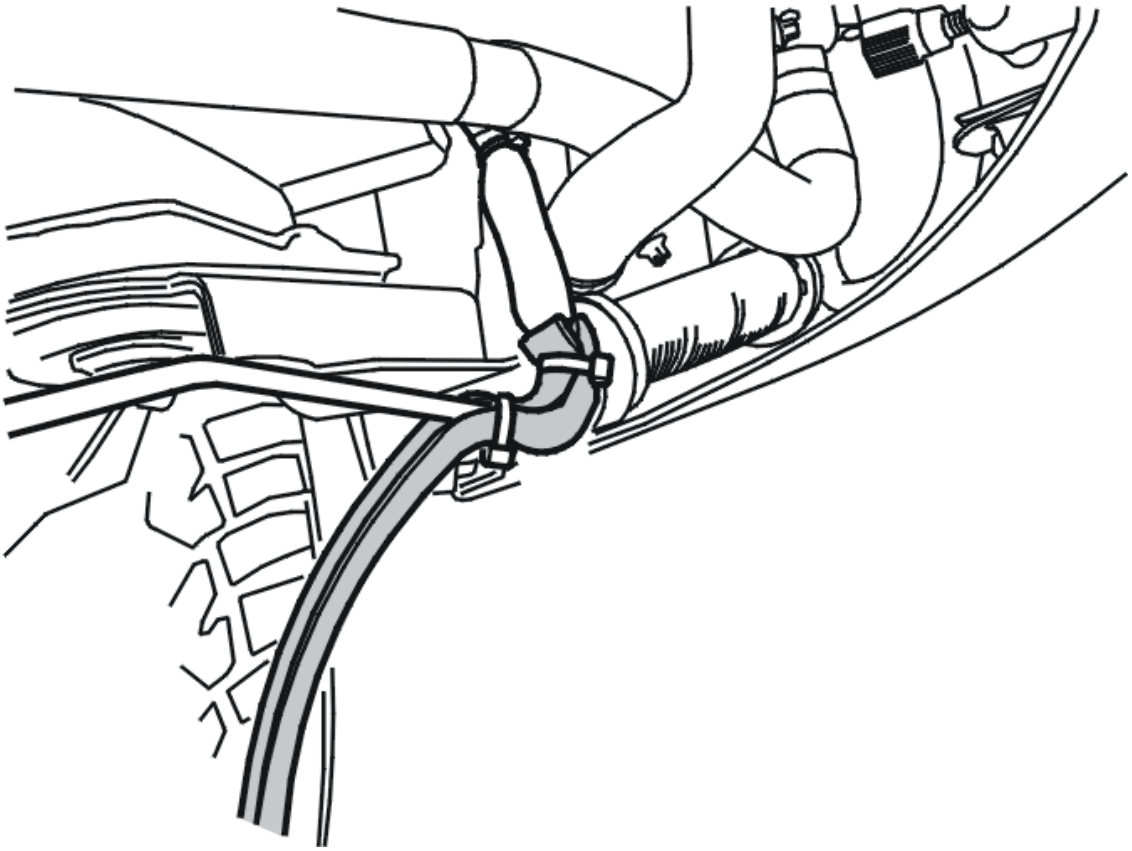

Fig. 40: Identifying Insulation Positioned To Wrap Fuel Pipe
Courtesy of VOLVO CARS CORPORATION

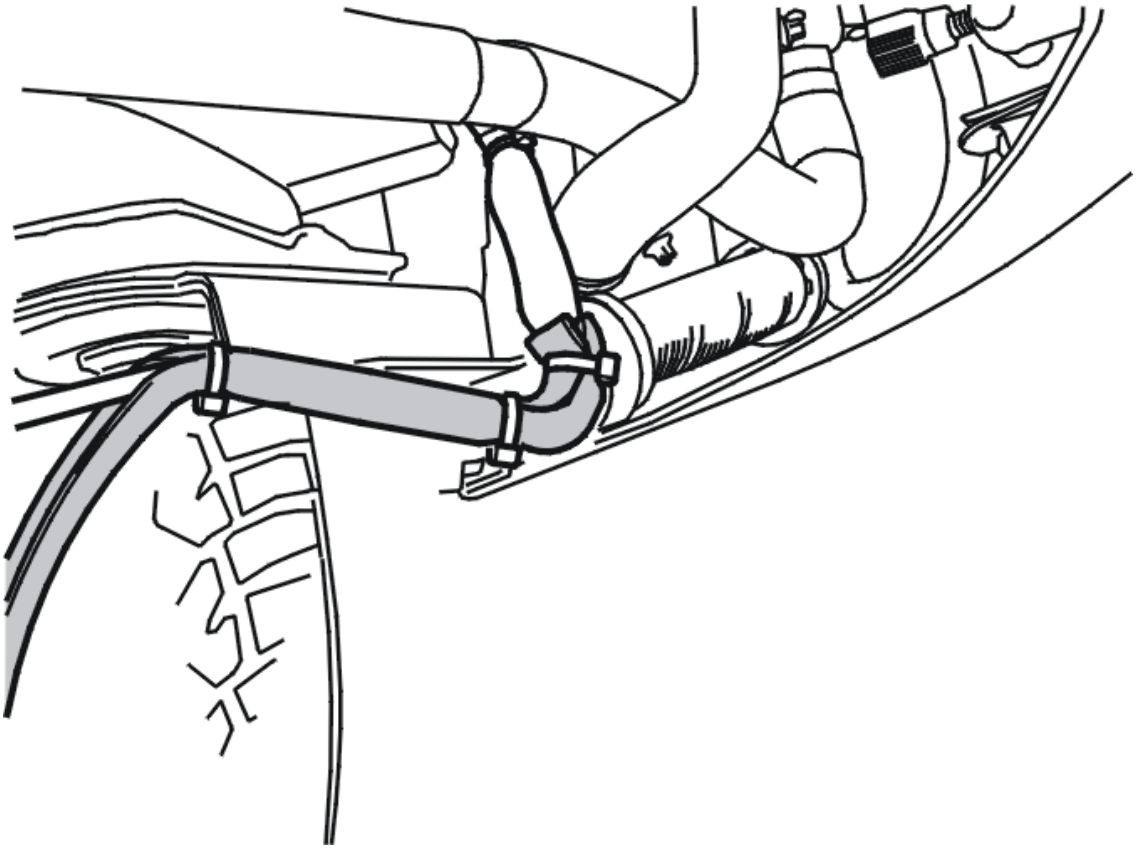

Fig. 41: Identifying Insulation Wrapped and Secured With Tie Straps
Courtesy of VOLVO CARS CORPORATION

Secure the insulation using tie straps.

NOTE: **Use several tie straps in spots with sharp curves to ensure that the insulation is properly secured.**

Cut off any excess from the tie straps.

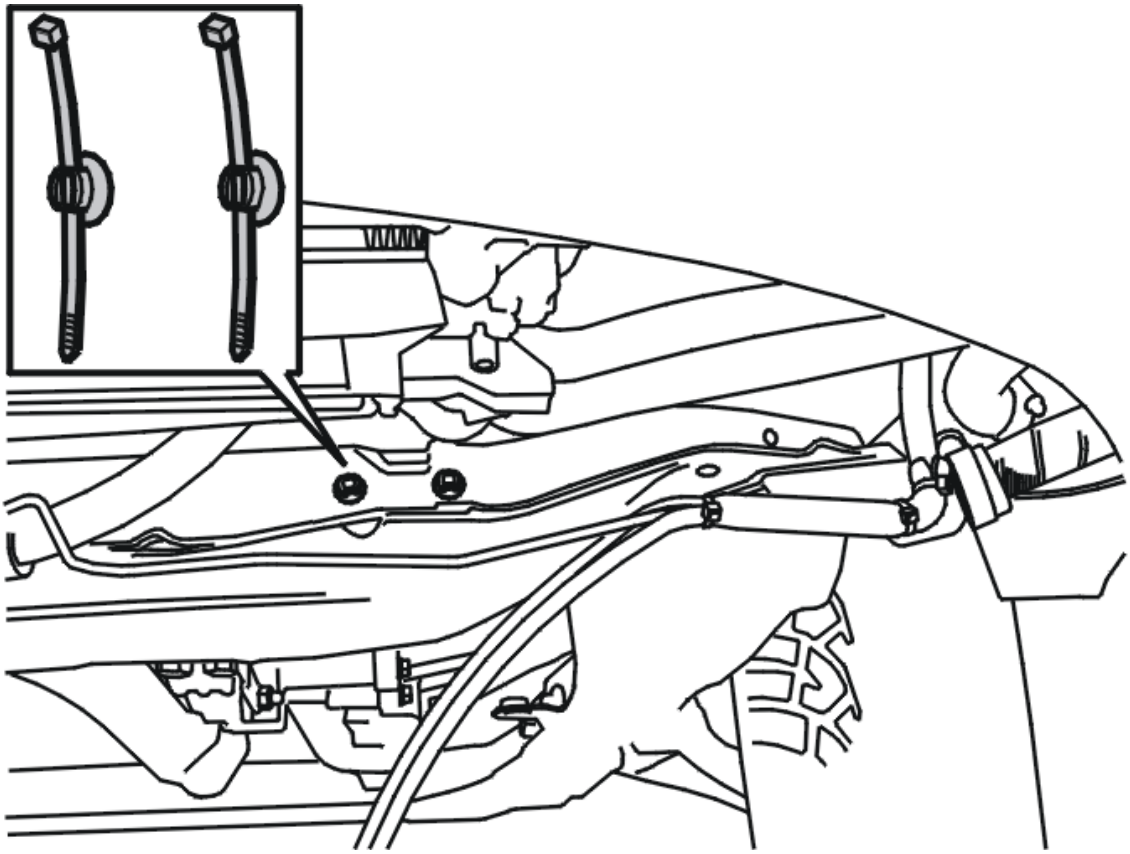

Fig. 42: Identifying Tie Straps Inserted In Clips In Subframe
Courtesy of VOLVO CARS CORPORATION

Insert tie straps in the two clips in the subframe by the auxiliary heater but do not tighten them yet.

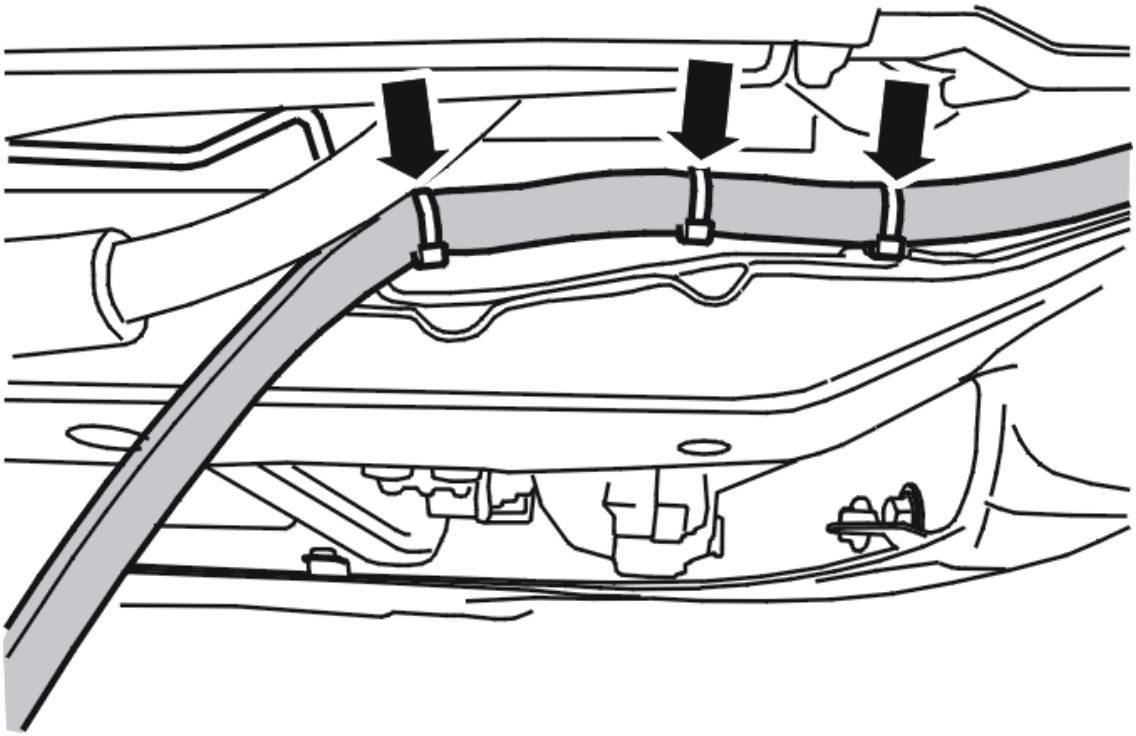

Fig. 43: Identifying Insulation Secured With Tie Straps
Courtesy of VOLVO CARS CORPORATION

Secure the insulation using tie straps.

Cut off any excess from the tie straps.

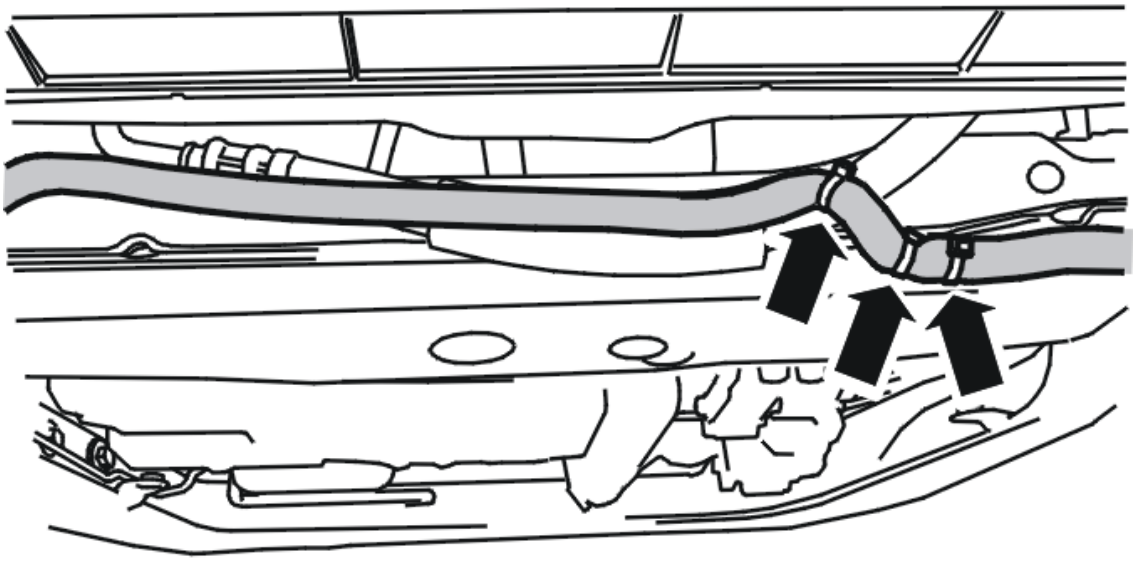

Fig. 44: Identifying Insulation Secured With Tie Straps
Courtesy of VOLVO CARS CORPORATION

Secure the insulation using tie straps.

NOTE: **For easier access to the fuel pipe, move aside the AC hose on variants in which it is in the way.**

Cut off any excess from the tie straps.

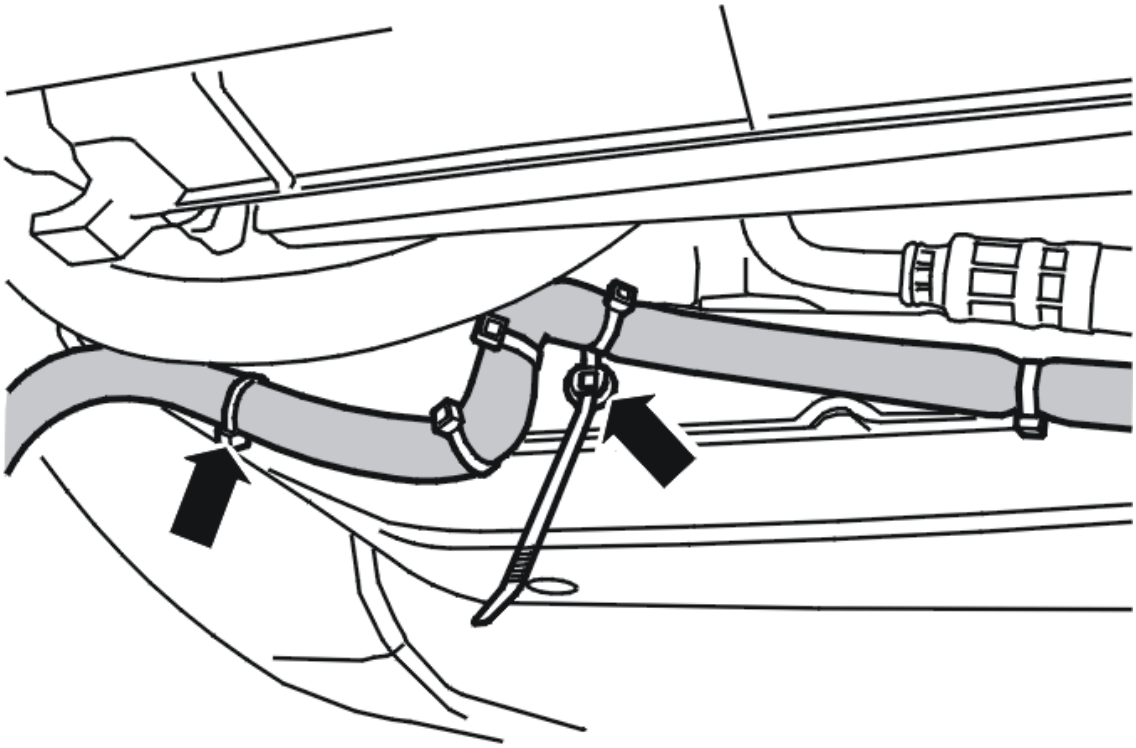

Fig. 45: Identifying Tie Straps Inserted In Clips In Right Part Of Subframe
Courtesy of VOLVO CARS CORPORATION

Insert tie straps in the two clips in the right part of the subframe but do not tighten them yet.

Secure the insulation using tie straps.

Cut off any excess from the tie straps.

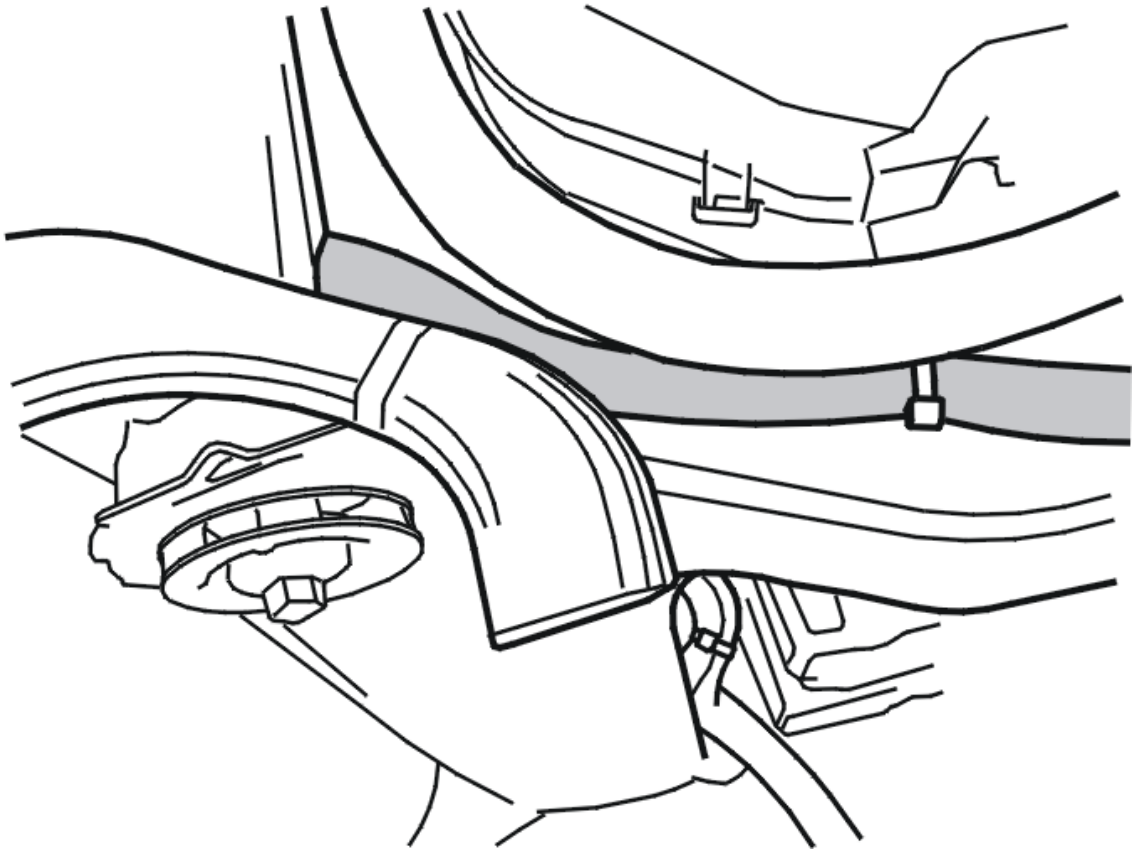

Fig. 46: Identifying Fuel Pipe Insulation
Courtesy of VOLVO CARS CORPORATION

Continue fitting insulation over the fuel pipe up and over the subframe.

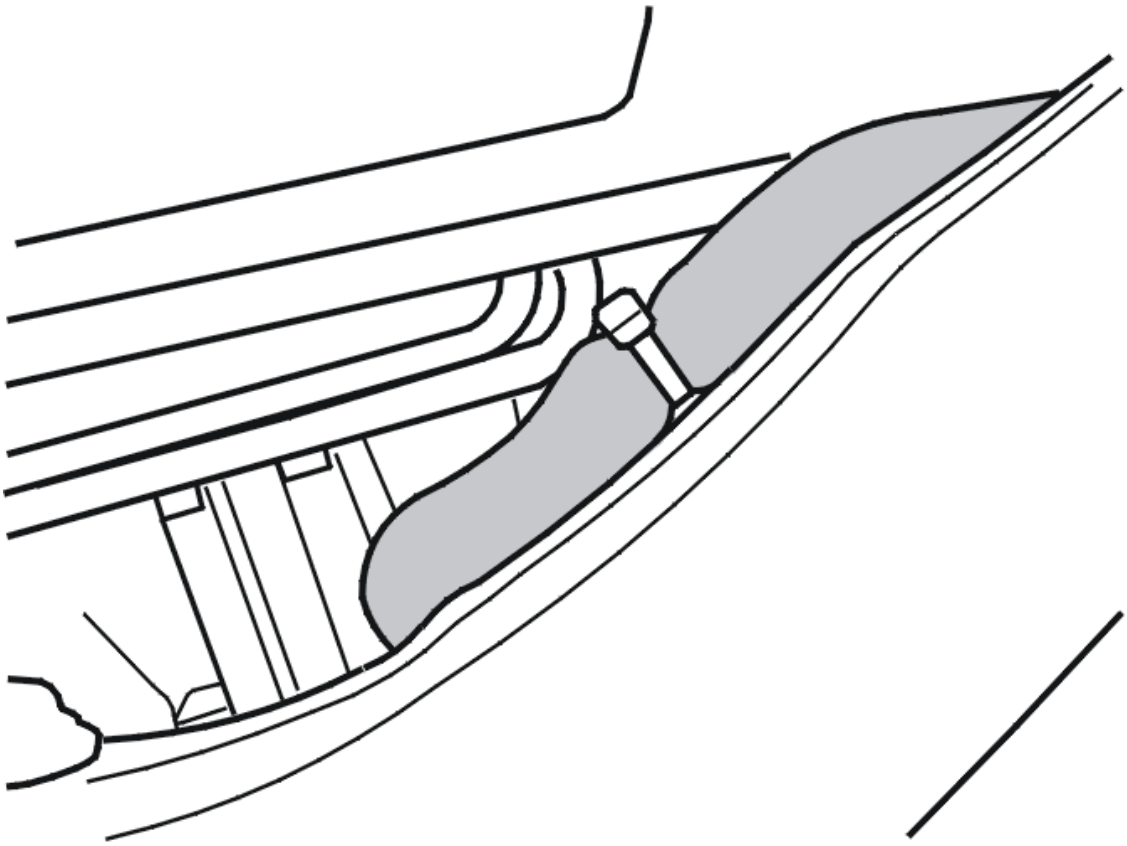

Fig. 47: Identifying Fuel Pipe Clipped To Subframe
Courtesy of VOLVO CARS CORPORATION

Press the fuel pipe into the clip on the top of the subframe.

Secure the insulation using tie straps.

NOTE: The fuel pipe is partly accessible from the right wheel housing when the fender liner is moved up.

Cut off any excess from the tie straps.

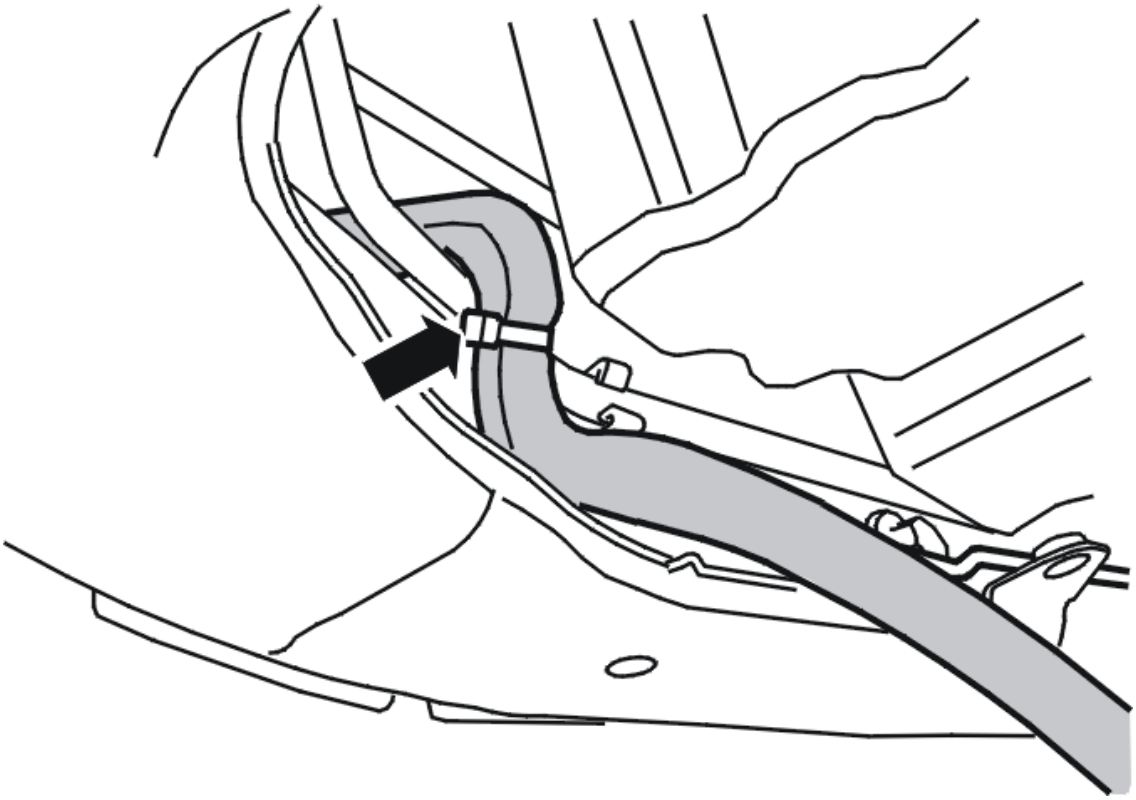

Fig. 48: Identifying Insulation Secured With Tie Straps
Courtesy of VOLVO CARS CORPORATION

Continue fitting insulation over the fuel pipe.

Secure the insulation using tie straps.

NOTE: **It is extremely important to secure insulation where the fuel pipe swings down and goes back.**

Cut off any excess from the tie straps.

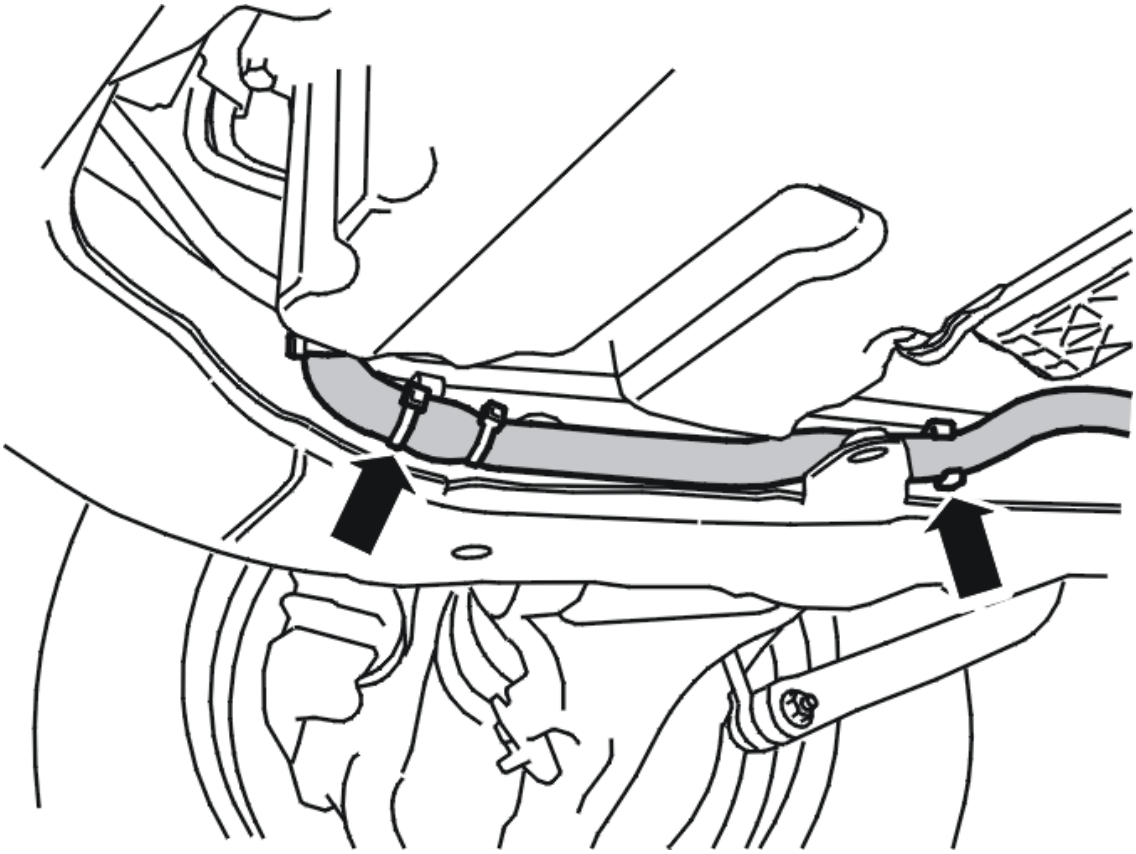

Fig. 49: Identifying Fuel Pipe Pressed To Clips
Courtesy of VOLVO CARS CORPORATION

Press the fuel pipe into the clips.

Fit a tie strap on each side of the clips with the opening inward. This ensures that the clip holds the fuel pips in place.

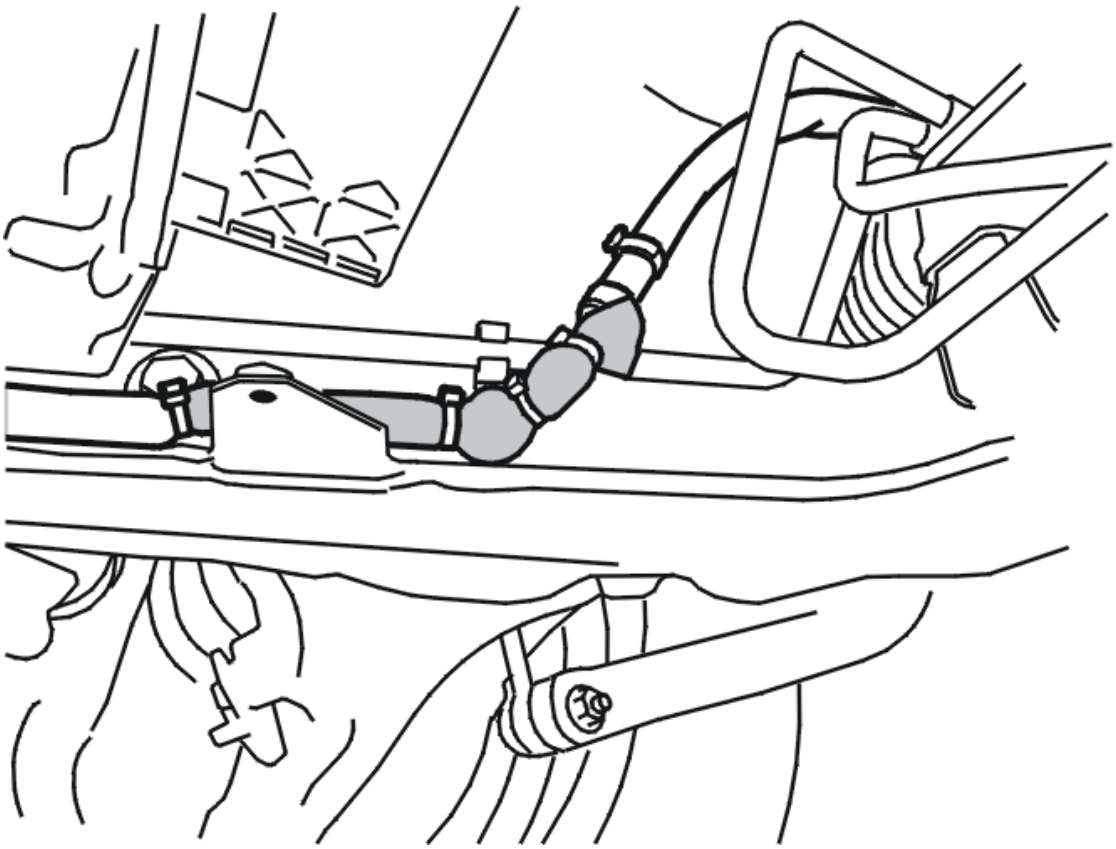

Fig. 50: Identifying Insulation Secured With Tie Straps
Courtesy of VOLVO CARS CORPORATION

Secure the insulation using tie straps.

Cut off any excess from the tie straps.

Cut off any excess insulation hose at the fuel hose.

Press the fuel pipe into the clips.

Reinstall the pipe in its original position against the front edge of the subframe.

Tighten the remaining tie straps in the clips (x4).

FINISHING

Install:

- the lower air guide on the bumper shell
- the splash guard (XC90 only)
- the splash guard under the engine

CLIMATE UNITS (B6294T; 2003-06)

FAULT TRACING CLIMATE UNITS

see **FAULT TRACING CLIMATE UNITS**

FUEL PIPE, AUXILIARY HEATER, ADDITIONAL INSULATION

see **FUEL PIPE, AUXILIARY HEATER, ADDITIONAL INSULATION**

CLIMATE UNITS (B6324S; 2007-10)

FAULT TRACING CLIMATE UNITS

Special tools	
	T9814092 MANOMETER STAND **Tool number:** T9814092 **Tool description:** MANOMETER STAND **Tool boards:**

WARNING: Follow the safety instructions for work on the air conditioning system. See SAFETY INFORMATION AIR CONDITIONING SYSTEM

NOTE: First read the instructions covering slow and fast leaks. See OIL AIR CONDITIONING (A/C) SYSTEM, FILLING

See information about the A/C-system. See **AIR CONDITIONING (AC) SYSTEM, GENERAL INSTRUCTIONS**

NOTE: Always plug the pipes and connections when working on the climate control system.

OVERVIEW A/C COMPONENTS

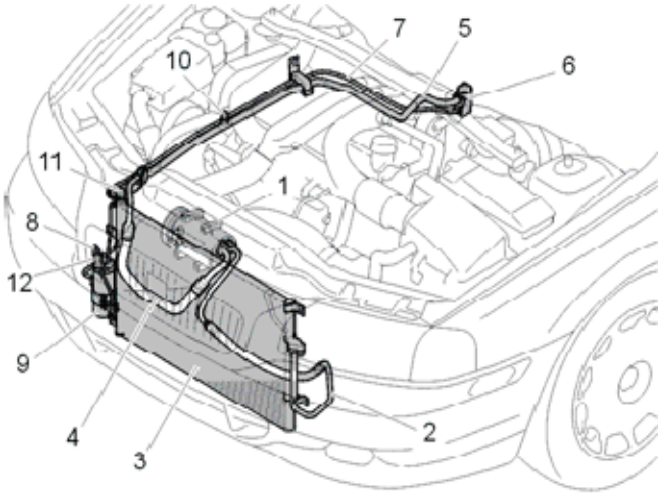

Fig. 51: Identifying Engine Compartment Components
Courtesy of VOLVO CARS CORPORATION

engine compartment

1. Compressor
2. Hose/pipe compressor-condenser
3. Condenser
4. Hose/pipe junction block side member-compressor
5. Pipe expansion valve-junction block side member
6. Expansion valve
7. Pipe accumulator-expansion valve
8. Intermediate pipe accumulator-member/expansion valve
9. Accumulator
10. Service valve, (LT)
11. Service valve, (HT)
12. Pressure sensor

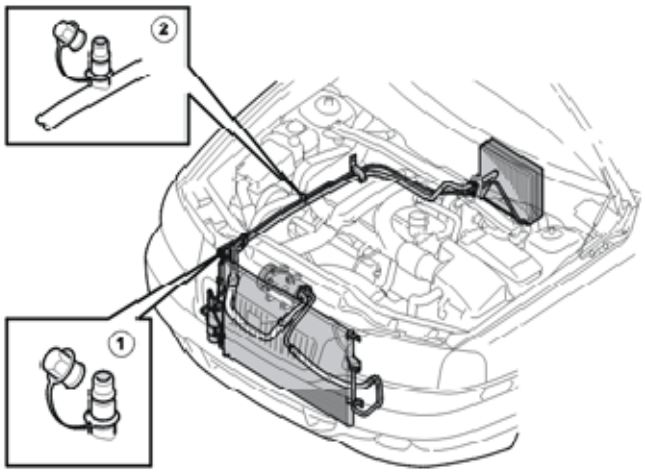

Fig. 52: Identifying High Pressure Side (HT) And Low Pressure Side (LT) Service Valves
Courtesy of VOLVO CARS CORPORATION

Service valves

1. High pressure side (HT) service valve

   Draining, vacuum-pumping, and filling

2. Low pressure side (LT) service valve

   - Draining, vacuum-pumping

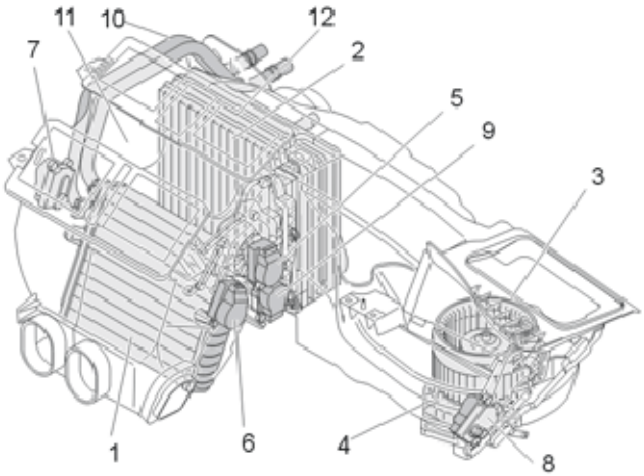

Fig. 53: Identifying Climate Control Unit Components
Courtesy of VOLVO CARS CORPORATION

Climate control unit

1. Heat exchanger

2. Evaporator
3. Fan motor
4. Power unit
5. Damper motor air distribution
6. Damper motor temperature right
7. Damper motor temperature left
8. Damper motor recirculation
9. Damper motor defroster (ECC)
10. Coolant pipe connection, to/from engine room
11. Temperature sensor evaporator (LHD)

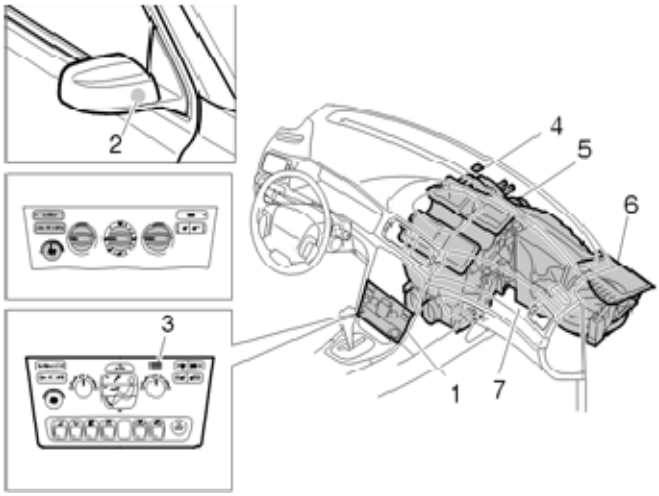

Fig. 54: Identifying Passenger Compartment/Door Mirror Components
Courtesy of VOLVO CARS CORPORATION

Passenger compartment/door mirror

1. Climate control unit
2. Ambient temperature sensor
3. Passenger compartment temperature sensor (ECC)
4. Sun sensor (ECC)
5. Climate control unit
6. Air quality sensor
7. Multifilter/filter

OVERVIEW OF THE A/C SYSTEM

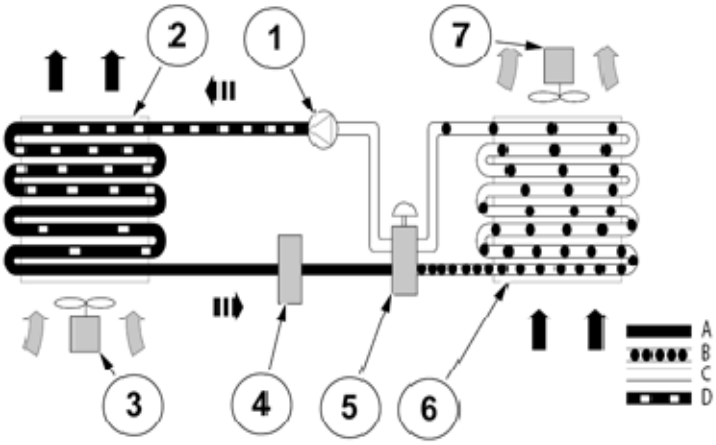

Fig. 55: Identifying Overview Of A/C System
Courtesy of VOLVO CARS CORPORATION

Refrigerant path

1. Compressor
2. Condenser
3. Cooling fan
4. Receiver drier
5. Expansion valve
6. Evaporator
7. Blower fan

Explanations:

- **A** - High pressure, hot liquid
- **B** - Low pressure, cold liquid
- **C** - Low pressure, cold gas
- **D** - High pressure, hot gas
- **Dark arrow** - Hot air
- **Light arrow** - Cold air

Troubleshooting consists of three sub procedures in total with a number of steps in each. Not all steps need to be performed if the fault has been rectified before.

FAULT TRACING STEP 1 OF 3

General check

1. Set the car to room temperature (approx. 20°C).
2. Connect VIDA diagnostic and download the AC check software 30745960 and check:

- Evaporator temperature sensor
- Temperature sensor passenger compartment
- Ambient temperature sensor
- Sun sensor

3. Check the damper motors
   - manually - temperature/temperature sides, defroster, ventilation, floor & recirculation
   - with VIDA diagnosis
4. Check blower fan speeds.
5. Check passenger compartment filter cleanliness.
6. Checking distance between drive plate and pulley

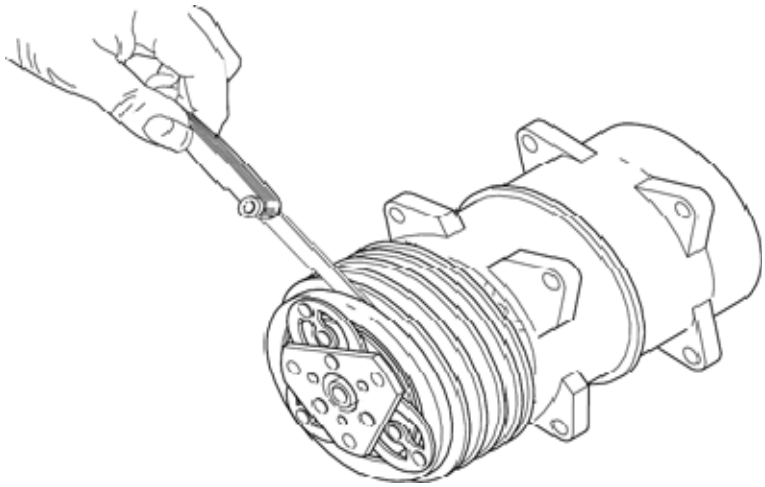

Fig. 56: Checking Distance Between Drive Plate And Pulley
Courtesy of VOLVO CARS CORPORATION

7. Check the drive/auxiliaries belt.
8. Check the cleanliness of the condenser.

FAULT TRACING STEP 2 OF 3

Carry out a performance test on the climate control system. See **CLIMATE SYSTEM, PERFORMANCE TEST**.

FAULT TRACING STEP 3 OF 3

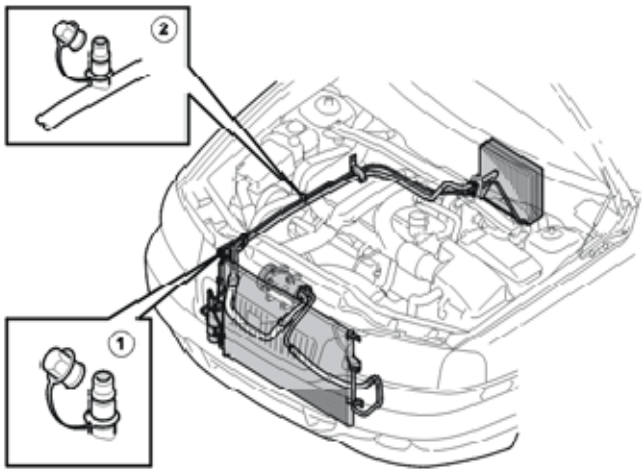

Fig. 57: Identifying High Pressure Side (HT) And Low Pressure Side (LT) Service Valves
Courtesy of VOLVO CARS CORPORATION

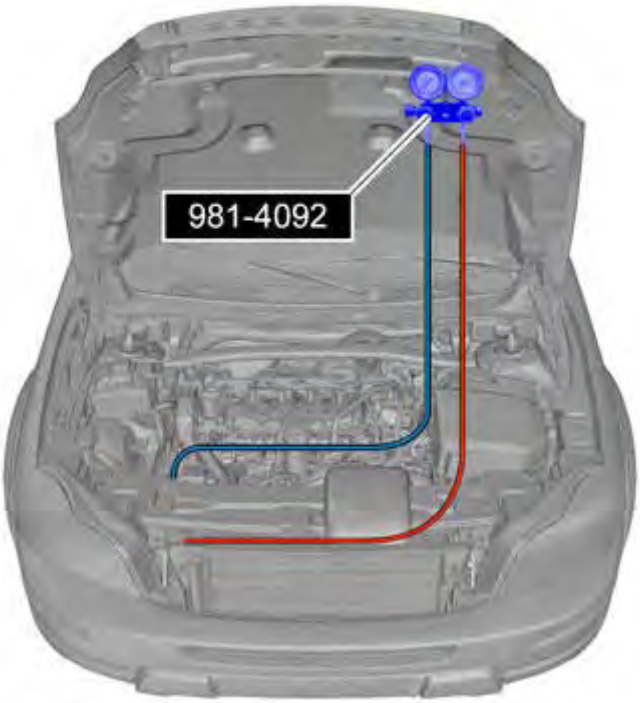

Fig. 58: Identifying Special Tool 9814092
Courtesy of VOLVO CARS CORPORATION

Fig. 59: Identifying Pressure Measurement Tool
Courtesy of VOLVO CARS CORPORATION

Pressure measurement

Use special tool: **T9814092**

- The pressure is measured on the high resp. low pressure side service valves.
- Before connecting the manometer to the car's service valves both the knobs must be turned clockwise (-) to the limit position.
- Connect the manometer to the service valves, hang from the bonnet opening, start and run the engine at idle.
- Inner adjustment of the climate control follows the same procedure as step 2 performance test.

Read off the values after the A/C has stabilized or after approx. 8 min.

XC90 ALL (EXCL. B6324S & B8444SX) A/C COMPRESSORS WITH CONSTANT STROKE VOLUME. TXV VALVE SYSTEM.

Outside temperature (C°)	Low pressure (LT) (bar)	High pressure (HT) (bar)	Panel temperature (C°)
15.5	Min: 0.5 Max: 3.0	Min: 8.5 Max: 12.0	Approx. 6.0
21.0	Min: 0.5 Max: 3.0	Min: 10.5 Max: 17.5	Approx. 8.0
26.5	Min: 0.5 Max: 3.0	Min: 12.5 Max: 19.0	Approx. 9.0
32.0	Min: 0.5 Max: 3.5	Min: 14.0 Max: 22.0	Approx. 11.0
38.8	Min: 0.5 Max: 3.5	Min: 16.0 Max: 23.0	Approx. 14.0

XC90 (B6324SX & B8444SX) A/C COMPRESSORS WITH VARIABLE STROKE VOLUME. TXV VALVE SYSTEM.

Outside temperature (C°)	Low pressure (LT) (bar)	High pressure (HT) (bar)	Panel temperature (C°)
15.5	Min: 1.5 Max: 2.3	Min: 9.5 Max: 13.0	Approx. 6.0
21.0	Min: 1.5 Max: 2.3	Min: 12.5 Max: 17.5	Approx. 8.0
26.5	Min: 1.5 Max: 2.3	Min: 14.0 Max: 20.5	Approx. 9.0

32.0	Min: 0.5 Max: 3.5	Min: 16.0 Max: 24.0	Approx. 11.0
38.8	Min: 0.5 Max: 3.5	Min: 18.5 Max: 25.5	Approx. 14.0

Explanations:

- If the pressure values are outside the stated values (see above) the reason must be established.
- **F** = Fixed displacement- resp. **V** = Variable displacement compressor
- 6x tables represent all the different fault symptoms on Volvo Car Company A/C systems with two service valves, with tips, results and action in order of priority.

Table 1 Faults	Possible cause in order of priority
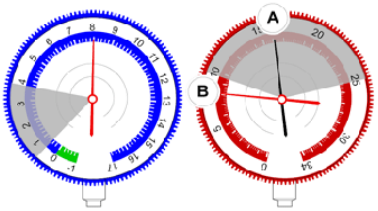	**All** 1. Compressor magnetic clutch slips or does not engage, adjust/replace magnetic clutch. See **ELECTROMAGNETIC CLUTCH** 2. Expansion valve is blocked in open position, replace expansion valve. See **EXPANSION VALVE, REPLACING** 3. Compressor damaged, replace compressor. See **AC COMPRESSOR, REPLACEMENT**

Table 2 Faults	Possible cause in order of priority
Low pressure (**LT**) too **low** High pressure (**HT**) **high** (**C**) or **normal** (**A**) 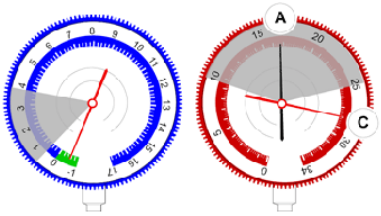	**1, 3, 4: "F", 2: All** 1. Evaporator temperature sensor defective, replace temperature sensor evaporator. See **TEMPERATURE SENSOR EVAPORATOR, REPLACING** 2. Receiver drier filled with moisture, replace receiver drier. See **RECEIVER DRIER, REPLACING** 3. Expansion valve is blocked in closed position, replace expansion valve. See **EXPANSION VALVE, REPLACING** 4. Blockage in refrigerant pipe/hose between receiver drier and expansion valve, remove the cause of the blockage (cleaning).

Table 3 Faults	Possible cause in order of priority
Low pressure (**LT**) **normal** (**A**) or too **low** (**B**) High pressure (**HT normal**	**All** 1. Inflow of warm air into evaporator (passenger compartment), defective temperature damper

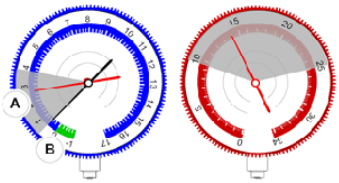	motor, replace damper motor. See **DAMPER MOTOR MODULE (DMM) TEMPERATURE, REPLACING** Alternatively defective damper. 2. Inflow of warm air into evaporator (passenger compartment), defective recirculation damper motor, replace damper motor. see **DAMPER MOTOR MODULE (DMM) RECIRCULATION, REPLACING**

Table 4 Faults	Possible cause in order of priority
Low pressure (**LT**) **high** (**C**) or **normal** (**A**) High pressure (**HT**) too **high** 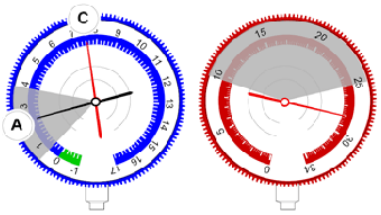	**All** 1. Possible normal operating pressure at **high** ambient temperature above 43°C (109°F) 2. Impurities in the condenser, clean/vacuum/rinse impurities from the front. 3. Too much refrigerant (30-35% more than the prescribed amount), drain and refill. See **REFRIGERANT, DRAINING** 4. Blockage in refrigerant pipe/hose between A/C compressor, condenser and receiver drier, remove the cause of the blockage (cleaning) **NOTE:** **The blockage should only be in the area around the (HT) service connection.**

Table 5 Faults	Possible cause in order of priority
Low pressure (**LT**) **high** (**C**) or **normal** (**A**) High pressure (**HT**) too **high** 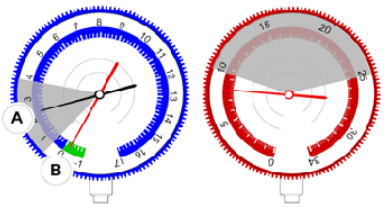	**1-3: All, 4-5: "V"** 1. Possible normal operating pressure at **low** ambient temperature below 5°C (41°F). 2. Too **little** refrigerant (below nominal amount), drain and refill. See **REFRIGERANT, DRAINING** 3. Blockage in refrigerant pipe/hose between A/C compressor and condenser or condenser and receiver drier, remove the cause of the blockage (cleaning). 4. Blockage in low or high pressure side

	between receiver drier and evaporator, remove the cause of the blockage (cleaning). 5. Expansion valve is blocked in closed position or blocked, replace expansion valve. See **EXPANSION VALVE, REPLACING**

Table 6 Faults	Possible cause in order of priority
Low pressure (**LT**) High pressure (**HT**) displays same values 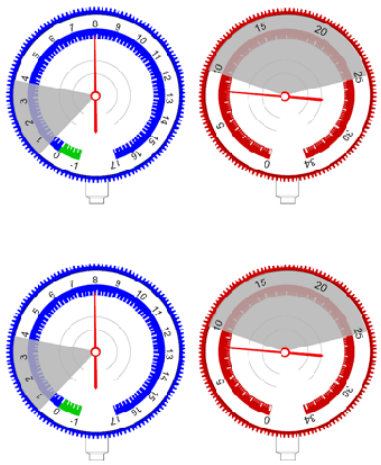	**1.3: All, 2.4: "V"** 1. Car switched off, no A/C compressor work is underway, system pressure/residual pressure. 2. A/C compressor not running. 3. Compressor's magnetic clutch is defective replace magnetic clutch. See **ELECTROMAGNETIC CLUTCH** 4. Compressor damaged, replace compressor. See **AC COMPRESSOR, REPLACEMENT**

FUEL PIPE, AUXILIARY HEATER, ADDITIONAL INSULATION

see **FUEL PIPE, AUXILIARY HEATER, ADDITIONAL INSULATION**

CLIMATE UNITS (B6324S5; 2011-12)

FAULT TRACING CLIMATE UNITS

see **FAULT TRACING CLIMATE UNITS**

FUEL PIPE, AUXILIARY HEATER, ADDITIONAL INSULATION

see **FUEL PIPE, AUXILIARY HEATER, ADDITIONAL INSULATION**

CLIMATE UNITS (B8444S; 2005-11)

FAULT TRACING CLIMATE UNITS

Special Tools	
	T9814092 MANOMETER STAND **Tool number:** T9814092

	Tool description: MANOMETER STAND **Tool boards:**

WARNING: Follow the safety instructions for work on the air conditioning system. See SAFETY INFORMATION AIR CONDITIONING SYSTEM

NOTE: First read the instructions covering slow and fast leaks. See OIL AIR CONDITIONING (A/C) SYSTEM, FILLING

See information about the A/C-system. See **AIR CONDITIONING (AC) SYSTEM, GENERAL INSTRUCTIONS**

NOTE: Always plug the pipes and connections when working on the climate control system.

OVERVIEW A/C COMPONENTS

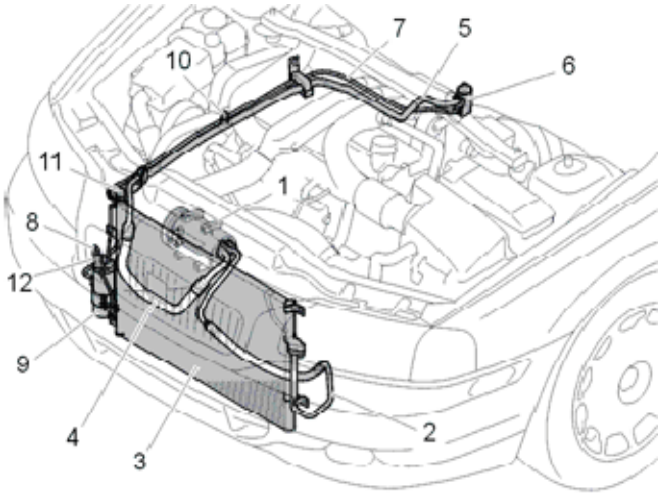

Fig. 60: Identifying Engine Compartment Components
Courtesy of VOLVO CARS CORPORATION

engine compartment

1. Compressor

2. Hose/pipe compressor-condenser
3. Condenser
4. Hose/pipe junction block side member-compressor
5. Pipe expansion valve-junction block side member
6. Expansion valve
7. Pipe accumulator-expansion valve
8. Intermediate pipe accumulator-member/expansion valve
9. Accumulator
10. Service valve, (LT)
11. Service valve, (HT)
12. Pressure sensor

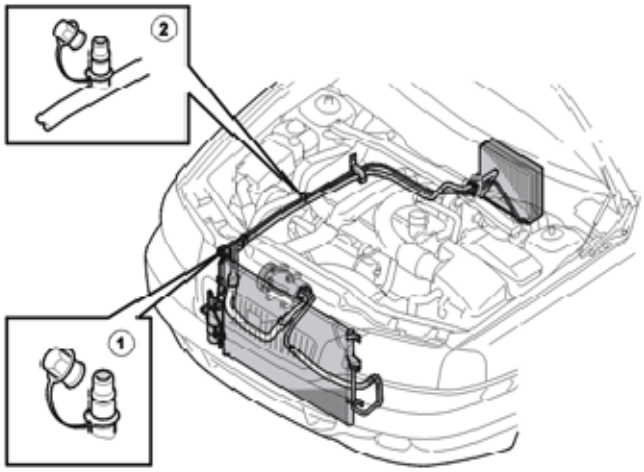

Fig. 61: Identifying High Pressure Side (HT) And Low Pressure Side (LT) Service Valves
Courtesy of VOLVO CARS CORPORATION

Service valves

1. High pressure side (HT) service valve

   Draining, vacuum-pumping, and filling

2. Low pressure side (LT) service valve

   - Draining, vacuum-pumping

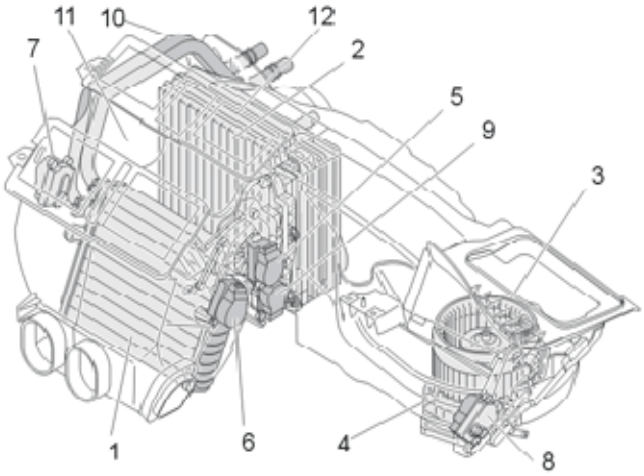

Fig. 62: Identifying Climate Control Unit Components
Courtesy of VOLVO CARS CORPORATION

Climate control unit

1. Heat exchanger
2. Evaporator
3. Fan motor
4. Power unit
5. Damper motor air distribution
6. Damper motor temperature right
7. Damper motor temperature left
8. Damper motor recirculation
9. Damper motor defroster (ECC)
10. Coolant pipe connection, to/from engine room
11. Temperature sensor evaporator (LHD)

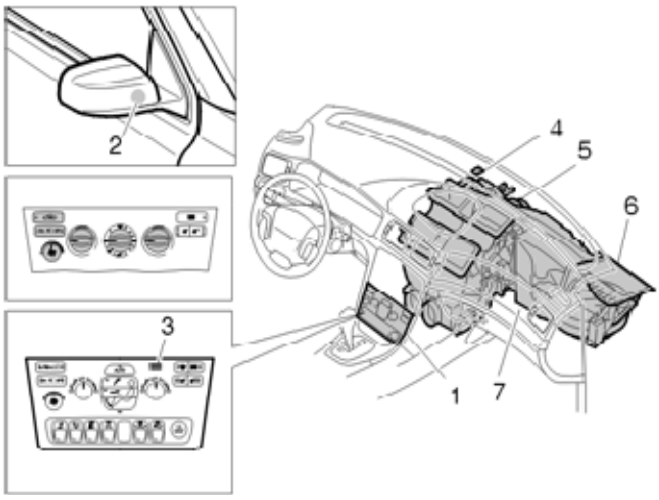

Fig. 63: Identifying Passenger Compartment/Door Mirror Components
Courtesy of VOLVO CARS CORPORATION

Passenger compartment/door mirror

1. Climate control unit
2. Ambient temperature sensor
3. Passenger compartment temperature sensor (ECC)
4. Sun sensor (ECC)
5. Climate control unit
6. Air quality sensor
7. Multifilter/filter

OVERVIEW OF THE A/C SYSTEM

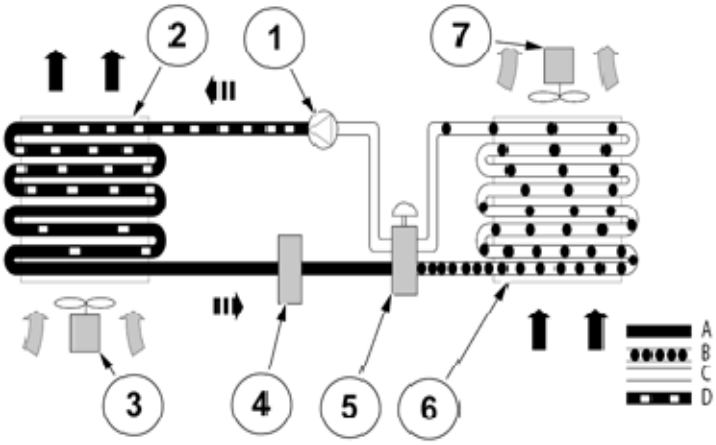

Fig. 64: Identifying Overview Of A/C System
Courtesy of VOLVO CARS CORPORATION

Refrigerant path

1. Compressor
2. Condenser
3. Cooling fan
4. Receiver drier
5. Expansion valve
6. Evaporator
7. Blower fan

Explanations:

- **A** - High pressure, hot liquid

- **B** - Low pressure, cold liquid
- **C** - Low pressure, cold gas
- **D** - High pressure, hot gas
- **Dark arrow** - Hot air
- **Light arrow** - Cold air

Troubleshooting consists of three sub procedures in total with a number of steps in each. Not all steps need to be performed if the fault has been rectified before.

FAULT TRACING STEP 1 OF 3

General check

1. Set the car to room temperature (approx. 20°C).
2. Connect VIDA diagnostic and download the AC check software 30745960 and check:
    - Evaporator temperature sensor
    - Temperature sensor passenger compartment
    - Ambient temperature sensor
    - Sun sensor
3. Check the damper motors
    - manually - temperature/temperature sides, defroster, ventilation, floor & recirculation
    - with VIDA diagnosis
4. Check blower fan speeds.
5. Check passenger compartment filter cleanliness.
6. Check distance between drive plate and pulley.

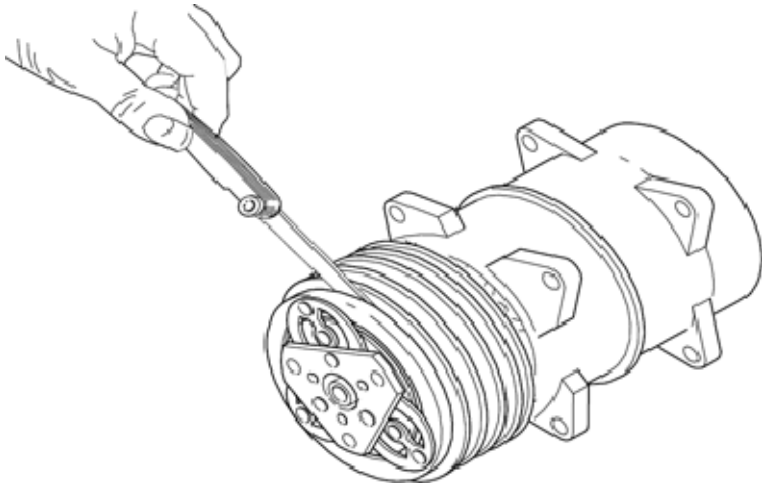

Fig. 65: Checking Distance Between Drive Plate And Pulley
Courtesy of VOLVO CARS CORPORATION

7. Check the drive/auxiliaries belt.

8. Check the cleanliness of the condenser.

FAULT TRACING STEP 2 OF 3

Carry out a performance test on the climate control system. See **CLIMATE SYSTEM, PERFORMANCE TEST**.

FAULT TRACING STEP 3 OF 3

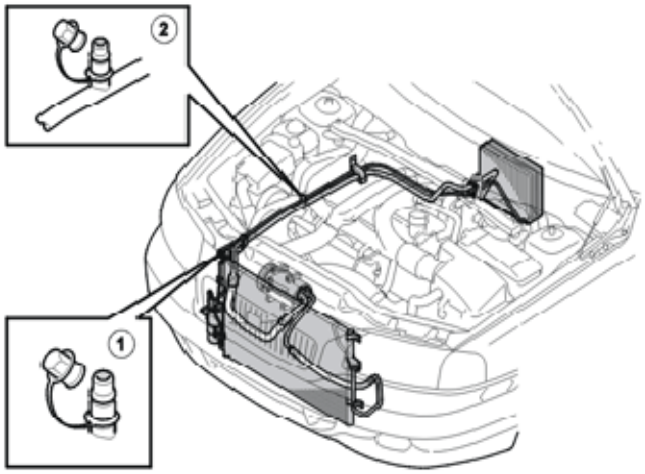

Fig. 66: Identifying High Pressure Side (HT) And Low Pressure Side (LT) Service Valves
Courtesy of VOLVO CARS CORPORATION

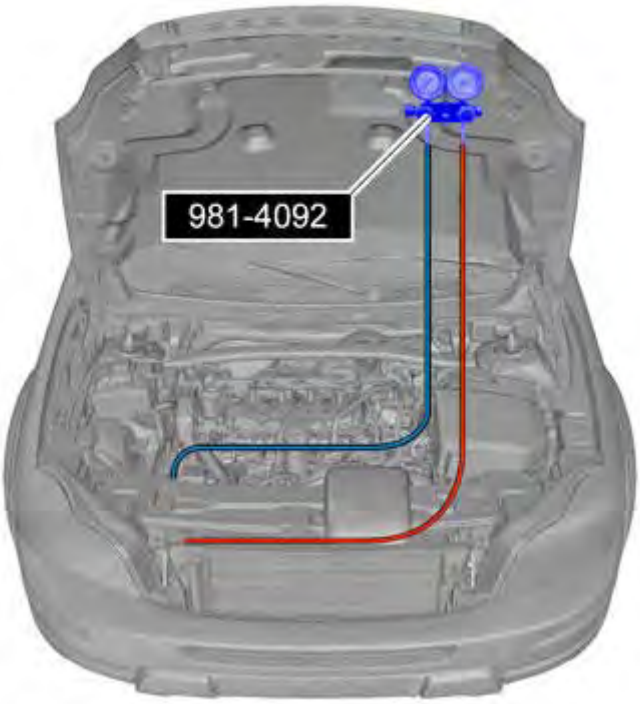

Fig. 67: Identifying Special Tool 9814092
Courtesy of VOLVO CARS CORPORATION

Fig. 68: Identifying Pressure Measurement Tool
Courtesy of VOLVO CARS CORPORATION

Pressure measurement

Use special tool: **T9814092**

- The pressure is measured on the high resp. low pressure side service valves.
- Before connecting the manometer to the car's service valves both the knobs must be turned clockwise (-) to the limit position.
- Connect the manometer to the service valves, hang from the bonnet opening, start and run the engine at idle.
- Inner adjustment of the climate control follows the same procedure as step 2 performance test.

Read off the values after the A/C has stabilized or after approx. 8 min.

XC90 ALL (EXCL. B6324S & B8444SX) A/C COMPRESSORS WITH CONSTANT STROKE VOLUME. TXV VALVE SYSTEM.

Outside temperature (C°)	Low pressure (LT) (bar)	High pressure (HT) (bar)	Panel temperature (C°)
15.5	Min: 0.5 Max: 3.0	Min: 8.5 Max: 12.0	Approx. 6.0
21.0	Min: 0.5 Max: 3.0	Min: 10.5 Max: 17.5	Approx. 8.0
26.5	Min: 0.5 Max: 3.0	Min: 12.5 Max: 19.0	Approx. 9.0
32.0	Min: 0.5 Max: 3.5	Min: 14.0 Max: 22.0	Approx. 11.0
38.8	Min: 0.5 Max: 3.5	Min: 16.0 Max: 23.0	Approx. 14.0

XC90 (B6324SX & B8444SX) A/C COMPRESSORS WITH VARIABLE STROKE VOLUME. TXV VALVE SYSTEM.

Outside temperature (C°)	Low pressure (LT) (bar)	High pressure (HT) (bar)	Panel temperature (C°)
15.5	Min: 1.5 Max: 2.3	Min: 9.5 Max: 13.0	Approx. 6.0
21.0	Min: 1.5 Max: 2.3	Min: 12.5 Max: 17.5	Approx. 8.0

26.5	Min: 1.5 Max: 2.3	Min: 14.0 Max: 20.5	Approx. 9.0
32.0	Min: 0.5 Max: 3.5	Min: 16.0 Max: 24.0	Approx. 11.0
38.8	Min: 0.5 Max: 3.5	Min: 18.5 Max: 25.5	Approx. 14.0

Explanations:

- If the pressure values are outside the stated values (see above) the reason must be established.
- **F** = Fixed displacement- resp. **V** = Variable displacement compressor
- 6x tables represent all the different fault symptoms on Volvo Car Company A/C systems with two service valves, with tips, results and action in order of priority.

Table 1 Faults	Possible cause in order of priority
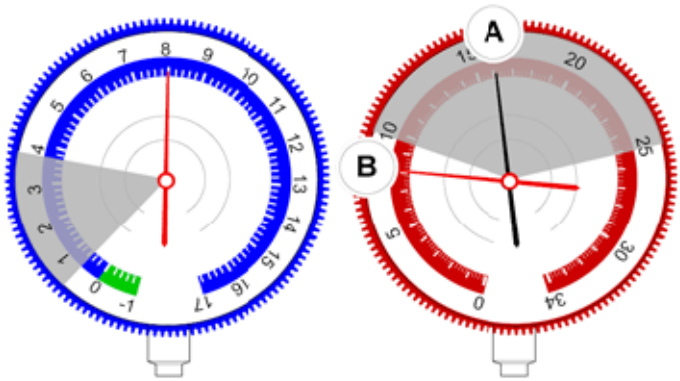	**All** 1. Compressor magnetic clutch slips or does not engage, adjust/replace magnetic clutch. See **MAGNETIC CLUTCH COMPRESSOR, REPLACING** 2. Expansion valve is blocked in open position, replace expansion valve. See **EXPANSION VALVE, REPLACING** 3. Compressor damaged, replace compressor. See **COMPRESSOR, REPLACING**

Table 2 Faults	Possible cause in order of priority
Low pressure (**LT**) too **low** High pressure (**HT**) **high** (**C**) or **normal** 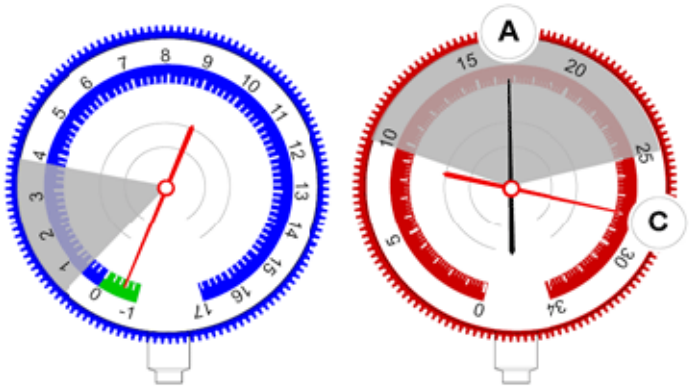 (**A**)	**1, 3, 4: "F", 2: All** 1. Evaporator temperature sensor defective, replace temperature sensor evaporator. See **TEMPERATURE SENSOR EVAPORATOR, REPLACING** 2. : Receiver drier filled with moisture, replace receiver drier. See **RECEIVER DRIER, REPLACING** 3. Expansion valve is blocked in closed position, replace expansion valve. See **EXPANSION VALVE, REPLACING** 4. Blockage in refrigerant

	pipe/hose between receiver drier and expansion valve, remove the cause of the blockage (cleaning).

Table 3 Faults	Possible cause in order of priority
Low pressure (**LT**) **normal** (**A**) or too **low** (**B**) High pressure (**HT normal** 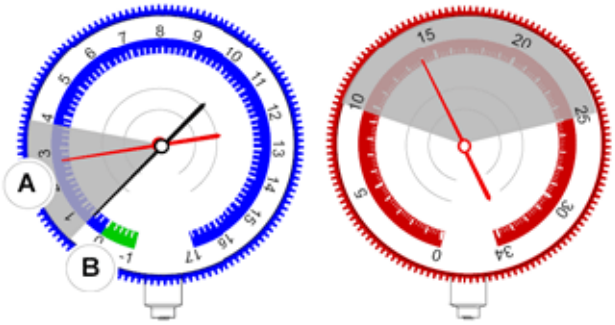 	**All** 1. Inflow of warm air into evaporator (passenger compartment), defective temperature damper motor, replace damper motor. Alternatively defective damper. See **DAMPER MOTOR MODULE (DMM) TEMPERATURE, REPLACING** 2. Inflow of warm air into evaporator (passenger compartment), defective recirculation damper motor, replace damper motor. See **DAMPER MOTOR MODULE (DMM) RECIRCULATION, REPLACING**

Table 4 Faults	Possible cause in order of priority
Low pressure (**LT**) **high** (**C**) or **normal** (**A**) High pressure (**HT**) too **high** 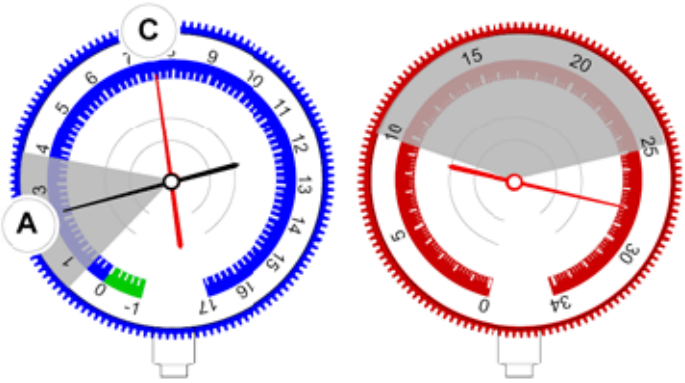 	**All** 1. Possible normal operating pressure at **high** ambient temperature above 43°C (109°F) 2. Impurities in the condenser, clean/vacuum/rinse impurities from the front. 3. Too much refrigerant (30-35% more than the prescribed amount), drain and refill. See **REFRIGERANT, DRAINING** 4. Blockage in refrigerant pipe/hose between A/C compressor, condenser and receiver drier, remove the cause of the blockage (cleaning)

	NOTE: **The blockage should only be in the area around the (HT) service connection.**

Table 5 Faults	Possible cause in order of priority
Low pressure (**LT**) **high** (**C**) or **normal** (**A**) High pressure (**HT**) too **high** 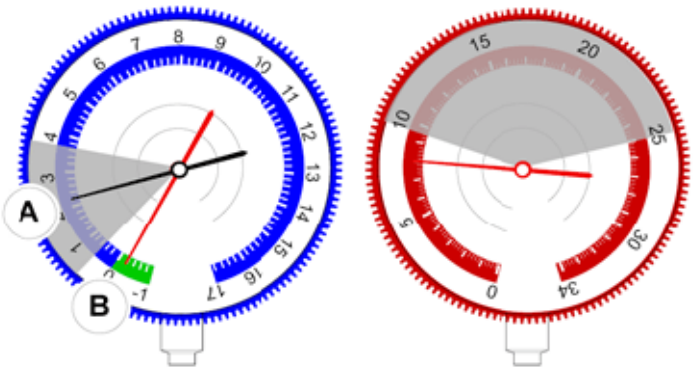 	**1-3: All, 4-5: "V"** 1. Possible normal operating pressure at **low** ambient temperature below 5 C° (41°F). 2. Too **little** refrigerant (below nominal amount), drain and refill. See **REFRIGERANT, DRAINING** 3. Blockage in refrigerant pipe/hose between A/C compressor and condenser or condenser and receiver drier, remove the cause of the blockage (cleaning). 4. Blockage in low or high pressure side between receiver drier and evaporator, remove the cause of the blockage (cleaning). 5. Expansion valve is blocked in closed position or blocked, replace expansion valve. See **EXPANSION VALVE, REPLACING**

Table 6 Faults	Possible cause in order of priority
Low pressure (**LT**) High pressure (**HT**) displays same values 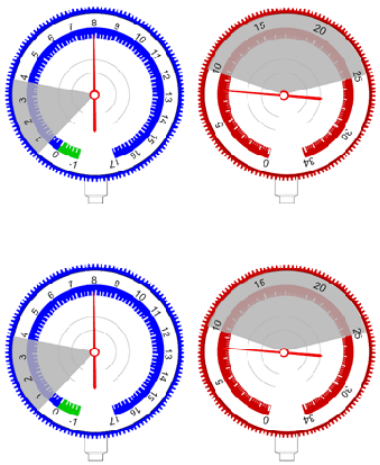	**1.3: All, 2.4: "V"** 1. Car switched off, no A/C compressor work is underway, system pressure/residual pressure. 2. A/C compressor not running 3. Compressor's magnetic clutch is defective replace magnetic clutch. See **MAGNETIC CLUTCH COMPRESSOR, REPLACING** 4. Compressor damaged, replace compressor. See **COMPRESSOR, REPLACING**

FUEL PIPE, AUXILIARY HEATER, ADDITIONAL INSULATION

see **FUEL PIPE, AUXILIARY HEATER, ADDITIONAL INSULATION**

CLIMATE CONTROL SYSTEM, GENERAL (2003-12)

CLIMATE CONTROL SYSTEM, CLEANING

Special tools	
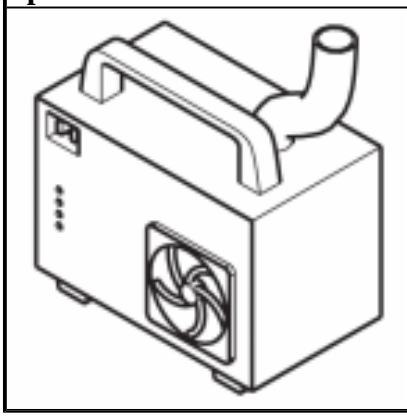	**T9814105 Aircomatic II unit** **Tool number:** T9814105 **Tool description:** AIRCOMATIC II UNIT **Tool boards:**

Materials:	
Designation	**Part number**
Cleaning agent	1161836
Cleaning agent (USA/CAN)	1161837

NOTE: Removal steps in this procedure may contain installation details.

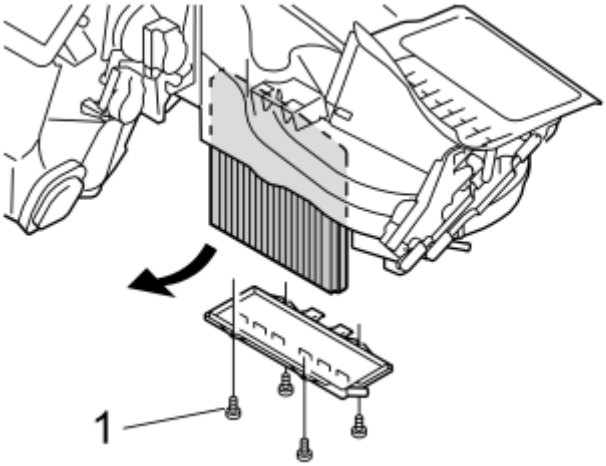

Fig. 69: Identifying Climate Control System Removal
Courtesy of VOLVO CARS CORPORATION

Remove, see **AIR CLEANER PASSENGER COMPARTMENT, REPLACING**

Do not reinstall the new pollen filter yet.

Vacuum the filter housing.

Reinstall the filter housing cover loosely with 2 screws.

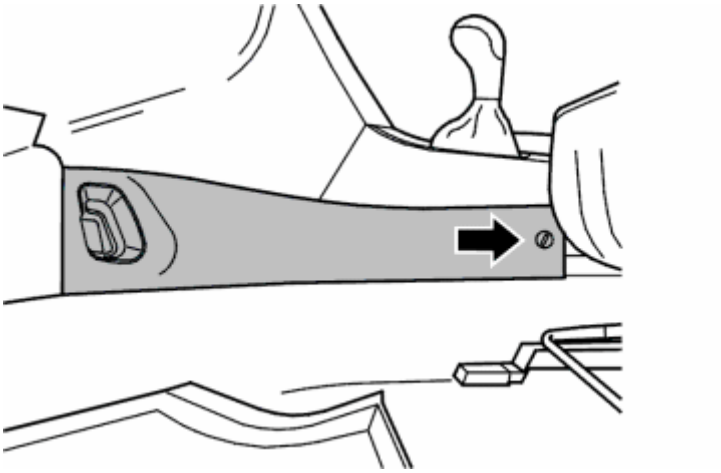

Fig. 70: Identifying Side Panel Clip
Courtesy of VOLVO CARS CORPORATION

Checking the drain hose.

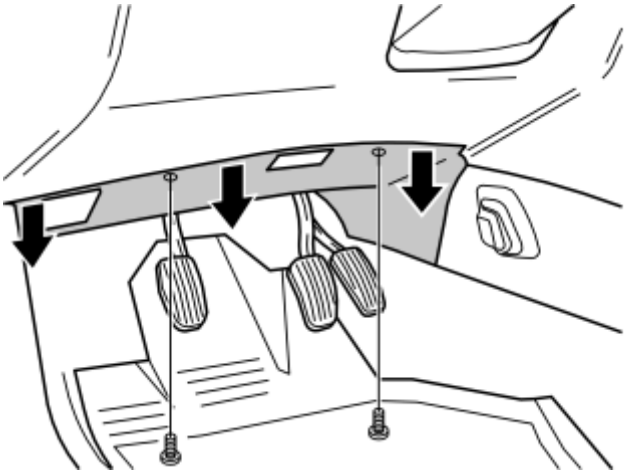

Fig. 71: Identifying Driver Side Panel Removal
Courtesy of VOLVO CARS CORPORATION

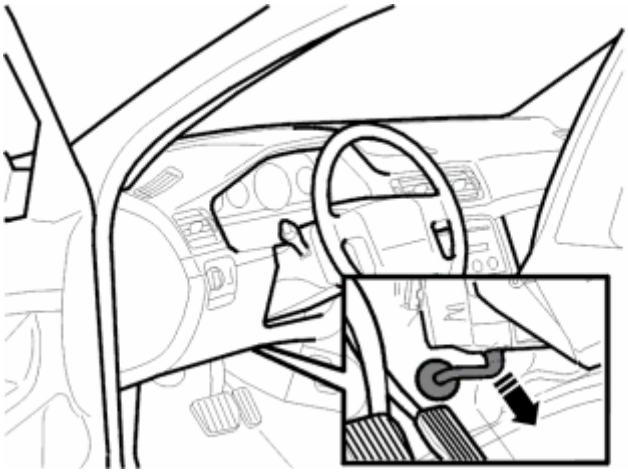

Fig. 72: Identifying Compressed Air Blown Through Drain Hose
Courtesy of VOLVO CARS CORPORATION

Carefully blow using the compressed air gun through the drain hose.

Reinstall the hose properly and secure with cable tie.

Reinstall the panels in reverse order.

Start the engine and allow to idle.

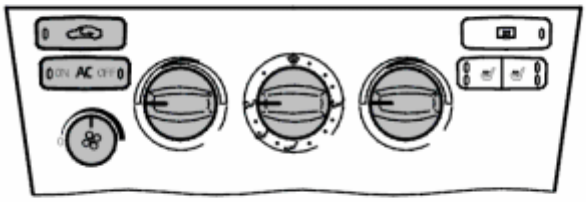

Fig. 73: Identifying MCC Control
Courtesy of VOLVO CARS CORPORATION

MCC control:

- Set the fan speed selector to the lowest speed/first position
- Move the air distribution selector to "Ventilation" position.
- Set the recirculation button to "On"
- Set the heater selectors to the 2 O'clock position

- Set the air conditioning (A/C) button to "On" position.

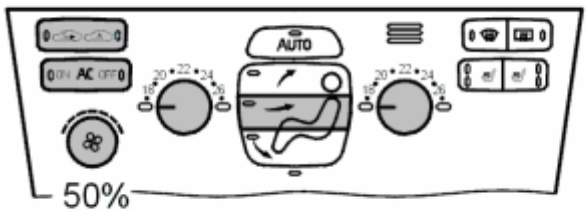

Fig. 74: Identifying ECC Control
Courtesy of VOLVO CARS CORPORATION

ECC control:

- Set the fan speed selector to the lowest speed/first position
- Move the air distribution selector to "Ventilation" position.
- Set the recirculation button to "On". Cars with air quality sensor (AQS) to "man"
- Set the heater selectors to 22°C (72°F)
- Set the air conditioning (A/C) button to "On" position.

Fig. 75: Identifying Explanations On Cleaner Display
Courtesy of VOLVO CARS CORPORATION

Explanations on cleaner's display:

- Start and stop button (1)
- Cleaning in progress, blue lamp (2)

- Cleaning complete, green lamp (3)
- Low level of cleaning fluid, yellow lamp (4)
- High level of cleaning fluid, yellow lamp (5)
- High temperature, red lamp (6)

Fig. 76: Identifying Special Tool Placed On Passenger Floor With Pipe In Forward Direction
Courtesy of VOLVO CARS CORPORATION

NOTE: Always follow the manufacturer's instructions when using the equipment.

Shake the bottle of cleaning agent.

Use: Cleaning agent, 1161836

Use: Cleaning agent (USA/CAN), 1161837

Empty the entire contents of the bottle into see **9814105**

Place see **9814105** on the passenger floor (left-hand drive), place the pipe in the forward direction.

Place some paper under and in front of the cleaner or allow stand it on a rubber mat.

Rout the wiring for the cleaner via the door's weatherstrip to an electrical socket.

Fig. 77: Identifying Explanations On Cleaner Display
Courtesy of VOLVO CARS CORPORATION

Start the cleaner (1), blue lamp illuminates (2).

Close the door carefully.

Ensure that all other doors are closed during treatment.

Allow it to run until the green lamp illuminates (3) (after approx. 15-20 minutes) and the treatment is complete.

Remove:

- The cable from the electrical socket
- The cable from the cleaner
- The cleaner from the car

It is normal that a small amount of fluid remains in the bottom of the cleaner after treatment, remove the pipe and discard the remaining fluid.

An odor is present for a few days after cleaning, which is usual.

Install the new filter. See **AIR CLEANER PASSENGER COMPARTMENT, REPLACING**

HVAC

Climate Units - Component Location

CLIMATE CONTROL SYSTEM

CLIMATE CONTROL SYSTEM, COMPONENT LOCATION (2003-04)

NOTE: **The graphics in this service information are used for different model years and/or models. Some variation may occur. However, the essential information in the graphics is always correct.**

PASSENGER COMPARTMENT/DOOR MIRROR

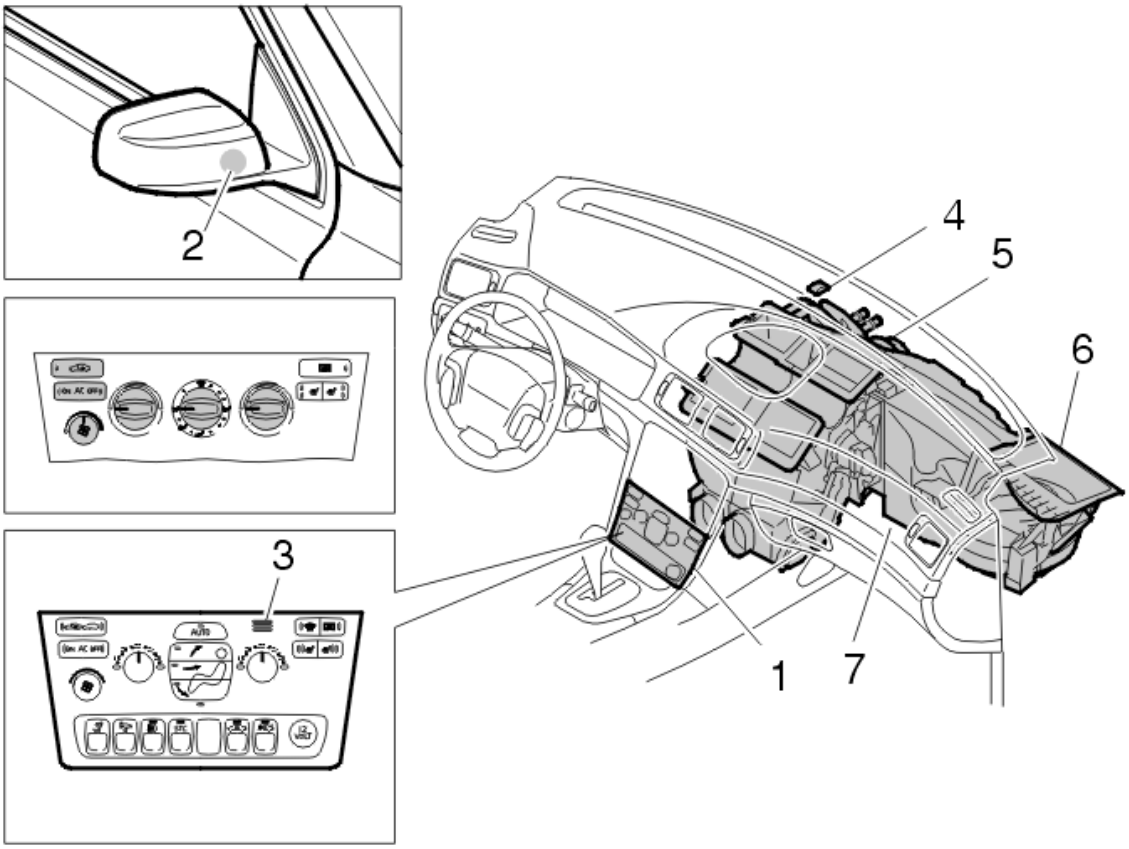

Fig. 1: Identifying Climate System Passenger Compartment
Courtesy of VOLVO CARS CORPORATION

1. Climate control unit
2. Outer temperature sensor
3. Passenger compartment temperature sensor (ECC)
4. Sun sensor (ECC)
5. Climate control unit

6. Air quality sensor
7. Multifilter/filter.

CLIMATE CONTROL UNIT

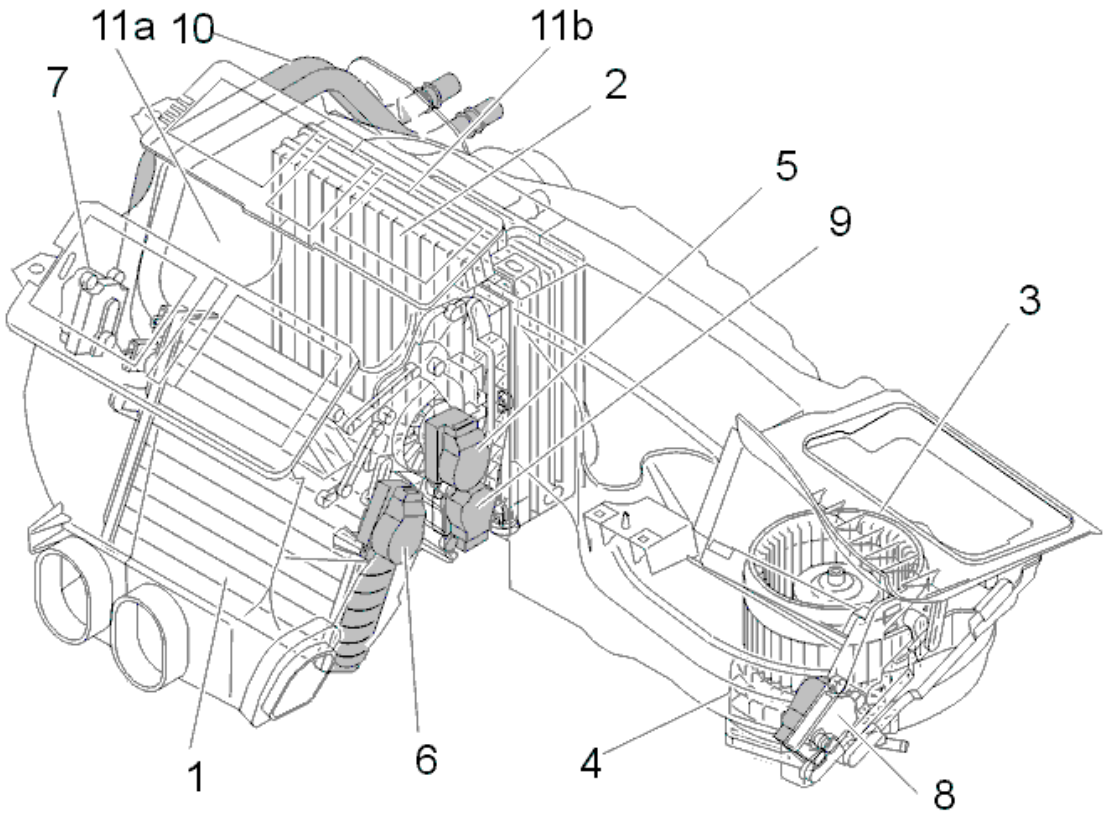

Fig. 2: Identifying Climate Control Unit
Courtesy of VOLVO CARS CORPORATION

1. Heat exchanger
2. Evaporator
3. Fan motor
4. Power unit
5. Damper Motor Position Sensor recirculation
6. Damper motor, temperature, right
7. Damper motor, temperature left
8. Damper motor
9. Damper motor, defroster damper (ECC)
10. Coolant pipe connection, to and from the engine compartment
11. **11a** Temperature sensor evaporator (left-hand drive cars)
12. **11b** Temperature sensor evaporator (right-hand drive cars).

CLIMATE CONTROL UNIT REAR

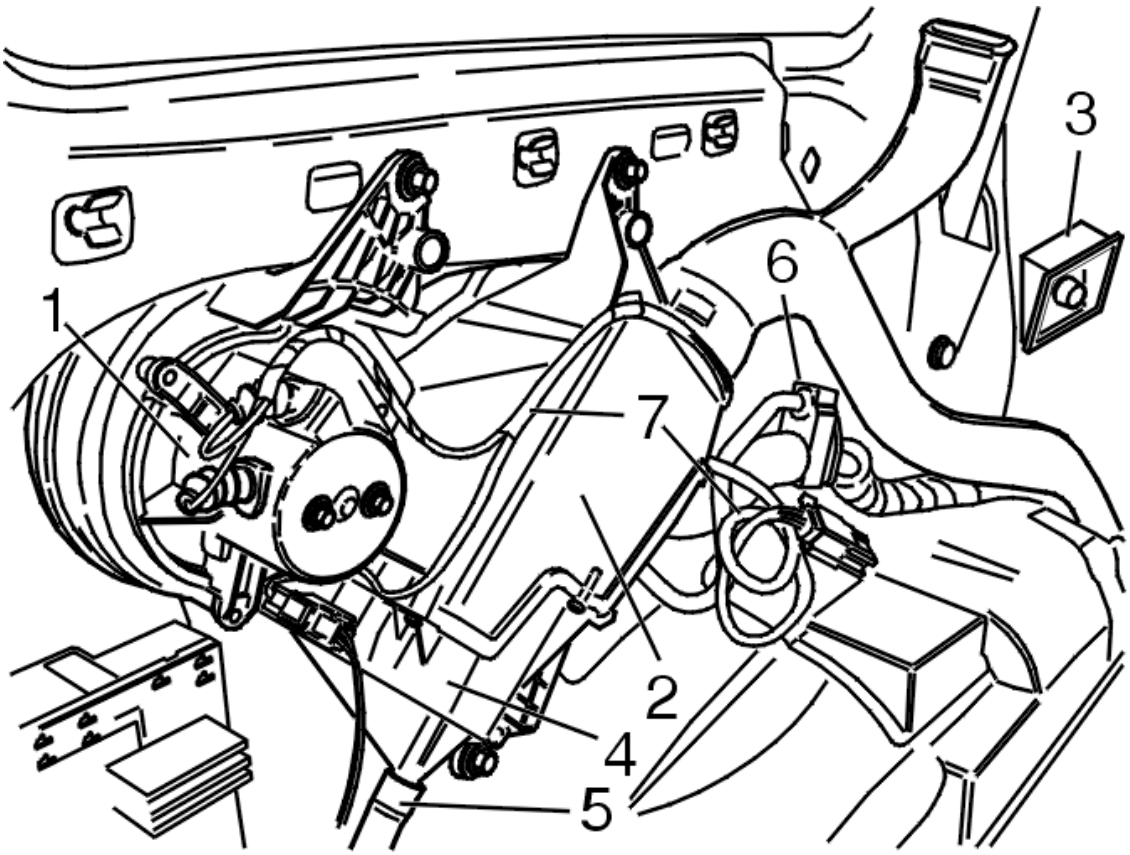

Fig. 3: Identifying Rear Climate Control Unit
Courtesy of VOLVO CARS CORPORATION

1. Fan motor
2. Evaporator
3. Switch, fan speed
4. No information
5. Drain hose
6. Pipe rear expansion valve - engine compartment
7. Cable harness.

ENGINE COMPARTMENT

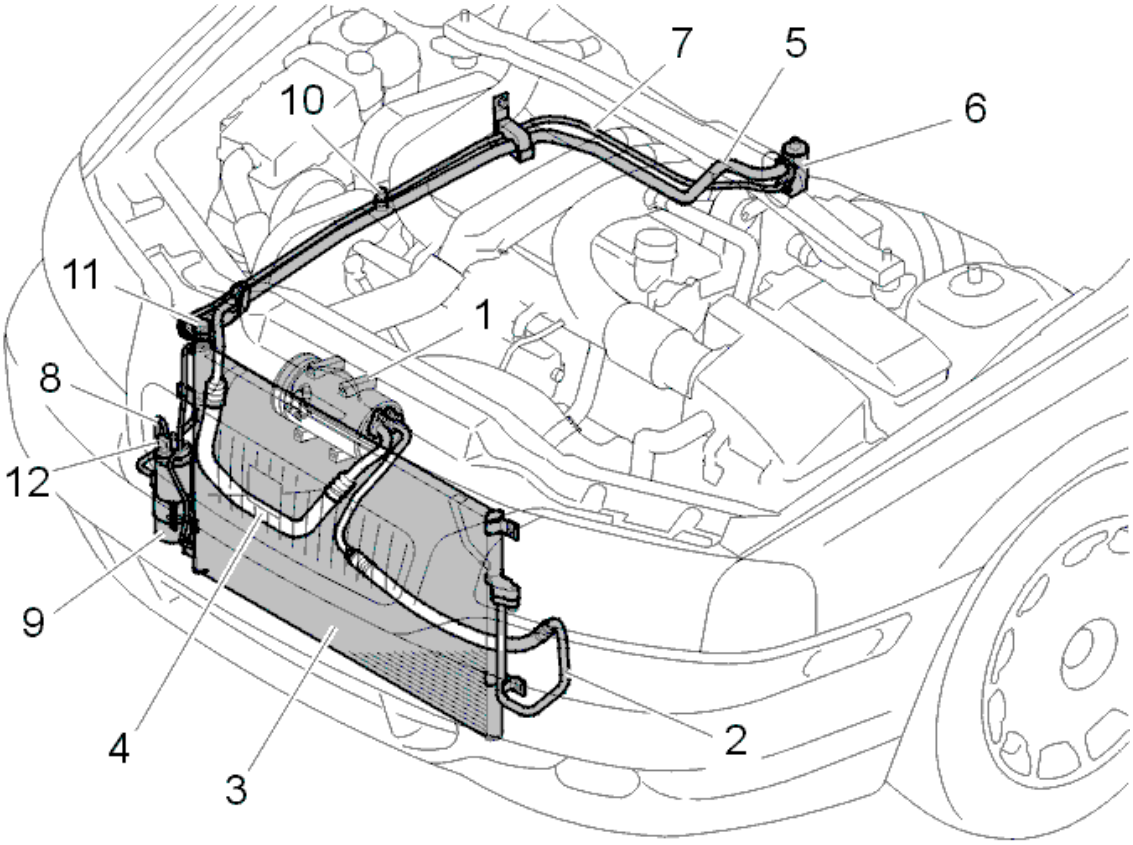

Fig. 4: Identifying Climate System Engine Compartment
Courtesy of VOLVO CARS CORPORATION

1. Compressor
2. Hoses/pipes compressor - condenser
3. Condenser
4. Hoses/pipes junction point side member - compressor
5. Pipe expansion valve - junction point side member
6. Expansion valve
7. Pipe receiver - expansion valve
8. Intermediate pipe receiver - member/expansion valve
9. Accumulator
10. Service valve
11. Service valve filling/emptying
12. Pressure sensor.

CLIMATE CONTROL, LOCATION OF COMPONENTS (2005-11)

NOTE: **The graphics in this service information are used for different model years and/or models. Some variation may occur. However, the essential information in the graphics is always correct.**

PASSENGER COMPARTMENT/DOOR MIRROR

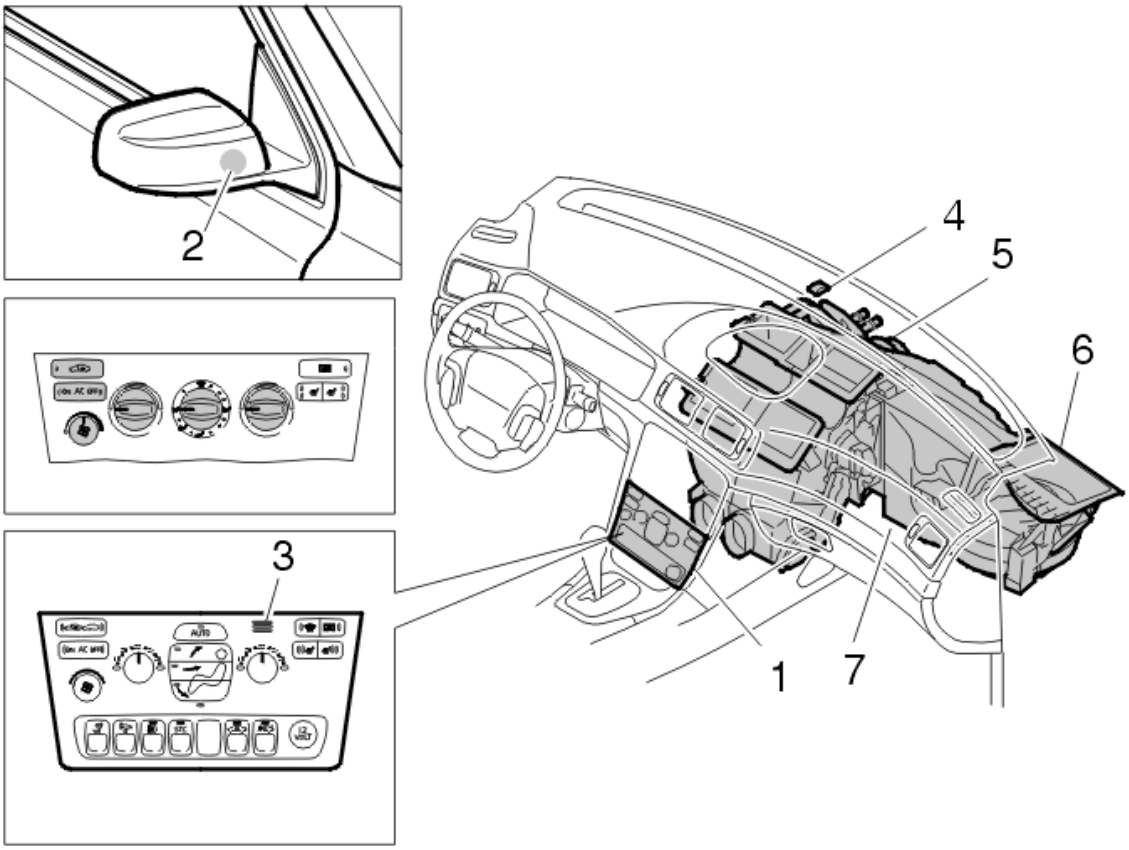

Fig. 5: Identifying Climate System Passenger Compartment
Courtesy of VOLVO CARS CORPORATION

1. Climate control unit
2. Outside temperature sensor
3. Passenger compartment temperature sensor (ECC)
4. Sun sensor (ECC)
5. Climate control unit
6. Air quality sensor
7. Multifilter/filter.

CLIMATE CONTROL UNIT

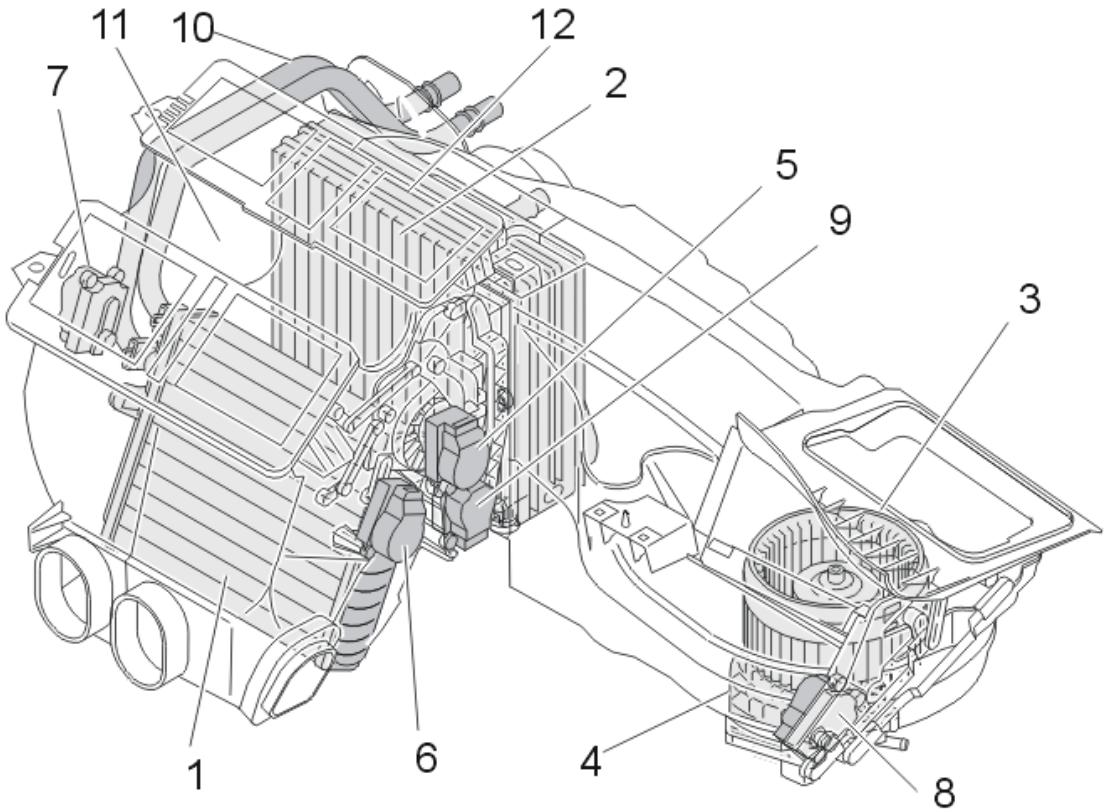

Fig. 6: Identifying Climate Control Unit
Courtesy of VOLVO CARS CORPORATION

1. Heat exchanger
2. Evaporator
3. Fan motor
4. Power unit
5. Damper motor module (DMM) air distribution
6. Damper motor module (DMM) temperature right
7. Damper motor module (DMM) temperature left
8. Damper motor module (DMM) recirculation
9. Damper motor module (DMM) defroster
10. Coolant pipe terminal; to and from the engine compartment
11. **11a** Temperature sensor, evaporator (left-hand drive cars)
12. **11b** Temperature sensor, evaporator (right-hand drive cars).

REAR CLIMATE CONTROL UNIT, XC90 ONLY

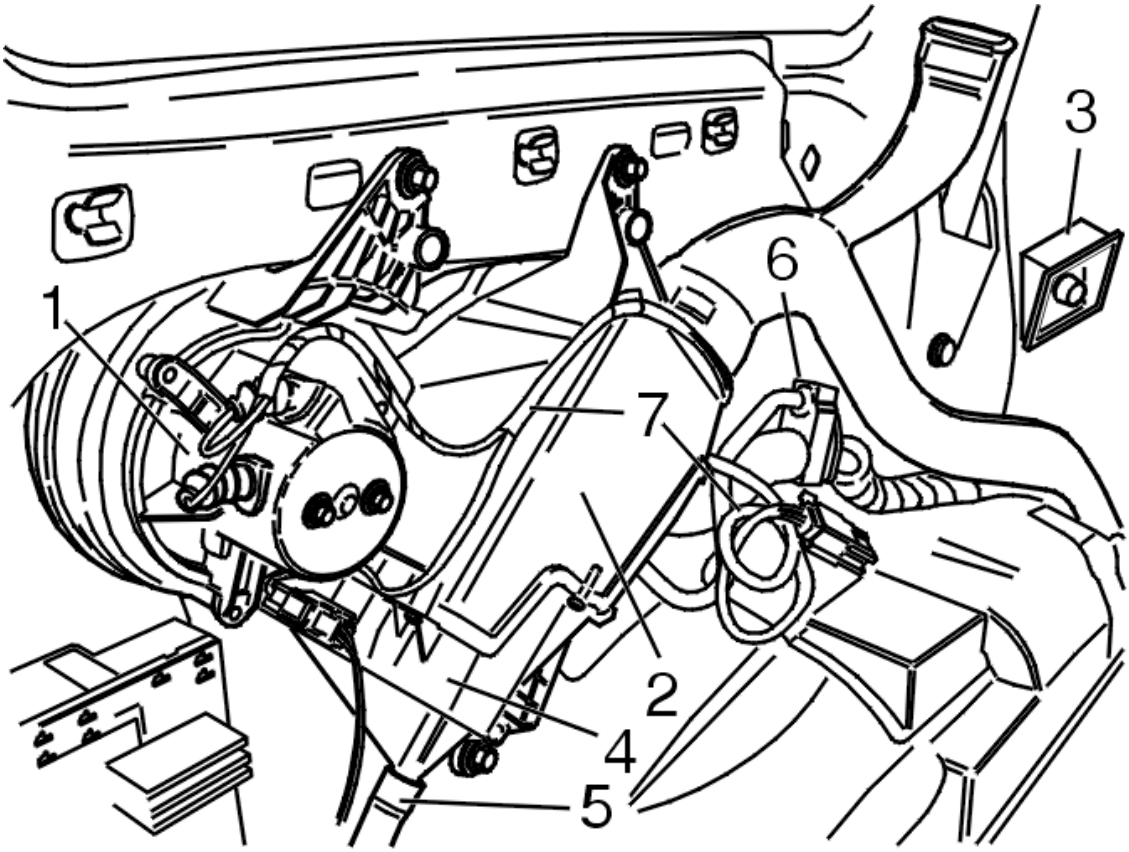

Fig. 7: Identifying Rear Climate Control Unit
Courtesy of VOLVO CARS CORPORATION

1. Fan motor
2. Evaporator
3. Switch, fan speed
4. Evaporator housing, lower
5. Drain hose
6. Pipe at the rear expansion valve - engine compartment
7. Cable harness

ENGINE COMPARTMENT

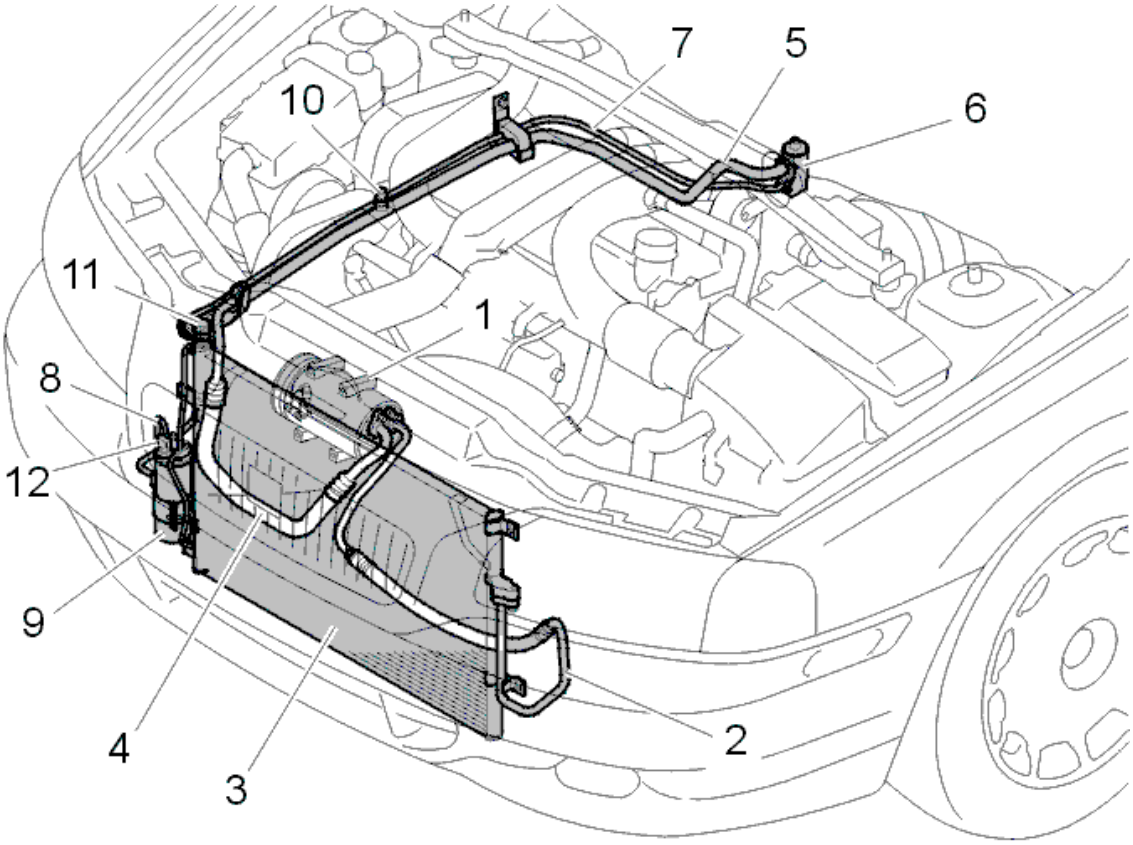

Fig. 8: Identifying Climate System Engine Compartment
Courtesy of VOLVO CARS CORPORATION

1. Compressor
2. Compressor - condenser hoses and pipes
3. Condenser
4. Hoses and pipes at the junction point of the side member - compressor
5. Pipe at the expansion valve - junction point side member
6. Expansion valve
7. Pipe, receiver - expansion valve
8. Intermediate pipe between the receiver-member and the expansion valve
9. Accumulator
10. Service valve
11. Service valve filling/emptying
12. Pressure sensor.

ENGINE COOLANT HEATER, FUEL DRIVEN

ENGINE COOLANT HEATER, COMPONENT LOCATION

NOTE: **As the graphics in this service information are used for different model years and/or models, some variation may occur. However, the essential information in the graphics is always correct.**

PARKING HEATERS 912-B AND 912-D

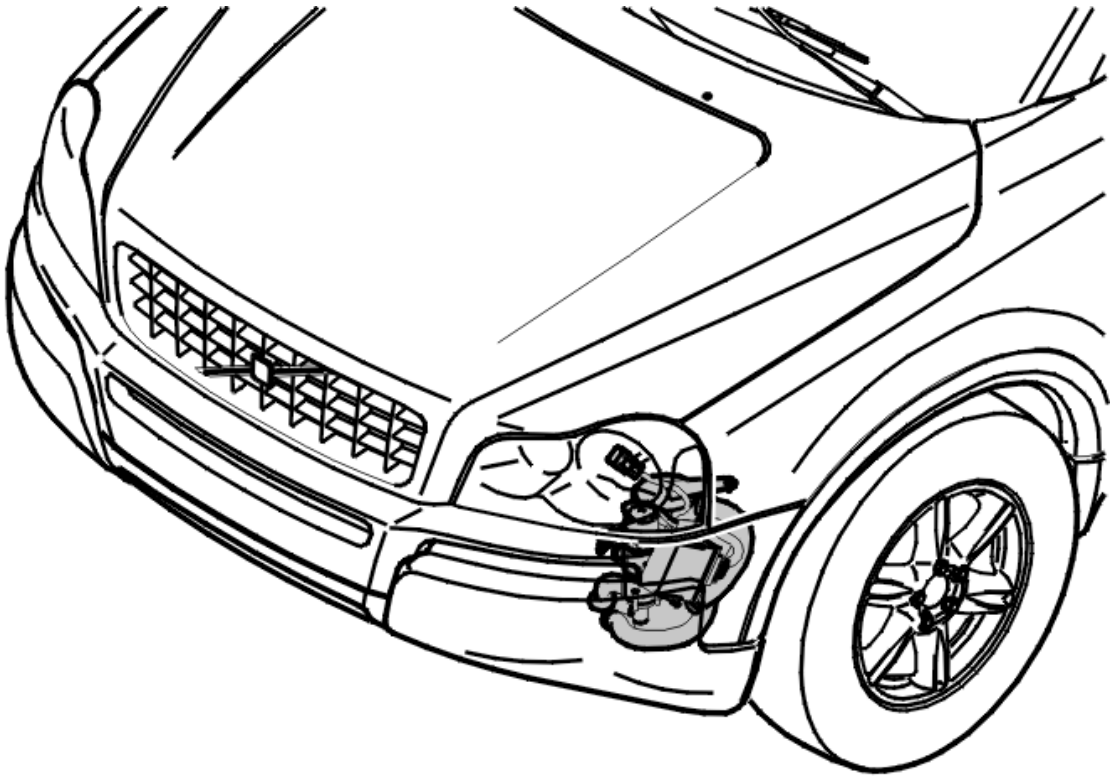

Fig. 9: Identifying Engine Coolant Heater
Courtesy of VOLVO CARS CORPORATION

Location in the car:

The engine coolant heater is located inside the front fender, in front of the front left wheel arch.

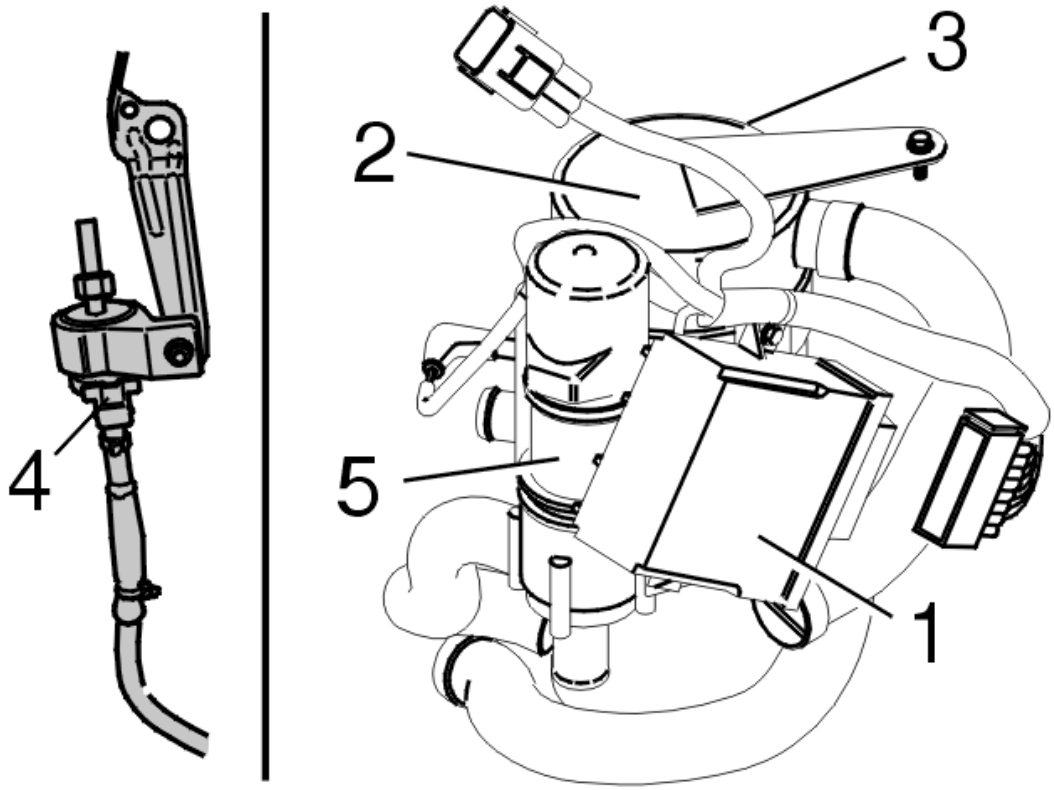

Fig. 10: Engine Coolant Heater Components (1 Of 2)
Courtesy of VOLVO CARS CORPORATION

Components:

1. Control module
2. Fan shroud
3. Heat exchanger
4. Fuel pump (FP) (in front of the fuel tank)
5. Water pump.

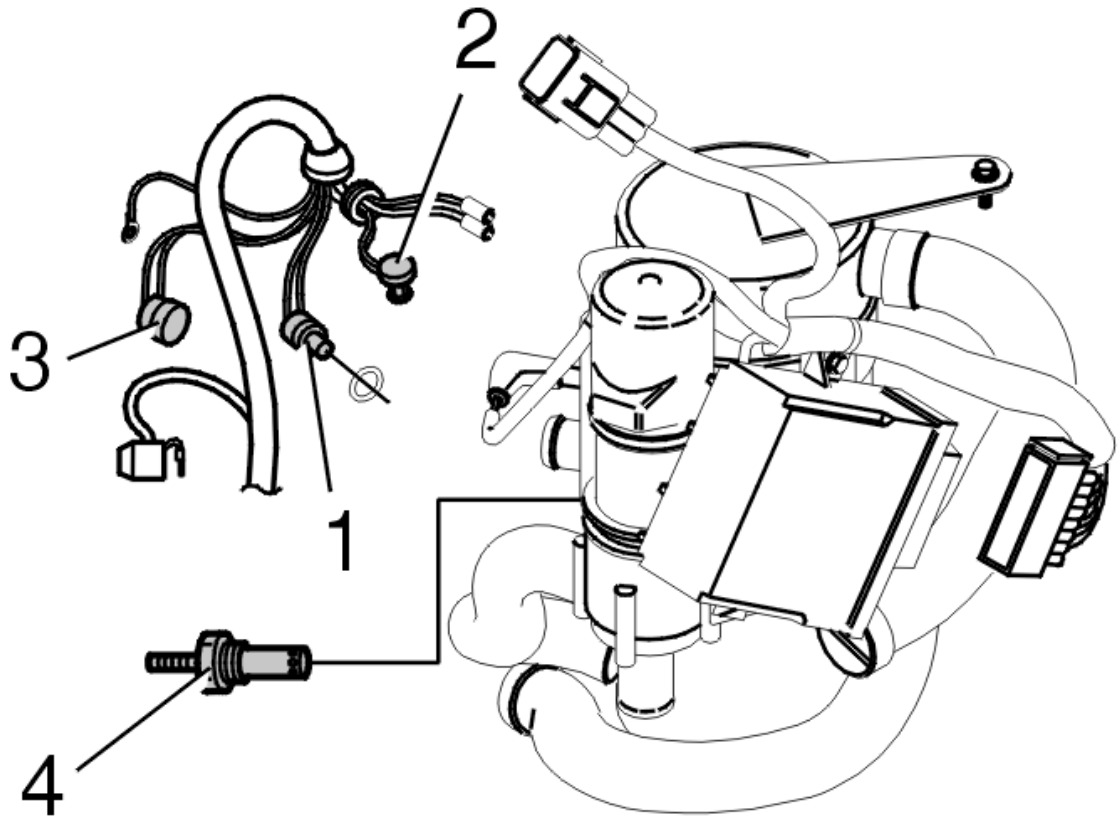

Fig. 11: Engine Coolant Heater Components (2 Of 2)
Courtesy of VOLVO CARS CORPORATION

Components on the heater:

1. Coolant temperature sensor
2. Flame sensor
3. Overheat protection thermostat
4. Glow plugs.

HVAC

Climate Units - Design & Function

CLIMATE CONTROL (2003-12)

DESIGN

see **DESIGN**

FUNCTION

see **FUNCTION**

OVERVIEW

see **OVERVIEW**

CLIMATE CONTROL MODULE (2003-04)

DESIGN

see **DESIGN**

DIAGNOSTIC FUNCTIONS

see **DIAGNOSTIC FUNCTIONS**

DOWNLOADING SOFTWARE AND REPLACING THE CONTROL MODULE

see **DOWNLOADING SOFTWARE AND REPLACING THE CONTROL MODULE**

FUNCTION

see **FUNCTION**

SYSTEM OVERVIEW

see **SYSTEM OVERVIEW**

CLIMATE CONTROL MODULE (CCM) (2005-12)

DESIGN

see **DESIGN**

DIAGNOSTIC FUNCTIONS

see **DIAGNOSTIC FUNCTIONS**

DOWNLOADING SOFTWARE AND REPLACING THE CONTROL MODULE

see **DOWNLOADING SOFTWARE AND REPLACING THE CONTROL MODULE**

FUNCTION

see **FUNCTION**

SYSTEM OVERVIEW

see **SYSTEM OVERVIEW**

ADDITIONAL HEATER AND PARKING HEATER (COMBUSTION PREHEATER MODULE) (2003-04)

ADDING ACCESSORIES AND REPLACING THE CONTROL MODULE

see **ADDING ACCESSORIES AND REPLACING THE CONTROL MODULE**

DESIGN

see **DESIGN**

DIAGNOSTIC FUNCTIONS

see **DIAGNOSTIC FUNCTIONS**

FUNCTION

see **FUNCTION**

SYSTEM OVERVIEW

see **SYSTEM OVERVIEW**

COMBUSTION PREHEATER MODULE (CPM) (2005-12)

INFORMATION

see **INFORMATION**

CCM-0001: BLOWER FAN MOTOR. SIGNAL TOO LOW (2003-04)

DIAGNOSTIC TROUBLE CODE (DTC) INFORMATION

Condition

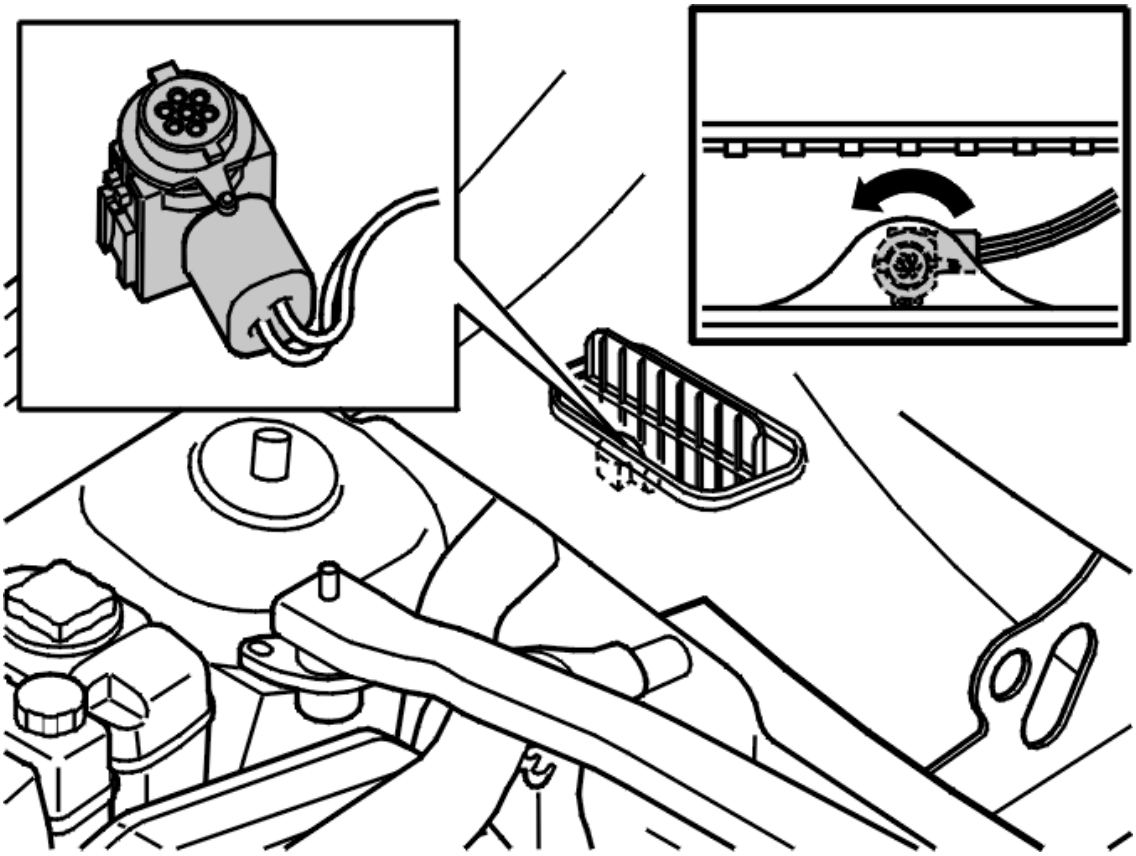

Fig. 1: Identifying Blower Fan Motor & Connector
Courtesy of VOLVO CARS CORPORATION

Diagnostic trouble code (DTC) CCM-0001 is stored if the control module registers that the diagnostic signal from the blower fan power unit is below 1.28 V and the control current to the blower fan power unit is below 0.42 mA.

Substitute Value

- The control module will not allow the blower fan motor to start while the fault persists
- The air conditioning (A/C) compressor is not allowed to start.

Possible Source

- Short-circuit to ground in the motor signal cable
- Short-circuit to supply voltage in the signal cable
- Open-circuit in the diagnostic signal cable

- Short-circuit to ground in the diagnostic signal cable
- Defective blower fan motor or power unit.

Fault symptom[s]

- Blower fan not operating
- Air flow problem
- No cooling from the air conditioning (A/C) system.

SIGNAL TOO LOW

CHECKING THE BLOWER FAN

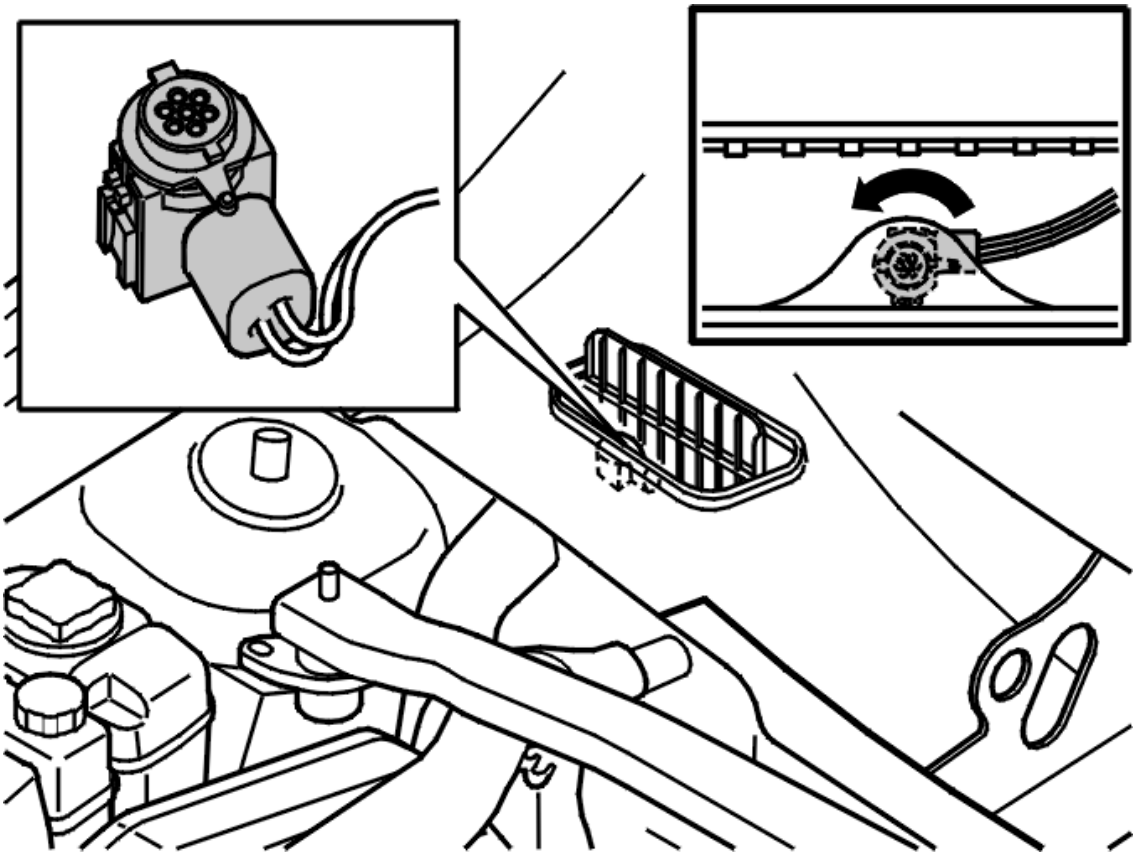

Fig. 2: Identifying Ignition ON
Courtesy of VOLVO CARS CORPORATION

- Ignition on.

  Check that the blower fan functions by turning the blower fan knob to maximum fan speed.

Is the blower fan working?

- **YES**

Refer to **CHECKING THE WIRING**

- **NO**

  Refer to **CHECKING COMPONENTS AND WIRING**

CHECKING COMPONENTS AND WIRING

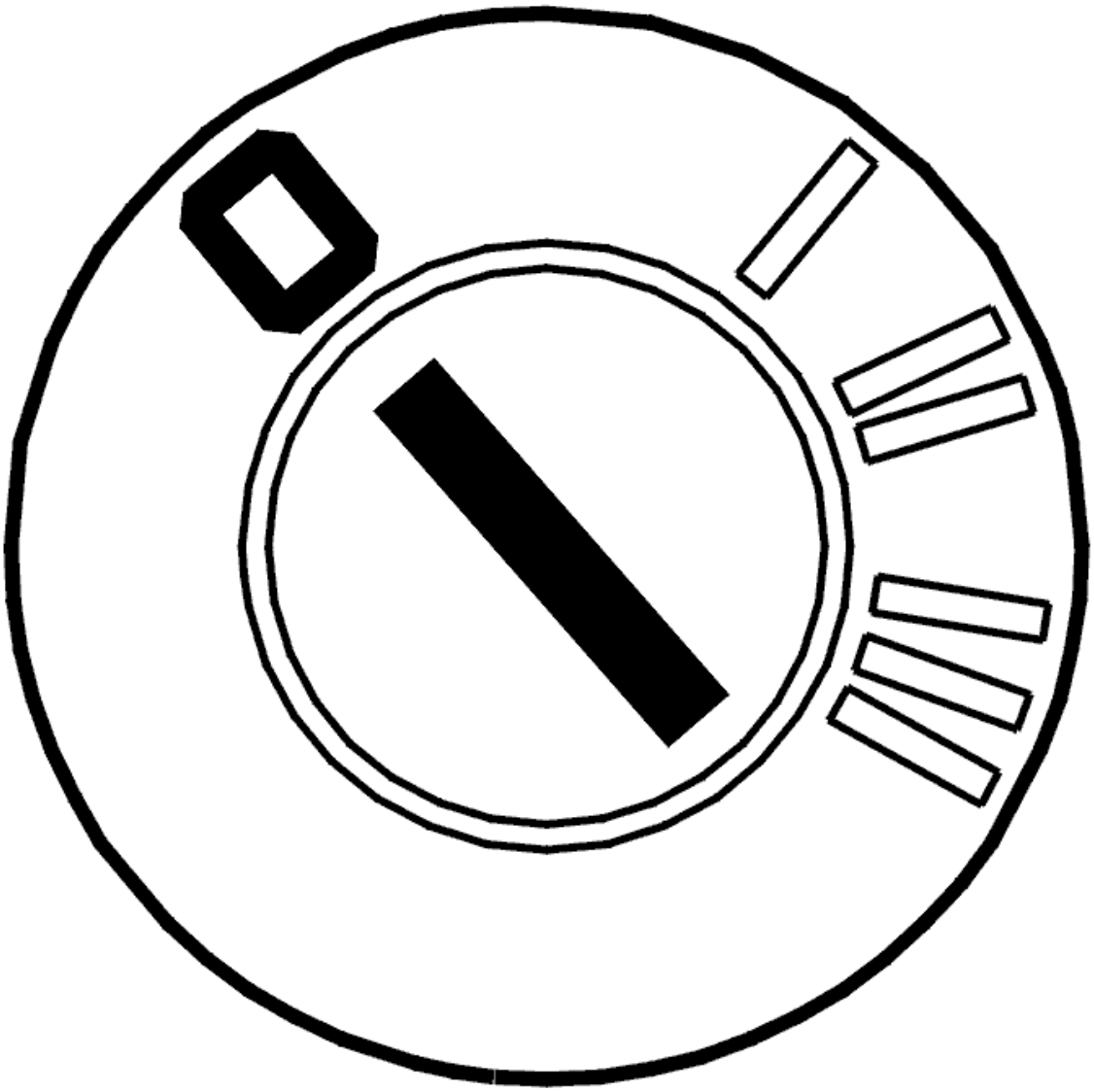

Fig. 3: Identifying Ignition OFF
Courtesy of VOLVO CARS CORPORATION

- Ignition off.

CAUTION: The blower fan motor power unit is very sensitive to short-circuits and excess current. Do not damage the power unit when taking readings. Take readings with the power unit connector disconnected

when checking the wiring.

Check if the fuse for the climate control module (CCM) is defective. If the fuse is defective, check:

- the signal cable between the fuse and the power unit terminal #A2. Check for a short-circuit to ground
- the signal cable between the power unit terminal #B2 and the blower fan motor positive terminal. Check for a short-circuit to ground.

Check the control signal cable between control module terminal #A3 and power unit terminal #A1. Check for a short-circuit to supply voltage.

Check the diagnostic signal cable between control module terminal #A2 and power unit terminal #A3. Check for an open-circuit. Check for a short-circuit to ground.

Remedy as necessary.

Other information:

- To access or replace the control module, see **CLIMATE CONTROL MODULE (CCM), REPLACING**
- To access the control module or connect the breakout box, see **CONNECTING THE BREAKOUT BOX**
- To access or replace the power unit, see **BLOWER FAN MOTOR/POWER UNIT, REPLACING**
- With the ignition on and the power unit connector disconnected, the voltage between power unit connector terminal #A2 (control module side) and ground must be approximately 13.5 V
- For other values, see **SIGNAL SPECIFICATION**
- see **CHECKING WIRING AND TERMINALS** .

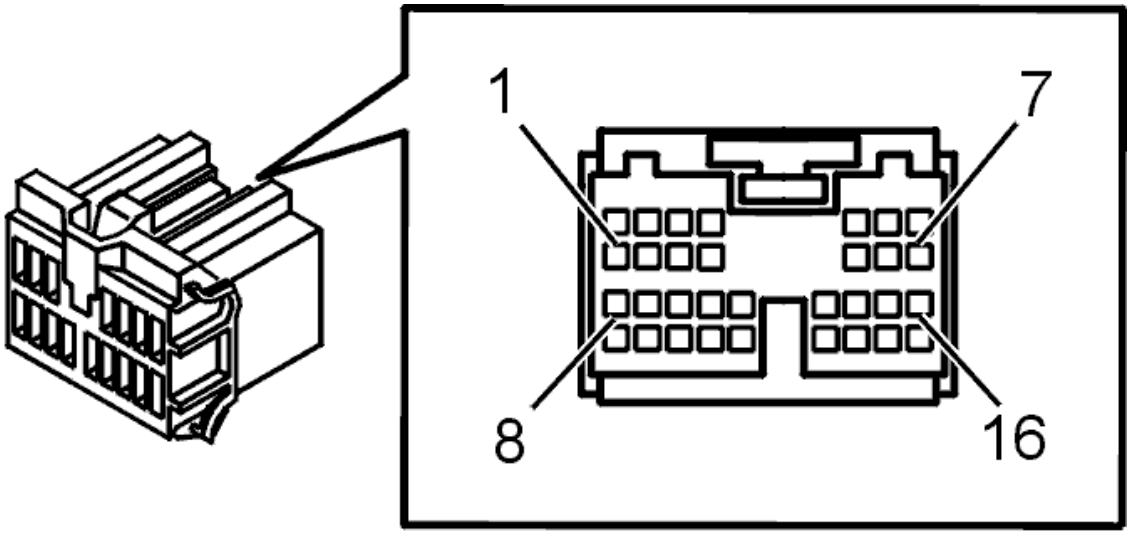

Fig. 4: Connector, Green (16-Pin)
Courtesy of VOLVO CARS CORPORATION

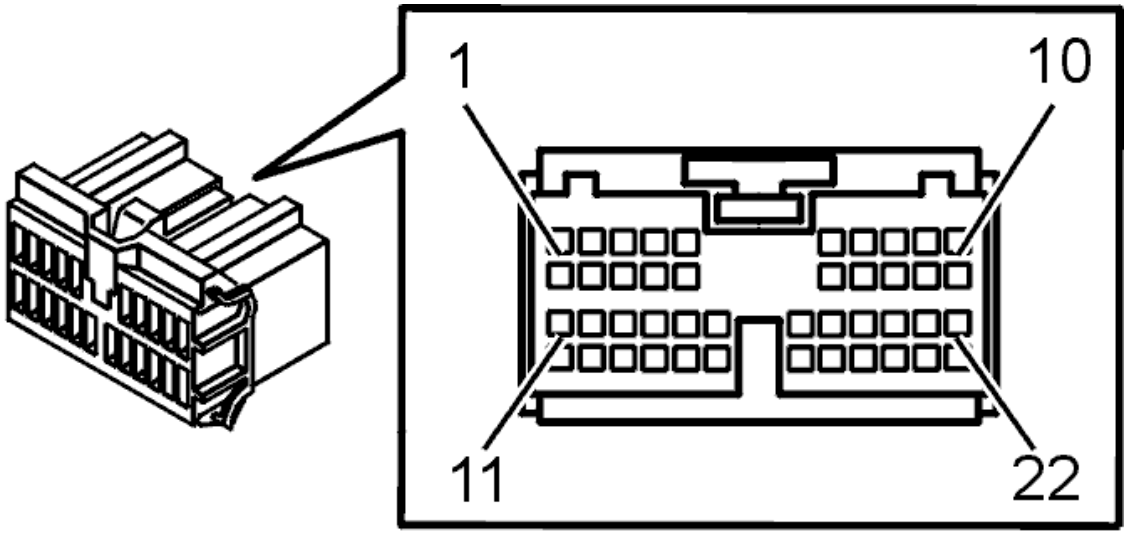

Fig. 5: Identifying Ohmmeter
Courtesy of VOLVO CARS CORPORATION

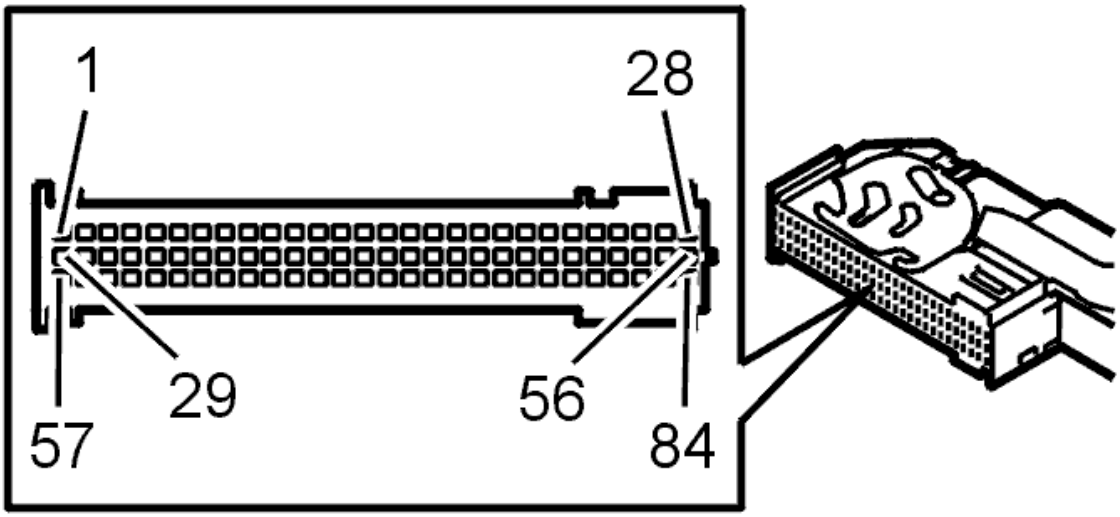

Fig. 6: Connector, Black (2-Pin)
Courtesy of VOLVO CARS CORPORATION

- **Continue**

  Refer to **VERIFICATION**

CHECKING THE WIRING

Fig. 7: Identifying Ignition OFF
Courtesy of VOLVO CARS CORPORATION

- Ignition off.

CAUTION: The blower fan motor power unit is very sensitive to short-circuits and excess current. Do not damage the power unit when taking readings. Take readings with the power unit connector disconnected when checking wiring.

Check the signal cable between the fuse and the power unit terminal #A2. Check for an intermittent short-circuit to ground.

Check the signal cable between power unit terminal #B2 and blower fan motor positive terminal. Check for an intermittent short-circuit to ground.

Check the control signal cable between control module terminal #A3 and power unit terminal #A1. Check for an intermittent short-circuit to supply voltage.

Check the diagnostic signal cable between control module terminal #A2 and power unit terminal #A3. Check for an intermittent open-circuit. Check for a short-circuit to ground.

NOTE: If the battery voltage has been interrupted, the blower fan speed must be calibrated. First turn the blower fan speed control to maximum speed and then to minimum speed.

Remedy as necessary.

Other information:

- To access or replace the control module, see **CLIMATE CONTROL MODULE (CCM), REPLACING**
- To connect the breakout box, see **CONNECTING THE BREAKOUT BOX**
- To access or replace the power unit, see **BLOWER FAN MOTOR/POWER UNIT, REPLACING**
- With the ignition on and the power unit connector disconnected, the voltage between power unit connector terminal #A2 (control module side) and ground must be approximately 13.5 V
- For other values, see **SIGNAL SPECIFICATION**
- see **CHECKING WIRING AND TERMINALS** .

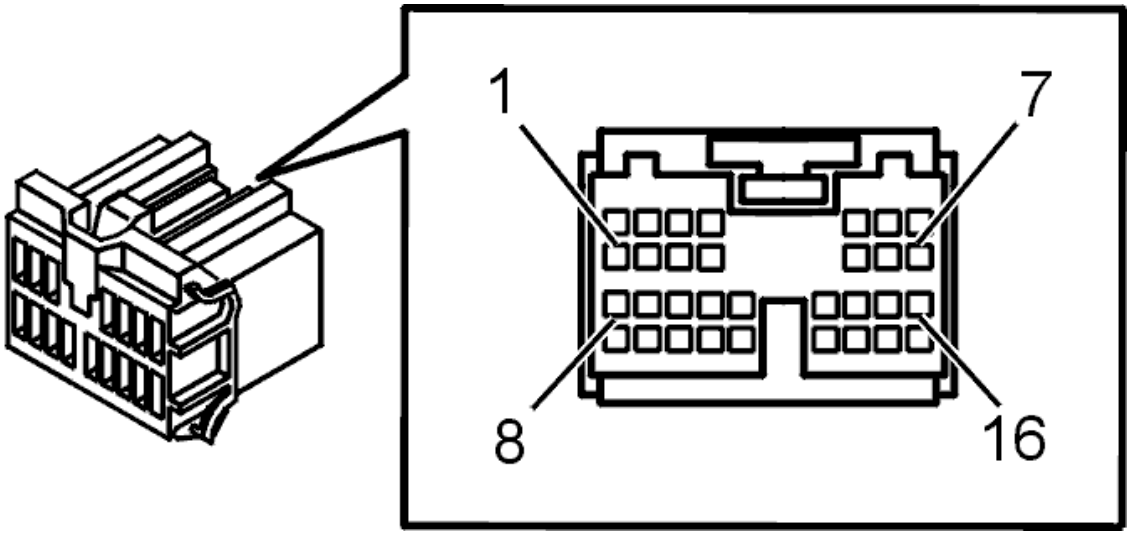

Fig. 8: Connector, Green (16-Pin)
Courtesy of VOLVO CARS CORPORATION

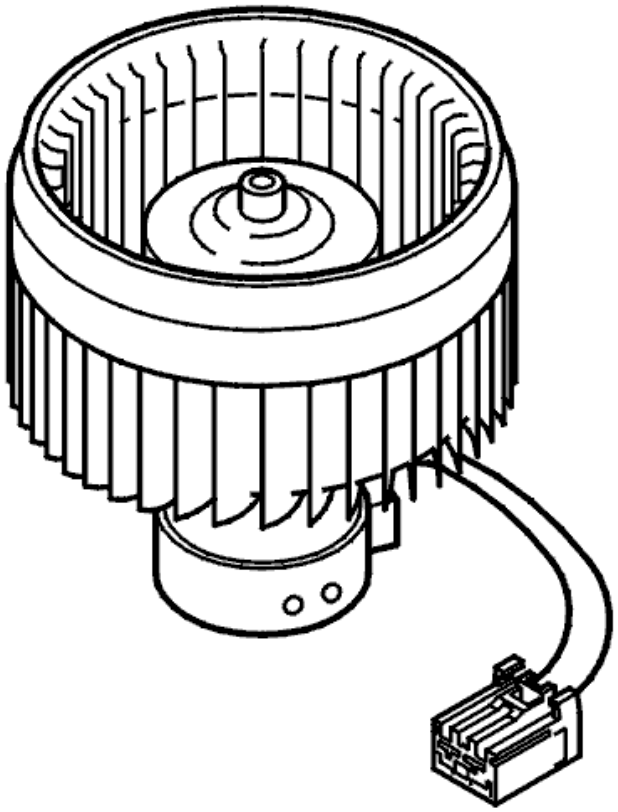

Fig. 9: Identifying Ohmmeter
Courtesy of VOLVO CARS CORPORATION

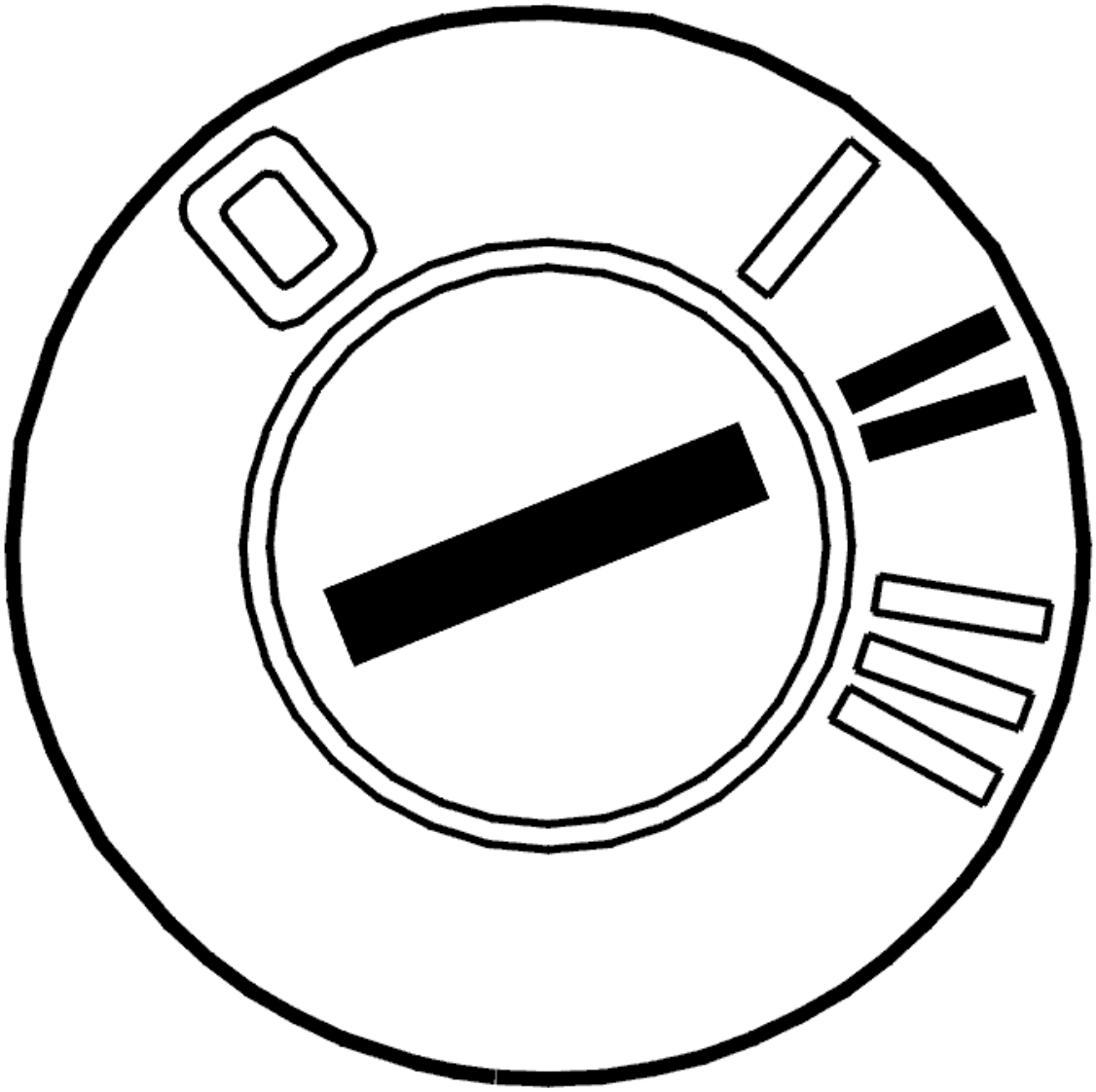

Fig. 10: Connector, Black (2-Pin)
Courtesy of VOLVO CARS CORPORATION

- **Continue**

  Refer to **INFORMATION**

VERIFICATION

HINT: After the repair it is necessary to check that the fault has been rectified.

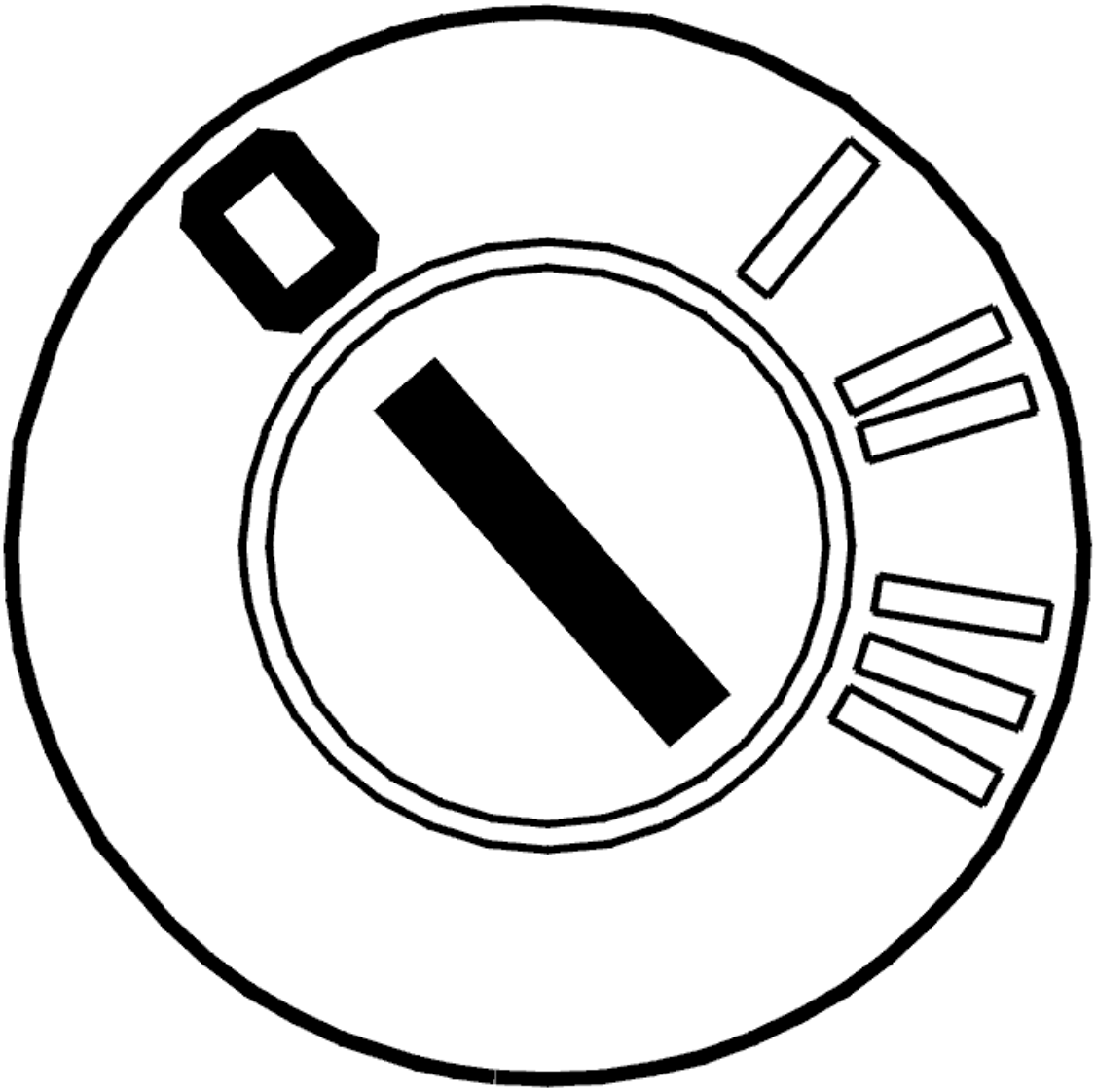

Fig. 11: Identifying Ignition ON
Courtesy of VOLVO CARS CORPORATION

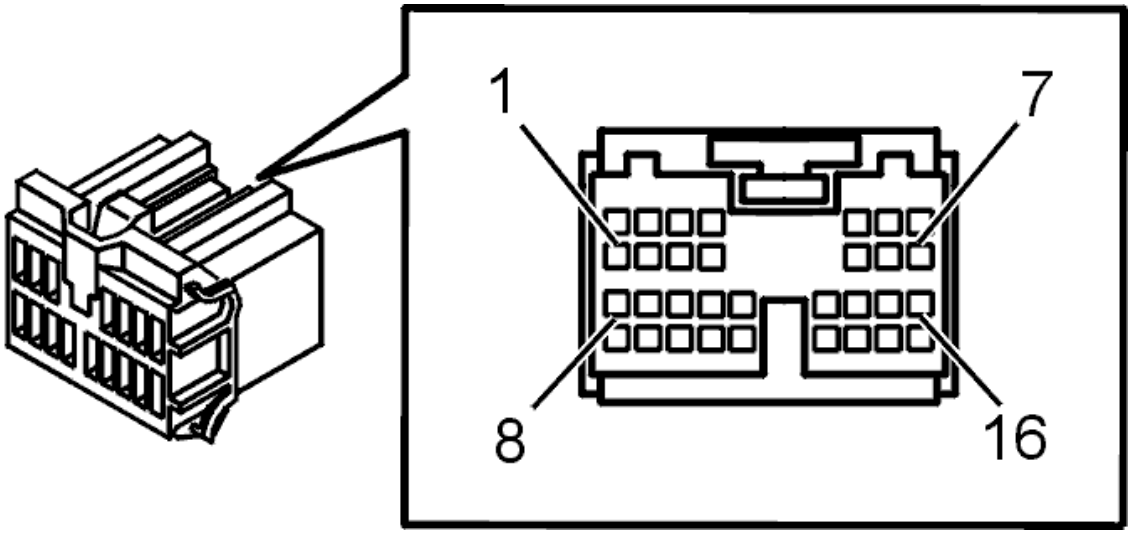

Fig. 12: Connecting Connector
Courtesy of VOLVO CARS CORPORATION

- Ignition off.
- Connect the connectors, install the components, etc.
- Ignition on.
- Read the diagnostic trouble codes.

  If the status of the diagnostic trouble code has changed to an intermittent fault this indicates that the fault has been rectified.

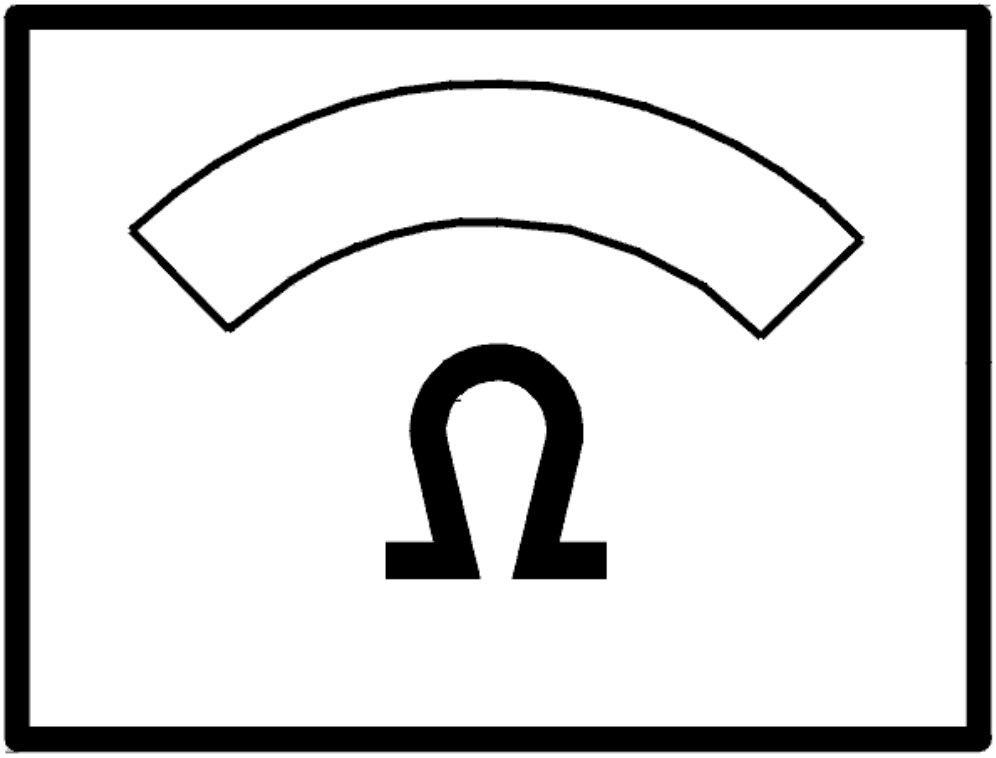

Fig. 13: Identifying VCT2000 Diagnostic Tool Symbol In VIDA
Courtesy of VOLVO CARS CORPORATION

Has the status of the diagnostic trouble code changed?

- **YES**

  VERIFIED: Troubleshooting has been completed.

- **NO**

  Refer to **INFORMATION**

INFORMATION

FAULT-TRACING INFORMATION

The fault should have been detected and remedied. As this is not the case fault-tracing has failed.

Exit fault-tracing for this diagnostic trouble code (DTC) or make another attempt.

CCM-0001: CONFIGURATION FAULT. NON-APPROVED VALUE (2005-12)

DIAGNOSTIC TROUBLE CODE (DTC) INFORMATION CCM-0001

Condition

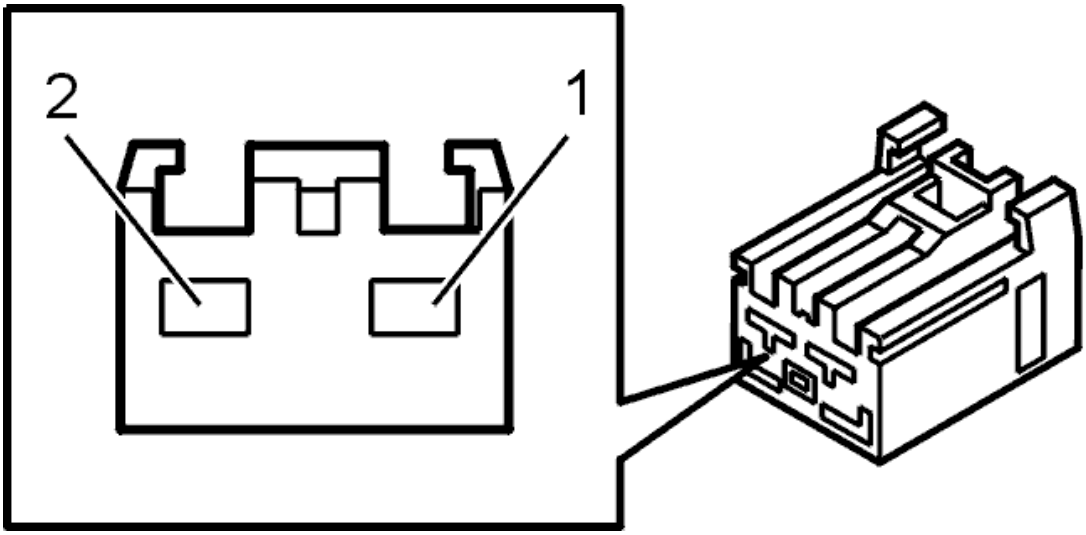

Fig. 14: Climate Control Module
Courtesy of VOLVO CARS CORPORATION

The diagnostic trouble code (DTC) is stored if the climate control module (CCM) detects an incorrect configuration parameter in the Car Configuration File.

The diagnostic trouble code (DTC) can be diagnosed in ignition positions I and II.

Substitute Value

- None.

Possible Source

- Incorrect configuration parameter.

Fault symptom[s]

- Misting on the windows and/or door mirrors.
- The function button is not working.
- Blower fan not operating.

- The front seat heating does not function.
- Functions in the infotainment system do not work.

NON-APPROVED: VALUE

CHECKING DATA FOR CAR CONFIGURATION

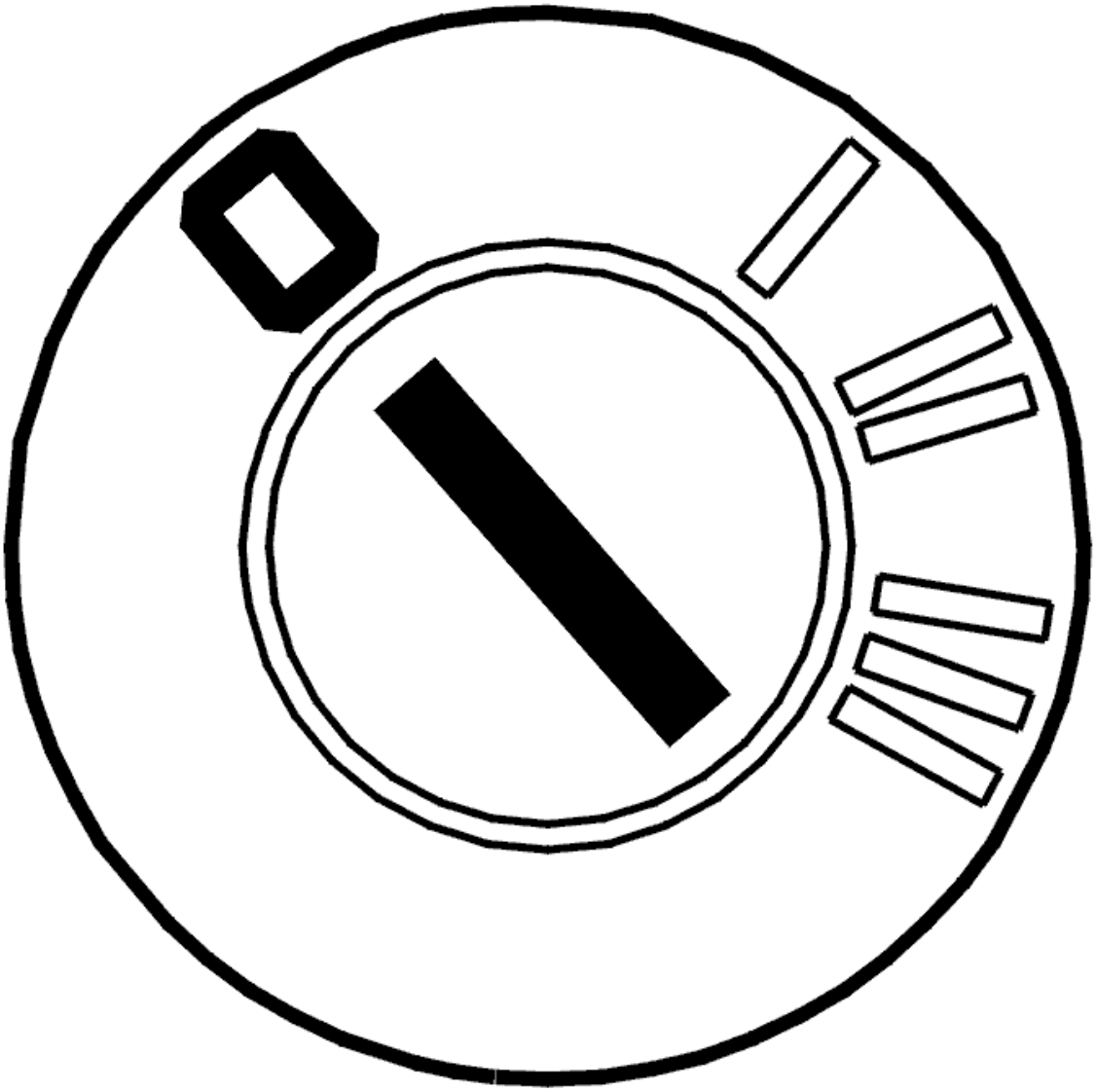

Fig. 15: Identifying Ignition ON
Courtesy of VOLVO CARS CORPORATION

- Ignition on.

  The climate control module (CCM) has registered that a parameter in the data for car configuration is incorrect.

Check which parameter is incorrect by clicking on the VCT2000 symbol.

The reason for the parameter being incorrect may be that the climate control module (CCM) has been replaced incorrectly.

Switching the climate control module (CCM) between different cars can result in the data in the car configuration being incorrectly adapted.

If this is the case, remedy by replacing the climate control module (CCM) in the correct way.

Other information:

- see **CLIMATE CONTROL, LOCATION OF COMPONENTS**
- see **CLIMATE CONTROL MODULE (CCM), REPLACING**

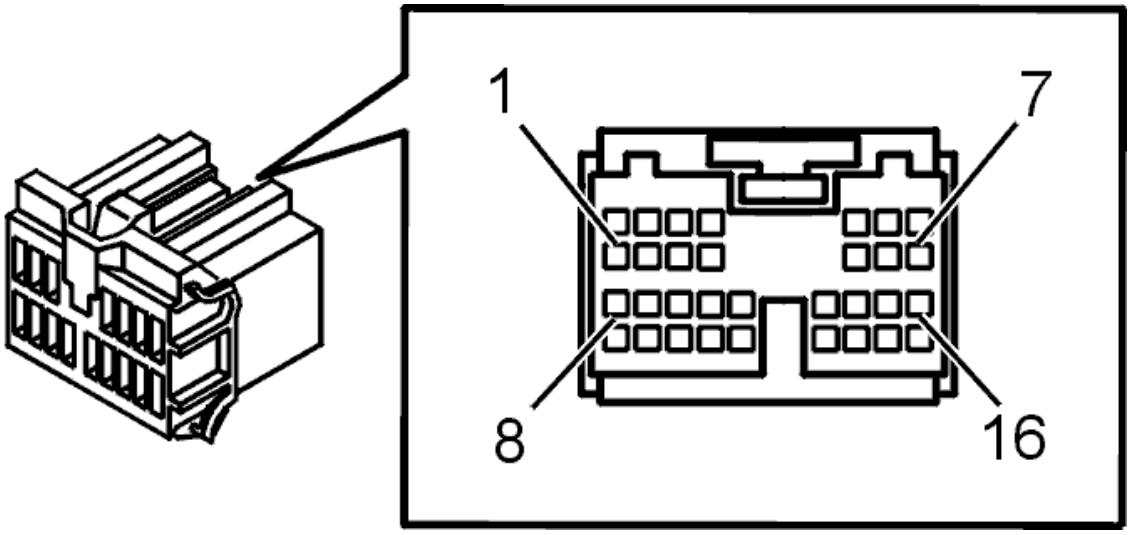

Fig. 16: Identifying VCT2000 Diagnostic Tool Symbol In VIDA
Courtesy of VOLVO CARS CORPORATION

- **Continue**

Refer to **CHECKING LIN BUS**

CHECKING LIN BUS

IDENTIFICATION

HINT: After replacing the climate control module (CCM), the LIN bus must be checked to identify which damper motors are installed and to identify their function and positions.

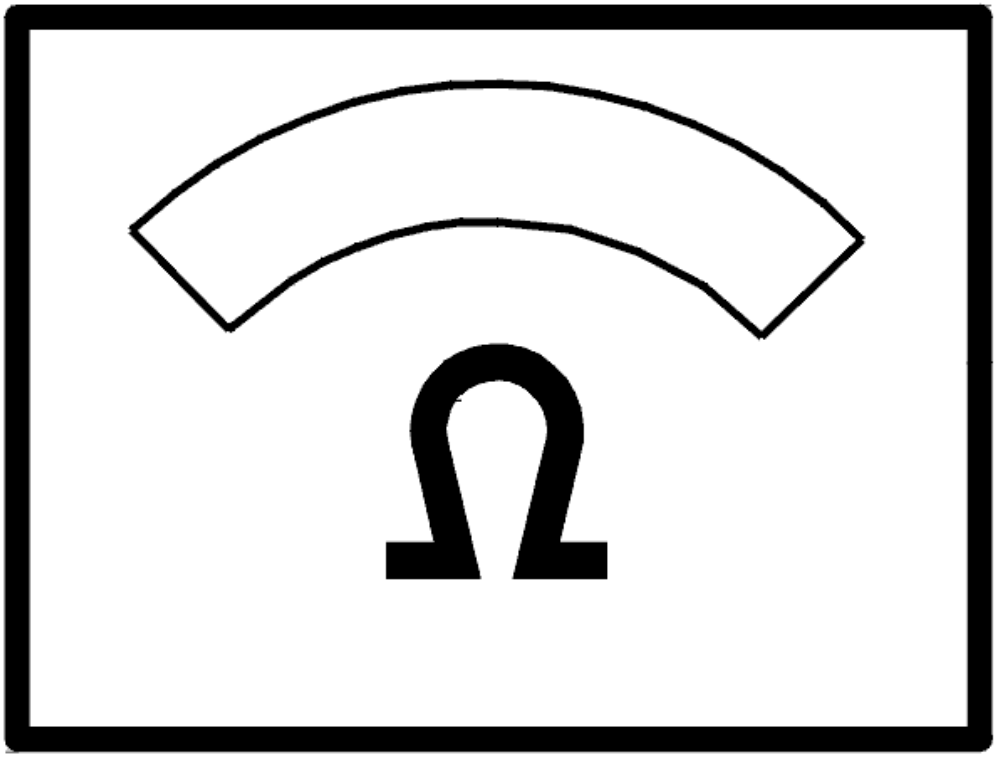

Fig. 17: Identifying Ignition ON
Courtesy of VOLVO CARS CORPORATION

- Ignition off
- Reinstall the connectors, components etc.
- Ignition on.

Click the VCT2000 symbol to activate the check.

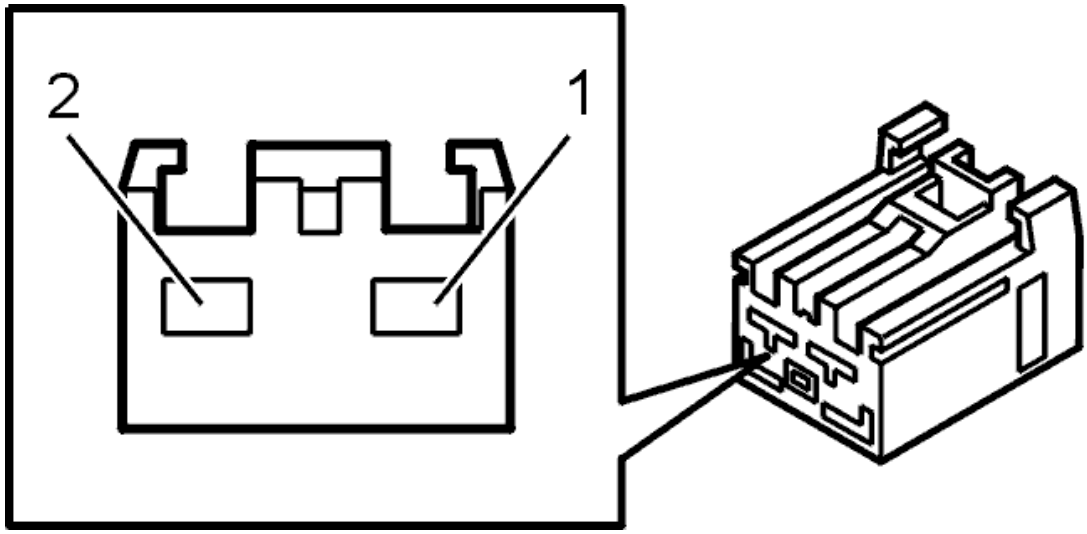

Fig. 18: Identifying VCT2000 Diagnostic Tool Symbol In VIDA
Courtesy of VOLVO CARS CORPORATION

- **Continue**

  Refer to **VERIFICATION**

VERIFICATION

HINT: After carrying out the repair, check that the fault has been remedied.

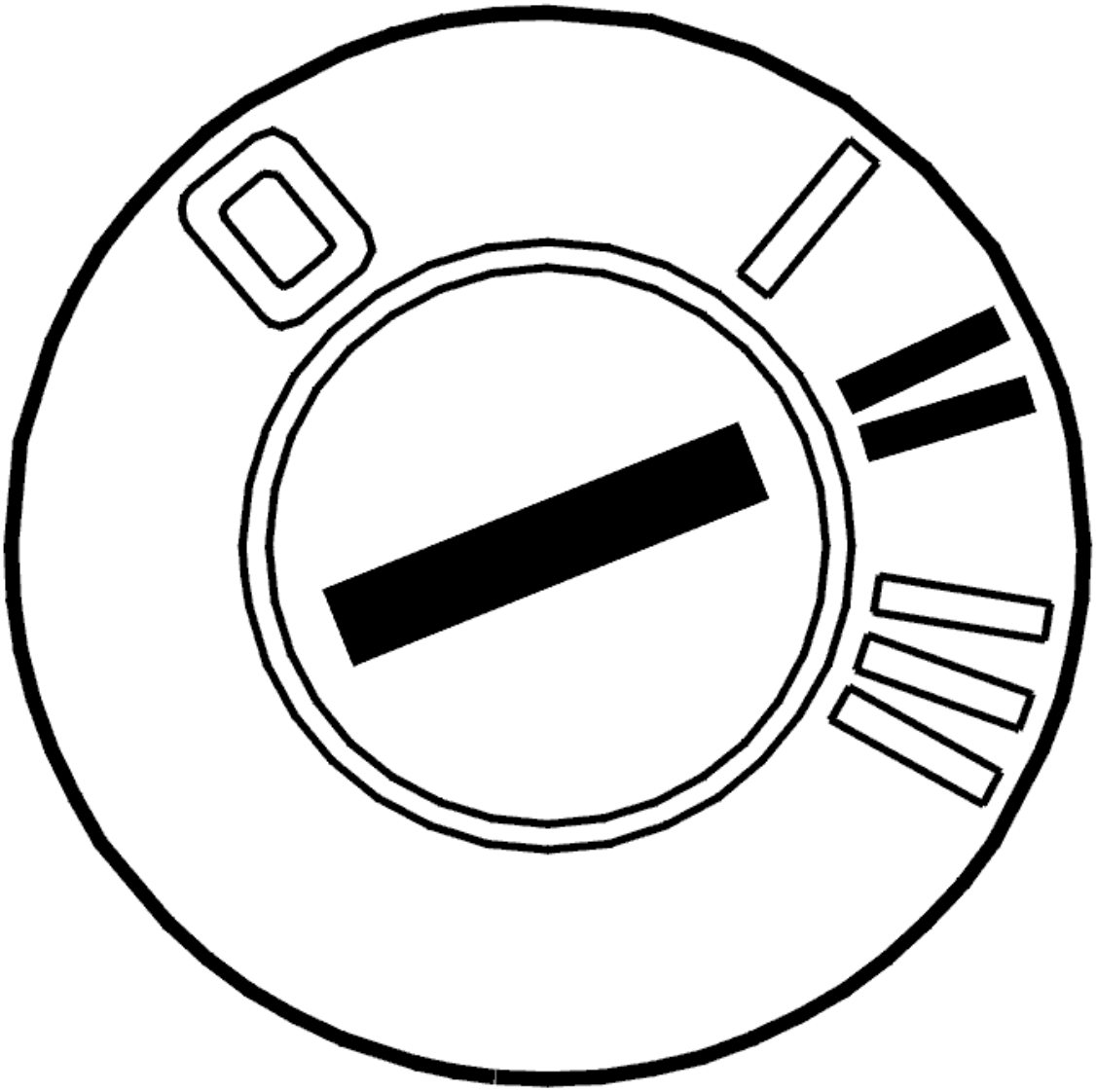

Fig. 19: Identifying Ignition ON
Courtesy of VOLVO CARS CORPORATION

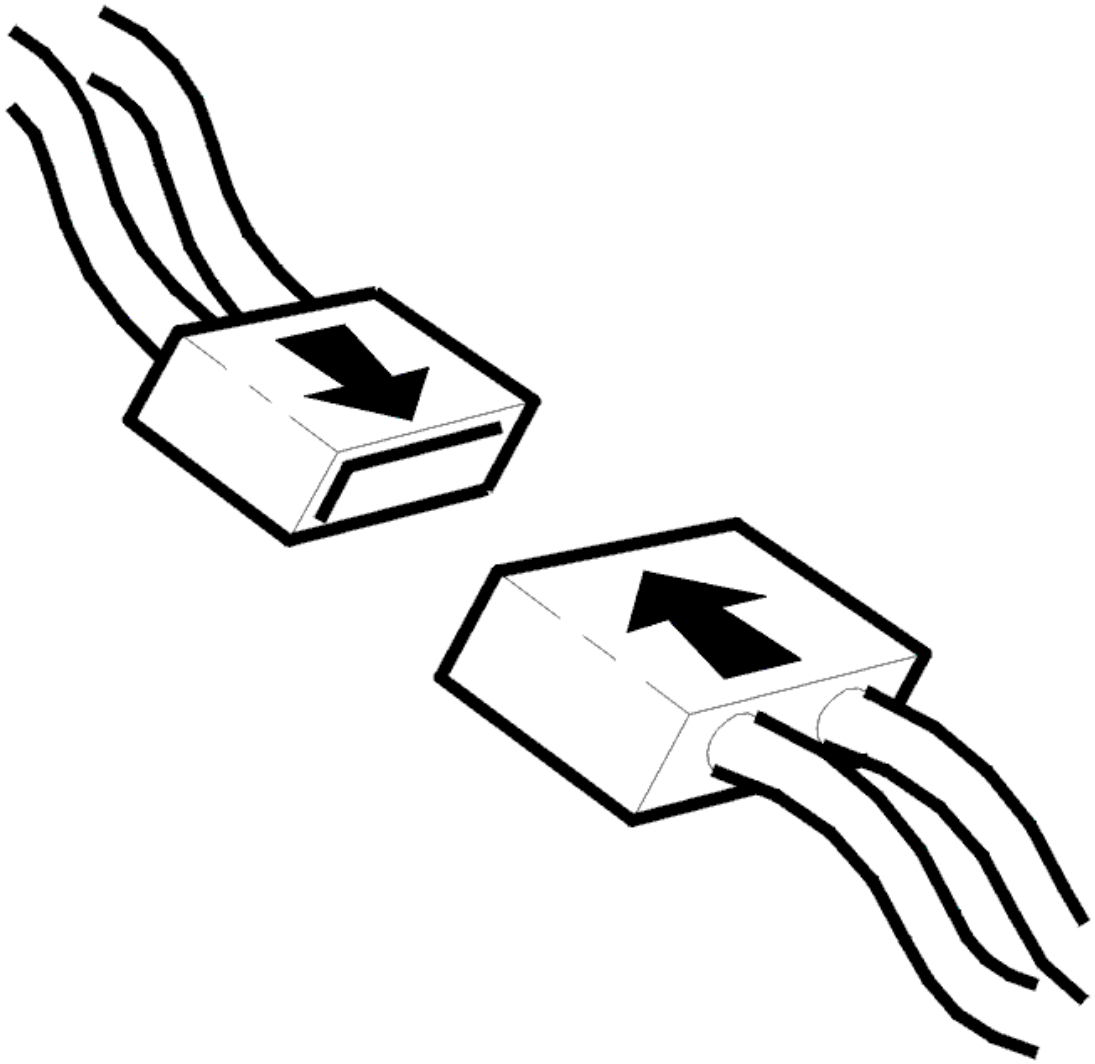

Fig. 20: Connecting Connector
Courtesy of VOLVO CARS CORPORATION

- Ignition off
- Reinstall the connectors, components etc.
- Ignition on.

  Check that the relevant diagnostic trouble code (DTC) has switched status from permanent to intermittent fault.

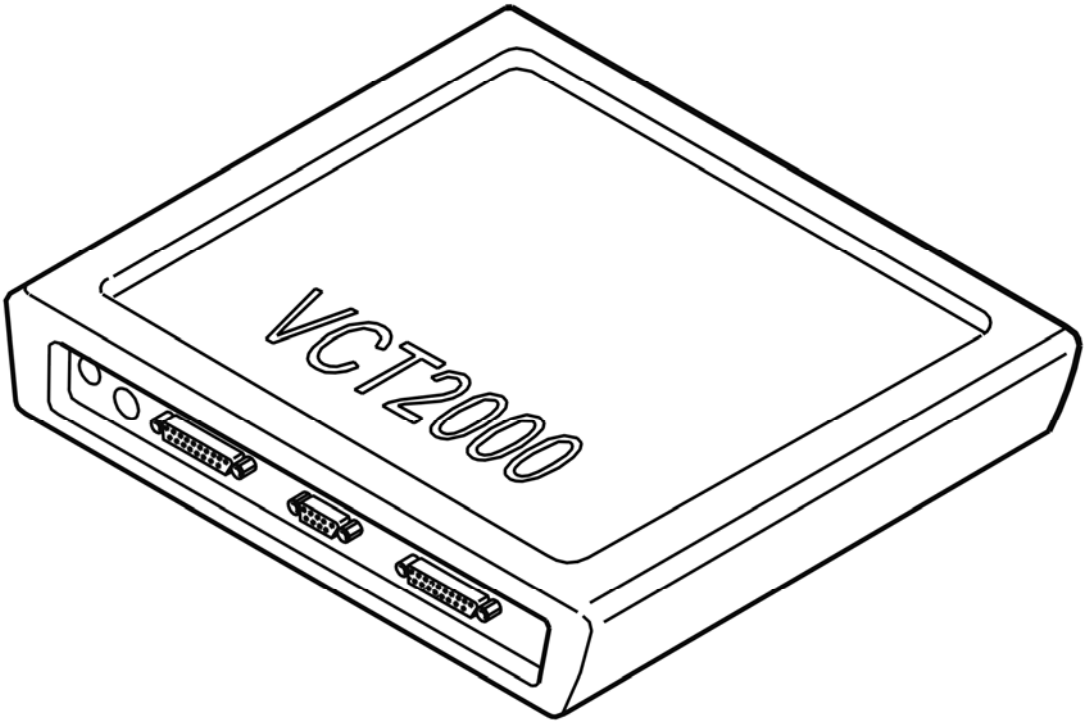

Fig. 21: Identifying VCT2000 Diagnostic Tool Symbol In VIDA
Courtesy of VOLVO CARS CORPORATION

Has the status of the diagnostic trouble code (DTC) changed?

- **YES**

  VERIFIED: Troubleshooting has been completed.

- **NO**

  Refer to **INFORMATION**

INFORMATION

FAULT-TRACING INFORMATION

The fault should have been detected and remedied. As this is not the case fault-tracing has failed.

Exit fault-tracing for this diagnostic trouble code (DTC) or make another attempt.

CCM-0002: BLOWER FAN MOTOR. SIGNAL TOO HIGH (2003-04)

DIAGNOSTIC TROUBLE CODE (DTC) INFORMATION

Condition

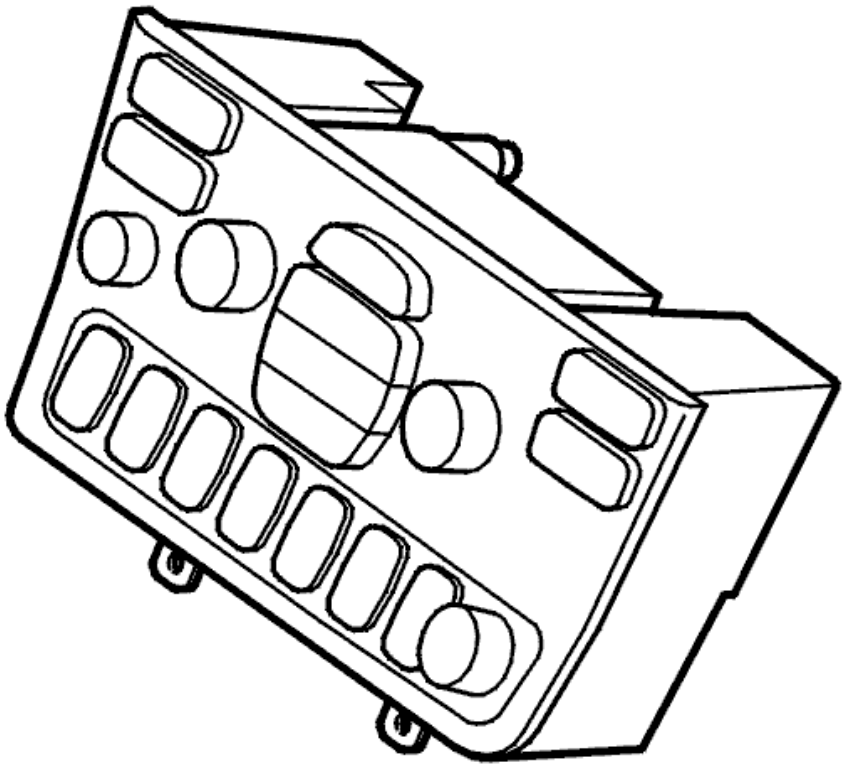

Fig. 22: Identifying Blower Fan Motor & Connector
Courtesy of VOLVO CARS CORPORATION

Diagnostic trouble code (DTC) CCM-0002 is stored if the control module registers that the diagnostic signal from the blower fan power unit is above 10 V and the control current to the blower fan power unit is above 8.56 mA.

Substitute Value

- The blower fan cannot start while the fault persists
- The air conditioning (A/C) compressor is not allowed to start.

Possible Source

- Blocked blower fan motor
- Open-circuit in the signal cable
- Open-circuit in the ground lead for the fan motor
- Short-circuit to supply voltage in the ground lead for the blower fan motor
- Short-circuit to ground in the control signal cable
- Open-circuit in the control signal cable

- Short-circuit to supply voltage in the diagnostic signal cable
- Defective blower fan motor or power unit
- Contact resistance.

Fault symptom[s]

- The blower fan does not operate
- Air flow problem
- No cooling from the air conditioning (A/C) system.

SIGNAL TOO HIGH

CHECKING THE BLOWER FAN

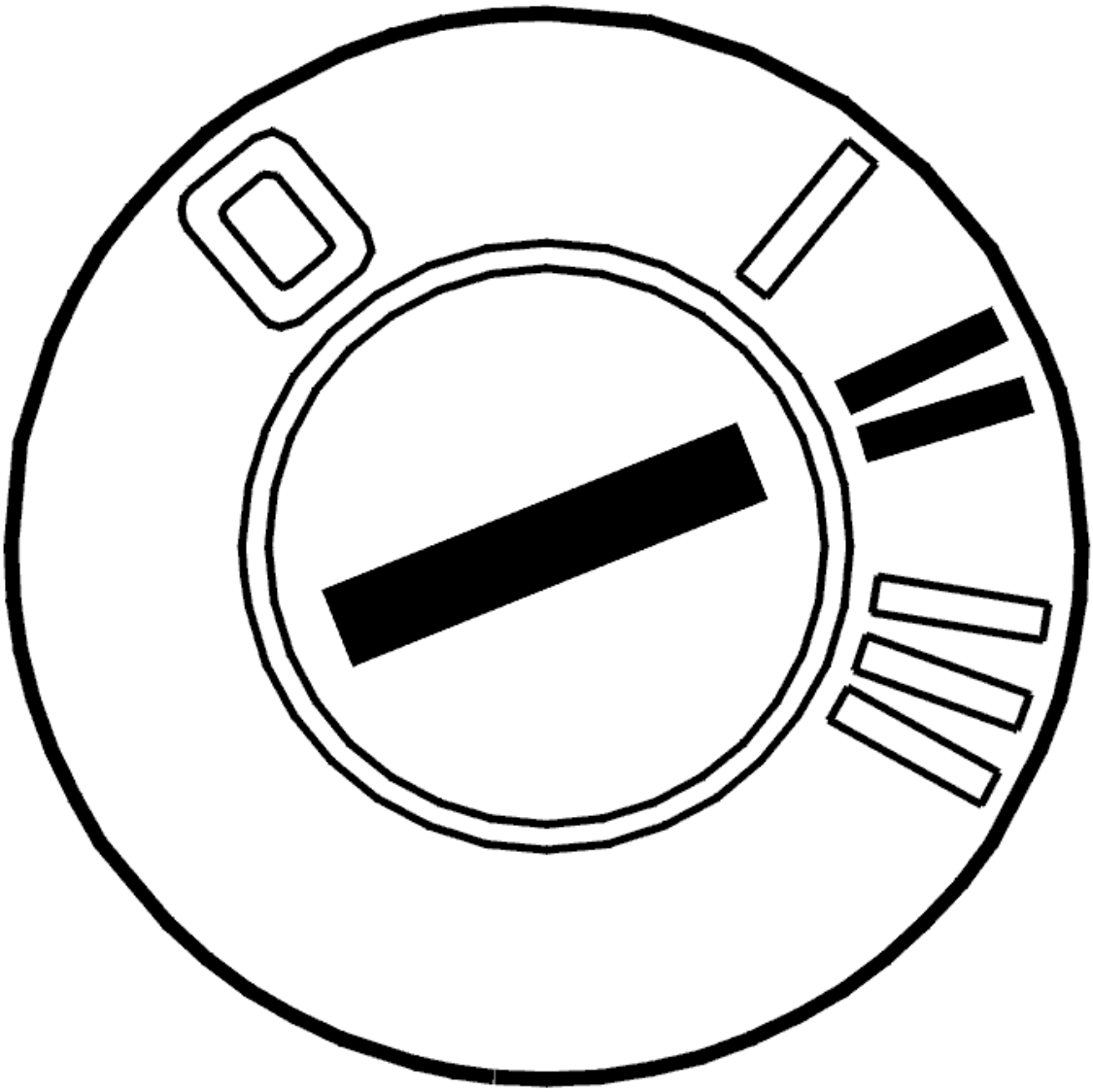

Fig. 23: Identifying Ignition ON

Courtesy of VOLVO CARS CORPORATION

- Ignition on.

  Check that the blower fan functions. Turn the blower fan knob to maximum fan speed.

Is the blower fan working?

- **YES**

  Refer to **CHECKING THE CONNECTORS AND CABLES**

- **NO**

  Refer to **CHECKING THE CONNECTORS**

CHECKING THE CONNECTORS

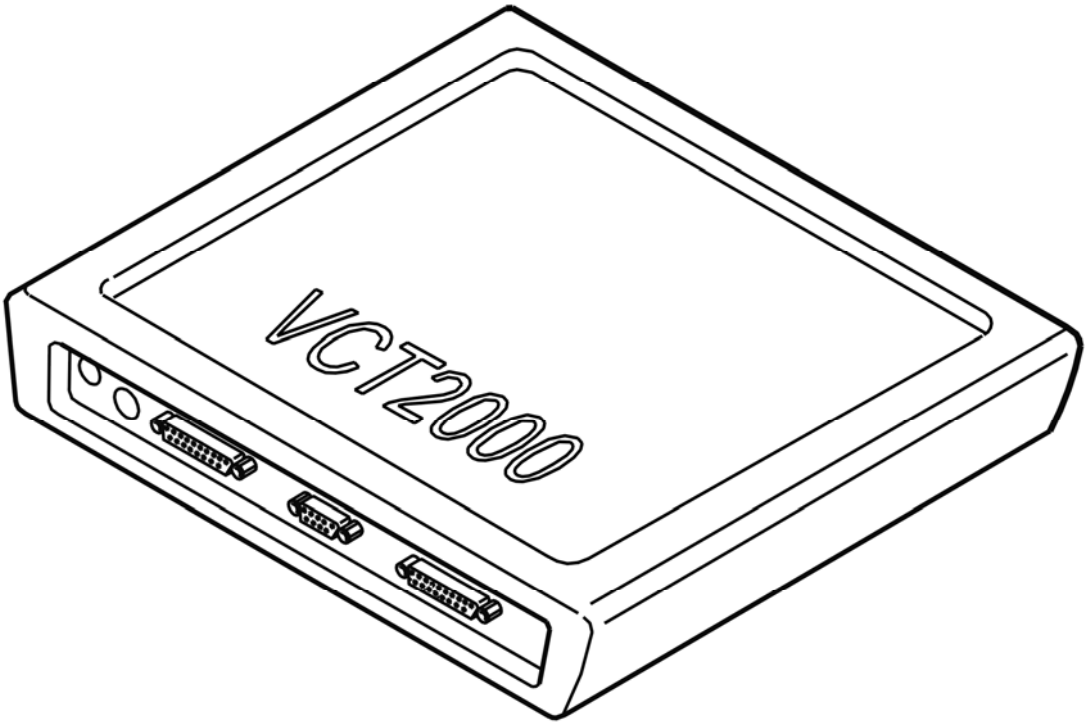

Fig. 24: Identifying Ignition ON
Courtesy of VOLVO CARS CORPORATION

- Ignition off
- Check the connectors on the climate control module (CCM) (terminals #A2, #A3) and the power unit.

Check for contact resistance and oxidation. In particular, check for any damage

- Reinstall the components, reconnect the connectors etc.
- Ignition on.

NOTE: **If the battery voltage has been interrupted, the blower fan speed must be calibrated. First turn the blower fan speed control to maximum speed and then to minimum speed.**

Check that the blower fan motor functions. Turn the blower fan speed switch.

If the blower fan is now working the cause of the fault was loose connections in the connectors.

Other information:

- To connect the breakout box, see **CONNECTING THE BREAKOUT BOX**
- To access and replace the control module, see **CLIMATE CONTROL MODULE (CCM), REPLACING**
- To access and replace the power unit, see **BLOWER FAN MOTOR/POWER UNIT, REPLACING**.

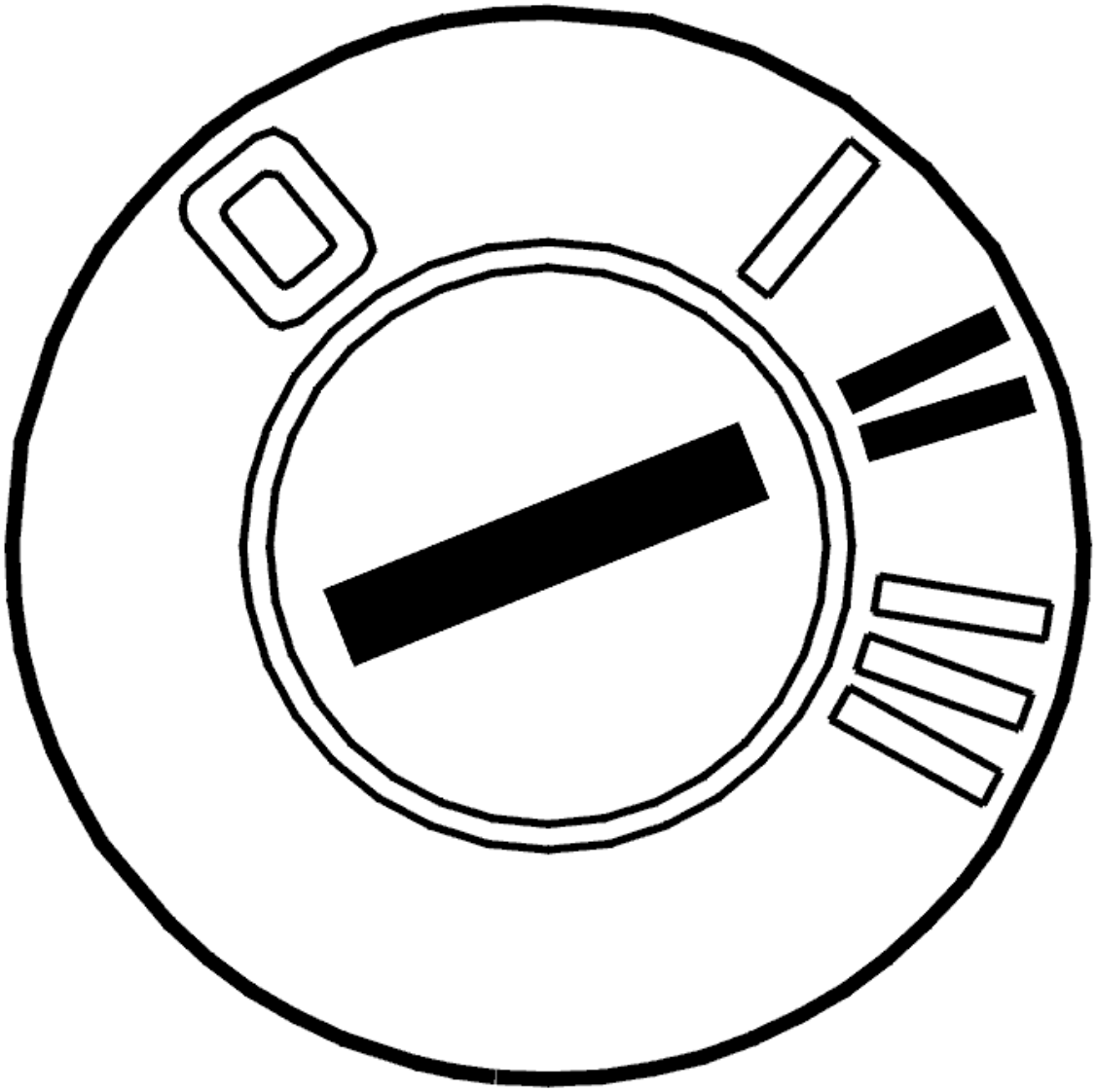

Fig. 25: Connector, Green (16-Pin)
Courtesy of VOLVO CARS CORPORATION

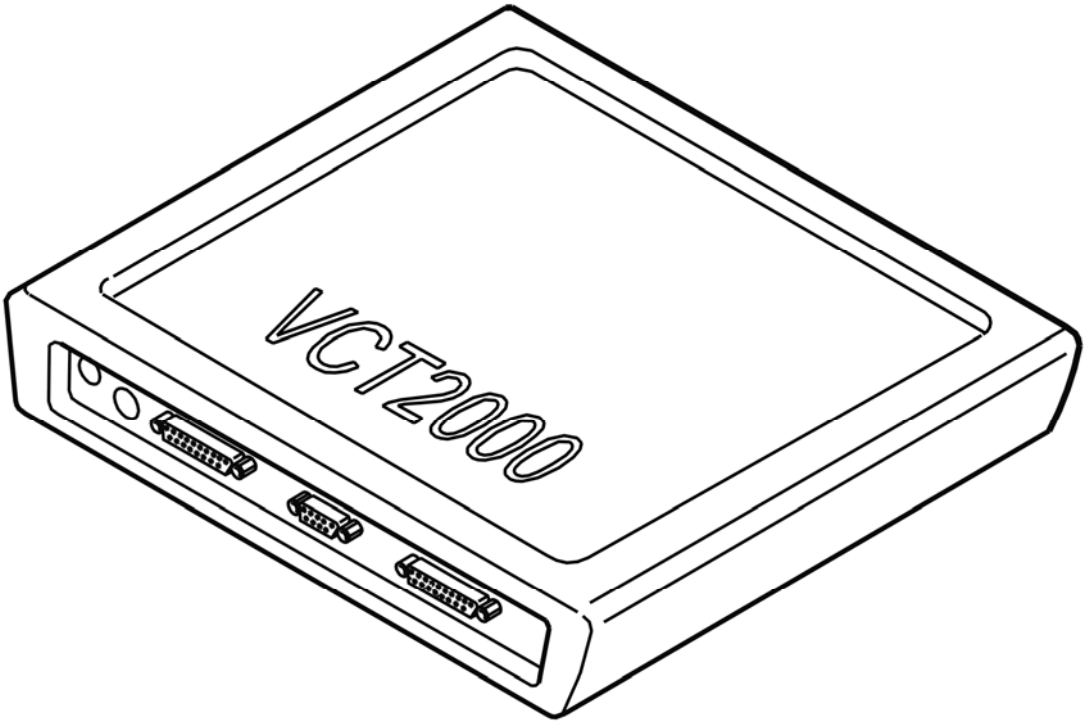

Fig. 26: Identifying Ohmmeter
Courtesy of VOLVO CARS CORPORATION

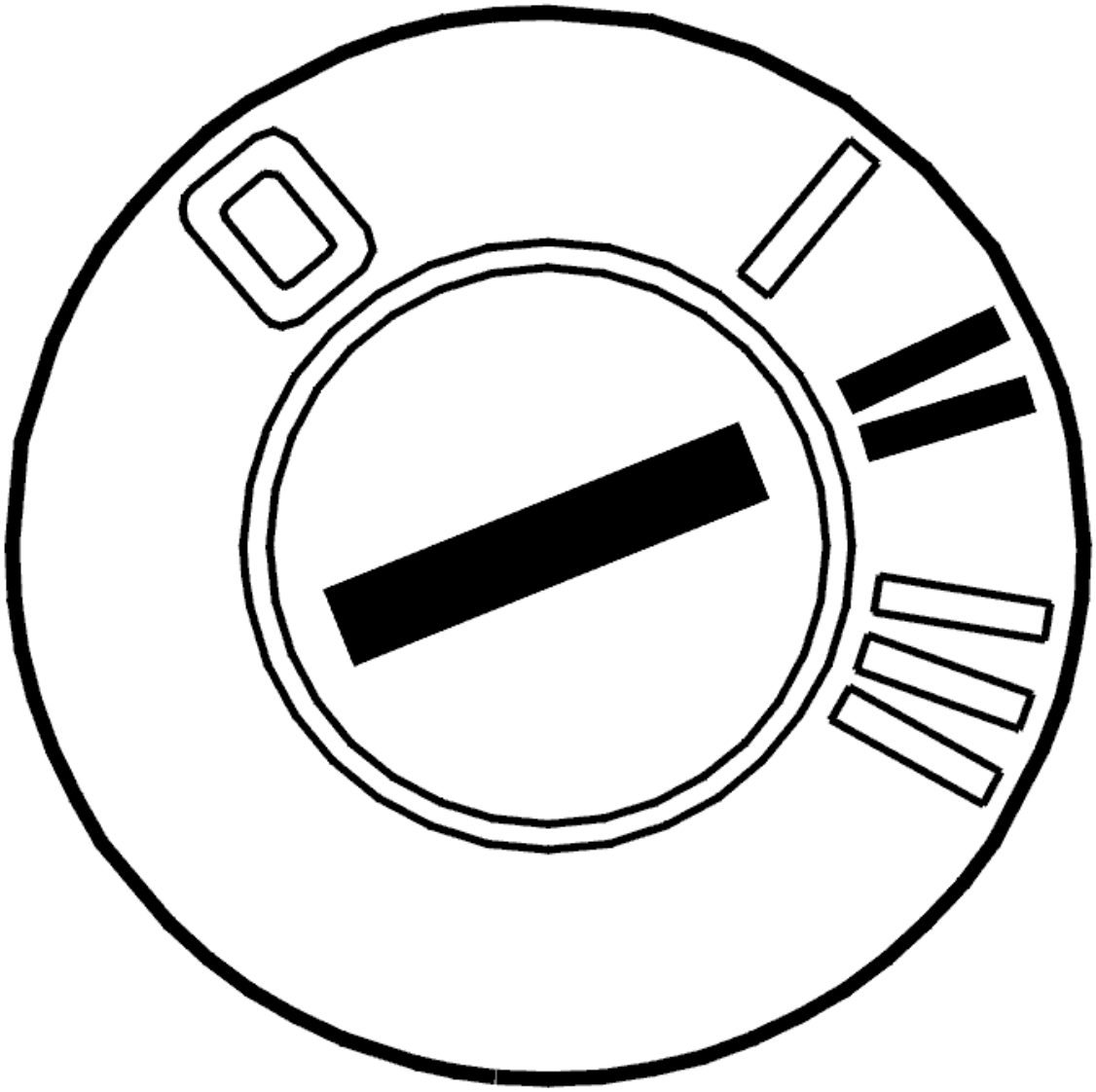

Fig. 27: Connector, Black (2-Pin)
Courtesy of VOLVO CARS CORPORATION

Is the blower fan motor functioning?

- **YES**

  OKAY: Troubleshooting has been completed.

- **NO**

  Refer to **CHECKING COMPONENTS AND WIRING**

CHECKING COMPONENTS AND WIRING

CAUTION: The blower fan motor power unit is very sensitive to short-circuits and

excess current. Do not damage the power unit when taking readings. Take readings with the power unit connector disconnected when checking the wiring.

Checking the engine cooling fan (FC) motor

Check that the blower fan rotor can rotate freely in the climate control system and that nothing is blocking it. Check by hand whether the blower fan rotor can rotate freely.

Checking the wiring

Check the ground lead between the power unit terminal #A4 and the ground terminal. Check for a short-circuit to supply voltage.

Check the control signal cable between control module terminal #A3 and power unit terminal #A1. Check for an open-circuit. Check for a short-circuit to ground.

Check the diagnostic signal cable between control module terminal #A2 and power unit terminal #A3. Check for a short-circuit to supply voltage.

NOTE: **If the battery voltage has been interrupted, the blower fan speed must be calibrated. First turn the blower fan speed control to maximum speed and then to minimum speed.**

Remedy as necessary.

Other information:

- To connect the breakout box, see **CONNECTING THE BREAKOUT BOX**
- To access and replace the control module, see **CLIMATE CONTROL MODULE (CCM), REPLACING**
- To access and replace the power unit, see **BLOWER FAN MOTOR/POWER UNIT, REPLACING**
- For other values, see **SIGNAL DESCRIPTION, CLIMATE CONTROL MODULE (CCM), CONNECTOR A**

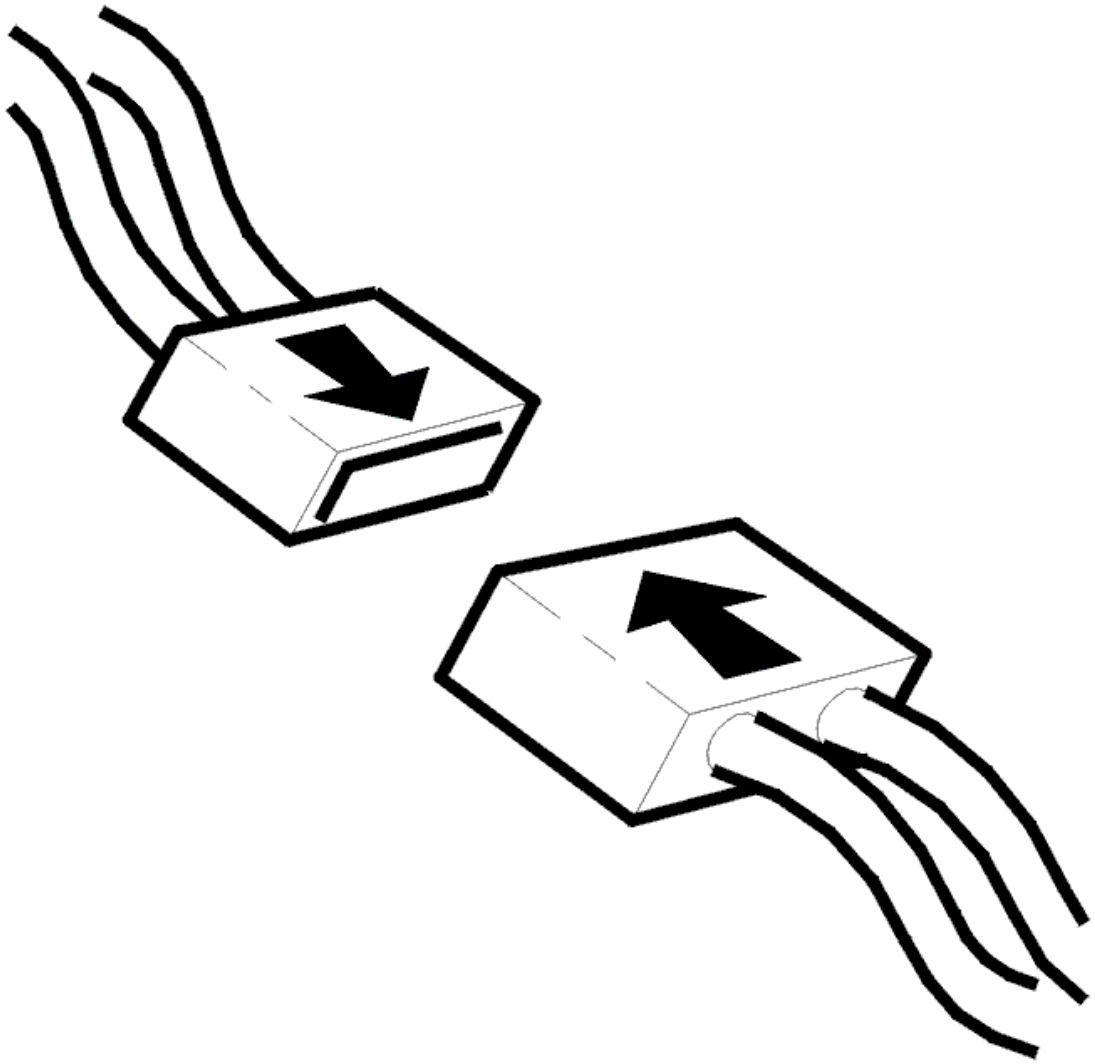

Fig. 28: Connector, Green (16-Pin)
Courtesy of VOLVO CARS CORPORATION

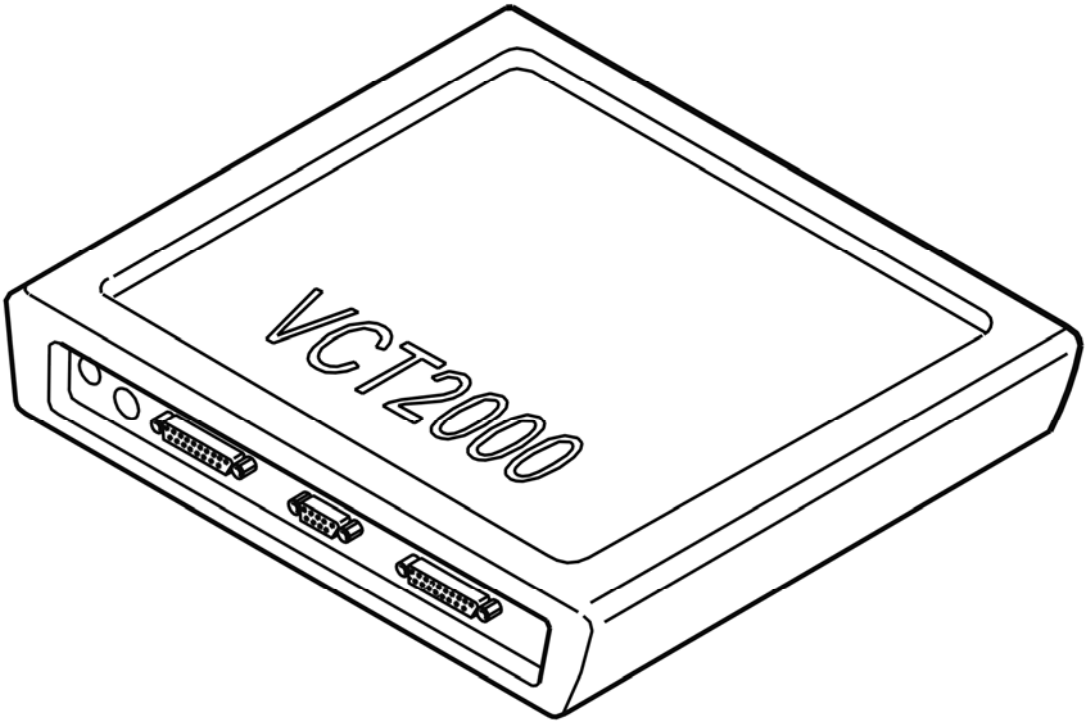

Fig. 29: Identifying Ohmmeter
Courtesy of VOLVO CARS CORPORATION

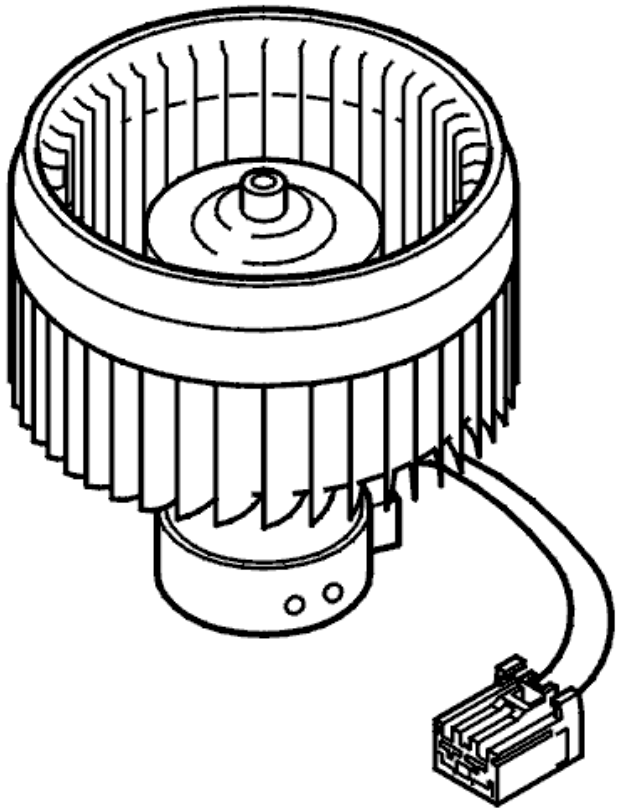

Fig. 30: Connector, Black (2-Pin)
Courtesy of VOLVO CARS CORPORATION

- **Continue**

  Refer to **VERIFICATION**

CHECKING THE CONNECTORS AND CABLES

CAUTION: The blower fan motor power unit is very sensitive to short-circuits and excess current. Do not damage the power unit when taking readings. Take readings with the power unit connector disconnected when checking the wiring.

Check the connectors on the control module (terminals #A2, #A3) and the power unit. Check for contact resistance and oxidation. Check for loose connections.

Check the ground lead between the power unit terminal #A4 and the ground terminal. Check for an intermittent short-circuit to supply voltage.

Check the control signal cable between the control module terminal #A3 and power unit terminal #A1. Check for an intermittent open-circuit. Check for an intermittent short-circuit to ground.

Check the diagnostic signal cable between control module terminal #A2 and power unit terminal #A3. Check

for an intermittent short-circuit to supply voltage.

NOTE: **If the battery voltage has been interrupted, the blower fan speed must be calibrated. First turn the blower fan speed control to maximum speed and then to minimum speed.**

Remedy as necessary.

Other information:

- To connect the breakout box, see **CONNECTING THE BREAKOUT BOX**
- To access and replace the control module, see **CLIMATE CONTROL MODULE (CCM), REPLACING**
- To access and replace the power unit, see **BLOWER FAN MOTOR/POWER UNIT, REPLACING**
- For other values, see **SIGNAL SPECIFICATION**
- see **CHECKING WIRING AND TERMINALS** .

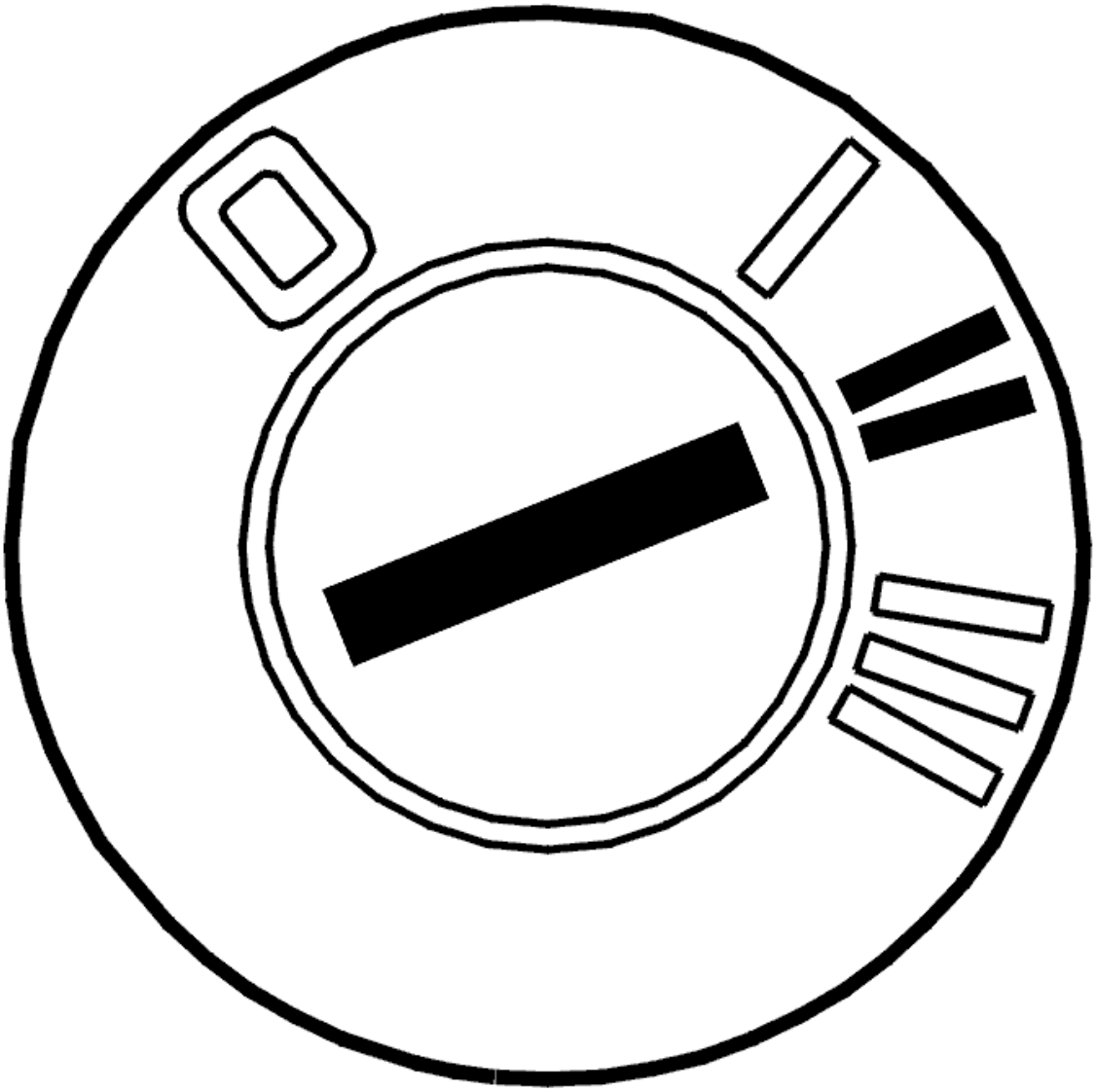

Fig. 31: Connector, Green (16-Pin)
Courtesy of VOLVO CARS CORPORATION

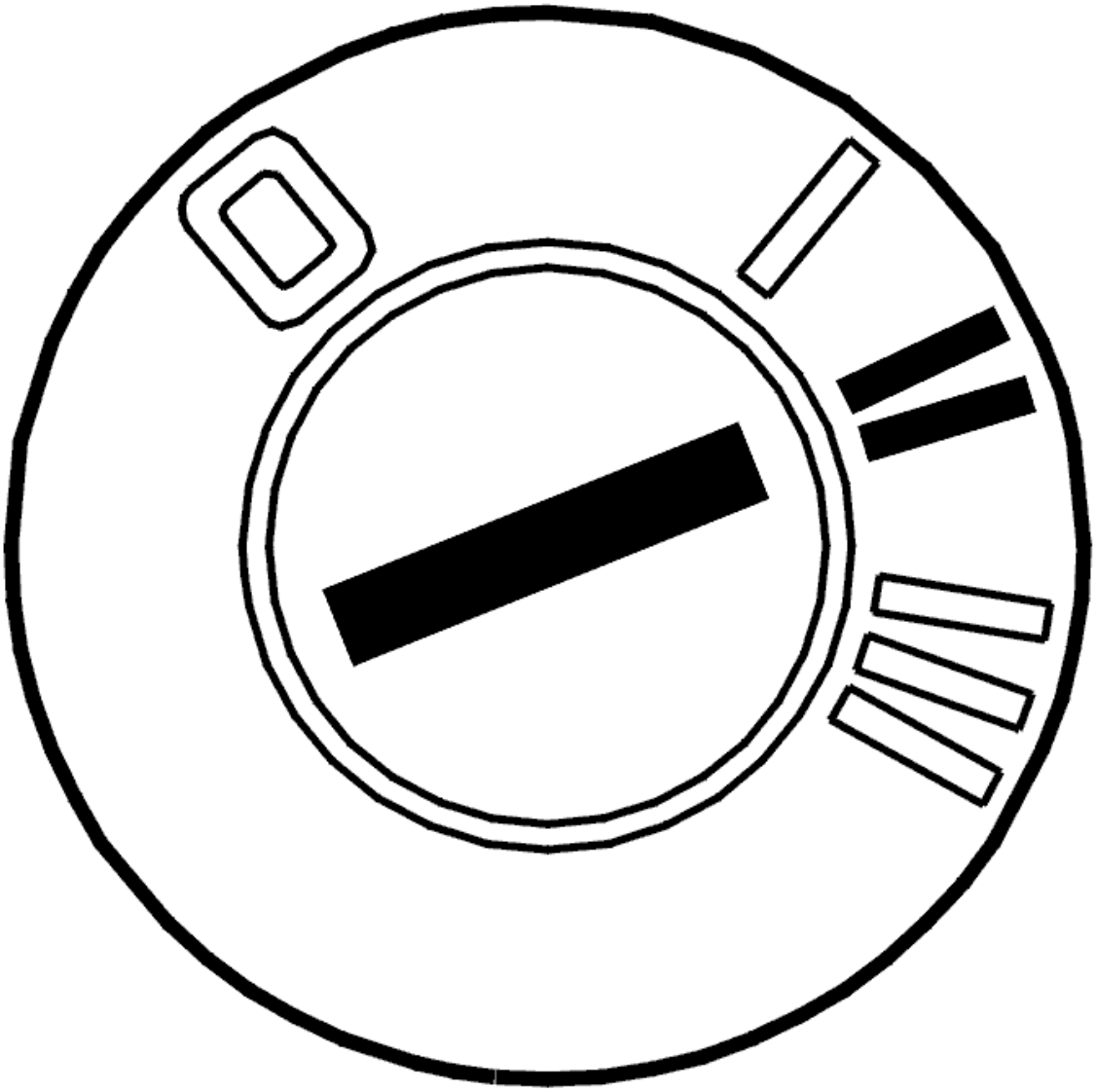

Fig. 32: Identifying Ohmmeter
Courtesy of VOLVO CARS CORPORATION

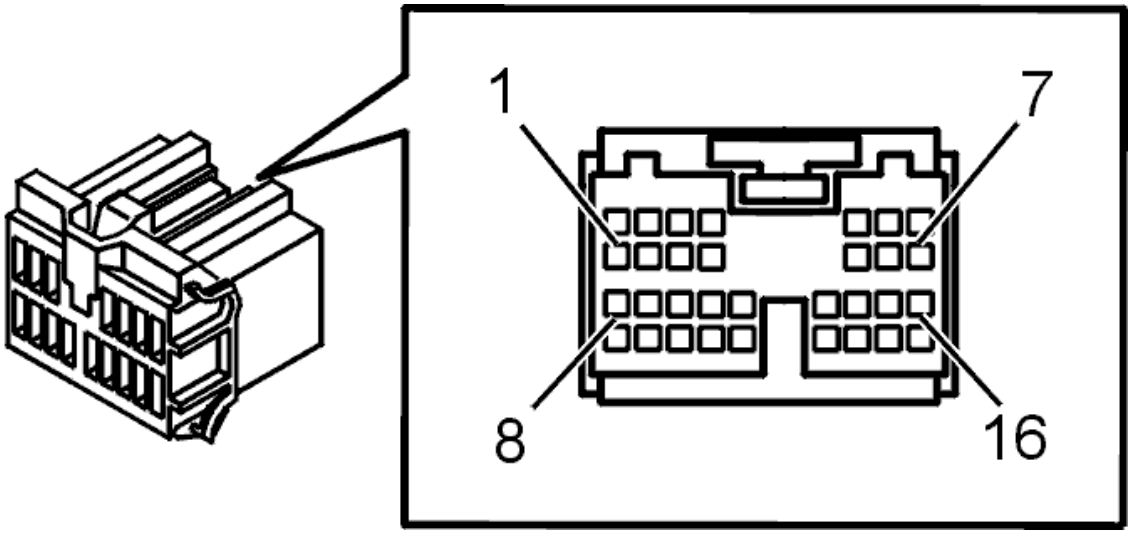

Fig. 33: Connector, Black (2-Pin)
Courtesy of VOLVO CARS CORPORATION

- **Continue**

  Refer to **INFORMATION**

VERIFICATION

HINT: After the repair it is necessary to check that the fault has been rectified.

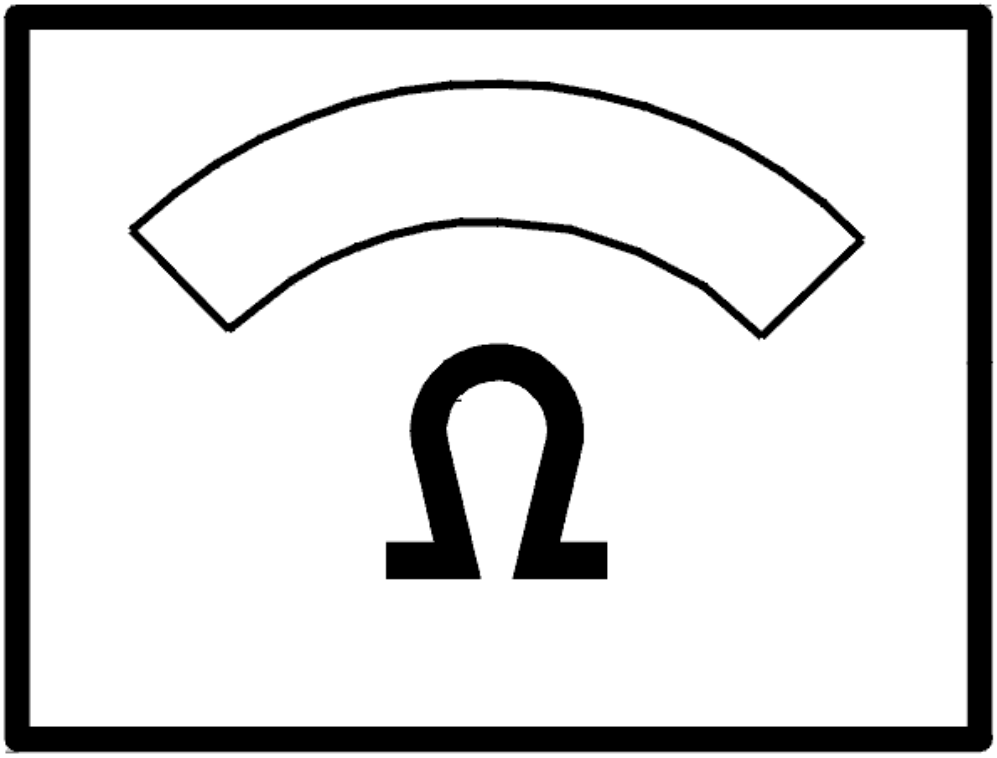

Fig. 34: Identifying Ignition ON
Courtesy of VOLVO CARS CORPORATION

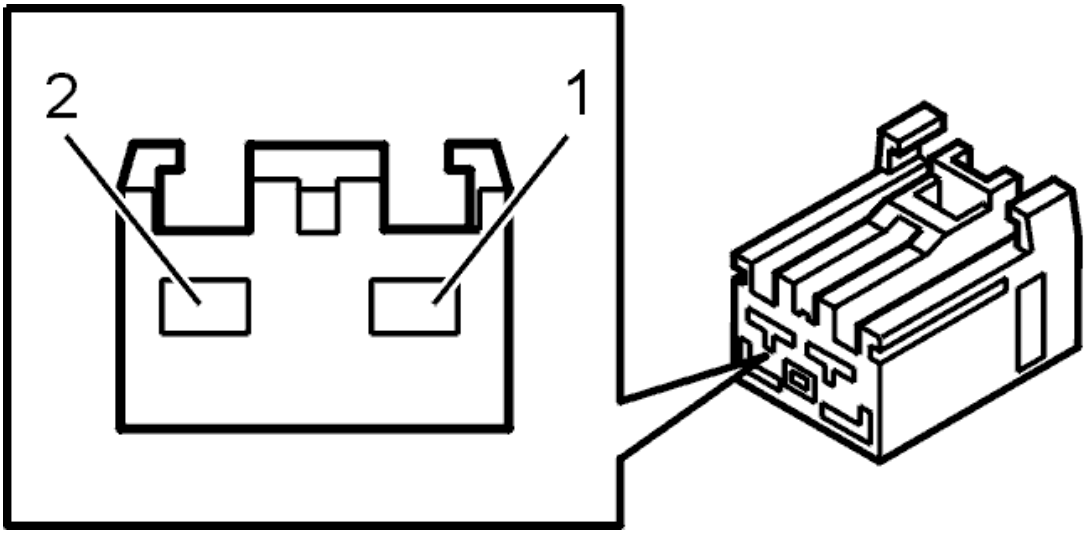

Fig. 35: Connecting Connector
Courtesy of VOLVO CARS CORPORATION

- Ignition off.
- Connect the connectors, install the components, etc.
- Ignition on.
- Read the diagnostic trouble codes.

  If the status of the diagnostic trouble code has changed to an intermittent fault this indicates that the fault has been rectified.

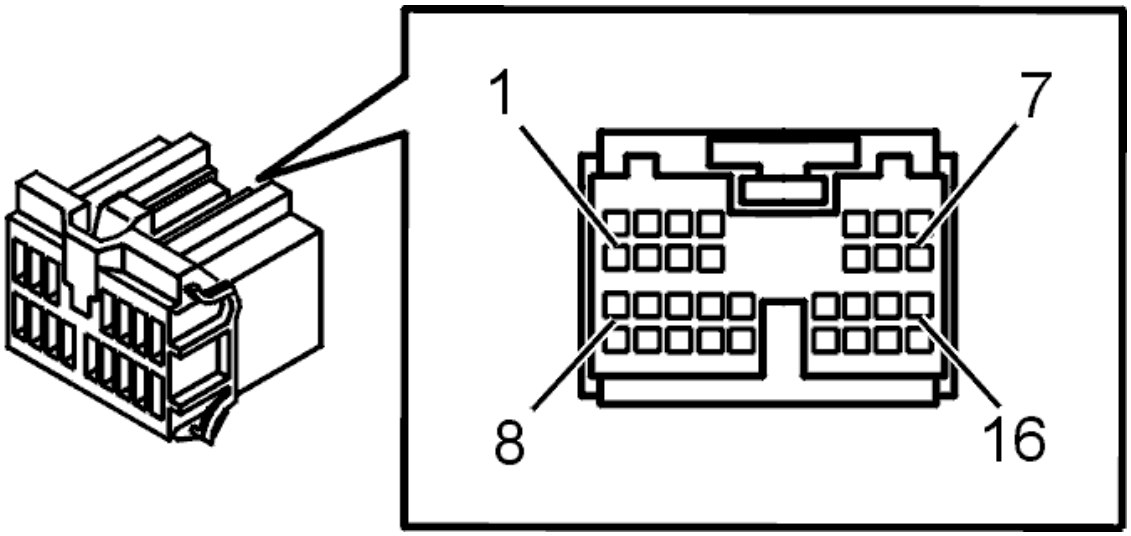

Fig. 36: Identifying VCT2000 Diagnostic Tool Symbol In VIDA
Courtesy of VOLVO CARS CORPORATION

Has the status of the diagnostic trouble code changed?

- **YES**

VERIFIED: Troubleshooting has been completed.

- **NO**

  Refer to **INFORMATION**

INFORMATION

FAULT-TRACING INFORMATION

The fault should have been detected and remedied. As this is not the case fault-tracing has failed.

Exit fault-tracing for this diagnostic trouble code (DTC) or make another attempt.

BLOWER FAN MOTOR/POWER UNIT, REPLACING

FAN MOTOR

REMOVAL

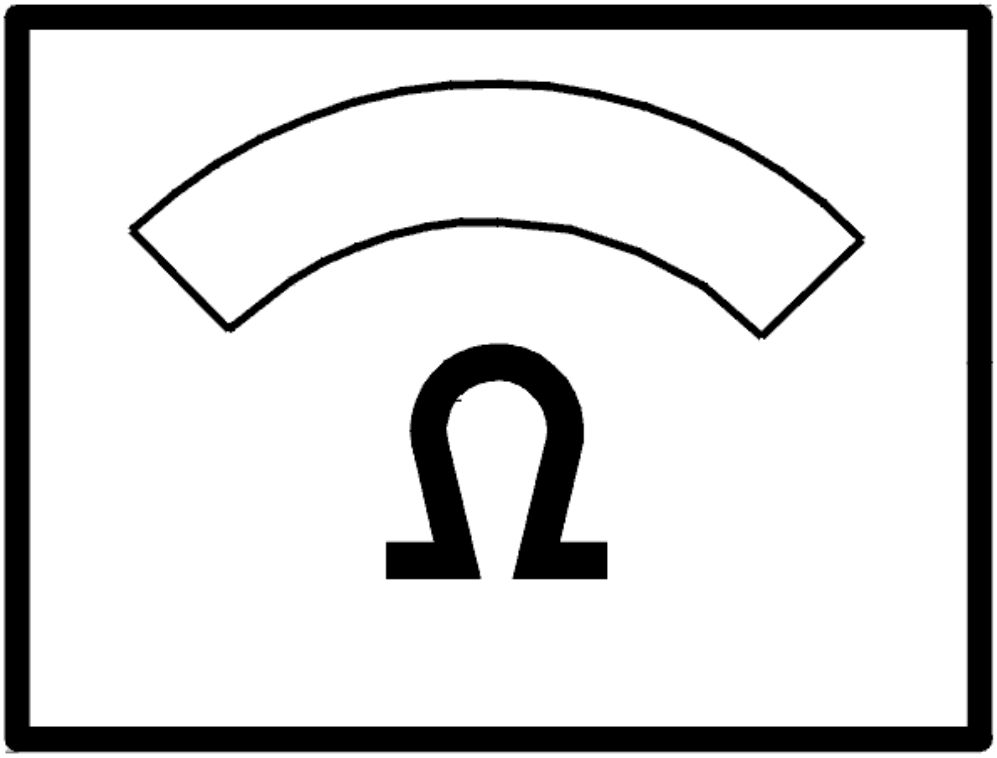

Fig. 37: Detaching Floor Carpet At Front
Courtesy of VOLVO CARS CORPORATION

Remove:

- the sill trim panel. See **FRONT DOOR SILL TRIM PANEL**
- the soundproofing panel. See **SOUNDPROOFING PANEL, REPLACING**
- side panel on the center console. See **REPLACING THE SIDE PANEL**
- the glove compartment. See **GLOVE COMPARTMENT, REPLACING**
- any mounting hooks for child seats
- detach the drain hoses from the engine and the filter housing. Move the drain hoses to one side
- detach the floor carpet at the front. Fold the carpet back.

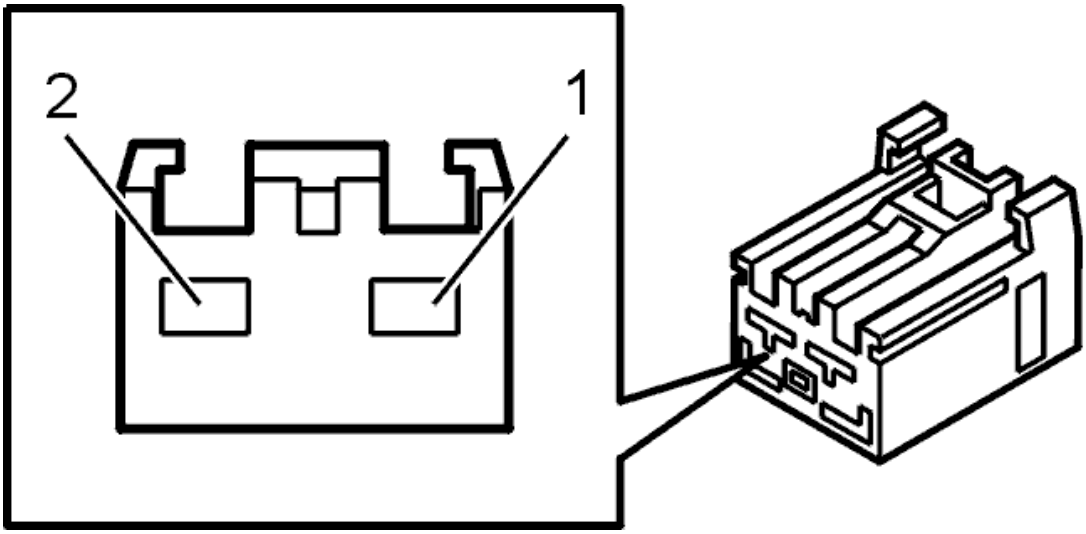

Fig. 38: Identifying Blower Fan Motor Screws
Courtesy of VOLVO CARS CORPORATION

Engine

Remove:

- disconnect the connector
- the 5 screws for the blower fan motor
- detach and remove the blower fan motor.

ENGINE

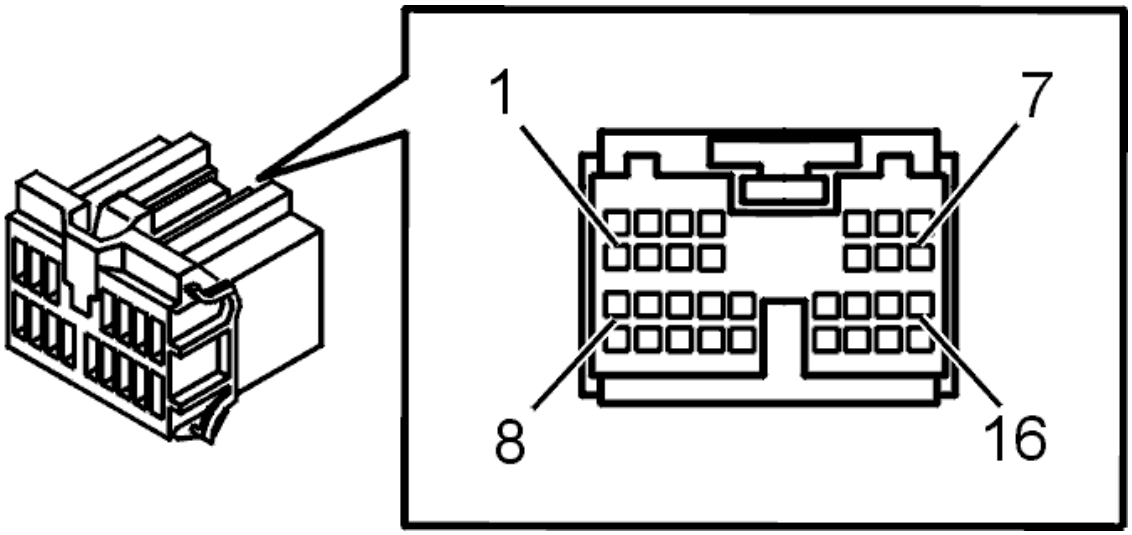

Fig. 39: Connector Cover From Motor
Courtesy of VOLVO CARS CORPORATION

Remove:

- the connector
- detach the cover from the motor
- the 2 screws on top
- press and pull out the motor and fan hub. Use a screwdriver for example.

INSTALLATION

Install in reverse order.

POWER UNIT

REMOVAL

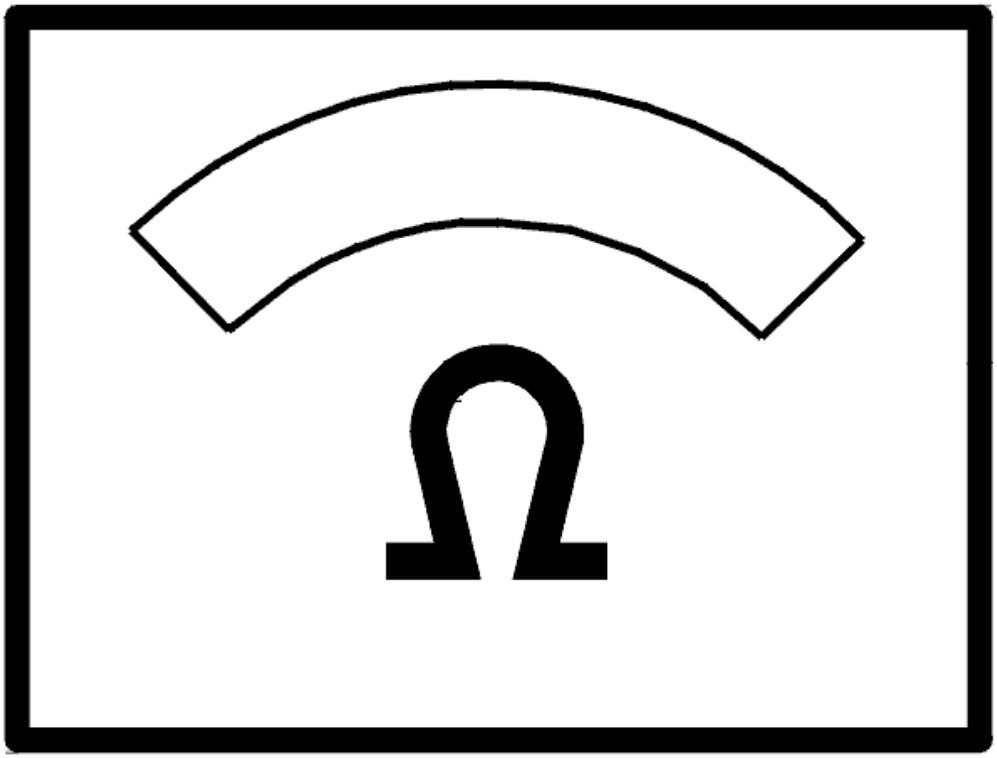

Fig. 40: Blower Fan Motor With Fan Hub
Courtesy of VOLVO CARS CORPORATION

Remove:

- the blower fan motor with the fan hub as above, see **FAN MOTOR**

Remove:

- the power unit, 2 screws.

INSTALLATION

Install in reverse order.

CCM-0002: EVAPORATOR TEMPERATURE SENSOR. SIGNAL TOO HIGH/SIGNAL MISSING (2005-12)

DIAGNOSTIC TROUBLE CODE (DTC) INFORMATION CCM-0002

Condition

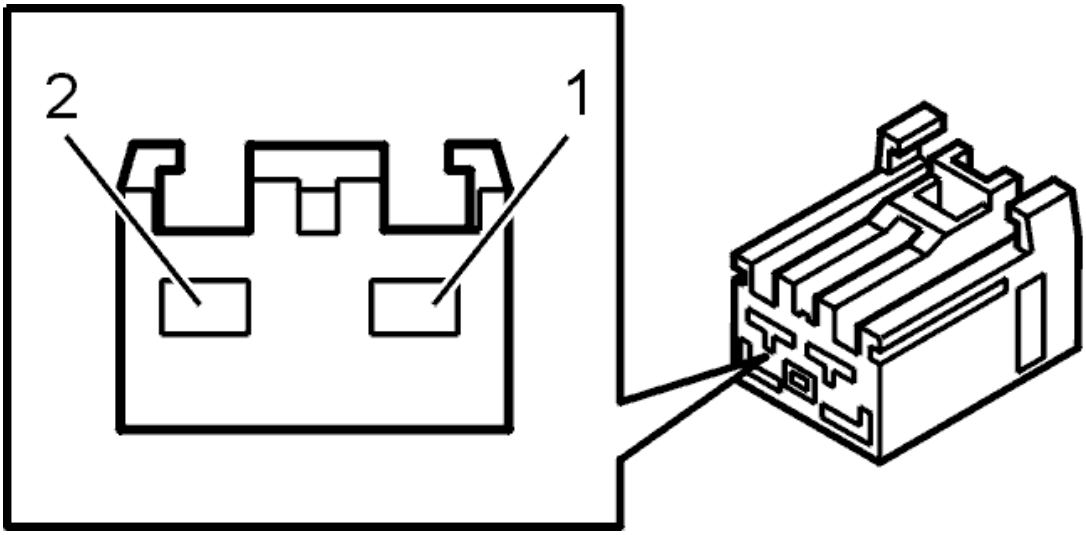

Fig. 41: Identifying Evaporator Temperature Sensor
Courtesy of VOLVO CARS CORPORATION

The diagnostic trouble code (DTC) is stored if the climate control module (CCM) detects a short-circuit to supply voltage in the signal, or an open-circuit in the signal between the control module and the evaporator temperature sensor.

The climate control module (CCM) uses the signal to control the A/C compressor.

At temperatures below 5.5°C the compressor is not permitted to operate because of the risk of freezing.

In normal operation (engine running and A/C selected) the control module can regulate the compressor in the following way based on the evaporator temperature:

- 10°C air conditioning (A/C) compressor on
- 5.5°C air conditioning (A/C) compressor off.

The diagnostic trouble code (DTC) can be diagnosed in ignition positions I and II.

Substitute Value

- The control module assumes a replacement value equivalent to 0°C. The compressor will not then be permitted to operate
- The normal value during operation (engine running and A/C selected) is 5.5-10°C. If the climate control system has not been operating and the engine has cooled, the temperature must correspond to the ambient temperature.

Possible Source

- There is a short-circuit to supply voltage in the signal between the evaporator temperature sensor and the climate control module (CCM)
- Open-circuit in the signal between the evaporator temperature sensor and the climate control module (CCM)
- Contact resistance, oxidation or loose connections in the connectors
- The evaporator temperature sensor does not function.

Fault symptom[s]

- No cooling from the air conditioning (A/C) system.
- Irregular cooling from the air conditioning (A/C) system.
- The air conditioning (A/C) compressor does not start, or runs sporadically.

SIGNAL TOO HIGH/SIGNAL MISSING

CHECKING THE EVAPORATOR TEMPERATURE

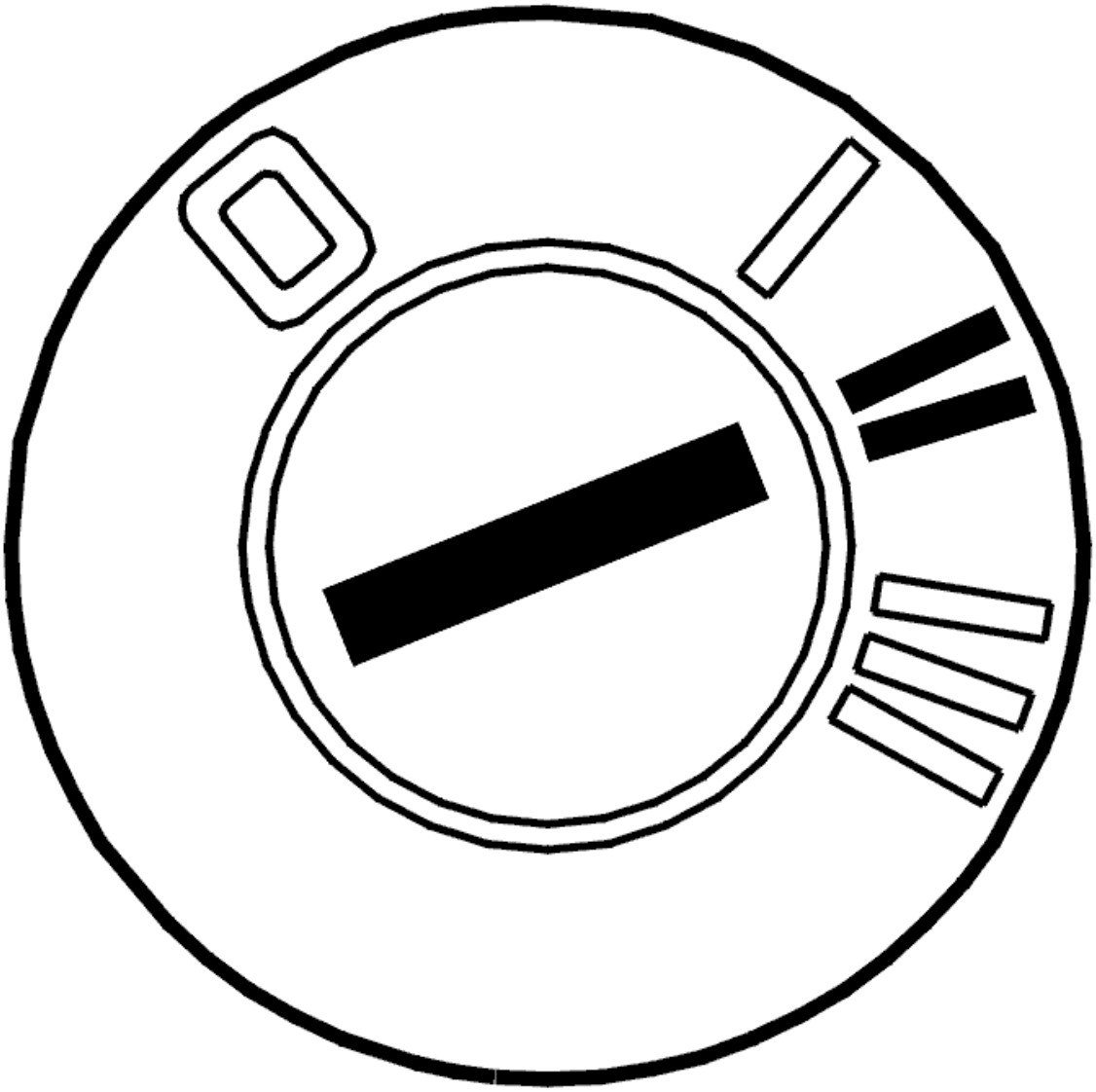

Fig. 42: Identifying Ignition ON
Courtesy of VOLVO CARS CORPORATION

- Ignition on.

  Check that the evaporator temperature is within its permitted range. If the climate control system has not been running and the engine has cooled down, the temperature must be the same as the outside temperature.

  If the temperature is now OK, the fault was caused by contact resistance or loose connections.

  Read off the evaporator temperature by clicking on the VCT2000 symbol.

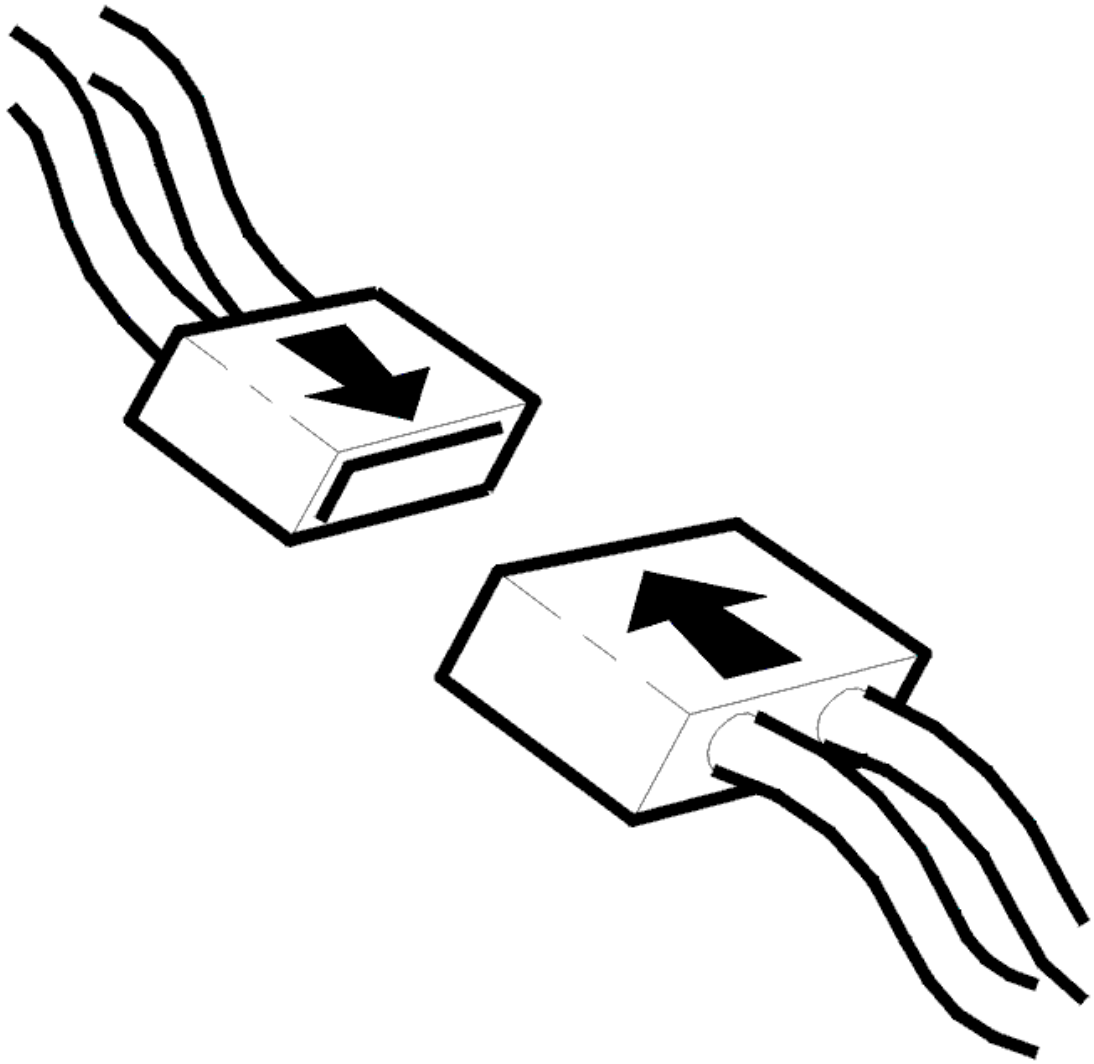

Fig. 43: Identifying VCT2000 Diagnostic Tool Symbol In VIDA
Courtesy of VOLVO CARS CORPORATION

Are the temperatures correct?

- **YES**

  Refer to **CHECKING THE CONNECTORS AND WIRING**

- **NO**

  Refer to **CHECKING THE COMPONENT AND WIRING**

CHECKING THE CONNECTORS AND WIRING

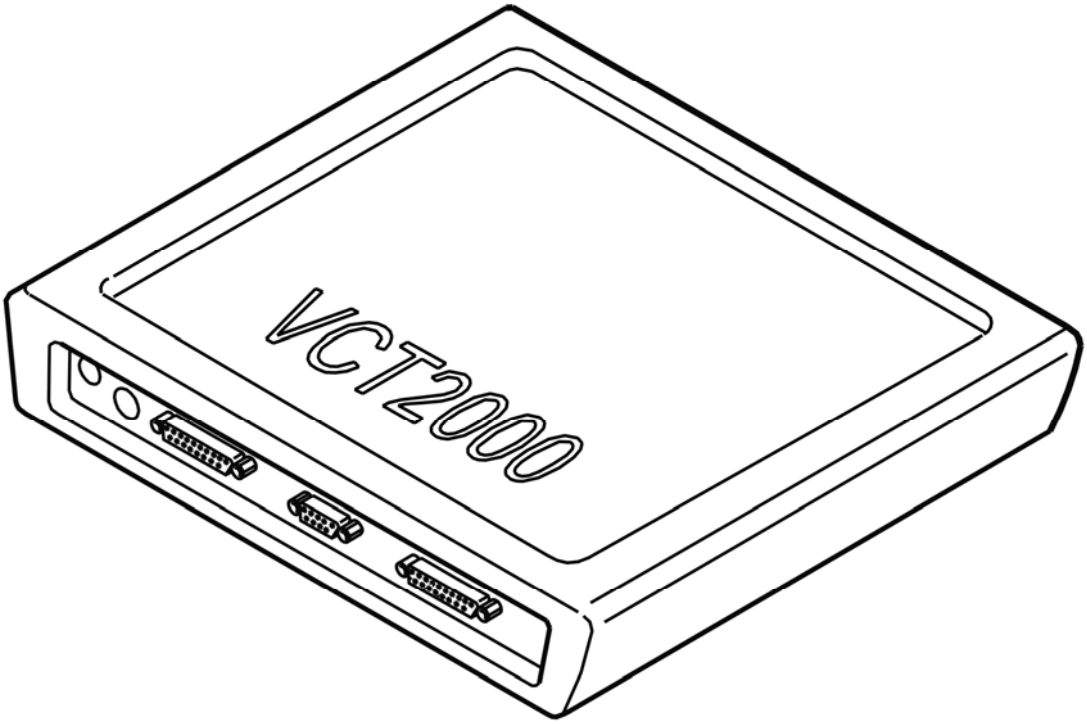

Fig. 44: Identifying Ignition OFF
Courtesy of VOLVO CARS CORPORATION

- Ignition off
- Disconnect the connector for the climate control module (CCM).

  Check the signal cable between the climate control module (CCM) and the evaporator temperature sensor. Check for a short-circuit to supply voltage.

  Take a reading on the connector for the climate control module (CCM) between terminals #5 (#29) and #16 (#40).

  Check the ground lead between the climate control module (CCM) and the evaporator temperature sensor. Check for a short-circuit to supply voltage.

  Take a reading on the connector for the climate control module (CCM) between terminals #13 (#37) and #16 (#40).

  The voltage must be approximately 0 V.

  Check the signal and ground cables between the climate control module (CCM) and the evaporator temperature sensor. Check for an intermittent open-circuit.

Take a reading between terminals #5 (#29) and #13 (#37) on the connector for the climate control module (CCM).

Check the connectors for contact resistance and oxidation.

Remedy as necessary.

Other information:

- see **CONNECTING THE BREAKOUT BOX**
- see **SIGNAL SPECIFICATION**
- see **CLIMATE CONTROL, LOCATION OF COMPONENTS**
- see **CLIMATE CONTROL MODULE (CCM), REPLACING**
- see **CONTENTS**

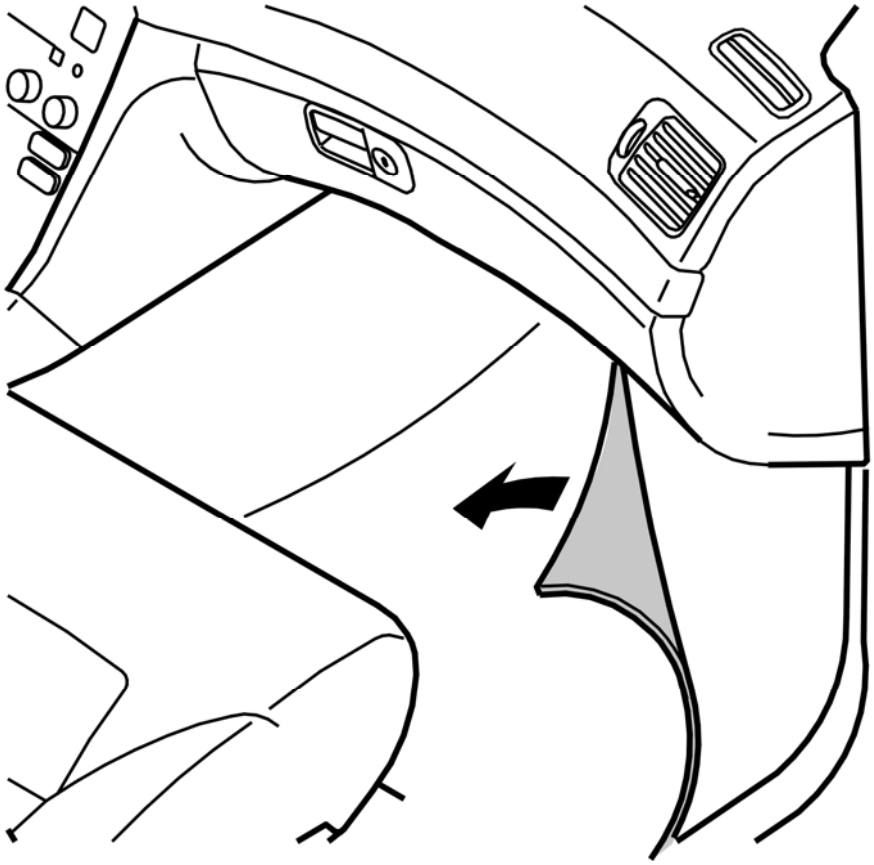

Fig. 45: Connector, Green (16-Pin)
Courtesy of VOLVO CARS CORPORATION

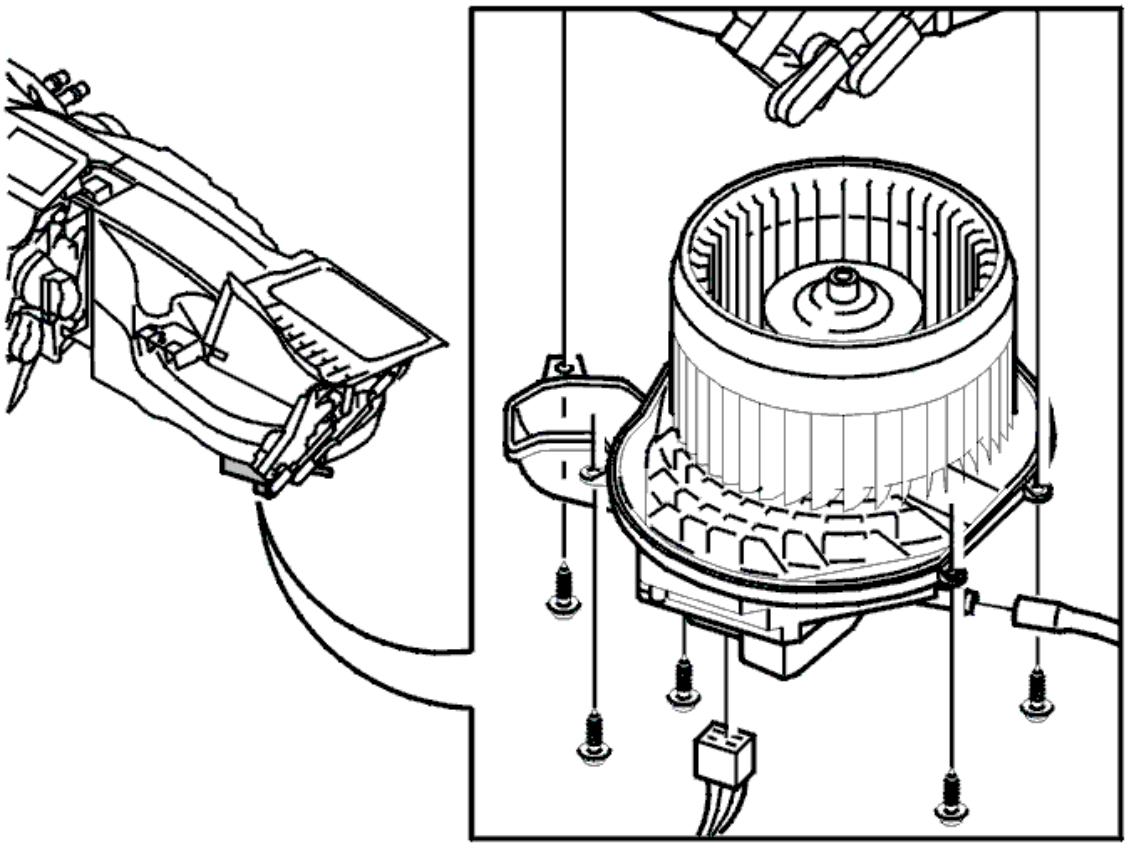

Fig. 46: Identifying Evaporator Temperature Sensor
Courtesy of VOLVO CARS CORPORATION

- **Continue**

  Refer to **INFORMATION**

CHECKING THE COMPONENT AND WIRING

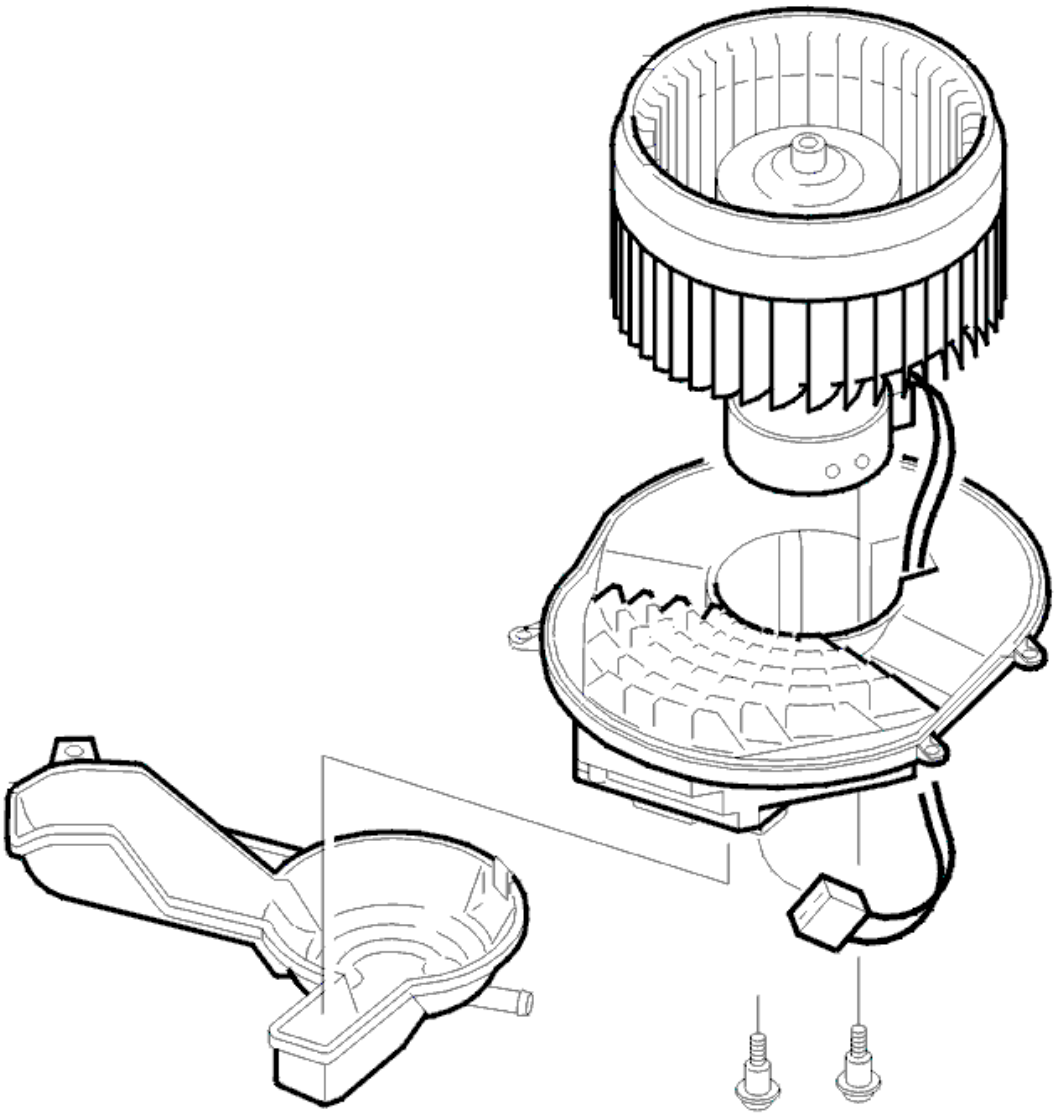

Fig. 47: Identifying Ignition OFF
Courtesy of VOLVO CARS CORPORATION

- Ignition off
- Disconnect the connector for the climate control module (CCM).

  Check the signal cable between the climate control module (CCM) and the evaporator temperature sensor. Check for a short-circuit to supply voltage.

  Take a reading on the connector for the climate control module (CCM) between terminals #5 (#29) and #16 (#40).

  Check the ground lead between the climate control module (CCM) and the evaporator temperature sensor. Check for a short-circuit to supply voltage.

  Take a reading on the connector for the climate control module (CCM) between terminals #13 (#37) and

#16 (#40).

The voltage must be approximately 0 V.

Check the signal and ground cables between the climate control module (CCM) and the evaporator temperature sensor. Check for an open-circuit.

Take a reading between terminals #5 (#29) and #13 (#37) on the connector for the climate control module (CCM).

The resistance must correspond to the resistance for the evaporator temperature sensor.

Check the connectors for contact resistance and oxidation.

Check that the climate control module (CCM) is receiving a correct value from the evaporator temperature sensor by measuring its resistance and comparing with the values in the table.

Remedy as necessary.

Other information:

- see **CONNECTING THE BREAKOUT BOX**
- see **SIGNAL SPECIFICATION**
- see **CLIMATE CONTROL, LOCATION OF COMPONENTS**
- see **CLIMATE CONTROL MODULE (CCM), REPLACING**
- see **CONTENTS**
- see **COMPONENT RESISTANCE VALUES**

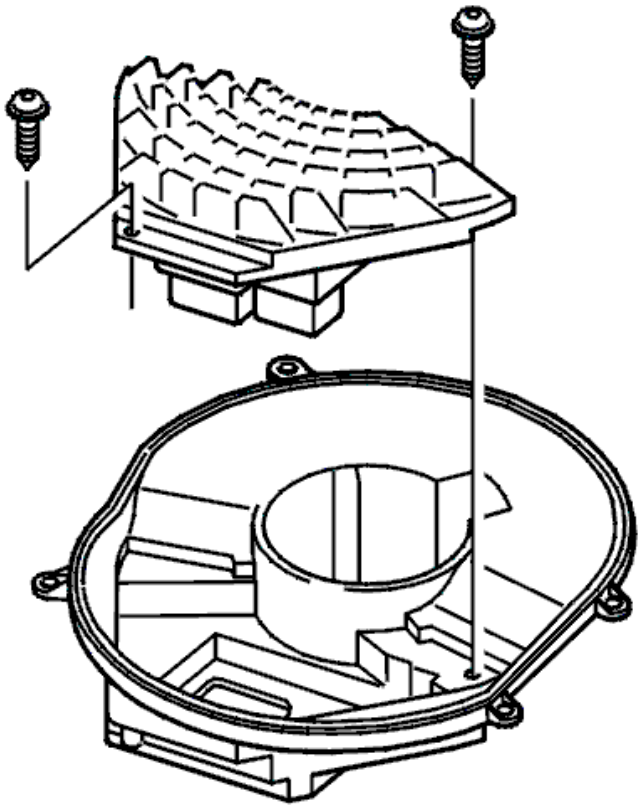

Fig. 48: Connector, Green (16-Pin)
Courtesy of VOLVO CARS CORPORATION

- **Continue**

  Refer to **VERIFICATION**

VERIFICATION

HINT: After carrying out the repair, check that the fault has been remedied.

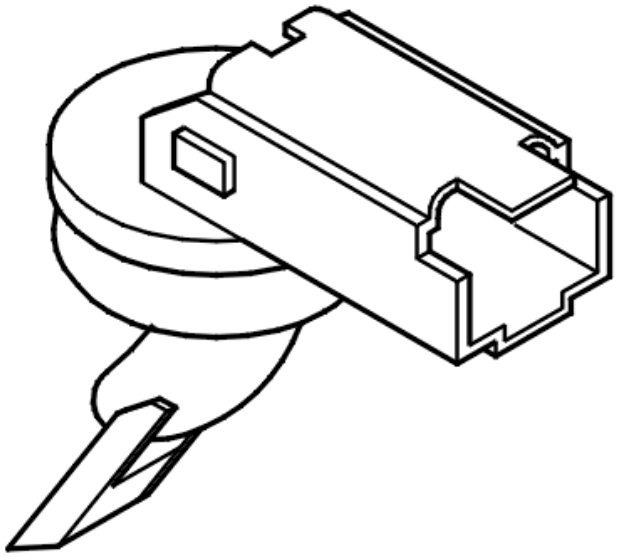

Fig. 49: Identifying Ignition ON
Courtesy of VOLVO CARS CORPORATION

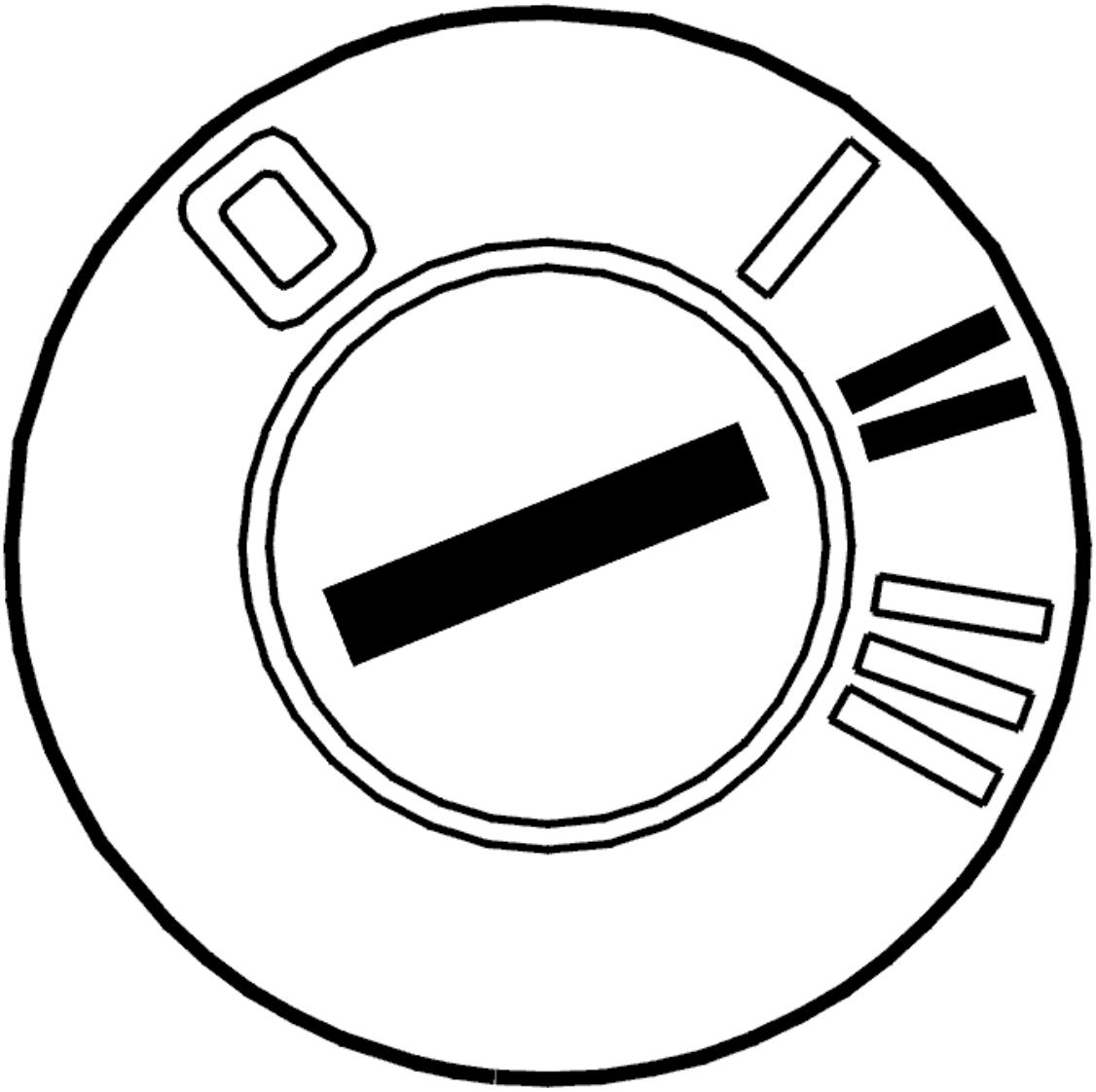

Fig. 50: Connecting Connector
Courtesy of VOLVO CARS CORPORATION

- Ignition off
- Reinstall the connectors, components etc.
- Ignition on.

Check the evaporator temperature sensor by clicking the VCT2000 symbol.

Check that the value from the evaporator temperature sensor corresponds to the ambient temperature.

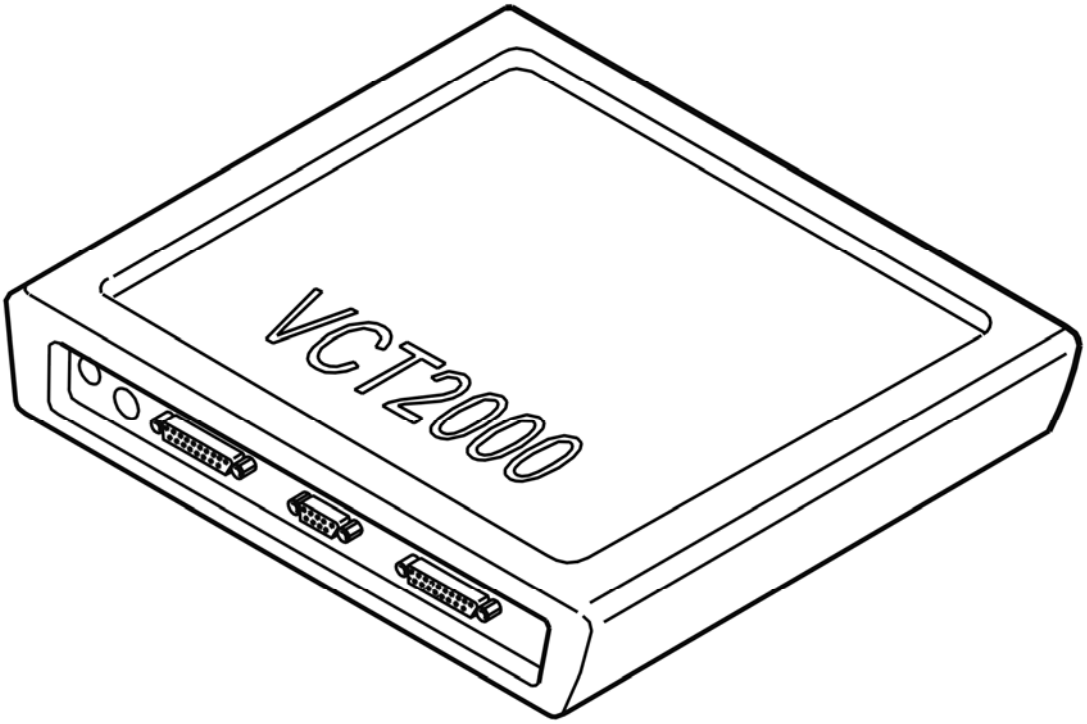

Fig. 51: Identifying VCT2000 Diagnostic Tool Symbol In VIDA
Courtesy of VOLVO CARS CORPORATION

Are the temperatures correct?

- **YES**

  VERIFIED: Troubleshooting has been completed.

- **NO**

  Refer to **INFORMATION**

INFORMATION

FAULT-TRACING INFORMATION

The fault should have been detected and remedied. As this is not the case fault-tracing has failed.

Exit fault-tracing for this diagnostic trouble code (DTC) or make another attempt.

CCM-0003: BLOWER FAN MOTOR PASSENGER COMPARTMENT TEMPERATURE SENSOR. FAULTY SIGNAL (2003-04)

DIAGNOSTIC TROUBLE CODE (DTC) INFORMATION

Condition

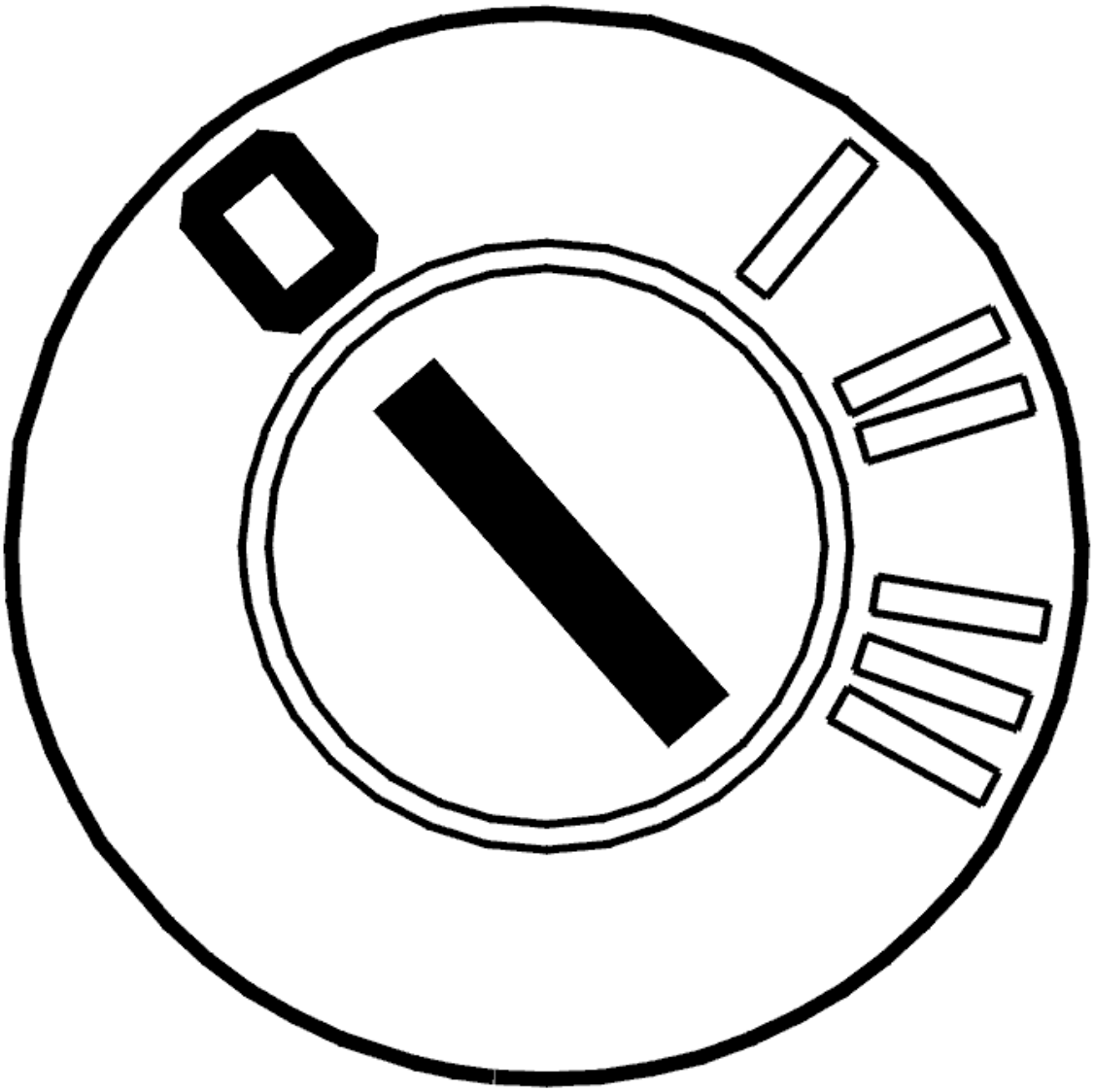

Fig. 52: Identifying Digital Climate Controls Faceplate
Courtesy of VOLVO CARS CORPORATION

If the control module registers that the pulses from the fan motor's pulse sensor fall below a certain frequency, DTC CEM-0003 is stored.

The fan is located on the reverse of the control module. The fan's function is to supply the passenger compartment temperature sensor with air from the passenger compartment to prevent the sensor's measurement values being affected by heat from the surrounding electronics. The fan activates when the passenger compartment temperature exceeds -10°C (14°F).

DTC CCM-0003 can only be diagnosed for Climate control module (CCM) in ECC versions.

Substitute Value

- The pulse sensor for the blower fan motor is switched off.

Possible Source

- Blocked blower fan motor.
- Open circuit on cables between control module and fan motor.
- Cables between the control module and fan motor short-circuited to voltage/ground.
- Damaged fan motor.

Fault symptom[s]

- Cabin temperature does not correspond to value set
- Poor heating in compartment

FAULTY SIGNAL

CHECKING THE BLOWER FAN MOTOR FOR THE PASSENGER COMPARTMENT TEMPERATURE SENSOR

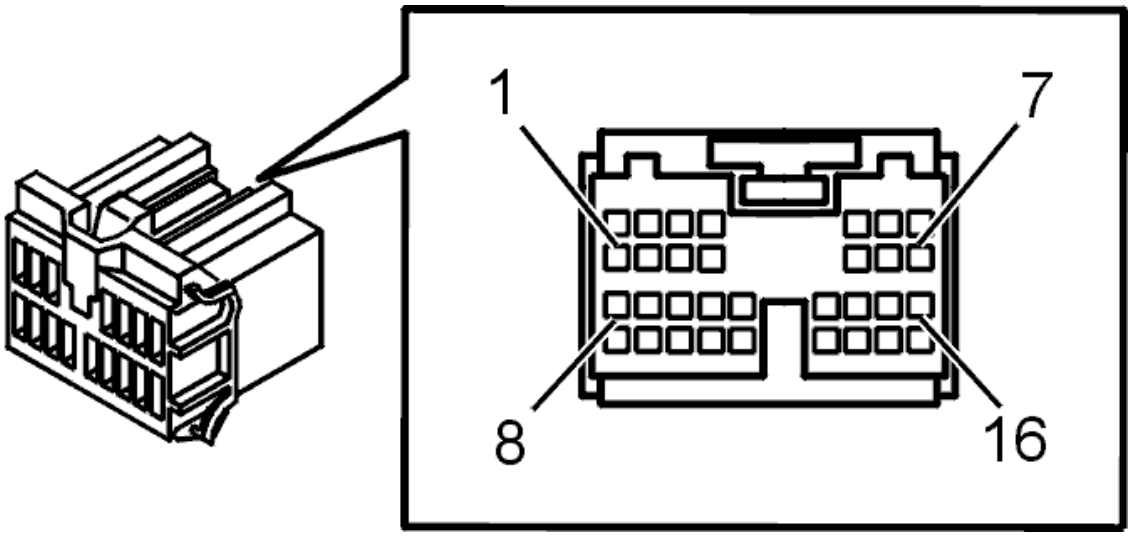

Fig. 53: Identifying Ignition ON
Courtesy of VOLVO CARS CORPORATION

- Ignition on
- Read off the number of pulses from the blower fan motor to the passenger compartment temperature sensor.

  The value must be approximately 12 pulses.

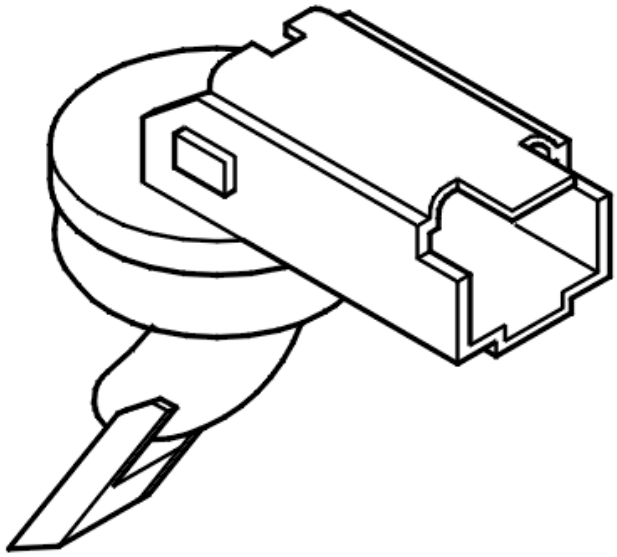

Fig. 54: Identifying VCT2000 Diagnostic Tool Symbol In VIDA
Courtesy of VOLVO CARS CORPORATION

Is the value correct?

- **YES**

  Refer to **CHECKING CONNECTORS AND WIRING**

- **NO**

  Refer to **CHECKING THE FAN MOTOR AND THE PASSENGER COMPARTMENT TEMPERATURE SENSOR**

CHECKING THE FAN MOTOR AND THE PASSENGER COMPARTMENT TEMPERATURE SENSOR

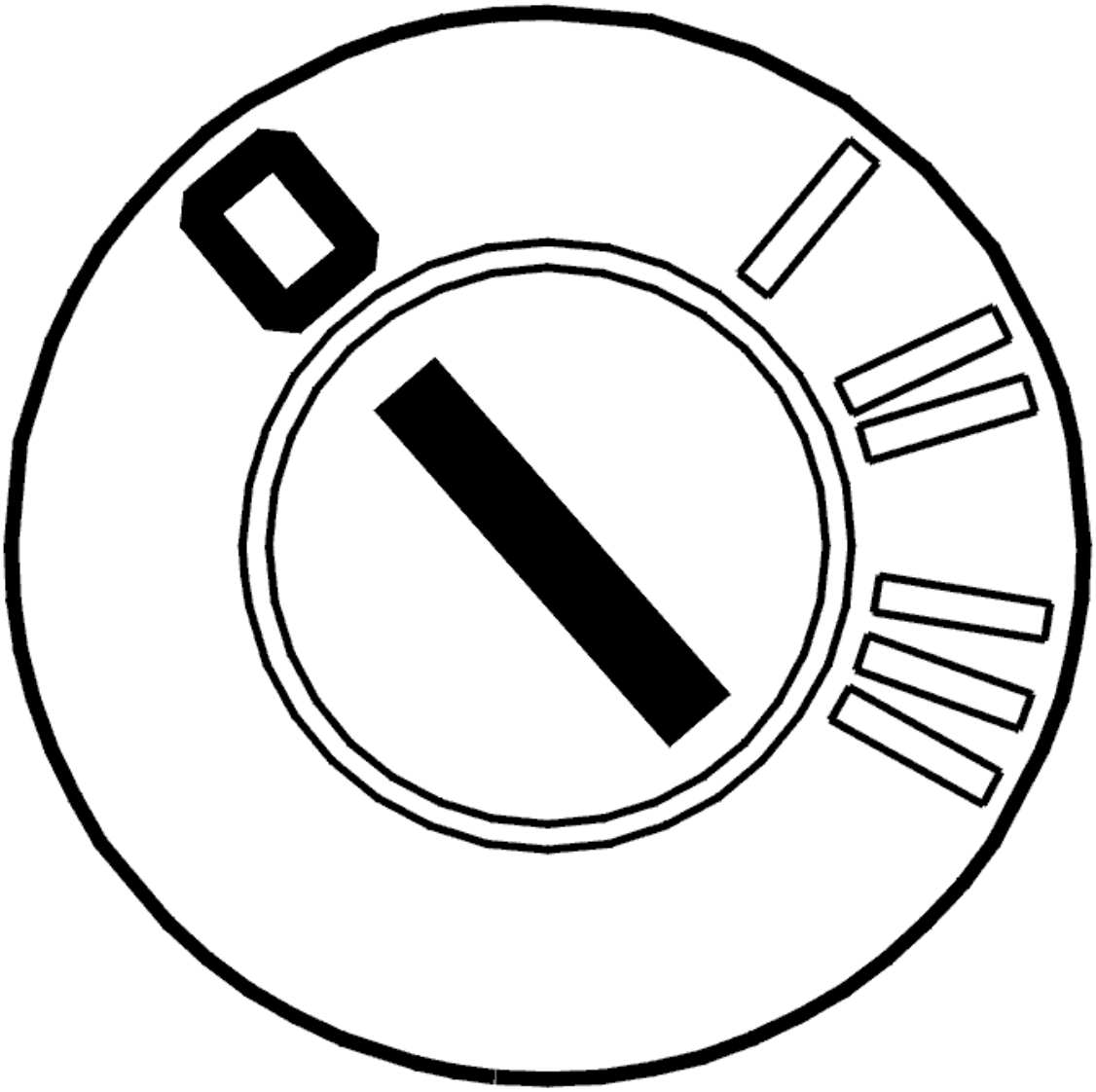

Fig. 55: Identifying Ignition ON
Courtesy of VOLVO CARS CORPORATION

- Ignition on
- Check that the fan is functioning by applying a small, thin piece of paper in front of the ventilation grille for the passenger compartment temperature sensor.

NOTE: **The fan is only activated at passenger compartment temperatures in excess of -10°C (14°F).**

If the paper is sucked against the grille, the fan is working.

Is the fan working?

- **YES**

Refer to **CHECKING CONNECTORS AND WIRING**

- **NO**

  Refer to **CHECKING COMPONENTS AND CONNECTORS**

CHECKING COMPONENTS AND CONNECTORS

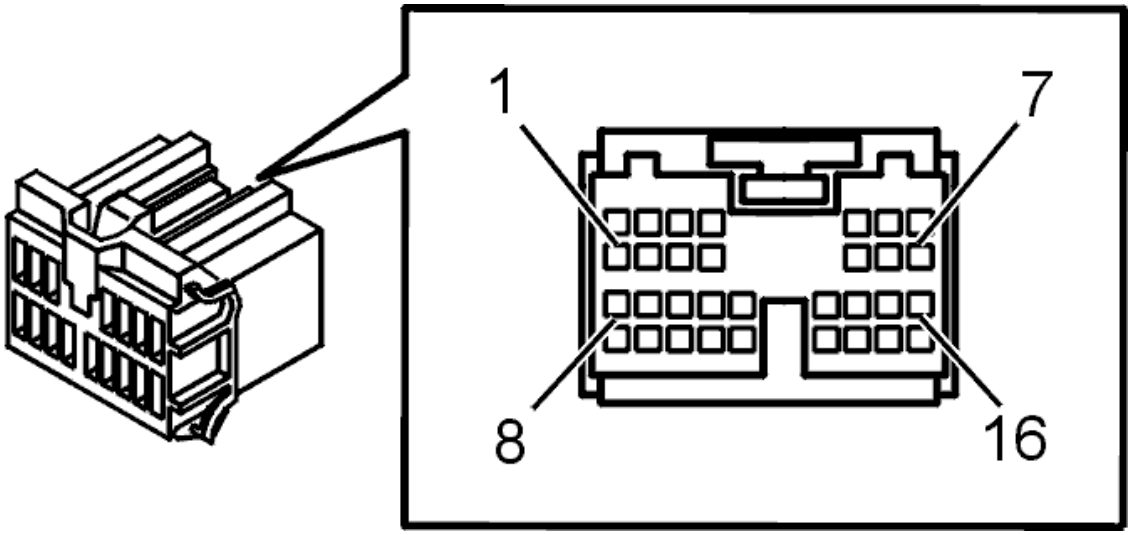

Fig. 56: Identifying Ignition ON
Courtesy of VOLVO CARS CORPORATION

- Ignition off
- Disconnect the climate control module (CCM).

  Check that the fan rotates freely and is not blocked by any objects.

  Check the fan connector. Check for contact resistance and oxidation.

  NOTE: From and including w50 2001, the fan is connected directly to connector C with no wiring in-between.

  Try replacing the fan if no other fault is found.

  Remedy as necessary.

  Other information:

  - To access or replace the control module, see **CLIMATE CONTROL MODULE (CCM), REPLACING**
  - To access or replace the blower fan motor, see **BLOWER FAN MOTOR PASSENGER COMPARTMENT TEMPERATURE SENSOR, REPLACING**

- For other values, see **SIGNAL SPECIFICATION**
- see **CHECKING WIRING AND TERMINALS** .

- **Continue**

  Refer to **VERIFICATION**

CHECKING CONNECTORS AND WIRING

NOTE: From and including w50 2001, the fan is connected directly to connector C with no wiring in-between.

Check the wiring between the climate control module (CCM) and fan motor. Check for an intermittent short-circuit to ground and supply voltage.

Check the wiring for the control module. Check for an intermittent open-circuit.

Check connector C. Check for contact resistance and loose connections.

Other information:

- To access or replace the control module, see **CLIMATE CONTROL MODULE (CCM), REPLACING**
- To access or replace the blower fan motor, see **BLOWER FAN MOTOR PASSENGER COMPARTMENT TEMPERATURE SENSOR, REPLACING**
- For other values, see **SIGNAL SPECIFICATION**
- see **CHECKING WIRING AND TERMINALS** .

- **Continue**

  Refer to **INFORMATION**

VERIFICATION

HINT: After carrying out the repair, check that the fault has been remedied.

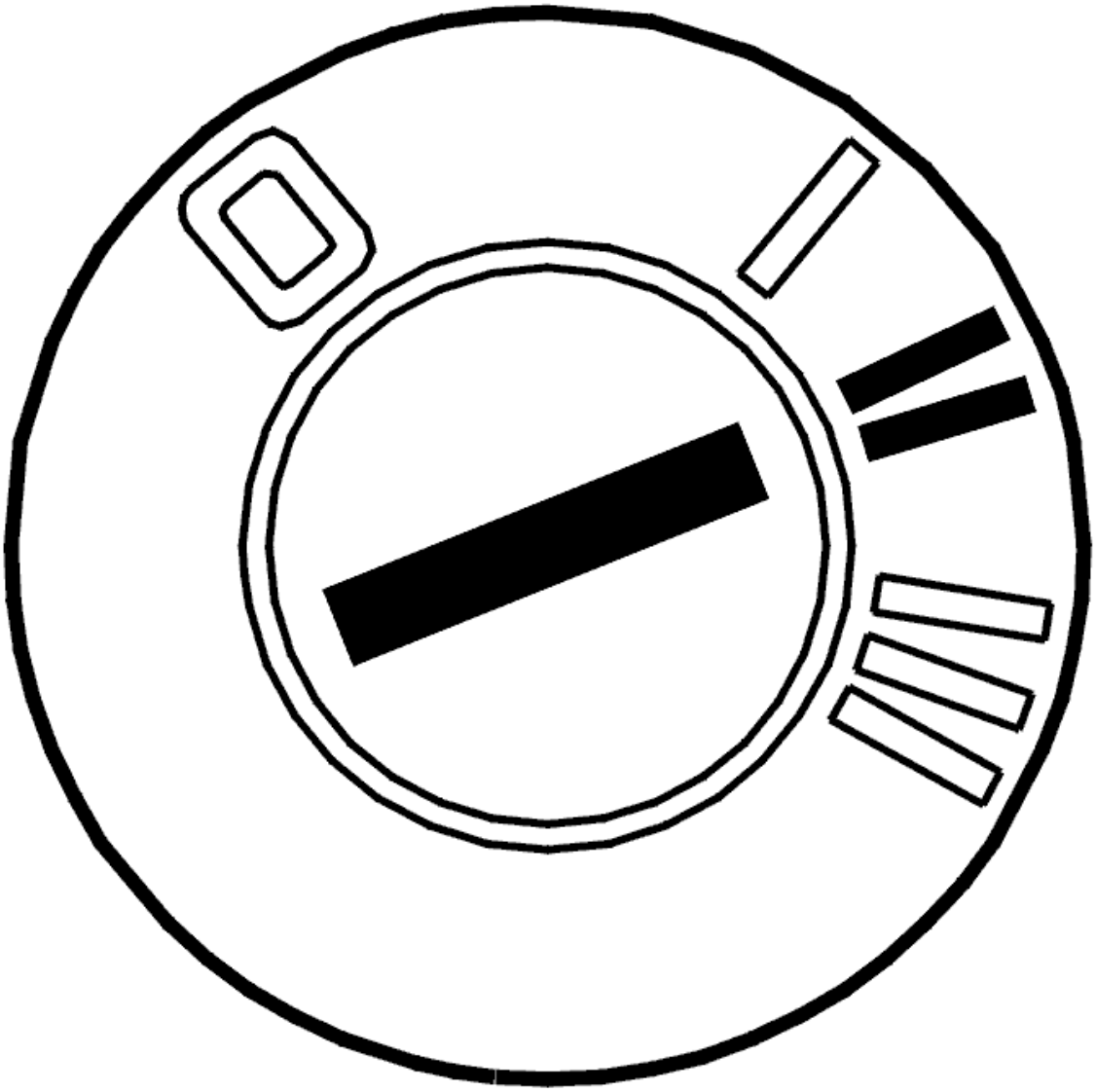

Fig. 57: Identifying Ignition ON
Courtesy of VOLVO CARS CORPORATION

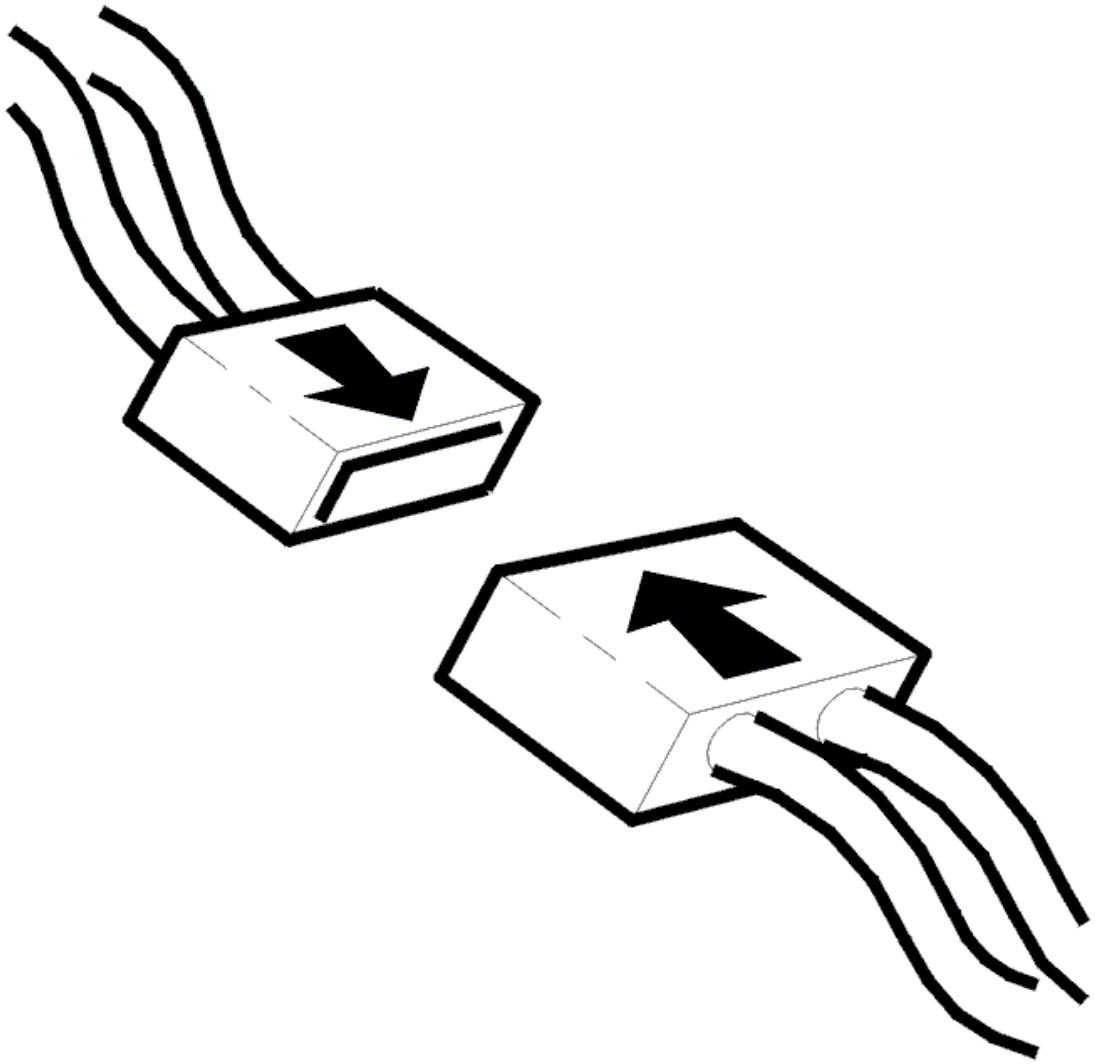

Fig. 58: Connecting Connector
Courtesy of VOLVO CARS CORPORATION

- Ignition off
- Reinstall the connectors, components etc.
- Ignition on
- Use a thin piece of paper in front of the fan to, see whether the fan is blowing (on the reverse of the control module).

  The fan is functioning if the paper moves.

Is the fan working?

- **YES**

VERIFIED: Troubleshooting has been completed.

- **NO**

  Refer to **INFORMATION**

INFORMATION

FAULT-TRACING INFORMATION

The fault should have been detected and remedied. As this is not the case fault-tracing has failed.

Exit fault-tracing for this diagnostic trouble code (DTC) or make another attempt.

CCM-0003: EVAPORATOR TEMPERATURE SENSOR. SIGNAL TOO LOW (2005-12)

DIAGNOSTIC TROUBLE CODE (DTC) INFORMATION CCM-0003

Condition

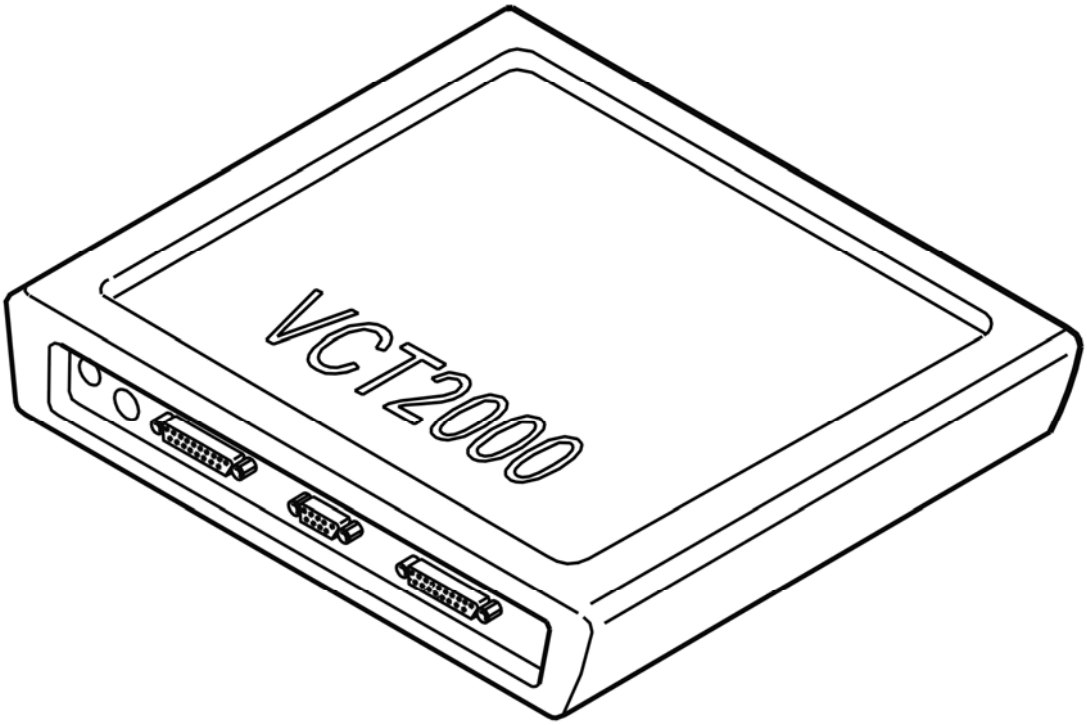

Fig. 59: Identifying Evaporator Temperature Sensor
Courtesy of VOLVO CARS CORPORATION

The diagnostic trouble code (DTC) is stored if the climate control module (CCM) detects a short-circuit to ground in the signal between the climate control module (CCM) and the evaporator temperature sensor.

The climate control module (CCM) uses the signal to control the A/C compressor.

At temperatures below 5.5°C the compressor is not permitted to operate because of the risk of freezing.

In normal operation (engine running and A/C selected) the control module can regulate the compressor in the following way based on the evaporator temperature:

- 10°C air conditioning (A/C) compressor on
- 5.5°C air conditioning (A/C) compressor off.

The diagnostic trouble code (DTC) can be diagnosed in ignition positions I and II.

Substitute Value

- The control module assumes a replacement value equivalent to 0°C. The compressor will not then be permitted to operate.
- The normal value during operation (engine running and A/C selected) is 5.5-10°C. If the climate control system has not been operating and the engine has cooled, the temperature must correspond to the ambient temperature.

Possible Source

- There is a short-circuit to ground in the signal between the evaporator temperature sensor and the climate control module (CCM)
- The evaporator temperature sensor does not function.

Fault symptom[s]

- No cooling from the air conditioning (A/C) system.
- Irregular cooling from the air conditioning (A/C) system.
- The air conditioning (A/C) compressor does not start, or runs sporadically.

SIGNAL TOO LOW

CHECKING THE EVAPORATOR TEMPERATURE

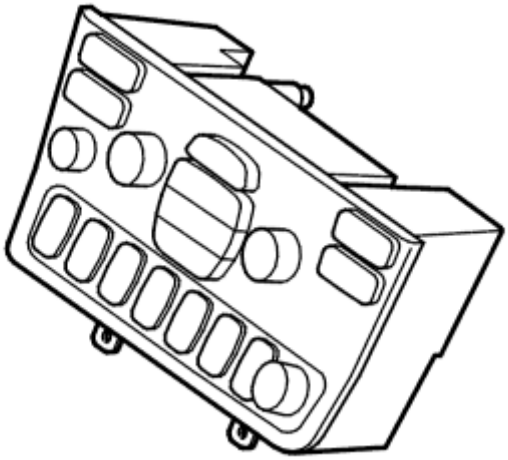

Fig. 60: Identifying Ignition ON
Courtesy of VOLVO CARS CORPORATION

- Ignition on.

  Check that the evaporator temperature is within its permitted range. If the climate control system has not been running and the engine has cooled down, the temperature must be the same as the outside temperature.

  The fault is intermittent if the outside temperature is now correct.

  Read off the evaporator temperature by clicking on the VCT2000 symbol.

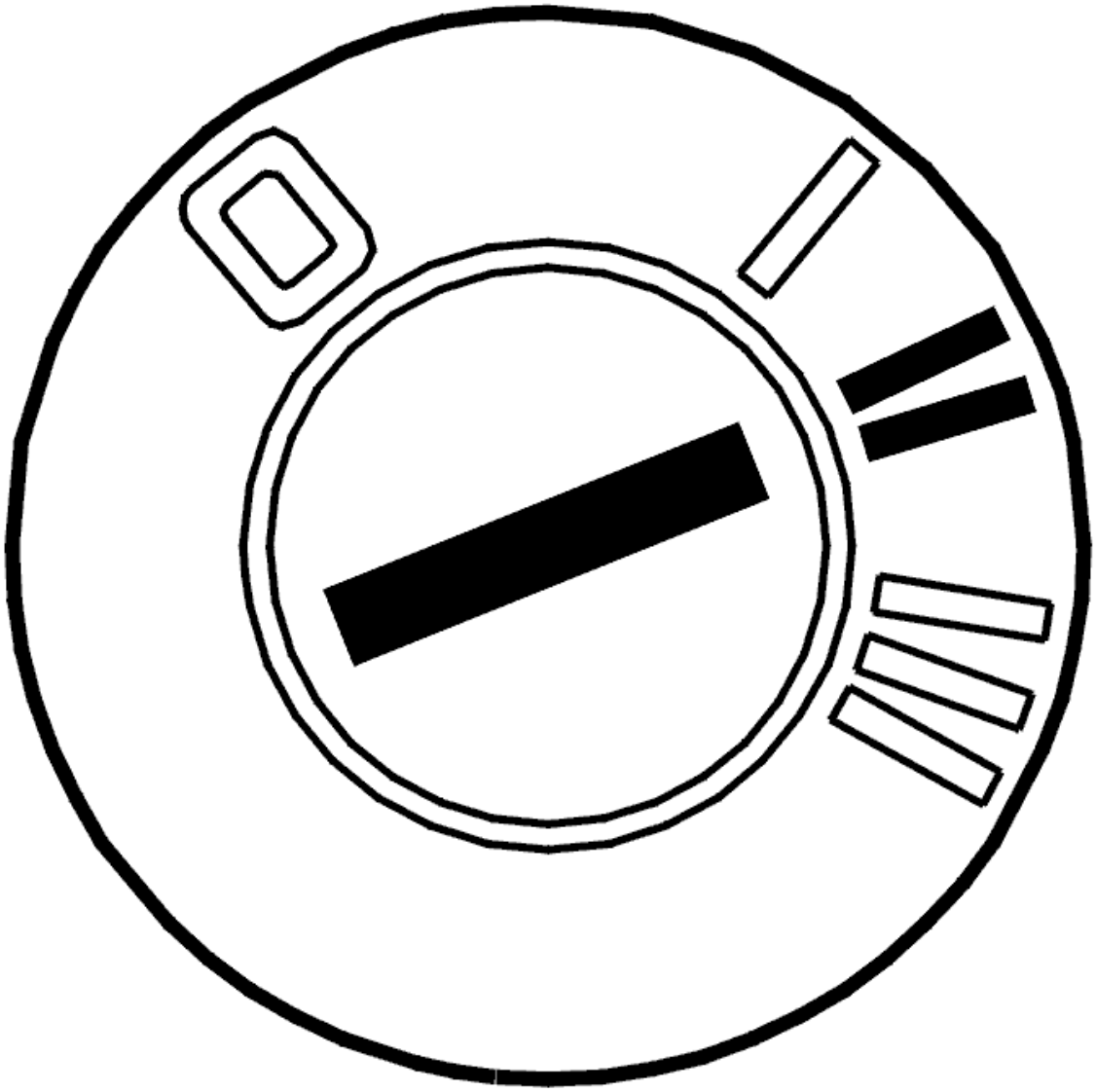

Fig. 61: Identifying VCT2000 Diagnostic Tool Symbol In VIDA
Courtesy of VOLVO CARS CORPORATION

Are the temperatures correct?

- **YES**

  Refer to **CHECKING THE WIRING**

- **NO**

  Refer to **CHECKING THE COMPONENT AND WIRING**

CHECKING THE WIRING

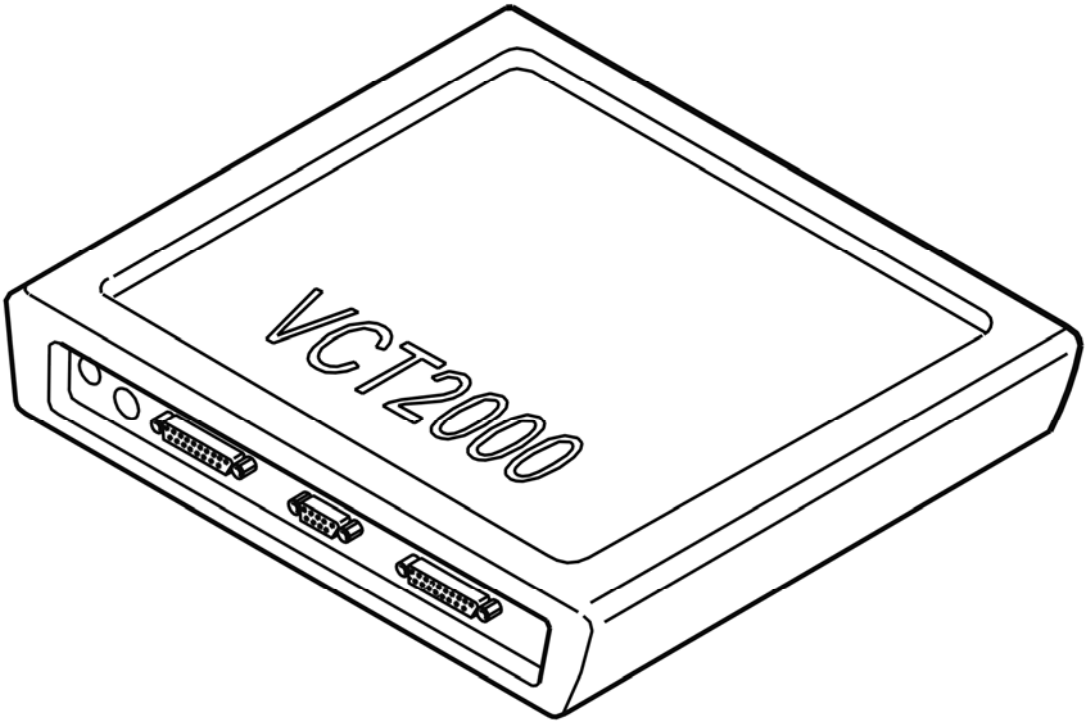

Fig. 62: Identifying Ignition OFF
Courtesy of VOLVO CARS CORPORATION

- Ignition off
- Disconnect the connector for the climate control module (CCM).

  Check the signal cable between the climate control module (CCM) and the evaporator temperature sensor. Check for an intermittent short-circuit to ground.

  Take a reading on the connector for the climate control module (CCM) between terminals #5 (#29) and #16 (#40).

  Remedy as necessary.

  Other information:

  - see **CONNECTING THE BREAKOUT BOX**
  - see **SIGNAL SPECIFICATION**
  - see **CLIMATE CONTROL, LOCATION OF COMPONENTS**
  - see **CLIMATE CONTROL MODULE (CCM), REPLACING**
  - see **CONTENTS**

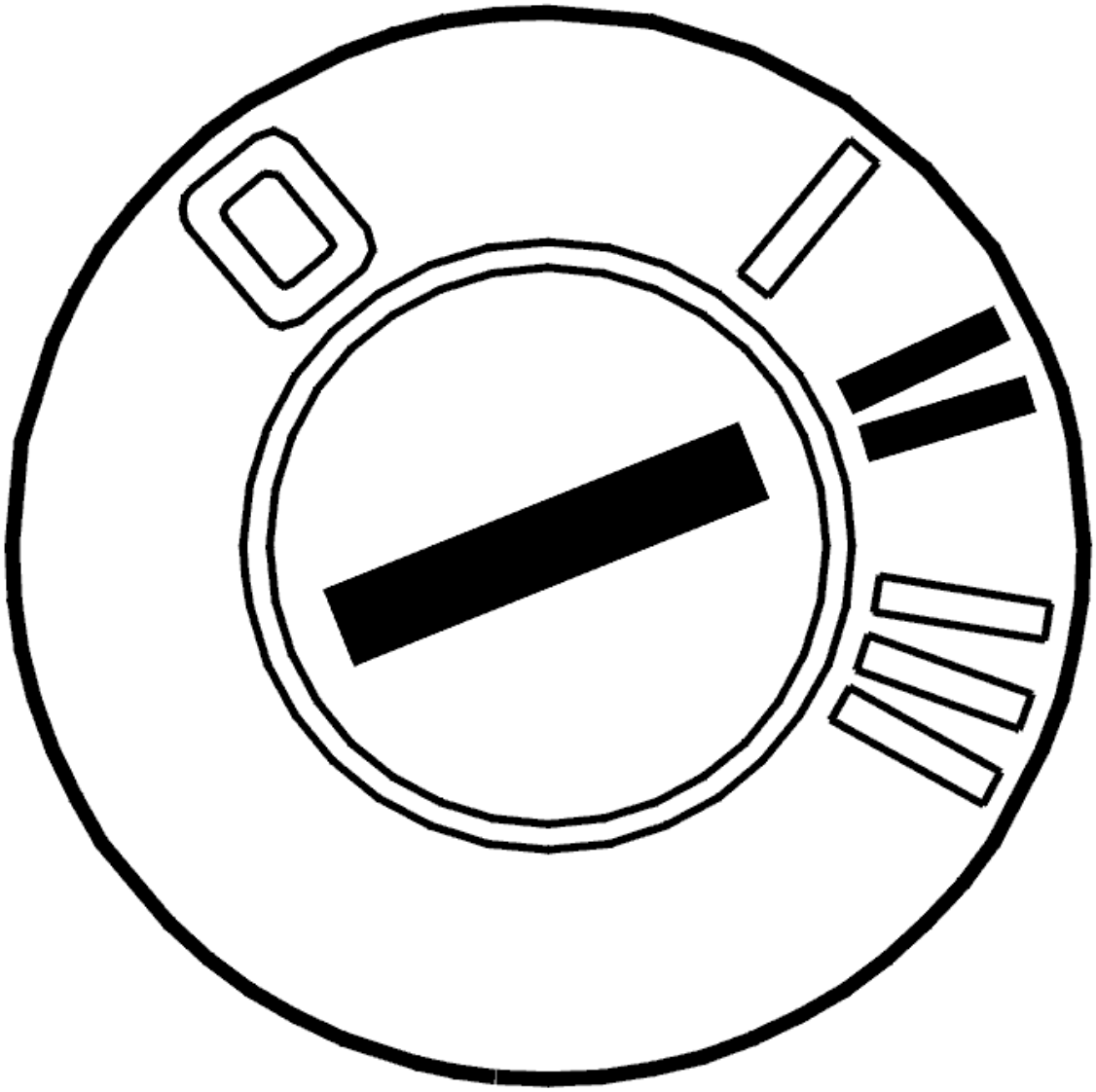

Fig. 63: Connector, Green (16-Pin)
Courtesy of VOLVO CARS CORPORATION

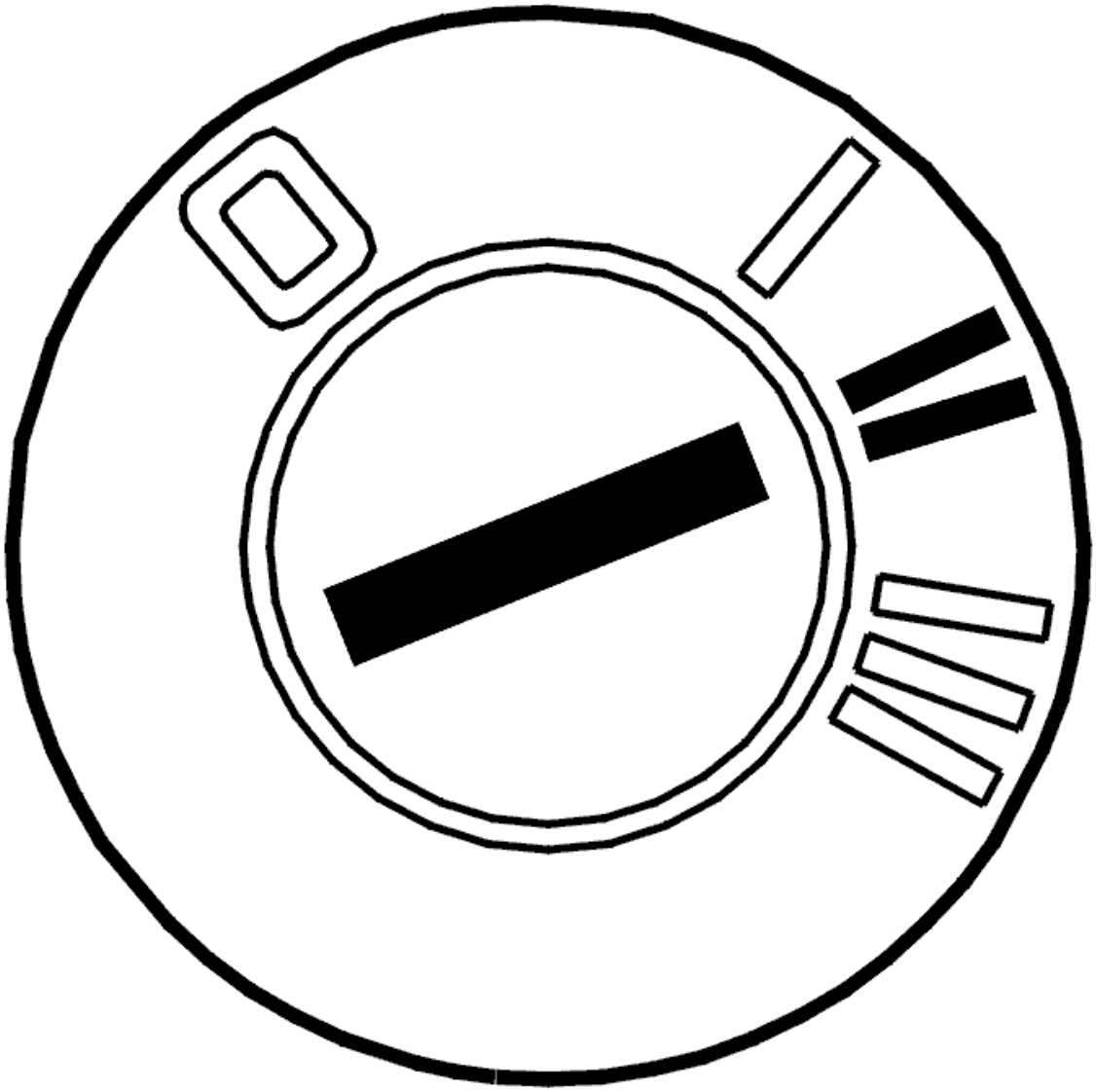

Fig. 64: Identifying Evaporator Temperature Sensor
Courtesy of VOLVO CARS CORPORATION

- **Continue**

  Refer to **INFORMATION**

CHECKING THE COMPONENT AND WIRING

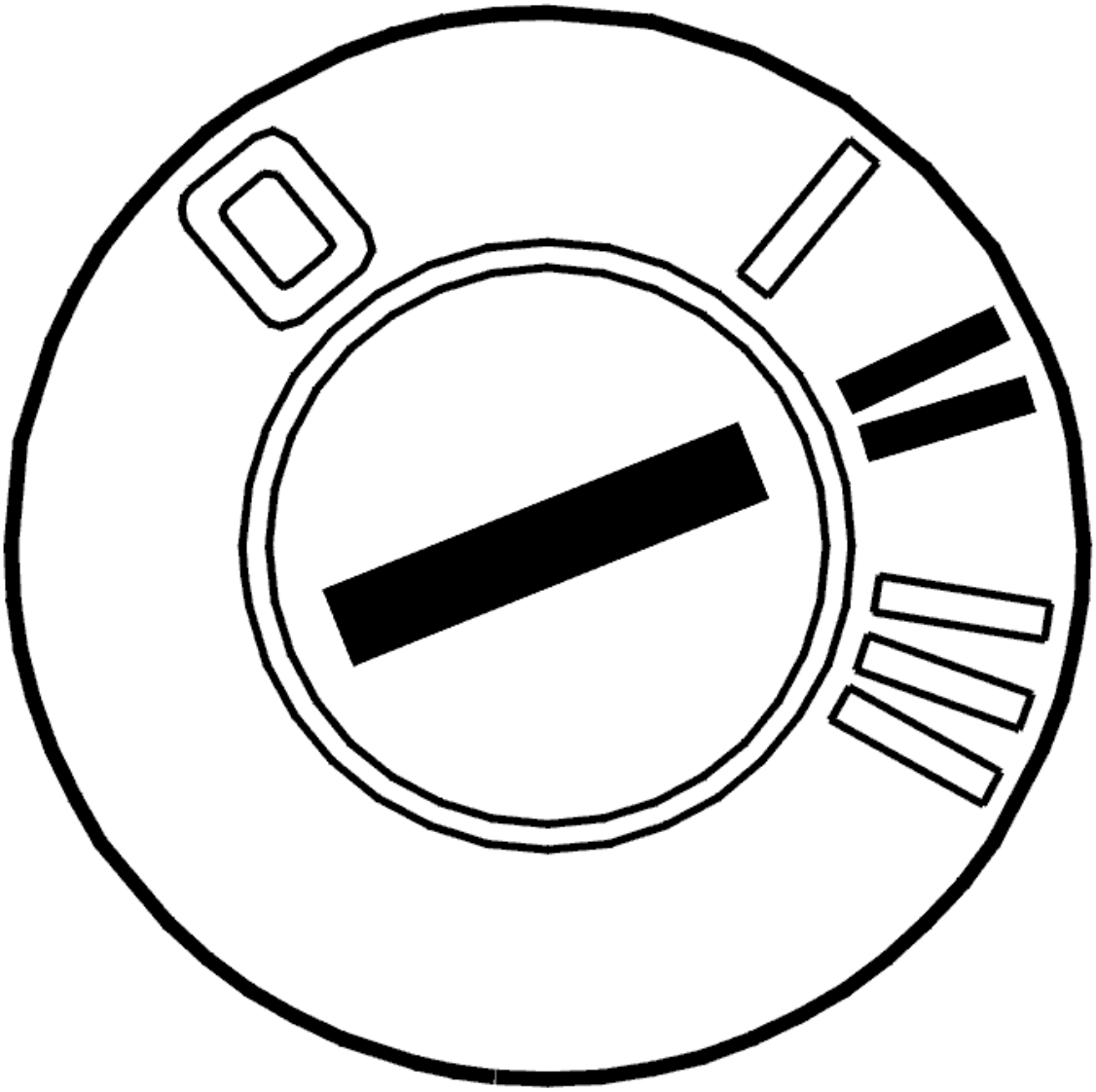

Fig. 65: Identifying Ignition OFF
Courtesy of VOLVO CARS CORPORATION

- Ignition off
- Disconnect the connector for the climate control module (CCM).

  Check the signal cable between the climate control module (CCM) and the evaporator temperature sensor. Check for a short-circuit to ground.

  Take a reading on the connector for the climate control module (CCM) between terminals #5 (#29) and #16 (#40).

  Check the signal and ground cables between the climate control module (CCM) and the evaporator temperature sensor. Check for a short-circuit to ground.

  Take a reading between terminals #5 (#29) and #13 (#37) on the connector for the climate control module

(CCM). The resistance must correspond to the resistance for the evaporator temperature sensor.

Check the connectors for contact resistance and oxidation.

Check that the climate control module (CCM) is receiving a correct value from the evaporator temperature sensor by measuring its resistance and comparing with the values in the table.

Remedy as necessary.

Other information:

- see **CONNECTING THE BREAKOUT BOX**
- see **SIGNAL SPECIFICATION**
- see **CLIMATE CONTROL, LOCATION OF COMPONENTS**
- see **CLIMATE CONTROL MODULE (CCM), REPLACING**
- see **CONTENTS**
- see **COMPONENT RESISTANCE VALUES**

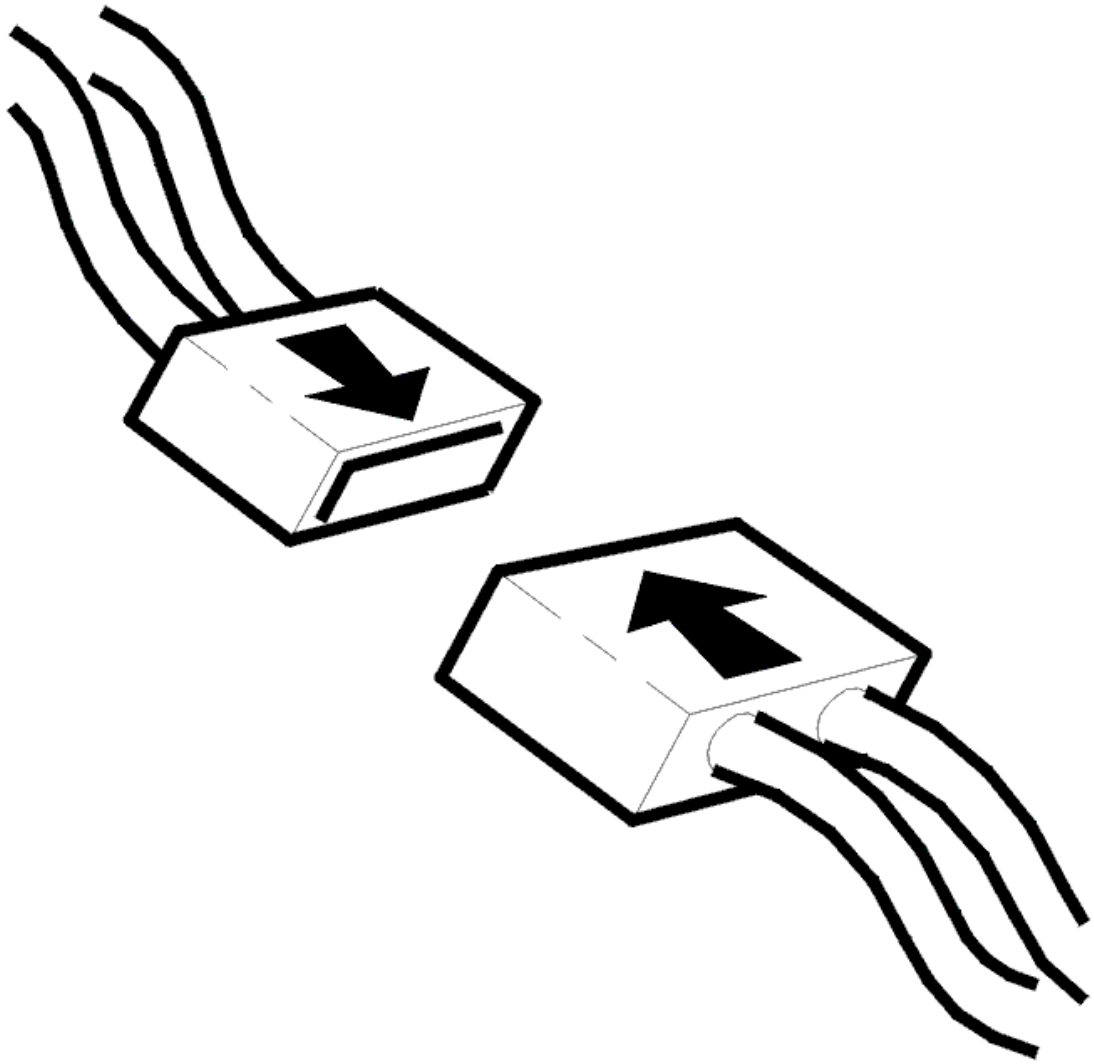

Fig. 66: Connector, Green (16-Pin)
Courtesy of VOLVO CARS CORPORATION

- **Continue**

  Refer to **VERIFICATION**

VERIFICATION

HINT: After carrying out the repair, check that the fault has been remedied.

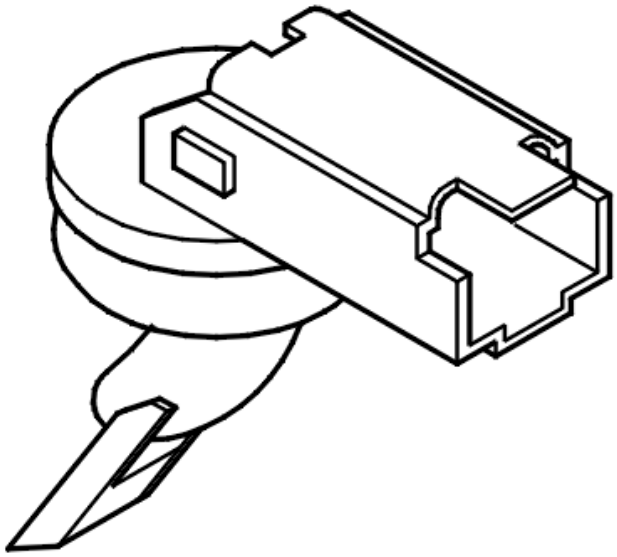

Fig. 67: Identifying Ignition ON
Courtesy of VOLVO CARS CORPORATION

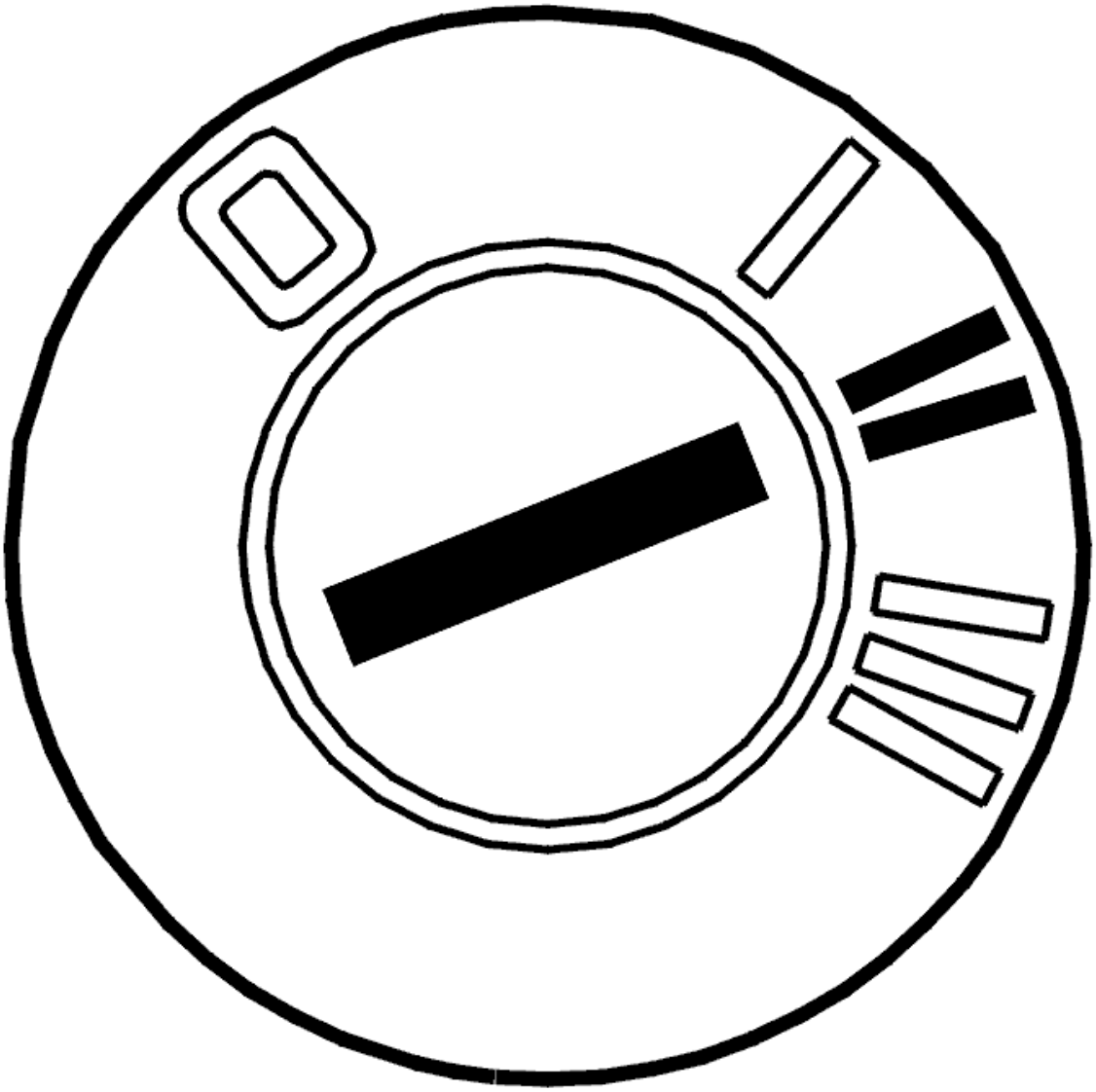

Fig. 68: Connecting Connector
Courtesy of VOLVO CARS CORPORATION

- Ignition off
- Reinstall the connectors, components etc.
- Ignition on.

Check the evaporator temperature sensor by clicking the VCT2000 symbol.

Check that the value from the evaporator temperature sensor corresponds to the ambient temperature.

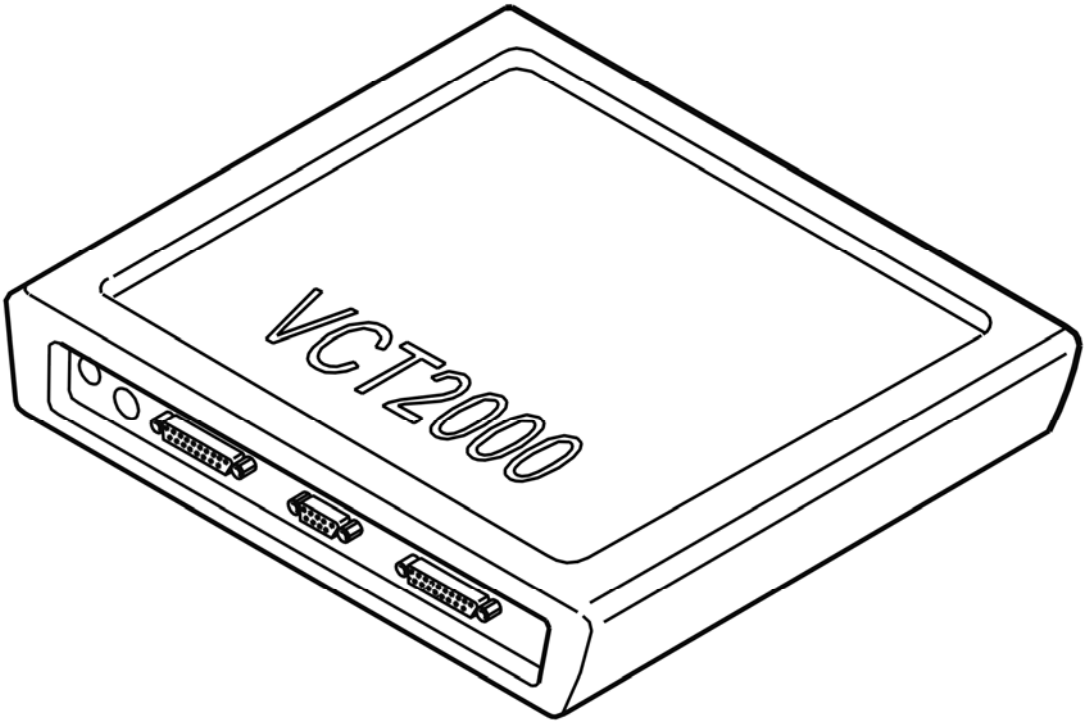

Fig. 69: Identifying VCT2000 Diagnostic Tool Symbol In VIDA
Courtesy of VOLVO CARS CORPORATION

Are the temperatures correct?

- **YES**

  VERIFIED: Troubleshooting has been completed.

- **NO**

  Refer to **INFORMATION**

INFORMATION

FAULT-TRACING INFORMATION

The fault should have been detected and remedied. As this is not the case fault-tracing has failed.

Exit fault-tracing for this diagnostic trouble code (DTC) or make another attempt.

CCM-0004: COMPRESSOR. FAULTY SIGNAL (2003-04)

DIAGNOSTIC TROUBLE CODE (DTC) INFORMATION

Condition

If the air conditioning (A/C) compressor has been in operation for its maximum run time, it is disengaged for 3 minutes. The run time is a function of the outside temperature. It then starts again. Diagnostic trouble code (DTC) CCM-0004 is stored if this happens 3 times. The counter is reset if the ignition key is turned to position 1. The A/C compressor can then run again.

Substitute Value

- None.

Possible Source

- The CAN-bus displays an incorrect configuration ID.
- Low coolant level.
- Low pressure in the air conditioning (A/C) system.

Fault symptom[s]

- The air conditioning (A/C) system does not operate.
- The air conditioning (A/C) compressor does not start, or runs sporadically.
- Sporadic cooling from the air conditioning (A/C) system.

FAULTY SIGNAL

CHECKING THE REFRIGERANT

Check the level of the refrigerant and that there are no leaks in the climate control system.

Remedy as necessary.

NOTE: Always disconnect the battery lead when working on the climate control system. See BATTERY, REPLACING .

Other information

- For visual and physical checks, see **VISUAL AND PHYSICAL CHECK**
- To fill with refrigerant, see **REFRIGERANT, FILLING**
- For vacuum pumping, see **VACUUM PUMPING**
- To leak trace using an electronic leak tracer, see **LEAK TRACING, ELECTRONIC LEAK TRACER**
- To leak trace using fluorescent tracing agent and an UV flashlight, see **LEAK TRACING, FLUORESCENT TRACING AGENT/UV LAMP**
- To fill with fluorescent tracing agent, see **FILLING WITH FLUORESCENT TRACING AGENT WITH THE REFRIGERANT** .

Was a fault detected?

- **YES**

  Refer to **VERIFICATION**

- **NO**

  FAULT NOT FOUND: Troubleshooting has been completed.

VERIFICATION

HINT: After carrying out the repair, check that the fault has been remedied.

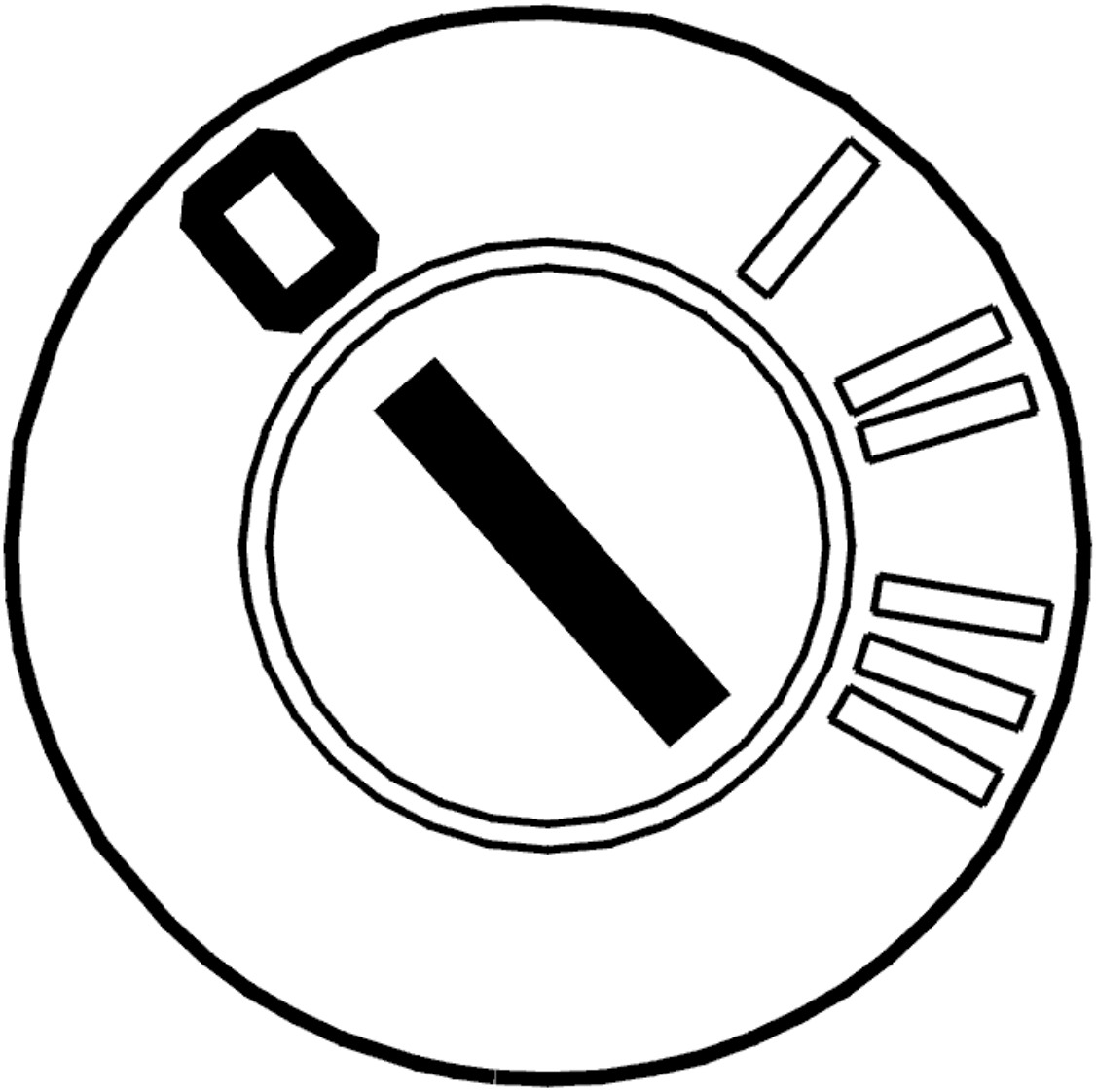

Fig. 70: Identifying Ignition ON
Courtesy of VOLVO CARS CORPORATION

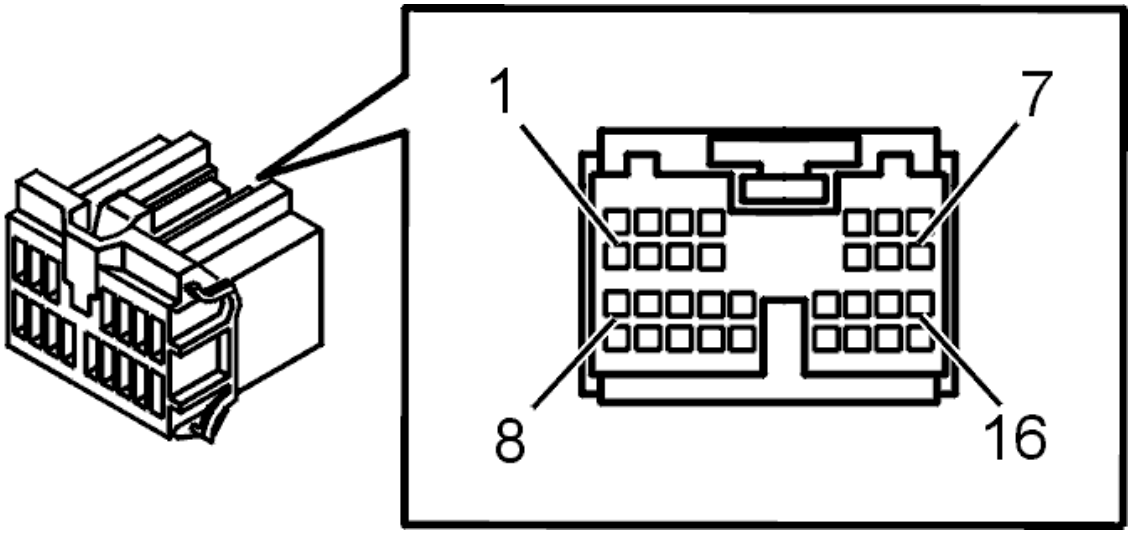

Fig. 71: Connecting Connector
Courtesy of VOLVO CARS CORPORATION

- Ignition off.

NOTE: **Wait at least 1 minute before "Ignition on". This is to allow the climate control module (CCM) to carry out a new diagnostic.**

- Reinstall the connectors, components etc.
- Ignition on
- Read off diagnostic trouble codes (DTCs).

The fault is no longer present if the status of the diagnostic trouble code (DTC) has changed to intermittent.

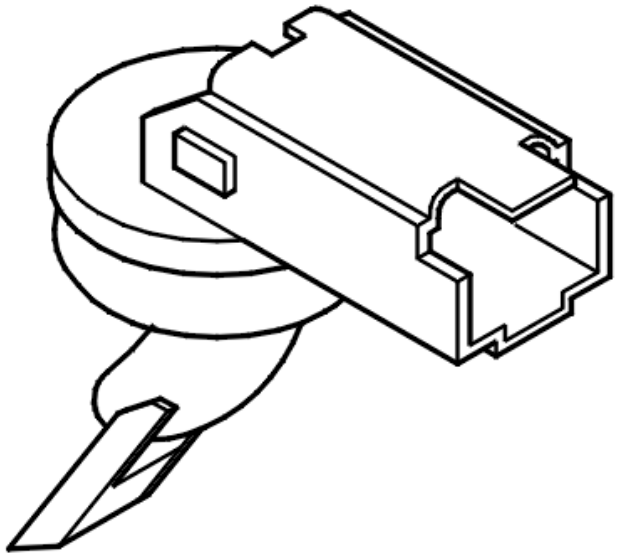

Fig. 72: Identifying VCT2000 Diagnostic Tool Symbol In VIDA
Courtesy of VOLVO CARS CORPORATION

Does the status change?

- **YES**

  VERIFIED: Troubleshooting has been completed.

- **NO**

  Refer to **INFORMATION**

INFORMATION

FAULT-TRACING INFORMATION

The fault should have been detected and remedied. As this is not the case fault-tracing has failed.

Exit fault-tracing for this diagnostic trouble code (DTC) or make another attempt.

CCM-0004: PASSENGER COMPARTMENT TEMPERATURE SENSOR. SIGNAL TOO HIGH/SIGNAL MISSING (2005-12)

DIAGNOSTIC TROUBLE CODE (DTC) INFORMATION CCM-0004

Condition

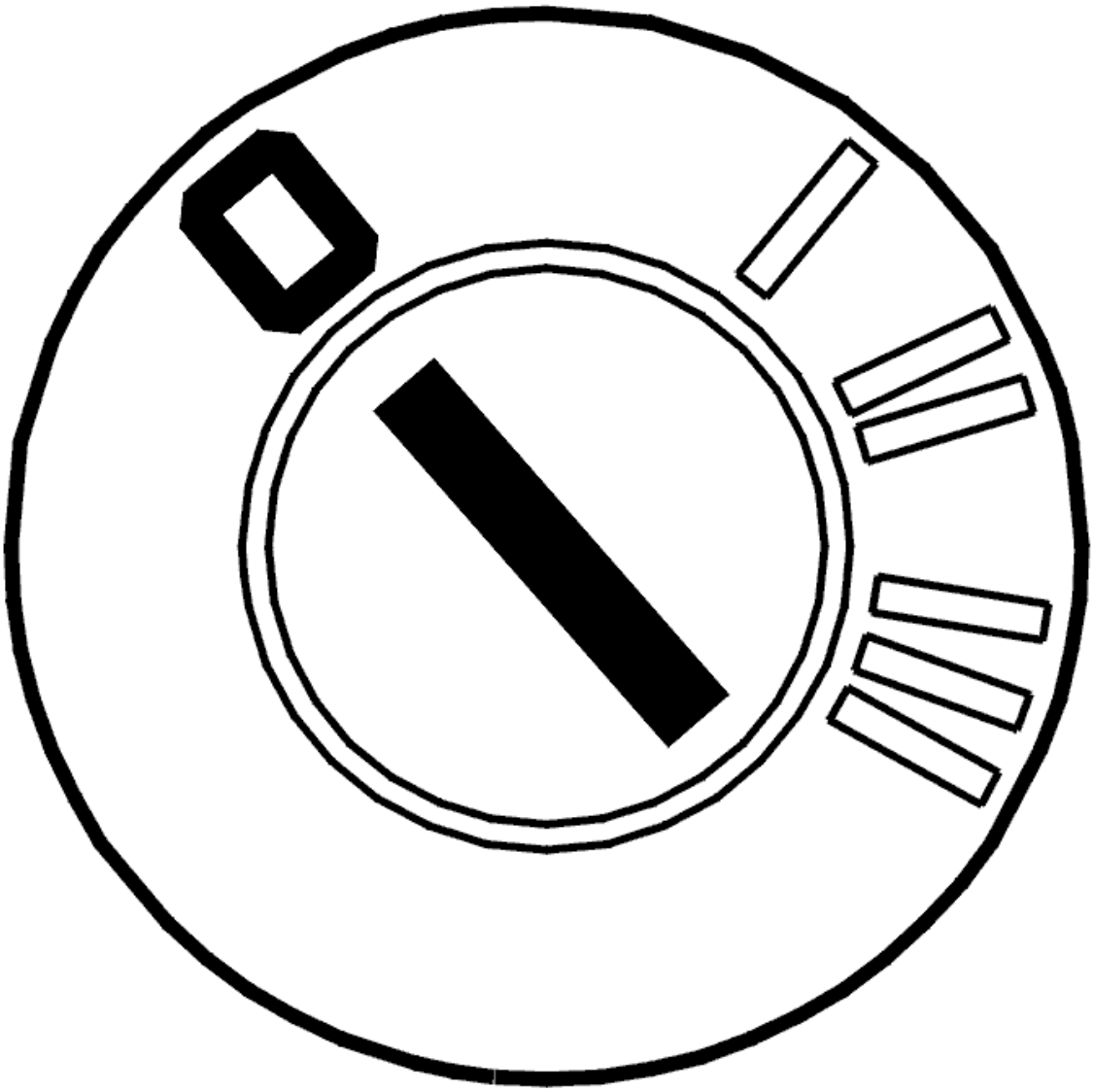

Fig. 73: Identifying Interior Temperature Sensor Air Inlet
Courtesy of VOLVO CARS CORPORATION

The diagnostic trouble code (DTC) is stored if the climate control module (CCM) detects an open-circuit in the signal between the climate control module (CCM) and the passenger compartment temperature sensor, or a short-circuit to supply voltage in the signal.

The climate control module (CCM) uses the signal to control the passenger compartment temperature.

The diagnostic trouble code (DTC) can be diagnosed in ignition positions I and II.

The diagnostic trouble code (DTC) can only be diagnosed for the electronic climate control module (CCM)

(ECC).

Substitute Value

- The control module adopts a substitute value corresponding to 25°C
- The normal value is the passenger compartment temperature.

Possible Source

- There is a short-circuit to supply voltage in the signal between the passenger compartment temperature sensor and the climate control module (CCM)
- Open-circuit in the signal between the passenger compartment temperature sensor and the climate control module (CCM)
- Contact resistance, oxidation or loose connections in the connectors
- The passenger compartment temperature sensor is not functioning.

Fault symptom[s]

- The passenger compartment temperature does not correspond to the set position.

SIGNAL TOO HIGH/SIGNAL MISSING

CHECKING PASSENGER COMPARTMENT TEMPERATURE SENSOR

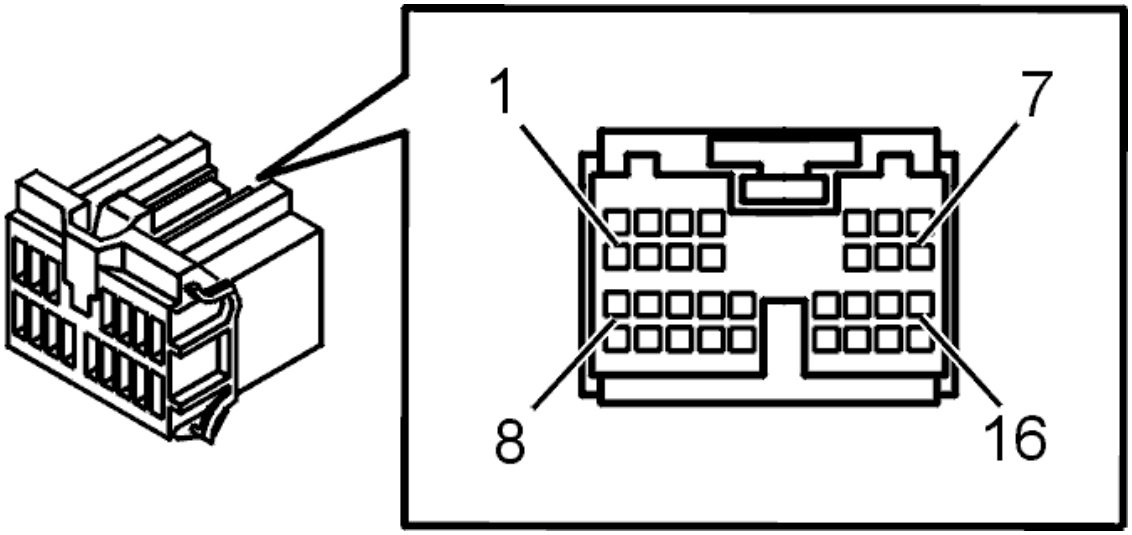

Fig. 74: Identifying Ignition ON
Courtesy of VOLVO CARS CORPORATION

- Ignition on
- Check that the value from the sensor is within its permitted range. Use a thermometer.

  Alternately blow hot and cold air onto the sensor. Check that the value displayed on the sensor changes.

Shine a light through the grille over the passenger compartment temperature sensor. Check for anything that could obstruct the airflow through the pipe.

Do not damage the sensor. The sensor is located just inside the grille.

Remedy as necessary.

Other information:

- see **CLIMATE CONTROL MODULE (CCM), REPLACING**

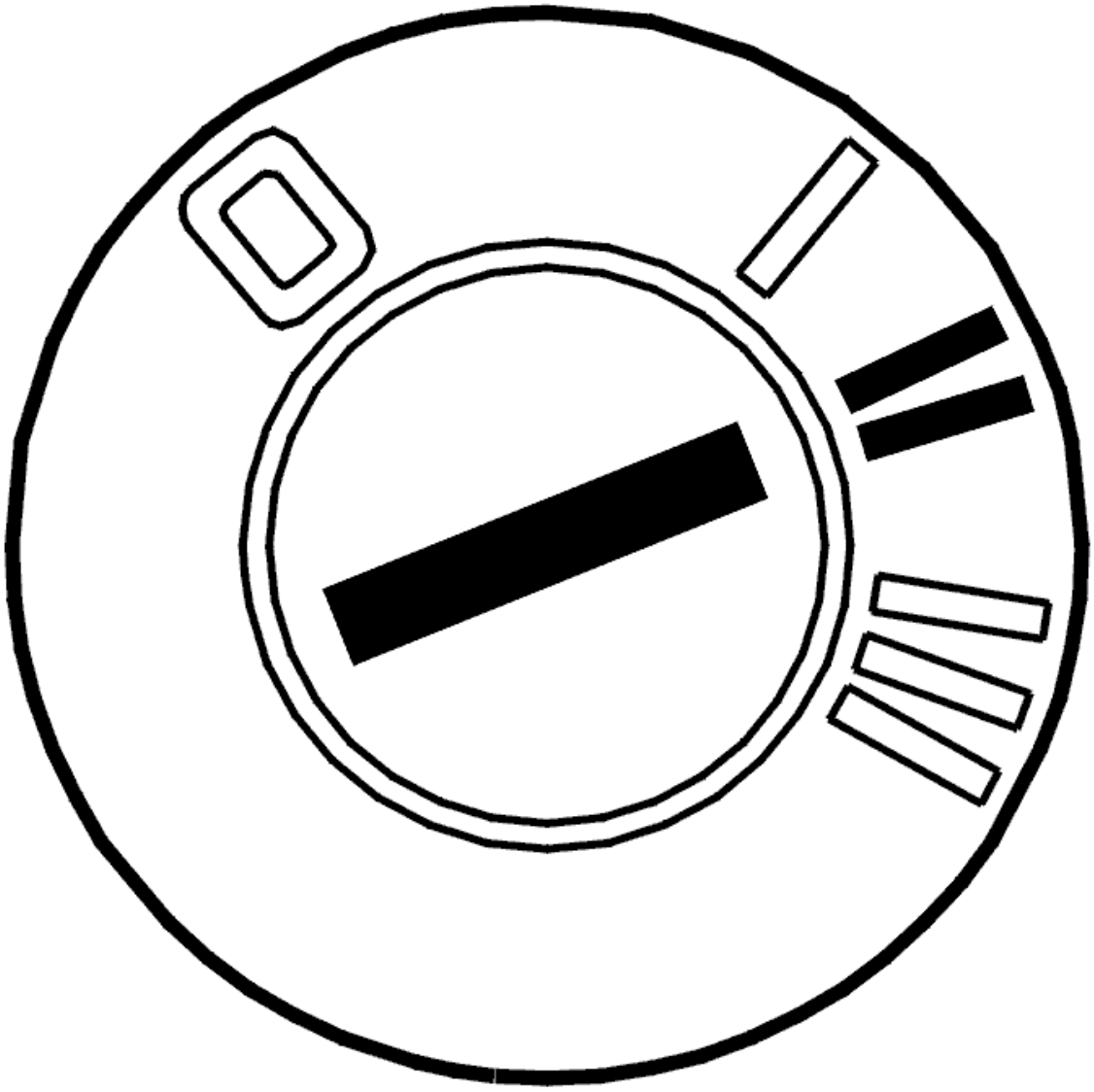

Fig. 75: Identifying VCT2000 Diagnostic Tool Symbol In VIDA
Courtesy of VOLVO CARS CORPORATION

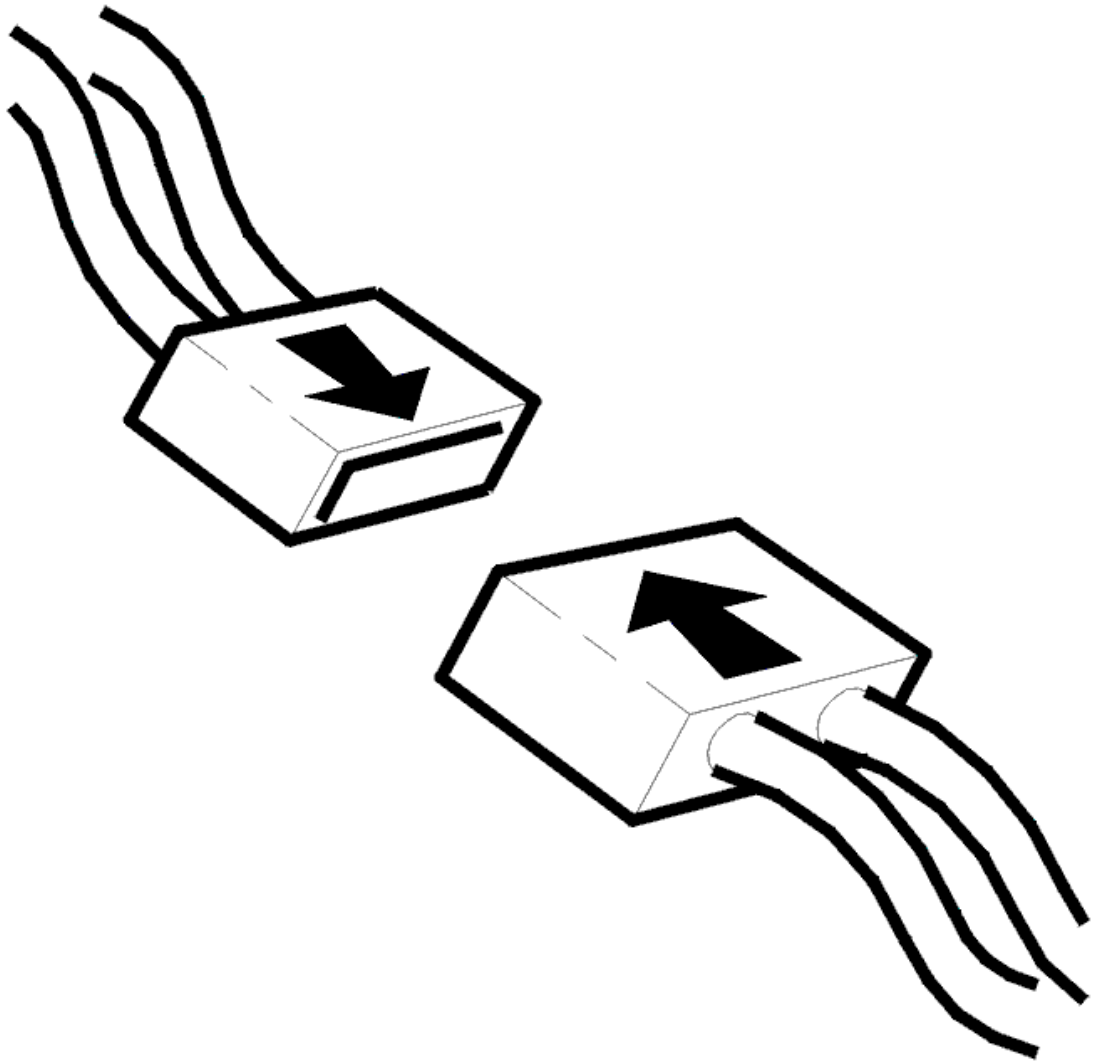

Fig. 76: Identifying Interior Temperature Sensor Air Inlet
Courtesy of VOLVO CARS CORPORATION

Is the sensor value correct?

- **YES**

  Refer to **FAULT-TRACING INFORMATION**

- **NO**

  Refer to **REPLACING THE COMPONENT**

REPLACING THE COMPONENT

The fault is probably a defective passenger compartment temperature sensor. This type of fault means that the

entire control module must be replaced. The passenger compartment temperature sensor cannot be replaced separately.

Replace the control module. See **CLIMATE CONTROL MODULE (CCM), REPLACING**

- **Continue**

  Refer to **CHECKING LIN BUS**

FAULT-TRACING INFORMATION

The fault has probably occurred as a result of a damaged power circuit in the climate control system. If the fault is intermittent, it has been registered previously but is no longer present. Intermittent faults may be caused by interference at start up of the control module. Intermittent faults may also be caused by other types of intermittent faults. The fault is evaluated depending on how it occurs. If the fault recurs, replace the control module.

- **Continue**

  Refer to **INFORMATION**

LIMIT POSITIONS FOR DAMPER MOTOR SELF-ADJUSTMENT

CHOICE OF CLIMATE CONTROL

1. Electronic climate control. Refer to **LIMIT POSITIONS FOR DAMPER MOTOR SELF-ADJUSTMENT**.
2. Manual climate control (MCC). Refer to **LIMIT POSITIONS FOR DAMPER MOTOR SELF-ADJUSTMENT**

LIMIT POSITIONS FOR DAMPER MOTOR SELF-ADJUSTMENT

HINT: Carry out self adjustment to define the shutter motor limit positions after replacing the control module or shutter motors, and when a shutter motor or link has been removed.

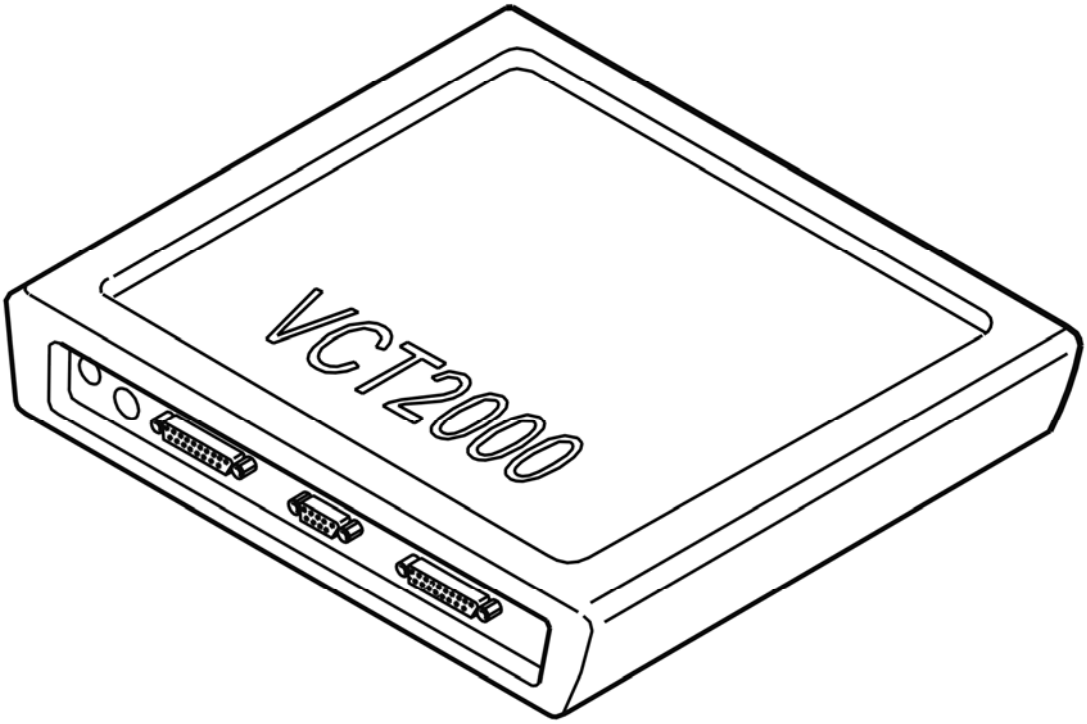

Fig. 77: Identifying Ignition ON
Courtesy of VOLVO CARS CORPORATION

- Ignition off
- Reinstall the connectors, components etc.
- Ignition on.

  Activate the self-adjustment. Wait at least 30 seconds.

  Ignition off for at least 1 minute.

  Start the engine.

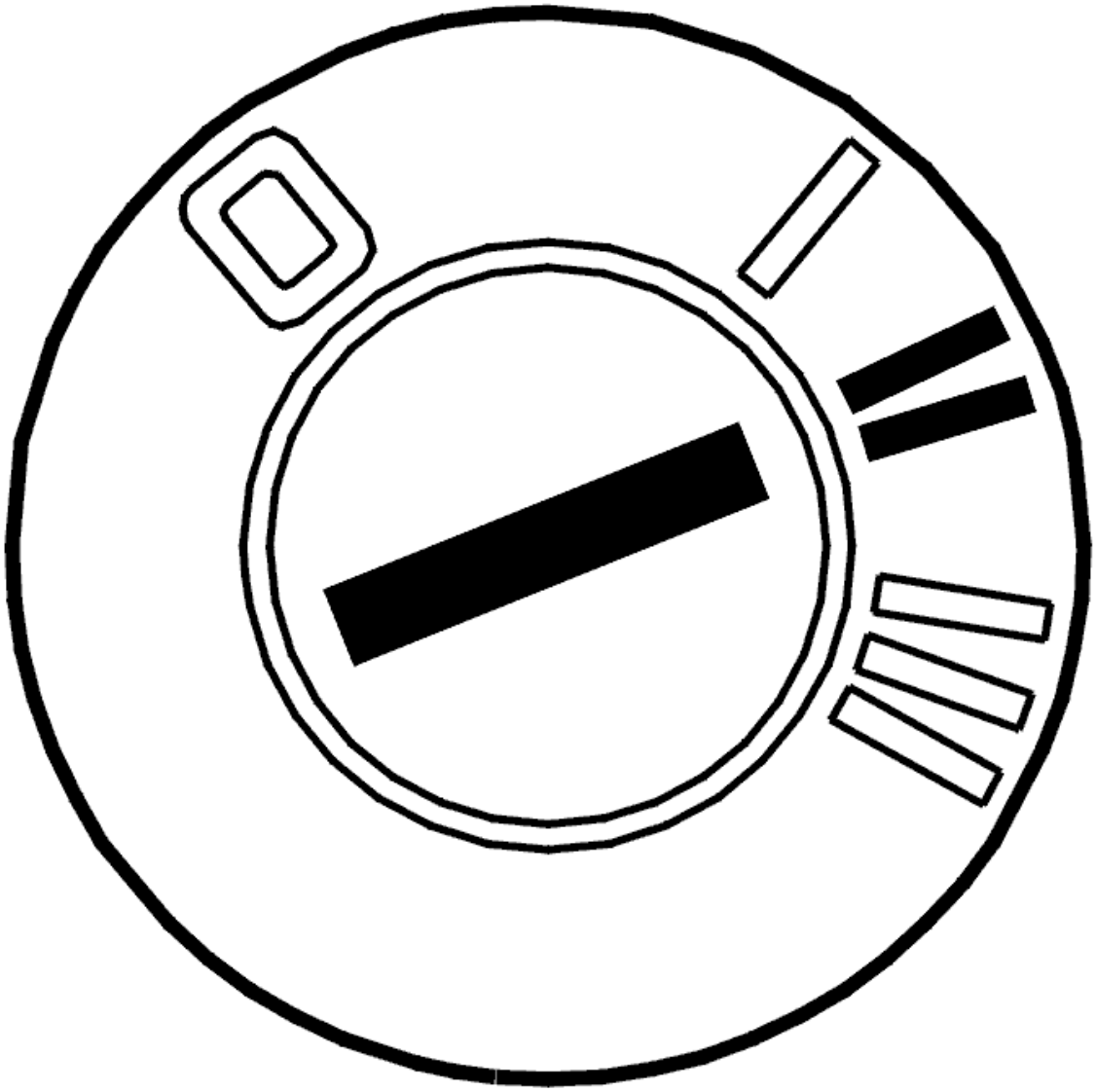

Fig. 78: Identifying VCT2000 Diagnostic Tool Symbol In VIDA
Courtesy of VOLVO CARS CORPORATION

- **Continue**

  Refer to **VERIFICATION**

LIMIT POSITIONS FOR DAMPER MOTOR SELF-ADJUSTMENT

HINT: After replacing the control module or shutter motors, and when a shutter motor or link has been removed, carry out self adjustment to define the shutter motor limit positions.

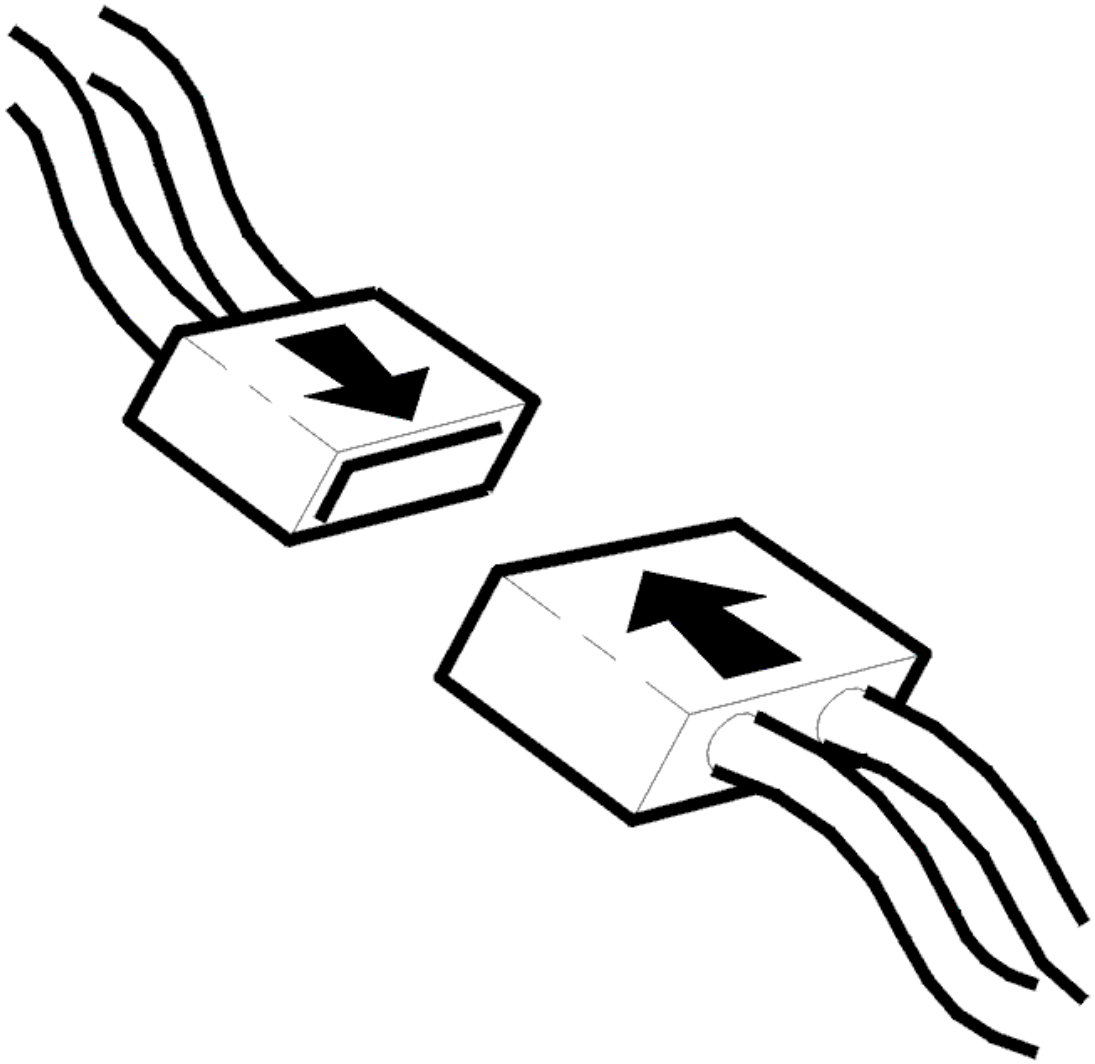

Fig. 79: Identifying Ignition ON
Courtesy of VOLVO CARS CORPORATION

- Ignition off
- Reinstall the connectors, components etc.
- Ignition on.

  Activate the self-adjustment. Wait at least 30 seconds.

  Ignition off for at least 1 minute.

  Start the engine.

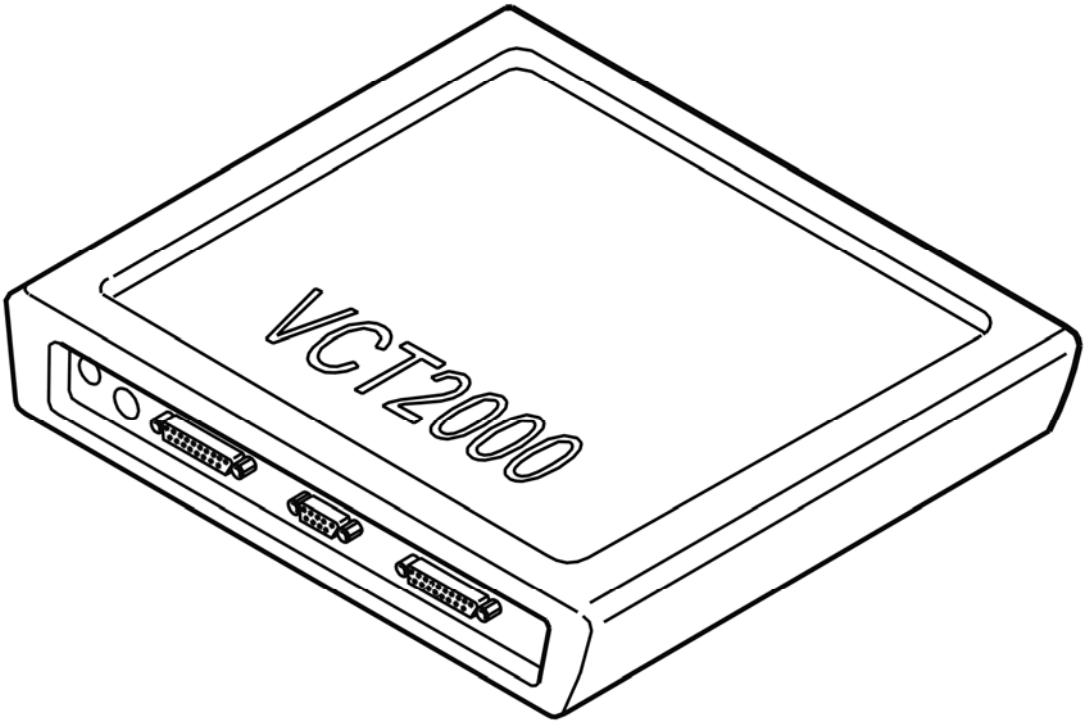

Fig. 80: Identifying VCT2000 Diagnostic Tool Symbol In VIDA
Courtesy of VOLVO CARS CORPORATION

- **Continue**

  Refer to **VERIFICATION**

VERIFICATION

HINT: After carrying out the repair, check that the fault has been remedied.

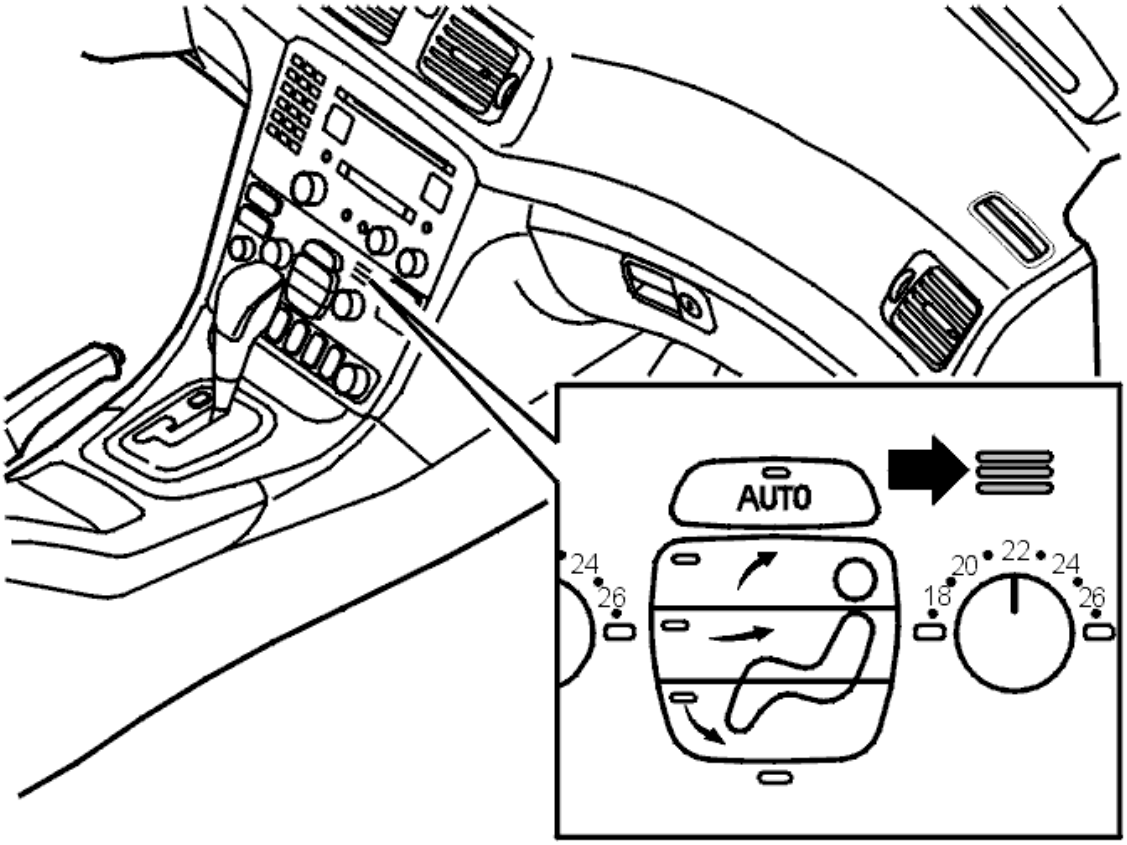

Fig. 81: Identifying Ignition ON
Courtesy of VOLVO CARS CORPORATION

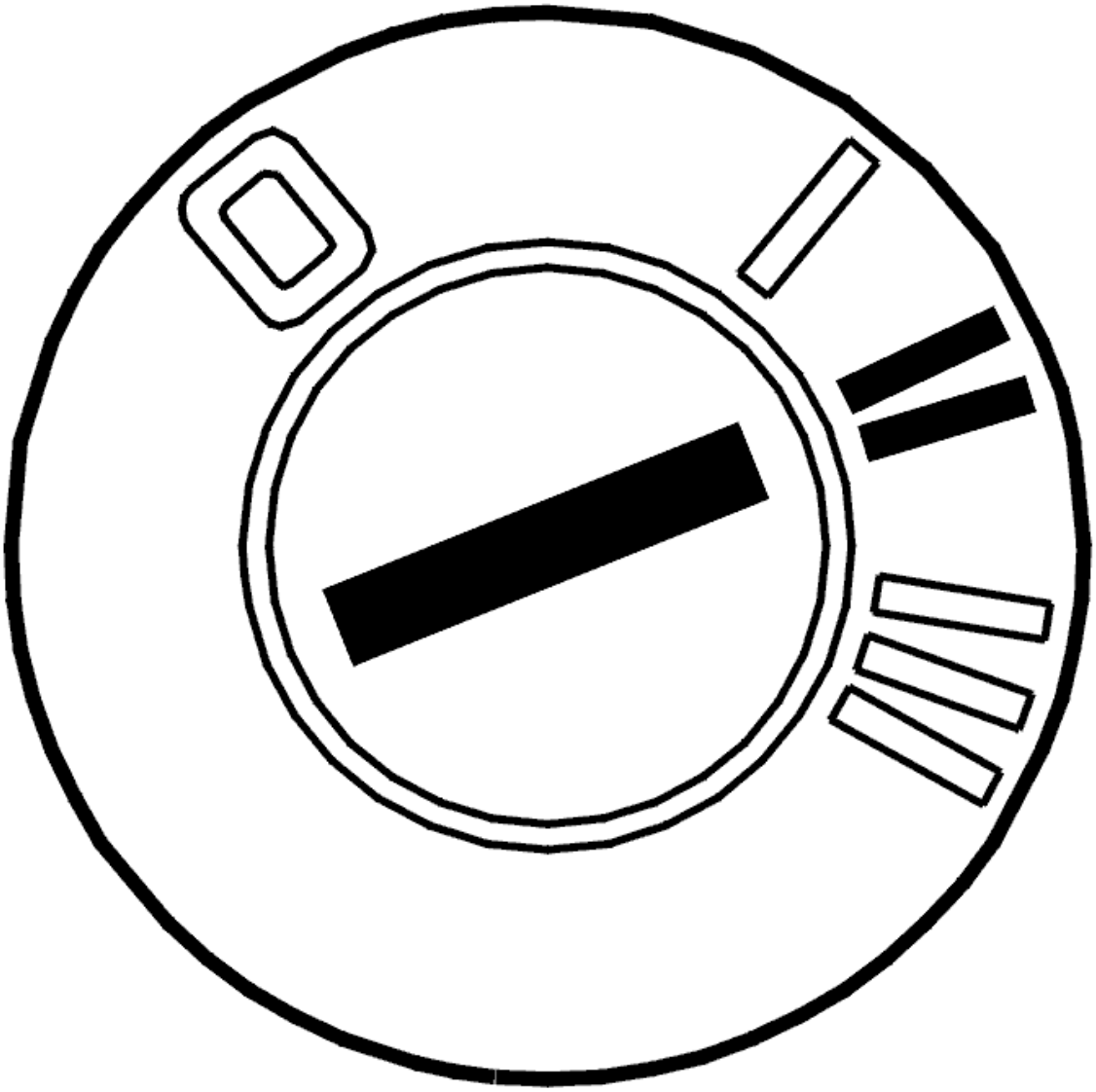

Fig. 82: Connecting Connector
Courtesy of VOLVO CARS CORPORATION

- Ignition off
- Reinstall the connectors, components etc.
- Ignition on.

  Read off the passenger compartment temperature. Vary the temperature at the passenger compartment temperature sensor to check that the value changes. Also check that the value is within its permitted range. Use a thermometer.

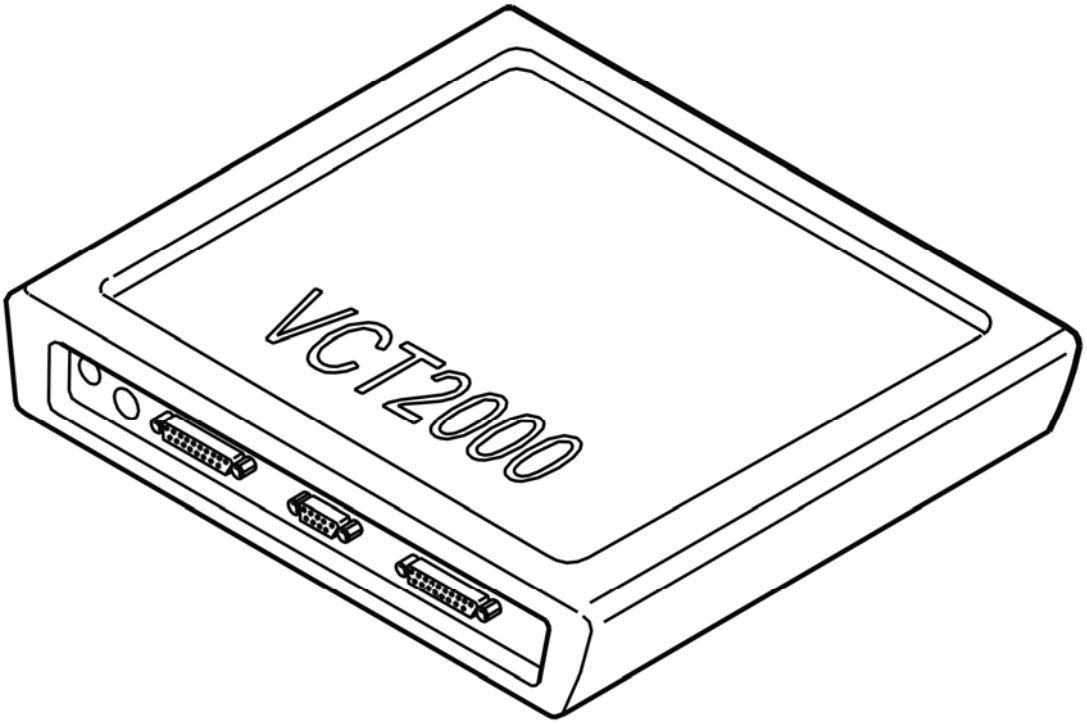

Fig. 83: Identifying VCT2000 Diagnostic Tool Symbol In VIDA
Courtesy of VOLVO CARS CORPORATION

Is the value OK?

- **YES**

  VERIFIED: Troubleshooting has been completed.

- **NO**

  Refer to **INFORMATION**

INFORMATION

FAULT-TRACING INFORMATION

The fault should have been detected and remedied. As this is not the case fault-tracing has failed.

Exit fault-tracing for this diagnostic trouble code (DTC) or make another attempt.

CHECKING LIN BUS

IDENTIFICATION

HINT: After replacing the climate control module (CCM), the LIN bus must be checked to identify which damper motors are installed and to identify their function and positions.

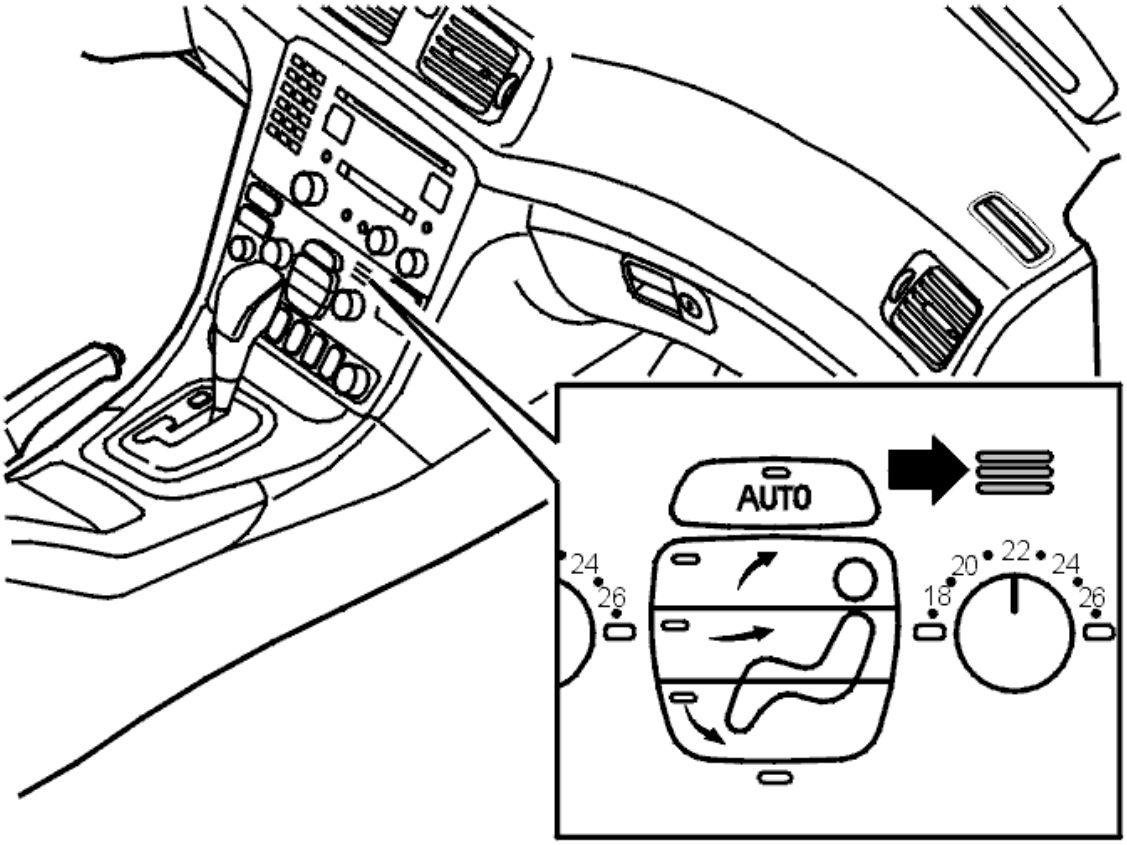

Fig. 84: Identifying Ignition ON
Courtesy of VOLVO CARS CORPORATION

- Ignition off
- Reinstall the connectors, components etc.
- Ignition on.

  Click the VCT2000 symbol to activate the check.

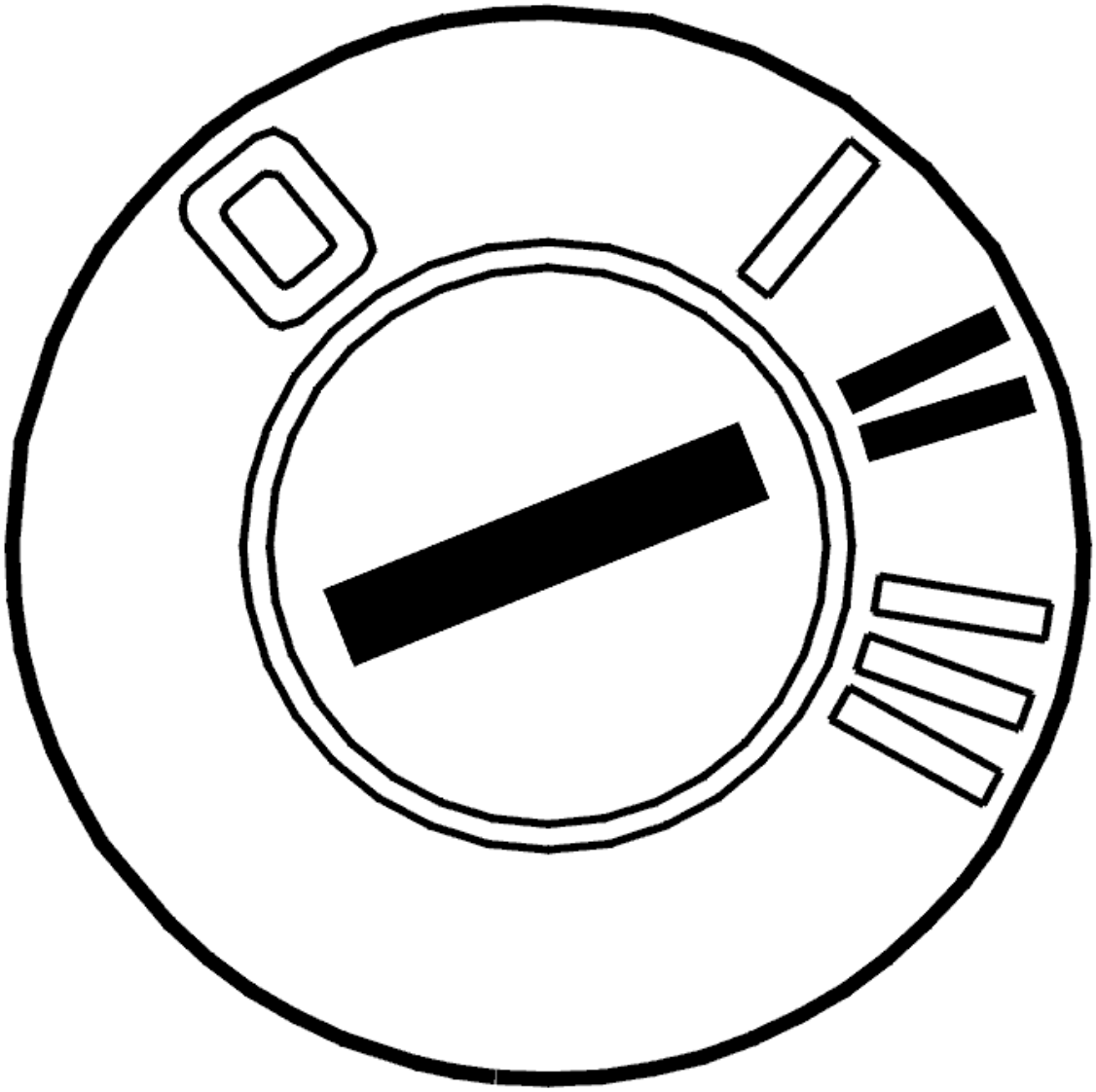

Fig. 85: Identifying VCT2000 Diagnostic Tool Symbol In VIDA
Courtesy of VOLVO CARS CORPORATION

- **Continue**

  Refer to **VERIFICATION**

CCM-0005: EVAPORATOR TEMPERATURE SENSOR. SIGNAL TOO HIGH (2003-04)

DIAGNOSTIC TROUBLE CODE INFORMATION

Condition

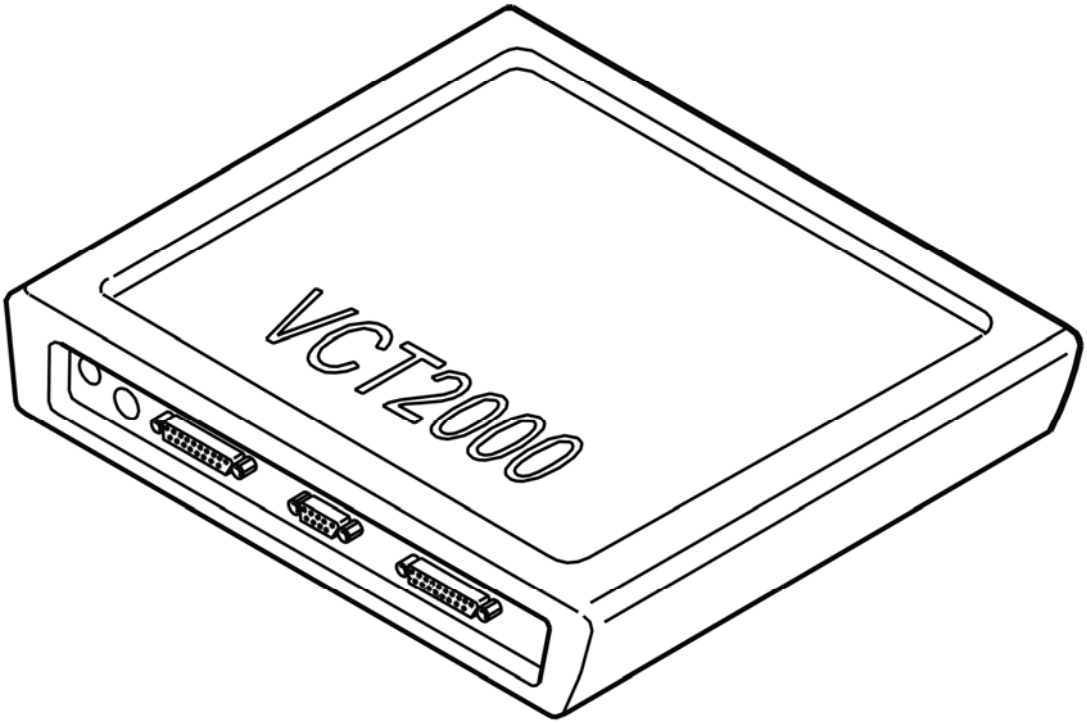

Fig. 86: Identifying Evaporator Temperature Sensor
Courtesy of VOLVO CARS CORPORATION

If control unit registers that signal from evaporator temperature sensor is more than 97% of excitation voltage (approximately 5 V), diagnostic trouble code CCM-0005 is displayed.

Substitute Value

- Control unit assumes a substitute value equivalent to approximately 0°C (32°F).

Possible Source

- Signal wire has open circuit or short circuit to voltage supply
- Contact resistance, oxidation or loose contact in connector
- Ground connection has open circuit or short circuit to voltage supply
- Defective evaporator temperature sensor.

Fault symptom[s]

- No cool air from A/C-system
- A/C compressor does not work or works intermittently
- Intermittent function of A/C-system.

SIGNAL TOO HIGH

CHECKING THE EVAPORATOR TEMPERATURE

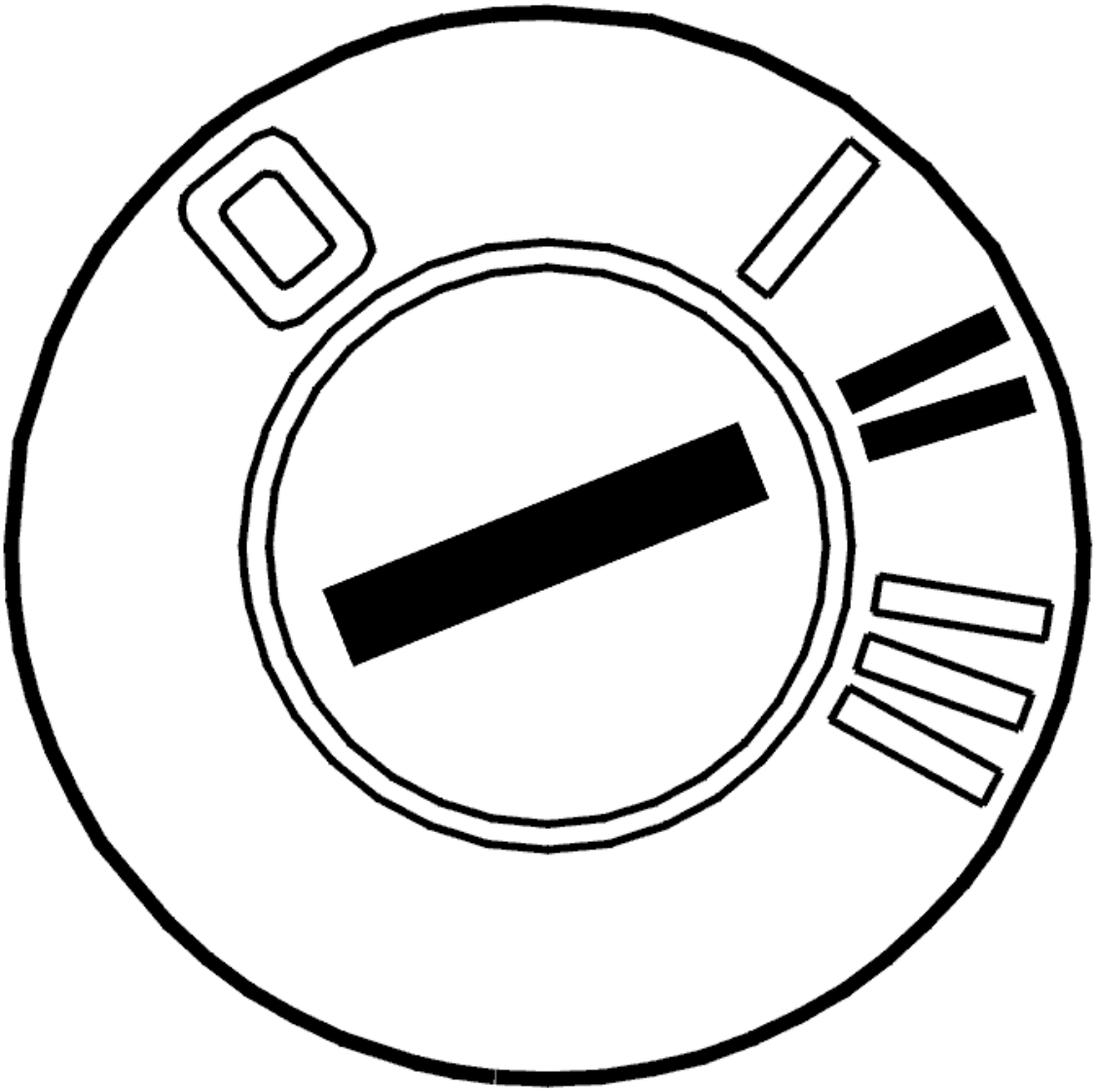

Fig. 87: Identifying Ignition ON
Courtesy of VOLVO CARS CORPORATION

- Ignition on.

  Check that the evaporator temperature is within its permitted range. If the climate control system has not been running and the engine has cooled down, the temperature should be the same as the outside temperature.

  If temperature is now OK the fault was caused by loose connections in the connectors.

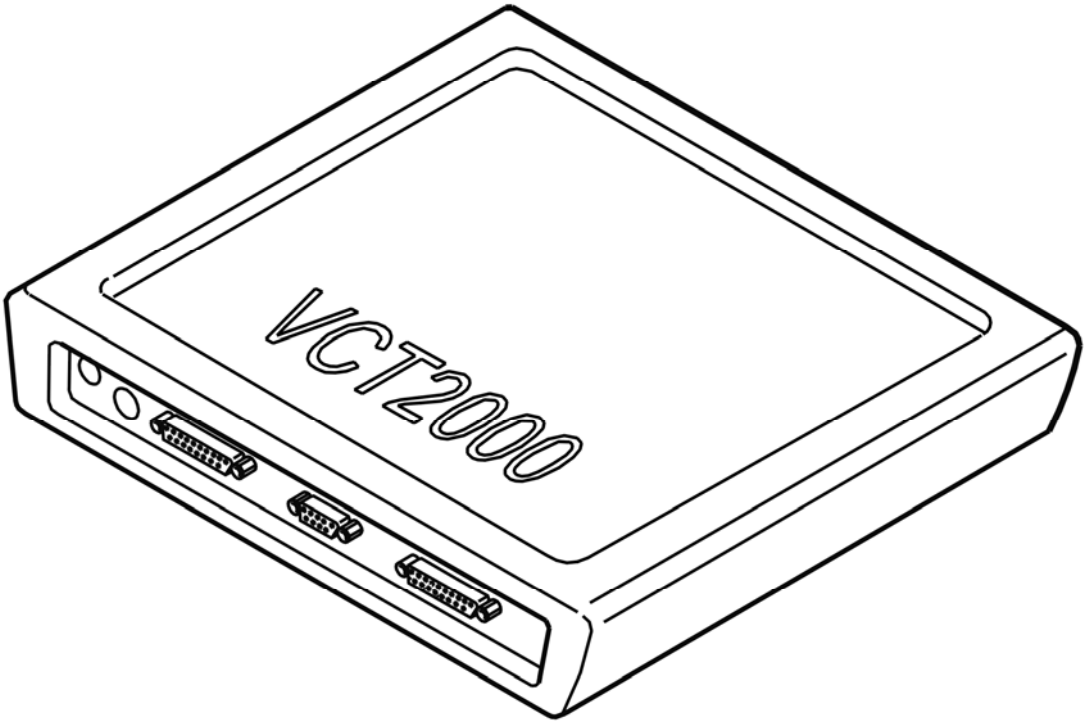

Fig. 88: Identifying VCT2000 Diagnostic Tool Symbol In VIDA
Courtesy of VOLVO CARS CORPORATION

Are the temperatures correct?

- **YES**

  Refer to **CHECKING CONNECTORS AND WIRING**

- **NO**

  Refer to **CHECKING THE EVAPORATOR TEMPERATURE SENSOR**

CHECKING THE EVAPORATOR TEMPERATURE SENSOR

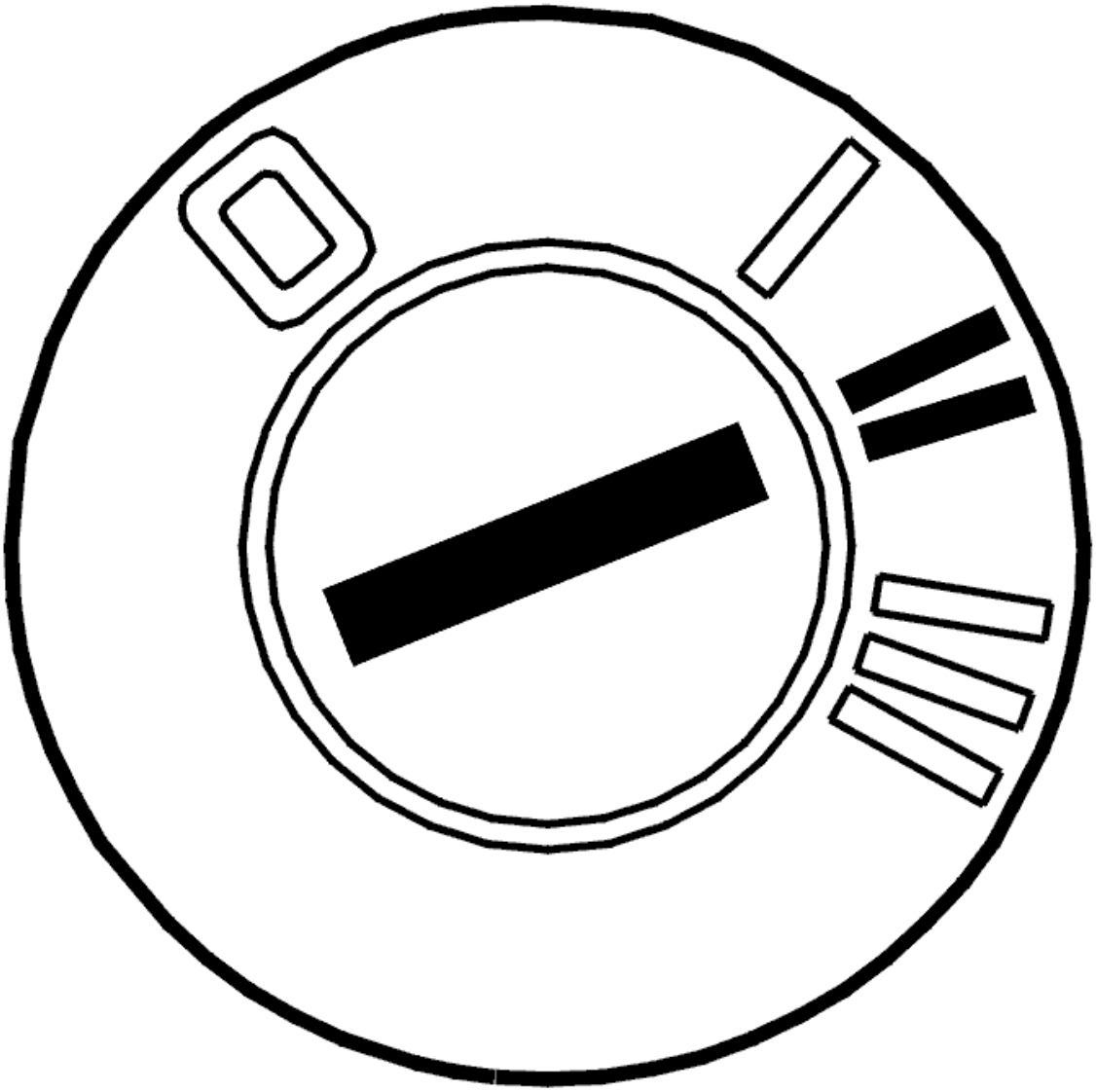

Fig. 89: Identifying Ignition OFF
Courtesy of VOLVO CARS CORPORATION

- Ignition off.

  Check that the control module receives a correct value from the evaporator temperature sensor by measuring its resistance and comparing with the values in the table.

  Measure the resistance between control module terminals #B1 (#1) and #B15 (#15). This value must correspond with the resistance of the evaporator temperature sensor.

  Other information:

  - To connect the breakout box, see **CONNECTING THE BREAKOUT BOX**
  - To access or replace the control module, see **DASHBOARD ENVIRONMENT PANEL (INCLUDING CLIMATE CONTROL MODULE (CCM)), REPLACING**

- For resistance values, see **COMPONENT RESISTANCE VALUES** .

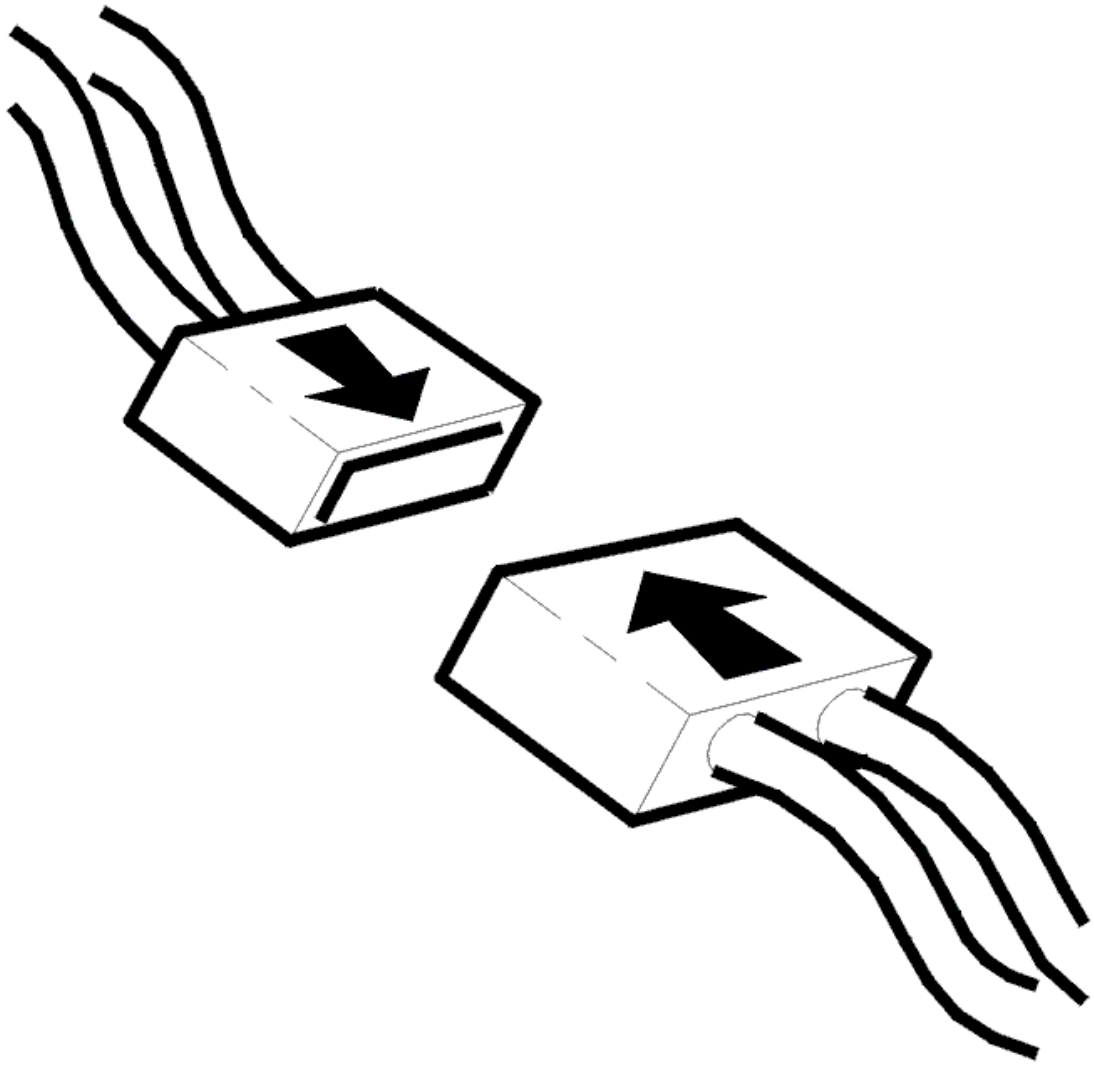

Fig. 90: Breakout Box
Courtesy of VOLVO CARS CORPORATION

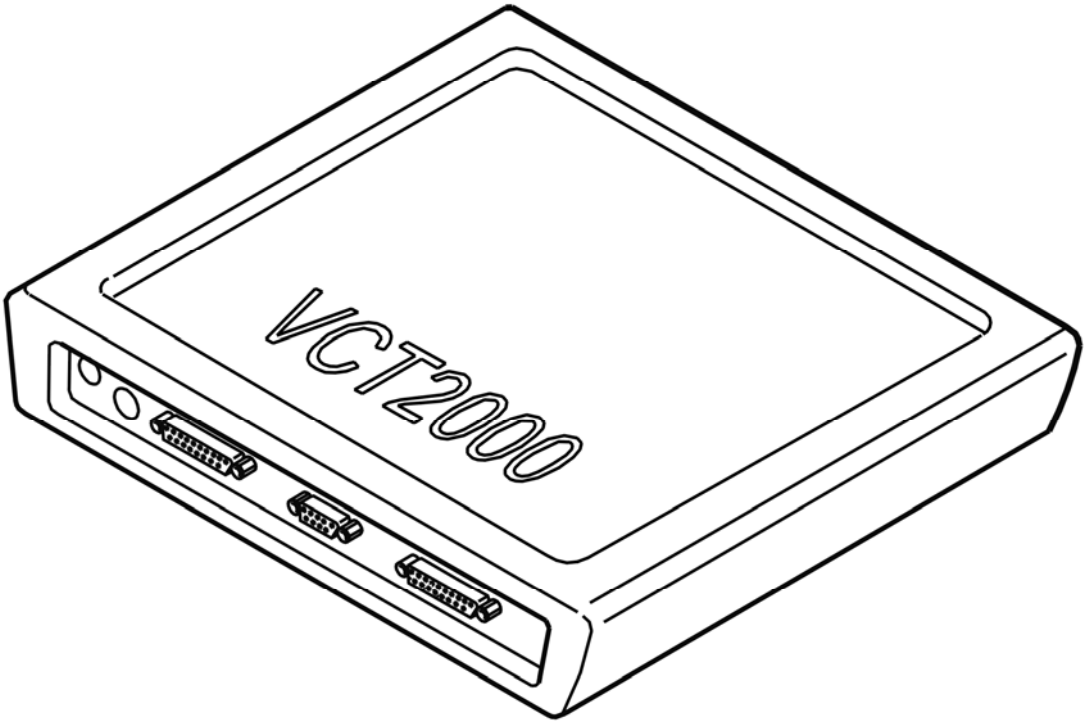

Fig. 91: Identifying Ohmmeter
Courtesy of VOLVO CARS CORPORATION

Is the resistance correct?

- **YES**

  Refer to **CHECKING CONNECTORS AND WIRING**

- **NO**

  Refer to **CHECKING COMPONENTS AND CONNECTORS**

CHECKING CONNECTORS AND WIRING

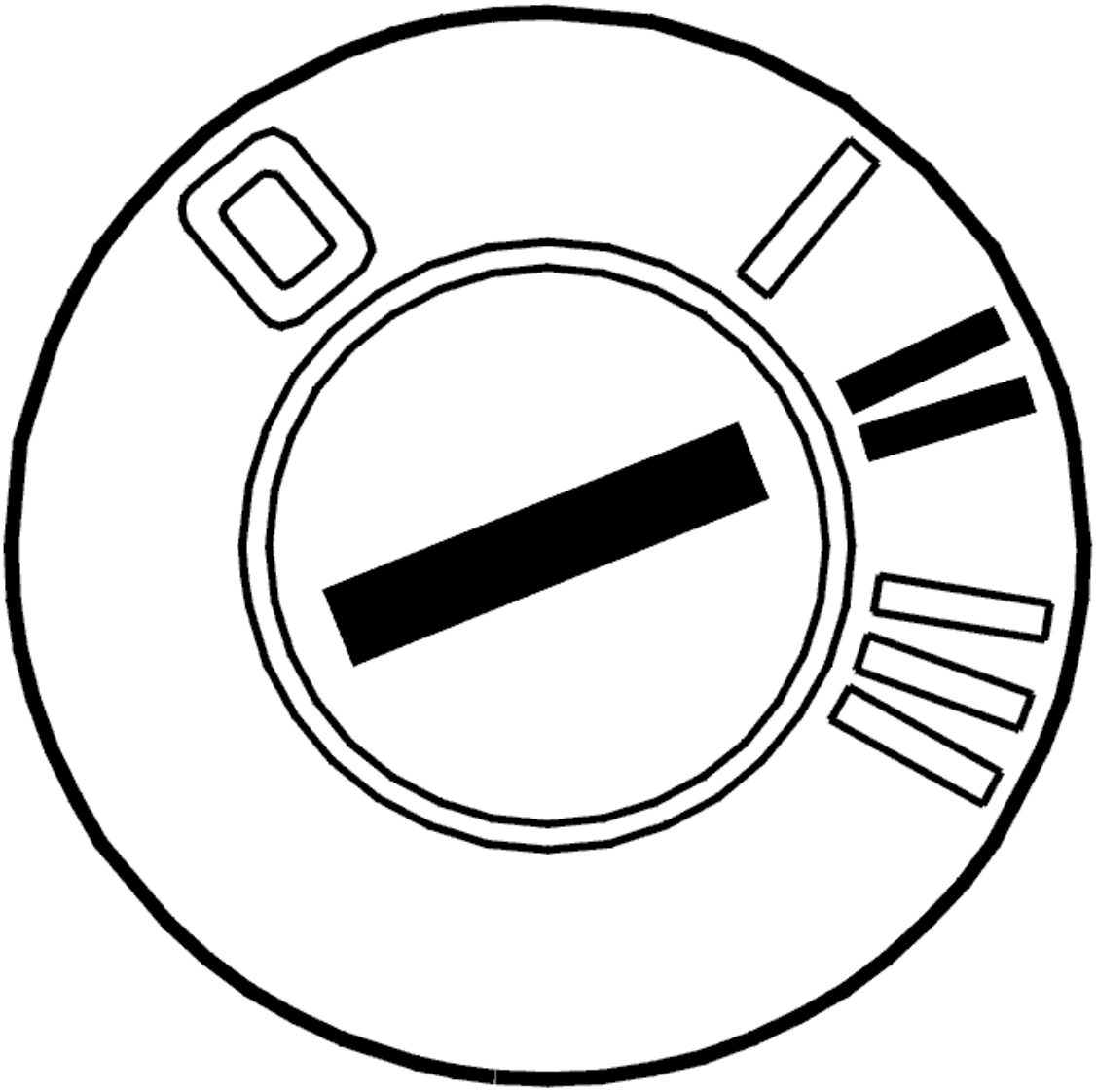

Fig. 92: Identifying Ignition ON
Courtesy of VOLVO CARS CORPORATION

- Ignition on.

  Check the signal cable between control module terminal #B1 and evaporator temperature sensor connector terminal #2 (#27). Check for an open-circuit. Check for a short-circuit to supply voltage.

  Check the ground lead between control module terminal #B15 and evaporator temperature sensor terminal #3 (#28). Check for an open-circuit. Check for a short-circuit to supply voltage.

  Remedy as necessary.

  Other information:

  - To connect the breakout box, see **CONNECTING THE BREAKOUT BOX**

- To access and replace the control module, see **DASHBOARD ENVIRONMENT PANEL (INCLUDING CLIMATE CONTROL MODULE (CCM)), REPLACING**
- To access or replace the evaporator temperature sensor, see **TEMPERATURE SENSOR EVAPORATOR, REPLACING**
- For other values, see **SIGNAL DESCRIPTION, CLIMATE CONTROL MODULE (CCM), CONNECTOR B**
- see **CHECKING WIRING AND TERMINALS** .

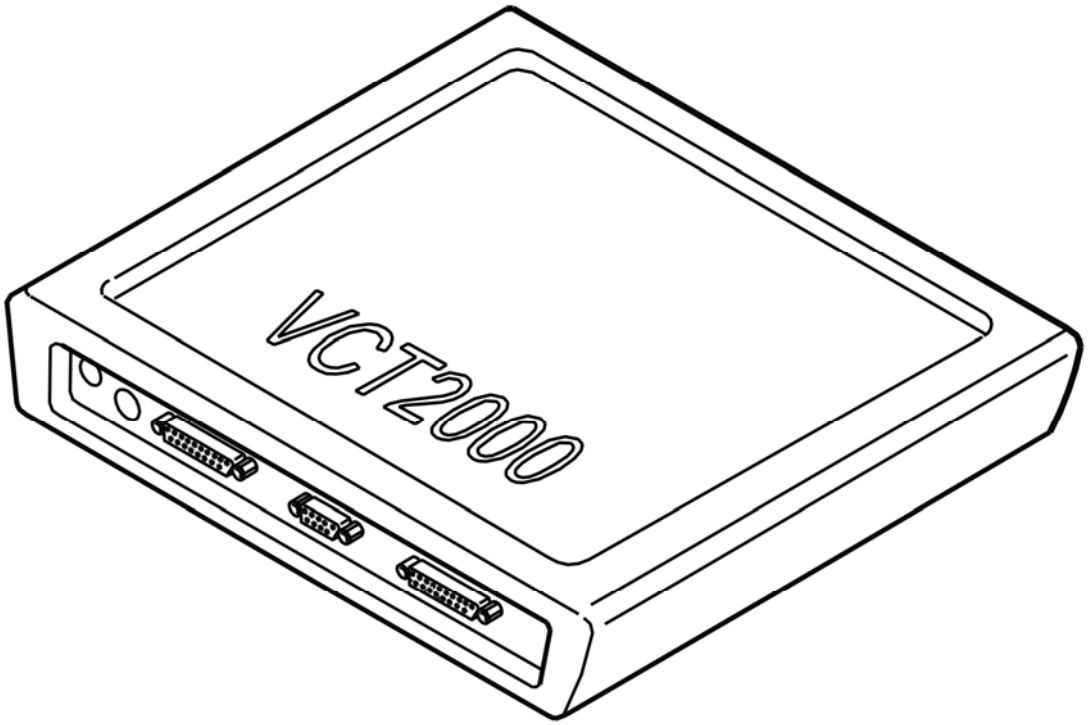

Fig. 93: Electronic Throttle Module (ETM) Connector Terminal Identification
Courtesy of VOLVO CARS CORPORATION

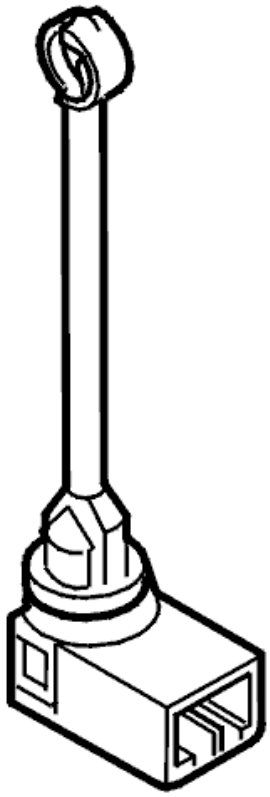

Fig. 94: Identifying Ohmmeter
Courtesy of VOLVO CARS CORPORATION

- **Continue**

  Refer to **VERIFICATION**

CHECKING COMPONENTS AND CONNECTORS

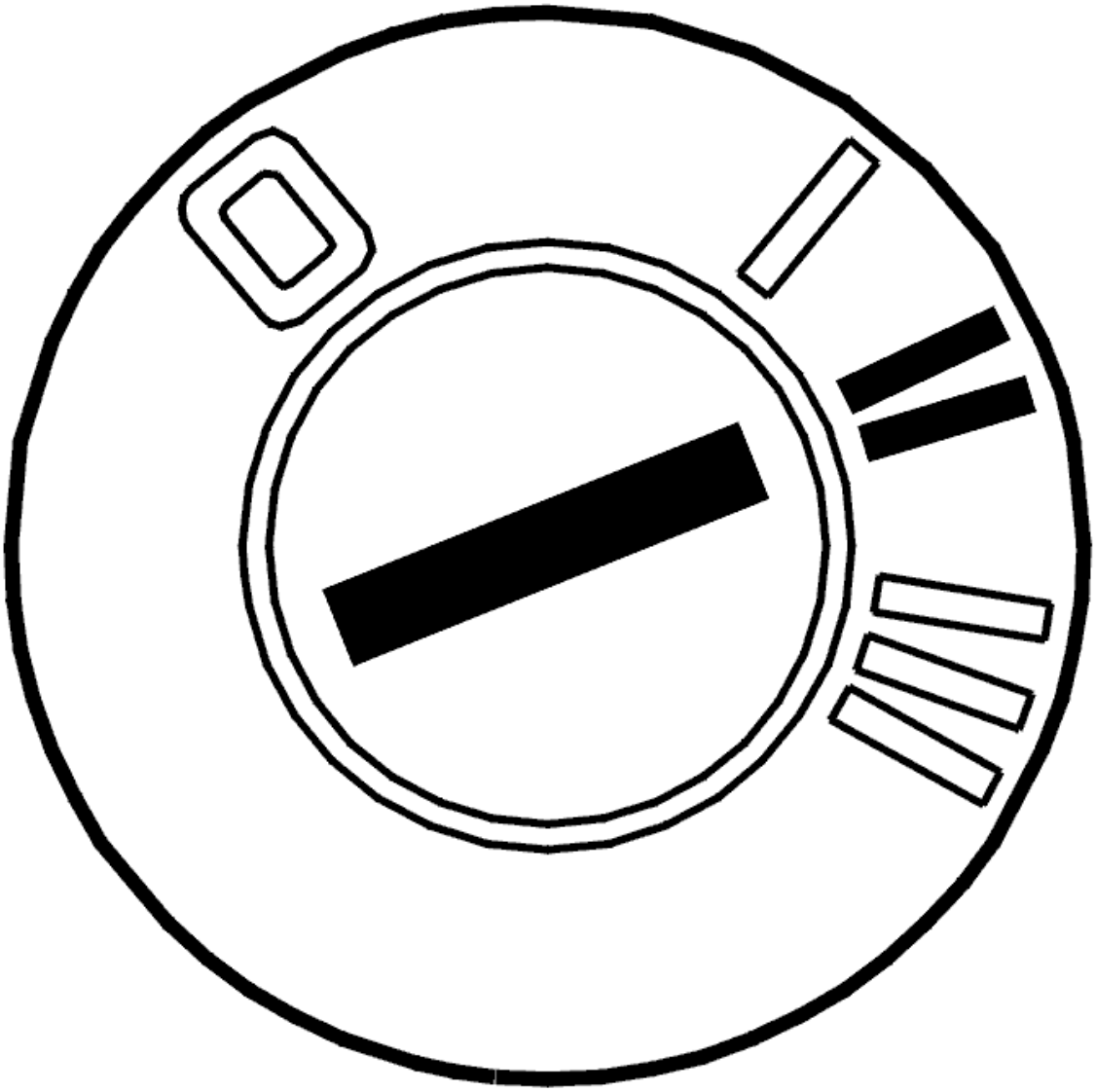

Fig. 95: Identifying Ignition OFF
Courtesy of VOLVO CARS CORPORATION

- Ignition off.

  Checking the evaporator temperature sensor

  Check the evaporator temperature sensor by measuring the resistance at the sensor connector between terminals #2 (#27) and #3 (#28).

  The resistance must correspond to the value in the table.

  Replace the evaporator temperature sensor if the resistance is not correct.

  Checking the connector

Check the evaporator temperature sensor connector. Check for oxidation and contact resistance.

Check control module connector terminals #B1 (#1) and #B15 (15). Check for oxidation and contact resistance.

Remedy as necessary.

Other information:

- To connect the breakout box, see **CONNECTING THE BREAKOUT BOX**
- To access and replace the control module, see **DASHBOARD ENVIRONMENT PANEL (INCLUDING CLIMATE CONTROL MODULE (CCM)), REPLACING**
- To access or replace the evaporator temperature sensor, see **TEMPERATURE SENSOR EVAPORATOR, REPLACING**
- For resistance values, see **COMPONENT RESISTANCE VALUES** .

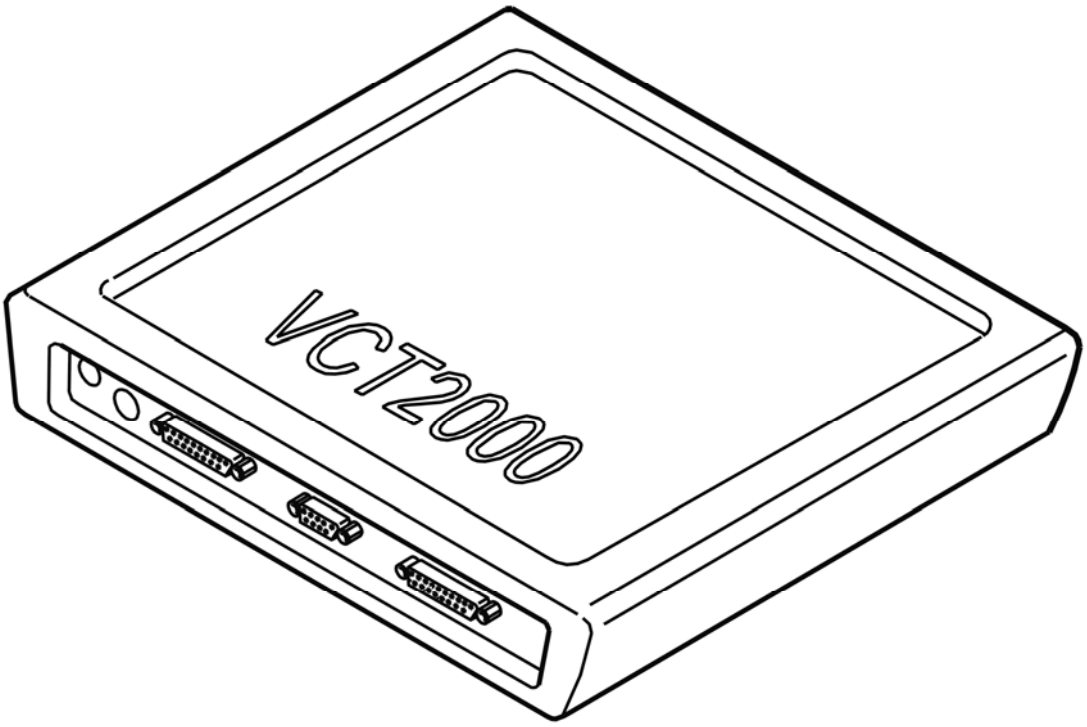

Fig. 96: Electronic Throttle Module (ETM) Connector Terminal Identification
Courtesy of VOLVO CARS CORPORATION

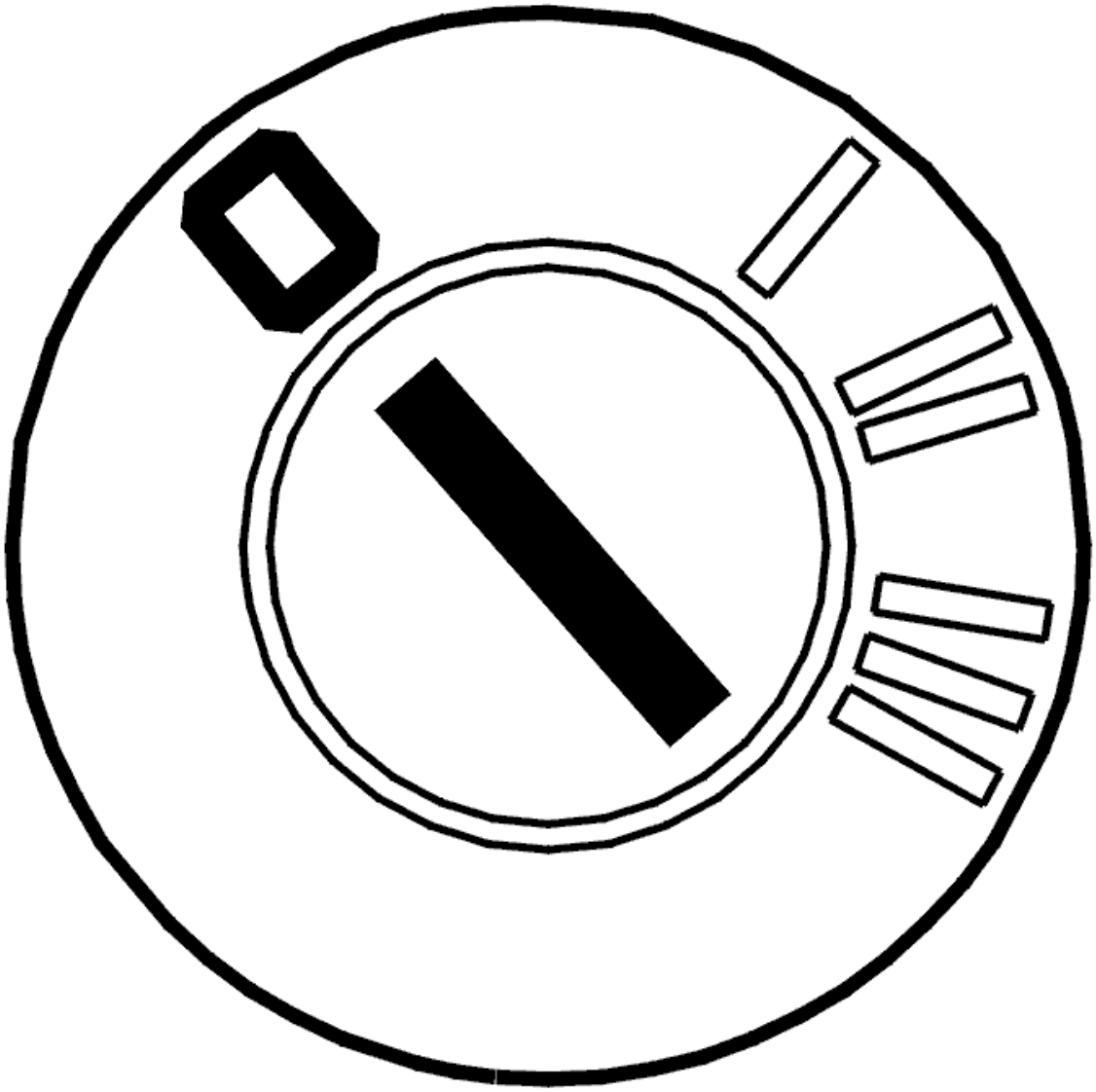

Fig. 97: Identifying Ohmmeter
Courtesy of VOLVO CARS CORPORATION

- **Continue**

  Refer to **VERIFICATION**

CHECKING CONNECTORS AND WIRING

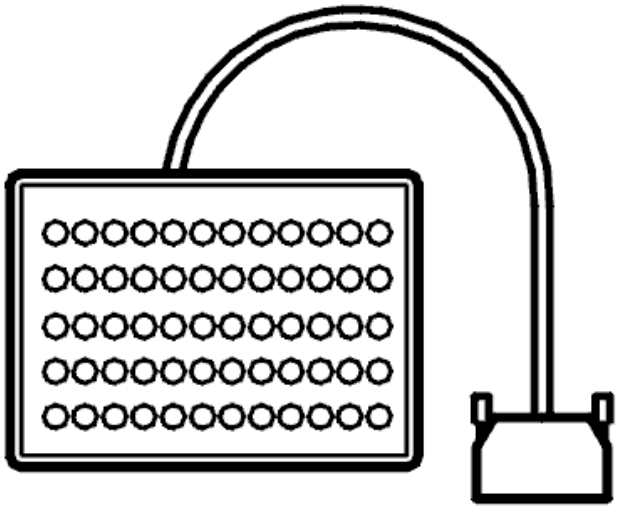

Fig. 98: Identifying Ignition OFF
Courtesy of VOLVO CARS CORPORATION

- Ignition off.

  Checking the connector

  Check the evaporator temperature sensor connector. Check for loose connections. Check for oxidation and contact resistance.

  Check control module connector terminals #B1 (#1) and #B15 (15). Check for loose connections. Check for oxidation and contact resistance.

  Checking the wiring

  Check the signal cable between control module terminal #B1 and evaporator temperature sensor connector terminal #2 (#27). Check for an intermittent open-circuit. Check for a short-circuit to supply voltage.

  Check the ground lead between control module terminal #B15 and evaporator temperature sensor connector terminal #3 (#28). Check for an intermittent open-circuit. Check for a short-circuit to supply voltage.

  Other information:

  - To connect the breakout box, see **CONNECTING THE BREAKOUT BOX**
  - To access and replace the control module, see **DASHBOARD ENVIRONMENT PANEL (INCLUDING CLIMATE CONTROL MODULE (CCM)), REPLACING**
  - To access or replace the evaporator temperature sensor, see **TEMPERATURE SENSOR EVAPORATOR, REPLACING**
  - see **CHECKING WIRING AND TERMINALS** .

- **Continue**

  Refer to **INFORMATION**

VERIFICATION

HINT: After the repair it is necessary to check that the fault has been rectified.

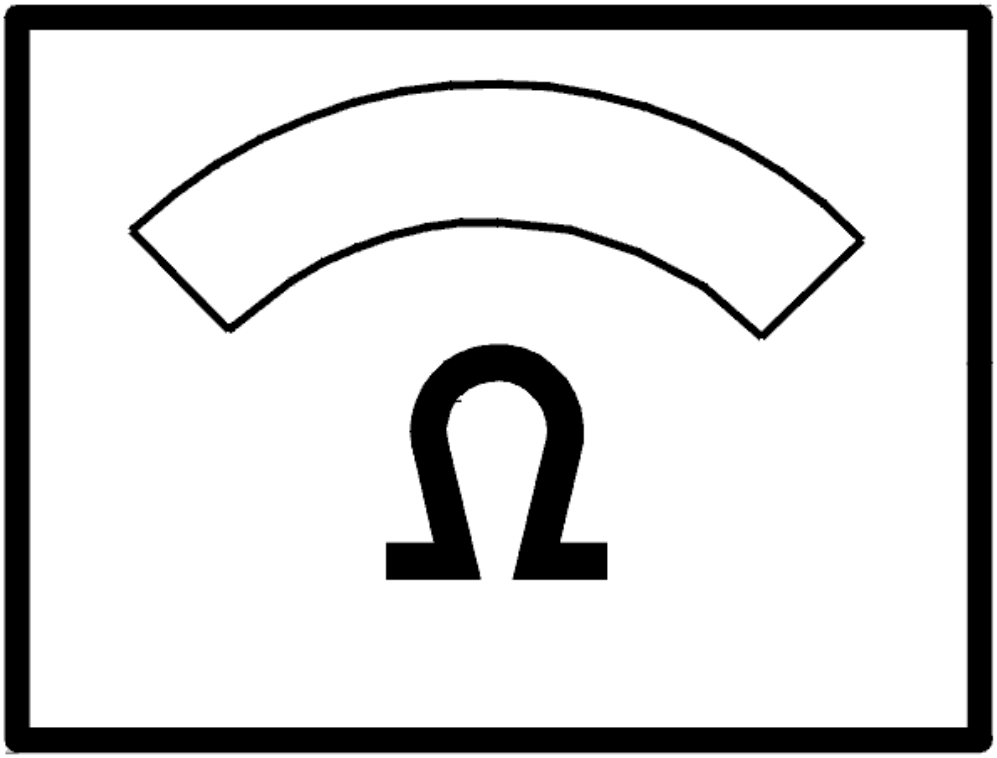

Fig. 99: Identifying Ignition ON
Courtesy of VOLVO CARS CORPORATION

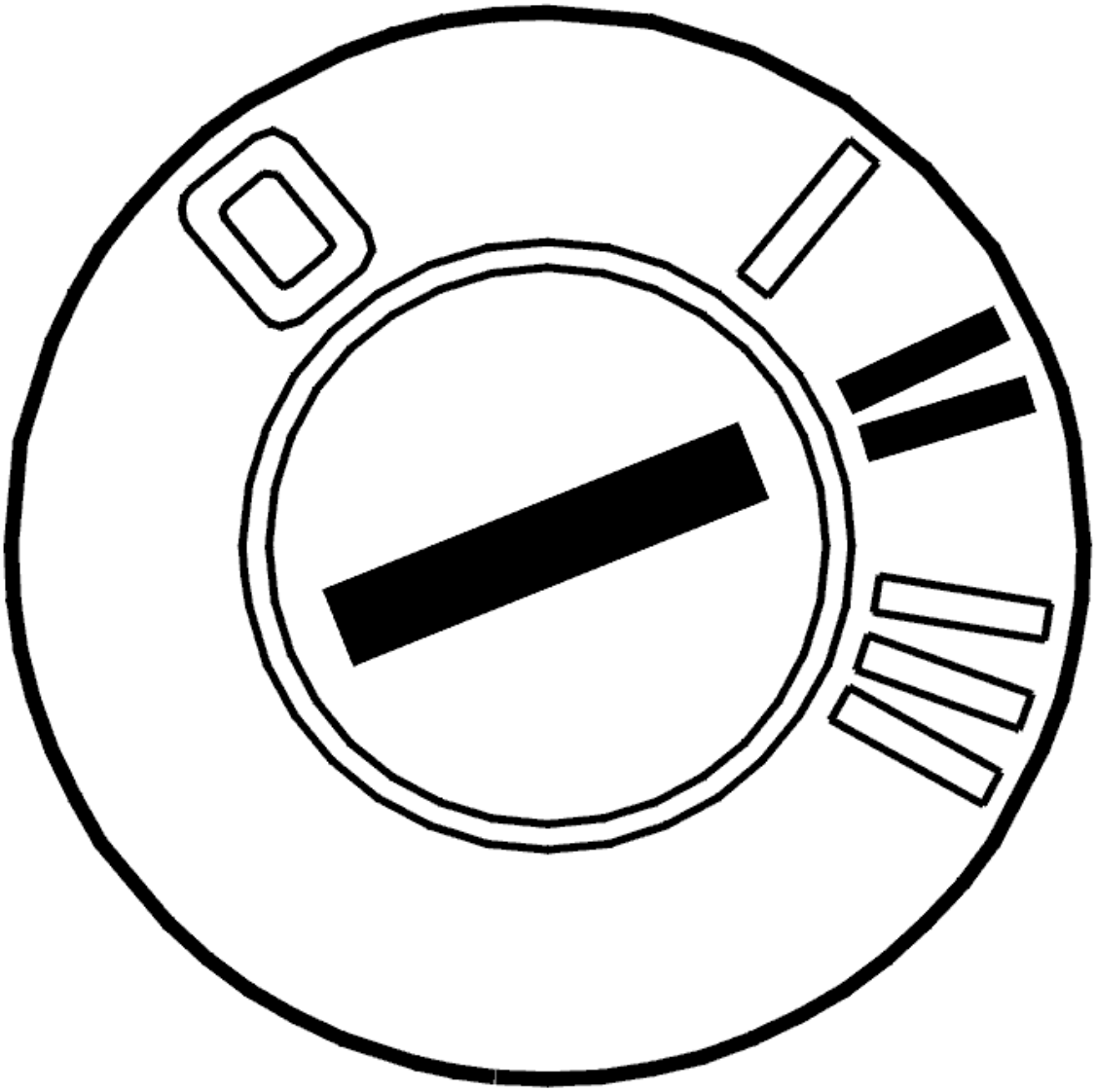

Fig. 100: Connecting Connector
Courtesy of VOLVO CARS CORPORATION

- Ignition off.
- Connect the connectors, install the components, etc.
- Ignition on.

Check evaporator temperature.

The value should be between -40°C and +85°C (-40°F and +185°F).

Start engine and switch on air-conditioning unit.

Check that the value changes and remains between the given minimum and maximum values.

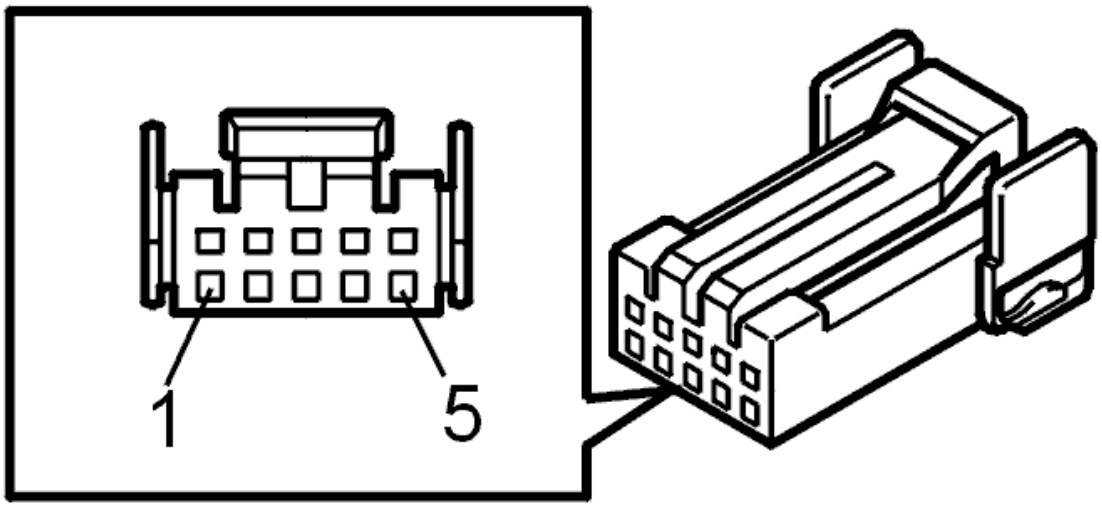

Fig. 101: Identifying VCT2000 Diagnostic Tool Symbol In VIDA
Courtesy of VOLVO CARS CORPORATION

Does the value change?

- **YES**

  VERIFIED: Troubleshooting has been completed.

- **NO**

  Refer to **INFORMATION**

INFORMATION

FAULT-TRACING INFORMATION

The fault should have been detected and remedied. As this is not the case fault-tracing has failed.

Exit fault-tracing for this diagnostic trouble code (DTC) or make another attempt.

CCM-0005: PASSENGER COMPARTMENT TEMPERATURE SENSOR. SIGNAL TOO HIGH/SIGNAL MISSING (2005-12)

DIAGNOSTIC TROUBLE CODE (DTC) INFORMATION CCM-0005

Condition

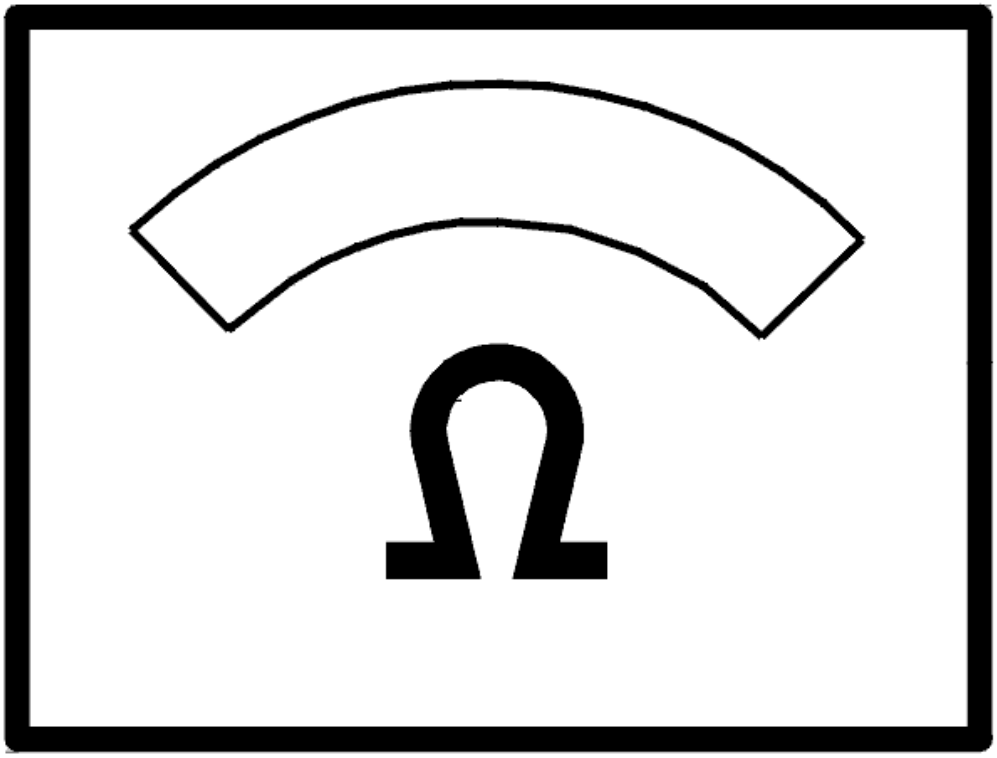

Fig. 102: Identifying Interior Temperature Sensor Air Inlet
Courtesy of VOLVO CARS CORPORATION

The diagnostic trouble code (DTC) is stored if the climate control module (CCM) detects a short-circuit to ground in the signal between the climate control module (CCM) and the passenger compartment temperature sensor.

The climate control module (CCM) uses the signal to control the passenger compartment temperature.

The diagnostic trouble code (DTC) can be diagnosed in ignition positions I and II.

The diagnostic trouble code (DTC) can only be diagnosed for the electronic climate control module (CCM) (ECC).

Substitute Value

- The control module adopts a substitute value corresponding to 25°C
- The normal value is the passenger compartment temperature.

Possible Source

- There is a short-circuit to ground in the signal between the passenger compartment temperature sensor and the climate control module (CCM)
- The passenger compartment temperature sensor is not functioning.

Fault symptom[s]

- The passenger compartment temperature does not correspond to the set position.

SIGNAL TOO HIGH/SIGNAL MISSING

see **SIGNAL TOO HIGH/SIGNAL MISSING**

CCM-0006: BLOWER FAN MOTOR PASSENGER COMPARTMENT TEMPERATURE SENSOR. SIGNAL TOO HIGH/SIGNAL MISSING (2005-12)

DIAGNOSTIC TROUBLE CODE (DTC) INFORMATION CCM-0006

Condition

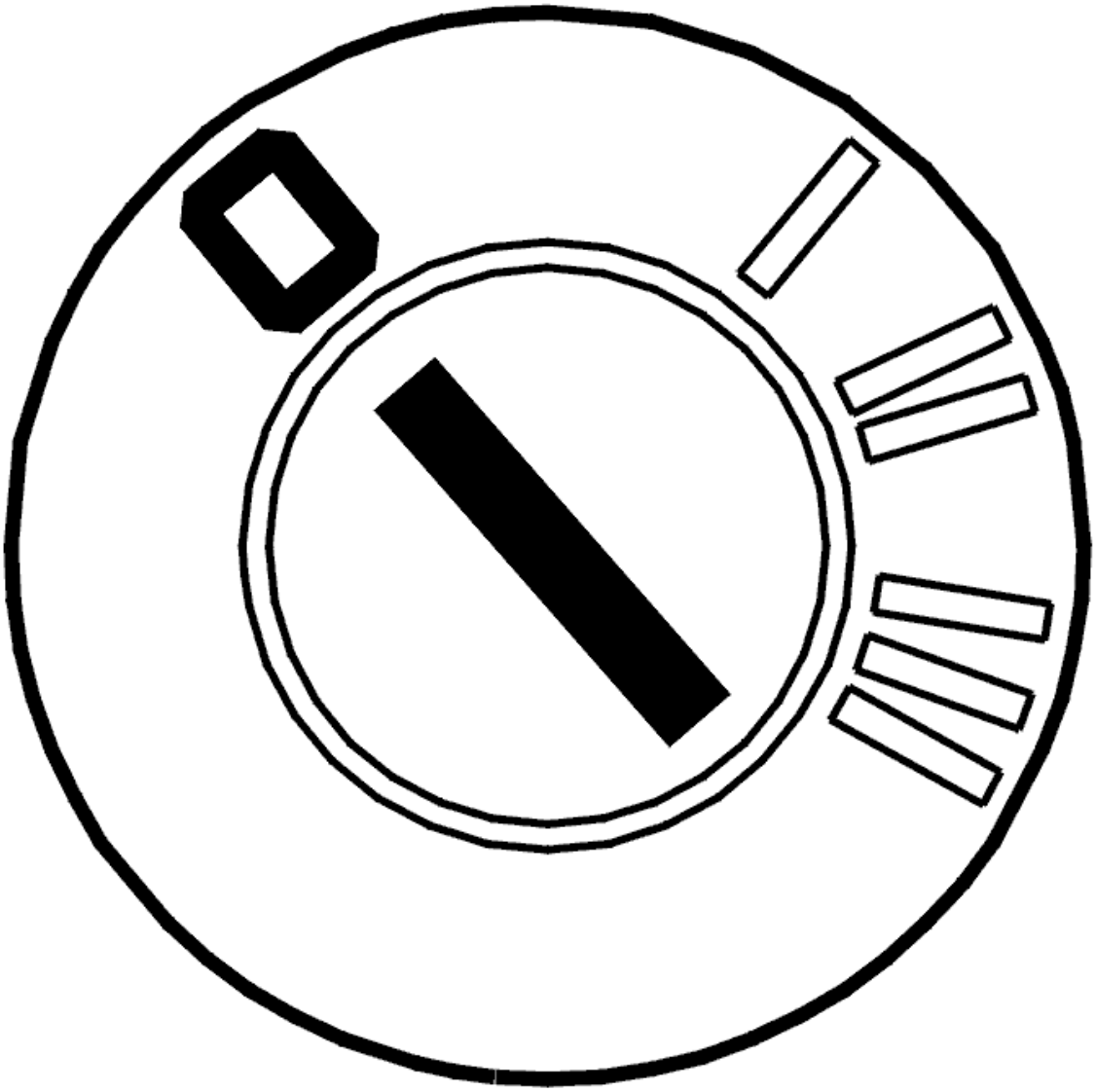

Fig. 103: Identifying Interior Temperature Sensor Air Inlet
Courtesy of VOLVO CARS CORPORATION

The diagnostic trouble code (DTC) is stored if the climate control module (CCM) detects an open-circuit in the power supply cable to the blower fan for the passenger compartment temperature sensor, or an open-circuit in the ground lead from the blower fan to the control module.

The function of the blower fan is to supply the passenger compartment temperature sensor with air from the passenger compartment. This prevents the sensor reading from being affected by heat from the surrounding electronics.

The diagnostic trouble code (DTC) can be diagnosed in ignition positions I and II.

The diagnostic trouble code (DTC) can only be diagnosed for the electronic climate control module (CCM) (ECC).

Substitute Value

- None.

Possible Source

- Open-circuit in the power supply cable between the climate control module (CCM) and the blower fan for the passenger compartment temperature sensor
- Open-circuit in the ground lead between the blower fan for the passenger compartment temperature sensor and the climate control module (CCM)
- Contact resistance, oxidation or loose connections in the connectors
- The blower fan for the passenger compartment temperature sensor is not functioning.

Fault symptom[s]

- The passenger compartment temperature does not correspond to the set position.
- Poor heating in the passenger compartment.

SIGNAL TOO HIGH/SIGNAL MISSING

CHECKING THE FAN MOTOR AND THE PASSENGER COMPARTMENT TEMPERATURE SENSOR

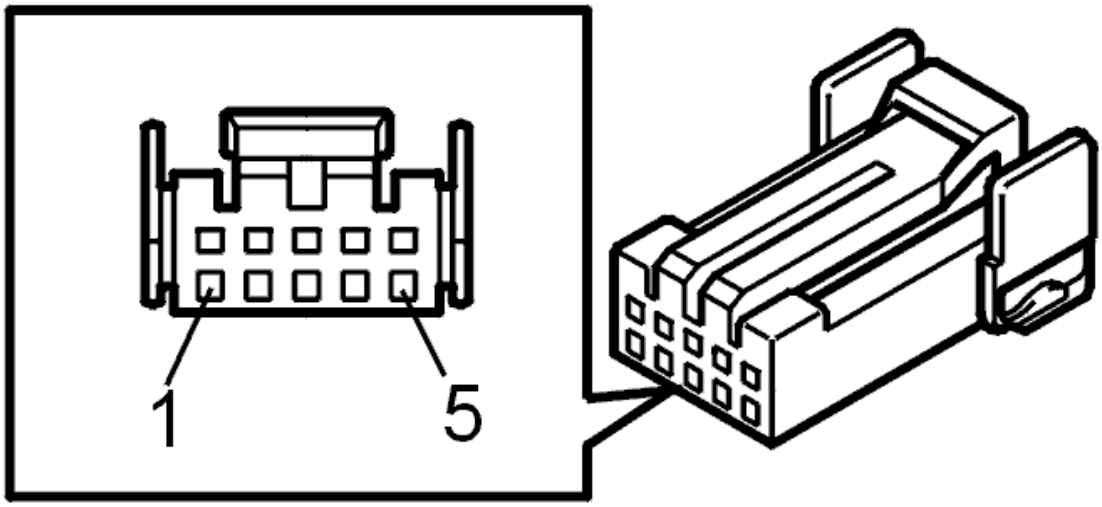

Fig. 104: Identifying Ignition ON
Courtesy of VOLVO CARS CORPORATION

- Ignition on
- Check that the fan is functioning. Place a small, thin piece of paper in front of the ventilation grille for the passenger compartment temperature sensor.

  If the paper is sucked against the grille, the fan is working.

NOTE: **The fan is only activated at passenger compartment temperatures in excess of -10°C (14°F).**

Is the fan working?

- **YES**

  Refer to **CHECKING CONNECTORS AND WIRING**

- **NO**

  Refer to **CHECKING COMPONENTS AND CONNECTORS**

CHECKING COMPONENTS AND CONNECTORS

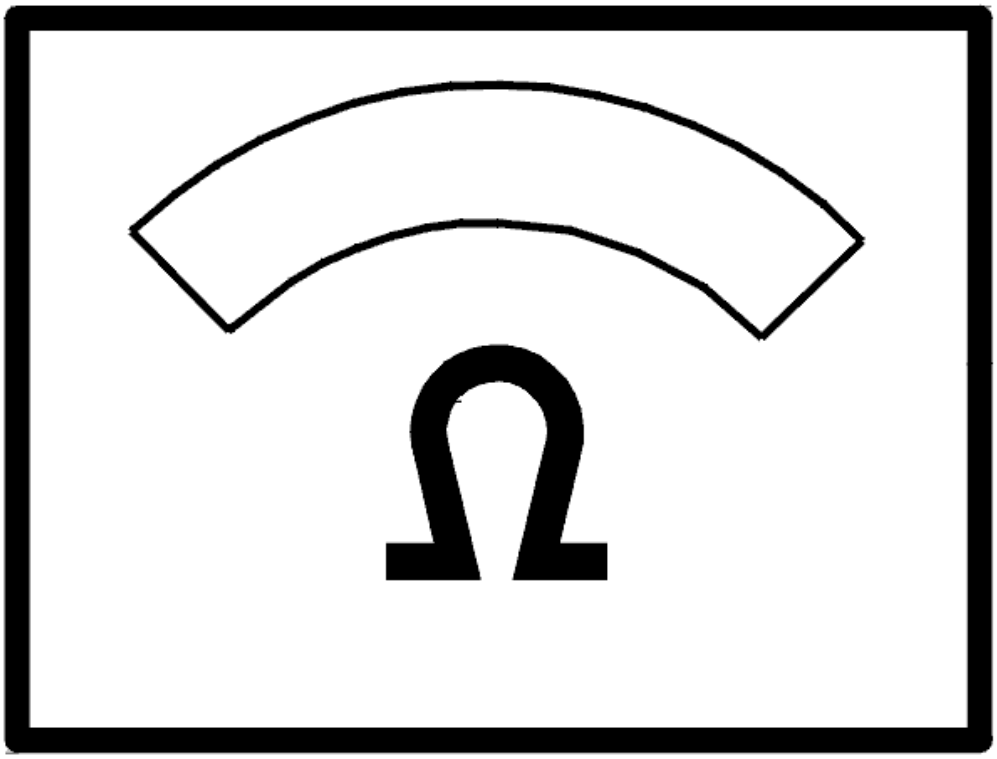

Fig. 105: Identifying Ignition ON

Courtesy of VOLVO CARS CORPORATION

- Ignition off
- Disconnect the climate control module (CCM).

  Check that the fan rotates freely and is not blocked by any objects.

  Check the fan connector. Check for contact resistance and oxidation.

  NOTE: From and including w50 2001, the fan is connected directly to connector C with no wiring in-between.

  Try replacing the fan if no other fault is found.

  Remedy as necessary.

  Other information:

  - To access and replace the control module, see **CLIMATE CONTROL MODULE (CCM), REPLACING**
  - To access or replace the blower fan motor, see **BLOWER FAN MOTOR PASSENGER COMPARTMENT TEMPERATURE SENSOR, REPLACING**
  - For other values, see **SIGNAL SPECIFICATION**
  - see **CONTENTS** .

- **Continue**

  Refer to **VERIFICATION**

CHECKING CONNECTORS AND WIRING

NOTE: From and including w50 2001, the fan is connected directly to connector C with no wiring in-between.

Check the wiring between the climate control module (CCM) and fan motor. Check for an intermittent short-circuit to ground and supply voltage.

Check the wiring for the control module. Check for an intermittent open-circuit.

Check connector C. Check for contact resistance and loose connections.

Other information:

- To access and replace the control module, see **CLIMATE CONTROL MODULE (CCM), REPLACING**

- To access or replace the blower fan motor, see **BLOWER FAN MOTOR PASSENGER COMPARTMENT TEMPERATURE SENSOR, REPLACING**
- For other values, see **SIGNAL SPECIFICATION**
- see **CONTENTS** .

- **Continue**

  Refer to **INFORMATION**

VERIFICATION

HINT: After carrying out the repair, check that the fault has been remedied.

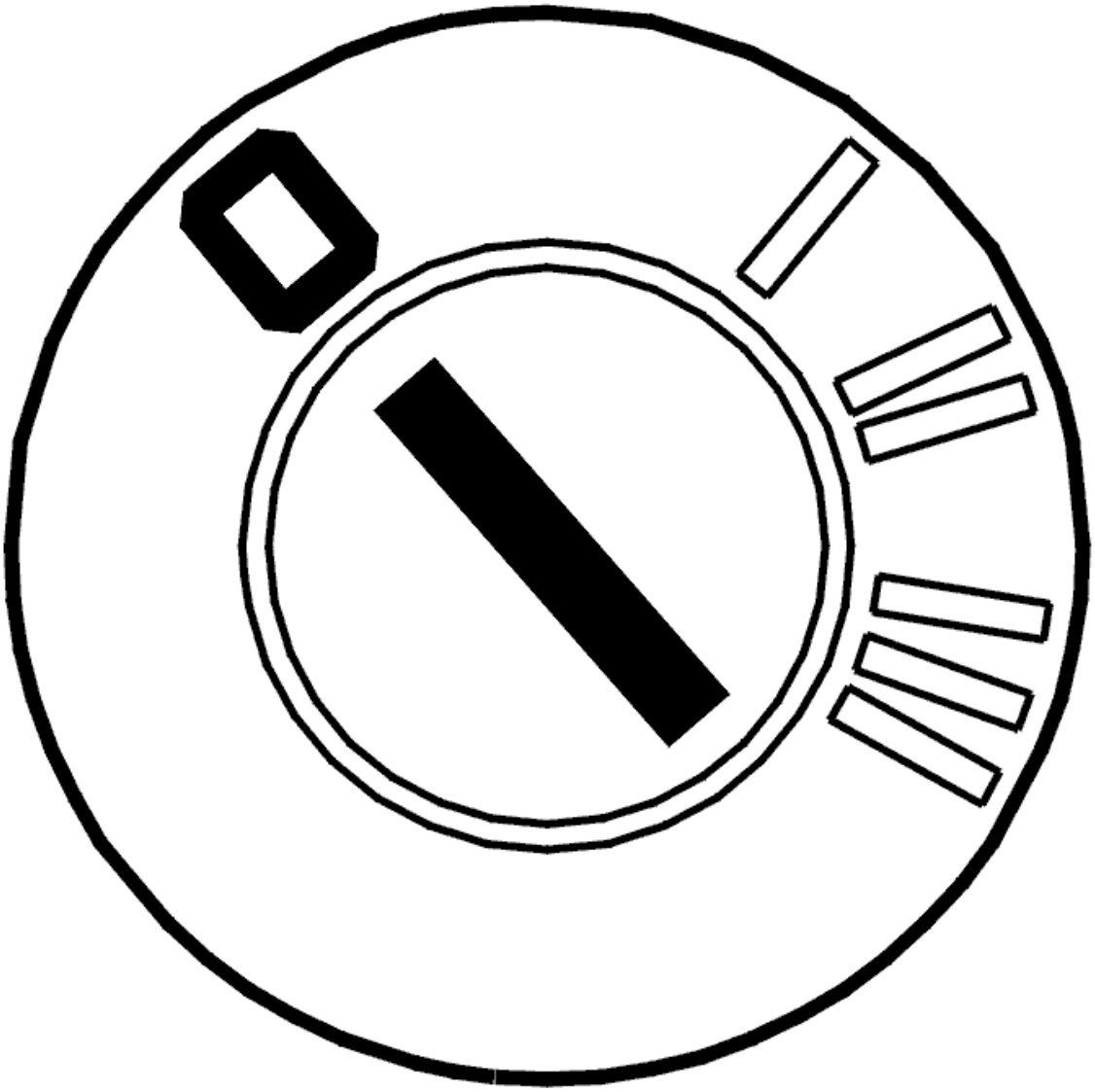

Fig. 106: Identifying Ignition ON
Courtesy of VOLVO CARS CORPORATION

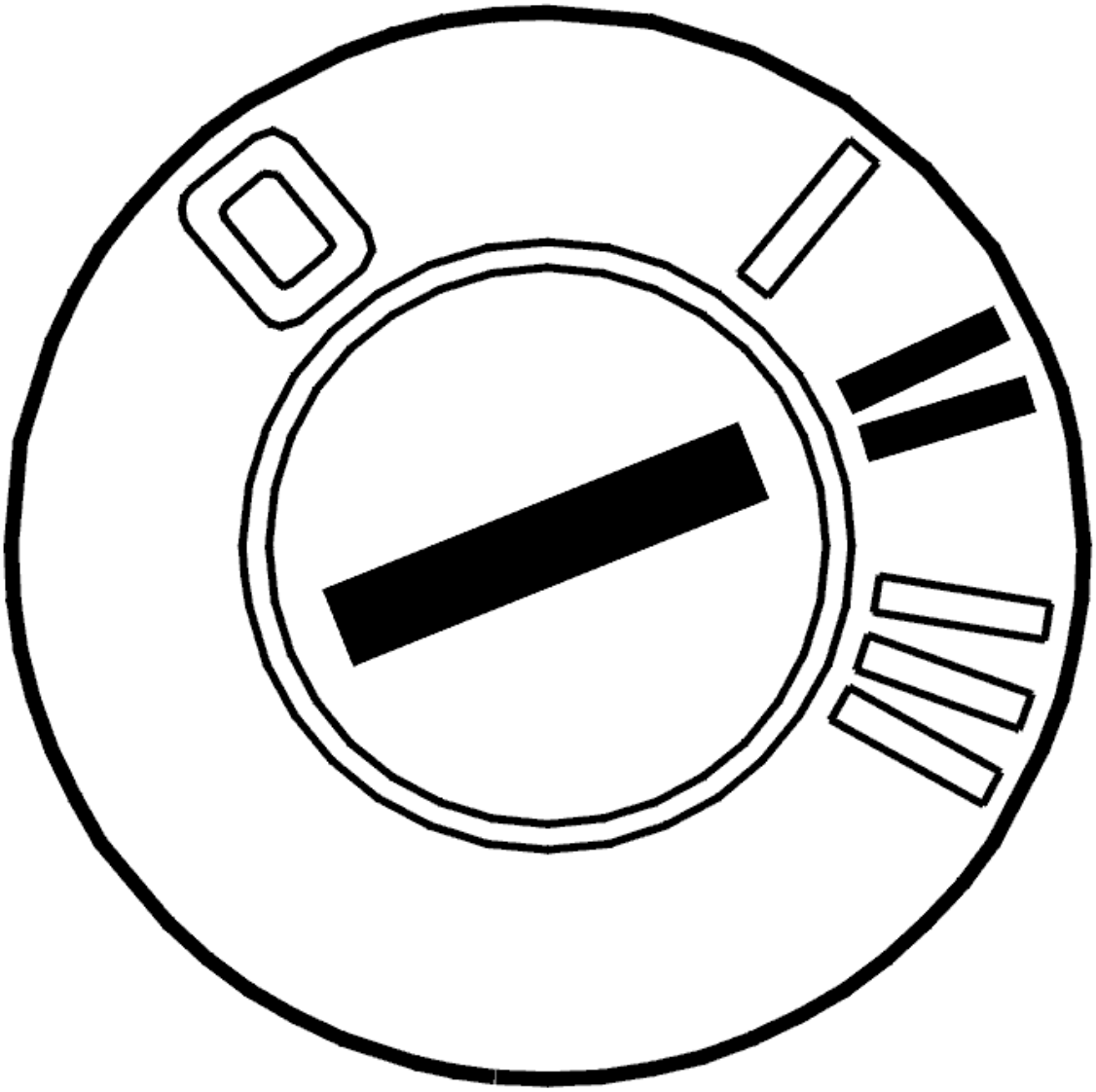

Fig. 107: Connecting Connector
Courtesy of VOLVO CARS CORPORATION

- Ignition off
- Reinstall the connectors, components etc.
- Ignition on
- Use a thin piece of paper in front of the fan to, see whether the fan is blowing (on the reverse of the control module).

  The fan is functioning if the paper moves.

Is the fan working?

- **YES**

VERIFIED: Troubleshooting has been completed.

- **NO**

  Refer to **INFORMATION**

INFORMATION

FAULT-TRACING INFORMATION

The fault should have been detected and remedied. As this is not the case fault-tracing has failed.

Exit fault-tracing for this diagnostic trouble code (DTC) or make another attempt.

CCM-0006: EVAPORATOR TEMPERATURE SENSOR. SIGNAL TOO LOW (2003-04)

DIAGNOSTIC TROUBLE CODE (DTC) INFORMATION

Condition

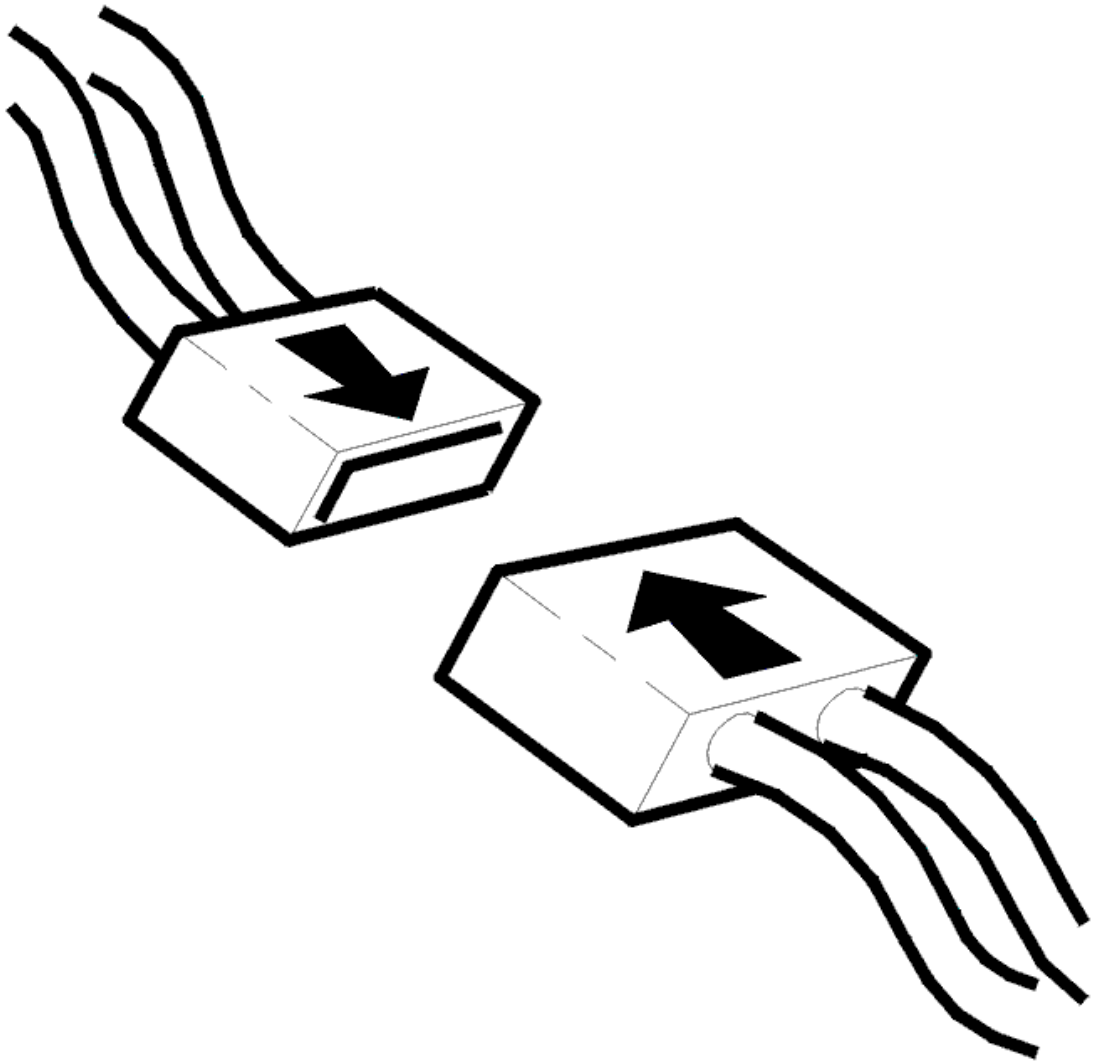

Fig. 108: Identifying Evaporator Temperature Sensor
Courtesy of VOLVO CARS CORPORATION

Diagnostic trouble code (DTC) CCM-0006 is stored if the control module registers that the signal from the evaporator temperature sensor is below 2% of the supply voltage (approximately 5 V).

Condition

- The control module adopts a substitute value corresponding to approximately 0 °C.

Possible Source

- Short-circuit to ground in the signal cable
- Defective evaporator temperature sensor.

Fault symptom[s]

- No cooling from the air conditioning (A/C) system
- The air conditioning (A/C) compressor does not start, or runs sporadically
- Irregular cooling from the air conditioning (A/C) system.

SIGNAL TOO LOW

CHECKING THE EVAPORATOR TEMPERATURE

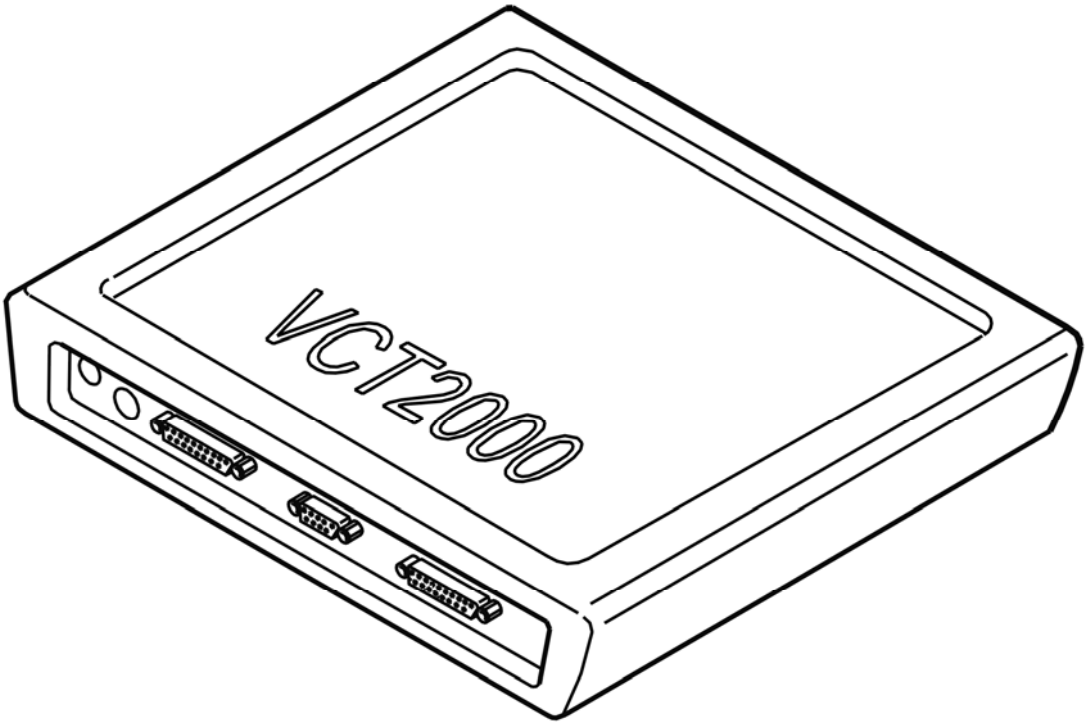

Fig. 109: Identifying Ignition ON
Courtesy of VOLVO CARS CORPORATION

- Ignition on.

  Check that the evaporator temperature is within its permitted range. If the climate control system has not been running and the engine has cooled down, the temperature must be the same as the outside temperature.

  If the temperature is now, OK the fault was caused by an intermittent short-circuit to ground.

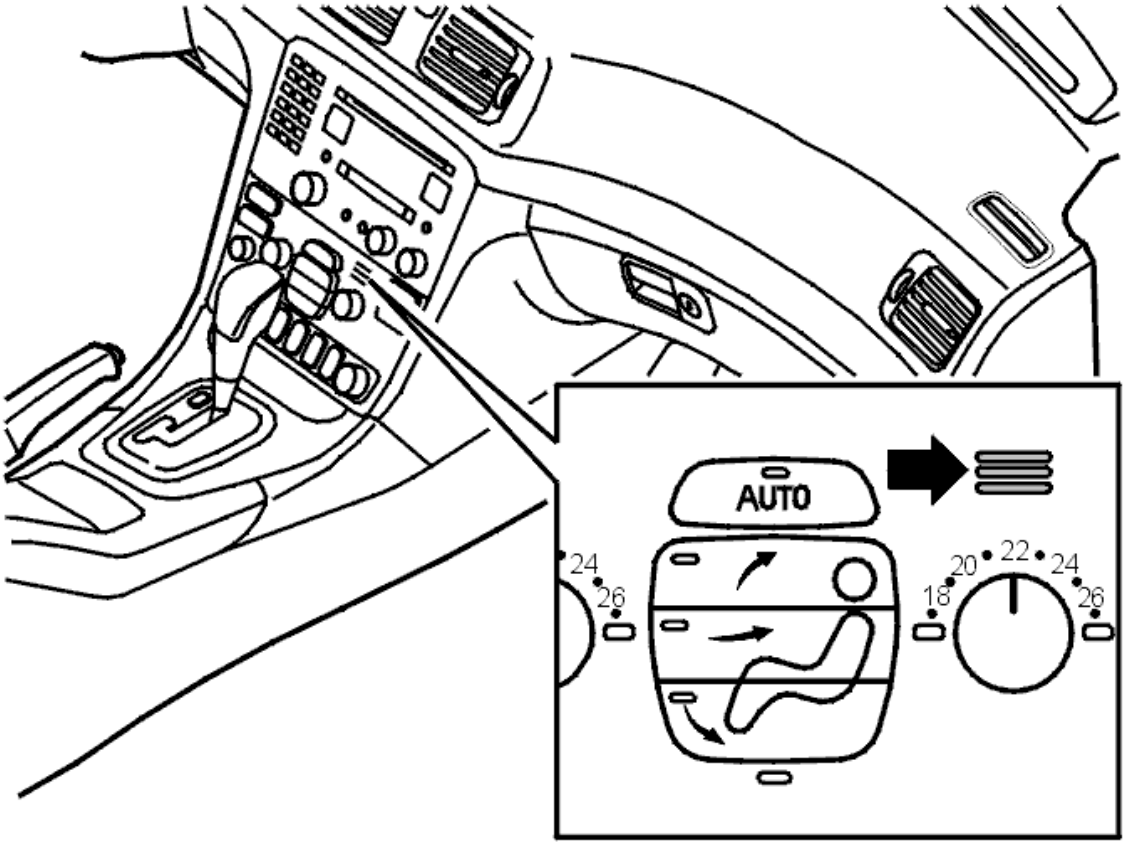

Fig. 110: Identifying VCT2000 Diagnostic Tool Symbol In VIDA
Courtesy of VOLVO CARS CORPORATION

Are the temperatures correct?

- **YES**

  Refer to **CHECKING THE WIRING**

- **NO**

  Refer to **CHECKING RESISTANCE VALUES**

CHECKING RESISTANCE VALUES

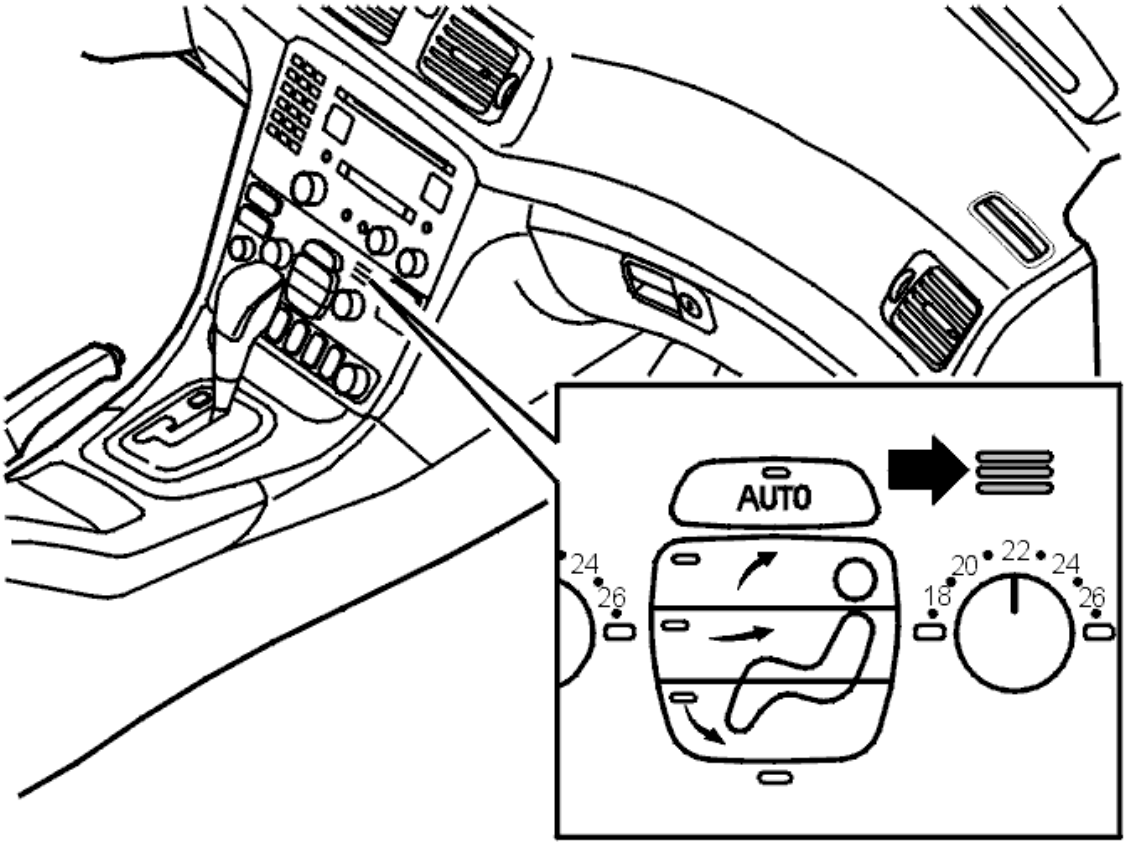

Fig. 111: Identifying Ignition OFF
Courtesy of VOLVO CARS CORPORATION

- Ignition off.

  Check that the climate control module (CCM) is receiving a correct value from the evaporator temperature sensor by measuring its resistance and comparing with the values in the table.

  Measure the resistance between climate control module (CCM) connector terminals #B1 (#1) and #B15 (#15). This value must correspond with the resistance of the evaporator temperature sensor.

  Other information:

  - To access or replace the control module, see **CLIMATE CONTROL MODULE (CCM), REPLACING**
  - To connect the breakout box, see **CONNECTING THE BREAKOUT BOX**
  - To access or replace the evaporator temperature sensor, see **TEMPERATURE SENSOR EVAPORATOR, REPLACING**
  - For the resistance values, see **COMPONENT RESISTANCE VALUES**
  - For other values, see **SIGNAL SPECIFICATION**
  - see **CHECKING WIRING AND TERMINALS** .

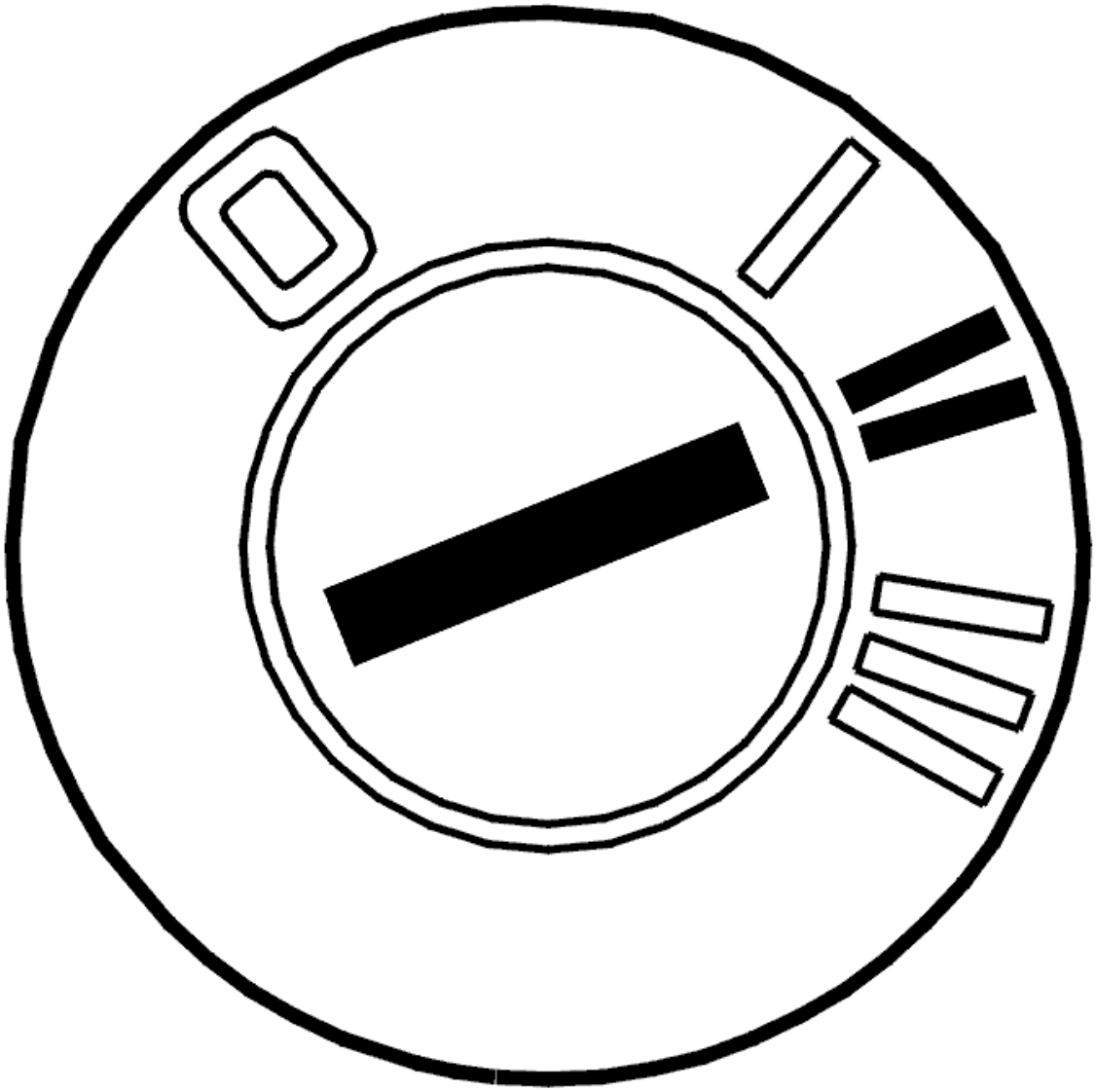

Fig. 112: Electronic Throttle Module (ETM) Connector Terminal Identification
Courtesy of VOLVO CARS CORPORATION

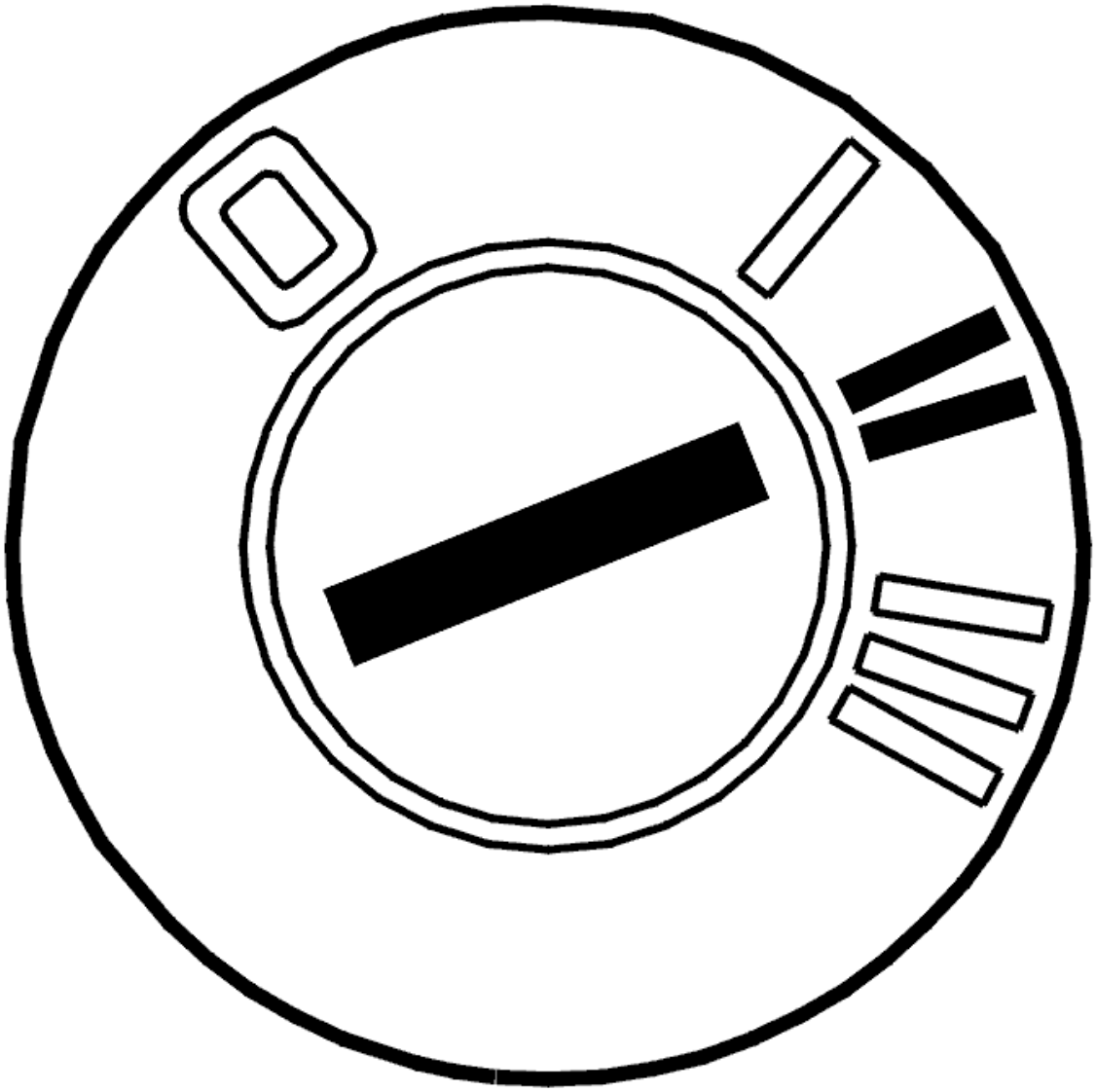

Fig. 113: Identifying Ohmmeter
Courtesy of VOLVO CARS CORPORATION

Is the resistance correct?

- **YES**

  Refer to **CHECKING THE WIRING**

- **NO**

  Refer to **CHECKING THE EVAPORATOR TEMPERATURE SENSOR**

CHECKING THE WIRING

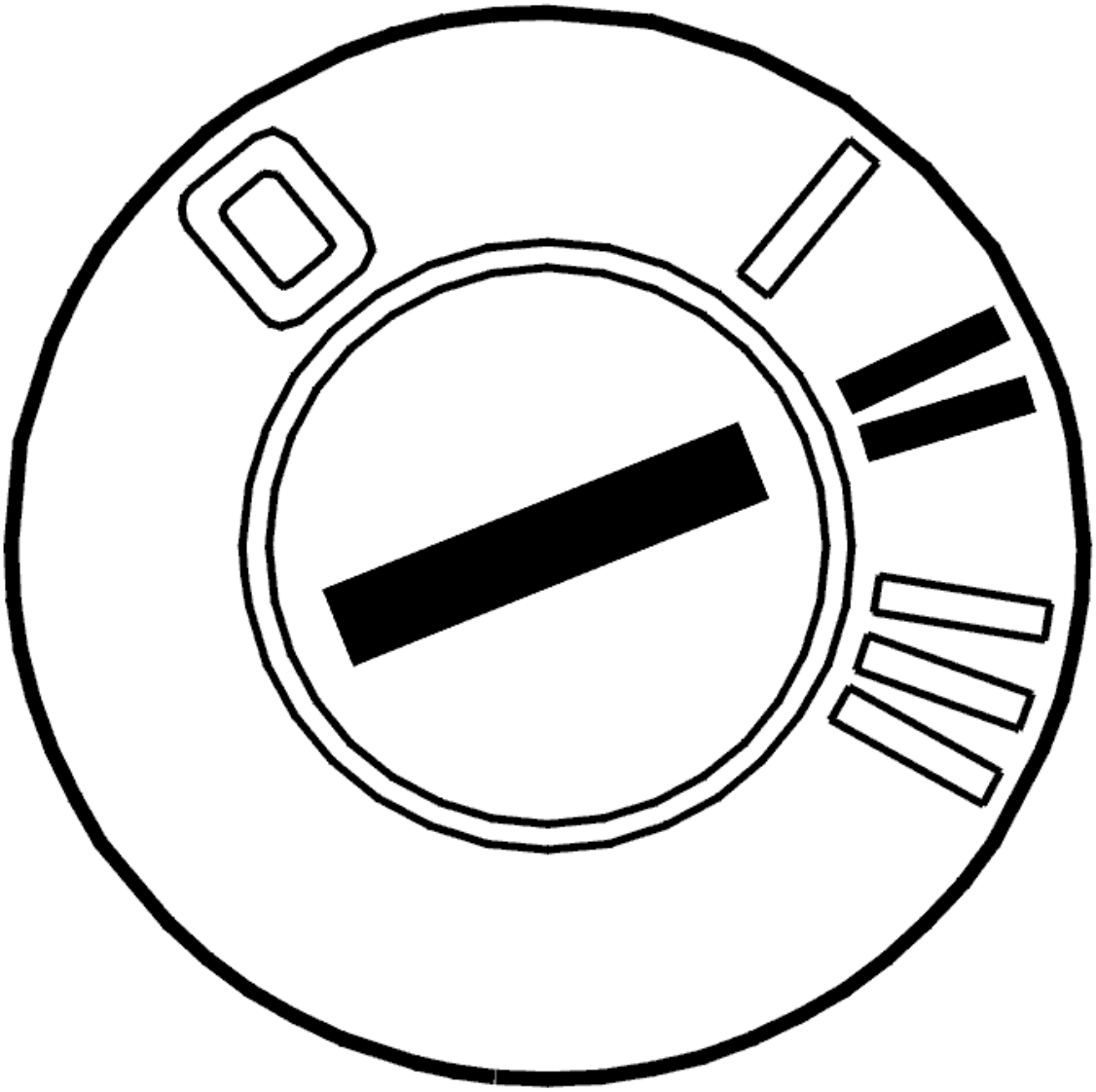

Fig. 114: Identifying Ignition OFF
Courtesy of VOLVO CARS CORPORATION

- Ignition off.

  Check the signal cable between climate control module (CCM) terminal #B1 (#1) and evaporator temperature sensor #2 (#27). Check for a short-circuit to ground.

  Remedy as necessary.

  Other information:

  - To access or replace the control module, see **CLIMATE CONTROL MODULE (CCM), REPLACING**
  - To connect the breakout box, see **CONNECTING THE BREAKOUT BOX**

- To access or replace the evaporator temperature sensor, see **TEMPERATURE SENSOR EVAPORATOR, REPLACING**
- For other values, see **SIGNAL SPECIFICATION**
- see **CHECKING WIRING AND TERMINALS** .

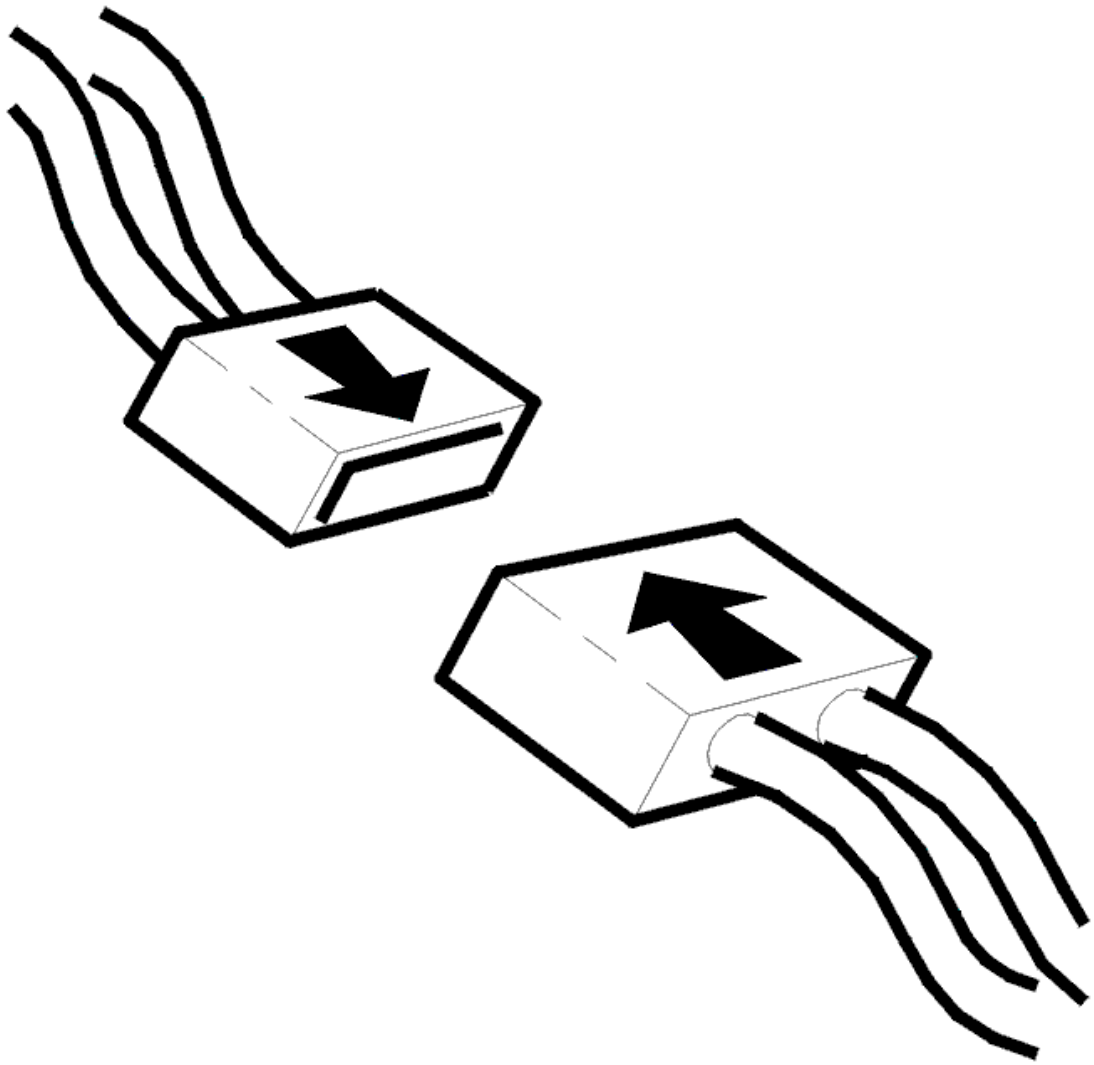

Fig. 115: Electronic Throttle Module (ETM) Connector Terminal Identification
Courtesy of VOLVO CARS CORPORATION

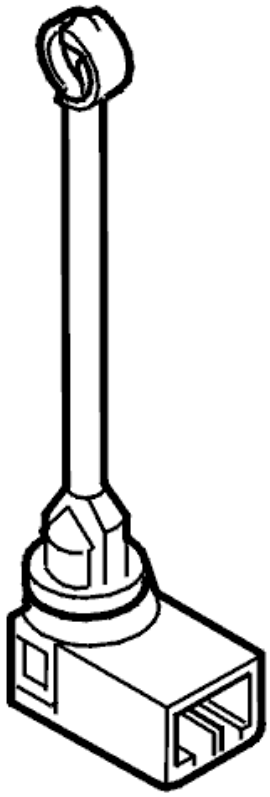

Fig. 116: Identifying Ohmmeter
Courtesy of VOLVO CARS CORPORATION

- **Continue**

  Refer to **VERIFICATION**

CHECKING THE EVAPORATOR TEMPERATURE SENSOR

Check the evaporator temperature sensor by measuring the resistance at the sensor connector between terminals #2 (#27) and #3 (#28).

The resistance must correspond to the value in the table.

Replace the evaporator temperature sensor if the resistance is not correct.

Other information:

- To connect the breakout box, see **CONNECTING THE BREAKOUT BOX**
- To access or replace the control module, see **DASHBOARD ENVIRONMENT PANEL (INCLUDING CLIMATE CONTROL MODULE (CCM)), REPLACING**
- To access or replace the evaporator temperature sensor, see **TEMPERATURE SENSOR EVAPORATOR, REPLACING**

- For resistance values, see **COMPONENT RESISTANCE VALUES** .
- **Continue**

  Refer to **VERIFICATION**

CHECKING THE WIRING

Check the signal cable between climate control module (CCM) terminal #B1 (#1) and evaporator temperature sensor terminal #2 (#27). Check for an intermittent short-circuit to ground.

Remedy as necessary.

Other information:

- To access or replace the control module, see **CLIMATE CONTROL MODULE (CCM), REPLACING**
- To connect the breakout box, see **CONNECTING THE BREAKOUT BOX**
- To access or replace the evaporator temperature sensor, see **TEMPERATURE SENSOR EVAPORATOR, REPLACING**
- For other values, see **SIGNAL SPECIFICATION**
- see **CHECKING WIRING AND TERMINALS** .

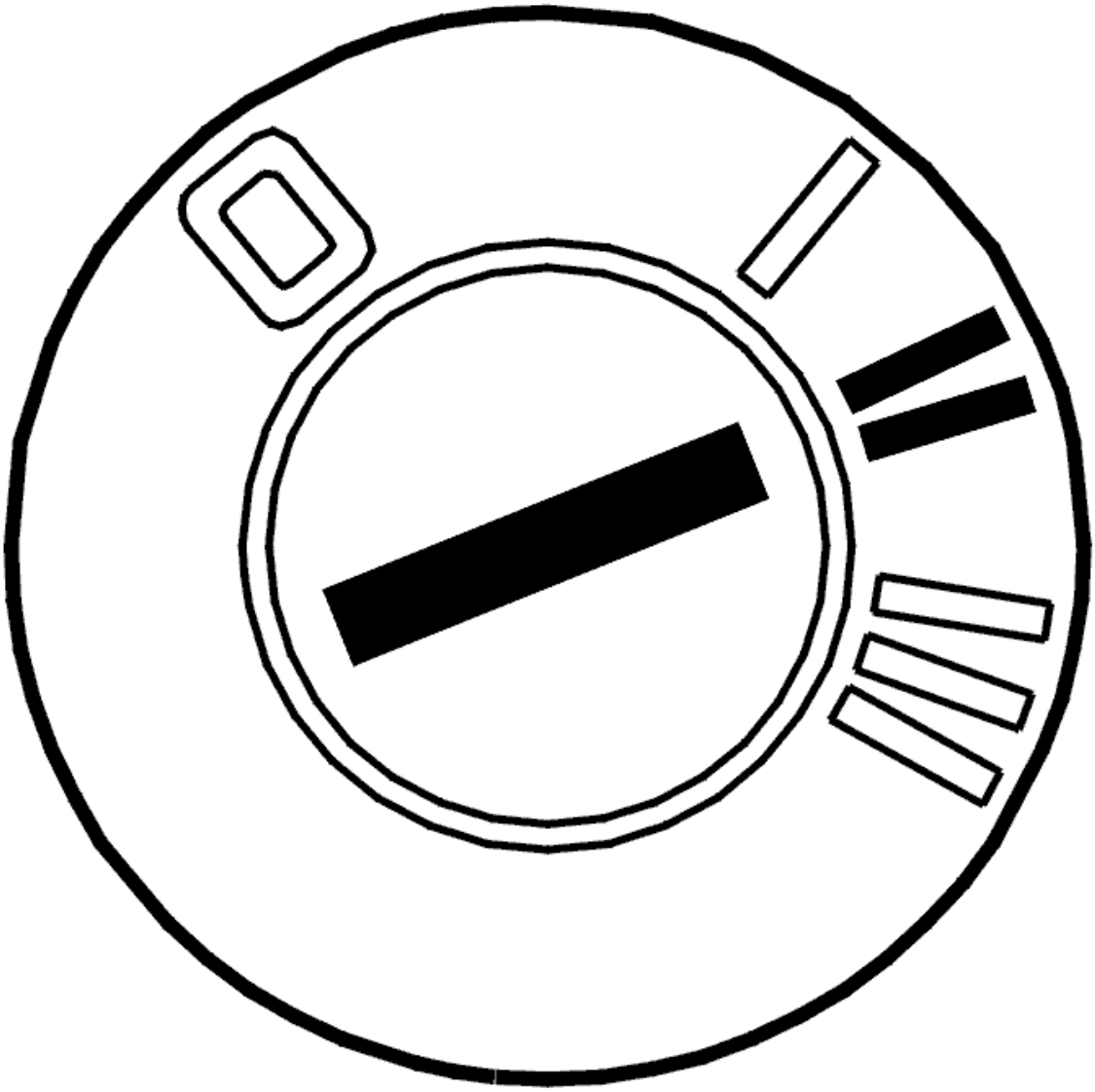

Fig. 117: Electronic Throttle Module (ETM) Connector Terminal Identification
Courtesy of VOLVO CARS CORPORATION

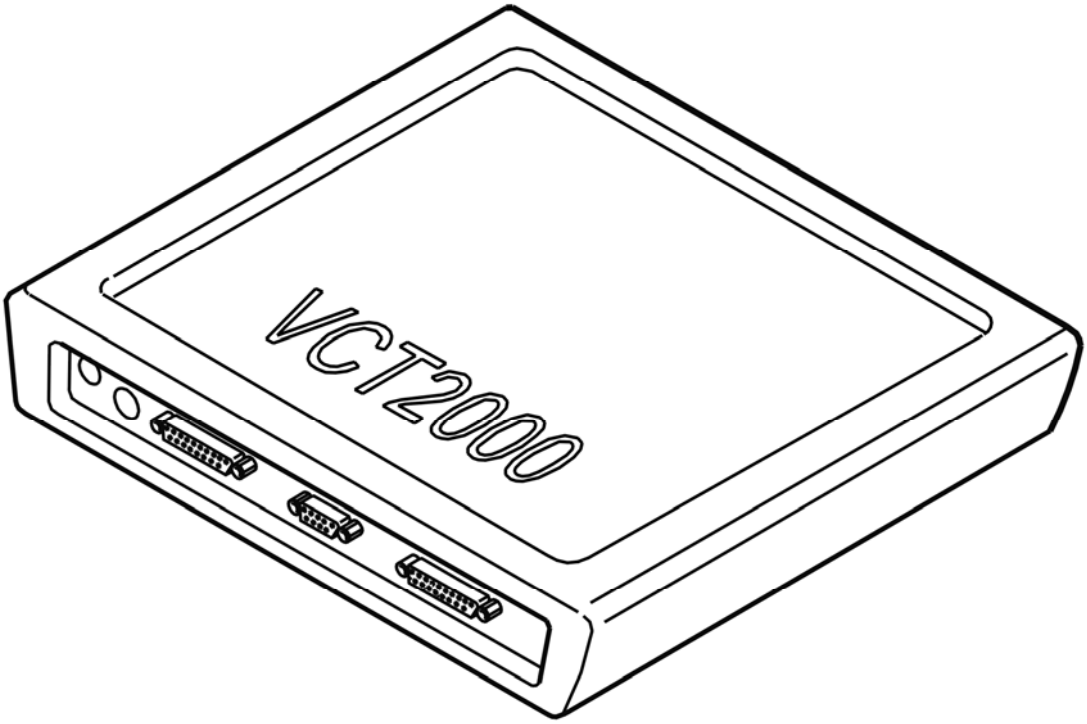

Fig. 118: Identifying Ohmmeter
Courtesy of VOLVO CARS CORPORATION

- **Continue**

  Refer to **INFORMATION**

VERIFICATION

HINT: After the repair it is necessary to check that the fault has been rectified.

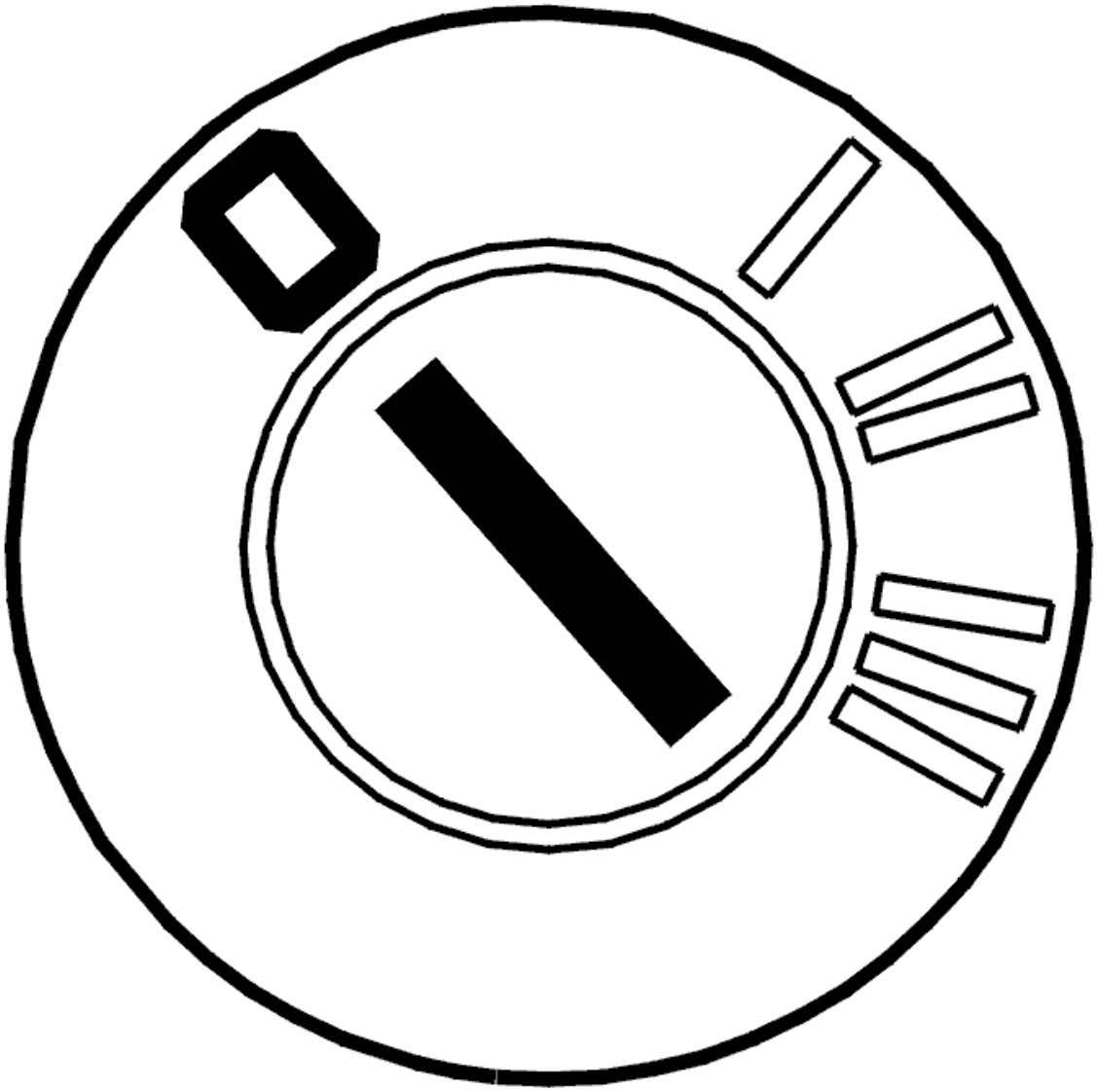

Fig. 119: Identifying Ignition ON
Courtesy of VOLVO CARS CORPORATION

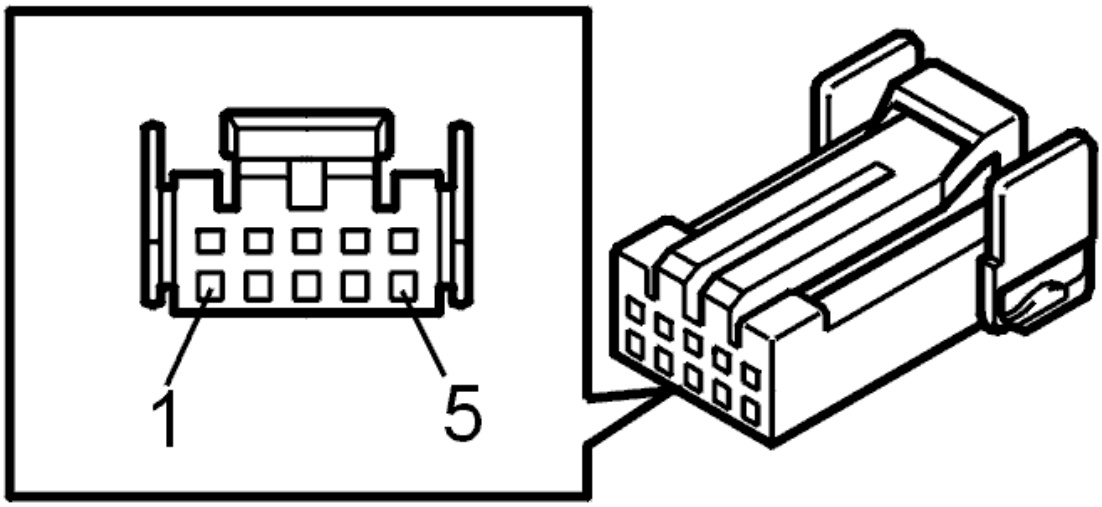

Fig. 120: Connecting Connector
Courtesy of VOLVO CARS CORPORATION

- Ignition off.
- Connect the connectors, install the components, etc.
- Ignition on.

Check evaporator temperature.

The value should be between -40°C and +85°C (-40°F and +185°F).

Start engine and switch on air-conditioning unit.

Check that the value changes and remains between the given minimum and maximum values.

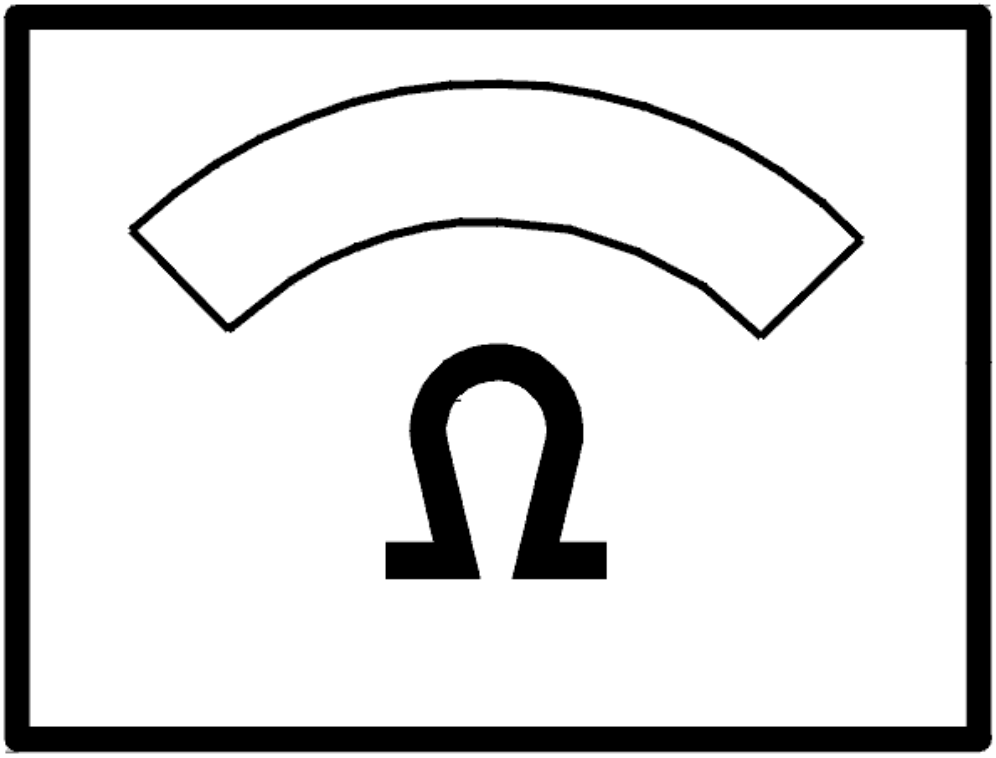

Fig. 121: Identifying VCT2000 Diagnostic Tool Symbol In VIDA
Courtesy of VOLVO CARS CORPORATION

Does the value change?

- **YES**

  VERIFIED: Troubleshooting has been completed.

- **NO**

  Refer to **INFORMATION**

INFORMATION

FAULT-TRACING INFORMATION

The fault should have been detected and remedied. As this is not the case fault-tracing has failed.

Exit fault-tracing for this diagnostic trouble code (DTC) or make another attempt.

CCM-0007: PASSENGER COMPARTMENT TEMPERATURE SENSOR. FAULTY SIGNAL (2003-04)

DIAGNOSTIC TROUBLE CODE (DTC) INFORMATION

Condition

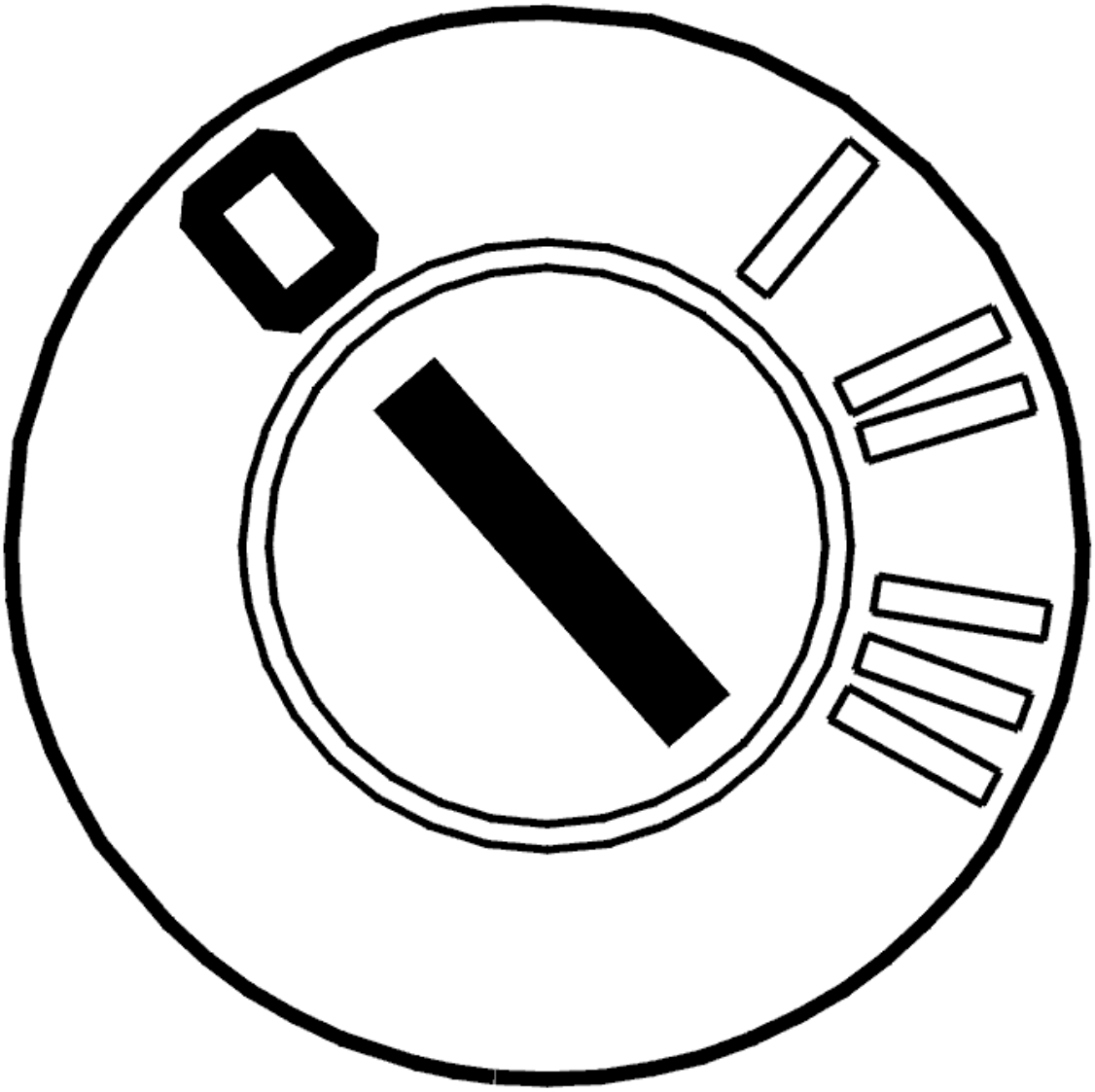

Fig. 122: Identifying Interior Temperature Sensor Air Inlet
Courtesy of VOLVO CARS CORPORATION

Diagnostic trouble code (DTC) CCM-0007 is stored if the control module registers that the signal from the

passenger compartment temperature sensor is above 97% or below 2% of supply voltage (approximately 5 V).

Substitute Value

- The control module adopts a substitute value corresponding to approximately 25 °C.

Possible Source

- Defective power circuit
- Defective passenger compartment temperature sensor.

Fault symptom[s]

- The passenger compartment temperature does not correspond to the set value.

FAULTY SIGNAL

CHECKING THE PASSENGER COMPARTMENT TEMPERATURE SENSOR

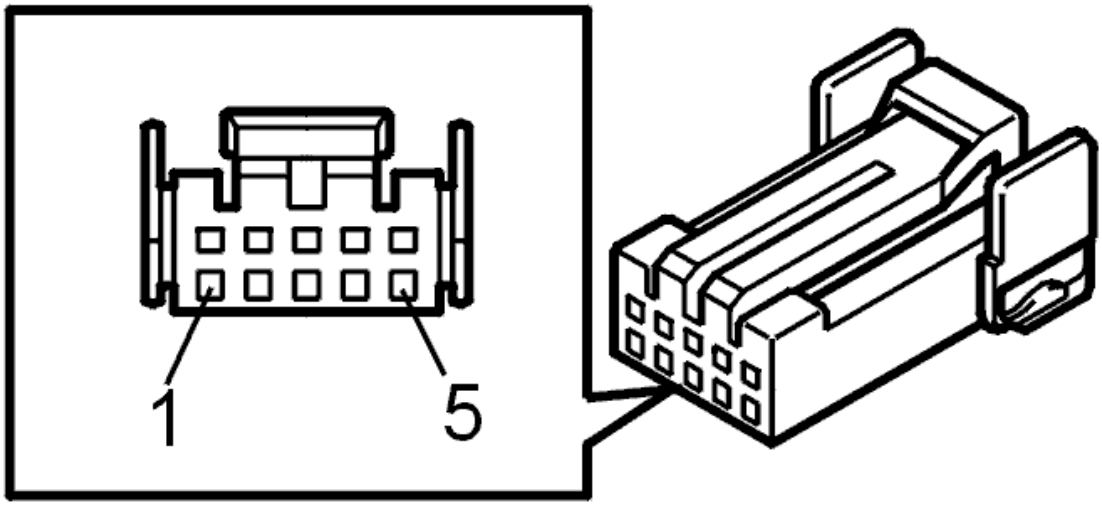

Fig. 123: Identifying Ignition ON
Courtesy of VOLVO CARS CORPORATION

- Ignition on
- Check that the temperature corresponds to the ambient temperature.

  Alternately blow hot and cold air onto the sensor. Check that the value displayed on the sensor changes.

  Shine a light through the grille over the passenger compartment temperature sensor. Check for anything that could obstruct the airflow through the pipe.

  Take care not to damage the sensor. The sensor is located just inside the grille.

Remedy as necessary.

Other information:

- To access or replace the climate control system, see **CLIMATE CONTROL MODULE (CCM), REPLACING** .

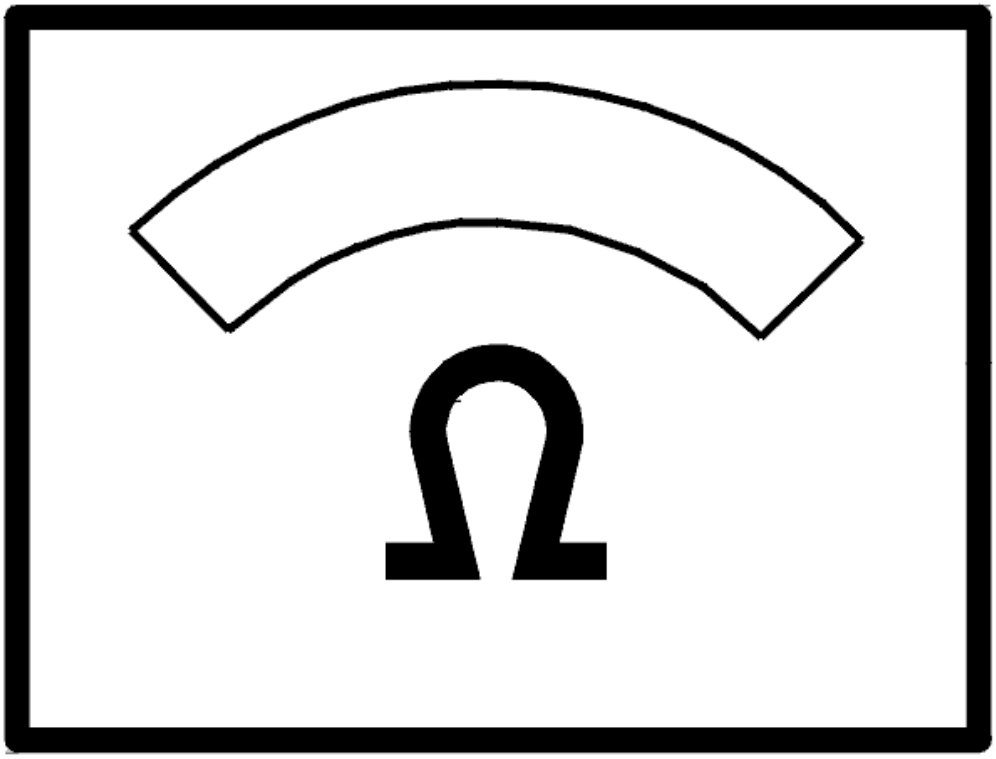

Fig. 124: Identifying VCT2000 Diagnostic Tool Symbol In VIDA
Courtesy of VOLVO CARS CORPORATION

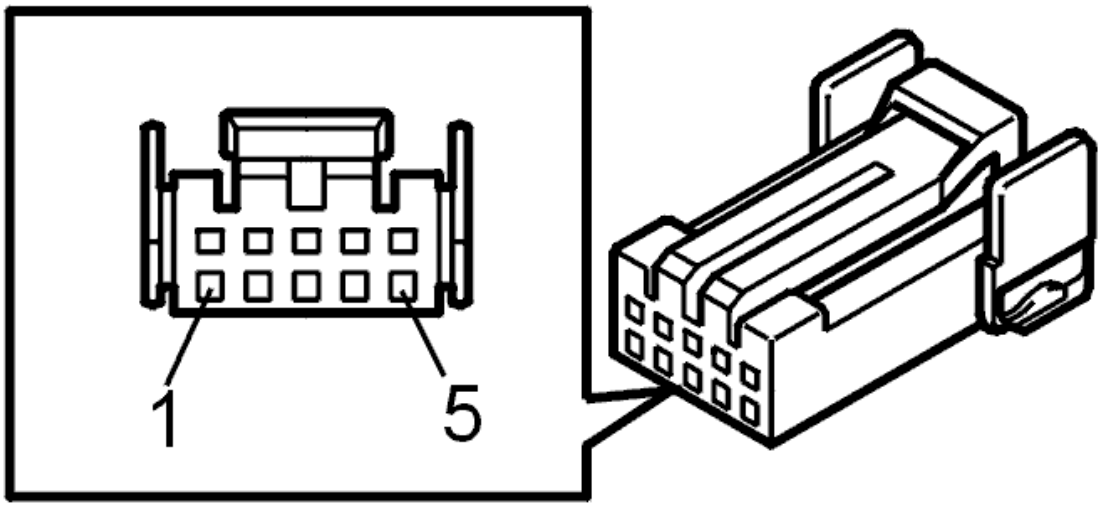

Fig. 125: Identifying Interior Temperature Sensor Air Inlet
Courtesy of VOLVO CARS CORPORATION

Is the sensor value correct?

- **YES**

  Refer to **FAULT-TRACING INFORMATION**

- **NO**

  Refer to **REPLACING THE COMPONENT**

REPLACING THE COMPONENT

The fault is probably a defective passenger compartment temperature sensor. This type of fault means that the entire control module must be replaced. The passenger compartment temperature sensor cannot be replaced separately.

Replace the control module. See **CLIMATE CONTROL MODULE (CCM), REPLACING** .

- **Continue**

  Refer to **LIMIT POSITIONS FOR DAMPER MOTOR SELF-ADJUSTMENT**

FAULT-TRACING INFORMATION

The fault has probably occurred as a result of a defective power circuit in the climate control system. If the fault is intermittent, it has been registered previously but is no longer present. Intermittent faults can be caused by interference at start up of the control module or may be a different type of fault which occurs on different occasions. The fault is evaluated depending on how it occurs. If the fault recurs, replace the control module.

- **Continue**

Refer to **INFORMATION**

LIMIT POSITIONS FOR DAMPER MOTOR SELF-ADJUSTMENT

CHOICE OF CLIMATE CONTROL

1. Electronic climate control (ECC). Refer to **LIMIT POSITIONS FOR DAMPER MOTOR SELF-ADJUSTMENT**.
2. Manual climate control (MCC)/Standard (STD). Refer to **LIMIT POSITIONS FOR DAMPER MOTOR SELF-ADJUSTMENT**.

LIMIT POSITIONS FOR DAMPER MOTOR SELF-ADJUSTMENT

HINT: After replacing the control module or shutter motors, and when a shutter motor or link has been removed, carry out self adjustment to define the shutter motor limit positions.

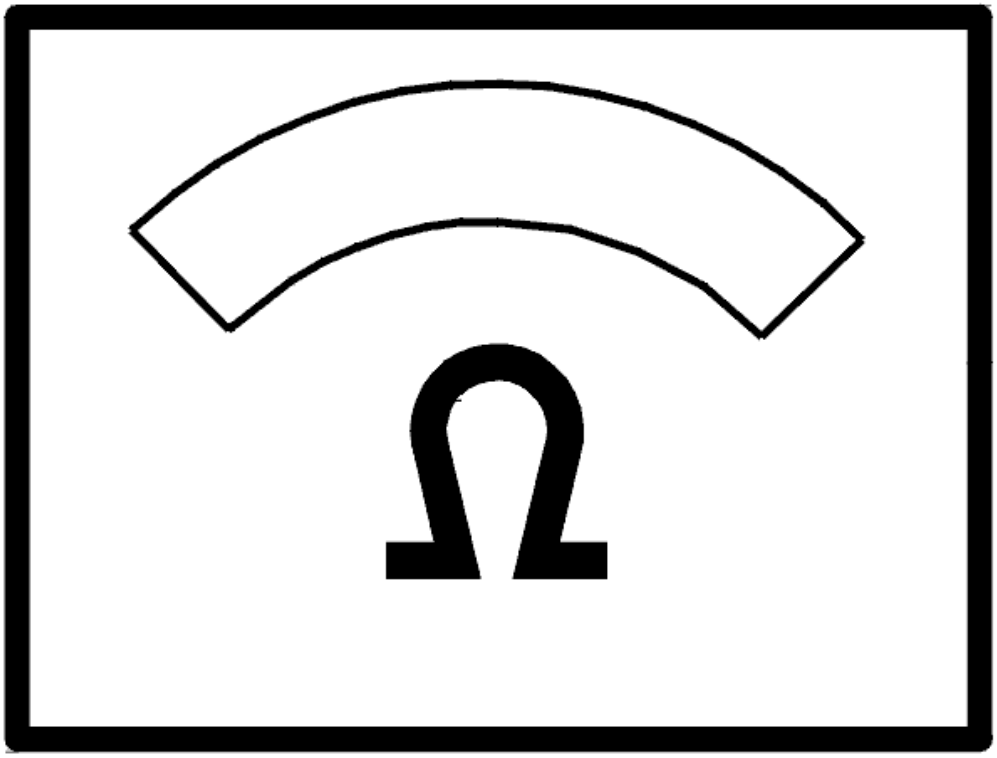

Fig. 126: Identifying Ignition ON
Courtesy of VOLVO CARS CORPORATION

- Ignition off
- Reinstall the connectors, components etc.
- Ignition on.

Activate the self-adjustment. Wait at least 30 seconds.

Ignition off for at least 1 minute.

Start the engine.

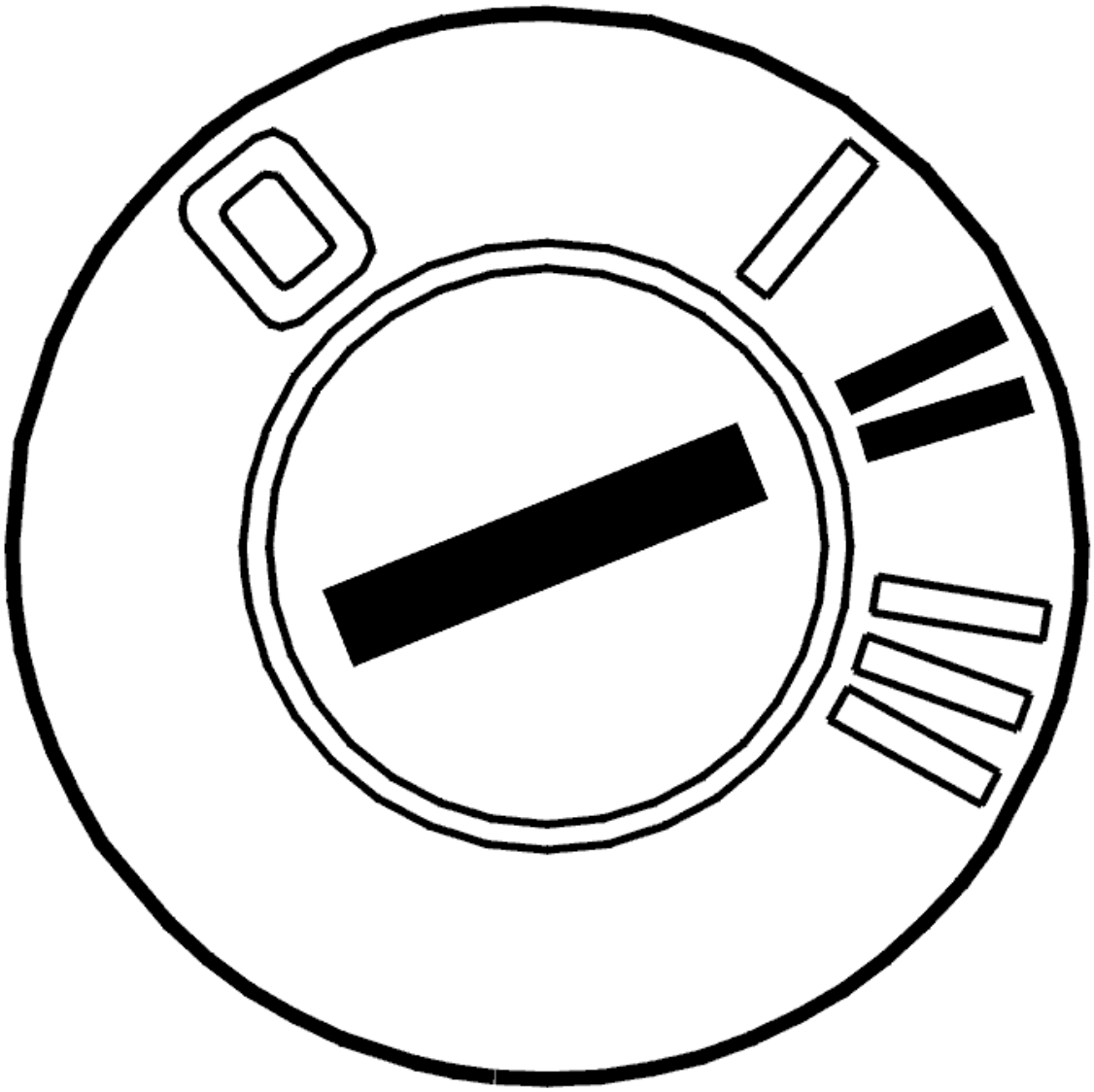

Fig. 127: Identifying VCT2000 Diagnostic Tool Symbol In VIDA
Courtesy of VOLVO CARS CORPORATION

- **Continue**

  Refer to **VERIFICATION**

LIMIT POSITIONS FOR DAMPER MOTOR SELF-ADJUSTMENT

HINT: After replacing the control module or shutter motors, and when a shutter motor or link has been removed, carry out self adjustment to define the shutter motor limit positions.

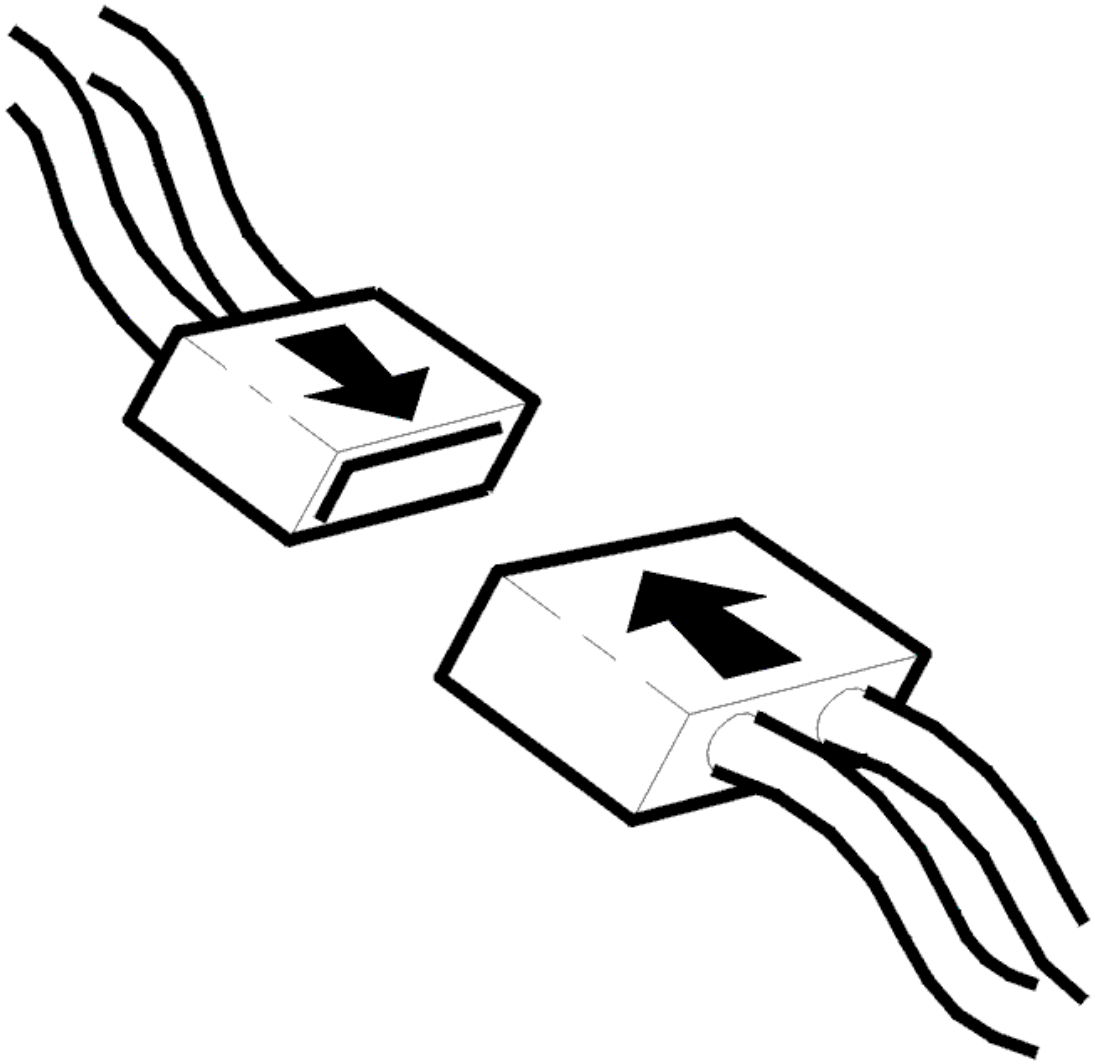

Fig. 128: Identifying Ignition ON
Courtesy of VOLVO CARS CORPORATION

- Ignition off
- Reinstall the connectors, components etc.
- Ignition on.

Activate the self-adjustment. Wait at least 30 seconds.

Ignition off for at least 1 minute.

Start the engine.

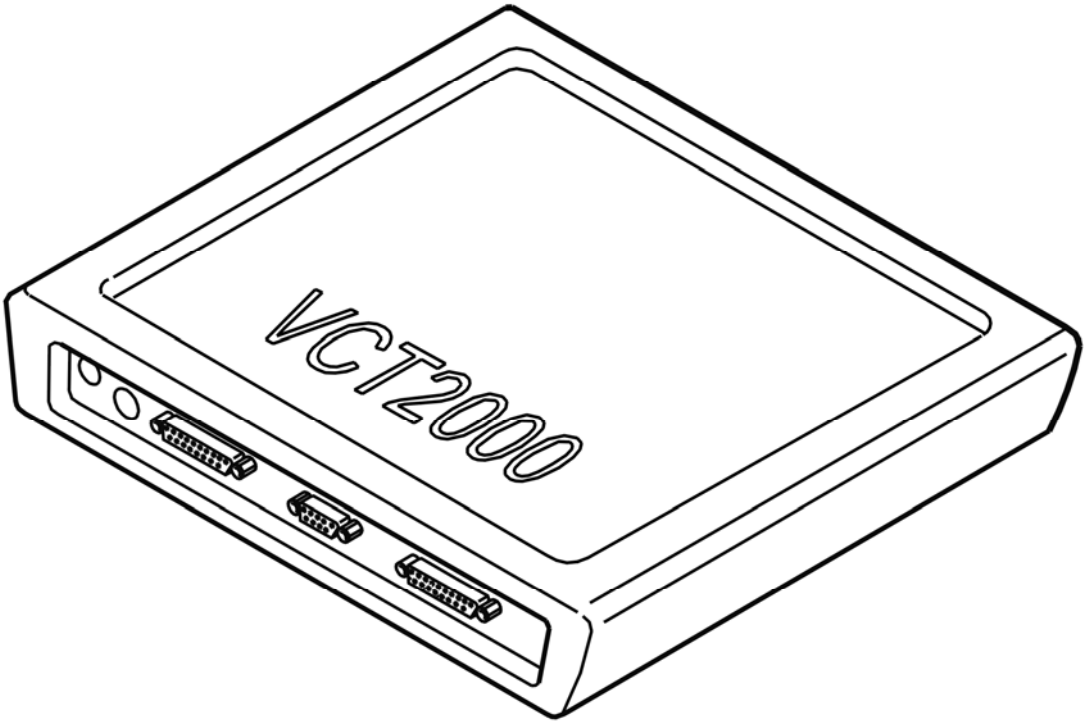

Fig. 129: Identifying VCT2000 Diagnostic Tool Symbol In VIDA
Courtesy of VOLVO CARS CORPORATION

- **Continue**

  Refer to **VERIFICATION**

VERIFICATION

HINT: After the repair it is necessary to check that the fault has been rectified.

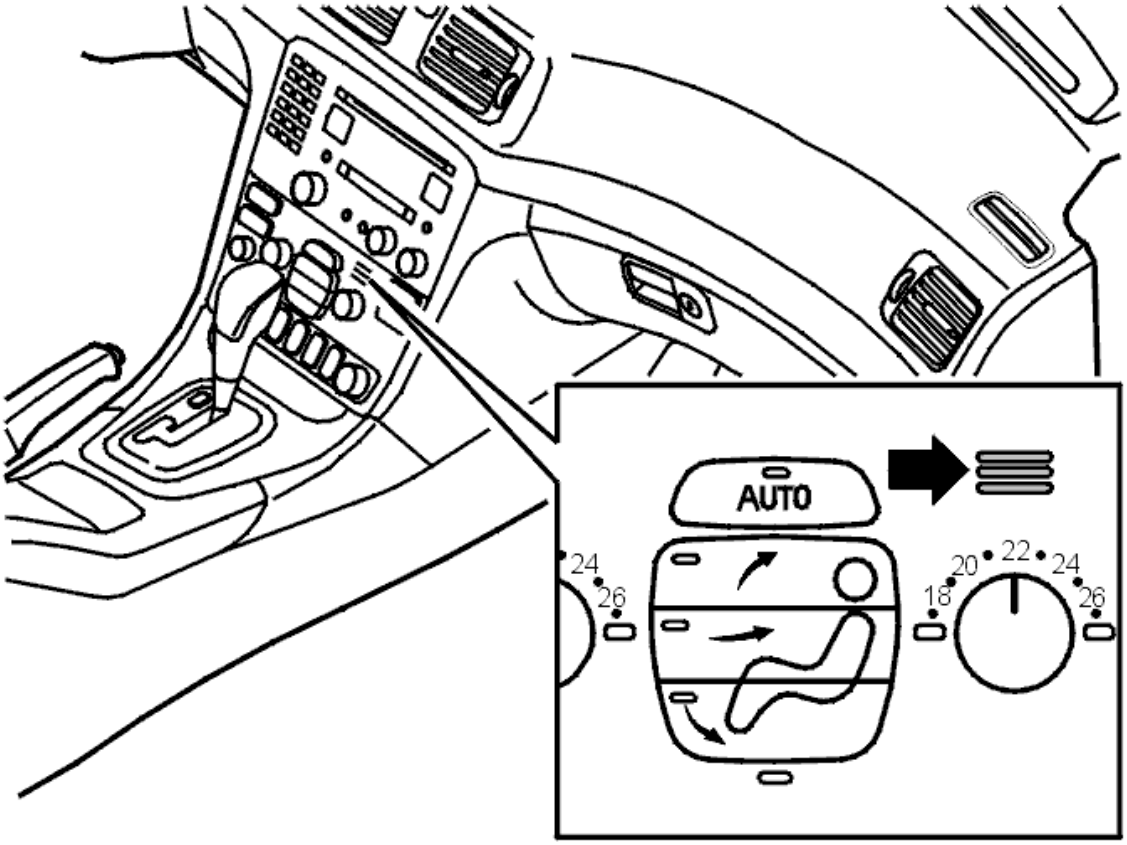

Fig. 130: Identifying Ignition ON
Courtesy of VOLVO CARS CORPORATION

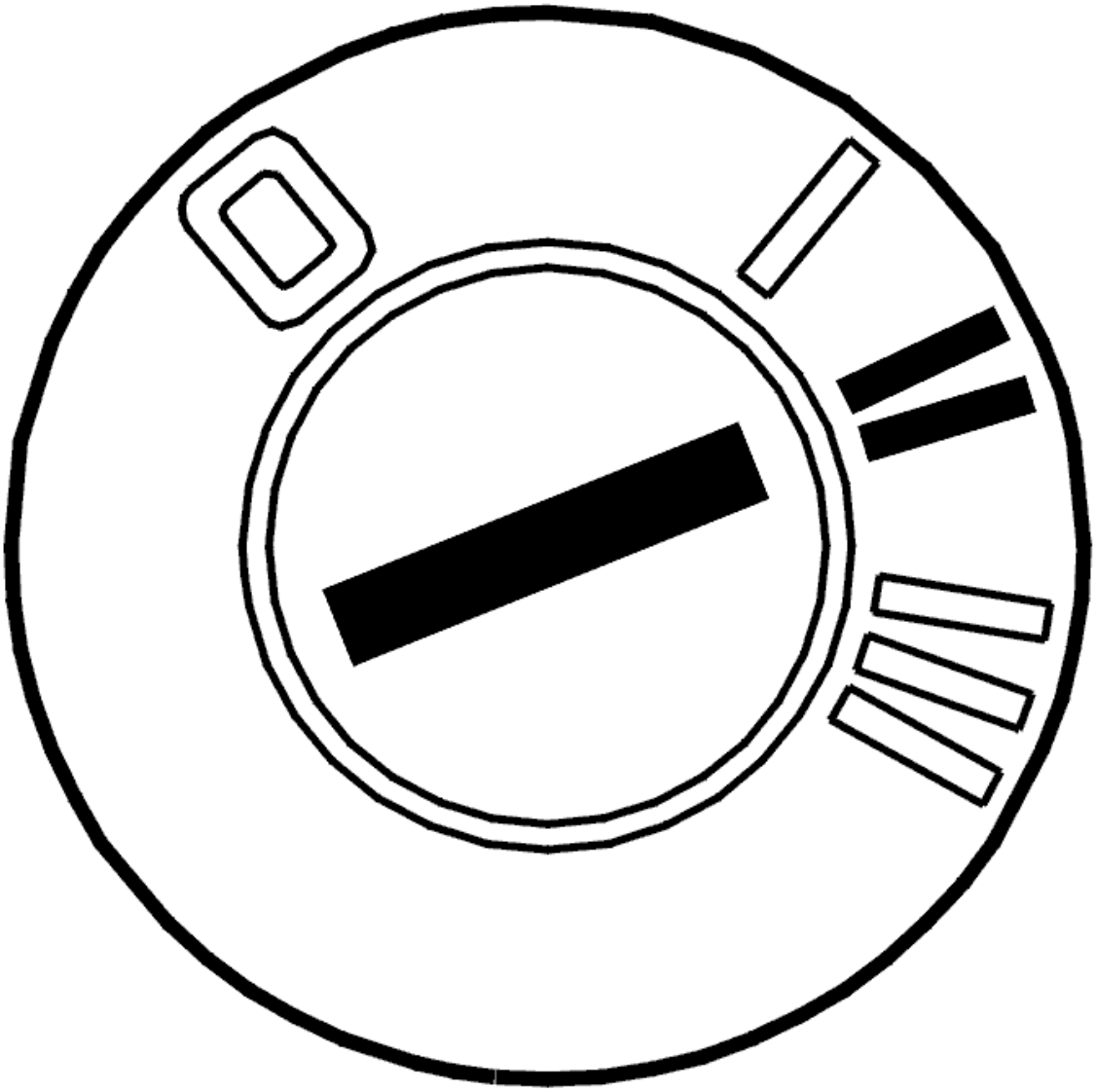

Fig. 131: Connecting Connector
Courtesy of VOLVO CARS CORPORATION

- Ignition off.
- Connect the connectors, install the components, etc.
- Ignition on.

  Read the interior temperature and vary the temperature with the interior temperature sensor to, see if the value changes. Check that the value is normal using a thermometer.

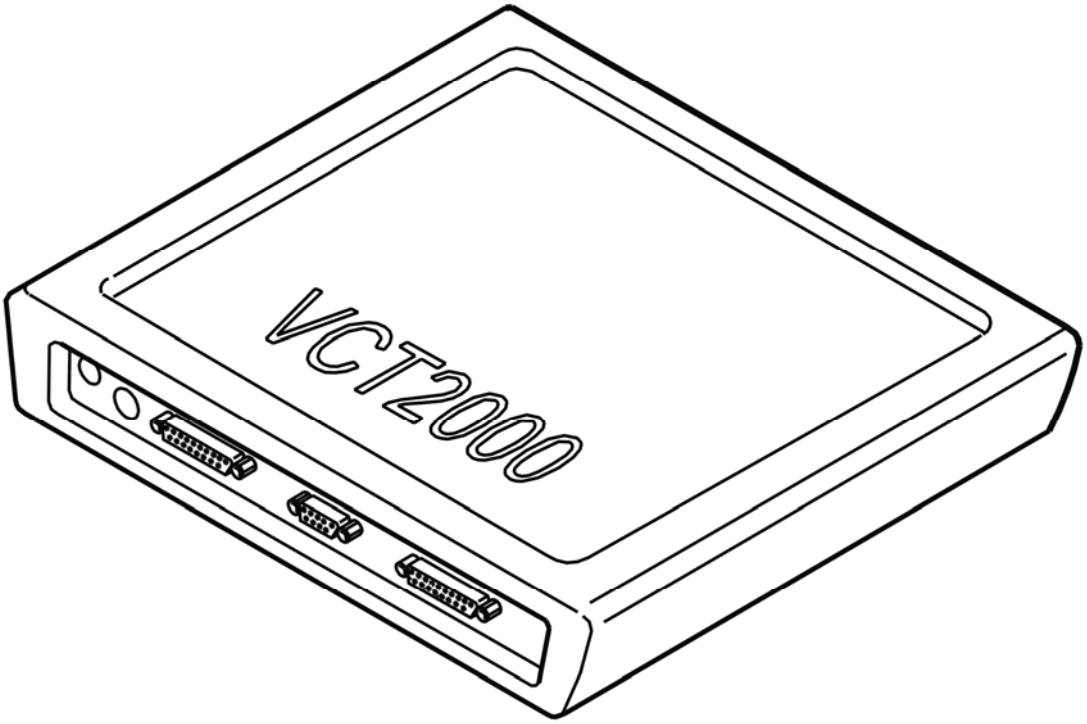

Fig. 132: Identifying VCT2000 Diagnostic Tool Symbol In VIDA
Courtesy of VOLVO CARS CORPORATION

Is the value OK?

- **YES**

  VERIFIED: Troubleshooting has been completed.

- **NO**

  Refer to **INFORMATION**

INFORMATION

FAULT-TRACING INFORMATION

The fault should have been detected and remedied. As this is not the case fault-tracing has failed.

Exit fault-tracing for this diagnostic trouble code (DTC) or make another attempt.

CCM-0008: SUN SENSOR. SIGNAL TOO HIGH (2003-04)

DIAGNOSTIC TROUBLE CODE (DTC) INFORMATION

Condition

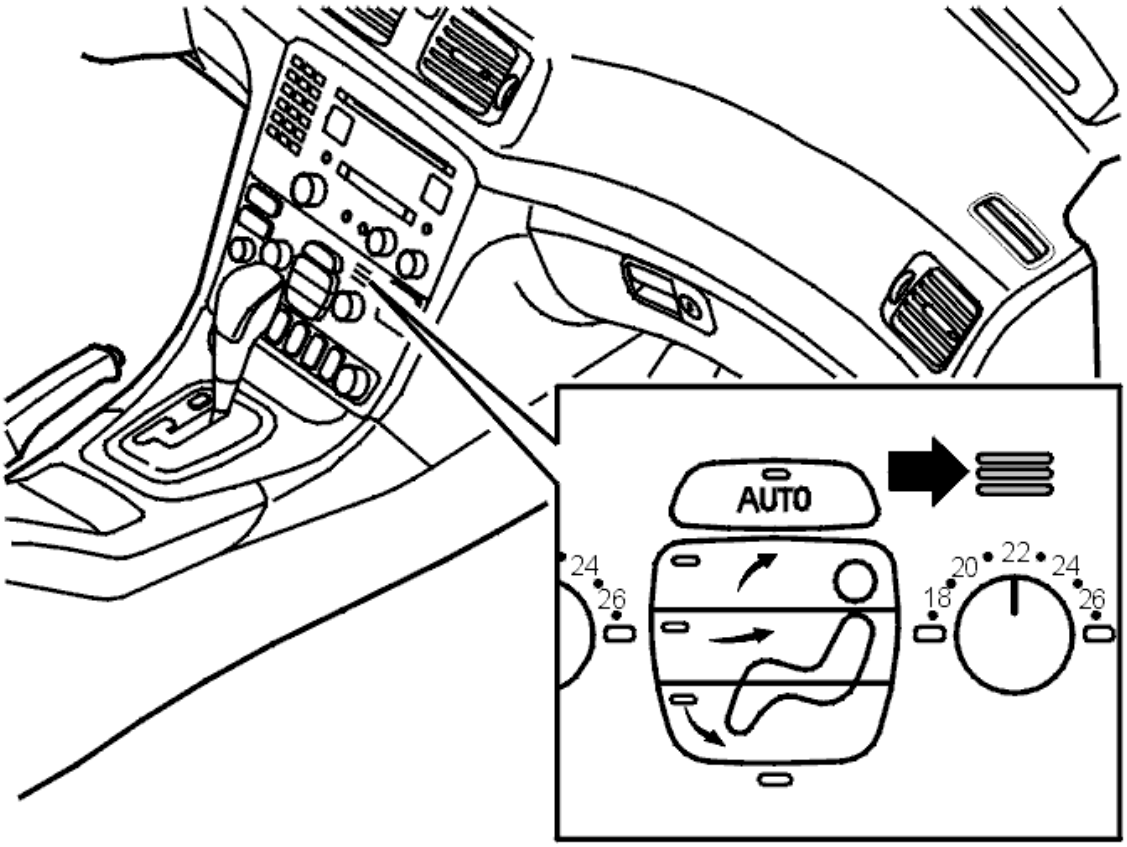

Fig. 133: Identifying Sun Sensor
Courtesy of VOLVO CARS CORPORATION

Diagnostic trouble code (DTC) CCM-0008 is stored if the control module registers that the signal from the sun sensor is above 98% of supply voltage (approximately 5 V).

The diagnostic trouble code (DTC) can only be diagnosed for the electronic climate control module (CCM) (ECC).

Substitute Value

- The control module adopts a substitute value corresponding to approximately 20% (200 W/m^2) of maximum solar heat.

Possible Source

- Contact resistance, oxidation or loose connections in the connectors
- Open-circuit in the signal cable between the control module and the sun sensor
- Short-circuit to supply voltage in the signal cable between the control module and the sun sensor
- Short-circuit to supply voltage in the ground lead between the control module and the sun sensor

- Open-circuit in the ground lead between the control module and the sun sensor
- Defective sun sensor.

Fault symptom[s]

- The passenger compartment temperature is not reduced when sun intensity is high.

SIGNAL TOO HIGH

CHECKING THE FUNCTION

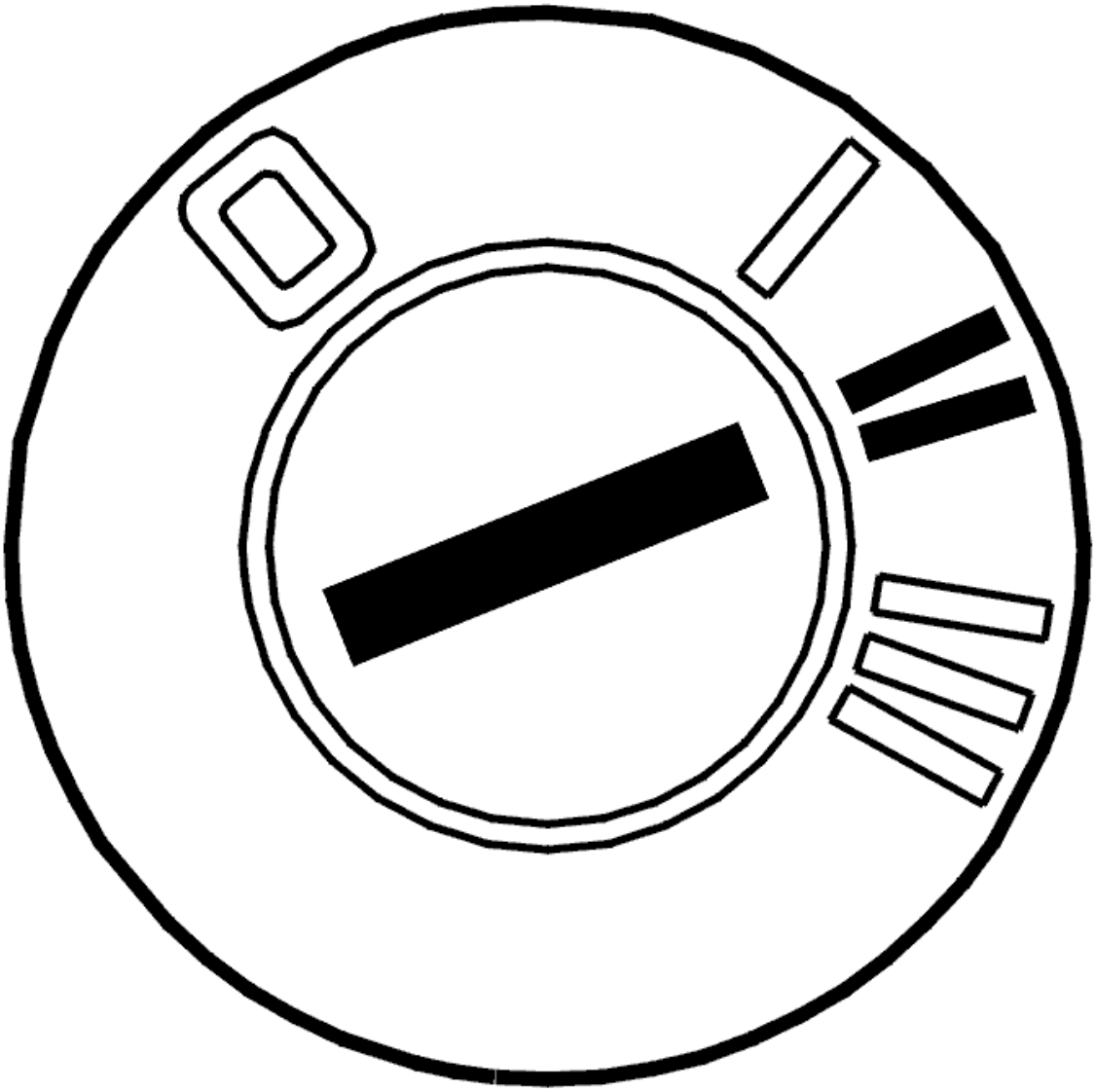

Fig. 134: Identifying Ignition ON
Courtesy of VOLVO CARS CORPORATION

- Ignition on.

Check the sun sensor signal: Vary the intensity of the light that it detects. Cover the sun sensor with your hand to obtain the minimum signal, approximately 0 W/m^2 .

Then aim a strong light source (for example a flashlight) at the sun sensor from close range to increase the signal.

HINT: If the signal from the sun sensor is a steady 200 W/m^2 either there is an open-circuit in the cable or the sun sensor is defective.

Click on the VCT2000 symbol to read off the sun intensity.

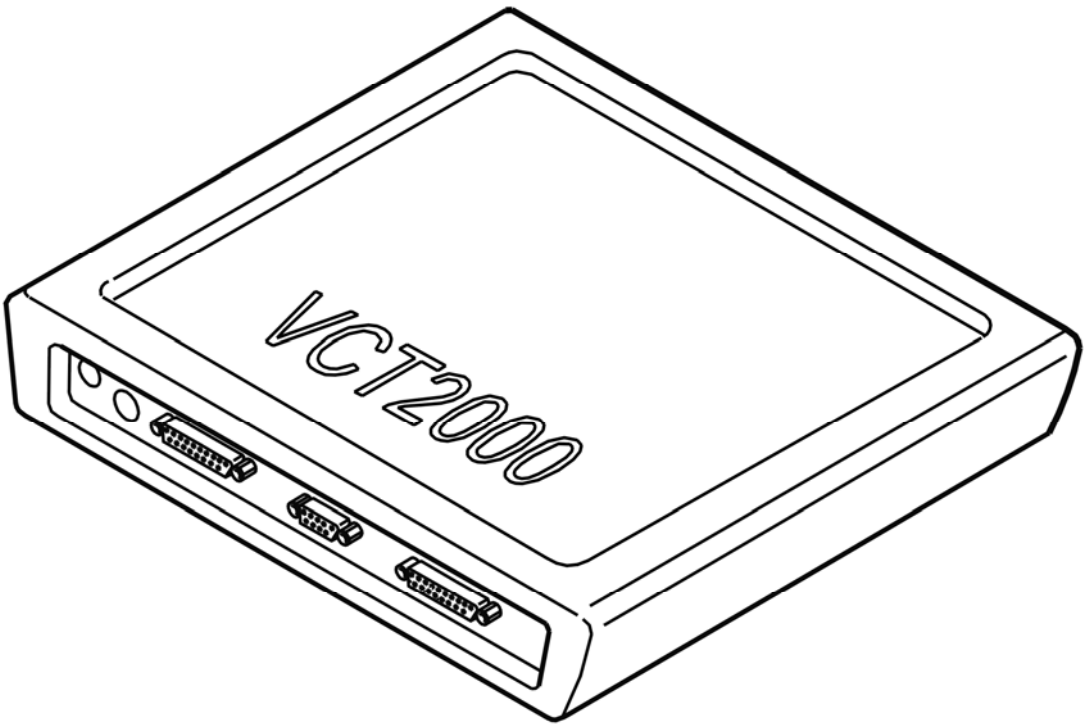

Fig. 135: Identifying VCT2000 Diagnostic Tool Symbol In VIDA
Courtesy of VOLVO CARS CORPORATION

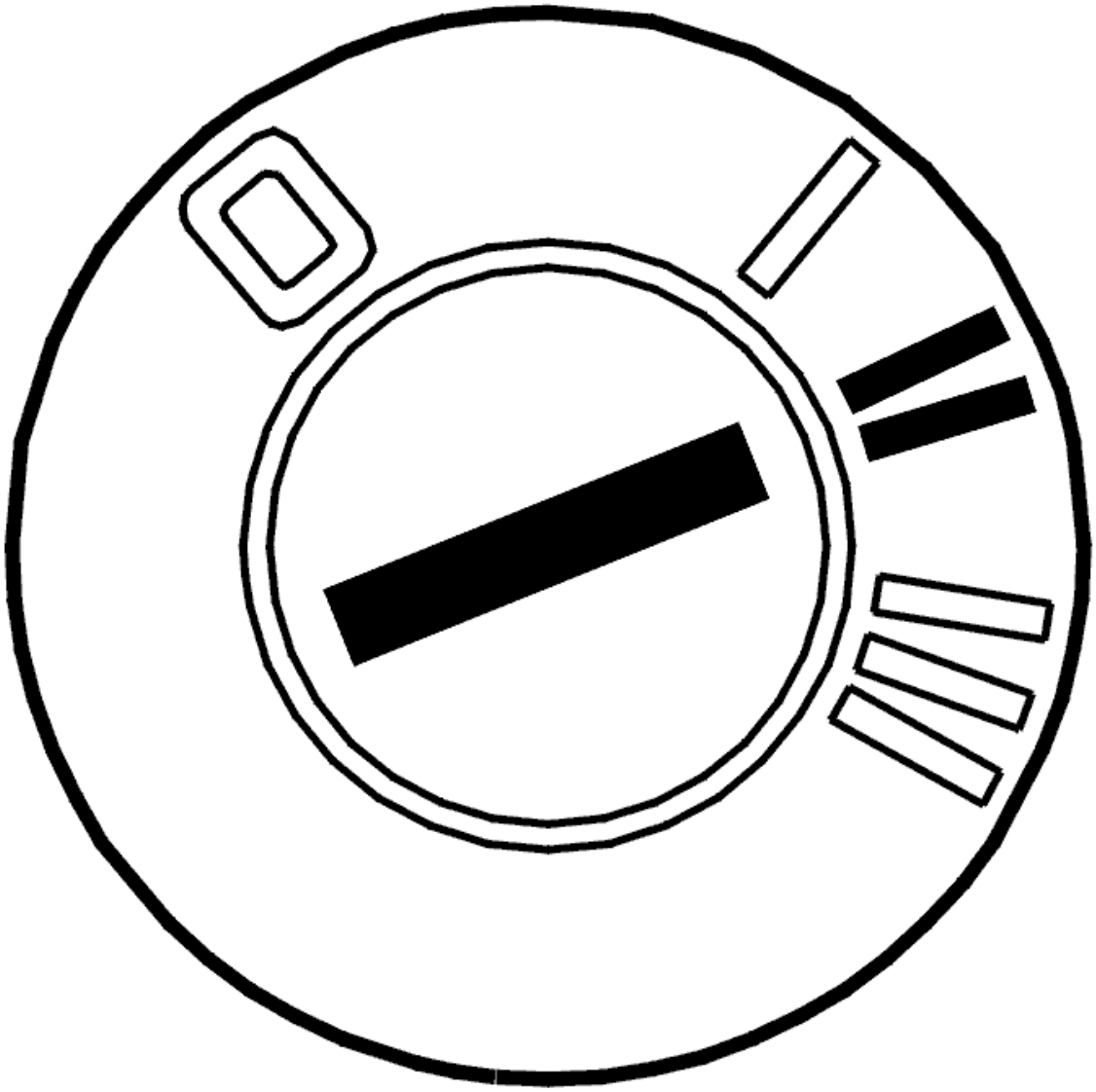

Fig. 136: Identifying Sun Sensor
Courtesy of VOLVO CARS CORPORATION

NOTE: **The graphic only shows the method. The appearance of the sun sensor can vary between different models.**

Does the value change?

- **YES**

  Refer to **CHECKING CONNECTORS AND WIRING**

- **NO**

  Refer to **CHECKING THE CONNECTOR**

CHECKING THE CONNECTOR

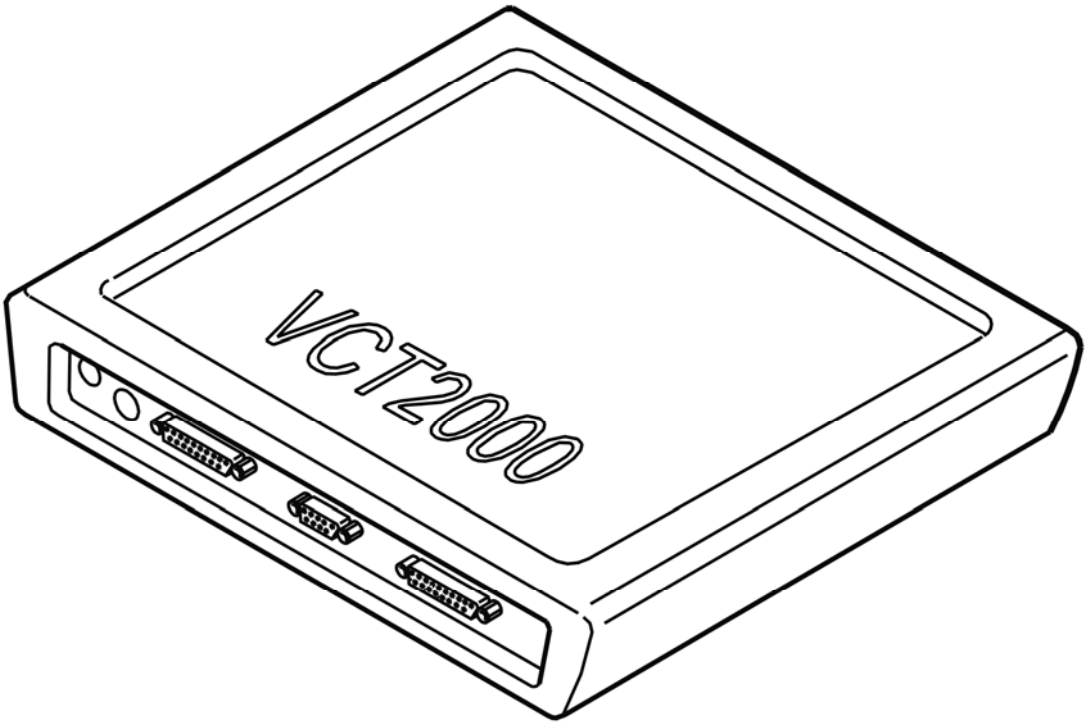

Fig. 137: Identifying Ignition OFF
Courtesy of VOLVO CARS CORPORATION

- Ignition off
- Check the control module connector (terminals #B4, #B5) and the sun sensor connectors. Check for contact resistance and oxidation. Check for damage carefully.

  Other information:

  - To access or replace the control module, see **CLIMATE CONTROL MODULE (CCM), REPLACING**
  - To access or replace the sun sensor, see **SUN SENSOR/ALARM LED, REPLACING**
  - see **CHECKING WIRING AND TERMINALS** .

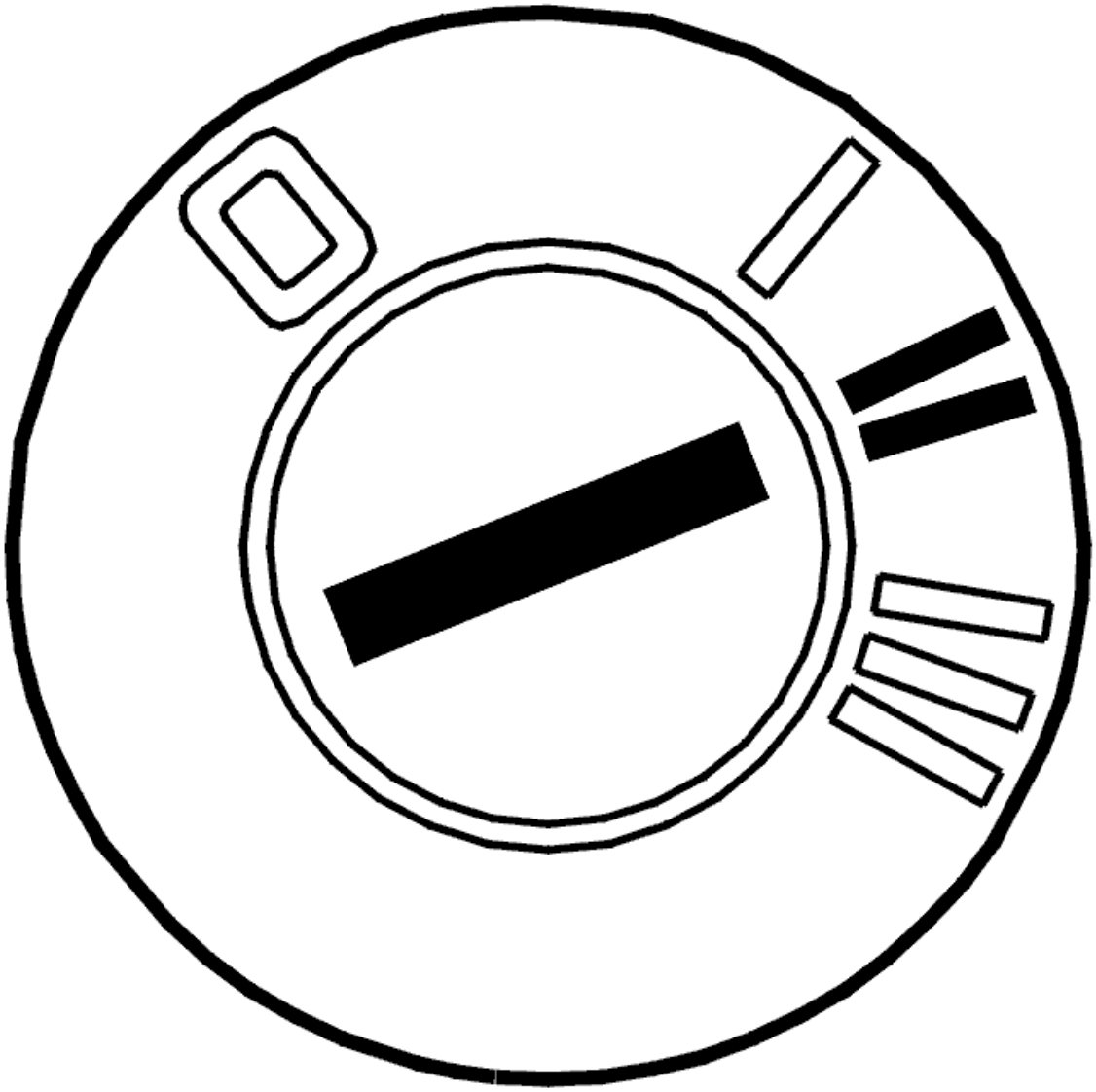

Fig. 138: Breakout Box
Courtesy of VOLVO CARS CORPORATION

Was a fault detected?

- **YES**

  Refer to **VERIFICATION**

- **NO**

  Refer to **CHECKING COMPONENTS AND WIRING**

CHECKING COMPONENTS AND WIRING

Check the signal cable between control module terminal #B4 (#4) and sun sensor terminal #1 (#21). Check for

an open-circuit. Check for a short-circuit to supply voltage.

Check the ground lead between control module terminal #B5 (#5) and sun sensor terminal #5 (#25). Check for an open-circuit. Check for a short-circuit to supply voltage.

Replace the sun sensor if no fault is found in the wiring.

Remedy as necessary.

Other information:

- To access or replace the control module, see **CLIMATE CONTROL MODULE (CCM), REPLACING**
- To connect the breakout box, see **CONNECTING THE BREAKOUT BOX**
- To access or replace the sun sensor, see **SUN SENSOR/ALARM LED, REPLACING**
- For other values, see **SIGNAL SPECIFICATION**
- see **CHECKING WIRING AND TERMINALS** .

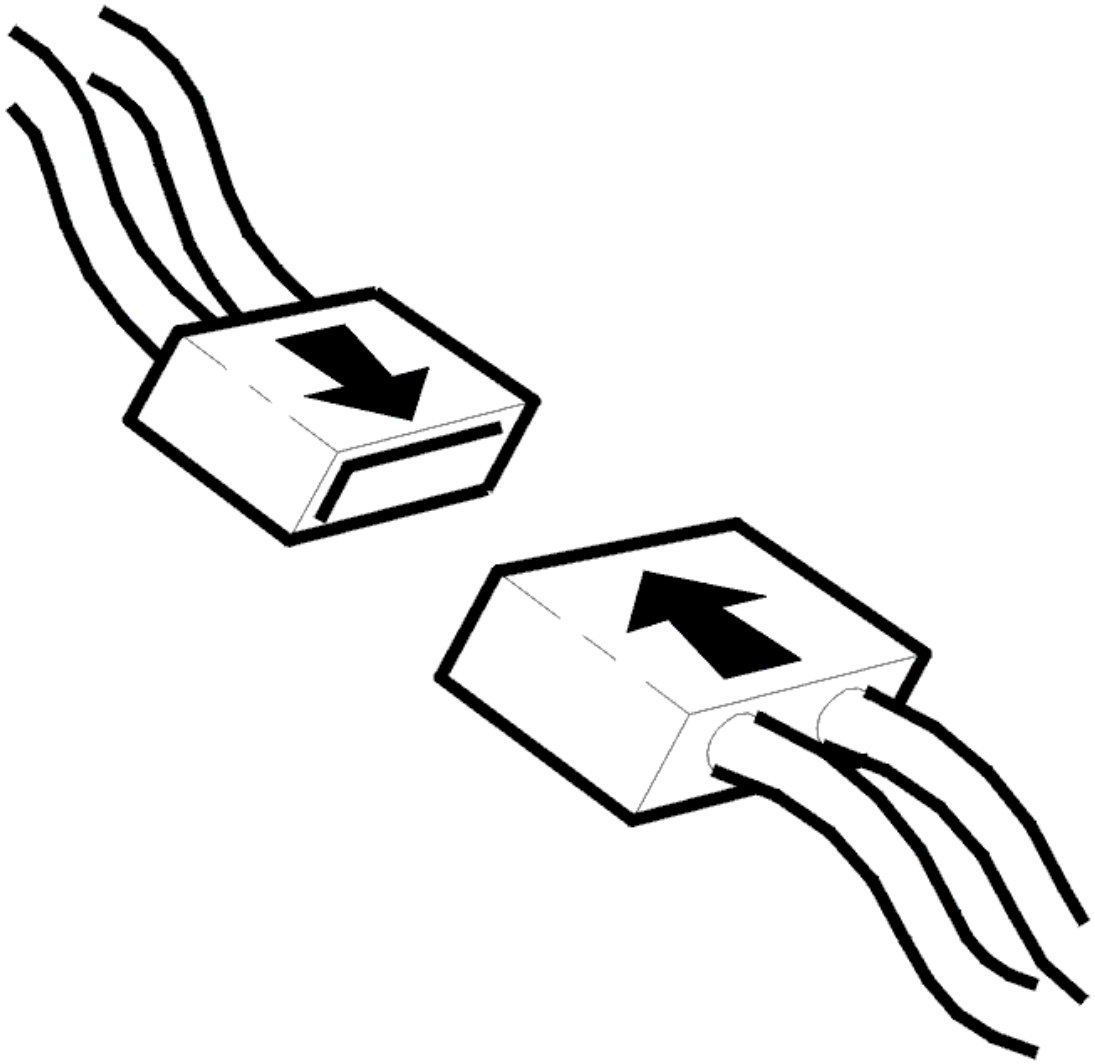

Fig. 139: Electronic Throttle Module (ETM) Connector Terminal Identification
Courtesy of VOLVO CARS CORPORATION

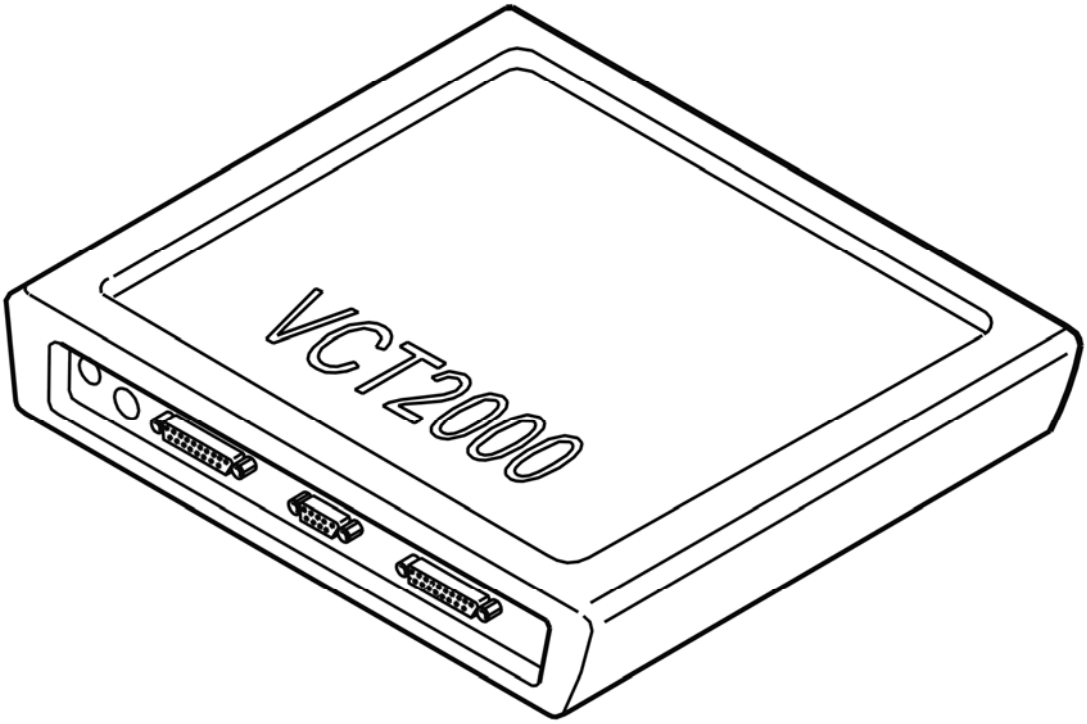

Fig. 140: Identifying Ohmmeter
Courtesy of VOLVO CARS CORPORATION

- **Continue**

  Refer to **VERIFICATION**

CHECKING CONNECTORS AND WIRING

Check the control module connector (terminals #B4, #B5) and the sun sensor connector. Check for contact resistance and loose connections. Check for oxidation.

Check the signal cable between control module terminal #B4 (#4) and sun sensor terminal #1 (#21). Check for an intermittent open-circuit. Check for a short-circuit to supply voltage.

Check the ground lead between control module terminal #B5 (#5) and sun sensor terminal #5 (#25). Check for an intermittent open-circuit. Check for a short-circuit to supply voltage.

Other information:

- To access or replace the control module, see **CLIMATE CONTROL MODULE (CCM), REPLACING**
- To connect the breakout box, see **CONNECTING THE BREAKOUT BOX**

- To access or replace the sun sensor, see **SUN SENSOR/ALARM LED, REPLACING**
- For other values, see **SIGNAL SPECIFICATION**
- see **CHECKING WIRING AND TERMINALS** .

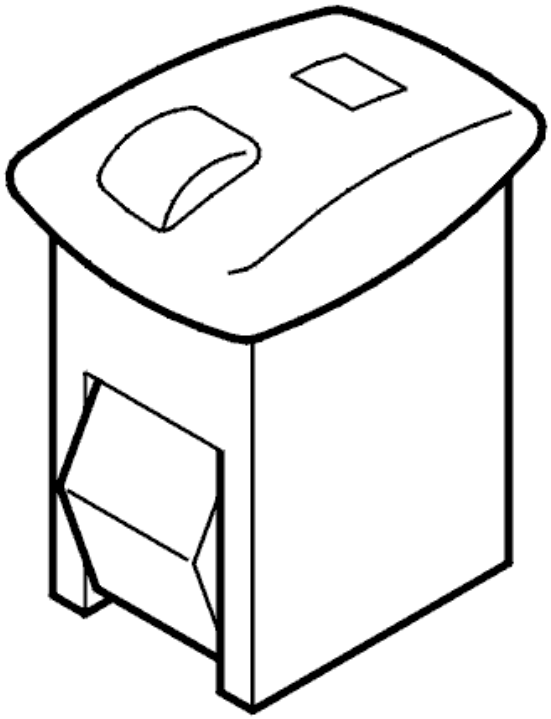

Fig. 141: Electronic Throttle Module (ETM) Connector Terminal Identification
Courtesy of VOLVO CARS CORPORATION

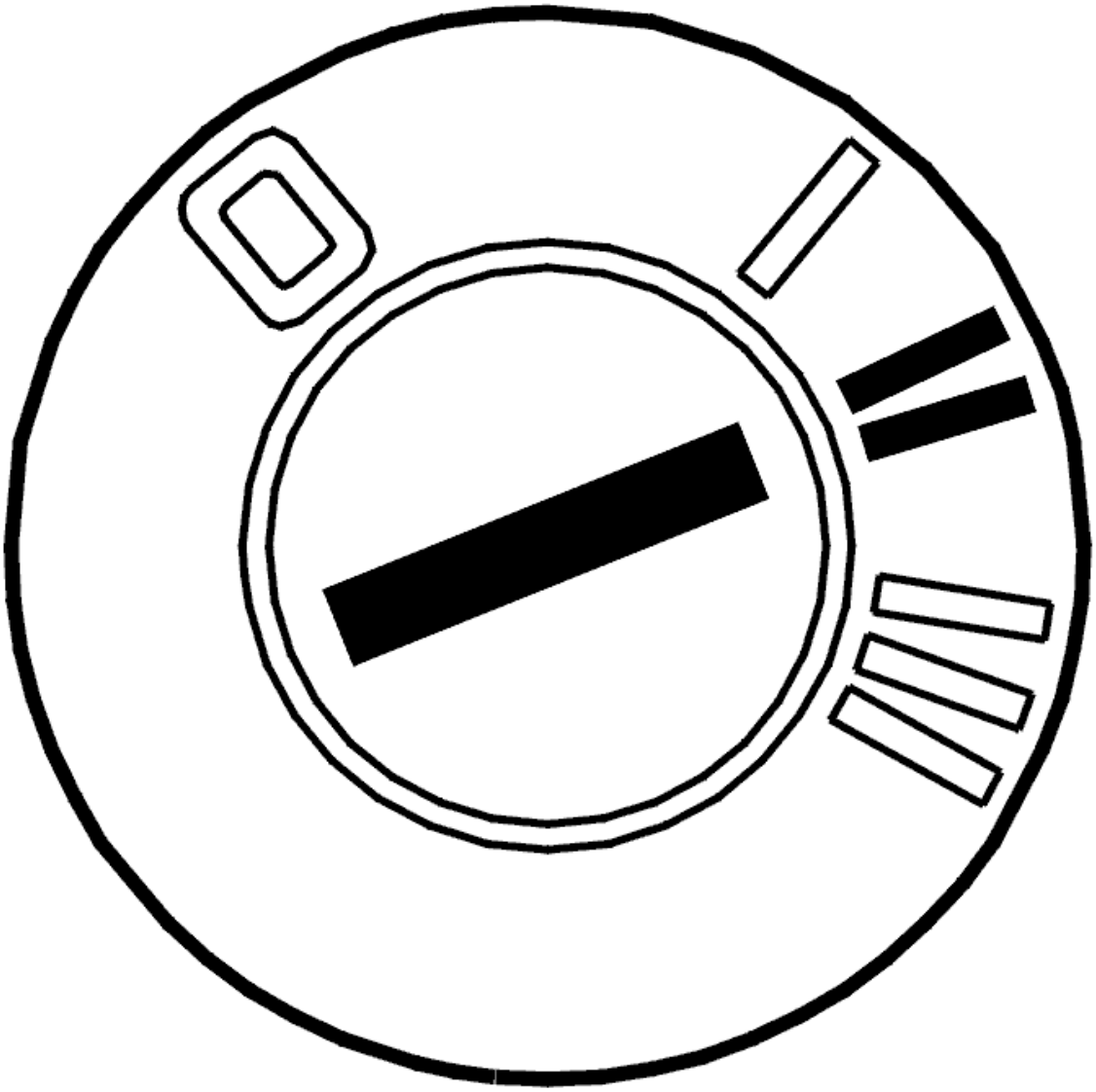

Fig. 142: Identifying Ohmmeter
Courtesy of VOLVO CARS CORPORATION

- **Continue**

  Refer to **INFORMATION**

VERIFICATION

HINT: After the repair it is necessary to check that the fault has been rectified.

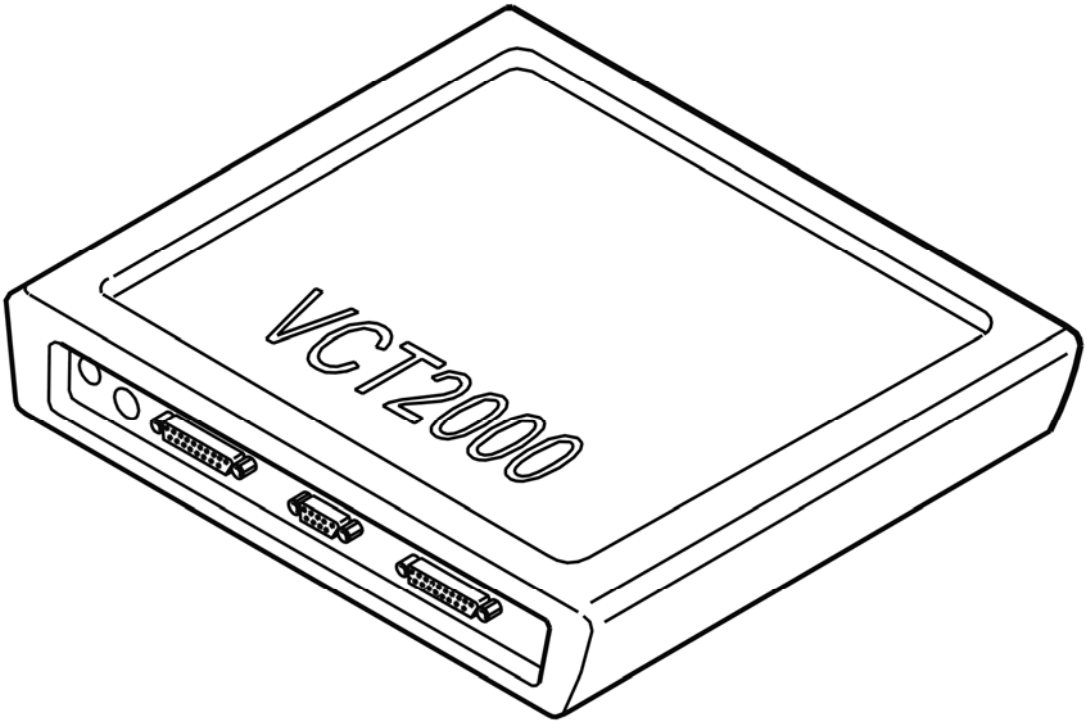

Fig. 143: Identifying Ignition ON
Courtesy of VOLVO CARS CORPORATION

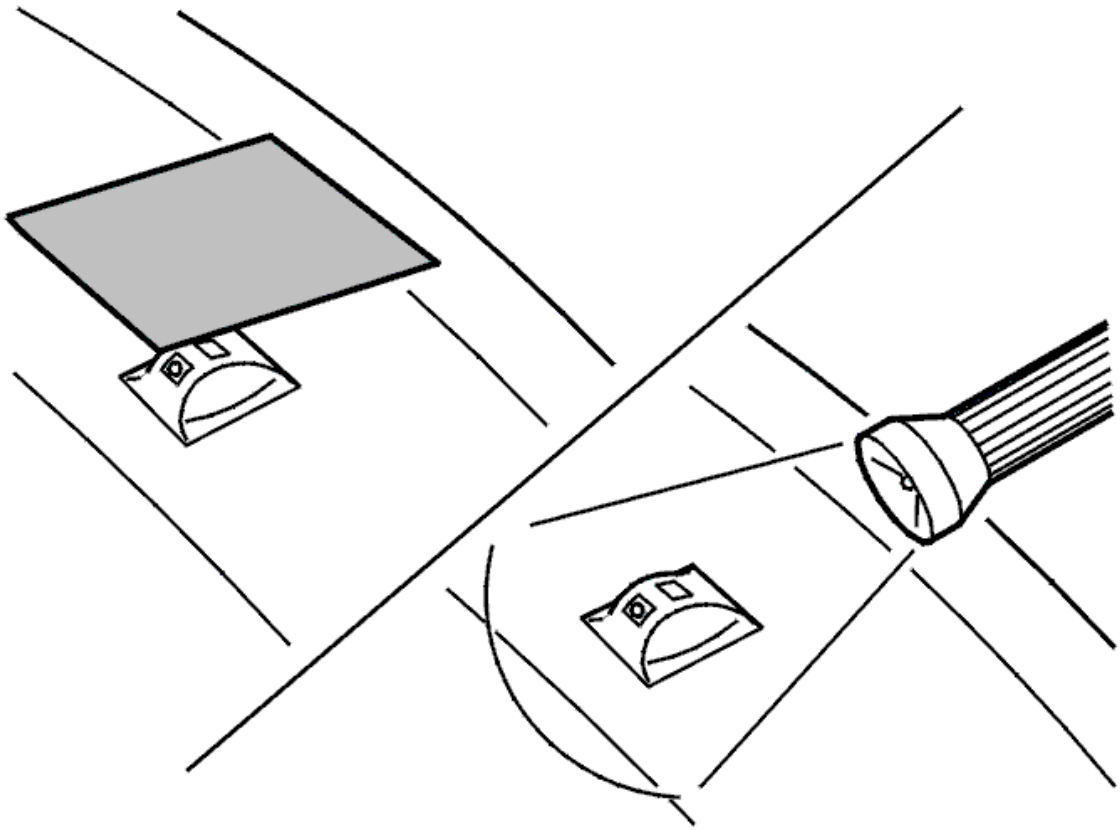

Fig. 144: Connecting Connector
Courtesy of VOLVO CARS CORPORATION

- Ignition off.
- Connect the connectors, install the components, etc.
- Ignition on.

  Check solar input signal by varying light intensity on solar sensor. Cover solar sensor, for example with hand, to get minimum signal. Shine, for example, a powerful torch close to the solar sensor to get a maximum signal.

  The value should vary between approximately 0 and 1000 W/m^2 .

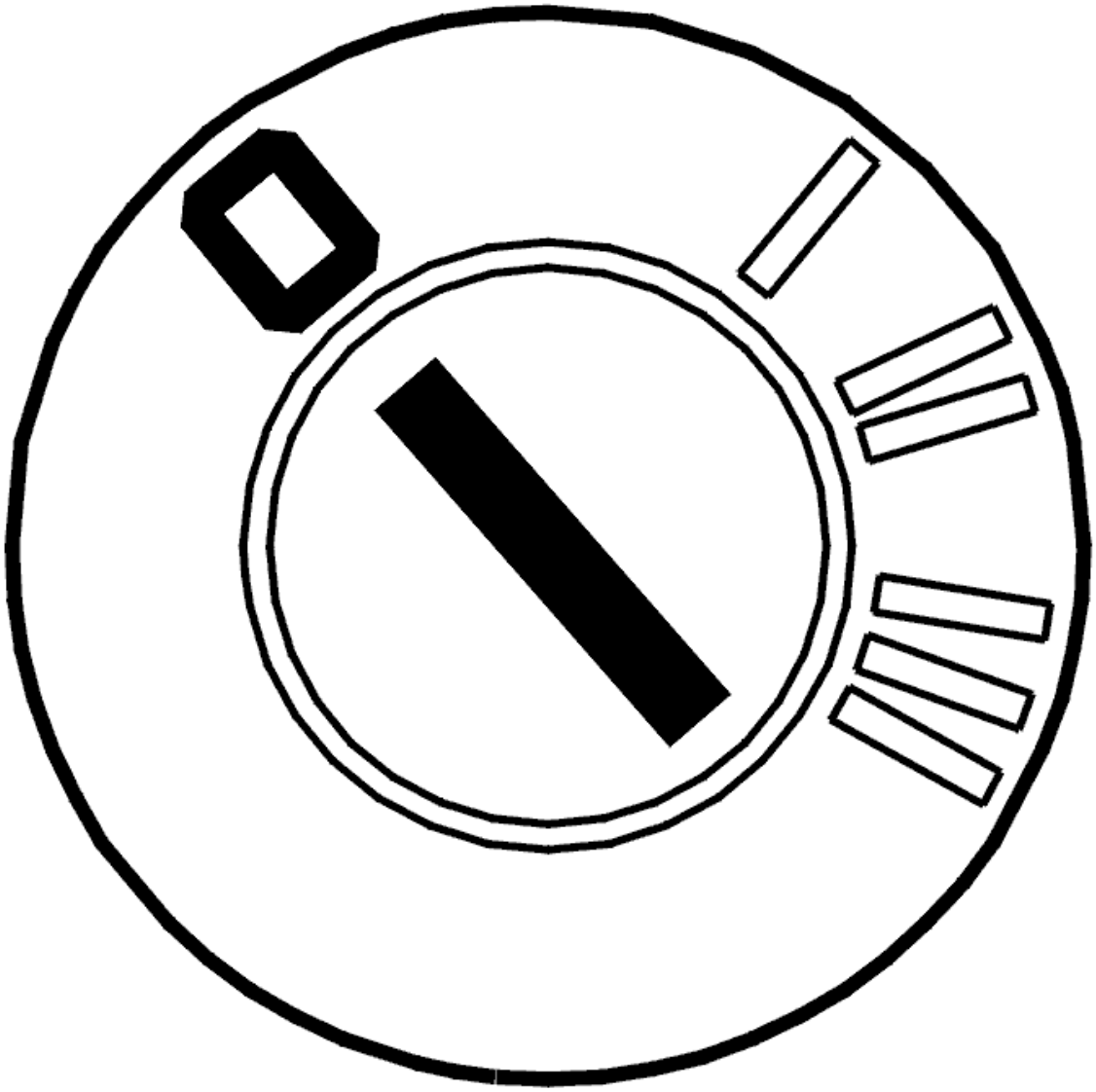

Fig. 145: Identifying VCT2000 Diagnostic Tool Symbol In VIDA
Courtesy of VOLVO CARS CORPORATION

Is the value OK?

- **YES**

  VERIFIED: Troubleshooting has been completed.

- **NO**

  Refer to **INFORMATION**

INFORMATION

FAULT-TRACING INFORMATION

The fault should have been detected and remedied. As this is not the case fault-tracing has failed.

Exit fault-tracing for this diagnostic trouble code (DTC) or make another attempt.

CCM-0009: SUN SENSOR. SIGNAL TOO LOW (2003-04)

DIAGNOSTIC TROUBLE CODE (DTC) INFORMATION

Condition

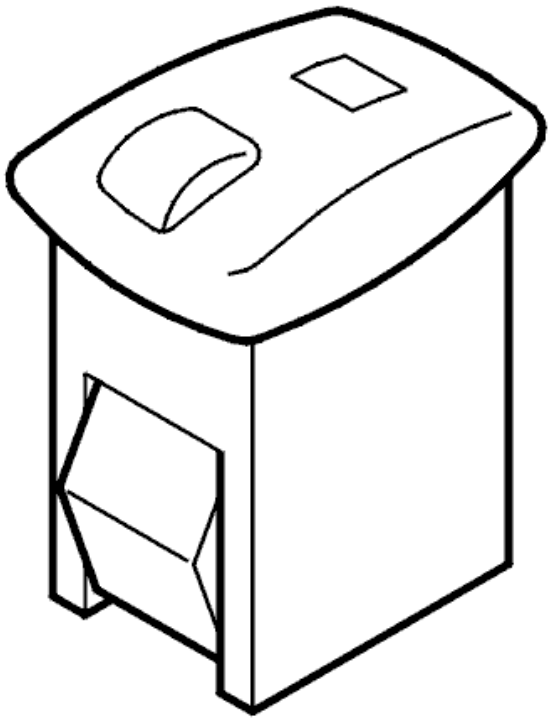

Fig. 146: Identifying Sun Sensor
Courtesy of VOLVO CARS CORPORATION

Diagnostic trouble code (DTC) CCM-0009 is stored if the control module registers that the signal from the sun sensor is below 5% of supply voltage (approximately 5 V).

The diagnostic trouble code (DTC) can only be diagnosed for the electronic climate control module (CCM) (ECC) and when the ignition is switched on.

Substitute Value

- The control module adopts a substitute value corresponding to approximately 20% (200 W/m^2) of the maximum solar heat value.

Possible Source

- Defective sun sensor

- Short-circuit to ground in the signal cable between the control module and the sun sensor.

Fault symptom[s]

- The passenger compartment temperature does not drop when the sun intensity is high.

SIGNAL TOO LOW

CHECKING COMPONENTS AND WIRING

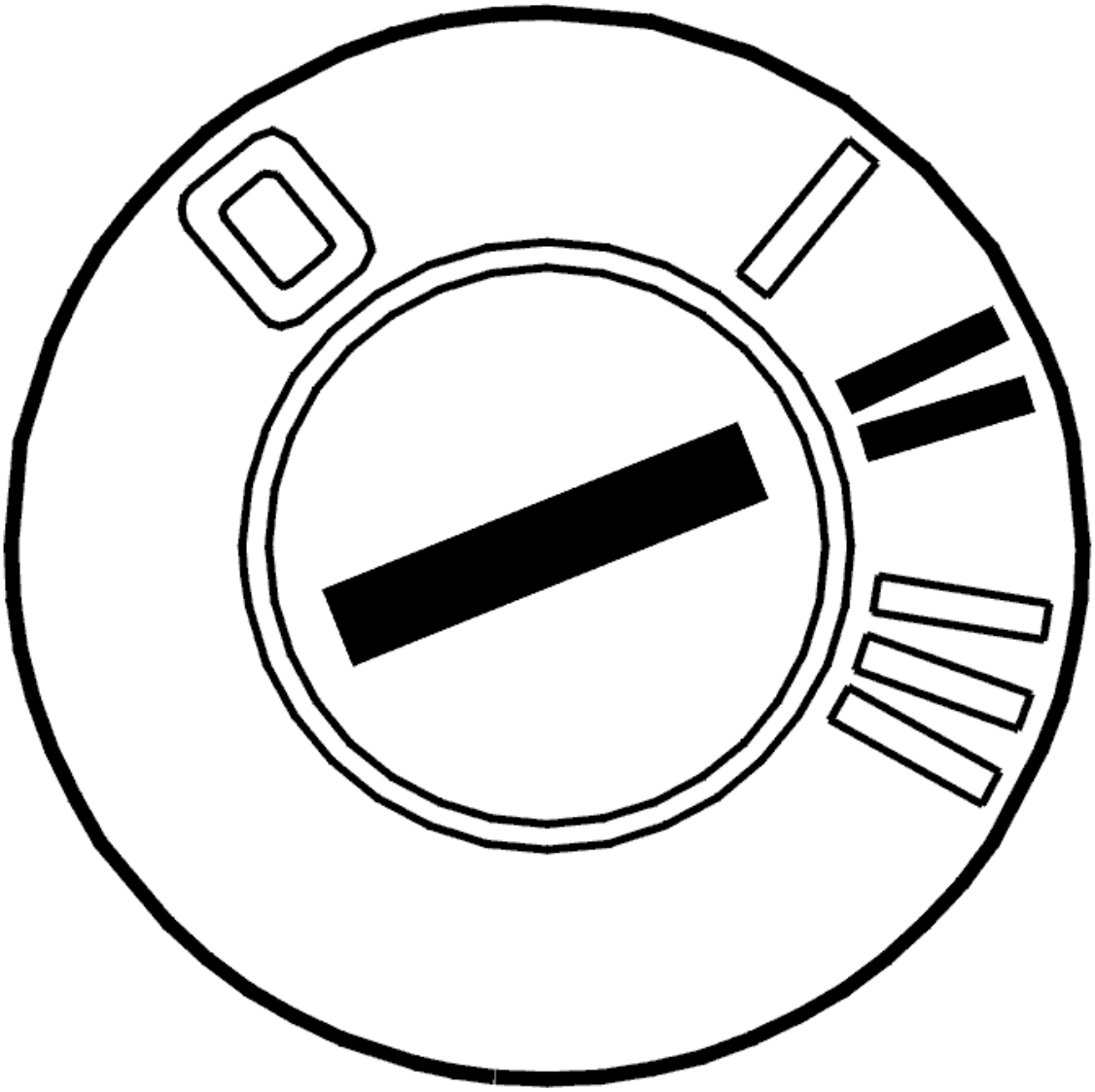

Fig. 147: Identifying Ignition ON
Courtesy of VOLVO CARS CORPORATION

- Ignition on.

  Check the sun sensor by varying the light intensity. Cover the sun sensor with your hand for example to

obtain the minimum signal value, approximately 0 W/m^2 .

Then aim a strong light source (for example a flashlight) at the sun sensor from close range to increase the signal.

Click on the VCT2000 symbol to read off the sun intensity.

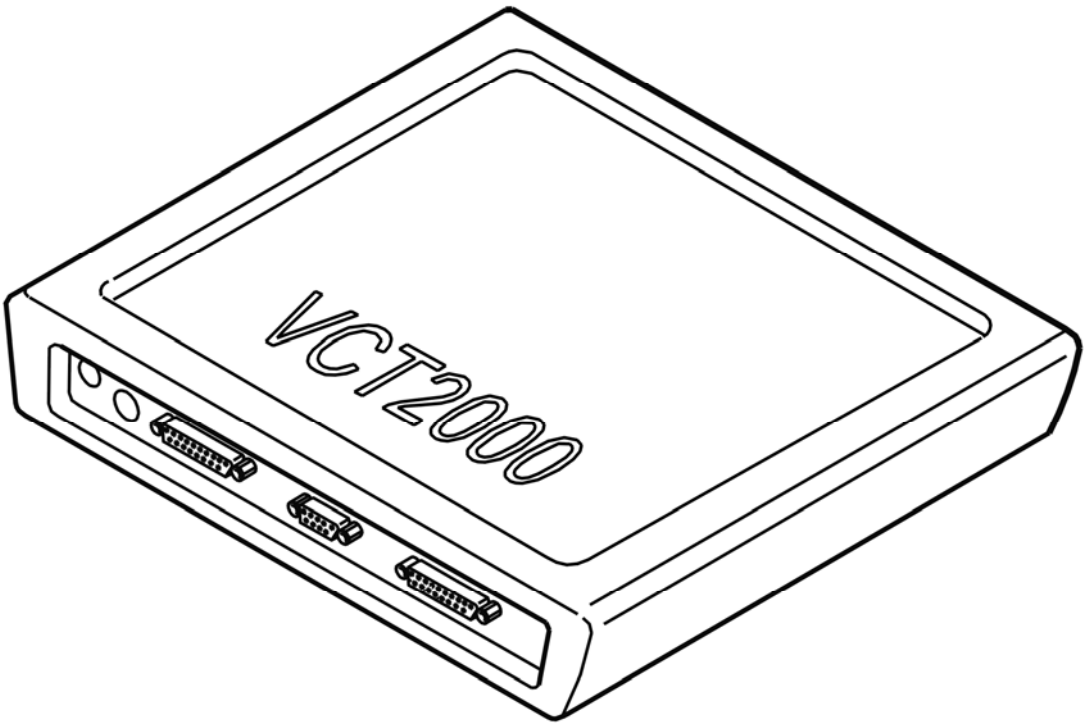

Fig. 148: Identifying VCT2000 Diagnostic Tool Symbol In VIDA
Courtesy of VOLVO CARS CORPORATION

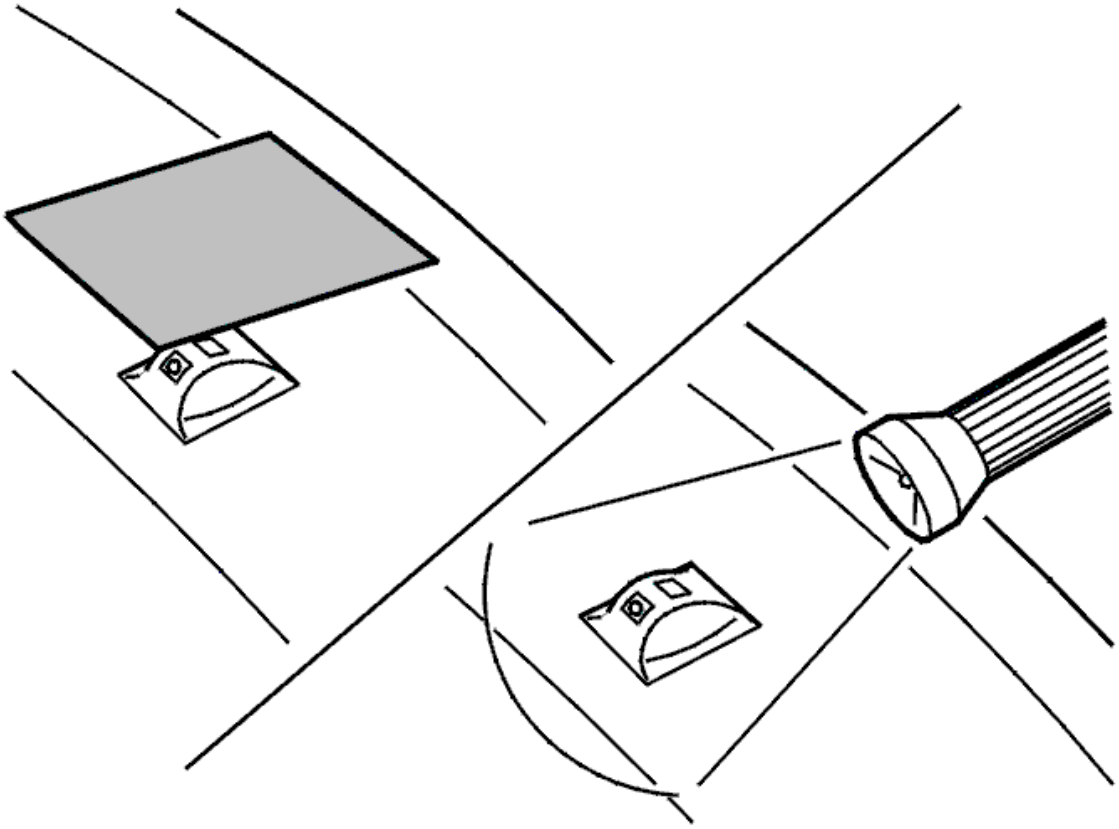

Fig. 149: Identifying Sun Sensor
Courtesy of VOLVO CARS CORPORATION

NOTE: The graphic only shows the method. The appearance of the sun sensor can vary between different models.

Does the value change?

- **YES**

  Refer to **CHECKING THE CABLE**

- **NO**

  Refer to **CHECKING COMPONENTS AND WIRING**

CHECKING COMPONENTS AND WIRING

Check the signal cable between control module terminal #B4 (#4) and sun sensor terminal #1 (#21). Check for a short-circuit to ground.

Try replacing the sun sensor if no fault is found in the wiring.

Remedy as necessary.

Other information:

- To access or replace the control module, see **CLIMATE CONTROL MODULE (CCM), REPLACING**
- To connect the breakout box, see **CONNECTING THE BREAKOUT BOX**
- To access or replace the sun sensor, see **SUN SENSOR/ALARM LED, REPLACING**
- For other values, see **SIGNAL DESCRIPTION, CLIMATE CONTROL MODULE (CCM), CONNECTOR B**
- see **CHECKING WIRING AND TERMINALS** .

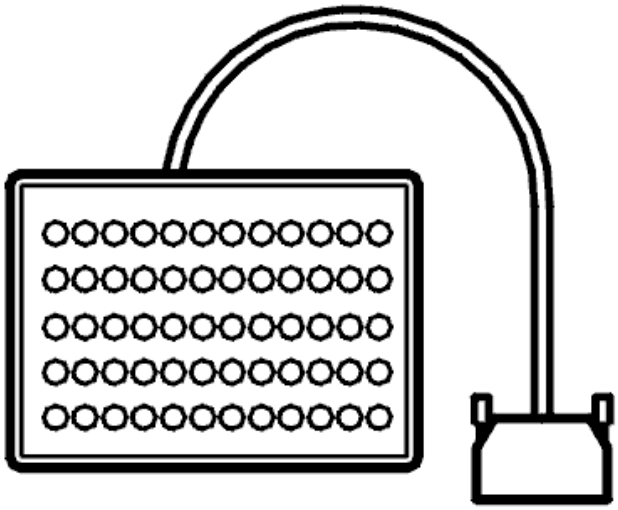

Fig. 150: Breakout Box
Courtesy of VOLVO CARS CORPORATION

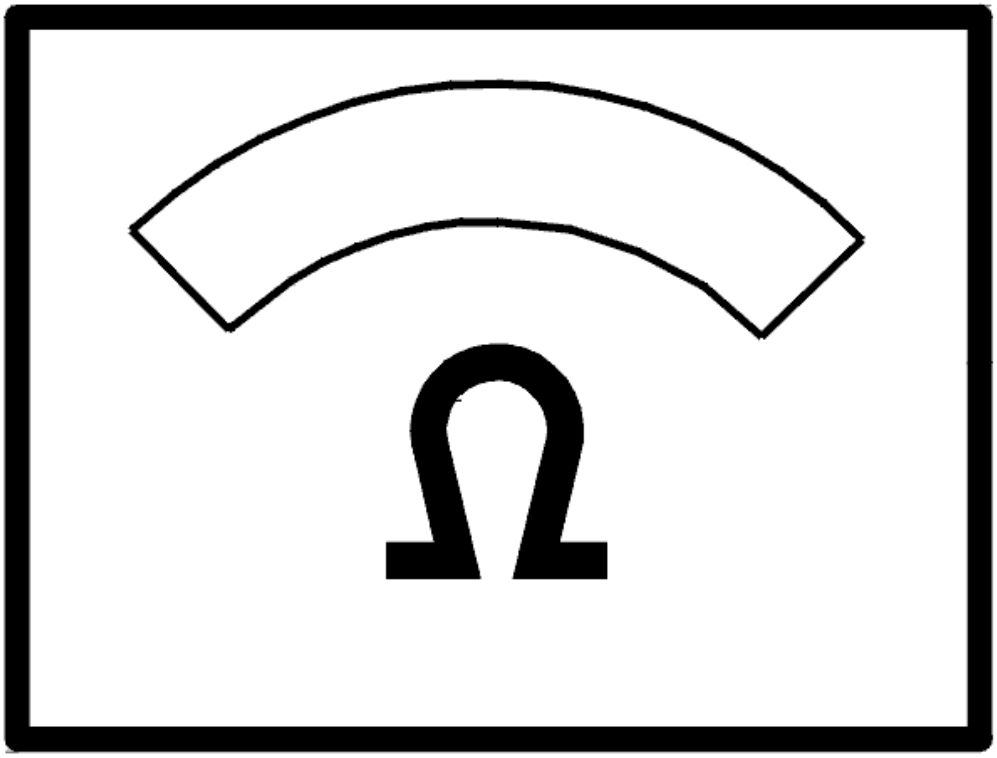

Fig. 151: Identifying Ohmmeter
Courtesy of VOLVO CARS CORPORATION

- **Continue**

  Refer to **VERIFICATION**

CHECKING THE CABLE

Check the cable between the control module terminal #B4 (#4) and sun sensor terminal #1 (#21). Check for an intermittent short-circuit to ground.

Remedy as necessary.

Other information:

- To access or replace the control module, see **CLIMATE CONTROL MODULE (CCM), REPLACING**
- To connect the breakout box, see **CONNECTING THE BREAKOUT BOX**
- To access or replace the sun sensor, see **SUN SENSOR/ALARM LED, REPLACING**
- For other values, see **SIGNAL DESCRIPTION, CLIMATE CONTROL MODULE (CCM), CONNECTOR B**
- see **CHECKING WIRING AND TERMINALS** .

- **Continue**

  Refer to **INFORMATION**

VERIFICATION

HINT: After the repair it is necessary to check that the fault has been rectified.

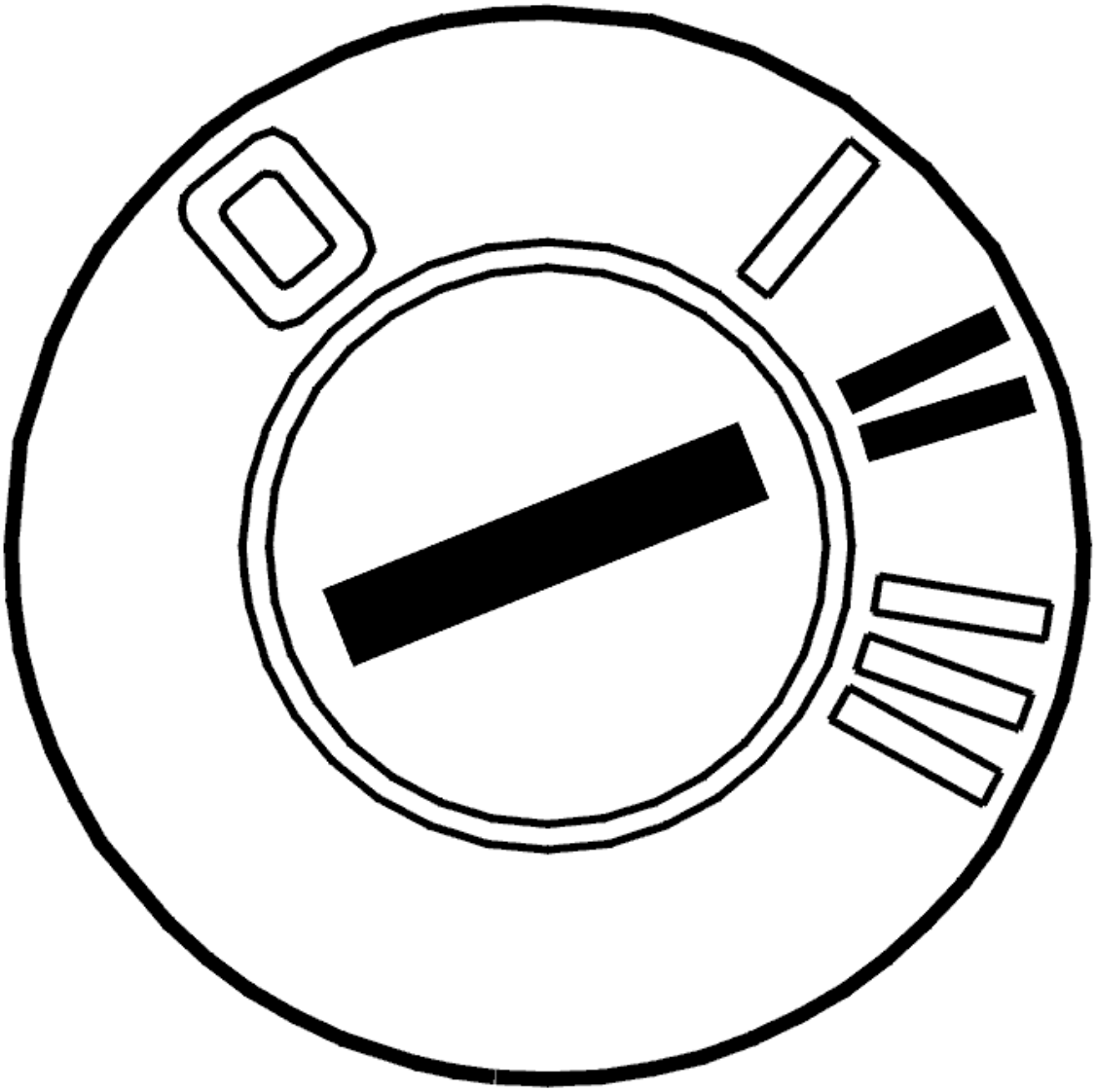

Fig. 152: Identifying Ignition ON
Courtesy of VOLVO CARS CORPORATION

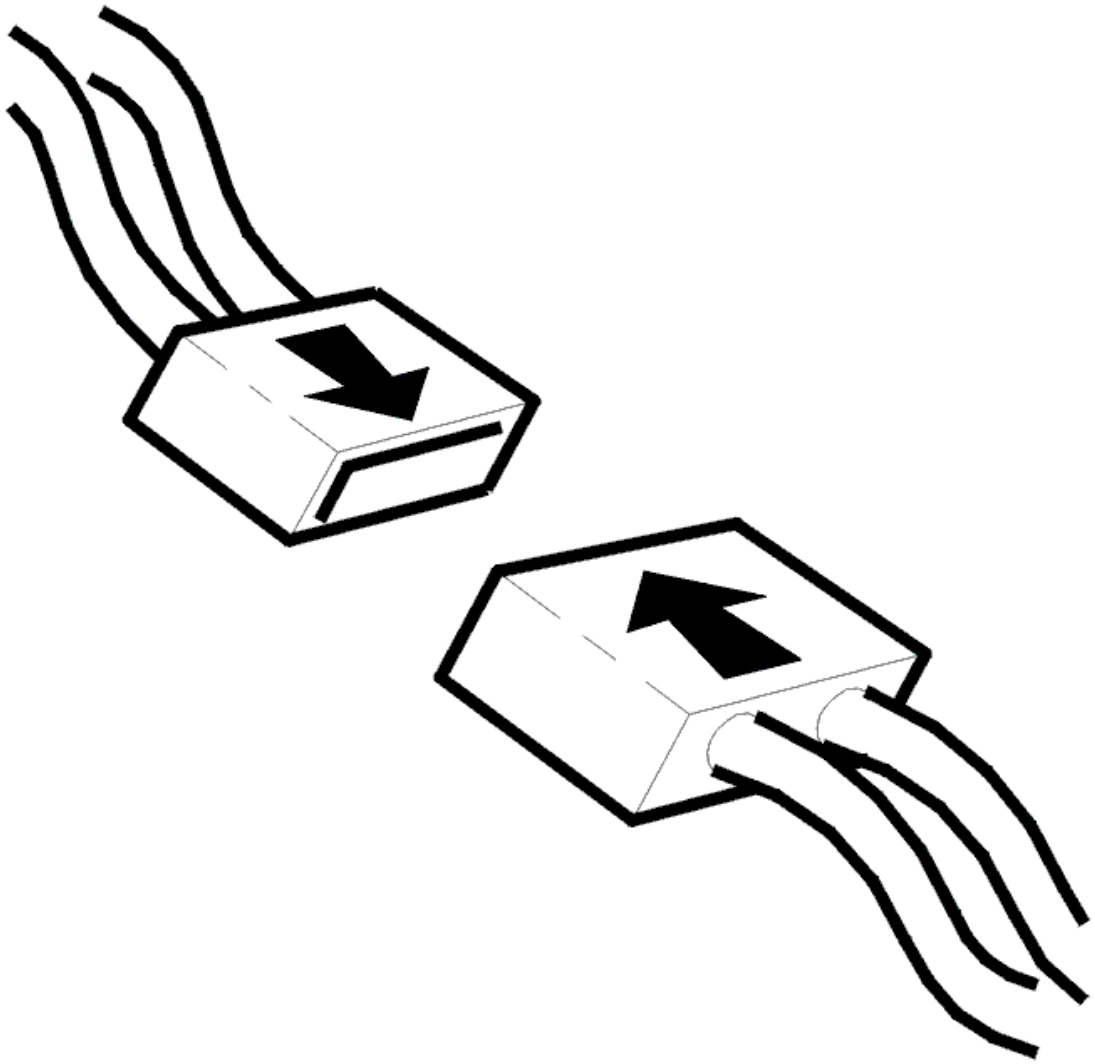

Fig. 153: Connecting Connector
Courtesy of VOLVO CARS CORPORATION

- Ignition off.
- Connect the connectors, install the components, etc.
- Ignition on.

  Check solar input signal by varying light intensity on solar sensor. Cover solar sensor, for example with hand, to get minimum signal. Shine, for example, a powerful torch close to the solar sensor to get a maximum signal.

  The value should vary between approximately 0 and 1000 W/m^2 .

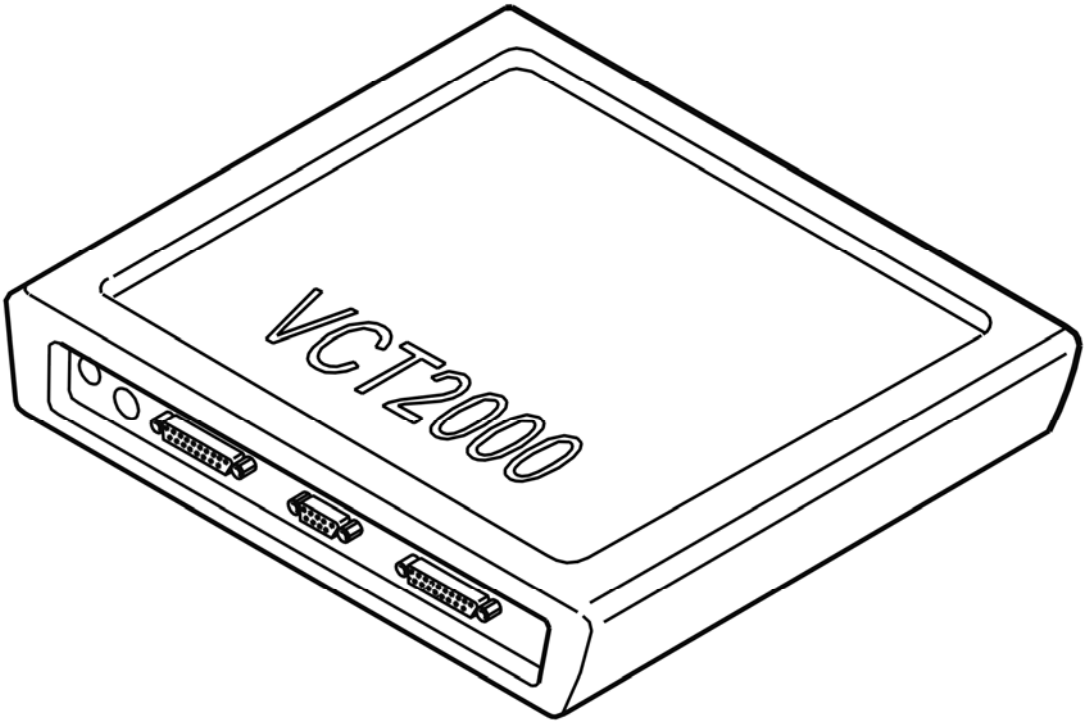

Fig. 154: Identifying VCT2000 Diagnostic Tool Symbol In VIDA
Courtesy of VOLVO CARS CORPORATION

Is the value OK?

- **YES**

  VERIFIED: Troubleshooting has been completed.

- **NO**

  Refer to **INFORMATION**

INFORMATION

FAULT-TRACING INFORMATION

The fault should have been detected and remedied. As this is not the case fault-tracing has failed.

Exit fault-tracing for this diagnostic trouble code (DTC) or make another attempt.

CCM-000B: LEFT TEMPERATURE DAMPER MOTOR. SIGNAL TOO LOW (2003-04)

DIAGNOSTIC TROUBLE CODE (DTC) INFORMATION

Condition

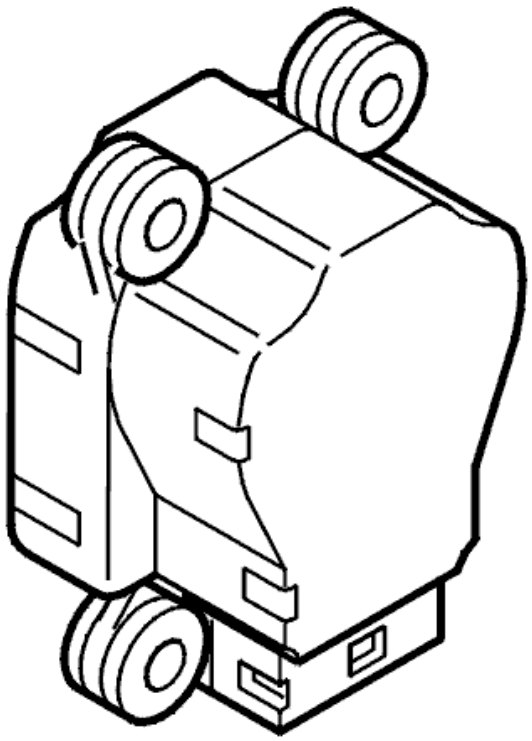

Fig. 155: Identifying Left Temperature Damper Motor
Courtesy of VOLVO CARS CORPORATION

Diagnostic trouble code (DTC) CCM-000B is stored if the control module registers too low a signal from the left temperature damper motor.

Substitute Value

- None.

Possible Source

- Short-circuit to supply voltage in the signal cable between the control module and the damper motor
- Open-circuit in the signal cable between the control module and the damper motor
- Contact resistance, oxidation or loose connections in the connectors
- Defective damper motor.

Fault symptom[s]

- The passenger compartment temperature does not correspond to the set value.

SIGNAL TOO LOW

CHECKING DAMPER MOTOR CONTROL

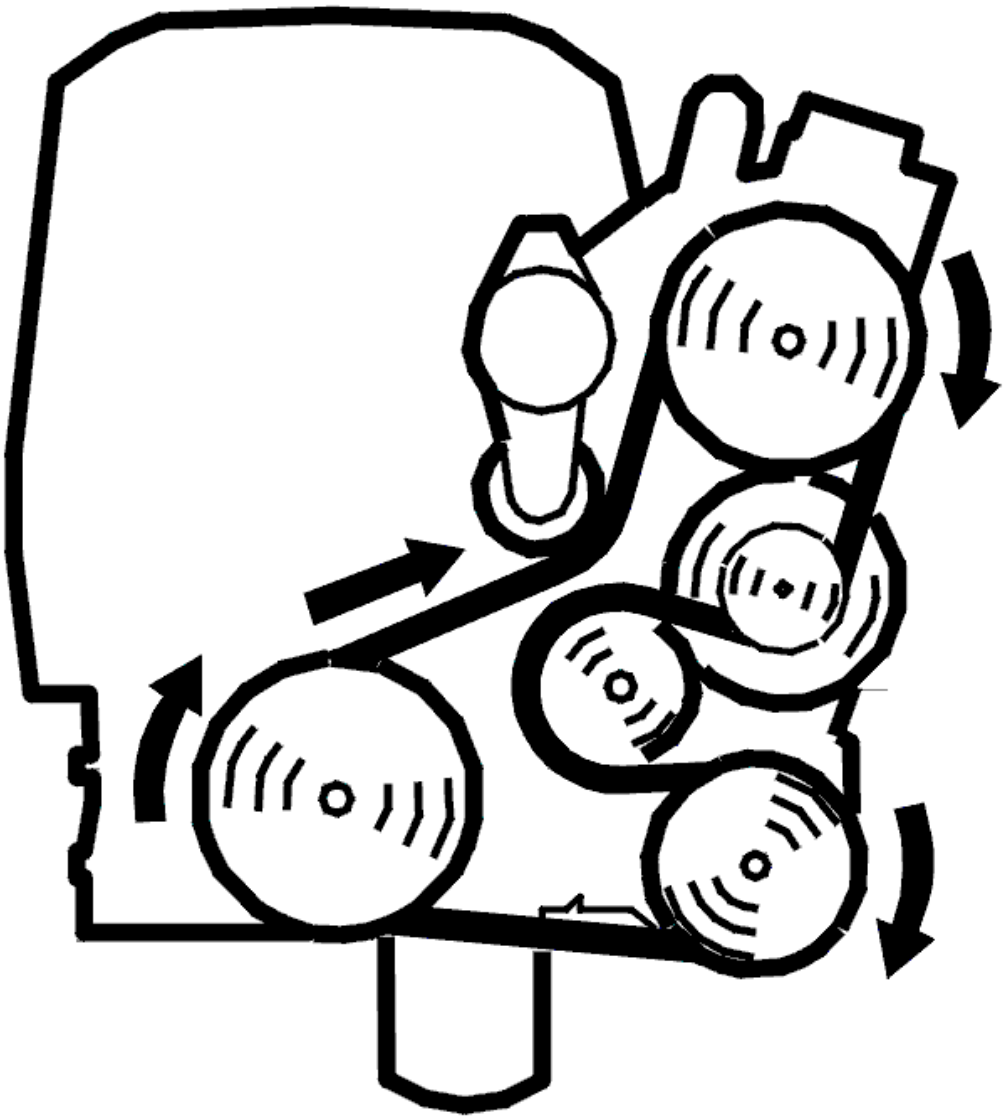

Fig. 156: Belt Routing/Engine Idling - Volvo
Courtesy of VOLVO CARS CORPORATION

- Engine running
- Blower fan on.

  Change the temperature on the left temperature control between max and min.

  Check that the temperature changes on the left-hand side of the passenger compartment.

Does the temperature change?

- **YES**

  Refer to **CHECKING THE WIRING**

- **NO**

  Refer to **CHECKING THE CIRCUIT**

CHECKING THE CIRCUIT

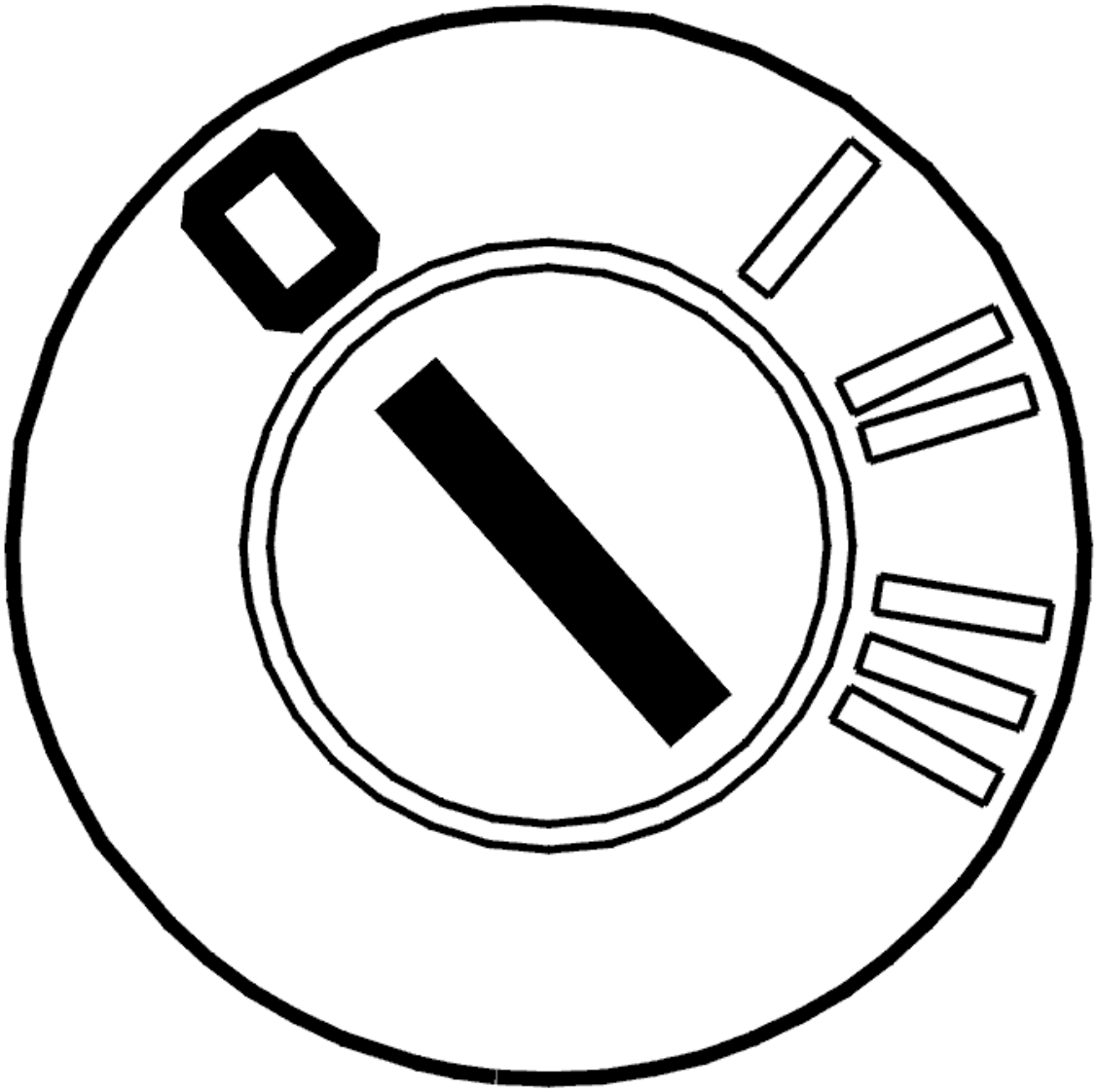

Fig. 157: Identifying Ignition OFF
Courtesy of VOLVO CARS CORPORATION

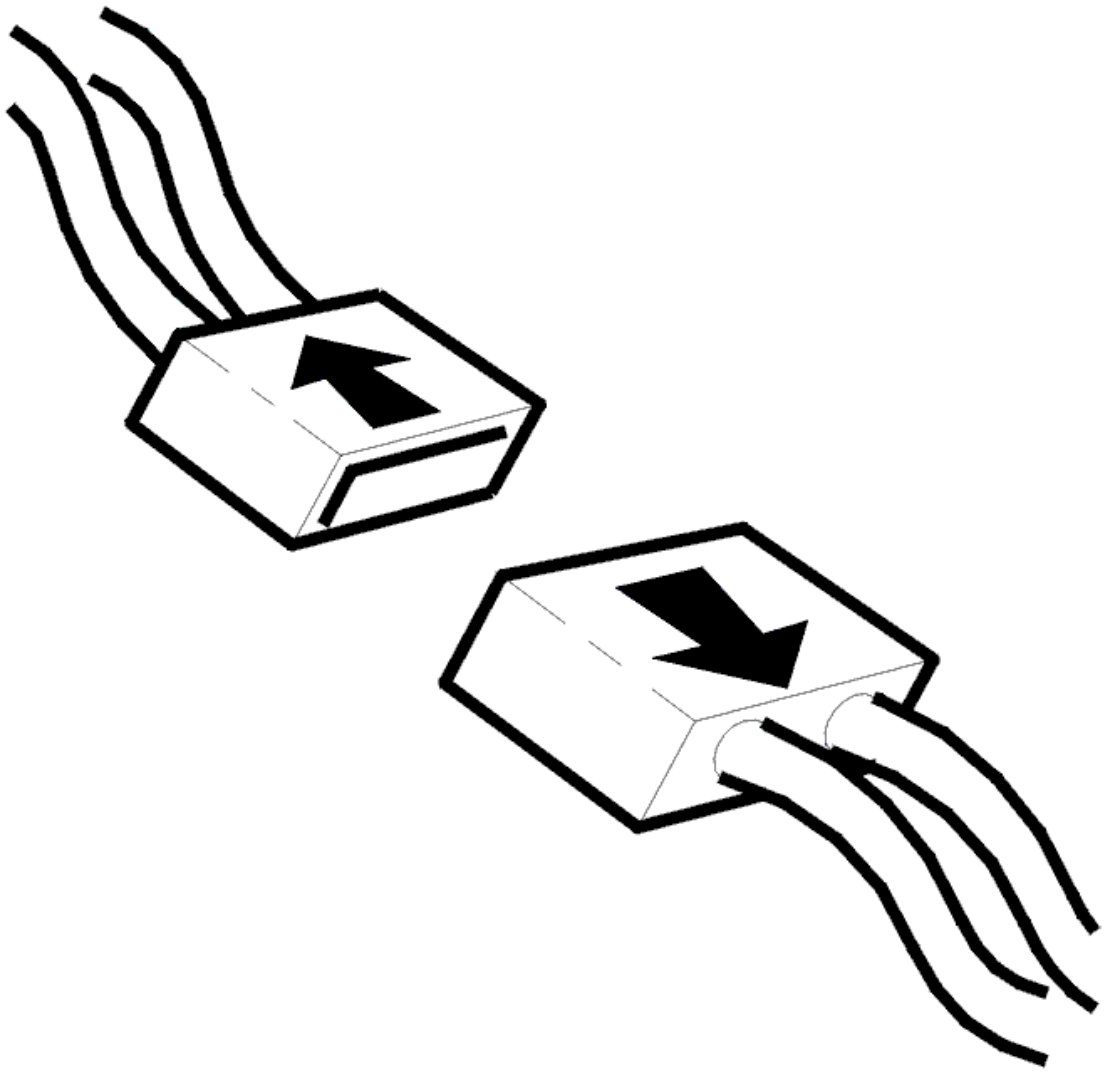

Fig. 158: Disconnecting Connector
Courtesy of VOLVO CARS CORPORATION

- Ignition off
- Disconnect connector B on the climate control module (CCM).

  Check connector B on the climate control module (CCM) and the damper motor connector. Check for contact resistance and oxidation. Check for damage carefully.

  Check the signal cable between the climate control module (CCM) and the damper motor. Check for an open-circuit by measuring the resistance between terminals #B18 (#18) and #B11-#B14 (#11-#14).

  Other information:

  - To access or replace the control module, see **CLIMATE CONTROL MODULE (CCM), REPLACING**

- To access or replace the damper motor, see **DAMPER MOTOR TEMPERATURE, REPLACING**
- see **CHECKING WIRING AND TERMINALS** .

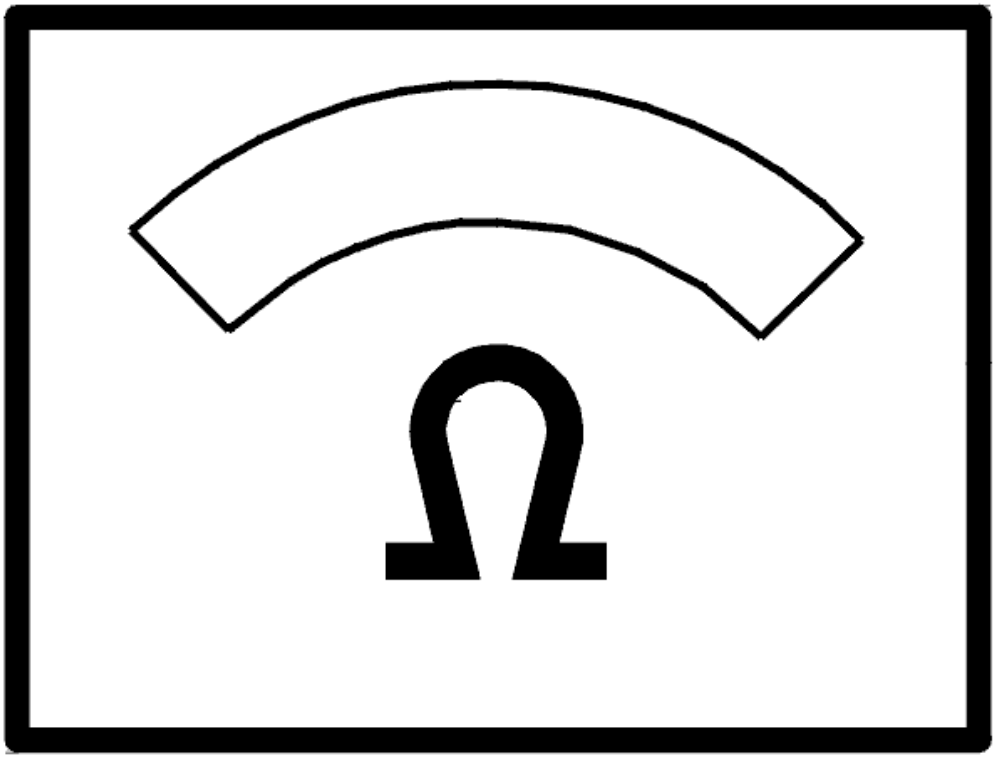

Fig. 159: Identifying Ohmmeter
Courtesy of VOLVO CARS CORPORATION

Was a fault detected?

- **YES**

  Refer to **CHECKING THE CABLE**

- **NO**

Refer to **CHECKING THE CABLE**

CHECKING THE CABLE

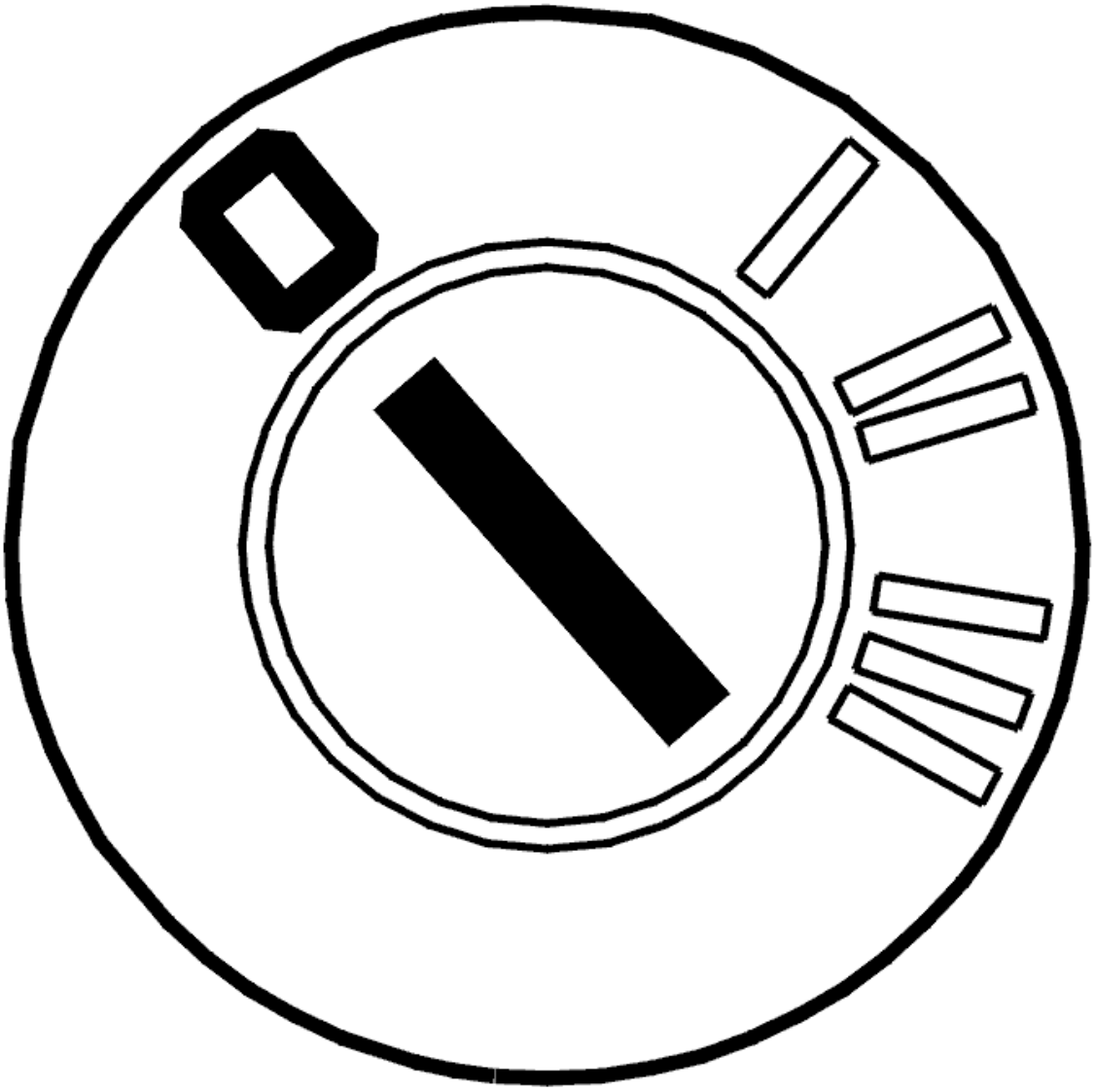

Fig. 160: Identifying Ignition OFF
Courtesy of VOLVO CARS CORPORATION

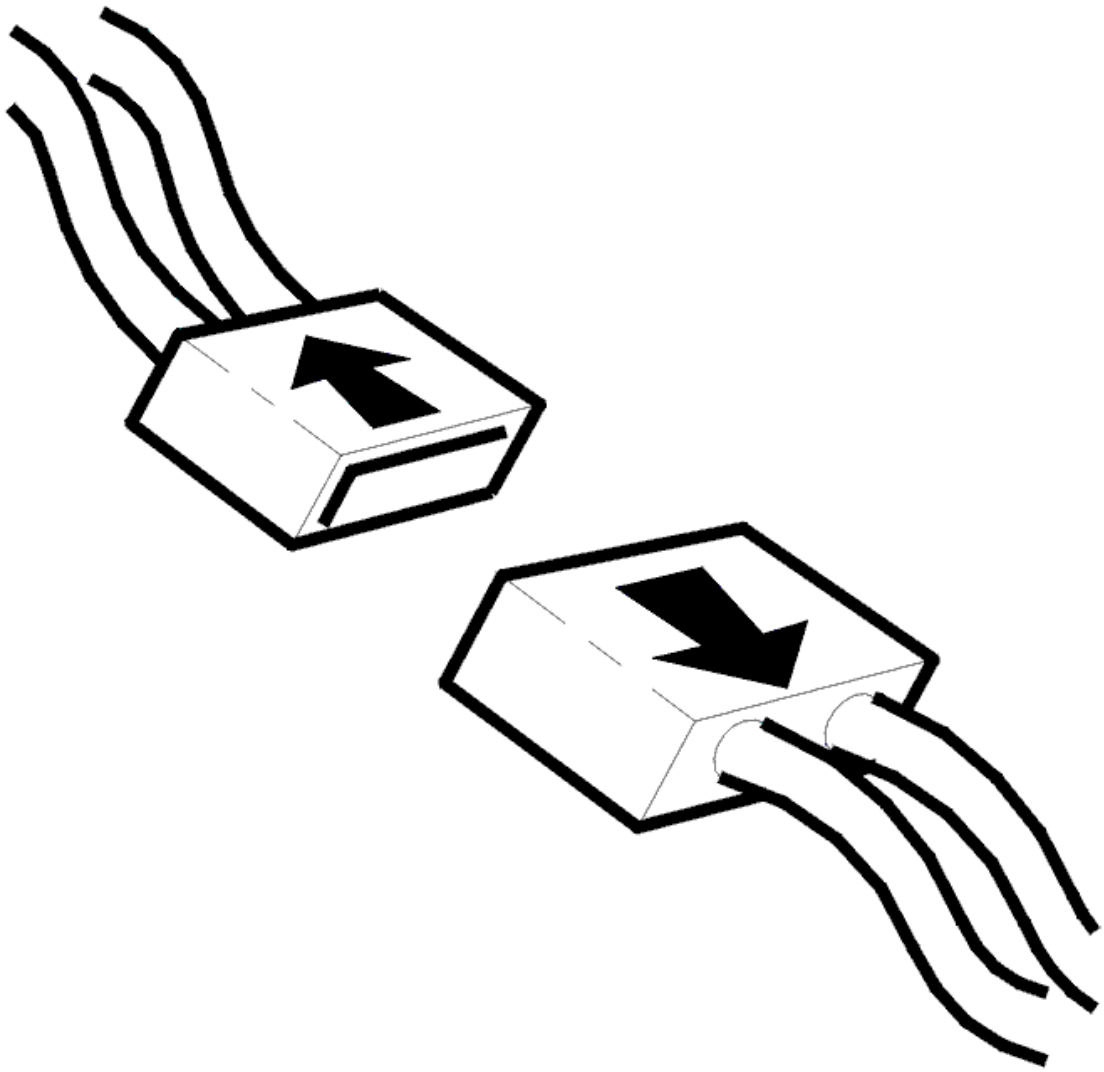

Fig. 161: Disconnecting Connector
Courtesy of VOLVO CARS CORPORATION

- Ignition off
- Disconnect connector B on the climate control module (CCM)
- Disconnect the connectors on the damper motors for left and right temperature.

  Check the signal cable. Check control module connector terminal #B18 (#18) and damper motor connector terminal #1. Check for an open-circuit.

  Check the wiring on the matrix network between the right-hand temperature damper motor and the left-hand temperature damper motor terminals #3-#6. Check for an open-circuit.

  Remedy as necessary.

Other information:

- To access or replace the control module, see **CLIMATE CONTROL MODULE (CCM), REPLACING**
- To connect the breakout box, see **CONNECTING THE BREAKOUT BOX**
- To access or replace the damper motor, see **DAMPER MOTOR TEMPERATURE, REPLACING**
- For other values, see **SIGNAL SPECIFICATION**
- see **CHECKING WIRING AND TERMINALS** .

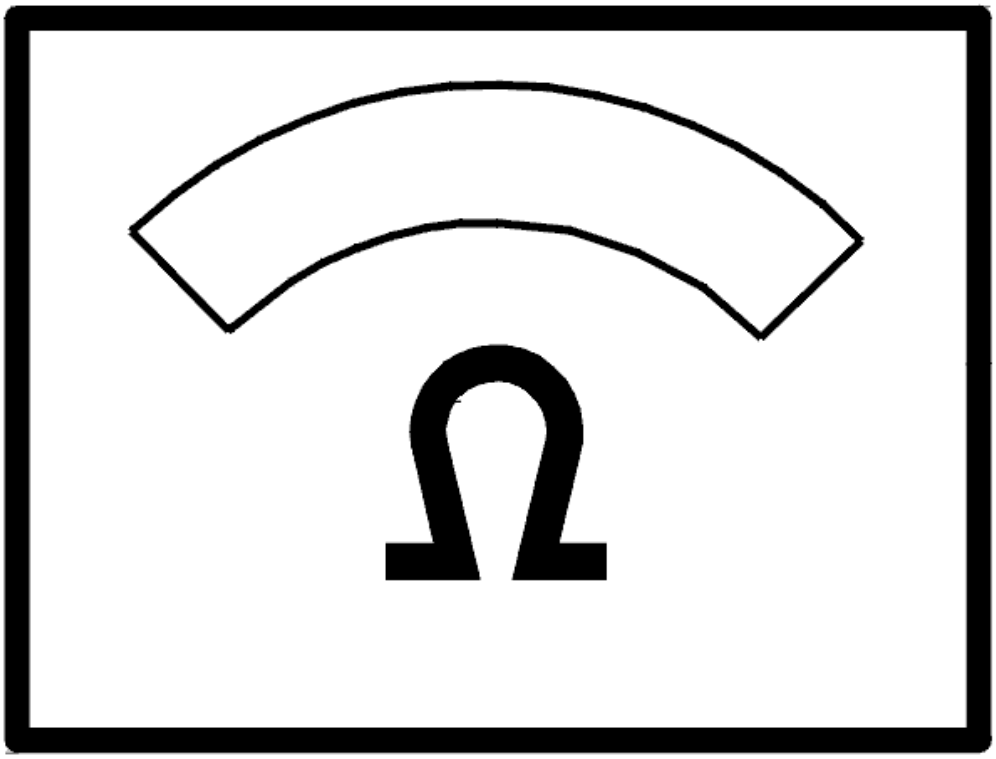

Fig. 162: Identifying Ohmmeter
Courtesy of VOLVO CARS CORPORATION

- **Continue**

Refer to **QUERY**

CHECKING THE CABLE

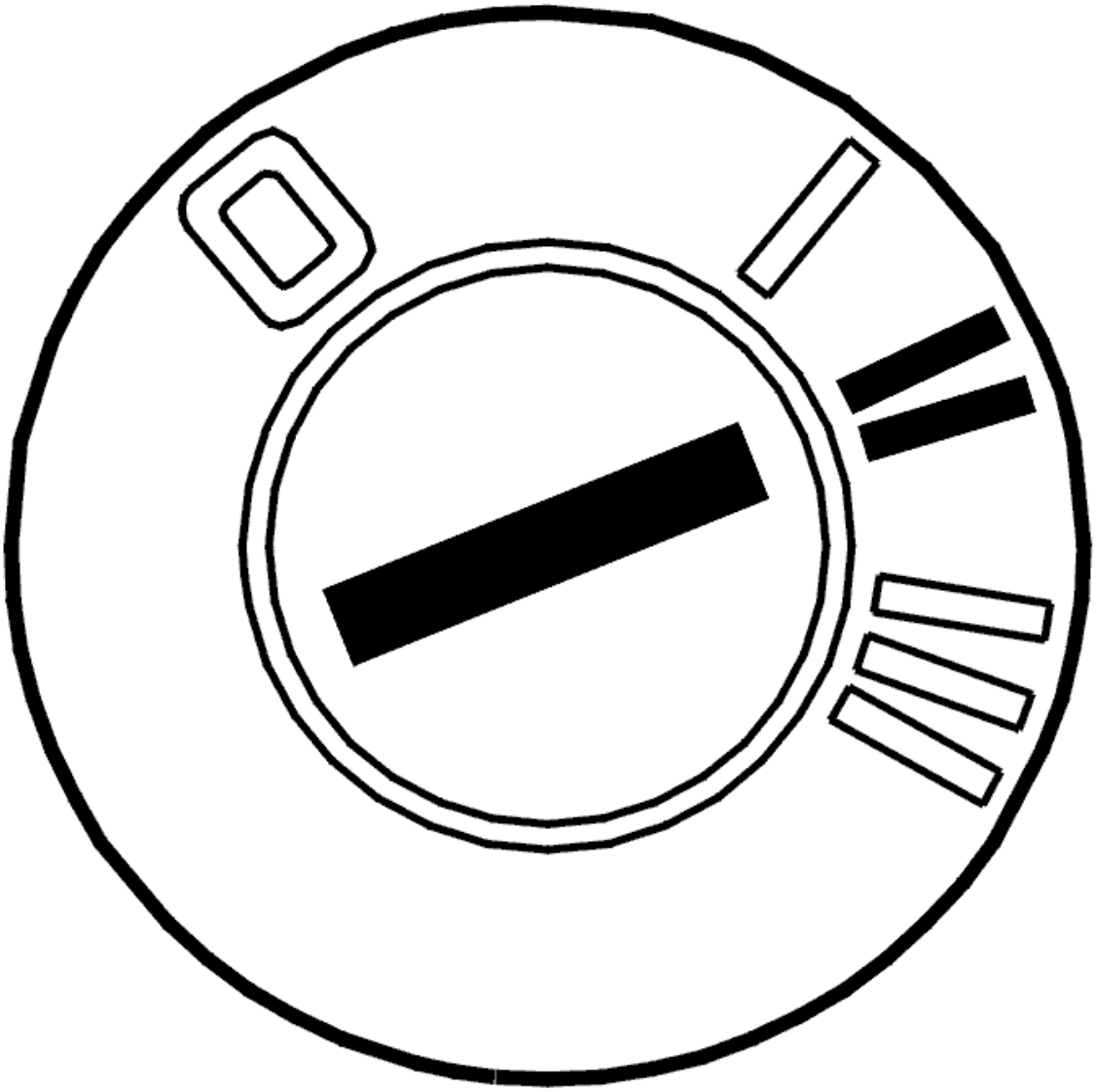

Fig. 163: Identifying Ignition ON
Courtesy of VOLVO CARS CORPORATION

- Ignition on.

  Check the signal cable between climate control module (CCM) terminal #B18 (#18) and damper motor terminal #1. Check for a short-circuit to supply voltage.

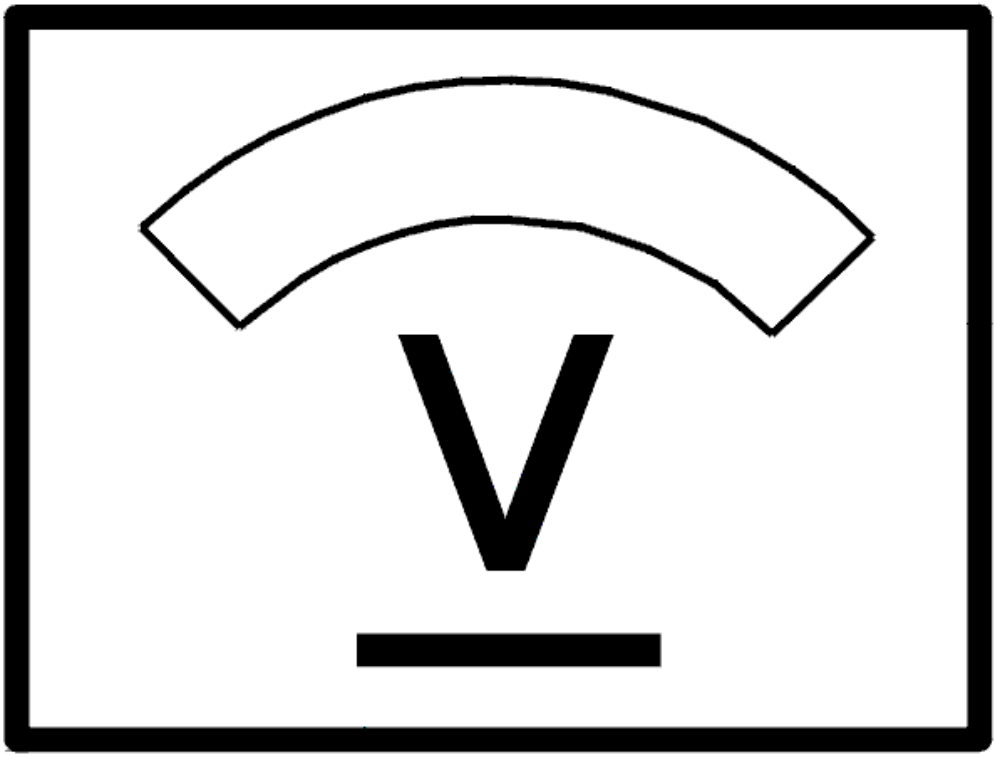

Fig. 164: Identifying Voltage Display
Courtesy of VOLVO CARS CORPORATION

Was a fault detected?

- **YES**

  Refer to **QUERY**

- **NO**

  FAULT NOT FOUND: Troubleshooting has been completed.

CHECKING THE WIRING

Check the control module connector (terminal #B18) and damper motor connector terminal #1. Check for

contact resistance and oxidation. Check for loose connections. Check for damage carefully.

Check the signal cable between control module terminal #B18 and damper motor terminal #1. Check for an intermittent open-circuit.

Check the wiring between the right-hand temperature damper motor and the left-hand temperature damper motor. Check for an intermittent open-circuit.

Check the signal cable between control module terminal #B18 and damper motor terminal #1. Check for an intermittent short-circuit to supply voltage.

- **Continue**

  Refer to **INFORMATION**

QUERY

Select which type of climate control the car is equipped with.

1. Electronic climate control. Refer to **SELF-ADJUSTMENT**.
2. Manual climate control (MCC)/Standard (STD). Refer to **SELF-ADJUSTMENT**

SELF-ADJUSTMENT

HINT: After replacing the control module or damper motor, and when a damper motor or link has been removed, carry out self adjustment to define the damper motor limit positions.

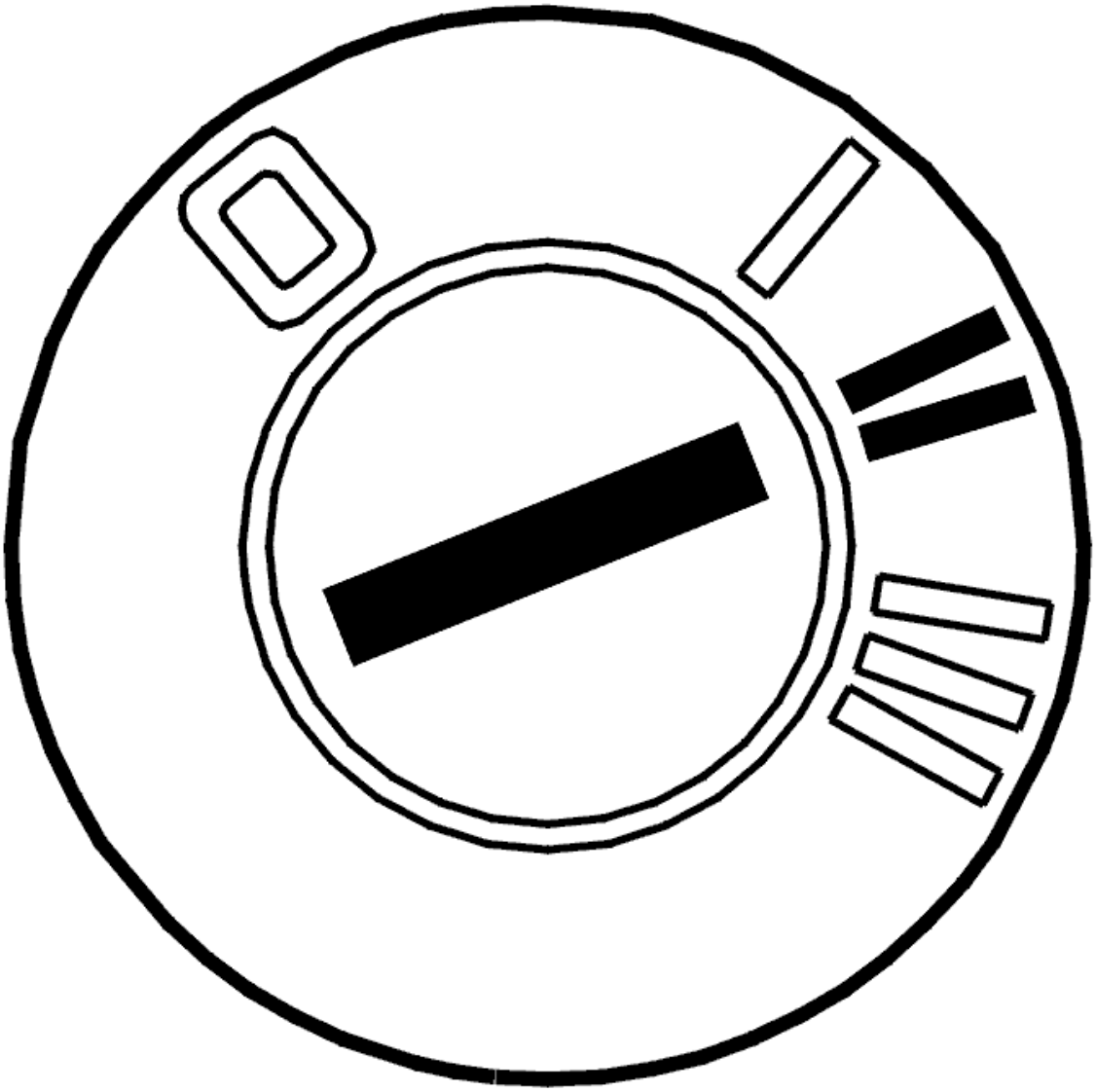

Fig. 165: Identifying Ignition ON
Courtesy of VOLVO CARS CORPORATION

- Ignition off.
- Reinstall the connectors, components etc.
- Ignition on.

  Activate self adjustment.

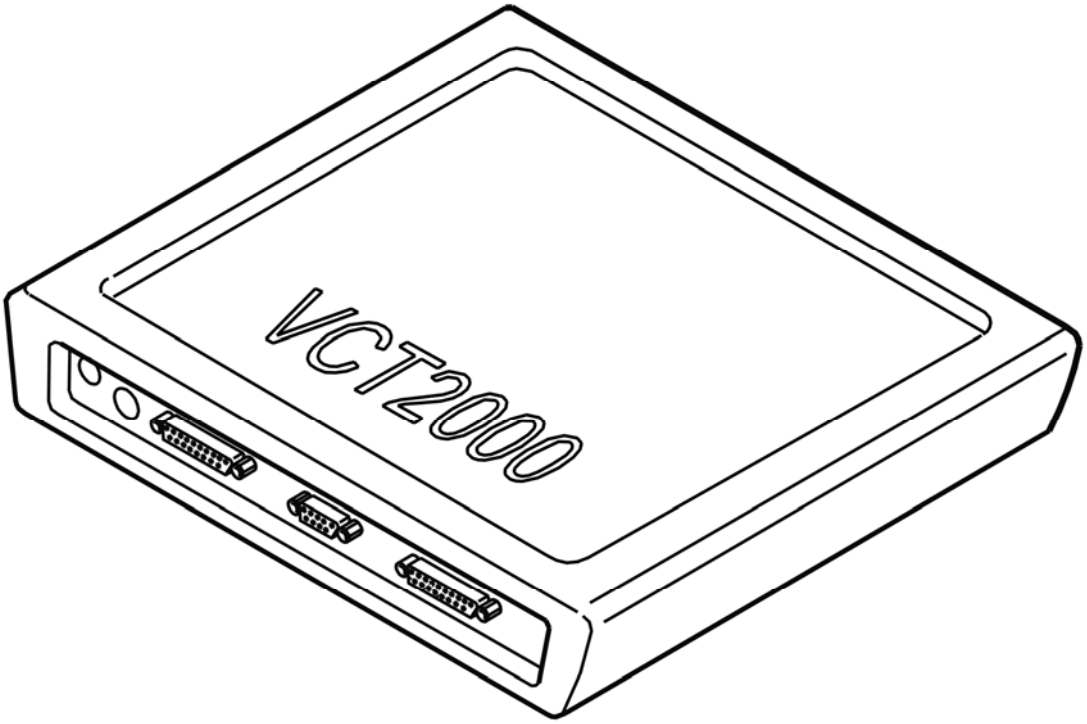

Fig. 166: Identifying VCT2000 Diagnostic Tool Symbol In VIDA
Courtesy of VOLVO CARS CORPORATION

- **Continue**

  Refer to **VERIFICATION**

SELF-ADJUSTMENT

HINT: After replacing the control module or damper motor, and when a damper motor or link has been removed, carry out self adjustment to define the damper motor limit positions.

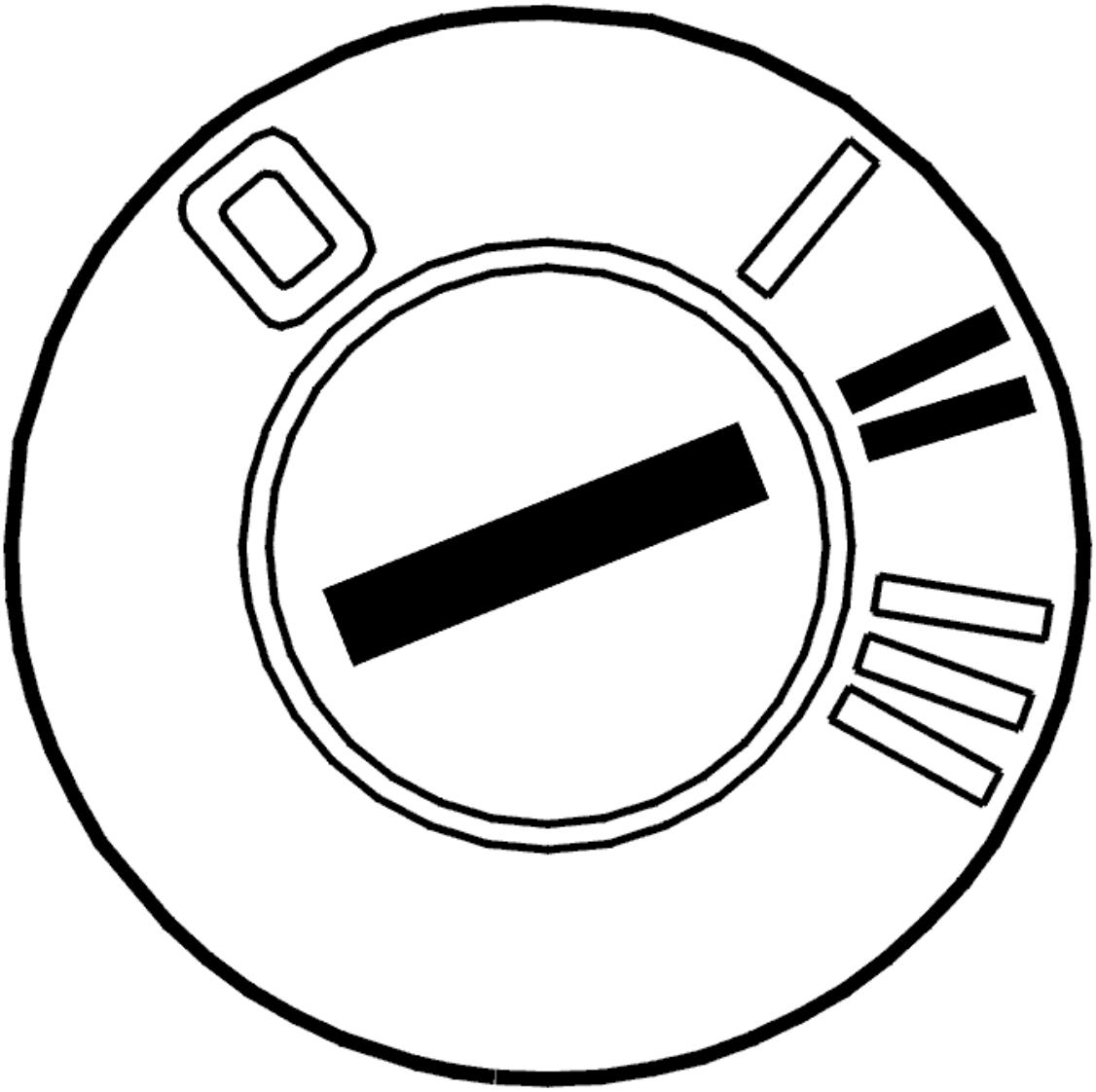

Fig. 167: Identifying Ignition ON
Courtesy of VOLVO CARS CORPORATION

- Ignition off.
- Reinstall the connectors, components etc.
- Ignition on.

  Activate self adjustment.

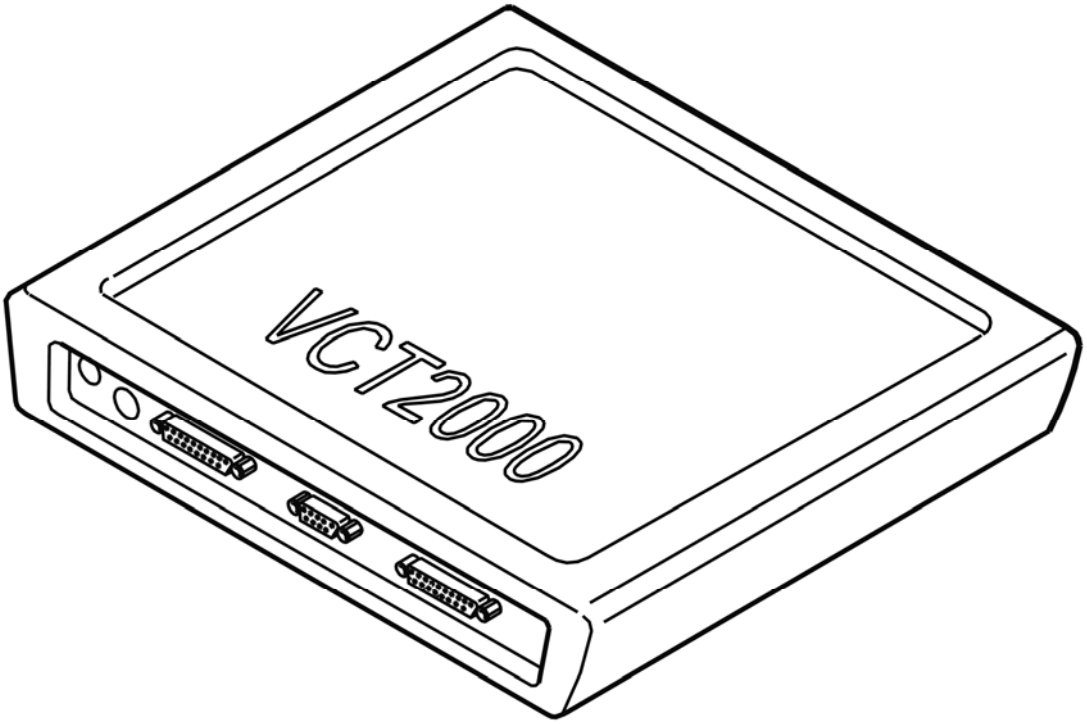

Fig. 168: Identifying VCT2000 Diagnostic Tool Symbol In VIDA
Courtesy of VOLVO CARS CORPORATION

- **Continue**

  Refer to **VERIFICATION**

VERIFICATION

HINT: After the repair it is necessary to check that the fault has been rectified.

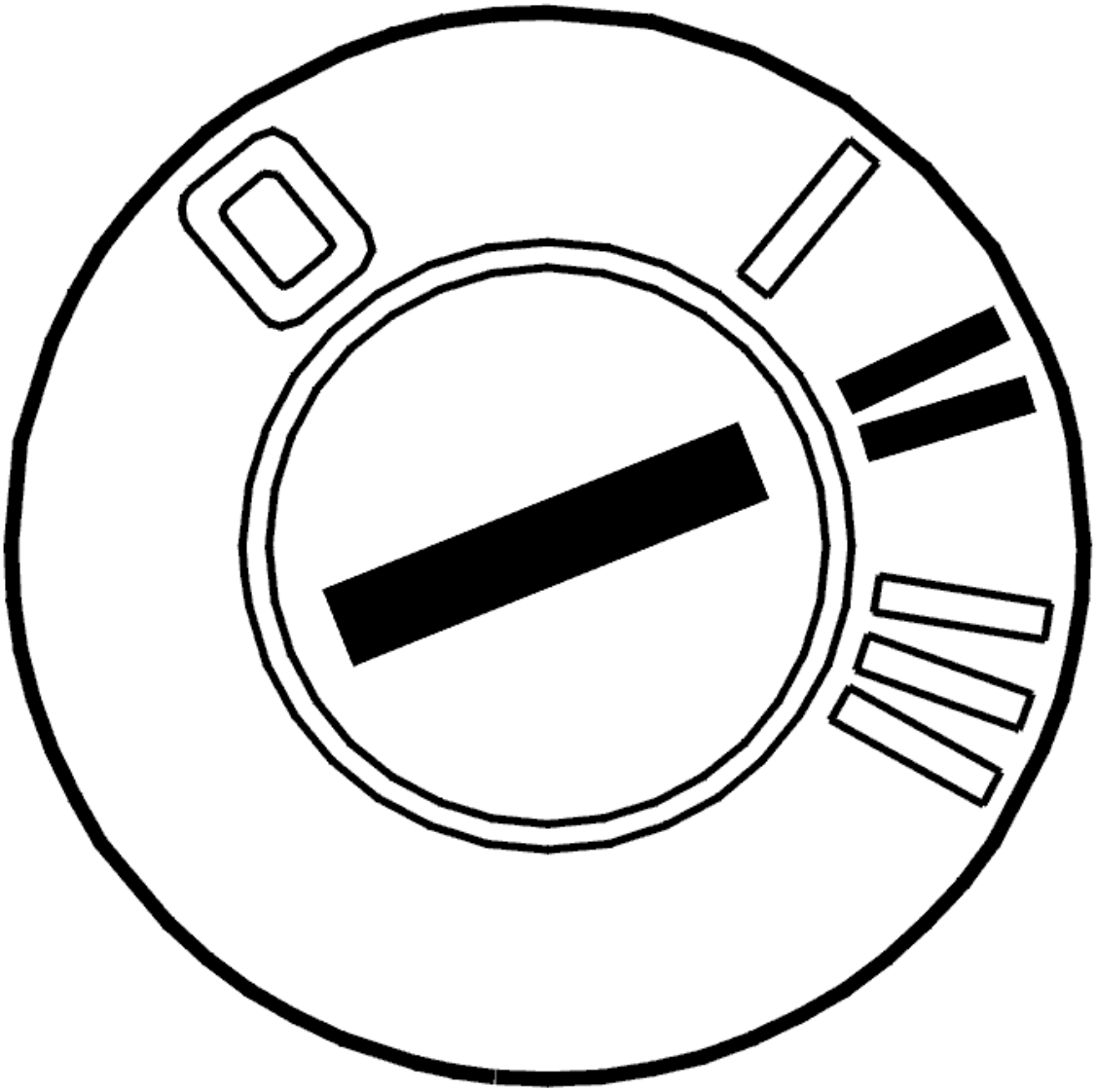

Fig. 169: Identifying Ignition ON
Courtesy of VOLVO CARS CORPORATION

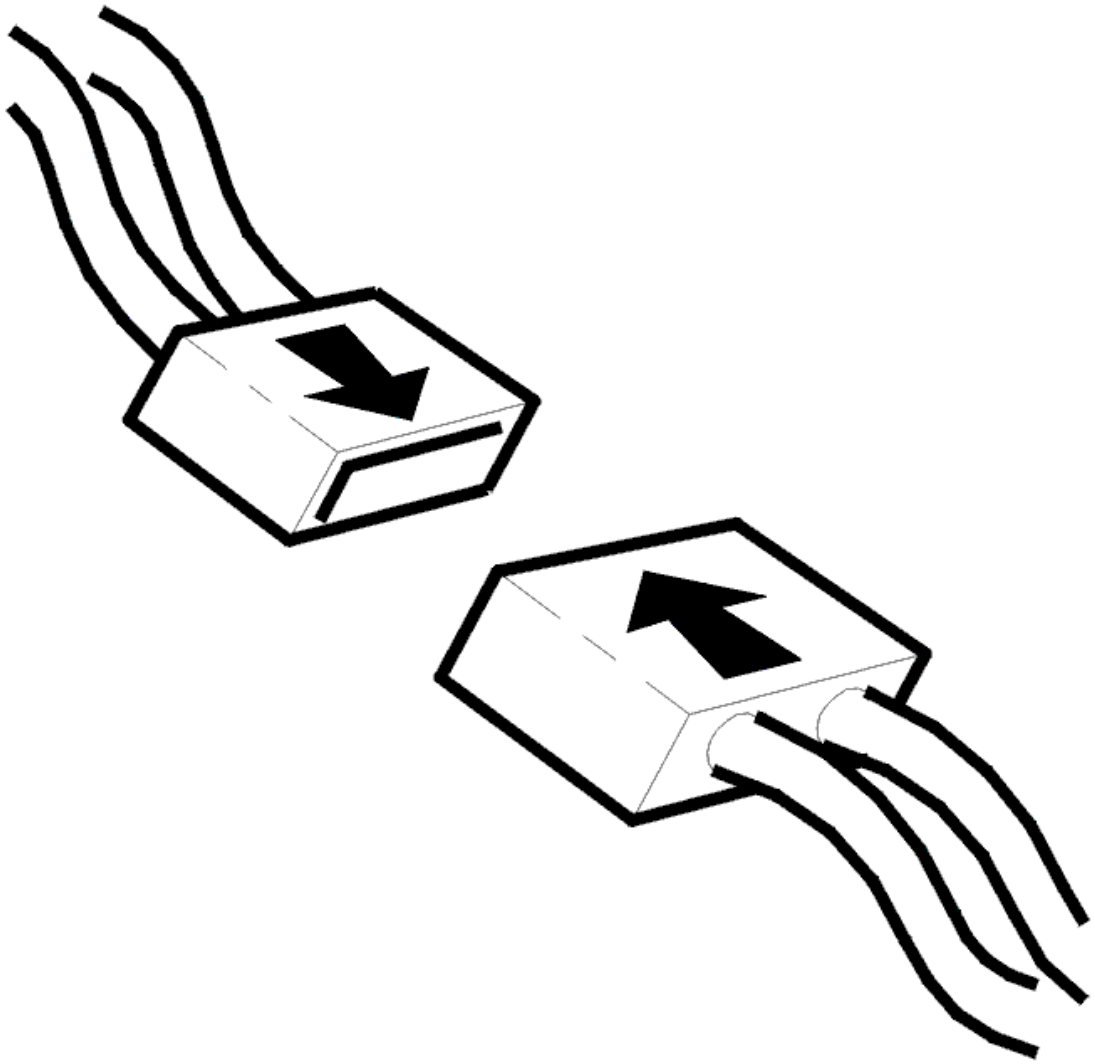

Fig. 170: Connecting Connector
Courtesy of VOLVO CARS CORPORATION

- Ignition off.
- Connect the connectors, install the components, etc.
- Ignition on.
- Blower motor on.

Check that damper motor position changes by changing control on climate control module (CCM). The values given below are the standard values that the damper motor positions should give.

NOTE: Blower motor must be in operation to activate the damper motors.

- Left/right temperature damper motor and defroster, 0-100%
- Recirculation damper motor, 40-100%

- Floor/ventilation damper motor, floor only approximately 39%, ventilation only approximately 87% and floor/ventilation approximately 71%.

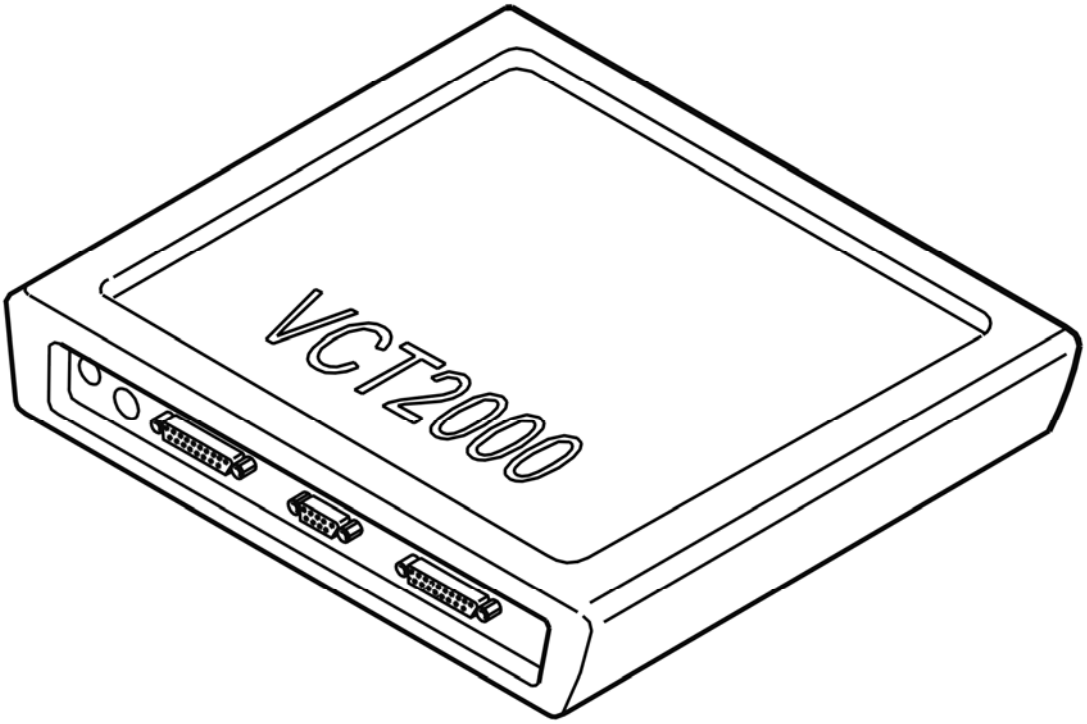

Fig. 171: Identifying VCT2000 Diagnostic Tool Symbol In VIDA
Courtesy of VOLVO CARS CORPORATION

Does damper motor work?

- **YES**

  VERIFIED: Troubleshooting has been completed.

- **NO**

  Refer to **INFORMATION**

INFORMATION

FAULT-TRACING INFORMATION

The fault should have been detected and remedied. As this is not the case fault-tracing has failed.

Exit fault-tracing for this diagnostic trouble code (DTC) or make another attempt.

CCM-000C: RIGHT TEMPERATURE DAMPER MOTOR. SIGNAL TOO LOW (2003-04)

DIAGNOSTIC TROUBLE CODE (DTC) INFORMATION

Condition

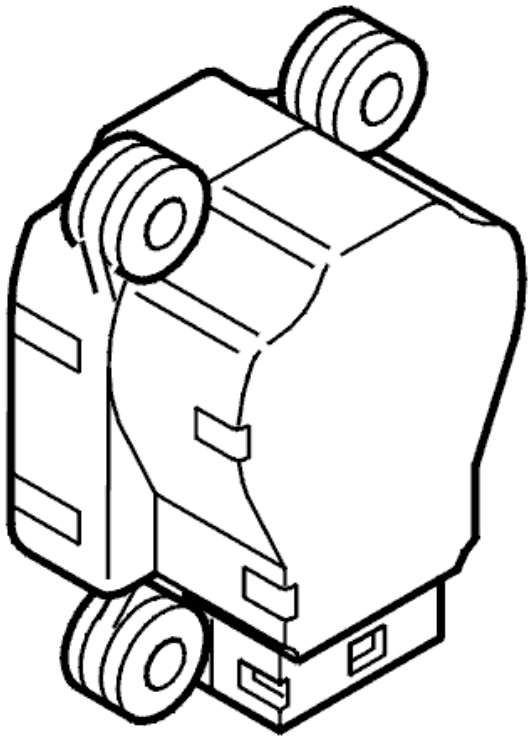

Fig. 172: Identifying Left Temperature Damper Motor
Courtesy of VOLVO CARS CORPORATION

Diagnostic trouble code (DTC) CCM-000C is stored if the control module registers too low a signal from the right-hand temperature damper motor.

Substitute Value

- None.

Possible Source

- Short-circuit to supply voltage in the signal cable between the control module and the damper motor
- Open-circuit in the signal cable between the control module and the damper motor
- Contact resistance, oxidation or loose connections in the connectors

- Defective damper motor.

Fault symptom[s]

- The passenger compartment temperature does not correspond to the set value.

SIGNAL TOO LOW

CHECKING DAMPER MOTOR CONTROL

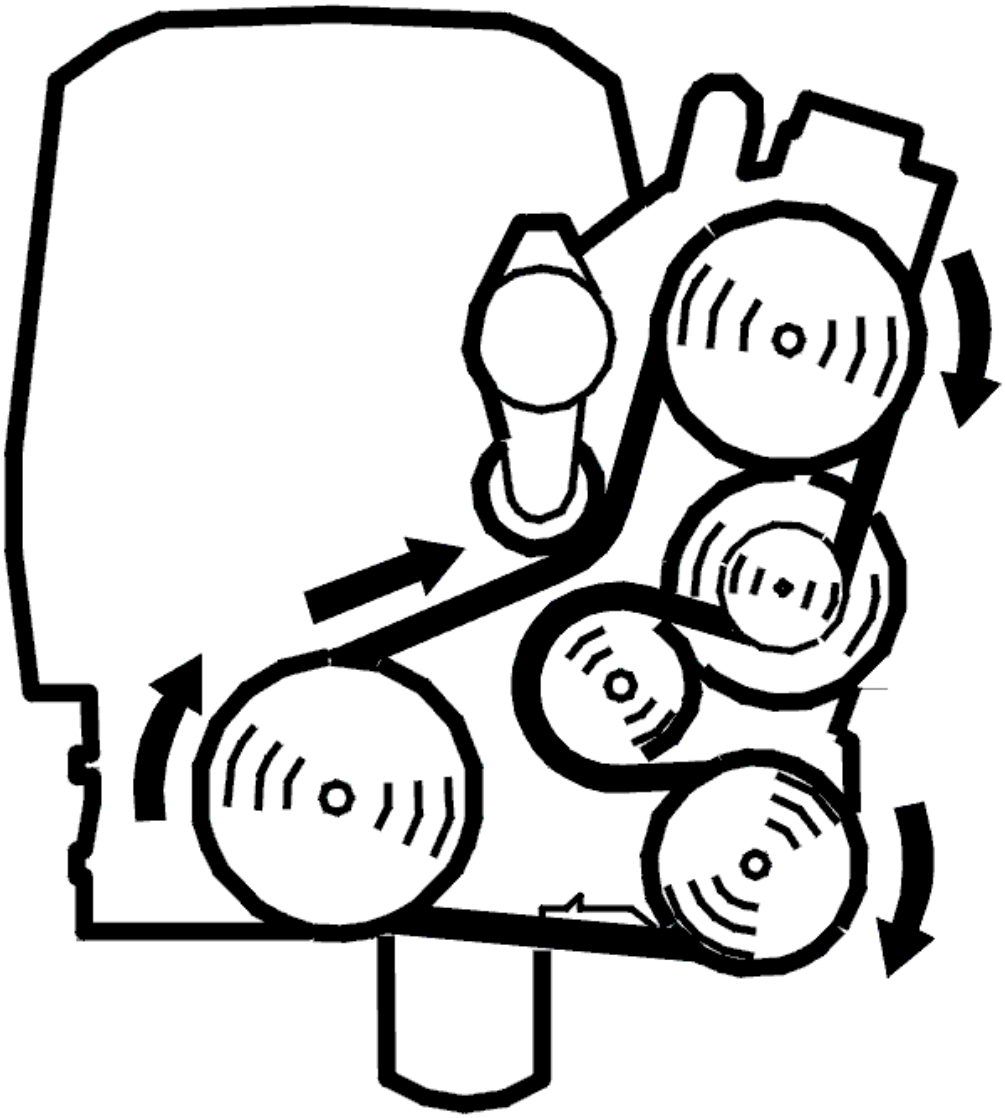

Fig. 173: Belt Routing/Engine Idling - Volvo
Courtesy of VOLVO CARS CORPORATION

- Engine running
- Blower fan on.

Change the temperature on the right temperature control between max and min.

Check that the temperature changes on the right-hand side of the passenger compartment.

Does the temperature change?

- **YES**

  Refer to **CHECKING THE WIRING**

- **NO**

  Refer to **CHECKING THE CIRCUIT**

CHECKING THE CIRCUIT

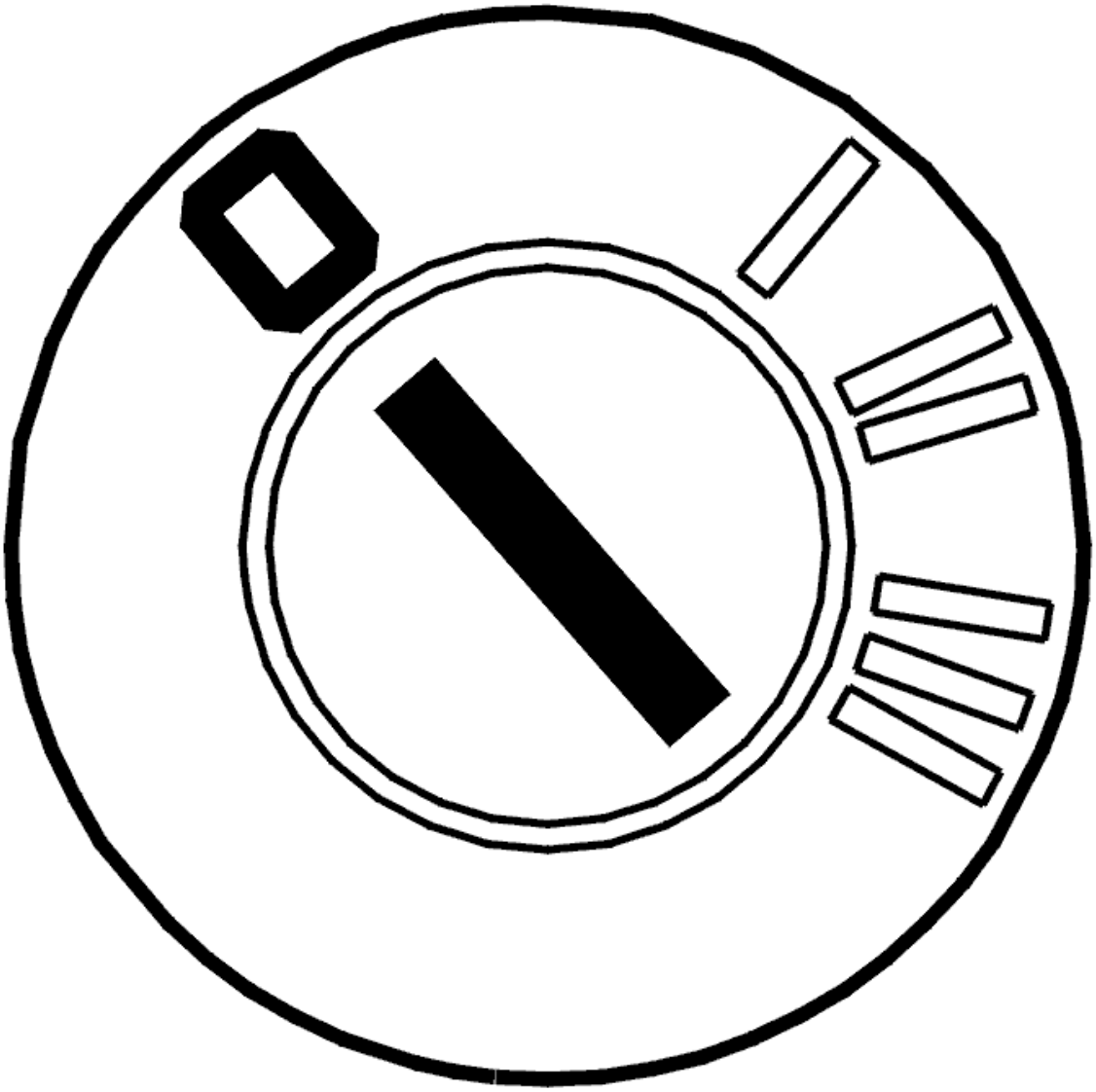

Fig. 174: Identifying Ignition OFF
Courtesy of VOLVO CARS CORPORATION

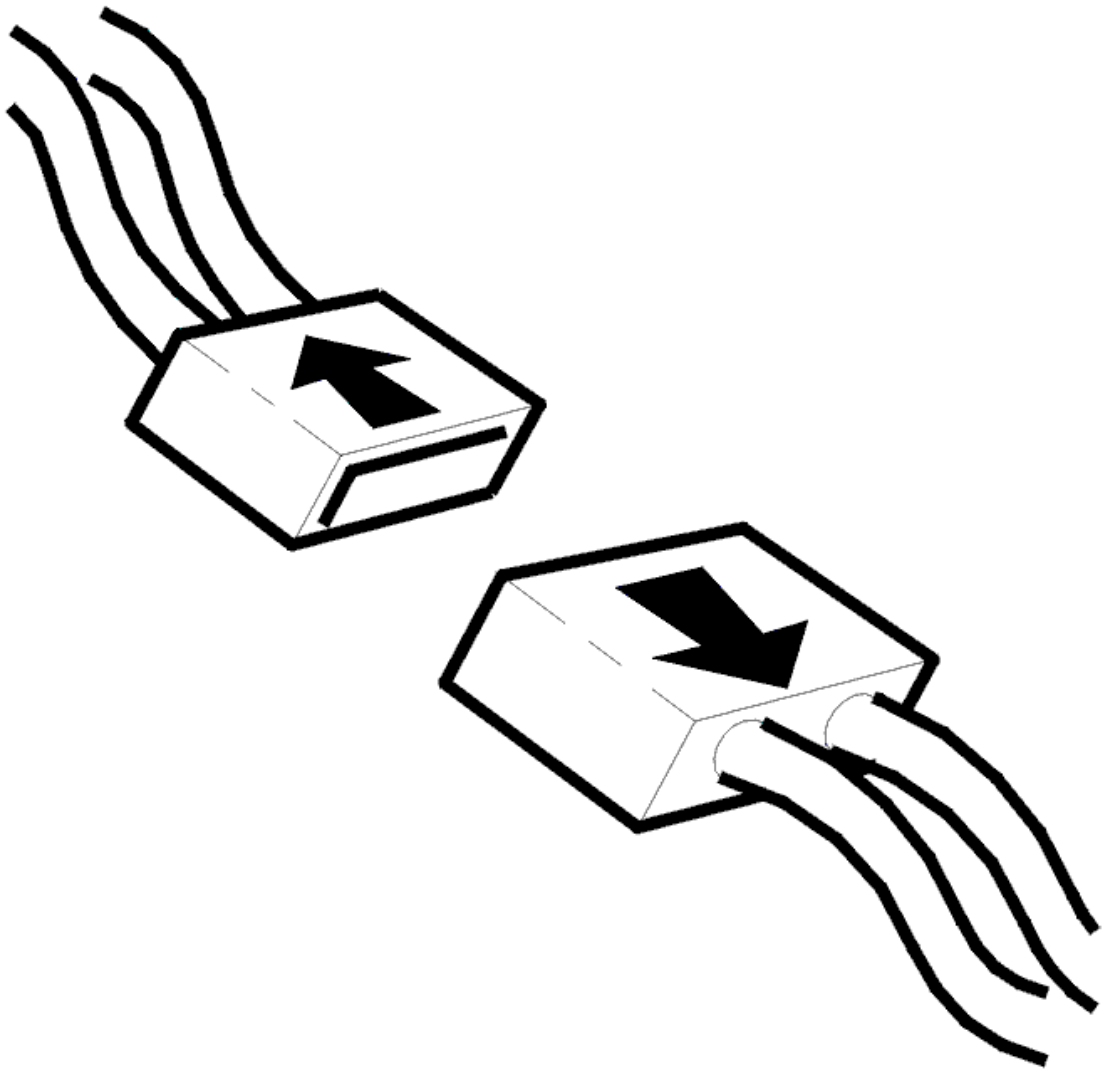

Fig. 175: Disconnecting Connector
Courtesy of VOLVO CARS CORPORATION

- Ignition off
- Disconnect connector B on the climate control module (CCM).

  Check connector B on the climate control module (CCM) and the damper motor connector. Check for contact resistance and oxidation. Check for damage carefully.

  Check the signal cable between the climate control module (CCM) and the damper motor. Check for an open-circuit by measuring the resistance between terminals #B19 (#19) and #B11-#B14 (#11-#14).

  Other information:

- To access or replace the control module, see **CLIMATE CONTROL MODULE (CCM), REPLACING**
- To access or replace the damper motor, see **DAMPER MOTOR TEMPERATURE, REPLACING**
- see **CHECKING WIRING AND TERMINALS** .

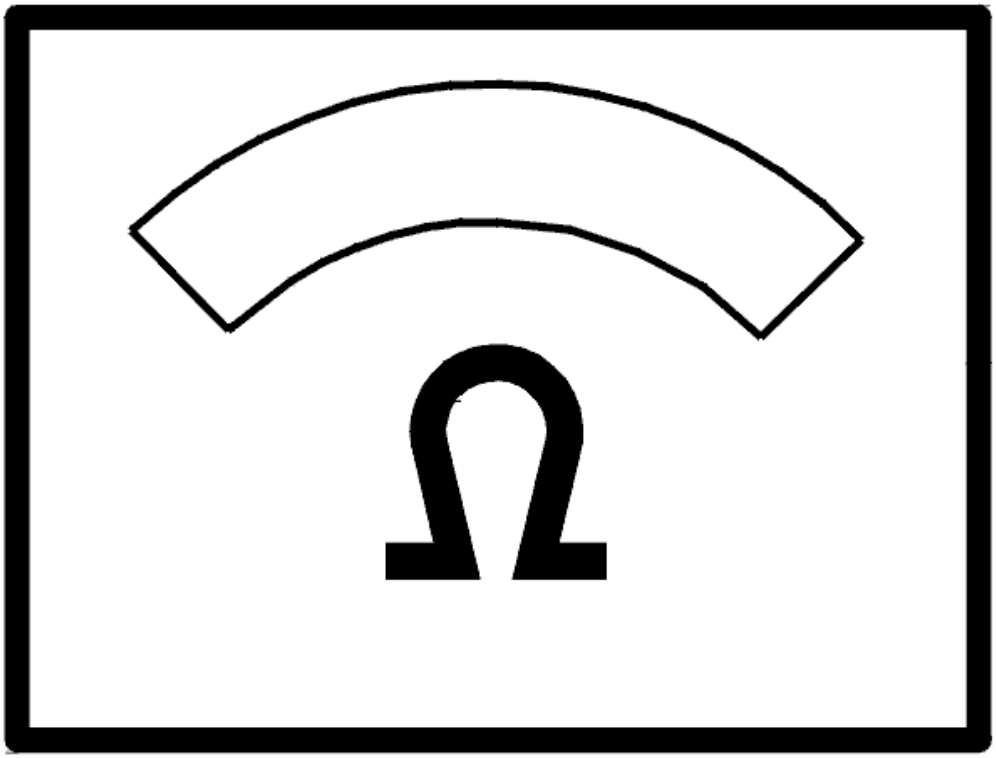

Fig. 176: Identifying Ohmmeter
Courtesy of VOLVO CARS CORPORATION

Was a fault detected?

- **YES**

  Refer to **CHECKING THE CABLE**

- **NO**

  Refer to **CHECKING THE CABLE**

CHECKING THE CABLE

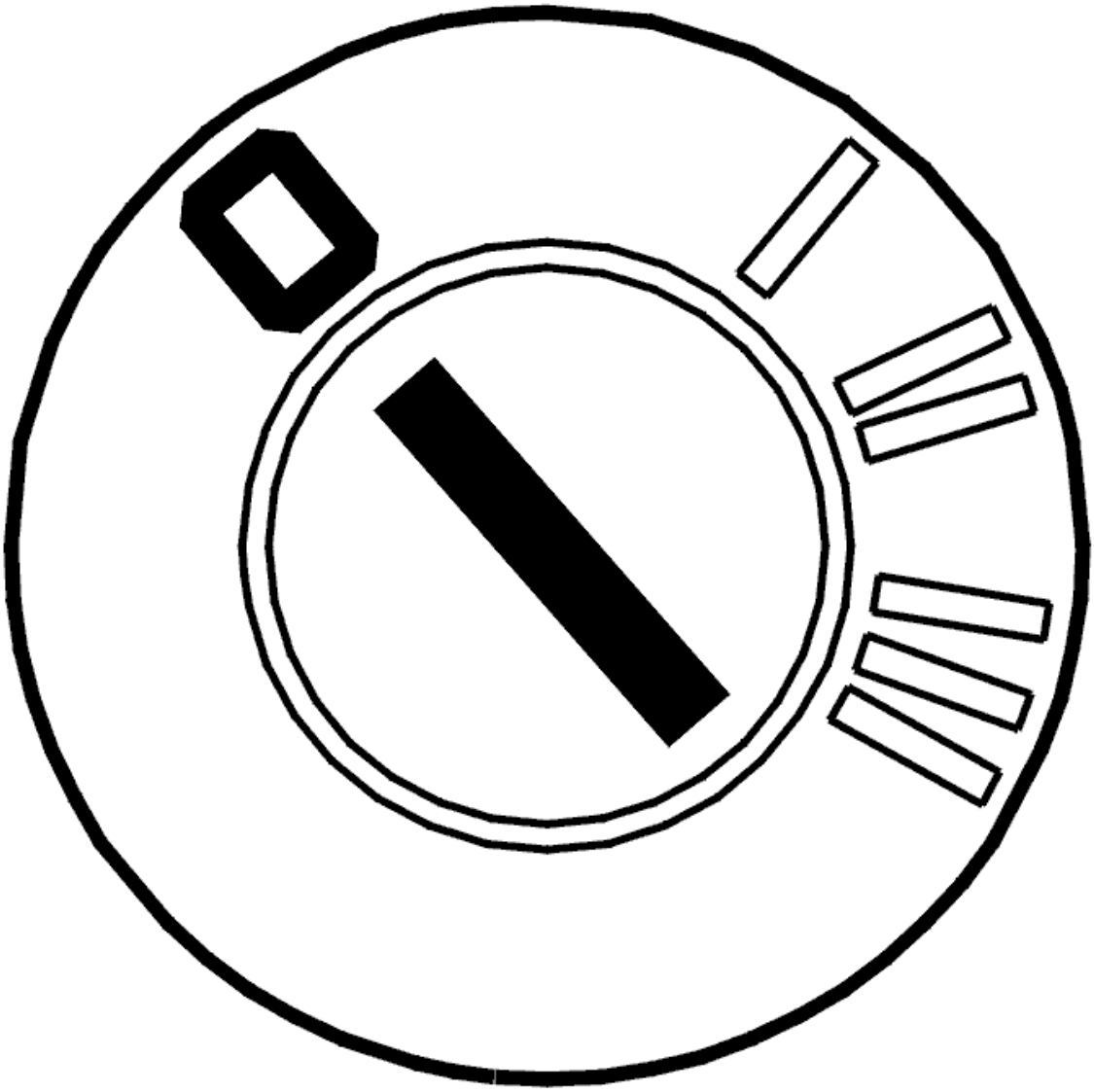

Fig. 177: Identifying Ignition OFF
Courtesy of VOLVO CARS CORPORATION

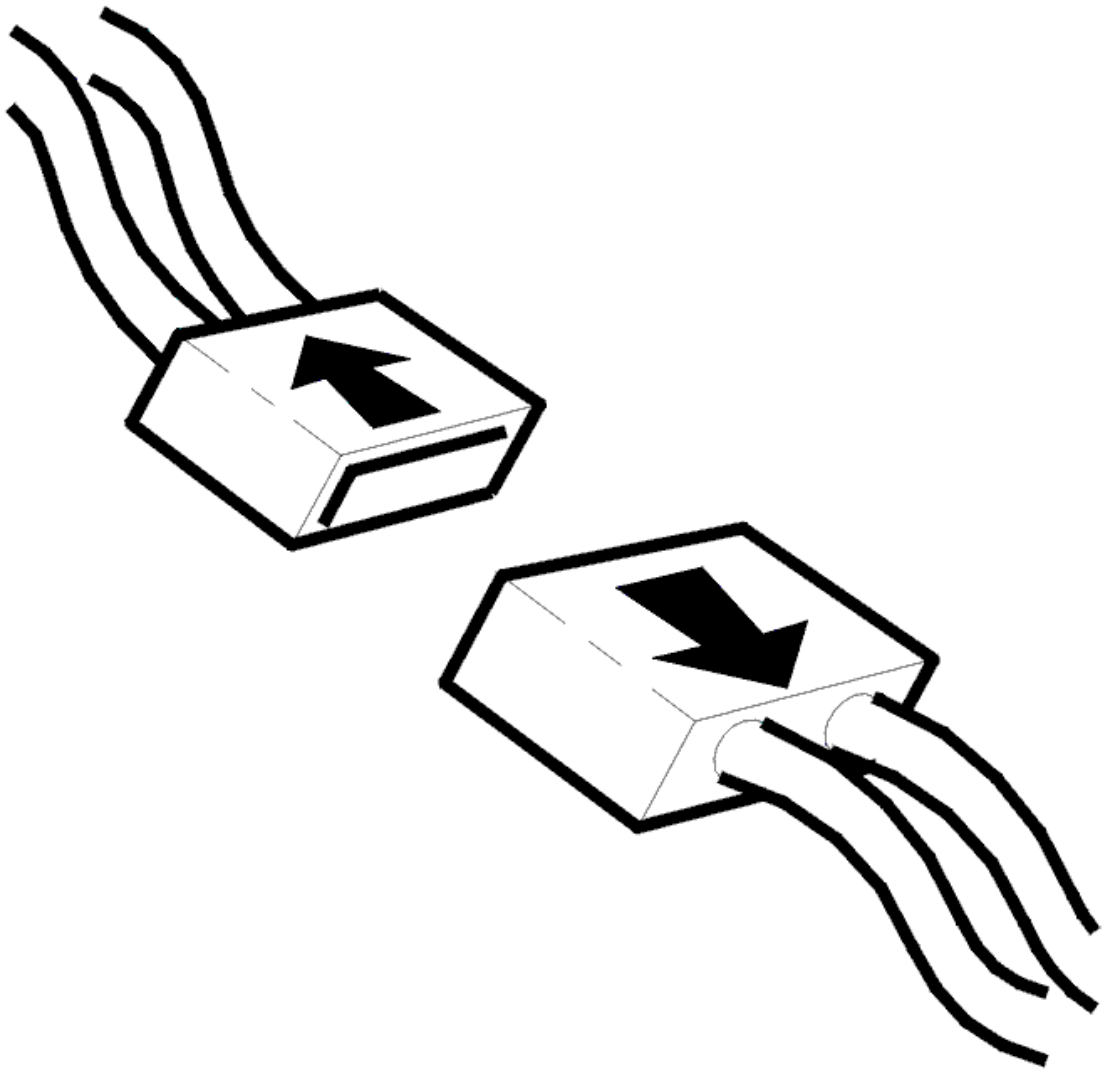

Fig. 178: Disconnecting Connector
Courtesy of VOLVO CARS CORPORATION

- Ignition off
- Disconnect connector B on the climate control module (CCM)
- Disconnect the connectors on the damper motors for right temperature and defroster.

  Check the signal cable. Check control module connector terminal #B19 (#19) and damper motor connector terminal #1. Check for an open-circuit.

  Check the wiring on the matrix network between the right-hand temperature damper motor and defroster damper motor terminals #3-#6. Check for an open-circuit.

  Remedy as necessary.

Other information:

- To access or replace the control module, see **CLIMATE CONTROL MODULE (CCM), REPLACING**
- To connect the breakout box, see **CONNECTING THE BREAKOUT BOX**
- To access or replace the damper motor, see **DAMPER MOTOR TEMPERATURE, REPLACING**
- For other values, see **SIGNAL SPECIFICATION**
- see **CHECKING WIRING AND TERMINALS** .

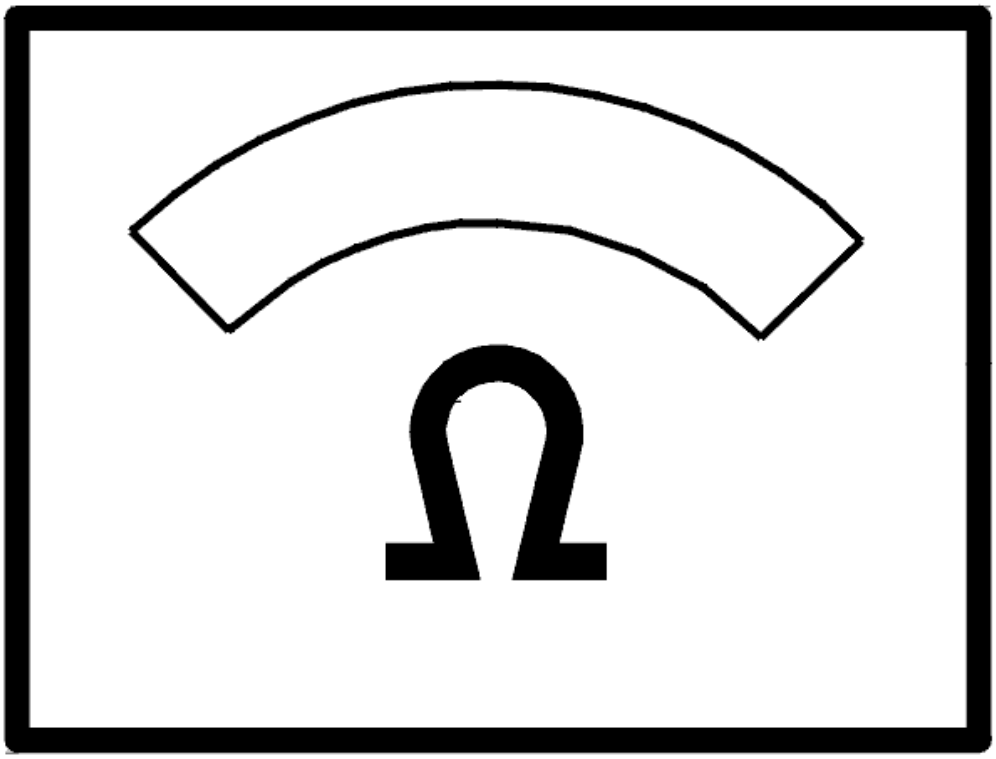

Fig. 179: Identifying Ohmmeter
Courtesy of VOLVO CARS CORPORATION

- **Continue**

Refer to **QUERY**

CHECKING THE CABLE

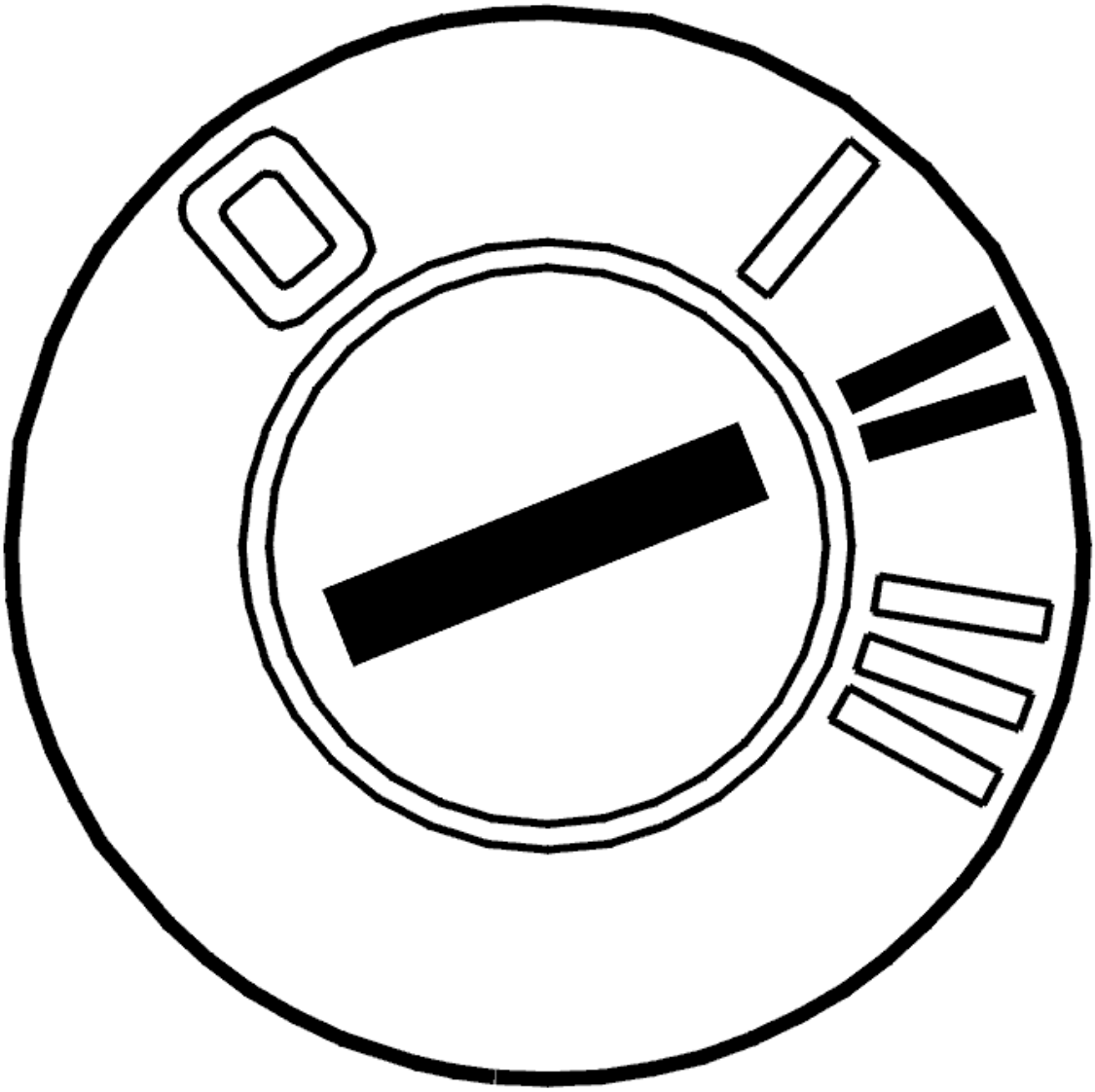

Fig. 180: Identifying Ignition ON
Courtesy of VOLVO CARS CORPORATION

- Ignition on.

  Check the signal cable between climate control module (CCM) terminal #B19 (#19) and the damper motor. Check for a short-circuit to supply voltage.

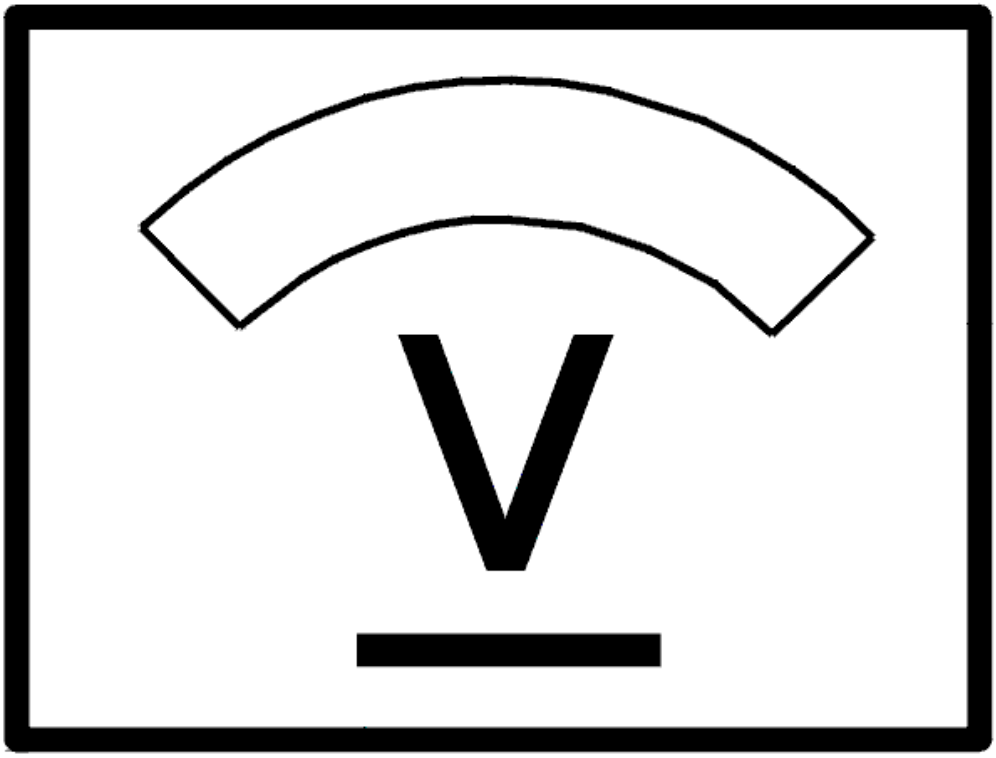

Fig. 181: Identifying Voltage Display
Courtesy of VOLVO CARS CORPORATION

Was a fault detected?

- **YES**

  Refer to **QUERY**

- **NO**

  FAULT NOT FOUND: Troubleshooting has been completed.

CHECKING THE WIRING

Check the control module (terminal #B19) and damper motor connector terminal #1. Check for contact

resistance and oxidation. Check for loose connections. Check for damage carefully.

Check the signal cable between control module terminal #B19 and damper motor terminal #1. Check for an intermittent open-circuit.

Check the wiring between the right-hand temperature damper motor and the defroster damper motor. Check for an intermittent open-circuit.

Check the signal cable between control module terminal #B19 and damper motor terminal #1. Check for an intermittent short-circuit to supply voltage.

- **Continue**

  Refer to **INFORMATION**

QUERY

Select which type of climate control the car is equipped with.

1. Electronic climate control. Refer to **SELF-ADJUSTMENT**.
2. Manual climate control (MCC)/Standard (STD). Refer to **SELF-ADJUSTMENT**.

SELF-ADJUSTMENT

HINT: After replacing the control module or damper motor, and when a damper motor or link has been removed, carry out self adjustment to define the damper motor limit positions.

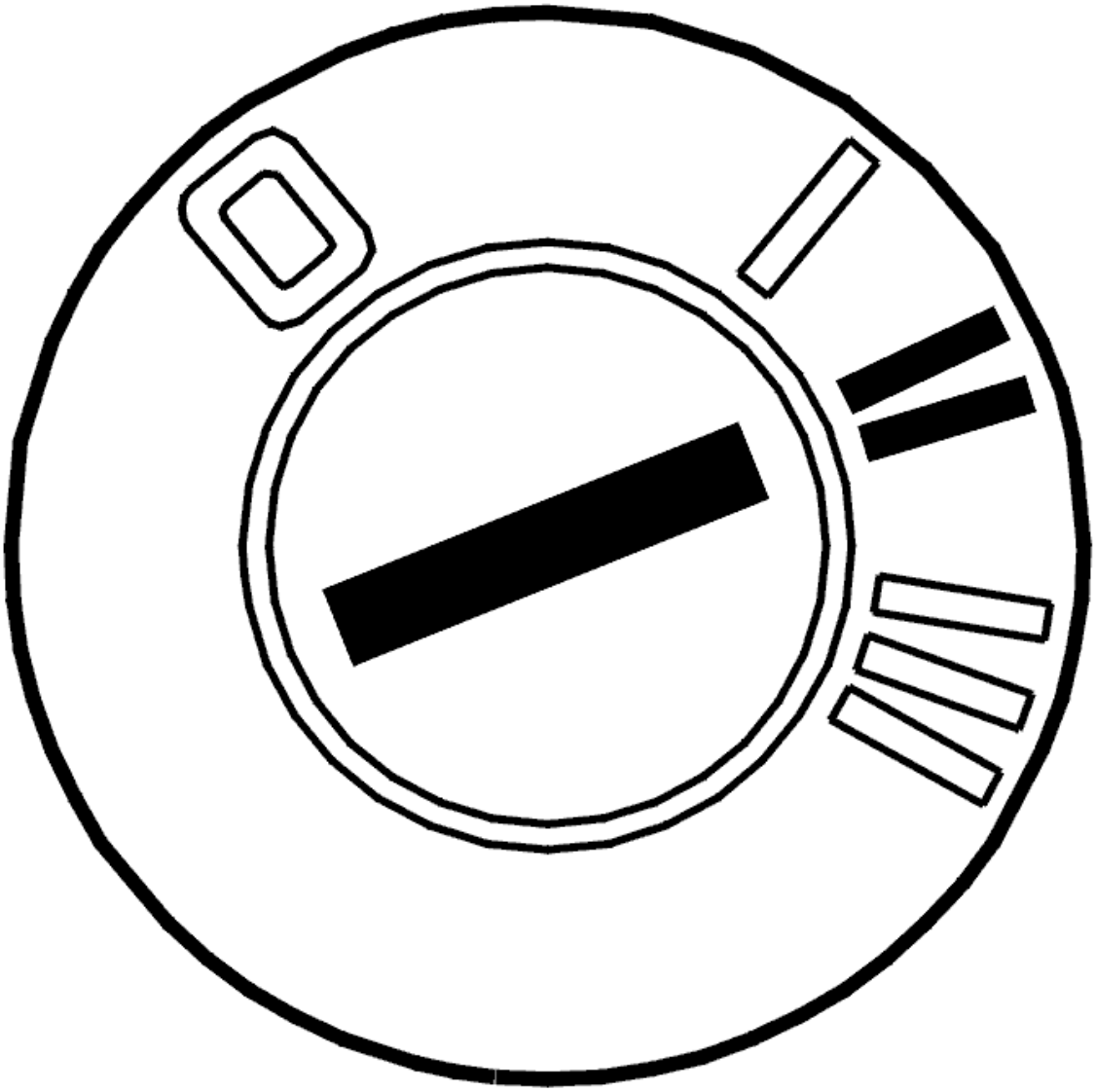

Fig. 182: Identifying Ignition ON
Courtesy of VOLVO CARS CORPORATION

- Ignition off.
- Reinstall the connectors, components etc.
- Ignition on.

  Activate self adjustment.

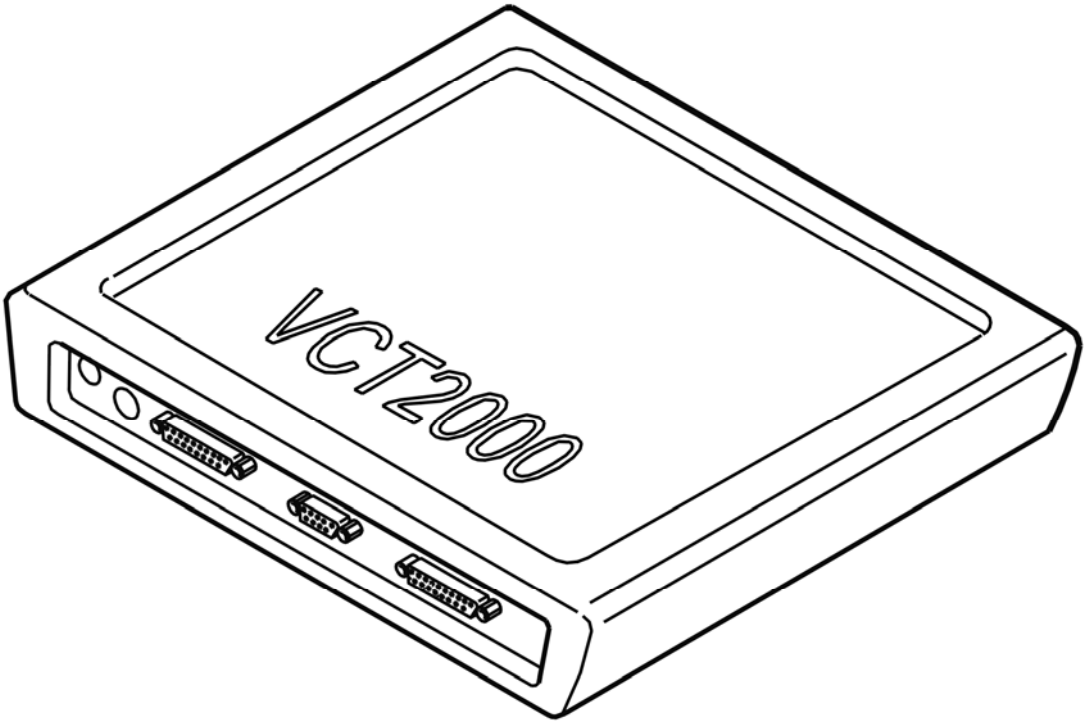

Fig. 183: Identifying VCT2000 Diagnostic Tool Symbol In VIDA
Courtesy of VOLVO CARS CORPORATION

- **Continue**

  Refer to **VERIFICATION**

SELF-ADJUSTMENT

HINT: After replacing the control module or damper motor, and when a damper motor or link has been removed, carry out self adjustment to define the damper motor limit positions.

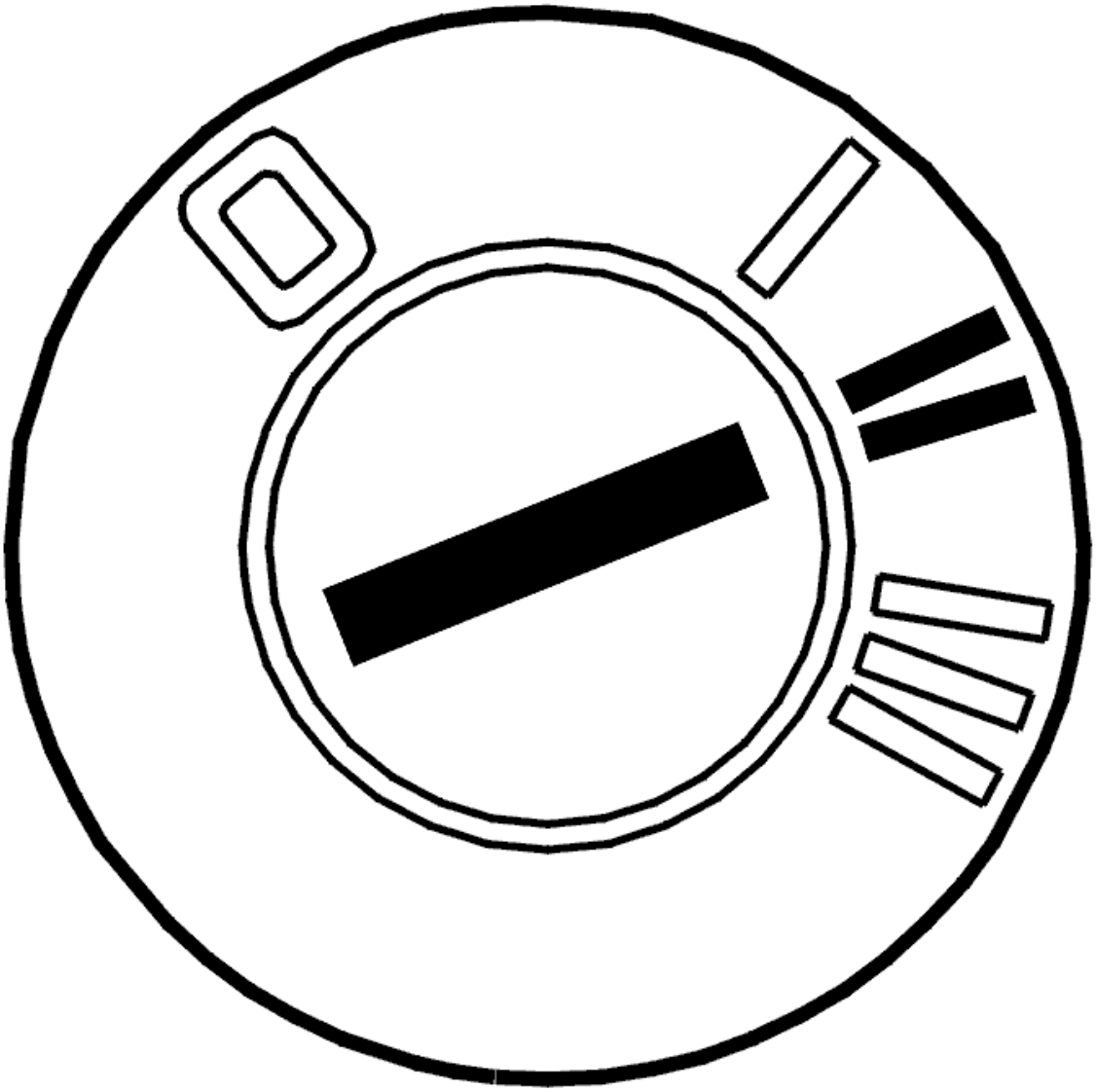

Fig. 184: Identifying Ignition ON
Courtesy of VOLVO CARS CORPORATION

- Ignition off.
- Reinstall the connectors, components etc.
- Ignition on.

  Activate self adjustment.

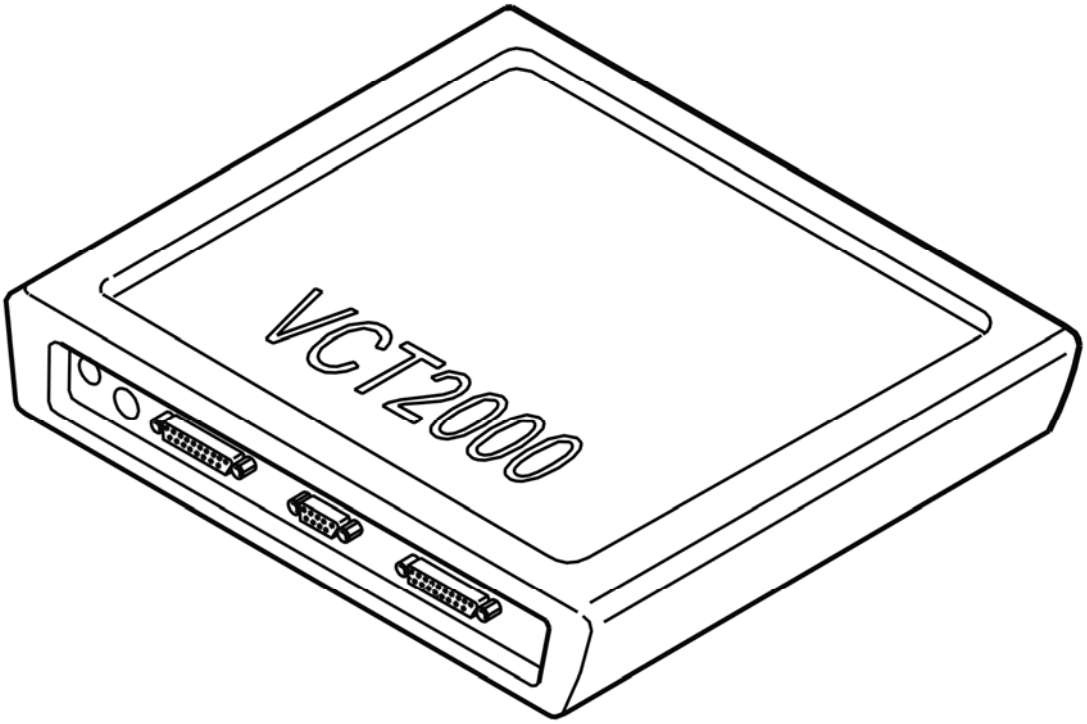

Fig. 185: Identifying VCT2000 Diagnostic Tool Symbol In VIDA
Courtesy of VOLVO CARS CORPORATION

- **Continue**

  Refer to **VERIFICATION**

VERIFICATION

HINT: After the repair it is necessary to check that the fault has been rectified.

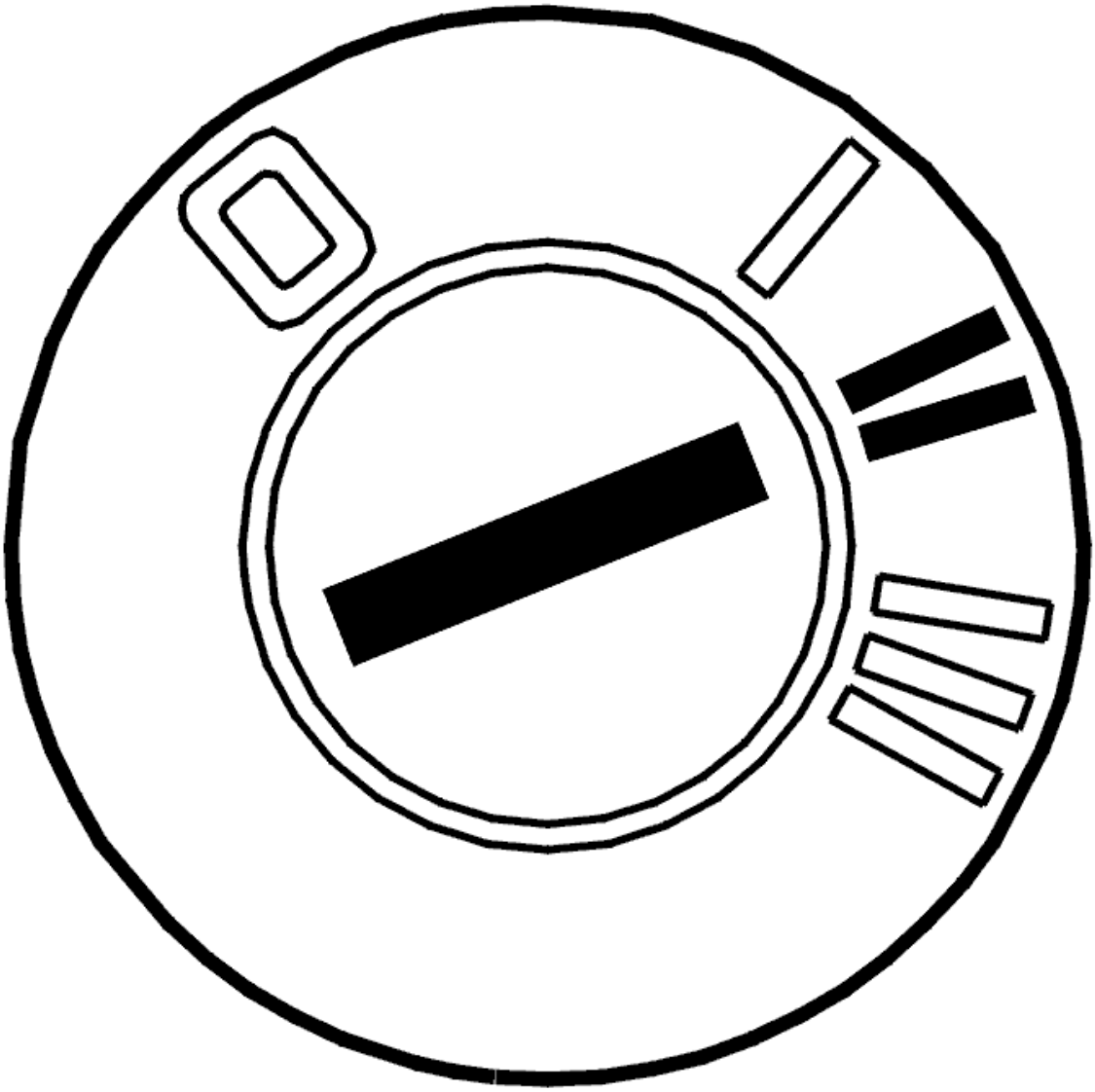

Fig. 186: Identifying Ignition ON
Courtesy of VOLVO CARS CORPORATION

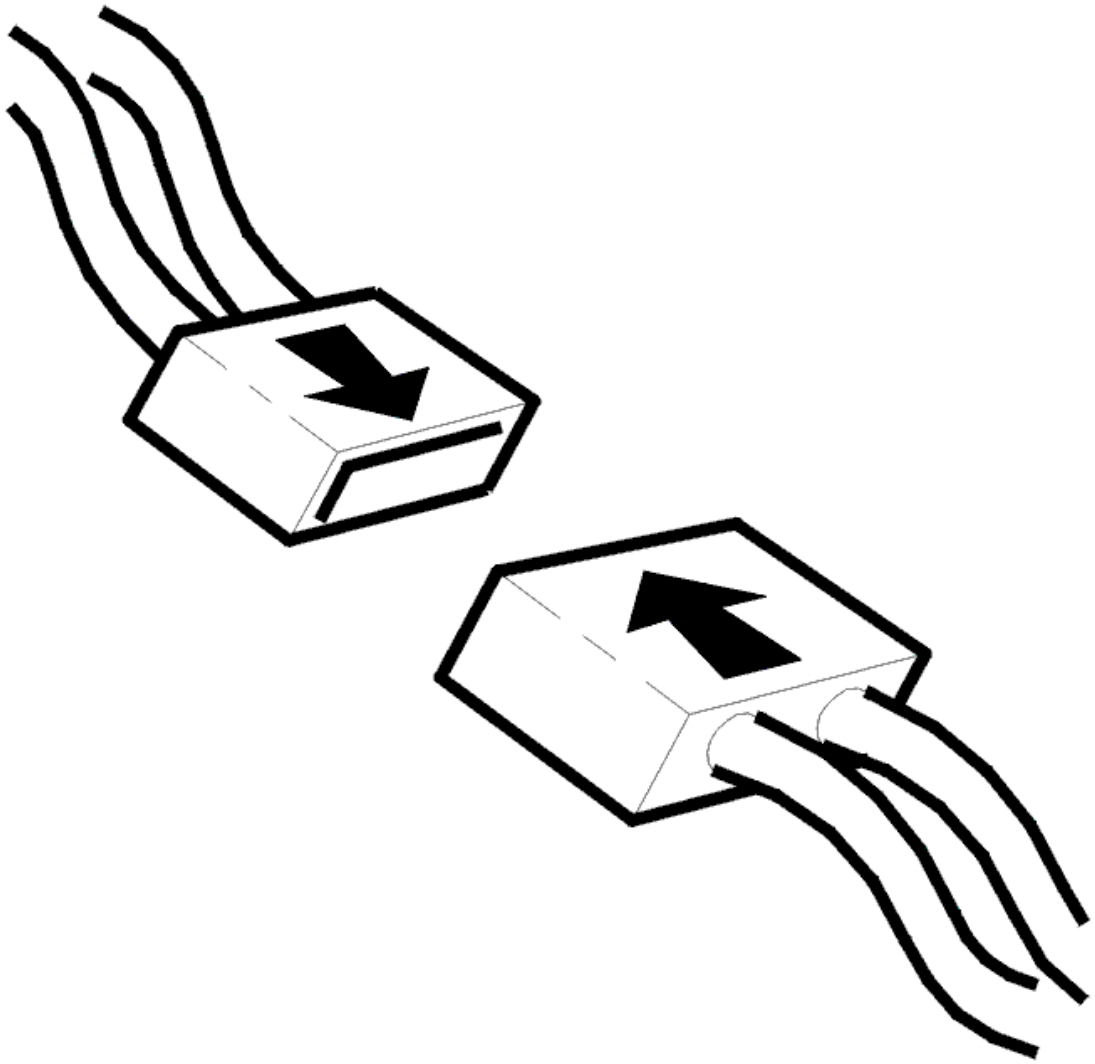

Fig. 187: Connecting Connector
Courtesy of VOLVO CARS CORPORATION

- Ignition off.
- Connect the connectors, install the components, etc.
- Ignition on.
- Blower motor on.

Check that damper motor position changes by changing control on climate control module (CCM). The values given below are the standard values that the damper motor positions should give.

NOTE: Blower motor must be in operation to activate the damper motors.

- Left/right temperature damper motor and defroster, 0-100%
- Recirculation damper motor, 40-100%

- Floor/ventilation damper motor, floor only approximately 39%, ventilation only approximately 87% and floor/ventilation approximately 71%.

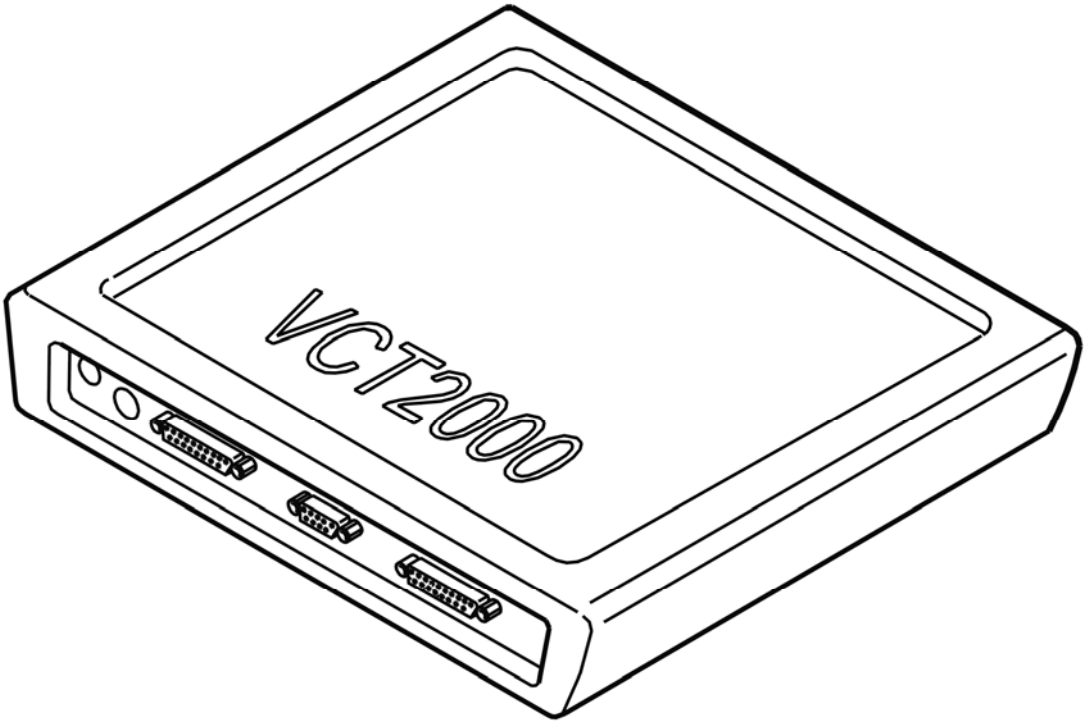

Fig. 188: Identifying VCT2000 Diagnostic Tool Symbol In VIDA
Courtesy of VOLVO CARS CORPORATION

Does damper motor work?

- **YES**

  VERIFIED: Troubleshooting has been completed.

- **NO**

  Refer to **INFORMATION**

INFORMATION

FAULT-TRACING INFORMATION

The fault should have been detected and remedied. As this is not the case fault-tracing has failed.

Exit fault-tracing for this diagnostic trouble code (DTC) or make another attempt.

CCM-000D: RECIRCULATION DAMPER MOTOR. SIGNAL TOO LOW (2003-04)

DIAGNOSTIC TROUBLE CODE (DTC) INFORMATION

Condition

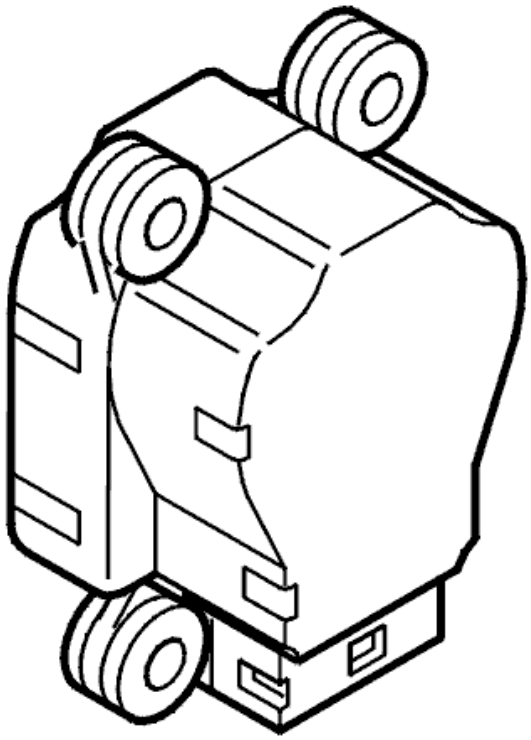

Fig. 189: Identifying Left Temperature Damper Motor
Courtesy of VOLVO CARS CORPORATION

Diagnostic trouble code (DTC) CCM-000D is stored if the control module registers too low a signal from the recirculation damper motor.

Substitute Value

- None.

Possible Source

- Short-circuit to supply voltage in the signal cable between the control module and the damper motor
- Open-circuit in the signal cable between the control module and the damper motor
- Contact resistance, oxidation or loose connections in the connectors

- Defective damper motor.

Fault symptom[s]

- Air flow problem.

SIGNAL TOO LOW

CHECKING DAMPER MOTOR CONTROL

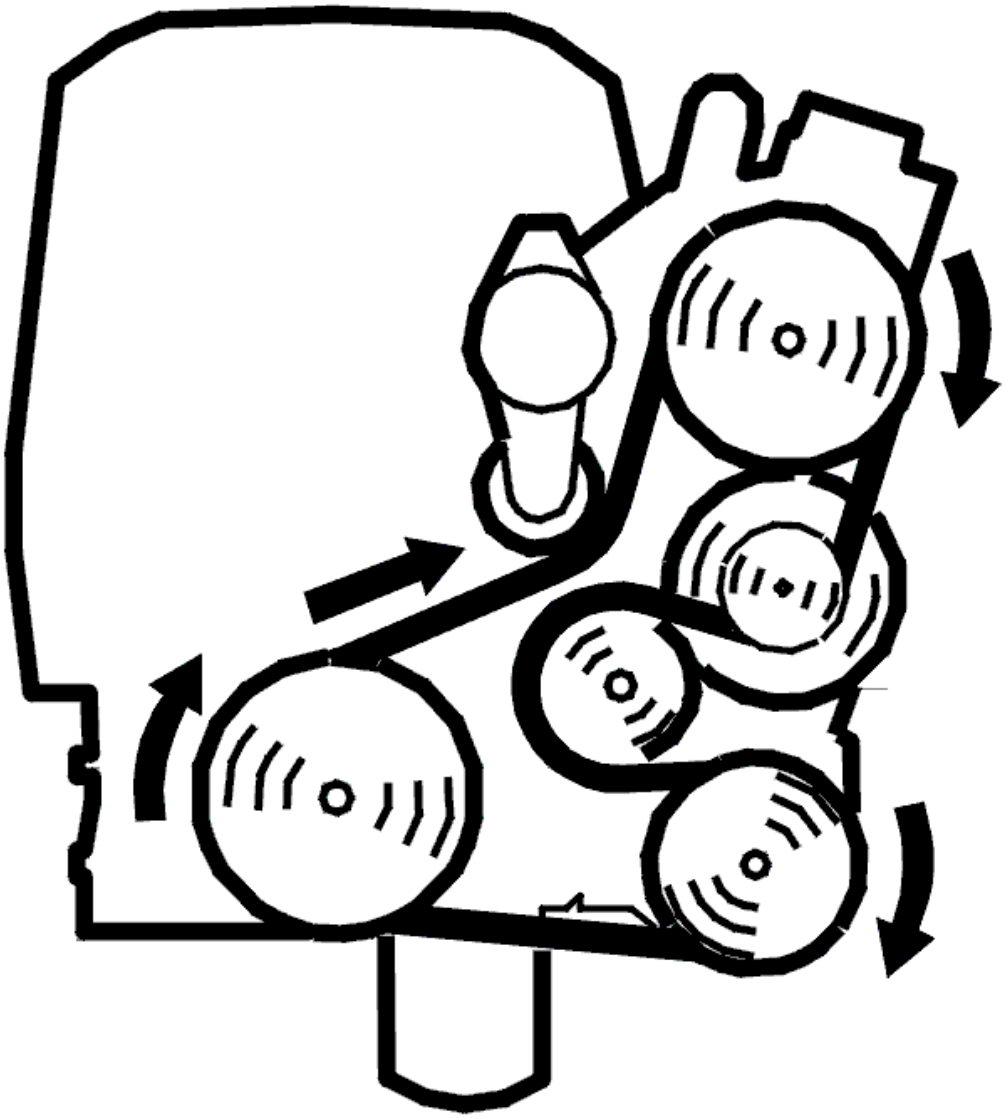

Fig. 190: Belt Routing/Engine Idling - Volvo
Courtesy of VOLVO CARS CORPORATION

- Engine running
- Blower fan on.

Activate the button for recirculation.

Check that the air flow changes.

Does the air flow change?

- **YES**

  Refer to **CHECKING THE WIRING**

- **NO**

  Refer to **CHECKING THE CIRCUIT**

CHECKING THE CIRCUIT

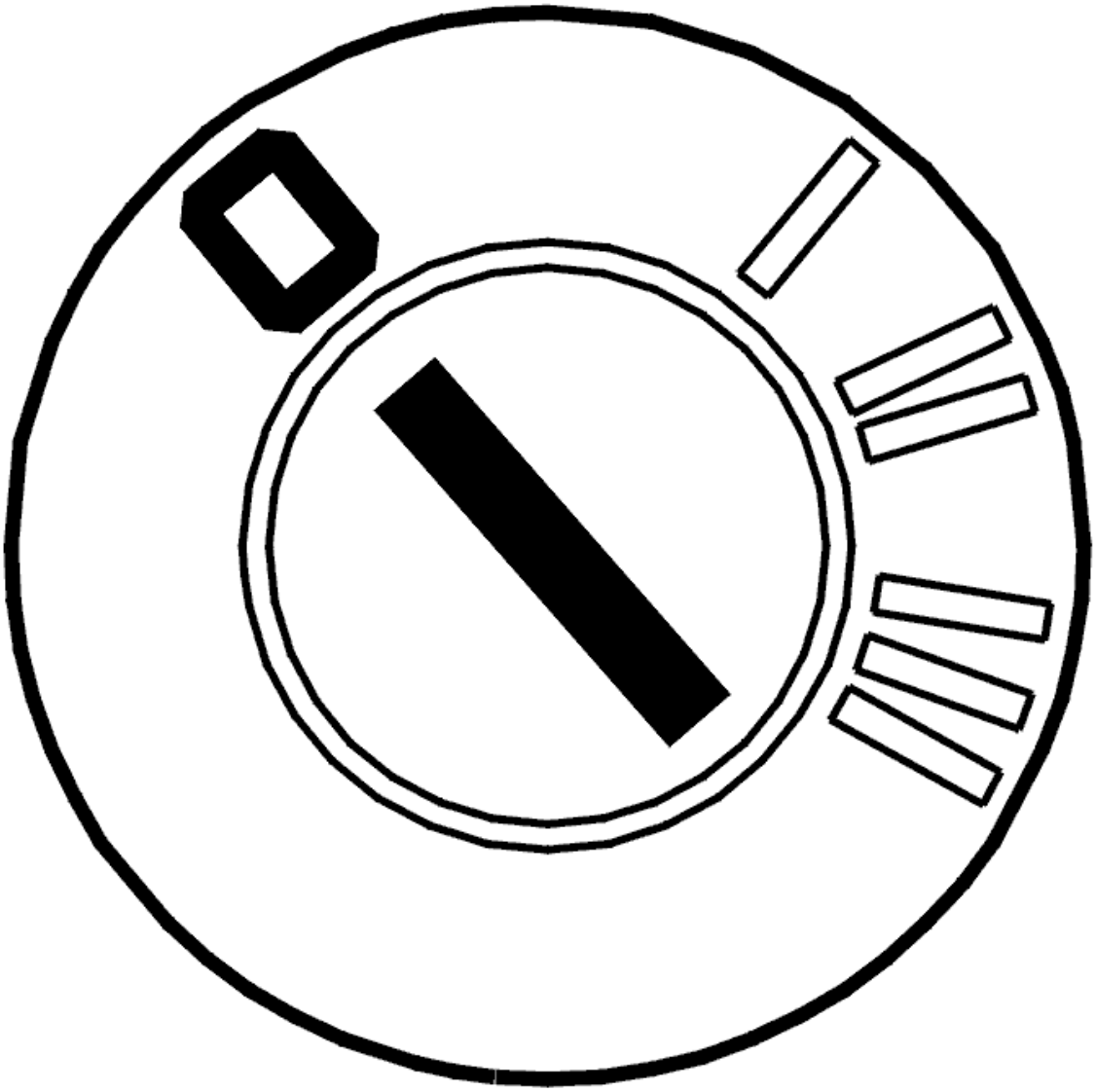

Fig. 191: Identifying Ignition OFF
Courtesy of VOLVO CARS CORPORATION

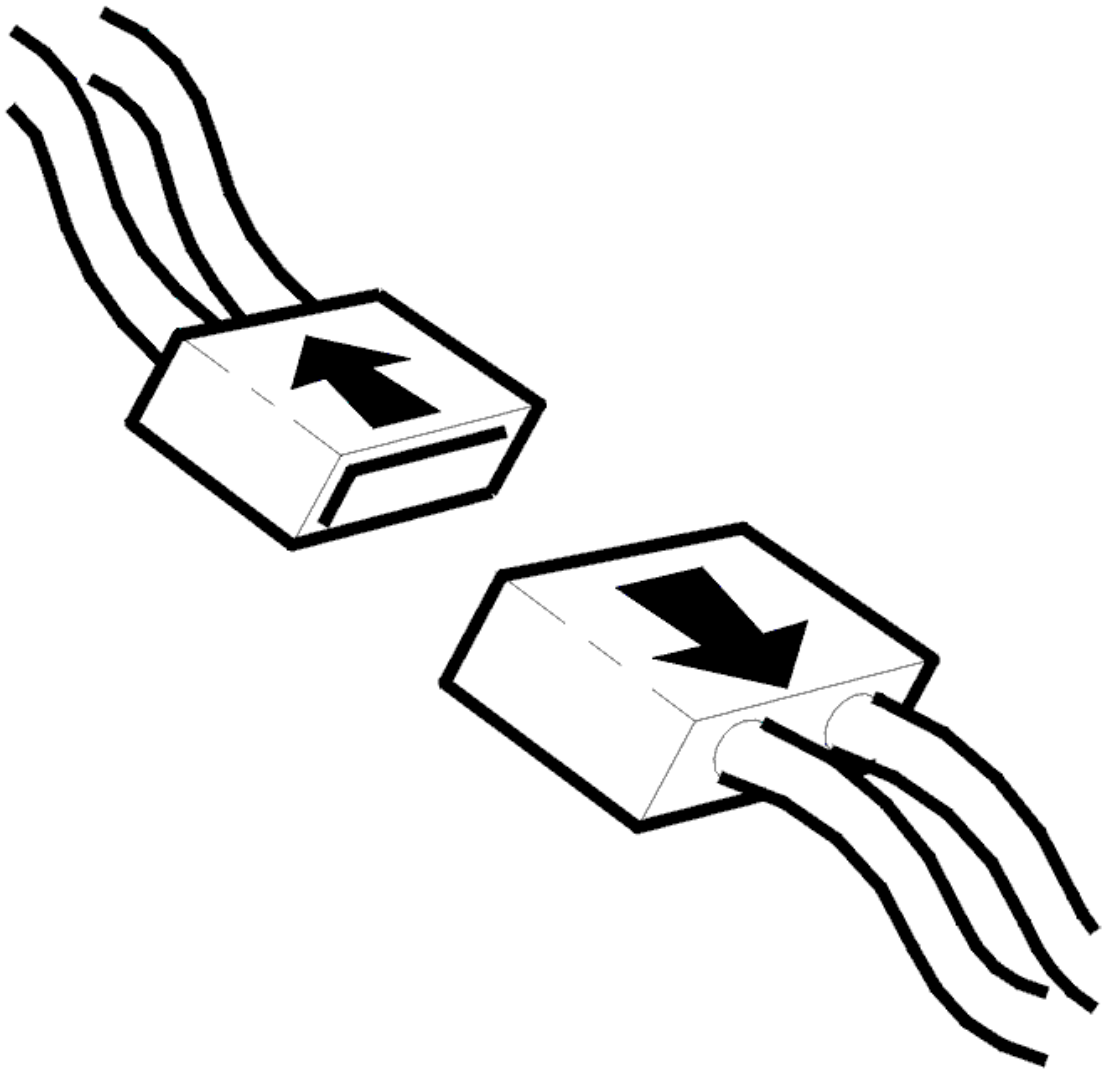

Fig. 192: Disconnecting Connector
Courtesy of VOLVO CARS CORPORATION

- Ignition off
- Disconnect connector B on the climate control module (CCM).

  Check connector B on the climate control module (CCM) and the damper motor connector. Check for contact resistance and oxidation. Check for damage carefully.

  Check the signal cable between the climate control module (CCM) and the damper motor. Check for an open-circuit by measuring the resistance between terminals #B21 (#21) and #B11-#B14 (#11-#14).

  Other information:

- To access or replace the control module, see **CLIMATE CONTROL MODULE (CCM), REPLACING**
- To access or replace the damper motor, see **DAMPER MOTOR TEMPERATURE, REPLACING**
- see **CHECKING WIRING AND TERMINALS** .

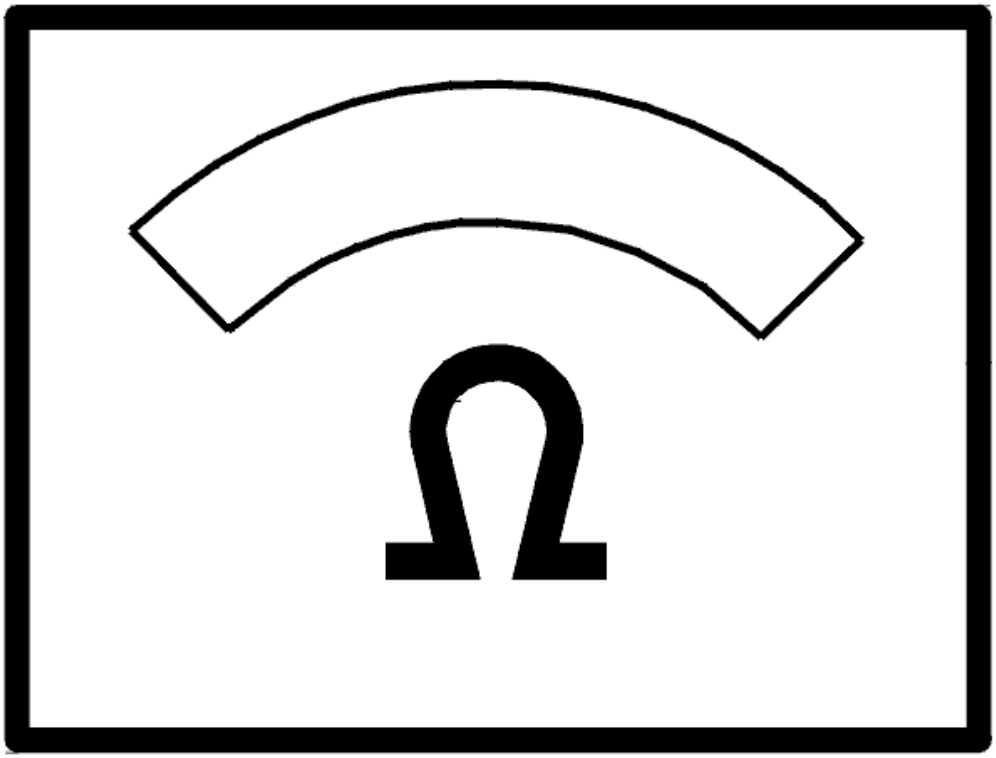

Fig. 193: Identifying Ohmmeter
Courtesy of VOLVO CARS CORPORATION

Was a fault detected?

- **YES**

  Refer to **CHECKING THE CABLE**

- **NO**

  Refer to **CHECKING THE CABLE**

CHECKING THE CABLE

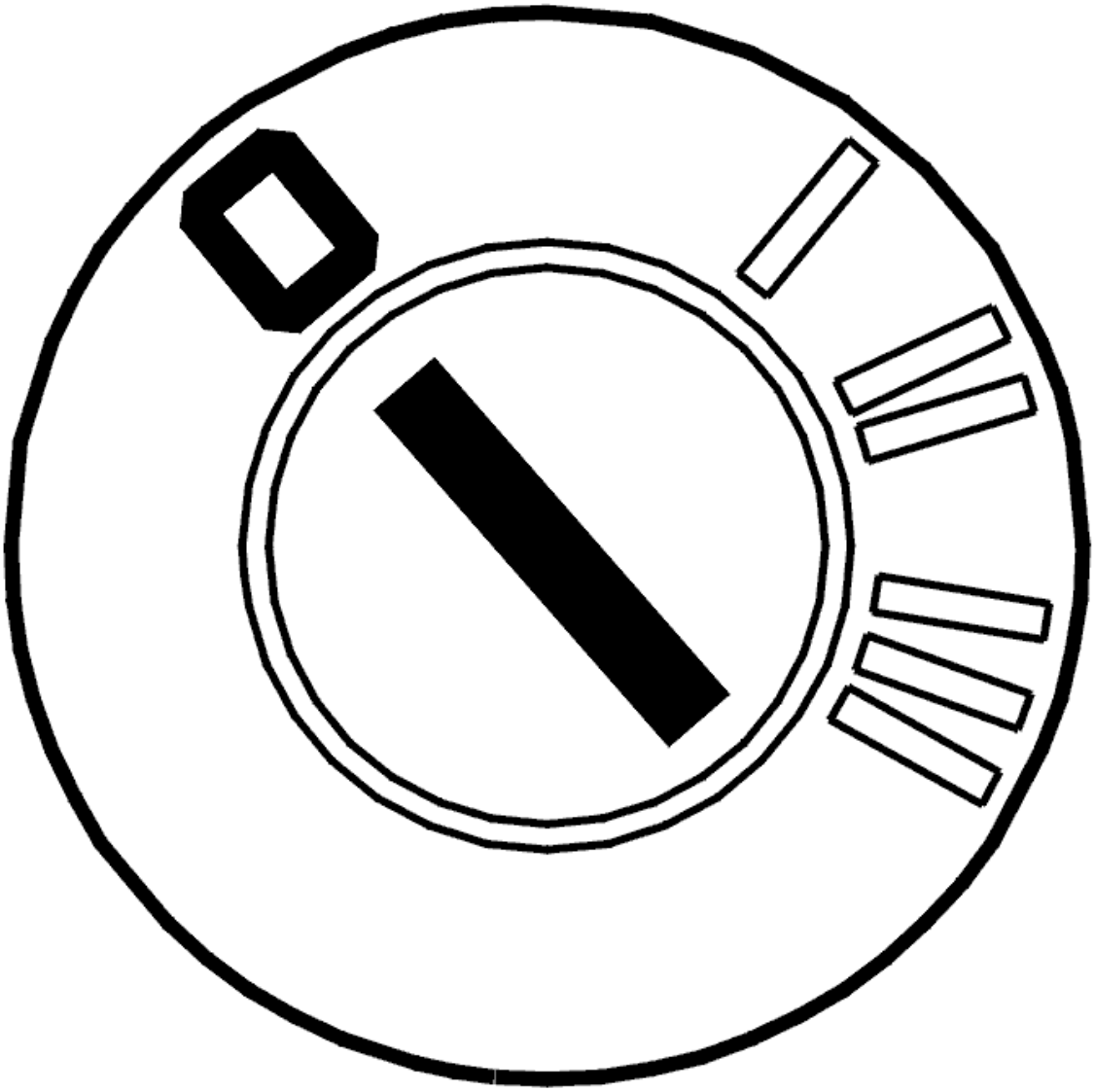

Fig. 194: Identifying Ignition OFF
Courtesy of VOLVO CARS CORPORATION

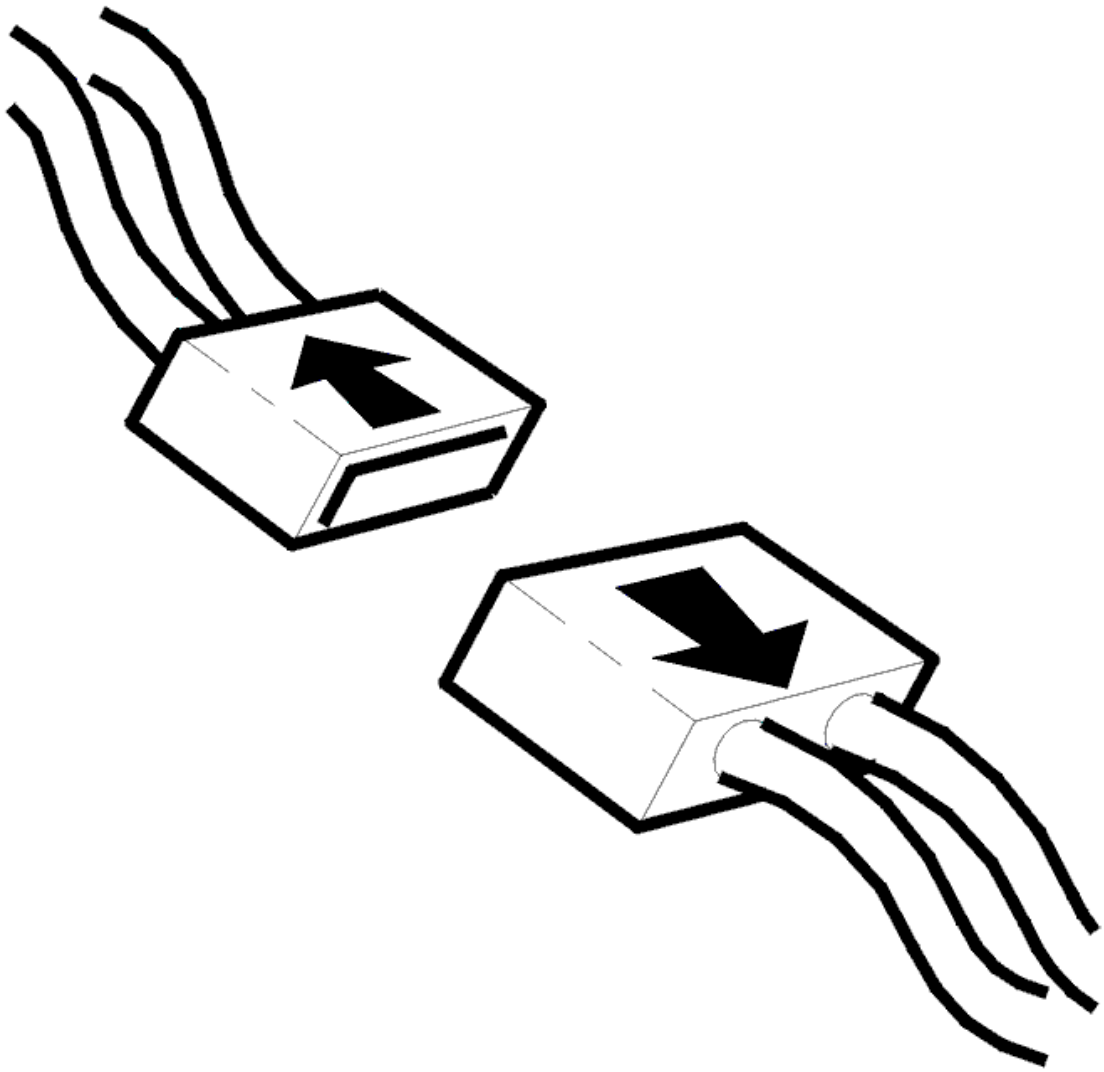

Fig. 195: Disconnecting Connector
Courtesy of VOLVO CARS CORPORATION

- Ignition off
- Disconnect connector B on the climate control module (CCM)
- Disconnect the connectors on the damper motors for recirculation and floor/ventilation (ECC), or the air distribution damper motor (MCC/STD).

  Check the signal cable. Check control module connector terminal #B21 (#21) and damper motor connector terminal #1. Check for an open-circuit.

  Check the wiring on the matrix network between the recirculation damper motor and the floor/ventilation damper motor, or air distribution terminals #3-#6. Check for an open-circuit.

  Remedy as necessary.

Other information:

- To access or replace the control module, see **CLIMATE CONTROL MODULE (CCM), REPLACING**
- To connect the breakout box, see **CONNECTING THE BREAKOUT BOX**
- To access or replace the damper motor, see **DAMPER MOTOR TEMPERATURE, REPLACING**
- For other values, see **SIGNAL SPECIFICATION**
- see **CHECKING WIRING AND TERMINALS** .

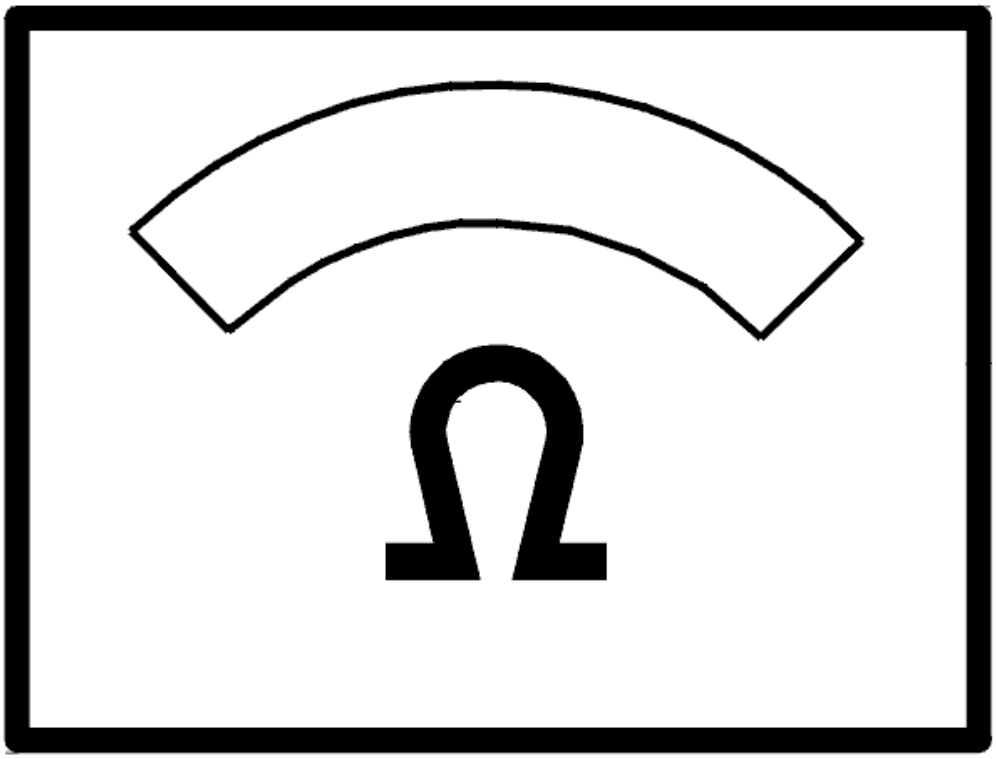

Fig. 196: Identifying Ohmmeter
Courtesy of VOLVO CARS CORPORATION

- **Continue**

Refer to **QUERY**

CHECKING THE CABLE

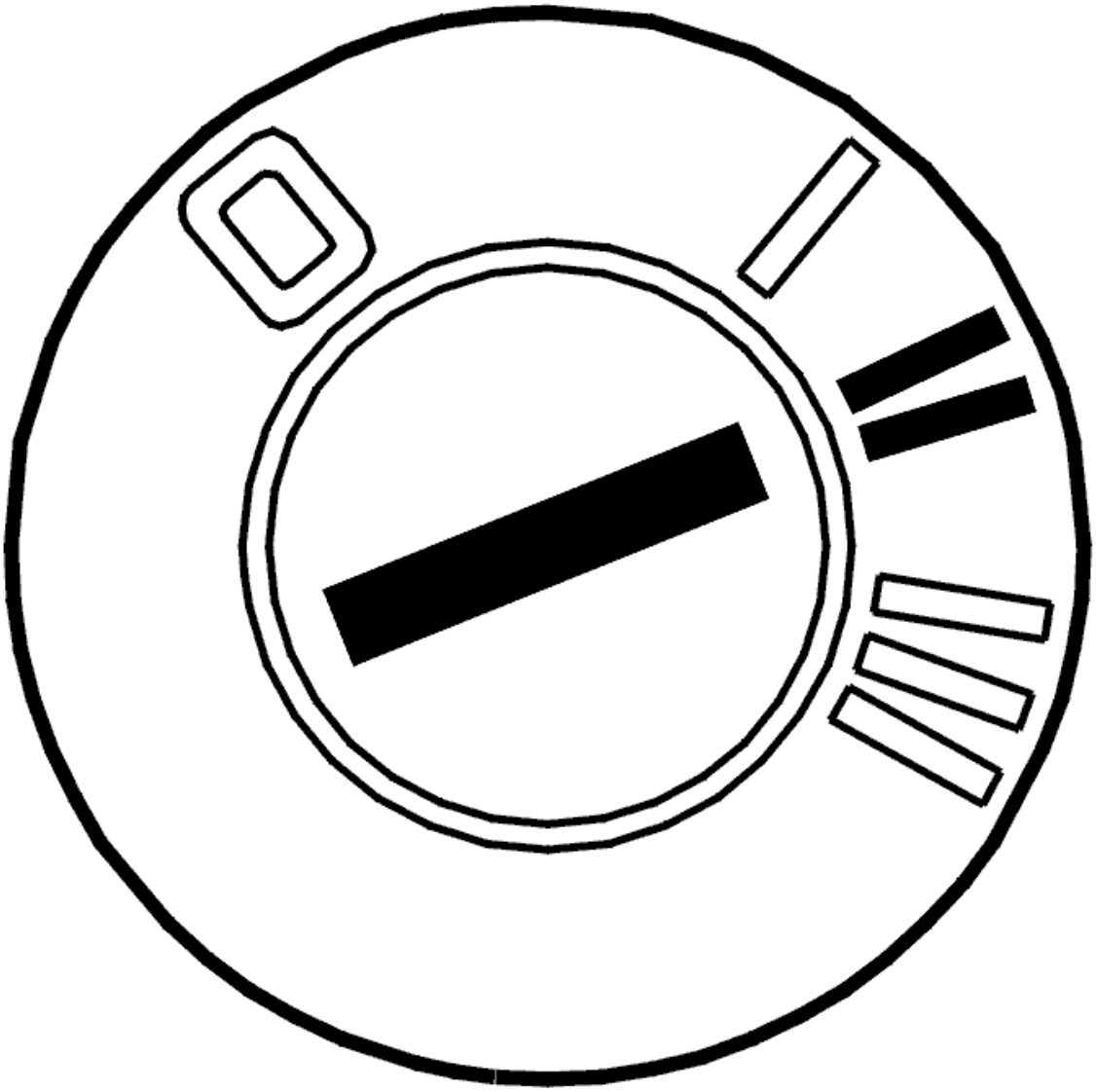

Fig. 197: Identifying Ignition ON
Courtesy of VOLVO CARS CORPORATION

- Ignition on.

  Check the signal cable between climate control module (CCM) terminal #B21 (#21) and the damper motor. Check for a short-circuit to supply voltage.

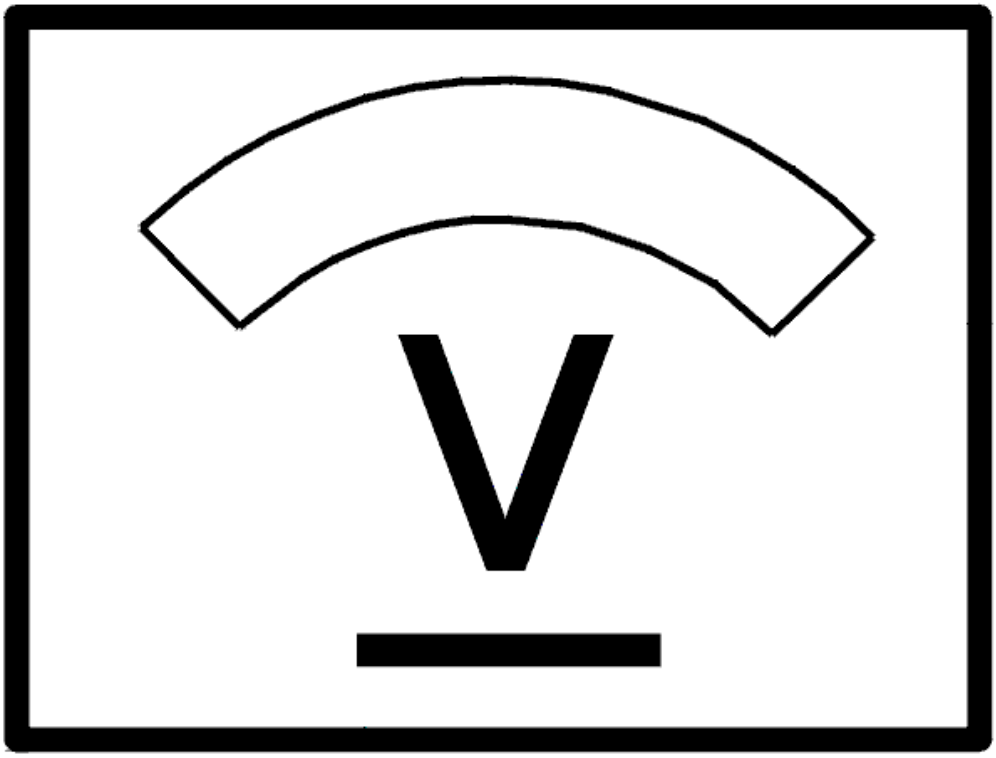

Fig. 198: Identifying Voltage Display
Courtesy of VOLVO CARS CORPORATION

Was a fault detected?

- **YES**

  Refer to **QUERY**

- **NO**

  FAULT NOT FOUND: Troubleshooting has been completed.

CHECKING THE WIRING

Check the control module (terminal #B21) and damper motor connector terminal #1. Check for contact

resistance and oxidation. Check for loose connections. Check for damage carefully.

Check the signal cable between control module terminal #B21 and damper motor terminal #1. Check for an intermittent open-circuit.

Check the wiring between the recirculation damper motor and the floor/ventilation damper motor (ECC), or the air distribution damper motor (MCC/STD). Check for an intermittent open-circuit.

Check the signal cable between control module terminal #B21 and damper motor terminal #1. Check for an intermittent short-circuit to supply voltage.

- **Continue**

  Refer to **INFORMATION**

QUERY

Select which type of climate control the car is equipped with.

1. Electronic climate control. Refer to **SELF-ADJUSTMENT**.
2. Manual climate control (MCC)/Standard (STD). Refer to **SELF-ADJUSTMENT**

SELF-ADJUSTMENT

HINT: After replacing the control module or damper motor, and when a damper motor or link has been removed, carry out self adjustment to define the damper motor limit positions.

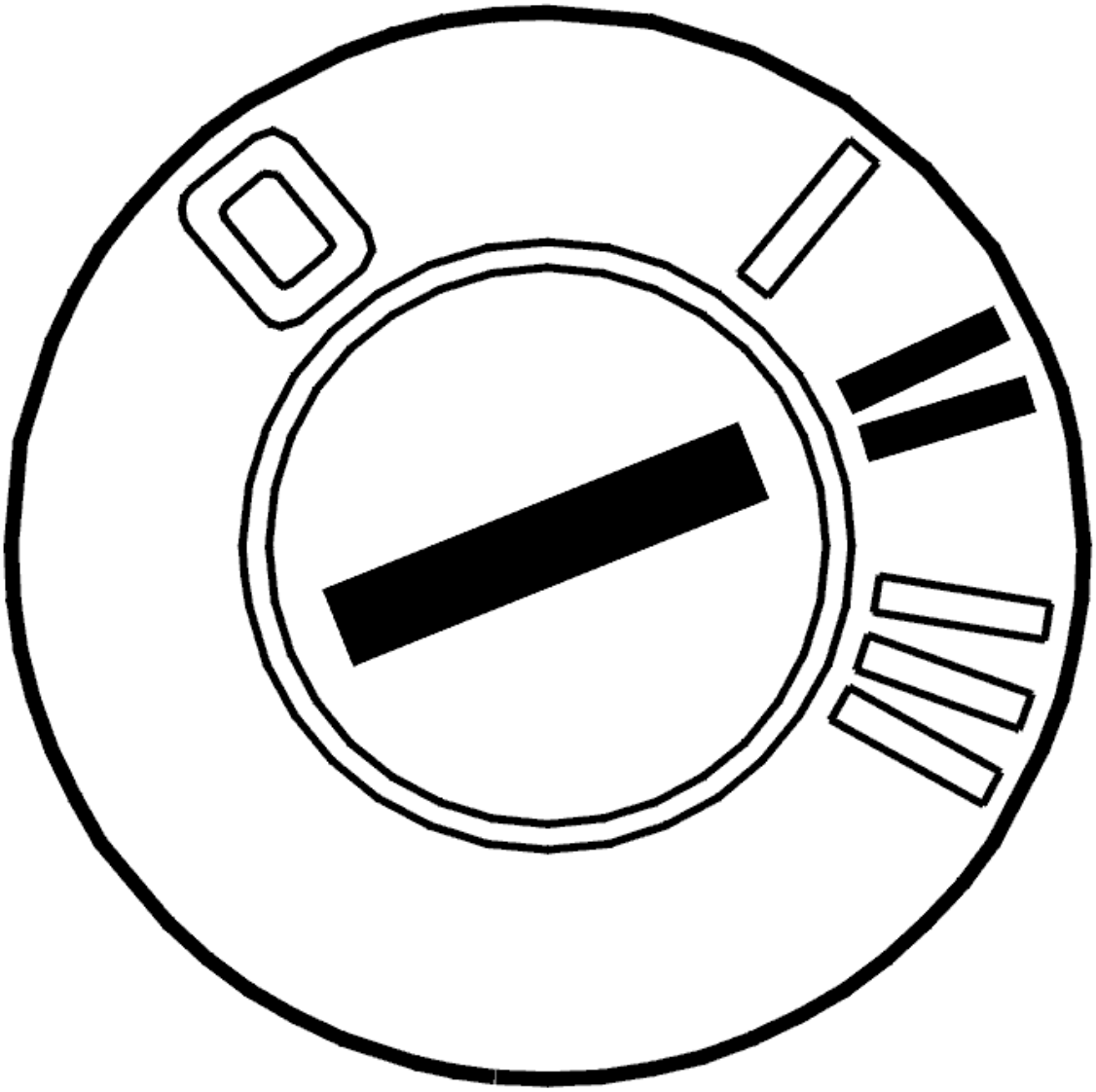

Fig. 199: Identifying Ignition ON
Courtesy of VOLVO CARS CORPORATION

- Ignition off.
- Reinstall the connectors, components etc.
- Ignition on.

  Activate self adjustment.

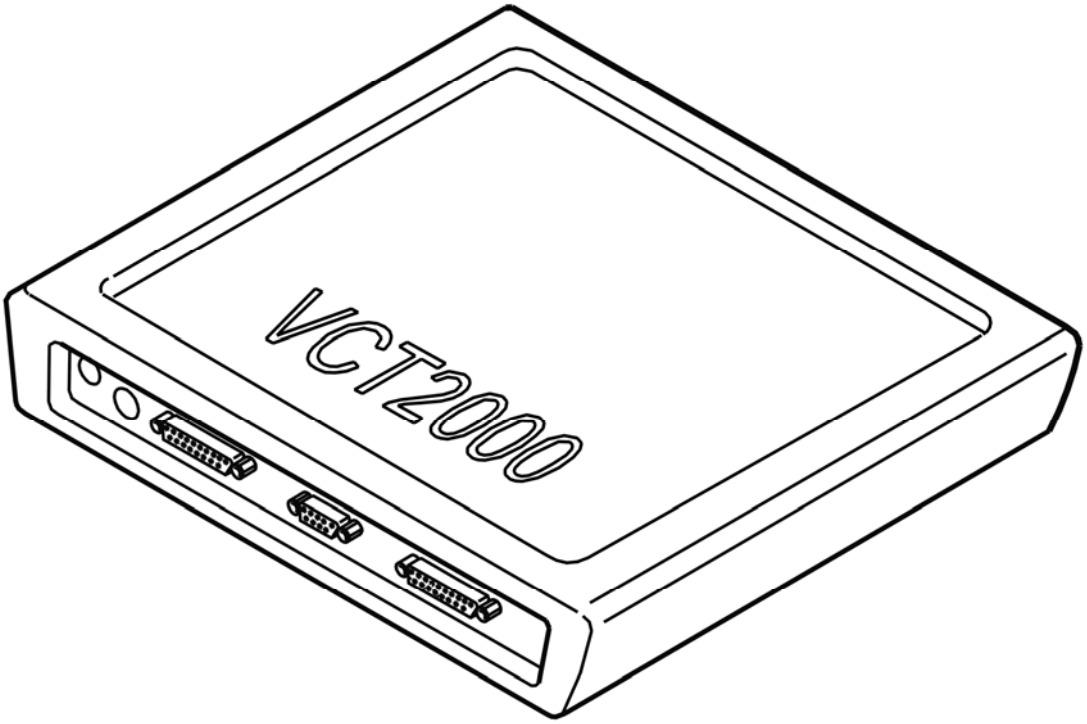

Fig. 200: Identifying VCT2000 Diagnostic Tool Symbol In VIDA
Courtesy of VOLVO CARS CORPORATION

- **Continue**

  Refer to **VERIFICATION**

SELF-ADJUSTMENT

HINT: After replacing the control module or damper motor, and when a damper motor or link has been removed, carry out self adjustment to define the damper motor limit positions.

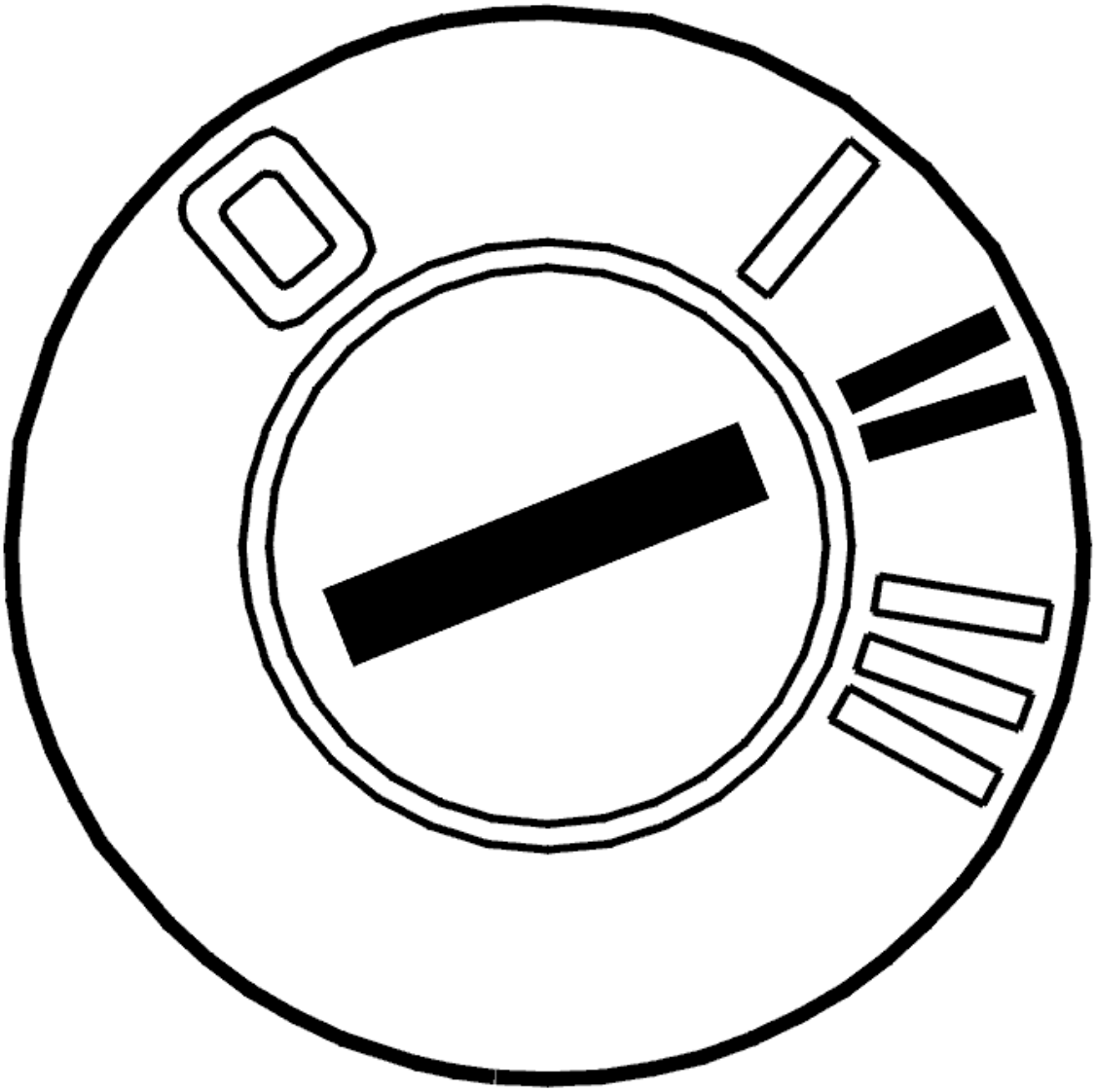

Fig. 201: Identifying Ignition ON
Courtesy of VOLVO CARS CORPORATION

- Ignition off.
- Reinstall the connectors, components etc.
- Ignition on.

  Activate self adjustment.

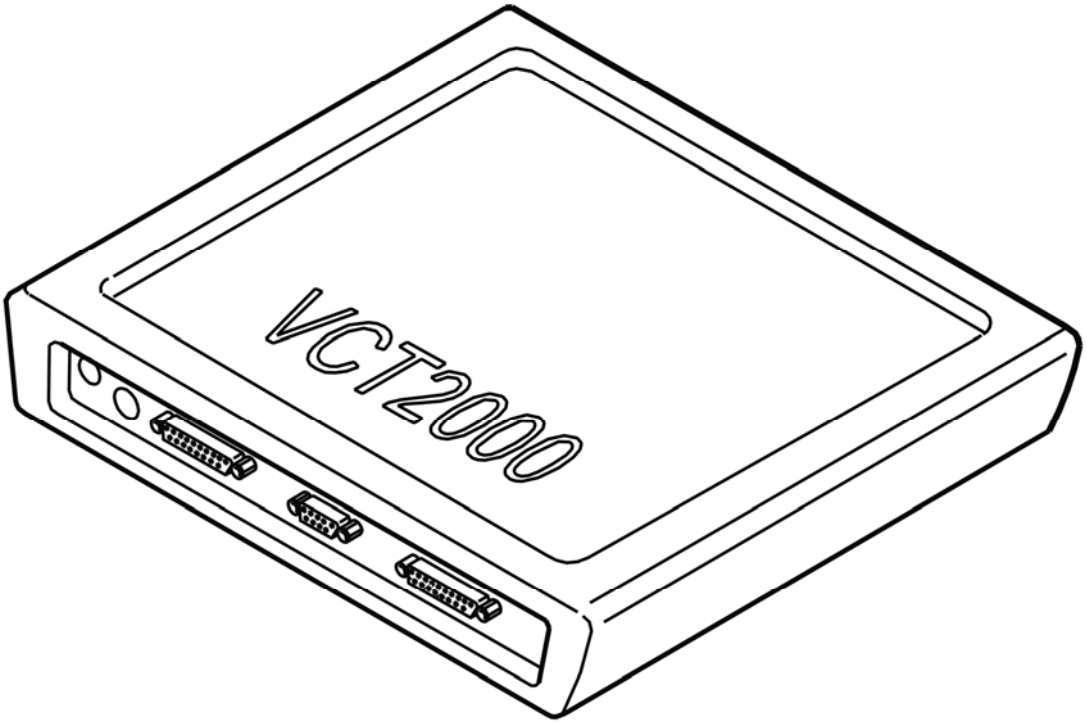

Fig. 202: Identifying VCT2000 Diagnostic Tool Symbol In VIDA
Courtesy of VOLVO CARS CORPORATION

- **Continue**

  Refer to **VERIFICATION**

VERIFICATION

HINT: After the repair it is necessary to check that the fault has been rectified.

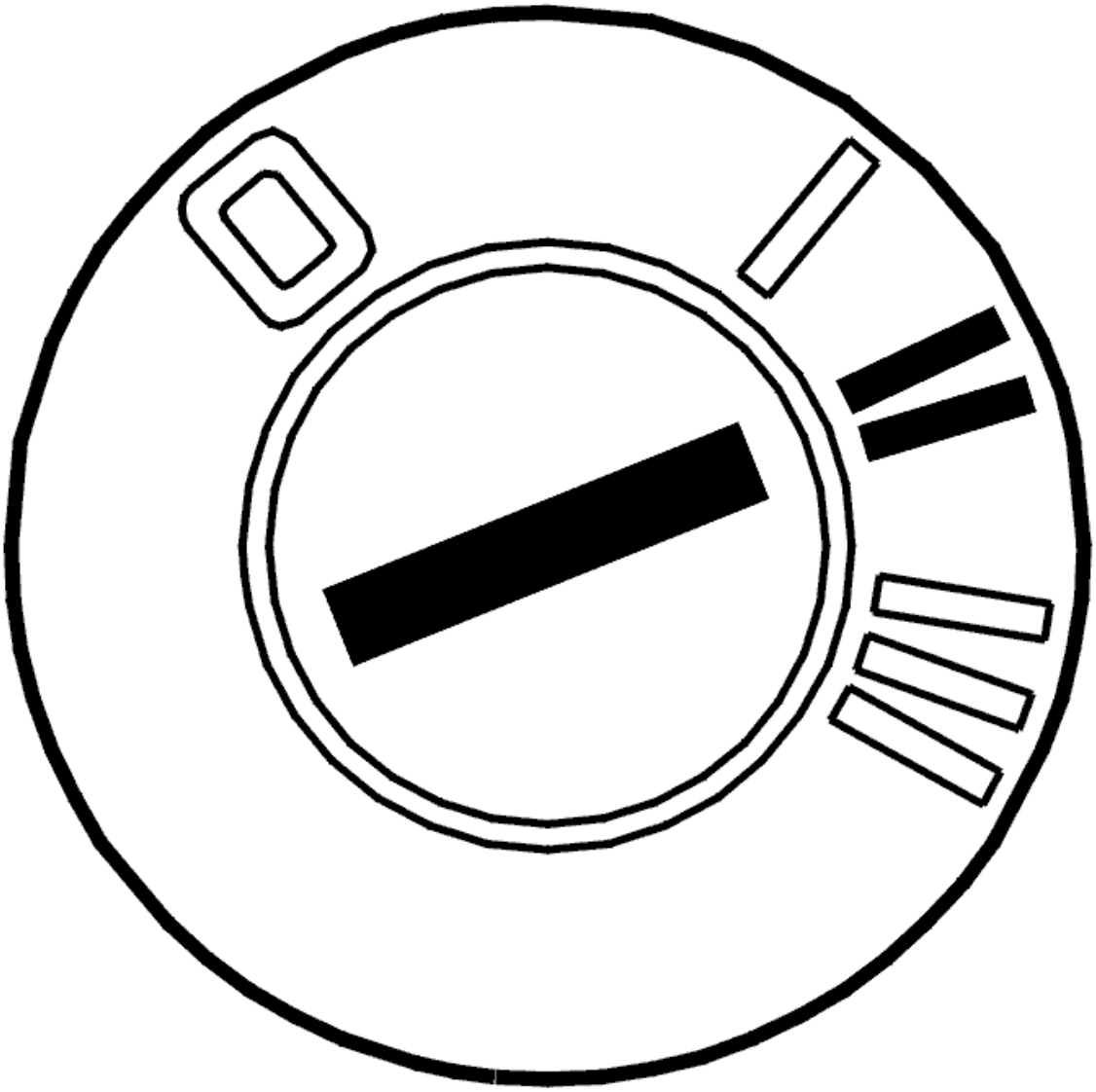

Fig. 203: Identifying Ignition ON
Courtesy of VOLVO CARS CORPORATION

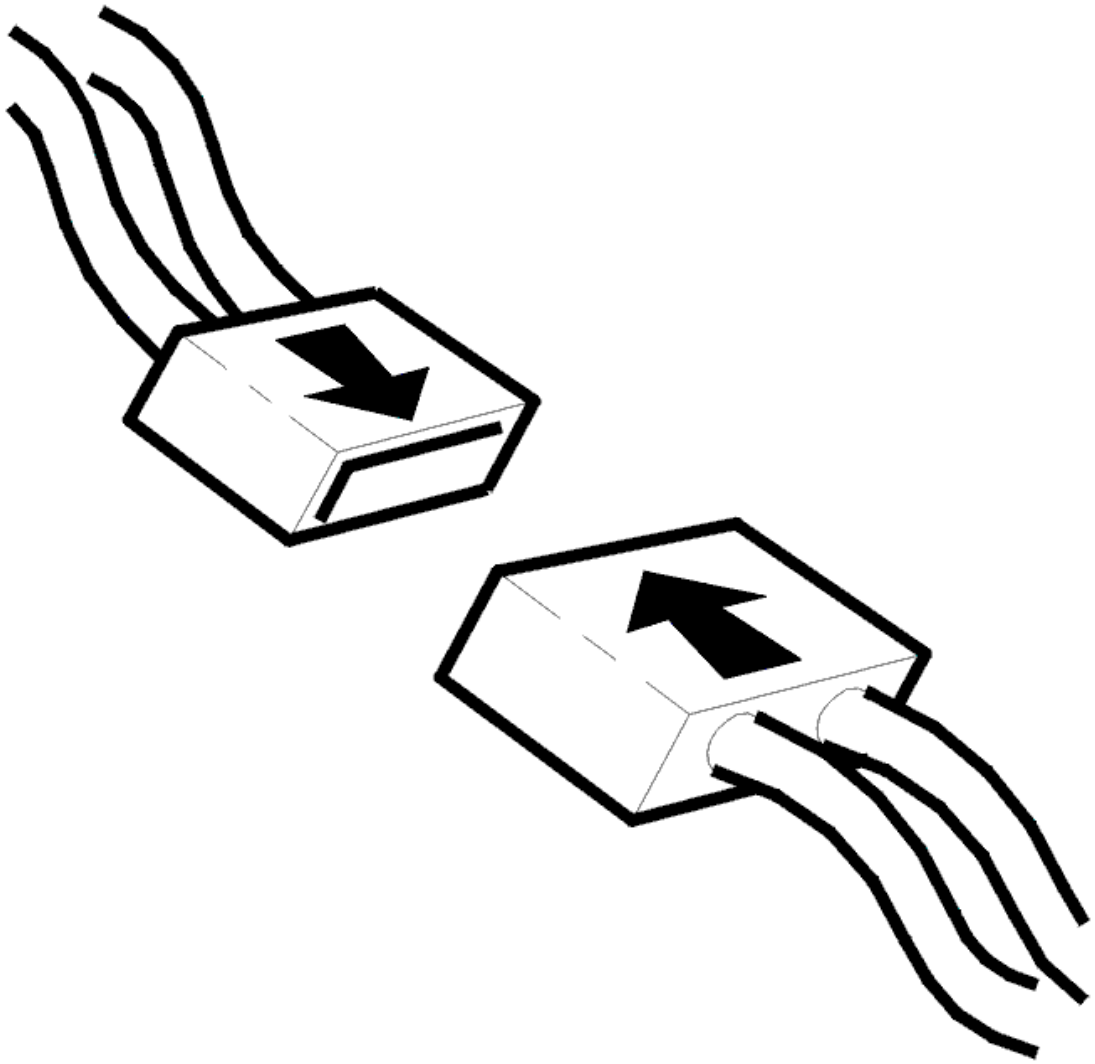

Fig. 204: Connecting Connector
Courtesy of VOLVO CARS CORPORATION

- Ignition off.
- Connect the connectors, install the components, etc.
- Ignition on.
- Blower motor on.

Check that damper motor position changes by changing control on climate control module (CCM). The values given below are the standard values that the damper motor positions should give.

NOTE: Blower motor must be in operation to activate the damper motors.

- Left/right temperature damper motor and defroster, 0-100%
- Recirculation damper motor, 40-100%

- Floor/ventilation damper motor, floor only approximately 39%, ventilation only approximately 87% and floor/ventilation approximately 71%.

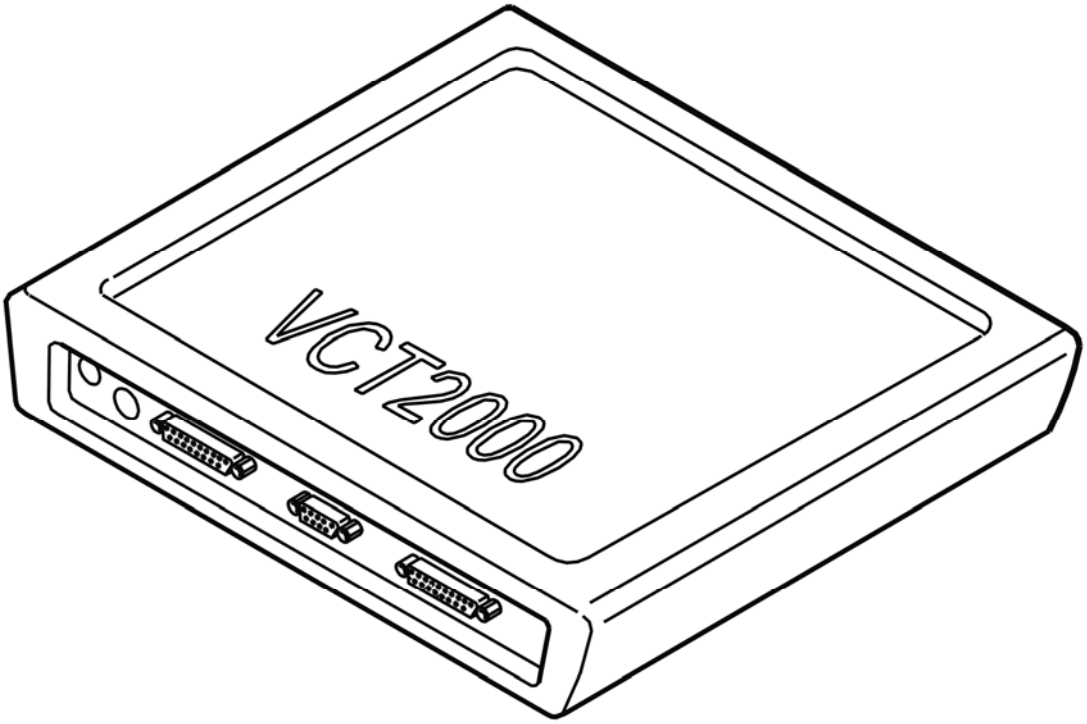

Fig. 205: Identifying VCT2000 Diagnostic Tool Symbol In VIDA
Courtesy of VOLVO CARS CORPORATION

Does damper motor work?

- **YES**

  VERIFIED: Troubleshooting has been completed.

- **NO**

  Refer to **INFORMATION**

INFORMATION

FAULT-TRACING INFORMATION

The fault should have been detected and remedied. As this is not the case fault-tracing has failed.

Exit fault-tracing for this diagnostic trouble code (DTC) or make another attempt.

CCM-000E: DAMPER MOTOR, FLOOR/VENTILATION. SIGNAL TOO LOW (2003-04)

DIAGNOSTIC TROUBLE CODE (DTC) INFORMATION

Condition

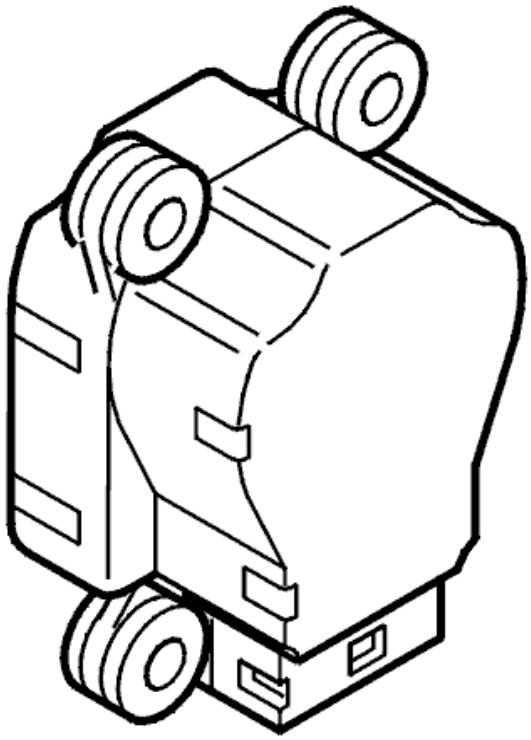

Fig. 206: Identifying Left Temperature Damper Motor
Courtesy of VOLVO CARS CORPORATION

Diagnostic trouble code (DTC) CCM-000E is stored if the control module registers too low a signal from the floor/ventilation damper motor.

Substitute Value

- None.

Possible Source

- Short-circuit to supply voltage in the signal cable between the control module and the damper motor
- Open-circuit in the signal cable between the control module and the damper motor
- Contact resistance, oxidation or loose connections in the connectors

- Defective damper motor.

Fault symptom[s]

- Air flow problem.

SIGNAL TOO LOW

CHECKING DAMPER MOTOR CONTROL

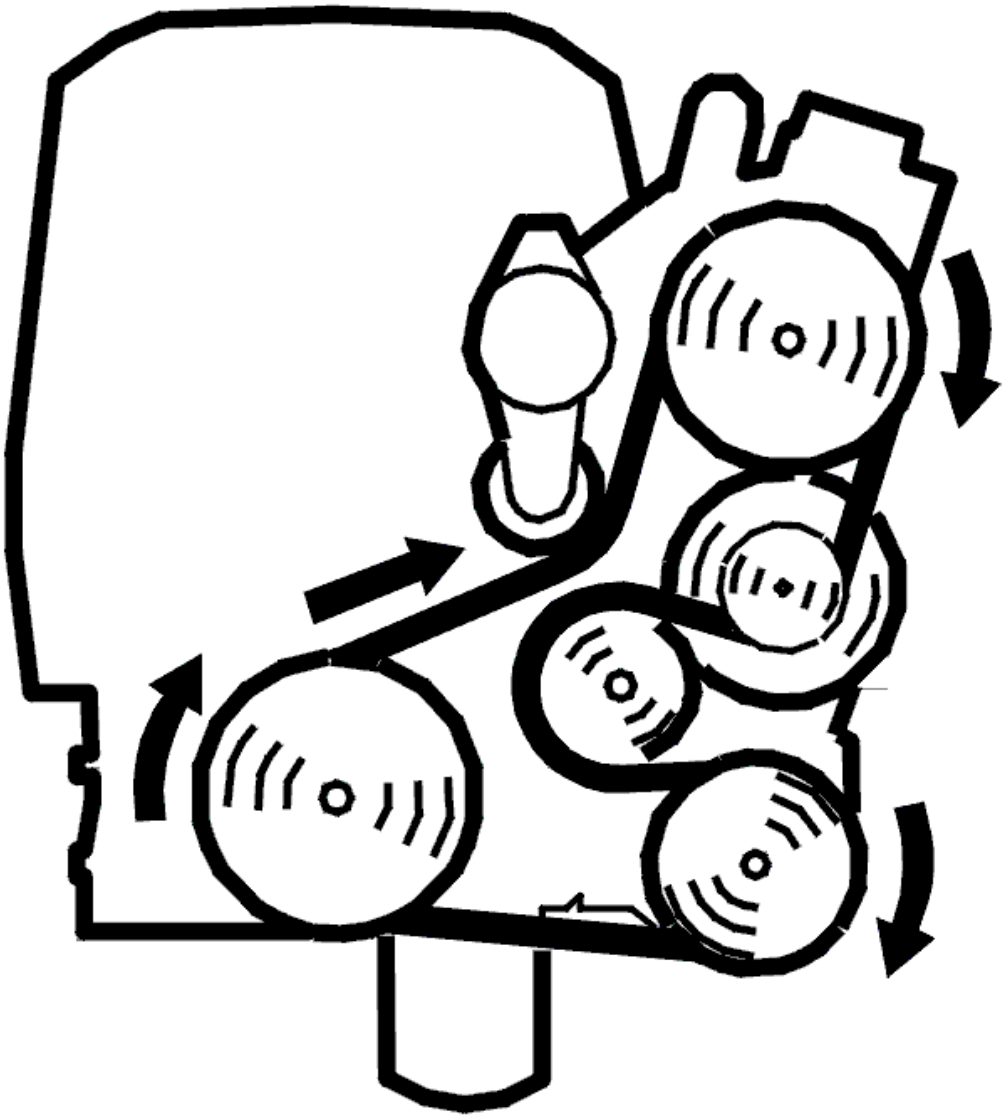

Fig. 207: Belt Routing/Engine Idling - Volvo
Courtesy of VOLVO CARS CORPORATION

- Engine running
- Blower fan on.

Activate the button for floor/ventilation.

Check that the air flow changes.

Does the air flow change?

- **YES**

  Refer to **CHECKING THE WIRING**

- **NO**

  Refer to **CHECKING THE CIRCUIT**

CHECKING THE CIRCUIT

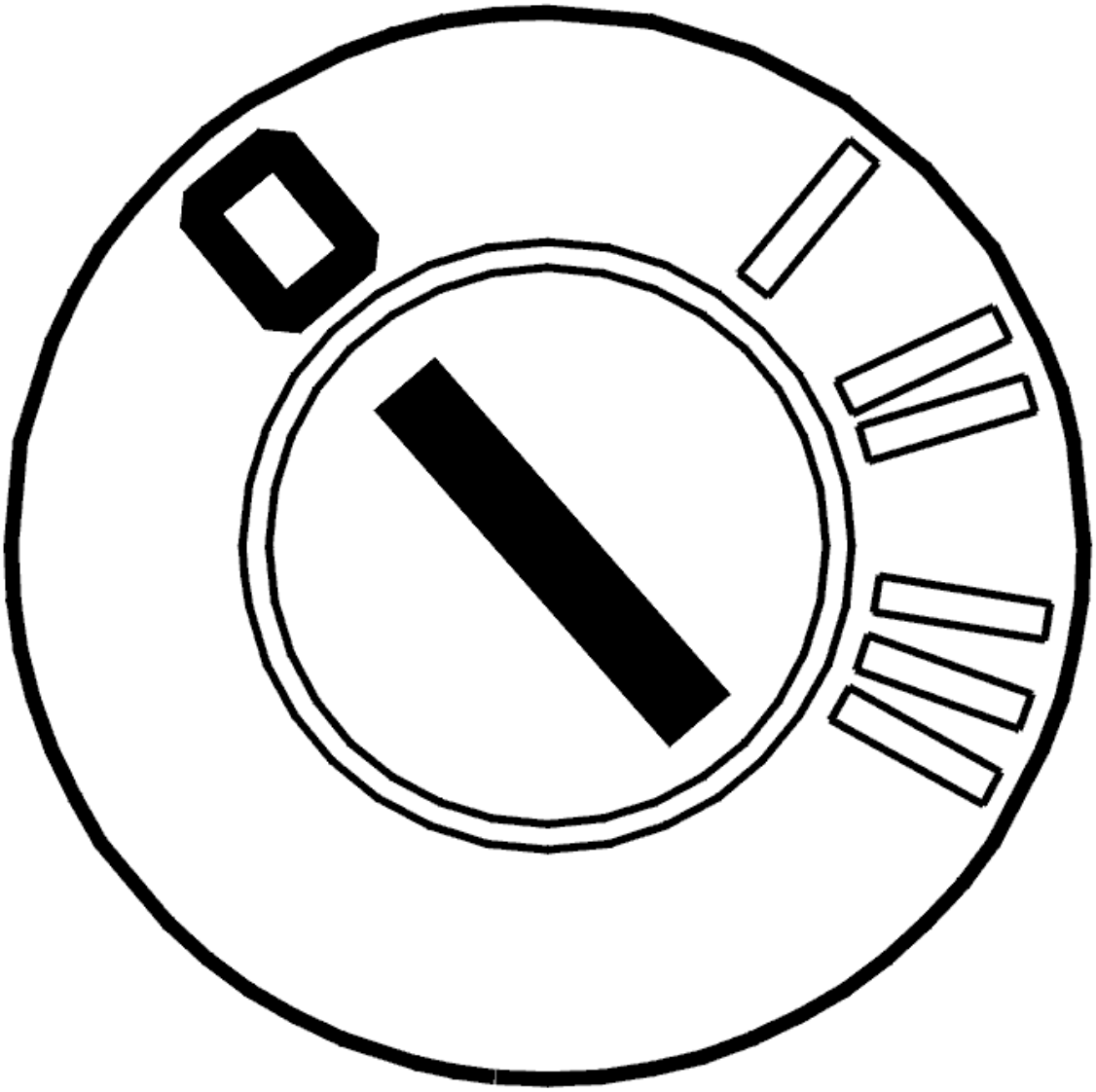

Fig. 208: Identifying Ignition OFF
Courtesy of VOLVO CARS CORPORATION

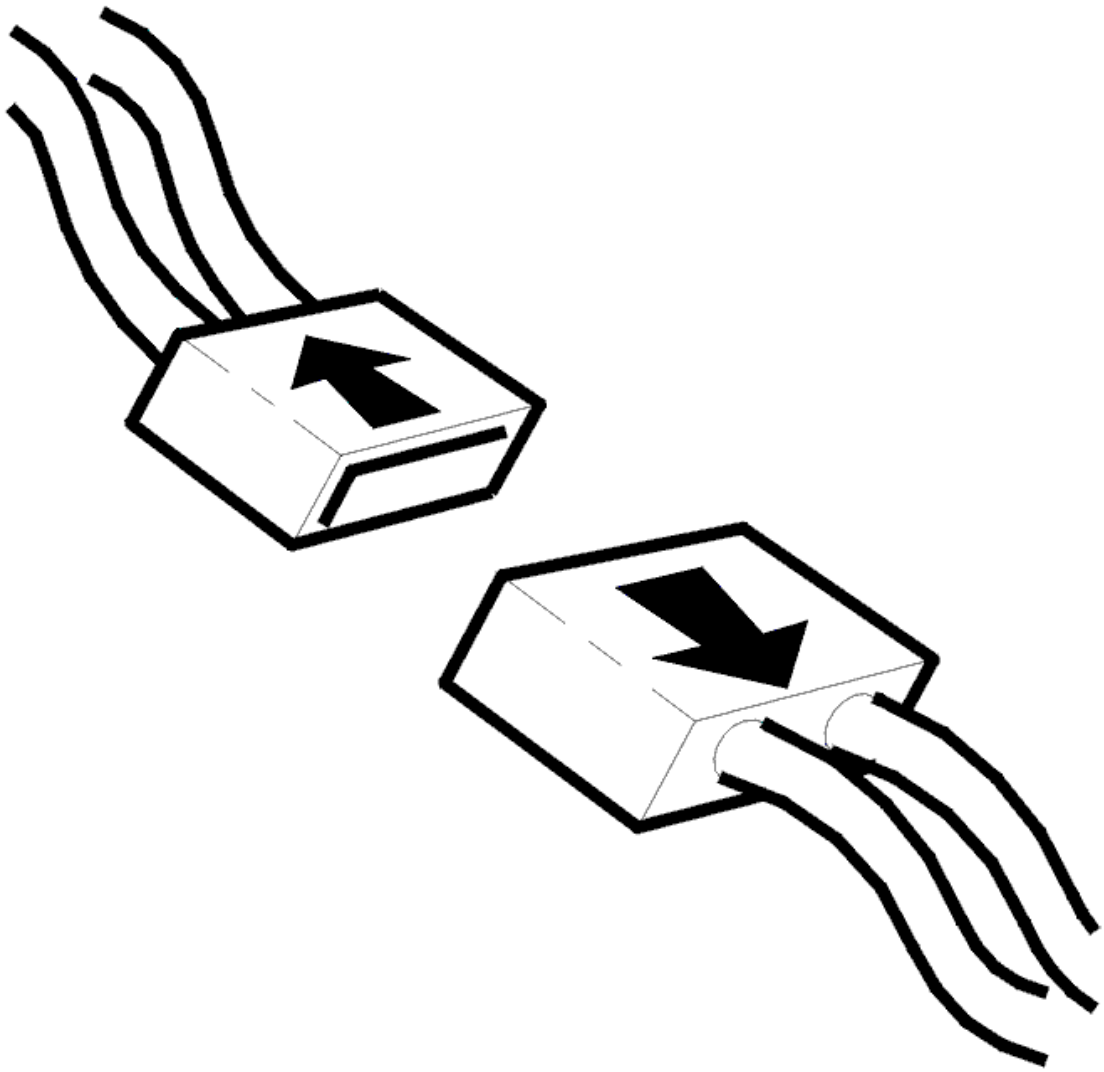

Fig. 209: Disconnecting Connector
Courtesy of VOLVO CARS CORPORATION

- Ignition off
- Disconnect connector B on the climate control module (CCM).

  Check connector B on the climate control module (CCM) and the damper motor connector. Check for contact resistance and oxidation. Check for damage carefully.

  Check the signal cable between the climate control module (CCM) and the damper motor. Check for an open-circuit by measuring the resistance between terminals #B22 (#22) and #B11-#B14 (#11-#14).

  Other information:

- To access or replace the control module, see **CLIMATE CONTROL MODULE (CCM), REPLACING**
- To access or replace the damper motor, see **DAMPER MOTOR TEMPERATURE, REPLACING**
- see **CHECKING WIRING AND TERMINALS** .

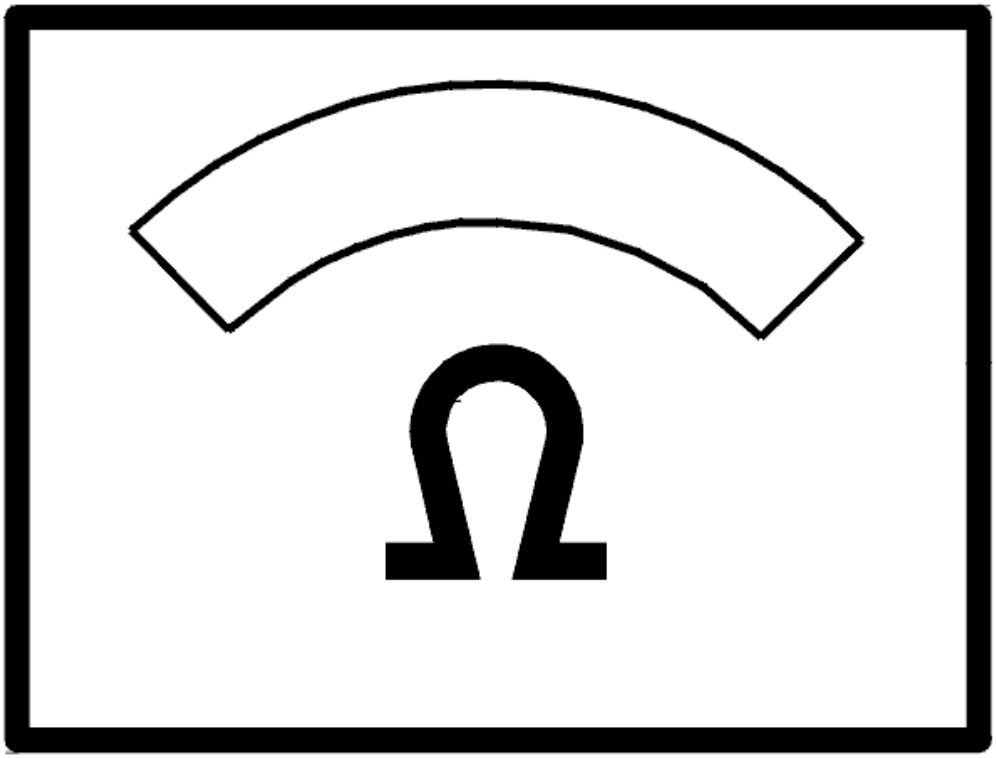

Fig. 210: Identifying Ohmmeter
Courtesy of VOLVO CARS CORPORATION

Was a fault detected?

- **YES**

  Refer to **CHECKING THE CABLE**

- **NO**

  Refer to **CHECKING THE CABLE**

CHECKING THE CABLE

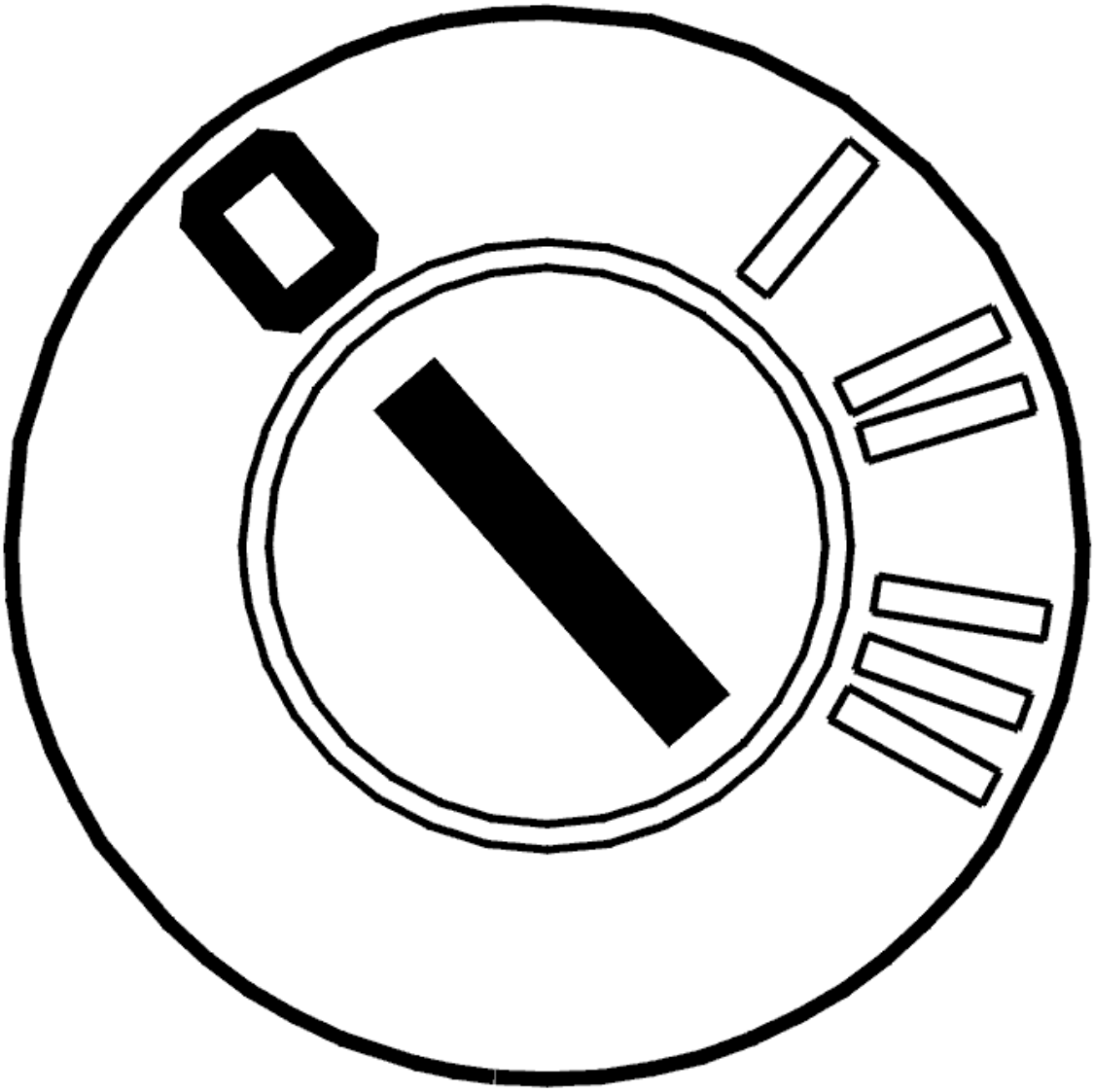

Fig. 211: Identifying Ignition OFF
Courtesy of VOLVO CARS CORPORATION

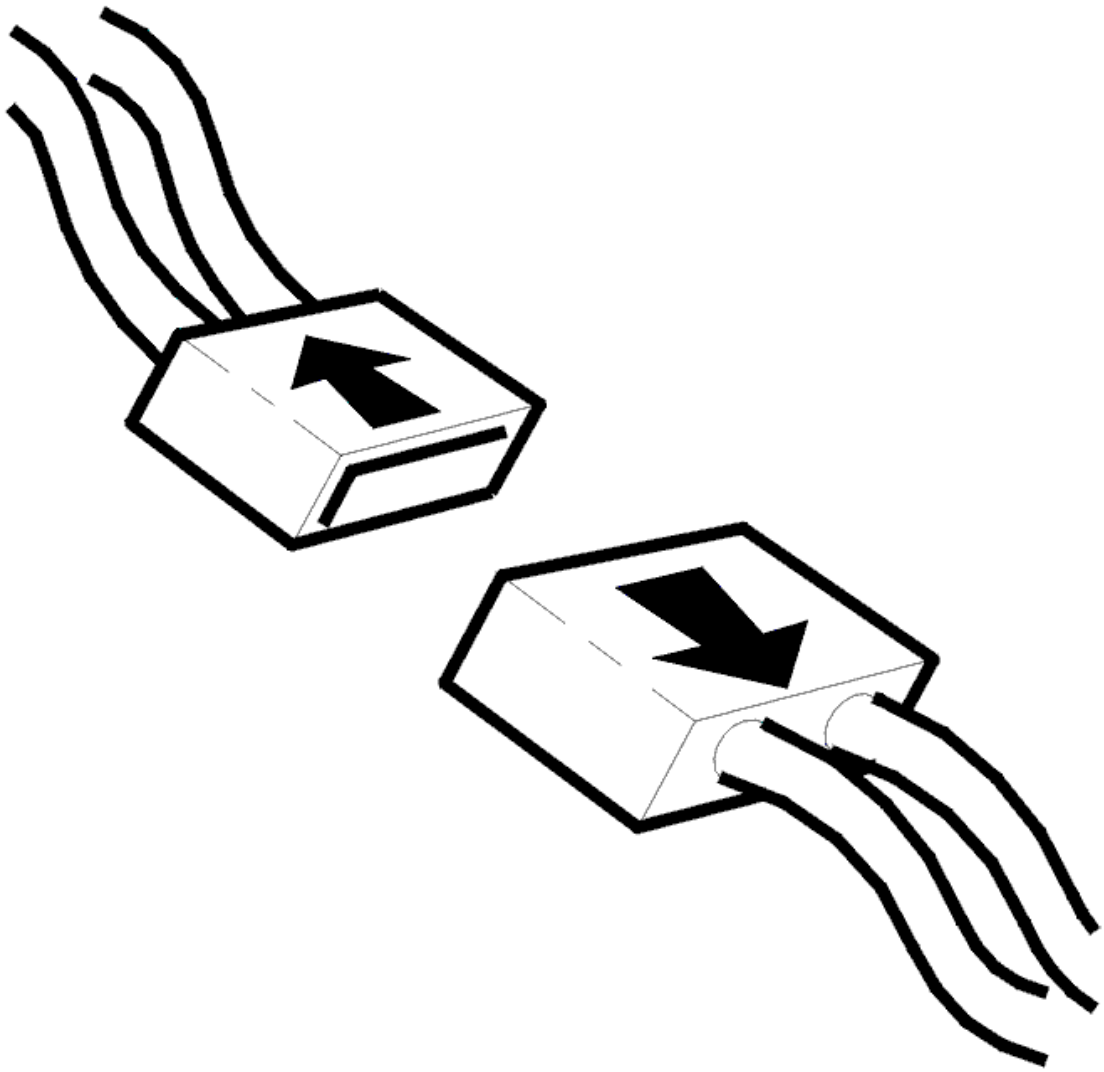

Fig. 212: Disconnecting Connector
Courtesy of VOLVO CARS CORPORATION

- Ignition off
- Disconnect connector B on the climate control module (CCM)
- Disconnect the connector on the damper motor for floor/defroster.

  Check the signal cable. Check control module connector terminal #B22 (#22) and damper motor connector terminal #1. Check for an open-circuit.

  Check the wiring on the matrix network between floor/defroster damper motor terminals #3-#6 and climate control module (CCM) terminals #B11-#B14 (#11-#14). Check for an open-circuit.

  Remedy as necessary.

Other information:

- To access or replace the control module, see **CLIMATE CONTROL MODULE (CCM), REPLACING**
- To connect the breakout box, see **CONNECTING THE BREAKOUT BOX**
- To access or replace the damper motor, see **DAMPER MOTOR TEMPERATURE, REPLACING**
- For other values, see **SIGNAL SPECIFICATION**
- see **CHECKING WIRING AND TERMINALS** .

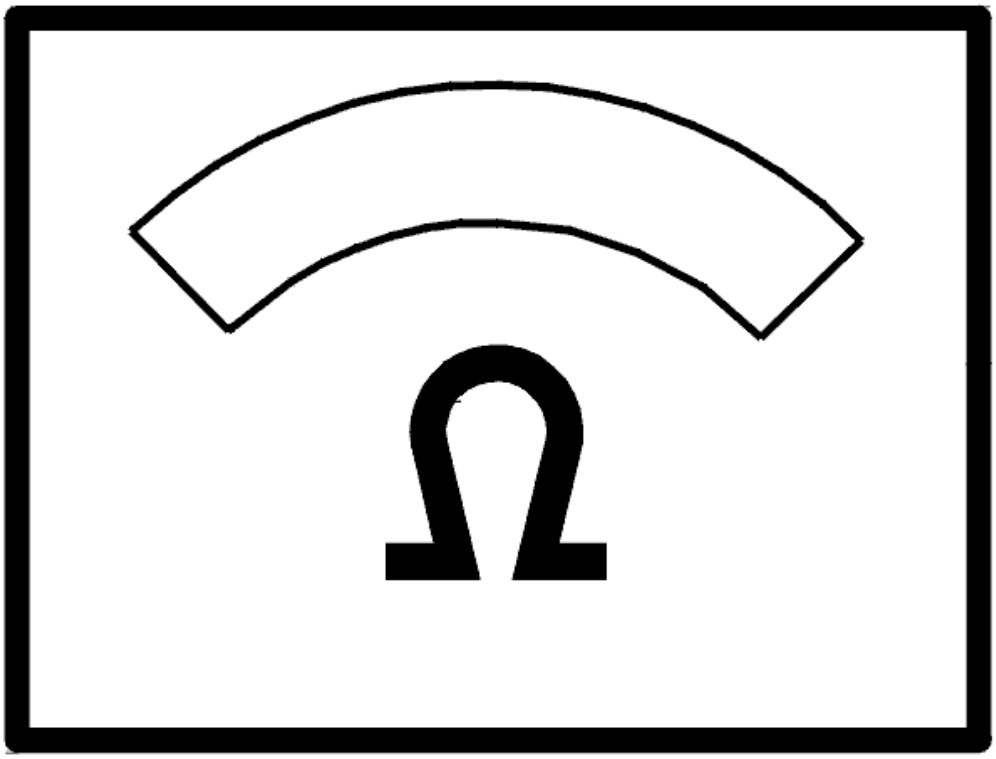

Fig. 213: Identifying Ohmmeter
Courtesy of VOLVO CARS CORPORATION

- **Continue**

Refer to **QUERY**

CHECKING THE CABLE

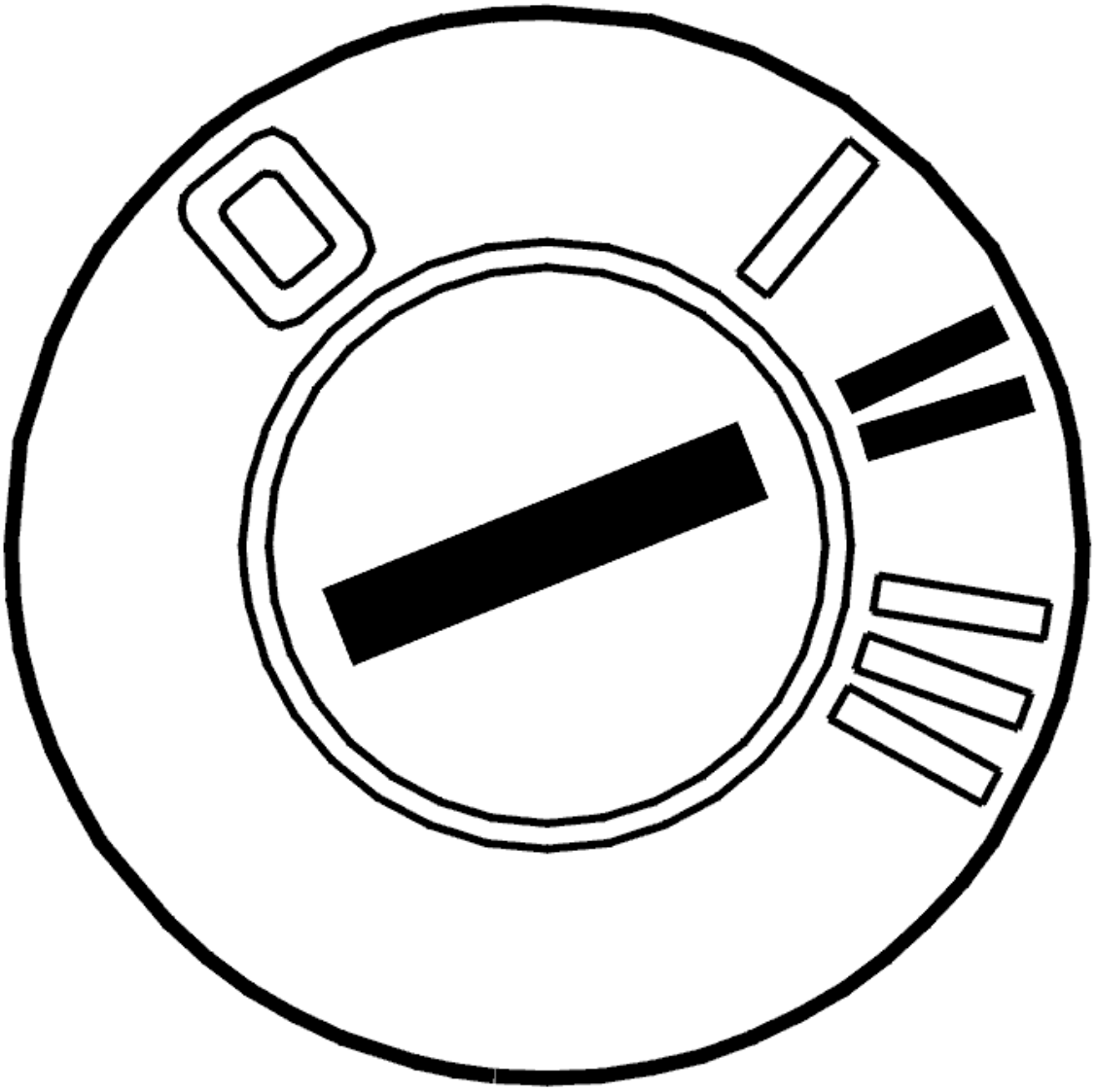

Fig. 214: Identifying Ignition ON
Courtesy of VOLVO CARS CORPORATION

- Ignition on.

  Check the signal cable between climate control module (CCM) terminal #B22 (#22) and the damper motor. Check for a short-circuit to supply voltage.

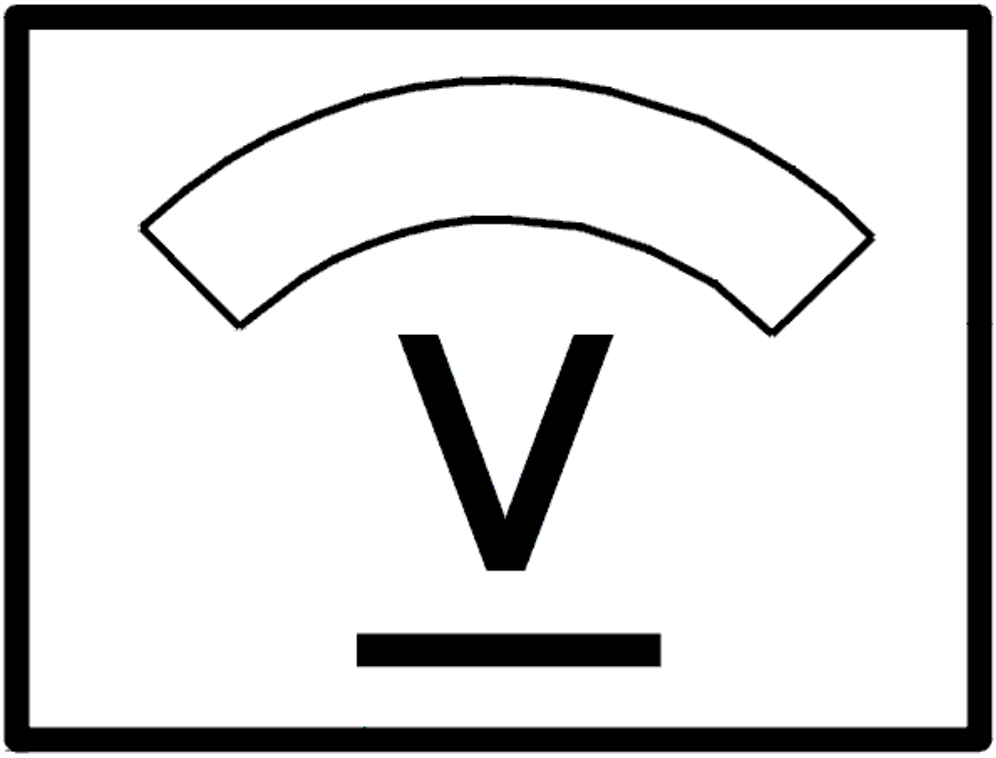

Fig. 215: Identifying Voltage Display
Courtesy of VOLVO CARS CORPORATION

Was a fault detected?

- **YES**

  Refer to **QUERY**

- **NO**

  FAULT NOT FOUND: Troubleshooting has been completed.

CHECKING THE WIRING

Check the control module (terminal #B22) and damper motor connector terminal #1. Check for contact

resistance and oxidation. Check for loose connections. Check for damage carefully.

Check the signal cable between control module terminal #B22 and damper motor terminal #1. Check for an intermittent open-circuit.

Check the wiring between floor/ventilation damper motor terminals #3-#6 and climate control module (CCM) terminals #B11-#B14 (#11-#14). Check for an intermittent open-circuit.

Check the signal cable between control module terminal #B22 and damper motor terminal #1. Check for an intermittent short-circuit to supply voltage.

- **Continue**

  Refer to **INFORMATION**

QUERY

Select which type of climate control the car is equipped with.

1. Electronic climate control. Refer to **SELF-ADJUSTMENT**.
2. Manual climate control (MCC)/Standard (STD). Refer to **SELF-ADJUSTMENT**

SELF-ADJUSTMENT

HINT: After replacing the control module or damper motor, and when a damper motor or link has been removed, carry out self adjustment to define the damper motor limit positions.

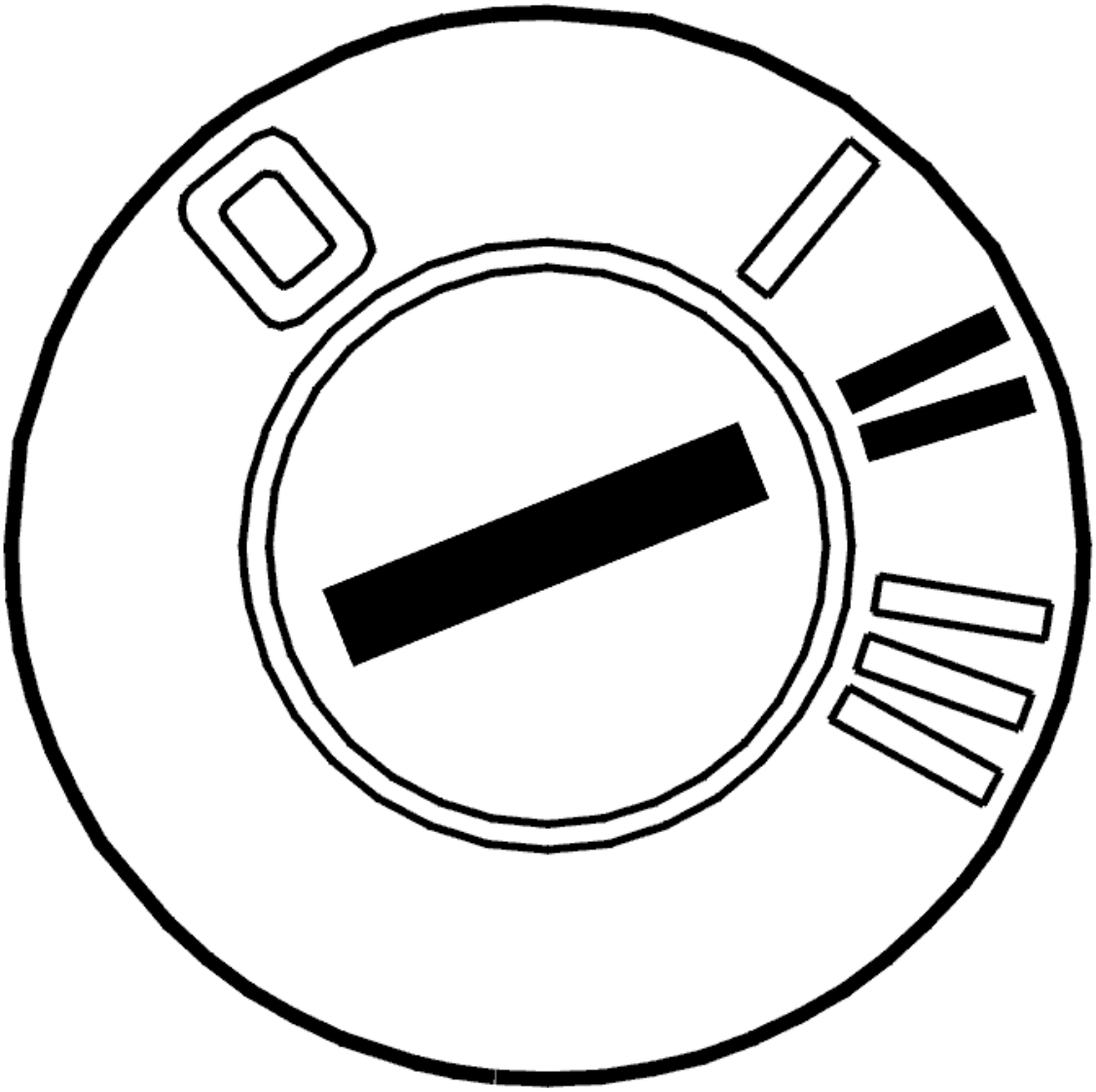

Fig. 216: Identifying Ignition ON
Courtesy of VOLVO CARS CORPORATION

- Ignition off.
- Reinstall the connectors, components etc.
- Ignition on.

  Activate self adjustment.

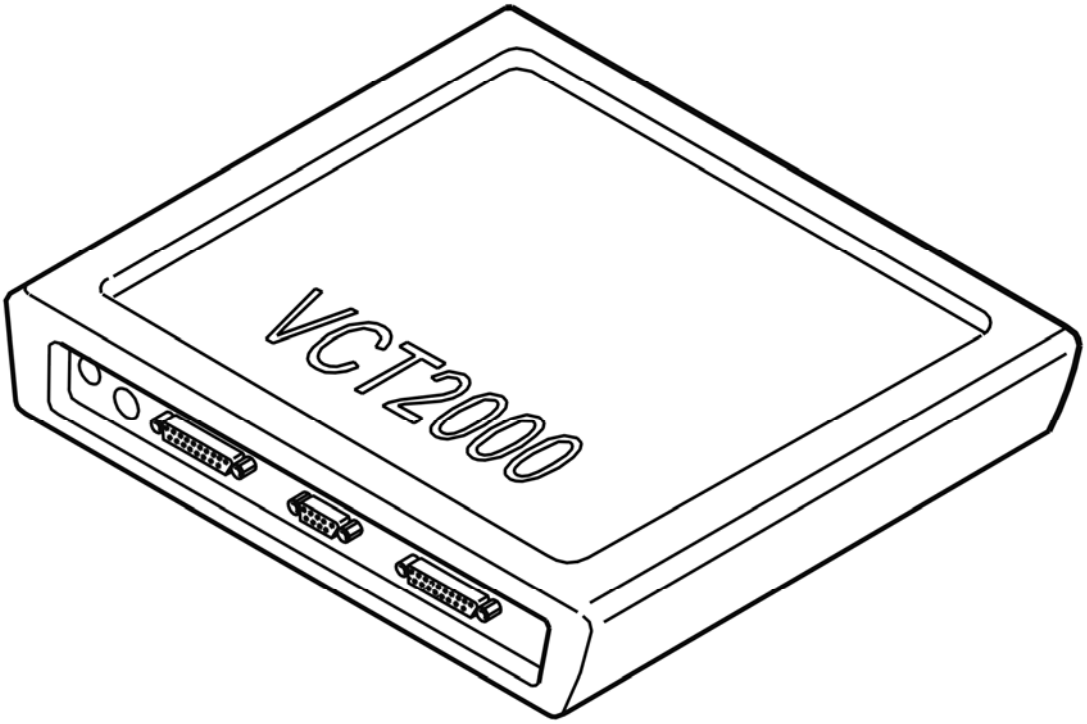

Fig. 217: Identifying VCT2000 Diagnostic Tool Symbol In VIDA
Courtesy of VOLVO CARS CORPORATION

- **Continue**

  Refer to **VERIFICATION**

SELF-ADJUSTMENT

HINT: After replacing the control module or damper motor, and when a damper motor or link has been removed, carry out self adjustment to define the damper motor limit positions.

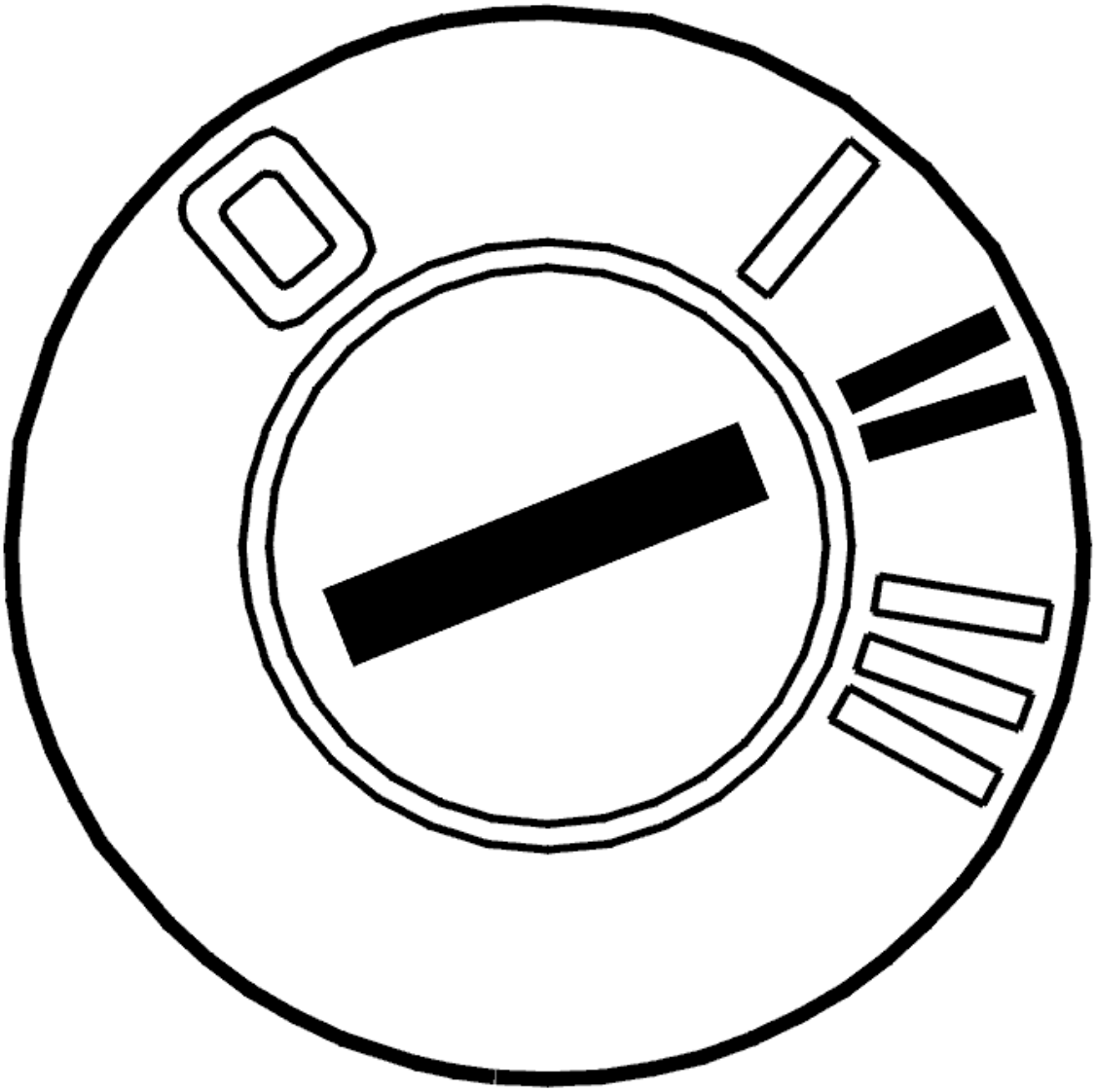

Fig. 218: Identifying Ignition ON
Courtesy of VOLVO CARS CORPORATION

- Ignition off.
- Reinstall the connectors, components etc.
- Ignition on.

  Activate self adjustment.

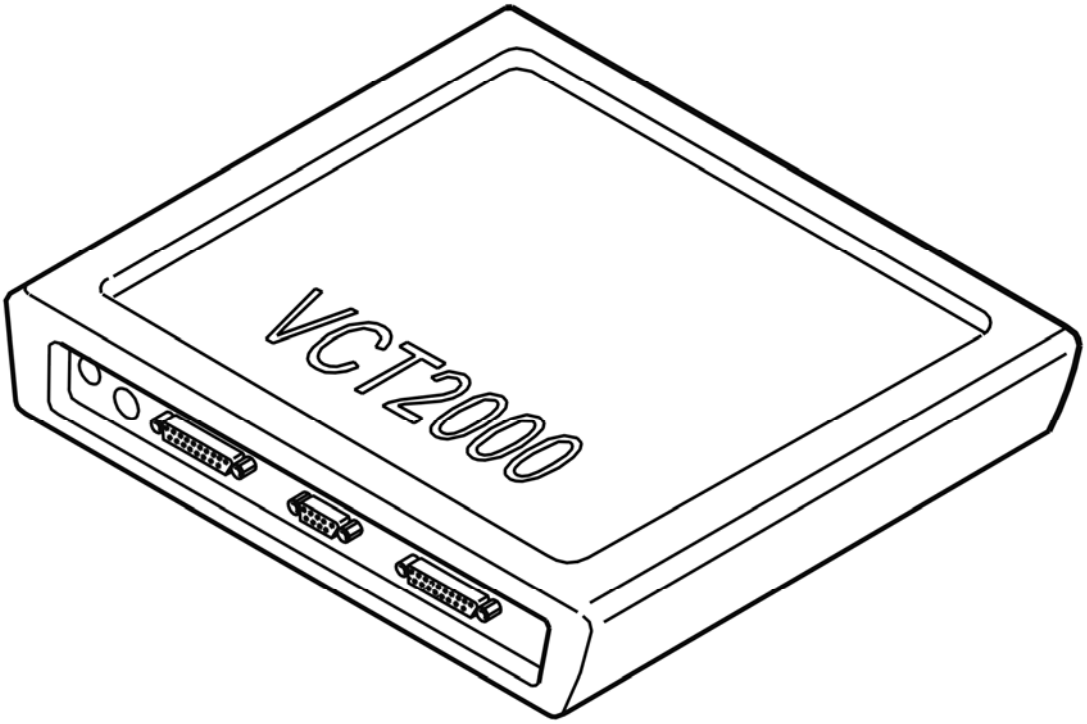

Fig. 219: Identifying VCT2000 Diagnostic Tool Symbol In VIDA
Courtesy of VOLVO CARS CORPORATION

- **Continue**

  Refer to **VERIFICATION**

VERIFICATION

HINT: After the repair it is necessary to check that the fault has been rectified.

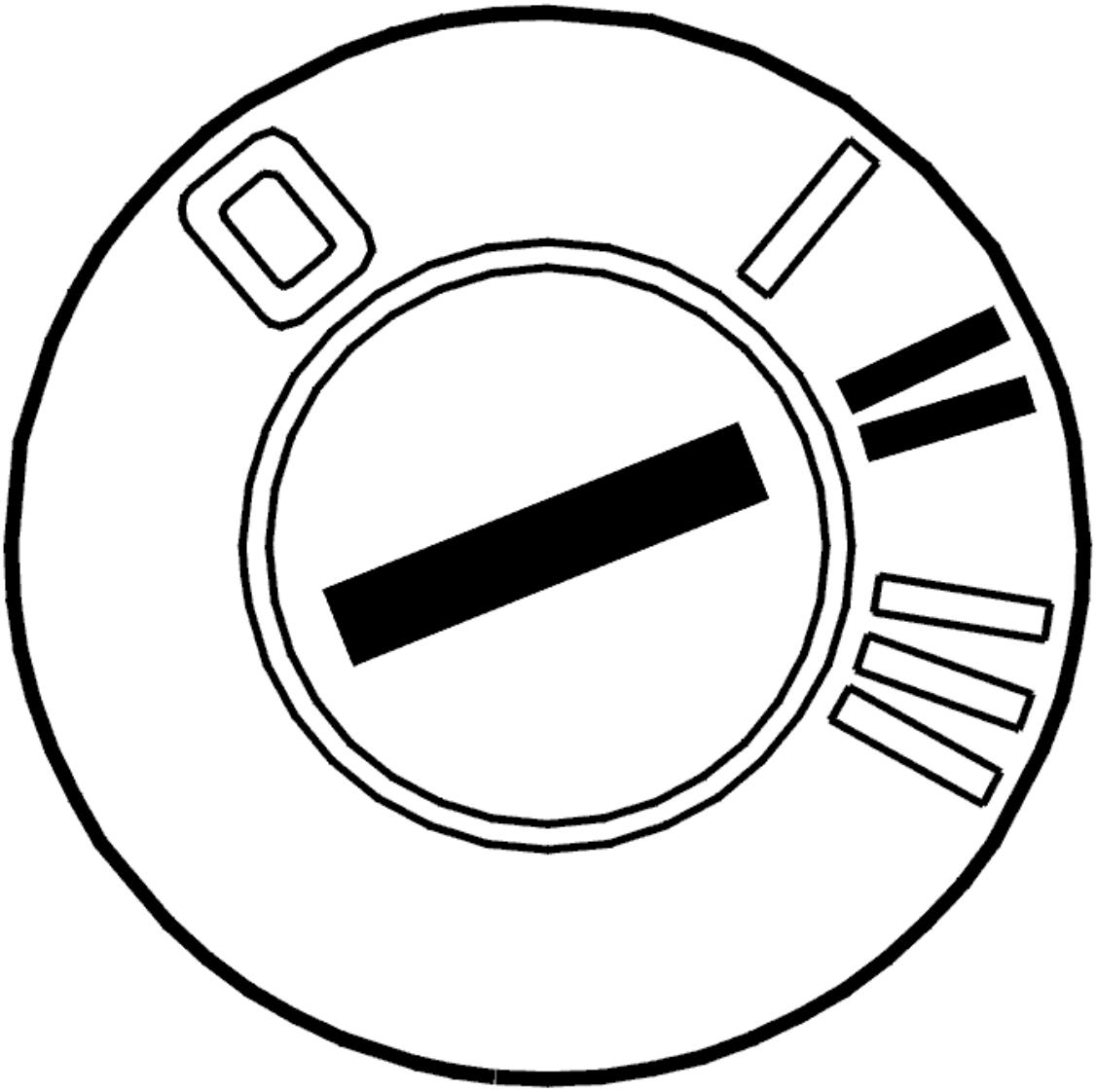

Fig. 220: Identifying Ignition ON
Courtesy of VOLVO CARS CORPORATION

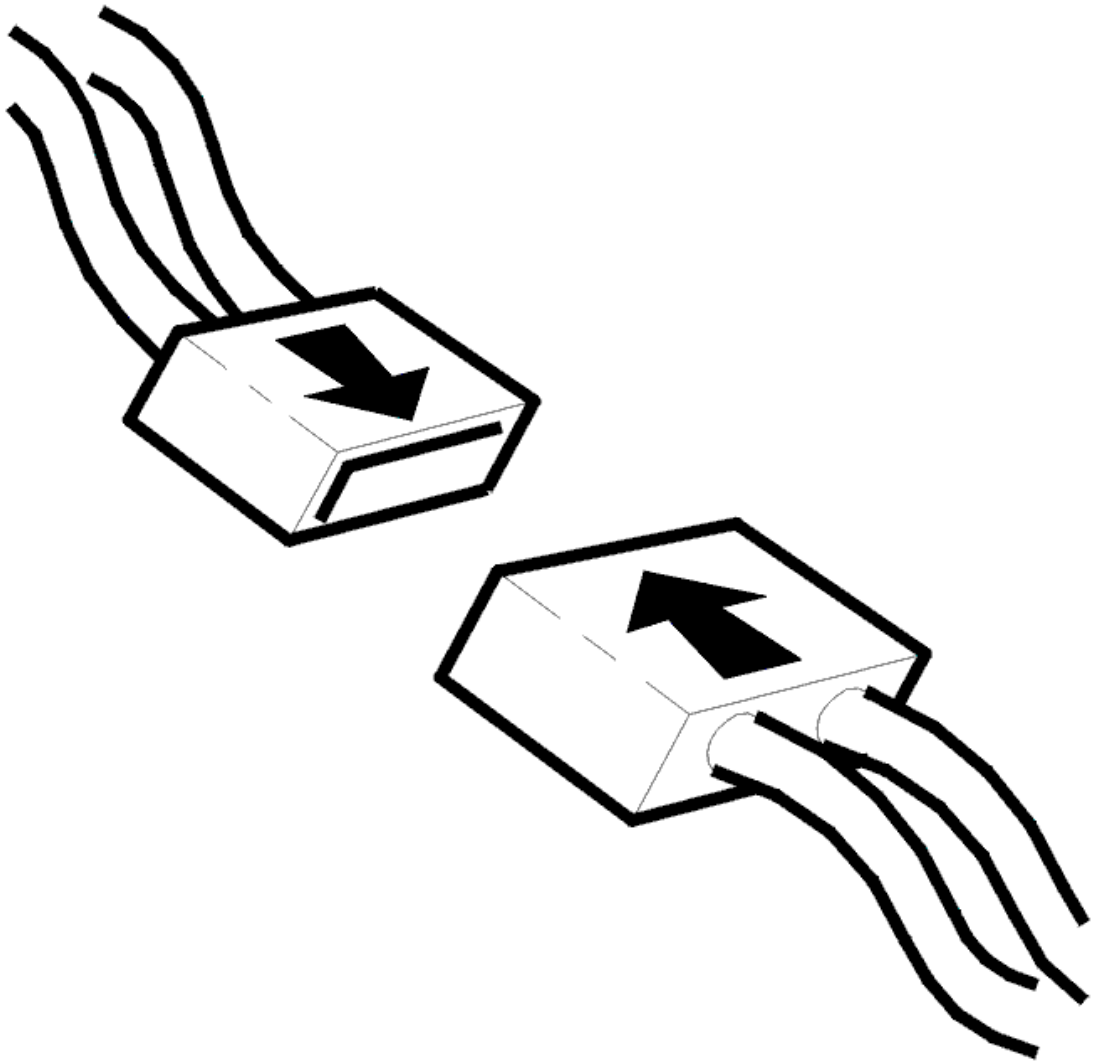

Fig. 221: Connecting Connector
Courtesy of VOLVO CARS CORPORATION

- Ignition off.
- Connect the connectors, install the components, etc.
- Ignition on.
- Blower motor on.

Check that damper motor position changes by changing control on climate control module (CCM). The values given below are the standard values that the damper motor positions should give.

NOTE: Blower motor must be in operation to activate the damper motors.

- Left/right temperature damper motor and defroster, 0-100%
- Recirculation damper motor, 40-100%

- Floor/ventilation damper motor, floor only approximately 39%, ventilation only approximately 87% and floor/ventilation approximately 71%.

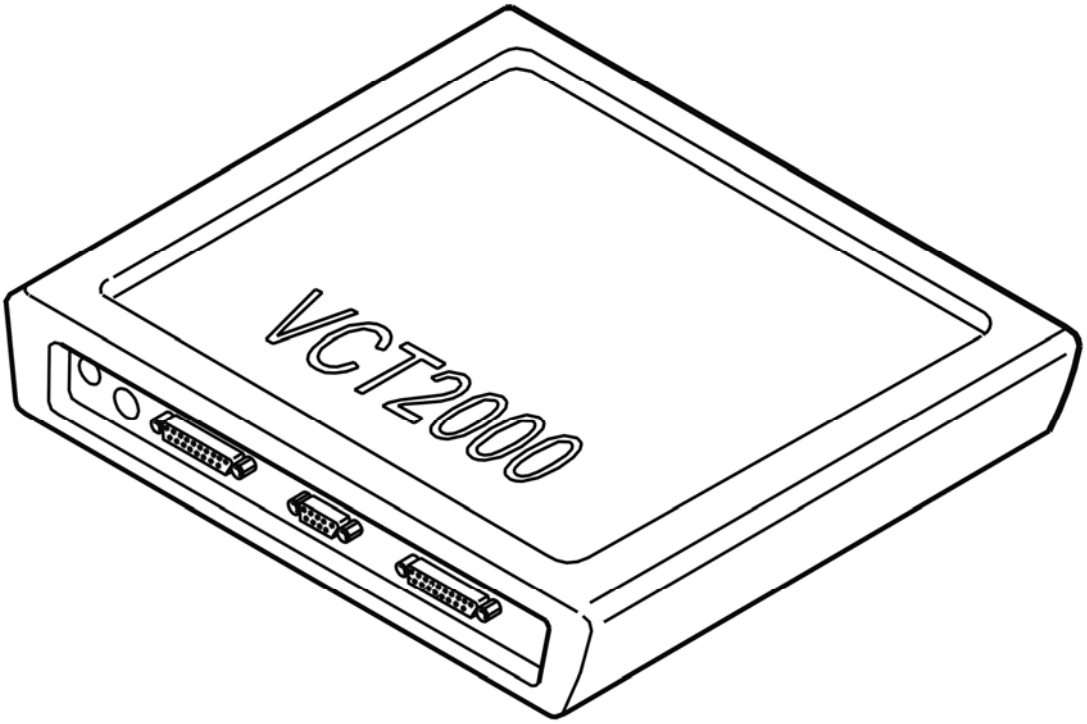

Fig. 222: Identifying VCT2000 Diagnostic Tool Symbol In VIDA
Courtesy of VOLVO CARS CORPORATION

Does damper motor work?

- **YES**

  VERIFIED: Troubleshooting has been completed.

- **NO**

  Refer to **INFORMATION**

INFORMATION

FAULT-TRACING INFORMATION

The fault should have been detected and remedied. As this is not the case fault-tracing has failed.

Exit fault-tracing for this diagnostic trouble code (DTC) or make another attempt.

CCM-000F: DAMPER MOTOR DEFROSTER. SIGNAL TOO LOW (2003-04)

DIAGNOSTIC TROUBLE CODE (DTC) INFORMATION

Condition

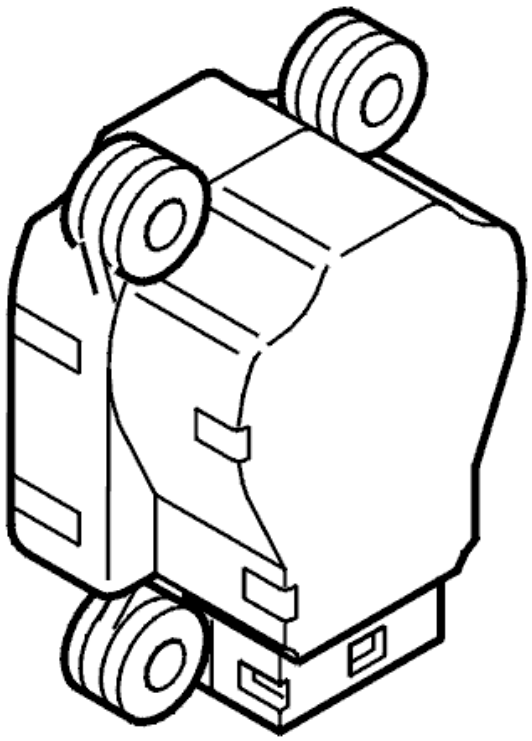

Fig. 223: Identifying Left Temperature Damper Motor
Courtesy of VOLVO CARS CORPORATION

Diagnostic trouble code (DTC) CCM-000F is stored if the control module registers too low a signal from the defroster damper motor.

Substitute Value

- None.

Possible Source

- Short-circuit to supply voltage in the signal cable between the control module and the damper motor
- Open-circuit in the signal cable between the control module and the damper motor
- Contact resistance, oxidation or loose connections in the connectors
- Defective damper motor.

Fault symptom[s]

- Air flow problem.

SIGNAL TOO LOW

CHECKING DAMPER MOTOR CONTROL

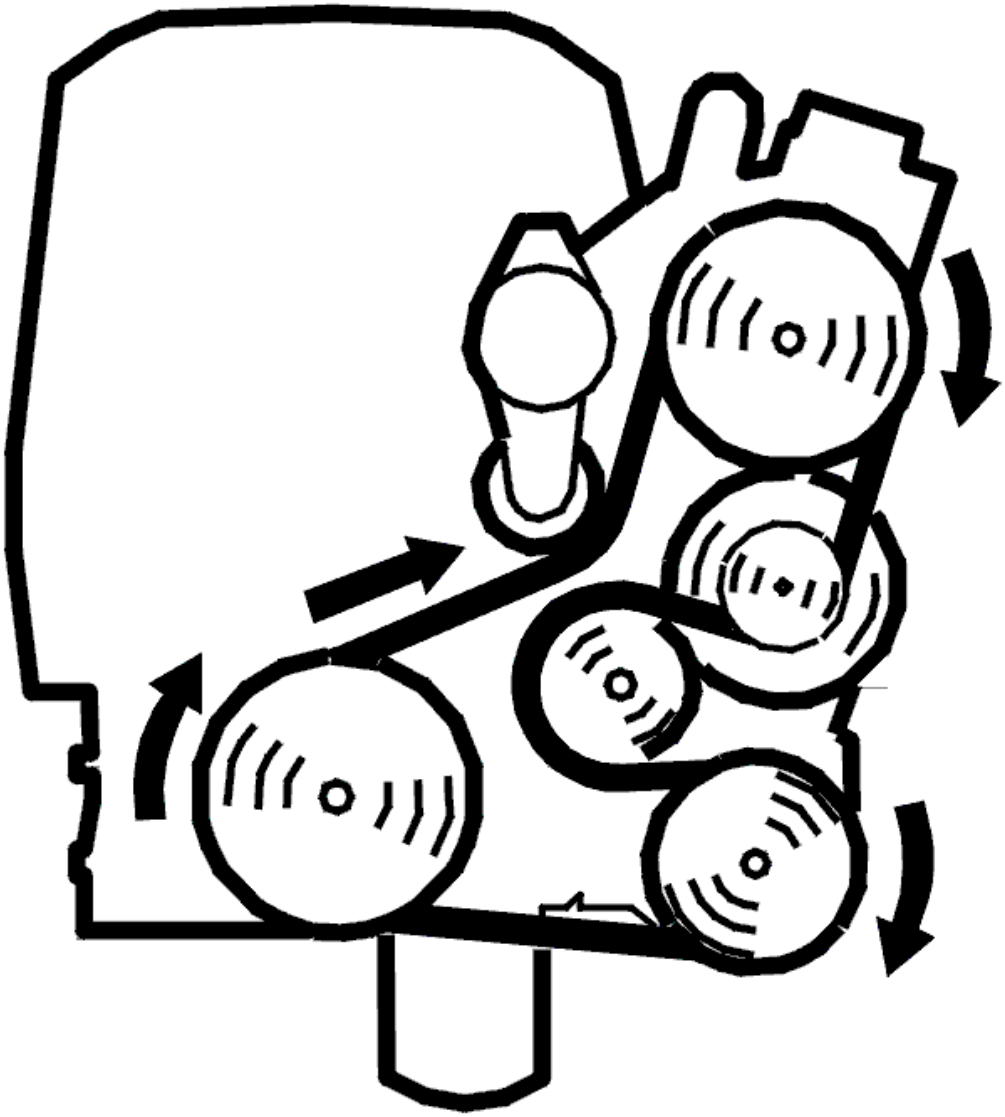

Fig. 224: Belt Routing/Engine Idling - Volvo
Courtesy of VOLVO CARS CORPORATION

- Engine running
- Blower fan on.

  Activate the button for the defroster.

Check that the air flow changes.

Does the air flow change?

- **YES**

  Refer to **CHECKING THE WIRING**

- **NO**

  Refer to **CHECKING THE CIRCUIT**

CHECKING THE CIRCUIT

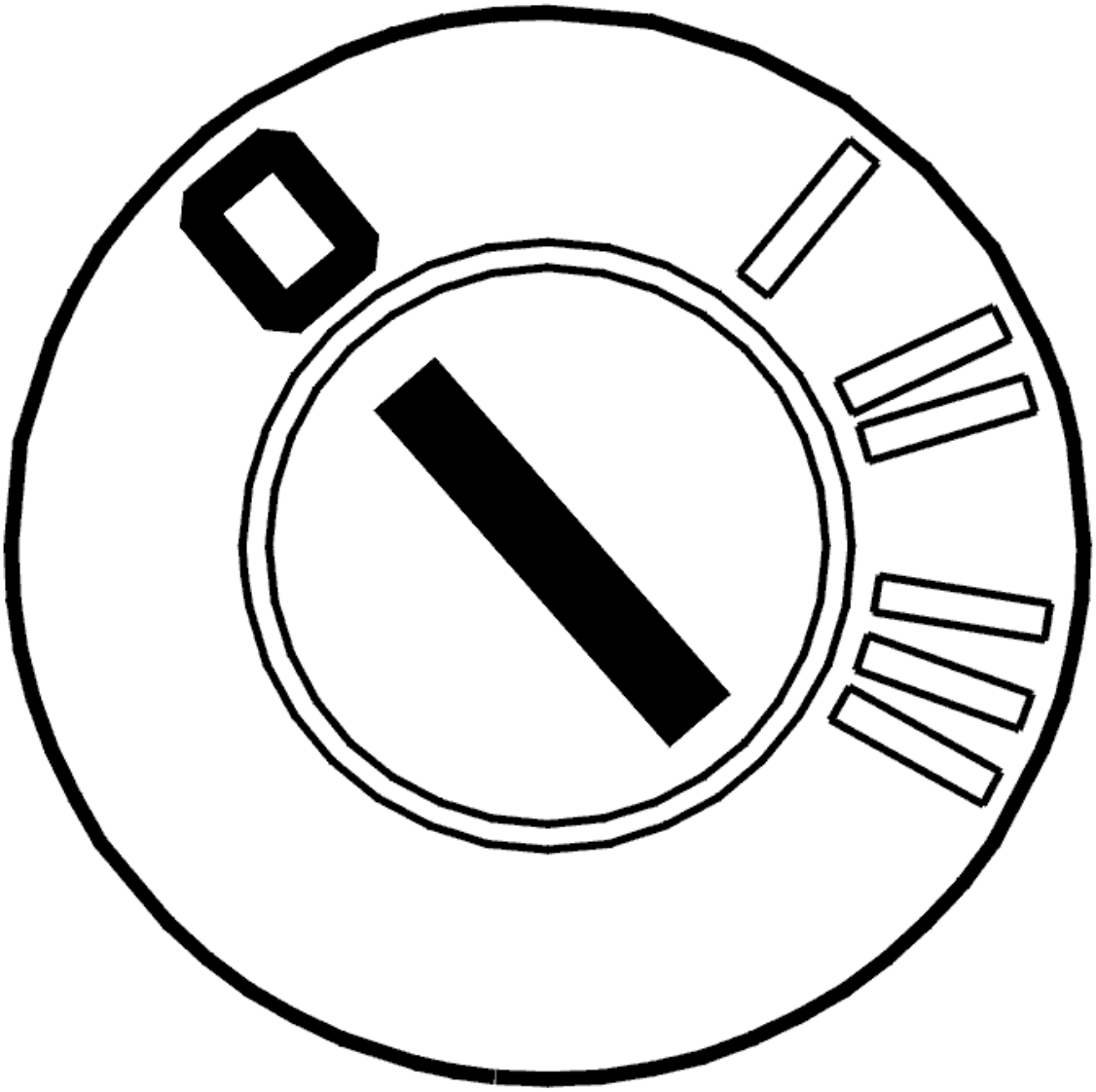

Fig. 225: Identifying Ignition OFF
Courtesy of VOLVO CARS CORPORATION

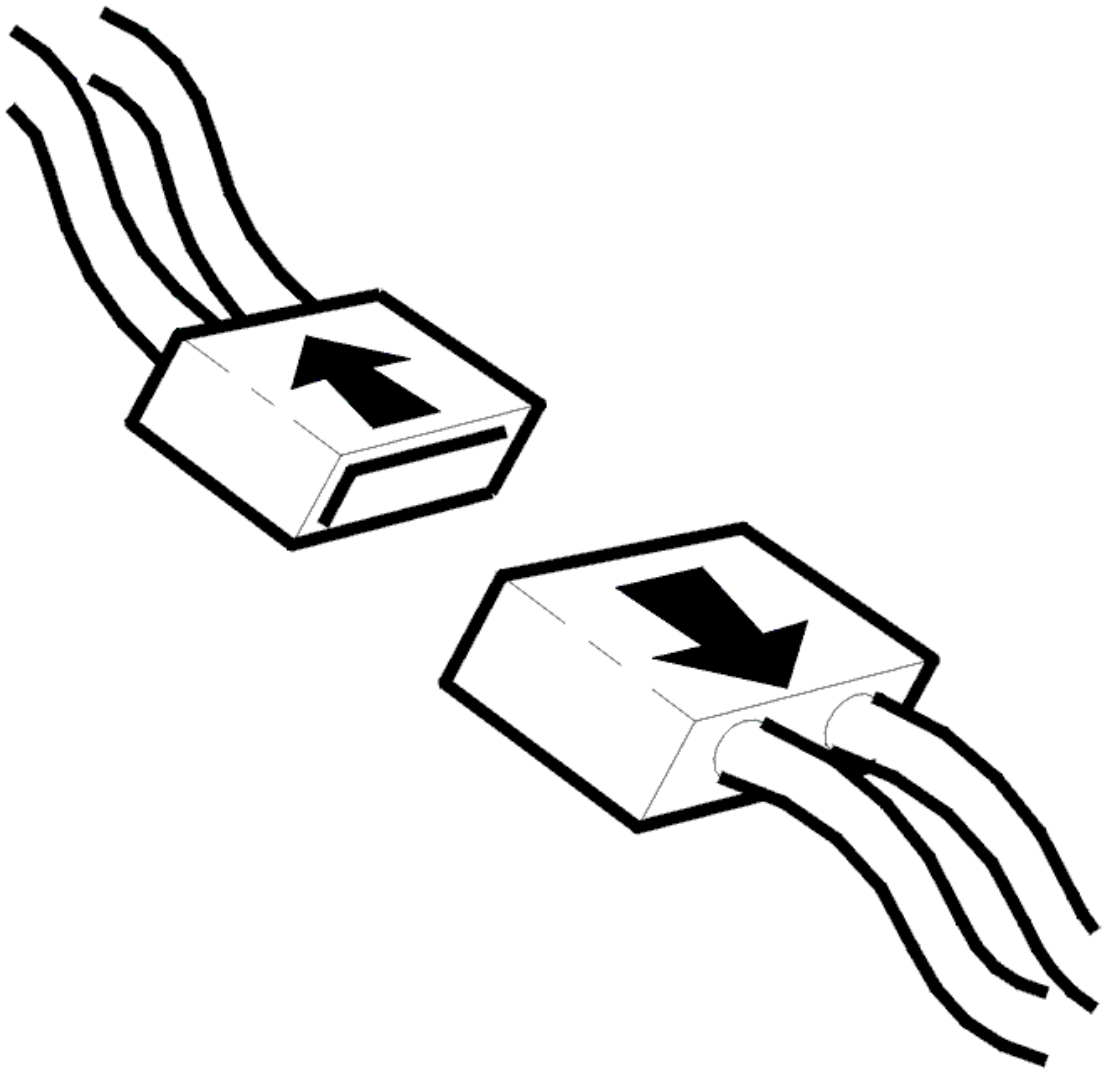

Fig. 226: Disconnecting Connector
Courtesy of VOLVO CARS CORPORATION

- Ignition off
- Disconnect connector B on the climate control module (CCM).

  Check connector B on the climate control module (CCM) and the damper motor connector. Check for contact resistance and oxidation. Check for damage carefully.

  Check the signal cable between the climate control module (CCM) and the damper motor. Check for an open-circuit by measuring the resistance between terminals #B20 (#20) and #B11-#B14 (#11-#14).

  Other information:

  - To access or replace the control module, see **CLIMATE CONTROL MODULE (CCM), REPLACING**

- To access or replace the damper motor, see **DAMPER MOTOR TEMPERATURE, REPLACING**
- see **CHECKING WIRING AND TERMINALS** .

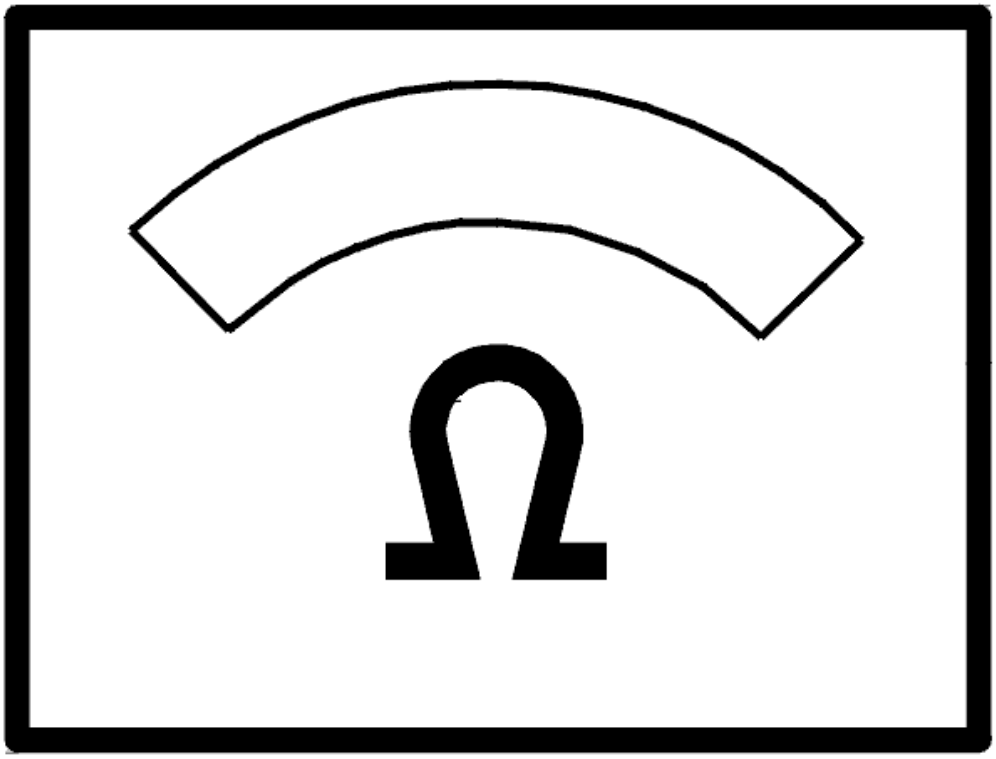

Fig. 227: Identifying Ohmmeter
Courtesy of VOLVO CARS CORPORATION

Was a fault detected?

- **YES**

  Refer to **CHECKING THE CABLE**

- **NO**

Refer to **CHECKING THE CABLE**

CHECKING THE CABLE

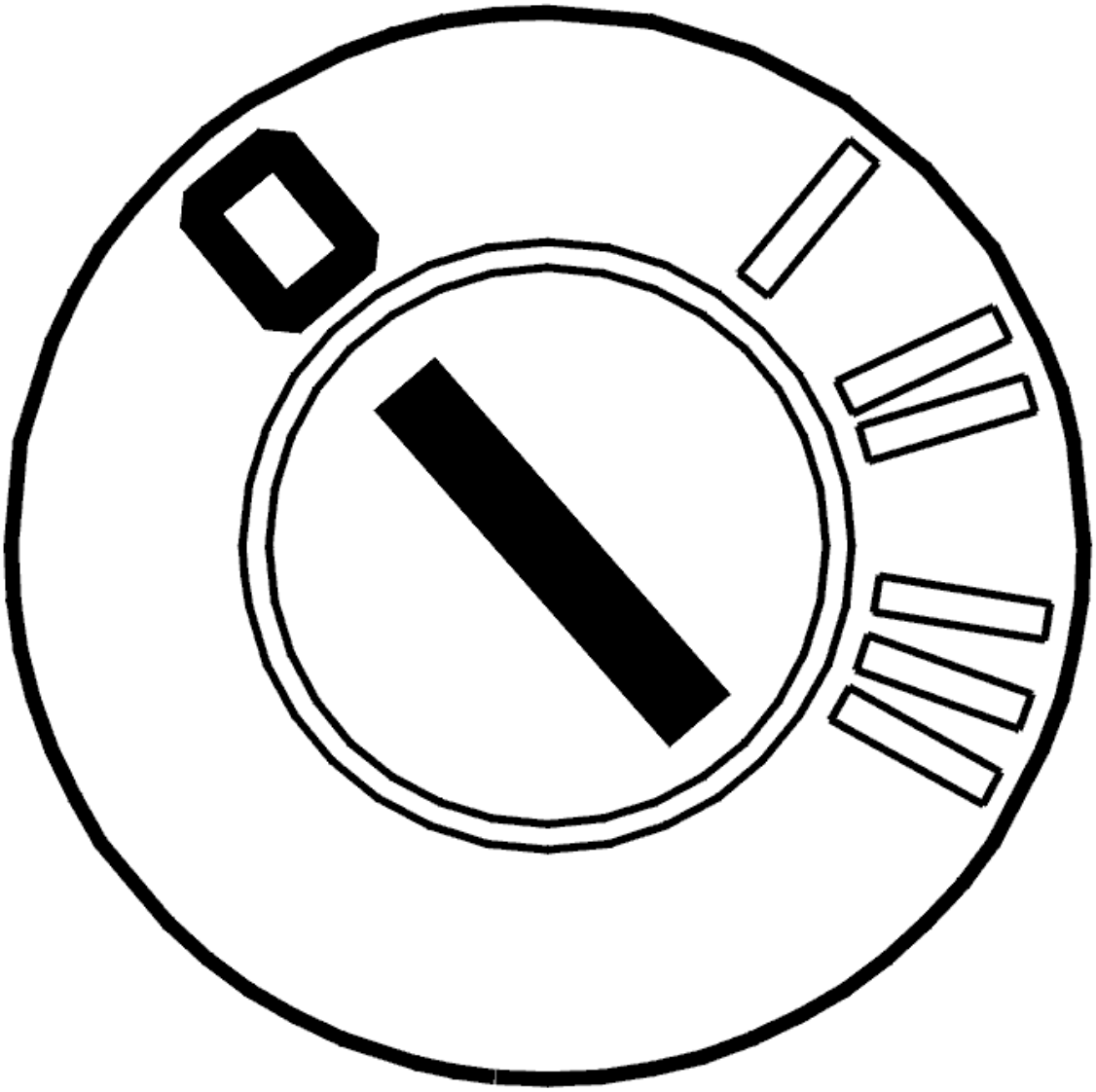

Fig. 228: Identifying Ignition OFF
Courtesy of VOLVO CARS CORPORATION

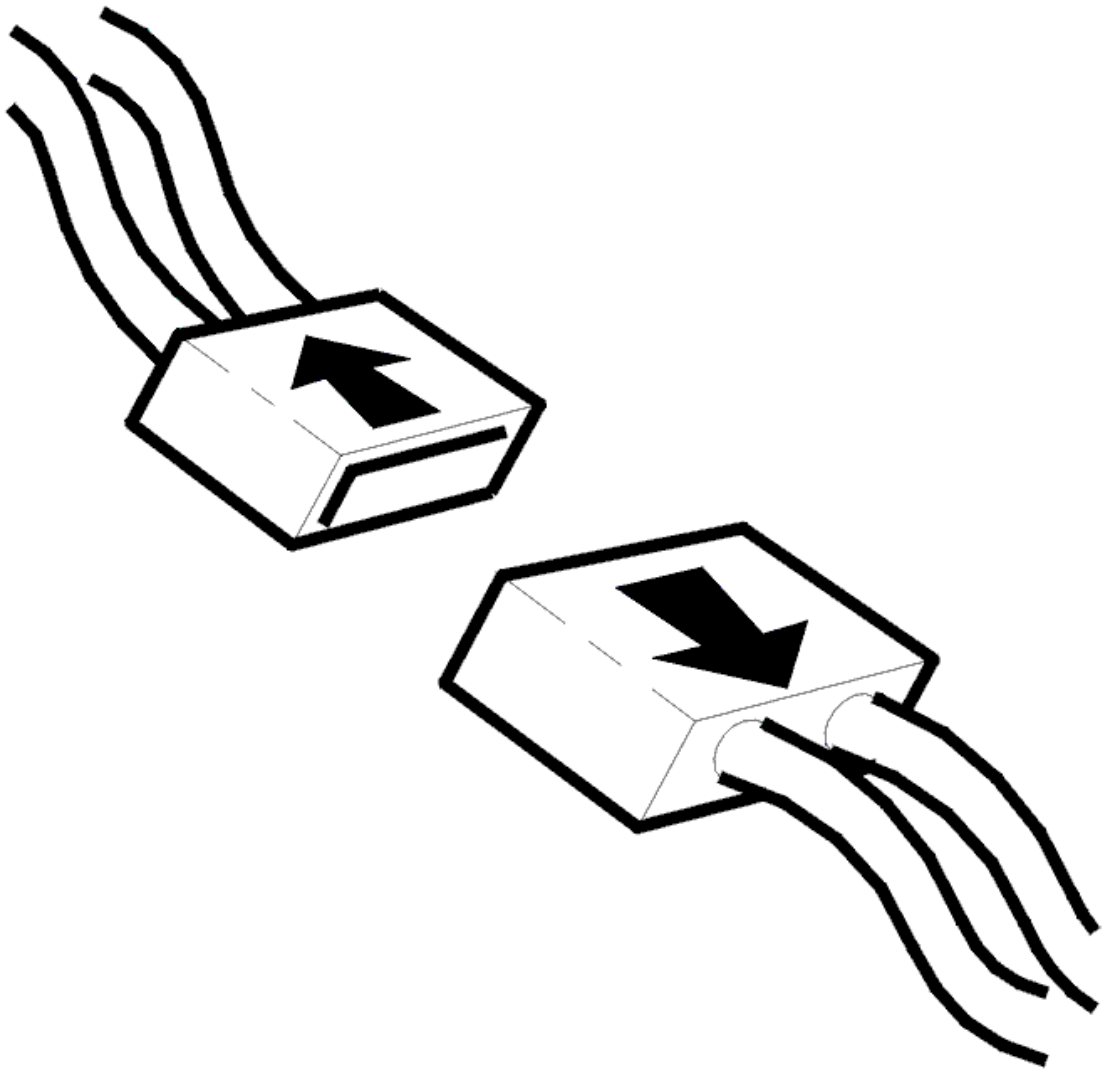

Fig. 229: Disconnecting Connector
Courtesy of VOLVO CARS CORPORATION

- Ignition off
- Disconnect connector B on the climate control module (CCM)
- Disconnect the connectors on the damper motors for defroster and recirculation.

  Check the signal cable. Check control module connector terminal #B20 (#20) and damper motor connector terminal #1. Check for an open-circuit.

  Check the wiring on the matrix network between the defroster damper motor and the recirculation damper motor terminals #3-#6. Check for an open-circuit.

  Remedy as necessary.

Other information:

- To access or replace the control module, see **CLIMATE CONTROL MODULE (CCM), REPLACING**
- To connect the breakout box, see **CONNECTING THE BREAKOUT BOX**
- To access or replace the damper motor, see **DAMPER MOTOR TEMPERATURE, REPLACING**
- For other values, see **SIGNAL SPECIFICATION**
- see **CHECKING WIRING AND TERMINALS** .

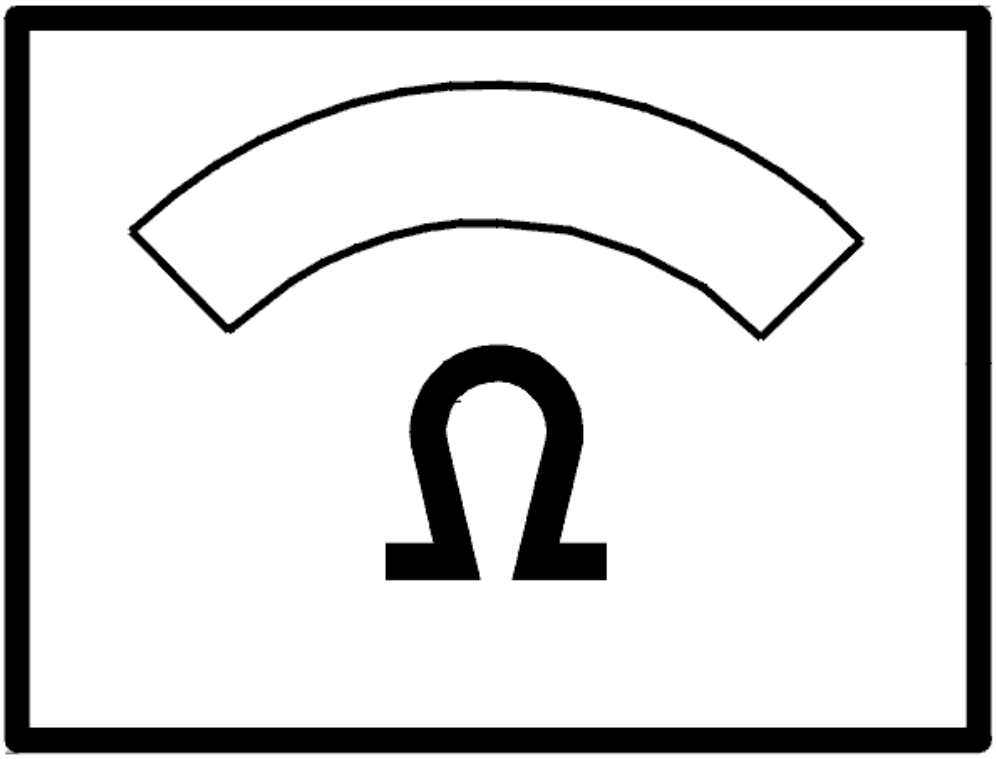

Fig. 230: Identifying Ohmmeter
Courtesy of VOLVO CARS CORPORATION

- **Continue**

Refer to **QUERY**

CHECKING THE CABLE

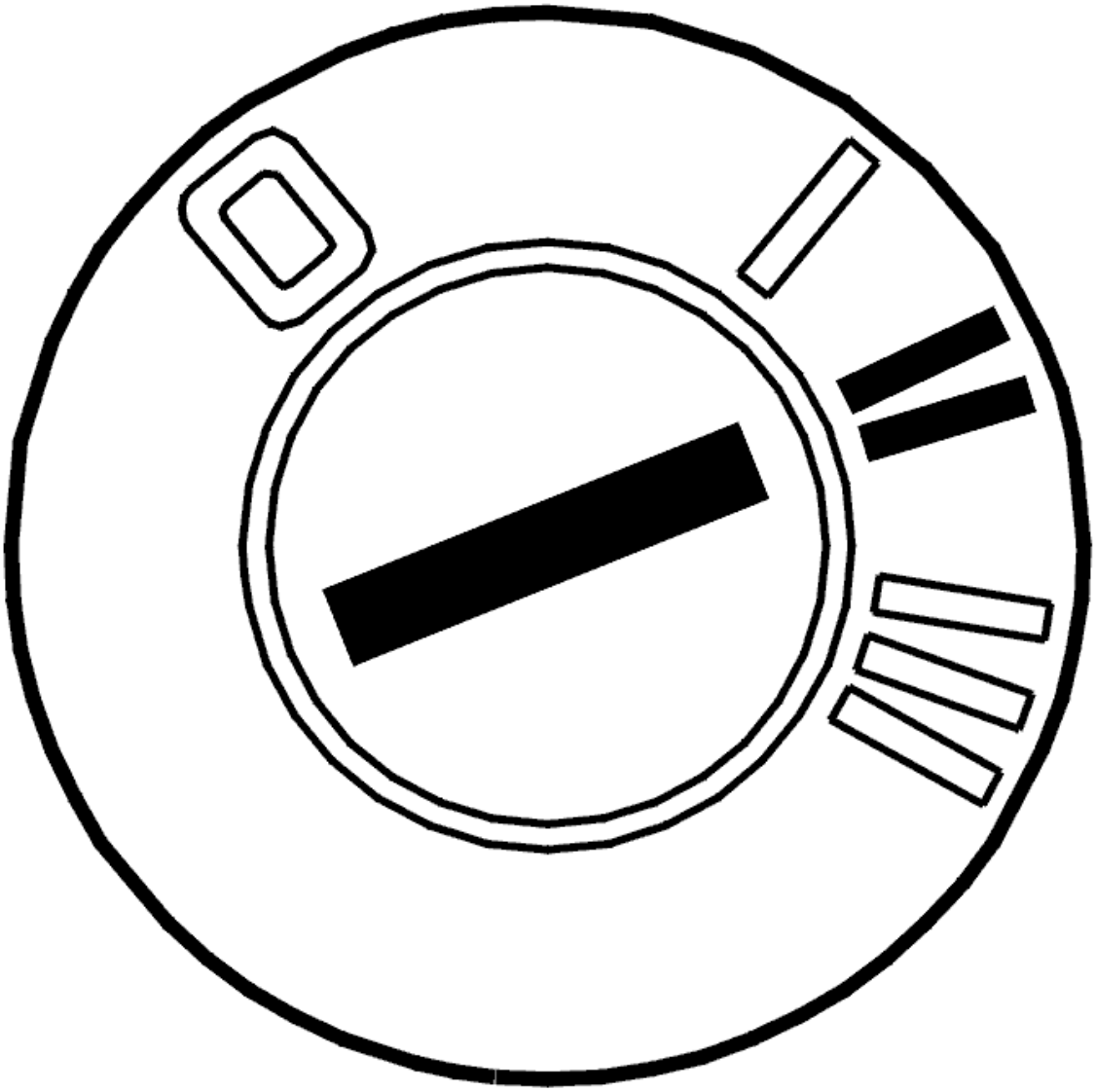

Fig. 231: Identifying Ignition ON
Courtesy of VOLVO CARS CORPORATION

- Ignition on.

  Check the signal cable between climate control module (CCM) terminal #B20 (#20) and damper motor terminal #1. Check for a short-circuit to supply voltage.

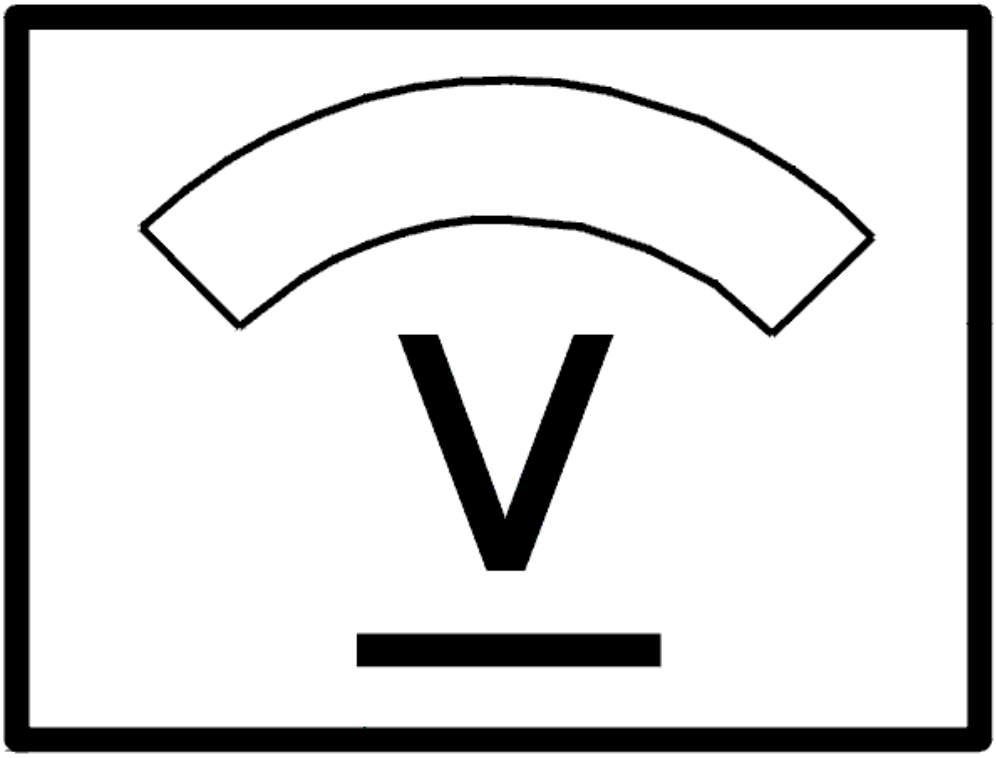

Fig. 232: Identifying Voltage Display
Courtesy of VOLVO CARS CORPORATION

Was a fault detected?

- **YES**

  Refer to **QUERY**

- **NO**

  FAULT NOT FOUND: Troubleshooting has been completed.

CHECKING THE WIRING

Check control module terminal #B20 and damper motor connector terminal #1. Check for contact resistance and

oxidation. Check for loose connections. Check for damage carefully.

Check the signal cable between control module terminal #B20 and damper motor terminal #1. Check for an intermittent open-circuit.

Check the wiring between the defroster damper motor and the recirculation damper motor. Check for an intermittent open-circuit.

Check the signal cable between control module terminal #B20 and damper motor terminal #1. Check for an intermittent short-circuit to supply voltage.

- **Continue**

  Refer to **INFORMATION**

QUERY

Select which type of climate control the car is equipped with.

1. Electronic climate control. Refer to **SELF-ADJUSTMENT**.
2. Manual climate control (MCC)/Standard (STD). Refer to **SELF-ADJUSTMENT**

SELF-ADJUSTMENT

HINT: After replacing the control module or damper motor, and when a damper motor or link has been removed, carry out self adjustment to define the damper motor limit positions.

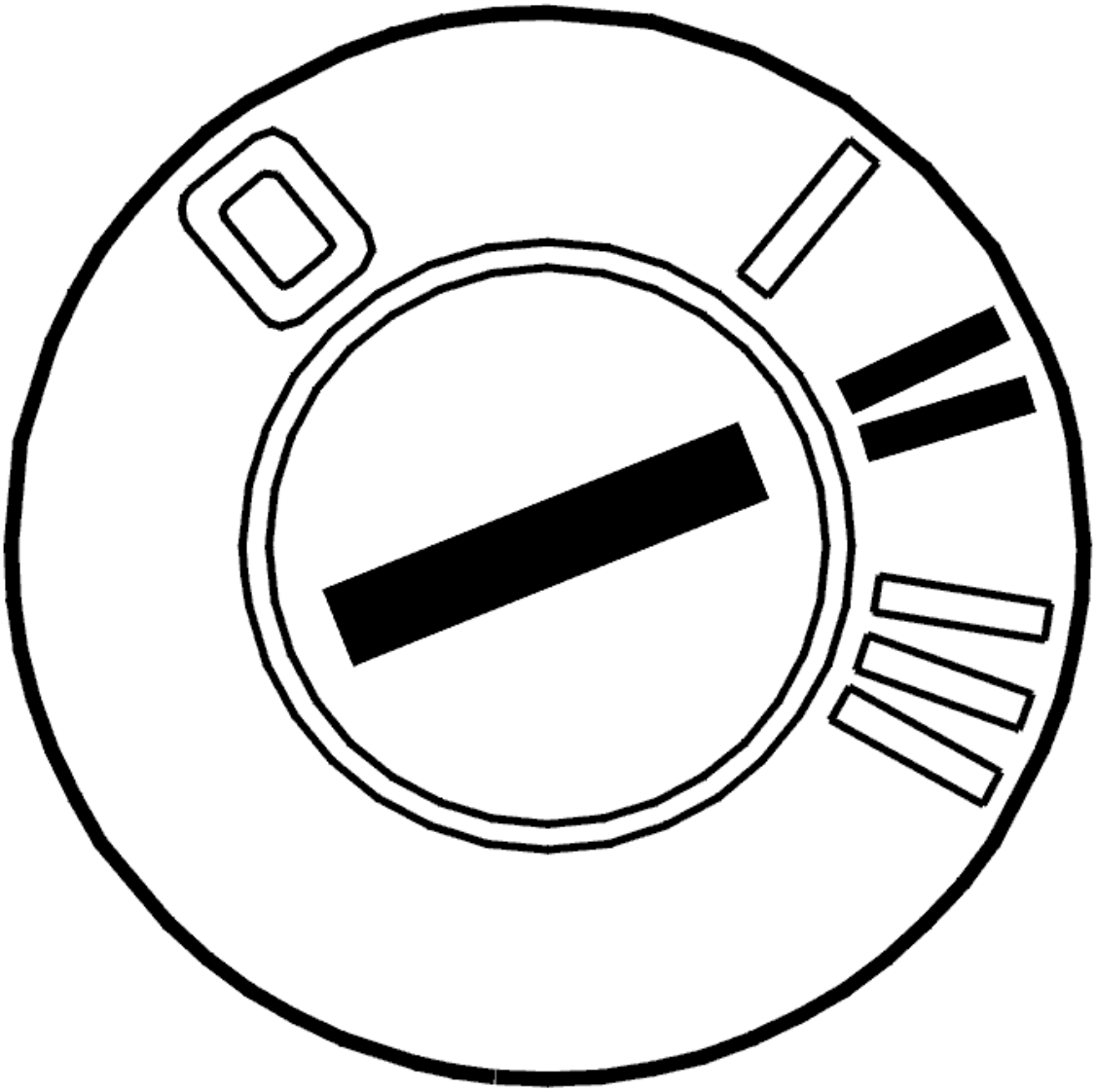

Fig. 233: Identifying Ignition ON
Courtesy of VOLVO CARS CORPORATION

- Ignition off.
- Reinstall the connectors, components etc.
- Ignition on.

  Activate self adjustment.

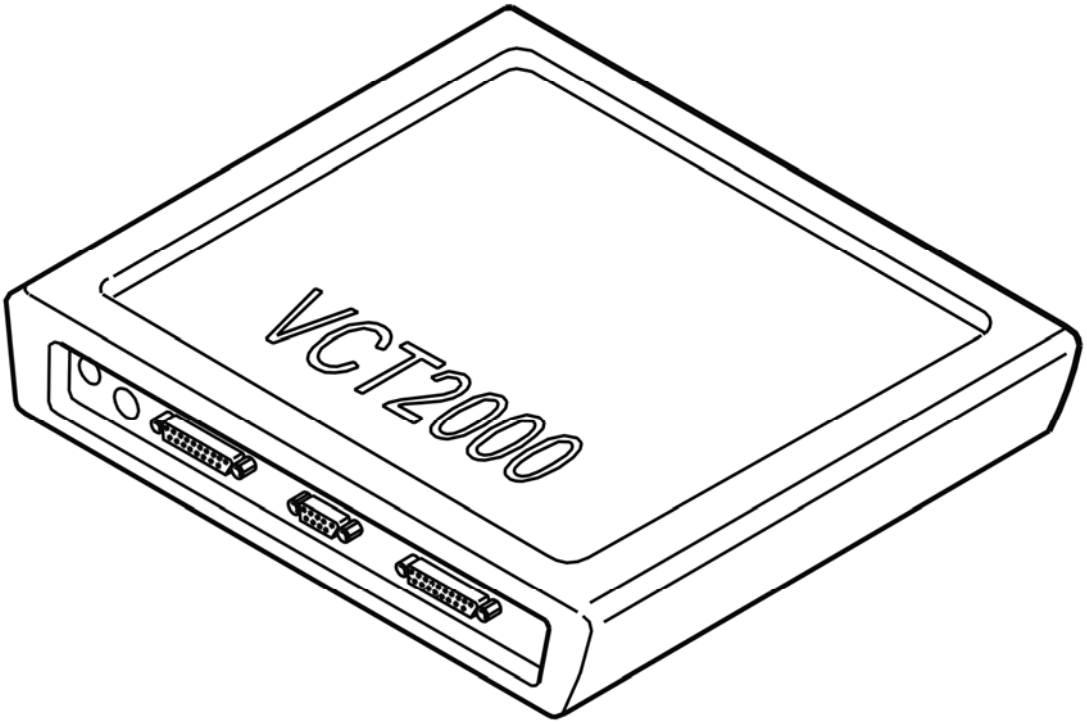

Fig. 234: Identifying VCT2000 Diagnostic Tool Symbol In VIDA
Courtesy of VOLVO CARS CORPORATION

- **Continue**

  Refer to **VERIFICATION**

SELF-ADJUSTMENT

HINT: After replacing the control module or damper motor, and when a damper motor or link has been removed, carry out self adjustment to define the damper motor limit positions.

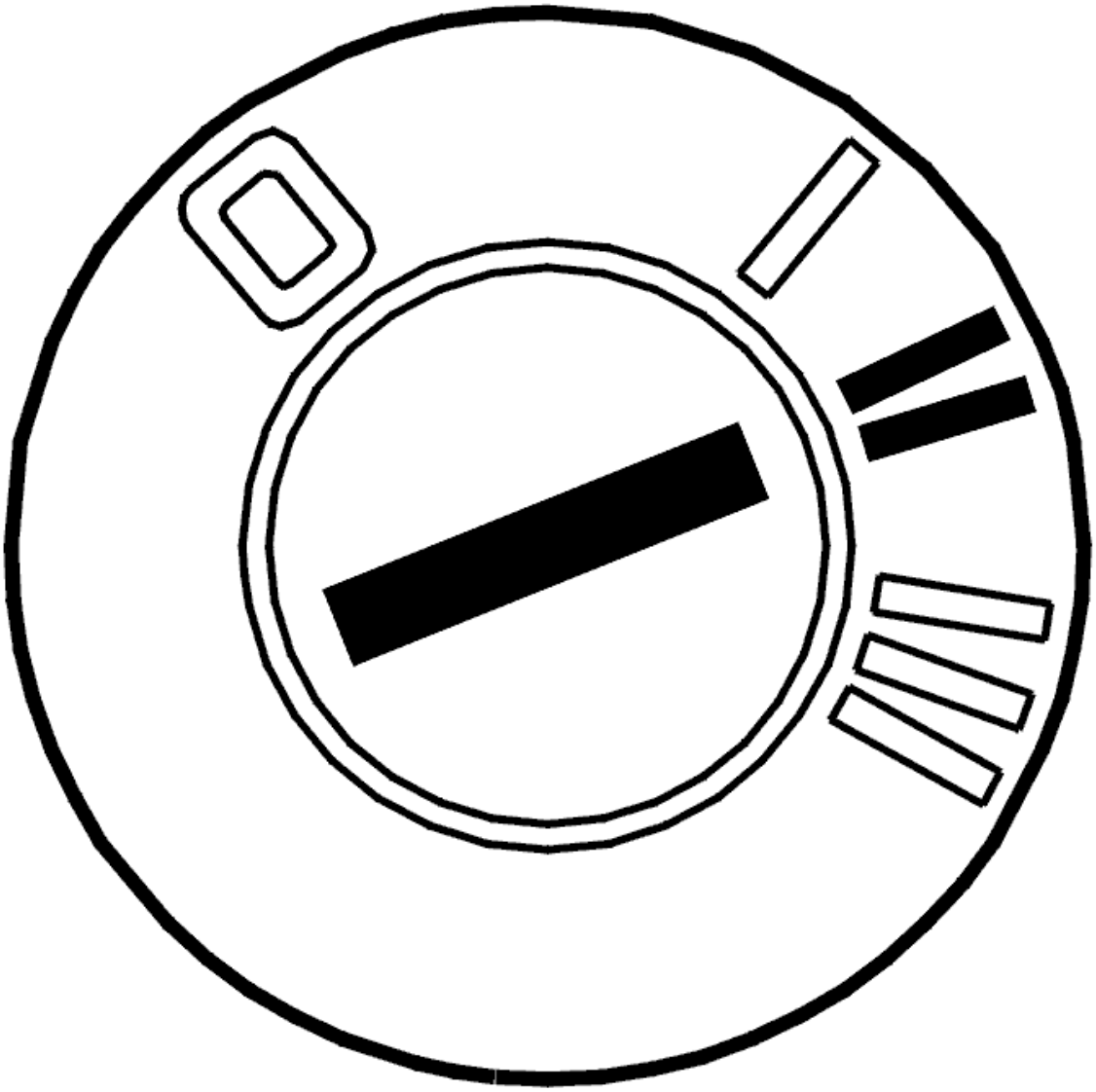

Fig. 235: Identifying Ignition ON
Courtesy of VOLVO CARS CORPORATION

- Ignition off.
- Reinstall the connectors, components etc.
- Ignition on.

  Activate self adjustment.

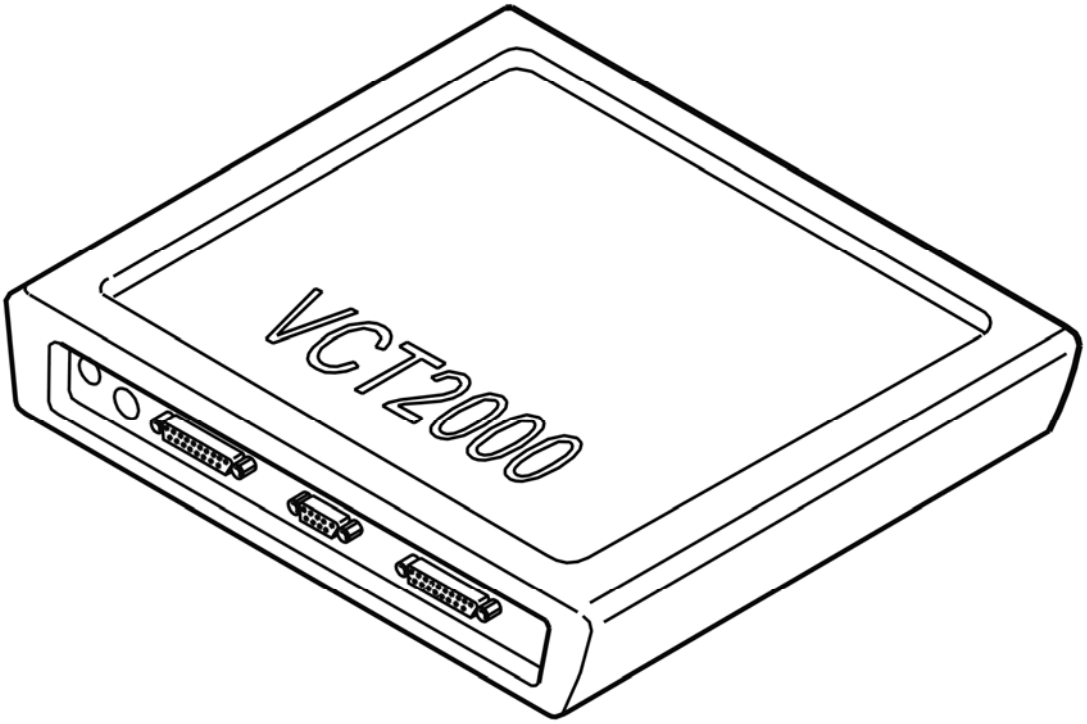

Fig. 236: Identifying VCT2000 Diagnostic Tool Symbol In VIDA
Courtesy of VOLVO CARS CORPORATION

- **Continue**

  Refer to **VERIFICATION**

VERIFICATION

HINT: After the repair it is necessary to check that the fault has been rectified.

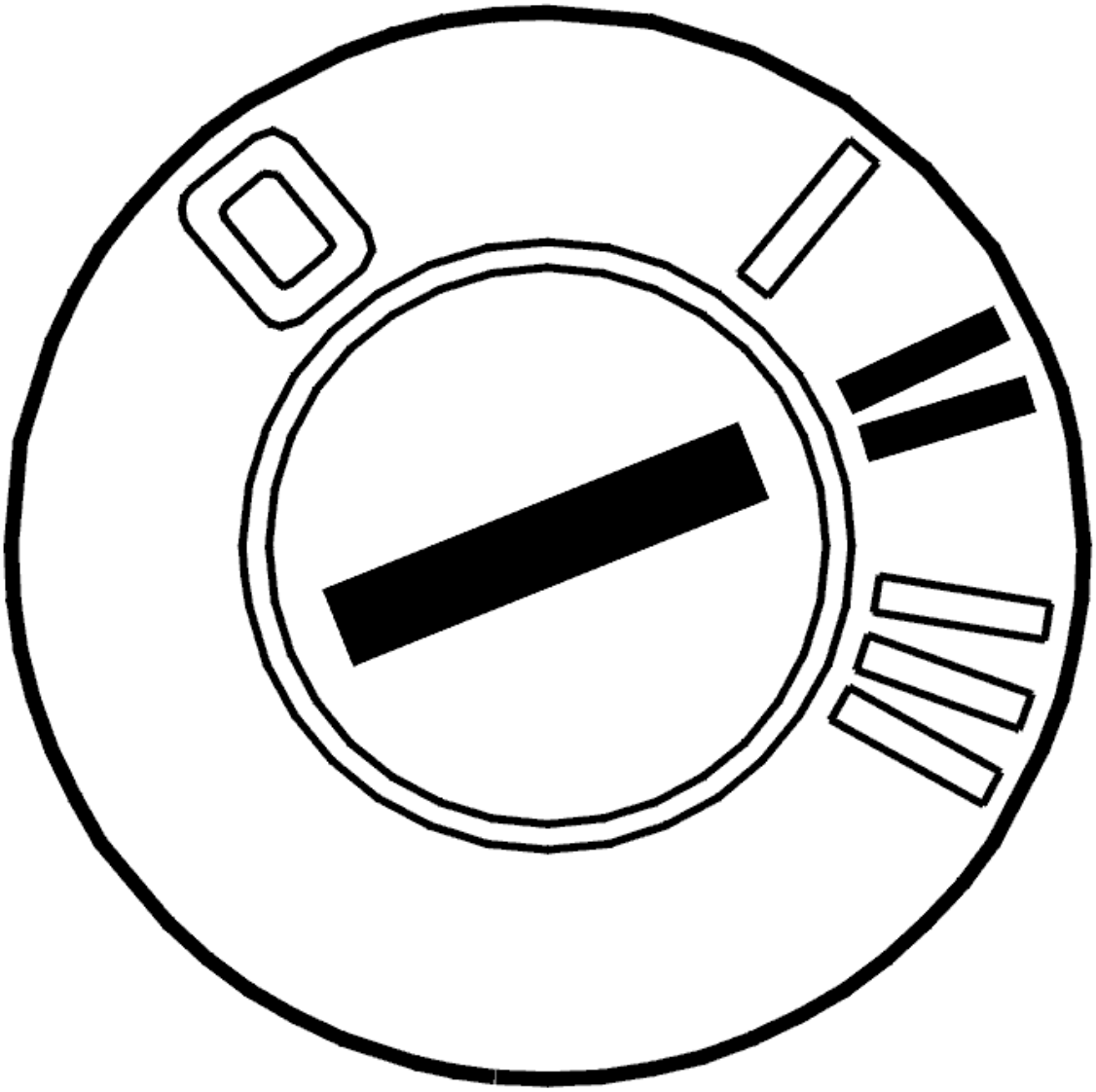

Fig. 237: Identifying Ignition ON
Courtesy of VOLVO CARS CORPORATION

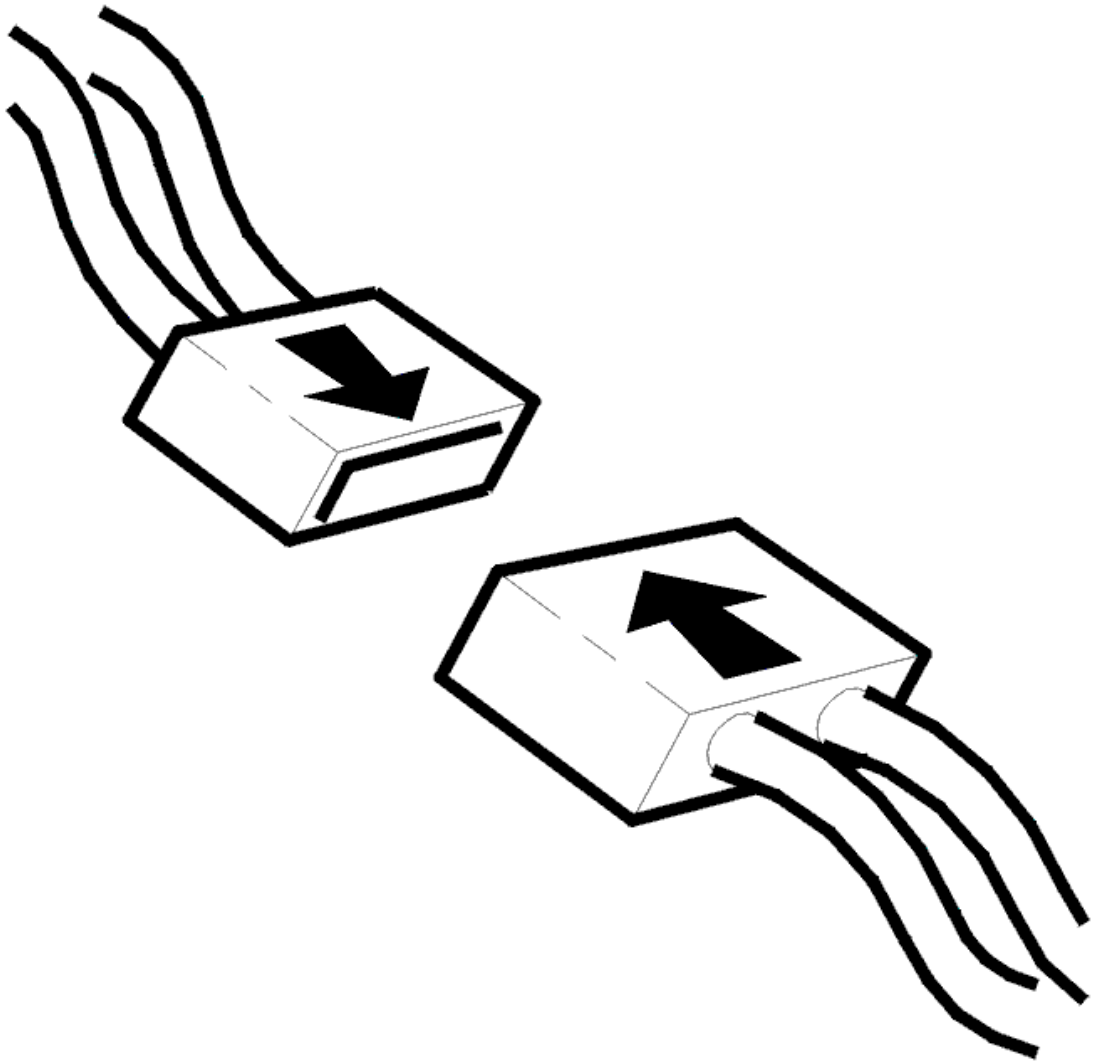

Fig. 238: Connecting Connector
Courtesy of VOLVO CARS CORPORATION

- Ignition off.
- Connect the connectors, install the components, etc.
- Ignition on.
- Blower motor on.

Check that damper motor position changes by changing control on climate control module (CCM). The values given below are the standard values that the damper motor positions should give.

NOTE: Blower motor must be in operation to activate the damper motors.

- Left/right temperature damper motor and defroster, 0-100%
- Recirculation damper motor, 40-100%

- Floor/ventilation damper motor, floor only approximately 39%, ventilation only approximately 87% and floor/ventilation approximately 71%.

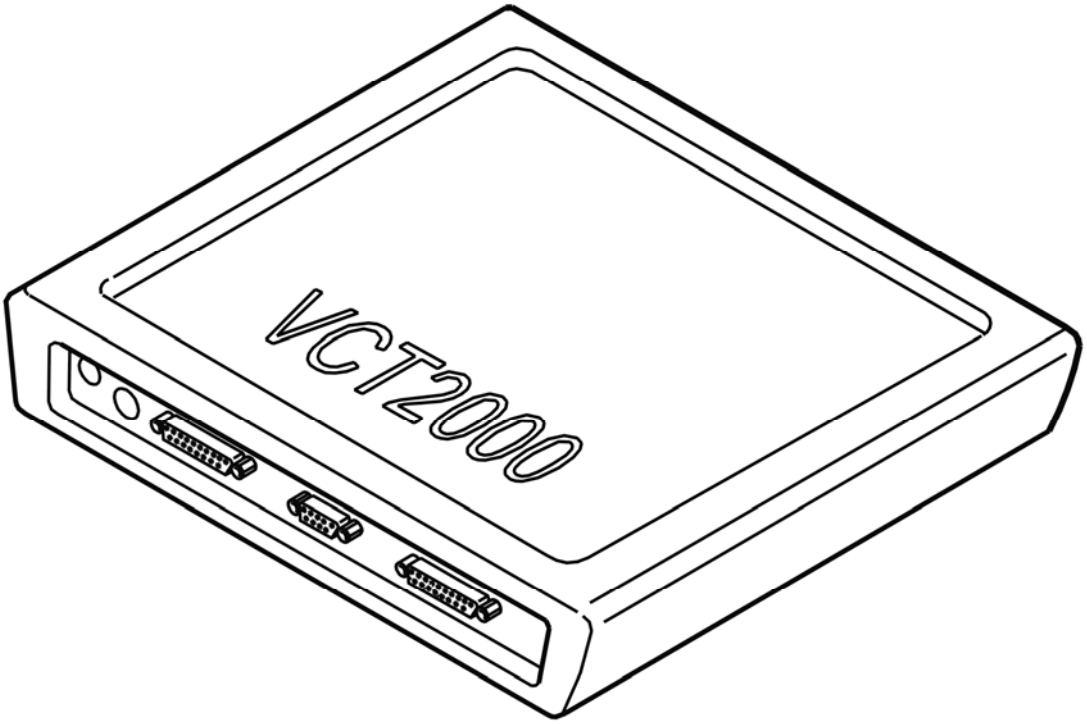

Fig. 239: Identifying VCT2000 Diagnostic Tool Symbol In VIDA
Courtesy of VOLVO CARS CORPORATION

Does damper motor work?

- **YES**

  VERIFIED: Troubleshooting has been completed.

- **NO**

  Refer to **INFORMATION**

INFORMATION

FAULT-TRACING INFORMATION

The fault should have been detected and remedied. As this is not the case fault-tracing has failed.

Exit fault-tracing for this diagnostic trouble code (DTC) or make another attempt.

CCM-0010: AIR DISTRIBUTION DAMPER MOTOR. SIGNAL TOO LOW (2003-04)

DIAGNOSTIC TROUBLE CODE (DTC) INFORMATION

Condition

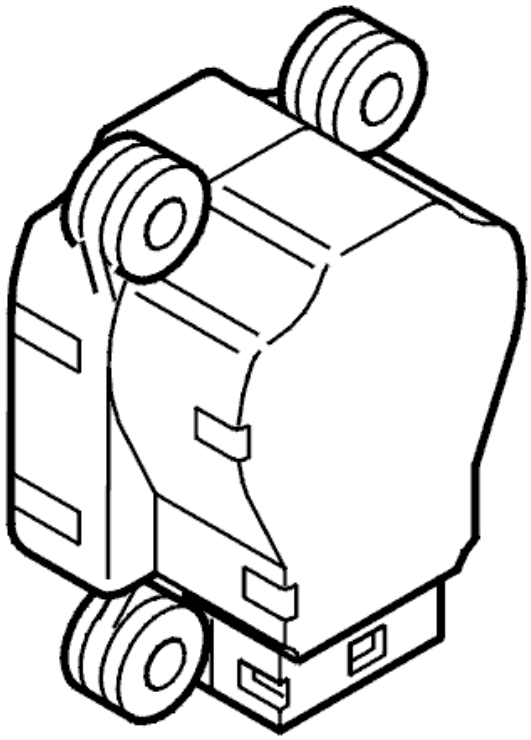

Fig. 240: Identifying Left Temperature Damper Motor
Courtesy of VOLVO CARS CORPORATION

Diagnostic trouble code (DTC) CCM-0010 is stored if the control module registers too low a signal from the air distribution damper motor. Diagnostic trouble code (DTC) CCM-0010 can only be detected for the climate control module (CCM) in MCC/STD version.

Substitute Value

- None.

Possible Source

- Short-circuit to supply voltage in the signal cable between the control module and the damper motor
- Open-circuit in the signal cable between the control module and the damper motor
- Contact resistance, oxidation or loose connections in the connectors

- Defective damper motor.

Fault symptom[s]

- Air flow problem.

SIGNAL TOO LOW

CHECKING DAMPER MOTOR CONTROL

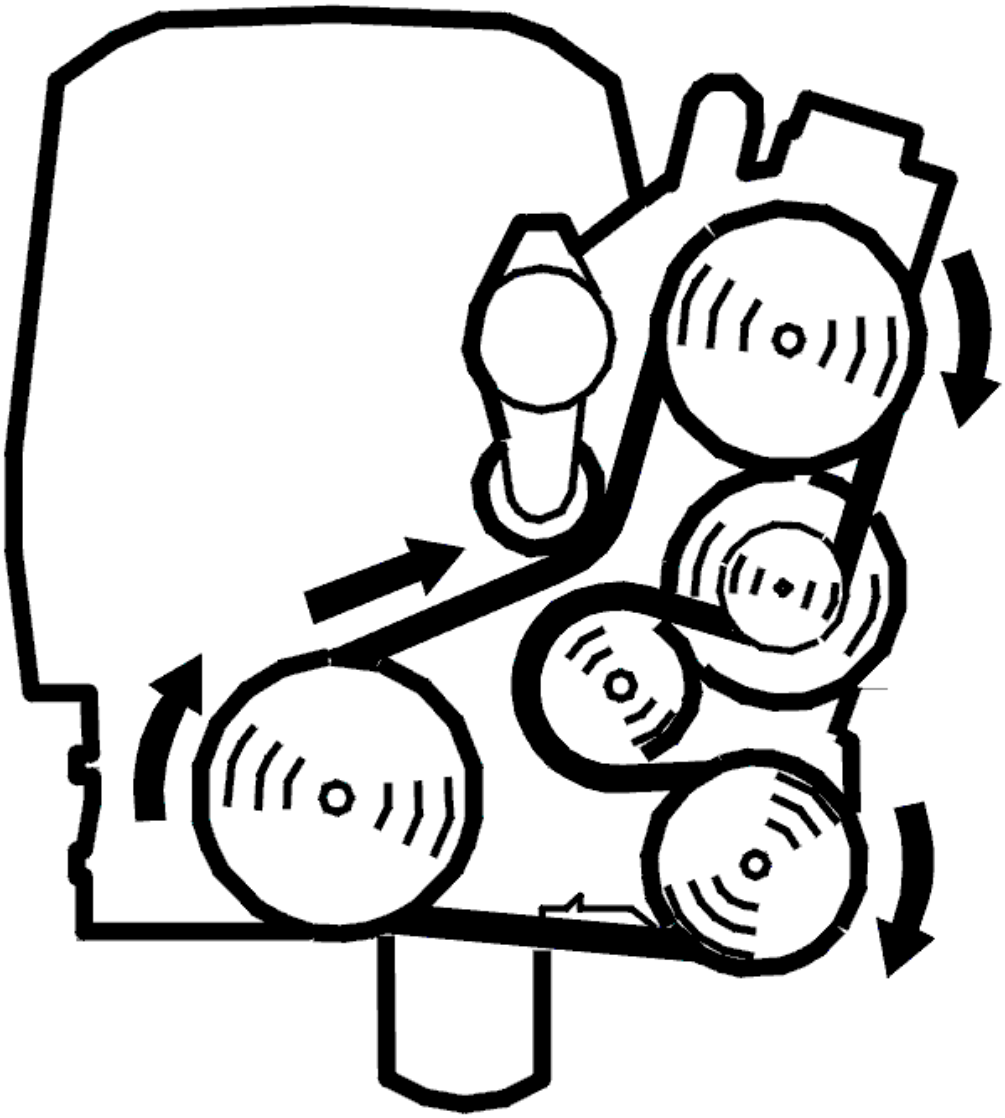

Fig. 241: Belt Routing/Engine Idling - Volvo
Courtesy of VOLVO CARS CORPORATION

- Engine running
- Blower fan on.

Activate the button for air distribution.

Check that the air flow changes.

Does the air flow change?

- **YES**

  Refer to **CHECKING THE WIRING**

- **NO**

  Refer to **CHECKING THE CIRCUIT**

CHECKING THE CIRCUIT

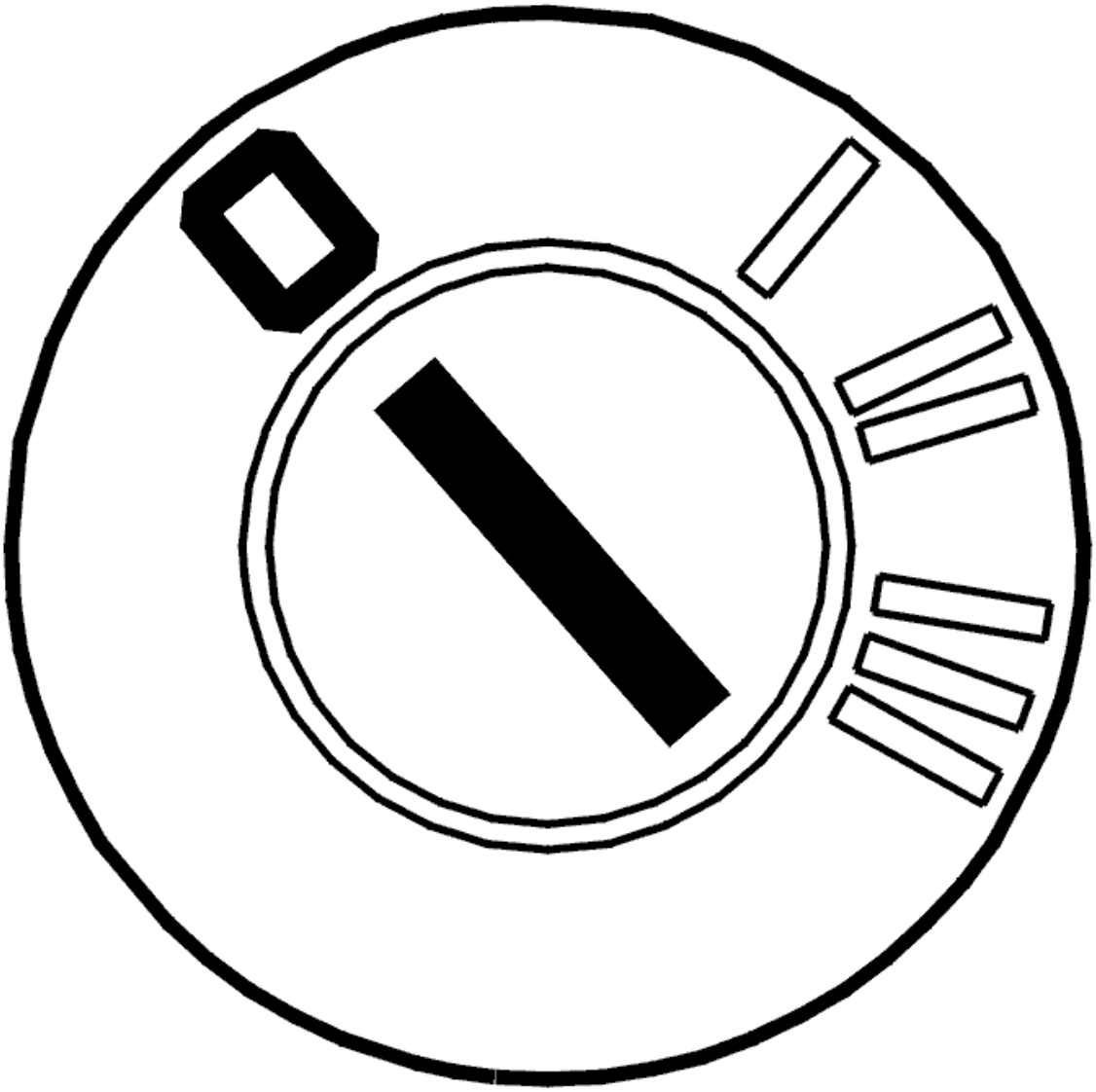

Fig. 242: Identifying Ignition OFF
Courtesy of VOLVO CARS CORPORATION

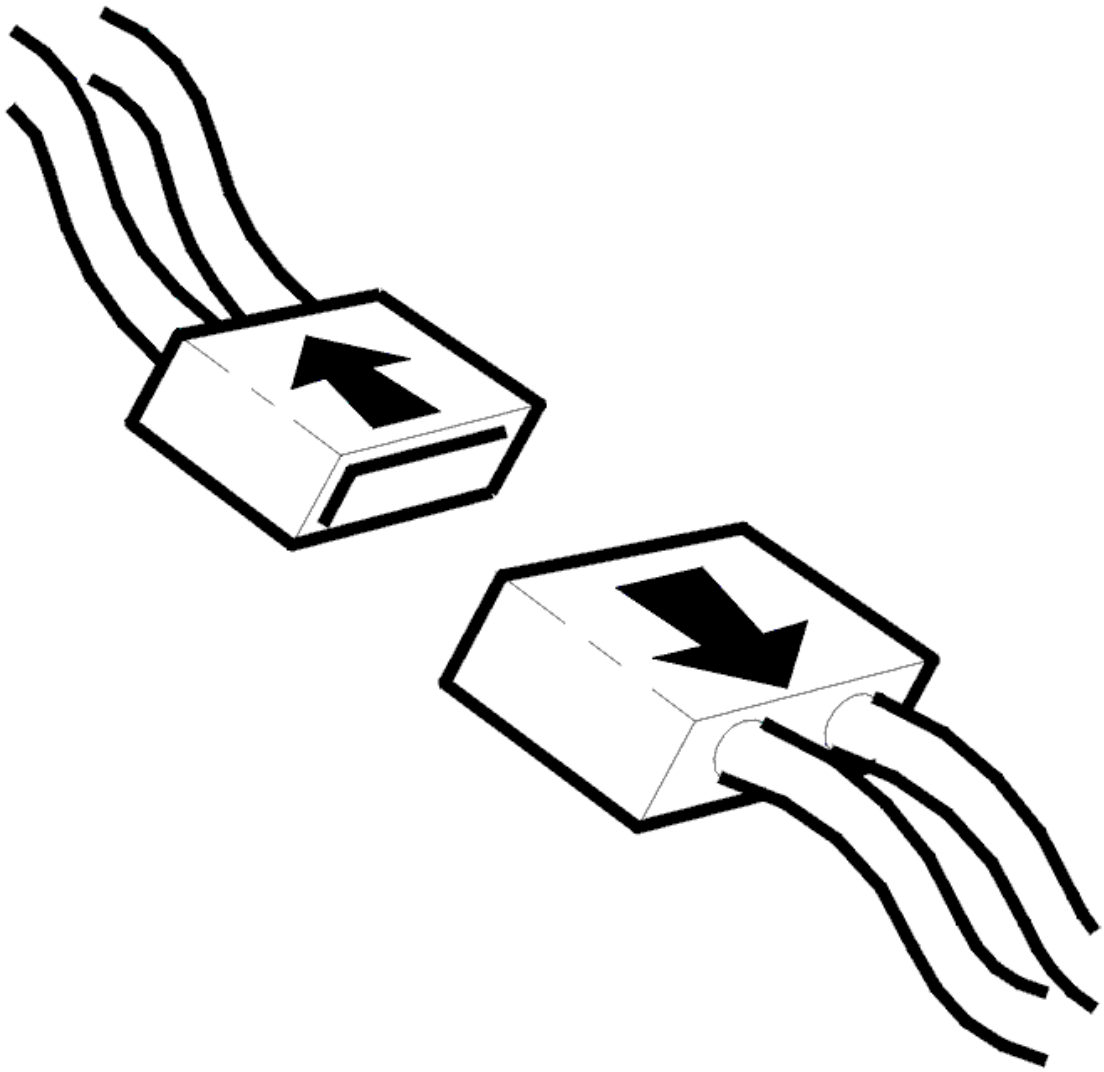

Fig. 243: Disconnecting Connector
Courtesy of VOLVO CARS CORPORATION

- Ignition off
- Disconnect connector B on the climate control module (CCM).

  Check connector B on the climate control module (CCM) and the damper motor connector. Check for contact resistance and oxidation. Check for damage carefully.

  Check the signal cable between the climate control module (CCM) and the damper motor. Check for an open-circuit by measuring the resistance between terminals #B22 (#21) and #B11-#B14 (#11-#14).

  Other information:

- To access or replace the control module, see **CLIMATE CONTROL MODULE (CCM), REPLACING**
- To access or replace the damper motor, see **DAMPER MOTOR TEMPERATURE, REPLACING**
- see **CHECKING WIRING AND TERMINALS** .

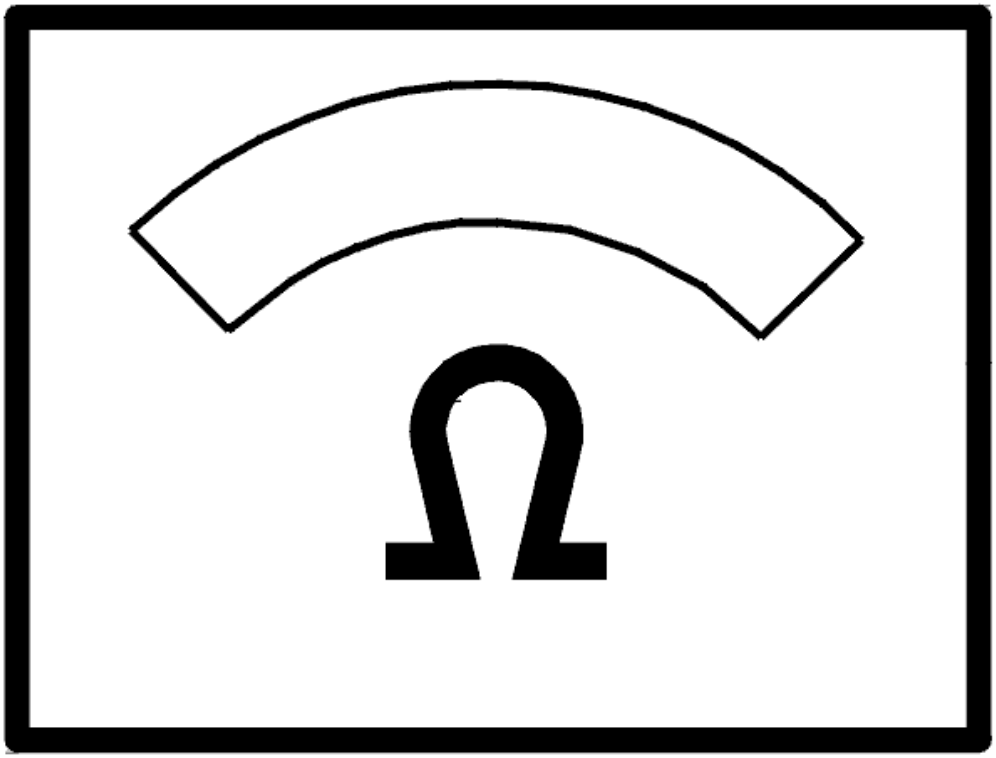

Fig. 244: Identifying Ohmmeter
Courtesy of VOLVO CARS CORPORATION

Was a fault detected?

- **YES**

  Refer to **CHECKING THE CABLE**

- **NO**

  Refer to **CHECKING THE CABLE**

CHECKING THE CABLE

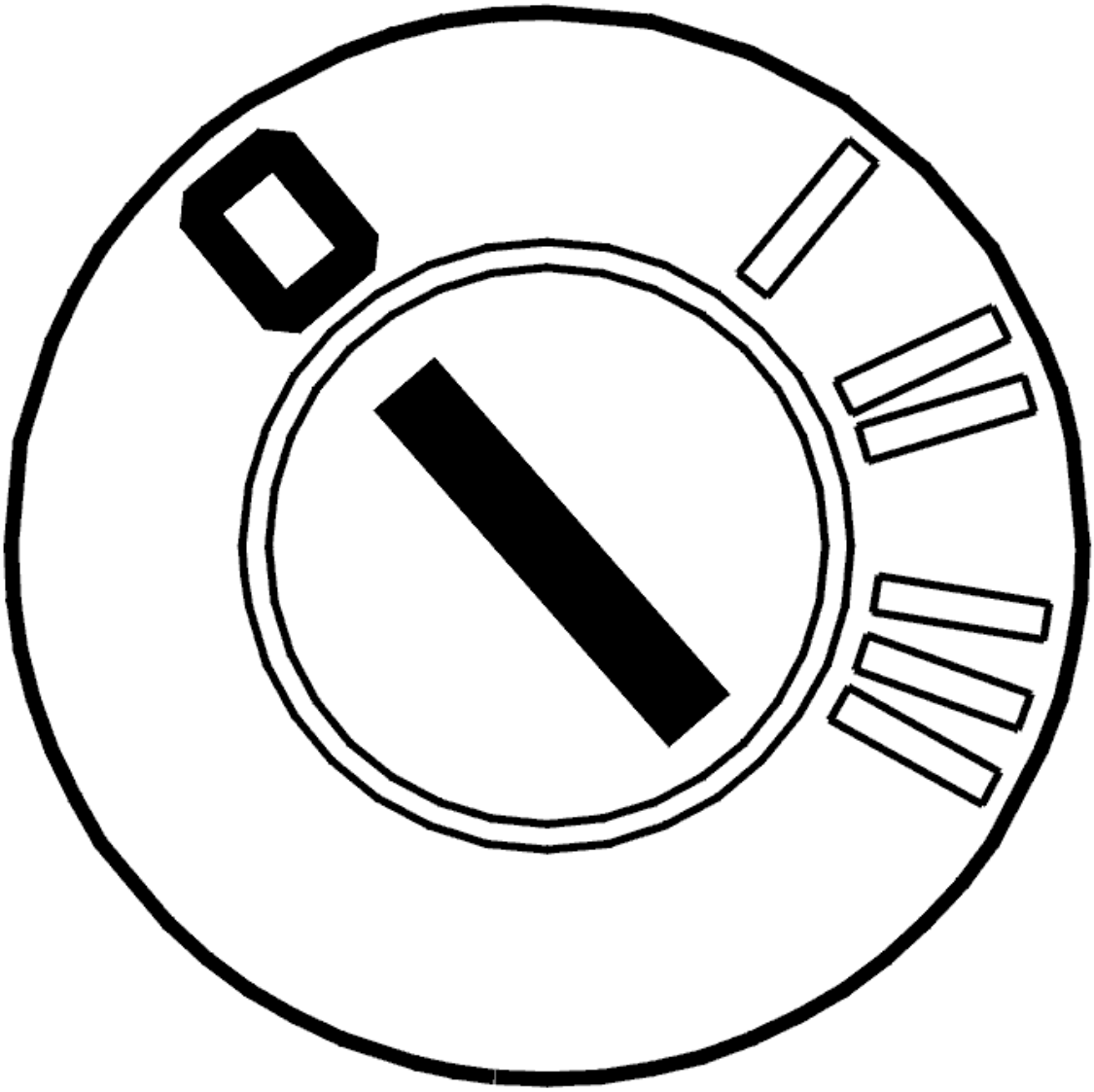

Fig. 245: Identifying Ignition OFF
Courtesy of VOLVO CARS CORPORATION

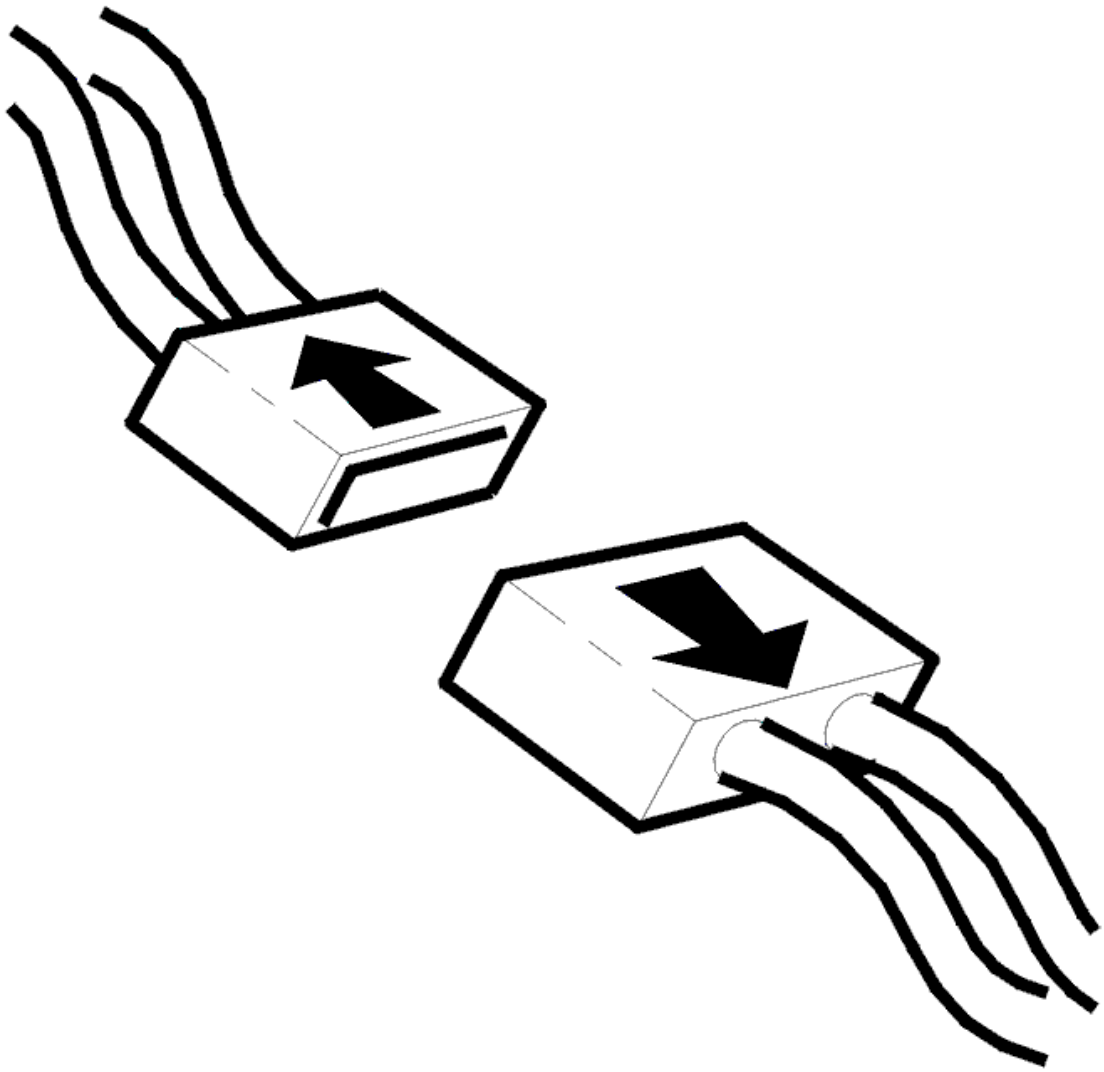

Fig. 246: Disconnecting Connector
Courtesy of VOLVO CARS CORPORATION

- Ignition off
- Disconnect connector B on the climate control module (CCM)
- Disconnect the connector on the air distribution damper motor.

  Check the signal cable. Check control module connector terminal #B22 (#22) and damper motor connector terminal #1. Check for an open-circuit.

  Check the wiring on the matrix network between air distribution damper motor terminals #3-#6 and climate control module (CCM) terminals #B11-#B14 (#11-#14). Check for an open-circuit.

  Remedy as necessary.

Other information:

- To access or replace the control module, see **CLIMATE CONTROL MODULE (CCM), REPLACING**
- To connect the breakout box, see **CONNECTING THE BREAKOUT BOX**
- To access or replace the damper motor, see **DAMPER MOTOR TEMPERATURE, REPLACING**
- For other values, see **SIGNAL SPECIFICATION**
- see **CHECKING WIRING AND TERMINALS** .

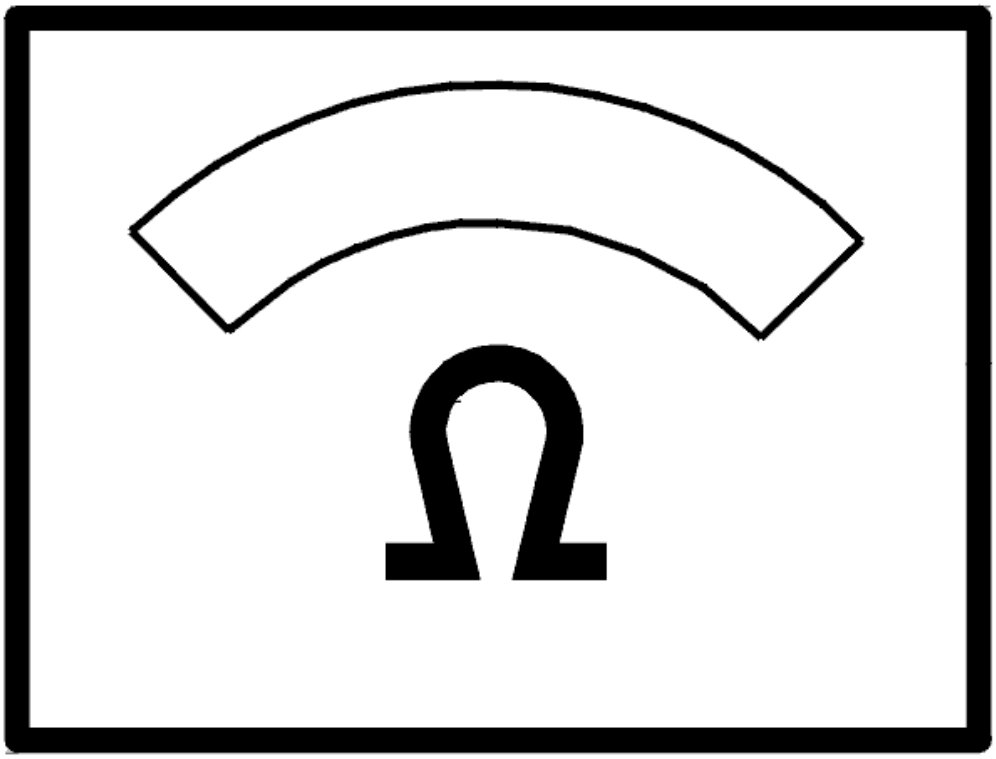

Fig. 247: Identifying Ohmmeter
Courtesy of VOLVO CARS CORPORATION

- **Continue**

Refer to **QUERY**

CHECKING THE CABLE

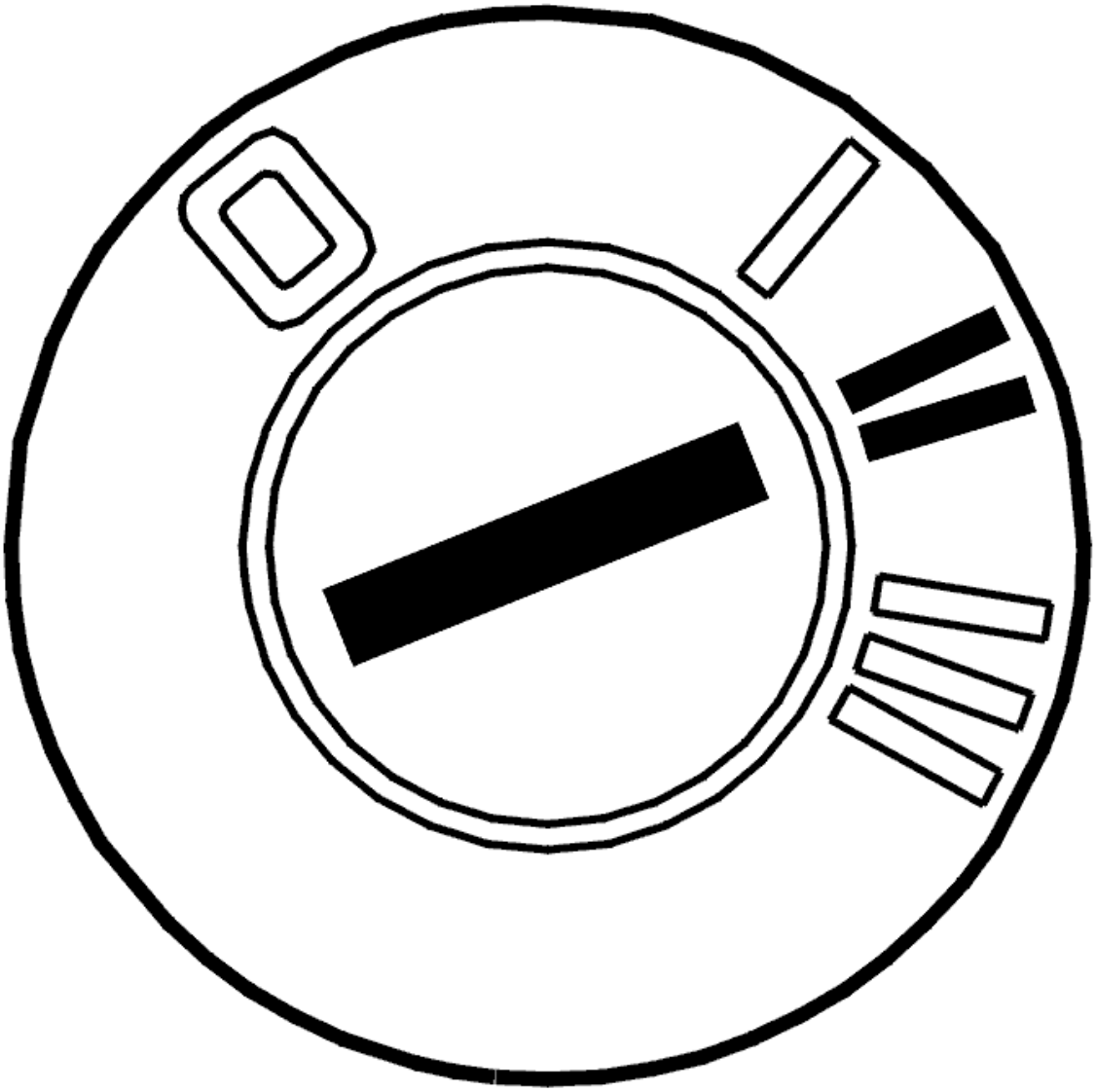

Fig. 248: Identifying Ignition ON
Courtesy of VOLVO CARS CORPORATION

- Ignition on.

  Check the signal cable between climate control module (CCM) terminal #B22 (#22) and damper motor terminal #1. Check for a short-circuit to supply voltage.

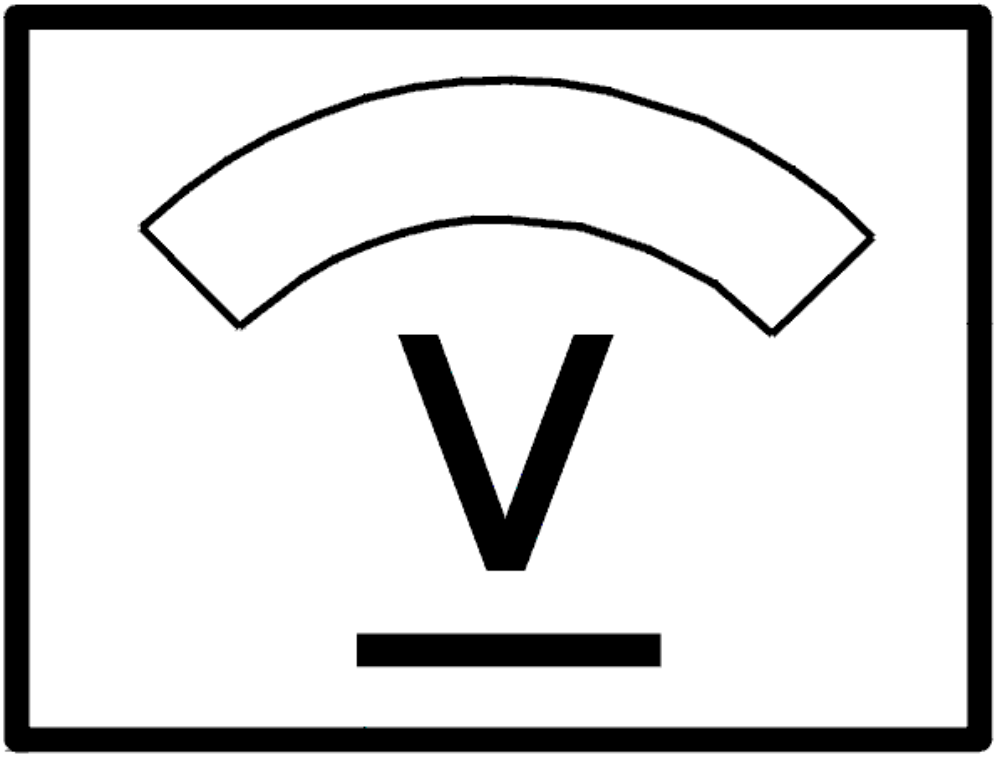

Fig. 249: Identifying Voltage Display
Courtesy of VOLVO CARS CORPORATION

Was a fault detected?

- **YES**

  Refer to **QUERY**

- **NO**

  FAULT NOT FOUND: Troubleshooting has been completed.

CHECKING THE WIRING

Check control module terminal #B22 and damper motor connector terminal #1. Check for contact resistance and

oxidation. Check for loose connections. Check for damage carefully.

Check the signal cable between control module terminal #B22 and damper motor terminal #1. Check for an intermittent open-circuit.

Check the wiring between air distribution damper motor terminals #3-#6 and climate control module (CCM) terminals #B11-#B14 (#11-#14). Check for an intermittent open-circuit.

Check the signal cable between control module terminal #B22 and damper motor terminal #1. Check for an intermittent short-circuit to supply voltage.

- **Continue**

  Refer to **INFORMATION**

QUERY

Select which type of climate control the car is equipped with.

1. Electronic climate control. Refer to **SELF-ADJUSTMENT**.
2. Manual climate control (MCC)/Standard (STD). Refer to **SELF-ADJUSTMENT**

SELF-ADJUSTMENT

HINT: After replacing the control module or damper motor, and when a damper motor or link has been removed, carry out self adjustment to define the damper motor limit positions.

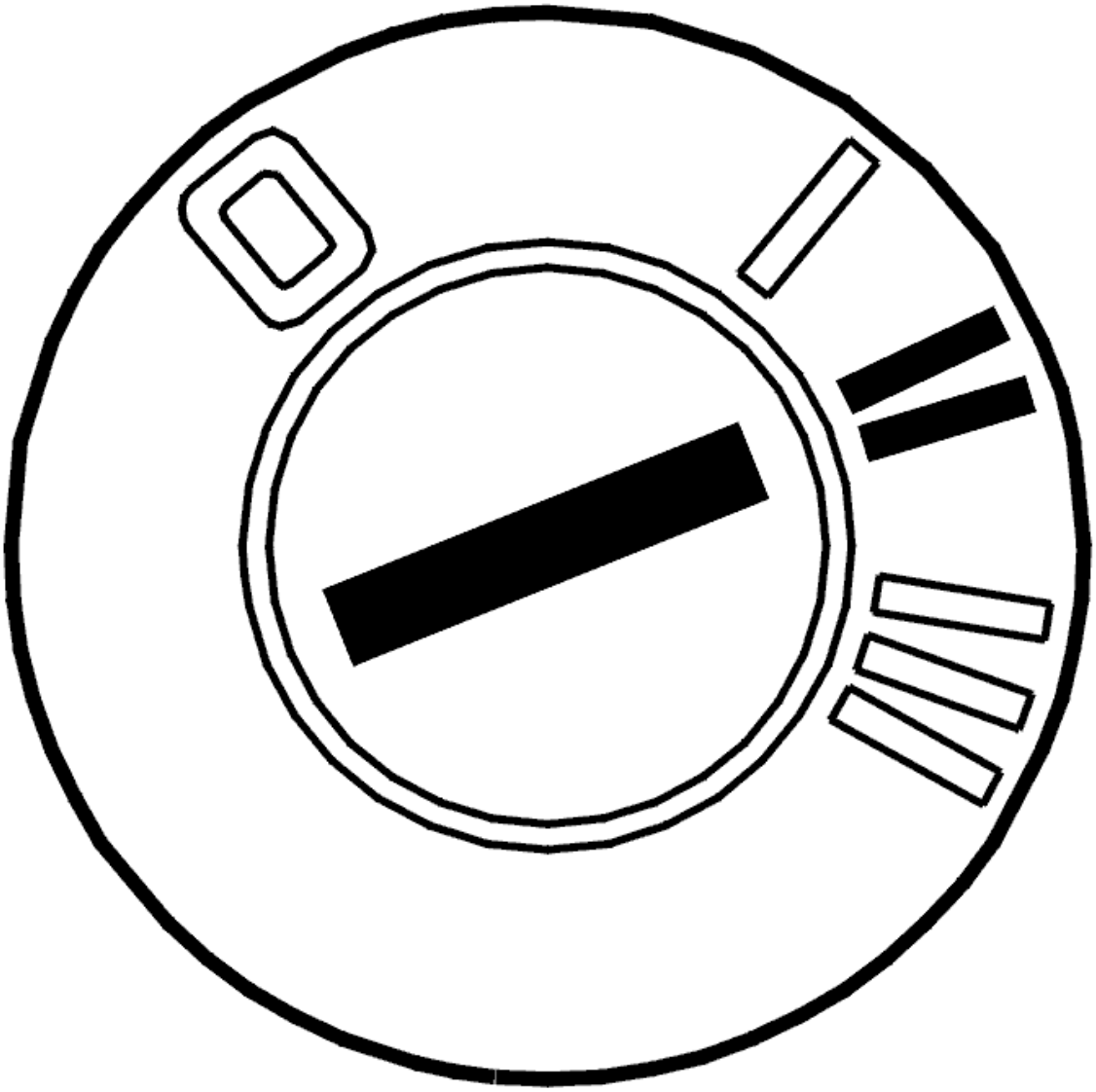

Fig. 250: Identifying Ignition ON
Courtesy of VOLVO CARS CORPORATION

- Ignition off.
- Reinstall the connectors, components etc.
- Ignition on.

  Activate self adjustment.

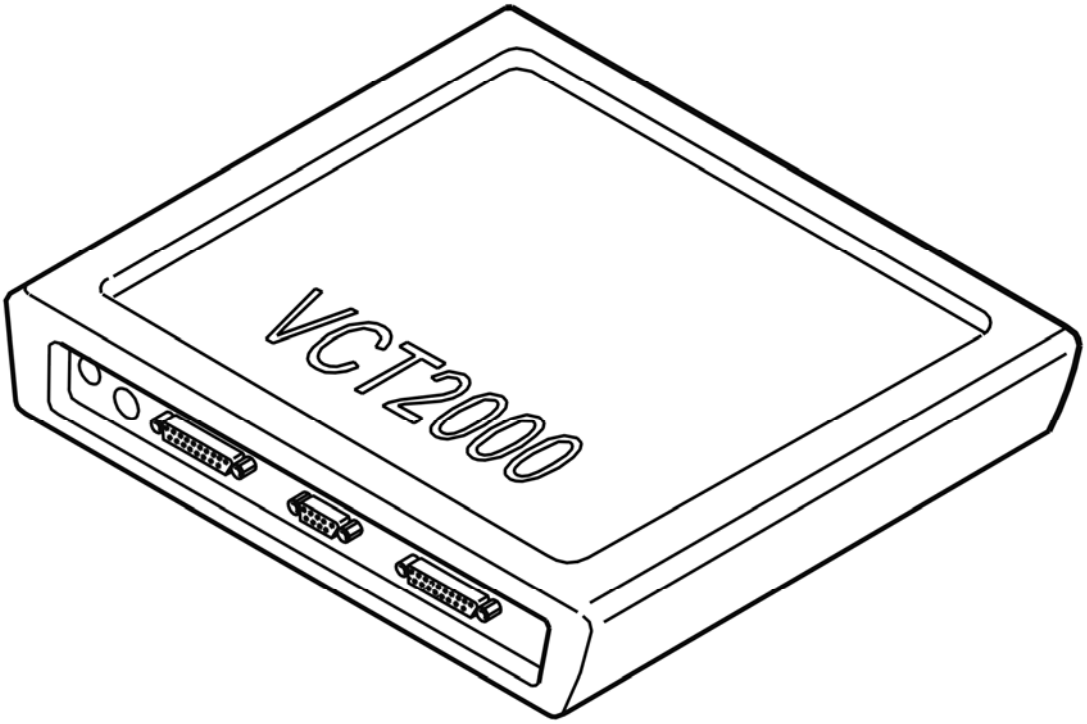

Fig. 251: Identifying VCT2000 Diagnostic Tool Symbol In VIDA
Courtesy of VOLVO CARS CORPORATION

- **Continue**

  Refer to **VERIFICATION**

SELF-ADJUSTMENT

HINT: After replacing the control module or damper motor, and when a damper motor or link has been removed, carry out self adjustment to define the damper motor limit positions.

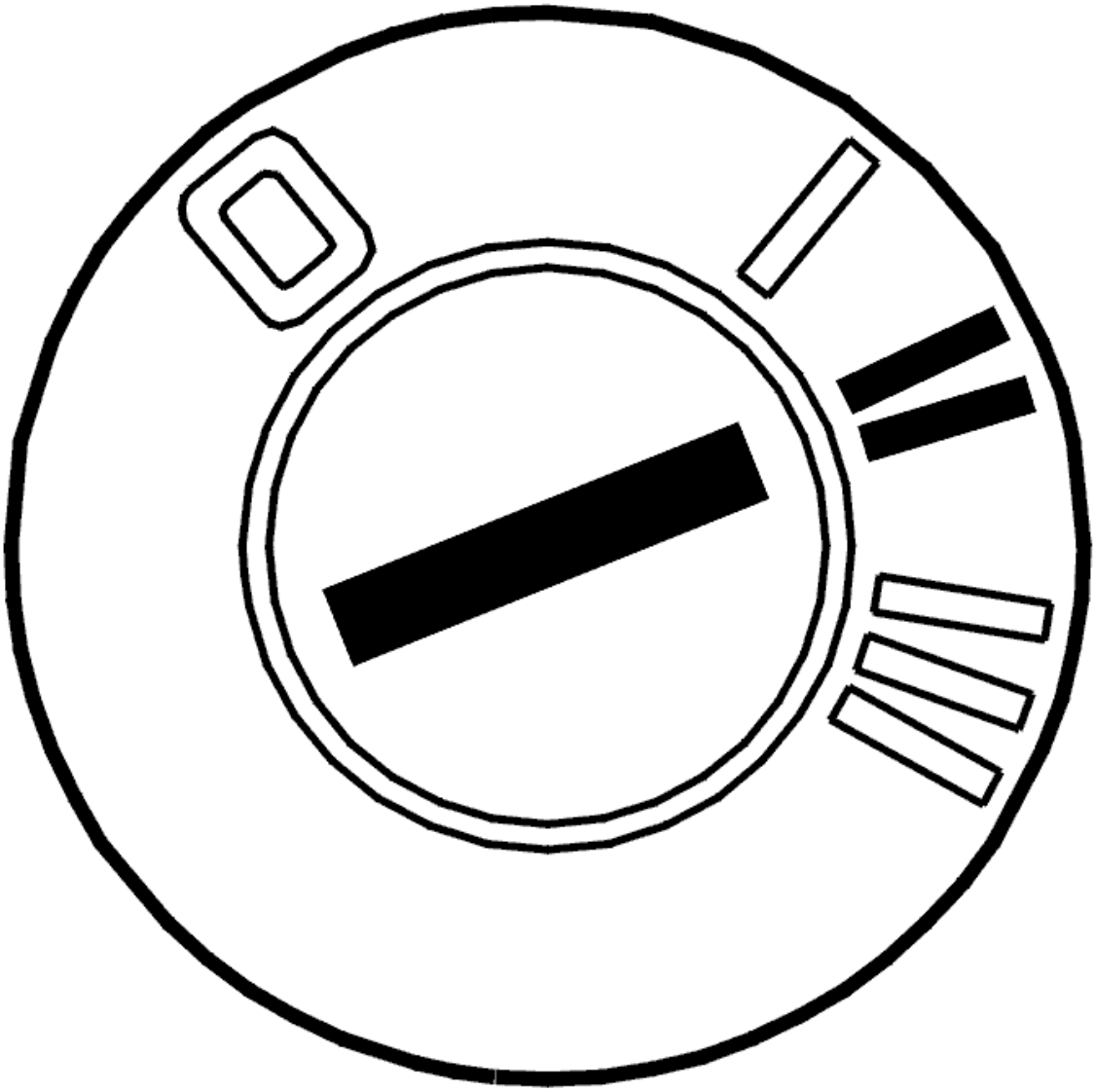

Fig. 252: Identifying Ignition ON
Courtesy of VOLVO CARS CORPORATION

- Ignition off.
- Reinstall the connectors, components etc.
- Ignition on.

  Activate self adjustment.

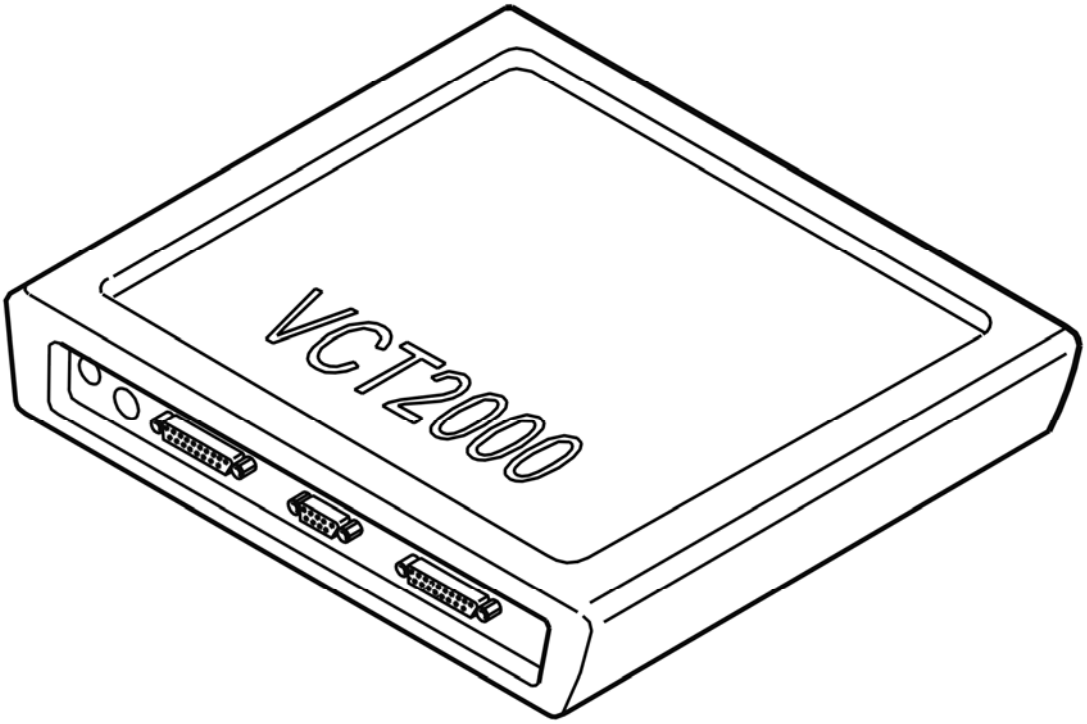

Fig. 253: Identifying VCT2000 Diagnostic Tool Symbol In VIDA
Courtesy of VOLVO CARS CORPORATION

- **Continue**

  Refer to **VERIFICATION**

VERIFICATION

HINT: After the repair it is necessary to check that the fault has been rectified.

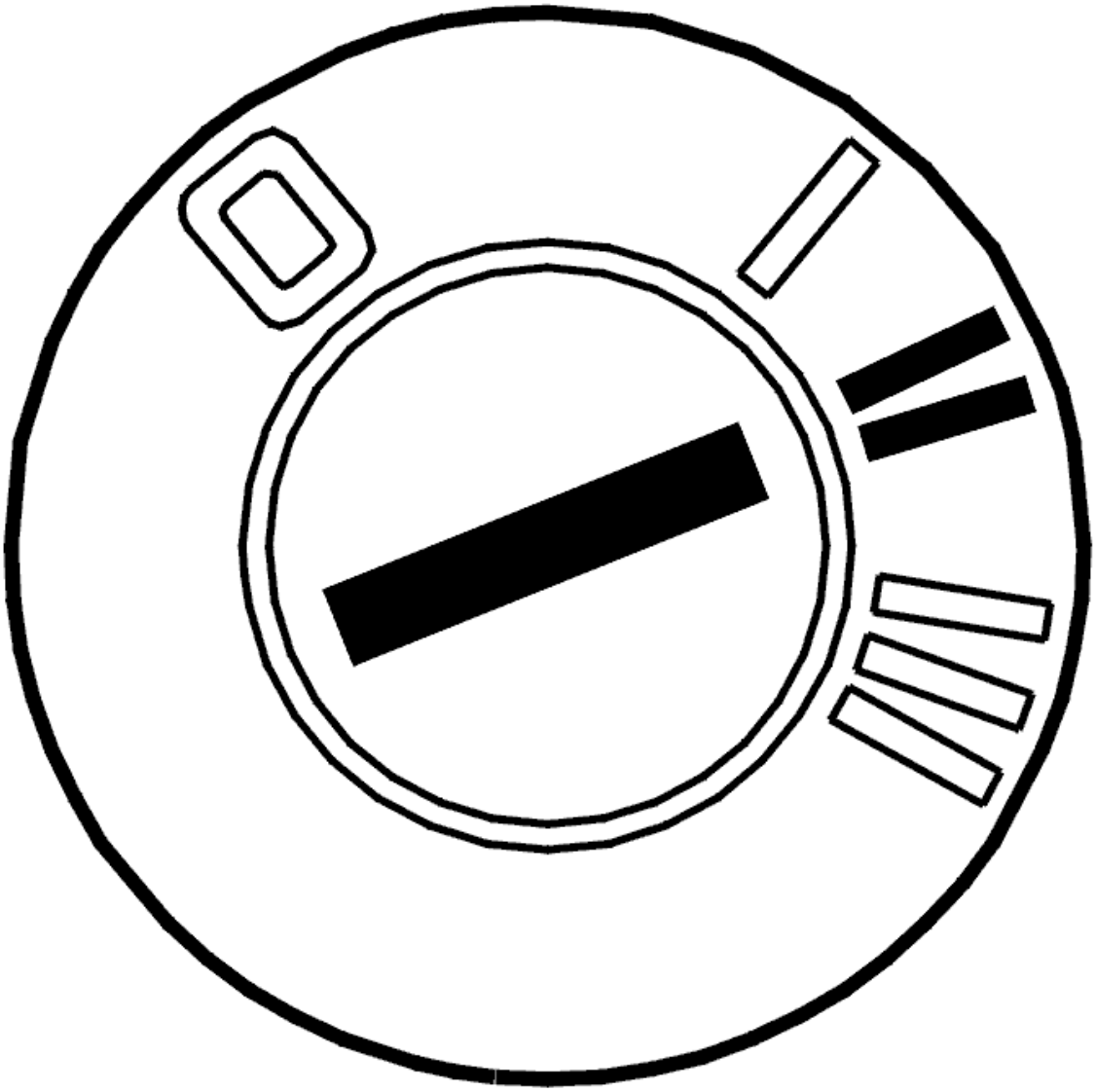

Fig. 254: Identifying Ignition ON
Courtesy of VOLVO CARS CORPORATION

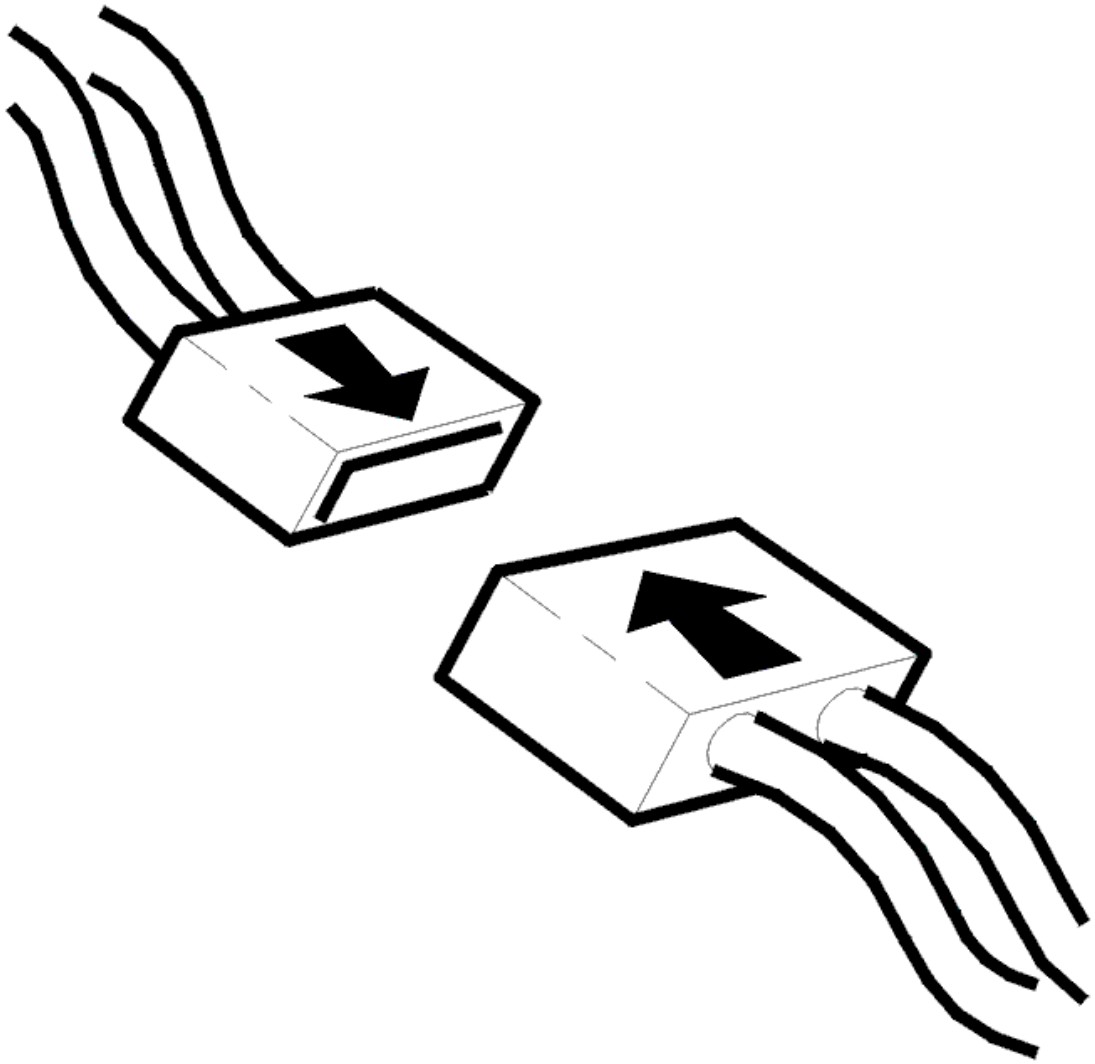

Fig. 255: Connecting Connector
Courtesy of VOLVO CARS CORPORATION

- Ignition off.
- Connect the connectors, install the components, etc.
- Ignition on.
- Blower motor on.

Check that damper motor position changes by changing control on climate control module (CCM). The values given below are the standard values that the damper motor positions should give.

NOTE: Blower motor must be in operation to activate the damper motors.

- Left/right temperature damper motor and defroster, 0-100%
- Recirculation damper motor, 40-100%

- Floor/ventilation damper motor, floor only approximately 39%, ventilation only approximately 87% and floor/ventilation approximately 71%.

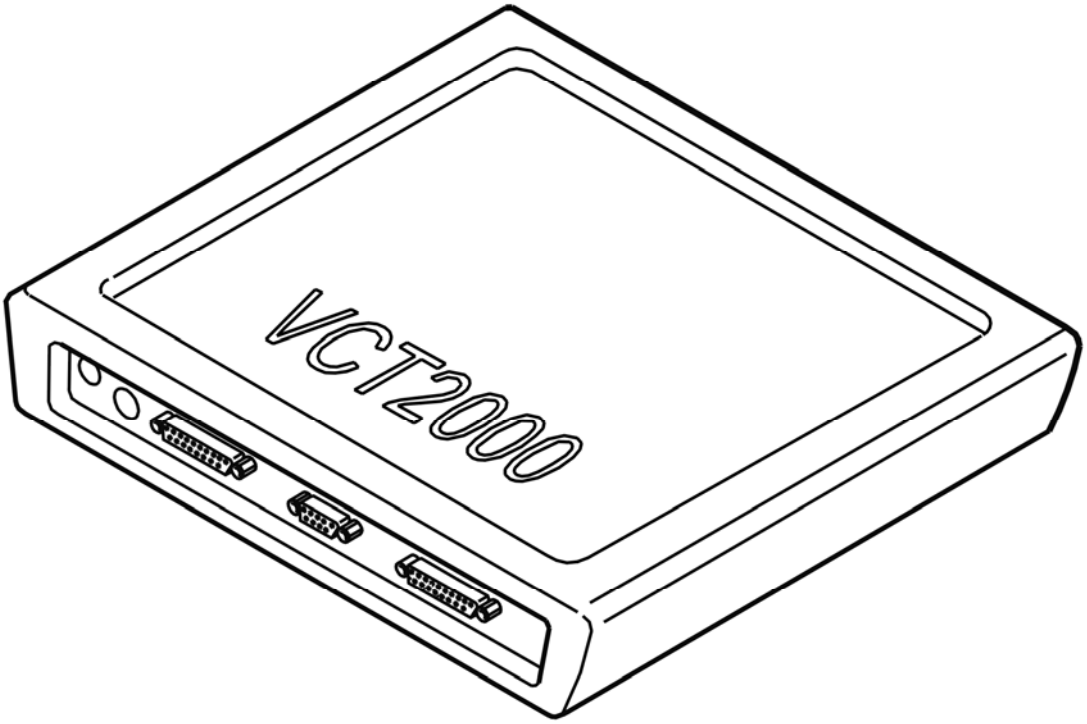

Fig. 256: Identifying VCT2000 Diagnostic Tool Symbol In VIDA
Courtesy of VOLVO CARS CORPORATION

Does damper motor work?

- **YES**

  VERIFIED: Troubleshooting has been completed.

- **NO**

  Refer to **INFORMATION**

INFORMATION

FAULT-TRACING INFORMATION

The fault should have been detected and remedied. As this is not the case fault-tracing has failed.

Exit fault-tracing for this diagnostic trouble code (DTC) or make another attempt.

CCM-0011: CONTROL MODULE. INTERNAL FAULT (2005-12)

DIAGNOSTIC TROUBLE CODE (DTC) INFORMATION CCM-0011

Condition

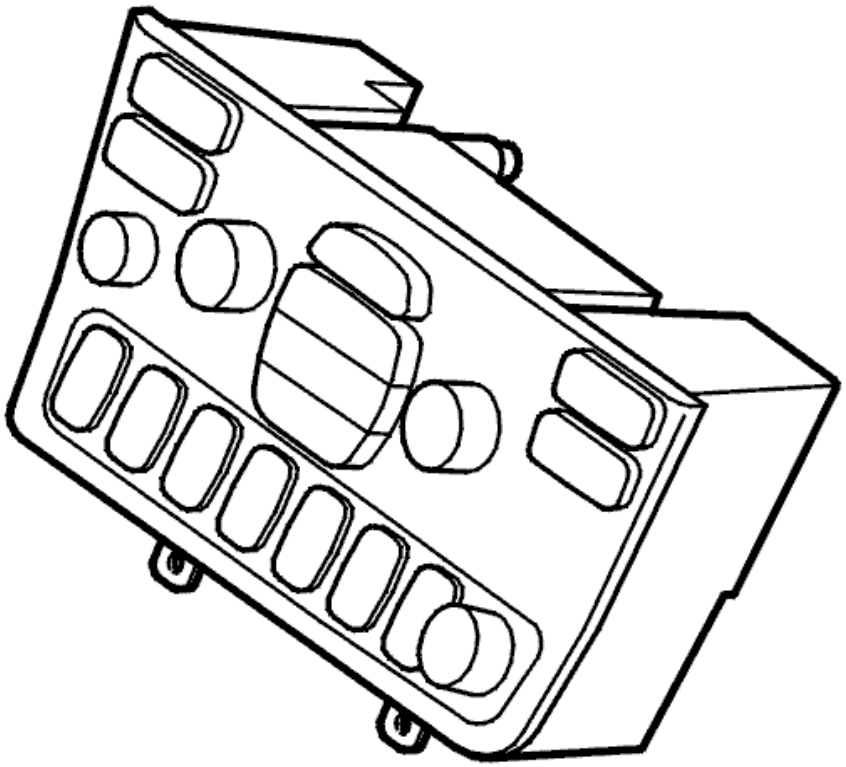

Fig. 257: Climate Control Module
Courtesy of VOLVO CARS CORPORATION

The diagnostic trouble code (DTC) is stored if the climate control module (CCM) detects an internal memory fault.

The diagnostic trouble code (DTC) can be diagnosed in ignition positions I and II.

Substitute Value

- None.

Possible Source

- Internal memory fault in the climate control module (CCM).

Fault symptom[s]

- The customer settings for the climate disappear.

INTERNAL FAULT

REPLACING THE COMPONENT

The climate control module (CCM) has registered an internal fault.

If the fault is intermittent, it has been registered previously but is no longer present. Intermittent faults may be caused by interference at start up of the climate control module (CCM). Intermittent faults may also be caused by other types of intermittent faults. The fault is evaluated depending on how it occurs. If the fault recurs, replace the climate control module (CCM).

Replace the climate control module (CCM) in the event of a permanent fault:

see **CLIMATE CONTROL MODULE (CCM), REPLACING**

Remedy as necessary.

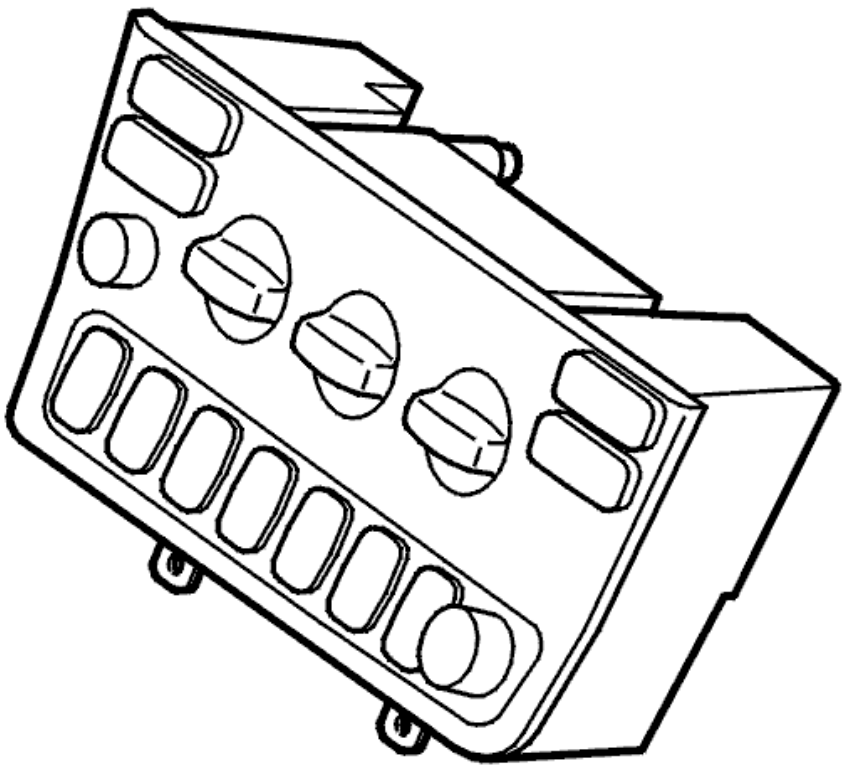

Fig. 258: Identifying Manual Climate Control Module
Courtesy of VOLVO CARS CORPORATION

- **Continue**

Refer to **INFORMATION**

INFORMATION

FAULT-TRACING INFORMATION

In case of this defect, troubleshooting is not followed by verification.

The information can be displayed again or the fault-tracing for this fault can be interrupted.

CCM-0011: LEFT TEMPERATURE DAMPER MOTOR. SIGNAL TOO HIGH (2003-04)

DIAGNOSTIC TROUBLE CODE (DTC) INFORMATION

Condition

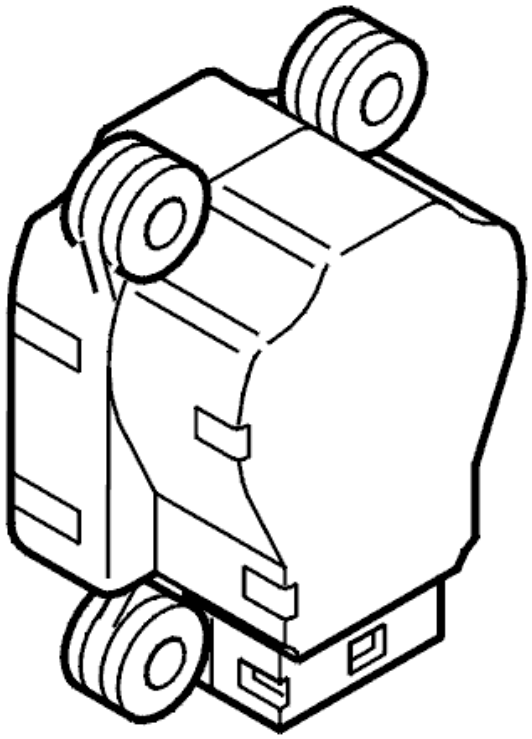

Fig. 259: Identifying Left Temperature Damper Motor
Courtesy of VOLVO CARS CORPORATION

Diagnostic trouble code (DTC) CCM-0011 is stored if the control module registers too high a signal from the left temperature damper motor.

Substitute Value

- The control module does not allow the damper motor to be activated while the fault persists.

Possible Source

- Short-circuit to ground in the signal cable
- Defective damper motor.

Fault symptom[s]

- The passenger compartment temperature does not correspond to the set value.

SIGNAL TOO HIGH

CHECKING THE DIAGNOSTIC TROUBLE CODES (DTCS)

Check which of the following alternatives apply when reading off diagnostic trouble codes (DTCs) for the climate control module (CCM).

Alternative 1

If the diagnostic trouble code (DTC) is stored with one or more other diagnostic trouble codes (DTCs), and the diagnostic trouble code (DTC) for direction control, this indicates a fault in the matrix network governing direction control.

The damper motors are connected in series in the matrix network governing direction control. In the event of a fault in the network, a diagnostic trouble code (DTC) will be stored for all damper motors which are in motion at the same time. Refer to **CHECKING THE WIRING**

The following are probable fault causes:

- short-circuit between the wiring in the matrix network
- short-circuit to supply voltage
- short-circuit to ground
- damaged damper motor.

Check if the diagnostic trouble code (DTC) has been stored with any of the following diagnostic trouble codes (DTCs):

- CCM-0012
- CCM-0013
- CCM-0014
- CCM-0015
- CCM-0016

- CCM-0017
- CCM-0018

Alternative 2

Check whether the diagnostic trouble code (DTC) has only been stored with the diagnostic trouble codes (DTCs) for direction control, CCM-0017 and CCM-0018. Refer to **CHECKING COMPONENTS AND WIRING**.

CHECKING COMPONENTS AND WIRING

Check the signal cable between control module terminal #B18 and damper motor terminal #1. Check for a short-circuit to ground.

Check the damper motor resistance. The resistance must be 46 ohms. Take readings between the damper motor terminal pins.

Remedy as necessary.

Other information:

- see **CONNECTING THE BREAKOUT BOX** .
- see **CLIMATE CONTROL MODULE (CCM), REPLACING** .
- see **DAMPER MOTOR TEMPERATURE, REPLACING** .
- see **SIGNAL SPECIFICATION** .
- see **CHECKING WIRING AND TERMINALS** .

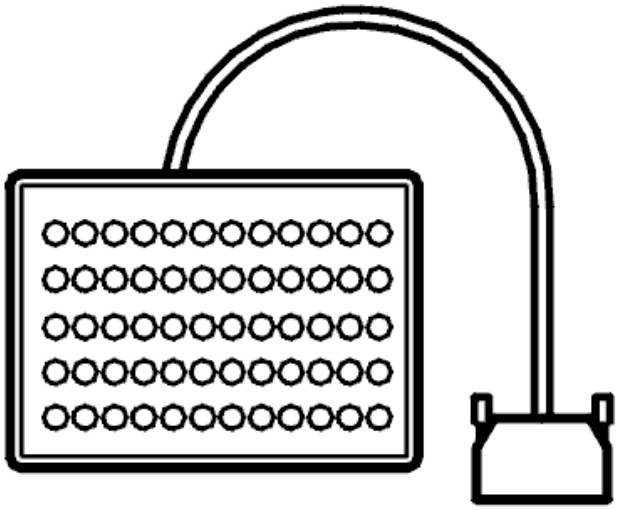

Fig. 260: Breakout Box
Courtesy of VOLVO CARS CORPORATION

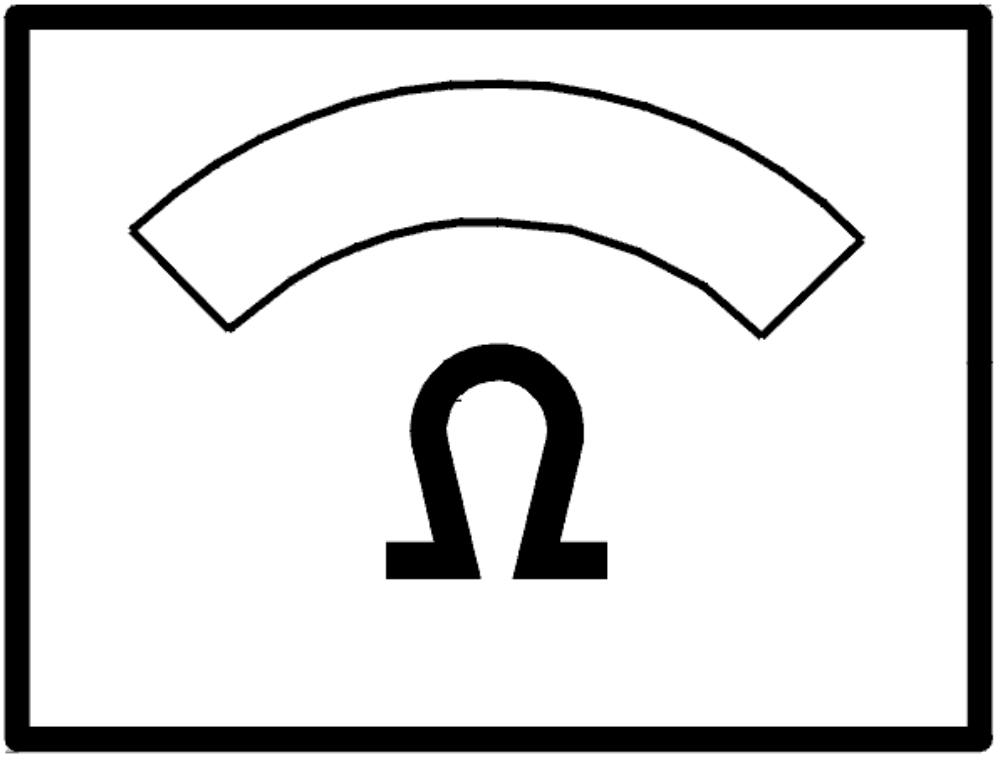

Fig. 261: Identifying Ohmmeter
Courtesy of VOLVO CARS CORPORATION

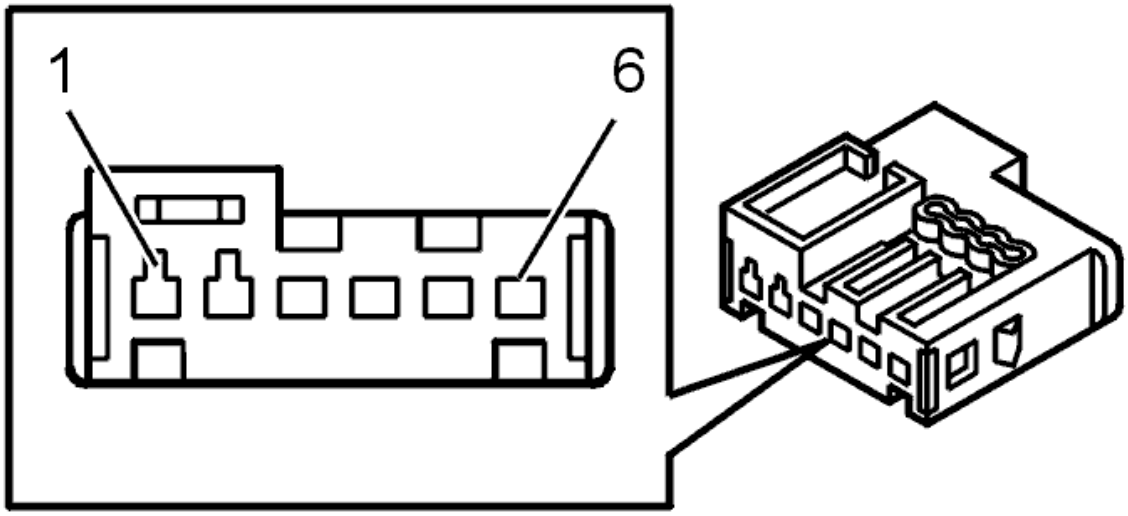

Fig. 262: Identifying Left Temperature Damper Motor Connector Terminals
Courtesy of VOLVO CARS CORPORATION

- **Continue**

  Refer to **EQUIPMENT**

CHECKING THE WIRING

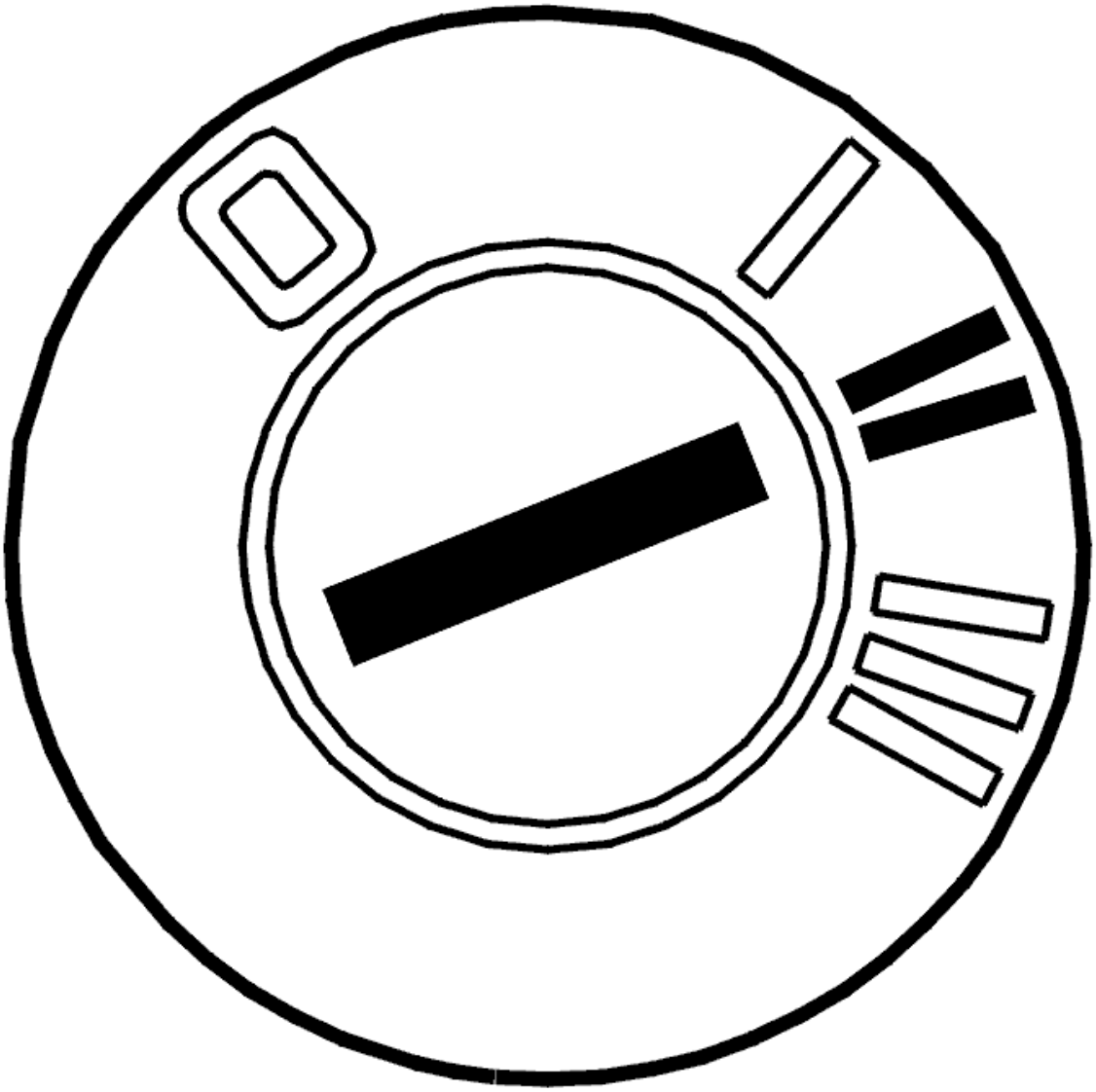

Fig. 263: Identifying Ignition ON
Courtesy of VOLVO CARS CORPORATION

- Ignition off
- Disconnect connector B on the climate control module (CCM).
- Ignition on

  Check the matrix wiring. Check for a short-circuit to supply voltage. Check for a short-circuit to ground.

  Take readings between the following terminals on connector B and ground:

  - #B11 (#11)
  - #B12 (#12)
  - #B13 (#13)
  - #B14 (#14)

Check whether there is an internal short-circuit in the matrix cables. Take pairs of readings between all the terminals #B11-#B14 on connector B.

Other information:

- see **CONNECTING THE BREAKOUT BOX** .
- see **CLIMATE CONTROL MODULE (CCM), REPLACING** .
- see **DAMPER MOTOR TEMPERATURE, REPLACING** .
- see **SIGNAL SPECIFICATION** .
- see **CHECKING WIRING AND TERMINALS** .

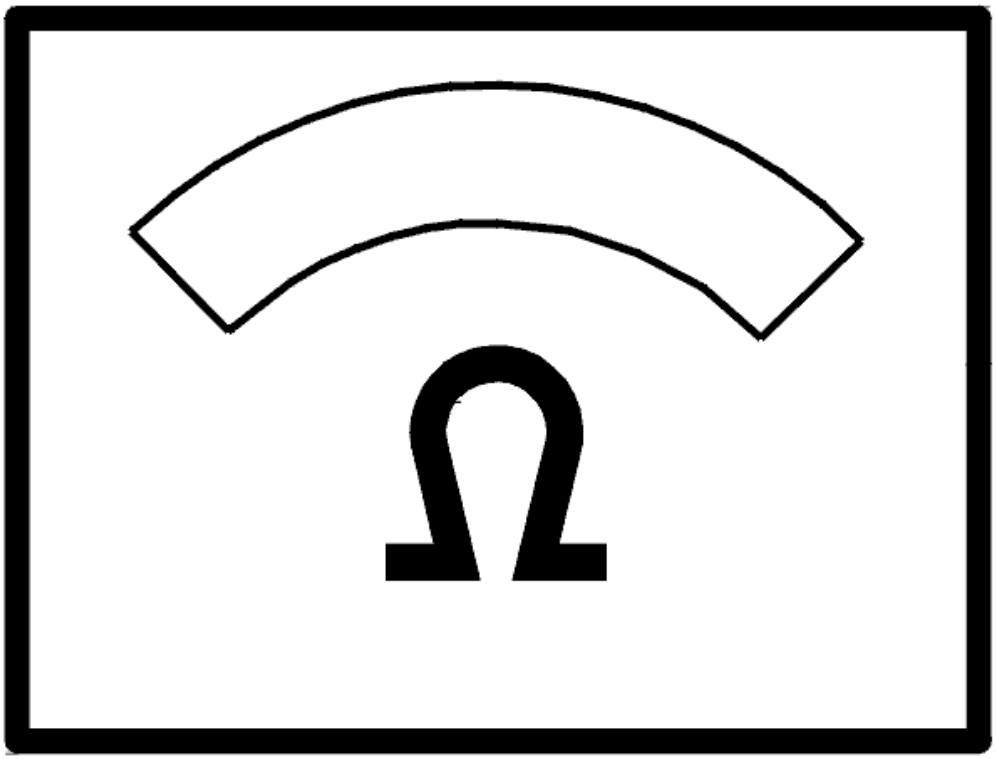

Fig. 264: Identifying Ohmmeter
Courtesy of VOLVO CARS CORPORATION

Was a fault detected?

- **YES**

  Refer to **EQUIPMENT**

- **NO**

  Refer to **CHECKING THE COMPONENT**

CHECKING THE COMPONENT

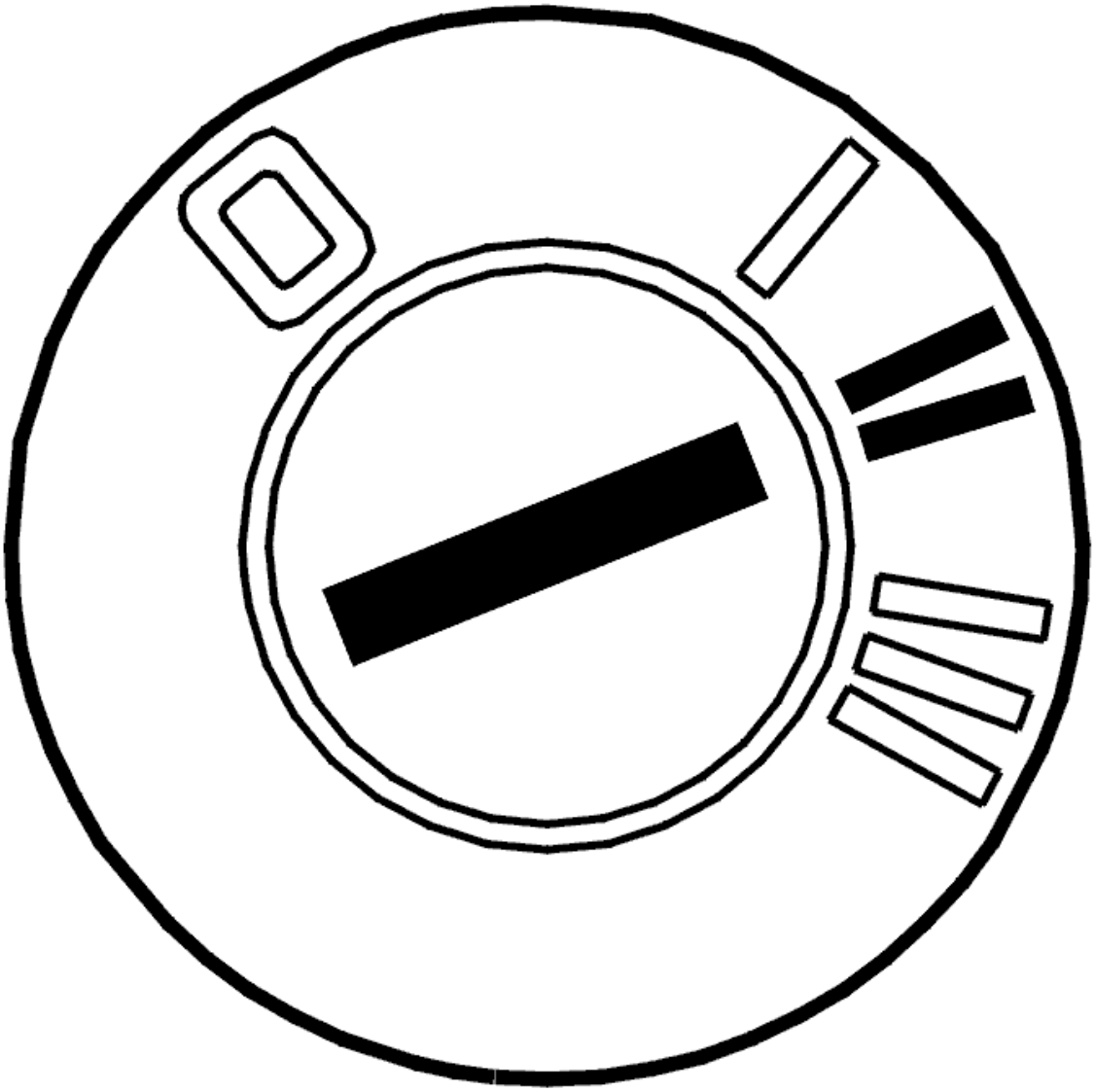

Fig. 265: Identifying Ignition ON
Courtesy of VOLVO CARS CORPORATION

- Ignition on

  Check the damper motors. Check for internal short-circuits as follows:

- Remove the soundproofing panel to access the damper motor connectors.
- Erase the diagnostic trouble codes (DTCs) for the climate control module (CCM).
- First disconnect the connector from a damper motor. Leave the other damper motors connected.

NOTE: Take care when disconnecting the connectors for the damper motors to prevent loose connections.

- Activate the controls (right and left-hand temperature knobs, defroster, air distribution selector, recirculation) on the climate control module (CCM) to operate all the damper motors.
- Read off the diagnostic trouble codes (DTCs) from the climate control module (CCM). If the diagnostic trouble codes (DTCs) have not recurred, there is an internal fault in the disconnected damper motor.
- If the diagnostic trouble codes (DTCs) recur, continue fault tracing. Reconnect the disconnected damper motor and disconnect the next damper motor. Repeat the procedure by erasing all diagnostic trouble codes (DTCs) and running the damper motors until the faulty damper motor has been identified.

Other information:

- see **CONNECTING THE BREAKOUT BOX** .
- see **CLIMATE CONTROL MODULE (CCM), REPLACING** .
- see **DAMPER MOTOR TEMPERATURE, REPLACING** .
- see **SIGNAL SPECIFICATION** .
- see **CHECKING WIRING AND TERMINALS** .

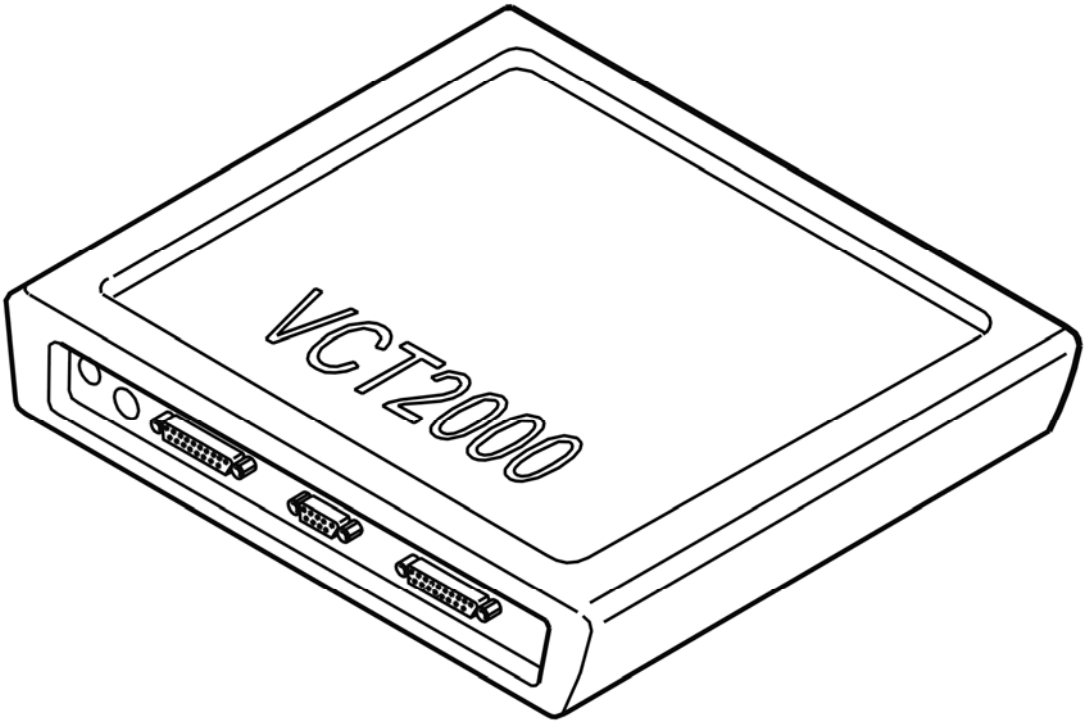

Fig. 266: Identifying VCT2000 Diagnostic Tool Symbol In VIDA
Courtesy of VOLVO CARS CORPORATION

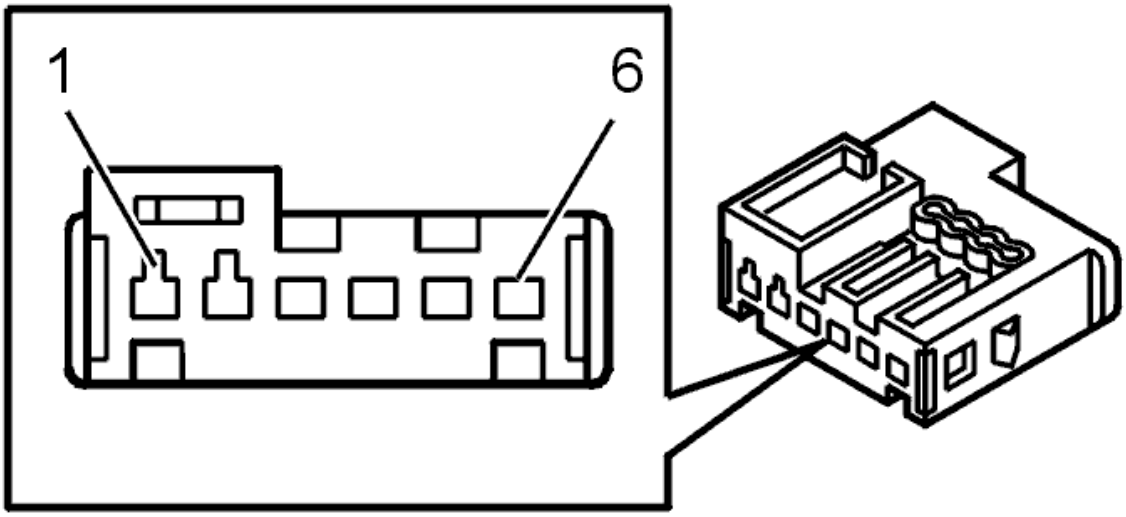

Fig. 267: Identifying Left Temperature Damper Motor Connector Terminals
Courtesy of VOLVO CARS CORPORATION

- **Continue**

  Refer to **EQUIPMENT**

EQUIPMENT

Which type of climate control is the car equipped with?

1. ECC. Refer to **SELF-ADJUSTMENT**.
2. Manual climate control (MCC)/Standard (STD). Refer to **SELF-ADJUSTMENT**

SELF-ADJUSTMENT

HINT: After replacing the control module or damper motor, and when a damper motor or link has been removed, carry out self adjustment to define the damper motor limit positions.

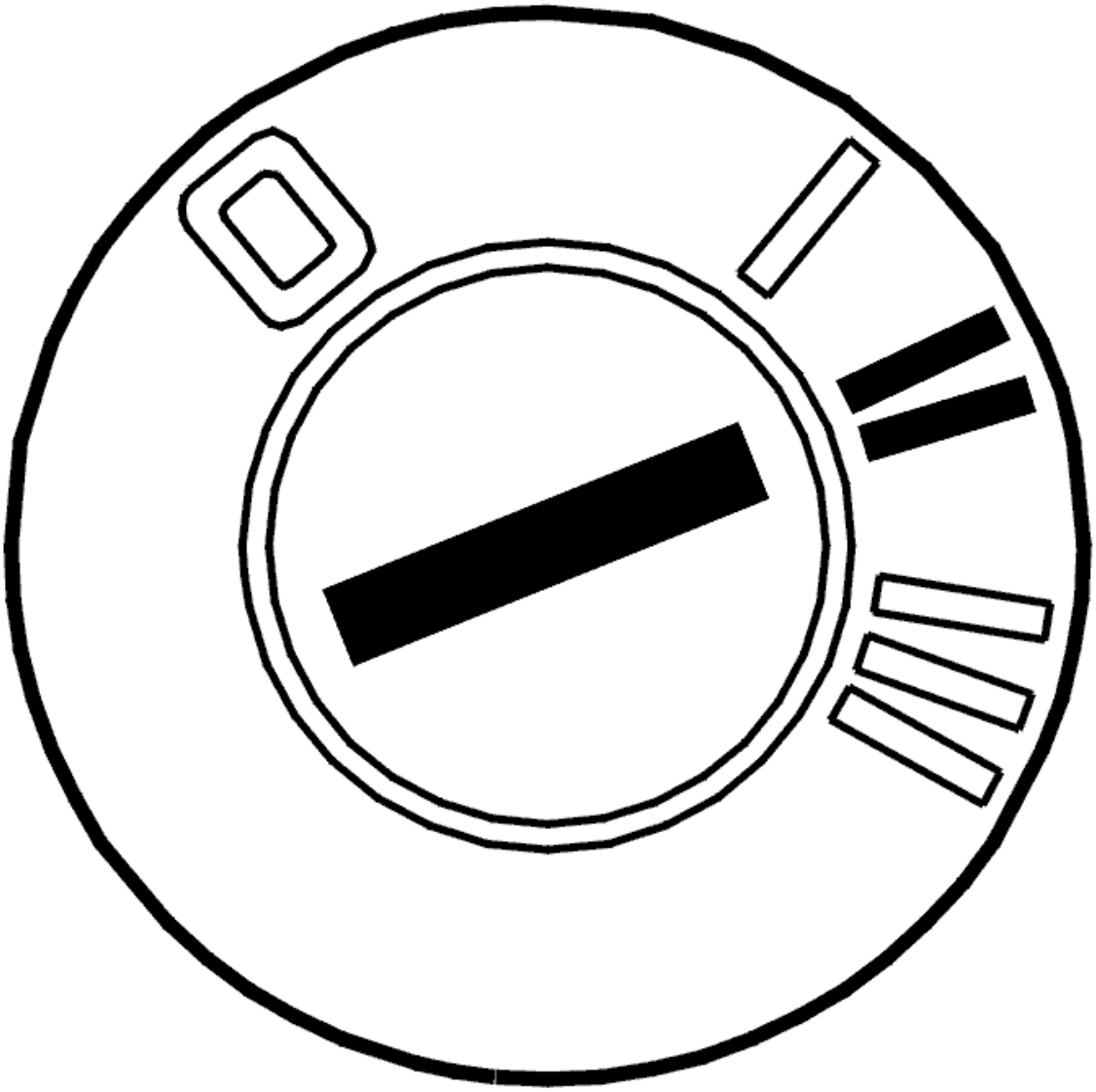

Fig. 268: Identifying Ignition ON
Courtesy of VOLVO CARS CORPORATION

- Ignition off.

- Reinstall the connectors, components etc.
- Ignition on.

  Activate self adjustment.

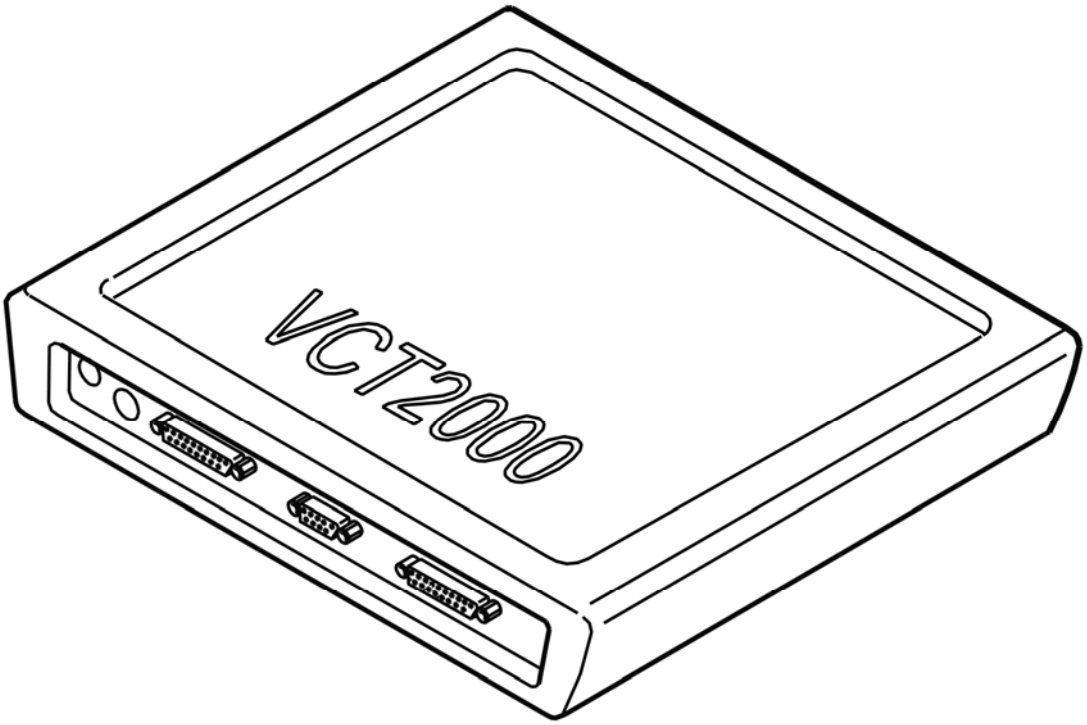

Fig. 269: Identifying VCT2000 Diagnostic Tool Symbol In VIDA
Courtesy of VOLVO CARS CORPORATION

- **Continue**

  Refer to **VERIFICATION**

VERIFICATION

HINT: After the repair it is necessary to check that the fault has been rectified.

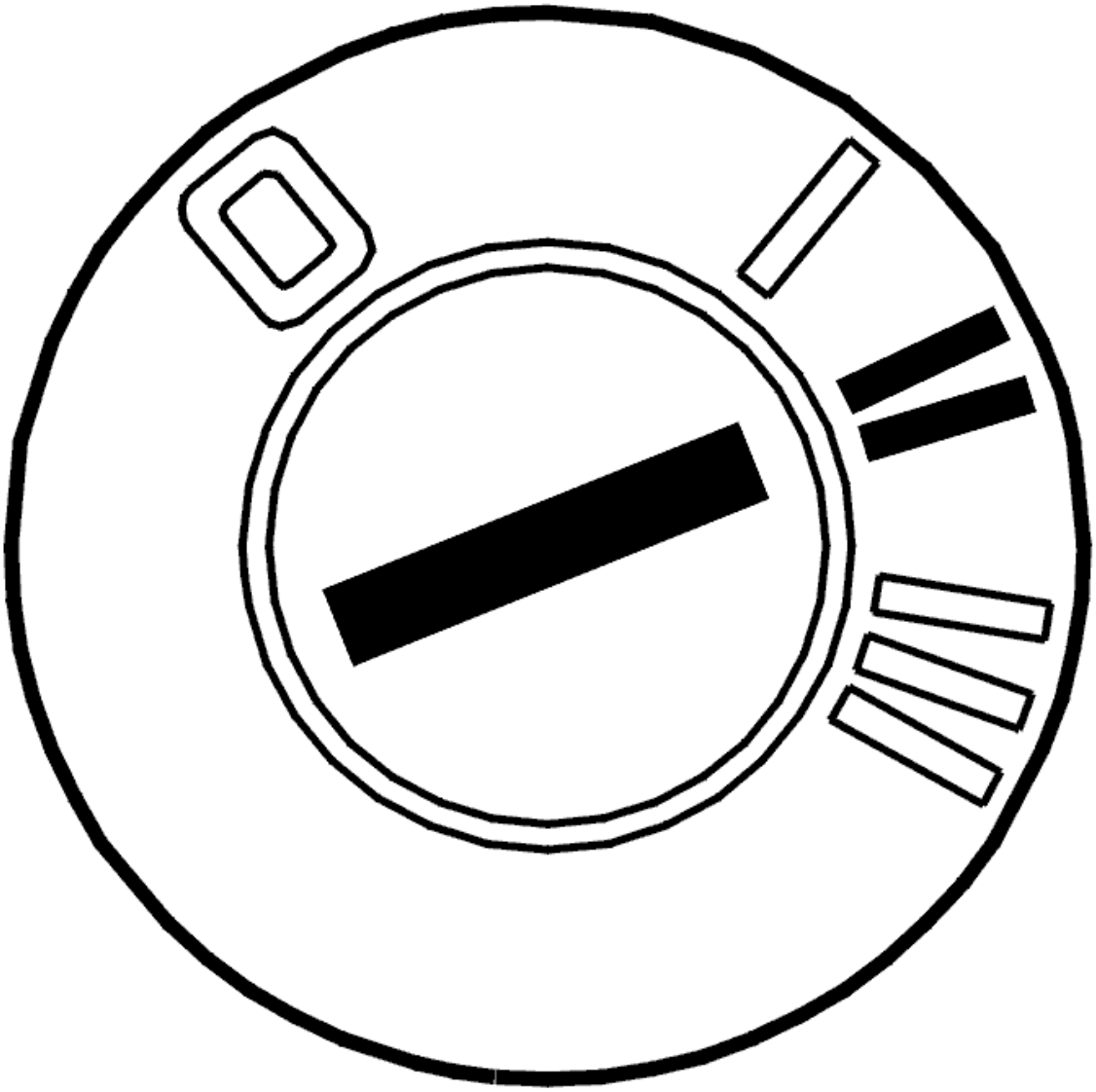

Fig. 270: Identifying Ignition ON
Courtesy of VOLVO CARS CORPORATION

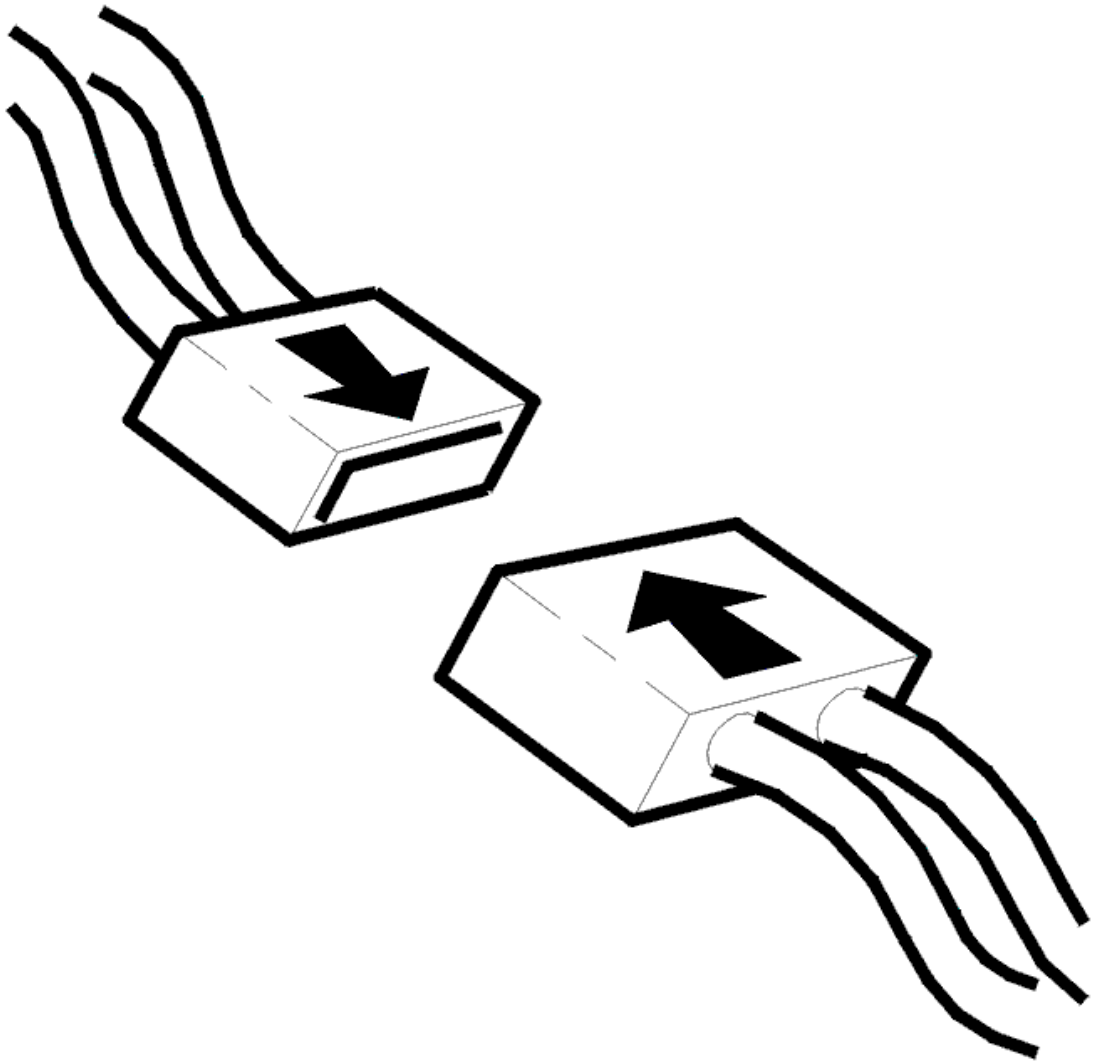

Fig. 271: Connecting Connector
Courtesy of VOLVO CARS CORPORATION

- Ignition off.
- Connect the connectors, install the components, etc.
- Ignition on.
- Blower motor on.

Check that damper motor position changes by changing control on climate control module (CCM). The values given below are the standard values that the damper motor positions should give.

NOTE: Blower motor must be in operation to activate the damper motors.

- Left/right temperature damper motor and defroster, 0-100%
- Recirculation damper motor, 40-100%

- Floor/ventilation damper motor, floor only approximately 39%, ventilation only approximately 87% and floor/ventilation approximately 71%.

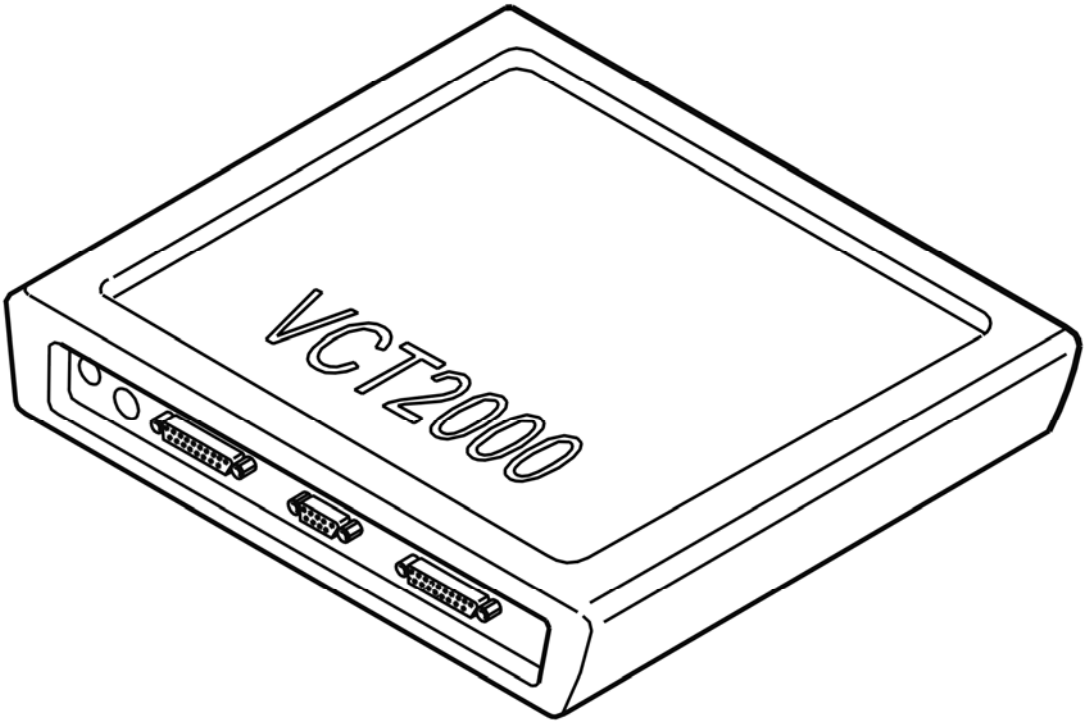

Fig. 272: Identifying VCT2000 Diagnostic Tool Symbol In VIDA
Courtesy of VOLVO CARS CORPORATION

Does damper motor work?

- **YES**

  VERIFIED: Troubleshooting has been completed.

- **NO**

  Refer to **INFORMATION**

SELF-ADJUSTMENT

HINT: After replacing the control module or damper motor, and when a damper motor or link has been removed, carry out self adjustment to define the damper motor limit positions.

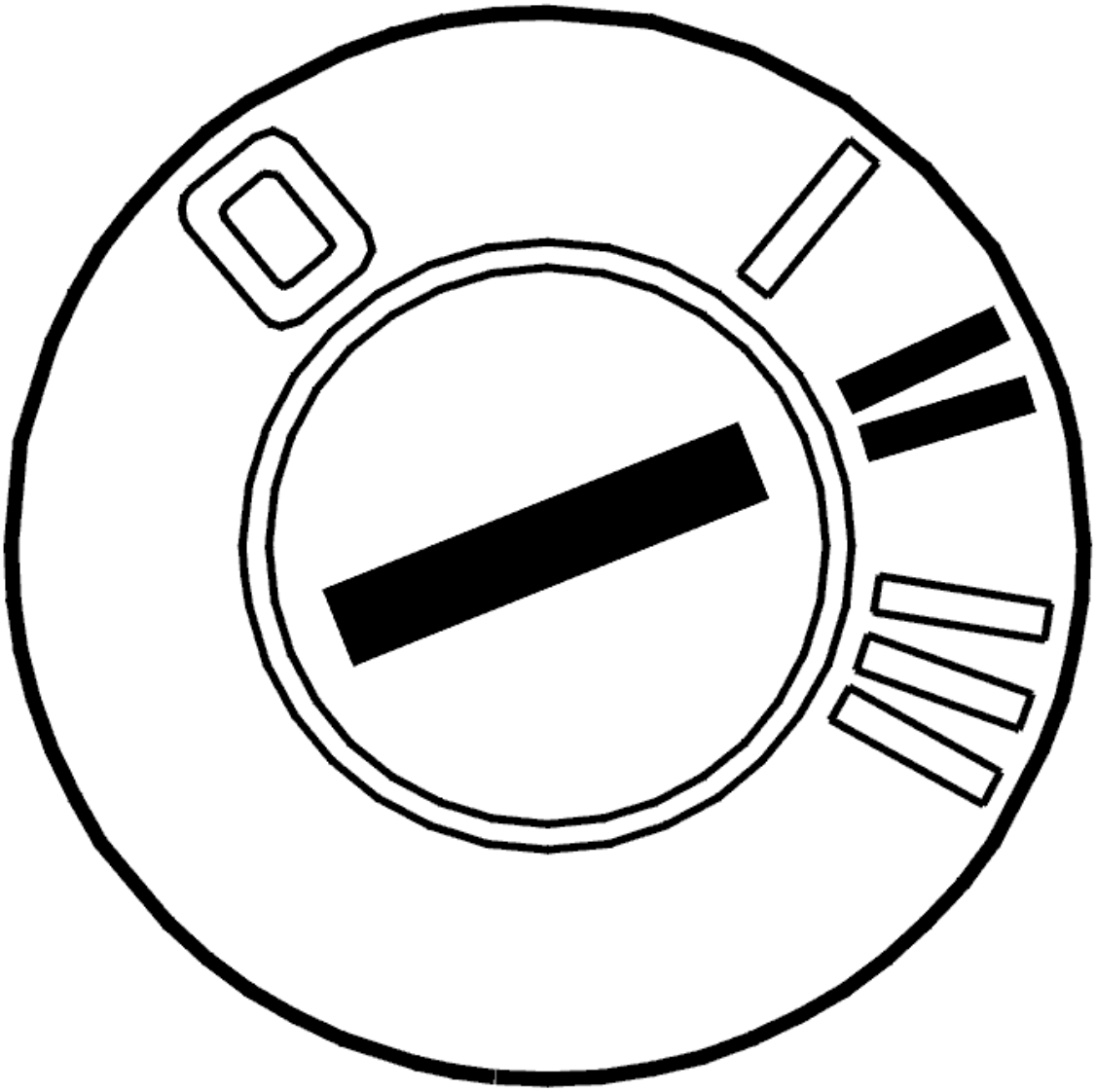

Fig. 273: Identifying Ignition ON
Courtesy of VOLVO CARS CORPORATION

- Ignition off.
- Reinstall the connectors, components etc.
- Ignition on.

  Activate self adjustment.

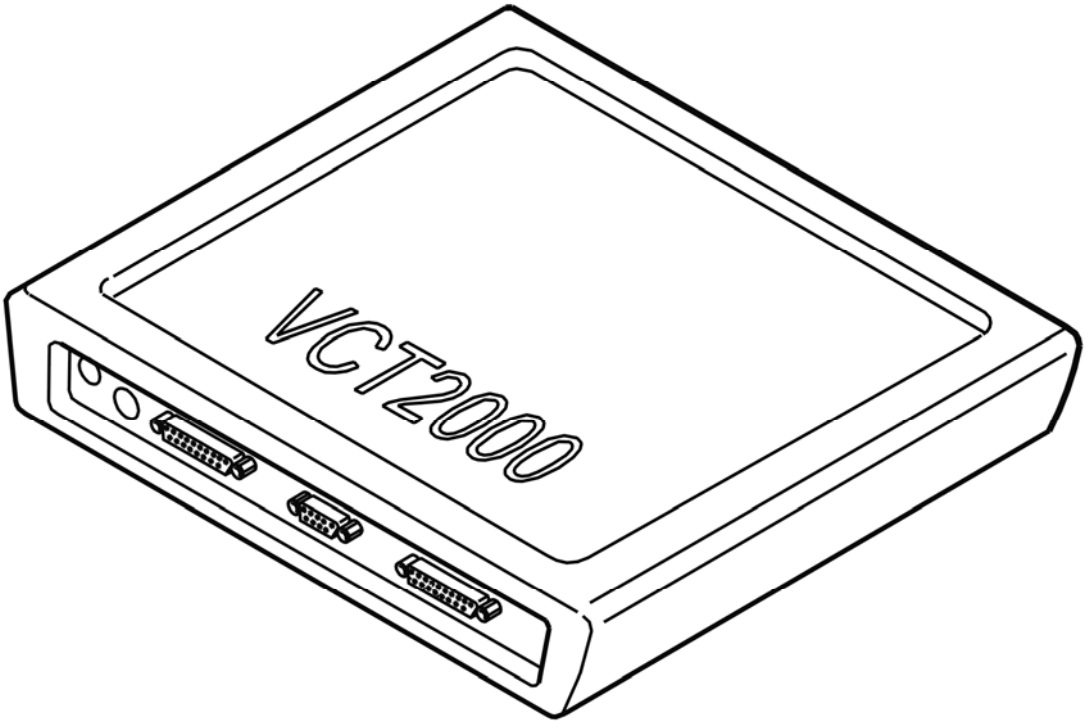

Fig. 274: Identifying VCT2000 Diagnostic Tool Symbol In VIDA
Courtesy of VOLVO CARS CORPORATION

- **Continue**

  Refer to **VERIFICATION**

VERIFICATION

HINT: After the repair it is necessary to check that the fault has been rectified.

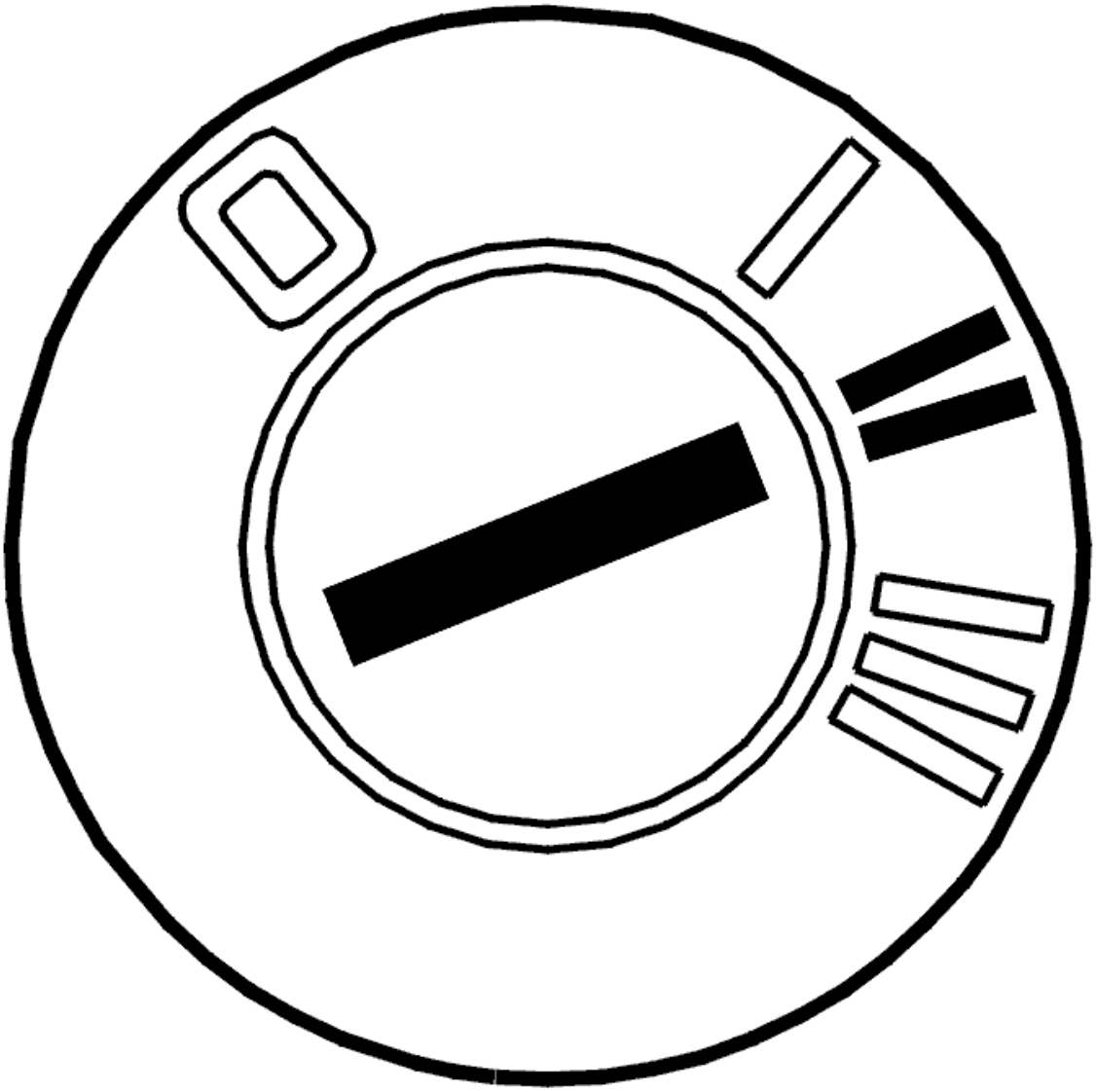

Fig. 275: Identifying Ignition ON
Courtesy of VOLVO CARS CORPORATION

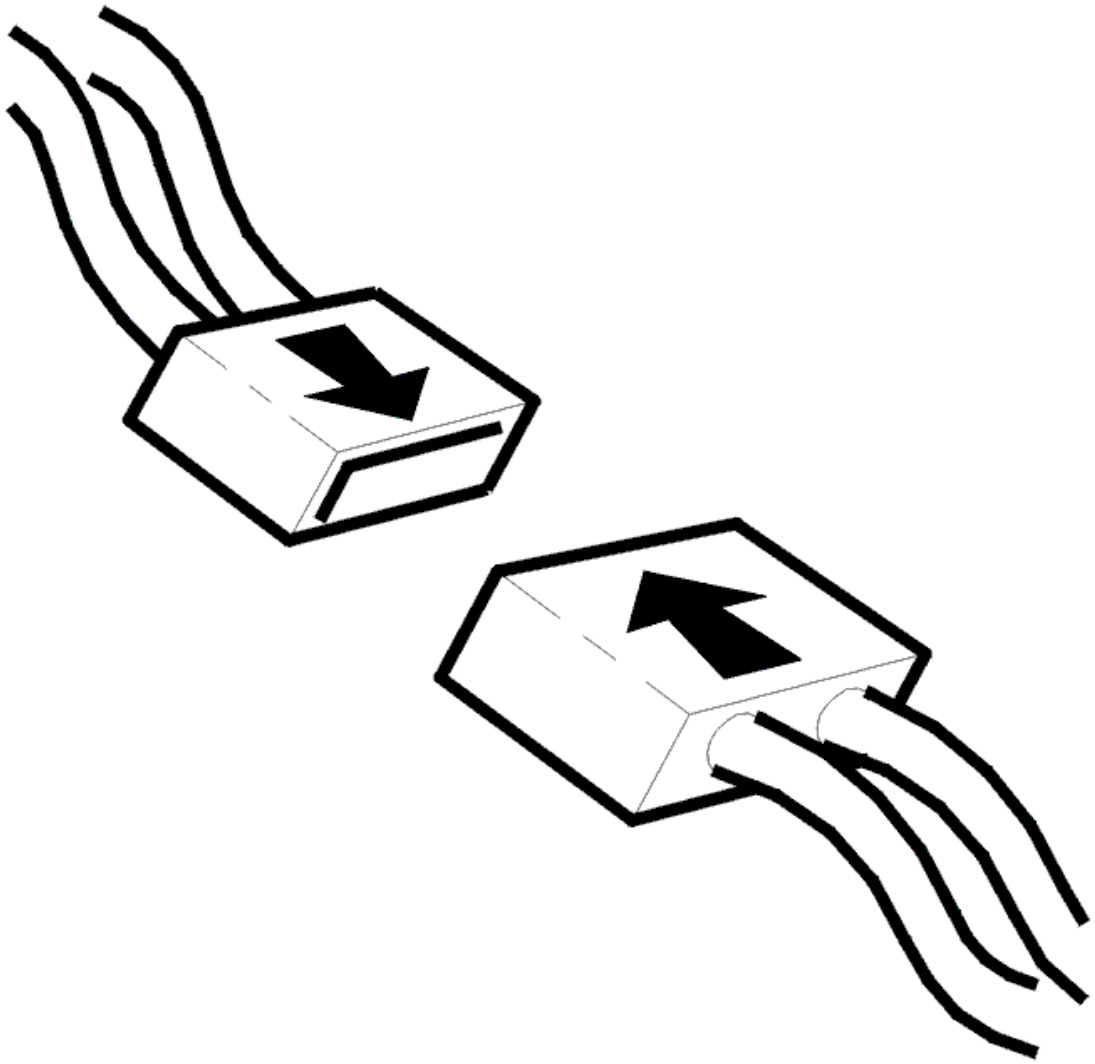

Fig. 276: Connecting Connector
Courtesy of VOLVO CARS CORPORATION

- Ignition off.
- Connect the connectors, install the components, etc.
- Ignition on.
- Blower motor on.

Check that damper motor position changes by changing control on climate control module (CCM). The values given below are the standard values that the damper motor positions should give.

NOTE: Blower motor must be in operation to activate the damper motors.

- Left/right temperature damper motor, 0-100%
- Recirculation damper motor, 40-100%

- Damper motor air distribution, defroster approximately 0%, floor/defroster approximately 19%, floor approximately 39%, ventilation approximately 83%.

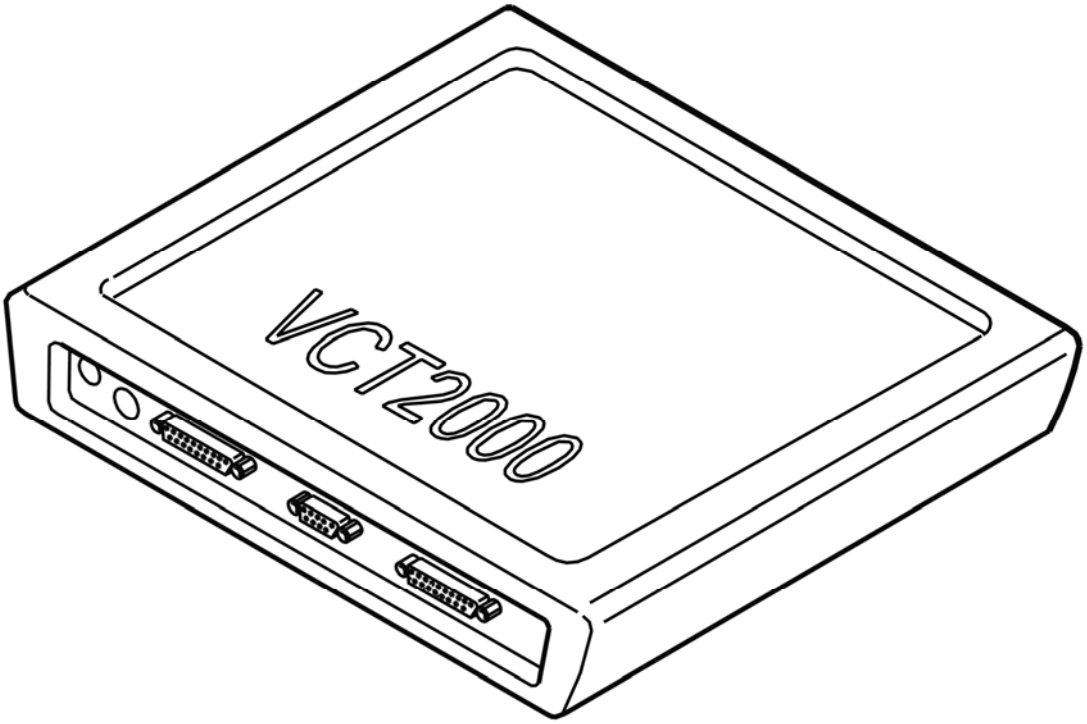

Fig. 277: Identifying VCT2000 Diagnostic Tool Symbol In VIDA
Courtesy of VOLVO CARS CORPORATION

Does damper motor work?

- **YES**

  VERIFIED: Troubleshooting has been completed.

- **NO**

  Refer to **INFORMATION**

INFORMATION

FAULT-TRACING INFORMATION

The fault should have been detected and remedied. As this is not the case fault-tracing has failed.

Exit fault-tracing for this diagnostic trouble code (DTC) or make another attempt.

CCM-0012: RIGHT TEMPERATURE DAMPER MOTOR. SIGNAL TOO HIGH (2003-04)

DIAGNOSTIC TROUBLE CODE (DTC) INFORMATION

Condition

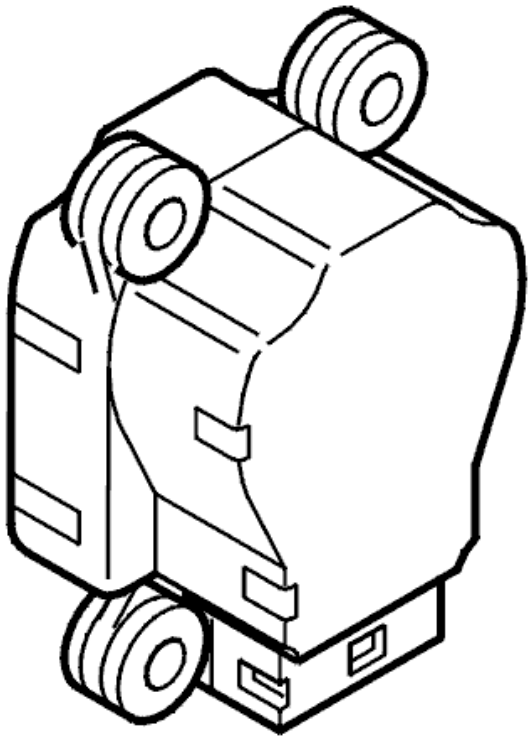

Fig. 278: Identifying Left Temperature Damper Motor
Courtesy of VOLVO CARS CORPORATION

Diagnostic trouble code (DTC) CCM-0012 is stored if the control module registers too high a signal from the right temperature damper motor.

Substitute Value

- The control module does not allow the damper motor to be activated while the fault persists.

Possible Source

- Short-circuit to ground in the signal cable
- Defective damper motor.

Fault symptom[s]

- The passenger compartment temperature does not correspond to the set value.

SIGNAL TOO HIGH

CHECKING THE DIAGNOSTIC TROUBLE CODES (DTCS)

Check which of the following alternatives apply when reading off diagnostic trouble codes (DTCs) for the climate control module (CCM).

Alternative 1

If the diagnostic trouble code (DTC) is stored with one or more other diagnostic trouble codes (DTCs), and the diagnostic trouble code (DTC) for direction control, this indicates a fault in the matrix network governing direction control.

The damper motors are connected in series in the matrix network governing direction control. In the event of a fault in the network, a diagnostic trouble code (DTC) will be stored for all damper motors which are in motion at the same time. Refer to **CHECKING THE WIRING**.

The following are probable fault causes:

- short-circuit between the wiring in the matrix network
- short-circuit to supply voltage
- short-circuit to ground
- damaged damper motor.

Check if the diagnostic trouble code (DTC) has been stored with any of the following diagnostic trouble codes (DTCs):

- CCM-0011
- CCM-0013
- CCM-0014
- CCM-0015
- CCM-0016
- CCM-0017
- CCM-0018

Alternative 2

Check whether the diagnostic trouble code (DTC) has only been stored with the diagnostic trouble codes (DTCs) for direction control, CCM-0017 and CCM-0018. Refer to **CHECKING COMPONENTS AND WIRING**.

CHECKING COMPONENTS AND WIRING

Check the signal cable between control module terminal #B19 and damper motor terminal #1. Check for a short-circuit to ground.

Check the damper motor resistance. The resistance must be 46 ohms. Take readings between the damper motor terminal pins.

Remedy as necessary.

Other information:

- see **CONNECTING THE BREAKOUT BOX** .
- see **CLIMATE CONTROL MODULE (CCM), REPLACING** .
- see **DAMPER MOTOR TEMPERATURE, REPLACING** .
- see **SIGNAL SPECIFICATION** .
- see **CHECKING WIRING AND TERMINALS** .

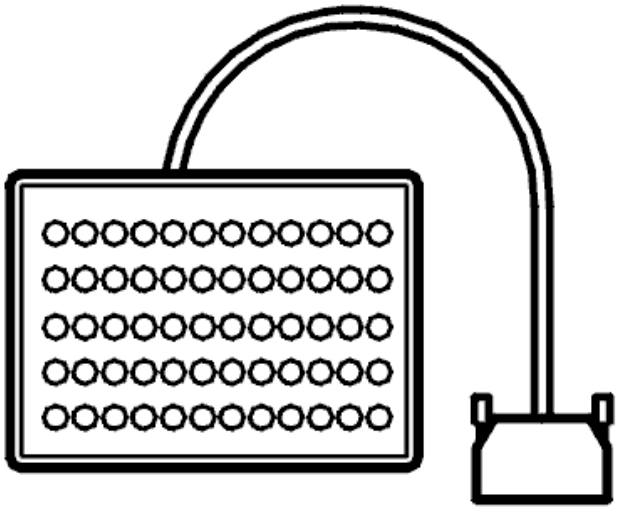

Fig. 279: Breakout Box
Courtesy of VOLVO CARS CORPORATION

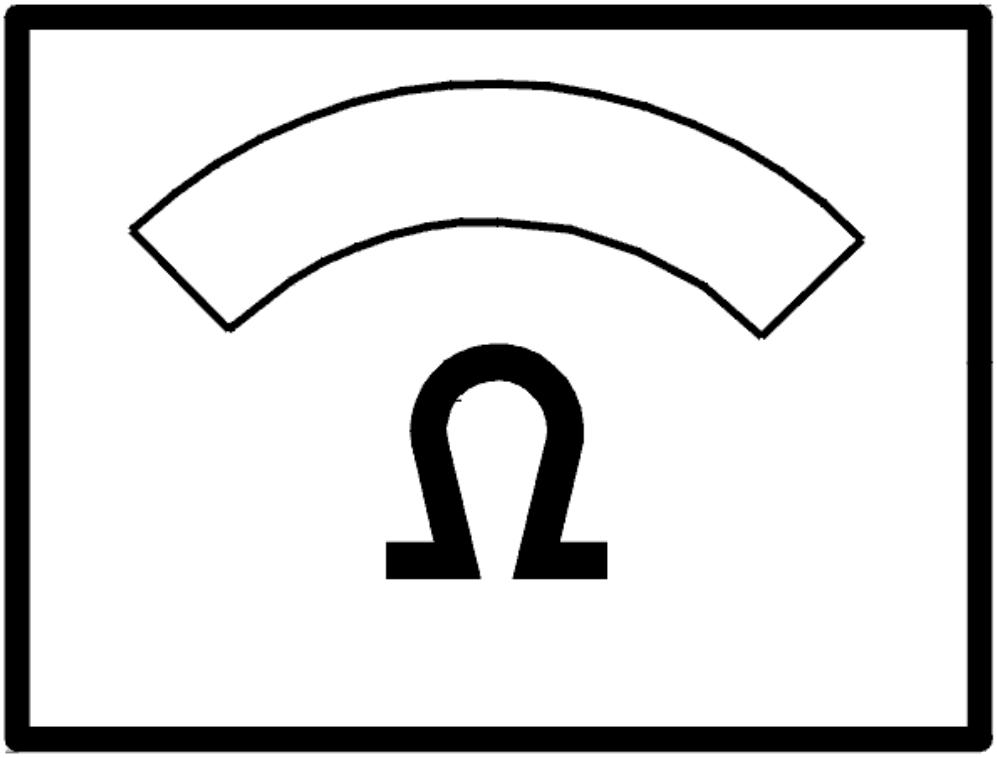

Fig. 280: Identifying Ohmmeter
Courtesy of VOLVO CARS CORPORATION

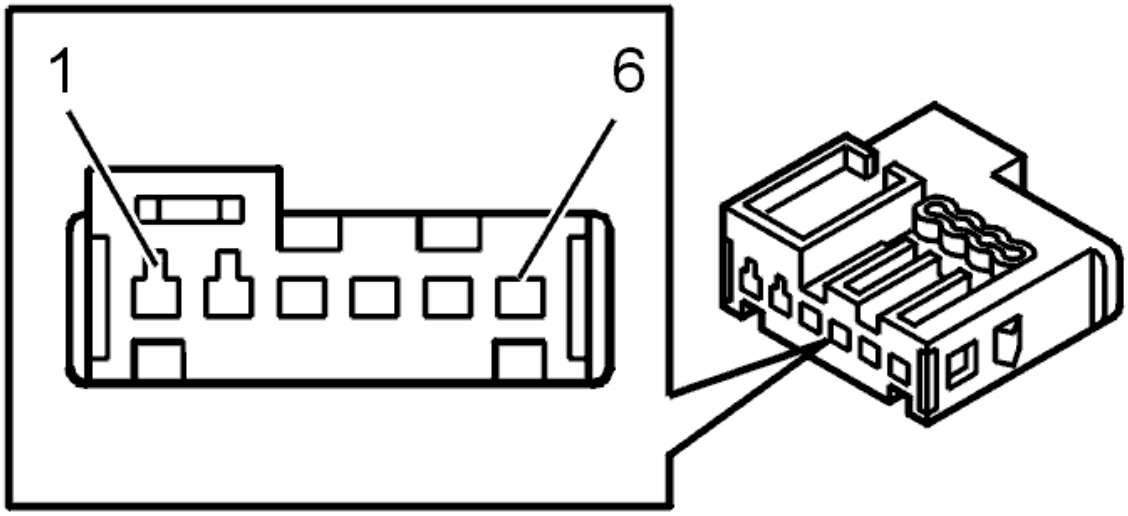

Fig. 281: Identifying Left Temperature Damper Motor Connector Terminals
Courtesy of VOLVO CARS CORPORATION

- **Continue**

  Refer to **EQUIPMENT**

CHECKING THE WIRING

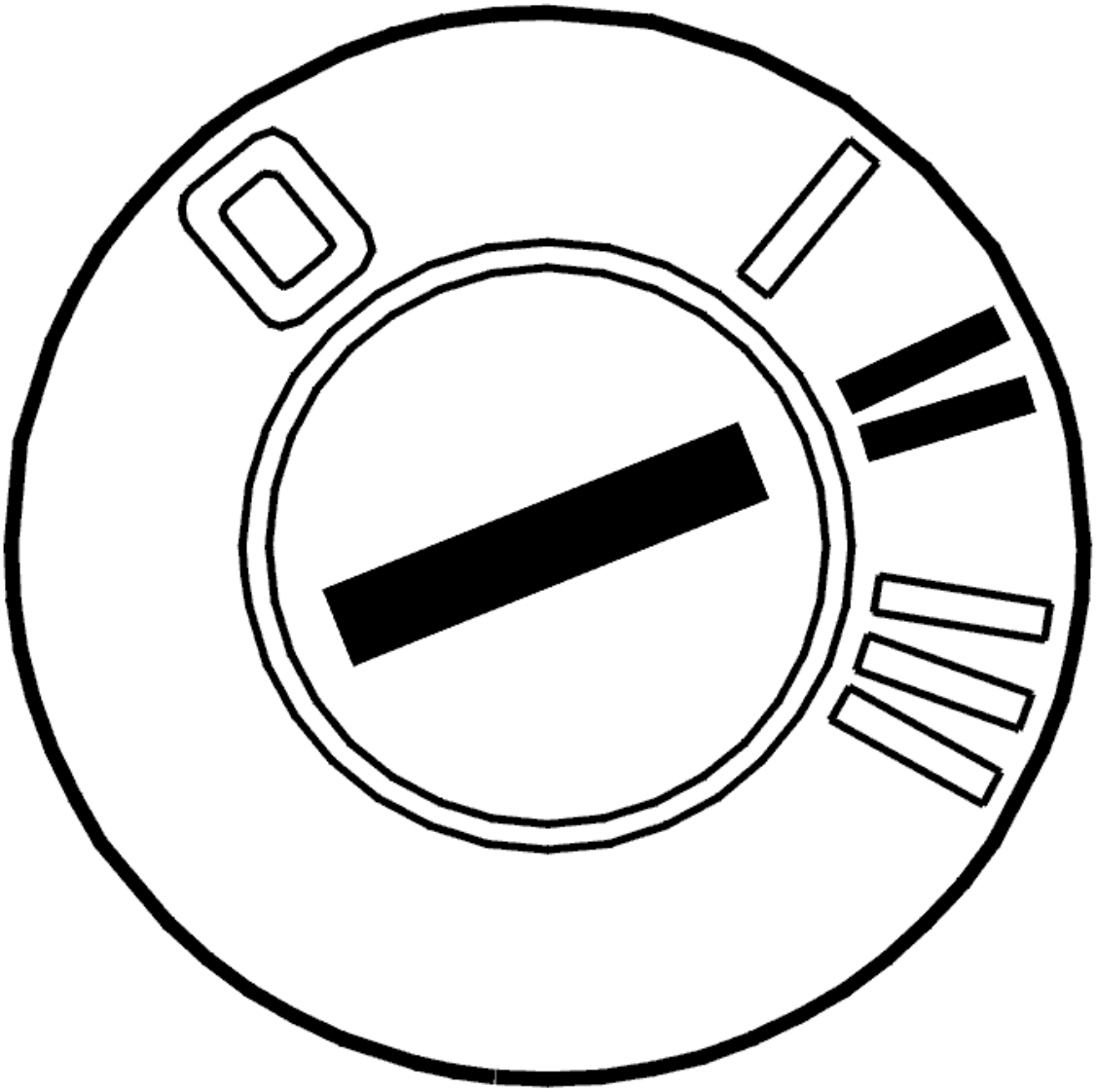

Fig. 282: Identifying Ignition ON
Courtesy of VOLVO CARS CORPORATION

- Ignition off
- Disconnect connector B on the climate control module (CCM).
- Ignition on

  Check the matrix wiring. Check for a short-circuit to supply voltage. Check for a short-circuit to ground.

  Take readings between the following terminals on connector B and ground:

  - #B11 (#11)
  - #B12 (#12)
  - #B13 (#13)
  - #B14 (#14)

Check whether there is an internal short-circuit in the matrix cables. Take pairs of readings between all the terminals #B11-#B14 on connector B.

Other information:

- see **CONNECTING THE BREAKOUT BOX** .
- see **CLIMATE CONTROL MODULE (CCM), REPLACING** .
- see **DAMPER MOTOR TEMPERATURE, REPLACING** .
- see **SIGNAL SPECIFICATION** .
- see **CHECKING WIRING AND TERMINALS** .

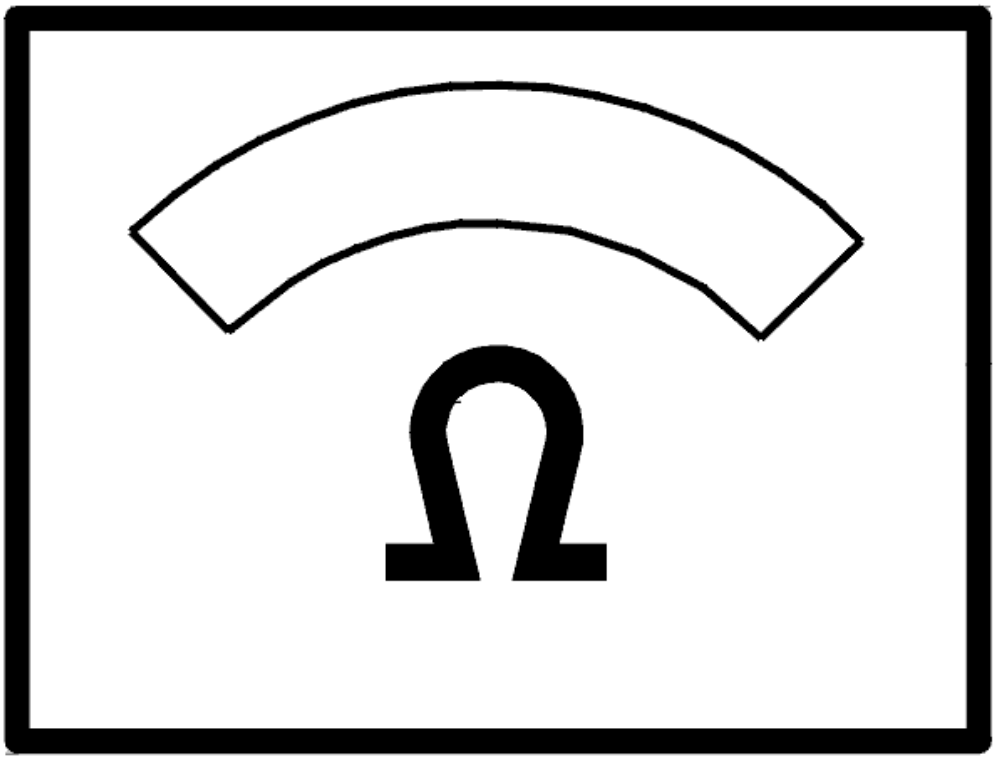

Fig. 283: Identifying Ohmmeter
Courtesy of VOLVO CARS CORPORATION

Was a fault detected?

- **YES**

  Refer to **EQUIPMENT**

- **NO**

  Refer to **CHECKING THE COMPONENT**

CHECKING THE COMPONENT

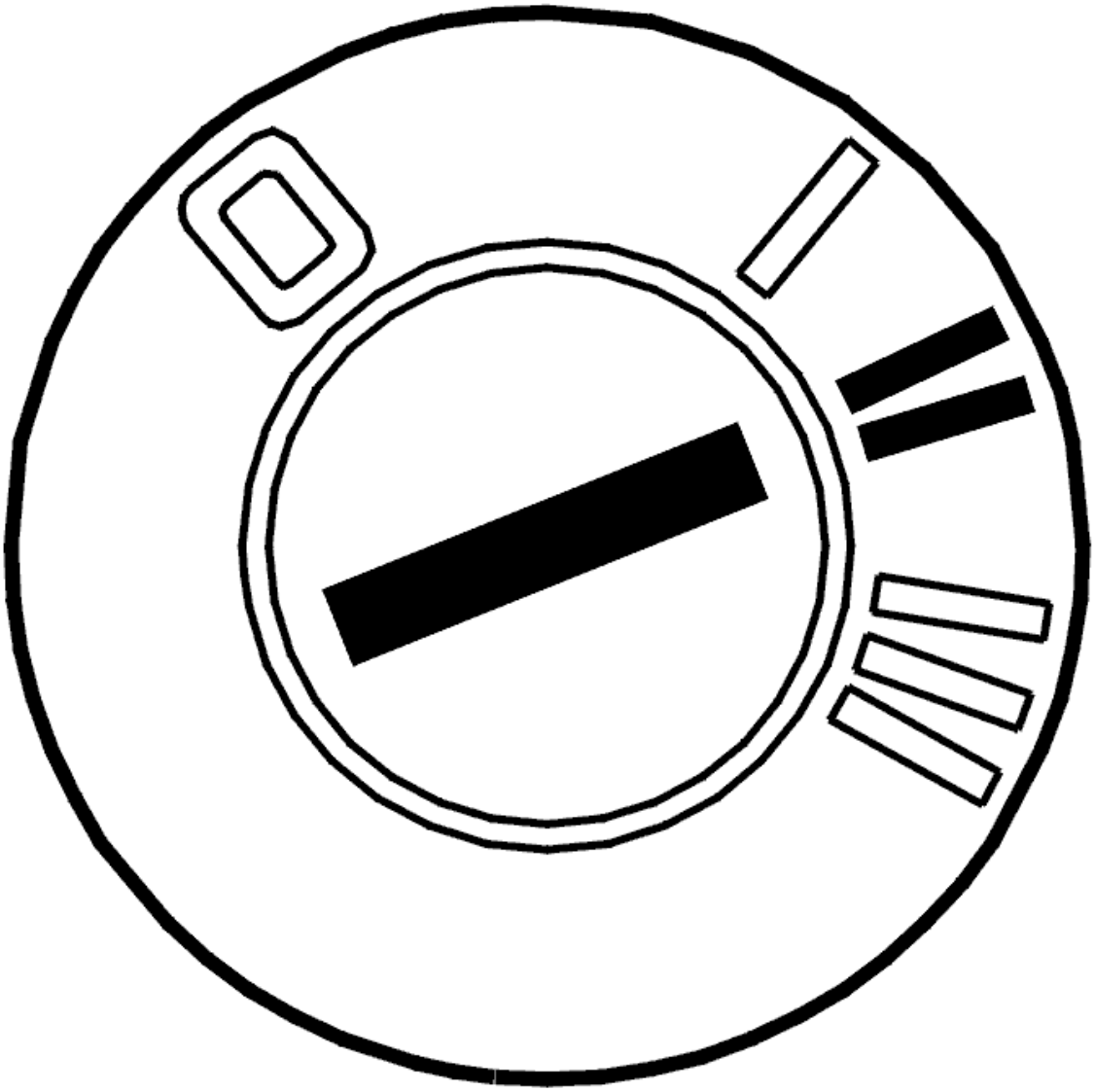

Fig. 284: Identifying Ignition ON
Courtesy of VOLVO CARS CORPORATION

- Ignition on

  Check the damper motors. Check for internal short-circuits as follows:

- Remove the soundproofing panel to access the damper motor connectors.
- Erase the diagnostic trouble codes (DTCs) for the climate control module (CCM).
- First disconnect the connector from a damper motor. Leave the other damper motors connected.

NOTE: Take care when disconnecting the connectors for the damper motors to prevent loose connections.

- Activate the controls (right and left-hand temperature knobs, defroster, air distribution selector, recirculation) on the climate control module (CCM) to operate all the damper motors.
- Read off the diagnostic trouble codes (DTCs) from the climate control module (CCM). If the diagnostic trouble codes (DTCs) have not recurred, there is an internal fault in the disconnected damper motor.
- If the diagnostic trouble codes (DTCs) recur, continue fault tracing. Reconnect the disconnected damper motor and disconnect the next damper motor. Repeat the procedure by erasing all diagnostic trouble codes (DTCs) and running the damper motors until the faulty damper motor has been identified.

Other information:

- see **CONNECTING THE BREAKOUT BOX** .
- see **CLIMATE CONTROL MODULE (CCM), REPLACING** .
- see **DAMPER MOTOR TEMPERATURE, REPLACING** .
- see **SIGNAL SPECIFICATION** .
- see **CHECKING WIRING AND TERMINALS** .

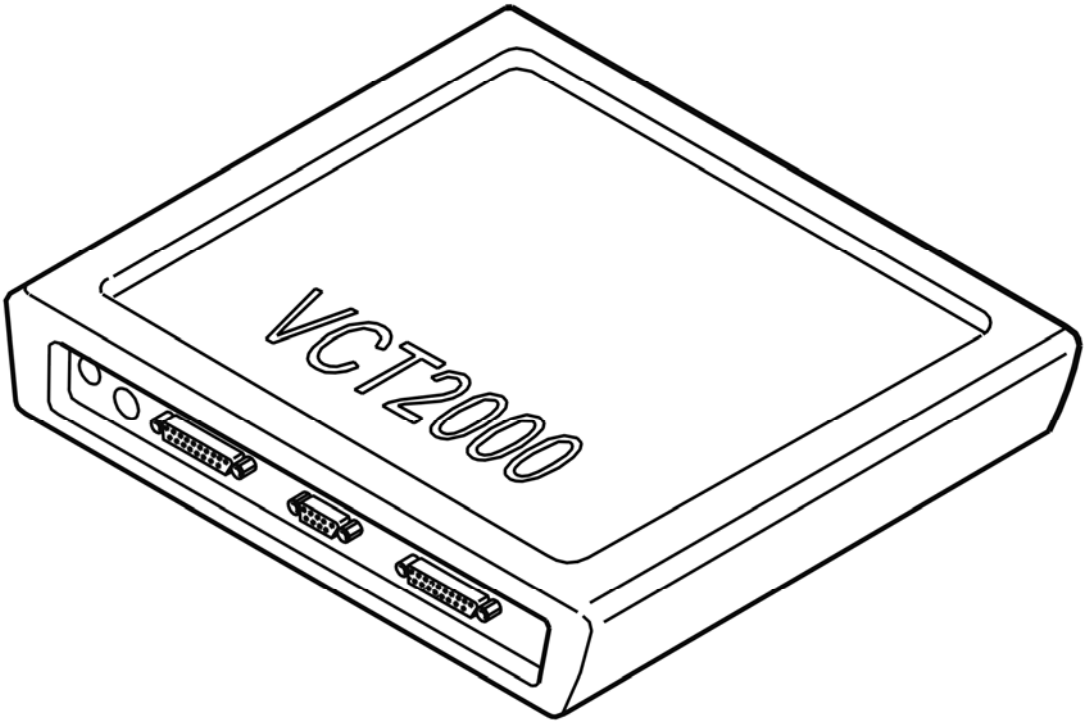

Fig. 285: Identifying VCT2000 Diagnostic Tool Symbol In VIDA
Courtesy of VOLVO CARS CORPORATION

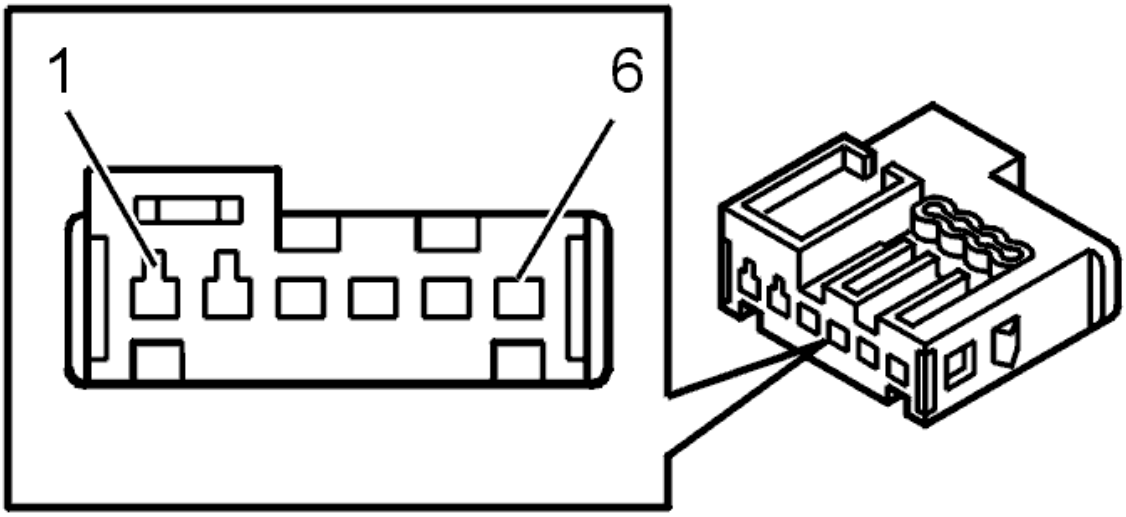

Fig. 286: Identifying Left Temperature Damper Motor Connector Terminals
Courtesy of VOLVO CARS CORPORATION

- **Continue**

  Refer to **EQUIPMENT**

EQUIPMENT

Which type of climate control is the car equipped with?

1. ECC. Refer to **SELF-ADJUSTMENT**.
2. Manual climate control (MCC)/Standard (STD). Refer to **SELF-ADJUSTMENT**

SELF-ADJUSTMENT

HINT: After replacing the control module or damper motor, and when a damper motor or link has been removed, carry out self adjustment to define the damper motor limit positions.

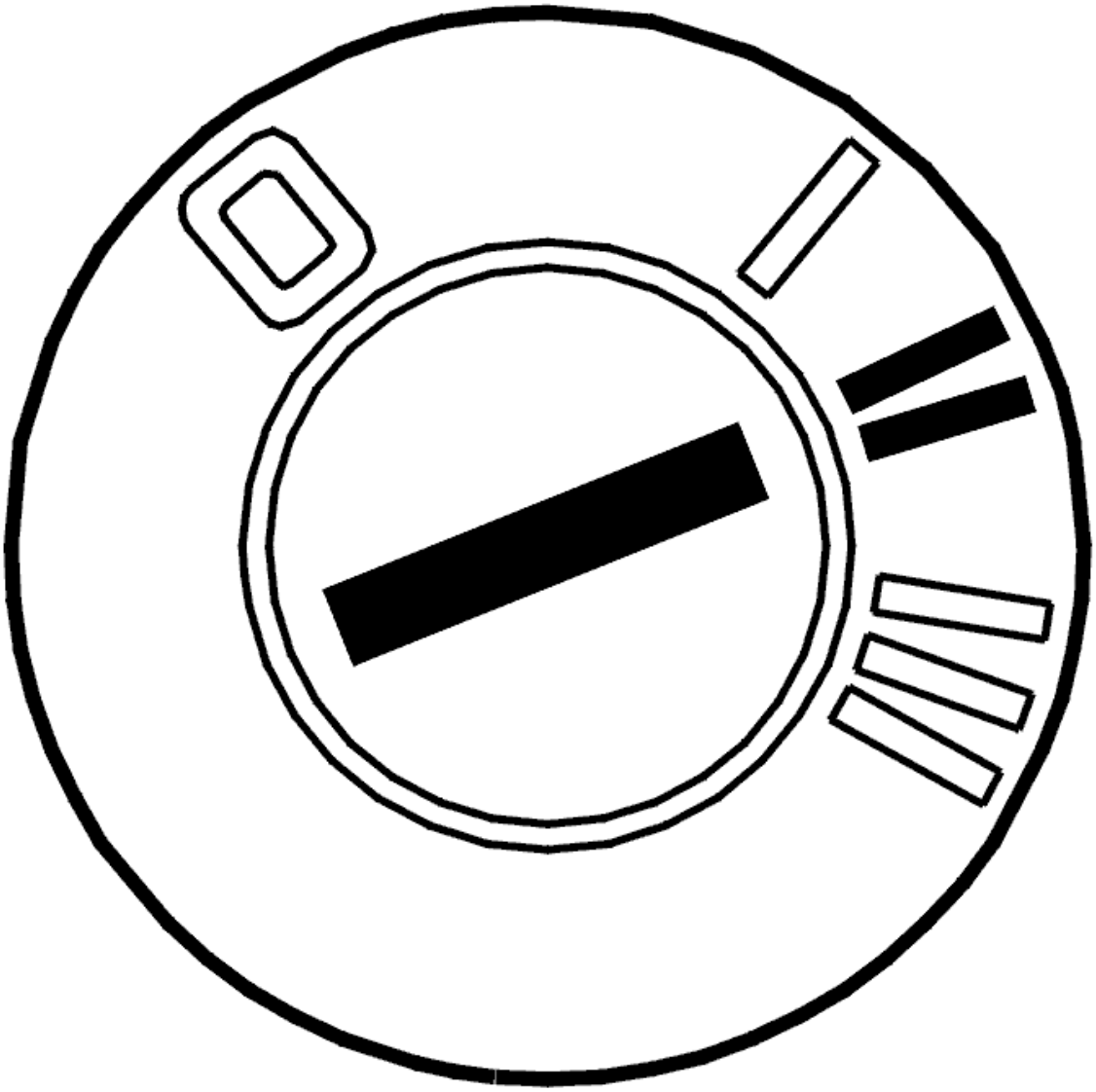

Fig. 287: Identifying Ignition ON
Courtesy of VOLVO CARS CORPORATION

- Ignition off.

- Reinstall the connectors, components etc.
- Ignition on.

  Activate self adjustment.

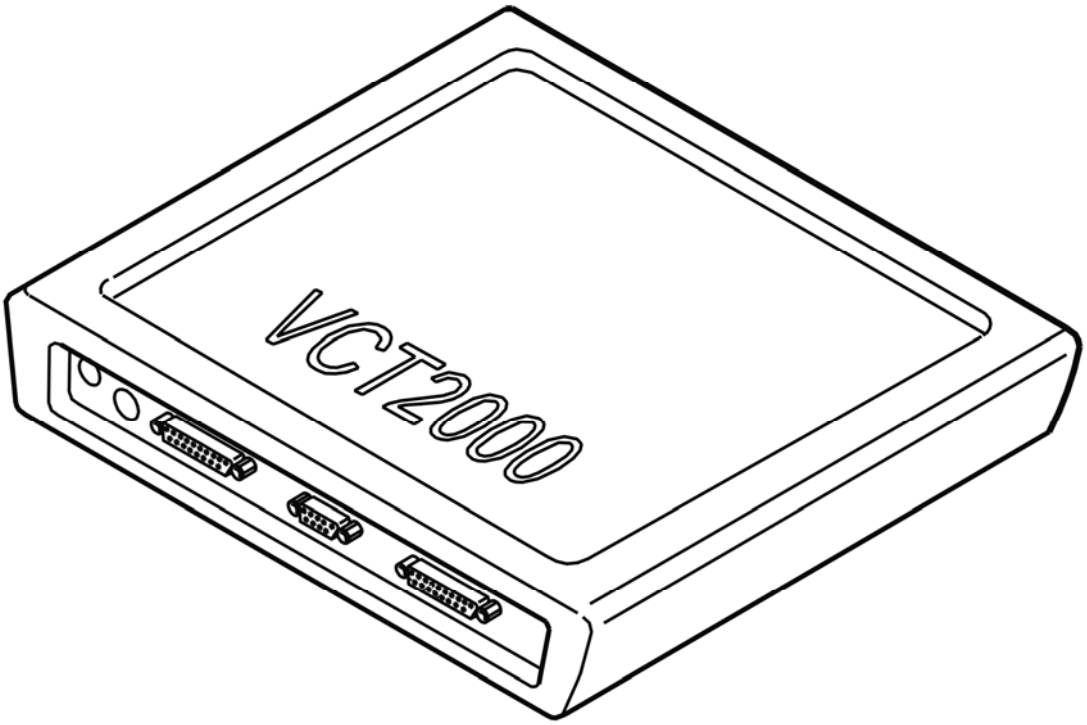

Fig. 288: Identifying VCT2000 Diagnostic Tool Symbol In VIDA
Courtesy of VOLVO CARS CORPORATION

- **Continue**

  Refer to **VERIFICATION**

VERIFICATION

HINT: After the repair it is necessary to check that the fault has been rectified.

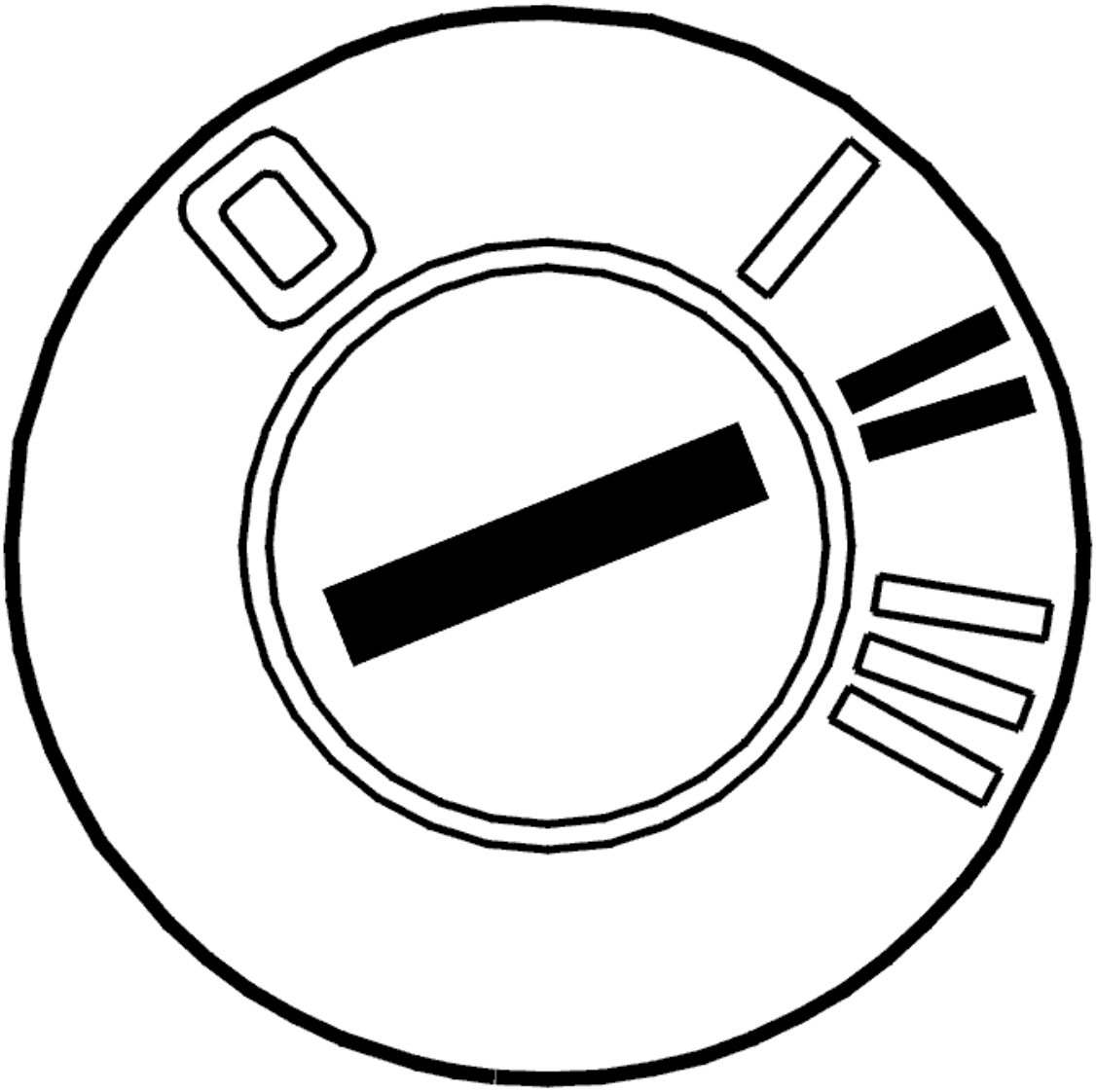

Fig. 289: Identifying Ignition ON
Courtesy of VOLVO CARS CORPORATION

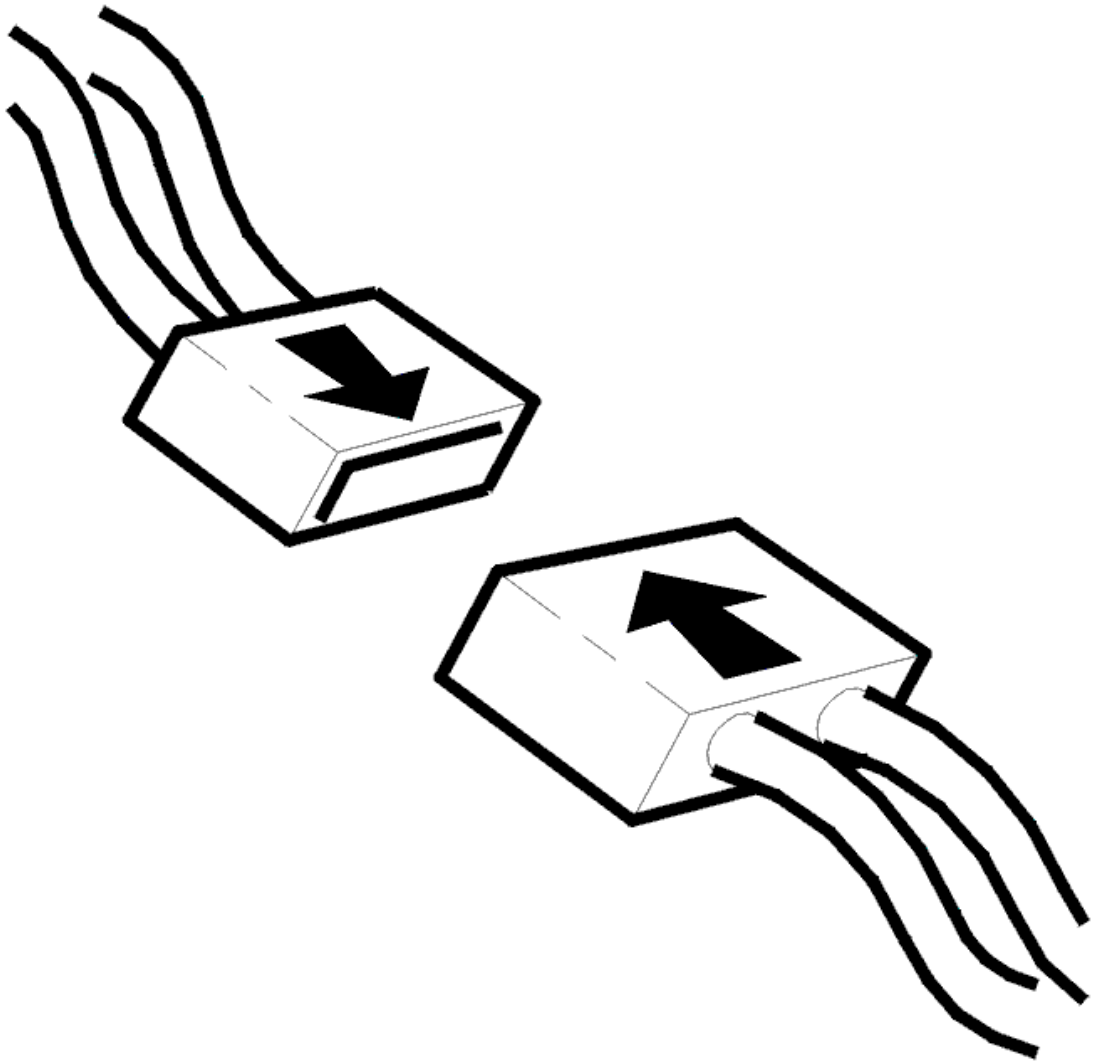

Fig. 290: Connecting Connector
Courtesy of VOLVO CARS CORPORATION

- Ignition off.
- Connect the connectors, install the components, etc.
- Ignition on.
- Blower motor on.

Check that damper motor position changes by changing control on climate control module (CCM). The values given below are the standard values that the damper motor positions should give.

NOTE: Blower motor must be in operation to activate the damper motors.

- Left/right temperature damper motor and defroster, 0-100%
- Recirculation damper motor, 40-100%

- Floor/ventilation damper motor, floor only approximately 39%, ventilation only approximately 87% and floor/ventilation approximately 71%.

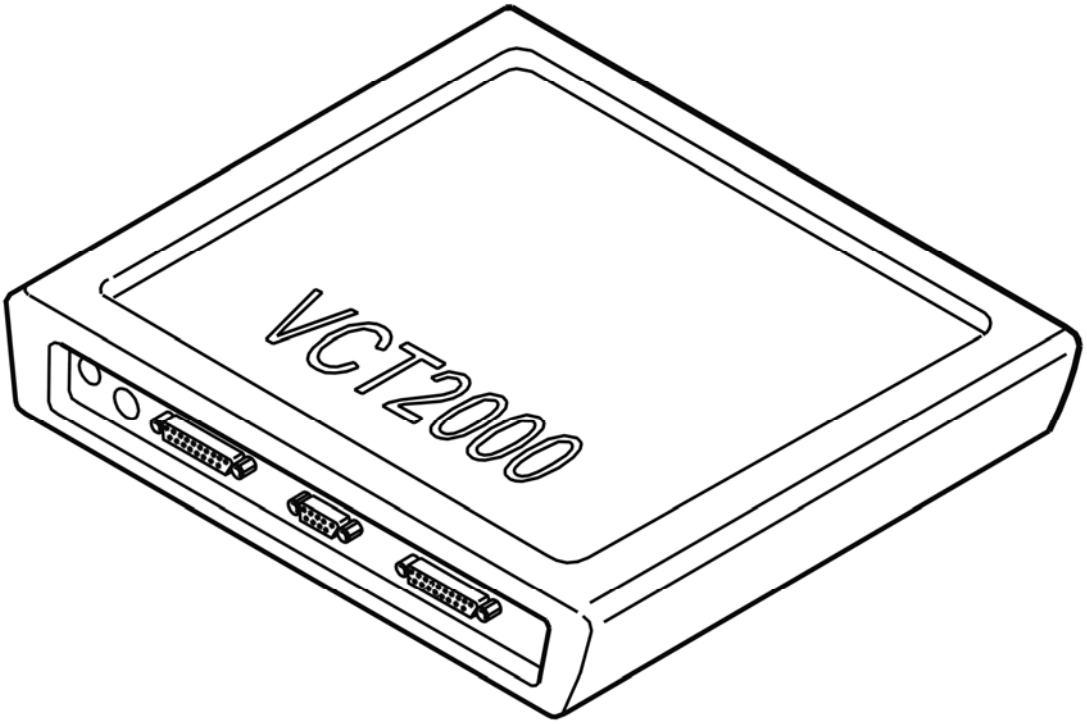

Fig. 291: Identifying VCT2000 Diagnostic Tool Symbol In VIDA
Courtesy of VOLVO CARS CORPORATION

Does damper motor work?

- **YES**

  VERIFIED: Troubleshooting has been completed.

- **NO**

  Refer to **INFORMATION**

SELF-ADJUSTMENT

HINT: After replacing the control module or damper motor, and when a damper motor or link has been removed, carry out self adjustment to define the damper motor limit positions.

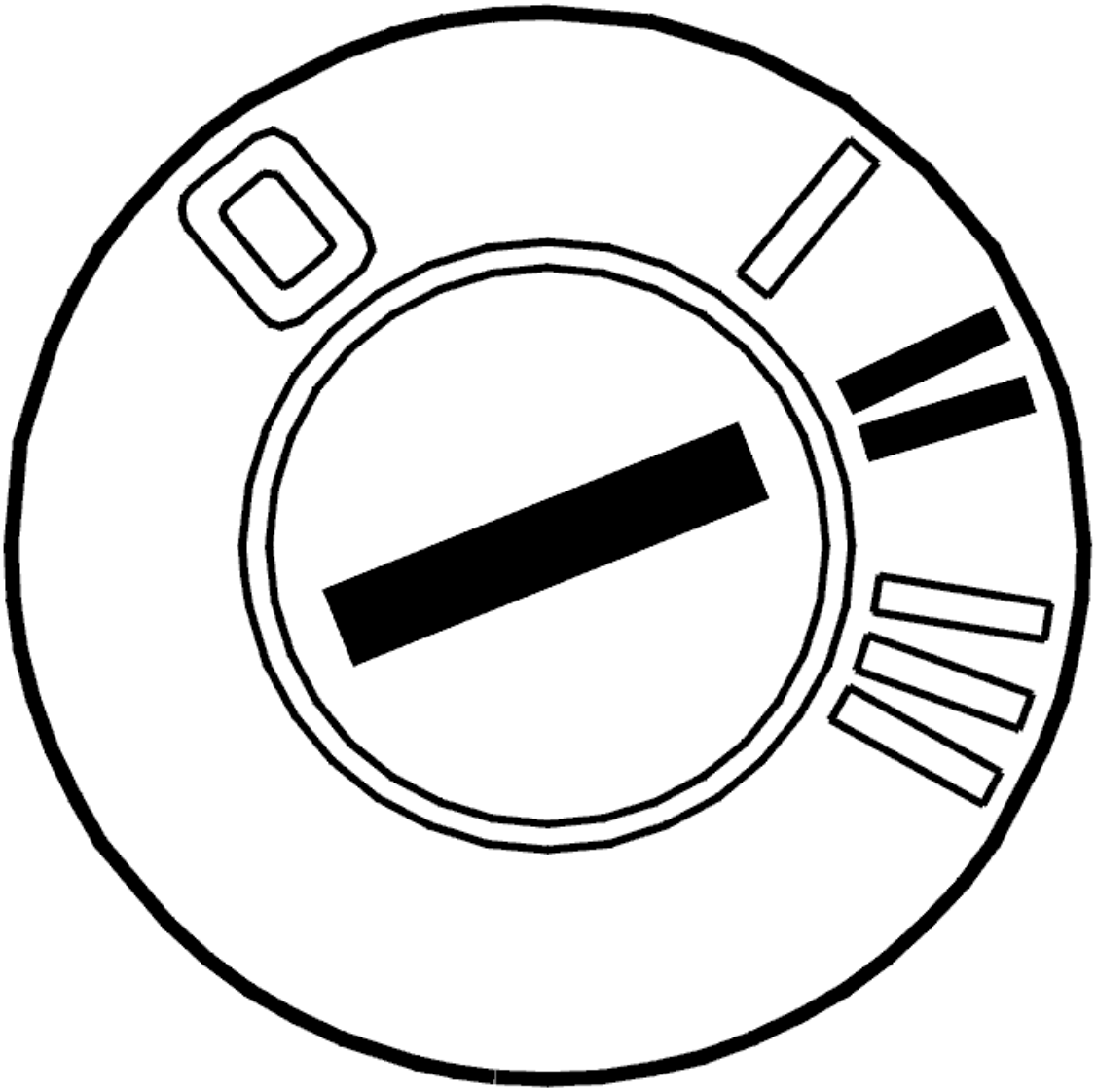

Fig. 292: Identifying Ignition ON
Courtesy of VOLVO CARS CORPORATION

- Ignition off.
- Reinstall the connectors, components etc.
- Ignition on.

  Activate self adjustment.

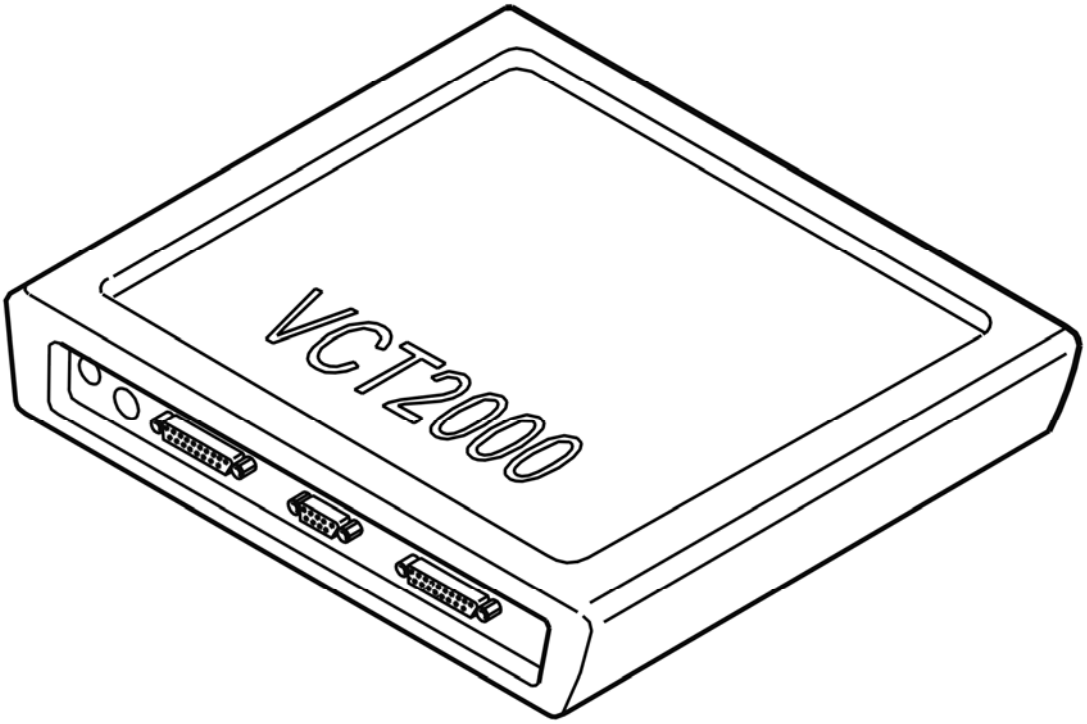

Fig. 293: Identifying VCT2000 Diagnostic Tool Symbol In VIDA
Courtesy of VOLVO CARS CORPORATION

- **Continue**

  Refer to **VERIFICATION**

VERIFICATION

HINT: After the repair it is necessary to check that the fault has been rectified.

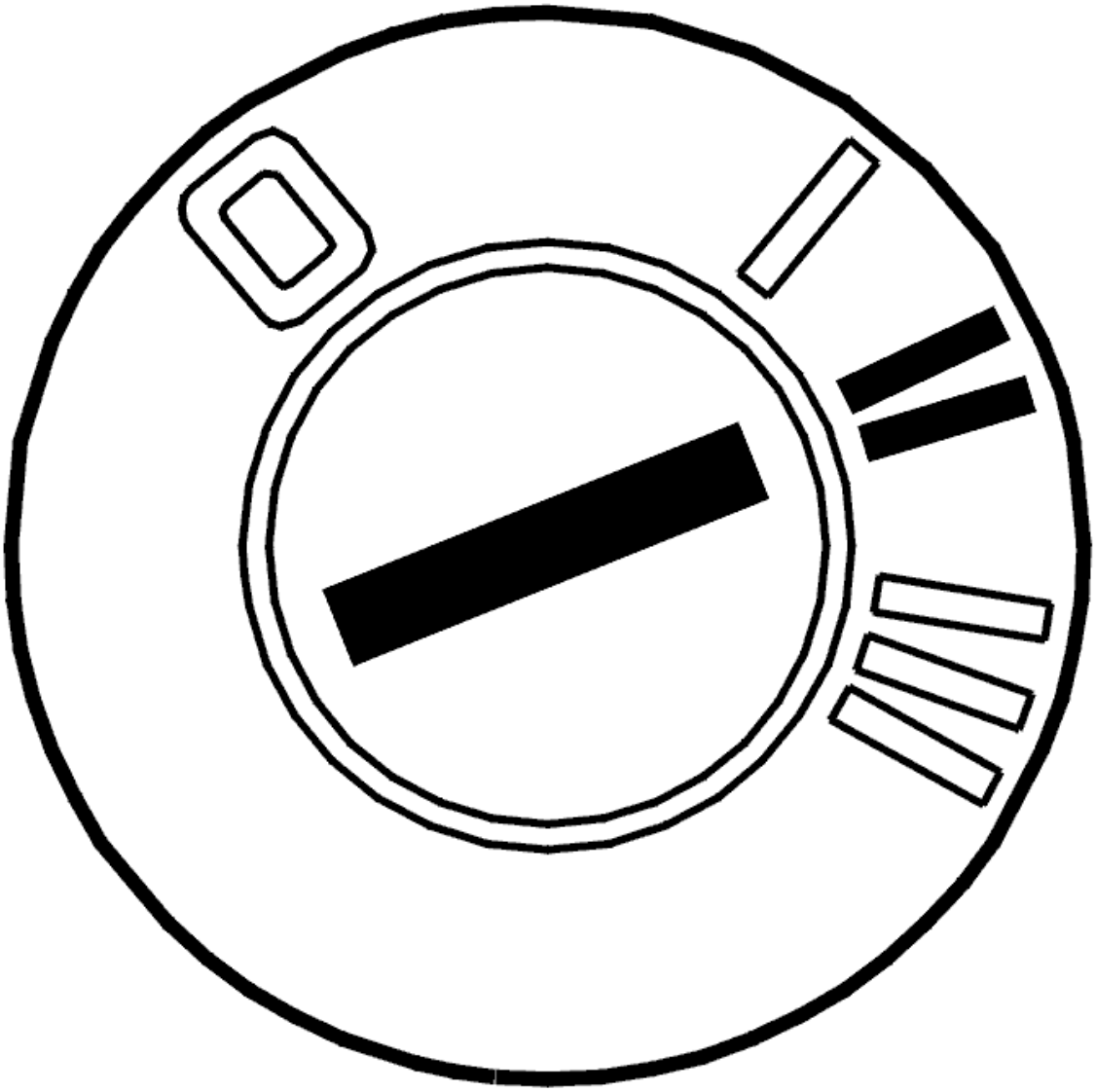

Fig. 294: Identifying Ignition ON
Courtesy of VOLVO CARS CORPORATION

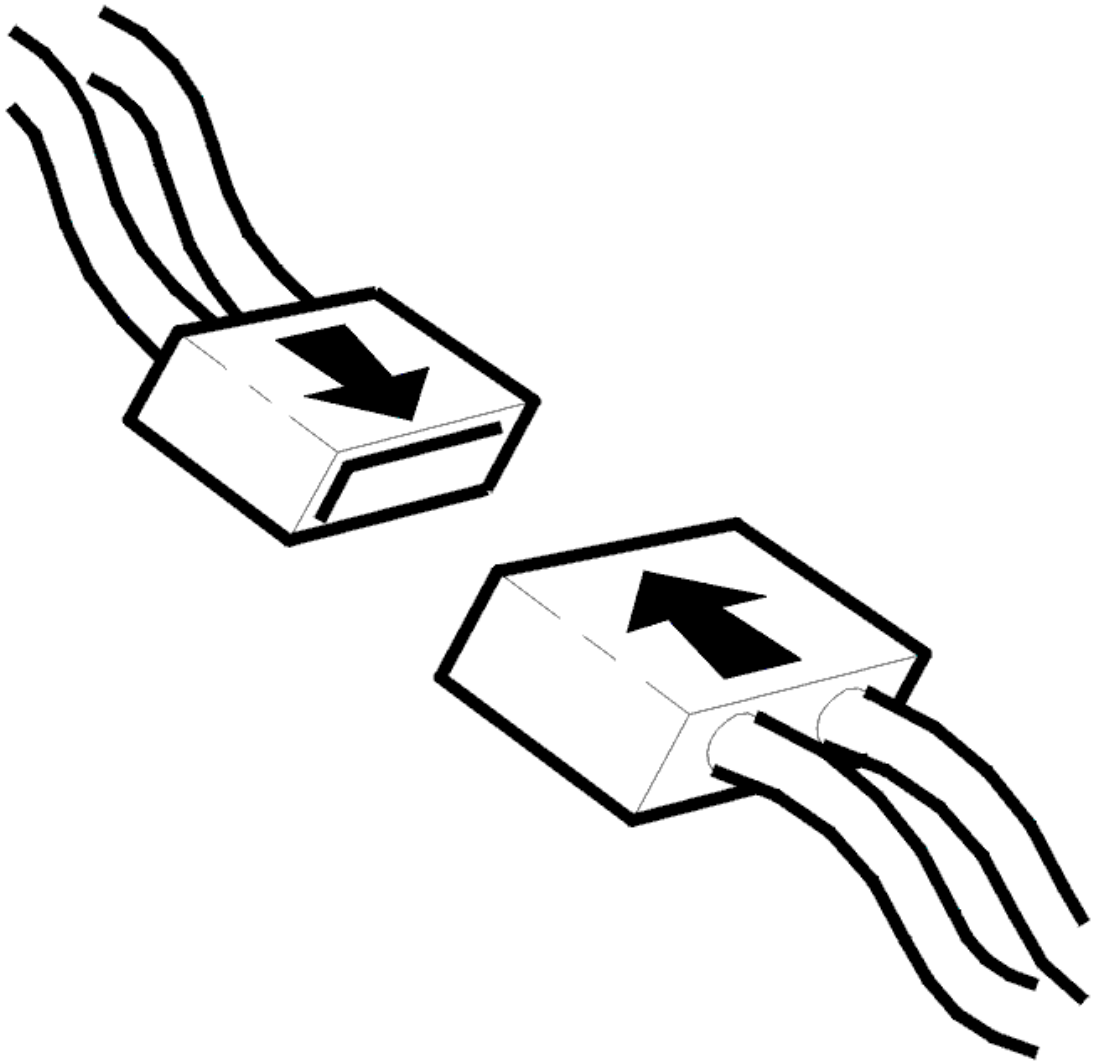

Fig. 295: Connecting Connector
Courtesy of VOLVO CARS CORPORATION

- Ignition off.
- Connect the connectors, install the components, etc.
- Ignition on.
- Blower motor on.

Check that damper motor position changes by changing control on climate control module (CCM). The values given below are the standard values that the damper motor positions should give.

NOTE: Blower motor must be in operation to activate the damper motors.

- Left/right temperature damper motor, 0-100%
- Recirculation damper motor, 40-100%

- Damper motor air distribution, defroster approximately 0%, floor/defroster approximately 19%, floor approximately 39%, ventilation approximately 83%.

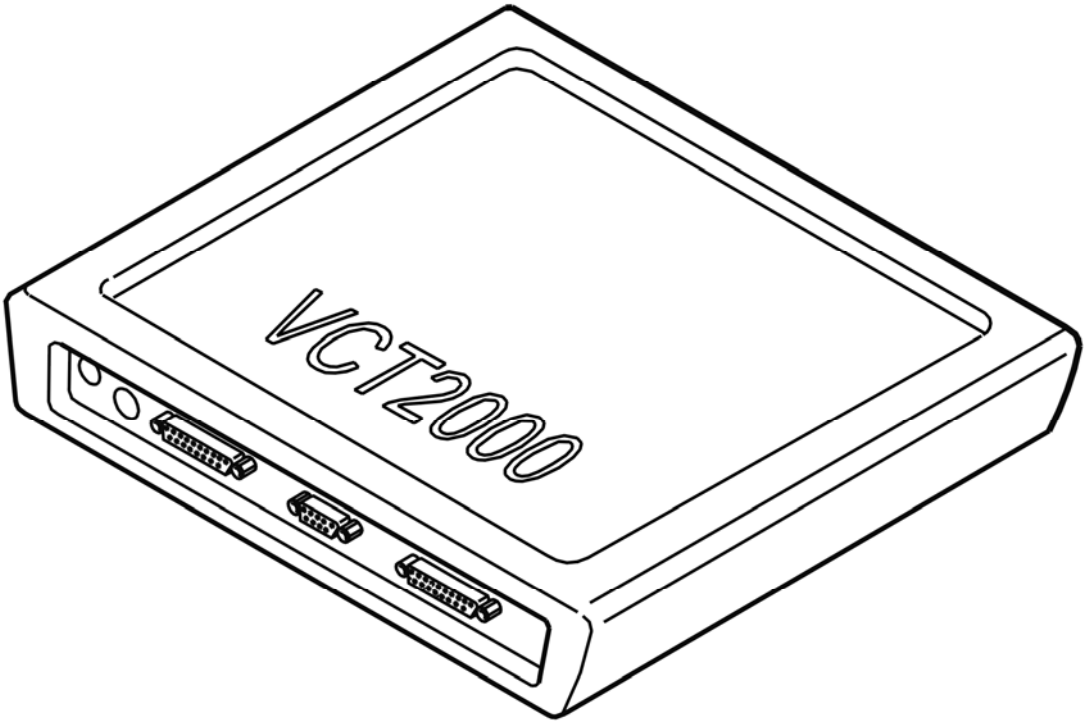

Fig. 296: Identifying VCT2000 Diagnostic Tool Symbol In VIDA
Courtesy of VOLVO CARS CORPORATION

Does damper motor work?

- **YES**

  VERIFIED: Troubleshooting has been completed.

- **NO**

  Refer to **INFORMATION**

INFORMATION

FAULT-TRACING INFORMATION

The fault should have been detected and remedied. As this is not the case fault-tracing has failed.

Exit fault-tracing for this diagnostic trouble code (DTC) or make another attempt.

CCM-0013: RECIRCULATION DAMPER MOTOR. SIGNAL TOO HIGH. PERMANENT FAULT (2003-04)

DIAGNOSTIC TROUBLE CODE (DTC) INFORMATION

Condition

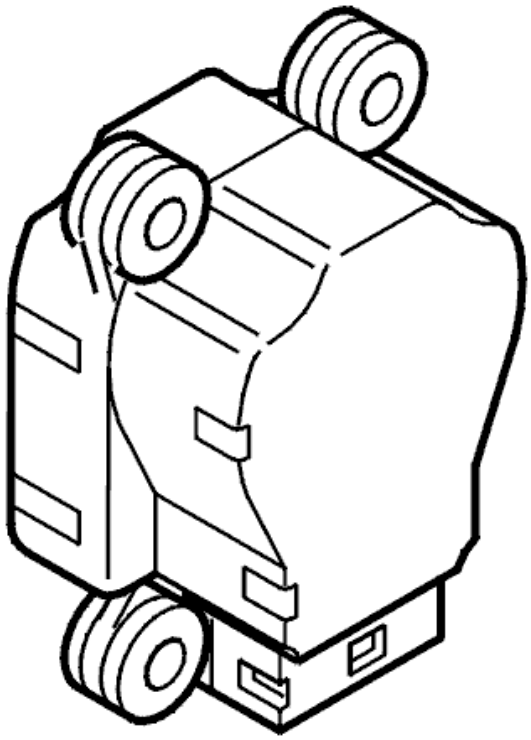

Fig. 297: Identifying Left Temperature Damper Motor
Courtesy of VOLVO CARS CORPORATION

Diagnostic trouble code (DTC) CCM-0013 is stored if the control module registers too high a signal from the recirculation damper motor.

Substitute Value

- The control module does not allow the damper motor to be activated while the fault persists.

Possible Source

- Short-circuit to ground in the signal cable
- Defective damper motor.

Fault symptom[s]

- Air flow problem.

SIGNAL TOO HIGH

CHECKING THE DIAGNOSTIC TROUBLE CODES (DTCS)

Check which of the following alternatives apply when reading off diagnostic trouble codes (DTCs) for the climate control module (CCM).

Alternative 1

If the diagnostic trouble code (DTC) is stored with one or more other diagnostic trouble codes (DTCs), and the diagnostic trouble code (DTC) for direction control, this indicates a fault in the matrix network governing direction control.

The damper motors are connected in series in the matrix network governing direction control. In the event of a fault in the network, a diagnostic trouble code (DTC) will be stored for all damper motors which are in motion at the same time. Refer to **CHECKING THE WIRING**

The following are probable fault causes:

- short-circuit between the wiring in the matrix network
- short-circuit to supply voltage
- short-circuit to ground
- damaged damper motor.

Check to, see if the diagnostic trouble code (DTC) has been stored with any of the following diagnostic trouble codes (DTCs):

- CCM-0011
- CCM-0012
- CCM-0014
- CCM-0015
- CCM-0016
- CCM-0017
- CCM-0018

Alternative 2

Check whether the diagnostic trouble code (DTC) has only been stored with the diagnostic trouble codes (DTCs) for direction control, CCM-0017 and CCM-0018. Refer to **CHECKING COMPONENTS AND WIRING**

CHECKING COMPONENTS AND WIRING

Check the signal cable between control module terminal #B21 and damper motor terminal #1. Check for a short-circuit to ground.

Check the damper motor resistance. The resistance must be 46 ohms. Take readings between the damper motor terminal pins.

Remedy as necessary.

Other information:

- see **CONNECTING THE BREAKOUT BOX** .
- see **CLIMATE CONTROL MODULE (CCM), REPLACING** .
- see **DAMPER MOTOR TEMPERATURE, REPLACING** .
- see **SIGNAL SPECIFICATION** .
- see **CHECKING WIRING AND TERMINALS** .

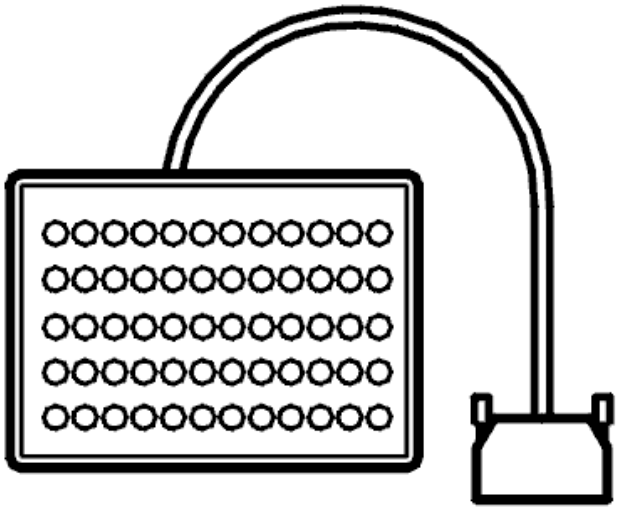

Fig. 298: Breakout Box
Courtesy of VOLVO CARS CORPORATION

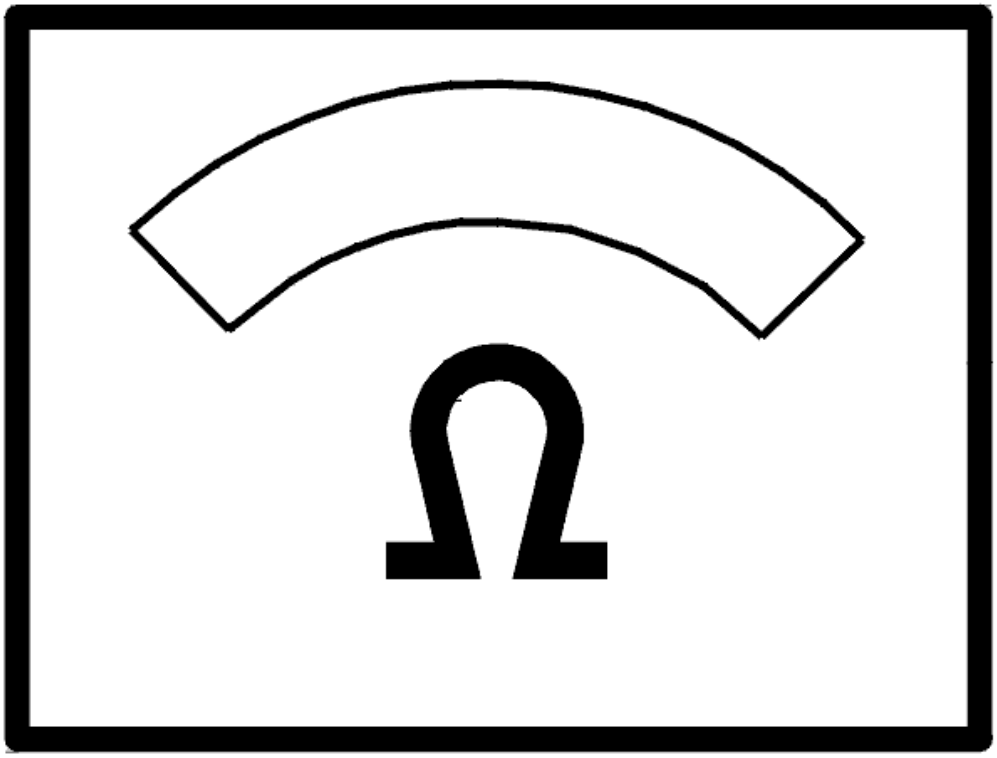

Fig. 299: Identifying Ohmmeter
Courtesy of VOLVO CARS CORPORATION

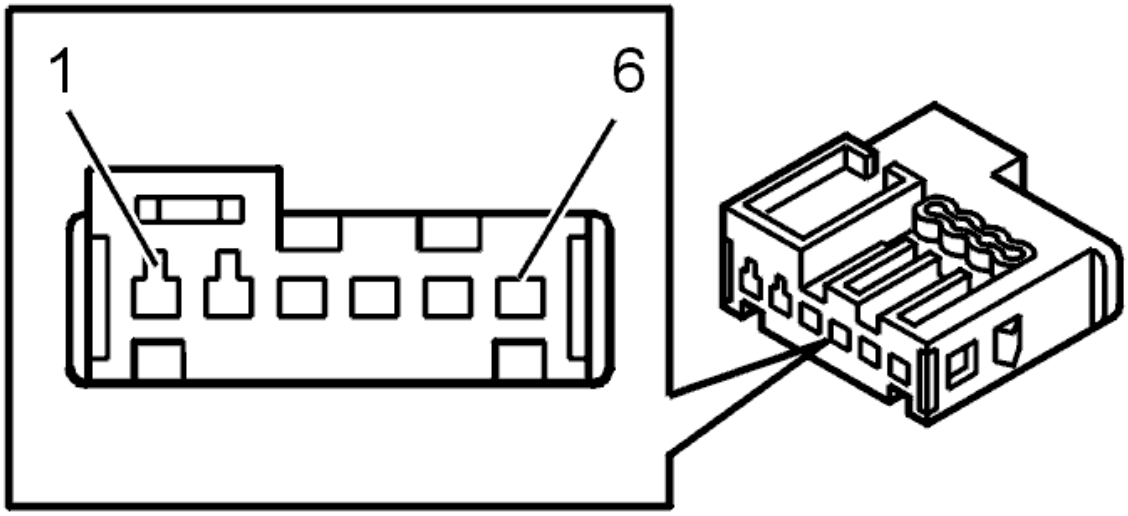

Fig. 300: Identifying Left Temperature Damper Motor Connector Terminals
Courtesy of VOLVO CARS CORPORATION

- **Continue**

  Refer to **EQUIPMENT**

CHECKING THE WIRING

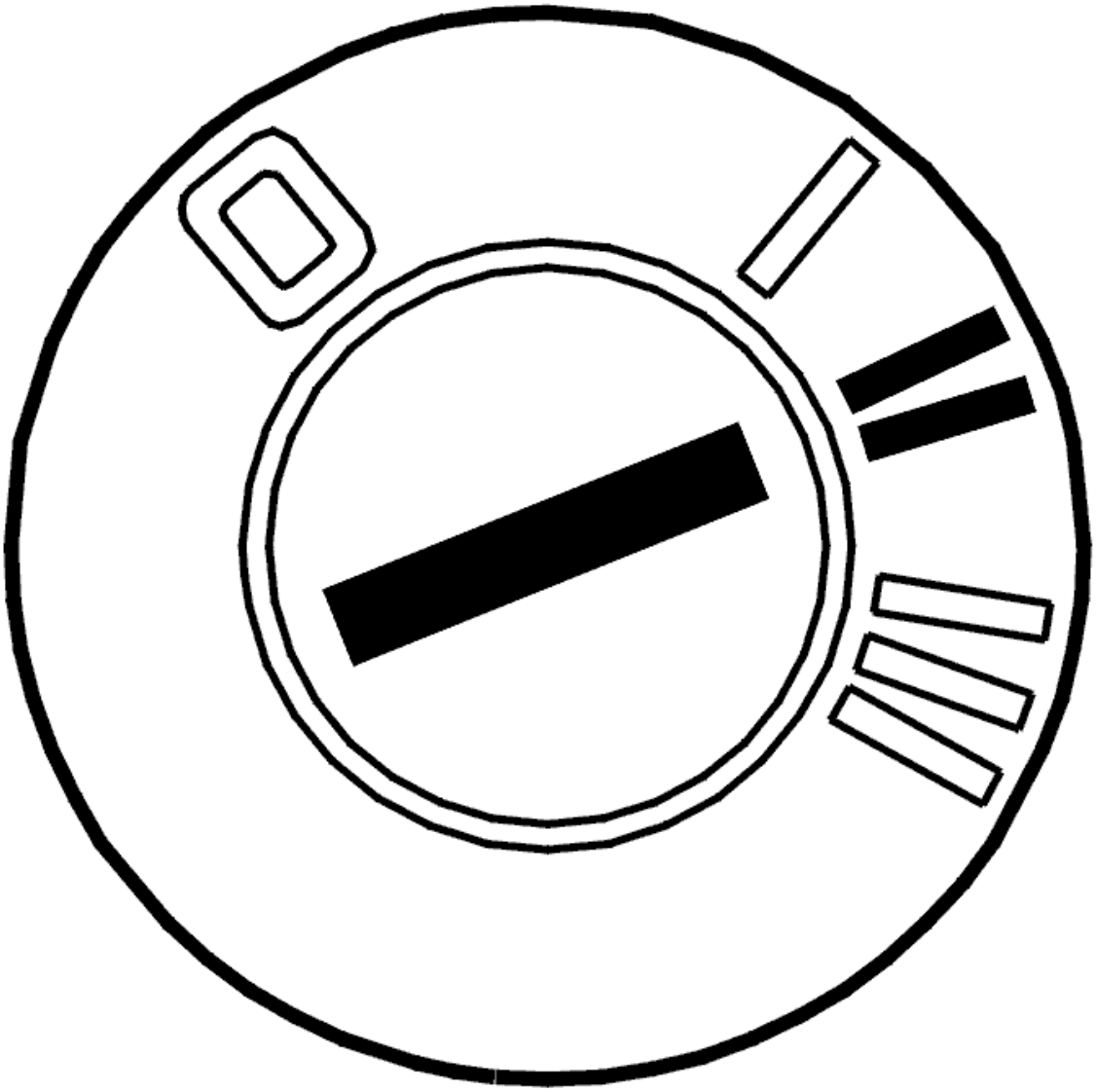

Fig. 301: Identifying Ignition ON
Courtesy of VOLVO CARS CORPORATION

- Ignition off
- Disconnect connector B on the climate control module (CCM).
- Ignition on

  Check the matrix wiring. Check for a short-circuit to supply voltage. Check for a short-circuit to ground.

  Take readings between the following terminals on connector B and ground:

  - #B11 (#11)
  - #B12 (#12)
  - #B13 (#13)
  - #B14 (#14)

Check whether there is an internal short-circuit in the matrix cables. Take pairs of readings between all the terminals #B11-#B14 on connector B.

Other information:

- see **CONNECTING THE BREAKOUT BOX**
- see **CLIMATE CONTROL MODULE (CCM), REPLACING** .
- see **DAMPER MOTOR TEMPERATURE, REPLACING** .
- see **SIGNAL SPECIFICATION** .
- see **CHECKING WIRING AND TERMINALS** .

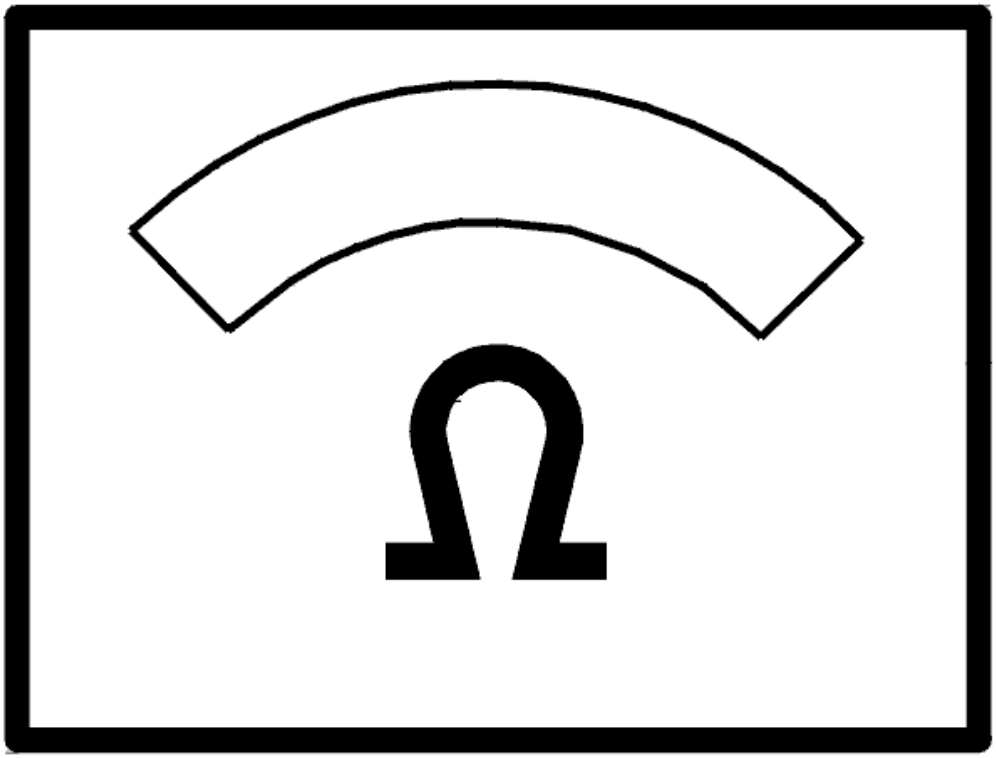

Fig. 302: Identifying Ohmmeter
Courtesy of VOLVO CARS CORPORATION

Was a fault detected?

- **YES**

  Refer to **EQUIPMENT**

- **NO**

  Refer to **CHECKING THE COMPONENT**

CHECKING THE COMPONENT

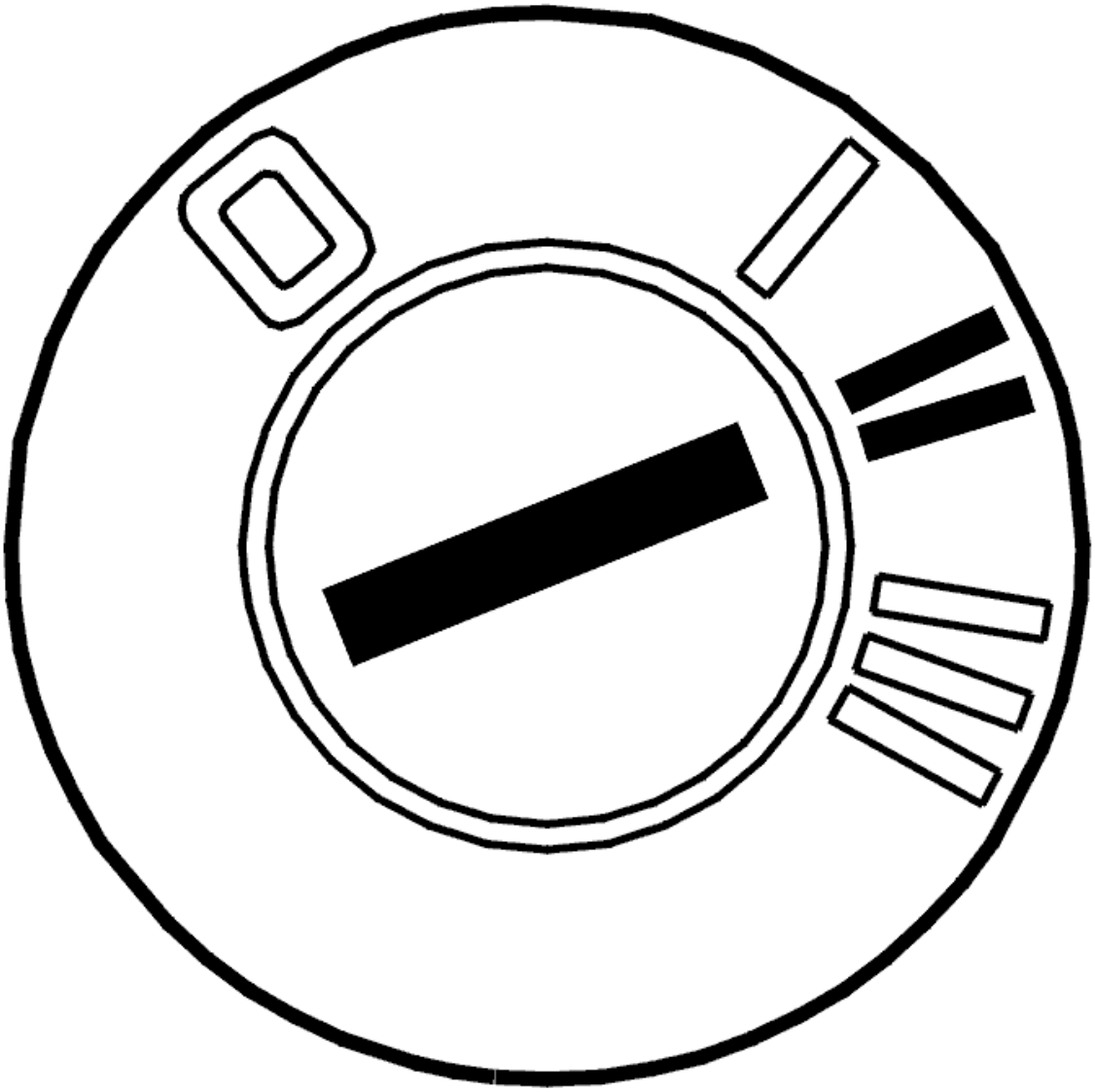

Fig. 303: Identifying Ignition ON
Courtesy of VOLVO CARS CORPORATION

- Ignition on

  Check the damper motors. Check for internal short-circuits according to the following method:

- Remove the soundproofing panel to access the damper motor connectors.
- Erase the diagnostic trouble codes (DTCs) for the climate control module (CCM).
- First disconnect the connector from a damper motor. Leave the other damper motors connected.

NOTE: Take care when disconnecting the connectors for the damper motors to prevent loose connections.

- Activate the controls (right and left-hand temperature knobs, defroster, air distribution selector, recirculation) on the climate control module (CCM) to operate all the damper motors.
- Read off the diagnostic trouble codes (DTCs) from the climate control module (CCM). If the diagnostic trouble codes (DTCs) have not recurred, there is an internal fault in the disconnected damper motor.
- If the diagnostic trouble codes (DTCs) recur, continue fault tracing. Reconnect the disconnected damper motor and disconnect the next damper motor. Repeat the procedure by erasing all diagnostic trouble codes (DTCs) and running the damper motors until the faulty damper motor has been identified.

Other information:

- see **CONNECTING THE BREAKOUT BOX** .
- see **CLIMATE CONTROL MODULE (CCM), REPLACING** .
- see **DAMPER MOTOR TEMPERATURE, REPLACING** .
- see **SIGNAL SPECIFICATION** .
- see **CHECKING WIRING AND TERMINALS** .

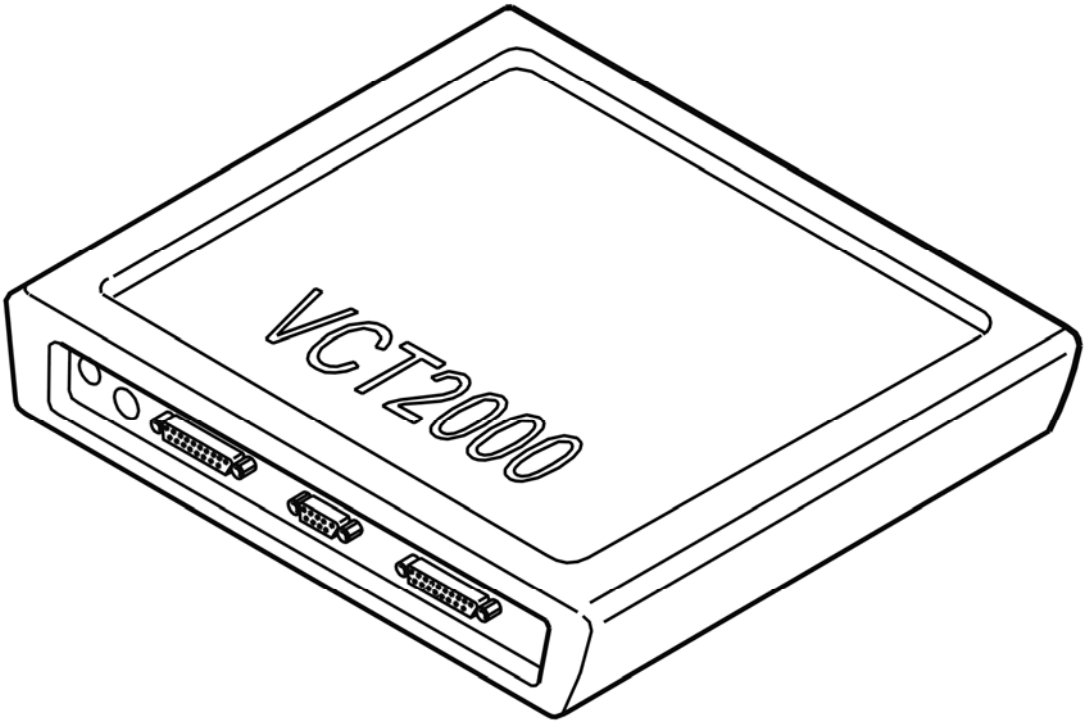

Fig. 304: Identifying VCT2000 Diagnostic Tool Symbol In VIDA
Courtesy of VOLVO CARS CORPORATION

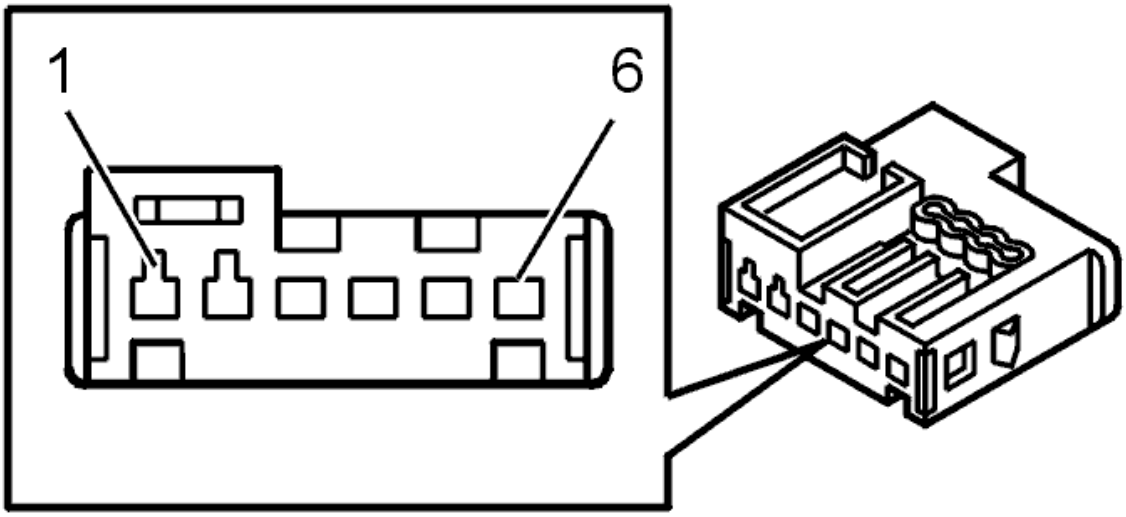

Fig. 305: Identifying Left Temperature Damper Motor Connector Terminals
Courtesy of VOLVO CARS CORPORATION

- **Continue**

Refer to **EQUIPMENT**

EQUIPMENT

Which type of climate control is the car equipped with?

1. ECC. Refer to **SELF-ADJUSTMENT**
2. Manual climate control (MCC)/Standard (STD). Refer to **SELF-ADJUSTMENT**

SELF-ADJUSTMENT

HINT: After replacing the control module or damper motor, and when a damper motor or link has been removed, carry out self adjustment to define the damper motor limit positions.

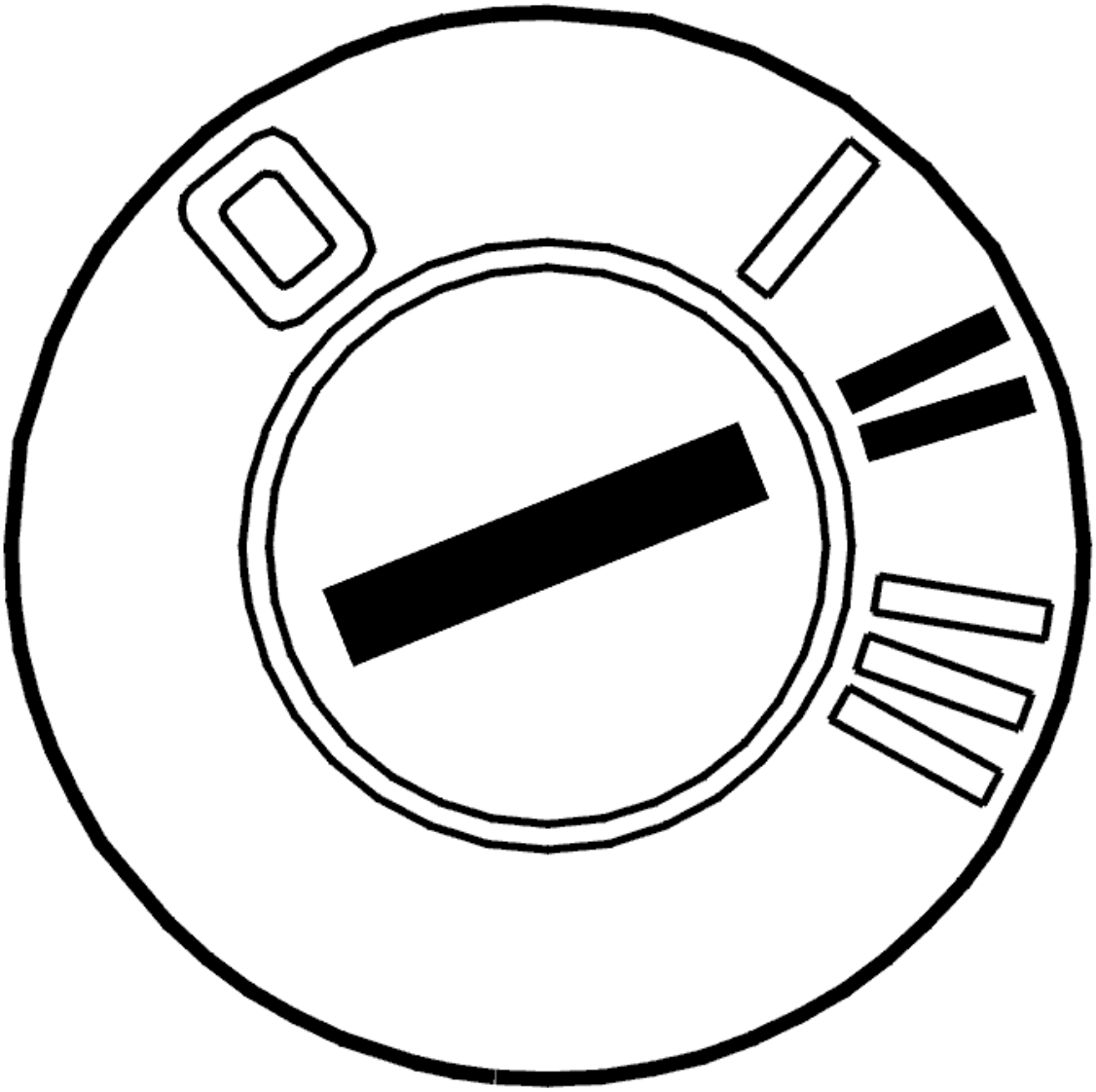

Fig. 306: Identifying Ignition ON
Courtesy of VOLVO CARS CORPORATION

- Ignition off.

- Reinstall the connectors, components etc.
- Ignition on.

  Activate self adjustment.

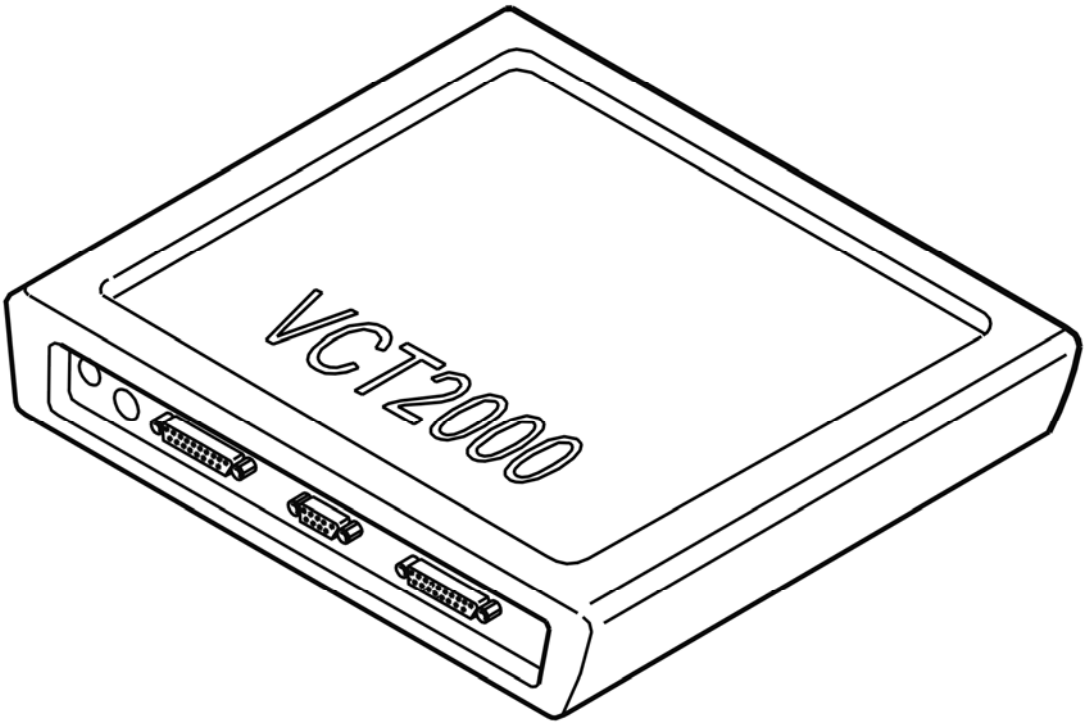

Fig. 307: Identifying VCT2000 Diagnostic Tool Symbol In VIDA
Courtesy of VOLVO CARS CORPORATION

- **Continue**

  Refer to **VERIFICATION**

VERIFICATION

HINT: After the repair it is necessary to check that the fault has been rectified.

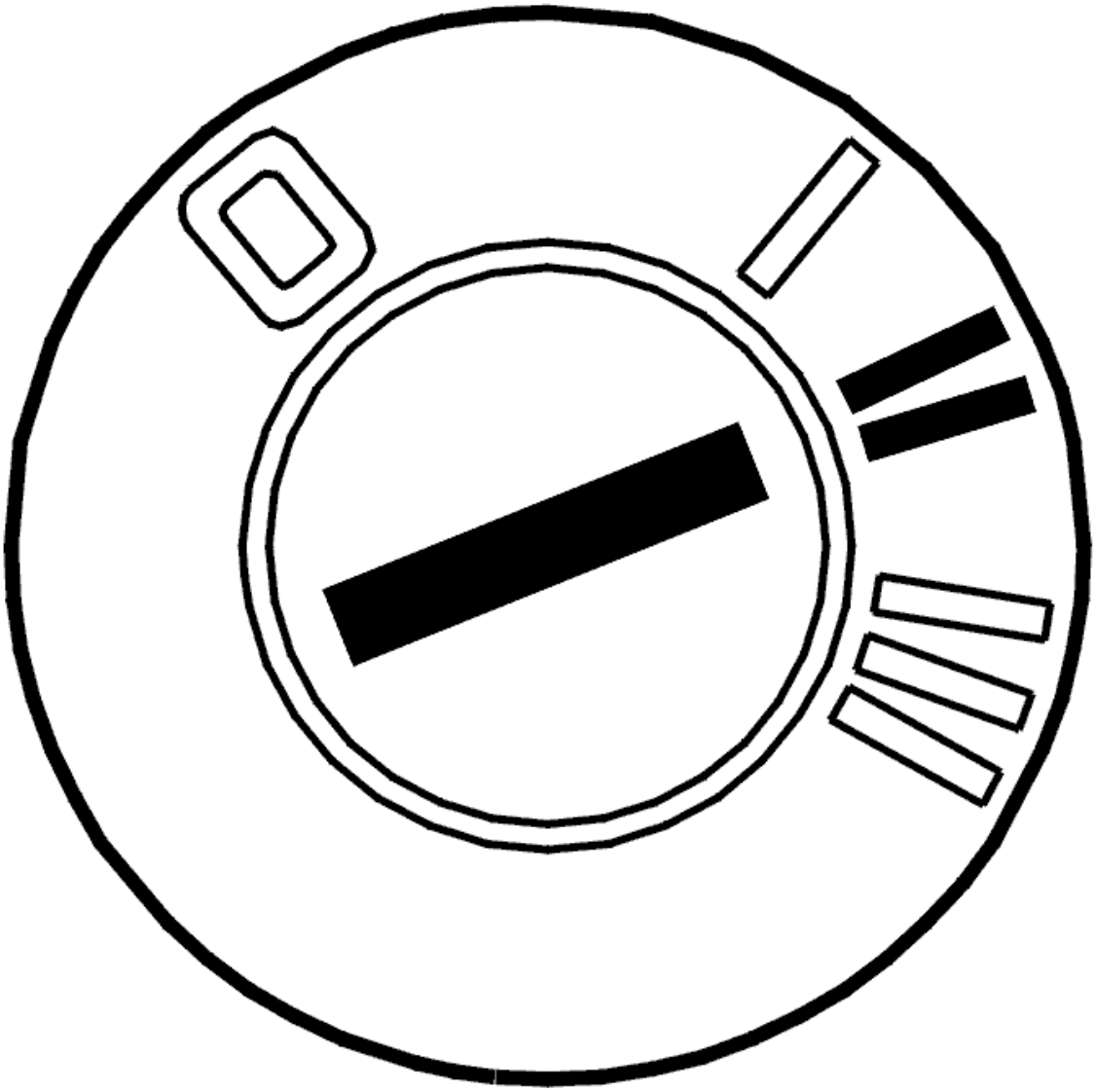

Fig. 308: Identifying Ignition ON
Courtesy of VOLVO CARS CORPORATION

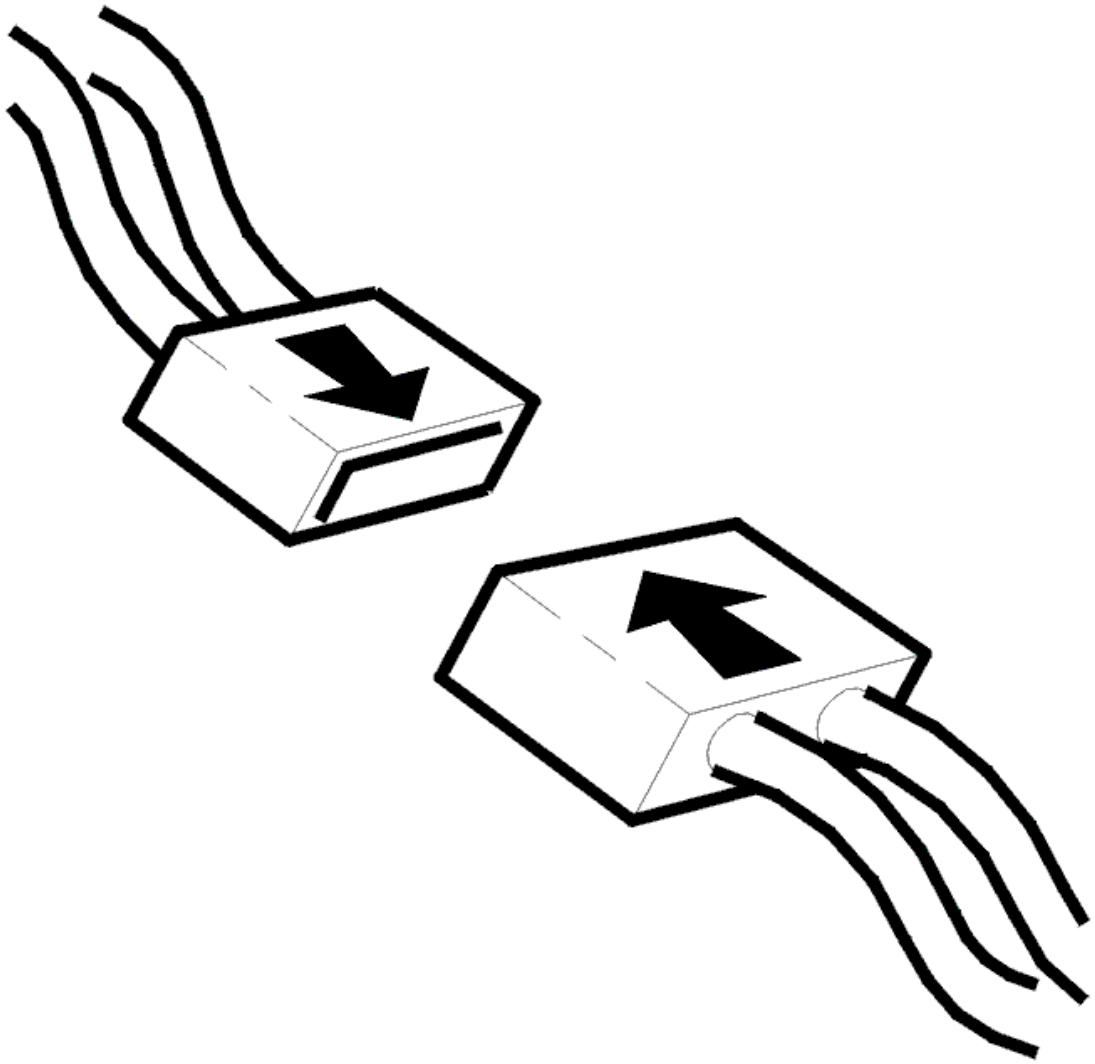

Fig. 309: Connecting Connector
Courtesy of VOLVO CARS CORPORATION

- Ignition off.
- Connect the connectors, install the components, etc.
- Ignition on.
- Blower motor on.

Check that damper motor position changes by changing control on climate control module (CCM). The values given below are the standard values that the damper motor positions should give.

NOTE: Blower motor must be in operation to activate the damper motors.

- Left/right temperature damper motor and defroster, 0-100%
- Recirculation damper motor, 40-100%

- Floor/ventilation damper motor, floor only approximately 39%, ventilation only approximately 87% and floor/ventilation approximately 71%.

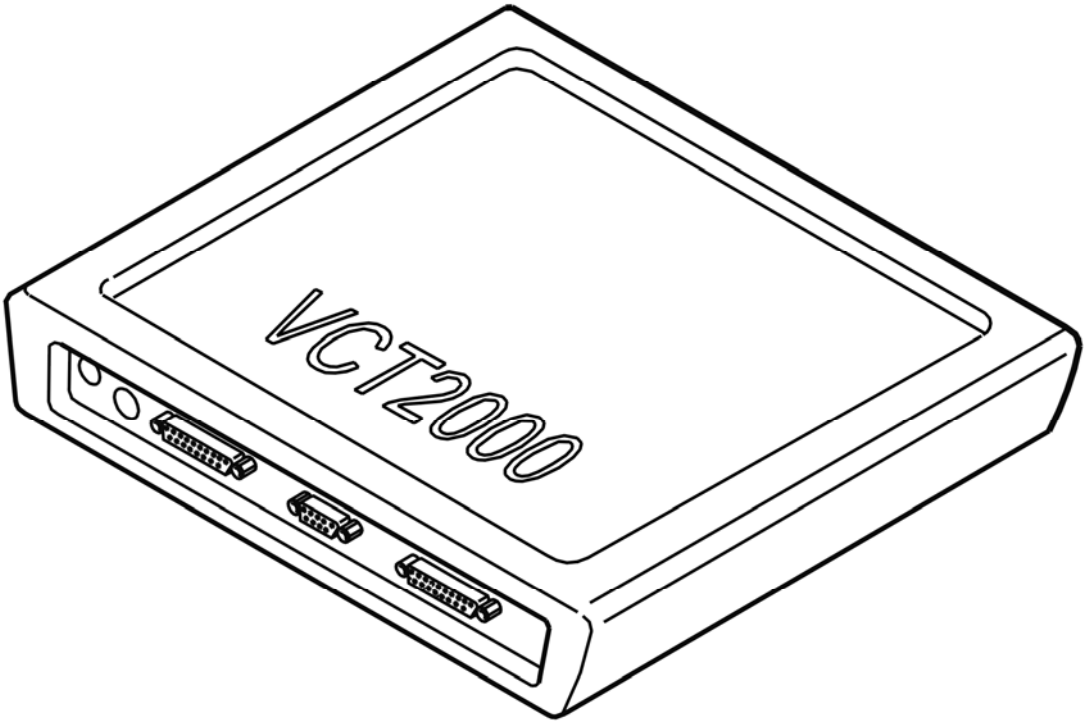

Fig. 310: Identifying VCT2000 Diagnostic Tool Symbol In VIDA
Courtesy of VOLVO CARS CORPORATION

Does damper motor work?

- **YES**

  VERIFIED: Troubleshooting has been completed.

- **NO**

  Refer to **INFORMATION**

SELF-ADJUSTMENT

HINT: After replacing the control module or damper motor, and when a damper motor or link has been removed, carry out self adjustment to define the damper motor limit positions.

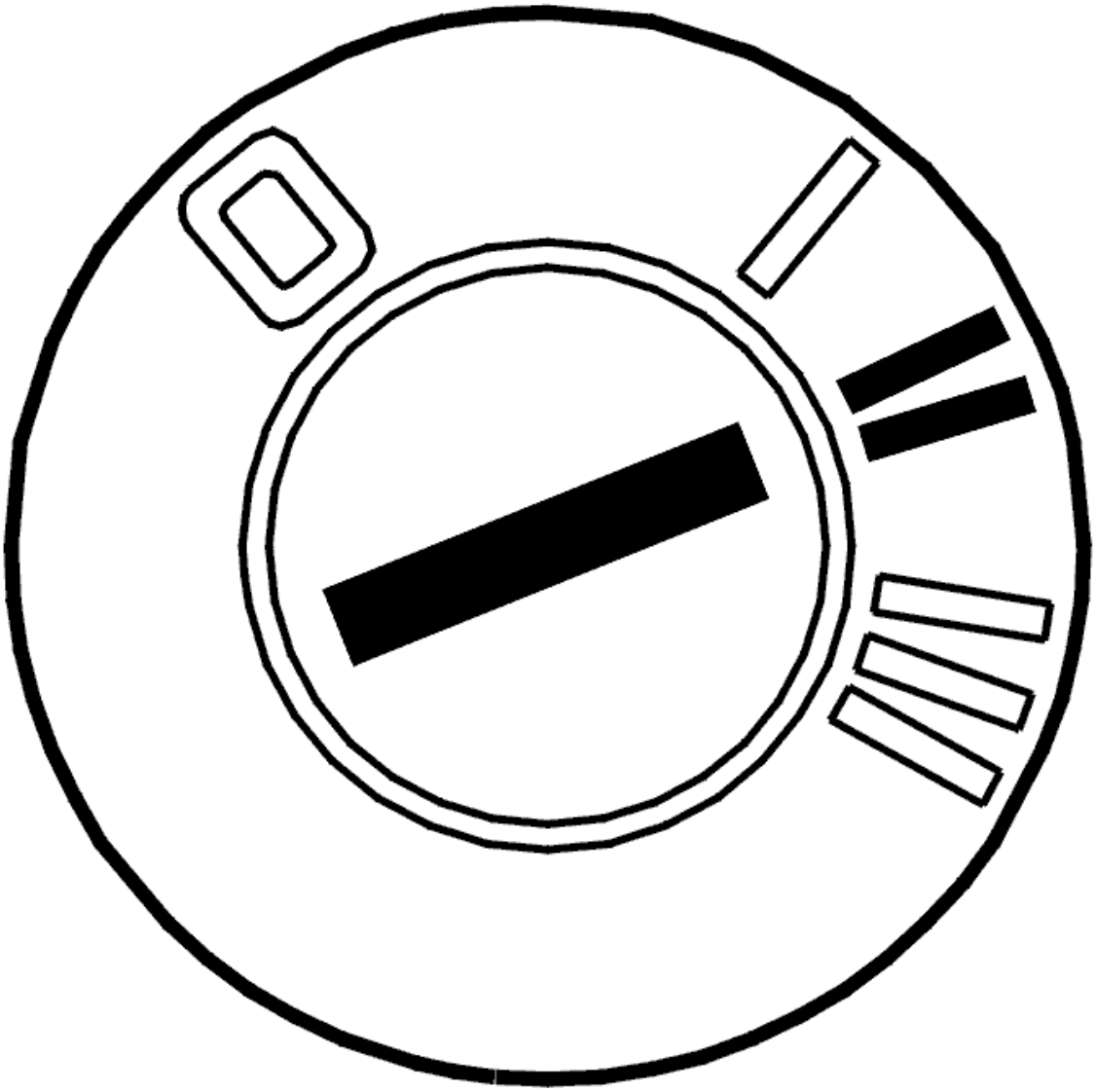

Fig. 311: Identifying Ignition ON
Courtesy of VOLVO CARS CORPORATION

- Ignition off.
- Reinstall the connectors, components etc.
- Ignition on.

  Activate self adjustment.

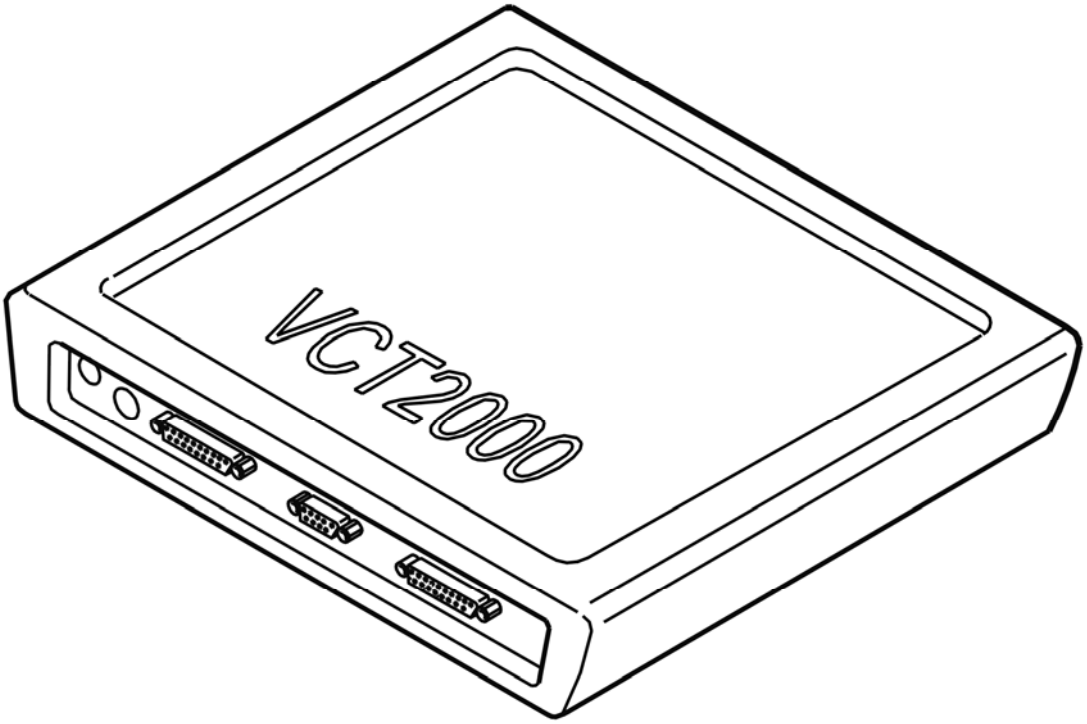

Fig. 312: Identifying VCT2000 Diagnostic Tool Symbol In VIDA
Courtesy of VOLVO CARS CORPORATION

- **Continue**

  Refer to **VERIFICATION**

VERIFICATION

HINT: After the repair it is necessary to check that the fault has been rectified.

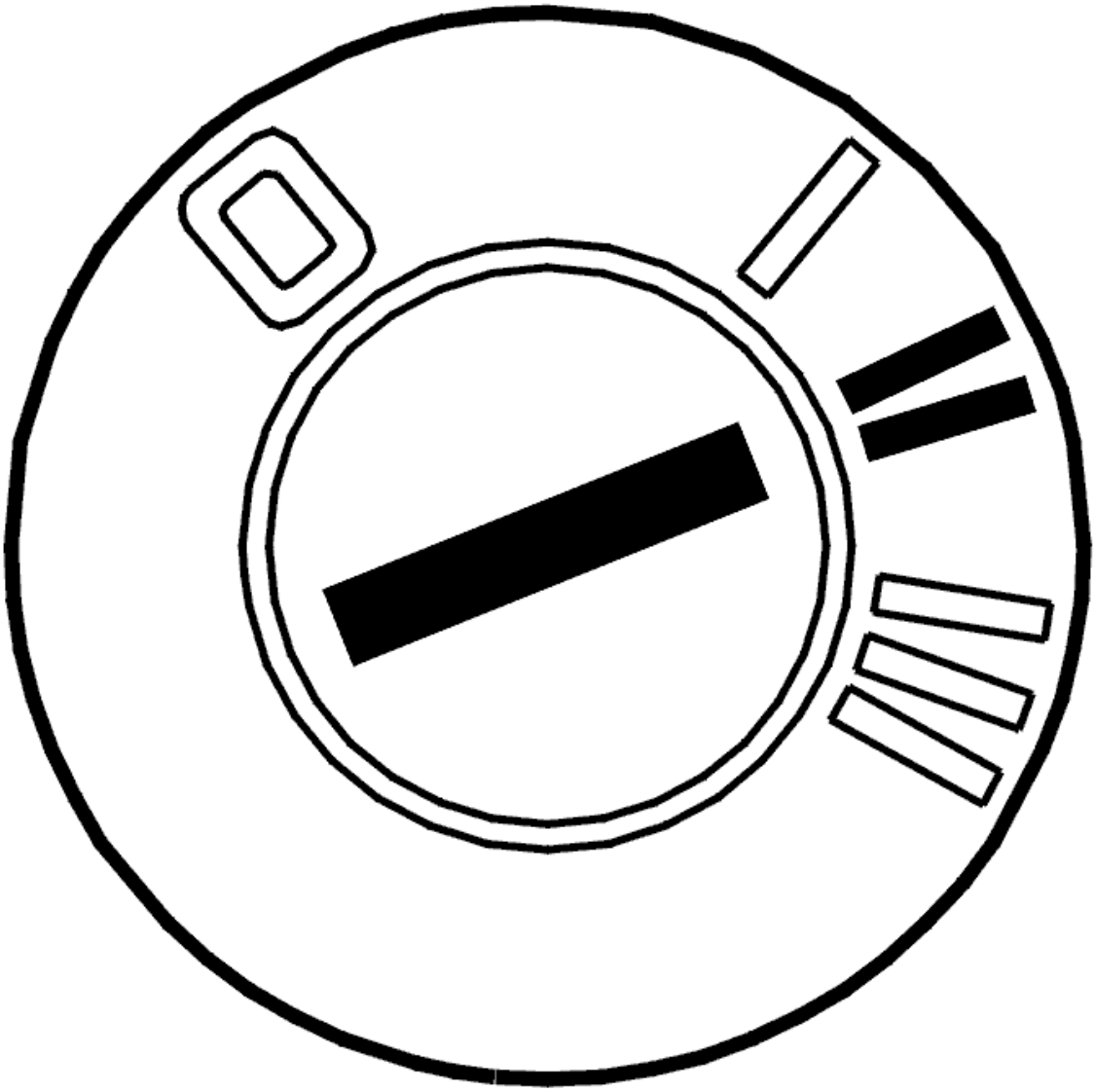

Fig. 313: Identifying Ignition ON
Courtesy of VOLVO CARS CORPORATION

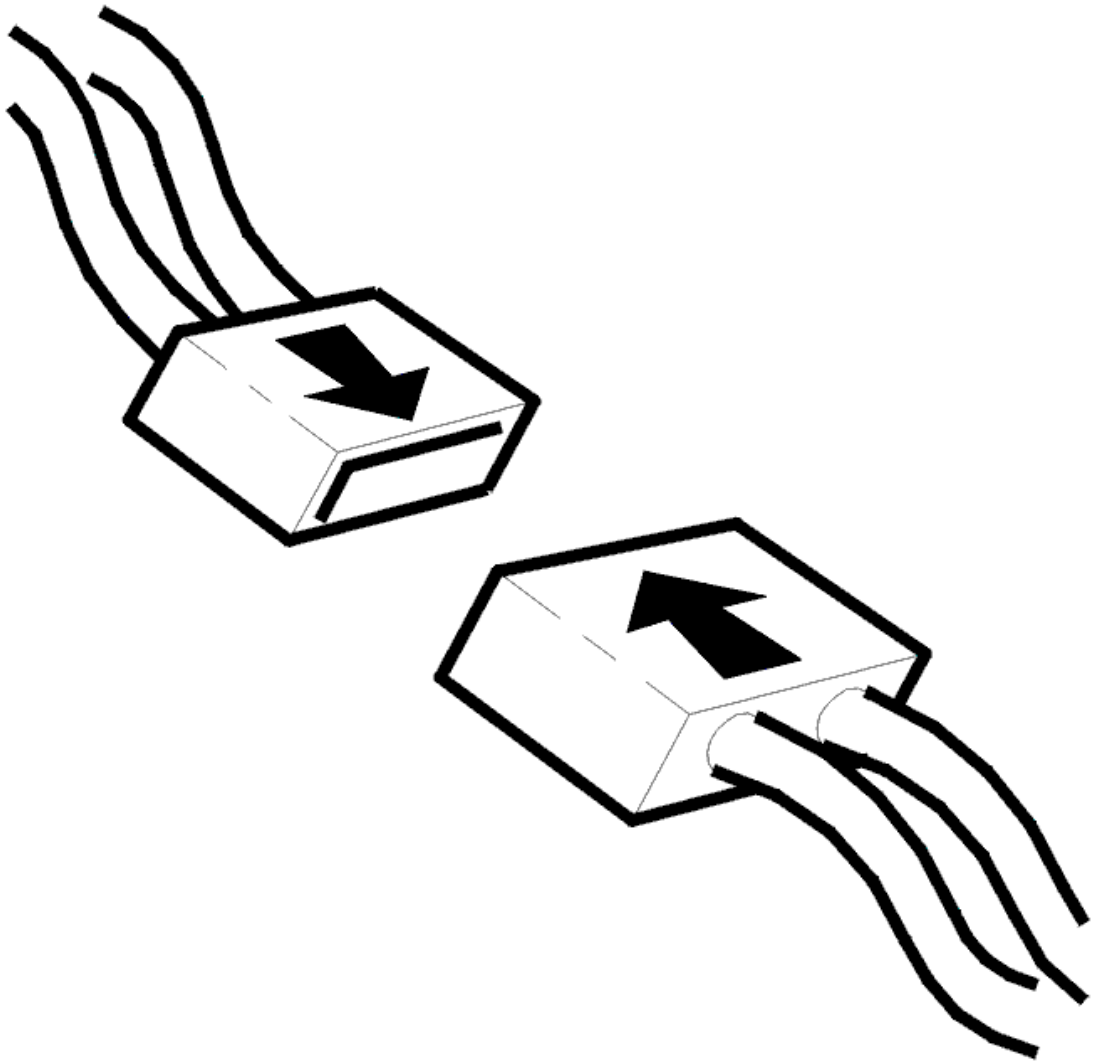

Fig. 314: Connecting Connector
Courtesy of VOLVO CARS CORPORATION

- Ignition off.
- Connect the connectors, install the components, etc.
- Ignition on.
- Blower motor on.

Check that damper motor position changes by changing control on climate control module (CCM). The values given below are the standard values that the damper motor positions should give.

NOTE: Blower motor must be in operation to activate the damper motors.

- Left/right temperature damper motor, 0-100%
- Recirculation damper motor, 40-100%

- Damper motor air distribution, defroster approximately 0%, floor/defroster approximately 19%, floor approximately 39%, ventilation approximately 83%.

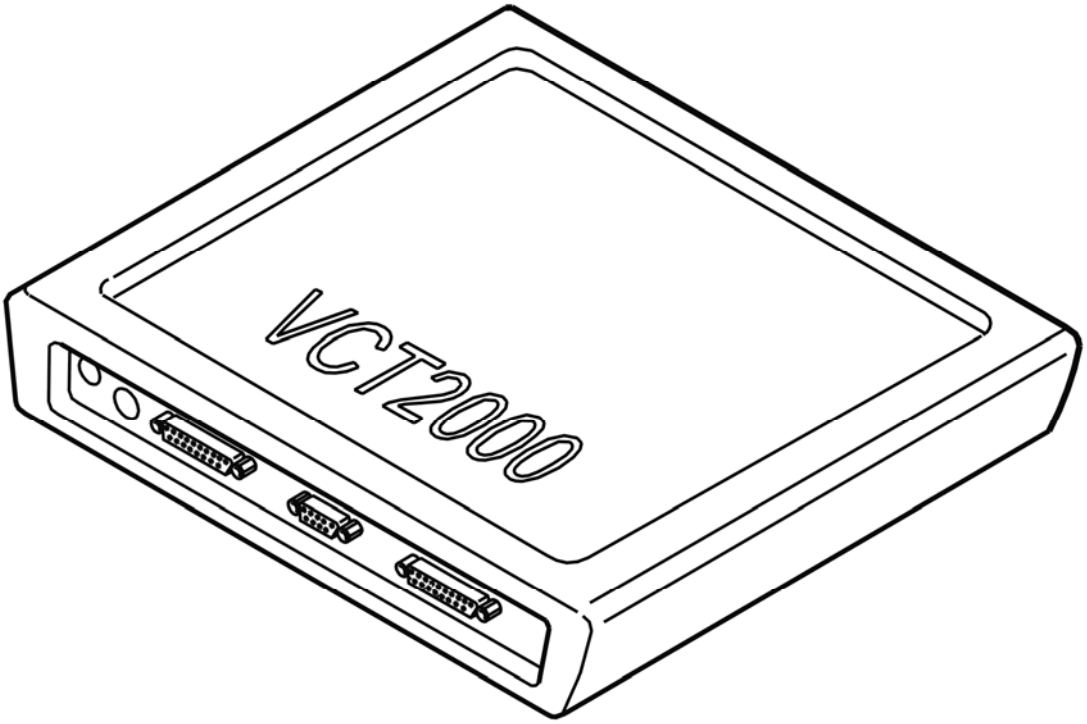

Fig. 315: Identifying VCT2000 Diagnostic Tool Symbol In VIDA
Courtesy of VOLVO CARS CORPORATION

Does damper motor work?

- **YES**

  VERIFIED: Troubleshooting has been completed.

- **NO**

  Refer to **INFORMATION**

INFORMATION

FAULT-TRACING INFORMATION

The fault should have been detected and remedied. As this is not the case fault-tracing has failed.

Exit fault-tracing for this diagnostic trouble code (DTC) or make another attempt.

CCM-0014: DAMPER MOTOR, FLOOR AND VENTILATION. SIGNAL TOO HIGH (2003-04)

DIAGNOSTIC TROUBLE CODE (DTC) INFORMATION

Condition

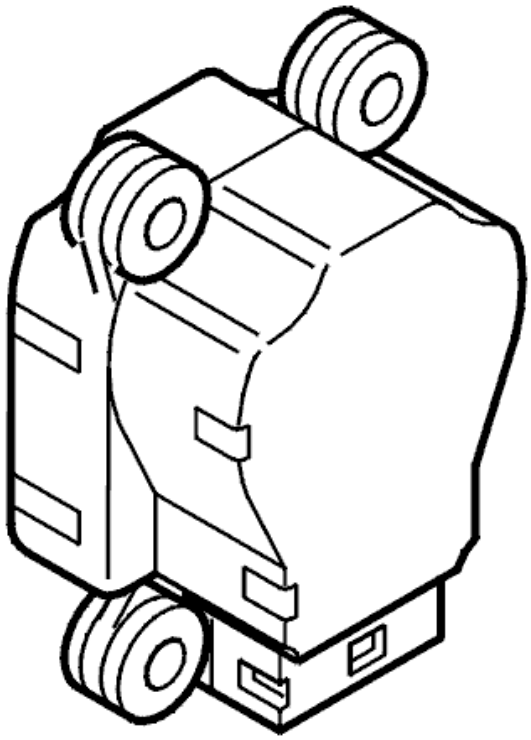

Fig. 316: Identifying Left Temperature Damper Motor
Courtesy of VOLVO CARS CORPORATION

Diagnostic trouble code (DTC) CCM-0014 is stored if the control module registers too high a signal from the floor/ventilation damper motor.

Substitute Value

- The control module does not allow the damper motor to be activated while the fault persists.

Possible Source

- Short-circuit to ground in the signal cable
- Defective damper motor.

Fault symptom[s]

- Air flow problem.

SIGNAL TOO HIGH

CHECKING THE DIAGNOSTIC TROUBLE CODES (DTCS)

Check which of the following alternatives apply when reading off diagnostic trouble codes (DTCs) for the climate control module (CCM).

Alternative 1

If the diagnostic trouble code (DTC) is stored with one or more other diagnostic trouble codes (DTCs), and the diagnostic trouble code (DTC) for direction control, this indicates a fault in the matrix network governing direction control.

The damper motors are connected in series in the matrix network governing direction control. In the event of a fault in the network, a diagnostic trouble code (DTC) will be stored for all damper motors which are in motion at the same time. Refer to **CHECKING THE WIRING**

The following are probable fault causes:

- short-circuit between the wiring in the matrix network
- short-circuit to supply voltage
- short-circuit to ground
- damaged damper motor.

Check if the diagnostic trouble code (DTC) has been stored with any of the following diagnostic trouble codes (DTCs):

- CCM-0011
- CCM-0012
- CCM-0013
- CCM-0015
- CCM-0016
- CCM-0017
- CCM-0018

Alternative 2

Check whether the diagnostic trouble code (DTC) has only been stored with the diagnostic trouble codes (DTCs) for direction control, CCM-0017 and CCM-0018. Refer to **CHECKING COMPONENTS AND WIRING**.

CHECKING COMPONENTS AND WIRING

Check the signal cable between control module terminal #B22 and damper motor terminal #1. Check for a short-circuit to ground.

Check the damper motor resistance. The resistance must be 46 ohms. Take readings between the damper motor terminal pins.

Remedy as necessary.

Other information:

- see **CONNECTING THE BREAKOUT BOX** .
- see **CLIMATE CONTROL MODULE (CCM), REPLACING** .
- see **DAMPER MOTOR TEMPERATURE, REPLACING** .
- see **SIGNAL SPECIFICATION** .
- see **CHECKING WIRING AND TERMINALS** .

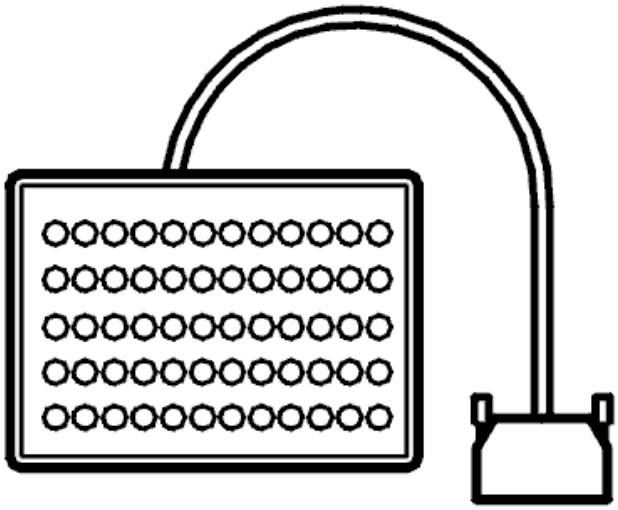

Fig. 317: Breakout Box
Courtesy of VOLVO CARS CORPORATION

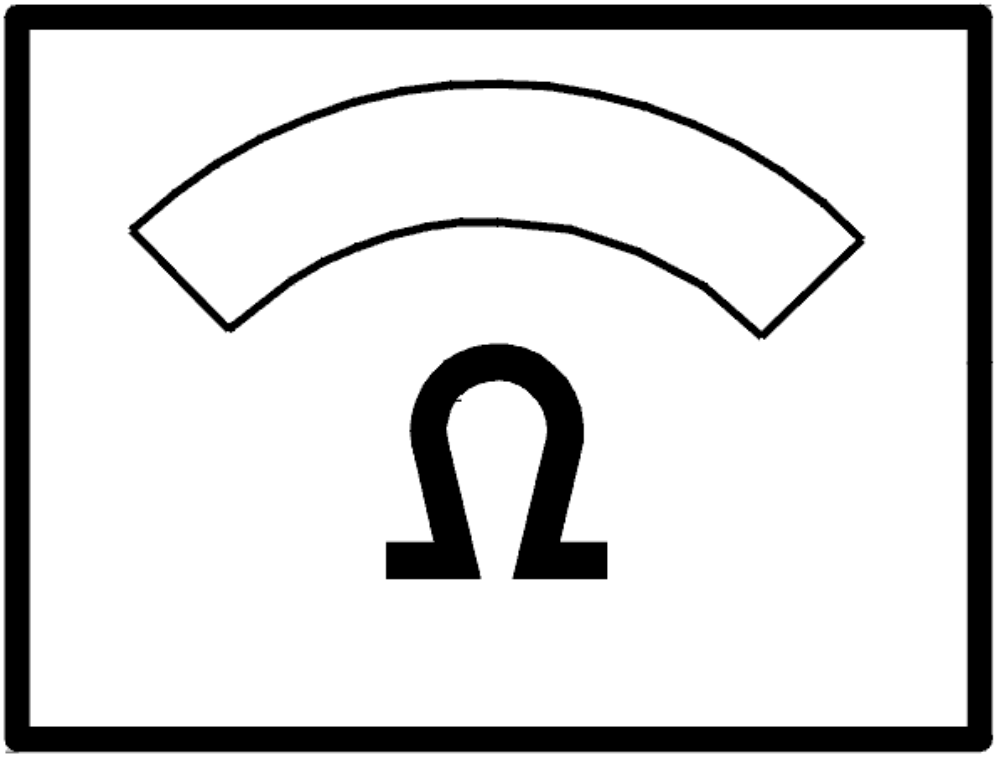

Fig. 318: Identifying Ohmmeter
Courtesy of VOLVO CARS CORPORATION

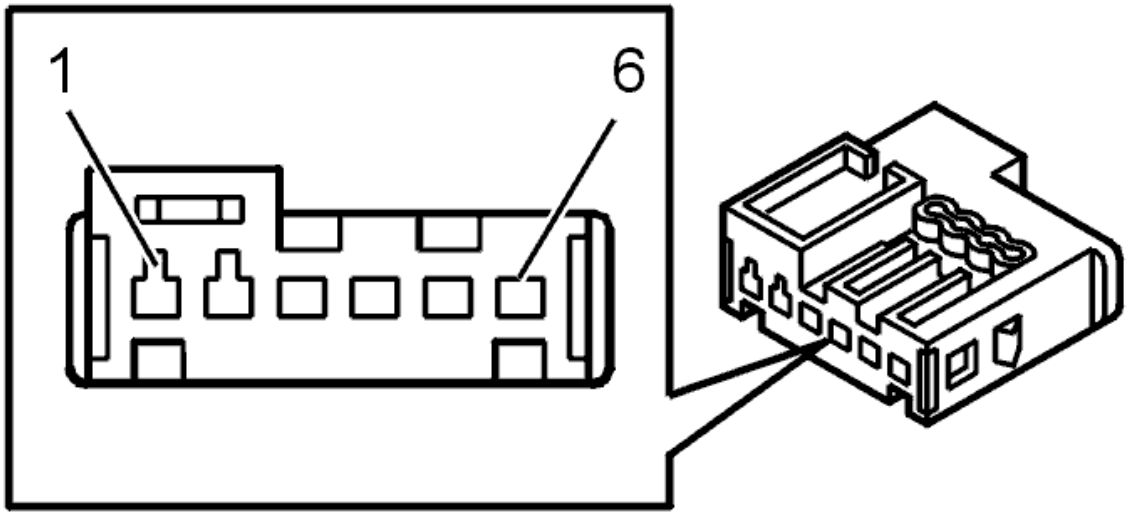

Fig. 319: Identifying Left Temperature Damper Motor Connector Terminals
Courtesy of VOLVO CARS CORPORATION

- **Continue**

  Refer to **EQUIPMENT**

CHECKING THE WIRING

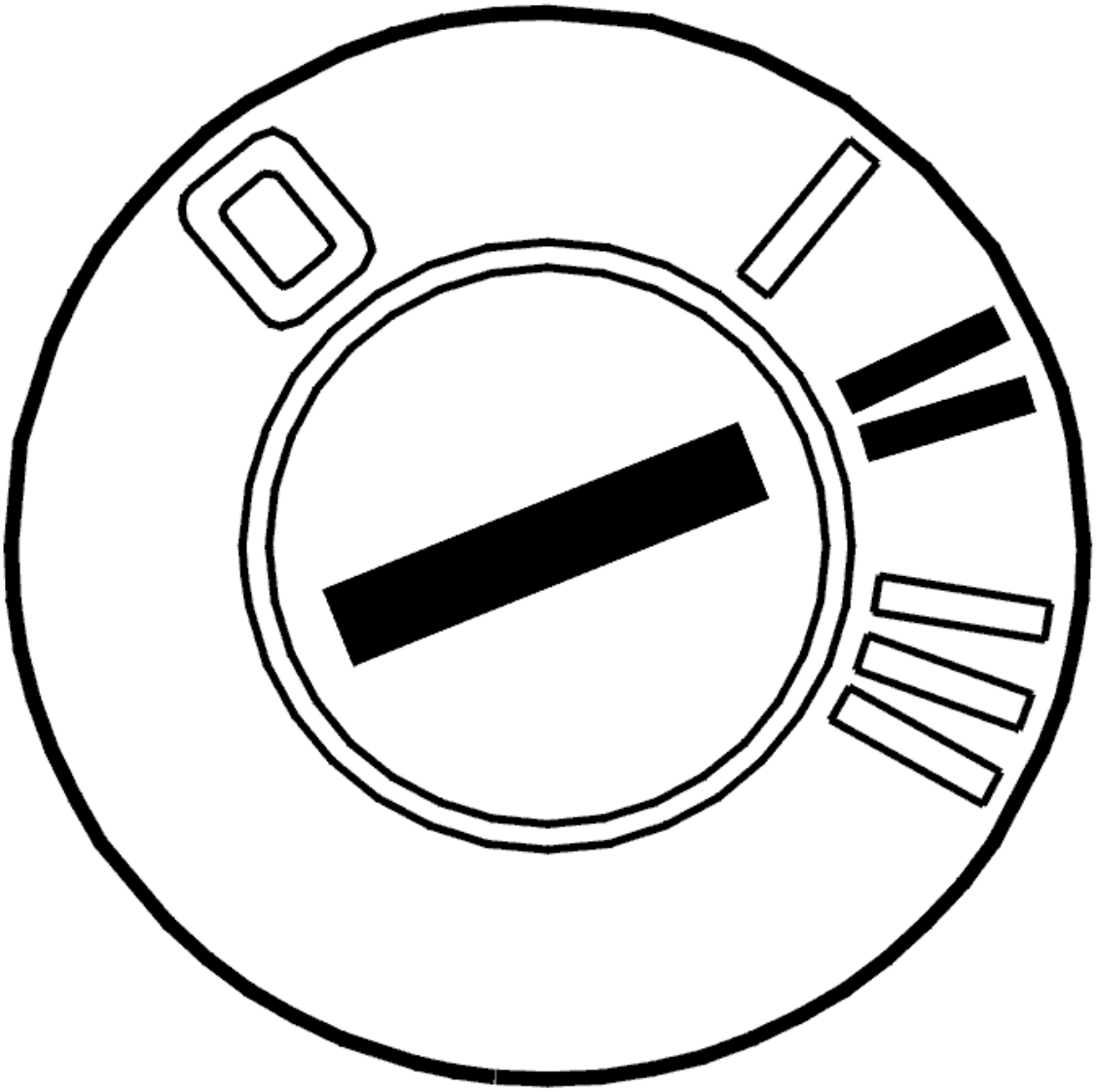

Fig. 320: Identifying Ignition ON
Courtesy of VOLVO CARS CORPORATION

- Ignition off
- Disconnect connector B on the climate control module (CCM).
- Ignition on

  Check the matrix wiring. Check for a short-circuit to supply voltage. Check for a short-circuit to ground.

  Take readings between the following terminals on connector B and ground:

  - #B11 (#11)
  - #B12 (#12)
  - #B13 (#13)
  - #B14 (#14)

Check whether there is an internal short-circuit in the matrix cables. Take pairs of readings between all the terminals #B11-#B14 on connector B.

Other information:

- see **CONNECTING THE BREAKOUT BOX**
- see **CLIMATE CONTROL MODULE (CCM), REPLACING** .
- see **DAMPER MOTOR TEMPERATURE, REPLACING** .
- see **SIGNAL SPECIFICATION** .
- see **CHECKING WIRING AND TERMINALS** .

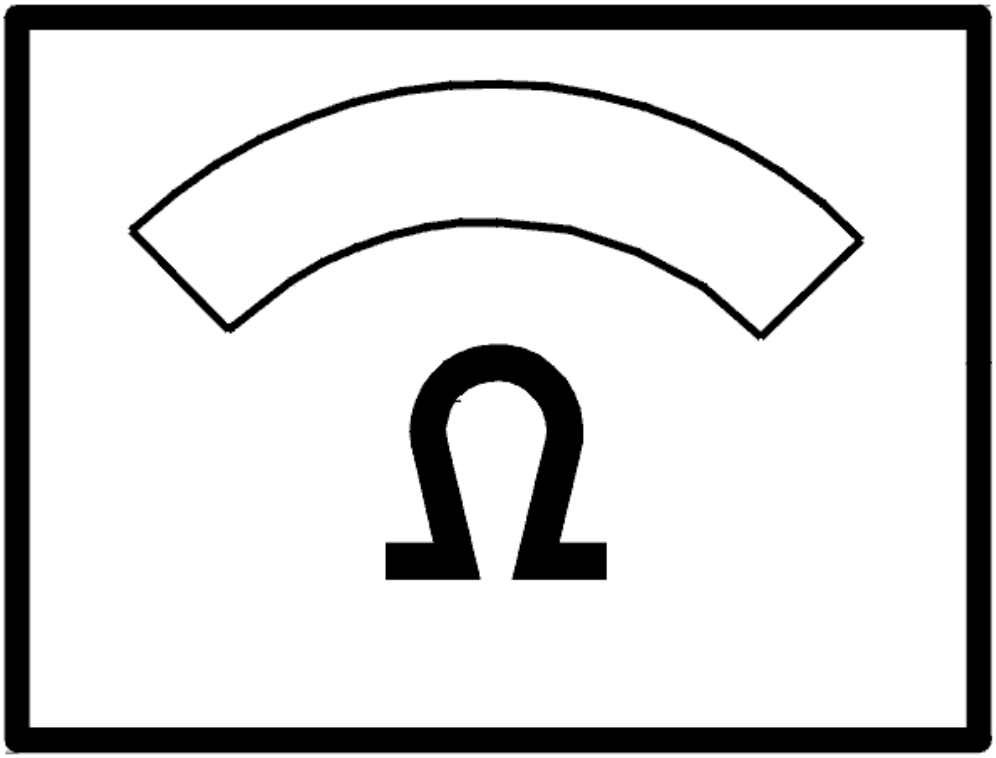

Fig. 321: Identifying Ohmmeter
Courtesy of VOLVO CARS CORPORATION

Was a fault detected?

- **YES**

  Refer to **EQUIPMENT**

- **NO**

  Refer to **CHECKING THE COMPONENT**

CHECKING THE COMPONENT

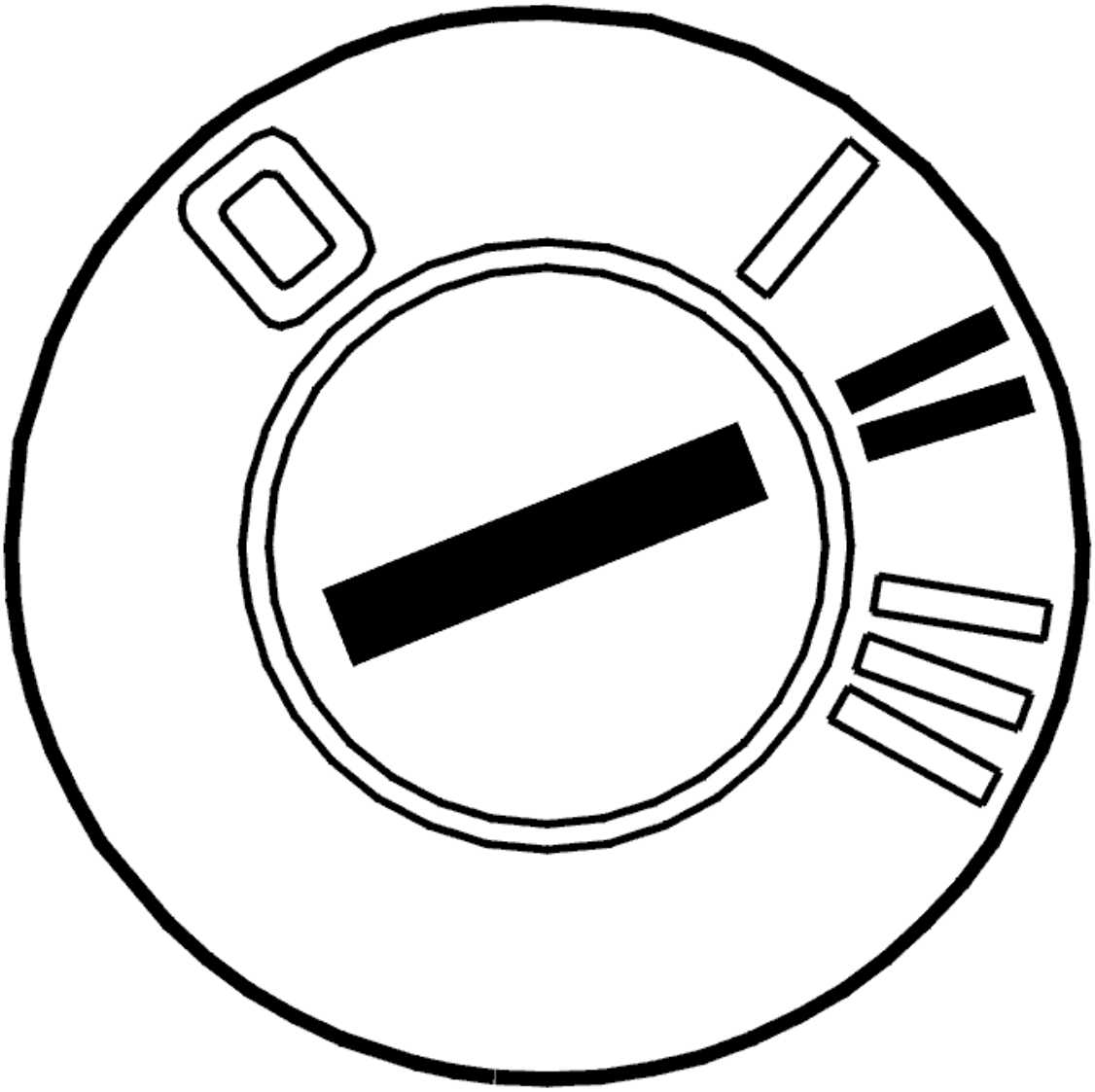

Fig. 322: Identifying Ignition ON
Courtesy of VOLVO CARS CORPORATION

- Ignition on

  Check the damper motors. Check for internal short-circuits as follows:

- Remove the soundproofing panel to access the damper motor connectors.
- Erase the diagnostic trouble codes (DTCs) for the climate control module (CCM).
- First disconnect the connector from a damper motor. Leave the other damper motors connected.

NOTE: Take care when disconnecting the connectors for the damper motors to prevent loose connections.

- Activate the controls (right and left-hand temperature knobs, defroster, air distribution selector, recirculation) on the climate control module (CCM) to operate all the damper motors.
- Read off the diagnostic trouble codes (DTCs) from the climate control module (CCM). If the diagnostic trouble codes (DTCs) have not recurred, there is an internal fault in the disconnected damper motor.
- If the diagnostic trouble codes (DTCs) recur, continue fault tracing. Reconnect the disconnected damper motor and disconnect the next damper motor. Repeat the procedure by erasing all diagnostic trouble codes (DTCs) and running the damper motors until the faulty damper motor has been identified.

Other information:

- see **CONNECTING THE BREAKOUT BOX** .
- see **CLIMATE CONTROL MODULE (CCM), REPLACING** .
- see **DAMPER MOTOR TEMPERATURE, REPLACING** .
- see **SIGNAL SPECIFICATION** .
- see **CHECKING WIRING AND TERMINALS** .

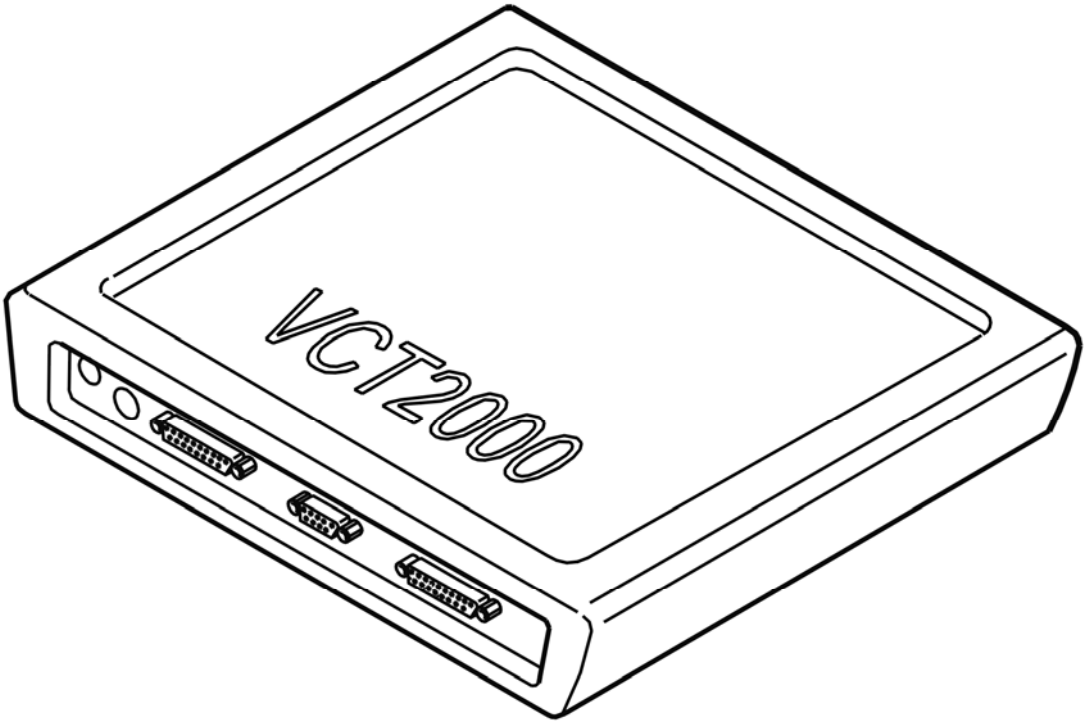

Fig. 323: Identifying VCT2000 Diagnostic Tool Symbol In VIDA
Courtesy of VOLVO CARS CORPORATION

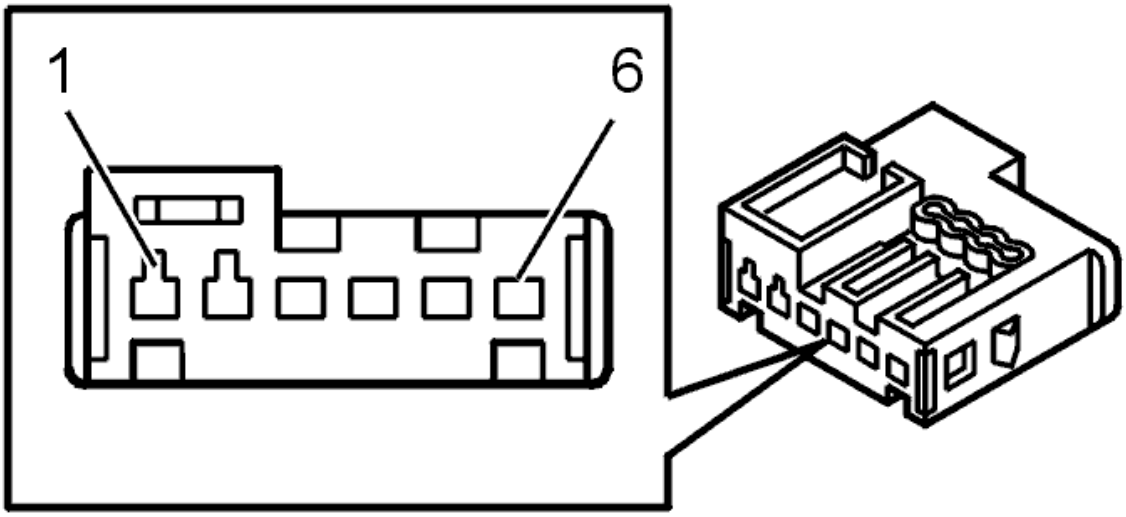

Fig. 324: Identifying Left Temperature Damper Motor Connector Terminals
Courtesy of VOLVO CARS CORPORATION

- **Continue**

Refer to **EQUIPMENT**

EQUIPMENT

Which type of climate control is the car equipped with?

1. ECC. Refer to **SELF-ADJUSTMENT**
2. Manual climate control (MCC)/Standard (STD). Refer to **SELF-ADJUSTMENT**

SELF-ADJUSTMENT

HINT: After replacing the control module or damper motor, and when a damper motor or link has been removed, carry out self adjustment to define the damper motor limit positions.

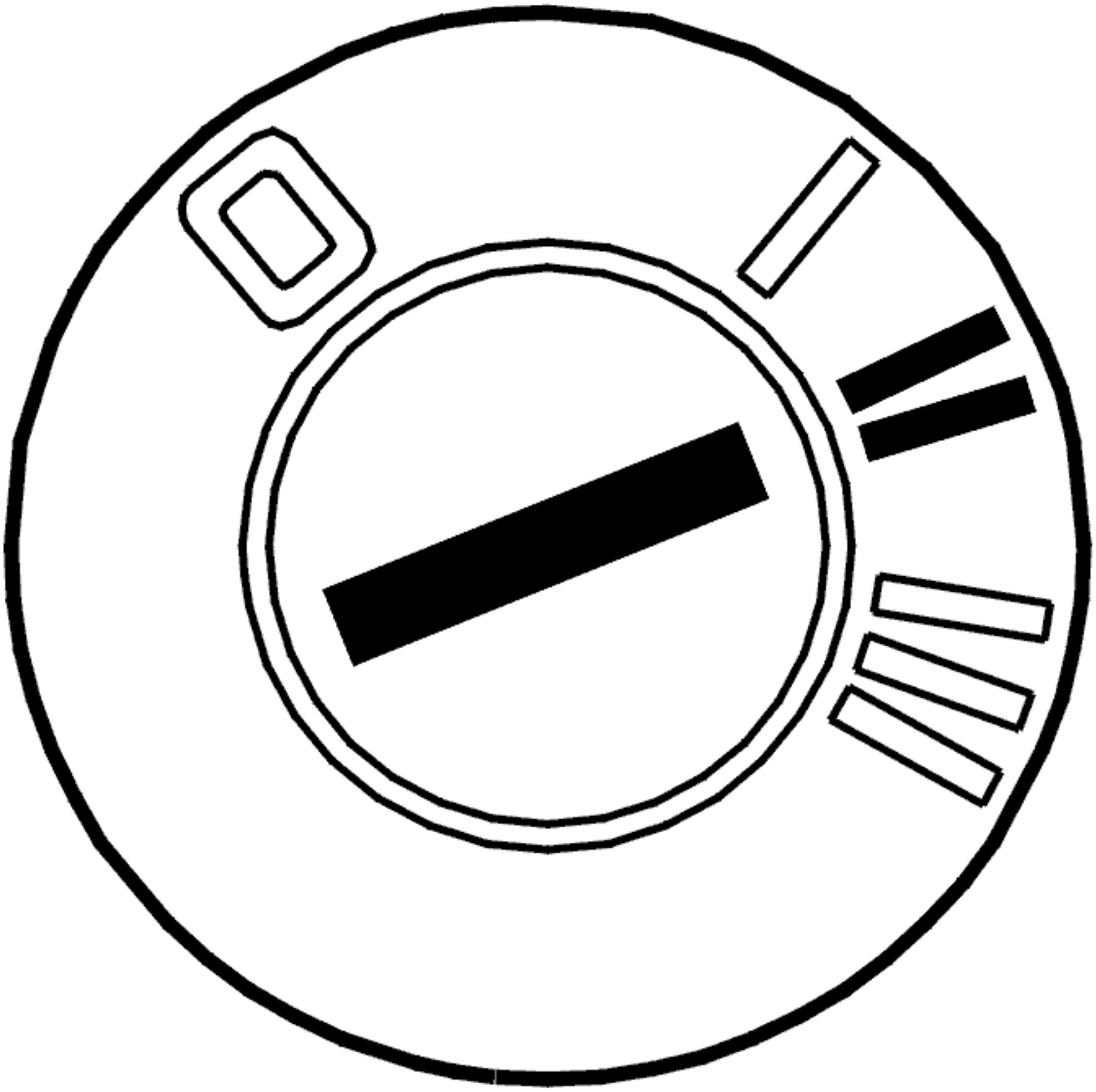

Fig. 325: Identifying Ignition ON
Courtesy of VOLVO CARS CORPORATION

- Ignition off.

- Reinstall the connectors, components etc.
- Ignition on.

  Activate self adjustment.

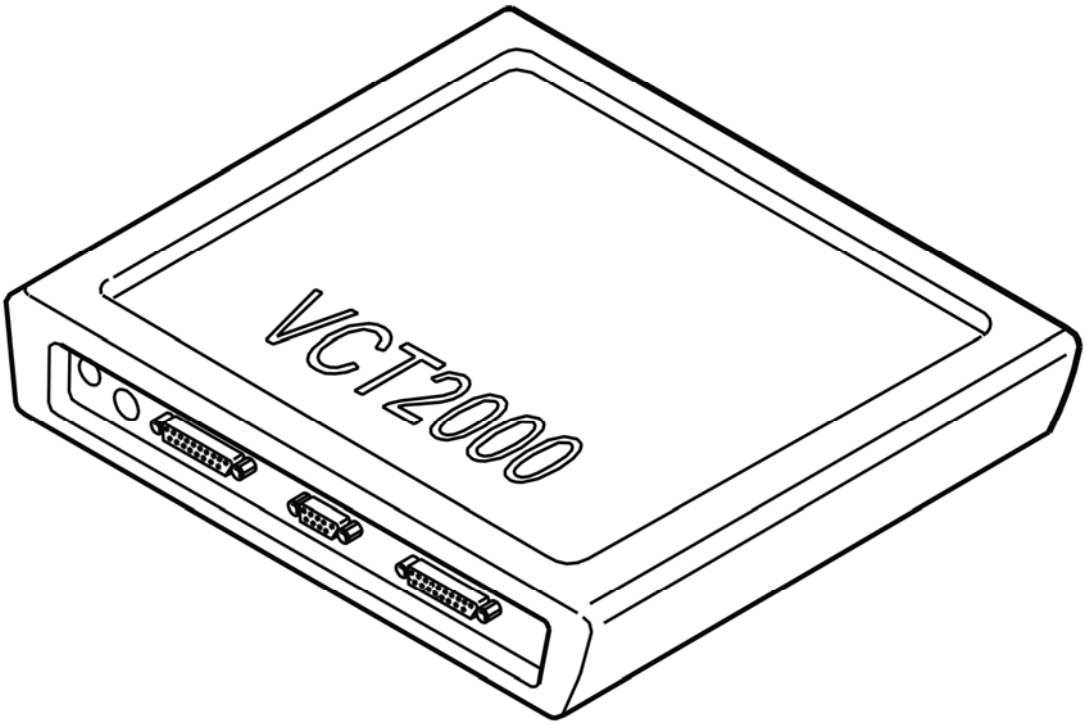

Fig. 326: Identifying VCT2000 Diagnostic Tool Symbol In VIDA
Courtesy of VOLVO CARS CORPORATION

- **Continue**

  Refer to **VERIFICATION**

VERIFICATION

HINT: After the repair it is necessary to check that the fault has been rectified.

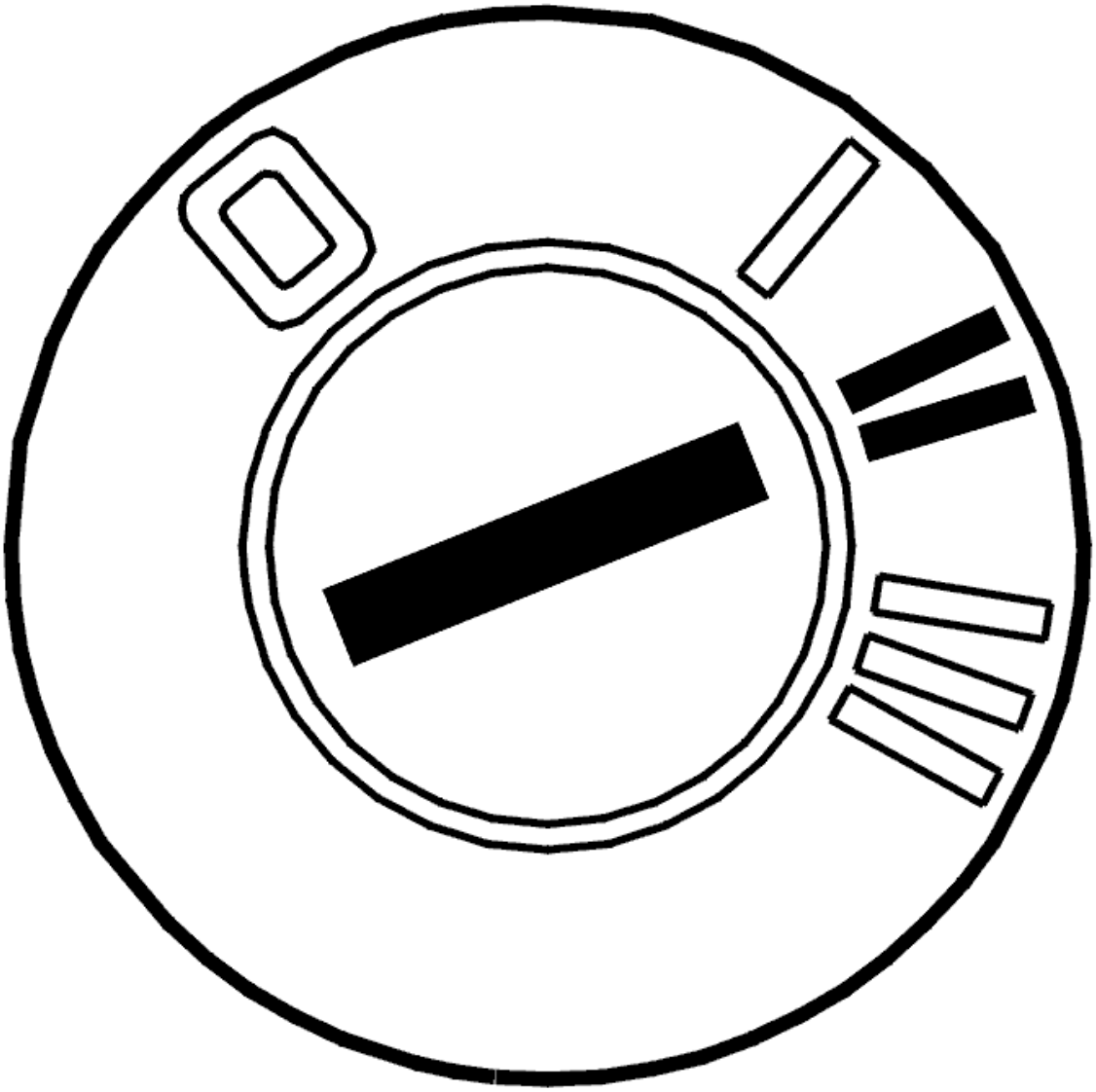

Fig. 327: Identifying Ignition ON
Courtesy of VOLVO CARS CORPORATION

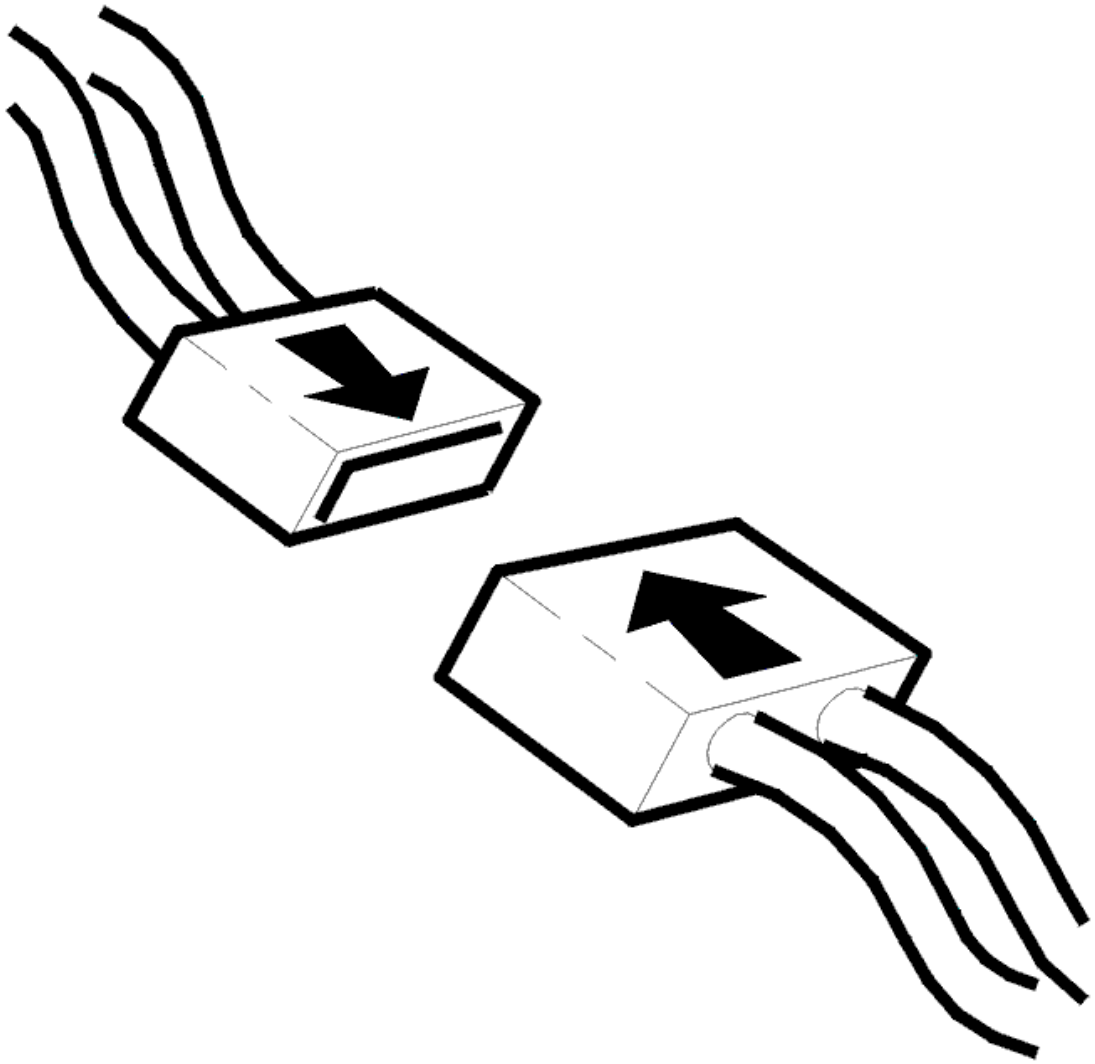

Fig. 328: Connecting Connector
Courtesy of VOLVO CARS CORPORATION

- Ignition off.
- Connect the connectors, install the components, etc.
- Ignition on.
- Blower motor on.

Check that damper motor position changes by changing control on climate control module (CCM). The values given below are the standard values that the damper motor positions should give.

NOTE: Blower motor must be in operation to activate the damper motors.

- Left/right temperature damper motor and defroster, 0-100%
- Recirculation damper motor, 40-100%

- Floor/ventilation damper motor, floor only approximately 39%, ventilation only approximately 87% and floor/ventilation approximately 71%.

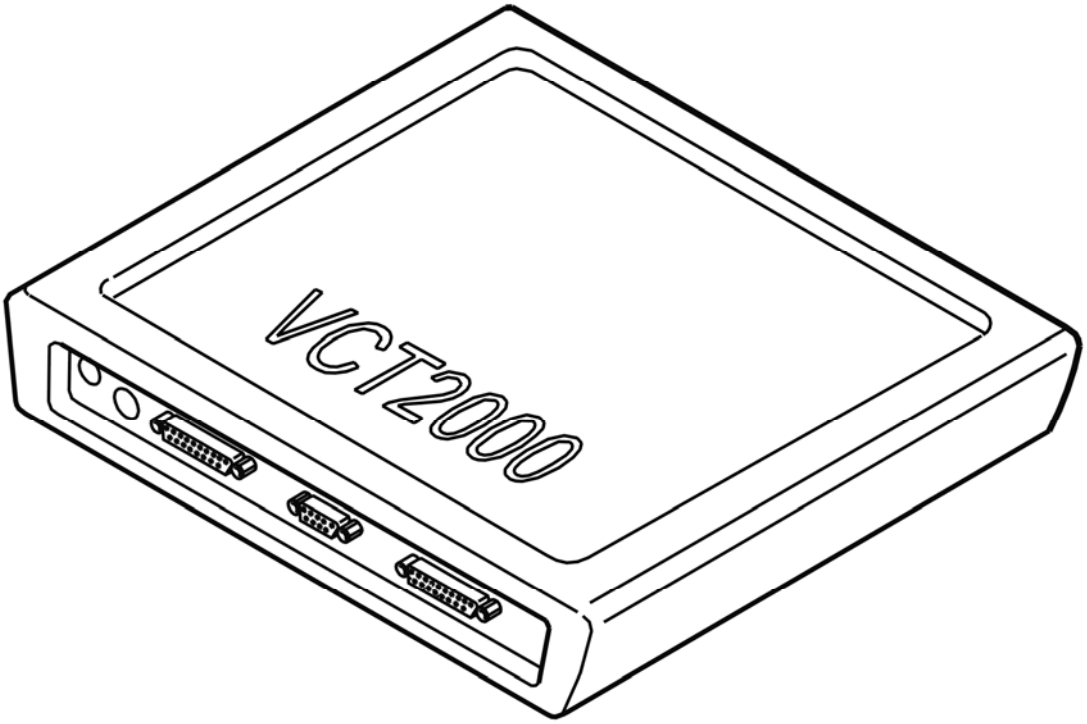

Fig. 329: Identifying VCT2000 Diagnostic Tool Symbol In VIDA
Courtesy of VOLVO CARS CORPORATION

Does damper motor work?

- **YES**

  VERIFIED: Troubleshooting has been completed.

- **NO**

  Refer to **INFORMATION**

SELF-ADJUSTMENT

HINT: After replacing the control module or damper motor, and when a damper motor or link has been removed, carry out self adjustment to define the damper motor limit positions.

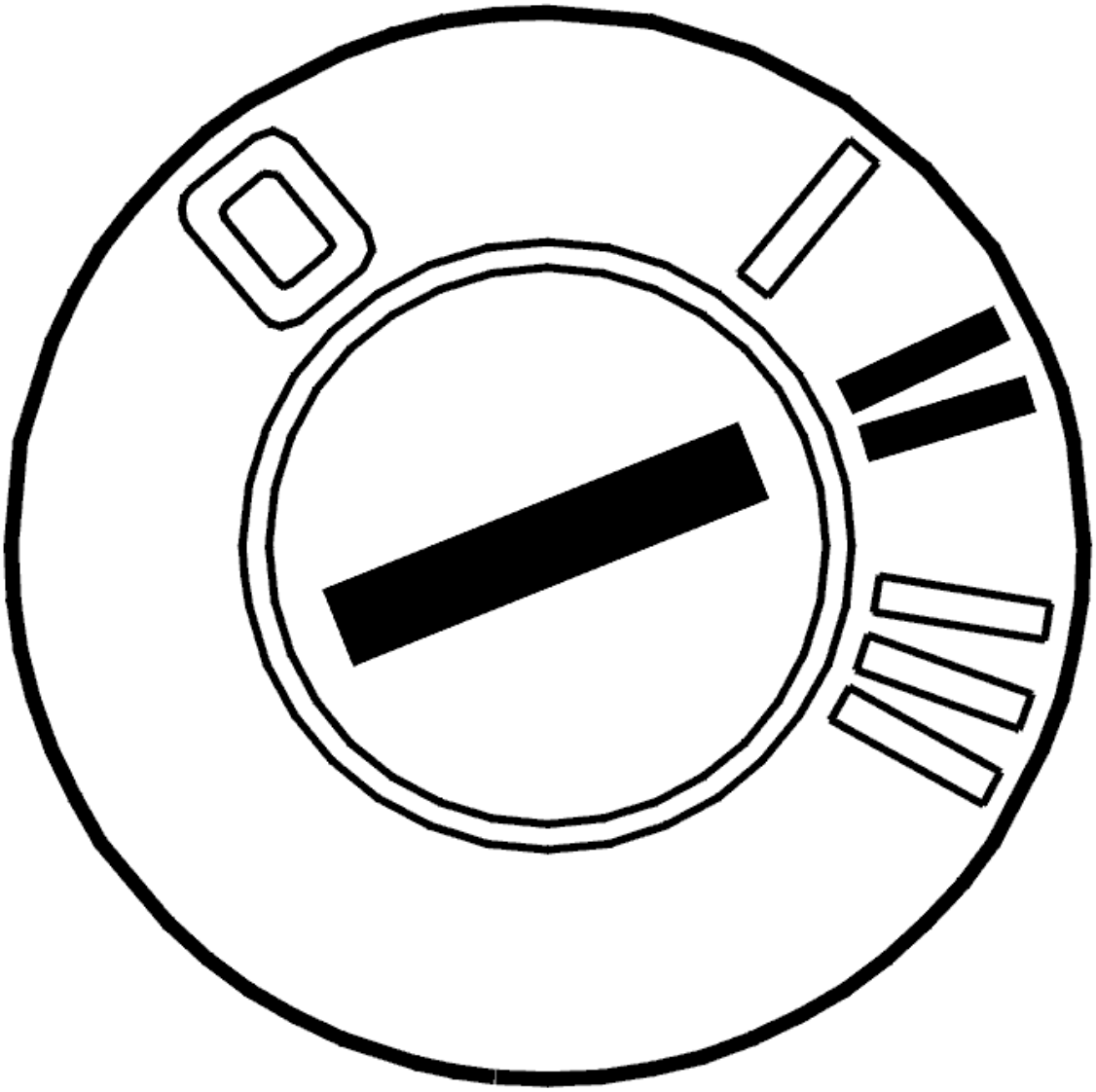

Fig. 330: Identifying Ignition ON
Courtesy of VOLVO CARS CORPORATION

- Ignition off.
- Reinstall the connectors, components etc.
- Ignition on.

  Activate self adjustment.

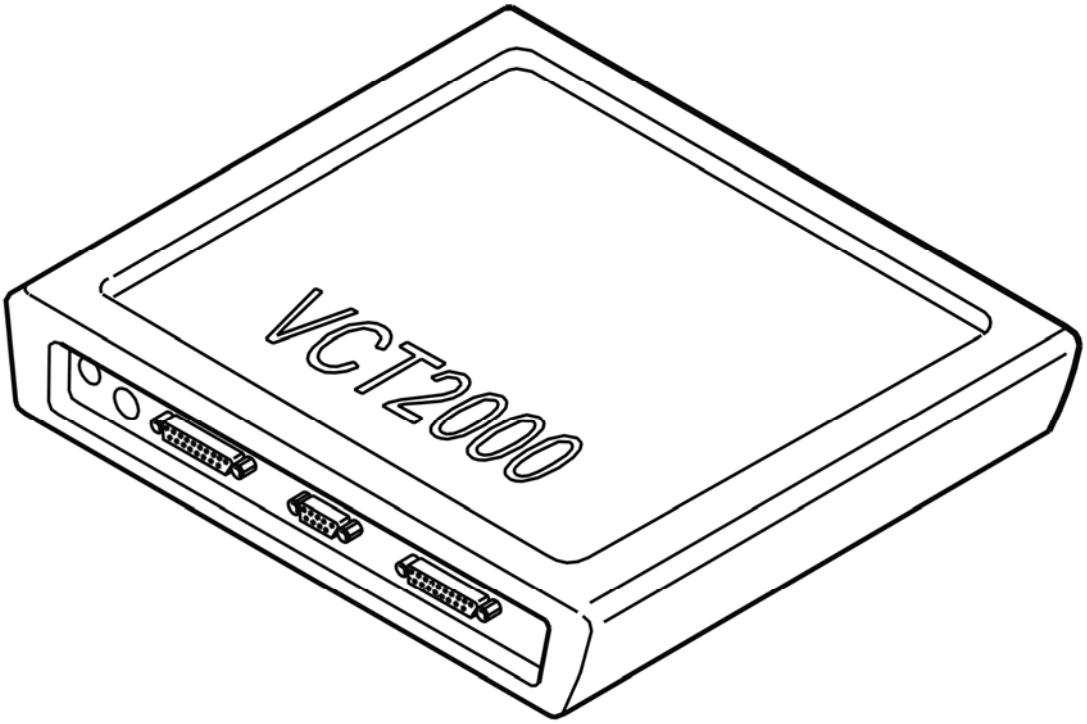

Fig. 331: Identifying VCT2000 Diagnostic Tool Symbol In VIDA
Courtesy of VOLVO CARS CORPORATION

- **Continue**

  Refer to **VERIFICATION**

VERIFICATION

HINT: After the repair it is necessary to check that the fault has been rectified.

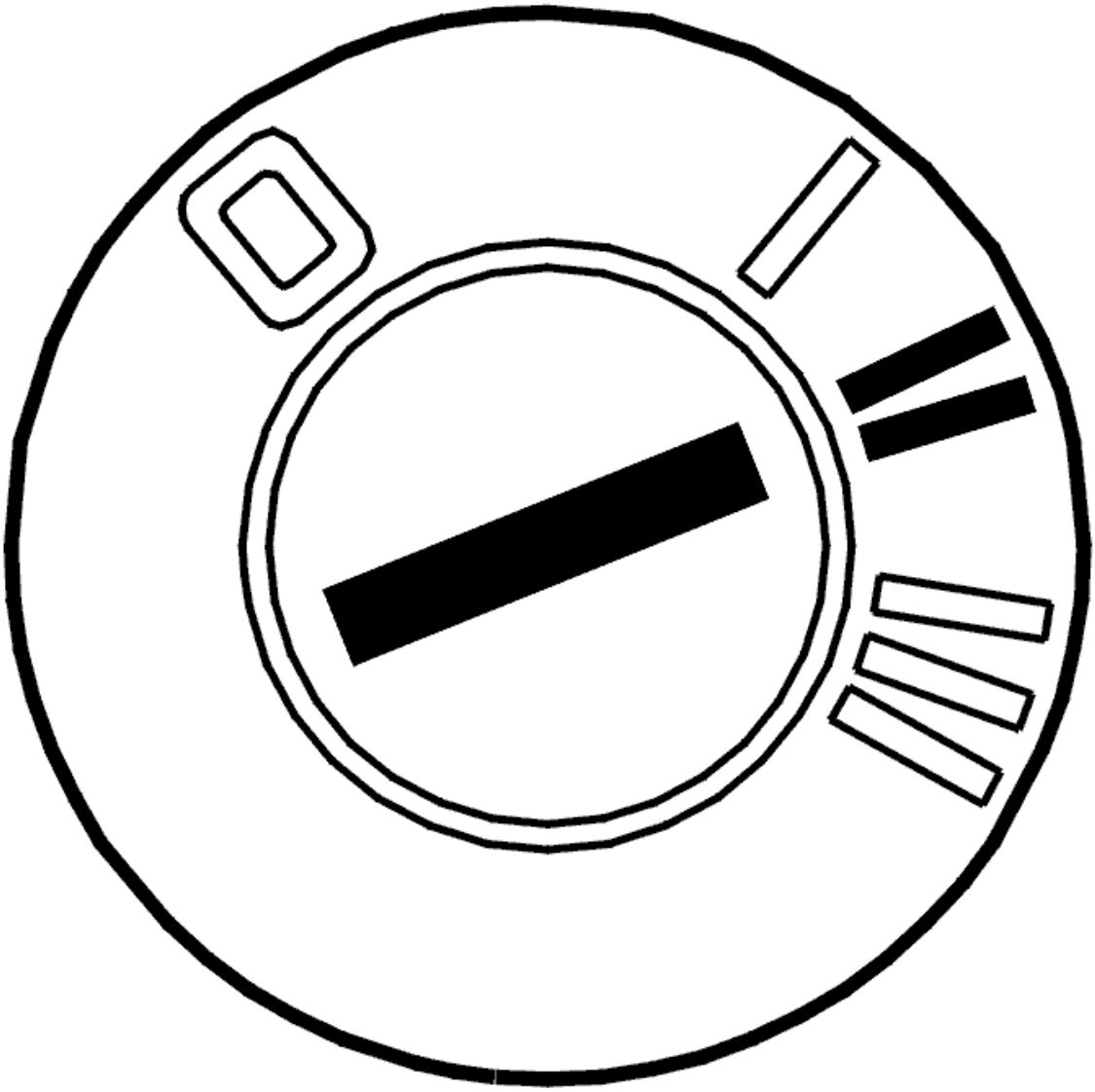

Fig. 332: Identifying Ignition ON
Courtesy of VOLVO CARS CORPORATION

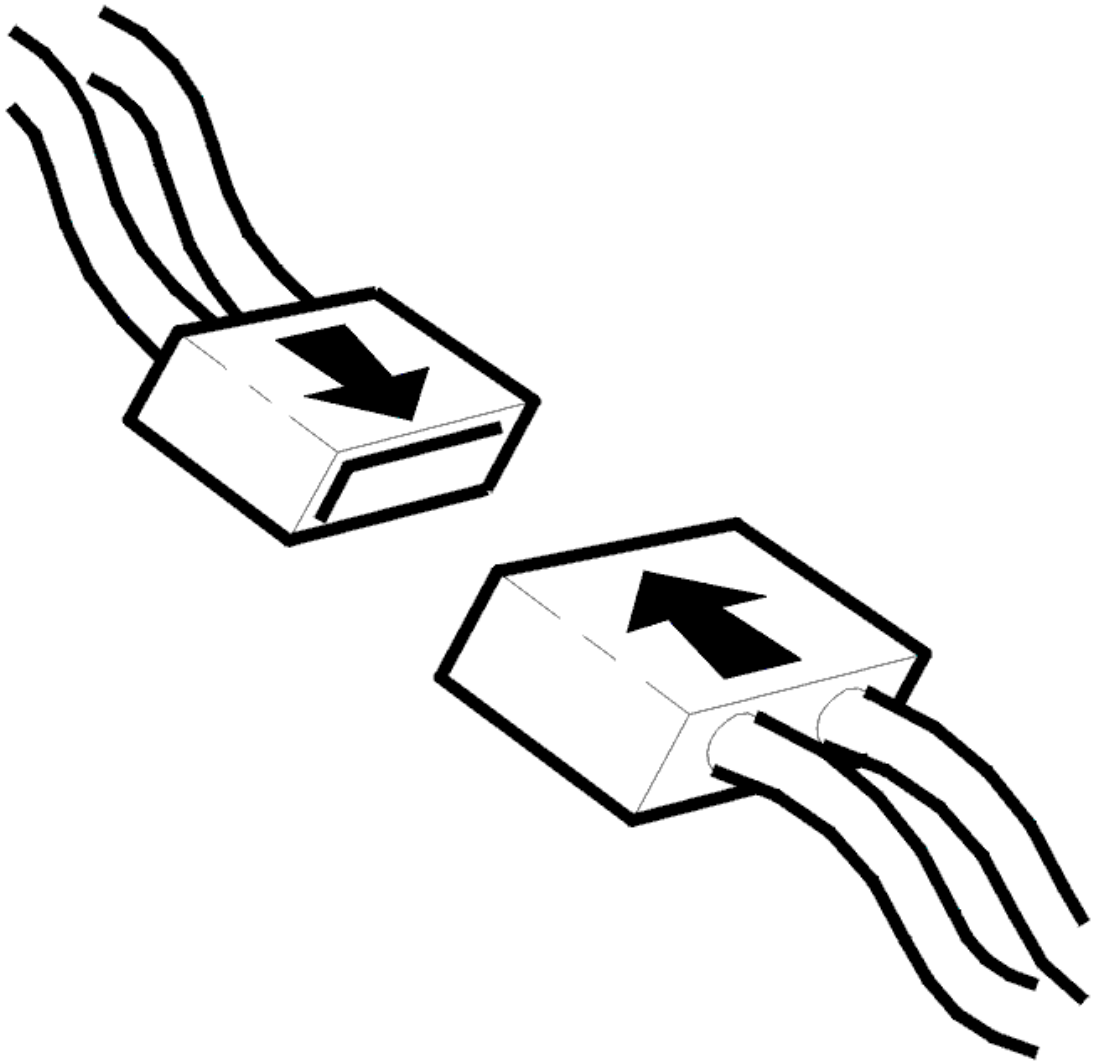

Fig. 333: Connecting Connector
Courtesy of VOLVO CARS CORPORATION

- Ignition off.
- Connect the connectors, install the components, etc.
- Ignition on.
- Blower motor on.

Check that damper motor position changes by changing control on climate control module (CCM). The values given below are the standard values that the damper motor positions should give.

NOTE: Blower motor must be in operation to activate the damper motors.

- Left/right temperature damper motor, 0-100%
- Recirculation damper motor, 40-100%

- Damper motor air distribution, defroster approximately 0%, floor/defroster approximately 19%, floor approximately 39%, ventilation approximately 83%.

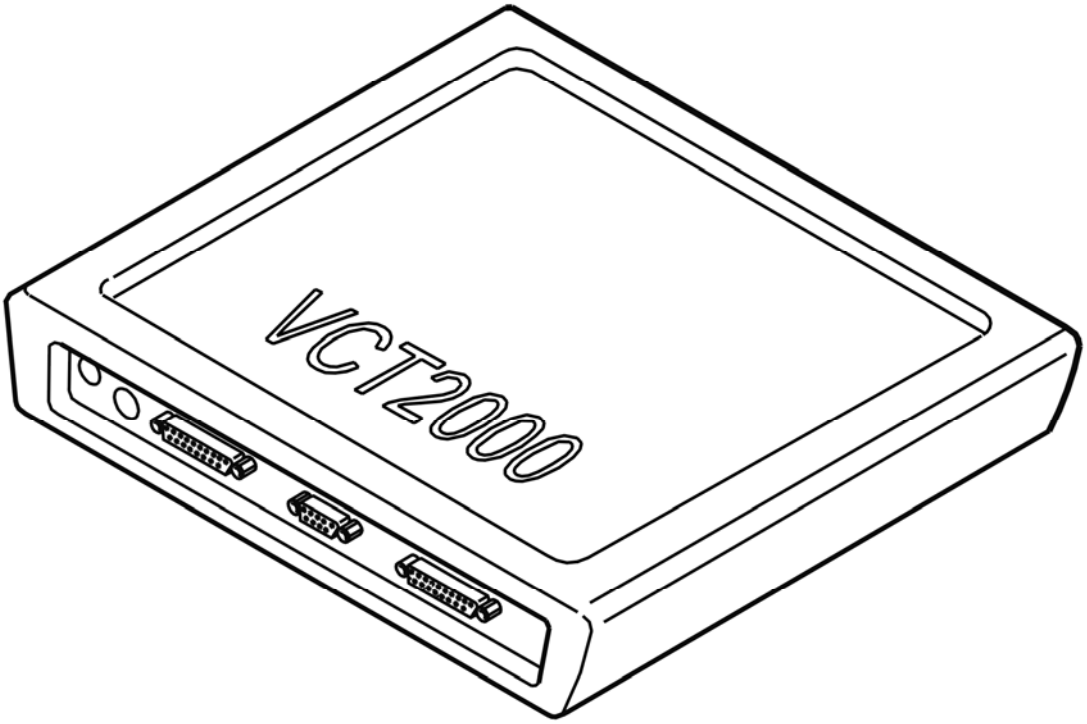

Fig. 334: Identifying VCT2000 Diagnostic Tool Symbol In VIDA
Courtesy of VOLVO CARS CORPORATION

Does damper motor work?

- **YES**

  VERIFIED: Troubleshooting has been completed.

- **NO**

  Refer to **INFORMATION**

INFORMATION

FAULT-TRACING INFORMATION

The fault should have been detected and remedied. As this is not the case fault-tracing has failed.

Exit fault-tracing for this diagnostic trouble code (DTC) or make another attempt.

CCM-0015: DAMPER MOTOR DEFROSTER. SIGNAL TOO HIGH (2003-04)

DIAGNOSTIC TROUBLE CODE (DTC) INFORMATION

Condition

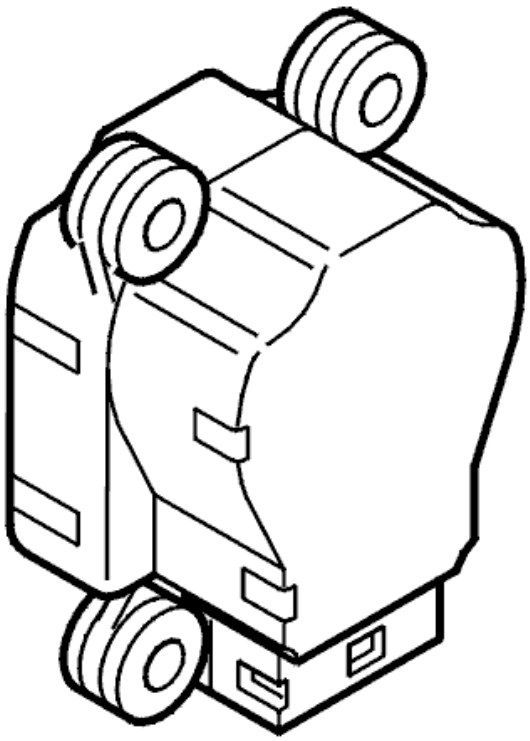

Fig. 335: Identifying Left Temperature Damper Motor
Courtesy of VOLVO CARS CORPORATION

Diagnostic trouble code (DTC) CCM-0015 is stored if the control module registers too high a signal from the defroster damper motor.

Substitute Value

- The control module does not allow the damper motor to be activated while the fault persists.

Possible Source

- Short-circuit to ground in the signal cable
- Defective damper motor.

Fault symptom[s]

- Air flow problem.

SIGNAL TOO HIGH

CHECKING THE DIAGNOSTIC TROUBLE CODES (DTCS)

Check which of the following alternatives apply when reading off diagnostic trouble codes (DTCs) for the climate control module (CCM).

Alternative 1

If the diagnostic trouble code (DTC) is stored with one or more other diagnostic trouble codes (DTCs), and the diagnostic trouble code (DTC) for direction control, this indicates a fault in the matrix network governing direction control.

The damper motors are connected in series in the matrix network governing direction control. In the event of a fault in the network, a diagnostic trouble code (DTC) will be stored for all damper motors which are in motion at the same time. Refer to **CHECKING THE WIRING**

The following are probable fault causes:

- short-circuit between the wiring in the matrix network
- short-circuit to supply voltage
- short-circuit to ground
- damaged damper motor.

Check if the diagnostic trouble code (DTC) has been stored with any of the following diagnostic trouble codes (DTCs):

- CCM-0011
- CCM-0012
- CCM-0013
- CCM-0014
- CCM-0016
- CCM-0017
- CCM-0018

Alternative 2

Check whether the diagnostic trouble code (DTC) has only been stored with the diagnostic trouble codes (DTCs) for direction control, CCM-0017 and CCM-0018. Refer to **CHECKING COMPONENTS AND WIRING**

CHECKING COMPONENTS AND WIRING

Check the signal cable between control module terminal #B20 and damper motor terminal #1. Check for a short-circuit to ground.

Check the damper motor resistance. The resistance must be 46 ohms. Take readings between the damper motor terminal pins.

Remedy as necessary.

Other information:

- see **CONNECTING THE BREAKOUT BOX** .
- see **CLIMATE CONTROL MODULE (CCM), REPLACING** .
- see **DAMPER MOTOR TEMPERATURE, REPLACING** .
- see **SIGNAL SPECIFICATION** .
- see **CHECKING WIRING AND TERMINALS** .

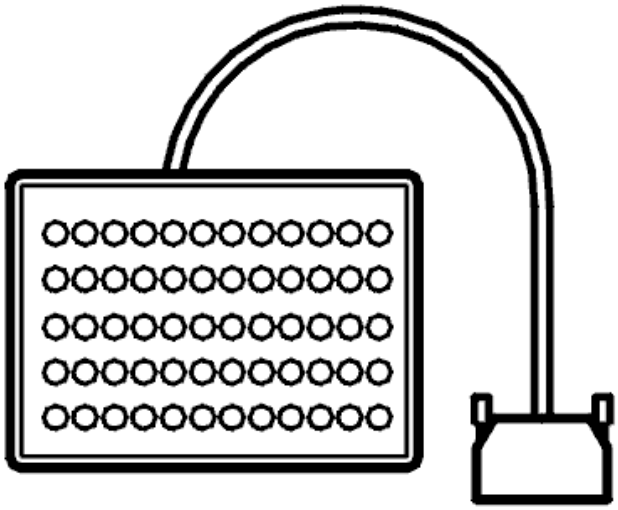

Fig. 336: Breakout Box
Courtesy of VOLVO CARS CORPORATION

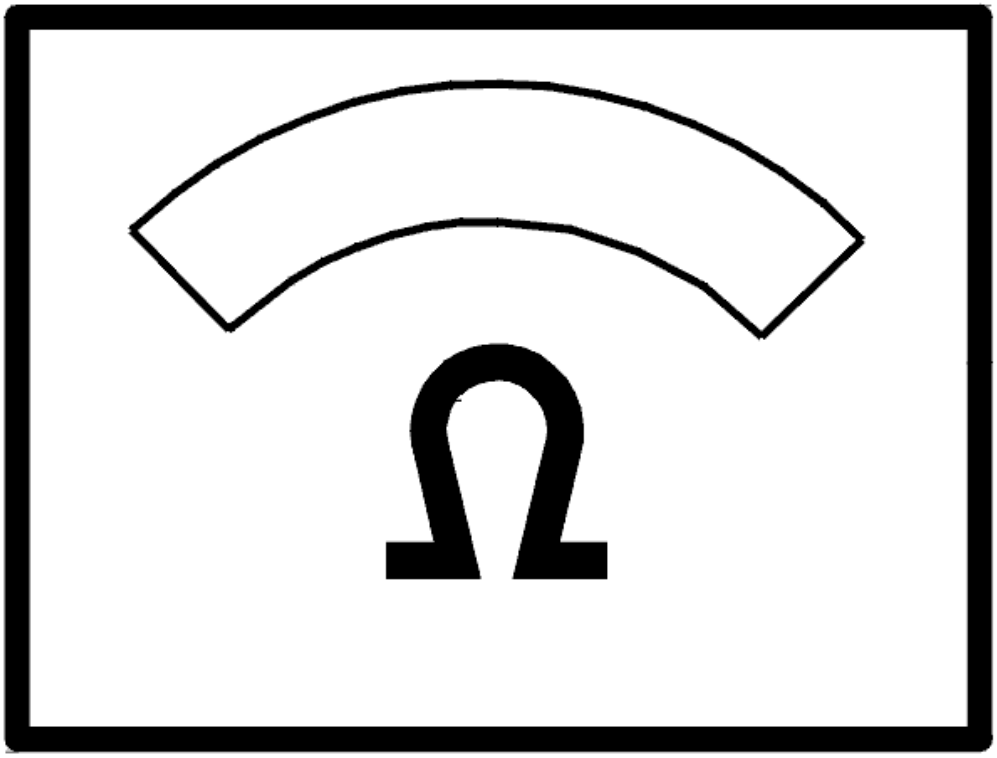

Fig. 337: Identifying Ohmmeter
Courtesy of VOLVO CARS CORPORATION

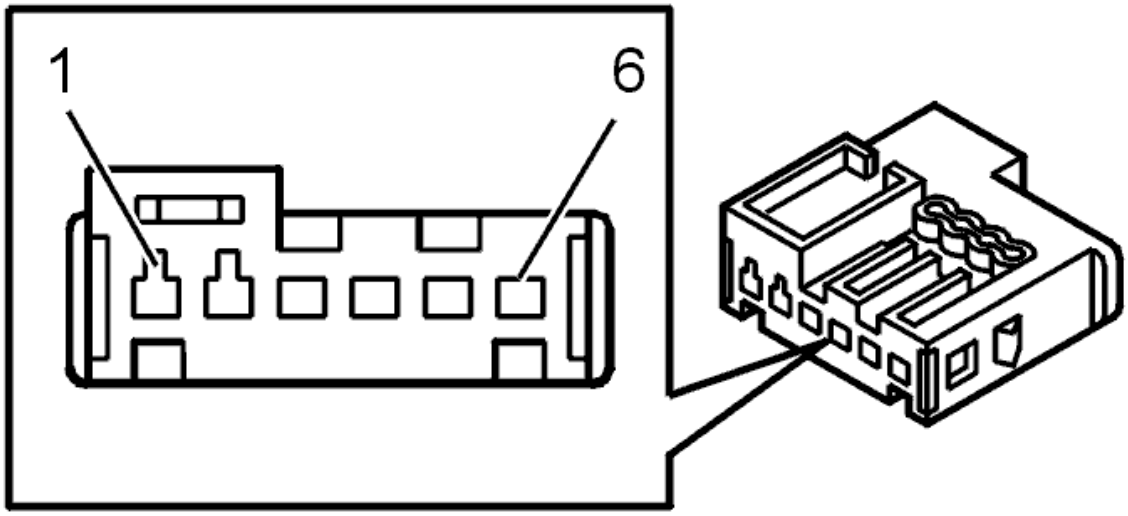

Fig. 338: Identifying Left Temperature Damper Motor Connector Terminals
Courtesy of VOLVO CARS CORPORATION

- **Continue**

  Refer to **EQUIPMENT**

CHECKING THE WIRING

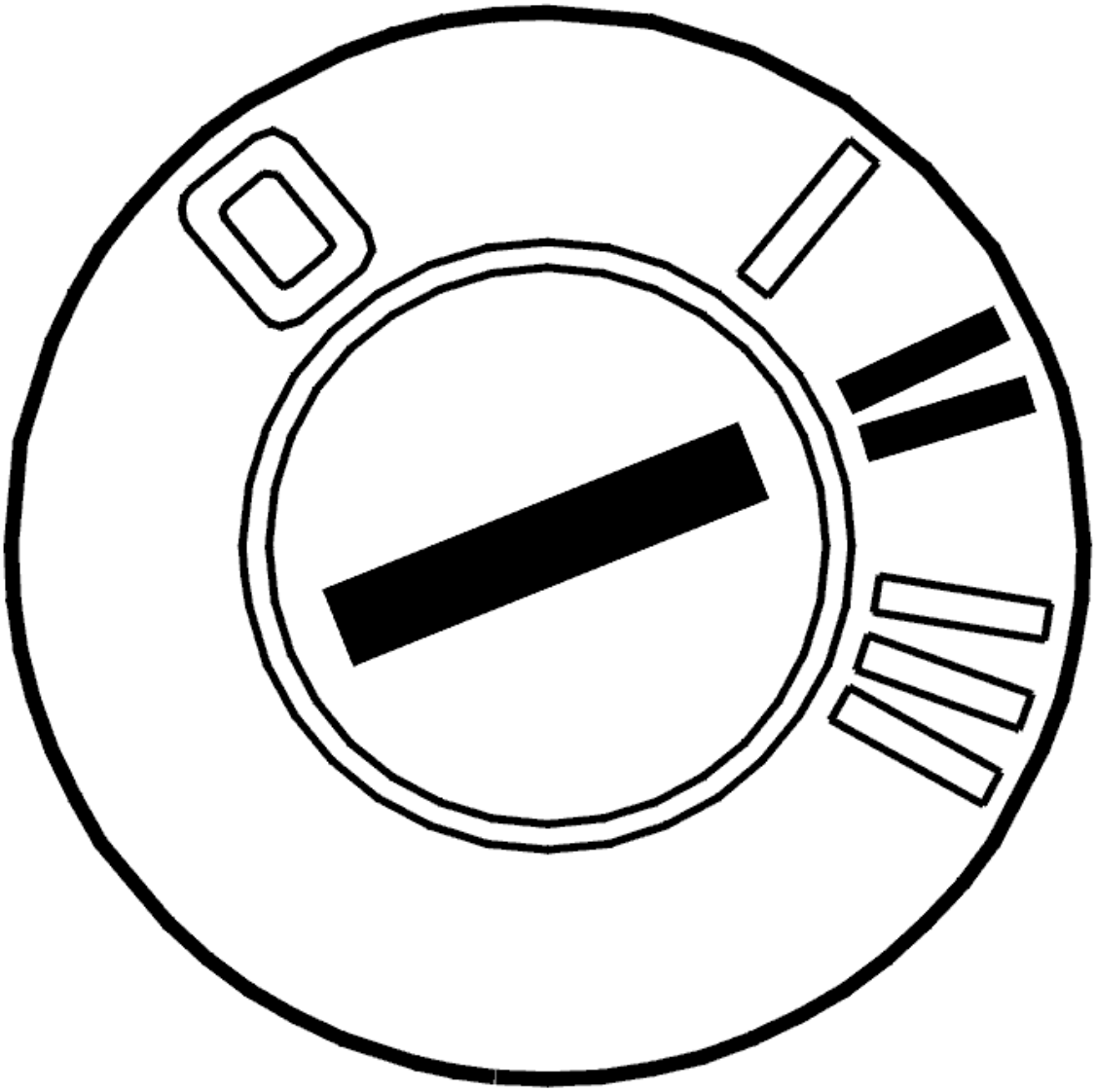

Fig. 339: Identifying Ignition ON
Courtesy of VOLVO CARS CORPORATION

- Ignition off
- Disconnect connector B on the climate control module (CCM).
- Ignition on

  Check the matrix wiring. Check for a short-circuit to supply voltage. Check for a short-circuit to ground.

  Take readings between the following terminals on connector B and ground:

  - #B11 (#11)
  - #B12 (#12)
  - #B13 (#13)
  - #B14 (#14)

Check whether there is an internal short-circuit in the matrix cables. Take pairs of readings between all the terminals #B11-#B14 on connector B.

Other information:

- see **CONNECTING THE BREAKOUT BOX**
- see **CLIMATE CONTROL MODULE (CCM), REPLACING** .
- see **DAMPER MOTOR TEMPERATURE, REPLACING** .
- see **SIGNAL SPECIFICATION** .
- see **CHECKING WIRING AND TERMINALS** .

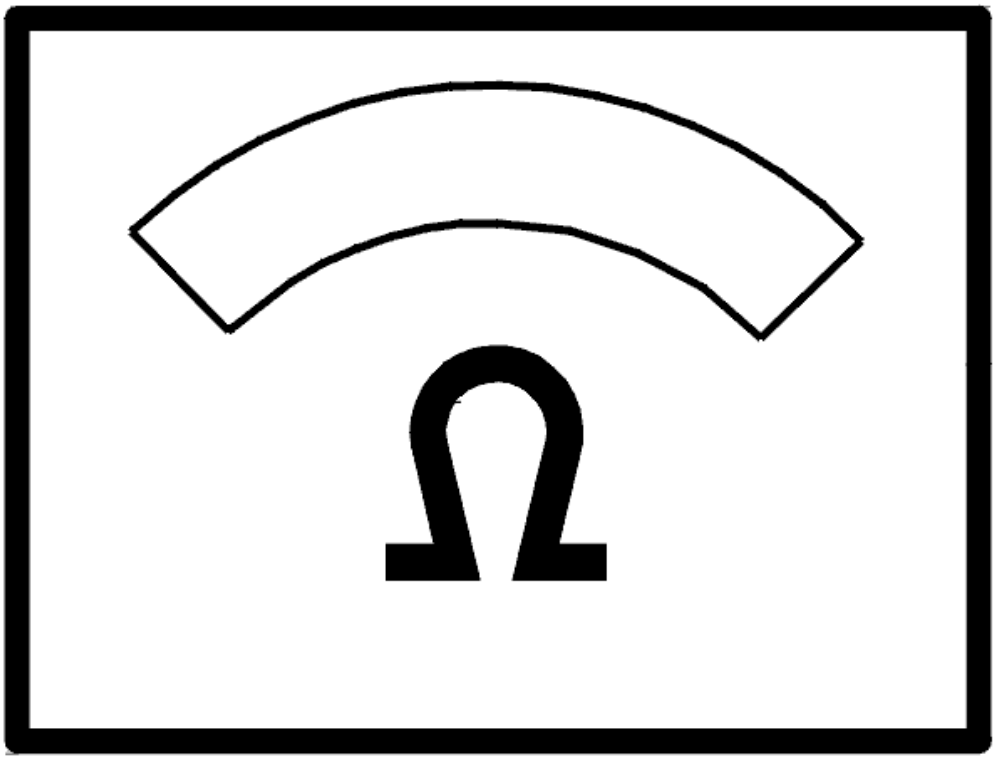

Fig. 340: Identifying Ohmmeter
Courtesy of VOLVO CARS CORPORATION

Was a fault detected?

- **YES**

  Refer to **EQUIPMENT**

- **NO**

  Refer to **CHECKING THE COMPONENT**

CHECKING THE COMPONENT

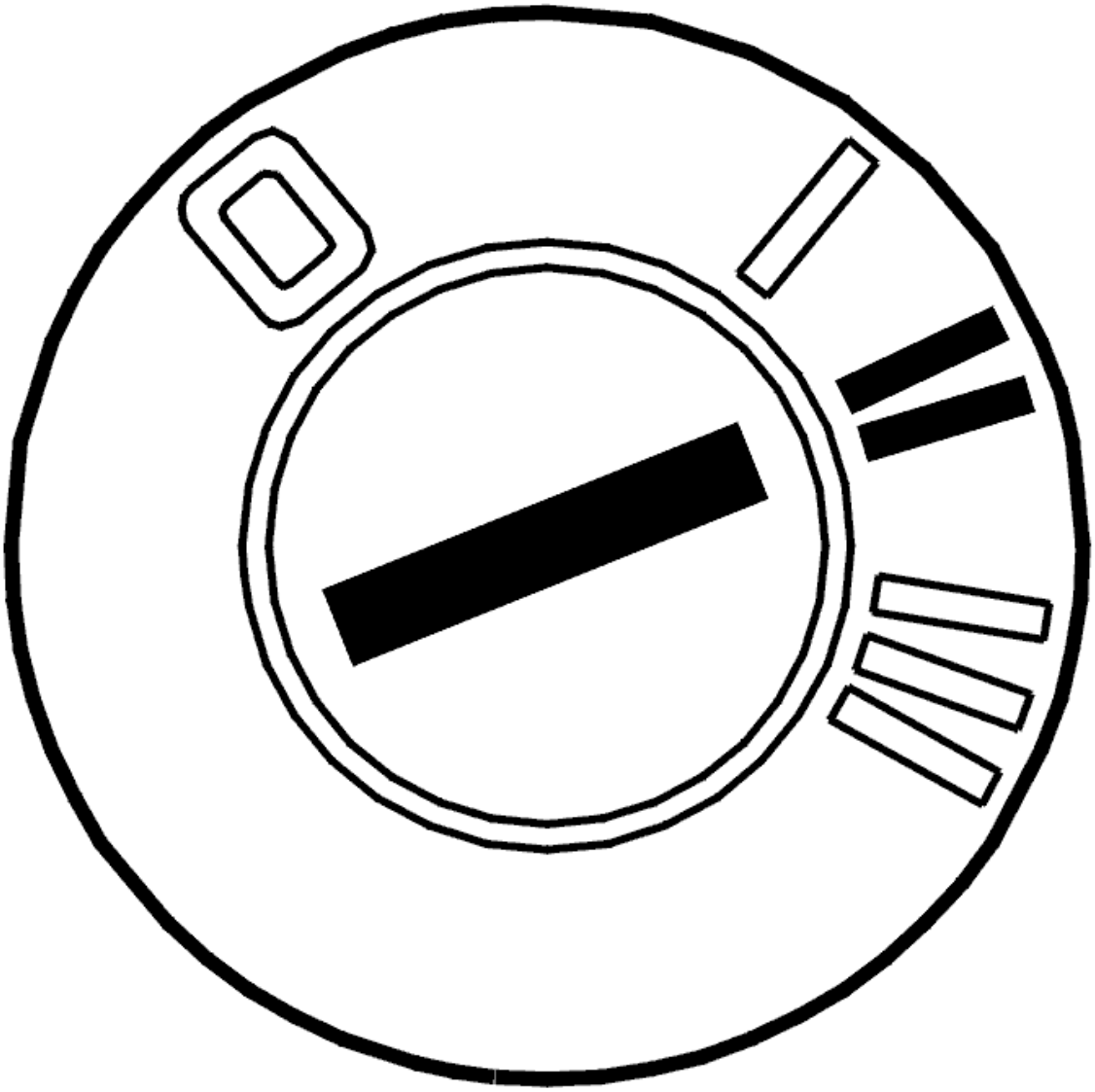

Fig. 341: Identifying Ignition ON
Courtesy of VOLVO CARS CORPORATION

- Ignition on

  Check the damper motors. Check for internal short-circuits as follows:

- Remove the soundproofing panel to access the damper motor connectors.
- Erase the diagnostic trouble codes (DTCs) for the climate control module (CCM).
- First disconnect the connector from a damper motor. Leave the other damper motors connected.

NOTE: Take care when disconnecting the connectors for the damper motors to prevent loose connections.

- Activate the controls (right and left-hand temperature knobs, defroster, air distribution selector, recirculation) on the climate control module (CCM) to operate all the damper motors.
- Read off the diagnostic trouble codes (DTCs) from the climate control module (CCM). If the diagnostic trouble codes (DTCs) have not recurred, there is an internal fault in the disconnected damper motor.
- If the diagnostic trouble codes (DTCs) recur, continue fault tracing. Reconnect the disconnected damper motor and disconnect the next damper motor. Repeat the procedure by erasing all diagnostic trouble codes (DTCs) and running the damper motors until the faulty damper motor has been identified.

Other information:

- see **CONNECTING THE BREAKOUT BOX** .
- see **CLIMATE CONTROL MODULE (CCM), REPLACING** .
- see **DAMPER MOTOR TEMPERATURE, REPLACING** .
- see **SIGNAL SPECIFICATION** .
- see **CHECKING WIRING AND TERMINALS** .

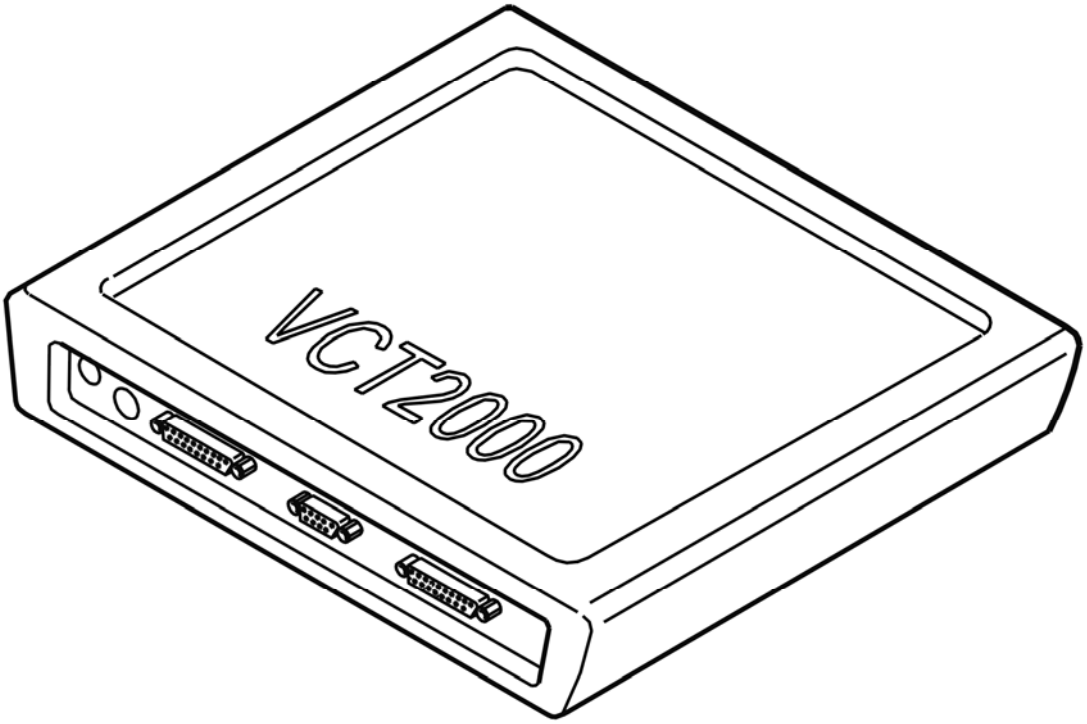

Fig. 342: Identifying VCT2000 Diagnostic Tool Symbol In VIDA
Courtesy of VOLVO CARS CORPORATION

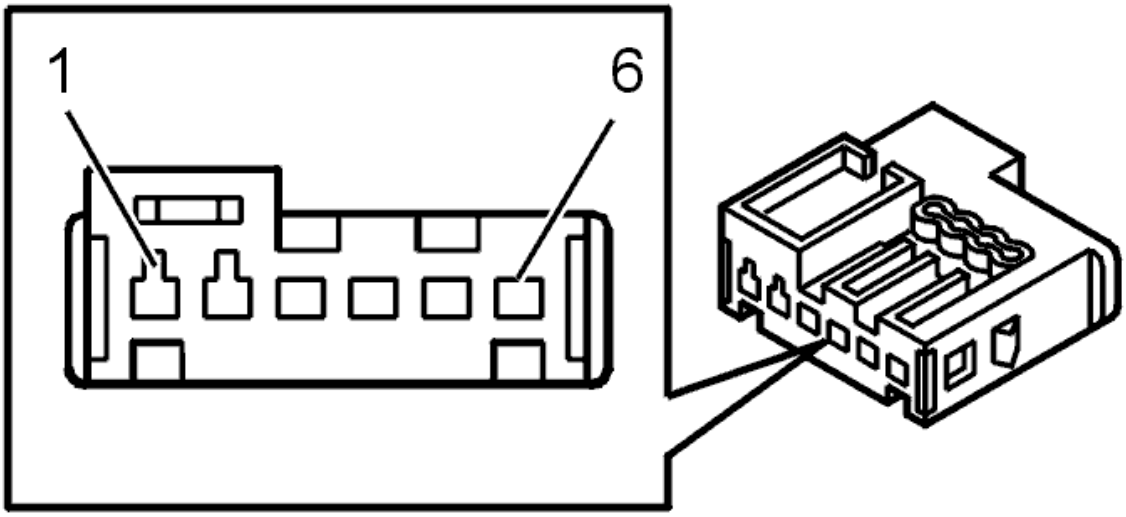

Fig. 343: Identifying Left Temperature Damper Motor Connector Terminals
Courtesy of VOLVO CARS CORPORATION

- **Continue**

  Refer to **EQUIPMENT**

EQUIPMENT

Which type of climate control is the car equipped with?

1. ECC. Refer to **SELF-ADJUSTMENT**.
2. Manual climate control (MCC)/Standard (STD). Refer to **SELF-ADJUSTMENT**

SELF-ADJUSTMENT

HINT: After replacing the control module or damper motor, and when a damper motor or link has been removed, carry out self adjustment to define the damper motor limit positions.

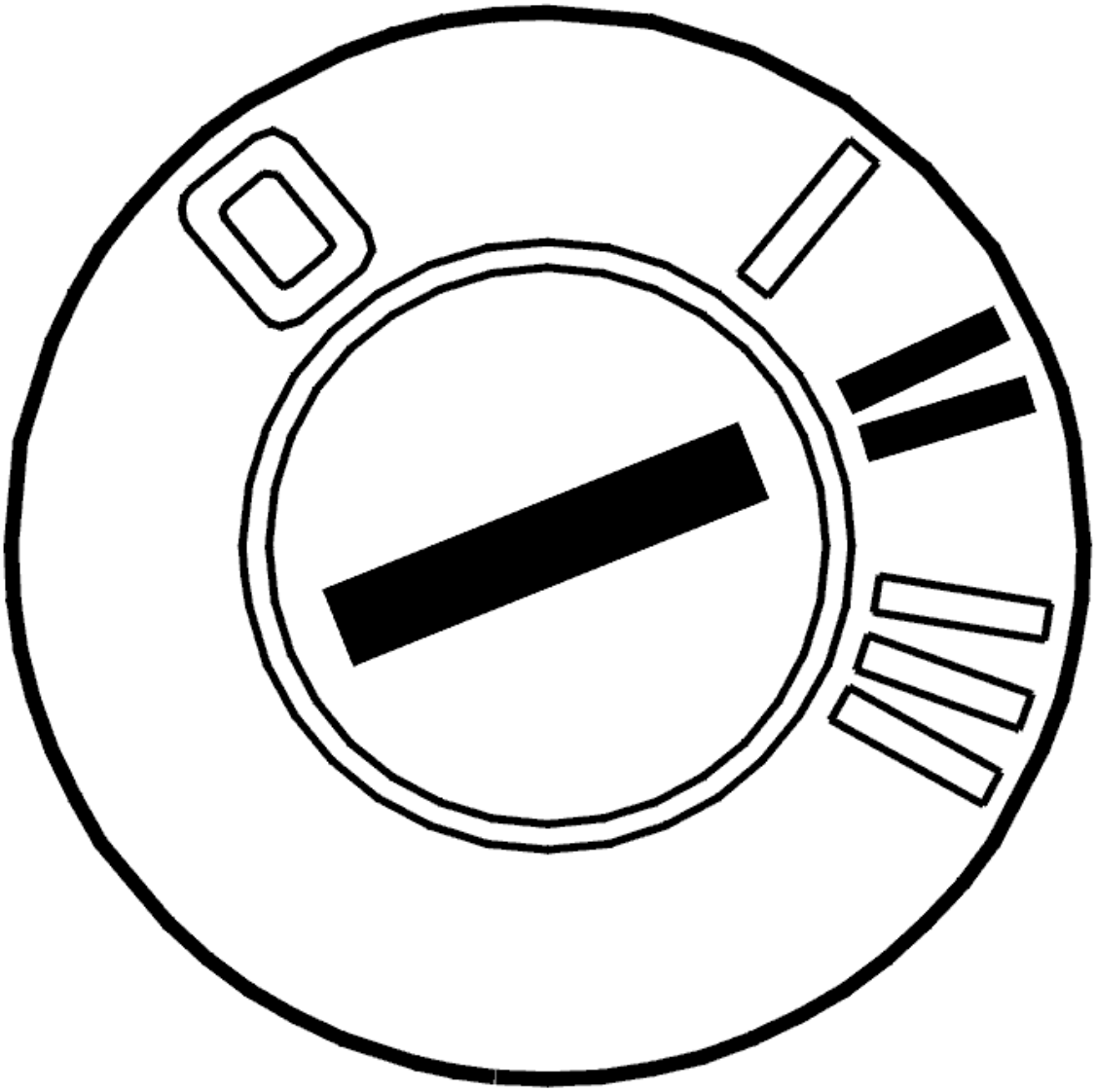

Fig. 344: Identifying Ignition ON
Courtesy of VOLVO CARS CORPORATION

- Ignition off.

- Reinstall the connectors, components etc.
- Ignition on.

  Activate self adjustment.

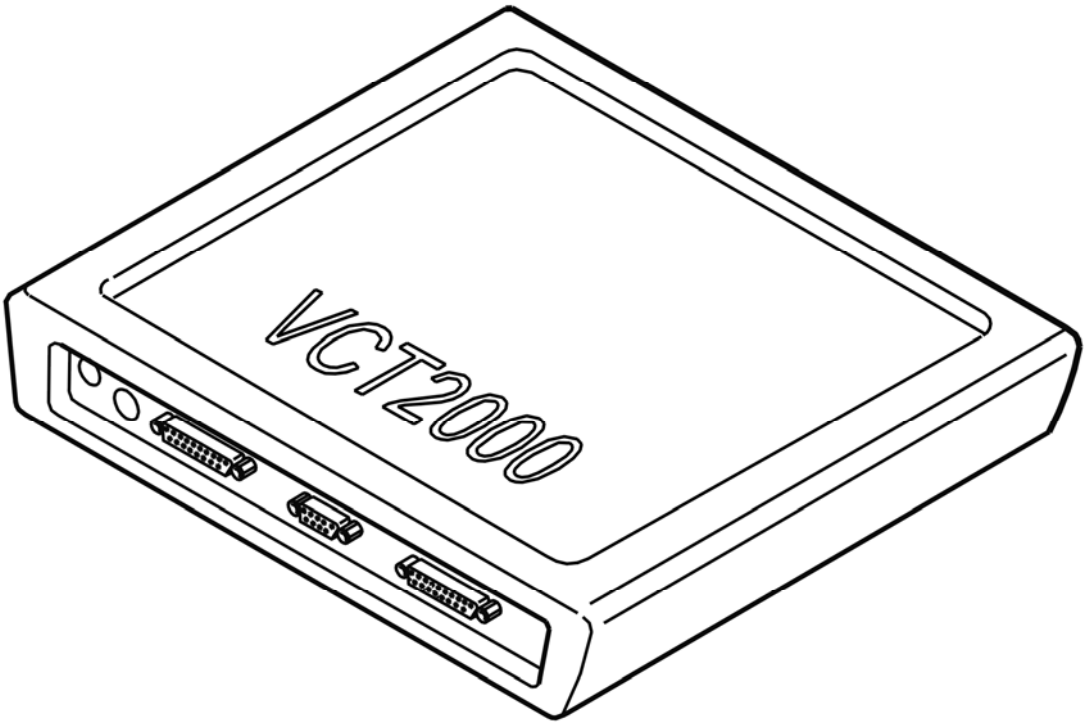

Fig. 345: Identifying VCT2000 Diagnostic Tool Symbol In VIDA
Courtesy of VOLVO CARS CORPORATION

- **Continue**

  Refer to **VERIFICATION**

VERIFICATION

HINT: After the repair it is necessary to check that the fault has been rectified.

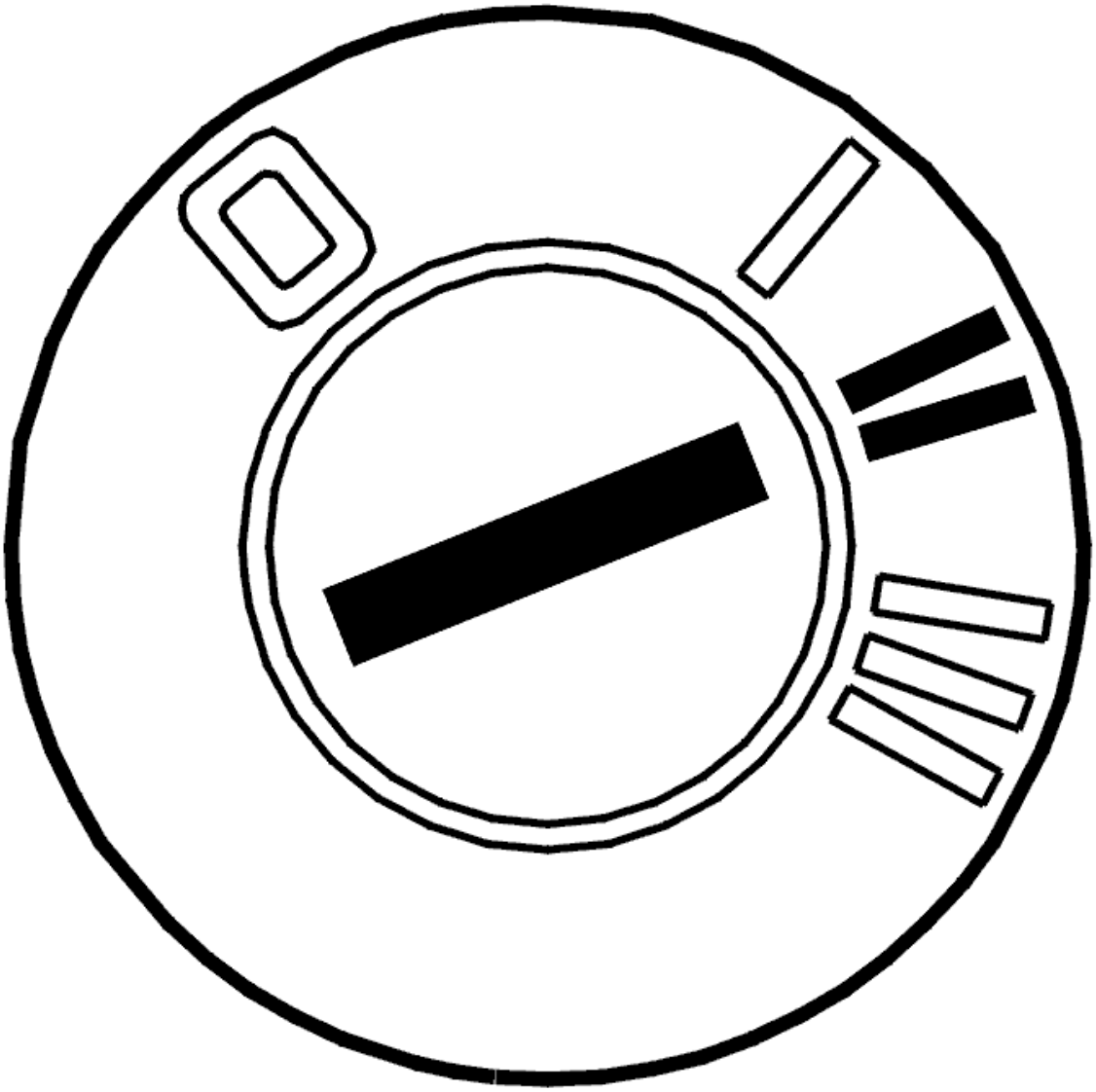

Fig. 346: Identifying Ignition ON
Courtesy of VOLVO CARS CORPORATION

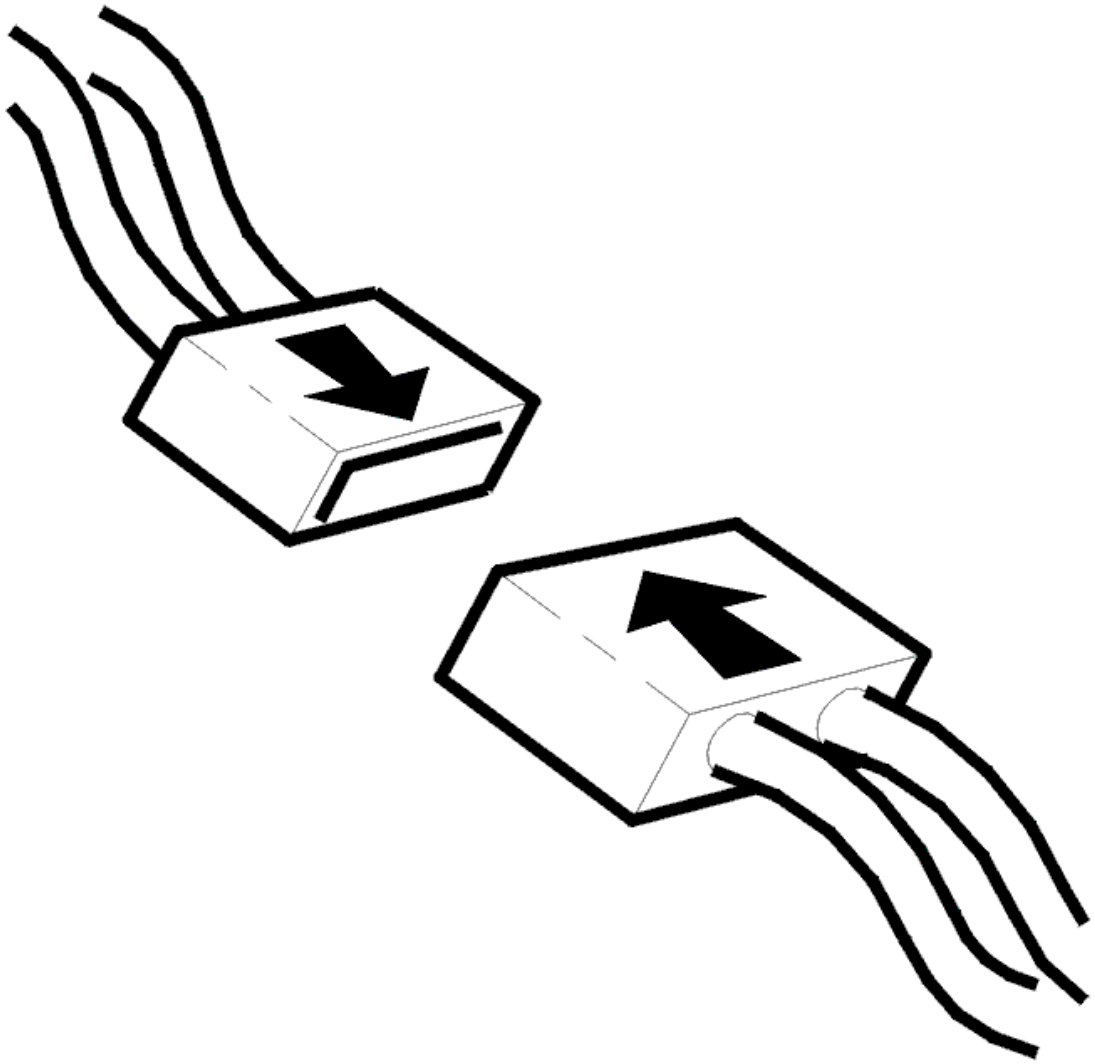

Fig. 347: Connecting Connector
Courtesy of VOLVO CARS CORPORATION

- Ignition off.
- Connect the connectors, install the components, etc.
- Ignition on.
- Blower motor on.

Check that damper motor position changes by changing control on climate control module (CCM). The values given below are the standard values that the damper motor positions should give.

NOTE: Blower motor must be in operation to activate the damper motors.

- Left/right temperature damper motor and defroster, 0-100%
- Recirculation damper motor, 40-100%

- Floor/ventilation damper motor, floor only approximately 39%, ventilation only approximately 87% and floor/ventilation approximately 71%.

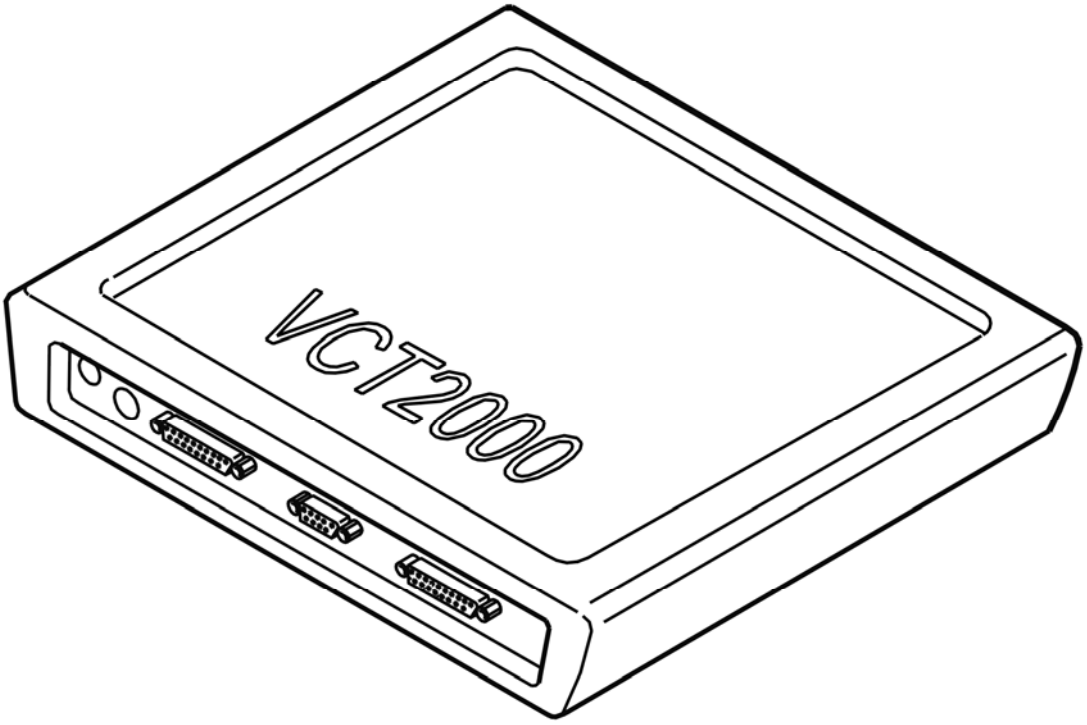

Fig. 348: Identifying VCT2000 Diagnostic Tool Symbol In VIDA
Courtesy of VOLVO CARS CORPORATION

Does damper motor work?

- **YES**

  VERIFIED: Troubleshooting has been completed.

- **NO**

  Refer to **INFORMATION**

INFORMATION

FAULT-TRACING INFORMATION

The fault should have been detected and remedied. As this is not the case fault-tracing has failed.

Exit fault-tracing for this diagnostic trouble code (DTC) or make another attempt.

SELF-ADJUSTMENT

HINT: After replacing the control module or damper motor, and when a damper motor or link has been removed, carry out self adjustment to define the damper motor limit positions.

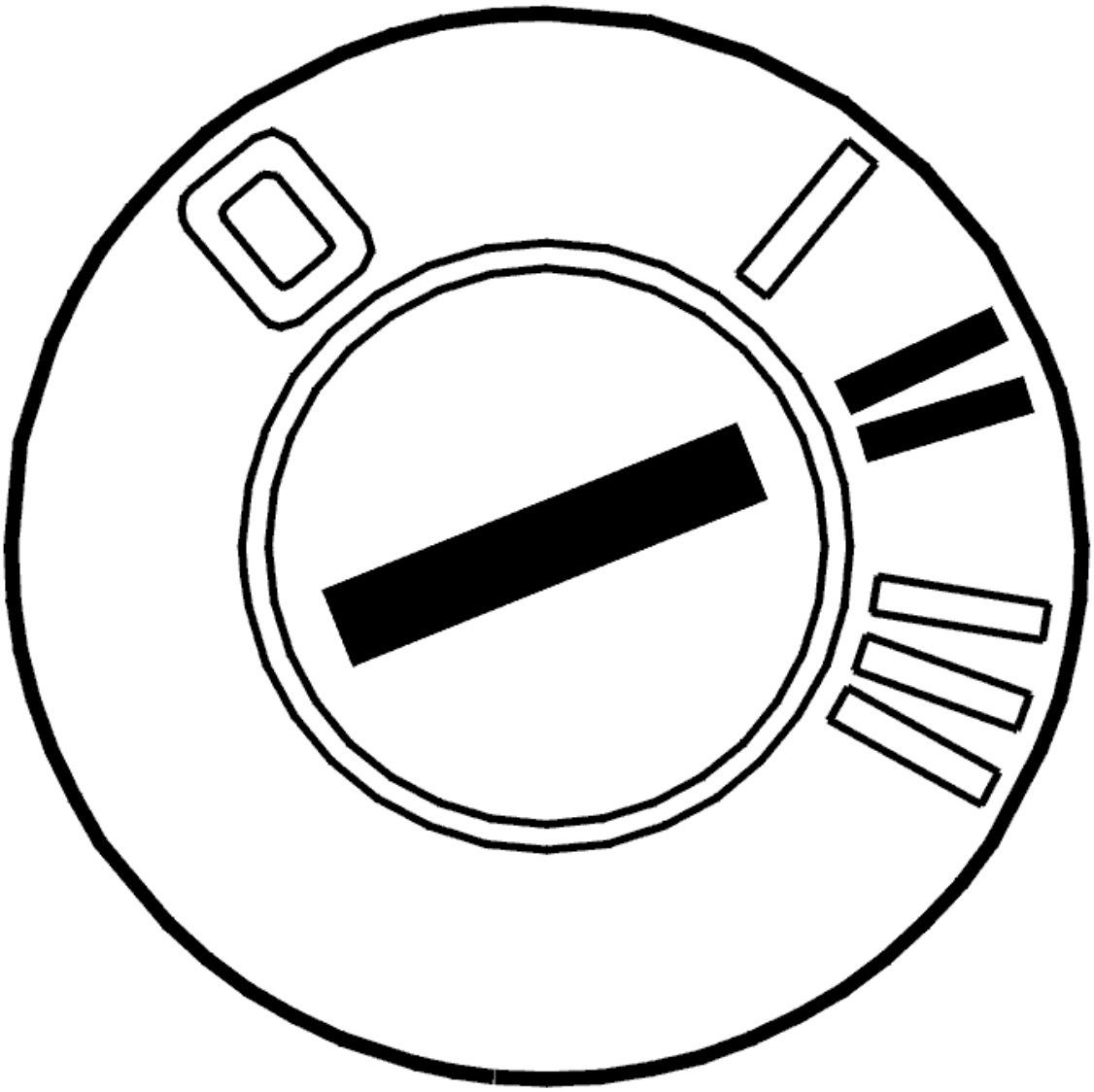

Fig. 349: Identifying Ignition ON
Courtesy of VOLVO CARS CORPORATION

- Ignition off.
- Reinstall the connectors, components etc.
- Ignition on.

  Activate self adjustment.

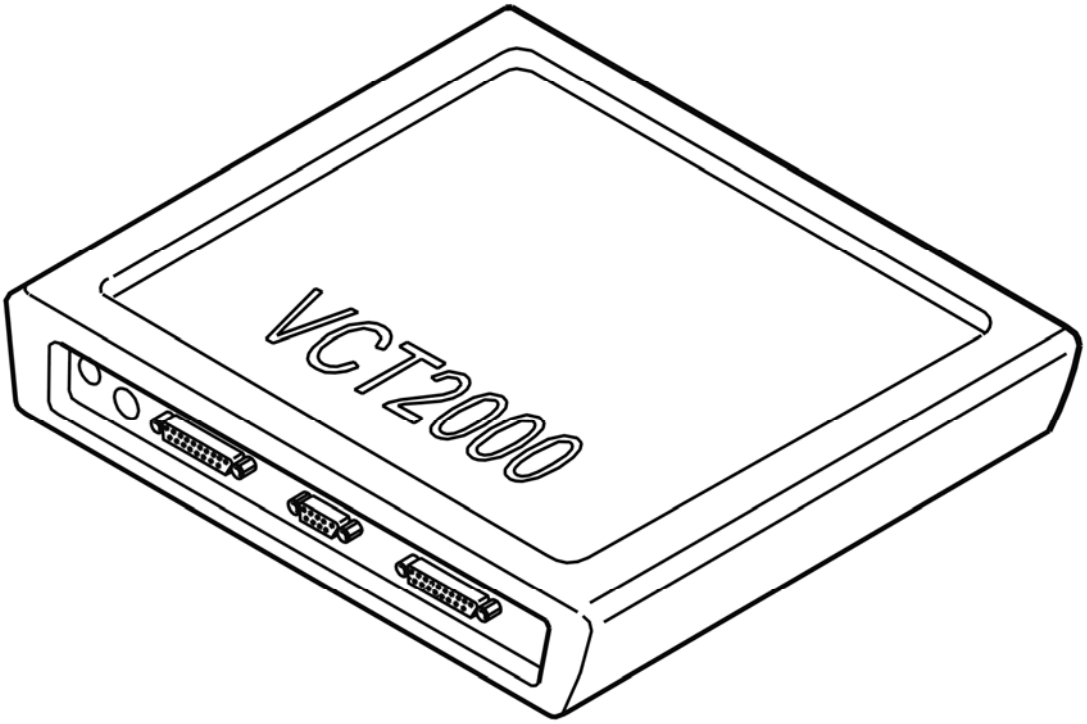

Fig. 350: Identifying VCT2000 Diagnostic Tool Symbol In VIDA
Courtesy of VOLVO CARS CORPORATION

- **Continue**

  Refer to **VERIFICATION**

VERIFICATION

HINT: After the repair it is necessary to check that the fault has been rectified.

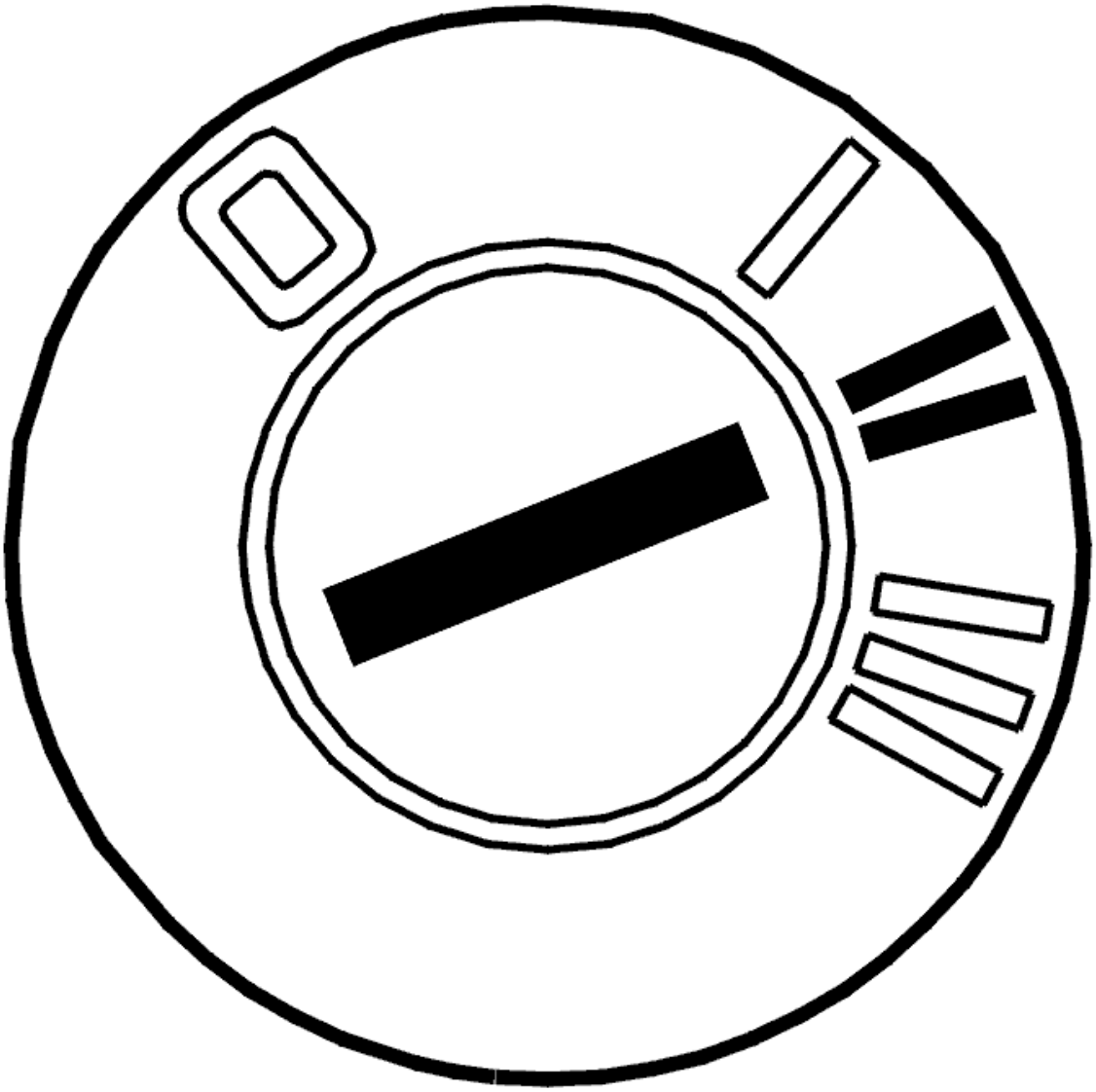

Fig. 351: Identifying Ignition ON
Courtesy of VOLVO CARS CORPORATION

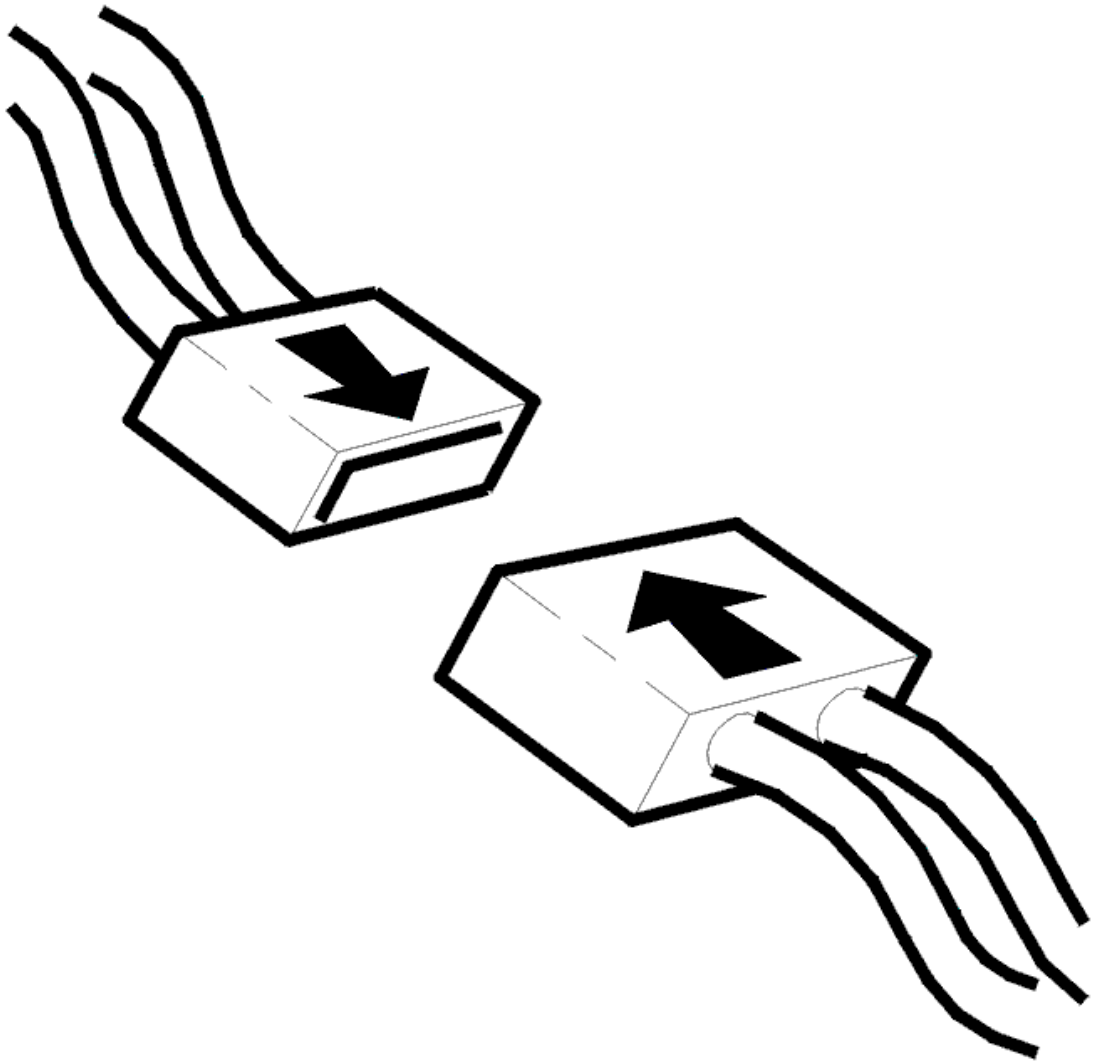

Fig. 352: Connecting Connector
Courtesy of VOLVO CARS CORPORATION

- Ignition off.
- Connect the connectors, install the components, etc.
- Ignition on.
- Blower motor on.

Check that damper motor position changes by changing control on climate control module (CCM). The values given below are the standard values that the damper motor positions should give.

NOTE: Blower motor must be in operation to activate the damper motors.

- Left/right temperature damper motor, 0-100%
- Recirculation damper motor, 40-100%

- Damper motor air distribution, defroster approximately 0%, floor/defroster approximately 19%, floor approximately 39%, ventilation approximately 83%.

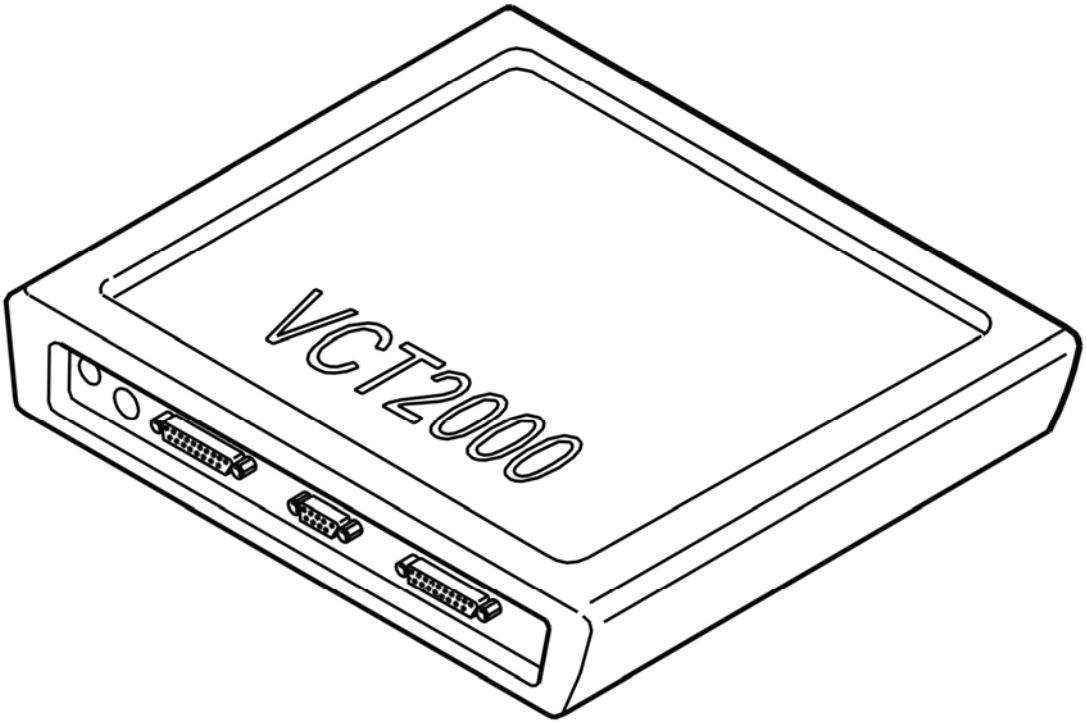

Fig. 353: Identifying VCT2000 Diagnostic Tool Symbol In VIDA
Courtesy of VOLVO CARS CORPORATION

Does damper motor work?

- **YES**

  VERIFIED: Troubleshooting has been completed.

- **NO**

  Refer to **INFORMATION**

CCM-0016: AIR DISTRIBUTION DAMPER MOTOR. SIGNAL TOO HIGH (2003-04)

DIAGNOSTIC TROUBLE CODE (DTC) INFORMATION

Condition

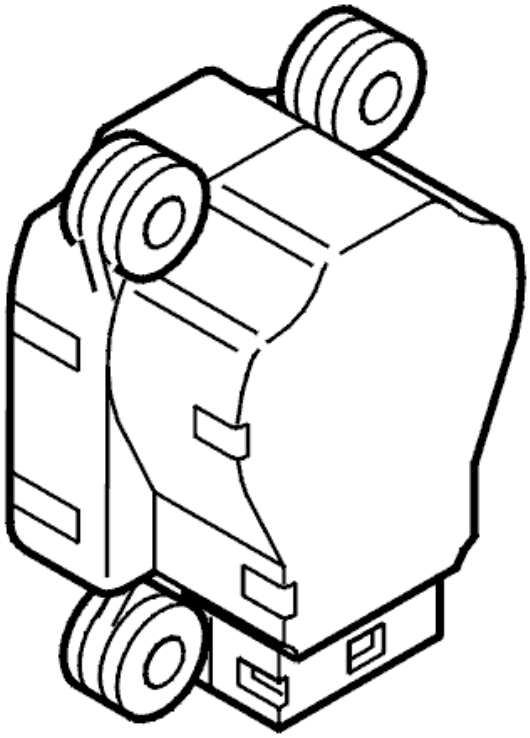

Fig. 354: Identifying Left Temperature Damper Motor
Courtesy of VOLVO CARS CORPORATION

Diagnostic trouble code (DTC) CCM-0016 is stored if the climate control module (CCM) registers too high a signal from the air distribution damper motor.

Substitute Value

- The control module does not allow the damper motor to be activated while the fault persists.

Possible Source

- Short-circuit to ground in the signal cable
- Defective damper motor.

Fault symptom[s]

- Air flow problem.

SIGNAL TOO HIGH

CHECKING THE DIAGNOSTIC TROUBLE CODES (DTCS)

Check which of the following alternatives apply when reading off diagnostic trouble codes (DTCs) for the climate control module (CCM).

Alternative 1 Refer to **CHECKING THE WIRING**

If the diagnostic trouble code (DTC) is stored with one or more other diagnostic trouble codes (DTCs), and the diagnostic trouble code (DTC) for direction control, this indicates a fault in the matrix network governing direction control.

The damper motors are connected in series in the matrix network governing direction control. In the event of a fault in the network, a diagnostic trouble code (DTC) will be stored for all damper motors which are in motion at the same time.

The following are probable fault causes:

- short-circuit between the wiring in the matrix network
- short-circuit to supply voltage
- short-circuit to ground
- damaged damper motor.

Check to, see if the diagnostic trouble code (DTC) has been stored with any of the following diagnostic trouble codes (DTCs):

- CCM-0011
- CCM-0012
- CCM-0013
- CCM-0014
- CCM-0015
- CCM-0017
- CCM-0018

Alternative 2 Refer to **CHECKING COMPONENTS AND WIRING**

Check whether the diagnostic trouble code (DTC) has only been stored with the diagnostic trouble codes (DTCs) for direction control, CCM-0017 and CCM-0018.

CHECKING COMPONENTS AND WIRING

Check the signal cable between control module terminal #B22 and damper motor terminal #1. Check for a short-circuit to ground.

Check the damper motor resistance. The resistance must be 46 ohms. Take readings between the damper motor terminal pins.

Remedy as necessary.

Other information:

- see **CONNECTING THE BREAKOUT BOX** .
- see **CLIMATE CONTROL MODULE (CCM), REPLACING** .
- see **DAMPER MOTOR TEMPERATURE, REPLACING** .
- see **SIGNAL SPECIFICATION** .
- see **CHECKING WIRING AND TERMINALS** .

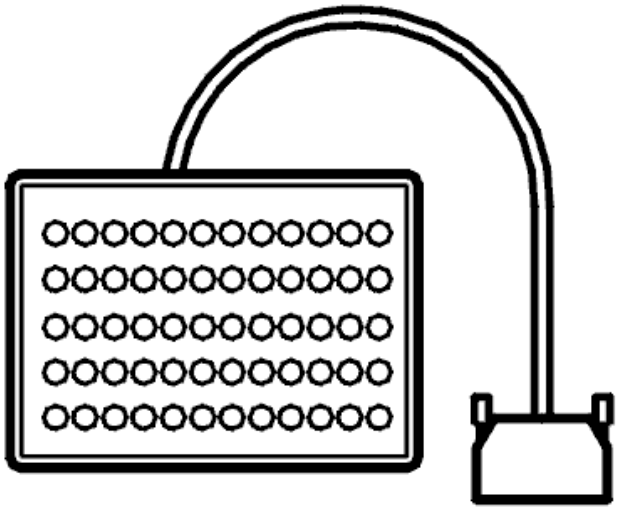

Fig. 355: Breakout Box
Courtesy of VOLVO CARS CORPORATION

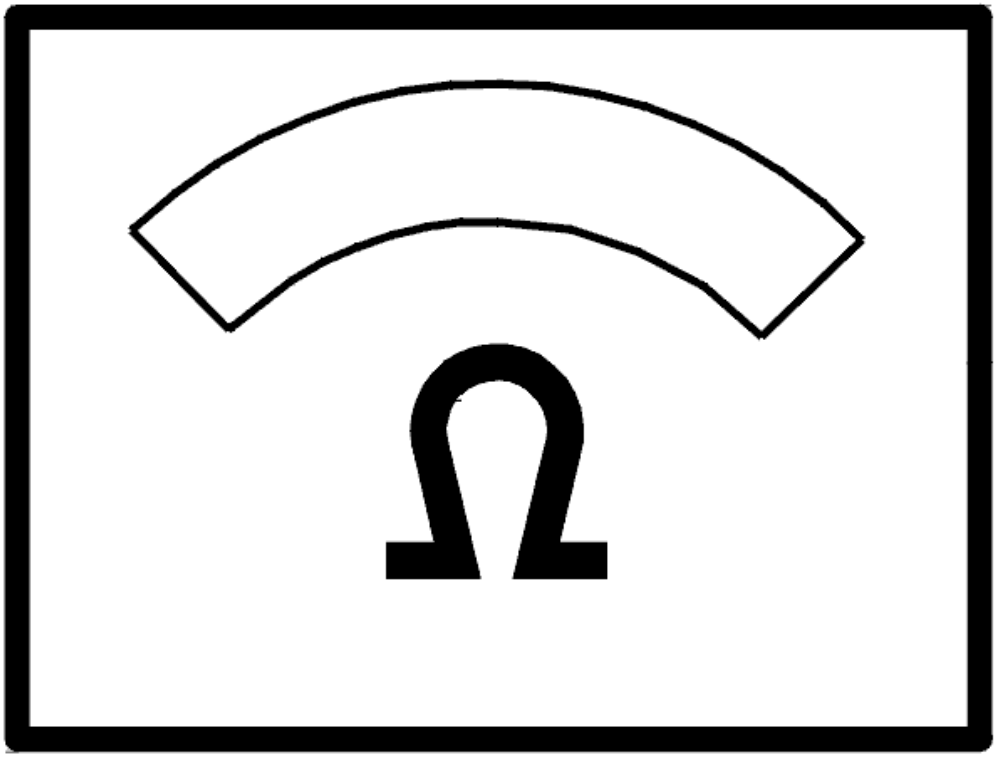

Fig. 356: Identifying Ohmmeter
Courtesy of VOLVO CARS CORPORATION

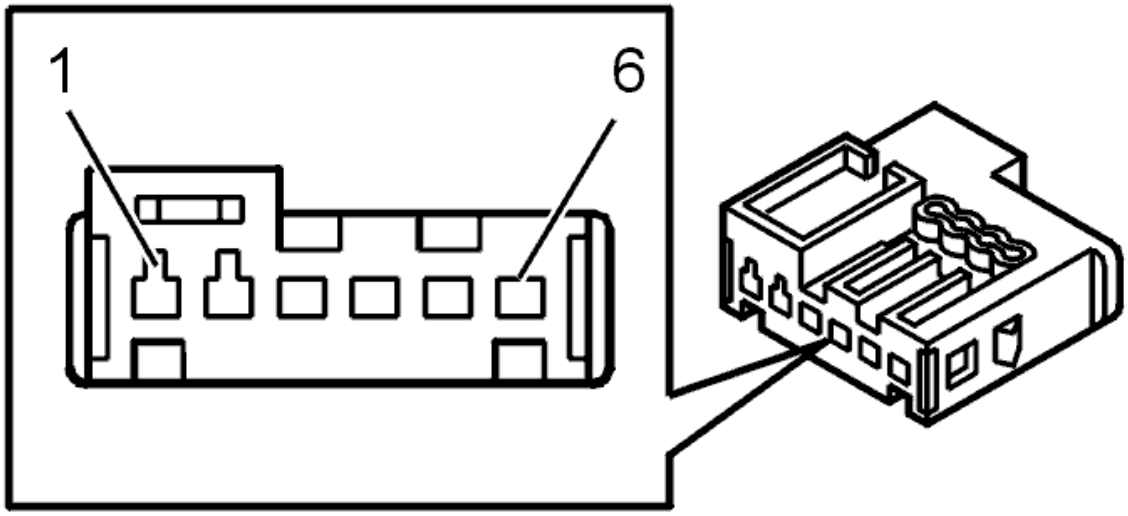

Fig. 357: Identifying Left Temperature Damper Motor Connector Terminals
Courtesy of VOLVO CARS CORPORATION

- **Continue**

  Refer to **EQUIPMENT**

CHECKING THE WIRING

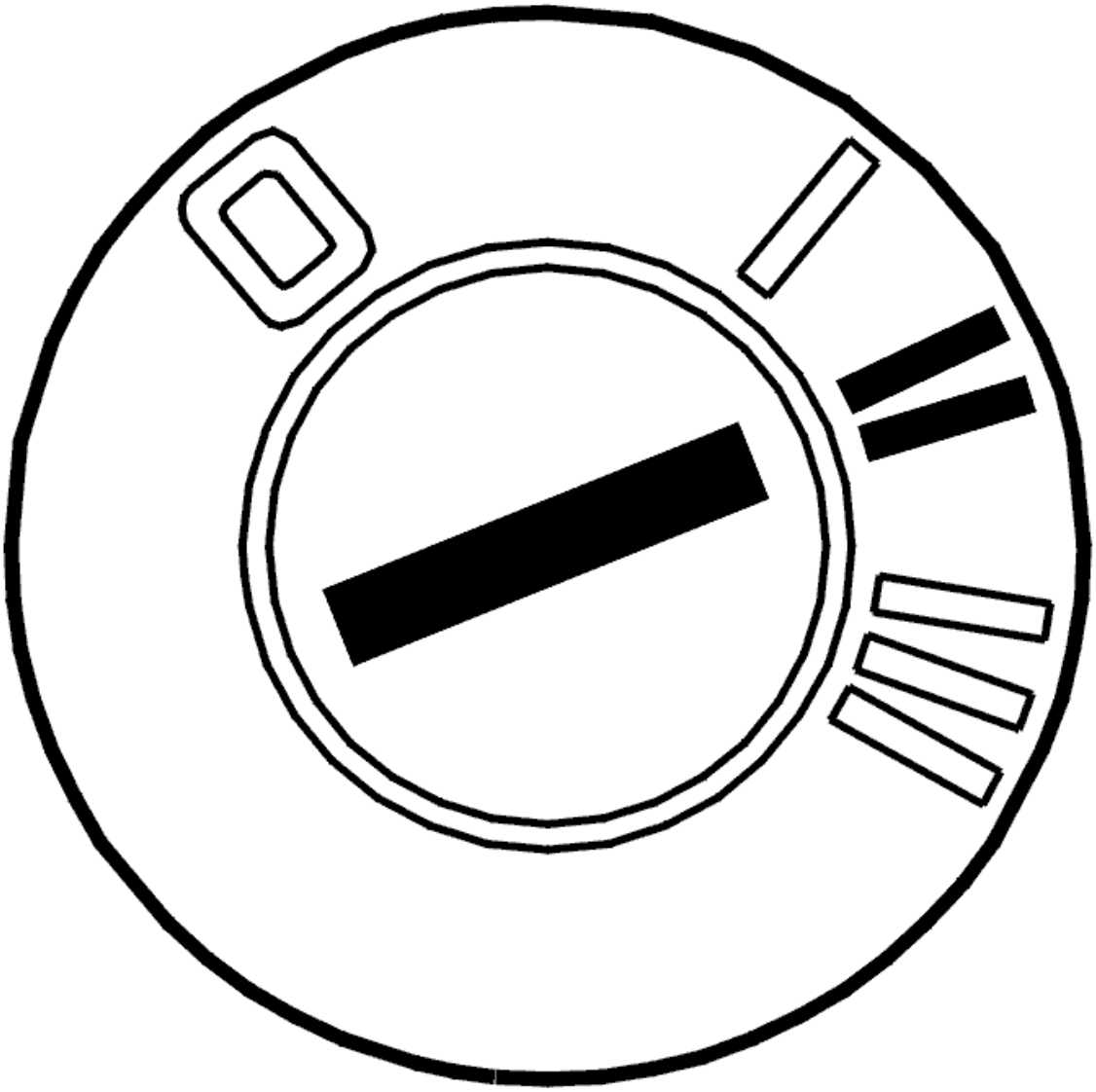

Fig. 358: Identifying Ignition ON
Courtesy of VOLVO CARS CORPORATION

- Ignition off
- Disconnect connector B on the climate control module (CCM).
- Ignition on

  Check the matrix wiring. Check for a short-circuit to supply voltage. Check for a short-circuit to ground.

  Take readings between the following terminals on connector B and ground:

  - #B11 (#11)
  - #B12 (#12)
  - #B13 (#13)
  - #B14 (#14).

Check whether there is an internal short-circuit in the matrix cables. Take pairs of readings between all the terminals #B11-#B14 on connector B.

Other information:

- see **CONNECTING THE BREAKOUT BOX**
- see **CLIMATE CONTROL MODULE (CCM), REPLACING** .
- see **DAMPER MOTOR TEMPERATURE, REPLACING** .
- see **SIGNAL SPECIFICATION** .
- see **CHECKING WIRING AND TERMINALS** .

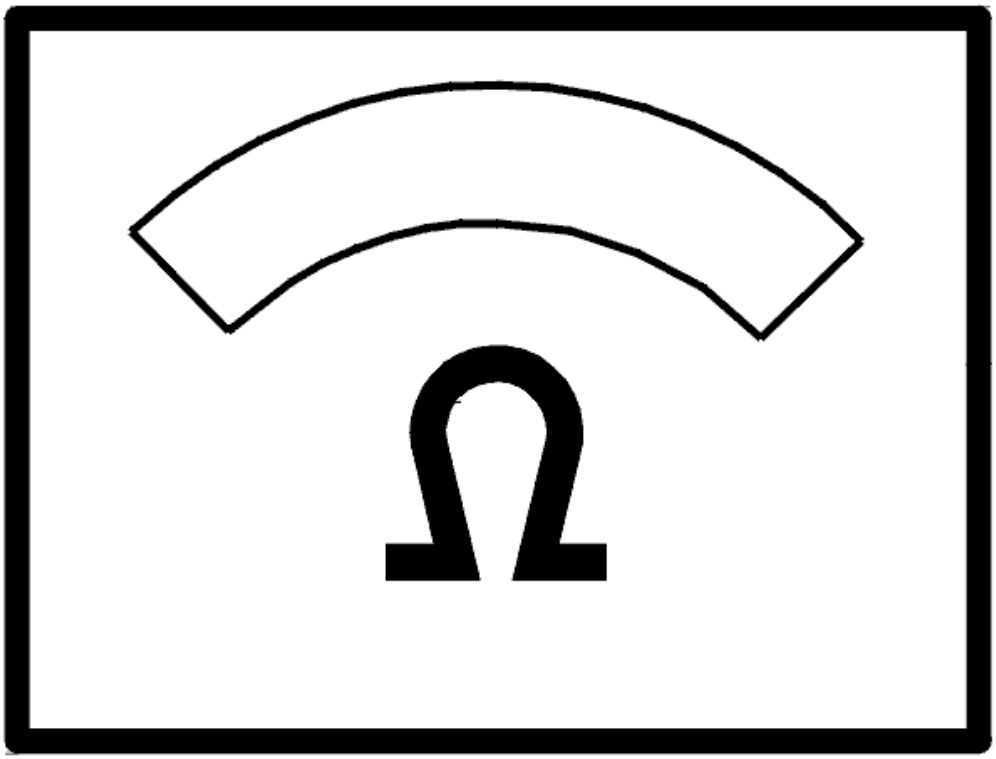

Fig. 359: Identifying Ohmmeter
Courtesy of VOLVO CARS CORPORATION

Was a fault detected?

- **YES**

  Refer to **EQUIPMENT**

- **NO**

  Refer to **CHECKING THE COMPONENT**

CHECKING THE COMPONENT

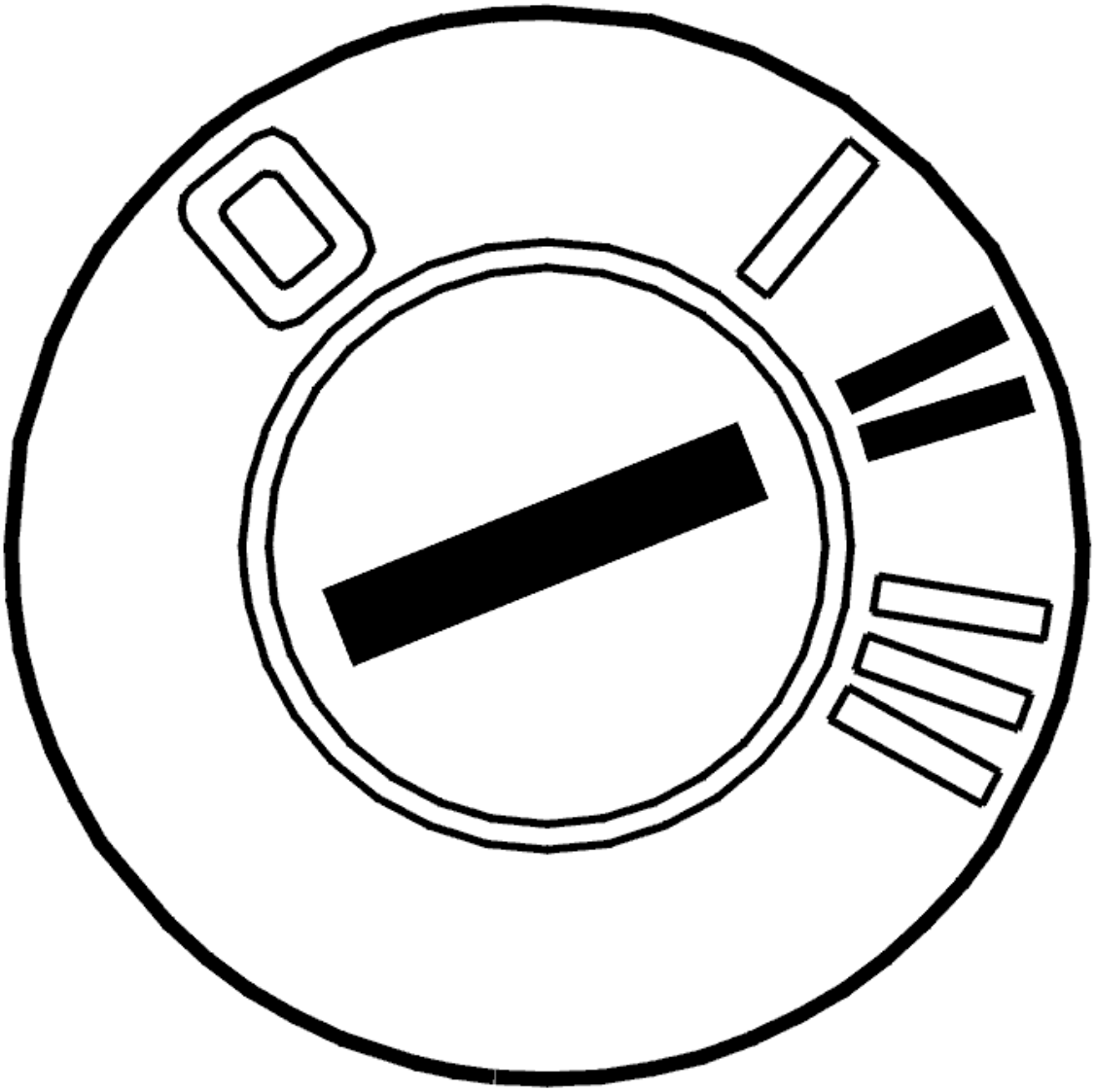

Fig. 360: Identifying Ignition ON
Courtesy of VOLVO CARS CORPORATION

- Ignition on

  Check the damper motors. Check for internal short-circuits as follows:

- Remove the soundproofing panel to access the damper motor connectors.
- Erase the diagnostic trouble codes (DTCs) for the climate control module (CCM).
- First disconnect the connector from a damper motor. Leave the other damper motors connected.

NOTE: Take care when disconnecting the connectors for the damper motors to prevent loose connections.

- Activate the controls (right and left-hand temperature knobs, defroster, air distribution selector, recirculation) on the climate control module (CCM) to operate all the damper motors.
- Read off the diagnostic trouble codes (DTCs) from the climate control module (CCM). If the diagnostic trouble codes (DTCs) have not recurred, there is an internal fault in the disconnected damper motor.
- If the diagnostic trouble codes (DTCs) recur, continue fault tracing. Reconnect the disconnected damper motor and disconnect the next damper motor. Repeat the procedure by erasing all diagnostic trouble codes (DTCs) and running the damper motors until the faulty damper motor has been identified.

Other information:

- see **CONNECTING THE BREAKOUT BOX** .
- see **CLIMATE CONTROL MODULE (CCM), REPLACING** .
- see **DAMPER MOTOR TEMPERATURE, REPLACING** .
- see **SIGNAL SPECIFICATION** .
- see **CHECKING WIRING AND TERMINALS** .

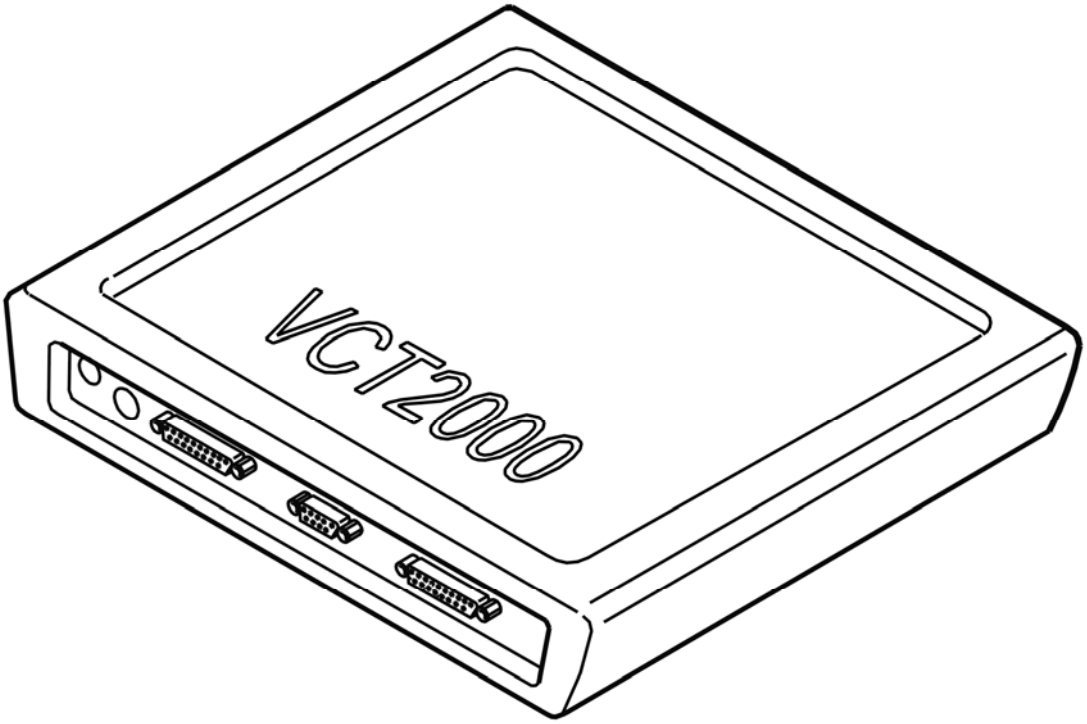

Fig. 361: Identifying VCT2000 Diagnostic Tool Symbol In VIDA
Courtesy of VOLVO CARS CORPORATION

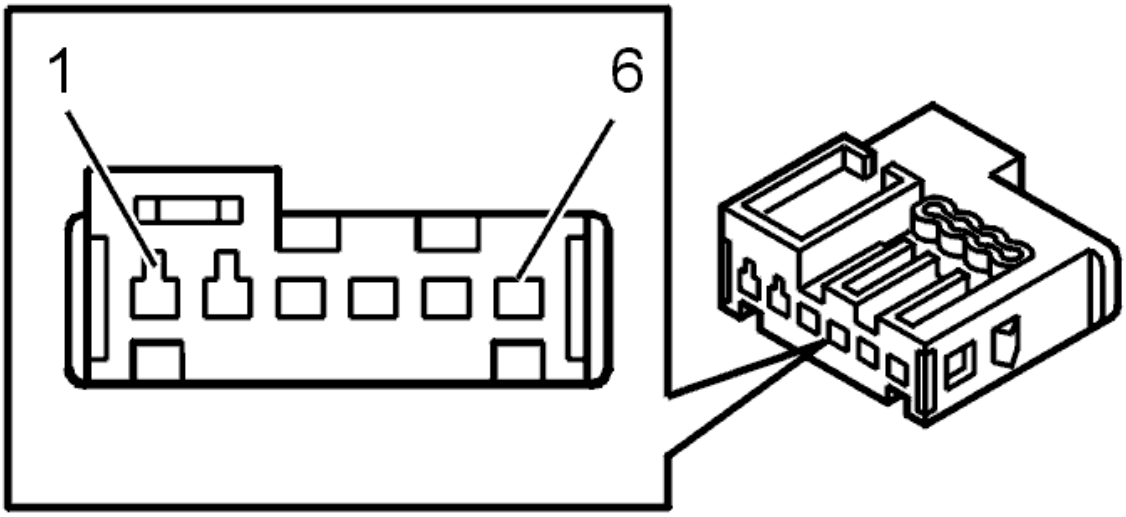

Fig. 362: Identifying Left Temperature Damper Motor Connector Terminals
Courtesy of VOLVO CARS CORPORATION

- **Continue**

Refer to **EQUIPMENT**

EQUIPMENT

Which type of climate control is the car equipped with?

1. ECC. Refer to **SELF-ADJUSTMENT**.
2. Manual climate control (MCC)/Standard (STD). Refer to **SELF-ADJUSTMENT**

SELF-ADJUSTMENT

HINT: After replacing the control module or damper motor, and when a damper motor or link has been removed, carry out self adjustment to define the damper motor limit positions.

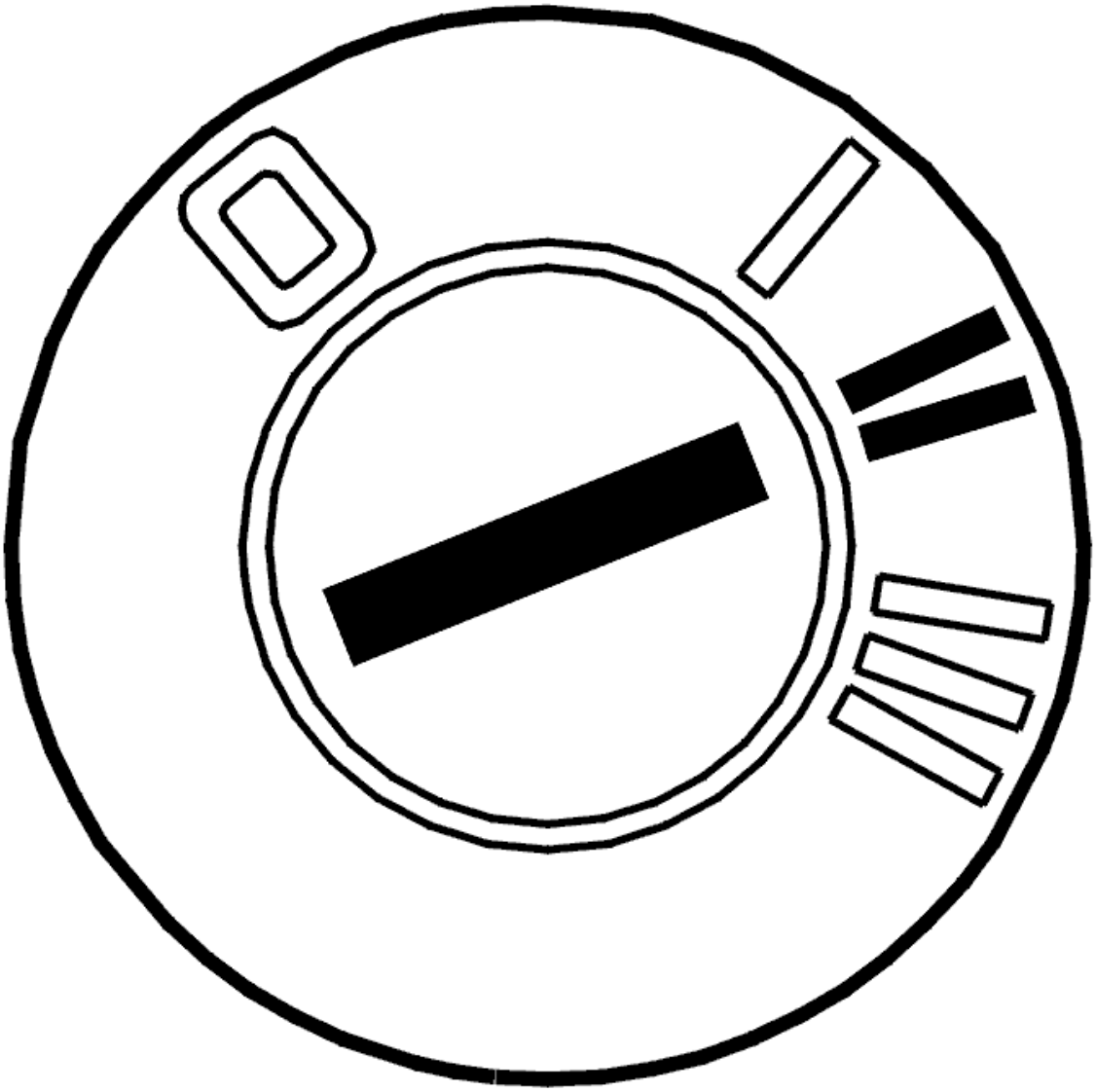

Fig. 363: Identifying Ignition ON
Courtesy of VOLVO CARS CORPORATION

- Ignition off.

- Reinstall the connectors, components etc.
- Ignition on.

  Activate self adjustment.

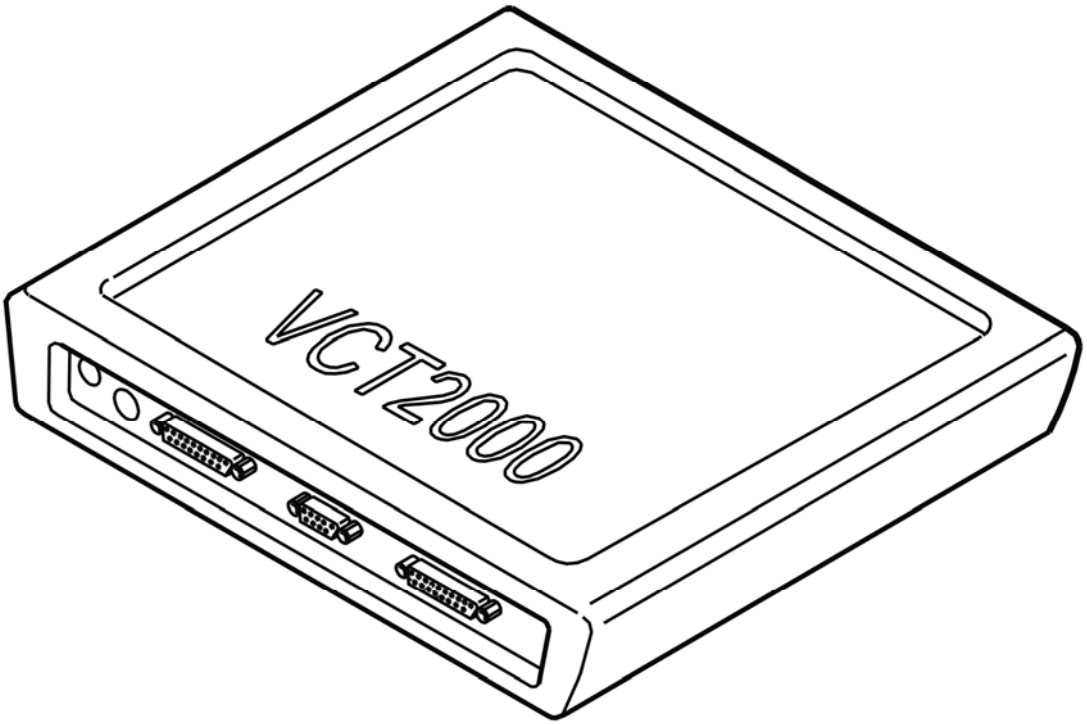

Fig. 364: Identifying VCT2000 Diagnostic Tool Symbol In VIDA
Courtesy of VOLVO CARS CORPORATION

- **Continue**

  Refer to **VERIFICATION**

VERIFICATION

HINT: After the repair it is necessary to check that the fault has been rectified.

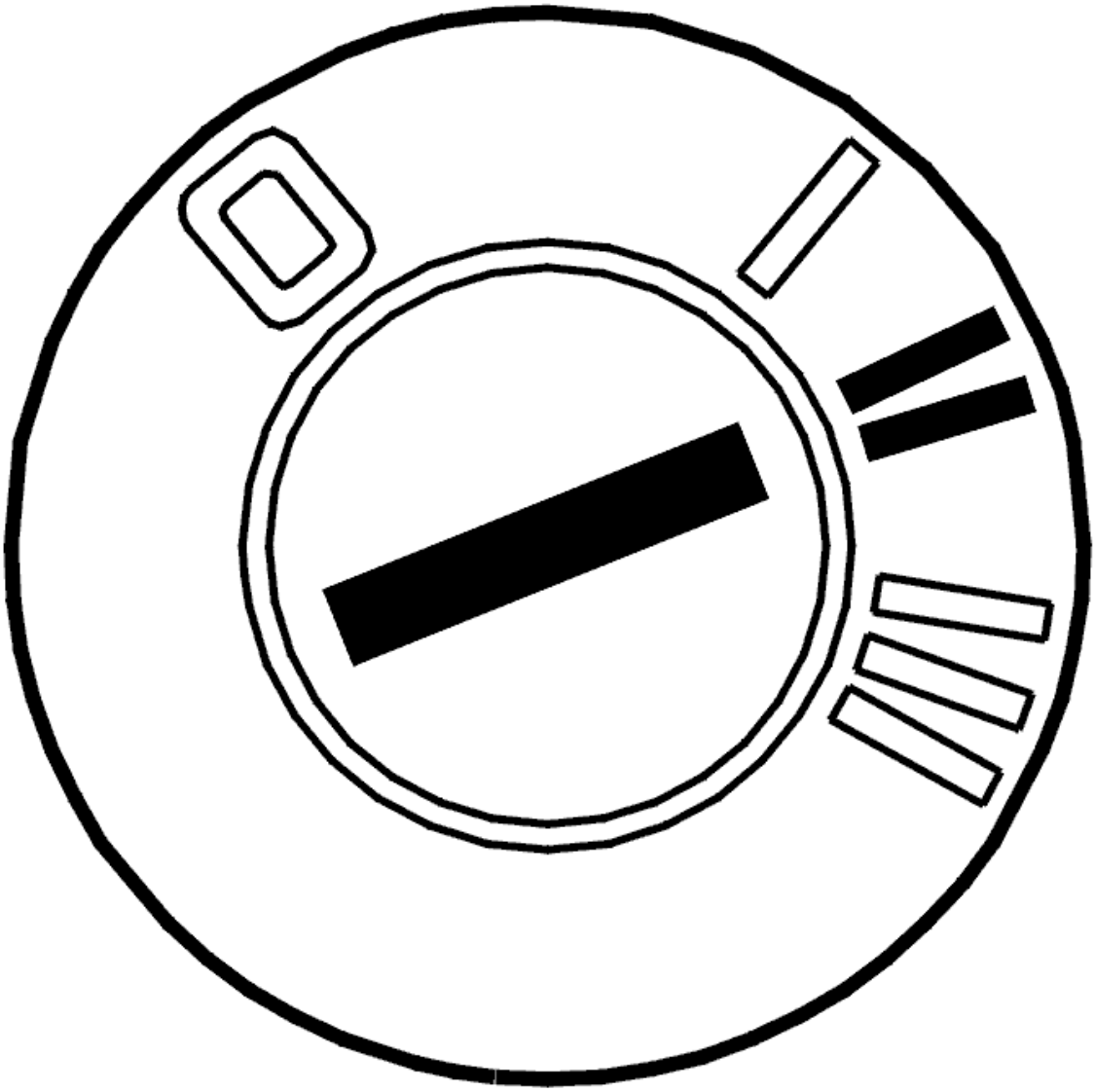

Fig. 365: Identifying Ignition ON
Courtesy of VOLVO CARS CORPORATION

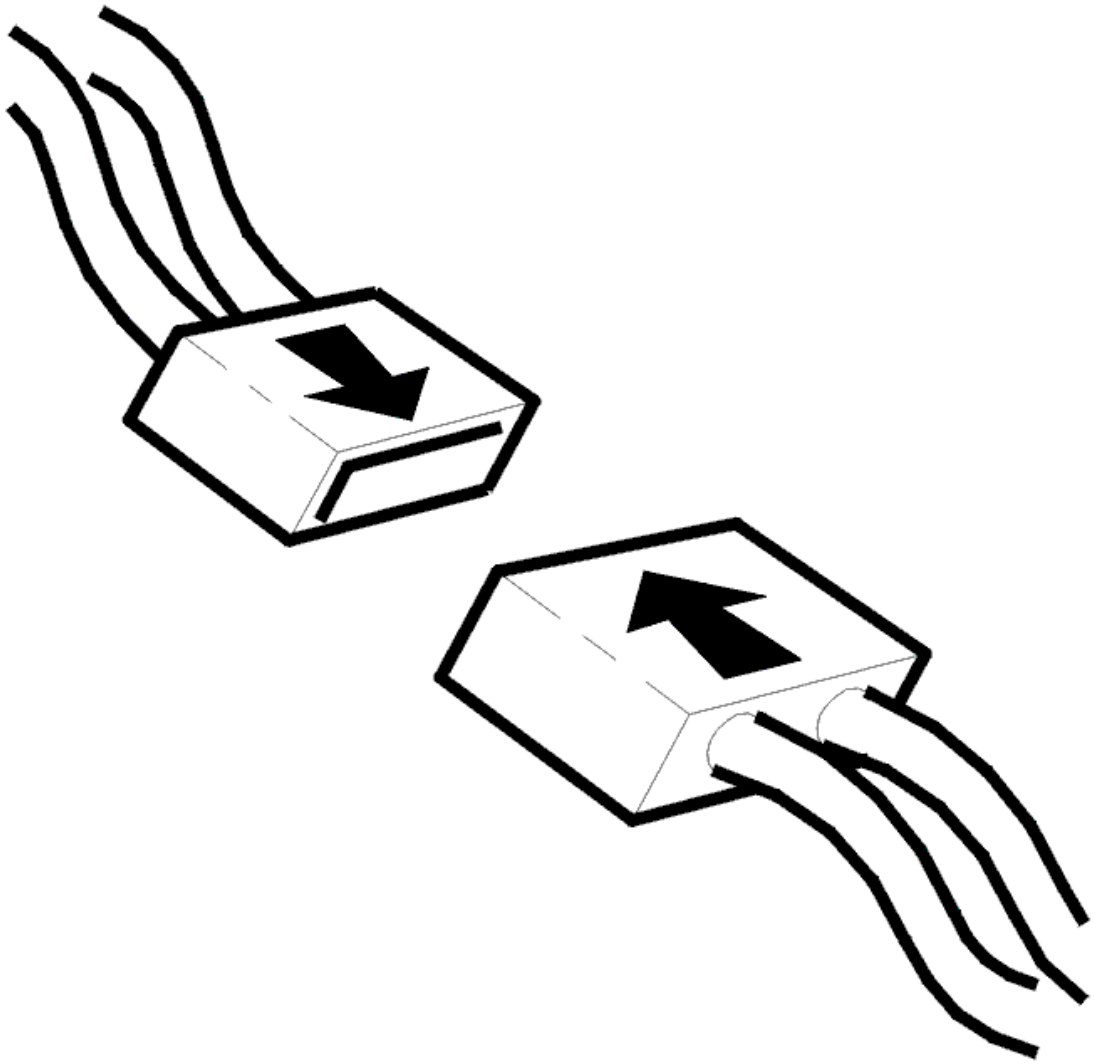

Fig. 366: Connecting Connector
Courtesy of VOLVO CARS CORPORATION

- Ignition off.
- Connect the connectors, install the components, etc.
- Ignition on.
- Blower motor on.

Check that damper motor position changes by changing control on climate control module (CCM). The values given below are the standard values that the damper motor positions should give.

NOTE: Blower motor must be in operation to activate the damper motors.

- Left/right temperature damper motor and defroster, 0-100%
- Recirculation damper motor, 40-100%

- Floor/ventilation damper motor, floor only approximately 39%, ventilation only approximately 87% and floor/ventilation approximately 71%.

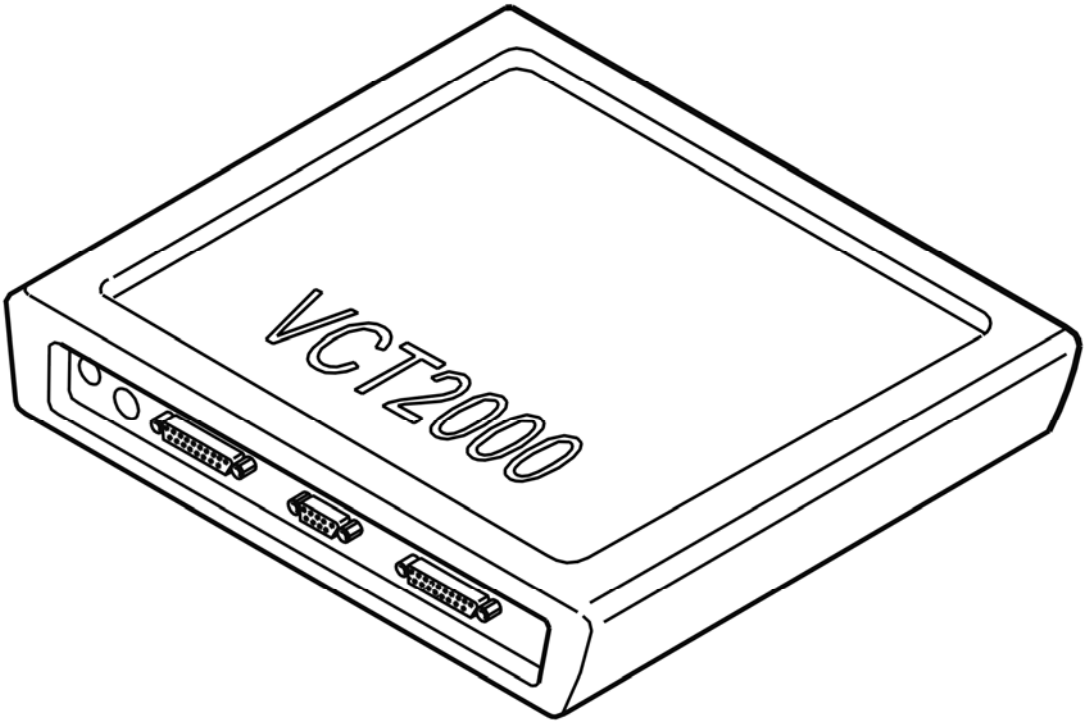

Fig. 367: Identifying VCT2000 Diagnostic Tool Symbol In VIDA
Courtesy of VOLVO CARS CORPORATION

Does damper motor work?

- **YES**

  VERIFIED: Troubleshooting has been completed.

- **NO**

  Refer to **INFORMATION**

SELF-ADJUSTMENT

HINT: After replacing the control module or damper motor, and when a damper motor or link has been removed, carry out self adjustment to define the damper motor limit positions.

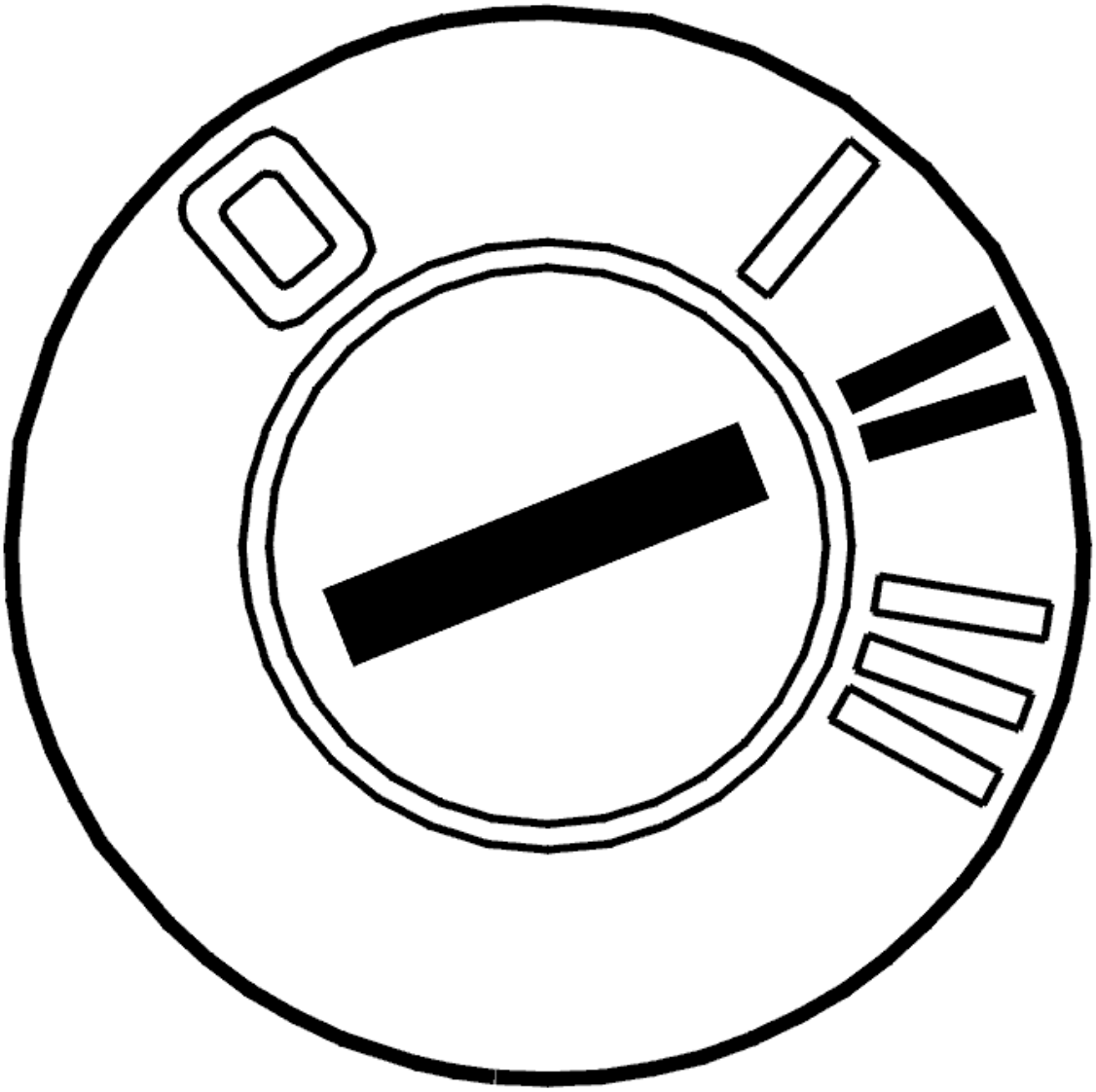

Fig. 368: Identifying Ignition ON
Courtesy of VOLVO CARS CORPORATION

- Ignition off.
- Reinstall the connectors, components etc.
- Ignition on.

  Activate self adjustment.

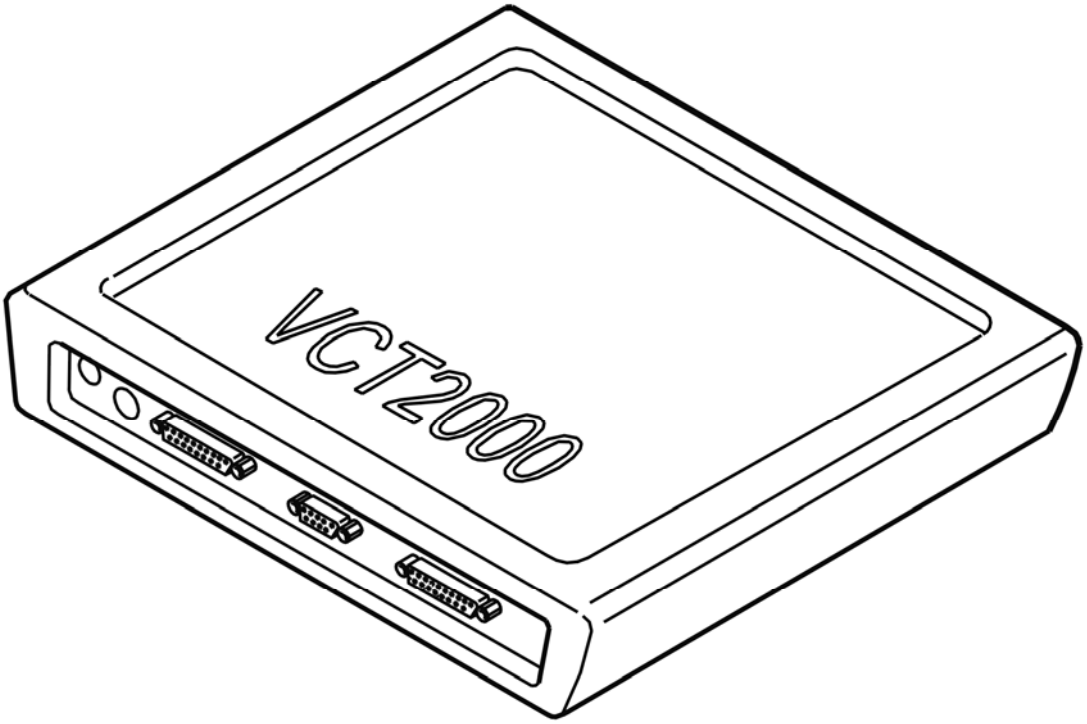

Fig. 369: Identifying VCT2000 Diagnostic Tool Symbol In VIDA
Courtesy of VOLVO CARS CORPORATION

- **Continue**

  Refer to **VERIFICATION**

VERIFICATION

HINT: After the repair it is necessary to check that the fault has been rectified.

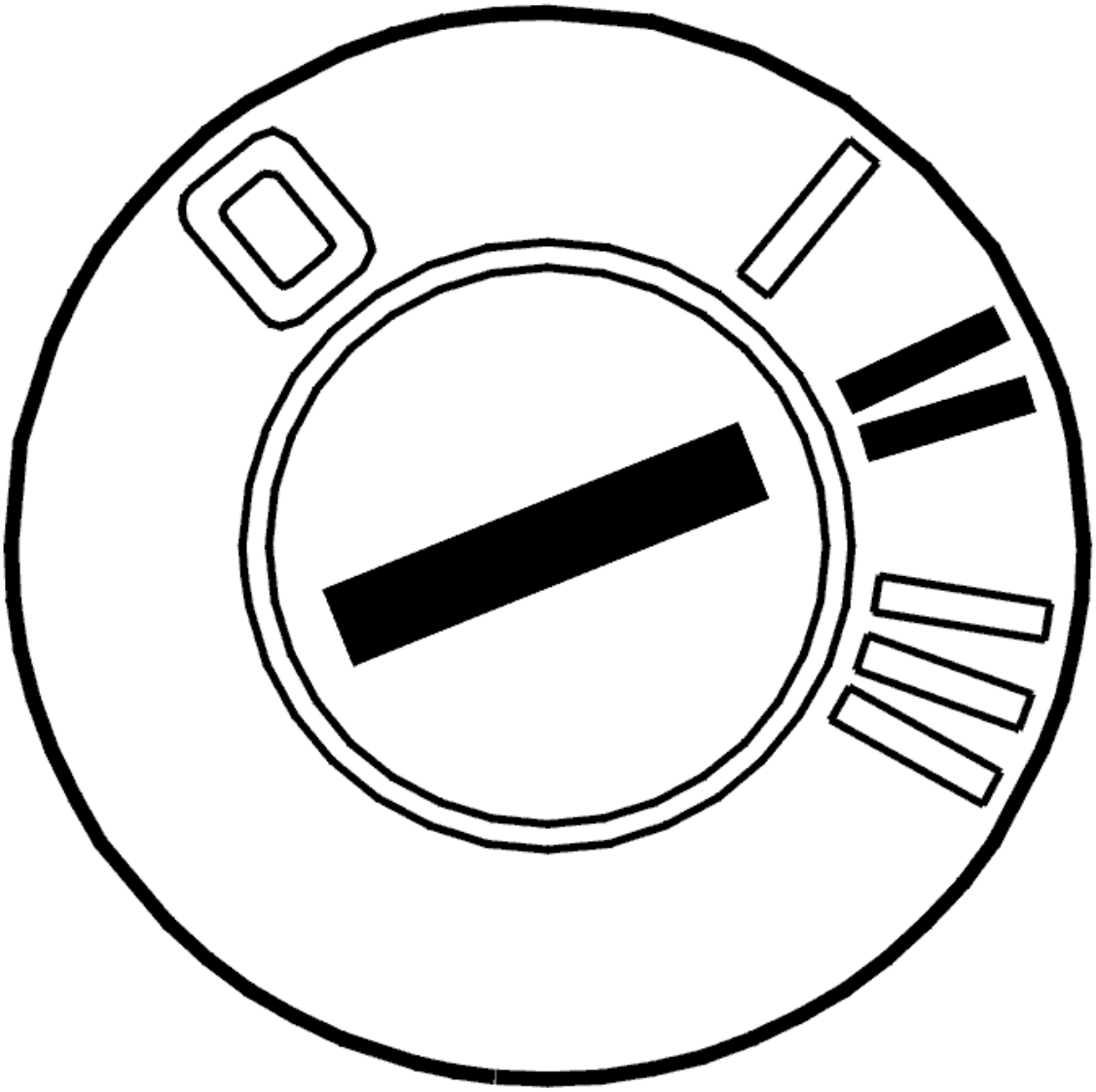

Fig. 370: Identifying Ignition ON
Courtesy of VOLVO CARS CORPORATION

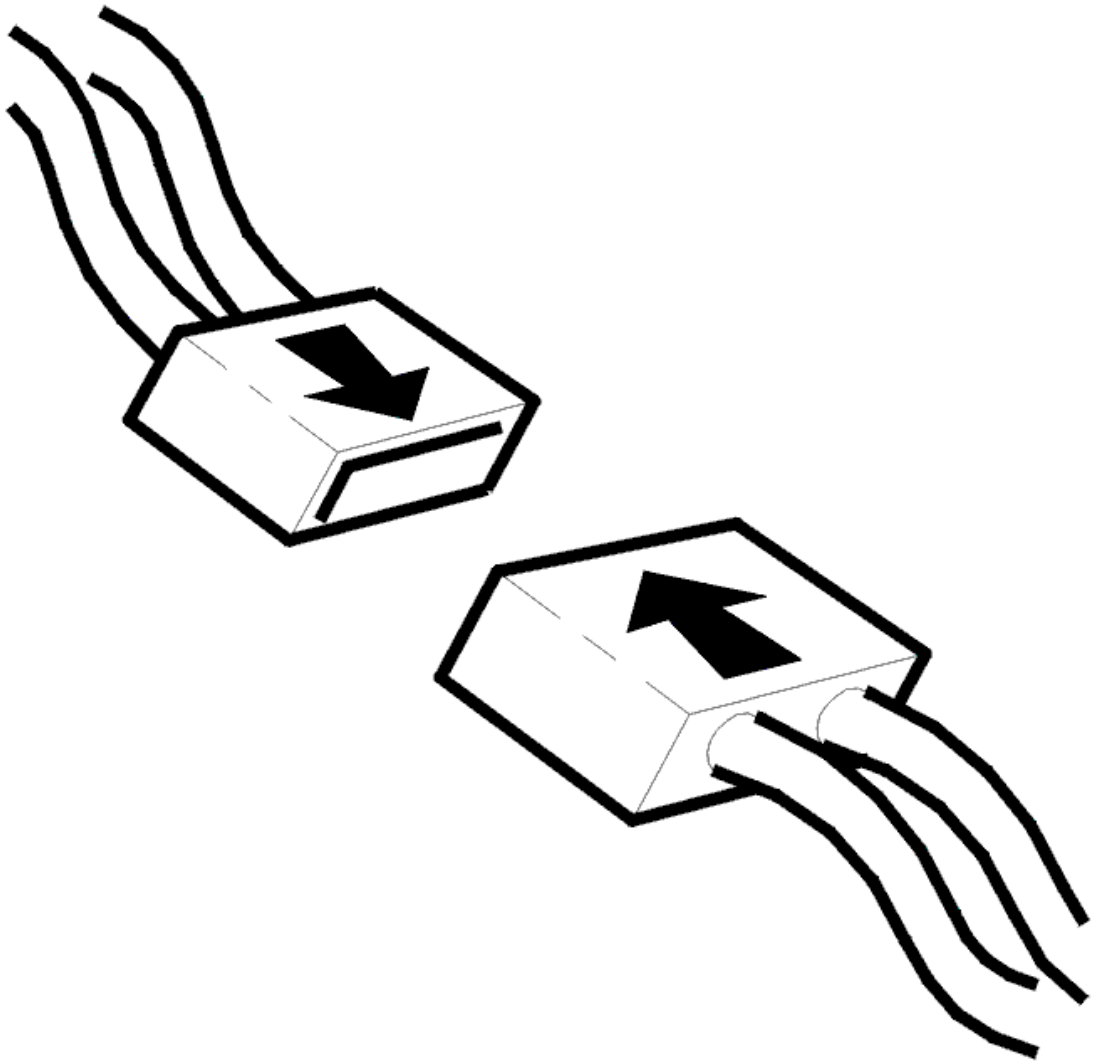

Fig. 371: Connecting Connector
Courtesy of VOLVO CARS CORPORATION

- Ignition off.
- Connect the connectors, install the components, etc.
- Ignition on.
- Blower motor on.

Check that damper motor position changes by changing control on climate control module (CCM). The values given below are the standard values that the damper motor positions should give.

NOTE: Blower motor must be in operation to activate the damper motors.

- Left/right temperature damper motor, 0-100%
- Recirculation damper motor, 40-100%

- Damper motor air distribution, defroster approximately 0%, floor/defroster approximately 19%, floor approximately 39%, ventilation approximately 83%.

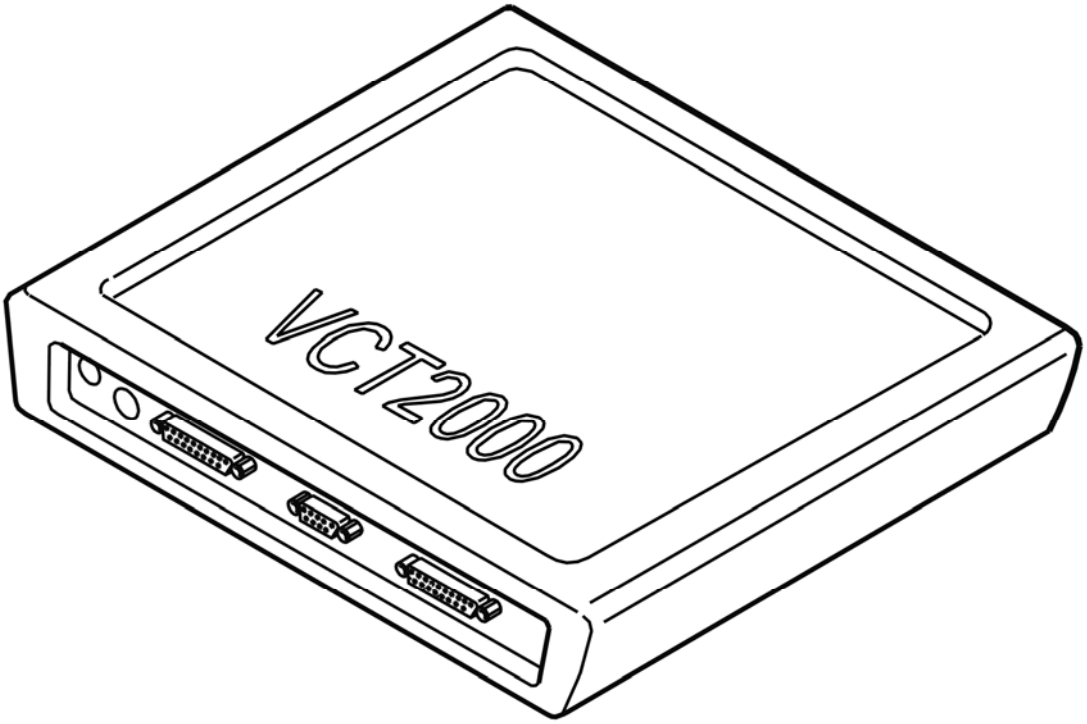

Fig. 372: Identifying VCT2000 Diagnostic Tool Symbol In VIDA
Courtesy of VOLVO CARS CORPORATION

Does damper motor work?

- **YES**

  VERIFIED: Troubleshooting has been completed.

- **NO**

  Refer to **INFORMATION**

INFORMATION

FAULT-TRACING INFORMATION

The fault should have been detected and remedied. As this is not the case fault-tracing has failed.

Exit fault-tracing for this diagnostic trouble code (DTC) or make another attempt.

HVAC

Climate Units - Diagnostic Trouble Codes And Associated Procedures

CCM-0017: DAMPER MOTOR DIRECTION CONTROL. SIGNAL TOO LOW (2003-2004)

DIAGNOSTIC TROUBLE CODE (DTC) INFORMATION

Condition

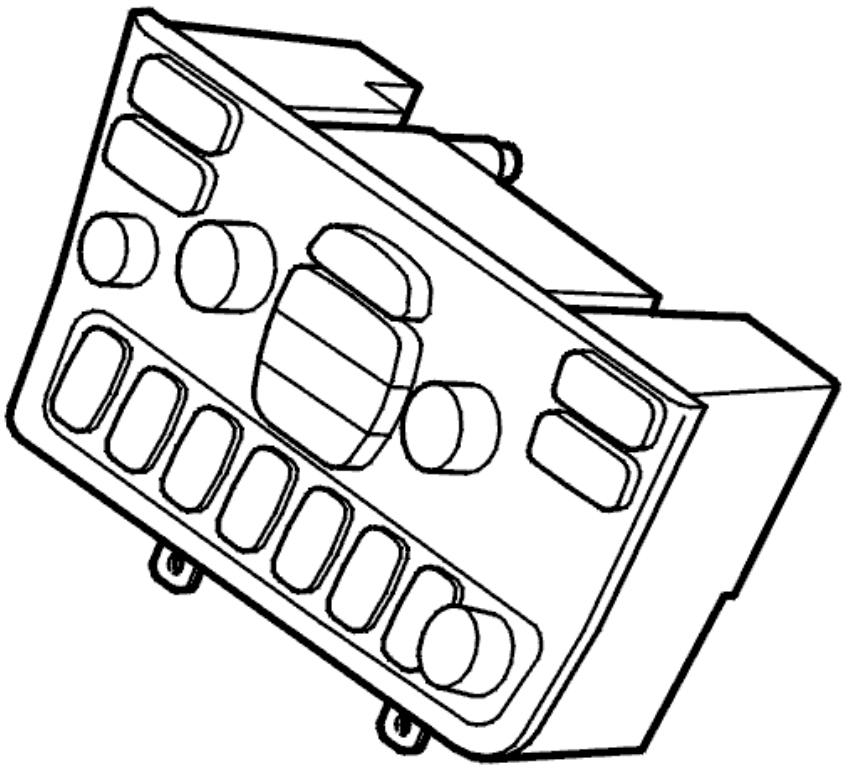

Fig. 1: Climate Control Module
Courtesy of VOLVO CARS CORPORATION

The control module stores diagnostic trouble code (DTC) CCM-0017 after it has detected the diagnostic trouble code (DTC) 5 times within a 10 second interval. After diagnostic trouble code (DTC) CCM-0017 has been stored 5 times, diagnostic trouble code (DTC) CCM-0018 is also stored.

If one or more damper motors is in motion when diagnostic trouble code (DTC) CCM-0017 is stored, a diagnostic trouble code (DTC) for the appropriate damper motor will also be stored (CCM-0011-CCM-0016).

Substitute Value

- None.

Possible Source

- Short-circuit to ground in the signal cable
- Short-circuit to supply voltage in the ground lead.

Fault symptom[s]

- Air flow problem
- The passenger compartment temperature does not correspond to the set value.

SIGNAL TOO LOW

FAULT-TRACING INFORMATION

INFORMATION

The diagnostic trouble code (DTC) is an information trouble code and never occurs alone. Therefore fault-trace for another diagnostic trouble code (DTC).

CCM-0018: DAMPER MOTOR DIRECTION CONTROL. SIGNAL TOO HIGH (2003-2004)

DIAGNOSTIC TROUBLE CODE (DTC) INFORMATION

Condition

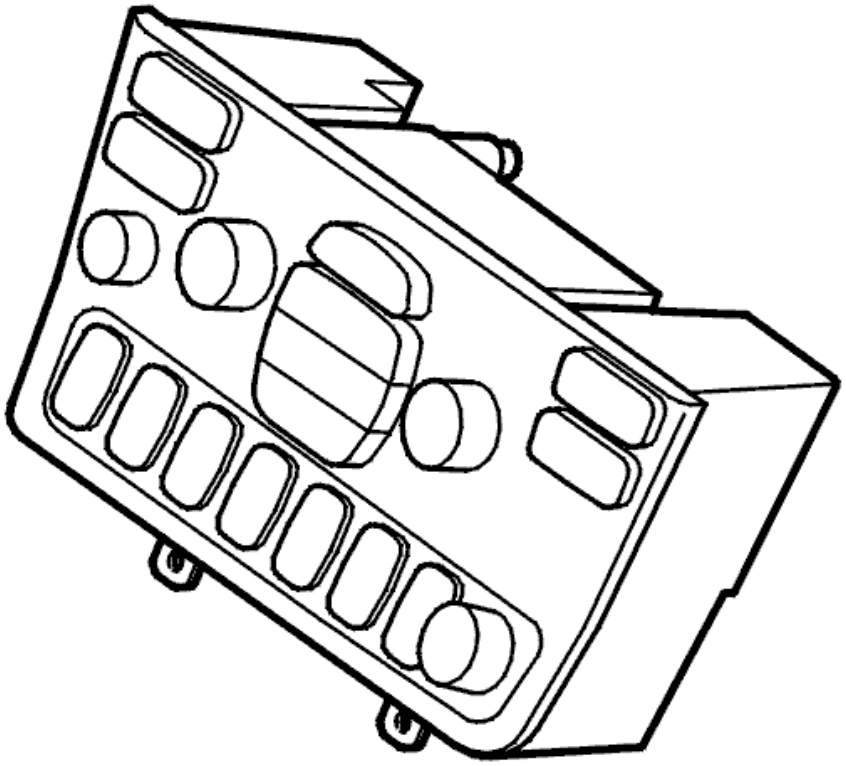

Fig. 2: Climate Control Module
Courtesy of VOLVO CARS CORPORATION

If the control module has detected diagnostic trouble code (DTC) CCM-0017 five times, diagnostic trouble code (DTC) CCM-0018 is stored the sixth time.

Substitute Value

- None.

Possible Source

- Defective damper motor control.

Fault symptom[s]

- Air flow problem
- The passenger compartment temperature does not correspond to the set value.

SIGNAL TOO HIGH

FAULT-TRACING INFORMATION

INFORMATION

The diagnostic trouble code (DTC) is an information trouble code and never occurs alone. Therefore fault-trace for another diagnostic trouble code (DTC).

CCM-0019: FUNCTION BUTTON. ACTIVATED TOO LONG (2003-2004)

ACTIVATED TOO LONG

CHECKING THE FUNCTION

Check that the functions that can be controlled via the climate control system are working.

Also check that the LEDs in the buttons light and go out when the buttons are pressed.

Are the function buttons OK?

- **YES**

  Refer to **FAULT-TRACING INFORMATION**

- **NO**

  Refer to **CHECKING THE COMPONENT**

CHECKING THE COMPONENT

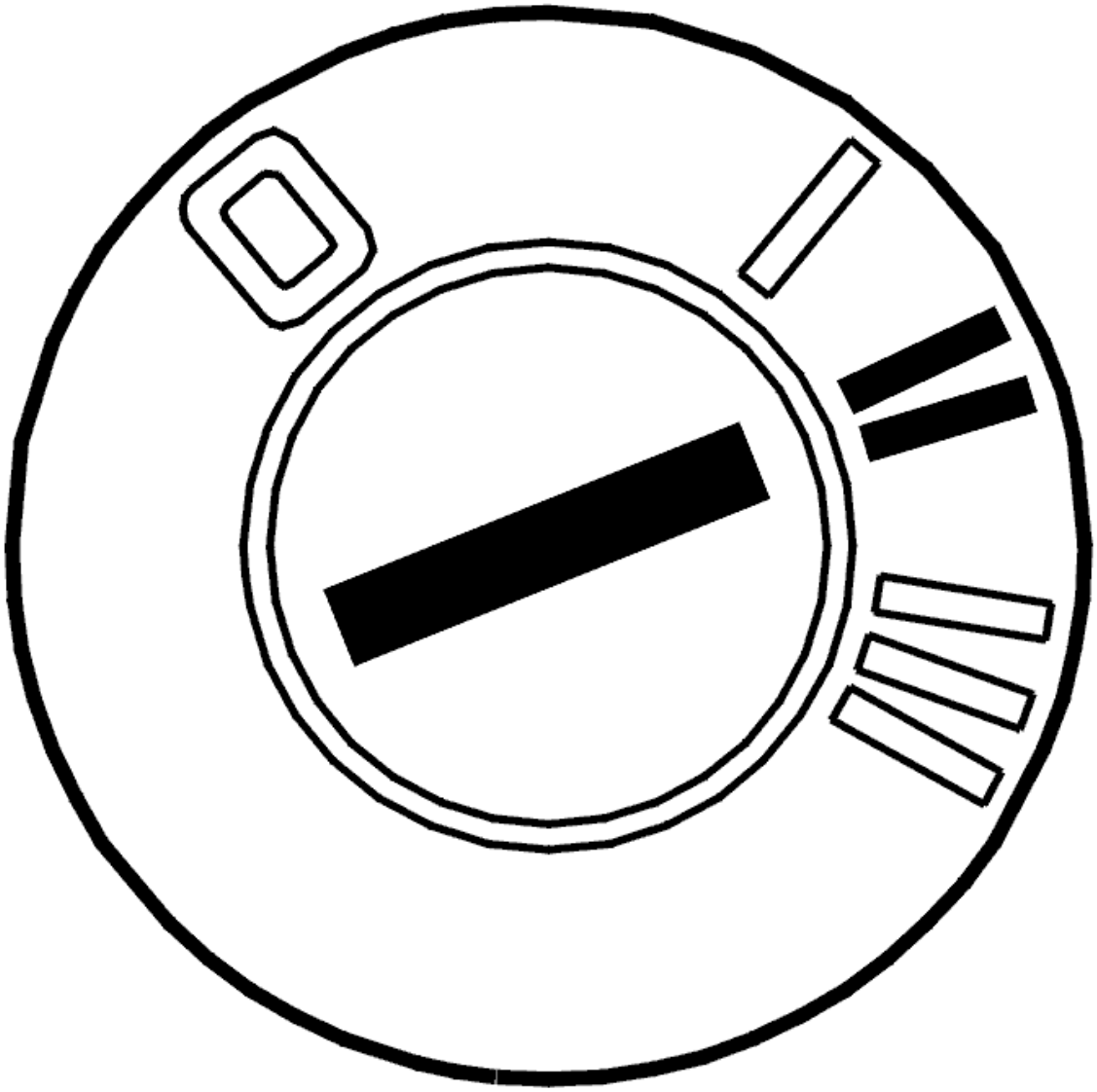

Fig. 3: Identifying Ignition ON
Courtesy of VOLVO CARS CORPORATION

- Ignition on.

  Check manually whether any of the climate control knobs are stuck or have locked in the depressed position. Check that the button LEDs light and go out when the button is pressed.

  Checking lower electrical switch

  Read off the activation for the lower electrical switch and check that the values switch between ON and OFF as the button is pressed for each switch.

  NOTE: Note the following about activating the lower switch.

  - **Adjustable head restraints. After four activations in quick succession**

the function is blocked for approximately 2 minutes. After the blocking period, the activation can be carried out again. The head restraints are folded back manually

- **Auxiliary lamps. The switch for the auxiliary lamps cannot be controlled using this function**
- **STC/DSTC. To activate and deactivate STC/DSTC, the switch must be held in for at least 0.5 seconds**
- **Private locking of the trunk lid. The Private locking function for the trunk lid can only be activated with the master key in position II**
- **Temporary disengagement of detectors (Deadlock position). The temporary disengagement of the detectors can only be activated with the master key in position I**
- **Rear A/C. Rear A/C can only be activated when the engine is running.**

Remedy as necessary.

Other information:

- To access or replace the control module, see **CLIMATE CONTROL MODULE (CCM), REPLACING** .

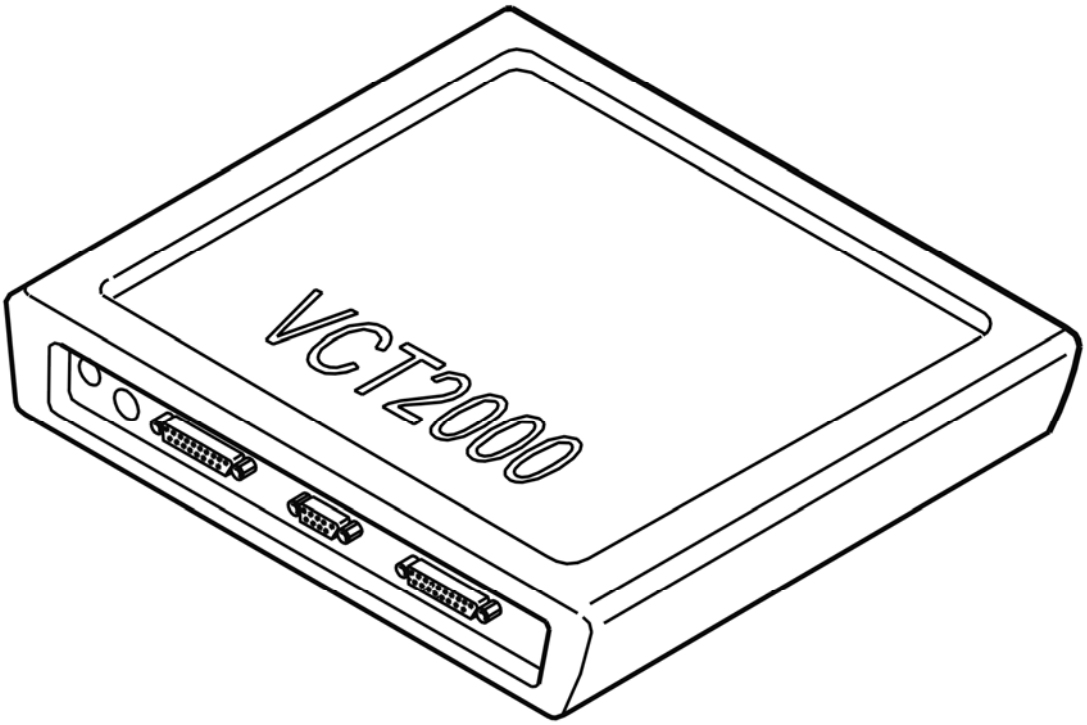

Fig. 4: Identifying VCT2000 Diagnostic Tool Symbol In VIDA

Courtesy of VOLVO CARS CORPORATION

- **Continue**

  Refer to **VERIFICATION**

FAULT-TRACING INFORMATION

The fault is probably because a switch has been activated too long during individual operating cycles. No further corrective action is required if the diagnostic trouble code (DTC) does not recur.

- **Continue**

  Refer to **INFORMATION**

VERIFICATION

HINT: After carrying out the repair, check that the fault has been remedied.

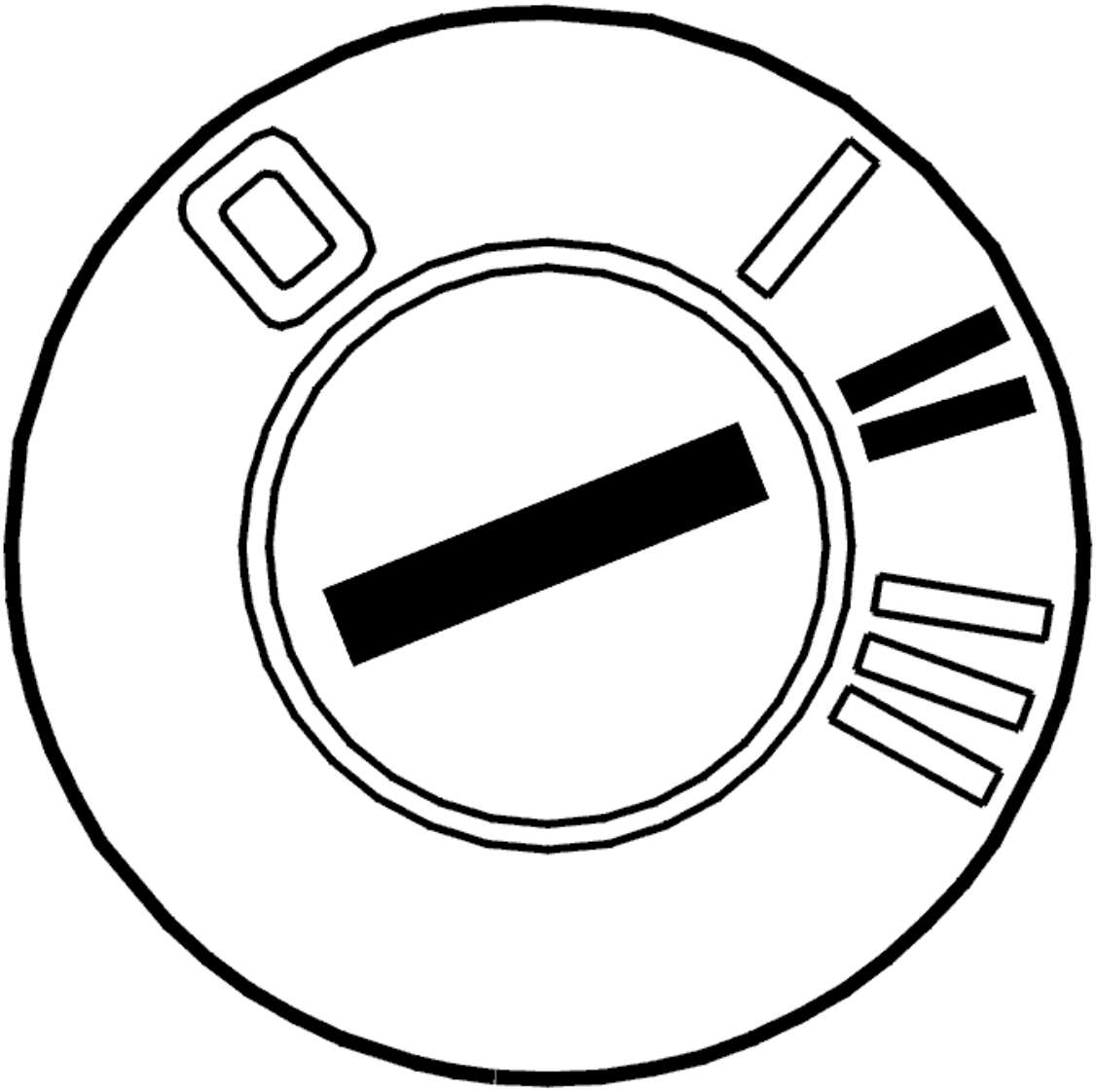

Fig. 5: Identifying Ignition ON
Courtesy of VOLVO CARS CORPORATION

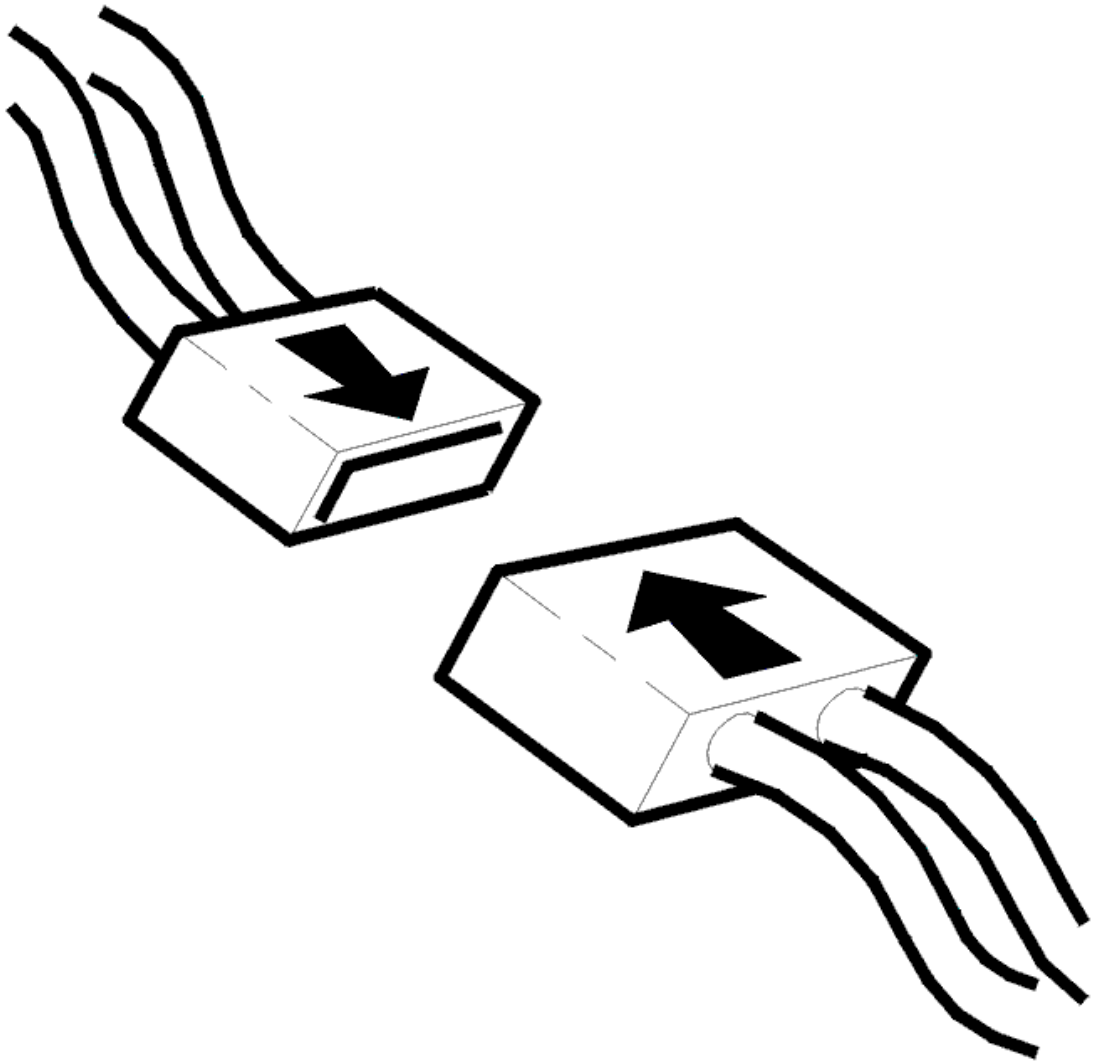

Fig. 6: Connecting Connector
Courtesy of VOLVO CARS CORPORATION

- Ignition off.

NOTE: **Wait at least 1 minute before "Ignition on". This is to allow the climate control module (CCM) to carry out a new diagnostic.**

- Reinstall the connectors, components etc.
- Ignition on
- Read off diagnostic trouble codes (DTCs).

  The fault is no longer present if the status of the diagnostic trouble code (DTC) has changed to intermittent.

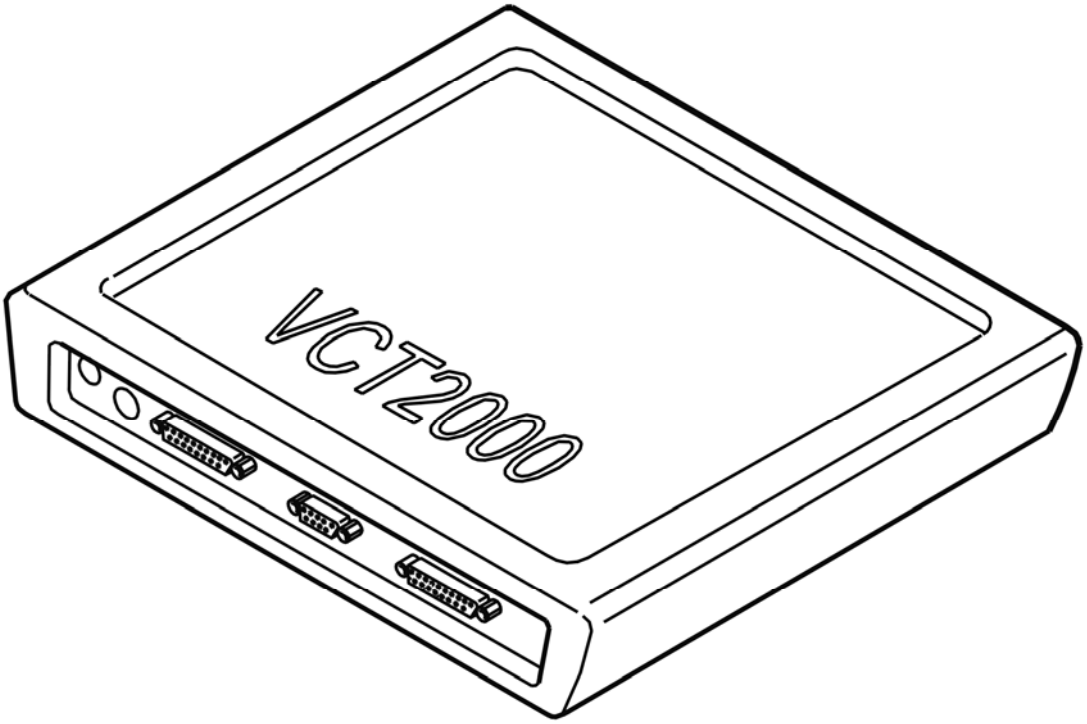

Fig. 7: Identifying VCT2000 Diagnostic Tool Symbol In VIDA
Courtesy of VOLVO CARS CORPORATION

Does the status change?

- **YES**

  VERIFIED: Troubleshooting has been completed.

- **NO**

  Refer to **INFORMATION**

INFORMATION

FAULT-TRACING INFORMATION

The fault should have been detected and remedied. As this is not the case fault-tracing has failed.

Exit fault-tracing for this diagnostic trouble code (DTC) or make another attempt.

INFORMATION

FAULT-TRACING INFORMATION

If the fault is intermittent, do not verify fault-tracing if the fault does not recur.

It is possible to view the information again, or leave fault-tracing for this diagnostic trouble code (DTC).

DIAGNOSTIC TROUBLE CODE (DTC) INFORMATION

Condition

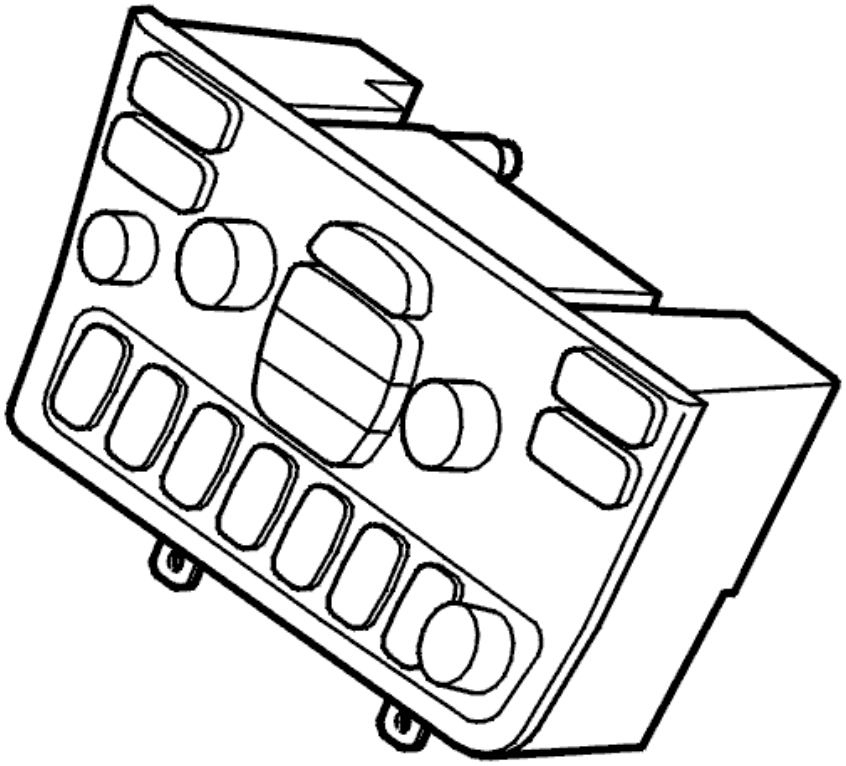

Fig. 8: Climate Control Module
Courtesy of VOLVO CARS CORPORATION

Diagnostic trouble code (DTC) CCM-0019 is stored if the control module registers that one of the function buttons on the climate control assembly has been in active mode (pressed in) continuously for more than 3 minutes.

Substitute Value

- The function button is disconnected.

Possible Source

- The function button has stuck in the pressed in position
- Involuntary activation of the function button

- Defective function button.

Fault symptom[s]

- Buttons/control knobs on center console (Climate)/No/reduced/incorrect function

CCM-001A: BLOWER FAN KNOB. FAULTY SIGNAL (2003-2004)

DIAGNOSTIC TROUBLE CODE (DTC) INFORMATION

Condition

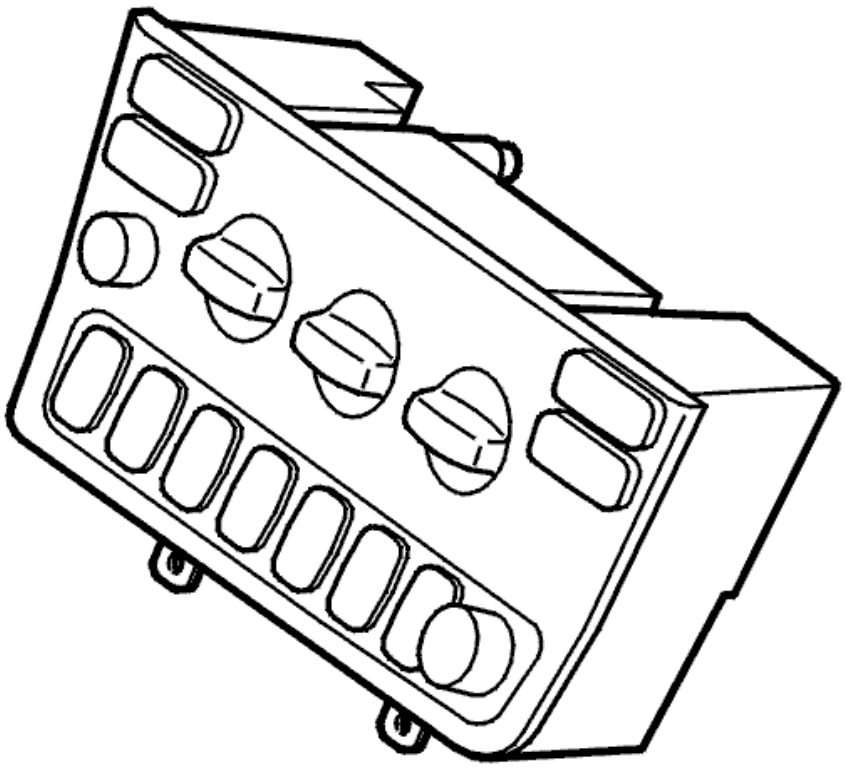

Fig. 9: Identifying Manual Climate Control Module
Courtesy of VOLVO CARS CORPORATION

Diagnostic trouble code (DTC) CCM-001A is stored if the control module registers that the signal from the fan knob is in excess of 99% or less than 1% of supply voltage (approximately 5 V).

Substitute Value

- The control module adopts a value corresponding to half of the maximum fan knob output.

Possible Source

- Defective potentiometer
- Short-circuit to supply voltage or ground in the potentiometer.

Fault symptom[s]

- Buttons/control knobs on center console (Climate)/No/reduced/incorrect function

FAULTY SIGNAL

CHECKING THE BLOWER FAN CONTROL

Check that the blower fan control is functioning by changing the speed of the blower fan.

Does the fan speed change?

- **YES**

  Refer to **FAULT-TRACING INFORMATION**

- **NO**

  Refer to **REPLACING THE COMPONENT**

REPLACING THE COMPONENT

The fault has probably occurred as a result of a defective potentiometer or a short-circuit in the potentiometer. This type of fault means that the climate control module (CCM) must be replaced. The potentiometer cannot be replaced independently.

Other information:

- To access or replace the control module, see **CLIMATE CONTROL MODULE (CCM), REPLACING** .

- **Continue**

  Refer to **VERIFICATION**

FAULT-TRACING INFORMATION

The fault has probably occurred as a result of a defective potentiometer or an intermittent short-circuit in the potentiometer. If the fault is intermittent, it has been registered previously but is no longer present. Intermittent faults can be caused by interference at start up of the control module or may be a different type of fault which occurs on different occasions. The fault is evaluated depending on how it occurs. If the fault recurs, replace the control module.

- **Continue**

Refer to **INFORMATION**

VERIFICATION

HINT: After the repair it is necessary to check that the fault has been rectified.

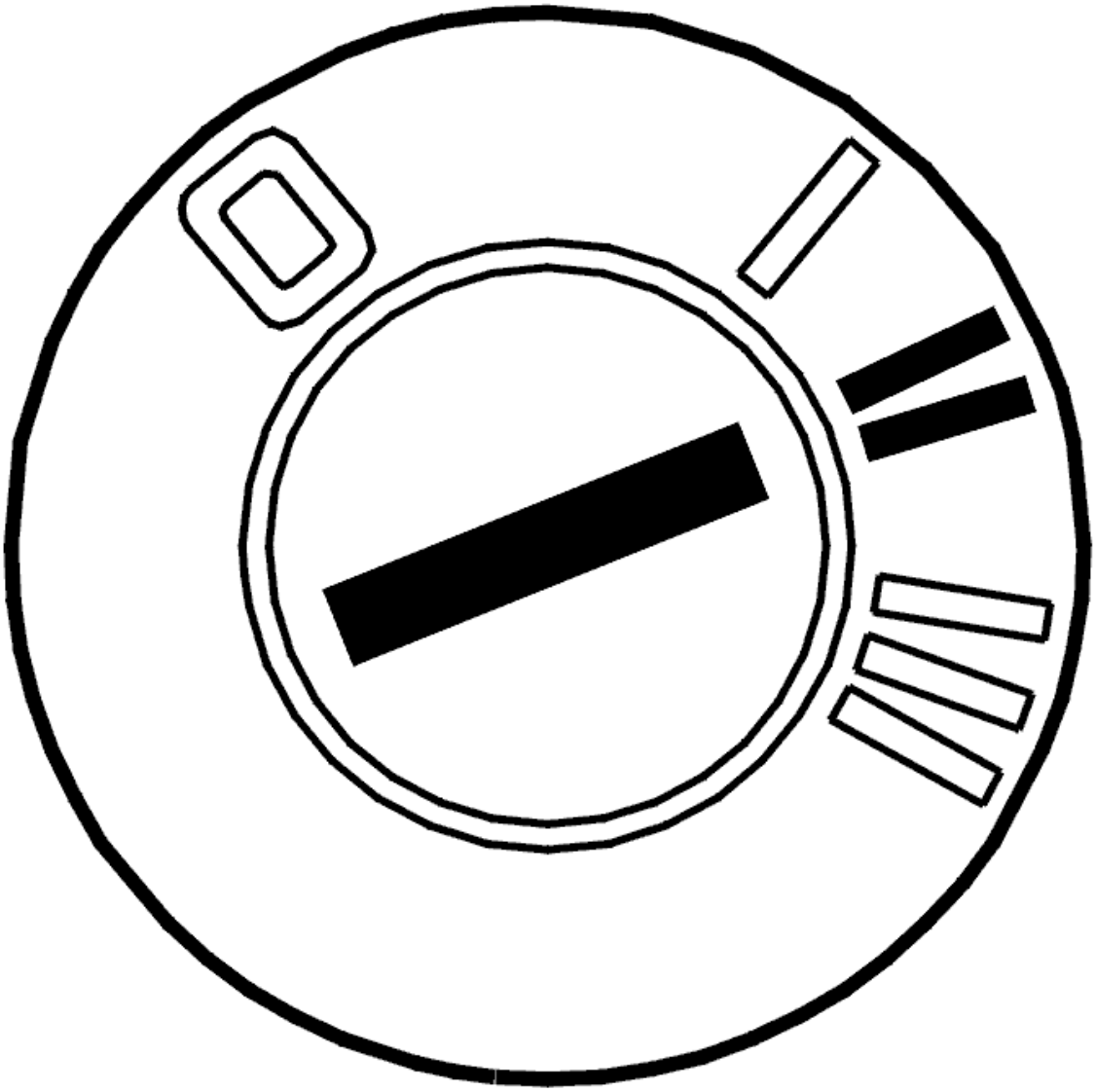

Fig. 10: Identifying Ignition ON
Courtesy of VOLVO CARS CORPORATION

- Ignition off.
- Connect connectors, install components, etc.
- Ignition on.

Check blower switch signal by turning blower switch between minimum and maximum settings.

The value should vary between 0.05 and 4.95 V.

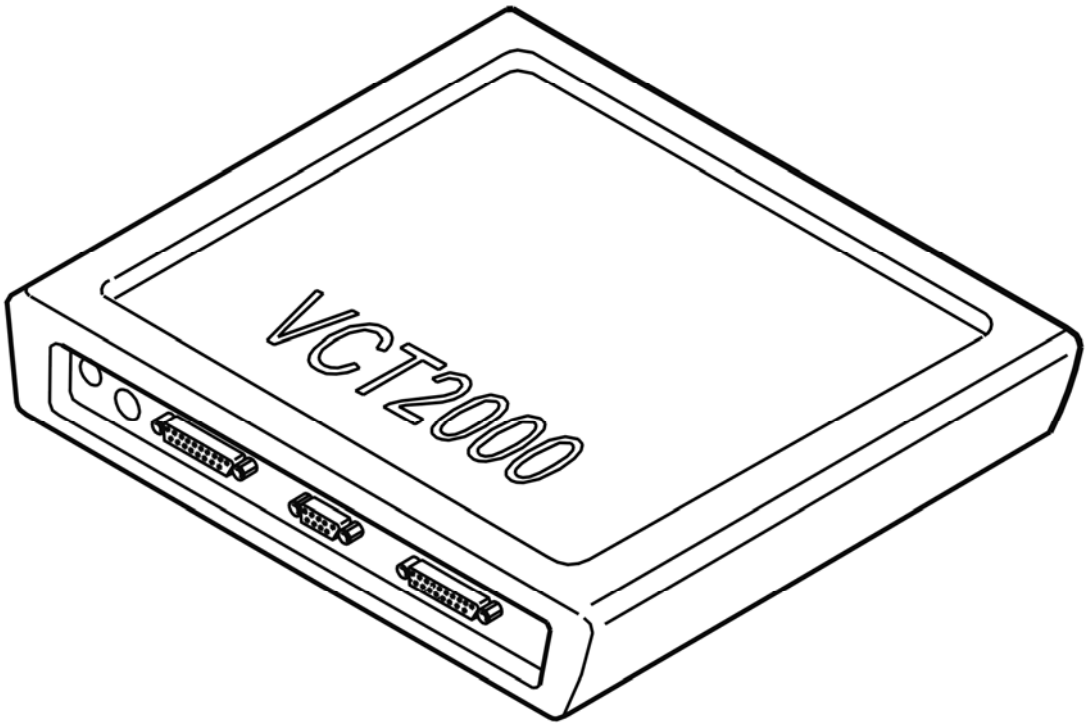

Fig. 11: Identifying VCT2000 Diagnostic Tool Symbol In VIDA
Courtesy of VOLVO CARS CORPORATION

Value OK?

- **YES**

  VERIFIED: Troubleshooting has been completed.

- **NO**

  Refer to **INFORMATION**

INFORMATION

FAULT-TRACING INFORMATION

The fault should have been detected and remedied. As this is not the case fault-tracing has failed.

Exit fault-tracing for this diagnostic trouble code (DTC) or make another attempt.

INFORMATION

FAULT-TRACING INFORMATION

If the fault is intermittent, do not verify fault-tracing if the fault does not recur.

It is possible to view the information again, or leave fault-tracing for this diagnostic trouble code (DTC).

CCM-001B: LOWER SWITCH. ID MISSING (2003-2004)

DIAGNOSTIC TROUBLE CODE (DTC) INFORMATION

Condition

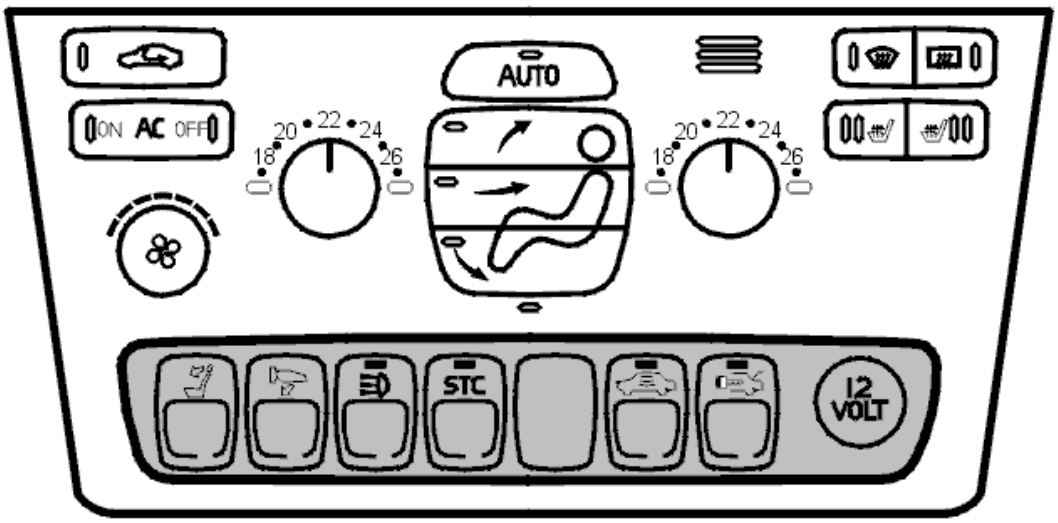

Fig. 12: Identifying Climate Control Module (CCM)
Courtesy of VOLVO CARS CORPORATION

Diagnostic trouble code (DTC) CCM-001B is stored if the control module registers that the identity of a lower switch is missing compared with the switch identities included in the Car Configuration File.

Substitute Value

- The control module assumes different values depending on which switch identity is missing.

Possible Source

- Defective switch
- Switch missing
- Fault in the Car Configuration File.

Fault symptom[s]

- Buttons/control knobs on center console (Climate)/No/reduced/incorrect function

ID MISSING

CHECKING THE FUNCTION

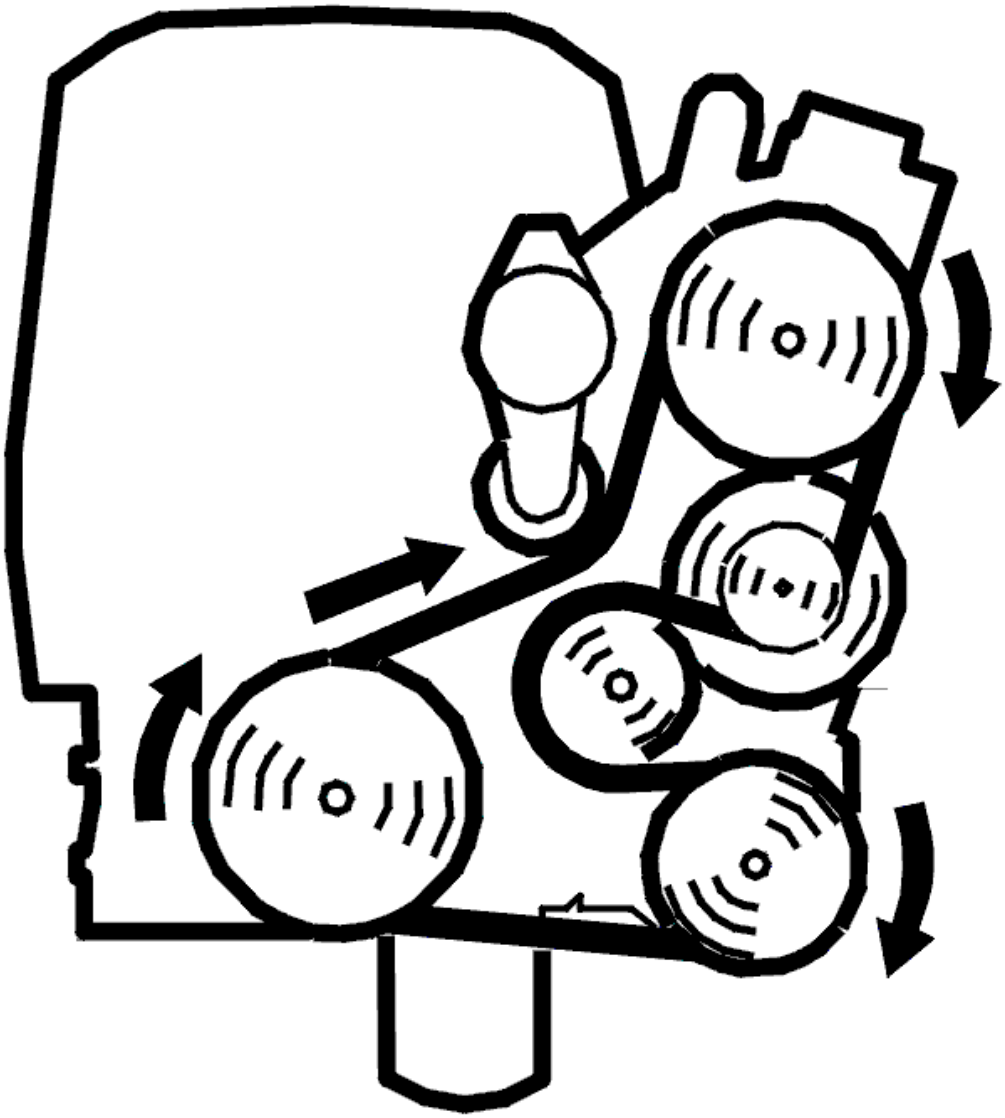

Fig. 13: Belt Routing / Engine Idling - Volvo
Courtesy of VOLVO CARS CORPORATION

- Engine running.

  Check that all the functions can be activated via the lower switch.

  HINT: Where applicable, the LED on the lower switch must be lit when the function is activated.

Are all functions activated?

- **YES**

  Refer to **FAULT-TRACING INFORMATION**

- **NO**

  Refer to **CHECKING THE COMPONENT**

CHECKING THE COMPONENT

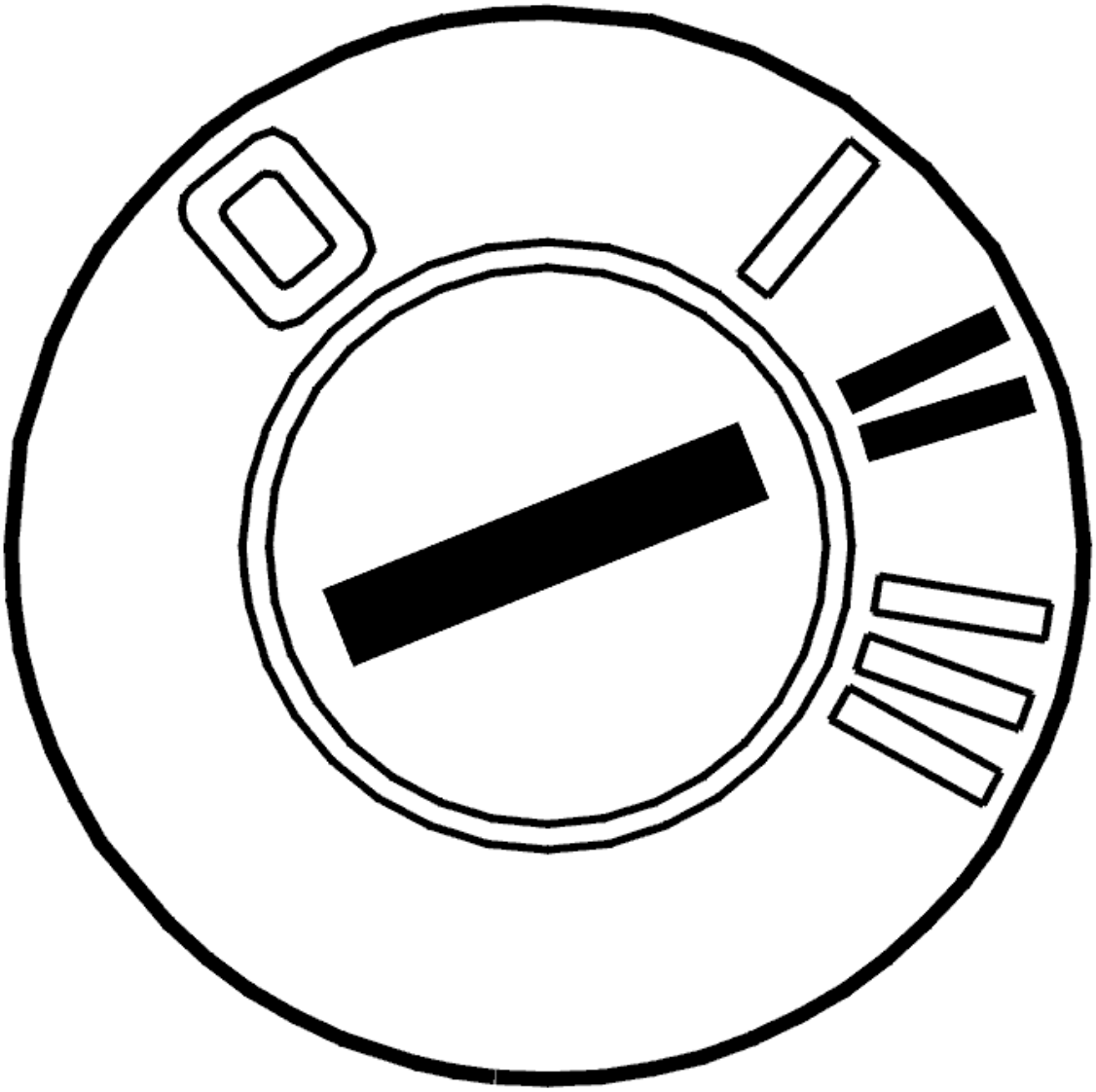

Fig. 14: Identifying Ignition ON
Courtesy of VOLVO CARS CORPORATION

- Ignition on.

NOTE: **The switches can be placed in any position in the climate control assembly (without internal order). The position of the switches must be taken into account when fault-tracing with VCT2000.**

The switch that is furthest to the left in the climate control assembly corresponds to no. 1 in VCT2000. VCT2000 then follows the numbering in order to the switch furthest to the right, which is designated no. 7.

Read off the identities of the switches. Check that the read off identity corresponds to the switch marking for its position in the dashboard environment panel. The switch is defective or missing if the identity does not correspond.

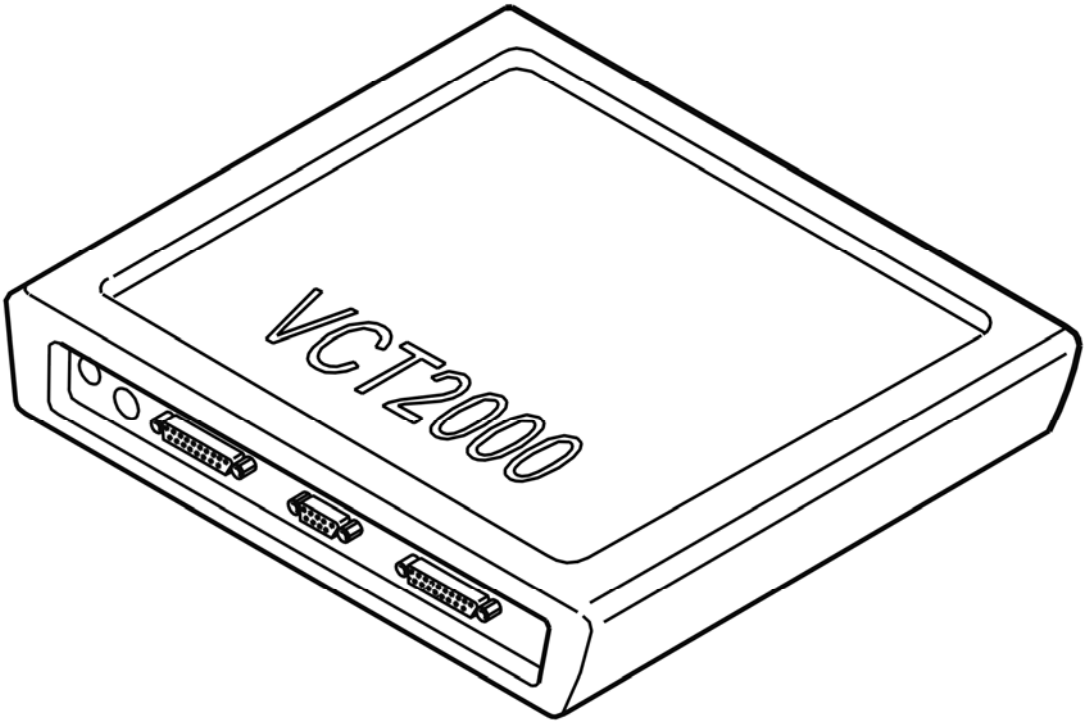

Fig. 15: Identifying VCT2000 Diagnostic Tool Symbol In VIDA
Courtesy of VOLVO CARS CORPORATION

- **Continue**

  Refer to **VERIFICATION**

FAULT-TRACING INFORMATION

The fault has probably occurred as a result of a defect or intermittent defect or a missing switch. If the fault is intermittent, it has been registered previously but is no longer present.

Intermittent faults can be caused by interference at start up of the control module or may be a different type of fault which occurs on different occasions. The fault is evaluated depending on how it occurs. If the fault recurs, replace the switch.

- **Continue**

  Refer to **INFORMATION**

VERIFICATION

HINT: After carrying out the repair, check that the fault has been remedied.

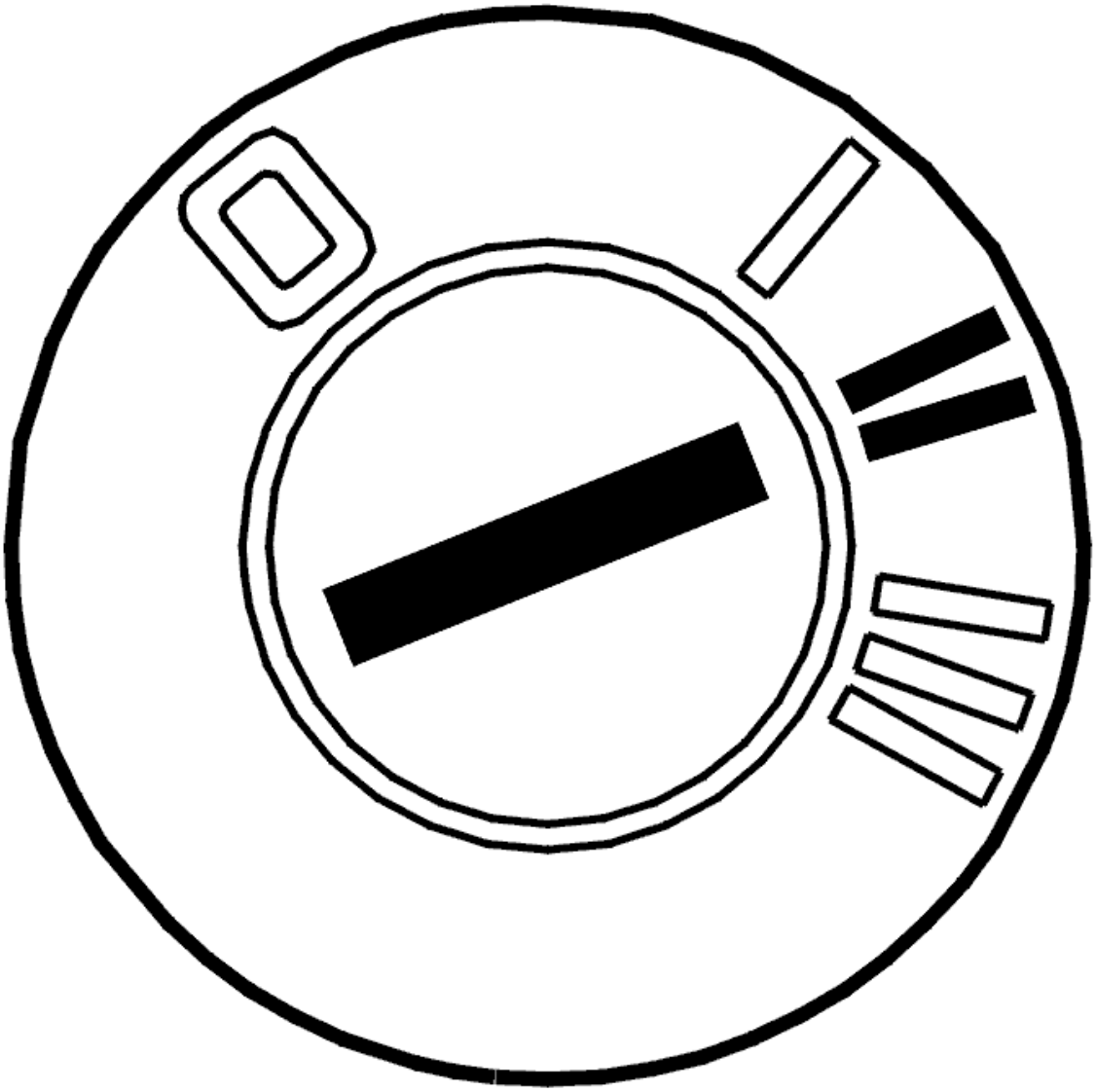

Fig. 16: Identifying Ignition ON
Courtesy of VOLVO CARS CORPORATION

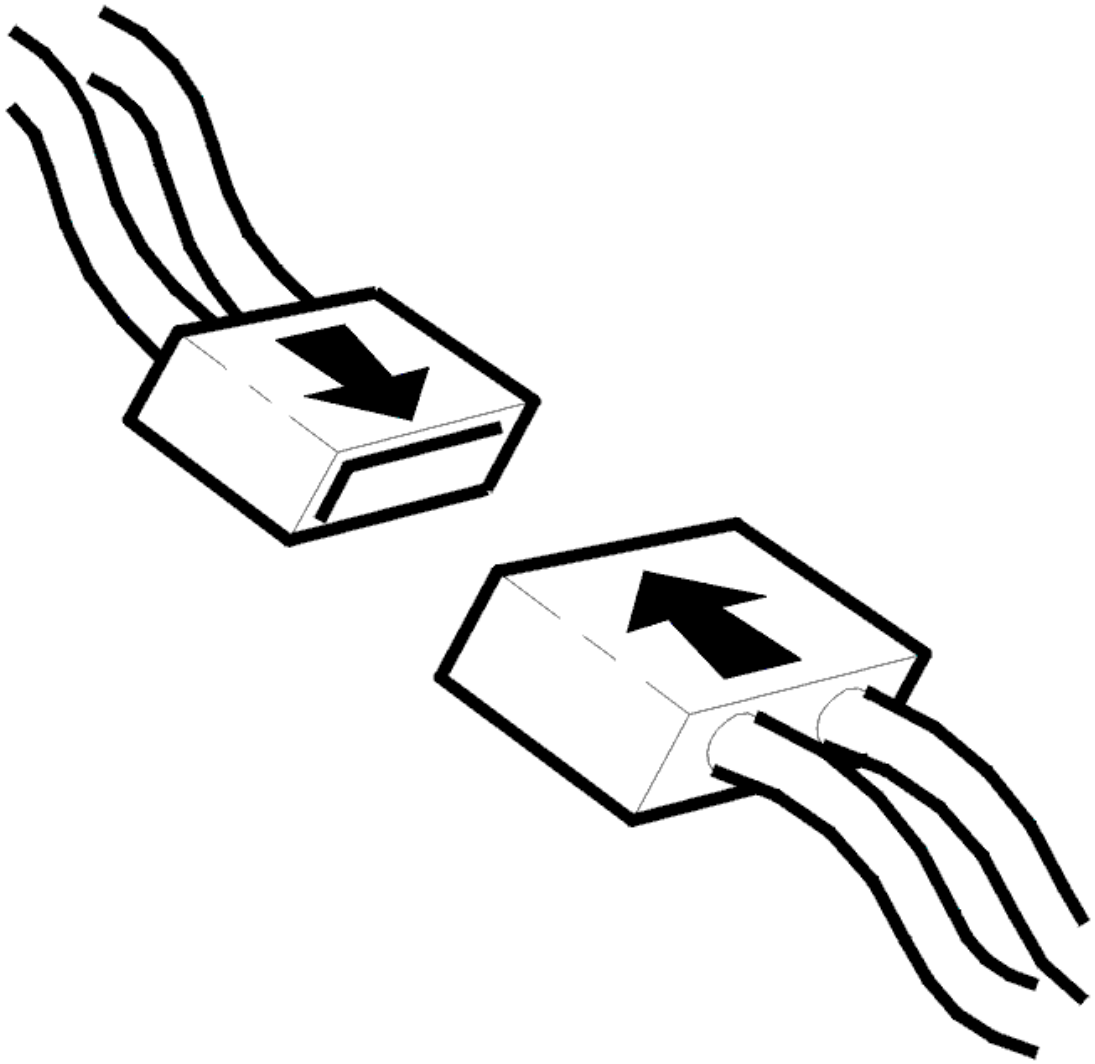

Fig. 17: Connecting Connector
Courtesy of VOLVO CARS CORPORATION

- Ignition off.

NOTE: **Wait at least 1 minute before "Ignition on". This is to allow the climate control module (CCM) to carry out a new diagnostic.**

- Reinstall the connectors, components etc.
- Ignition on
- Read off diagnostic trouble codes (DTCs).

  The fault is no longer present if the status of the diagnostic trouble code (DTC) has changed to intermittent.

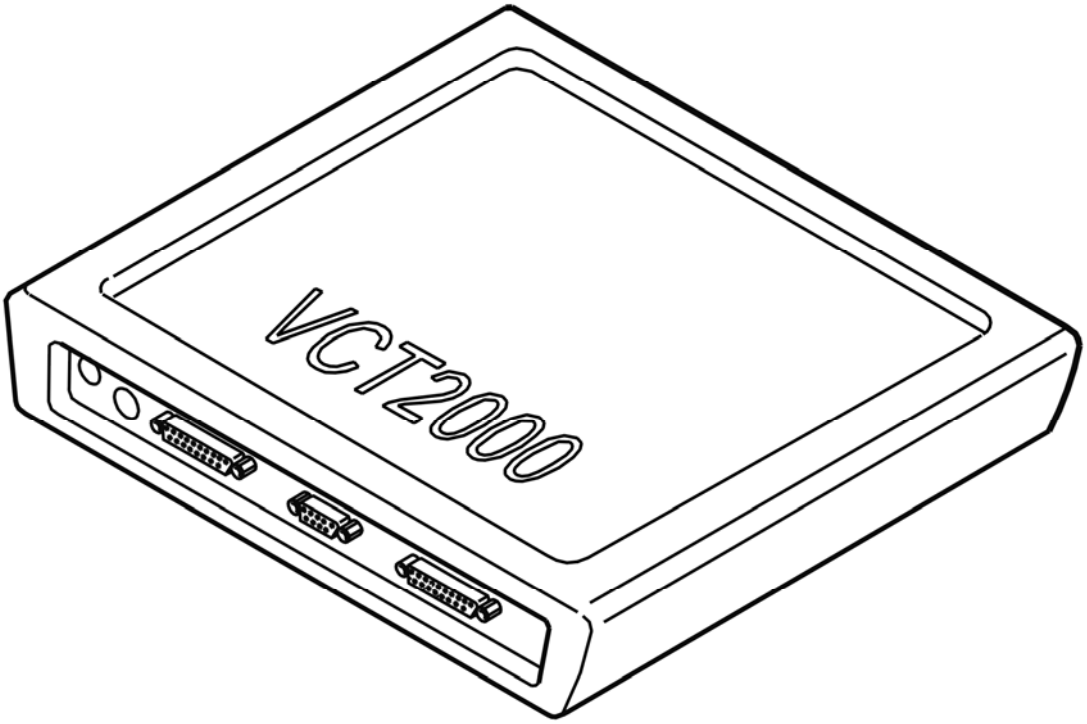

Fig. 18: Identifying VCT2000 Diagnostic Tool Symbol In VIDA
Courtesy of VOLVO CARS CORPORATION

Does the status change?

- **YES**

  VERIFIED: Troubleshooting has been completed.

- **NO**

  Refer to **INFORMATION**

INFORMATION

FAULT-TRACING INFORMATION

The fault should have been detected and remedied. As this is not the case fault-tracing has failed.

Exit fault-tracing for this diagnostic trouble code (DTC) or make another attempt.

INFORMATION

FAULT-TRACING INFORMATION

If the fault is intermittent, do not verify fault-tracing if the fault does not recur.

It is possible to view the information again, or leave fault-tracing for this diagnostic trouble code (DTC).

CCM-001C: LOWER SWITCH. FAULTY ID (2003-2004)

DIAGNOSTIC TROUBLE CODE (DTC) INFORMATION

Condition

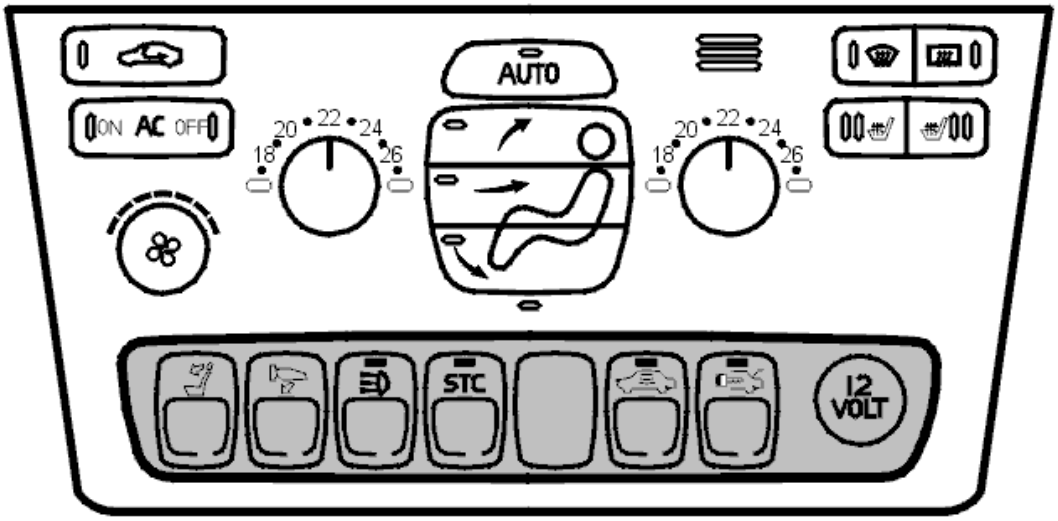

Fig. 19: Identifying Climate Control Module (CCM)
Courtesy of VOLVO CARS CORPORATION

Diagnostic trouble code (DTC) CCM-001C is stored if the control module registers an non-permissible switch identity compared with the permitted switch identities included in the Car Configurable File.

Substitute Value

- None.

Possible Source

- Switch replaced with a switch with incorrect identity

- Defective switch
- Fault in the Car Configuration File
- Two or more switches with the same ID.

Fault symptom[s]

- Buttons/control knobs on center console (Climate)/No/reduced/incorrect function

FAULTY ID

CHECKING THE FUNCTION

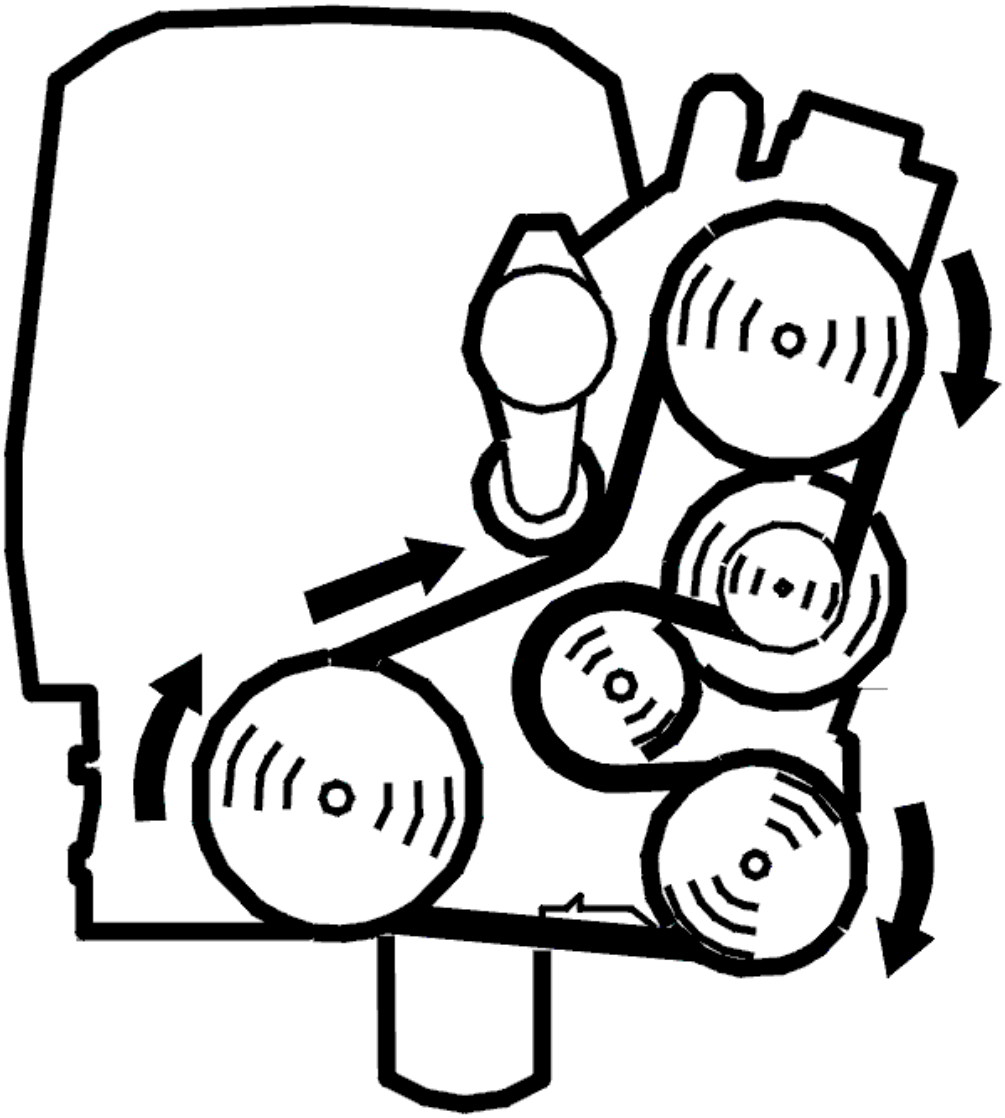

Fig. 20: Belt Routing / Engine Idling - Volvo
Courtesy of VOLVO CARS CORPORATION

- Engine running.

  Check that all the functions can be activated via the lower switch.

  HINT: Where applicable, the LED on the lower switch must be lit when the function is activated.

Are all functions activated?

- **YES**

  Refer to **FAULT-TRACING INFORMATION**

- **NO**

  Refer to **CHECKING THE SWITCH IDENTITY**

CHECKING THE SWITCH IDENTITY

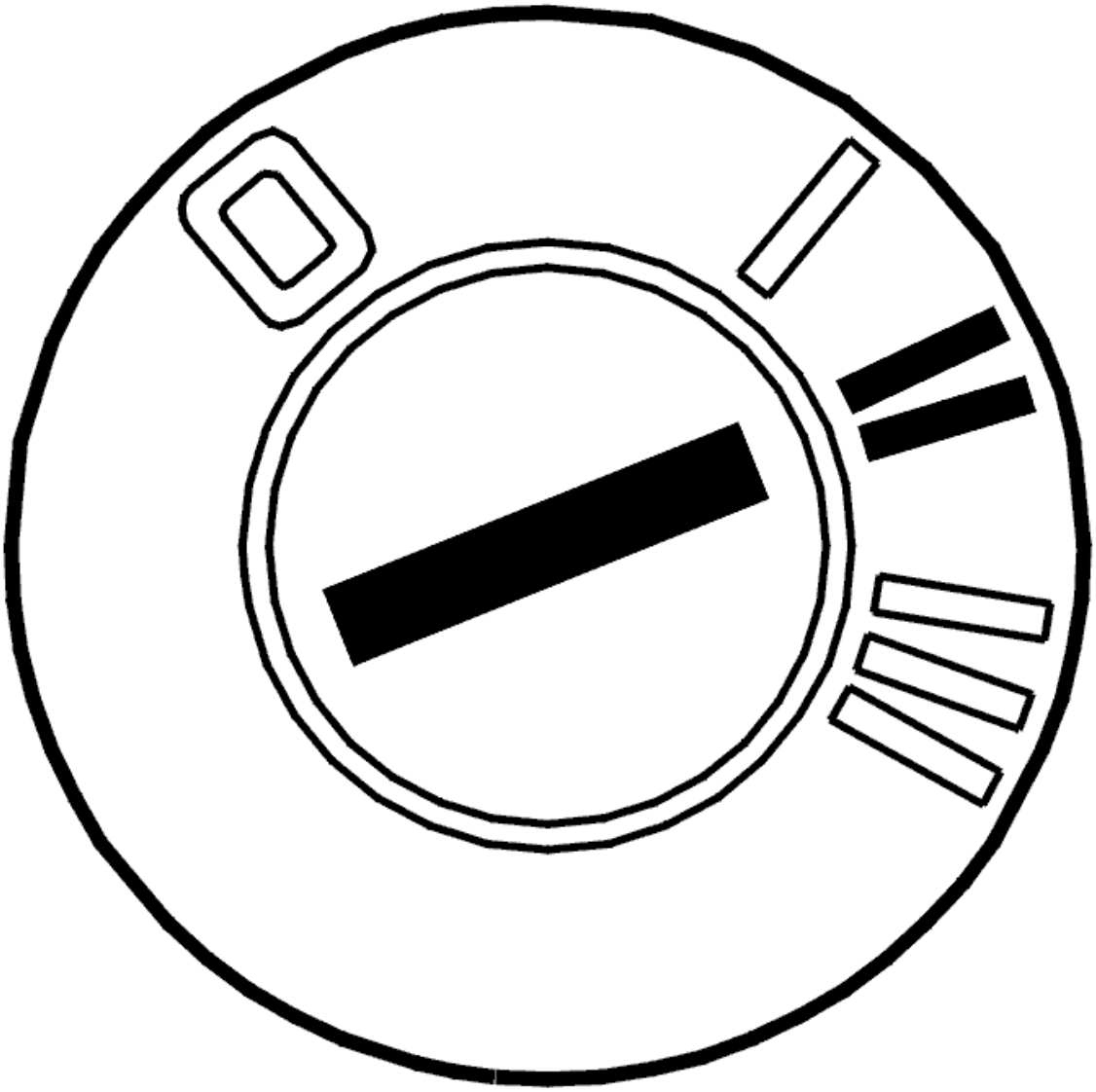

Fig. 21: Identifying Ignition ON
Courtesy of VOLVO CARS CORPORATION

- Ignition on.

NOTE: **The switches can be placed in any position in the climate control assembly (without internal order). The position of the switches must be taken into account when fault-tracing with VCT2000.**

The switch that is furthest to the left in the climate control assembly corresponds to no. 1 in VCT2000. VCT2000 then follows the numbering in order to the switch furthest to the right, which is designated no. 7.

Read off the identities of the switches. Check that the read off identity corresponds to the switch marking for its position in the dashboard environment panel. If the identity does not correspond to the marking, this indicates a defective switch.

Remedy as necessary.

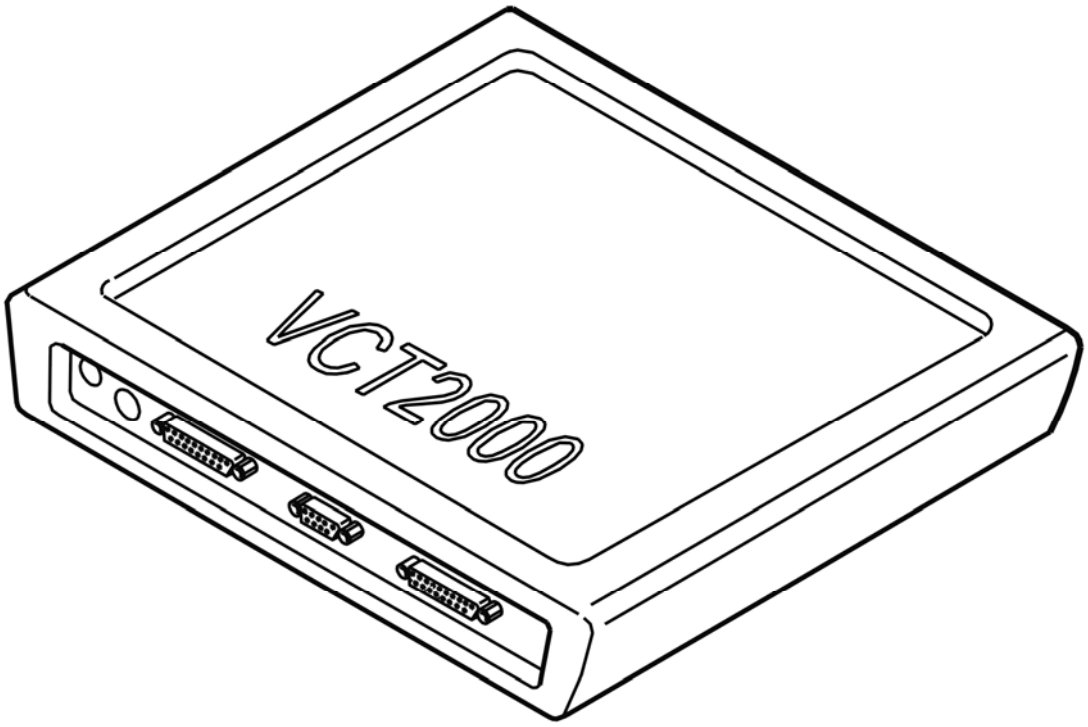

Fig. 22: Identifying VCT2000 Diagnostic Tool Symbol In VIDA
Courtesy of VOLVO CARS CORPORATION

Was a fault detected?

- **YES**

  Refer to **VERIFICATION**

- **NO**

  Refer to **CHECKING THE SWITCH STATUS**

CHECKING THE SWITCH STATUS

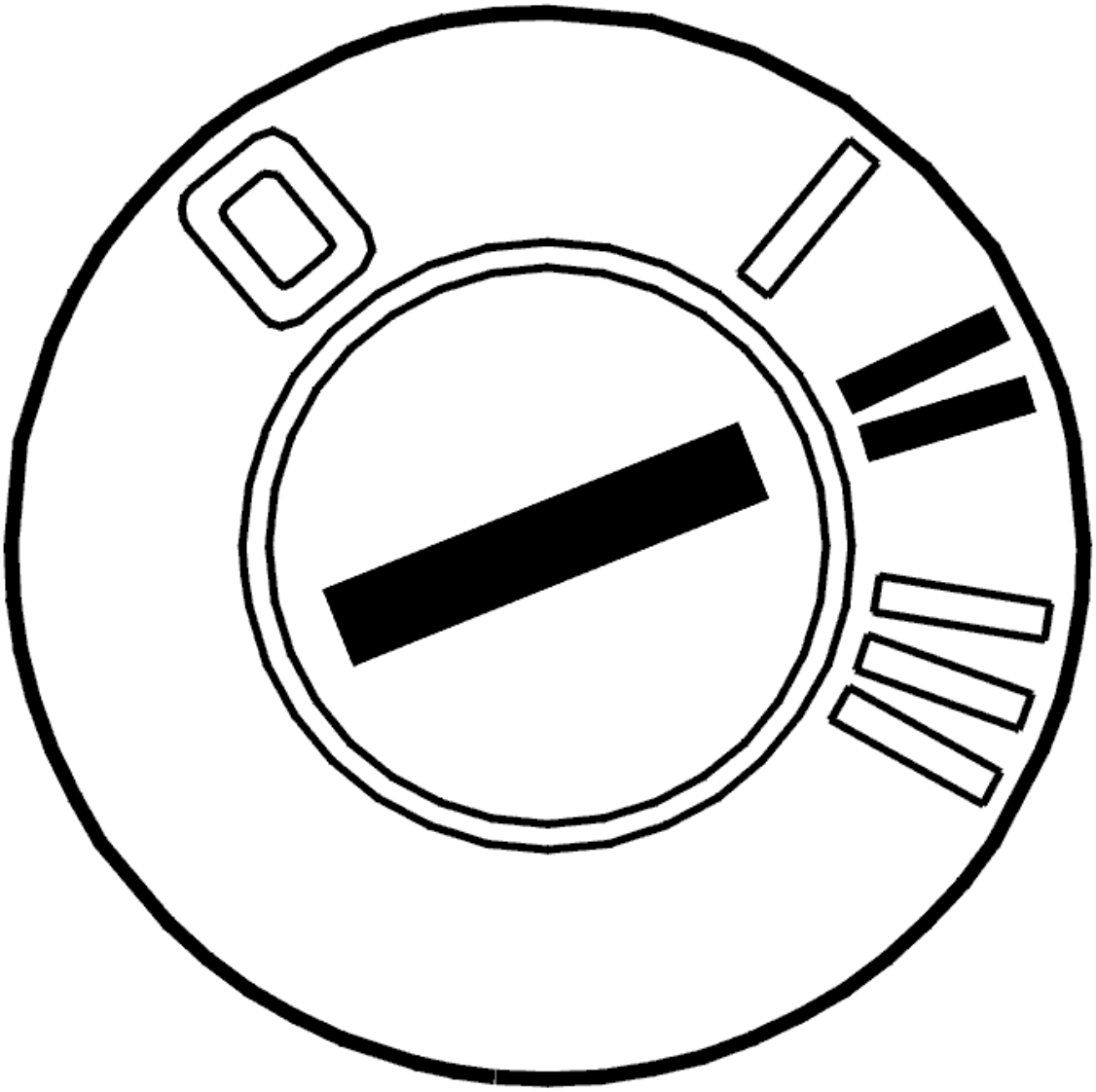

Fig. 23: Identifying Ignition ON
Courtesy of VOLVO CARS CORPORATION

- Ignition on.

NOTE: **The switches can be placed in any position in the climate control assembly (without internal order). The position of the switches must be taken into account when fault-tracing with VCT2000.**

The switch that is furthest to the left in the climate control assembly corresponds to no. 1 in VCT2000. VCT2000 then follows the numbering in order to the switch furthest to the right, which is designated no. 7.

Read off the status of the switches. Check that the read off status is OK for each switch. If the status is not OK, this indicates that the function of the switch is not in the Car Configuration.

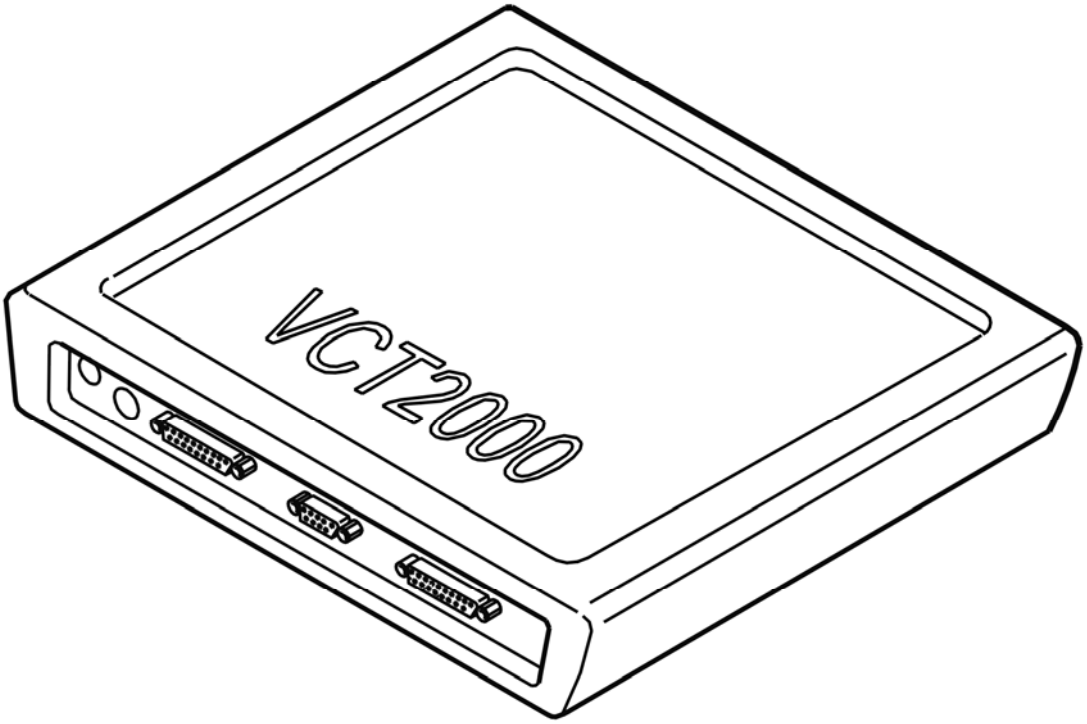

Fig. 24: Identifying VCT2000 Diagnostic Tool Symbol In VIDA
Courtesy of VOLVO CARS CORPORATION

Was a fault detected?

- **YES**

  Refer to **INFORMATION**

- **NO**

  FAULT NOT FOUND: Troubleshooting has been completed.

INFORMATION

The fault is probably because the functionality of the button is not in Car Configuration. This is remedied by ordering and downloading the missing functionality.

- **Continue**

  Refer to **VERIFICATION**

FAULT-TRACING INFORMATION

The fault has probably occurred as a result of a defect or intermittent defect or a missing switch. If the fault is intermittent, it has been registered previously but is no longer present.

Intermittent faults can be caused by interference at start up of the control module or may be a different type of fault which occurs on different occasions. The fault is evaluated depending on how it occurs.

- **Continue**

  Refer to **INFORMATION**

VERIFICATION

HINT: After carrying out the repair, check that the fault has been remedied.

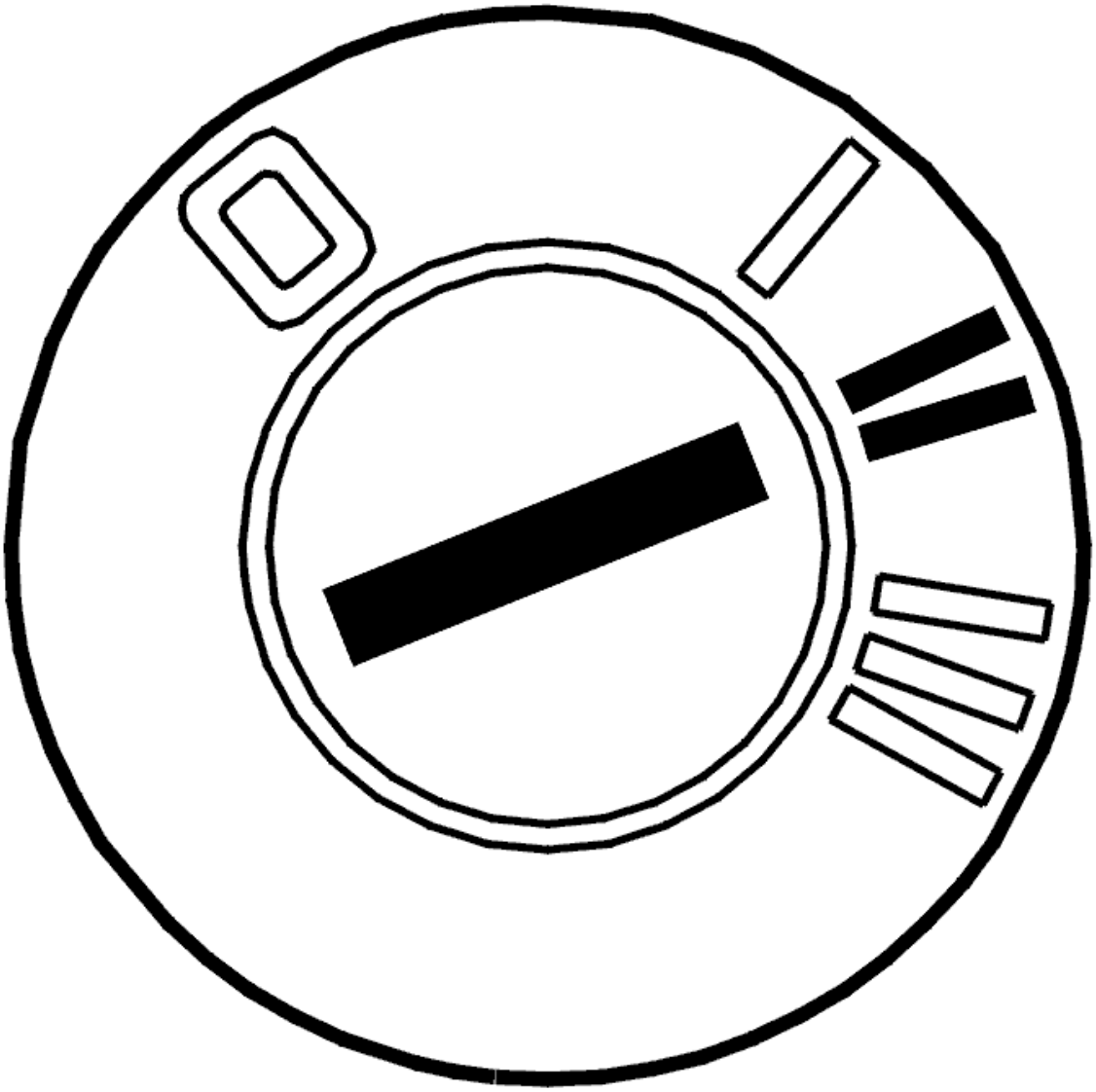

Fig. 25: Identifying Ignition ON
Courtesy of VOLVO CARS CORPORATION

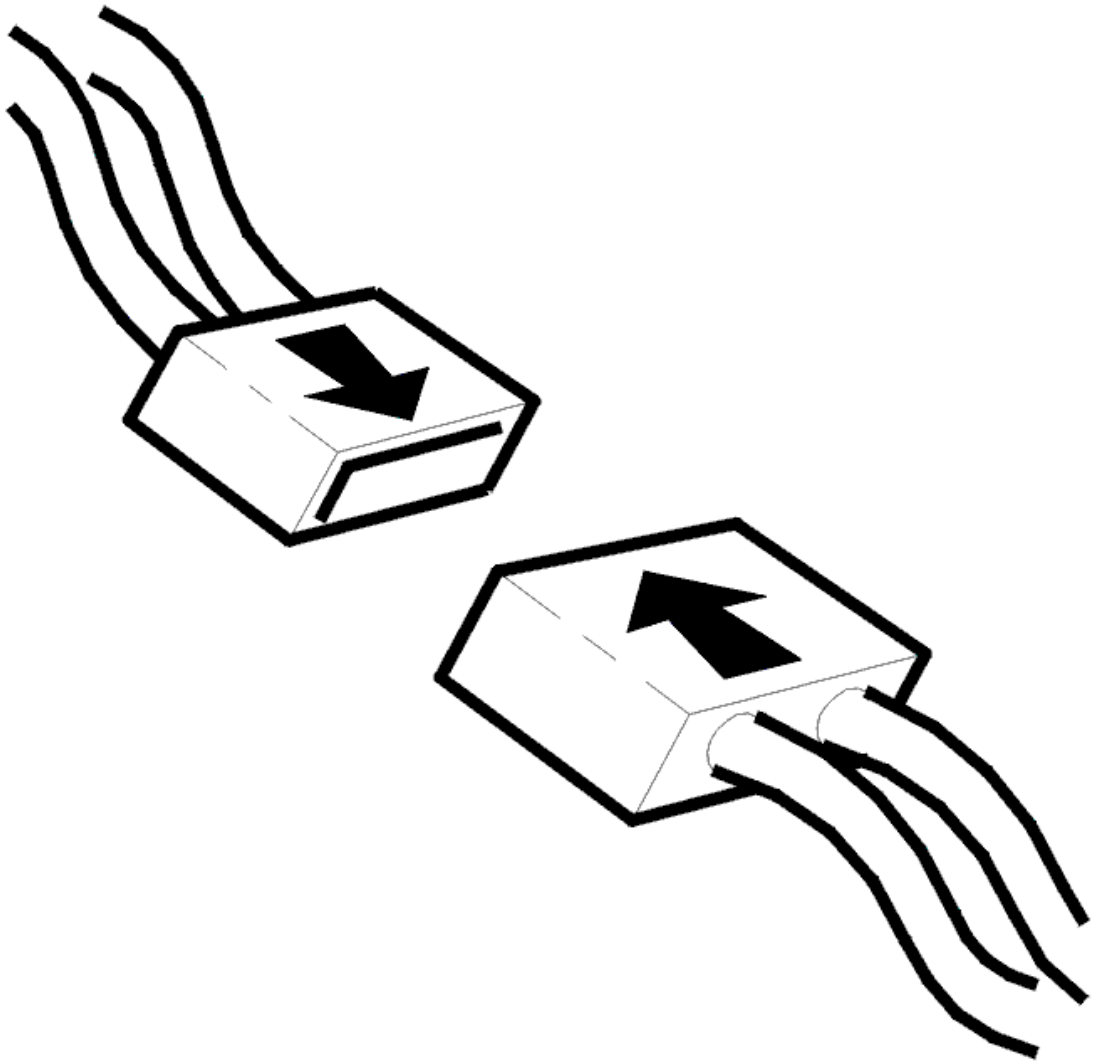

Fig. 26: Connecting Connector
Courtesy of VOLVO CARS CORPORATION

- Ignition off.

NOTE: **Wait at least 1 minute before "Ignition on". This is to allow the climate control module (CCM) to carry out a new diagnostic.**

- Reinstall the connectors, components etc.
- Ignition on
- Read off diagnostic trouble codes (DTCs).

The fault is no longer present if the status of the diagnostic trouble code (DTC) has changed to intermittent.

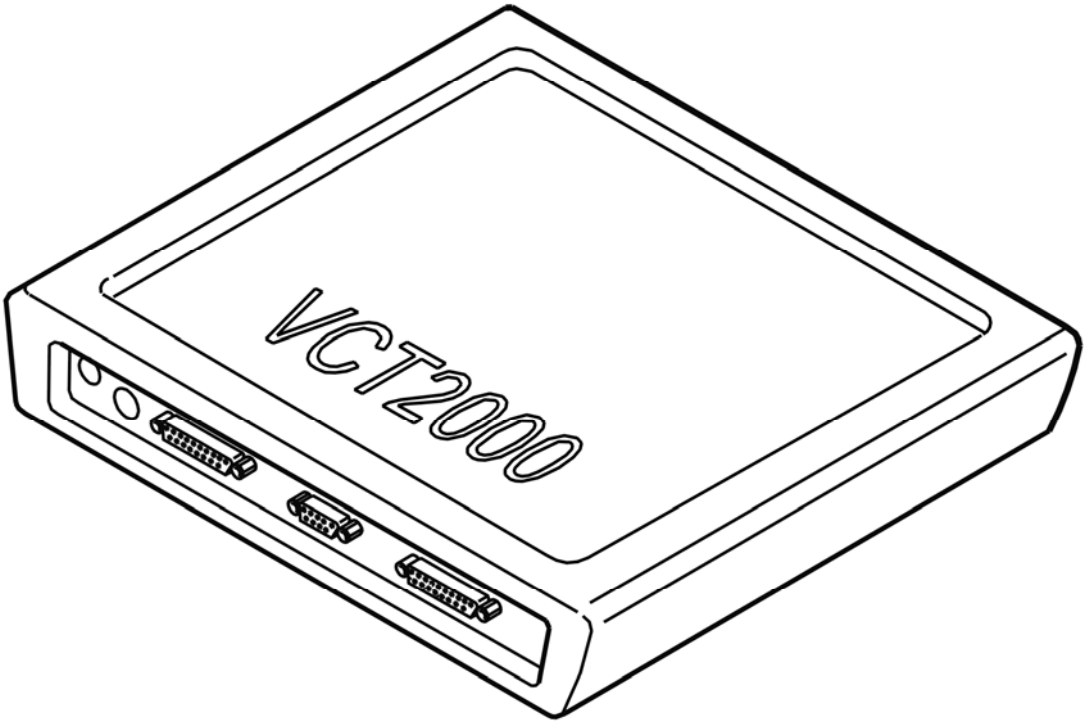

Fig. 27: Identifying VCT2000 Diagnostic Tool Symbol In VIDA
Courtesy of VOLVO CARS CORPORATION

Does the status change?

- **YES**

  VERIFIED: Troubleshooting has been completed.

- **NO**

  Refer to **INFORMATION**

INFORMATION

FAULT-TRACING INFORMATION

The fault should have been detected and remedied. As this is not the case fault-tracing has failed.

Exit fault-tracing for this diagnostic trouble code (DTC) or make another attempt.

INFORMATION

FAULT-TRACING INFORMATION

If the fault is intermittent, do not verify fault-tracing if the fault does not recur.

It is possible to view the information again, or leave fault-tracing for this diagnostic trouble code (DTC).

CCM-001D: LEFT TEMPERATURE KNOB. FAULTY SIGNAL (2003-2004)

DIAGNOSTIC TROUBLE CODE (DTC) INFORMATION

Condition

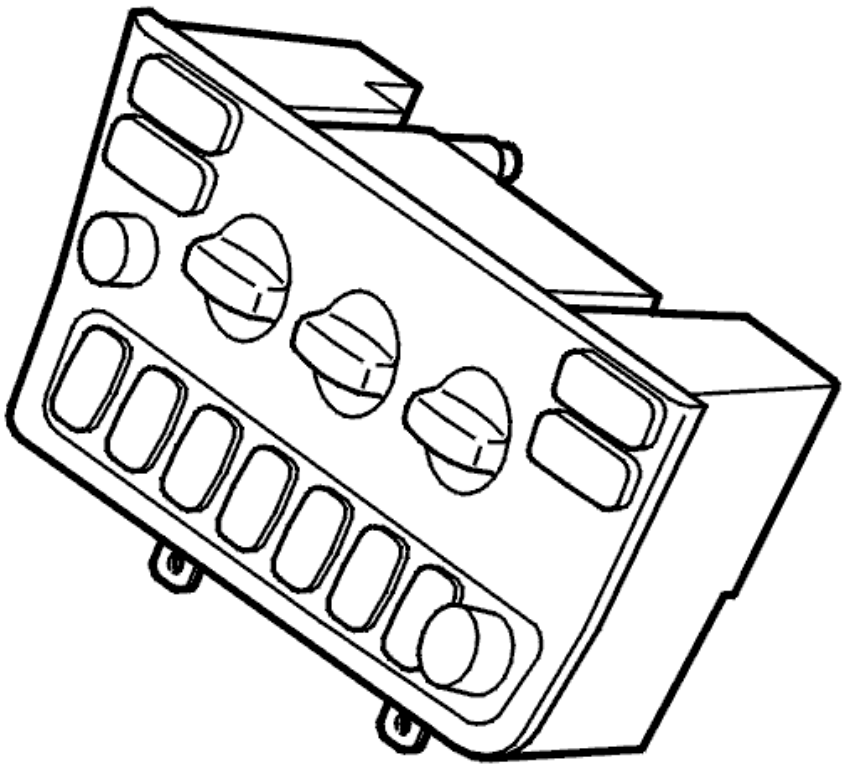

Fig. 28: Identifying Manual Climate Control Module
Courtesy of VOLVO CARS CORPORATION

Diagnostic trouble code (DTC) CCM-001D is stored if the control module registers that the signal from the left-hand temperature control is in excess of 99% or less than 1% of the supply voltage (approximately 5 V).

Substitute Value

- The control module adopts a value corresponding to half of the maximum temperature control output.

Possible Source

- Defective potentiometer

- Short-circuit to supply voltage or ground in the potentiometer.

Fault symptom[s]

- Buttons/control knobs on center console (Climate)/No/reduced/incorrect function

FAULTY SIGNAL

REPLACING THE COMPONENT

The fault has probably occurred as a result of a defective potentiometer or a short-circuit in the potentiometer. If the fault is intermittent, it has been registered previously but is no longer present. Intermittent faults can be caused by interference at start up of the control module or may be a different type of fault which occurs on different occasions. The fault is evaluated depending on how it occurs. If the fault recurs, replace the control module.

If the fault persists, replace the climate control module (CCM). The potentiometer cannot be replaced as a separate part.

Other information:

- To access or replace the control module, see **CLIMATE CONTROL MODULE (CCM), REPLACING** .
- **Continue**

  Refer to **EQUIPMENT**

EQUIPMENT

Which type of climate control is the car equipped with?

1. Electronic climate control

   Refer to **VERIFICATION**

2. Manual climate control (MCC) / Standard (STD).

   Refer to **VERIFICATION**

VERIFICATION

HINT: After the repair it is necessary to check that the fault has been rectified.

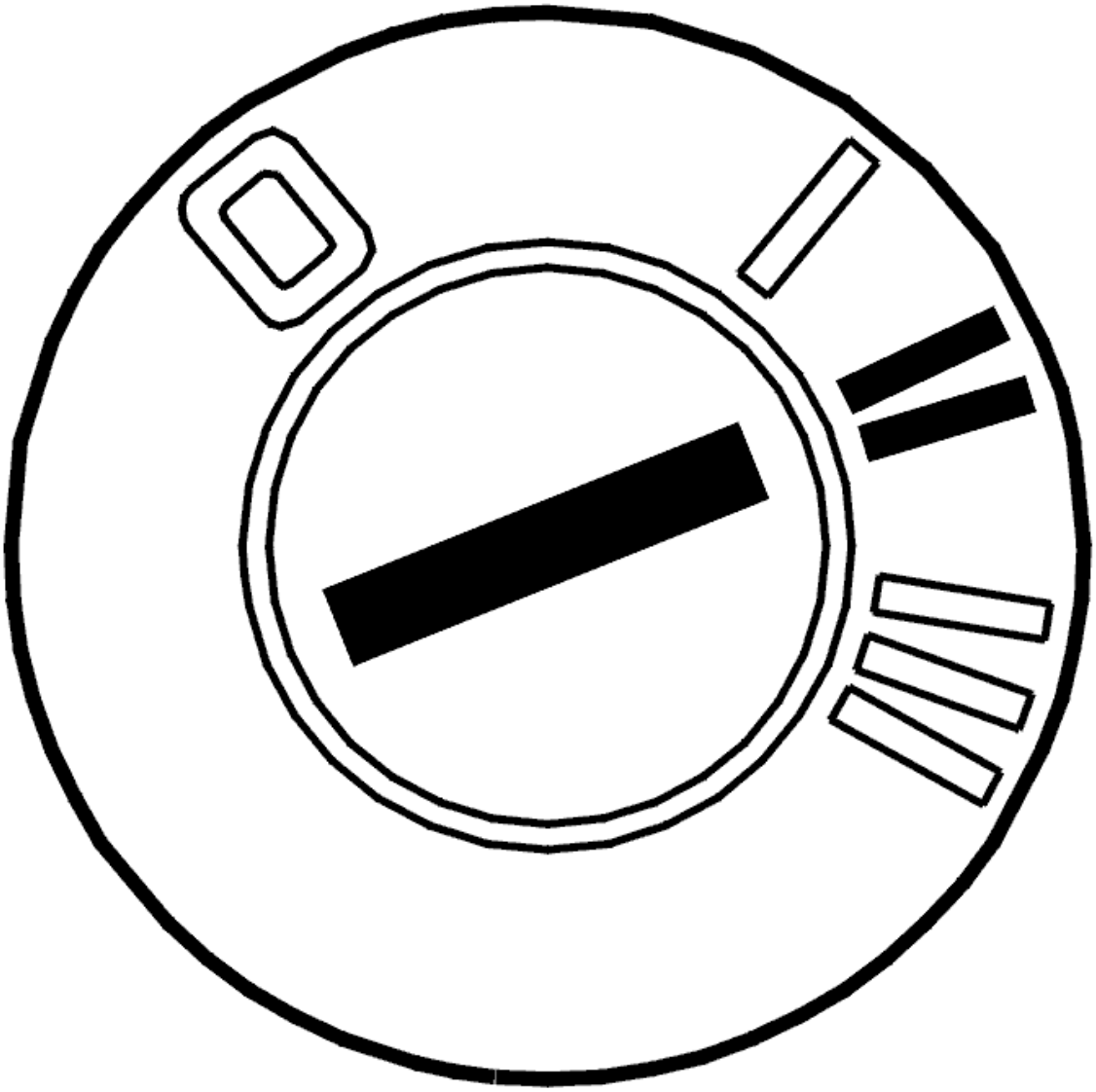

Fig. 29: Identifying Ignition ON
Courtesy of VOLVO CARS CORPORATION

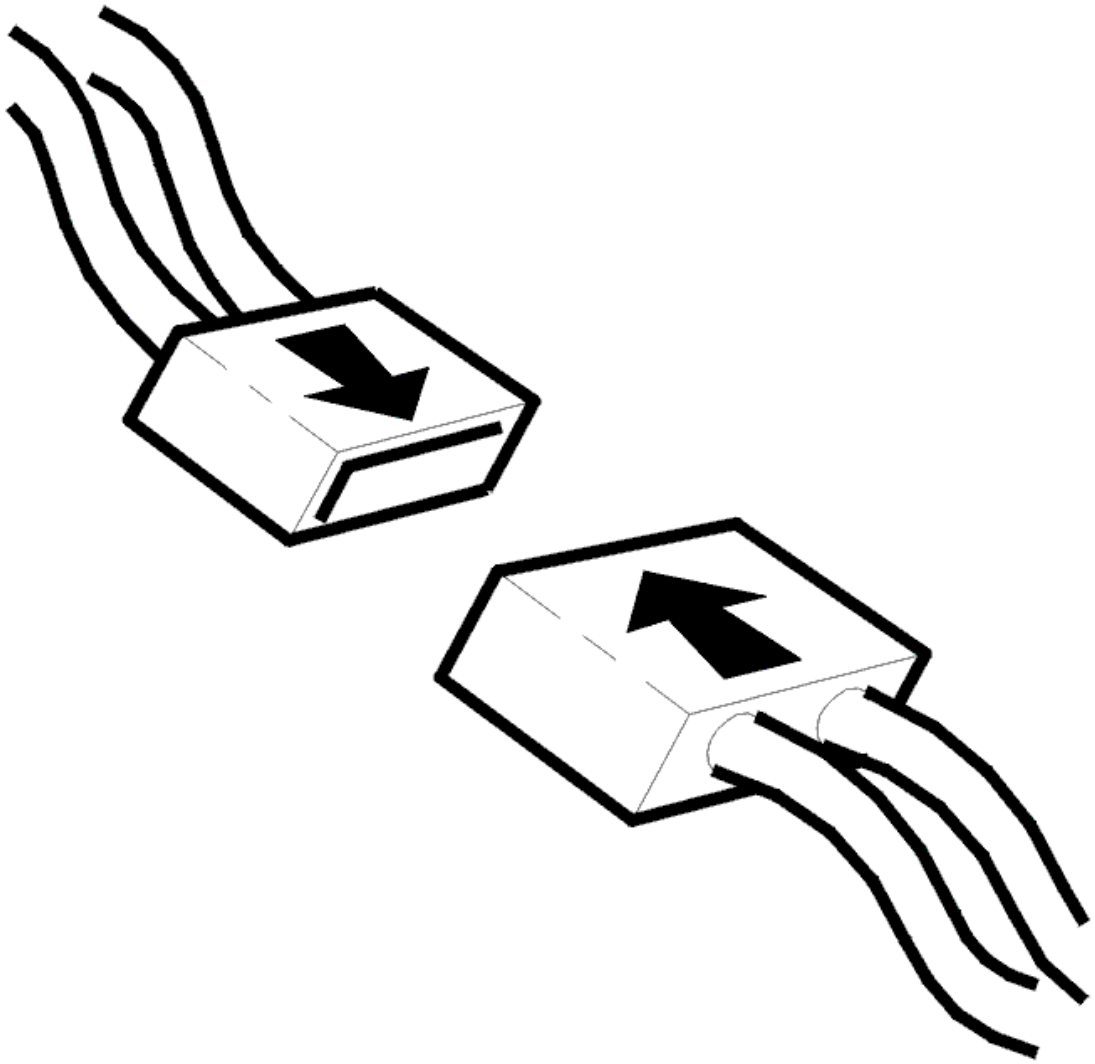

Fig. 30: Connecting Connector
Courtesy of VOLVO CARS CORPORATION

- Ignition off.
- Connect the connectors, install the components, etc.
- Ignition on.
- Blower motor on.

  Check that damper motor position changes by activating and de-activating from control panel. The values given below are the standard values that the damper motor positions should give.

  - Left/right temperature damper motor and defroster, 0-100%
  - Recirculation damper motor, 40-100%
  - Floor/ventilation damper motor, floor only approximately 39%, ventilation only approximately 87% and floor/ventilation approximately 71%.

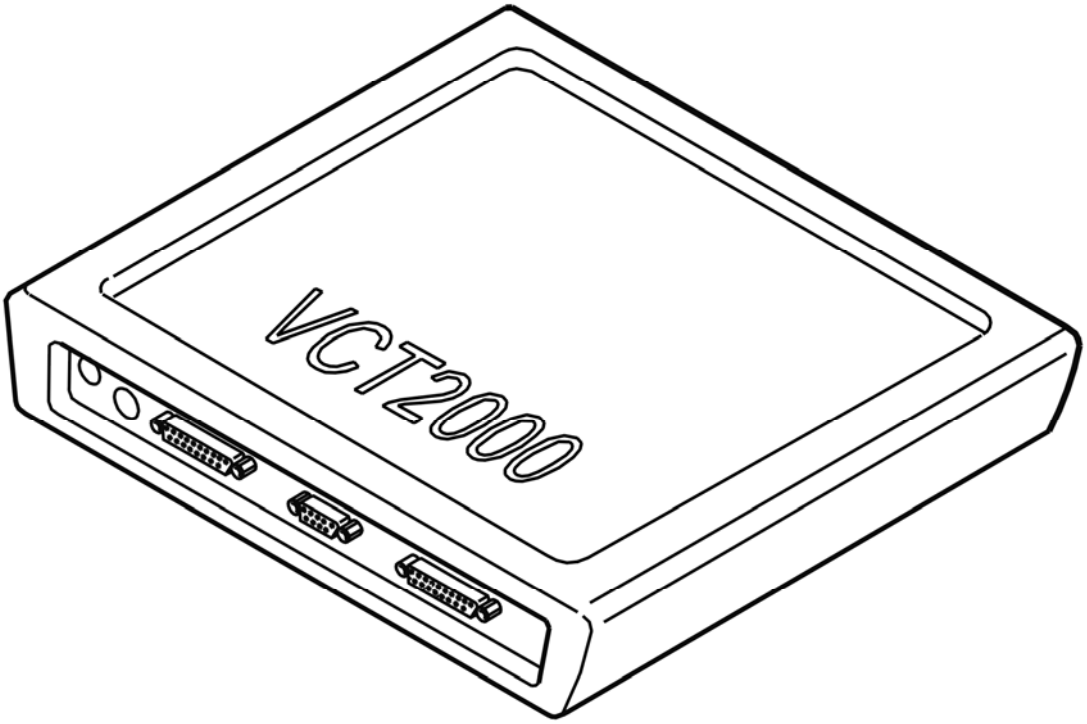

Fig. 31: Identifying VCT2000 Diagnostic Tool Symbol In VIDA
Courtesy of VOLVO CARS CORPORATION

Does damper motor work?

- **YES**

  VERIFIED: Troubleshooting has been completed.

- **NO**

  Refer to **INFORMATION**

VERIFICATION

HINT: After the repair it is necessary to check that the fault has been rectified.

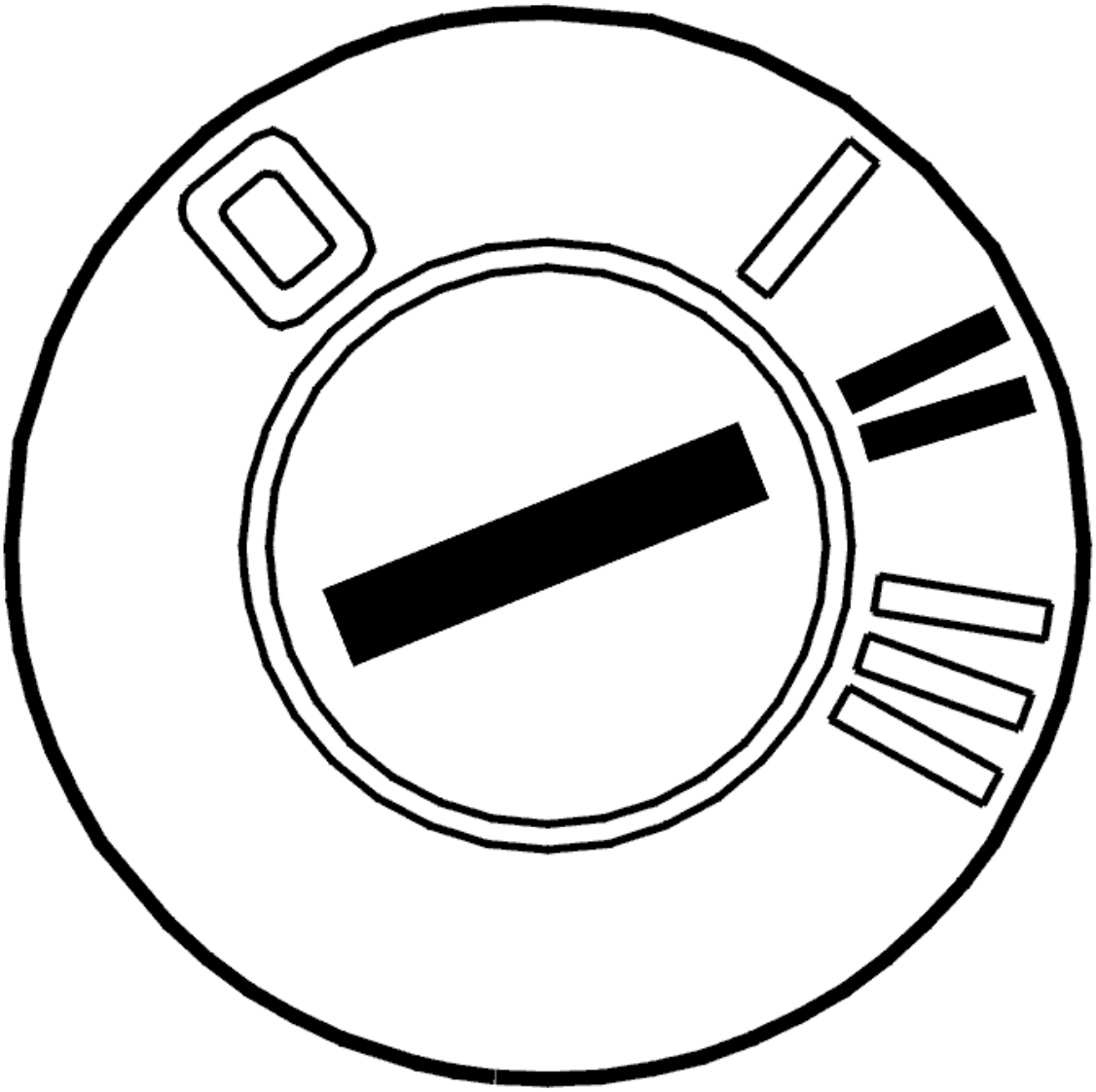

Fig. 32: Identifying Ignition ON
Courtesy of VOLVO CARS CORPORATION

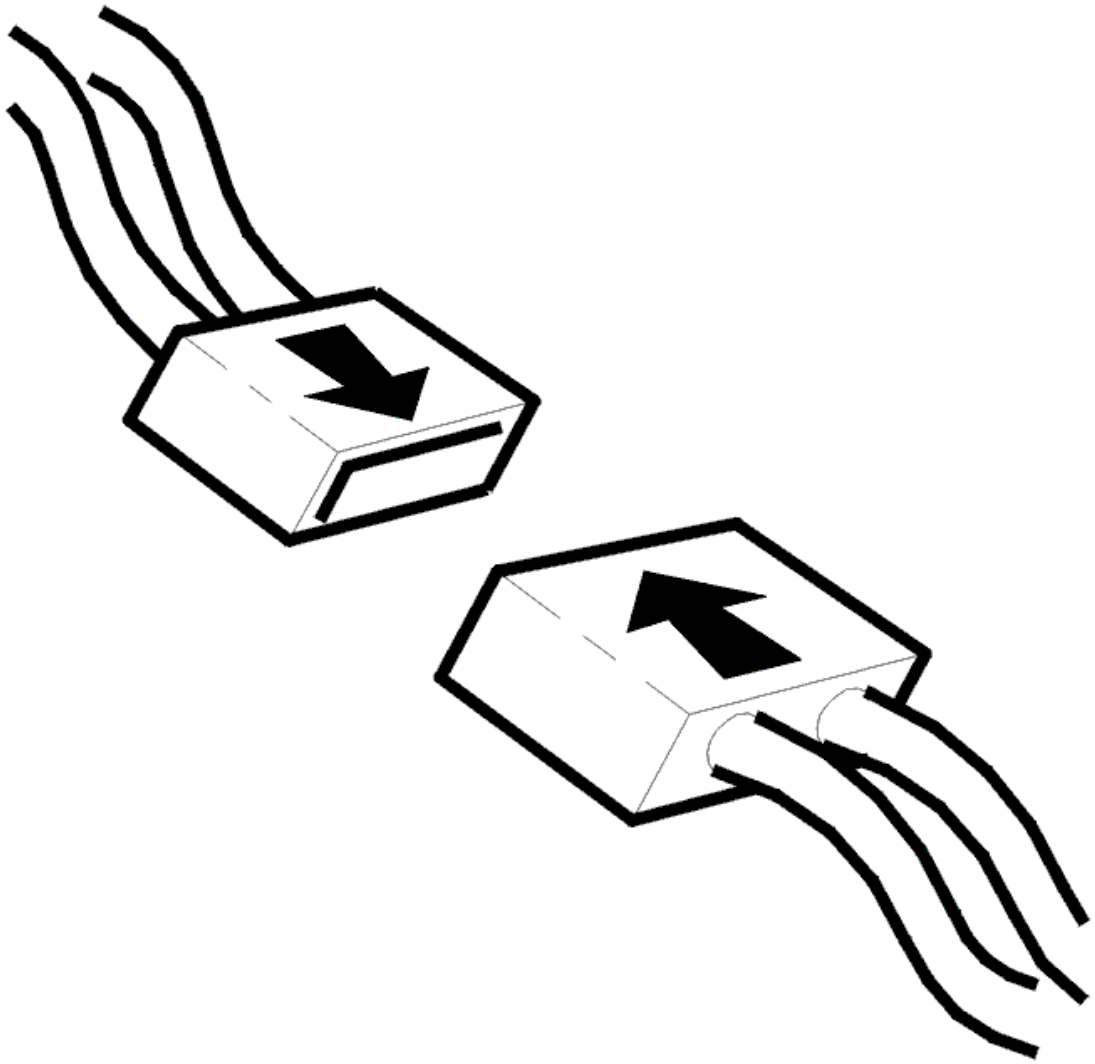

Fig. 33: Connecting Connector
Courtesy of VOLVO CARS CORPORATION

- Ignition off.
- Connect the connectors, install the components, etc.
- Ignition on.
- Blower motor on.

Check that damper motor position changes by activating and de-activating from control panel. The values given below are the standard values that the damper motor positions should give.

NOTE: Blower motor must be in operation to activate the damper motors.

- Left/right damper motor temperature, 0-100%
- Recirculation damper motor, 40-100%

- Damper motor air distribution, defroster approximately 0%, floor/defroster approximately 19%, floor approximately 39%, ventilation approximately 83%.

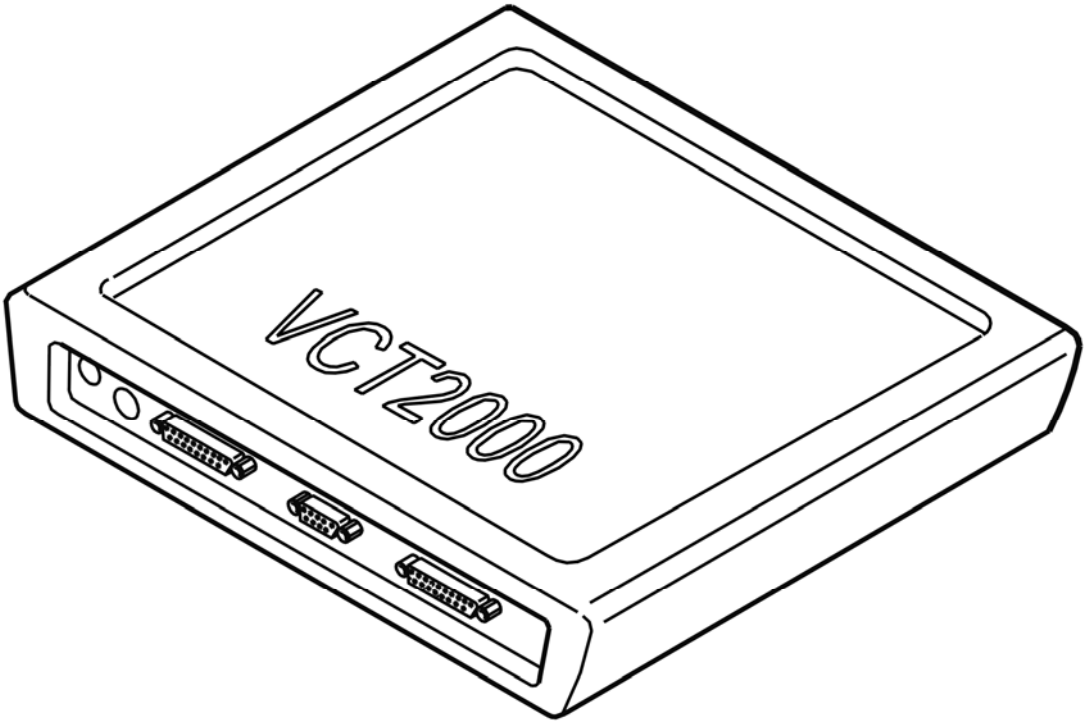

Fig. 34: Identifying VCT2000 Diagnostic Tool Symbol In VIDA
Courtesy of VOLVO CARS CORPORATION

Does damper motor work?

- **YES**

  VERIFIED: Troubleshooting has been completed.

- **NO**

  Refer to **INFORMATION**

INFORMATION

FAULT-TRACING INFORMATION

The fault should have been detected and remedied. As this is not the case fault-tracing has failed.

Exit fault-tracing for this diagnostic trouble code (DTC) or make another attempt.

CCM-001E: RIGHT TEMPERATURE KNOB. FAULTY SIGNAL (2003-2004)

DIAGNOSTIC TROUBLE CODE (DTC) INFORMATION

Condition

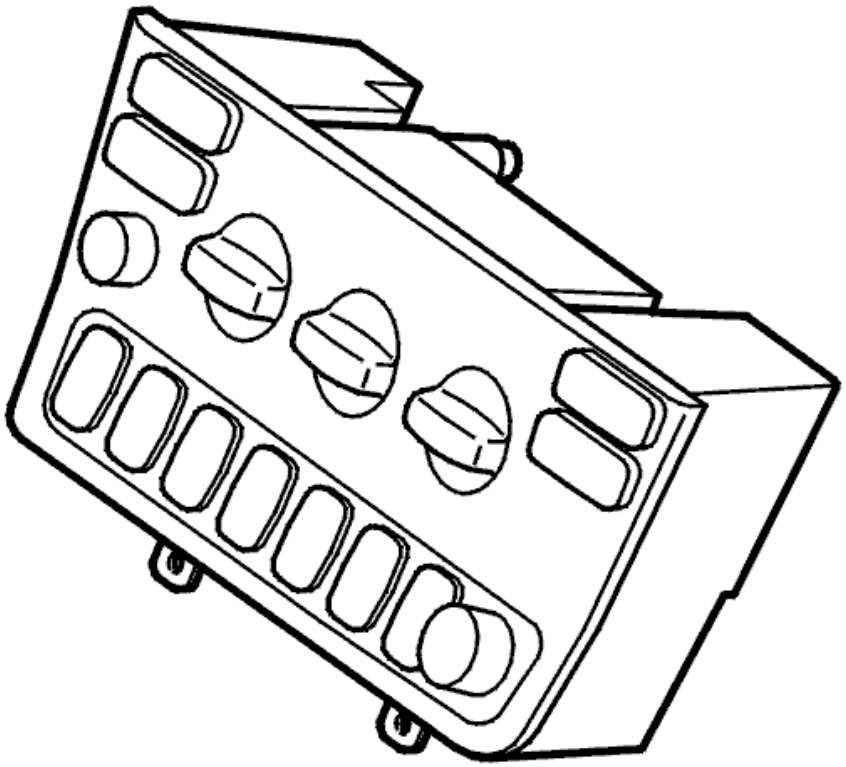

Fig. 35: Identifying Manual Climate Control Module
Courtesy of VOLVO CARS CORPORATION

Diagnostic trouble code (DTC) CCM-001E is stored if the control module registers that the signal from the right temperature knob is in excess of 99% or less than 1% of supply voltage (approximately 5 V).

Substitute Value

- The control module adopts a value corresponding to half of the maximum temperature control output.

Possible Source

- Defective potentiometer
- Short-circuit to supply voltage or ground in the potentiometer.

Fault symptom[s]

- Buttons/control knobs on center console (Climate)/No/reduced/incorrect function

FAULTY SIGNAL

REPLACING THE COMPONENT

The fault has probably occurred as a result of a defective potentiometer or a short-circuit in the potentiometer. If the fault is intermittent, it has been registered previously but is no longer present. Intermittent faults can be caused by interference at start up of the control module or may be a different type of fault which occurs on different occasions. The fault is evaluated depending on how it occurs. If the fault recurs, replace the control module.

If the fault persists, replace the climate control module (CCM). The potentiometer cannot be replaced as a separate part.

Other information:

- To access or replace the control module, see **CLIMATE CONTROL MODULE (CCM), REPLACING** .

- **Continue**

  Refer to **VERIFICATION**

VERIFICATION

HINT: After the repair it is necessary to check that the fault has been rectified.

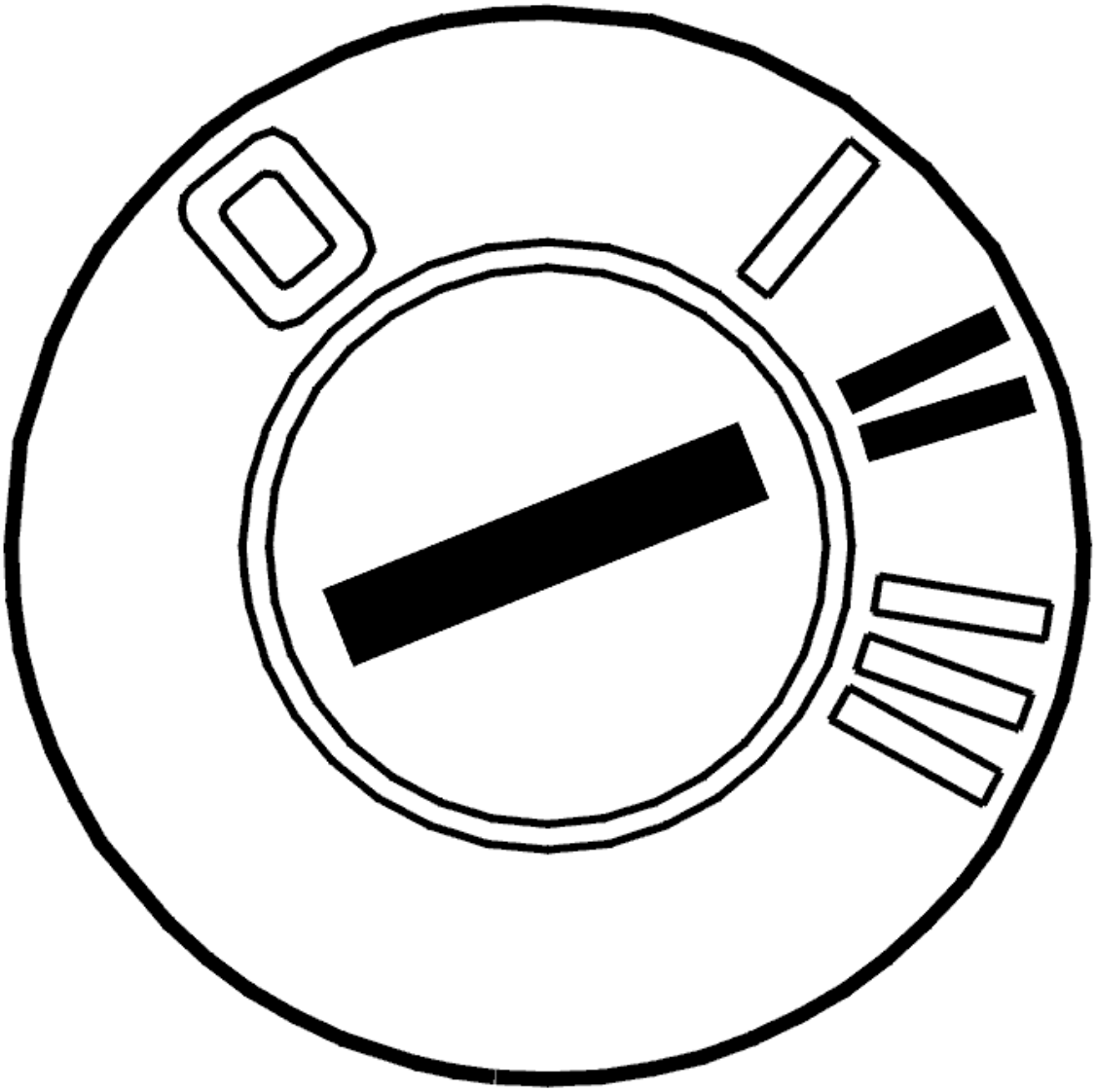

Fig. 36: Identifying Ignition ON
Courtesy of VOLVO CARS CORPORATION

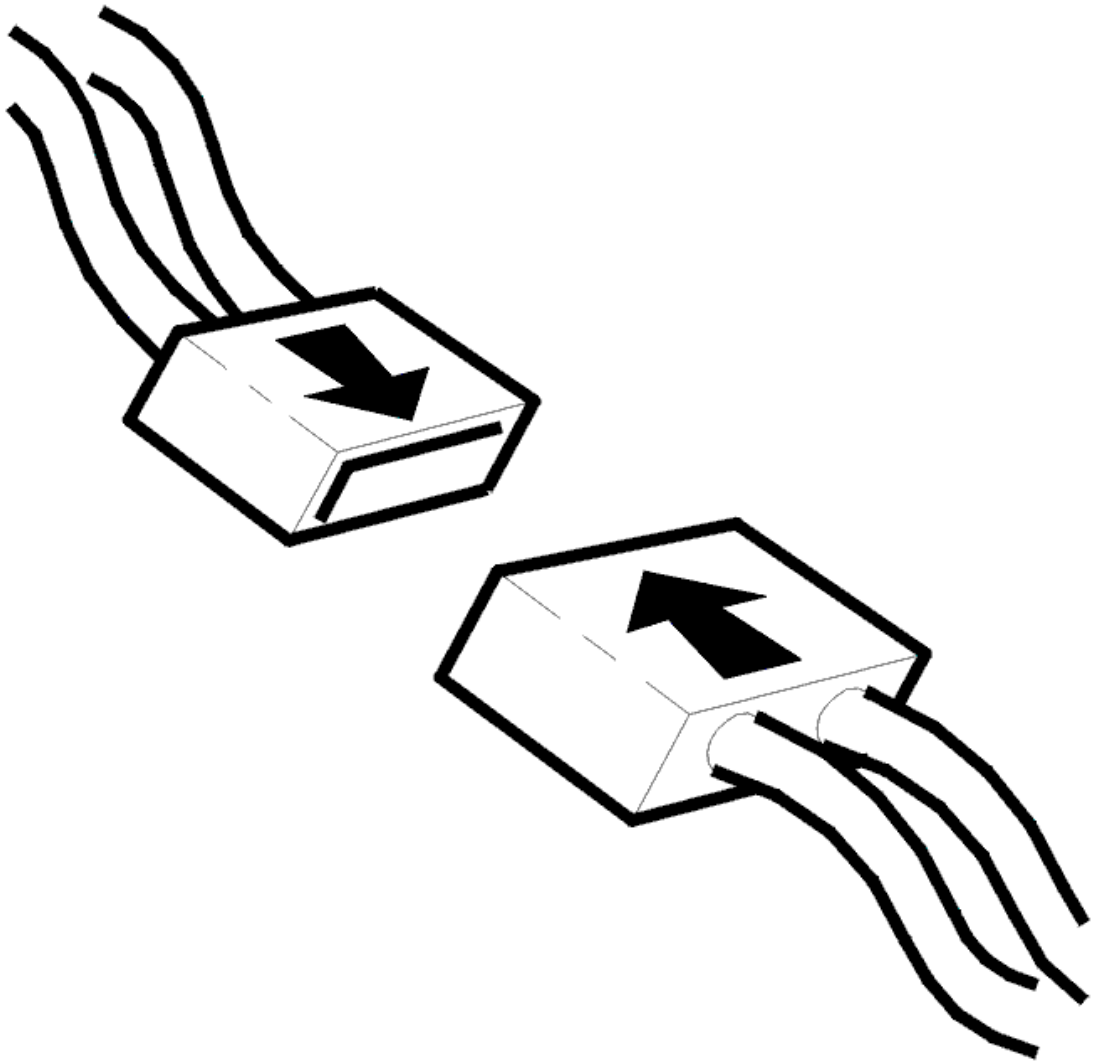

Fig. 37: Connecting Connector
Courtesy of VOLVO CARS CORPORATION

- Ignition off.
- Connect the connectors, install the components, etc.
- Ignition on.
- Blower motor on.

  Check that damper motor position changes by activating and de-activating from control panel. The values given below are the standard values that the damper motor positions should give.

  - Left/right temperature damper motor and defroster, 0-100%
  - Recirculation damper motor, 40-100%
  - Floor/ventilation damper motor, floor only approximately 39%, ventilation only approximately 87% and floor/ventilation approximately 71%.

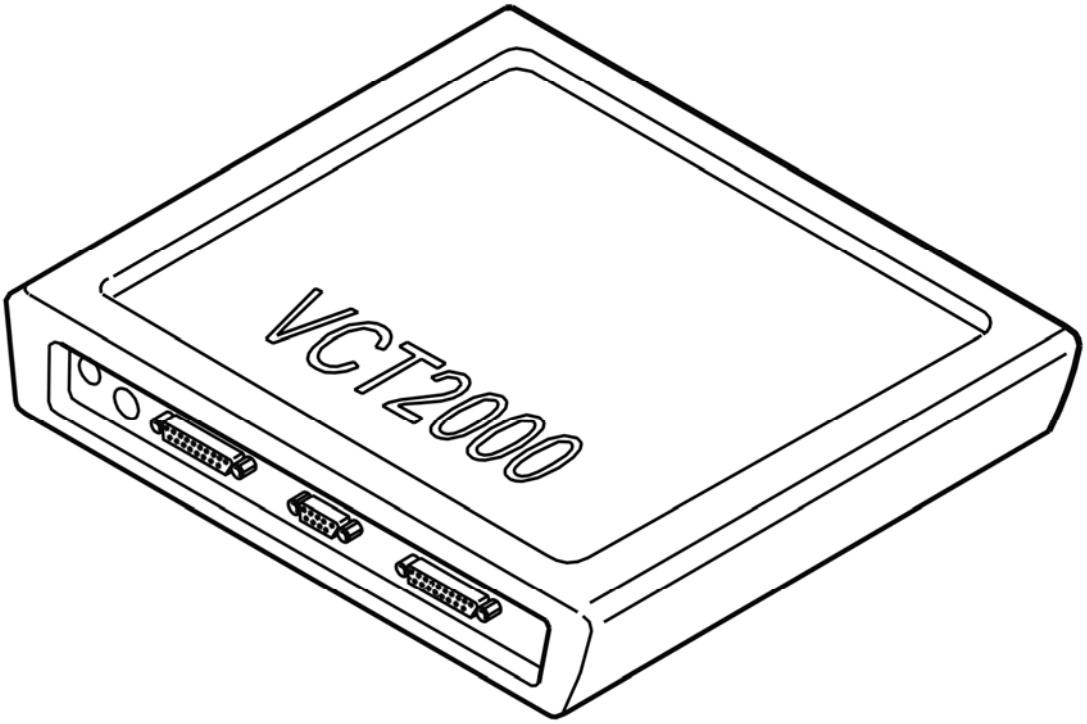

Fig. 38: Identifying VCT2000 Diagnostic Tool Symbol In VIDA
Courtesy of VOLVO CARS CORPORATION

Does damper motor work?

- **YES**

  VERIFIED: Troubleshooting has been completed.

- **NO**

  Refer to **INFORMATION**

INFORMATION

FAULT-TRACING INFORMATION

The fault should have been detected and remedied. As this is not the case fault-tracing has failed.

Exit fault-tracing for this diagnostic trouble code (DTC) or make another attempt.

CCM-001F: AIR QUALITY SENSOR. SIGNAL TOO HIGH (2003-2004)

DIAGNOSTIC TROUBLE CODE (DTC) INFORMATION

Condition

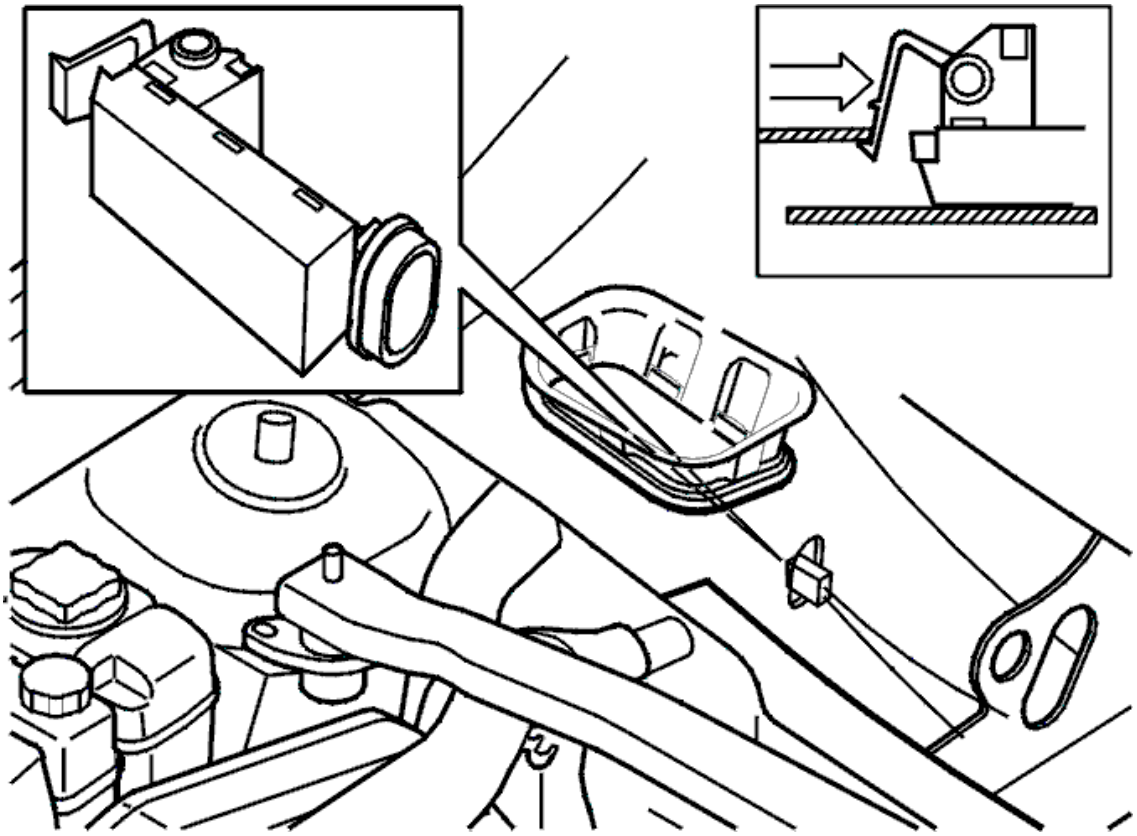

Fig. 39: Air Quality Sensor
Courtesy of VOLVO CARS CORPORATION

Diagnostic trouble code (DTC) CCM-001F is stored if the control module registers that the signal from the air quality sensor has a pulse length which exceeds 97% of the period.

Diagnostic trouble code (DTC) CCM-001F can only be diagnosed for electronic climate control modules (CCM) (ECC version) with air quality sensors.

Substitute Value

- The control module does not permit the recirculation shutter to close in the air quality sensor mode while the fault persists
- No air quality function.

Possible Source

- Open-circuit in the signal cable between the control module and the air quality sensor
- Short-circuit to supply voltage in the signal cable between the control module and the air quality sensor
- Defective air quality sensor.

Fault symptom[s]

- Poor air quality in the passenger compartment.

SIGNAL TOO HIGH

CHECKING THE FUNCTION

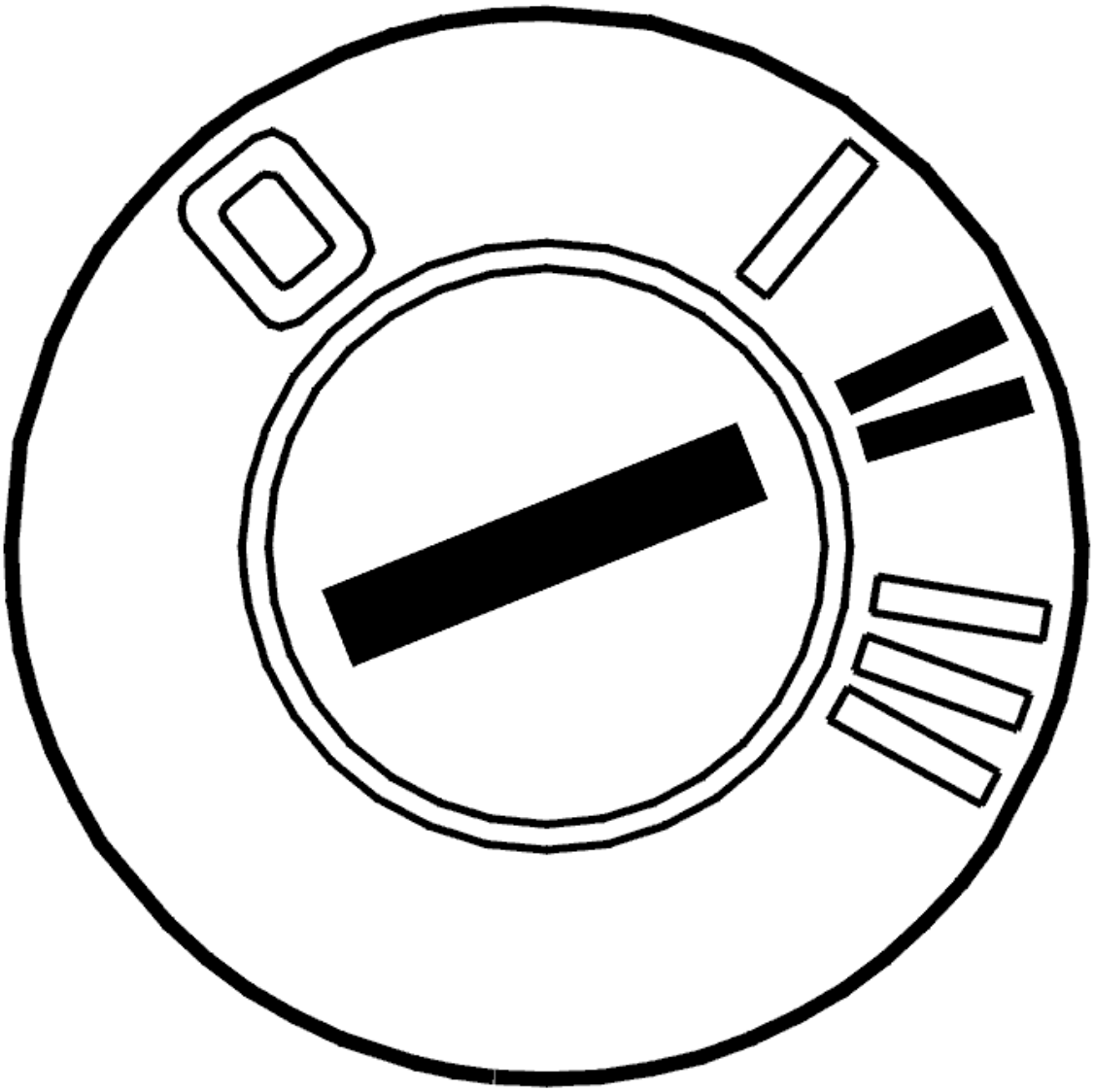

Fig. 40: Identifying Ignition ON
Courtesy of VOLVO CARS CORPORATION

- Ignition on
- Check that the value from the air quality sensor is within the permitted range.

NOTE: The blower fan must be running.

Expose the fresh air intake to windshield washer fluid, gasoline vapor or similar.

The value should be between 4% and 96%.

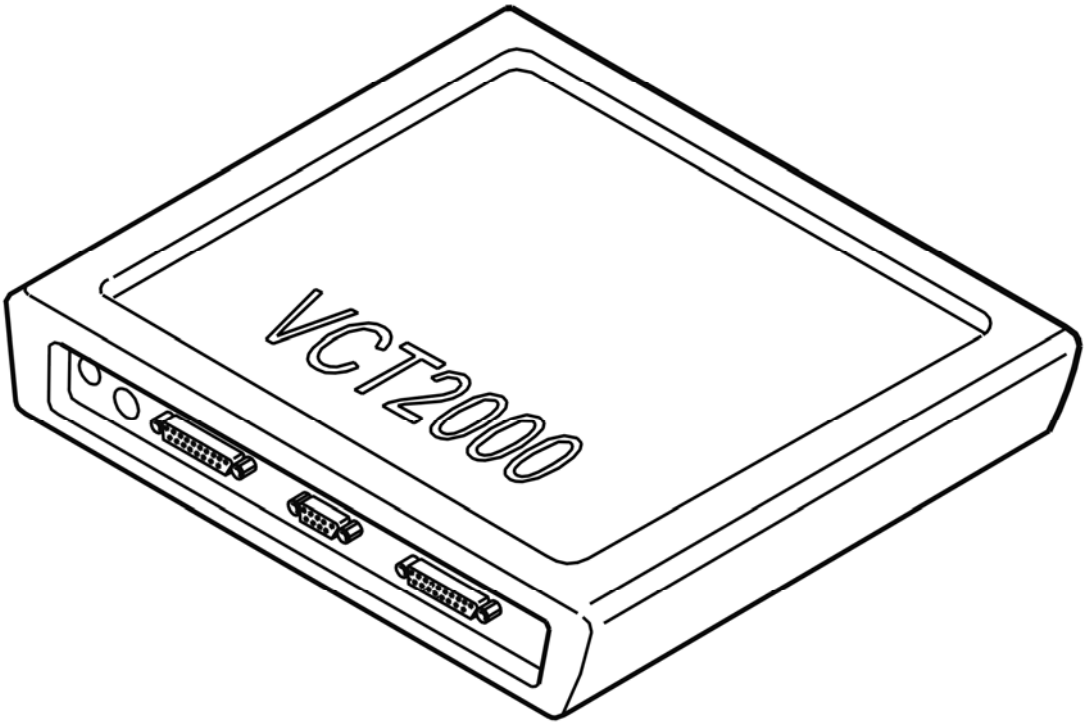

Fig. 41: Identifying VCT2000 Diagnostic Tool Symbol In VIDA
Courtesy of VOLVO CARS CORPORATION

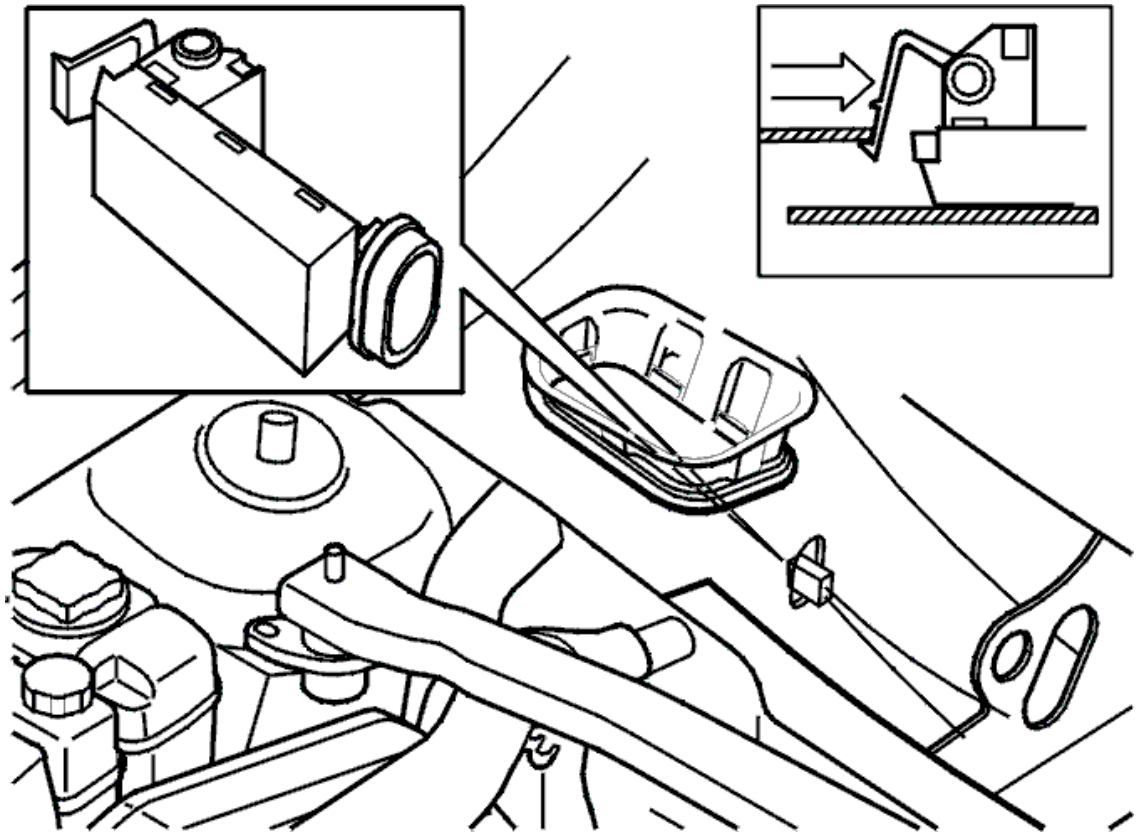

Fig. 42: Air Quality Sensor
Courtesy of VOLVO CARS CORPORATION

Is this value within its permitted range?

- **YES**

  Refer to **CHECKING THE CONNECTORS AND CABLES**

- **NO**

  Refer to **CHECKING COMPONENTS AND WIRING**

CHECKING THE CONNECTORS AND CABLES

Check the climate control module (CCM) and air quality sensor connectors. Check for contact resistance and oxidation. Check for loose connections.

Check the cable between control module terminal #B3 (#3) and air quality sensor terminal #3. Check for an intermittent open-circuit. Check for an intermittent short-circuit to supply voltage.

Check the cable between control module terminal #B5 (#5) and air quality sensor terminal #5. Check for an intermittent open-circuit. Check for an intermittent short-circuit to supply voltage.

Check the cable between control module terminal #B16 and air quality sensor terminal #1. Check for an intermittent open-circuit. Check for an intermittent short-circuit to ground.

Other information:

- To access and replace the control module, see **CLIMATE CONTROL MODULE (CCM), REPLACING**
- To access or replace the air quality sensor, see **AIR QUALITY SENSOR, REPLACING**
- For other values, see **SIGNAL DESCRIPTION, CLIMATE CONTROL MODULE (CCM), CONNECTOR B**
- see **CHECKING WIRING AND TERMINALS** .

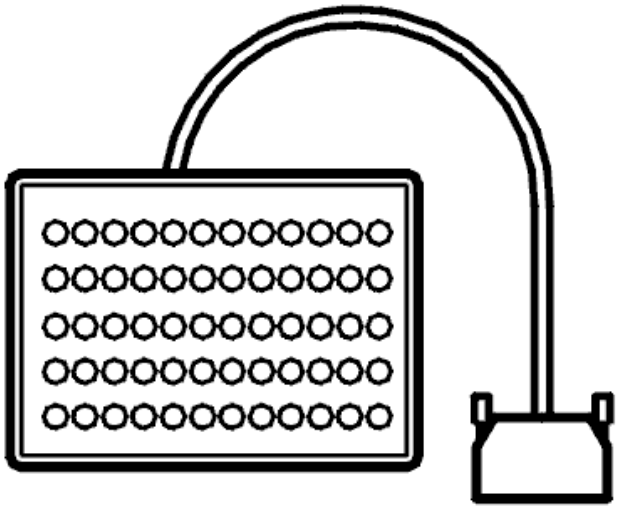

Fig. 43: Breakout Box
Courtesy of VOLVO CARS CORPORATION

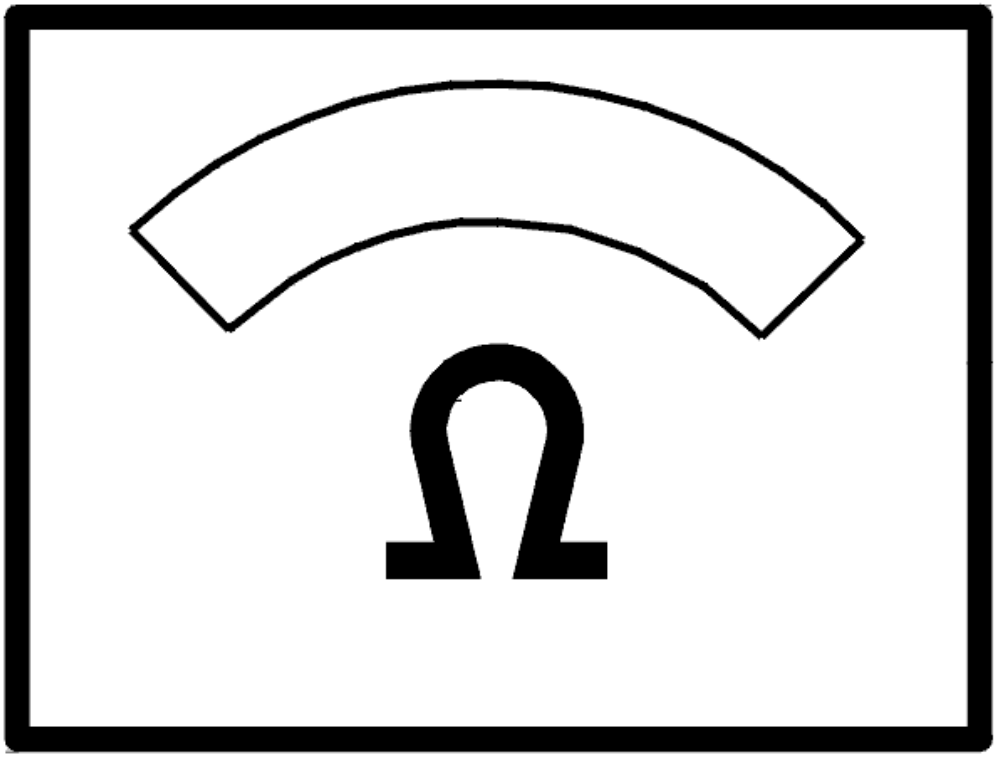

Fig. 44: Identifying Ohm Meter
Courtesy of VOLVO CARS CORPORATION

- **Continue**

  Refer to **INFORMATION**

CHECKING COMPONENTS AND WIRING

Check the cable between control module terminal #B3 (#3) and air quality sensor terminal #3. Check for an open-circuit. Check for a short-circuit to supply voltage.

Check the cable between control module terminal #B5 (#5) and air quality sensor terminal #5. Check for an open-circuit. Check for a short-circuit to supply voltage.

Check the cable between control module terminal #B16 (#16) and air quality sensor terminal #1. Check for an

open-circuit. Check for a short-circuit to supply voltage.

Remedy as necessary.

Other information:

- To access and replace the control module, see **CLIMATE CONTROL MODULE (CCM), REPLACING**
- To access or replace the air quality sensor, see **AIR QUALITY SENSOR, REPLACING**
- For other values, see **SIGNAL DESCRIPTION, CLIMATE CONTROL MODULE (CCM), CONNECTOR C**
- see **CHECKING WIRING AND TERMINALS** .

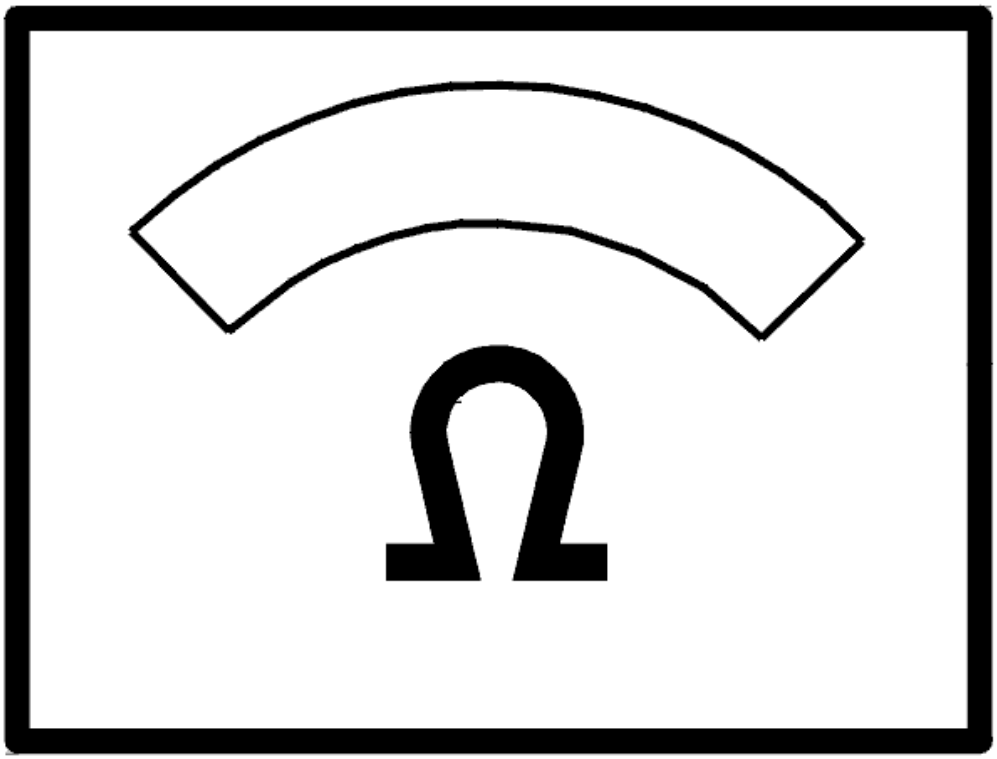

Fig. 45: Identifying Ohm Meter
Courtesy of VOLVO CARS CORPORATION

Was a fault detected?

- **YES**

  Refer to **VERIFICATION**

- **NO**

  Refer to **INFORMATION**

VERIFICATION

HINT: After carrying out the repair, check that the fault has been remedied:

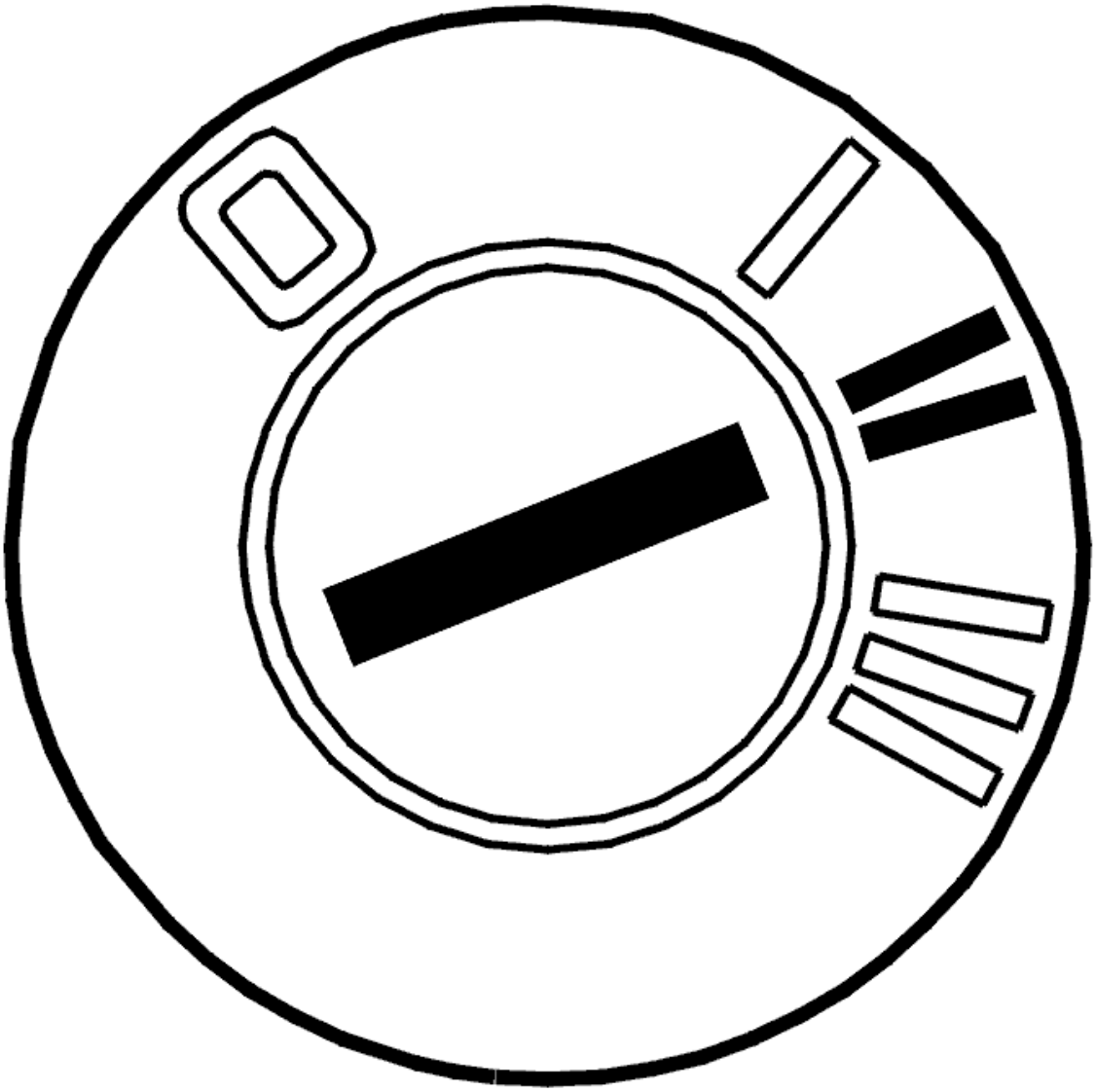

Fig. 46: Identifying Ignition ON
Courtesy of VOLVO CARS CORPORATION

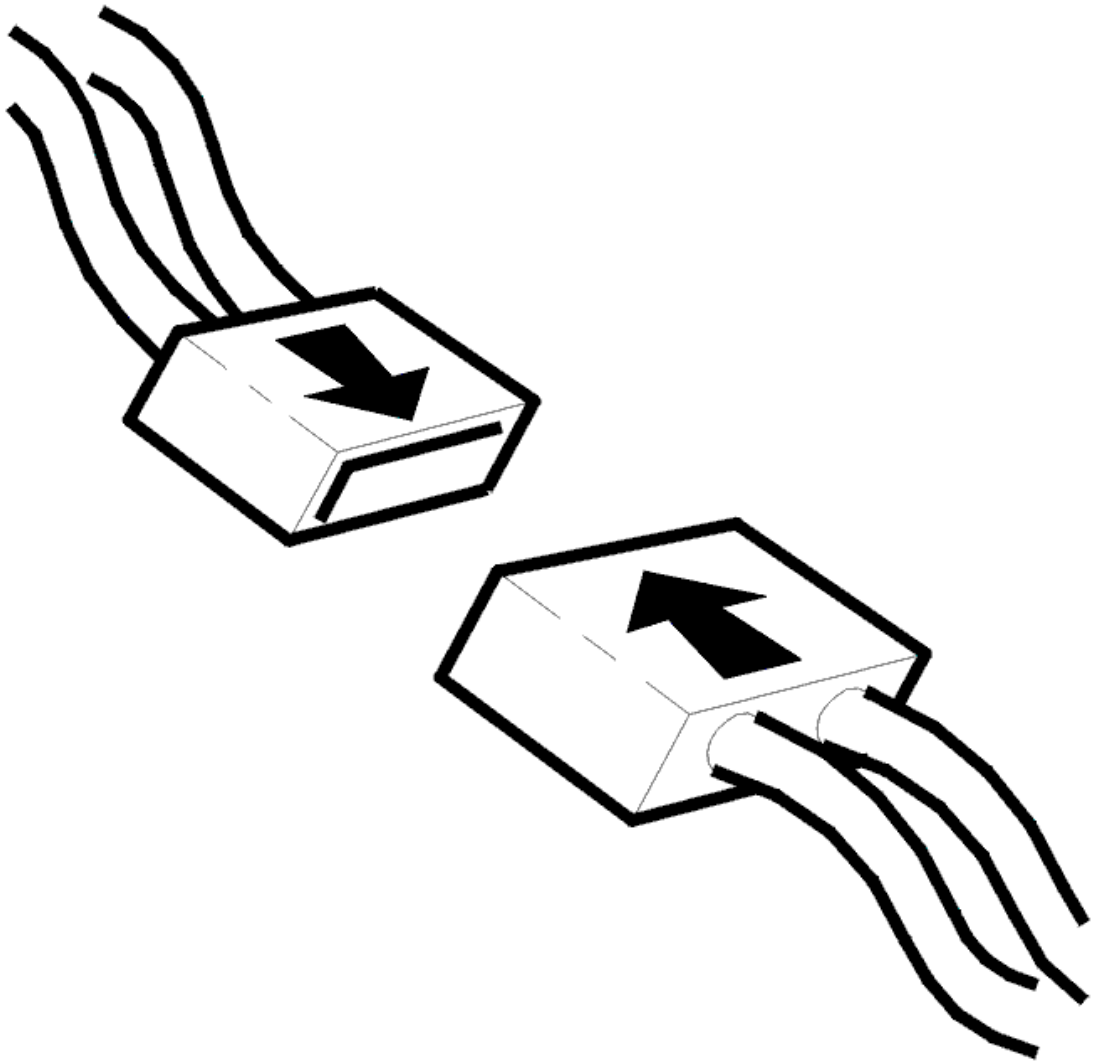

Fig. 47: Connecting Connector
Courtesy of VOLVO CARS CORPORATION

- Ignition off
- Reconnect the connectors, reinstall components etc.
- Ignition on
- Check that the value from the air quality sensor is within the permitted range.

  The value should be between 4% and 96%.

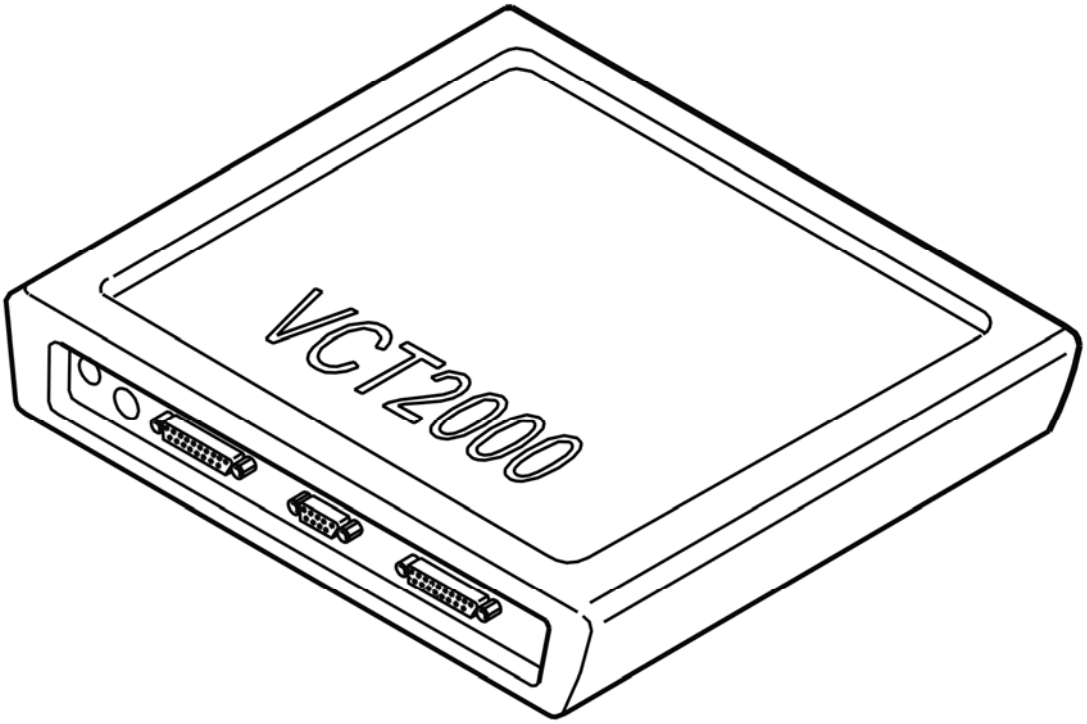

Fig. 48: Identifying VCT2000 Diagnostic Tool Symbol In VIDA
Courtesy of VOLVO CARS CORPORATION

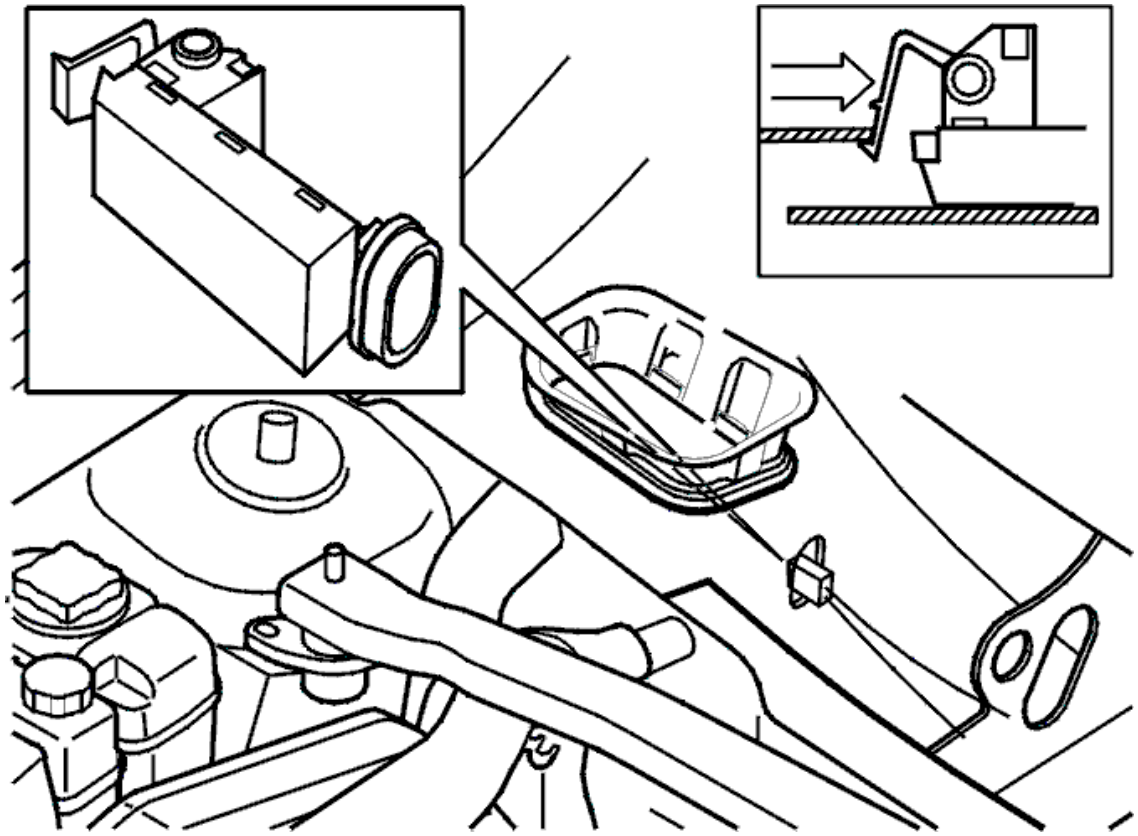

Fig. 49: Air Quality Sensor
Courtesy of VOLVO CARS CORPORATION

Are the values correct?

- **YES**

  VERIFIED: Troubleshooting has been completed.

- **NO**

  Refer to **INFORMATION**

INFORMATION

FAULT-TRACING INFORMATION

The fault should have been detected and remedied. As this is not the case fault-tracing has failed.

Exit fault-tracing for this diagnostic trouble code (DTC) or make another attempt.

INFORMATION

FAULT-TRACING INFORMATION

If the fault is intermittent, do not verify fault-tracing if the fault does not recur.

It is possible to view the information again, or leave fault-tracing for this diagnostic trouble code (DTC).

AIR-QUALITY: SENSOR, REPLACING

As the illustrations in this service information are used for different model years and / or models, some variation may occur. However, the essential information in the illustrations is always correct.

PREPARATIONS

Remove the plenum chamber. See **COWL, REPLACING**

Open the damper for the air intake.

REMOVING THE AIR QUALITY SENSOR

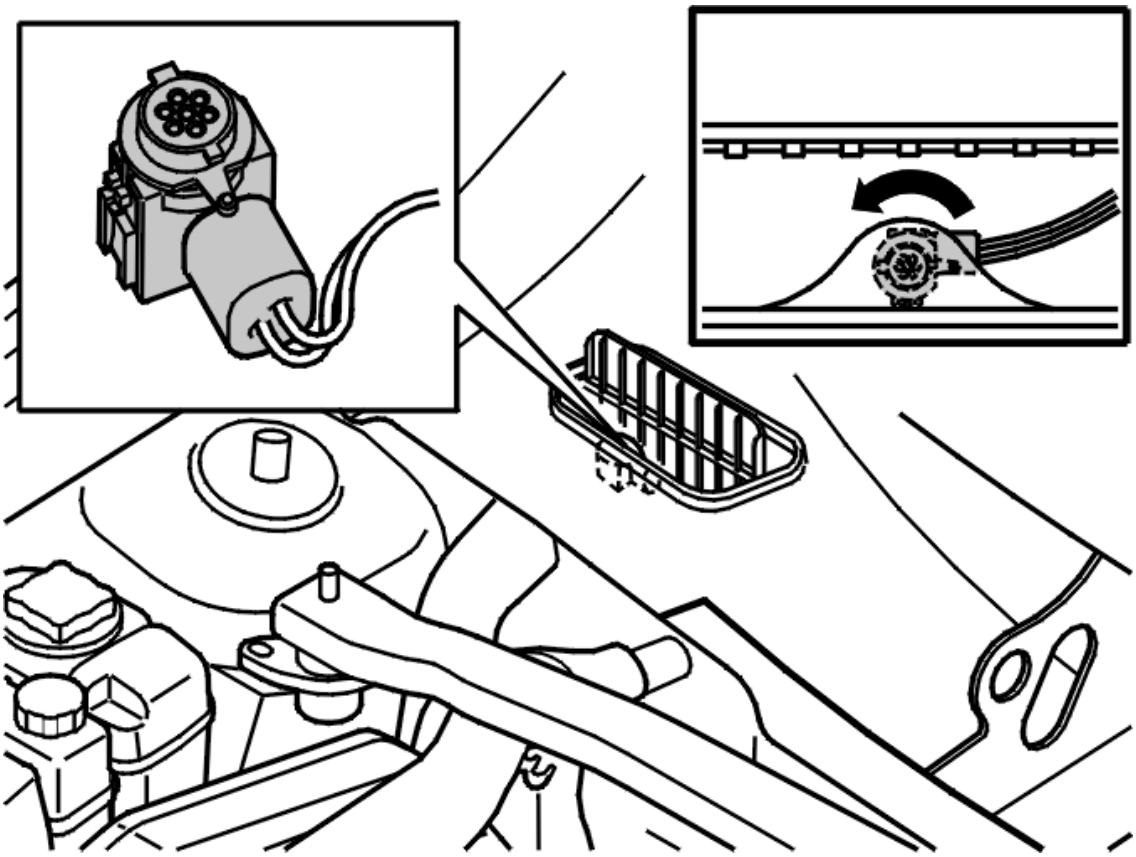

Fig. 50: Identifying Air Quality Sensor Removal
Courtesy of VOLVO CARS CORPORATION

Turn the sensor approximately 60° counter-clockwise (see the illustration).

Slightly pull out the sensor and cable to access the connector.

Disconnect the connector.

INSTALLING THE AIR QUALITY SENSOR

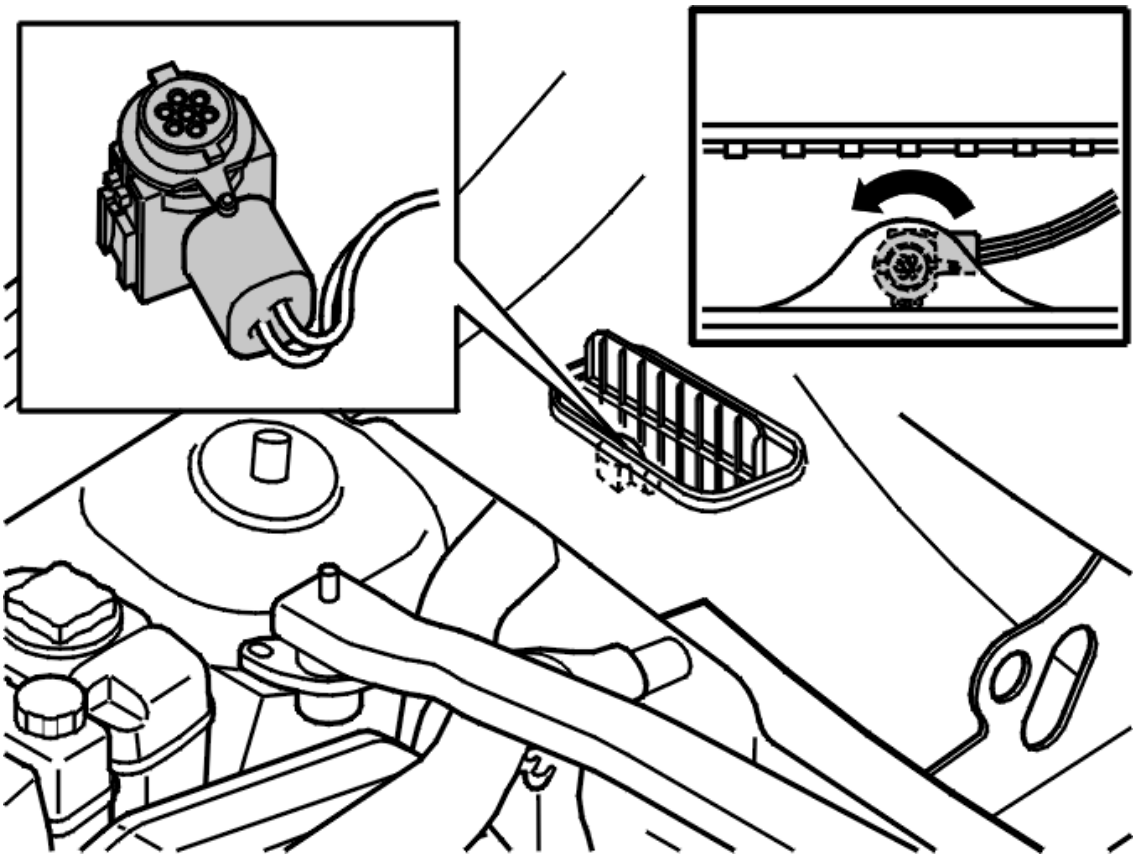

Fig. 51: Identifying Air Quality Sensor Removal
Courtesy of VOLVO CARS CORPORATION

Connect the connector.

Insert as much of the cable through the hole as possible.

Position the sensor and seal (the flat side must face upwards) in the groove. The sensor can only be positioned one way in the groove (see the illustration).

Turn the sensor approximately 60° clockwise until it will not turn any further. Check that the air quality sensor is securely in place.

Ensure that the cable is as far in as possible.

Close the damper for the air intake.

Install the plenum chamber. See **COWL, REPLACING** .

SIGNAL DESCRIPTION, CLIMATE CONTROL MODULE (CCM), CONNECTOR C

There is no breakout box for this connector.

NOTE: **From and including w50 2001, the fan is connected directly to connector C with no wiring in-between.**

U=	DC voltage in volts (V)	U_{AC} =	AC voltage in volts (V)
U_{bat} =	Battery voltage (V)	f =	Frequency in Hertz (Hz)
U_{low} =	Voltage approximately 0 V	% duty =	Duty cycle (pulse ratio) as a percentage (%)
t =	Time in milliseconds (ms)		

Control module terminal	Connecting the component	Signal type	Ignition on	Engine idling	Other
#C1	terminal #1 Hall sensor	Power supply (H+), Hall sensor	6.1-6.3 V	6.1-6.3 V	
#C2	terminal #2 Hall sensor	Signal (H1), Hall sensor	3.7 V	3.7 V	
#C3	terminal #3 fan motor passenger compartment temperature sensor	Signal, fan motor passenger compartment temperature sensor	1-5.2 V	1-5.2 V	Quadratic signal when the motor is running
#C4	terminal #4 fan motor passenger compartment temperature sensor	Signal, fan motor passenger compartment temperature sensor	1-5.2 V	1-5.2 V	Quadratic signal when the motor is running
#C5	terminal #5 Hall sensor	Signal ground (H-), Hall sensor	0.9-1.6 V	0.9-1.6 V	
#C6	terminal #6 Hall sensor	Signal (H2), Hall sensor	3.7 V	3.7 V	

CCM-0020: AIR QUALITY SENSOR. SIGNAL TOO LOW (2003-2004)

DIAGNOSTIC TROUBLE CODE (DTC) INFORMATION

Condition

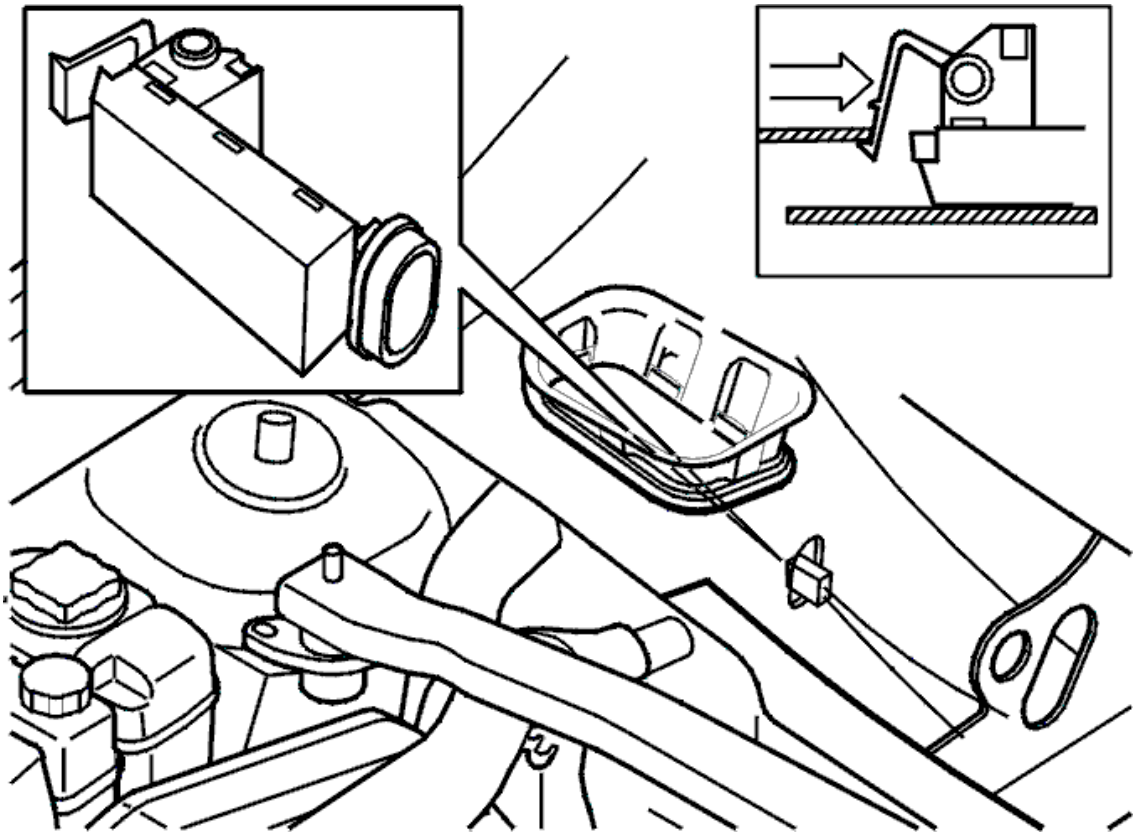

Fig. 52: Air Quality Sensor
Courtesy of VOLVO CARS CORPORATION

Diagnostic trouble code (DTC) CCM-0020 is stored if the control module registers that the signal from the air quality sensor has a pulse length which is less than 3% of the period.

The diagnostic trouble code (DTC) CCM-0020 can only be diagnosed for electronic climate control modules (CCM) (ECC versions) with air quality sensors.

Substitute Value

- The control module does not permit the recirculation shutter to close in the air quality sensor mode while the fault persists
- No air quality sensor function.

Possible Source

- Short-circuit to ground in the signal cable between the control module and the air quality sensor.

Fault symptom[s]

- Poor air quality in the passenger compartment.

SIGNAL TOO LOW

CHECKING THE FUNCTION

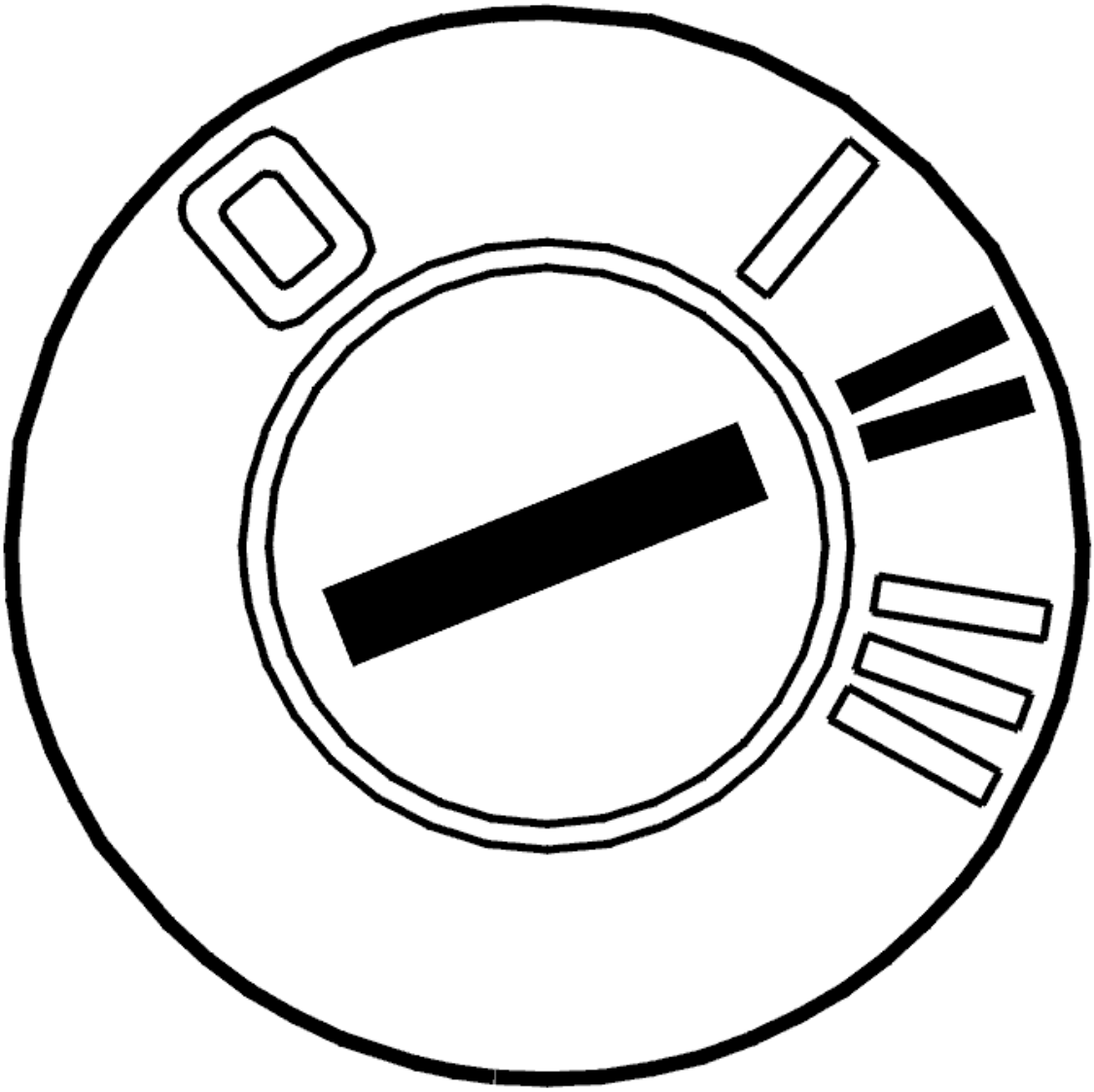

Fig. 53: Identifying Ignition ON
Courtesy of VOLVO CARS CORPORATION

- Ignition on
- Check that the value from the air quality sensor is within the permitted range.

NOTE: The blower fan must be running.

Expose the fresh air intake to windshield washer fluid, gasoline vapor or similar.

The value should be between 4% and 96%.

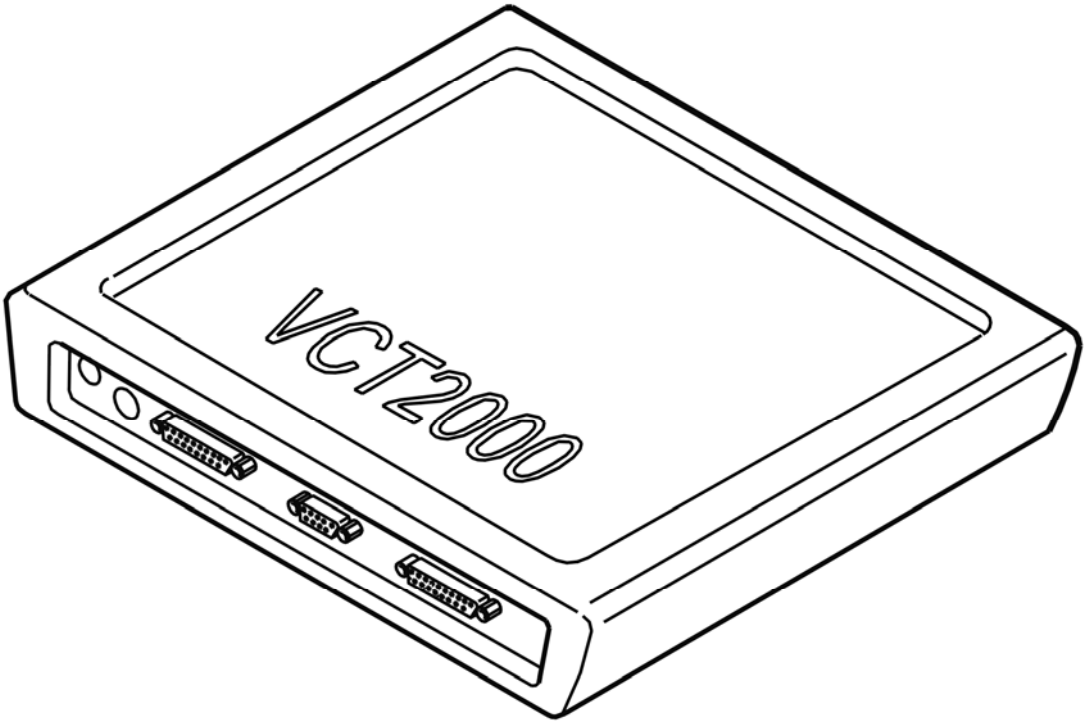

Fig. 54: Identifying VCT2000 Diagnostic Tool Symbol In VIDA
Courtesy of VOLVO CARS CORPORATION

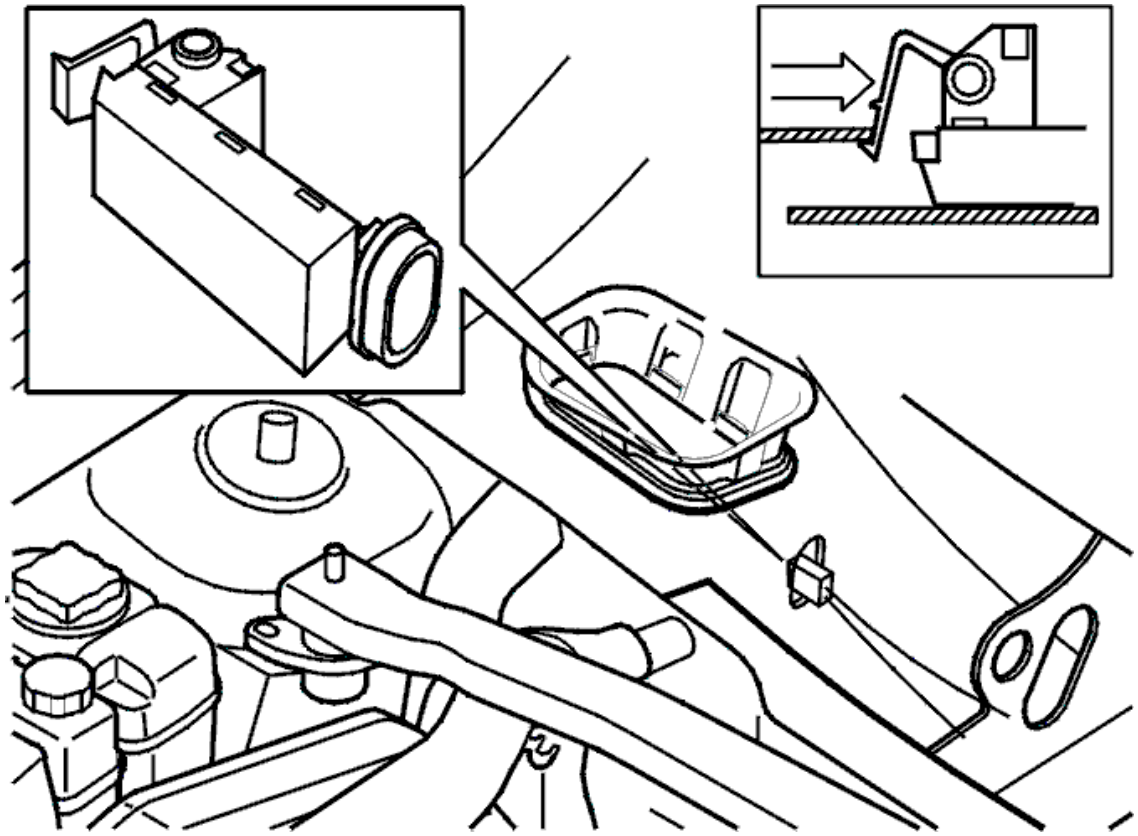

Fig. 55: Air Quality Sensor
Courtesy of VOLVO CARS CORPORATION

Is this value within its permitted range?

- **YES**

  Refer to **CHECKING THE CONNECTORS AND CABLES**

- **NO**

  Refer to **CHECKING COMPONENTS AND WIRING**

CHECKING THE CONNECTORS AND CABLES

Check connector B on the climate control module (CCM) and the air quality sensor connector. Check for contact resistance and oxidation. Check for loose connections.

Check the cable between climate control module (CCM) terminal #B3 (#3) and air quality sensor terminal #3. Check for an intermittent short-circuit to ground.

Check the cable between climate control module (CCM) terminal #B16 (#16) and air quality sensor terminal #1. Check for an intermittent short-circuit to ground.

Check the cable between climate control module (CCM) terminal #B5 (#5) and air quality sensor terminal #5. Check for an intermittent short-circuit to ground.

Other information:

- To access or replace the climate control module (CCM), see **CLIMATE CONTROL MODULE (CCM), REPLACING**
- To access or replace the air quality sensor, see **AIR QUALITY SENSOR, REPLACING**
- For other values, see **SIGNAL DESCRIPTION, CLIMATE CONTROL MODULE (CCM), CONNECTOR B**
- see **CHECKING WIRING AND TERMINALS** .

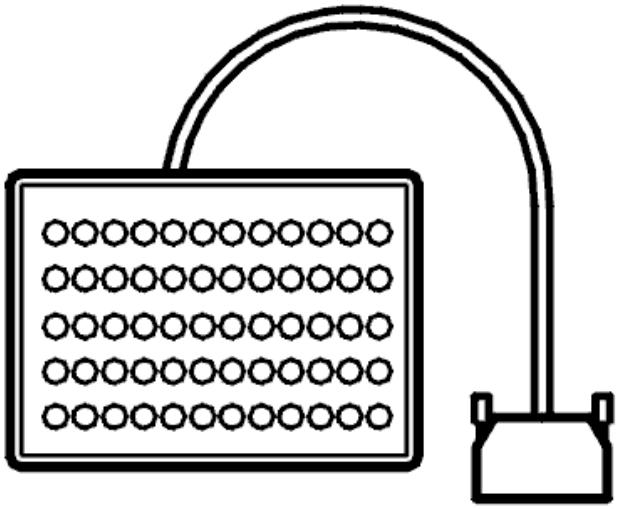

Fig. 56: Breakout Box
Courtesy of VOLVO CARS CORPORATION

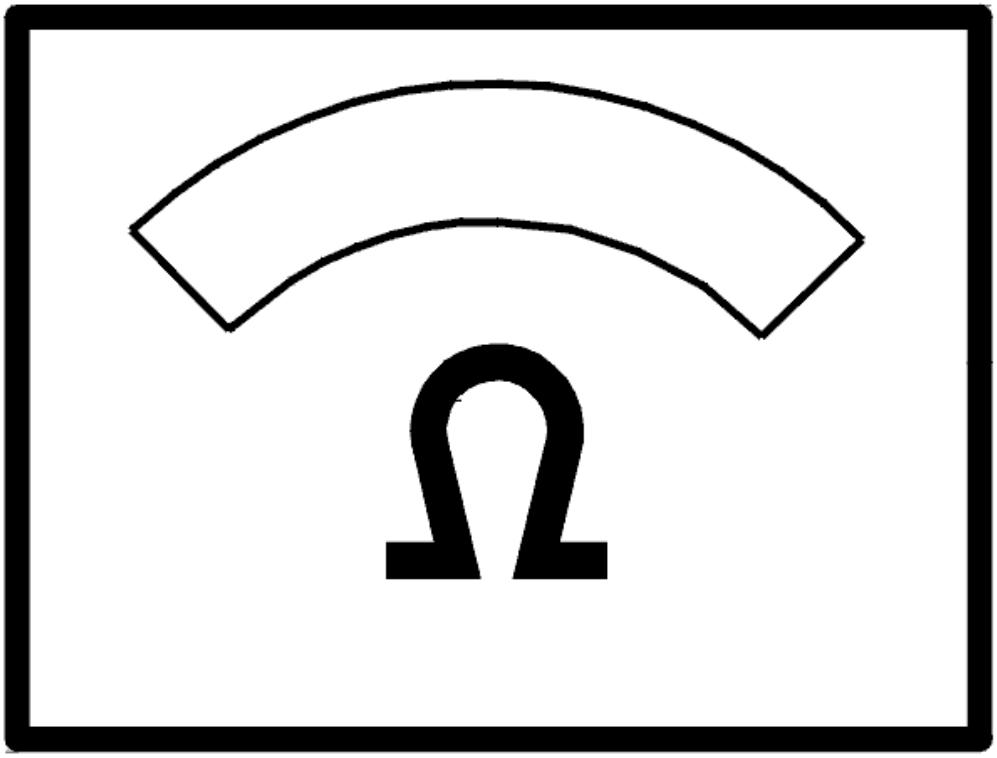

Fig. 57: Identifying Ohm Meter
Courtesy of VOLVO CARS CORPORATION

- **Continue**

  Refer to **INFORMATION**

CHECKING COMPONENTS AND WIRING

Check the cable between climate control module (CCM) terminal #B3 (#3) and air quality sensor terminal #3. Check for a short-circuit to ground.

Check the cable between climate control module (CCM) terminal #B16 (#16) and air quality sensor terminal #1. Check for a short-circuit to ground.

Remedy as necessary.

Other information:

- To access or replace the climate control module (CCM), see **CLIMATE CONTROL MODULE (CCM), REPLACING**
- To access or replace the air quality sensor, see **AIR QUALITY SENSOR, REPLACING**
- For other values, see **SIGNAL DESCRIPTION, CLIMATE CONTROL MODULE (CCM), CONNECTOR B**
- see **CHECKING WIRING AND TERMINALS** .

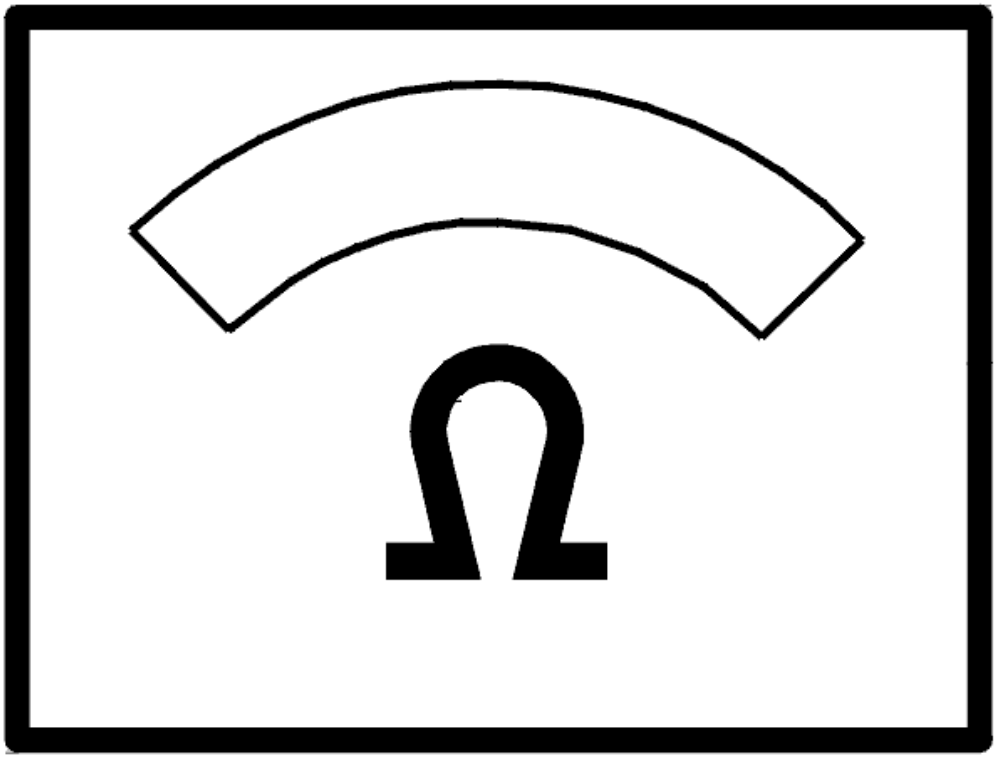

Fig. 58: Identifying Ohm Meter
Courtesy of VOLVO CARS CORPORATION

Was a fault detected?

- **YES**

Refer to **VERIFICATION**

- **NO**

  Refer to **INFORMATION**

VERIFICATION

HINT: After carrying out the repair, check that the fault has been remedied:

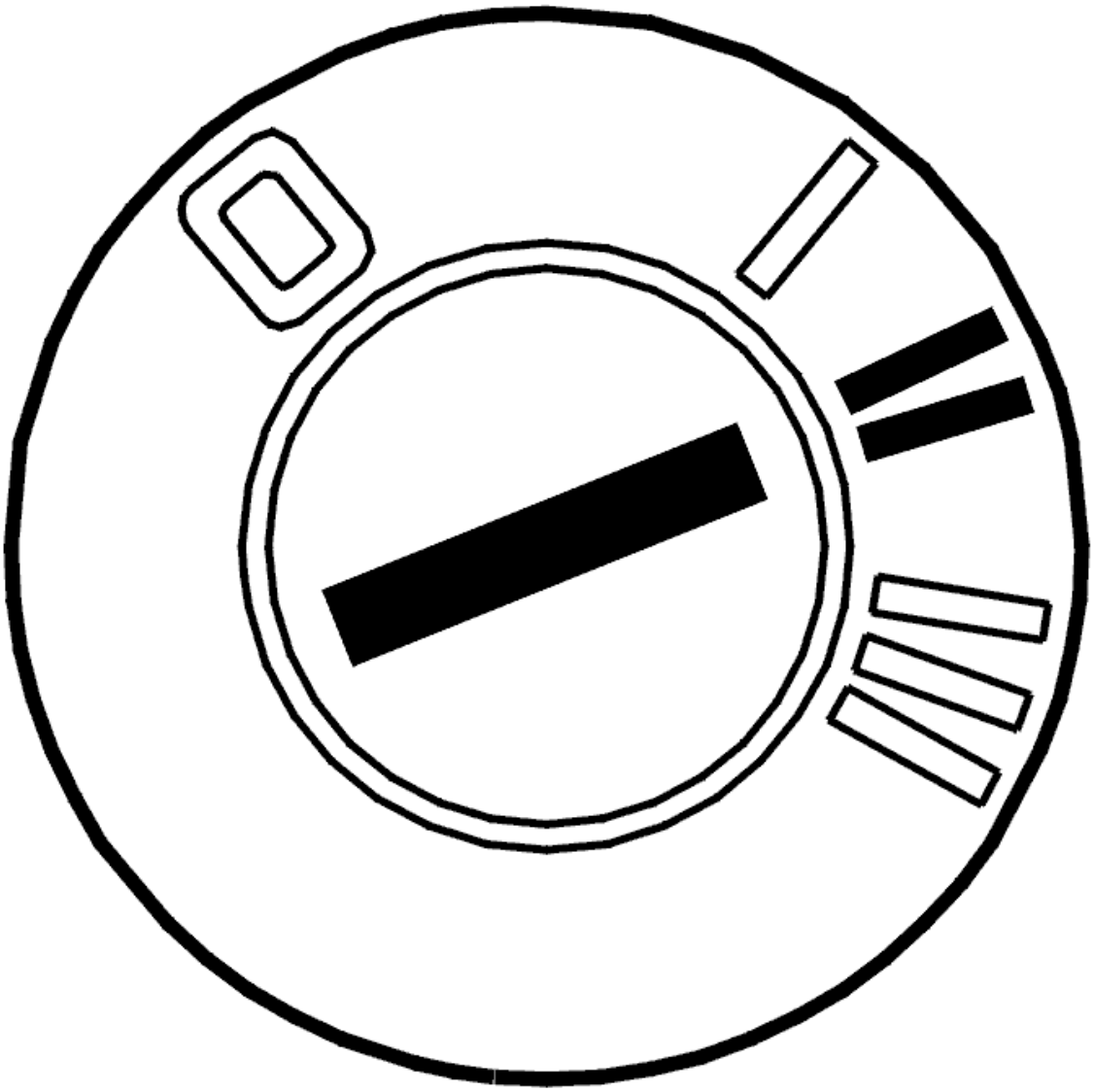

Fig. 59: Identifying Ignition ON
Courtesy of VOLVO CARS CORPORATION

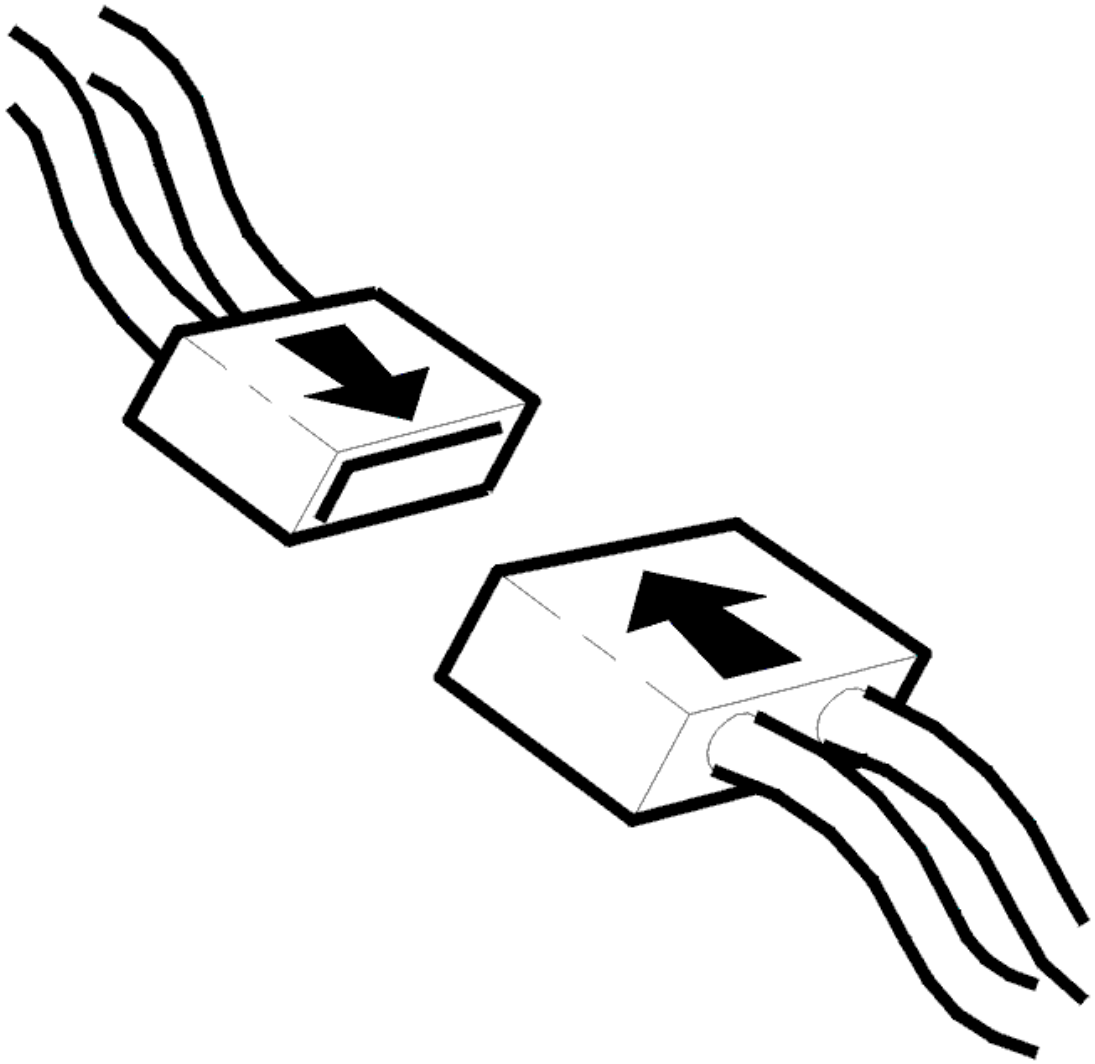

Fig. 60: Connecting Connector
Courtesy of VOLVO CARS CORPORATION

- Ignition off
- Reconnect the connectors, reinstall components etc.
- Ignition on
- Check that the value from the air quality sensor is within the permitted range.

  The value should be between 4% and 96%.

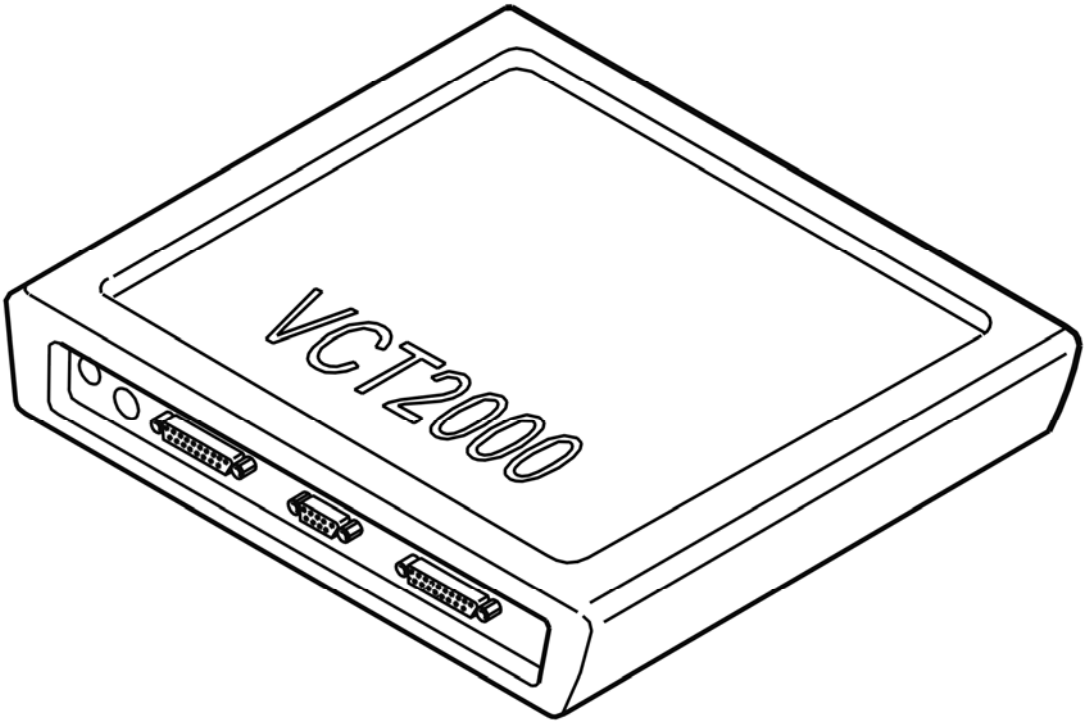

Fig. 61: Identifying VCT2000 Diagnostic Tool Symbol In VIDA
Courtesy of VOLVO CARS CORPORATION

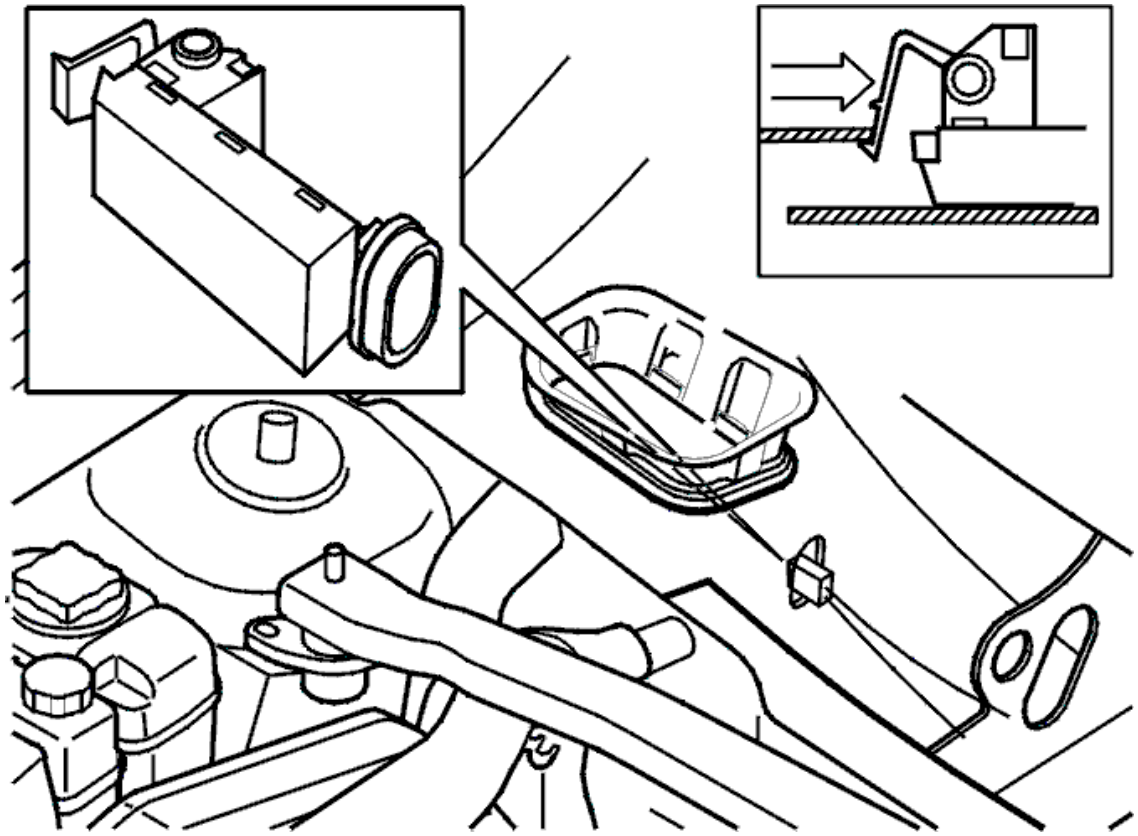

Fig. 62: Air Quality Sensor
Courtesy of VOLVO CARS CORPORATION

Are the values correct?

- **YES**

  VERIFIED: Troubleshooting has been completed.

- **NO**

  Refer to **INFORMATION**

SIGNAL DESCRIPTION, CLIMATE CONTROL MODULE (CCM), CONNECTOR B

General

There may be several connections and connectors between the control module and components.

NOTE: **It is important to connect the breakout box and check the ground terminals before taking readings.**

U=	DC voltage in volts (V)	U_{AC} =	AC voltage in volts (V)

U_{bat} =	Battery voltage (V)	f =	Frequency in Hertz (Hz)
U_{low} =	Voltage approximately 0 V	% duty =	Duty cycle (pulse ratio) as a percentage (%)
t =	Time in milliseconds (ms)		

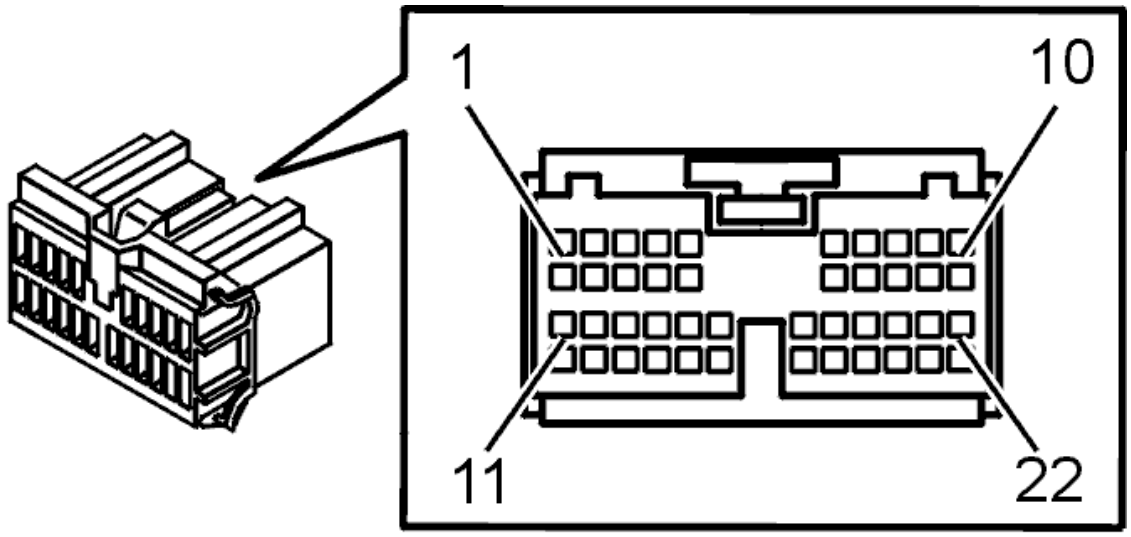

Fig. 63: Climate Control Module Connector
Courtesy of VOLVO CARS CORPORATION

Breakout box terminal	Terminal	Connecting the component	Signal type	Ignition on	Engine idling	Other
#1	#B1	terminal #2 evap	Signal, evaporator temperature sensor	0.1-4.85 V	0.1-4.85 V	ECC, MCC (U_{low} STD)
#2	#B2	-	-	-V	-	-
#3	#B3	terminal #3 air quality sensor	Signal, air quality sensor	Pulse width modulation (PWM) signal, 80 Hz. 0.4-12 V.	Pulse width modulation (PWM) signal, 80 Hz. 0.4-12 V.	ECC,
#4	#B4	terminal #1 sun sensor	Signal, sun sensor	0.78-4.62 V	0.78-4.62 V	ECC, MCC (U^{low} STD)
#5	#B5	terminal #5	Signal ground, sun	U_{low}	U_{low}	Electronic

		sun sensor, terminal #5 air quality sensor	sensor, air quality sensor and alarm LED			climate control
#6	#B6	-	-	-	-	-
#7	#B7	-	-	-	-	-
#8	#B8	-	-			
#9	#B9	-	-			
#10	#B10	-	-			
#11	#B11	terminal #3 damper motors	Signal ground, damper motor control MA1+	~U_{low}	~U_{low}	
#12	#B12	terminal #4 damper motors	Signal ground, damper motor control MA1-	~U_{low}	~U_{low}	
#13	#B13	terminal #5 damper motors	Signal ground, damper motor control MA2+	~U_{low}	~U_{low}	
#14	#B14	terminal #6 damper motors	Signal ground, damper motor control MA2-	~U_{low}	~U_{low}	
#15	#B15	terminal #3 evap	Signal ground, evaporator temperature sensor	~U_{low}	~U_{low}	Electronic climate control (ECC), Manual climate control (MCC)
#16	#B16	terminal #1, air quality sensor	Power supply, air quality sensor	12 V	12 V	Electronic climate control
#17	#B17	terminal #3 sun sensor	Signal, alarm LED (out). Internally directly connected to terminal #A7.	1.9 V 1 Hz 10% duty	1.9 V 1 Hz 10% duty	Electronic climate control
#18	#B18	terminal #1 damper motor temp left	Signal, damper motor temperature left	0-U_{bat}	0-U_{bat}	Quadratic signal when the motor is running
#19	#B19	terminal #1 damper motor temp right	Signal, damper motor temperature right	0-U_{bat}	0-U_{bat}	Quadratic signal when the motor is running
#20	#B20	#1 damper motor def	Signal, damper motor, defroster	0-U_{bat}	0-U_{bat}	Quadratic signal when

						the motor is operating (ECC, MCC)
#21	#B21	terminal #1 damper motor rec	Signal, damper motor recirculation	0-U_{bat}	0-U_{bat}	Quadratic signal when the motor is running
#22	#B22	terminal #1 damper motor floor/vent (ECC) terminal #1 damper motor air distribution (MCC, STD)	Signal, damper motor floor/ventilation (ECC), air distribution (MCC, STD)	0-U_{bat}	0-U_{bat}	Quadratic signal when the motor is running

INFORMATION

FAULT-TRACING INFORMATION

The fault should have been detected and remedied. As this is not the case fault-tracing has failed.

Exit fault-tracing for this diagnostic trouble code (DTC) or make another attempt.

INFORMATION

FAULT-TRACING INFORMATION

If the fault is intermittent, do not verify fault-tracing if the fault does not recur.

It is possible to view the information again, or leave fault-tracing for this diagnostic trouble code (DTC).

CCM-0020: FUNCTION BUTTON. ACTIVATED TOO LONG (2005-2012)

DIAGNOSTIC TROUBLE CODE (DTC) INFORMATION CCM-0020

Condition

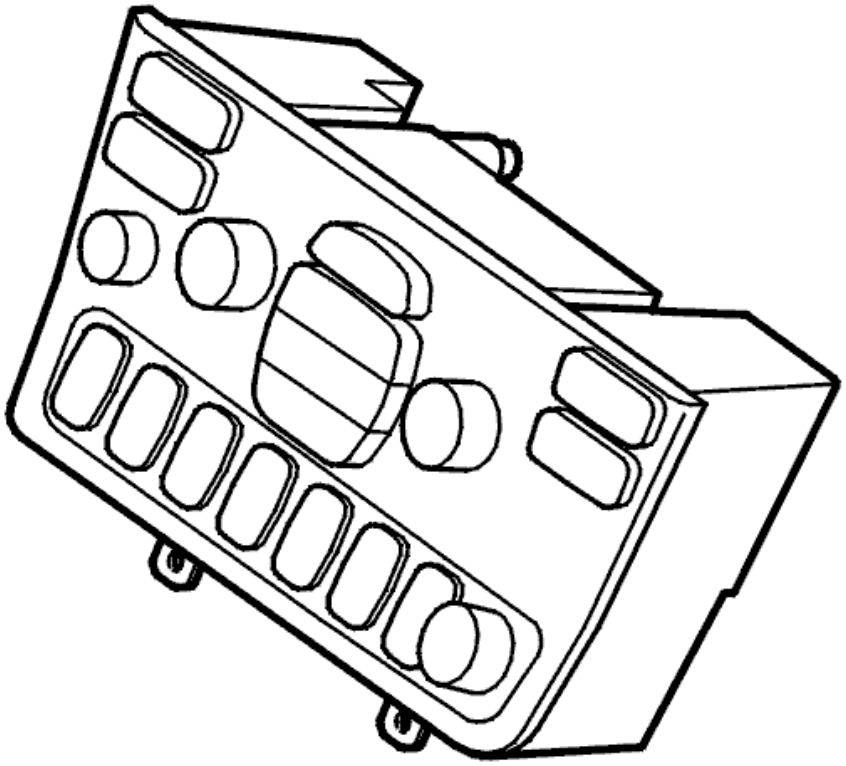

Fig. 64: Climate Control Module
Courtesy of VOLVO CARS CORPORATION

The diagnostic trouble code (DTC) is stored if the climate control module (CCM) detects that a function button on the dashboard environment panel has been activated for longer than two minutes.

The climate control module (CCM) can detect a maximum of two buttons being pressed simultaneously. If more than two buttons are activated for too long simultaneously, the functionality for all the buttons may be lost.

The diagnostic trouble code (DTC) can be diagnosed in ignition positions I and II.

Substitute Value

- The climate control module (CCM) does not permit the button function to be activated before the button has returned to the normal position.

Possible Source

- One or more function buttons are stuck in the pressed-in position
- Unintentionally long activation of the function button.

Fault symptom[s]

- Buttons/control knobs on center console (Climate)/No/reduced/incorrect function

ACTIVATED TOO LONG

CHECKING THE COMPONENT

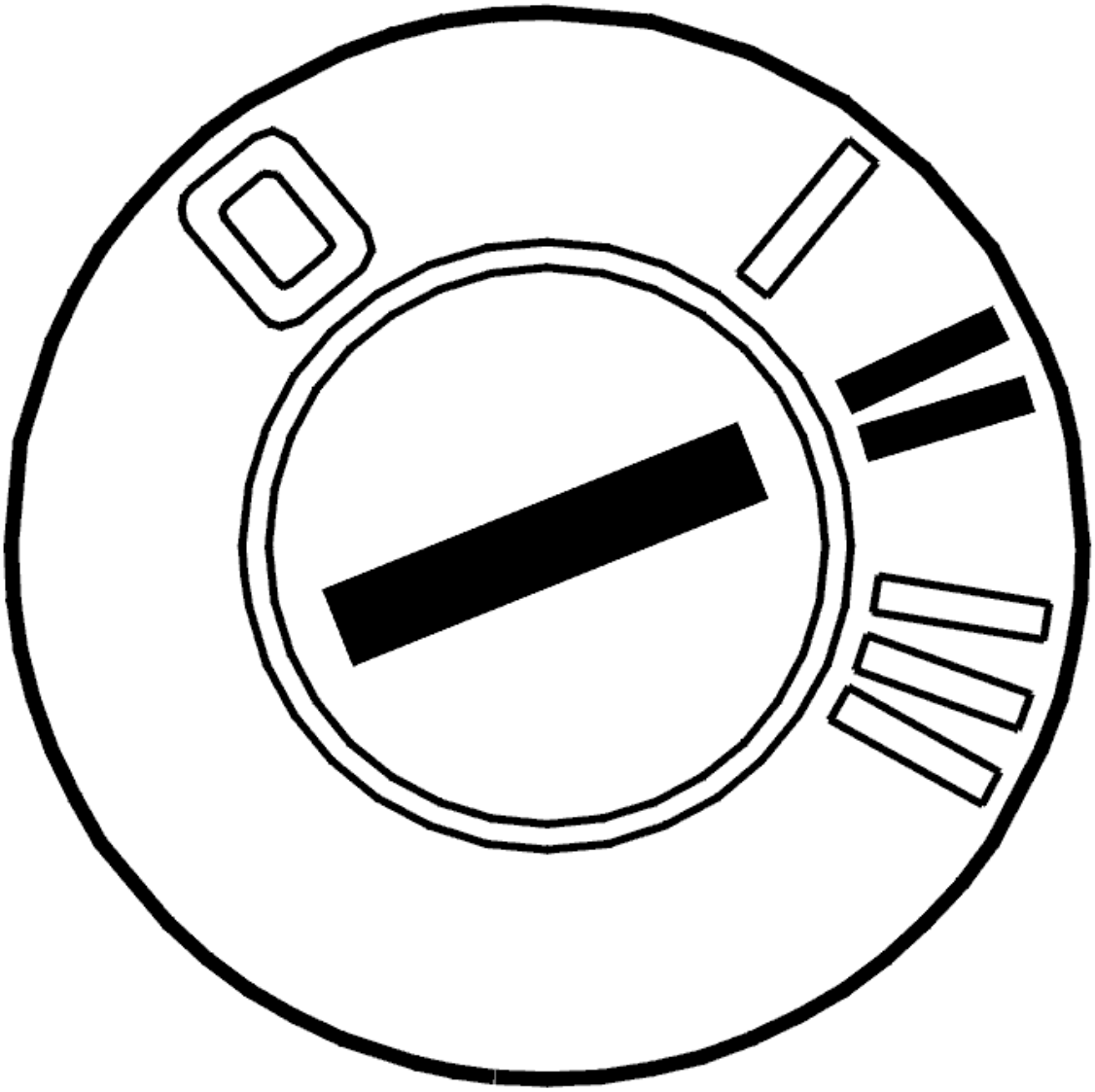

Fig. 65: Identifying Ignition ON
Courtesy of VOLVO CARS CORPORATION

- Ignition on.

  Read off which switch was activated when the diagnostic trouble code (DTC) was set by clicking on the VCT2000 symbol.

  Check if the switch is sticking due to dirt. Check if there is an obstruction preventing the switch from returning.

Check that the functions that can be controlled via the switch on the climate control module (CCM) are working.

Also check that the LEDs in the switches light and go out when the buttons are pressed.

The keypad must be replaced if the switch does not spring back and the fault is not due to dirt or an external object.

Other information:

- see **CLIMATE CONTROL MODULE (CCM), REPLACING**

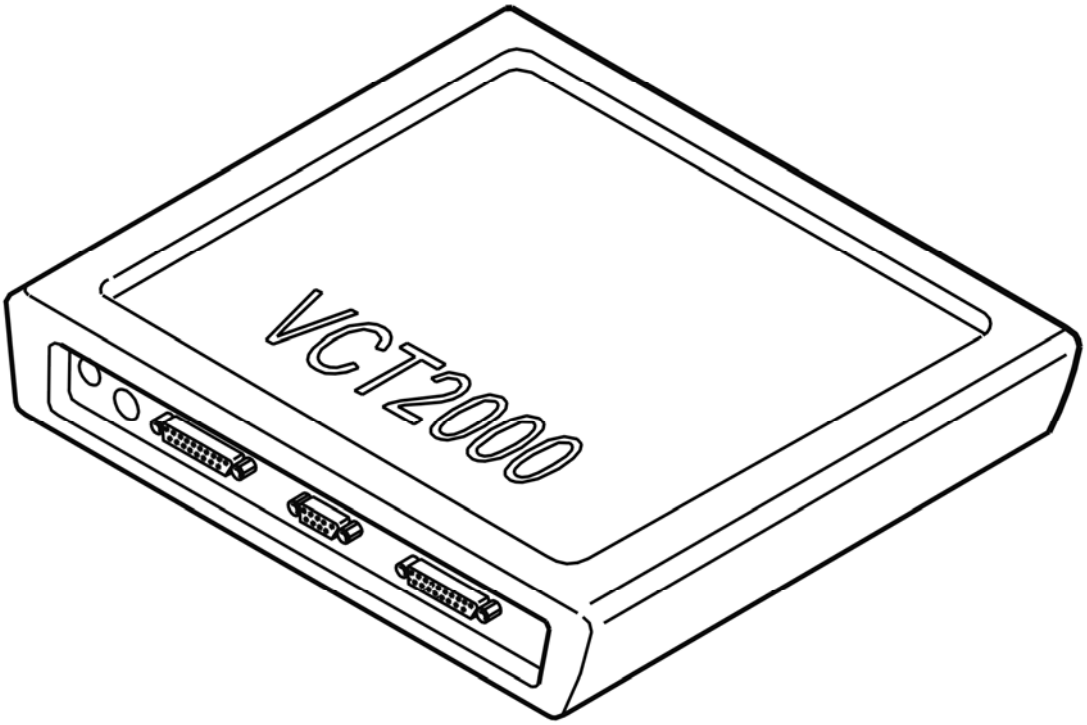

Fig. 66: Identifying VCT2000 Diagnostic Tool Symbol In VIDA
Courtesy of VOLVO CARS CORPORATION

Was a fault detected?

- **YES**

  Refer to **VERIFICATION**

- **NO**

  Refer to **FAULT-TRACING INFORMATION**

FAULT-TRACING INFORMATION

The fault is probably because a switch has been activated for too long during individual operating cycles. No further corrective action is required if the diagnostic trouble code (DTC) does not recur.

- **Continue**

  Refer to **INFORMATION**

VERIFICATION

HINT: After carrying out the repair, check that the fault has been remedied.

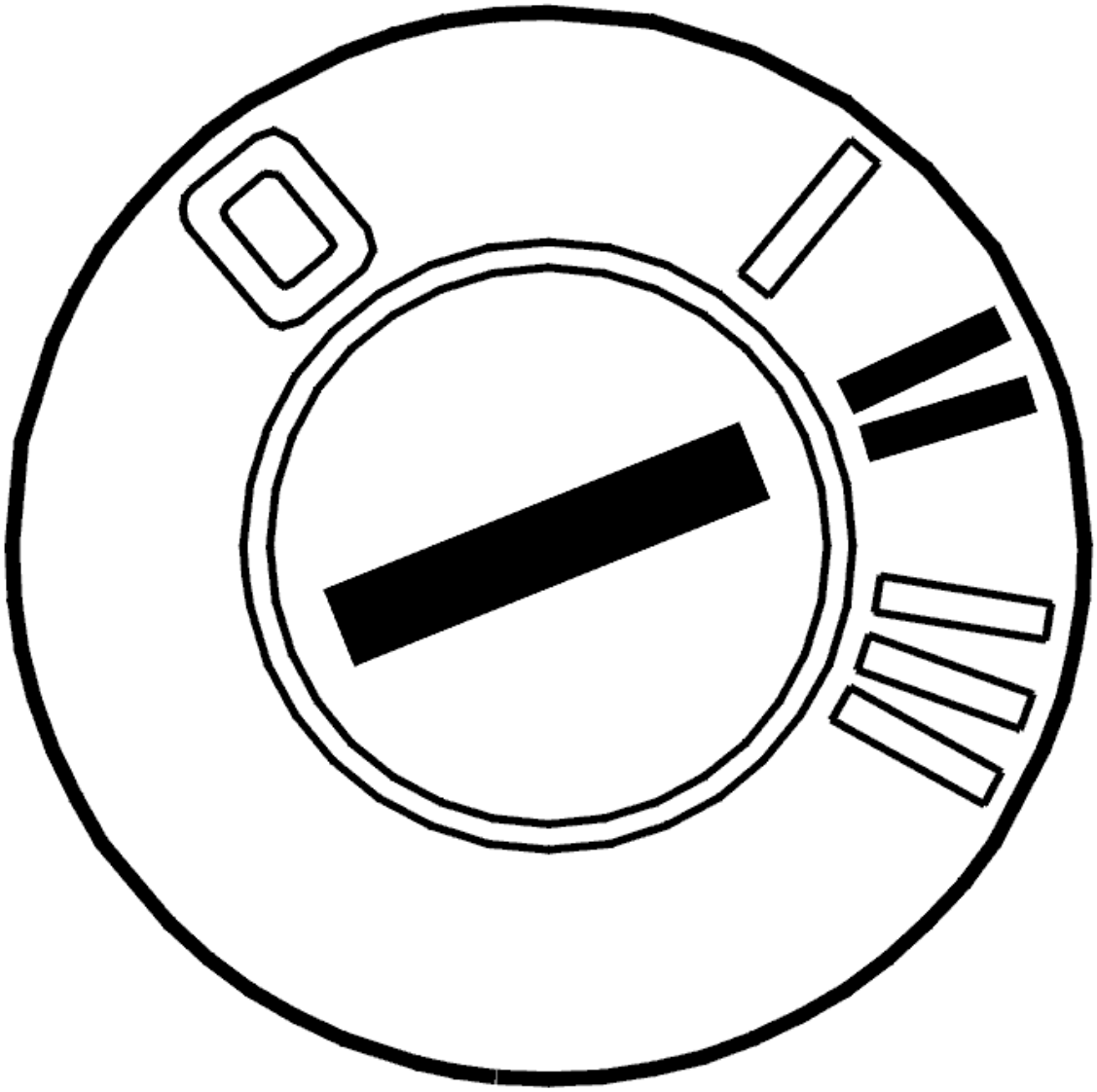

Fig. 67: Identifying Ignition ON
Courtesy of VOLVO CARS CORPORATION

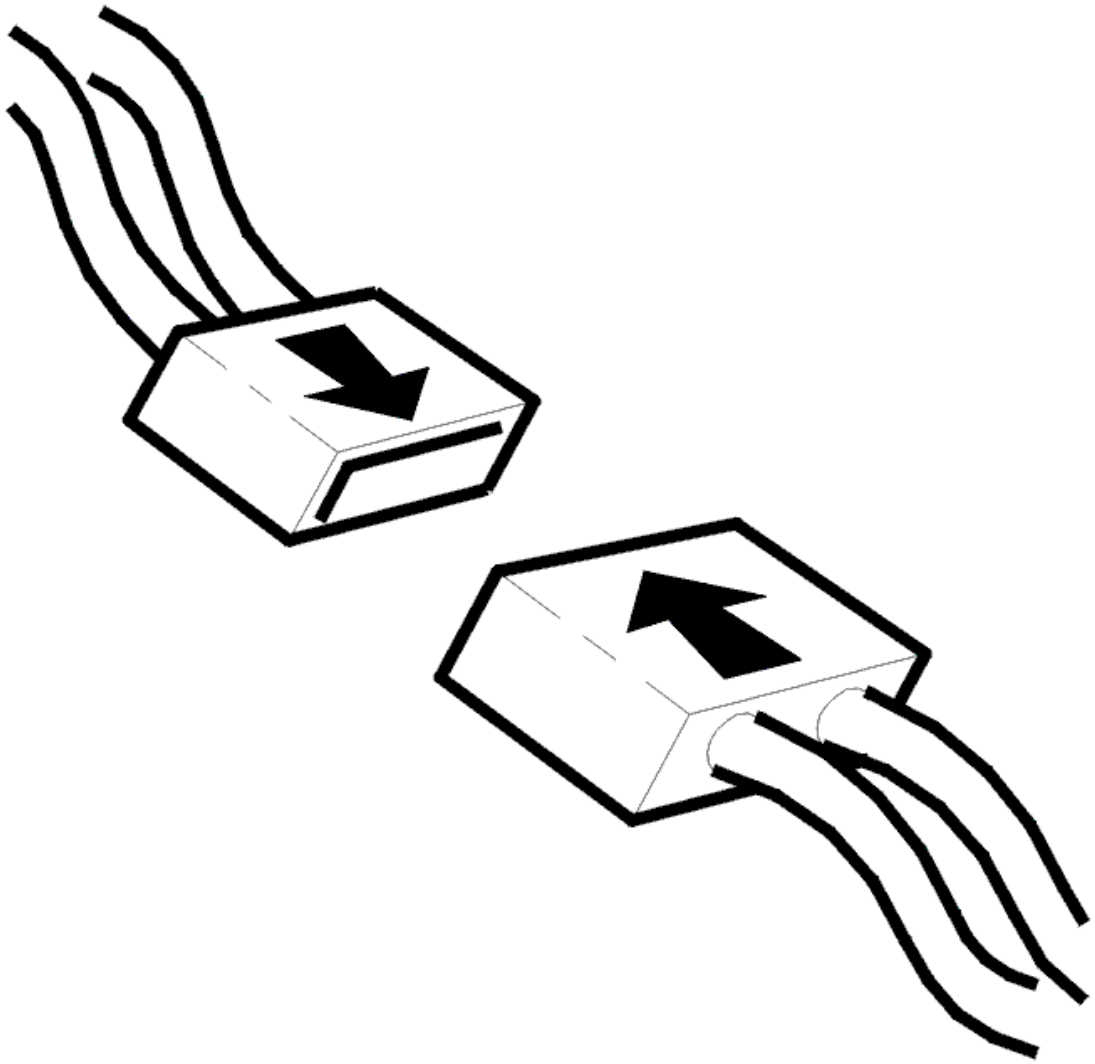

Fig. 68: Connecting Connector
Courtesy of VOLVO CARS CORPORATION

- Ignition off.

NOTE: **Wait at least 1 minute before "Ignition on". This is to allow the climate control module (CCM) to carry out a new diagnostic.**

- Reinstall the connectors, components etc.
- Ignition on
- Read off diagnostic trouble codes (DTCs).

The fault is no longer present if the status of the diagnostic trouble code (DTC) has changed to intermittent.

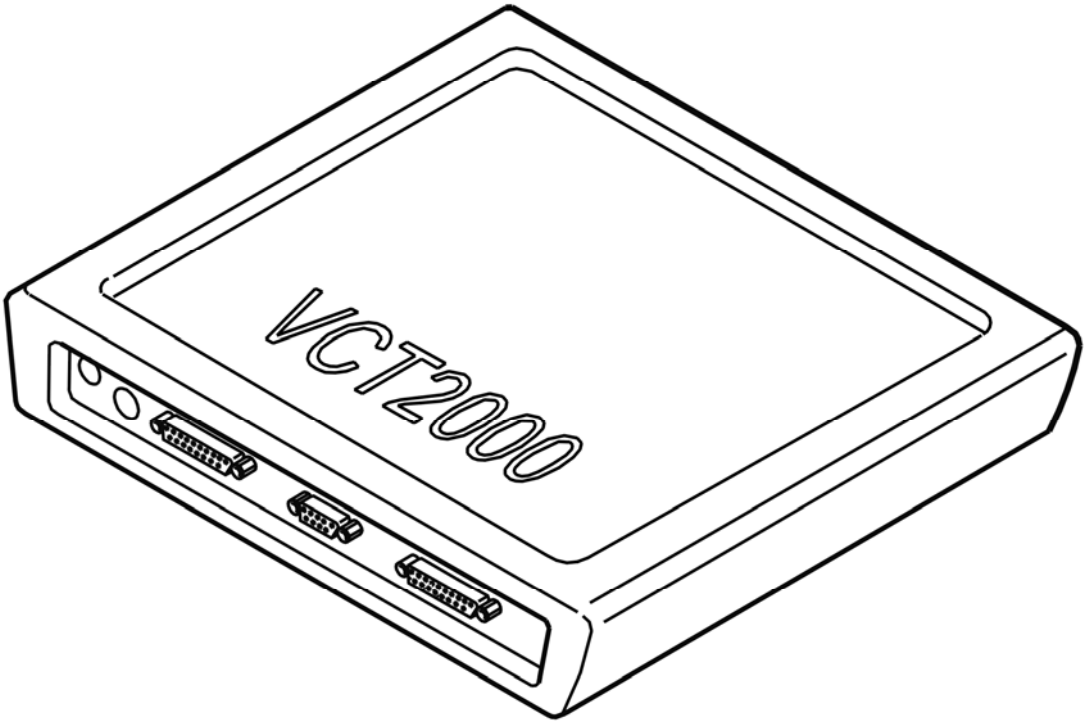

Fig. 69: Identifying VCT2000 Diagnostic Tool Symbol In VIDA
Courtesy of VOLVO CARS CORPORATION

Does the status change?

- **YES**

  VERIFIED: Troubleshooting has been completed.

- **NO**

  Refer to **INFORMATION**

INFORMATION

FAULT-TRACING INFORMATION

The fault should have been detected and remedied. As this is not the case fault-tracing has failed.

Exit fault-tracing for this diagnostic trouble code (DTC) or make another attempt.

INFORMATION

FAULT-TRACING INFORMATION

If the fault is intermittent, do not verify fault-tracing if the fault does not recur.

It is possible to view the information again, or leave fault-tracing for this diagnostic trouble code (DTC).

CCM-0021: AIR QUALITY SENSOR. INTERNAL FAULT (2003-2004)

DIAGNOSTIC TROUBLE CODE (DTC) INFORMATION

Condition

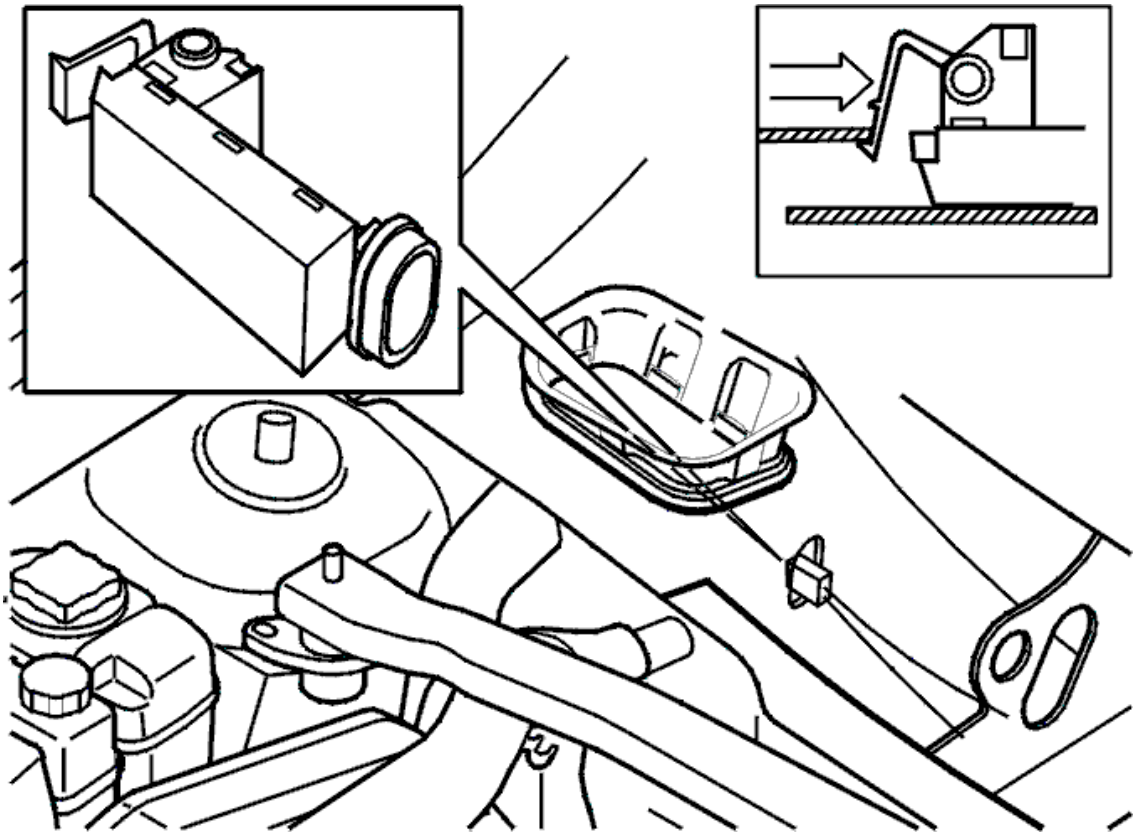

Fig. 70: Air Quality Sensor
Courtesy of VOLVO CARS CORPORATION

Diagnostic trouble code (DTC) CCM-0021 is stored if the control module registers that the signal from the air quality sensor has a pulse length which is between 48% and 50% of the period.

The diagnostic trouble code (DTC) CCM-0021 can only be diagnosed for electronic climate control modules (CCM) (ECC version) with air quality sensors.

Substitute Value

- The control module does not permit the recirculation shutter to close in the air quality sensor mode while the fault persists
- No air quality sensor function.

Possible Source

- Internal fault in the circuit for the air quality sensor function.

Fault symptom[s]

- Poor air quality in the passenger compartment.

INTERNAL FAULT

CHECKING THE FUNCTION

The climate control module (CCM) has registered an internal fault in the air quality sensor. If the fault is intermittent, it has been registered previously but is no longer present. Intermittent faults can be caused by interference at start up of the control module or may be a different type of fault which occurs on different occasions. The fault is evaluated depending on how it occurs. If the fault recurs, replace the air quality sensor.

In the event of a permanent fault, replace the air quality sensor. See **AIR QUALITY SENSOR, REPLACING**.

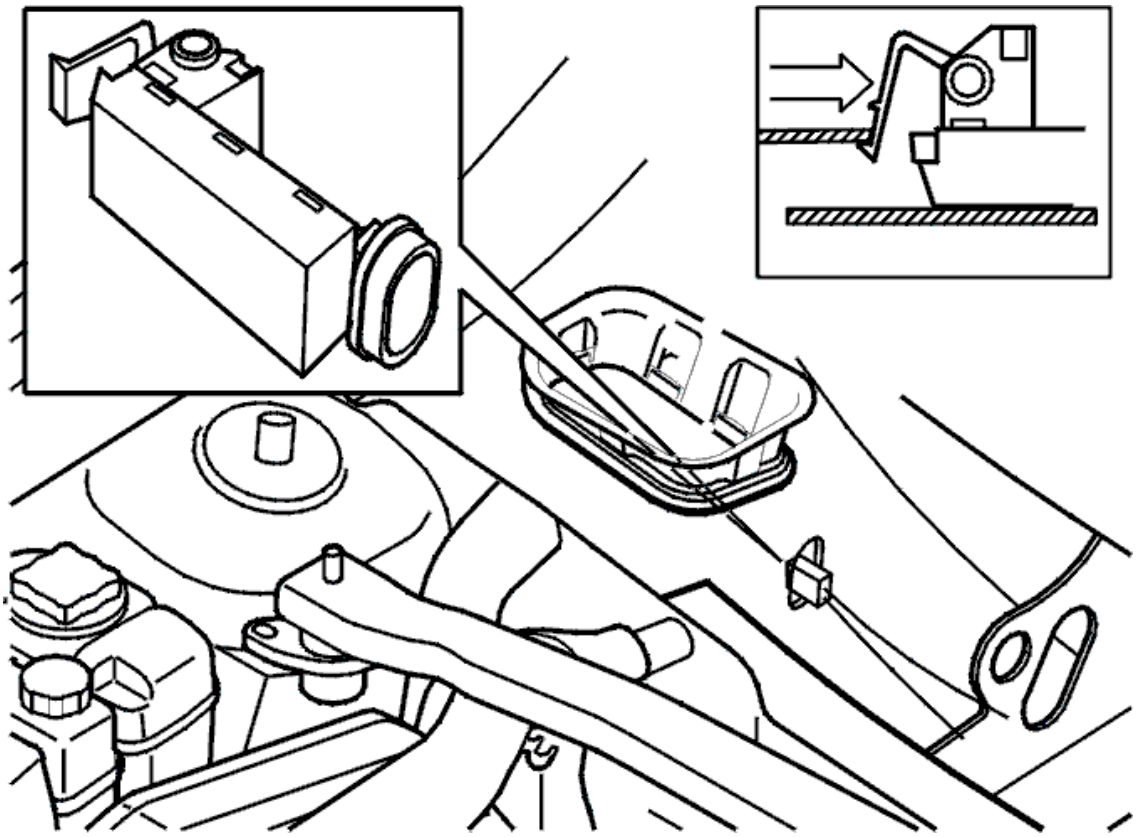

Fig. 71: Air Quality Sensor
Courtesy of VOLVO CARS CORPORATION

- **Continue**

Refer to **VERIFICATION**

VERIFICATION

HINT: After carrying out the repair, check that the fault has been remedied:

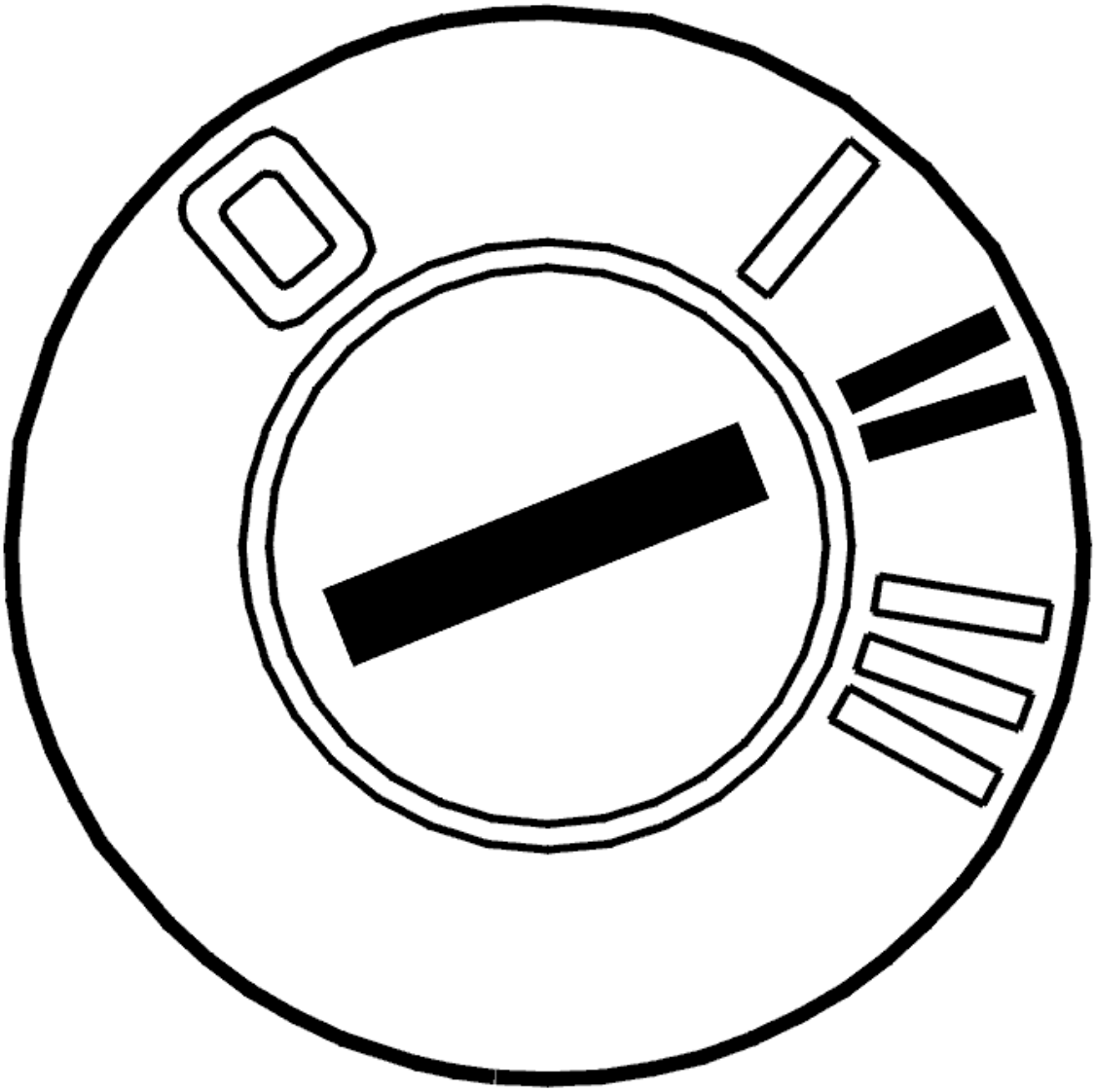

Fig. 72: Identifying Ignition ON
Courtesy of VOLVO CARS CORPORATION

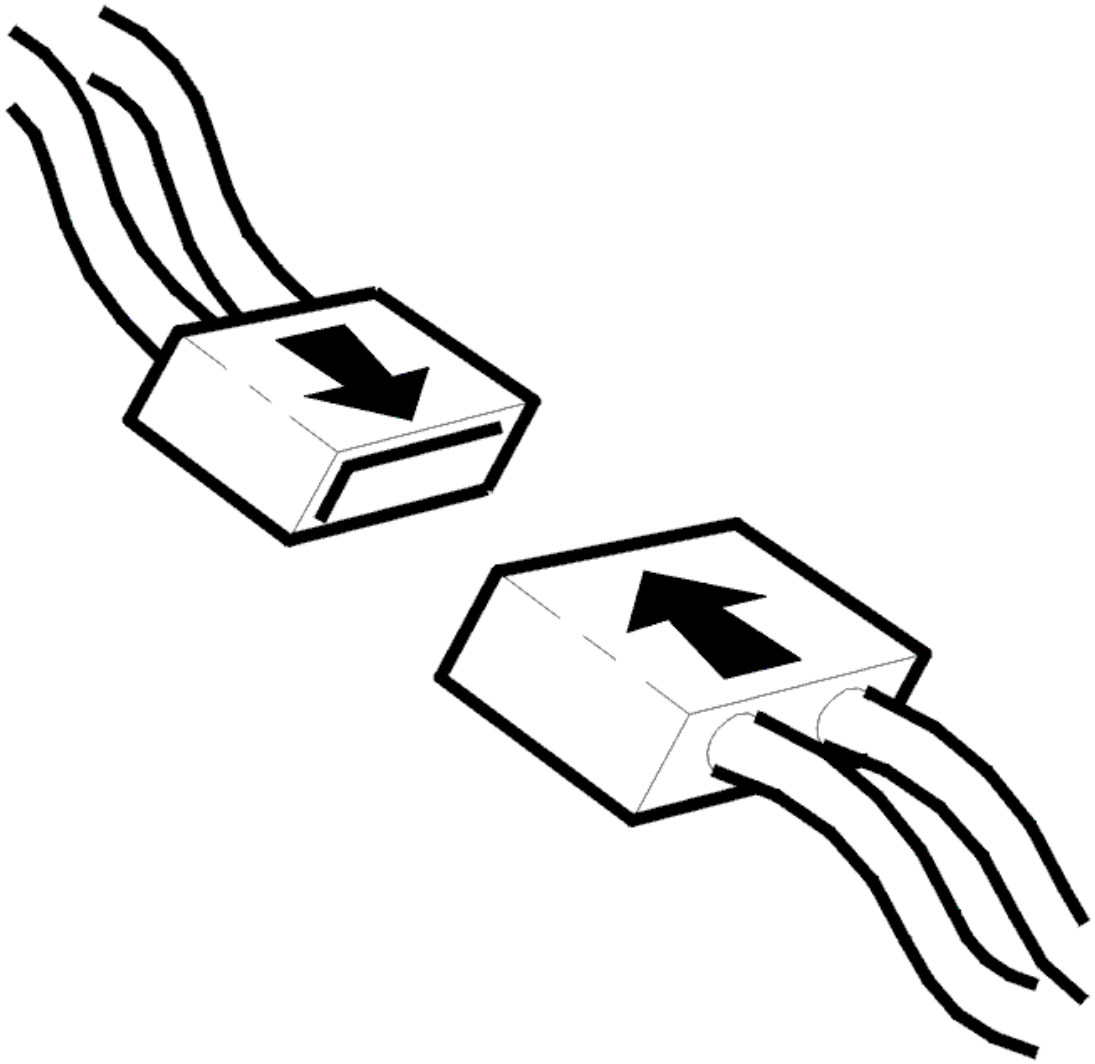

Fig. 73: Connecting Connector
Courtesy of VOLVO CARS CORPORATION

- Ignition off
- Reconnect the connectors, reinstall components etc.
- Ignition on
- Check that the value from the air quality sensor is within the permitted range.

  The value should be between 4% and 96%.

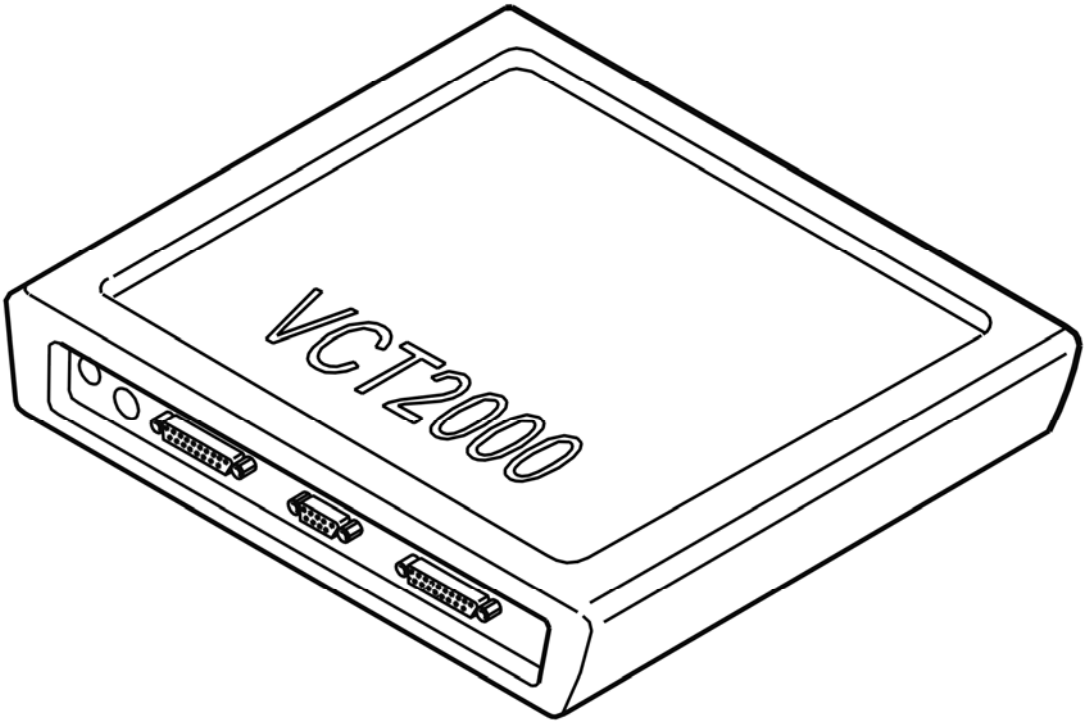

Fig. 74: Identifying VCT2000 Diagnostic Tool Symbol In VIDA
Courtesy of VOLVO CARS CORPORATION

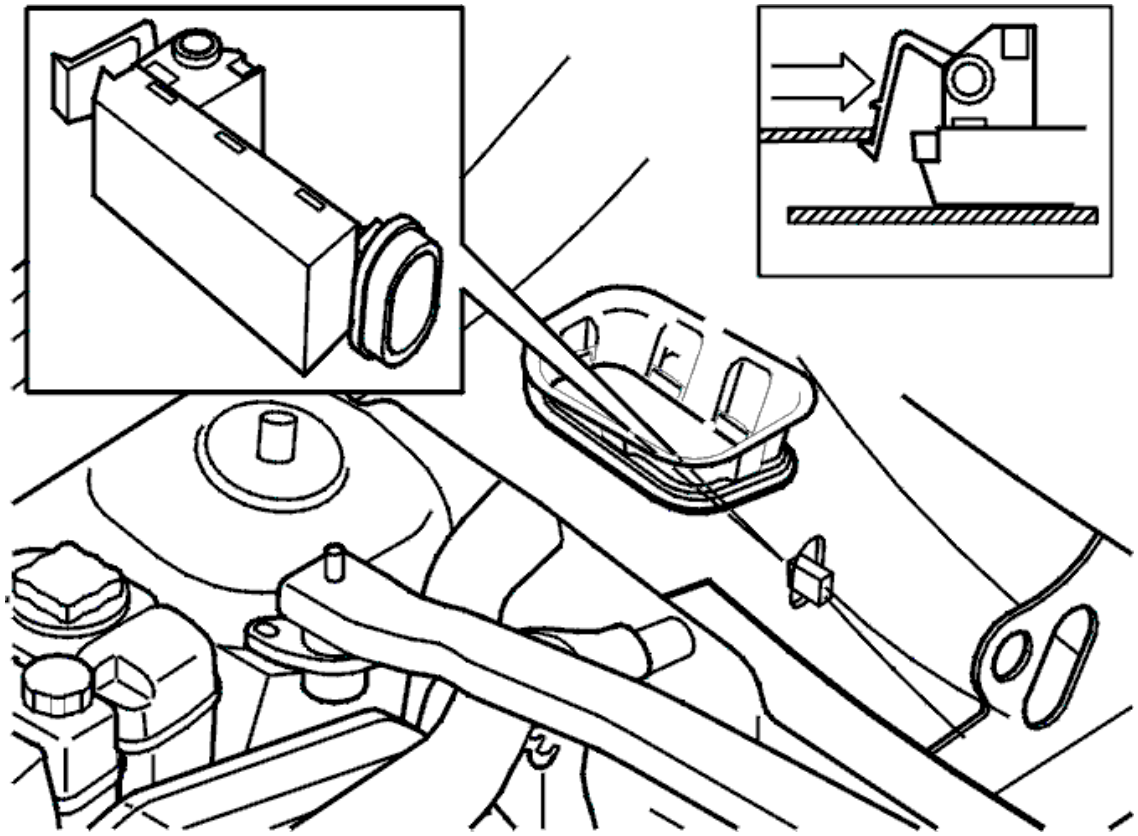

Fig. 75: Air Quality Sensor
Courtesy of VOLVO CARS CORPORATION

Are the values correct?

- **YES**

  VERIFIED: Troubleshooting has been completed.

- **NO**

  Refer to **INFORMATION**

INFORMATION

FAULT-TRACING INFORMATION

The fault should have been detected and remedied. As this is not the case fault-tracing has failed.

Exit fault-tracing for this diagnostic trouble code (DTC) or make another attempt.

CCM-0022: AIR QUALITY SENSOR. FAULTY ID (2003-2004)

DIAGNOSTIC TROUBLE CODE (DTC) INFORMATION

Condition

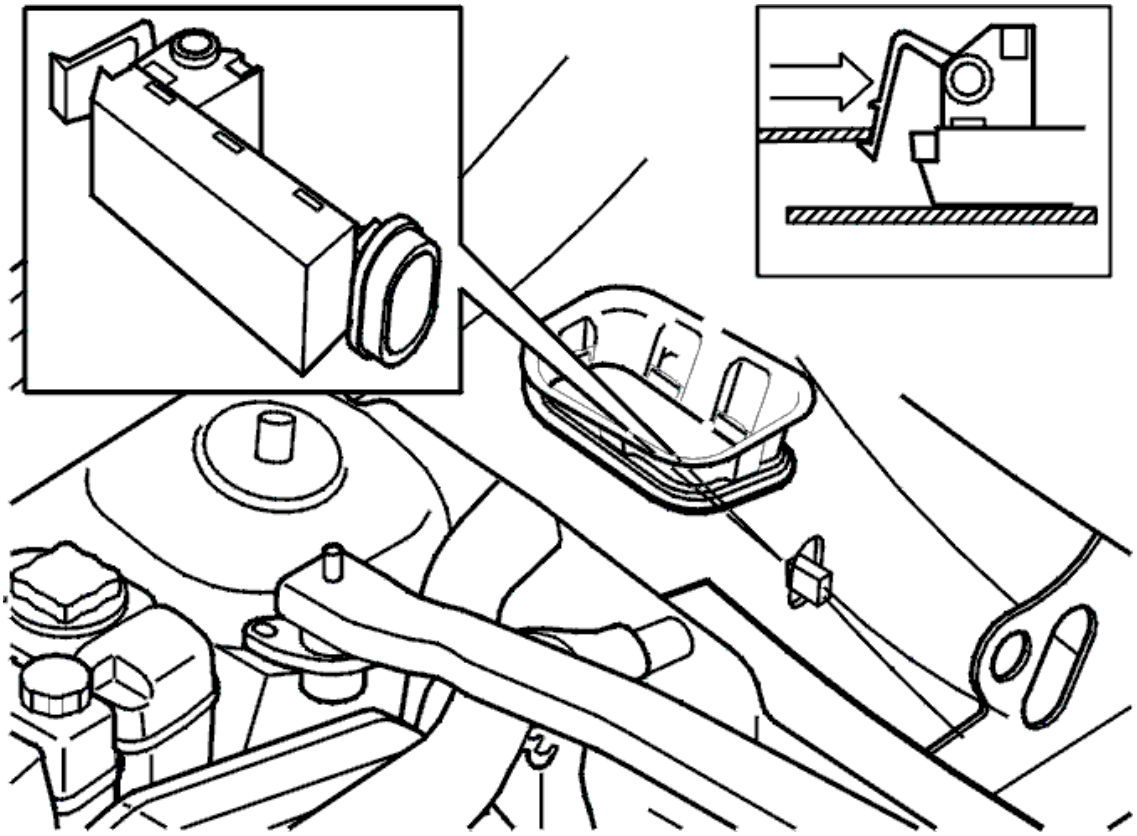

Fig. 76: Air Quality Sensor
Courtesy of VOLVO CARS CORPORATION

Diagnostic trouble code (DTC) CCM-0022 is stored if the control module registers that the signal from the air quality sensor has a pulse length which is above 3% of the period and that the car configuration parameter states that there should not be an air quality sensor.

The diagnostic trouble code (DTC) CCM-0022 can only be diagnosed for electronic climate control modules (CCM) (ECC version) with air quality sensors.

Substitute Value

- The control module does not permit the recirculation shutter to close in the air quality sensor mode while the fault persists
- No air quality sensor function.

Possible Source

- The climate control system should not have an air quality sensor
- Fault in the car configuration file.

Fault symptom[s]

- Poor air quality in the passenger compartment.

FAULTY IDENTIFICATION

CHECKING THE COMPONENT

The air quality sensor function is not in the Car Configuration file. To update the climate control system with this function, the Car Configuration file must be updated. This is carried out by downloading the software with this function into the car.

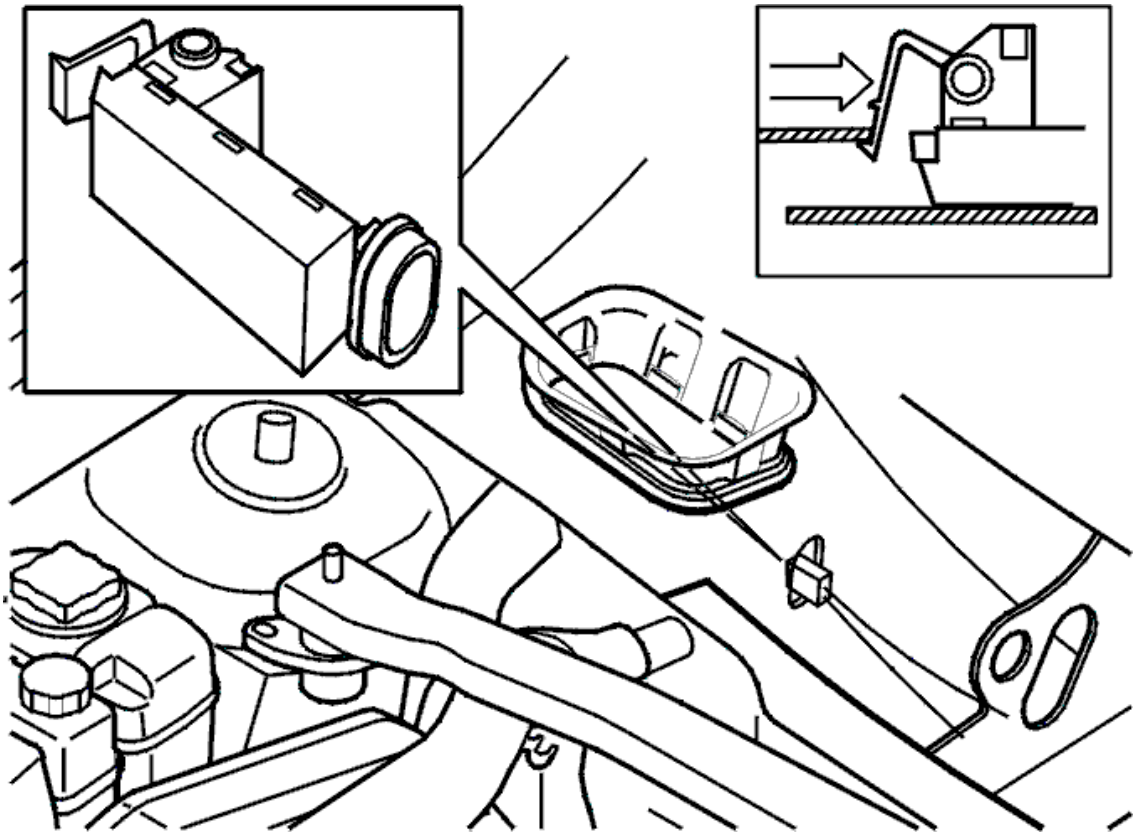

Fig. 77: Air Quality Sensor
Courtesy of VOLVO CARS CORPORATION

- **Continue**

  Refer to **VERIFICATION**

VERIFICATION

HINT: After carrying out the repair, check that the fault has been remedied:

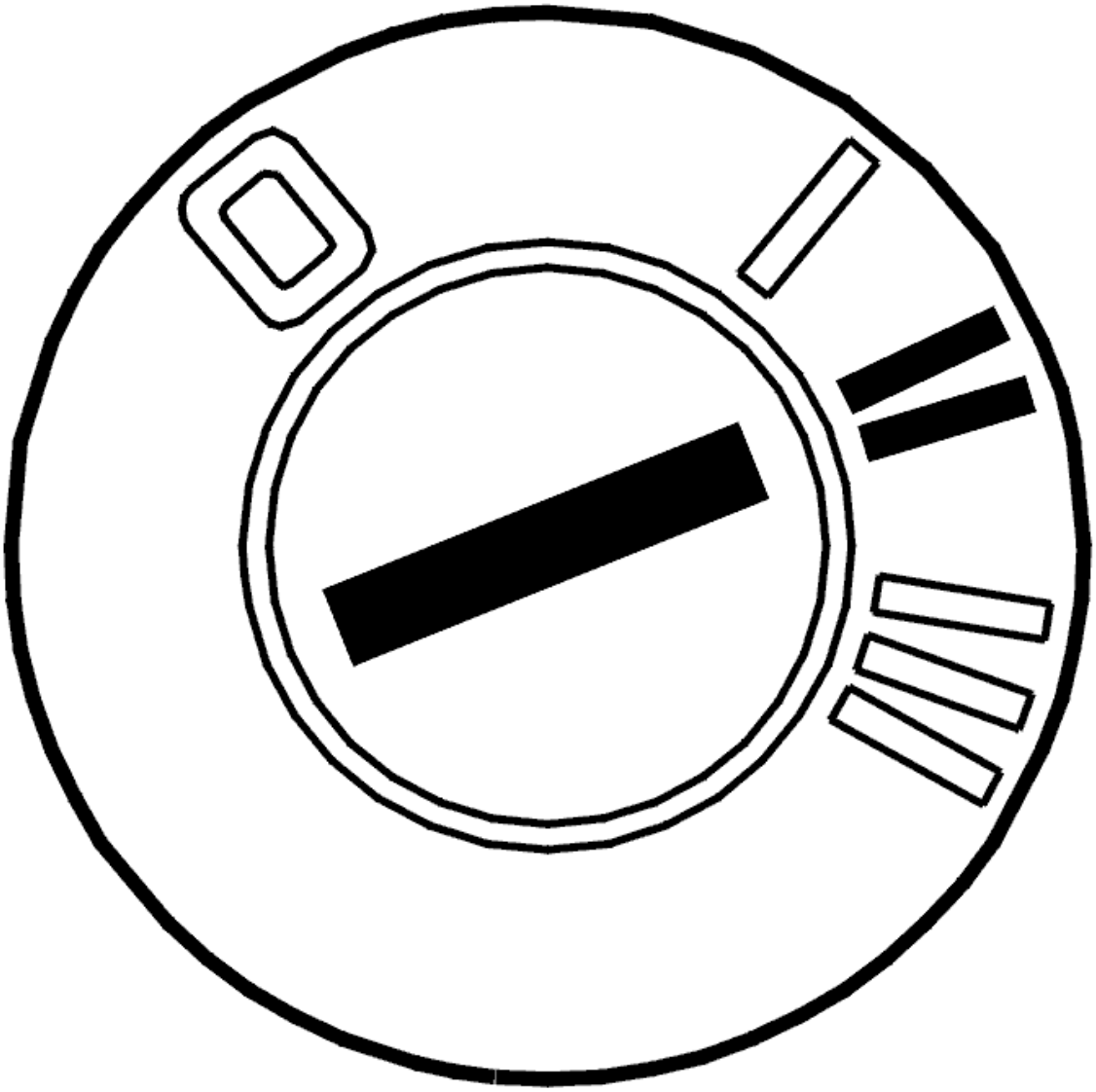

Fig. 78: Identifying Ignition ON
Courtesy of VOLVO CARS CORPORATION

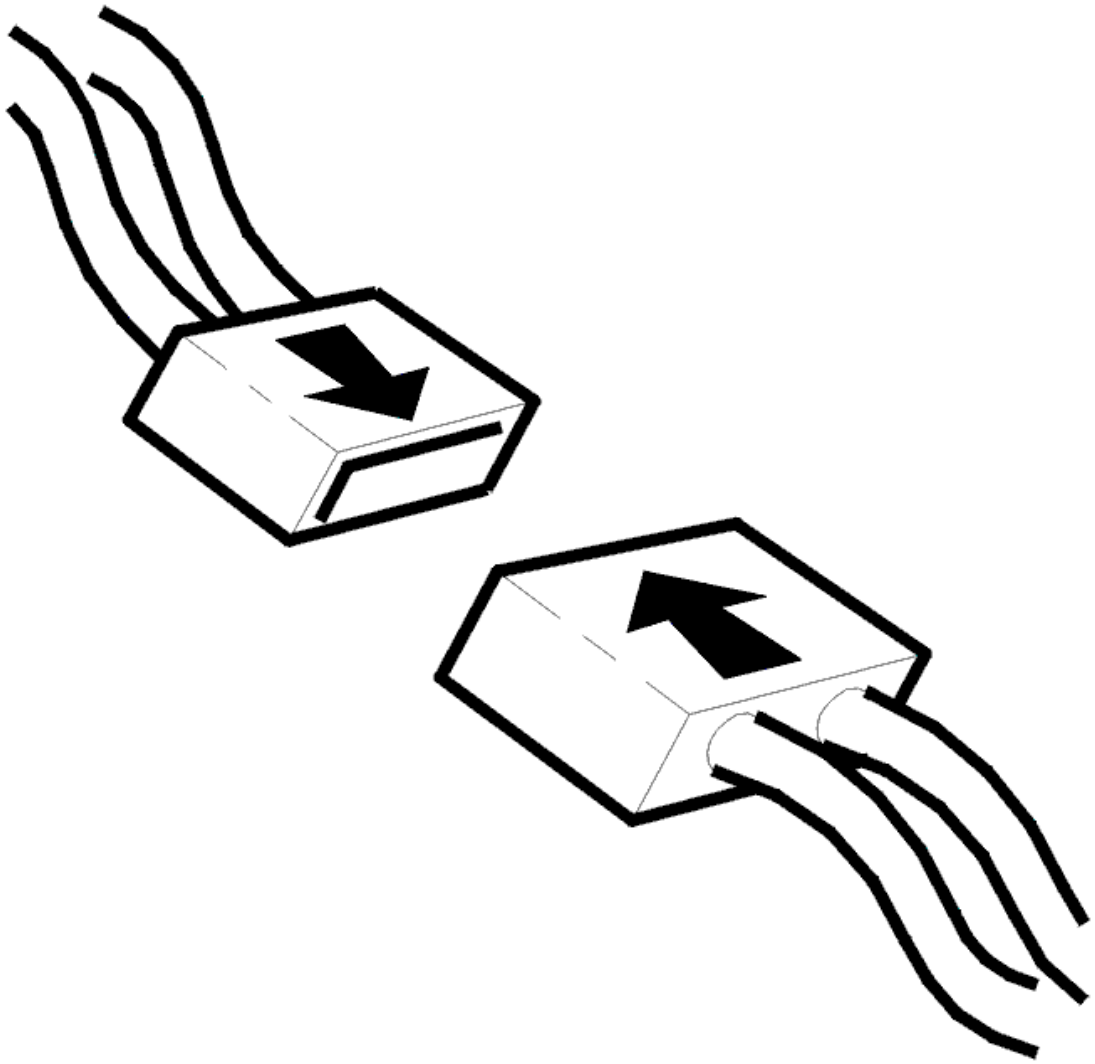

Fig. 79: Connecting Connector
Courtesy of VOLVO CARS CORPORATION

- Ignition off
- Reconnect the connectors, reinstall components etc.
- Ignition on
- Check that the value from the air quality sensor is within the permitted range.

  The value should be between 4% and 96%.

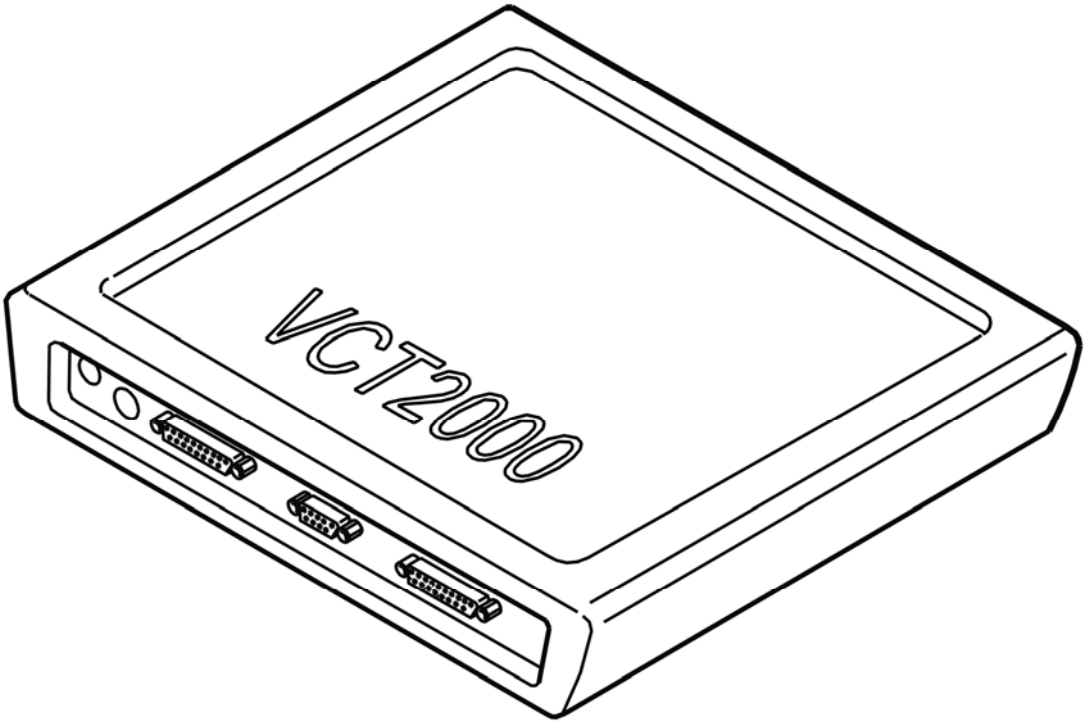

Fig. 80: Identifying VCT2000 Diagnostic Tool Symbol In VIDA
Courtesy of VOLVO CARS CORPORATION

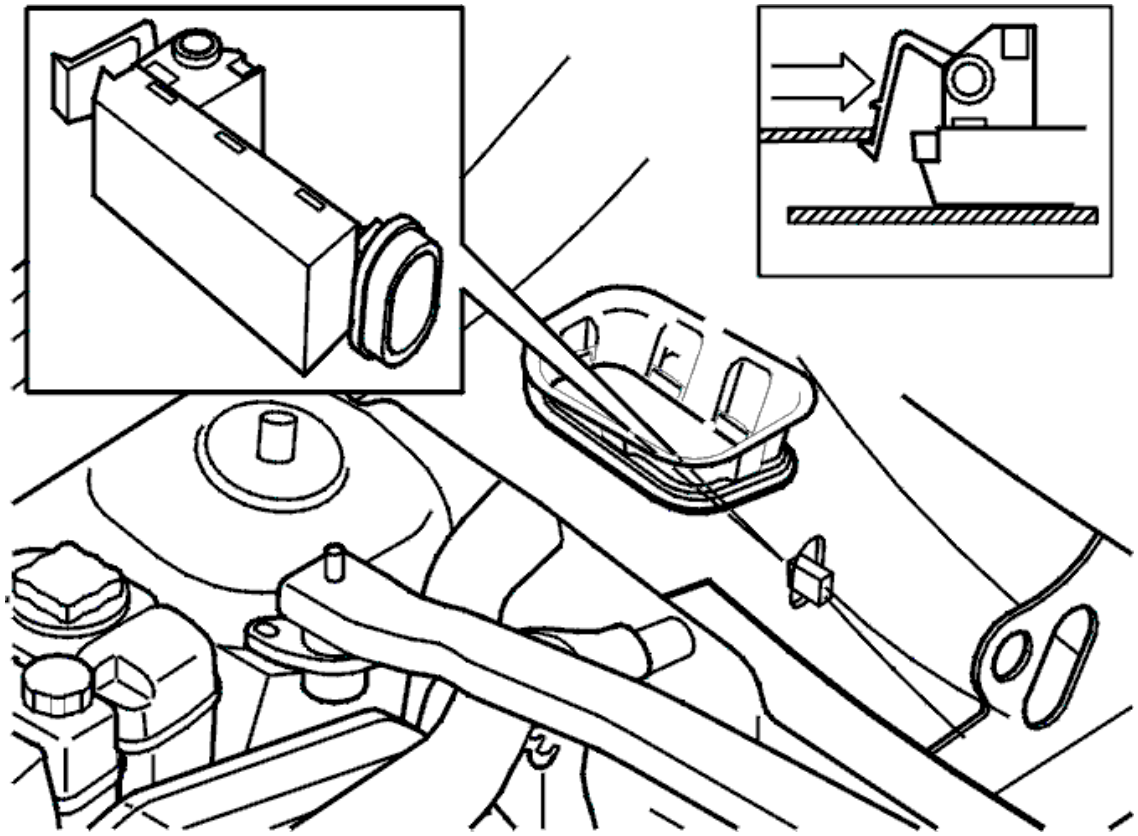

Fig. 81: Air Quality Sensor
Courtesy of VOLVO CARS CORPORATION

Are the values correct?

- **YES**

  VERIFIED: Troubleshooting has been completed.

- **NO**

  Refer to **INFORMATION**

INFORMATION

FAULT-TRACING INFORMATION

The fault should have been detected and remedied. As this is not the case fault-tracing has failed.

Exit fault-tracing for this diagnostic trouble code (DTC) or make another attempt.

CCM-0030: LEFT HEATER PAD. FAULTY SIGNAL (2005-2012)

DIAGNOSTIC TROUBLE CODE (DTC) INFORMATION CCM-0030

Condition

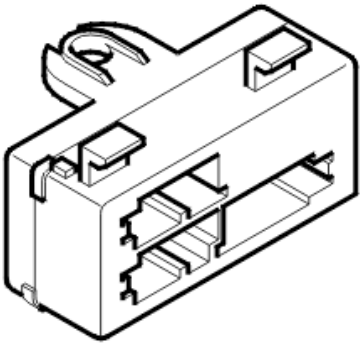

Fig. 82: Identifying Left Seat Heating Module (SHM)
Courtesy of VOLVO CARS CORPORATION

The diagnostic trouble code (DTC) is stored if the climate control module (CCM) detects a fault in the heater pad for the left seat heating module (SHM).

The climate control module (CCM) communicates with the left seat heating module (SHM) via LIN bus 1.

The seat heating module (SHM) transmits information to the climate control module (CCM) about status and current temperature.

The diagnostic trouble code (DTC) can be diagnosed at ignition switch position II.

Substitute Value

- The climate control module (CCM) does not allow activation of the seat heater.

Possible Source

- Open-circuit in the cable between the seat heating module (SHM) and the heater pad
- There is a short-circuit to supply voltage in the cable between the seat heating module (SHM) and the heater pad
- There is a short-circuit to ground in the cable between the seat heating module (SHM) and the heater pad.

Fault symptom[s]

- The front seat heating does not function.

FAULTY SIGNAL

CHECKING HEATER ELEMENTS

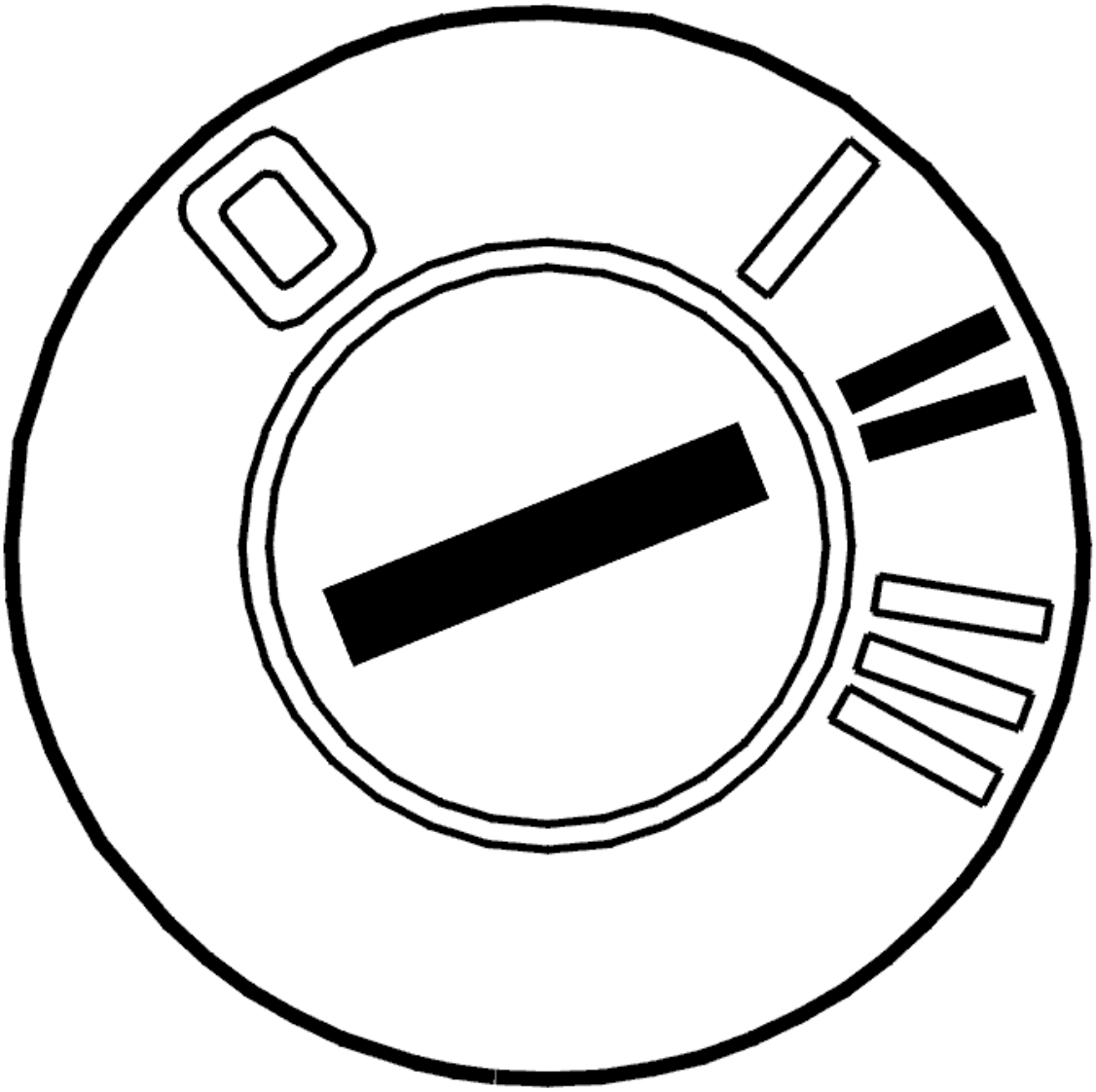

Fig. 83: Identifying Ignition ON
Courtesy of VOLVO CARS CORPORATION

- Ignition on.

  Checking components and connectors

  Check the connectors. Check for contact resistance. Check for oxidation. Check for loose connections.

  Check the heating loop in the seat. Take readings between:

  - terminals #1 and #4 on connector B for the seat heating module (SHM). Check for an open-circuit
  - terminal #1 on connector B and chassis ground. Check for a short-circuit to ground
  - terminal #1 on connector B and terminal #4 on connector A. Check for a short-circuit to supply voltage.

Check the heating loop in the backrest. Take readings between:

- terminals #1 and #2 on connector C for the seat heating module (SHM). Check for an open-circuit
- terminal #1 on connector C and chassis ground. Check for a short-circuit to ground
- terminal #1 on connector C and terminal #4 on connector A. Check for a short-circuit to supply voltage.

Remedy as necessary.

Other information:

- For further information about the connectors, fuses and relays, see the appropriate service information
- see **CONNECTING THE BREAKOUT BOX**
- see **SIGNAL SPECIFICATION**
- see **CLIMATE CONTROL, LOCATION OF COMPONENTS**
- see **SEAT HEATING MODULE (SHM), REPLACING**
- see **CONTENTS**

- **Continue**

Refer to **VERIFICATION**

VERIFICATION

HINT: After carrying out the repair, check that the fault has been remedied.

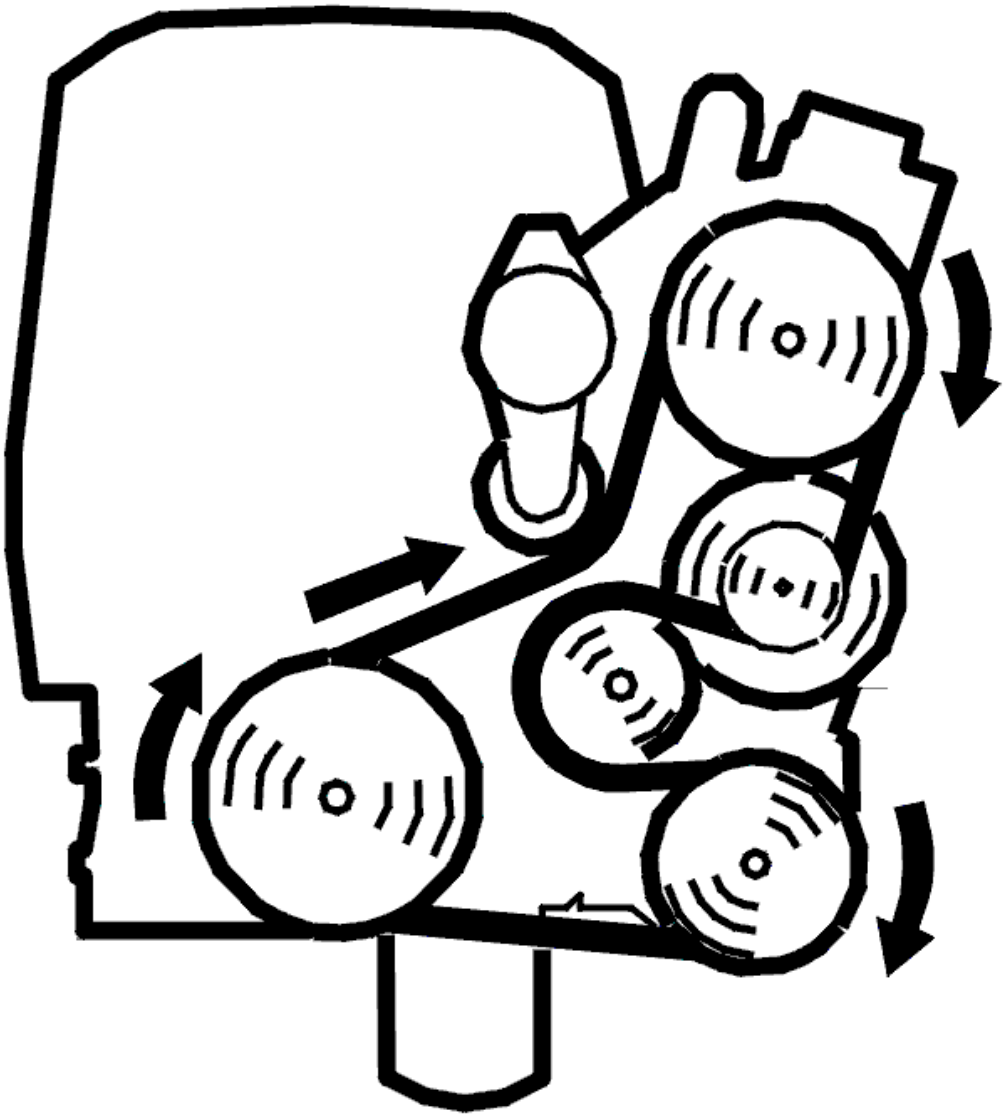

Fig. 84: Belt Routing / Engine Idling - Volvo
Courtesy of VOLVO CARS CORPORATION

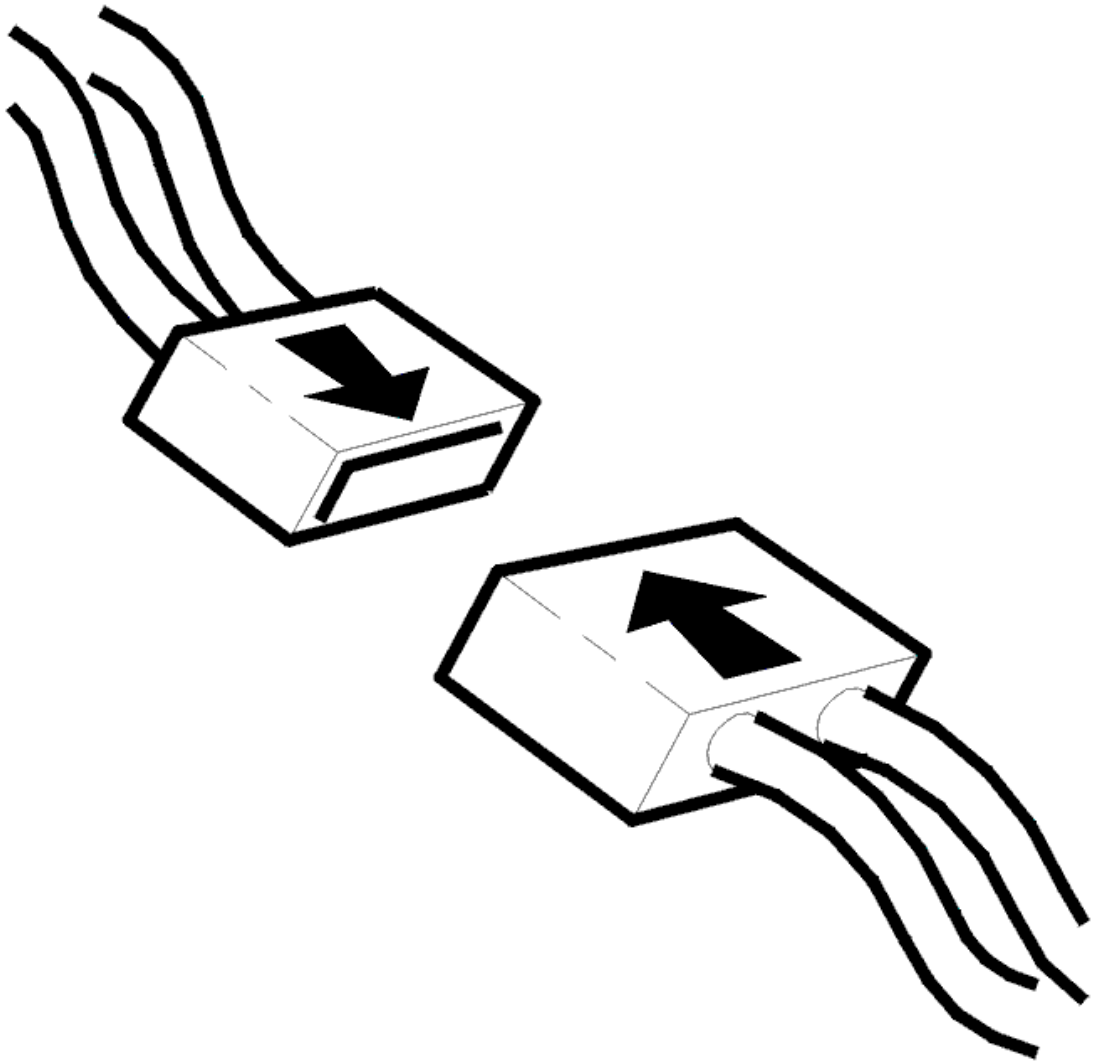

Fig. 85: Connecting Connector
Courtesy of VOLVO CARS CORPORATION

- Ignition off
- Reinstall the connectors, components etc.
- Engine running.

  Activate the seat heating. Check that the seat heats up.

Is the seat heater functioning?

- **YES**

  VERIFIED: Troubleshooting has been completed.

- **NO**

  Refer to **INFORMATION**

INFORMATION

FAULT-TRACING INFORMATION

The fault should have been detected and remedied. As this is not the case fault-tracing has failed.

Exit fault-tracing for this diagnostic trouble code (DTC) or make another attempt.

CCM-0031: SENSOR LEFT-HAND SEAT HEATER. FAULTY SIGNAL (2005-2012)

DIAGNOSTIC TROUBLE CODE (DTC) INFORMATION CCM-0031

Condition

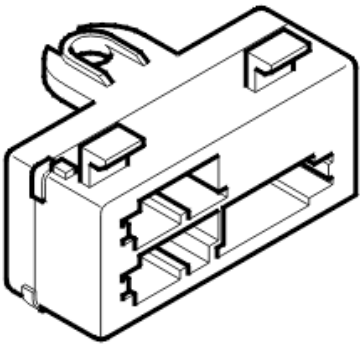

Fig. 86: Identifying Left Seat Heating Module (SHM)
Courtesy of VOLVO CARS CORPORATION

The diagnostic trouble code (DTC) is stored if the climate control module (CCM) detects a fault in the temperature sensor for the left seat heating module (SHM).

The climate control module (CCM) communicates with the left seat heating module (SHM) via LIN bus 1.

The seat heating module (SHM) transmits information to the climate control module (CCM) about status and current temperature.

The diagnostic trouble code (DTC) can be diagnosed at ignition switch position II.

Substitute Value

- The climate control module (CCM) does not allow activation of seat heating.

Possible Source

- Open-circuit in the cable between the seat heating module (SHM) and the temperature sensor
- There is a short-circuit to supply voltage in the cable between the seat heating module (SHM) and the temperature sensor
- There is a short-circuit to ground in the cable between the seat heating module (SHM) and the temperature sensor.

Fault symptom[s]

- The front seat heating does not function.

FAULTY SIGNAL

CHECKING THE SENSOR

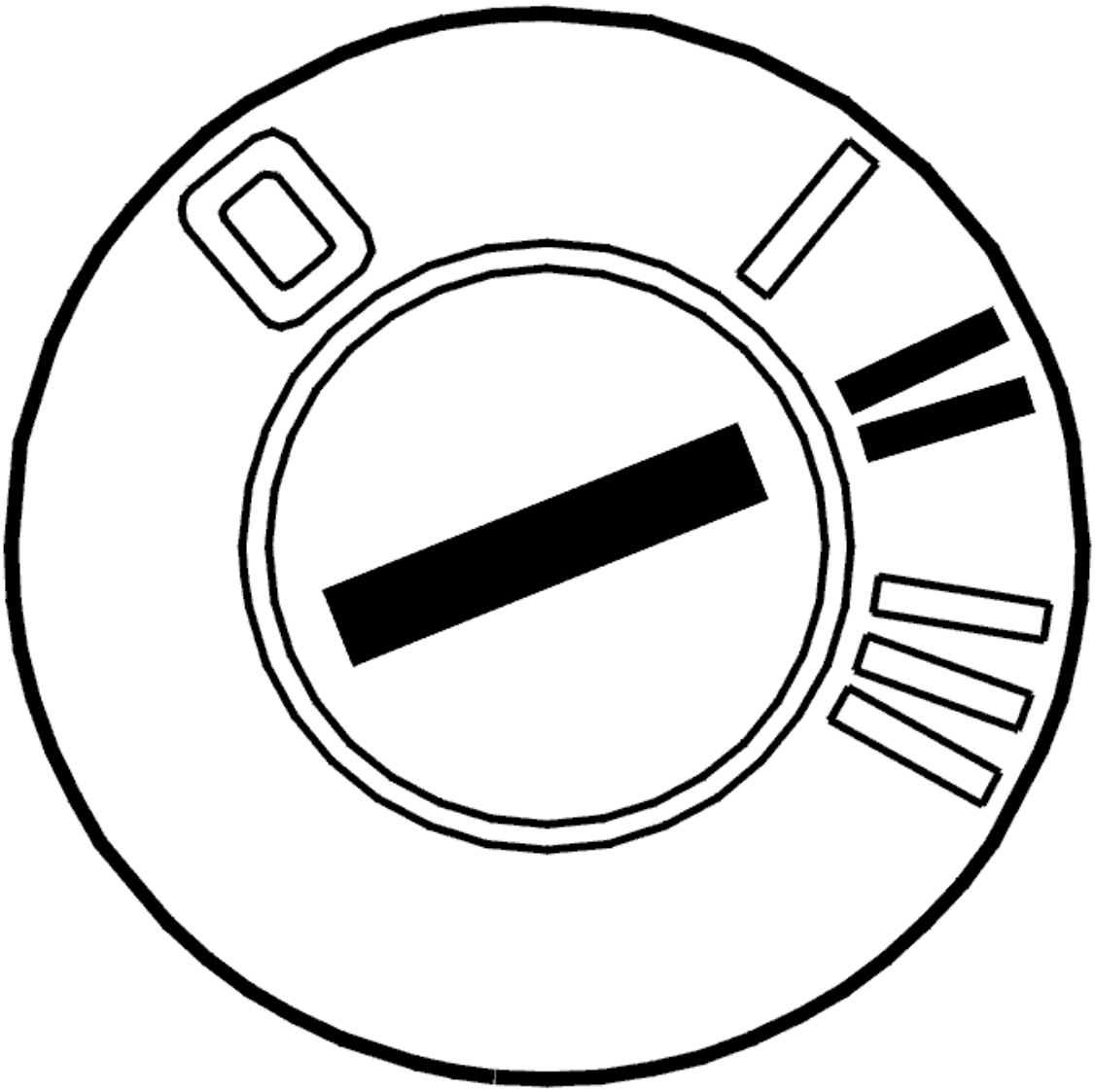

Fig. 87: Identifying Ignition ON
Courtesy of VOLVO CARS CORPORATION

- Ignition on.

  Checking components and connectors

  Check the connectors. Check for contact resistance. Check for oxidation. Check for loose connections.

  Check the sensor in the seat. Take readings between:

  - terminals #2 and #3 on connector B for the seat heating module (SHM). Check for an open-circuit
  - terminal #2 on connector B and chassis ground. Check for a short-circuit to ground
  - terminal #2 on connector B and terminal #4 on connector A. Check for a short-circuit to supply voltage.

  Remedy as necessary.

  Other information:

  - For further information about the connectors, fuses and relays, see the appropriate service information.
  - see **CONNECTING THE BREAKOUT BOX**
  - see **SIGNAL SPECIFICATION**
  - see **CLIMATE CONTROL, LOCATION OF COMPONENTS**
  - see **SEAT HEATING MODULE (SHM), REPLACING**
  - see **CONTENTS**

- **Continue**

  Refer to **VERIFICATION**

VERIFICATION

HINT: After carrying out the repair, check that the fault has been remedied.

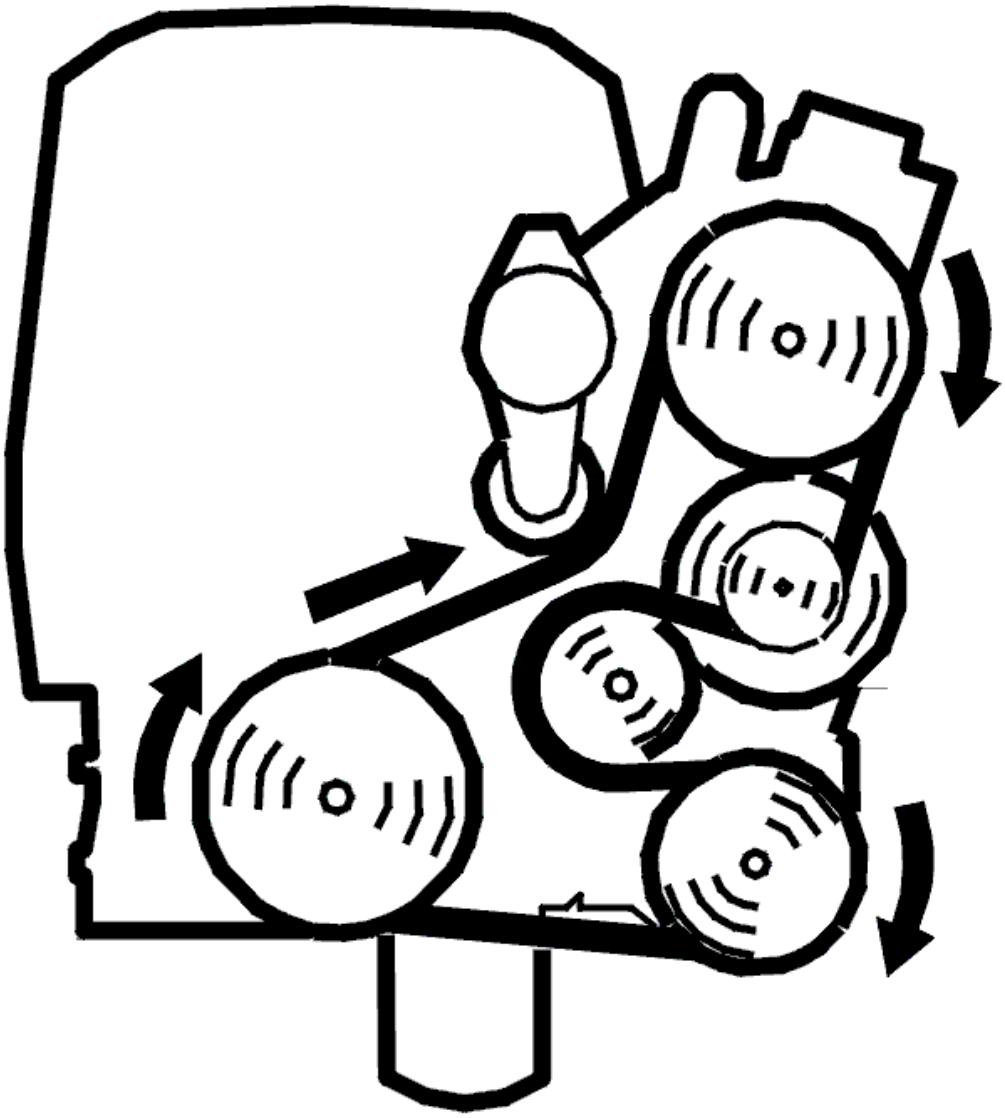

Fig. 88: Belt Routing / Engine Idling - Volvo
Courtesy of VOLVO CARS CORPORATION

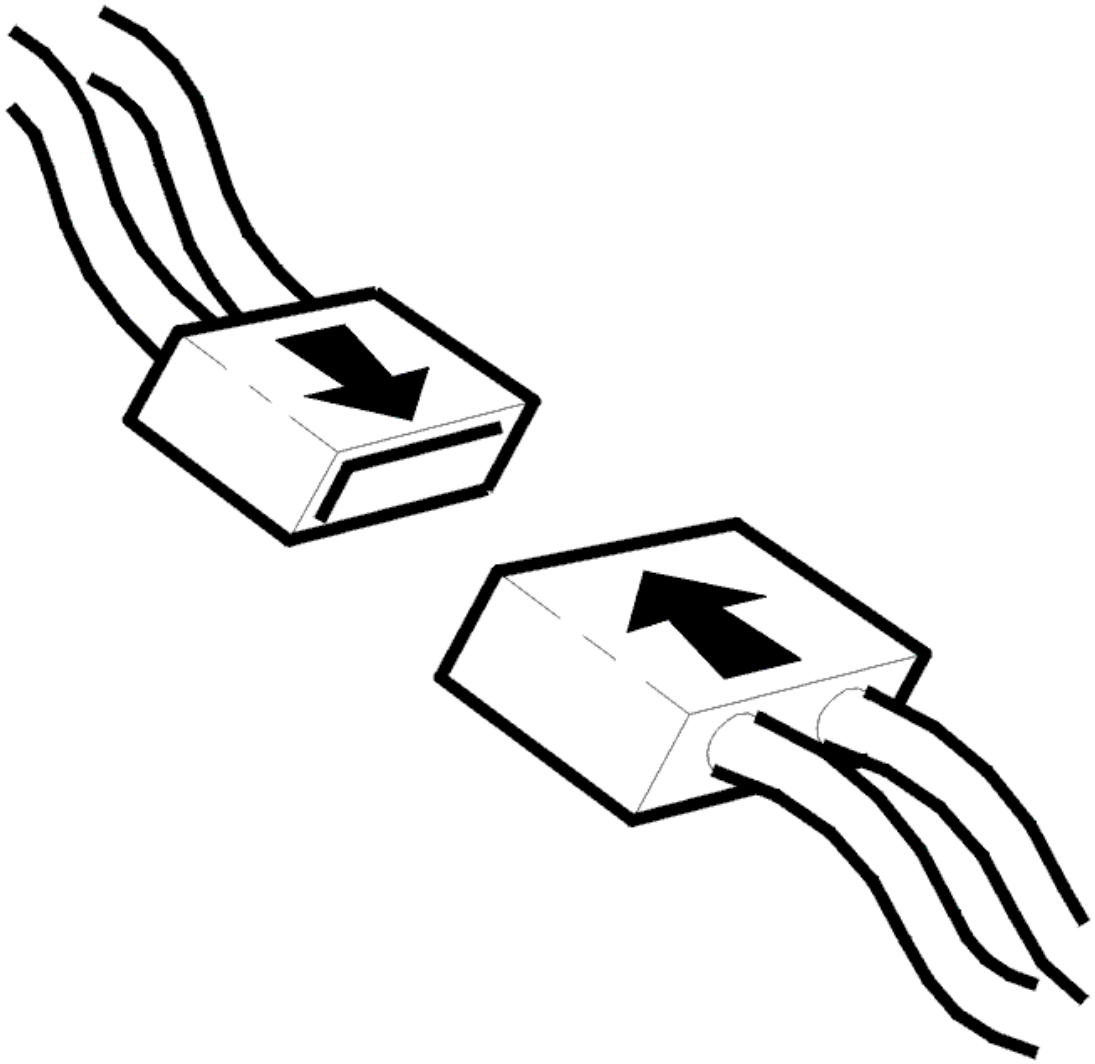

Fig. 89: Connecting Connector
Courtesy of VOLVO CARS CORPORATION

- Ignition off
- Reinstall the connectors, components etc.
- Engine running.

  Activate the seat heating. Check that the seat heats up.

Is the seat heater functioning?

- **YES**

  VERIFIED: Troubleshooting has been completed.

- **NO**

  Refer to **INFORMATION**

INFORMATION

FAULT-TRACING INFORMATION

The fault should have been detected and remedied. As this is not the case fault-tracing has failed.

Exit fault-tracing for this diagnostic trouble code (DTC) or make another attempt.

CCM-0032: LEFT-HAND SEAT HEATER. INTERNAL FAULT (2005-2012)

DIAGNOSTIC TROUBLE CODE (DTC) INFORMATION CCM-0032

Condition

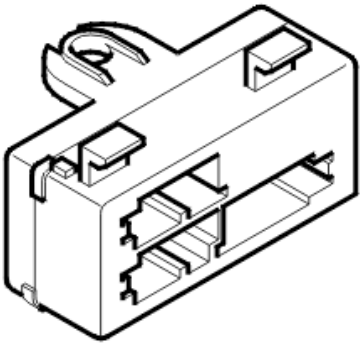

Fig. 90: Identifying Left Seat Heating Module (SHM)
Courtesy of VOLVO CARS CORPORATION

The diagnostic trouble code (DTC) is stored if the climate control module (CCM) detects an internal fault in the left seat heating module (SHM).

The climate control module (CCM) communicates with the left seat heating module (SHM) via LIN bus 1.

The seat heating module (SHM) transmits information to the climate control module (CCM) about status and current temperature.

The diagnostic trouble code (DTC) can be diagnosed at ignition switch position II.

Substitute Value

- The climate control module (CCM) does not allow activation of seat heating.

Possible Source

- Internal fault in the left seat heating module (SHM).

Fault symptom[s]

- The front seat heating does not function.

INTERNAL FAULT

REPLACING THE COMPONENT

The climate control module (CCM) has registered an internal fault in the left-hand seat heating module (SHM).

If the fault is intermittent, it has been registered previously but is no longer present. Intermittent faults may be caused by interference at start up of the left-hand seat heating module (SHM). Intermittent faults may also be caused by other types of intermittent faults. The fault is evaluated depending on how it occurs. Replace the left-hand seat heating module (SHM) if the fault recurs.

Replace the left-hand seat heating module (SHM) if the fault is permanent:

see **SEAT HEATING MODULE (SHM), REPLACING**

Remedy as necessary.

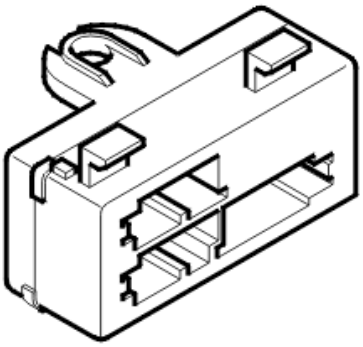

Fig. 91: Identifying Left Seat Heating Module (SHM)
Courtesy of VOLVO CARS CORPORATION

- **Continue**

  Refer to **INFORMATION**

INFORMATION

FAULT-TRACING INFORMATION

In case of this defect, troubleshooting is not followed by verification.

The information can be displayed again or the fault-tracing for this fault can be interrupted.

CCM-0033: LEFT-HAND SEAT HEATER. INTERNAL FAULT (2005-2012)

DIAGNOSTIC TROUBLE CODE (DTC) INFORMATION CCM-0033

Condition

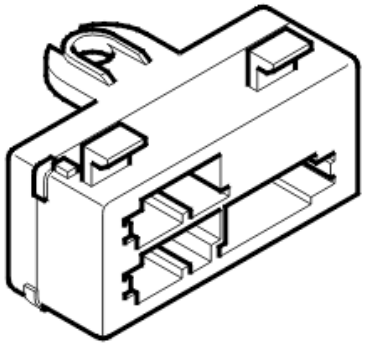

Fig. 92: Identifying Left Seat Heating Module (SHM)
Courtesy of VOLVO CARS CORPORATION

The diagnostic trouble code (DTC) is stored if the climate control module (CCM) detects an internal fault in the left seat heating module (SHM).

The climate control module (CCM) communicates with the left seat heating module (SHM) via LIN bus 1.

The seat heating module (SHM) transmits information to the climate control module (CCM) about status and current temperature.

The diagnostic trouble code (DTC) can be diagnosed at ignition switch position II.

Substitute Value

- The climate control module (CCM) does not allow activation of seat heating.

Possible Source

- Internal fault in the left seat heating module (SHM).

Fault symptom[s]

- The front seat heating does not function.

INTERNAL FAULT

REPLACING THE COMPONENT

The climate control module (CCM) has registered an internal fault in the left-hand seat heating module (SHM).

If the fault is intermittent, it has been registered previously but is no longer present. Intermittent faults may be caused by interference at start up of the left-hand seat heating module (SHM). Intermittent faults may also be caused by other types of intermittent faults. The fault is evaluated depending on how it occurs. Replace the left-hand seat heating module (SHM) if the fault recurs.

Replace the left-hand seat heating module (SHM) if the fault is permanent:

see **SEAT HEATING MODULE (SHM), REPLACING**

Remedy as necessary.

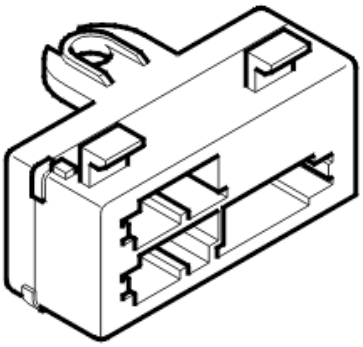

Fig. 93: Identifying Left Seat Heating Module (SHM)
Courtesy of VOLVO CARS CORPORATION

- **Continue**

  Refer to **INFORMATION**

INFORMATION

FAULT-TRACING INFORMATION

In case of this defect, troubleshooting is not followed by verification.

The information can be displayed again or the fault-tracing for this fault can be interrupted.

CCM-0034: RIGHT HEATER PAD. FAULTY SIGNAL (2005-2012)

DIAGNOSTIC TROUBLE CODE (DTC) INFORMATION CCM-0034

Condition

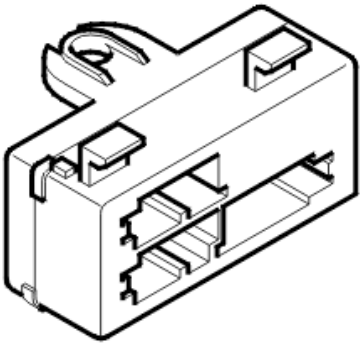

Fig. 94: Identifying Left Seat Heating Module (SHM)
Courtesy of VOLVO CARS CORPORATION

The diagnostic trouble code (DTC) is stored if the climate control module (CCM) detects a fault in the heater pad for the right seat heating module (SHM).

The climate control module (CCM) communicates with the right seat heating module (SHM) via LIN bus 2.

The seat heating module (SHM) transmits information to the climate control module (CCM) about status and current temperature.

The diagnostic trouble code (DTC) can be diagnosed at ignition switch position II.

Substitute Value

- The climate control module (CCM) does not allow activation of seat heating.

Possible Source

- Open-circuit in the cable between the seat heating module (SHM) and the heater pad
- There is a short-circuit to supply voltage in the cable between the seat heating module (SHM) and the heater pad
- There is a short-circuit to ground in the cable between the seat heating module (SHM) and the heater pad.

Fault symptom[s]

- The front seat heating does not function.

FAULTY SIGNAL

CHECKING HEATER ELEMENTS

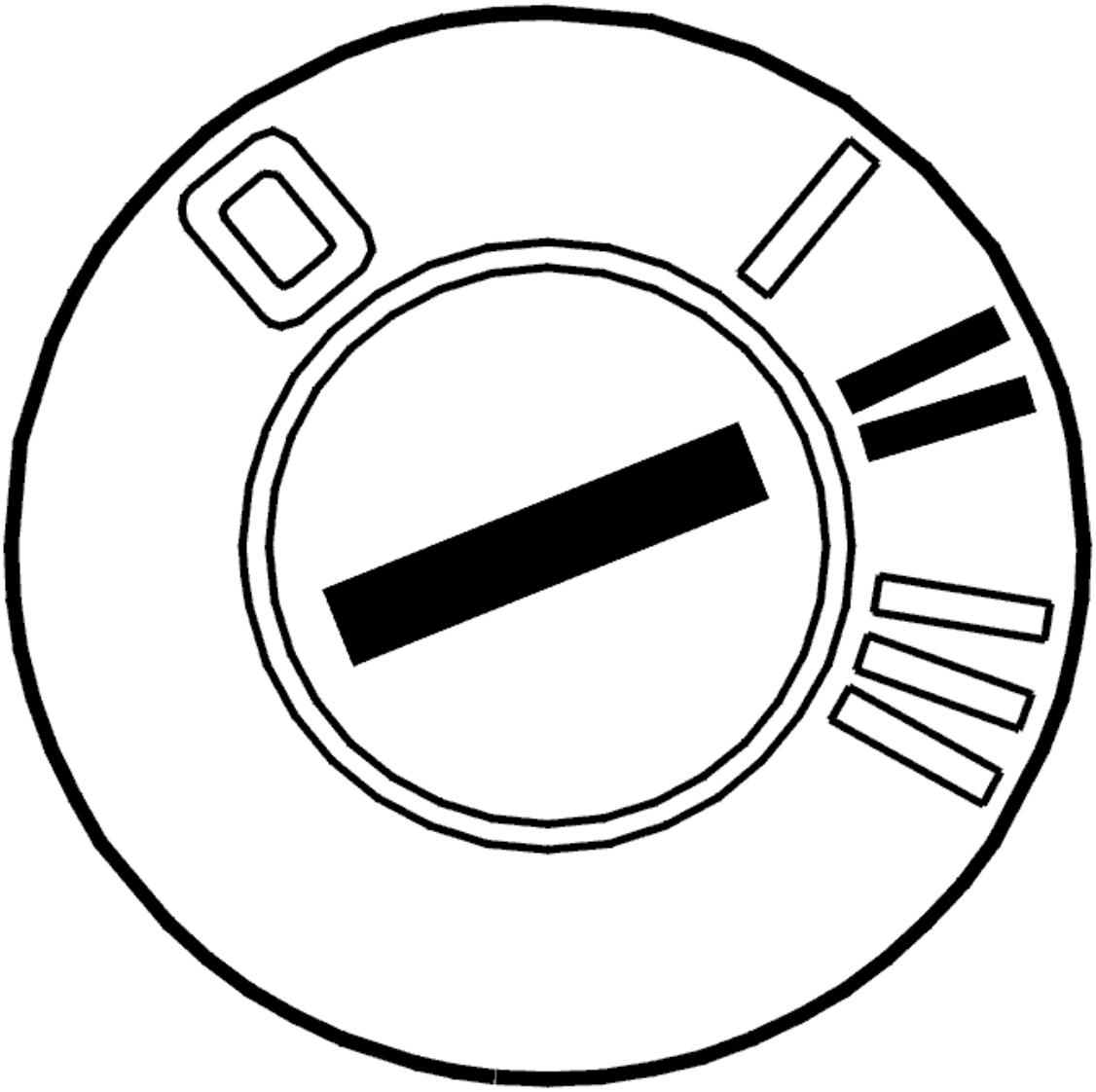

Fig. 95: Identifying Ignition ON
Courtesy of VOLVO CARS CORPORATION

- Ignition on.

  Checking components and connectors

  Check the connectors. Check for contact resistance. Check for oxidation. Check for loose connections.

  Check the heating loop in the seat. Take readings between:

  - terminals #1 and #4 on connector B for the seat heating module (SHM). Check for an open-circuit
  - terminal #1 on connector B and chassis ground. Check for a short-circuit to ground
  - terminal #1 on connector B and terminal #4 on connector A. Check for a short-circuit to supply voltage.

Check the heating loop in the backrest. Take readings between:

- terminals #1 and #2 on connector C for the seat heating module (SHM). Check for an open-circuit
- terminal #1 on connector C and chassis ground. Check for a short-circuit to ground
- terminal #1 on connector C and terminal #4 on connector A. Check for a short-circuit to supply voltage.

Remedy as necessary.

Other information:

- For further information about the connectors, fuses and relays, see the appropriate service information.
- see **CONNECTING THE BREAKOUT BOX**
- see **SIGNAL SPECIFICATION**
- see **CLIMATE CONTROL, LOCATION OF COMPONENTS**
- see **SEAT HEATING MODULE (SHM), REPLACING**
- see **CONTENTS**

- **Continue**

Refer to **VERIFICATION**

VERIFICATION

HINT: After carrying out the repair, check that the fault has been remedied.

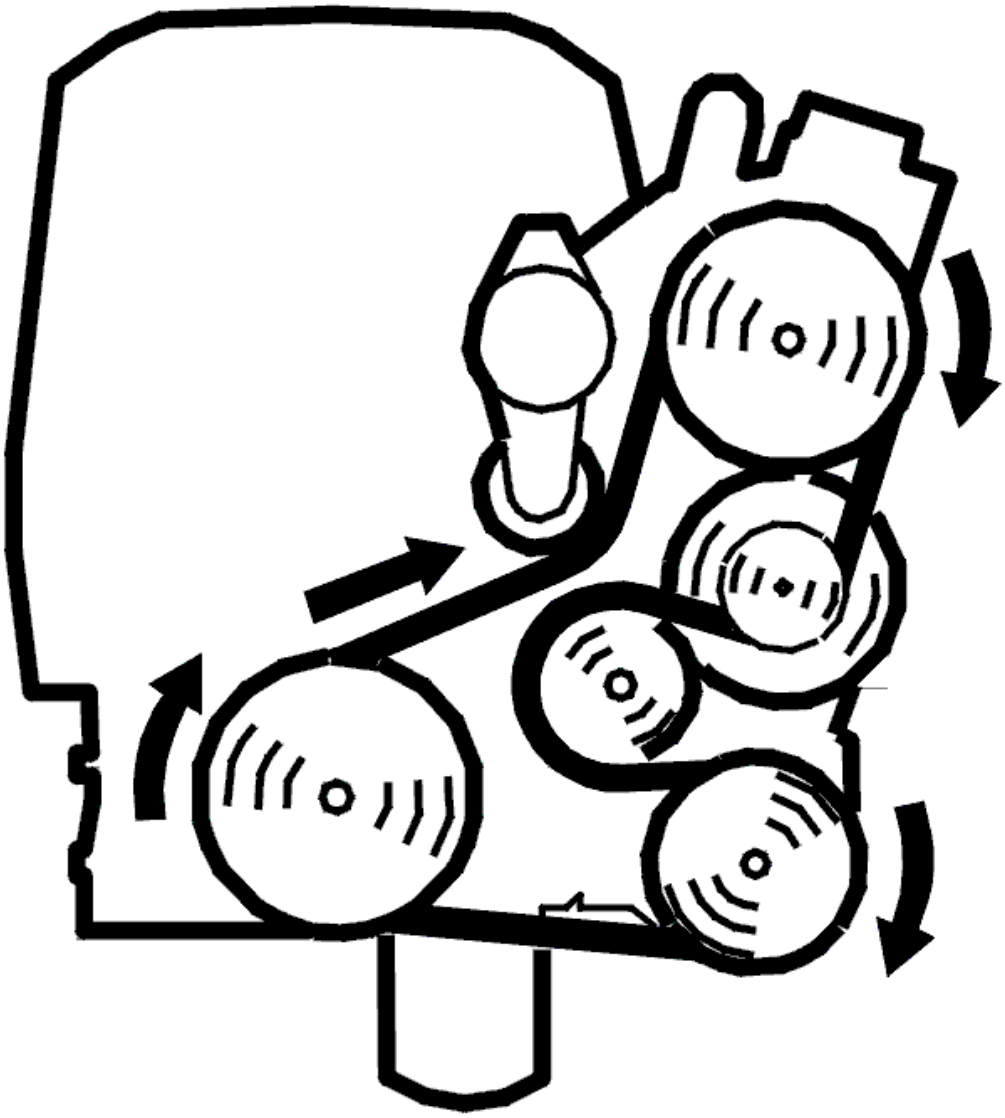

Fig. 96: Belt Routing / Engine Idling - Volvo
Courtesy of VOLVO CARS CORPORATION

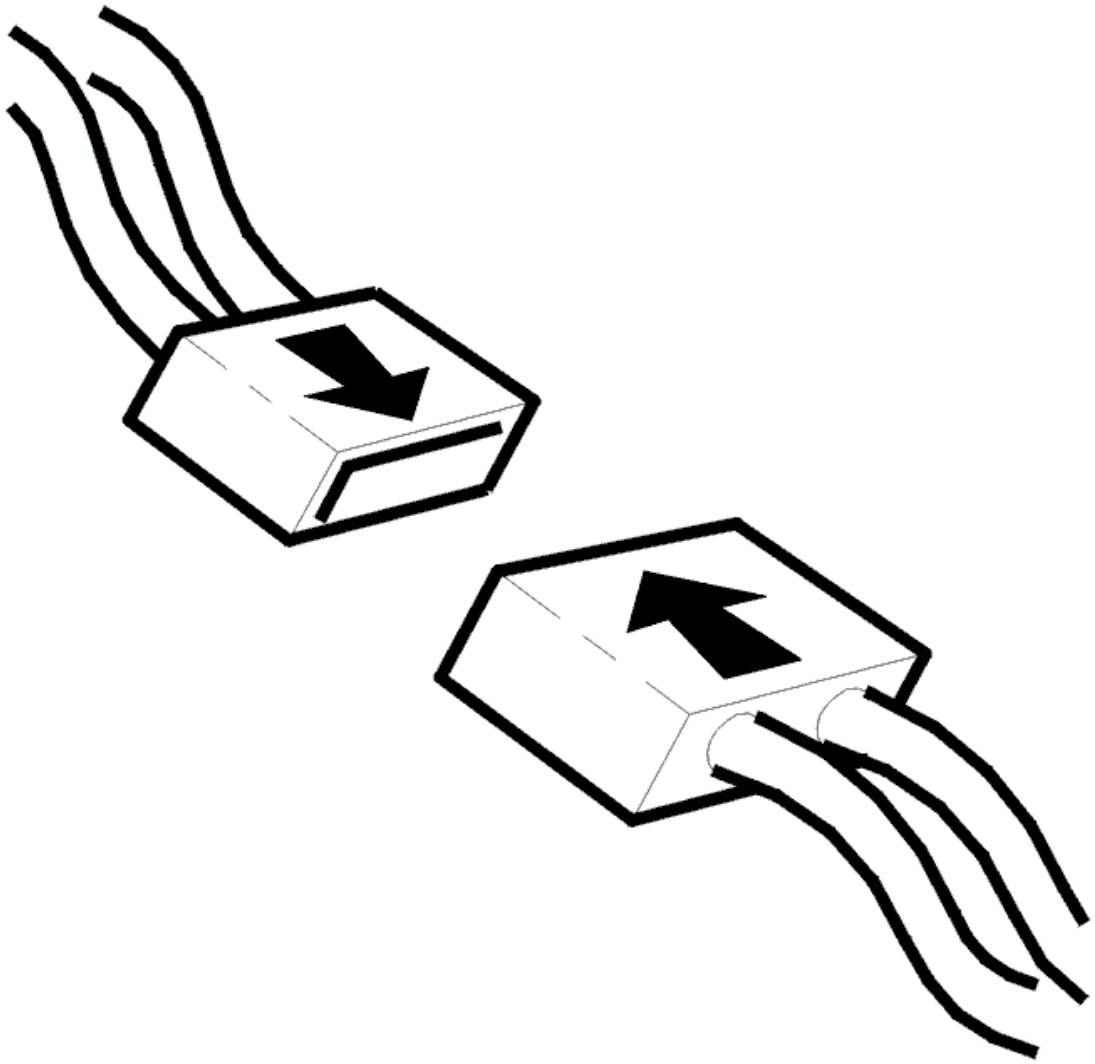

Fig. 97: Connecting Connector
Courtesy of VOLVO CARS CORPORATION

- Ignition off
- Reinstall the connectors, components etc.
- Engine running.

  Activate the seat heating. Check that the seat heats up.

Is the seat heater functioning?

- **YES**

  VERIFIED: Troubleshooting has been completed.

- **NO**

  Refer to **INFORMATION**

INFORMATION

FAULT-TRACING INFORMATION

The fault should have been detected and remedied. As this is not the case fault-tracing has failed.

Exit fault-tracing for this diagnostic trouble code (DTC) or make another attempt.

CCM-0035: SENSOR RIGHT-HAND SEAT HEATER. FAULTY SIGNAL (2005-2012)

DIAGNOSTIC TROUBLE CODE (DTC) INFORMATION CCM-0035

Condition

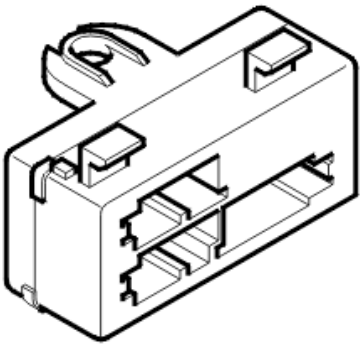

Fig. 98: Identifying Left Seat Heating Module (SHM)
Courtesy of VOLVO CARS CORPORATION

The diagnostic trouble code (DTC) is stored if the climate control module (CCM) detects a fault in the temperature sensor for the right seat heating module (SHM).

The climate control module (CCM) communicates with the right seat heating module (SHM) via LIN bus 2.

The seat heating module (SHM) transmits information to the climate control module (CCM) about status and current temperature.

The diagnostic trouble code (DTC) can be diagnosed at ignition switch position II.

Substitute Value

- The climate control module (CCM) does not allow activation of seat heating.

Possible Source

- Open-circuit in the cable between the seat heating module (SHM) and the temperature sensor
- There is a short-circuit to supply voltage in the cable between the seat heating module (SHM) and the temperature sensor
- There is a short-circuit to ground in the cable between the seat heating module (SHM) and the temperature sensor.

Fault symptom[s]

- The front seat heating does not function.

FAULTY SIGNAL

CHECKING THE SENSOR

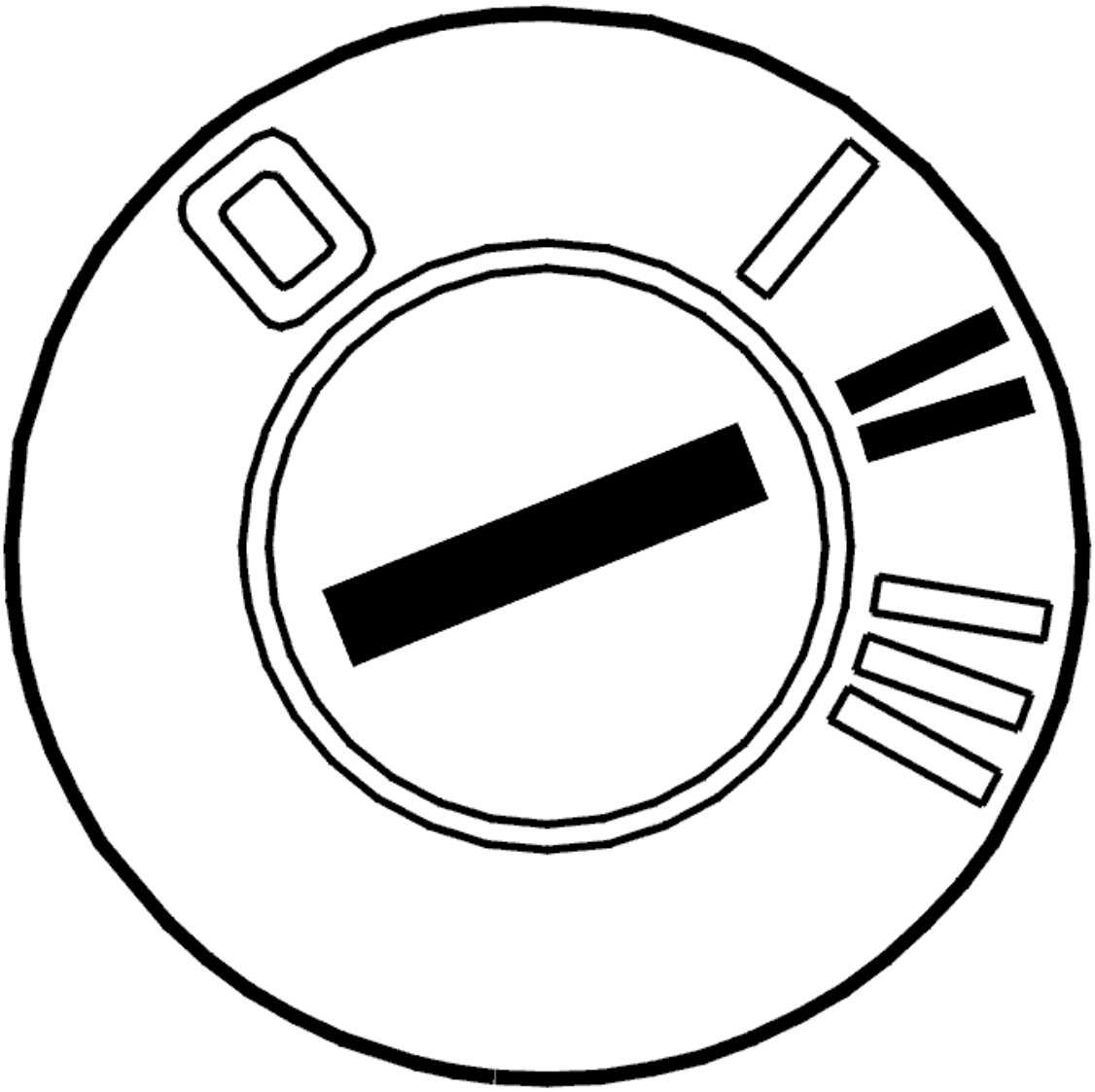

Fig. 99: Identifying Ignition ON
Courtesy of VOLVO CARS CORPORATION

- Ignition on.

  Checking components and connectors

  Check the connectors. Check for contact resistance. Check for oxidation. Check for loose connections.

  Check the sensor in the seat. Take readings between:

  - terminals #2 and #3 on connector B for the seat heating module (SHM). Check for an open-circuit
  - terminal #2 on connector B and chassis ground. Check for a short-circuit to ground
  - terminal #2 on connector B and terminal #4 on connector A. Check for a short-circuit to supply voltage.

  Remedy as necessary.

  Other information:

  - For further information about the connectors, fuses and relays, see the appropriate service information.
  - see **CONNECTING THE BREAKOUT BOX**
  - see **SIGNAL SPECIFICATION**
  - see **CLIMATE CONTROL, LOCATION OF COMPONENTS**
  - see **SEAT HEATING MODULE (SHM), REPLACING**
  - see **CONTENTS**

- **Continue**

  Refer to **VERIFICATION**

VERIFICATION

HINT: After carrying out the repair, check that the fault has been remedied.

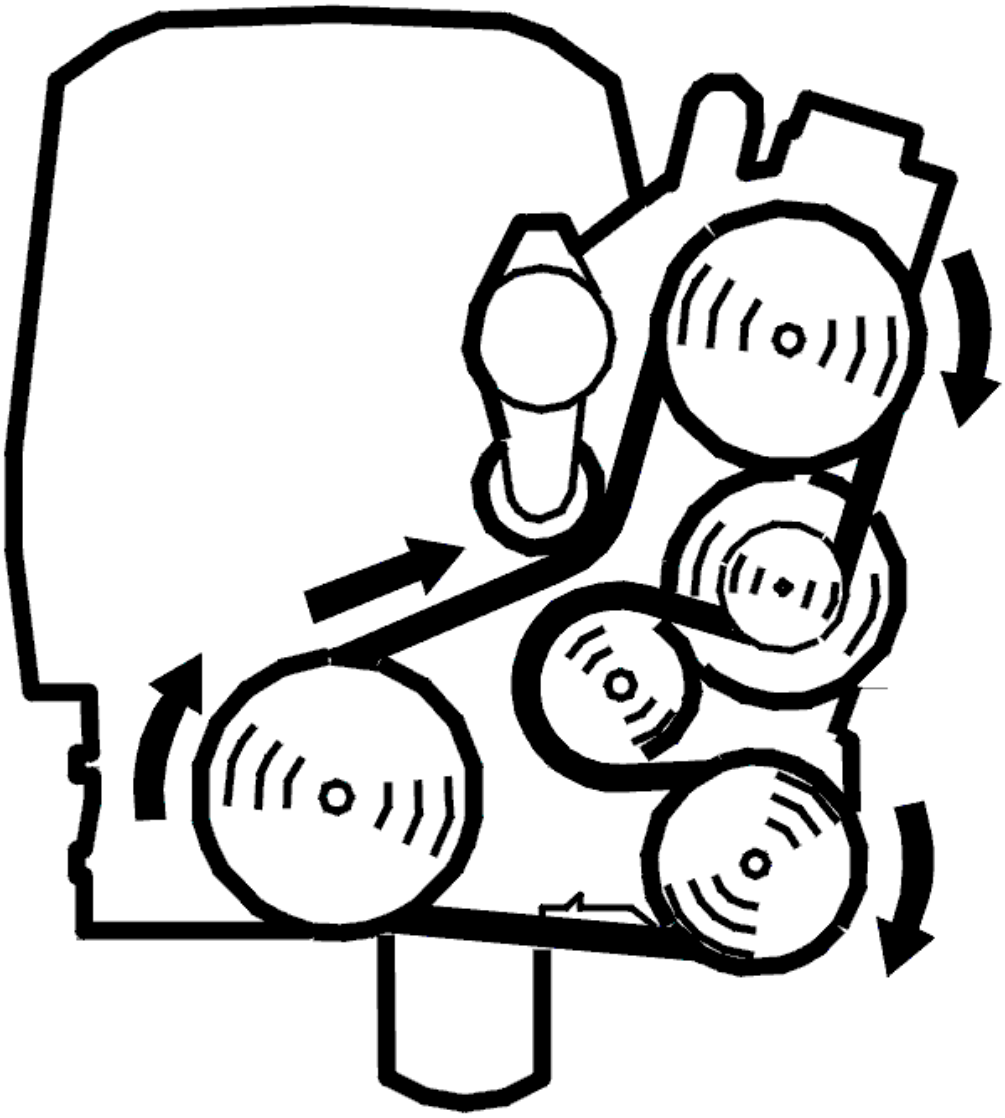

Fig. 100: Belt Routing / Engine Idling - Volvo
Courtesy of VOLVO CARS CORPORATION

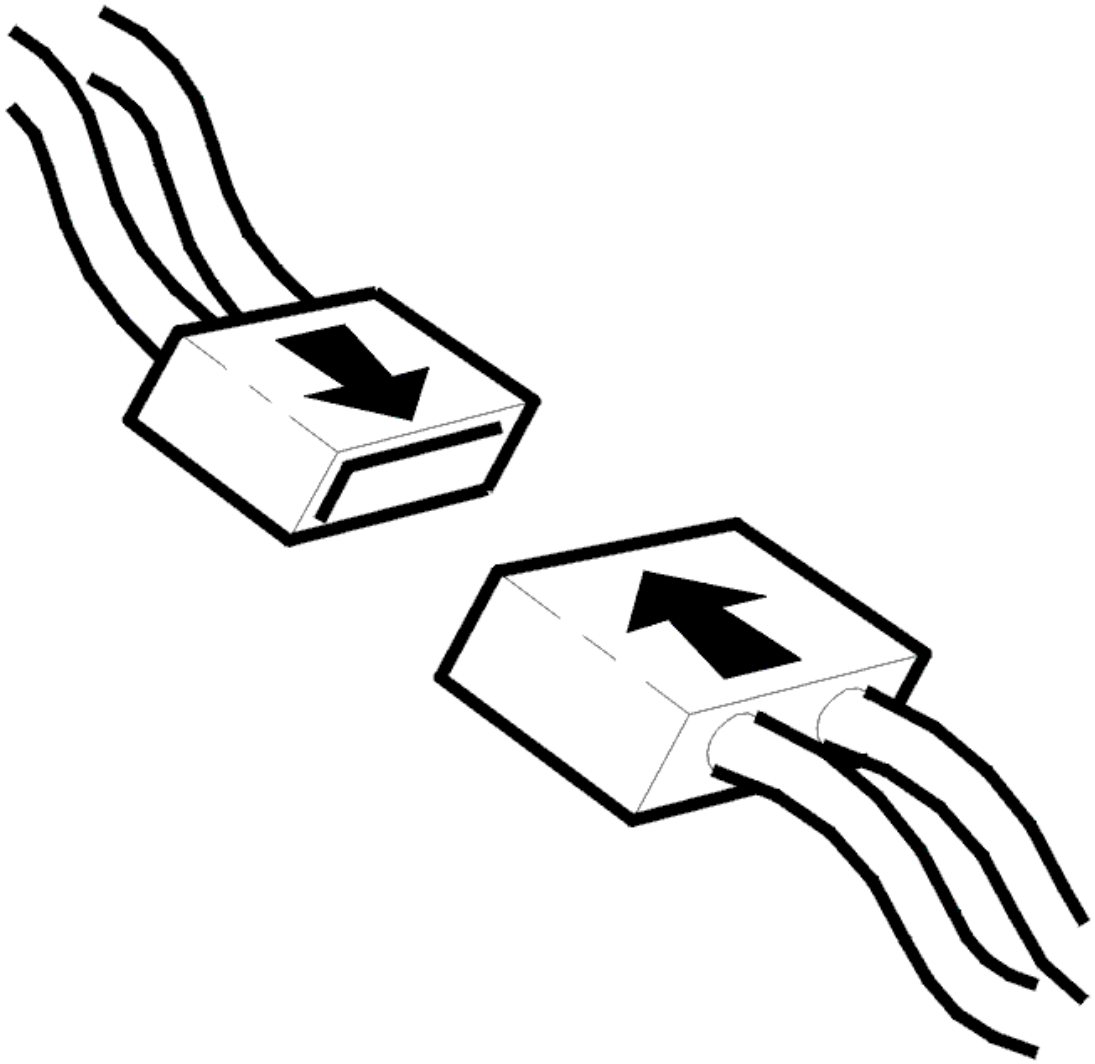

Fig. 101: Connecting Connector
Courtesy of VOLVO CARS CORPORATION

- Ignition off
- Reinstall the connectors, components etc.
- Engine running.

  Activate the seat heating. Check that the seat heats up.

Is the seat heater functioning?

- **YES**

  VERIFIED: Troubleshooting has been completed.

- **NO**

  Refer to **INFORMATION**

INFORMATION

FAULT-TRACING INFORMATION

The fault should have been detected and remedied. As this is not the case fault-tracing has failed.

Exit fault-tracing for this diagnostic trouble code (DTC) or make another attempt.

CCM-0036: RIGHT-HAND SEAT HEATER. INTERNAL FAULT (2005-2012)

DIAGNOSTIC TROUBLE CODE (DTC) INFORMATION CCM-0036

Condition

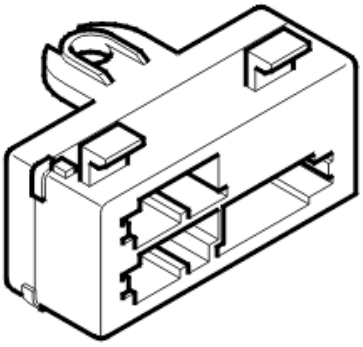

Fig. 102: Identifying Left Seat Heating Module (SHM)
Courtesy of VOLVO CARS CORPORATION

The diagnostic trouble code (DTC) is stored if the climate control module (CCM) detects an internal fault in the right-hand seat heating module (SHM).

The climate control module (CCM) communicates with the right seat heating module (SHM) via LIN bus 2.

The seat heating module (SHM) transmits information to the climate control module (CCM) about status and current temperature.

The diagnostic trouble code (DTC) can be diagnosed at ignition switch position II.

Substitute Value

- The climate control module (CCM) does not allow activation of seat heating.

Possible Source

- Internal fault in the right-hand seat heating module (SHM).

Fault symptom[s]

- The front seat heating does not function.

INTERNAL FAULT

REPLACING THE COMPONENT

The climate control module (CCM) has registered an internal fault in the right-hand seat heating module (SHM).

If the fault is intermittent, it has been registered previously but is no longer present. Intermittent faults may be caused by interference at start up of the right-hand seat heating module (SHM). Intermittent faults may also be caused by other types of intermittent faults. The fault is evaluated depending on how it occurs. Replace the right-hand seat heating module (SHM) if the fault recurs.

Replace the right-hand seat heating module (SHM) if the fault is permanent:

see **SEAT HEATING MODULE (SHM), REPLACING**

Remedy as necessary.

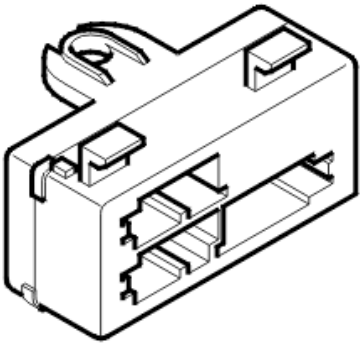

Fig. 103: Identifying Left Seat Heating Module (SHM)
Courtesy of VOLVO CARS CORPORATION

- **Continue**

  Refer to **INFORMATION**

INFORMATION

FAULT-TRACING INFORMATION

In case of this defect, troubleshooting is not followed by verification.

The information can be displayed again or the fault-tracing for this fault can be interrupted.

CCM-0037: RIGHT-HAND SEAT HEATER. INTERNAL FAULT (2005-2012)

DIAGNOSTIC TROUBLE CODE (DTC) INFORMATION CCM-0037

Condition

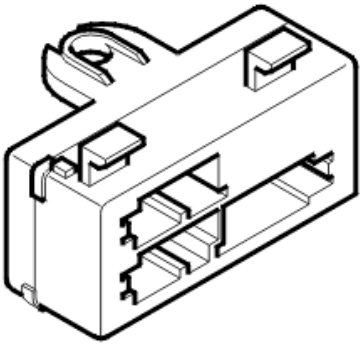

Fig. 104: Identifying Left Seat Heating Module (SHM)
Courtesy of VOLVO CARS CORPORATION

The diagnostic trouble code (DTC) is stored if the climate control module (CCM) detects an internal fault in the right-hand seat heating module (SHM).

The climate control module (CCM) communicates with the right seat heating module (SHM) via LIN bus 2.

The seat heating module (SHM) transmits information to the climate control module (CCM) about status and current temperature.

The diagnostic trouble code (DTC) can be diagnosed at ignition switch position II.

Substitute Value

- The climate control module (CCM) does not allow activation of seat heating.

Possible Source

- Internal fault in the right-hand seat heating module (SHM).

Fault symptom[s]

- The front seat heating does not function.

INTERNAL FAULT

REPLACING THE COMPONENT

The climate control module (CCM) has registered an internal fault in the right-hand seat heating module (SHM).

If the fault is intermittent, it has been registered previously but is no longer present. Intermittent faults may be caused by interference at start up of the right-hand seat heating module (SHM). Intermittent faults may also be caused by other types of intermittent faults. The fault is evaluated depending on how it occurs. Replace the right-hand seat heating module (SHM) if the fault recurs.

Replace the right-hand seat heating module (SHM) if the fault is permanent:

see **SEAT HEATING MODULE (SHM), REPLACING**

Remedy as necessary.

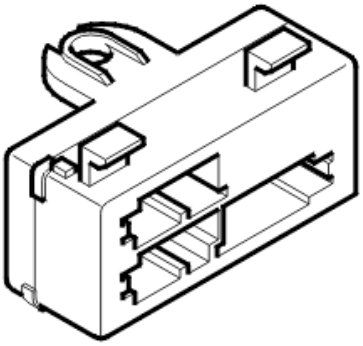

Fig. 105: Identifying Left Seat Heating Module (SHM)
Courtesy of VOLVO CARS CORPORATION

- **Continue**

  Refer to **INFORMATION**

INFORMATION

FAULT-TRACING INFORMATION

In case of this defect, troubleshooting is not followed by verification.

The information can be displayed again or the fault-tracing for this fault can be interrupted.

CCM-0040: AIR QUALITY SENSOR. INTERNAL FAULT (2005-2012)

DIAGNOSTIC TROUBLE CODE (DTC) INFORMATION CCM-0040

Condition

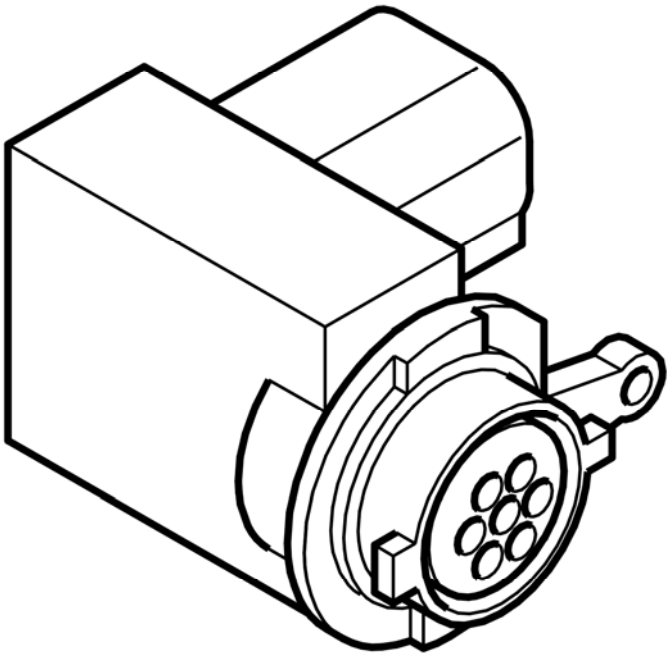

Fig. 106: Identifying Air Quality Sensor (AQS)
Courtesy of VOLVO CARS CORPORATION

The diagnostic trouble code (DTC) is stored if the climate control module (CCM) detects a fault in the air quality sensor (AQS).

The climate control module (CCM) communicates with the air quality sensor (AQS) and via LIN bus 2.

The air quality sensor (AQS) sends information to the climate control module (CCM) about status.

The diagnostic trouble code (DTC) can only be diagnosed for the climate control module (CCM) of electronic climate control (ECC) equipped with the air quality sensor (AQS).

The diagnostic trouble code (DTC) can be diagnosed in ignition positions I and II.

Substitute Value

- None.

Possible Source

- The air quality sensor (AQS) is not functioning.

Fault symptom[s]

- Poor air quality in the passenger compartment.

INTERNAL FAULT

REPLACING THE COMPONENT

The climate control module (CCM) has registered an internal fault in the air quality sensor (AQS).

If the fault is intermittent, it has been registered previously but is no longer present. Intermittent faults may be caused by interference at start up of the air quality sensor (AQS). Intermittent faults may also be caused by other types of intermittent faults. The fault is evaluated depending on how it occurs. Replace the air quality sensor (AQS) if the diagnostic trouble code (DTC) recurs.

Replace the air quality sensor (AQS) if the fault is permanent:

see **AIR QUALITY SENSOR, REPLACING**

Remedy as necessary.

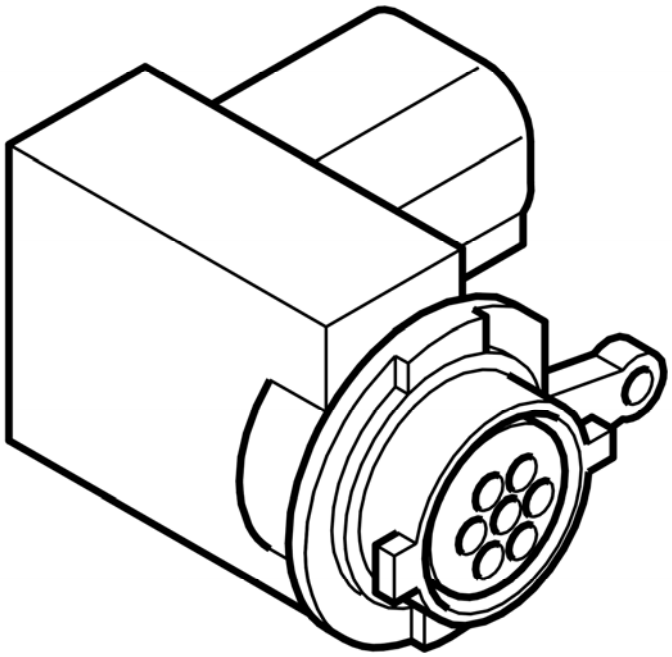

Fig. 107: Identifying Air Quality Sensor (AQS)
Courtesy of VOLVO CARS CORPORATION

- **Continue**

  Refer to **INFORMATION**

INFORMATION

FAULT-TRACING INFORMATION

In case of this defect, troubleshooting is not followed by verification.

The information can be displayed again or the fault-tracing for this fault can be interrupted.

CCM-0050: BLOWER FAN KNOB. FAULTY SIGNAL (2005-2012)

DIAGNOSTIC TROUBLE CODE (DTC) INFORMATION CCM-0050

Condition

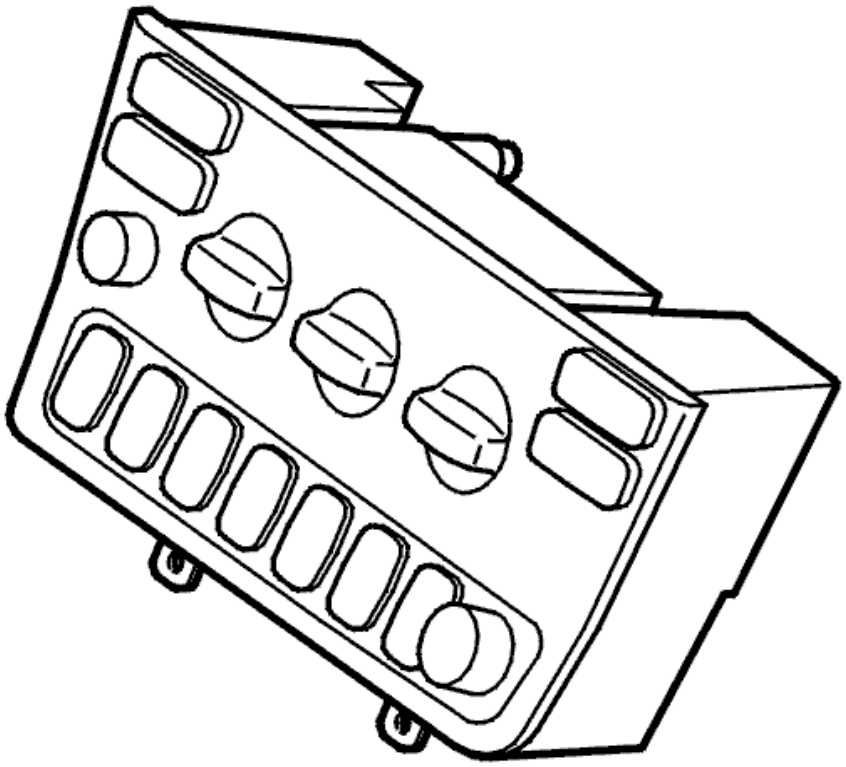

Fig. 108: Identifying Manual Climate Control Module
Courtesy of VOLVO CARS CORPORATION

The diagnostic trouble code (DTC) is stored if the climate control module (CCM) registers that the signal from the fan knob exceeds 99%, or is less than 1% of supply voltage (approximately 5 V).

The diagnostic trouble code (DTC) can be diagnosed in ignition positions I and II.

Substitute Value

- The climate control module (CCM) adopts a value corresponding to half of the maximum fan knob output.

Possible Source

- Defective potentiometer
- Short-circuit to supply voltage or ground in the potentiometer.

Fault symptom[s]

- The blower fan only runs at one speed.
- Buttons/control knobs on center console (Climate)/No/reduced/incorrect function

FAULTY SIGNAL

REPLACING THE COMPONENT

The fault has probably occurred as a result of a defective potentiometer or a short-circuit in the potentiometer. If the fault is intermittent, it has been registered previously but is no longer present. Intermittent faults may be caused by interference at start up of the control module. Intermittent faults may also be caused by other types of intermittent faults. The fault is evaluated depending on how it occurs. If the fault recurs, replace the control module.

If the fault persists, replace the climate control module (CCM). The potentiometer cannot be replaced as a separate part.

Other information:

- To access and replace the control module, see **CLIMATE CONTROL MODULE (CCM), REPLACING** .

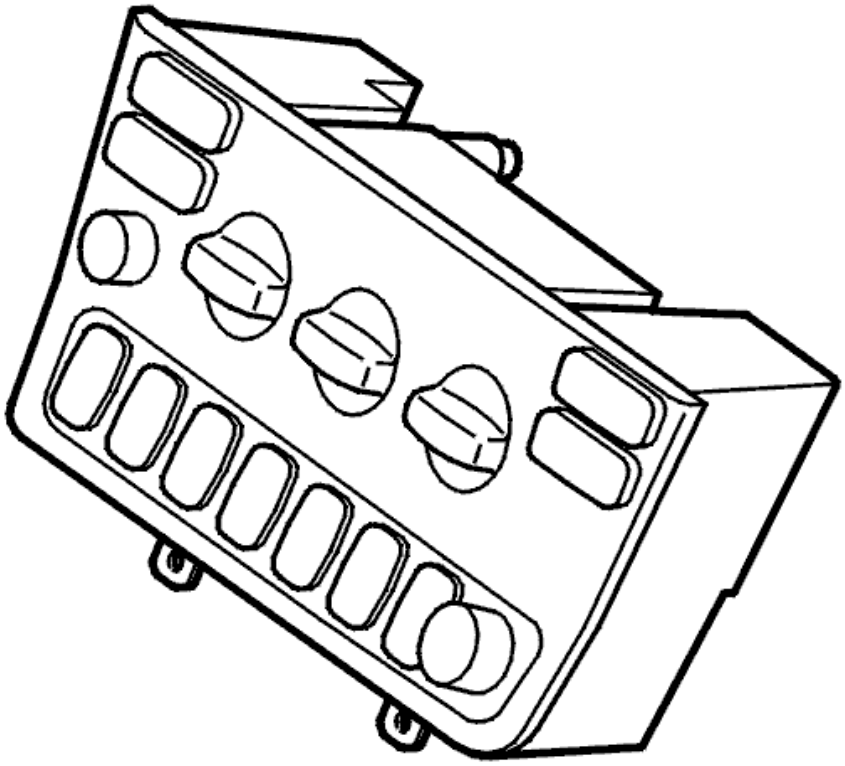

Fig. 109: Identifying Manual Climate Control Module
Courtesy of VOLVO CARS CORPORATION

- **Continue**

  Refer to **CHECKING LIN BUS**

CHECKING LIN BUS

IDENTIFICATION

HINT: After replacing the climate control module (CCM), the LIN bus must be checked to identify which damper motors are installed and to identify their function and positions.

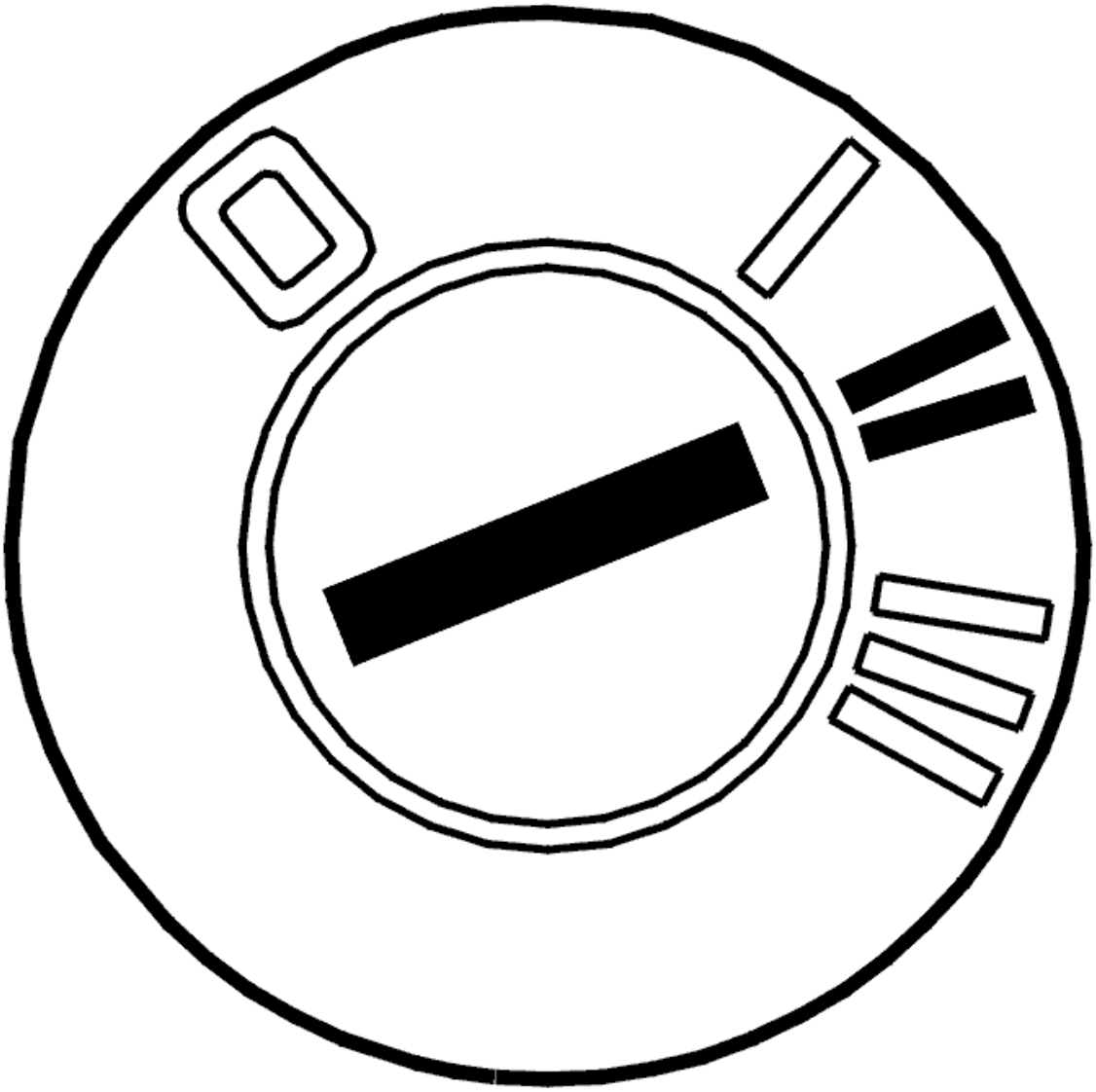

Fig. 110: Identifying Ignition ON
Courtesy of VOLVO CARS CORPORATION

- Ignition off
- Reinstall the connectors, components etc.
- Ignition on.

Click the VCT2000 symbol to activate the check.

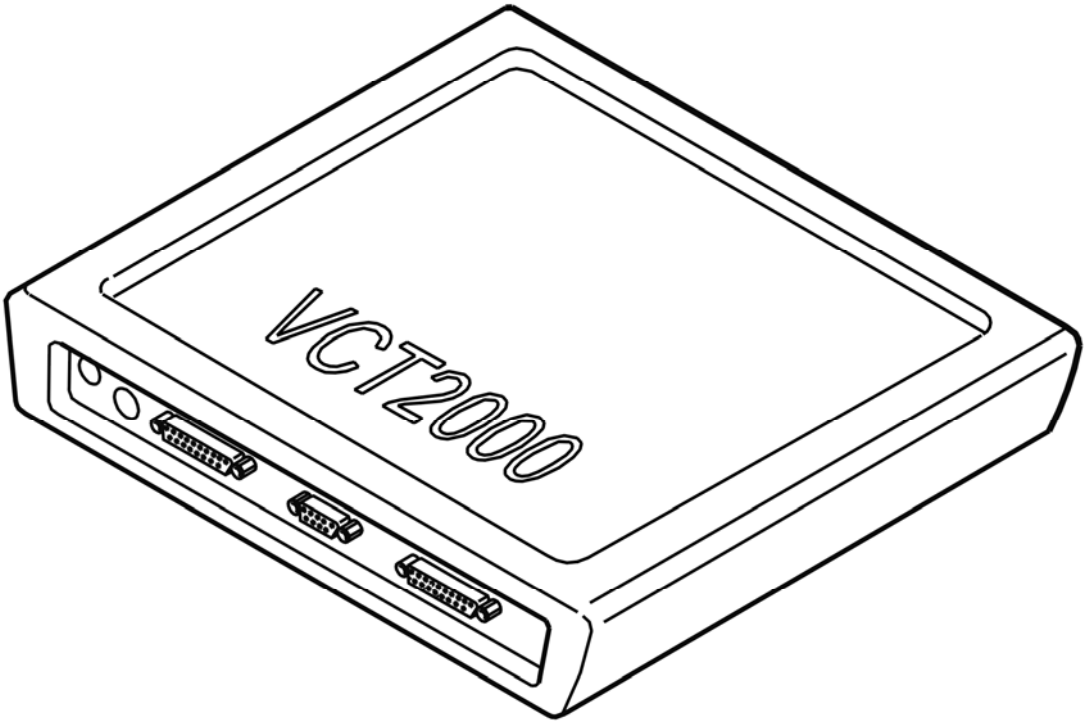

Fig. 111: Identifying VCT2000 Diagnostic Tool Symbol In VIDA
Courtesy of VOLVO CARS CORPORATION

- **Continue**

  Refer to **VERIFICATION**

VERIFICATION

HINT: After carrying out the repair, check that the fault has been remedied.

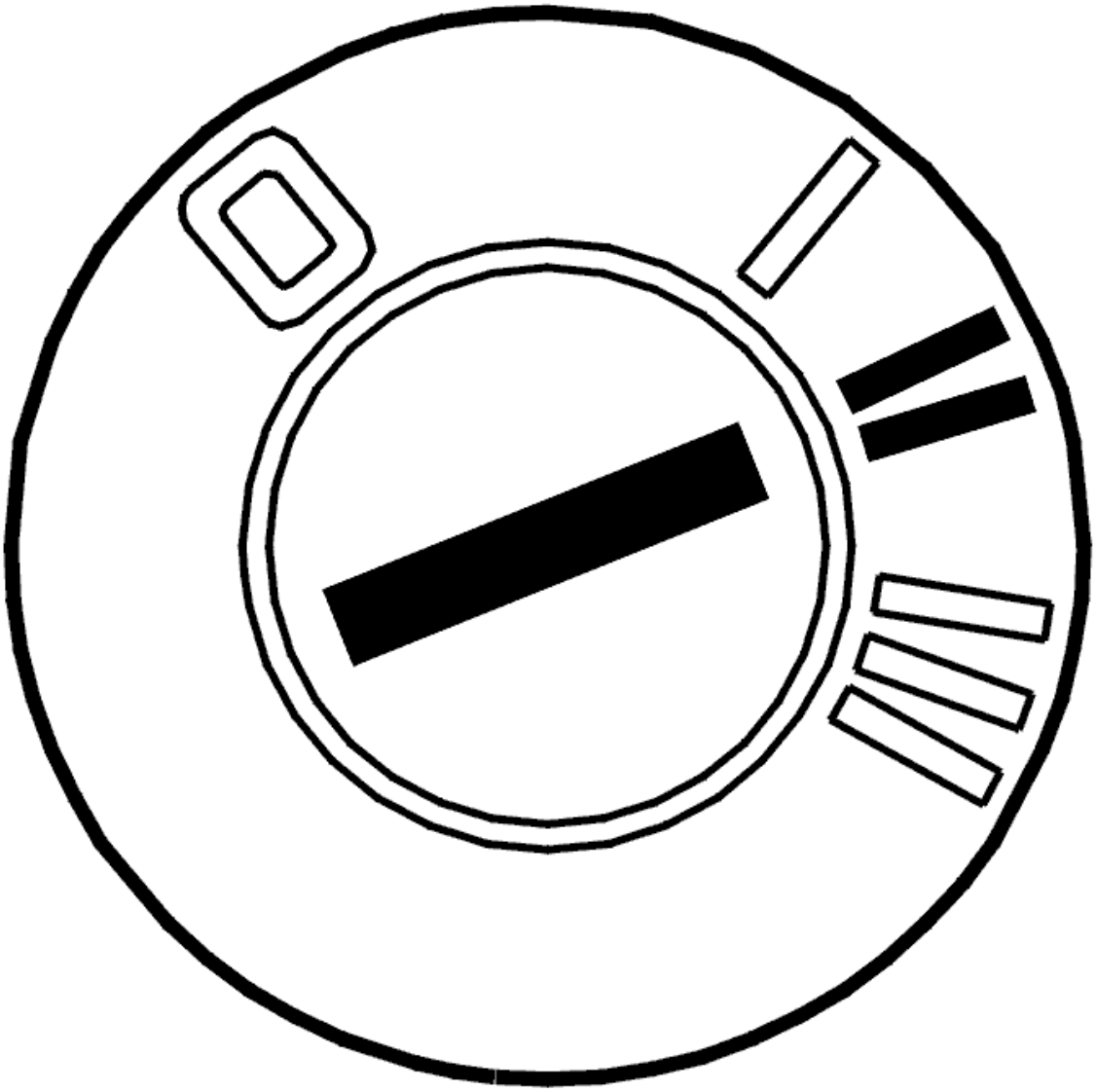

Fig. 112: Identifying Ignition ON
Courtesy of VOLVO CARS CORPORATION

- Ignition off
- Reinstall the connectors, components etc.
- Ignition on.

  Check the function of the blower fan control. Turn the control between the minimum and maximum positions.

Does the fan speed change?

- **YES**

  VERIFIED: Troubleshooting has been completed.

- **NO**

  Refer to **INFORMATION**

INFORMATION

FAULT-TRACING INFORMATION

The fault should have been detected and remedied. As this is not the case fault-tracing has failed.

Exit fault-tracing for this diagnostic trouble code (DTC) or make another attempt.

CCM-0051: TEMPERATURE CONTROL LEFT. FAULTY SIGNAL (2005-2012)

DIAGNOSTIC TROUBLE CODE (DTC) INFORMATION CCM-0051

Condition

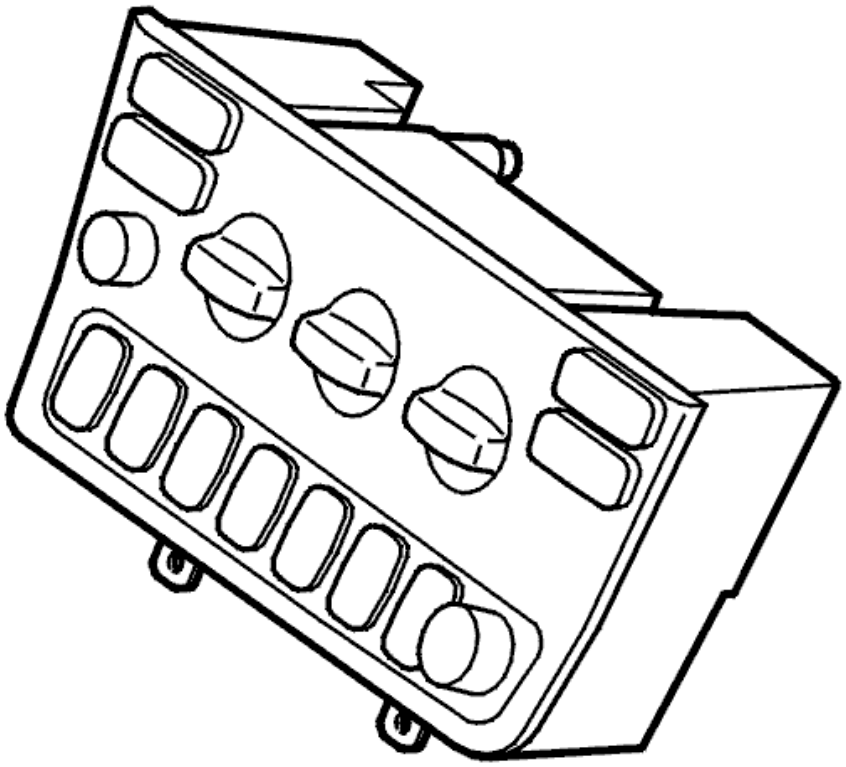

Fig. 113: Identifying Manual Climate Control Module
Courtesy of VOLVO CARS CORPORATION

The diagnostic trouble code (DTC) is stored if the climate control module (CCM) registers that the signal from the temperature control for the left-hand side exceeds 99%, or is less than 1% of supply voltage (approximately

5 V).

The diagnostic trouble code (DTC) can be diagnosed in ignition positions I and II.

Substitute Value

- The climate control module (CCM) adopts a value corresponding to half of the maximum output of the temperature control.

Possible Source

- Defective potentiometer
- Short-circuit to supply voltage or ground in the potentiometer.

Fault symptom[s]

- The passenger compartment temperature does not correspond to the set value.
- Buttons/control knobs on center console (Climate)/No/reduced/incorrect function

FAULTY SIGNAL

REPLACING THE COMPONENT

The fault has probably occurred as a result of a defective potentiometer or a short-circuit in the potentiometer. If the fault is intermittent, it has been registered previously but is no longer present. Intermittent faults may be caused by interference at start up of the control module. Intermittent faults may also be caused by other types of intermittent faults. The fault is evaluated depending on how it occurs. If the fault recurs, replace the control module.

If the fault persists, replace the climate control module (CCM). The potentiometer cannot be replaced as a separate part.

Other information:

- To access and replace the control module, see **CLIMATE CONTROL MODULE (CCM), REPLACING** .

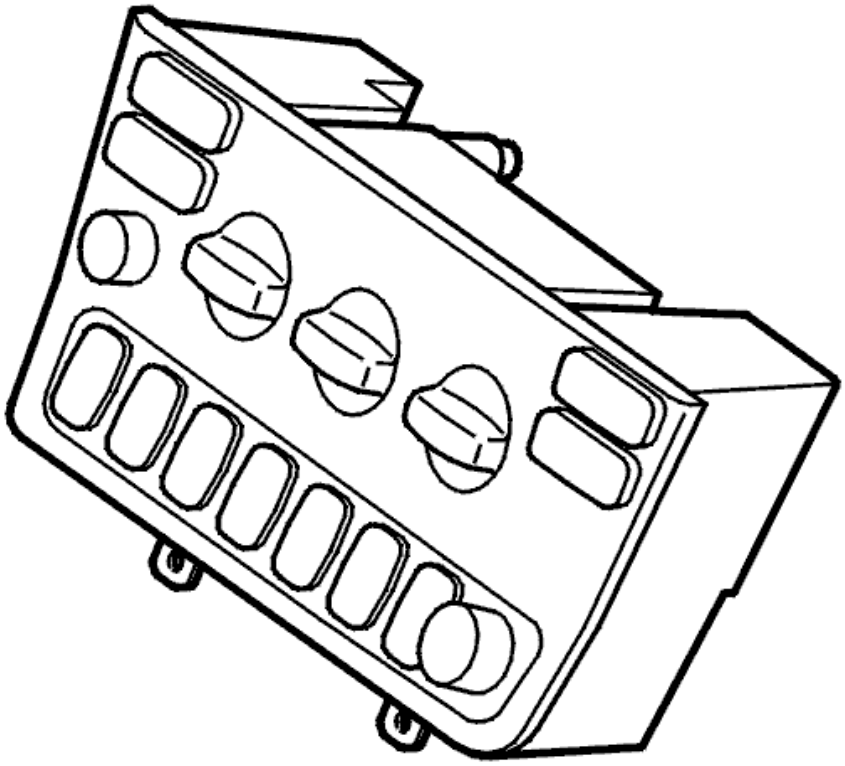

Fig. 114: Identifying Manual Climate Control Module
Courtesy of VOLVO CARS CORPORATION

- **Continue**

  Refer to **CHECKING LIN BUS**

CHECKING LIN BUS

IDENTIFICATION

HINT: After replacing the climate control module (CCM), the LIN bus must be checked to identify which damper motors are installed and to identify their function and positions.

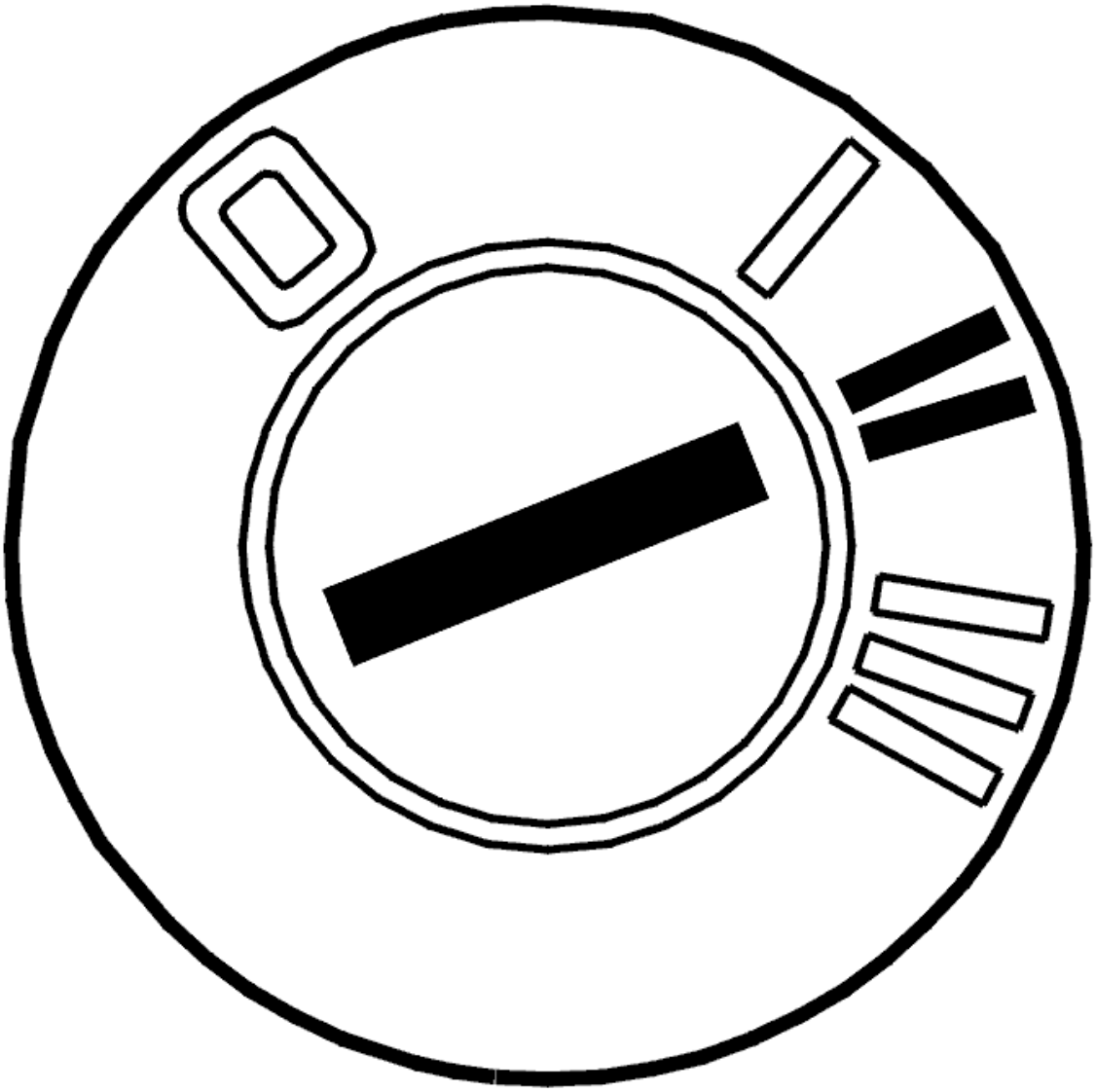

Fig. 115: Identifying Ignition ON
Courtesy of VOLVO CARS CORPORATION

- Ignition off
- Reinstall the connectors, components etc.
- Ignition on.

Click the VCT2000 symbol to activate the check.

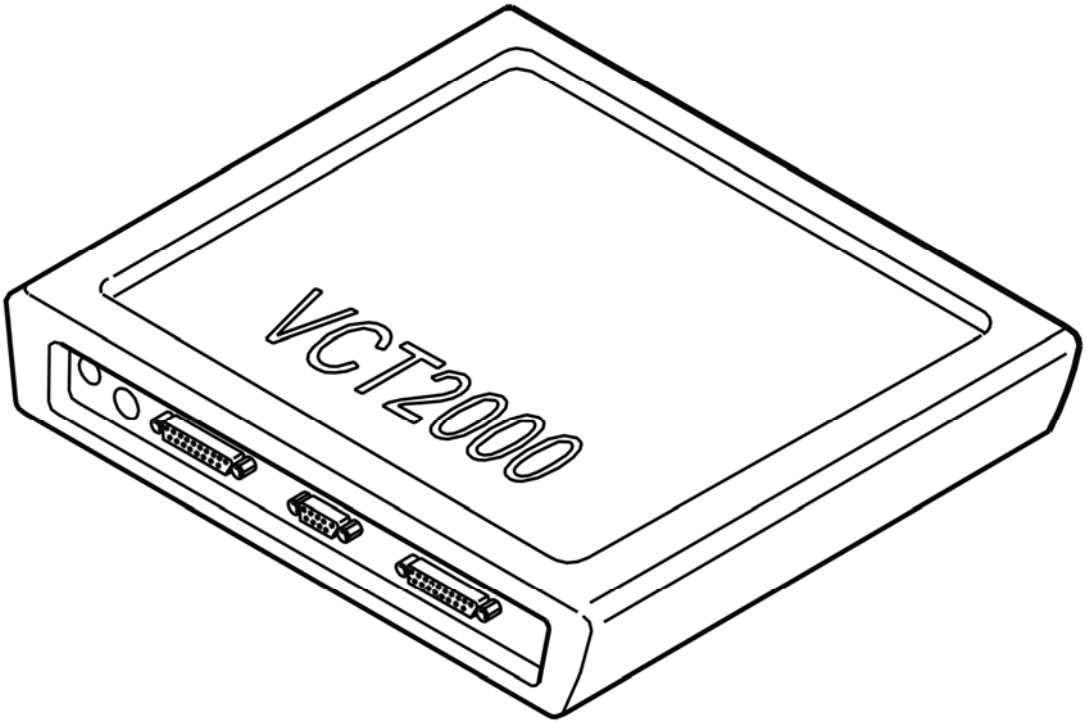

Fig. 116: Identifying VCT2000 Diagnostic Tool Symbol In VIDA
Courtesy of VOLVO CARS CORPORATION

- **Continue**

  Refer to **VERIFICATION**

VERIFICATION

HINT: After carrying out the repair, check that the fault has been remedied.

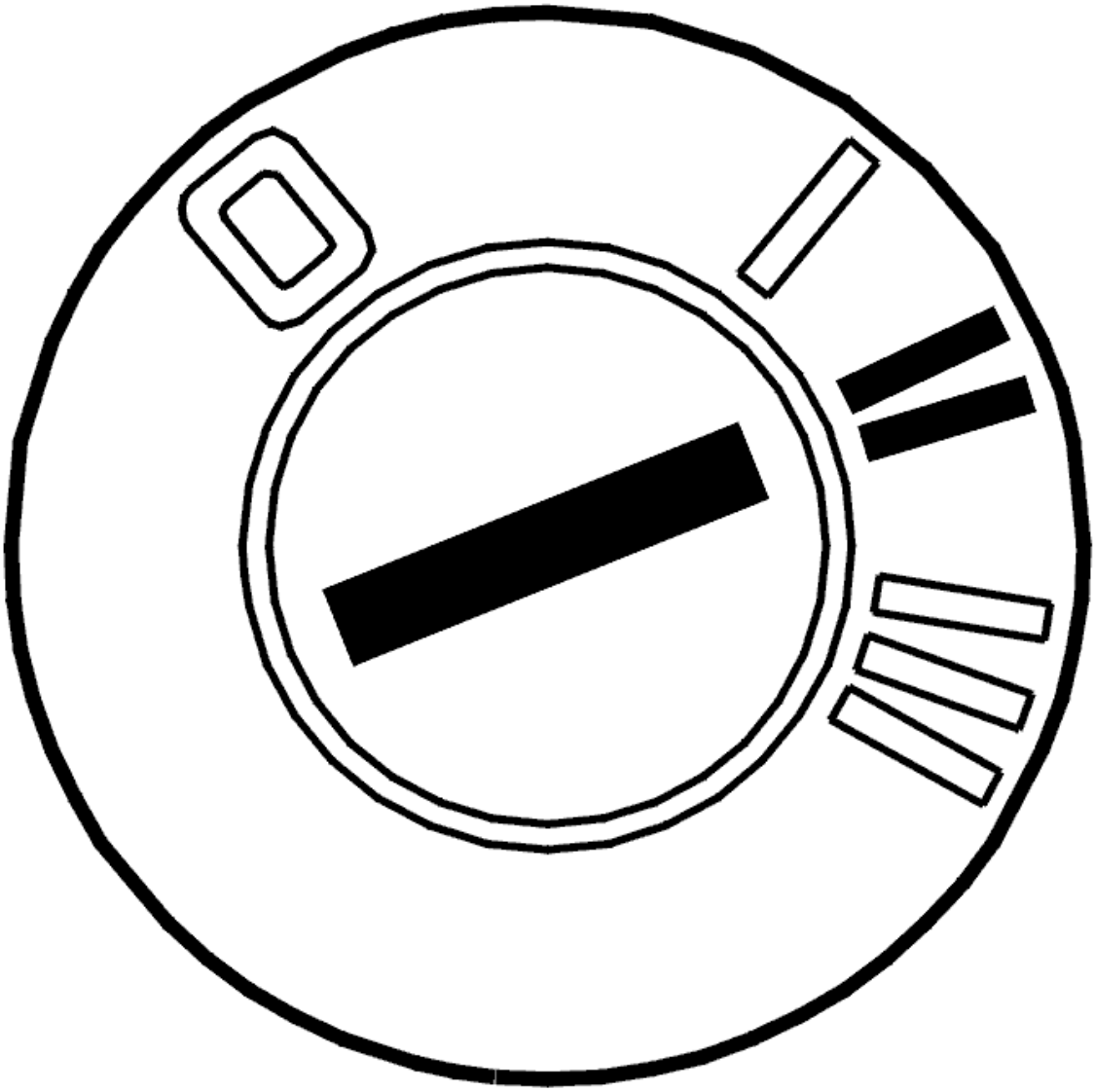

Fig. 117: Identifying Ignition ON
Courtesy of VOLVO CARS CORPORATION

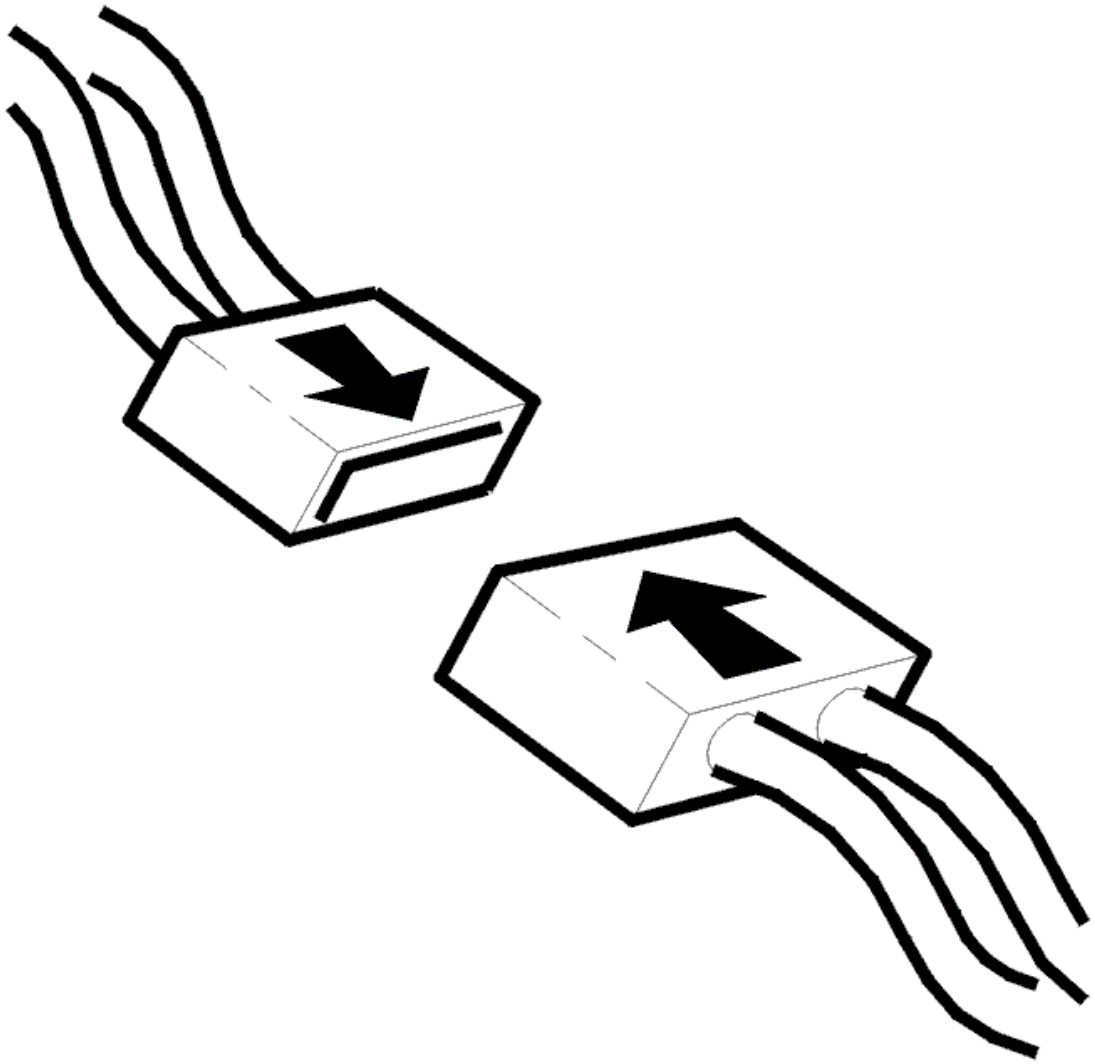

Fig. 118: Connecting Connector
Courtesy of VOLVO CARS CORPORATION

- Ignition off
- Reinstall the connectors, components etc.
- Ignition on
- Blower fan on.

Check the function of the temperature control. Turn the control between the minimum and maximum positions.

A the same time, check the desired and actual position of the damper motors during control. Ensure that the desired and actual positions are approximately the same.

The values listed below should be seen as guidelines for the positions which the damper motors should

reach.

NOTE: The blower fan must be running for the damper motors to be activated.

- Temperature damper motor left/right 0-100%
- Recirculation damper motor, 40-100%
- Air distribution damper motor, defroster approximately 0%, floor/defroster approximately 19%, floor approximately 39%, vent approximately 83%.

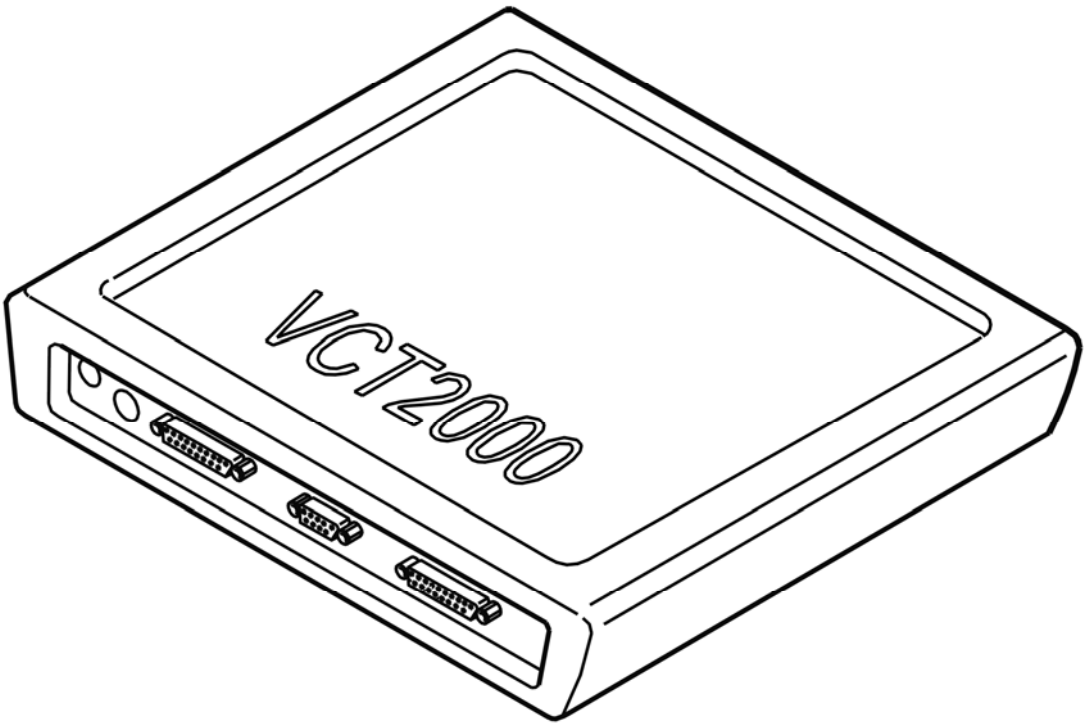

Fig. 119: Identifying VCT2000 Diagnostic Tool Symbol In VIDA
Courtesy of VOLVO CARS CORPORATION

Is the damper motor functioning?

- **YES**

  VERIFIED: Troubleshooting has been completed.

- **NO**

  Refer to **INFORMATION**

INFORMATION

FAULT-TRACING INFORMATION

The fault should have been detected and remedied. As this is not the case fault-tracing has failed.

Exit fault-tracing for this diagnostic trouble code (DTC) or make another attempt.

CCM-0052: TEMPERATURE CONTROL RIGHT. FAULTY SIGNAL (2005-2012)

DIAGNOSTIC TROUBLE CODE (DTC) INFORMATION CCM-0052

Condition

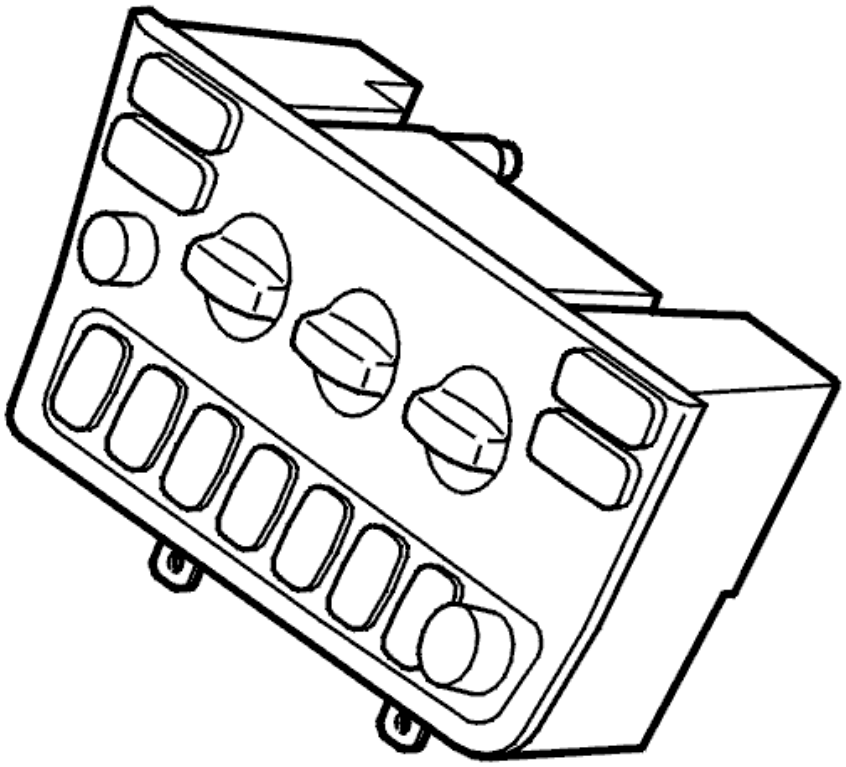

Fig. 120: Identifying Manual Climate Control Module
Courtesy of VOLVO CARS CORPORATION

The diagnostic trouble code (DTC) is stored if the climate control module (CCM) registers that the signal from the temperature control for the right-hand side exceeds 99% or is less than 1% of supply voltage (approximately 5 V).

Substitute Value

- The climate control module (CCM) adopts a value corresponding to half of the maximum output of the temperature control.

Possible Source

- Defective potentiometer
- Short-circuit to supply voltage or ground in the potentiometer.

Fault symptom[s]

- The passenger compartment temperature does not correspond to the set value.
- Buttons/control knobs on center console (Climate)/No/reduced/incorrect function

FAULTY SIGNAL

REPLACING THE COMPONENT

The fault has probably occurred as a result of a defective potentiometer or a short-circuit in the potentiometer. If the fault is intermittent, it has been registered previously but is no longer present. Intermittent faults may be caused by interference at start up of the control module. Intermittent faults may also be caused by other types of intermittent faults. The fault is evaluated depending on how it occurs. If the fault recurs, replace the control module.

If the fault persists, replace the climate control module (CCM). The potentiometer cannot be replaced as a separate part.

Other information:

- To access and replace the control module, see **CLIMATE CONTROL MODULE (CCM), REPLACING** .

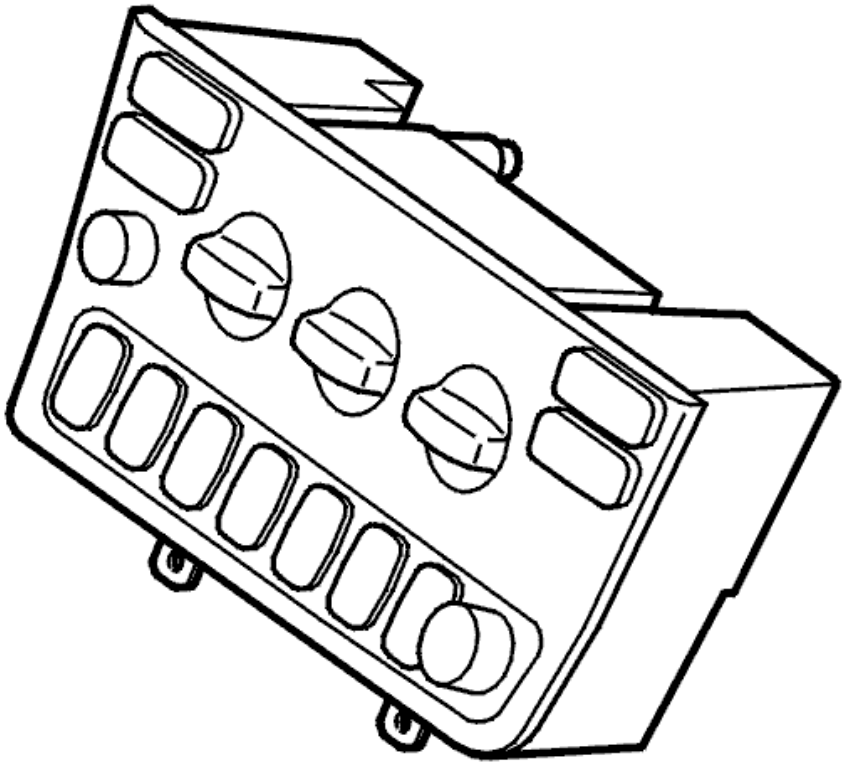

Fig. 121: Identifying Manual Climate Control Module
Courtesy of VOLVO CARS CORPORATION

- **Continue**

  Refer to **CHECKING LIN BUS**

CHECKING LIN BUS

IDENTIFICATION

HINT: After replacing the climate control module (CCM), the LIN bus must be checked to identify which damper motors are installed and to identify their function and positions.

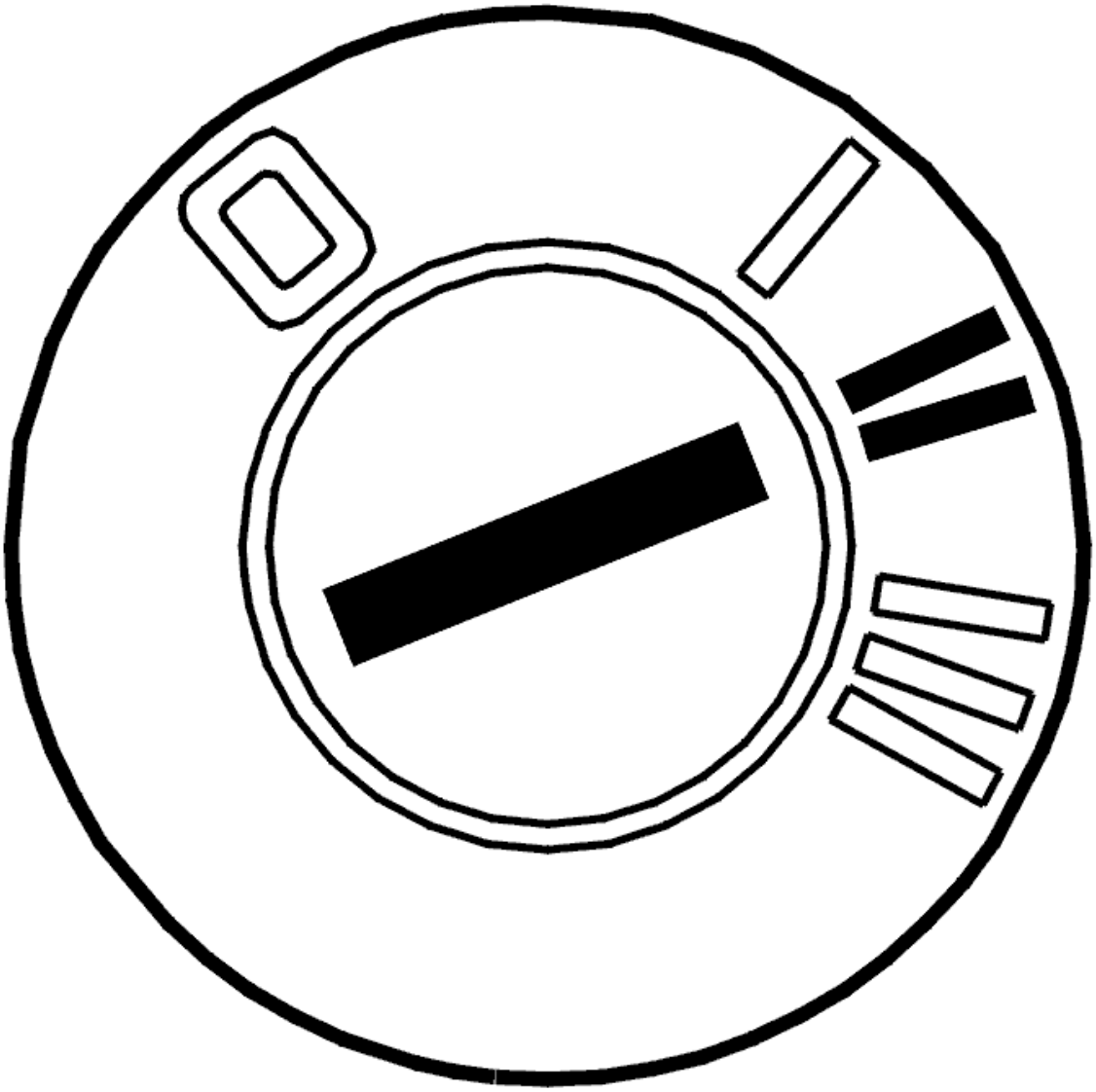

Fig. 122: Identifying Ignition ON
Courtesy of VOLVO CARS CORPORATION

- Ignition off
- Reinstall the connectors, components etc.
- Ignition on.

Click the VCT2000 symbol to activate the check.

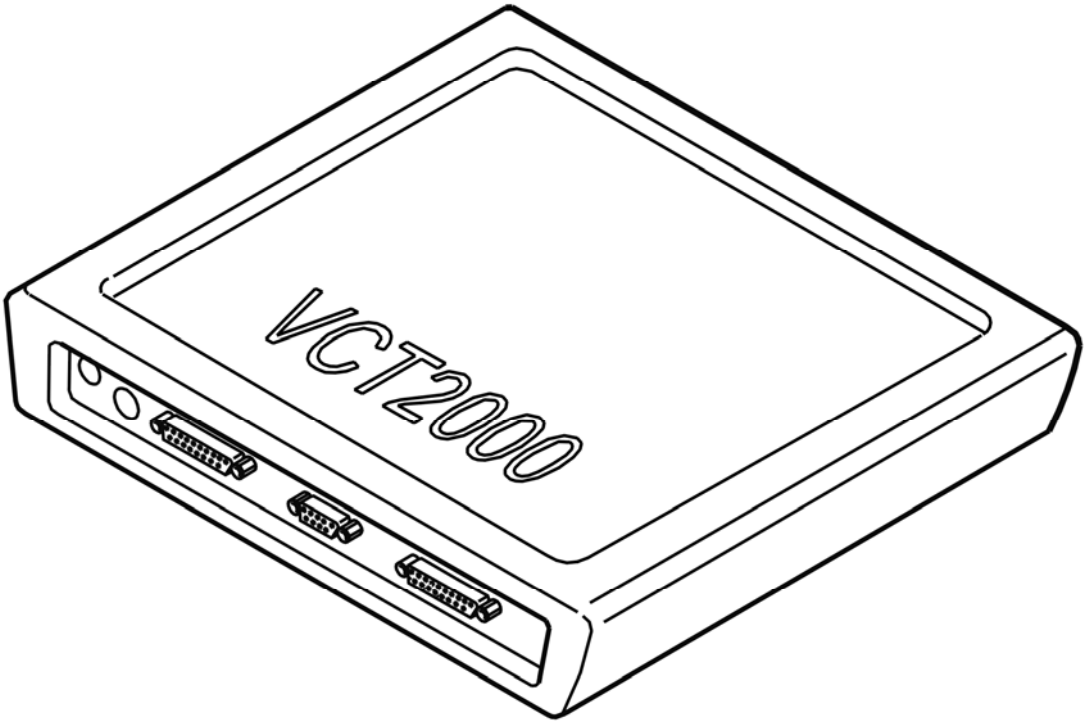

Fig. 123: Identifying VCT2000 Diagnostic Tool Symbol In VIDA
Courtesy of VOLVO CARS CORPORATION

- **Continue**

  Refer to **VERIFICATION**

VERIFICATION

HINT: After carrying out the repair, check that the fault has been remedied.

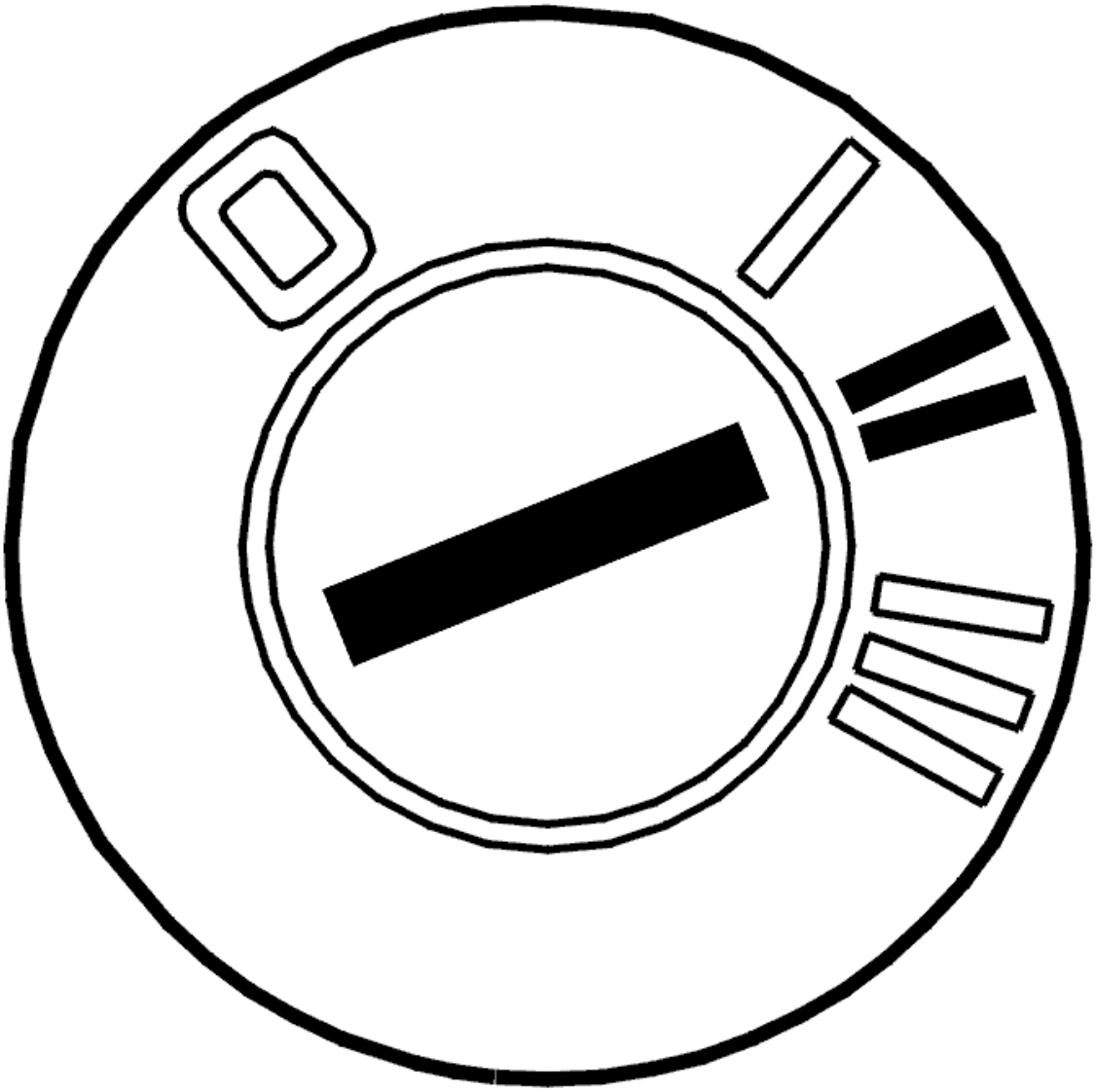

Fig. 124: Identifying Ignition ON
Courtesy of VOLVO CARS CORPORATION

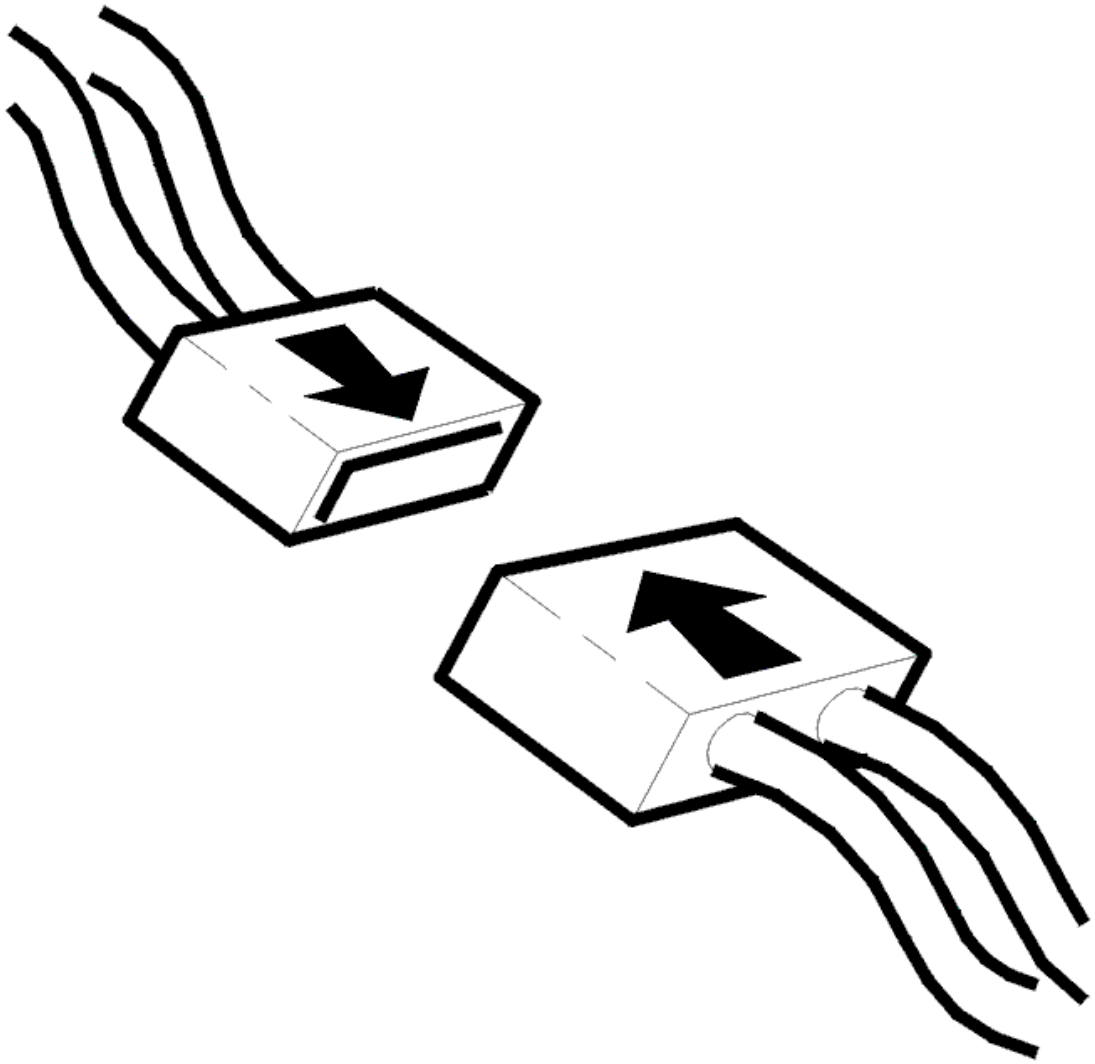

Fig. 125: Connecting Connector
Courtesy of VOLVO CARS CORPORATION

- Ignition off
- Reinstall the connectors, components etc.
- Ignition on
- Blower fan on.

Check the function of the temperature control. Turn the control between the minimum and maximum positions.

A the same time, check the desired and actual position of the damper motors during control. Ensure that the desired and actual positions are approximately the same.

The values listed below should be seen as guidelines for the positions which the damper motors should

reach.

NOTE: The blower fan must be running for the damper motors to be activated.

- Temperature damper motor left/right 0-100%
- Recirculation damper motor, 40-100%
- Air distribution damper motor, defroster approximately 0%, floor/defroster approximately 19%, floor approximately 39%, vent approximately 83%.

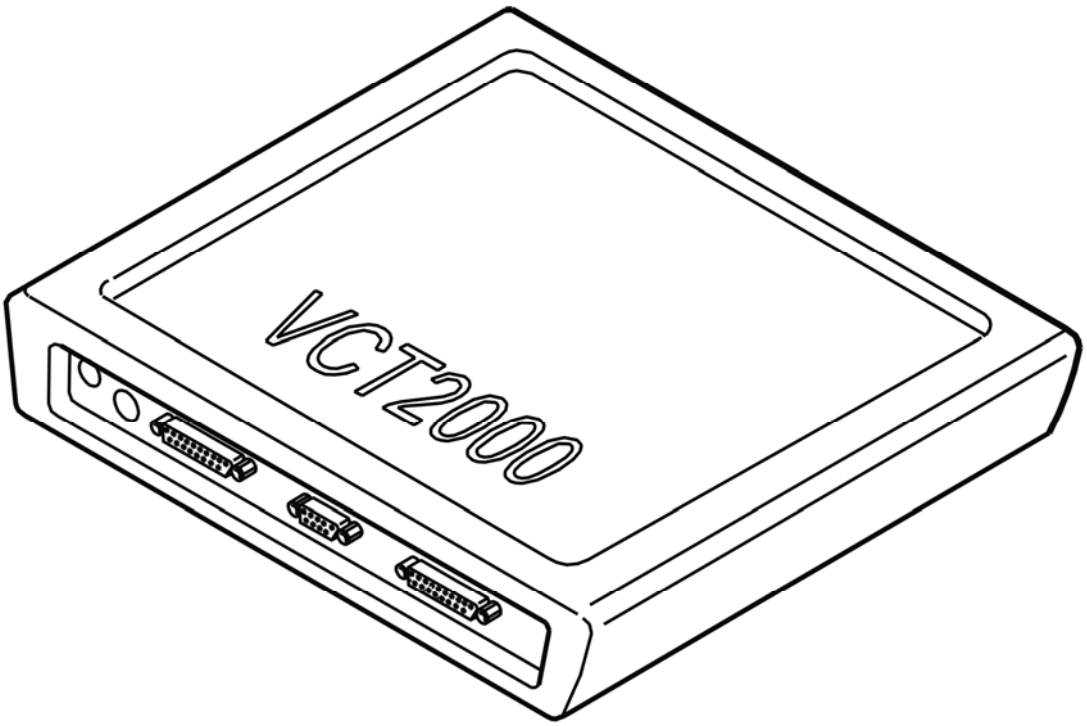

Fig. 126: Identifying VCT2000 Diagnostic Tool Symbol In VIDA
Courtesy of VOLVO CARS CORPORATION

Is the damper motor functioning?

- **YES**

  VERIFIED: Troubleshooting has been completed.

- **NO**

  Refer to **INFORMATION**

INFORMATION

FAULT-TRACING INFORMATION

The fault should have been detected and remedied. As this is not the case fault-tracing has failed.

Exit fault-tracing for this diagnostic trouble code (DTC) or make another attempt.

CCM-0053: AIR DISTRIBUTION CONTROL. FAULTY SIGNAL (2005-2012)

DIAGNOSTIC TROUBLE CODE (DTC) INFORMATION CCM-0053

Condition

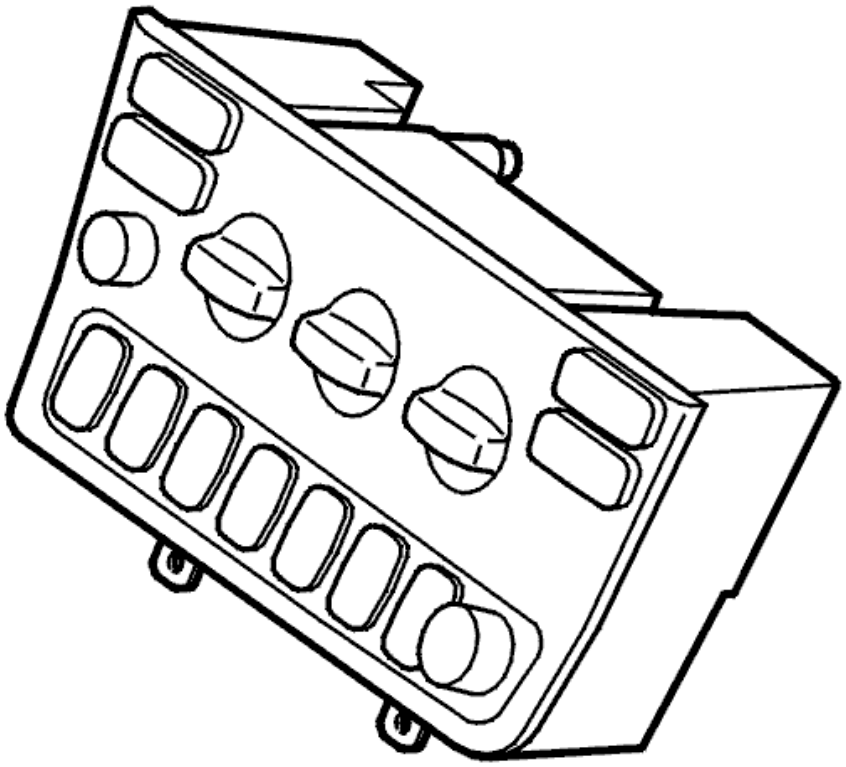

Fig. 127: Identifying Manual Climate Control Module
Courtesy of VOLVO CARS CORPORATION

The diagnostic trouble code (DTC) is stored if the climate control module (CCM) registers that the signal from the air distribution control exceeds 99% or is less than 1% of supply voltage (approximately 5 V).

The diagnostic trouble code (DTC) can be diagnosed in ignition positions I and II.

Substitute Value

- None.

Possible Source

- Defective potentiometer
- Short-circuit to supply voltage or ground in the potentiometer.

Fault symptom[s]

- No air distribution function.
- Buttons/control knobs on center console (Climate)/No/reduced/incorrect function

FAULTY SIGNAL

REPLACING THE COMPONENT

The fault has probably occurred as a result of a defective potentiometer or a short-circuit in the potentiometer. If the fault is intermittent, it has been registered previously but is no longer present. Intermittent faults may be caused by interference at start up of the control module. Intermittent faults may also be caused by other types of intermittent faults. The fault is evaluated depending on how it occurs. If the fault recurs, replace the control module.

If the fault persists, replace the climate control module (CCM). The potentiometer cannot be replaced as a separate part.

Other information:

- To access and replace the control module, see **CLIMATE CONTROL MODULE (CCM), REPLACING** .

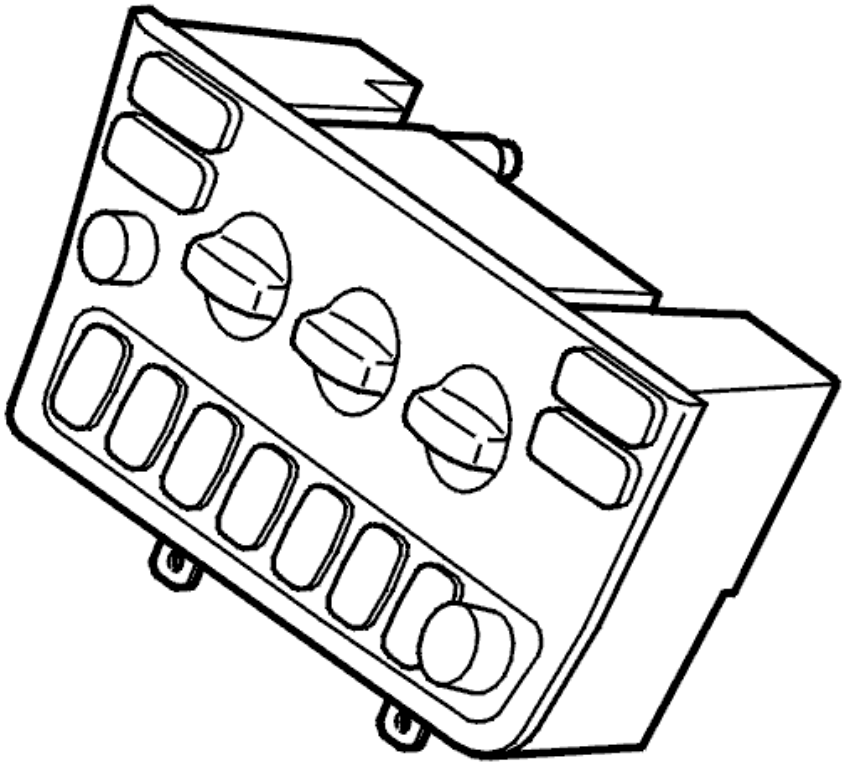

Fig. 128: Identifying Manual Climate Control Module
Courtesy of VOLVO CARS CORPORATION

- **Continue**

  Refer to **CHECKING LIN BUS**

CHECKING LIN BUS

IDENTIFICATION

HINT: After replacing the climate control module (CCM), the LIN bus must be checked to identify which damper motors are installed and to identify their function and positions.

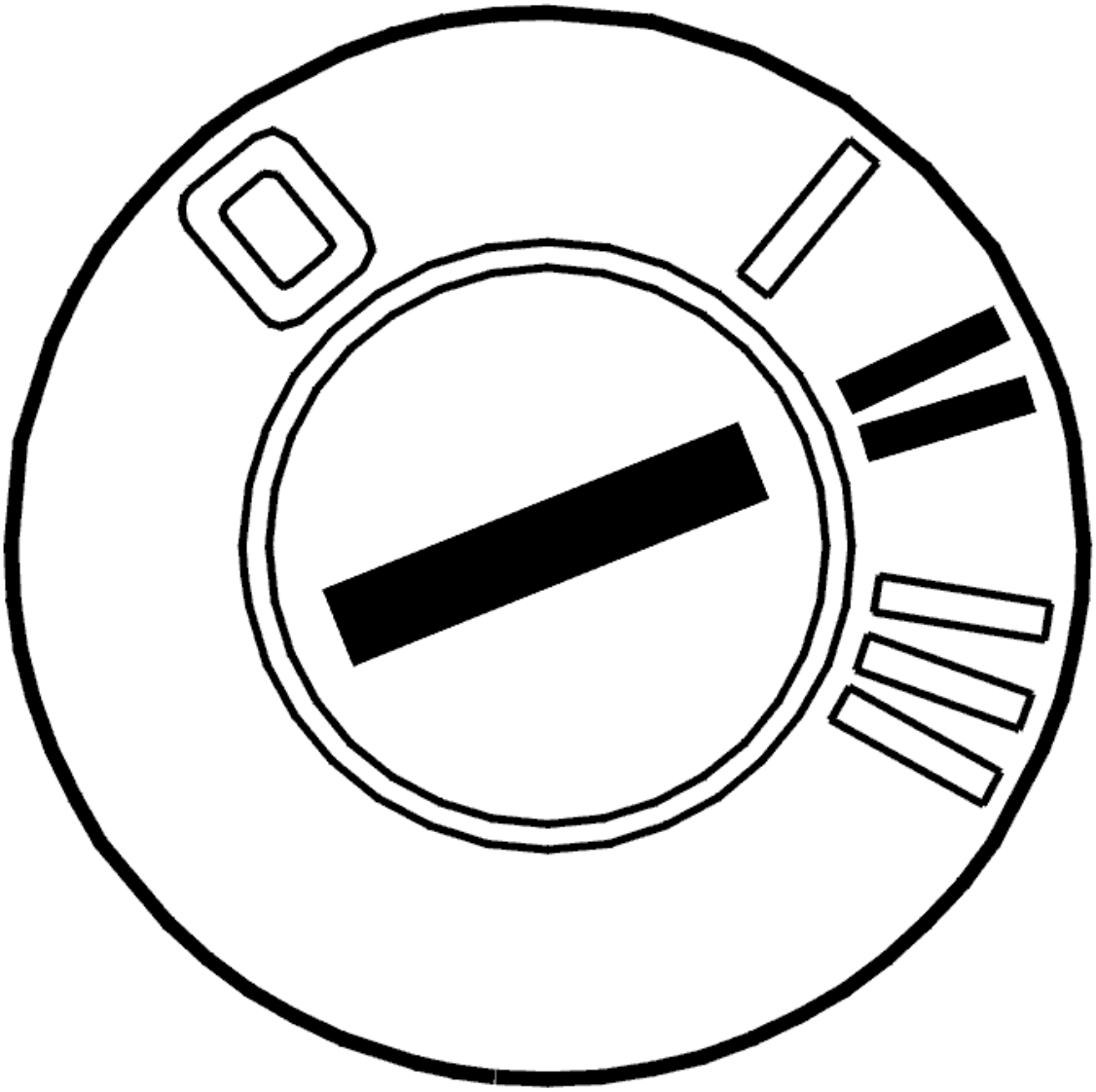

Fig. 129: Identifying Ignition ON
Courtesy of VOLVO CARS CORPORATION

- Ignition off
- Reinstall the connectors, components etc.
- Ignition on.

Click the VCT2000 symbol to activate the check.

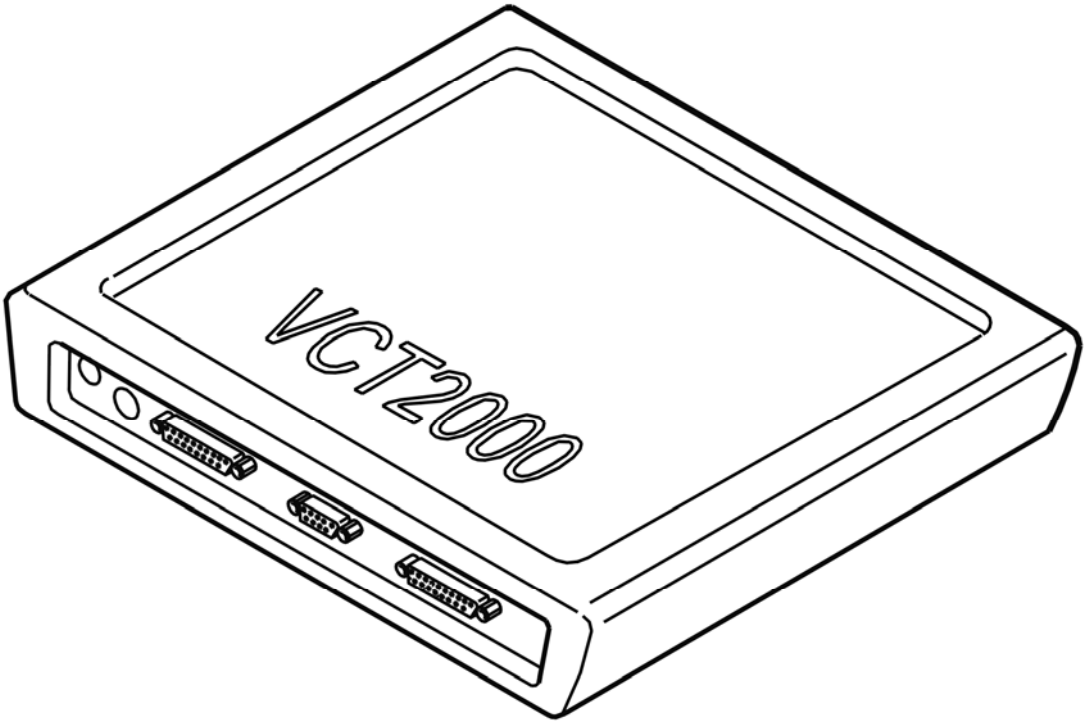

Fig. 130: Identifying VCT2000 Diagnostic Tool Symbol In VIDA
Courtesy of VOLVO CARS CORPORATION

- **Continue**

  Refer to **VERIFICATION**

VERIFICATION

HINT: After carrying out the repair, check that the fault has been remedied.

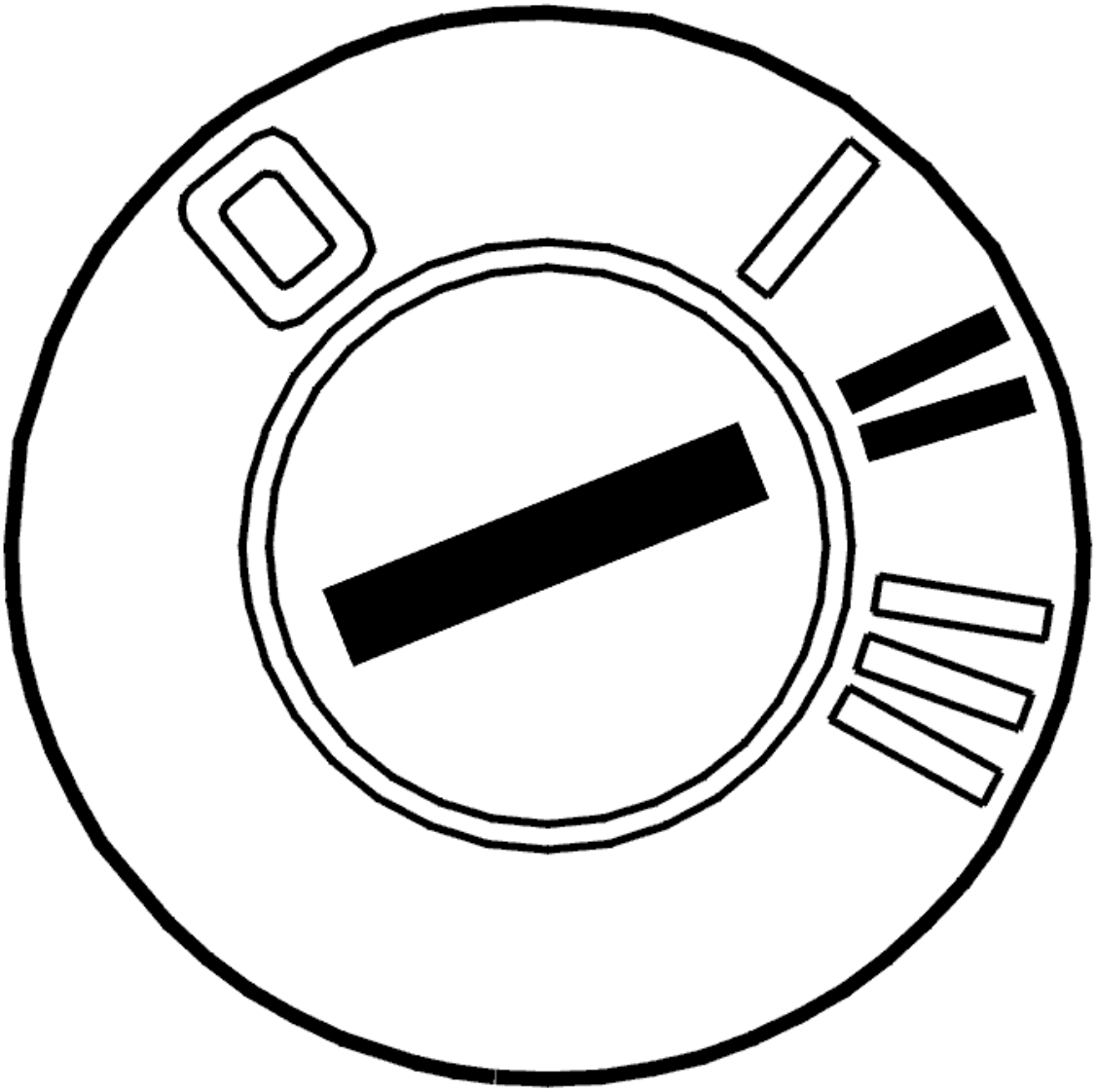

Fig. 131: Identifying Ignition ON
Courtesy of VOLVO CARS CORPORATION

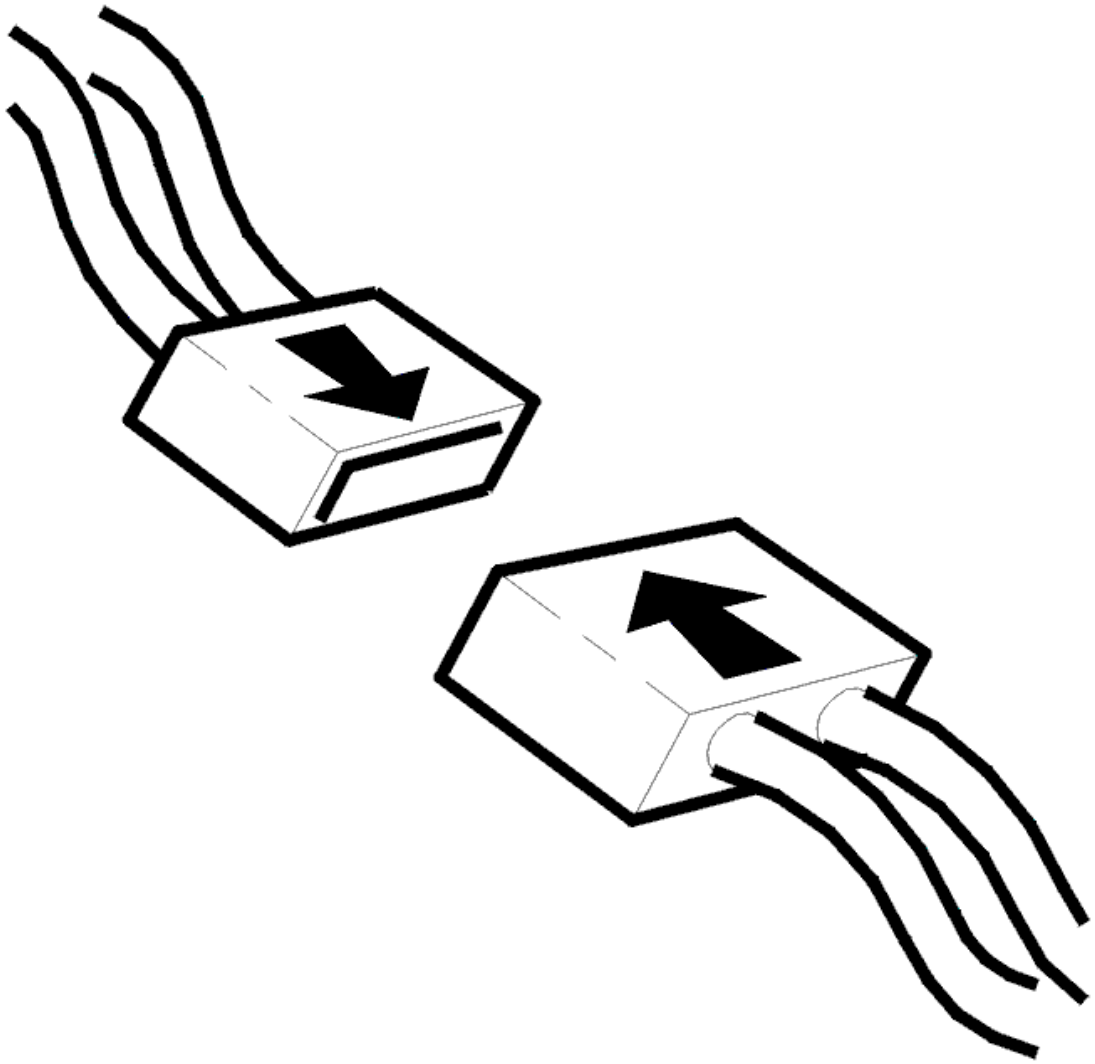

Fig. 132: Connecting Connector
Courtesy of VOLVO CARS CORPORATION

- Ignition off
- Reinstall the connectors, components etc.
- Ignition on
- Blower fan on.

Check the function of the temperature control. Turn the control between the minimum and maximum positions.

A the same time, check the desired and actual position of the damper motors during control. Ensure that the desired and actual positions are approximately the same.

The values listed below should be seen as guidelines for the positions which the damper motors should

reach.

NOTE: The blower fan must be running for the damper motors to be activated.

- Temperature damper motor left/right 0-100%
- Recirculation damper motor, 40-100%
- Air distribution damper motor, defroster approximately 0%, floor/defroster approximately 19%, floor approximately 39%, vent approximately 83%.

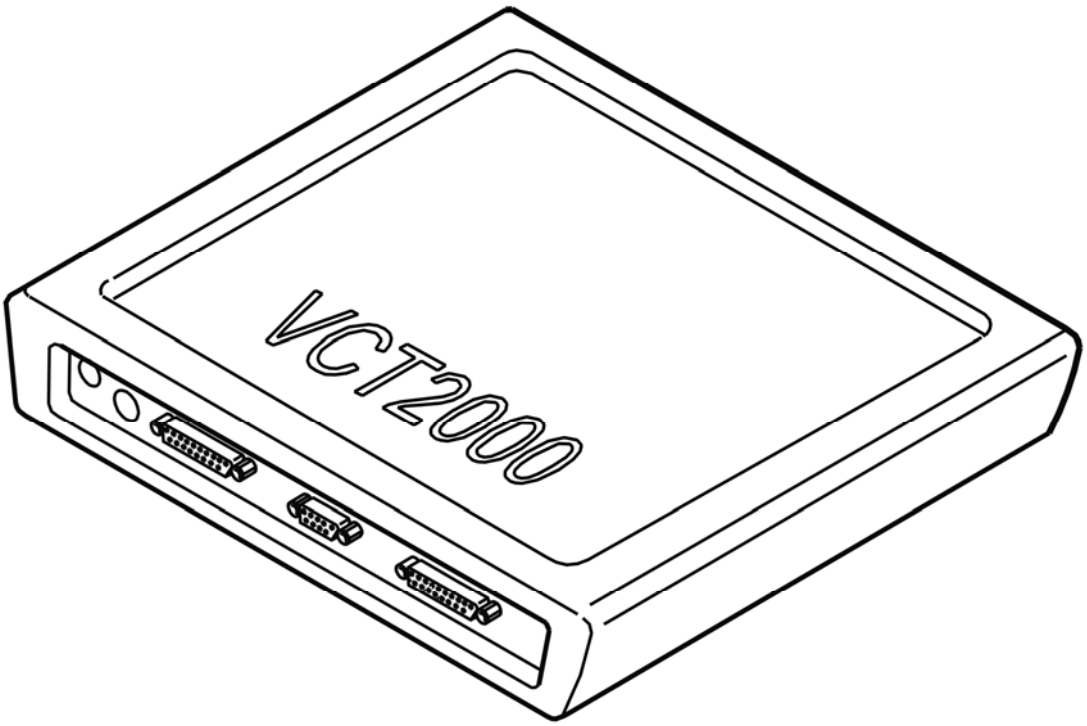

Fig. 133: Identifying VCT2000 Diagnostic Tool Symbol In VIDA
Courtesy of VOLVO CARS CORPORATION

Is the damper motor functioning?

- **YES**

  VERIFIED: Troubleshooting has been completed.

- **NO**

  Refer to **INFORMATION**

INFORMATION

FAULT-TRACING INFORMATION

The fault should have been detected and remedied. As this is not the case fault-tracing has failed.

Exit fault-tracing for this diagnostic trouble code (DTC) or make another attempt.

CCM-0060: DAMPER MOTOR DEFROSTER. INTERNAL FAULT (2005-2012)

DIAGNOSTIC TROUBLE CODE (DTC) INFORMATION CCM-0060

Condition

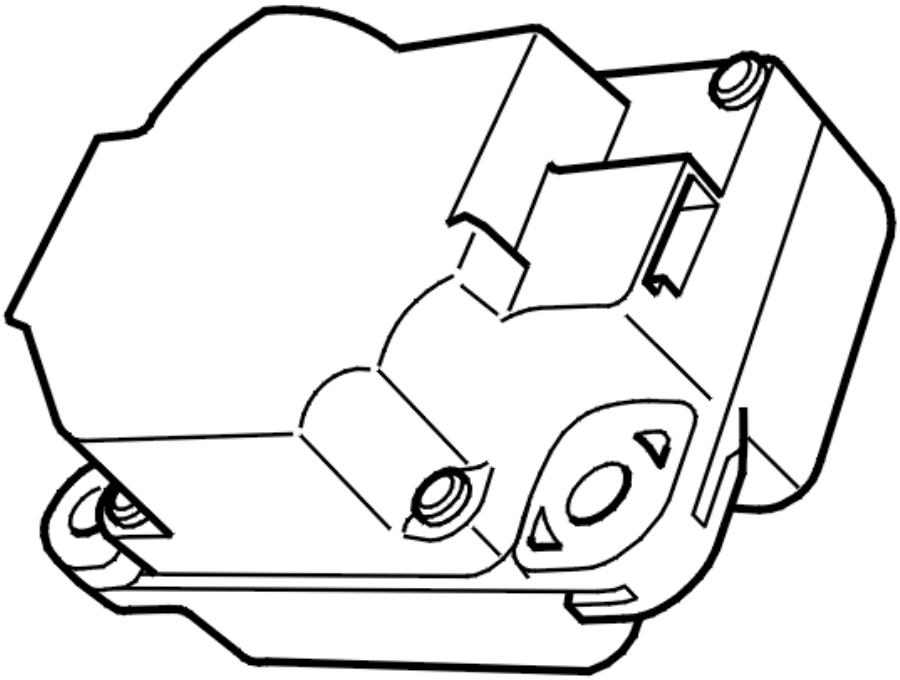

Fig. 134: Identifying Damper Motor Module (DMM)
Courtesy of VOLVO CARS CORPORATION

The diagnostic trouble code (DTC) is stored if the climate control module (CCM) detects a fault in the damper motor module (DMM) defroster.

The climate control module (CCM) communicates with the damper motor module (DMM) defroster via the LIN bus 2.

The damper motor module (DMM) transmits information to the climate control module (CCM) about status.

The diagnostic trouble code (DTC) can be diagnosed in ignition positions I and II.

Substitute Value

- None.

Possible Source

- Internal fault in the damper motor module (DMM) defroster
- Incorrect calibration due to loss of power.

Fault symptom[s]

- The passenger compartment temperature does not correspond to the set position.
- Air flow problem.

INTERNAL FAULT

REPLACING THE COMPONENT

The climate control module (CCM) has registered an internal fault in the damper motor module (DMM) for the defroster.

If the fault is intermittent, it has been registered previously but is no longer present. Intermittent faults may be caused by interference at start up of the damper motor module (DMM). Intermittent faults may also be caused by other types of intermittent faults. The fault is evaluated depending on how it occurs. Replace the damper motor module (DMM) if the fault recurs.

Replace the damper motor module (DMM) for the defroster if the fault is permanent:

For -2004, see **DAMPER MOTOR DEFROSTER, REPLACING** . For 2005-, see **DAMPER MOTOR MODULE (DMM) DEFROSTER, REPLACING**

Remedy as necessary.

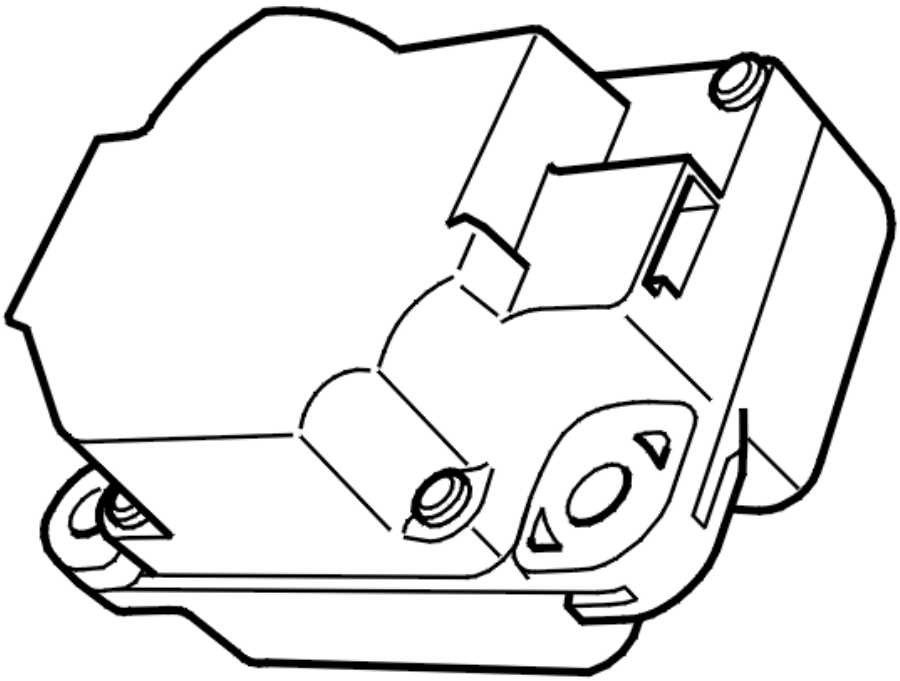

Fig. 135: Identifying Damper Motor Module (DMM)
Courtesy of VOLVO CARS CORPORATION

- **Continue**

  Refer to **IDENTIFYING COMPONENTS ON THE LIN NETWORK THAT BELONG TO THE CLIMATE CONTROL SYSTEM (CCM)**

IDENTIFYING COMPONENTS ON THE LIN NETWORK THAT BELONG TO THE CLIMATE CONTROL SYSTEM (CCM)

INFORMATION

- The control module must be identified after replacing the Damper Motor Module (DMM).

NOTE: Identification must only be carried out when replacing components on the LIN network that belong to the climate control system (CCM).

Have any of the components on the LIN network been replaced?

- **YES**

  Refer to **IDENTIFYING COMPONENTS ON THE LIN NETWORK THAT BELONG TO THE CLIMATE CONTROL SYSTEM (CCM)**

- **NO**

  Refer to **VERIFICATION**

IDENTIFYING COMPONENTS ON THE LIN NETWORK THAT BELONG TO THE CLIMATE CONTROL SYSTEM (CCM)

HINT: When identifying damper motors, each damper motor must be run to its limit position. These operations can take up to 30 seconds. When identifying the damper motors it is important that a battery charger is connected.

Fig. 136: Checking Traffic Load On CAN Cables
Courtesy of VOLVO CARS CORPORATION

- Ignition off
- Reinstall the connectors, components etc.

NOTE: **Climate Control Module (CCM) and damper motors can be affected by the temperature. The vehicle should have normal room temperature when performing this service.**

Carry out identification as follows:

- Ignition on.
- Click on the VCT2000 symbol. Wait until identification has been carried out.
- Ignition off.

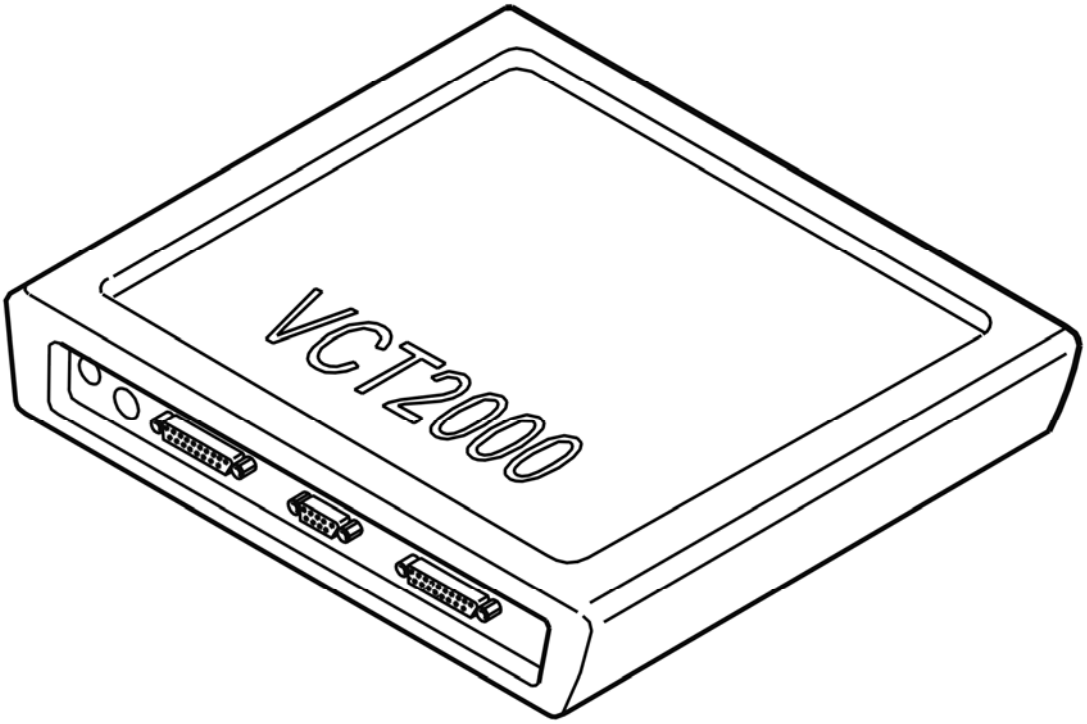

Fig. 137: Identifying VCT2000 Diagnostic Tool Symbol In VIDA
Courtesy of VOLVO CARS CORPORATION

- **Continue**

Refer to **CALIBRATING THE CLIMATE CONTROL MODULE (CCM)**

CALIBRATING THE CLIMATE CONTROL MODULE (CCM)

CAUTION: When activating this function, calibration of the Climate Control Module (CCM) starts. After carrying out calibration read off of the diagnostic trouble codes (DTCs) starts. To ensure that diagnostics for the Climate Control Module (CCM) have been carried out, delay for 30 seconds before reading out diagnostic trouble codes (DTCs) after calibration.

NOTE: Climate Control Module (CCM) and damper motors can be affected by the temperature. The vehicle should have normal room temperature when performing this service.

Fig. 138: Checking Traffic Load On CAN Cables
Courtesy of VOLVO CARS CORPORATION

Carry out calibration as follows:

- Ignition on.
- Click on the VCT2000 symbol. Wait until calibration has been carried out and diagnostic trouble codes (DTCs) read out.
- Ignition off.

This function controls the components that communicate with the Climate Control Module (CCM) via LIN bus 1 and LIN bus 2. In the event of a fault in any of the LIN buses, diagnostic trouble codes (DTCs) CCM-0070 to CCM-0071 will be stored depending on the fault. These diagnostic trouble codes (DTCs) can only be stored in conjunction with this diagnostic function.

If any of these diagnostic trouble codes (DTCs) recur, recalibrate to check if the problem was overcome. If the diagnostic trouble code (DTC) recurs, fault-trace the relevant diagnostic trouble code (DTC).

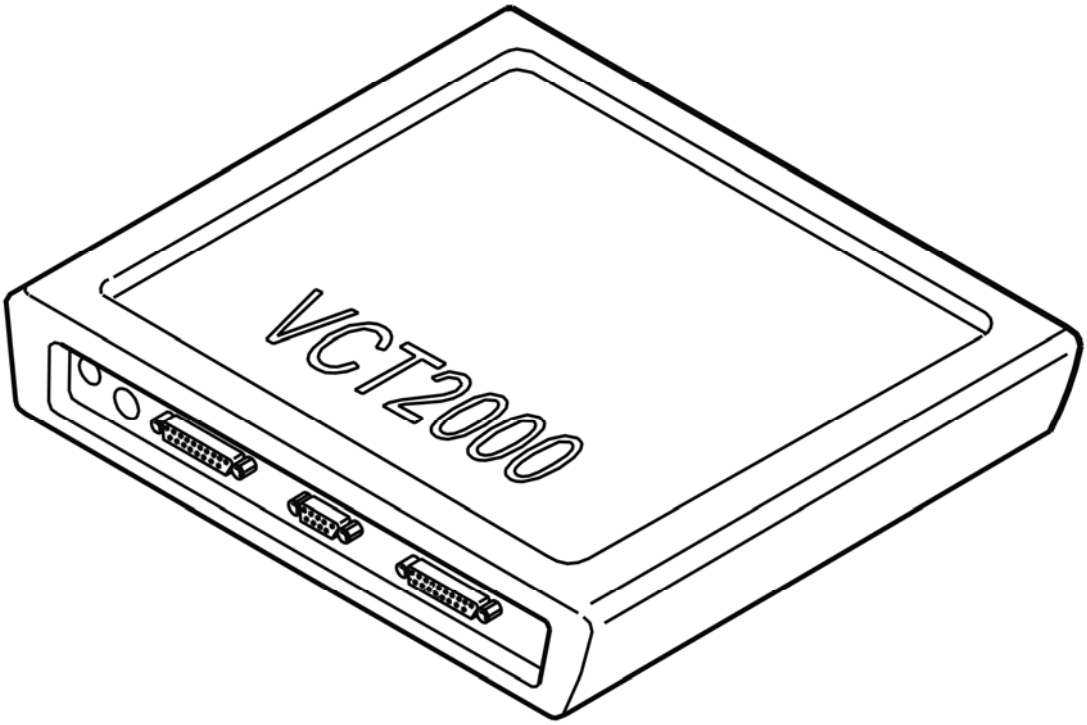

Fig. 139: Identifying VCT2000 Diagnostic Tool Symbol In VIDA
Courtesy of VOLVO CARS CORPORATION

- **Continue**

  Refer to **VERIFICATION**

VERIFICATION

HINT: After carrying out the repair, check that the fault has been remedied.

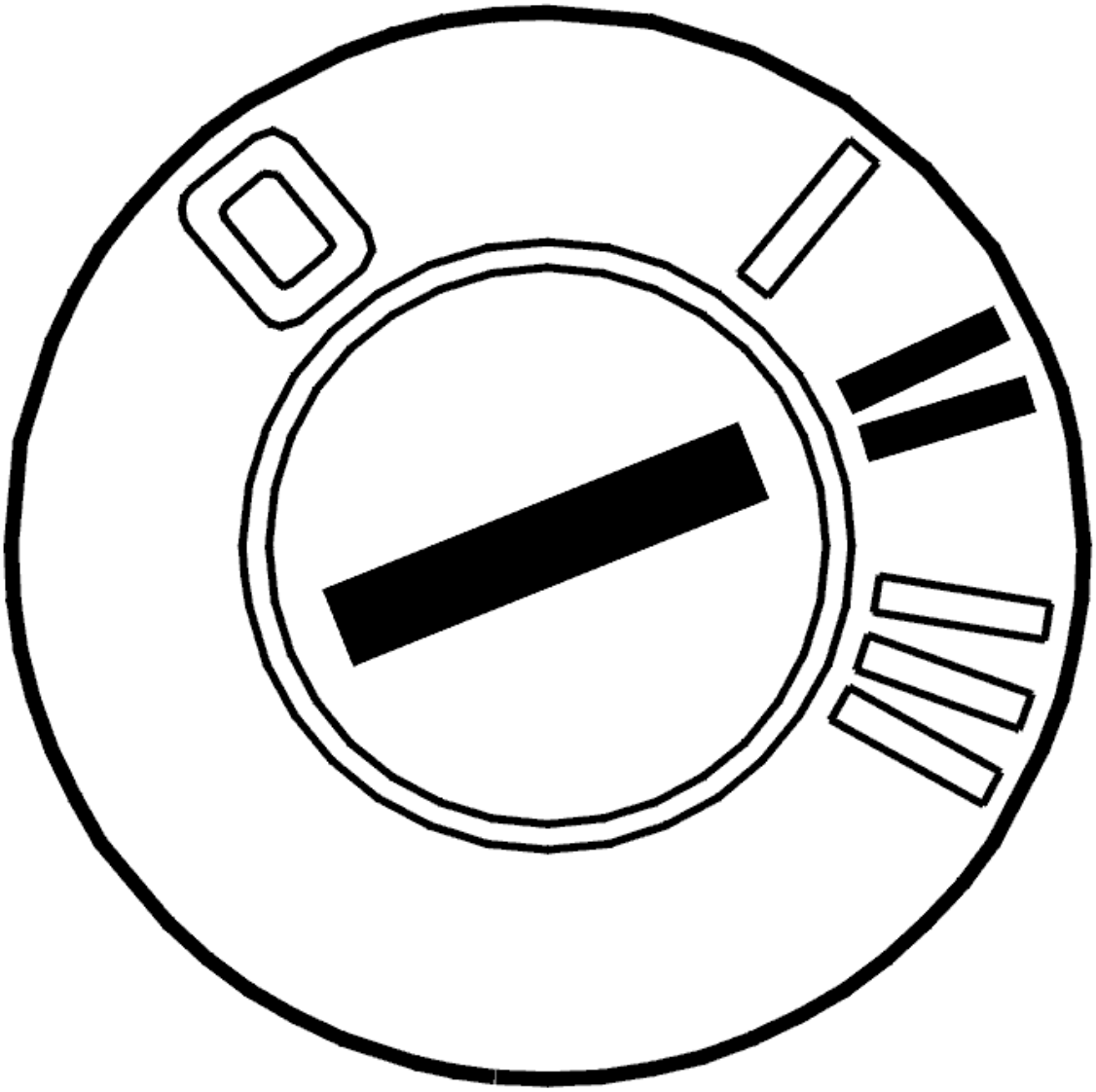

Fig. 140: Identifying Ignition ON
Courtesy of VOLVO CARS CORPORATION

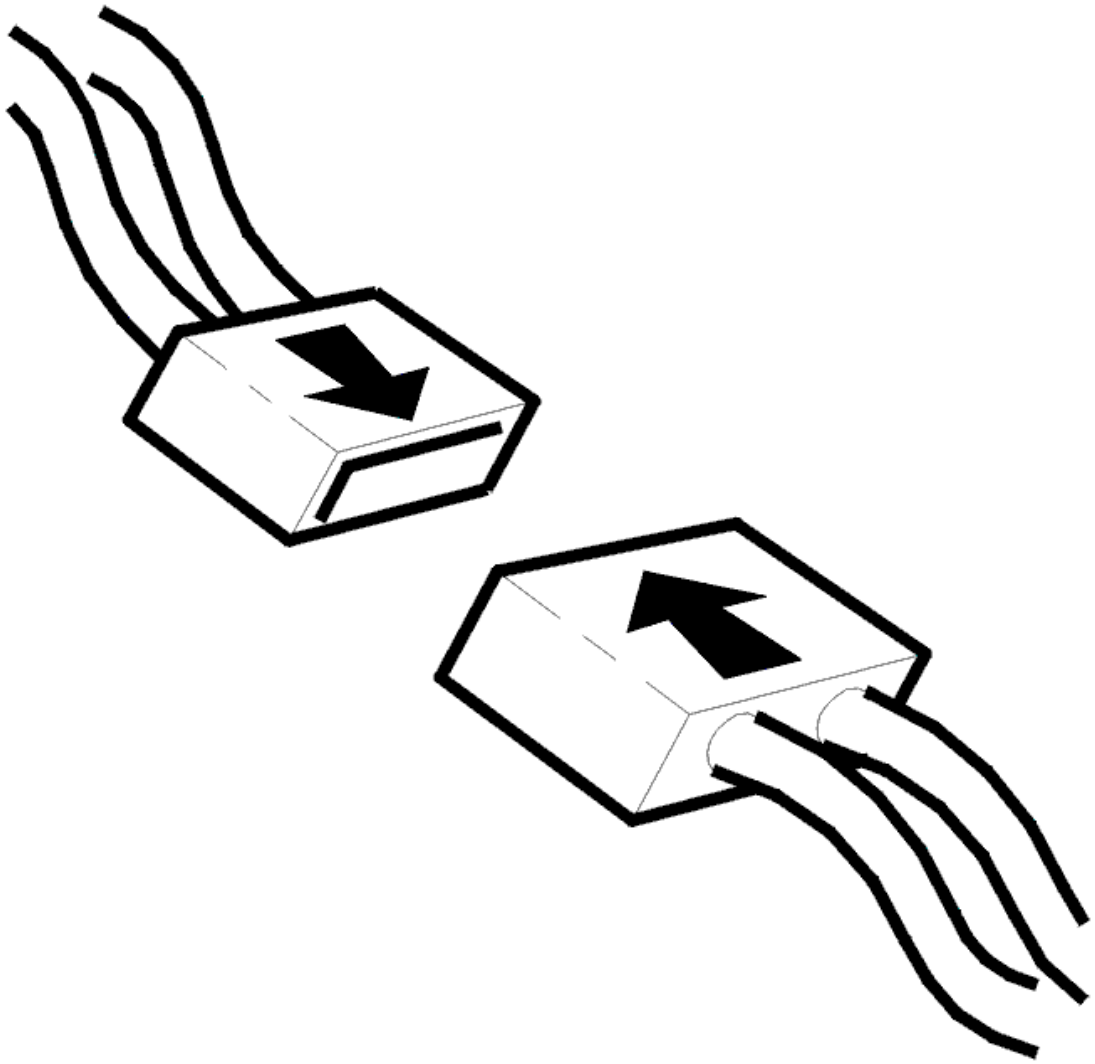

Fig. 141: Connecting Connector
Courtesy of VOLVO CARS CORPORATION

- Ignition off
- Reinstall the connectors, components etc.
- Ignition on.

  Check that the relevant diagnostic trouble code (DTC) has switched status from permanent to intermittent fault.

  Check also that diagnostic trouble code (DTC) CCM-0070, CCM-0071 CCM-0072 or CCM-0073 has not been stored during identification of the damper motors.

  These diagnostic trouble codes (DTCs) can only be stored when identifying damper motors. They mean that the identification has failed for some reason.

Remedy by correctly identifying the damper motor. Fault-trace according to the relevant information.

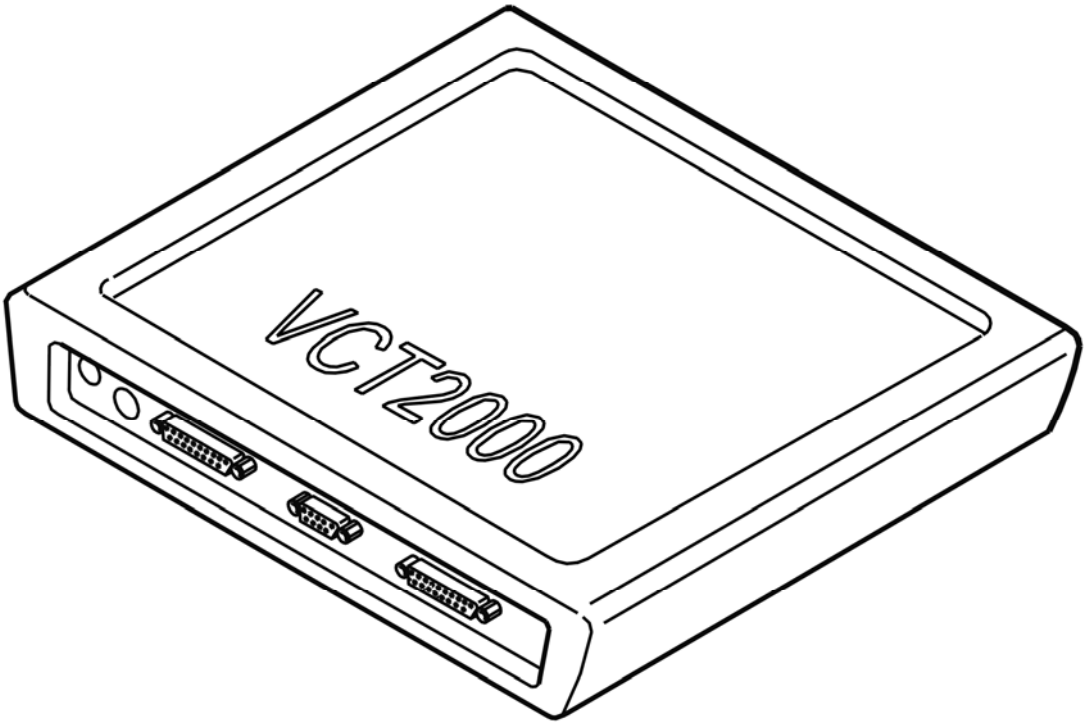

Fig. 142: Identifying VCT2000 Diagnostic Tool Symbol In VIDA
Courtesy of VOLVO CARS CORPORATION

Has the status of the diagnostic trouble code (DTC) changed?

- **YES**

  VERIFIED: Troubleshooting has been completed.

- **NO**

  Refer to **INFORMATION**

INFORMATION

FAULT-TRACING INFORMATION

The fault should have been detected and remedied. As this is not the case fault-tracing has failed.

Exit fault-tracing for this diagnostic trouble code (DTC) or make another attempt.

CCM-0061: RECIRCULATION DAMPER MOTOR. INTERNAL FAULT (2005-

2012)

DIAGNOSTIC TROUBLE CODE (DTC) INFORMATION CCM-0061

Condition

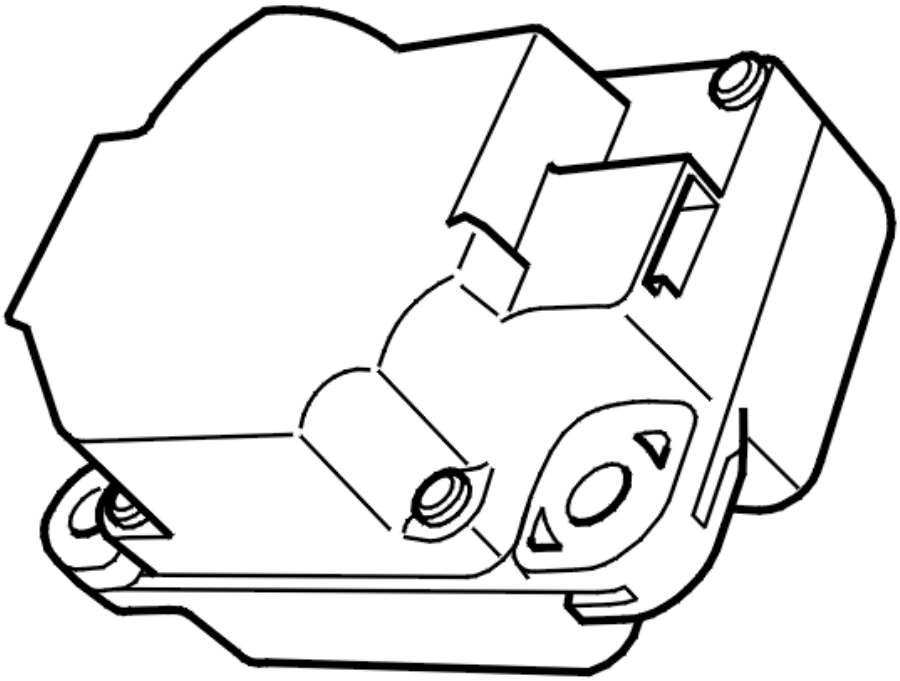

Fig. 143: Identifying Damper Motor Module (DMM)
Courtesy of VOLVO CARS CORPORATION

The diagnostic trouble code (DTC) is stored if the climate control module (CCM) detects a fault in the damper motor module (DMM) recirculation.

The climate control module (CCM) communicates with the damper motor module (DMM) recirculation and via LIN bus 2.

The damper motor module (DMM) transmits information to the climate control module (CCM) about status.

The diagnostic trouble code (DTC) can be diagnosed in ignition positions I and II.

Substitute Value

- None.

Possible Source

- Internal fault in the damper motor module (DMM) recirculation
- Incorrect calibration due to loss of power.

Fault symptom[s]

- No recirculation.
- Air flow problem.

INTERNAL FAULT

REPLACING THE COMPONENT

The climate control module (CCM) has registered an internal fault in the damper motor module (DMM) for recirculation.

If the fault is intermittent, it has been registered previously but is no longer present. Intermittent faults may be caused by interference at start up of the damper motor module (DMM). Intermittent faults may also be caused by other types of intermittent faults. The fault is evaluated depending on how it occurs. Replace the damper motor module (DMM) if the fault recurs.

Replace the damper motor module (DMM) recirculation if the fault is permanent:

For -2004, see **DAMPER MOTOR RECIRCULATION, REPLACING** . For 2005-, see **DAMPER MOTOR MODULE (DMM) RECIRCULATION, REPLACING**

Remedy as necessary.

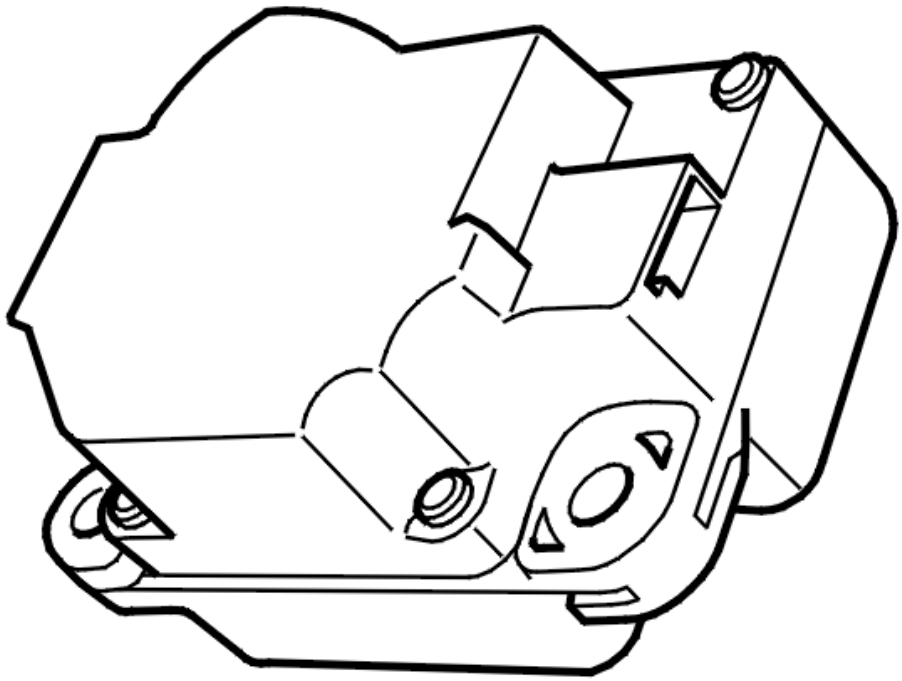

Fig. 144: Identifying Damper Motor Module (DMM)
Courtesy of VOLVO CARS CORPORATION

- **Continue**

  Refer to **IDENTIFYING COMPONENTS ON THE LIN NETWORK THAT BELONG TO THE CLIMATE CONTROL SYSTEM (CCM)**

IDENTIFYING COMPONENTS ON THE LIN NETWORK THAT BELONG TO THE CLIMATE CONTROL SYSTEM (CCM)

INFORMATION

- The control module must be identified after replacing the Damper Motor Module (DMM).

NOTE: Identification must only be carried out when replacing components on the LIN network that belong to the climate control system (CCM).

Have any of the components on the LIN network been replaced?

- **YES**

  Refer to **IDENTIFYING COMPONENTS ON THE LIN NETWORK THAT BELONG TO THE CLIMATE CONTROL SYSTEM (CCM)**

- **NO**

  Refer to **VERIFICATION**

IDENTIFYING COMPONENTS ON THE LIN NETWORK THAT BELONG TO THE CLIMATE CONTROL SYSTEM (CCM)

HINT: When identifying damper motors, each damper motor must be run to its limit position. These operations can take up to 30 seconds. When identifying the damper motors it is important that a battery charger is connected.

Fig. 145: Checking Traffic Load On CAN Cables
Courtesy of VOLVO CARS CORPORATION

- Ignition off
- Reinstall the connectors, components etc.

NOTE: **Climate Control Module (CCM) and damper motors can be affected by the temperature. The vehicle should have normal room temperature when performing this service.**

Carry out identification as follows:

- Ignition on.
- Click on the VCT2000 symbol. Wait until identification has been carried out.
- Ignition off.

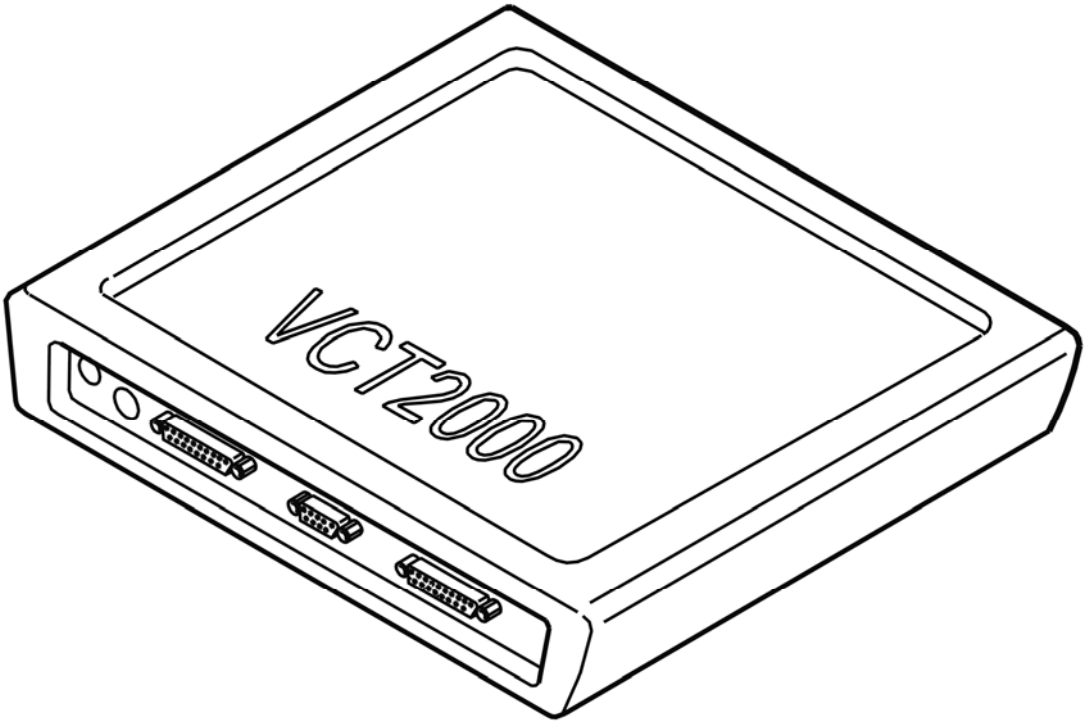

Fig. 146: Identifying VCT2000 Diagnostic Tool Symbol In VIDA
Courtesy of VOLVO CARS CORPORATION

- **Continue**

Refer to **CALIBRATING THE CLIMATE CONTROL MODULE (CCM)**

CALIBRATING THE CLIMATE CONTROL MODULE (CCM)

CAUTION: When activating this function, calibration of the Climate Control Module (CCM) starts. After carrying out calibration read off of the diagnostic trouble codes (DTCs) starts. To ensure that diagnostics for the Climate Control Module (CCM) have been carried out, delay for 30 seconds before reading out diagnostic trouble codes (DTCs) after calibration.

NOTE: Climate Control Module (CCM) and damper motors can be affected by the temperature. The vehicle should have normal room temperature when performing this service.

Fig. 147: Checking Traffic Load On CAN Cables
Courtesy of VOLVO CARS CORPORATION

Carry out calibration as follows:

- Ignition on.
- Click on the VCT2000 symbol. Wait until calibration has been carried out and diagnostic trouble codes (DTCs) read out.
- Ignition off.

This function controls the components that communicate with the Climate Control Module (CCM) via LIN bus 1 and LIN bus 2. In the event of a fault in any of the LIN buses, diagnostic trouble codes (DTCs) CCM-0070 to CCM-0071 will be stored depending on the fault. These diagnostic trouble codes (DTCs) can only be stored in conjunction with this diagnostic function.

If any of these diagnostic trouble codes (DTCs) recur, recalibrate to check if the problem was overcome. If the diagnostic trouble code (DTC) recurs, fault-trace the relevant diagnostic trouble code (DTC).

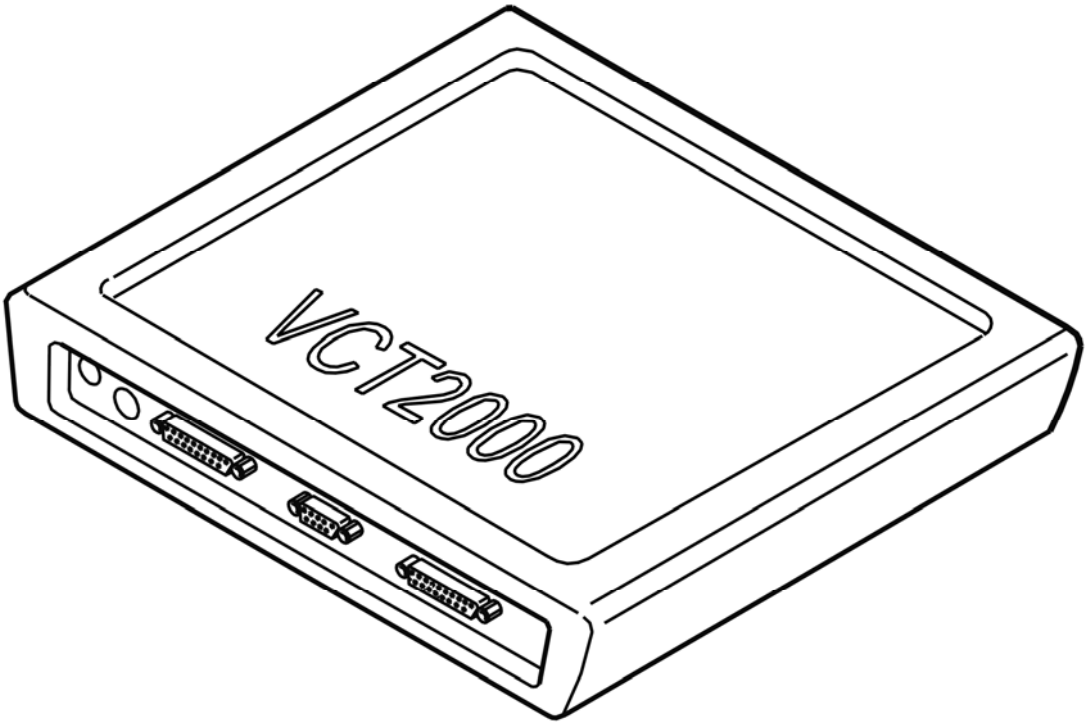

Fig. 148: Identifying VCT2000 Diagnostic Tool Symbol In VIDA
Courtesy of VOLVO CARS CORPORATION

- **Continue**

  Refer to **VERIFICATION**

VERIFICATION

HINT: After carrying out the repair, check that the fault has been remedied.

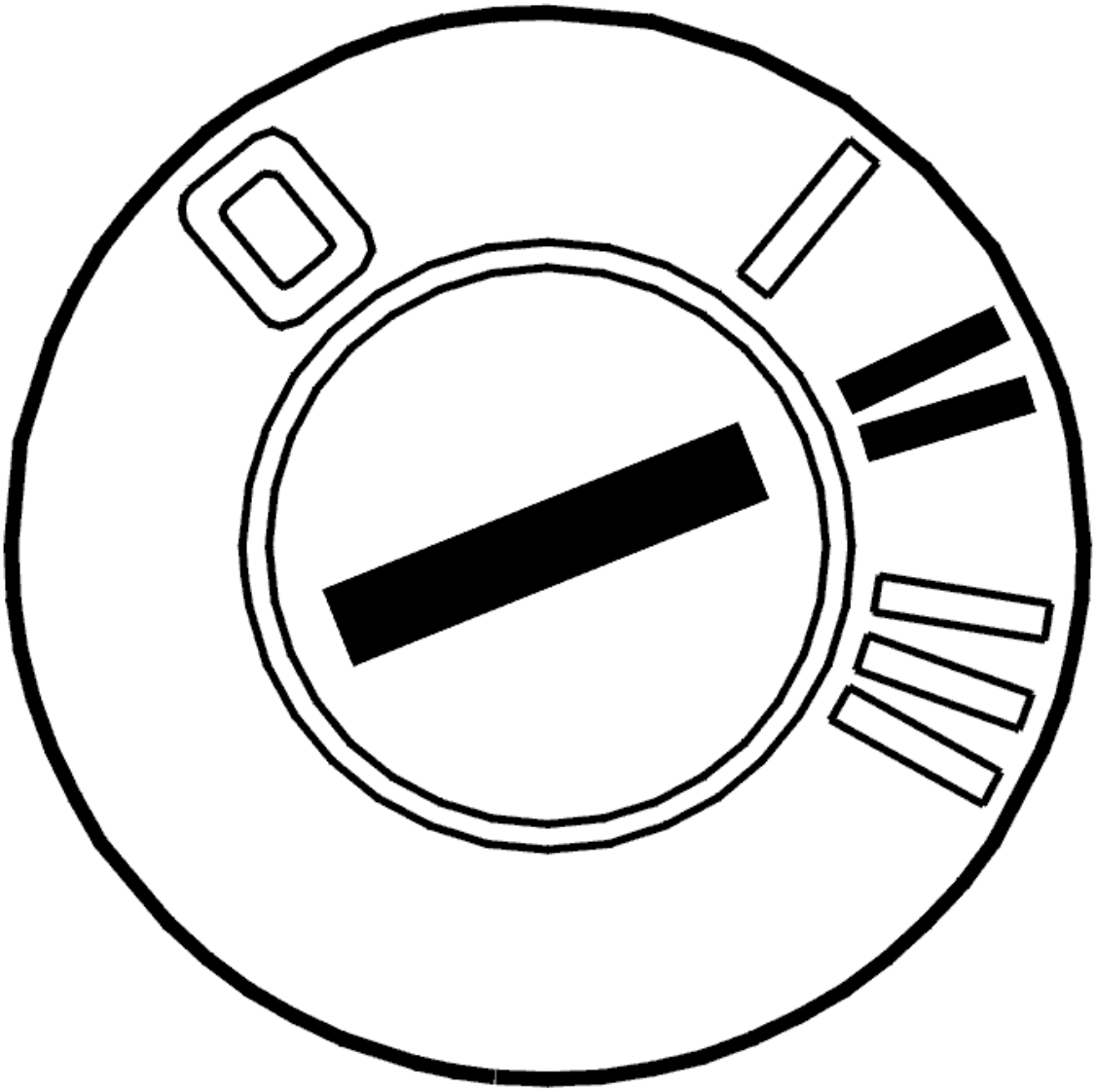

Fig. 149: Identifying Ignition ON
Courtesy of VOLVO CARS CORPORATION

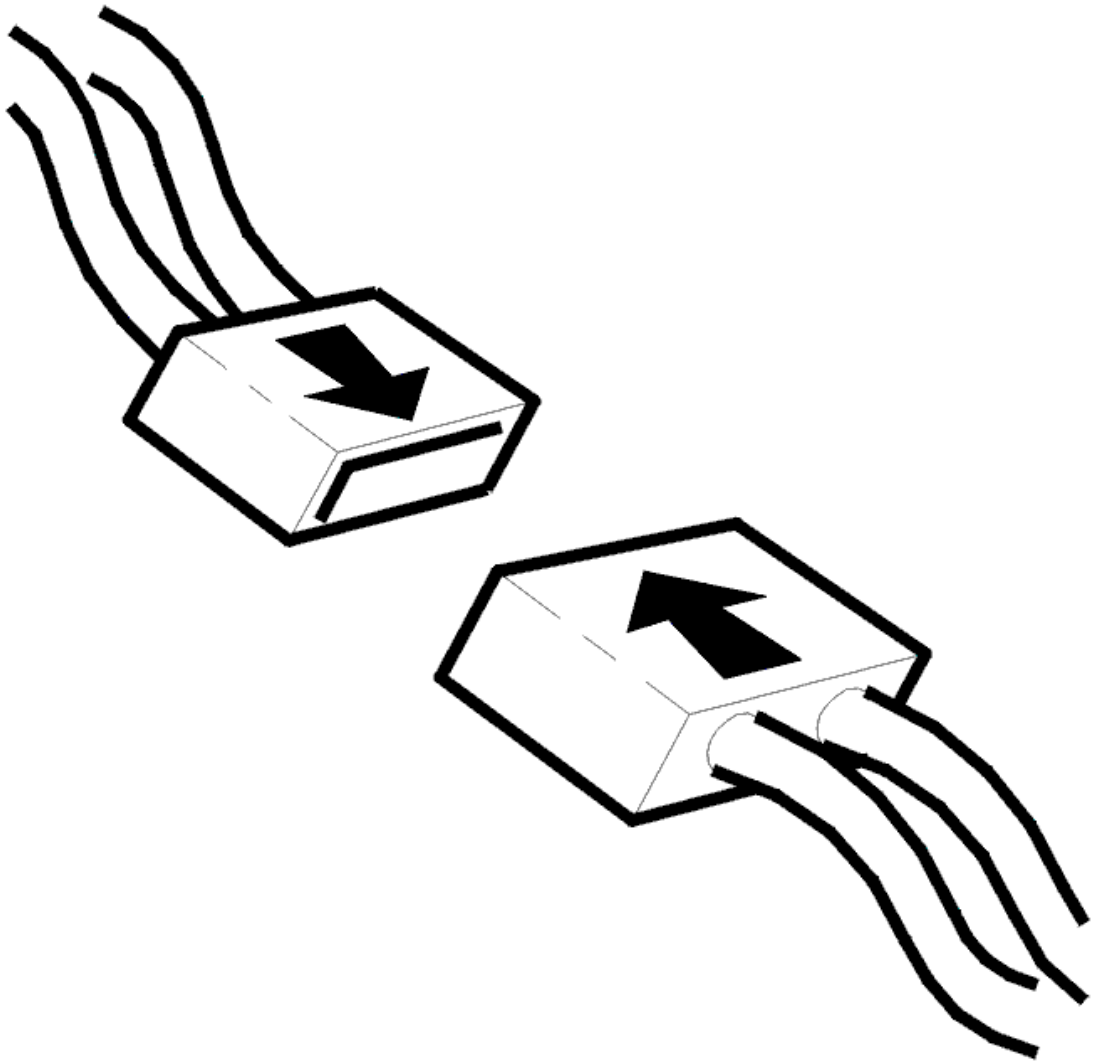

Fig. 150: Connecting Connector
Courtesy of VOLVO CARS CORPORATION

- Ignition off
- Reinstall the connectors, components etc.
- Ignition on.

  Check that the relevant diagnostic trouble code (DTC) has switched status from permanent to intermittent fault.

  Check also that diagnostic trouble code (DTC) CCM-0070, CCM-0071 CCM-0072 or CCM-0073 has not been stored during identification of the damper motors.

  These diagnostic trouble codes (DTCs) can only be stored when identifying damper motors. They mean that the identification has failed for some reason.

Remedy by correctly identifying the damper motor. Fault-trace according to the relevant information.

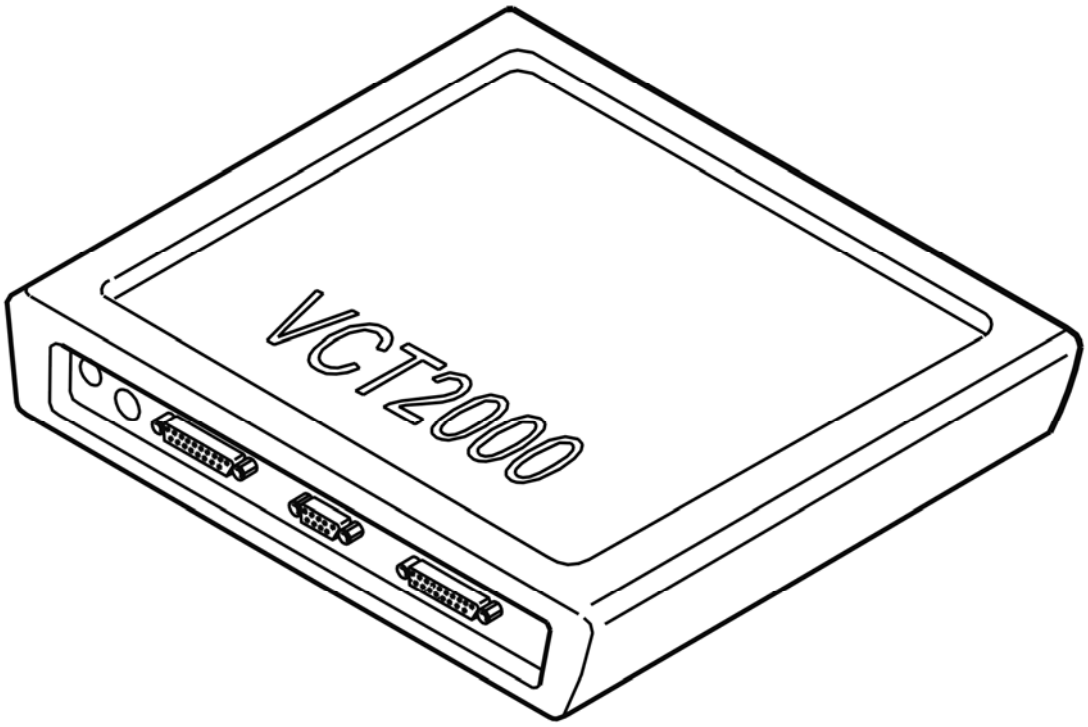

Fig. 151: Identifying VCT2000 Diagnostic Tool Symbol In VIDA
Courtesy of VOLVO CARS CORPORATION

Has the status of the diagnostic trouble code (DTC) changed?

- **YES**

  VERIFIED: Troubleshooting has been completed.

- **NO**

  Refer to **INFORMATION**

INFORMATION

FAULT-TRACING INFORMATION

The fault should have been detected and remedied. As this is not the case fault-tracing has failed.

Exit fault-tracing for this diagnostic trouble code (DTC) or make another attempt.

CCM-0062: LEFT TEMPERATURE DAMPER MOTOR. INTERNAL FAULT

(2005-2012)

DIAGNOSTIC TROUBLE CODE (DTC) INFORMATION CCM-0062

Condition

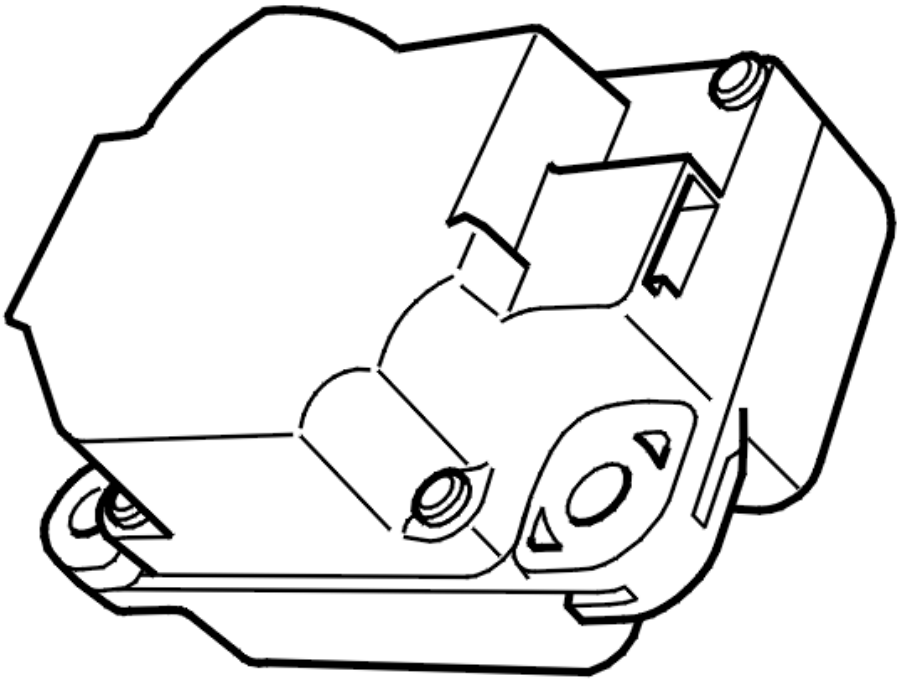

Fig. 152: Identifying Damper Motor Module (DMM)
Courtesy of VOLVO CARS CORPORATION

The diagnostic trouble code (DTC) is stored if the climate control module (CCM) detects a fault in the damper motor module (DMM) temperature left.

The climate control module (CCM) communicates with the damper motor module (DMM) temperature left via LIN bus 1.

The damper motor module (DMM) transmits information to the climate control module (CCM) about status.

The diagnostic trouble code (DTC) can be diagnosed in ignition positions I and II.

Substitute Value

- None.

Possible Source

- Internal fault in the damper motor module (DMM) temperature left
- Incorrect calibration due to loss of power.

Fault symptom[s]

- The passenger compartment temperature does not correspond to the set position.
- Air flow problem.

INTERNAL FAULT

REPLACING THE COMPONENT

The climate control module (CCM) has registered an internal fault in the damper motor module (DMM) for temperature left.

If the fault is intermittent, it has been registered previously but is no longer present. Intermittent faults may be caused by interference at start up of the damper motor module (DMM). Intermittent faults may also be caused by other types of intermittent faults. The fault is evaluated depending on how it occurs. Replace the damper motor module (DMM) if the fault recurs.

Replace the damper motor module (DMM) for temperature left If the fault is permanent:

For -2004, see **DAMPER MOTOR TEMPERATURE, REPLACING** . For 2005-, see **DAMPER MOTOR MODULE (DMM) TEMPERATURE, REPLACING**

Remedy as necessary.

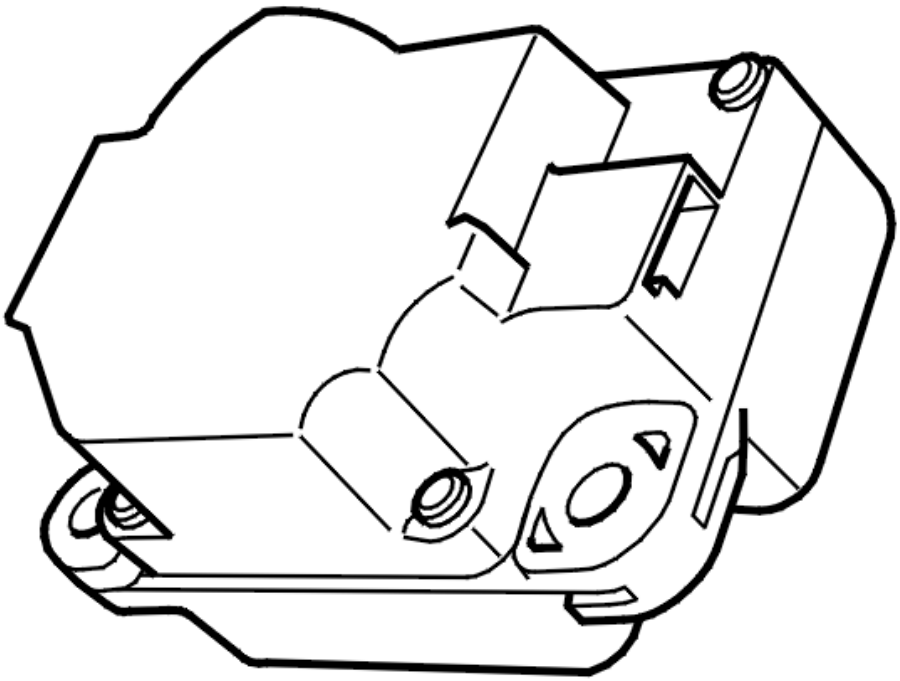

Fig. 153: Identifying Damper Motor Module (DMM)
Courtesy of VOLVO CARS CORPORATION

- **Continue**

  Refer to **IDENTIFYING COMPONENTS ON THE LIN NETWORK THAT BELONG TO THE CLIMATE CONTROL SYSTEM (CCM)**

IDENTIFYING COMPONENTS ON THE LIN NETWORK THAT BELONG TO THE CLIMATE CONTROL SYSTEM (CCM)

INFORMATION

- The control module must be identified after replacing the Damper Motor Module (DMM).

NOTE: Identification must only be carried out when replacing components on the LIN network that belong to the climate control system (CCM).

Have any of the components on the LIN network been replaced?

- **YES**

  Refer to **IDENTIFYING COMPONENTS ON THE LIN NETWORK THAT BELONG TO THE CLIMATE CONTROL SYSTEM (CCM)**

- **NO**

  Refer to **VERIFICATION**

IDENTIFYING COMPONENTS ON THE LIN NETWORK THAT BELONG TO THE CLIMATE CONTROL SYSTEM (CCM)

HINT: When identifying damper motors, each damper motor must be run to its limit position. These operations can take up to 30 seconds. When identifying the damper motors it is important that a battery charger is connected.

Fig. 154: Checking Traffic Load On CAN Cables
Courtesy of VOLVO CARS CORPORATION

- Ignition off
- Reinstall the connectors, components etc.

NOTE: **Climate Control Module (CCM) and damper motors can be affected by the temperature. The vehicle should have normal room temperature when performing this service.**

Carry out identification as follows:

- Ignition on.
- Click on the VCT2000 symbol. Wait until identification has been carried out.
- Ignition off.

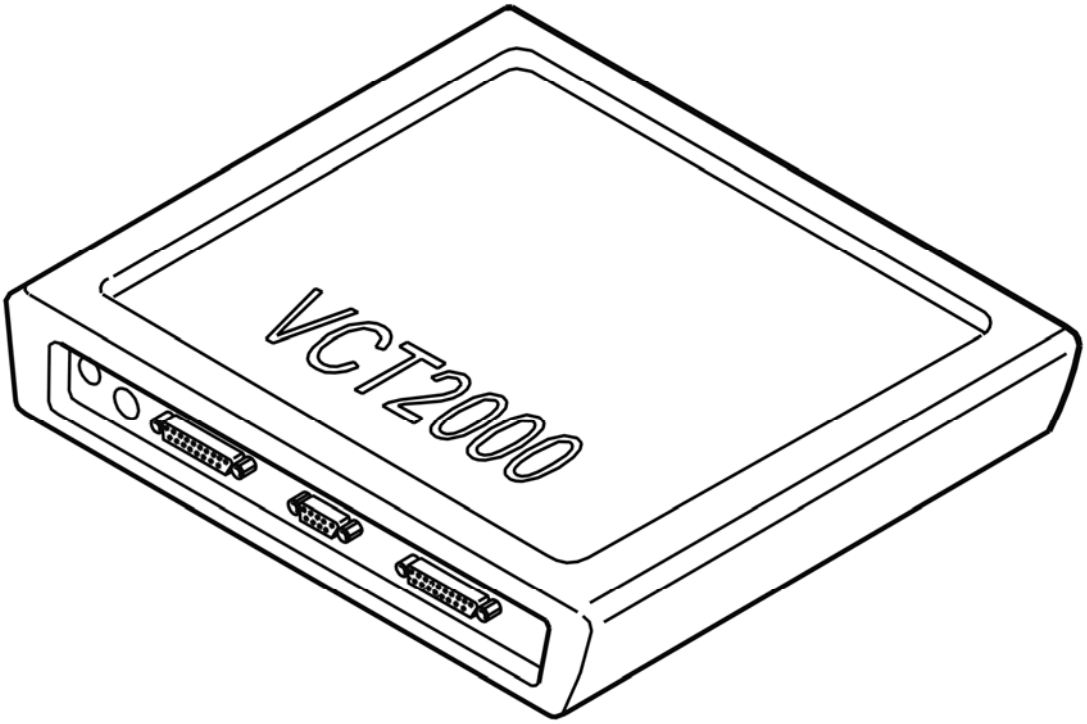

Fig. 155: Identifying VCT2000 Diagnostic Tool Symbol In VIDA
Courtesy of VOLVO CARS CORPORATION

- **Continue**

Refer to **CALIBRATING THE CLIMATE CONTROL MODULE (CCM)**

CALIBRATING THE CLIMATE CONTROL MODULE (CCM)

CAUTION: When activating this function, calibration of the Climate Control Module (CCM) starts. After carrying out calibration read off of the diagnostic trouble codes (DTCs) starts. To ensure that diagnostics for the Climate Control Module (CCM) have been carried out, delay for 30 seconds before reading out diagnostic trouble codes (DTCs) after calibration.

NOTE: Climate Control Module (CCM) and damper motors can be affected by the temperature. The vehicle should have normal room temperature when performing this service.

Fig. 156: Checking Traffic Load On CAN Cables
Courtesy of VOLVO CARS CORPORATION

Carry out calibration as follows:

- Ignition on.
- Click on the VCT2000 symbol. Wait until calibration has been carried out and diagnostic trouble codes (DTCs) read out.
- Ignition off.

This function controls the components that communicate with the Climate Control Module (CCM) via LIN bus 1 and LIN bus 2. In the event of a fault in any of the LIN buses, diagnostic trouble codes (DTCs) CCM-0070 to CCM-0071 will be stored depending on the fault. These diagnostic trouble codes (DTCs) can only be stored in conjunction with this diagnostic function.

If any of these diagnostic trouble codes (DTCs) recur, recalibrate to check if the problem was overcome. If the diagnostic trouble code (DTC) recurs, fault-trace the relevant diagnostic trouble code (DTC).

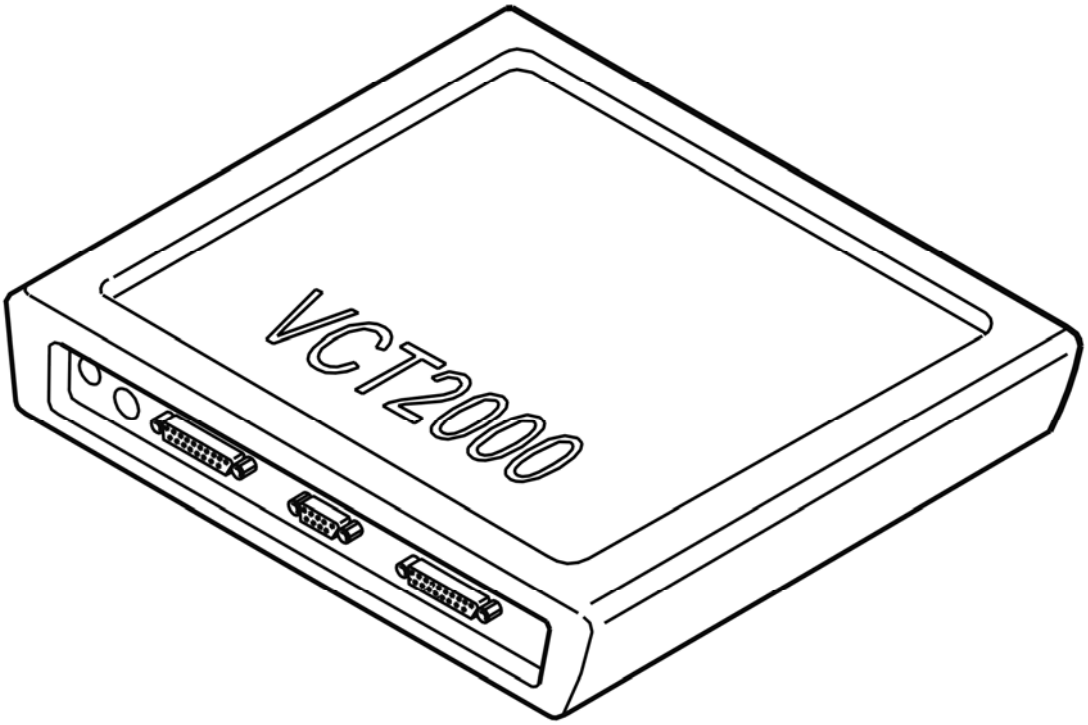

Fig. 157: Identifying VCT2000 Diagnostic Tool Symbol In VIDA
Courtesy of VOLVO CARS CORPORATION

- **Continue**

  Refer to **VERIFICATION**

VERIFICATION

HINT: After carrying out the repair, check that the fault has been remedied.

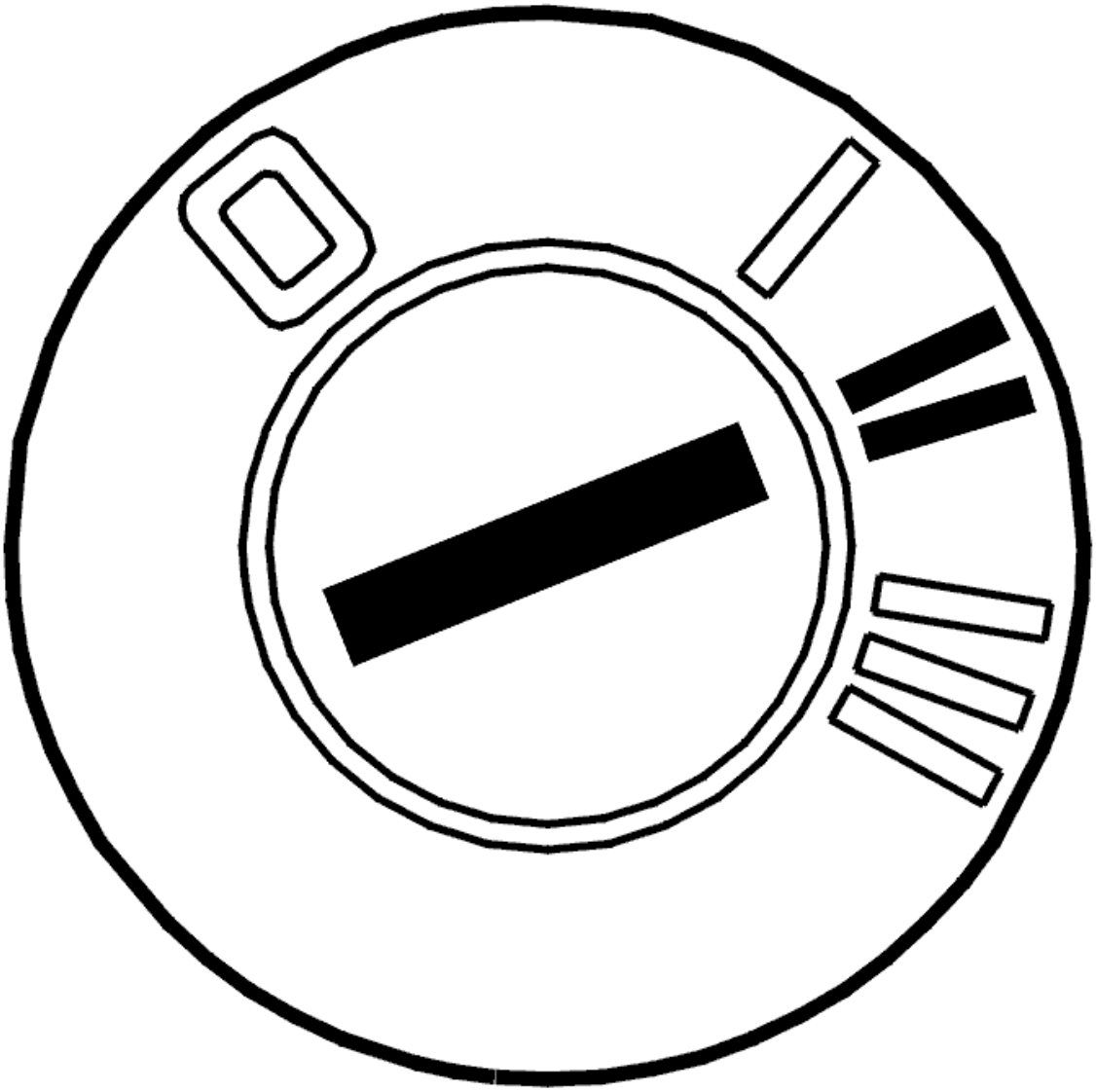

Fig. 158: Identifying Ignition ON
Courtesy of VOLVO CARS CORPORATION

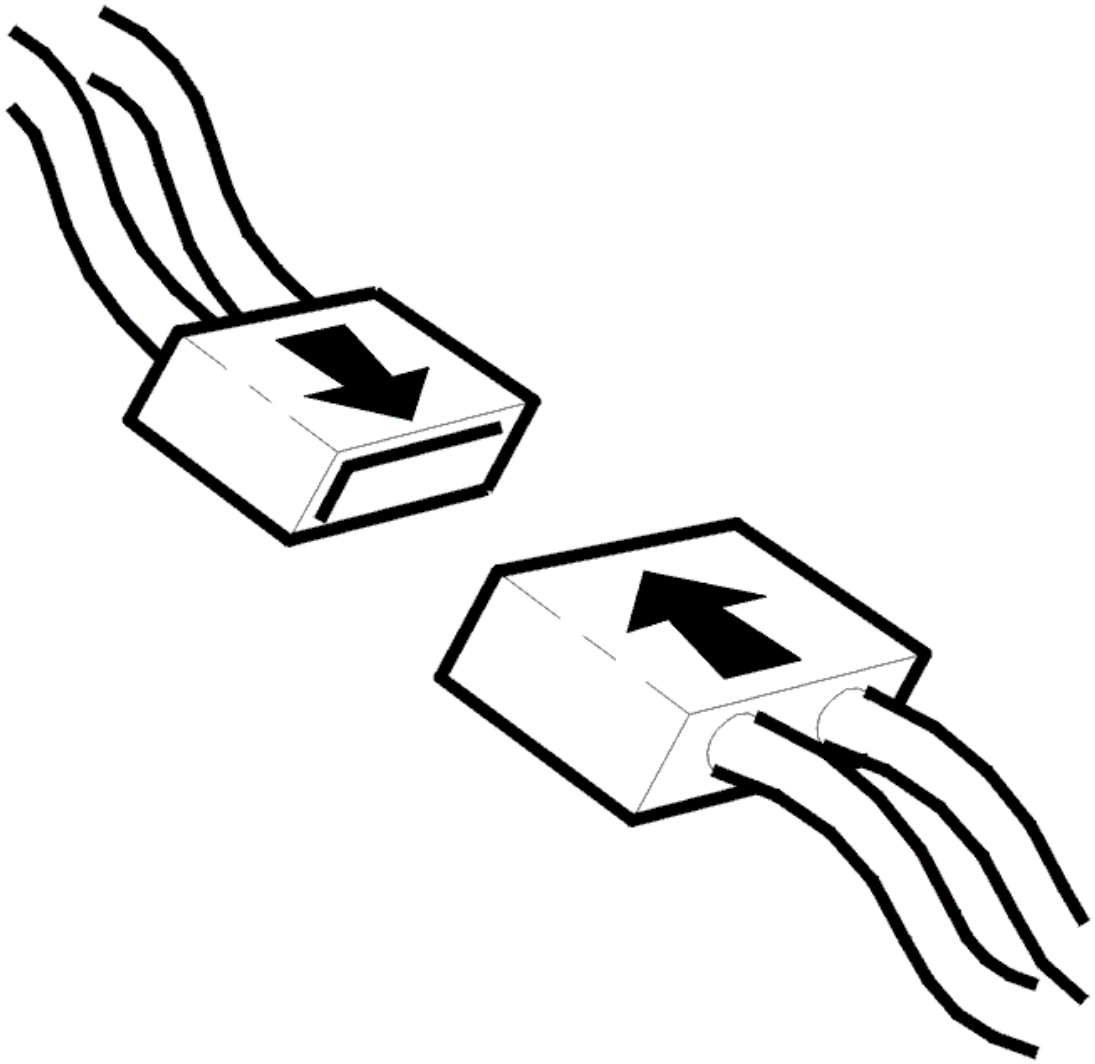

Fig. 159: Connecting Connector
Courtesy of VOLVO CARS CORPORATION

- Ignition off
- Reinstall the connectors, components etc.
- Ignition on.

  Check that the relevant diagnostic trouble code (DTC) has switched status from permanent to intermittent fault.

  Check also that diagnostic trouble code (DTC) CCM-0070, CCM-0071 CCM-0072 or CCM-0073 has not been stored during identification of the damper motors.

  These diagnostic trouble codes (DTCs) can only be stored when identifying damper motors. They mean that the identification has failed for some reason.

Remedy by correctly identifying the damper motor. Fault-trace according to the relevant information.

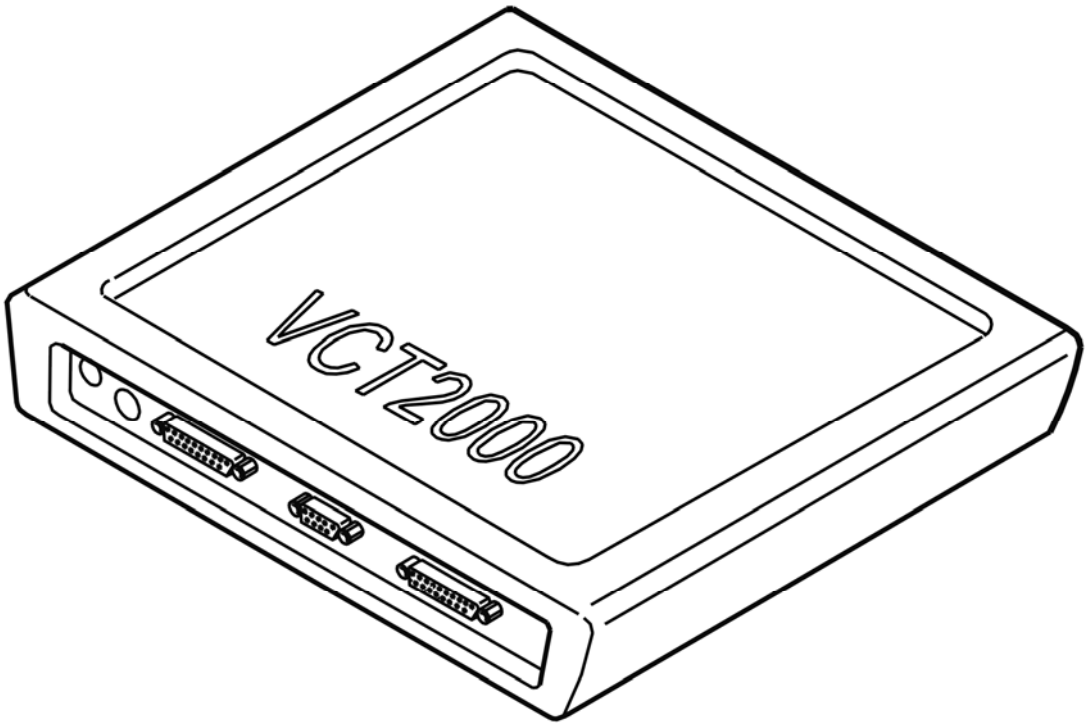

Fig. 160: Identifying VCT2000 Diagnostic Tool Symbol In VIDA
Courtesy of VOLVO CARS CORPORATION

Has the status of the diagnostic trouble code (DTC) changed?

- **YES**

  VERIFIED: Troubleshooting has been completed.

- **NO**

  Refer to **INFORMATION**

INFORMATION

FAULT-TRACING INFORMATION

The fault should have been detected and remedied. As this is not the case fault-tracing has failed.

Exit fault-tracing for this diagnostic trouble code (DTC) or make another attempt.

CCM-0063: RIGHT TEMPERATURE DAMPER MOTOR. INTERNAL FAULT

(2005-2012)

DIAGNOSTIC TROUBLE CODE (DTC) INFORMATION CCM-0063

Condition

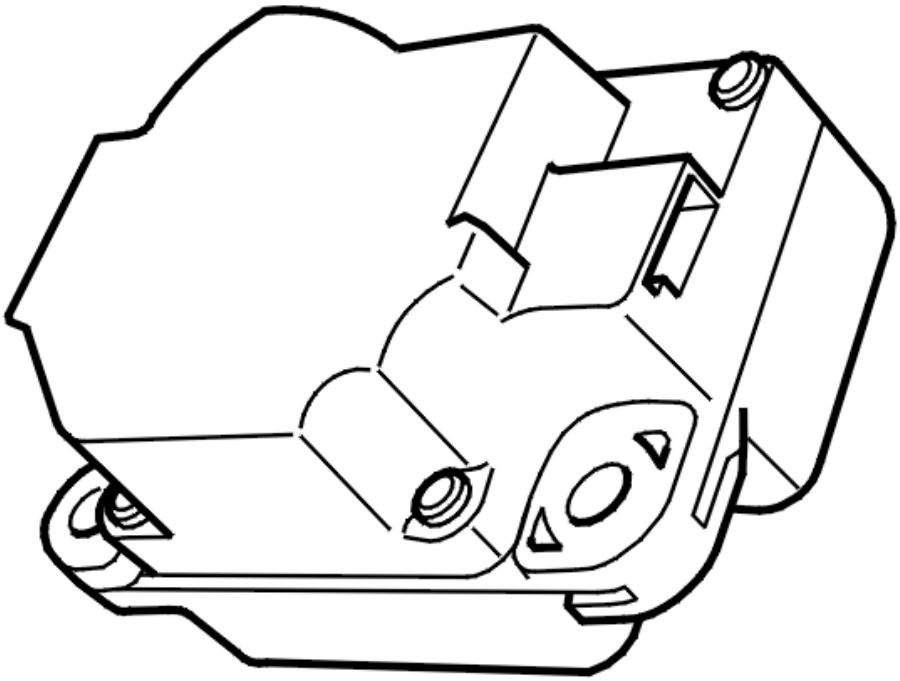

Fig. 161: Identifying Damper Motor Module (DMM)
Courtesy of VOLVO CARS CORPORATION

The diagnostic trouble code (DTC) is stored if the climate control module (CCM) detects a fault in the damper motor module (DMM) temperature right.

The climate control module (CCM) communicates with the damper motor module (DMM) temperature right via LIN bus 2.

The damper motor module (DMM) transmits information to the climate control module (CCM) about status.

The diagnostic trouble code (DTC) can be diagnosed in ignition positions I and II.

The diagnostic trouble code (DTC) can only be diagnosed for the electronic climate control module (CCM) (ECC).

Substitute Value

- None.

Possible Source

- Internal fault in the damper motor module (DMM) for temperature right
- Incorrect calibration due to loss of power.

Fault symptom[s]

- The passenger compartment temperature does not correspond to the set position.
- Air flow problem.

INTERNAL FAULT

REPLACING THE COMPONENT

The climate control module (CCM) has registered an internal fault in the damper motor module (DMM) for temperature right.

If the fault is intermittent, it has been registered previously but is no longer present. Intermittent faults may be caused by interference at start up of the damper motor module (DMM). Intermittent faults may also be caused by other types of intermittent faults. The fault is evaluated depending on how it occurs. Replace the damper motor module (DMM) if the fault recurs.

Replace the damper motor module (DMM) for temperature right if the fault is permanent:

For -2004, see **DAMPER MOTOR TEMPERATURE, REPLACING** . For 2005-, see **DAMPER MOTOR MODULE (DMM) TEMPERATURE, REPLACING** .

Remedy as necessary.

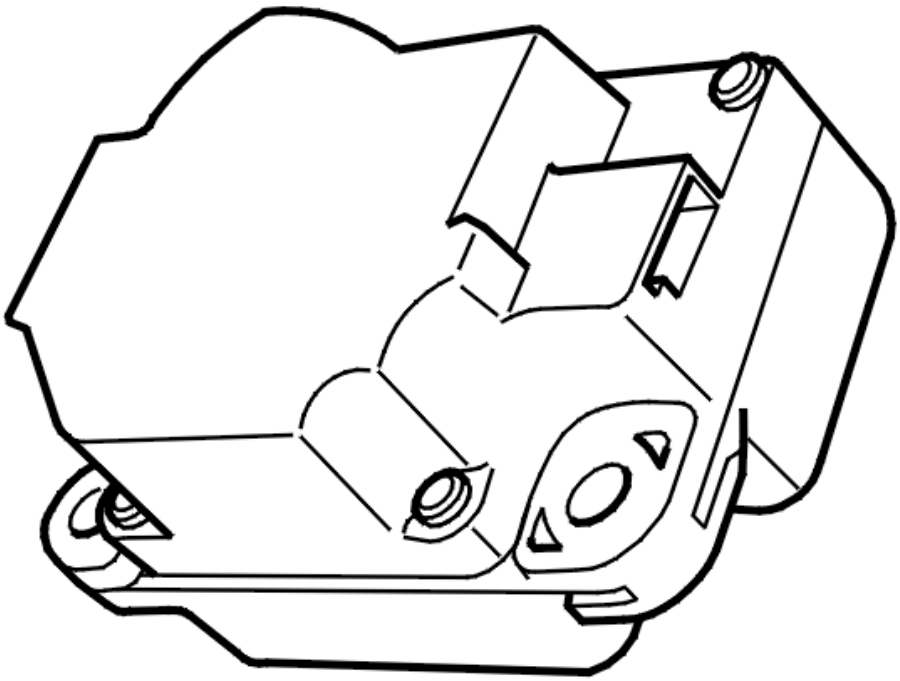

Fig. 162: Identifying Damper Motor Module (DMM)
Courtesy of VOLVO CARS CORPORATION

- **Continue**

  Refer to **IDENTIFYING COMPONENTS ON THE LIN NETWORK THAT BELONG TO THE CLIMATE CONTROL SYSTEM (CCM)**

IDENTIFYING COMPONENTS ON THE LIN NETWORK THAT BELONG TO THE CLIMATE CONTROL SYSTEM (CCM)

INFORMATION

- The control module must be identified after replacing the Damper Motor Module (DMM).

NOTE: **Identification must only be carried out when replacing components on the LIN network that belong to the climate control system (CCM).**

Have any of the components on the LIN network been replaced?

- **YES**

  Refer to **IDENTIFYING COMPONENTS ON THE LIN NETWORK THAT BELONG TO THE CLIMATE CONTROL SYSTEM (CCM)**

- **NO**

  Refer to **VERIFICATION**

IDENTIFYING COMPONENTS ON THE LIN NETWORK THAT BELONG TO THE CLIMATE CONTROL SYSTEM (CCM)

HINT: When identifying damper motors, each damper motor must be run to its limit position. These operations can take up to 30 seconds. When identifying the damper motors it is important that a battery charger is connected.

Fig. 163: Checking Traffic Load On CAN Cables
Courtesy of VOLVO CARS CORPORATION

- Ignition off
- Reinstall the connectors, components etc.

NOTE: **Climate Control Module (CCM) and damper motors can be affected by the temperature. The vehicle should have normal room temperature when performing this service.**

Carry out identification as follows:

- Ignition on.
- Click on the VCT2000 symbol. Wait until identification has been carried out.
- Ignition off.

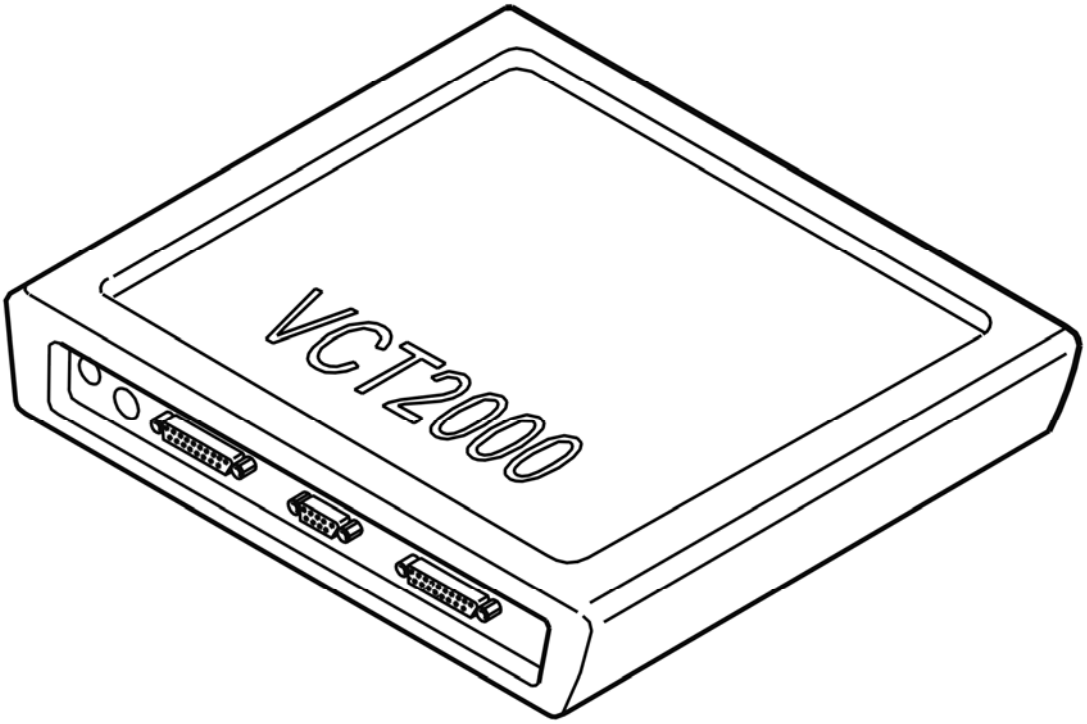

Fig. 164: Identifying VCT2000 Diagnostic Tool Symbol In VIDA
Courtesy of VOLVO CARS CORPORATION

- **Continue**

Refer to **CALIBRATING THE CLIMATE CONTROL MODULE (CCM)**

CALIBRATING THE CLIMATE CONTROL MODULE (CCM)

CAUTION: When activating this function, calibration of the Climate Control Module (CCM) starts. After carrying out calibration read off of the diagnostic trouble codes (DTCs) starts. To ensure that diagnostics for the Climate Control Module (CCM) have been carried out, delay for 30 seconds before reading out diagnostic trouble codes (DTCs) after calibration.

NOTE: Climate Control Module (CCM) and damper motors can be affected by the temperature. The vehicle should have normal room temperature when performing this service.

Fig. 165: Checking Traffic Load On CAN Cables
Courtesy of VOLVO CARS CORPORATION

Carry out calibration as follows:

- Ignition on.
- Click on the VCT2000 symbol. Wait until calibration has been carried out and diagnostic trouble codes (DTCs) read out.
- Ignition off.

This function controls the components that communicate with the Climate Control Module (CCM) via LIN bus 1 and LIN bus 2. In the event of a fault in any of the LIN buses, diagnostic trouble codes (DTCs) CCM-0070 to CCM-0071 will be stored depending on the fault. These diagnostic trouble codes (DTCs) can only be stored in conjunction with this diagnostic function.

If any of these diagnostic trouble codes (DTCs) recur, recalibrate to check if the problem was overcome. If the diagnostic trouble code (DTC) recurs, fault-trace the relevant diagnostic trouble code (DTC).

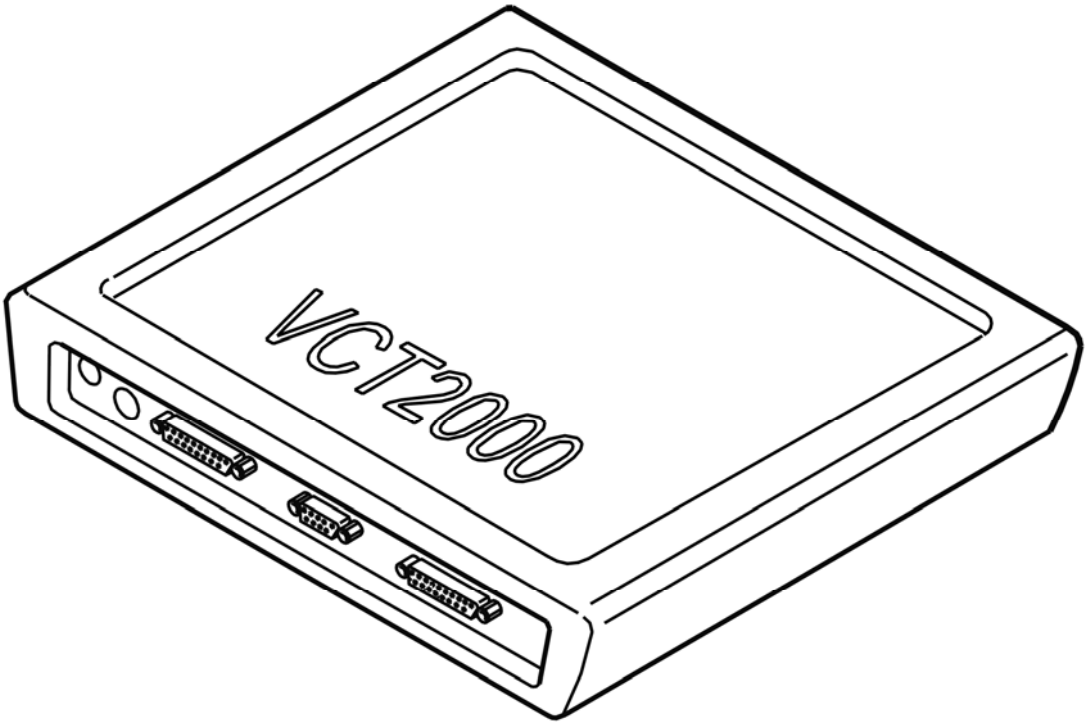

Fig. 166: Identifying VCT2000 Diagnostic Tool Symbol In VIDA
Courtesy of VOLVO CARS CORPORATION

- **Continue**

  Refer to **VERIFICATION**

VERIFICATION

HINT: After carrying out the repair, check that the fault has been remedied.

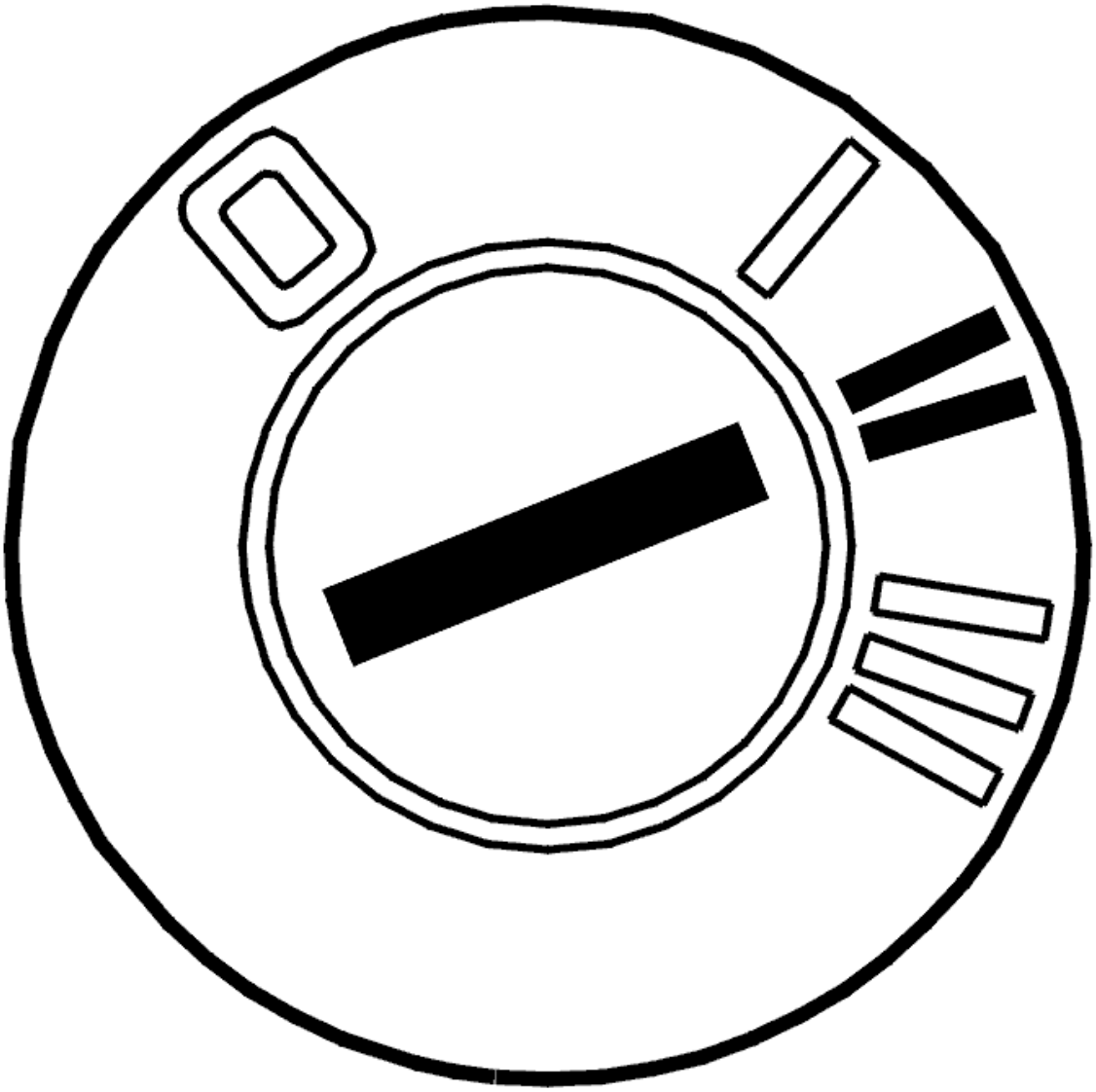

Fig. 167: Identifying Ignition ON
Courtesy of VOLVO CARS CORPORATION

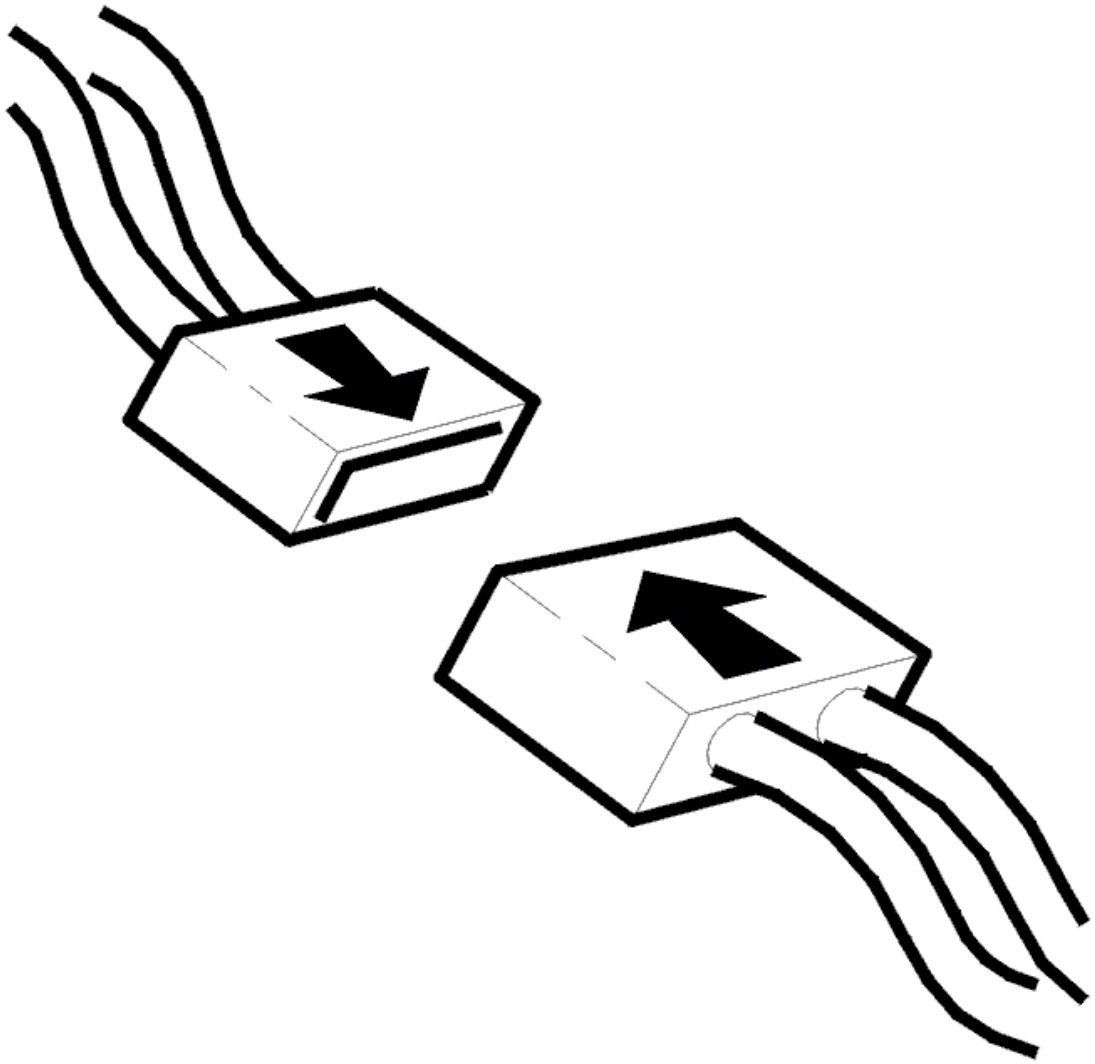

Fig. 168: Connecting Connector
Courtesy of VOLVO CARS CORPORATION

- Ignition off
- Reinstall the connectors, components etc.
- Ignition on.

  Check that the relevant diagnostic trouble code (DTC) has switched status from permanent to intermittent fault.

  Check also that diagnostic trouble code (DTC) CCM-0070, CCM-0071 CCM-0072 or CCM-0073 has not been stored during identification of the damper motors.

  These diagnostic trouble codes (DTCs) can only be stored when identifying damper motors. They mean that the identification has failed for some reason.

Remedy by correctly identifying the damper motor. Fault-trace according to the relevant information.

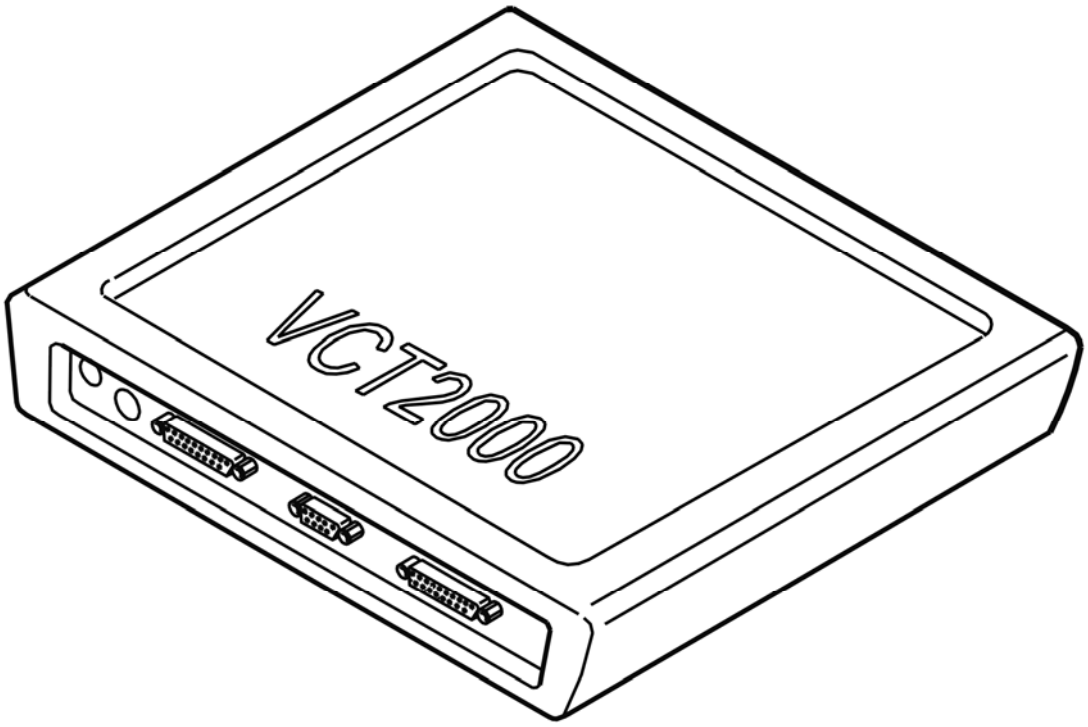

Fig. 169: Identifying VCT2000 Diagnostic Tool Symbol In VIDA
Courtesy of VOLVO CARS CORPORATION

Has the status of the diagnostic trouble code (DTC) changed?

- **YES**

  VERIFIED: Troubleshooting has been completed.

- **NO**

  Refer to **INFORMATION**

INFORMATION

FAULT-TRACING INFORMATION

The fault should have been detected and remedied. As this is not the case fault-tracing has failed.

Exit fault-tracing for this diagnostic trouble code (DTC) or make another attempt.

CCM-0064: AIR DISTRIBUTION DAMPER MOTOR. INTERNAL FAULT (2005-

2012)

DIAGNOSTIC TROUBLE CODE (DTC) INFORMATION CCM-0064

Condition

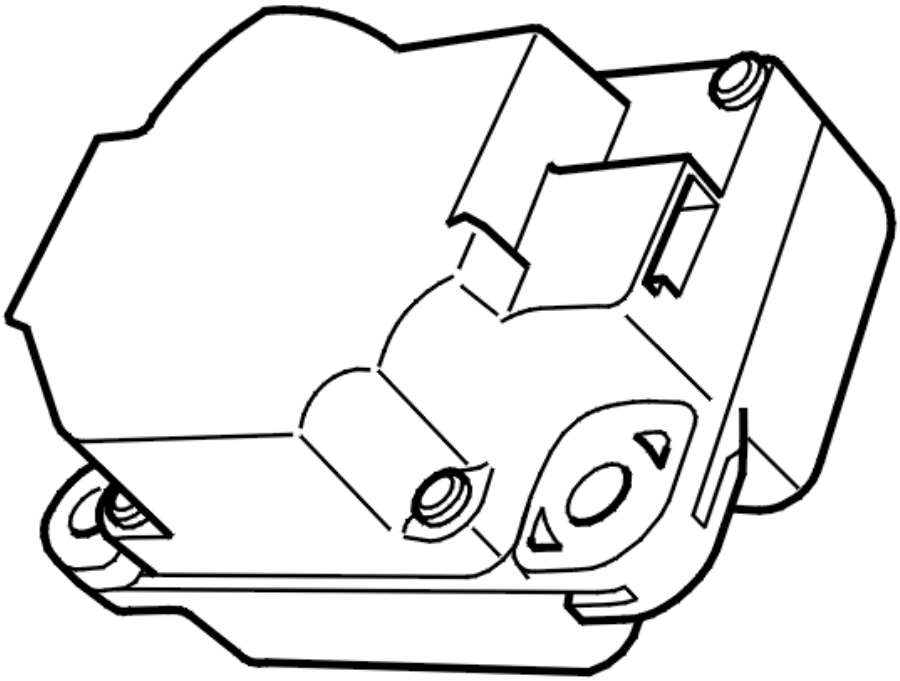

Fig. 170: Identifying Damper Motor Module (DMM)
Courtesy of VOLVO CARS CORPORATION

The diagnostic trouble code (DTC) is stored if the climate control module (CCM) detects a fault in the damper motor module (DMM) air distribution.

The climate control module (CCM) communicates with the damper motor module (DMM) air distribution via LIN bus 1.

The damper motor module (DMM) transmits information to the climate control module (CCM) about status.

The diagnostic trouble code (DTC) can be diagnosed in ignition positions I and II.

Substitute Value

- None.

Possible Source

- Internal fault in the damper motor module (DMM) air distribution
- Incorrect calibration due to loss of power.

Fault symptom[s]

- Misting on the windows and/or door mirrors.
- Air flow problem.

INTERNAL FAULT

REPLACING THE COMPONENT

The climate control module (CCM) has registered an internal fault in the damper motor module (DMM) for air distribution.

If the fault is intermittent, it has been registered previously but is no longer present. Intermittent faults may be caused by interference at start up of the damper motor module (DMM). Intermittent faults may also be caused by other types of intermittent faults. The fault is evaluated depending on how it occurs. Replace the damper motor module (DMM) if the fault recurs.

Replace the damper motor module (DMM) for air distribution if the fault is permanent:

For -2004, see **DAMPER MOTOR AIR DISTRIBUTION, REPLACING** . For 2005-, see **DAMPER MOTOR MODULE (DMM) AIR DISTRIBUTION, REPLACING**

Remedy as necessary.

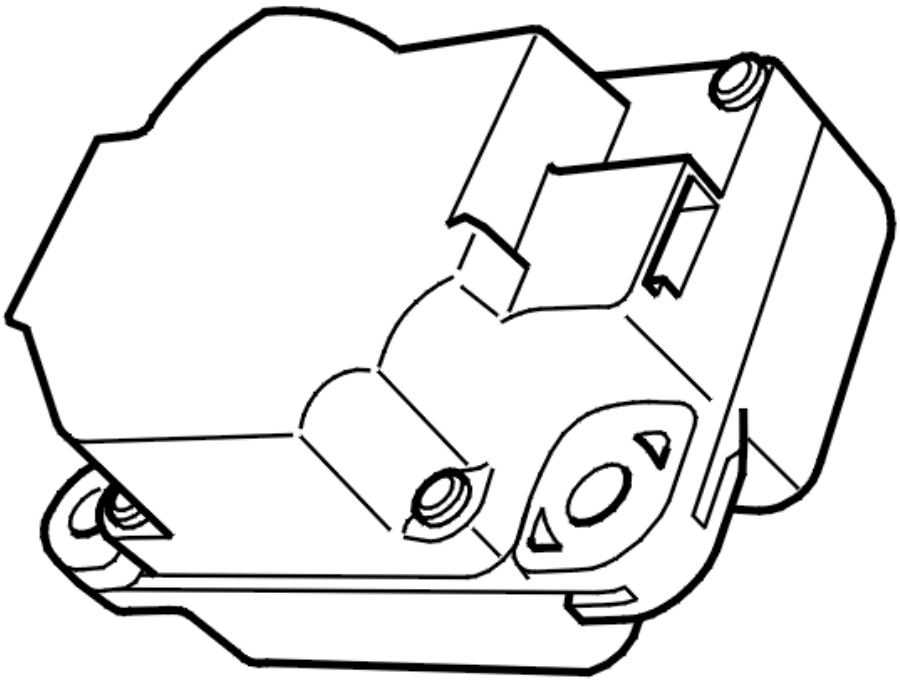

Fig. 171: Identifying Damper Motor Module (DMM)
Courtesy of VOLVO CARS CORPORATION

- **Continue**

  Refer to **IDENTIFYING COMPONENTS ON THE LIN NETWORK THAT BELONG TO THE CLIMATE CONTROL SYSTEM (CCM)**

IDENTIFYING COMPONENTS ON THE LIN NETWORK THAT BELONG TO THE CLIMATE CONTROL SYSTEM (CCM)

INFORMATION

- The control module must be identified after replacing the Damper Motor Module (DMM).

NOTE: Identification must only be carried out when replacing components on the LIN network that belong to the climate control system (CCM).

Have any of the components on the LIN network been replaced?

- **YES**

  Refer to **IDENTIFYING COMPONENTS ON THE LIN NETWORK THAT BELONG TO THE CLIMATE CONTROL SYSTEM (CCM)**

- **NO**

  Refer to **VERIFICATION**

IDENTIFYING COMPONENTS ON THE LIN NETWORK THAT BELONG TO THE CLIMATE CONTROL SYSTEM (CCM)

HINT: When identifying damper motors, each damper motor must be run to its limit position. These operations can take up to 30 seconds. When identifying the damper motors it is important that a battery charger is connected.

Fig. 172: Checking Traffic Load On CAN Cables
Courtesy of VOLVO CARS CORPORATION

- Ignition off
- Reinstall the connectors, components etc.

NOTE: **Climate Control Module (CCM) and damper motors can be affected by the temperature. The vehicle should have normal room temperature when performing this service.**

Carry out identification as follows:

- Ignition on.
- Click on the VCT2000 symbol. Wait until identification has been carried out.
- Ignition off.

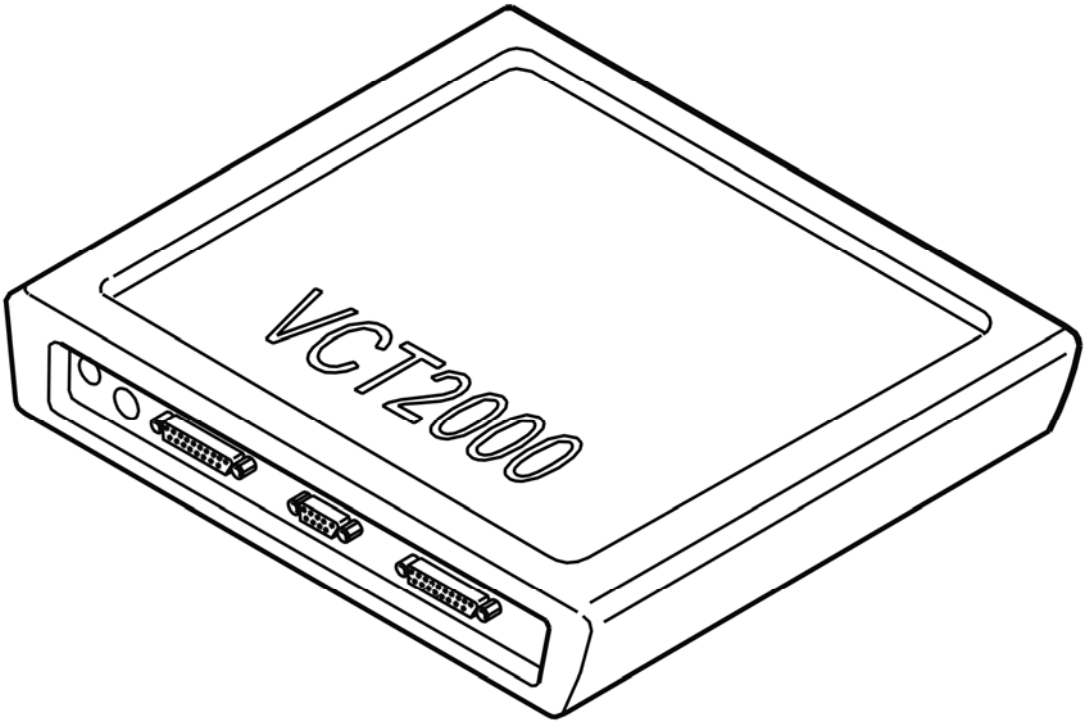

Fig. 173: Identifying VCT2000 Diagnostic Tool Symbol In VIDA
Courtesy of VOLVO CARS CORPORATION

- **Continue**

Refer to **CALIBRATING THE CLIMATE CONTROL MODULE (CCM)**

CALIBRATING THE CLIMATE CONTROL MODULE (CCM)

CAUTION: When activating this function, calibration of the Climate Control Module (CCM) starts. After carrying out calibration read off of the diagnostic trouble codes (DTCs) starts. To ensure that diagnostics for the Climate Control Module (CCM) have been carried out, delay for 30 seconds before reading out diagnostic trouble codes (DTCs) after calibration.

NOTE: Climate Control Module (CCM) and damper motors can be affected by the temperature. The vehicle should have normal room temperature when performing this service.

Fig. 174: Checking Traffic Load On CAN Cables
Courtesy of VOLVO CARS CORPORATION

Carry out calibration as follows:

- Ignition on.
- Click on the VCT2000 symbol. Wait until calibration has been carried out and diagnostic trouble codes (DTCs) read out.
- Ignition off.

This function controls the components that communicate with the Climate Control Module (CCM) via LIN bus 1 and LIN bus 2. In the event of a fault in any of the LIN buses, diagnostic trouble codes (DTCs) CCM-0070 to CCM-0071 will be stored depending on the fault. These diagnostic trouble codes (DTCs) can only be stored in conjunction with this diagnostic function.

If any of these diagnostic trouble codes (DTCs) recur, recalibrate to check if the problem was overcome. If the diagnostic trouble code (DTC) recurs, fault-trace the relevant diagnostic trouble code (DTC).

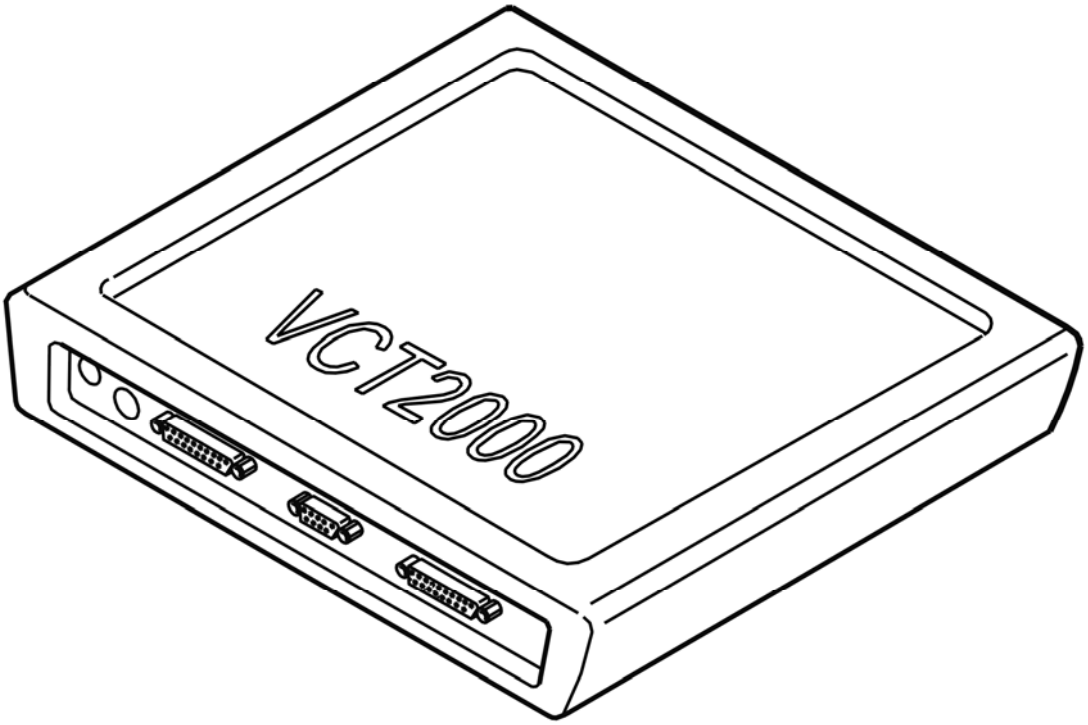

Fig. 175: Identifying VCT2000 Diagnostic Tool Symbol In VIDA
Courtesy of VOLVO CARS CORPORATION

- **Continue**

  Refer to **VERIFICATION**

VERIFICATION

HINT: After carrying out the repair, check that the fault has been remedied.

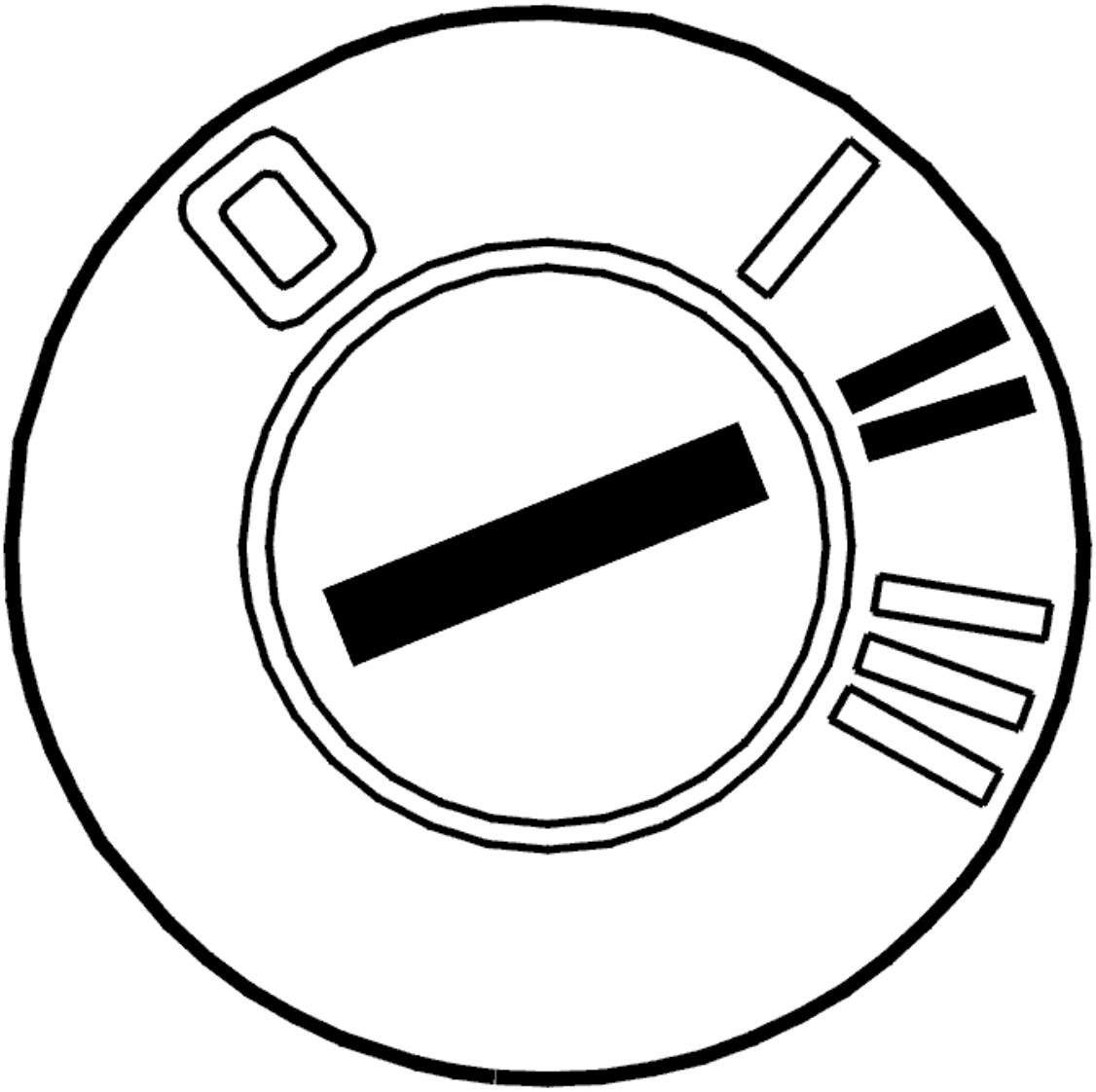

Fig. 176: Identifying Ignition ON
Courtesy of VOLVO CARS CORPORATION

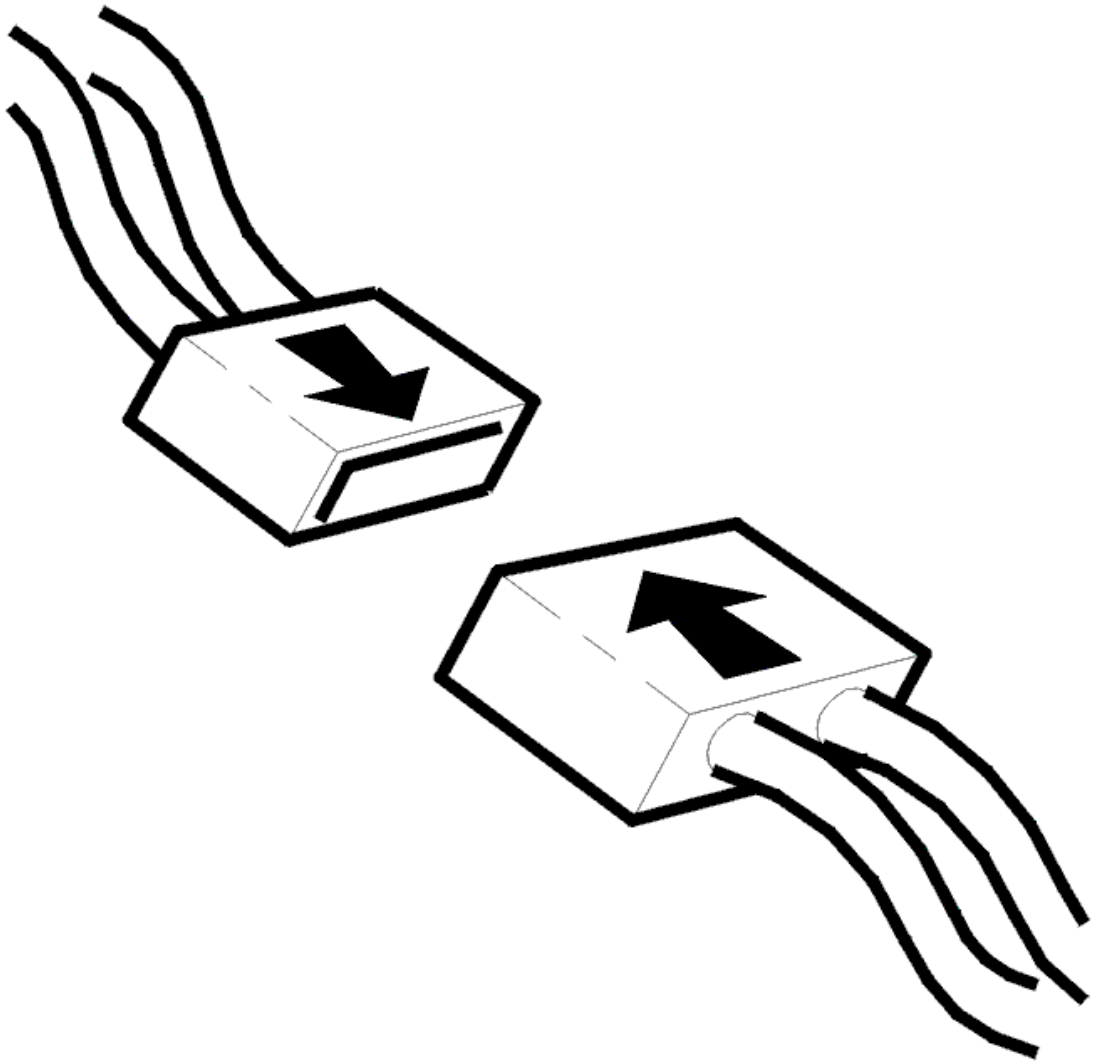

Fig. 177: Connecting Connector
Courtesy of VOLVO CARS CORPORATION

- Ignition off
- Reinstall the connectors, components etc.
- Ignition on.

  Check that the relevant diagnostic trouble code (DTC) has switched status from permanent to intermittent fault.

  Check also that diagnostic trouble code (DTC) CCM-0070, CCM-0071 CCM-0072 or CCM-0073 has not been stored during identification of the damper motors.

  These diagnostic trouble codes (DTCs) can only be stored when identifying damper motors. They mean that the identification has failed for some reason.

Remedy by correctly identifying the damper motor. Fault-trace according to the relevant information.

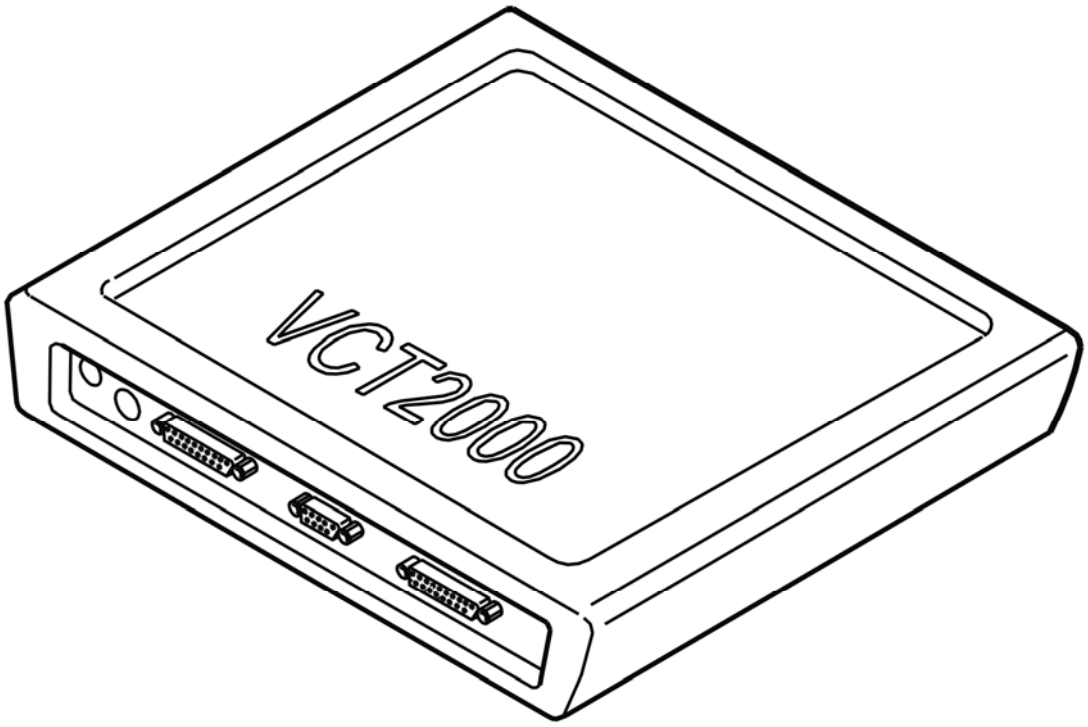

Fig. 178: Identifying VCT2000 Diagnostic Tool Symbol In VIDA
Courtesy of VOLVO CARS CORPORATION

Has the status of the diagnostic trouble code (DTC) changed?

- **YES**

  VERIFIED: Troubleshooting has been completed.

- **NO**

  Refer to **INFORMATION**

INFORMATION

FAULT-TRACING INFORMATION

The fault should have been detected and remedied. As this is not the case fault-tracing has failed.

Exit fault-tracing for this diagnostic trouble code (DTC) or make another attempt.

CCM-0070: CONFIGURATION FAULT. FAULTY IDENTIFICATION (2005-2012)

DIAGNOSTIC TROUBLE CODE (DTC) INFORMATION CCM-0070

Condition

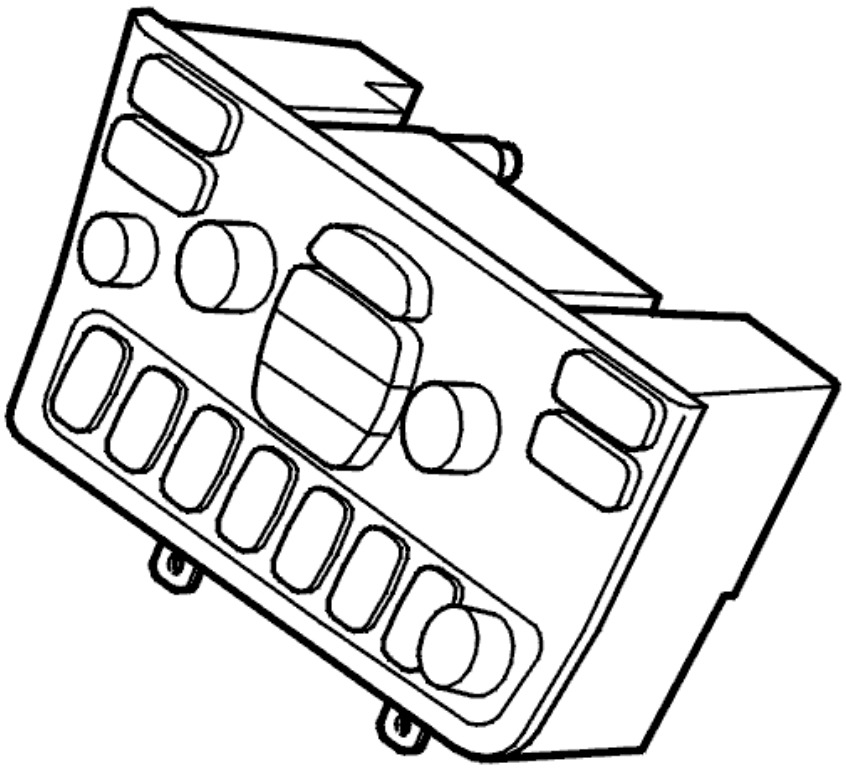

Fig. 179: Climate Control Module
Courtesy of VOLVO CARS CORPORATION

The diagnostic trouble code (DTC) is stored if the climate control module (CCM) detects that components on LIN bus 1 and LIN bus 2 do not correspond with the components included in the Car Config File.

The climate control module (CCM) receives information about the Car Config File from the central electronic module (CEM) via the CAN network.

The diagnostic trouble code (DTC) can be diagnosed in ignition positions I and II.

The diagnostic trouble code (DTC) can only be diagnosed in conjunction with activation of a diagnostic function.

Substitute Value

- None.

Possible Source

- Components on LIN bus 1 or LIN bus 2 are missing
- Components on LIN bus 1 or LIN bus 2 are incorrectly installed.

Fault symptom[s]

- Misting on the windows and/or door mirrors.
- Air flow problem.
- Temperature control/Uneven temperature
- The passenger compartment temperature does not correspond to the set position.
- No recirculation.

FAULTY IDENTIFICATION

CHECKING COMPONENTS ON LIN BUS

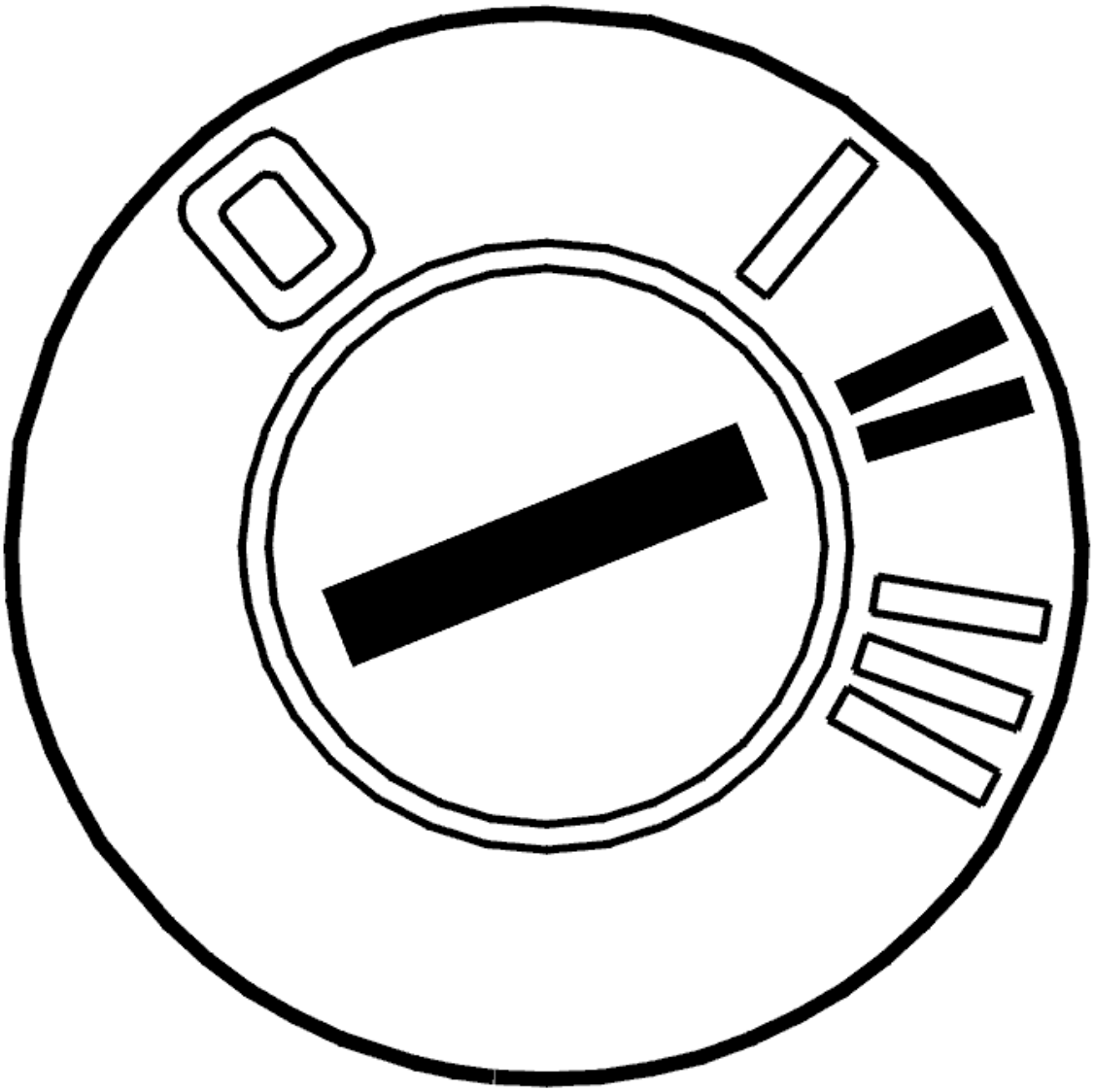

Fig. 180: Identifying Ignition ON
Courtesy of VOLVO CARS CORPORATION

- Ignition on.

  The climate control module (CCM) has registered that the number of control modules on LIN bus 1 or 2 does not correspond with the number of control modules occupied in the car configuration.

  If a control module is missing according to the car configuration, check that the control module is installed and correctly connected.

  Check also whether any control modules are connected that are not occupied in the car configuration.

  If the diagnostic trouble code (DTC) is stored together with CCM-0072, the fault can be due to several damper motor modules (DMM) having the same identity. In such cases, remedy by identifying the damper motor.

  Read out which control modules/sensors are on LIN bus 1 and 2 and compare this to the car configuration. Which control modules and sensors are to be found and which alternatives can be presented in the car configuration can be read in the tables below.

  LIN-BUS: 1

Control module/sensor	On LIN bus 1
Damper Motor Position Sensor recirculation	Always
Damper motor, temperature left	Always
Left seat heating	If the vehicle is equipped with seat heating

  LIN-BUS: 2

Control module/sensor	On LIN bus 2
Damper motor, temperature, right	Always
Defroster damper motor	If the vehicle is equipped with ECC
Seat heater, right.	If the vehicle is

	equipped with seat heating

CAR CONFIGURATION

Parameter	Alternative
Steering	
Climate control system	ECC ECC/AQS ECC, rear AC MCC
Seat heating calibration	No Low 28C/82F-High 35C/95F Low 30C/86F-High 36C/97F Low 31C/88F-High 37C/99F Low 32C/90F-High 38C/100F Low 33C/91F-High 39C/102F Low 34C/93F-High 40C/104F Low 35C/95F-High 41C/106F Low 36C/97F-High 43C/109F
	Pollen filter Air Quality

Cabin filter	System, AQS

Click the VCT2000 symbol to check which control module/sensor does not correspond to the car configuration.

Remedy as necessary.

Other information:

- see **CLIMATE CONTROL, LOCATION OF COMPONENTS**
- see **CLIMATE CONTROL MODULE (CCM), REPLACING**
- For -2004, see **DAMPER MOTOR TEMPERATURE, REPLACING** . For 2005-, see **DAMPER MOTOR MODULE (DMM) TEMPERATURE, REPLACING**
- For -2004, see **DAMPER MOTOR DEFROSTER, REPLACING** . For 2005-, see **DAMPER MOTOR MODULE (DMM) DEFROSTER, REPLACING**
- For -2004, see **DAMPER MOTOR RECIRCULATION, REPLACING** . For 2005-, see **DAMPER MOTOR MODULE (DMM) RECIRCULATION, REPLACING**
- For -2004, see **DAMPER MOTOR AIR DISTRIBUTION, REPLACING** . For 2005-, see **DAMPER MOTOR MODULE (DMM) AIR DISTRIBUTION, REPLACING**

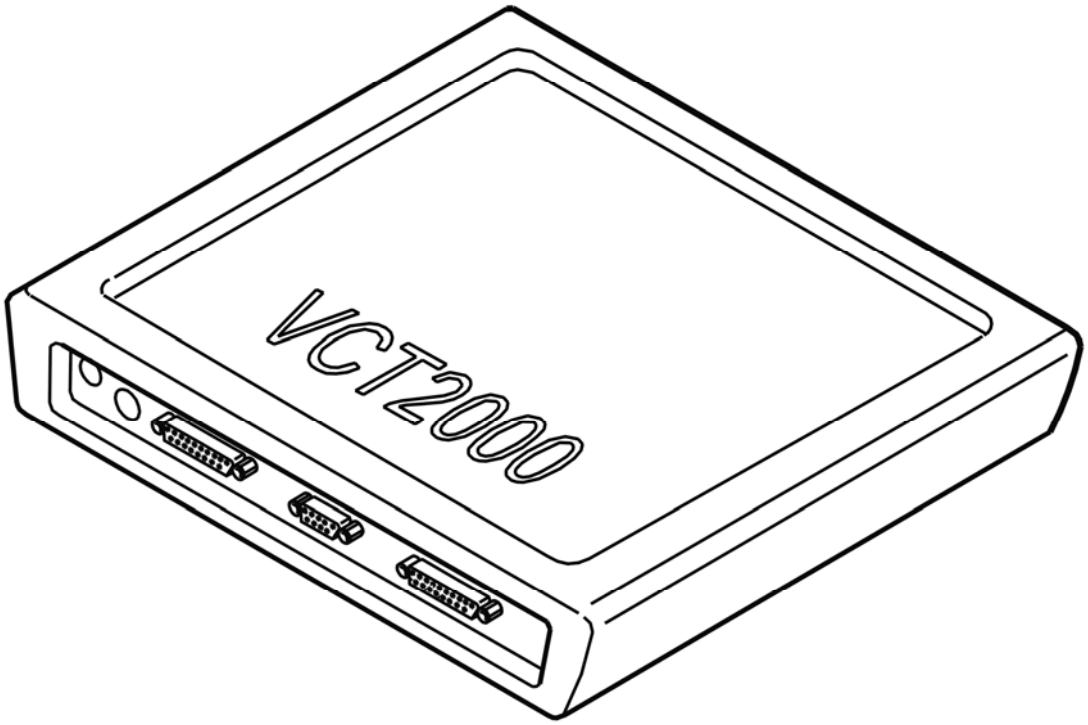

Fig. 181: Identifying VCT2000 Diagnostic Tool Symbol In VIDA

Courtesy of VOLVO CARS CORPORATION

- **Continue**

  Refer to **IDENTIFYING COMPONENTS ON THE LIN NETWORK THAT BELONG TO THE CLIMATE CONTROL SYSTEM (CCM)**

IDENTIFYING COMPONENTS ON THE LIN NETWORK THAT BELONG TO THE CLIMATE CONTROL SYSTEM (CCM)

INFORMATION

- The control module must be identified after replacing the Damper Motor Module (DMM).

NOTE: **Identification must only be carried out when replacing components on the LIN network that belong to the climate control system (CCM).**

Have any of the components on the LIN network been replaced?

- **YES**

  Refer to **IDENTIFYING COMPONENTS ON THE LIN NETWORK THAT BELONG TO THE CLIMATE CONTROL SYSTEM (CCM)**

- **NO**

  Refer to **VERIFICATION**

IDENTIFYING COMPONENTS ON THE LIN NETWORK THAT BELONG TO THE CLIMATE CONTROL SYSTEM (CCM)

HINT: When identifying damper motors, each damper motor must be run to its limit position. These operations can take up to 30 seconds. When identifying the damper motors it is important that a battery charger is connected.

Fig. 182: Checking Traffic Load On CAN Cables
Courtesy of VOLVO CARS CORPORATION

- Ignition off
- Reinstall the connectors, components etc.

NOTE: Climate Control Module (CCM) and damper motors can be affected by the temperature. The vehicle should have normal room temperature when performing this service.

Carry out identification as follows:

- Ignition on.
- Click on the VCT2000 symbol. Wait until identification has been carried out.
- Ignition off.

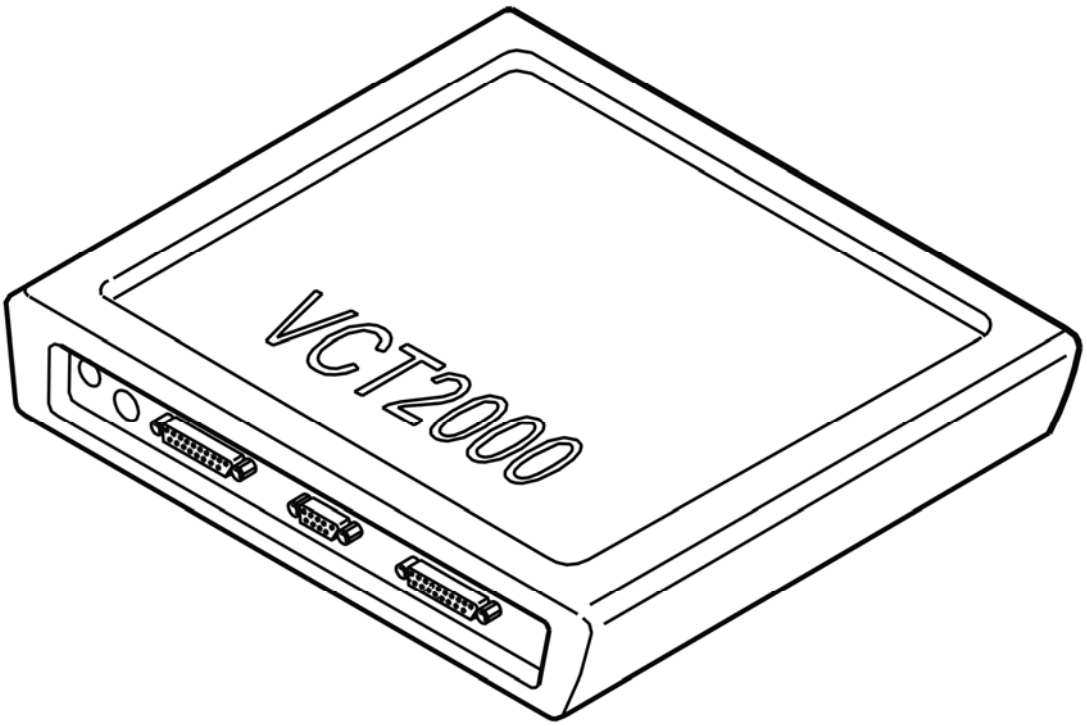

Fig. 183: Identifying VCT2000 Diagnostic Tool Symbol In VIDA
Courtesy of VOLVO CARS CORPORATION

- **Continue**

Refer to **CALIBRATING THE CLIMATE CONTROL MODULE (CCM)**

CALIBRATING THE CLIMATE CONTROL MODULE (CCM)

CAUTION: When activating this function, calibration of the Climate Control Module (CCM) starts. After carrying out calibration read off of the diagnostic trouble codes (DTCs) starts. To ensure that diagnostics for the Climate Control Module (CCM) have been carried out, delay for 30 seconds before

reading out diagnostic trouble codes (DTCs) after calibration.

NOTE: Climate Control Module (CCM) and damper motors can be affected by the temperature. The vehicle should have normal room temperature when performing this service.

Fig. 184: Checking Traffic Load On CAN Cables
Courtesy of VOLVO CARS CORPORATION

Carry out calibration as follows:

- Ignition on.
- Click on the VCT2000 symbol. Wait until calibration has been carried out and diagnostic trouble codes (DTCs) read out.
- Ignition off.

This function controls the components that communicate with the Climate Control Module (CCM) via LIN bus 1 and LIN bus 2. In the event of a fault in any of the LIN buses, diagnostic trouble codes (DTCs) CCM-0070 to CCM-0071 will be stored depending on the fault. These diagnostic trouble codes (DTCs) can only be stored in conjunction with this diagnostic function.

If any of these diagnostic trouble codes (DTCs) recur, recalibrate to check if the problem was overcome. If the diagnostic trouble code (DTC) recurs, fault-trace the relevant diagnostic trouble code (DTC).

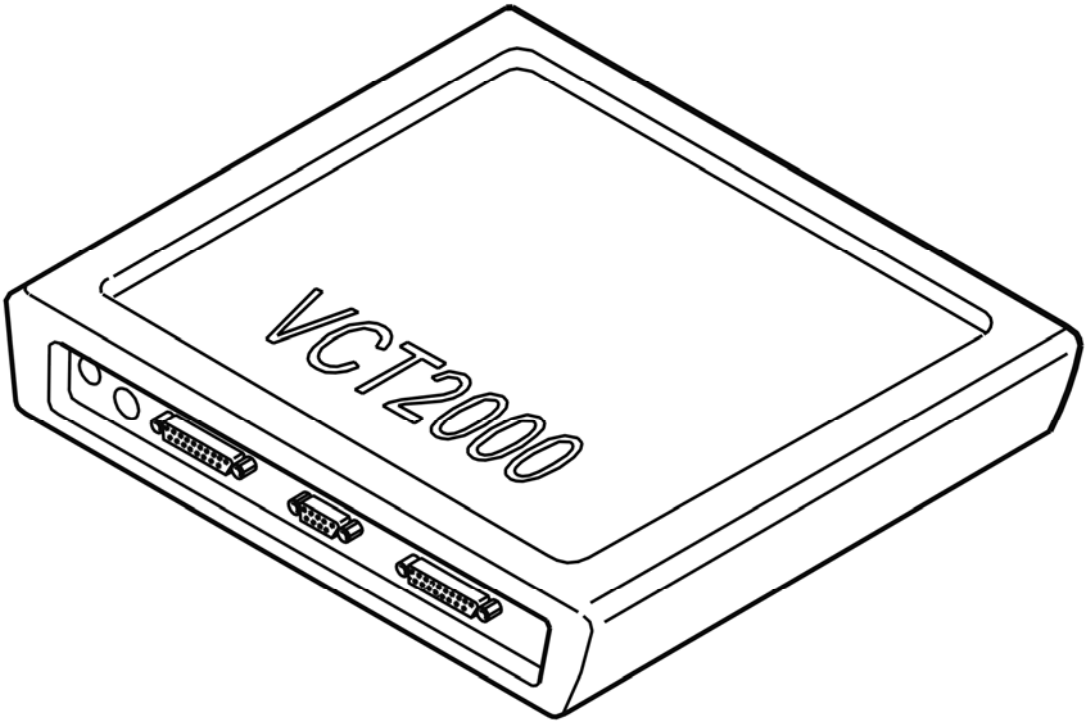

Fig. 185: Identifying VCT2000 Diagnostic Tool Symbol In VIDA
Courtesy of VOLVO CARS CORPORATION

- **Continue**

  Refer to **VERIFICATION**

VERIFICATION

HINT: After carrying out the repair, check that the fault has been remedied.

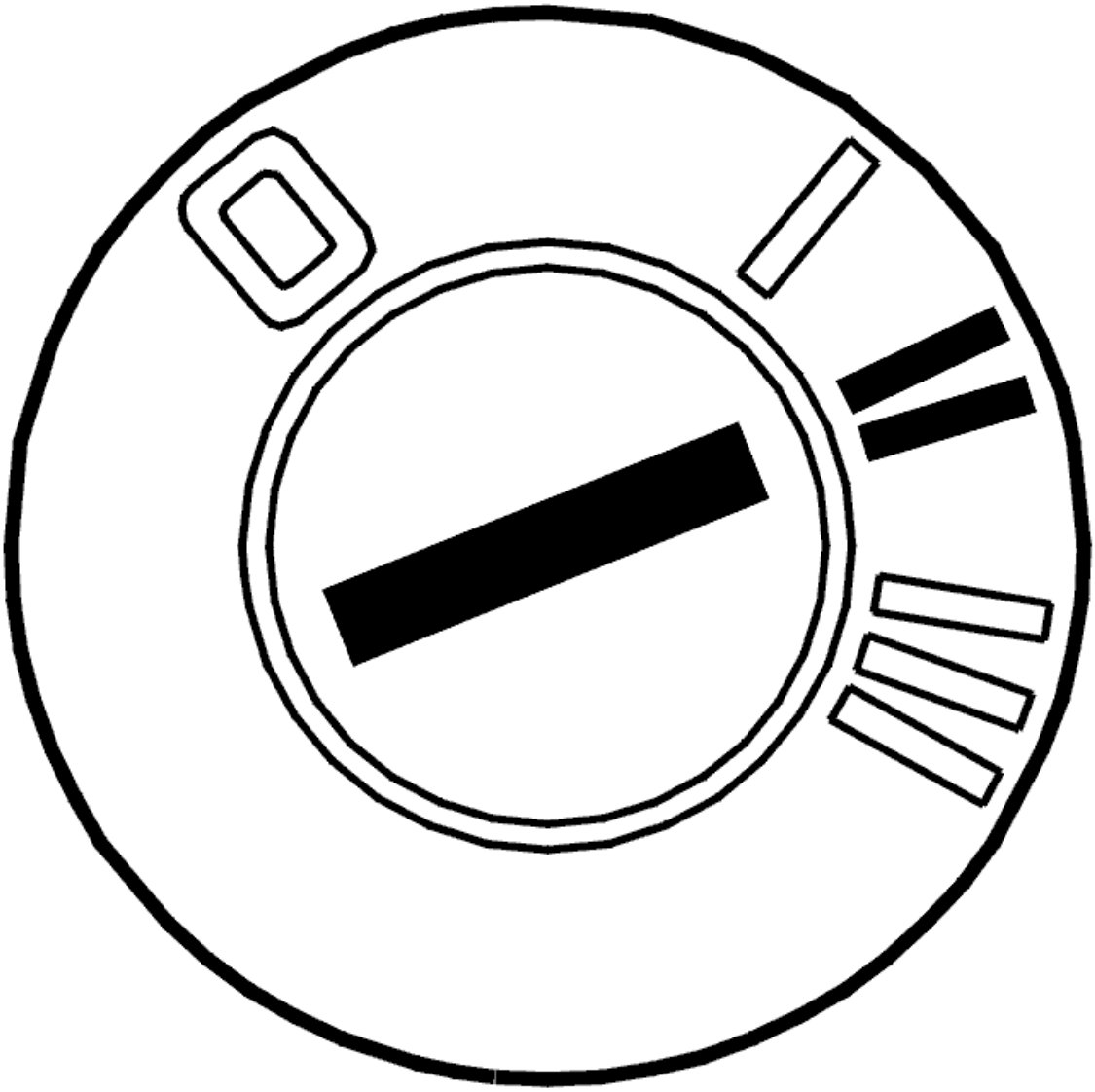

Fig. 186: Identifying Ignition ON
Courtesy of VOLVO CARS CORPORATION

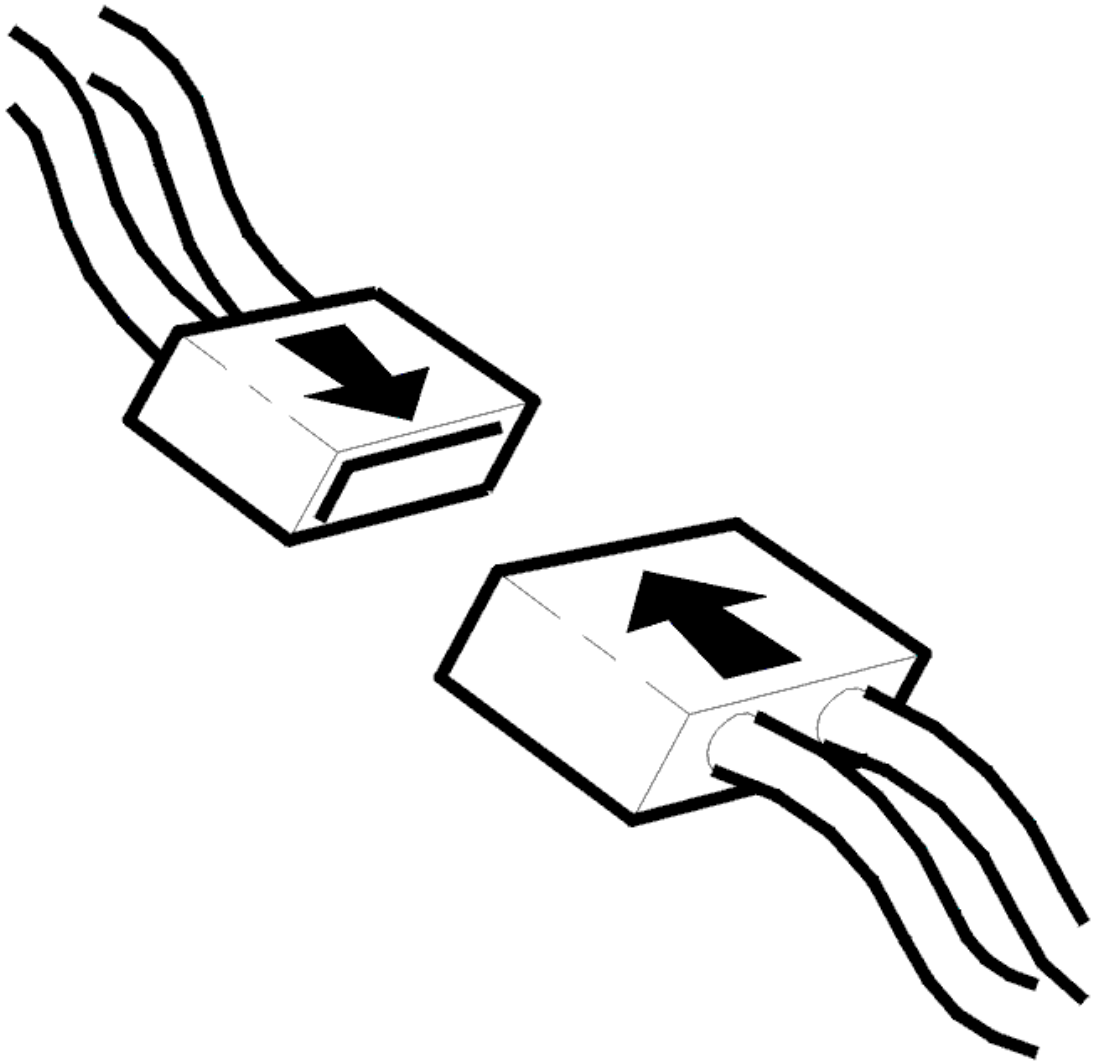

Fig. 187: Connecting Connector
Courtesy of VOLVO CARS CORPORATION

- Ignition off
- Reinstall the connectors, components etc.
- Ignition on.

  Check that the relevant diagnostic trouble code (DTC) has switched status from permanent to intermittent fault.

  Check also that diagnostic trouble code (DTC) CCM-0070, CCM-0071 CCM-0072 or CCM-0073 has not been stored during identification of the damper motors.

  These diagnostic trouble codes (DTCs) can only be stored when identifying damper motors. They mean that the identification has failed for some reason.

Remedy by correctly identifying the damper motor. Fault-trace according to the relevant information.

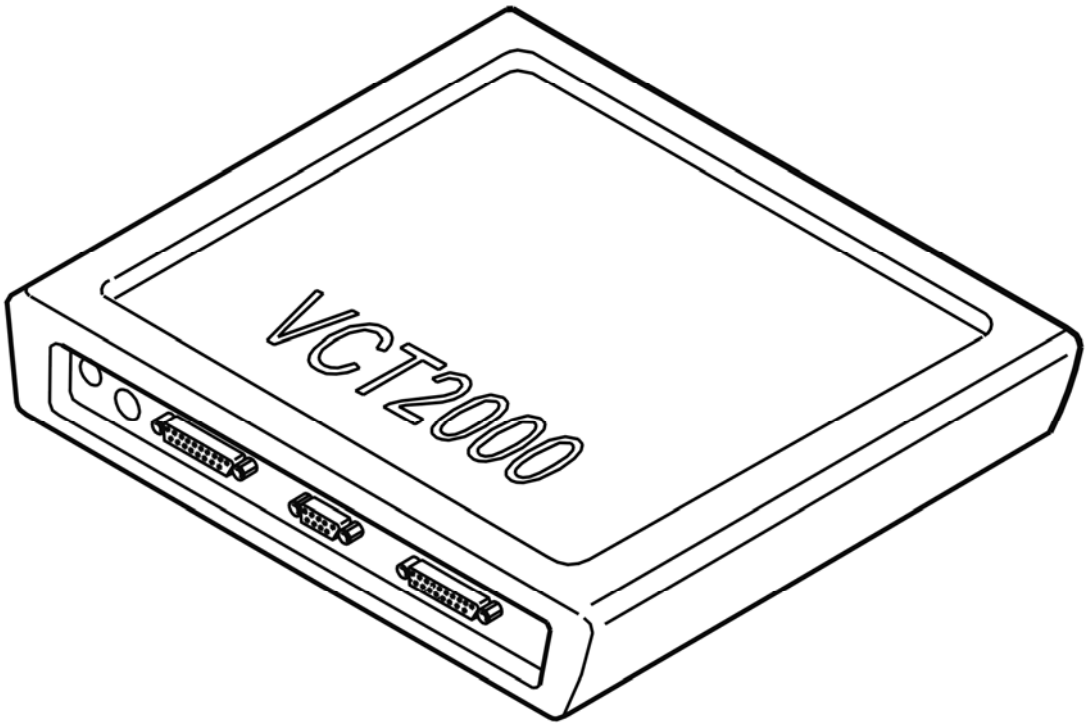

Fig. 188: Identifying VCT2000 Diagnostic Tool Symbol In VIDA
Courtesy of VOLVO CARS CORPORATION

Has the status of the diagnostic trouble code (DTC) changed?

- **YES**

  VERIFIED: Troubleshooting has been completed.

- **NO**

  Refer to **INFORMATION**

INFORMATION

FAULT-TRACING INFORMATION

The fault should have been detected and remedied. As this is not the case fault-tracing has failed.

Exit fault-tracing for this diagnostic trouble code (DTC) or make another attempt.

CCM-0071: DAMPER MOTOR. FAULTY POSITION (2005-2012)

DIAGNOSTIC TROUBLE CODE (DTC) INFORMATION CCM-0071

Condition

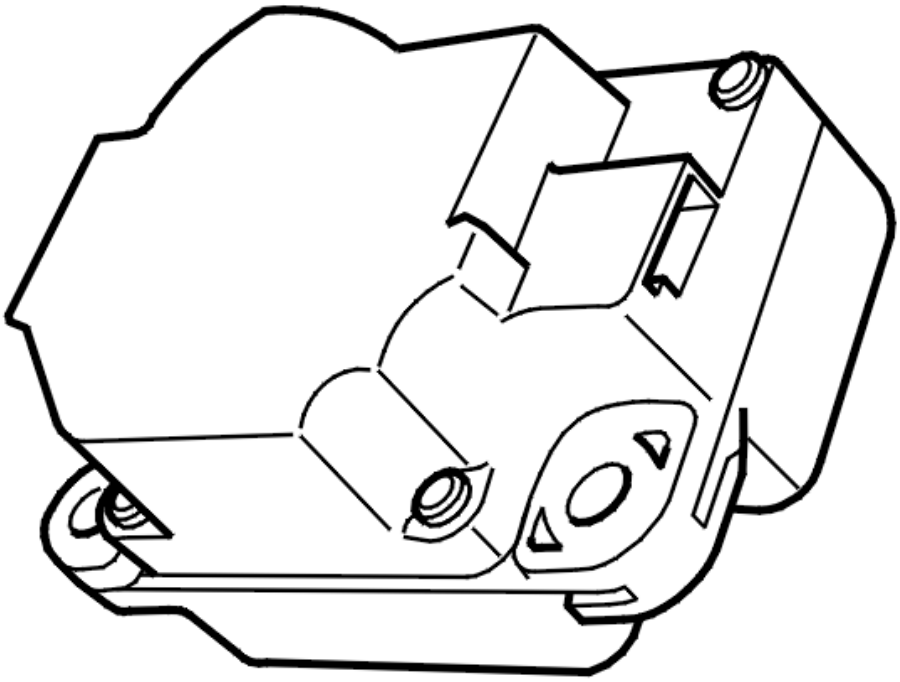

Fig. 189: Identifying Damper Motor Module (DMM)
Courtesy of VOLVO CARS CORPORATION

The diagnostic trouble code (DTC) is stored if the climate control module (CCM) detects that the limit positions for a damper motor module (DMM) do not correspond to the anticipated limit positions.

The diagnostic trouble code (DTC) can be diagnosed in ignition positions I and II.

The diagnostic trouble code (DTC) can only be diagnosed in conjunction with activation of a diagnostic function.

Substitute Value

- None.

Possible Source

- Blocked damper.
- Climate control unit calibrated at incorrect temperature.

- Internal fault in the Damper motor module (DMM).

Fault symptom[s]

- Misting on the windows and/or door mirrors.
- Air flow problem.
- The passenger compartment temperature does not correspond to the set position.
- No recirculation.

INCORRECT POSITION

CHECKING THE COMPONENT

Fig. 190: Checking Traffic Load On CAN Cables
Courtesy of VOLVO CARS CORPORATION

- Ignition on.

  The climate control module (CCM) has registered that one or more damper motor modules (DMM) have an incorrect number of steps between the end positions during damper regulation.

  Check which damper motor has an incorrect number of steps between the end positions by:

  - Read out the actual range to identify the number of stages between the upper and lower end positions measured by the damper motor module (DMM).
  - Read out the preset range to identify the number of stages between the upper and lower end positions stored by the damper motor module (DMM).
  - Compare these values to check the tolerances.

  The defective damper motor has been identified if the actual range of any of the damper motors is outside the preset range by more than the tolerance.

  Check that the damper motor is correctly installed.

  Check that the damper is not blocked and that is has not become stuck. Look, for example, for a screw, cable or foam rubber gasket.

  Other information:

  - see **CLIMATE CONTROL, LOCATION OF COMPONENTS**

- For -2004, see **DAMPER MOTOR TEMPERATURE, REPLACING** . For 2005-, see **DAMPER MOTOR MODULE (DMM) TEMPERATURE, REPLACING**
- For -2004, see **DAMPER MOTOR DEFROSTER, REPLACING** . For 2005-, see **DAMPER MOTOR MODULE (DMM) DEFROSTER, REPLACING**
- For -2004, see **DAMPER MOTOR RECIRCULATION, REPLACING** . For 2005-, see **DAMPER MOTOR MODULE (DMM) RECIRCULATION, REPLACING**
- For -2004, see **DAMPER MOTOR AIR DISTRIBUTION, REPLACING** . For 2005-, see **DAMPER MOTOR MODULE (DMM) AIR DISTRIBUTION, REPLACING**

Fig. 191: Identifying VCT2000 Diagnostic Tool Symbol In VIDA
Courtesy of VOLVO CARS CORPORATION

- **Continue**

  Refer to **CALIBRATION**

CALIBRATION

WARNING: When activating this function, calibration of the Climate Control Module (CCM) starts. After carrying out calibration read off of the diagnostic trouble codes (DTCs) starts. To ensure that diagnostics for the Climate Control Module (CCM) have been carried out, delay for 30 seconds before reading out diagnostic trouble codes (DTCs) after calibration.

NOTE: Climate Control Module (CCM) and damper motors can be affected by the temperature. The vehicle should have normal room temperature when performing this service.

Carry out calibration as follows:

- Ignition on.
- Click on the VCT2000 symbol. Wait until calibration has been carried out and diagnostic trouble codes (DTCs) read out.
- Ignition off.

This function controls the components that communicate with the Climate Control Module (CCM) via LIN bus 1 and LIN bus 2. In the event of a fault in any of the LIN buses, diagnostic trouble codes (DTCs) CCM-0070 to CCM-0071 will be stored depending on the fault. These diagnostic trouble codes (DTCs) can only be stored in conjunction with this diagnostic function.

Fig. 192: Identifying VCT2000 Diagnostic Tool Symbol In VIDA
Courtesy of VOLVO CARS CORPORATION

- **Continue**

  Refer to **VERIFICATION**

CHECKING THE COMPONENT

Click on the VCT2000 symbol.

There is an internal fault if the damper motor range shows 0 or 4095. Replace the Damper motor module (DMM).

Fig. 193: Identifying VCT2000 Diagnostic Tool Symbol In VIDA
Courtesy of VOLVO CARS CORPORATION

Does the damper motor range show 0 or 4095?

- **YES**

  Refer to **REPLACING THE CONTROL MODULE**

- **NO**

  Refer to **CHECKING THE COMPONENT**

CHECKING THE COMPONENT

Check that the throttle in the throttle module can be closed and opened completely without binding. Check that the damper is not blocked and that is has not become stuck.

Other information:

- see **CLIMATE CONTROL, LOCATION OF COMPONENTS**

- **Continue**

  Refer to **CALIBRATION**

REPLACING THE CONTROL MODULE

Replace the control module.

Other information:

- see **CLIMATE CONTROL, LOCATION OF COMPONENTS**
- For -2004, see **DAMPER MOTOR TEMPERATURE, REPLACING** . For 2005-, see **DAMPER MOTOR MODULE (DMM) TEMPERATURE, REPLACING**
- For -2004, see **DAMPER MOTOR DEFROSTER, REPLACING** . For 2005-, see **DAMPER MOTOR MODULE (DMM) DEFROSTER, REPLACING**
- For -2004, see **DAMPER MOTOR RECIRCULATION, REPLACING** . For 2005-, see **DAMPER MOTOR MODULE (DMM) RECIRCULATION, REPLACING**
- For -2004, see **DAMPER MOTOR AIR DISTRIBUTION, REPLACING** . For 2005-, see **DAMPER MOTOR MODULE (DMM) AIR DISTRIBUTION, REPLACING**

- **Continue**

  Refer to **IDENTIFICATION**

IDENTIFICATION

HINT: Identification of damper motors requires that the relevant damper motor is run to the limit positions. These runs can take up to 30 seconds. When identifying the damper motors it is important that a battery charger is connected.

- Ignition off.
- Reinstall the connectors, components etc.

NOTE: **Ensure that nothing is physically preventing the damper from moving to its limit positions. If something is blocking the damper, an identification can cause problems which are extremely difficult to correct.**

Climate Control Module (CCM) and damper motors can be affected by the temperature. The vehicle should have normal room temperature when performing this service.

Carry out identification as follows:

- Ignition on.
- Click on the VCT2000 symbol. Wait until identification has been carried out.

- Ignition off.

Fig. 194: Identifying VCT2000 Diagnostic Tool Symbol In VIDA
Courtesy of VOLVO CARS CORPORATION

- **Continue**

  Refer to **CALIBRATION**

CALIBRATION

WARNING: When activating this function, calibration of the Climate Control Module (CCM) starts. After carrying out calibration read off of the diagnostic trouble codes (DTCs) starts. To ensure that diagnostics for the Climate Control Module (CCM) have been carried out, delay for 30 seconds before reading out diagnostic trouble codes (DTCs) after calibration.

NOTE: Climate Control Module (CCM) and damper motors can be affected by the temperature. The vehicle should have normal room temperature when performing this service.

Carry out calibration as follows:

- Ignition on.
- Click on the VCT2000 symbol. Wait until calibration has been carried out and diagnostic trouble codes (DTCs) read out.
- Ignition off.

This function controls the components that communicate with the Climate Control Module (CCM) via LIN bus 1 and LIN bus 2. In the event of a fault in any of the LIN buses, diagnostic trouble codes (DTCs) CCM-0070 to CCM-0071 will be stored depending on the fault. These diagnostic trouble codes (DTCs) can only be stored in conjunction with this diagnostic function.

Fig. 195: Identifying VCT2000 Diagnostic Tool Symbol In VIDA

Courtesy of VOLVO CARS CORPORATION

- **Continue**

  Refer to **VERIFICATION**

FAULTY POSITION

Fig. 196: Checking Traffic Load On CAN Cables
Courtesy of VOLVO CARS CORPORATION

- Ignition on.

  Read off the car structure week by clicking on the VCT2000 symbol.

  1. Vehicles with structure week up to and incl. 200445, that is, year 2004 week 45. Refer to **CHECKING THE COMPONENT**
  2. Vehicles with structure week from and incl. 200446, that is, year 2004 week 46. Refer to **CHECKING THE COMPONENT**

Fig. 197: Identifying VCT2000 Diagnostic Tool Symbol In VIDA
Courtesy of VOLVO CARS CORPORATION

CHECKING THE COMPONENT

Fig. 198: Checking Traffic Load On CAN Cables
Courtesy of VOLVO CARS CORPORATION

- Ignition on.

The climate control module (CCM) has registered that one or more damper motor modules (DMM) have an incorrect number of steps between the end positions during damper regulation.

Check which damper motor has an incorrect number of steps between the end positions by:

- Read out the actual range to identify the number of stages between the upper and lower end positions measured by the damper motor module (DMM).
- Read out the preset range to identify the number of stages between the upper and lower end positions stored by the damper motor module (DMM).
- Compare these values to check the tolerances.

The defective damper motor has been identified if the actual range of any of the damper motors is outside the preset range by more than the tolerance.

Check that the damper motor is correctly installed.

Check that the damper is not blocked and that is has not become stuck. Look, for example, for a screw, cable or foam rubber gasket.

Other information:

- see **CLIMATE CONTROL, LOCATION OF COMPONENTS**
- For -2004, see **DAMPER MOTOR TEMPERATURE, REPLACING** . For 2005-, see **DAMPER MOTOR MODULE (DMM) TEMPERATURE, REPLACING** .
- For -2004, see **DAMPER MOTOR DEFROSTER, REPLACING** . For 2005-, see **DAMPER MOTOR MODULE (DMM) DEFROSTER, REPLACING** .
- For -2004, see **DAMPER MOTOR RECIRCULATION, REPLACING** . For 2005-, see **DAMPER MOTOR MODULE (DMM) RECIRCULATION, REPLACING** .
- For -2004, see **DAMPER MOTOR AIR DISTRIBUTION, REPLACING** . For 2005-, see **DAMPER MOTOR MODULE (DMM) AIR DISTRIBUTION, REPLACING** .

Fig. 199: Identifying VCT2000 Diagnostic Tool Symbol In VIDA
Courtesy of VOLVO CARS CORPORATION

- **Continue**

Refer to **CALIBRATION**

CALIBRATION

WARNING: When activating this function, calibration of the Climate Control Module (CCM) starts. After carrying out calibration read off of the diagnostic trouble codes (DTCs) starts. To ensure that diagnostics for the Climate Control Module (CCM) have been carried out, delay for 30 seconds before reading out diagnostic trouble codes (DTCs) after calibration.

NOTE: Climate Control Module (CCM) and damper motors can be affected by the temperature. The vehicle should have normal room temperature when performing this service.

Carry out calibration as follows:

- Ignition on.
- Click on the VCT2000 symbol. Wait until calibration has been carried out and diagnostic trouble codes (DTCs) read out.
- Ignition off.

This function controls the components that communicate with the Climate Control Module (CCM) via LIN bus 1 and LIN bus 2. In the event of a fault in any of the LIN buses, diagnostic trouble codes (DTCs) CCM-0070 to CCM-0071 will be stored depending on the fault. These diagnostic trouble codes (DTCs) can only be stored in conjunction with this diagnostic function.

Fig. 200: Identifying VCT2000 Diagnostic Tool Symbol In VIDA
Courtesy of VOLVO CARS CORPORATION

- **Continue**

  Refer to **VERIFICATION**

CHECKING THE COMPONENT

Click on the VCT2000 symbol.

There is an internal fault if the damper motor range shows 0 or 4095. Replace the Damper motor module (DMM).

Fig. 201: Identifying VCT2000 Diagnostic Tool Symbol In VIDA
Courtesy of VOLVO CARS CORPORATION

Does the damper motor range show 0 or 4095?

- **YES**

  Refer to **REPLACING THE CONTROL MODULE**

- **NO**

  Refer to **CHECKING THE COMPONENT**

VERIFICATION

HINT: After carrying out the repair, check that the fault has been remedied.

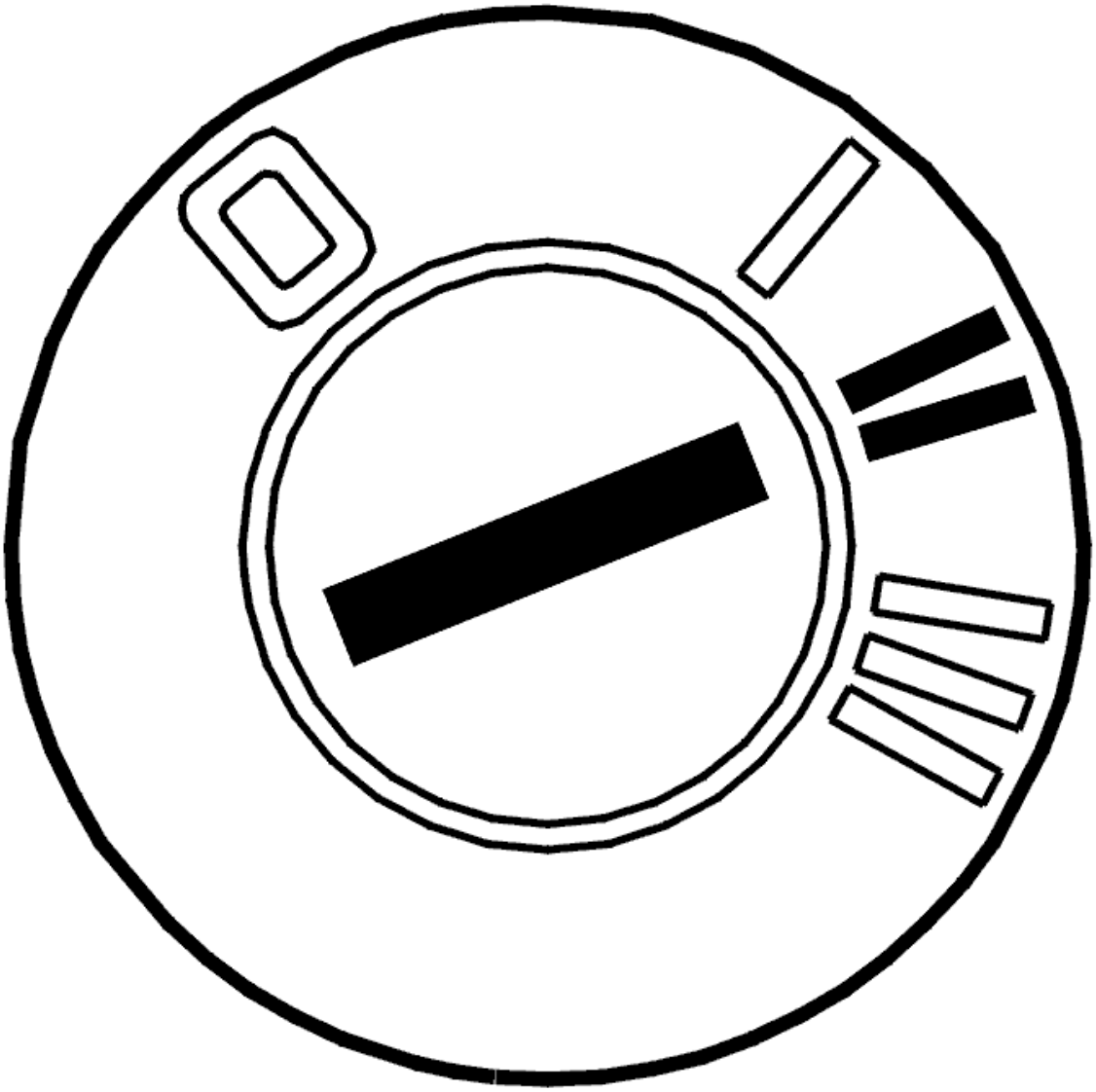

Fig. 202: Identifying Ignition ON
Courtesy of VOLVO CARS CORPORATION

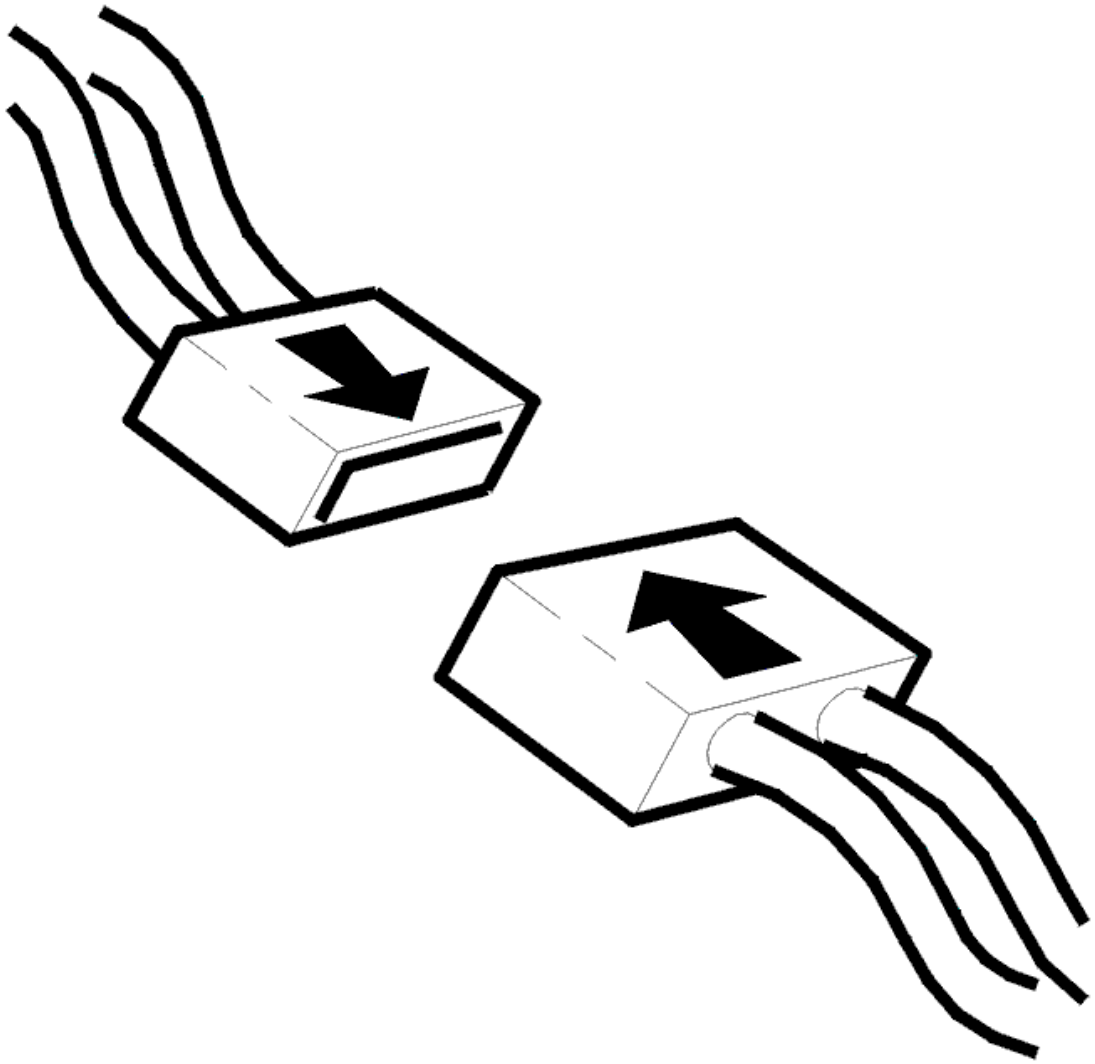

Fig. 203: Connecting Connector
Courtesy of VOLVO CARS CORPORATION

- Ignition off
- Reinstall the connectors, components etc.
- Ignition on.

  Check that the relevant diagnostic trouble code (DTC) has switched status from permanent to intermittent fault.

  Check also that diagnostic trouble code (DTC) CCM-0070, CCM-0071 CCM-0072 or CCM-0073 has not been stored during identification of the damper motors.

  These diagnostic trouble codes (DTCs) can only be stored when identifying damper motors. They mean that the identification has failed for some reason.

Remedy by correctly identifying the damper motor. Fault-trace according to the relevant information.

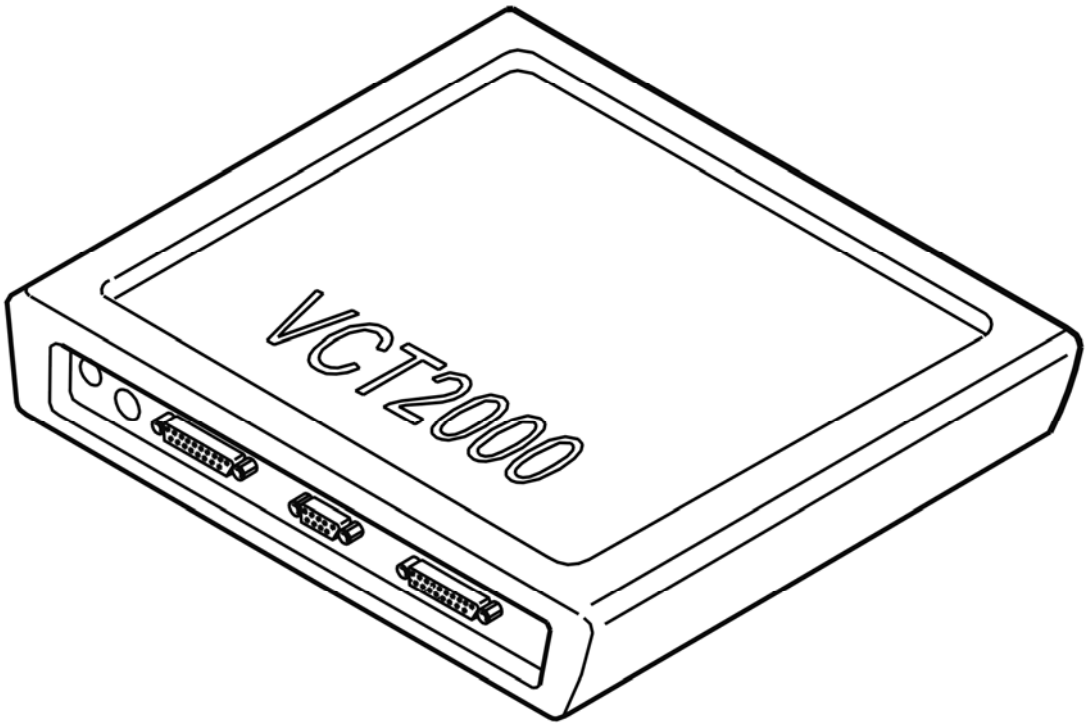

Fig. 204: Identifying VCT2000 Diagnostic Tool Symbol In VIDA
Courtesy of VOLVO CARS CORPORATION

Has the status of the diagnostic trouble code (DTC) changed?

- **YES**

  VERIFIED: Troubleshooting has been completed.

- **NO**

  Refer to **CHECKING THE COMPONENT**

INFORMATION

FAULT-TRACING INFORMATION

The fault should have been detected and remedied. As this is not the case fault-tracing has failed.

Exit fault-tracing for this diagnostic trouble code (DTC) or make another attempt.

VERIFICATION

HINT: After carrying out the repair, check that the fault has been remedied.

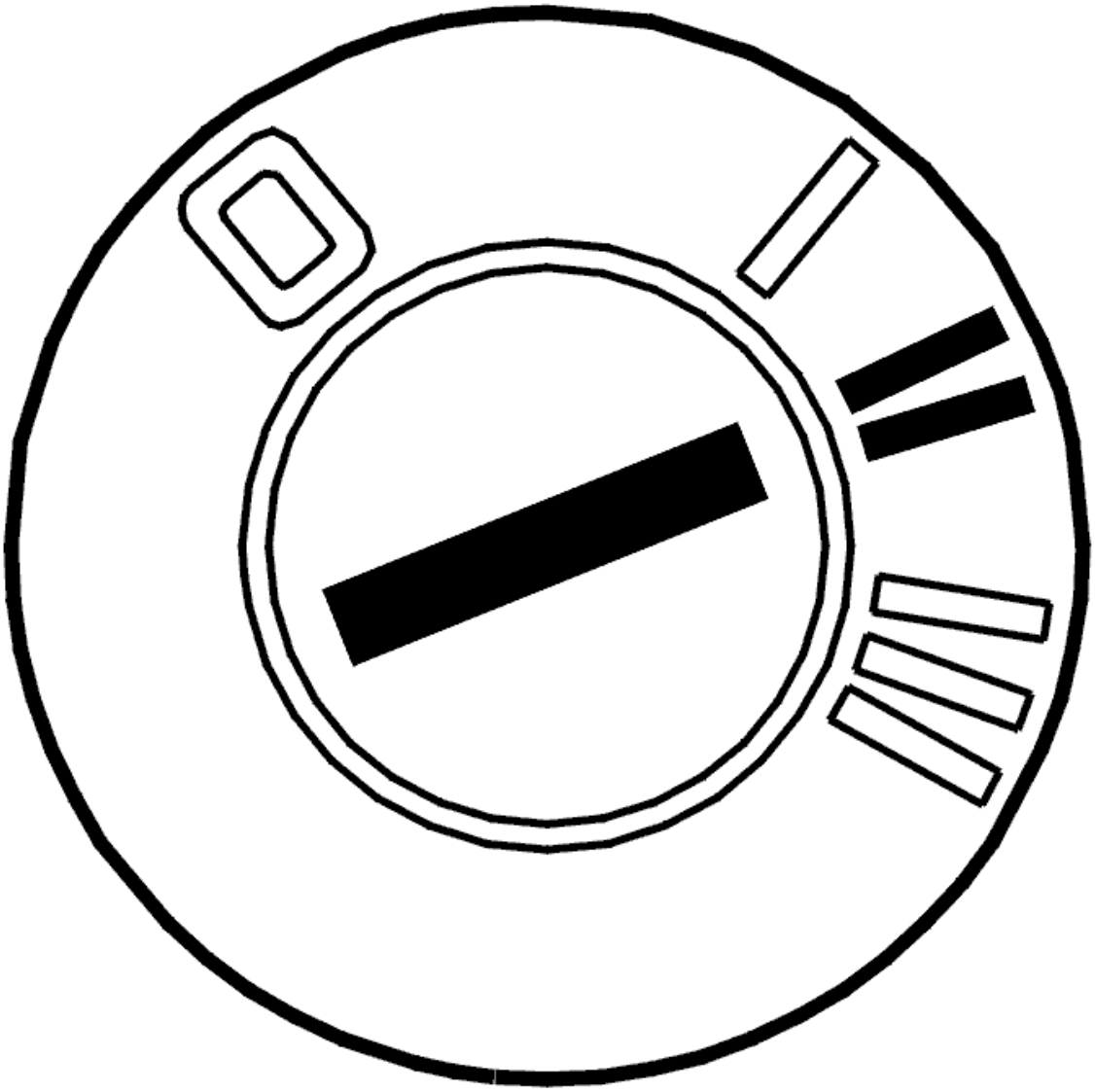

Fig. 205: Identifying Ignition ON
Courtesy of VOLVO CARS CORPORATION

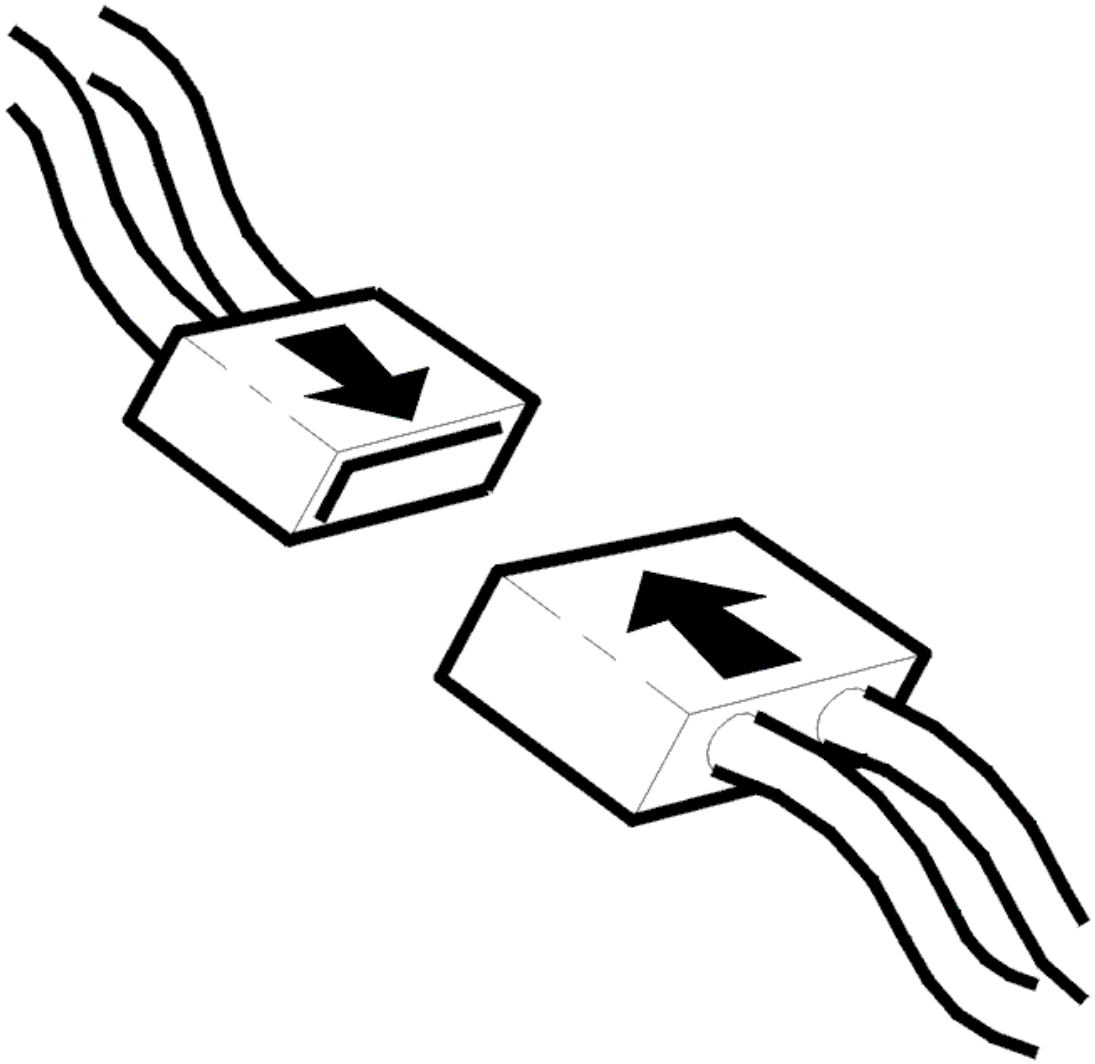

Fig. 206: Connecting Connector
Courtesy of VOLVO CARS CORPORATION

- Ignition off
- Reinstall the connectors, components etc.
- Ignition on.

  Check that the relevant diagnostic trouble code (DTC) has switched status from permanent to intermittent fault.

  Check also that diagnostic trouble code (DTC) CCM-0070, CCM-0071 CCM-0072 or CCM-0073 has not been stored during identification of the damper motors.

  These diagnostic trouble codes (DTCs) can only be stored when identifying damper motors. They mean that the identification has failed for some reason.

Remedy by correctly identifying the damper motor. Fault-trace according to the relevant information.

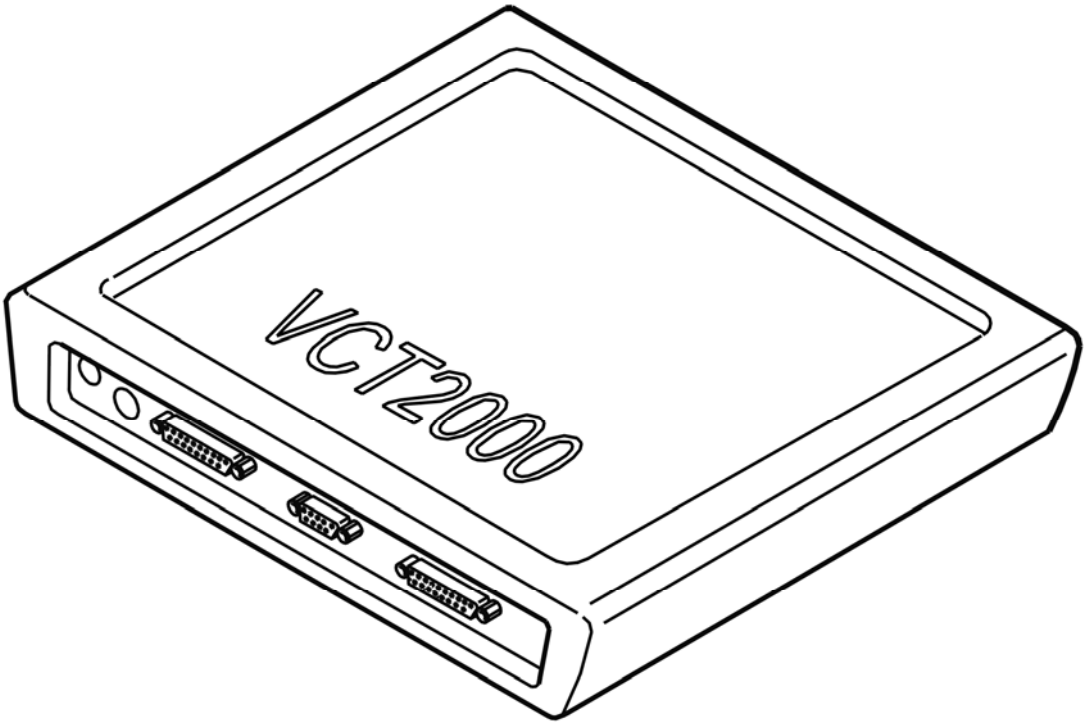

Fig. 207: Identifying VCT2000 Diagnostic Tool Symbol In VIDA
Courtesy of VOLVO CARS CORPORATION

Has the status of the diagnostic trouble code (DTC) changed?

- **YES**

  VERIFIED: Troubleshooting has been completed.

- **NO**

  Refer to **INFORMATION**

VERIFICATION

HINT: After carrying out the repair, check that the fault has been remedied.

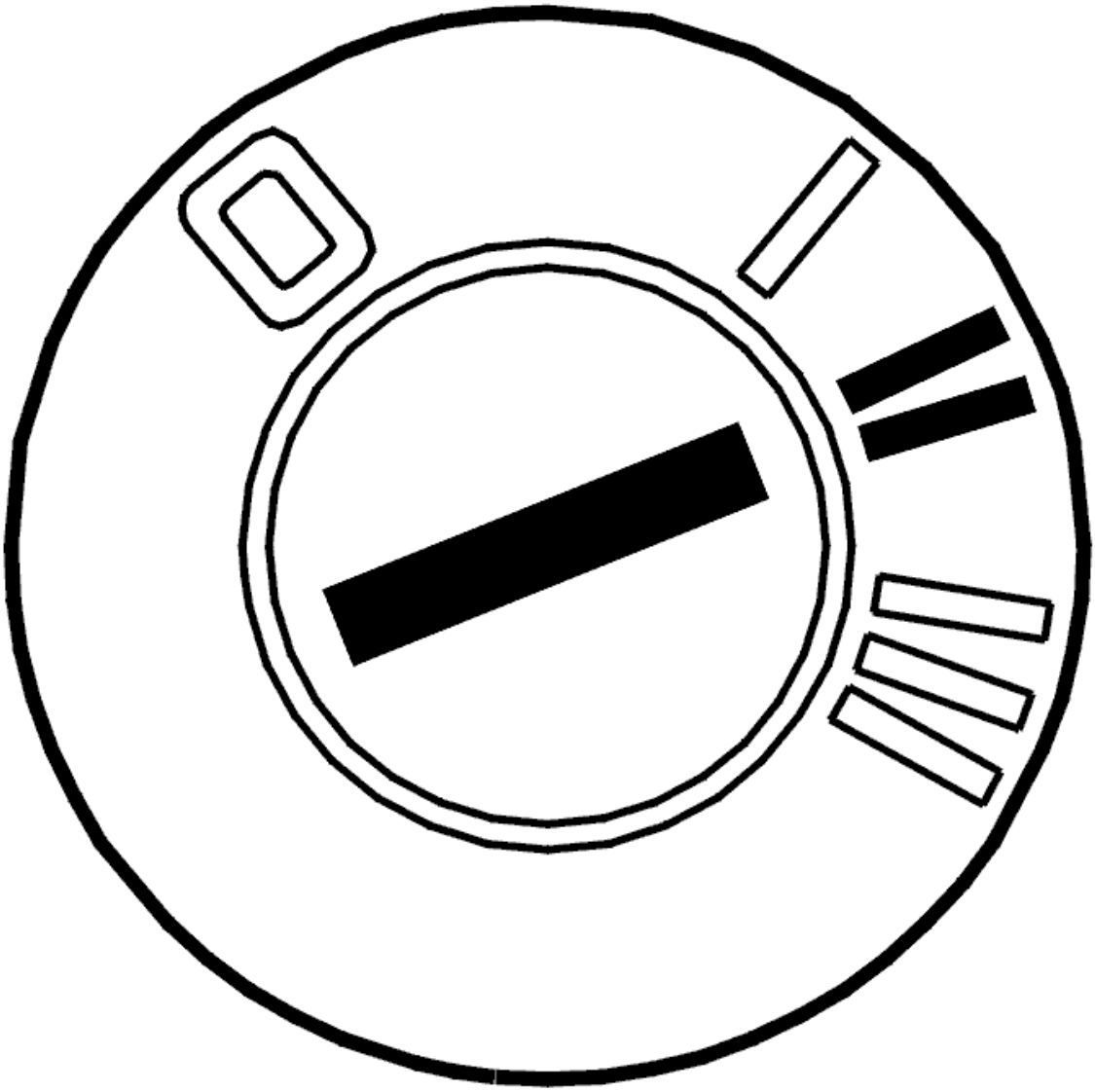

Fig. 208: Identifying Ignition ON
Courtesy of VOLVO CARS CORPORATION

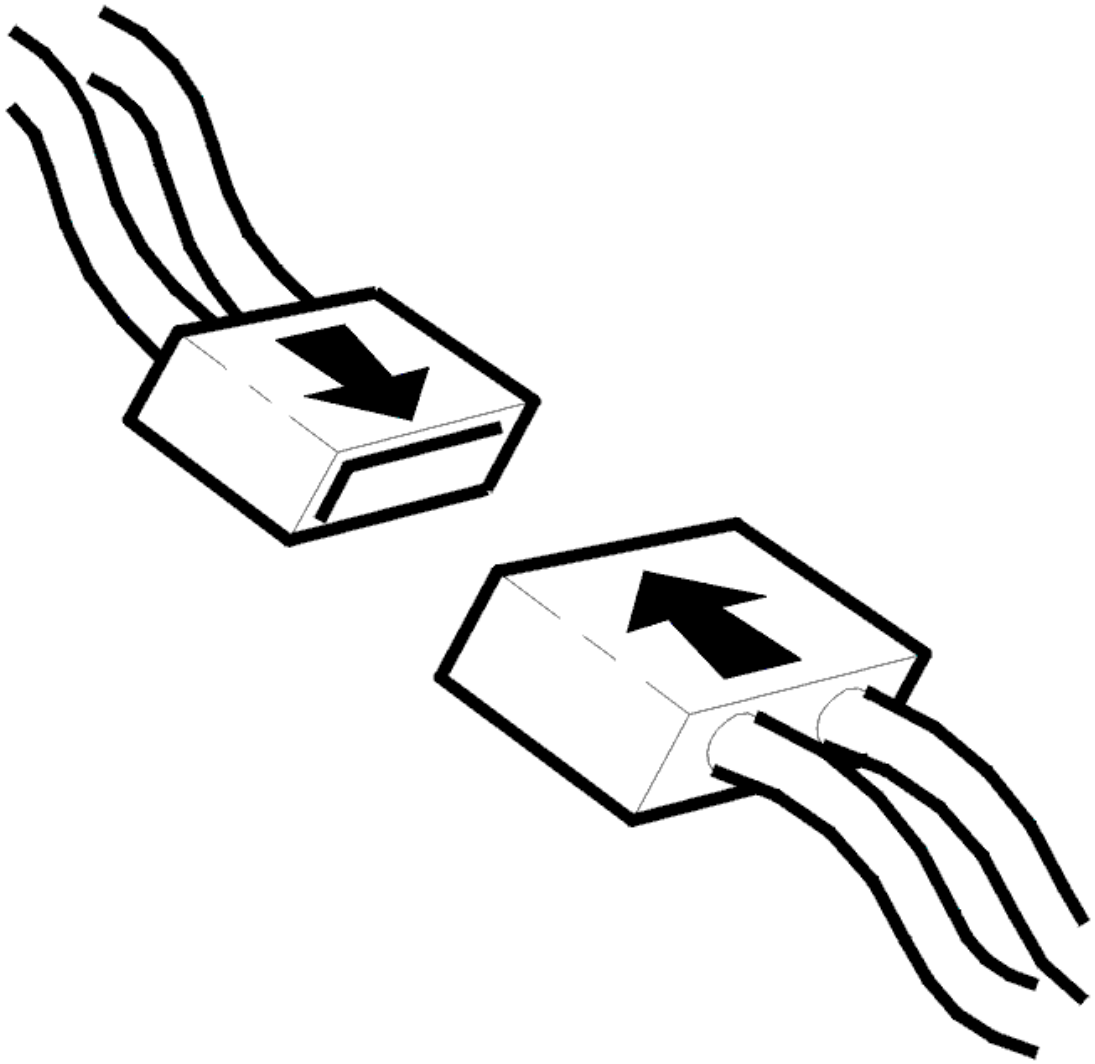

Fig. 209: Connecting Connector
Courtesy of VOLVO CARS CORPORATION

- Ignition off
- Reinstall the connectors, components etc.
- Ignition on.

  Check that the relevant diagnostic trouble code (DTC) has switched status from permanent to intermittent fault.

  Check also that diagnostic trouble code (DTC) CCM-0070, CCM-0071 CCM-0072 or CCM-0073 has not been stored during identification of the damper motors.

  These diagnostic trouble codes (DTCs) can only be stored when identifying damper motors. They mean that the identification has failed for some reason.

Remedy by correctly identifying the damper motor. Fault-trace according to the relevant information.

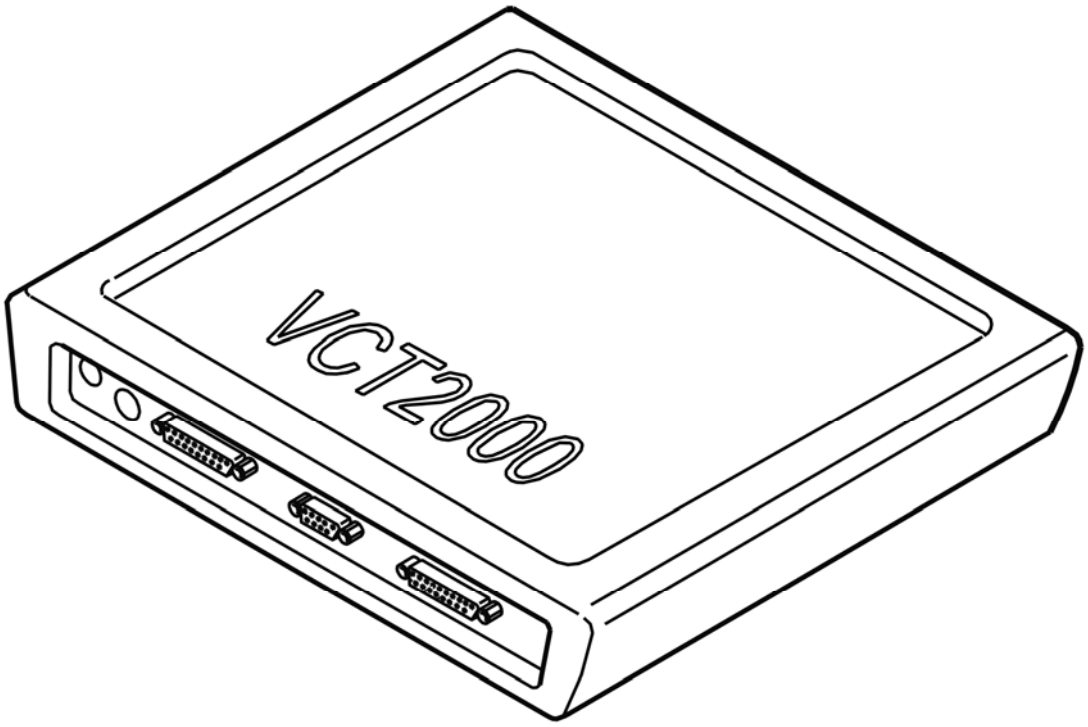

Fig. 210: Identifying VCT2000 Diagnostic Tool Symbol In VIDA
Courtesy of VOLVO CARS CORPORATION

Has the status of the diagnostic trouble code (DTC) changed?

- **YES**

  VERIFIED: Troubleshooting has been completed.

- **NO**

  Refer to **CHECKING THE COMPONENT**

CCM-0072: DAMPER MOTOR. INITIATION FAULT (2005-2012)

DIAGNOSTIC TROUBLE CODE (DTC) INFORMATION CCM-0072

Condition

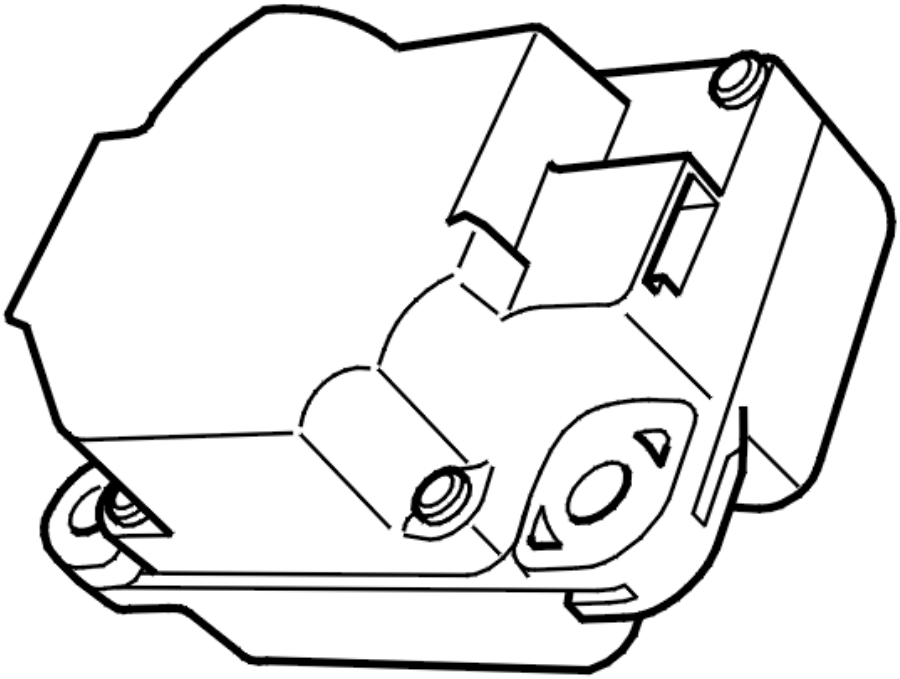

Fig. 211: Identifying Damper Motor Module (DMM)
Courtesy of VOLVO CARS CORPORATION

The diagnostic trouble code (DTC) is stored if the climate control module (CCM) detects that the correct address for a damper motor module (DMM) cannot be programmed.

The diagnostic trouble code (DTC) can be diagnosed in ignition positions I and II.

The diagnostic trouble code (DTC) can only be diagnosed in conjunction with activation of a diagnostic function.

Substitute Value

- None.

Possible Source

- Incorrect damper motor module (DMM).

Fault symptom[s]

- Misting on the windows and/or door mirrors.
- Air flow problem.

- The passenger compartment temperature does not correspond to the set position.
- No recirculation.

INITIATION FAULT

CHECKING THE COMPONENT

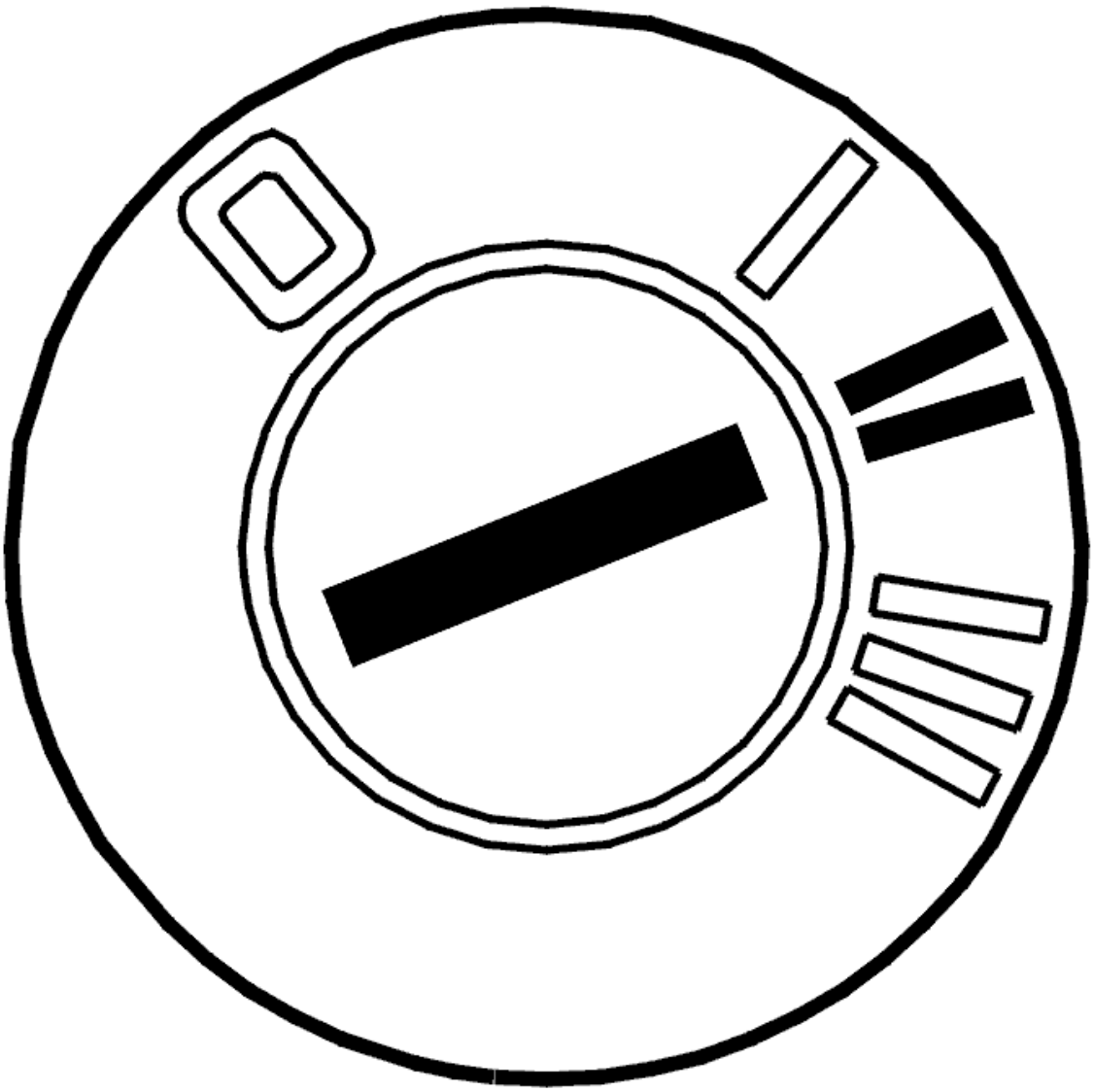

Fig. 212: Identifying Ignition ON
Courtesy of VOLVO CARS CORPORATION

- Ignition on.

  The climate control module (CCM) has registered that the identification of one or more damper motor modules (DMM) failed.

Remedy by making a new attempt to identify the damper motor.

Try replacing the damper motor module (DMM) if this does not work.

Click on the VCT2000 symbol to check which damper motor module (DMM) was not identified correctly.

Other information:

- see **CLIMATE CONTROL, LOCATION OF COMPONENTS**
- For -2004, see **DAMPER MOTOR TEMPERATURE, REPLACING** . For 2005-, see **DAMPER MOTOR MODULE (DMM) TEMPERATURE, REPLACING** .
- For -2004, see **DAMPER MOTOR DEFROSTER, REPLACING** . For 2005-, see **DAMPER MOTOR MODULE (DMM) DEFROSTER, REPLACING** .
- For -2004, see **DAMPER MOTOR RECIRCULATION, REPLACING** . For 2005-, see **DAMPER MOTOR MODULE (DMM) RECIRCULATION, REPLACING** .
- For -2004, see **DAMPER MOTOR AIR DISTRIBUTION, REPLACING** . For 2005-, see **DAMPER MOTOR MODULE (DMM) AIR DISTRIBUTION, REPLACING** .

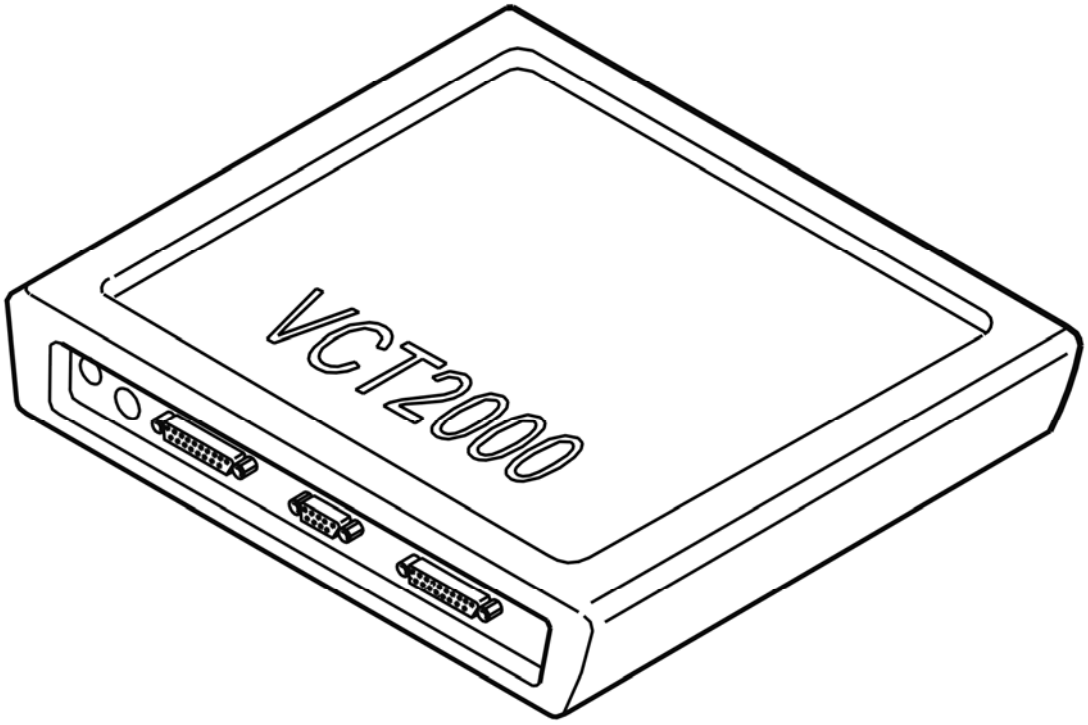

Fig. 213: Identifying VCT2000 Diagnostic Tool Symbol In VIDA
Courtesy of VOLVO CARS CORPORATION

- **Continue**

Refer to **IDENTIFYING COMPONENTS ON THE LIN NETWORK THAT BELONG TO THE CLIMATE CONTROL SYSTEM (CCM)**

IDENTIFYING COMPONENTS ON THE LIN NETWORK THAT BELONG TO THE CLIMATE CONTROL SYSTEM (CCM)

INFORMATION

- The control module must be identified after replacing the Damper Motor Module (DMM).

NOTE: **Identification must only be carried out when replacing components on the LIN network that belong to the climate control system (CCM).**

Have any of the components on the LIN network been replaced?

- **YES**

  Refer to **IDENTIFYING COMPONENTS ON THE LIN NETWORK THAT BELONG TO THE CLIMATE CONTROL SYSTEM (CCM)**

- **NO**

  Refer to **VERIFICATION**

IDENTIFYING COMPONENTS ON THE LIN NETWORK THAT BELONG TO THE CLIMATE CONTROL SYSTEM (CCM)

HINT: When identifying damper motors, each damper motor must be run to its limit position. These operations can take up to 30 seconds. When identifying the damper motors it is important that a battery charger is connected.

Fig. 214: Checking Traffic Load On CAN Cables
Courtesy of VOLVO CARS CORPORATION

- Ignition off
- Reinstall the connectors, components etc.

NOTE: **Climate Control Module (CCM) and damper motors can be affected by the temperature. The vehicle should have normal room temperature when performing this service.**

Carry out identification as follows:

- Ignition on.
- Click on the VCT2000 symbol. Wait until identification has been carried out.
- Ignition off.

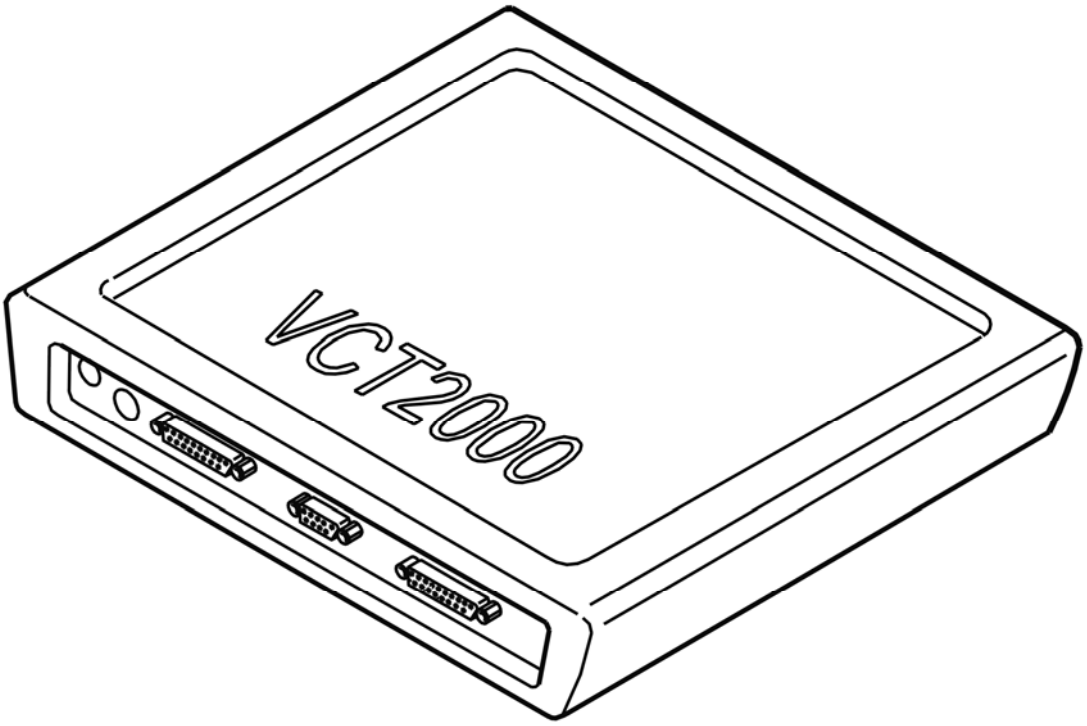

Fig. 215: Identifying VCT2000 Diagnostic Tool Symbol In VIDA
Courtesy of VOLVO CARS CORPORATION

- **Continue**

Refer to **CALIBRATING THE CLIMATE CONTROL MODULE (CCM)**

CALIBRATING THE CLIMATE CONTROL MODULE (CCM)

CAUTION: When activating this function, calibration of the Climate Control Module (CCM) starts. After carrying out calibration read off of the diagnostic trouble codes (DTCs) starts. To ensure that diagnostics for the Climate Control Module (CCM) have been carried out, delay for 30 seconds before reading out diagnostic trouble codes (DTCs) after calibration.

NOTE: Climate Control Module (CCM) and damper motors can be affected by the temperature. The vehicle should have normal room temperature when

performing this service.

Fig. 216: Checking Traffic Load On CAN Cables
Courtesy of VOLVO CARS CORPORATION

Carry out calibration as follows:

- Ignition on.
- Click on the VCT2000 symbol. Wait until calibration has been carried out and diagnostic trouble codes (DTCs) read out.
- Ignition off.

This function controls the components that communicate with the Climate Control Module (CCM) via LIN bus 1 and LIN bus 2. In the event of a fault in any of the LIN buses, diagnostic trouble codes (DTCs) CCM-0070 to CCM-0071 will be stored depending on the fault. These diagnostic trouble codes (DTCs) can only be stored in conjunction with this diagnostic function.

If any of these diagnostic trouble codes (DTCs) recur, recalibrate to check if the problem was overcome. If the diagnostic trouble code (DTC) recurs, fault-trace the relevant diagnostic trouble code (DTC).

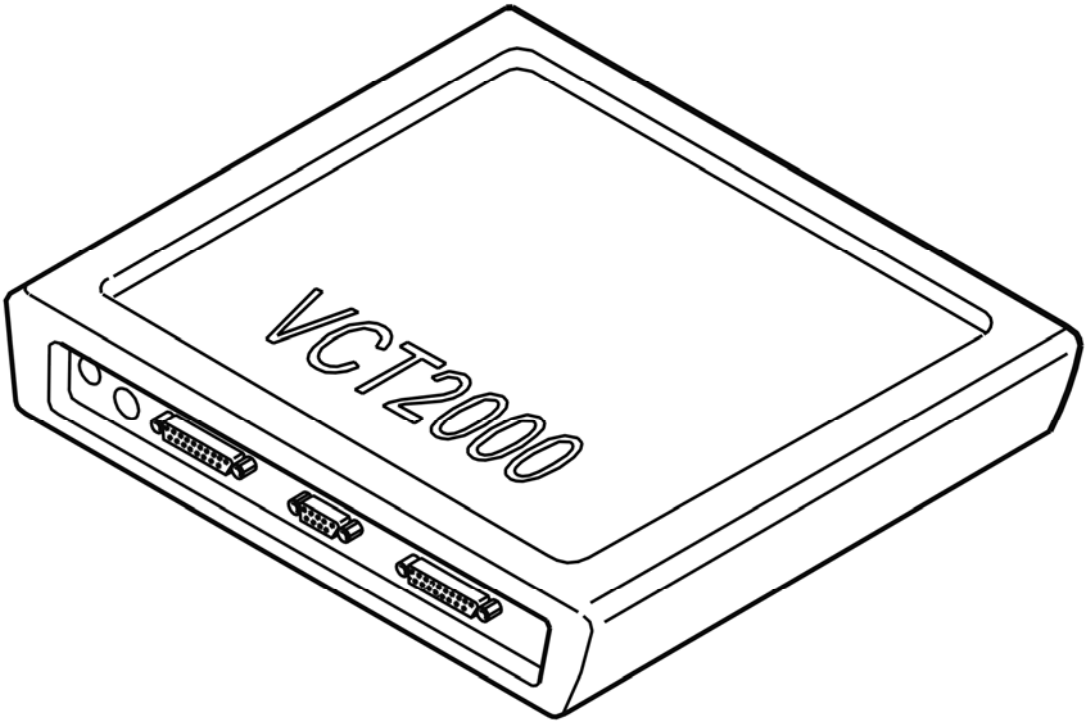

Fig. 217: Identifying VCT2000 Diagnostic Tool Symbol In VIDA
Courtesy of VOLVO CARS CORPORATION

- **Continue**

  Refer to **VERIFICATION**

VERIFICATION

HINT: After carrying out the repair, check that the fault has been remedied.

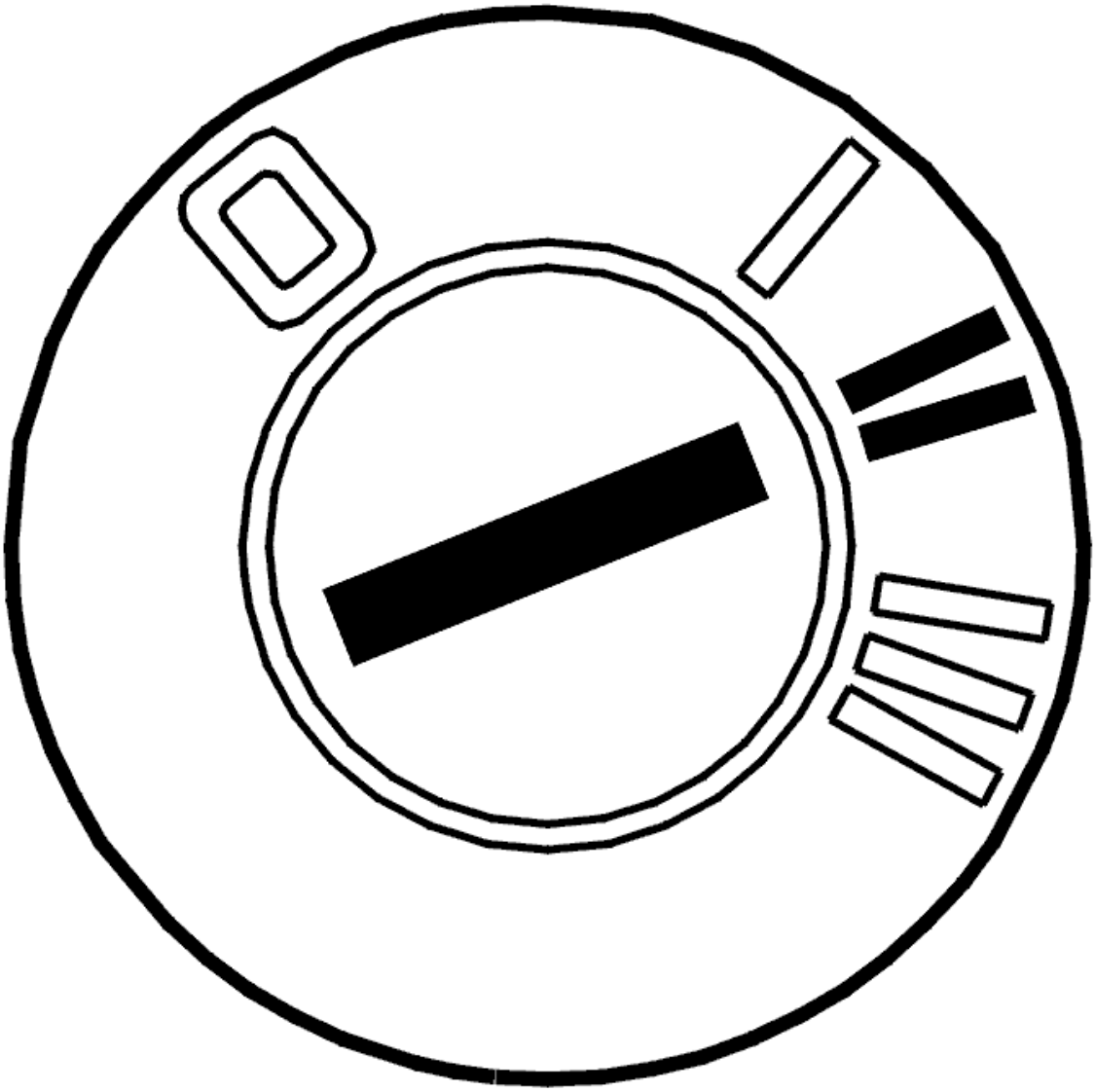

Fig. 218: Identifying Ignition ON
Courtesy of VOLVO CARS CORPORATION

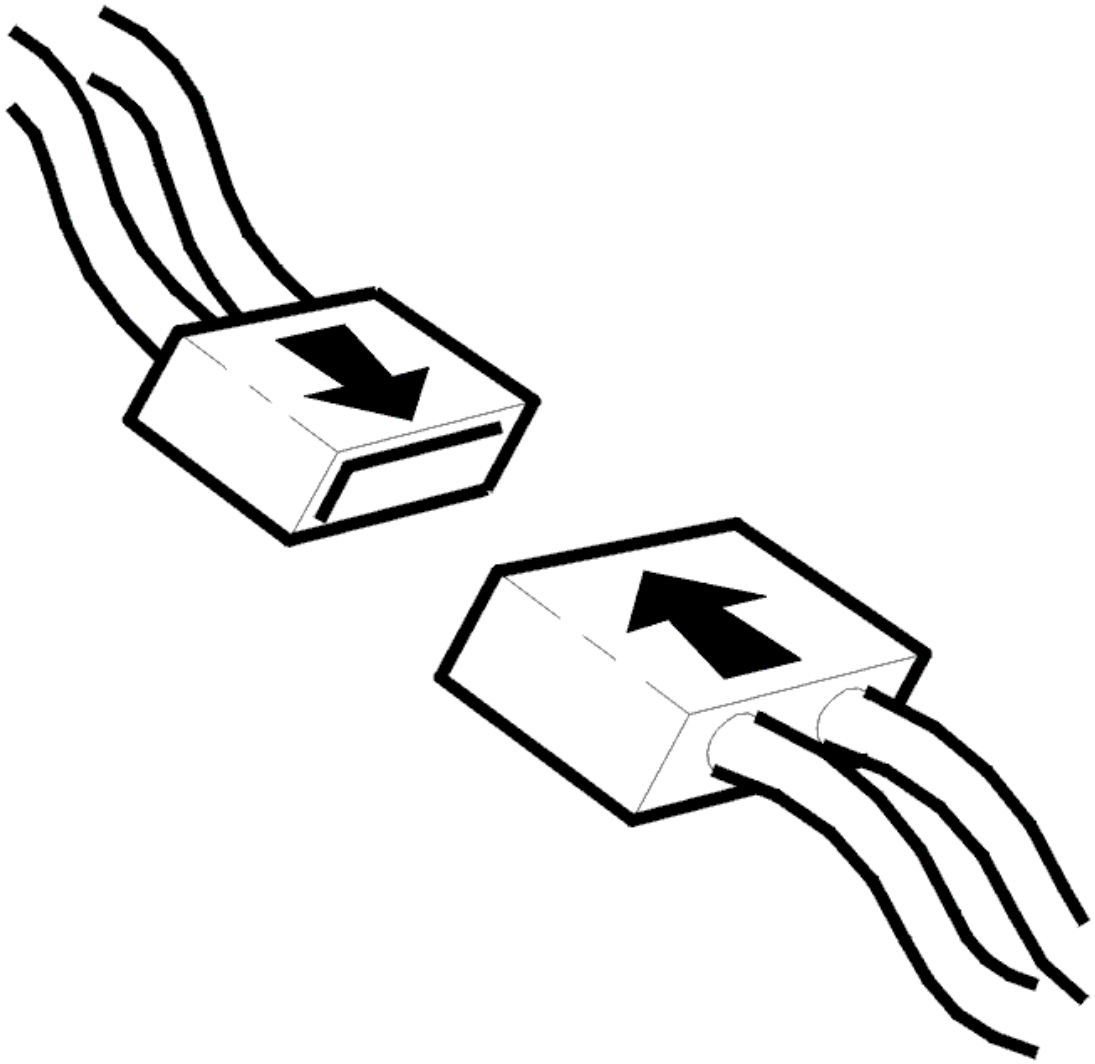

Fig. 219: Connecting Connector
Courtesy of VOLVO CARS CORPORATION

- Ignition off
- Reinstall the connectors, components etc.
- Ignition on.

  Check that the relevant diagnostic trouble code (DTC) has switched status from permanent to intermittent fault.

  Check also that diagnostic trouble code (DTC) CCM-0070, CCM-0071 CCM-0072 or CCM-0073 has not been stored during identification of the damper motors.

  These diagnostic trouble codes (DTCs) can only be stored when identifying damper motors. They mean that the identification has failed for some reason.

Remedy by correctly identifying the damper motor. Fault-trace according to the relevant information.

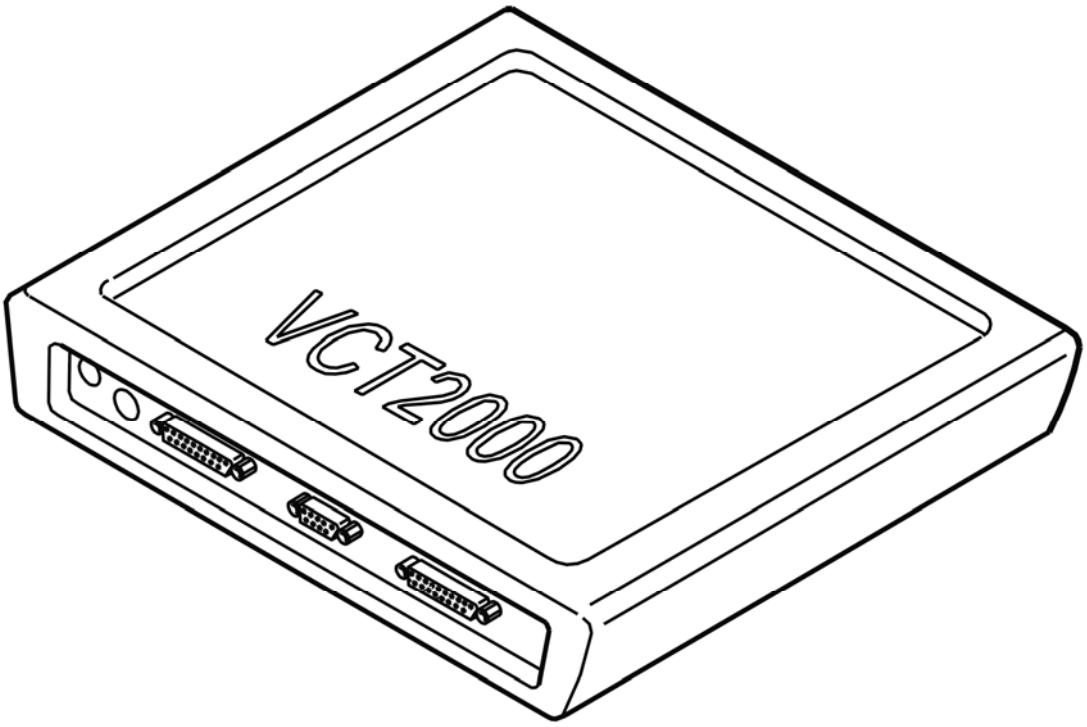

Fig. 220: Identifying VCT2000 Diagnostic Tool Symbol In VIDA
Courtesy of VOLVO CARS CORPORATION

Has the status of the diagnostic trouble code (DTC) changed?

- **YES**

  VERIFIED: Troubleshooting has been completed.

- **NO**

  Refer to **INFORMATION**

INFORMATION

FAULT-TRACING INFORMATION

The fault should have been detected and remedied. As this is not the case fault-tracing has failed.

Exit fault-tracing for this diagnostic trouble code (DTC) or make another attempt.

CCM-0073: CONFIGURATION FAULT. CALIBRATION NOT DONE (2005-

2012)

DIAGNOSTIC TROUBLE CODE (DTC) INFORMATION CCM-0073

Condition

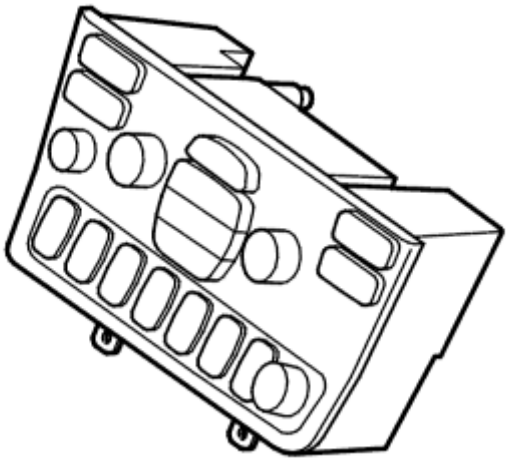

Fig. 221: Identifying Digital Climate Controls Faceplate
Courtesy of VOLVO CARS CORPORATION

If the climate control module (CCM) detects that the calibration has not been performed correctly then the diagnostic trouble code (DTC) is generated.

The diagnostic trouble code (DTC) can be diagnosed at ignition position l and ll.

The diagnostic trouble code (DTC) can only be diagnosed in conjunction with activation of a diagnostic function.

Substitute Value

- None.

Possible Source

- Automatic calibration has failed.
- Auto calibration has not been carried out.

Fault symptom[s]

- Mist on rear window and door mirrors
- Front seat heating does not operate
- No function on air distribution knob
- Air flow problem

- Temperature control/Uneven temperature

CALIBRATION NOT DONE

CALIBRATING THE CLIMATE CONTROL MODULE (CCM)

Fig. 222: Checking Traffic Load On CAN Cables
Courtesy of VOLVO CARS CORPORATION

The climate control module (CCM) has detected that the calibration has not been performed correctly. Remedy by making a new attempt to calibrate the climate control system.

CAUTION: When activating this function, calibration of the Climate Control Module (CCM) starts. After carrying out calibration read off of the diagnostic trouble codes (DTCs) starts. To ensure that diagnostics for the Climate Control Module (CCM) have been carried out, delay for 30 seconds before reading out diagnostic trouble codes (DTCs) after calibration.

Carry out calibration as follows:

- Ignition on.
- Click on the VCT2000 symbol. Wait until calibration has been carried out and diagnostic trouble codes (DTCs) read out.
- Ignition off.

This function controls the components that communicate with the Climate Control Module (CCM) via LIN bus 1 and LIN bus 2. In the event of a fault in any of the LIN buses, diagnostic trouble codes (DTCs) CCM-0070 to CCM-0071 will be stored depending on the fault. These diagnostic trouble codes (DTCs) can only be stored in conjunction with this diagnostic function.

If any of these diagnostic trouble codes (DTCs) recur, recalibrate to check if the problem was overcome. If the diagnostic trouble code (DTC) recurs, fault-trace the relevant diagnostic trouble code (DTC).

Fig. 223: Identifying VCT2000 Diagnostic Tool Symbol In VIDA
Courtesy of VOLVO CARS CORPORATION

CCM-0074: DAMPER MOTOR, DEFROSTER INTERNAL FAULT (2005-2012)

DIAGNOSTIC TROUBLE CODE (DTC) INFORMATION CCM-0074

Condition

The climate control module (CCM) communicates with the damper motor module (DMM) defroster via the LIN bus 2.

The diagnostic trouble code (DTC) is stored if the control module detects that:

- Damper motor module (DMM) defroster does not go to desired position.

Substitute Value

- None.

Possible Source

- Internal fault in Damper motor module (DMM) defroster.

Fault symptom[s]

- Defog/defrost/Windshield defog/defrost/Slow to clear/uneven clearing
- Defog/defrost/Windshield defog/defrost/Does not work

CCM-0074: DAMPER MOTOR, DEFROSTER INTERNAL FAULT (L. H. D; 2005-2012)

FAULT-TRACING

FAULT-TRACING INFORMATION

Use the following information and general checks during fault-tracing.

NOTE: Check that the fuses are intact. For locations, see the instruction manual, cover for fuse box, fuse ratings or similar.

1. Check, if possible, relevant functions in the vehicle using buttons/controls/test drives to determine the status of the fault.

   NOTE: If the vehicle does not show any of the given symptoms in the diagnostic trouble code information (DTC), this may mean that the fault is intermittent or that the control module is not detecting the fault at this moment.

2. Use the diagnostic trouble code's **frozen values** , **status identifiers** and **counter** to determine the

operating conditions when the fault was detected, the fault's current status and any degree of intermittence of the fault.

3. Check and fault-trace according to **the fault causes** that are specified in the **diagnostic trouble code (DTC) information** .
4. Use **VIDA (Volvo Scan Tool) Vehicle communication** . Read off the parameters, activate components and functions, carry out quick tests and checking routines for the diagnostic trouble codes to identify the fault.
5. Check relevant components according to **Component specifications** .
6. Check relevant signals using **wiring diagrams** , **signal specification** and **breakout box** .

Remedy as necessary.

Other information

- see **SIGNAL SPECIFICATION**
- see **COMPONENT RESISTANCE VALUES**
- see **DESCRIPTION OF PARAMETERS**
- see **DESCRIPTION OF FROZEN VALUES**
- see **CLIMATE CONTROL, LOCATION OF COMPONENTS**

Repair

- see **CLIMATE CONTROL MODULE (CCM), REPLACING**
- see **DAMPER MOTOR MODULE (DMM) DEFROSTER, REPLACING**
- see **DAMPER MOTOR MODULE (DMM) RECIRCULATION, REPLACING**
- see **DAMPER MOTOR MODULE (DMM) TEMPERATURE, REPLACING**
- see **DAMPER MOTOR MODULE (DMM) AIR DISTRIBUTION, REPLACING**
- see **AIR QUALITY SENSOR**
- see **SEAT HEATING MODULE (SHM), REPLACING**

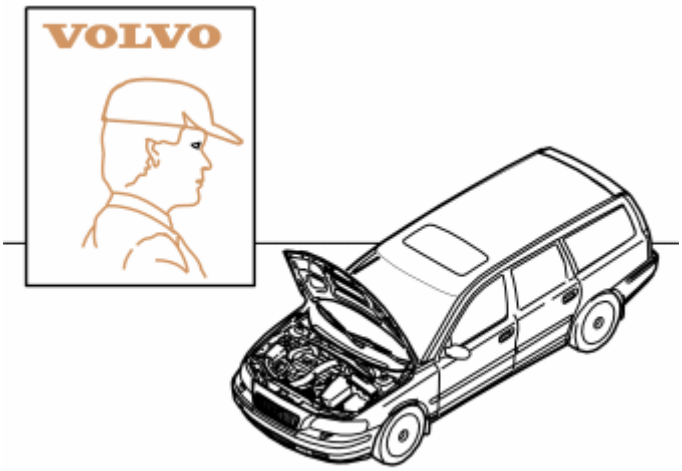

Fig. 224: Identifying VOLVO Certified Service Personnel
Courtesy of VOLVO CARS CORPORATION

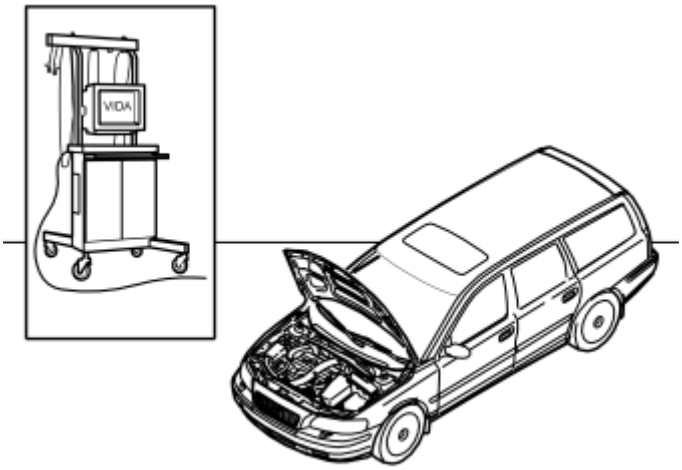

Fig. 225: Identifying VIDA
Courtesy of VOLVO CARS CORPORATION

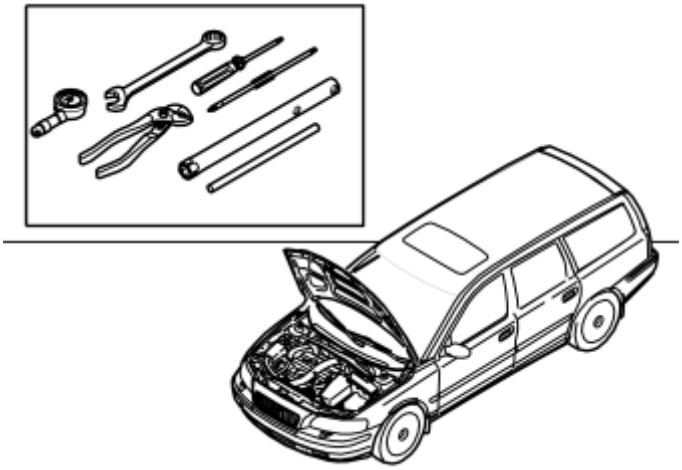

Fig. 226: Identifying Relevant Tools
Courtesy of VOLVO CARS CORPORATION

- **Continue**

  Refer to **INFORMATION**

INFORMATION

FAULT-TRACING INFORMATION

In case of this defect, troubleshooting is not followed by verification.

The information can be displayed again or the fault-tracing for this fault can be interrupted.

FAULT-TRACING

FAULT-TRACING INFORMATION

Use the following information and general checks during fault-tracing.

NOTE: Check that the fuses are intact. For locations, see the instruction manual, cover for fuse box, fuse ratings or similar.

1. Check, if possible, relevant functions in the vehicle using buttons/controls/test drives to determine the status of the fault.

   NOTE: If the vehicle does not show any of the given symptoms in the diagnostic trouble code information (DTC), this may mean that the fault is intermittent or that the control module is not detecting the fault at this moment.

2. Use the diagnostic trouble code's **frozen values** , **status identifiers** and **counter** to determine the operating conditions when the fault was detected, the fault's current status and any degree of intermittence of the fault.
3. Check and fault-trace according to **the fault causes** that are specified in the **diagnostic trouble code (DTC) information** .
4. Use **VIDA (Volvo Scan Tool) Vehicle communication** . Read off the parameters, activate components and functions, carry out quick tests and checking routines for the diagnostic trouble codes to identify the fault.
5. Check relevant components according to **Component specifications** .
6. Check relevant signals using **wiring diagrams** , **signal specification** and **breakout box** .

Remedy as necessary.

Other information

- see **SIGNAL SPECIFICATION**
- see **COMPONENT RESISTANCE VALUES**
- see **DESCRIPTION OF PARAMETERS**
- see **DESCRIPTION OF FROZEN VALUES**
- see **CLIMATE CONTROL, LOCATION OF COMPONENTS**

Repair

- see **CLIMATE CONTROL MODULE (CCM), REPLACING**
- see **DAMPER MOTOR MODULE (DMM) DEFROSTER, REPLACING**
- see **DAMPER MOTOR MODULE (DMM) RECIRCULATION, REPLACING**

- see **DAMPER MOTOR MODULE (DMM) TEMPERATURE, REPLACING**
- see **DAMPER MOTOR MODULE (DMM) AIR DISTRIBUTION, REPLACING**
- see **AIR QUALITY SENSOR**
- see **SEAT HEATING MODULE (SHM), REPLACING**

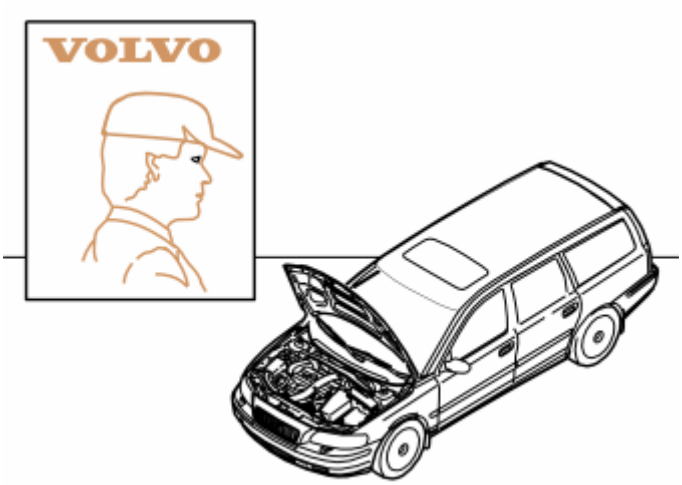

Fig. 227: Identifying VOLVO Certified Service Personnel
Courtesy of VOLVO CARS CORPORATION

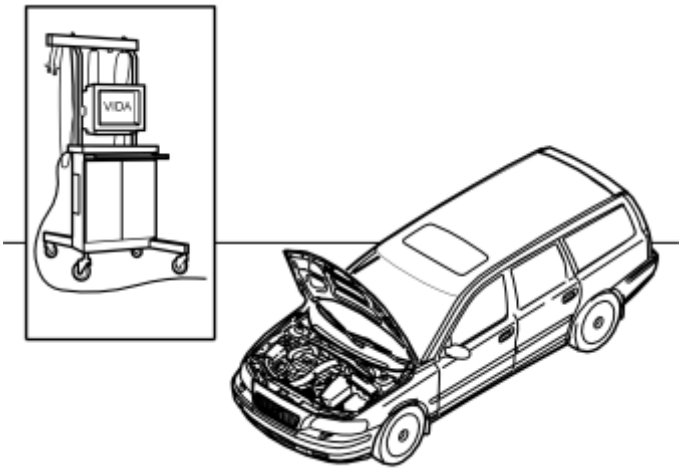

Fig. 228: Identifying VIDA
Courtesy of VOLVO CARS CORPORATION

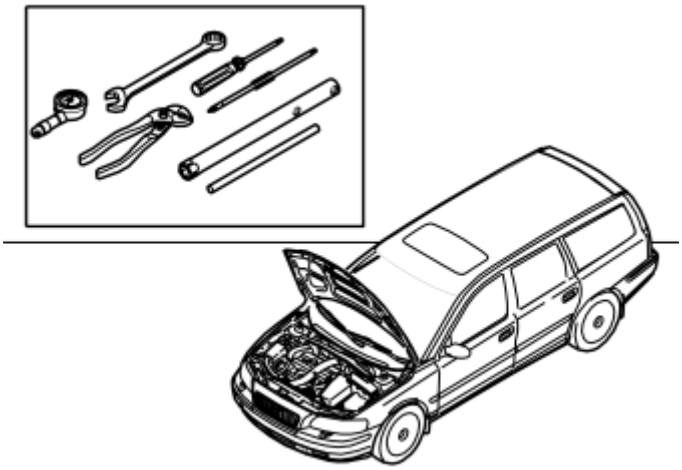

Fig. 229: Identifying Relevant Tools
Courtesy of VOLVO CARS CORPORATION

- **Continue**

  see **INFORMATION**

INFORMATION

- FAULT FOUND

  OKAY: Troubleshooting has been completed.

- NEW TRY

  see **FAULT-TRACING INFORMATION**

DESCRIPTION OF FROZEN VALUES

EXPLANATION

Not all the parameters that are described need to be implemented in the control module. These vary from system to system.

The number of parameters can also vary between diagnostic trouble codes (DTCs).

Frozen values are parameter values that are stored when a diagnostic trouble code (DTC) is stored.

ENGINE RUNNING, STATUS

The status displays whether the engine was running when the diagnostic trouble code (DTC) was stored.

No = the engine was not running

Yes = the engine was running

PASSENGER COMPARTMENT TEMPERATURE, VALUE

Measurement range: -60-192 °C.

The climate control module (CCM) obtains the value on the control area network (CAN).

OUTSIDE TEMPERATURE, VALUE

Measurement range: -128-124 °C.

The climate control module (CCM) obtains the value on the control area network (CAN).

BATTERY VOLTAGE, CENTRAL ELECTRONIC MODULE (CEM), VALUE

Measurement range: 5-30 V.

Normal value when the generator (GEN) is charging: 13.0-14.5 V.

The parameter indicates the supply voltage to the central electronic module (CEM) when the diagnostic trouble code (DTC) was stored.

The climate control module (CCM) obtains the value on the control area network (CAN).

DISTANCE, VALUE

Measurement range: 0-1, 000, 000 km.

The parameter indicates the mileage when the diagnostic trouble code (DTC) was stored.

The climate control module (CCM) obtains the value on the control area network (CAN).

INCORRECT CAR CONFIGURATION PARAMETER, VALUE

The parameter indicates which parameter in the car configuration data is incorrect.

The climate control module (CCM) obtains the value from the central electronic module (CEM) on the Control area network (CAN).

EVAPORATOR TEMPERATURE, VALUE

Measurement range -100- 100 °C.

If the air conditioning (A/C) has not been activated and the engine has cooled, the value must correspond to the ambient temperature.

The climate control module (CCM) obtains the value from the evaporator temperature sensor.

PASSENGER COMPARTMENT TEMPERATURE SENSOR

Measurement range -40- 90 °C.

The value must correspond to the ambient temperature.

The parameter indicates the value from the passenger compartment temperature sensor.

STATUS OF THE KEYPAD

The parameter indicates whether the climate control module (CCM) detects that buttons on the keypad were pressed or not when the diagnostic trouble code (DTC) was stored.

Not pressed = the button is not pressed in

Pressed = the button is pressed in

STATUS OF LEDS

The parameter indicates whether the climate control module (CCM) recognizes that the LEDs for buttons on the keypad should be lit or not when the diagnostic trouble code (DTC) was stored.

Not lit = the LED must not be lit

Lit = the LED must be lit

STATUS, SEAT HEATER RIGHT FRONT

The parameter indicates the status of the seat heating module (SHM) right front when the diagnostic trouble code (DTC) was stored.

The climate control module (CCM) receives the information via LIN communication.

OK, heating off = seat heating module (SHM) functioning, heating off.

OK, heating on = seat heating module (SHM) functioning, heating on.

Incorrect status 1 = incorrect heater pad.

Incorrect status 2 = incorrect temperature sensor.

Incorrect status 3 = seat heating module (SHM) overheated.

Incorrect status 4 = communication fault.

Incorrect status 5 = other faults.

Incorrect status 6 = seat heating module (SHM) internal fault.

STATUS, SEAT HEATER LEFT FRONT

The parameter indicates the status of the seat heating module (SHM) left front when the diagnostic trouble code (DTC) was stored.

The climate control module (CCM) receives the information via LIN communication.

OK, heating off = seat heating module (SHM) functioning, heating off.

OK, heating on = seat heating module (SHM) functioning, heating on.

Incorrect status 1 = incorrect heater pad.

Incorrect status 2 = incorrect temperature sensor.

Incorrect status 3 = seat heating module (SHM) overheated.

Incorrect status 4 = communication fault.

Incorrect status 5 = other faults.

Incorrect status 6 = seat heating module (SHM) internal fault.

DESIRED TEMPERATURE LEFT SEAT HEATER, VALUE

Measurement range 0-60 °C.

The parameter indicates the value of the desired seat temperature that the climate control module (CCM) transmits to the seat heating module (SHM).

The climate control module (CCM) calculates the value based on activation of the seat heater button.

DESIRED TEMPERATURE RIGHT SEAT HEATER, VALUE

Measurement range 0-60 °C.

The parameter indicates the value of the desired seat temperature that the climate control module (CCM) transmits to the seat heating module (SHM).

The climate control module (CCM) calculates the value based on activation of the seat heater button.

AQS SIGNAL, STATUS

The parameter displays the signal from the air quality sensor (AQS) when the diagnostic trouble code (DTC) was stored. The climate control module (CCM) uses the signal to regulate the damper motor module (DMM) recirculation.

Off = no increase or reduction in pollutant level.

Level 1 = slow increase in pollutant level.

Level 2 = medium increase in pollutant level.

Level 3 = rapid increase in pollutant level.

AIR-QUALITY: SENSOR (AQS), STATUS

The parameter displays the status of the air quality sensor (AQS) when the diagnostic trouble code (DTC) was stored.

Warm-up phase = the sensor is being heated by the heater element.

Faulty heater pad.

Faulty sensor.

Calibration commenced.

FAULT INFORMATION, STATUS

The parameter indicates the status of the damper motor module (DMM) when the diagnostic trouble code (DTC) was stored.

The climate control module (CCM) receives the information via LIN communication.

Faulty status 1 = faulty Hall sensor in the damper motor.

Faulty status 2 = fault when storing the position of the damper motor.

Incorrect status 3 = unexpected stop when operating the damper motor.

Faulty status 4 = over voltage or overheating in the damper motor.

Faulty status 5 = communication fault in the LIN bus.

Faulty status 6 = hardware fault in the driver circuit.

Faulty status 7 = hardware fault in the driver circuit.

Faulty status 8 = voltage drop in the damper motor.

CONTROL MODULES ON LIN BUS 1, STATUS

The parameter indicates which control modules the climate control module (CCM) detects as being installed on LIN bus 1.

Not installed = the climate control module (CCM) cannot communicate with the control module.

Installed = the climate control module (CCM) is able to communicate with the control module.

CONTROL MODULES ON LIN BUS 2, STATUS

The parameter indicates which control modules the climate control module (CCM) detects as being installed on LIN bus 2.

Not installed = the climate control module (CCM) cannot communicate with the control module.

Installed = the climate control module (CCM) is able to communicate with the control module.

CONFIGURED CONTROL MODULES FOR LIN BUS 1, STATUS

The parameter indicates which control modules are configured to be present on LIN bus 1.

Should not exist = the control module must not be on LIN bus 1.

Should exist = the control module must be on LIN bus 1.

CONFIGURED CONTROL MODULES FOR LIN BUS 2, STATUS

The parameter indicates which control modules are configured to be present on LIN bus 2.

Should not exist = the control module must not be on LIN bus 2.

Should exist = the control module must be on LIN bus 2.

IDENTIFICATION OF THE DAMPER MOTOR MODULE (DMM), LIN BUS 1, STATUS

The parameter indicates the status after identification of the damper motors.

Temporary ID not OK = the climate control module (CCM) has been unable to allocate the damper motors a temporary ID during identification.

Defroster not OK = failed identification of the damper motor module (DMM) defroster.

Recirculation not OK = failed identification of the damper motor module (DMM) recirculation.

Temperature left not OK = failed identification of the damper motor module (DMM) temperature left.

Temperature right not OK = failed identification of the damper motor module (DMM) temperature right.

Air distribution not OK = failed identification of the damper motor module (DMM) air distribution.

OK = identification ok.

IDENTIFICATION OF THE DAMPER MOTOR MODULE (DMM), LIN BUS 2

The parameter indicates the status after identification of the damper motors.

Temporary ID not OK = the climate control module (CCM) has been unable to allocate the damper motors a temporary ID during identification.

Defroster not OK = failed identification of the damper motor module (DMM) defroster.

Recirculation not OK = failed identification of the damper motor module (DMM) recirculation.

Temperature left not OK = failed identification of the damper motor module (DMM) temperature left.

Temperature right not OK = failed identification of the damper motor module (DMM) temperature right.

Air distribution not OK = failed identification of the damper motor module (DMM) air distribution.

OK = identification ok.

POWER SUPPLY, VALUE

The parameter indicates the power supply to the climate control module (CCM) when the diagnostic trouble code (DTC) was stored.

Measurement range 0-50 V.

Normal value approximately 12 V (battery voltage).

CCM-0075: DAMPER MOTOR INTERNAL FAULT (2005-2012)

DIAGNOSTIC TROUBLE CODE (DTC) INFORMATION CCM-0075

Condition

Climate control module (CCM) communicates with Damper motor module (DMM) recirculation and via LIN-bus 2.

The diagnostic trouble code (DTC) is stored if the control module detects that:

- Damper motor module (DMM) recirculation does not go to desired position.

Substitute Value

- None.

Possible Source

- Internal fault in the Damper motor module (DMM) recirculation.

Fault symptom[s]

- Climate control system/Unusual odor

CCM-0076: DAMPER MOTOR, TEMPERATURE LEFT INTERNAL FAULT (2005-2012)

DIAGNOSTIC TROUBLE CODE (DTC) INFORMATION CCM-0076

Condition

Climate control module (CCM) communicates with Damper motor module (DMM) temperature left via LIN-bus 1.

The diagnostic trouble code (DTC) is stored if the control module detects that:

- Damper motor module (DMM) temperature left does not go to desired value.

Substitute Value

- None.

Possible Source

- Internal fault in Damper motor module (DMM) temperature left.

Fault symptom[s]

- Temperature control/Uneven temperature

CCM-0077: DAMPER MOTOR, TEMPERATURE RIGHT INTERNAL FAULT (2005-2012)

DIAGNOSTIC TROUBLE CODE (DTC) INFORMATION CCM-0077

Condition

Climate control module (CCM) communicates with Damper motor module (DMM) temperature right via LIN-bus 2.

The diagnostic trouble code (DTC) is stored if the control module detects that:

- Damper motor module (DMM) temperature right does not go to desired position.

Substitute Value

- None.

Possible Source

- Internal fault in Damper motor module (DMM) temperature right.

Fault symptom[s]

- Temperature control/Uneven temperature

CCM-0078: DAMPER MOTOR DISTRIBUTION INTERNAL FAULT (2005-2012)

DIAGNOSTIC TROUBLE CODE (DTC) INFORMATION CCM-0078

Condition

The climate control module (CCM) communicates with the damper motor module (DMM) air distribution via LIN-bus 1.

The diagnostic trouble code (DTC) is stored if the control module detects that:

- Damper motor module (DMM) air distribution does not go to desired position.

Substitute Value

- None.

Possible Source

- Internal fault in the Damper motor module (DMM) air distribution.

Fault symptom[s]

- Blower fan/Does not work

CCM-0090: LOWER SWITCH. FAULTY ID (2005-2012)

DIAGNOSTIC TROUBLE CODE (DTC) INFORMATION CCM-0090

Condition

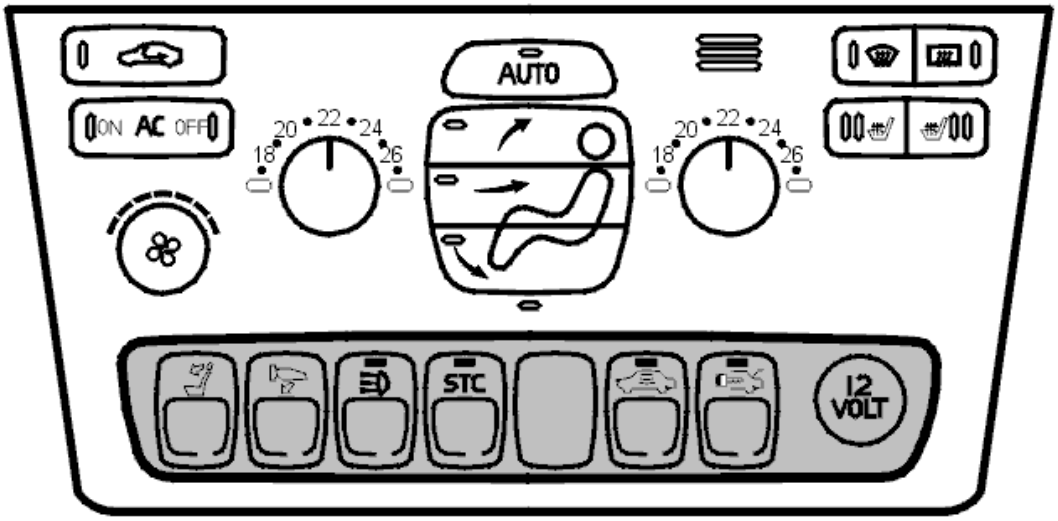

Fig. 230: Identifying Climate Control Module (CCM)
Courtesy of VOLVO CARS CORPORATION

The diagnostic trouble code (DTC) is stored if the climate control module (CCM) registers a non-permissible switch identity compared to the permitted switch identities included in the Car Config File.

The diagnostic trouble code (DTC) can be diagnosed in ignition positions I and II.

Substitute Value

- None.

Possible Source

- Switch replaced with a switch with incorrect identity
- Defective switch
- Fault in the Car Configuration File
- Two or more switches with the same ID.

Fault symptom[s]

- Buttons/control knobs on center console (Climate)/No/reduced/incorrect function

FAULTY ID

CHECKING THE FUNCTION

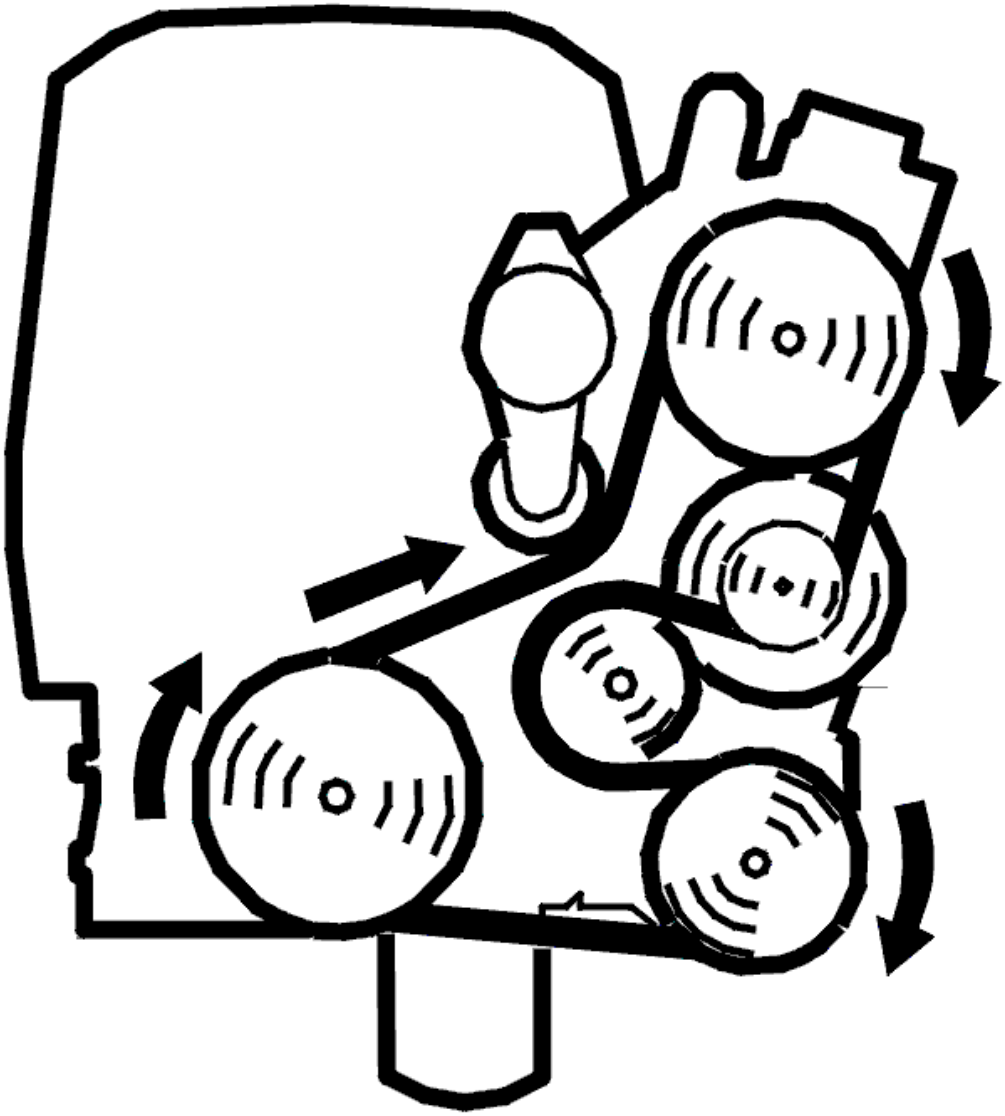

Fig. 231: Belt Routing / Engine Idling - Volvo
Courtesy of VOLVO CARS CORPORATION

- Engine running.

  Check that all the functions can be activated via the lower switch.

  HINT: Where applicable, the LED on the lower switch must be lit when the function is activated.

Are all functions activated?

- **YES**

Refer to **FAULT-TRACING INFORMATION**

- **NO**

  Refer to **CHECKING THE SWITCH IDENTITY**

CHECKING THE SWITCH IDENTITY

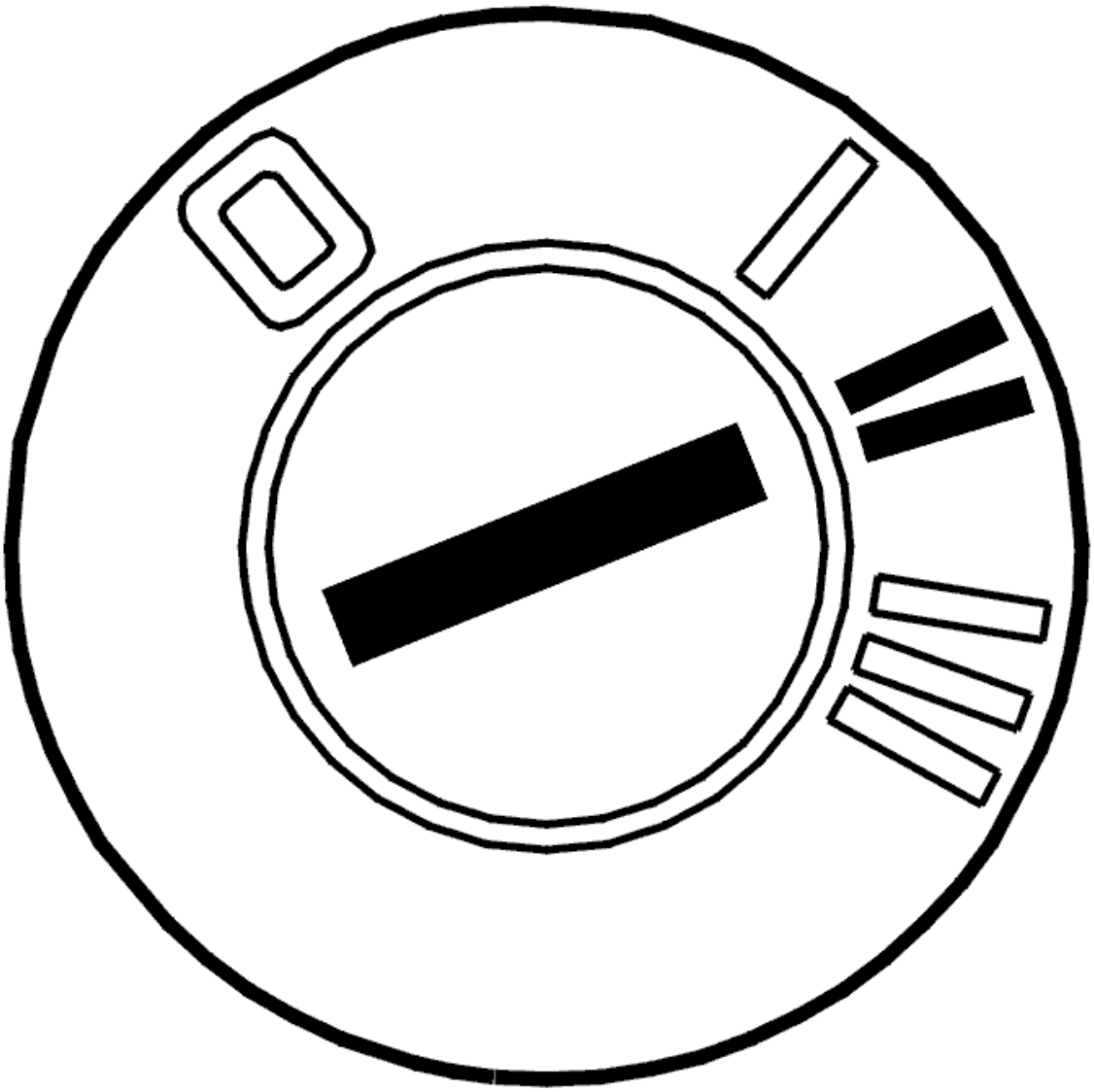

Fig. 232: Identifying Ignition ON
Courtesy of VOLVO CARS CORPORATION

- Ignition on.

NOTE: **The switches can be placed in any position in the climate control assembly (without internal order). The position of the switches must be taken into account when fault-tracing with VCT2000.**

The switch furthest to the left in the climate control assembly corresponds to no. 1 in VCT2000. VCT2000 then follows the numbering in order to the switch furthest to the right, which is designated no. 7.

Read off the identities of the switches. Check that the read off identity corresponds to the switch marking for its position in the dashboard environment panel. If the identity does not correspond to the marking, this indicates a defective switch.

Remedy as necessary.

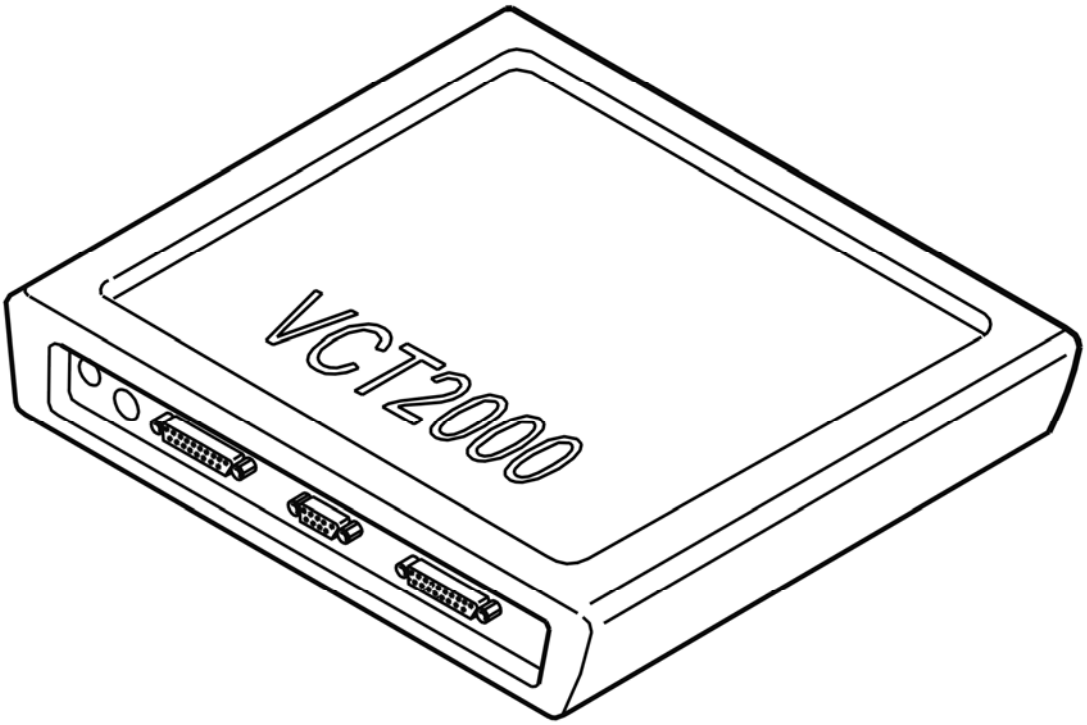

Fig. 233: Identifying VCT2000 Diagnostic Tool Symbol In VIDA
Courtesy of VOLVO CARS CORPORATION

Was a fault detected?

- **YES**

  Refer to **VERIFICATION**

- **NO**

  Refer to **CHECKING THE SWITCH STATUS**

CHECKING THE SWITCH STATUS

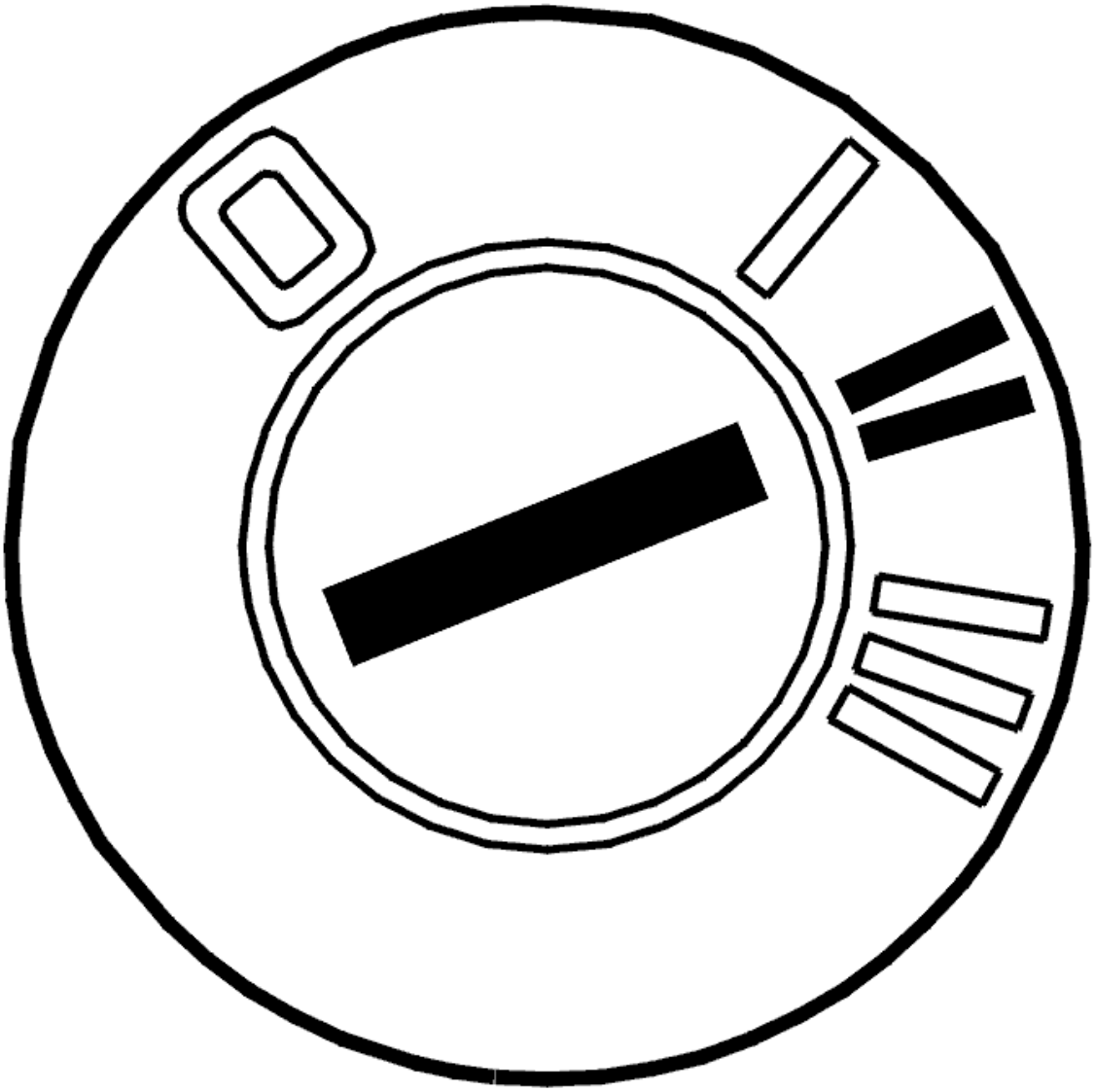

Fig. 234: Identifying Ignition ON
Courtesy of VOLVO CARS CORPORATION

- Ignition on.

NOTE: **The switches can be placed in any position in the climate control assembly (without internal order). The position of the switches must be taken into account when fault-tracing with VCT2000.**

The switch furthest to the left in the climate control assembly corresponds to no. 1 in VCT2000. VCT2000 then follows the numbering in order to the switch furthest to the right, which is designated no. 7.

Read off the status of the switches. Check that the read off status is OK for each switch. If the status is not

OK, this indicates that the function of the switch is not in the Car Configuration.

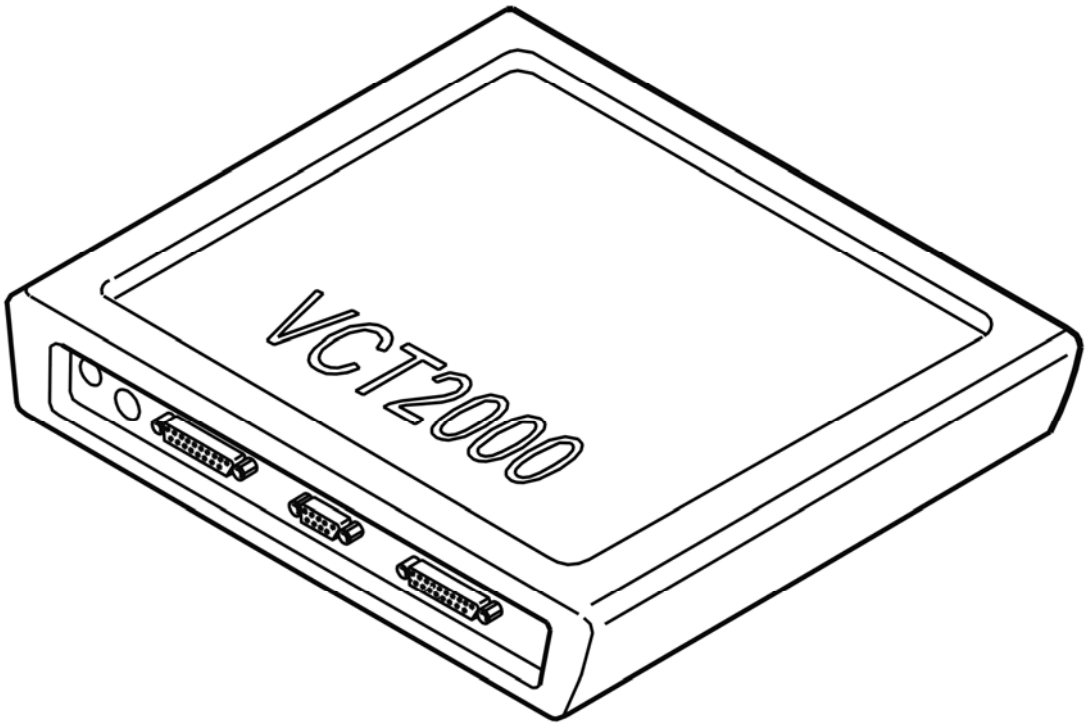

Fig. 235: Identifying VCT2000 Diagnostic Tool Symbol In VIDA
Courtesy of VOLVO CARS CORPORATION

Was a fault detected?

- **YES**

  Refer to **INFORMATION**

- **NO**

  Refer to **INFORMATION**

INFORMATION

The fault is probably because the functionality of the button is not in Car Configuration. This is remedied by ordering and downloading the missing functionality.

- **Continue**

  Refer to **VERIFICATION**

FAULT-TRACING INFORMATION

The fault is probably the result of a damaged, intermittently defective or missing switch. If the fault is intermittent, it has been registered previously but is no longer present.

Intermittent faults may be caused by interference at start up of the control module. Intermittent faults may also be caused by other types of intermittent faults. The fault is evaluated depending on how it occurs.

- **Continue**

  Refer to **INFORMATION**

VERIFICATION

HINT: After carrying out the repair, check that the fault has been remedied.

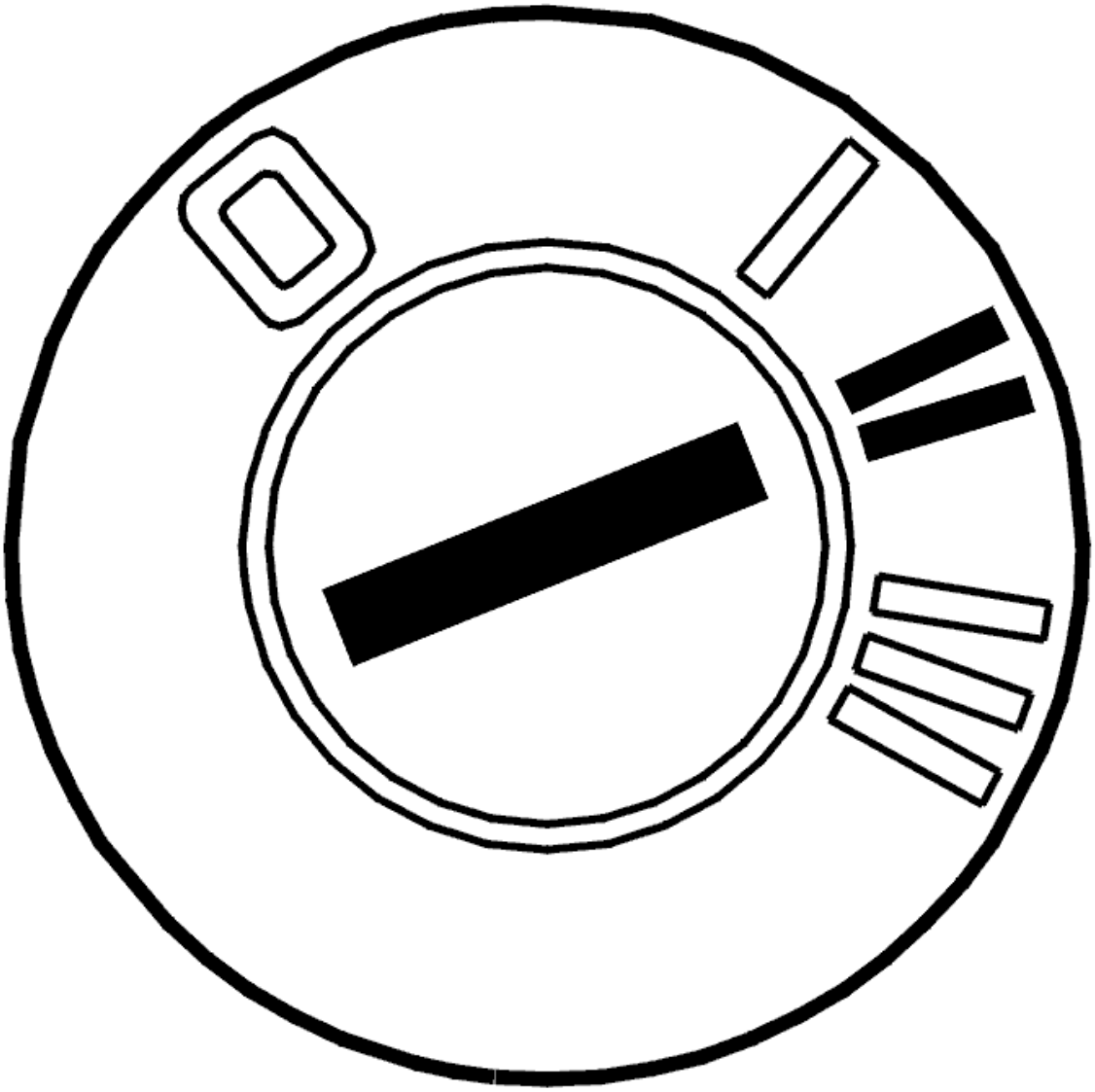

Fig. 236: Identifying Ignition ON
Courtesy of VOLVO CARS CORPORATION

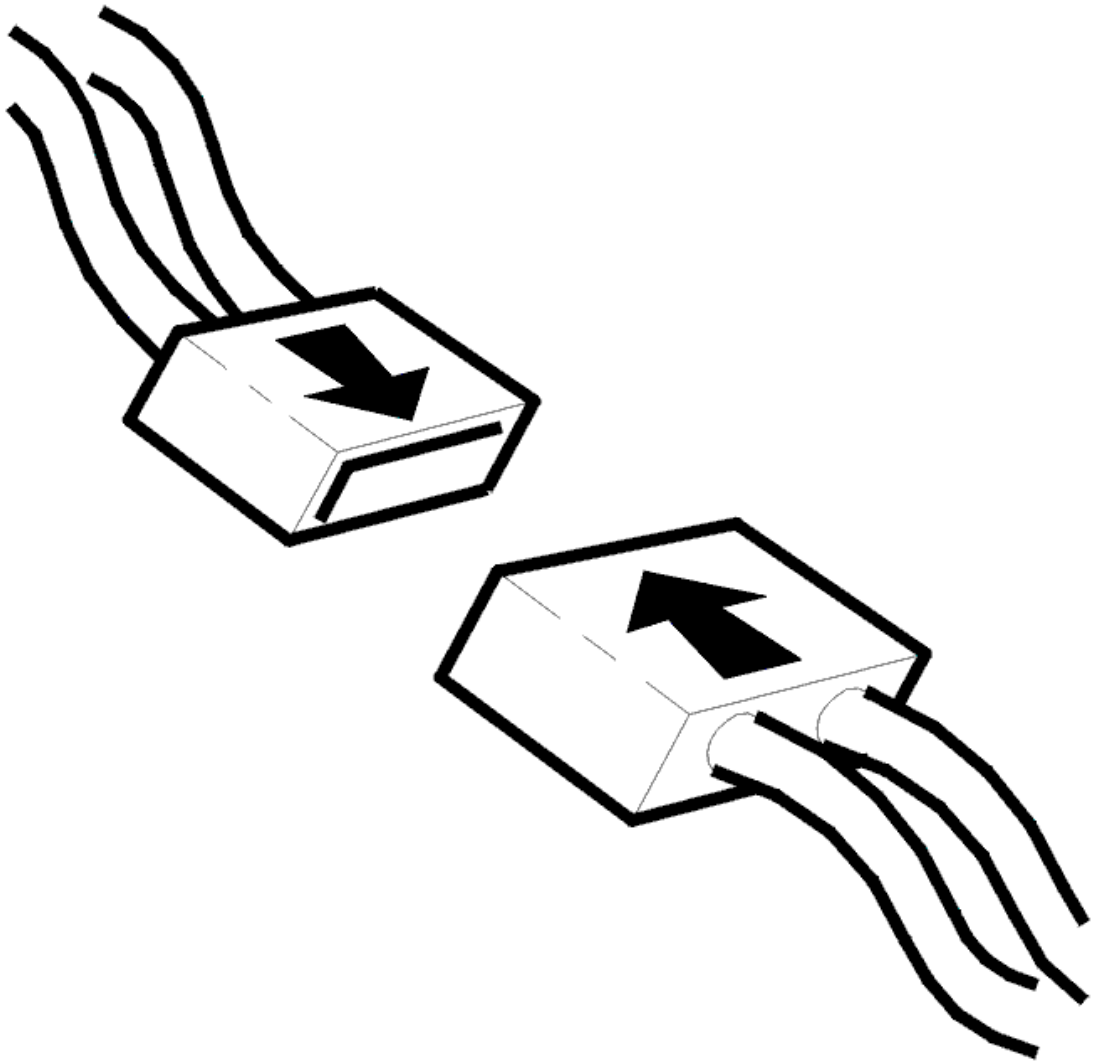

Fig. 237: Connecting Connector
Courtesy of VOLVO CARS CORPORATION

- Ignition off.

NOTE: **Wait at least 1 minute before "Ignition on". This is to allow the climate control module (CCM) to carry out a new diagnostic.**

- Reinstall the connectors, components etc.
- Ignition on
- Read off diagnostic trouble codes (DTCs).

The fault is no longer present if the status of the diagnostic trouble code (DTC) has changed to intermittent.

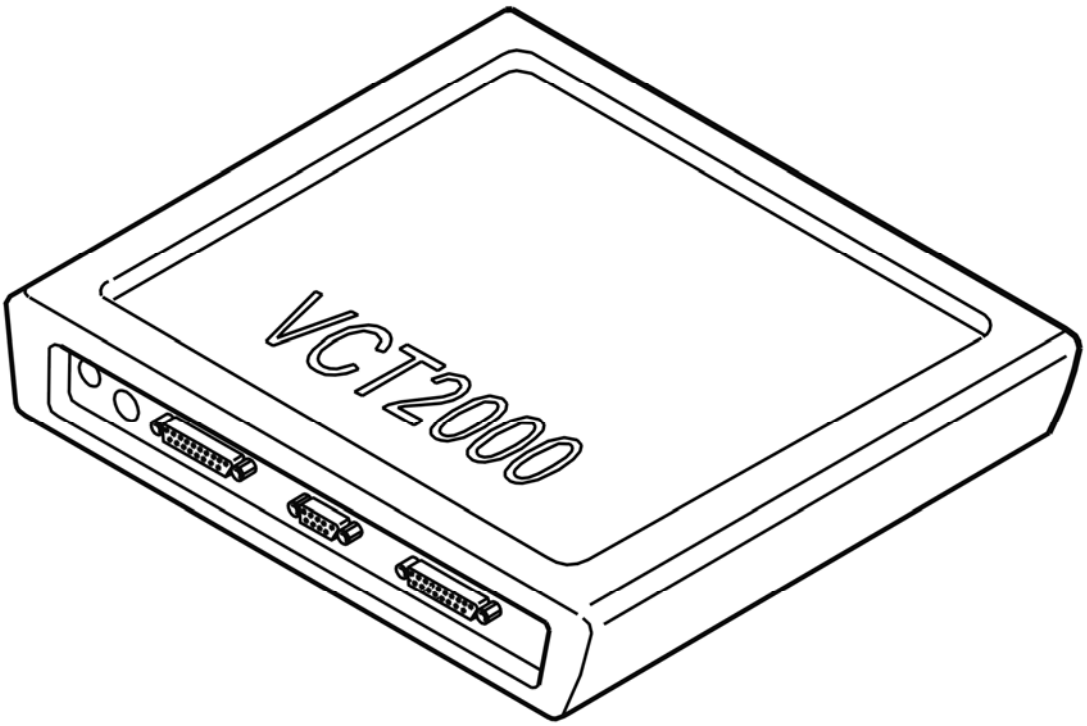

Fig. 238: Identifying VCT2000 Diagnostic Tool Symbol In VIDA
Courtesy of VOLVO CARS CORPORATION

Does the status change?

- **YES**

  VERIFIED: Troubleshooting has been completed.

- **NO**

  Refer to **INFORMATION**

INFORMATION

FAULT-TRACING INFORMATION

The fault should have been detected and remedied. As this is not the case fault-tracing has failed.

Exit fault-tracing for this diagnostic trouble code (DTC) or make another attempt.

INFORMATION

FAULT-TRACING INFORMATION

If the fault is intermittent, do not verify fault-tracing if the fault does not recur.

It is possible to view the information again, or leave fault-tracing for this diagnostic trouble code (DTC).

CCM-0091: LOWER SWITCH. ID MISSING (2005-2012)

DIAGNOSTIC TROUBLE CODE (DTC) INFORMATION CCM-0091

Condition

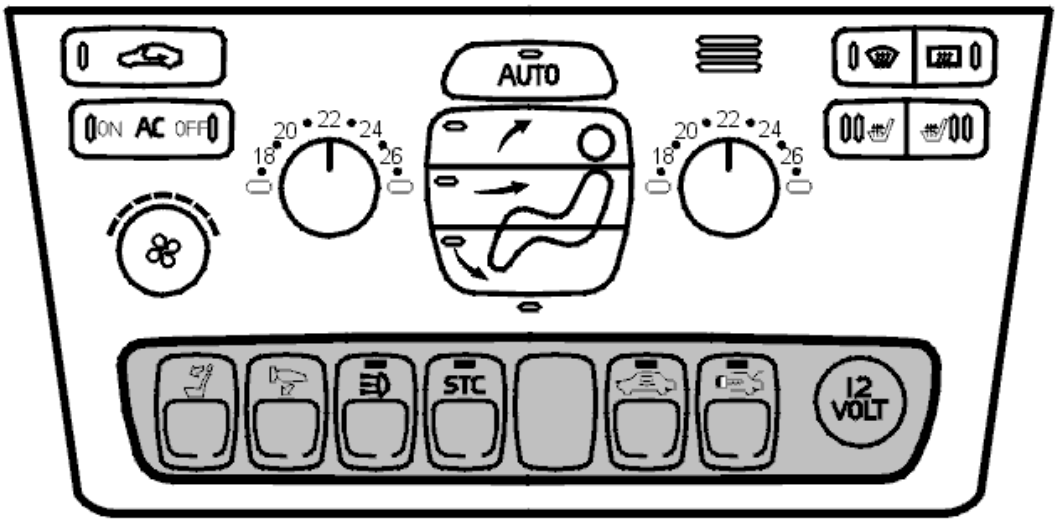

Fig. 239: Identifying Climate Control Module (CCM)
Courtesy of VOLVO CARS CORPORATION

The diagnostic trouble code (DTC) is stored if the climate control module (CCM) registers that the identity of a lower switch is missing compared to the switch identities included in the Car Config File.

The diagnostic trouble code (DTC) can be diagnosed in ignition positions I and II.

Substitute Value

- The climate control module (CCM) assumes different values depending on which switch identity is missing.

Possible Source

- Defective switch
- Switch missing
- Fault in the Car Configuration File.

Fault symptom[s]

- Buttons/control knobs on center console (Climate)/No/reduced/incorrect function

ID MISSING

CHECKING THE FUNCTION

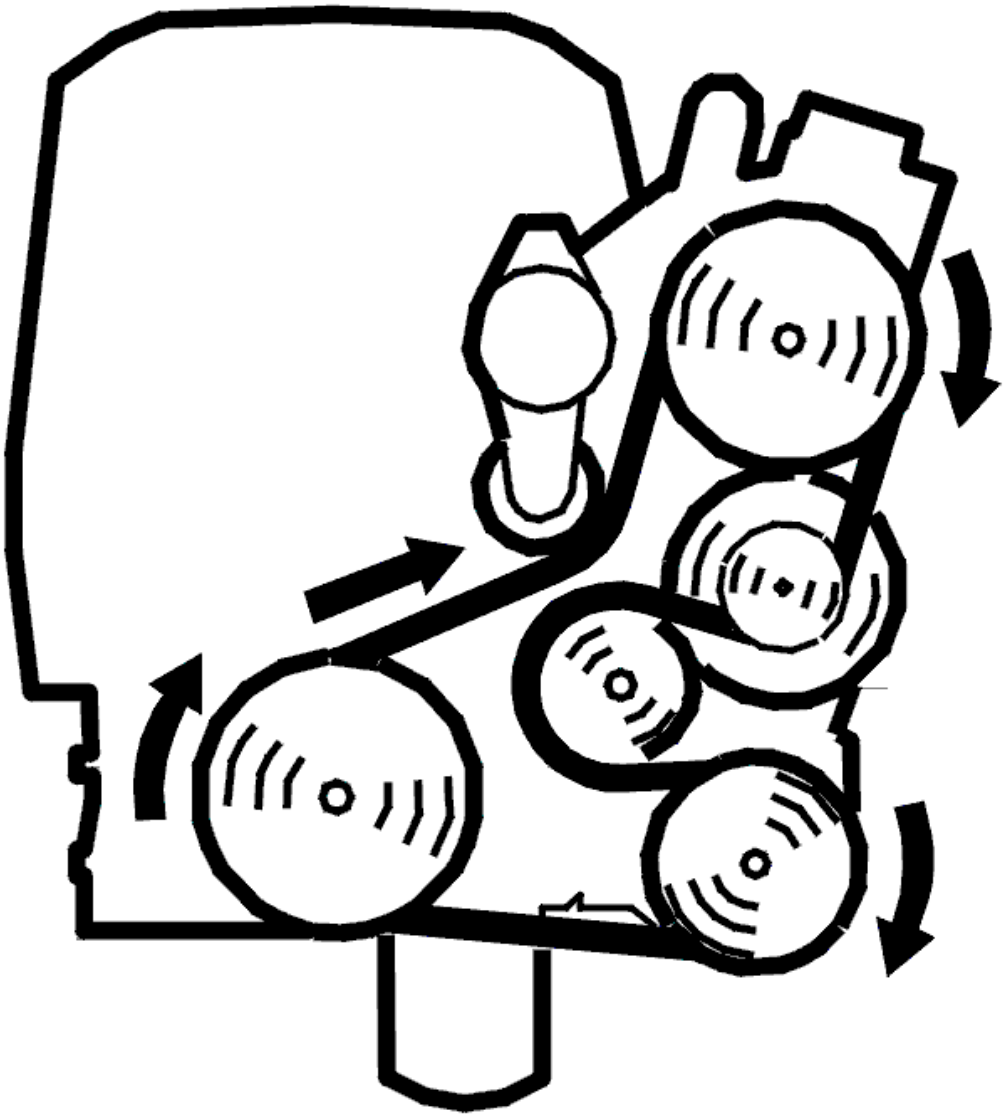

Fig. 240: Belt Routing / Engine Idling - Volvo
Courtesy of VOLVO CARS CORPORATION

- Engine running.

  Check that all the functions can be activated via the lower switch.

  HINT: Where applicable, the LED on the lower switch must be lit when the function is activated.

Are all functions activated?

- **YES**

  Refer to **FAULT-TRACING INFORMATION**

- **NO**

Refer to **CHECKING THE COMPONENT**

CHECKING THE COMPONENT

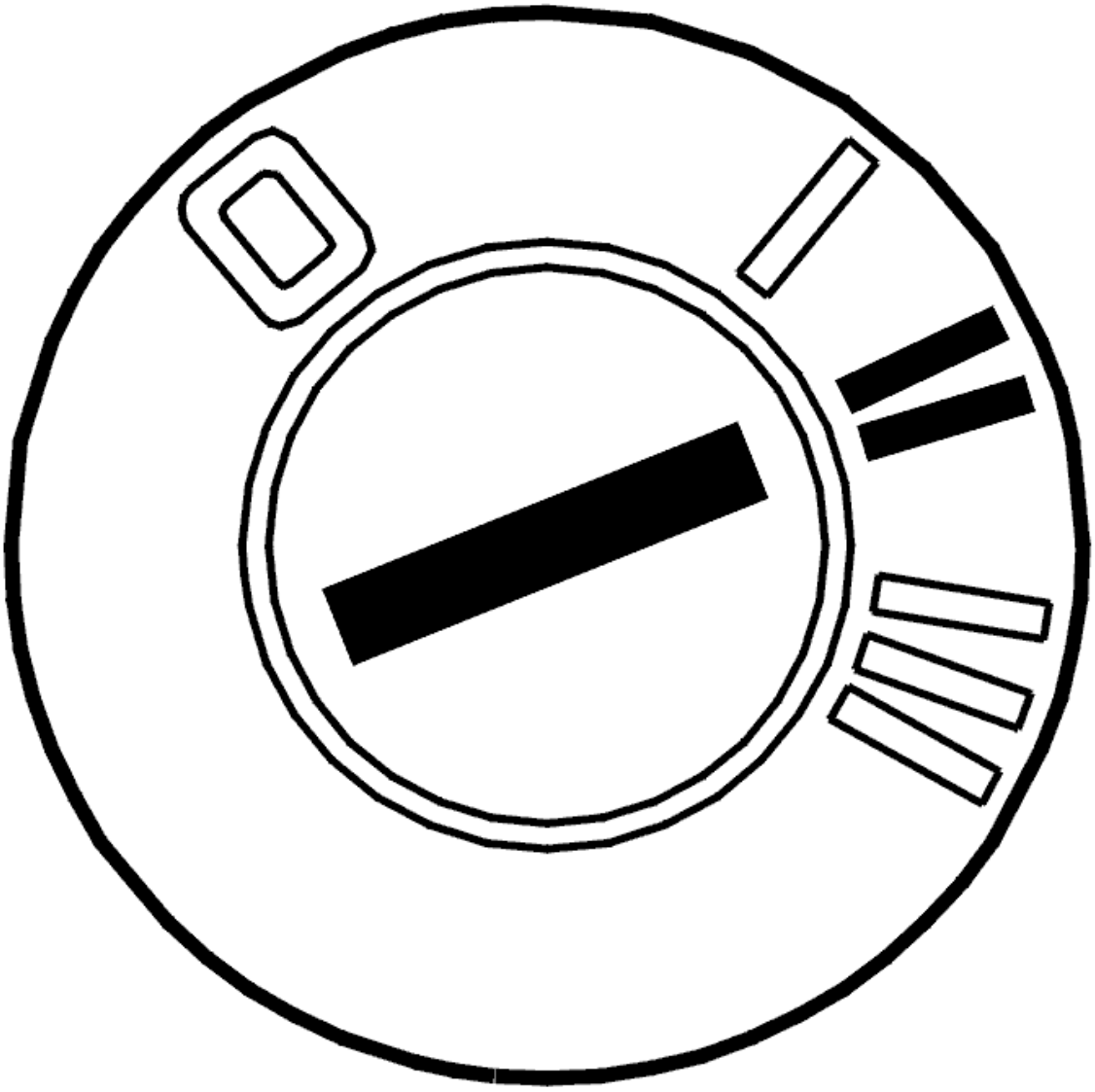

Fig. 241: Identifying Ignition ON
Courtesy of VOLVO CARS CORPORATION

- Ignition on.

NOTE: **The switches can be placed in any position in the climate control assembly (without internal order). The position of the switches must be taken into account when fault-tracing with VCT2000.**

The switch furthest to the left in the climate control assembly corresponds to no. 1 in VCT2000. VCT2000 then follows the numbering in order to the switch furthest to the right, which is designated no. 7.

Read off the identities of the switches. Check that the read off identity corresponds to the switch marking for its position in the dashboard environment panel. The switch is defective or missing if the identity does not correspond.

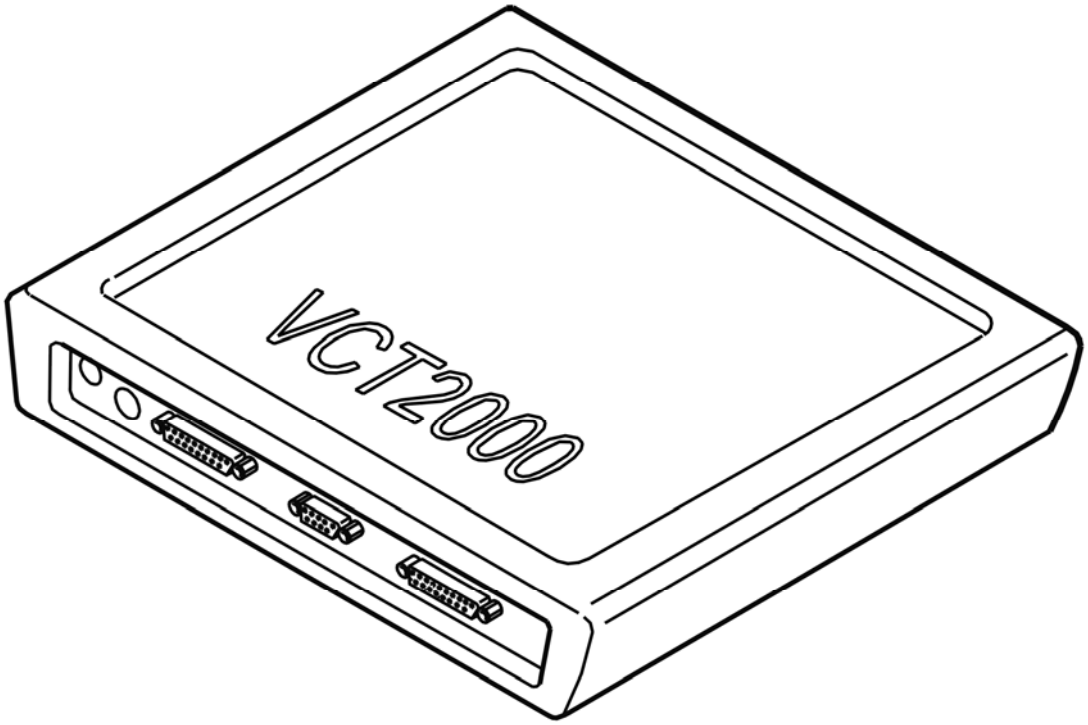

Fig. 242: Identifying VCT2000 Diagnostic Tool Symbol In VIDA
Courtesy of VOLVO CARS CORPORATION

- **Continue**

  Refer to **VERIFICATION**

FAULT-TRACING INFORMATION

The fault has probably occurred as a result of a defect or intermittent defect or a missing switch. If the fault is intermittent, it has been registered previously but is no longer present.

Intermittent faults may be caused by interference at start up of the control module. Intermittent faults may also be caused by other types of intermittent faults. The fault is evaluated depending on how it occurs. If the fault recurs, replace the switch.

- **Continue**

  Refer to **INFORMATION**

VERIFICATION

HINT: After carrying out the repair, check that the fault has been remedied.

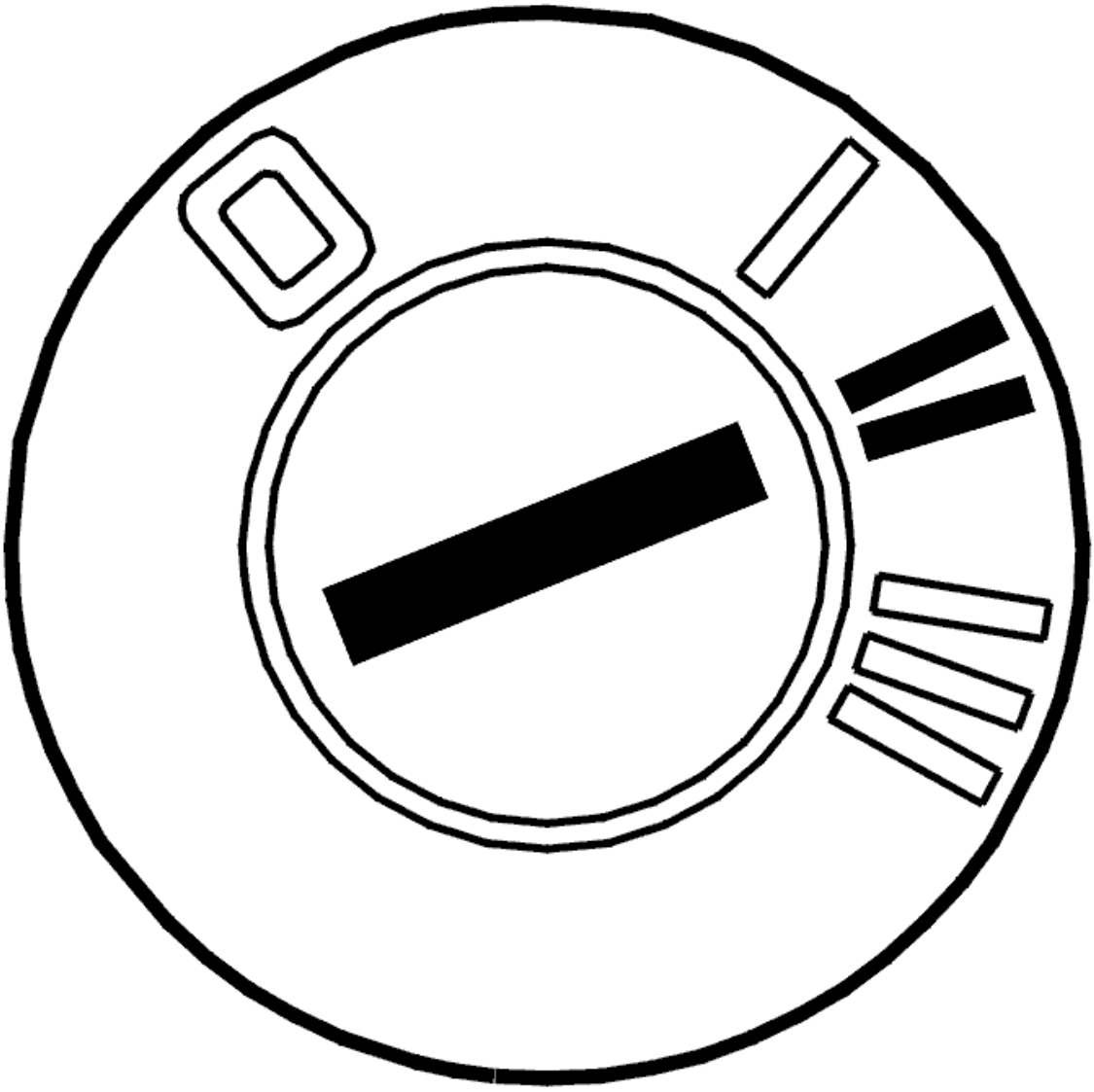

Fig. 243: Identifying Ignition ON
Courtesy of VOLVO CARS CORPORATION

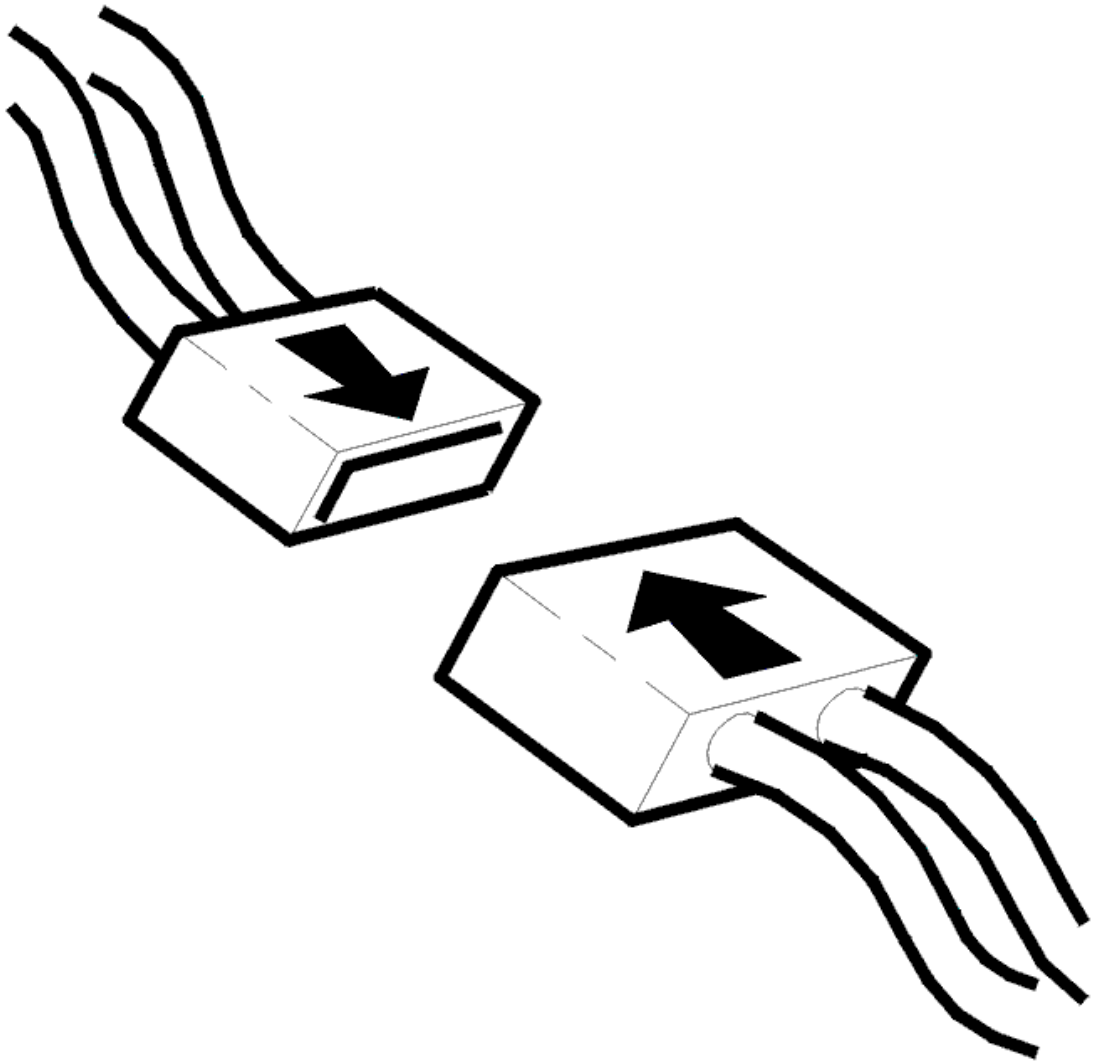

Fig. 244: Connecting Connector
Courtesy of VOLVO CARS CORPORATION

- Ignition off.

NOTE: **Wait at least 1 minute before "Ignition on". This is to allow the climate control module (CCM) to carry out a new diagnostic.**

- Reinstall the connectors, components etc.
- Ignition on
- Read off diagnostic trouble codes (DTCs).

The fault is no longer present if the status of the diagnostic trouble code (DTC) has changed to intermittent.

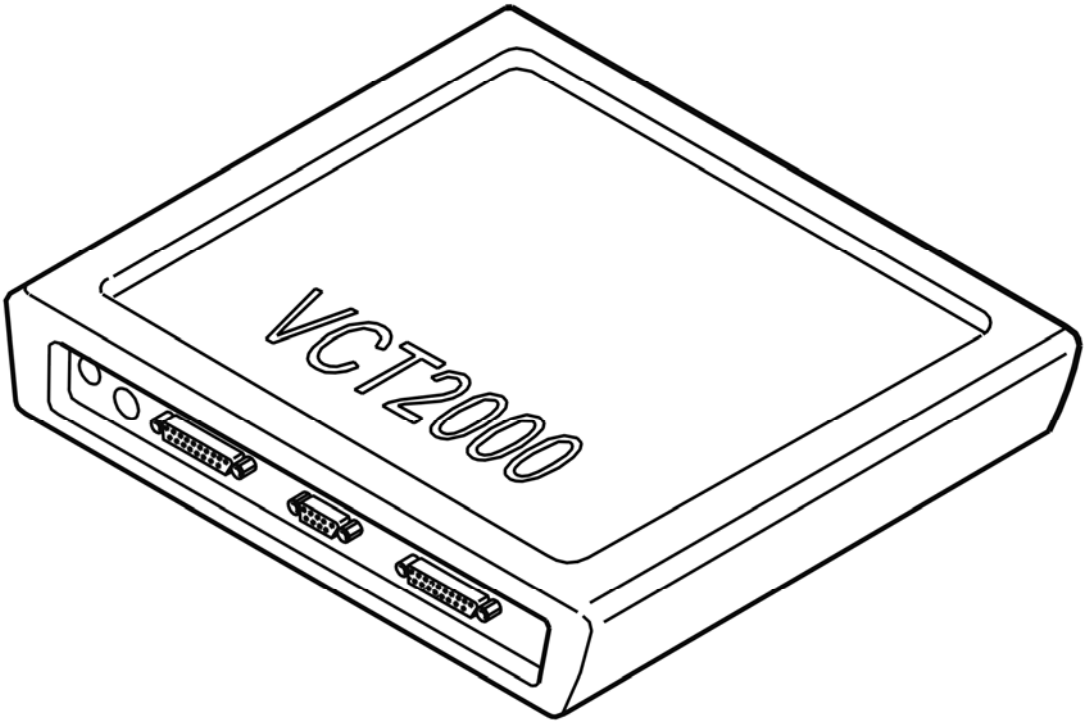

Fig. 245: Identifying VCT2000 Diagnostic Tool Symbol In VIDA
Courtesy of VOLVO CARS CORPORATION

Does the status change?

- **YES**

  VERIFIED: Troubleshooting has been completed.

- **NO**

  Refer to **INFORMATION**

INFORMATION

FAULT-TRACING INFORMATION

The fault should have been detected and remedied. As this is not the case fault-tracing has failed.

Exit fault-tracing for this diagnostic trouble code (DTC) or make another attempt.

INFORMATION

FAULT-TRACING INFORMATION

If the fault is intermittent, do not verify fault-tracing if the fault does not recur.

It is possible to view the information again, or leave fault-tracing for this diagnostic trouble code (DTC).

CCM-00A0: BLOWER FAN MOTOR. SIGNAL TOO LOW (2005-2012)

DIAGNOSTIC TROUBLE CODE (DTC) INFORMATION CCM-00A0

Condition

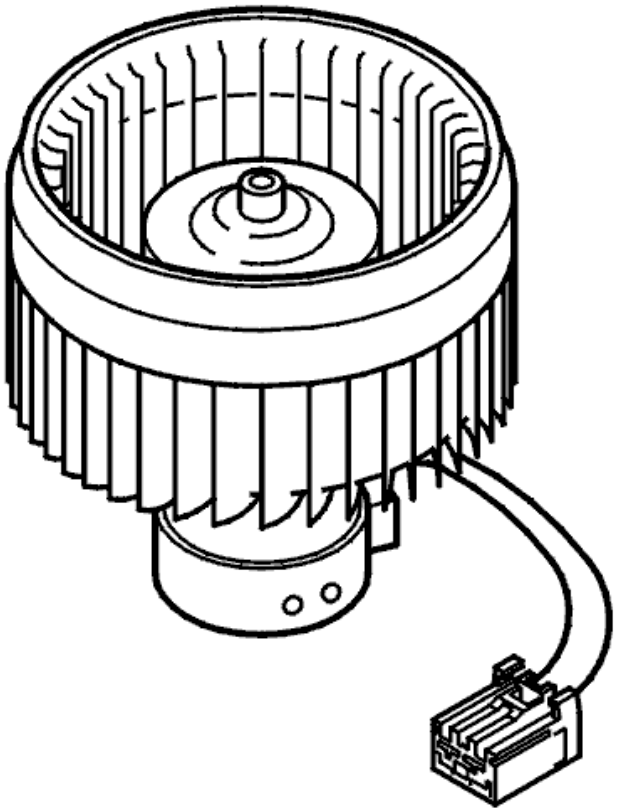

Fig. 246: Identifying Blower Fan Motor & Connector
Courtesy of VOLVO CARS CORPORATION

Diagnostic trouble code (DTC) is stored if the climate control module (CCM) registers that the diagnostic signal from the blower fan power unit is below 1.28 V and the control current to the blower fan power unit is below 0.42 mA.

Substitute Value

- The control module will not allow the blower fan motor to start while the fault persists
- The air conditioning (A/C) compressor is not allowed to start.

Possible Source

- Short-circuit to ground in the motor signal cable
- Short-circuit to supply voltage in the signal cable
- Open-circuit in the diagnostic signal cable
- Short-circuit to ground in the diagnostic signal cable
- Defective blower fan motor or power unit.

Fault symptom[s]

- Blower fan not operating.
- Air flow problem.
- No cooling from the air conditioning (A/C) system.

SIGNAL TOO LOW

CHECKING THE BLOWER FAN

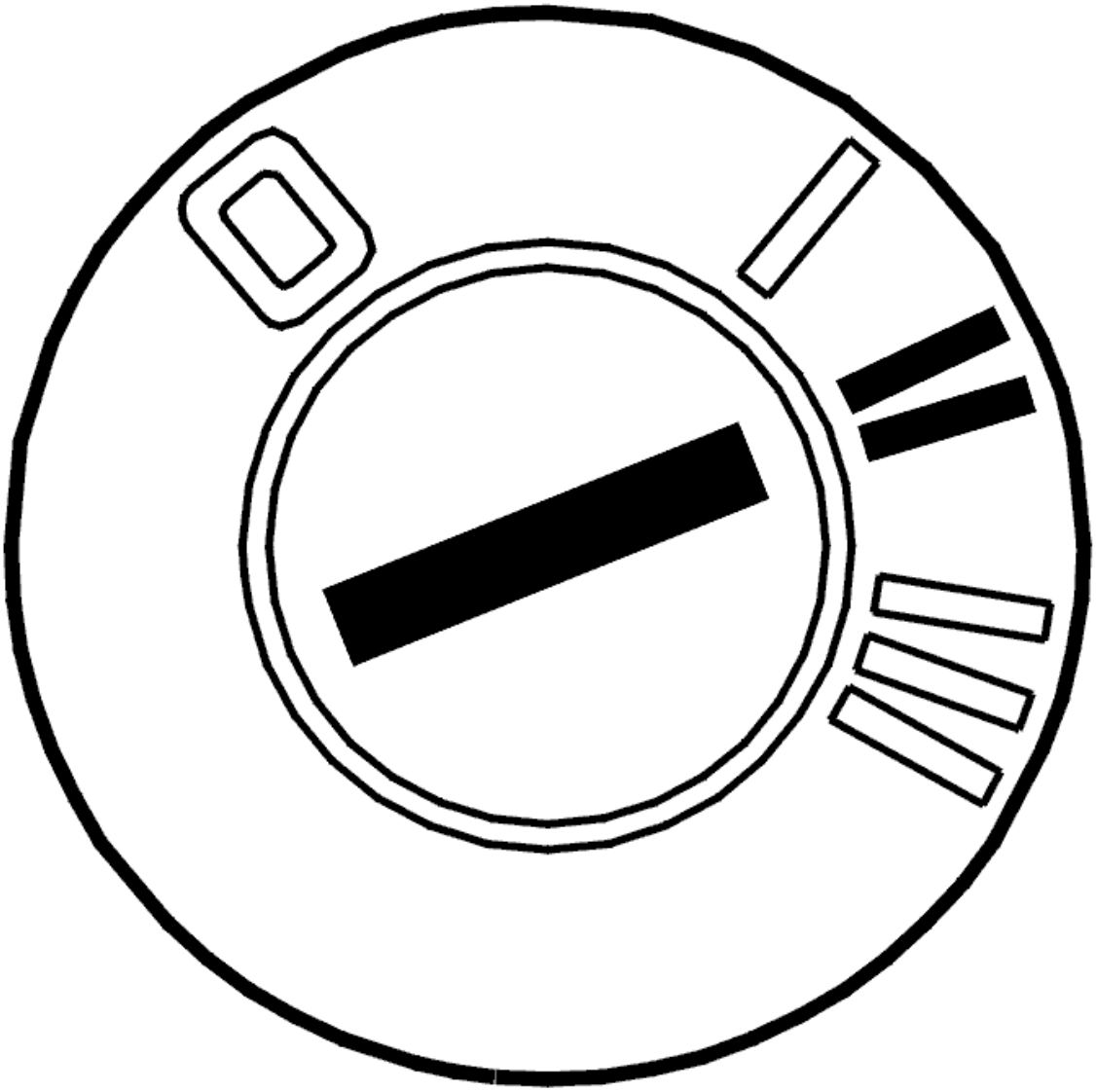

Fig. 247: Identifying Ignition ON
Courtesy of VOLVO CARS CORPORATION

- Ignition on.

  Check that the blower fan functions by turning the blower fan knob to maximum fan speed.

Is the blower fan working?

- **YES**

  Refer to **CHECKING THE WIRING**

- **NO**

  Refer to **CHECKING THE COMPONENT AND WIRING**

CHECKING THE COMPONENT AND WIRING

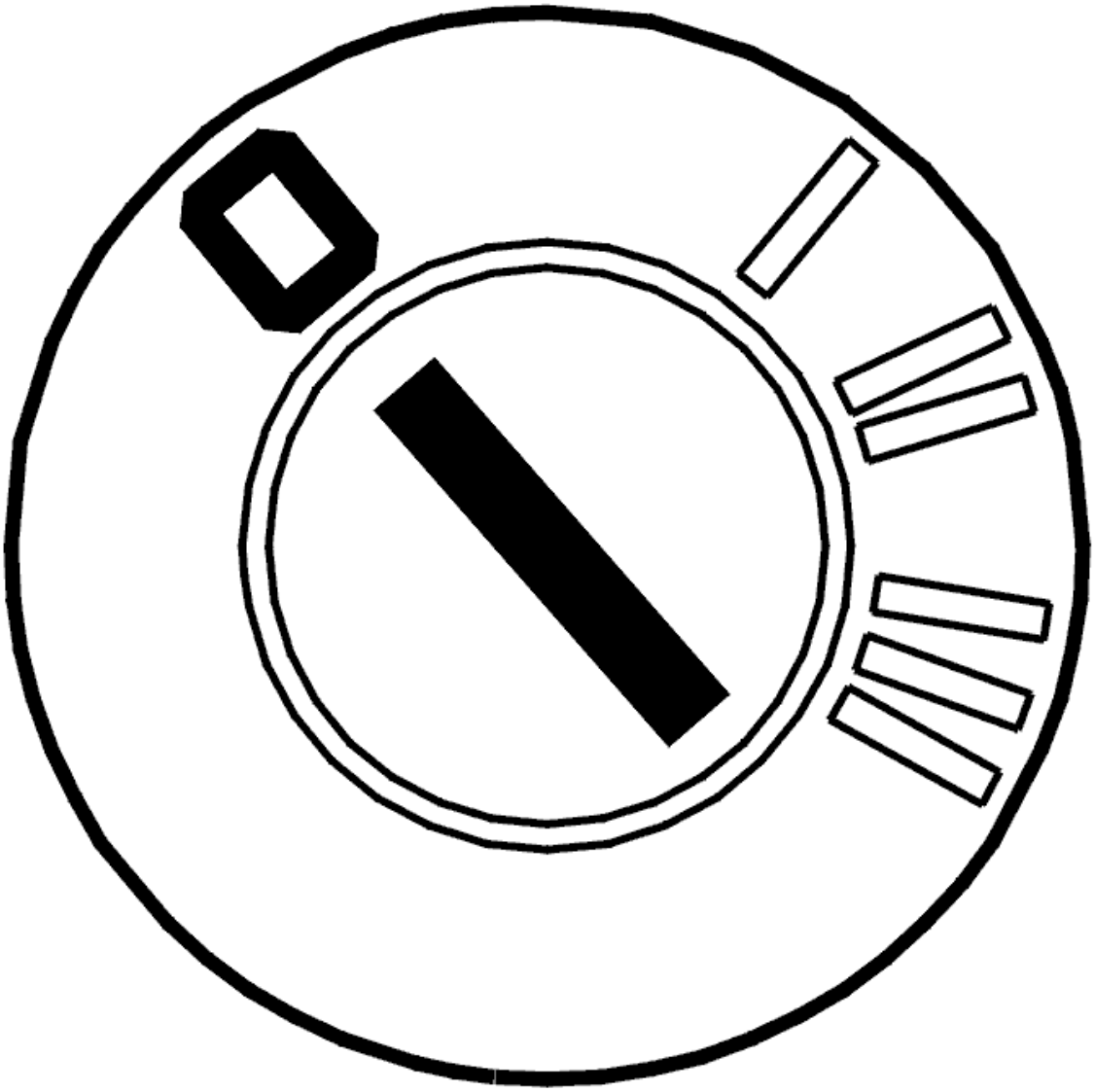

Fig. 248: Identifying Ignition OFF
Courtesy of VOLVO CARS CORPORATION

- Ignition off.

CAUTION: The blower fan motor power unit is very sensitive to short-circuits and excess current. Do not damage the power unit when taking readings.

Take readings with the power unit connector disconnected when checking the wiring.

Check if the fuse for the climate control module (CCM) is defective. If the fuse is defective, check:

- the signal cable between the fuse and the power unit terminal #A2. Check for a short-circuit to ground
- the signal cable between the power unit terminal #B2 and the blower fan motor positive terminal. Check for a short-circuit to ground.

Check the control signal cable between control module terminal #A3 and power unit terminal #A1. Check for a short-circuit to supply voltage.

Check the diagnostic signal cable between control module terminal #A2 and power unit terminal #A3. Check for an open-circuit. Check for a short-circuit to ground.

Remedy as necessary.

Other information:

- To access and replace the control module, see **CLIMATE CONTROL MODULE (CCM), REPLACING**
- To access the control module or connect the breakout box, see **CONNECTING THE BREAKOUT BOX**
- To access or replace the power unit, see **BLOWER FAN MOTOR / POWER UNIT, REPLACING**
- With the ignition on and the power unit connector disconnected, the voltage between power unit connector terminal #A2 (control module side) and ground must be approximately 13.5 V
- For other values, see **SIGNAL SPECIFICATION**
- see **CONTENTS** .

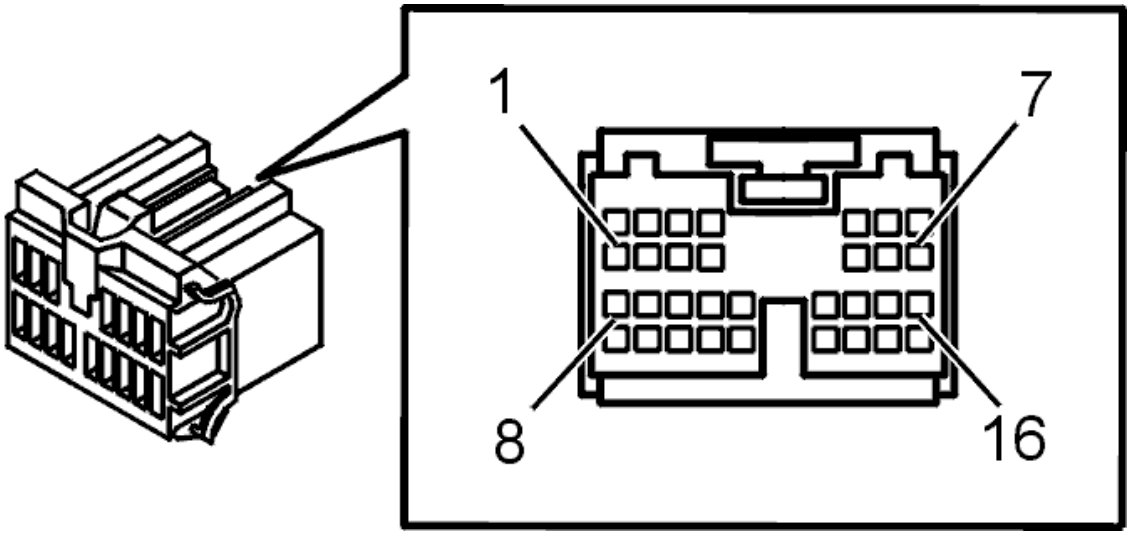

Fig. 249: Connector, Green (16- Pin)
Courtesy of VOLVO CARS CORPORATION

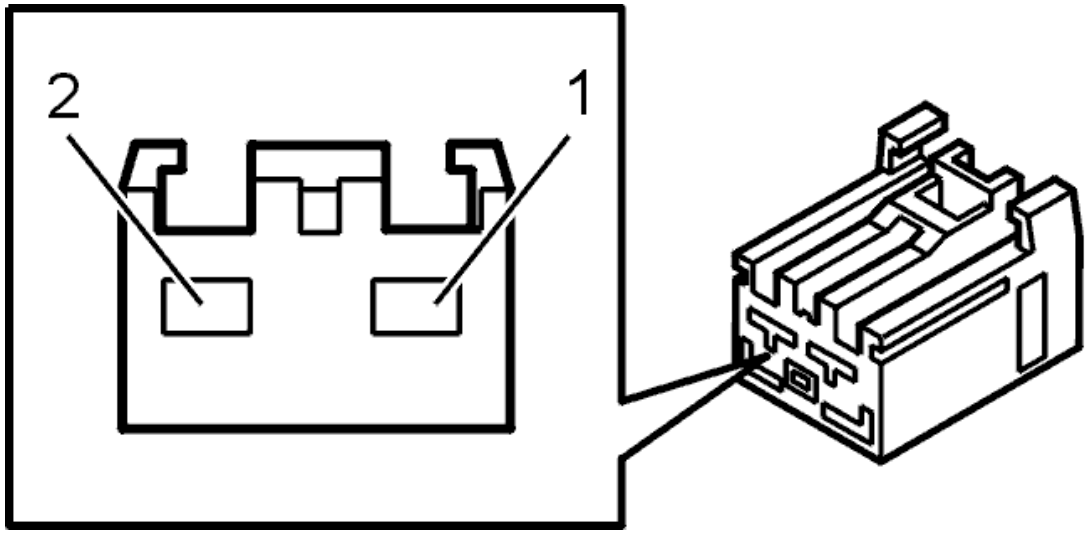

Fig. 250: Connector, Black (2-Pin)
Courtesy of VOLVO CARS CORPORATION

- **Continue**

  Refer to **VERIFICATION**

CHECKING THE WIRING

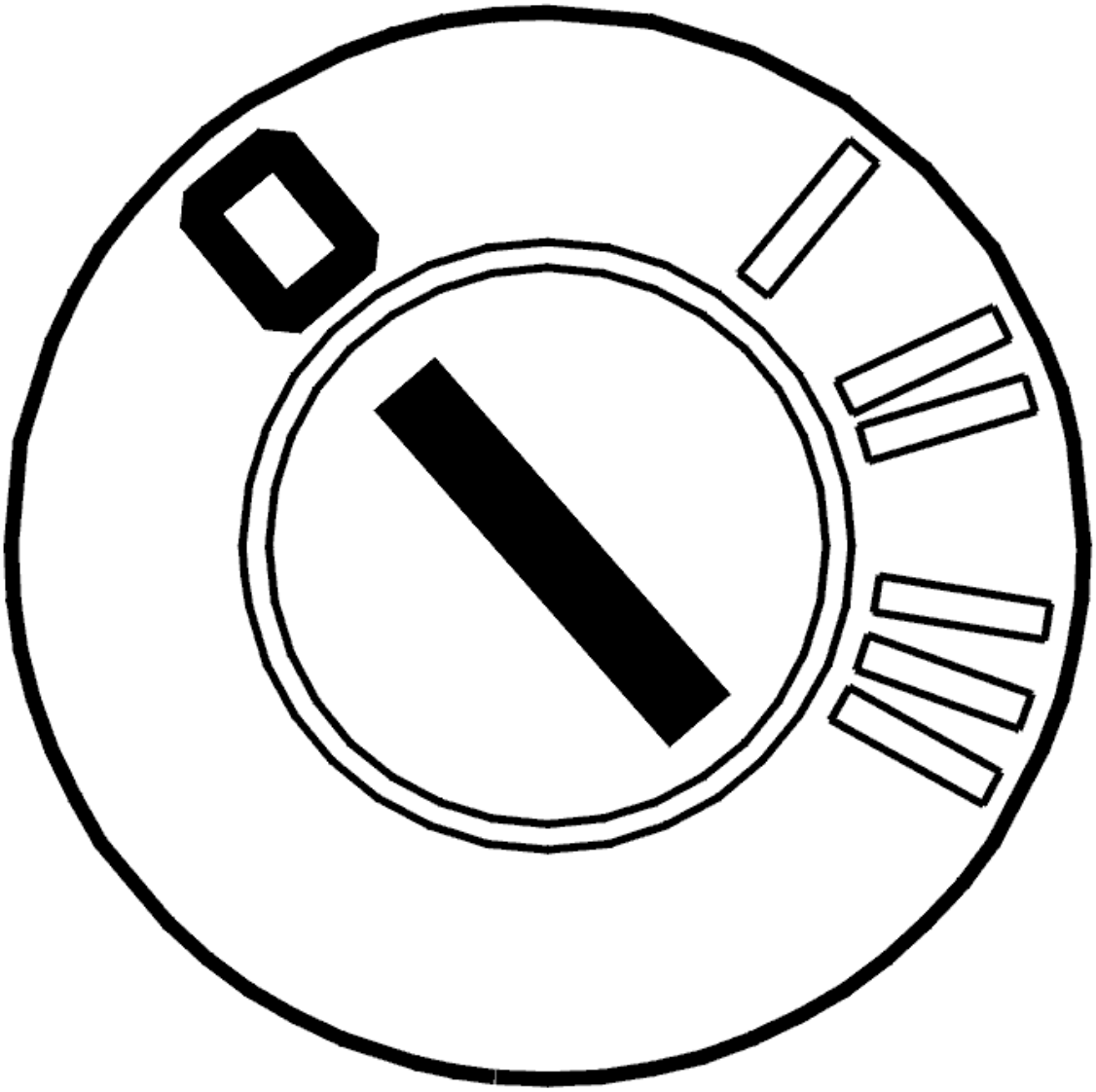

Fig. 251: Identifying Ignition OFF
Courtesy of VOLVO CARS CORPORATION

- Ignition off.

CAUTION: The blower fan motor power unit is very sensitive to short-circuits and excess current. Do not damage the power unit when taking readings.

Take readings with the power unit connector disconnected when checking the wiring.

Check the signal cable between the fuse and the power unit terminal #A2. Check for an intermittent short-circuit to ground.

Check the signal cable between power unit terminal #B2 and blower fan motor positive terminal. Check

for an intermittent short-circuit to ground.

Check the control signal cable between control module terminal #A3 and power unit terminal #A1. Check for an intermittent short-circuit to supply voltage.

Check the diagnostic signal cable between control module terminal #A2 and power unit terminal #A3. Check for an intermittent open-circuit. Check for a short-circuit to ground.

NOTE: **If the battery voltage has been interrupted, the blower fan speed must be calibrated. First turn the blower fan speed control to maximum speed and then to minimum speed.**

Remedy as necessary.

Other information:

- To access and replace the control module, see **CLIMATE CONTROL MODULE (CCM), REPLACING**
- To connect the breakout box, see **CONNECTING THE BREAKOUT BOX**
- To access or replace the power unit, see **BLOWER FAN MOTOR / POWER UNIT, REPLACING**
- With the ignition on and the power unit connector disconnected, the voltage between power unit connector terminal #A2 (control module side) and ground must be approximately 13.5 V
- For other values, see **SIGNAL SPECIFICATION**
- see **CONTENTS** .

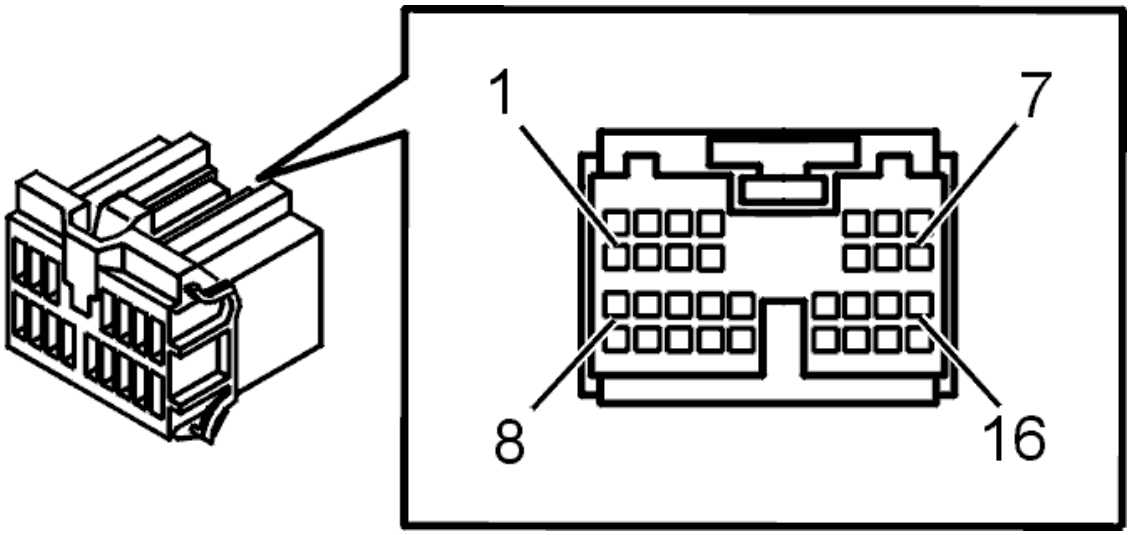

Fig. 252: Connector, Green (16- Pin)
Courtesy of VOLVO CARS CORPORATION

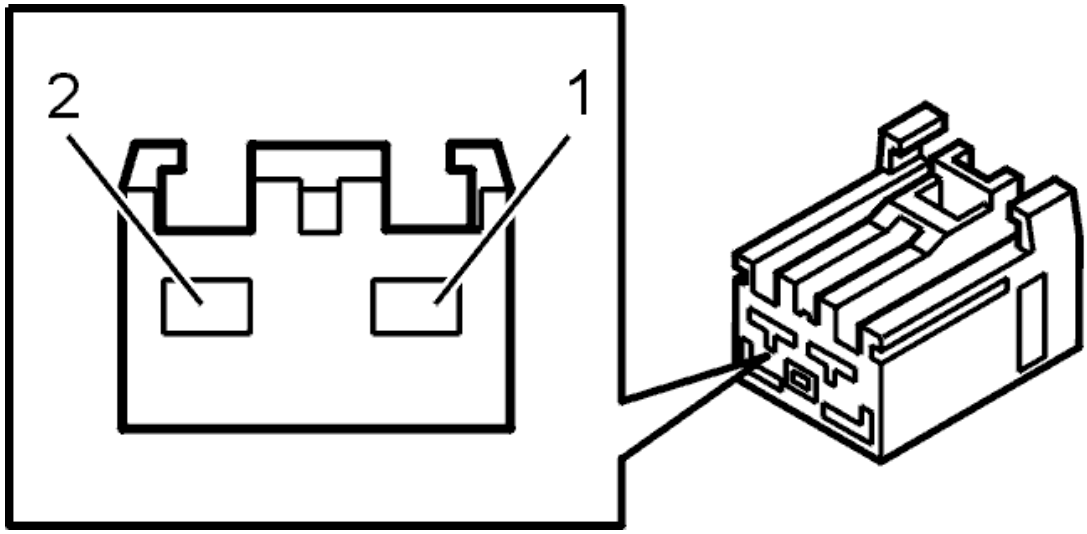

Fig. 253: Connector, Black (2-Pin)
Courtesy of VOLVO CARS CORPORATION

- **Continue**

  Refer to **INFORMATION**

VERIFICATION

HINT: After the repair it is necessary to check that the fault has been rectified.

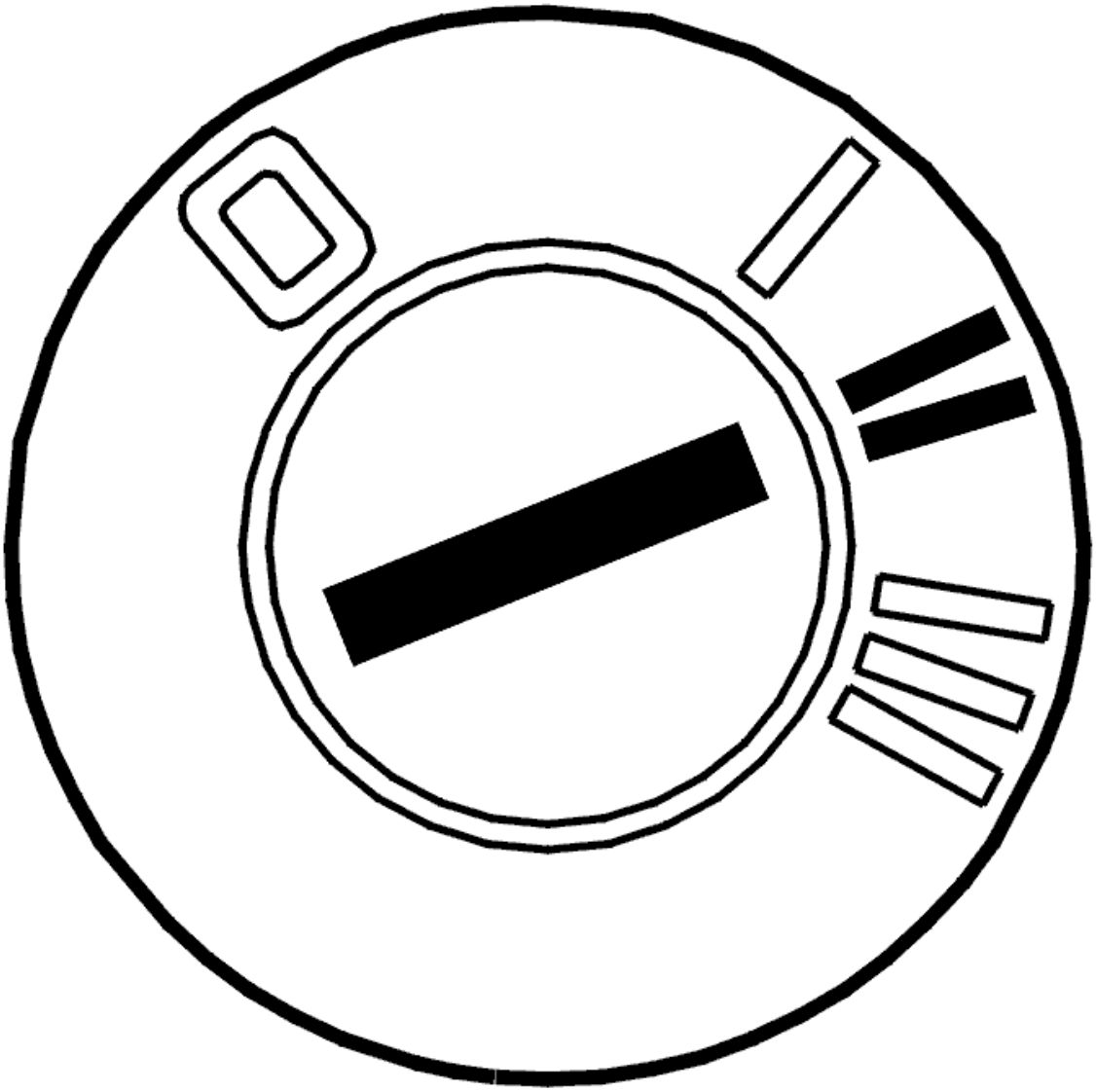

Fig. 254: Identifying Ignition ON
Courtesy of VOLVO CARS CORPORATION

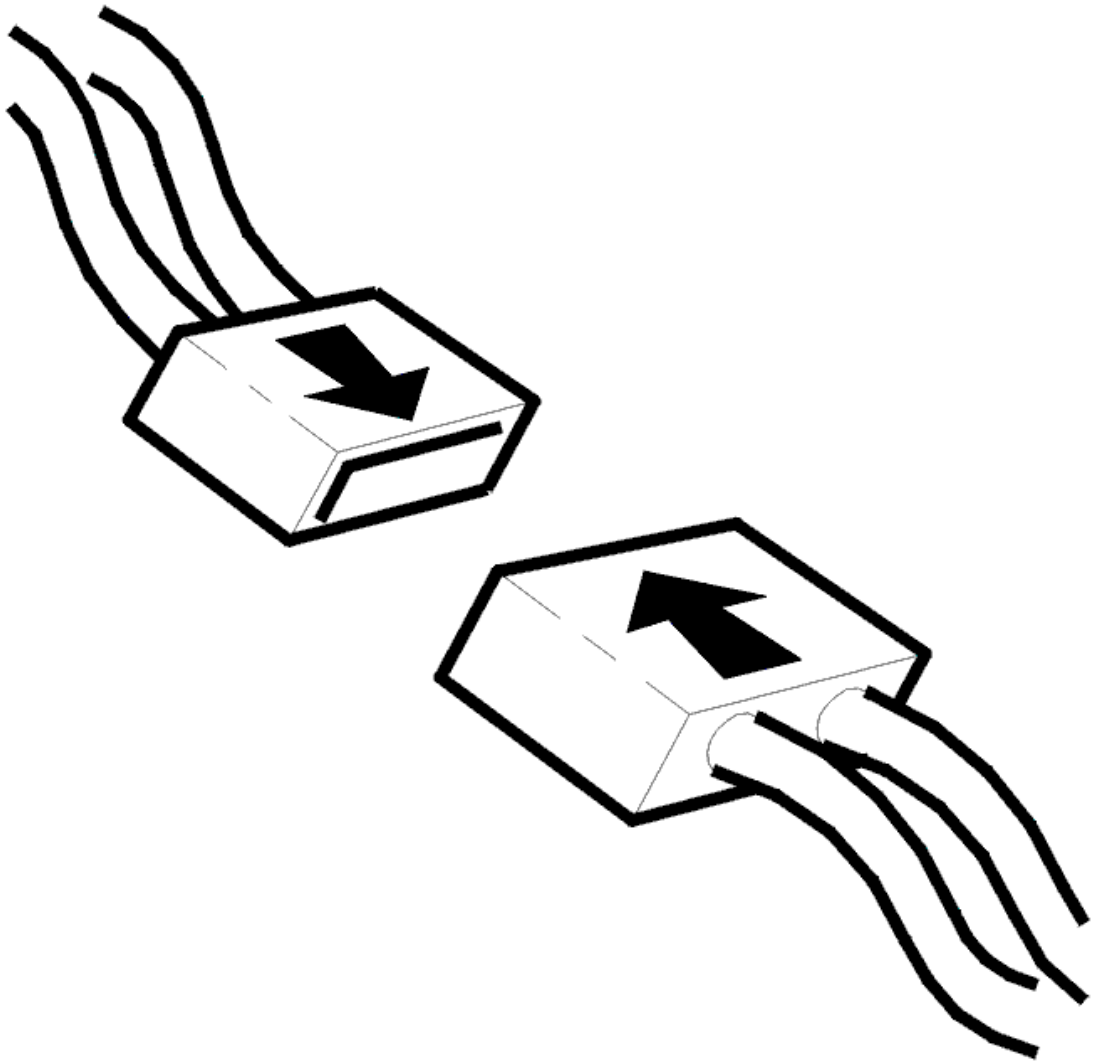

Fig. 255: Connecting Connector
Courtesy of VOLVO CARS CORPORATION

- Ignition off.
- Connect the connectors, install the components, etc.
- Ignition on.
- Read the diagnostic trouble codes.

  If the status of the diagnostic trouble code has changed to an intermittent fault this indicates that the fault has been rectified.

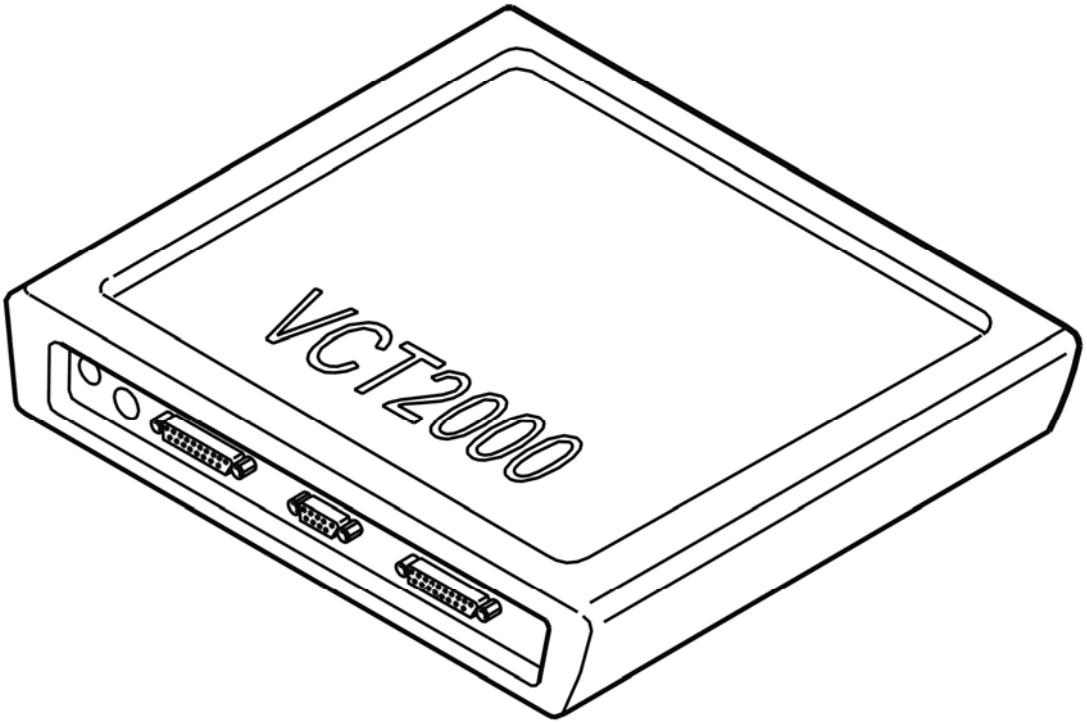

Fig. 256: Identifying VCT2000 Diagnostic Tool Symbol In VIDA
Courtesy of VOLVO CARS CORPORATION

Has the status of the diagnostic trouble code changed?

- **YES**

  VERIFIED: Troubleshooting has been completed.

- **NO**

  Refer to **INFORMATION**

INFORMATION

FAULT-TRACING INFORMATION

The fault should have been detected and remedied. As this is not the case fault-tracing has failed.

Exit fault-tracing for this diagnostic trouble code (DTC) or make another attempt.

INFORMATION

FAULT-TRACING INFORMATION

If the fault is intermittent, do not verify fault-tracing if the fault does not recur.

It is possible to view the information again, or leave fault-tracing for this diagnostic trouble code (DTC).

HVAC

Climate Units - Diagnostic Trouble Codes And Associated Procedures

CCM-00A1: BLOWER FAN MOTOR. SIGNAL TOO HIGH (2005-2012)

DIAGNOSTIC TROUBLE CODE (DTC) INFORMATION CCM-00A1

Condition

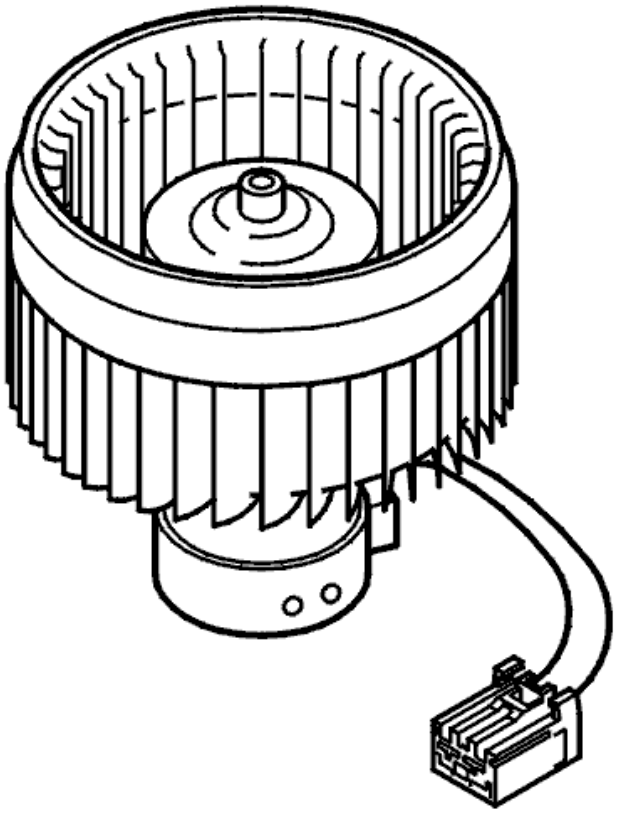

Fig. 1: Identifying Blower Fan Motor & Connector
Courtesy of VOLVO CARS CORPORATION

The diagnostic trouble code (DTC) is stored if the climate control module (CCM) registers that the diagnostic signal from the blower fan power unit is in excess of 10 V and the control current to the blower fan power unit is above 8.56 mA.

Substitute Value

- The blower fan cannot start while the fault persists
- The air conditioning (A/C) compressor is not allowed to start.

Possible Source

- Blocked blower fan motor
- Open-circuit in the signal cable
- Open-circuit in the ground lead for the blower fan motor
- Short-circuit to supply voltage in the ground lead for the blower fan motor
- Short-circuit to ground in the control signal cable
- Open-circuit in the control signal cable
- Short-circuit to supply voltage in the diagnostic signal cable
- Defective blower fan motor or power unit
- Contact resistance.

Fault symptom[s]

- Blower fan not operating.
- Air flow problem.
- No cooling from the air conditioning (A/C) system.

SIGNAL TOO HIGH

CHECKING THE BLOWER FAN

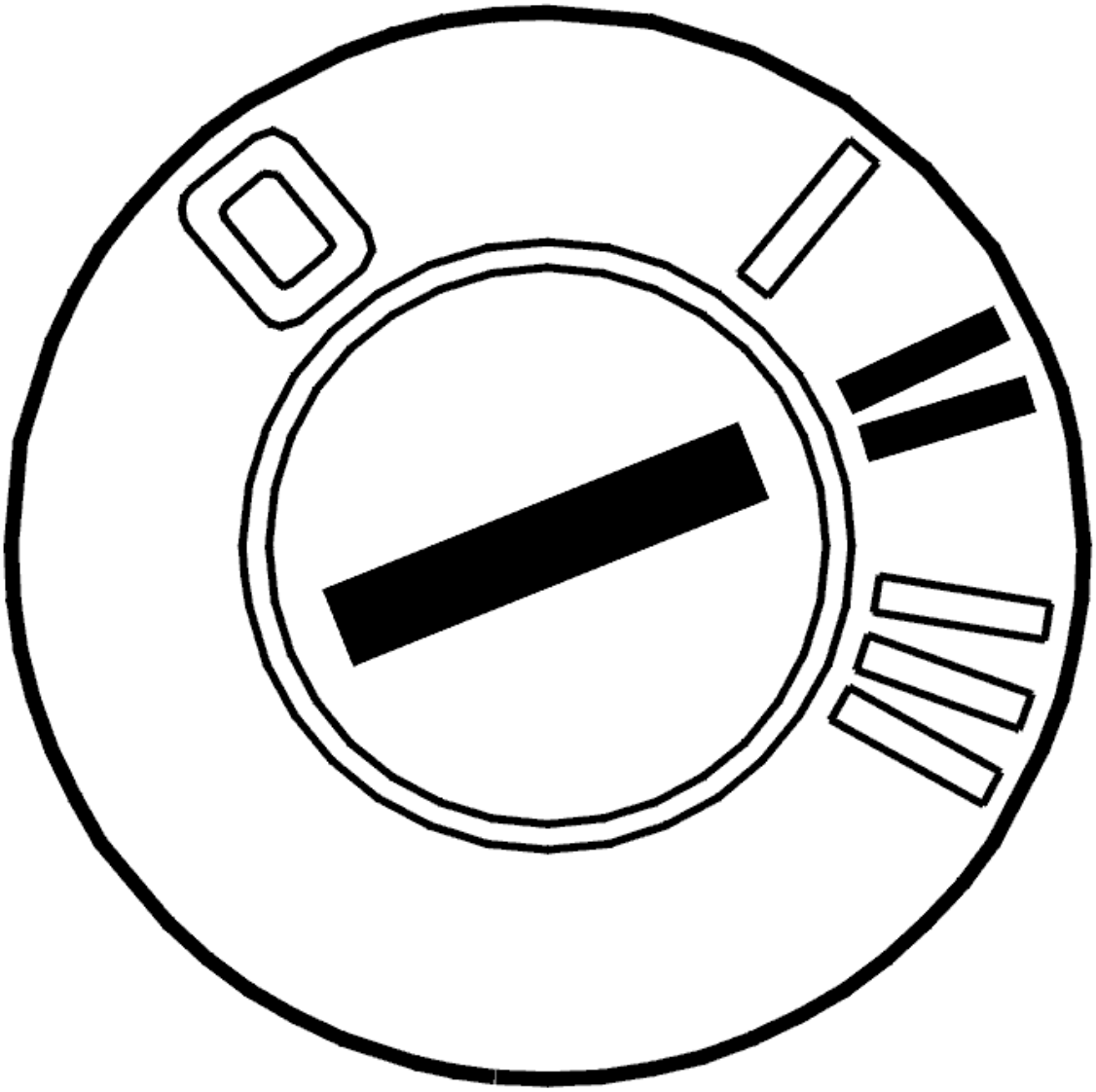

Fig. 2: Identifying Ignition ON
Courtesy of VOLVO CARS CORPORATION

- Ignition on.

  Check that the blower fan functions by turning the blower fan knob to maximum fan speed.

Is the blower fan working?

- **YES**

  Refer to **CHECKING THE CONNECTORS AND CABLES**

- **NO**

  Refer to **CHECKING THE CONNECTORS**

CHECKING THE CONNECTORS

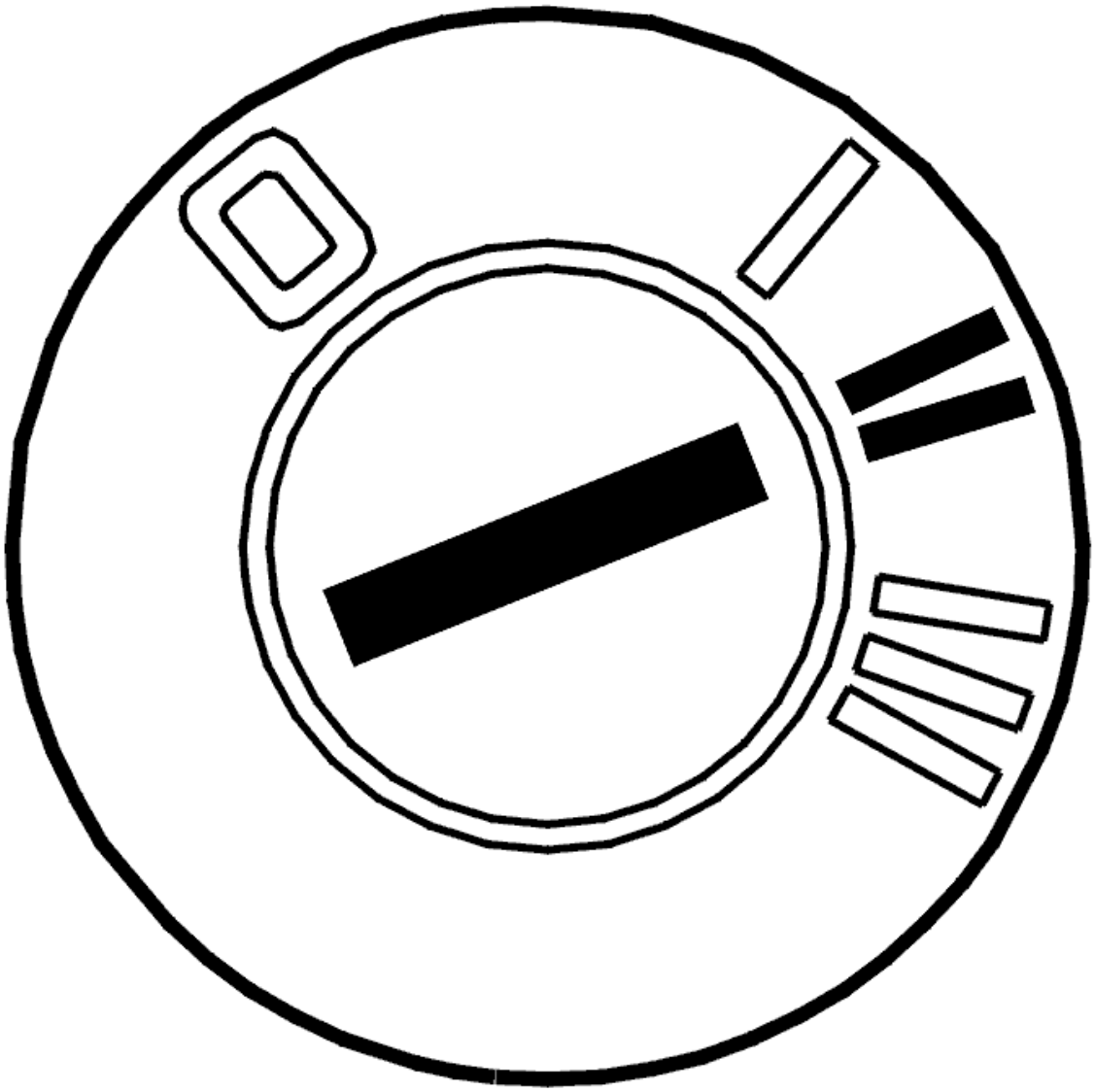

Fig. 3: Identifying Ignition ON
Courtesy of VOLVO CARS CORPORATION

- Ignition off
- Check the connectors on the climate control module (CCM) (terminals #A2, #A3) and the power unit. Check for contact resistance and oxidation. In particular, check for any damage
- Reinstall the components, reconnect the connectors etc.
- Ignition on.

NOTE: **If the battery voltage has been interrupted, the blower fan speed must be calibrated. First turn the blower fan speed control to maximum speed and then to minimum speed.**

Check that the blower fan motor functions: Turn the blower fan speed switch.

If the blower fan is now working the cause of the fault was loose connections in the connectors.

Other information:

- To connect the breakout box, see **CONNECTING THE BREAKOUT BOX**
- To access and replace the control module, see **CLIMATE CONTROL MODULE (CCM), REPLACING** .
- To access or replace the power unit, see **BLOWER FAN MOTOR / POWER UNIT, REPLACING** .

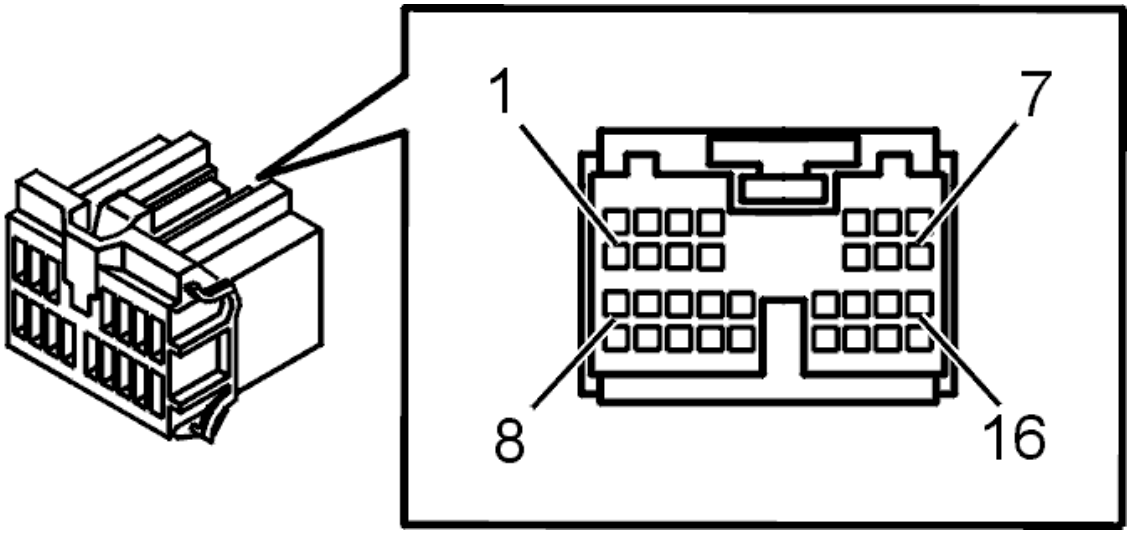

Fig. 4: Connector, Green (16- Pin)
Courtesy of VOLVO CARS CORPORATION

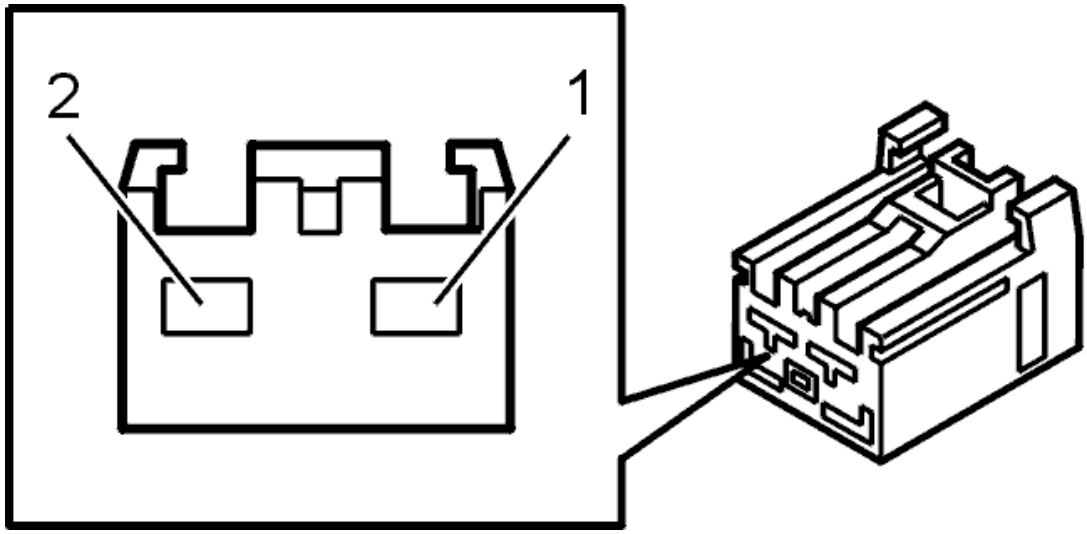

Fig. 5: Connector, Black (2-Pin)
Courtesy of VOLVO CARS CORPORATION

Is the blower fan motor functioning?

- **YES**

  OKAY: Troubleshooting has been completed.

- **NO**

  Refer to **CHECKING THE COMPONENT AND WIRING**

CHECKING THE COMPONENT AND WIRING

CAUTION: The blower fan motor power unit is very sensitive to short-circuits and excess current. Do not damage the power unit when taking readings.

Take readings with the power unit connector disconnected when checking the wiring.

Checking the engine cooling fan (FC) motor

Check the position of the fan in the climate control system to ensure that nothing is blocking the blower fan rotor. Check by hand whether the blower fan rotor can rotate freely.

Checking the wiring

Check the ground lead between the power unit terminal #A4 and the ground terminal. Check for a short-circuit to supply voltage.

Check the control signal cable between control module terminal #A3 and power unit terminal #A1. Check for an open-circuit. Check for a short-circuit to ground.

Check the diagnostic signal cable between control module terminal #A2 and power unit terminal #A3. Check for a short-circuit to supply voltage.

NOTE: If the battery voltage has been interrupted, the blower fan speed must be calibrated. First turn the blower fan speed control to maximum speed and then to minimum speed.

Remedy as necessary.

Other information:

- To connect the breakout box, see **CONNECTING THE BREAKOUT BOX**
- To access and replace the control module, see **CLIMATE CONTROL MODULE (CCM), REPLACING** .
- To access or replace the power unit, see **BLOWER FAN MOTOR / POWER UNIT, REPLACING**

- For other values, see **SIGNAL SPECIFICATION**
- For further information about the fuses, relays and ground terminals, see the appropriate service information.

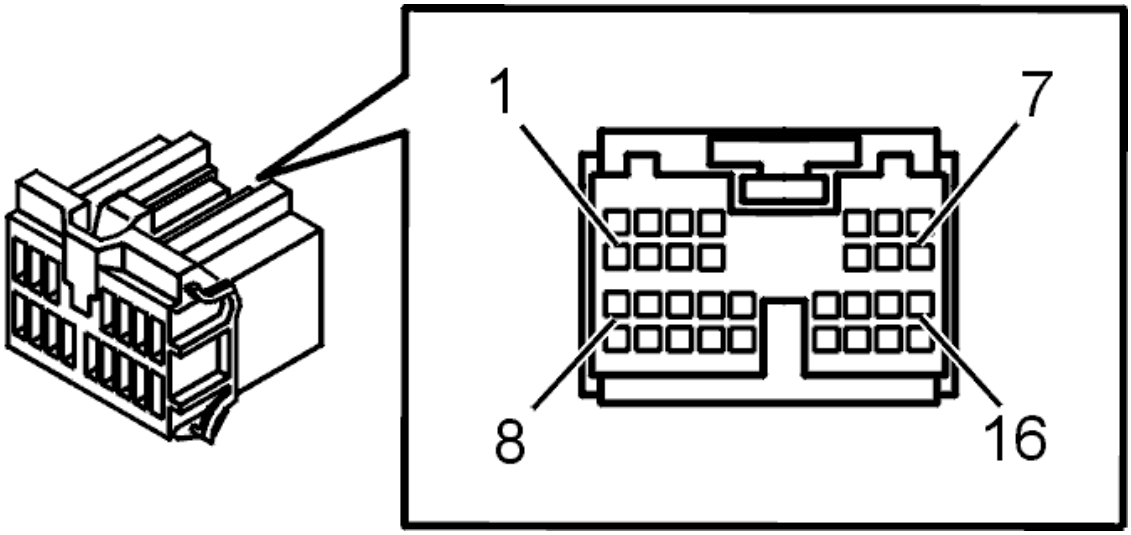

Fig. 6: Connector, Green (16- Pin)
Courtesy of VOLVO CARS CORPORATION

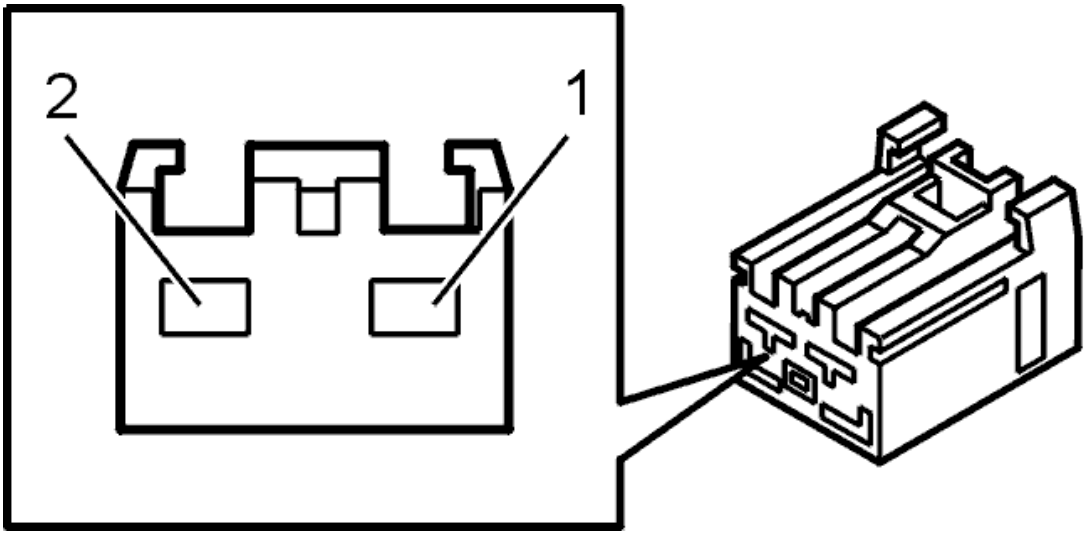

Fig. 7: Connector, Black (2-Pin)
Courtesy of VOLVO CARS CORPORATION

- **Continue**

  Refer to **VERIFICATION**

CHECKING THE CONNECTORS AND CABLES

CAUTION: The blower fan motor power unit is very sensitive to short-circuits and

excess current. Do not damage the power unit when taking readings.

Take readings with the power unit connector disconnected when checking the wiring.

Check the connectors on the control module (terminals #A2, #A3) and the power unit. Check for contact resistance and oxidation. Check for loose connections.

Check the ground lead between the power unit terminal #A4 and the ground terminal. Check for an intermittent short-circuit to supply voltage.

Check the control signal cable between the control module terminal #A3 and power unit terminal #A1. Check for an intermittent open-circuit. Check for an intermittent short-circuit to ground.

Check the diagnostic signal cable between control module terminal #A2 and power unit terminal #A3. Check for an intermittent short-circuit to supply voltage.

NOTE: **If the battery voltage has been interrupted, the blower fan speed must be calibrated. First turn the blower fan speed control to maximum speed and then to minimum speed.**

Remedy as necessary.

Other information:

- To connect the breakout box, see **CONNECTING THE BREAKOUT BOX**
- To access and replace the control module, see **CLIMATE CONTROL MODULE (CCM), REPLACING** .
- To access or replace the power unit, see **BLOWER FAN MOTOR / POWER UNIT, REPLACING** .
- For other values, see **SIGNAL SPECIFICATION**
- see **CONTENTS** .

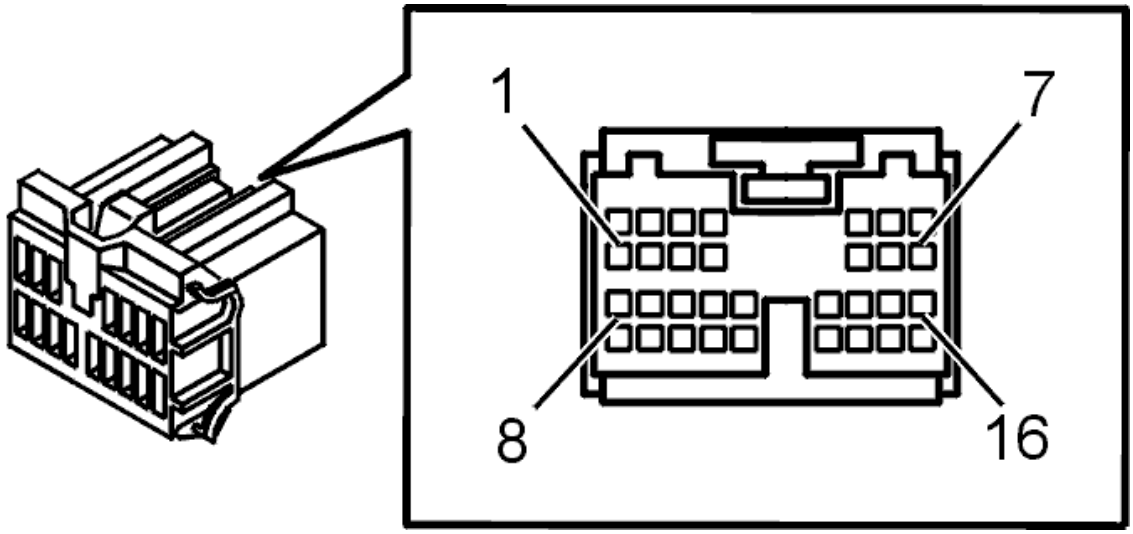

Fig. 8: Connector, Green (16- Pin)
Courtesy of VOLVO CARS CORPORATION

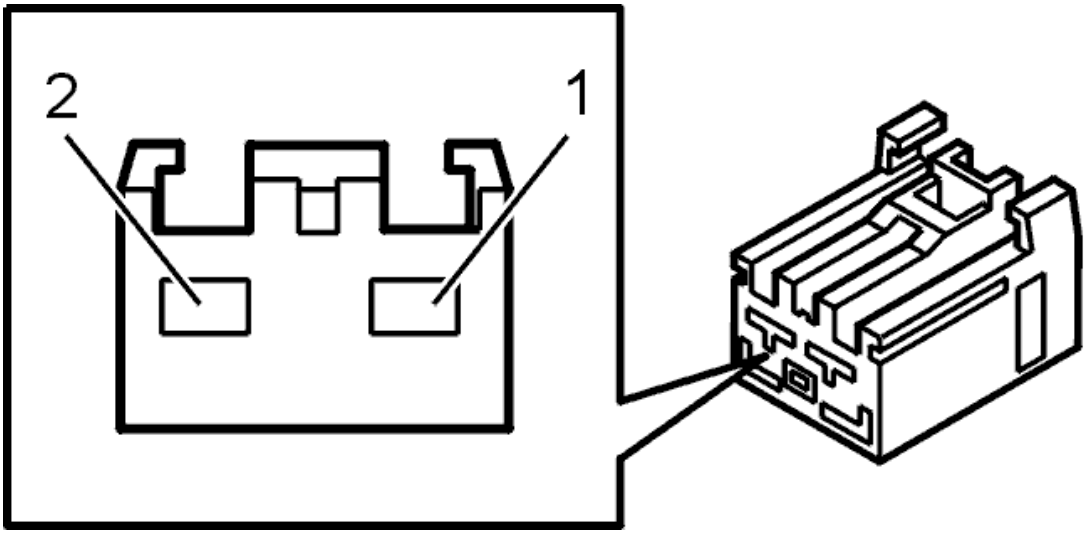

Fig. 9: Connector, Black (2-Pin)
Courtesy of VOLVO CARS CORPORATION

- **Continue**

  Refer to **INFORMATION**

VERIFICATION

HINT: After the repair it is necessary to check that the fault has been rectified.

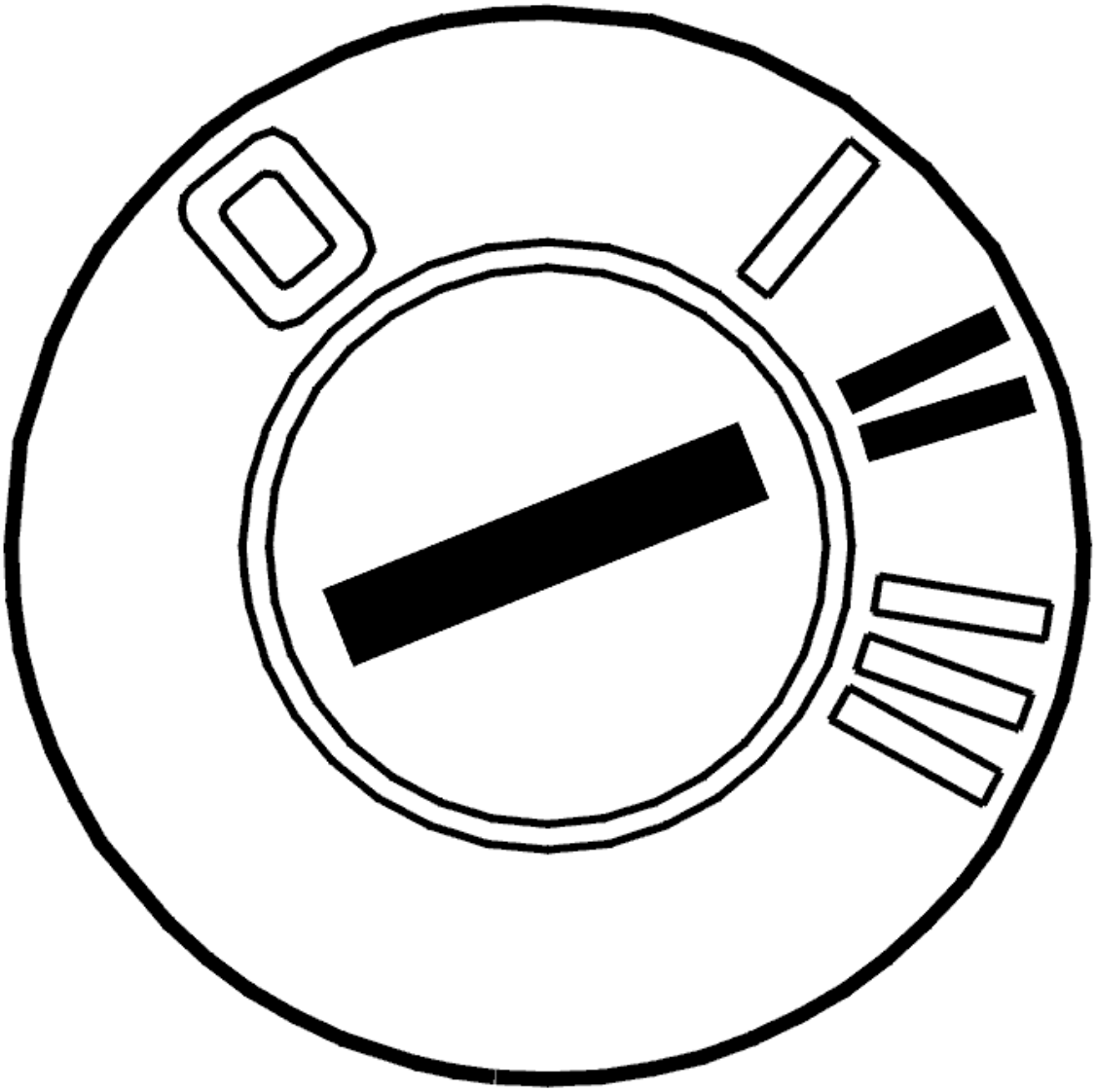

Fig. 10: Identifying Ignition ON
Courtesy of VOLVO CARS CORPORATION

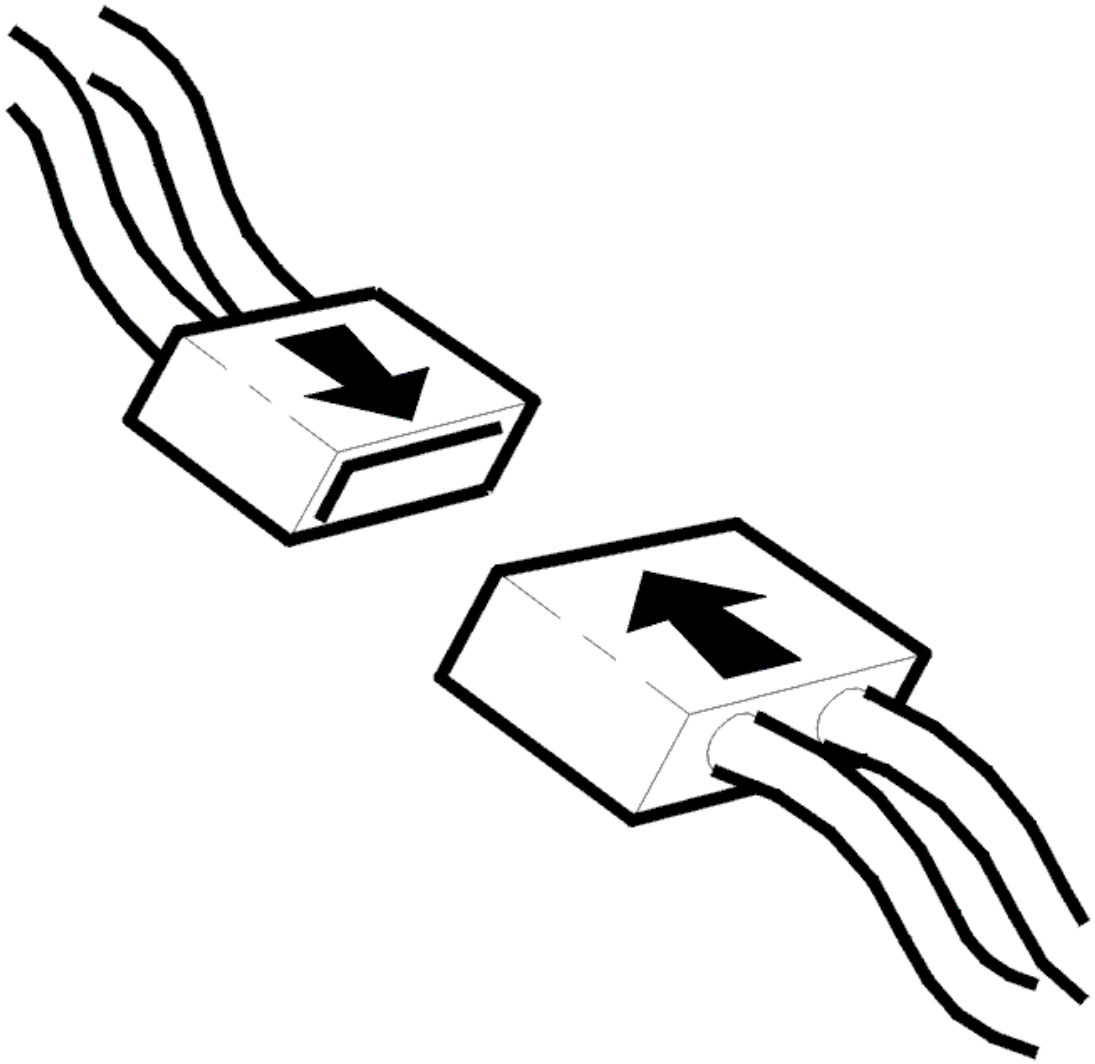

Fig. 11: Connecting Connector
Courtesy of VOLVO CARS CORPORATION

- Ignition off.
- Connect the connectors, install the components, etc.
- Ignition on.
- Read the diagnostic trouble codes.

  If the status of the diagnostic trouble code has changed to an intermittent fault this indicates that the fault has been rectified.

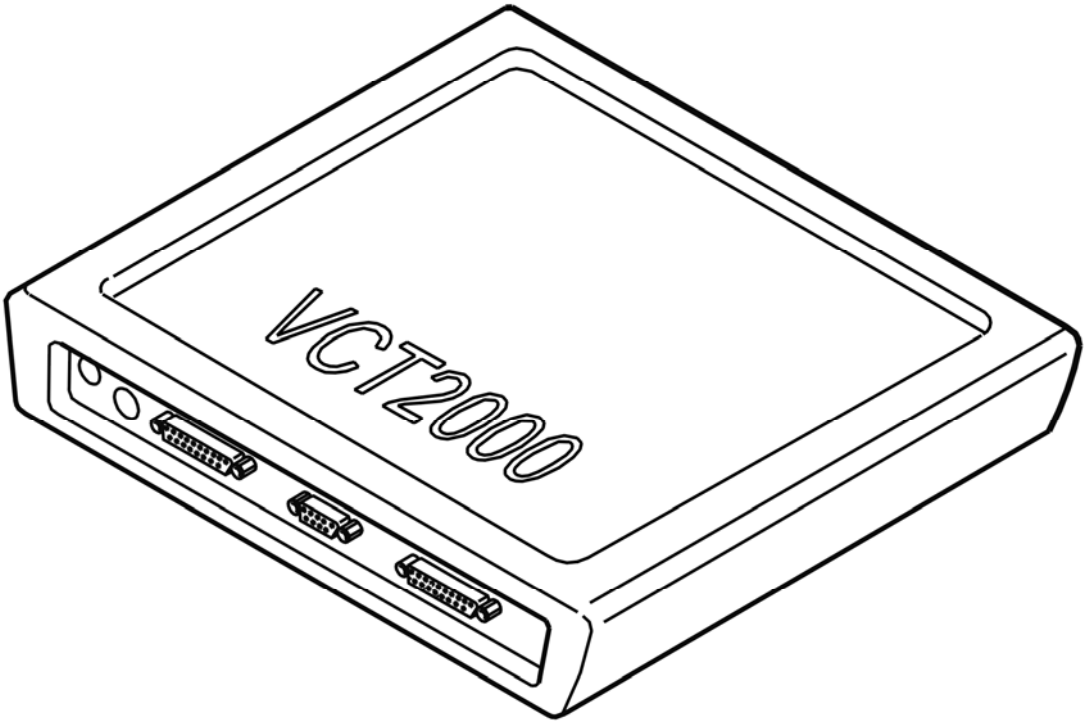

Fig. 12: Identifying VCT2000 Diagnostic Tool Symbol In VIDA
Courtesy of VOLVO CARS CORPORATION

Has the status of the diagnostic trouble code changed?

- **YES**

  VERIFIED: Troubleshooting has been completed.

- **NO**

  Refer to **INFORMATION**

INFORMATION

FAULT-TRACING INFORMATION

The fault should have been detected and remedied. As this is not the case fault-tracing has failed.

Exit fault-tracing for this diagnostic trouble code (DTC) or make another attempt.

INFORMATION

FAULT-TRACING INFORMATION

If the fault is intermittent, do not verify fault-tracing if the fault does not recur.

It is possible to view the information again, or leave fault-tracing for this diagnostic trouble code (DTC).

CCM-DD00: LIN BUS1. INCORRECT DATA (2005-2012)

DIAGNOSTIC TROUBLE CODE (DTC) INFORMATION CCM-DD00

Condition

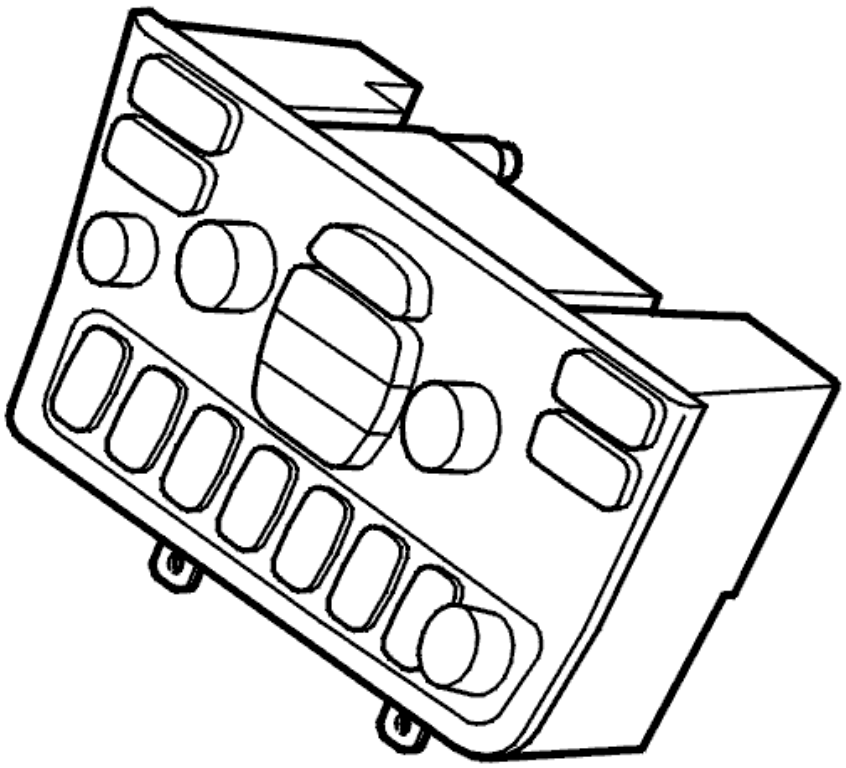

Fig. 13: Climate Control Module
Courtesy of VOLVO CARS CORPORATION

The diagnostic trouble code (DTC) is stored if the climate control module (CCM) detects that data that is sent on LIN bus 1 is incorrect.

The following components communicate with the climate control module (CCM) via LIN bus 1:

- damper motor module (DMM) air distribution
- damper motor module (DMM) temperature left
- seat heating module (SHM) left.

The diagnostic trouble code (DTC) can be diagnosed in ignition positions I and II.

Substitute Value

- None.

Possible Source

- Incorrect data during communication on LIN bus 1.

Fault symptom[s]

- Misting on the windows and/or door mirrors.
- Air flow problem.
- Poor heating in the passenger compartment.
- The front seat heating does not function.
- Poor air quality in the passenger compartment.

INCORRECT DATA

CHECKING COMPONENTS

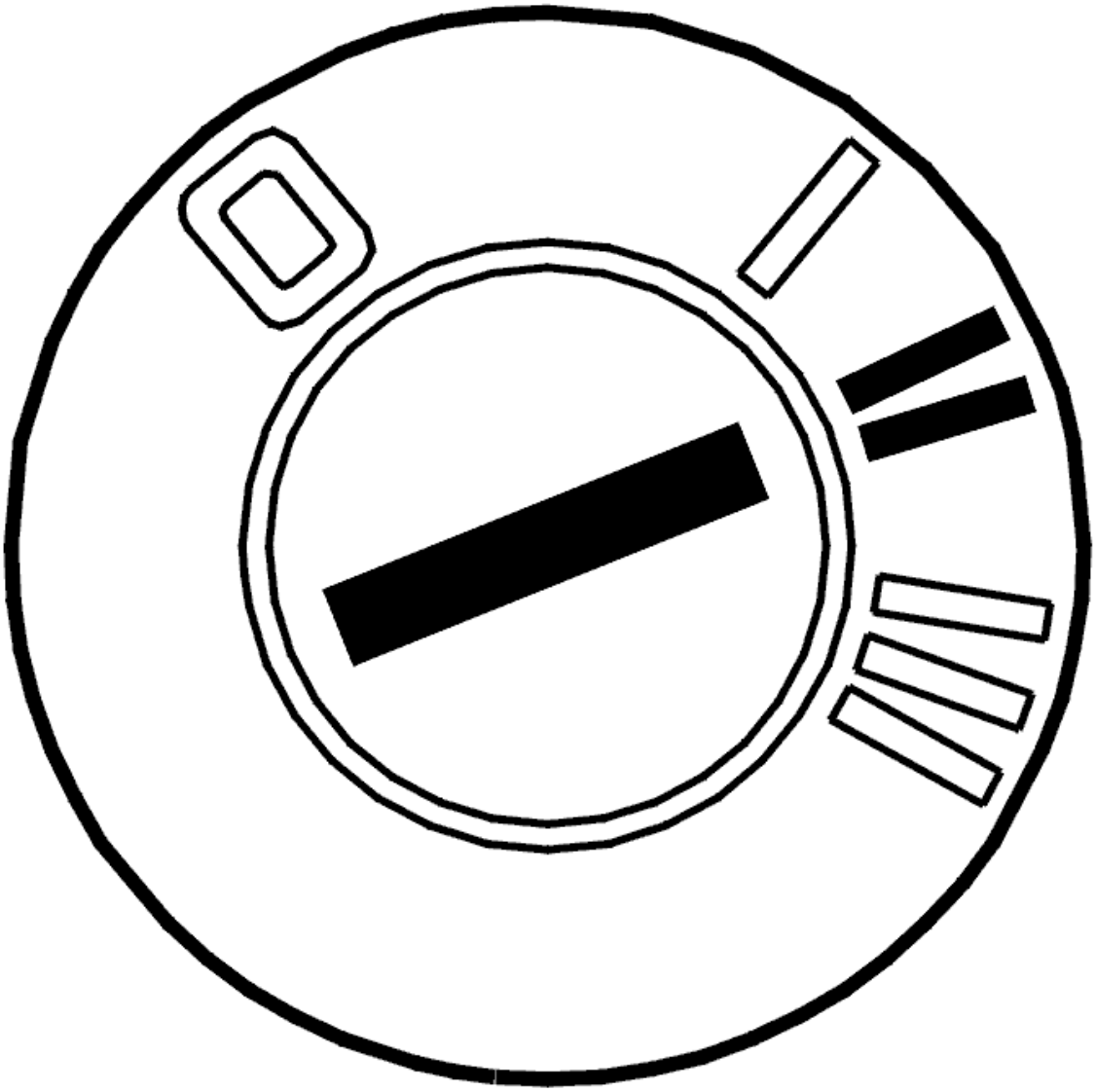

Fig. 14: Identifying Ignition ON
Courtesy of VOLVO CARS CORPORATION

- Ignition off
- Disconnect connector A for the seat heating module (SHM) left
- Ignition on.

  The climate control module (CCM) has detected that a component on LIN bus 1 is transmitting incorrect data and disrupting communication on the LIN bus.

  Check the communication by disconnecting the seat heating module (SHM) left.

  If other control modules on LIN bus 1 now function, replace the seat heating module (SHM) left.

Was a fault detected?

- **YES**

  Refer to **VERIFICATION**

- **NO**

  Refer to **CHECKING COMPONENTS**

CHECKING COMPONENTS

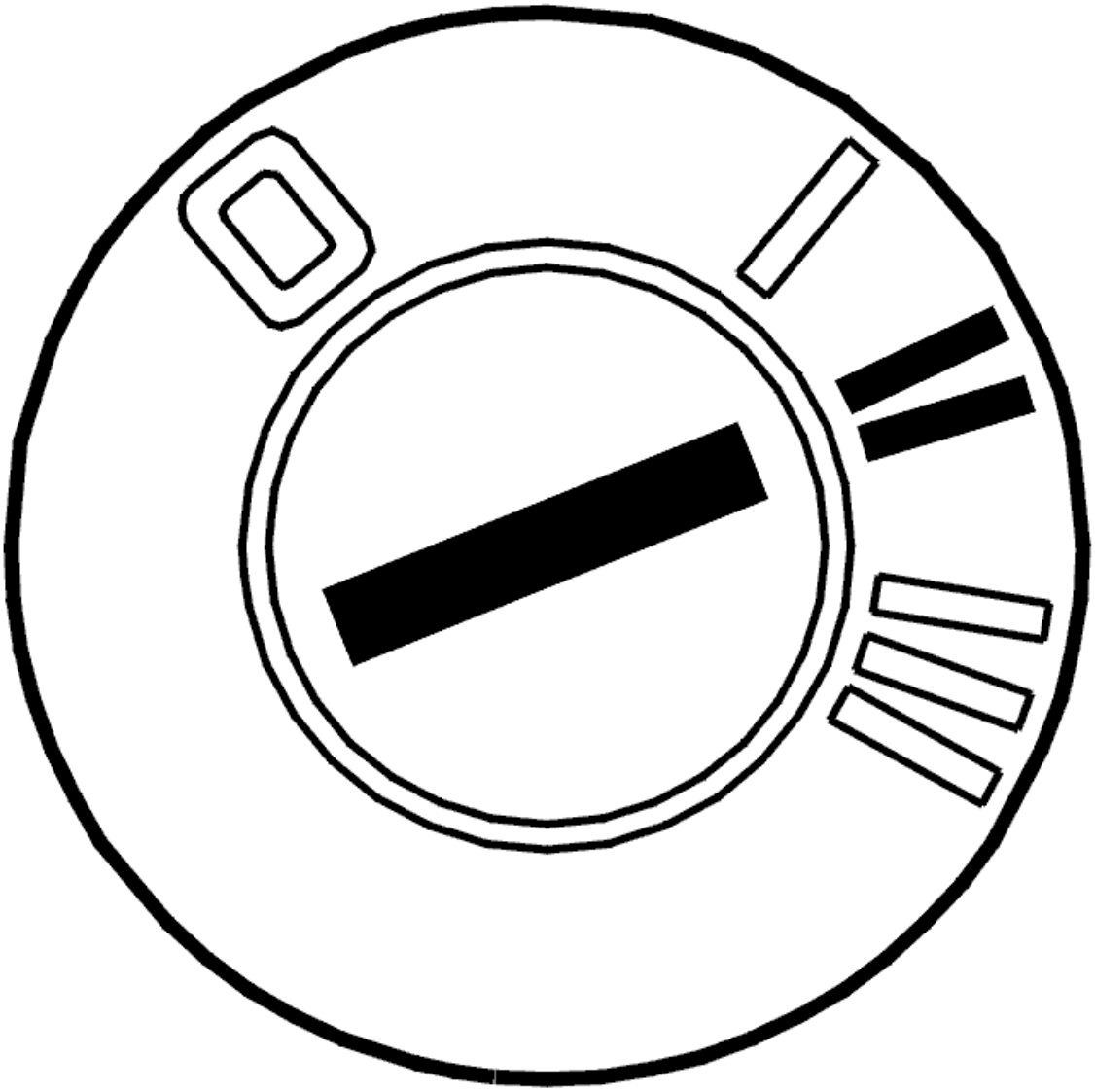

Fig. 15: Identifying Ignition ON
Courtesy of VOLVO CARS CORPORATION

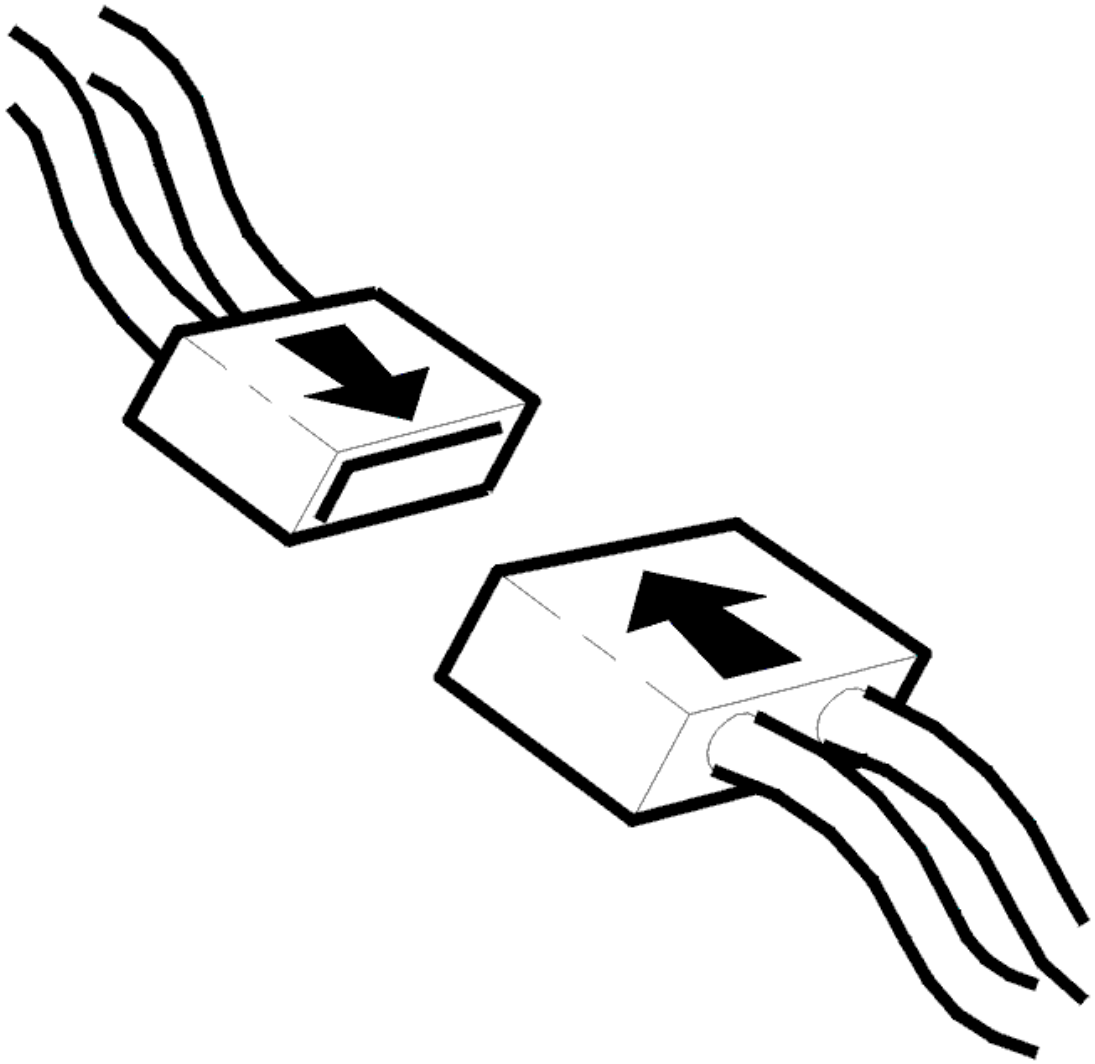

Fig. 16: Connecting Connector
Courtesy of VOLVO CARS CORPORATION

- Ignition off
- Reconnect connector A for the seat heating module (SHM)
- Ignition on.

Check the components on the climate control unit as follows:

- Disconnect the connectors for the components one at a time
- Check whether the other components regain functionality, for example by activating seat heating
- If the functionality for the other components returns, the fault is probably in the disconnected components.

Remedy as necessary.

Other information:

- For further information about the connectors, fuses and relays, appropriate service information.
- see **CONNECTING THE BREAKOUT BOX**
- see **SIGNAL SPECIFICATION**
- see **CLIMATE CONTROL, LOCATION OF COMPONENTS**
- see **CLIMATE CONTROL MODULE (CCM), REPLACING**
- For -2004, see **DAMPER MOTOR AIR DISTRIBUTION, REPLACING** . For 2005-, see **DAMPER MOTOR MODULE (DMM) AIR DISTRIBUTION, REPLACING**
- For -2004, see **DAMPER MOTOR TEMPERATURE, REPLACING** . For 2005-, see **DAMPER MOTOR MODULE (DMM) TEMPERATURE, REPLACING**
- For -2004, see **DAMPER MOTOR RECIRCULATION, REPLACING** . For 2005-, see **DAMPER MOTOR MODULE (DMM) RECIRCULATION, REPLACING**
- see **AIR QUALITY SENSOR, REPLACING**
- see **SEAT HEATING MODULE (SHM), REPLACING**
- see **CONTENTS**

- **Continue**

  Refer to **IDENTIFYING COMPONENTS ON THE LIN NETWORK THAT BELONG TO THE CLIMATE CONTROL SYSTEM (CCM)**

IDENTIFYING COMPONENTS ON THE LIN NETWORK THAT BELONG TO THE CLIMATE CONTROL SYSTEM (CCM)

INFORMATION

- The control module must be identified after replacing the Damper Motor Module (DMM).

NOTE: Identification must only be carried out when replacing components on the LIN network that belong to the climate control system (CCM).

Have any of the components on the LIN network been replaced?

- **YES**

  Refer to **IDENTIFYING COMPONENTS ON THE LIN NETWORK THAT BELONG TO THE CLIMATE CONTROL SYSTEM (CCM)**

- **NO**

  Refer to **VERIFICATION**

IDENTIFYING COMPONENTS ON THE LIN NETWORK THAT BELONG TO THE CLIMATE CONTROL SYSTEM (CCM)

HINT: When identifying damper motors, each damper motor must be run to its limit position. These operations can take up to 30 seconds. When identifying the damper motors it is important that a battery charger is connected.

Fig. 17: Checking Traffic Load On CAN Cables
Courtesy of VOLVO CARS CORPORATION

- Ignition off
- Reinstall the connectors, components etc.

NOTE: **Climate Control Module (CCM) and damper motors can be affected by the temperature. The vehicle should have normal room temperature when performing this service.**

Carry out identification as follows:

- Ignition on.
- Click on the VCT2000 (Volvo Scan Tool) symbol. Wait until identification has been carried out.
- Ignition off.

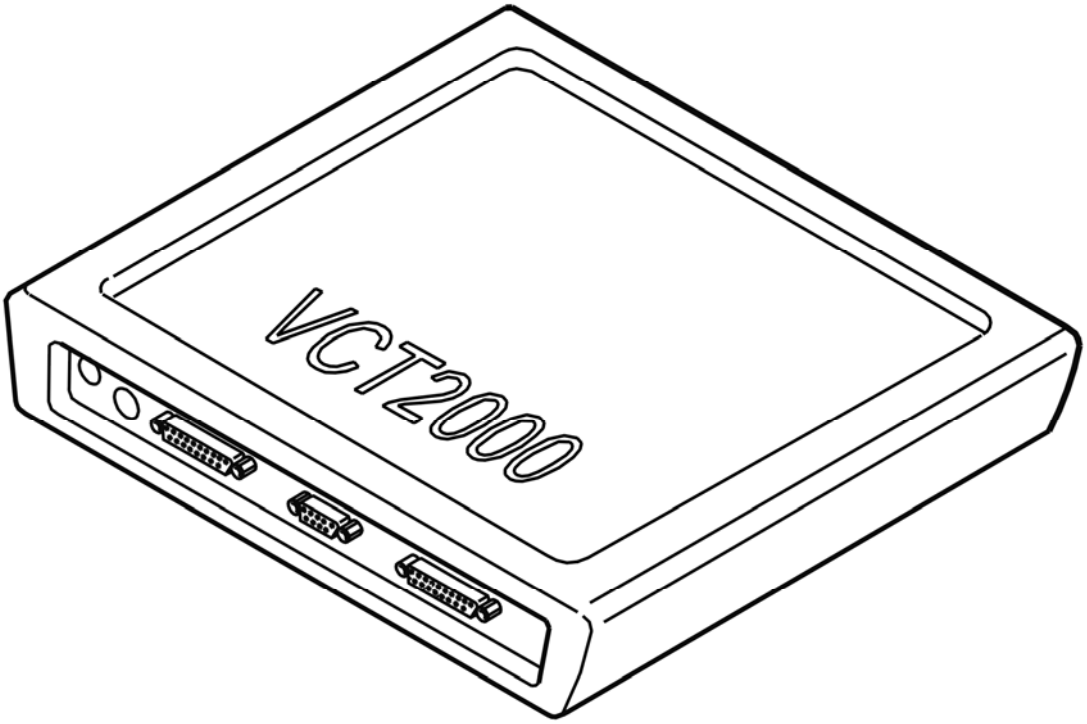

Fig. 18: Identifying VCT2000 Diagnostic Tool Symbol In VIDA
Courtesy of VOLVO CARS CORPORATION

- **Continue**

Refer to **CALIBRATING THE CLIMATE CONTROL MODULE (CCM)**

CALIBRATING THE CLIMATE CONTROL MODULE (CCM)

CAUTION: When activating this function, calibration of the Climate Control Module (CCM) starts. After carrying out calibration read off of the diagnostic trouble codes (DTCs) starts. To ensure that diagnostics for the Climate Control Module (CCM) have been carried out, delay for 30 seconds before reading out diagnostic trouble codes (DTCs) after calibration.

NOTE: Climate Control Module (CCM) and damper motors can be affected by the temperature. The vehicle should have normal room temperature when performing this service.

Fig. 19: Checking Traffic Load On CAN Cables
Courtesy of VOLVO CARS CORPORATION

Carry out calibration as follows:

- Ignition on.
- Click on the VCT2000 (Volvo Scan Tool) symbol. Wait until calibration has been carried out and diagnostic trouble codes (DTCs) read out.
- Ignition off.

This function controls the components that communicate with the Climate Control Module (CCM) via LIN bus 1 and LIN bus 2. In the event of a fault in any of the LIN buses, diagnostic trouble codes (DTCs) CCM-0070 to CCM-0071 will be stored depending on the fault. These diagnostic trouble codes (DTCs) can only be stored in conjunction with this diagnostic function.

If any of these diagnostic trouble codes (DTCs) recur, recalibrate to check if the problem was overcome. If the diagnostic trouble code (DTC) recurs, fault-trace the relevant diagnostic trouble code (DTC).

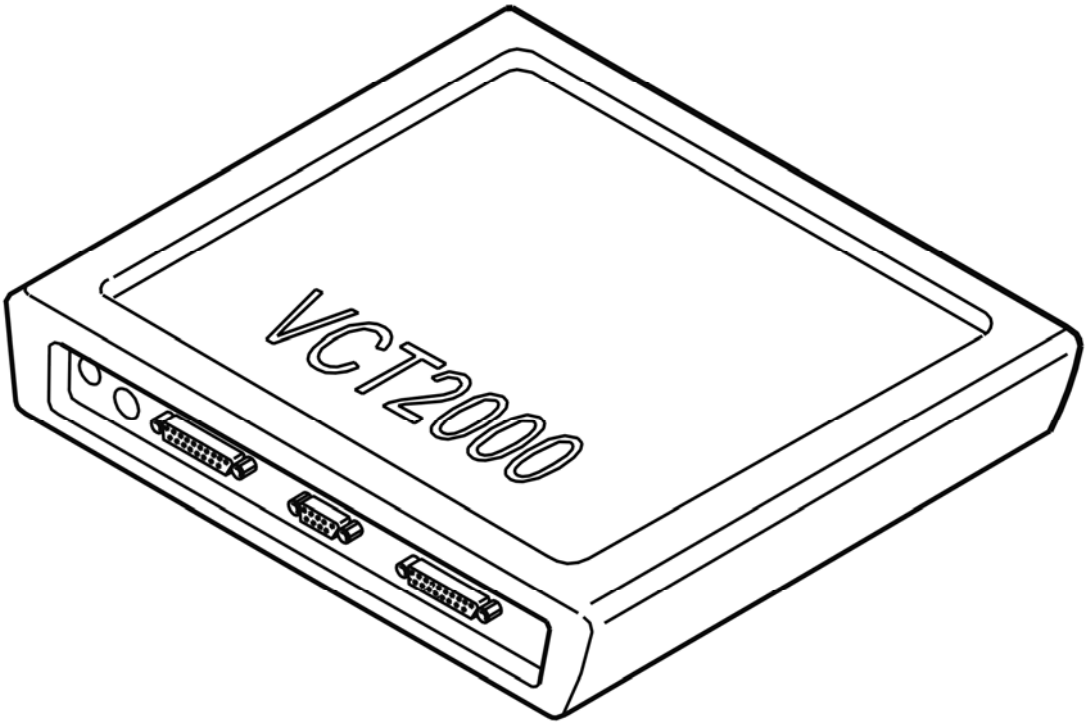

Fig. 20: Identifying VCT2000 Diagnostic Tool Symbol In VIDA
Courtesy of VOLVO CARS CORPORATION

- **Continue**

  Refer to **VERIFICATION**

VERIFICATION

HINT: After carrying out the repair, check that the fault has been remedied.

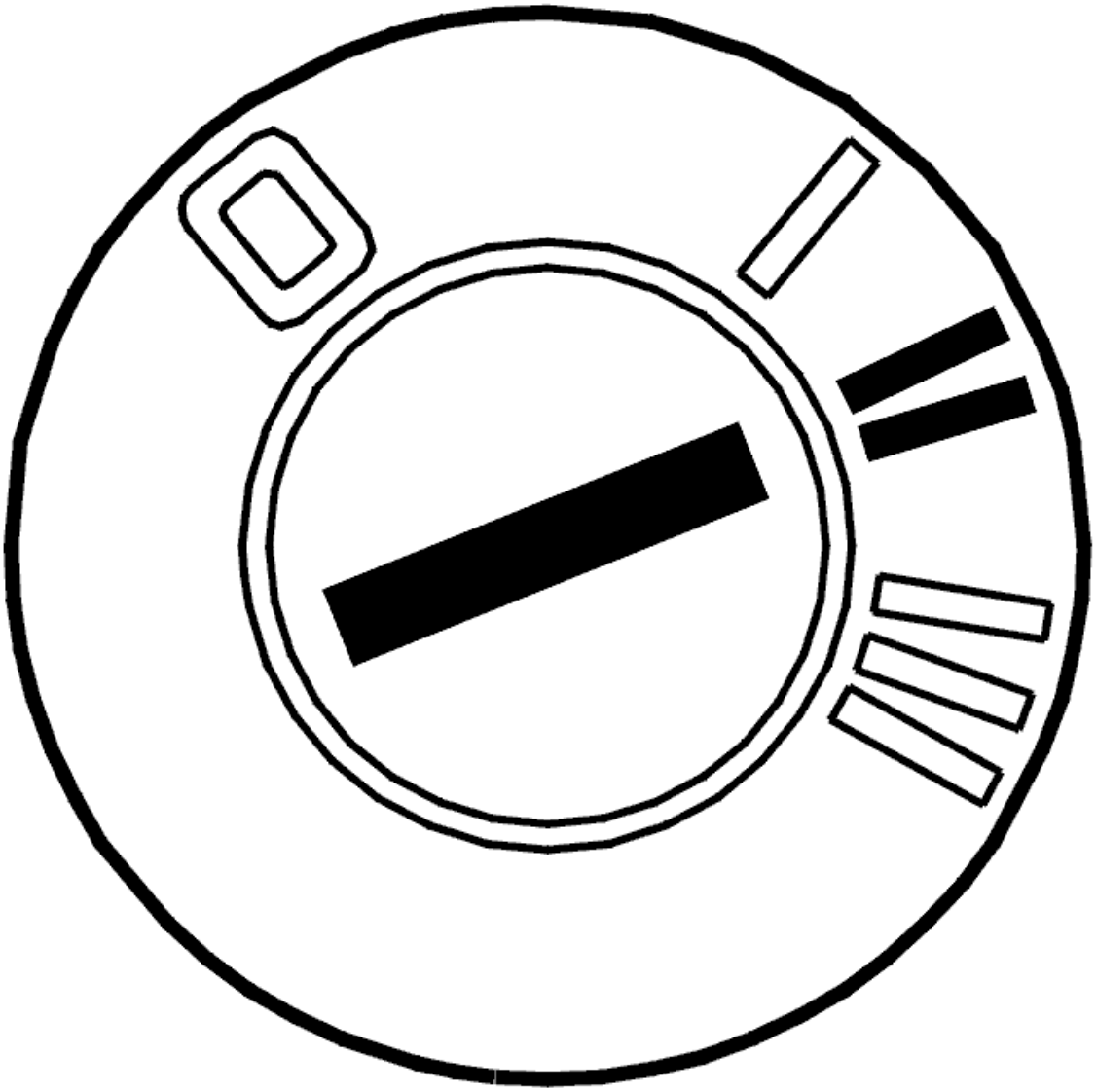

Fig. 21: Identifying Ignition ON
Courtesy of VOLVO CARS CORPORATION

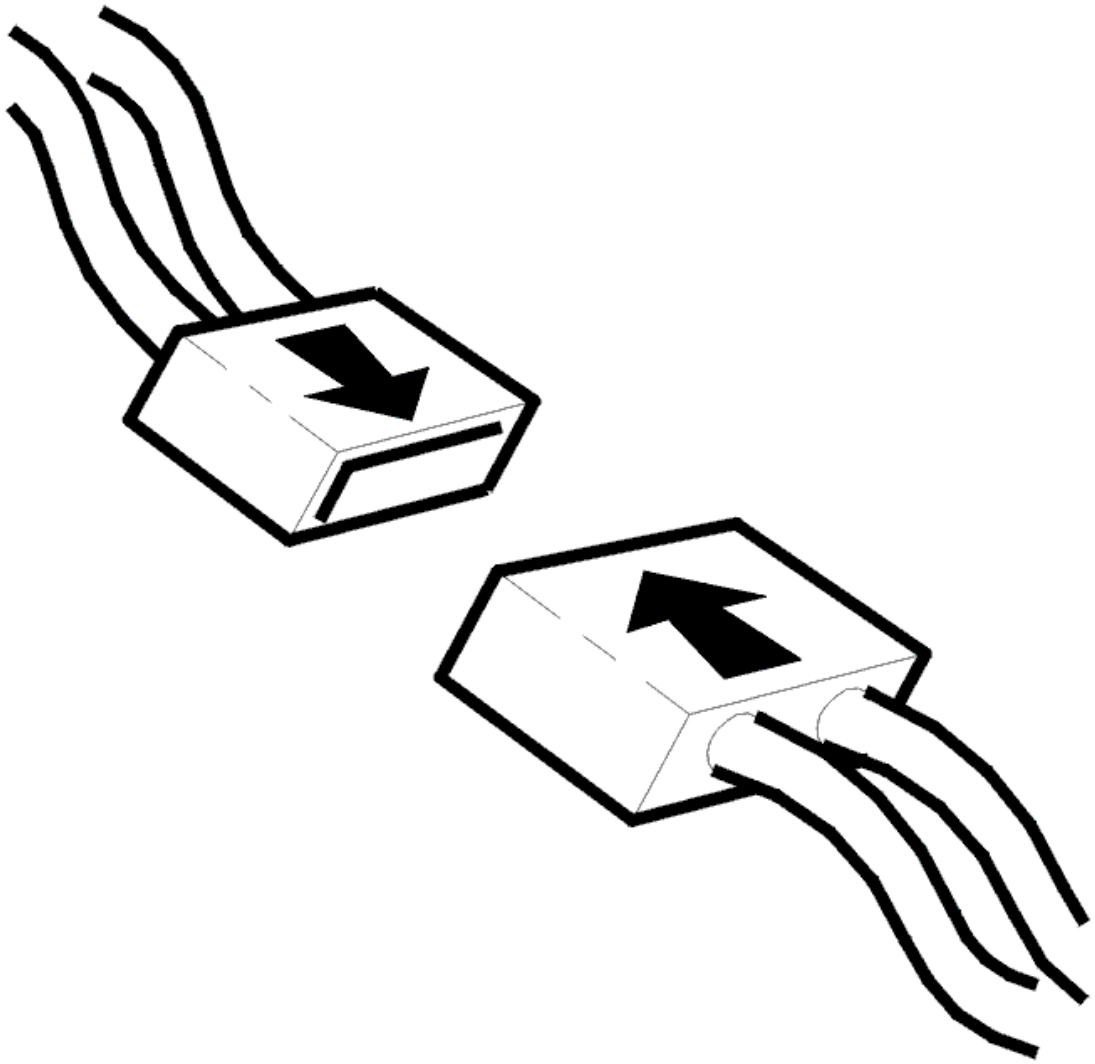

Fig. 22: Connecting Connector
Courtesy of VOLVO CARS CORPORATION

- Ignition off
- Reinstall the connectors, components etc.
- Ignition on.

  Check that the relevant diagnostic trouble code (DTC) has switched status from permanent to intermittent fault.

  Check also that diagnostic trouble code (DTC) CCM-0070, CCM-0071 CCM-0072 or CCM-0073 has not been stored during identification of the damper motors.

  These diagnostic trouble codes (DTCs) can only be stored when identifying damper motors. They mean that the identification has failed for some reason.

Remedy by correctly identifying the damper motor. Fault-trace according to the relevant information.

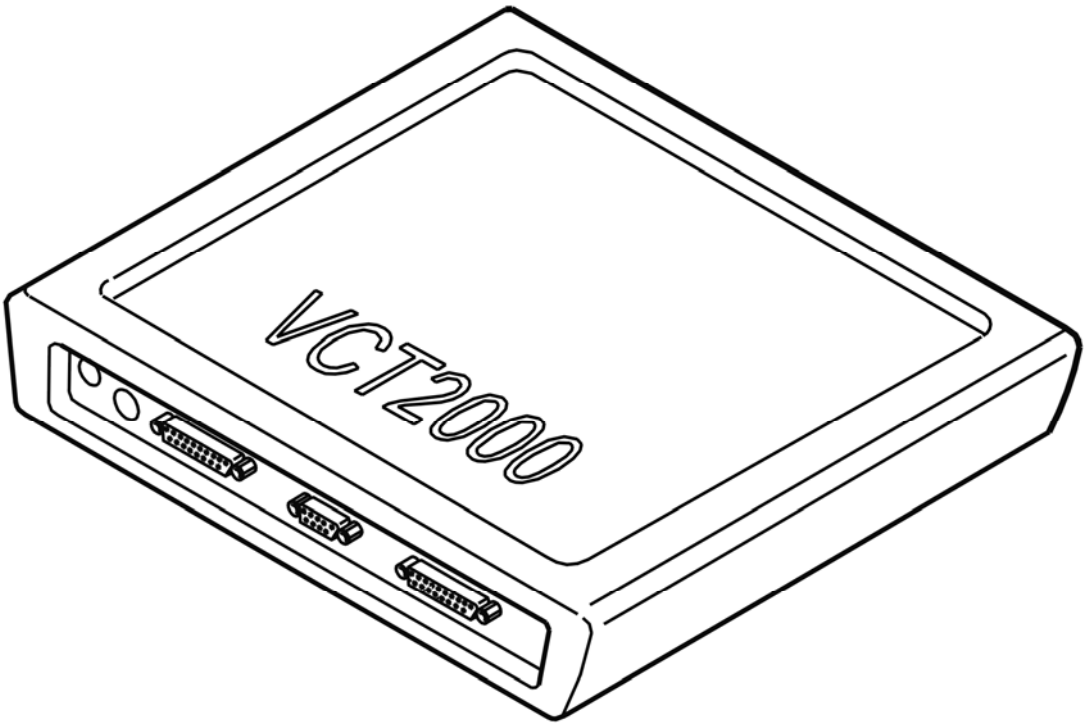

Fig. 23: Identifying VCT2000 Diagnostic Tool Symbol In VIDA
Courtesy of VOLVO CARS CORPORATION

Has the status of the diagnostic trouble code (DTC) changed?

- **YES**

  VERIFIED: Troubleshooting has been completed.

- **NO**

  Refer to **INFORMATION**

AIR-QUALITY: SENSOR, REPLACING

As the illustrations in this service information are used for different model years and / or models, some variation may occur. However, the essential information in the illustrations is always correct.

PREPARATIONS

Remove the plenum chamber. See **COWL, REPLACING**

Open the damper for the air intake.

REMOVING THE AIR QUALITY SENSOR

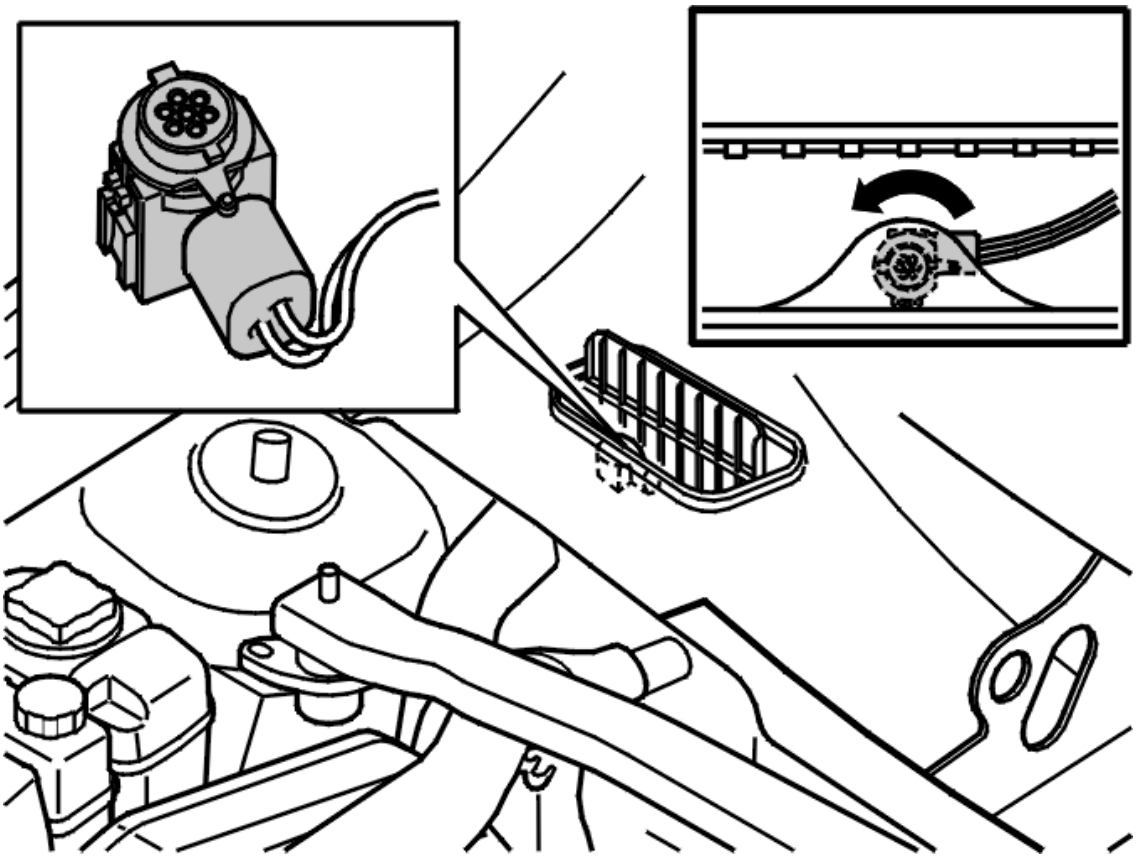

Fig. 24: Identifying Air Quality Sensor Removal
Courtesy of VOLVO CARS CORPORATION

Turn the sensor approximately 60° counter-clockwise (see the illustration).

Slightly pull out the sensor and cable to access the connector.

Disconnect the connector.

INSTALLING THE AIR QUALITY SENSOR

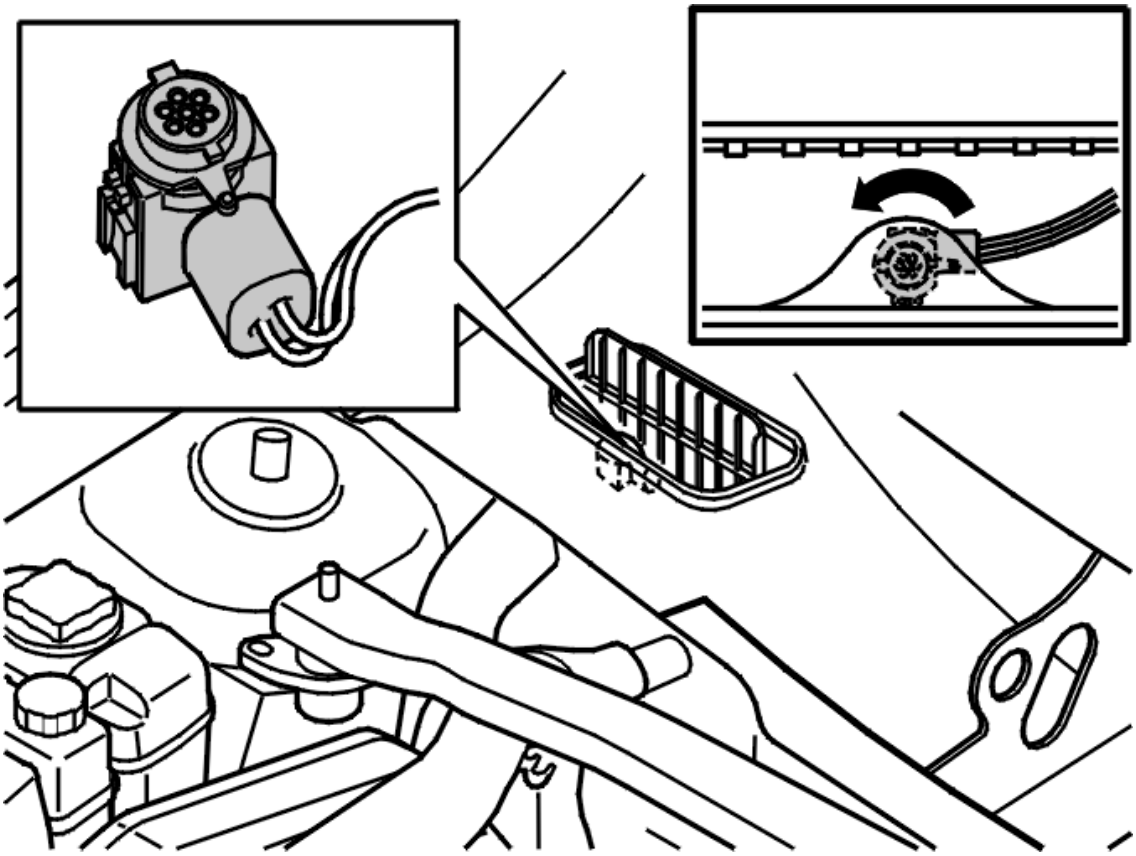

Fig. 25: Identifying Air Quality Sensor Removal
Courtesy of VOLVO CARS CORPORATION

Connect the connector.

Insert as much of the cable through the hole as possible.

Position the sensor and seal (the flat side must face upwards) in the groove. The sensor can only be positioned one way in the groove (see the illustration).

Turn the sensor approximately 60° clockwise until it will not turn any further. Check that the air quality sensor is securely in place.

Ensure that the cable is as far in as possible.

Close the damper for the air intake.

Install the plenum chamber. See **COWL, REPLACING** .

INFORMATION

FAULT-TRACING INFORMATION

The fault should have been detected and remedied. As this is not the case fault-tracing has failed.

Exit fault-tracing for this diagnostic trouble code (DTC) or make another attempt.

CCM-DD01: LIN BUS1. SIGNAL TOO HIGH / SIGNAL TOO LOW (2005-2012)

DIAGNOSTIC TROUBLE CODE (DTC) INFORMATION CCM-DD01

Condition

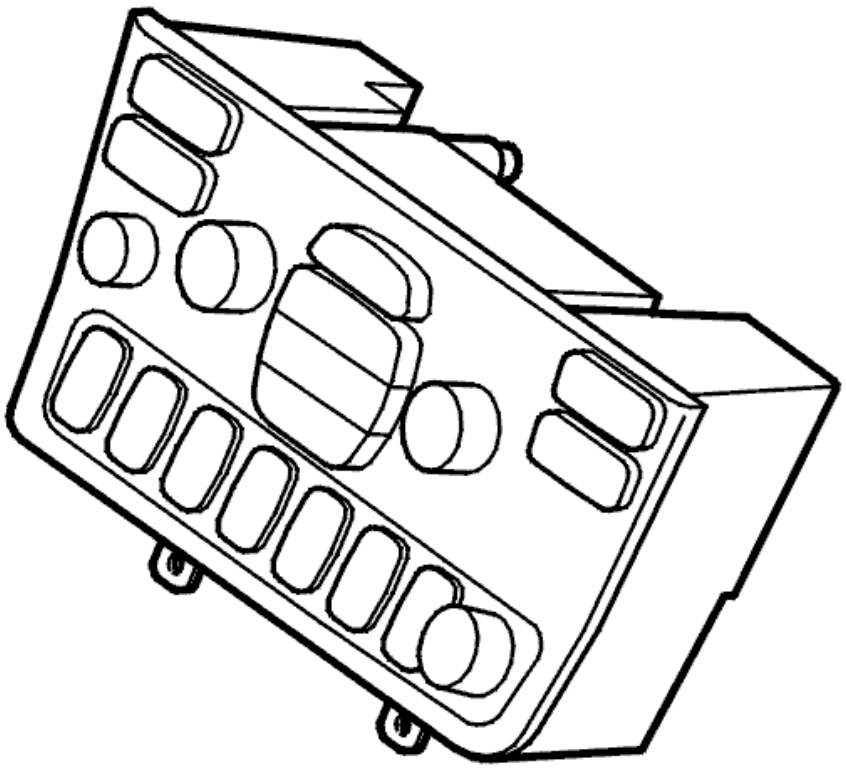

Fig. 26: Climate Control Module
Courtesy of VOLVO CARS CORPORATION

The diagnostic trouble code (DTC) is stored if the climate control module (CCM) detects a short-circuit to supply voltage or ground in LIN bus 1.

A short-circuit to supply voltage or ground in the LIN bus will affect communications and the function of all the components.

The climate control module (CCM) communicates with damper motors, air quality sensors and seat heating via two LIN buses.

The number of components in LIN bus 1 can vary depending on the vehicle equipment (ECC/MCC and options).

The following components communicate on LIN bus 1:

- damper motor air distribution
- damper motor, temperature left
- left seat heater.

The diagnostic trouble code (DTC) can be diagnosed in ignition positions I and II.

Substitute Value

- None.

Possible Source

- Short-circuit to supply voltage in LIN bus 1
- Short-circuit to ground in LIN bus 1.

Fault symptom[s]

- Misting on the windows and/or door mirrors.
- Air flow problem.
- Poor heating in the passenger compartment.
- The front seat heating does not function.
- Poor air quality in the passenger compartment.

SIGNAL TOO HIGH / SIGNAL TOO LOW

CHECKING THE CABLE

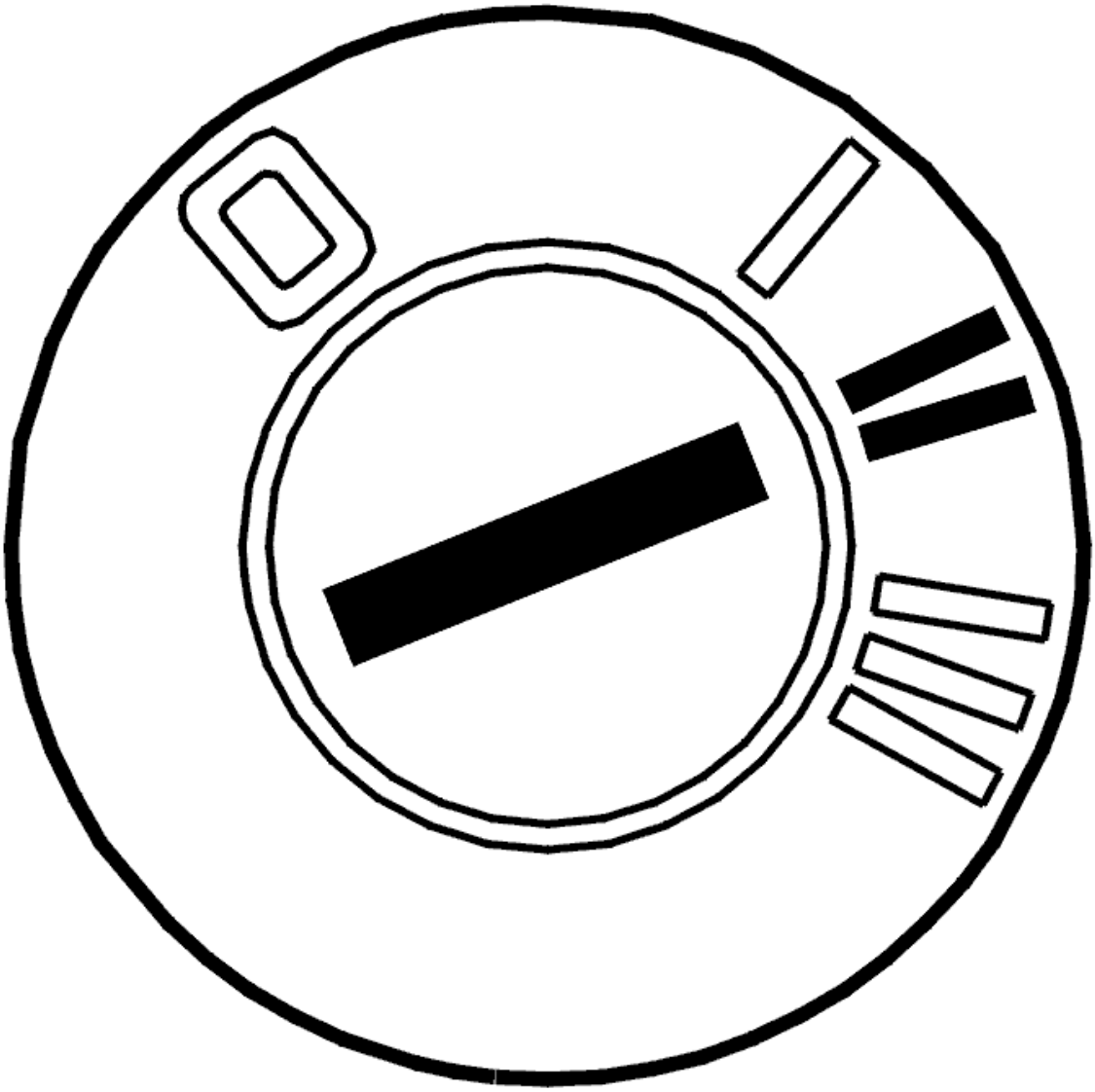

Fig. 27: Identifying Ignition ON
Courtesy of VOLVO CARS CORPORATION

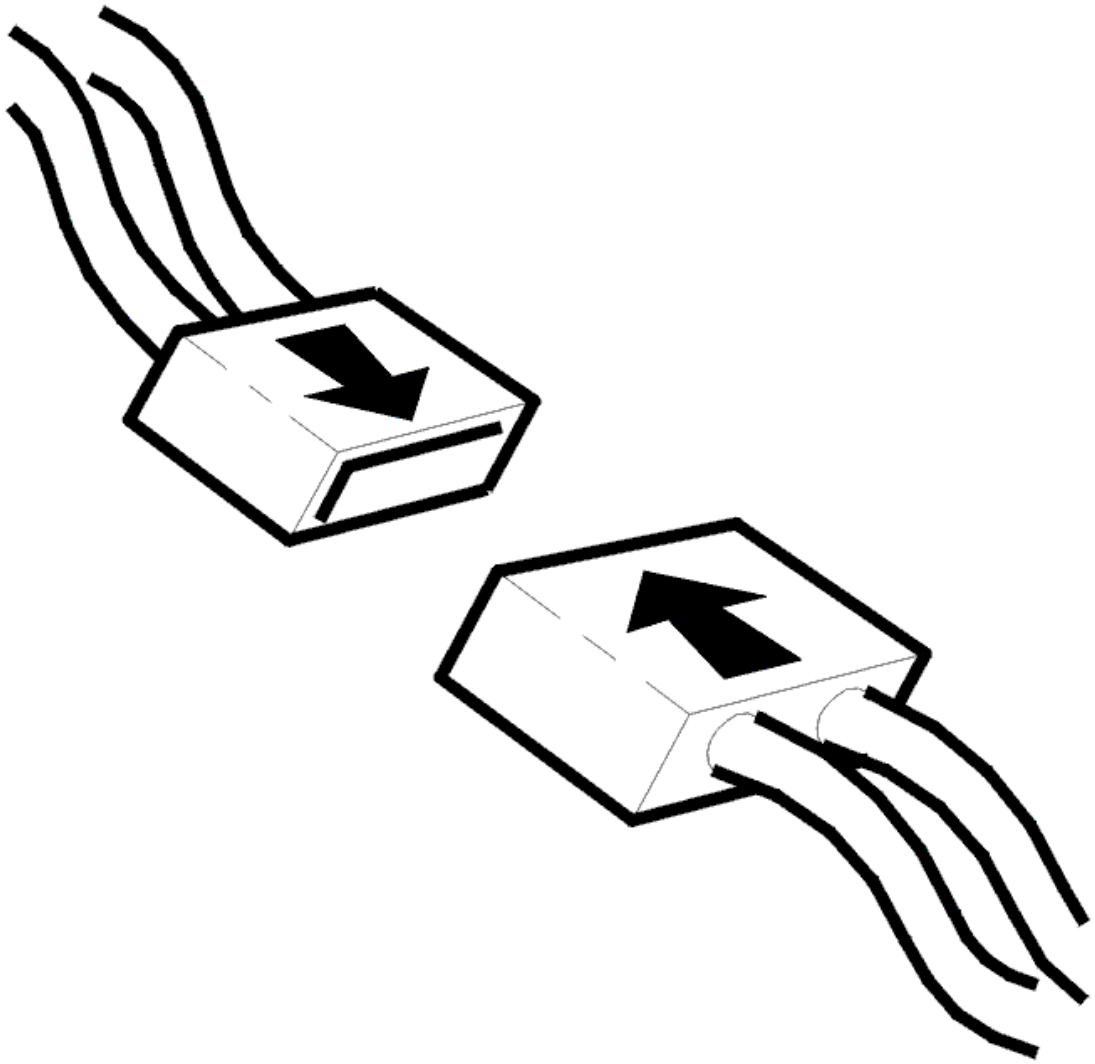

Fig. 28: Connecting Connector
Courtesy of VOLVO CARS CORPORATION

- Ignition off
- Disconnect the connector for the climate control module (CCM)
- Ignition on.

  Check LIN bus 1. Check for a short-circuit to supply voltage.

  Take a reading on the connector for the climate control module (CCM) between terminals #12 (#36) and #1 (#25).

  If there is a short-circuit to supply voltage in LIN bus 1, continue fault-tracing by locating where the short-circuit has occurred as follows:

- Disconnect the connector on the climate control unit that connects LIN bus 1 from the climate control module (CCM) to other components on the climate control unit
- Check the section of LIN bus 1 that connects the climate control module (CCM) to the left-hand seat heating module (SHM) and the connector on the climate control unit. Take a reading on the connector for the climate control module (CCM) between terminals #12 (#36) and #1 (#25).

If the fault persists, fault-trace LIN bus 1 between the climate control module (CCM), the left-hand seat heating module (SHM) and the connector for the climate control unit. Check for a short-circuit to supply voltage.

If the fault is no longer present, fault-trace LIN bus 1 between the connector and the components of the climate control unit. Check for a short-circuit to supply voltage.

Remedy as necessary.

Other information:

- For further information about the connectors, fuses and relays, see the appropriate service information.
- see **CONNECTING THE BREAKOUT BOX**
- see **SIGNAL SPECIFICATION**
- see **CLIMATE CONTROL, LOCATION OF COMPONENTS**
- see **CLIMATE CONTROL MODULE (CCM), REPLACING**
- see **SEAT HEATING MODULE (SHM), REPLACING**
- see **CONTENTS**

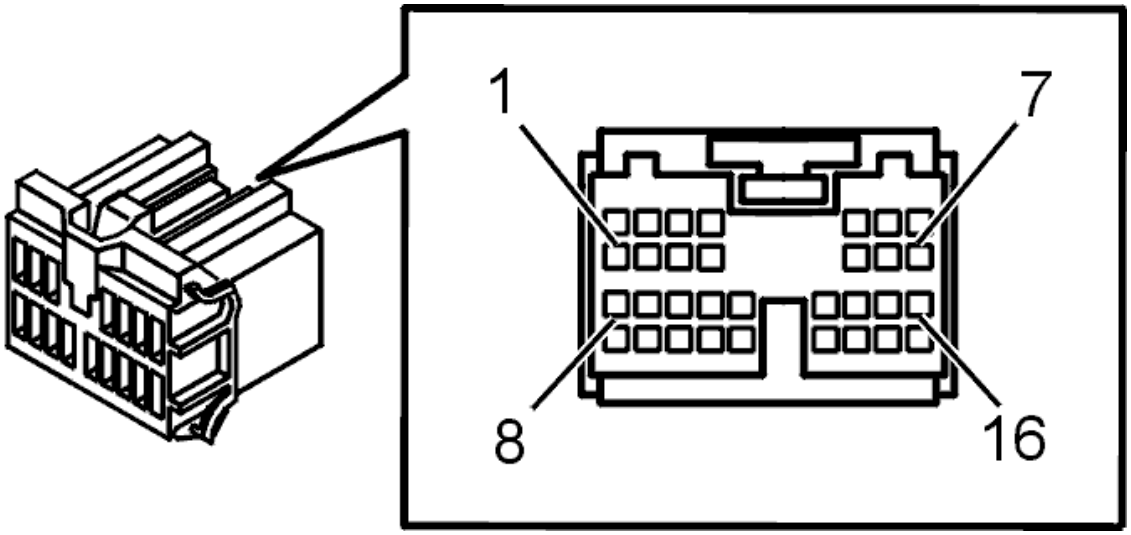

Fig. 29: Connector, Green (16- Pin)
Courtesy of VOLVO CARS CORPORATION

Was a fault detected?

- **YES**

  Refer to **VERIFICATION**

- **NO**

  Refer to **CHECKING THE CABLE**

CHECKING THE CABLE

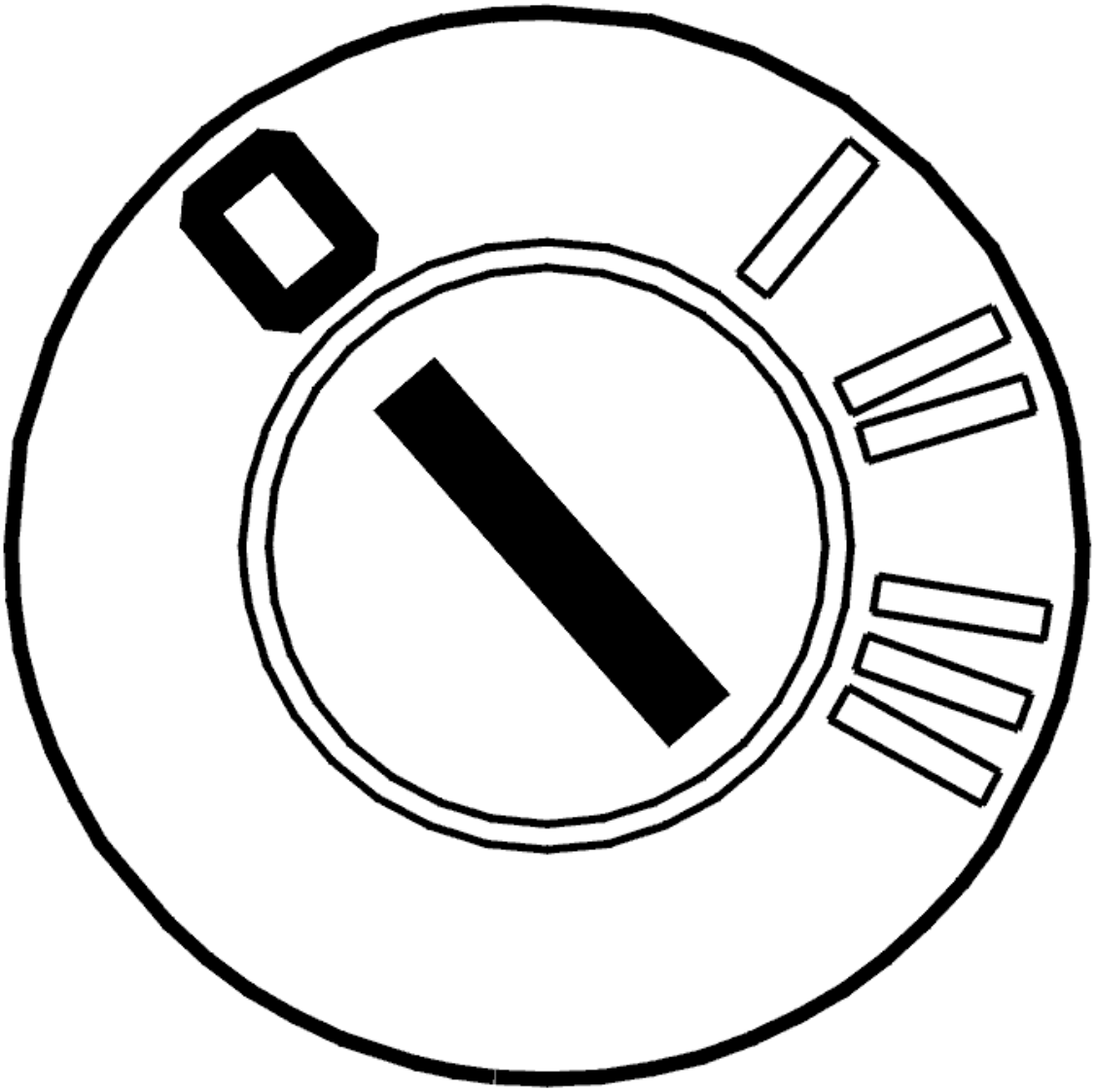

Fig. 30: Identifying Ignition OFF
Courtesy of VOLVO CARS CORPORATION

- Ignition off
- Disconnect the connector for the climate control module (CCM).

Check LIN bus 1. Check for a short-circuit to ground.

Take a reading on the connector for the climate control module (CCM) between terminals #12 (#36) and #16 (#40).

If there is a short-circuit to ground in LIN bus 1, continue fault-tracing by locating where the short-circuit has occurred as follows:

- Disconnect the connector for the climate control unit that connects LIN bus 1 from the climate control module (CCM) to the other components on the climate control unit
- Check the section of LIN bus 1 that connects the climate control module (CCM) to the left-hand seat heating module (SHM) and the connector on the climate control unit. Take a reading on the connector for the climate control module (CCM) between terminals #12 (#36) and #16 (#40).

If the fault persists, fault-trace LIN bus 1 between the climate control module (CCM), the left-hand seat heating module (SHM) and the connector for the climate control unit. Check for a short-circuit to ground.

If the fault is no longer present, fault-trace LIN bus 1 between the connector and the components of the climate control unit. Check for a short-circuit to ground.

Remedy as necessary.

Other information:

- For further information about the connectors, fuses and relays, see the appropriate service information.
- see **CONNECTING THE BREAKOUT BOX**
- see **SIGNAL SPECIFICATION**
- see **CLIMATE CONTROL, LOCATION OF COMPONENTS**
- see **CLIMATE CONTROL MODULE (CCM), REPLACING**
- see **SEAT HEATING MODULE (SHM), REPLACING**
- see **CONTENTS**

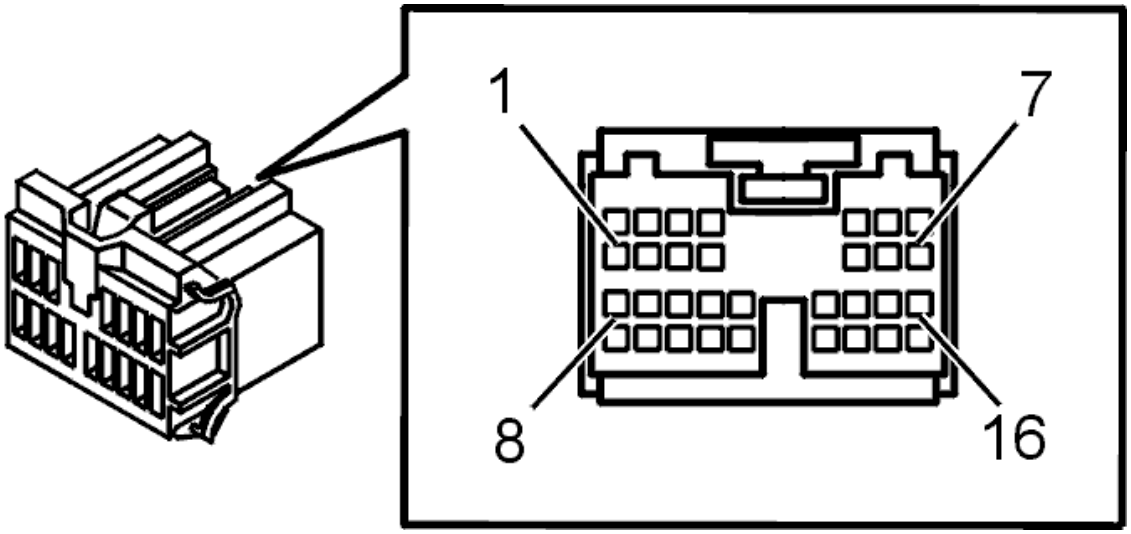

Fig. 31: Connector, Green (16- Pin)
Courtesy of VOLVO CARS CORPORATION

- **Continue**

  Refer to **VERIFICATION**

VERIFICATION

HINT: After carrying out the repair, check that the fault has been remedied.

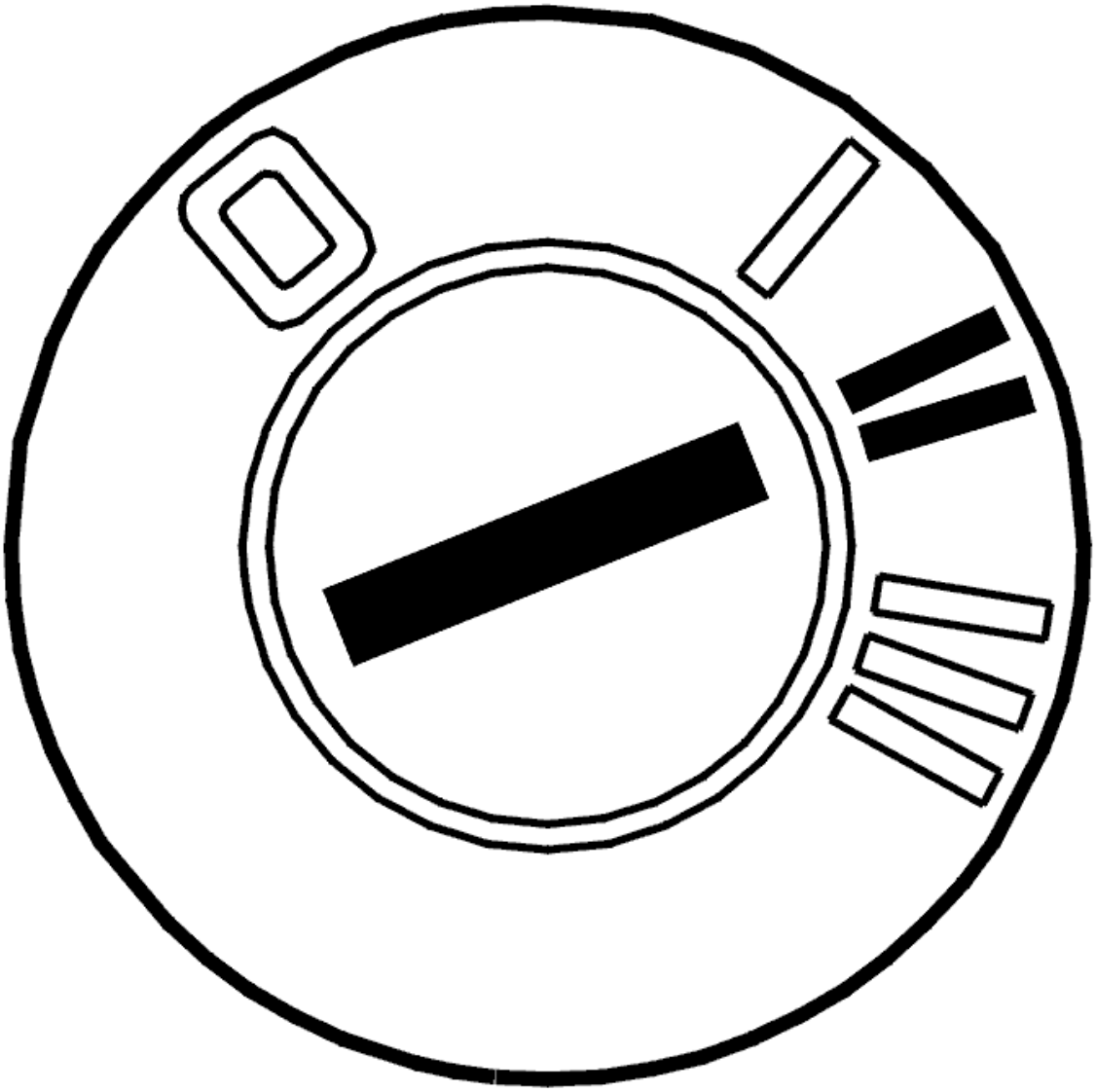

Fig. 32: Identifying Ignition ON
Courtesy of VOLVO CARS CORPORATION

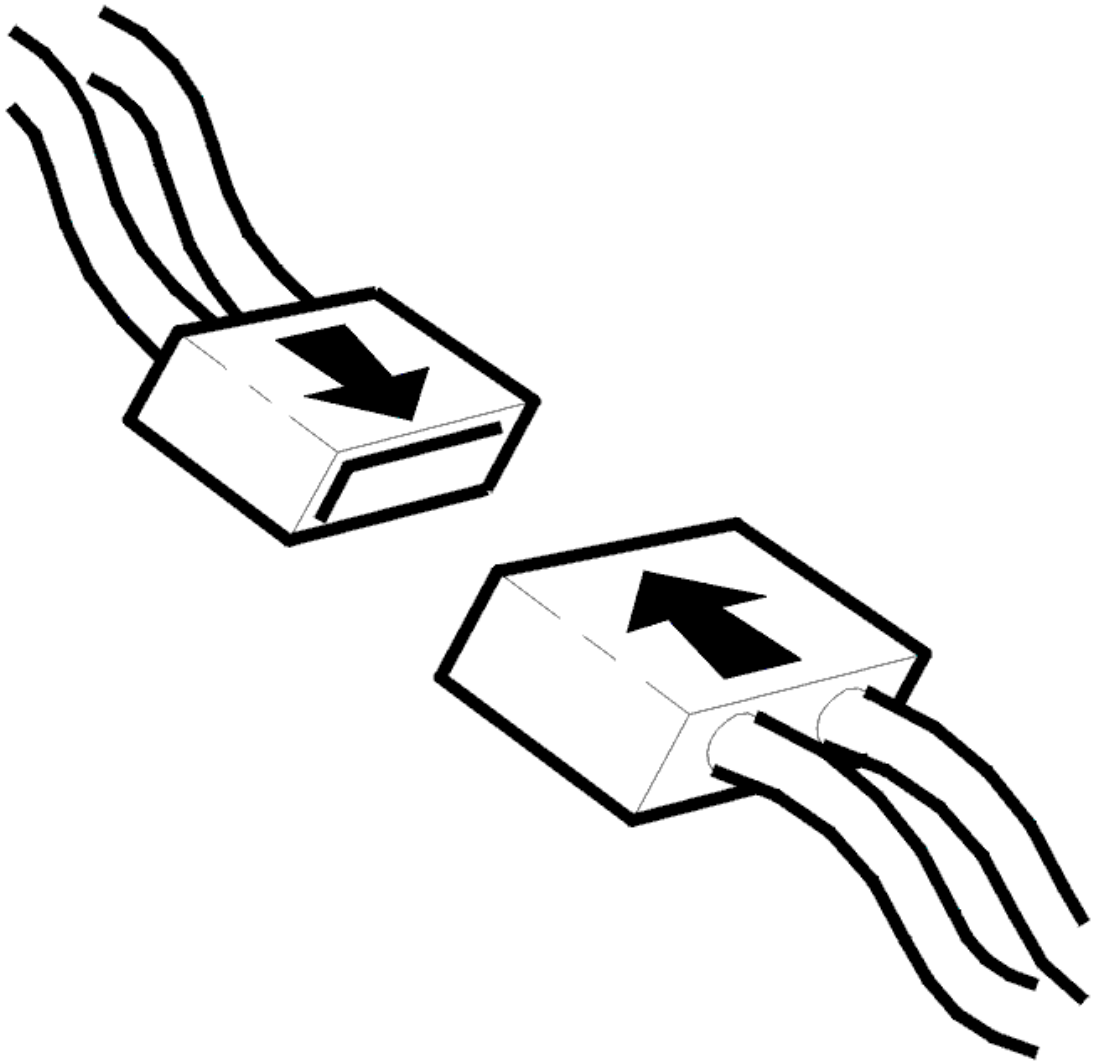

Fig. 33: Connecting Connector
Courtesy of VOLVO CARS CORPORATION

- Ignition off
- Reinstall the connectors, components etc.
- Ignition on.

  Check that the relevant diagnostic trouble code (DTC) has switched status from permanent to intermittent fault.

  Check also that diagnostic trouble code (DTC) CCM-0070, CCM-0071 CCM-0072 or CCM-0073 has not been stored during identification of the damper motors.

  These diagnostic trouble codes (DTCs) can only be stored when identifying damper motors. They mean that the identification has failed for some reason.

Remedy by correctly identifying the damper motor. Fault-trace according to the relevant information.

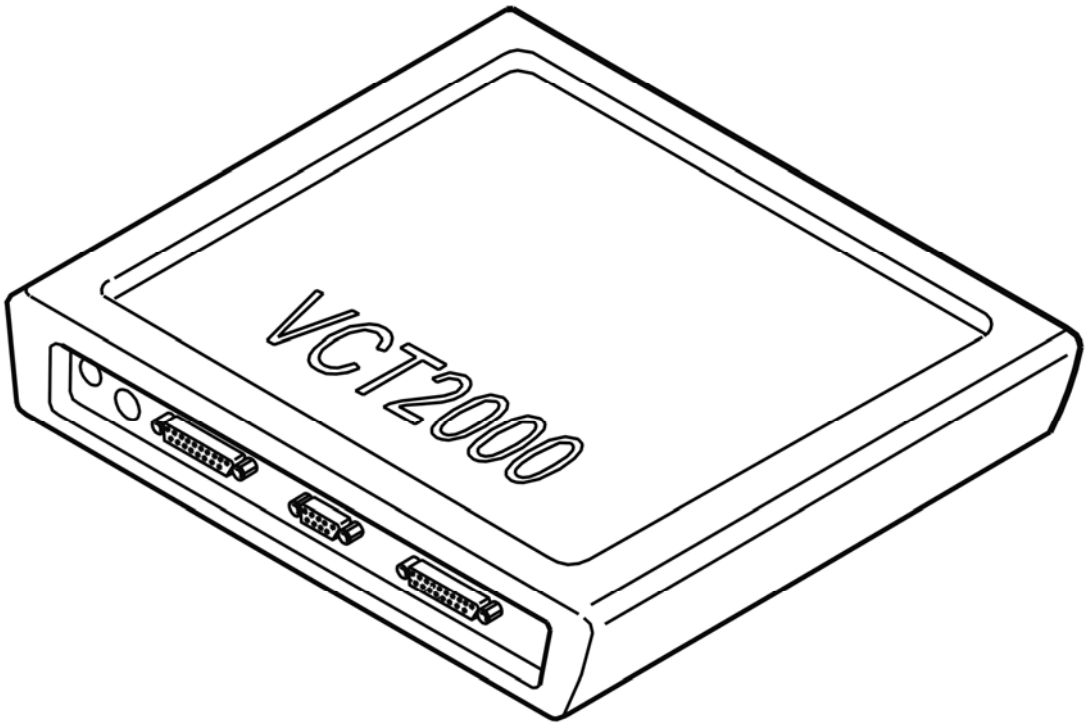

Fig. 34: Identifying VCT2000 Diagnostic Tool Symbol In VIDA
Courtesy of VOLVO CARS CORPORATION

Has the status of the diagnostic trouble code (DTC) changed?

- **YES**

  VERIFIED: Troubleshooting has been completed.

- **NO**

  Refer to **INFORMATION**

INFORMATION

FAULT-TRACING INFORMATION

The fault should have been detected and remedied. As this is not the case fault-tracing has failed.

Exit fault-tracing for this diagnostic trouble code (DTC) or make another attempt.

CCM-DD02: LIN BUS1. FAULTY CHECK SUM (2005-2012)

DIAGNOSTIC TROUBLE CODE (DTC) INFORMATION CCM-DD02

Condition

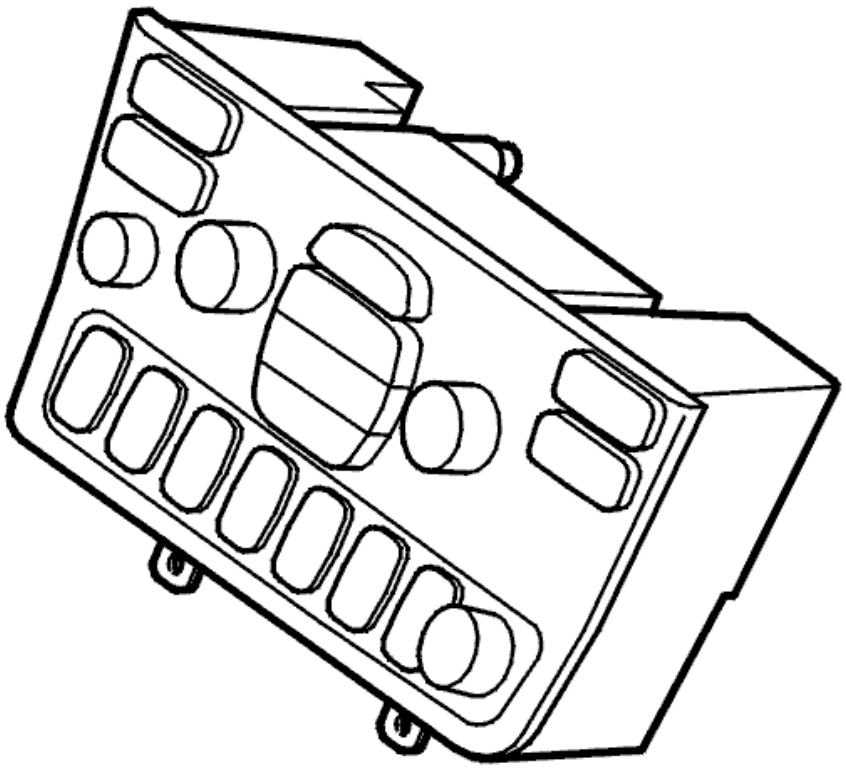

Fig. 35: Climate Control Module
Courtesy of VOLVO CARS CORPORATION

The diagnostic trouble code (DTC) is stored if the climate control module (CCM) detects that data that is sent on LIN bus 1 is incorrect.

The following components communicate with the climate control module (CCM) via LIN bus 1:

- damper motor module (DMM) air distribution
- damper motor module (DMM) temperature left
- seat heating module (SHM) left.

The diagnostic trouble code (DTC) can be diagnosed in ignition positions I and II.

Substitute Value

- None.

Possible Source

- Incorrect data during communication on LIN bus 1.

Fault symptom[s]

- Misting on the windows and/or door mirrors.
- Air flow problem.
- Poor heating in the passenger compartment.
- The front seat heating does not function.
- Poor air quality in the passenger compartment.

FAULTY CHECK SUM

CHECKING COMPONENTS

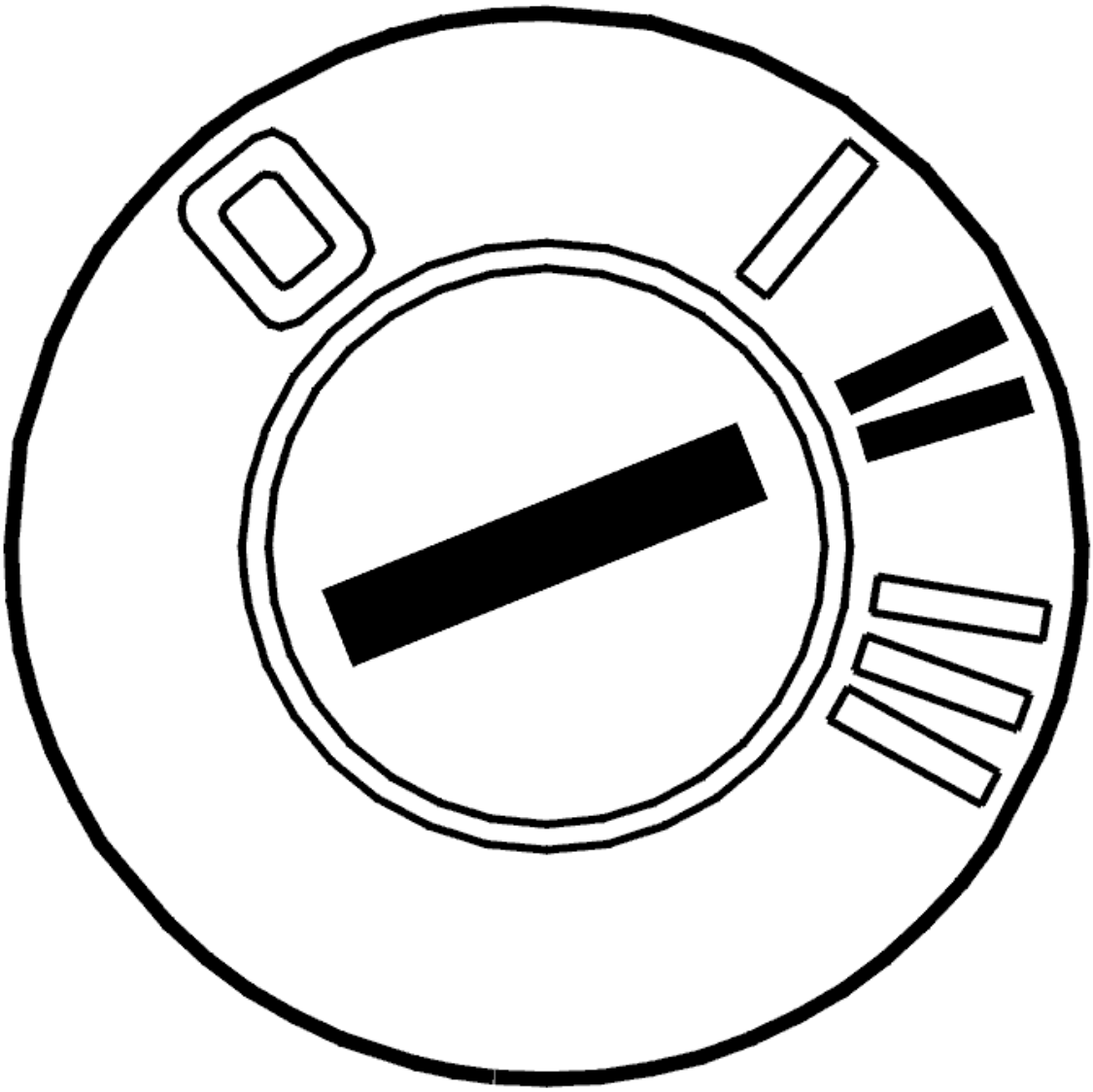

Fig. 36: Identifying Ignition ON

Courtesy of VOLVO CARS CORPORATION

- Ignition on.

  The climate control module (CCM) has diagnosed that two or more damper motor modules (DMM) have the same identity on LIN bus 1.

  This may be because one damper motor module (DMM) has been installed incorrectly.

  After replacing a damper motor module (DMM), it must be allocated a correct identity by the climate control module (CCM). This is performed during identification of the damper motors on the LIN bus.

  If a damper motor module (DMM) is installed that already has an identity allocated to it, this can lead to a conflict on the LIN bus.

  Remedy by correctly identifying the damper motor.

  Other information:

  - see **CLIMATE CONTROL, LOCATION OF COMPONENTS**
  - see **CLIMATE CONTROL MODULE (CCM), REPLACING**
  - For -2004, see **DAMPER MOTOR TEMPERATURE, REPLACING** For 2005-, see **DAMPER MOTOR MODULE (DMM) TEMPERATURE, REPLACING**
  - For -2004, see **DAMPER MOTOR DEFROSTER, REPLACING** . For 2005-, see **DAMPER MOTOR MODULE (DMM) DEFROSTER, REPLACING** .
  - For -2004, see **DAMPER MOTOR RECIRCULATION, REPLACING** . For 2005-, see **DAMPER MOTOR AIR DISTRIBUTION, REPLACING** .

IDENTIFYING COMPONENTS ON THE LIN NETWORK THAT BELONG TO THE CLIMATE CONTROL SYSTEM (CCM)

INFORMATION

- The control module must be identified after replacing the Damper Motor Module (DMM).

  NOTE: Identification must only be carried out when replacing components on the LIN network that belong to the climate control system (CCM).

Have any of the components on the LIN network been replaced?

- **YES**

  Refer to **IDENTIFYING COMPONENTS ON THE LIN NETWORK THAT BELONG TO THE CLIMATE CONTROL SYSTEM (CCM)**

- **NO**

Refer to **VERIFICATION**

IDENTIFYING COMPONENTS ON THE LIN NETWORK THAT BELONG TO THE CLIMATE CONTROL SYSTEM (CCM)

HINT: When identifying damper motors, each damper motor must be run to its limit position. These operations can take up to 30 seconds. When identifying the damper motors it is important that a battery charger is connected.

Fig. 37: Checking Traffic Load On CAN Cables
Courtesy of VOLVO CARS CORPORATION

- Ignition off
- Reinstall the connectors, components etc.

NOTE: **Climate Control Module (CCM) and damper motors can be affected by the temperature. The vehicle should have normal room temperature when performing this service.**

Carry out identification as follows:

- Ignition on.
- Click on the VCT2000 (Volvo Scan Tool) symbol. Wait until identification has been carried out.
- Ignition off.

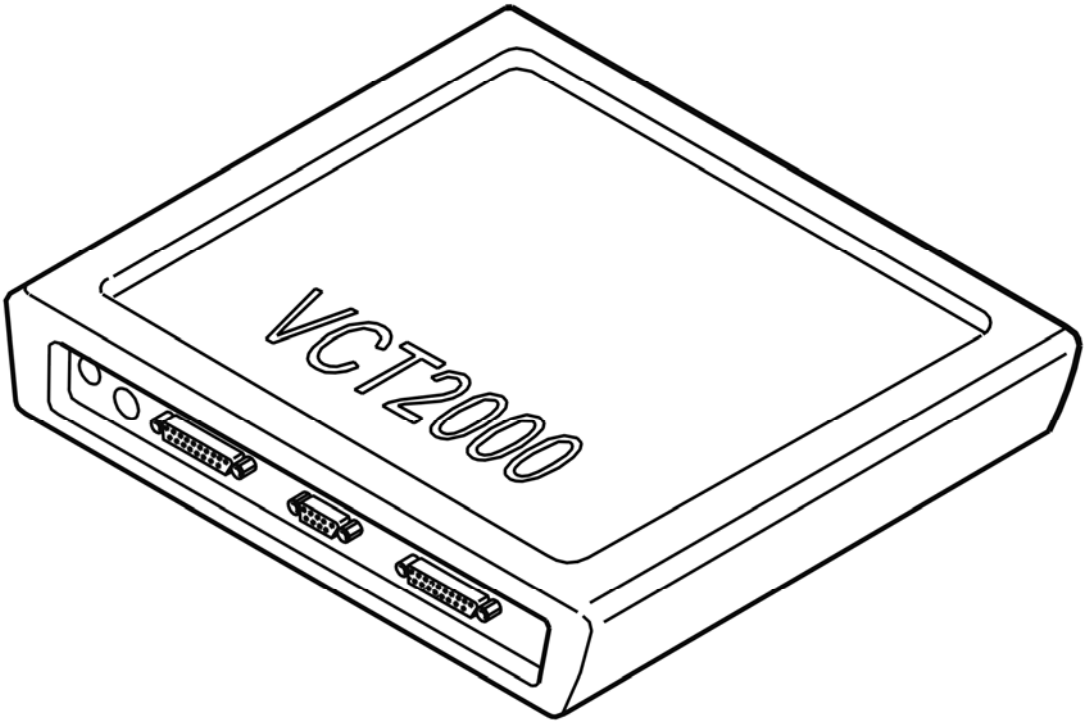

Fig. 38: Identifying VCT2000 Diagnostic Tool Symbol In VIDA
Courtesy of VOLVO CARS CORPORATION

- **Continue**

Refer to **CALIBRATING THE CLIMATE CONTROL MODULE (CCM)**

CALIBRATING THE CLIMATE CONTROL MODULE (CCM)

CAUTION: When activating this function, calibration of the Climate Control Module (CCM) starts. After carrying out calibration read off of the diagnostic trouble codes (DTCs) starts. To ensure that diagnostics for the Climate Control Module (CCM) have been carried out, delay for 30 seconds before reading out diagnostic trouble codes (DTCs) after calibration.

NOTE: Climate Control Module (CCM) and damper motors can be affected by the temperature. The vehicle should have normal room temperature when performing this service.

Fig. 39: Checking Traffic Load On CAN Cables
Courtesy of VOLVO CARS CORPORATION

Carry out calibration as follows:

- Ignition on.
- Click on the VCT2000 (Volvo Scan Tool) symbol. Wait until calibration has been carried out and diagnostic trouble codes (DTCs) read out.
- Ignition off.

This function controls the components that communicate with the Climate Control Module (CCM) via LIN bus 1 and LIN bus 2. In the event of a fault in any of the LIN buses, diagnostic trouble codes (DTCs) CCM-0070 to CCM-0071 will be stored depending on the fault. These diagnostic trouble codes (DTCs) can only be stored in conjunction with this diagnostic function.

If any of these diagnostic trouble codes (DTCs) recur, recalibrate to check if the problem was overcome. If the diagnostic trouble code (DTC) recurs, fault-trace the relevant diagnostic trouble code (DTC).

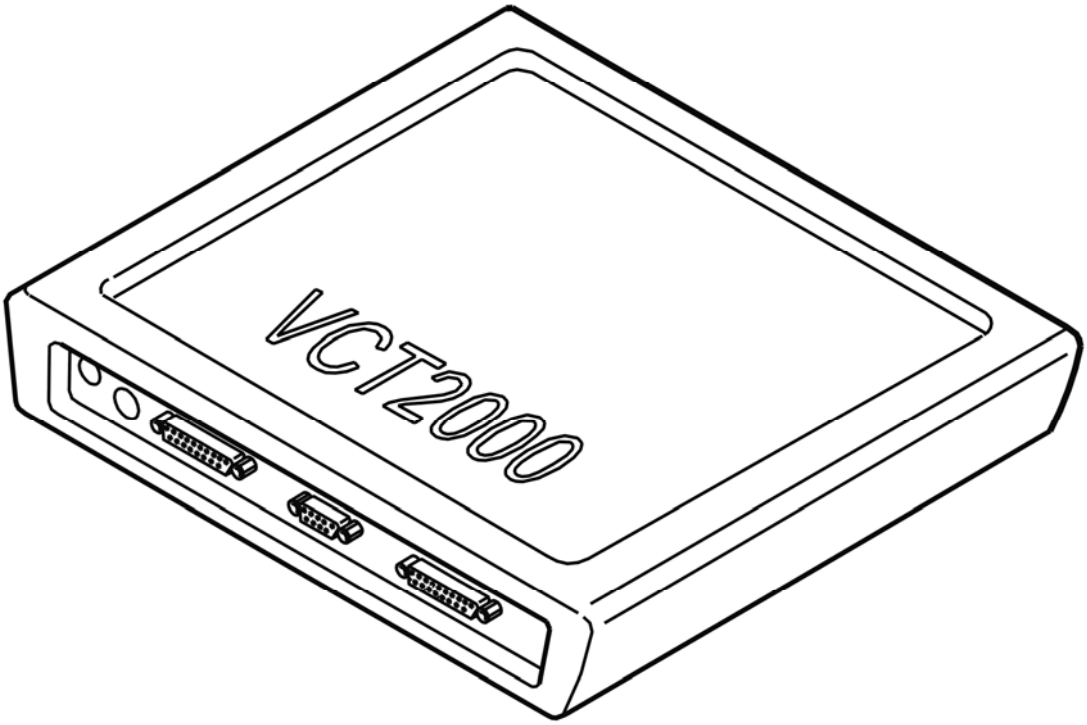

Fig. 40: Identifying VCT2000 Diagnostic Tool Symbol In VIDA
Courtesy of VOLVO CARS CORPORATION

- **Continue**

  Refer to **VERIFICATION**

VERIFICATION

HINT: After carrying out the repair, check that the fault has been remedied.

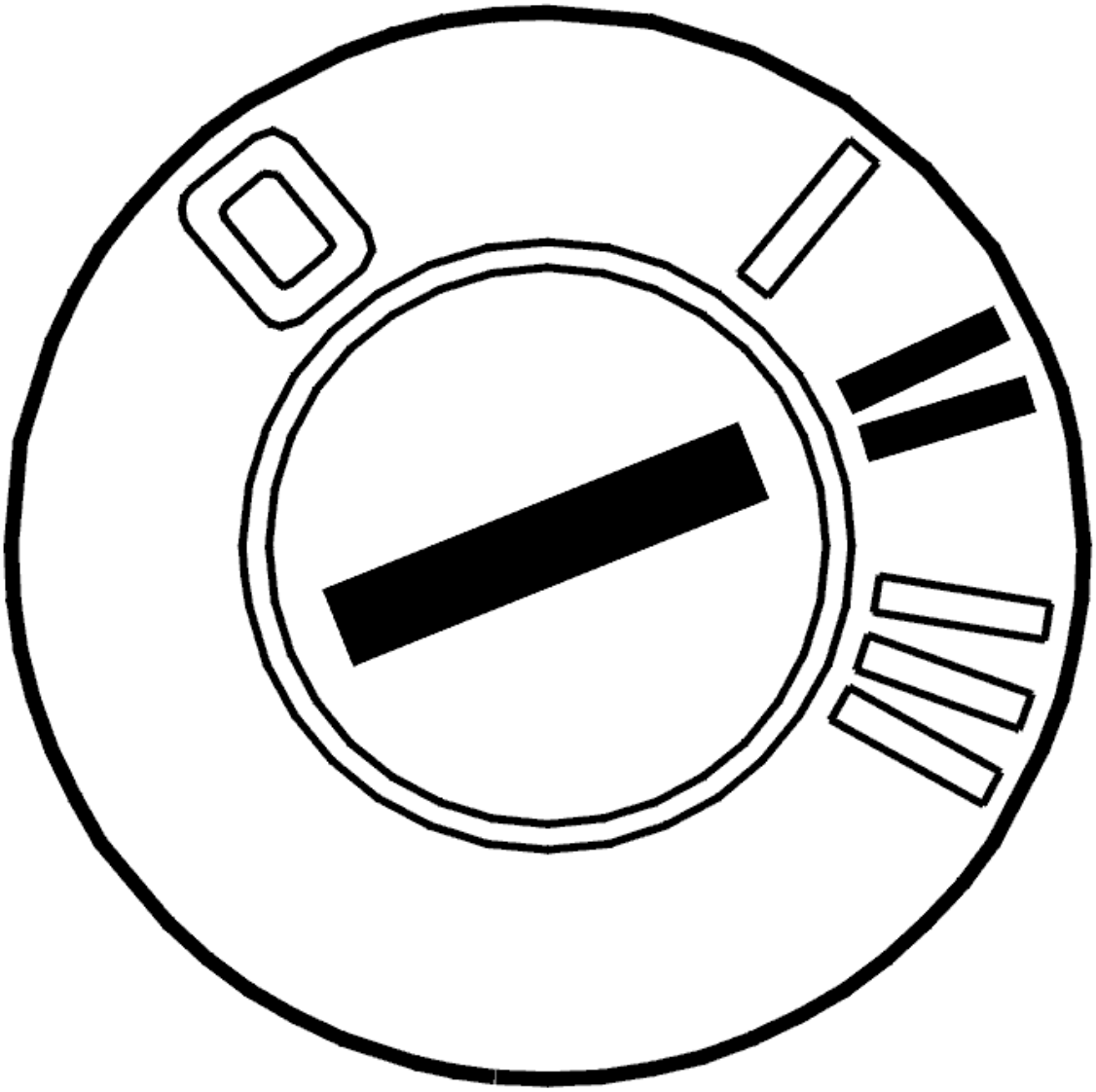

Fig. 41: Identifying Ignition ON
Courtesy of VOLVO CARS CORPORATION

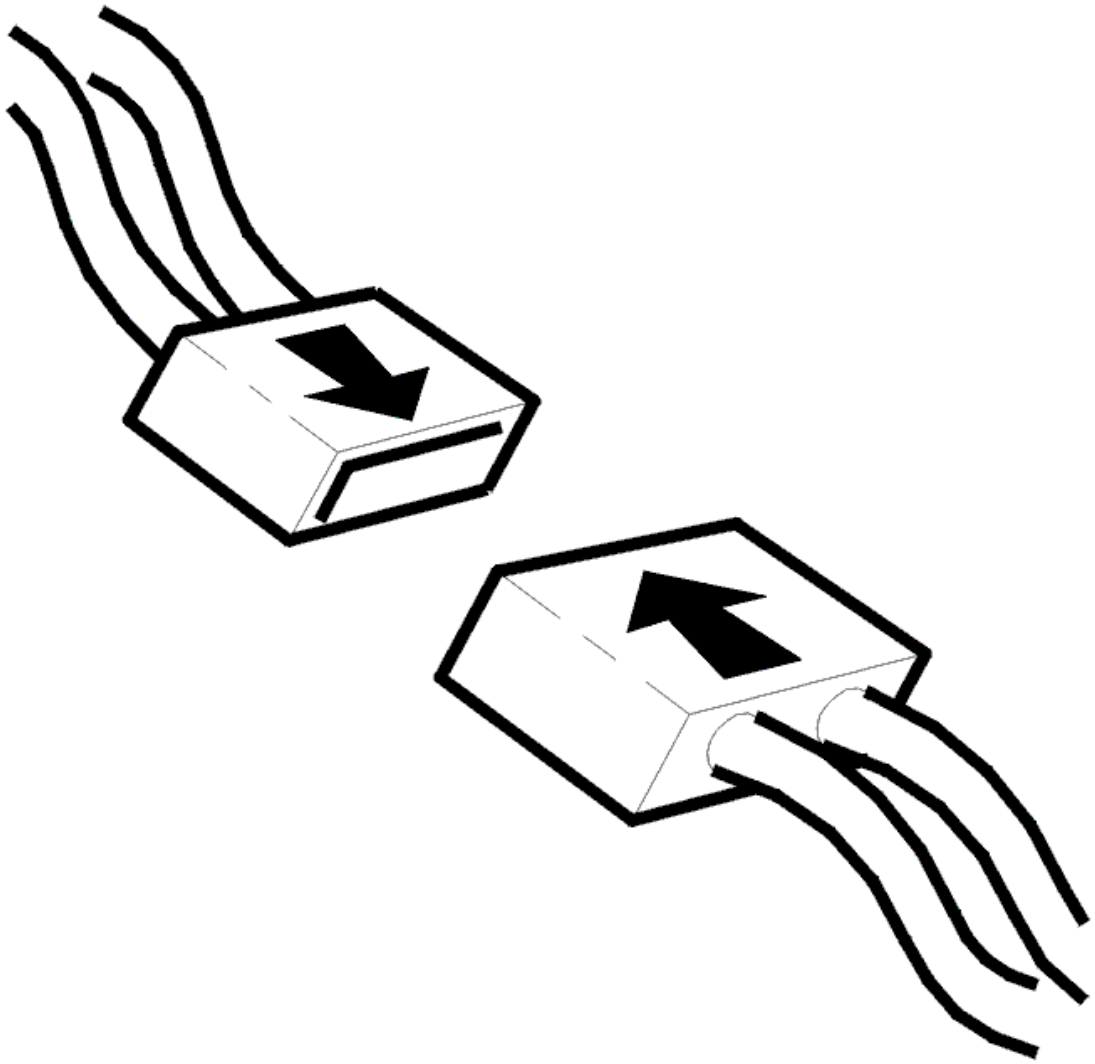

Fig. 42: Connecting Connector
Courtesy of VOLVO CARS CORPORATION

- Ignition off
- Reinstall the connectors, components etc.
- Ignition on.

  Check that the relevant diagnostic trouble code (DTC) has switched status from permanent to intermittent fault.

  Check also that diagnostic trouble code (DTC) CCM-0070, CCM-0071 CCM-0072 or CCM-0073 has not been stored during identification of the damper motors.

  These diagnostic trouble codes (DTCs) can only be stored when identifying damper motors. They mean that the identification has failed for some reason.

Remedy by correctly identifying the damper motor. Fault-trace according to the relevant information.

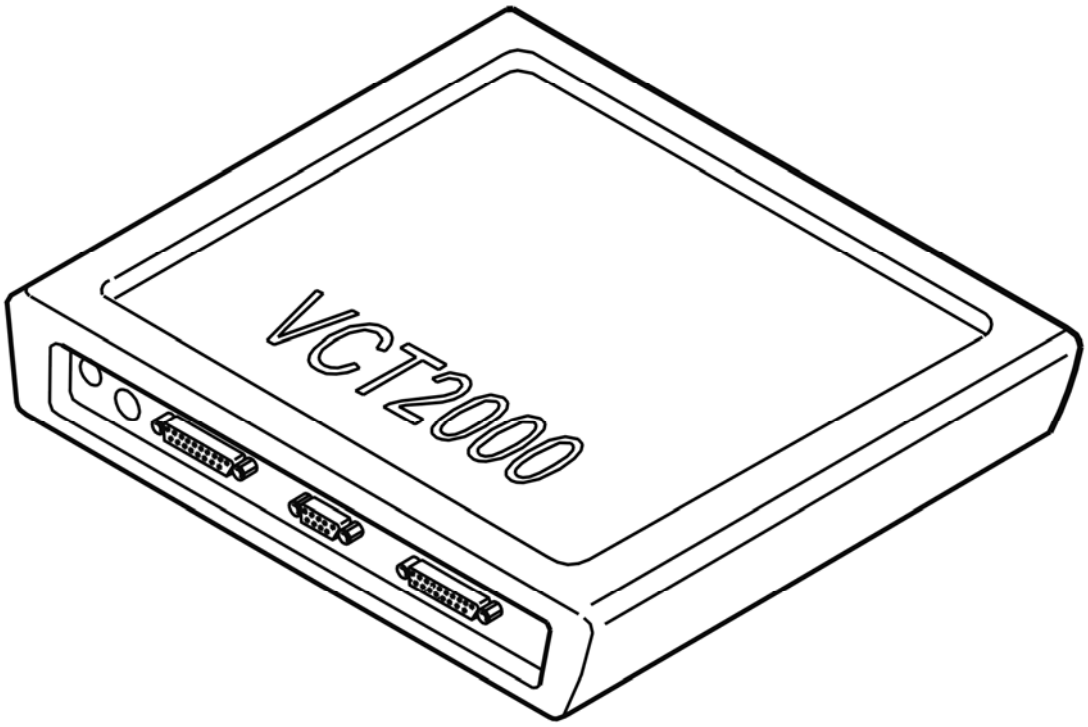

Fig. 43: Identifying VCT2000 Diagnostic Tool Symbol In VIDA
Courtesy of VOLVO CARS CORPORATION

Has the status of the diagnostic trouble code (DTC) changed?

- **YES**

  VERIFIED: Troubleshooting has been completed.

- **NO**

  Refer to **INFORMATION**

INFORMATION

FAULT-TRACING INFORMATION

The fault should have been detected and remedied. As this is not the case fault-tracing has failed.

Exit fault-tracing for this diagnostic trouble code (DTC) or make another attempt.

CCM-DD10: AIR QUALITY SENSOR (AQS). NO COMMUNICATION (2005-

2012)

DIAGNOSTIC TROUBLE CODE (DTC) INFORMATION CCM-DD10

Condition

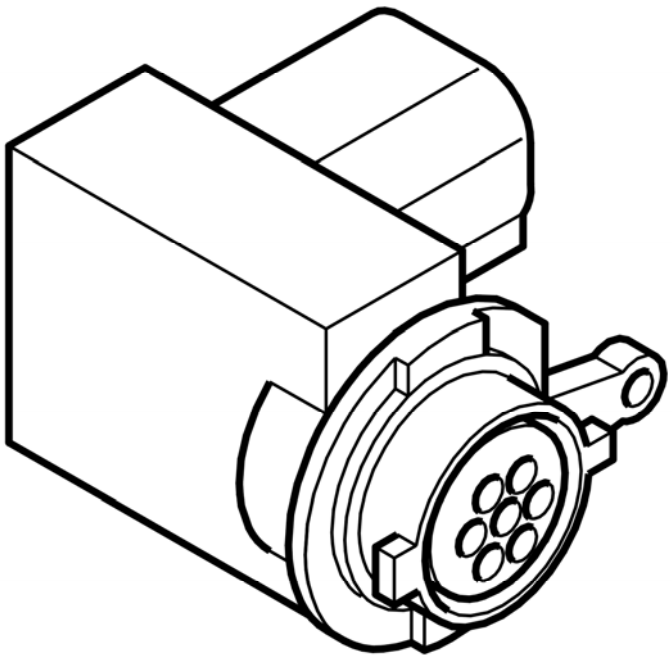

Fig. 44: Identifying Air Quality Sensor (AQS)
Courtesy of VOLVO CARS CORPORATION

The diagnostic trouble code (DTC) is stored if the climate control module (CCM) detects an open-circuit in the communication between the air quality sensor (AQS) and the climate control module (CCM) on LIN bus 1.

The diagnostic trouble code (DTC) can occur together with diagnostic trouble codes (DTCs) for other components on LIN bus 1 (CCM-DD10 - CCM-DD16) depending on where the open-circuit has occurred.

The diagnostic trouble code (DTC) can be diagnosed at ignition switch position II.

The diagnostic trouble code (DTC) can only be diagnosed for the electronic climate control module (CCM) (ECC).

Substitute Value

- None.

Possible Source

- Open-circuit on LIN bus 1 between the climate control module (CCM) and the air quality sensor (AQS)
- Contact resistance, oxidation or loose connections in the connectors.

Fault symptom[s]

- Poor air quality in the passenger compartment.

NO COMMUNICATION

CHECKING THE DIAGNOSTIC TROUBLE CODES (DTCS)

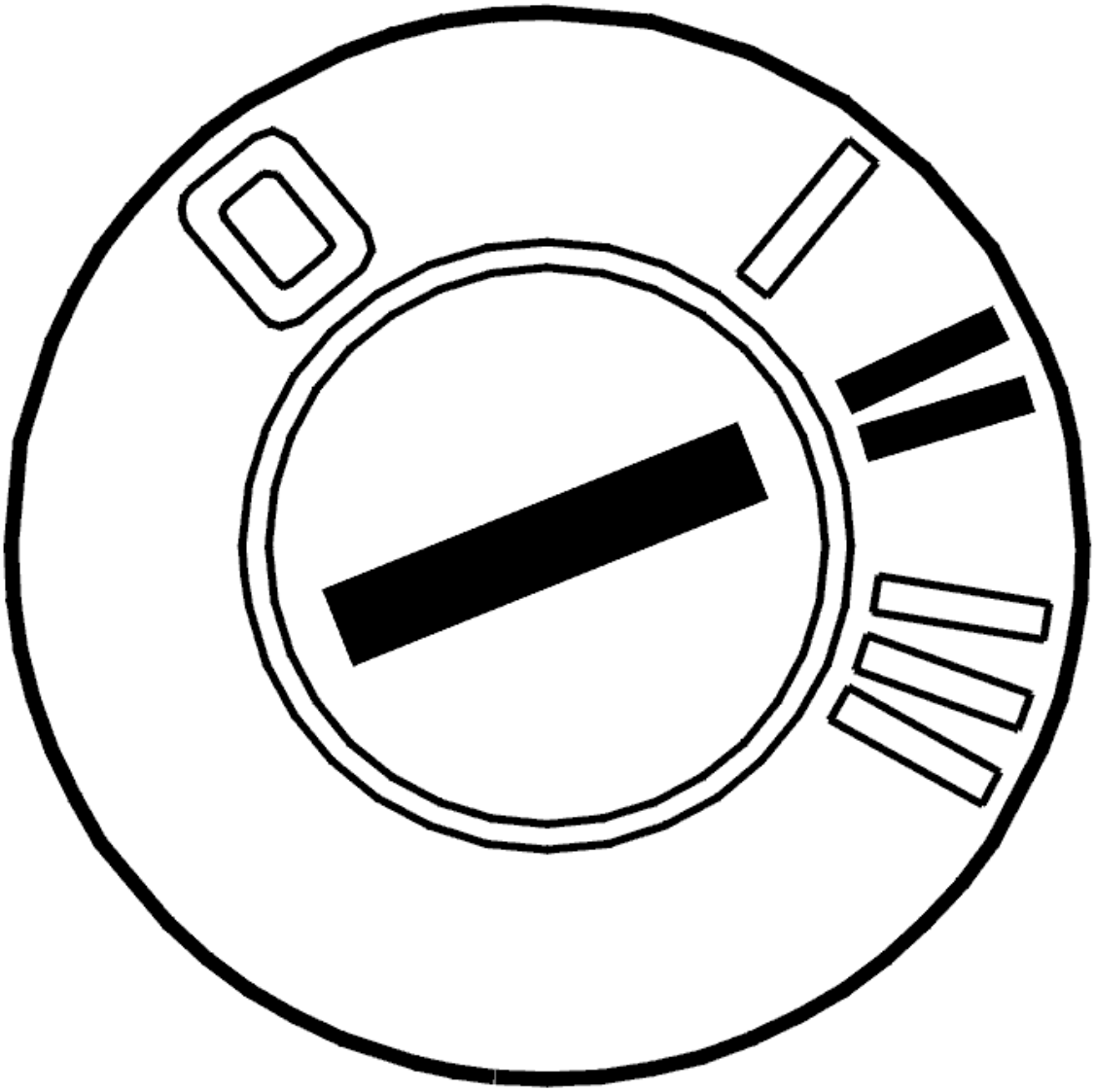

Fig. 45: Identifying Ignition ON
Courtesy of VOLVO CARS CORPORATION

- Ignition on.

  The diagnostic trouble code (DTC) may occur together with diagnostic trouble codes (DTCs) for other components that communicate with the climate control module (CCM) via LIN bus 1 and LIN bus 2.

  Check whether the diagnostic trouble code (DTC) has been stored together with other diagnostic trouble codes (DTCs) for other components on the climate control unit.

  Following options:

  1. The diagnostic trouble code (DTC) is stored together with diagnostic trouble codes (DTCs) for components in both LIN bus 1 and LIN bus 2 (CCM-DD10 - CCM-DD16, CCM-DD30 - CCM-DD34). Refer to **CHECKING THE CONNECTORS AND WIRING**
  2. The diagnostic trouble code (DTC) is stored together with diagnostic trouble codes (DTCs) for components only on LIN bus 1 (CCM-DD10 - CCM-DD16). Refer to **CHECKING LIN BUS 1 AND CONNECTOR**
  3. The diagnostic trouble code (DTC) is not together with diagnostic trouble codes (DTCs) for other components on LIN bus 1 and LIN bus 2. Refer to **CHECKING THE WIRING AND COMPONENT**

CHECKING THE CONNECTORS AND WIRING

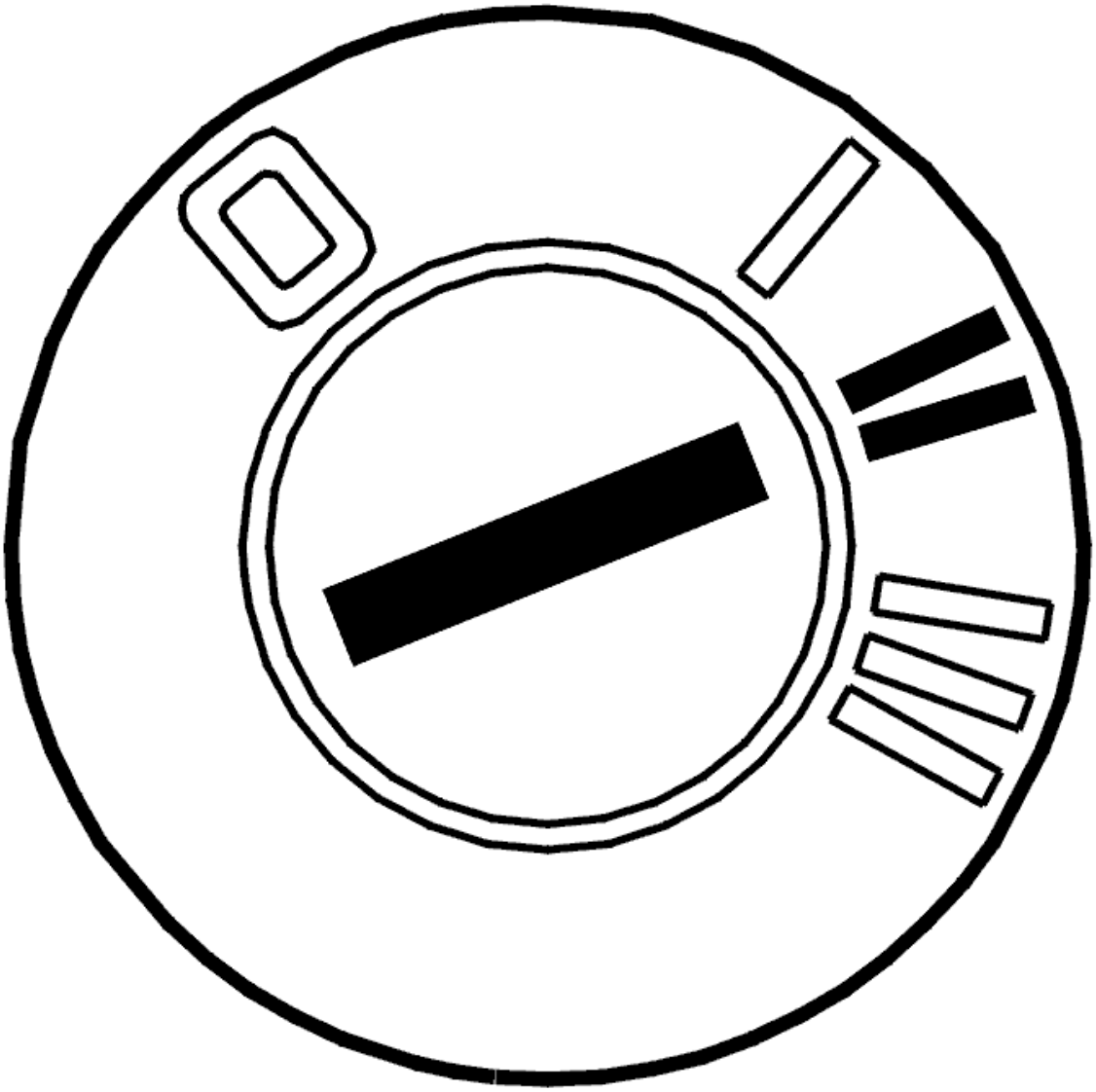

Fig. 46: Identifying Ignition ON
Courtesy of VOLVO CARS CORPORATION

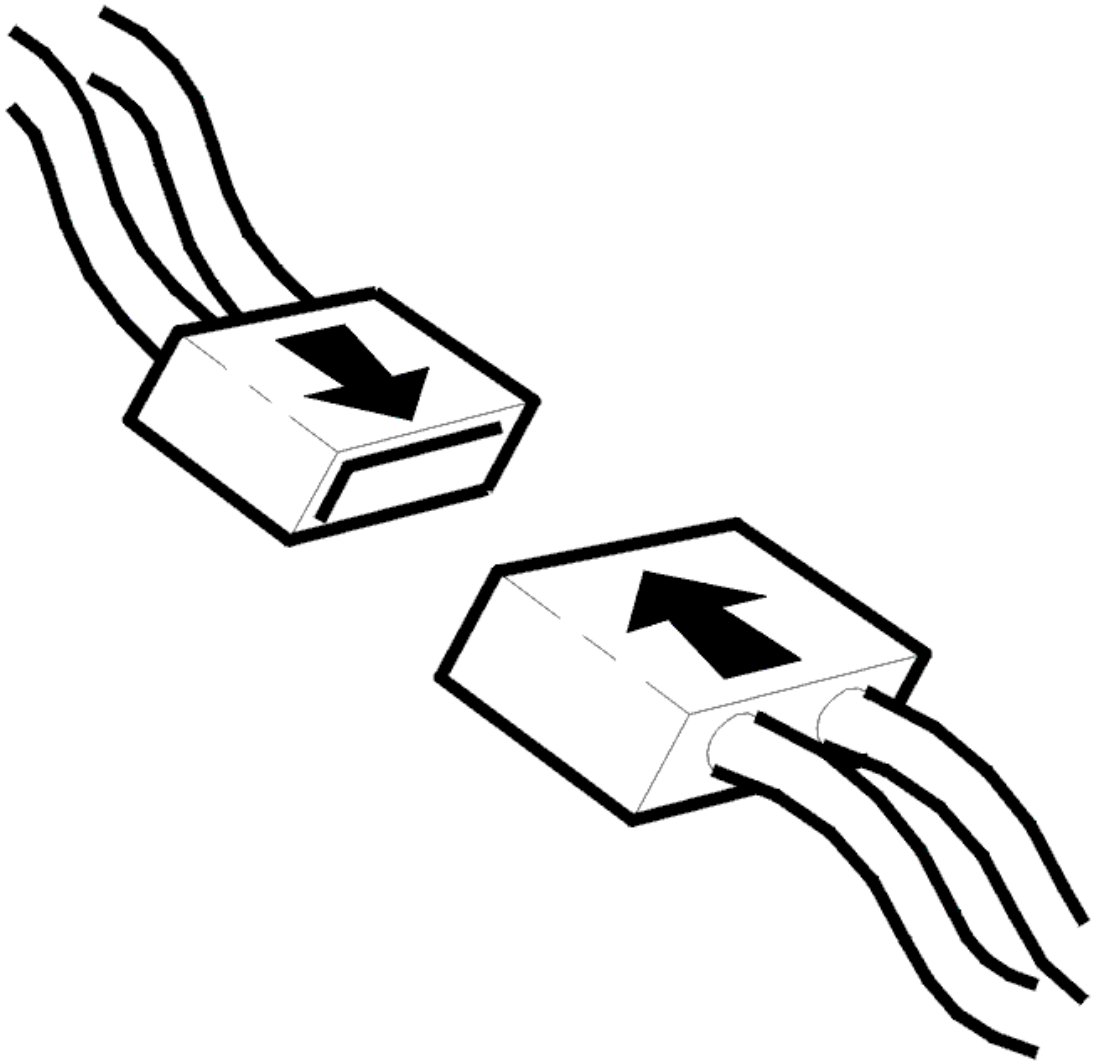

Fig. 47: Connecting Connector
Courtesy of VOLVO CARS CORPORATION

- Ignition off
- Disconnect the connector for the climate control module (CCM)
- Disconnect the connector for the central electronic module (CEM)
- Ignition on.

Checking the power supply and ground terminals

The following applies to components on the climate control unit that communicate with the climate control module (CCM) via LIN bus 1 and LIN bus 2:

- All components are jointly powered via a fuse from the central electronic module (CEM)
- All components are grounded via a common ground terminal.

Check the power supply to the components on the climate control unit by taking a reading on connector A for the central electronic module (CEM) between terminal #A44 (C44) and chassis ground.

Also check the fuse on the central electronic module (CEM).

Check the power supply cable between the central electronic module (CEM) and the connector for the climate control unit. Check for an open-circuit. Measure between terminal #1 on the connector for the climate control unit and chassis ground.

Check the ground terminal for the components on the climate control unit. Measure between the connector for climate control unit terminal #6 and chassis ground.

Check the connector for the climate control unit and connector A for the central electronic module (CEM). Check for contact resistance. Check for oxidation. Check for loose connections.

Checking LIN bus

Check both LIN bus 1 and LIN bus 2. Check for an open-circuit.

Take readings between:

- The connector for climate control module (CCM) terminal #12 (#36) and the connector for climate control unit terminal #2
- The connector for climate control module (CCM) terminal #7 (#31) and the connector for climate control unit terminal #5.

Check the wiring between the connector and the components on the climate control unit. Check for an open-circuit.

Remedy as necessary.

Other information:

- For further information about the connectors, fuses and relays, see the appropriate service information.
- To connect the breakout box to the climate control module (CCM), see **CONNECTING THE BREAKOUT BOX**
- To connect the breakout box to the central electronic module (CEM), see **CONNECTING THE BREAKOUT BOX**
- see **SIGNAL SPECIFICATION**
- see **CLIMATE CONTROL, LOCATION OF COMPONENTS**
- see **CLIMATE CONTROL MODULE (CCM), REPLACING**
- For -2004, see **CENTRAL ELECTRONIC MODULE (CEM), REPLACING** . For 2005-, see **CENTRAL ELECTRONIC MODULE (CEM), REPLACING**
- see **CONTENTS**

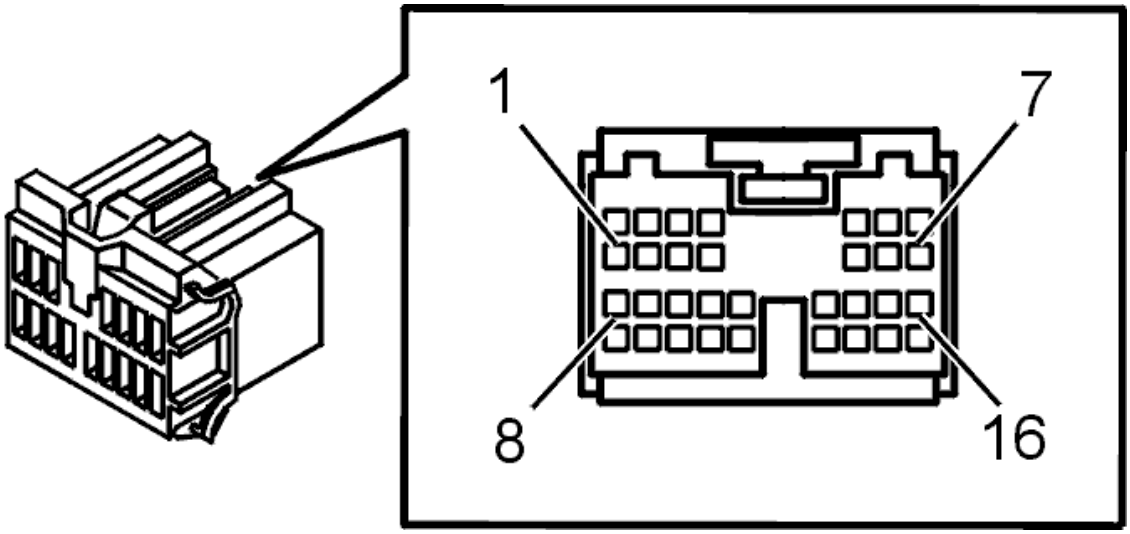

Fig. 48: Connector, Green (16- Pin)
Courtesy of VOLVO CARS CORPORATION

- **Continue**

  Refer to **VERIFICATION**

CHECKING LIN BUS 1 AND CONNECTOR

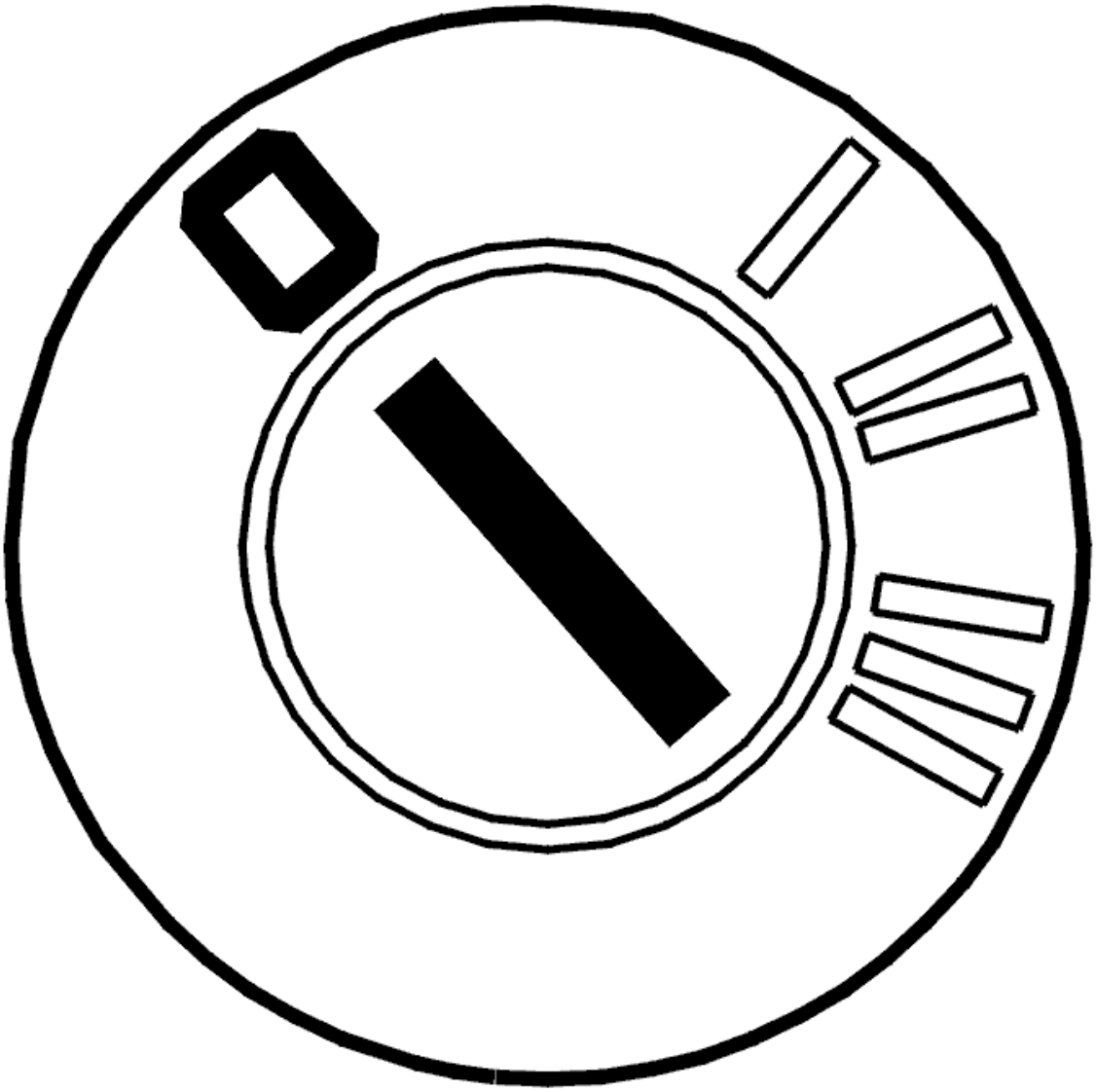

Fig. 49: Identifying Ignition OFF
Courtesy of VOLVO CARS CORPORATION

- Ignition off
- Disconnect the connector for the climate control module (CCM).

  Check the climate control module (CCM) connector. Check for contact resistance. Check for oxidation. Check for loose connections.

  Check LIN bus 1 between the climate control module (CCM), the connector for the climate control unit and the seat heating module (SHM) left. Check for an open-circuit.

  Take readings between:

  - The connector for climate control module (CCM) terminal #12 (#36) and the connector for climate control unit terminal #2

- The connector for climate control module (CCM) terminal #12 (#36) and connector A for the left-hand seat heating module (SHM) terminal #2.

Check LIN bus 1 between the components (the damper motors and the air quality sensor (AQS) and the connector for the climate control unit. Check for an open-circuit.

Check the connector for the climate control unit. Check for contact resistance. Check for oxidation. Check for loose connections.

Remedy as necessary.

Other information:

- For further information about the connectors, fuses and relays, see the appropriate service information.
- see **CONNECTING THE BREAKOUT BOX**
- see **SIGNAL SPECIFICATION**
- see **CLIMATE CONTROL, LOCATION OF COMPONENTS**
- see **CLIMATE CONTROL MODULE (CCM), REPLACING**
- see **SEAT HEATING MODULE (SHM), REPLACING**
- see **CONTENTS**

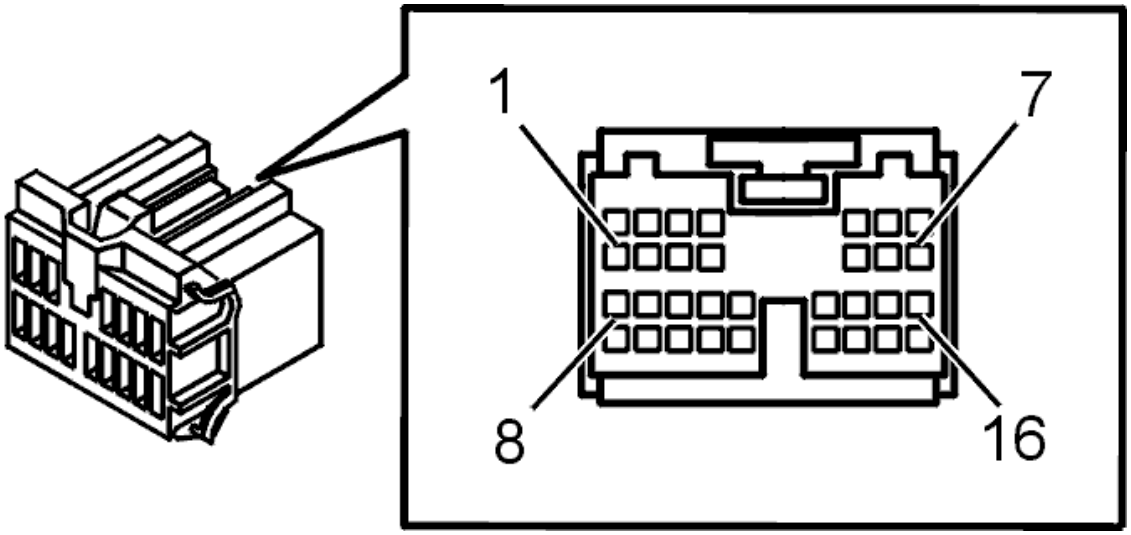

Fig. 50: Connector, Green (16- Pin)
Courtesy of VOLVO CARS CORPORATION

- **Continue**

Refer to **VERIFICATION**

CHECKING THE WIRING AND COMPONENT

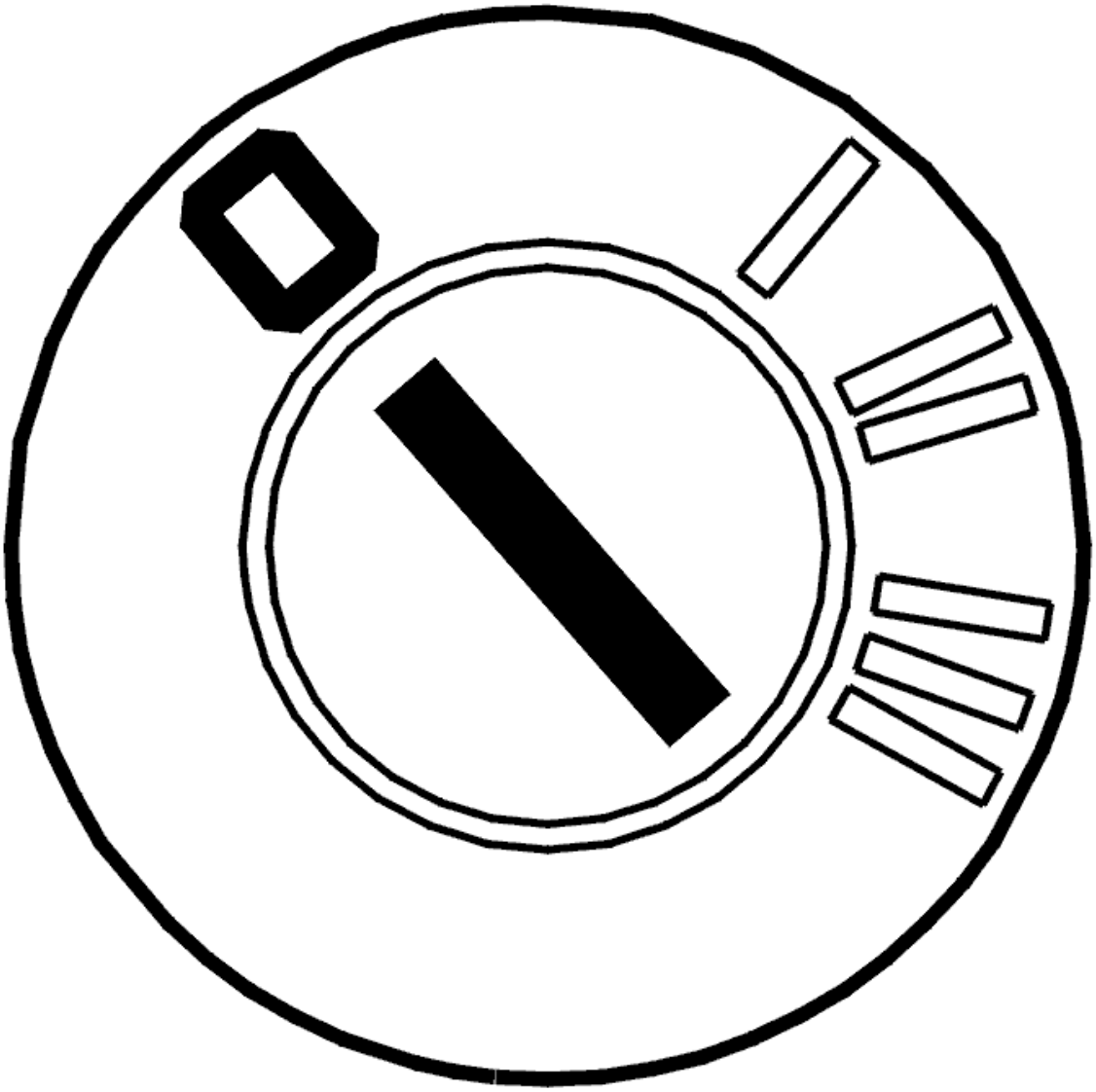

Fig. 51: Identifying Ignition OFF
Courtesy of VOLVO CARS CORPORATION

- Ignition off
- Disconnect the connector for the air quality sensor (AQS)
- Ignition on.

Check the connector for the air quality sensor (AQS). Check for contact resistance. Check for oxidation. Check for loose connections.

Check that the air quality sensor (AQS) is connected to the power supply and ground.

Measure the voltage at the connector for the air quality sensor (AQS) between terminals #1 and #3.

Check LIN bus 1 by taking a reading between sensor connector terminal #2 and the connector for climate

control unit terminal #2. Check for an open-circuit.

Try replacing the sensor if no fault is found.

Remedy as necessary.

Other information:

- For further information about the connectors, fuses and relays, see the appropriate service information.
- see **CONNECTING THE BREAKOUT BOX**
- see **SIGNAL SPECIFICATION**
- see **CLIMATE CONTROL, LOCATION OF COMPONENTS**
- see **CLIMATE CONTROL MODULE (CCM), REPLACING**
- see **AIR QUALITY SENSOR, REPLACING**
- see **CONTENTS**

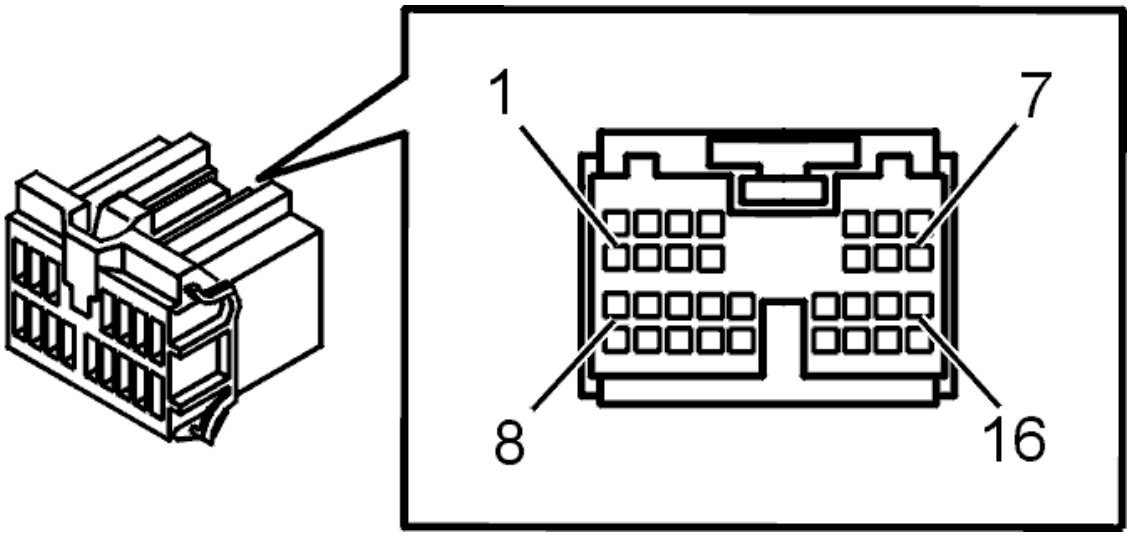

Fig. 52: Connector, Green (16- Pin)
Courtesy of VOLVO CARS CORPORATION

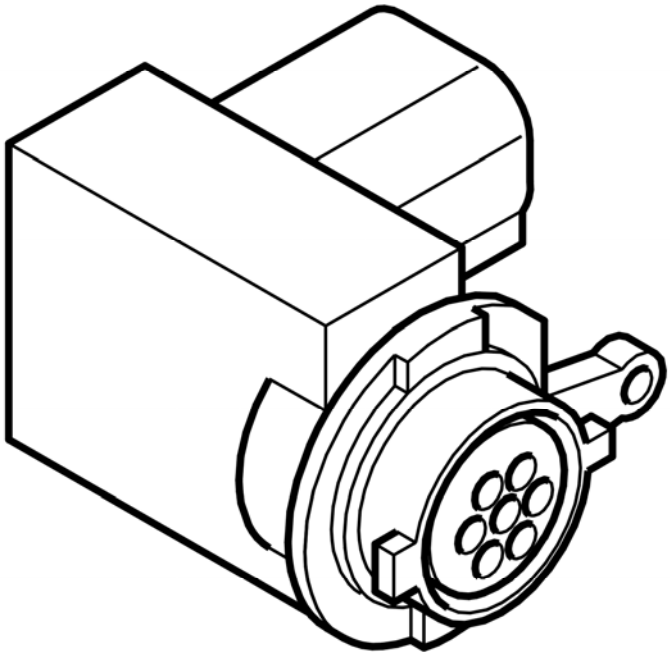

Fig. 53: Identifying Air Quality Sensor (AQS)
Courtesy of VOLVO CARS CORPORATION

VERIFICATION

HINT: After carrying out the repair, check that the fault has been remedied.

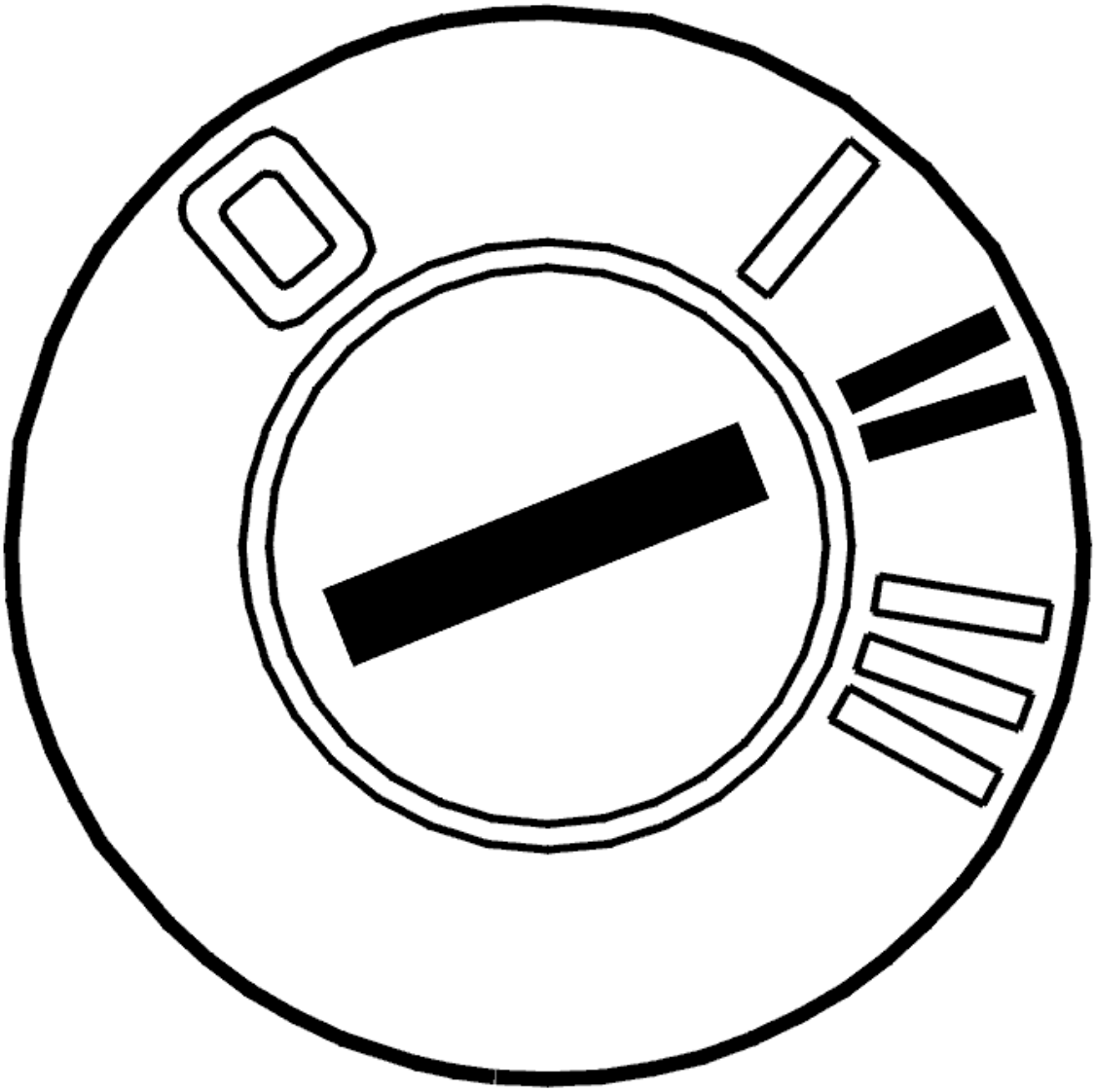

Fig. 54: Identifying Ignition ON
Courtesy of VOLVO CARS CORPORATION

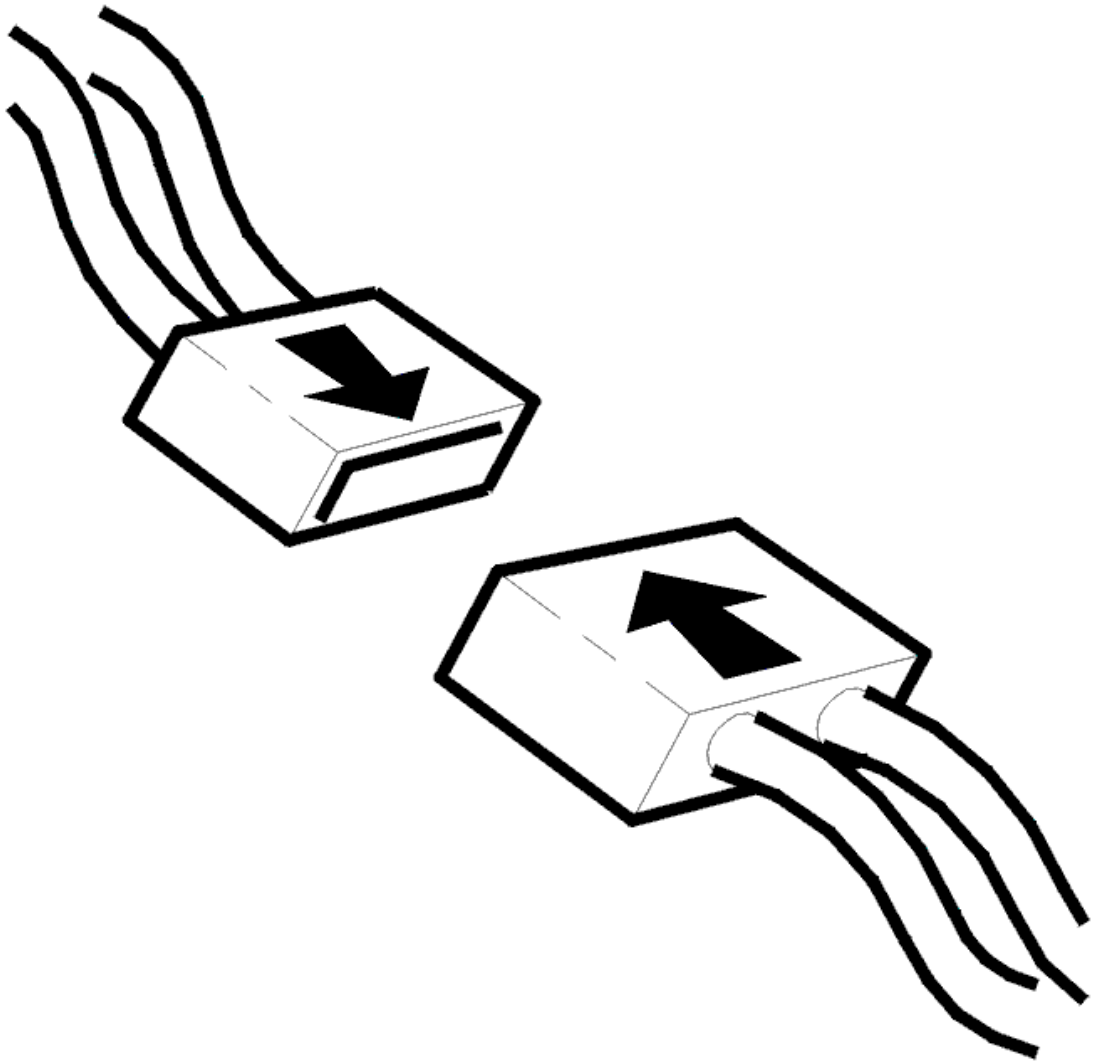

Fig. 55: Connecting Connector
Courtesy of VOLVO CARS CORPORATION

- Ignition off
- Reinstall the connectors, components etc.
- Ignition on.

  Check that the relevant diagnostic trouble code (DTC) has switched status from permanent to intermittent fault.

  Check also that diagnostic trouble code (DTC) CCM-0070, CCM-0071 CCM-0072 or CCM-0073 has not been stored during identification of the damper motors.

  These diagnostic trouble codes (DTCs) can only be stored when identifying damper motors. They mean that the identification has failed for some reason.

Remedy by correctly identifying the damper motor. Fault-trace according to the relevant information.

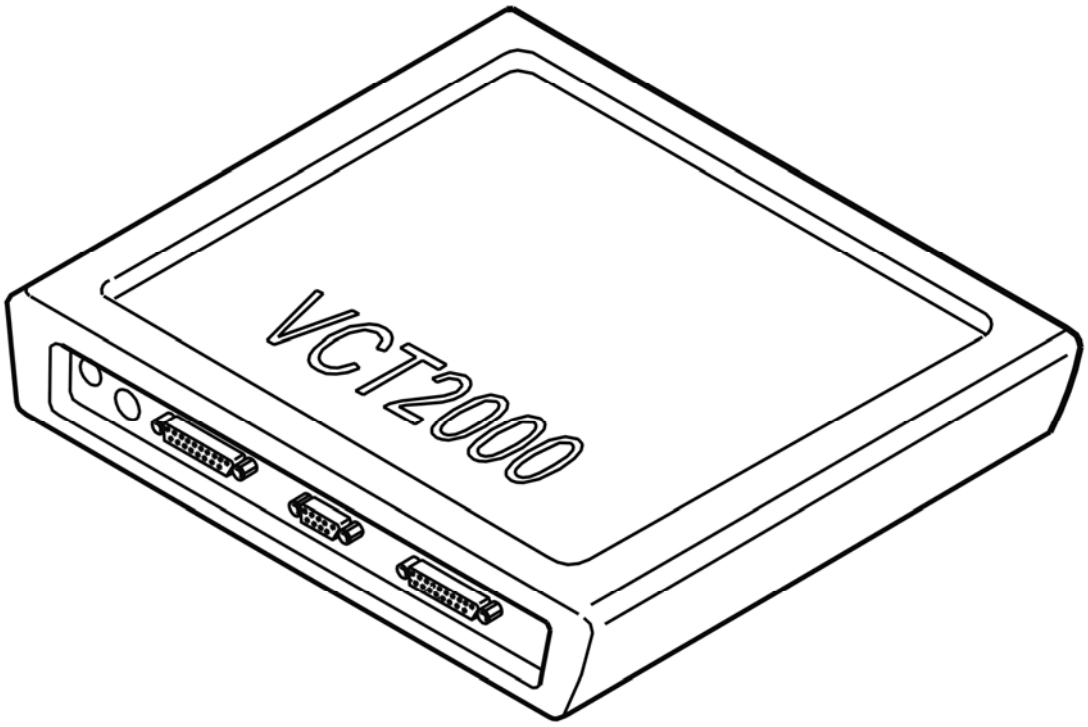

Fig. 56: Identifying VCT2000 Diagnostic Tool Symbol In VIDA
Courtesy of VOLVO CARS CORPORATION

Has the status of the diagnostic trouble code (DTC) changed?

- **YES**

  VERIFIED: Troubleshooting has been completed.

- **NO**

  Refer to **INFORMATION**

INFORMATION

FAULT-TRACING INFORMATION

The fault should have been detected and remedied. As this is not the case fault-tracing has failed.

Exit fault-tracing for this diagnostic trouble code (DTC) or make another attempt.

CCM-DD12: LEFT-HAND SEAT HEATER. NO COMMUNICATION (2005-2012)

DIAGNOSTIC TROUBLE CODE (DTC) INFORMATION CCM-DD12

Condition

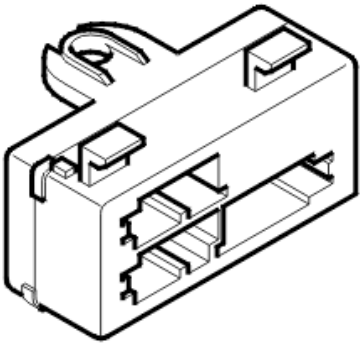

Fig. 57: Identifying Left Seat Heating Module (SHM)
Courtesy of VOLVO CARS CORPORATION

The diagnostic trouble code (DTC) is stored if the climate control module (CCM) detects an open-circuit in the communication between the left seat heater and the climate control module (CCM) on LIN bus 1.

The diagnostic trouble code (DTC) can occur together with diagnostic trouble codes (DTCs) for other components on LIN bus 1 (CCM-DD10 - CCM-DD16) depending on where the open-circuit has occurred.

The diagnostic trouble code (DTC) can be diagnosed at ignition switch position II.

The diagnostic trouble code (DTC) can only be diagnosed for the climate control module (CCM) when seat heating is installed in the car.

Substitute Value

- None.

Possible Source

- Open-circuit on LIN bus 1 between the climate control module (CCM) and the left seat heater
- Contact resistance, oxidation or loose connections in the connectors.

Fault symptom[s]

- The front seat heating does not function.

NO COMMUNICATION

CHECKING THE DIAGNOSTIC TROUBLE CODES (DTCS)

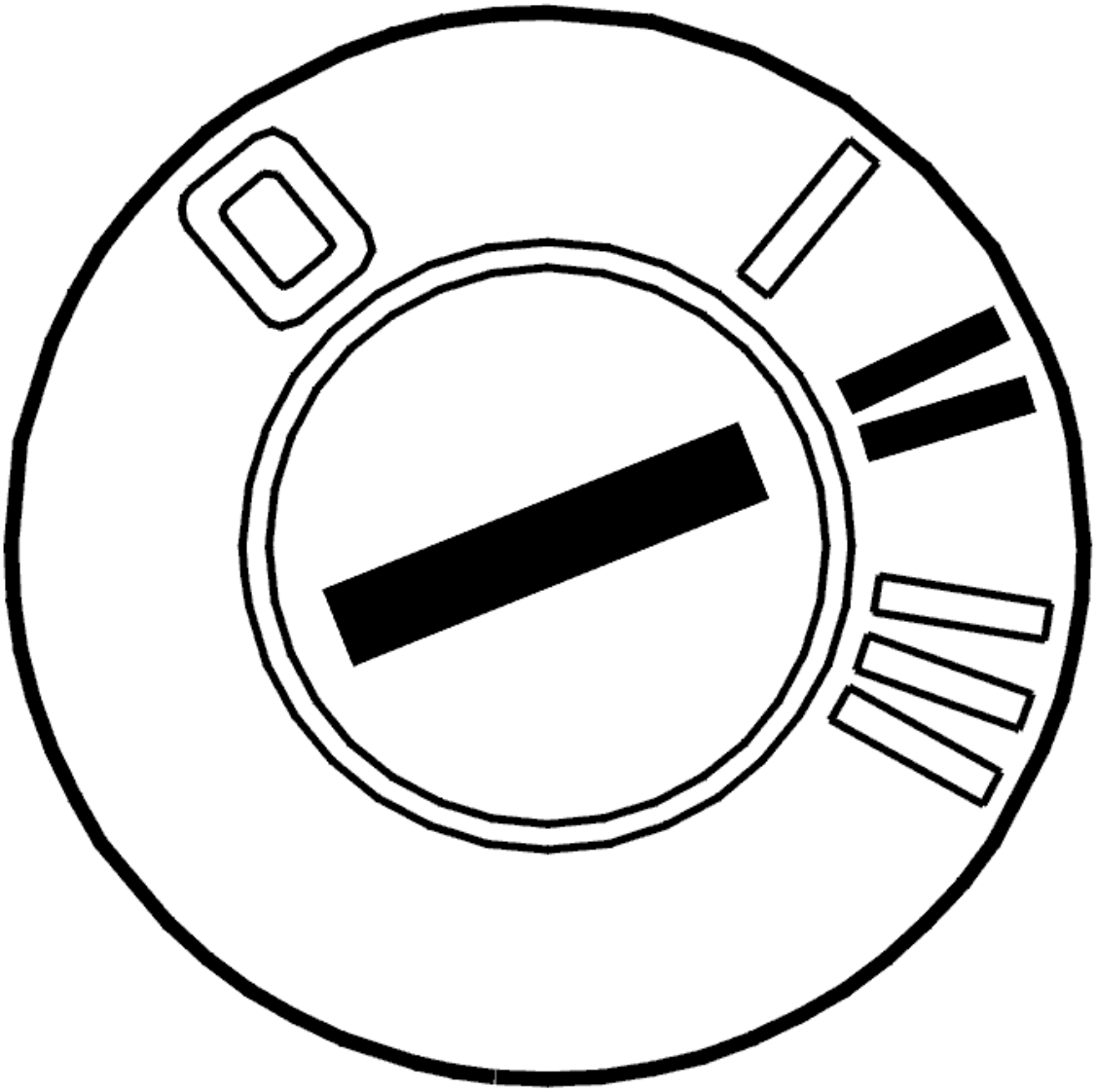

Fig. 58: Identifying Ignition ON
Courtesy of VOLVO CARS CORPORATION

- Ignition on.

  Check that the fuse for the Seat heating module (SHM) is intact.

  The diagnostic trouble code (DTC) may occur together with diagnostic trouble codes (DTCs) for other components that communicate with the climate control module (CCM) via LIN bus 1.

  Check whether the diagnostic trouble code (DTC) has been stored together with other diagnostic trouble codes (DTCs) for other components on the climate control unit.

  Following options:

  1. The diagnostic trouble code (DTC) is stored together with diagnostic trouble codes (DTCs) for

components on LIN bus 1 (CCM-DD10 - CCM-DD16). Refer to **CHECKING LIN BUS 1 AND CONNECTOR**

2. The diagnostic trouble code (DTC) is not stored together with diagnostic trouble codes (DTCs) for other components on LIN bus 1. Refer to **CHECKING THE WIRING AND COMPONENT**

CHECKING LIN BUS 1 AND CONNECTOR

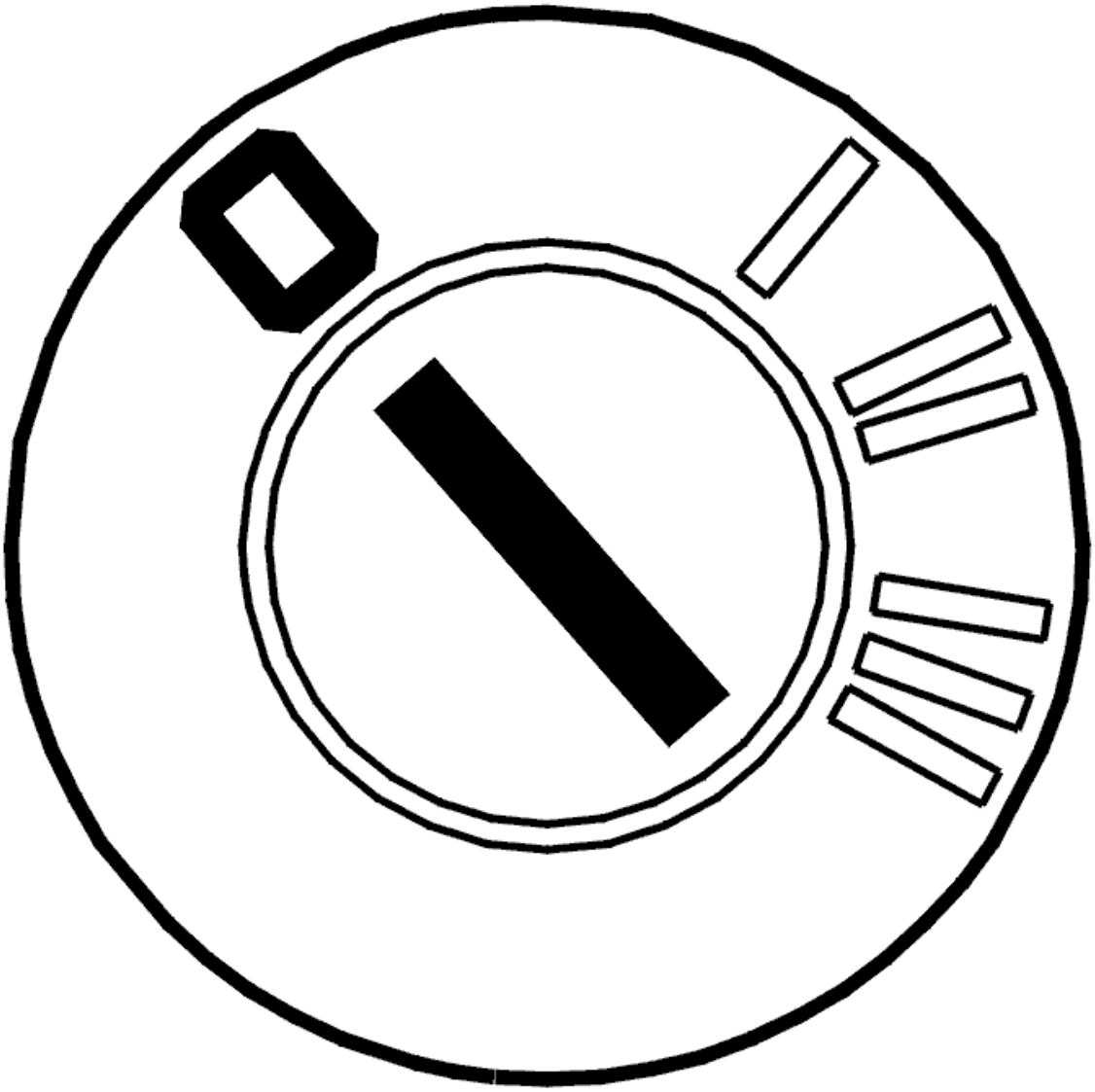

Fig. 59: Identifying Ignition OFF
Courtesy of VOLVO CARS CORPORATION

- Ignition off
- Disconnect the connector for the climate control module (CCM).

  Check the climate control module (CCM) connector. Check for contact resistance. Check for oxidation. Check for loose connections.

Check LIN bus 1 between the climate control module (CCM), the connector for the climate control unit and the left-hand seat heating module (SHM). Check for an open-circuit.

Take readings between:

- The connector for climate control module (CCM) terminal #12 (#36) and the connector for climate control unit terminal #2
- The connector for climate control module (CCM) terminal #12 (#36) and connector A for seat heating module (SHM) left terminal #2.

Check LIN bus 1 between the components (the damper motors and the air quality sensor (AQS) and the connector for the climate control unit. Check for an open-circuit.

Check the connector for the climate control unit. Check for contact resistance. Check for oxidation. Check for loose connections.

Remedy as necessary.

Other information:

- For further information about the connectors, fuses and relays, see the appropriate service information.
- see **CONNECTING THE BREAKOUT BOX**
- see **SIGNAL SPECIFICATION**
- see **CLIMATE CONTROL, LOCATION OF COMPONENTS**
- see **CLIMATE CONTROL MODULE (CCM), REPLACING**
- see **SEAT HEATING MODULE (SHM), REPLACING**
- see **CONTENTS**

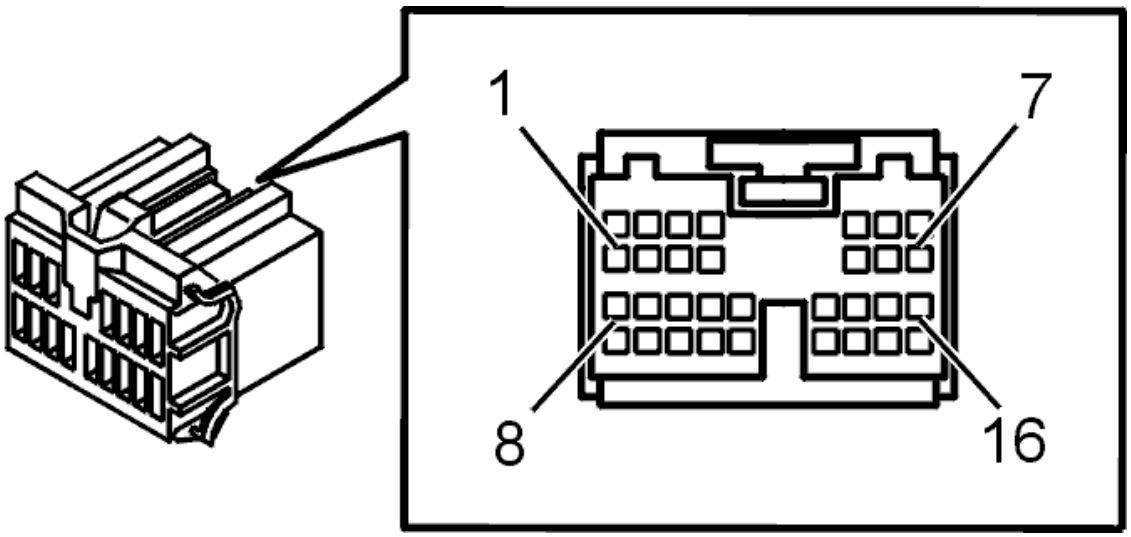

Fig. 60: Connector, Green (16- Pin)
Courtesy of VOLVO CARS CORPORATION

- **Continue**

  Refer to **VERIFICATION**

CHECKING THE WIRING AND COMPONENT

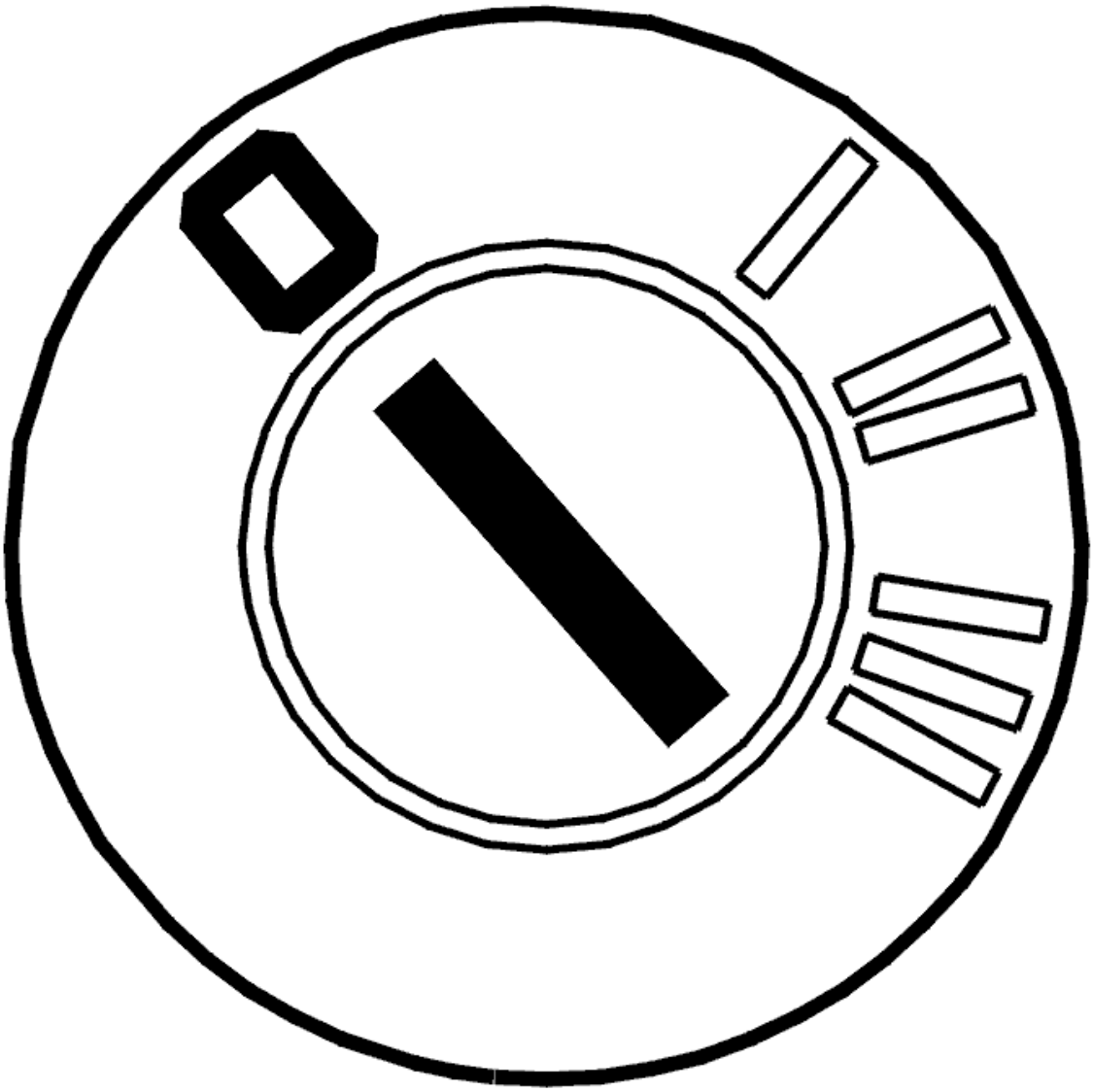

Fig. 61: Identifying Ignition OFF
Courtesy of VOLVO CARS CORPORATION

- Ignition off
- Disconnect connector A for the seat heating module (SHM) left.

  Check connector A for the seat heating module (SHM). Check for contact resistance. Check for oxidation. Check for loose connections.

Check that the seat heating module (SHM) is connected to power supply and ground.

Measure the voltage at connector A between terminals #1 and #4.

Check LIN bus 1 by taking a reading between connector A for seat heating module (SHM) terminal #2 and the connector for the climate control module (CCM) terminal #12 (#35). Check for an open-circuit.

Try replacing the seat heating module (SHM) if no fault is found.

Remedy as necessary.

Other information:

- For further information about the connectors, fuses and relays, see the appropriate service information.
- see **CONNECTING THE BREAKOUT BOX**
- see **SIGNAL SPECIFICATION**
- see **CLIMATE CONTROL, LOCATION OF COMPONENTS**
- see **CLIMATE CONTROL MODULE (CCM), REPLACING**
- see **SEAT HEATING MODULE (SHM), REPLACING**
- see **CHECKING WIRING AND TERMINALS**

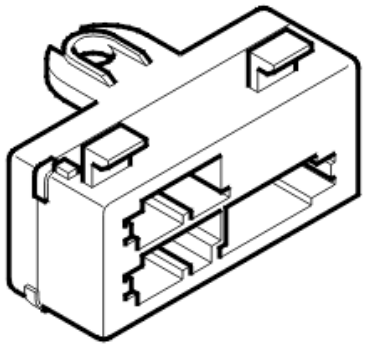

Fig. 62: Identifying Left Seat Heating Module (SHM)
Courtesy of VOLVO CARS CORPORATION

- **Continue**

Refer to **VERIFICATION**

VERIFICATION

HINT: After carrying out the repair, check that the fault has been remedied.

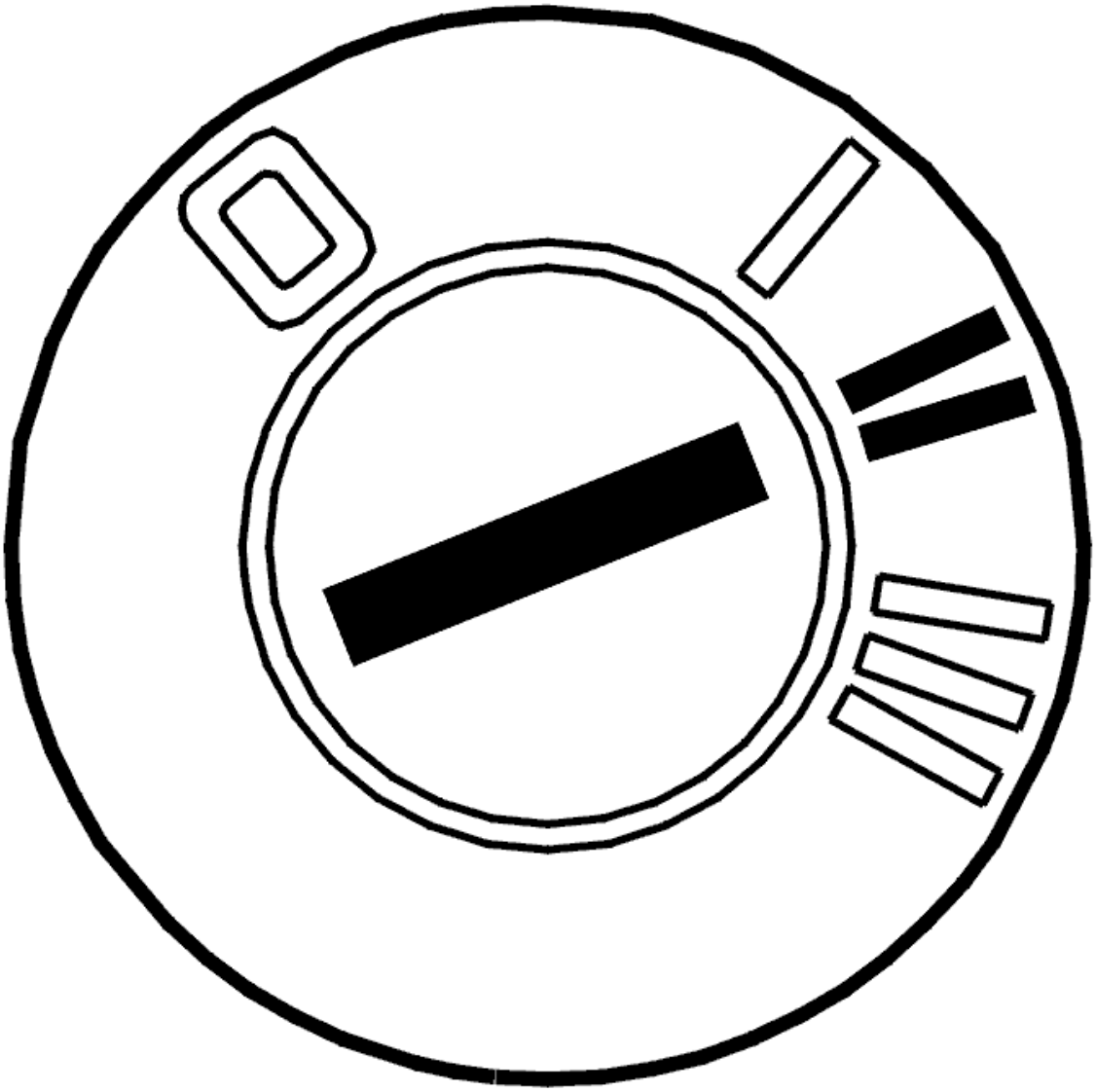

Fig. 63: Identifying Ignition ON
Courtesy of VOLVO CARS CORPORATION

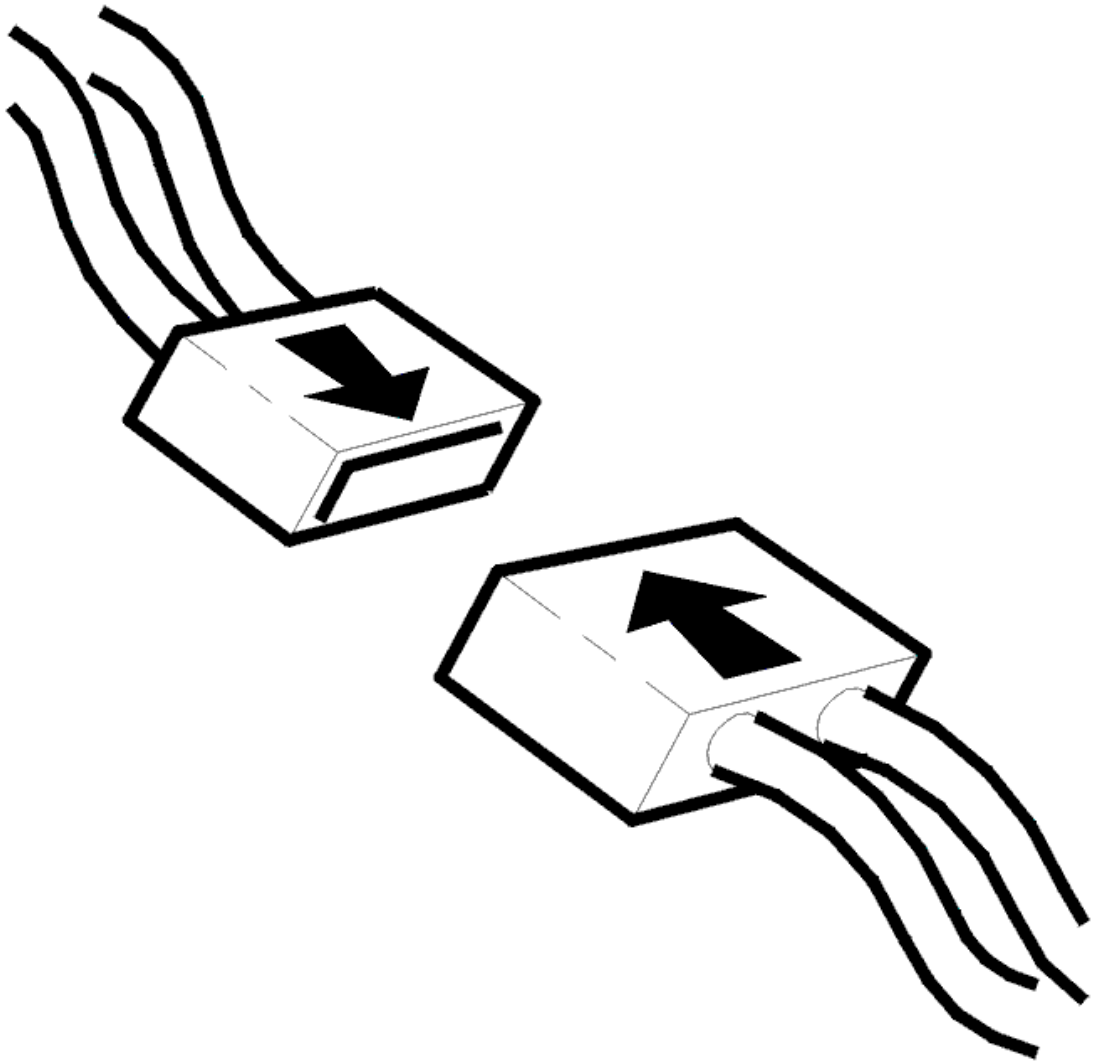

Fig. 64: Connecting Connector
Courtesy of VOLVO CARS CORPORATION

- Ignition off
- Reinstall the connectors, components etc.
- Ignition on.

  Check that the relevant diagnostic trouble code (DTC) has switched status from permanent to intermittent fault.

  Check also that diagnostic trouble code (DTC) CCM-0070, CCM-0071 CCM-0072 or CCM-0073 has not been stored during identification of the damper motors.

  These diagnostic trouble codes (DTCs) can only be stored when identifying damper motors. They mean that the identification has failed for some reason.

Remedy by correctly identifying the damper motor. Fault-trace according to the relevant information.

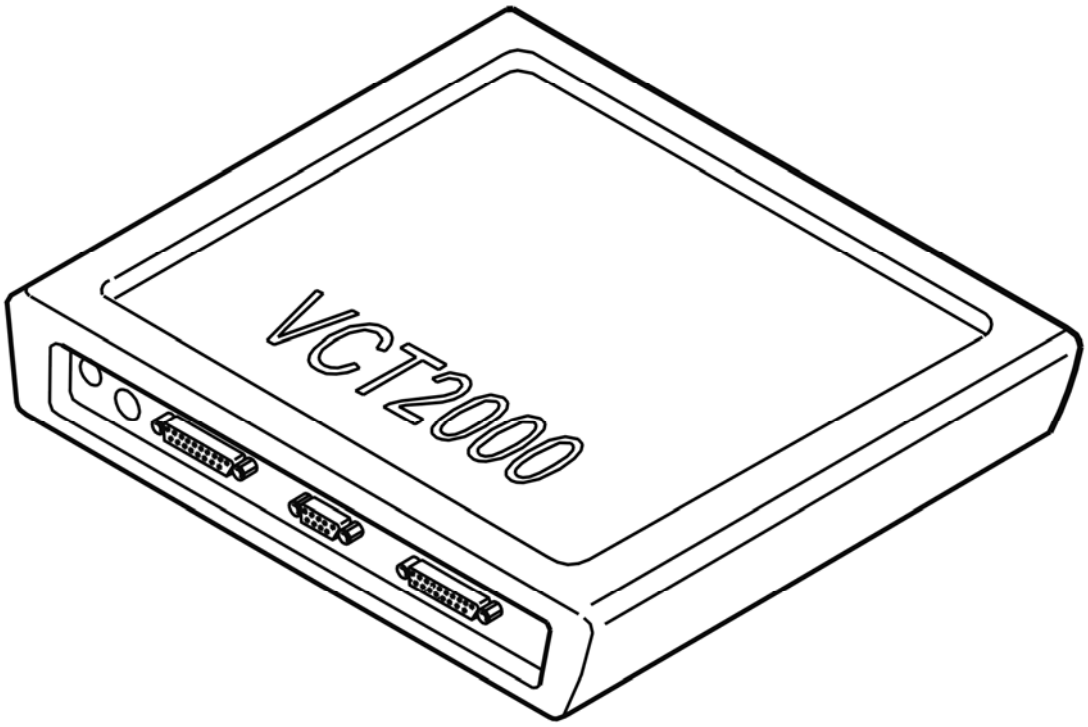

Fig. 65: Identifying VCT2000 Diagnostic Tool Symbol In VIDA
Courtesy of VOLVO CARS CORPORATION

Has the status of the diagnostic trouble code (DTC) changed?

- **YES**

  VERIFIED: Troubleshooting has been completed.

- **NO**

  Refer to **INFORMATION**

INFORMATION

FAULT-TRACING INFORMATION

The fault should have been detected and remedied. As this is not the case fault-tracing has failed.

Exit fault-tracing for this diagnostic trouble code (DTC) or make another attempt.

CCM-DD14: RECIRCULATION DAMPER MOTOR. NO COMMUNICATION

(2005-2012)

DIAGNOSTIC TROUBLE CODE (DTC) INFORMATION CCM-DD14

Condition

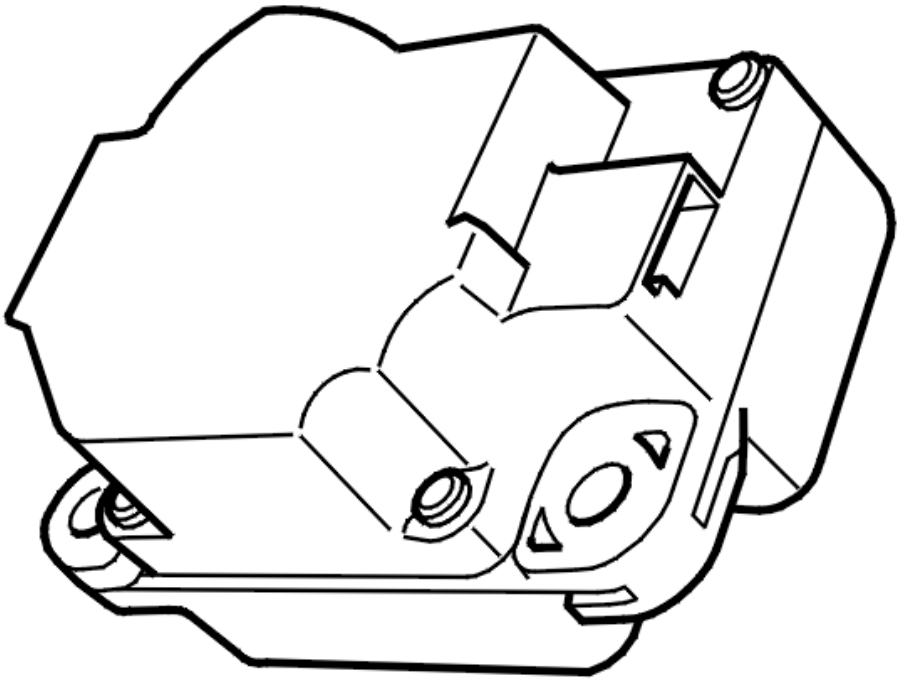

Fig. 66: Identifying Damper Motor Module (DMM)
Courtesy of VOLVO CARS CORPORATION

The diagnostic trouble code (DTC) is stored if the climate control module (CCM) detects an open-circuit in the communication between the damper motor recirculation and the climate control module (CCM) on LIN bus 1.

The diagnostic trouble code (DTC) can occur together with diagnostic trouble codes (DTCs) for other components on LIN bus 1 (CCM-DD10 - CCM-DD16) depending on where the open-circuit has occurred.

The diagnostic trouble code (DTC) can be diagnosed at ignition switch position II.

Substitute Value

- None.

Possible Source

- Open-circuit on LIN bus 1 between the climate control module (CCM) and the damper motor module (DMM) recirculation
- Contact resistance, oxidation or loose connections in the connectors.

Fault symptom[s]

- No recirculation.

NO COMMUNICATION

CHECKING THE DIAGNOSTIC TROUBLE CODES (DTCS)

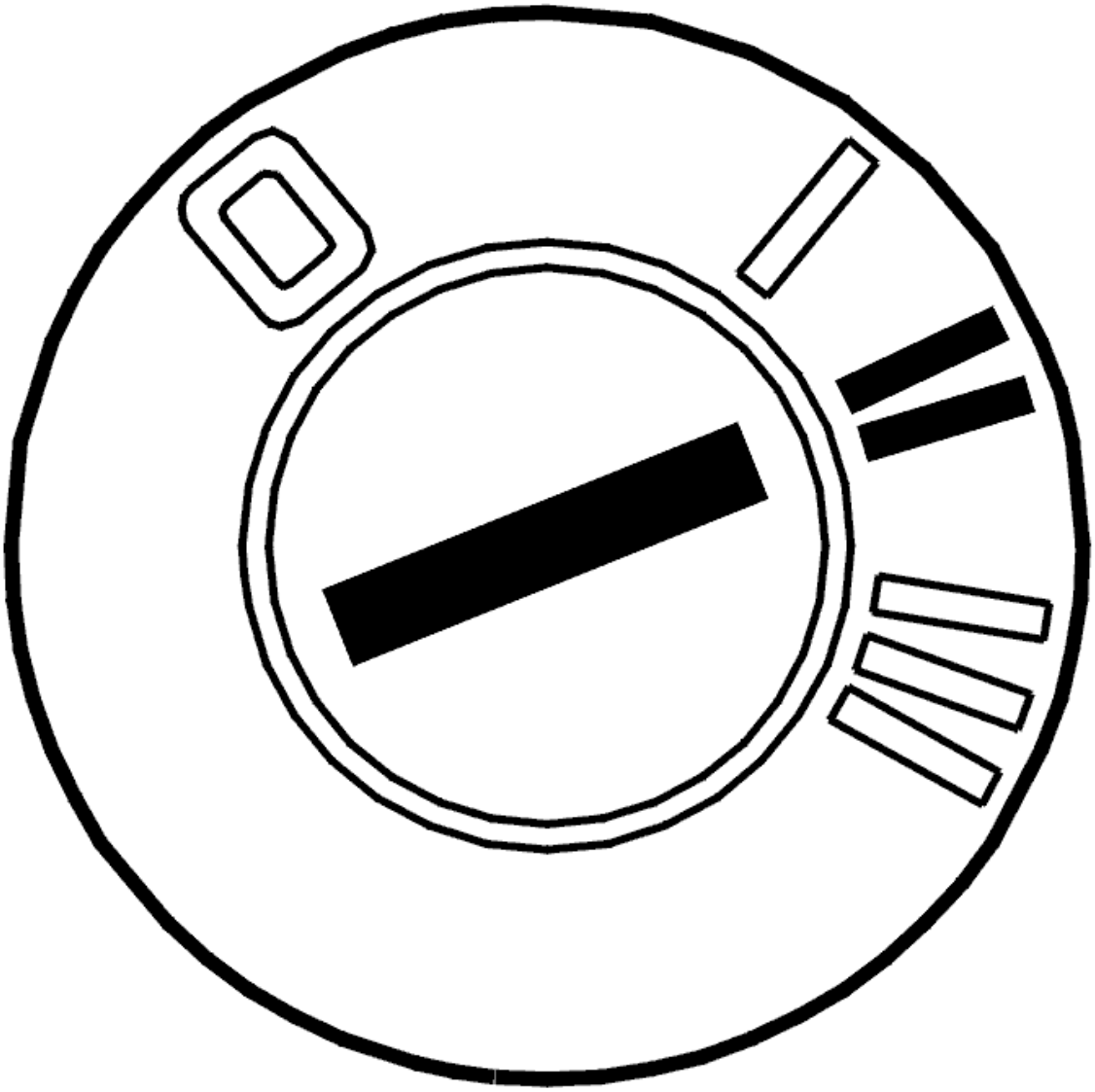

Fig. 67: Identifying Ignition ON
Courtesy of VOLVO CARS CORPORATION

- Ignition on.

  The diagnostic trouble code (DTC) may occur together with diagnostic trouble codes (DTCs) for other components that communicate with the climate control module (CCM) via LIN bus 1 and LIN bus 2.

  Check whether the diagnostic trouble code (DTC) has been stored together with other diagnostic trouble codes (DTCs) for other components on the climate control unit.

  Following options:

  1. The diagnostic trouble code (DTC) is stored together with diagnostic trouble codes (DTCs) for components in both LIN bus 1 and LIN bus 2 (CCM-DD10 - CCM-DD16, CCM-DD30 - CCM-DD34). Refer to **CHECKING THE CONNECTORS AND WIRING**.
  2. The diagnostic trouble code (DTC) is stored together with diagnostic trouble codes (DTCs) for components only on LIN bus 1 (CCM-DD10 - CCM-DD16). Refer to **CHECKING LIN BUS 1 AND CONNECTOR**.
  3. The diagnostic trouble code (DTC) is not together with diagnostic trouble codes (DTCs) for other components on LIN bus 1 and LIN bus 2. Refer to **CHECKING THE WIRING AND COMPONENT**.

CHECKING THE CONNECTORS AND WIRING

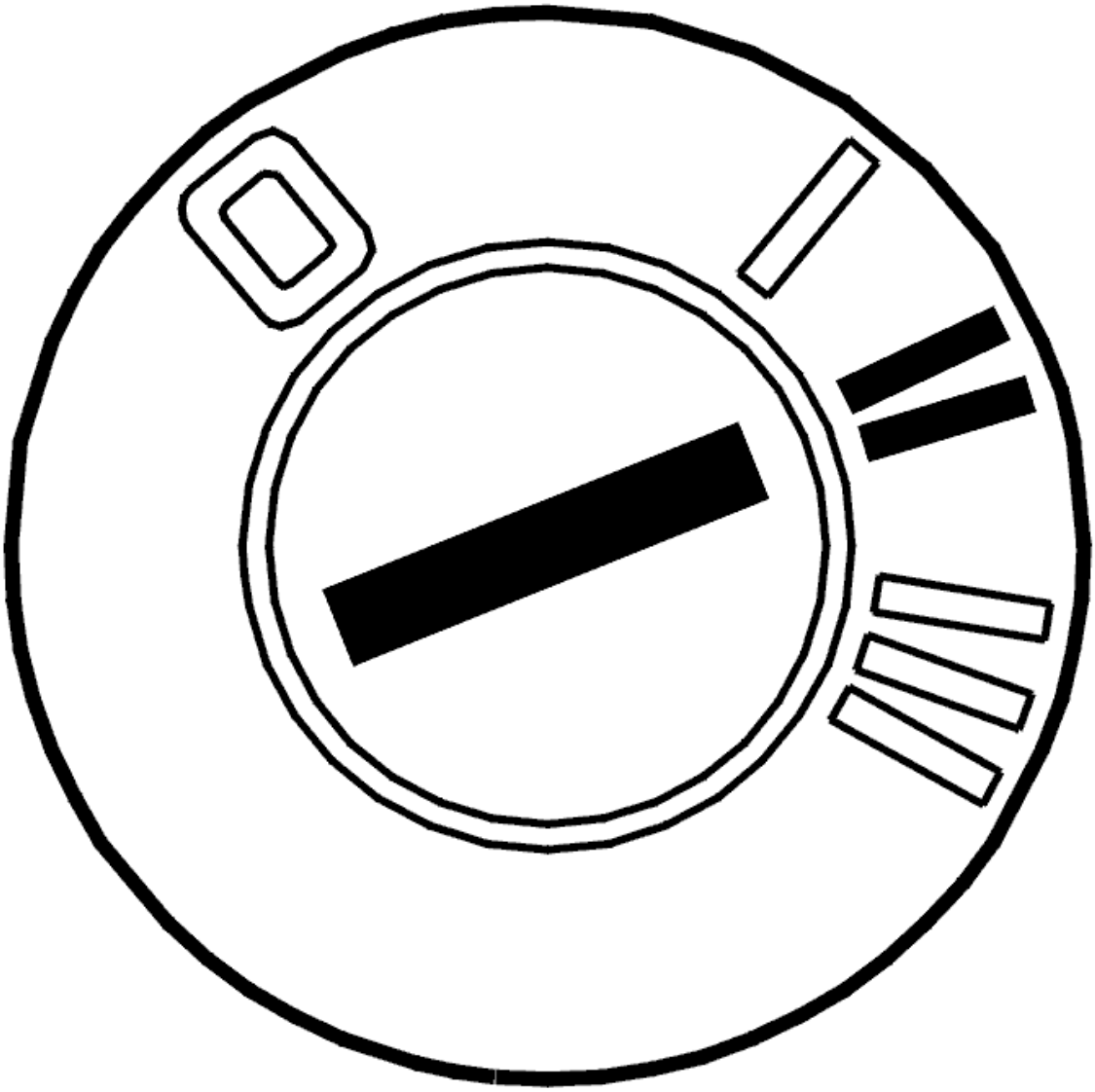

Fig. 68: Identifying Ignition ON
Courtesy of VOLVO CARS CORPORATION

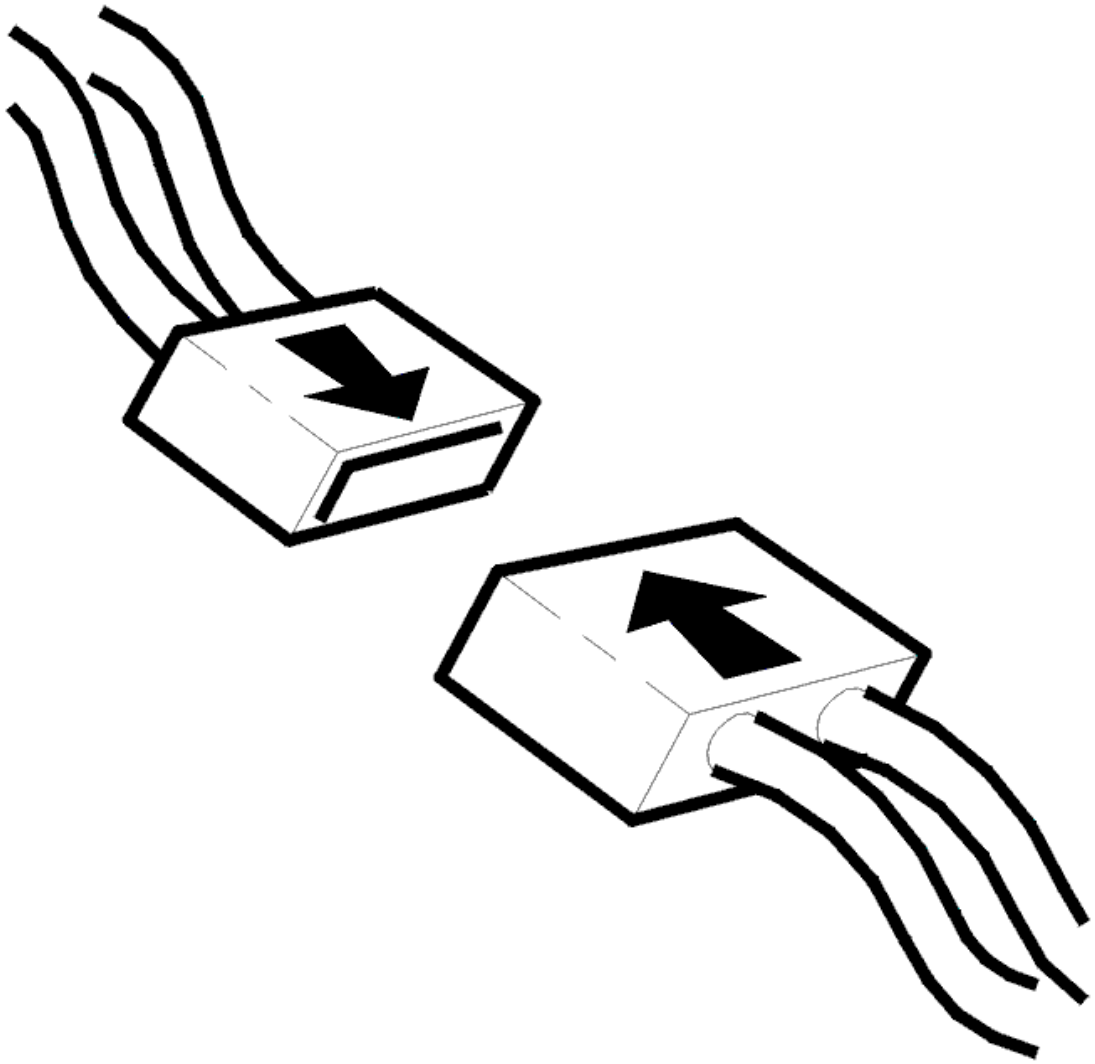

Fig. 69: Connecting Connector
Courtesy of VOLVO CARS CORPORATION

- Ignition off
- Disconnect the connector for the climate control module (CCM)
- Disconnect the connector for the central electronic module (CEM)
- Ignition on.

Checking the power supply and ground terminals

The following applies to components on the climate control unit that communicate with the climate control module (CCM) via LIN bus 1 and LIN bus 2:

- All components are jointly powered via a fuse from the central electronic module (CEM)
- All components are grounded via a common ground terminal.

Check the power supply to the components on the climate control unit by taking a reading on connector A for the central electronic module (CEM) between terminal #A44 (C44) and chassis ground.

Also check the fuse on the central electronic module (CEM).

Check the power supply cable between the central electronic module (CEM) and the connector for the climate control unit. Check for an open-circuit. Measure between terminal #1 on the connector for the climate control unit and chassis ground.

Check the ground terminal for the components on the climate control unit. Measure between the connector for climate control unit terminal #5 and chassis ground.

Check the connector on the climate control unit and connector A for the central electronic module (CEM). Check for contact resistance. Check for oxidation. Check for loose connections.

Checking LIN bus

Check both LIN bus 1 and LIN bus 2. Check for an open-circuit.

Take readings between:

- The connector for climate control module (CCM) terminal #12 (#36) and the connector for climate control unit terminal #2
- The connector for climate control module (CCM) terminal #7 (#31) and the connector for climate control unit terminal #5.

Check the wiring between the connector and the components on the climate control unit. Check for an open-circuit.

Remedy as necessary.

Other information:

- For further information about the connectors, fuses and relays, see the appropriate service information.
- To connect the breakout box to the climate control module (CCM), see: **CONNECTING THE BREAKOUT BOX**
- To connect the breakout box, central electronic module (CEM), see: **CONNECTING THE BREAKOUT BOX**
- see **SIGNAL SPECIFICATION**
- see **CLIMATE CONTROL, LOCATION OF COMPONENTS**
- see **CLIMATE CONTROL MODULE (CCM), REPLACING**
- For -2004, see **CENTRAL ELECTRONIC MODULE (CEM), REPLACING** For 2005-, see **CENTRAL ELECTRONIC MODULE (CEM), REPLACING**
- see **CONTENTS**

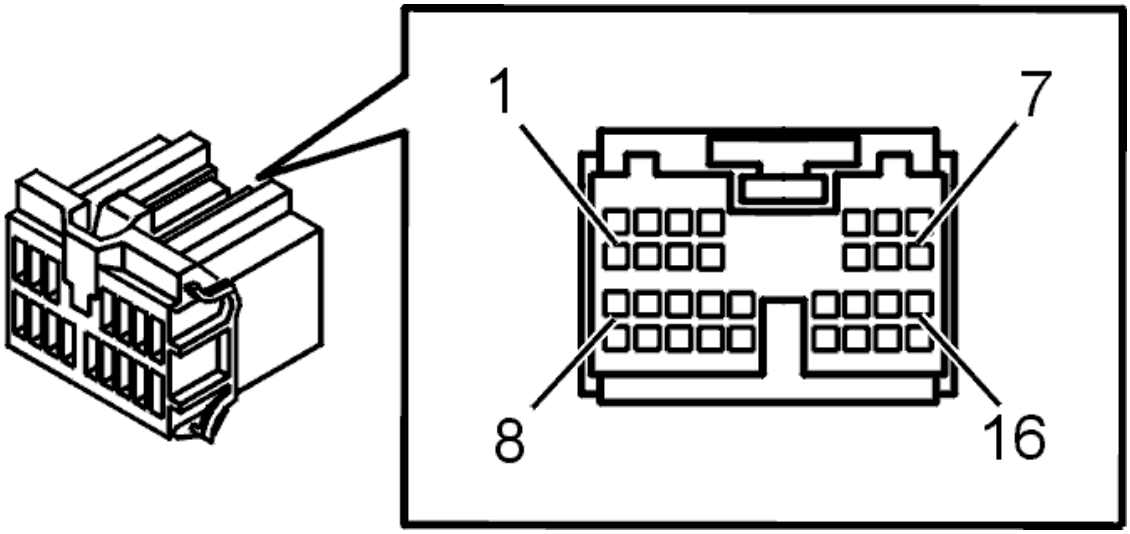

Fig. 70: Connector, Green (16- Pin)
Courtesy of VOLVO CARS CORPORATION

- **Continue**

  Refer to **VERIFICATION**

CHECKING LIN BUS 1 AND CONNECTOR

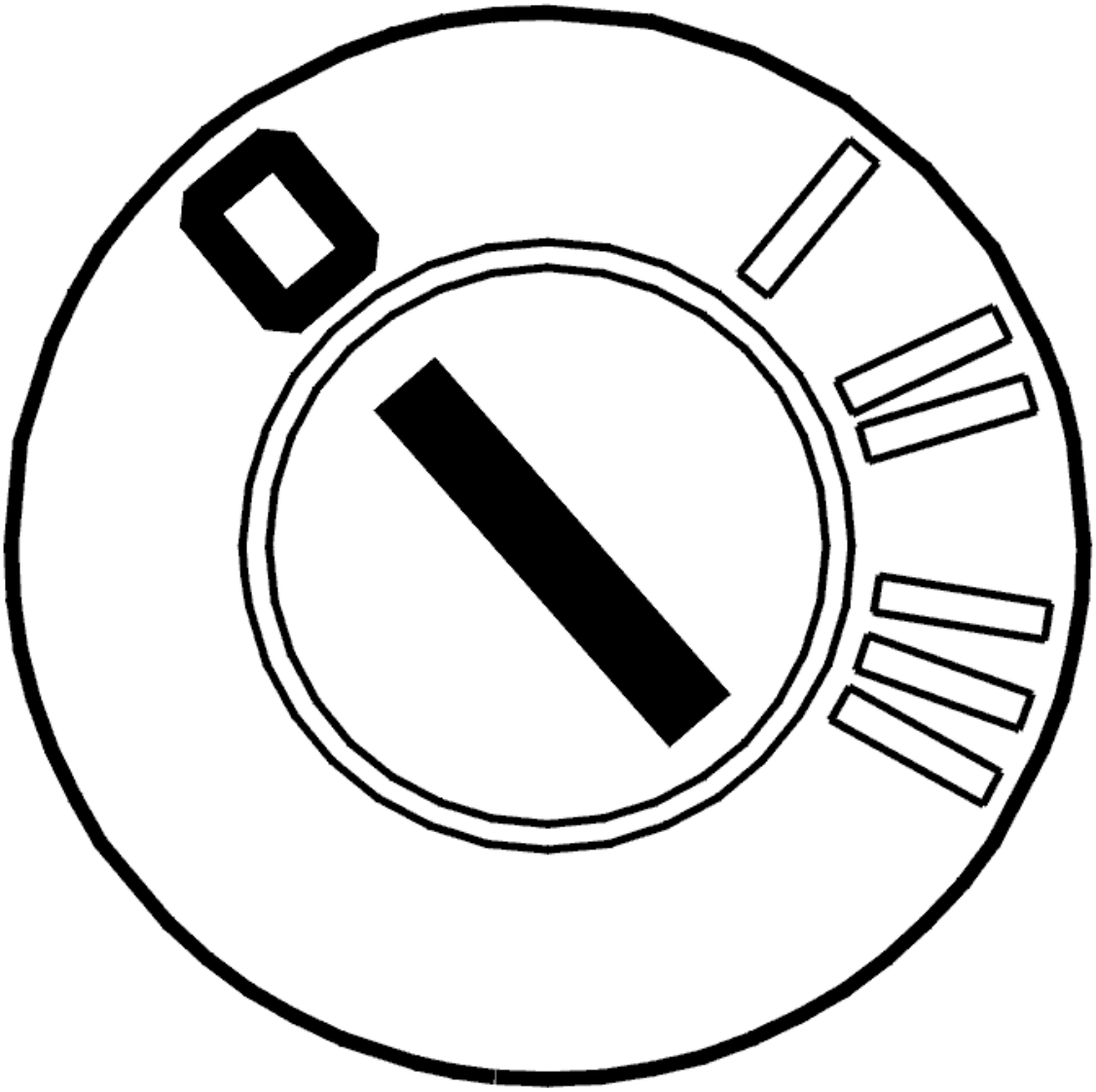

Fig. 71: Identifying Ignition OFF
Courtesy of VOLVO CARS CORPORATION

- Ignition off
- Disconnect the connector for the climate control module (CCM).

  Check the climate control module (CCM) connector. Check for contact resistance. Check for oxidation. Check for loose connections.

  Check LIN bus 1 between the climate control module (CCM), the connector for the climate control unit and the seat heating module (SHM) left. Check for an open-circuit.

  Take readings between:

  - The connector for climate control module (CCM) terminal #12 (#36) and the connector for climate control unit terminal #2

- The connector for climate control module (CCM) terminal #12 (#36) and connector A for seat heating module (SHM) left terminal #2.

Check LIN bus 1 between the components (the damper motors and the air quality sensor (AQS) and the connector for the climate control unit. Check for an open-circuit.

Check the connector for the climate control unit. Check for contact resistance. Check for oxidation. Check for loose connections.

Remedy as necessary.

Other information:

- For further information about the connectors, fuses and relays, see the appropriate service information.
- see **CONNECTING THE BREAKOUT BOX**
- see **SIGNAL SPECIFICATION**
- see **CLIMATE CONTROL, LOCATION OF COMPONENTS**
- see **SEAT HEATING MODULE (SHM), REPLACING**
- see **CLIMATE CONTROL MODULE (CCM), REPLACING**
- see **CONTENTS**

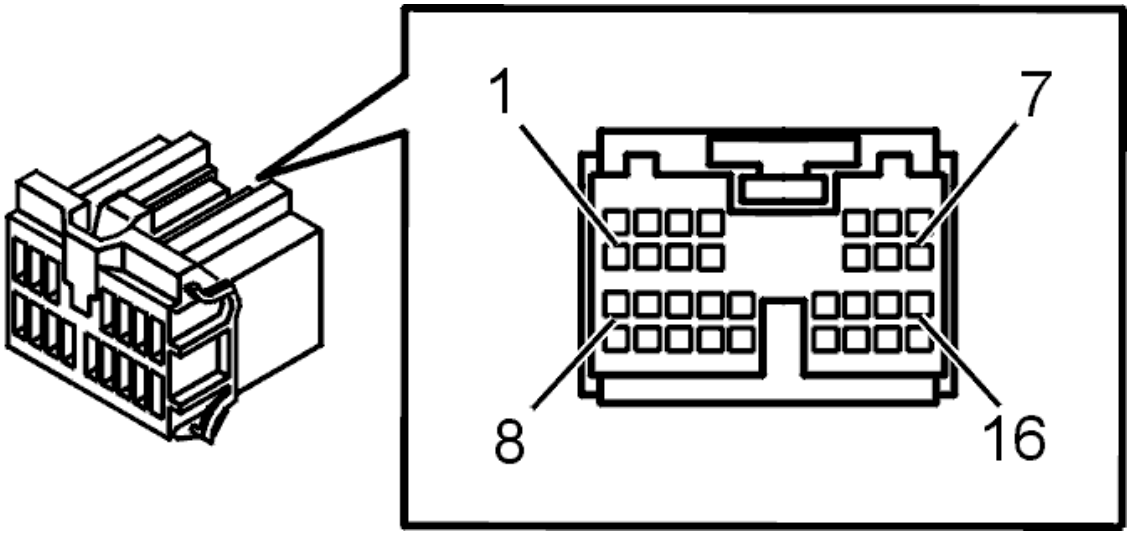

Fig. 72: Connector, Green (16- Pin)
Courtesy of VOLVO CARS CORPORATION

- **Continue**

Refer to **VERIFICATION**

CHECKING THE WIRING AND COMPONENT

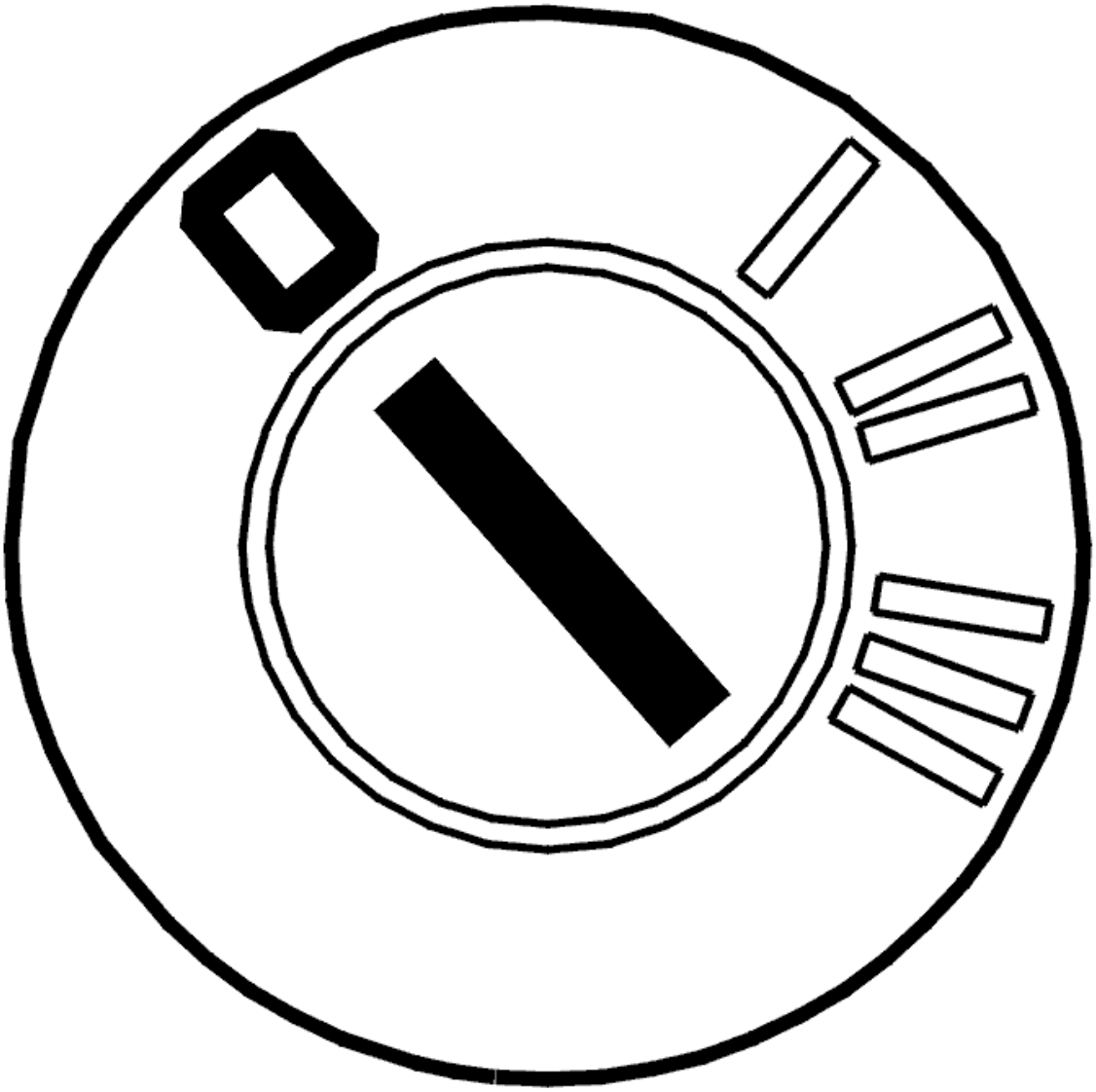

Fig. 73: Identifying Ignition OFF
Courtesy of VOLVO CARS CORPORATION

- Ignition off
- Disconnect the connector for the damper motor module (DMM) for recirculation
- Ignition on.

  Check the connector. Check for contact resistance. Check for oxidation. Check for loose connections.

  Check that the damper motor module (DMM) is connected to power supply and ground.

  Measure the voltage on the connector for the damper motor module (DMM) between terminals #1 and #3

  Check LIN bus 1 by taking a reading between damper motor module (DMM) connector terminal #2 and the connector for climate control unit terminal #2. Check for an open-circuit.

Try replacing the damper motor module (DMM) if no fault is found.

Remedy as necessary.

Other information:

- For further information about the connectors, fuses and relays, see the appropriate service information.
- see **CONNECTING THE BREAKOUT BOX**
- see **SIGNAL SPECIFICATION**
- see **CLIMATE CONTROL, LOCATION OF COMPONENTS**
- see **CLIMATE CONTROL MODULE (CCM), REPLACING**
- for -2004, see **DAMPER MOTOR RECIRCULATION, REPLACING** For 2005-, see **DAMPER MOTOR MODULE (DMM) RECIRCULATION, REPLACING**
- see **CONTENTS**

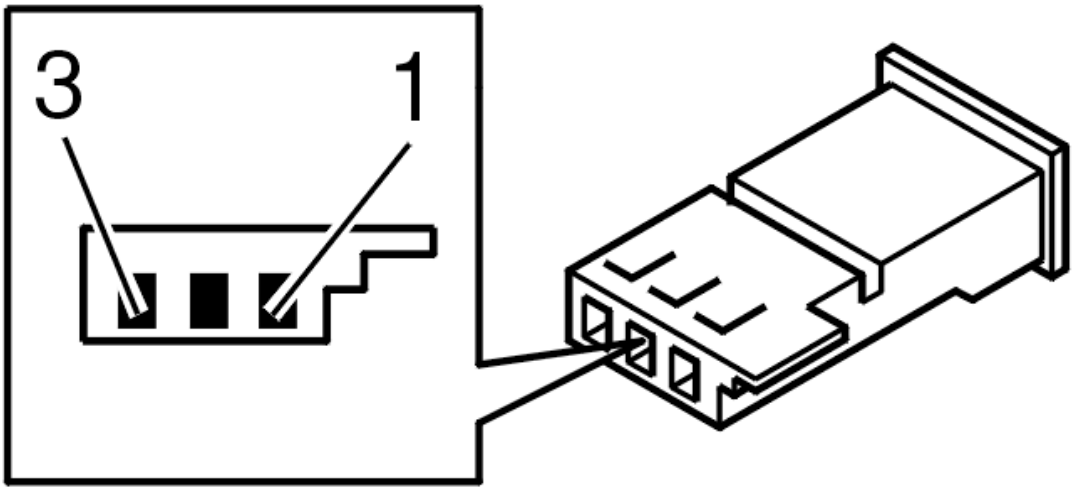

Fig. 74: Identifying Damper Motor Module (DMM) Connector Terminals
Courtesy of VOLVO CARS CORPORATION

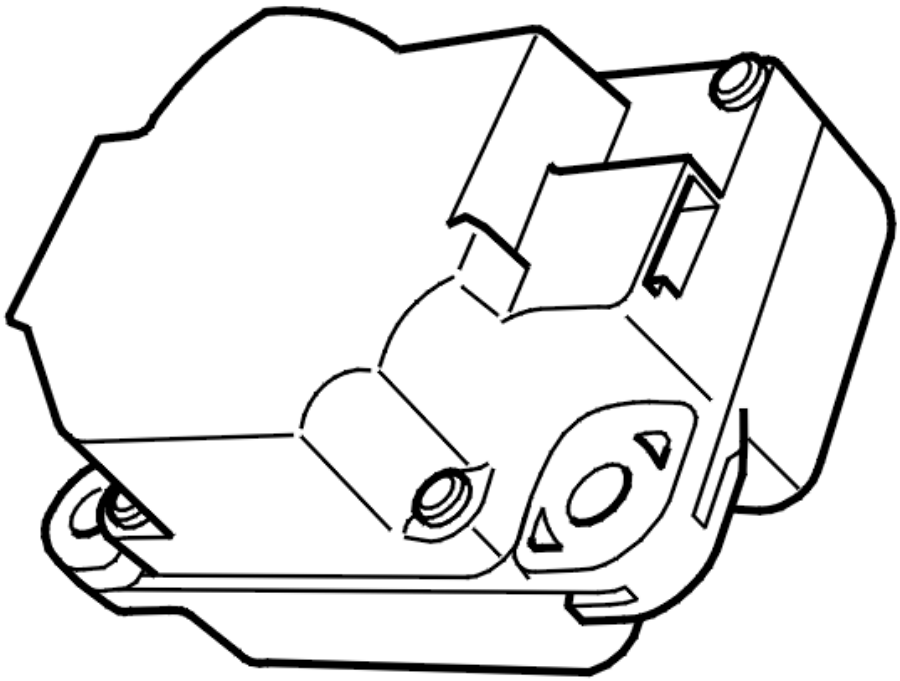

Fig. 75: Identifying Damper Motor Module (DMM)
Courtesy of VOLVO CARS CORPORATION

- **Continue**

  Refer to **VERIFICATION**

IDENTIFYING COMPONENTS ON THE LIN NETWORK THAT BELONG TO THE CLIMATE CONTROL SYSTEM (CCM)

INFORMATION

- The control module must be identified after replacing the Damper Motor Module (DMM).

NOTE: **Identification must only be carried out when replacing components on the LIN network that belong to the climate control system (CCM).**

Have any of the components on the LIN network been replaced?

- **YES**

  Refer to **IDENTIFYING COMPONENTS ON THE LIN NETWORK THAT BELONG TO THE CLIMATE CONTROL SYSTEM (CCM)**

- **NO**

  Refer to **VERIFICATION**

IDENTIFYING COMPONENTS ON THE LIN NETWORK THAT BELONG TO THE CLIMATE CONTROL SYSTEM (CCM)

HINT: When identifying damper motors, each damper motor must be run to its limit position. These operations can take up to 30 seconds. When identifying the damper motors it is important that a battery charger is connected.

Fig. 76: Checking Traffic Load On CAN Cables
Courtesy of VOLVO CARS CORPORATION

- Ignition off
- Reinstall the connectors, components etc.

NOTE: **Climate Control Module (CCM) and damper motors can be affected by the temperature. The vehicle should have normal room temperature when performing this service.**

Carry out identification as follows:

- Ignition on.
- Click on the VCT2000 (Volvo Scan Tool) symbol. Wait until identification has been carried out.
- Ignition off.

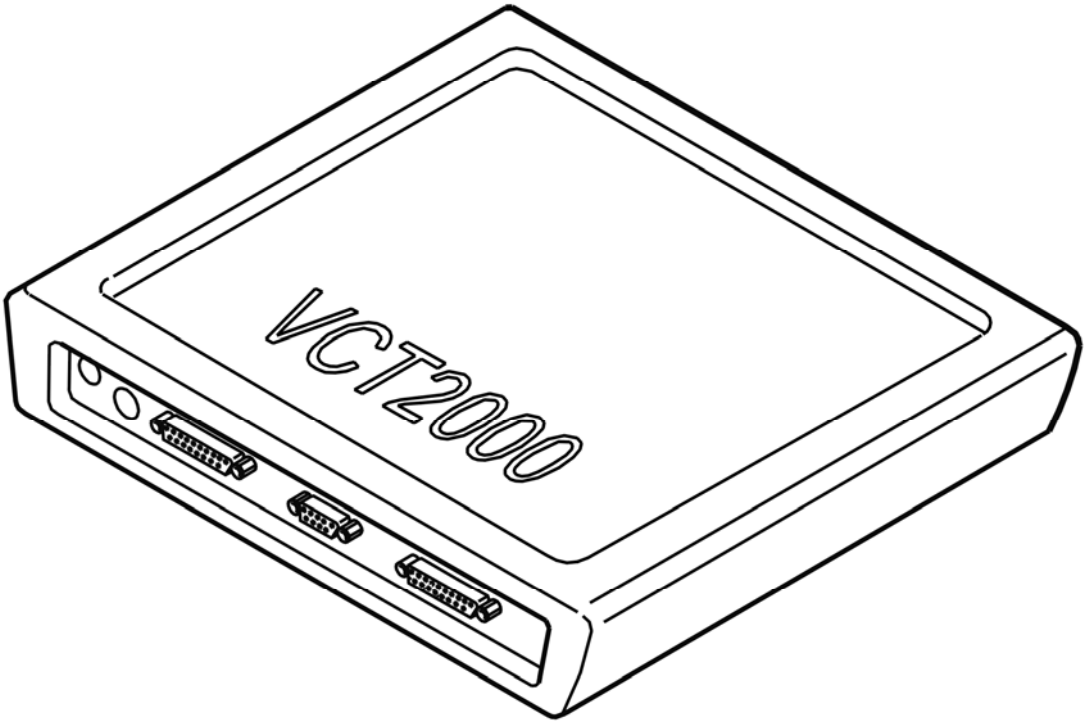

Fig. 77: Identifying VCT2000 Diagnostic Tool Symbol In VIDA
Courtesy of VOLVO CARS CORPORATION

- **Continue**

Refer to **CALIBRATING THE CLIMATE CONTROL MODULE (CCM)**

CALIBRATING THE CLIMATE CONTROL MODULE (CCM)

CAUTION: When activating this function, calibration of the Climate Control Module (CCM) starts. After carrying out calibration read off of the diagnostic trouble codes (DTCs) starts. To ensure that diagnostics for the Climate Control Module (CCM) have been carried out, delay for 30 seconds before reading out diagnostic trouble codes (DTCs) after calibration.

NOTE: Climate Control Module (CCM) and damper motors can be affected by the temperature. The vehicle should have normal room temperature when performing this service.

Fig. 78: Checking Traffic Load On CAN Cables
Courtesy of VOLVO CARS CORPORATION

Carry out calibration as follows:

- Ignition on.
- Click on the VCT2000 (Volvo Scan Tool) symbol. Wait until calibration has been carried out and diagnostic trouble codes (DTCs) read out.
- Ignition off.

This function controls the components that communicate with the Climate Control Module (CCM) via LIN bus 1 and LIN bus 2. In the event of a fault in any of the LIN buses, diagnostic trouble codes (DTCs) CCM-0070 to CCM-0071 will be stored depending on the fault. These diagnostic trouble codes (DTCs) can only be stored in conjunction with this diagnostic function.

If any of these diagnostic trouble codes (DTCs) recur, recalibrate to check if the problem was overcome. If the diagnostic trouble code (DTC) recurs, fault-trace the relevant diagnostic trouble code (DTC).

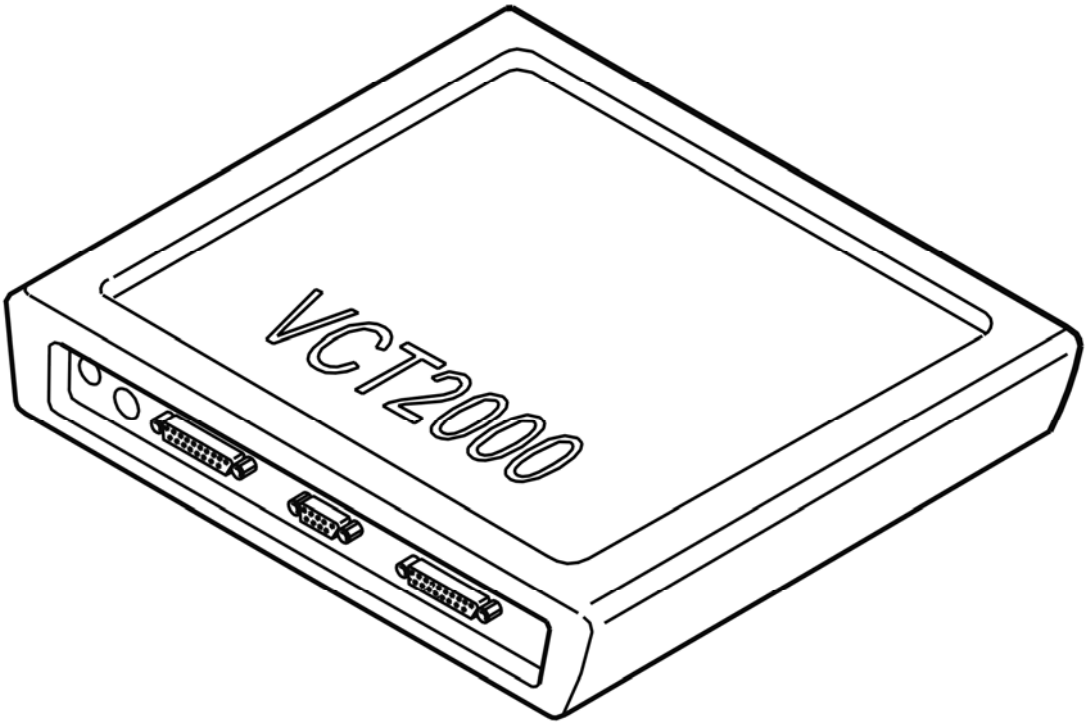

Fig. 79: Identifying VCT2000 Diagnostic Tool Symbol In VIDA
Courtesy of VOLVO CARS CORPORATION

VERIFICATION

HINT: After carrying out the repair, check that the fault has been remedied.

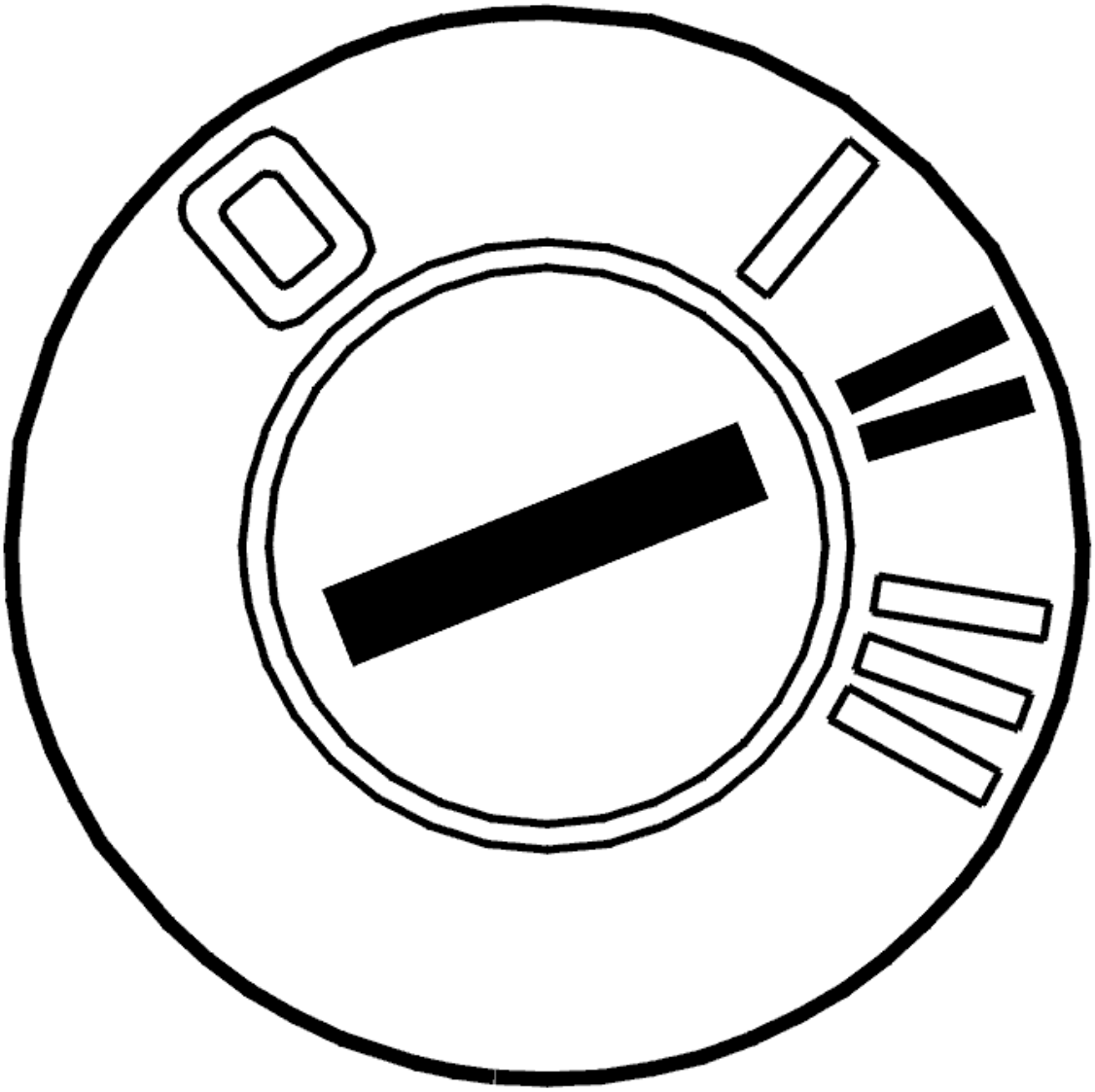

Fig. 80: Identifying Ignition ON
Courtesy of VOLVO CARS CORPORATION

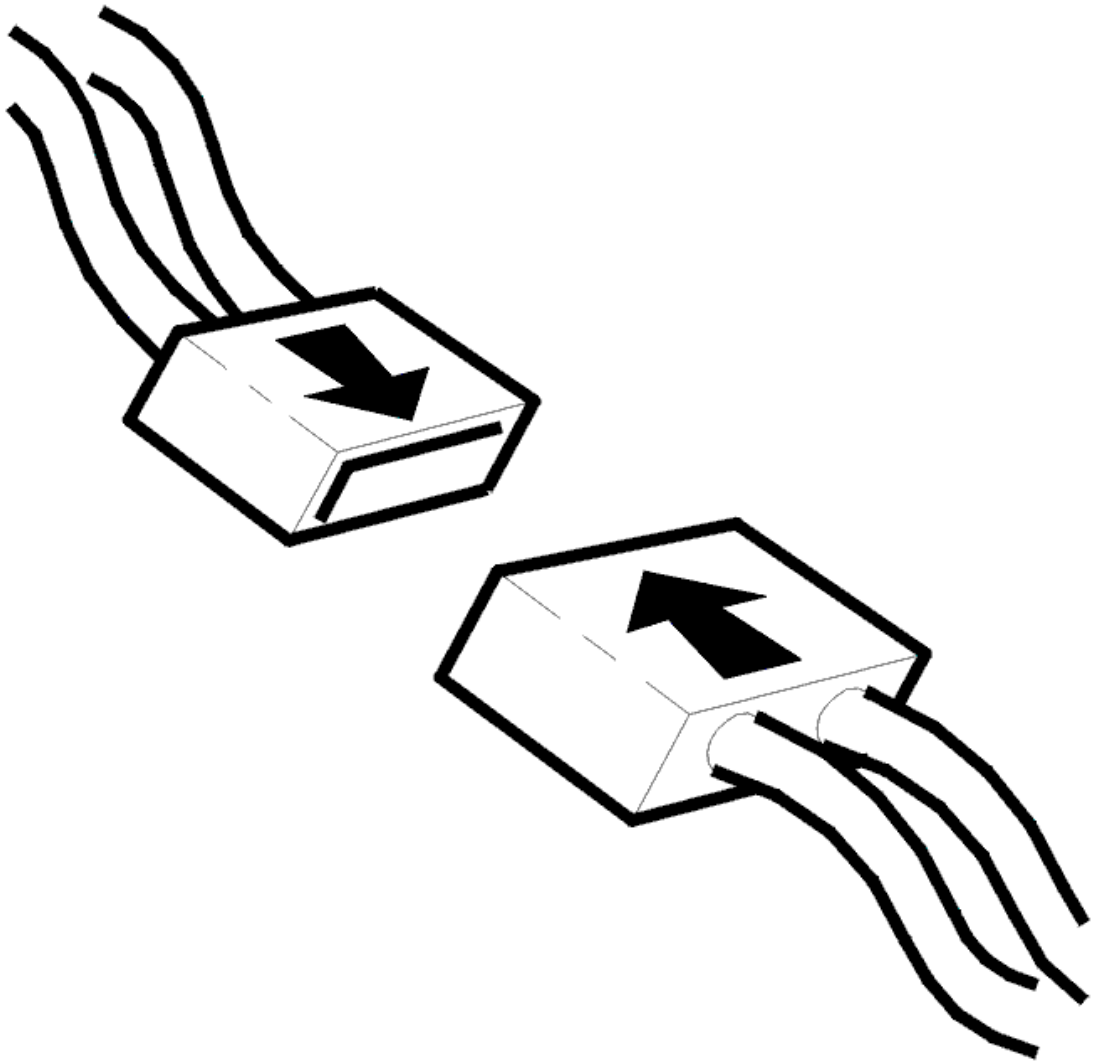

Fig. 81: Connecting Connector
Courtesy of VOLVO CARS CORPORATION

- Ignition off
- Reinstall the connectors, components etc.
- Ignition on.

  Check that the relevant diagnostic trouble code (DTC) has switched status from permanent to intermittent fault.

  Check also that diagnostic trouble code (DTC) CCM-0070, CCM-0071 CCM-0072 or CCM-0073 has not been stored during identification of the damper motors.

  These diagnostic trouble codes (DTCs) can only be stored when identifying damper motors. They mean that the identification has failed for some reason.

Remedy by correctly identifying the damper motor. Fault-trace according to the relevant information.

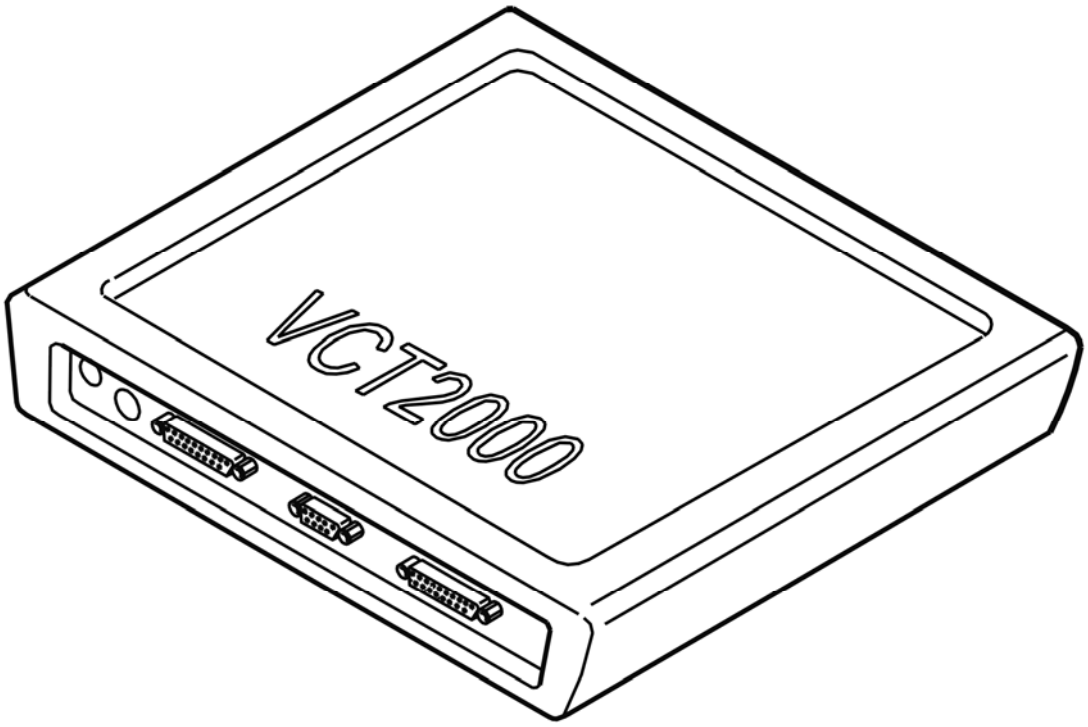

Fig. 82: Identifying VCT2000 Diagnostic Tool Symbol In VIDA
Courtesy of VOLVO CARS CORPORATION

Has the status of the diagnostic trouble code (DTC) changed?

- **YES**

  VERIFIED: Troubleshooting has been completed.

- **NO**

  Refer to **INFORMATION**

INFORMATION

FAULT-TRACING INFORMATION

The fault should have been detected and remedied. As this is not the case fault-tracing has failed.

Exit fault-tracing for this diagnostic trouble code (DTC) or make another attempt.

CCM-DD15: LEFT TEMPERATURE DAMPER MOTOR. NO COMMUNICATION

(2005-2012)

DIAGNOSTIC TROUBLE CODE (DTC) INFORMATION CCM-DD15

Condition

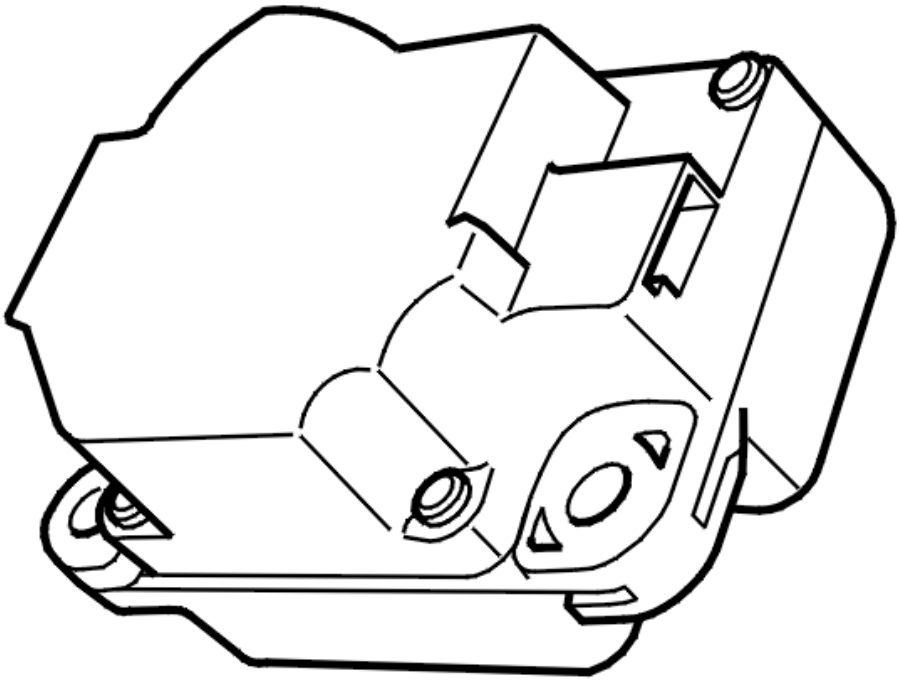

Fig. 83: Identifying Damper Motor Module (DMM)
Courtesy of VOLVO CARS CORPORATION

The diagnostic trouble code (DTC) is stored if the climate control module (CCM) detects an open-circuit in the communication between the climate control module (CCM) and the damper motor module (DMM) temperature left on LIN bus 1.

The diagnostic trouble code (DTC) can occur together with diagnostic trouble codes (DTCs) for other components on LIN bus 1 (CCM-DD10 - CCM-DD16) depending on where the open-circuit has occurred.

The diagnostic trouble code (DTC) can be diagnosed at ignition switch position II.

Substitute Value

- None.

Possible Source

- Open-circuit on LIN bus 1 between the climate control module (CCM) and the air quality sensor (AQS)
- Contact resistance, oxidation or loose connections in the connectors.

Fault symptom[s]

- The passenger compartment temperature does not correspond to the set position.

NO COMMUNICATION

CHECKING THE DIAGNOSTIC TROUBLE CODES (DTCS)

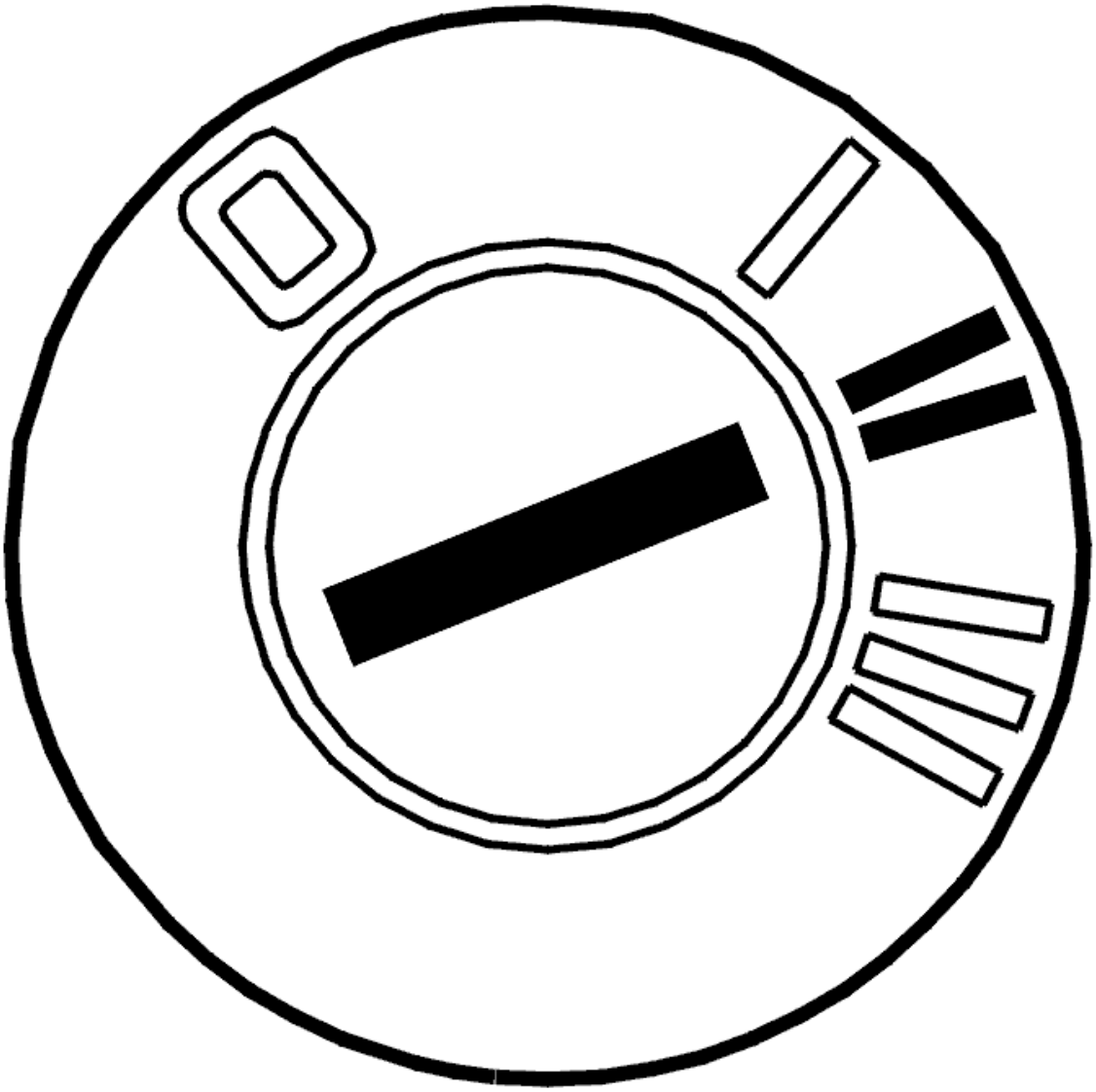

Fig. 84: Identifying Ignition ON
Courtesy of VOLVO CARS CORPORATION

- Ignition on.

The diagnostic trouble code (DTC) may occur together with diagnostic trouble codes (DTCs) for other components that communicate with the climate control module (CCM) via LIN bus 1 and LIN bus 2.

Check whether the diagnostic trouble code (DTC) has been stored together with other diagnostic trouble codes (DTCs) for other components in the climate control unit.

Following options:

1. The diagnostic trouble code (DTC) is stored together with diagnostic trouble codes (DTCs) for components in both LIN bus 1 and LIN bus 2 (CCM-DD10 - CCM-DD16, CCM-DD30 - CCM-DD34). Refer to **CHECKING THE CONNECTORS AND WIRING**
2. The diagnostic trouble code (DTC) is stored together with diagnostic trouble codes (DTCs) for components only on LIN bus 1 (CCM-DD10 - CCM-DD16). Refer to **CHECKING LIN BUS 1 AND CONNECTOR**
3. The diagnostic trouble code (DTC) is not together with diagnostic trouble codes (DTCs) for other components on LIN bus 1 and LIN bus 2. Refer to **CHECKING THE WIRING AND COMPONENT**

CHECKING THE CONNECTORS AND WIRING

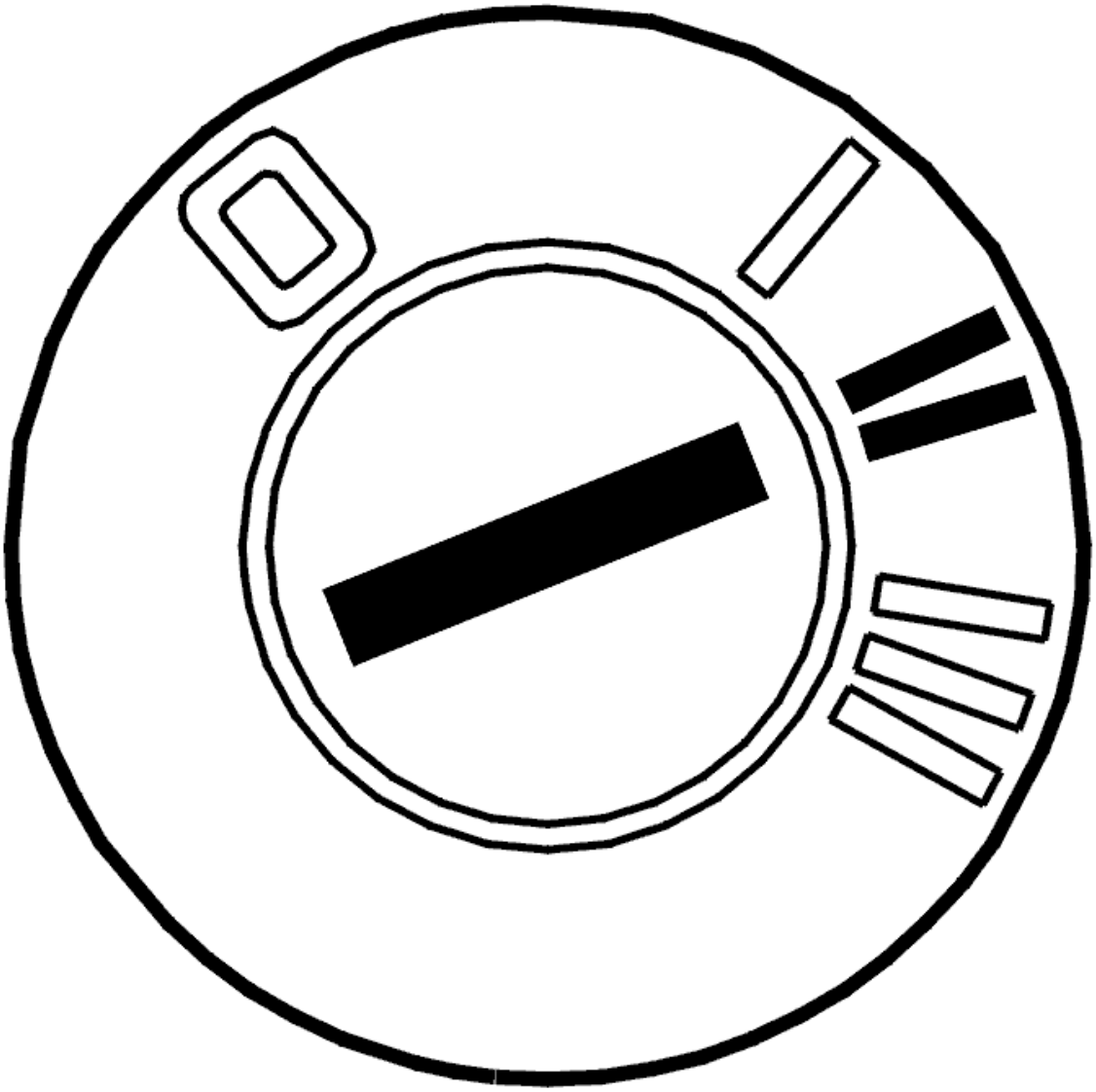

Fig. 85: Identifying Ignition ON
Courtesy of VOLVO CARS CORPORATION

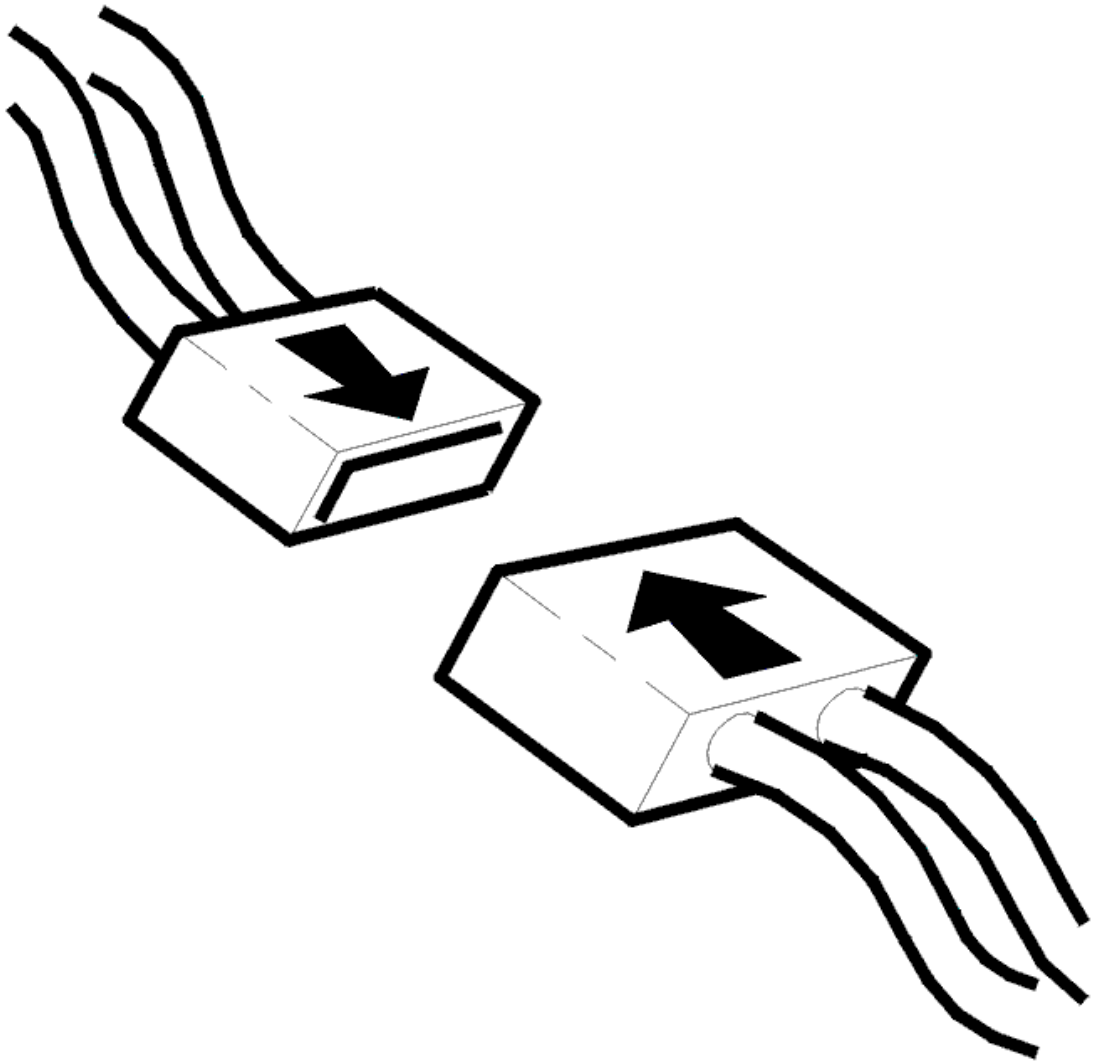

Fig. 86: Connecting Connector
Courtesy of VOLVO CARS CORPORATION

- Ignition off
- Disconnect the connector for the climate control module (CCM)
- Disconnect the connector for the central electronic module (CEM)
- Ignition on.

Checking the power supply and ground terminals

The following applies to components on the climate control unit that communicate with the climate control module (CCM) via LIN bus 1 and LIN bus 2:

- All components are jointly powered via a fuse from the central electronic module (CEM)
- All components are grounded via a common ground terminal.

Check the power supply to the components on the climate control unit by taking a reading on connector A for the central electronic module (CEM) between terminal #A44 (C44) and chassis ground.

Also check the fuse on the central electronic module (CEM).

Check the power supply cable between the central electronic module (CEM) and the connector for the climate control unit. Check for an open-circuit. Measure between terminal #1 on the connector for the climate control unit and chassis ground.

Check the ground terminal for the components on the climate control unit. Measure between the connector for climate control unit terminal #6 and chassis ground.

Check the connector for the climate control unit and connector A for the central electronic module (CEM). Check for contact resistance. Check for oxidation. Check for loose connections.

Checking LIN bus

Check both LIN bus 1 and LIN bus 2. Check for an open-circuit.

Take readings between:

- The connector for climate control module (CCM) terminal #12 (#36) and the connector for climate control unit terminal #2
- The connector for climate control module (CCM) terminal #7 (#31) and the connector for climate control unit terminal #5.

Check the wiring between the connector and the components on the climate control unit. Check for an open-circuit.

Remedy as necessary.

Other information:

- For further information about the connectors, fuses and relays, see the appropriate service information.
- To connect the breakout box to the climate control module (CCM), see: **CONNECTING THE BREAKOUT BOX**
- To connect the breakout box, central electronic module (CEM), see: **CONNECTING THE BREAKOUT BOX**
- see **SIGNAL SPECIFICATION**
- see **CLIMATE CONTROL, LOCATION OF COMPONENTS**
- see **CLIMATE CONTROL MODULE (CCM), REPLACING**
- For -2004, see **CENTRAL ELECTRONIC MODULE (CEM), REPLACING** . For 2005-, see **CENTRAL ELECTRONIC MODULE (CEM), REPLACING** .
- see **CONTENTS**

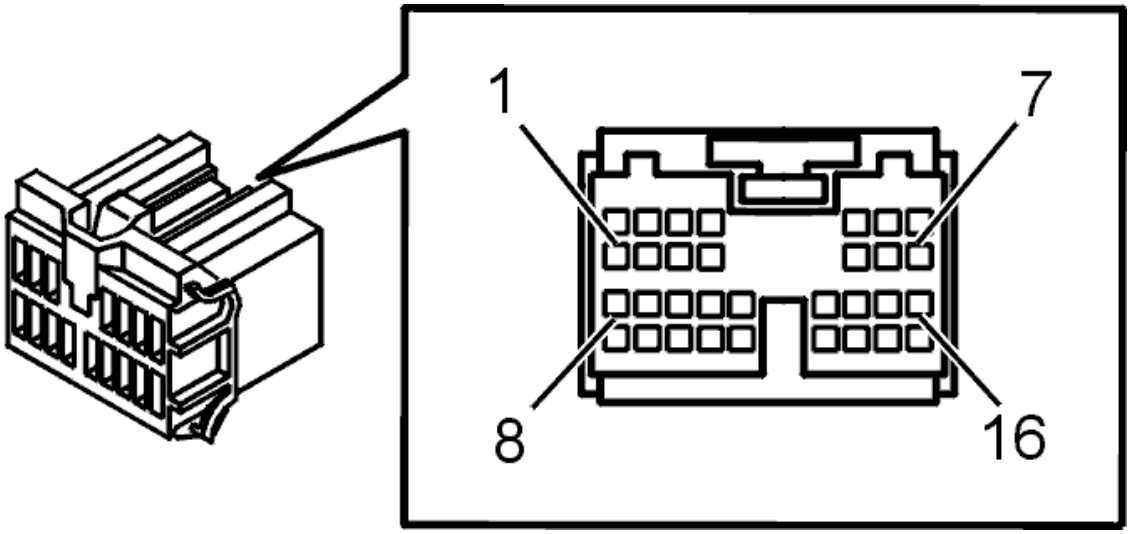

Fig. 87: Connector, Green (16- Pin)
Courtesy of VOLVO CARS CORPORATION

- **Continue**

  Refer to **VERIFICATION**

CHECKING LIN BUS 1 AND CONNECTOR

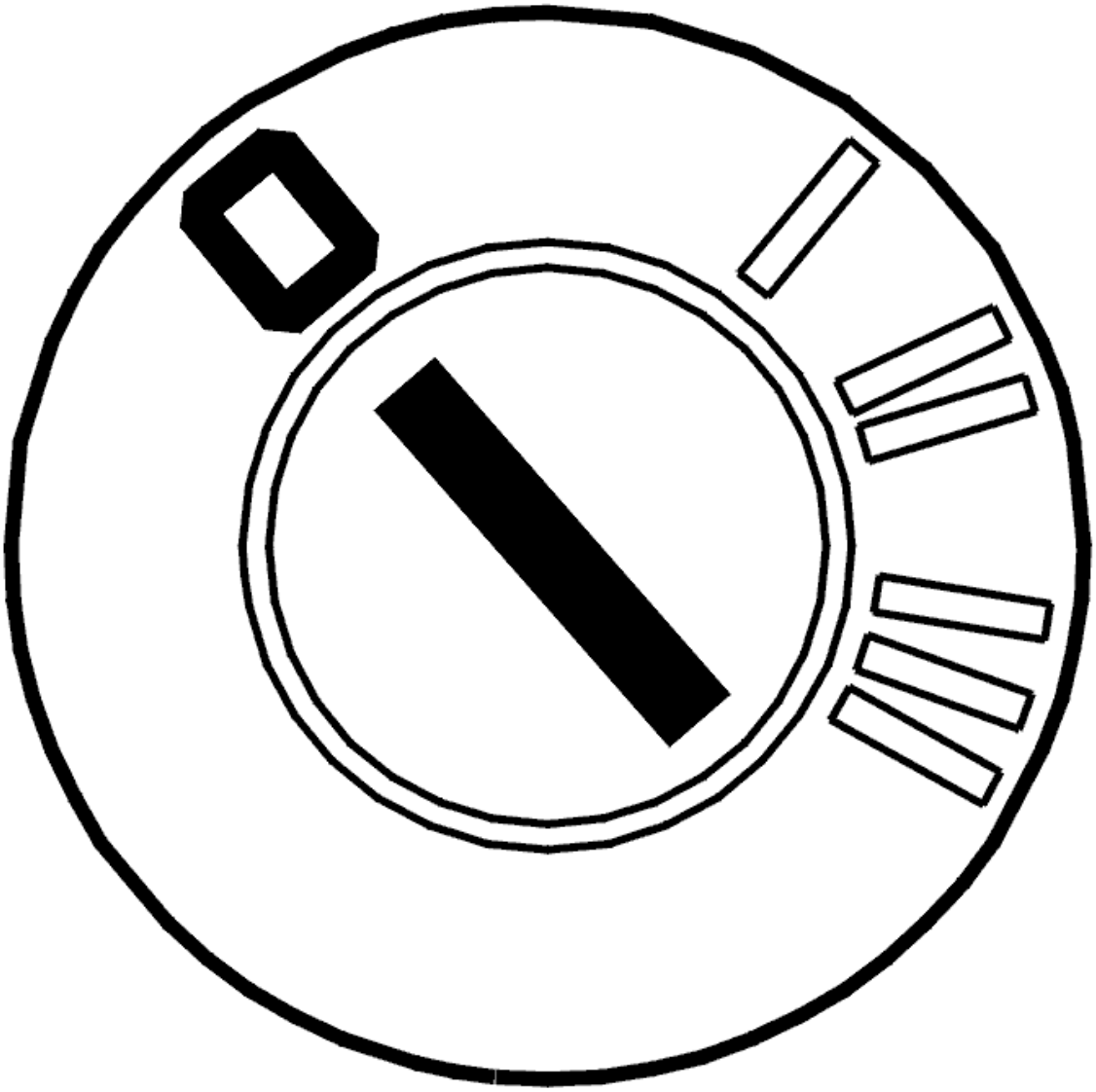

Fig. 88: Identifying Ignition OFF
Courtesy of VOLVO CARS CORPORATION

- Ignition off
- Disconnect the connector for the climate control module (CCM).

  Check the climate control module (CCM) connector. Check for contact resistance. Check for oxidation. Check for loose connections.

  Check LIN bus 1 between the climate control module (CCM), the connector for the climate control unit and the seat heating module (SHM) left. Check for an open-circuit.

  Take readings between:

  - The connector for climate control module (CCM) terminal #12 (#36) and the connector for climate control unit terminal #2

- The connector for climate control module (CCM) terminal #12 (#36) and connector A for seat heating module (SHM) left terminal #2.

Check LIN bus 1 between the components (the damper motors and the air quality sensor (AQS) and the connector for the climate control unit. Check for an open-circuit.

Check the connector for the climate control unit. Check for contact resistance. Check for oxidation. Check for loose connections.

Remedy as necessary.

Other information:

- For further information about the connectors, fuses and relays, see the appropriate service information.
- see **CONNECTING THE BREAKOUT BOX**
- see **SIGNAL SPECIFICATION**
- see **CLIMATE CONTROL, LOCATION OF COMPONENTS**
- see **CLIMATE CONTROL MODULE (CCM), REPLACING**
- see **CONTENTS**

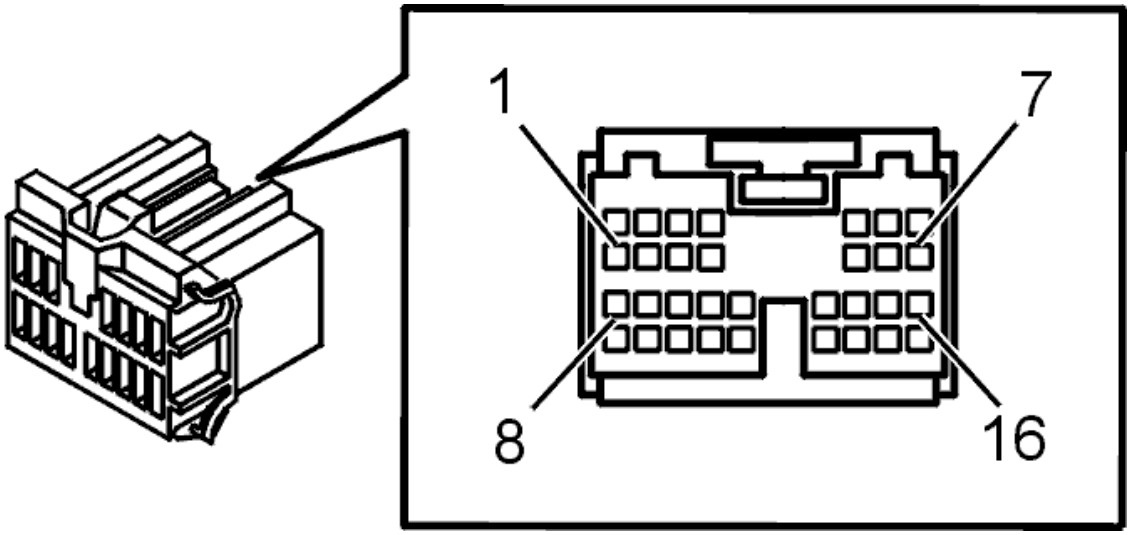

Fig. 89: Connector, Green (16- Pin)
Courtesy of VOLVO CARS CORPORATION

- **Continue**

Refer to **VERIFICATION**

CHECKING THE WIRING AND COMPONENT

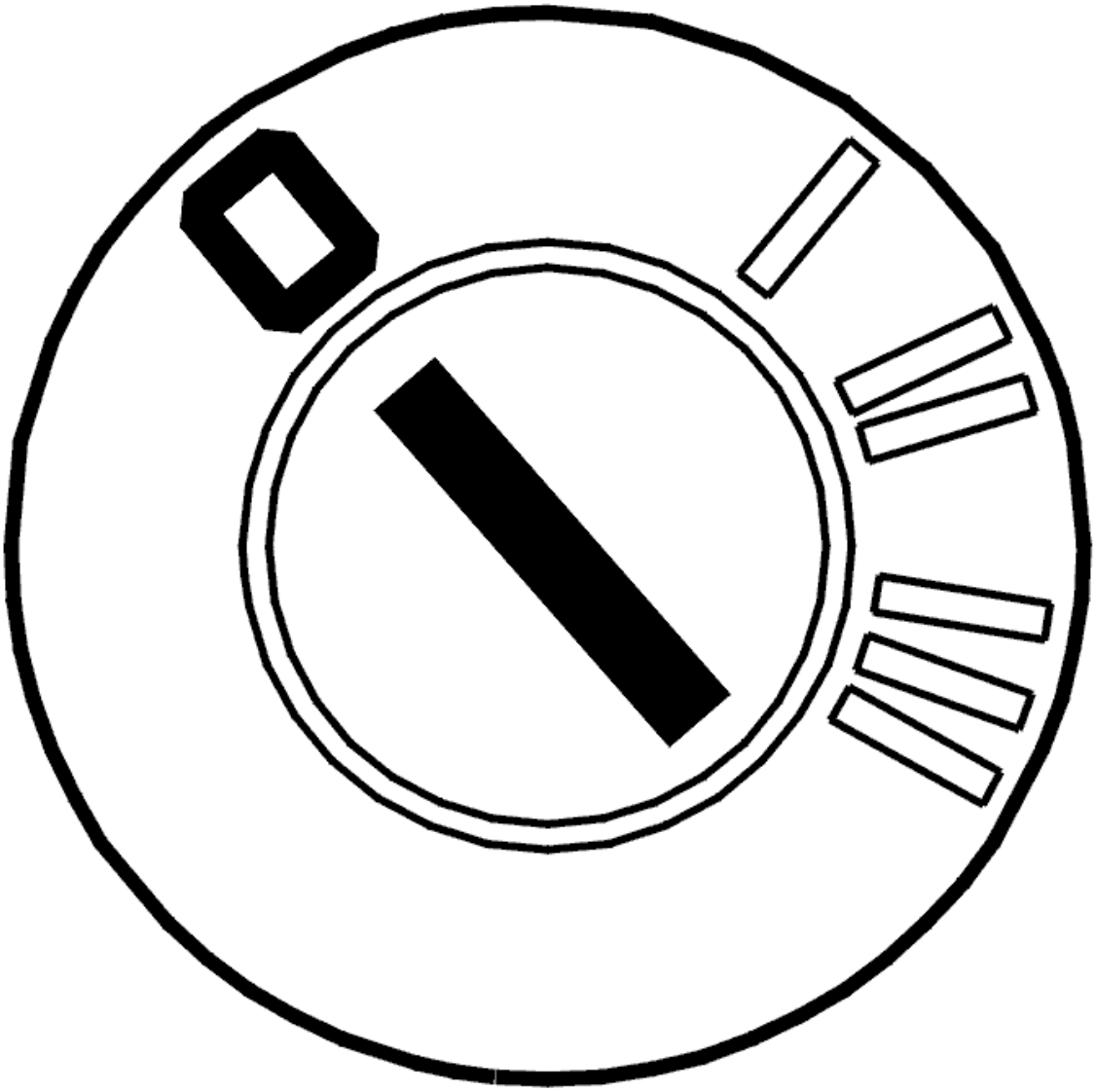

Fig. 90: Identifying Ignition OFF
Courtesy of VOLVO CARS CORPORATION

- Ignition off
- Disconnect the connector for the damper motor module (DMM) for temperature left
- Ignition on.

  Check the connector. Check for contact resistance. Check for oxidation. Check for loose connections.

  Check that the damper motor module (DMM) is connected to power supply and ground.

  Measure the voltage on the connector for the damper motor module (DMM) between terminals #1 and #3

  Check LIN bus 1 by taking a reading between damper motor module (DMM) connector terminal #2 and the connector for climate control unit terminal #2. Check for an open-circuit.

Try replacing the damper motor module (DMM) if no fault is found.

Remedy as necessary.

Other information:

- For further information about the connectors, fuses and relays, see the appropriate service information.
- see **CONNECTING THE BREAKOUT BOX**
- see **SIGNAL SPECIFICATION**
- see **CLIMATE CONTROL, LOCATION OF COMPONENTS**
- see **CLIMATE CONTROL MODULE (CCM), REPLACING**
- For -2004, see **DAMPER MOTOR TEMPERATURE, REPLACING** . For 2005-, see **DAMPER MOTOR MODULE (DMM) TEMPERATURE, REPLACING**
- see **CONTENTS**

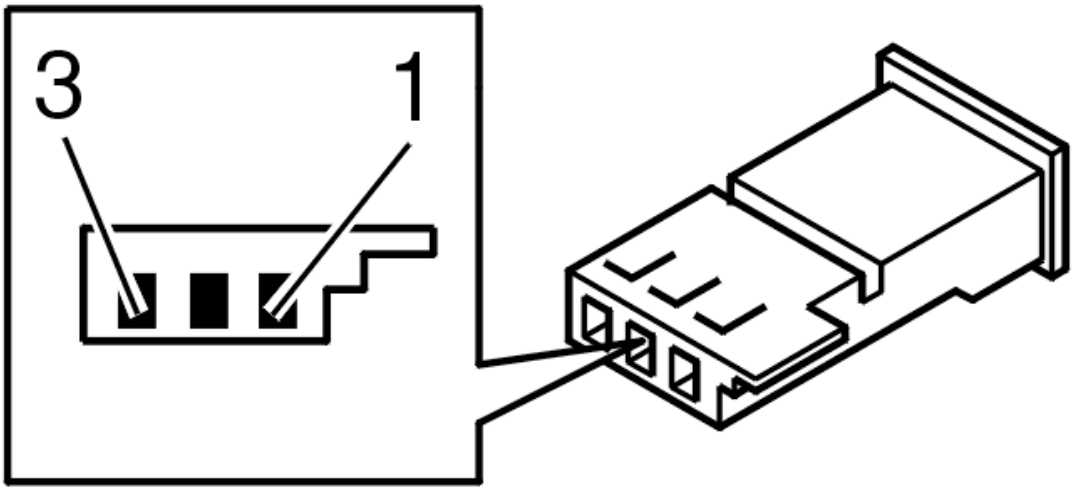

Fig. 91: Identifying Damper Motor Module (DMM) Connector Terminals
Courtesy of VOLVO CARS CORPORATION

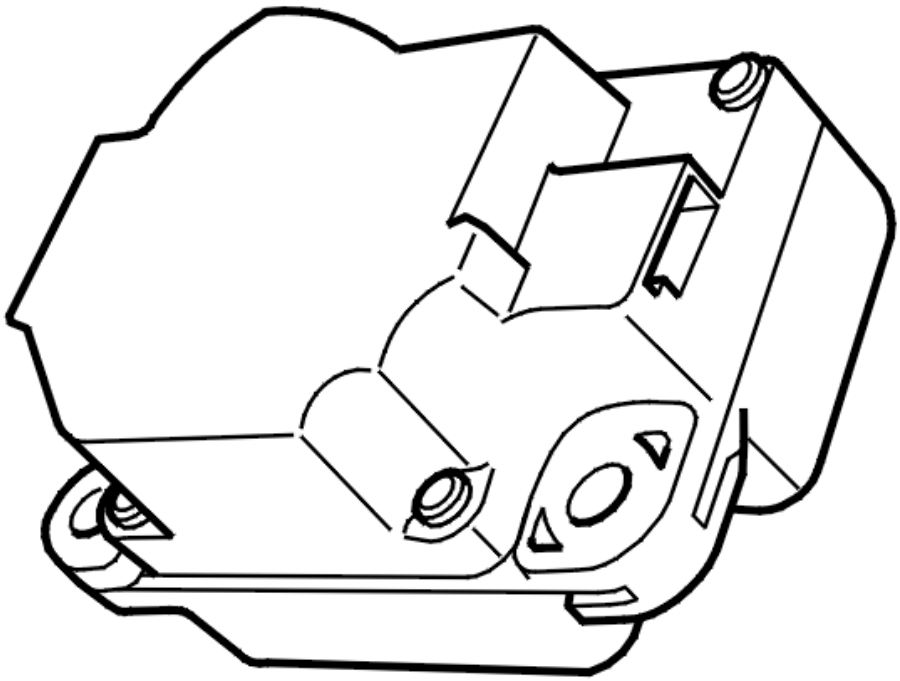

Fig. 92: Identifying Damper Motor Module (DMM)
Courtesy of VOLVO CARS CORPORATION

- **Continue**

  Refer to **VERIFICATION**

IDENTIFYING COMPONENTS ON THE LIN NETWORK THAT BELONG TO THE CLIMATE CONTROL SYSTEM (CCM)

INFORMATION

- The control module must be identified after replacing the Damper Motor Module (DMM).

NOTE: **Identification must only be carried out when replacing components on the LIN network that belong to the climate control system (CCM).**

Have any of the components on the LIN network been replaced?

- **YES**

  Refer to **IDENTIFYING COMPONENTS ON THE LIN NETWORK THAT BELONG TO THE CLIMATE CONTROL SYSTEM (CCM)**

- **NO**

  Refer to **VERIFICATION**

IDENTIFYING COMPONENTS ON THE LIN NETWORK THAT BELONG TO THE CLIMATE CONTROL SYSTEM (CCM)

HINT: When identifying damper motors, each damper motor must be run to its limit position. These operations can take up to 30 seconds. When identifying the damper motors it is important that a battery charger is connected.

Fig. 93: Checking Traffic Load On CAN Cables
Courtesy of VOLVO CARS CORPORATION

- Ignition off
- Reinstall the connectors, components etc.

NOTE: **Climate Control Module (CCM) and damper motors can be affected by the temperature. The vehicle should have normal room temperature when performing this service.**

Carry out identification as follows:

- Ignition on.
- Click on the VCT2000 (Volvo Scan Tool) symbol. Wait until identification has been carried out.
- Ignition off.

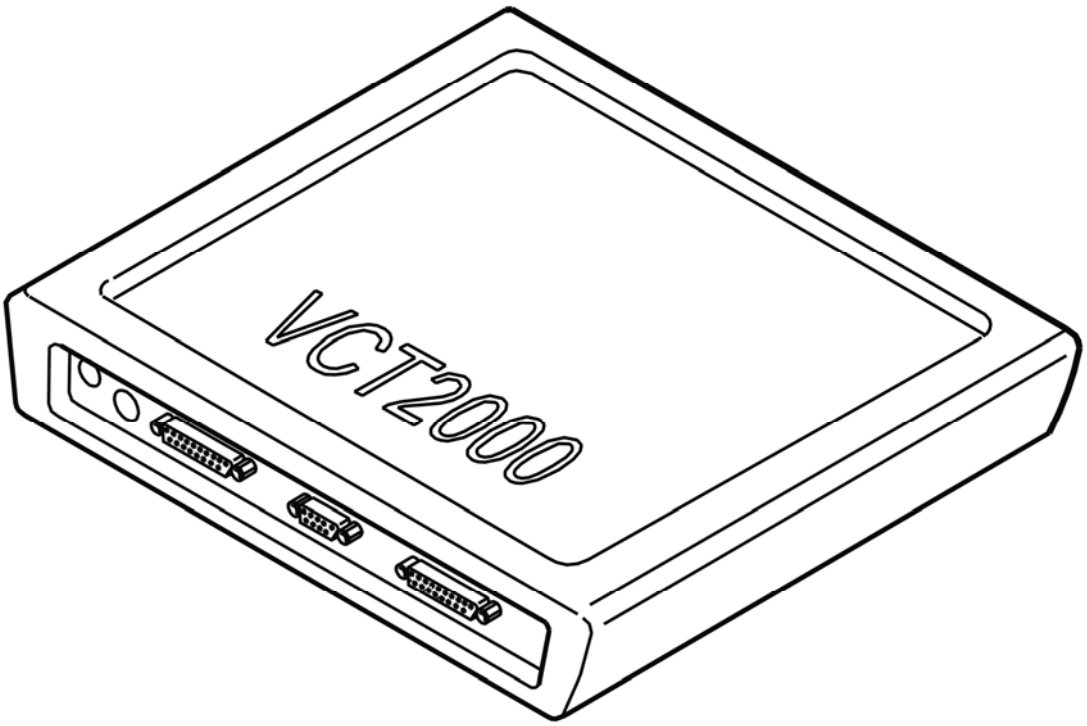

Fig. 94: Identifying VCT2000 Diagnostic Tool Symbol In VIDA
Courtesy of VOLVO CARS CORPORATION

See **CALIBRATING THE CLIMATE CONTROL MODULE (CCM)**.

CALIBRATING THE CLIMATE CONTROL MODULE (CCM)

CAUTION: When activating this function, calibration of the Climate Control Module (CCM) starts. After carrying out calibration read off of the diagnostic trouble codes (DTCs) starts. To ensure that diagnostics for the Climate Control Module (CCM) have been carried out, delay for 30 seconds before reading out diagnostic trouble codes (DTCs) after calibration.

NOTE: Climate Control Module (CCM) and damper motors can be affected by the temperature. The vehicle should have normal room temperature when performing this service.

Fig. 95: Checking Traffic Load On CAN Cables
Courtesy of VOLVO CARS CORPORATION

Carry out calibration as follows:

- Ignition on.
- Click on the VCT2000 (Volvo Scan Tool) symbol. Wait until calibration has been carried out and diagnostic trouble codes (DTCs) read out.
- Ignition off.

This function controls the components that communicate with the Climate Control Module (CCM) via LIN bus 1 and LIN bus 2. In the event of a fault in any of the LIN buses, diagnostic trouble codes (DTCs) CCM-0070 to CCM-0071 will be stored depending on the fault. These diagnostic trouble codes (DTCs) can only be stored in conjunction with this diagnostic function.

If any of these diagnostic trouble codes (DTCs) recur, recalibrate to check if the problem was overcome. If the diagnostic trouble code (DTC) recurs, fault-trace the relevant diagnostic trouble code (DTC).

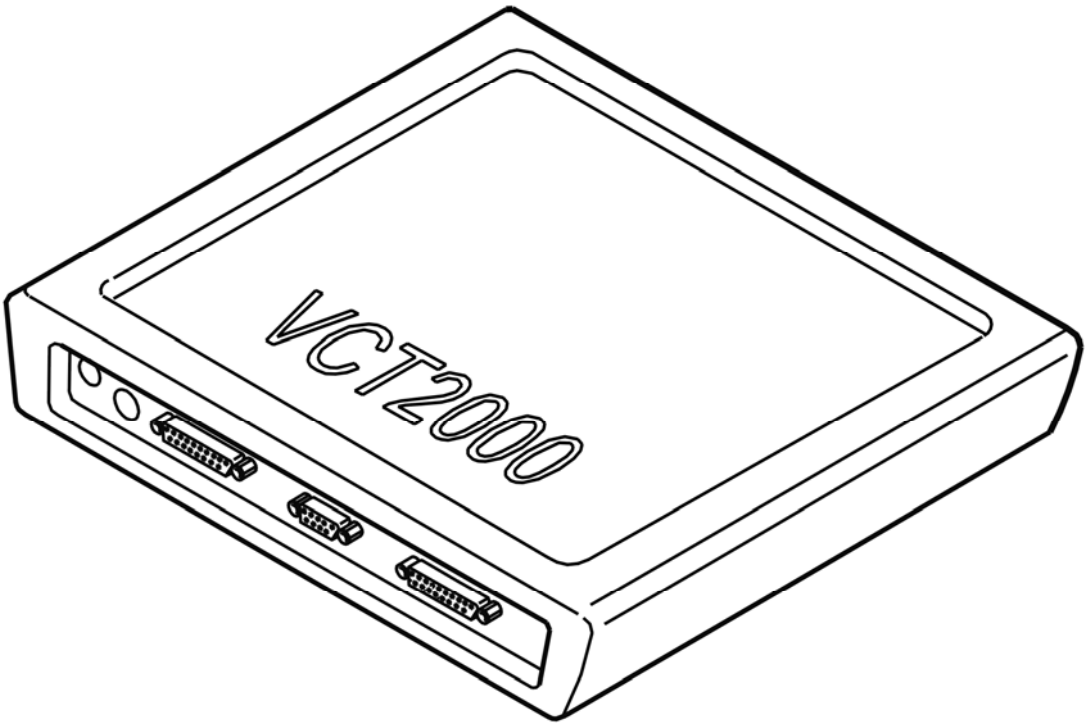

Fig. 96: Identifying VCT2000 Diagnostic Tool Symbol In VIDA
Courtesy of VOLVO CARS CORPORATION

- **Continue**

Refer to **VERIFICATION**

VERIFICATION

HINT: After carrying out the repair, check that the fault has been remedied.

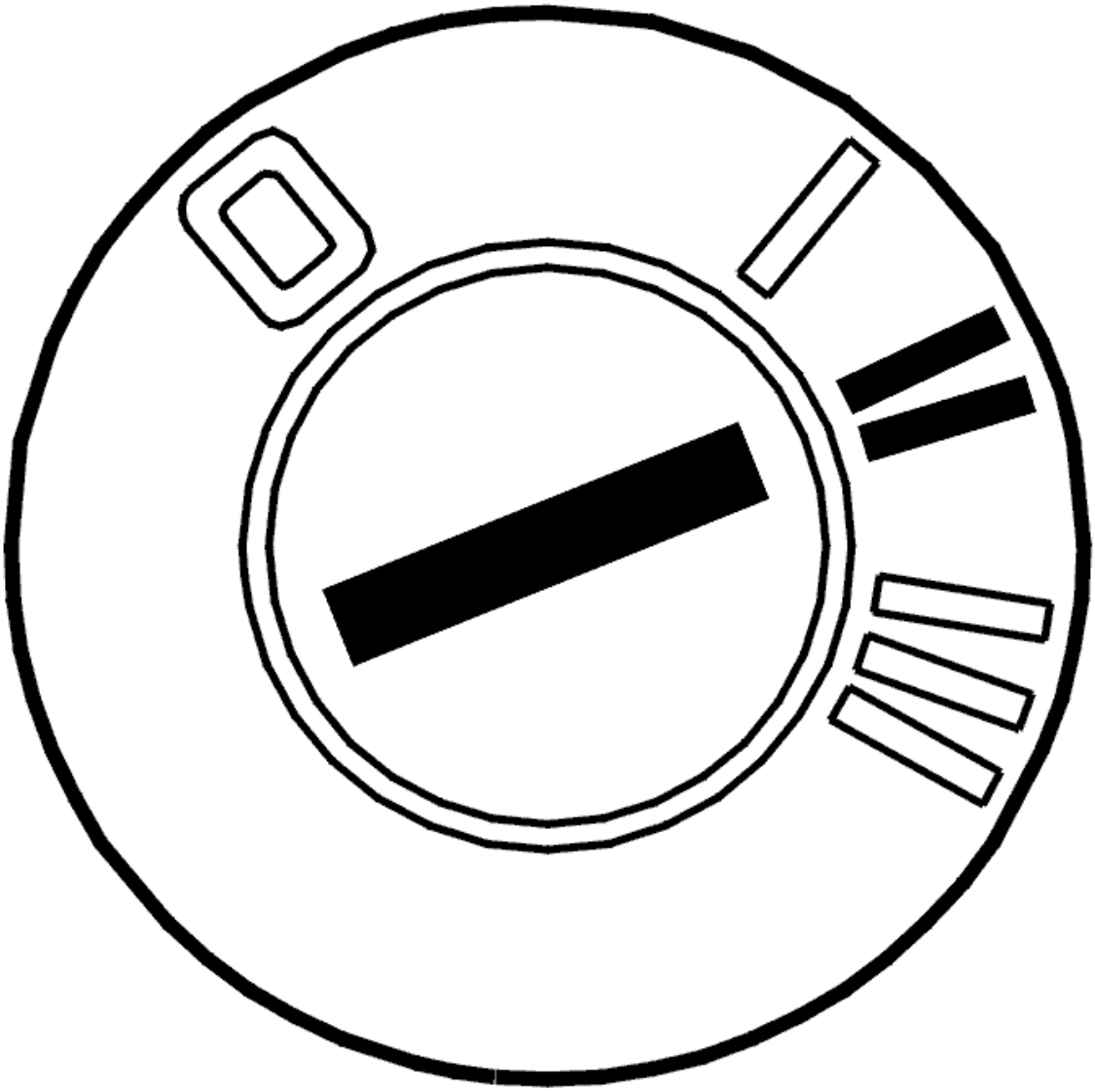

Fig. 97: Identifying Ignition ON
Courtesy of VOLVO CARS CORPORATION

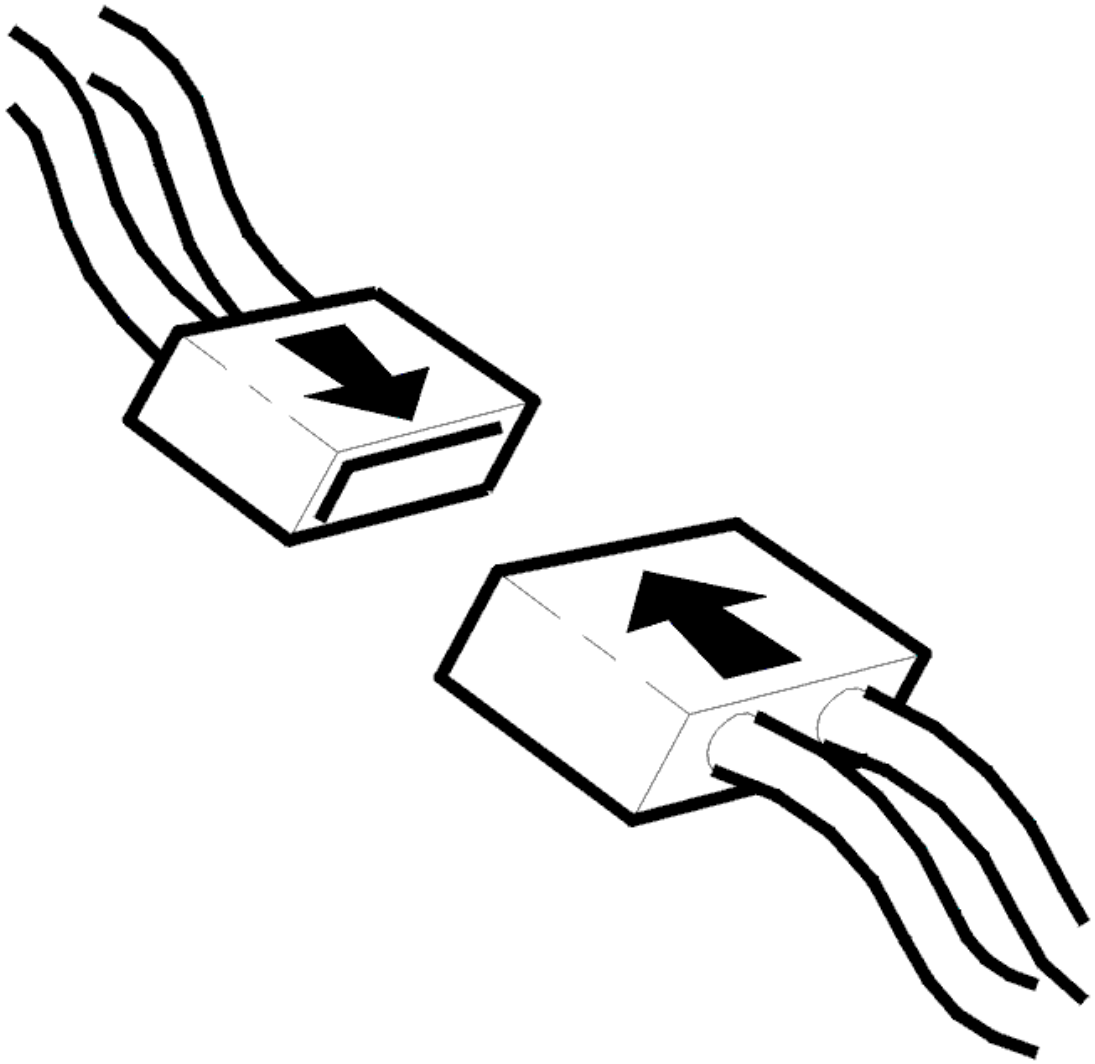

Fig. 98: Connecting Connector
Courtesy of VOLVO CARS CORPORATION

- Ignition off
- Reinstall the connectors, components etc.
- Ignition on.

  Check that the relevant diagnostic trouble code (DTC) has switched status from permanent to intermittent fault.

  Check also that diagnostic trouble code (DTC) CCM-0070, CCM-0071 CCM-0072 or CCM-0073 has not been stored during identification of the damper motors.

  These diagnostic trouble codes (DTCs) can only be stored when identifying damper motors. They mean that the identification has failed for some reason.

Remedy by correctly identifying the damper motor. Fault-trace according to the relevant information.

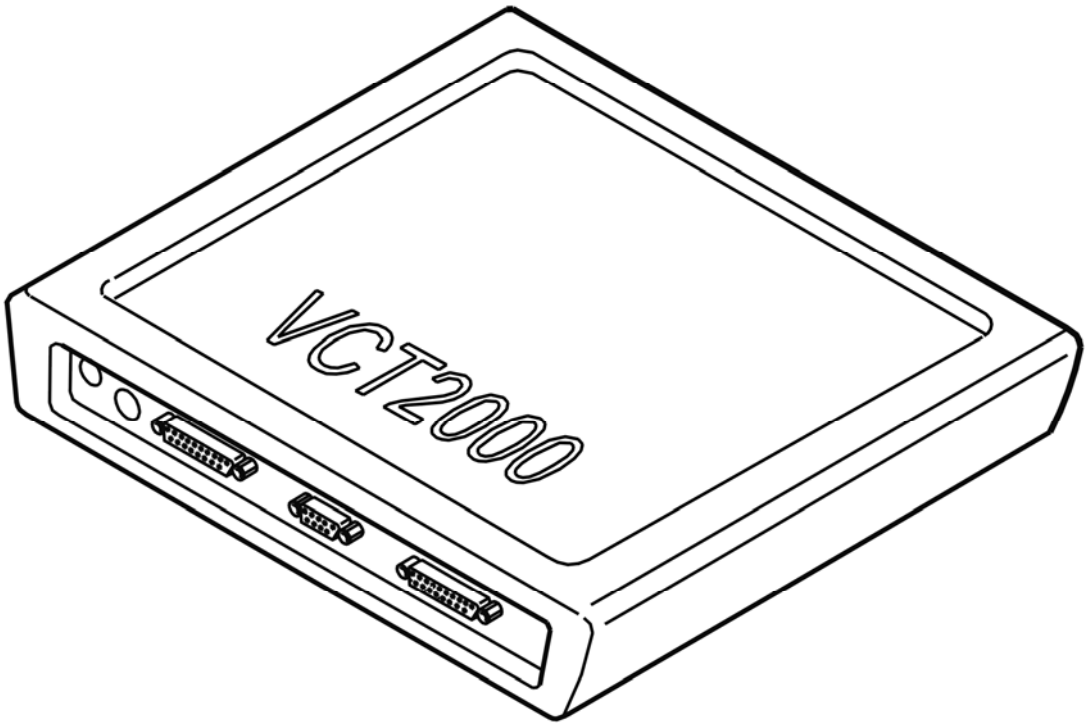

Fig. 99: Identifying VCT2000 Diagnostic Tool Symbol In VIDA
Courtesy of VOLVO CARS CORPORATION

Has the status of the diagnostic trouble code (DTC) changed?

- **YES**

  VERIFIED: Troubleshooting has been completed.

- **NO**

  Refer to **INFORMATION**

INFORMATION

FAULT-TRACING INFORMATION

The fault should have been detected and remedied. As this is not the case fault-tracing has failed.

Exit fault-tracing for this diagnostic trouble code (DTC) or make another attempt.

CCM-DD16: DAMPER MOTOR AIR DISTRIBUTION. NO COMMUNICATION

(2005-2012)

DIAGNOSTIC TROUBLE CODE (DTC) INFORMATION CCM-DD16

Condition

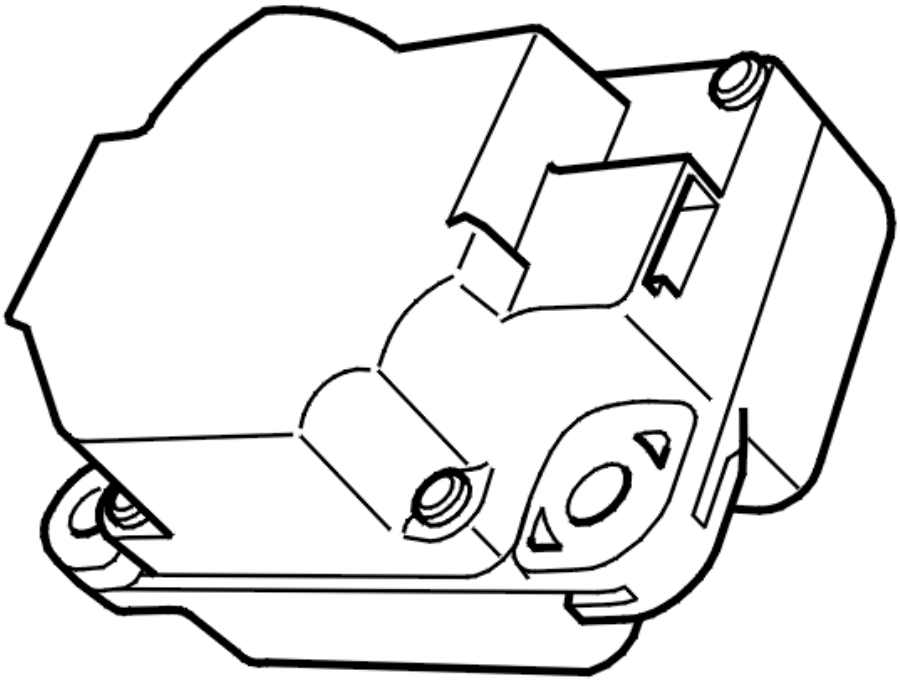

Fig. 100: Identifying Damper Motor Module (DMM)
Courtesy of VOLVO CARS CORPORATION

The diagnostic trouble code (DTC) is stored if the climate control module (CCM) detects an open-circuit in the communication between the climate control module (CCM) and the damper motor module (DMM) air distribution on LIN bus 1.

The diagnostic trouble code (DTC) can occur together with diagnostic trouble codes (DTCs) for other components on LIN bus 1 (CCM-DD10 - CCM-DD16) depending on where the open-circuit has occurred.

The diagnostic trouble code (DTC) can be diagnosed at ignition switch position II.

Substitute Value

- None.

Possible Source

- Open-circuit on LIN bus 1 between the climate control module (CCM) and the damper motor module (DMM) air distribution
- Contact resistance, oxidation or loose connections in the connectors.

Fault symptom[s]

- Misting on the windows and/or door mirrors.
- Air flow problem.

NO COMMUNICATION

CHECKING THE DIAGNOSTIC TROUBLE CODES (DTCS)

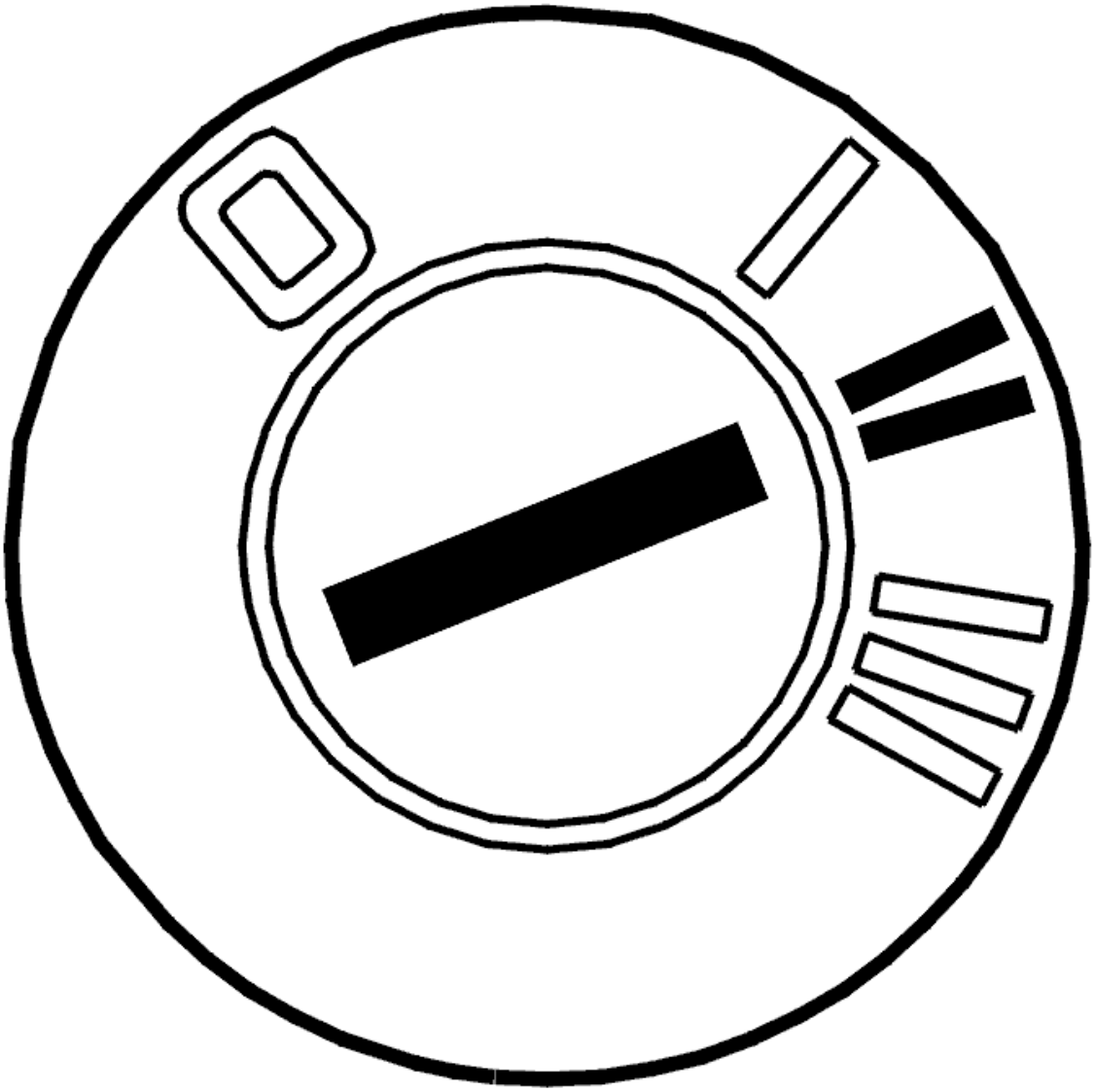

Fig. 101: Identifying Ignition ON
Courtesy of VOLVO CARS CORPORATION

- Ignition on.

  The diagnostic trouble code (DTC) may occur together with diagnostic trouble codes (DTCs) for other components that communicate with the climate control module (CCM) via LIN bus 1 and LIN bus 2.

  Check whether the diagnostic trouble code (DTC) has been stored together with other diagnostic trouble codes (DTCs) for other components on the climate control unit.

  Following options:

  1. The diagnostic trouble code (DTC) is stored together with diagnostic trouble codes (DTCs) for components in both LIN bus 1 and LIN bus 2 (CCM-DD10 - CCM-DD16, CCM-DD30 - CCM-DD34). Refer to **CHECKING THE CONNECTORS AND WIRING**
  2. The diagnostic trouble code (DTC) is stored together with diagnostic trouble codes (DTCs) for components only on LIN bus 1 (CCM-DD10 - CCM-DD16). Refer to **CHECKING LIN BUS 1 AND CONNECTOR**
  3. The diagnostic trouble code (DTC) is not together with diagnostic trouble codes (DTCs) for other components on LIN bus 1 and LIN bus 2. Refer to **CHECKING THE WIRING AND COMPONENT**

CHECKING THE CONNECTORS AND WIRING

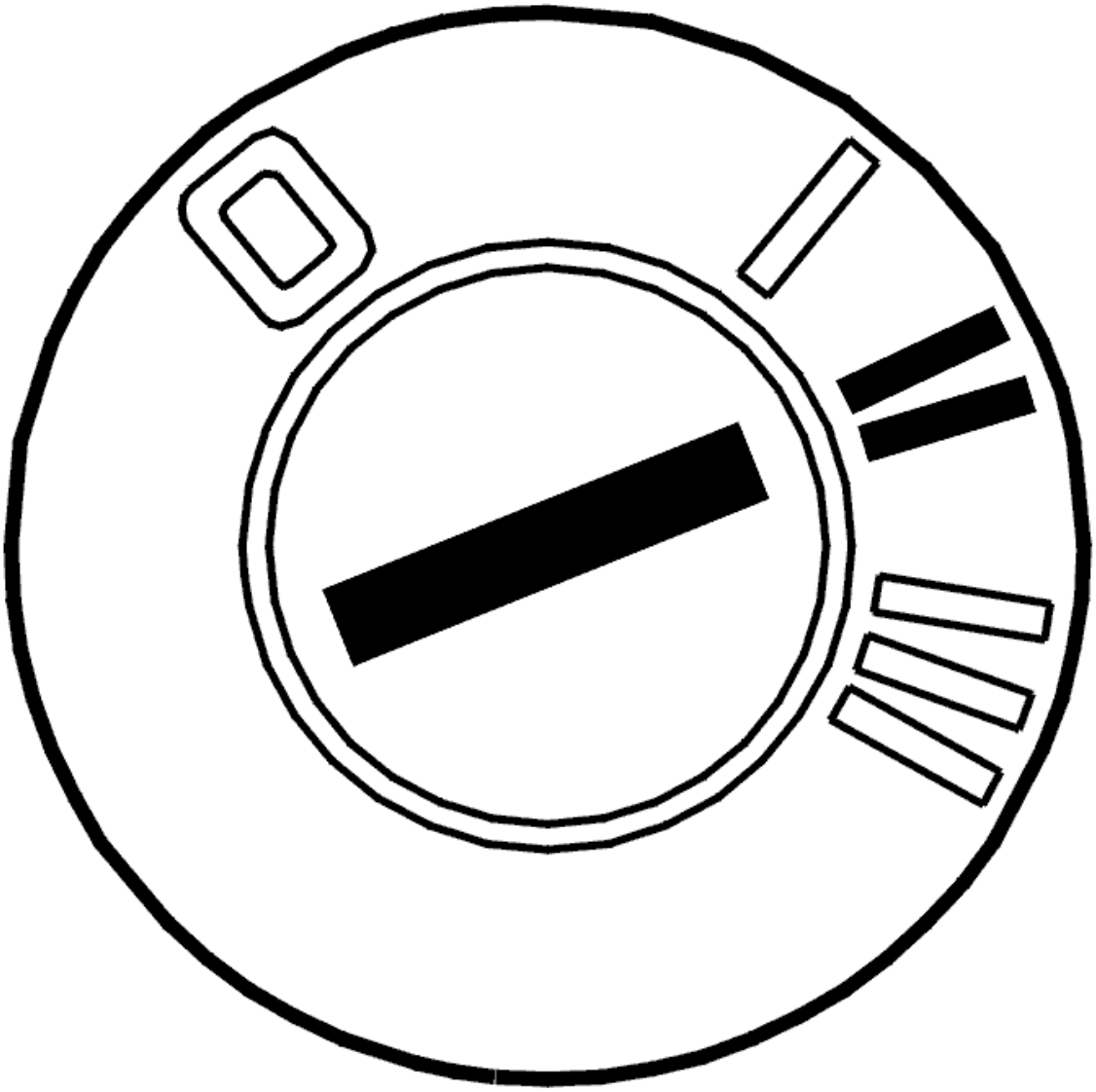

Fig. 102: Identifying Ignition ON
Courtesy of VOLVO CARS CORPORATION

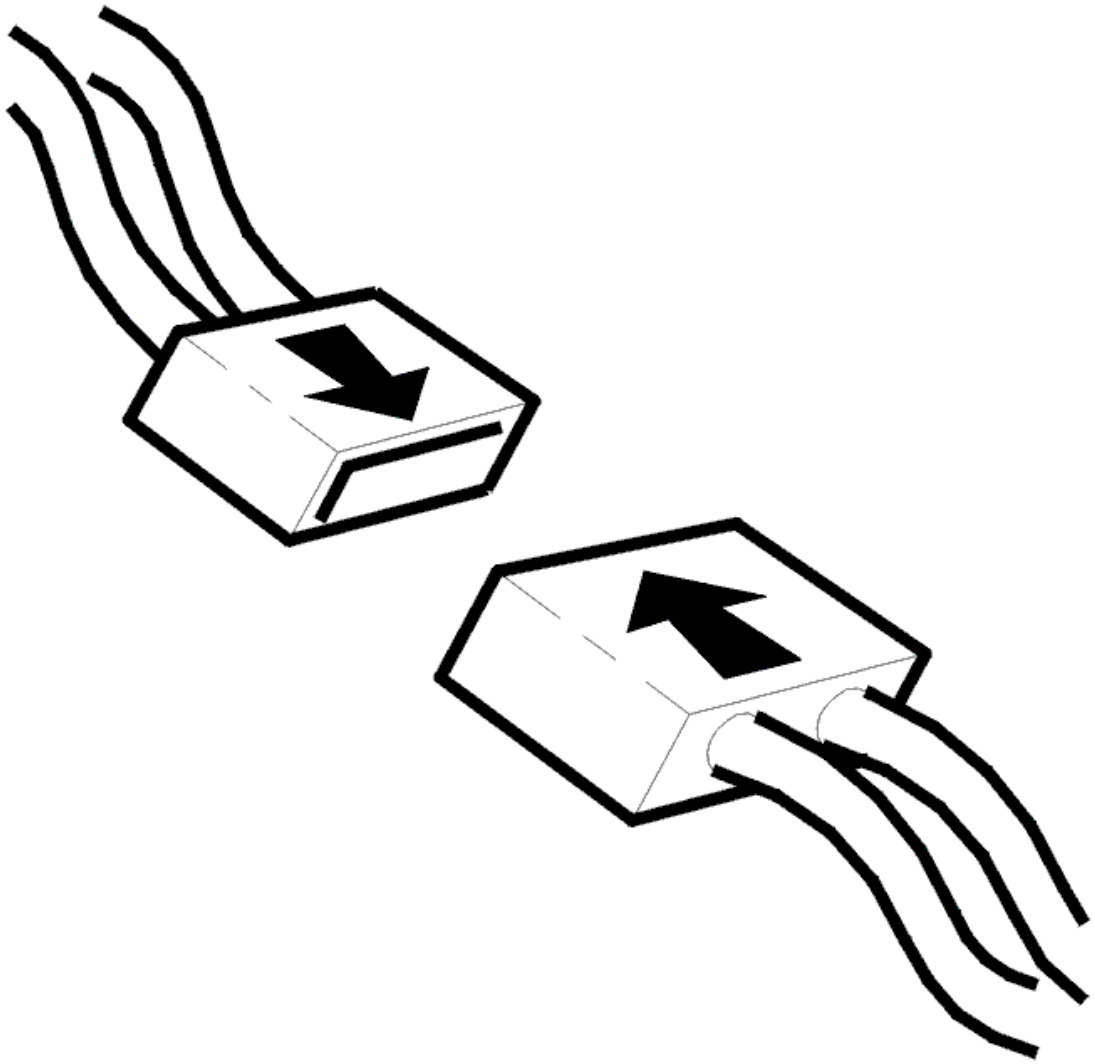

Fig. 103: Connecting Connector
Courtesy of VOLVO CARS CORPORATION

- Ignition off
- Disconnect the connector for the climate control module (CCM)
- Disconnect the connector for the central electronic module (CEM)
- Ignition on.

Checking the power supply and ground terminals

The following applies to components on the climate control unit that communicate with the climate control module (CCM) via LIN bus 1 and LIN bus 2:

- All components are jointly powered via a fuse from the central electronic module (CEM)
- All components are grounded via a common ground terminal.

Check the power supply to the components on the climate control unit by taking a reading on connector A for the central electronic module (CEM) between terminal #A44 (C44) and chassis ground.

Also check the fuse on the central electronic module (CEM).

Check the power supply cable between the central electronic module (CEM) and the connector for the climate control unit. Check for an open-circuit. Measure between terminal #1 on the connector for the climate control unit and chassis ground.

Check the ground terminal for the components on the climate control unit. Measure between the connector for climate control unit terminal #6 and chassis ground.

Check the connector for the climate control unit and connector A on the central electronic module (CEM). Check for contact resistance. Check for oxidation. Check for loose connections.

Checking LIN bus

Check both LIN bus 1 and LIN bus 2. Check for an open-circuit.

Take readings between:

- The connector for climate control module (CCM) terminal #12 (#36) and the connector for climate control unit terminal #2
- The connector for climate control module (CCM) terminal #7 (#31) and the connector for climate control unit terminal #5.

Check the wiring between the connector and the components on the climate control unit. Check for an open-circuit.

Remedy as necessary.

Other information:

- For further information about the connectors, fuses and relays, see the appropriate service information.
- To connect the breakout box to the climate control module (CCM), see: **CONNECTING THE BREAKOUT BOX**
- To connect the breakout box, central electronic module (CEM), see: **CONNECTING THE BREAKOUT BOX**
- see **SIGNAL SPECIFICATION**
- see **CLIMATE CONTROL, LOCATION OF COMPONENTS**
- see **CLIMATE CONTROL MODULE (CCM), REPLACING**
- For -2004, see **CENTRAL ELECTRONIC MODULE (CEM), REPLACING** . For 2005-, see **CENTRAL ELECTRONIC MODULE (CEM), REPLACING**
- see **CONTENTS**

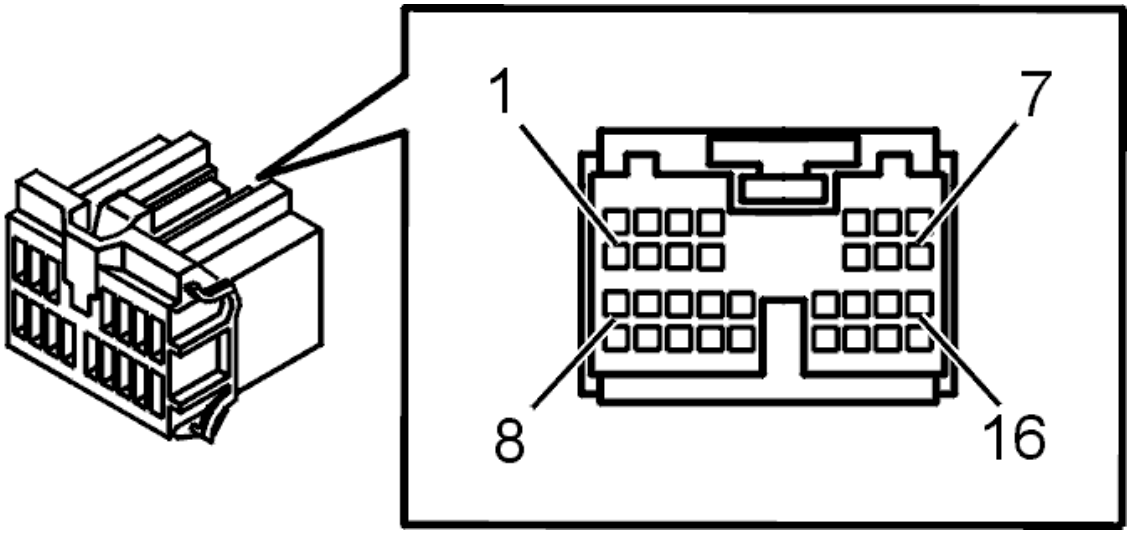

Fig. 104: Connector, Green (16- Pin)
Courtesy of VOLVO CARS CORPORATION

- **Continue**

  Refer to **VERIFICATION**

CHECKING LIN BUS 1 AND CONNECTOR

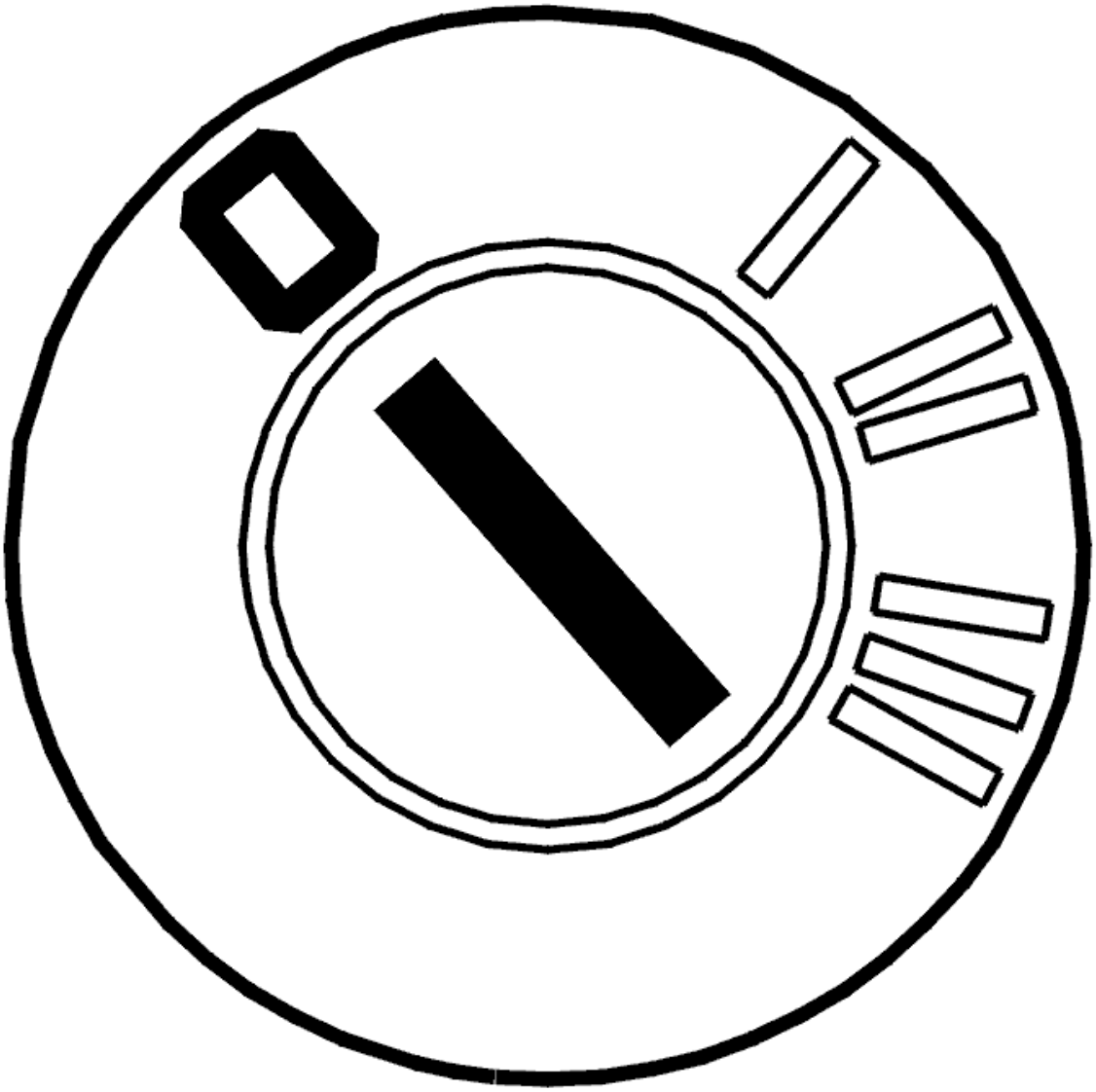

Fig. 105: Identifying Ignition OFF
Courtesy of VOLVO CARS CORPORATION

- Ignition off
- Disconnect the connector for the climate control module (CCM).

  Check the climate control module (CCM) connector. Check for contact resistance. Check for oxidation. Check for loose connections.

  Check LIN bus 1 between the climate control module (CCM), the connector for the climate control unit and the seat heating module (SHM) left. Check for an open-circuit.

  Take readings between:

  - The connector for climate control module (CCM) terminal #12 (#36) and the connector for climate control unit terminal #2

- The connector for climate control module (CCM) terminal #12 (#36) and connector A for seat heating module (SHM) left terminal #2.

Check LIN bus 1 between the components (the damper motors and the air quality sensor (AQS) and the connector for the climate control unit. Check for an open-circuit.

Check the connector for the climate control unit. Check for contact resistance. Check for oxidation. Check for loose connections.

Remedy as necessary.

Other information:

- For further information about the connectors, fuses and relays, see the appropriate service information.
- see **CONNECTING THE BREAKOUT BOX**
- see **SIGNAL SPECIFICATION**
- see **CLIMATE CONTROL, LOCATION OF COMPONENTS**
- see **CLIMATE CONTROL MODULE (CCM), REPLACING**
- see **SEAT HEATING MODULE (SHM), REPLACING**
- see **CONTENTS**

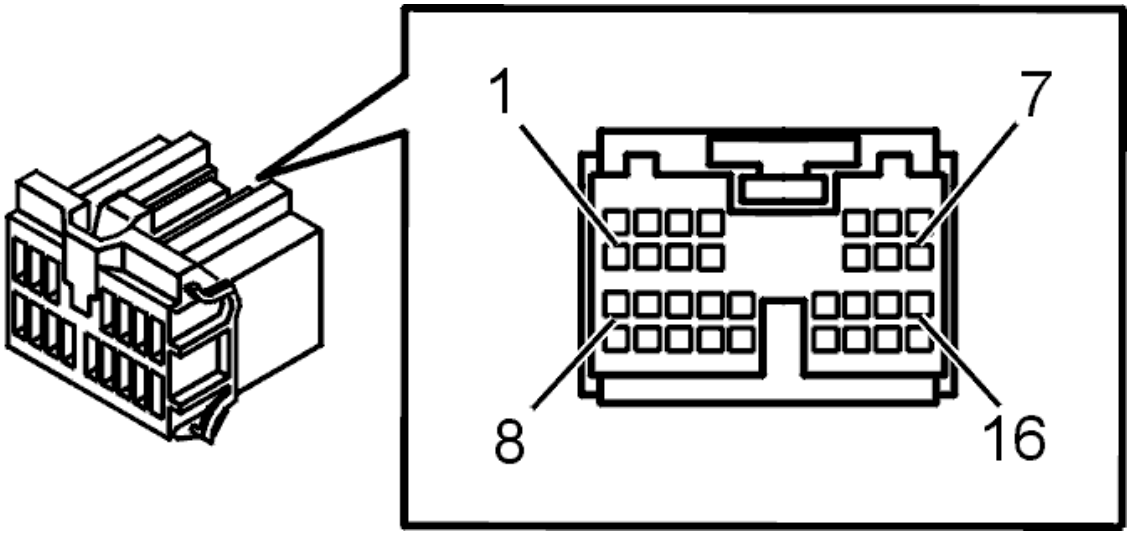

Fig. 106: Connector, Green (16- Pin)
Courtesy of VOLVO CARS CORPORATION

- **Continue**

Refer to **VERIFICATION**

CHECKING THE WIRING AND COMPONENT

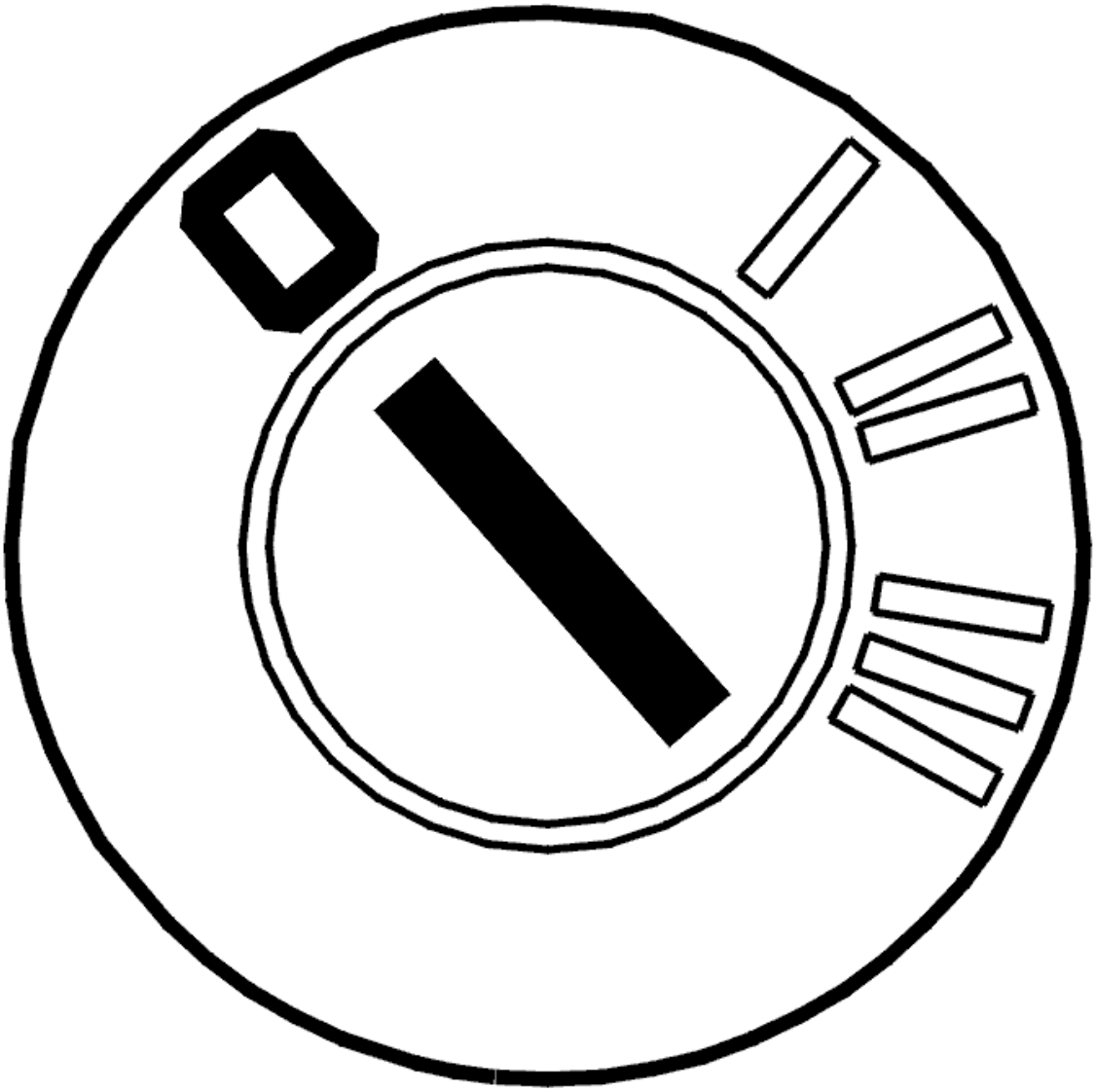

Fig. 107: Identifying Ignition OFF
Courtesy of VOLVO CARS CORPORATION

- Ignition off
- Disconnect the connector for the damper motor module (DMM) for air distribution
- Ignition on.

  Check the connector. Check for contact resistance. Check for oxidation. Check for loose connections.

  Check that the damper motor module (DMM) is connected to power supply and ground.

  Measure the voltage on the connector for the damper motor module (DMM) between terminals #1 and #3

  Check LIN bus 1 by taking a reading between the damper motor module (DMM) connector terminal #2 and the connector for the climate control unit terminal #2. Check for an open-circuit.

Try replacing the damper motor module (DMM) if no fault is found.

Remedy as necessary.

Other information:

- For further information about the connectors, fuses and relays, see the appropriate service information.
- see **CONNECTING THE BREAKOUT BOX**
- see **SIGNAL SPECIFICATION**
- see **CLIMATE CONTROL, LOCATION OF COMPONENTS**
- see **CLIMATE CONTROL MODULE (CCM), REPLACING**
- For -2004, see **DAMPER MOTOR AIR DISTRIBUTION, REPLACING** . For 2005-, see **DAMPER MOTOR MODULE (DMM) AIR DISTRIBUTION, REPLACING**
- see **CONTENTS**

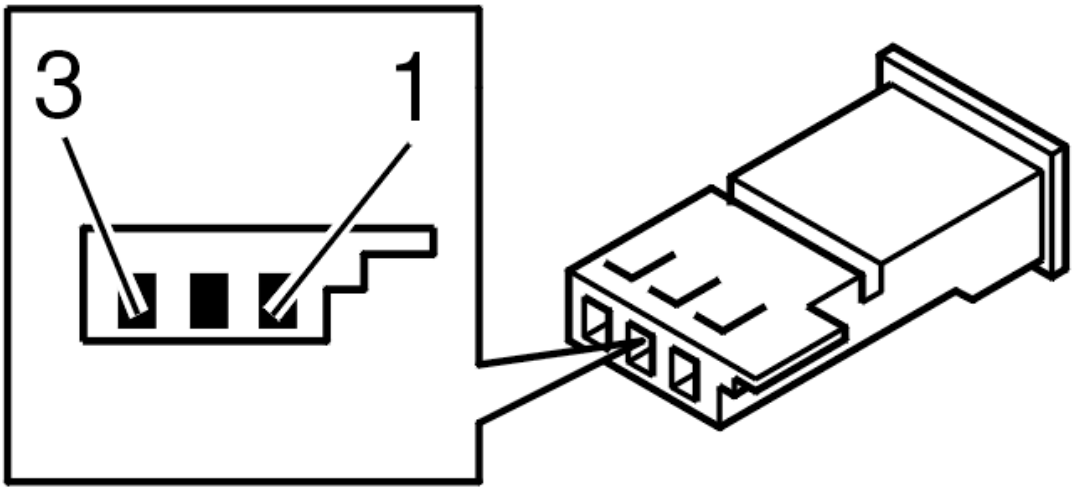

Fig. 108: Identifying Damper Motor Module (DMM) Connector Terminals
Courtesy of VOLVO CARS CORPORATION

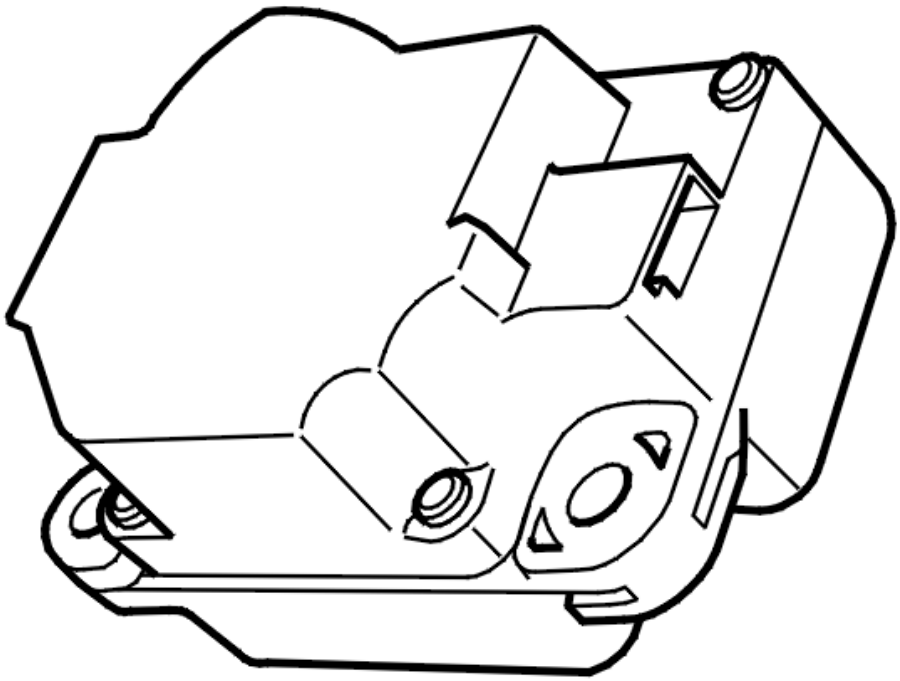

Fig. 109: Identifying Damper Motor Module (DMM)
Courtesy of VOLVO CARS CORPORATION

- **Continue**

  Refer to **VERIFICATION**

IDENTIFYING COMPONENTS ON THE LIN NETWORK THAT BELONG TO THE CLIMATE CONTROL SYSTEM (CCM)

INFORMATION

- The control module must be identified after replacing the Damper Motor Module (DMM).

NOTE: **Identification must only be carried out when replacing components on the LIN network that belong to the climate control system (CCM).**

Have any of the components on the LIN network been replaced?

- **YES**

  Refer to **IDENTIFYING COMPONENTS ON THE LIN NETWORK THAT BELONG TO THE CLIMATE CONTROL SYSTEM (CCM)**

- **NO**

  Refer to **VERIFICATION**

IDENTIFYING COMPONENTS ON THE LIN NETWORK THAT BELONG TO THE CLIMATE CONTROL SYSTEM (CCM)

HINT: When identifying damper motors, each damper motor must be run to its limit position. These operations can take up to 30 seconds. When identifying the damper motors it is important that a battery charger is connected.

Fig. 110: Checking Traffic Load On CAN Cables
Courtesy of VOLVO CARS CORPORATION

- Ignition off
- Reinstall the connectors, components etc.

NOTE: **Climate Control Module (CCM) and damper motors can be affected by the temperature. The vehicle should have normal room temperature when performing this service.**

Carry out identification as follows:

- Ignition on.
- Click on the VCT2000 (Volvo Scan Tool) symbol. Wait until identification has been carried out.
- Ignition off.

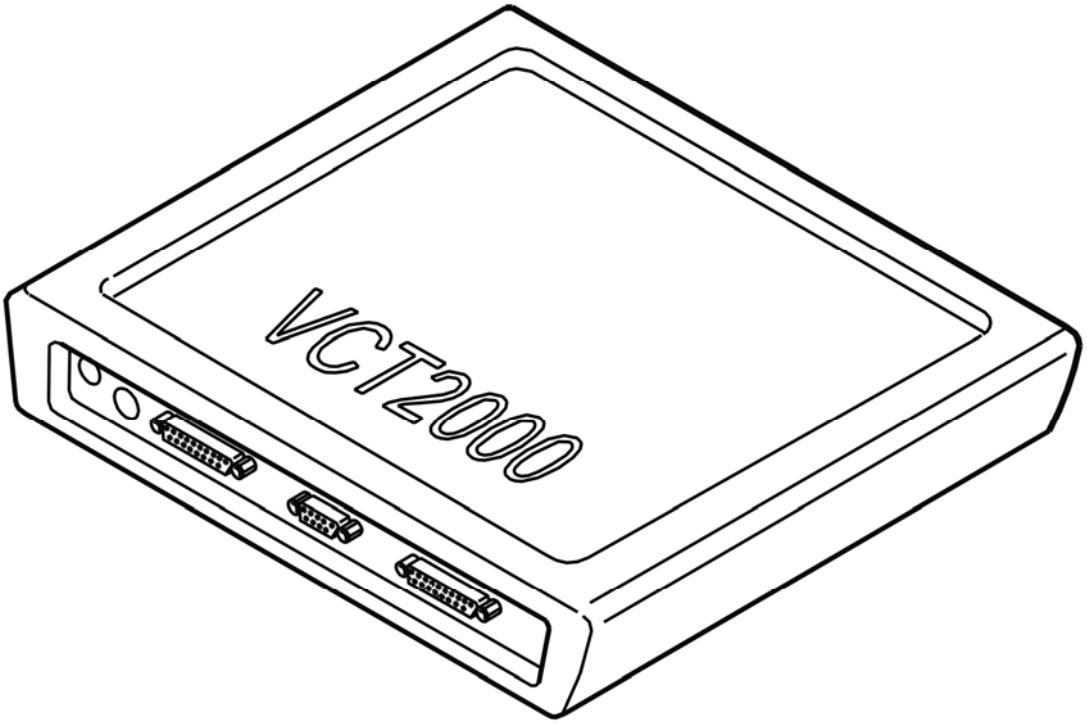

Fig. 111: Identifying VCT2000 Diagnostic Tool Symbol In VIDA
Courtesy of VOLVO CARS CORPORATION

- **Continue**

Refer to **CALIBRATING THE CLIMATE CONTROL MODULE (CCM)**

CALIBRATING THE CLIMATE CONTROL MODULE (CCM)

CAUTION: When activating this function, calibration of the Climate Control Module (CCM) starts. After carrying out calibration read off of the diagnostic trouble codes (DTCs) starts. To ensure that diagnostics for the Climate Control Module (CCM) have been carried out, delay for 30 seconds before reading out diagnostic trouble codes (DTCs) after calibration.

NOTE: Climate Control Module (CCM) and damper motors can be affected by the temperature. The vehicle should have normal room temperature when performing this service.

Fig. 112: Checking Traffic Load On CAN Cables
Courtesy of VOLVO CARS CORPORATION

Carry out calibration as follows:

- Ignition on.
- Click on the VCT2000 (Volvo Scan Tool) symbol. Wait until calibration has been carried out and diagnostic trouble codes (DTCs) read out.
- Ignition off.

This function controls the components that communicate with the Climate Control Module (CCM) via LIN bus 1 and LIN bus 2. In the event of a fault in any of the LIN buses, diagnostic trouble codes (DTCs) CCM-0070 to CCM-0071 will be stored depending on the fault. These diagnostic trouble codes (DTCs) can only be stored in conjunction with this diagnostic function.

If any of these diagnostic trouble codes (DTCs) recur, recalibrate to check if the problem was overcome. If the diagnostic trouble code (DTC) recurs, fault-trace the relevant diagnostic trouble code (DTC).

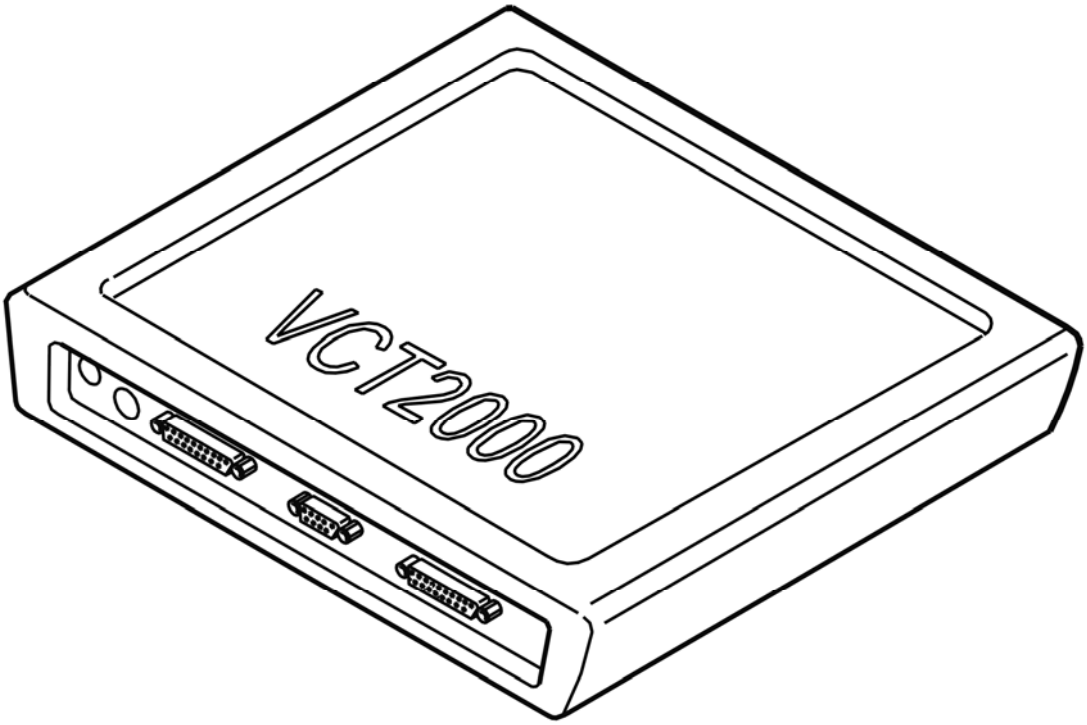

Fig. 113: Identifying VCT2000 Diagnostic Tool Symbol In VIDA
Courtesy of VOLVO CARS CORPORATION

VERIFICATION

HINT: After carrying out the repair, check that the fault has been remedied.

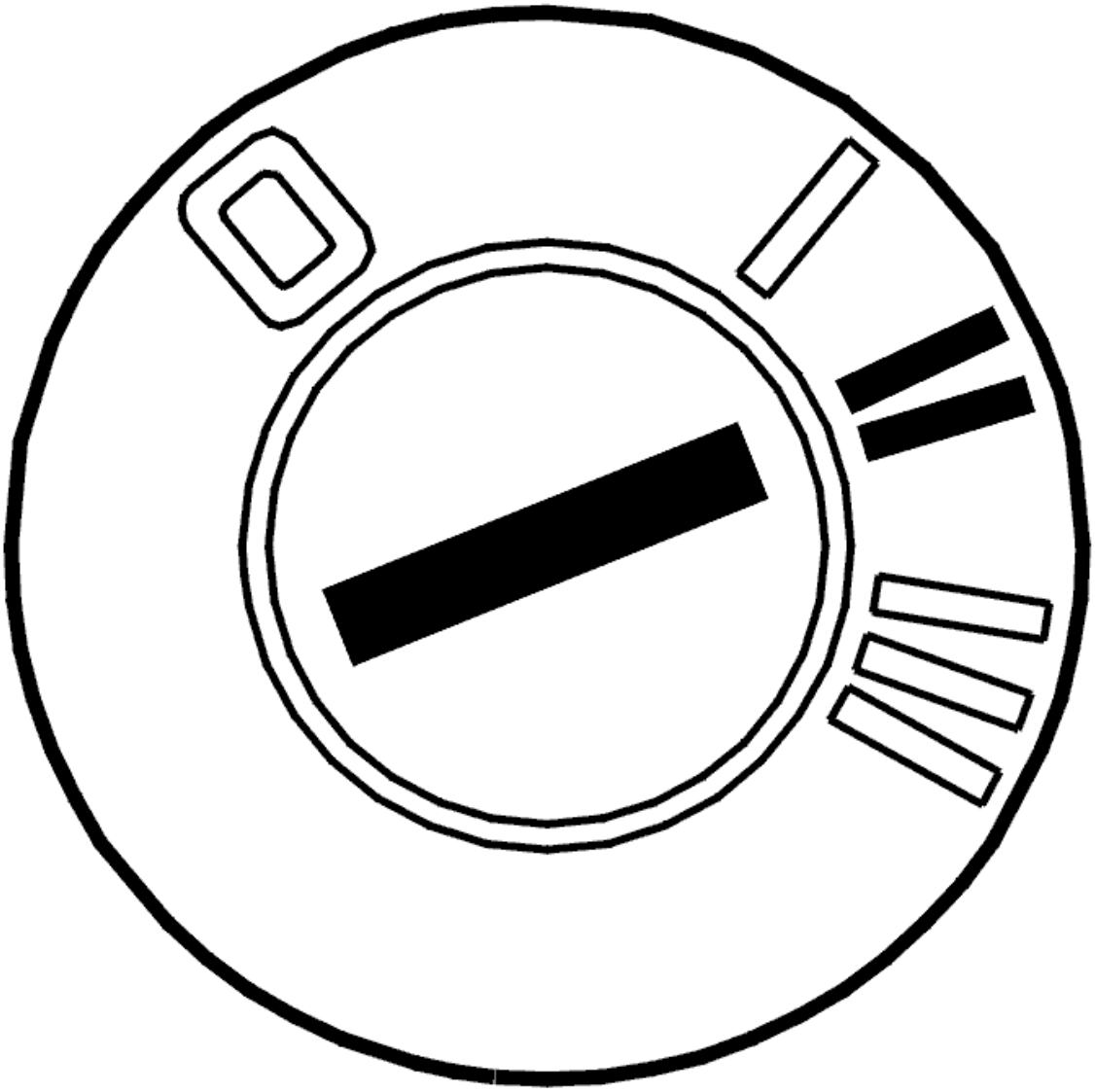

Fig. 114: Identifying Ignition ON
Courtesy of VOLVO CARS CORPORATION

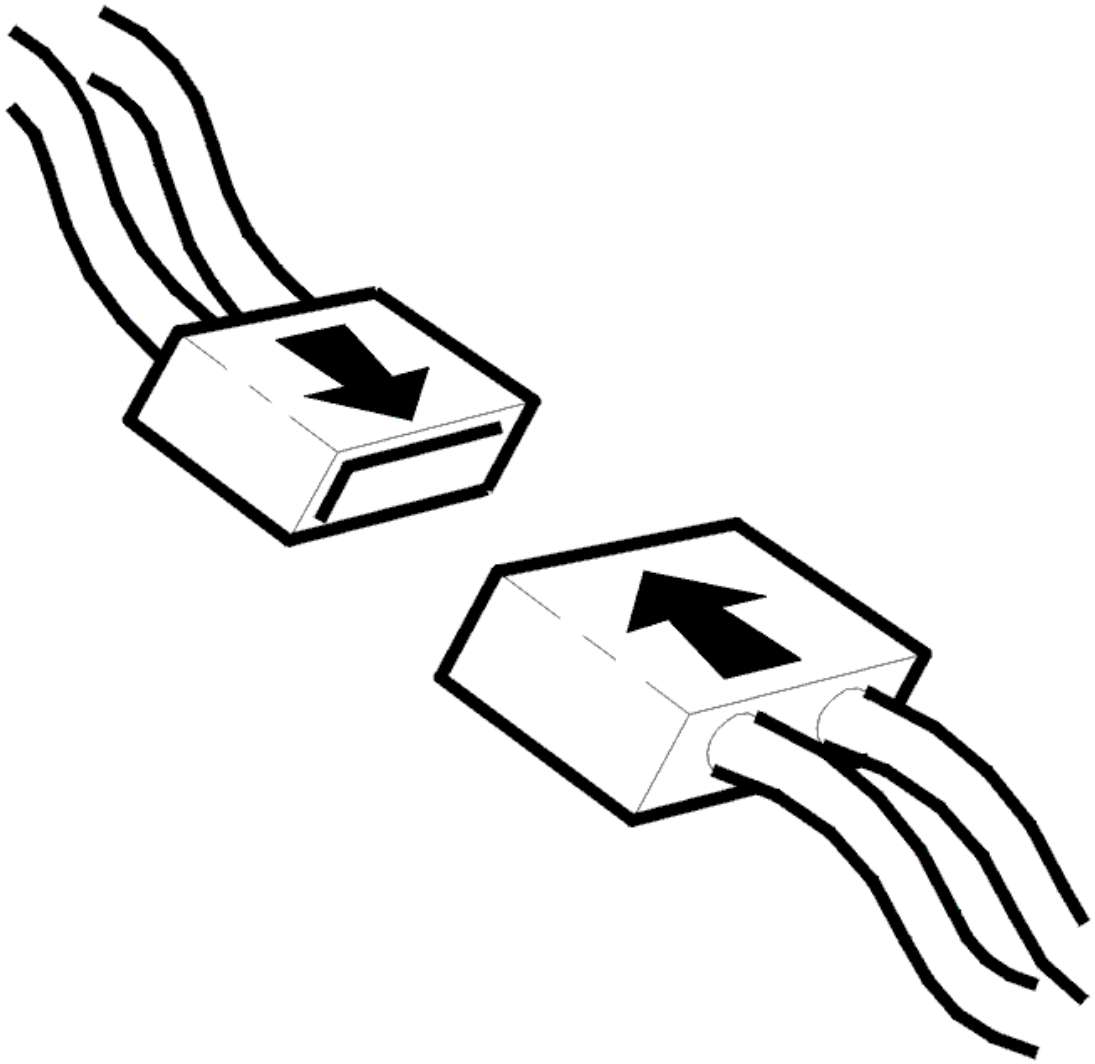

Fig. 115: Connecting Connector
Courtesy of VOLVO CARS CORPORATION

- Ignition off
- Reinstall the connectors, components etc.
- Ignition on.

  Check that the relevant diagnostic trouble code (DTC) has switched status from permanent to intermittent fault.

  Check also that diagnostic trouble code (DTC) CCM-0070, CCM-0071 CCM-0072 or CCM-0073 has not been stored during identification of the damper motors.

  These diagnostic trouble codes (DTCs) can only be stored when identifying damper motors. They mean that the identification has failed for some reason.

Remedy by correctly identifying the damper motor. Fault-trace according to the relevant information.

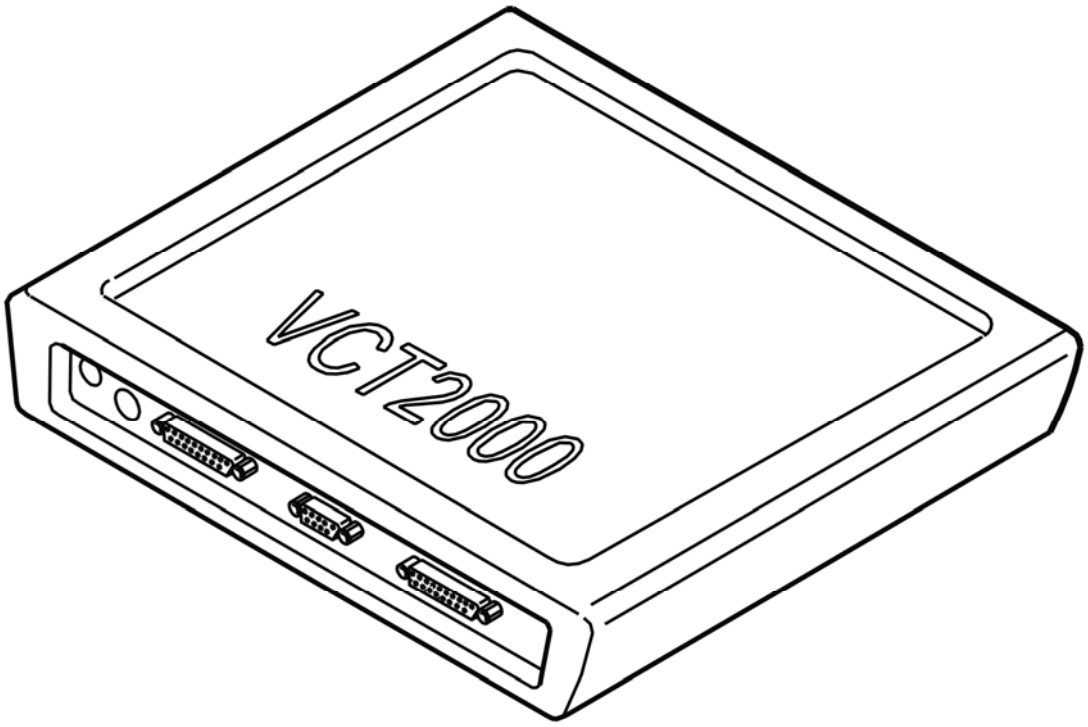

Fig. 116: Identifying VCT2000 Diagnostic Tool Symbol In VIDA
Courtesy of VOLVO CARS CORPORATION

Has the status of the diagnostic trouble code (DTC) changed?

- **YES**

  VERIFIED: Troubleshooting has been completed.

- **NO**

  Refer to **INFORMATION**

INFORMATION

FAULT-TRACING INFORMATION

The fault should have been detected and remedied. As this is not the case fault-tracing has failed.

Exit fault-tracing for this diagnostic trouble code (DTC) or make another attempt.

CCM-DD20: LIN BUS 2. INCORRECT DATA (2005-2012)

DIAGNOSTIC TROUBLE CODE (DTC) INFORMATION CCM-DD20

Condition

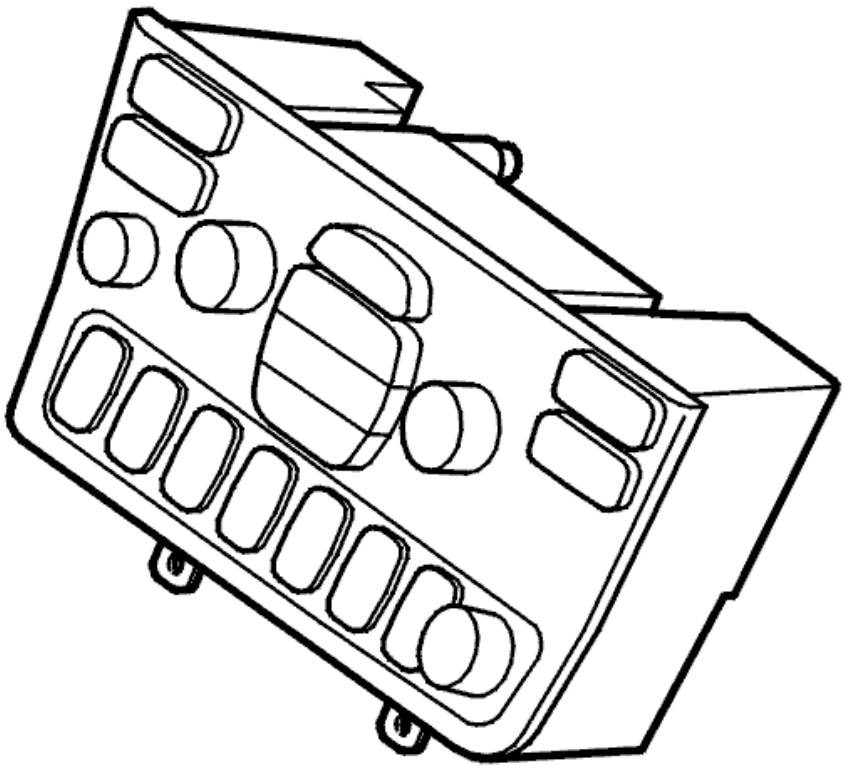

Fig. 117: Climate Control Module
Courtesy of VOLVO CARS CORPORATION

The diagnostic trouble code (DTC) is stored if the climate control module (CCM) detects that data that is sent on LIN bus 2 is incorrect.

The following components communicate with the climate control module (CCM) via LIN bus 2:

- damper motor module (DMM) defroster
- damper motor module (DMM) temperature right (only ECC)
- damper motor module (DMM) recirculation
- air quality sensor (AQS)
- seat heating module (SHM) right.

The diagnostic trouble code (DTC) can be diagnosed in ignition positions I and II.

Substitute Value

- None.

Possible Source

- Incorrect data during communication on LIN bus 2.

Fault symptom[s]

- Misting on the windows and/or door mirrors.
- Air flow problem.
- Poor heating in the passenger compartment.
- The front seat heating does not function.
- Poor air quality in the passenger compartment.

INCORRECT DATA

CHECKING COMPONENTS

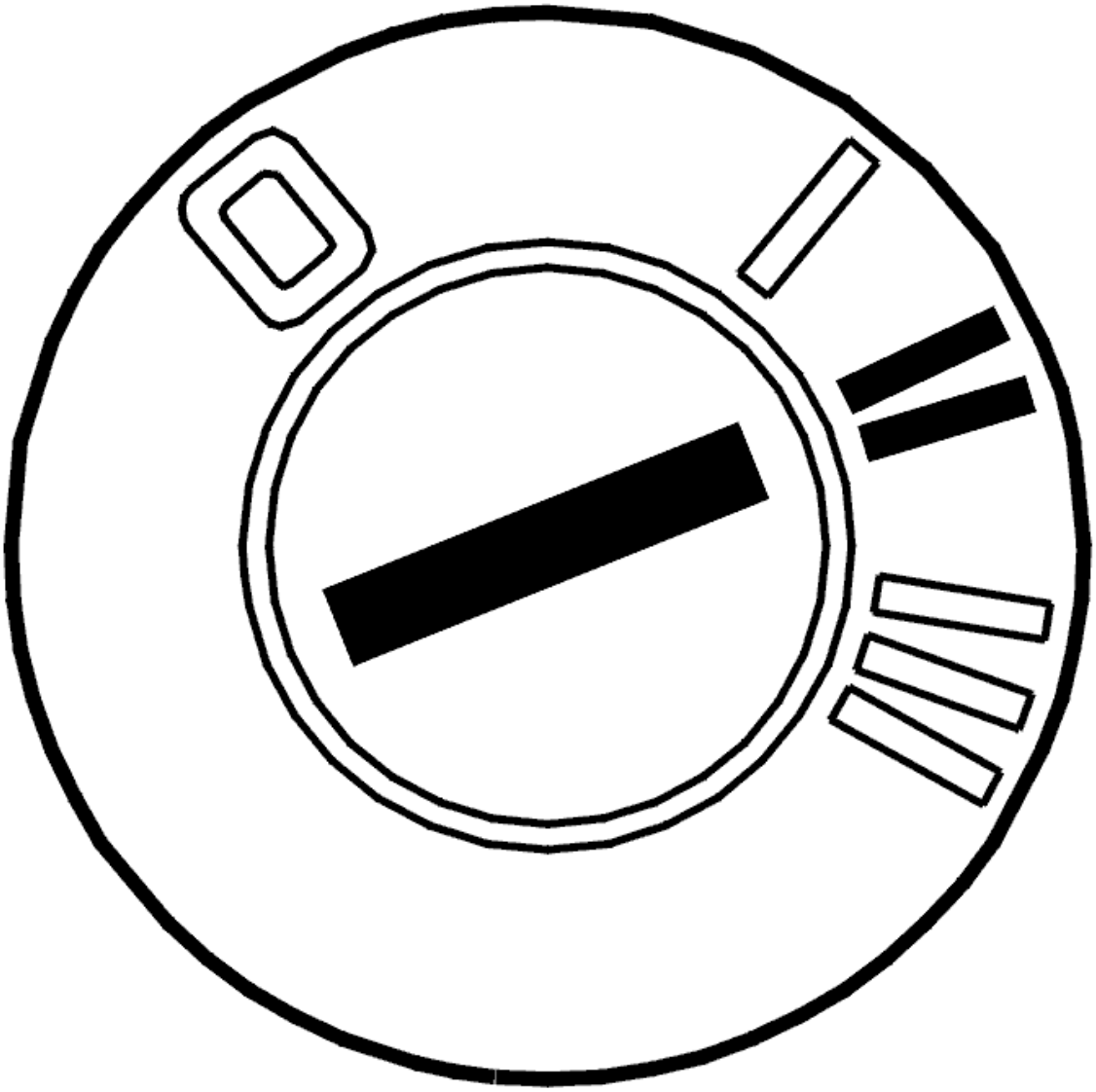

Fig. 118: Identifying Ignition ON
Courtesy of VOLVO CARS CORPORATION

- Ignition off
- Disconnect connector A for the seat heating module (SHM) right
- Ignition on.

  The climate control module (CCM) has detected that a component on LIN bus 2 is transmitting incorrect data and disrupting communication on the LIN bus.

  Check the communication by disconnecting the seat heating module (SHM) right.

  If other control modules on LIN bus 2 now function, replace the seat heating module (SHM) right.

Was a fault detected?

- **YES**

  Refer to **VERIFICATION**

- **NO**

  Refer to **CHECKING COMPONENTS**

CHECKING COMPONENTS

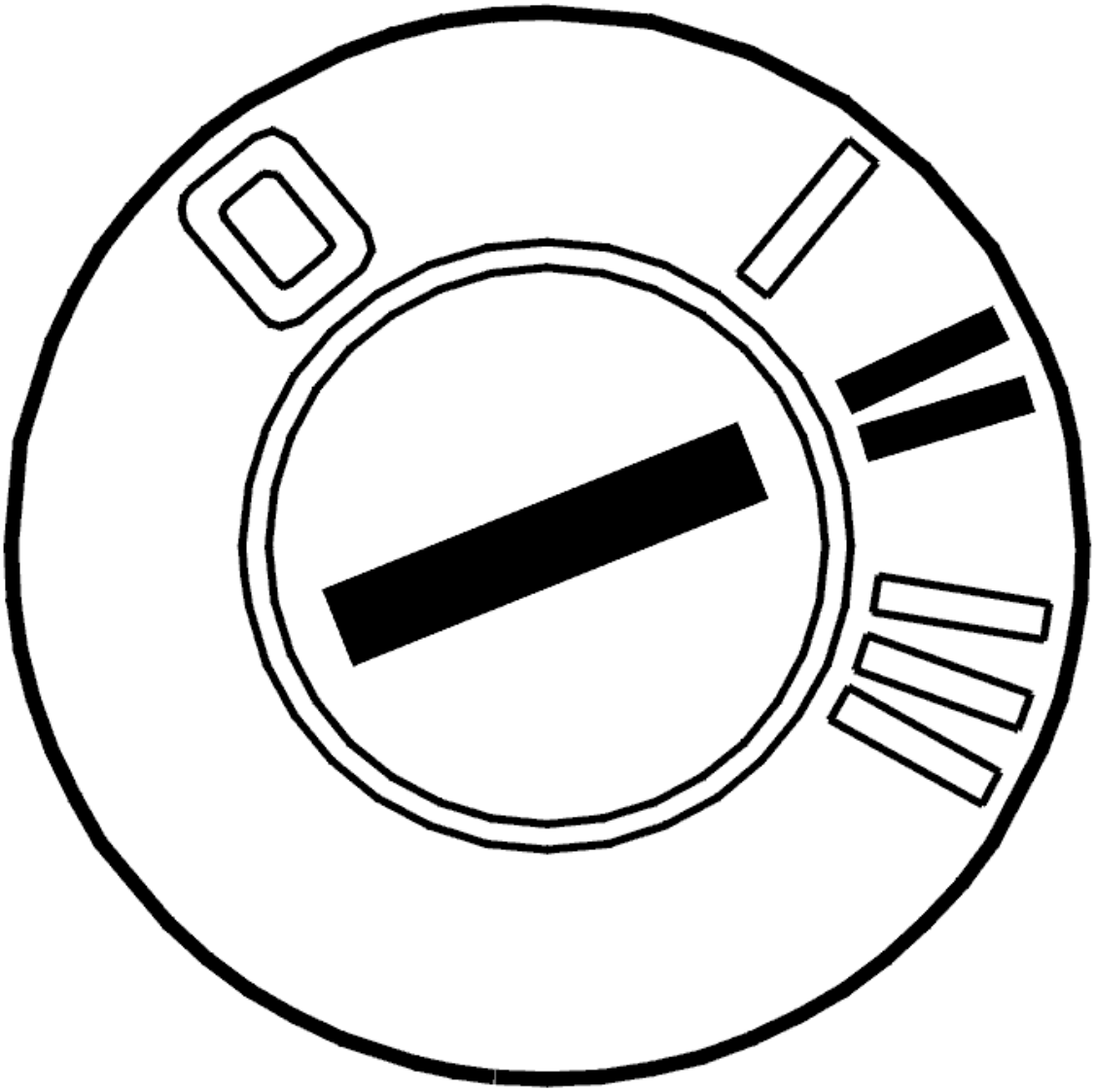

Fig. 119: Identifying Ignition ON
Courtesy of VOLVO CARS CORPORATION

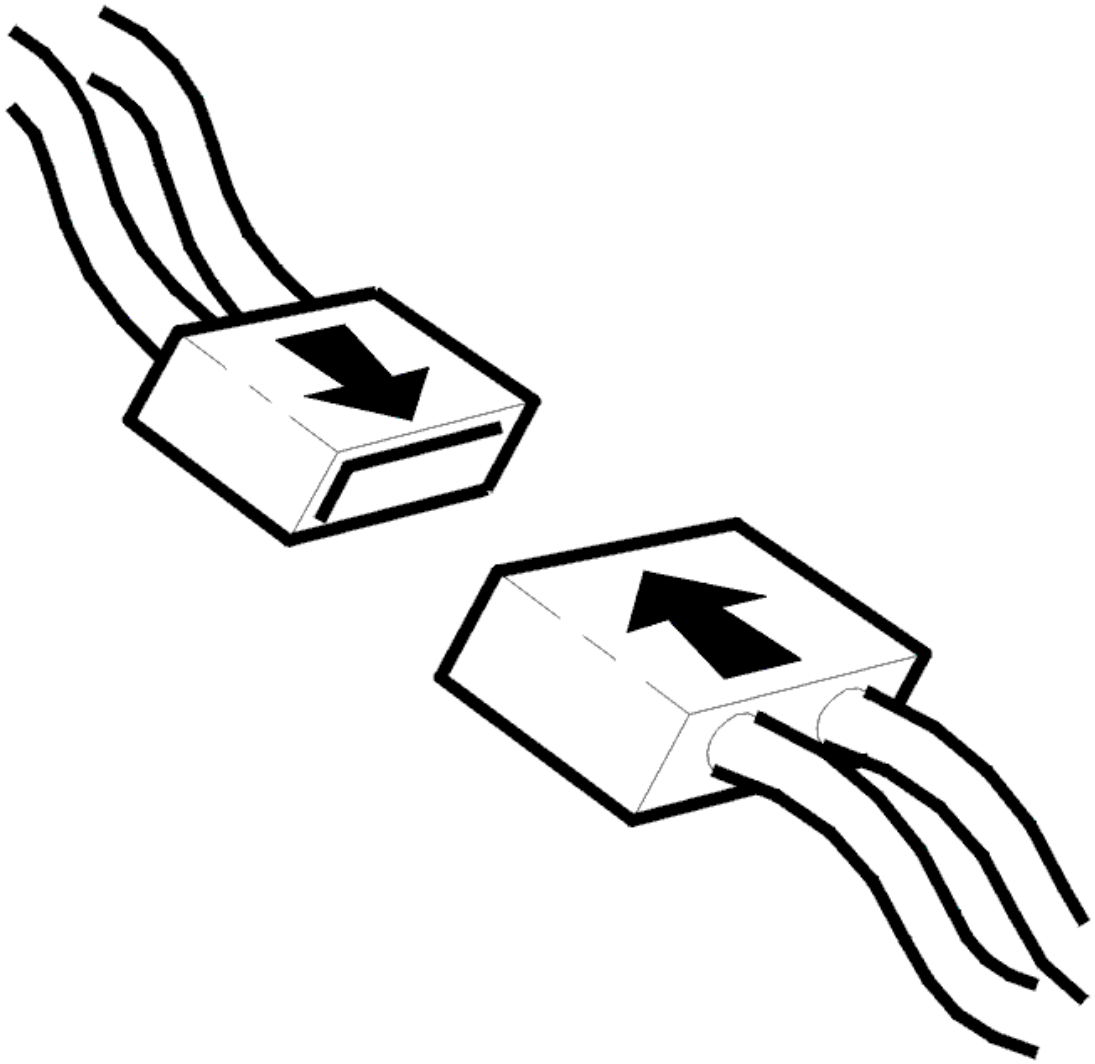

Fig. 120: Connecting Connector
Courtesy of VOLVO CARS CORPORATION

- Ignition off
- Reconnect connector A for the seat heating module (SHM)
- Ignition on.

Check the components on the climate control unit as follows:

- Disconnect the connectors for the components one at a time
- Check whether the other components regain functionality, for example by activating seat heating
- If the functionality for the other components returns, the fault is probably in the disconnected components.

Remedy as necessary.

Other information:

- For further information about the connectors, fuses and relays, see the appropriate service information.
- see **CONNECTING THE BREAKOUT BOX**
- see **SIGNAL SPECIFICATION**
- see **CLIMATE CONTROL, LOCATION OF COMPONENTS**
- For -2004, see **DAMPER MOTOR DEFROSTER, REPLACING** . For 2005-, see **DAMPER MOTOR MODULE (DMM) DEFROSTER, REPLACING**
- For -2004, see **DAMPER MOTOR TEMPERATURE, REPLACING** . For 2005-, see **DAMPER MOTOR MODULE (DMM) TEMPERATURE, REPLACING**
- For -2004, see **DAMPER MOTOR RECIRCULATION, REPLACING** . For 2005-, see **DAMPER MOTOR MODULE (DMM) RECIRCULATION, REPLACING**
- see **AIR QUALITY SENSOR, REPLACING**
- see **CLIMATE CONTROL MODULE (CCM), REPLACING**
- see **SEAT HEATING MODULE (SHM), REPLACING**
- see **CONTENTS**

IDENTIFYING COMPONENTS ON THE LIN NETWORK THAT BELONG TO THE CLIMATE CONTROL SYSTEM (CCM)

INFORMATION

- The control module must be identified after replacing the Damper Motor Module (DMM).

NOTE: **Identification must only be carried out when replacing components on the LIN network that belong to the climate control system (CCM).**

Have any of the components on the LIN network been replaced?

- **NO**

  Refer to **VERIFICATION**

IDENTIFYING COMPONENTS ON THE LIN NETWORK THAT BELONG TO THE CLIMATE CONTROL SYSTEM (CCM)

HINT: When identifying damper motors, each damper motor must be run to its limit position. These operations can take up to 30 seconds. When identifying the damper motors it is important that a battery charger is connected.

Fig. 121: Checking Traffic Load On CAN Cables
Courtesy of VOLVO CARS CORPORATION

- Ignition off
- Reinstall the connectors, components etc.

NOTE: **Climate Control Module (CCM) and damper motors can be affected by the temperature. The vehicle should have normal room temperature when performing this service.**

Carry out identification as follows:

- Ignition on.
- Click on the VCT2000 (Volvo Scan Tool) symbol. Wait until identification has been carried out.
- Ignition off.

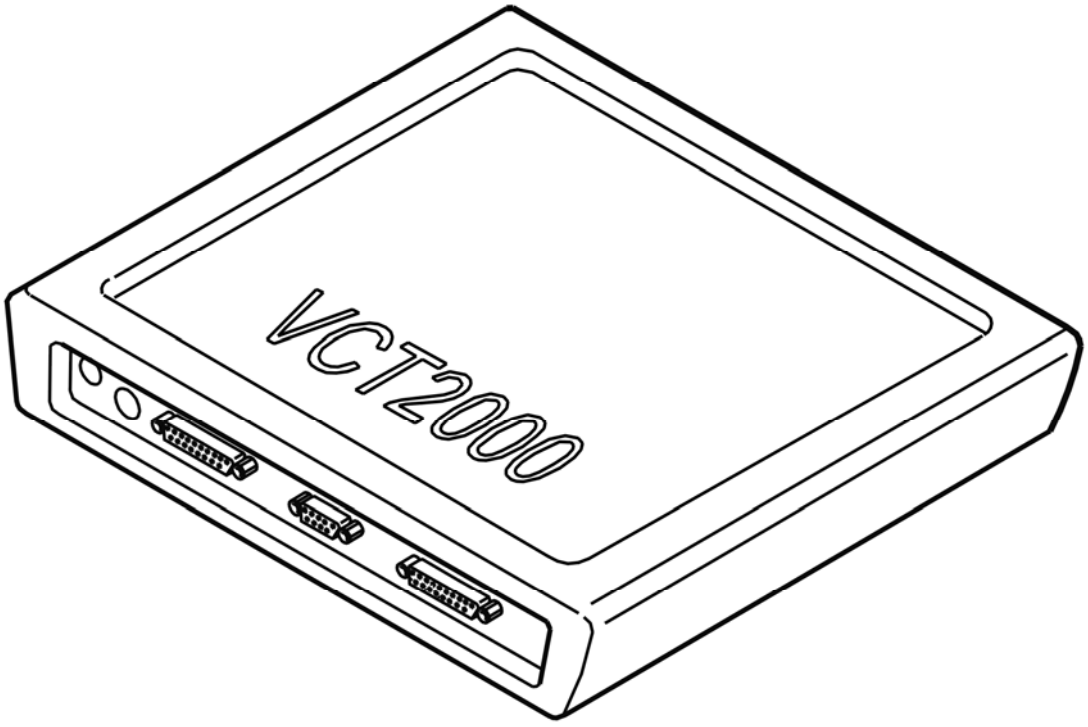

Fig. 122: Identifying VCT2000 Diagnostic Tool Symbol In VIDA

Courtesy of VOLVO CARS CORPORATION

- **Continue**

Refer to **CALIBRATING THE CLIMATE CONTROL MODULE (CCM)**

CALIBRATING THE CLIMATE CONTROL MODULE (CCM)

CAUTION: When activating this function, calibration of the Climate Control Module (CCM) starts. After carrying out calibration read off of the diagnostic trouble codes (DTCs) starts. To ensure that diagnostics for the Climate Control Module (CCM) have been carried out, delay for 30 seconds before reading out diagnostic trouble codes (DTCs) after calibration.

NOTE: Climate Control Module (CCM) and damper motors can be affected by the temperature. The vehicle should have normal room temperature when performing this service.

Fig. 123: Checking Traffic Load On CAN Cables
Courtesy of VOLVO CARS CORPORATION

Carry out calibration as follows:

- Ignition on.
- Click on the VCT2000 (Volvo Scan Tool) symbol. Wait until calibration has been carried out and diagnostic trouble codes (DTCs) read out.
- Ignition off.

This function controls the components that communicate with the Climate Control Module (CCM) via LIN bus 1 and LIN bus 2. In the event of a fault in any of the LIN buses, diagnostic trouble codes (DTCs) CCM-0070 to CCM-0071 will be stored depending on the fault. These diagnostic trouble codes (DTCs) can only be stored in conjunction with this diagnostic function.

If any of these diagnostic trouble codes (DTCs) recur, recalibrate to check if the problem was overcome. If the diagnostic trouble code (DTC) recurs, fault-trace the relevant diagnostic trouble code (DTC).

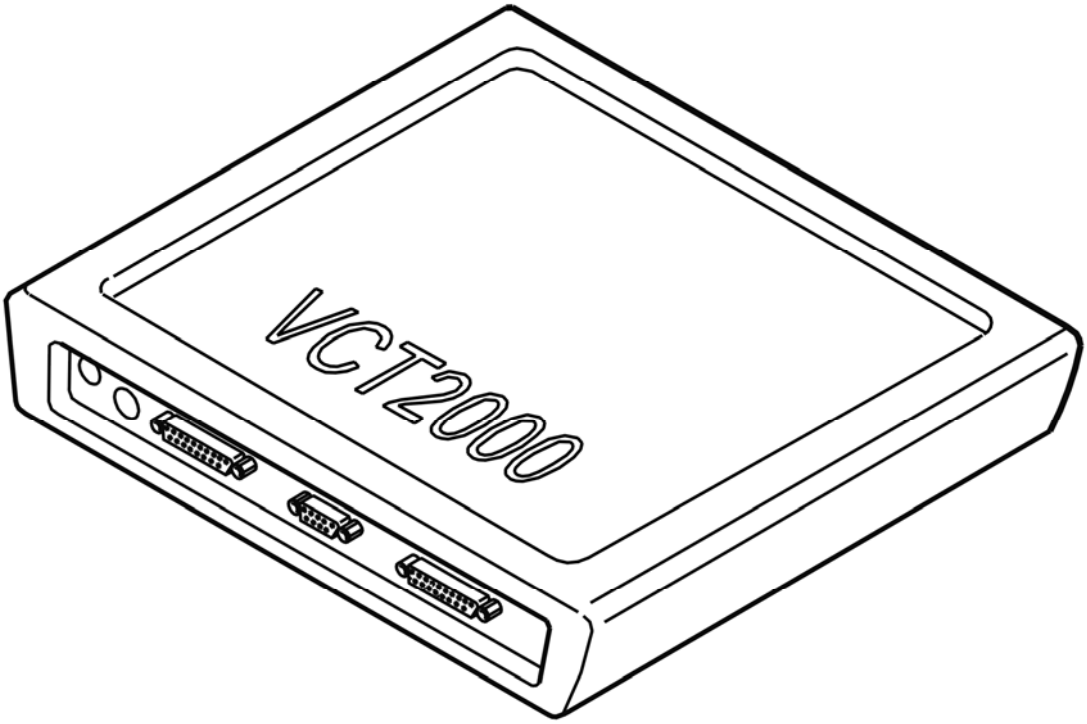

Fig. 124: Identifying VCT2000 Diagnostic Tool Symbol In VIDA
Courtesy of VOLVO CARS CORPORATION

VERIFICATION

HINT: After carrying out the repair, check that the fault has been remedied.

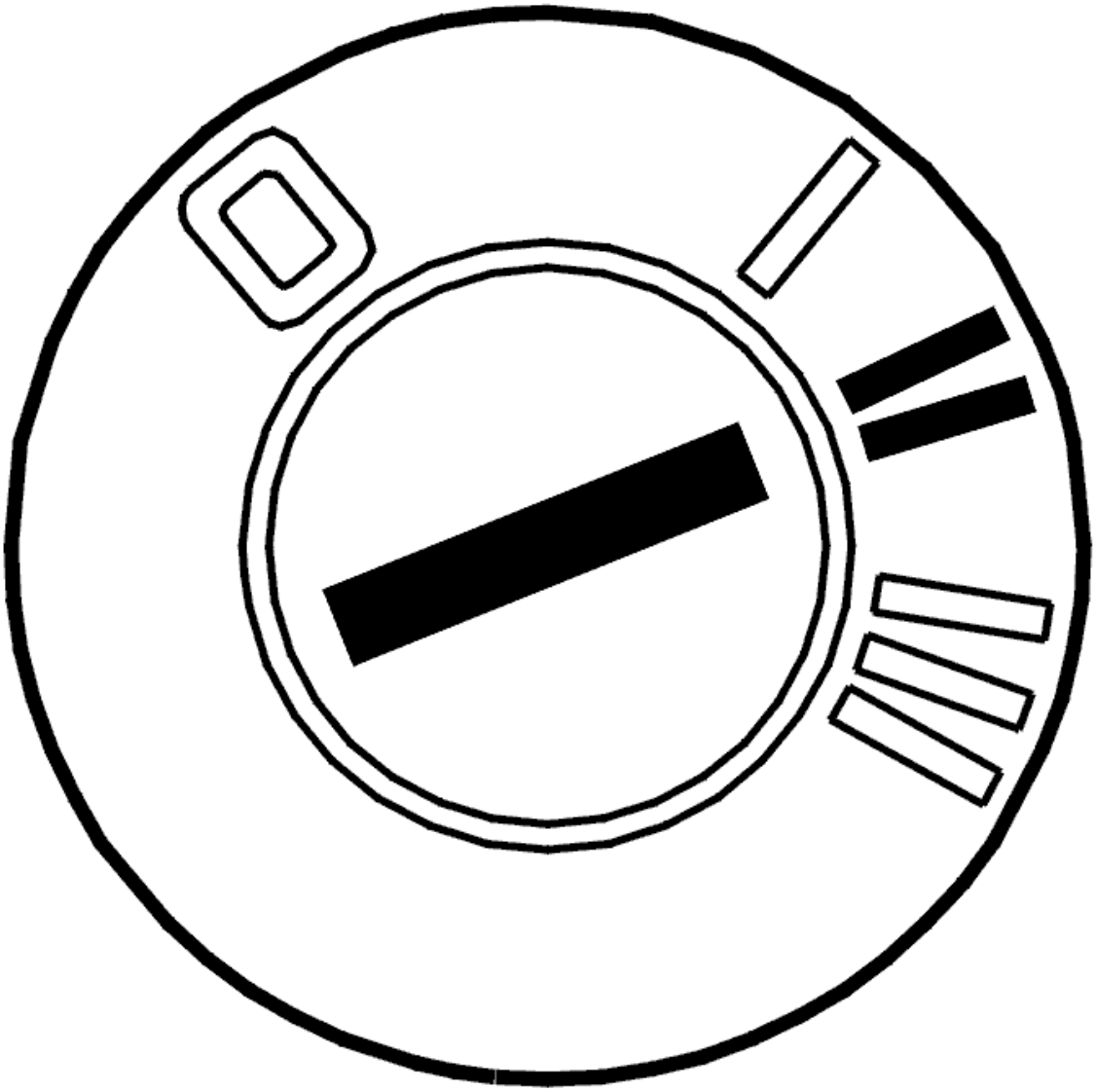

Fig. 125: Identifying Ignition ON
Courtesy of VOLVO CARS CORPORATION

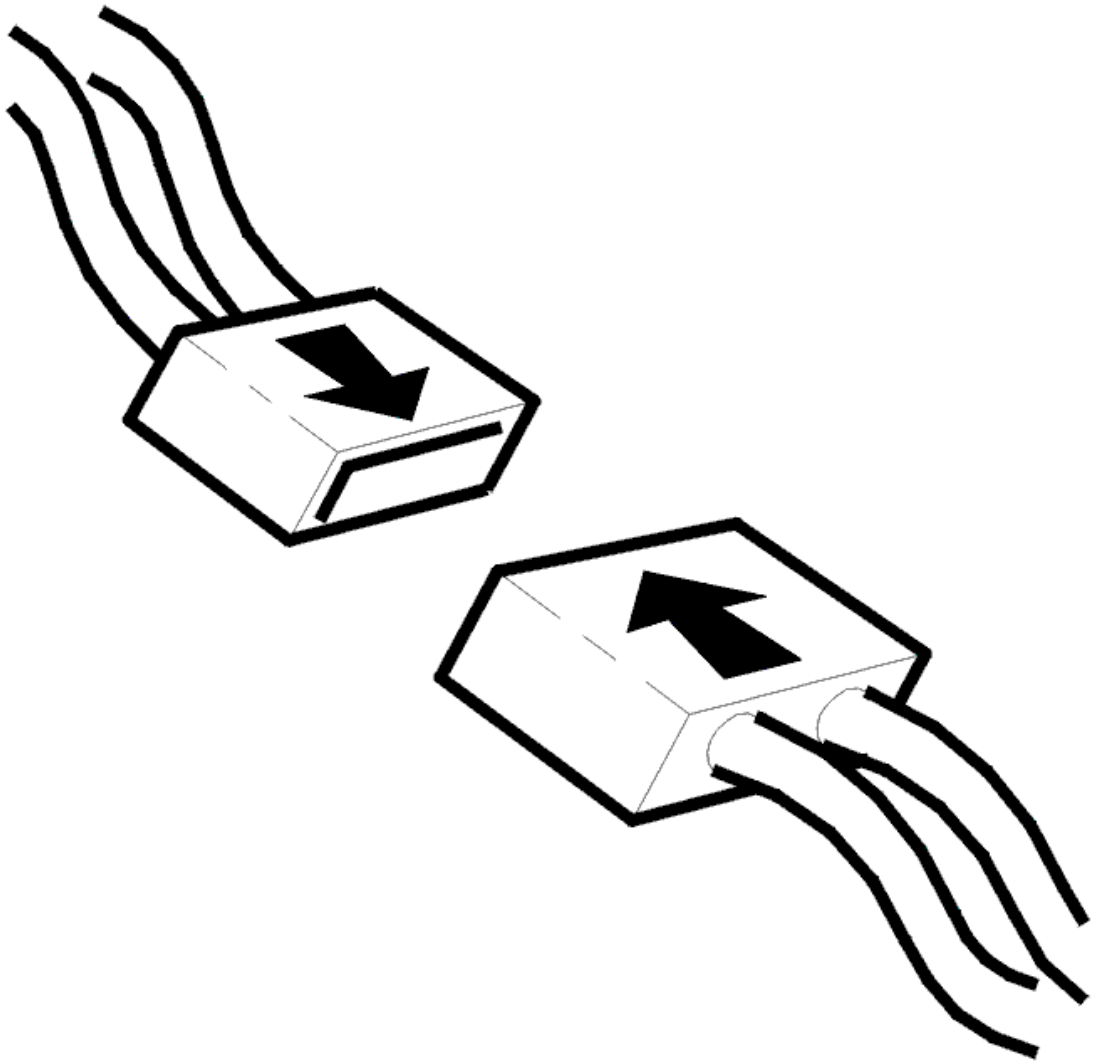

Fig. 126: Connecting Connector
Courtesy of VOLVO CARS CORPORATION

- Ignition off
- Reinstall the connectors, components etc.
- Ignition on.

  Check that the relevant diagnostic trouble code (DTC) has switched status from permanent to intermittent fault.

  Check also that diagnostic trouble code (DTC) CCM-0070, CCM-0071 CCM-0072 or CCM-0073 has not been stored during identification of the damper motors.

  These diagnostic trouble codes (DTCs) can only be stored when identifying damper motors. They mean that the identification has failed for some reason.

Remedy by correctly identifying the damper motor. Fault-trace according to the relevant information.

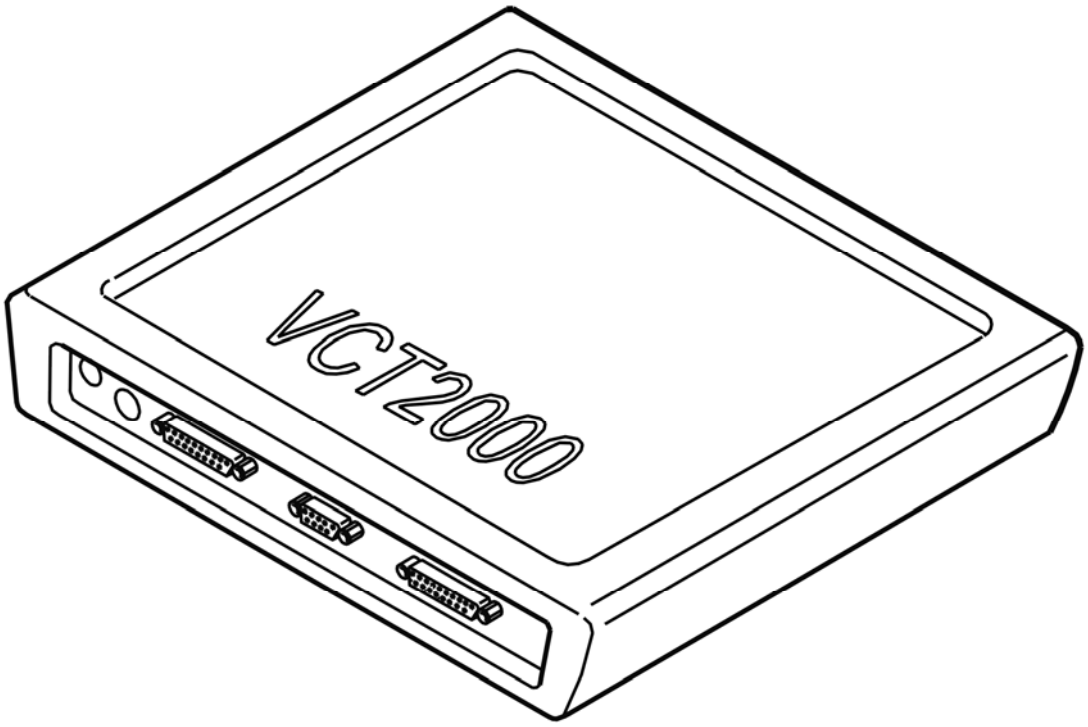

Fig. 127: Identifying VCT2000 Diagnostic Tool Symbol In VIDA
Courtesy of VOLVO CARS CORPORATION

Has the status of the diagnostic trouble code (DTC) changed?

- **YES**

  VERIFIED: Troubleshooting has been completed.

- **NO**

  Refer to **INFORMATION**

INFORMATION

FAULT-TRACING INFORMATION

The fault should have been detected and remedied. As this is not the case fault-tracing has failed.

Exit fault-tracing for this diagnostic trouble code (DTC) or make another attempt.

CCM-DD21: LIN BUS 2. SIGNAL TOO HIGH/SIGNAL TOO LOW (2005-2012)

DIAGNOSTIC TROUBLE CODE (DTC) INFORMATION CCM-DD21

Condition

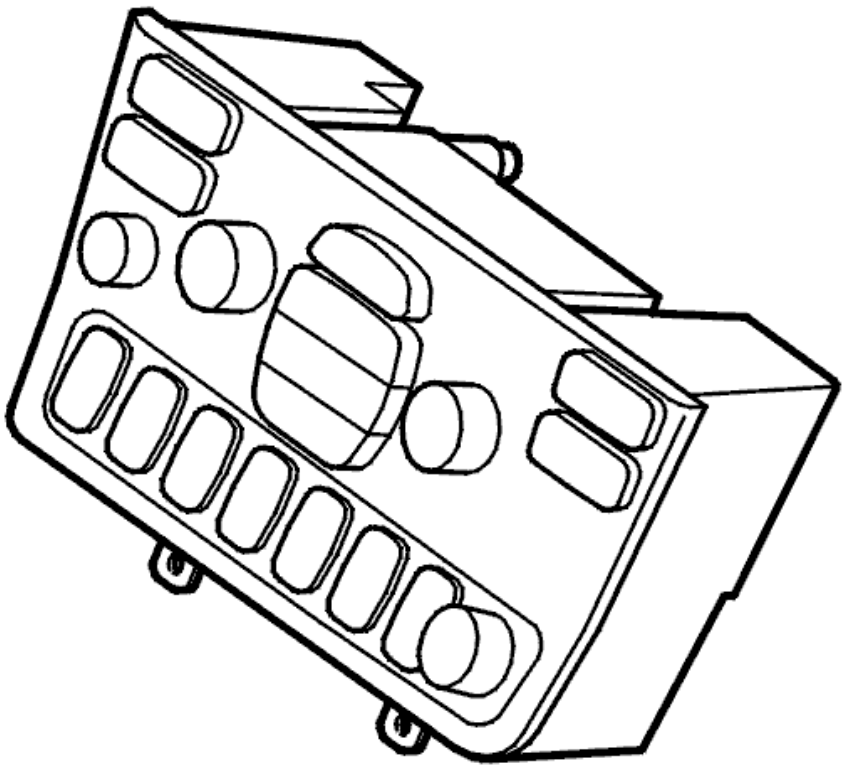

Fig. 128: Climate Control Module
Courtesy of VOLVO CARS CORPORATION

The diagnostic trouble code (DTC) is stored if the climate control module (CCM) detects a short-circuit to supply voltage or ground in LIN bus 2.

A short-circuit to supply voltage or ground in the LIN bus will affect communications and the function of all the components.

The climate control module (CCM) communicates with the damper motors, air quality sensors and seat heating via two LIN buses.

The number of components in LIN bus 2 can vary depending on the vehicle equipment (ECC/MCC and options).

The following components communicate on LIN bus 2:

- damper motor module (DMM) defroster
- damper motor module (DMM) temperature right (only ECC)

- damper motor module (DMM) recirculation
- air quality sensor (AQS)
- seat heating module (SHM) right.

The diagnostic trouble code (DTC) can be diagnosed in ignition positions I and II.

Substitute Value

- None.

Possible Source

- LIN bus 2 short-circuited to supply voltage
- LIN bus 2 short-circuited to ground.

Fault symptom[s]

- Misting on the windows and/or door mirrors.
- Poor heating in the passenger compartment.
- The front seat heating does not function.
- Poor air quality in the passenger compartment.

SIGNAL TOO HIGH / SIGNAL TOO LOW

CHECKING THE CABLE

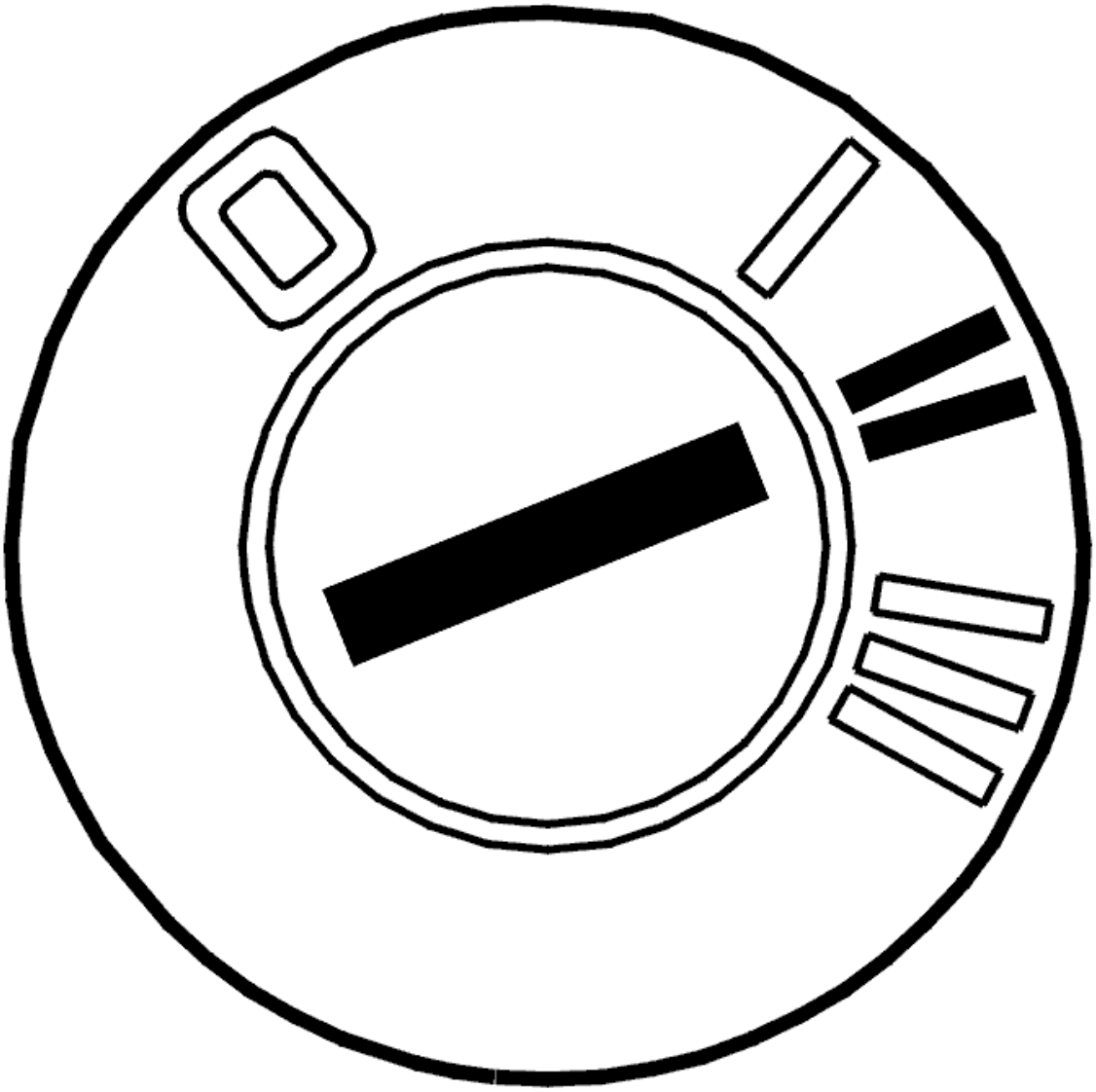

Fig. 129: Identifying Ignition ON
Courtesy of VOLVO CARS CORPORATION

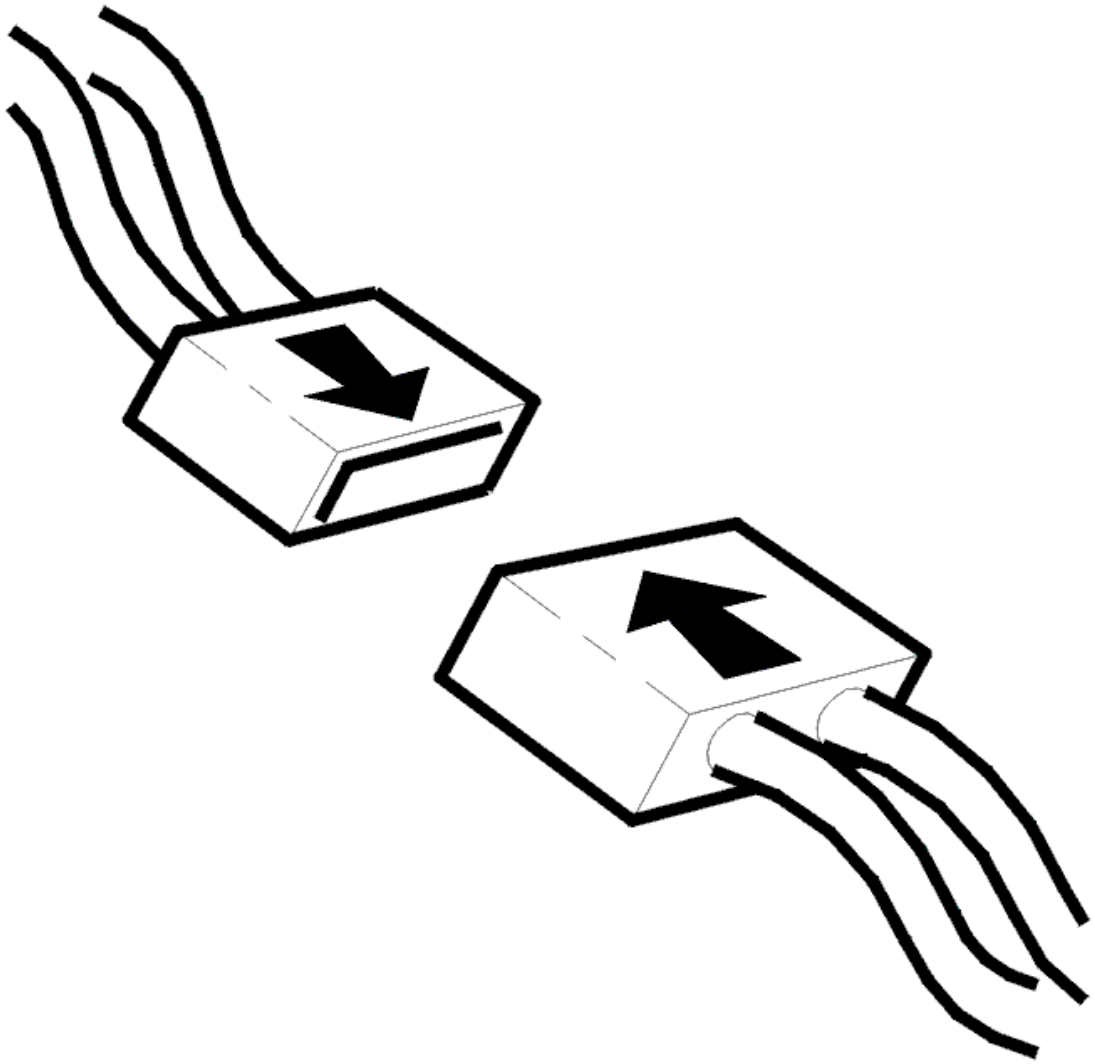

Fig. 130: Connecting Connector
Courtesy of VOLVO CARS CORPORATION

- Ignition off
- Disconnect the connector for the climate control module (CCM)
- Ignition on.

  Check LIN bus 2. Check for a short-circuit to supply voltage.

  Take a reading on the connector for the climate control module (CCM) between terminals #7 (#31) and #1 (#25).

  If there is a short-circuit to supply voltage in LIN bus 2, continue fault-tracing by locating where the short-circuit has occurred as follows:

- Disconnect the connector on the climate control unit that connects LIN bus 2 from the climate control module (CCM) to other components on the climate control unit
- Check the section of LIN bus 2 that connects the climate control module (CCM) to the right-hand seat heating module (SHM) and the connector on the climate control unit. Take a reading on the connector for the climate control module (CCM) between terminals #7 (#31) and #1 (#25).

If the fault persists, fault-trace LIN bus 2 between the climate control module (CCM), the right-hand seat heating module (SHM) and the connector on the climate control unit. Check for a short-circuit to supply voltage.

If the fault is no longer present, fault-trace LIN bus 2 between the connector and the components on the climate control unit. Check for a short-circuit to supply voltage.

Remedy as necessary.

Other information:

- For further information about the connectors, fuses and relays, see the appropriate service information.
- see **CONNECTING THE BREAKOUT BOX**
- see **SIGNAL SPECIFICATION**
- see **CLIMATE CONTROL, LOCATION OF COMPONENTS**
- see **CLIMATE CONTROL MODULE (CCM), REPLACING**
- see **SEAT HEATING MODULE (SHM), REPLACING**
- see **CONTENTS**

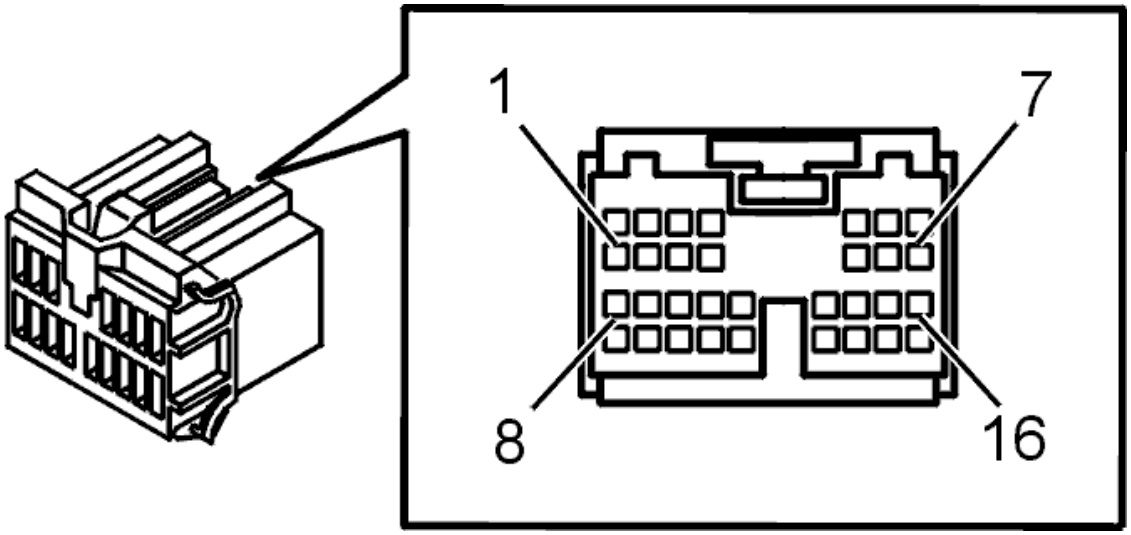

Fig. 131: Connector, Green (16- Pin)
Courtesy of VOLVO CARS CORPORATION

Was a fault detected?

- **YES**

  Refer to **VERIFICATION**

- **NO**

  Refer to **CHECKING THE CABLE**

CHECKING THE CABLE

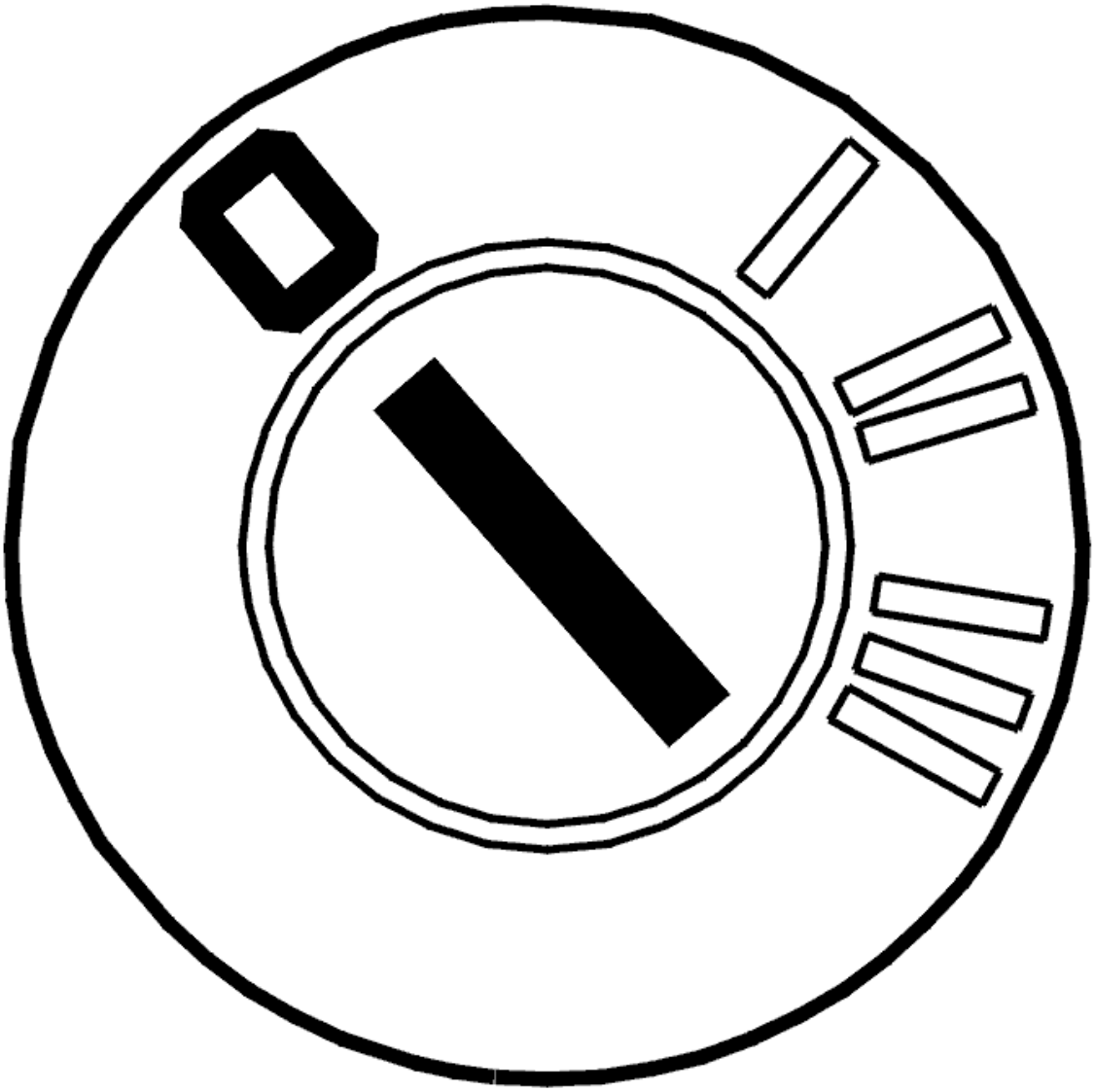

Fig. 132: Identifying Ignition OFF
Courtesy of VOLVO CARS CORPORATION

- Ignition off
- Disconnect the connector for the climate control module (CCM).

Check LIN bus 2. Check for a short-circuit to ground.

Take a reading on the connector for the climate control module (CCM) between terminals #7 (#31) and #16 (#40).

If there is a short-circuit to ground in LIN bus 2, continue fault-tracing by locating where the short-circuit has occurred as follows:

- Disconnect the connector for the climate control unit that connects LIN bus 2 from the climate control module (CCM) to the other components on the climate control unit
- Check the section of LIN bus 2 that connects the climate control module (CCM) to the left-hand seat heating module (SHM) and the connector on the climate control unit.

  Take a reading on the connector for the climate control module (CCM) between terminals #7 (#31) and #16 (#40).

If the fault persists, fault-trace LIN bus 2 between the climate control module (CCM), the left-hand seat heating module (SHM) and the connector on the climate control unit. Check for a short-circuit to ground.

If the fault is no longer present, fault-trace LIN bus 2 between the connector and the components of the climate control unit. Check for a short-circuit to ground.

Remedy as necessary.

Other information:

- For further information about the connectors, fuses and relays, see the appropriate service information.
- see **CONNECTING THE BREAKOUT BOX**
- see **SIGNAL SPECIFICATION**
- see **CLIMATE CONTROL, LOCATION OF COMPONENTS**
- see **CLIMATE CONTROL MODULE (CCM), REPLACING**
- see **SEAT HEATING MODULE (SHM), REPLACING**
- see **CONTENTS**

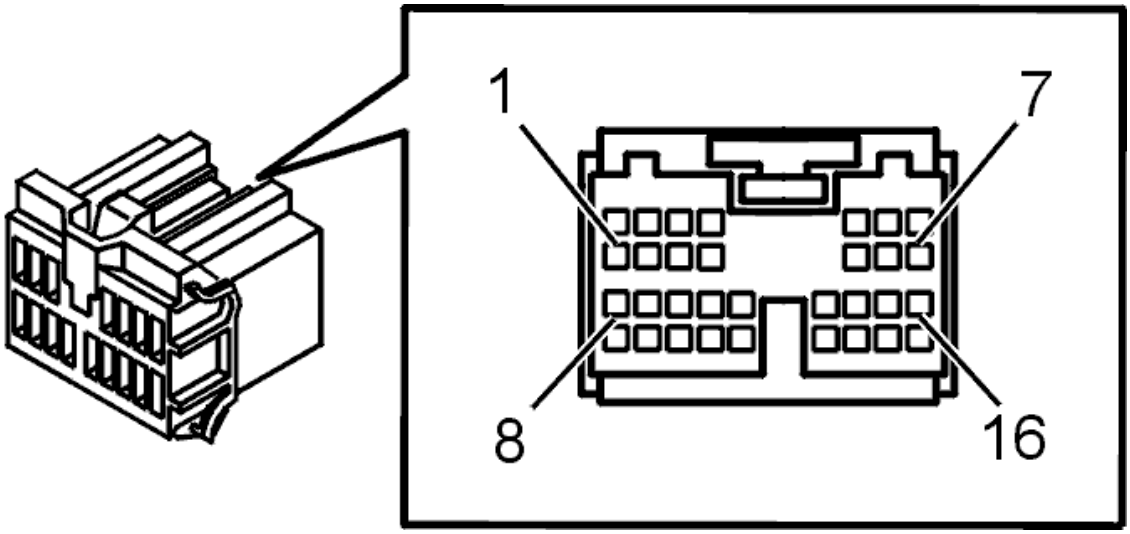

Fig. 133: Connector, Green (16- Pin)
Courtesy of VOLVO CARS CORPORATION

VERIFICATION

HINT: After carrying out the repair, check that the fault has been remedied.

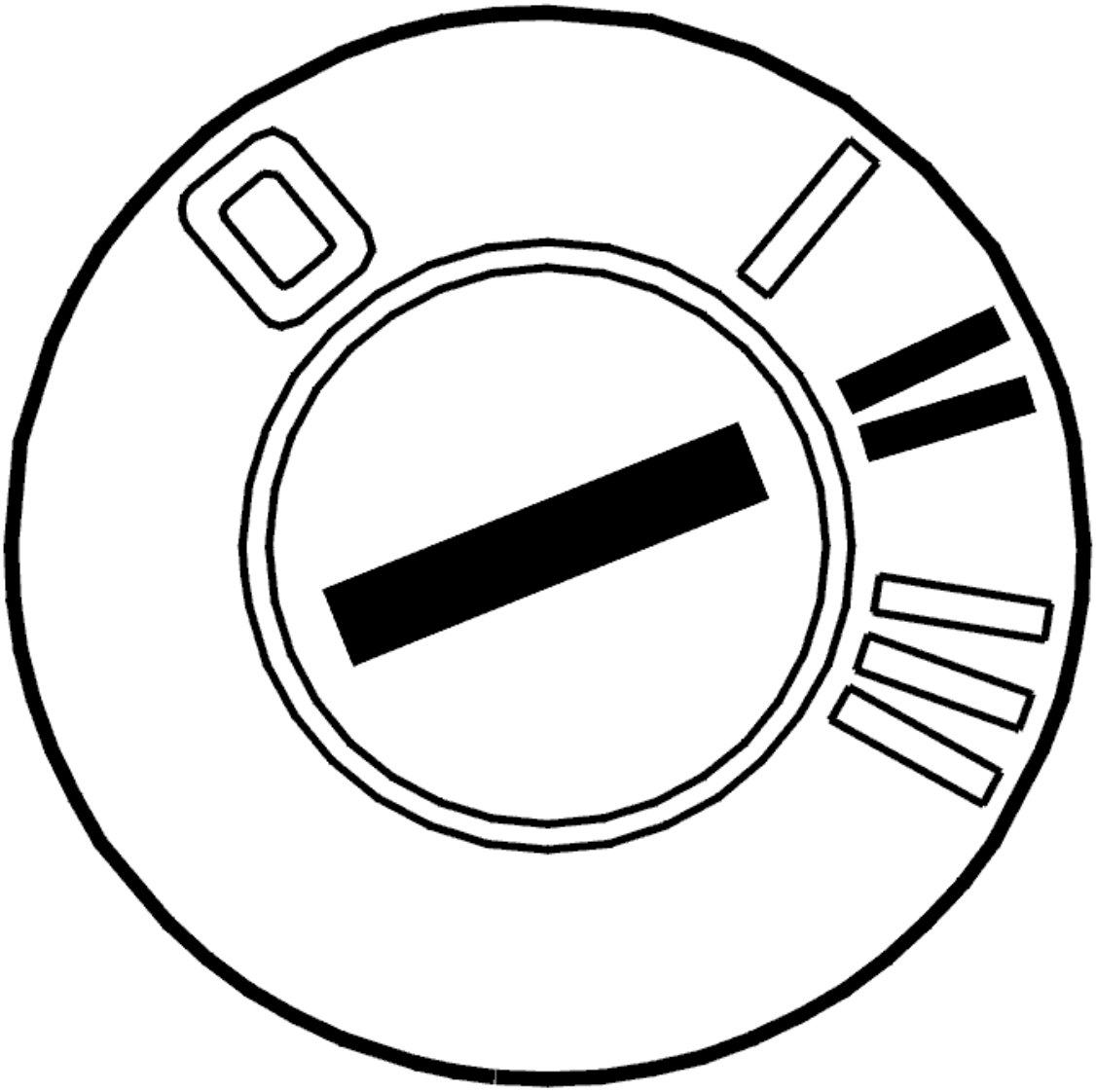

Fig. 134: Identifying Ignition ON
Courtesy of VOLVO CARS CORPORATION

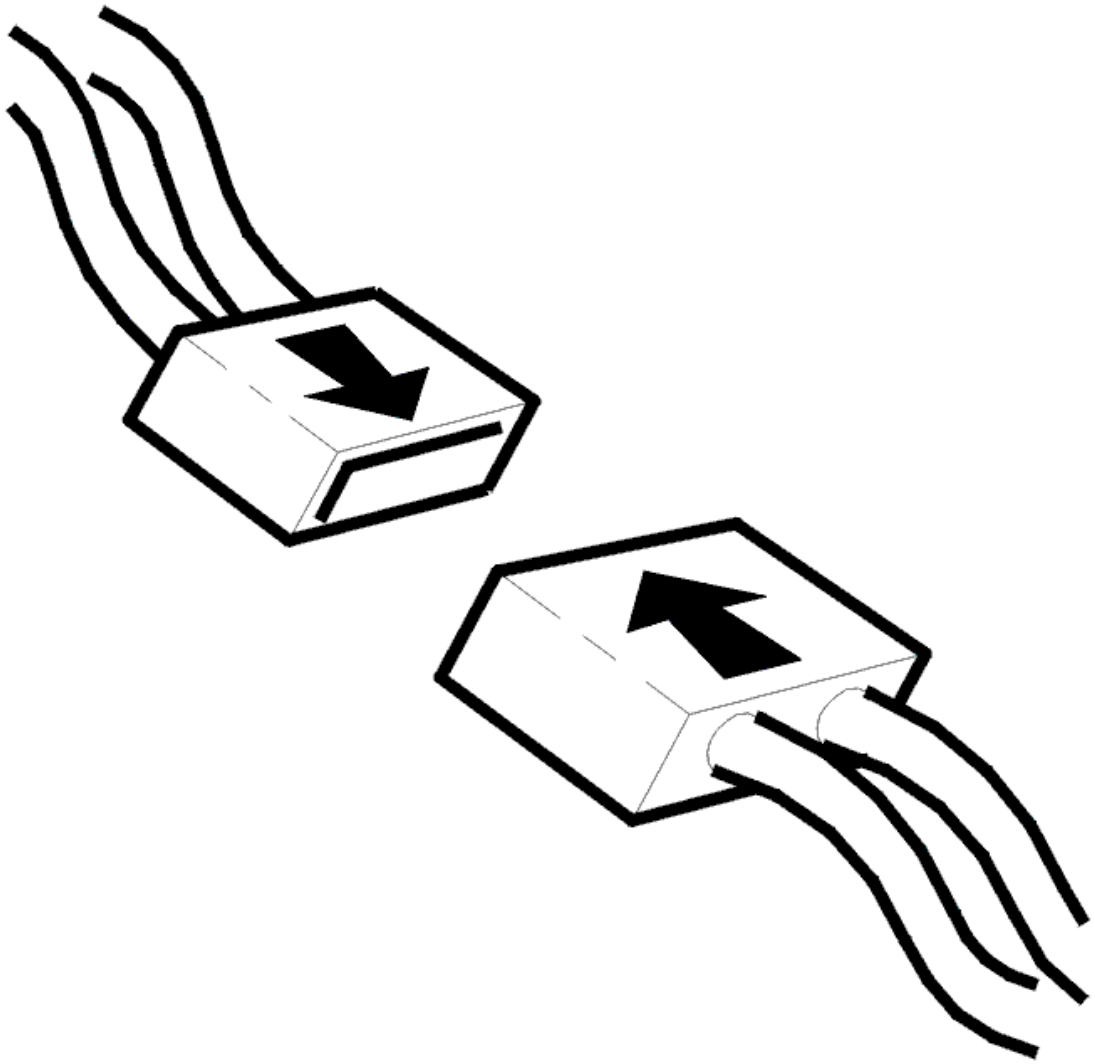

Fig. 135: Connecting Connector
Courtesy of VOLVO CARS CORPORATION

- Ignition off
- Reinstall the connectors, components etc.
- Ignition on.

  Check that the relevant diagnostic trouble code (DTC) has switched status from permanent to intermittent fault.

  Check also that diagnostic trouble code (DTC) CCM-0070, CCM-0071 CCM-0072 or CCM-0073 has not been stored during identification of the damper motors.

  These diagnostic trouble codes (DTCs) can only be stored when identifying damper motors. They mean that the identification has failed for some reason.

Remedy by correctly identifying the damper motor. Fault-trace according to the relevant information.

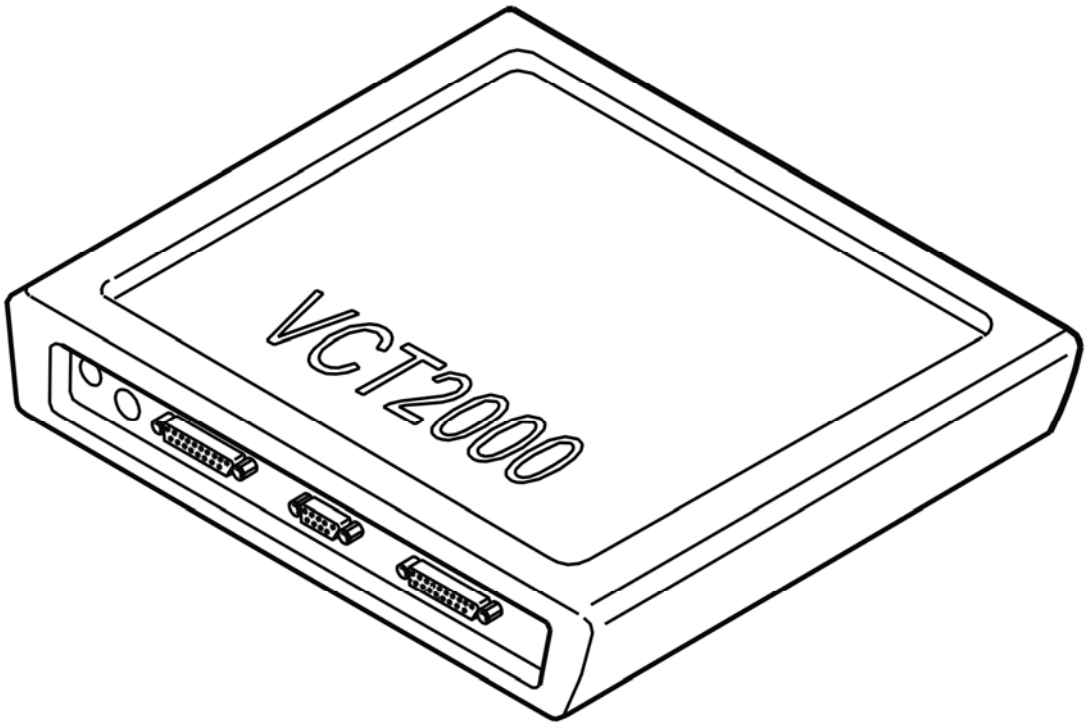

Fig. 136: Identifying VCT2000 Diagnostic Tool Symbol In VIDA
Courtesy of VOLVO CARS CORPORATION

Has the status of the diagnostic trouble code (DTC) changed?

- **YES**

  VERIFIED: Troubleshooting has been completed.

- **NO**

  Refer to **INFORMATION**

INFORMATION

FAULT-TRACING INFORMATION

The fault should have been detected and remedied. As this is not the case fault-tracing has failed.

Exit fault-tracing for this diagnostic trouble code (DTC) or make another attempt.

CCM-DD22: LIN BUS 2. INCORRECT CHECK SUM (2005-2012)

DIAGNOSTIC TROUBLE CODE (DTC) INFORMATION CCM-DD22

Condition

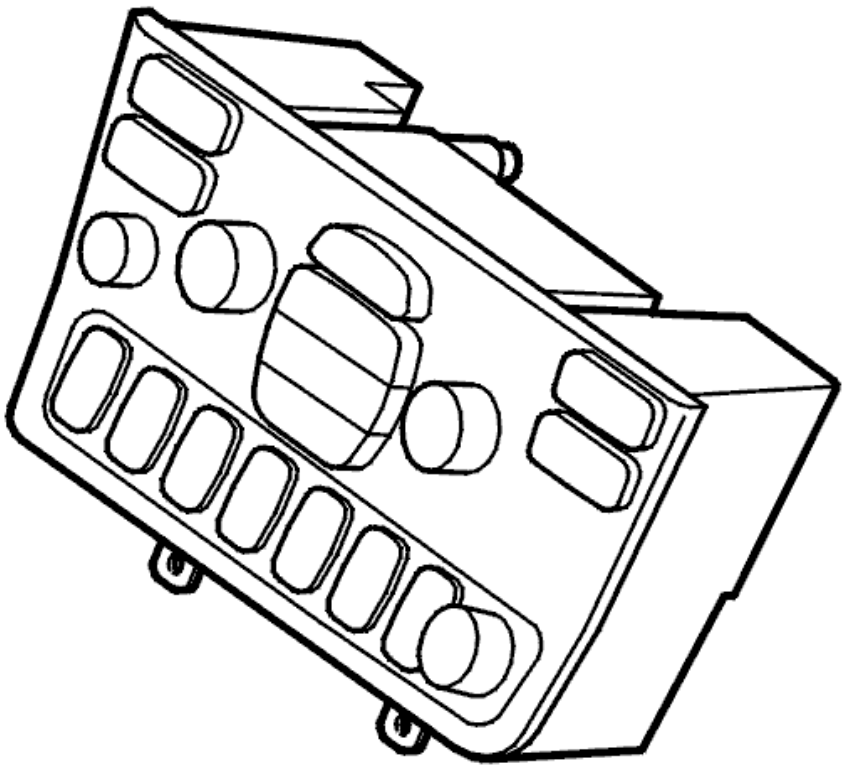

Fig. 137: Climate Control Module
Courtesy of VOLVO CARS CORPORATION

The diagnostic trouble code (DTC) is stored if the climate control module (CCM) detects that data that is sent on LIN bus 2 is incorrect.

The following components communicate with the climate control module (CCM) via LIN bus 2:

- damper motor module (DMM) defroster
- damper motor module (DMM) temperature right (only ECC)
- damper motor module (DMM) recirculation
- air quality sensor (AQS)
- seat heating module (SHM) right.

The diagnostic trouble code (DTC) can be diagnosed in ignition positions I and II.

Substitute Value

- None.

Possible Source

- Incorrect data during communication on LIN bus 2.

Fault symptom[s]

- Misting on the windows and/or door mirrors.
- Air flow problem.
- Poor heating in the passenger compartment.
- The front seat heating does not function.
- Poor air quality in the passenger compartment.

FAULTY CHECK SUM

CHECKING COMPONENTS

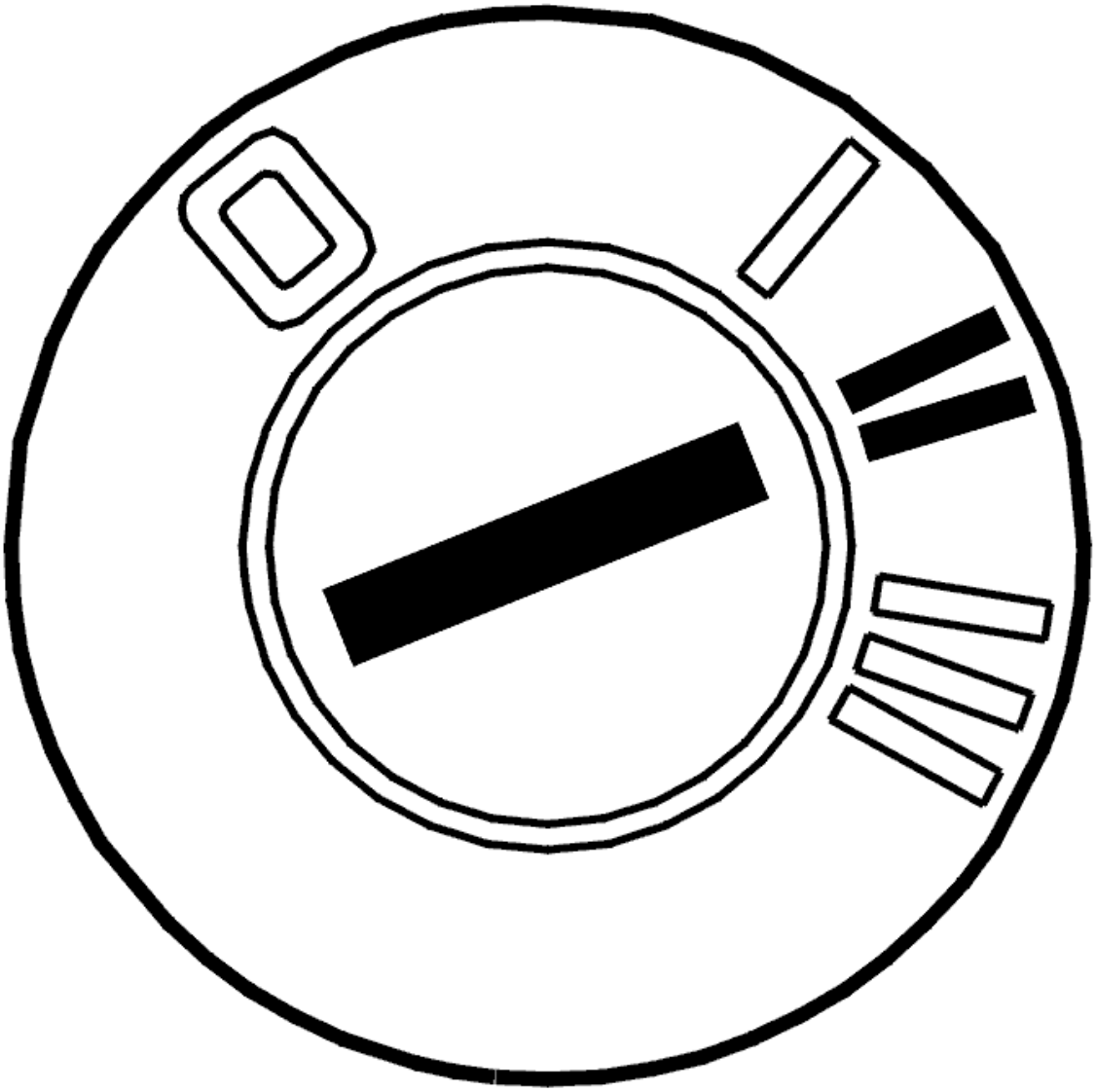

Fig. 138: Identifying Ignition ON
Courtesy of VOLVO CARS CORPORATION

- Ignition on.

  The climate control module (CCM) has diagnosed that two or more damper motor modules (DMM) have the same identity on LIN bus 2.

  This may be because one damper motor module (DMM) has been installed incorrectly.

  After replacing a damper motor module (DMM), it must be allocated a correct identity by the climate control module (CCM). This is performed during identification of the damper motors on the LIN bus.

  If a damper motor module (DMM) is installed that already has an identity allocated to it, this can lead to a conflict on the LIN bus.

Remedy by correctly identifying the damper motor.

Other information:

- see **CLIMATE CONTROL, LOCATION OF COMPONENTS**
- see **CLIMATE CONTROL MODULE (CCM), REPLACING**
- For -2004, see **DAMPER MOTOR TEMPERATURE, REPLACING** . For 2005-, see **DAMPER MOTOR MODULE (DMM) TEMPERATURE, REPLACING**
- For -2004, see **DAMPER MOTOR DEFROSTER, REPLACING** . For 2005-, see **DAMPER MOTOR MODULE (DMM) DEFROSTER, REPLACING**
- For -2004, see **DAMPER MOTOR RECIRCULATION, REPLACING** . For 2005-, see **DAMPER MOTOR MODULE (DMM) RECIRCULATION, REPLACING**
- For -2004, see **DAMPER MOTOR AIR DISTRIBUTION, REPLACING** . For 2005-, see **DAMPER MOTOR MODULE (DMM) AIR DISTRIBUTION, REPLACING**

IDENTIFYING COMPONENTS ON THE LIN NETWORK THAT BELONG TO THE CLIMATE CONTROL SYSTEM (CCM)

INFORMATION

- The control module must be identified after replacing the Damper Motor Module (DMM).

NOTE: Identification must only be carried out when replacing components on the LIN network that belong to the climate control system (CCM).

Have any of the components on the LIN network been replaced?

- **YES**

  Refer to **IDENTIFYING COMPONENTS ON THE LIN NETWORK THAT BELONG TO THE CLIMATE CONTROL SYSTEM (CCM)**

- **NO**

  Refer to **VERIFICATION**

IDENTIFYING COMPONENTS ON THE LIN NETWORK THAT BELONG TO THE CLIMATE CONTROL SYSTEM (CCM)

HINT: When identifying damper motors, each damper motor must be run to its limit position. These operations can take up to 30 seconds. When identifying the damper motors it is important that a battery charger is connected.

Fig. 139: Checking Traffic Load On CAN Cables
Courtesy of VOLVO CARS CORPORATION

- Ignition off
- Reinstall the connectors, components etc.

NOTE: **Climate Control Module (CCM) and damper motors can be affected by the temperature. The vehicle should have normal room temperature when performing this service.**

Carry out identification as follows:

- Ignition on.
- Click on the VCT2000 (Volvo Scan Tool) symbol. Wait until identification has been carried out.
- Ignition off.

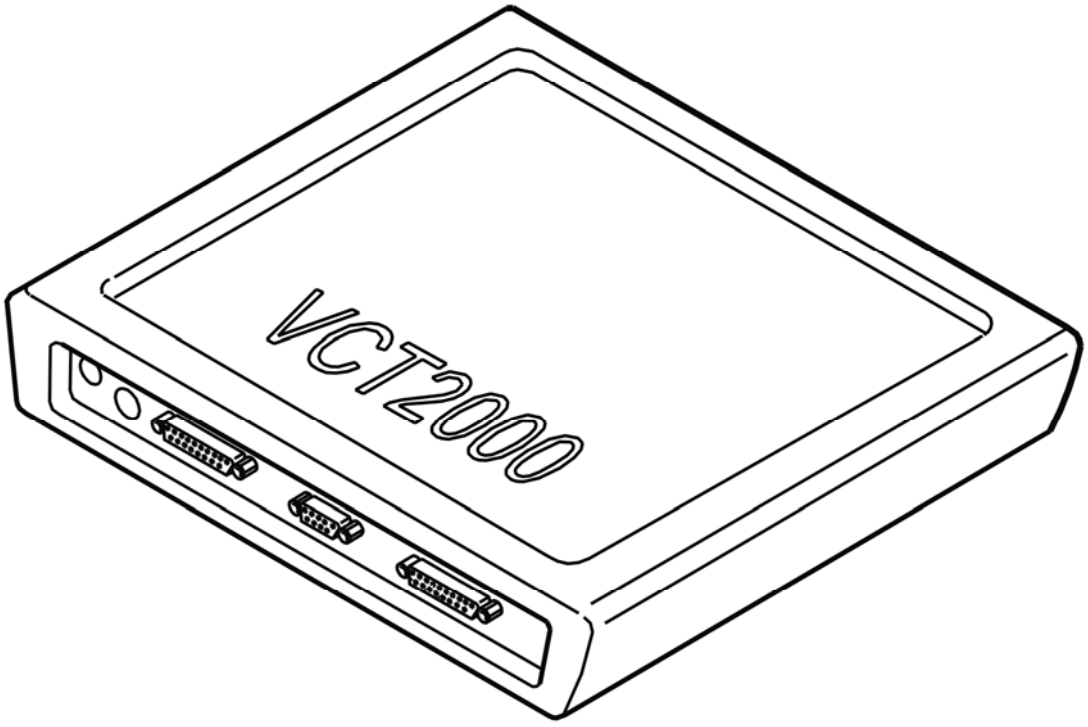

Fig. 140: Identifying VCT2000 Diagnostic Tool Symbol In VIDA

Courtesy of VOLVO CARS CORPORATION

- **Continue**

Refer to **CALIBRATING THE CLIMATE CONTROL MODULE (CCM)**

CALIBRATING THE CLIMATE CONTROL MODULE (CCM)

CAUTION: When activating this function, calibration of the Climate Control Module (CCM) starts. After carrying out calibration read off of the diagnostic trouble codes (DTCs) starts. To ensure that diagnostics for the Climate Control Module (CCM) have been carried out, delay for 30 seconds before reading out diagnostic trouble codes (DTCs) after calibration.

NOTE: Climate Control Module (CCM) and damper motors can be affected by the temperature. The vehicle should have normal room temperature when performing this service.

Fig. 141: Checking Traffic Load On CAN Cables
Courtesy of VOLVO CARS CORPORATION

Carry out calibration as follows:

- Ignition on.
- Click on the VCT2000 (Volvo Scan Tool) symbol. Wait until calibration has been carried out and diagnostic trouble codes (DTCs) read out.
- Ignition off.

This function controls the components that communicate with the Climate Control Module (CCM) via LIN bus 1 and LIN bus 2. In the event of a fault in any of the LIN buses, diagnostic trouble codes (DTCs) CCM-0070 to CCM-0071 will be stored depending on the fault. These diagnostic trouble codes (DTCs) can only be stored in conjunction with this diagnostic function.

If any of these diagnostic trouble codes (DTCs) recur, recalibrate to check if the problem was overcome. If the diagnostic trouble code (DTC) recurs, fault-trace the relevant diagnostic trouble code (DTC).

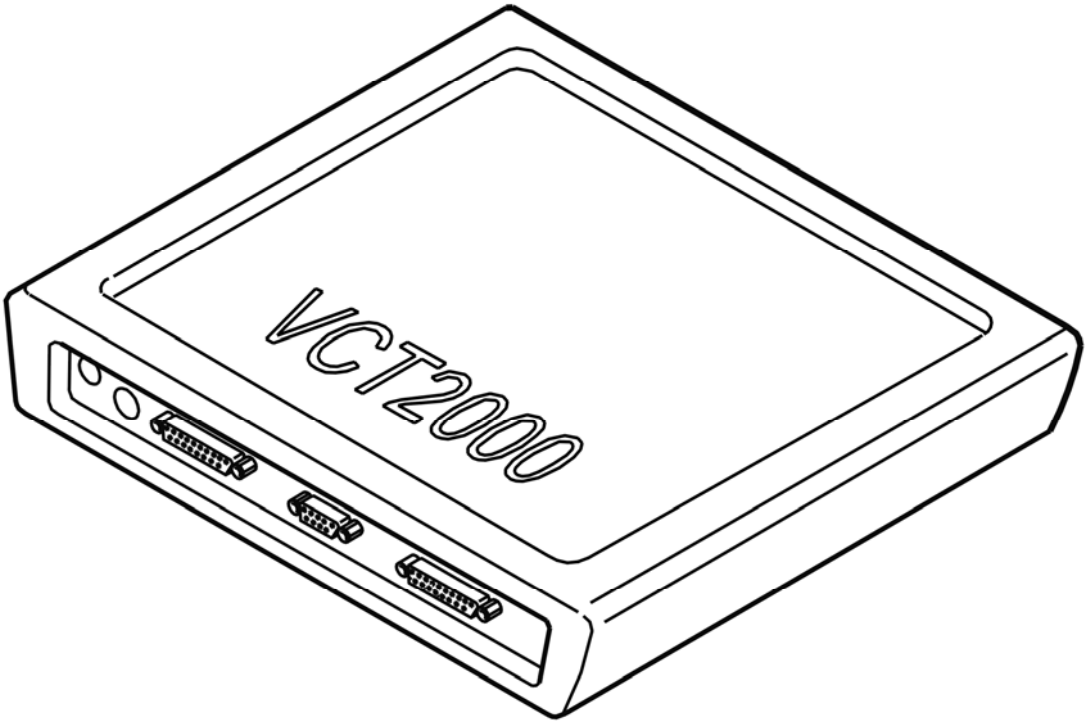

Fig. 142: Identifying VCT2000 Diagnostic Tool Symbol In VIDA
Courtesy of VOLVO CARS CORPORATION

VERIFICATION

HINT: After carrying out the repair, check that the fault has been remedied.

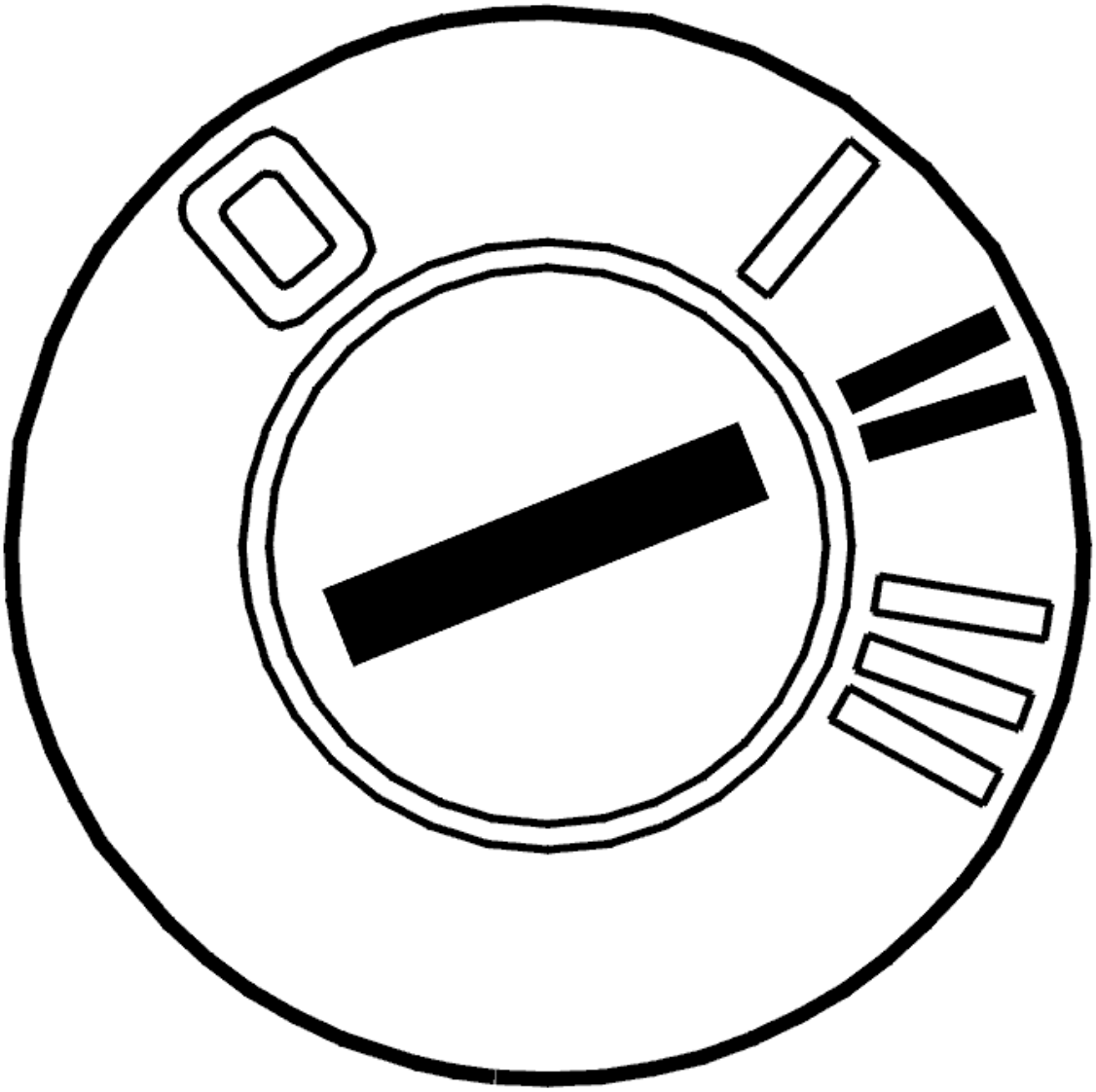

Fig. 143: Identifying Ignition ON
Courtesy of VOLVO CARS CORPORATION

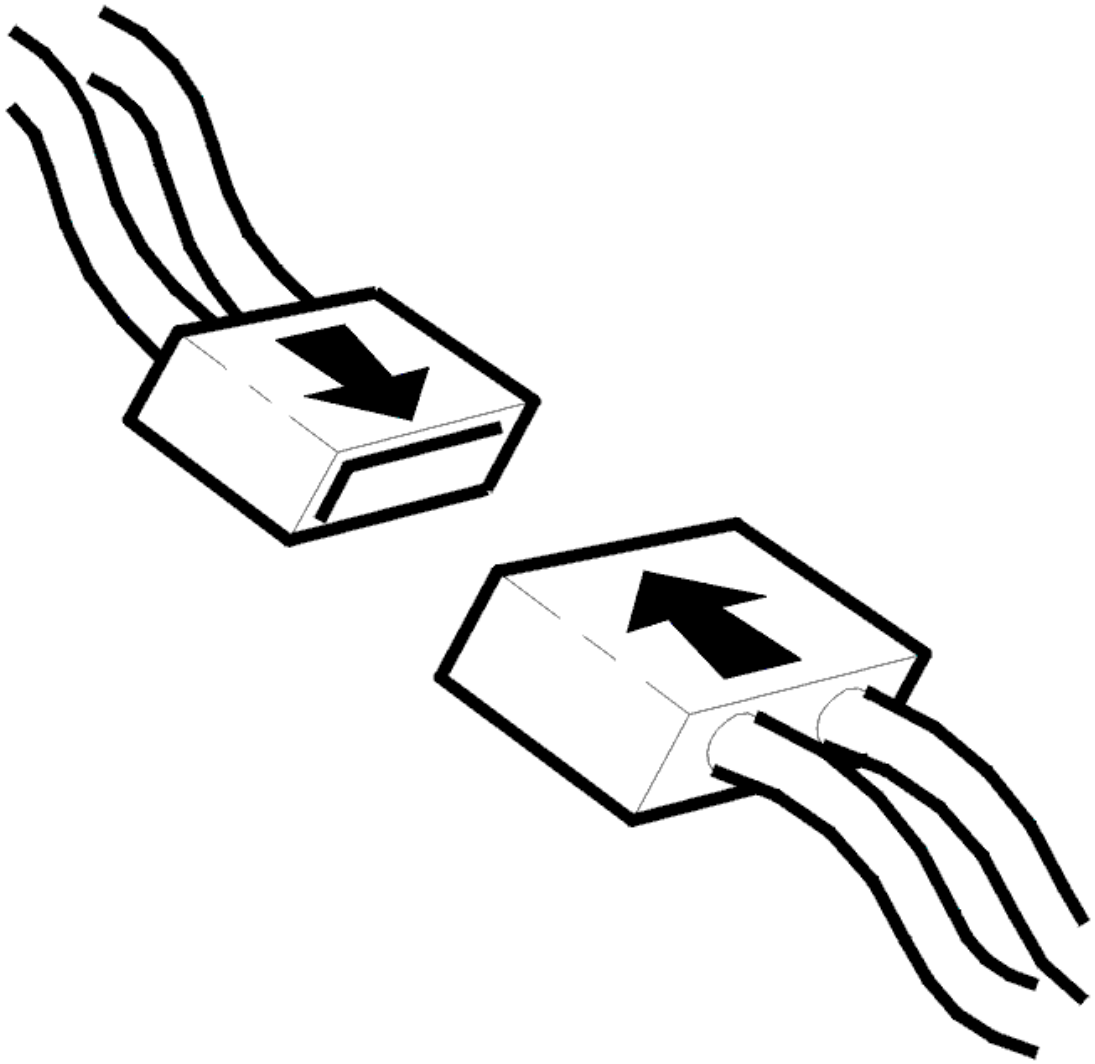

Fig. 144: Connecting Connector
Courtesy of VOLVO CARS CORPORATION

- Ignition off
- Reinstall the connectors, components etc.
- Ignition on.

  Check that the relevant diagnostic trouble code (DTC) has switched status from permanent to intermittent fault.

  Check also that diagnostic trouble code (DTC) CCM-0070, CCM-0071 CCM-0072 or CCM-0073 has not been stored during identification of the damper motors.

  These diagnostic trouble codes (DTCs) can only be stored when identifying damper motors. They mean that the identification has failed for some reason.

Remedy by correctly identifying the damper motor. Fault-trace according to the relevant information.

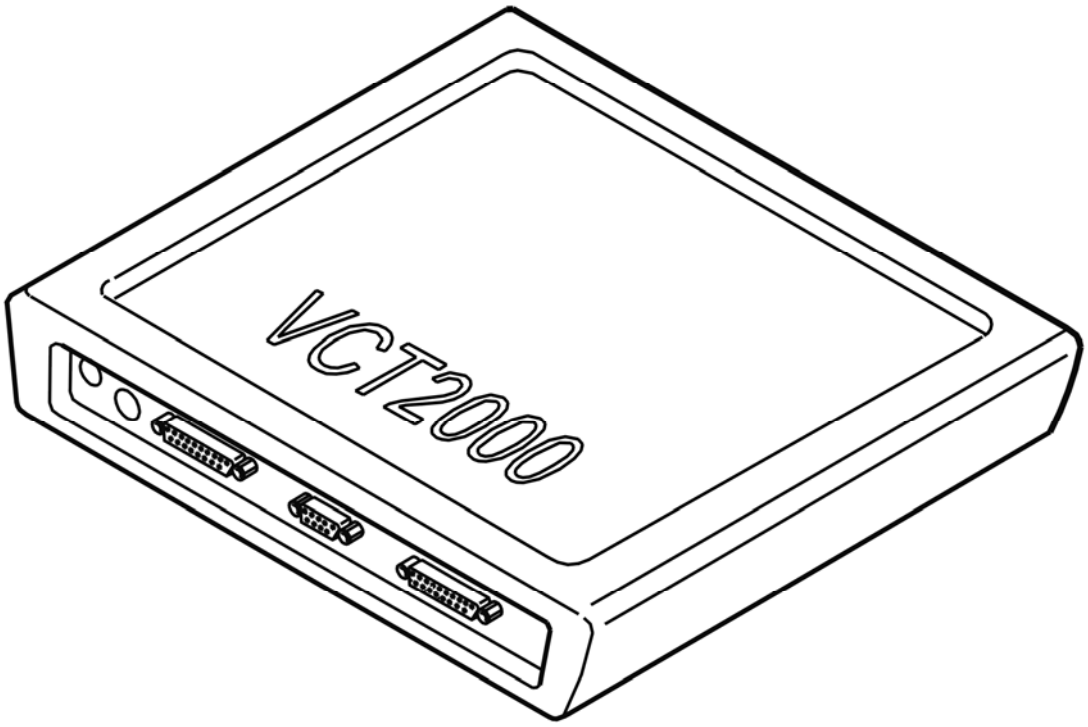

Fig. 145: Identifying VCT2000 Diagnostic Tool Symbol In VIDA
Courtesy of VOLVO CARS CORPORATION

Has the status of the diagnostic trouble code (DTC) changed?

- **YES**

  VERIFIED: Troubleshooting has been completed.

- **NO**

  Refer to **INFORMATION**

INFORMATION

FAULT-TRACING INFORMATION

The fault should have been detected and remedied. As this is not the case fault-tracing has failed.

Exit fault-tracing for this diagnostic trouble code (DTC) or make another attempt.

CCM-DD30: RIGHT-HAND SEAT HEATER. NO COMMUNICATION (2005-

2012)

DIAGNOSTIC TROUBLE CODE (DTC) INFORMATION CCM-DD30

Condition

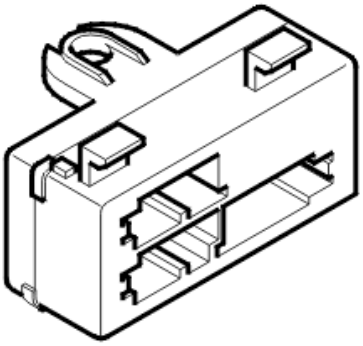

Fig. 146: Identifying Left Seat Heating Module (SHM)
Courtesy of VOLVO CARS CORPORATION

The diagnostic trouble code (DTC) is stored if the climate control module (CCM) detects an open-circuit in the communication between the right-hand seat heater and the climate control module (CCM) on LIN bus 2.

The diagnostic trouble code (DTC) may occur together with diagnostic trouble codes (DTCs) for other components on LIN bus 2 (CCM-DD30 - CCM-DD34) depending on where the open-circuit has occurred.

The diagnostic trouble code (DTC) can be diagnosed at ignition switch position II.

The diagnostic trouble code (DTC) can only be diagnosed for the climate control module (CCM) when seat heating is installed in the car.

Substitute Value

- None.

Possible Source

- Open-circuit on LIN bus 2 between the climate control module (CCM) and the right-hand seat heating module (SHM)
- Contact resistance, oxidation or loose connections in the connectors.

Fault symptom[s]

- The front seat heating does not function.

NO COMMUNICATION

CHECKING THE DIAGNOSTIC TROUBLE CODES (DTCS)

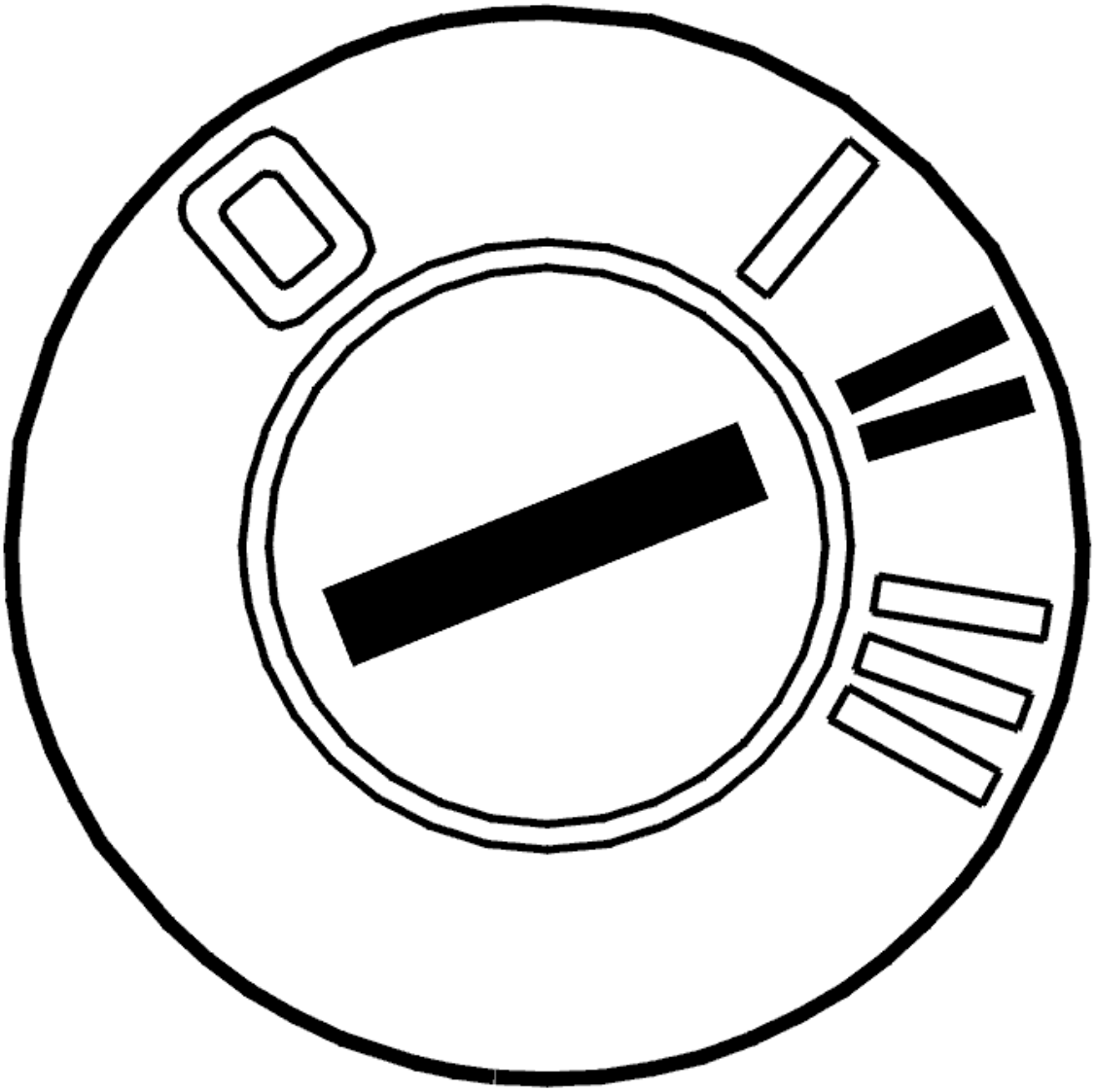

Fig. 147: Identifying Ignition ON
Courtesy of VOLVO CARS CORPORATION

- Ignition on.

  Check that the fuse for the Seat heating module (SHM) is intact.

  The diagnostic trouble code (DTC) may occur together with diagnostic trouble codes (DTCs) for other components that communicate with the climate control module (CCM) via LIN bus 2.

  Check whether the diagnostic trouble code (DTC) has been stored together with other diagnostic trouble codes (DTCs) for other components on the climate control unit.

  Following options:

1. The diagnostic trouble code (DTC) is stored together with diagnostic trouble codes (DTCs) for components on LIN bus 2 (CCM-DD30-CCM-DD34). Refer to **CHECKING LIN BUS 2 AND CONNECTOR**
2. The diagnostic trouble code (DTC) is not stored together with diagnostic trouble codes (DTCs) for other components on LIN bus 2. Refer to **CHECKING THE WIRING AND COMPONENT**

CHECKING LIN BUS 2 AND CONNECTOR

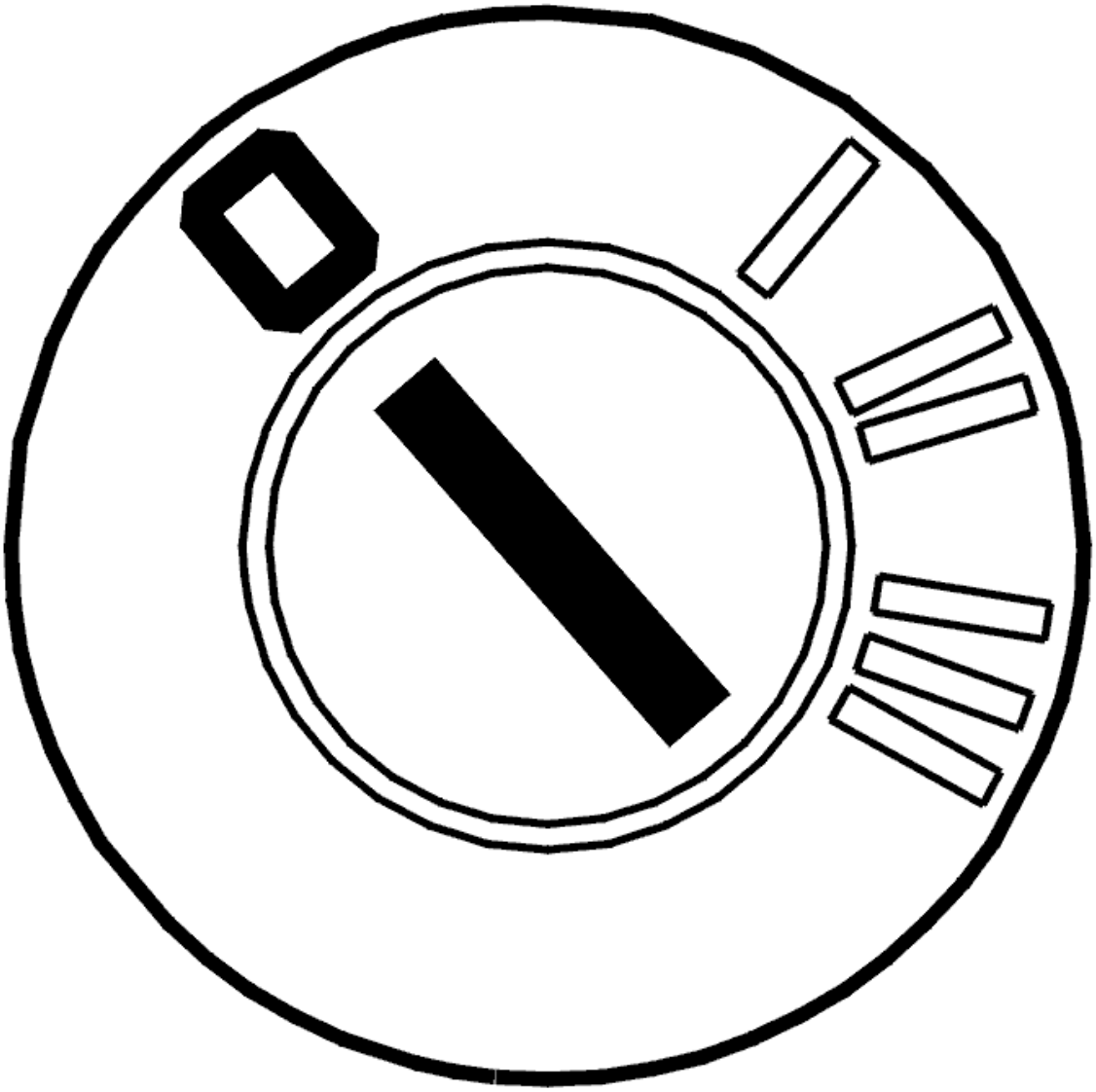

Fig. 148: Identifying Ignition OFF
Courtesy of VOLVO CARS CORPORATION

- Ignition off
- Disconnect the connector for the climate control module (CCM).

Check the climate control module (CCM) connector. Check for contact resistance. Check for oxidation.

Check for loose connections.

Check LIN bus 2 between the climate control module (CCM), the connector for the climate control unit and the seat heating module (SHM) right. Check for an open-circuit.

Take readings between:

- The connector for climate control module (CCM) terminal #7 (#31) and the connector for climate control unit terminal #5
- The connector for the climate control module (CCM) terminal #7 (#31) and connector A for the seat heating module (SHM) right terminal #2.

Remedy as necessary.

Other information:

- For further information about the connectors, fuses and relays, see the appropriate service information.
- see **SIGNAL TOO LOW**
- see **SIGNAL SPECIFICATION**
- see **CLIMATE CONTROL, LOCATION OF COMPONENTS**
- see **CLIMATE CONTROL MODULE (CCM), REPLACING**
- see **SEAT HEATING MODULE (SHM), REPLACING**
- see **CHECKING WIRING AND TERMINALS**

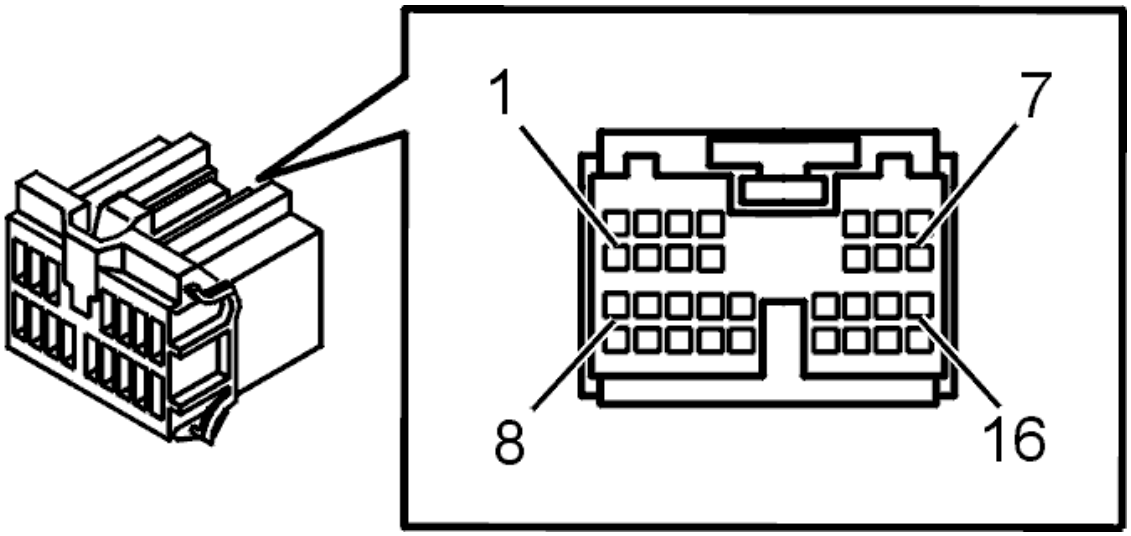

Fig. 149: Connector, Green (16- Pin)
Courtesy of VOLVO CARS CORPORATION

- **Continue**

Refer to **VERIFICATION**

CHECKING THE WIRING AND COMPONENT

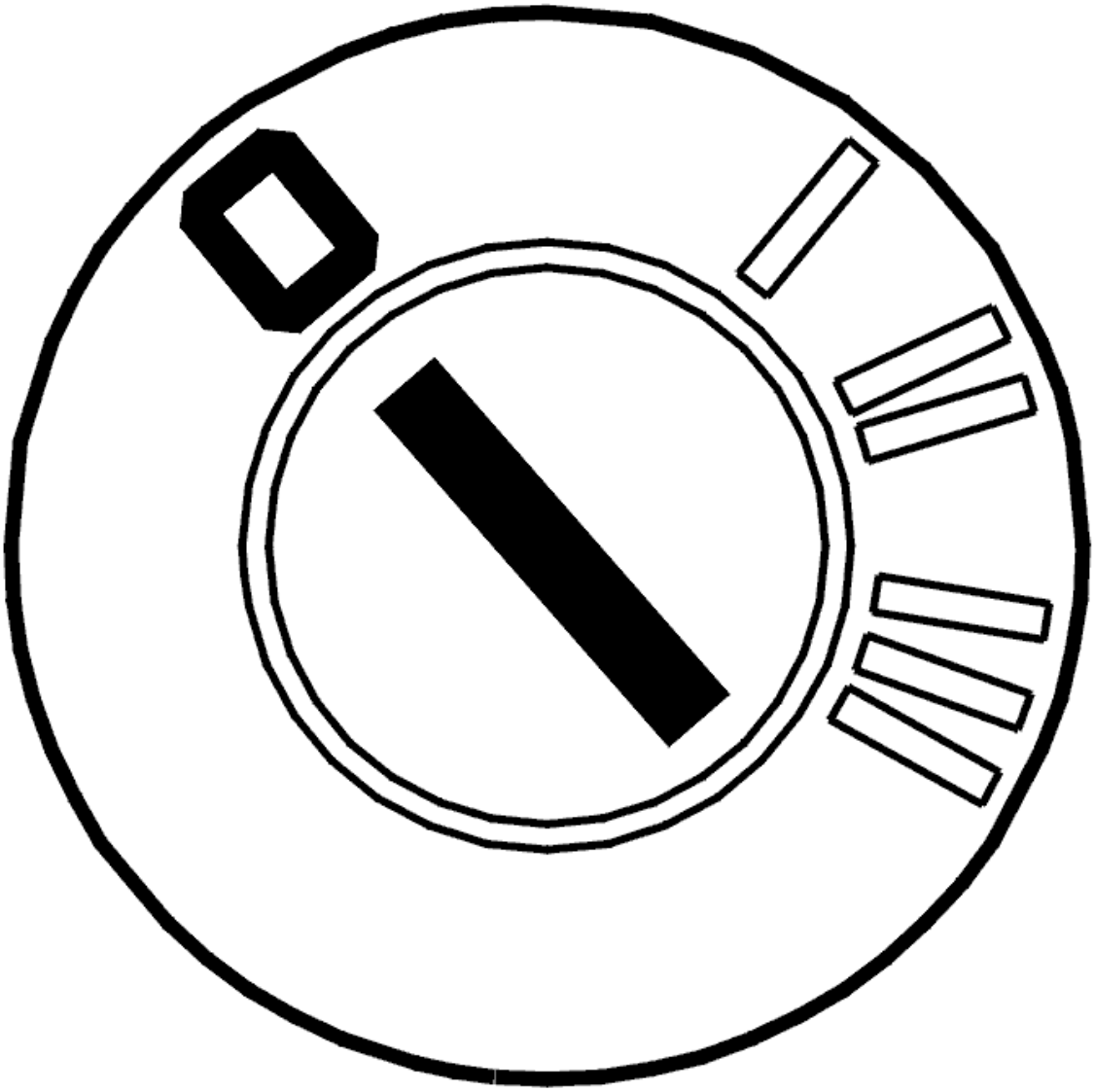

Fig. 150: Identifying Ignition OFF
Courtesy of VOLVO CARS CORPORATION

- Ignition off
- Disconnect connector A for the seat heating module (SHM) right.

  Check connector A for the seat heating module (SHM). Check for contact resistance. Check for oxidation. Check for loose connections.

  Check that the seat heating module (SHM) is connected to power supply and ground.

  Measure the voltage at connector A between terminals #1 and #4.

  Check LIN bus 2 by taking a reading between connector A for seat heating module (SHM) terminal #2

and the connector for climate control module (CCM) terminal A#7 (#31). Check for an open-circuit.

Try replacing the seat heating module (SHM) if no fault is found.

Remedy as necessary.

Other information:

- For further information about the connectors, fuses and relays, see the appropriate service information.
- see **CONNECTING THE BREAKOUT BOX**
- see **SIGNAL SPECIFICATION**
- see **CLIMATE CONTROL, LOCATION OF COMPONENTS**
- see **CLIMATE CONTROL MODULE (CCM), REPLACING**
- see **SEAT HEATING MODULE (SHM), REPLACING**
- see **CHECKING WIRING AND TERMINALS**

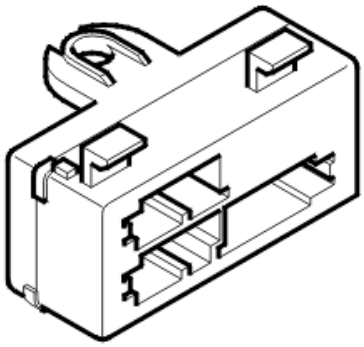

Fig. 151: Identifying Left Seat Heating Module (SHM)
Courtesy of VOLVO CARS CORPORATION

- **Continue**

  Refer to **VERIFICATION**

VERIFICATION

HINT: After carrying out the repair, check that the fault has been remedied.

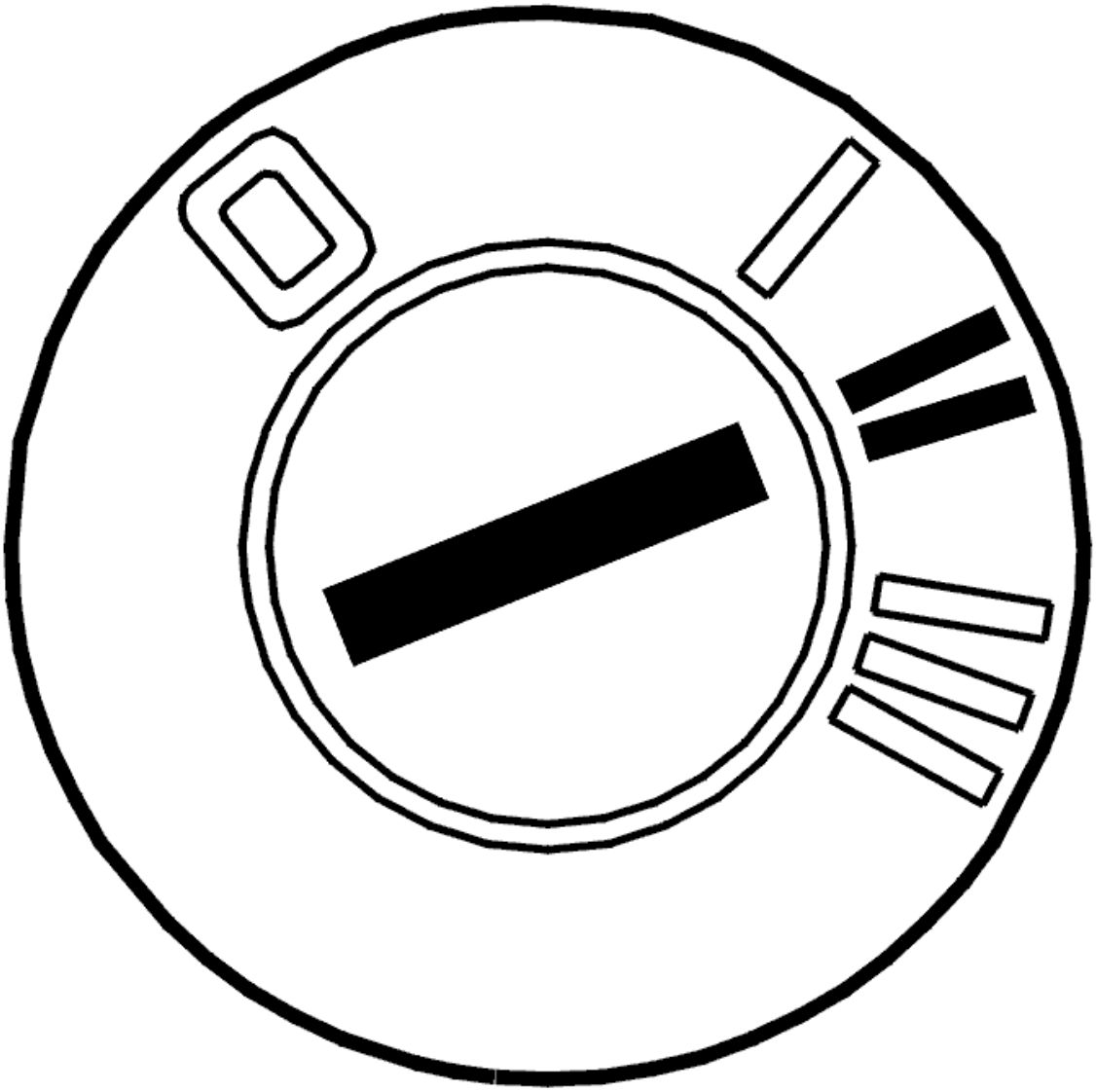

Fig. 152: Identifying Ignition ON
Courtesy of VOLVO CARS CORPORATION

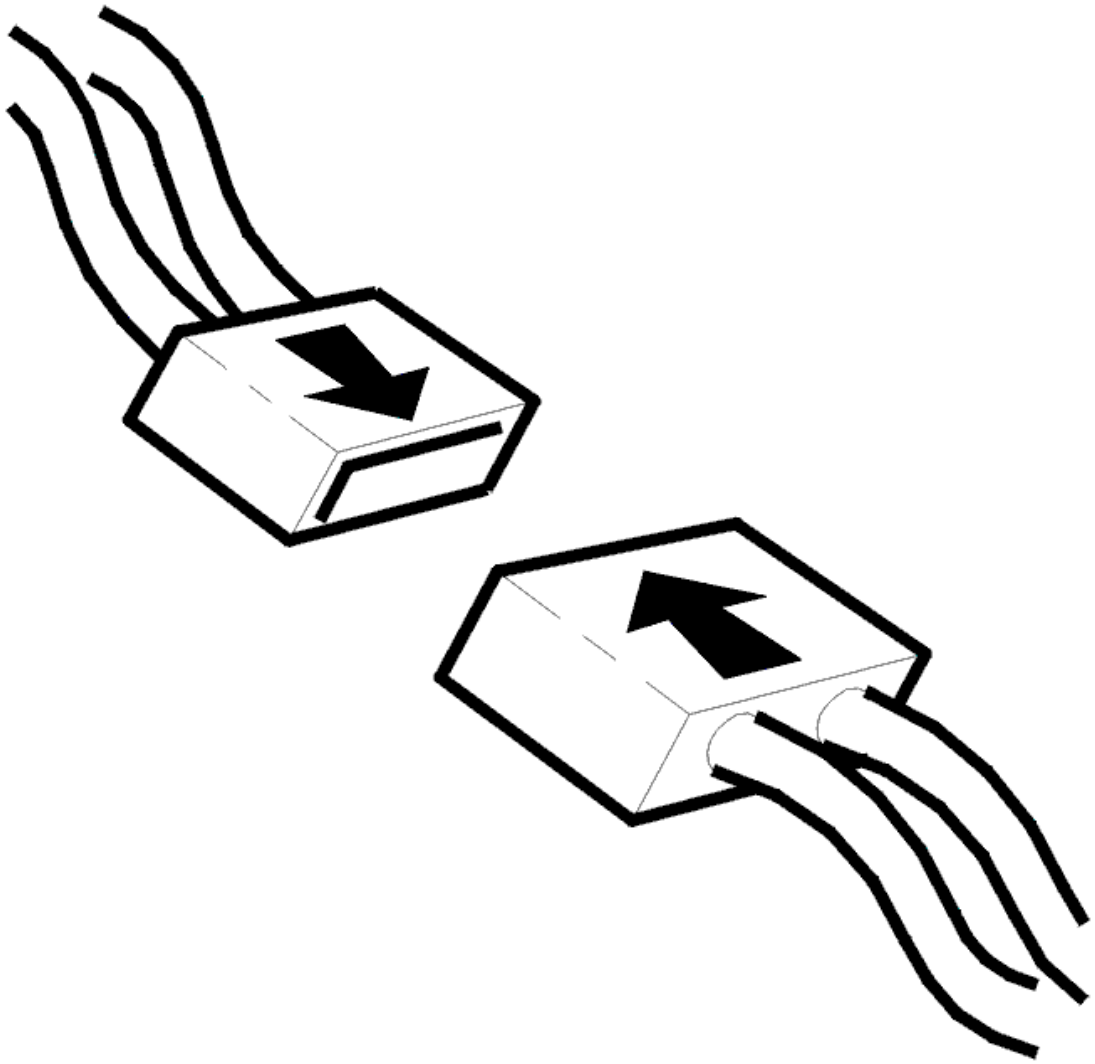

Fig. 153: Connecting Connector
Courtesy of VOLVO CARS CORPORATION

- Ignition off
- Reinstall the connectors, components etc.
- Ignition on.

  Check that the relevant diagnostic trouble code (DTC) has switched status from permanent to intermittent fault.

  Check also that diagnostic trouble code (DTC) CCM-0070, CCM-0071 CCM-0072 or CCM-0073 has not been stored during identification of the damper motors.

  These diagnostic trouble codes (DTCs) can only be stored when identifying damper motors. They mean that the identification has failed for some reason.

Remedy by correctly identifying the damper motor. Fault-trace according to the relevant information.

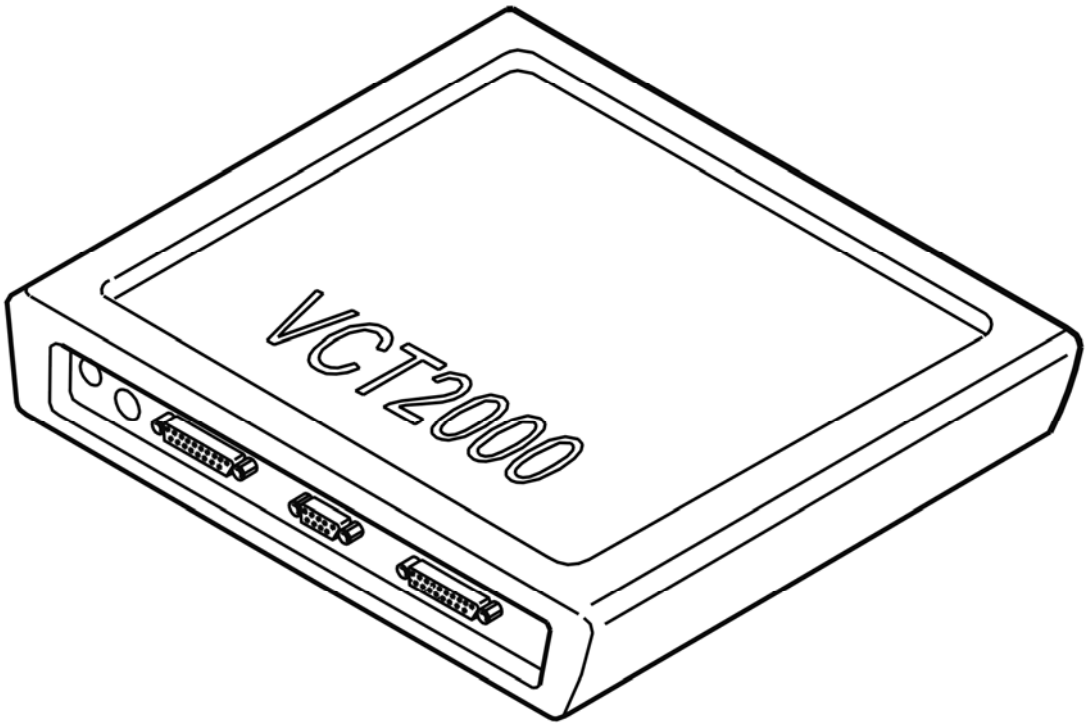

Fig. 154: Identifying VCT2000 Diagnostic Tool Symbol In VIDA
Courtesy of VOLVO CARS CORPORATION

Has the status of the diagnostic trouble code (DTC) changed?

- **YES**

  VERIFIED: Troubleshooting has been completed.

- **NO**

  Refer to **INFORMATION**

INFORMATION

FAULT-TRACING INFORMATION

The fault should have been detected and remedied. As this is not the case fault-tracing has failed.

Exit fault-tracing for this diagnostic trouble code (DTC) or make another attempt.

CCM-DD31: RECIRCULATION DAMPER MOTOR. NO COMMUNICATION

(2005-2012)

DIAGNOSTIC TROUBLE CODE (DTC) INFORMATION CCM-DD31

Condition

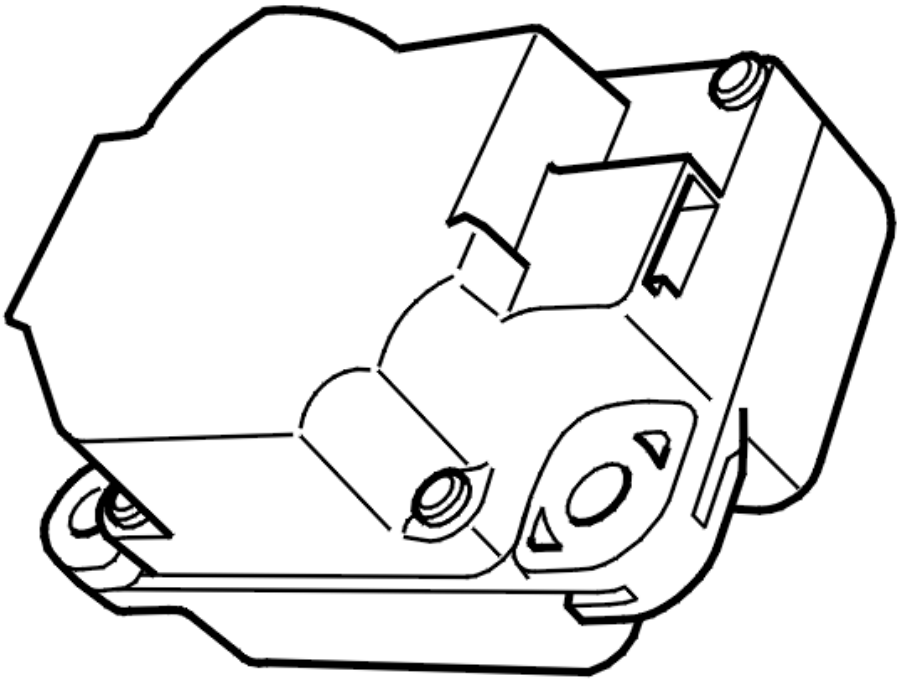

Fig. 155: Identifying Damper Motor Module (DMM)
Courtesy of VOLVO CARS CORPORATION

The diagnostic trouble code (DTC) is stored if the climate control module (CCM) detects an open-circuit in the communication between the damper motor recirculation and the climate control module (CCM) on LIN bus 2.

The diagnostic trouble code (DTC) may occur together with diagnostic trouble codes (DTCs) for other components on LIN bus 2 (CCM-DD30 - CCM-DD34) depending on where the open-circuit has occurred.

The diagnostic trouble code (DTC) can be diagnosed at ignition switch position II.

Substitute Value

- None.

Possible Source

- Open-circuit on LIN bus 2 between the climate control module (CCM) and the damper motor module (DMM) recirculation
- Contact resistance, oxidation or loose connections in the connectors.

Fault symptom[s]

- No recirculation.

NO COMMUNICATION

CHECKING THE DIAGNOSTIC TROUBLE CODES (DTCS)

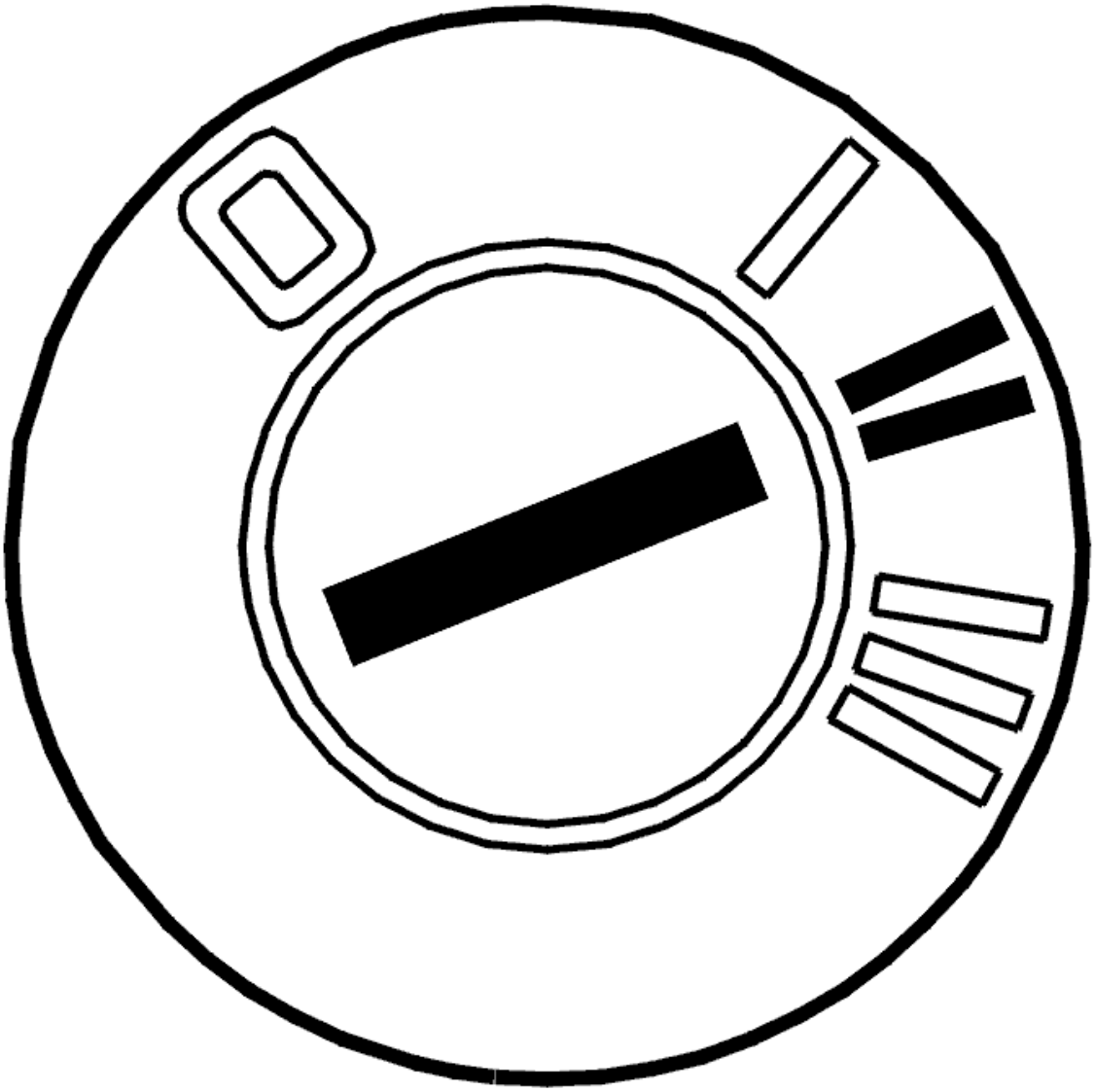

Fig. 156: Identifying Ignition ON
Courtesy of VOLVO CARS CORPORATION

- Ignition on.

  The diagnostic trouble code (DTC) may occur together with diagnostic trouble codes (DTCs) for other components that communicate with the climate control module (CCM) via LIN bus 1 and LIN bus 2.

  Check whether the diagnostic trouble code (DTC) has been stored together with other diagnostic trouble codes (DTCs) for other components on the climate control unit.

  Following options:

  1. The diagnostic trouble code (DTC) is stored together with diagnostic trouble codes (DTCs) for components in both LIN bus 1 and LIN bus 2 (CCM-DD10 - CCM-DD16, CCM-DD30 - CCM-DD34). Refer to **CHECKING THE CONNECTORS AND WIRING**.
  2. The diagnostic trouble code (DTC) is together with diagnostic trouble codes (DTCs) for components only on LIN bus 2 (CCM-DD30-CCM-DD34). Refer to **CHECKING LIN BUS 2 AND CONNECTOR**.
  3. The diagnostic trouble code (DTC) is not together with diagnostic trouble codes (DTCs) for other components on LIN bus 1 and LIN bus 2. Refer to **CHECKING THE WIRING AND COMPONENT**.

CHECKING THE CONNECTORS AND WIRING

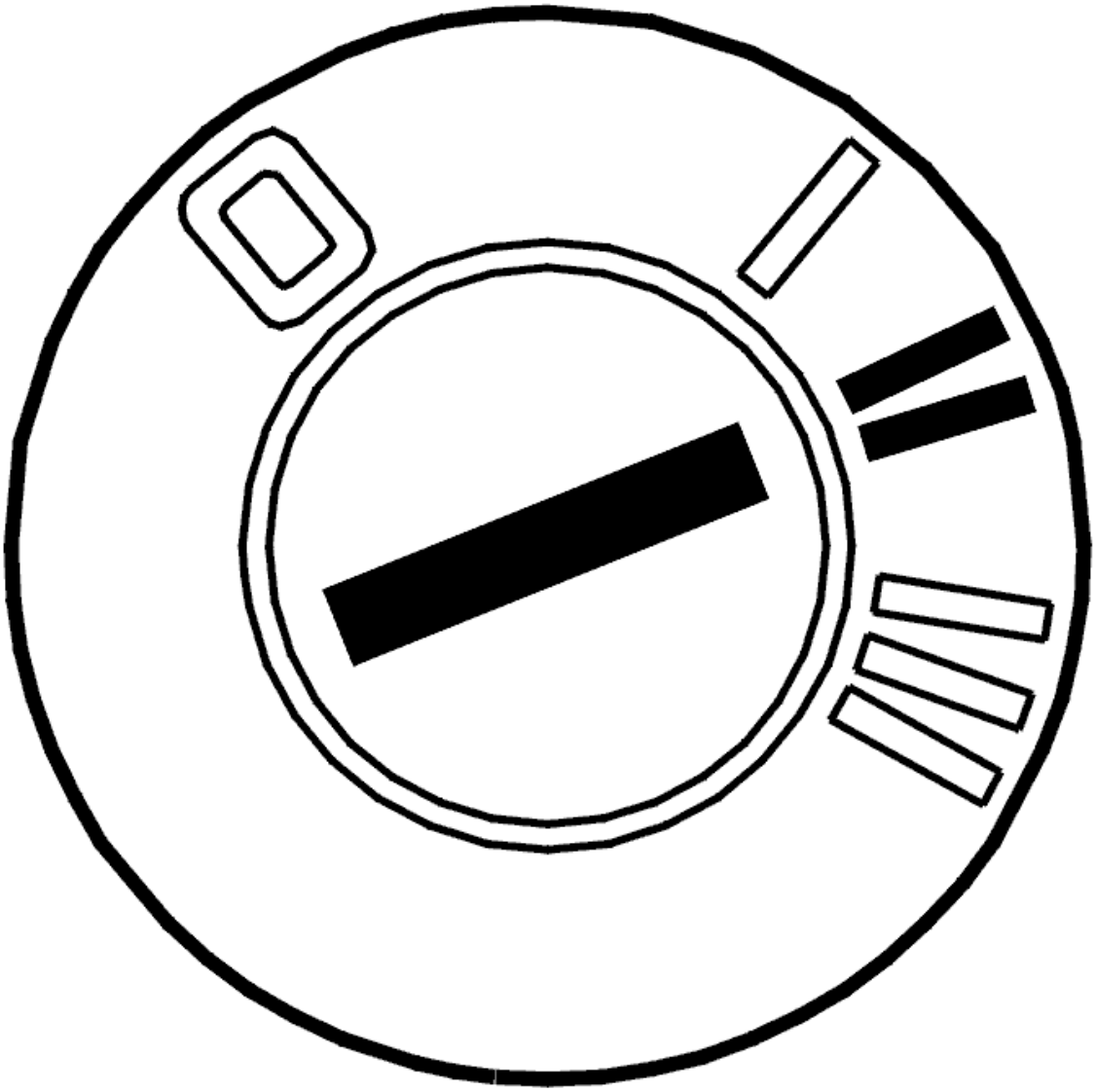

Fig. 157: Identifying Ignition ON
Courtesy of VOLVO CARS CORPORATION

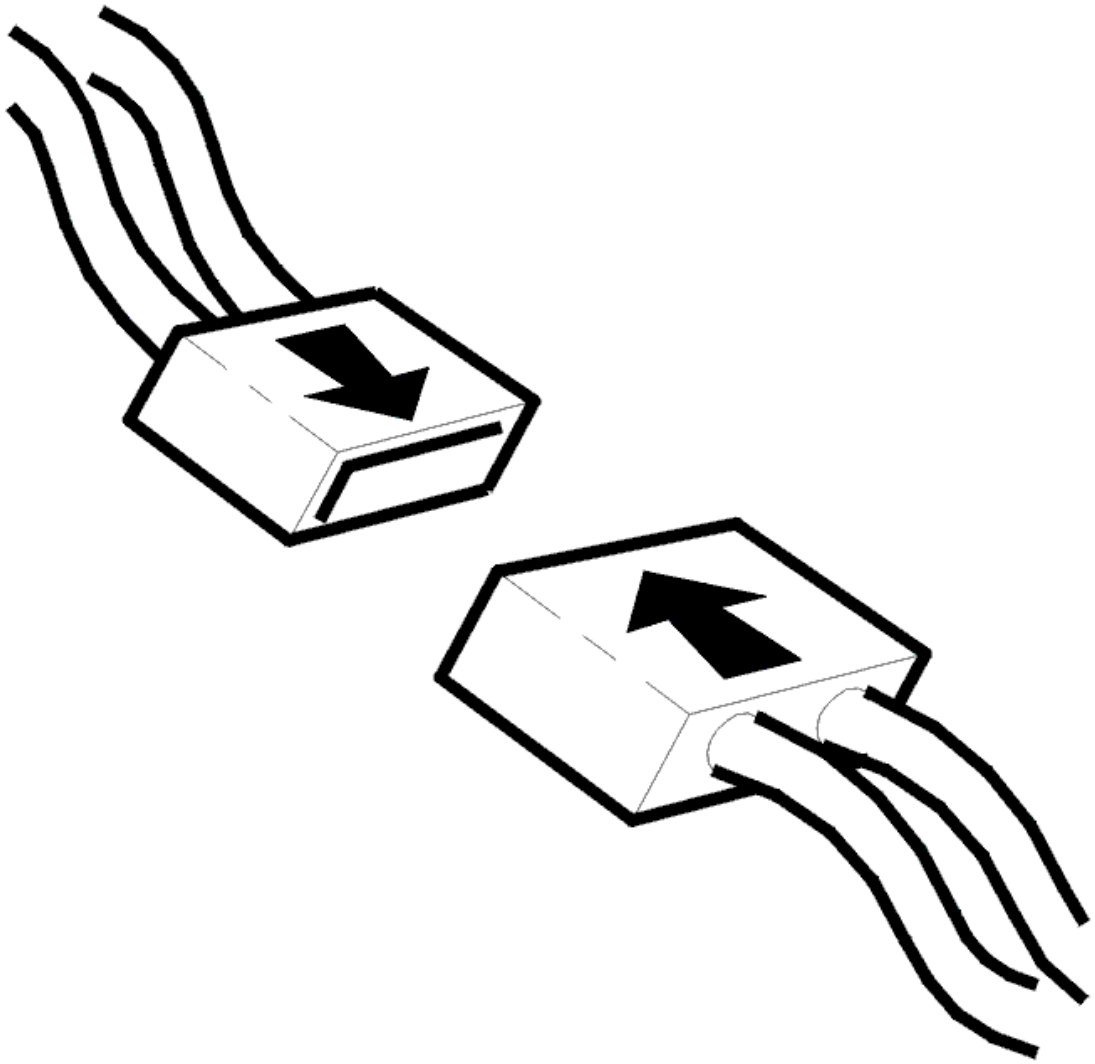

Fig. 158: Connecting Connector
Courtesy of VOLVO CARS CORPORATION

- Ignition off
- Disconnect the connector for the climate control module (CCM)
- Disconnect the connector for the central electronic module (CEM)
- Ignition on.

Checking the power supply and ground terminals

The following applies to components on the climate control unit that communicate with the climate control module (CCM) via LIN bus 1 and LIN bus 2:

- All components are jointly powered via a fuse from the central electronic module (CEM)
- All components are grounded via a common ground terminal.

Check the power supply to the components on the climate control unit by taking a reading on connector A for the central electronic module (CEM) between terminal #A44 (C44) and chassis ground.

Also check the fuse on the central electronic module (CEM).

Check the power supply cable between the central electronic module (CEM) and the connector for the climate control unit. Check for an open-circuit. Measure between terminal #1 on the connector for the climate control unit and chassis ground.

Check the ground terminal for the components on the climate control unit. Measure between the connector for climate control unit terminal #6 and chassis ground.

Check the connector for the climate control unit and connector A for the central electronic module (CEM). Check for contact resistance. Check for oxidation. Check for loose connections.

Checking LIN bus

Check both LIN bus 1 and LIN bus 2. Check for an open-circuit.

Take readings between:

- The connector for climate control module (CCM) terminal #12 (#36) and the connector for climate control unit terminal #2
- The connector for climate control module (CCM) terminal #7 (#31) and the connector for climate control unit terminal #5.

Check the wiring between the connector and the components on the climate control unit. Check for an open-circuit.

Remedy as necessary.

Other information:

- For further information about the connectors, fuses and relays, see the appropriate service information.
- To connect the breakout box to the climate control module (CCM), see: **CONNECTING THE BREAKOUT BOX**
- To connect the breakout box, central electronic module (CEM), see: **CONNECTING THE BREAKOUT BOX**
- see **SIGNAL SPECIFICATION**
- see **CLIMATE CONTROL, LOCATION OF COMPONENTS**
- see **CLIMATE CONTROL MODULE (CCM), REPLACING**
- For -2004, see **CENTRAL ELECTRONIC MODULE (CEM), REPLACING** . For 2005-, see **CENTRAL ELECTRONIC MODULE (CEM), REPLACING**
- see **CONTENTS**

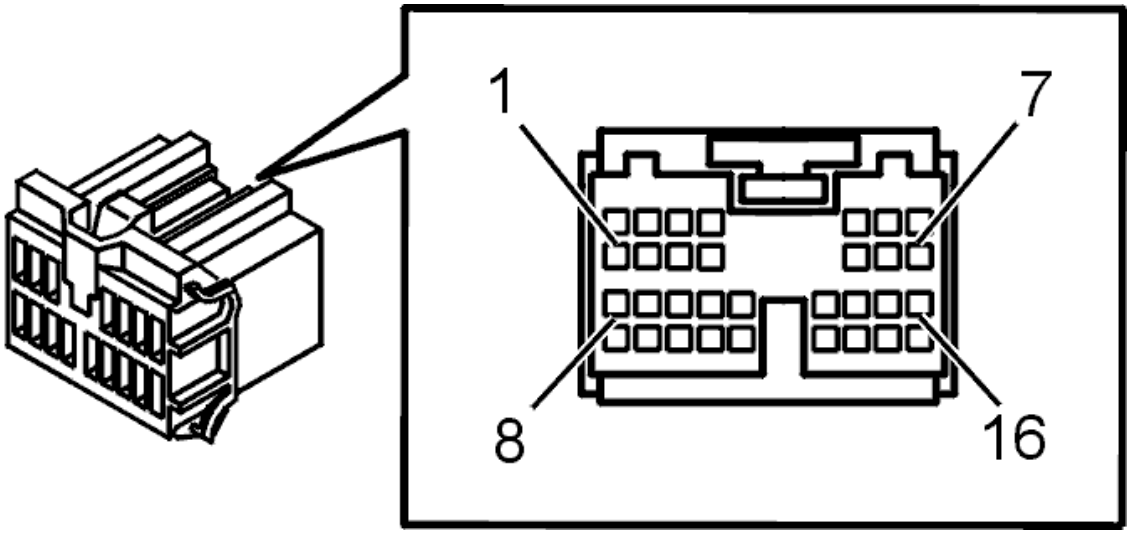

Fig. 159: Connector, Green (16- Pin)
Courtesy of VOLVO CARS CORPORATION

- **Continue**

  Refer to **VERIFICATION**

CHECKING LIN BUS 2 AND CONNECTOR

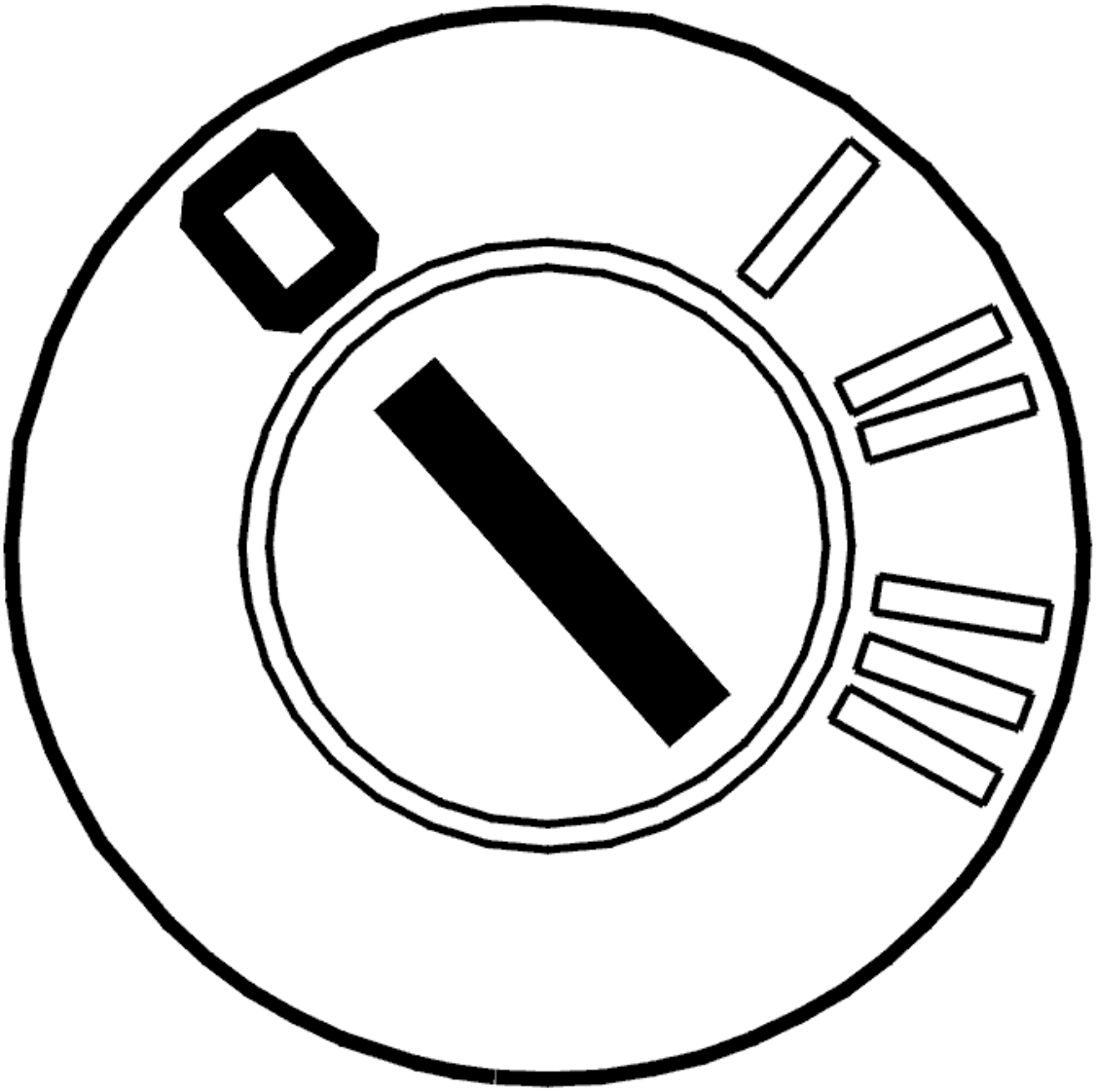

Fig. 160: Identifying Ignition OFF
Courtesy of VOLVO CARS CORPORATION

- Ignition off
- Disconnect the connector for the climate control module (CCM).

  Check the climate control module (CCM) connector. Check for contact resistance. Check for oxidation. Check for loose connections.

  Check LIN bus 2 between the climate control module (CCM), the connector for the climate control unit and the seat heating module (SHM) right. Check for an open-circuit.

  Take readings between:

  - The connector for climate control module (CCM) terminal #7 (#31) and the connector for climate control unit terminal #5

- The connector for the climate control module (CCM) terminal #7 (#31) and connector A for the seat heating module (SHM) right terminal #2.

Check LIN bus 2 between the components (the damper motors and the air quality sensor (AQS) and the connector for the climate control unit. Check for an open-circuit.

Check the connector for the climate control unit. Check for contact resistance. Check for oxidation. Check for loose connections.

Remedy as necessary.

Other information:

- For further information about the connectors, fuses and relays, see the appropriate service information.
- see **CONNECTING THE BREAKOUT BOX**
- see **SIGNAL SPECIFICATION**
- see **CLIMATE CONTROL, LOCATION OF COMPONENTS**
- see **CLIMATE CONTROL MODULE (CCM), REPLACING**
- see **SEAT HEATING MODULE (SHM), REPLACING**
- see **CONTENTS**

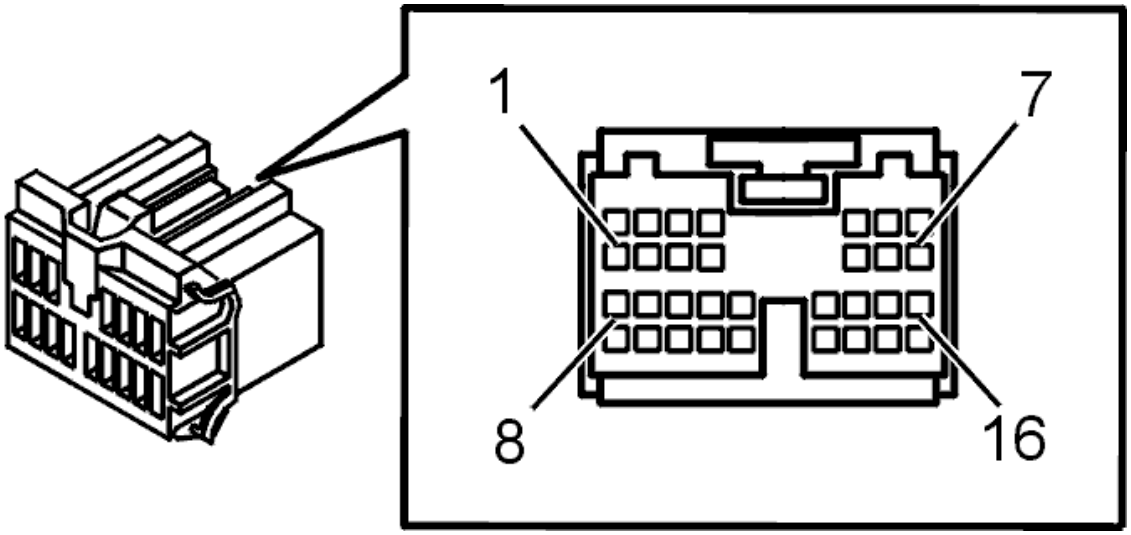

Fig. 161: Connector, Green (16- Pin)
Courtesy of VOLVO CARS CORPORATION

- **Continue**

Refer to **VERIFICATION**

CHECKING THE WIRING AND COMPONENT

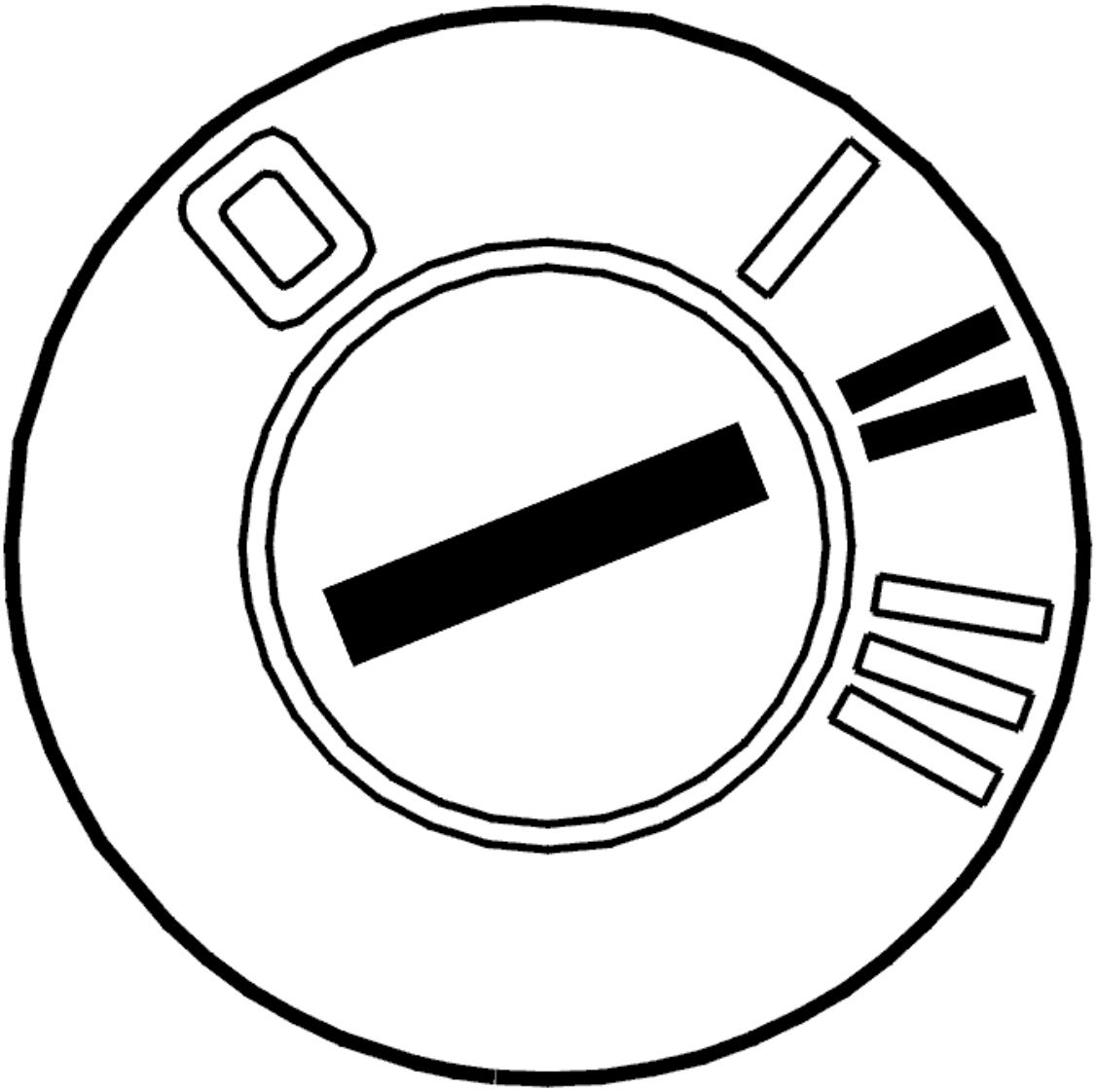

Fig. 162: Identifying Ignition ON
Courtesy of VOLVO CARS CORPORATION

- Ignition off
- Disconnect the connector for the damper motor module (DMM) for recirculation
- Ignition on.

  Check the connector. Check for contact resistance. Check for oxidation. Check for loose connections.

  Check that the damper motor module (DMM) is connected to power supply and ground.

  Measure the voltage on the connector for the damper motor module (DMM) between terminals #1 and #3

  Check LIN bus 2 by taking a reading between the damper motor module (DMM) connector terminal #2 and the connector for the climate control unit terminal #5. Check for an open-circuit.

Try replacing the damper motor module (DMM) if no fault is found.

Remedy as necessary.

Other information:

- For further information about the connectors, fuses and relays, see the appropriate service information.
- see **CONNECTING THE BREAKOUT BOX**
- see **SIGNAL SPECIFICATION**
- see **CLIMATE CONTROL, LOCATION OF COMPONENTS**
- see **CLIMATE CONTROL MODULE (CCM), REPLACING**
- For -2004, see **DAMPER MOTOR RECIRCULATION, REPLACING** . For 2005-, see **DAMPER MOTOR MODULE (DMM) RECIRCULATION, REPLACING**
- see **CONTENTS**

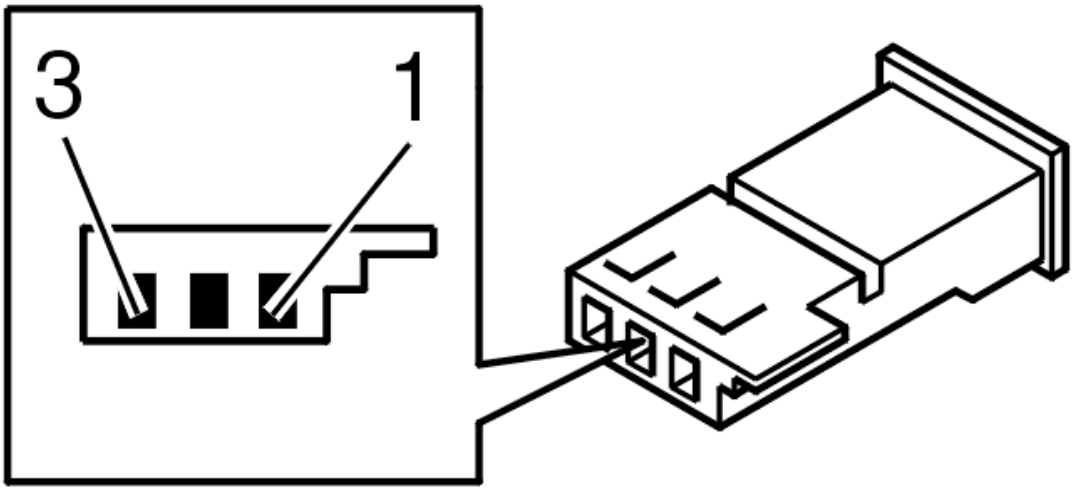

Fig. 163: Identifying Damper Motor Module (DMM) Connector Terminals
Courtesy of VOLVO CARS CORPORATION

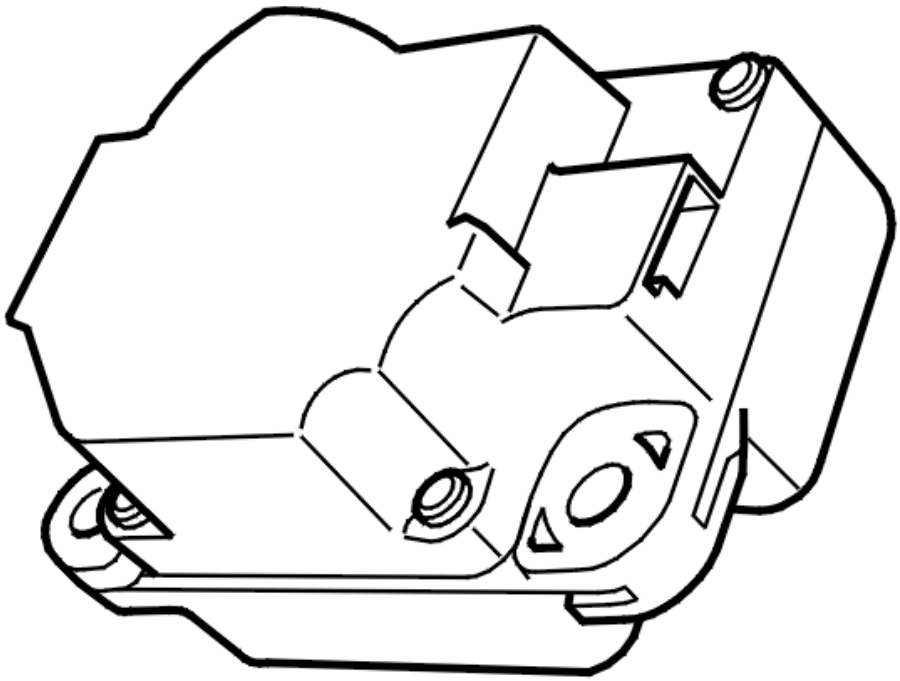

Fig. 164: Identifying Damper Motor Module (DMM)
Courtesy of VOLVO CARS CORPORATION

- **Continue**

  Refer to **VERIFICATION**

IDENTIFYING COMPONENTS ON THE LIN NETWORK THAT BELONG TO THE CLIMATE CONTROL SYSTEM (CCM)

INFORMATION

- The control module must be identified after replacing the Damper Motor Module (DMM).

NOTE: **Identification must only be carried out when replacing components on the LIN network that belong to the climate control system (CCM).**

Have any of the components on the LIN network been replaced?

- **YES**

  Refer to **IDENTIFYING COMPONENTS ON THE LIN NETWORK THAT BELONG TO THE CLIMATE CONTROL SYSTEM (CCM)**

- **NO**

  Refer to **VERIFICATION**

IDENTIFYING COMPONENTS ON THE LIN NETWORK THAT BELONG TO THE CLIMATE CONTROL SYSTEM (CCM)

HINT: When identifying damper motors, each damper motor must be run to its limit position. These operations can take up to 30 seconds. When identifying the damper motors it is important that a battery charger is connected.

Fig. 165: Checking Traffic Load On CAN Cables
Courtesy of VOLVO CARS CORPORATION

- Ignition off
- Reinstall the connectors, components etc.

NOTE: **Climate Control Module (CCM) and damper motors can be affected by the temperature. The vehicle should have normal room temperature when performing this service.**

Carry out identification as follows:

- Ignition on.
- Click on the VCT2000 (Volvo Scan Tool) symbol. Wait until identification has been carried out.
- Ignition off.

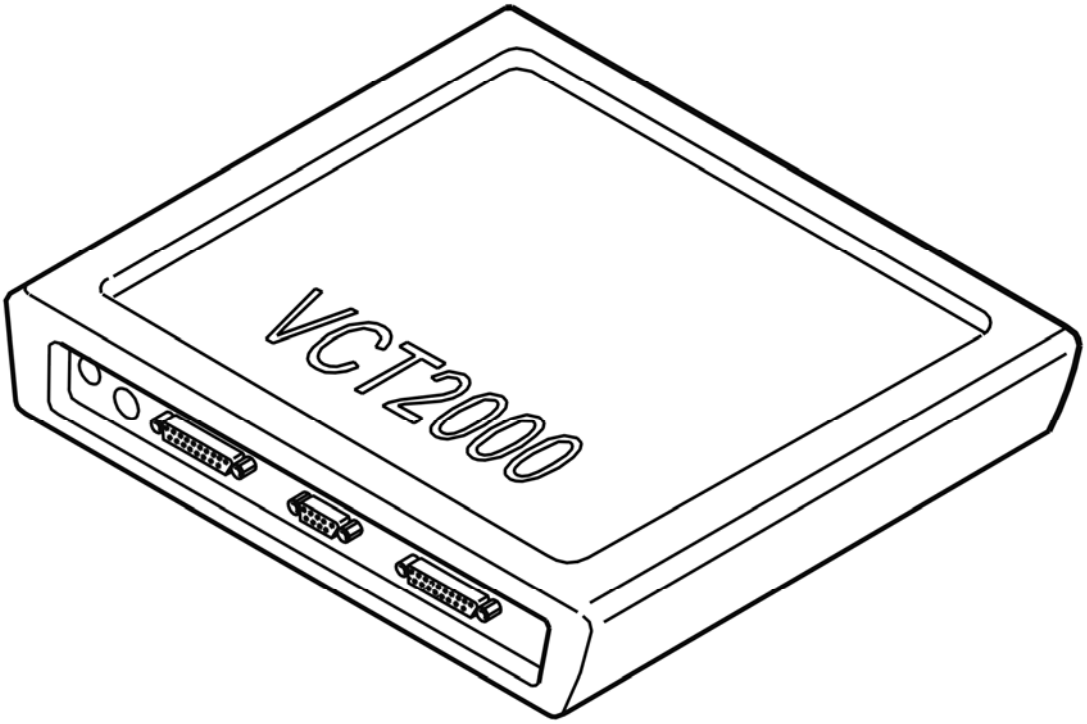

Fig. 166: Identifying VCT2000 Diagnostic Tool Symbol In VIDA
Courtesy of VOLVO CARS CORPORATION

- **Continue**

Refer to **CALIBRATING THE CLIMATE CONTROL MODULE (CCM)**

CALIBRATING THE CLIMATE CONTROL MODULE (CCM)

CAUTION: When activating this function, calibration of the Climate Control Module (CCM) starts. After carrying out calibration read off of the diagnostic trouble codes (DTCs) starts. To ensure that diagnostics for the Climate Control Module (CCM) have been carried out, delay for 30 seconds before reading out diagnostic trouble codes (DTCs) after calibration.

NOTE: Climate Control Module (CCM) and damper motors can be affected by the temperature. The vehicle should have normal room temperature when performing this service.

Fig. 167: Checking Traffic Load On CAN Cables
Courtesy of VOLVO CARS CORPORATION

Carry out calibration as follows:

- Ignition on.
- Click on the VCT2000 (Volvo Scan Tool) symbol. Wait until calibration has been carried out and diagnostic trouble codes (DTCs) read out.
- Ignition off.

This function controls the components that communicate with the Climate Control Module (CCM) via LIN bus 1 and LIN bus 2. In the event of a fault in any of the LIN buses, diagnostic trouble codes (DTCs) CCM-0070 to CCM-0071 will be stored depending on the fault. These diagnostic trouble codes (DTCs) can only be stored in conjunction with this diagnostic function.

If any of these diagnostic trouble codes (DTCs) recur, recalibrate to check if the problem was overcome. If the diagnostic trouble code (DTC) recurs, fault-trace the relevant diagnostic trouble code (DTC).

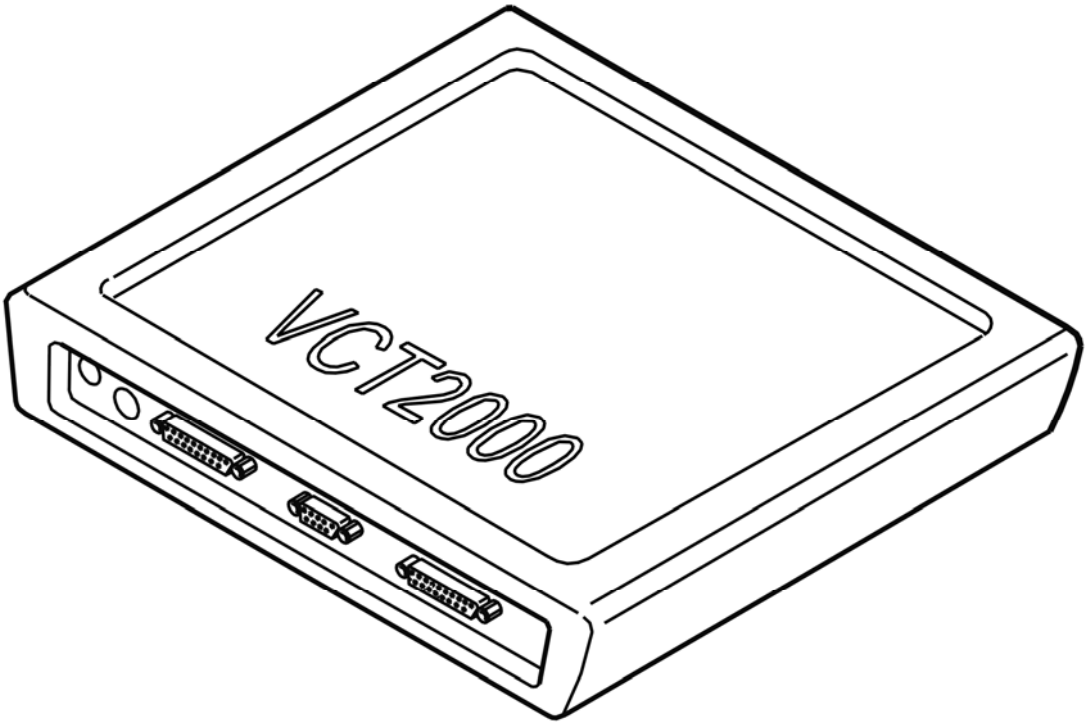

Fig. 168: Identifying VCT2000 Diagnostic Tool Symbol In VIDA
Courtesy of VOLVO CARS CORPORATION

- **Continue**

  Refer to **VERIFICATION**

VERIFICATION

HINT: After carrying out the repair, check that the fault has been remedied.

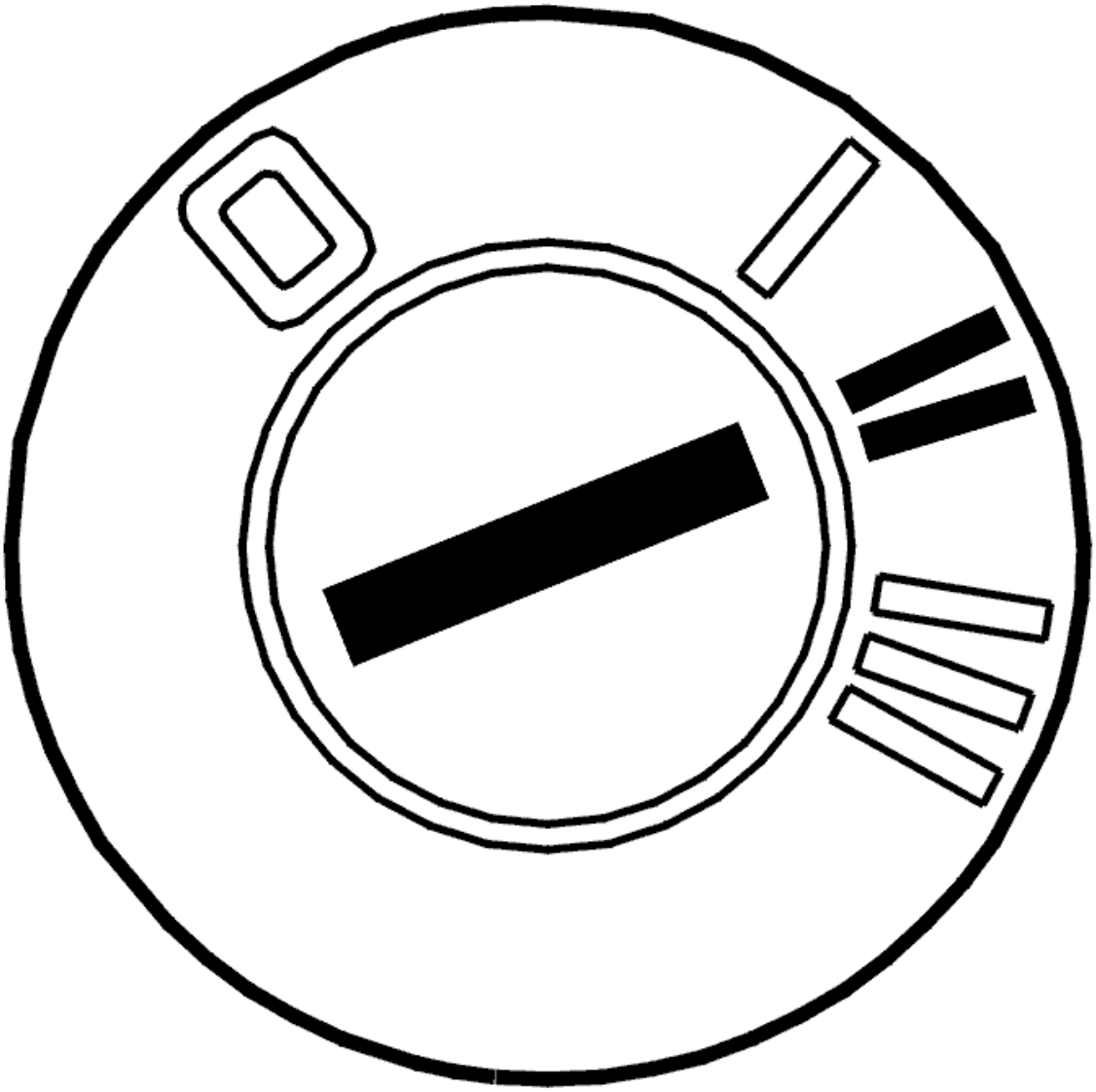

Fig. 169: Identifying Ignition ON
Courtesy of VOLVO CARS CORPORATION

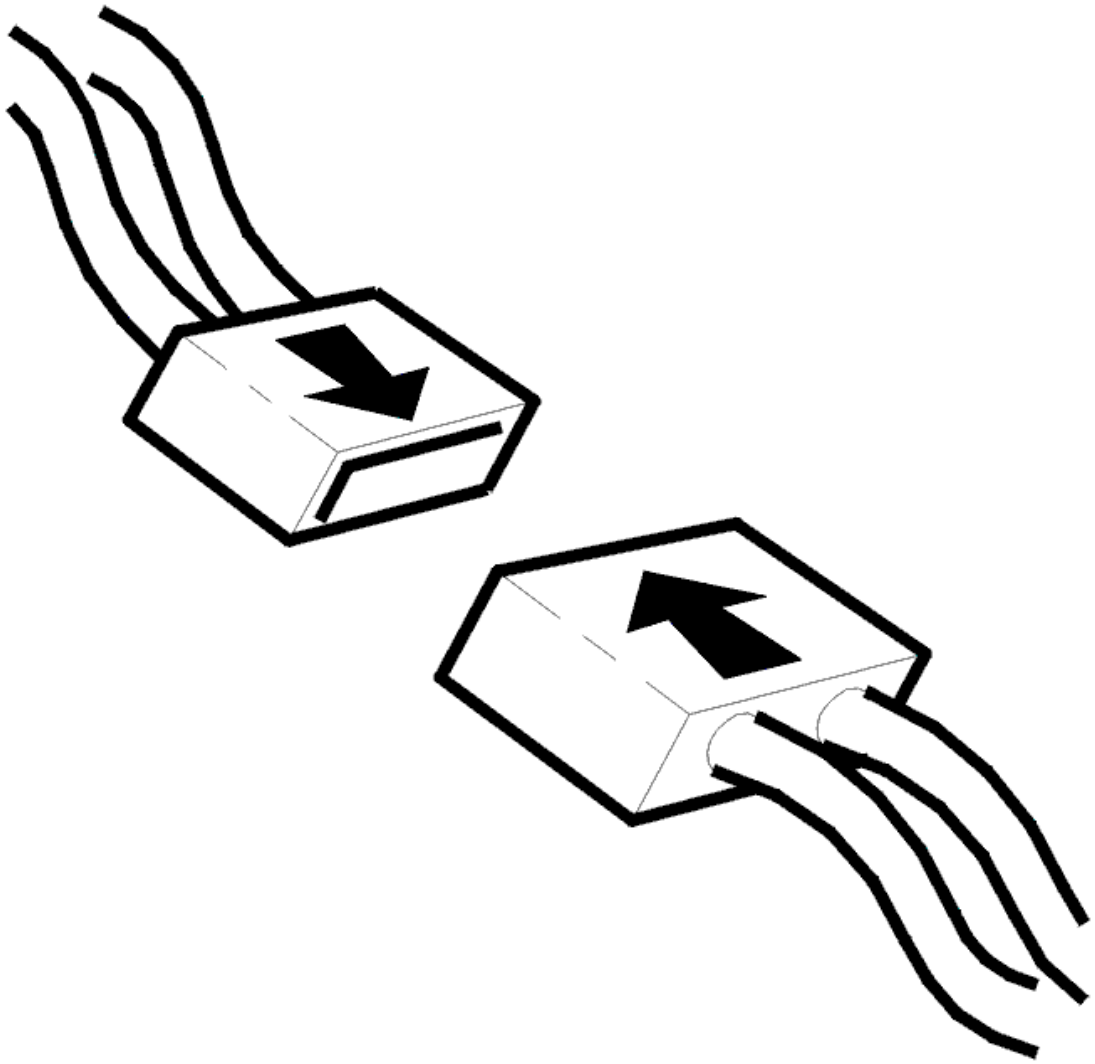

Fig. 170: Connecting Connector
Courtesy of VOLVO CARS CORPORATION

- Ignition off
- Reinstall the connectors, components etc.
- Ignition on.

  Check that the relevant diagnostic trouble code (DTC) has switched status from permanent to intermittent fault.

  Check also that diagnostic trouble code (DTC) CCM-0070, CCM-0071 CCM-0072 or CCM-0073 has not been stored during identification of the damper motors.

  These diagnostic trouble codes (DTCs) can only be stored when identifying damper motors. They mean that the identification has failed for some reason.

Remedy by correctly identifying the damper motor. Fault-trace according to the relevant information.

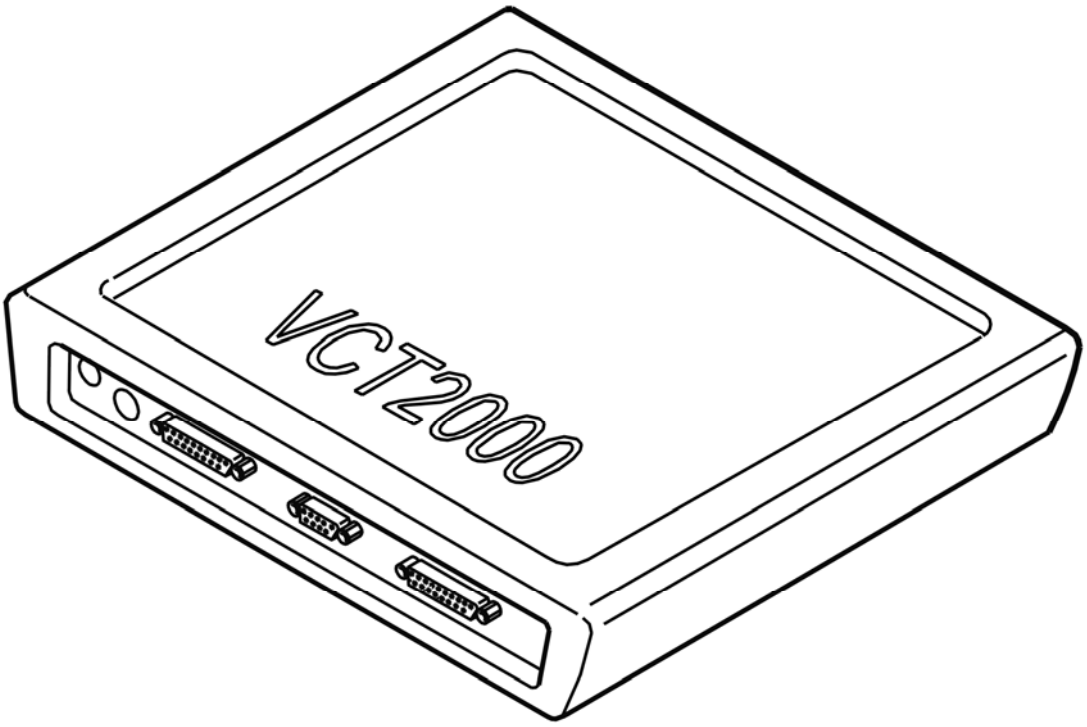

Fig. 171: Identifying VCT2000 Diagnostic Tool Symbol In VIDA
Courtesy of VOLVO CARS CORPORATION

Has the status of the diagnostic trouble code (DTC) changed?

- **YES**

  VERIFIED: Troubleshooting has been completed.

- **NO**

  Refer to **INFORMATION**

INFORMATION

FAULT-TRACING INFORMATION

The fault should have been detected and remedied. As this is not the case fault-tracing has failed.

Exit fault-tracing for this diagnostic trouble code (DTC) or make another attempt.

CCM-DD32: RIGHT TEMPERATURE DAMPER MOTOR. NO

COMMUNICATION (2005-2012)

DIAGNOSTIC TROUBLE CODE (DTC) INFORMATION CCM-DD32

Condition

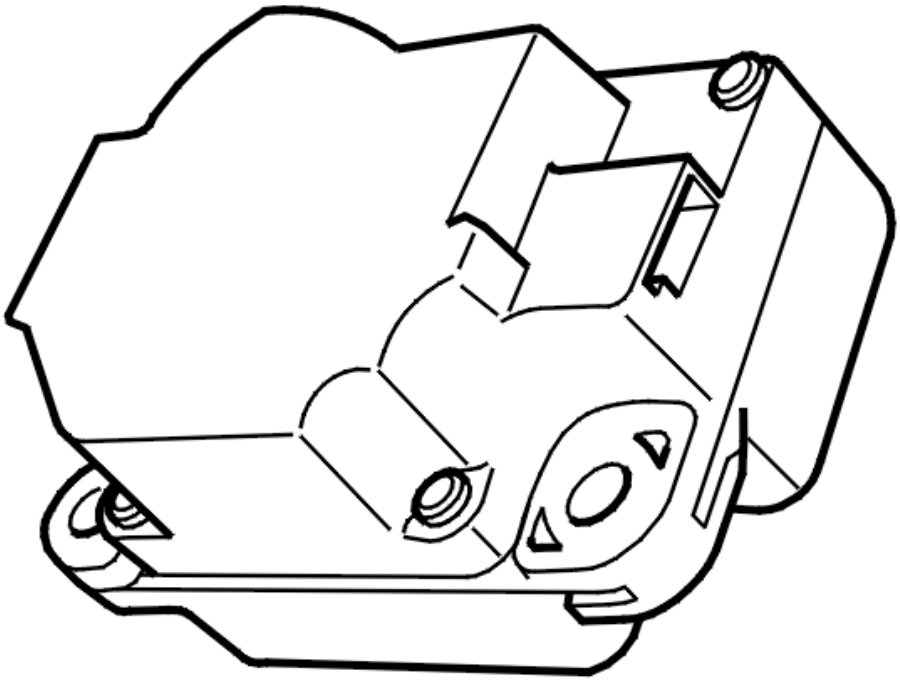

Fig. 172: Identifying Damper Motor Module (DMM)
Courtesy of VOLVO CARS CORPORATION

The diagnostic trouble code (DTC) is stored if the climate control module (CCM) detects an open-circuit in the communication between the climate control module (CCM) and the damper motor module (DMM) temperature right on LIN bus 2.

The diagnostic trouble code (DTC) may occur together with diagnostic trouble codes (DTCs) for other components on LIN bus 2 (CCM-DD30 - CCM-DD34) depending on where the open-circuit has occurred.

The diagnostic trouble code (DTC) can be diagnosed at ignition switch position II.

The diagnostic trouble code (DTC) can only be diagnosed for the electronic climate control module (CCM) (ECC).

Substitute Value

- None.

Possible Source

- Open-circuit on LIN bus 2 between the climate control module (CCM) and the damper motor module (DMM) temperature right
- Contact resistance, oxidation or loose connections in the connectors.

Fault symptom[s]

- The passenger compartment temperature does not correspond to the set position.

NO COMMUNICATION

CHECKING THE DIAGNOSTIC TROUBLE CODES (DTCS)

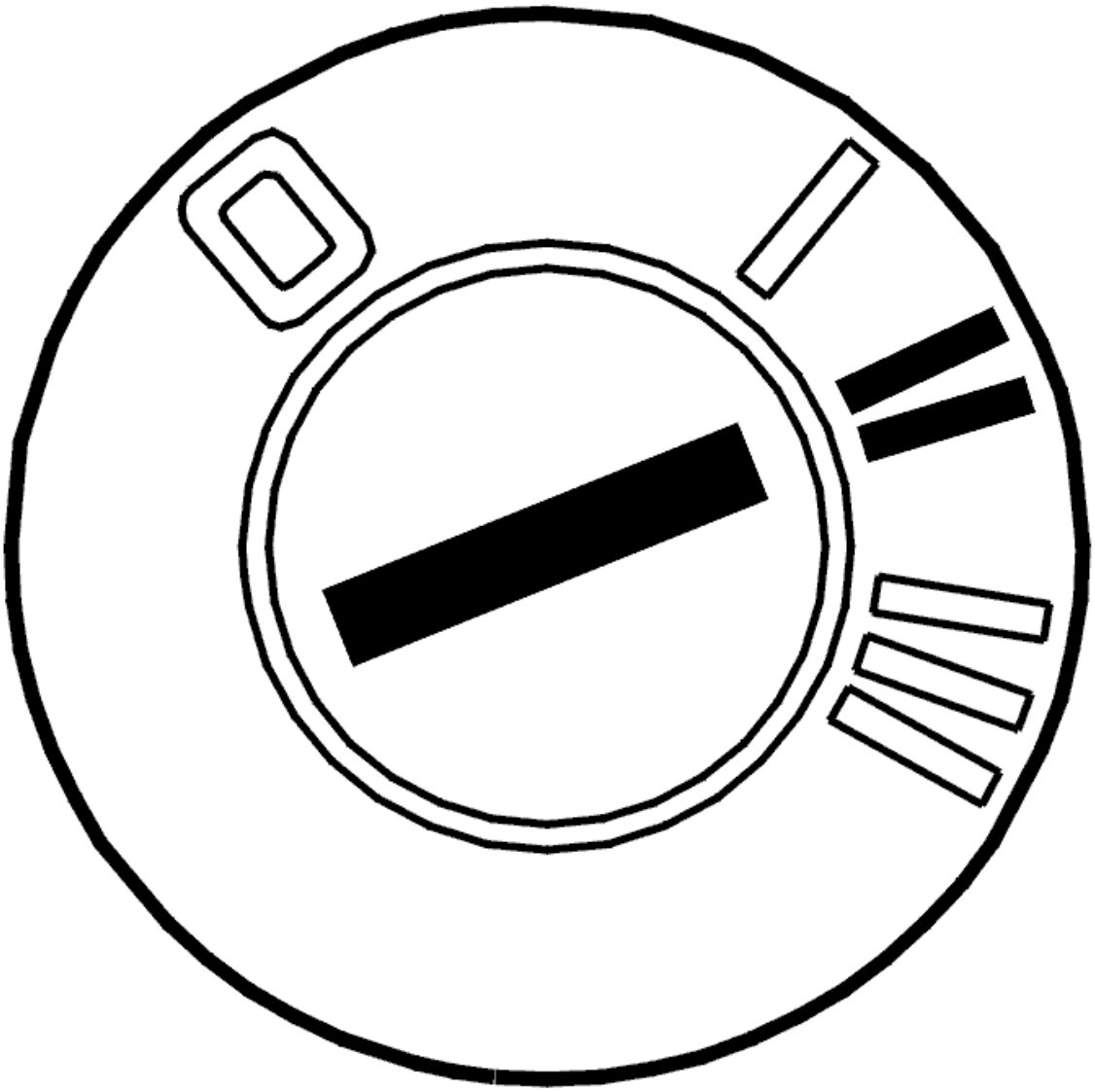

Fig. 173: Identifying Ignition ON
Courtesy of VOLVO CARS CORPORATION

- Ignition on.

  The diagnostic trouble code (DTC) may occur together with diagnostic trouble codes (DTCs) for other components that communicate with the climate control module (CCM) via LIN bus 1 and LIN bus 2.

  Check whether the diagnostic trouble code (DTC) has been stored together with other diagnostic trouble codes (DTCs) for other components on the climate control unit.

  Following options:

  1. The diagnostic trouble code (DTC) is stored together with diagnostic trouble codes (DTCs) for components in both LIN bus 1 and LIN bus 2 (CCM-DD10 - CCM-DD16, CCM-DD30 - CCM-DD34). Refer to **CHECKING THE CONNECTORS AND WIRING**.
  2. The diagnostic trouble code (DTC) is together with diagnostic trouble codes (DTCs) for components only on LIN bus 2 (CCM-DD30-CCM-DD34). Refer to **CHECKING LIN BUS 2 AND CONNECTOR**.
  3. The diagnostic trouble code (DTC) is not together with diagnostic trouble codes (DTCs) for other components on LIN bus 1 and LIN bus 2. Refer to **CHECKING THE WIRING AND COMPONENT**.

CHECKING THE CONNECTORS AND WIRING

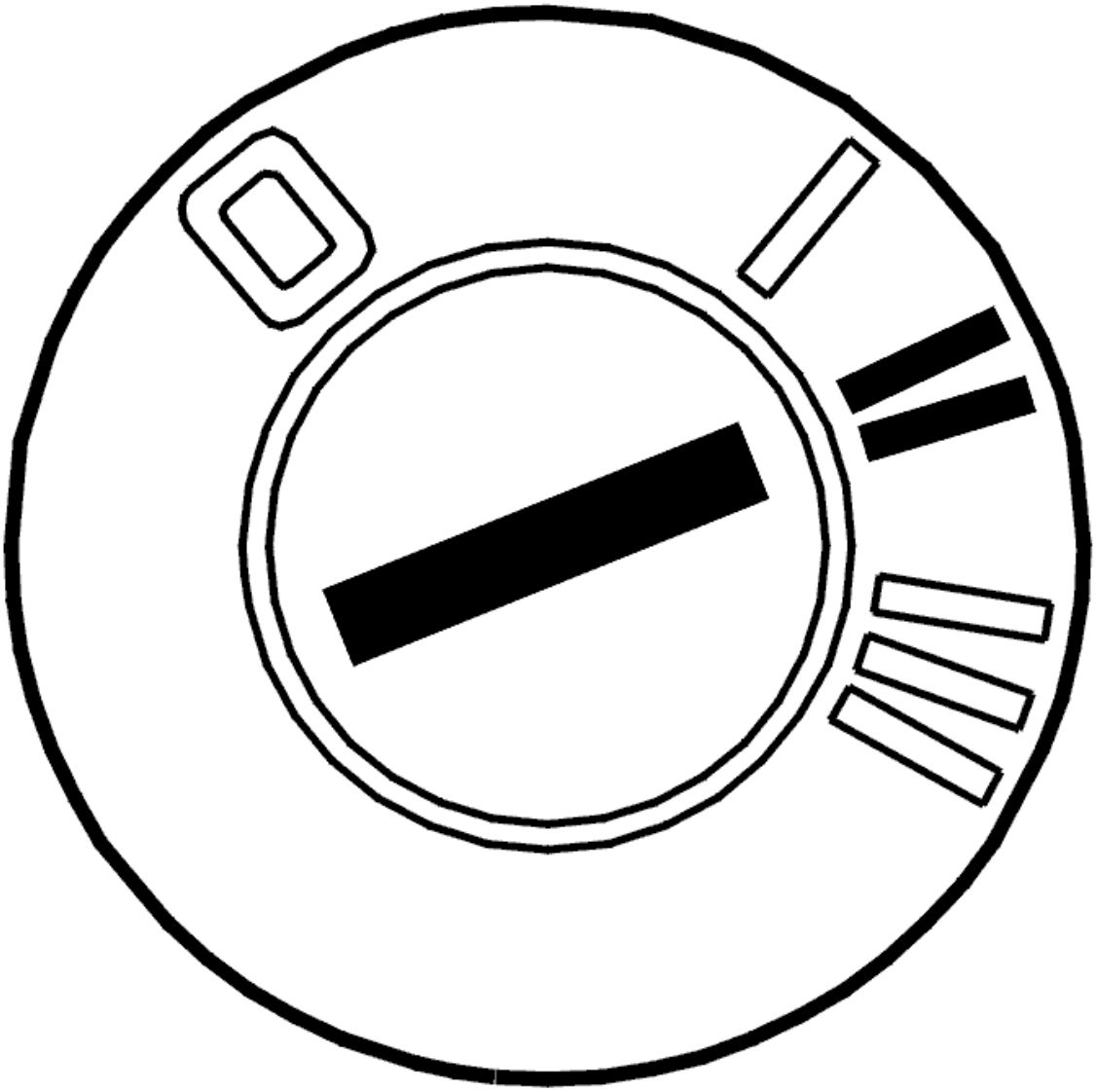

Fig. 174: Identifying Ignition ON
Courtesy of VOLVO CARS CORPORATION

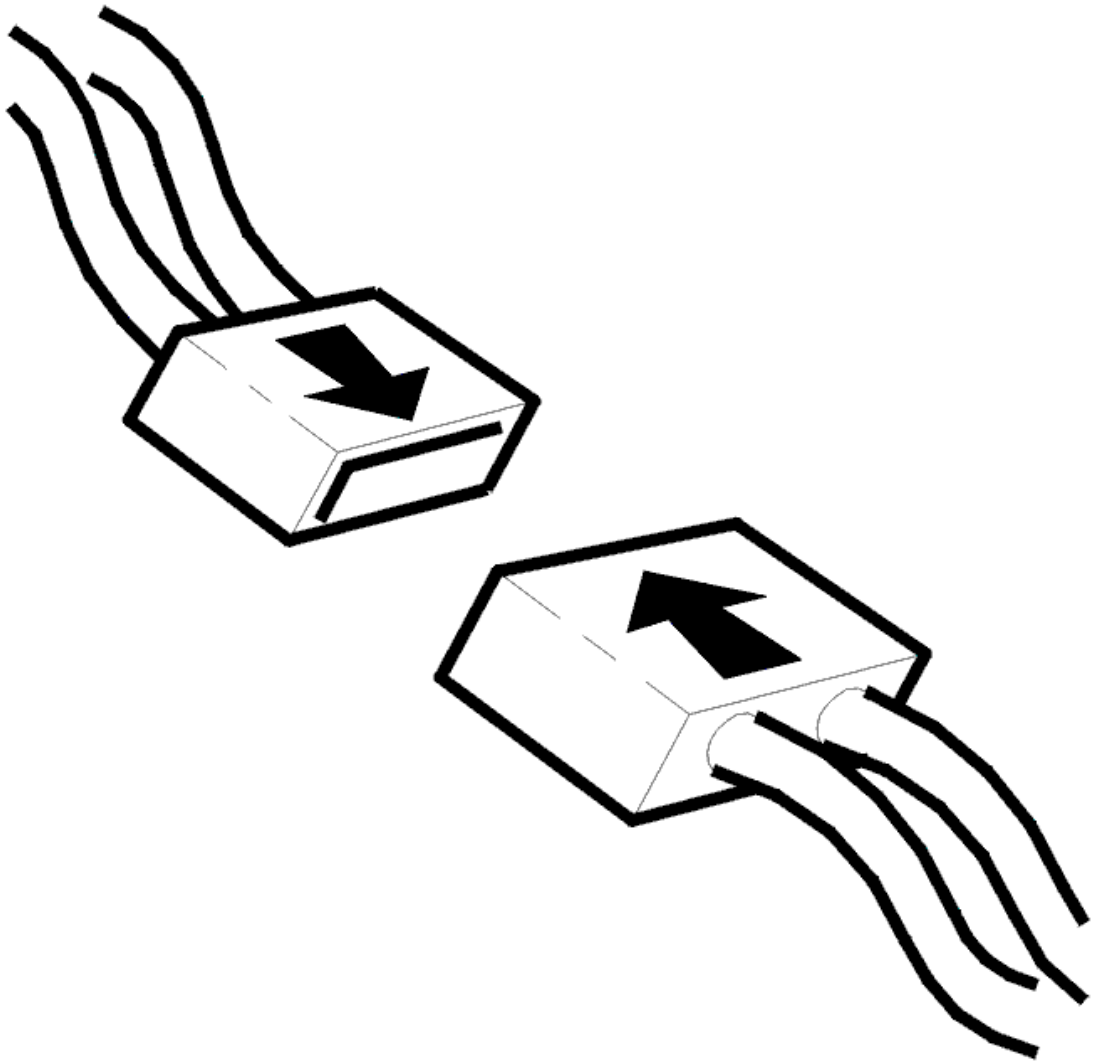

Fig. 175: Connecting Connector
Courtesy of VOLVO CARS CORPORATION

- Ignition off
- Disconnect the connector for the climate control module (CCM)
- Disconnect the connector for the central electronic module (CEM)
- Ignition on.

Checking the power supply and ground terminals

The following applies to components on the climate control unit that communicate with the climate control module (CCM) via LIN bus 1 and LIN bus 2:

- All components are jointly powered via a fuse from the central electronic module (CEM)
- All components are grounded via a common ground terminal.

Check the power supply to the components on the climate control unit by taking a reading on connector A for the central electronic module (CEM) between terminal #A44 (C44) and chassis ground.

Also check the fuse on the central electronic module (CEM).

Check the power supply cable between the central electronic module (CEM) and the connector for the climate control unit. Check for an open-circuit. Measure between terminal #1 on the connector for the climate control unit and chassis ground.

Check the ground terminal for the components on the climate control unit. Measure between the connector for climate control unit terminal #6 and chassis ground.

Check the connector for the climate control unit and connector A on the central electronic module (CEM). Check for contact resistance. Check for oxidation. Check for loose connections.

Checking LIN bus

Check both LIN bus 1 and LIN bus 2. Check for an open-circuit.

Take readings between:

- The connector for climate control module (CCM) terminal #12 (#36) and the connector for climate control unit terminal #2
- The connector for climate control module (CCM) terminal #7 (#31) and the connector for climate control unit terminal #5.

Check the wiring between the connector and the components on the climate control unit. Check for an open-circuit.

Remedy as necessary.

Other information:

- For further information about the connectors, fuses and relays, see the appropriate service information.
- To connect the breakout box to the climate control module (CCM), see: **CONNECTING THE BREAKOUT BOX**
- To connect the breakout box, central electronic module (CEM), see: **CONNECTING THE BREAKOUT BOX**
- see **SIGNAL SPECIFICATION**
- see **CLIMATE CONTROL, LOCATION OF COMPONENTS**
- see **CLIMATE CONTROL MODULE (CCM), REPLACING**
- For -2004, see **CENTRAL ELECTRONIC MODULE (CEM), REPLACING** . For 2005-, see **CENTRAL ELECTRONIC MODULE (CEM), REPLACING**
- see **CONTENTS**

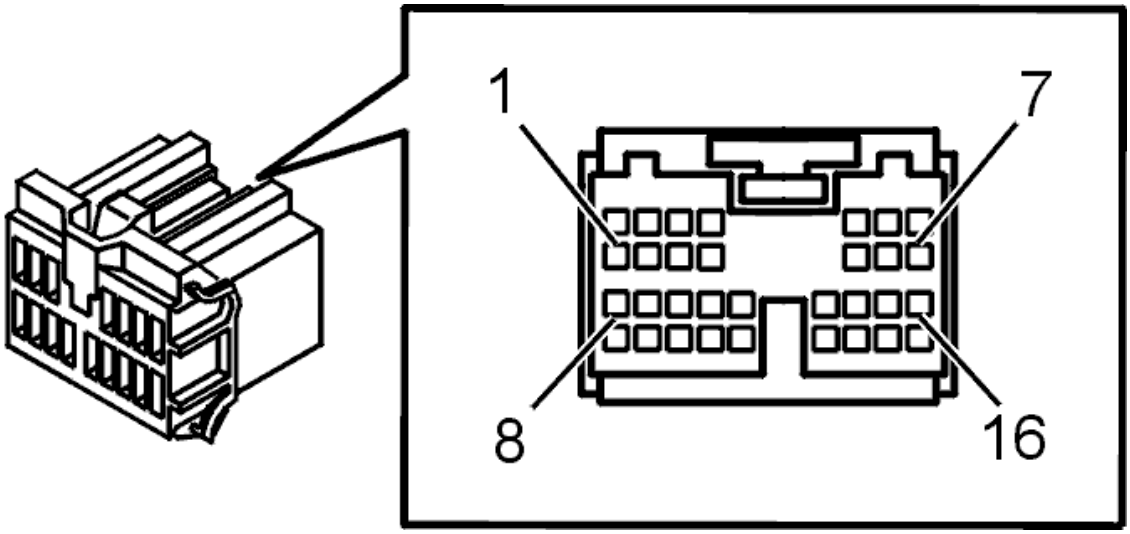

Fig. 176: Connector, Green (16- Pin)
Courtesy of VOLVO CARS CORPORATION

- **Continue**

  Refer to **VERIFICATION**

CHECKING LIN BUS 2 AND CONNECTOR

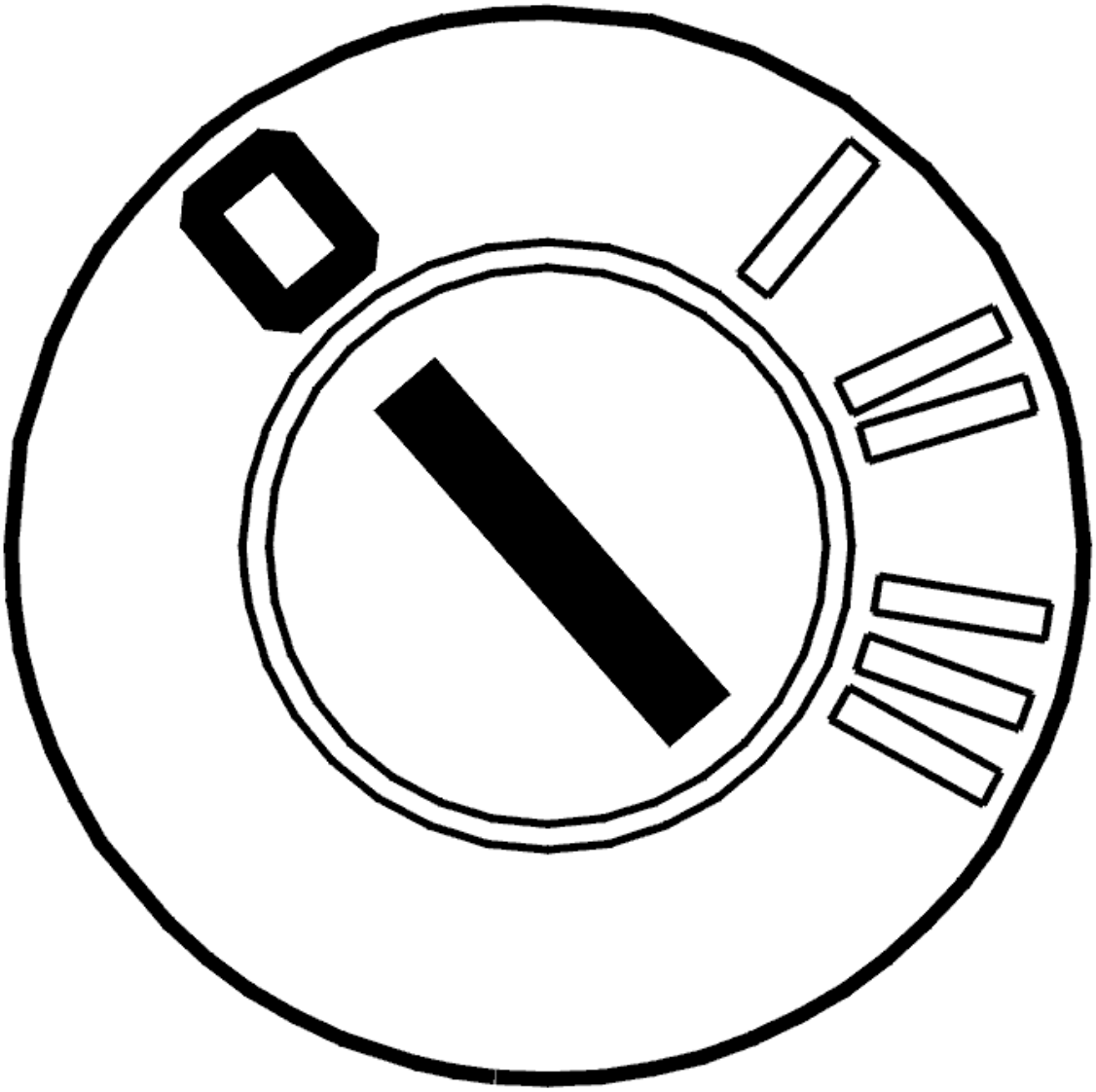

Fig. 177: Identifying Ignition OFF
Courtesy of VOLVO CARS CORPORATION

- Ignition off
- Disconnect the connector for the climate control module (CCM).

  Check the climate control module (CCM) connector. Check for contact resistance. Check for oxidation. Check for loose connections.

  Check LIN bus 2 between the climate control module (CCM), the connector for the climate control unit and the seat heating module (SHM) right. Check for an open-circuit.

  Take readings between:

  - The connector for climate control module (CCM) terminal #7 (#31) and the connector for climate control unit terminal #5

- The connector for the climate control module (CCM) terminal #7 (#31) and connector A for the seat heating module (SHM) right terminal #2.

Check LIN bus 2 between the components (the damper motors and the air quality sensor (AQS) and the connector for the climate control unit. Check for an open-circuit.

Check the connector for the climate control unit. Check for contact resistance. Check for oxidation. Check for loose connections.

Remedy as necessary.

Other information:

- For further information about the connectors, fuses and relays, see the appropriate service information.
- see **CONNECTING THE BREAKOUT BOX**
- see **SIGNAL SPECIFICATION**
- see **CLIMATE CONTROL, LOCATION OF COMPONENTS**
- see **CLIMATE CONTROL MODULE (CCM), REPLACING**
- see **SEAT HEATING MODULE (SHM), REPLACING**
- see **CONTENTS**

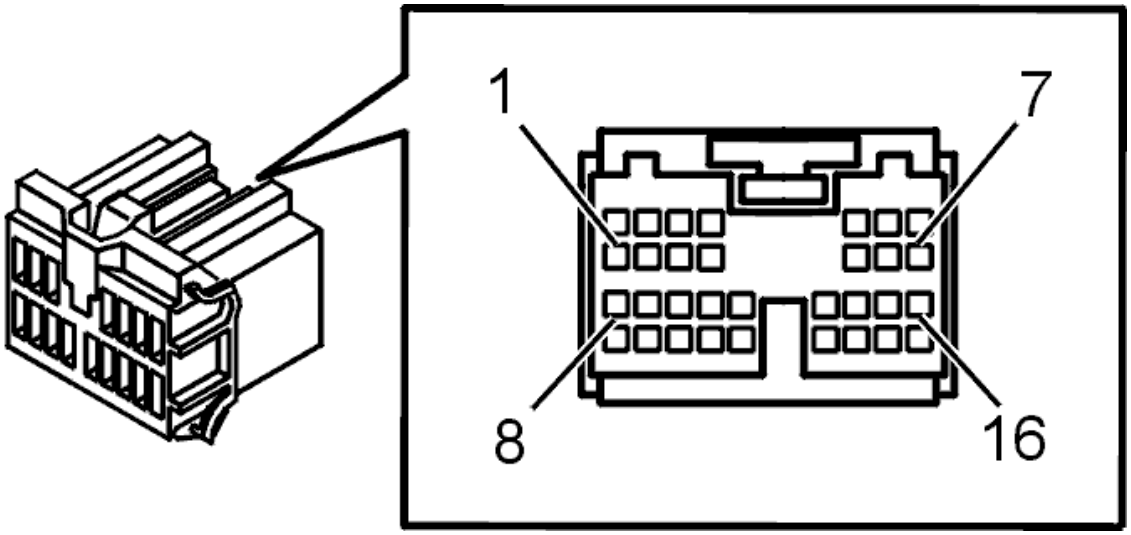

Fig. 178: Connector, Green (16- Pin)
Courtesy of VOLVO CARS CORPORATION

- **Continue**

Refer to **VERIFICATION**

CHECKING THE WIRING AND COMPONENT

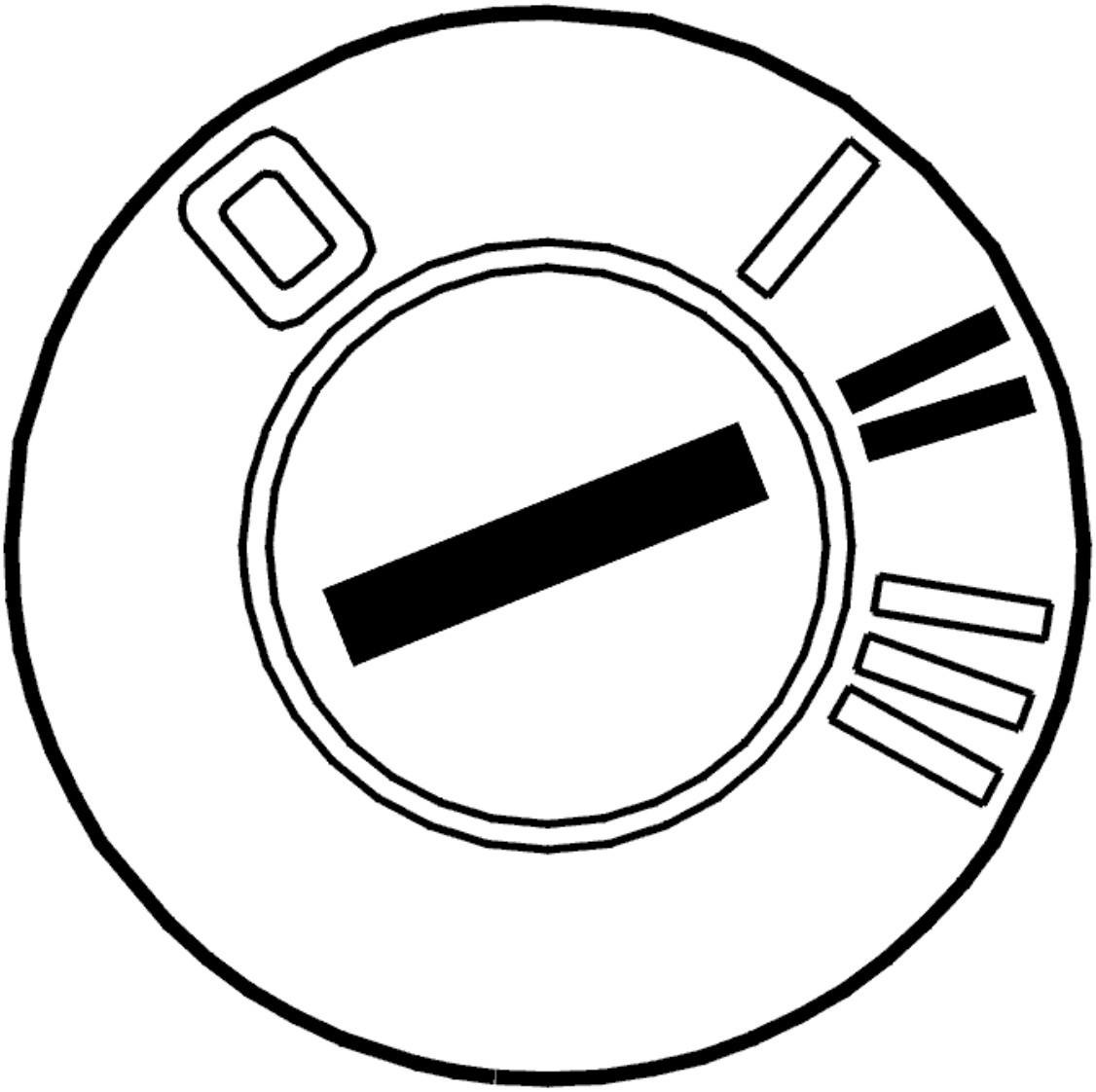

Fig. 179: Identifying Ignition ON
Courtesy of VOLVO CARS CORPORATION

- Ignition off
- Disconnect the connector for the damper motor module (DMM) for temperature right
- Ignition on.

  Check the connector. Check for contact resistance. Check for oxidation. Check for loose connections.

  Check that the damper motor module (DMM) is connected to power supply and ground.

  Measure the voltage on the connector for the damper motor module (DMM) between terminals #1 and #3.

  Check LIN bus 2 by taking a reading between connector terminal #2 on the damper motor module (DMM) and the connector for climate control unit terminal #5. Check for an open-circuit.

Try replacing the damper motor module (DMM) if no fault is found.

Remedy as necessary.

Other information:

- For further information about the connectors, fuses and relays, see the appropriate service information.
- see **CONNECTING THE BREAKOUT BOX**
- see **SIGNAL SPECIFICATION**
- see **CLIMATE CONTROL, LOCATION OF COMPONENTS**
- see **CLIMATE CONTROL MODULE (CCM), REPLACING**
- For -2004, see **DAMPER MOTOR TEMPERATURE, REPLACING** . For 2005-, see **DAMPER MOTOR MODULE (DMM) TEMPERATURE, REPLACING**
- see **CONTENTS**

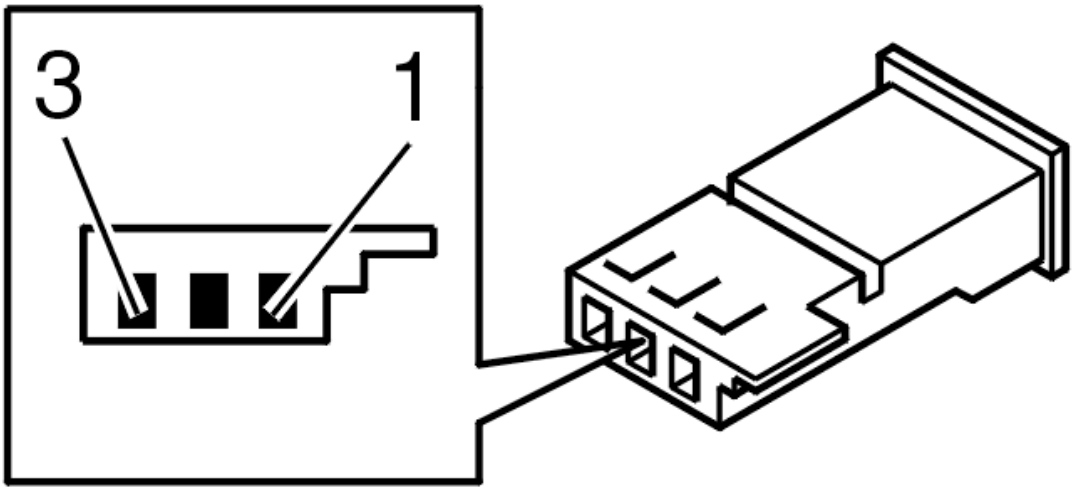

Fig. 180: Identifying Damper Motor Module (DMM) Connector Terminals
Courtesy of VOLVO CARS CORPORATION

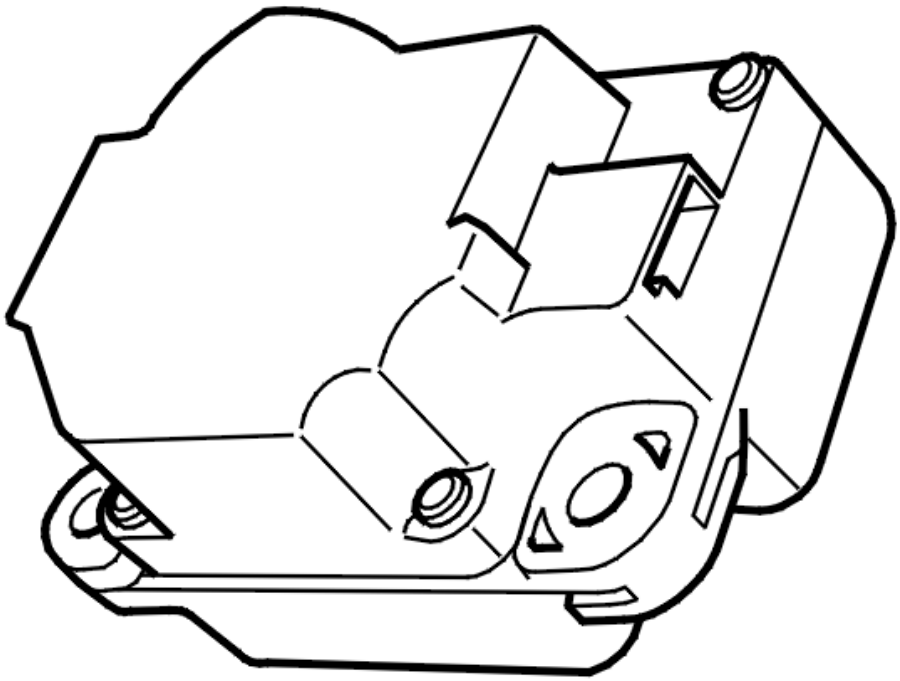

Fig. 181: Identifying Damper Motor Module (DMM)
Courtesy of VOLVO CARS CORPORATION

- **Continue**

  Refer to **VERIFICATION**

IDENTIFYING COMPONENTS ON THE LIN NETWORK THAT BELONG TO THE CLIMATE CONTROL SYSTEM (CCM)

INFORMATION

- The control module must be identified after replacing the Damper Motor Module (DMM).

NOTE: **Identification must only be carried out when replacing components on the LIN network that belong to the climate control system (CCM).**

Have any of the components on the LIN network been replaced?

- **YES**

  Refer to **IDENTIFYING COMPONENTS ON THE LIN NETWORK THAT BELONG TO THE CLIMATE CONTROL SYSTEM (CCM)**

- **NO**

  Refer to **VERIFICATION**

IDENTIFYING COMPONENTS ON THE LIN NETWORK THAT BELONG TO THE CLIMATE CONTROL SYSTEM (CCM)

HINT: When identifying damper motors, each damper motor must be run to its limit position. These operations can take up to 30 seconds. When identifying the damper motors it is important that a battery charger is connected.

Fig. 182: Checking Traffic Load On CAN Cables
Courtesy of VOLVO CARS CORPORATION

- Ignition off
- Reinstall the connectors, components etc.

NOTE: **Climate Control Module (CCM) and damper motors can be affected by the temperature. The vehicle should have normal room temperature when performing this service.**

Carry out identification as follows:

- Ignition on.
- Click on the VCT2000 (Volvo Scan Tool) symbol. Wait until identification has been carried out.
- Ignition off.

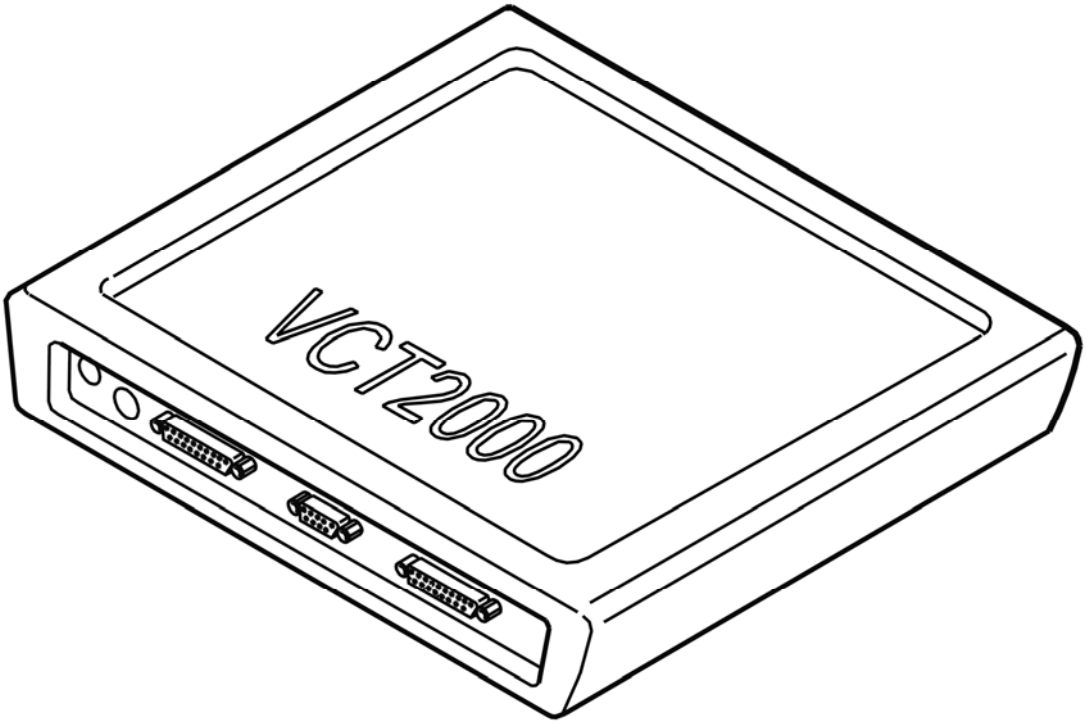

Fig. 183: Identifying VCT2000 Diagnostic Tool Symbol In VIDA
Courtesy of VOLVO CARS CORPORATION

- **Continue**

Refer to **CALIBRATING THE CLIMATE CONTROL MODULE (CCM)**

CALIBRATING THE CLIMATE CONTROL MODULE (CCM)

CAUTION: When activating this function, calibration of the Climate Control Module (CCM) starts. After carrying out calibration read off of the diagnostic trouble codes (DTCs) starts. To ensure that diagnostics for the Climate Control Module (CCM) have been carried out, delay for 30 seconds before reading out diagnostic trouble codes (DTCs) after calibration.

NOTE: Climate Control Module (CCM) and damper motors can be affected by the temperature. The vehicle should have normal room temperature when performing this service.

Fig. 184: Checking Traffic Load On CAN Cables
Courtesy of VOLVO CARS CORPORATION

Carry out calibration as follows:

- Ignition on.
- Click on the VCT2000 (Volvo Scan Tool) symbol. Wait until calibration has been carried out and diagnostic trouble codes (DTCs) read out.
- Ignition off.

This function controls the components that communicate with the Climate Control Module (CCM) via LIN bus 1 and LIN bus 2. In the event of a fault in any of the LIN buses, diagnostic trouble codes (DTCs) CCM-0070 to CCM-0071 will be stored depending on the fault. These diagnostic trouble codes (DTCs) can only be stored in conjunction with this diagnostic function.

If any of these diagnostic trouble codes (DTCs) recur, recalibrate to check if the problem was overcome. If the diagnostic trouble code (DTC) recurs, fault-trace the relevant diagnostic trouble code (DTC).

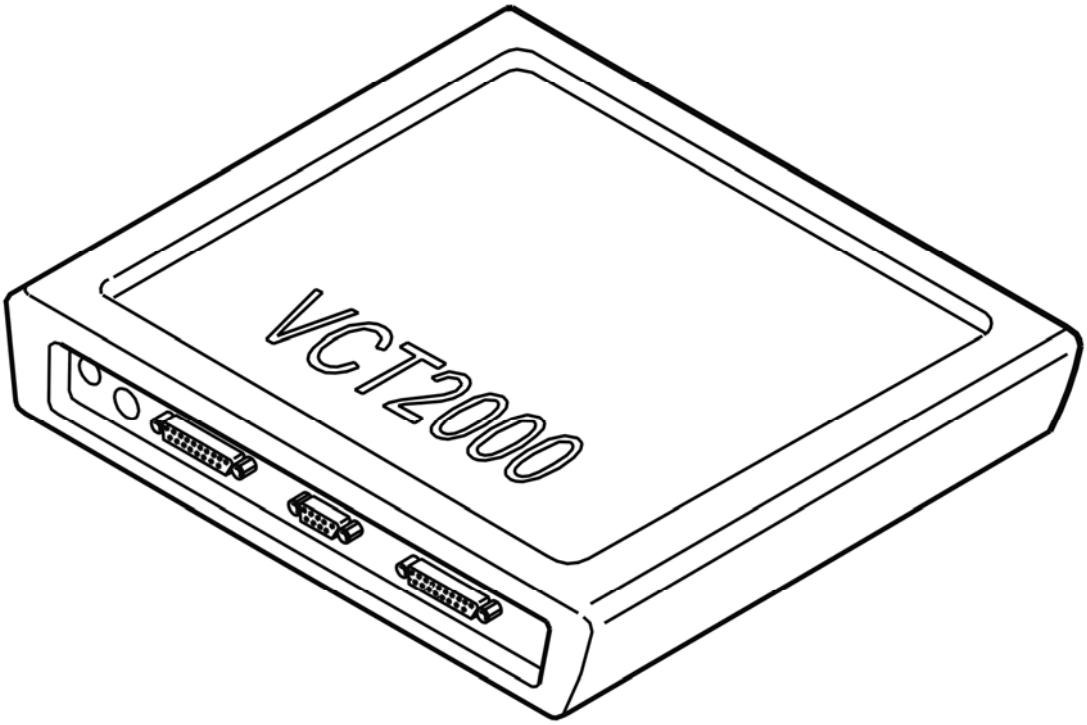

Fig. 185: Identifying VCT2000 Diagnostic Tool Symbol In VIDA
Courtesy of VOLVO CARS CORPORATION

- **Continue**

  Refer to **VERIFICATION**

VERIFICATION

HINT: After carrying out the repair, check that the fault has been remedied.

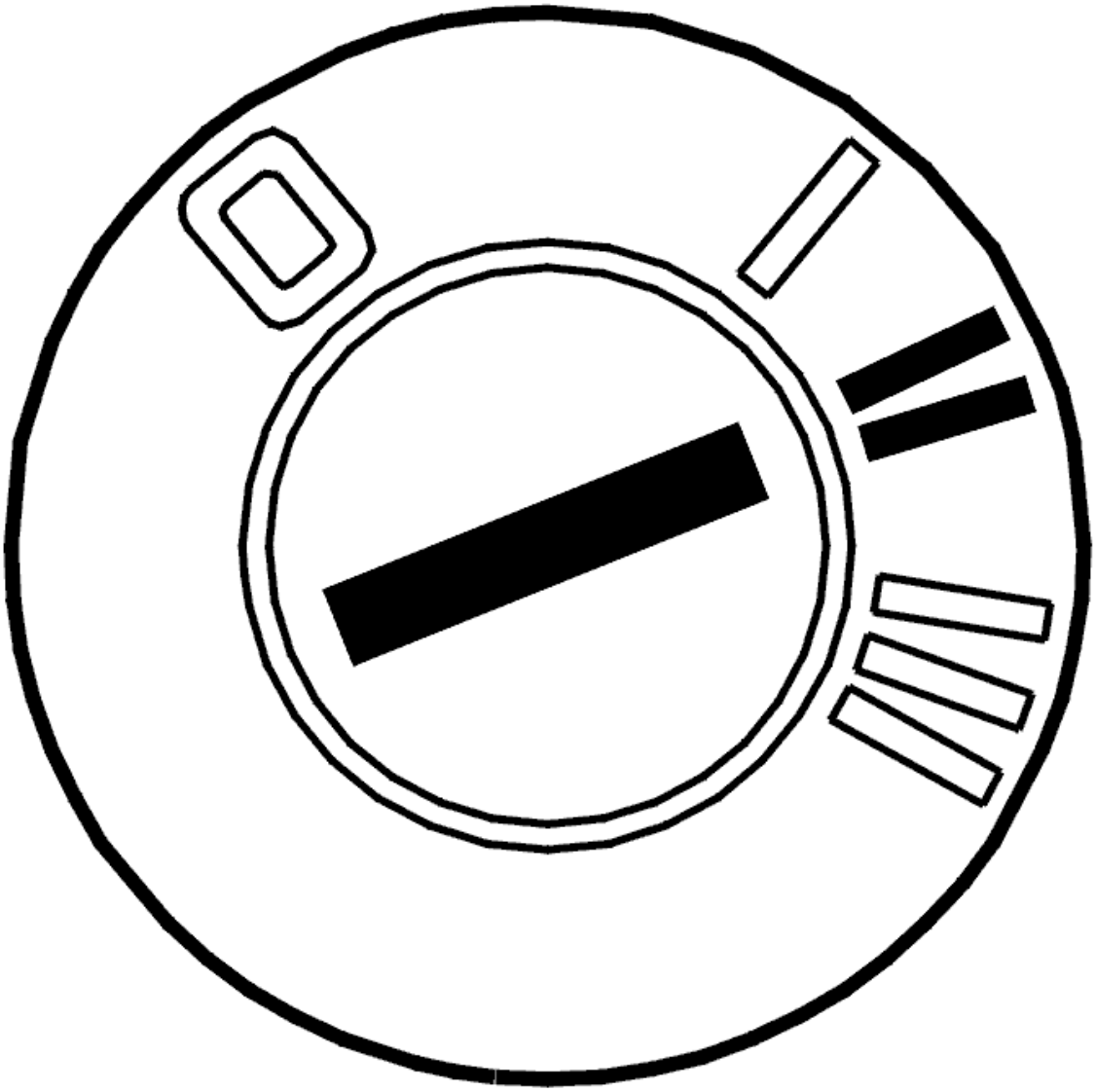

Fig. 186: Identifying Ignition ON
Courtesy of VOLVO CARS CORPORATION

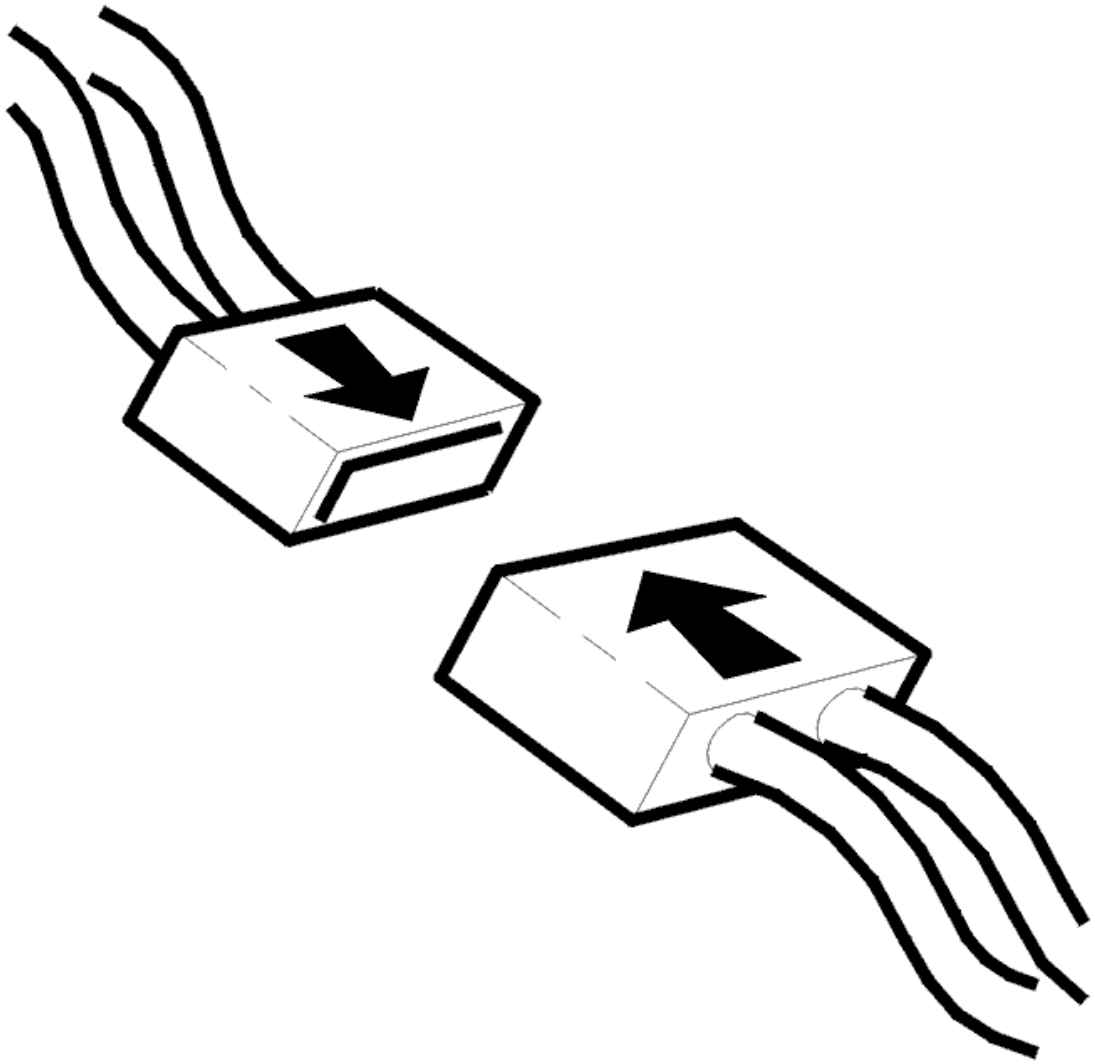

Fig. 187: Connecting Connector
Courtesy of VOLVO CARS CORPORATION

- Ignition off
- Reinstall the connectors, components etc.
- Ignition on.

  Check that the relevant diagnostic trouble code (DTC) has switched status from permanent to intermittent fault.

  Check also that diagnostic trouble code (DTC) CCM-0070, CCM-0071 CCM-0072 or CCM-0073 has not been stored during identification of the damper motors.

  These diagnostic trouble codes (DTCs) can only be stored when identifying damper motors. They mean that the identification has failed for some reason.

Remedy by correctly identifying the damper motor. Fault-trace according to the relevant information.

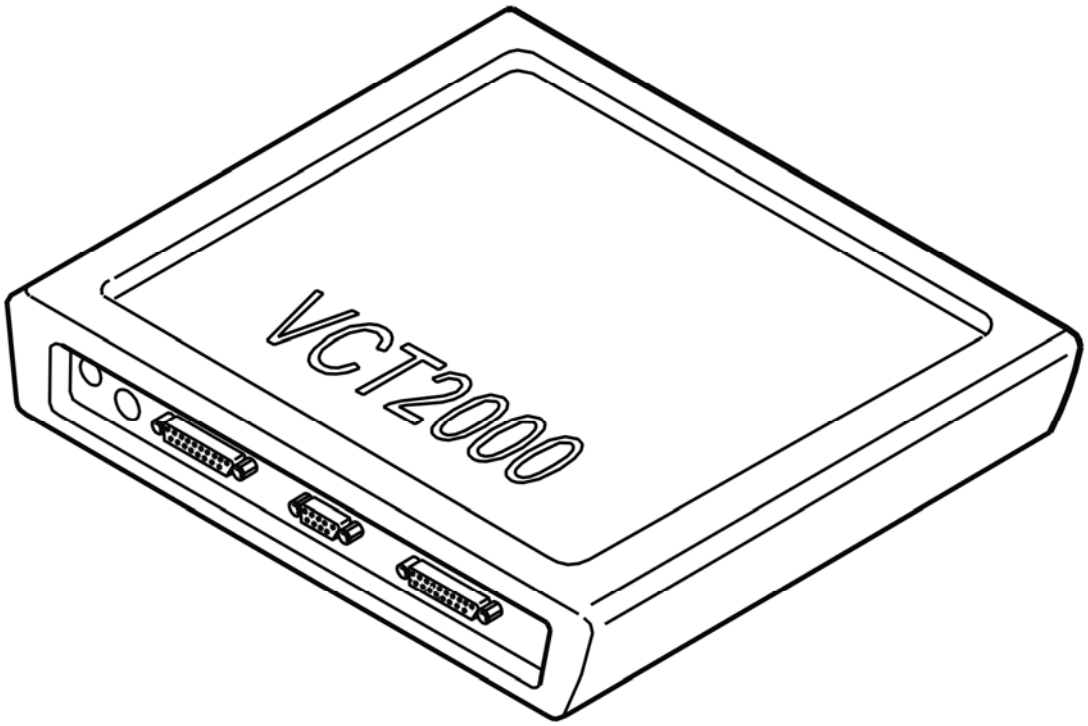

Fig. 188: Identifying VCT2000 Diagnostic Tool Symbol In VIDA
Courtesy of VOLVO CARS CORPORATION

Has the status of the diagnostic trouble code (DTC) changed?

- **YES**

  VERIFIED: Troubleshooting has been completed.

- **NO**

  Refer to **INFORMATION**

INFORMATION

FAULT-TRACING INFORMATION

The fault should have been detected and remedied. As this is not the case fault-tracing has failed.

Exit fault-tracing for this diagnostic trouble code (DTC) or make another attempt.

CCM-DD33: DAMPER MOTOR DEFROSTER. NO COMMUNICATION (2005-

2012)

DIAGNOSTIC TROUBLE CODE (DTC) INFORMATION CCM-DD33

Condition

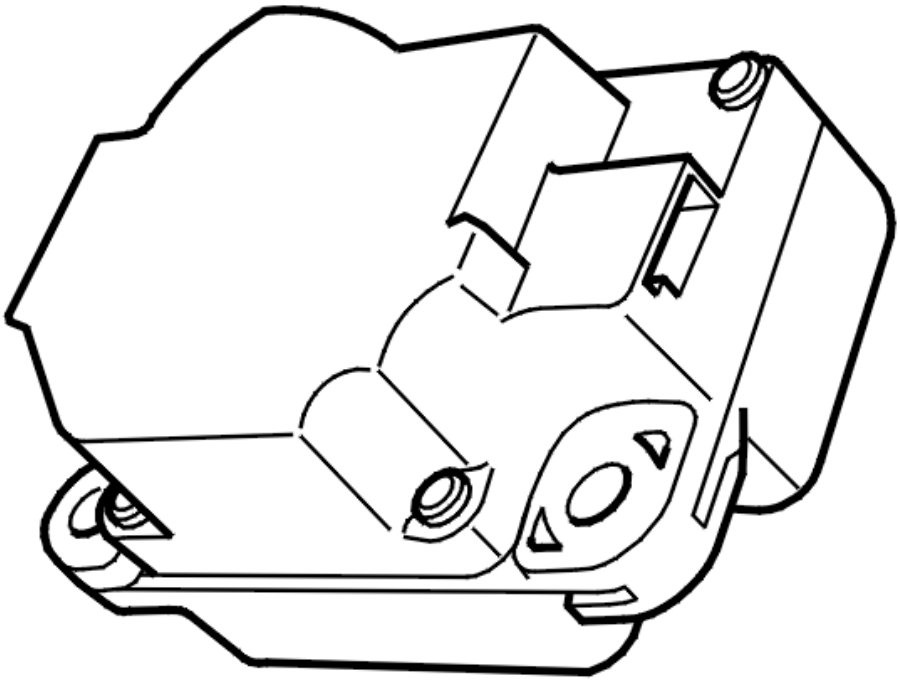

Fig. 189: Identifying Damper Motor Module (DMM)
Courtesy of VOLVO CARS CORPORATION

The diagnostic trouble code (DTC) is stored if the climate control module (CCM) detects an open-circuit in the communication between the climate control module (CCM) and the damper motor module (DMM) defroster on LIN bus 2.

The diagnostic trouble code (DTC) may occur together with diagnostic trouble codes (DTCs) for other components on LIN bus 2 (CCM-DD30 - CCM-DD34) depending on where the open-circuit has occurred.

The diagnostic trouble code (DTC) can be diagnosed at ignition switch position II.

Substitute Value

- None.

Possible Source

- Open-circuit on LIN bus 2 between the climate control module (CCM) and the damper motor module (DMM) defroster
- Contact resistance, oxidation or loose connections in the connectors.

Fault symptom[s]

- Misting on the windows and/or door mirrors.

NO COMMUNICATION

CHECKING THE DIAGNOSTIC TROUBLE CODES (DTCS)

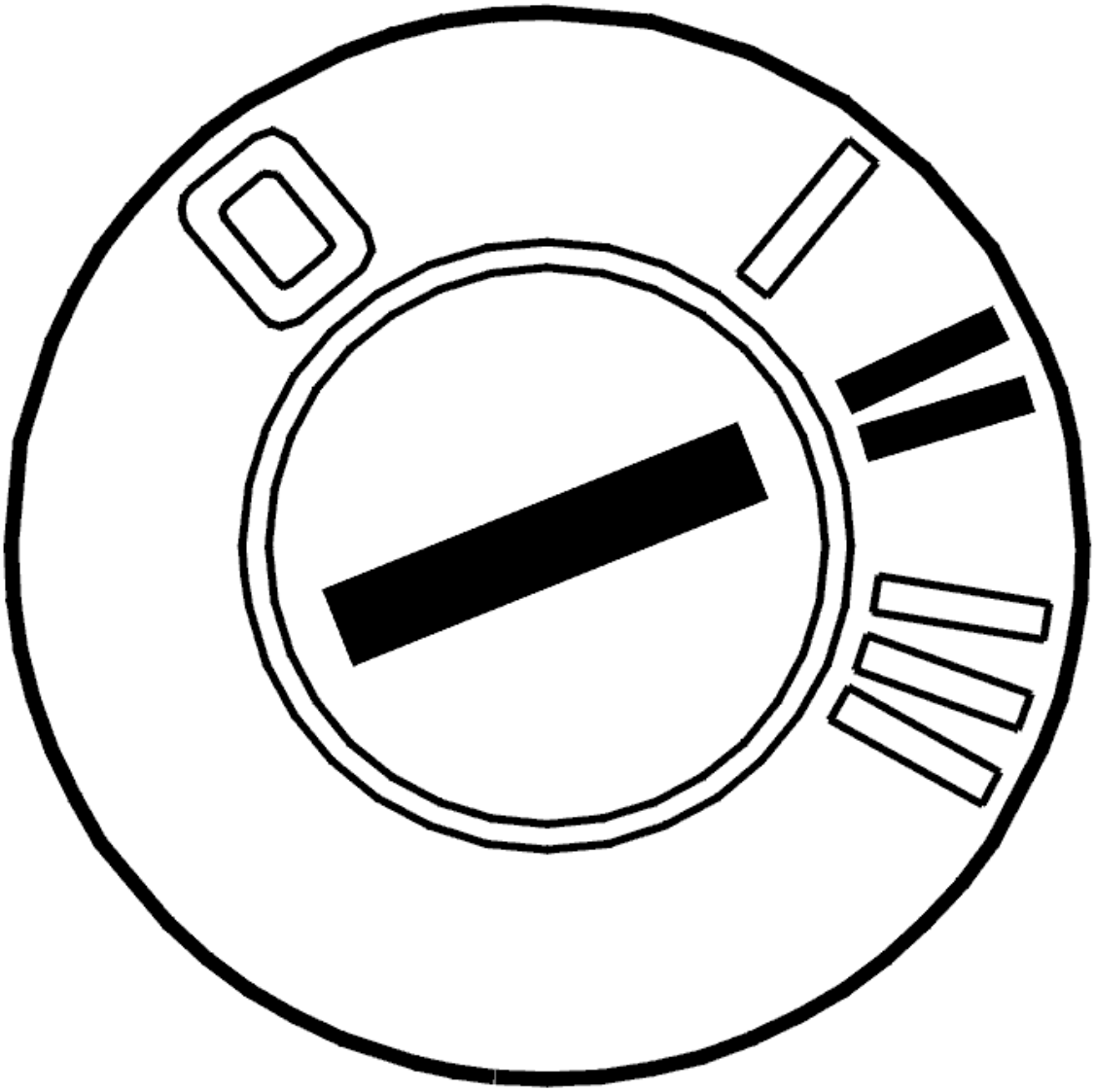

Fig. 190: Identifying Ignition ON
Courtesy of VOLVO CARS CORPORATION

- Ignition on.

  The diagnostic trouble code (DTC) may occur together with diagnostic trouble codes (DTCs) for other components that communicate with the climate control module (CCM) via LIN bus 1 and LIN bus 2.

  Check whether the diagnostic trouble code (DTC) has been stored together with other diagnostic trouble codes (DTCs) for other components on the climate control unit.

  Following options:

  1. The diagnostic trouble code (DTC) is stored together with diagnostic trouble codes (DTCs) for components in both LIN bus 1 and LIN bus 2 (CCM-DD10 - CCM-DD16, CCM-DD30 - CCM-DD34). Refer to **CHECKING THE CONNECTORS AND WIRING**.
  2. The diagnostic trouble code (DTC) is together with diagnostic trouble codes (DTCs) for components only on LIN bus 2 (CCM-DD30-CCM-DD34). Refer to **CHECKING LIN BUS 2 AND CONNECTOR**.
  3. The diagnostic trouble code (DTC) is not together with diagnostic trouble codes (DTCs) for other components on LIN bus 1 and LIN bus 2. Refer to **CHECKING THE WIRING AND COMPONENT**.

CHECKING THE CONNECTORS AND WIRING

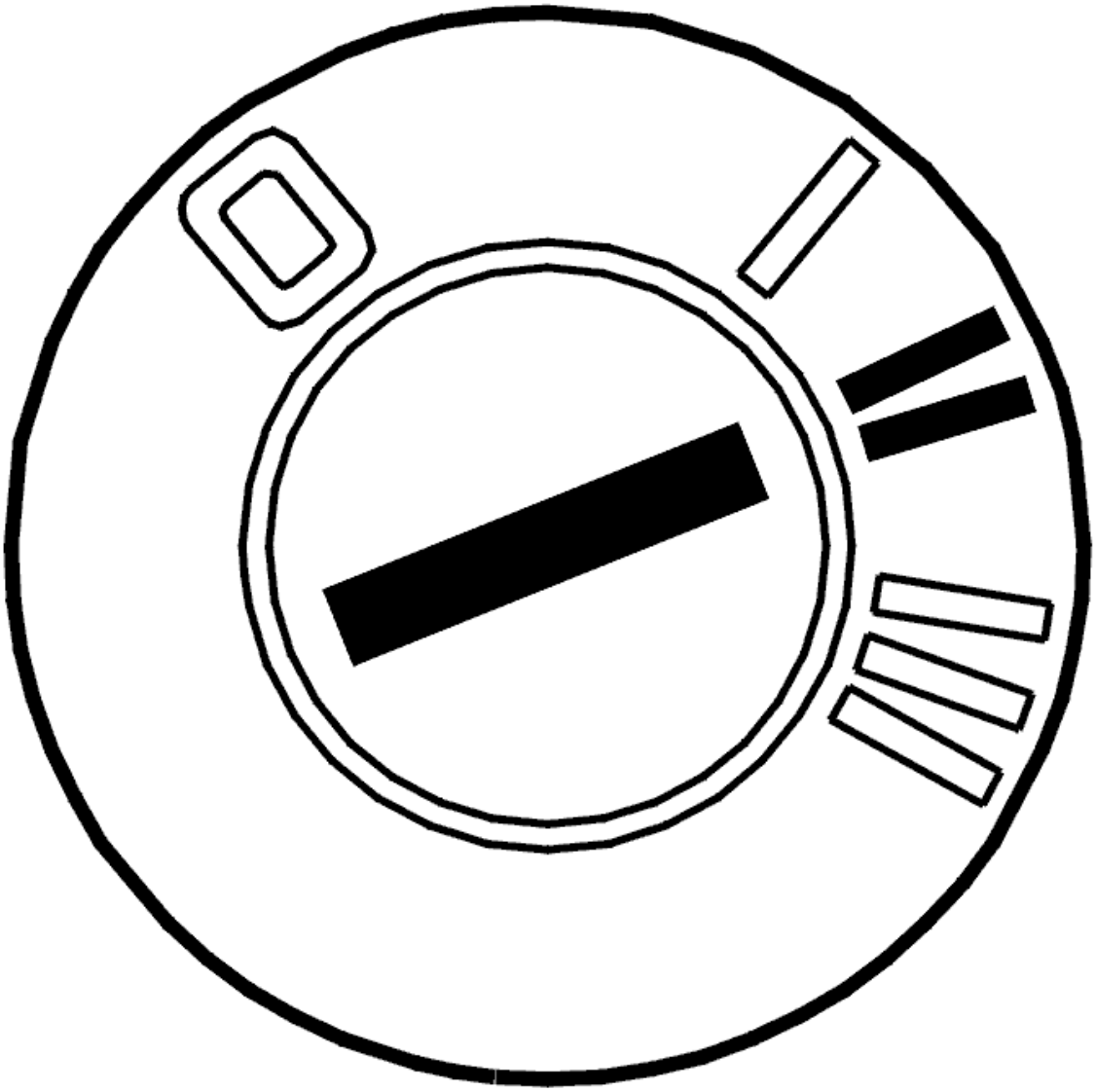

Fig. 191: Identifying Ignition ON
Courtesy of VOLVO CARS CORPORATION

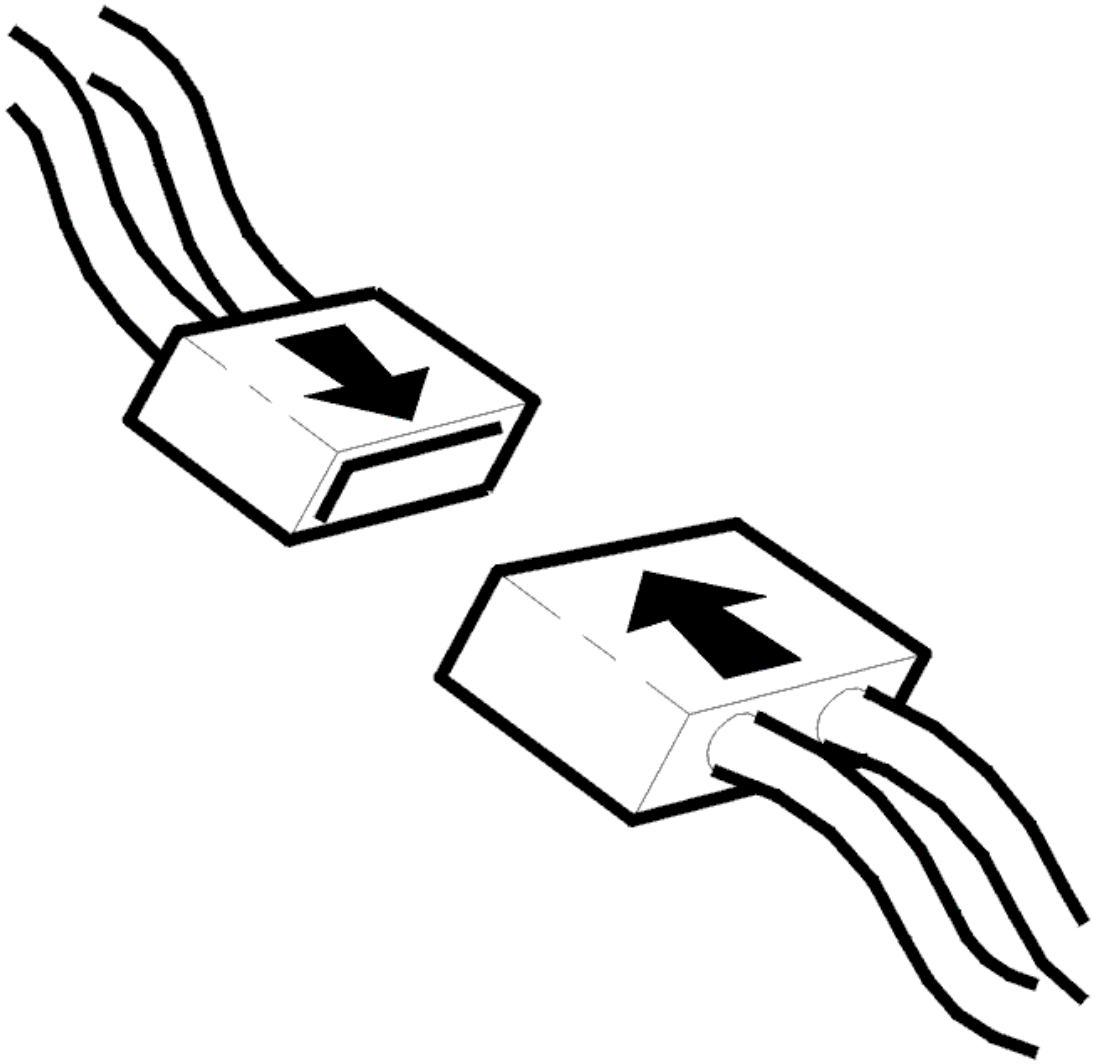

Fig. 192: Connecting Connector
Courtesy of VOLVO CARS CORPORATION

- Ignition off
- Disconnect the connector for the climate control module (CCM)
- Disconnect the connector for the central electronic module (CEM)
- Ignition on.

Checking the power supply and ground terminals

The following applies to components on the climate control unit that communicate with the climate control module (CCM) via LIN bus 1 and LIN bus 2:

- All components are jointly powered via a fuse from the central electronic module (CEM)
- All components are grounded via a common ground terminal.

Check the power supply to the components on the climate control unit by taking a reading on connector A for the central electronic module (CEM) between terminal #A44 (C44) and chassis ground.

Also check the fuse on the central electronic module (CEM).

Check the power supply cable between the central electronic module (CEM) and the connector for the climate control unit. Check for an open-circuit. Measure between terminal #1 on the connector for the climate control unit and chassis ground.

Check the ground terminal for the components on the climate control unit. Measure between the connector for climate control unit terminal #6 and chassis ground.

Check the connector for the climate control unit and connector A for the central electronic module (CEM). Check for contact resistance. Check for oxidation. Check for loose connections.

Checking LIN bus

Check both LIN bus 1 and LIN bus 2. Check for an open-circuit.

Take readings between:

- The connector for climate control module (CCM) terminal #12 (#36) and the connector for climate control unit terminal #2
- The connector for climate control module (CCM) terminal #7 (#31) and the connector for climate control unit terminal #5.

Check the wiring between the connector and the components on the climate control unit. Check for an open-circuit.

Remedy as necessary.

Other information:

- For further information about the connectors, fuses and relays, see the appropriate service information.
- To connect the breakout box to the climate control module (CCM), see: **CONNECTING THE BREAKOUT BOX**
- To connect the breakout box, central electronic module (CEM), see: **CONNECTING THE BREAKOUT BOX**
- see **SIGNAL SPECIFICATION**
- see **CLIMATE CONTROL, LOCATION OF COMPONENTS**
- see **CLIMATE CONTROL MODULE (CCM), REPLACING**
- For -2004, see **CENTRAL ELECTRONIC MODULE (CEM), REPLACING** . For 2005-, see **CENTRAL ELECTRONIC MODULE (CEM), REPLACING**
- see **CONTENTS**

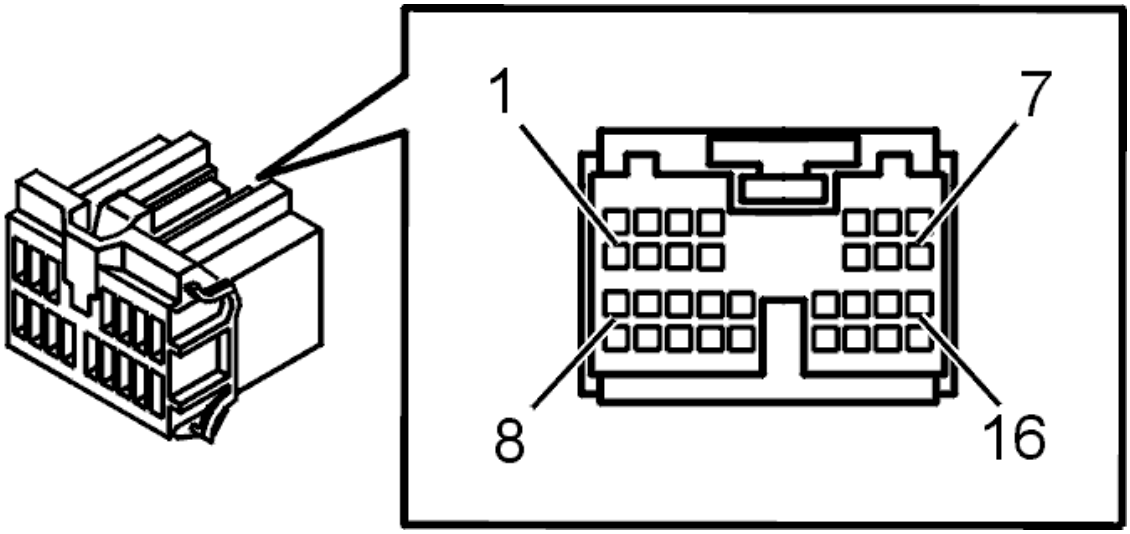

Fig. 193: Connector, Green (16- Pin)
Courtesy of VOLVO CARS CORPORATION

- **Continue**

  Refer to **VERIFICATION**

CHECKING LIN BUS 2 AND CONNECTOR

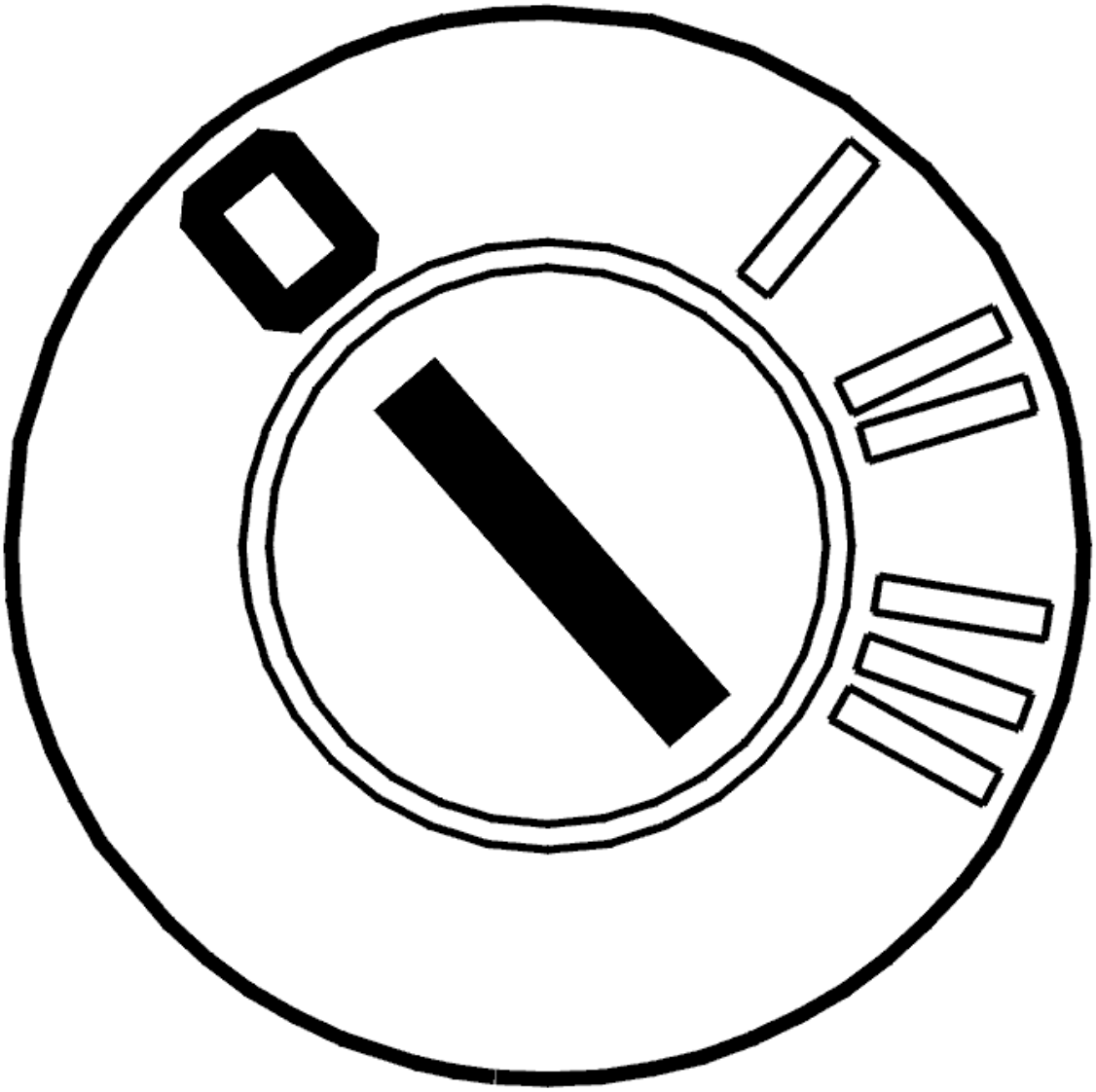

Fig. 194: Identifying Ignition OFF
Courtesy of VOLVO CARS CORPORATION

- Ignition off
- Disconnect the connector for the climate control module (CCM).

  Check the climate control module (CCM) connector. Check for contact resistance. Check for oxidation. Check for loose connections.

  Check LIN bus 2 between the climate control module (CCM), the connector for the climate control unit and the seat heating module (SHM) right. Check for an open-circuit.

  Take readings between:

  - The connector for climate control module (CCM) terminal #7 (#31) and the connector for climate control unit terminal #5

- The connector for the climate control module (CCM) terminal #7 (#31) and connector A for the seat heating module (SHM) right terminal #2.

Check LIN bus 2 between the components (the damper motors and the air quality sensor (AQS) and the connector for the climate control unit. Check for an open-circuit.

Check the connector for the climate control unit. Check for contact resistance. Check for oxidation. Check for loose connections.

Remedy as necessary.

Other information:

- For further information about the connectors, fuses and relays, see the appropriate service information.
- see **CONNECTING THE BREAKOUT BOX**
- see **SIGNAL SPECIFICATION**
- see **CLIMATE CONTROL, LOCATION OF COMPONENTS**
- see **CLIMATE CONTROL MODULE (CCM), REPLACING**
- see **SEAT HEATING MODULE (SHM), REPLACING**
- see **CONTENTS**

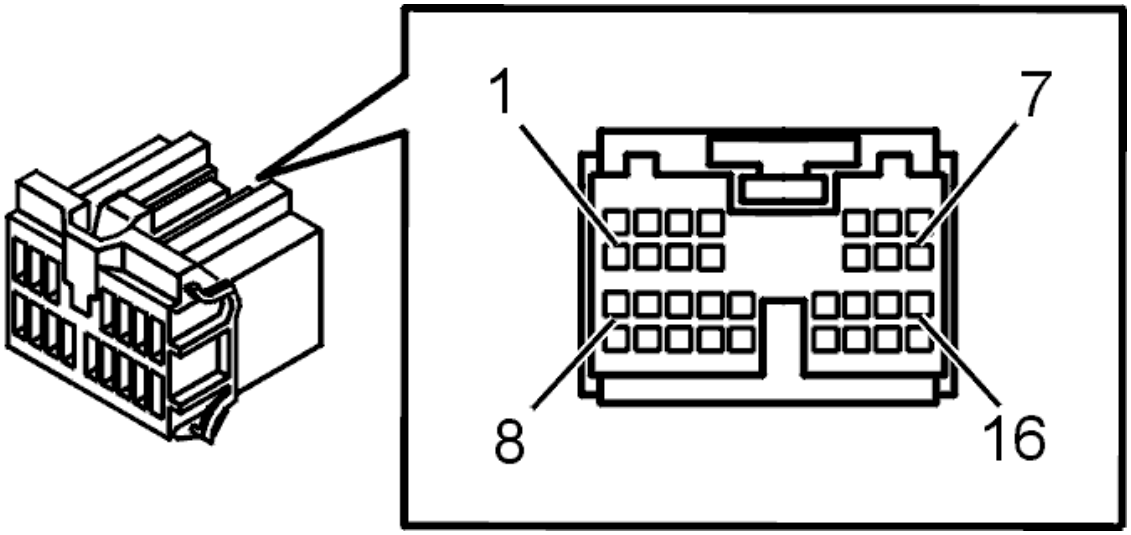

Fig. 195: Connector, Green (16- Pin)
Courtesy of VOLVO CARS CORPORATION

- **Continue**

Refer to **VERIFICATION**

CHECKING THE WIRING AND COMPONENT

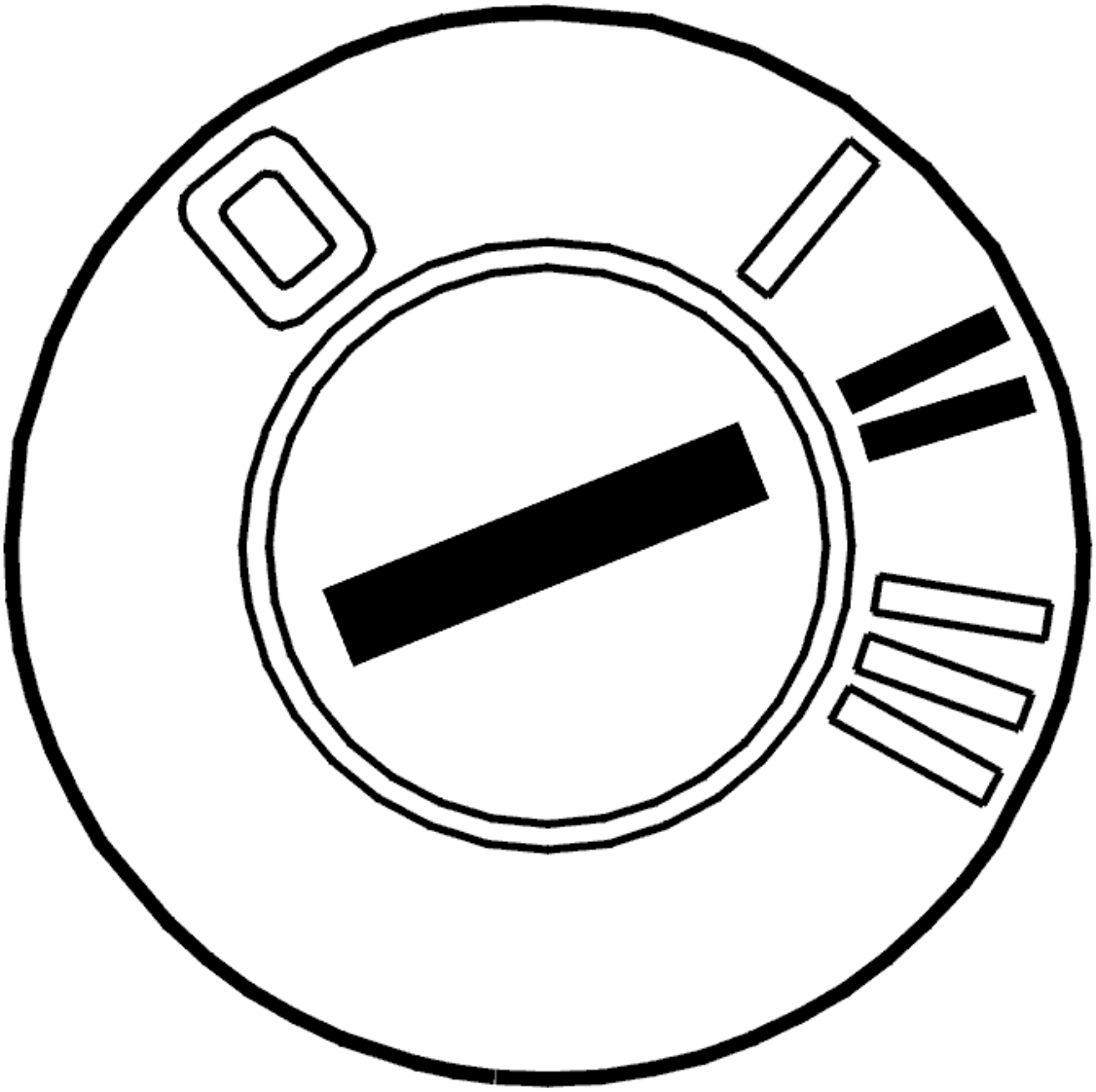

Fig. 196: Identifying Ignition ON
Courtesy of VOLVO CARS CORPORATION

- Ignition off
- Disconnect the connector for the damper motor module (DMM) defroster
- Ignition on.

  Check the connector. Check for contact resistance. Check for oxidation. Check for loose connections.

  Check that the damper motor module (DMM) is connected to power supply and ground.

  Measure the voltage on the connector for the damper motor module (DMM) between terminals #1 and #3.

  Check LIN bus 2 by taking a reading between the damper motor module (DMM) connector terminal #2 and the connector for the climate control unit terminal #5. Check for an open-circuit.

Try replacing the damper motor module (DMM) if no fault is found.

Remedy as necessary.

Other information:

- For further information about the connectors, fuses and relays, see the appropriate service information.
- see **CONNECTING THE BREAKOUT BOX**
- see **SIGNAL SPECIFICATION**
- see **CLIMATE CONTROL, LOCATION OF COMPONENTS**
- see **CLIMATE CONTROL MODULE (CCM), REPLACING**
- For -2004, see **DAMPER MOTOR DEFROSTER, REPLACING** . For 2005-, see **DAMPER MOTOR MODULE (DMM) DEFROSTER, REPLACING**
- see **CONTENTS**

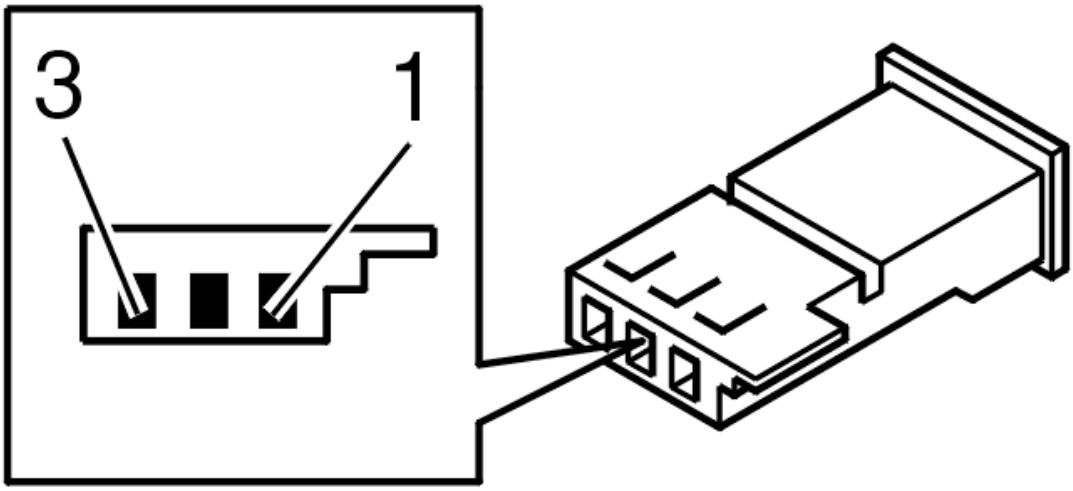

Fig. 197: Identifying Damper Motor Module (DMM) Connector Terminals
Courtesy of VOLVO CARS CORPORATION

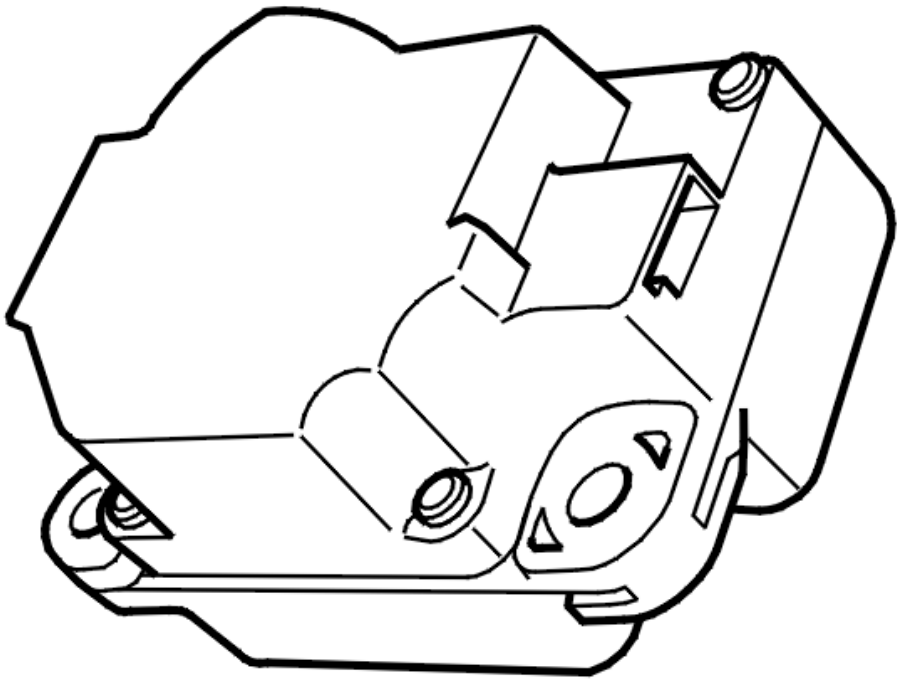

Fig. 198: Identifying Damper Motor Module (DMM)
Courtesy of VOLVO CARS CORPORATION

- **Continue**

  Refer to **VERIFICATION**

IDENTIFYING COMPONENTS ON THE LIN NETWORK THAT BELONG TO THE CLIMATE CONTROL SYSTEM (CCM)

INFORMATION

- The control module must be identified after replacing the Damper Motor Module (DMM).

NOTE: **Identification must only be carried out when replacing components on the LIN network that belong to the climate control system (CCM).**

Have any of the components on the LIN network been replaced?

- **YES**

  Refer to **IDENTIFYING COMPONENTS ON THE LIN NETWORK THAT BELONG TO THE CLIMATE CONTROL SYSTEM (CCM)**

- **NO**

  Refer to **VERIFICATION**

IDENTIFYING COMPONENTS ON THE LIN NETWORK THAT BELONG TO THE CLIMATE CONTROL SYSTEM (CCM)

HINT: When identifying damper motors, each damper motor must be run to its limit position. These operations can take up to 30 seconds. When identifying the damper motors it is important that a battery charger is connected.

Fig. 199: Checking Traffic Load On CAN Cables
Courtesy of VOLVO CARS CORPORATION

- Ignition off
- Reinstall the connectors, components etc.

NOTE: **Climate Control Module (CCM) and damper motors can be affected by the temperature. The vehicle should have normal room temperature when performing this service.**

Carry out identification as follows:

- Ignition on.
- Click on the VCT2000 (Volvo Scan Tool) symbol. Wait until identification has been carried out.
- Ignition off.

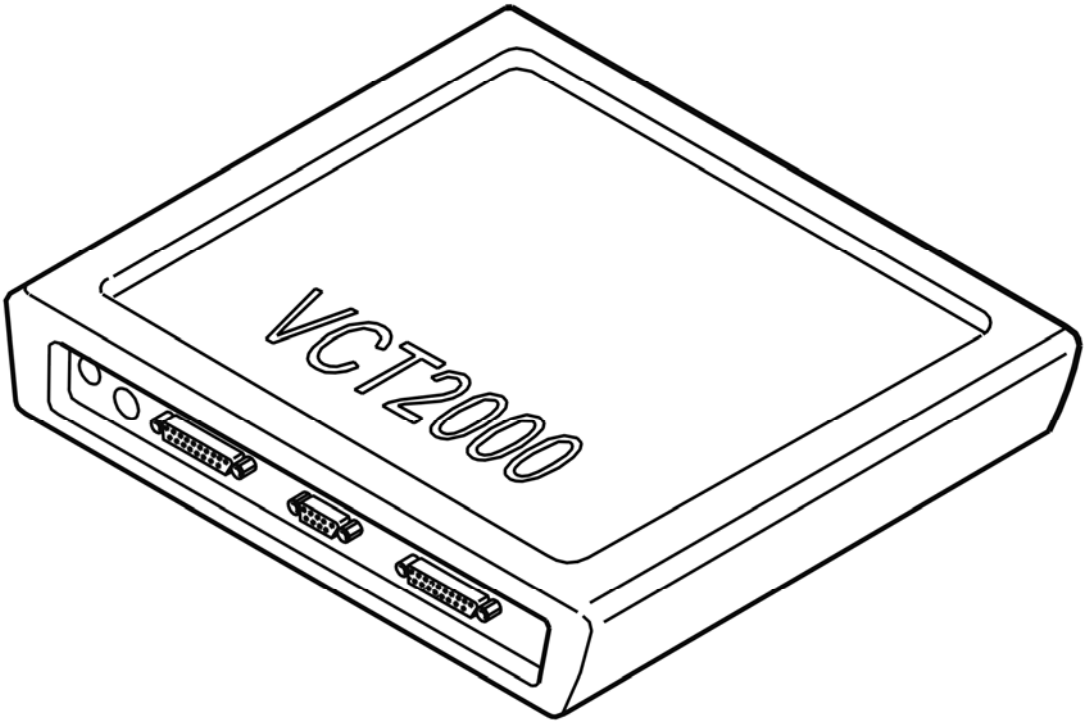

Fig. 200: Identifying VCT2000 Diagnostic Tool Symbol In VIDA
Courtesy of VOLVO CARS CORPORATION

- **Continue**

Refer to **CALIBRATING THE CLIMATE CONTROL MODULE (CCM)**

CALIBRATING THE CLIMATE CONTROL MODULE (CCM)

CAUTION: When activating this function, calibration of the Climate Control Module (CCM) starts. After carrying out calibration read off of the diagnostic trouble codes (DTCs) starts. To ensure that diagnostics for the Climate Control Module (CCM) have been carried out, delay for 30 seconds before reading out diagnostic trouble codes (DTCs) after calibration.

NOTE: Climate Control Module (CCM) and damper motors can be affected by the temperature. The vehicle should have normal room temperature when performing this service.

Fig. 201: Checking Traffic Load On CAN Cables
Courtesy of VOLVO CARS CORPORATION

Carry out calibration as follows:

- Ignition on.
- Click on the VCT2000 (Volvo Scan Tool) symbol. Wait until calibration has been carried out and diagnostic trouble codes (DTCs) read out.
- Ignition off.

This function controls the components that communicate with the Climate Control Module (CCM) via LIN bus 1 and LIN bus 2. In the event of a fault in any of the LIN buses, diagnostic trouble codes (DTCs) CCM-0070 to CCM-0071 will be stored depending on the fault. These diagnostic trouble codes (DTCs) can only be stored in conjunction with this diagnostic function.

If any of these diagnostic trouble codes (DTCs) recur, recalibrate to check if the problem was overcome. If the diagnostic trouble code (DTC) recurs, fault-trace the relevant diagnostic trouble code (DTC).

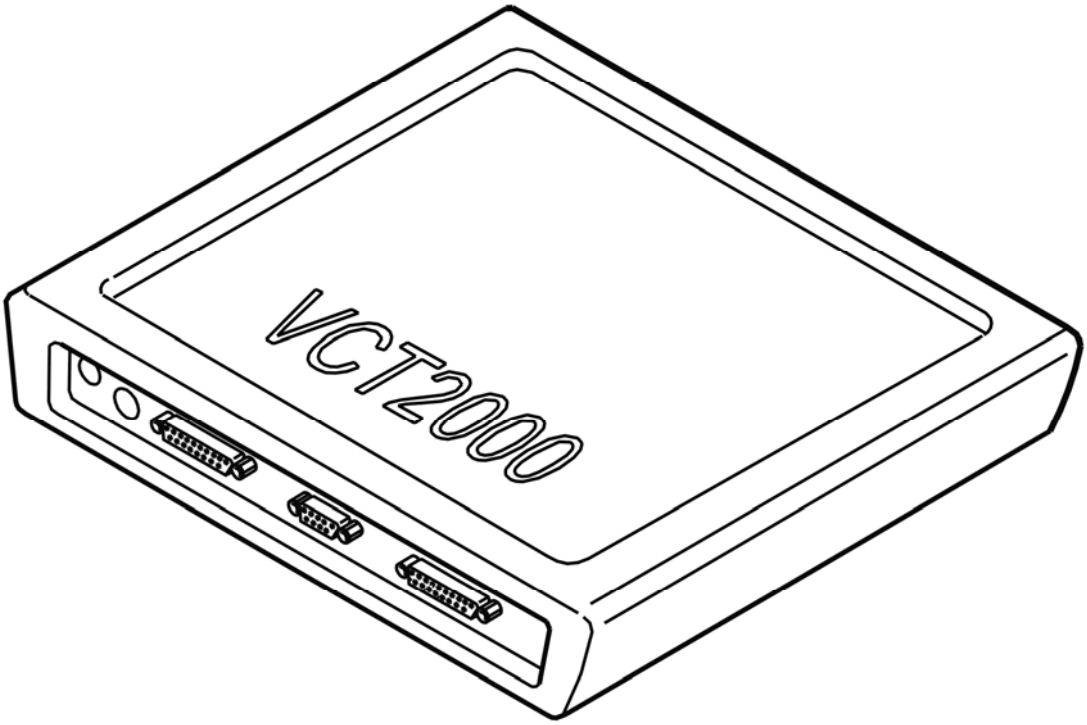

Fig. 202: Identifying VCT2000 Diagnostic Tool Symbol In VIDA
Courtesy of VOLVO CARS CORPORATION

- **Continue**

  Refer to **VERIFICATION**

VERIFICATION

HINT: After carrying out the repair, check that the fault has been remedied.

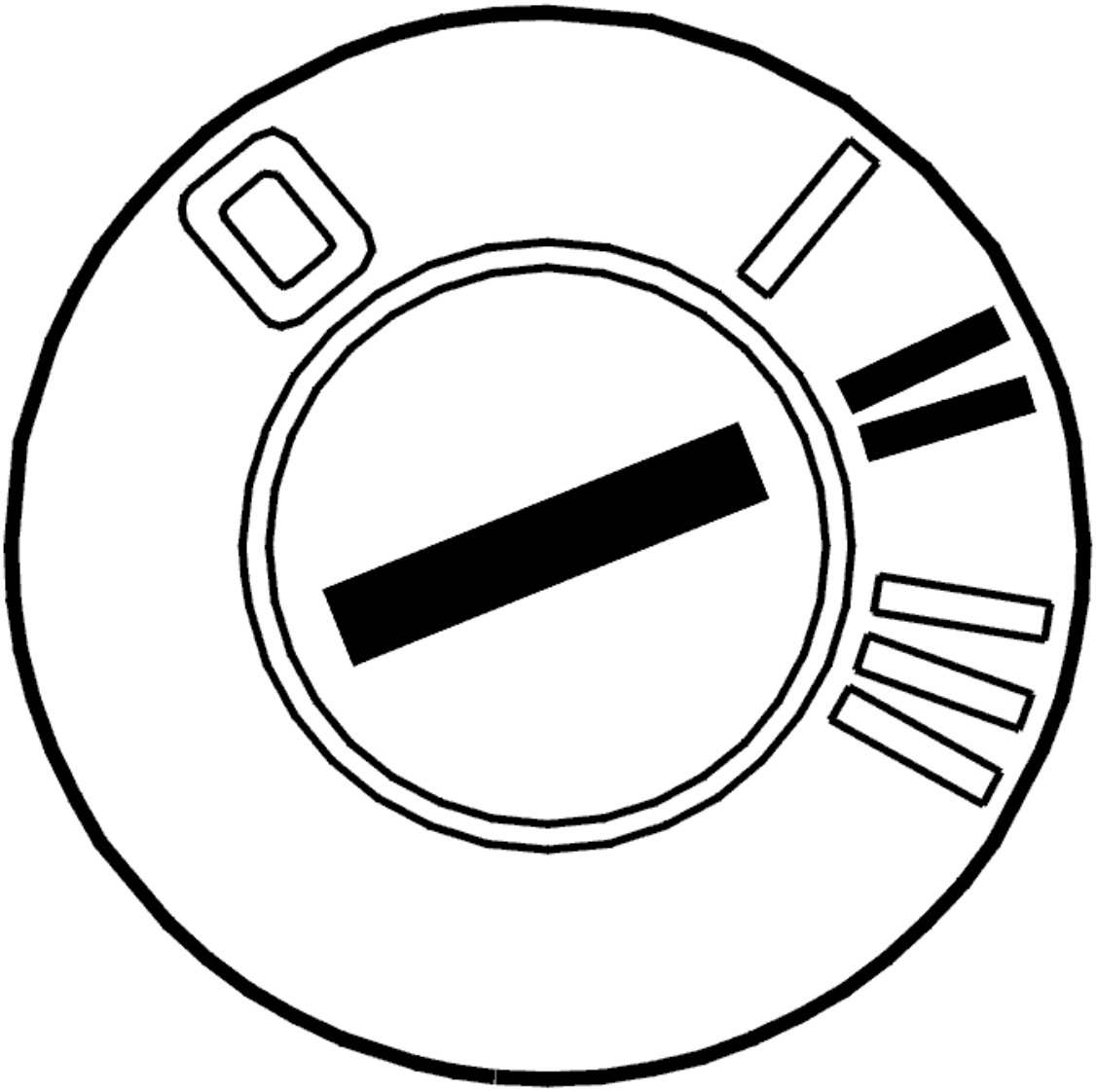

Fig. 203: Identifying Ignition ON
Courtesy of VOLVO CARS CORPORATION

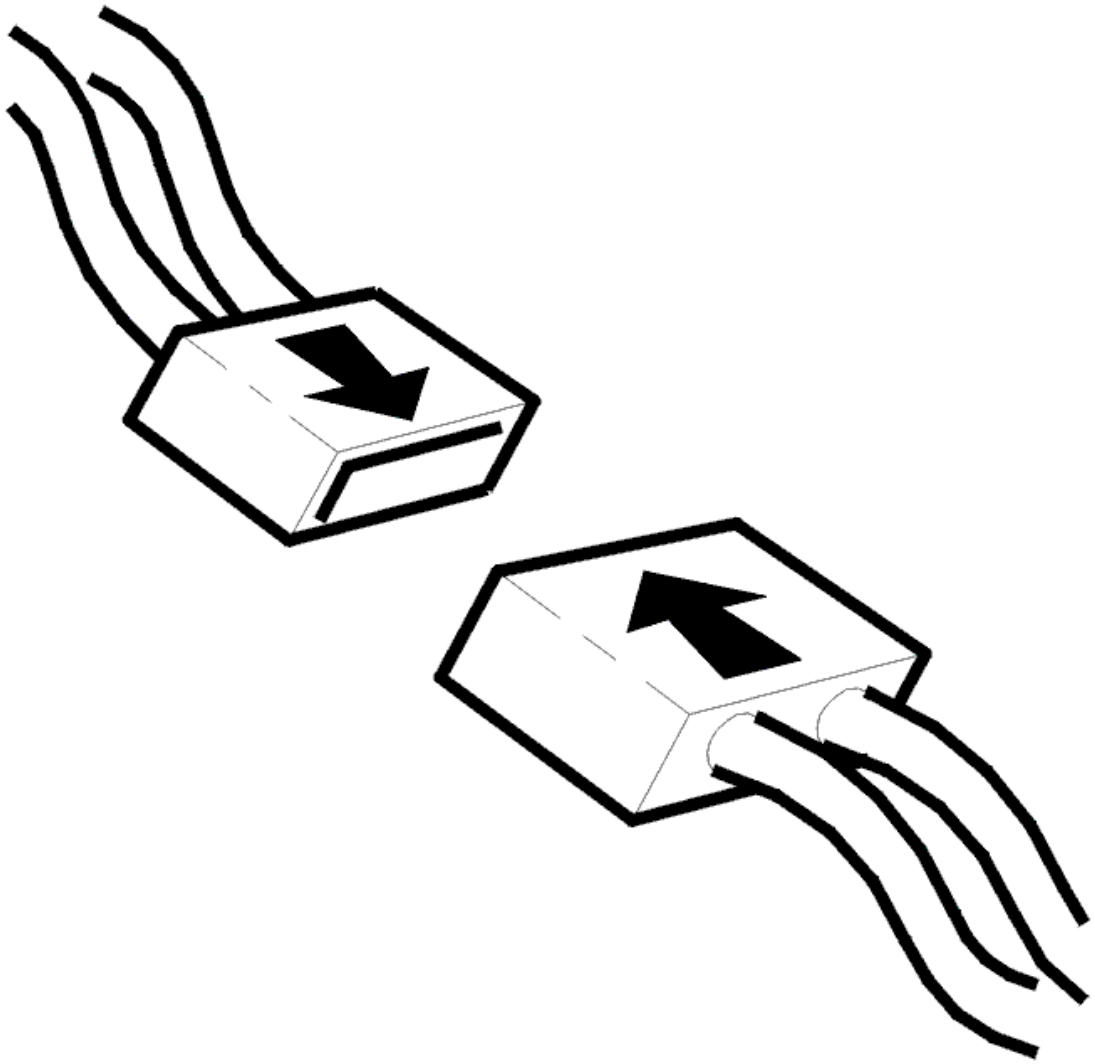

Fig. 204: Connecting Connector
Courtesy of VOLVO CARS CORPORATION

- Ignition off
- Reinstall the connectors, components etc.
- Ignition on.

  Check that the relevant diagnostic trouble code (DTC) has switched status from permanent to intermittent fault.

  Check also that diagnostic trouble code (DTC) CCM-0070, CCM-0071 CCM-0072 or CCM-0073 has not been stored during identification of the damper motors.

  These diagnostic trouble codes (DTCs) can only be stored when identifying damper motors. They mean that the identification has failed for some reason.

Remedy by correctly identifying the damper motor. Fault-trace according to the relevant information.

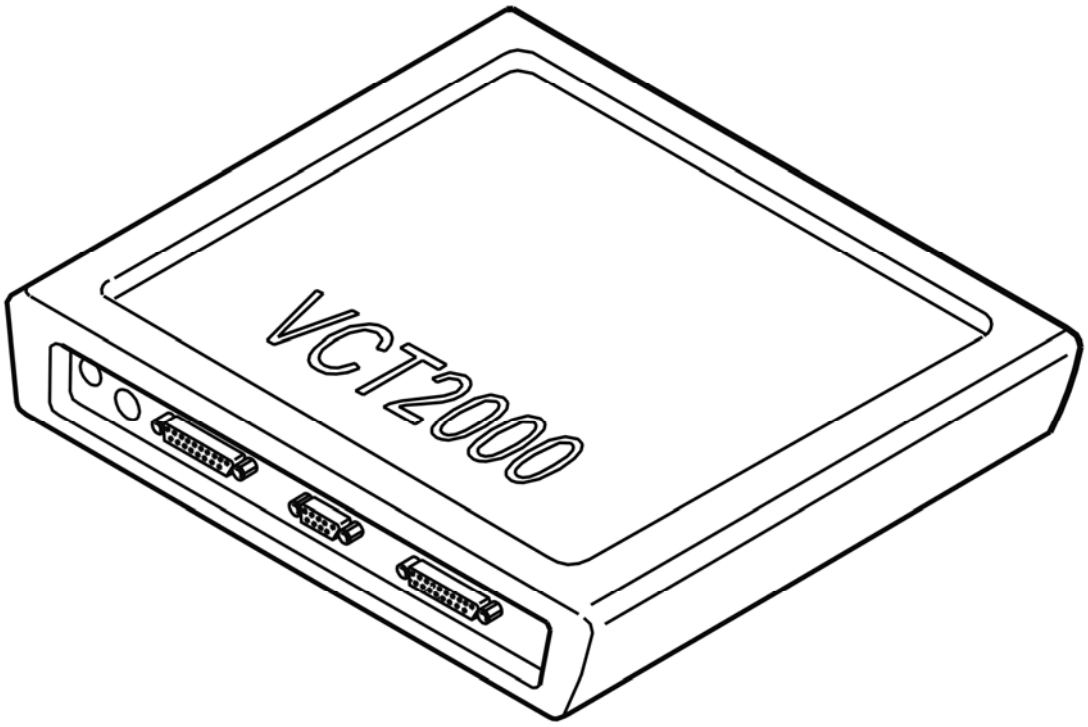

Fig. 205: Identifying VCT2000 Diagnostic Tool Symbol In VIDA
Courtesy of VOLVO CARS CORPORATION

Has the status of the diagnostic trouble code (DTC) changed?

- **YES**

  VERIFIED: Troubleshooting has been completed.

- **NO**

  Refer to **INFORMATION**

INFORMATION

FAULT-TRACING INFORMATION

The fault should have been detected and remedied. As this is not the case fault-tracing has failed.

Exit fault-tracing for this diagnostic trouble code (DTC) or make another attempt.

CCM-DD34: AIR QUALITY SENSOR (AQS). NO COMMUNICATION (2005-

2012)

DIAGNOSTIC TROUBLE CODE (DTC) INFORMATION CCM-DD34

Condition

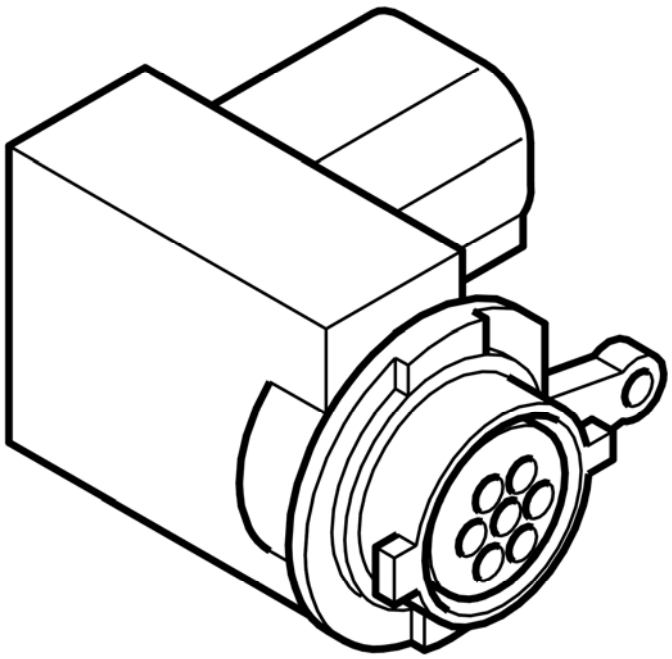

Fig. 206: Identifying Air Quality Sensor (AQS)
Courtesy of VOLVO CARS CORPORATION

The diagnostic trouble code (DTC) is stored if the climate control module (CCM) detects an open-circuit in the communication between the air quality sensor (AQS) and the climate control module (CCM) on LIN bus 2.

The diagnostic trouble code (DTC) may occur together with diagnostic trouble codes (DTCs) for other components on LIN bus 2 (CCM-DD30 - CCM-DD34) depending on where the open-circuit has occurred

The diagnostic trouble code (DTC) can be diagnosed at ignition switch position II.

The diagnostic trouble code (DTC) can only be diagnosed for the electronic climate control module (CCM) (ECC).

Substitute Value

- None.

Possible Source

- Open-circuit on LIN bus 2 between the climate control module (CCM) and the air quality sensor (AQS)
- Contact resistance, oxidation or loose connections in the connectors.

Fault symptom[s]

- Poor air quality in the passenger compartment.

NO COMMUNICATION

CHECKING THE DIAGNOSTIC TROUBLE CODES (DTCS)

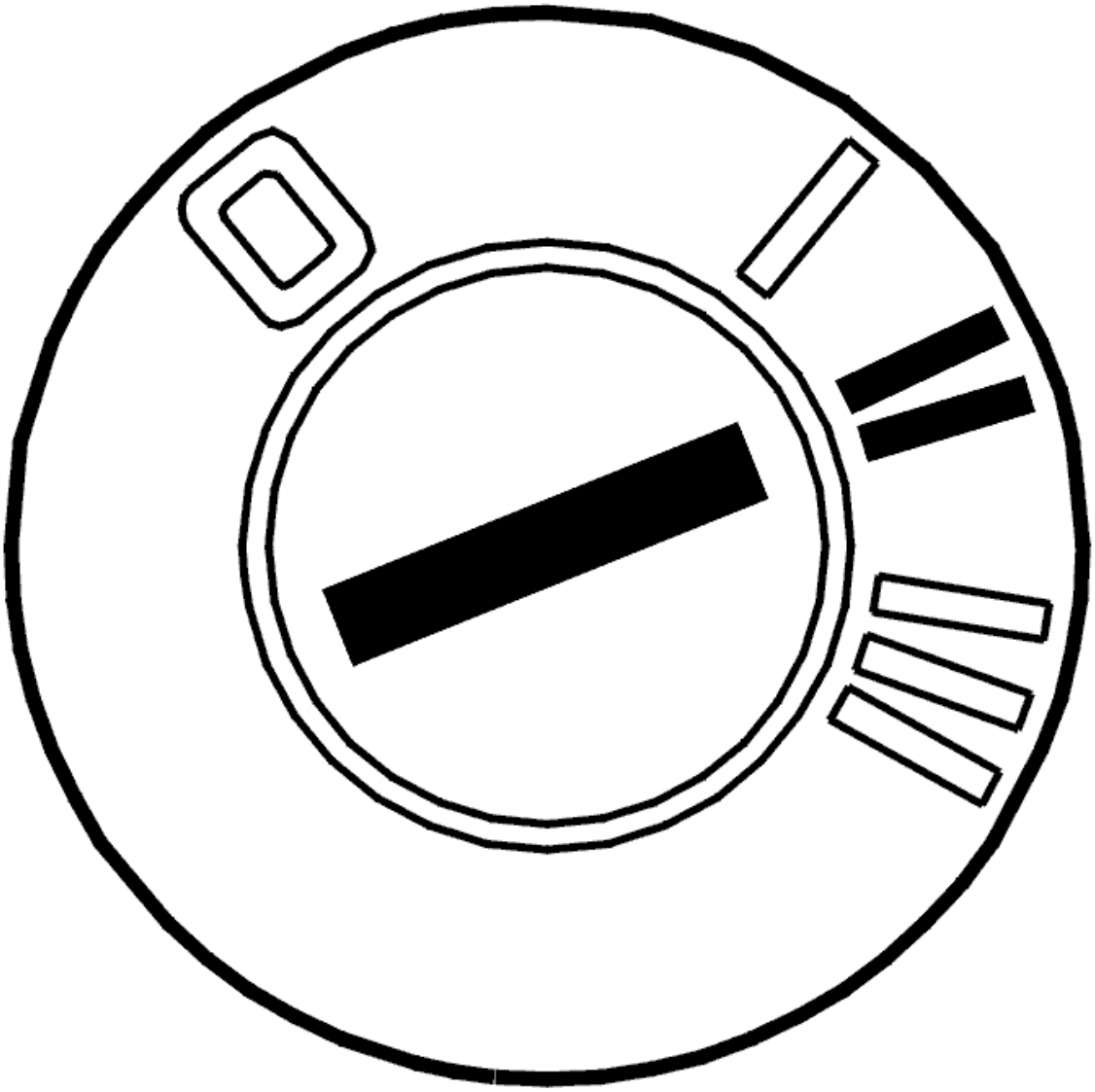

Fig. 207: Identifying Ignition ON
Courtesy of VOLVO CARS CORPORATION

- Ignition on.

  The diagnostic trouble code (DTC) may occur together with diagnostic trouble codes (DTCs) for other components that communicate with the climate control module (CCM) via LIN bus 1 and LIN bus 2.

  Check whether the diagnostic trouble code (DTC) has been stored together with other diagnostic trouble codes (DTCs) for other components on the climate control unit.

  Following options:

  1. The diagnostic trouble code (DTC) is stored together with diagnostic trouble codes (DTCs) for components in both LIN bus 1 and LIN bus 2 (CCM-DD10 - CCM-DD16, CCM-DD30 - CCM-DD34). Refer to **CHECKING THE CONNECTORS AND WIRING**
  2. The diagnostic trouble code (DTC) is together with diagnostic trouble codes (DTCs) for components only on LIN bus 1 (CCM-DD31-CCM-DD34). Refer to **CHECKING LIN BUS 2 AND CONNECTOR**
  3. The diagnostic trouble code (DTC) is not together with diagnostic trouble codes (DTCs) for other components on LIN bus 1 and LIN bus 2. Refer to **CHECKING THE WIRING AND COMPONENT**

CHECKING THE CONNECTORS AND WIRING

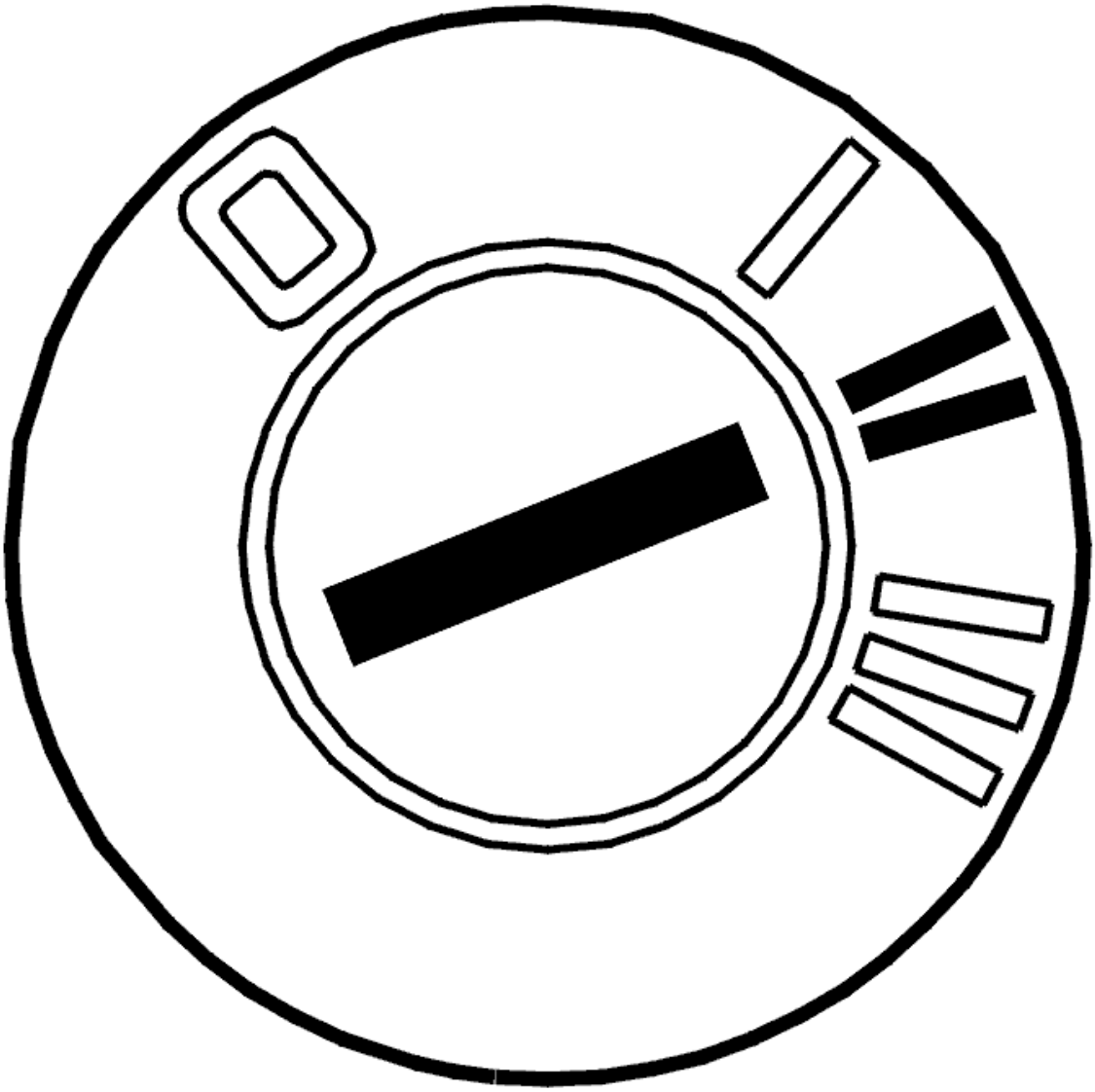

Fig. 208: Identifying Ignition ON
Courtesy of VOLVO CARS CORPORATION

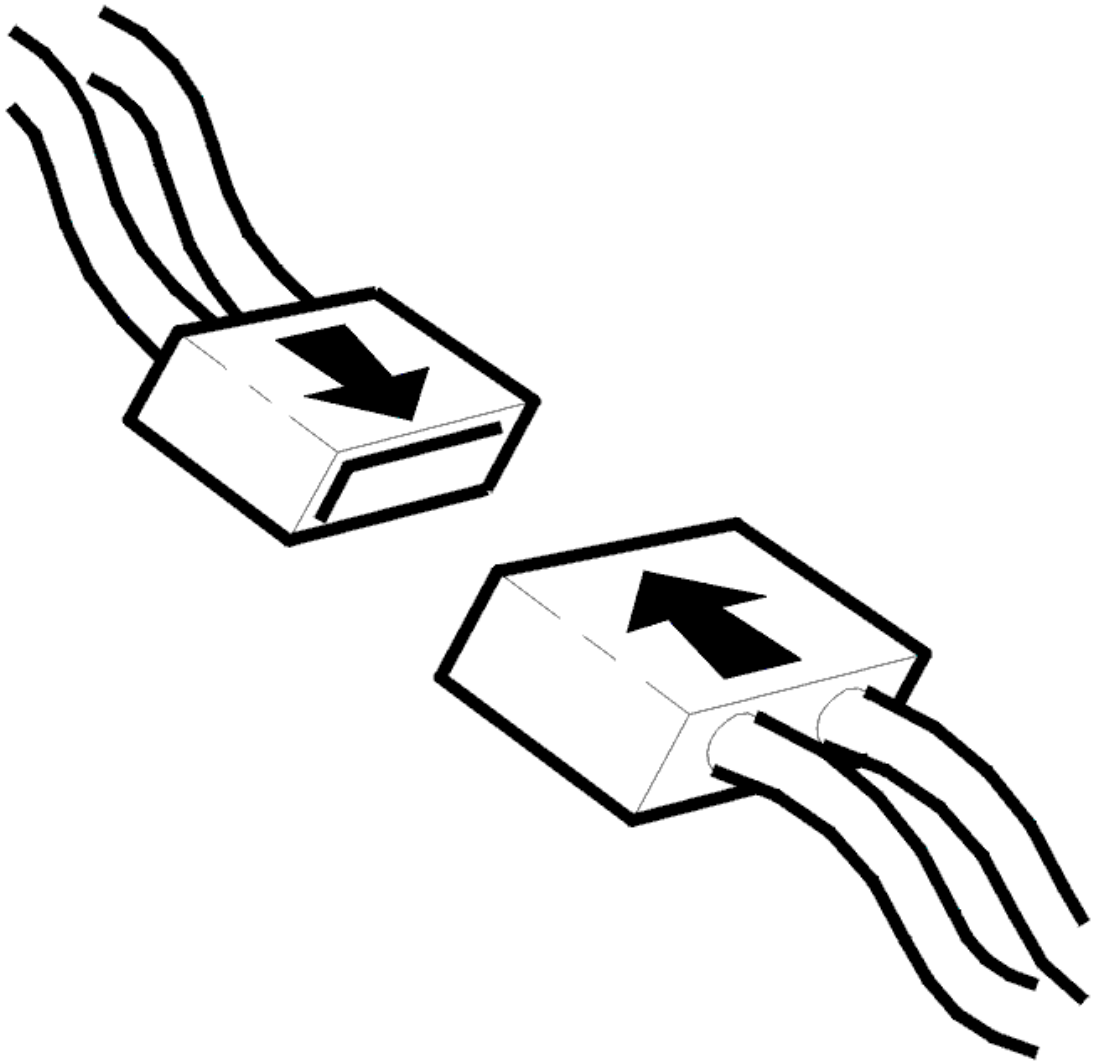

Fig. 209: Connecting Connector
Courtesy of VOLVO CARS CORPORATION

- Ignition off
- Disconnect the connector for the climate control module (CCM)
- Disconnect the connector for the central electronic module (CEM)
- Ignition on.

Checking the power supply and ground terminals

The following applies to components on the climate control unit that communicate with the climate control module (CCM) via LIN bus 1 and LIN bus 2:

- All components are jointly powered via a fuse from the central electronic module (CEM)
- All components are grounded via a common ground terminal.

Check the power supply to the components on the climate control unit by taking a reading on connector A for the central electronic module (CEM) between terminal #A44 (C44) and chassis ground.

Also check the fuse on the central electronic module (CEM).

Check the power supply cable between the central electronic module (CEM) and the connector for the climate control unit. Check for an open-circuit. Measure between terminal #1 on the connector for the climate control unit and chassis ground.

Check the ground terminal for the components on the climate control unit. Measure between the connector for climate control unit terminal #6 and chassis ground.

Check the connector for the climate control unit and connector A for the central electronic module (CEM). Check for contact resistance. Check for oxidation. Check for loose connections.

Checking LIN bus

Check both LIN bus 1 and LIN bus 2. Check for an open-circuit.

Take readings between:

- The connector for climate control module (CCM) terminal #12 (#36) and the connector for climate control unit terminal #2
- The connector for climate control module (CCM) terminal #7 (#31) and the connector for climate control unit terminal #5.

Check the wiring between the connector and the components on the climate control unit. Check for an open-circuit.

Remedy as necessary.

Other information:

- For further information about the connectors, fuses and relays, see the appropriate service information.
- To connect the breakout box to the climate control module (CCM), see: **CONNECTING THE BREAKOUT BOX**
- To connect the breakout box, central electronic module (CEM), see: **CONNECTING THE BREAKOUT BOX**
- see **SIGNAL SPECIFICATION**
- see **CLIMATE CONTROL, LOCATION OF COMPONENTS**
- see **CLIMATE CONTROL MODULE (CCM), REPLACING**
- For -2004, see **CENTRAL ELECTRONIC MODULE (CEM), REPLACING** . For 2005-, see **CENTRAL ELECTRONIC MODULE (CEM), REPLACING**
- see **CONTENTS**

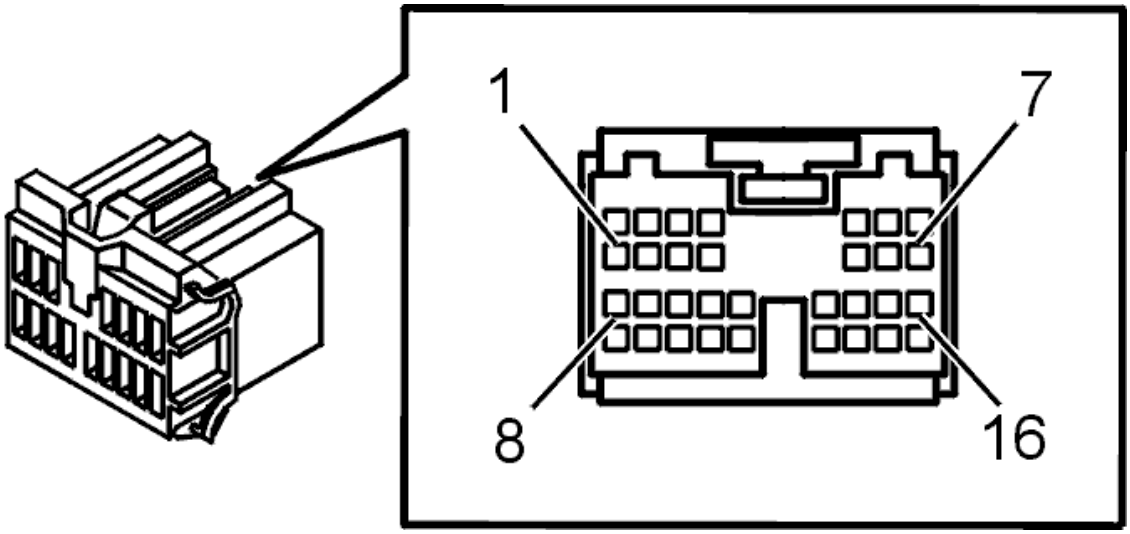

Fig. 210: Connector, Green (16- Pin)
Courtesy of VOLVO CARS CORPORATION

- **Continue**

  Refer to **VERIFICATION**

CHECKING LIN BUS 2 AND CONNECTOR

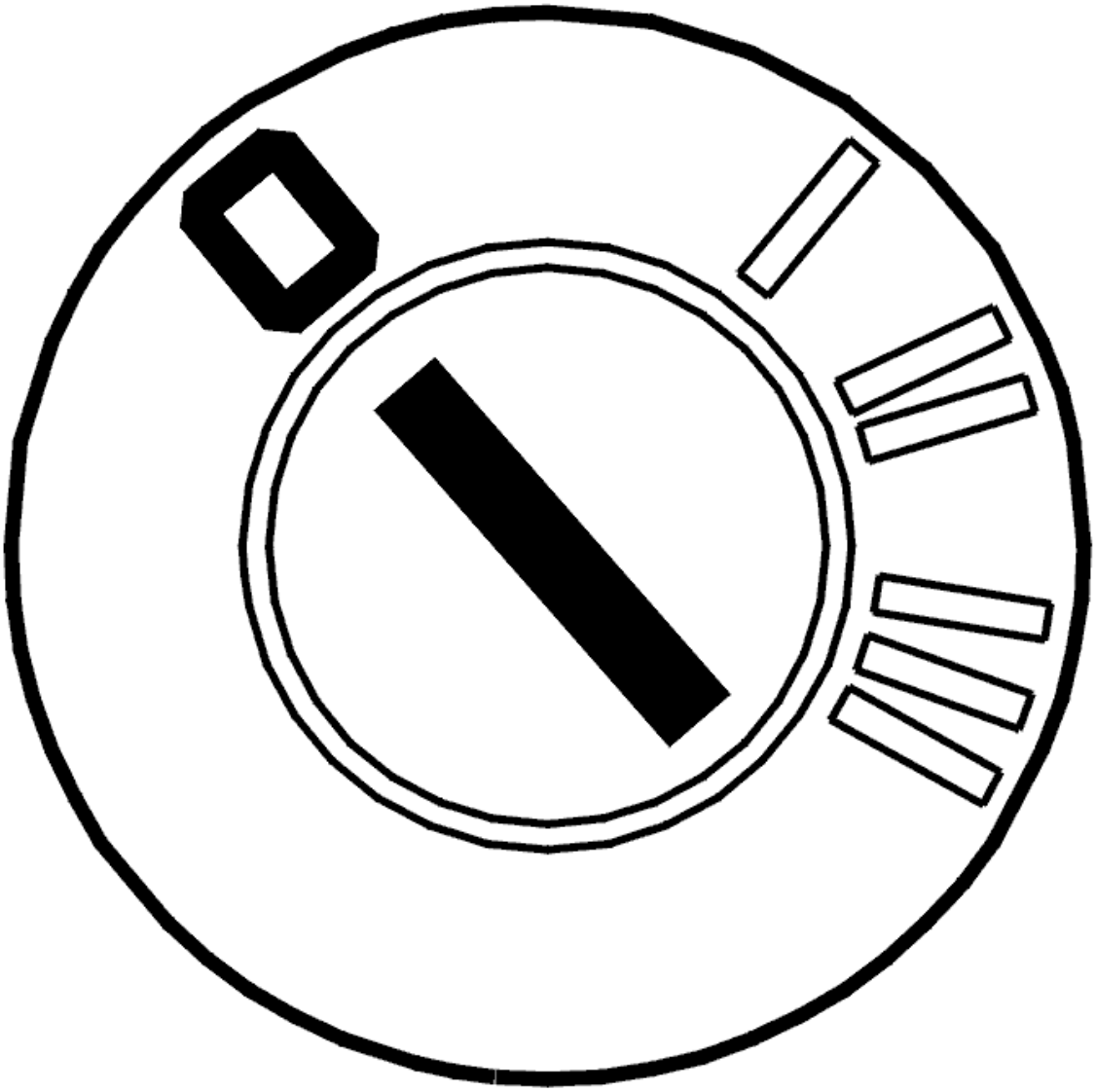

Fig. 211: Identifying Ignition OFF
Courtesy of VOLVO CARS CORPORATION

- Ignition off
- Disconnect the connector for the climate control module (CCM).

  Check the climate control module (CCM) connector. Check for contact resistance. Check for oxidation. Check for loose connections.

  Check LIN bus 2 between the climate control module (CCM), the connector for the climate control unit and the seat heating module (SHM) left. Check for an open-circuit.

  Take readings between:

  - The connector for climate control module (CCM) terminal #7 (#31) and the connector for climate control unit terminal #5

- The connector for climate control module (CCM) terminal #7 (#31) and connector A for seat heating module (SHM) left terminal #2.

Check LIN bus 2 between the components (the damper motors and the air quality sensor (AQS) and the connector for the climate control unit. Check for an open-circuit.

Check the connector for the climate control unit. Check for contact resistance. Check for oxidation. Check for loose connections.

Remedy as necessary.

Other information:

- For further information about the connectors, fuses and relays, see the appropriate service information.
- see **CONNECTING THE BREAKOUT BOX**
- see **SIGNAL SPECIFICATION**
- see **CLIMATE CONTROL, LOCATION OF COMPONENTS**
- see **CLIMATE CONTROL MODULE (CCM), REPLACING**
- see **SEAT HEATING MODULE (SHM), REPLACING**
- see **CONTENTS**

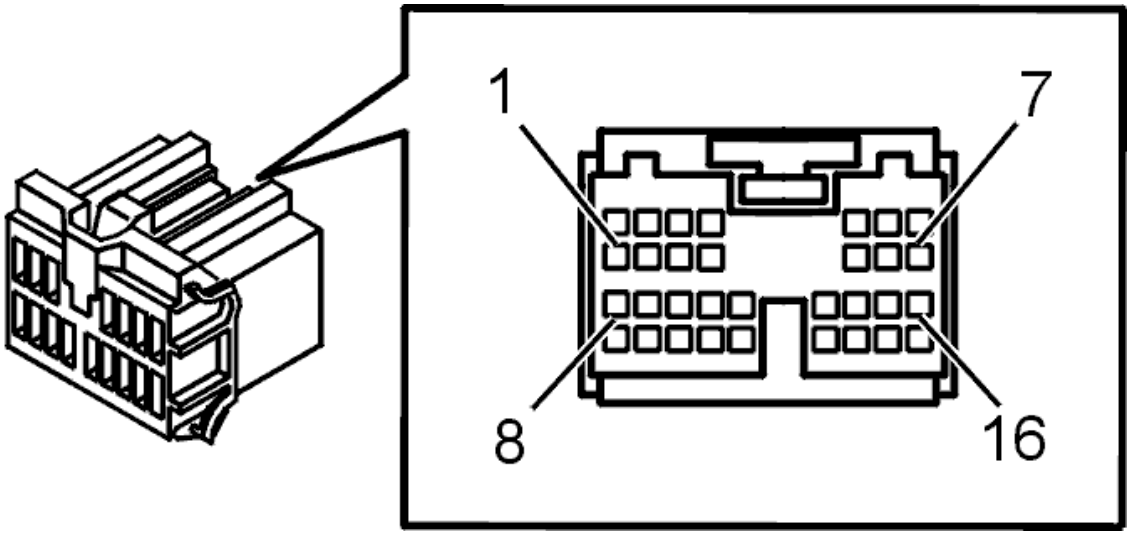

Fig. 212: Connector, Green (16- Pin)
Courtesy of VOLVO CARS CORPORATION

- **Continue**

Refer to **VERIFICATION**

CHECKING THE WIRING AND COMPONENT

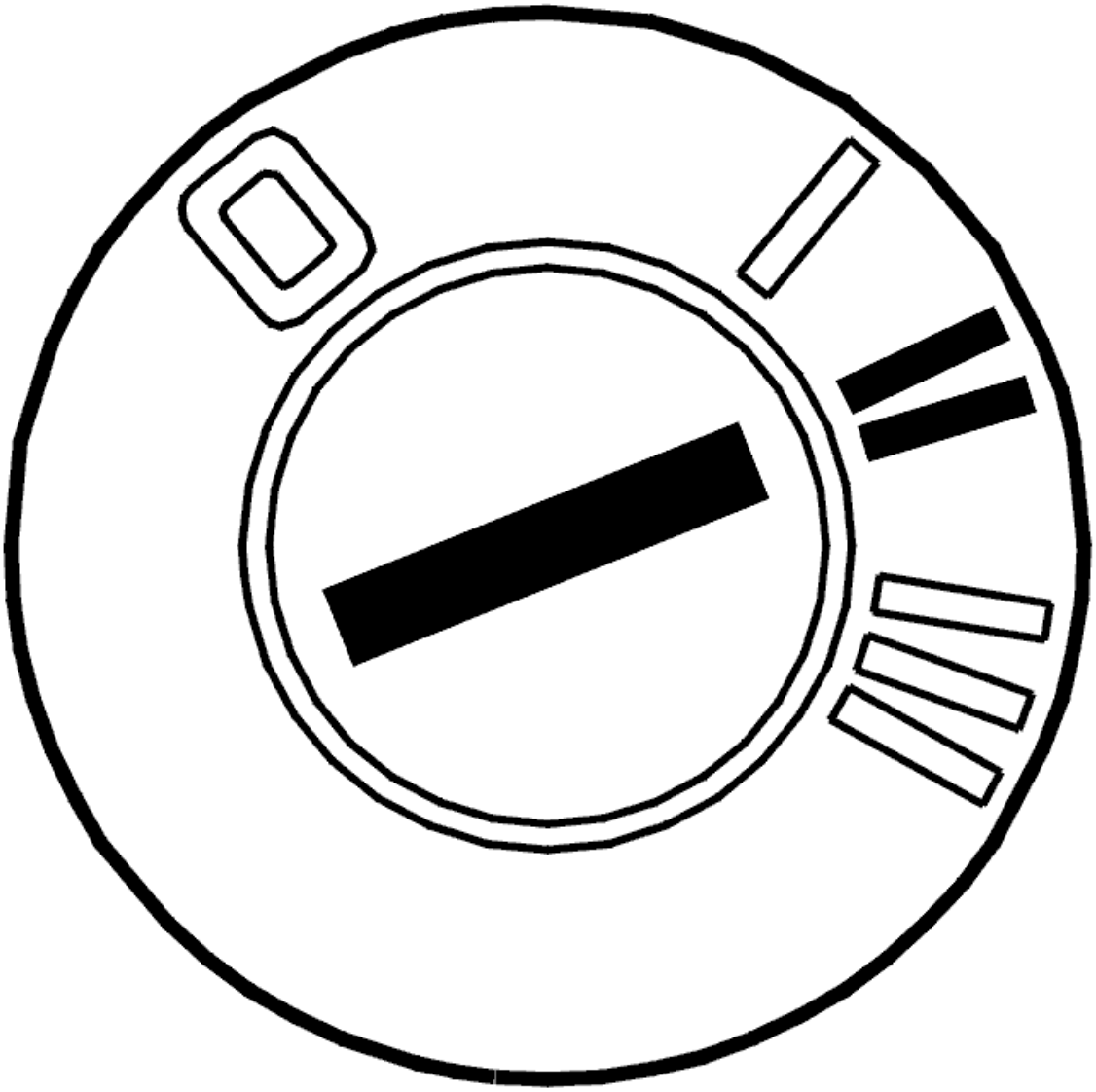

Fig. 213: Identifying Ignition ON
Courtesy of VOLVO CARS CORPORATION

- Ignition off
- Disconnect the connector for the air quality sensor (AQS)
- Ignition on.

Check the connector for the air quality sensor (AQS). Check for contact resistance. Check for oxidation. Check for loose connections.

Check that the air quality sensor (AQS) is connected to the power supply and ground.

Measure the voltage at the connector for the air quality sensor (AQS) between terminals #1 and #3.

Check LIN bus 2 by taking a reading between sensor connector terminal #2 and the connector for climate

control unit terminal #5. Check for an open-circuit.

Try replacing the air quality sensor (AQS) if no fault is found.

Remedy as necessary.

Other information:

- For further information about the connectors, fuses and relays, see the appropriate service information.
- see **CONNECTING THE BREAKOUT BOX**
- see **SIGNAL SPECIFICATION**
- see **CLIMATE CONTROL, LOCATION OF COMPONENTS**
- see **CLIMATE CONTROL MODULE (CCM), REPLACING**
- see **AIR QUALITY SENSOR, REPLACING**
- see **CONTENTS**

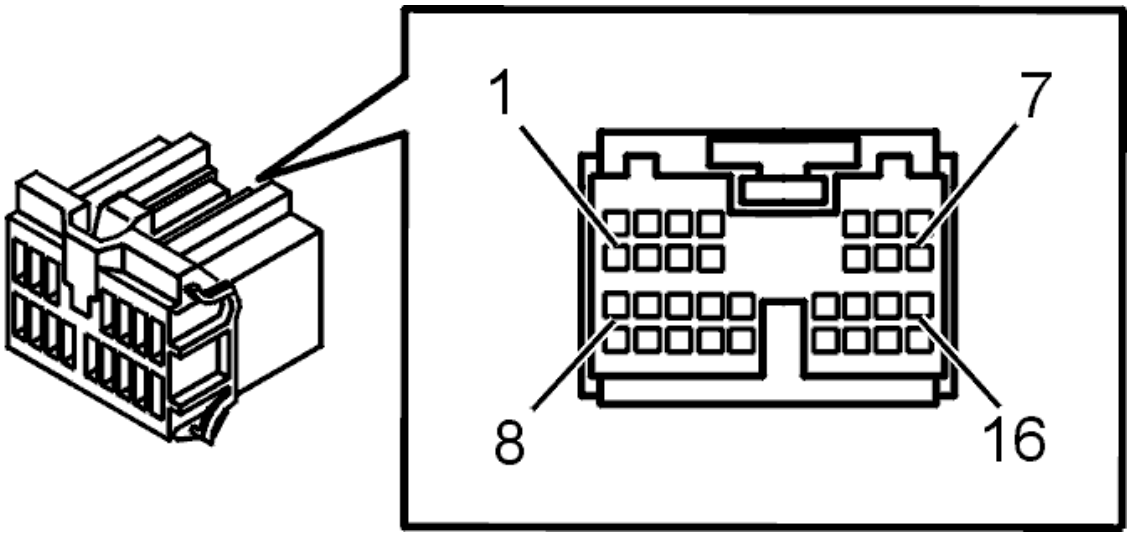

Fig. 214: Connector, Green (16- Pin)
Courtesy of VOLVO CARS CORPORATION

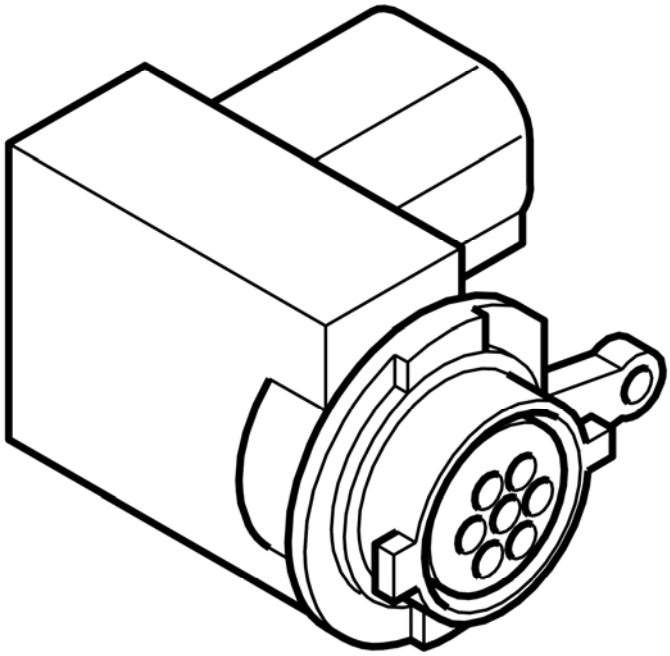

Fig. 215: Identifying Air Quality Sensor (AQS)
Courtesy of VOLVO CARS CORPORATION

VERIFICATION

HINT: After carrying out the repair, check that the fault has been remedied.

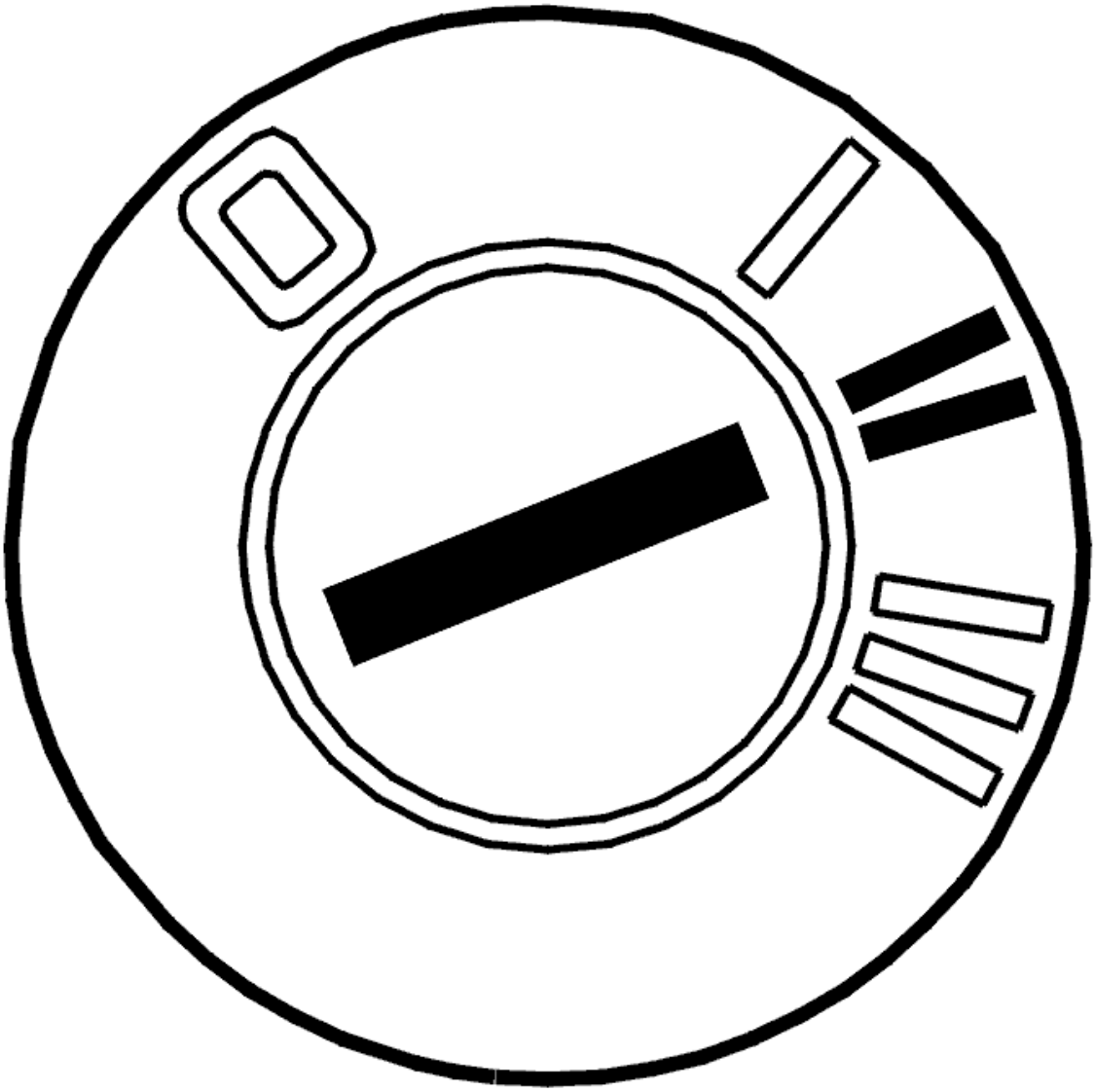

Fig. 216: Identifying Ignition ON
Courtesy of VOLVO CARS CORPORATION

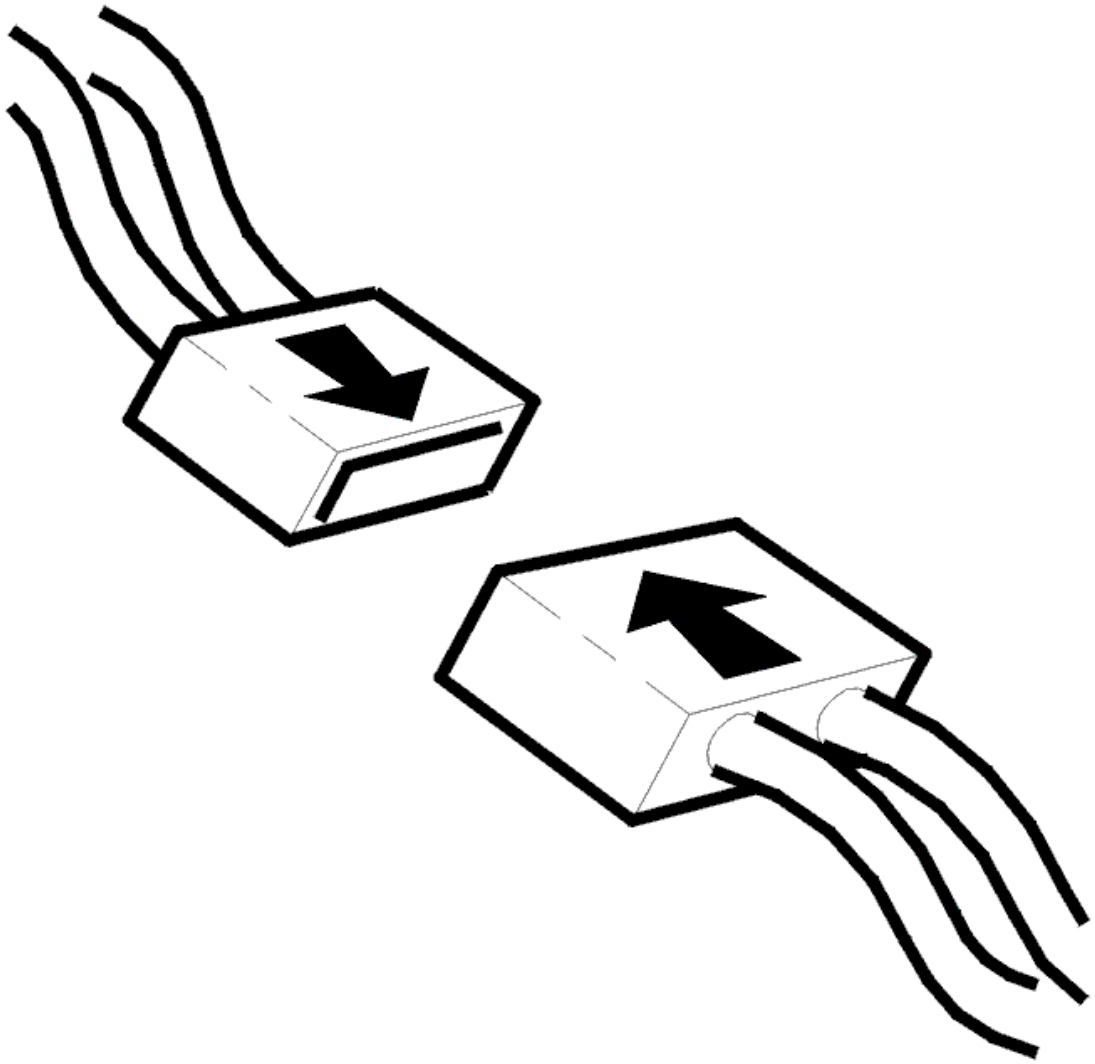

Fig. 217: Connecting Connector
Courtesy of VOLVO CARS CORPORATION

- Ignition off
- Reinstall the connectors, components etc.
- Ignition on.

  Check that the relevant diagnostic trouble code (DTC) has switched status from permanent to intermittent fault.

  Check also that diagnostic trouble code (DTC) CCM-0070, CCM-0071 CCM-0072 or CCM-0073 has not been stored during identification of the damper motors.

  These diagnostic trouble codes (DTCs) can only be stored when identifying damper motors. They mean that the identification has failed for some reason.

Remedy by correctly identifying the damper motor. Fault-trace according to the relevant information.

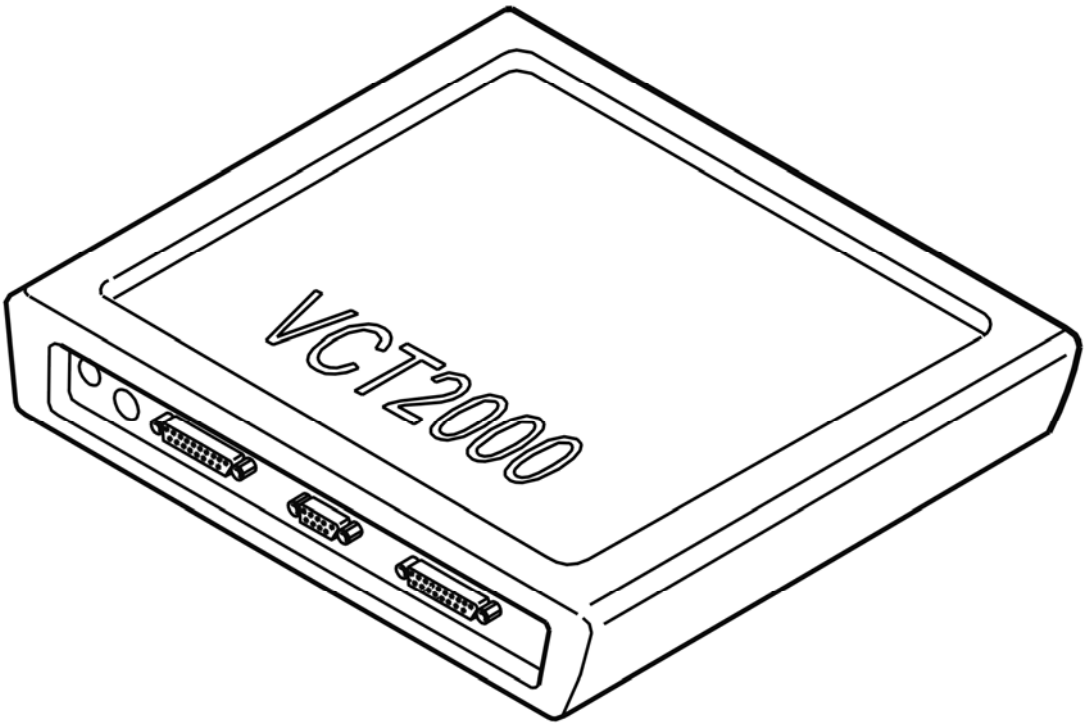

Fig. 218: Identifying VCT2000 Diagnostic Tool Symbol In VIDA
Courtesy of VOLVO CARS CORPORATION

Has the status of the diagnostic trouble code (DTC) changed?

- **YES**

  VERIFIED: Troubleshooting has been completed.

- **NO**

  Refer to **INFORMATION**

INFORMATION

FAULT-TRACING INFORMATION

The fault should have been detected and remedied. As this is not the case fault-tracing has failed.

Exit fault-tracing for this diagnostic trouble code (DTC) or make another attempt.

CCM-E001: CONTROL MODULE COMMUNICATION (2005-2012)

DIAGNOSTIC TROUBLE CODE (DTC) INFORMATION CCM-E001

Condition

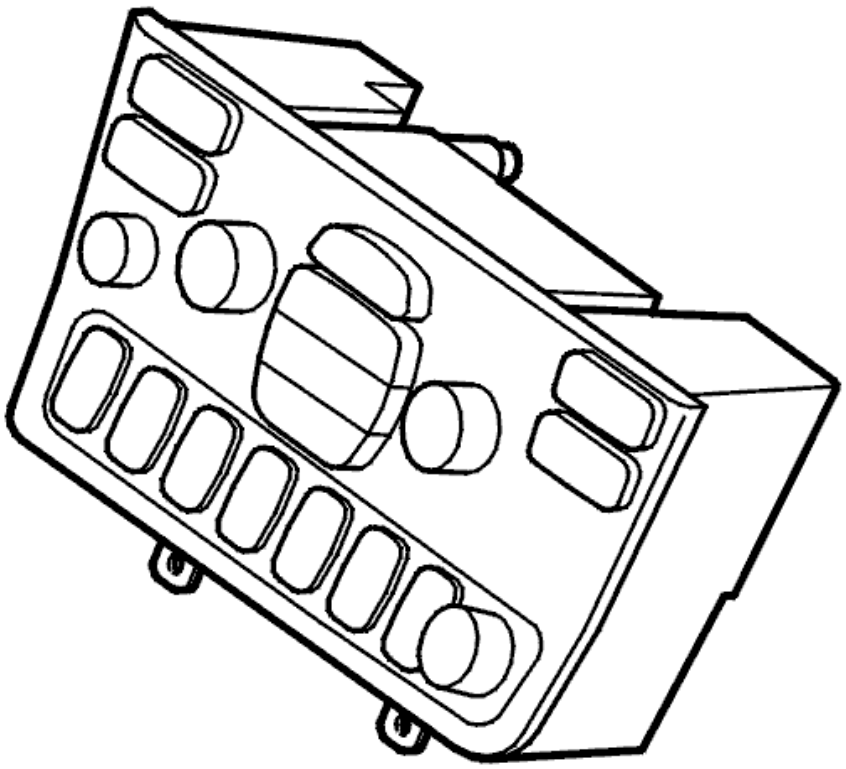

Fig. 219: Climate Control Module
Courtesy of VOLVO CARS CORPORATION

The control modules transmit and receive information via a standardized serial communication method - CAN (Control Area Network). The diagnostic trouble code (DTC) is stored if the control module registers serious interference on the low speed network (CAN communication blocked).

NOTE: **In the event of system communication problems, it is not possible to communicate with the control module. Therefore it will only be possible to read off the diagnostic trouble code (DTC) if the fault is intermittent.**

Substitute Value

- The control module shuts itself off ("bus-off").

HINT: The control module will remain shut off until the power supply is broken (15, 30, X). When the power supply is connected the control module will make a new attempt to communicate.

Possible Source

- Short-circuit between the control area network (CAN) wiring
- Open-circuit in the control area network (CAN) wiring
- Internal fault in the control module
- Internal fault in another control module in the same part of the control area network (CAN).

Fault symptom[s]

- Misting on the windows and/or door mirrors.
- The function button is not working.
- Blower fan not operating.
- The front seat heating does not function.
- Functions in the infotainment system do not work.

SIGNAL MISSING

see **SIGNAL MISSING**

CCM-E001: CONTROL MODULE COMMUNICATION. FAULTY COMMUNICATION (2003-2004)

DIAGNOSTIC TROUBLE CODE (DTC) INFORMATION CCM-E001

Condition

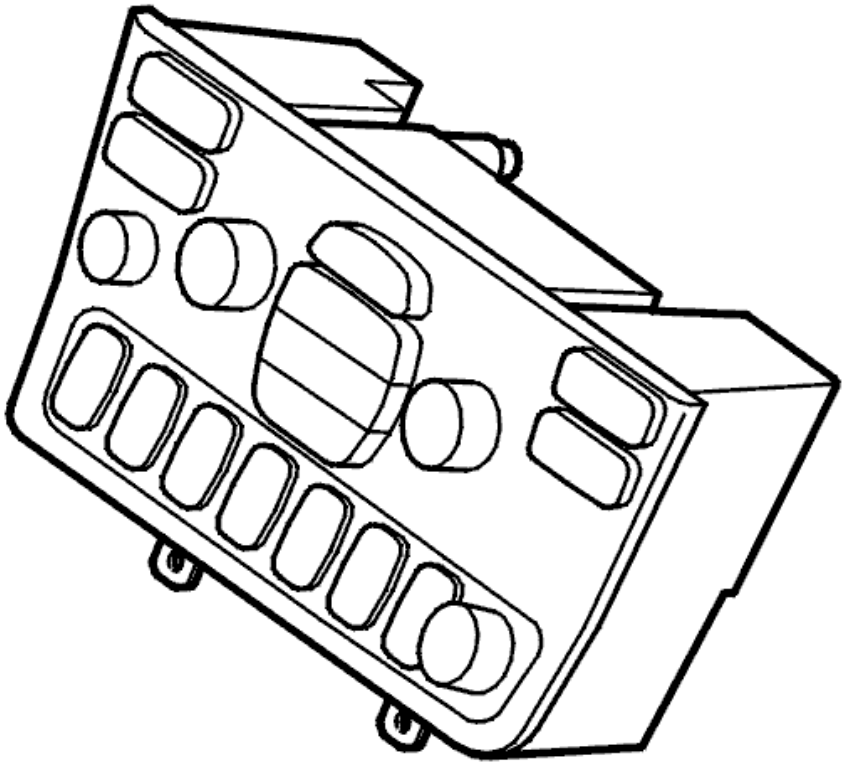

Fig. 220: Climate Control Module
Courtesy of VOLVO CARS CORPORATION

The control modules transmit and receive information via a standardized serial communication method - CAN (Controller Area Network). The diagnostic trouble code (DTC) is stored if the control module registers serious interference (CAN communication blocked).

NOTE: **In the event of system communication problems, it is not possible to communicate with the control module. Therefore it will only be possible to read off the fault if it is intermittent.**

Substitute Value

- The control module shuts itself off ("bus-off").

  HINT: The control module will remain shut off until the power supply is broken (15, 30, X). When the power supply is connected the control module will make a new attempt to communicate.

Possible Source

- Short-circuit between the control area network (CAN) wiring
- Open-circuit in the control area network (CAN) wiring
- Internal fault in the control module

- Internal fault in another control module in the same part of the control area network (CAN).

NOTE: **In the event of missing CAN communication, but with the power supply still on, the climate control module (CCM) will function for a few minutes after the key has been removed (Limp-home function).**

Fault symptom[s]

- The climate control system functions after the key has been removed
- The lower row of buttons on the climate control system does not function
- The air conditioning (A/C) compressor does not start, or runs sporadically
- Misting on the windows and/or door mirrors
- Does not deadlock
- Does not open from deadlock
- Private locking of the trunk lid does not function. (S80, S60)
- Temporary disengagement of the detectors is not possible.

FAULTY COMMUNICATION

see **FAULTY COMMUNICATION**

CCM-E003: CONFIGURATION FAULT (2005-2012)

DIAGNOSTIC TROUBLE CODE (DTC) INFORMATION CCM-E003

Condition

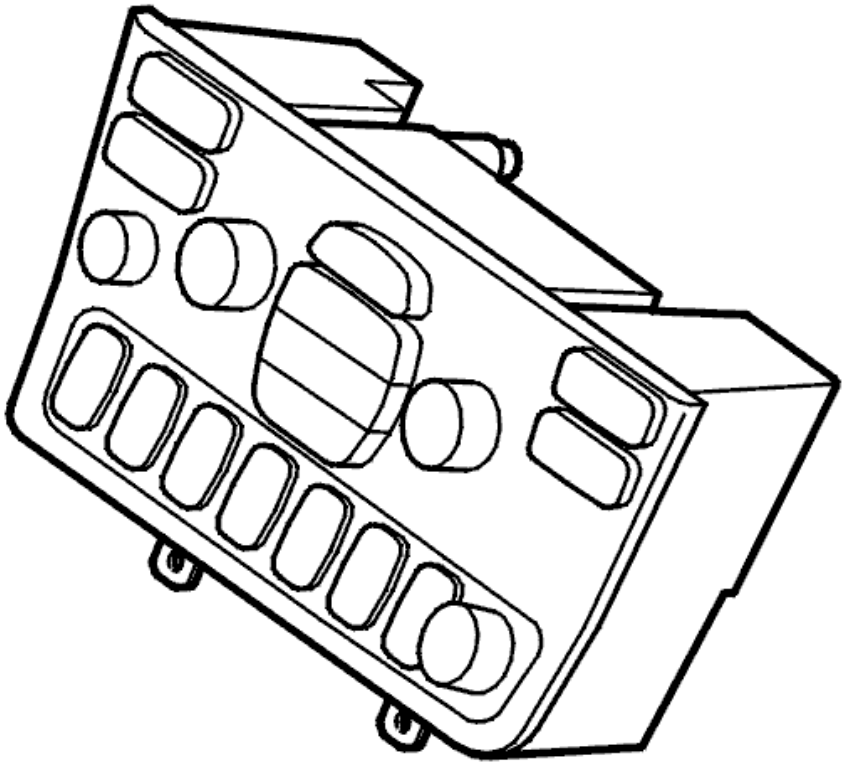

Fig. 221: Climate Control Module
Courtesy of VOLVO CARS CORPORATION

The control module compares its configuration ID with the signal configuration transmitted on the control area network (CAN) by the central electronic module (CEM). If the configuration IDs do not correspond the fault code is stored. The diagnostic trouble code (DTC) is also stored if the communication between the control module and the central electronic module (CEM) is interrupted.

NOTE: **In the event of an open-circuit in both the control area network (CAN) cables, it is not possible to communicate with the control module. Therefore it will only be possible to read off the diagnostic trouble code (DTC) if this type of fault is intermittent. When the diagnostic trouble code (DTC) is stored, the control module responds to the diagnostic commands. However normal control area network (CAN) communication does not work ("Expulsion mode").**

Substitute Value

- None.

Possible Source

- Faulty control area network (CAN) configuration ID. (The control module is not intended for this vehicle, for example, a used control module with different software/hardware)

- Open-circuit in the control area network (CAN) wiring between the control module and the central electrical module (CEM).

Fault symptom[s]

- Misting on the windows and/or door mirrors.
- The function button is not working.
- Blower fan not operating.
- The front seat heating does not function.
- Functions in the infotainment system do not work.

SIGNAL MISSING

see **SIGNAL MISSING**

CCM-E003: CONFIGURATION FAULT. FAULTY CONFIGURATION (2003-2004)

DIAGNOSTIC TROUBLE CODE (DTC) INFORMATION CCM-E003

Condition

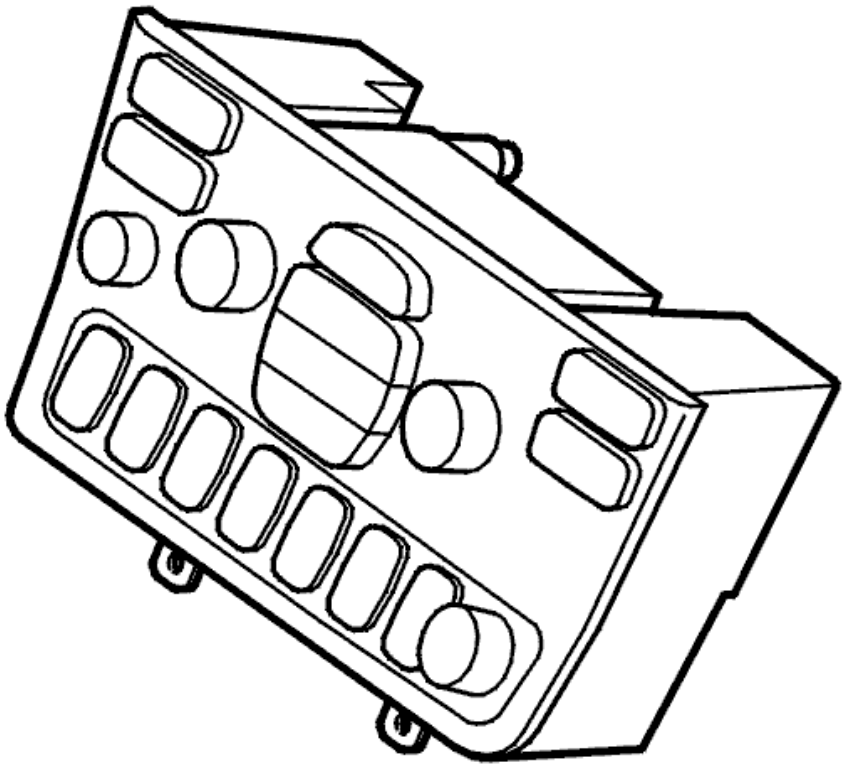

Fig. 222: Climate Control Module
Courtesy of VOLVO CARS CORPORATION

The control module compares its configuration ID with the signal configuration transmitted on the control area network (CAN) by the central electronic module (CEM). If the configuration IDs do not correspond the fault code is stored. The diagnostic trouble code (DTC) is also stored if the communication between the control module and the central electronic module (CEM) is interrupted.

NOTE: **In the event of open-circuit in both the control area network (CAN) cables, it is not possible to communicate with the control module. Therefore it will only be possible to read off the diagnostic trouble code (DTC) if this type of fault is intermittent. When the diagnostic trouble code (DTC) is stored, the control module responds to the diagnostic command, however normal control area network (CAN) communication does not work. ("Expulsion mode")**

Substitute Value

- Limp home function.

Possible Source

- Faulty control area network (CAN) configuration ID. (The node is not intended for this car (for example a used control module with different software/hardware)).

NOTE: **In the event of open-circuit in both the control area network (CAN) cables, it is not possible to communicate with the control module. Therefore it will only be possible to read off the diagnostic trouble code (DTC) if this type of fault is intermittent. Diagnostic information can be read off if there is an open-circuit in only one of the cables. The functionality of the control module may also remain, but with a possible reduction in performance.**

NOTE: **The control module responds to diagnostic data, however the CAN communication does not function.**

NOTE: **In the event of missing CAN communication, but with the power supply still on, the climate control module (CCM) will function for a few minutes after the key has been removed (Limp-home function).**

HINT: If the diagnostic trouble code (DTC) has also been stored for an open-circuit in the communication with other control modules on the control area network (CAN), the fault may be a common one (for example an open-circuit in one of the control area network (CAN) cables). To localize faults, refer to the appropriate service information.

Fault symptom[s]

- The climate control system functions after the key has been removed

- The lower row of buttons on the climate control system does not function
- No cooling from the air conditioning (A/C) system
- Misting on the windows and/or door mirrors
- Does not deadlock
- Does not open from deadlock
- Private locking of the trunk lid does not function. (S80, S60)
- Temporary disengagement of the detectors is not possible.

FAULTY CONFIGURATION (2003)

see **FAULTY CONFIGURATION (2003)**

FAULTY CONFIGURATION (2004)

see **FAULTY CONFIGURATION (2004)**

CCM-E010: POWER SUPPLY (2005-2012)

DIAGNOSTIC TROUBLE CODE (DTC) INFORMATION CCM-E010

Condition

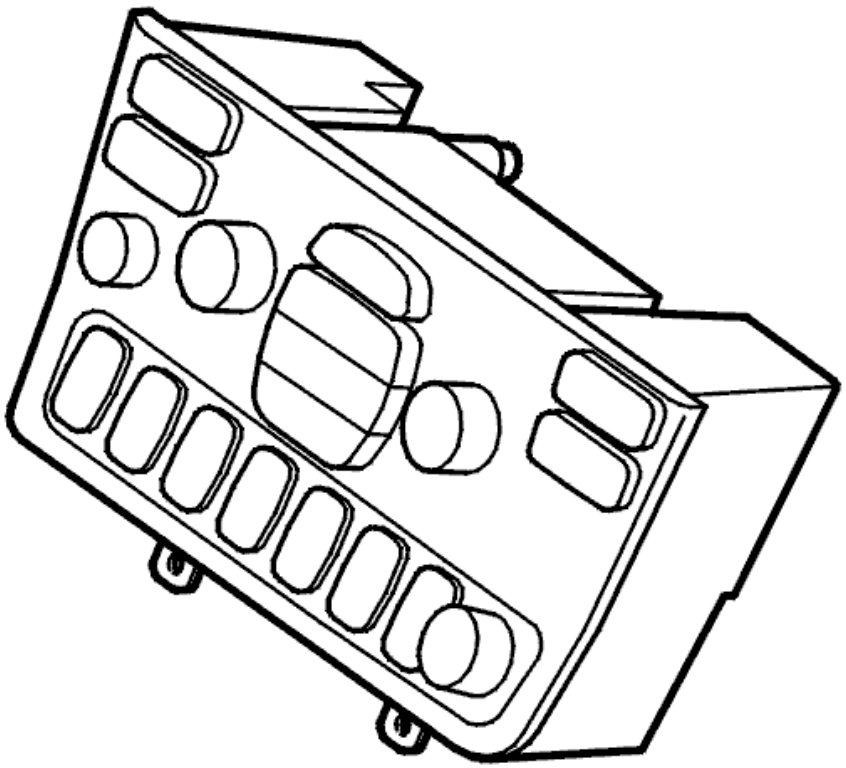

Fig. 223: Climate Control Module
Courtesy of VOLVO CARS CORPORATION

The diagnostic trouble code (DTC) is stored if the supply voltage to the climate control module (CCM) differs by more than 2 V from the supply voltage to the central electronic module (CEM).

The climate control module (CCM) receives information about supply voltage from the central electronic module (CEM) via the CAN network.

The diagnostic trouble code (DTC) can be diagnosed in ignition positions I and II.

Substitute Value

- None.

Possible Source

- Short-circuit to ground in the cable harness
- Open-circuit in the cable harness
- Contact resistance
- Half-burned fuse to the climate control module (CCM).

Fault symptom[s]

- Misting on the windows and/or door mirrors.
- The function button is not working.
- Blower fan not operating.
- The front seat heating does not function.
- Functions in the infotainment system do not work.

SIGNAL MISSING

see **SIGNAL MISSING**

CCM-XXXX: UNKNOWN DIAGNOSTIC TROUBLE CODE (DTC) FOR THE CURRENT CONTROL MODULE VERSION (2005-2012)

UNKNOWN DIAGNOSTIC TROUBLE CODE (DTC) FOR THE PRESENT CONTROL MODULE VERSION

READING OFF DIAGNOSTIC TROUBLE CODES (DTC)

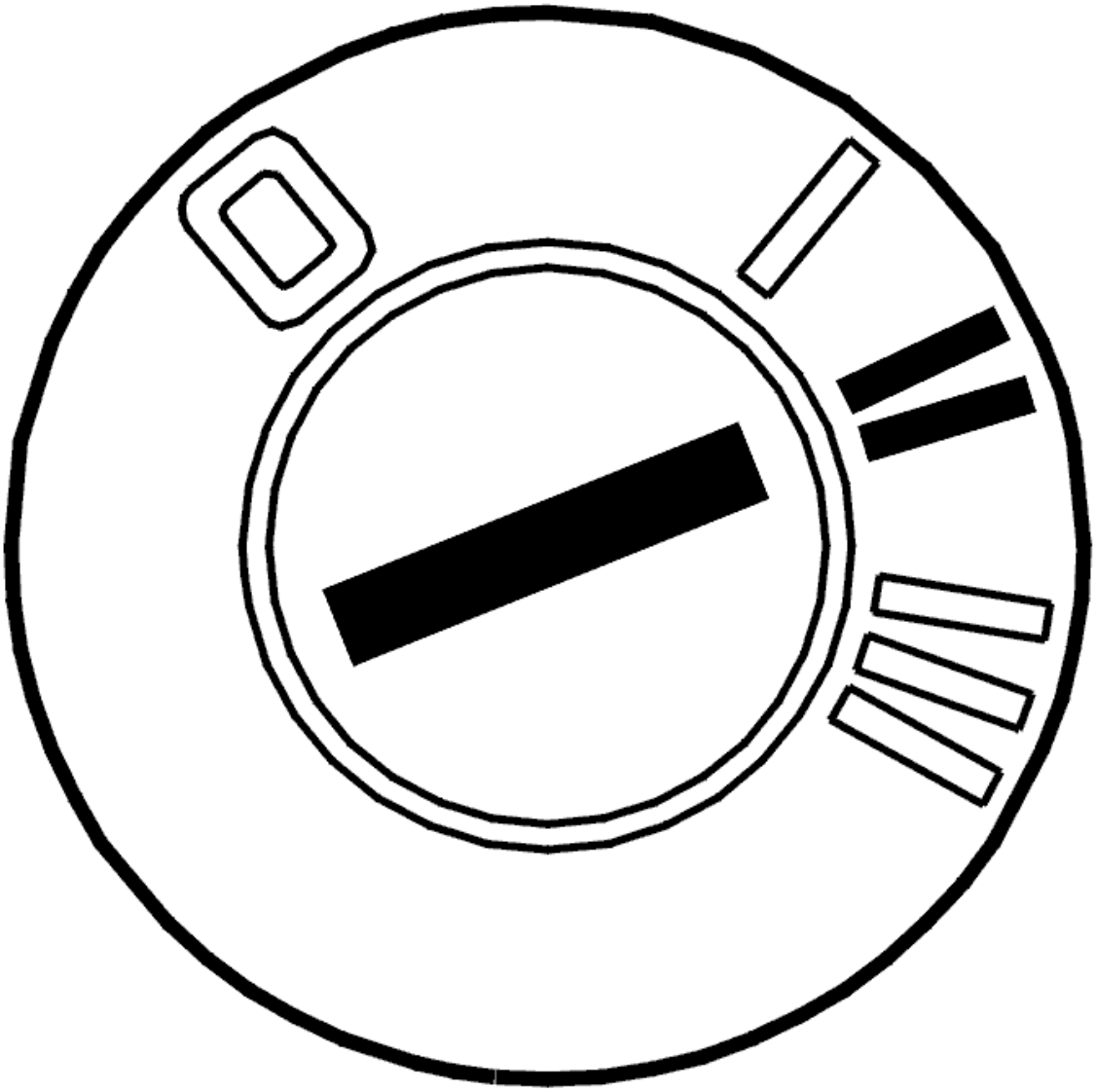

Fig. 224: Identifying Ignition ON
Courtesy of VOLVO CARS CORPORATION

- Ignition on.

  Read off the diagnostic trouble code (DTC) that is stored in the car.

  Make a note of the code. Report the code to VIDA (Volvo Scan Tool) customer support.

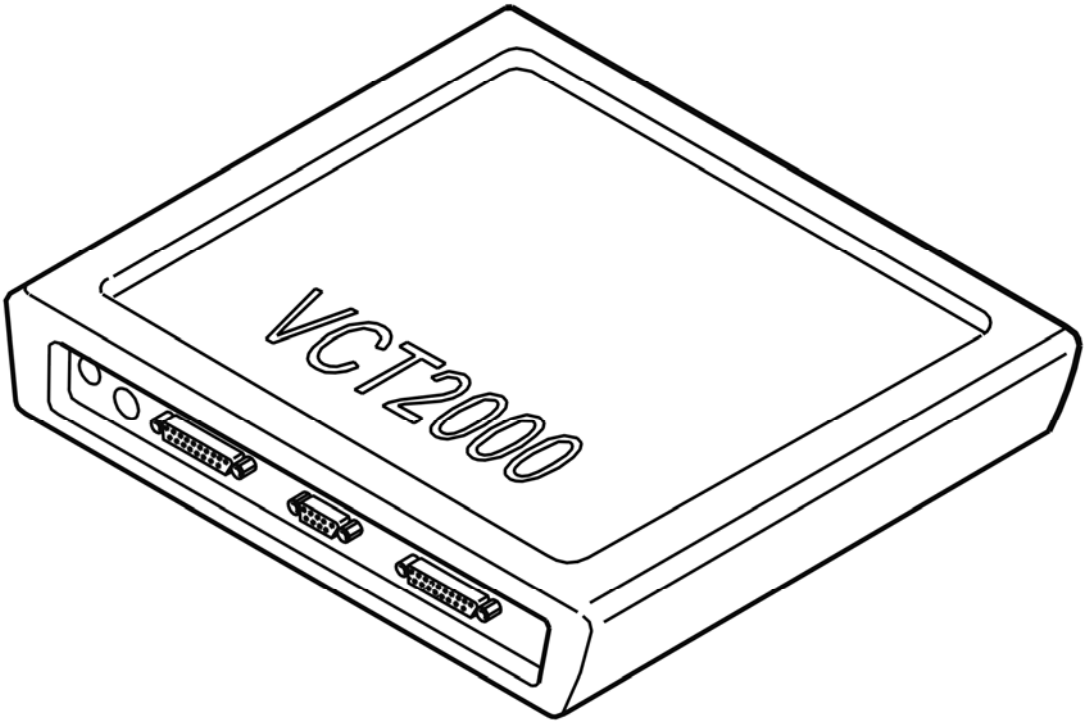

Fig. 225: Identifying VCT2000 Diagnostic Tool Symbol In VIDA
Courtesy of VOLVO CARS CORPORATION

CHECKING THE BLOWER MOTOR CONTROL (2003-2004)

CHECKING THE INTERIOR TEMPERATURE SENSOR (ECC)

CHECKING THE INTERIOR TEMPERATURE SENSOR SIGNAL

- Ignition on.

  Read the interior temperature and vary the temperature with the interior temperature sensor to, see if the value changes. Also check that the value is correct by comparing it with the values from the outside temperature sensor and interior temperature sensor, UEM or thermometer.

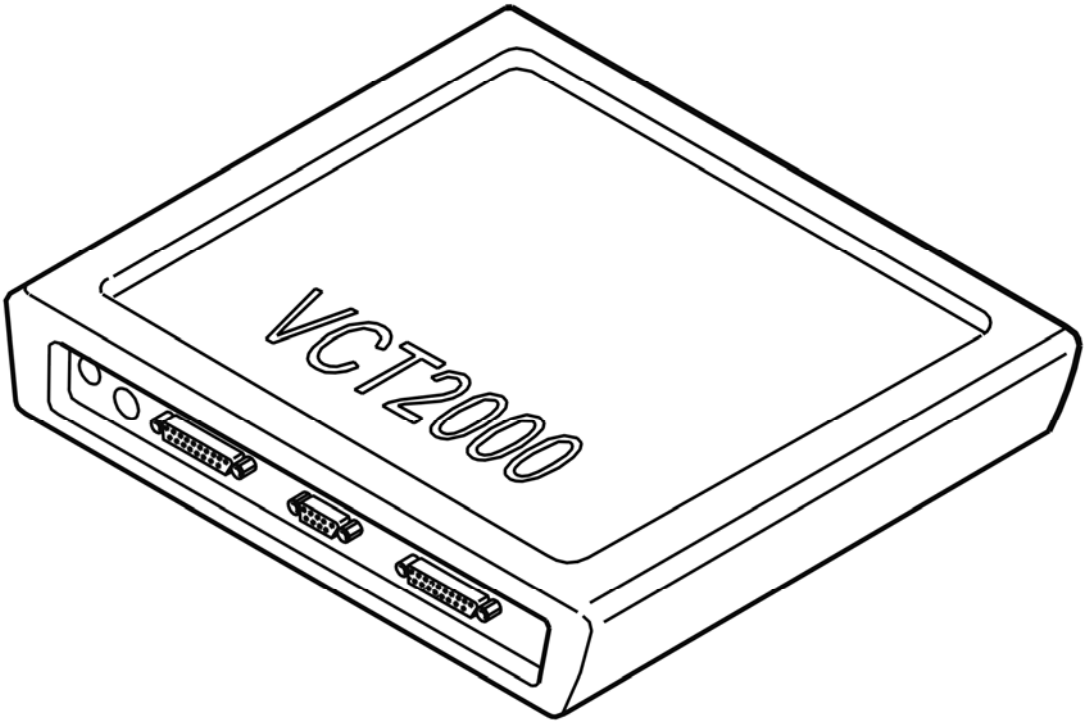

Fig. 226: Identifying VCT2000 Diagnostic Tool Symbol In VIDA
Courtesy of VOLVO CARS CORPORATION

Is the temperature OK?

- **YES**

  FAULT NOT FOUND: Troubleshooting has been completed.

- **NO**

  Refer to **CHECKING THE COMPONENTS**

CHECKING THE COMPONENTS

The fault is probably caused by a defective measuring device in the climate control. With this type of fault, the climate control must be replaced because the interior temperature sensor cannot be replaced.

Additional information:

- To access/replace the climate control module (CCM).

CLIMATE CONTROL UNIT, REPLACING

Special tools:

see **1158957**

PREPARATIONS

NOTE: Read off data from the control module before replacing the control module. This is carried out via VIDA (Volvo Scan Tool) vehicle communication. After replacing the control module, the relevant parameters must be programmed into the new control module.

BEFORE STARTING WORK ON THE CLIMATE CONTROL SYSTEM

CAUTION: Follow the safety instructions for work on air conditioning systems, see REFRIGERANT, SAFETY REGULATIONS .

NOTE: First read the instructions covering slow and fast leaks. See OIL IN THE A/C SYSTEM .

NOTE: Always plug pipes and connectors when working on the climate control system.

REMOVAL

- First read section, see PREPARATIONS under, see **CLIMATE CONTROL UNIT, REPLACING**.
- **Work in the engine compartment**
- Disconnect the battery lead. See **BATTERY, REPLACING** .
- Drain the refrigerant from the system. See **REFRIGERANT, DRAINING** .

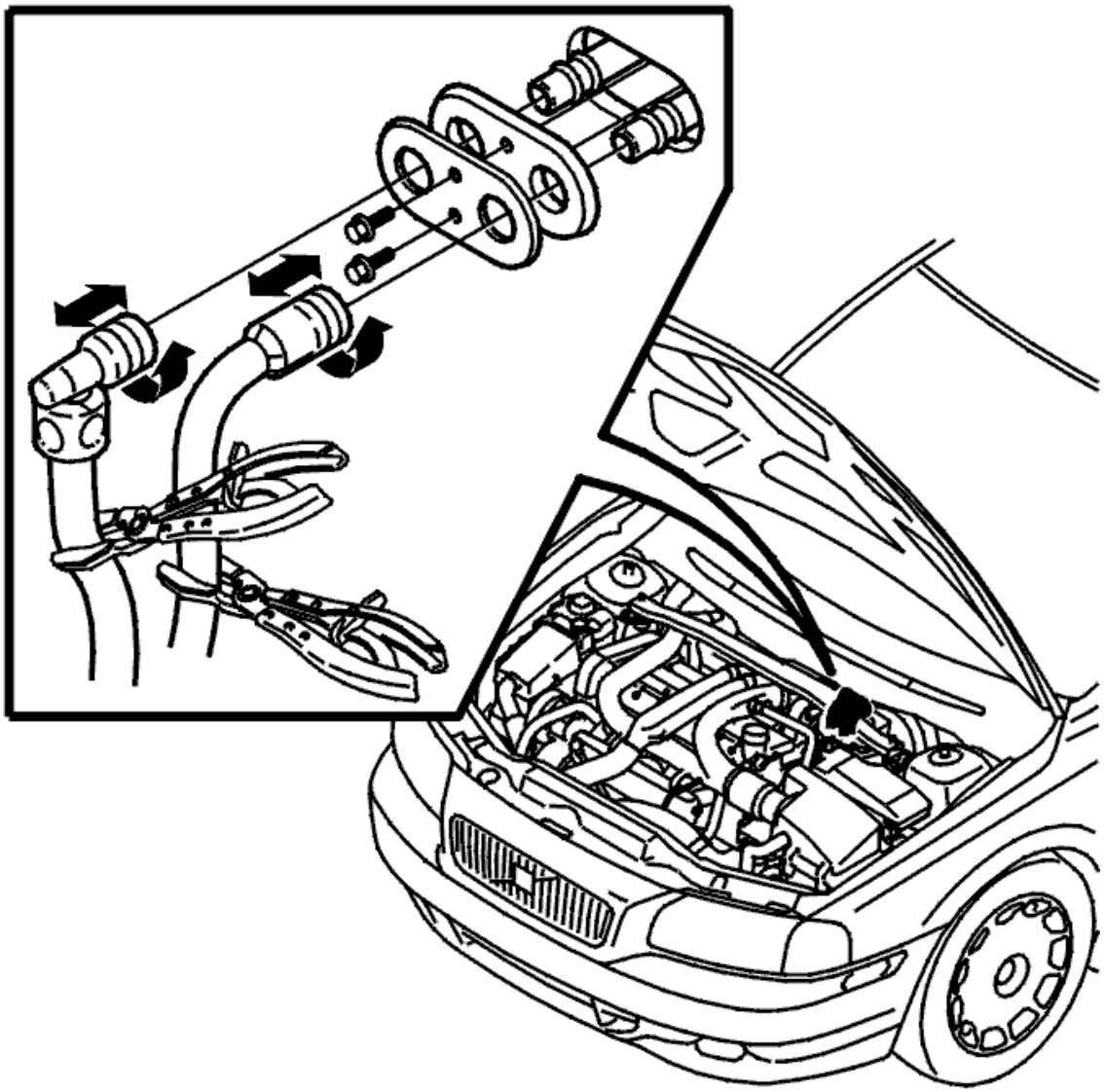

Fig. 227: Heater Hoses From Heat Exchanger
Courtesy of VOLVO CARS CORPORATION

- Clamp the heating hoses using lock grip pliers see **1158957**
- Disconnect the heater hoses from the heat exchanger by pressing in the hose connector. Turn it to the side so that the hose can be pulled out.
- Plug the pipes for the heat exchanger.
- the cover plate and the rubber seal for the lead-in.

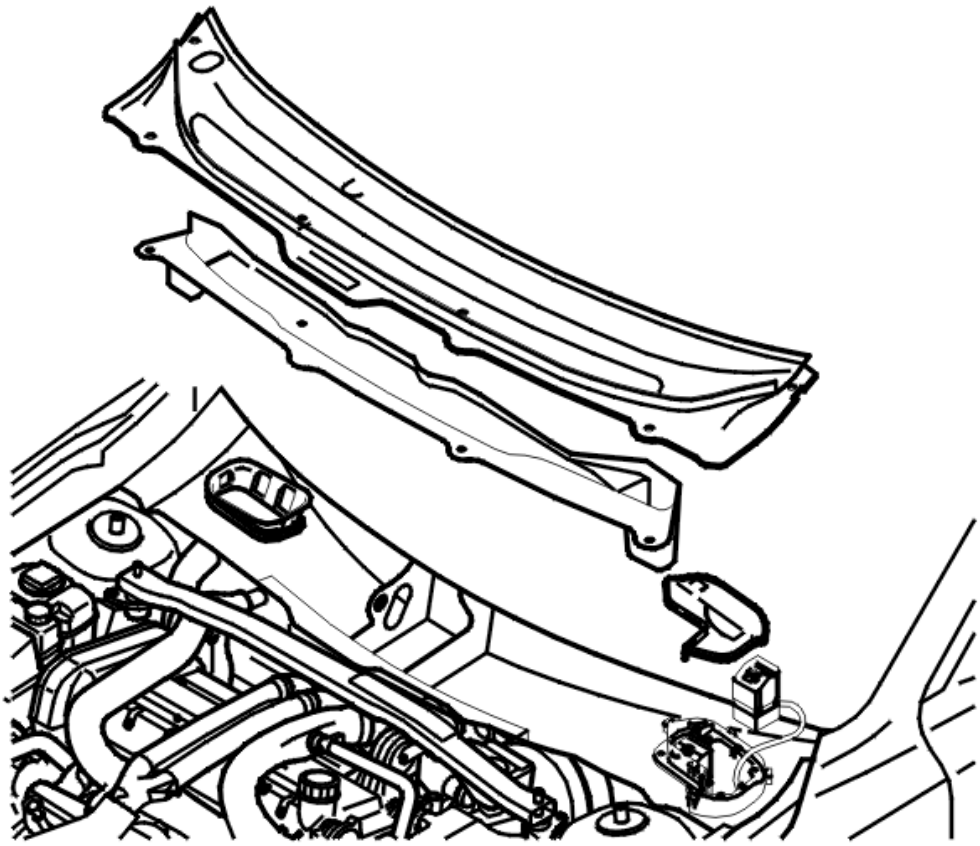

Fig. 228: Identifying Windshield Wiper, Cowl, Gutter & Rain Protection
Courtesy of VOLVO CARS CORPORATION

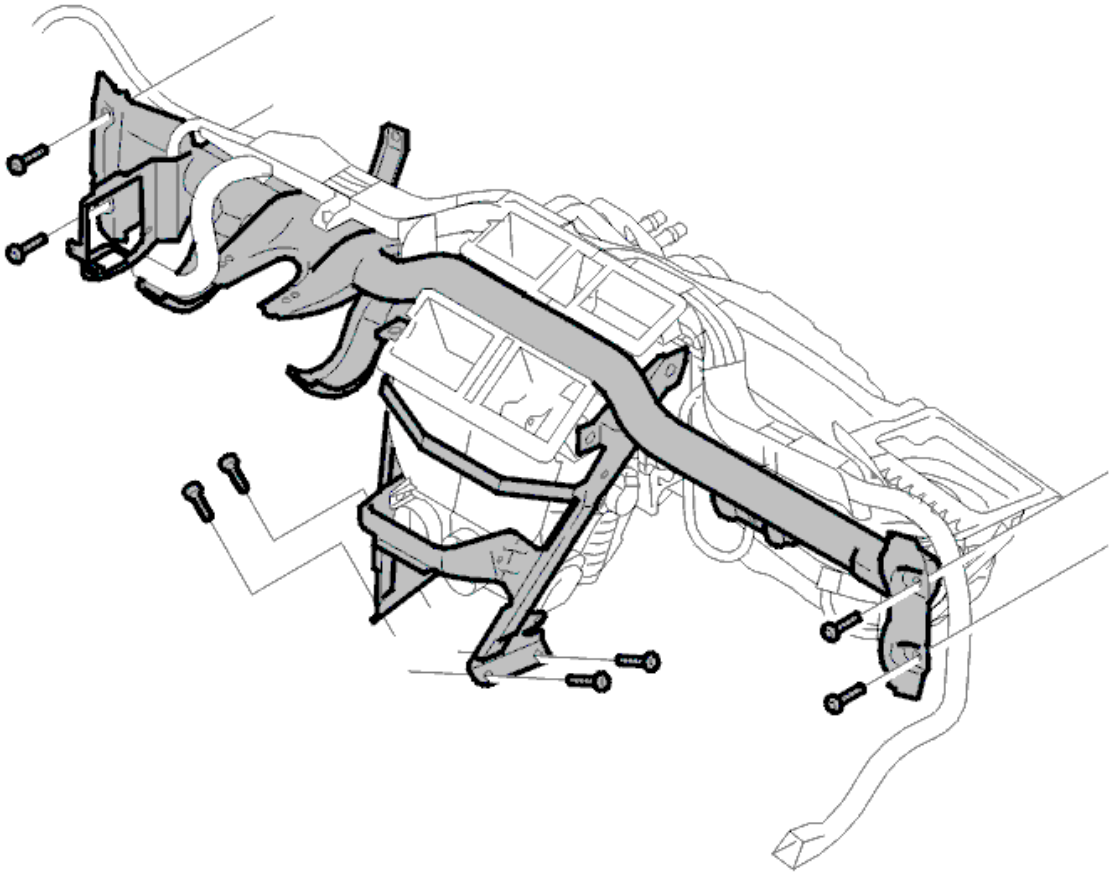

Fig. 229: Identifying Center Console A-Post Screws
Courtesy of VOLVO CARS CORPORATION

Remove:

- the windscreen wiper. See **WIPERS/WASHERS (2003-2004)**
- the cowl, gutter and rain protection. See **COWL, REPLACING**
- the cover for the connectors in the engine compartment-passenger compartment
- The screw for the member

Disconnect the connectors by screwing the connectors upwards so that the threads release. Then remove the connectors.

Additional work in the engine compartment on cars with air conditioning (A/C)

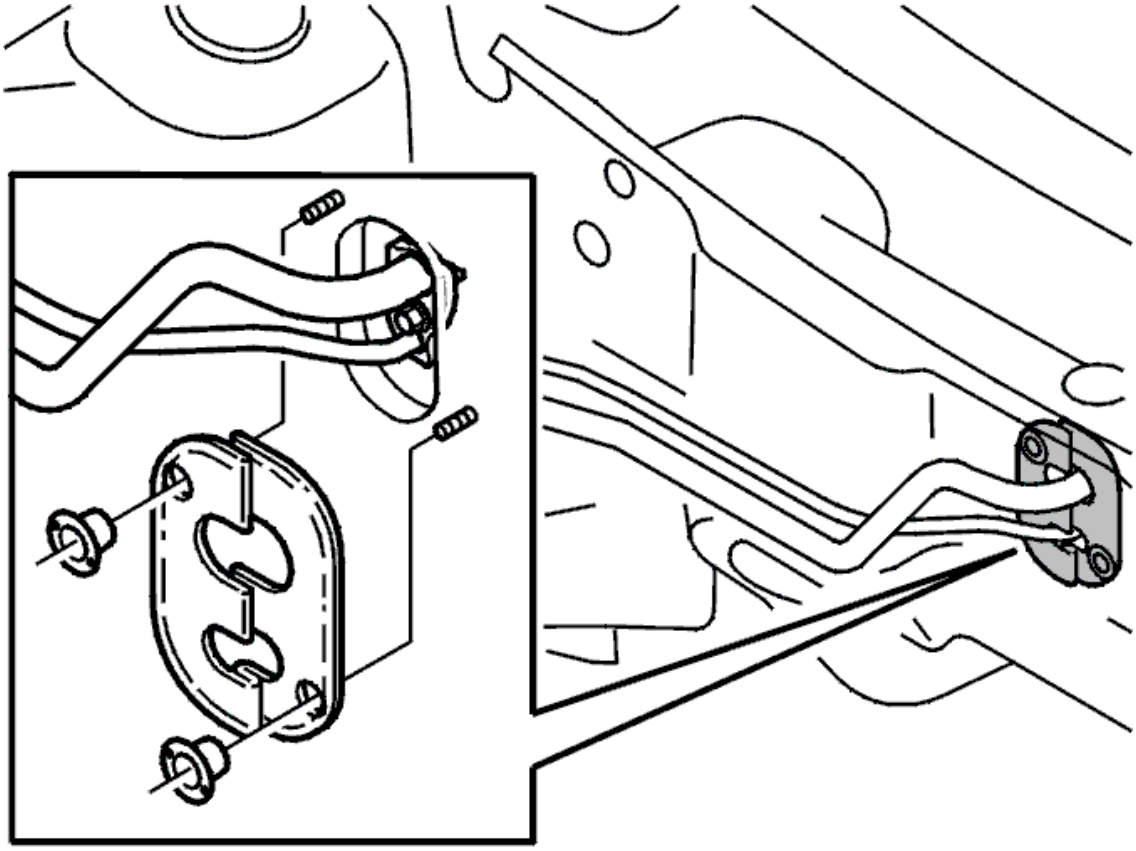

Fig. 230: Heat Deflector Plate On Firewall
Courtesy of VOLVO CARS CORPORATION

Remove the heat deflector plate on the bulkhead. See **REPLACING THE HEAT SHIELD FOR THE TXV VALVE** .

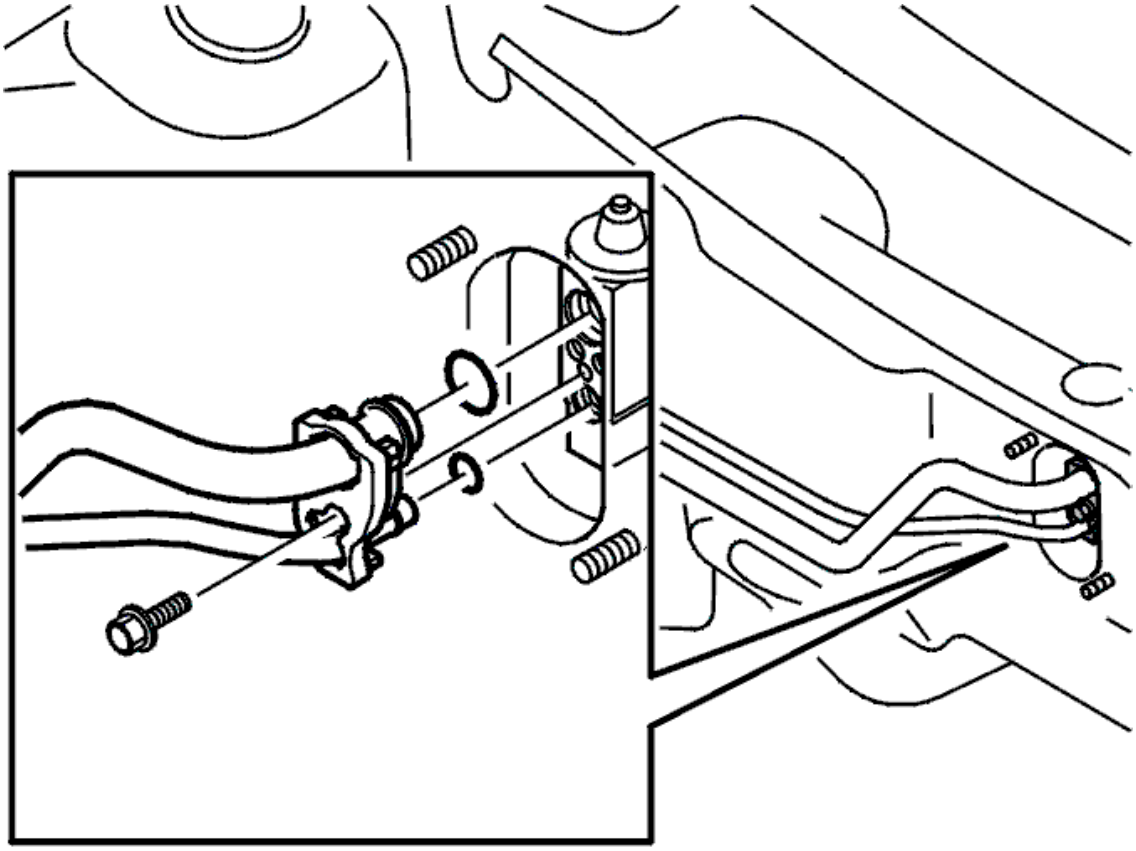

Fig. 231: Identifying Locking Bracket For Refrigerant Pipes
Courtesy of VOLVO CARS CORPORATION

Remove the locking bracket for the refrigerant pipes

- Disconnect the refrigerant pipes from the expansion valve

Work in the passenger compartment

Remove:

- The dashboard and center console. See **DASHBOARD AND RADIO PANEL**

NOTE: Move the front seat as far back as possible. Protect the floor and sills.

The climate control unit and the member from the bodywork

Remove:

- the steering column from the member: Remove the four screws which hold the steering column in place. Detach and fold down the steering column.

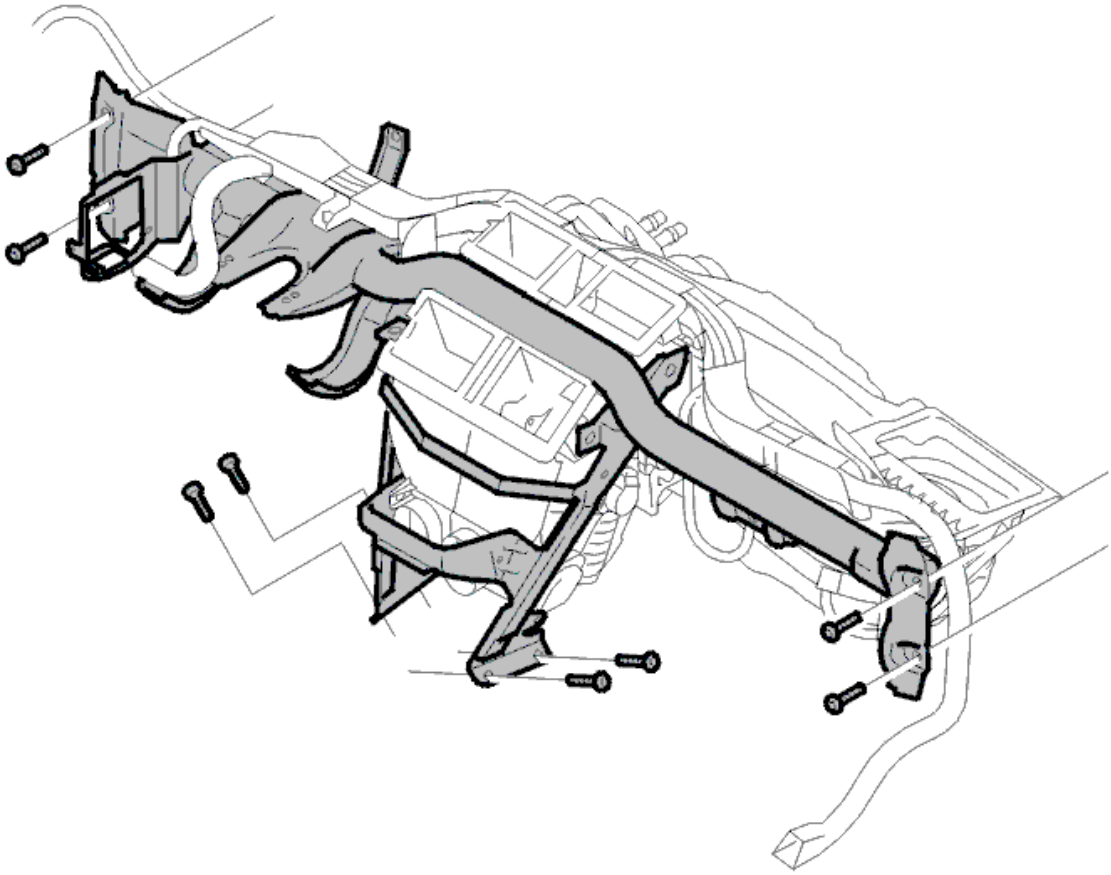

Fig. 232: Identifying Center Console A-Post Screws
Courtesy of VOLVO CARS CORPORATION

- the screws to the left and right of the A-post
- the screws to the left and right of the center console

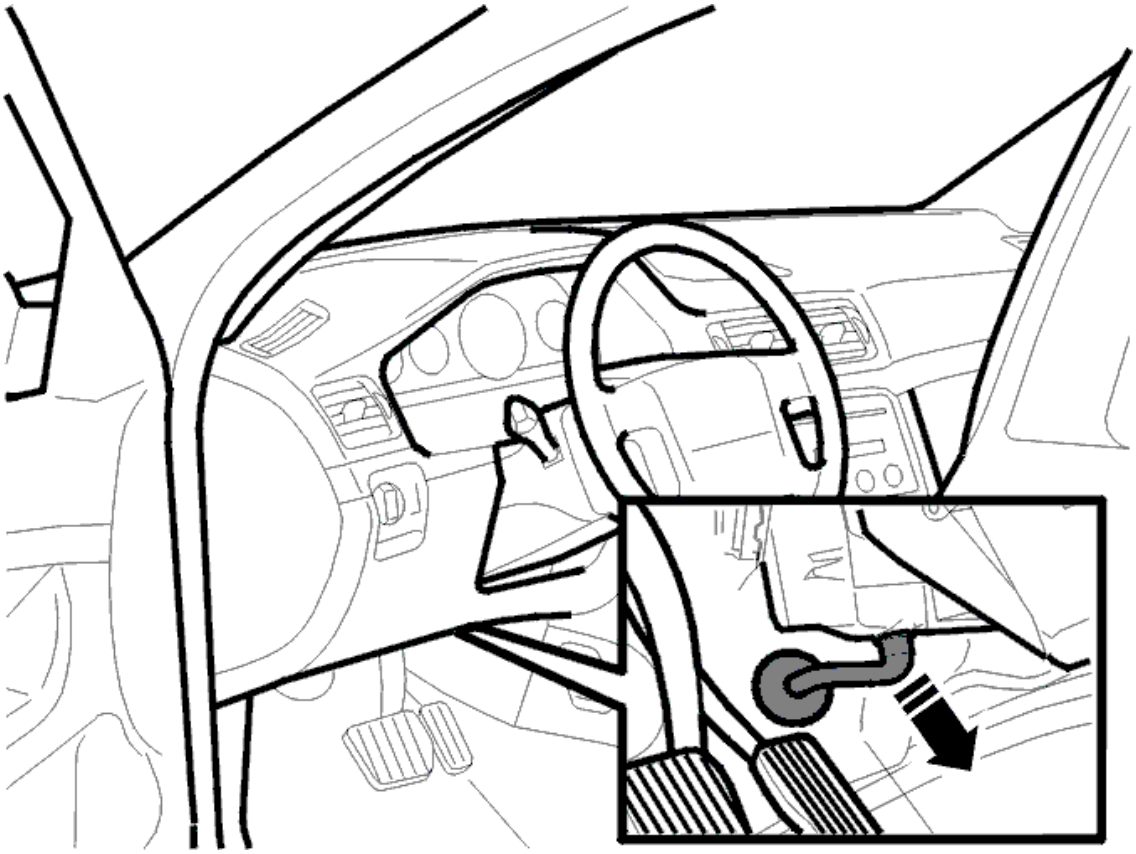

Fig. 233: Air Ducts From Floor Heater Unit
Courtesy of VOLVO CARS CORPORATION

Remove:

- the air ducts from the floor heater unit
- the floor guttering on the left and right sides

Pull the member for the climate control unit backwards a little.

THE CLIMATE CONTROL UNIT FROM THE MEMBER IN THE PASSENGER COMPARTMENT

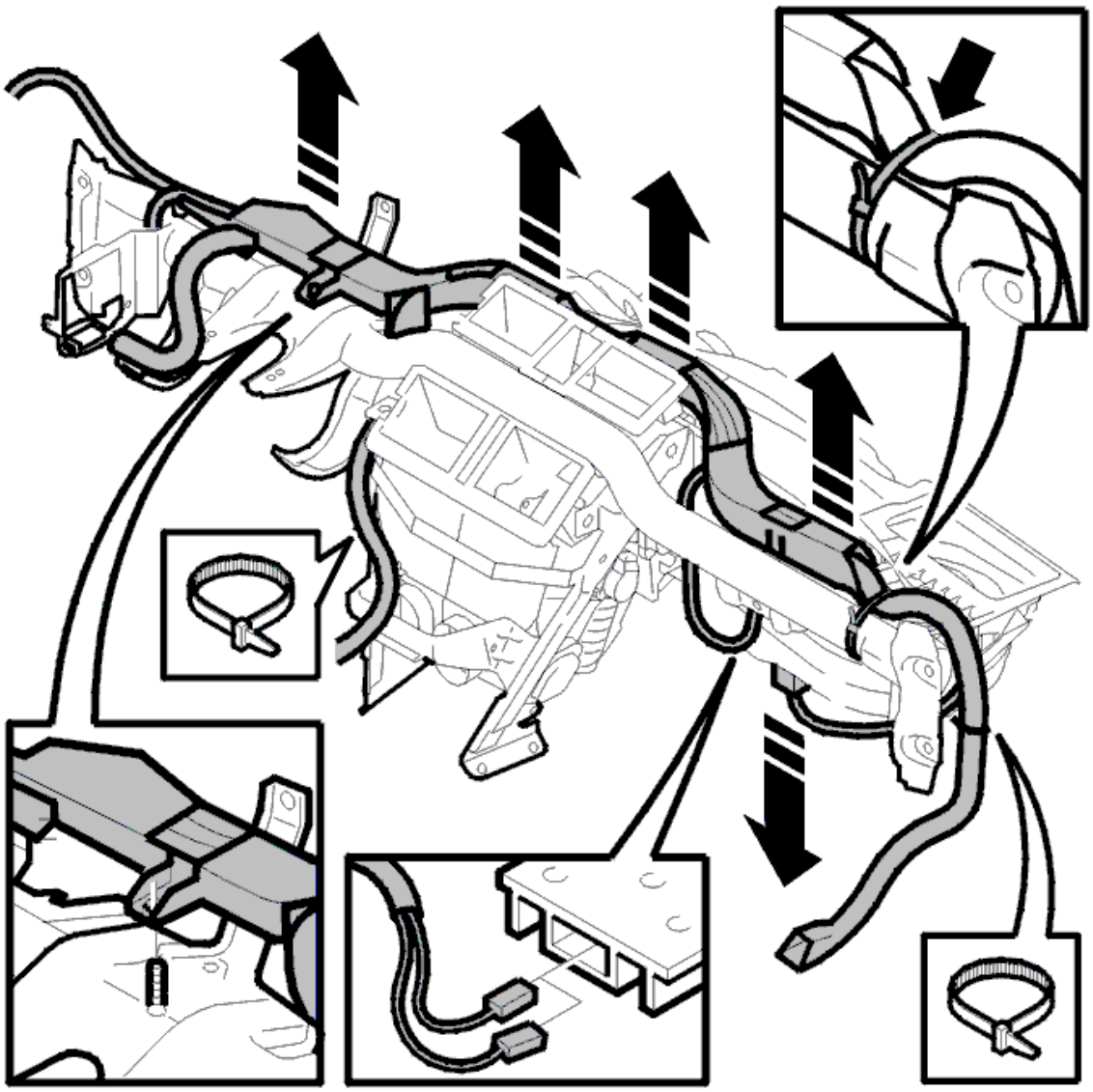

Fig. 234: Identifying Passenger Side Cable Duct Tie Straps
Courtesy of VOLVO CARS CORPORATION

Remove:

- the tie strap for the cable duct on the passenger side

Remove:

- the cable duct behind and above the climate control unit and on the driver's side

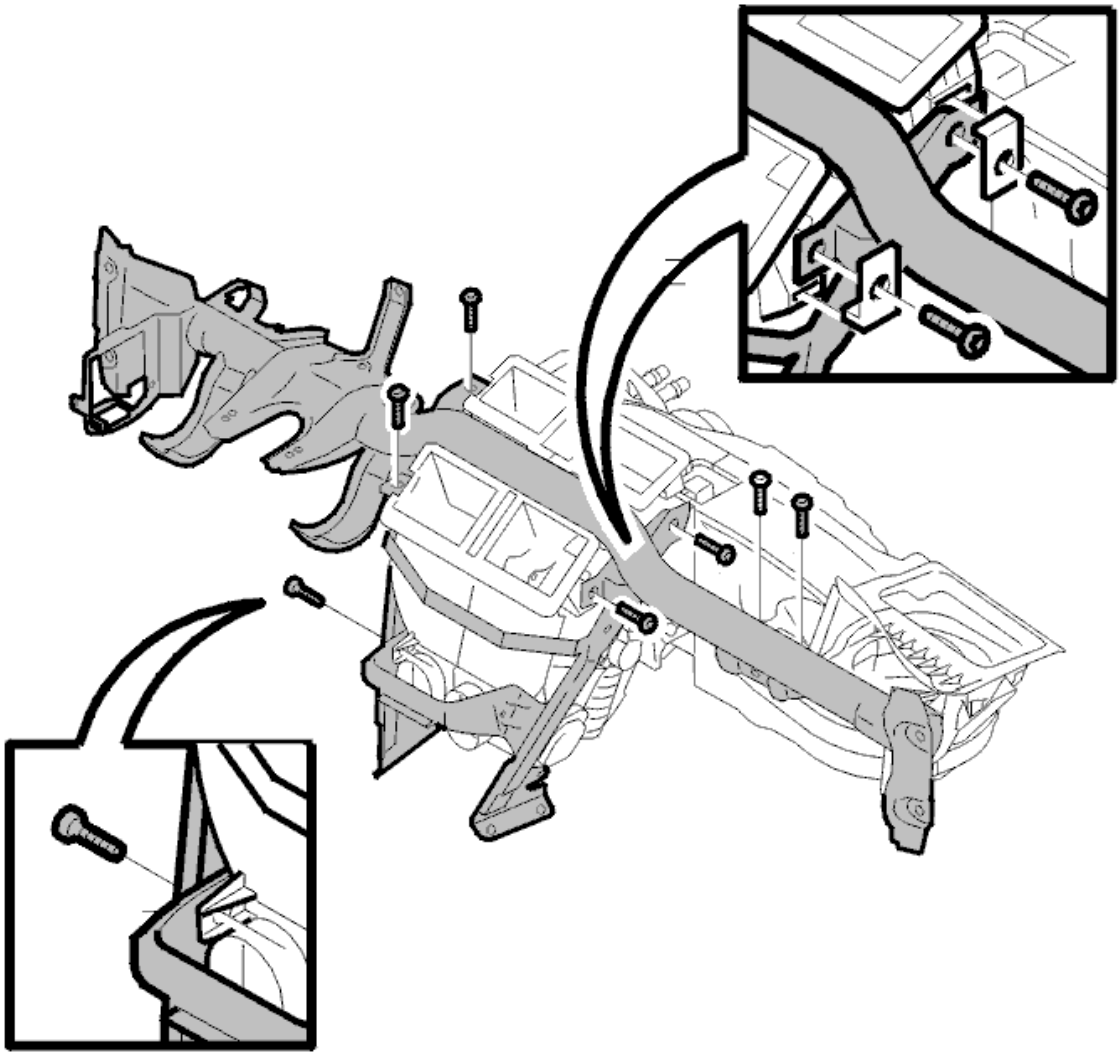

Fig. 235: Identifying Climate Control Unit & Connecting Member Screws (Left & Right)
Courtesy of VOLVO CARS CORPORATION

Remove:

- the 2 screws from the climate control unit-member on the passenger side
- the screws connecting the member to the climate control unit on the left and right-hand sides

Remove:

- the switch for the blower fan motor

Lift:

- the cable duct behind / above the member on the passenger side

- the cable duct above and behind the mounting for the member

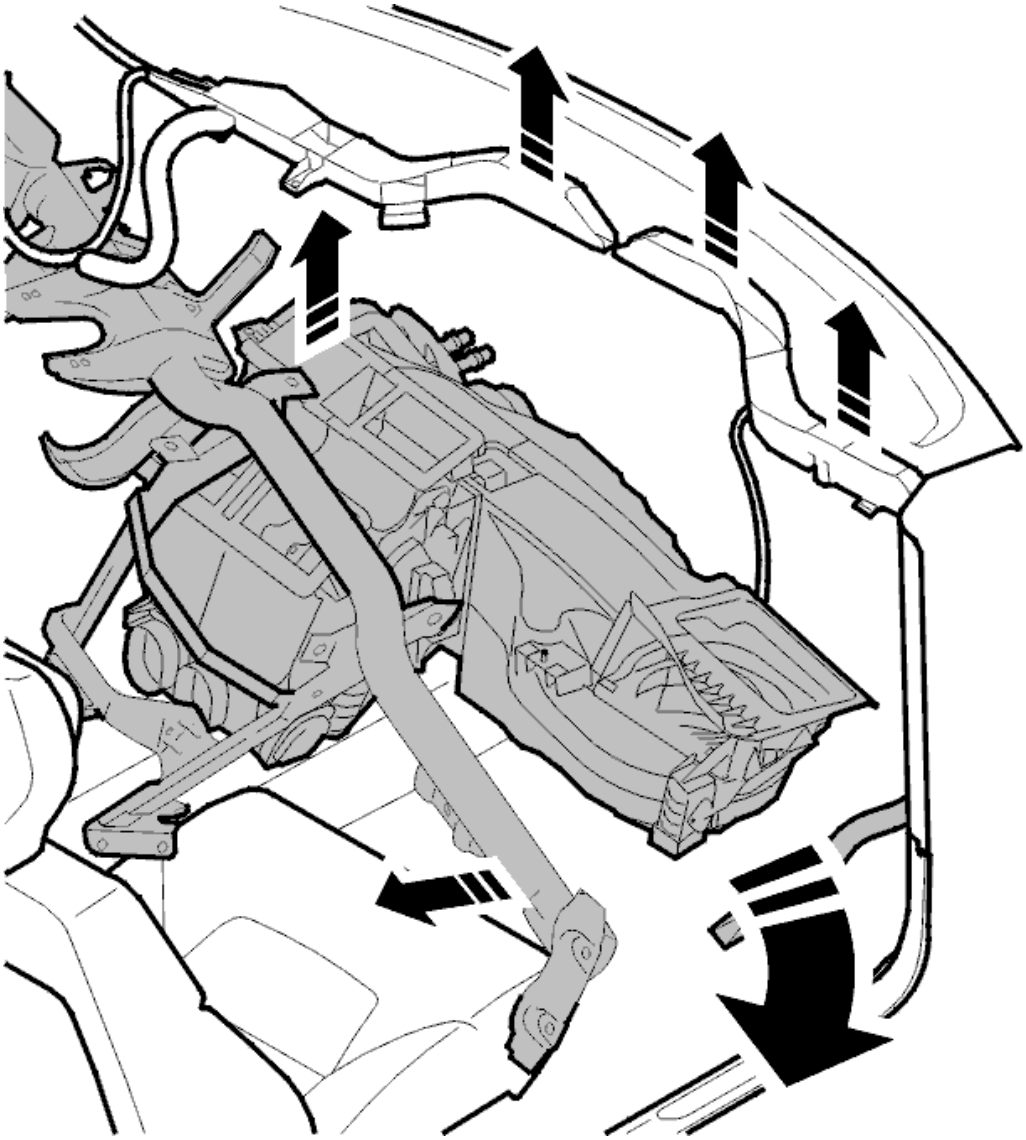

Fig. 236: Identifying Climate Control Unit Member
Courtesy of VOLVO CARS CORPORATION

Loosen:

- the member from the climate control unit

Hold up the member and cable duct on the passenger side. Remove the climate control unit on the passenger side.

NOTE: Two people required.

INSTALLATION

THE CLIMATE CONTROL UNIT ON THE PASSENGER COMPARTMENT MEMBER

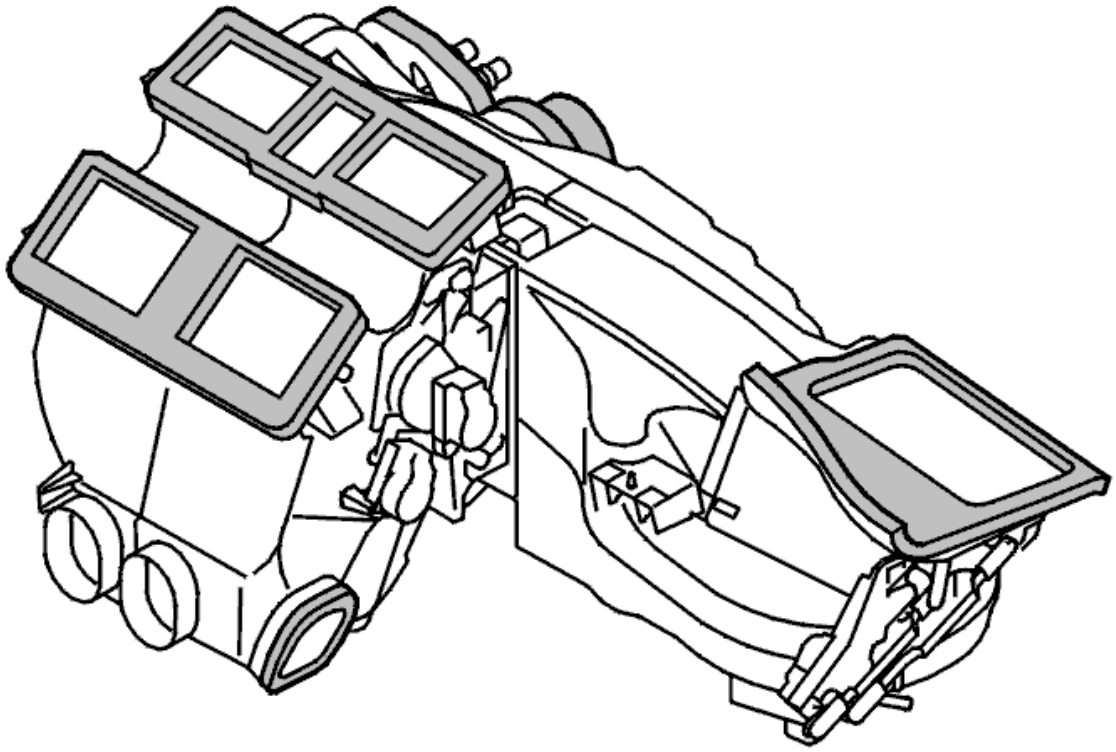

Fig. 237: Floor Seals
Courtesy of VOLVO CARS CORPORATION

- Check and replace the floor seals if necessary

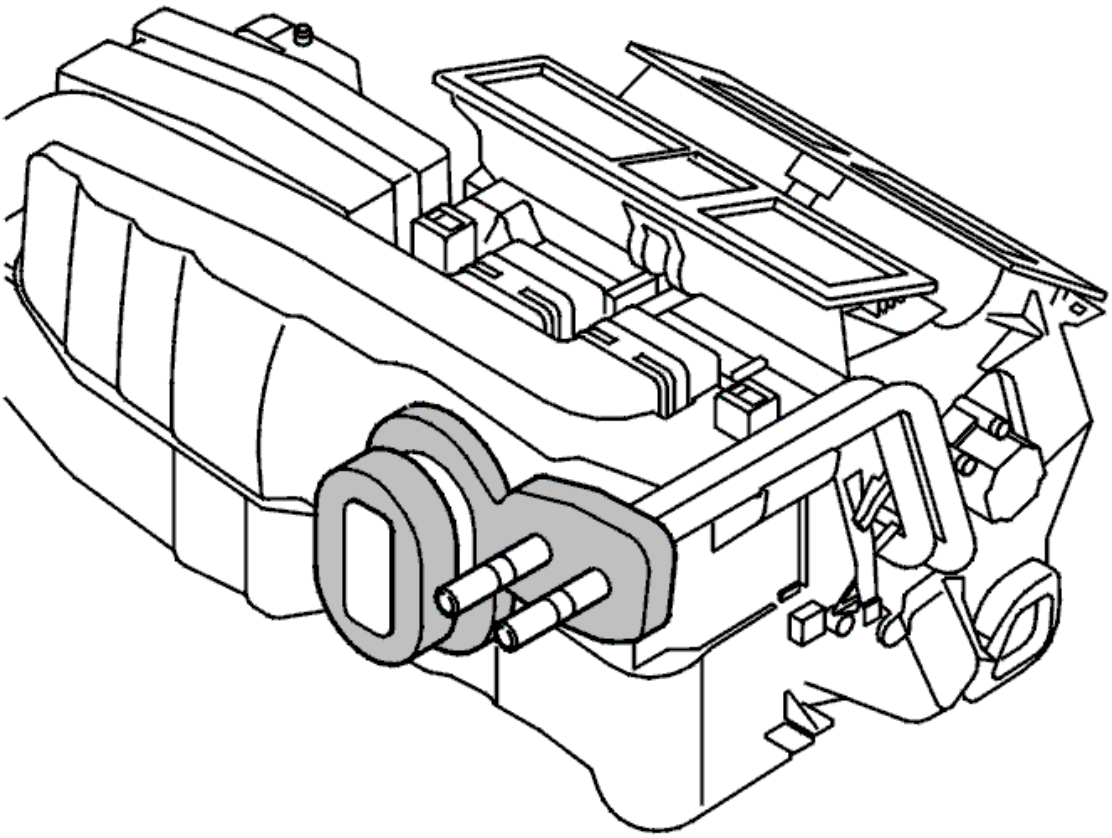

Fig. 238: Front Seal For Refrigerant Pipe
Courtesy of VOLVO CARS CORPORATION

Install:

- the front seal for the refrigerant pipe. Check and replace the O-rings.

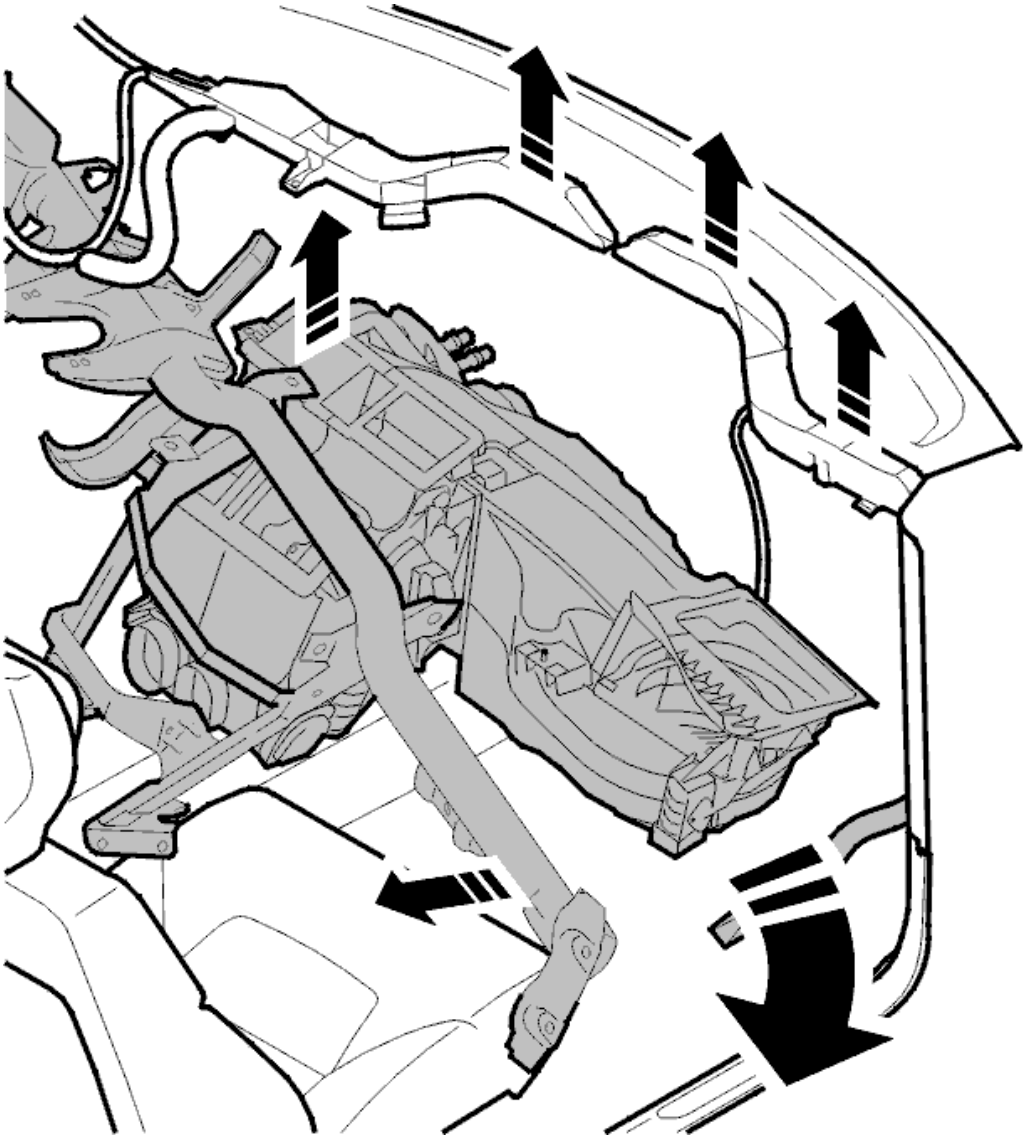

Fig. 239: Identifying Climate Control Unit Member
Courtesy of VOLVO CARS CORPORATION

Position:

- the climate control unit in the car
- the member on the climate control unit

NOTE: Two people required.

Install:

- the screws and the bracket on the member for the climate control unit
- Install and secure the cable duct.

- Check and position the cables for the radio and the dashboard environment unit.
- Take out the cable for the sensor on the dashboard and light switch.
- Position the member for the climate control unit against the bulkhead
- Check the location in relation to the opening for the coolant and heat exchange pipes.
- Press the member for the climate control unit into position against the bulkhead A-post.
- Secure the member for the climate control unit against the A-post loosely with the screws.
- Secure the member for the climate control on the center console loosely using the screws.

Tighten:

- the member on the A-post
- the screws on the center console
- Install the air ducts.

OTHER WORK IN THE PASSENGER COMPARTMENT

- In reverse order

WORK IN THE ENGINE COMPARTMENT

- In reverse order

  Vacuum pump and test the system. See **REFRIGERANT, DRAINING**

  Fill the system with refrigerant. Check for leaks. See **REFRIGERANT, DRAINING** .

  Install the battery lead. See **BATTERY, REPLACING** .

ORDERING SOFTWARE

Order the software. See 9438271 .

FINISHING

After replacing the control module, the following must be carried out.

- Reprogram the customer programmed data.
- Carry out self-adjustment of the damper motor end positions.
- Test drive the car. Check that the function of the engine is OK.
- Then check that no diagnostic trouble codes have been stored during the replacement.

Information about programming the control module, damper motor self-adjustment and reading off diagnostic trouble codes can be found under VIDA (Volvo Scan Tool) vehicle communication.

HVAC

Climate Units - General Diagnostics And Tests

CHECKING THE POWER SUPPLY AND GROUND (2003-04)

CHECKING POWER SUPPLY AND GROUND. INTERMITTENT FAULT

CHECKING THE POWER SUPPLY AND GROUND FOR THE CONTROL MODULE

Check climate control module (CCM) terminal #A1 and relay 2/29 (passenger compartment relay box) connectors. Check for contact resistance and oxidation.

Check fuses 23 and 24 in the passenger compartment fusebox for the climate control module (CCM). Check for contact resistance and oxidation.

Check the power supply cable between fuse 23 and the control module terminal #A8. Check for an open-circuit.

Check the function of relay 2/29 by replacing it with a new relay.

Check the cable for power supply (extended X supply) between fuse 24 and relay 2/29 terminal #3. Check for an intermittent open-circuit.

Check the cable for power supply (extended X supply) between relay 2/29 terminal #1 and climate control module (CCM) terminal #A1. Check for an intermittent open-circuit.

Check power supply cable between fuse 23 and the climate control module (CCM) terminal #A8. Check for an intermittent open-circuit.

Check the ground lead between control module terminal #A16 and ground terminal 31/84. Check for an intermittent open-circuit. Check ground terminal 31/84. Check for contact resistance and oxidation.

Remedy as necessary.

Other information:

- To access or replace the control module, see **CLIMATE CONTROL MODULE (CCM), REPLACING**
- To connect the breakout box, see **CONNECTING THE BREAKOUT BOX**
- For other values, see **SIGNAL DESCRIPTION, CLIMATE CONTROL MODULE (CCM), CONNECTOR A**
- see **CHECKING WIRING AND TERMINALS**

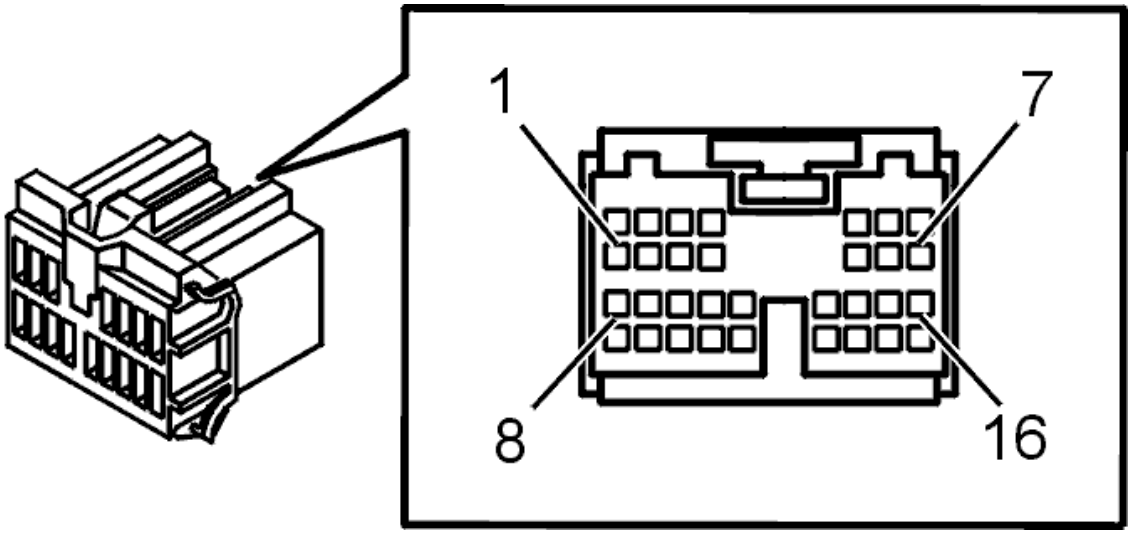

Fig. 1: Connector, Green (16-Pin)
Courtesy of VOLVO CARS CORPORATION

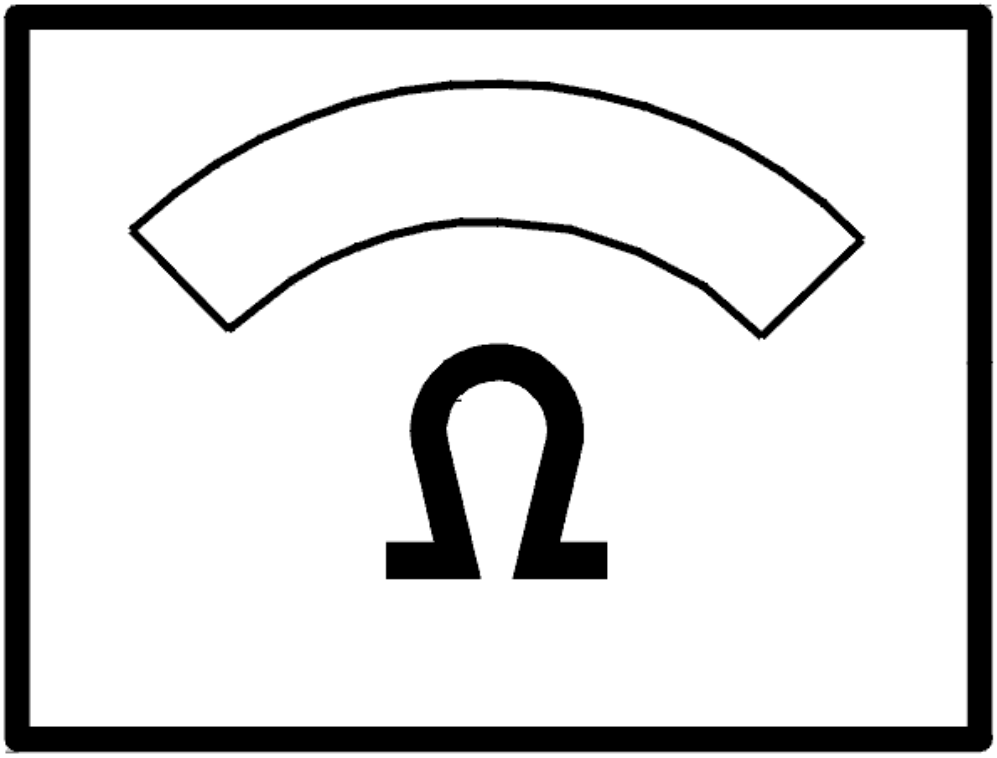

Fig. 2: Identifying Ohmmeter
Courtesy of VOLVO CARS CORPORATION

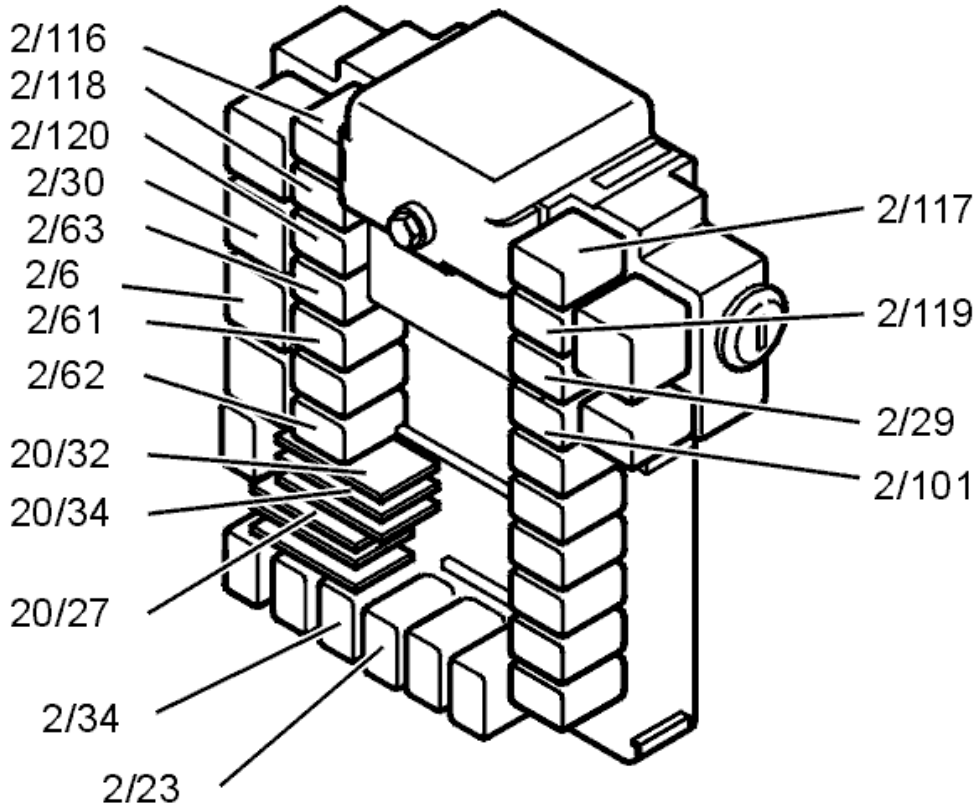

Fig. 3: Identifying Relay Locations
Courtesy of VOLVO CARS CORPORATION

CHECKING POWER SUPPLY AND GROUND. PERMANENT FAULT

CHECKING THE POWER SUPPLY AND GROUND FOR THE CONTROL MODULE

Check climate control module terminal #A1 and relay 2/29 (passenger compartment relay box) connectors. Check for contact resistance and oxidation.

Check fuse 23 and 24 in the passenger compartment fusebox for the climate control module.

NOTE: **If the fuse is blown, check the circuit after the fuse for a short-circuit to ground before replacing the fuse. Then replace the fuse.**

Check the cable for power supply between fuse 23 in the passenger compartment fusebox and control module terminal #A8. Check for an open-circuit.

Check the function of relay 2/29 by replacing it with a new relay.

Check the cable for power supply (delayed X supply) between fuse 24 and relay 2/29 terminal #3. Check for an open-circuit. The voltage at the relay terminal must be battery voltage, measured to ground.

Check the cable for power supply (delayed X supply) between relay 2/29 terminal #1 and climate control module (CCM) terminal #A1. Check for an open-circuit. The voltage at the terminal must be battery voltage, measured to ground.

Check power supply cable between fuse 23 and the climate control module (CCM) terminal #A8. Check for an open-circuit.

Check the ground lead between climate control module (CCM) terminal # A16 and ground terminal 31/84. Check for an open-circuit. Check ground terminal 31/84. Check for contact resistance and oxidation.

Remedy as necessary.

Other information:

- To access or replace the control module, see **CLIMATE CONTROL MODULE (CCM), REPLACING**
- To connect the breakout box, see **CONNECTING THE BREAKOUT BOX**
- For other values, see **SIGNAL DESCRIPTION, CLIMATE CONTROL MODULE (CCM), CONNECTOR A**
- see **CHECKING WIRING AND TERMINALS** .

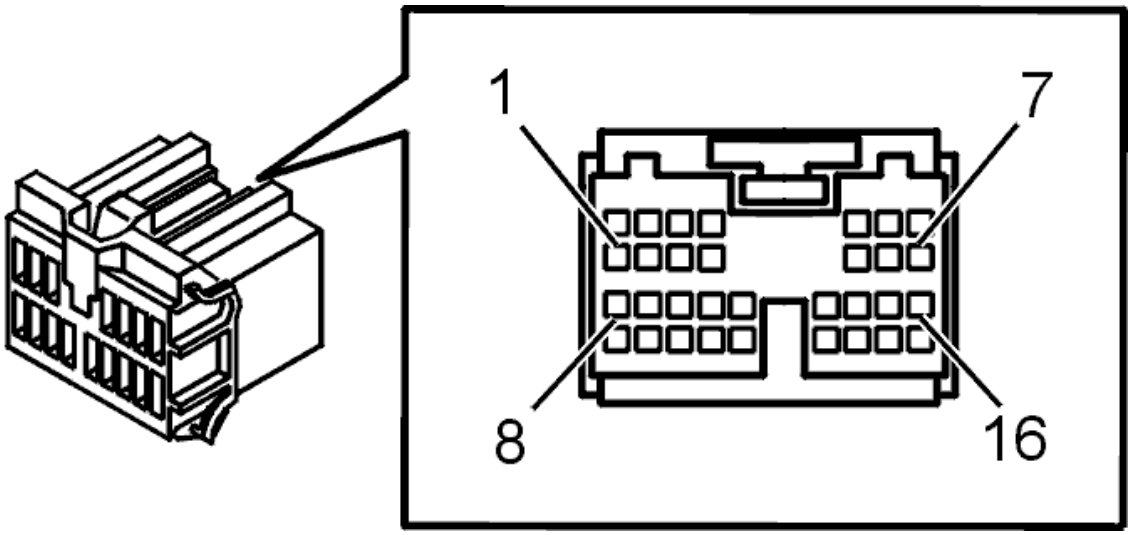

Fig. 4: Connector, Green (16-Pin)
Courtesy of VOLVO CARS CORPORATION

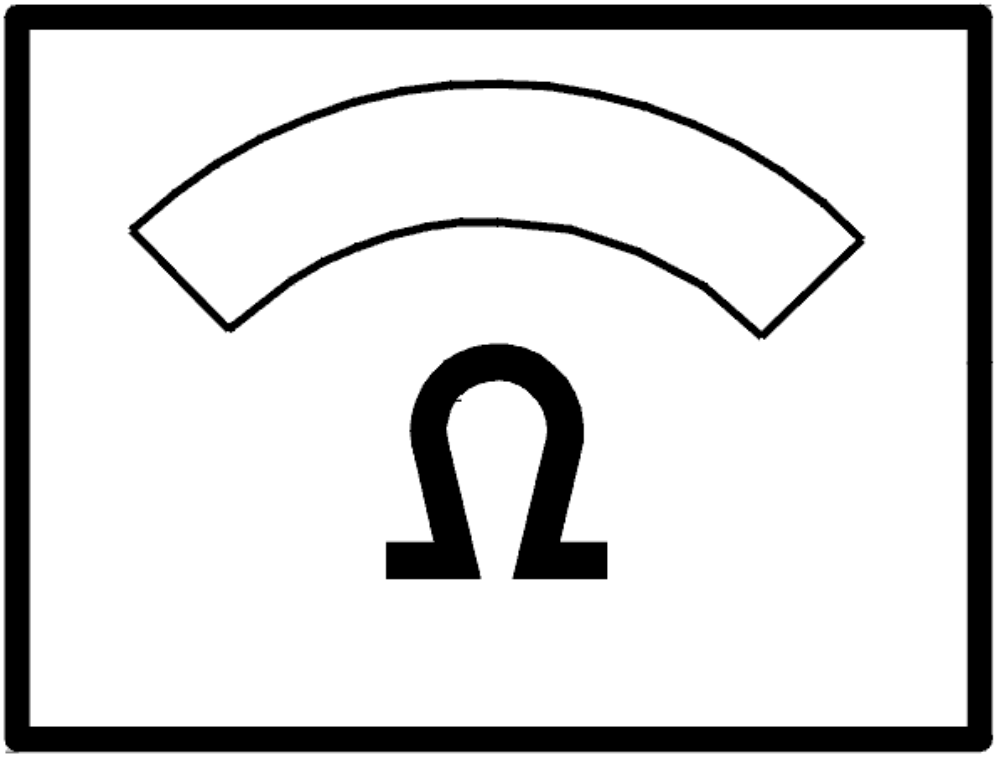

Fig. 5: Identifying Ohmmeter
Courtesy of VOLVO CARS CORPORATION

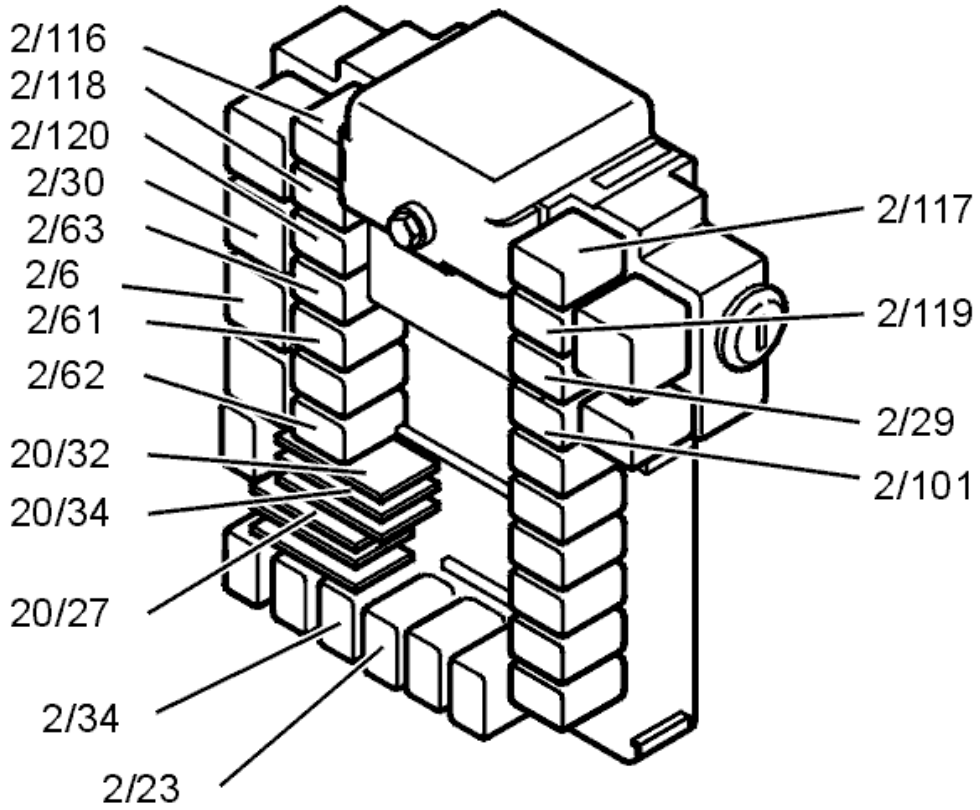

Fig. 6: Identifying Relay Locations
Courtesy of VOLVO CARS CORPORATION

CHECKING THE POWER SUPPLY AND GROUND TERMINAL (2005-12)

CHECKING THE SUPPLY VOLTAGE/GROUND TERMINAL

CHECKING THE POWER SUPPLY AND GROUND TERMINALS

Power supply, climate control module (CCM)

The climate control module (CCM) is powered via a power input on the control module.

Power input terminal #1 (#25) is +15-supplied via a relay and fuse from the central electronic module (CEM). In the event of an open-circuit, climate control functions cannot be activated.

Checking the power supply

Check the power supply cable from the central electronic module (CEM) to climate control module (CCM) terminal #1 (#25). Check for an open-circuit. Check for loose connections. Check for contact resistance. Check for oxidation. Check the fuse. The voltage must be approximately battery voltage.

Ground terminal, climate control module (CCM)

The climate control module (CCM) has a ground input. The ground input from the control module is power ground and is connected to the ground terminal in the car body.

Checking the ground terminal

Check the ground lead between climate control module (CCM) terminal #16 (#40) and the ground terminal. Check for an open-circuit. Check for loose connections. Check for contact resistance. Check for oxidation. With the ignition on, the drop in voltage between the ground connection and the ground terminal for the climate control module (CCM) must not be greater than 0.5 V.

Remedy as necessary.

Other information

- see **CONNECTING THE BREAKOUT BOX**
- see **SIGNAL SPECIFICATION**
- see **CONTENTS**

CONNECTING THE BREAKOUT BOX, CLIMATE CONTROL MODULE (CCM) (2003-04)

CONNECTING THE BREAKOUT BOX

Special tools:

see **9511463**

see **9511428**

see **9511428**

GENERAL INFORMATION

Check that the male and female terminals on the connectors are undamaged and secure (cannot be pressed in). Check that the cables to the female terminals are secured to the terminal pins.

The breakout box is designed to facilitate reading off the control module input and output signals when the control module is connected, and the cable and component resistance when the control module is disconnected. The use of a breakout box reduces the risk of accidental short-circuited cables and damage to the connector pins.

CONNECTING THE BREAKOUT BOX

- Ignition off
- To expose the climate control module (CCM) connector, see **CLIMATE CONTROL MODULE (CCM), REPLACING**

- To expose the evaporator temperature sensor connector, see **TEMPERATURE SENSOR EVAPORATOR, REPLACING**
- To expose the sun sensor connector, see **SUN SENSOR / ALARM LED, REPLACING** .

Connect breakout box see **9511428** to the adapter.

Climate control module (CCM)

- Connect adapter see **9511463** to control module connectors A and B
- For connector A, terminals #A1-#A16 correspond to terminals #25-#40 on the breakout box
- For connector B, terminals #B1-#B22 correspond to terminals #1-#22 on the breakout box.

Evaporator temperature sensor

- Connect adapter see **9511463** to the evaporator temperature sensor connector
- Terminals #1-#5 on the connector correspond to terminals #26-#30 on the breakout box.

Sun sensor

- Connect adapter see **9511463** to the sun sensor connector
- Terminals #1-#5 on the connector correspond to terminals #26-#30 on the breakout box.

CONNECTING THE BREAKOUT BOX, CLIMATE CONTROL MODULE (CCM) (2005-12)

CONNECTING THE BREAKOUT BOX

Special tools:

see **9511463**

see **9511428**

see **9511508**

GENERAL INFORMATION

Check that the male and female terminals on the connectors are undamaged and secure (cannot be pressed in). Check that the cables to the female terminals are secured to the terminal pins.

The breakout box is designed to facilitate reading off the control module input and output signals when the control module is connected. The breakout box is designed to facilitate reading off the cable and component resistance when the control module is disconnected. The use of a breakout box reduces the risk of accidental short-circuited cables and damage to the connector pins.

CONNECTING THE BREAKOUT BOX

- Ignition off
- To expose the climate control module (CCM) connector, see **CLIMATE CONTROL MODULE (CCM), REPLACING**
- To expose the evaporator temperature sensor connector, see **TEMPERATURE SENSOR EVAPORATOR, REPLACING** .

Connect breakout box see **9511428** to the adapter.

Climate control module (CCM)

- Connect adapter see **9511463** to control module connectors A and B
- For connector A, terminals #A1-#A16 correspond to terminals #25-#40 on the breakout box
- For connector B, terminals #B1-#B22 correspond to terminals #1-#22 on the breakout box.

Evaporator temperature sensor

- Connect adapter see **9511508** to the evaporator temperature sensor connector
- Terminals #1-#5 on the connector correspond to terminals #26-#30 on the breakout box.

HVAC

Climate Units - General Information

HVAC GENERAL INFORMATION

AIR CONDITIONING (AC) SYSTEM, GENERAL INSTRUCTIONS

Any leakage must be repaired immediately in order to prevent moisture entering the system.

Ensure the work area is kept dry and clean. Moisture and dirt will reduce the efficiency of the air conditioning (A/C) system.

Store compressor oil in a sealed container (compressor oil absorbs water).

When working on A/C systems, for example when replacing components, open ends must always be plugged immediately after undoing pipe or hose connections. When installing new components, leave the protective plugs in the holes until the component is actually needed. If dirt may have entered any component it must be inspected and cleaned.

If the car has been damaged in a collision it is important that every component in the system is inspected. Special attention must be paid to brazed joints. Cracked or deformed components must not be repaired.

DESICCANT IN THE AIR RECEIVER/DRYER

The dryer must be replaced when repairing a major leak or replacing a component, or if moisture is suspected to have entered the system. The unit need not be replaced more often than on every third occasion if only minor work is carried out under favorable conditions. Favorable conditions are defined, for example, as a slow leak (over 24 hours) which is repaired immediately. When installing new components in a one-year-old car the receiver need not be replaced.

CAUTION: To avoid corrosion, the system must be filled immediately after installation.

If the car has been left standing for more than 24 hours without refrigerant in the system, the system must be flushed twice with approximately 200 grams of refrigerant. Between the two flushing operations, pump the system completely empty for at least 10 minutes.

NOTE: Return used refrigerant to the supplier who is responsible for safe disposal of environmentally harmful substances.

AIR QUALITY SENSOR

AIM:

To offer the customer a passenger compartment which is free of bad odors and pollutants.

General:

By placing an air quality sensor in the air intake it is possible to measure the amounts of polluted air, primarily from motor vehicles. The signal from the air quality sensor is used to exclude the pollutants by using the recirculation (REC) mode. An activated carbon filter is installed in the heater. This filter takes care of the pollutants in the couple of seconds before the recirculation shutter closes and on those occasions when recirculation cannot be used because of misting. The filter and the sensor are interdependent to provide the customer with as clean a passenger compartment as possible. The climate control system is equipped with a button to activate the system.

The filter:

By supplying a particle filter with activated carbon, gases entering the passenger compartment can be absorbed. The focus of exclusion is on the following substances: NO, NO2, HC (benzene, toluene, xylene), CO, ozone.

What can activated carbon absorb?

Cold start: Good absorption of petrol components is usually achieved.

Manure: Ammonia is badly absorbed, however some neutralization can be expected.

Exhausts: Good separation of uncombusted hydrocarbons and "diesel odor" is achieved.

Oil odor: Good.

Water treatment plants: Sulphuric acid cannot be dealt with.

Solvents Good.

Pulp mills: Many odorous substances. Some can be absorbed.

Odors are complicated and are difficult to explain in terms of concentrations and percentages. A filter will reduce odors and minimize strong odor changes and will therefore improve comfort. The car can never be completely odorless. In some cases the odor compounds may seem unexpected because the constituent substance compounds are modified.

Sensor:

The sensor registers NOxCO and HC. These are the most prominent compounds produced by motor vehicles. The sensor registers increases in concentrations, for example when a tunnel is entered or when driving behind a truck. The sensor learns the environment it is in and only reacts to the relevant increase in concentration. One point is that the sensor reacts to CO, a compound which activated charcoal filters cannot handle.

OIL AIR CONDITIONING (A/C) SYSTEM, FILLING

Special tools:

see **9511204**

TOPPING UP THE LUBRICATING OIL

WARNING: Do not mix oil types. Always use the correct type of compressor oil.

NOTE: Too much lubrication oil will impair cooling. Too little lubrication oil will damage the compressor.

The oil must be topped up when repairing a leak or when replacing a component. The quantity required for the component in question will depend on whether leakage has taken place slowly or quickly.

Model	Engine	Model Year	Oil, AC compressor R134a
XC90	All	All	**1161 627-3**

Slow leakage (longer than 24 hours)

With a slow leak, there is normally minimal risk of oil loss.

When installing new components the following procedures apply:

Rapid leakage (e. g. hose rupture)

Rapid leakage often means that lubricating oil escapes with the refrigerant.

When replacing components, the following oil volumes shall be found in the new components or shall be filled in the system through the service valve, except for the compressor:

Receiver drier	30 cm^3
Evaporator	50 cm^3
Condenser	30 cm^3
Tube	10 cm^3
Hose	10 cm^3

Compressor

Oil return when reusing compressor:

- measure the volume of the oil drained from the compressor
- replace the volume of drained oil according to the table below:

Drained oil	Filling with oil
> or = 70 cm^3 oil	Replace the volume of drained oil with the corresponding quantity.
< 70 cm^3 oil	Fill with 70 cm^3 of oil.

Oil return when replacing compressor:

- Drain the old compressor of oil, and measure the amount.
- Drain the new compressor of oil (the amount may be below specified value since it is not possible to drain all oil from the compressor).
- Use the table below to fill the new compressor with the right amount of oil.

Drained oil	Filling with oil
> or = 70 cm^3 oil	Replace the drained oil volume with the same amount that was drained from the old compressor.
< 70 cm^3 oil	Fill with 70 cm^3 of oil.

CAUTION: When installing completely new system: Check that there is oil in the compressor. The other components should contain no oil.

REPLACING THE RECEIVER DRIER

Replace the receiver drier in the following cases:

- when replacing the compressor (e. g., compressor breakdown)
- refrigerant leakage, where nearly 100% has leaked out of the system (the system has no pressure)
- when replacing any air conditioning (A/C) component outside the warranty period.

FILLING THE A/C SYSTEM WITH OIL

NOTE: On newer filling/draining/vacuum-pumping stations there is a reservoir for injecting oil. This can be used before filling with refrigerant and after vacuum-pumping without needing to remove the needle valve in the service valve.

NOTE: Fill with oil before vacuum-pumping.

FILLING WITH PAG OIL

When replacing pipes/hoses, oil can be filled through the service valve.

When filling the vehicle with PAG oil (for P/N, see spare parts catalog), carry out the following:

- Remove the needle valve in the service valve using valve tool see **9511204** .

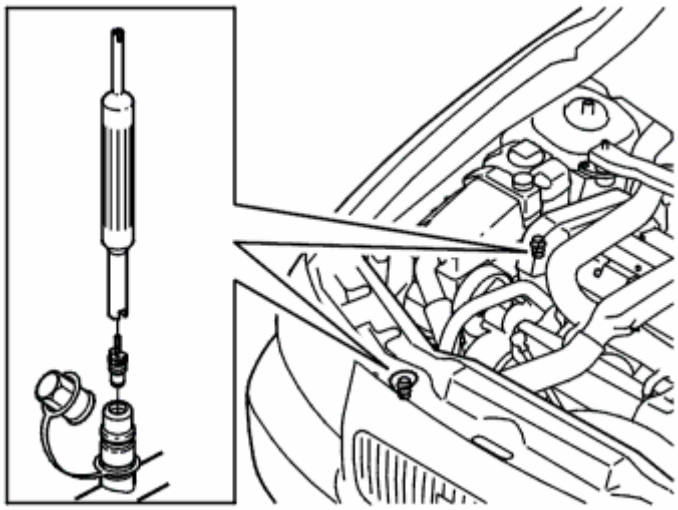

Fig. 1: Identifying Needle Valve, Service Valve & Valve Tool (951 1204)
Courtesy of VOLVO CARS CORPORATION

Use the filling syringe (without plastic hose) supplied with the unit to top up the oil. Clean the syringe to avoid the possibility of mixing different types of oil.

- Check according to the table above. Measure how much oil is to be added. After topping up the oil, reinstall the needle valve.

NOTE: **Use only your thumb and index finger when tightening the service valve using valve needle tool see 9511204 . This is to prevent damage to the seal on the service valve.**

REFRIGERANT, OVERVIEW

Environmental legislation makes increasing demands on safe handling of refrigerant.

The refrigerant used by Volvo in the AC systems is designated R134a.

WARNING: **R134a must not be mixed with other refrigerants. R134a must not be used in air conditioning (A/C) systems for which other refrigerant types are specified.**

NOTE: **The statutory requirements for handling refrigerants can vary from country to country. It is important that national legislation, applying to handling of refrigerants for the country where the equipment is to be used, is followed. Read the safety regulations for handling refrigerant according to REFRIGERANT, SAFETY REGULATIONS before the equipment is used**

TRACING AGENT FLUORESCENT, PRODUCTION/AFTER MARKET

TRACING AGENT FLUORESCENT, PRODUCTION

Volvo has introduced a fluorescent tracing agent into production.

The tracing agent is impregnated in a free standing "Dry-Water"cylindrical filter in the drying agent in the dryer.

The tracing agent dissolves and mixes with the compressor oil in the climate control system. The tracing agent is light green in color. It is used to identify any leakage in the climate control system. If an UV lamp is used, it is easier to, see where the fluorescent tracing agent is leaking out.

The receiver drier is supplied without tracing agent for aftermarket orders.

To fill with refrigerant, see **REFRIGERANT, FILLING** .

Test for leaks. See **LEAK TRACING, FLUORESCENT TRACING AGENT/UV LAMP** or **LEAK TRACING, FLUORESCENT TRACING AGENT/UV LAMP** .

TRACING AGENT FLUORESCENT, AFTERMARKET

Volvo has introduced a fluorescent tracing agent for aftermarket use.

Facts about the tracing agent

- The tracing agent is in liquid form. It is mixed with the A/C compressor oil in the climate control system
- The tracing agent is light green in color. It is used to identify any leakage in the climate control system
- If an UV lamp is used, it is easier to, see where the fluorescent tracing agent is leaking out.

HVAC

Climate Units - General Safety Information

SAFETY INFORMATION

REFRIGERANT, SAFETY REGULATIONS

Always wear tight-fitting safety glasses if there is any risk for refrigerant leakage.

If refrigerant gets in the eyes rinse immediately in running water for 15 seconds. Seek medical assistance if you experience any problems after exposure (with vision etc.).

Protect exposed skin (hands) to avoid frostbite injuries.

If skin is exposed to refrigerant, flush the affected area with warm running water. Treat the injury as for frostbite.

Toxic gases may be generated if refrigerant comes into contact with a naked flame.

WARNING: **The toxic gases generated when the refrigerant is heated are hazardous to health. These gases have an irritating smell and can cause lung damage. The symptoms can continue for a long time after you have been in contact with the gases. The gases can cause lung damage even if the amount of gas in the air is too little to smell it.**

Do not keep gas bottles where the temperature can exceed 45° C.

WARNING: **Exposing a gas bottle to heat will cause the pressure in the bottle to increase with a correspondingly greater risk of an explosion occurring.**

NOTE: **Some countries have special legislation about working with air-conditioning systems. Only qualified technicians are to be allowed to work with the A/C system.**

AIR CONDITIONING SYSTEM, SAFETY INFORMATION

WARNING: **Only trained technicians may work with the air conditioning (A/C) system.**

WARNING: **Air conditioning (A/C) components can be extremely hot or cold.**

WARNING: **Always wear protective goggles and gloves made of fluoroelastomers**

when handling refrigerants. Leather or textile gloves are not suitable.

WARNING: **Check that the air conditioning (A/C) system is at room temperature before starting any repair work.**

WARNING: **If liquid refrigerant comes into contact with skin, it causes severe frostbite.**

WARNING: **Immediately rinse the area with water for 15 minutes. Seek medical attention.**

WARNING: **If refrigerant comes into contact with your eyes, immediately rinse the eyes with copious amounts of water for 15 minutes. Seek medical attention.**

WARNING: **If the refrigerant comes into contact with open flames or hot surfaces, it gives off poisonous gases (fluorine and phosgene).**

WARNING: **These poisonous gases are easily detected by their pungent odor, even in very small concentrations.**

WARNING: **The refrigerant is flammable and explosive.**

WARNING: **Ensure compliance with local regulations regarding work with air conditioning (A/C) systems.**

WARNING: **Make sure that refrigerant bottles are not exposed to temperatures greater than 45 °C.**

WARNING: **Make sure that the refrigerant bottles are properly closed.**

WARNING: **The poisonous gases generated when the refrigerant is heated are hazardous to your health.**

WARNING: **The gases have a pungent odor and can cause lung damage.**

WARNING: The symptoms can continue for a long time after exposure to the gases.

WARNING: The gases can cause lung damage, even if the amount of gas in the air is too small to be detected by its odor.

WARNING: Refrigerant in gas form has a higher density than air.

WARNING: Risk of asphyxiation if working near the floor or in a lubrication pit.

WARNING: Make sure there is proper ventilation when handling refrigerant.

WARNING: Never release refrigerant into the air.

WARNING: Only use special tools, equipment and lubricant that has been approved for the type of refrigerant used.

WARNING: The pressurized container in the service unit must never be overfilled.

WARNING: The refrigerant must have sufficient space to be able to expand if the temperature rises.

WARNING: Always follow the manufacturer's instructions for correct use of the service unit.

CAUTION: Do not mix oils for different refrigerants.

CAUTION: Never mix different types of refrigerants or equipment intended for such.

CAUTION: Refrigerants cause some plastics to break down. Only use seals suitable for the refrigerant in question.

CAUTION: If the air conditioning (A/C) compressor is damaged, the fixed opening pipe may become blocked by metal particles. Any type of blockage in the refrigerant circuit will damage the air conditioning (A/C) compressor beyond repair.

CAUTION: If the air conditioning system (A/C) is open for more than 2 hours, a new dryer filter must be installed and evacuation time must be increased by at least 2 hours.

NOTE: New air conditioning (A/C) compressors come pre-filled.

NOTE: The refrigerant oil in the new air conditioning (A/C) compressors contains teflon, which can appear as white particles. These will not damage the system.

HVAC

Climate Units - Installation Instructions, Accessories

ELECTRICAL ENGINE BLOCK HEATER 115V (B6294T; 2003)

ELECTRICAL ENGINE BLOCK HEATER 115V

CAUTION: Ensure that the cable for the engine block heater is not routed close to any rotating components or sharp edges.

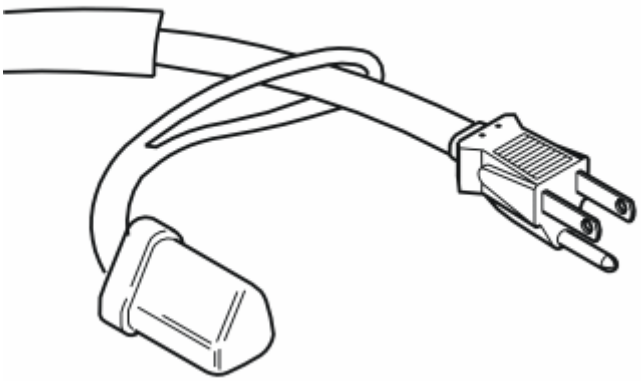

Fig. 1: Cable And Protective Cover
Courtesy of VOLVO CARS CORPORATION

- Take the cable for the front engine block heater socket and the protective cover from the kit
- Thread the protective cover on to the cable.

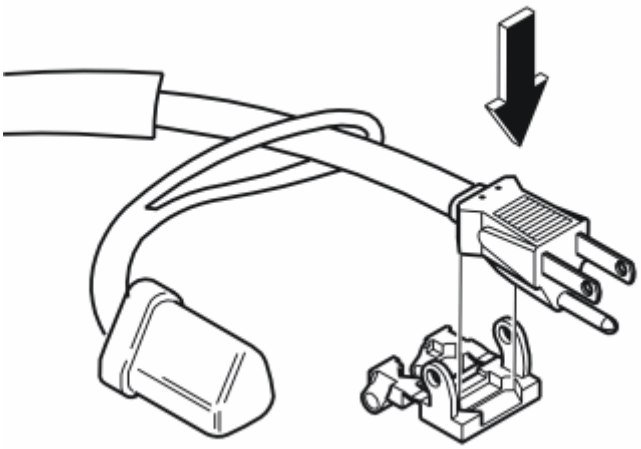

Fig. 2: Connector And Holder

Courtesy of VOLVO CARS CORPORATION

- Take the holder for the connector from the kit. Press the connector into place in the bottom of the holder.

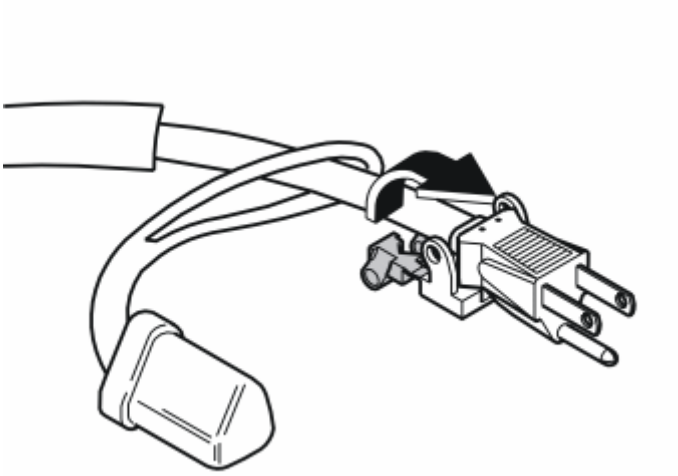

Fig. 3: Folding Cover Over Connector
Courtesy of VOLVO CARS CORPORATION

- Fold the cover over the connector. Press together so that the holes in the holder and cover align with each other.

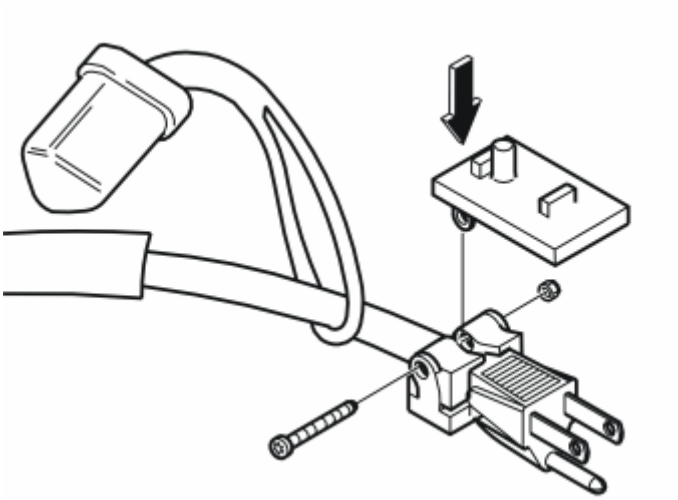

Fig. 4: Identifying Front Intake Components
Courtesy of VOLVO CARS CORPORATION

- Take the mounting and screw for the grille from the kit. Tighten the mounting for the holder and cover.

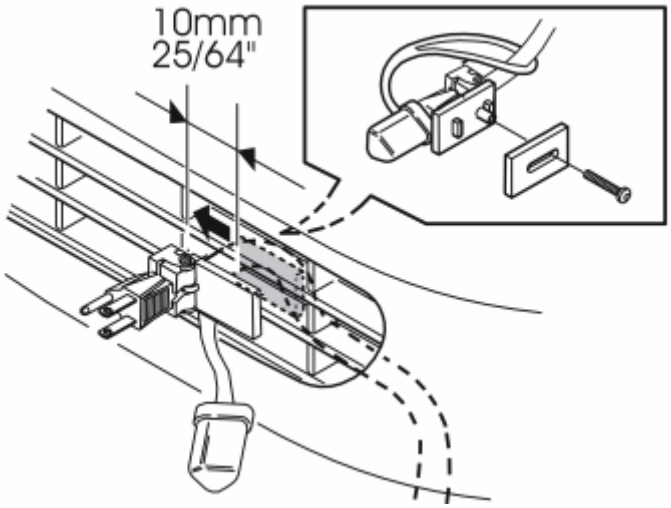

Fig. 5: Installing Front Engine Block Heater Socket
Courtesy of VOLVO CARS CORPORATION

- Insert the cable for the front engine block heater socket through the center hole, second from the left in the grille
- Take the screw and the mounting plate from the kit. Insert the front engine block heater socket. Slide it to the right so that the distance between the mounting plate and the second rib in the grille is 10 mm (25/64"). This is so that the cable does not become trapped when folding the connector out or back in
- Route the cable to the left into the join between the two rubber seals for the radiator. Continue routing the cable along the left-hand side of the radiator and out between the front skid plate and the front edge of the sub-frame.

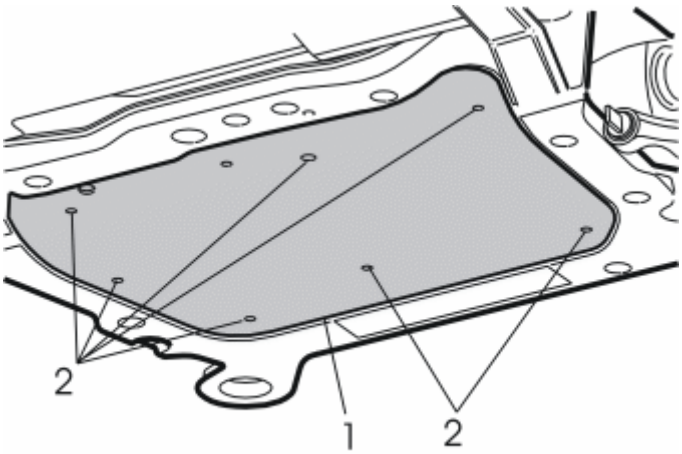

Fig. 6: Engine Splash Guard
Courtesy of VOLVO CARS CORPORATION

- Remove the engine splash guard (1) by first removing the screws (2).

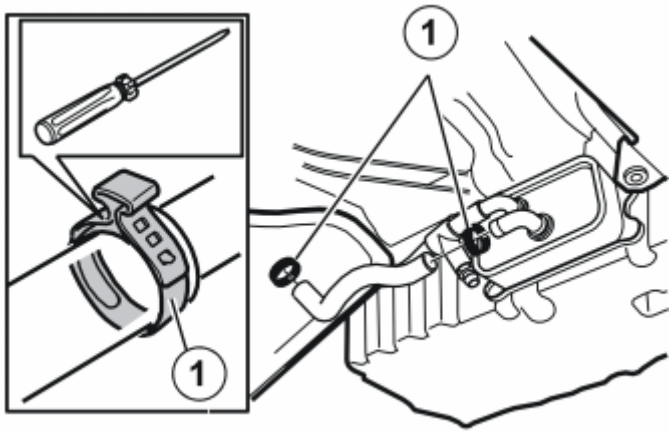

Fig. 7: Locating Hose Clamps
Courtesy of VOLVO CARS CORPORATION

- Remove the draining nipple on the hose to the left of the oil cooler. Drain the coolant
- Remove the clamps (1) on the lower hose on the oil cooler. Remove the hose. Place the hose to one side. It will not be reused.

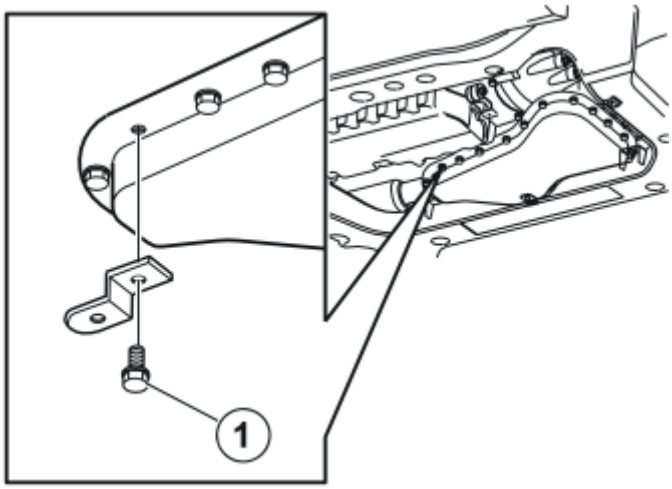

Fig. 8: Gearbox Right Front Corner Screw
Courtesy of VOLVO CARS CORPORATION

- Remove the screw (1) in the bottom cover on the right front corner of the gearbox
- Tighten the small bracket (from the kit) using the screw to the gearbox as illustrated. Tighten the screws. Tighten to **10 Nm (7 lbf. ft.)** .

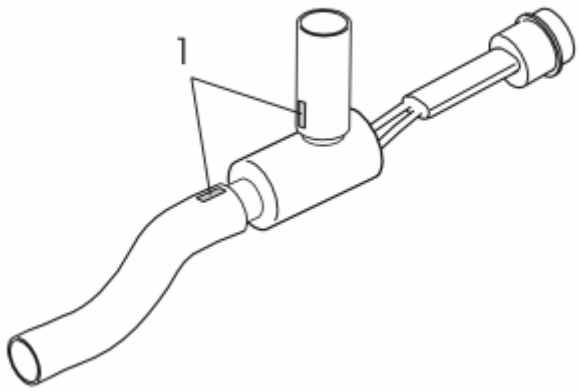

Fig. 9: Hose Alignment Markings
Courtesy of VOLVO CARS CORPORATION

- Install the hoses (from the kit) on the heater. Align the white markings (1) with each other as illustrated.

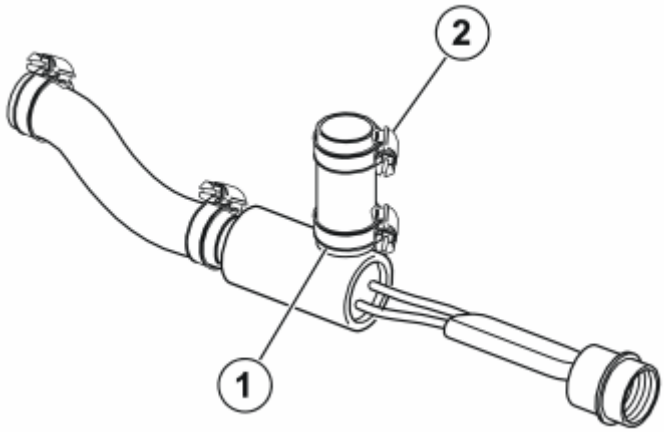

Fig. 10: Hose Clamps
Courtesy of VOLVO CARS CORPORATION

- Position the four hose clamps (from the kit) on the hoses and heater
- Tighten the hose clamp (1). Position the hose clamp (2) as illustrated. Tighten the hose to the oil cooler.

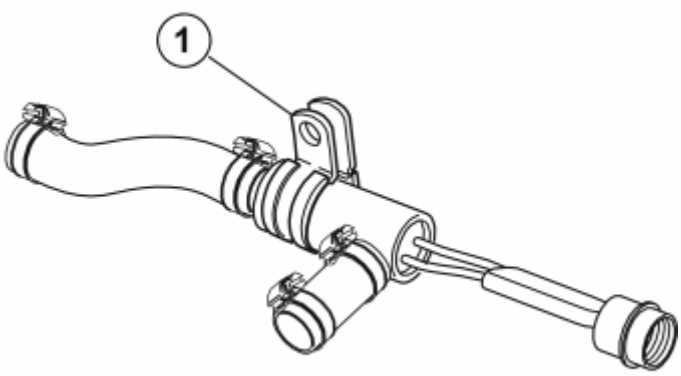

Fig. 11: Rubber Coated Clamp
Courtesy of VOLVO CARS CORPORATION

- Position the rubber coated clamp (1) (from the kit) on the heater as illustrated.

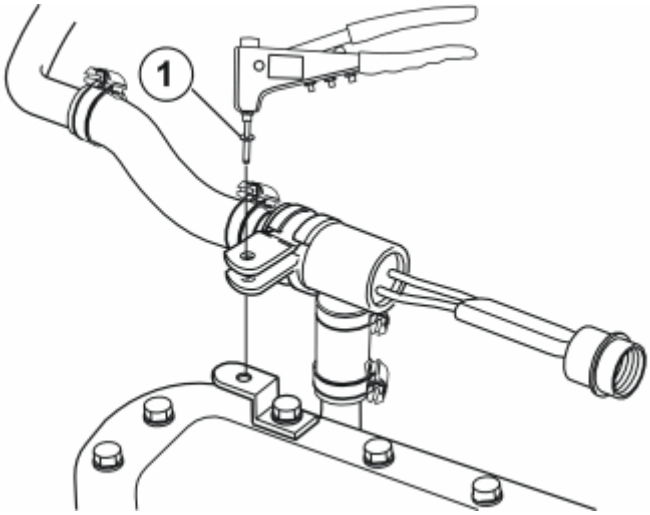

Fig. 12: Blind Riveting Rubber Coated Clamp With Heater To Bracket In Bottom Cover Of Gearbox
Courtesy of VOLVO CARS CORPORATION

- Install the heater with the hoses to the oil cooler pipe
- Take a blind rivet (1) from the kit. Blind rivet the rubber coated clamp with the heater to the bracket in the bottom cover of the transmission
- Tighten the remaining hose clamps to the heater and oil cooler pipe.

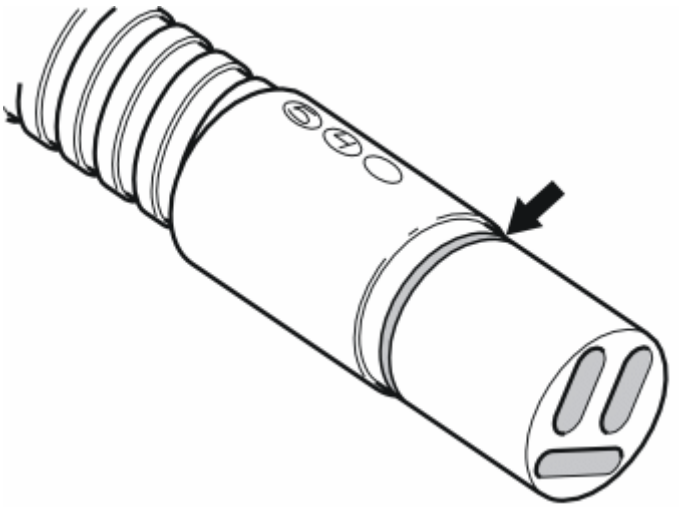

Fig. 13: Identifying O-Ring
Courtesy of VOLVO CARS CORPORATION

- Route the previously routed cable for the front engine block heater socket above the front left corner of the sub-frame
- Grease the O-ring on the switch using low temperature grease, (P/N 1161417-9).

NOTE: Do not get any grease on the contact surfaces of the connector.

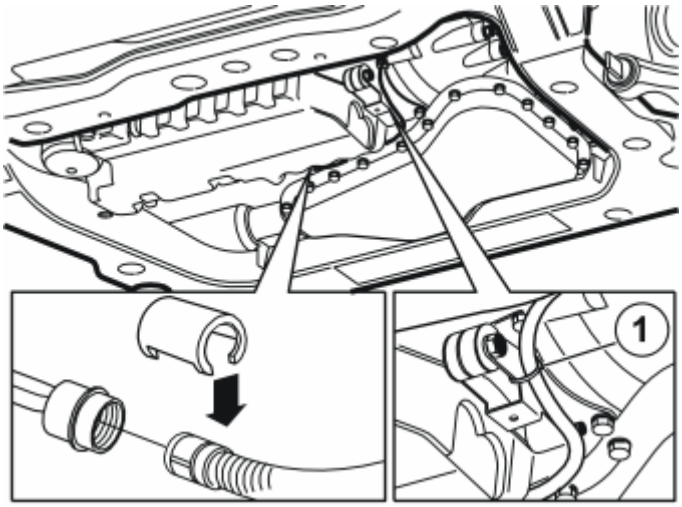

Fig. 14: Cable Clamped Using Tie Strap
Courtesy of VOLVO CARS CORPORATION

- Connect the cable connector to the connector on the engine block heater. Install a locking sleeve from the kit over the joint.

WARNING: Never break the power supply to the engine block heater by disconnecting this connector.

- Route the cable as illustrated. Clamp the cable using a tie strap from the kit at position (1).
- Fill with coolant. Test run the engine. Bleed the cooling system. Check for leakage
- Reinstall the engine splash guard. Tighten to **25 Nm (19 lbf. ft.)**

ELECTRIC ENGINE BLOCK HEATER 115V, B8444S (B8444S; 2005-2008)

ELECTRIC ENGINE BLOCK HEATER, 115V

PREPARATIONS

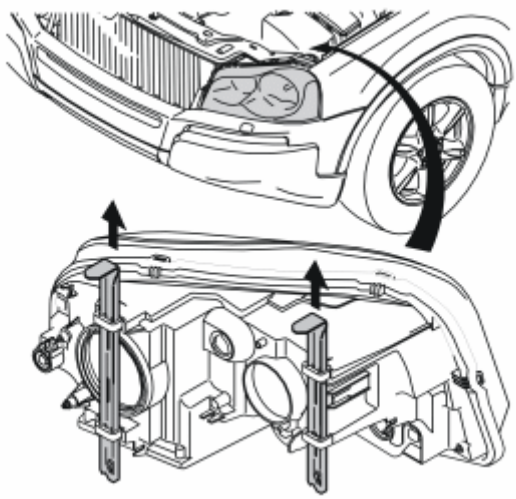

Fig. 15: Detach Left-Hand Headlamp By Pulling Up Two Locking Pins
Courtesy of VOLVO CARS CORPORATION

- Detach the left-hand headlamp by pulling up the two locking pins and then carefully pulling away the headlamp forwards.

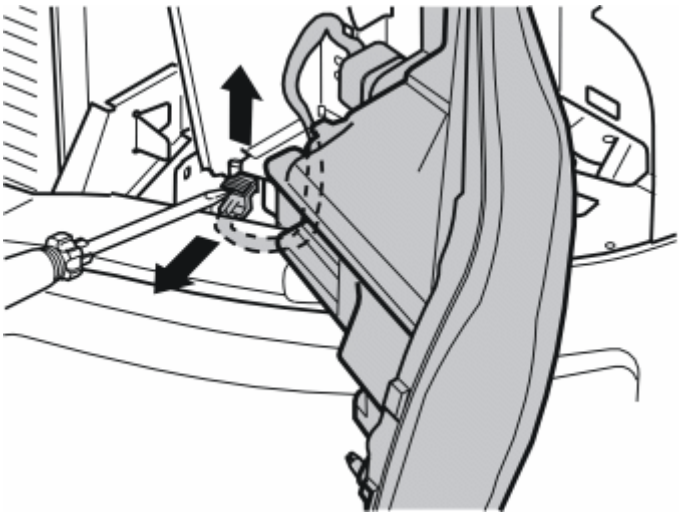

Fig. 16: Carefully Prize Up Catch On Connector For Headlamp With A Screwdriver

Courtesy of VOLVO CARS CORPORATION

- Carefully prize up the catch on the connector for the headlamp using a screwdriver.
- Pull the catch up completely, detach the connector and place the headlamp to one side.

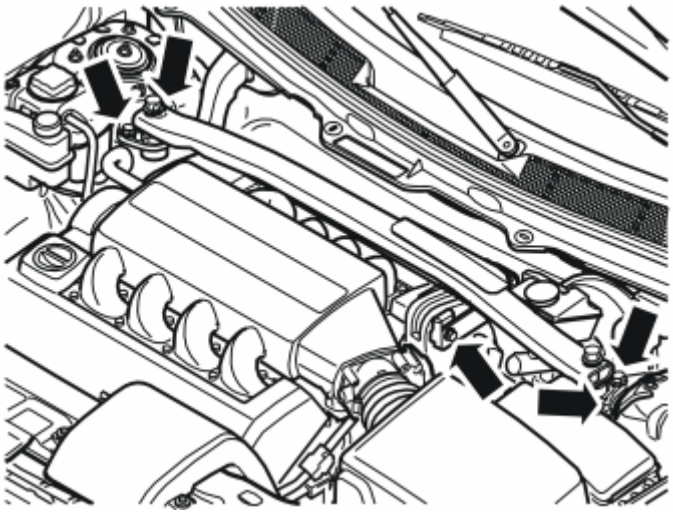

Fig. 17: Removing Upper Engine Strut
Courtesy of VOLVO CARS CORPORATION

- Remove the screw in the upper engine mounting. Remove the four screws holding the strut between the spring strut turrets and lift out the strut.

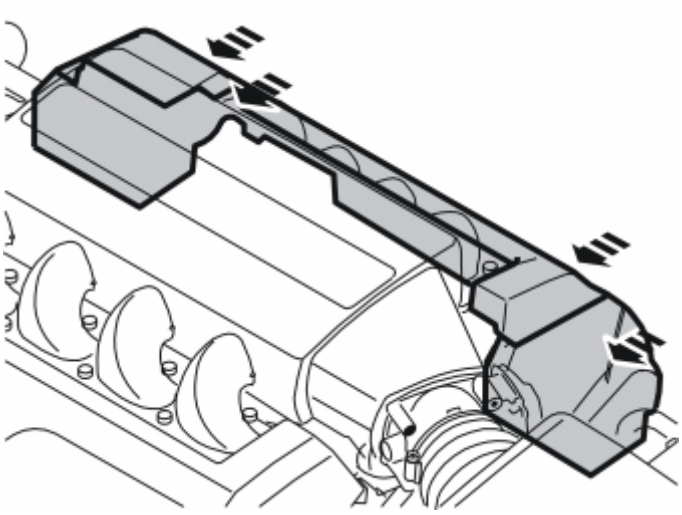

Fig. 18: Removing Rear Engine Cover
Courtesy of VOLVO CARS CORPORATION

- Remove the rear engine cover behind the intake manifold by pulling it away backwards. It is fitted with four rubber mountings.

INSTALLING THE FRONT ENGINE BLOCK HEATER SOCKET

APPLIES TO CARS FROM MODEL YEAR 2007-

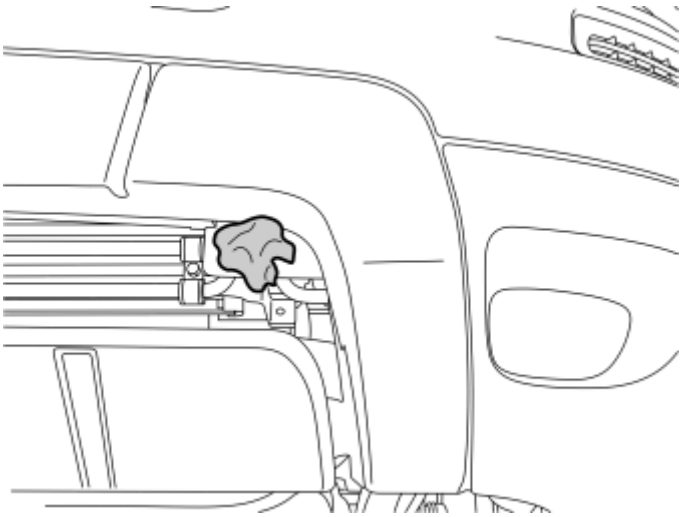

Fig. 19: Identifying Surface To Clean Where Front Engine Block Heater Socket Is Secured
Courtesy of VOLVO CARS CORPORATION

- Clean the surface where the front engine block heater socket will be secured.

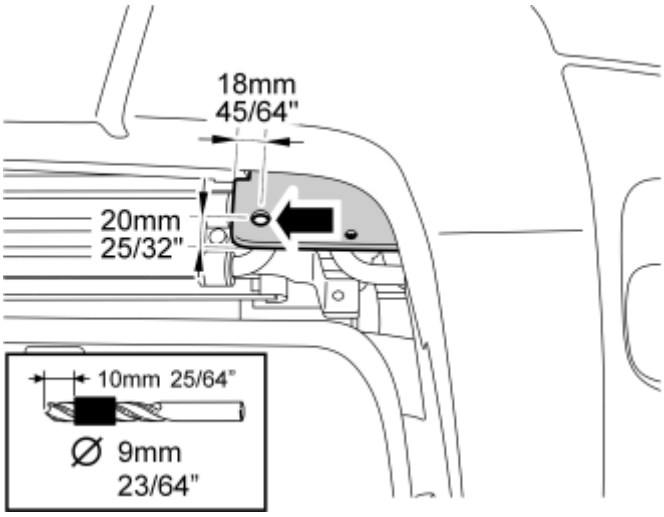

Fig. 20: Identifying Hole Drilled In Front Engine Block Heater Socket's Mounting Plate
Courtesy of VOLVO CARS CORPORATION

- Drill a hole for the guide to the front engine block heater socket's mounting plate.
- File down the edges of the holes.

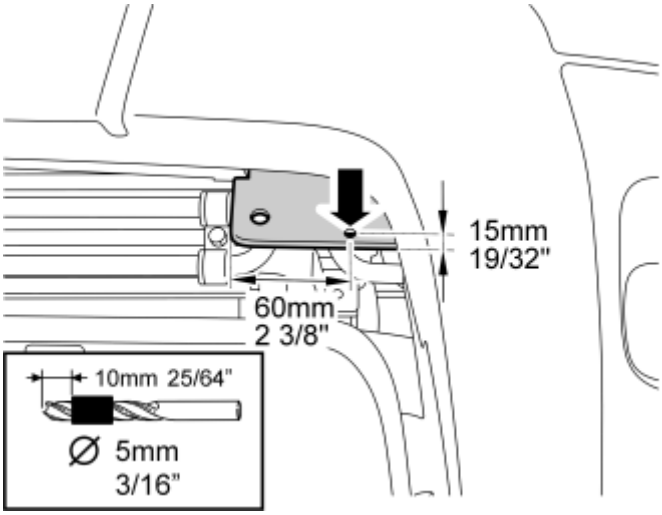

Fig. 21: Identifying Hole Drilled For Tie Strap In Front Engine Block Heater Socket's Cable
Courtesy of VOLVO CARS CORPORATION

- Drill a hole for the tie strap for the front engine block heater socket's cable.
- File down the edges of the holes.

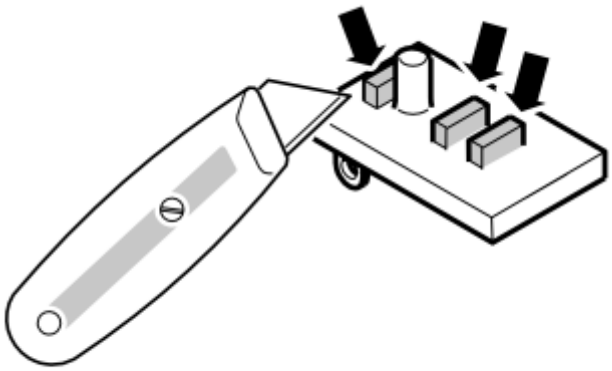

Fig. 22: Cutting Away Engine Block Heater Socket Mounting Plate Pins
Courtesy of VOLVO CARS CORPORATION

- Cut away the three pins on the front engine block heater socket's mounting plate.

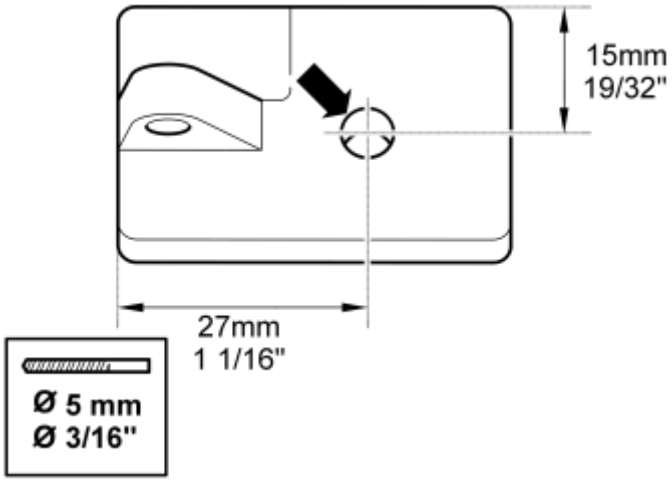

Fig. 23: Identifying Drill Area And Dimensions
Courtesy of VOLVO CARS CORPORATION

- Drill a **5 mm (3/16 ")** diameter hole in the mounting plate.
- File down the edges of the holes.

- Assemble the front engine block heater socket using the parts from the kit, in accordance with illustrations A, B, C and D.

Illustration A

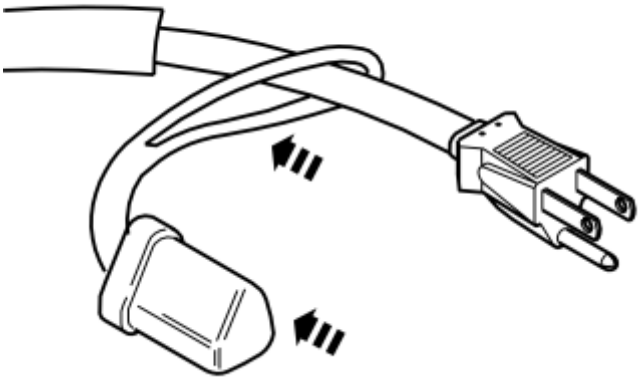

Fig. 24: Installing Kit Components
Courtesy of VOLVO CARS CORPORATION

Illustration B

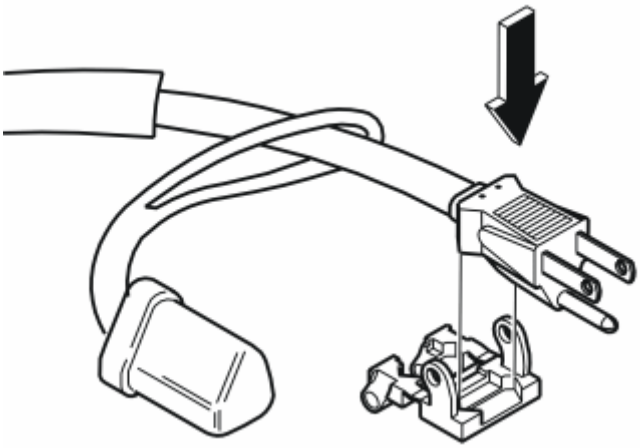

Fig. 25: Connector And Holder
Courtesy of VOLVO CARS CORPORATION

Illustration C

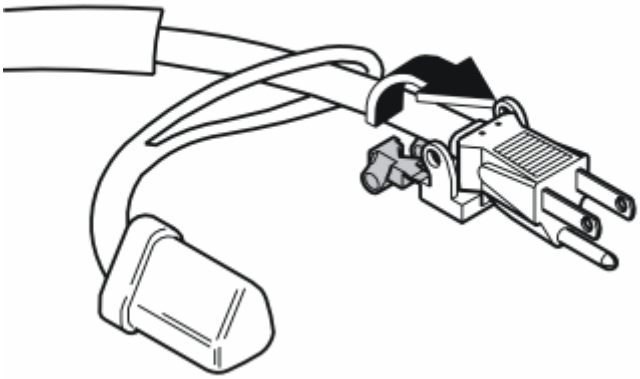

Fig. 26: Folding Cover Over Connector
Courtesy of VOLVO CARS CORPORATION

Illustration D

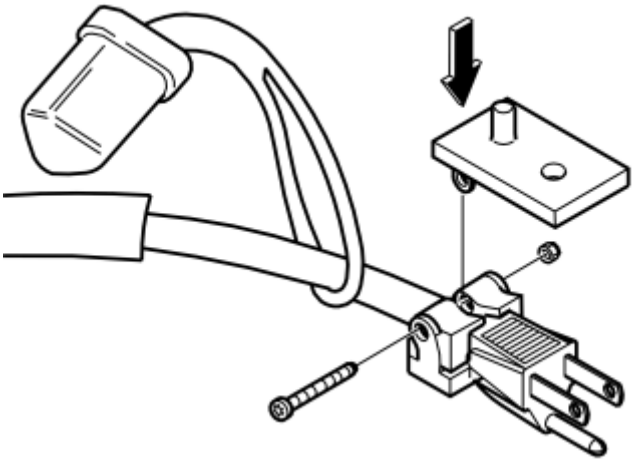

Fig. 27: Mounting Plate
Courtesy of VOLVO CARS CORPORATION

APPLIES TO CARS FROM MODEL YEAR 2007-

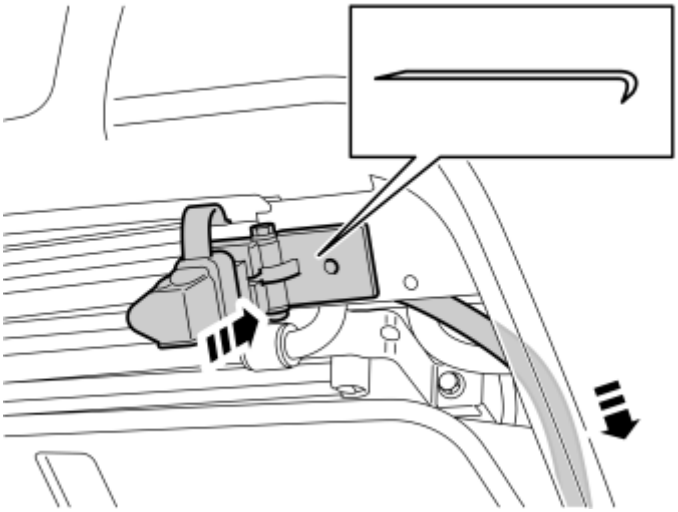

Fig. 28: Front Engine Block Heater Socket
Courtesy of VOLVO CARS CORPORATION

- Install the front engine block heater socket with the guide pin in the large hole.
- Route the cable in so that it runs down on the inside of the left-hand bracket for the skid plate.
- Align the front engine block heater socket so that the long sides of the mounting plate are parallel with the edges of the surface into which the mounting plate shall be screwed.
- Mark out for drilling the hole for the screw for the mounting plate.

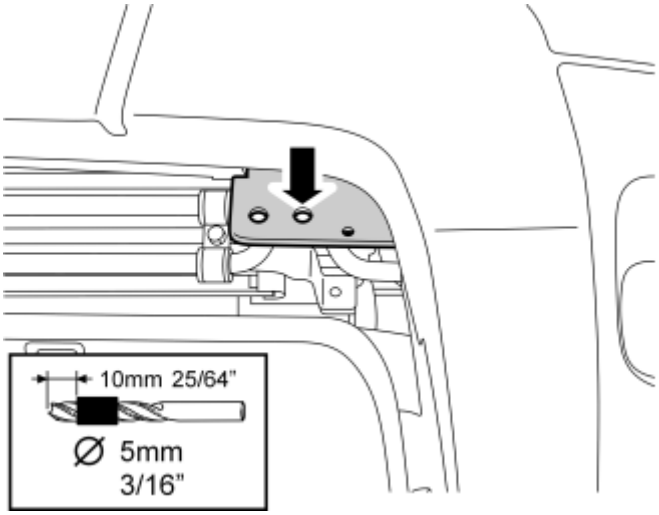

Fig. 29: Identifying 3/16 Inch Hole Drilled To Secure Front Engine Block Heater Socket's Mounting Plate
Courtesy of VOLVO CARS CORPORATION

- Drill a **5 mm (3/16 ")** diameter hole for the screw for securing the front engine block heater socket's mounting plate.

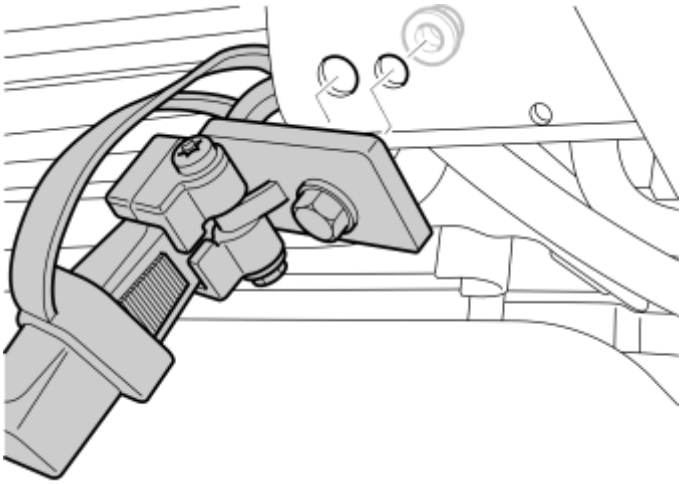

Fig. 30: Installing Front Engine Block Heater Socket
Courtesy of VOLVO CARS CORPORATION

- with a screw and nut in the drilled hole and tighten.

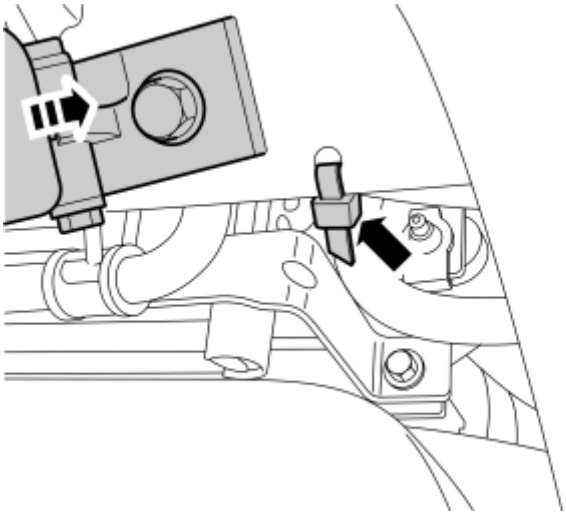

Fig. 31: Securing Engine Block Heater Socket
Courtesy of VOLVO CARS CORPORATION

- Secure the tie strap in the hole around the front cable.
- Fold in the connector so that the cable adopts the correct length in the tie strap before it is tightened.
- Tighten the tie strap.

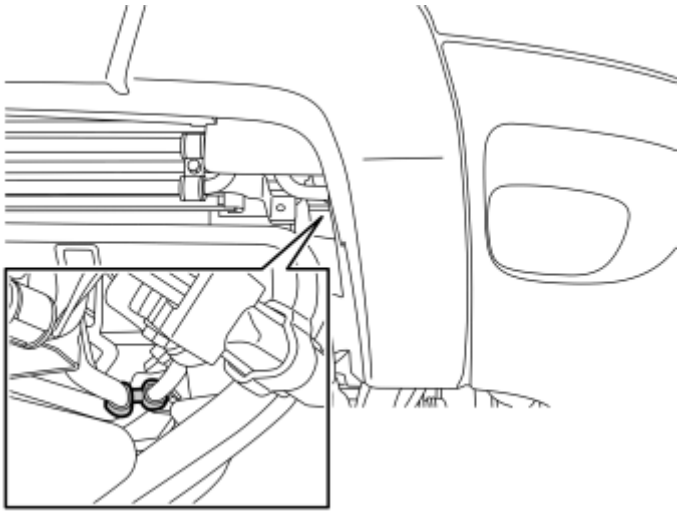

Fig. 32: Identifying Cable Clamped At Pipe
Courtesy of VOLVO CARS CORPORATION

- Clamp the cable in at the pipe for the air conditioning using a double tie strap.
- Route the cable up on the inside of the side member and under the plate underneath the headlamp.

APPLIES TO CARS UP TO AND INCLUDING MODEL YEAR -2006

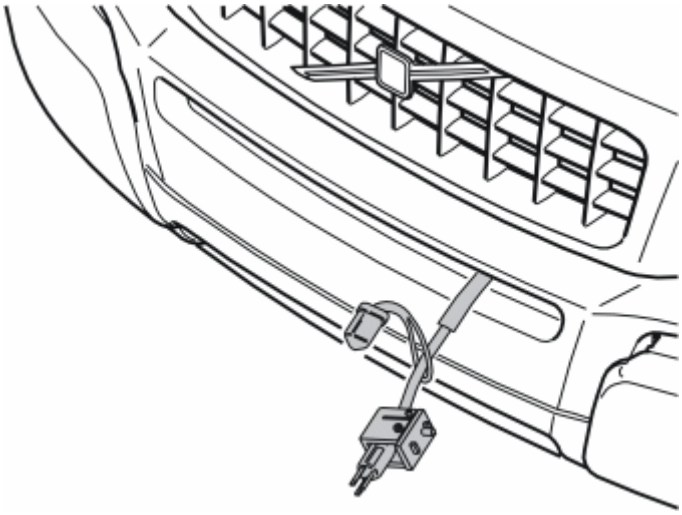

Fig. 33: Front Socket Cable
Courtesy of VOLVO CARS CORPORATION

- Guide the front socket's cable in through the center hole, next furthest to the left in the grille.

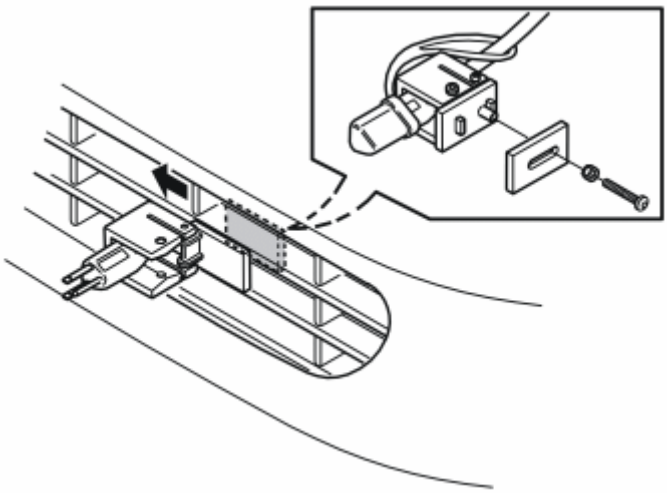

Fig. 34: Screw, Washer And Attaching Plate
Courtesy of VOLVO CARS CORPORATION

- Take a screw, washer and attaching plate from the kit and install the front socket. Push it as far as possible to the left and tighten it.
- Route the cable to the left, in through the rubber seal on the left-hand side of the radiator and under the plate on the underside of the headlamp.

INSTALLING THE HEATER

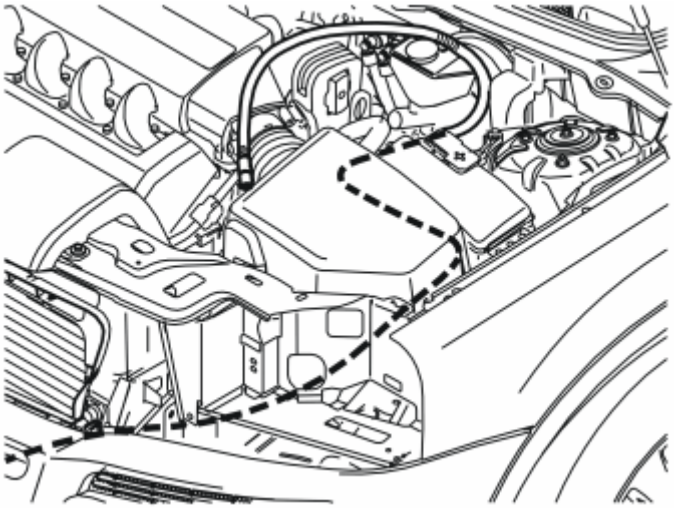

Fig. 35: Routing Cable
Courtesy of VOLVO CARS CORPORATION

- Route the cable back along the left-hand side of the air cleaner and between the air cleaner and fuse holder. Continue to route it backwards, under the ABS system and up between the cable duct and brake fluid reservoir.
- Check that the cable does not chafe against sharp edges or moving parts in the engine compartment.
- Clamp with tie straps from the kit.

NOTE: Do not clamp the cable against brake pipes, fuel lines or air conditioning (A/C) pipes.

- Open the cover for the radiator expansion tank.

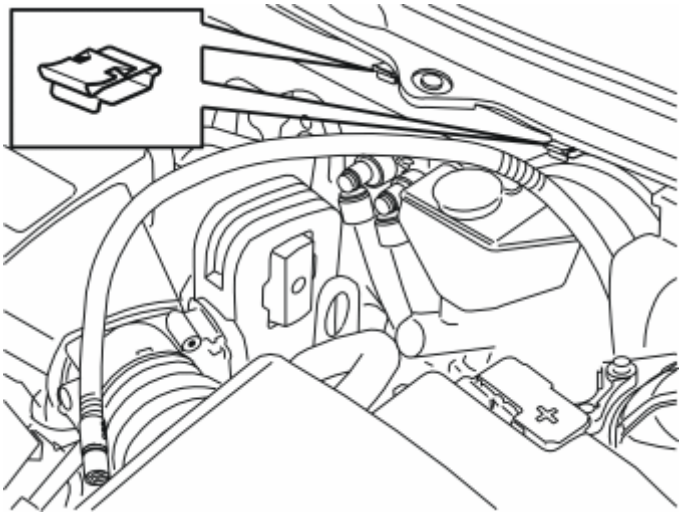

Fig. 36: Installation Clips
Courtesy of VOLVO CARS CORPORATION

- Take two clips from the kit and install them in the edge of the plate at the front edge of the panel above

the windscreen wiper arms.

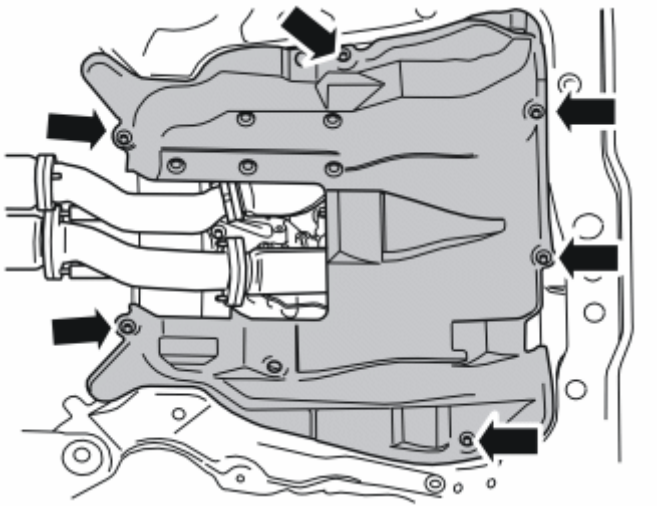

Fig. 37: Engine Splash Guard And Screws
Courtesy of VOLVO CARS CORPORATION

- Remove the six screws and the engine splash guard.

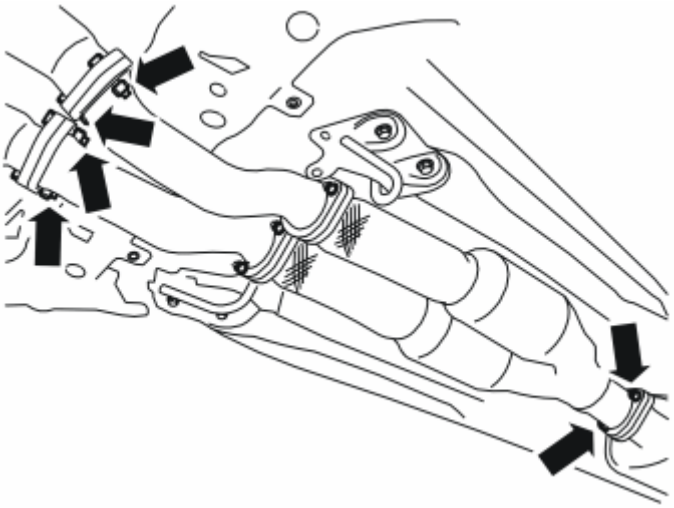

Fig. 38: Removing Exhaust Manifold Joint Bolts
Courtesy of VOLVO CARS CORPORATION

- Remove the four nuts in the joints to the manifold and the two in the joint in the front edge of the front silencer.

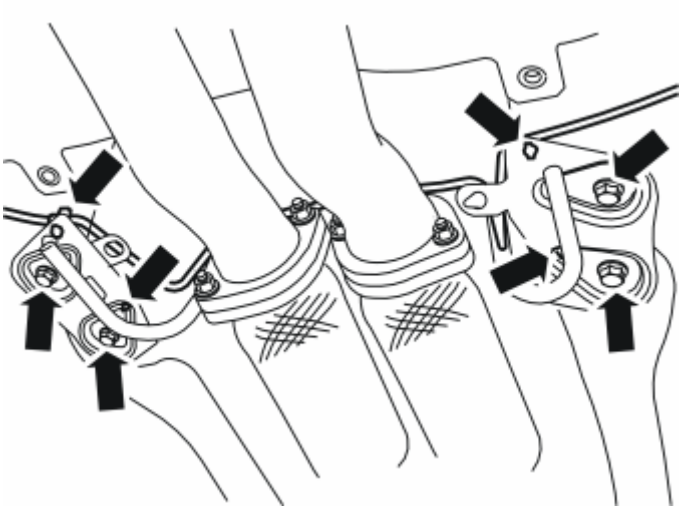

Fig. 39: Removing Pipe Above Exhaust Manifold
Courtesy of VOLVO CARS CORPORATION

- Detach the pipe above the exhaust manifold from the clips in the brackets to the exhaust manifold's front mounting.
- Remove the four screws in the brackets
- Detach the heat deflector plate's two clips from the brackets.
- Remove the exhaust pipe and catalytic converters.

NOTE: Take care with the twisted parts of the exhaust manifold.

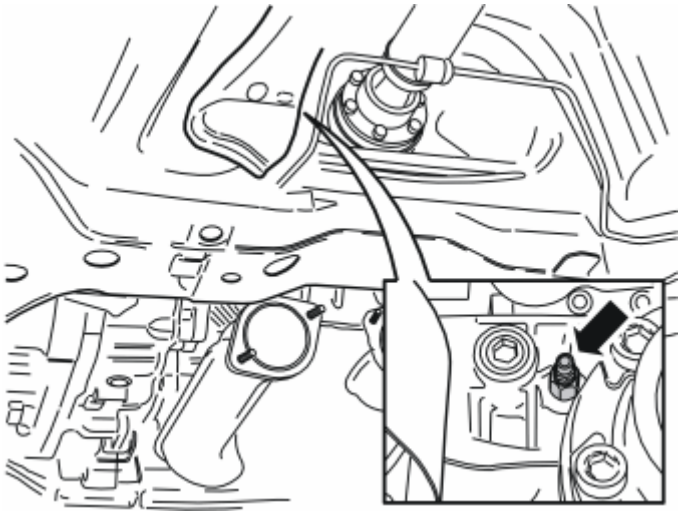

Fig. 40: Identifying Engine Block Drain Nipple
Courtesy of VOLVO CARS CORPORATION

- Detach the engine block drain nipple under the left-hand side of the rear manifold and drain the coolant.
- Tighten the nipple when the coolant is drained.

Illustration A

Fig. 41: Identifying Engine Block Plug
Courtesy of VOLVO CARS CORPORATION

- Remove the plug in the engine block under the left-hand side of the rear manifold.

Illustration B

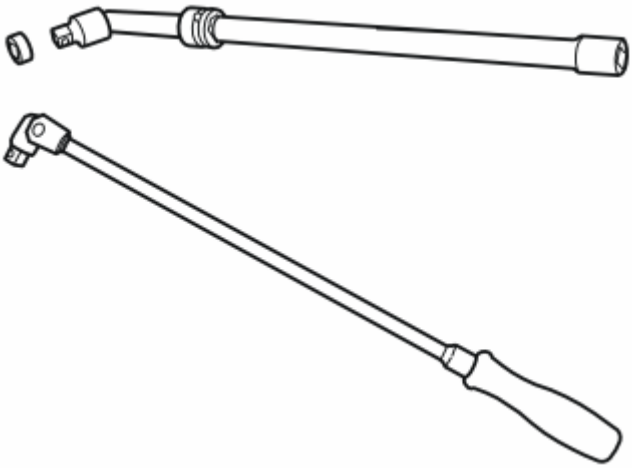

Fig. 42: Service Tools
Courtesy of VOLVO CARS CORPORATION

- Use hexagon socket P/N 9512965, socket extension 120 mm (4 3/4 ") with spherical end, socket extension 500 mm (19 11/16 ") with spherical end and handle.

Illustration C

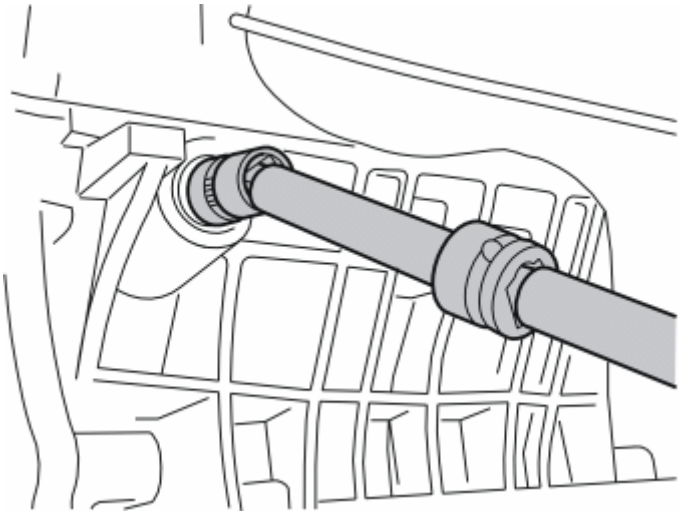

Fig. 43: Removing Plug
Courtesy of VOLVO CARS CORPORATION

- Apply a piece of butyl tape on the hexagon socket so that the plug does not fall away when it is unscrewed.

NOTE: Removing the plug requires significant force.

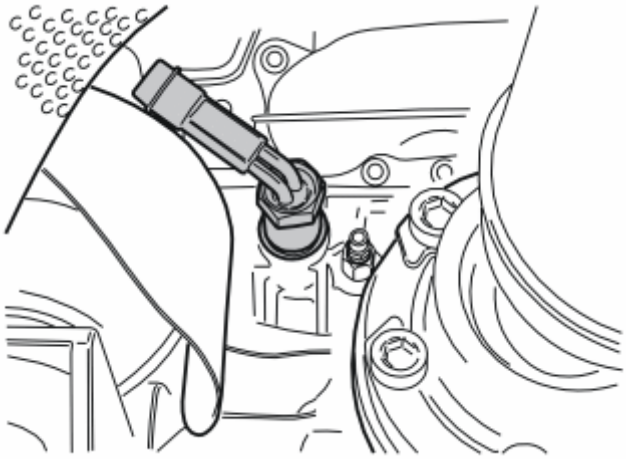

Fig. 44: Installing Heater
Courtesy of VOLVO CARS CORPORATION

- Take the heater from the kit.

HINT: Try to rotate the connector in the heater before installation to reduce any friction.

- Brush thread sealant P/N 1161056 on the threads.
- Install the heater in the engine block and manually screw it on as far as possible. It may be difficult to make the threads engage in the hole as the connector rotates stiffly in the threaded part of the heater.

Illustration A

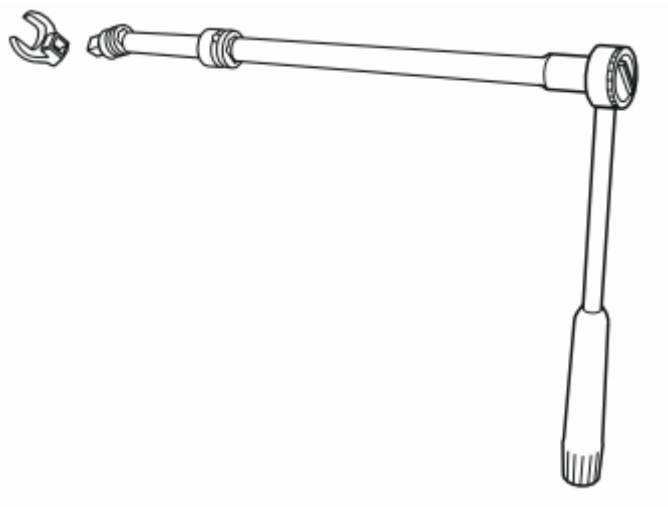

Fig. 45: Service Tools
Courtesy of VOLVO CARS CORPORATION

- Take tool P/N 9814012, a 1/2 "- 3/8" adapter, the two socket extensions and a 1/2 " ratchet handle.

Illustration B

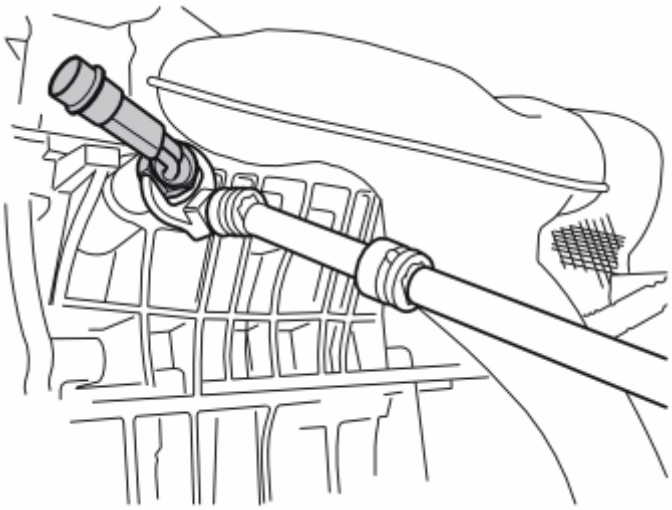

Fig. 46: Tightening The Heater To The Engine Block
Courtesy of VOLVO CARS CORPORATION

- Tighten the heater firmly to the engine block.

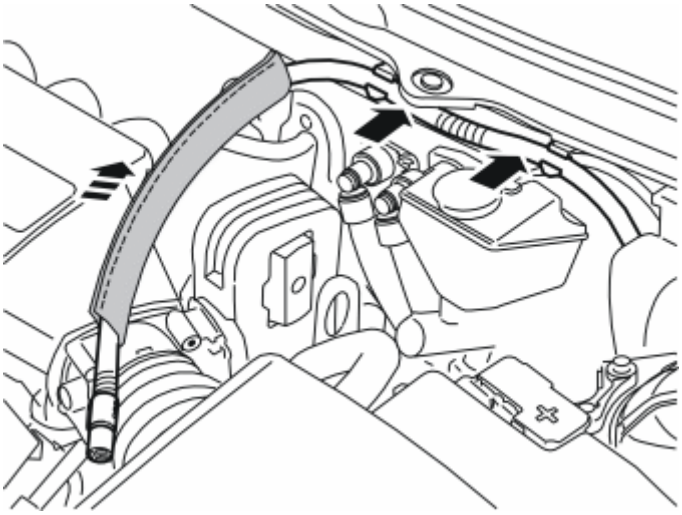

Fig. 47: Installing Cable
Courtesy of VOLVO CARS CORPORATION

- Press the cable to the engine block heater into the clips.
- Take the radiation shield from the kit and pull it on the end of the cable.
- Guide the cable down to the location where the engine block heater was installed.

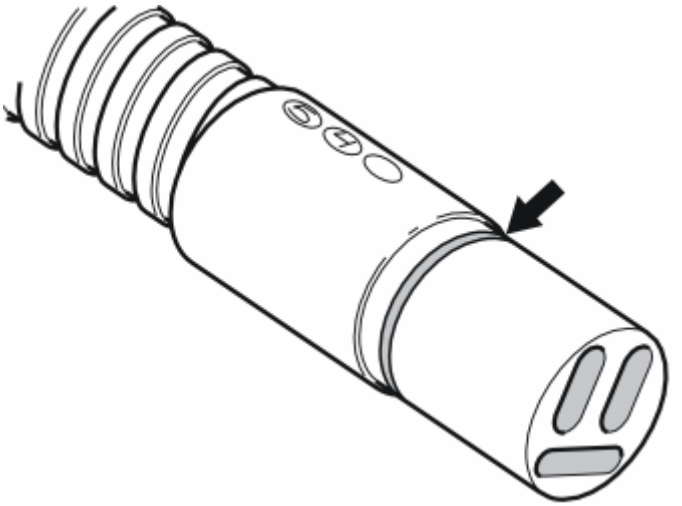

Fig. 48: Identifying O-Ring
Courtesy of VOLVO CARS CORPORATION

- Grease in the O-ring on the connector for the heater's cable using low temperature grease (P/N 1161417-9).

NOTE: Do not get any grease on the surfaces of the connector.

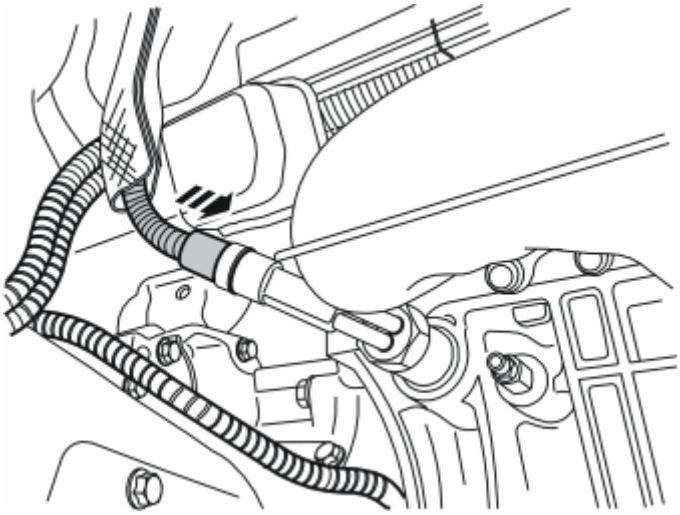

Fig. 49: Installing Connector
Courtesy of VOLVO CARS CORPORATION

- Firmly press in the connector to the engine block heater.

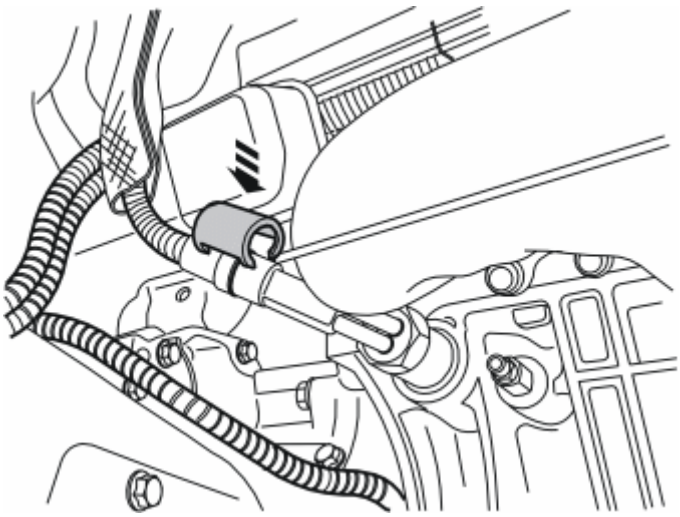

Fig. 50: Installing Locking Sleeve
Courtesy of VOLVO CARS CORPORATION

- Press a locking sleeve (from the kit) over the cable splice.

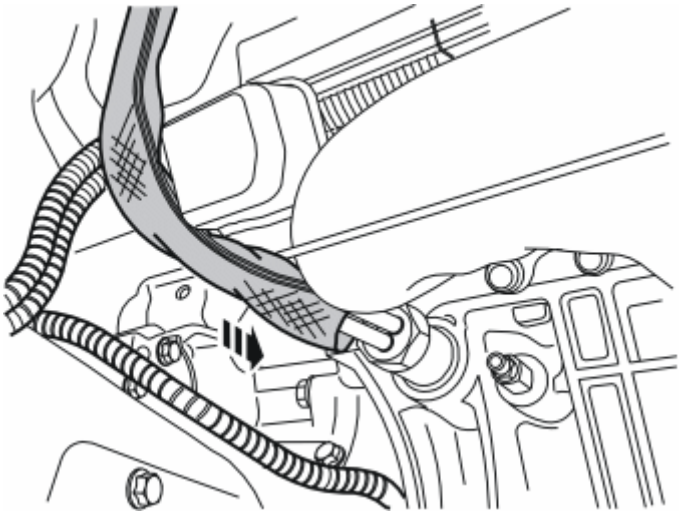

Fig. 51: Installing Radiation Shield
Courtesy of VOLVO CARS CORPORATION

- Pull the radiation shield down so that it fully covers the connector.

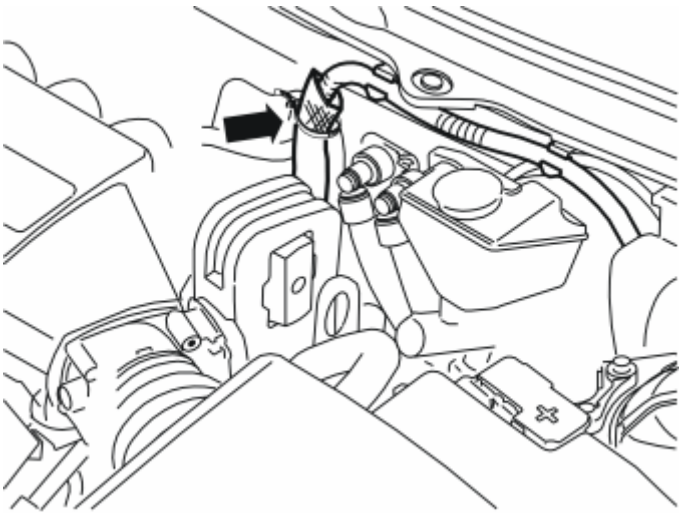

Fig. 52: Installing Grey Tie Strap
Courtesy of VOLVO CARS CORPORATION

- Take the grey tie strap from the kit and tighten the radiation shield to the cable at the top edge.
- Connect and reinstall the left-hand headlamp.
- Reinstall the engine's rear protective cover.
- Reinstall the strut between the spring strut turrets.

  Torque tighten the four M10 screws to **50 Nm (37 lbf. ft.)** and the M12 screw to **80 Nm (59 lbf. ft.)** .

- Make sure that all sealing surfaces are thoroughly cleaned and reinstall the exhaust manifold with new gaskets and clamp nuts from the kit. Torque tighten to **25 Nm (18.5 lbf. ft.)** .

- Clamp the pipe above the bracket into its clips.
- Align the clips for the heat deflector plate's mounting in the bracket for the exhaust manifold's mounting.
- Tighten the bracket for the exhaust manifold's mounting to **25 Nm (18.5 lbf. ft.)** .
- Fill with coolant, drive to normal operating temperature and bleed the system. Check that there are no leaks.
- Top up with coolant as required.
- Reinstall the engine splash guard and torque tighten the screws to **25 Nm (18.5 lbf. ft.)** .

ELECTRIC ENGINE BLOCK HEATER 230V B8444S (B8444S; 2005-2008)

ELECTRIC ENGINE BLOCK HEATER 230V

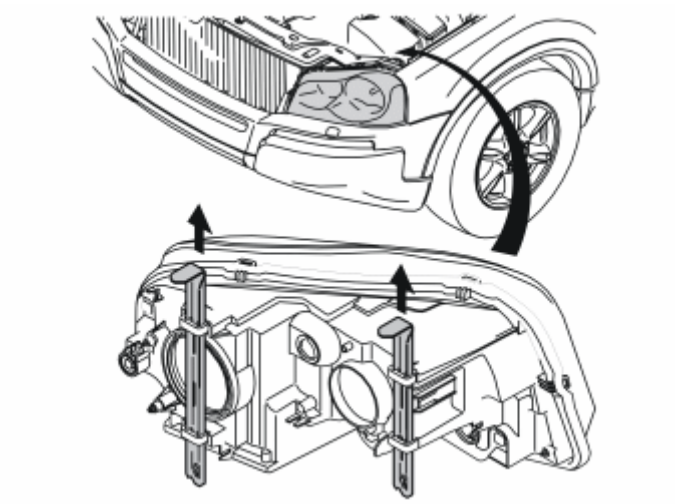

Fig. 53: Detach Left-Hand Headlamp By Pulling Up Two Locking Pins
Courtesy of VOLVO CARS CORPORATION

- Detach the left-hand headlamp by pulling up the two locking pins and then carefully pulling away the headlamp forwards.

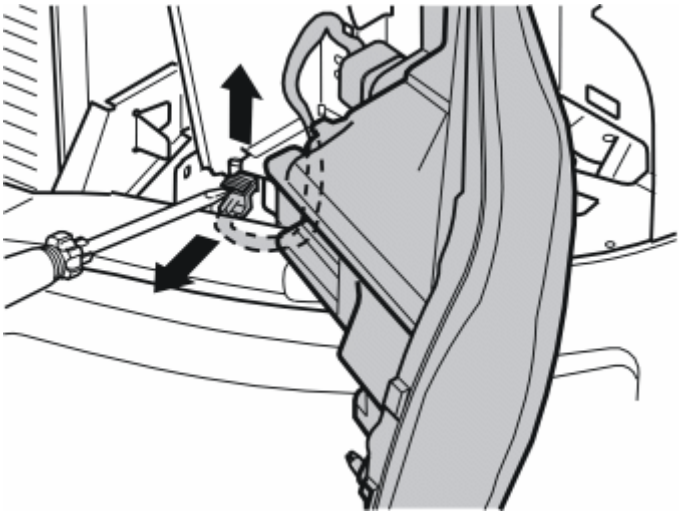

Fig. 54: Carefully Prize Up Catch On Connector For Headlamp With A Screwdriver
Courtesy of VOLVO CARS CORPORATION

- Carefully prize up the catch on the connector for the headlamp with a screwdriver.
- Pull the catch up completely, detach the connector and place the headlamp to one side.

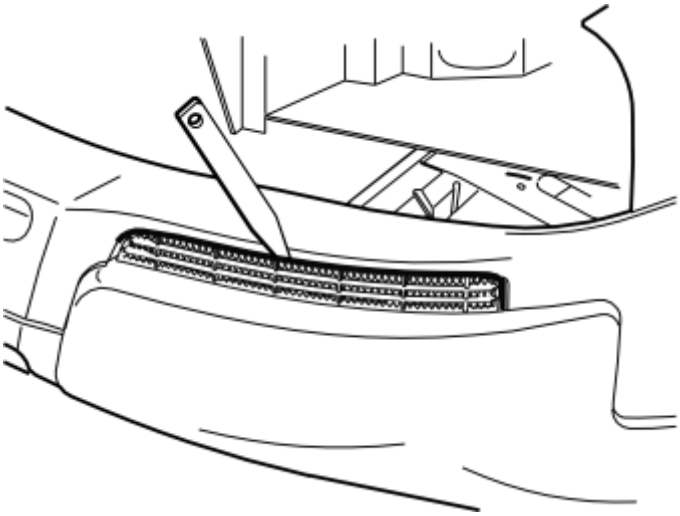

Fig. 55: Remove Left-Hand Grille From Bumper By Carefully Prying It Away With A Weatherstrip Tool
Courtesy of VOLVO CARS CORPORATION

- Remove the left-hand grille from the bumper by carefully prizing it away with a weatherstrip tool.

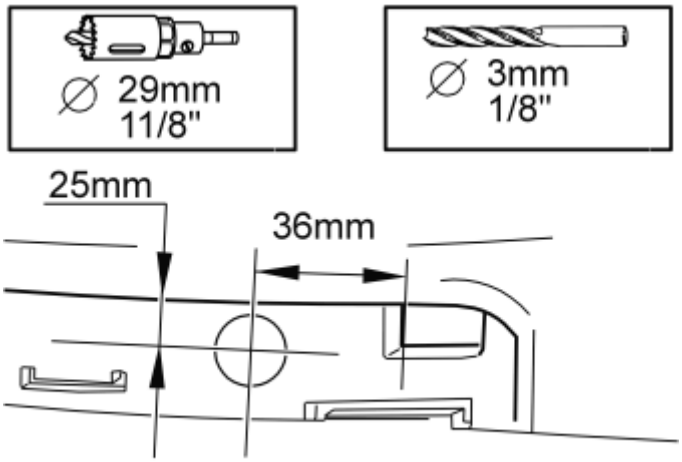

Fig. 56: Measure Out For Drilling Front Socket Hole
Courtesy of VOLVO CARS CORPORATION

- Measure out for drilling the front socket hole as illustrated.
- Pre-drill the hole using a **3 mm (1/8")** bit.
- Drill out the hole. Use a **29 mm (1 1/8")** diameter hole saw.
- Remove any shavings.

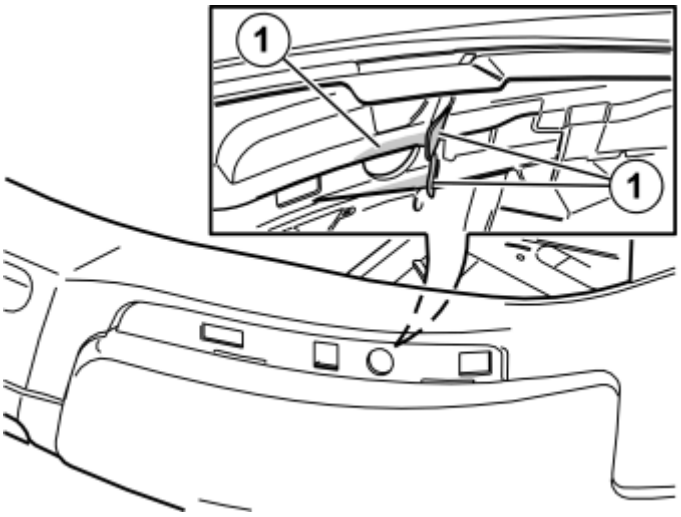

Fig. 57: Cutting Out Discs
Courtesy of VOLVO CARS CORPORATION

- Take a utility knife and cut out the discs (1) in such a way that they are equally as high. The plastic nut for the front socket then has a flat surface to be tightened against.

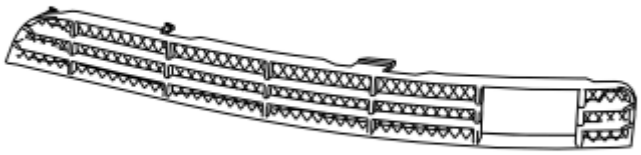

Fig. 58: Left-Hand Grille Of Bumper
Courtesy of VOLVO CARS CORPORATION

- Saw or cut out for the front socket connector in the second hole from the left in the left-hand grille of the bumper.
- Smooth off the edges.
- Press the grille into the bumper.

Illustration A

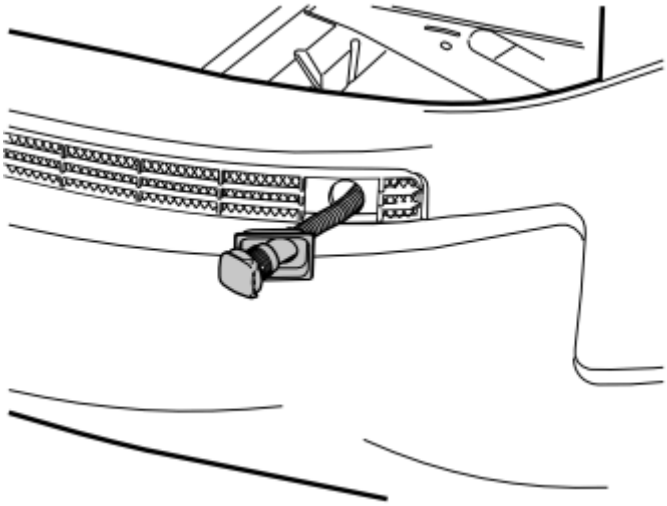

Fig. 59: Identifying Blind Cover Plug
Courtesy of VOLVO CARS CORPORATION

- Take the front socket, protective cover and plastic nut from the kit.
- Fit the protective cover onto the front socket's connector. Turn the connector so that the cover is opened to the left-hand side of the car as illustrated.

Illustration B

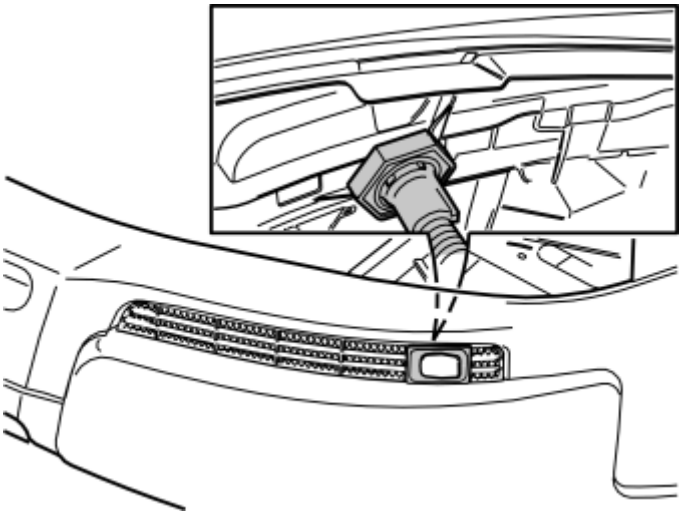

Fig. 60: Identifying Plastic Nut
Courtesy of VOLVO CARS CORPORATION

- Install the plastic nut.
- Tighten the plastic nut firmly. Connect the cable to the front socket for counterholding when the plastic nut is tightened.
- Guide down the front socket ground cable on the left-hand side of the left-hand side member.

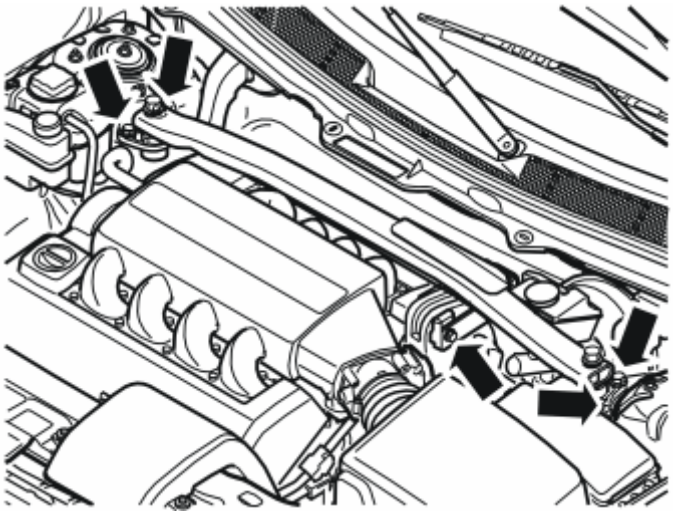

Fig. 61: Removing Upper Engine Strut
Courtesy of VOLVO CARS CORPORATION

- Remove the screw in the upper engine mounting. Remove the four screws holding the strut between the spring strut turrets and lift out the strut.

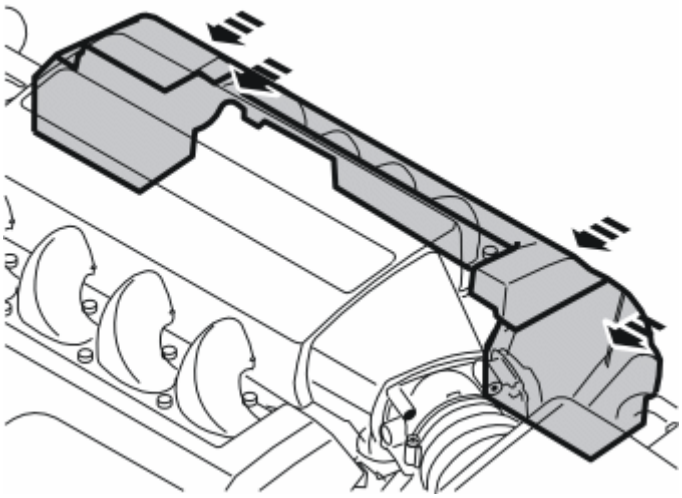

Fig. 62: Removing Rear Engine Cover
Courtesy of VOLVO CARS CORPORATION

- Remove the rear engine cover behind the intake manifold by pulling it away backwards. It is fitted with four rubber mountings.

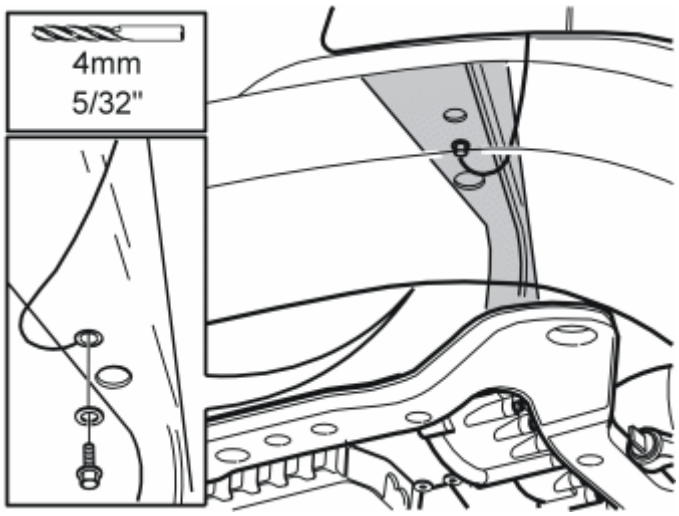

Fig. 63: Identifying Drill Hole Area
Courtesy of VOLVO CARS CORPORATION

- Drill a hole in the front/lower edge of the side member with a **4 mm (5/32")** bit.
- Apply anti-corrosion agent and secure the ground cable with the enclosed **4.8 mm (3/16")** flanged screw and toothed washer (under the screw head).

NOTE: Connect the ground lead to the side member, not to the sub-frame.

- Secure the excess ground cable length with a tie strap from the kit.

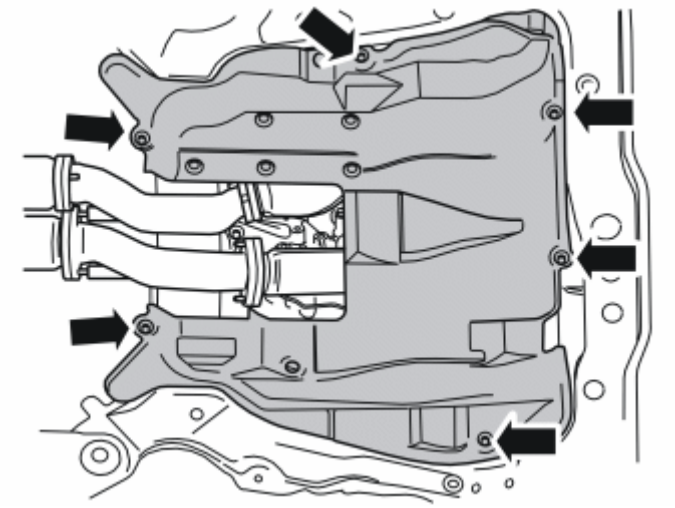

Fig. 64: Engine Splash Guard And Screws
Courtesy of VOLVO CARS CORPORATION

- Remove the six screws from the engine splash guard.

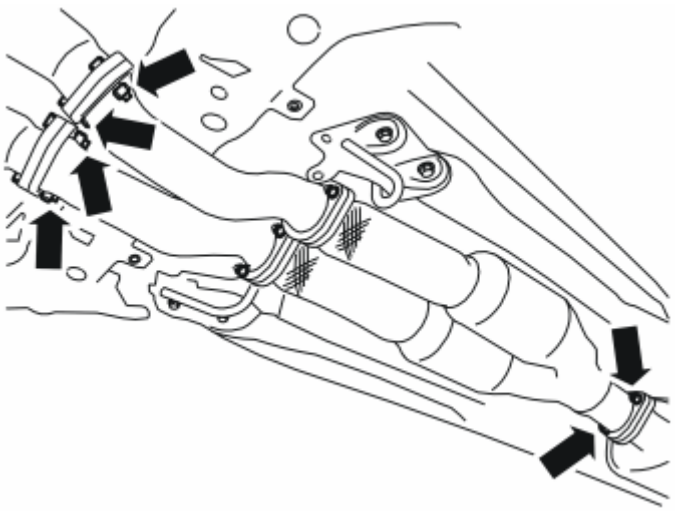

Fig. 65: Removing Exhaust Manifold Joint Bolts
Courtesy of VOLVO CARS CORPORATION

- Remove the four nuts in the joints to the manifold and the two in the joint in the front edge of the front silencer.

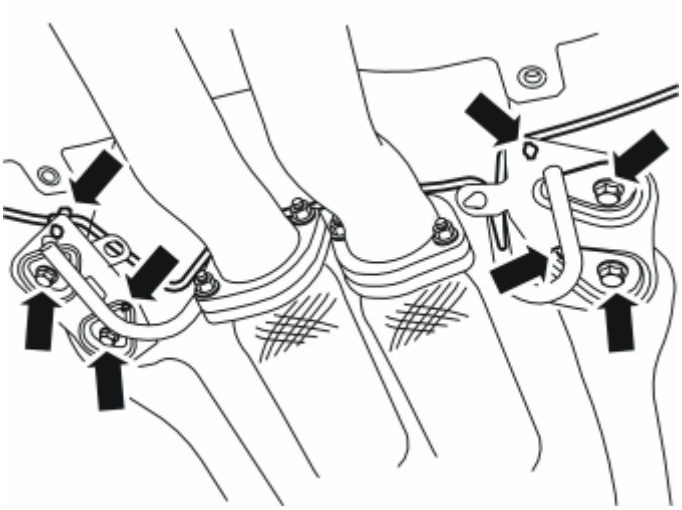

Fig. 66: Removing Pipe Above Exhaust Manifold
Courtesy of VOLVO CARS CORPORATION

- Detach the pipe above the exhaust manifold from the clips in the brackets to the exhaust manifold's front mounting.
- Remove the four screws in the brackets
- Detach the heat deflector plate's two clips from the brackets.
- Remove the exhaust pipe and catalytic converters.

NOTE: Take care with the twisted parts of the exhaust manifold.

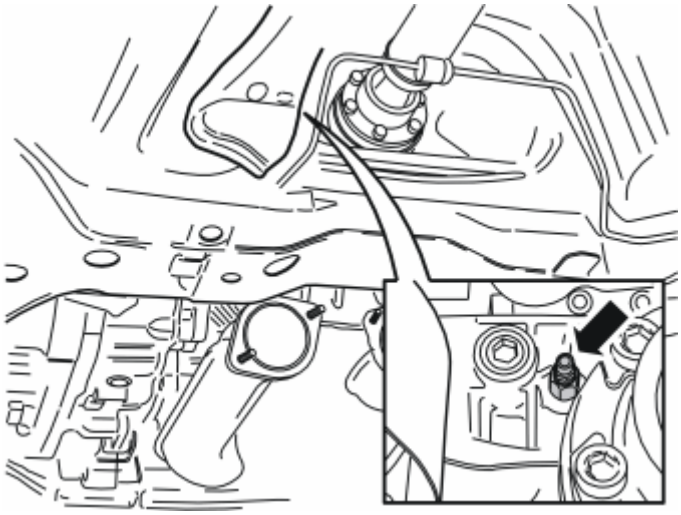

Fig. 67: Identifying Engine Block Drain Nipple
Courtesy of VOLVO CARS CORPORATION

- Detach the engine block drain nipple under the left-hand side of the rear manifold and drain the coolant.
- Tighten the nipple when the coolant is drained.

Illustration A

Fig. 68: Identifying Engine Block Plug
Courtesy of VOLVO CARS CORPORATION

- Remove the plug in the engine block under the left-hand side of the rear manifold.

Illustration B

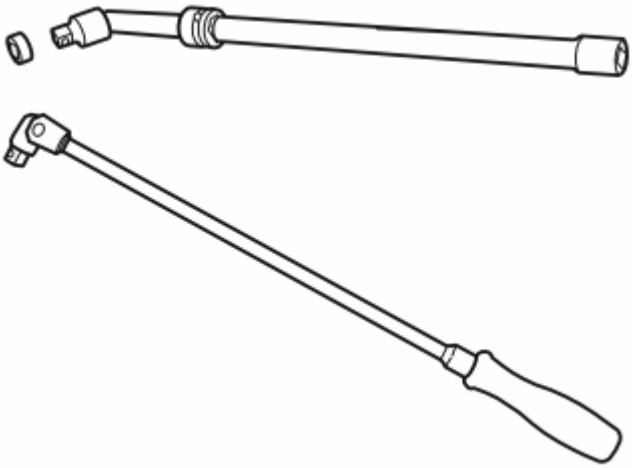

Fig. 69: Service Tools
Courtesy of VOLVO CARS CORPORATION

- Use hexagon socket part no. 9512965, socket extension 120 mm (4 3/4 ") with spherical end, socket extension 500 mm (19 11/16 ") with spherical end and handle.

Illustration C

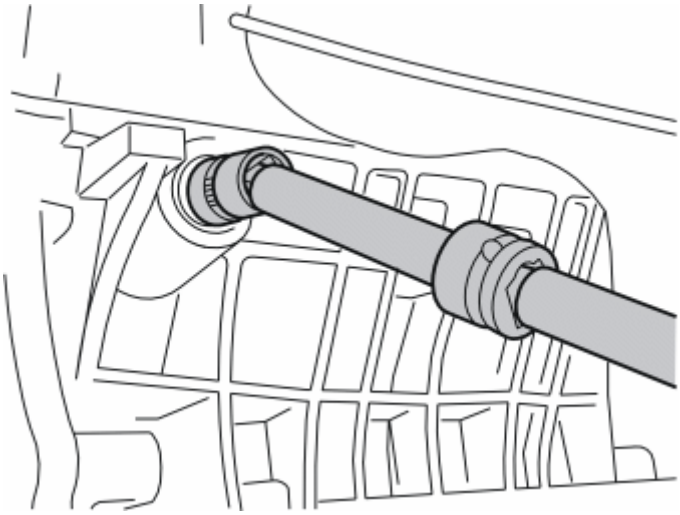

Fig. 70: Installing Plug
Courtesy of VOLVO CARS CORPORATION

- Apply a piece of butyl tape on the hexagon socket so that the plug does not fall away when it is unscrewed.

NOTE: Removing the plug requires significant force.

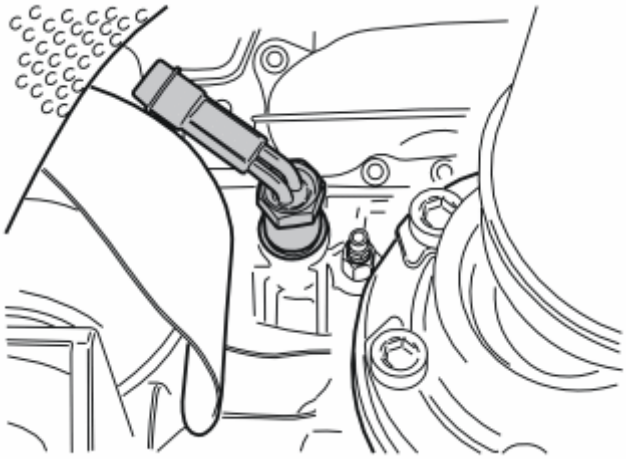

Fig. 71: Installing Heater
Courtesy of VOLVO CARS CORPORATION

- Take the heater from the kit.

HINT: Try to rotate the connector in the heater before installation to reduce any friction.

- Brush thread sealant part no. 1161056 on the threads.
- Install the heater in the engine block and manually screw it on as far as possible. It may be difficult to make the threads engage in the hole as the connector rotates stiffly in the threaded part of the heater.

Illustration A

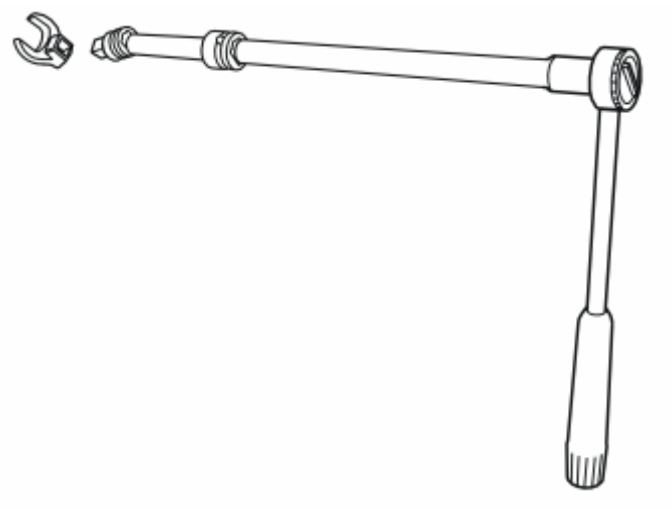

Fig. 72: Service Tools
Courtesy of VOLVO CARS CORPORATION

- Take tool part no. 9814012, a 1/2 "- 3/8" adapter, the two socket extensions and a 1/2 " ratchet handle.

Illustration B

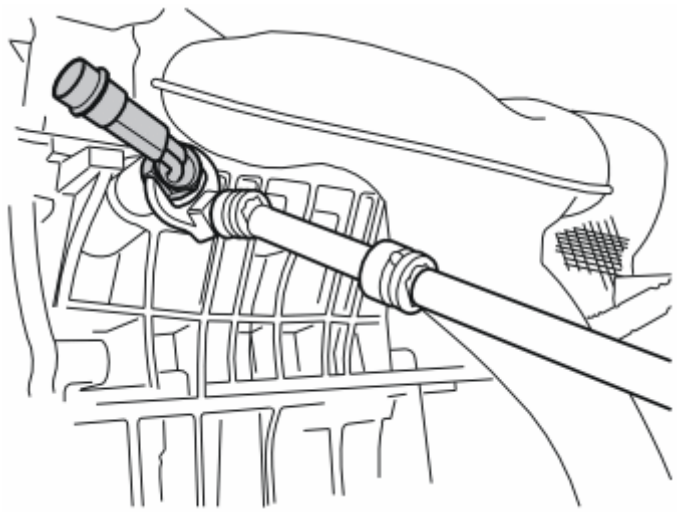

Fig. 73: Tightening Heater Into Engine Block
Courtesy of VOLVO CARS CORPORATION

- Tighten the heater firmly to the engine block.

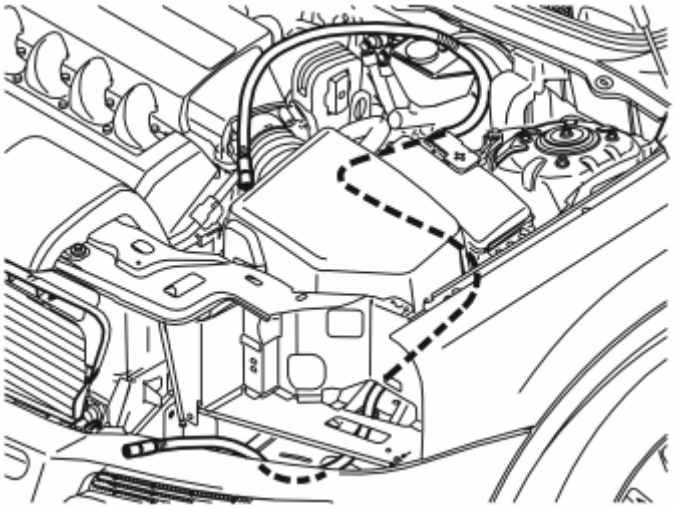

Fig. 74: Routing Cable
Courtesy of VOLVO CARS CORPORATION

- Take the jointing cable from the kit and route it under the plate beneath the left-hand headlamp. Continue to route it back along the left-hand side of the air cleaner and between the air cleaner and fuse holder. Route it further backwards, under the ABS system and up between the cable duct and brake fluid reservoir.
- Clamp it in with tie straps from the kit.
- Check that the cable does not chafe against sharp edges or moving parts in the engine compartment.

CAUTION: Do not clamp the cable against brake pipes, fuel lines or air conditioning (A/C) pipes.

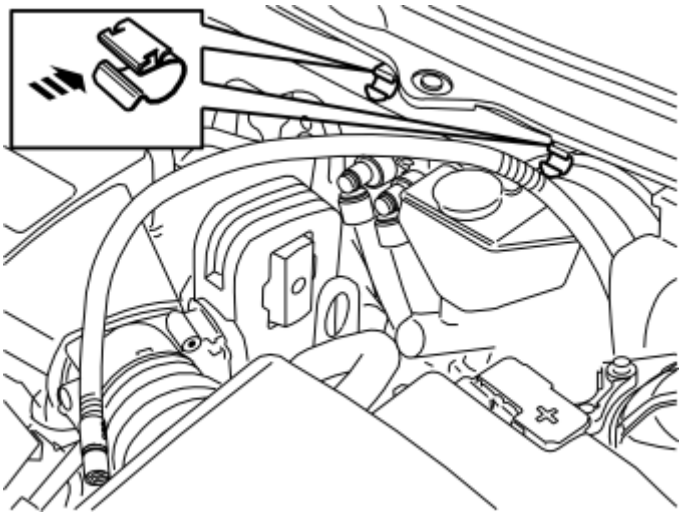

Fig. 75: Installing Clips
Courtesy of VOLVO CARS CORPORATION

- Take two clips from the kit and install them in the edge of the plate at the front edge of the panel above the windscreen wiper arms.

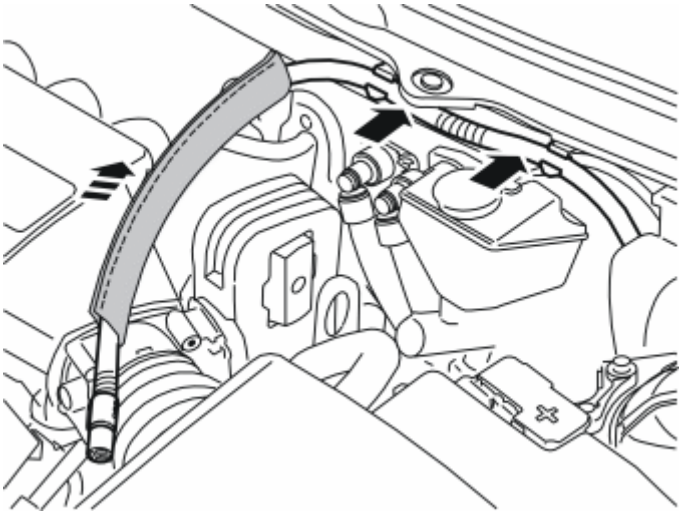

Fig. 76: Installing Cable
Courtesy of VOLVO CARS CORPORATION

- Press the jointing cable into the clips.
- Take the radiation shield from the kit and pull it on the end of the cable.
- Guide the cable down to the location where the engine block heater was installed.

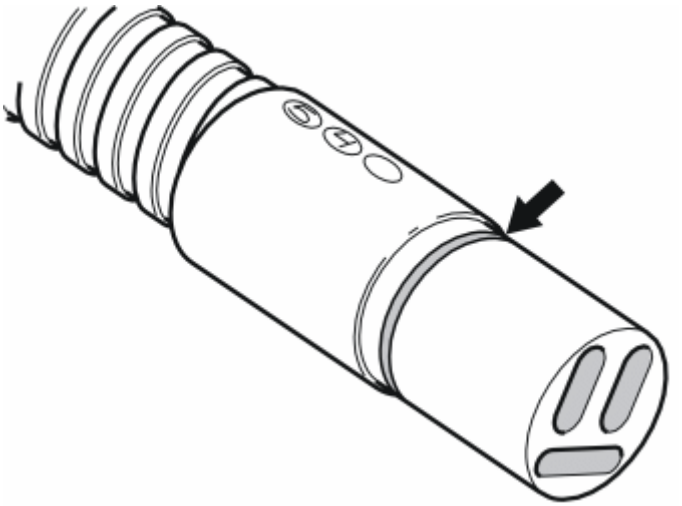

Fig. 77: Identifying O-Ring
Courtesy of VOLVO CARS CORPORATION

- Lubricate the O-ring on the connector for the heater's jointing cable and the cable to the front socket with low temperature grease (part no. 1161417-9).

NOTE: Do not get any grease on the surfaces of the connector.

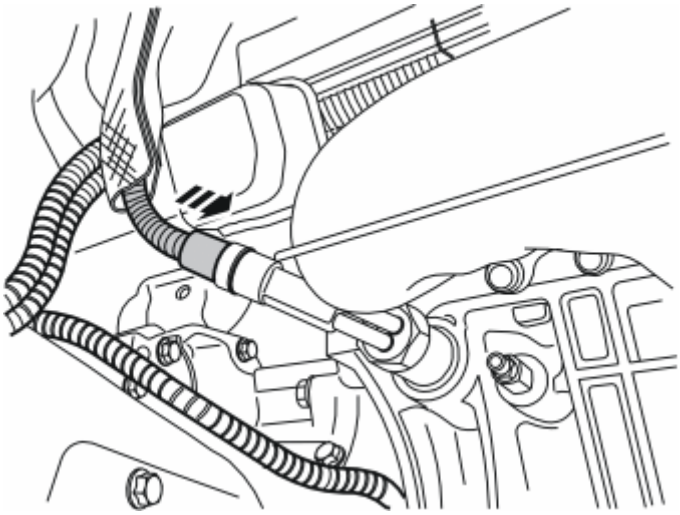

Fig. 78: Installing Cable Joint Connector
Courtesy of VOLVO CARS CORPORATION

- Firmly press the jointing cable connector into the engine block heater connector.

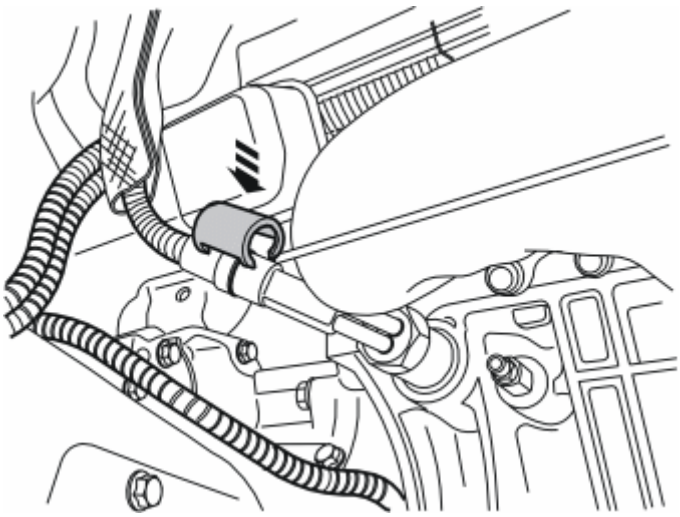

Fig. 79: Installing Locking Sleeve
Courtesy of VOLVO CARS CORPORATION

- Press a locking sleeve (from the kit) over the cable splice.

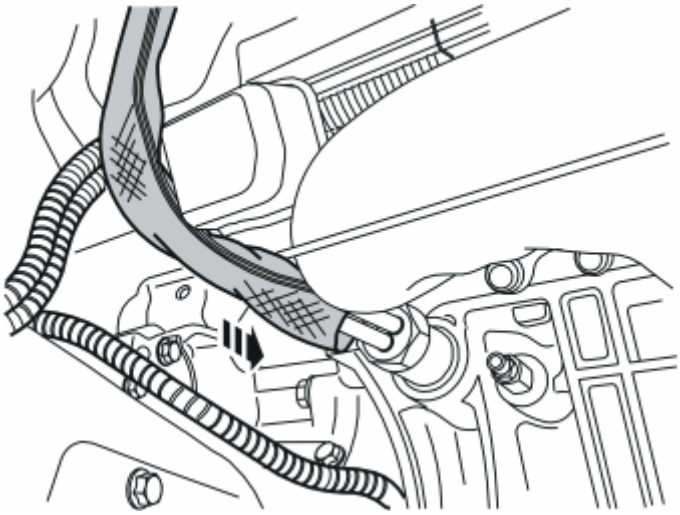

Fig. 80: Installing Radiation Shield
Courtesy of VOLVO CARS CORPORATION

- Pull the radiation shield down so that it fully covers the connector.

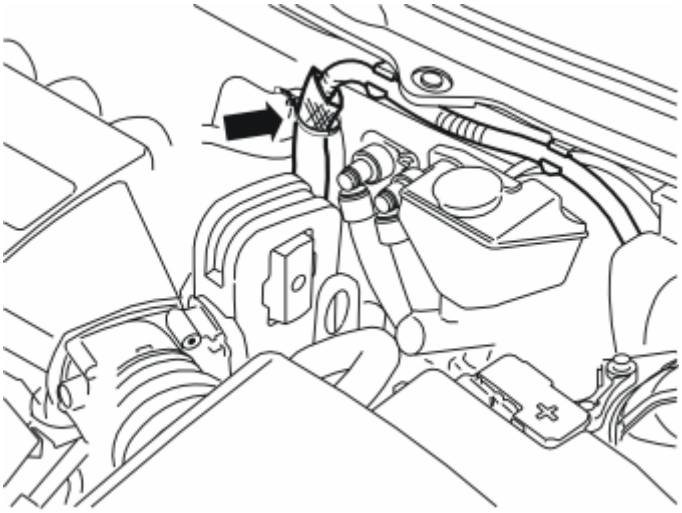

Fig. 81: Installing Grey Tie Strap
Courtesy of VOLVO CARS CORPORATION

- Take the grey tie strap from the kit and tighten the radiation shield to the cable at the top edge.

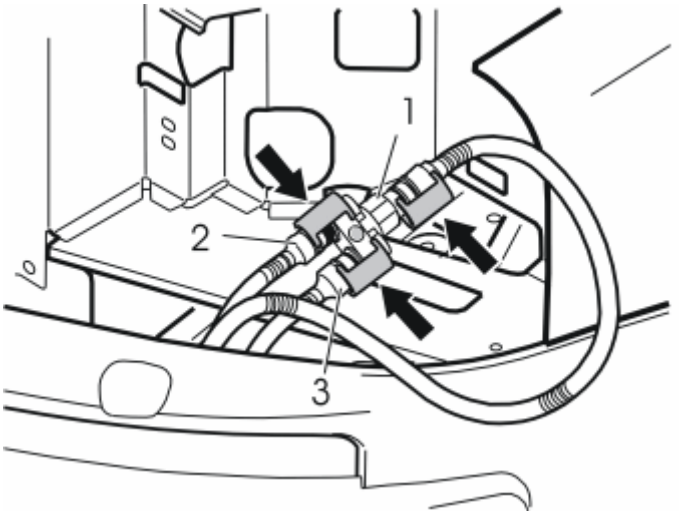

Fig. 82: Branch Connector
Courtesy of VOLVO CARS CORPORATION

Applies when fitting passenger compartment connector at the same time

- If the car is equipped with passenger compartment connector then the branch connector is to be installed now.

  Connect:

  socket (1) in branch connector to the cable for the front socket.
  sockets (2, 3) in the branch connector to any of the cables for the engine block heater and branch connector.

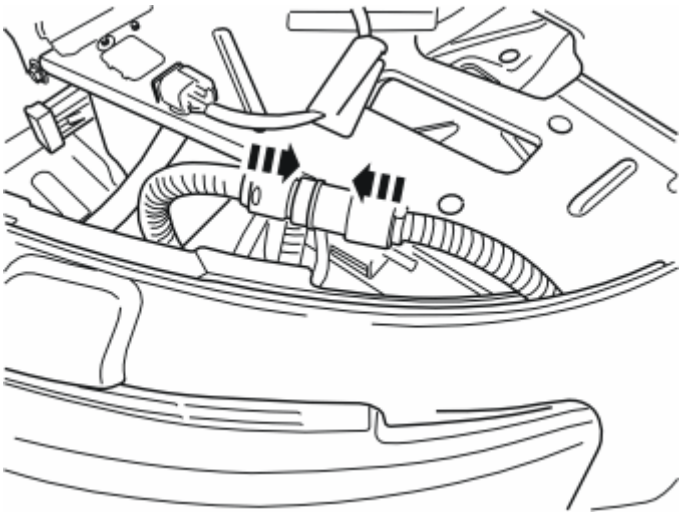

Fig. 83: Installing Front Socket Cable Connector
Courtesy of VOLVO CARS CORPORATION

- Firmly press the front socket cable connector into the into the jointing cable connector.

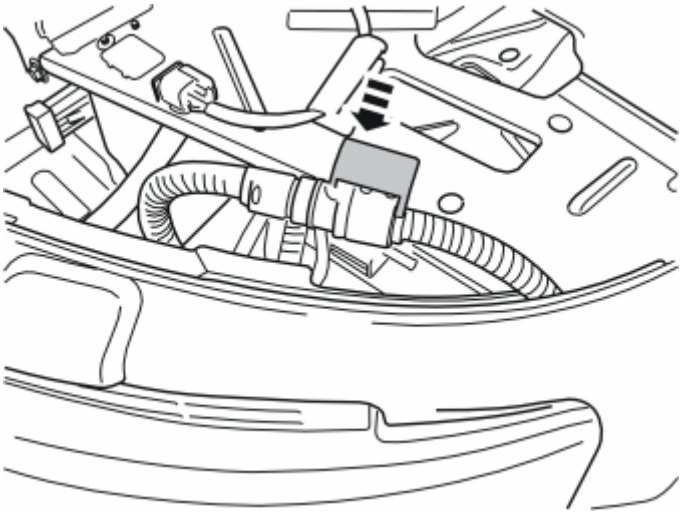

Fig. 84: Installing Locking Sleeve
Courtesy of VOLVO CARS CORPORATION

- Press a locking sleeve (from the kit) over the cable splice.

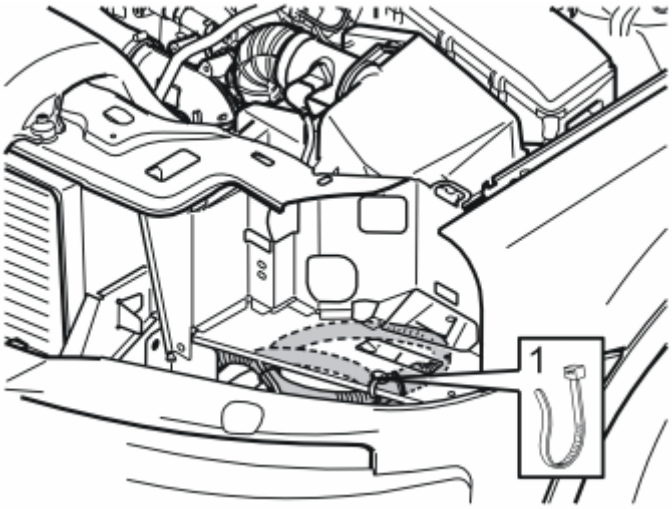

Fig. 85: Securing Excess Cable
Courtesy of VOLVO CARS CORPORATION

- Collect any excess cable under the plate beneath the left-hand headlamp and clamp it into the existing hole using a tie strap from the kit.

- Connect and reinstall the left-hand headlamp.
- Reinstall the engine's rear protective cover.
- Reinstall the strut between the spring strut turrets.

  Torque tighten the four M10 screws to **50 Nm (37 lbf. ft.)** and the M12 screw to **80 Nm (59 lbf. ft.)** .

- Make sure that all sealing surfaces are thoroughly cleaned and reinstall the exhaust manifold with new

gaskets and clamp nuts from the kit. Torque tighten to **25 Nm (18.5 lbf. ft.)** .

- Clamp the pipe above the bracket into its clips.
- Align the clips for the heat deflector plate's mounting in the bracket for the exhaust manifold's mounting.
- Tighten the bracket for the exhaust manifold's mounting to **25 Nm (18.5 lbf. ft.)** .
- Fill with coolant, drive to normal operating temperature and bleed the system. Check that there are no leaks.
- Top up with coolant as required.
- Reinstall the engine splash guard and torque tighten the screws to **25 Nm (18.5 lbf. ft.)** .

ELECTRIC ENGINE BLOCK HEATER 230V (B6294T; 2003-2006)

ELECTRICAL ENGINE BLOCK HEATER 230V, B6294T

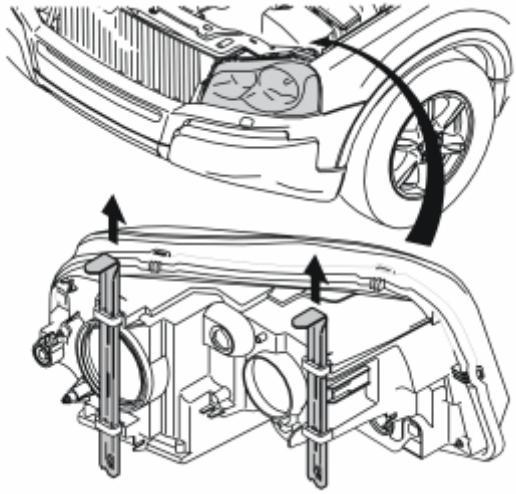

Fig. 86: Detach Left-Hand Headlamp By Pulling Up Two Locking Pins
Courtesy of VOLVO CARS CORPORATION

- Remove the left-hand headlamp by pulling up the two cotter pins and then carefully pulling the headlamp forwards.

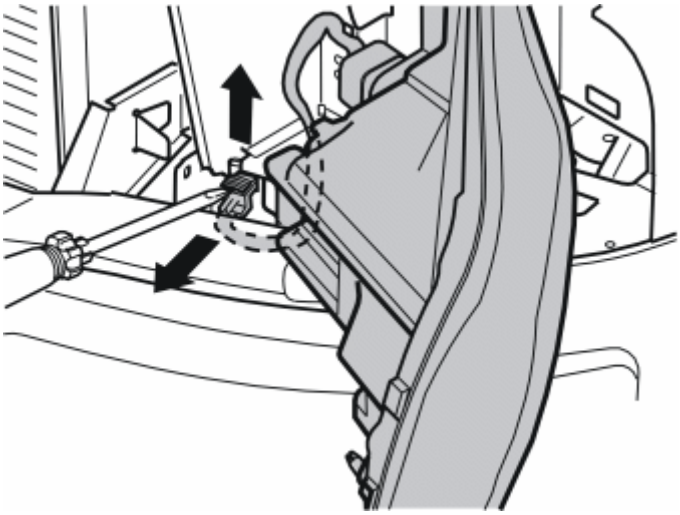

Fig. 87: Carefully Prize Up Catch On Connector For Headlamp With A Screwdriver
Courtesy of VOLVO CARS CORPORATION

- Carefully pry up the catch on the connector for the headlamp using a screwdriver
- Pull up the catch completely, disconnect the connector. Place the headlamp to one side.

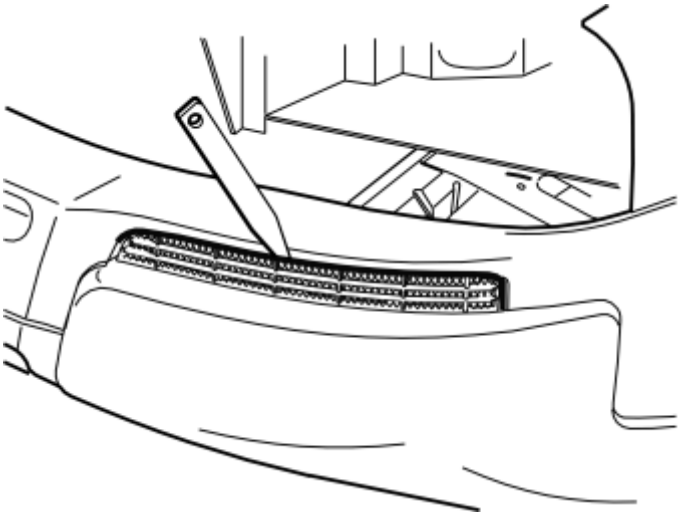

Fig. 88: Remove Left-Hand Grille From Bumper By Carefully Prying It Away With A Weatherstrip Tool
Courtesy of VOLVO CARS CORPORATION

- Carefully pry up the left-hand grille on the bumper up using a weatherstrip tool. Remove the grille.

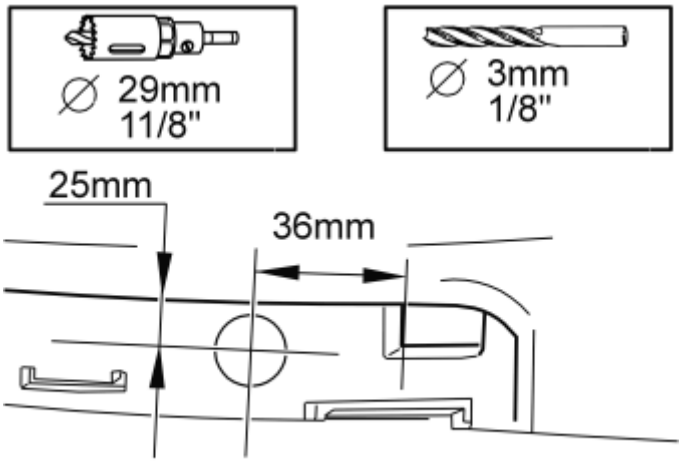

Fig. 89: Measure Out For Drilling Front Socket Hole
Courtesy of VOLVO CARS CORPORATION

- Measure for drilling out the hole for the front engine block heater socket as illustrated
- Pre-drill the hole using a 3 mm (1/8") diameter drill bit
- Drill out the hole. Use a 29 mm (1 1/8") diameter hole saw
- Remove any shavings.

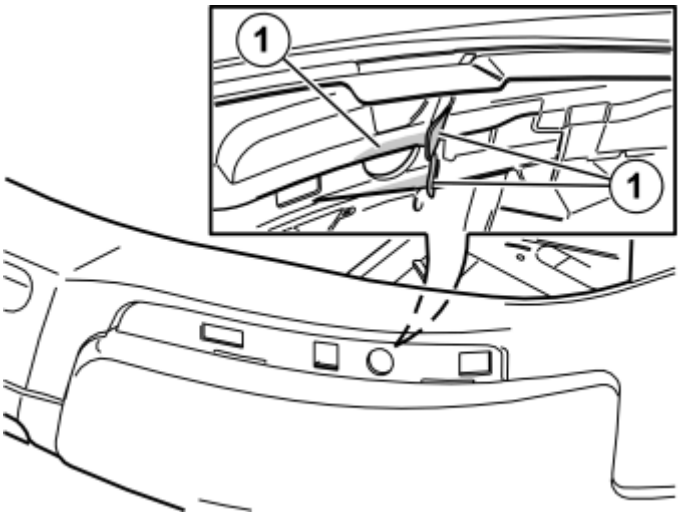

Fig. 90: Cutting Out Discs
Courtesy of VOLVO CARS CORPORATION

- Cut the tabs (1) using a utility knife so that they are the same height. This ensures a flat surface to tighten the plastic nut for the front engine block heater socket against.

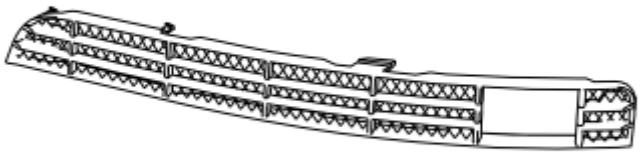

Fig. 91: Left-Hand Grille Of Bumper
Courtesy of VOLVO CARS CORPORATION

- Make a cut out for the connector for the front engine block heater socket in the second hole from the left in the left-hand bumper grille
- Smooth off the edges
- Press the grille into the bumper.

Illustration A

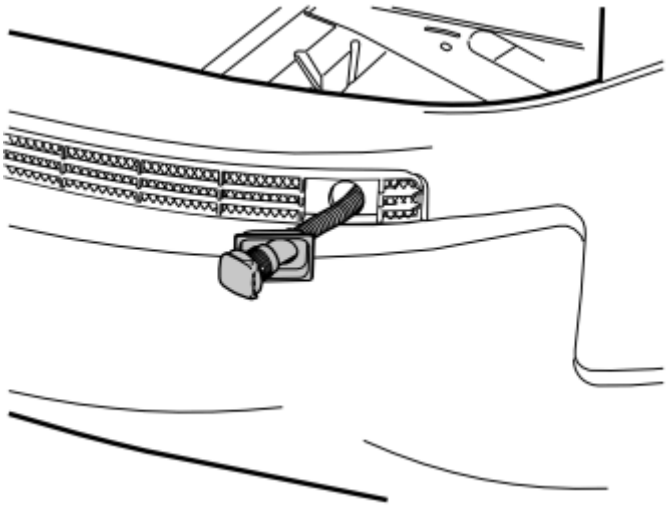

Fig. 92: Identifying Blind Cover Plug
Courtesy of VOLVO CARS CORPORATION

- Take the front engine block heater socket, protective cover and plastic nut from the kit
- Install the protective cover on the front engine block heater socket connector. Turn the connector so that the cover opens on the left-hand side of the car as illustrated.

Illustration B

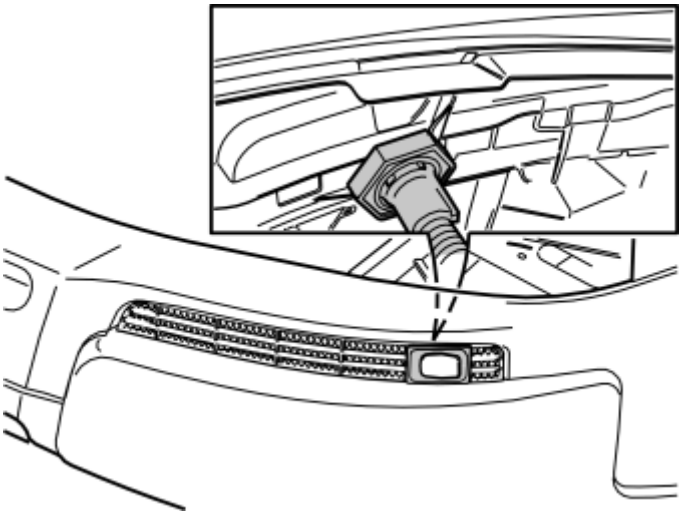

Fig. 93: Identifying Plastic Nut
Courtesy of VOLVO CARS CORPORATION

- Install the plastic nut
- Tighten the plastic nut properly. Connect the cable to the front engine block heater socket to use as a counterhold when tightening the plastic nut
- Insert the front engine block heater socket ground lead on the left-hand side of the left-hand side member.

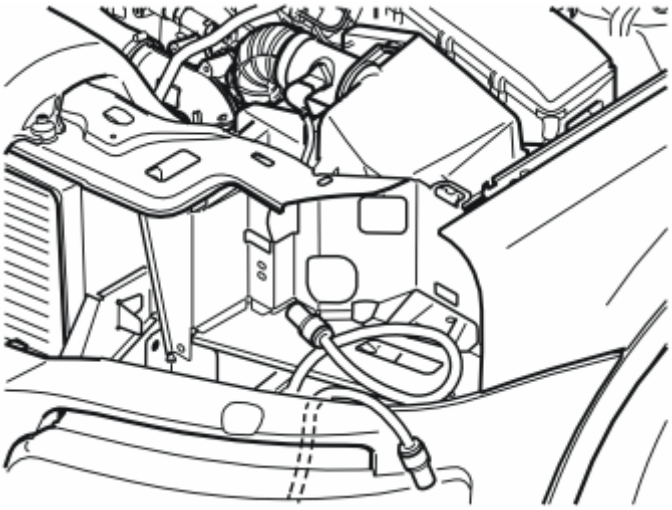

Fig. 94: Installing Extension Cable
Courtesy of VOLVO CARS CORPORATION

- Insert the extension cable (1) (from the kit) on the left-hand side of the left-hand side member as illustrated
- Remove the cover on the expansion tank for the radiator.

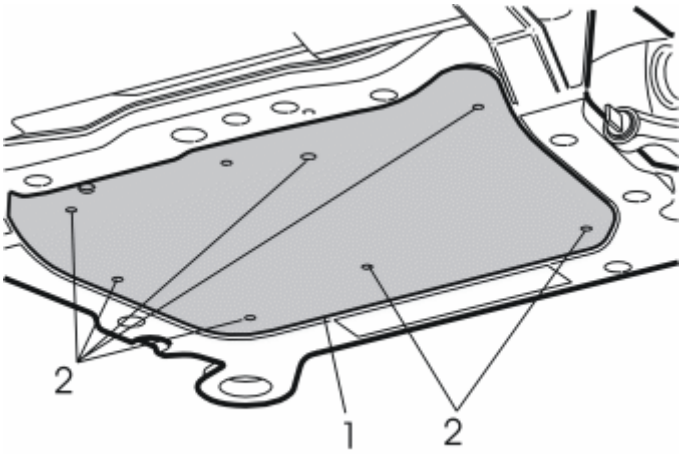

Fig. 95: Engine Splash Guard
Courtesy of VOLVO CARS CORPORATION

- Remove the engine splash guard (1) by first removing the screws (2).

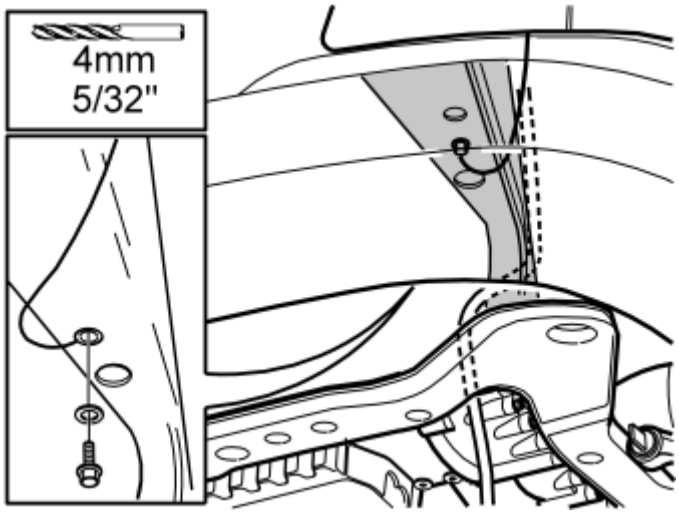

Fig. 96: Drilling A Hole In Front/Lower Edge Of Side Member With 4mm (5/32") Bit
Courtesy of VOLVO CARS CORPORATION

- Drill a hole at the front edge/lower edge of the side member using a 4 mm (5/32") diameter drill bit
- Rust-proof and secure the ground lead using the included 4.8 mm (3/16") diameter flanged screw and toothed washer (under the screw head).

NOTE: Connect the ground lead to the side member, not to the sub-frame.

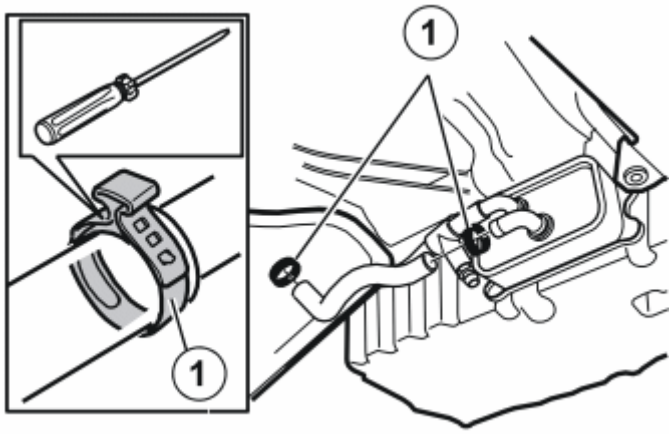

Fig. 97: Locating Hose Clamps
Courtesy of VOLVO CARS CORPORATION

- Remove the draining nipple on the hose to the left of the oil cooler. Drain the coolant
- Remove the clamps (1) on the lower hose on the oil cooler. Remove the hose. Place the hose to one side. It will not reused.

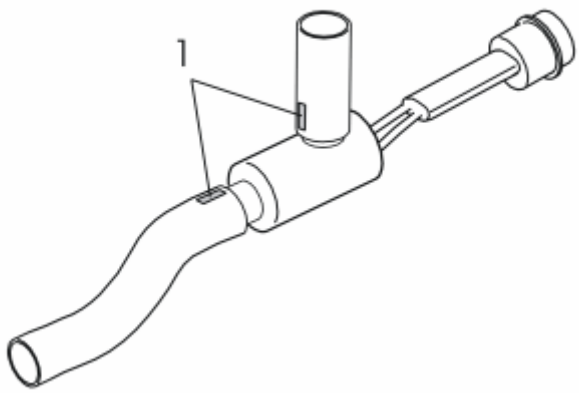

Fig. 98: Hose Alignment Markings
Courtesy of VOLVO CARS CORPORATION

- Install the hoses (from the kit) on the heater. Align the white markings (1) with each other as illustrated.

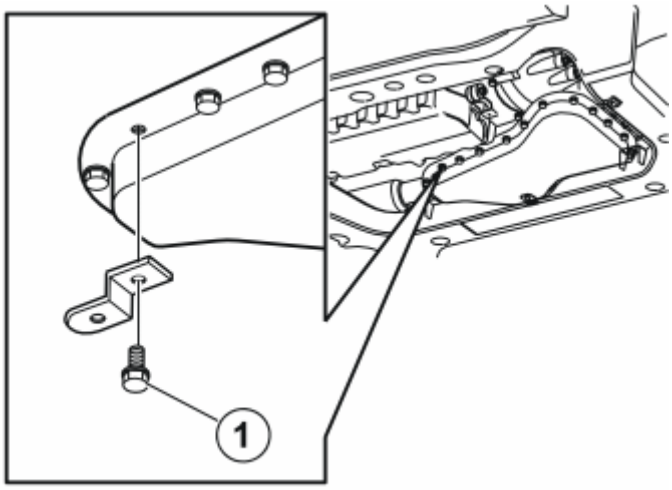

Fig. 99: Gearbox Right Front Corner Screw
Courtesy of VOLVO CARS CORPORATION

- Remove the screw (1) in the bottom cover on the right front corner of the gearbox
- Tighten the small bracket (from the kit) using the screw to the gearbox as illustrated. Tighten the screws. Tighten to **10 Nm (7 lbf. ft.)** .

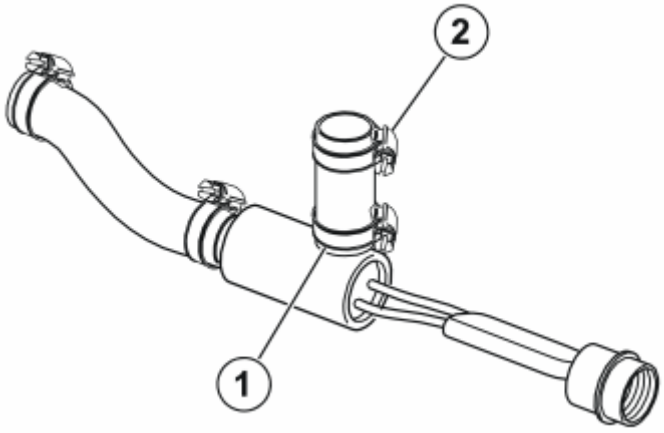

Fig. 100: Hose Clamps
Courtesy of VOLVO CARS CORPORATION

- Position the four hose clamps (from the kit) on the hoses and heater
- Tighten the hose clamp (1). Position the hose clamp (2) as illustrated. Tighten the hose to the oil cooler.

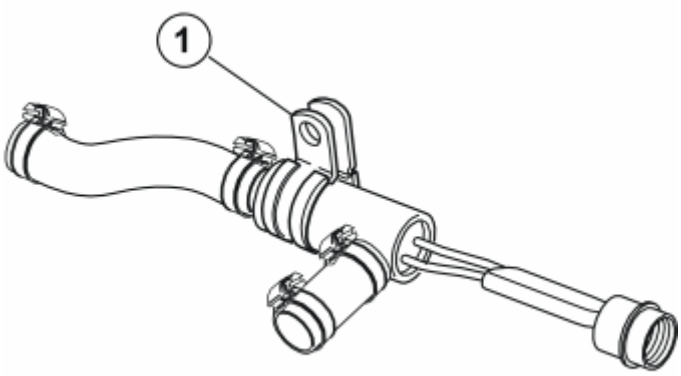

Fig. 101: Rubber Coated Clamp
Courtesy of VOLVO CARS CORPORATION

- Position the rubber coated clamp (1) (from the kit) on the heater as illustrated.

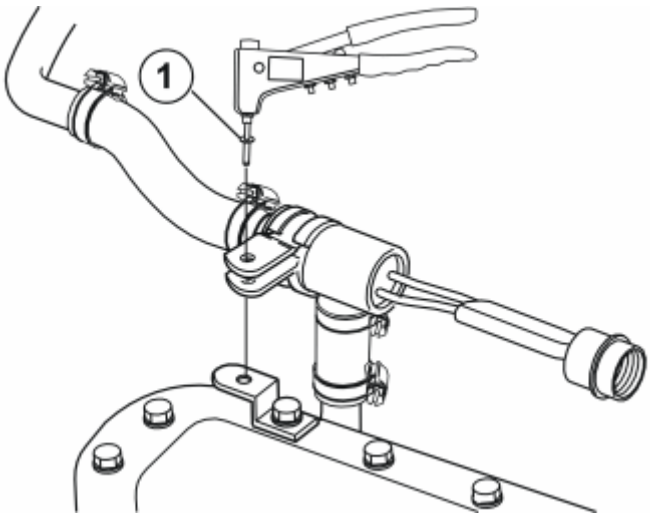

Fig. 102: Blind Riveting Rubber Coated Clamp With Heater To Bracket In Bottom Cover Of Gearbox
Courtesy of VOLVO CARS CORPORATION

- Install the heater with the hoses to the oil cooler pipe
- Take a blind rivet (1) from the kit. Blind rivet the rubber coated clamp with the heater to the bracket in the bottom cover of the gearbox
- Tighten the remaining hose clamps to the heater and oil cooler pipe.

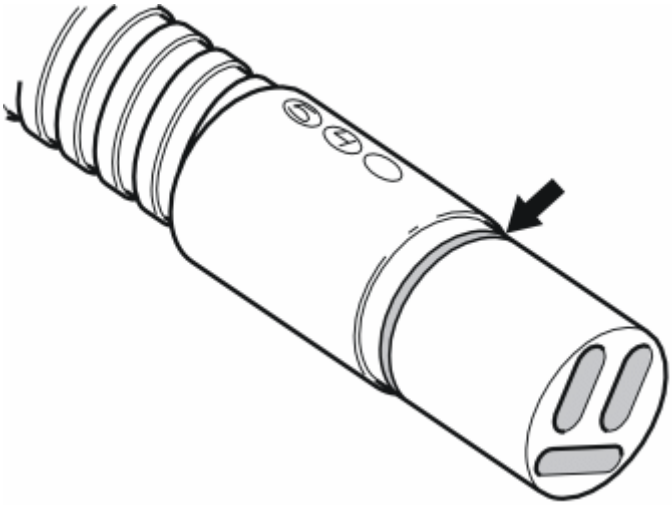

Fig. 103: Identifying O-Ring
Courtesy of VOLVO CARS CORPORATION

- Route the previously routed extension cable inside the front left corner. Grease the O-ring on the switch using low temperature grease, (P/N 1161417-9).

NOTE: Do not get any grease on the contact surfaces of the connector.

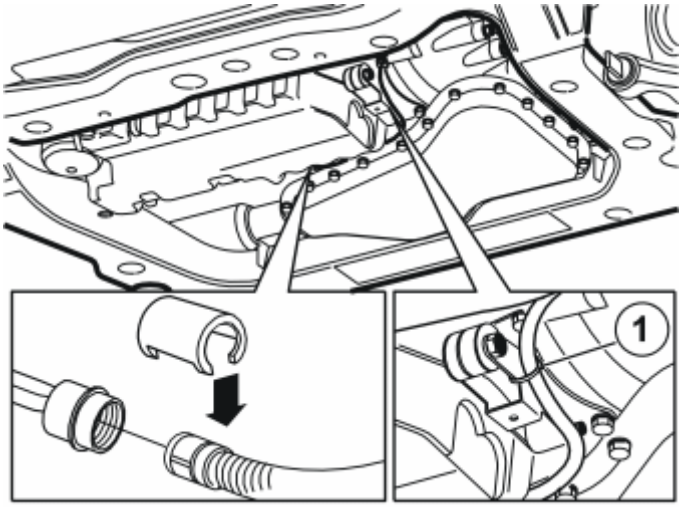

Fig. 104: Cable Clamped Using Tie Strap
Courtesy of VOLVO CARS CORPORATION

- Connect the extension cable to the engine block heater
- Press a locking sleeve (from the kit) over the cable splice
- Tighten the cable as illustrated. Secure the cable using a tie strap from the kit at position (1) as illustrated.

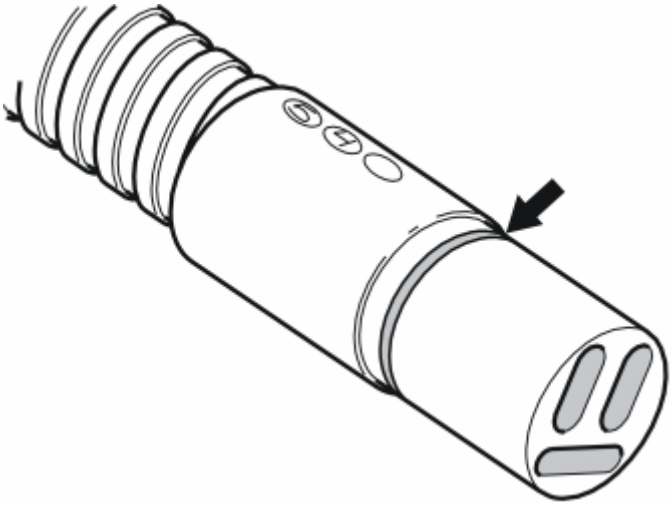

Fig. 105: Identifying O-Ring
Courtesy of VOLVO CARS CORPORATION

- Grease the O-ring on the switch for the front engine block heater socket using low temperature grease, (P/N 1161417).

NOTE: Do not get any grease on the contact surfaces of the connector.

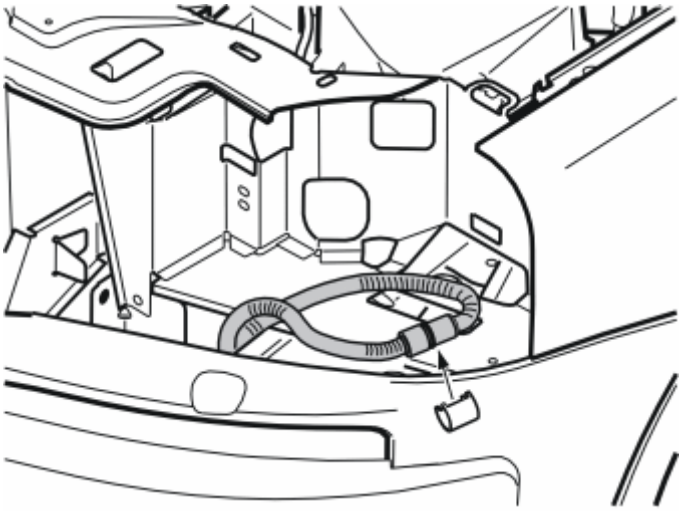

Fig. 106: Installing Locking Sleeve
Courtesy of VOLVO CARS CORPORATION

Applies to cars where only a single engine block heater is to be installed

- Connect the front engine block heater socket cable to the extension cable (routed earlier)
- Press a locking sleeve (from the kit) over the cable splice.

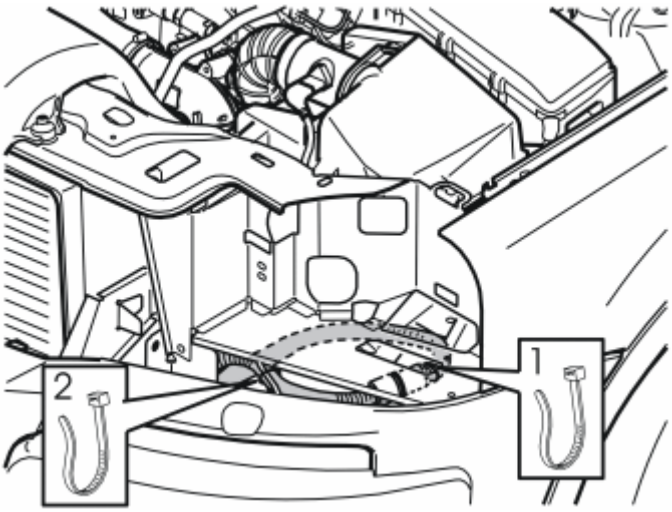

Fig. 107: Installing Cable Terminal Under Plate
Courtesy of VOLVO CARS CORPORATION

Applies to cars where only a single engine block heater is to be installed

- Position the cable terminal on the underside of the plate under the headlamp. Secure at points (1) and (2). Secure the ground lead at point (2) using tie straps from the kit.

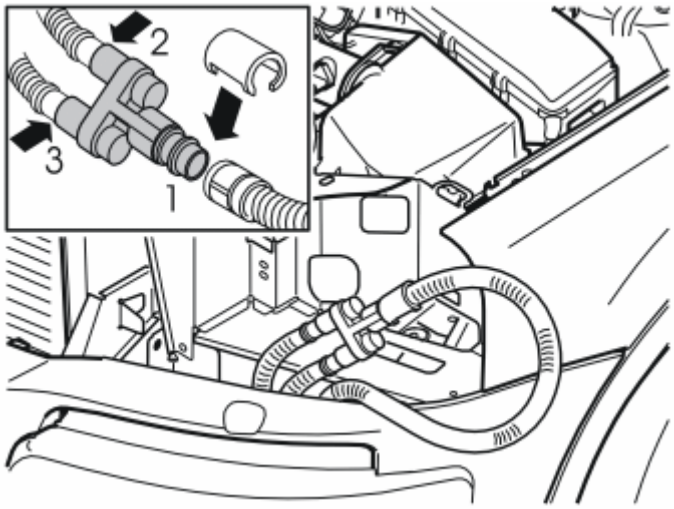

Fig. 108: Installing Junction Connector
Courtesy of VOLVO CARS CORPORATION

Applies to cars where the engine block heater and passenger compartment connector socket must be mounted at the same time

- Grease the O-rings on the cable for the front engine block heater socket and connections on the junction connector. Use low temperature grease, (P/N 1161417-9) as before.

NOTE: Do not get any grease on the contact surfaces of the connector.

- Connect the front engine block heater socket cable to socket (1) on the junction connector
- Connect the wiring for the engine block heater and passenger compartment connector socket to either socket (2) or (3) on the junction cable
- Press the three locking sleeves (from the kit) over the cable splices.

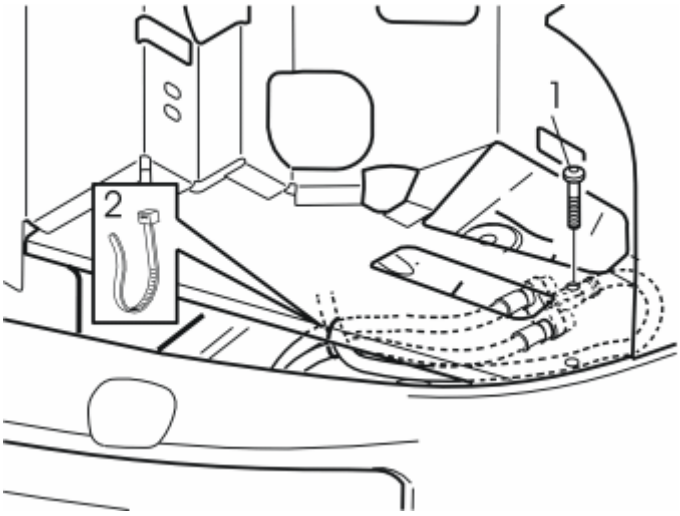

Fig. 109: Screw, Nut, Washer, Tie Strap, And Branch Connector -- 6-Cylinder Engine
Courtesy of VOLVO CARS CORPORATION

Applies to cars where the engine block heater and passenger compartment connector socket must be mounted at the same time

- Position the junction connector with the wiring on the underneath of the plate under the headlamp, with the two sockets pointing forward and the cable from the front engine block heater socket pointing backward
- Take the screw and the nut from the kit. Tighten the junction connector in the hole in the plate (1)
- Take a tie strap from the kit and secure the wiring at point (2).

- Connect the connector to the headlamp and reinstall the headlamp
- Fill with coolant. Test drive the engine. Bleed the system. Check for leakage
- Reinstall the engine splash guard. Tighten the screws for engine splash guard. Tighten to **25 Nm (19 lbf. ft.)** .

ELECTRIC ENGINE BLOCK HEATER, 230V, 5-CYL (B5254T2; 2003-2007)

ELECTRIC ENGINE BLOCK HEATER, 230V, 5-CYL

UP TO AND INCLUDING MODEL YEAR -2006

PREPARATIONS

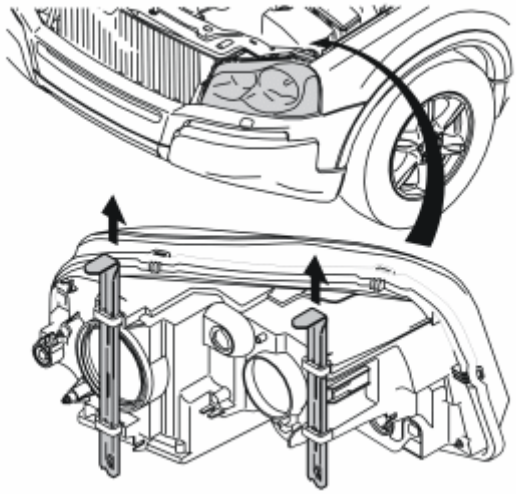

Fig. 110: Detach Left-Hand Headlamp By Pulling Up Two Locking Pins
Courtesy of VOLVO CARS CORPORATION

- Detach the left-hand headlamp by pulling up the two locking pins and then carefully pulling away the headlamp forwards.

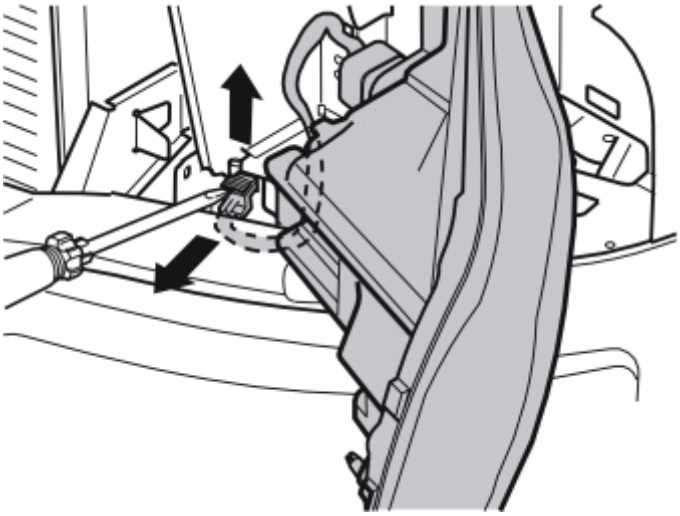

Fig. 111: Carefully Prize Up Catch On Connector For Headlamp With A Screwdriver
Courtesy of VOLVO CARS CORPORATION

- Carefully prize up the catch on the connector for the headlamp with a screwdriver.
- Pull the catch up completely, detach the connector and place the headlamp to one side.

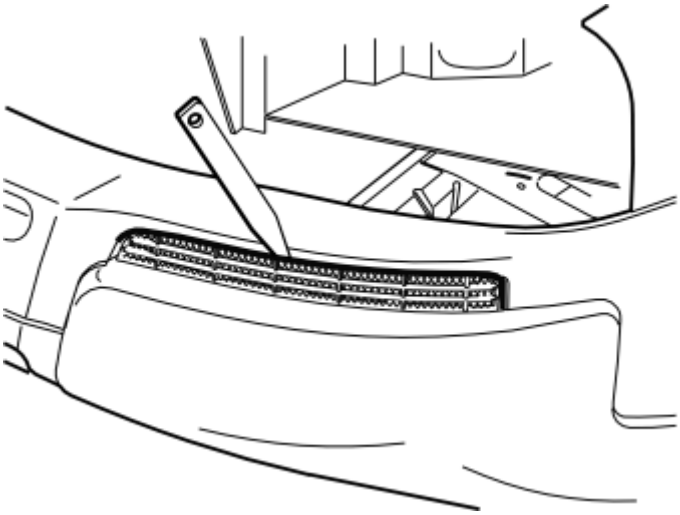

Fig. 112: Remove Left-Hand Grille From Bumper By Carefully Prying It Away With A Weatherstrip Tool
Courtesy of VOLVO CARS CORPORATION

- Remove the left-hand grille from the bumper by carefully prizing it away with a weatherstrip tool.

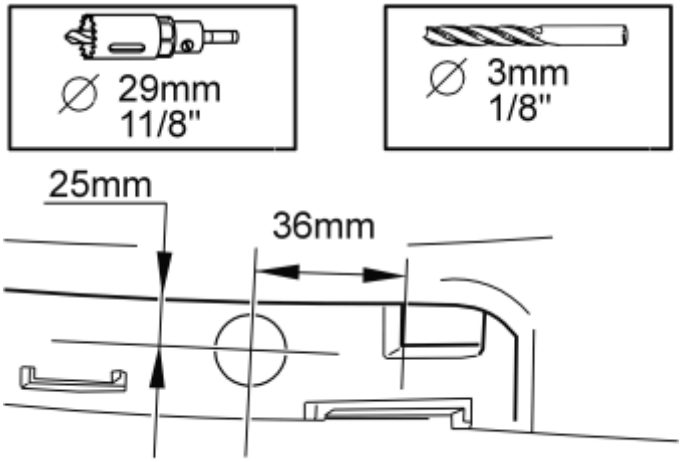

Fig. 113: Measure Out For Drilling Front Socket Hole
Courtesy of VOLVO CARS CORPORATION

- Measure out for drilling the front socket hole as illustrated.
- Pre-drill the hole using a **3 mm (1/8")** bit.
- Drill out the hole. Use a **29 mm (1 1/8")** diameter hole saw.
- Remove any shavings.

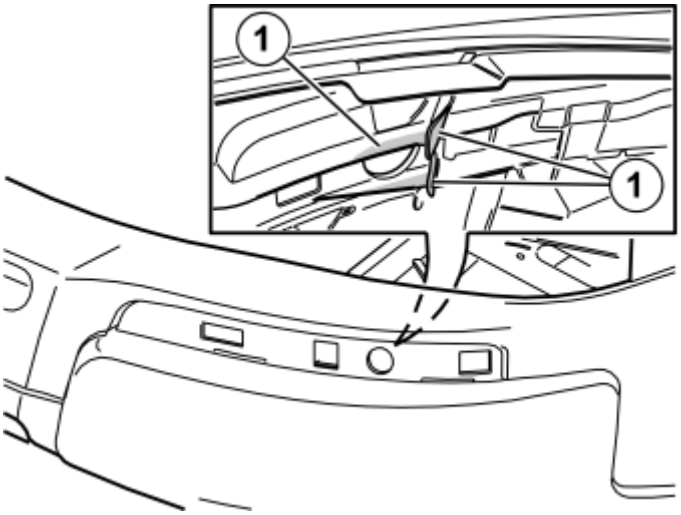

Fig. 114: Cutting Out Discs
Courtesy of VOLVO CARS CORPORATION

- Take a utility knife and cut out the discs (1) in such a way that they are equally as high. The plastic nut for the front socket then has a flat surface to be tightened against.

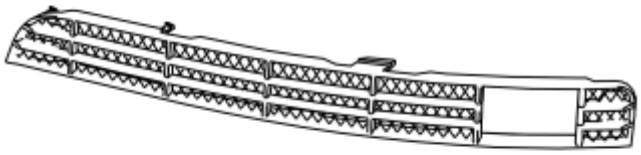

Fig. 115: Left-Hand Grille Of Bumper
Courtesy of VOLVO CARS CORPORATION

- Saw or cut out for the front socket connector in the second hole from the left in the left-hand grille of the bumper.
- Even off the edges.
- Press the grille into the bumper.

INSTALLING THE FRONT ENGINE BLOCK HEATER SOCKET

Illustration A

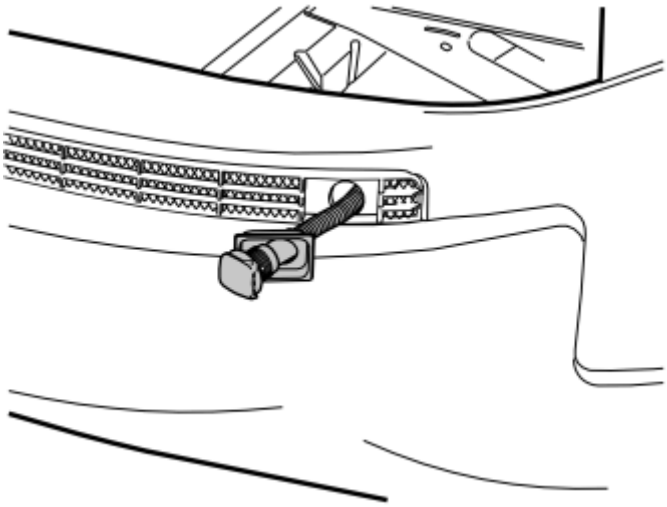

Fig. 116: Identifying Blind Cover Plug
Courtesy of VOLVO CARS CORPORATION

- Take the front intake, blind cover plug and plastic nut from the kit.
- Fit the blind cover plug on the front socket's connector and turn the connector so that the cover is opened to the left-hand side of the car as illustrated.

Illustration B

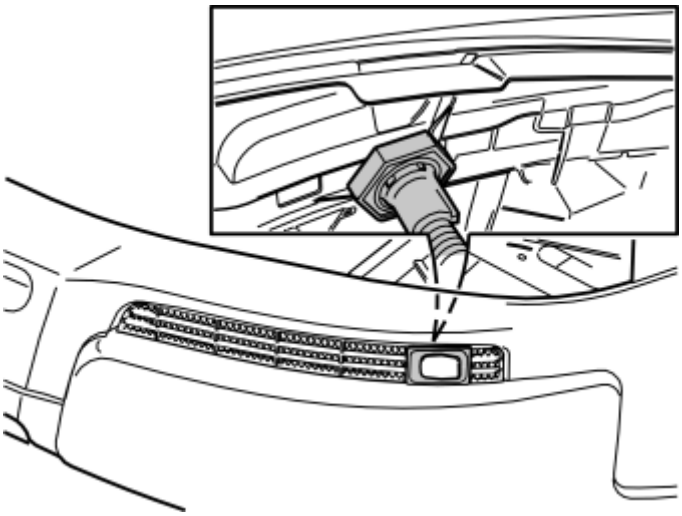

Fig. 117: Identifying Plastic Nut
Courtesy of VOLVO CARS CORPORATION

- Install the plastic nut.
- Tighten the plastic nut properly.
- Route the cable along the outside of the left-hand side member.

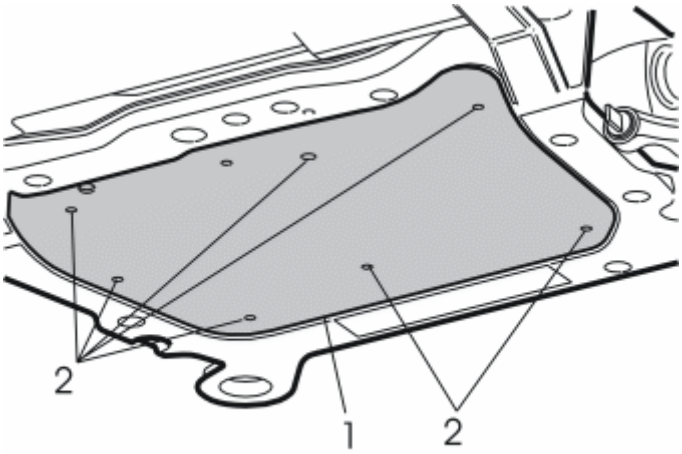

Fig. 118: Engine Splash Guard
Courtesy of VOLVO CARS CORPORATION

- Remove the engine splash guard (1) by first removing the screws (2).

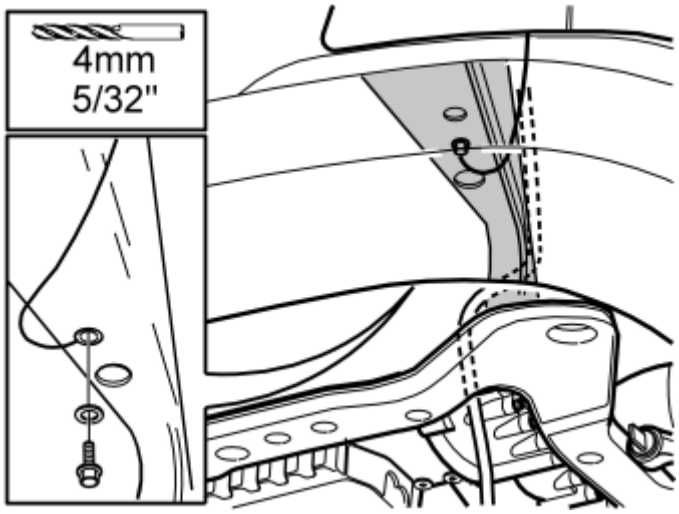

Fig. 119: Drilling A Hole In Front/Lower Edge Of Side Member With 4mm (5/32") Bit
Courtesy of VOLVO CARS CORPORATION

- Drill a hole in the front/lower edge of the side member with a **4 mm (5/32")** bit.
- Apply anti-corrosion agent and secure the ground cable with the enclosed **4.8 mm (3/16")** flanged screw and toothed washer (under the screw head).

NOTE: Connect the ground cable to the side member, not to the subframe.

- Secure the excess ground cable with a tie strap.

FROM AND INCLUDING MODEL YEAR 2007-

PREPARATIONS

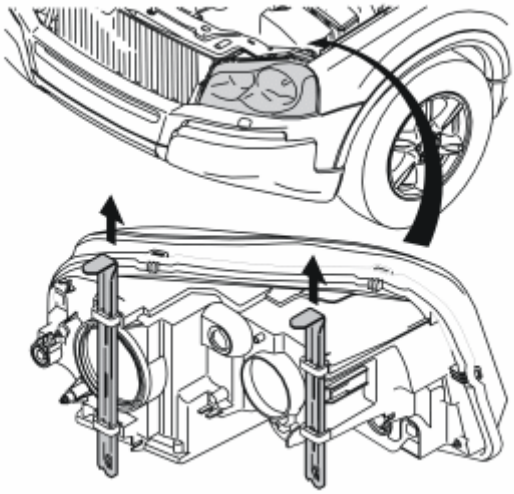

Fig. 120: Detach Left-Hand Headlamp By Pulling Up Two Locking Pins
Courtesy of VOLVO CARS CORPORATION

- Detach the left-hand headlamp by pulling up the two locking pins and then carefully pulling away the headlamp forwards.

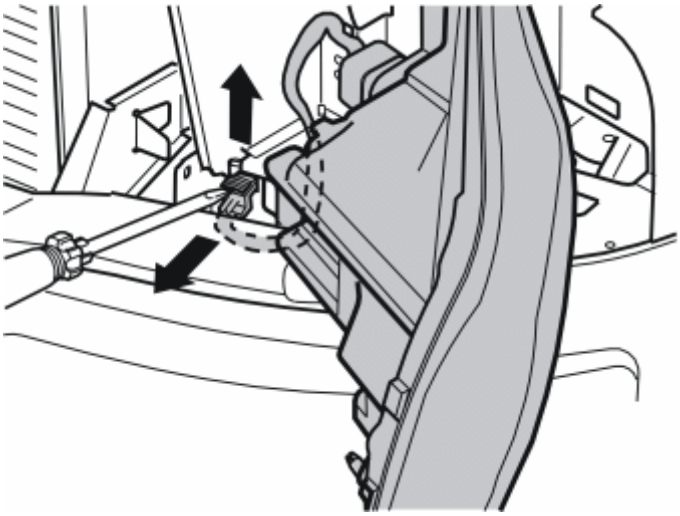

Fig. 121: Carefully Prize Up Catch On Connector For Headlamp With A Screwdriver
Courtesy of VOLVO CARS CORPORATION

- Carefully prize up the catch on the connector for the headlamp with a screwdriver.
- Pull the catch up completely, detach the connector and place the headlamp to one side.

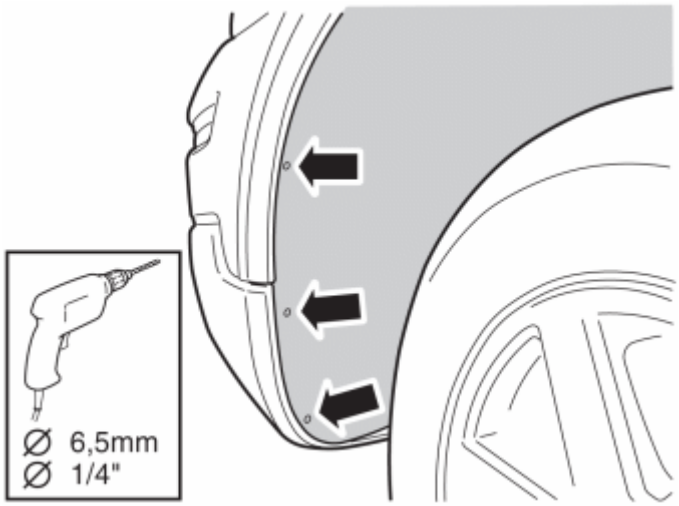

Fig. 122: Drilling Out Three Rivets From Front Edge Of Left Wing Liner
Courtesy of VOLVO CARS CORPORATION

Applies to cars with fuel-driven parking heater installed

- Drill out the three rivets from the front edge of the left wing liner.
- Remove the remains of the rivets.
- Move the wing liner aside and fasten it so that the parking heater is accessible.

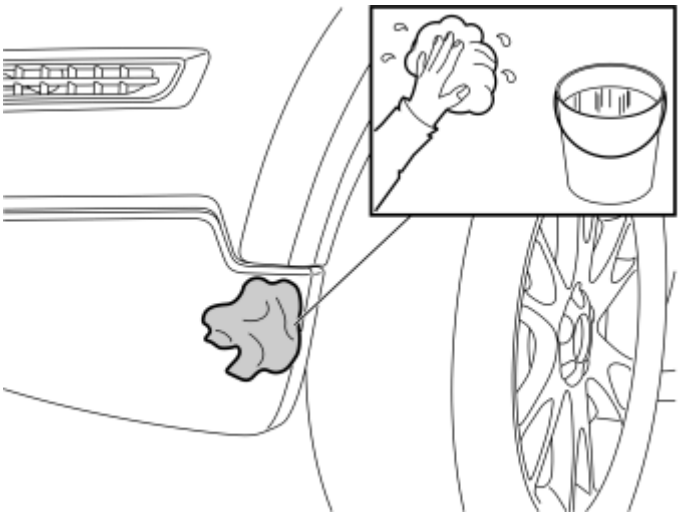

Fig. 123: Clean Bumper Cover Where Front Engine Block Heater Socket Shall Be Secured
Courtesy of VOLVO CARS CORPORATION

- Clean the bumper cover where the front engine block heater socket shall be secured.

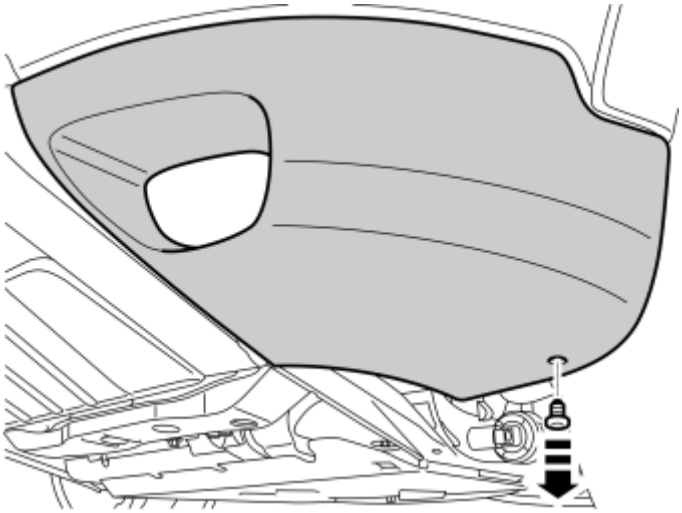

Fig. 124: Clip On Panel For Front Fog Lamp
Courtesy of VOLVO CARS CORPORATION

- Remove the clip on the panel for the front fog lamp.

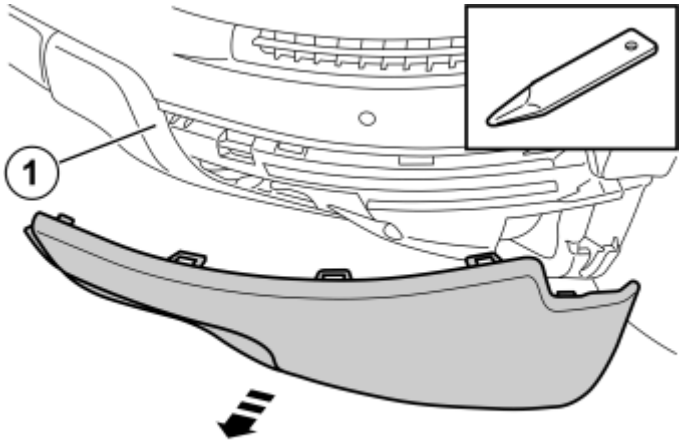

Fig. 125: Removing Panel Over Fog Lamp By Carefully Prying It Loose From Bumper Shell With A Weatherstrip Tool
Courtesy of VOLVO CARS CORPORATION

- Remove the panel over the fog lamp by carefully prying it loose from the bumper shell with a weatherstrip tool. The panel is held in place with catches. The corner (1) of the other panel section must be pried loose since it overlaps the panel.

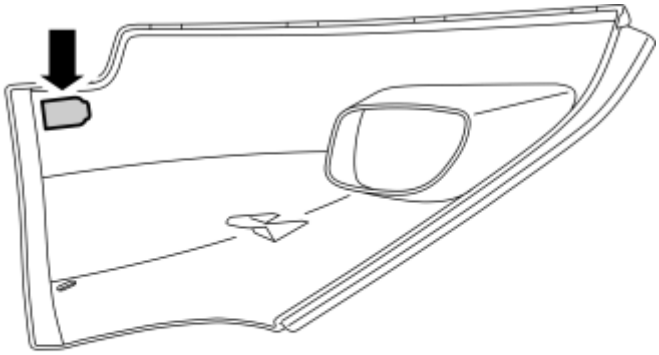

Fig. 126: Marking On Inside Of Panel
Courtesy of VOLVO CARS CORPORATION

- Cut out according to the existing marking on the inside of the panel for the protective cover for the front engine block heater socket.
- Test and cut until the protective cover fits.

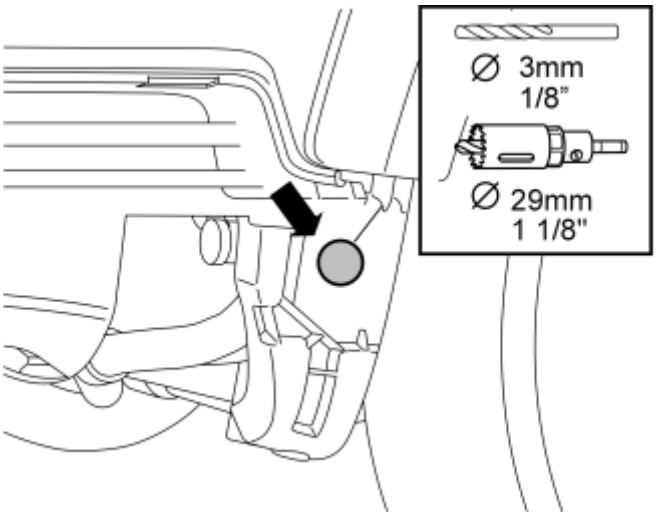

Fig. 127: Drilling A 29 MM (1 1/8 inches) Diameter Hole Using A Hole Saw According To Existing Marking In Lower Edge Of Bumper Cover
Courtesy of VOLVO CARS CORPORATION

- Drill a **29 mm (1 1/8 ")** diameter hole using a hole saw according to the existing marking in the lower edge of the bumper cover. Pre-drill using a **3mm (1/8 ")** diameter drill bit.

NOTE: **It is important that the hole is drilled right in the center of the marking in order to correspond with the hole cut out earlier.**

- Even out the hole edges and remove the drill shavings.

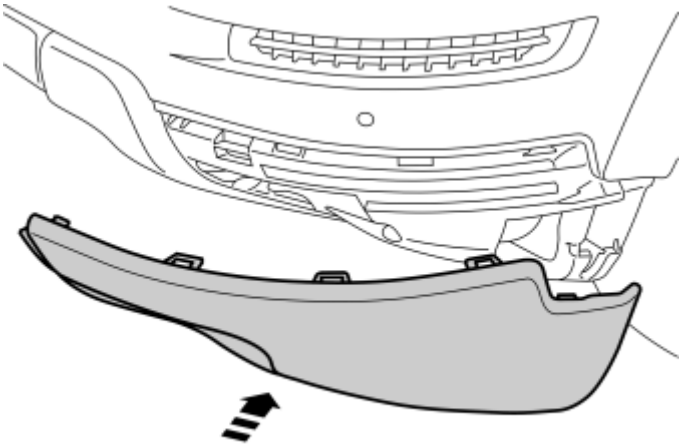

Fig. 128: Front Fog Lamp Panel
Courtesy of VOLVO CARS CORPORATION

- Reinstall the front fog lamp panel.

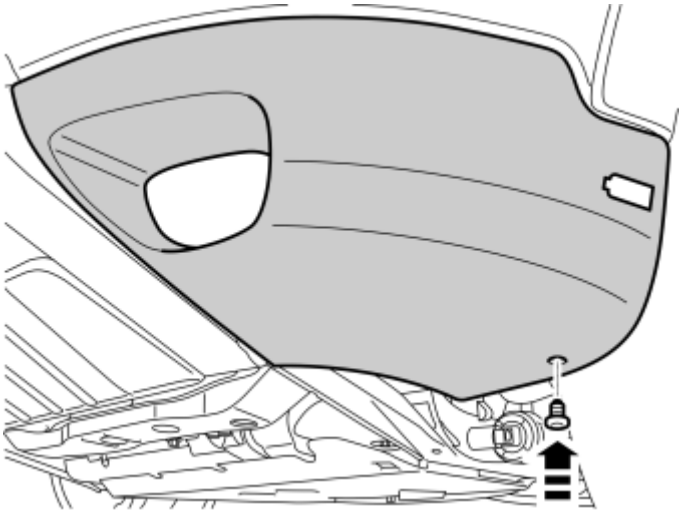

Fig. 129: Clip Into Panel
Courtesy of VOLVO CARS CORPORATION

- Press the clip into the panel.

INSTALLING THE FRONT ENGINE BLOCK HEATER SOCKET

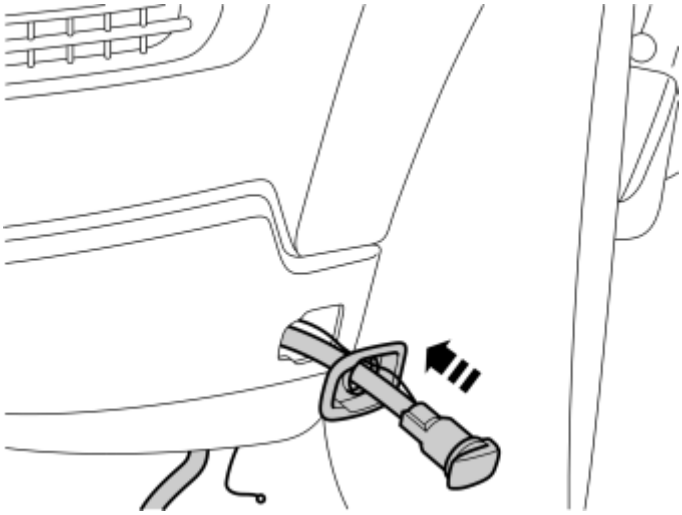

Fig. 130: Take Protective Cover From Kit And Press It Into Hole Cut In Bumper Cover
Courtesy of VOLVO CARS CORPORATION

- Take the protective cover from the kit and press it into the hole cut in the bumper cover.
- Take the cable for the front engine block heater socket with ground lead from the kit and thread them through the protective cover.

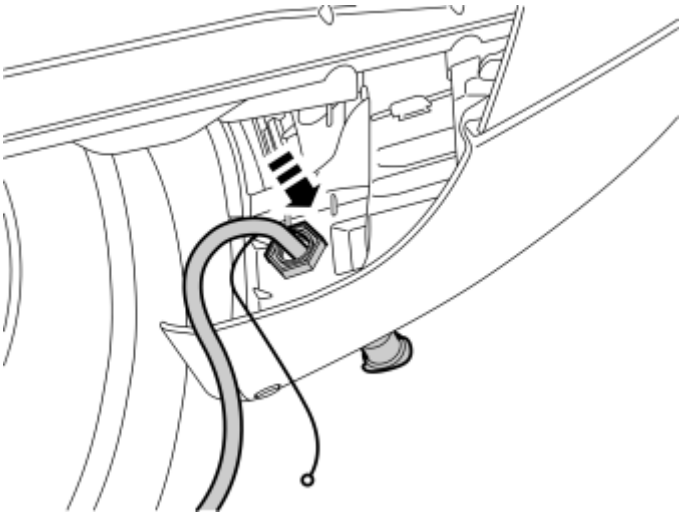

Fig. 131: Take Cable For Front Engine Block Heater Socket With Ground Lead From Kit & Thread Them Through Protective Cover
Courtesy of VOLVO CARS CORPORATION

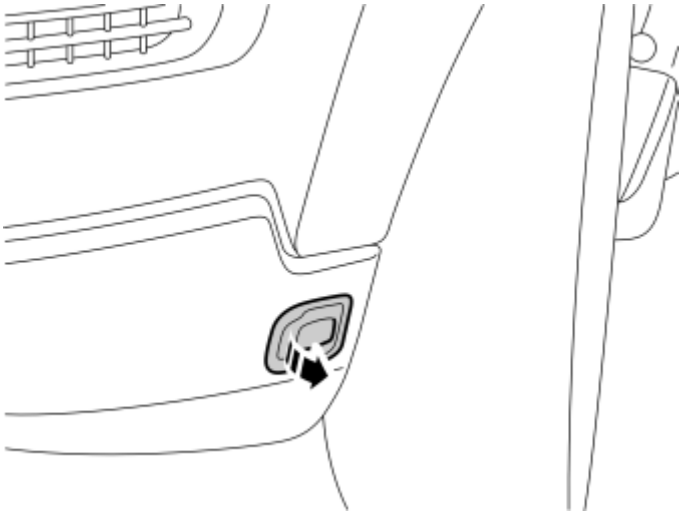

Fig. 132: Rotate Connector For Front Engine Block Heater Socket So That Cover Opens Backwards
Courtesy of VOLVO CARS CORPORATION

Illustrations A and B

- Install the nut from the kit.
- Rotate the connector for the front engine block heater socket so that the cover opens backwards (Illustration B).
- Tighten the front engine block heater socket to the bumper cover.
- Plug the electrical connector into the front engine block heater socket. Use the connector as a counterhold when tightening.
- Remove the cover on the radiator expansion tank.

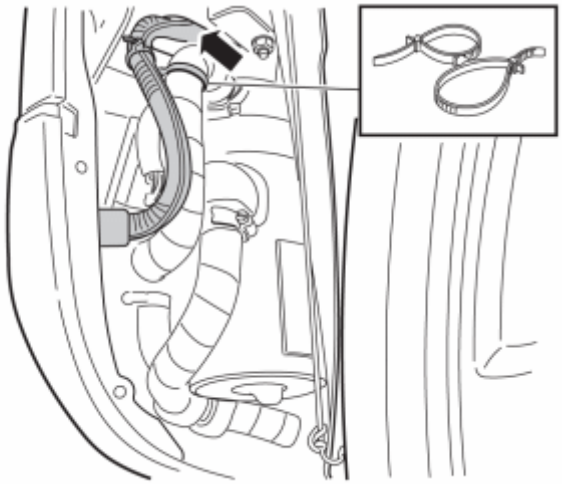

Fig. 133: Cable On Front Intake
Courtesy of VOLVO CARS CORPORATION

Applies to cars with fuel-driven parking heater installed

- Route the cable to the front intake with ground cable along the parking heater induction pipe. Secure them to the pipe with a double tie strap.
- Pull up the ground cable on the upper side of the plate where the connector to the fuel heater is located, and pull the thick cable underneath the plate.

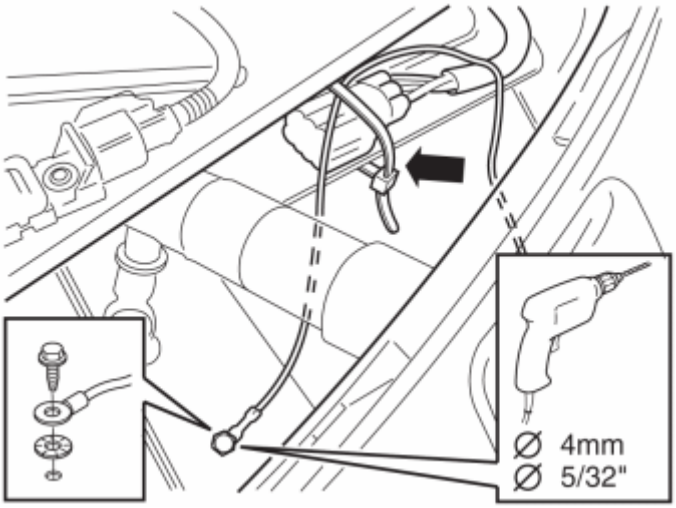

Fig. 134: Drilling A Hole In Front/Top Edge Of Side Member With 4 MM (5/32") Bit
Courtesy of VOLVO CARS CORPORATION

Applies to cars with fuel-driven parking heater installed

- Drill a hole in the front/top edge of the side member with a **4 mm (5/32")** bit.
- Apply anti-corrosion agent to the edges of the holes and secure the ground cable with the enclosed **4.8 mm (3/16")** flanged screw and toothed washer.
- Secure the excess length of ground cable with a tie strap from the kit. Clamp it at the gray connectors of the parking heater.

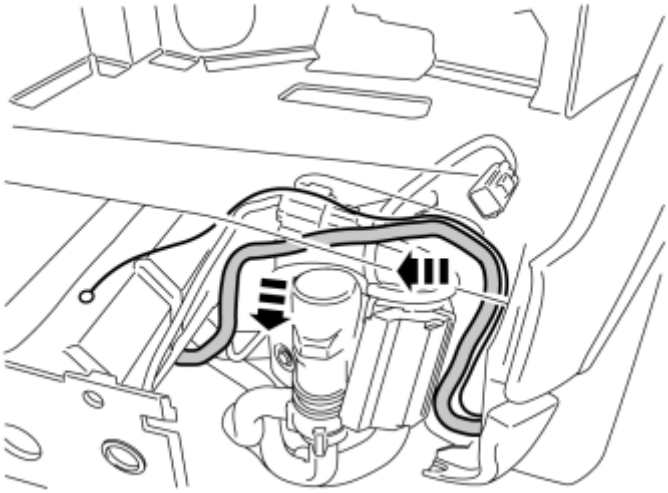

Fig. 135: Continue Routing Thick Cable On Top Of Fuel Heater Along Cables There
Courtesy of VOLVO CARS CORPORATION

Applies to cars with fuel-driven parking heater installed

- Continue routing the thick cable on top of the fuel heater along the cables there. Then pull it under the plate where the connector for the fuel heater is, continuing underneath the side member, before the front mounting for the subframe.

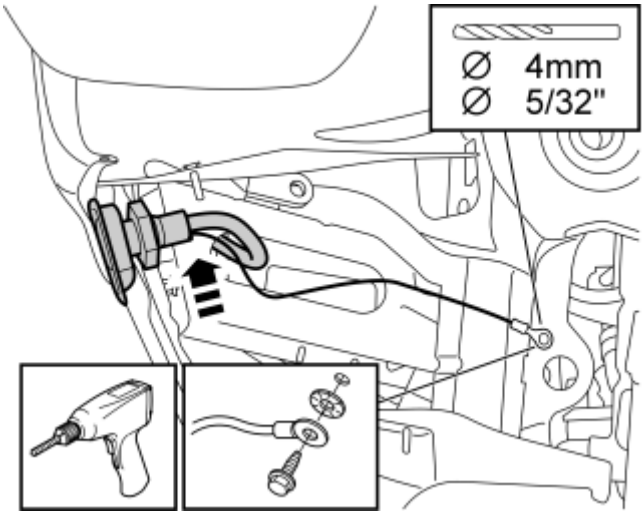

Fig. 136: Drill A Hole In Front/Lower Edge Of Side Member With 4 MM (5/32") Bit
Courtesy of VOLVO CARS CORPORATION

- Drill a hole in the front/lower edge of the side member with a **4 mm (5/32")** bit.
- Apply anti-corrosion agent and secure the ground cable with the enclosed **4.8 mm (3/16")** flanged screw and toothed washer.

NOTE: Connect the ground cable to the side member, not to the subframe.

- Secure the excess ground cable length with a tie strap from the kit.

APPLIES TO ALL YEARS

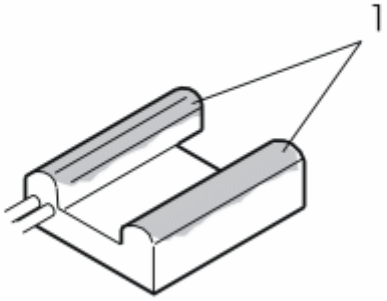

Fig. 137: Identifying Heat Conducting Paste
Courtesy of VOLVO CARS CORPORATION

- Apply heat conducting paste (P/N 9499205), on the surfaces (1) of the heater body which are in contact with the cylinder block.

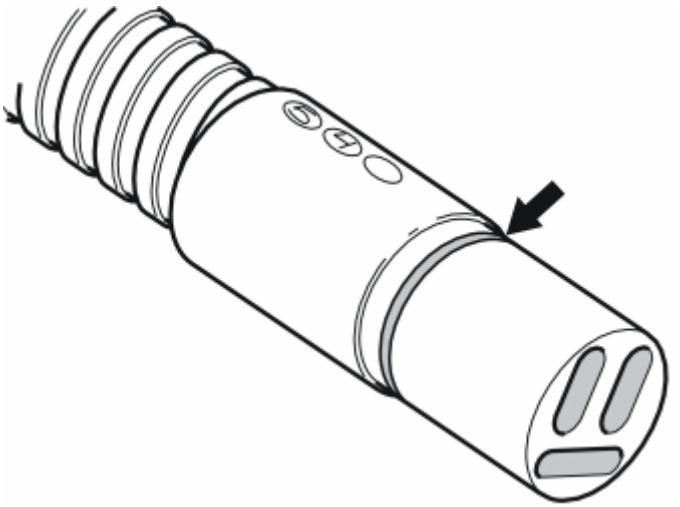

Fig. 138: Identifying O-Ring
Courtesy of VOLVO CARS CORPORATION

- Grease the O-ring on the connector for the heater's jointing cable with low temperature grease (part no. 1161417-9).

NOTE: Do not get any grease on the surfaces of the connector.

Applies to cars with stay for the turbocharger

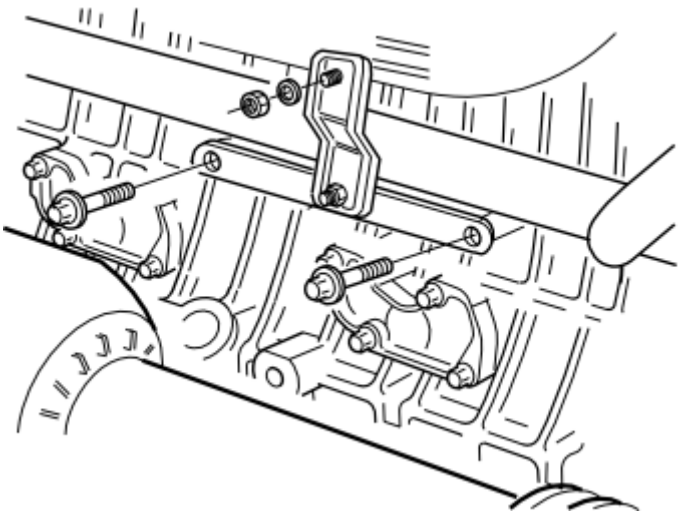

Fig. 139: Identifying Stay Removal
Courtesy of VOLVO CARS CORPORATION

- Remove the stay.

Applies to cars up to and including model year -2004, with stay for the turbocharger,

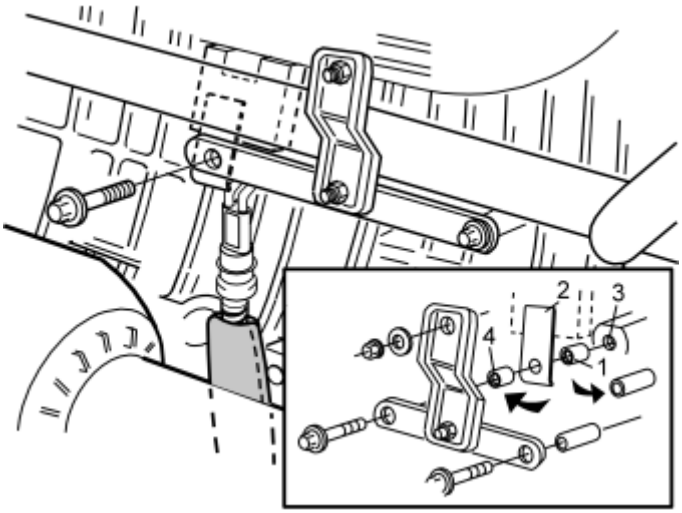

Fig. 140: Identifying Engine Block Heater
Courtesy of VOLVO CARS CORPORATION

- Carefully clean the surface where the heater is to be located to provide good heat conduction to the cylinder block. Also clean the internal threads.
- Install the heater on the engine block as illustrated.

  HINT: To facilitate the installation of the heater on the engine block, first secure the tensioner (2) by the heater using a small piece of butyl tape, and then also secure the spacer sleeves (1 and 4) on each side of the tensioner using small pieces of butyl tape.

- Install the spacer washer (1), **(t =10 mm (25/64"))** , between the tensioner (2) and the mounting (3) in the engine block.
- Install the outer spacer washer (4), **(t =32 mm (1 1/4"))** , between the stay and the tensioner (2).
- Tighten the heater using the screws from the kit. Tighten to **16 Nm (12 lbf. ft.)** .
- Take the radiation protection and cable from the kit. Thread the radiation protection onto the cable and connect the cable to the heater.

Applies to cars from model year 2005-, with stay for the turbocharger

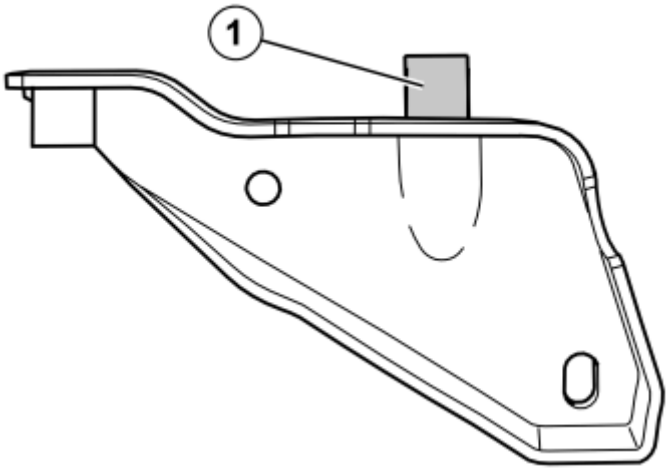

Fig. 141: Identifying Stay And Spacer
Courtesy of VOLVO CARS CORPORATION

Illustration A

- Knock off the spacer (1) from the stay. Grind off the welds if the spacer is securely fastened.

Illustration B

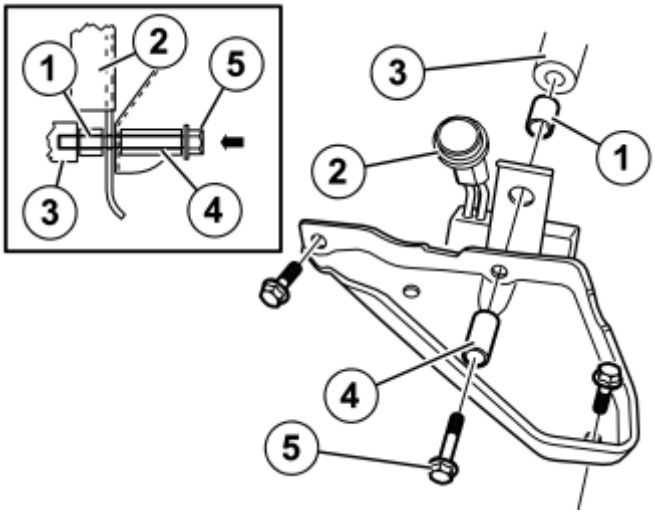

Fig. 142: Identifying Tensioner And Cylinder Block
Courtesy of VOLVO CARS CORPORATION

- Carefully clean the surface where the heater is to be located to provide good heat conduction to the cylinder block. Also clean the internal threads.

HINT: To facilitate the installation of the heater on the engine block, first secure the tensioner (2) by the heater using a small piece of butyl tape. Then also secure the spacer sleeve (1) on the rear side of the tensioner using a small piece of butyl tape.

NOTE: The bent section of the tensioner must point away from the heater.

- Install space washer (1)**(t=10 mm (25/64"))** between tensioner (2) and the mounting in the engine block (3). Install the outer spacer washer (4) **(t=32 mm (1 1/4"))** on the outside of the bracket.
- Thread through the long screw (5) so that everything is held together.

Illustration C

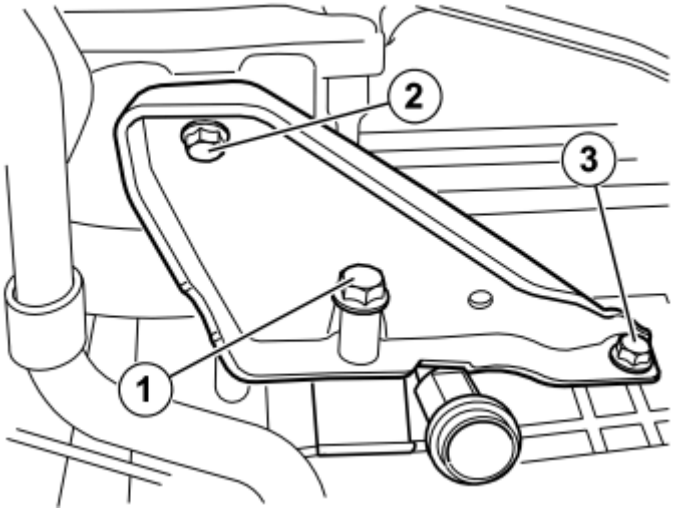

Fig. 143: Identifying Turbocharger And Screws
Courtesy of VOLVO CARS CORPORATION

- Thread the heater and the tensioner. Install the turbocharger stay and screw using the three screws as follows:

  Screw the turbocharger stay into place through the tensioner in the mounting in the engine block, with the long screw (1).

  Screw the turbocharger stay in the turbocharger with the short screw (2) and into the other mounting in the engine block with screw (3).
- Tighten the screws to **16 Nm (12 lbf. ft.)** .
- Take the radiation protection and cable from the kit. Thread the radiation protection onto the cable and connect the cable to the heater
- Install the locking sleeve on the heater's connector.

Applies to cars without stay for the turbocharger

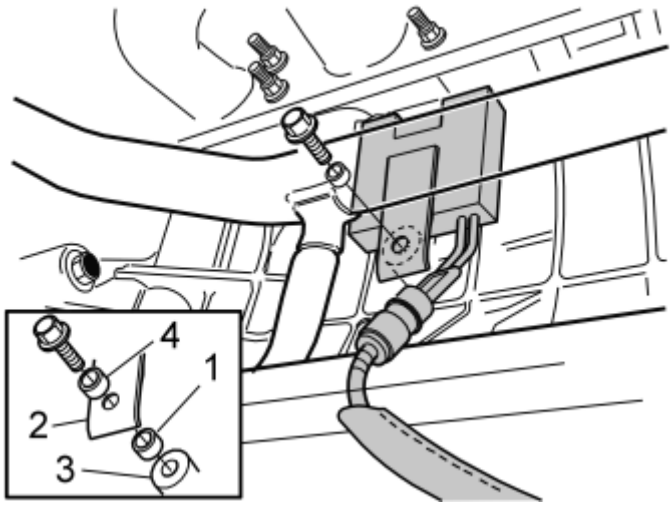

Fig. 144: Identifying Engine Block Heater
Courtesy of VOLVO CARS CORPORATION

- Carefully clean the surface where the heater is to be located to provide good heat conduction to the cylinder block. Also clean the internal threads.
- Install the heater on the engine block as illustrated.

  HINT: To facilitate the installation of the heater on the engine block, first secure the tensioner (2) by the heater using a small piece of butyl tape and then also secure the spacer sleeve (1) on the rear side of the tensioner using a small piece of butyl tape.

- Install space washer (1)**(t=10 mm (25/64"))** between tensioner (2) and the mounting in the engine block (3). Install the outer spacer washer (4) **(t=32 mm (1 1/4"))** on the outside of the tensioner (2).
- Tighten the heater using the screws from the kit. Tighten to **16 Nm (12 lbf. ft.)** .
- Take the radiation protection and cable from the kit. Thread the radiation protection onto the cable and connect the cable to the heater.

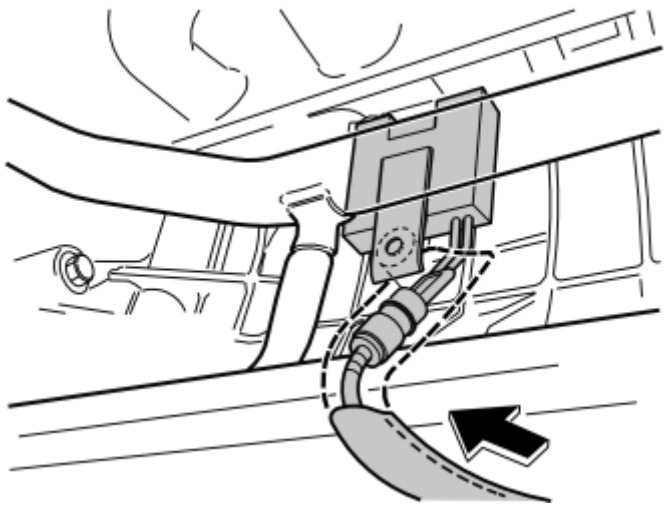

Fig. 145: Identifying Heat Shield

Courtesy of VOLVO CARS CORPORATION

- Pull the radiation protection all the way up to the block heater, so that the joint and plastic casting is completely covered.

NOTE: It is important that the radiation protection covers the entire joint at the engine.

- Secure the radiation protection around the cable, to the block heater, using a gray, heat resistant tie strap at the lower edge of the radiation protection.

Only applies to TDI engines and immersion heaters

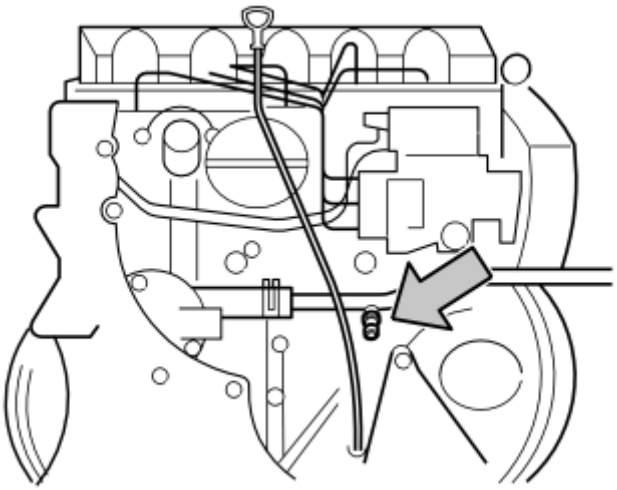

Fig. 146: Identifying Radiator Expansion Tank Cap
Courtesy of VOLVO CARS CORPORATION

- Open the cap for the radiator's expansion tank.
- Position a collection container under the engine and open the coolant cock.
- Drain the coolant and close the cock.

Only applies to TDI engines and immersion heaters

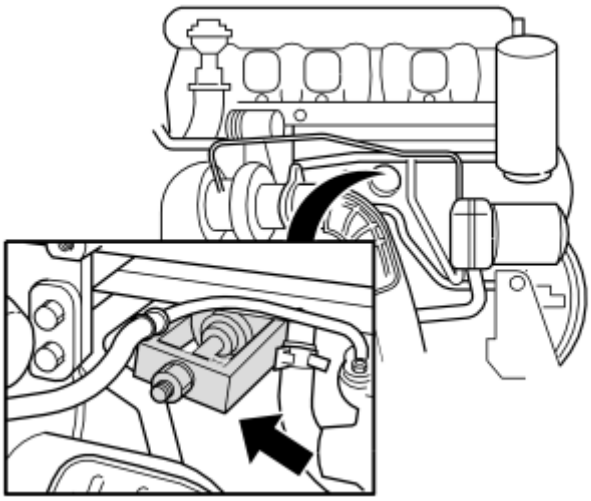

Fig. 147: Identifying Core Plug
Courtesy of VOLVO CARS CORPORATION

- Pull out the core plug using an extractor.

Only applies to TDI engines and immersion heaters

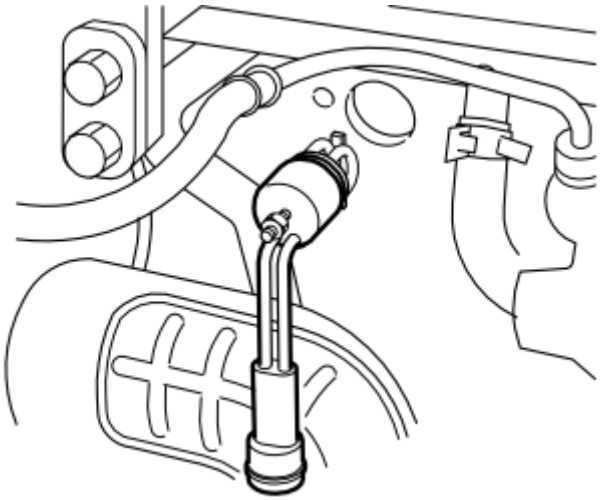

Fig. 148: Identifying Immersion Heater
Courtesy of VOLVO CARS CORPORATION

- Thread the O-ring onto the heater.
- Grease the O-ring using low temperature grease (P/N 1161427).
- Screw the immersion heater into the engine block. **Tighten to 3.5 Nm (2.6 lbf. ft.)** .
- Clamp the cable at the pipe on the right-hand side of the reverse of the sub-frame. Use the tie strap from the kit.

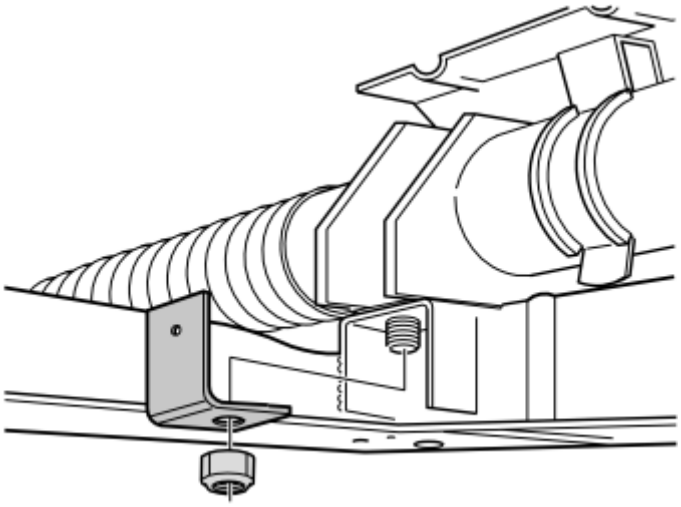

Fig. 149: Identifying Bracket And Nut From Right-Hand Side Of Steering Gear
Courtesy of VOLVO CARS CORPORATION

- Remove the existing nut from the steering gear.
- Install the bracket for mounting the branching connector and cables.
- Install the new supplied lock nut. Tighten to **48 Nm (36 lbf. ft.)** .

Applies if engine block heater and passenger compartment connector shall be fitted at the same time

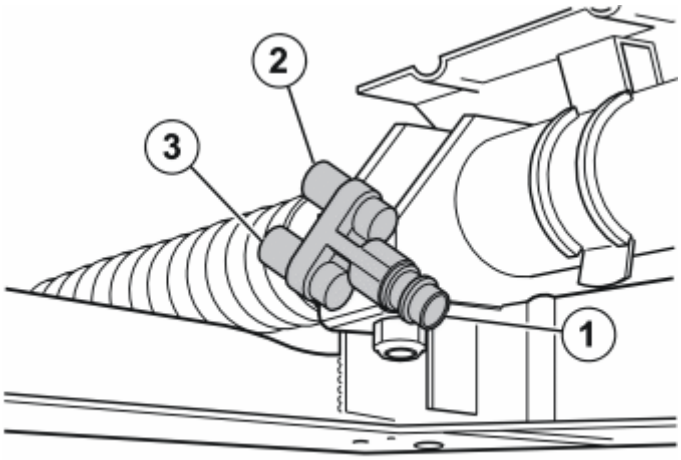

Fig. 150: Identifying Front Socket, Passenger Compartment Socket & Engine Block Heater
Courtesy of VOLVO CARS CORPORATION

- Install the branching connector on the bracket with screw and nut from the kit.
- Grease the O-rings using low temperature grease (P/N 1161417-9).
- Connect the cables from the front socket (1), the passenger compartment socket (2) and the engine block heater (3) to the branching connector.
- Tighten the branching connector to the bracket for the steering gear.

CONNECTION AND FINISHING WORK

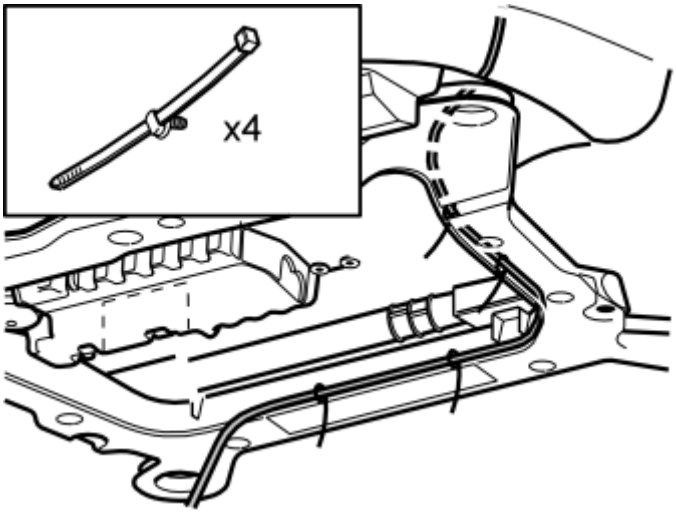

Fig. 151: Identifying Front Socket Cable Above Front Edge Of Subframe
Courtesy of VOLVO CARS CORPORATION

- Take four tie straps from the kit and press them into the holes on the inside of the subframe.
- Route the cable from the front socket above the front edge of the subframe and back to the cable from the engine block heater.
- Clamp the cable securely into the fitted tie straps.
- Grease the O-ring on the connector using low temperature grease (P/N 1161417-9).

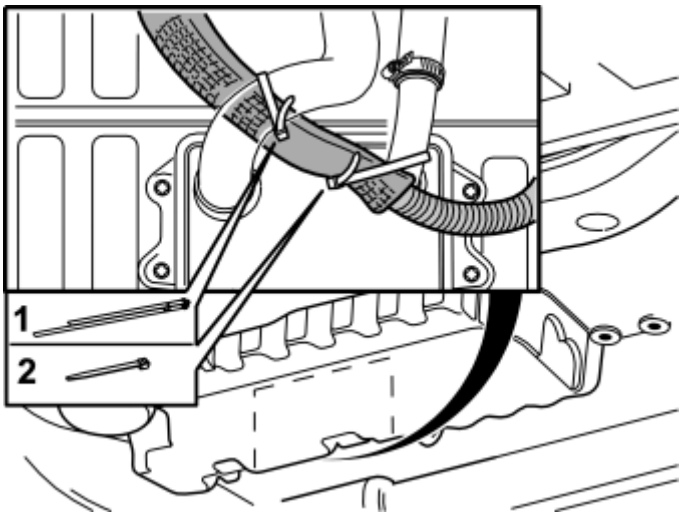

Fig. 152: Identifying Cable At Right-Hand Pipe And Tie Strap
Courtesy of VOLVO CARS CORPORATION

- Route the cable from the engine block heater over oil cooler and to the bracket previously installed.
- Take the double clamp (1) from the kit and secure the cable at the left-hand hose on the oil cooler. Secure the cable at the right-hand pipe using a tie strap (2) from the kit.

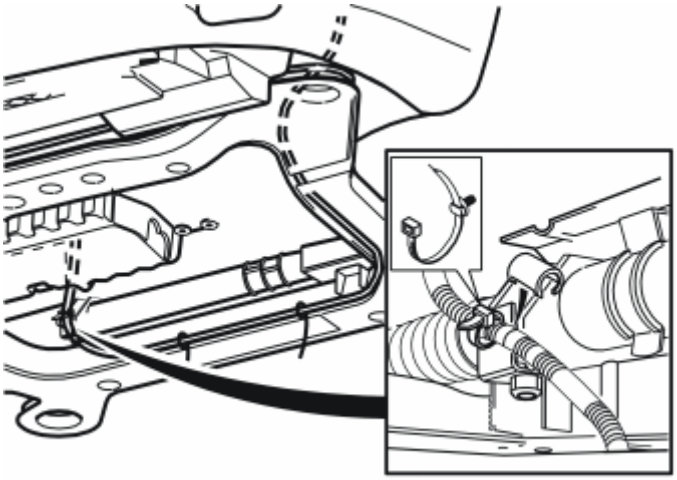

Fig. 153: Identifying Front Socket Cable & Engine Block Heater Cable
Courtesy of VOLVO CARS CORPORATION

- Connect the cable from the front socket to the cable from the engine block heater, or to the branching connector.
- Press the locking sleeves (from the kit) over the cable splices.
- Take a clamp from the kit and press it into the hole on the previously installed bracket.
- Clamp the cable in at the bracket as illustrated.

NOTE: **The cable must not be secured to the drive shaft, to the fuel lines, air conditioning (A/C) pipes or brake pipes. Ensure that the cable is not rubbing against any sharp edges and that it is not too close to the turbocharger (TC) or exhaust pipe to prevent damage from radiant heat.**

- Reinstall the engine splash guard. Torque tighten the engine splash guard screws to **25 Nm (19 lbf. ft.)** .
- Connect the headlamp and reinstall it.

ELECTRIC ENGINE BLOCK HEATER, 5-CYL. 110V (B5254T2; 2003-2007)

ELECTRIC ENGINE BLOCK HEATER, 5-CYL. 110V

ASSEMBLING THE FRONT INTAKE

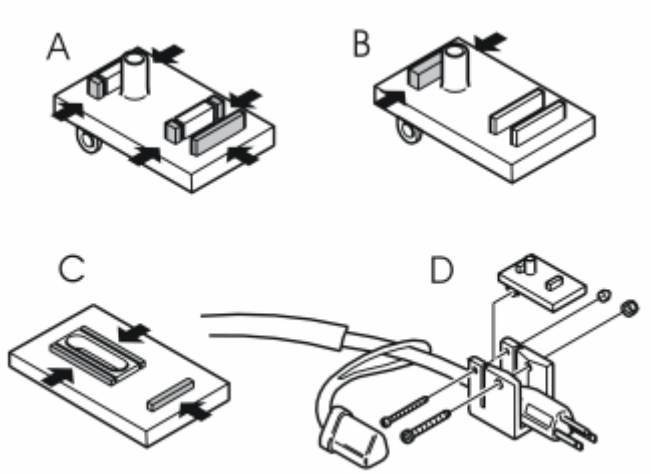

Fig. 154: Identifying Mounting Plates
Courtesy of VOLVO CARS CORPORATION

- Assemble the front intake according to figure D.

INSTALLING THE FRONT INTAKE

UP TO AND INCLUDING MODEL YEAR -2006 (CH-327999)

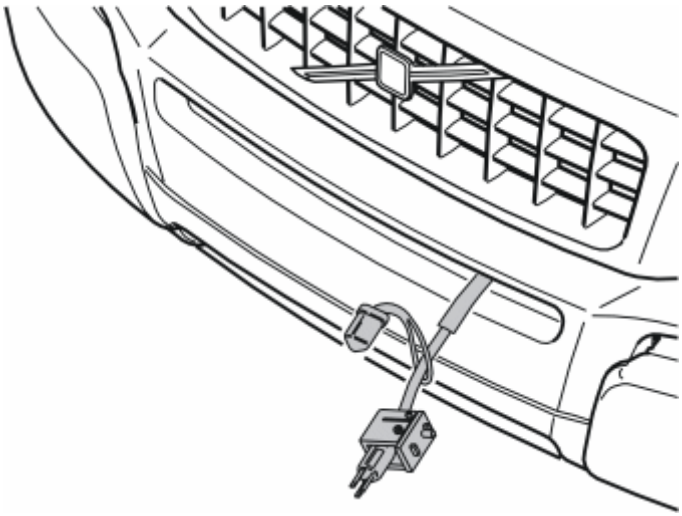

Fig. 155: Front Socket Cable
Courtesy of VOLVO CARS CORPORATION

- Guide the front socket's cable in through the center hole, next furthest to the left in the grille.

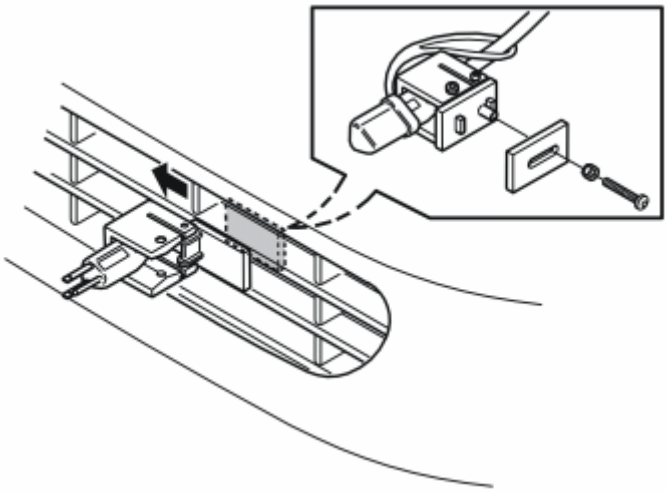

Fig. 156: Screw, Washer And Attaching Plate
Courtesy of VOLVO CARS CORPORATION

- Take a screw, washer and attaching plate from the kit and install the front socket. Push it as far to the left as possible and tighten it.
- Pull the cable to the left, in through the rubber seal on the left-hand side of the radiator, continue down by the left front side, on the right-hand side.

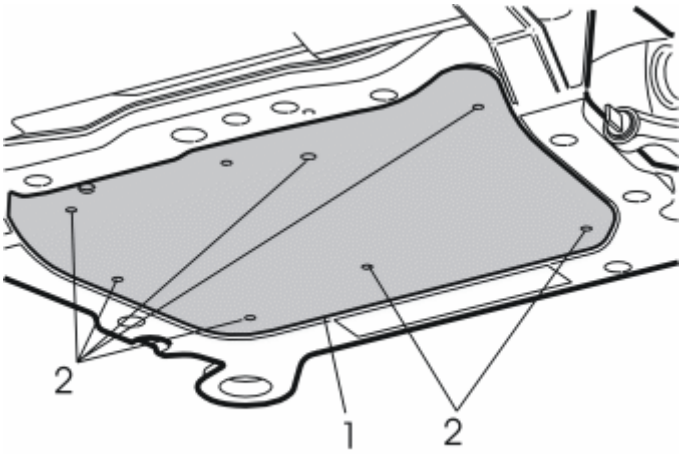

Fig. 157: Engine Splash Guard
Courtesy of VOLVO CARS CORPORATION

- Remove the engine splash guard (1) by first removing the screws (2).

FROM AND INCLUDING MODEL YEAR 2007- (CH 328000-)

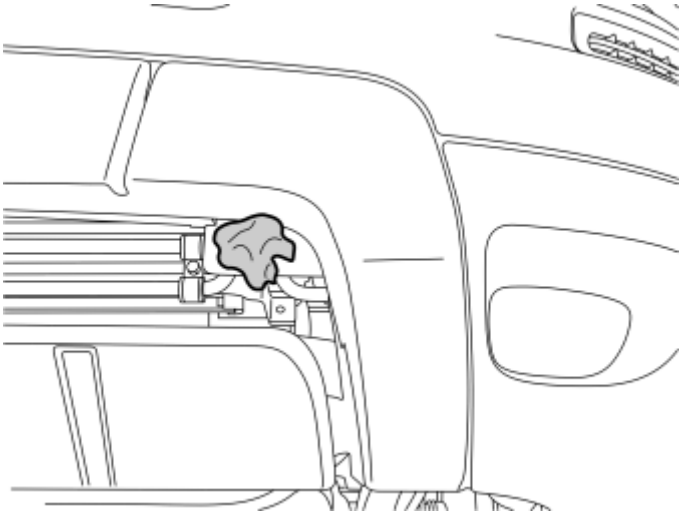

Fig. 158: Identifying Surface To Clean Where Front Engine Block Heater Socket Is Secured
Courtesy of VOLVO CARS CORPORATION

- Clean the surface where the front engine block heater socket will be secured.

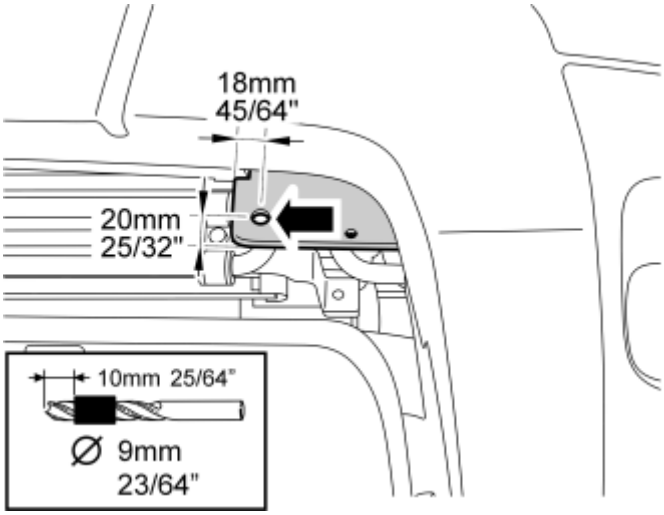

Fig. 159: Identifying Hole Drilled In Front Engine Block Heater Socket's Mounting Plate
Courtesy of VOLVO CARS CORPORATION

- Drill a hole for the guide to the front engine block heater socket's mounting plate.
- File down the edges of the holes.

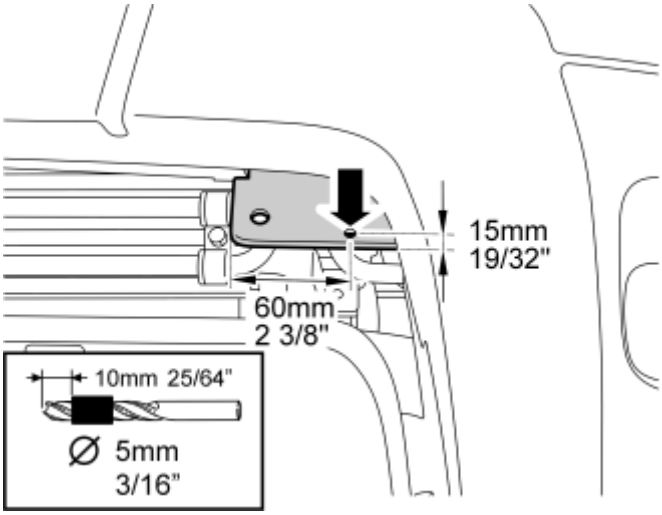

Fig. 160: Identifying Hole Drilled For Tie Strap In Front Engine Block Heater Socket's Cable
Courtesy of VOLVO CARS CORPORATION

- Drill a hole for the tie strap for the front engine block heater socket's cable.
- File down the edges of the holes.

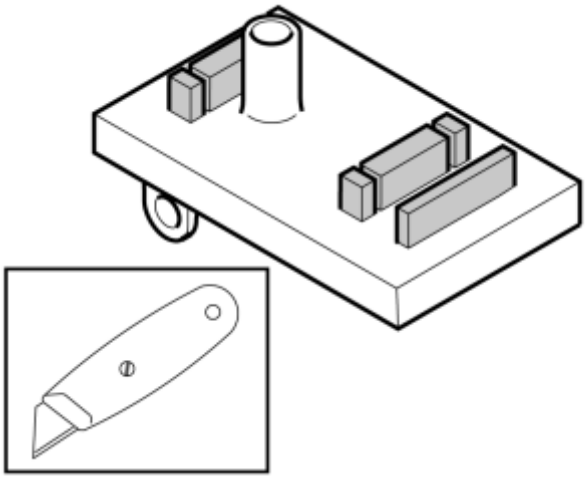

Fig. 161: Identifying Shaded Sections On Mounting Plate
Courtesy of VOLVO CARS CORPORATION

- Cut-off all shaded sections on the mounting plate so that only the cylinder shaped section remains.

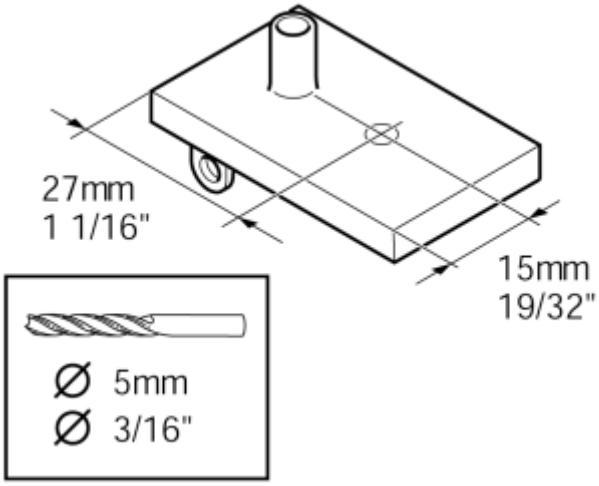

Fig. 162: Identifying 3/16 Inch Diameter Drill Hole In Mounting Plate
Courtesy of VOLVO CARS CORPORATION

- Drill a **5 mm (3/16 ")** diameter hole in the mounting plate.
- File down the edges of the holes.

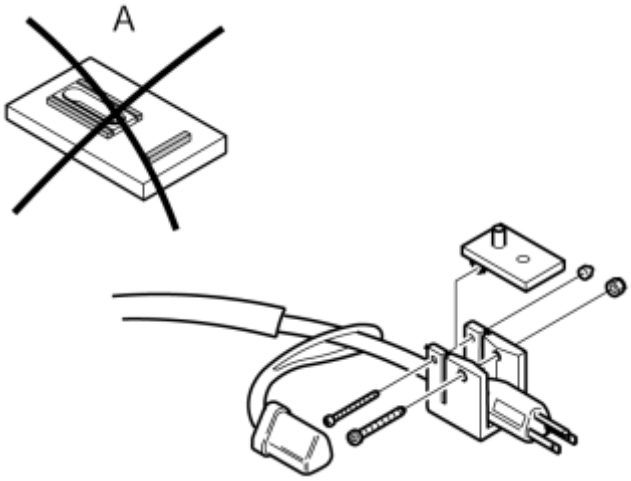

Fig. 163: Identifying Front Intake & Mounting Plate
Courtesy of VOLVO CARS CORPORATION

- Assemble the front intake as illustrated. The mounting plate (A) must not be used.

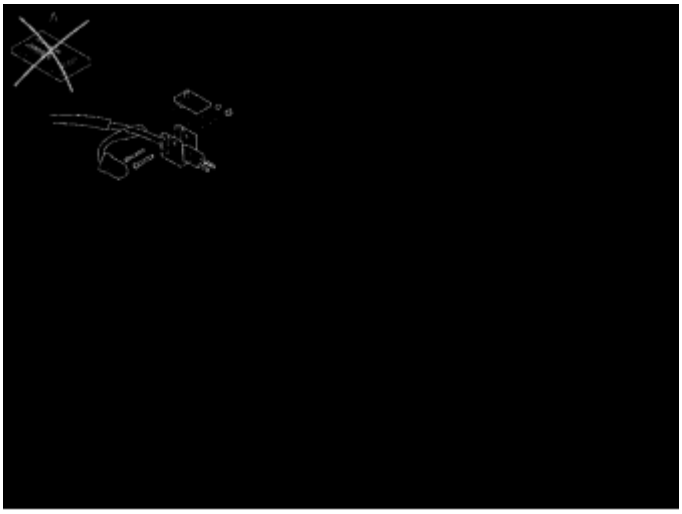

Fig. 164: Identifying Cable Route To Run Down Inside Of Left-Hand Bracket Of Skid Plate
Courtesy of VOLVO CARS CORPORATION

- Install the front engine block heater socket with the guide pin in the large hole.
- Route the cable in so that it runs down on the inside of the left-hand bracket for the skid plate.
- Align the front engine block heater socket so that the long sides of the mounting plate are parallel with the edges of the surface into which the mounting plate shall be screwed.
- Mark out for drilling the hole for the screw for the mounting plate.

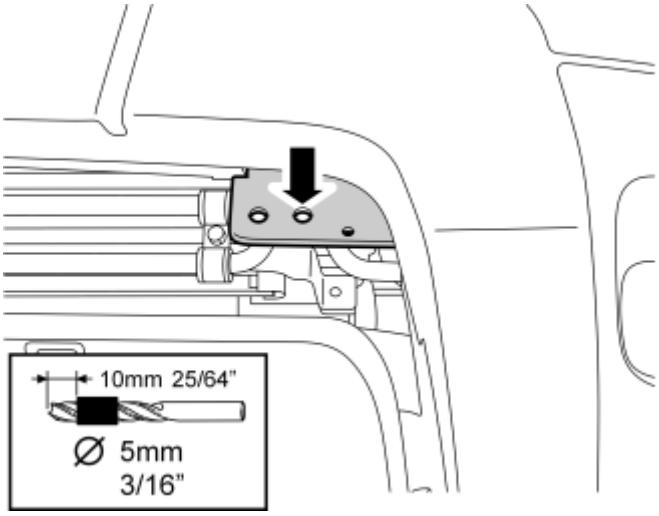

Fig. 165: Identifying 3/16 Inch Hole Drilled To Secure Front Engine Block Heater Socket's Mounting Plate
Courtesy of VOLVO CARS CORPORATION

- Drill a hole with a **5 mm (3/16 ")** diameter drill bit for the screw for securing the front engine block heater socket's mounting plate.

Fig. 166: Identifying Front Engine Block Heater Socket & Screw
Courtesy of VOLVO CARS CORPORATION

- Secure the front engine block heater socket with a screw and nut in the drilled hole and tighten.

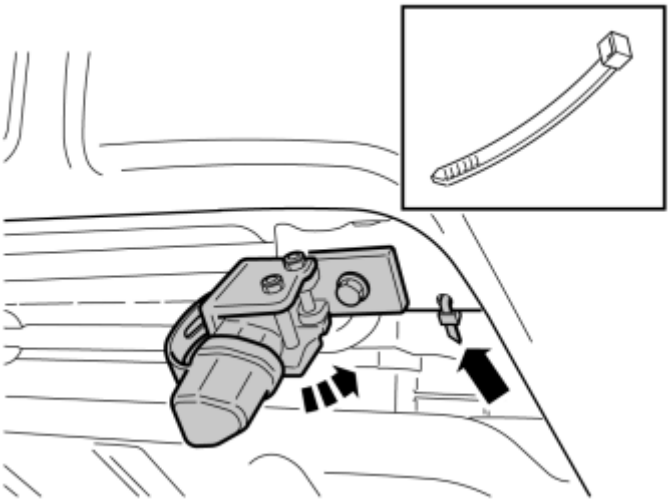

Fig. 167: Identifying Tie Strap Secured In Hole Around Front Engine Block Heater Socket's Cable
Courtesy of VOLVO CARS CORPORATION

- Secure the tie strap in the hole around the front engine block heater socket's cable.
- Fold in the connector so that the cable adopts the correct length in the tie strap before it is tightened.
- Tighten the tie strap.

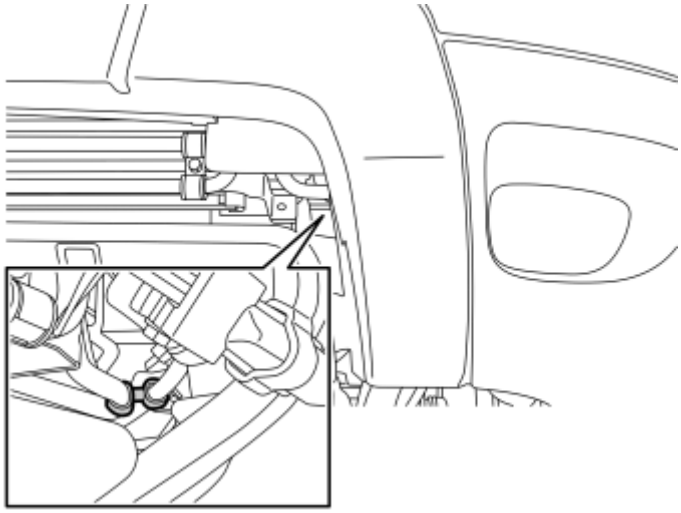

Fig. 168: Identifying Cable Clamped At Pipe
Courtesy of VOLVO CARS CORPORATION

- Clamp the cable in at the pipe for the air conditioning using a double tie strap.

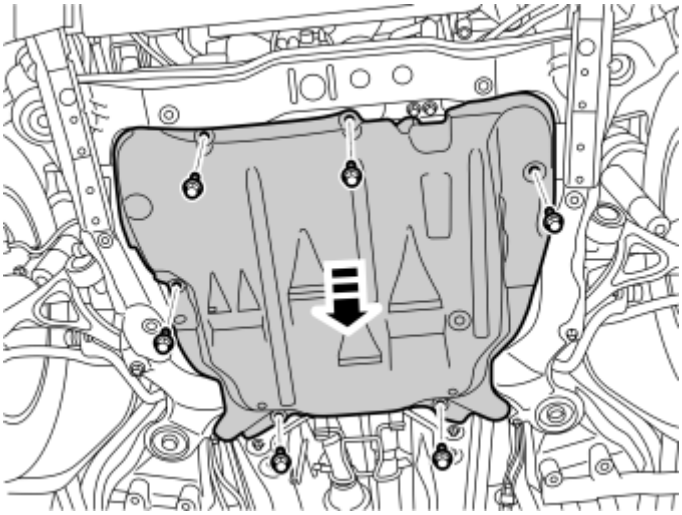

Fig. 169: Identifying Engine Splash Guard
Courtesy of VOLVO CARS CORPORATION

- Remove the engine splash guard.

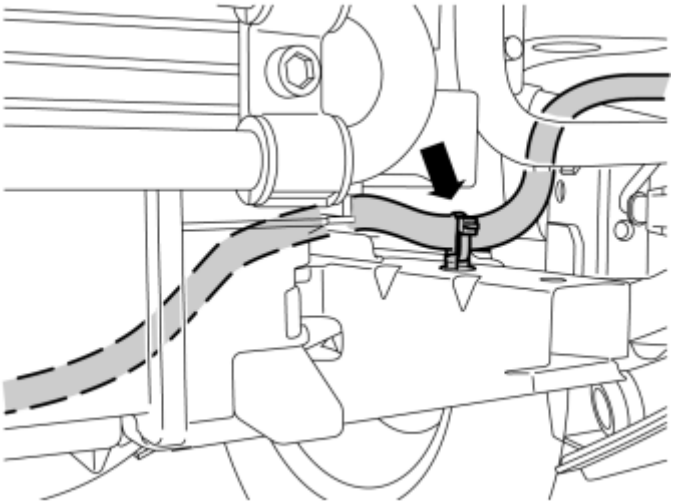

Fig. 170: Identifying Cable Pulled Over Skid Plate, Above Corner Of Subframe & Down To Subframe
Courtesy of VOLVO CARS CORPORATION

- Pull the cable from the front intake over the skid plate, above the inside of the front left-hand side corner of the subframe, and down to the inside of the left-hand side of the subframe.
- Take the tie strap equipped with clip and press it into the hole on the top of the left-hand bracket for the skid plate.
- Tighten the cable with the tie-strap.

INSTALLING, ENGINE BLOCK HEATER

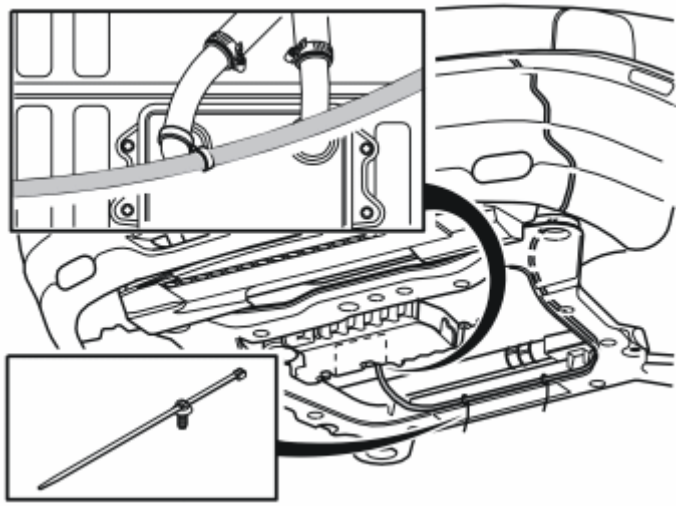

Fig. 171: Identifying Cable Pulled Above Subframe And Inside Of Left Front Mounting
Courtesy of VOLVO CARS CORPORATION

- Pull the cable above the subframe and on the inside of its left front mounting, along the left-hand side and up towards the engine.
- Clamp the cable using tie straps in the existing holes and with double clamps at pipes on the oil cooler.

CAUTION: Do not clamp the drive axle, and ensure that the cable does not chafe against sharp edges.

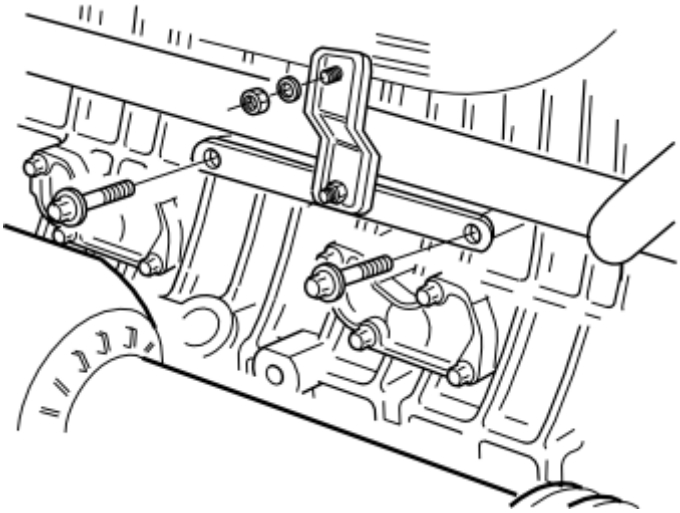

Fig. 172: Identifying Stay Removal
Courtesy of VOLVO CARS CORPORATION

Applies to cars with T stay, as illustrated

- Remove the stay.

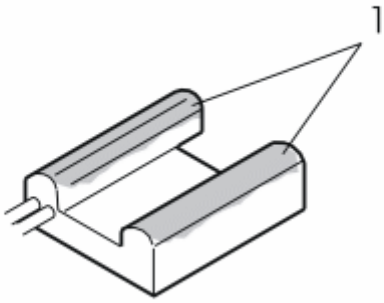

Fig. 173: Identifying Heat Conducting Paste
Courtesy of VOLVO CARS CORPORATION

- Apply heat conducting paste, (P/N 9499205), on the surfaces (1) of the heater body that are in contact with the cylinder block.

CAUTION: The heat conducting paste must be applied as illustrated. This is to prevent damage from overheating.

Image A applies to cars with T stay, as illustrated

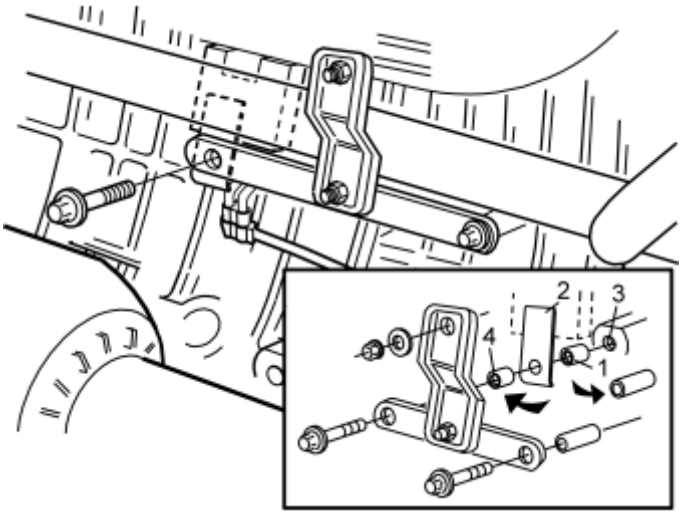

Fig. 174: Identifying Washer, Mounting Bracket, Hole & Space Washer Of Heater Bracket
Courtesy of VOLVO CARS CORPORATION

Image B applies to cars without T stay

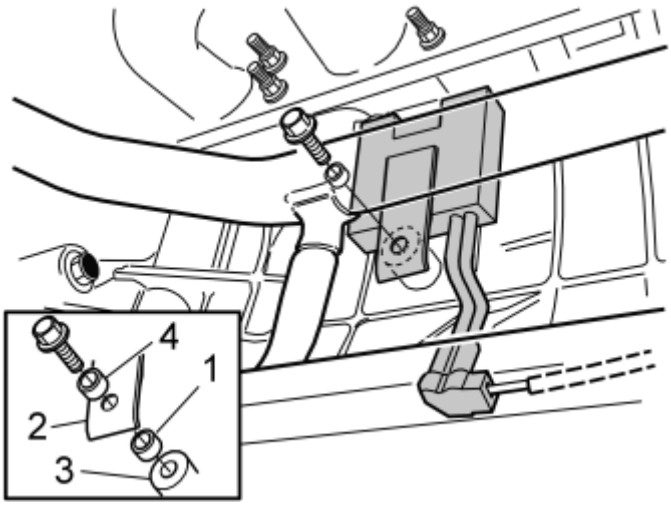

Fig. 175: Identifying Heater & Bracket Assembly
Courtesy of VOLVO CARS CORPORATION

- Clean the area where the heater is to be installed. This ensures optimal heat conduction to the cylinder block. Also clean the internal threads.
- Connect the cable supplied to the heater.
- Install the heater on the engine block, as illustrated.
- Install spacer washer (1) **(t=10 mm (25/64"))** between the mounting bracket (2) and mounting hole (3) in the engine block. The outer spacer washer(4) **(t=32 mm (1 1/4"))** is inserted between the mounting bracket (2) and the T stay, if applicable.
- Tighten the heater using the screws from the kit. Tighten to **16 Nm (12 lbf. ft.)** .

APPLIES TO CARS WITH STAY FOR THE TURBOCHARGER FROM MODEL YEAR 2005-

NOTE:

- **XC90 CH 134000-**

Illustration A

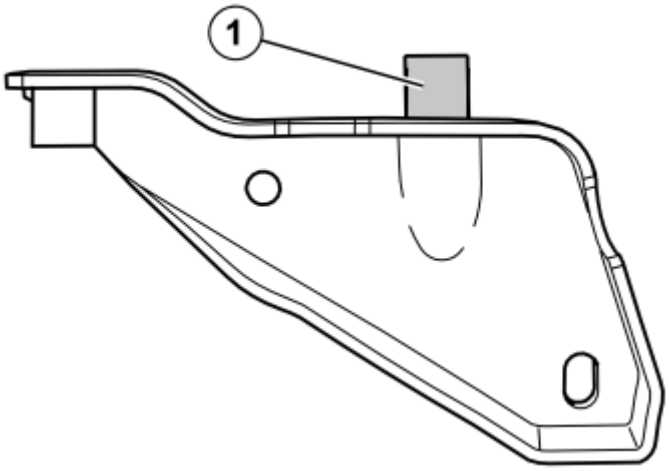

Fig. 176: Identifying Stay And Spacer
Courtesy of VOLVO CARS CORPORATION

- Knock off the spacer (1) from the stay. Grind off the welds if the spacer is secured too tightly.

Illustration B

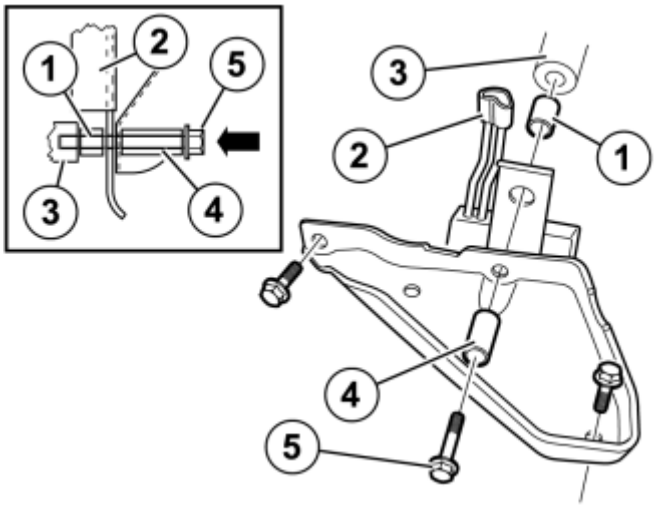

Fig. 177: Identifying Stay, Fasteners And Connector
Courtesy of VOLVO CARS CORPORATION

- Carefully clean the surface where the heater is to be located to provide good heat conduction to the engine block. Also clean the internal threads.

HINT: To facilitate the installation of the heater on the engine block, first secure the tensioner (2) by the heater using a small piece of butyl tape and then also secure the spacer sleeve (1) on the rear side of the tensioner using a small piece of butyl tape.

NOTE: The bent section of the tensioner must point away from the heater.

- Install space washer (1)**(t=10 mm (25/64"))** between tensioner (2) and the mounting in the engine block (3). Install the outer spacer washer (4) **(t=32 mm (1 1/4"))** on the outside of the bracket.
- Thread through the long screw (5) so that everything is held together.

Illustration C

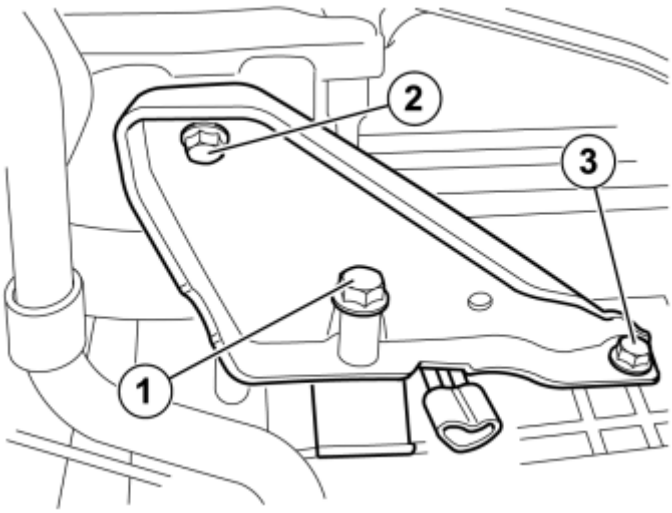

Fig. 178: Identifying Stay And Screws
Courtesy of VOLVO CARS CORPORATION

- Thread the heater and the tensioner. Install the turbocharger stay and screw using the three screws as follows:

  Screw the turbocharger stay into place through the tensioner in the mounting in the engine block, with the long screw (1).

  Screw the turbocharger stay in the turbocharger with the short screw (2) and into the other mounting in the engine block with the screw (3).
- Tighten the screws to **16 Nm (12 lbf. ft.)** .
- Take the radiation protection and cable from the kit. Thread the radiation protection onto the cable and connect the cable to the heater
- Install the locking sleeve on the heater's connector.

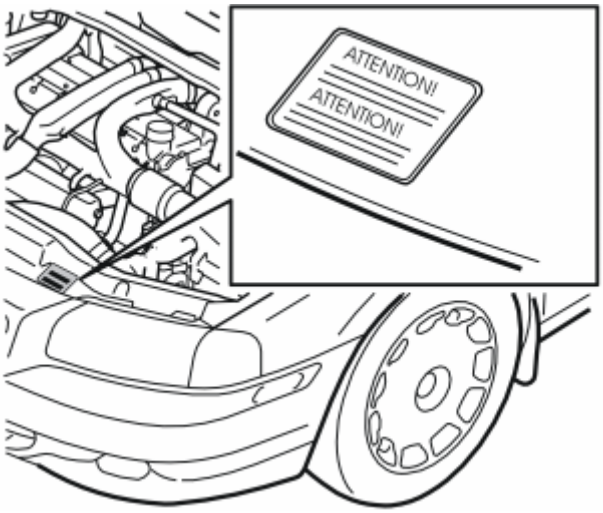

Fig. 179: Identifying Decal
Courtesy of VOLVO CARS CORPORATION

Install:

- air baffle
- the splash guard. Tighten the screws to **25 Nm (18.5 lbf. ft.)** .
- the decal from the kit.

ELECTRIC ENGINE BLOCK HEATER, 110V, 6-CYL (2007-2012)

ELECTRIC ENGINE BLOCK HEATER, 110V, 6-CYL

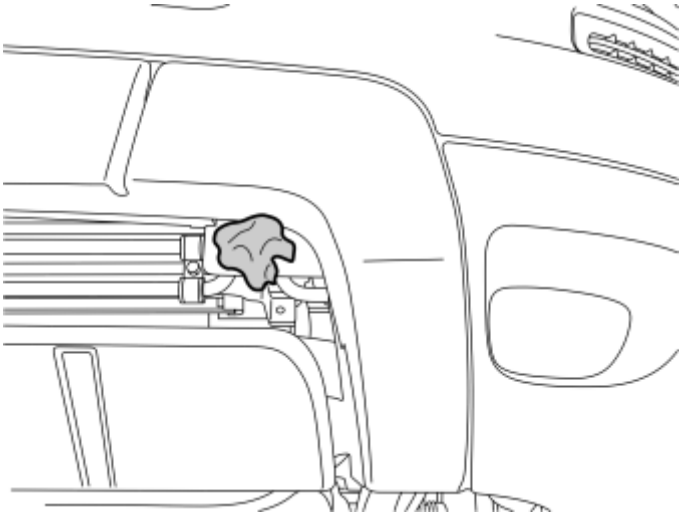

Fig. 180: Identifying Surface To Clean Where Front Engine Block Heater Socket Is Secured
Courtesy of VOLVO CARS CORPORATION

- Clean the surface where the front engine block heater socket will be secured.

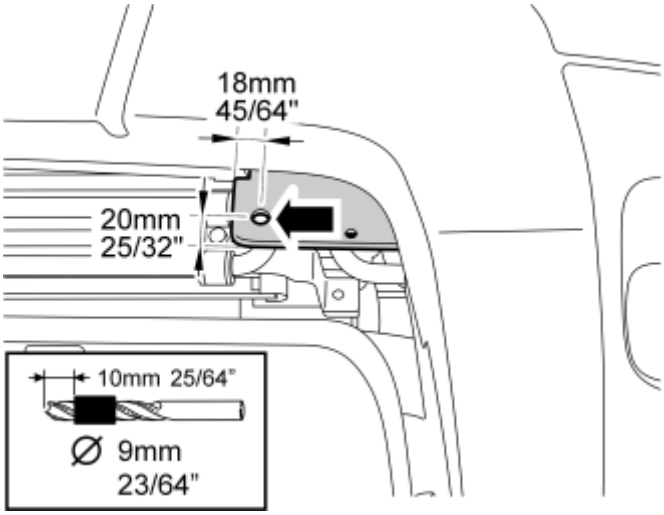

Fig. 181: Identifying Hole Drilled In Front Engine Block Heater Socket's Mounting Plate
Courtesy of VOLVO CARS CORPORATION

- Drill a hole for the guide to the front engine block heater socket's mounting plate.
- File down the edges of the holes.

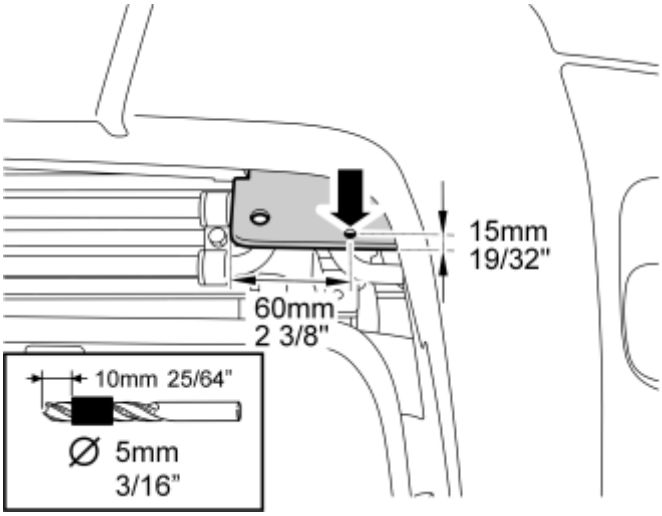

Fig. 182: Identifying Hole Drilled For Tie Strap In Front Engine Block Heater Socket's Cable
Courtesy of VOLVO CARS CORPORATION

- Drill a hole for the tie strap for the front engine block heater socket's cable.
- File down the edges of the holes.

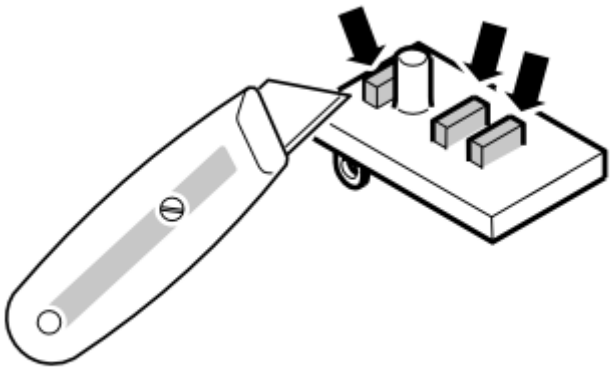

Fig. 183: Cutting Engine Block Mounting Plate Pins
Courtesy of VOLVO CARS CORPORATION

- Cut away the three pins on the front engine block heater socket's mounting plate.

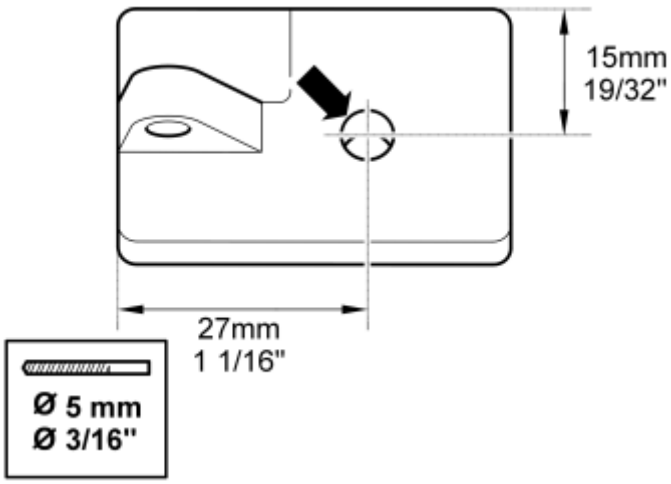

Fig. 184: Identifying Drilling Area And Dimensions
Courtesy of VOLVO CARS CORPORATION

- Drill a **5 mm (3/16 ")** diameter hole in the mounting plate.
- File down the edges of the holes.

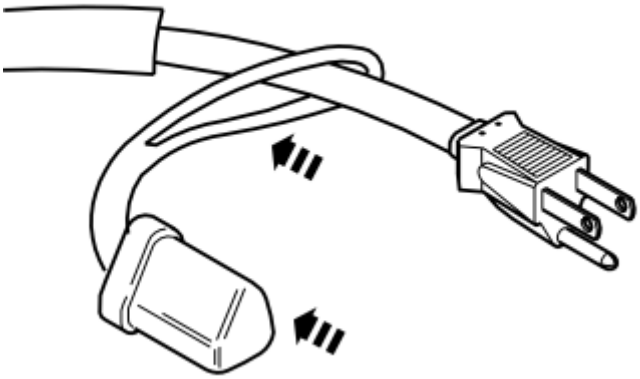

Fig. 185: Installing Kit Components
Courtesy of VOLVO CARS CORPORATION

Illustration A, B, C and D

- Assemble the front engine block heater socket with the parts from the kit as illustrated.

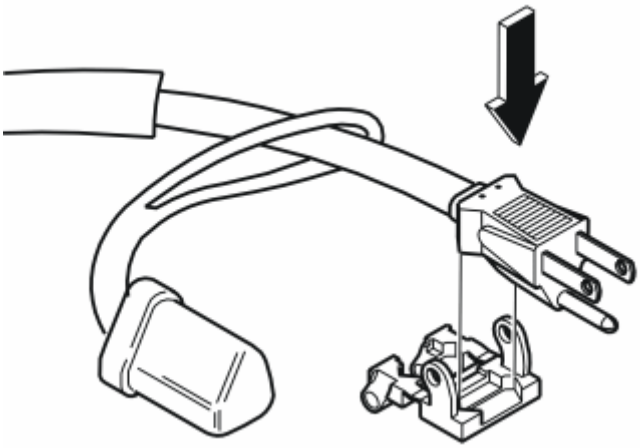

Fig. 186: Connector And Holder
Courtesy of VOLVO CARS CORPORATION

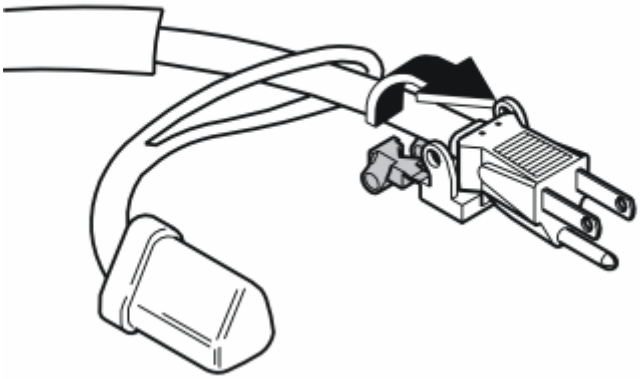

Fig. 187: Folding Cover Over Connector
Courtesy of VOLVO CARS CORPORATION

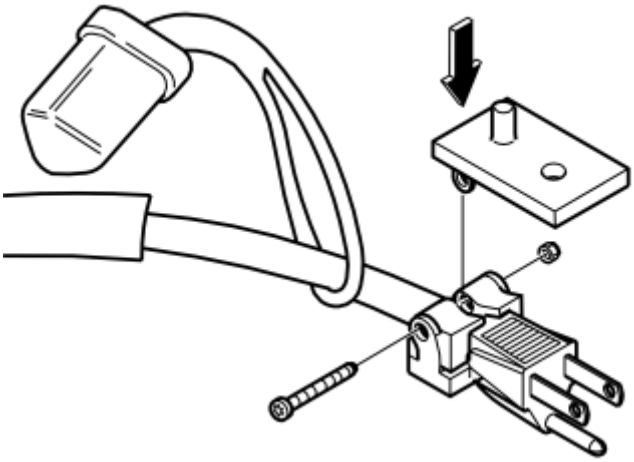

Fig. 188: Mounting Plate
Courtesy of VOLVO CARS CORPORATION

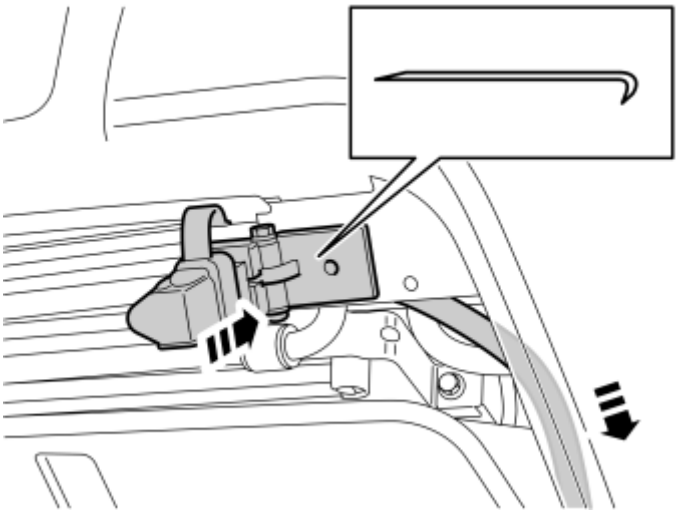

Fig. 189: Installing Block Heater Socket
Courtesy of VOLVO CARS CORPORATION

- Install the front engine block heater socket with the guide pin in the large hole.
- Route the cable in so that it runs down on the inside of the left-hand bracket for the skid plate.
- Align the front engine block heater socket so that the long sides of the mounting plate are parallel with the edges of the surface into which the mounting plate shall be screwed.
- Mark out for drilling the hole for the screw for the mounting plate.

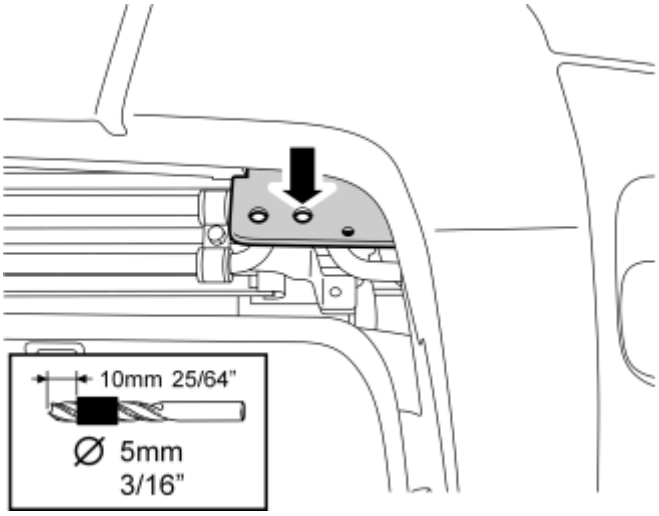

Fig. 190: Identifying 3/16 Inch Hole Drilled To Secure Front Engine Block Heater Socket's Mounting Plate
Courtesy of VOLVO CARS CORPORATION

- Drill a hole with a **5 mm (3/16 ")** diameter drill bit for the screw for securing the front engine block heater socket's mounting plate.

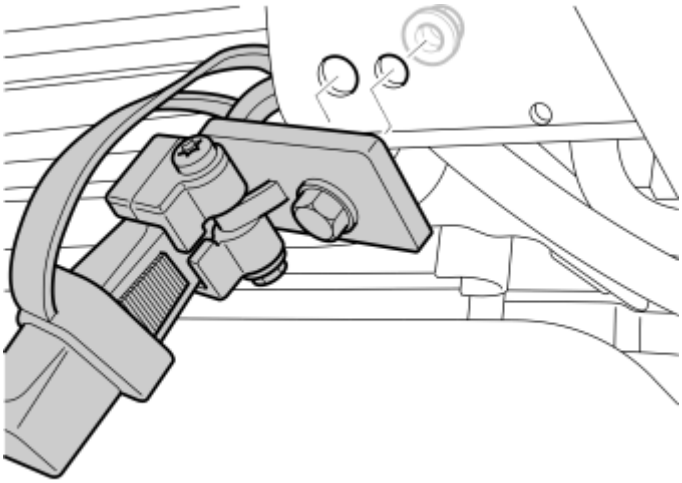

Fig. 191: Securing Front Engine Block Heater Socket
Courtesy of VOLVO CARS CORPORATION

- Secure the front engine block heater socket with a screw and nut in the drilled hole and tighten.

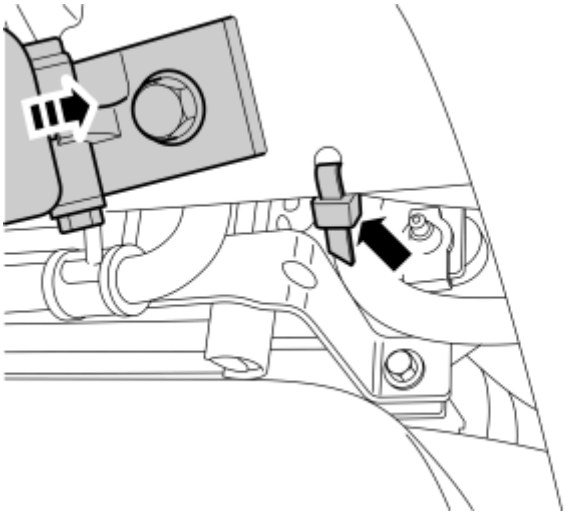

Fig. 192: Securing Cable
Courtesy of VOLVO CARS CORPORATION

- Secure the tie strap in the hole around the front engine block heater socket's cable.
- Fold in the connector so that the cable adopts the correct length in the tie strap before it is tightened.
- Tighten the tie strap.

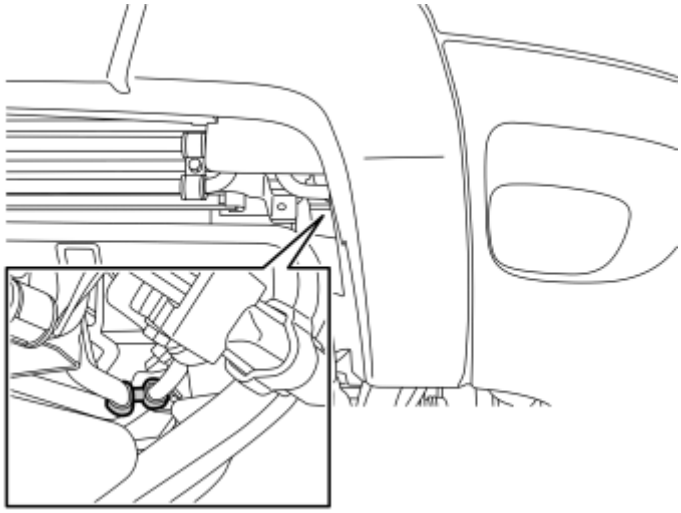

Fig. 193: Identifying Cable Clamped At Pipe
Courtesy of VOLVO CARS CORPORATION

- Clamp the cable in at the pipe for the air conditioning using a double tie strap.
- Remove the cover on the cooling system expansion tank.

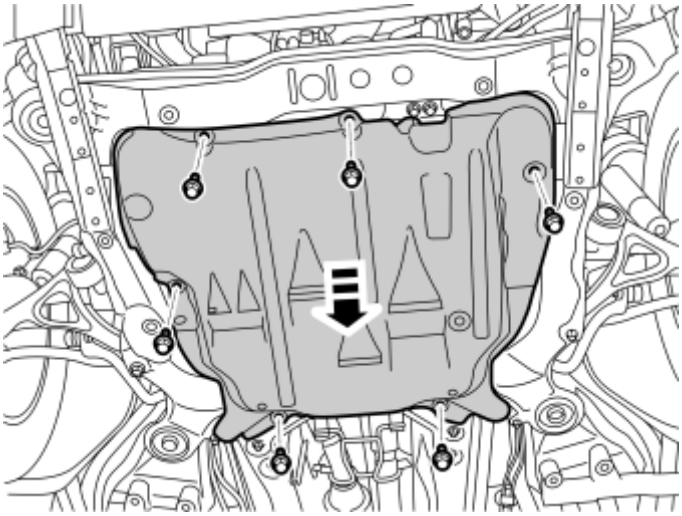

Fig. 194: Identifying Engine Splash Guard
Courtesy of VOLVO CARS CORPORATION

- Remove the engine splash guard.

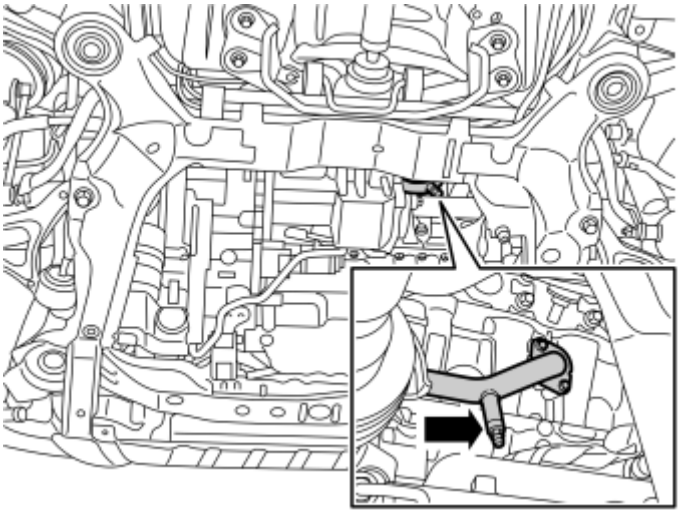

Fig. 195: Identifying Drain Nipple
Courtesy of VOLVO CARS CORPORATION

- Detach the nipple and drain the coolant.
- Retighten the nipple after the coolant has been drained.

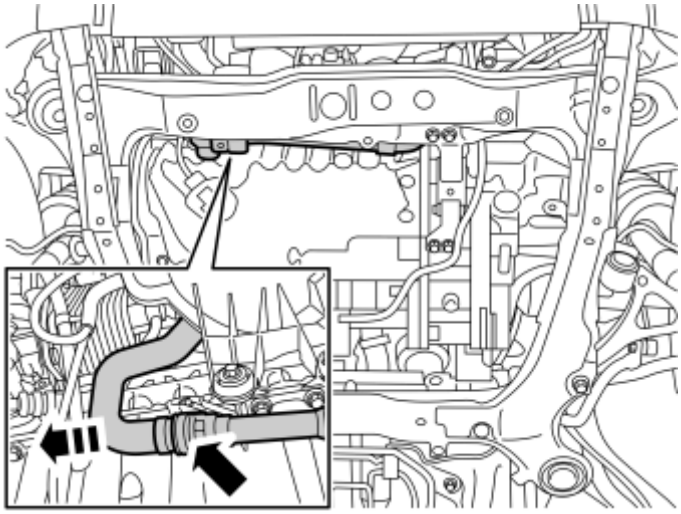

Fig. 196: Rotating Coolant Pipe Catch
Courtesy of VOLVO CARS CORPORATION

- Rotate the catch on the coolant pipe that runs to thermostat housing anticlockwise, pull the hose out and drain the remaining coolant.

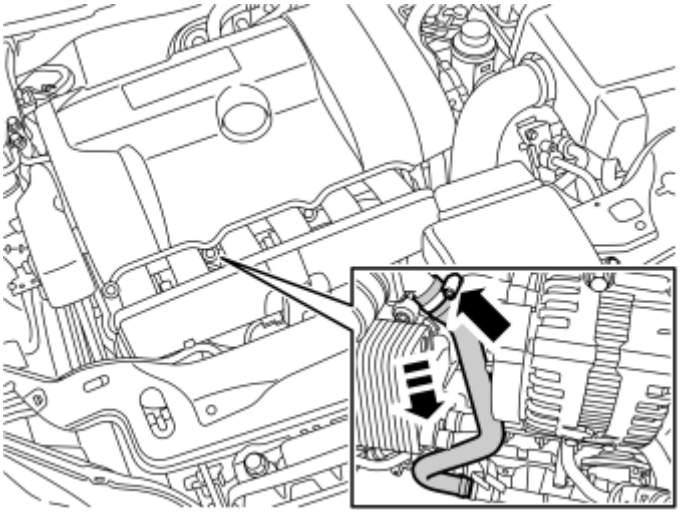

Fig. 197: Detaching Hose Clamp
Courtesy of VOLVO CARS CORPORATION

- Detach the hose clamp on the hose to the thermostat housing inside the intake manifold and remove the hose.

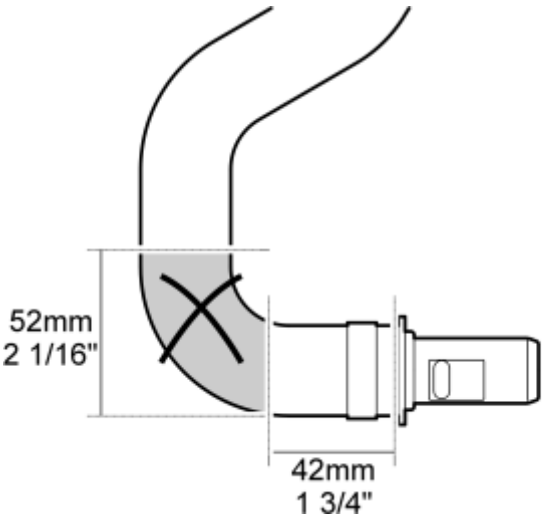

Fig. 198: Removed Hose Cutting Area
Courtesy of VOLVO CARS CORPORATION

- Cut the removed hose as illustrated. First cut to a dimension of **52 mm (1 1/16 ")** .
- Discard the small cut-off hose bend.

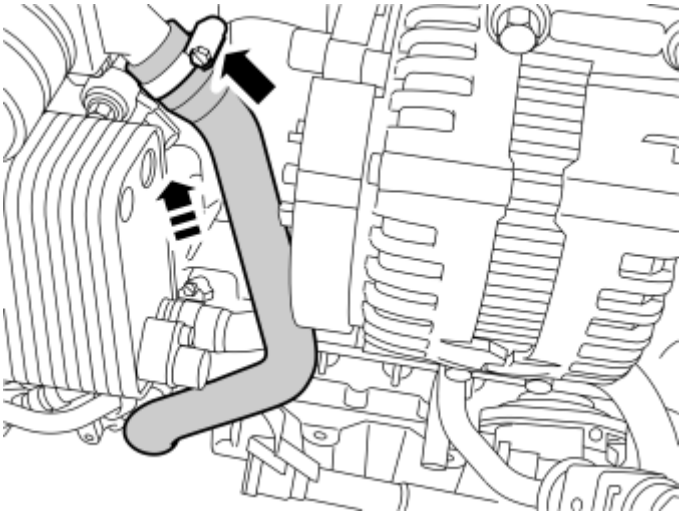

Fig. 199: Installing Coolant Hose
Courtesy of VOLVO CARS CORPORATION

- Reinstall the longer of the hose sections onto the thermostat housing's connection and tighten the hose clamp. Make sure that the cut-out in the upper hose-end fits into the corresponding pin in the pipe connection in the thermostat housing.

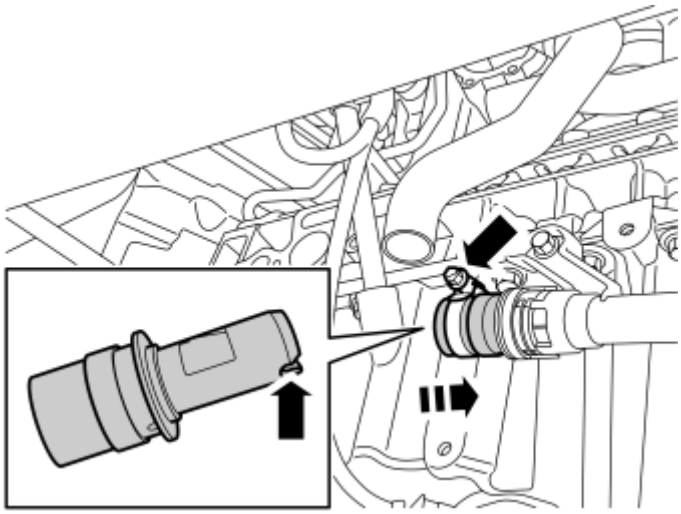

Fig. 200: Connecting Pipes
Courtesy of VOLVO CARS CORPORATION

- Remove the short hose-end and press it on the pipe that runs to the thermostat housing. Make sure that the cut-out in the hose connection is turned down and fits into the corresponding pin in the pipe connection.
- Rotate the catch on the pipe clockwise against the stop.
- Take a hose clamp from the kit and install it on the hose-end.

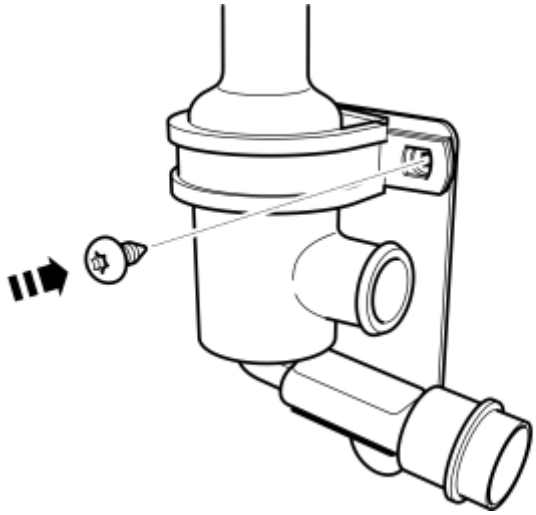

Fig. 201: Bracket Installation Screw
Courtesy of VOLVO CARS CORPORATION

- Take the engine block heater, bracket, rubber coated clamp and screw from the kit and assemble them as illustrated.
- Do not tighten the screw yet.

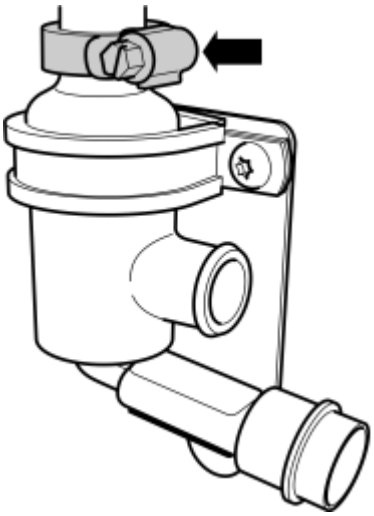

Fig. 202: Installing Hose Clamp
Courtesy of VOLVO CARS CORPORATION

- Take the hose clamp from the kit and fit it onto the engine block heater's upper connection.

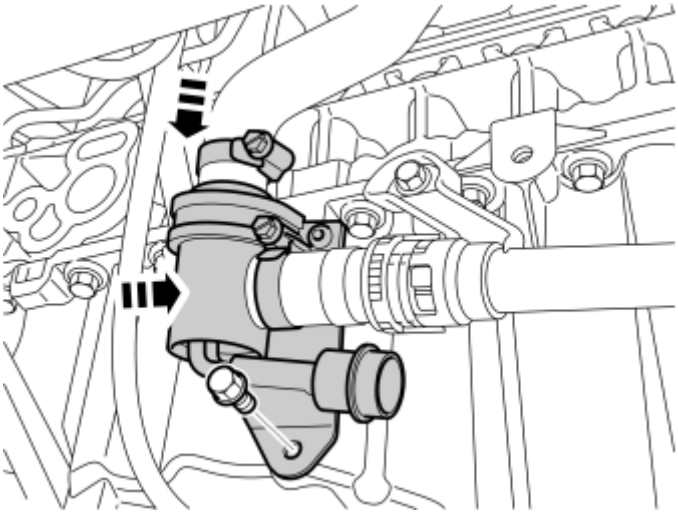

Fig. 203: Positioning Block Heater
Courtesy of VOLVO CARS CORPORATION

- Position the engine block heater with bracket in the front edge of the oil sump and connect both hose-ends to the engine block heater's connections.
- Take a screw from the kit and tighten the bracket with engine block heater into the existing hole in the oil sump.

NOTE: **The screw is self-tapping so inserting it may be slow. Make sure that the screw is centered straight into the hole, so that the screw head is flat against the bracket.**

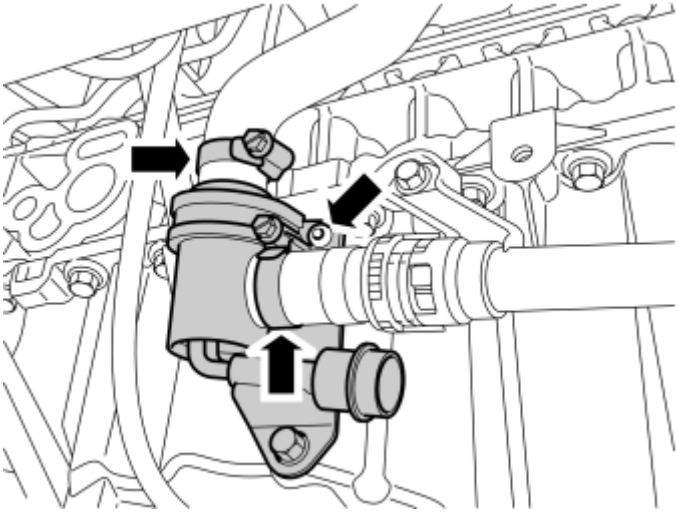

Fig. 204: Adjusting And Ensuring Proper Installation
Courtesy of VOLVO CARS CORPORATION

- Now adjust the engine block heater in the rubber coated clamp so that the hoses are properly fitted on the engine block heater's connections.
- Tighten the screw to the rubber coated clamp.

- Tighten the hose clamps to the engine block heater.

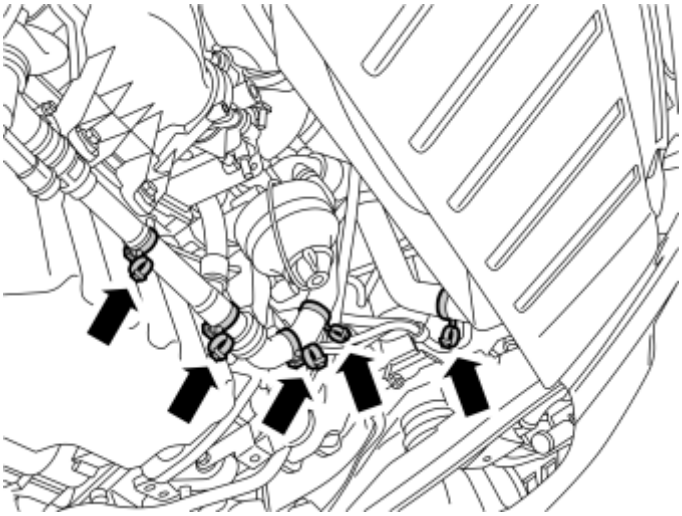

Fig. 205: Securing Hose With Tie Straps
Courtesy of VOLVO CARS CORPORATION

- Take five double tie straps from the kit and secure them on the pipe and hose to the thermostat housing as well as the lower hose to the radiator.
- Check that the cable does not chafe against sharp edges or moving parts in the engine compartment.

CAUTION: Do not clamp the cable directly to brake pipes, fuel lines, AC pipes or pipes to the power steering.

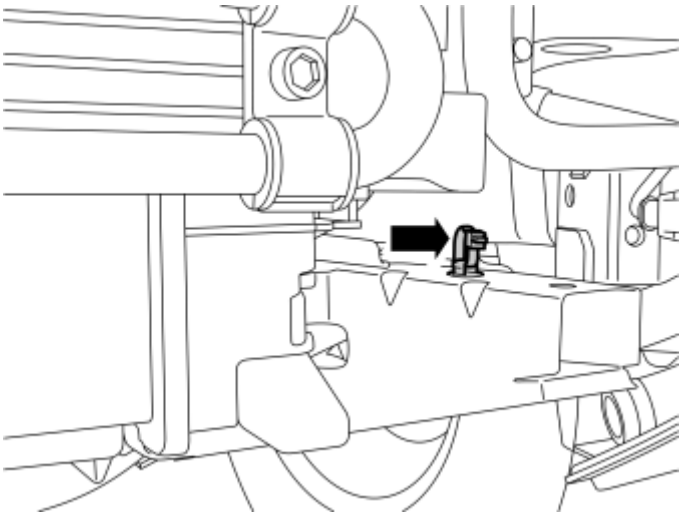

Fig. 206: Installing Tie Strap With Clip
Courtesy of VOLVO CARS CORPORATION

- Take a tie strap equipped with clip and press it into the hole on the top of the left-hand bracket for the skid plate.

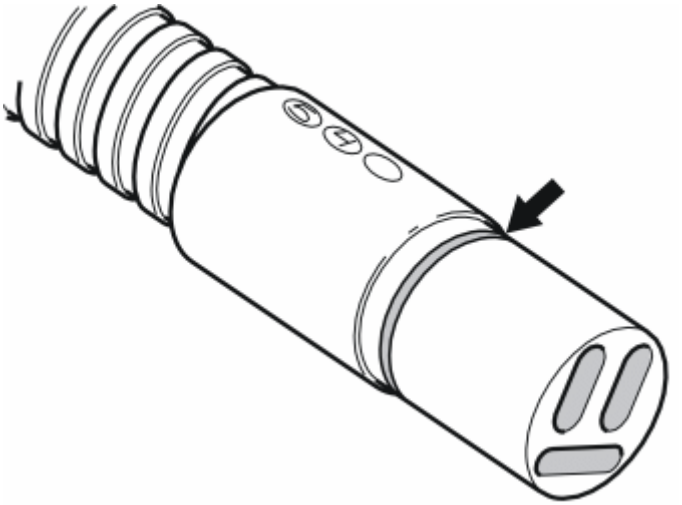

Fig. 207: Identifying O-Ring
Courtesy of VOLVO CARS CORPORATION

- Grease in the O-ring on the connector on the cable to the front engine block heater socket, use low temperature grease **P/N 1161427** .

NOTE: Do not get any grease on the surfaces of the connector.

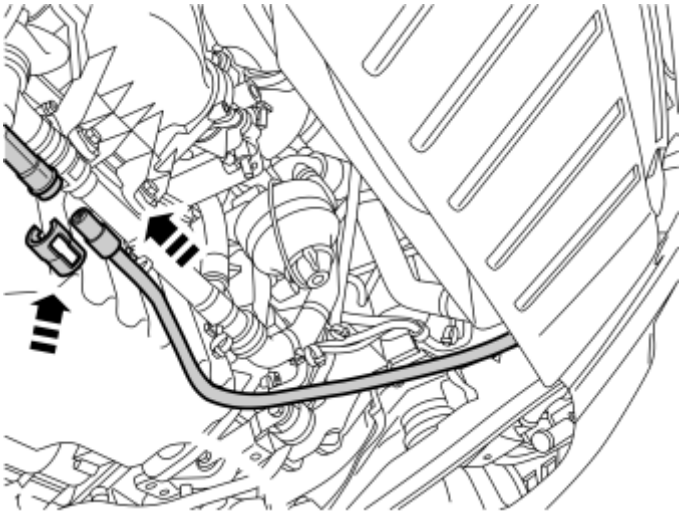

Fig. 208: Installing Locking Sleeve
Courtesy of VOLVO CARS CORPORATION

- Connect the cable in the engine block heater and press it in firmly.
- Press a locking sleeve from the kit over the cable splice.

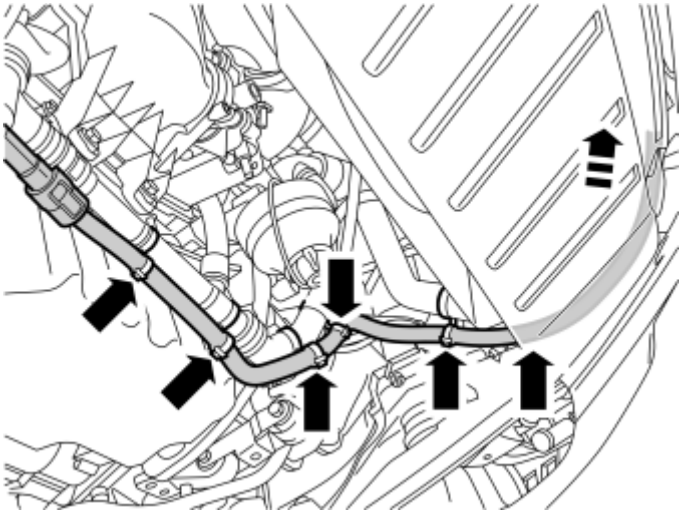

Fig. 209: Securing Joint Cable With Tie Straps
Courtesy of VOLVO CARS CORPORATION

- Clamp the joint cable from the engine block heater into the recently installed tie straps. Clamp up all excess cable around the tie strap on the top of the skid plate bracket.
- If necessary, use another tie strap for clamping the cable behind the skid plate.

- Fill with coolant, run the engine to operating temperature, bleed the cooling system and check that there are no leaks.
- Top up the cooling system as required.
- Reinstall the engine splash guard and torque tighten the screws to **25 Nm (18.5 lbf. ft.)** .

ELECTRIC ENGINE BLOCK HEATER, 230V, 6-CYL (2007-2012)

ELECTRIC ENGINE BLOCK HEATER, 230V, 6-CYL

PREPARATIONS

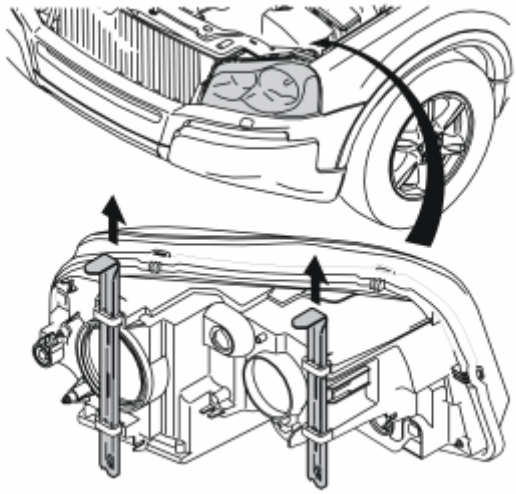

Fig. 210: Detach Left-Hand Headlamp By Pulling Up Two Locking Pins
Courtesy of VOLVO CARS CORPORATION

- Detach the left-hand headlamp by pulling up the two locking pins and then carefully pulling away the headlamp forwards.

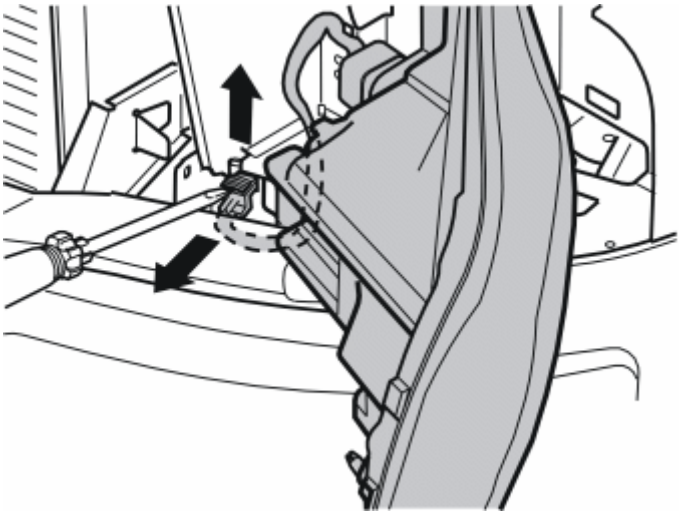

Fig. 211: Carefully Prize Up Catch On Connector For Headlamp With A Screwdriver
Courtesy of VOLVO CARS CORPORATION

- Carefully prize up the catch on the connector for the headlamp using a screwdriver.
- Pull the catch up completely, detach the connector and place the headlamp to one side.

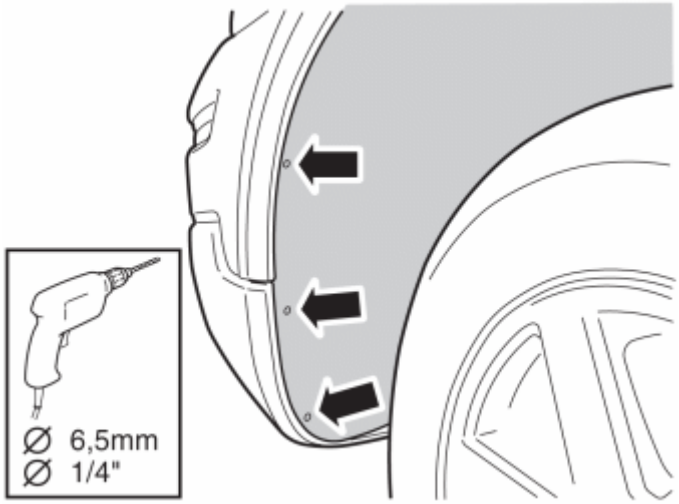

Fig. 212: Drilling Out Three Rivets From Front Edge Of Left Wing Liner
Courtesy of VOLVO CARS CORPORATION

For cars with fuel-driven parking heater installed.

- Drill out the three rivets from the front edge of the left wing liner.

- Remove the remains of the rivets.
- Move the wing liner aside and fasten it so that the parking heater is accessible.

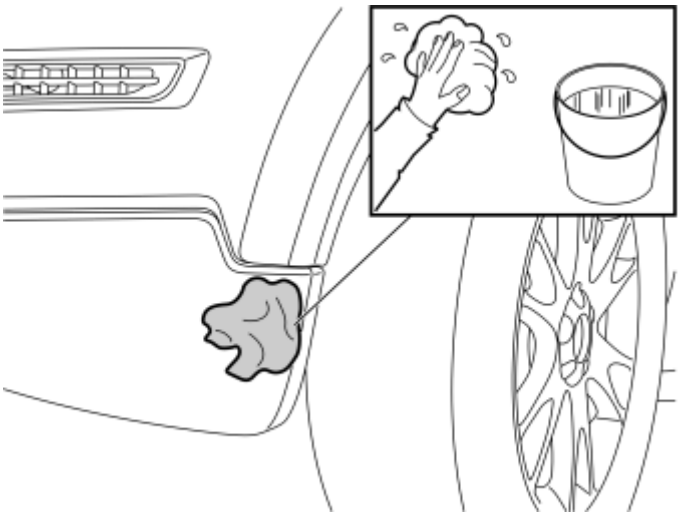

Fig. 213: Clean Bumper Cover Where Front Engine Block Heater Socket Shall Be Secured
Courtesy of VOLVO CARS CORPORATION

- Clean the surface on the bumper cover where the front engine block heater socket will be secured.

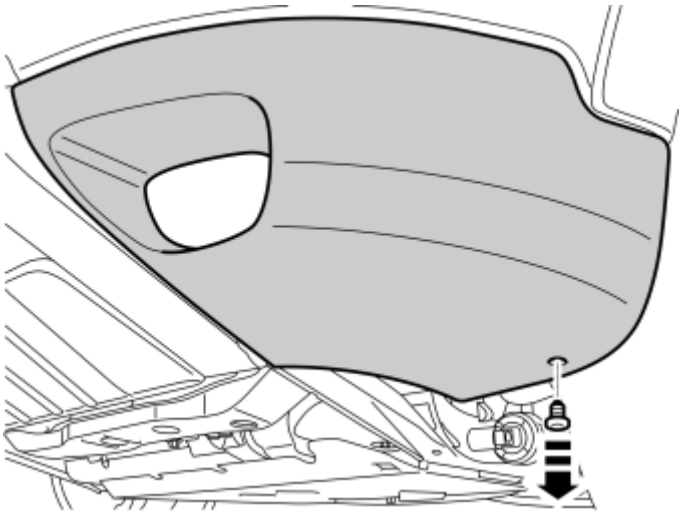

Fig. 214: Clip On Panel For Front Fog Lamp
Courtesy of VOLVO CARS CORPORATION

- Remove the clip on the panel for the front fog lamp.

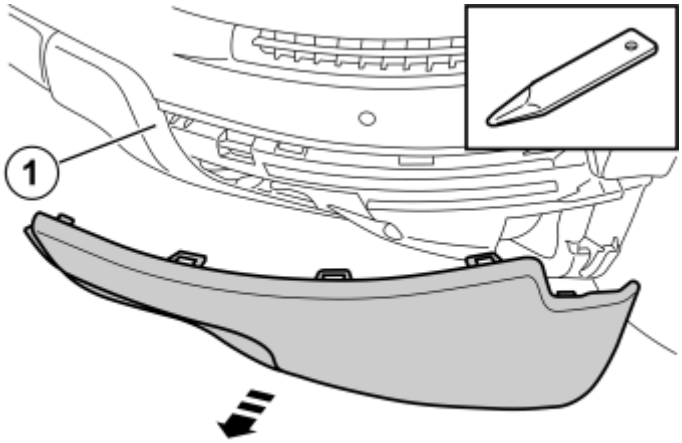

Fig. 215: Removing Panel Over Fog Lamp By Carefully Prying It Loose From Bumper Shell With A Weatherstrip Tool
Courtesy of VOLVO CARS CORPORATION

- Remove the panel over the fog lamp by carefully prying it loose from the bumper shell with a weatherstrip tool. The panel is held in place with catches. The corner (1) of the other panel section must be pried loose since it overlaps the panel.

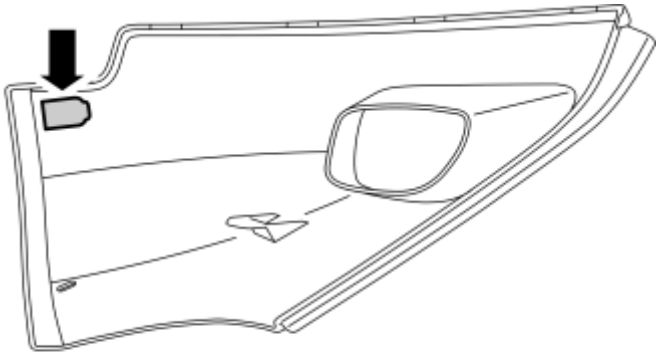

Fig. 216: Marking On Inside Of Panel
Courtesy of VOLVO CARS CORPORATION

- Cut out according to the existing marking on the inside of the panel for the protective cover for the front engine block heater socket.
- Test and cut until the protective cover fits.

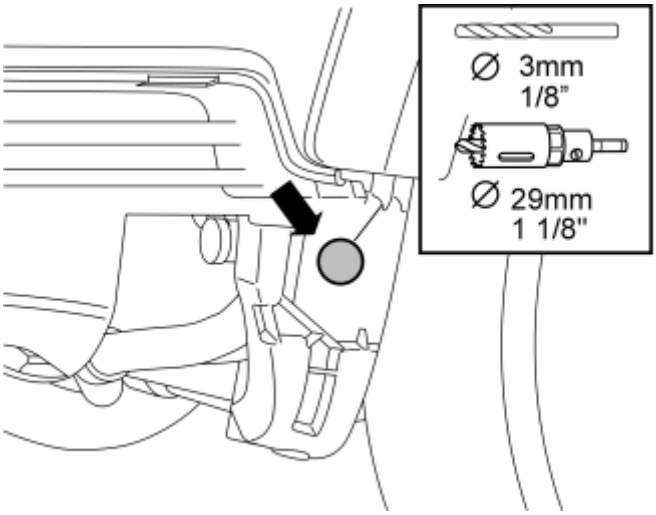

Fig. 217: Drilling A 29 MM (1 1/8 inches) Diameter Hole Using A Hole Saw According To Existing Marking In Lower Edge Of Bumper Cover
Courtesy of VOLVO CARS CORPORATION

- Drill a **29 mm (1 1/8 ")** diameter hole using a hole saw according to the existing marking in the lower edge of the bumper cover. Pre-drill using a **3mm (1/8 ")** diameter drill bit.

NOTE: **It is important that the hole is drilled right in the center of the marking in order to correspond with the hole cut out earlier.**

- Even out the hole edges and remove the drill shavings.

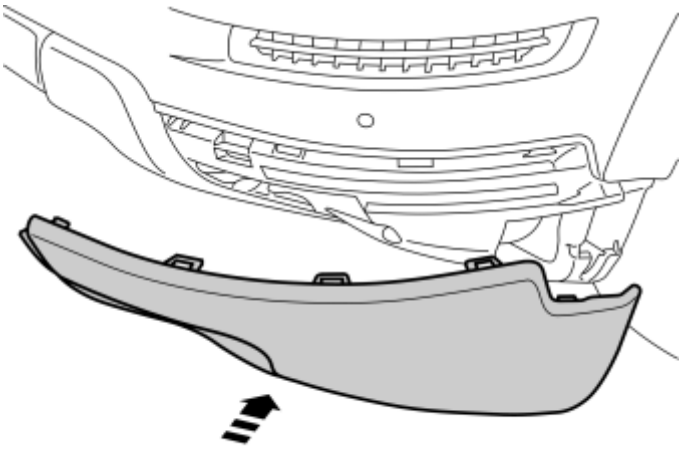

Fig. 218: Front Fog Lamp Panel
Courtesy of VOLVO CARS CORPORATION

- Reinstall the front fog lamp panel.

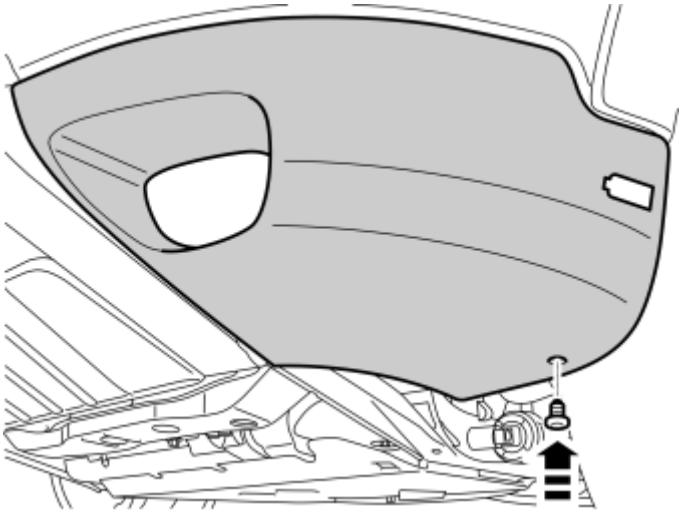

Fig. 219: Clip Into Panel
Courtesy of VOLVO CARS CORPORATION

- Press the clip into the panel.

INSTALLING THE FRONT ENGINE BLOCK HEATER SOCKET

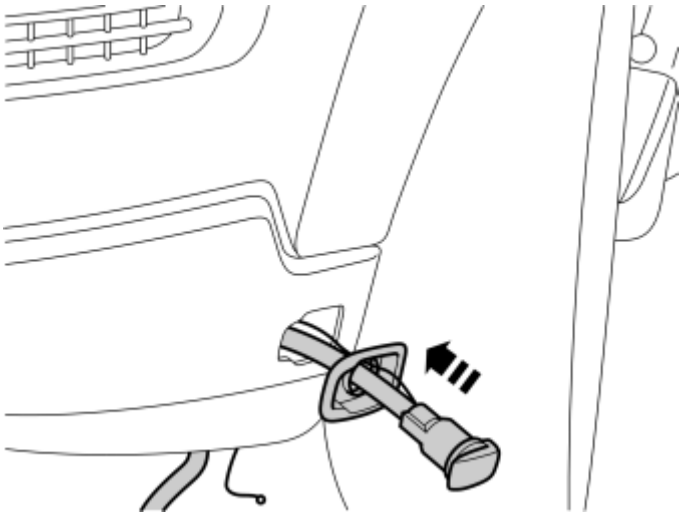

Fig. 220: Take Protective Cover From Kit And Press It Into Hole Cut In Bumper Cover
Courtesy of VOLVO CARS CORPORATION

- Press the protective cover (from the kit) into place in the hole cut in the bumper cover.
- Insert the cable for the front engine block heater socket together with the ground lead from the kit through the protective cover.

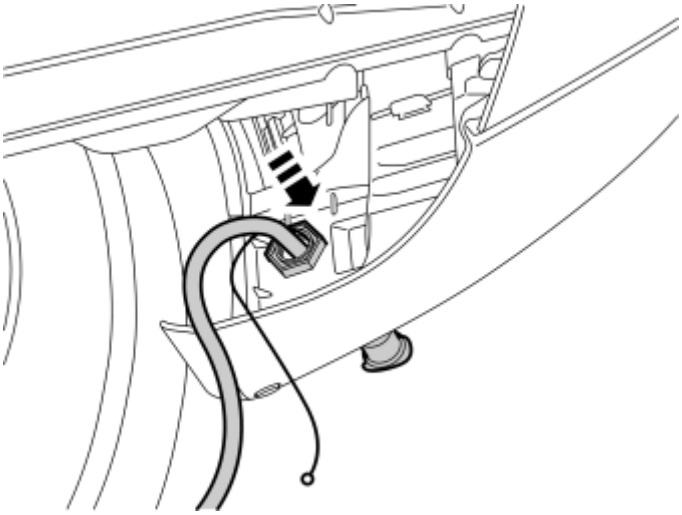

Fig. 221: Take Cable For Front Engine Block Heater Socket With Ground Lead From Kit & Thread Them Through Protective Cover
Courtesy of VOLVO CARS CORPORATION

Illustrations A and B

- Install the nut from the kit.
- Rotate the connector for the front engine block heater socket so that the cover opens backwards (Illustration B).
- Plug the electrical connector into the front engine block heater socket. Use the connector as a counterhold when tightening.
- Tighten the front engine block heater socket to the bumper cover.
- Remove the cover on the cooling system expansion tank.

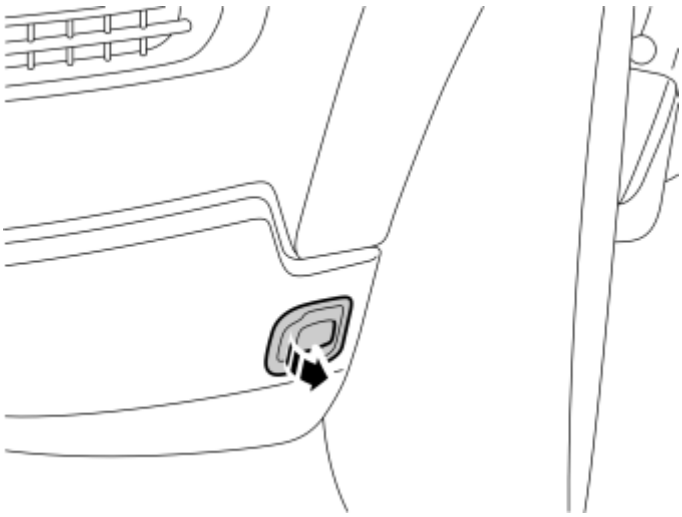

Fig. 222: Rotate Connector For Front Engine Block Heater Socket So That Cover Opens Backwards
Courtesy of VOLVO CARS CORPORATION

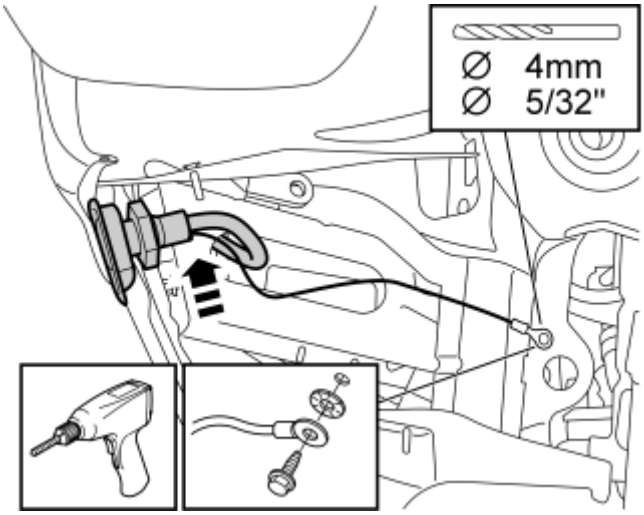

Fig. 223: Drill A Hole In Front/Lower Edge Of Side Member With 4 MM (5/32") Bit
Courtesy of VOLVO CARS CORPORATION

- Drill a hole in the front/lower edge of the side member with a **4 mm (5/32")** bit.
- Apply anti-corrosion agent to the edges of the holes and secure the ground cable with the enclosed **4.8 mm (3/16")** flanged screw and toothed washer.

NOTE: Connect the ground cable to the side member, not to the subframe.

- Secure the excess ground cable length with a tie strap from the kit.
- Guide the cable for the front engine block heater socket up where the headlamp was located.

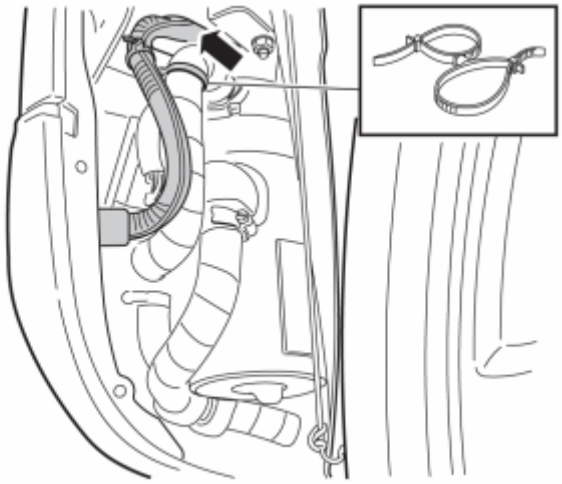

Fig. 224: Cable On Front Intake
Courtesy of VOLVO CARS CORPORATION

For cars with fuel-driven parking heater installed.

- Route the cable to the front intake and ground cable along the parking heater induction pipe. Secure them

to the pipe with a double tie strap.

- Route the cables to the underside of the bracket beneath the headlamp.

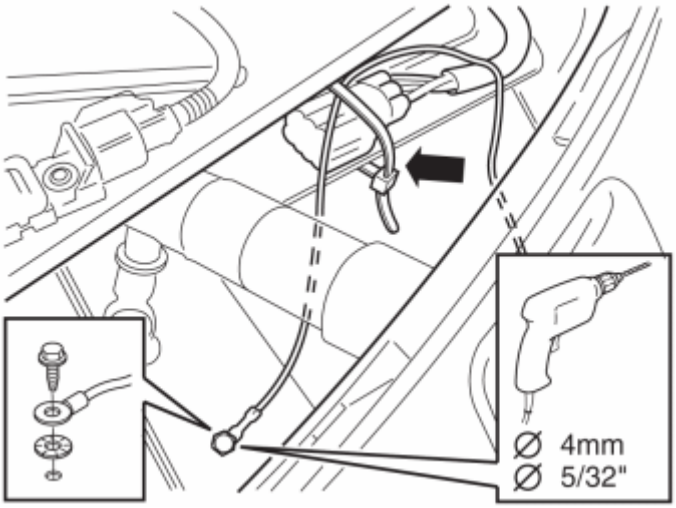

Fig. 225: Drilling A Hole In Front/Top Edge Of Side Member With 4 MM (5/32") Bit
Courtesy of VOLVO CARS CORPORATION

- Drill a hole in the front/top edge of the side member with a **4 mm (5/32")** bit.
- Apply anti-corrosion agent to the edges of the holes and secure the ground cable with the enclosed **4.8 mm (3/16")** flanged screw and toothed washer.
- Secure the excess length of ground cable with a tie strap from the kit. Clamp it at the grey connectors of the parking heater.

INSTALLING THE ENGINE BLOCK HEATER

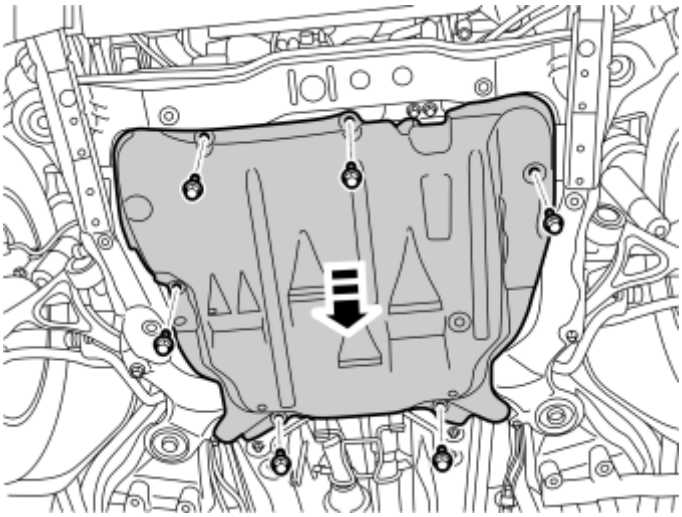

Fig. 226: Identifying Engine Splash Guard
Courtesy of VOLVO CARS CORPORATION

- Remove the engine splash guard.

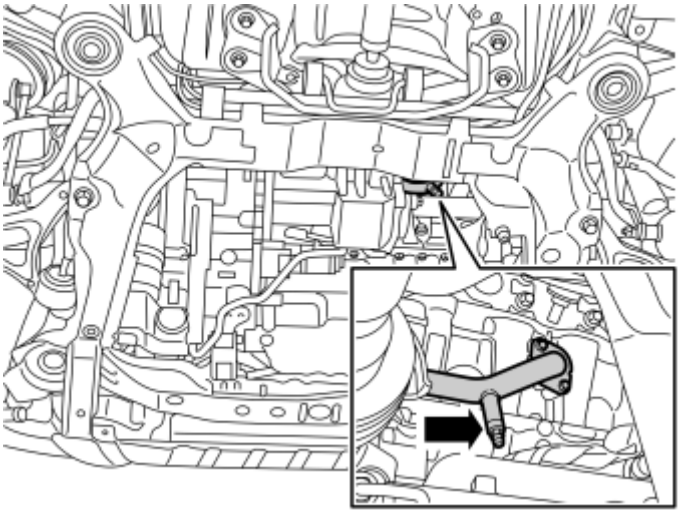

Fig. 227: Coolant Drain Nipple
Courtesy of VOLVO CARS CORPORATION

- Detach the nipple and drain the coolant.
- Retighten the nipple after the coolant has been drained.

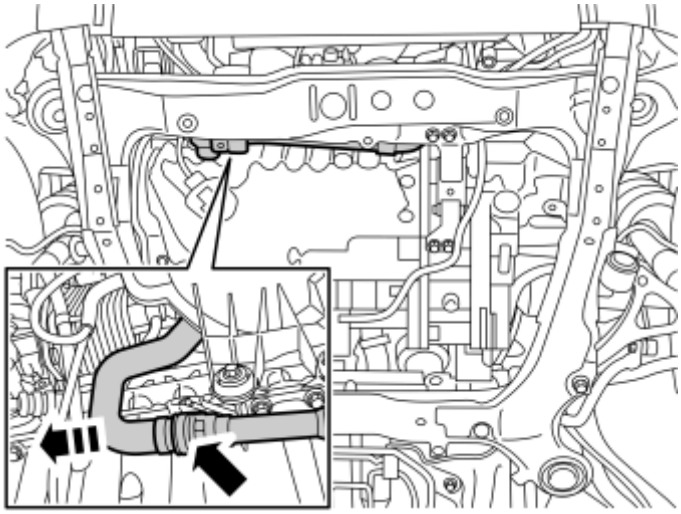

Fig. 228: Rotating Coolant Pipe Catch
Courtesy of VOLVO CARS CORPORATION

- Turn the catch on the coolant pipe that runs to the thermostat housing anticlockwise and pull out the hose.

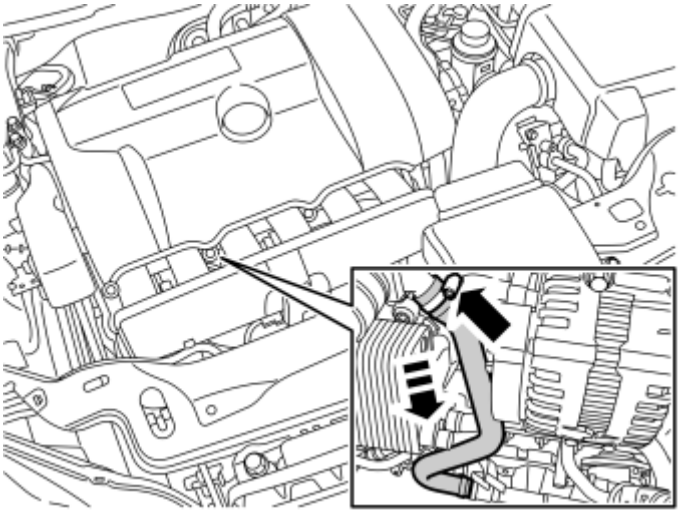

Fig. 229: Removing Hose Clamp
Courtesy of VOLVO CARS CORPORATION

- Detach the hose clamp on the hose to the thermostat housing inside the intake manifold and remove the hose.

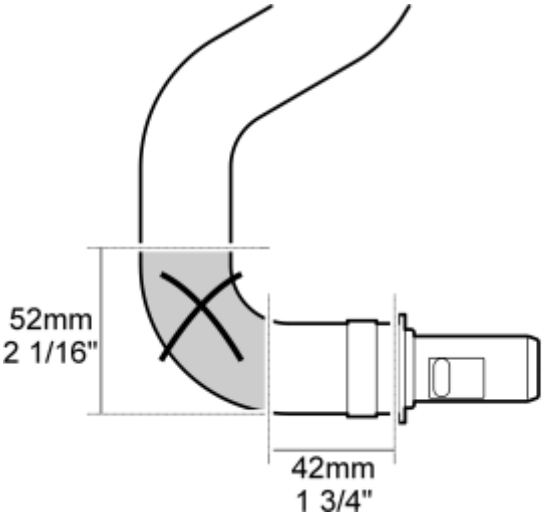

Fig. 230: Removed Hose Cutting Area
Courtesy of VOLVO CARS CORPORATION

- Cut the removed hose as illustrated. First cut to a dimension of **52 mm (1 1/16 ")** .
- Discard the small cut-off hose bend.

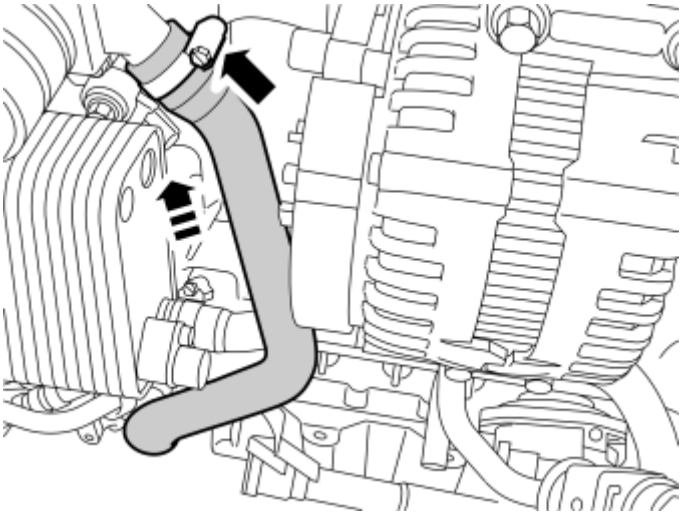

Fig. 231: Installing Coolant Hose
Courtesy of VOLVO CARS CORPORATION

- Reinstall the longer of the hose sections onto the thermostat housing's connection and tighten the hose clamp. Make sure that the cut-out in the upper hose-end fits into the corresponding pin in the pipe connection in the thermostat housing.

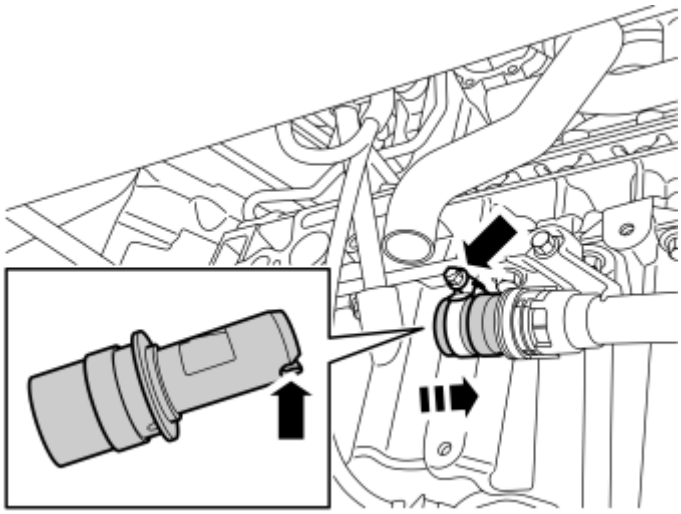

Fig. 232: Connecting Pipe Connection
Courtesy of VOLVO CARS CORPORATION

- Remove the short hose-end and press it on the pipe that runs to the thermostat housing. Make sure that the cut-out in the hose connection is turned down and fits into the corresponding pin in the pipe connection.
- Rotate the catch on the pipe clockwise against the stop.
- Take a hose clamp from the kit and install it on the hose-end.

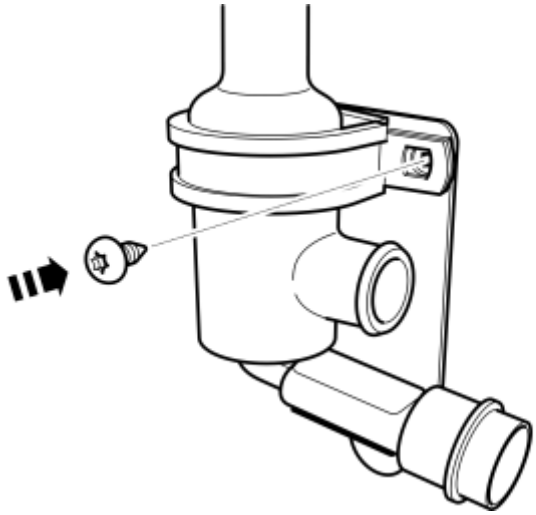

Fig. 233: Bracket Mounting Screw
Courtesy of VOLVO CARS CORPORATION

- Take the engine block heater, bracket, rubber coated clamp and screw from the kit and assemble them as illustrated.
- Do not tighten the screw yet.

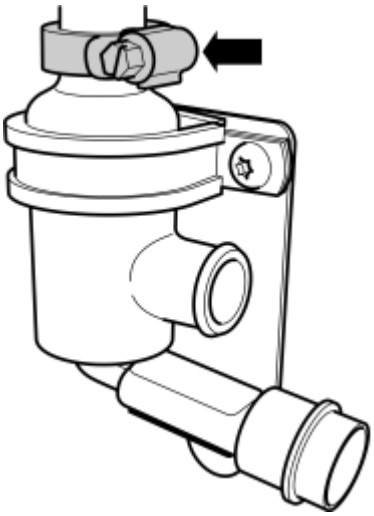

Fig. 234: Installing Hose Clamp
Courtesy of VOLVO CARS CORPORATION

- Take a hose clamp from the kit and fit it onto the engine block heater's upper connection.

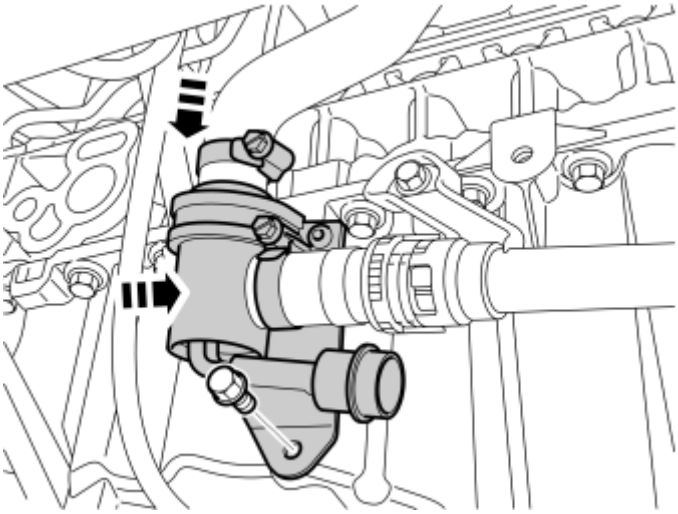

Fig. 235: Positioning Block Heater
Courtesy of VOLVO CARS CORPORATION

- Position the engine block heater with bracket in the front edge of the oil sump and connect both hose-ends to the engine block heater's connections.
- Take a screw from the kit and tighten the bracket with engine block heater into the existing hole in the oil sump.

NOTE: **The screw is self-tapping so inserting it may be slow. Make sure that the screw is centered straight into the hole, so that the screw head is flat against the bracket.**

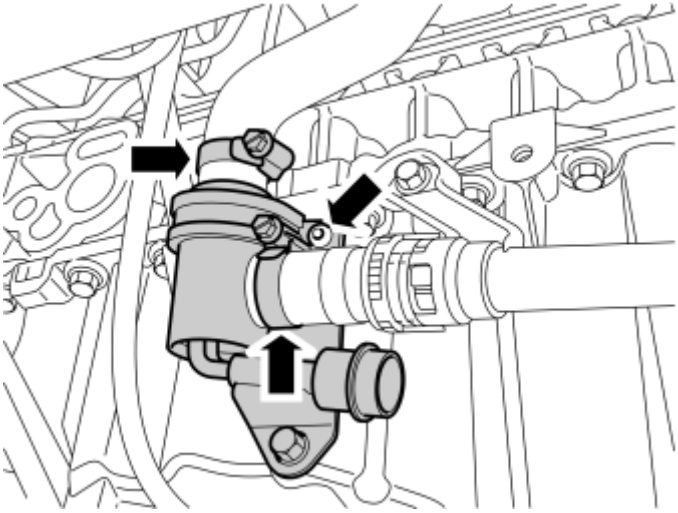

Fig. 236: Positioning Block Heater
Courtesy of VOLVO CARS CORPORATION

- Now adjust the engine block heater in the rubber coated clamp so that the hoses are properly fitted on the engine block heater's connections.
- Tighten the screw to the rubber coated clamp.

- Tighten the hose clamps to the engine block heater.

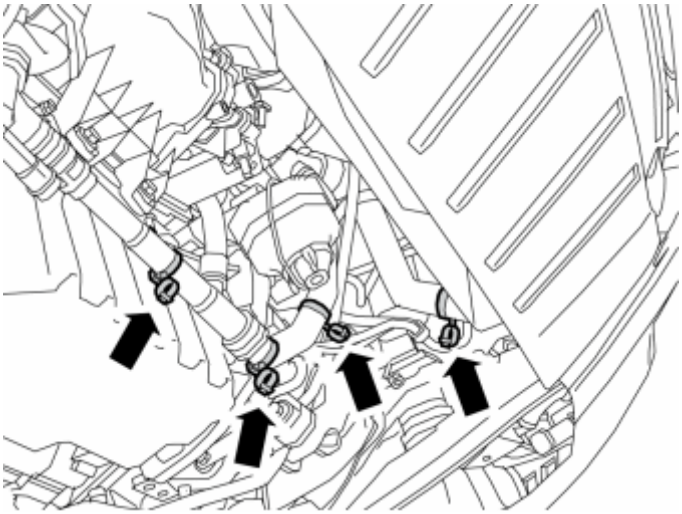

Fig. 237: Securing Hose With Tie Straps
Courtesy of VOLVO CARS CORPORATION

- Take four double tie straps from the kit and secure them on the pipe and hose to the thermostat housing as well as the lower hose to the radiator.
- Check that the cable does not chafe against sharp edges or moving parts in the engine compartment.

CAUTION: Do not clamp the cable directly to brake pipes, fuel lines, AC pipes or pipes to the power steering.

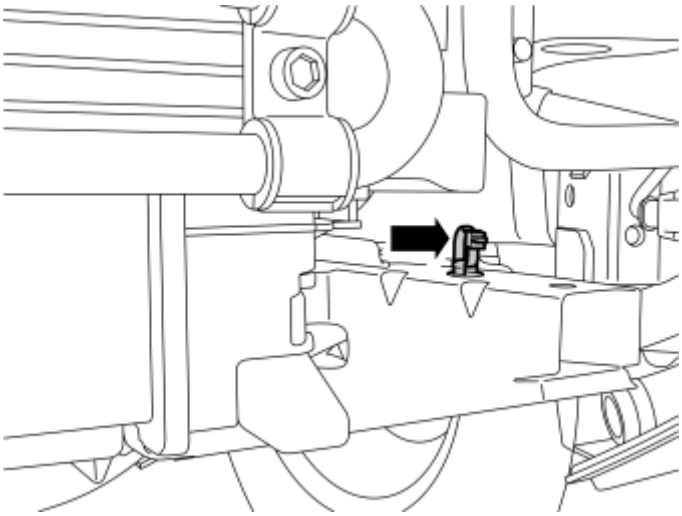

Fig. 238: Installing Tie Strap With Clip
Courtesy of VOLVO CARS CORPORATION

- Take a tie strap equipped with clip and press it into the hole on the top of the left-hand bracket to the skid plate.

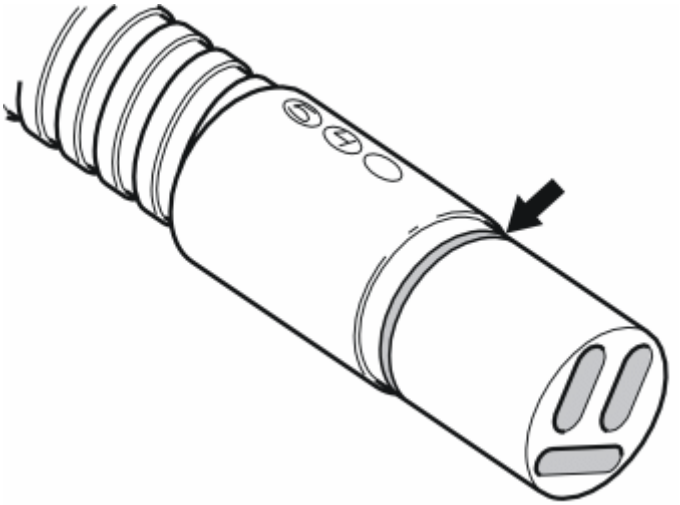

Fig. 239: Identifying O-Ring
Courtesy of VOLVO CARS CORPORATION

- Take the joint cable from the kit.
- Grease in the O-ring on the connector on the cable to the front engine block heater socket, use low temperature grease **P/N 1161427** .

NOTE: Do not get any grease on the surfaces of the connector.

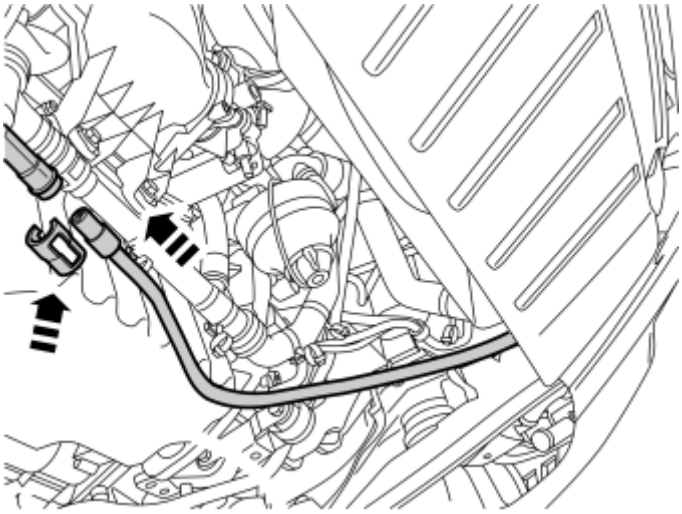

Fig. 240: Installing Locking Sleeve
Courtesy of VOLVO CARS CORPORATION

- Connect the joint cable in the engine block heater and press it in firmly.
- Press a locking sleeve from the kit over the cable splice.

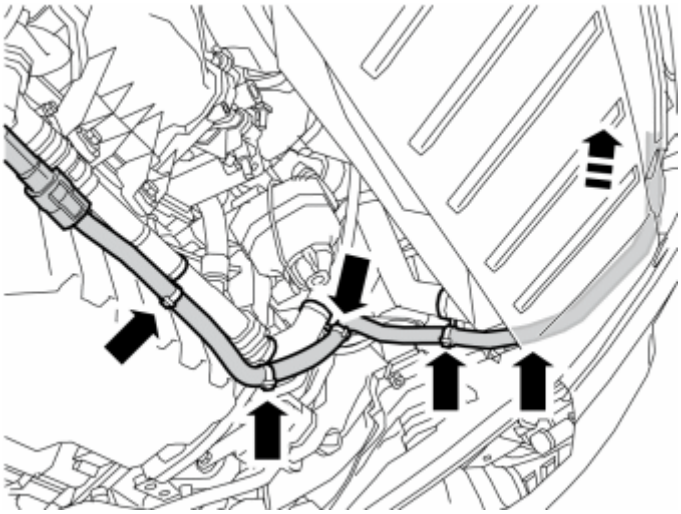

Fig. 241: Securing Cable With Tie Straps
Courtesy of VOLVO CARS CORPORATION

- Clamp the joint cable from the engine block heater into the recently installed tie straps and route it up to the location for the headlamp. The cable must be routed up on the outside of the left-hand side member.

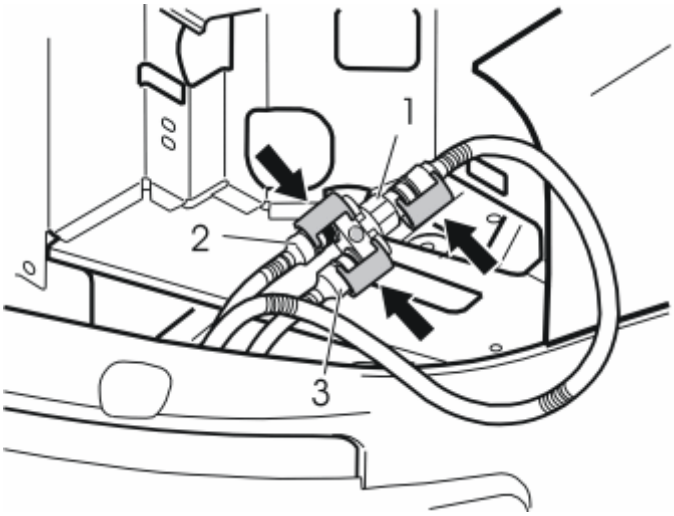

Fig. 242: Installing Branch Connector
Courtesy of VOLVO CARS CORPORATION

Applies when fitting passenger compartment connector at the same time

- If the car is equipped with passenger compartment connector then the branch connector is to be installed now.

Connect:

- socket (1) on the branch connector to the cable for the front engine block heater socket.
- sockets (2, and 3) on the branch connector to any of the cables for the engine block heater and branch connector.

Illustration A

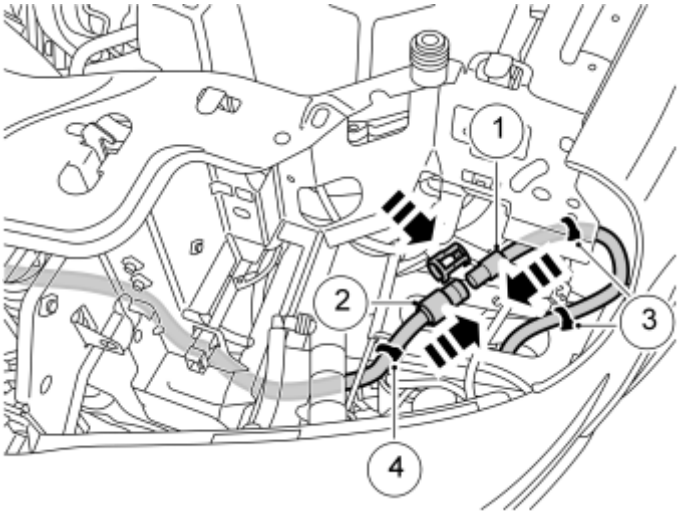

Fig. 243: Installing Locking Sleeve Over Cable Splice
Courtesy of VOLVO CARS CORPORATION

This cable joint must be secured under the headlamp's lower bracket (Illustration B).

- Connect the cable from the front engine block heater socket (1) to the recently routed joint cable (2) from the electric engine block heater and press the connectors together firmly.
- Press in a locking sleeve from the kit over the cable splice.
- Take tie straps (3) from the kit and clamp in the cable for the front engine block heater socket into the holes in the plates.
- Clamp the joint cable using a tie strap (4) into the hole in the plate.

Illustration B

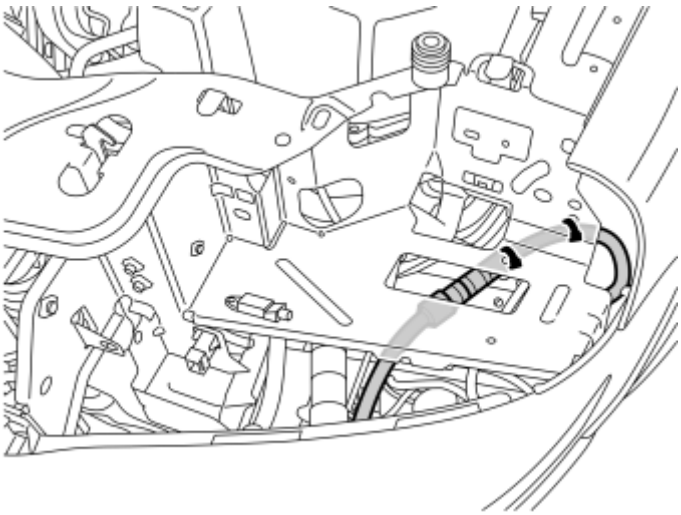

Fig. 244: Installing Cable Under Plate
Courtesy of VOLVO CARS CORPORATION

- Take a tie strap from the kit and clamp the cable joint on the underside of the headlamp's lower bracket. Use the rear of the two holes in the bracket.

FINISHING WORK

- Connect and reinstall the left-hand headlamp.
- **For cars with fuel-driven heater:** Reposition the left wing liner and rivet it in place.
- Fill with coolant, run the engine to operating temperature, bleed the cooling system and check that there are no leaks.
- Top up the cooling system as required.
- Reinstall the engine splash guard and torque tighten the screws to **25 Nm (18.5 lbf. ft.)** .

ELECTRIC ENGINE BLOCK HEATER, 230V, 8 CYL (B8444S; 2005-2011)

ELECTRIC ENGINE BLOCK HEATER 230V, 8 CYL (2005-2009)

PREPARATIONS

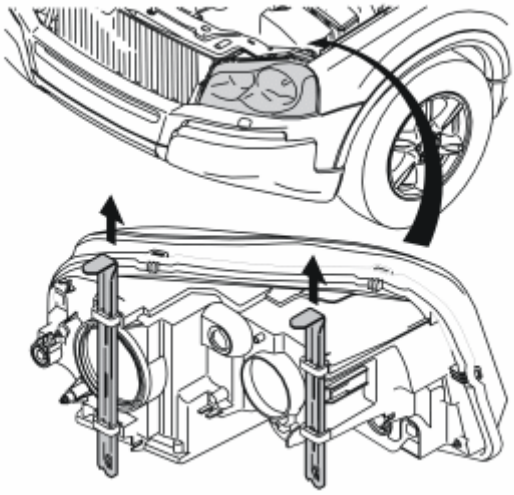

Fig. 245: Detach Left-Hand Headlamp By Pulling Up Two Locking Pins
Courtesy of VOLVO CARS CORPORATION

- Detach the left-hand headlamp by pulling up the two locking pins and then carefully pulling away the headlamp forwards.

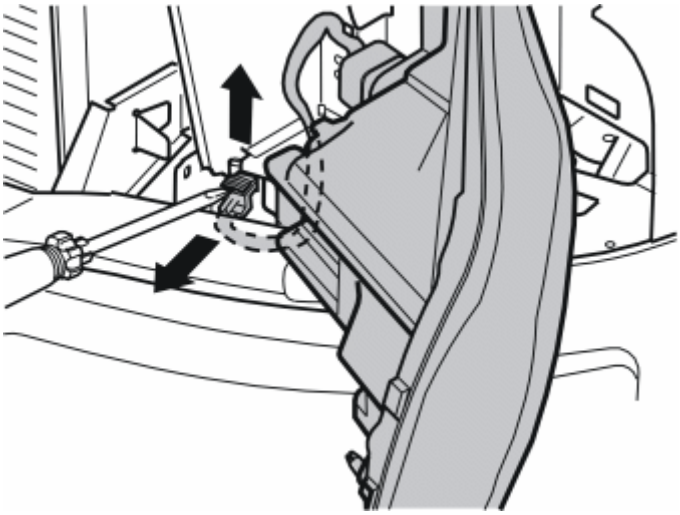

Fig. 246: Carefully Prize Up Catch On Connector For Headlamp With A Screwdriver
Courtesy of VOLVO CARS CORPORATION

- Carefully prize up the catch on the connector for the headlamp using a screwdriver.
- Pull the catch up completely, detach the connector and place the headlamp to one side.

INSTALLING THE FRONT ENGINE BLOCK HEATER SOCKET

UP TO AND INCLUDING MODEL YEAR -2006

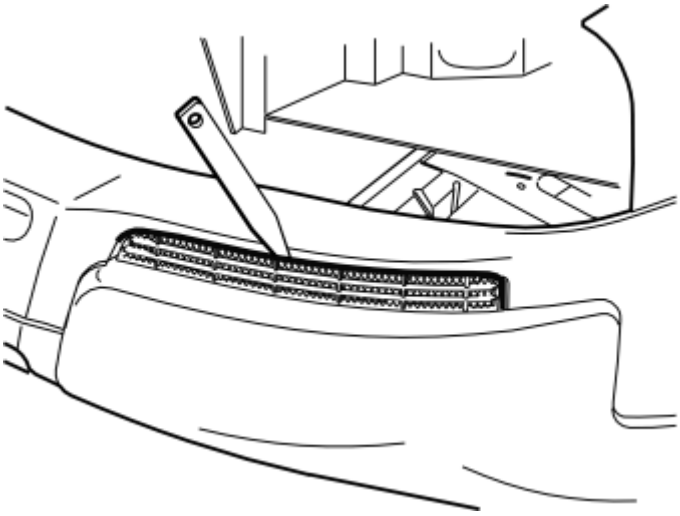

Fig. 247: Remove Left-Hand Grille From Bumper By Carefully Prying It Away With A Weatherstrip Tool
Courtesy of VOLVO CARS CORPORATION

- Remove the left-hand grille from the bumper by carefully prizing it away with a weatherstrip tool.

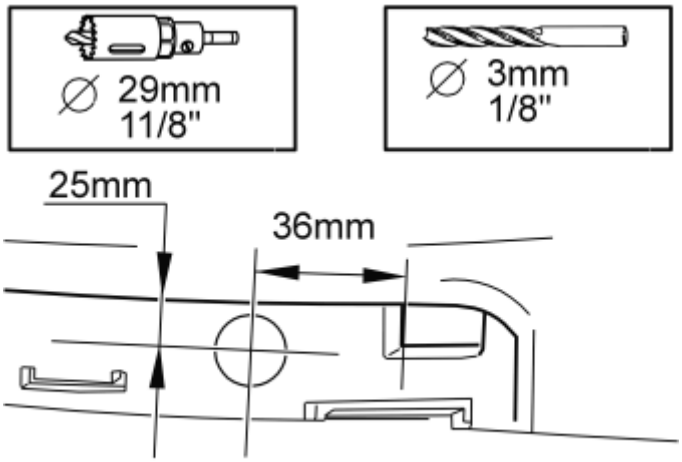

Fig. 248: Measure Out For Drilling Front Socket Hole
Courtesy of VOLVO CARS CORPORATION

- Measure out for drilling the front socket hole as illustrated.
- Pre-drill the hole using a **3 mm (1/8")** bit.
- Drill out the hole. Use a **29 mm (1 1/8")** diameter hole saw.
- Remove any shavings.

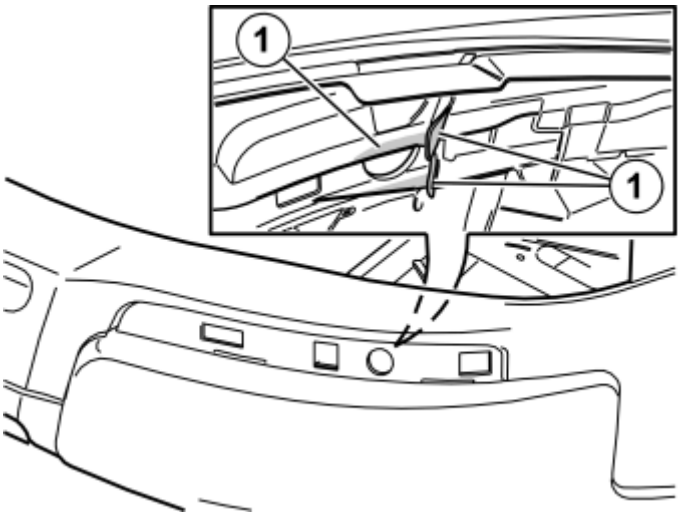

Fig. 249: Cutting Out Discs
Courtesy of VOLVO CARS CORPORATION

- Take a utility knife and cut out the discs (1) in such a way that they are equally as high. The plastic nut for the front socket then has a flat surface to be tightened against.

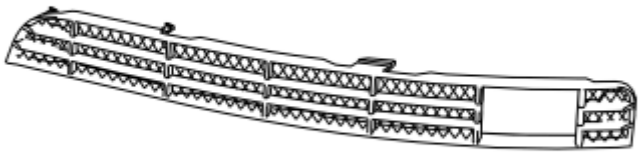

Fig. 250: Left-Hand Grille Of Bumper
Courtesy of VOLVO CARS CORPORATION

- Saw or cut out for the front socket connector in the second hole from the left in the left-hand grille of the bumper.
- Even off the edges.
- Press the grille into the bumper.

Illustration A

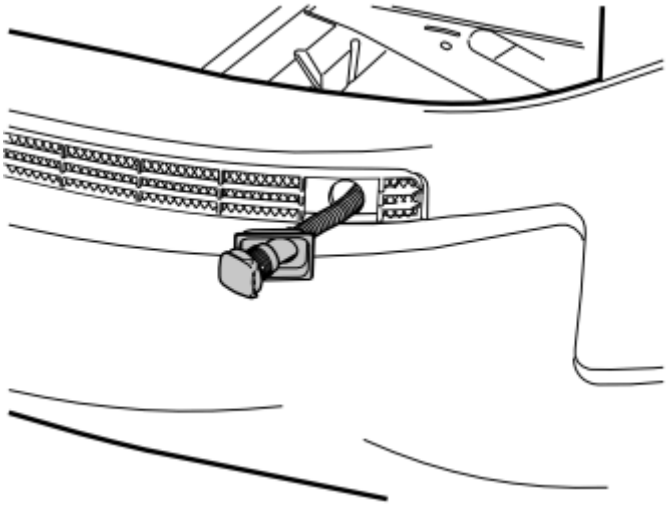

Fig. 251: Identifying Blind Cover Plug
Courtesy of VOLVO CARS CORPORATION

- Take the front socket, protective cover and plastic nut from the kit.
- Fit the protective cover onto the front socket's connector. Turn the connector so that the cover is opened to the left-hand side of the car as illustrated.

Illustration B

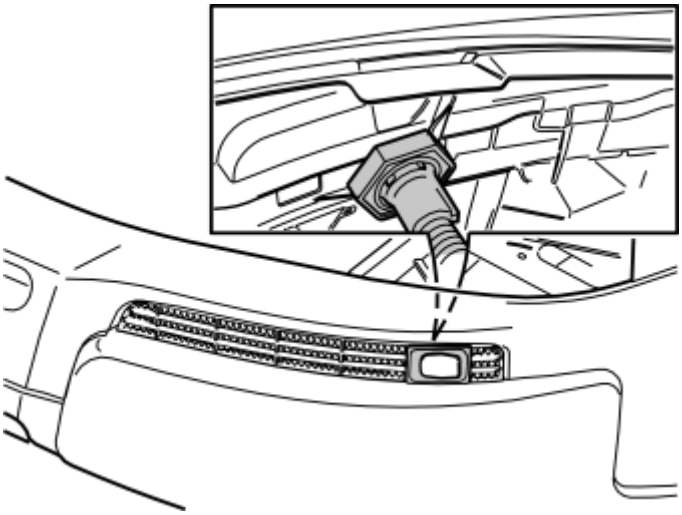

Fig. 252: Identifying Plastic Nut
Courtesy of VOLVO CARS CORPORATION

- Install the plastic nut.
- Tighten the plastic nut firmly. Connect the cable to the front socket for counterholding when the plastic nut is tightened.
- Guide down the front socket ground cable on the left-hand side of the left-hand side member.

FROM AND INCLUDING MODEL YEAR 2007-

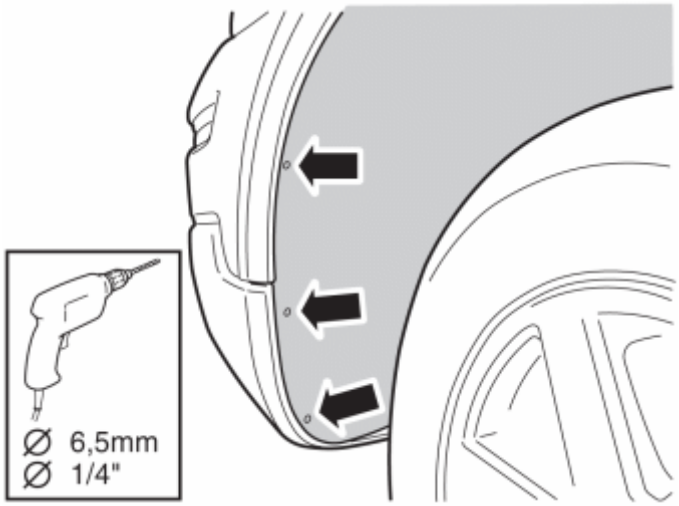

Fig. 253: Drilling Out Three Rivets From Front Edge Of Left Wing Liner
Courtesy of VOLVO CARS CORPORATION

Applies to cars with fuel-driven parking heater installed.

- Drill out the three rivets from the front edge of the left wing liner.
- Remove the remains of the rivets.
- Move the wing liner aside and fasten it so that the parking heater is accessible.

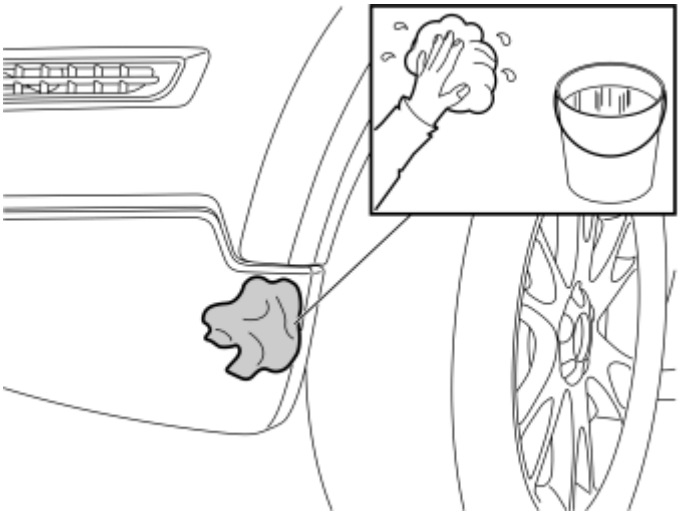

Fig. 254: Clean Bumper Cover Where Front Engine Block Heater Socket Shall Be Secured
Courtesy of VOLVO CARS CORPORATION

- Clean the bumper cover where the front engine block heater socket shall be secured.

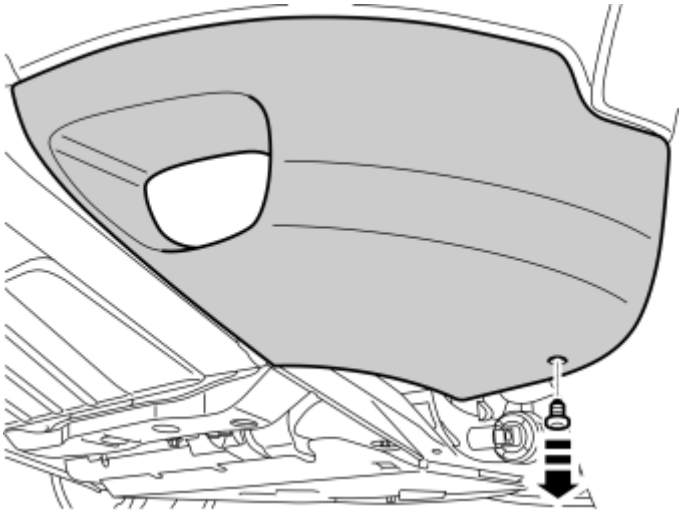

Fig. 255: Clip On Panel For Front Fog Lamp
Courtesy of VOLVO CARS CORPORATION

- Remove the clip on the panel for the front fog lamp.

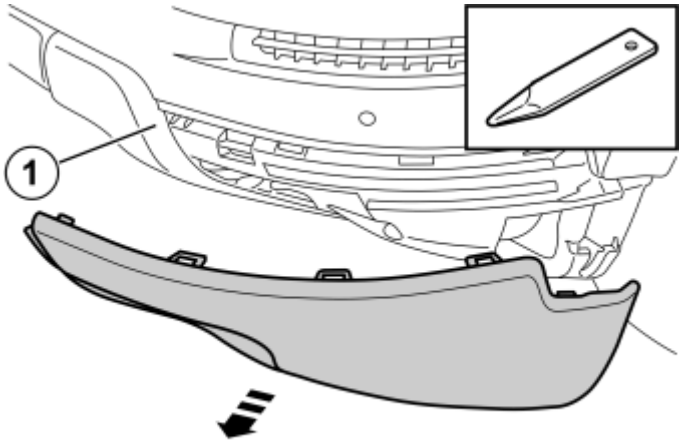

Fig. 256: Removing Panel Over Fog Lamp By Carefully Prying It Loose From Bumper Shell With A Weatherstrip Tool
Courtesy of VOLVO CARS CORPORATION

- Remove the panel above the front fog lamp by carefully prizing it loose from the bumper cover using a weatherstrip tool. The panel is secured all round with catches.

  The corner (1) of the second panel section must be pried loose as it overlaps the panel.

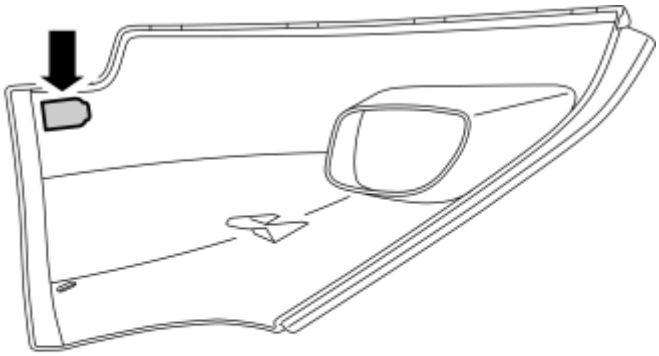

Fig. 257: Marking On Inside Of Panel
Courtesy of VOLVO CARS CORPORATION

- Cut out according to the existing marking on the inside of the panel for the protective cover for the front engine block heater socket.
- Test and cut until the protective cover fits.

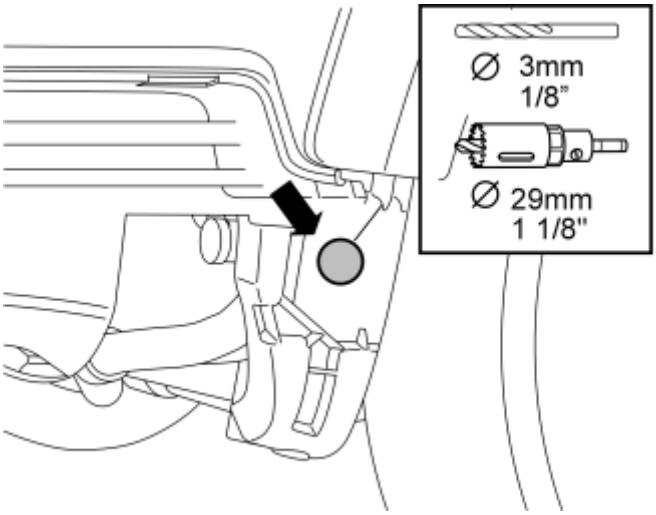

Fig. 258: Drilling A 29 MM (1 1/8 inches) Diameter Hole Using A Hole Saw According To Existing Marking In Lower Edge Of Bumper Cover
Courtesy of VOLVO CARS CORPORATION

- Drill a **29 mm (1 1/8 ")** diameter hole using a hole saw according to the existing marking in the lower edge of the bumper cover. Pre-drill using a **3mm (1/8 ")** diameter drill bit.

NOTE: **It is important that the hole is drilled right in the center of the marking in order to correspond with the hole cut out earlier.**

- Even out the hole edges and remove the drill shavings.

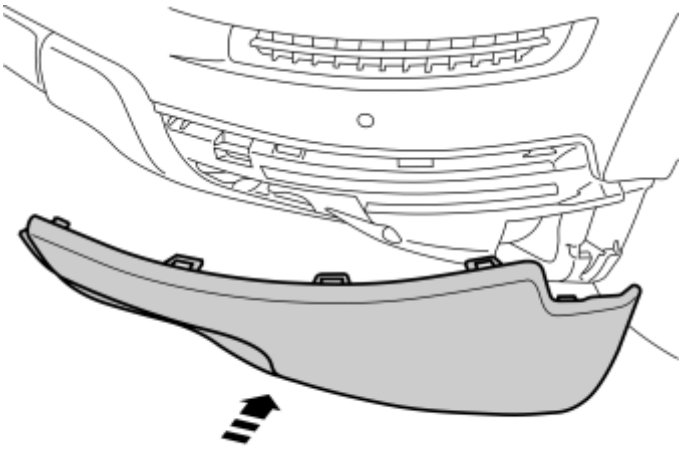

Fig. 259: Front Fog Lamp Panel
Courtesy of VOLVO CARS CORPORATION

- Reinstall the front fog lamp panel.

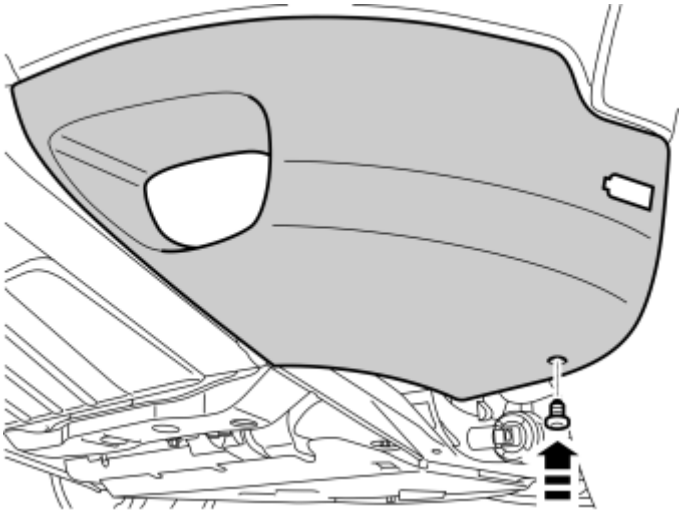

Fig. 260: Clip Into Panel
Courtesy of VOLVO CARS CORPORATION

- Press the clip into the panel.

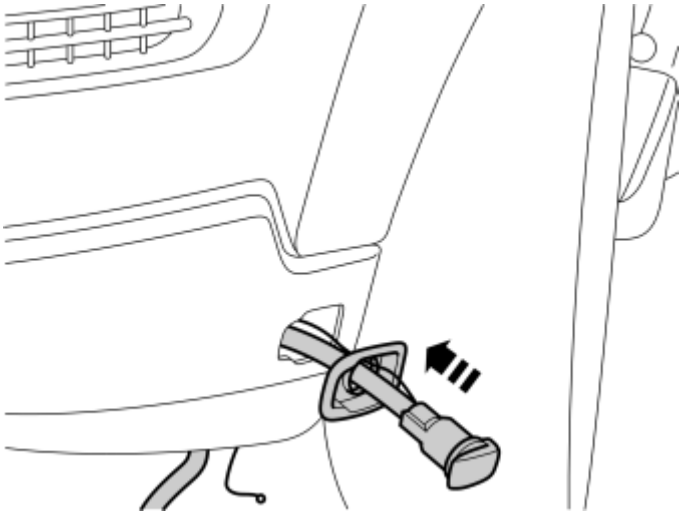

Fig. 261: Take Protective Cover From Kit And Press It Into Hole Cut In Bumper Cover
Courtesy of VOLVO CARS CORPORATION

- Take the protective cover from the kit and press it into the hole cut in the bumper cover.
- Take the cable for the front engine block heater socket with ground lead from the kit and thread them through the protective cover.

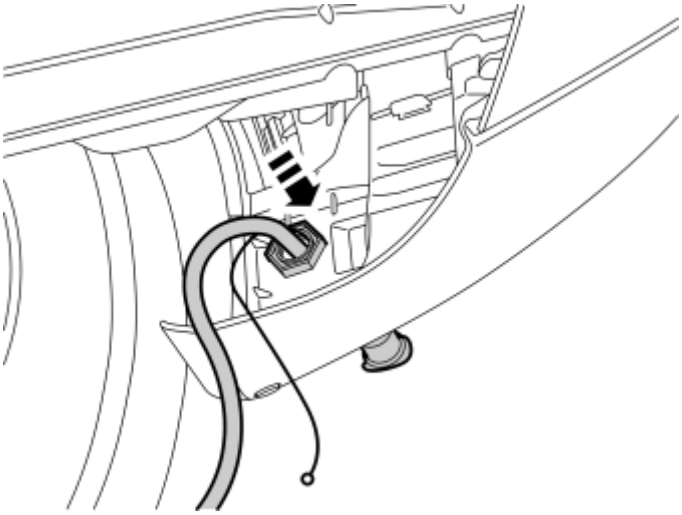

Fig. 262: Take Cable For Front Engine Block Heater Socket With Ground Lead From Kit & Thread Them Through Protective Cover
Courtesy of VOLVO CARS CORPORATION

Illustrations A and B

- Install the nut from the kit.
- Rotate the connector for the front engine block heater socket so that the cover opens backwards (Illustration B).
- Tighten the front engine block heater socket to the bumper cover.
- Plug the electrical connector into the front engine block heater socket. Use the connector as a counterhold when tightening.
- Remove the cover on the radiator expansion tank.

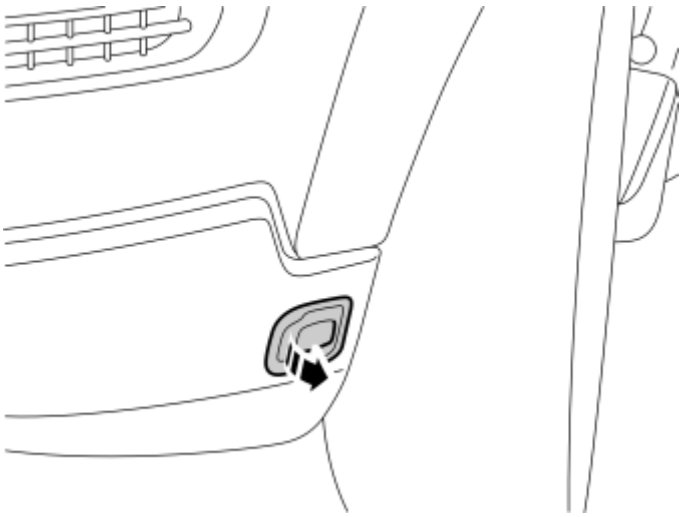

Fig. 263: Rotate Connector For Front Engine Block Heater Socket So That Cover Opens Backwards
Courtesy of VOLVO CARS CORPORATION

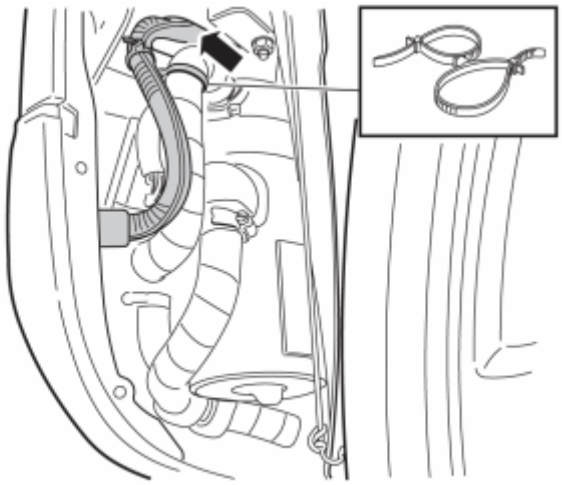

Fig. 264: Cable On Front Intake
Courtesy of VOLVO CARS CORPORATION

For cars with fuel-driven parking heater installed.

- Route the cable to the front intake with the ground cable along the parking heater induction pipe. Secure them to the pipe with a double tie strap.
- Route the cables to the underside of the bracket beneath the headlamp.

Applies to cars without fuel-driven parking heater

- Route the front intake cable to the underside of the bracket beneath the headlamp.

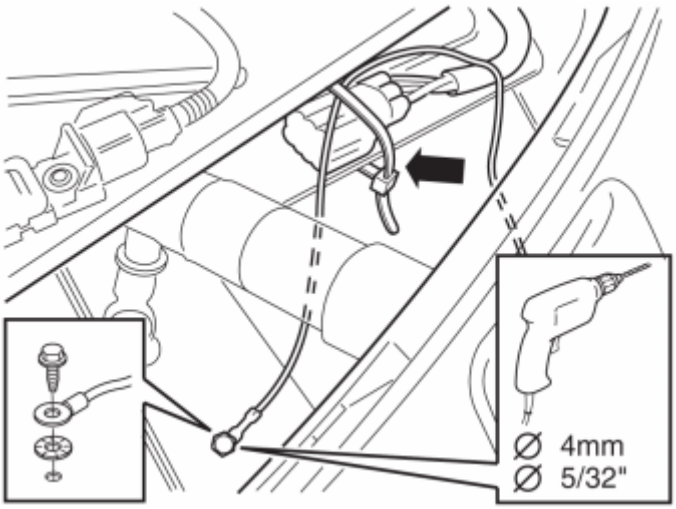

Fig. 265: Drilling A Hole In Front/Top Edge Of Side Member With 4 MM (5/32") Bit
Courtesy of VOLVO CARS CORPORATION

Applies to cars with fuel-driven parking heater installed.

- Drill a hole in the front/top edge of the side member with a **4 mm (5/32")** bit.

- Apply anti-corrosion agent to the edges of the holes and secure the ground cable with the enclosed **4.8 mm (3/16")** flanged screw and toothed washer.
- Secure the excess length of ground cable with a tie strap from the kit. Clamp it at the grey connectors of the parking heater.

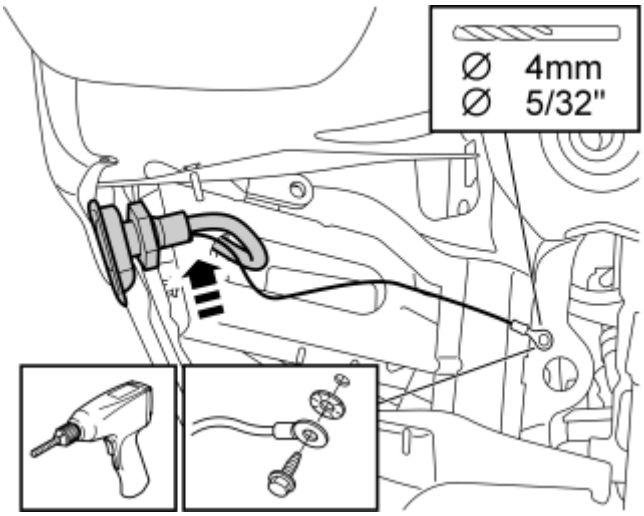

Fig. 266: Drill A Hole In Front/Lower Edge Of Side Member With 4 MM (5/32") Bit
Courtesy of VOLVO CARS CORPORATION

- Drill a hole in the front/lower edge of the side member with a **4 mm (5/32")** bit.
- Apply anti-corrosion agent and secure the ground cable with the enclosed **4.8 mm (3/16")** flanged screw and toothed washer.

NOTE: Connect the ground cable to the side member, not to the subframe.

- Secure the excess ground cable length with a tie strap from the kit.

INSTALLING THE ENGINE BLOCK HEATER

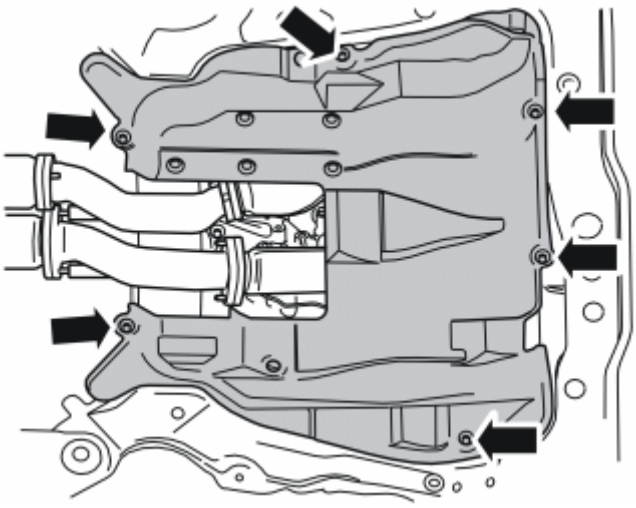

Fig. 267: Engine Splash Guard And Screws
Courtesy of VOLVO CARS CORPORATION

- Remove the six screws and the engine splash guard.

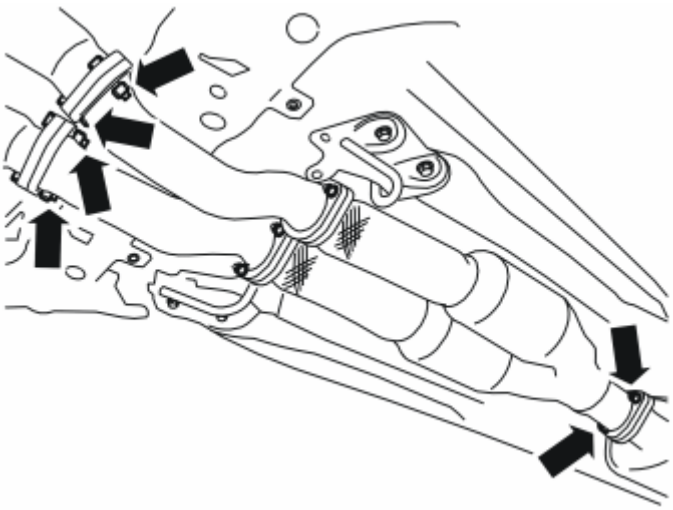

Fig. 268: Removing Exhaust Manifold Joint Bolts
Courtesy of VOLVO CARS CORPORATION

- Remove the four nuts in the joints to the manifold and the two in the joint in the front edge of the front silencer.

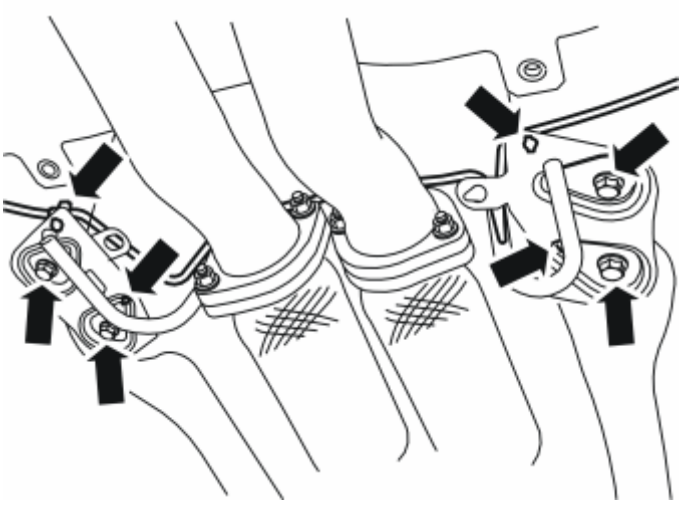

Fig. 269: Removing Pipe Above Exhaust Manifold
Courtesy of VOLVO CARS CORPORATION

- Detach the pipe above the exhaust manifold from the clips in the brackets to the exhaust manifold's front mounting.
- Remove the four screws in the brackets
- Detach the heat deflector plate's two clips from the brackets.

- Remove the exhaust pipe and catalytic converters.

NOTE: Take care with the twisted parts of the exhaust manifold.

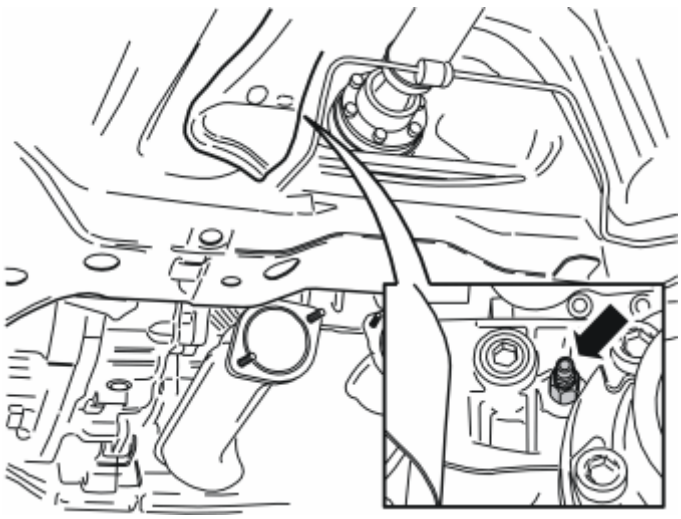

Fig. 270: Identifying Engine Block Drain Nipple
Courtesy of VOLVO CARS CORPORATION

- Detach the engine block drain nipple under the left-hand side of the rear manifold and drain the coolant.
- Tighten the nipple when the coolant is drained.

Illustration A

Fig. 271: Identifying Engine Block Plug
Courtesy of VOLVO CARS CORPORATION

- Remove the plug in the engine block under the left-hand side of the rear manifold.

Illustration B

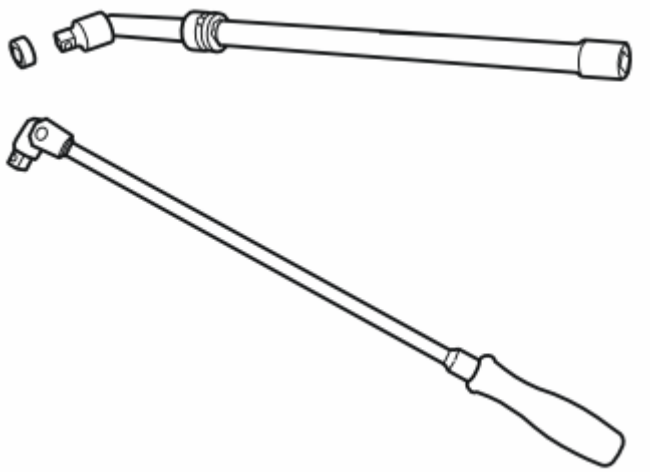

Fig. 272: Service Tools
Courtesy of VOLVO CARS CORPORATION

- Use hexagon socket **P/N 9512965** , socket extension **120 mm (4 3/4 ")** with spherical end, socket extension **500 mm (19 11/16 ")** with spherical end and handle.

Illustration C

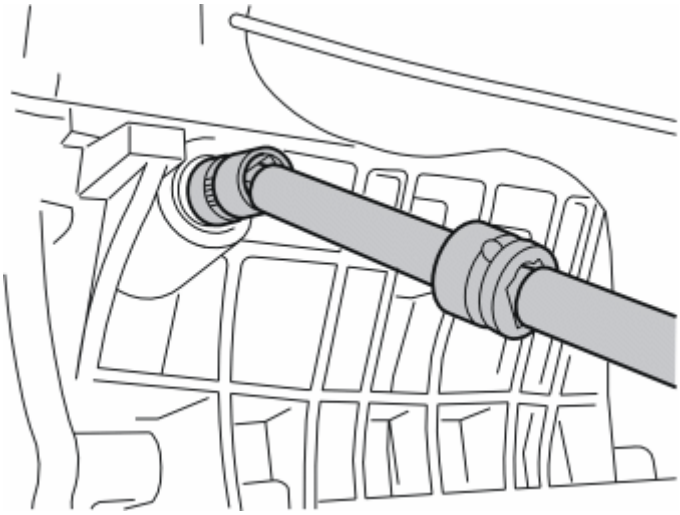

Fig. 273: Installing Plug
Courtesy of VOLVO CARS CORPORATION

- Apply a piece of butyl tape on the hexagon socket so that the plug does not fall away when it is unscrewed.

NOTE: Removing the plug requires significant force.

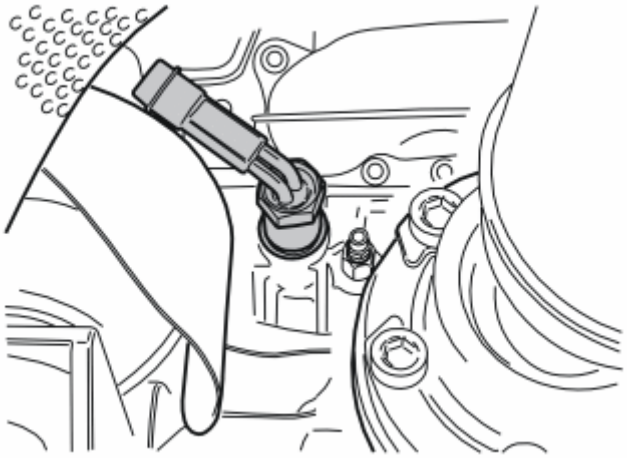

Fig. 274: Installing Block Heater
Courtesy of VOLVO CARS CORPORATION

- Take the heater from the kit.

  HINT: Try to rotate the connector in the heater before installation to reduce any friction.

- Brush thread sealant **P/N 1161056** on the threads.
- Install the heater in the engine block and manually screw it on as far as possible. It may be difficult to make the threads engage in the hole as the connector rotates stiffly in the threaded part of the heater.

Illustration A

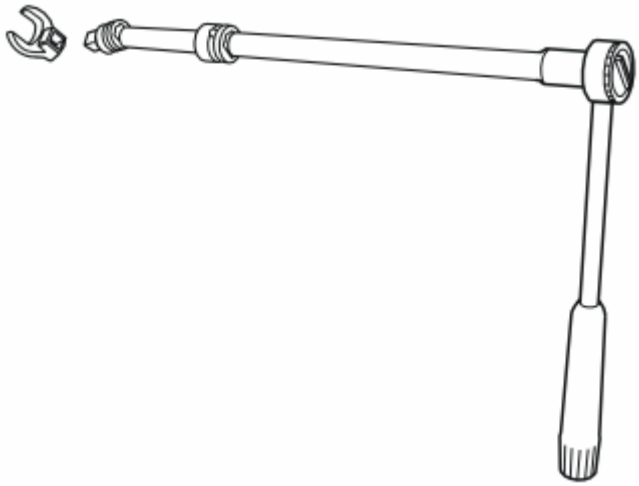

Fig. 275: Service Tools
Courtesy of VOLVO CARS CORPORATION

- Take tool **P/N 9814012** , a **1/2 "- 3/8"** adapter, the two socket extensions and a **1/2 "** ratchet handle.

Illustration B

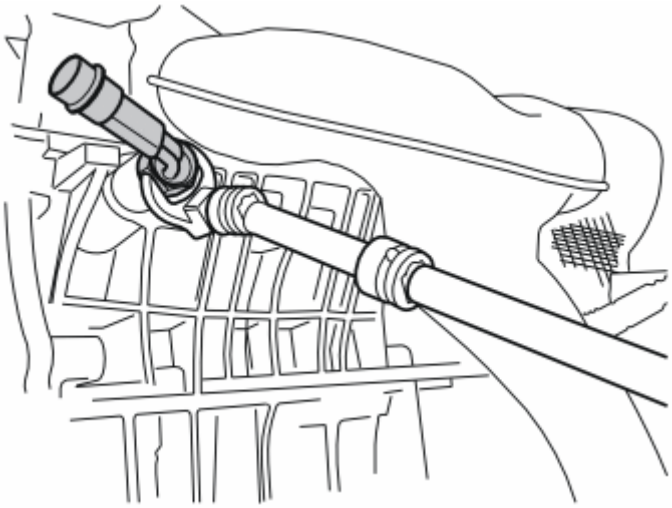

Fig. 276: Tightening Heater Into Block
Courtesy of VOLVO CARS CORPORATION

- Tighten the heater firmly to the engine block.

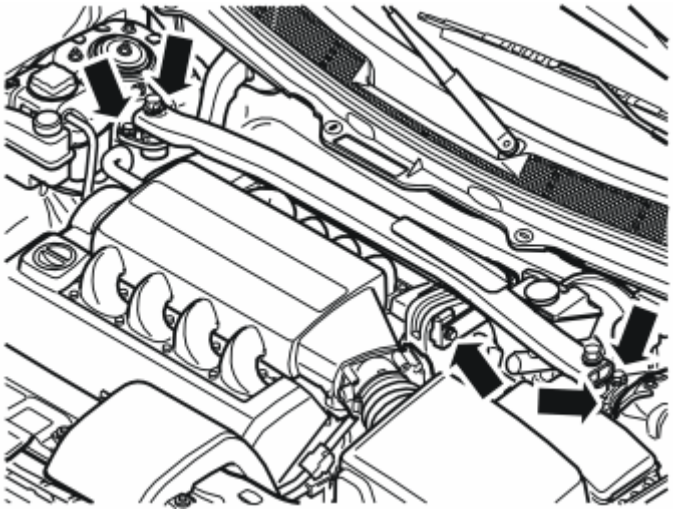

Fig. 277: Removing Upper Engine Strut
Courtesy of VOLVO CARS CORPORATION

- Remove the screw in the upper engine mounting. Remove the four screws holding the strut between the spring strut turrets and lift out the strut.

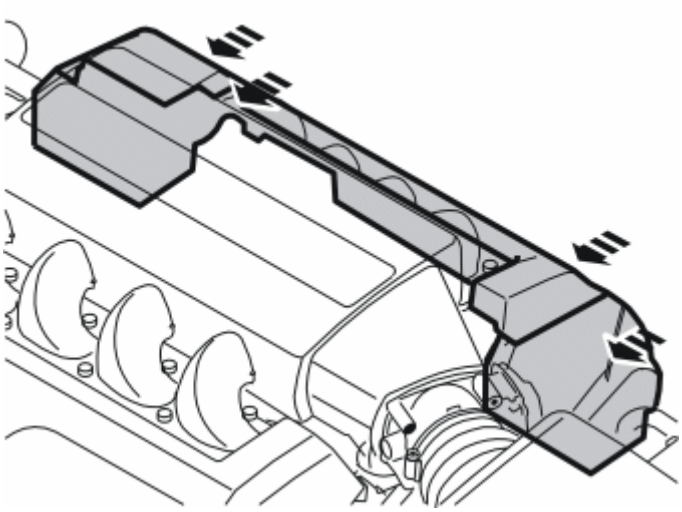

Fig. 278: Removing Rear Engine Cover
Courtesy of VOLVO CARS CORPORATION

- Remove the rear engine cover behind the intake manifold by pulling it away backwards. It is fitted with four rubber mountings.

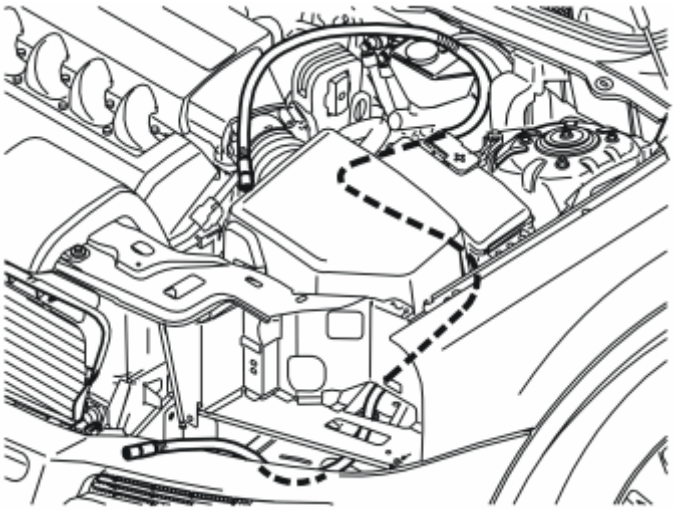

Fig. 279: Routing Cable
Courtesy of VOLVO CARS CORPORATION

- Take the joint cable from the kit and route it under the plate beneath the left-hand headlamp. Continue to route it back along the left-hand side of the air cleaner and between the air cleaner and fuse holder. Route it further backwards, under the ABS system and up between the cable duct and brake fluid reservoir.
- Clamp it in with tie straps from the kit.
- Check that the cable does not chafe against sharp edges or moving parts in the engine compartment.

CAUTION: Do not clamp the cable against brake pipes, fuel lines or air conditioning (A/C) pipes.

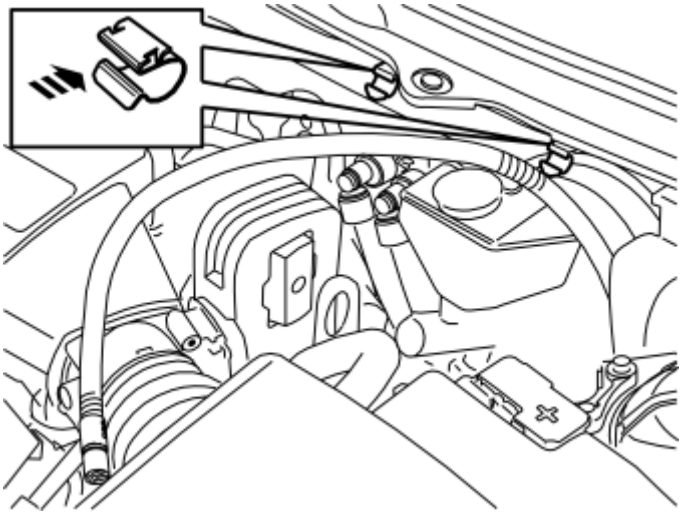

Fig. 280: Installing Clips
Courtesy of VOLVO CARS CORPORATION

- Take two clips from the kit and install them in the edge of the plate at the front edge of the panel above the windscreen wiper arms.

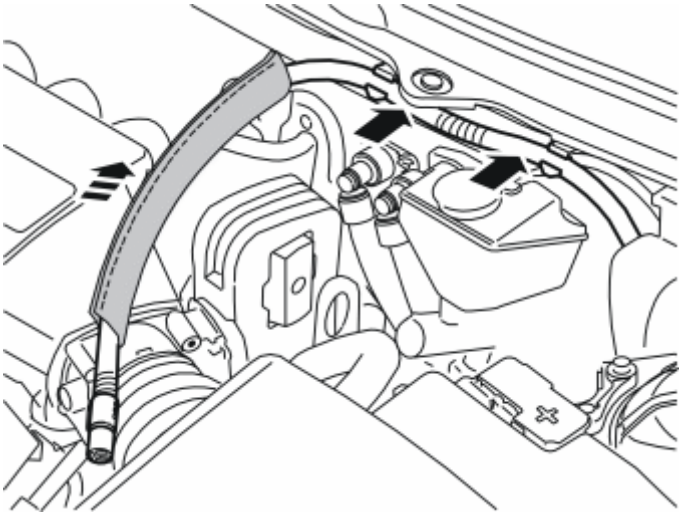

Fig. 281: Installing Cable
Courtesy of VOLVO CARS CORPORATION

- Press the joint cable into the clips.
- Take the radiation shield from the kit and pull it on the end of the cable.
- Guide the cable down to the location where the engine block heater was installed.

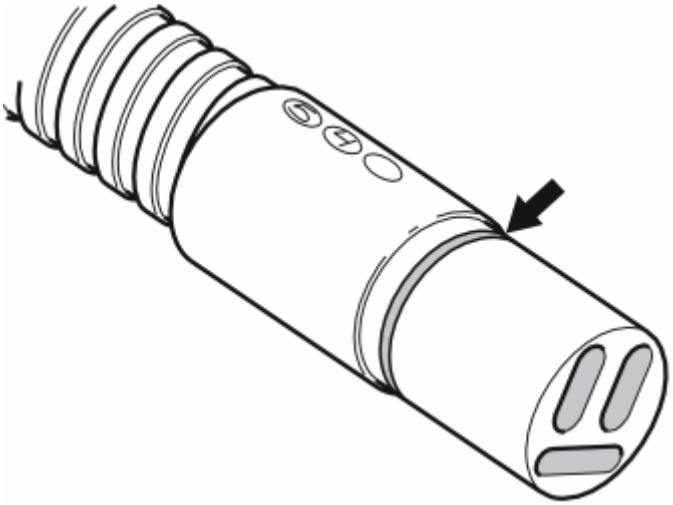

Fig. 282: Identifying O-Ring
Courtesy of VOLVO CARS CORPORATION

- Grease in the O-ring on the connector for the heater's joint cable and the cable to the front engine block heater socket with low temperature grease **P/N 1161427** .

NOTE: Do not get any grease on the surfaces of the connector.

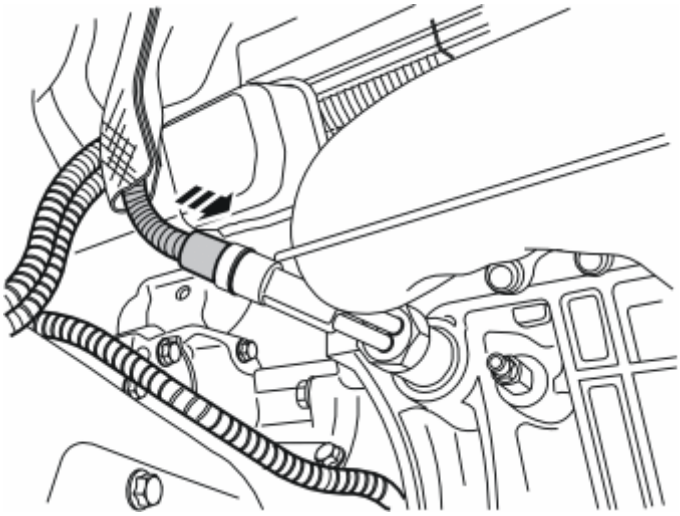

Fig. 283: Installing Joint Cable Connector
Courtesy of VOLVO CARS CORPORATION

- Firmly press the joint cable connector into the engine block heater connector.

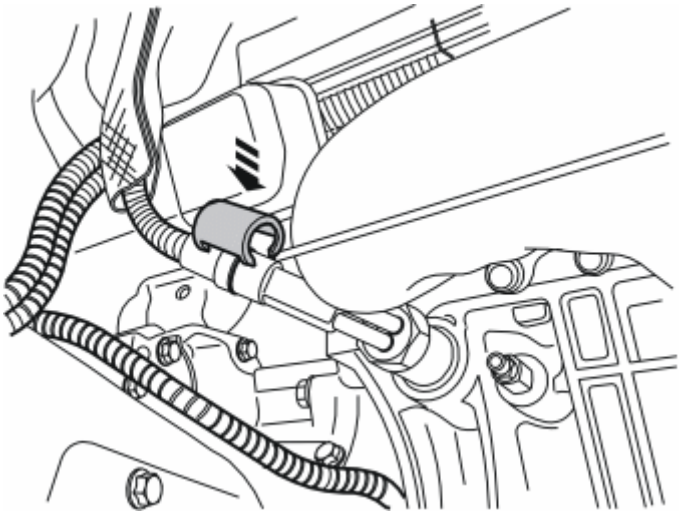

Fig. 284: Installing Locking Sleeve
Courtesy of VOLVO CARS CORPORATION

- Press a locking sleeve (from the kit) over the cable splice.

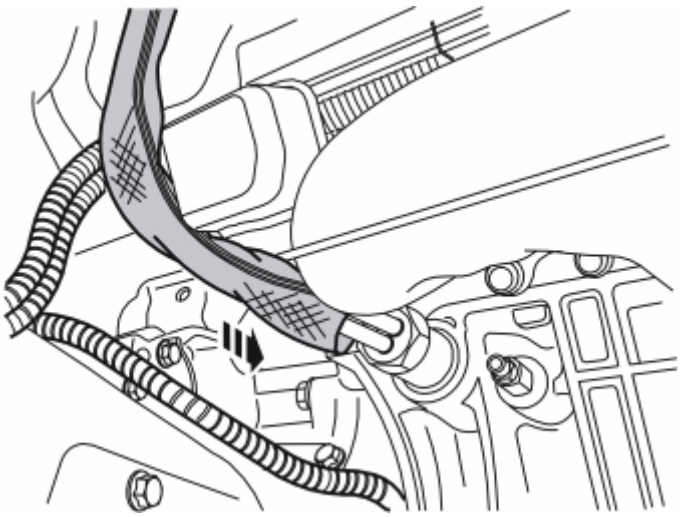

Fig. 285: Installing Radiation Shield
Courtesy of VOLVO CARS CORPORATION

- Pull the radiation shield down so that it fully covers the connector.

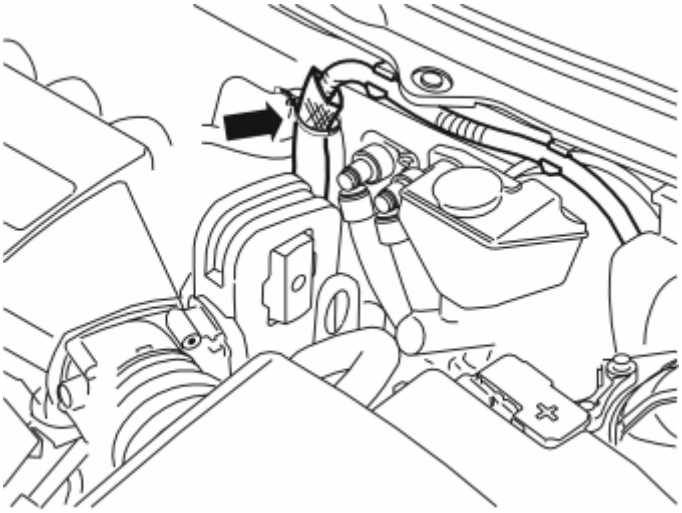

Fig. 286: Installing Cable
Courtesy of VOLVO CARS CORPORATION

- Take the grey tie strap from the kit and tighten the radiation shield to the cable at the top edge.

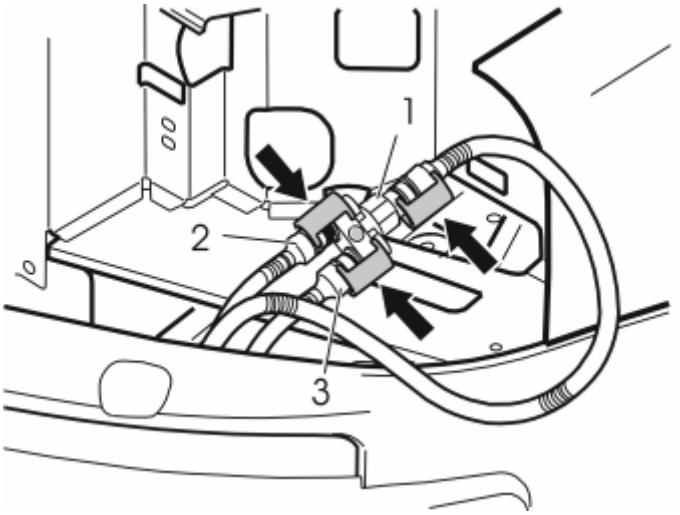

Fig. 287: Installing Branch Connector
Courtesy of VOLVO CARS CORPORATION

Applies when fitting passenger compartment connector at the same time

- If the car is equipped with passenger compartment connector then the branch connector is to be installed now.

  Connect:

  socket (1) in branch connector to the cable for the front socket.

  sockets (2, 3) in the branch connector to any of the cables for the engine block heater and branch connector.

- Route the cable up from the front engine block heater through the hole in the body, up to the underside of the plate under the headlamp.

  Connect:

  socket (1) in branch connector to the cable for the front socket.

  sockets (2, 3) in the branch connector to any of the cables for the engine block heater and branch connector.

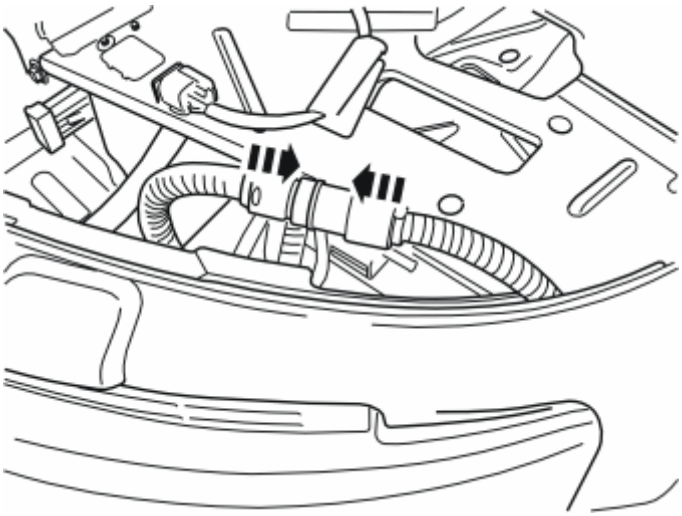

Fig. 288: Connecting Cables
Courtesy of VOLVO CARS CORPORATION

- Route the cable up from the front engine block heater through the hole in the body, up to the underside of the plate under the headlamp.
- Firmly press the front socket cable connector into the into the joint cable connector.

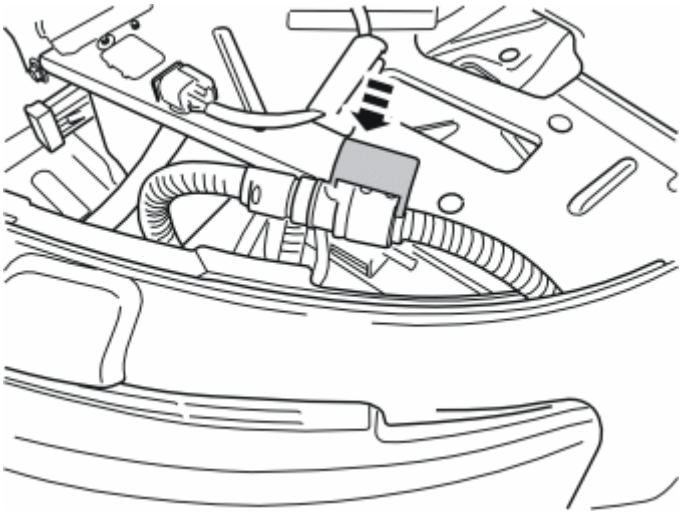

Fig. 289: Installing Locking Sleeve
Courtesy of VOLVO CARS CORPORATION

- Press a locking sleeve (from the kit) over the cable splice.

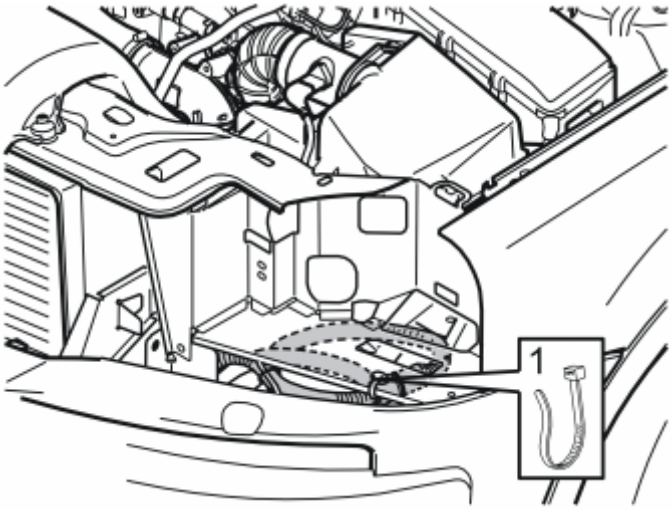

Fig. 290: Securing Excess Cable
Courtesy of VOLVO CARS CORPORATION

- Collect any excess cable under the plate beneath the left-hand headlamp and clamp it into the existing hole using a tie strap from the kit.

FINISHING WORK

- Connect and reinstall the left-hand headlamp.
- Reinstall the engine's rear protective cover.
- Reinstall the strut between the spring strut turrets.

  Torque tighten the four M10 screws to **50 Nm (37 lbf. ft.)** and the M12 screw to **80 Nm (59 lbf. ft.)** .

- Make sure that all sealing surfaces are thoroughly cleaned and reinstall the exhaust manifold with new gaskets and clamp nuts from the kit. Torque tighten to **25 Nm (18.5 lbf. ft.)** .
- Clamp the pipe above the bracket into its clips.
- Align the clips for the heat deflector plate's mounting in the bracket for the exhaust manifold's mounting.
- Tighten the bracket for the exhaust manifold's mounting to **25 Nm (18.5 lbf. ft.)** .
- Fill with coolant, drive to normal operating temperature and bleed the system. Check that there are no leaks.
- Top up with coolant as required.
- Reinstall the engine splash guard and torque tighten the screws to **25 Nm (18.5 lbf. ft.)** .

For cars with fuel-driven parking heater installed.

- Rivet the wing liner to the bumper shell.

FUEL DRIVEN HEATER 912-B (2003-2008)

FUEL DRIVEN HEATER 912-B

NOTE: This accessory requires software unique to the car.

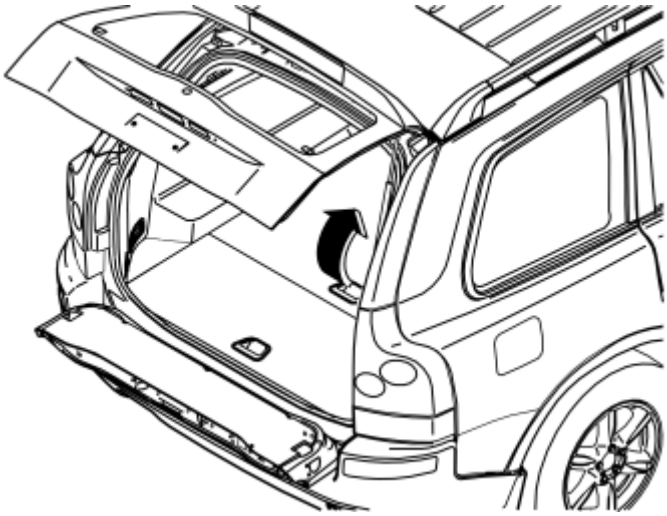

Fig. 291: Removing Front Floor Hatch
Courtesy of VOLVO CARS CORPORATION

Applies to cars with two rows of seats

- Remove the front floor hatch. First lift up slightly and then pull the hatch loose from its mountings at the front edge.

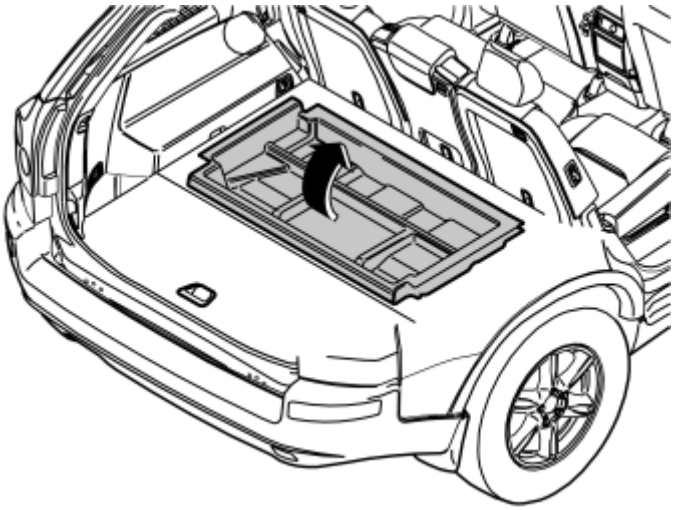

Fig. 292: Removing Front Storage Compartment
Courtesy of VOLVO CARS CORPORATION

Applies to cars with two rows of seats

- Lift out the front storage compartment.

NOTE: **Removing the right-hand seat in the second row of seats. For cars with three rows of seats, the left-hand and center seats in the middle row must also be removed. See point 9.**

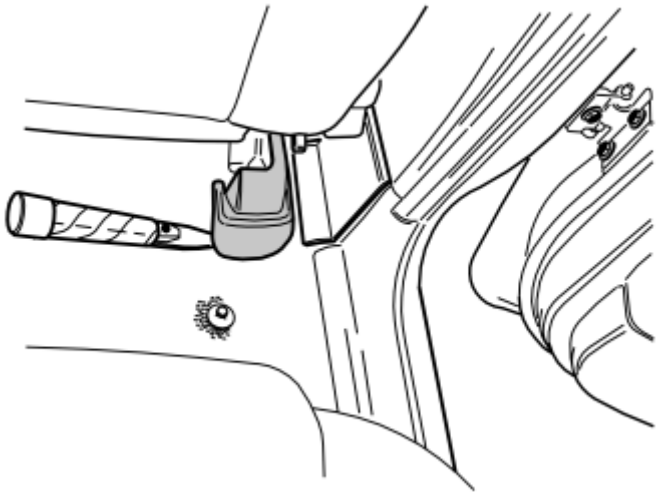

Fig. 293: Prying Right-Hand Rear Mounting Of Cover Panel
Courtesy of VOLVO CARS CORPORATION

- Remove the panel on the right rear mounting on the right-hand front seat. Pry up the rear edge of the panel slightly and then pull backwards and upwards.

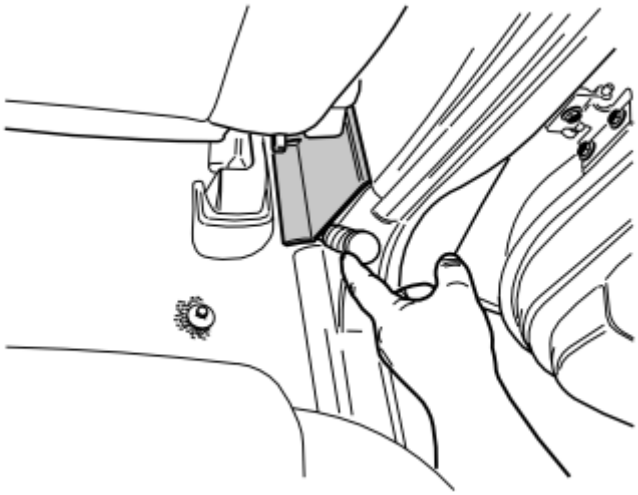

Fig. 294: Prying Away Cover Panel Over Joint Between Door Sills On Right-Hand Side, At Lower Edge, Using A Weatherstrip Tool
Courtesy of VOLVO CARS CORPORATION

- Slide the seats in the first row as far forwards as possible
- Carefully pry off and remove the panel above the joint between the right-hand door sills.

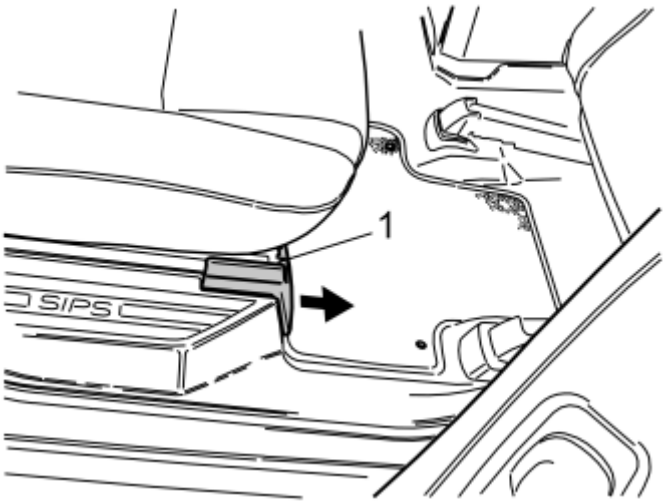

Fig. 295: Pushing Up Catch On Top Side
Courtesy of VOLVO CARS CORPORATION

- Remove the panel for the front right seat mounting on the right-hand seat in the second row. Press down the catch (1) on top and detach the panel by pulling it forward. Remove the screw underneath.

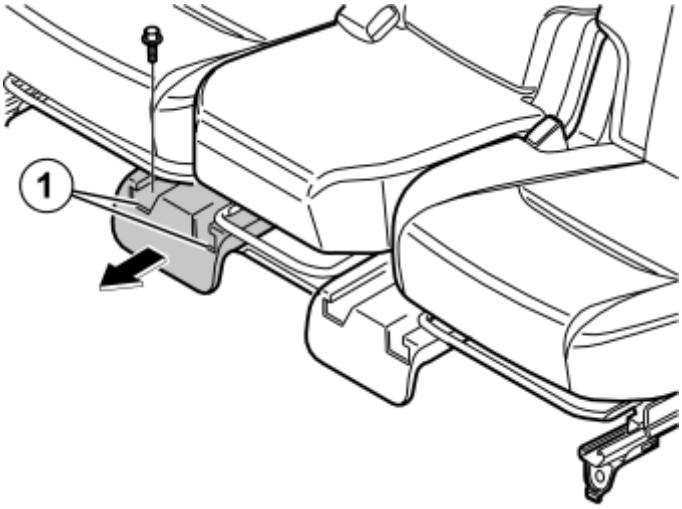

Fig. 296: Removing Front Seat Mountings
Courtesy of VOLVO CARS CORPORATION

- Remove the panel for the front seat mountings for the right-hand seat/middle seat in the second row. Press down the catches (1) on top and detach the panel by pulling it forward. Remove the screw for the right-hand seat.

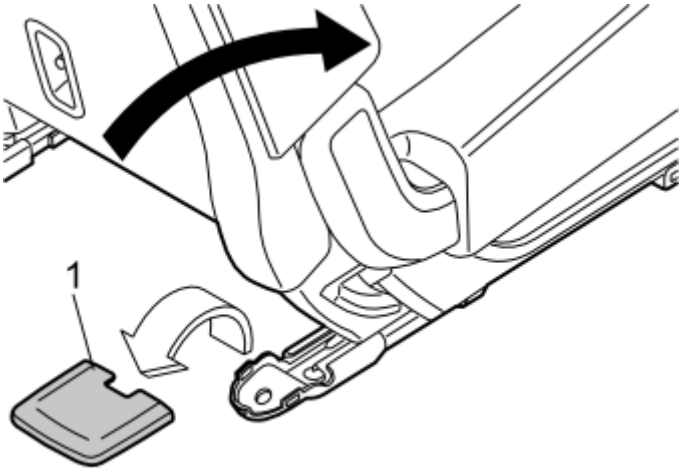

Fig. 297: Rear Seat Mounting Covers
Courtesy of VOLVO CARS CORPORATION

- Fold the rear backrest forwards on the right-hand seat in the second row
- Remove the covers (1) for the rear seat mountings on the right-hand seat by prying them off the rear edge. Remove the screws.

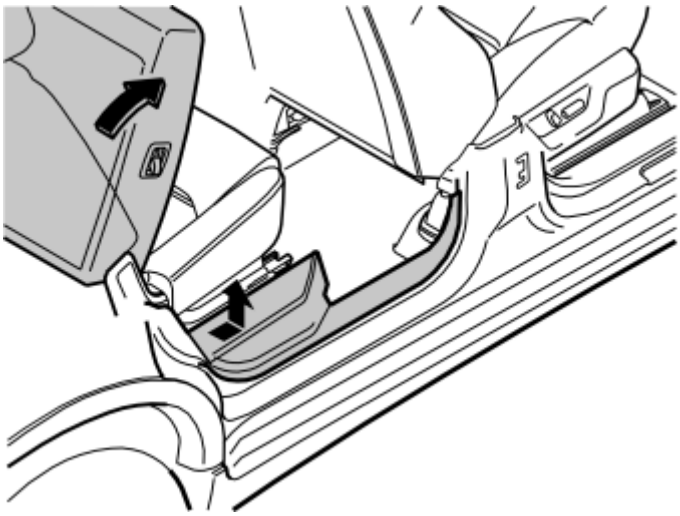

Fig. 298: Removing Seal Trim Panel
Courtesy of VOLVO CARS CORPORATION

- Remove the sill trim panel for the right-hand rear door. Pull off the rear edge until the clips release. Continue forwards until the remaining clips have released
- Unhook the sill trim panel from the B-post panel. Place the sill trim panel in the cargo compartment
- Remove the seat.

CAUTION: Be careful when lifting the seats out of the passenger compartment. Ensure that the mountings do not damage the door panels.

Applies to cars with three rows of seats

- Remove the corresponding panels and screws as in steps 3-8, on the left-hand side, and for the left-hand and middle seats in the second row
- Remove the left-hand and center seats.

CAUTION: Be careful when lifting the seats out of the passenger compartment. Ensure that the mountings do not damage the door panels.

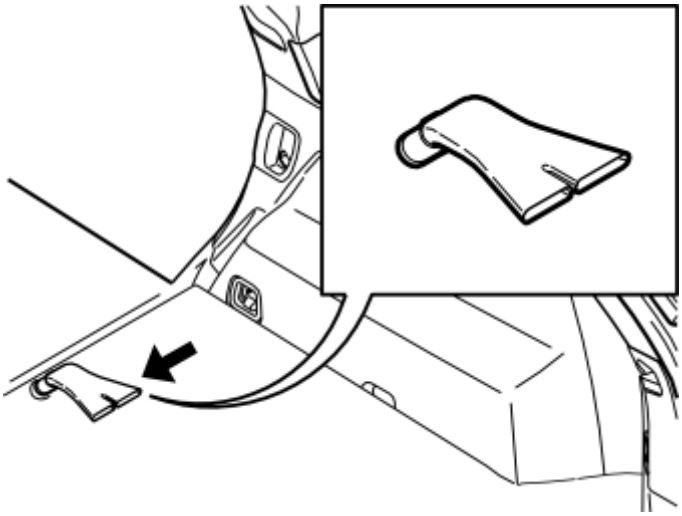

Fig. 299: Seat Mountings
Courtesy of VOLVO CARS CORPORATION

Applies to cars with three rows of seats

- Remove the vents on the right and left-hand sides.

Illustration A applies to cars with two rows of seats

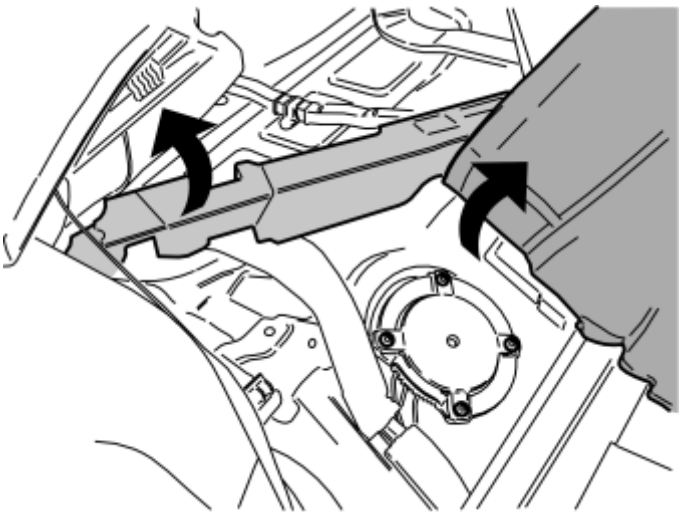

Fig. 300: Pushing Insulations And Moldings Aside
Courtesy of VOLVO CARS CORPORATION

- Push the floor carpet to one side and secure it using the seat belt on the left-hand side
- Carefully push the insulation to one side so that the cover for the fuel tank unit is accessible.

CAUTION: Take care with the insulation. It will break off easily.

Illustration B applies to cars with three rows of seats

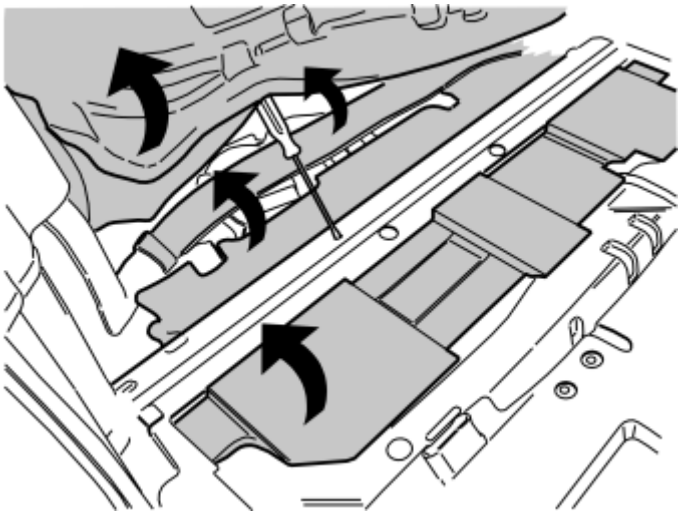

Fig. 301: Removing Insulation Panels
Courtesy of VOLVO CARS CORPORATION

- Push the floor carpet and insulation panel to one side
- Position a screwdriver or similar to hold the carpet in place
- Remove the air duct
- Remove both insulation panels.

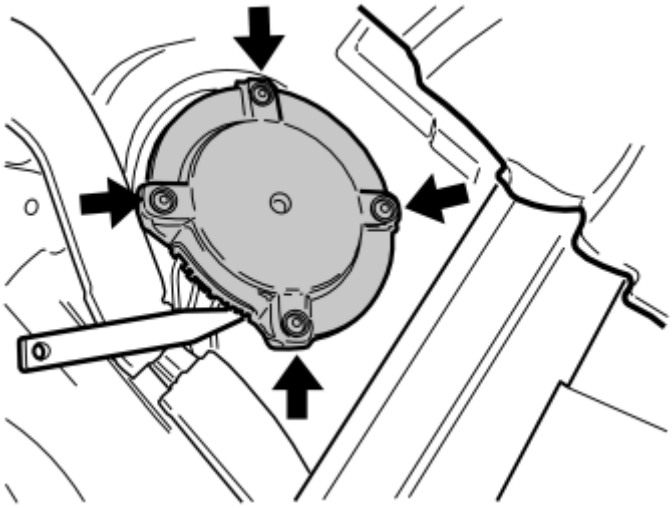

Fig. 302: Removing Fuel Tank Unit Cover
Courtesy of VOLVO CARS CORPORATION

- Remove the four screws in the cover for the fuel tank unit
- Carefully pry off the cover. Use a weatherstrip tool.

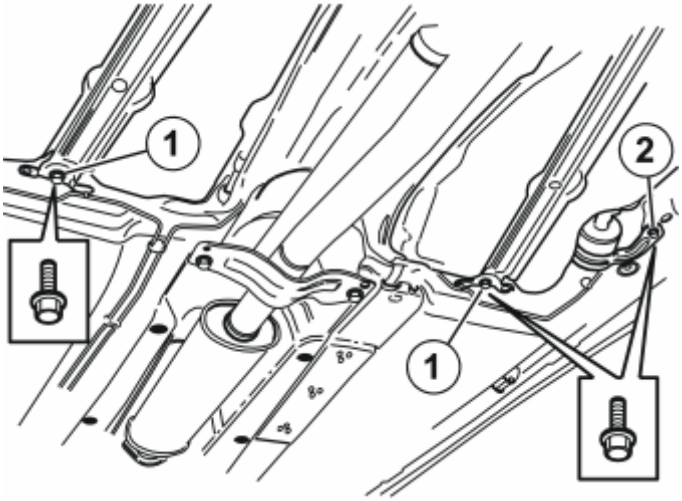

Fig. 303: Identifying Front Mounting & Fuel Filter Screws
Courtesy of VOLVO CARS CORPORATION

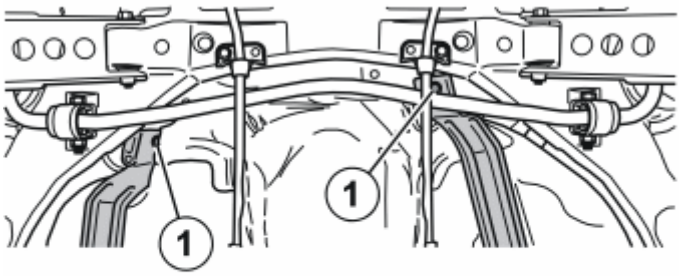

Fig. 304: Identifying Rear Mounting Screws
Courtesy of VOLVO CARS CORPORATION

- Remove the four screws (1) in the front and rear mountings for the fuel tank so that the fuel tank lowers slightly. This allows the suction pipe for the fuel tank to be installed. If necessary, remove the screw (2) for the fuel filter to lower the fuel tank further.

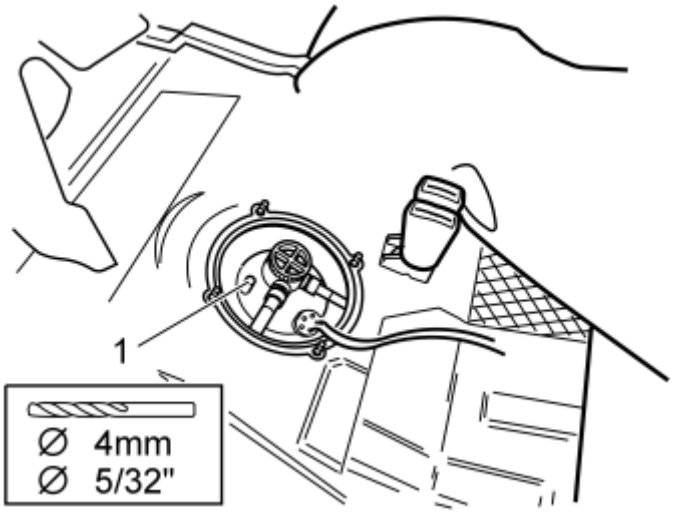

Fig. 305: Identifying Drill Hole Area And Dimensions
Courtesy of VOLVO CARS CORPORATION

- Drill out the terminal (1) in the fuel tank unit. Use a **4 mm (5/32")** diameter drill bit.

NOTE: Use a compressed air power drill with a greased bit.

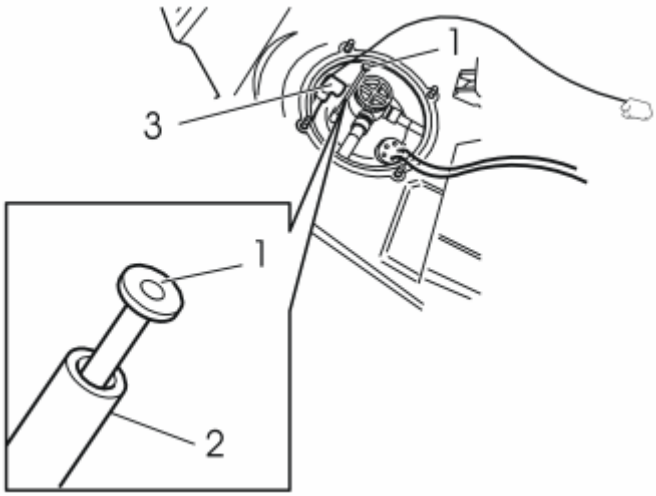

Fig. 306: Installing Pipe And Cable Assembly
Courtesy of VOLVO CARS CORPORATION

- Insert the pipe (1) from the kit into the connection (2). Press the pipe down until it is against the terminal
- Take the fuel line and electrical cable from the kit. Apply masking tape on the end of the part of the fuel line that is to be inserted down through the hole in the floor (the end with the short free cable end)
- Insert the entire cable assembly (3) between the floor and the fuel tank out to the right.

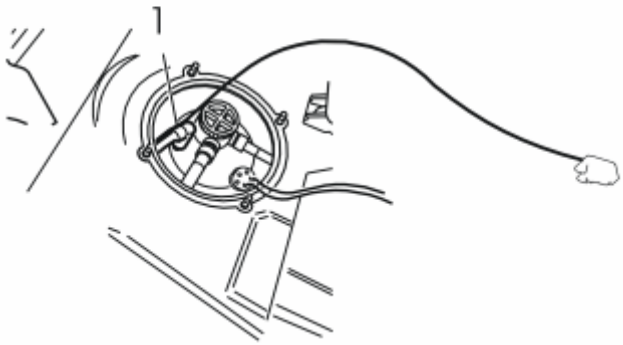

Fig. 307: Installing Quick-Release Connector
Courtesy of VOLVO CARS CORPORATION

- Press the quick-release connector (1) onto the connection until a click is heard. Check that the quick-release connector is secure.

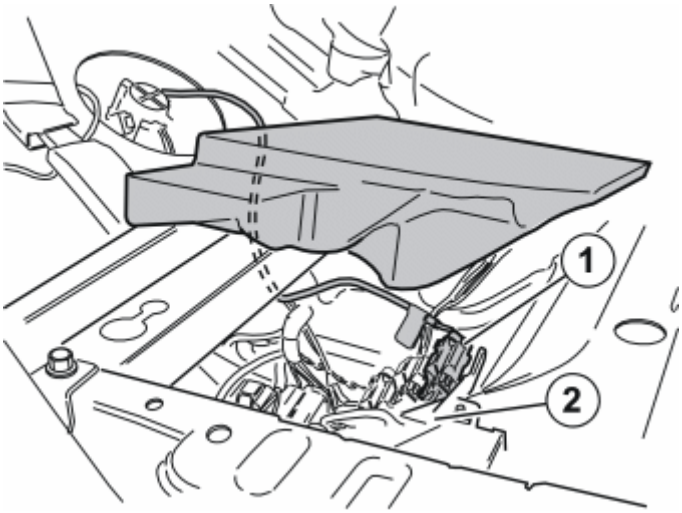

Fig. 308: Routing And Connecting Cable
Courtesy of VOLVO CARS CORPORATION

Applies to cars with two rows of seats

- Carefully push up the end of the insulation.
- Position a spacer underneath.
- Route the cable that was previously routed along with the fuel line under the seat member. Connect the cable to the front connector (1) in the connector bridge (2)
- **Applies to cars with two rows of seats:** Remove the spacer and fold down the insulation
- Position the cable in the holder in the fuel tank unit cover
- Reinstall the cover for the fuel tank unit. Secure the cover using the four screws.
- Reinstall the insulation panels
- **Applies to cars with three rows of seats:** Reinstall the air duct
- Fold back the carpet
- **Applies to cars with three rows of seats:** Reinstall the vents under the outer seats
- Reinstall the seats.

CAUTION: Be careful when lifting the seats into the passenger compartment. Ensure that the mountings do not damage the door panels.

- Secure the seats. Tighten the screws. Tighten to **48 Nm (35 lbf. ft.)**
- Reinstall the panels and covers over the seat mountings
- Reinstall the panels over the joint between the door sills.

Applies to cars with two rows of seats

- Reinstall the front storage compartment
- Reinstall the front floor hatch.

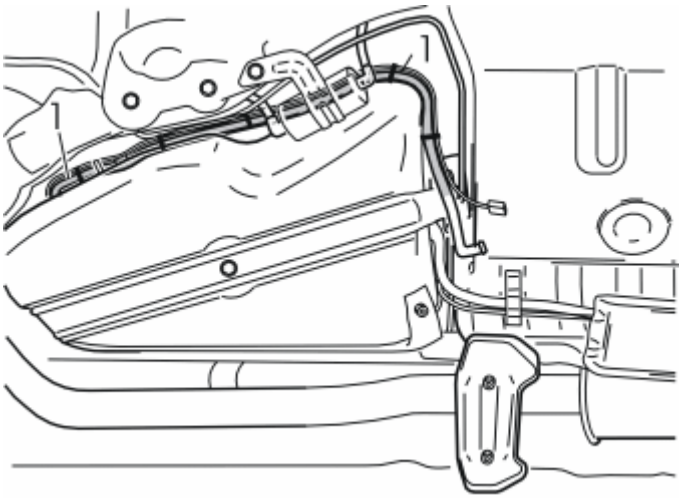

Fig. 309: Identifying Fuel Hose & Cable Harness At Rear Edge Of Fuel Tank
Courtesy of VOLVO CARS CORPORATION

- Route the fuel hose and cable harness (1) at the rear edge of the fuel tank. Route it along the right-hand side of the fuel tank and forwards. Let it hang down.

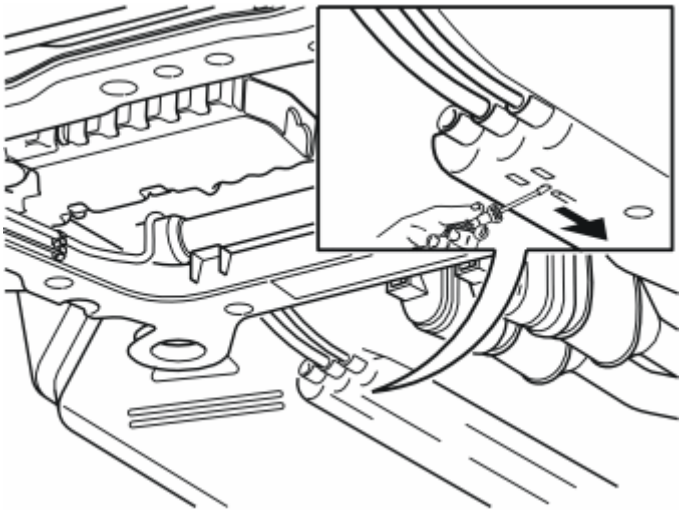

Fig. 310: Detaching Fuel Rail At Front Edge
Courtesy of VOLVO CARS CORPORATION

- Disconnect the rail for the fuel line. Insert a small screwdriver in the small hole between the rail and the yellow clip. Slide the clip in the same direction as the oval hole in the rail. The rear black clip has a small collar on the clip. Position the screwdriver against the collar and slide it forwards.

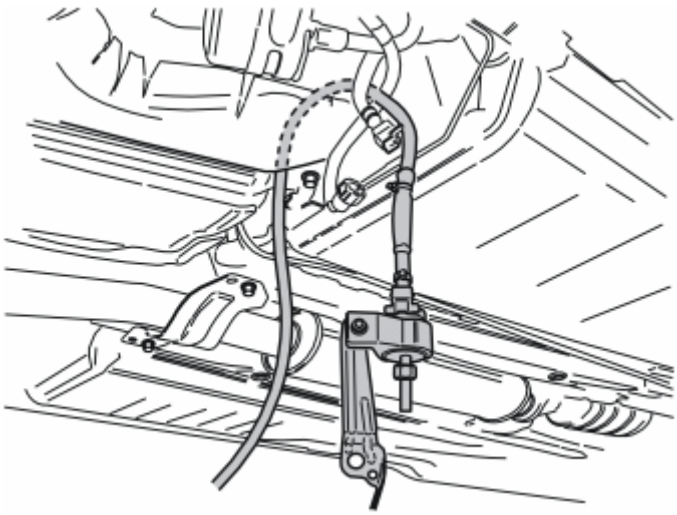

Fig. 311: Identifying Cable At Front Edge & Right-Hand Side Of Fuel Tank
Courtesy of VOLVO CARS CORPORATION

- Take the fuel pump (FP) and cable from the kit. Slide the cable up at the front edge on the right-hand side of the fuel tank
- Route the cable so that is next to the existing cable in the cut-out on top of the fuel tank. Then position the cable on the right-hand side of the wiring which runs to the engine compartment
- Pull up the wiring so that the fuel pump (FP) is positioned as approximately as illustrated.

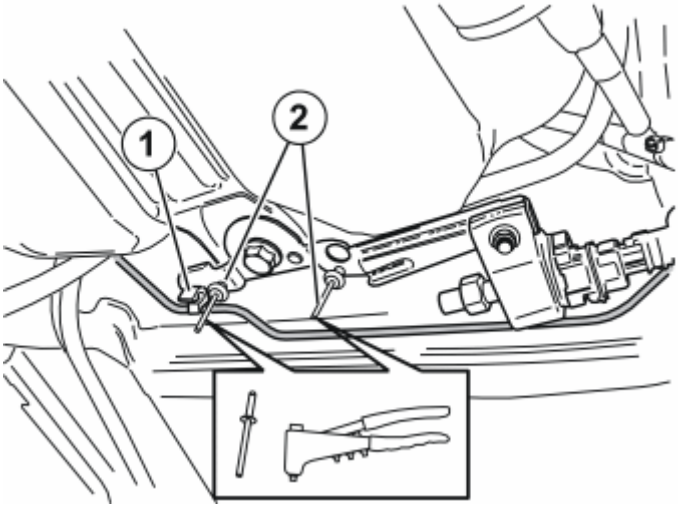

Fig. 312: Identifying Brake Pipe Clamp
Courtesy of VOLVO CARS CORPORATION

- Remove the brake pipe (1) from the clamp
- Take the fuel pump (FP) and bracket. Position the bracket on top of the bracket for the fuel tank mounting, aligned with the small holes for the rivets
- Take two metal rivets (2) from the kit. Rivet the fuel pump bracket to the bracket for the fuel tank mounting.

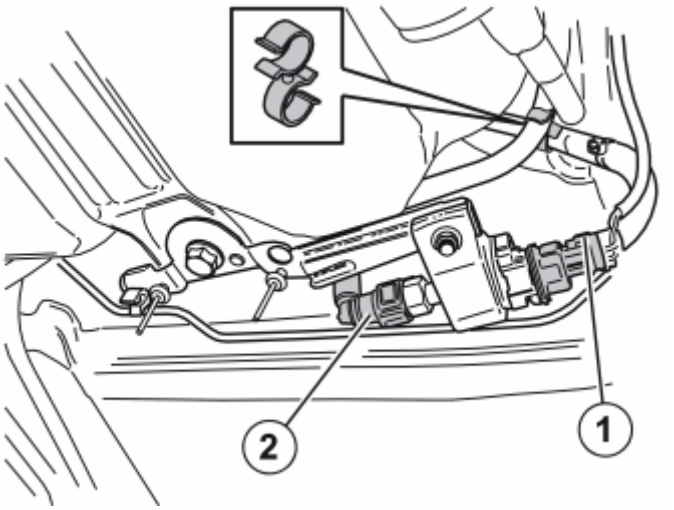

Fig. 313: Identifying Double Clamp & Fuel Lines From Fuel Pump
Courtesy of VOLVO CARS CORPORATION

- Take the double clamp from the kit. Secure the two fuel lines from the fuel pump (FP) to each other, opposite the two blue markings on the fuel lines
- Press the brake pipe back into the clamp
- Tighten the four screws securing the fuel tank. Tighten the screw for the fuel filter if it was loosened. Tighten the screws. Tighten to **24 Nm (18 lbf. ft)**
- Connect the connector (1) from the pre-routed power cable to the fuel pump (FP)
- Connect the quick-release connector (2) on the pre-routed fuel line to the fuel pump (FP).

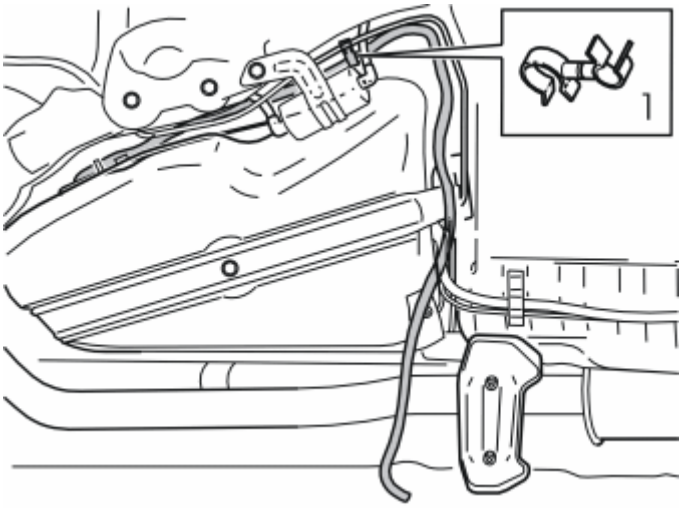

Fig. 314: Identifying Brake Pipe Fuel Line
Courtesy of VOLVO CARS CORPORATION

- Take a double clamp from the kit. Clamp the fuel line to the brake pipe at point (1).

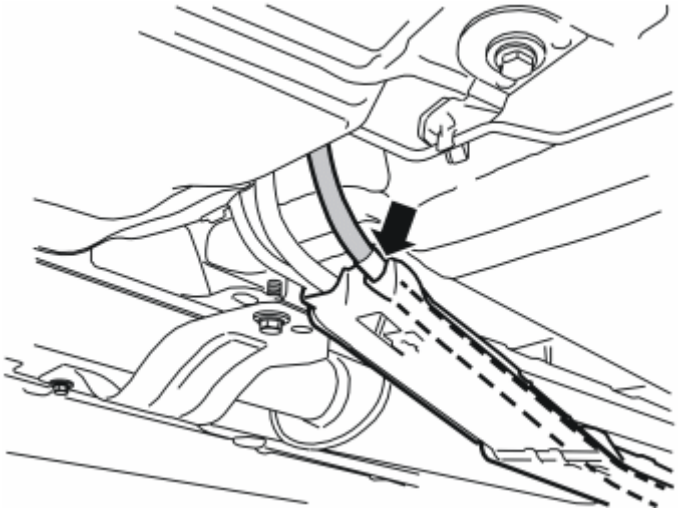

Fig. 315: Identifying Fuel Pump Hose
Courtesy of VOLVO CARS CORPORATION

- Press into place the fuel hose from the recently installed fuel pump (FP). Press into place in the bottom of the rail and forwards, in the cut-out furthest to the right.

NOTE: The marking on the fuel hose must be opposite the point where the fuel hose goes into the rail.

- Slide back the retaining clip for the rail. Press the rail against the car body. Ensure that the rail is securely installed.

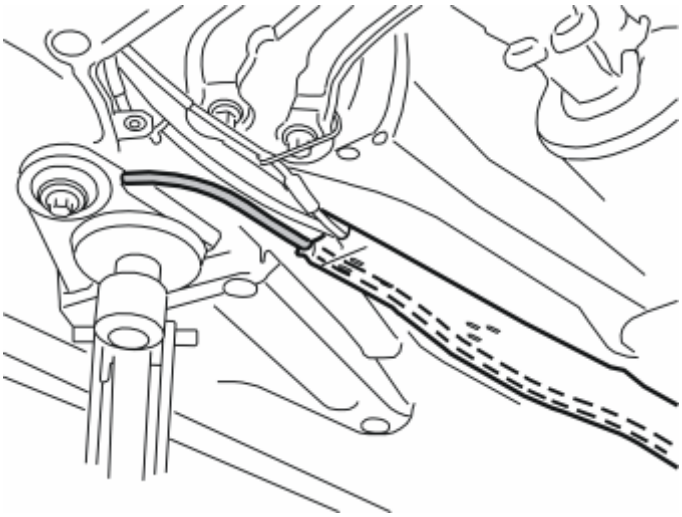

Fig. 316: Identifying Rail Retaining Clip
Courtesy of VOLVO CARS CORPORATION

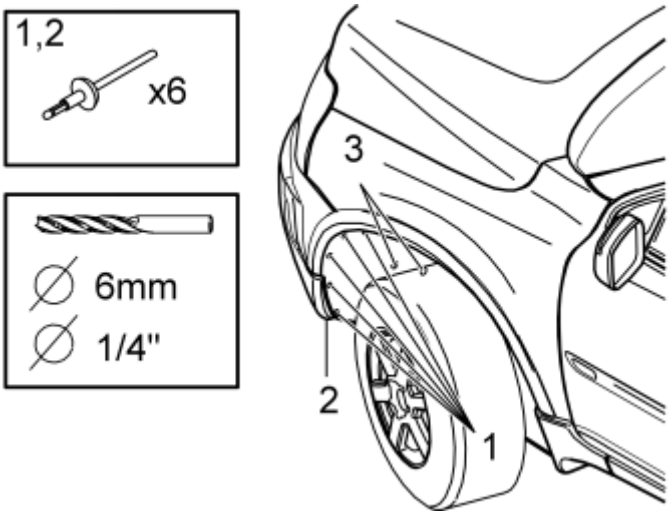

Fig. 317: Identifying Drill Area And Dimensions
Courtesy of VOLVO CARS CORPORATION

- Remove the left front wheel
- Drill out the five rivets (1) holding the wheel arch lining and the rivets (2) in the lower edge of the bumper. Use a **6 mm (1/4")** diameter drill bit.

Remove:

- any rivet remains
- the plastic nuts (3) holding the wheel arch lining in place
- the small protective panel.

Applies to cars with accessory side trim

NOTE: The side trim on the front wing must not be removed.

- Only move the mounting lugs on the front wing side trim to one side so that the edge of the wing lining can be exposed.

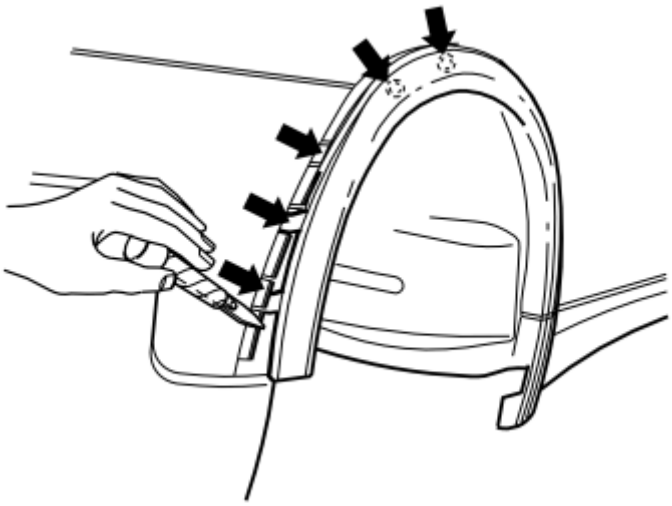

Fig. 318: Removing Side Trim
Courtesy of VOLVO CARS CORPORATION

Applies to cars without accessory side trim

- Detach the wing extension. Carefully pry off the wing extension using a weatherstrip tool
- Pull the wing extension up to the highest point until the three catches at the lower edge and the two clips slightly higher up have released.

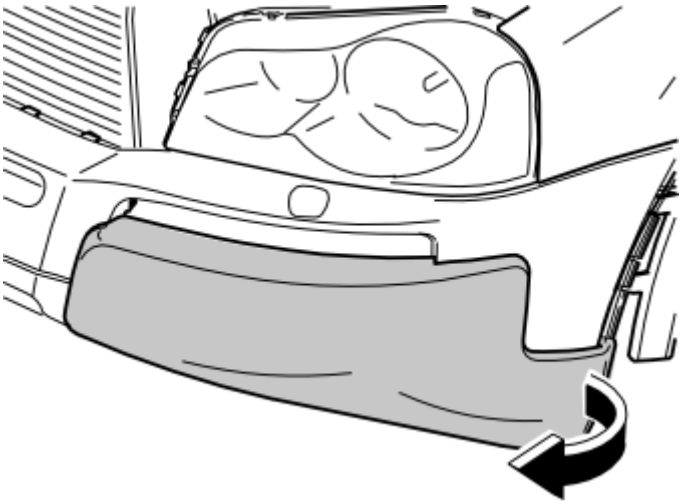

Fig. 319: Removing Bumper Left Hand Panel
Courtesy of VOLVO CARS CORPORATION

- Remove the left-hand panel on the bumper by carefully pull off the left-hand lower edge until the clip at the bottom on the inside releases. Continue pulling until the clips around the panel release.

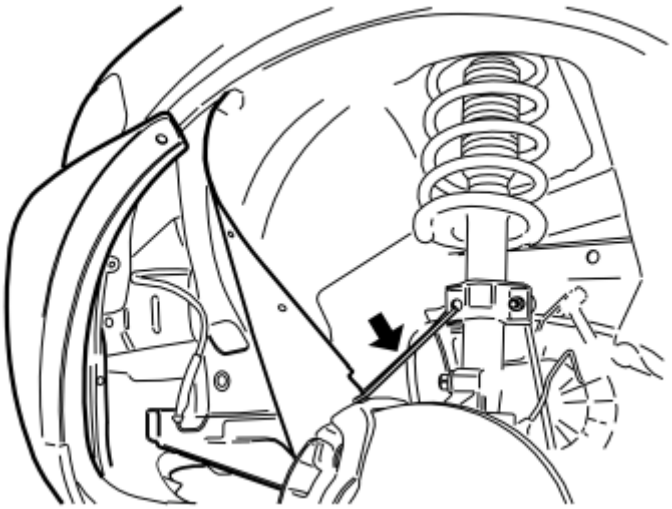

Fig. 320: Pushing Wheel Arch Lining Aside
Courtesy of VOLVO CARS CORPORATION

- Push the wheel arch lining to one side. Secure with a tie strap or similar.

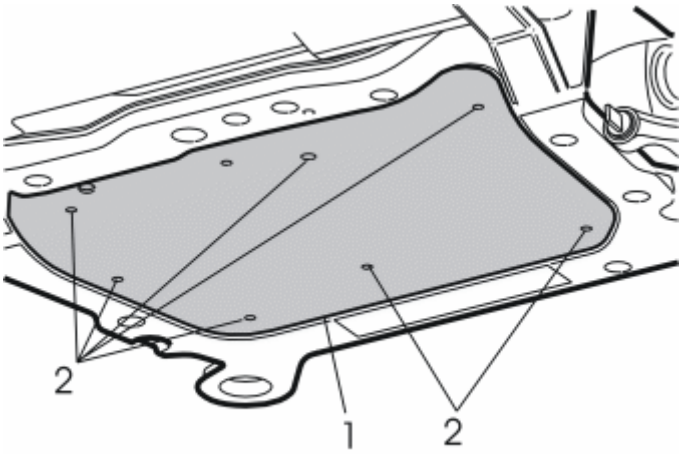

Fig. 321: Engine Splash Guard
Courtesy of VOLVO CARS CORPORATION

- Remove the engine splash guard (1) by removing the screws (2).

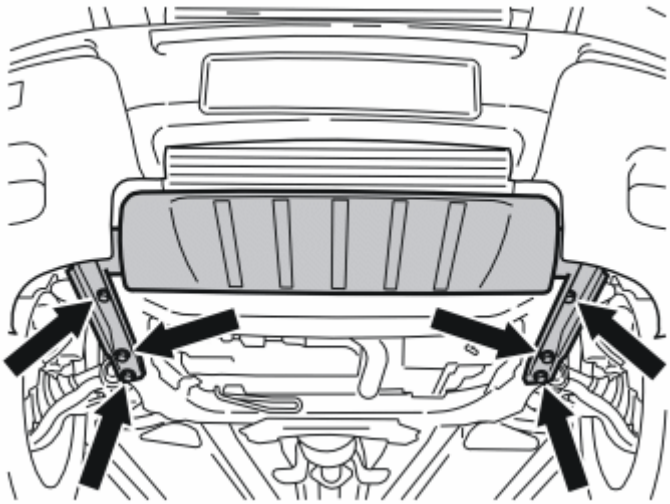

Fig. 322: Removing Front Skid Plate
Courtesy of VOLVO CARS CORPORATION

- Remove the front skid plate. First remove the six screws (1) on the underneath
- With the assistance of a colleague, pull the skid plate forwards. Pull one of the corners until the mounting lug on that side of the skid plate releases from the sub-frame. Then pull off the other corner. The underside of the bumper cover may need to be carefully pushed down at the same time
- Open the cover for the radiator expansion tank
- Thread a hose onto the engine coolant drain nipple
- Open the drain nipple. Drain off the coolant.

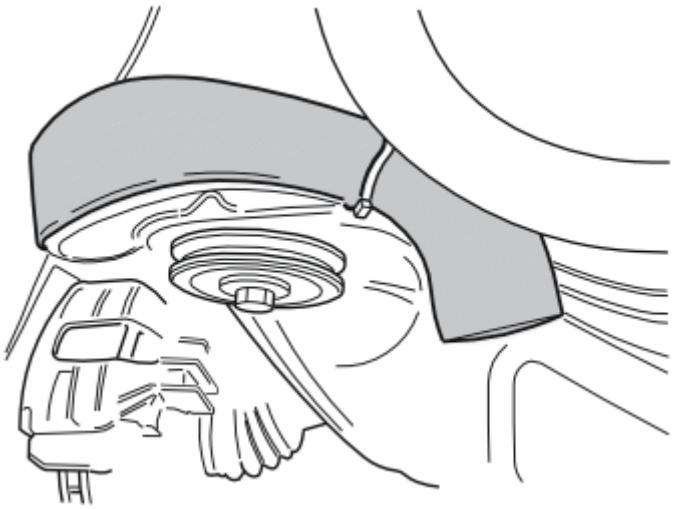

Fig. 323: Identifying Pipe Elbow
Courtesy of VOLVO CARS CORPORATION

- Pull off and push the pipe elbow to one side so that the fuel pipe can be positioned.

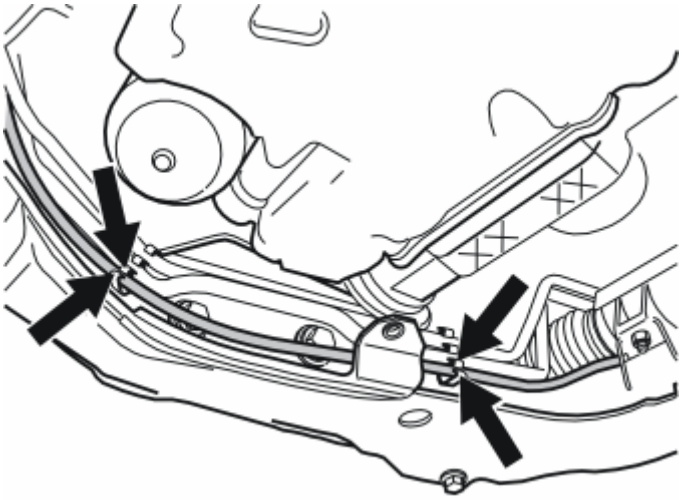

Fig. 324: Identifying Power Steering Pipes And Plastic Hose
Courtesy of VOLVO CARS CORPORATION

- Remove the power steering pipes and the plastic hose from their clips to make installing the fuel pipe easier. In order to push the upper power steering pipe to one side, the rubber coated clamp on the upper side of the front edge of the sub-frame may need to be removed.

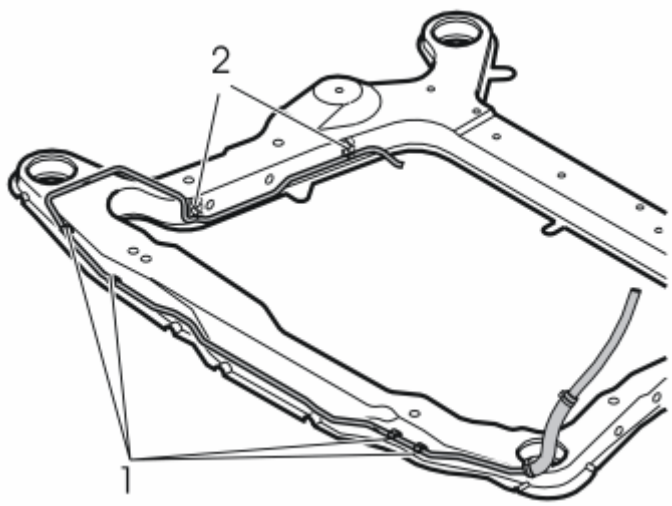

Fig. 325: Identifying Fuel Pipe And Clips
Courtesy of VOLVO CARS CORPORATION

- Install the fuel pipe using the four pre-installed clips (1) (from the kit) on the sub-frame. Insert the fuel pipe between the disconnected pipes and the sub-frame. Press the fuel pipe into place using the clips in the front edge of the sub-frame and in the bottom in the clips (2) that secured the plastic hose. Due to limited space, the fuel pipe needs to be worked slightly in order to position it.

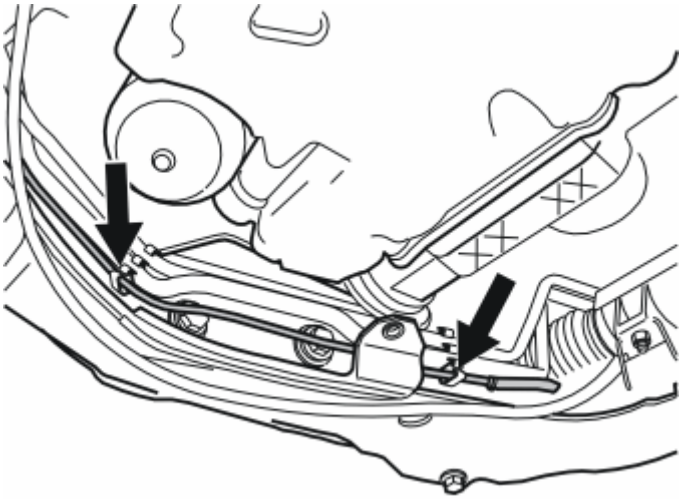

Fig. 326: Identifying Plastic Hose Clips
Courtesy of VOLVO CARS CORPORATION

- Reinstall the power steering pipes. Press the plastic hose into place on the outside of the fuel pipe. Reinstall the rubber coated clamp if this has been removed
- Check that the fuel pipe does not catch on the sub-frame. Check that the fuel pipe does not rub against pipes or screw heads for the suspension.

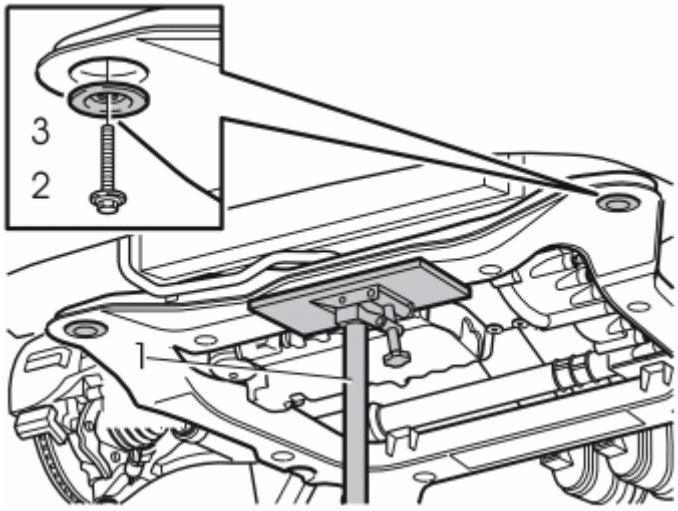

Fig. 327: Supporting Sub-Frame
Courtesy of VOLVO CARS CORPORATION

- Reinstall the pipe elbow
- Install the jack (1) under the front edge of the sub-frame
- Take the weight off the sub-frame
- Remove the screw (2) and the washer (3) from the left front mounting on the sub-frame.

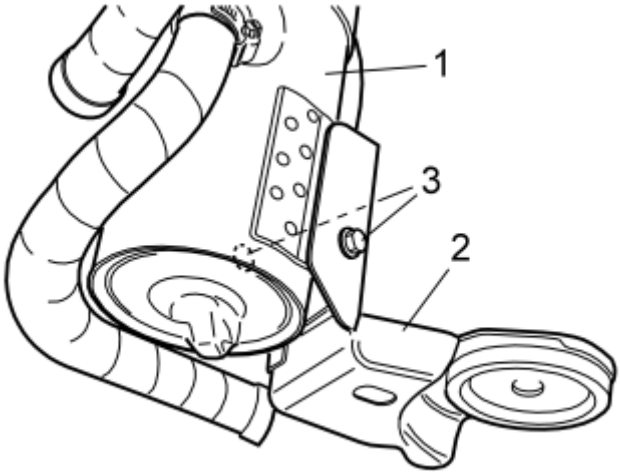

Fig. 328: Identifying Heater And Bracket
Courtesy of VOLVO CARS CORPORATION

- Install the heater (1) on the bracket (2.) Use the screws (3) from the kit. Tighten.

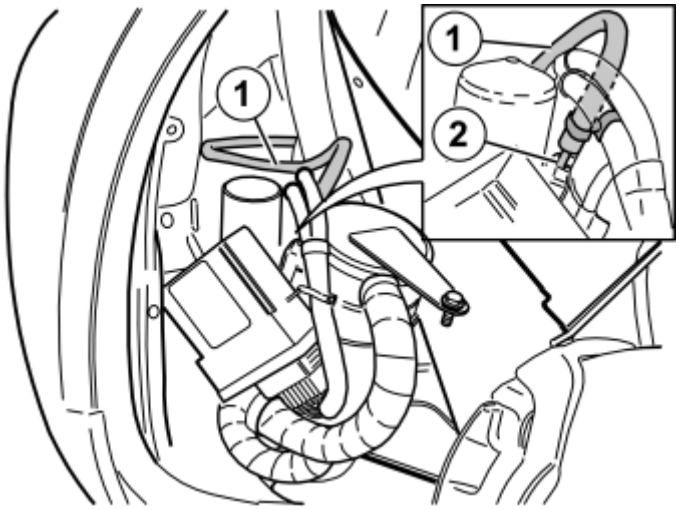

Fig. 329: Identifying Fuel Hose Clamp & Inlet
Courtesy of VOLVO CARS CORPORATION

- Slide the heater up to the installation position
- Take a small hose clamp for the fuel line from the kit. Install the hose clamp on the fuel hose (1) from the fuel pipe on the sub-frame
- Press the fuel line on the inlet (2) on the fuel pump (FP). Tighten.

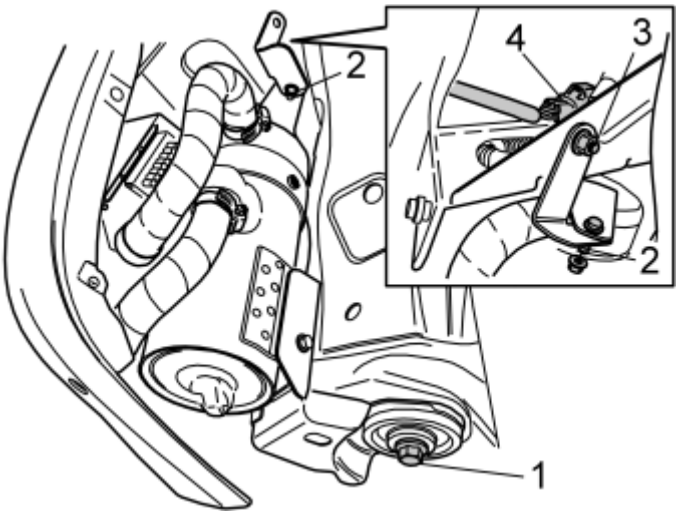

Fig. 330: Installing Bracket
Courtesy of VOLVO CARS CORPORATION

- Take a new screw (1) from the kit. Secure the heater to the left-hand front corner of the sub-frame. Do not tighten fully yet
- Take the metal bracket and two nuts from the kit
- Install one of the mounting lugs for the metal bracket on the stud (2) on the heater. Install the nut. Finger tighten
- Install the other mounting lug for the bracket on the stud (3). Install the nut
- Tighten the heater to the sub-frame and the bracket. Tighten the screw (1). Tighten to **105 Nm (78 lbf. ft)** . Angle-tighten to 120° or **max. 280 Nm (206 lbf. ft.)**
- Remove the protective cover from the pre-routed connector (4). Press in the catch on the top. Pull off the cover
- Connect the cable from the heater to the connector.

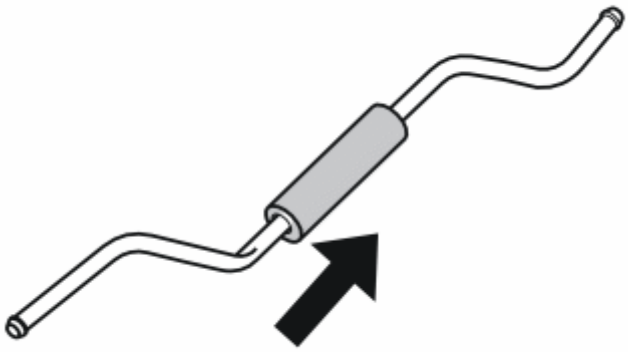

Fig. 331: Identifying Pipe Joint Cover
Courtesy of VOLVO CARS CORPORATION

- Take the chafe protection and the short fuel pipe from the kit. Install the chafe protection on the pipe.

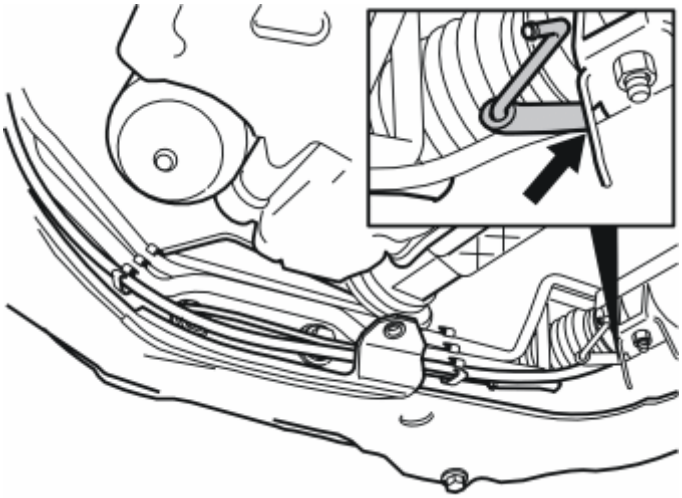

Fig. 332: Identifying Fuel Line Placement
Courtesy of VOLVO CARS CORPORATION

- Insert the end of the short fuel pipe that is bent in two different directions, under the power steering and the anti-roll bar, over the right-hand rear corner of the sub-frame.

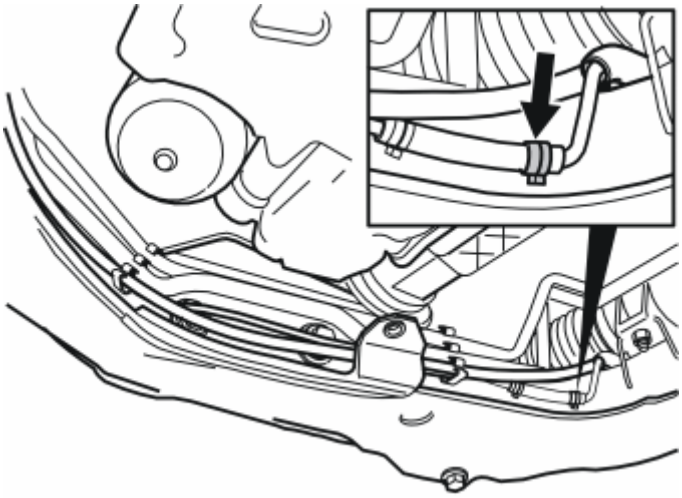

Fig. 333: Identifying Hose Clamp, Short Fuel Line & Fuel Pipe On Sub-Frame
Courtesy of VOLVO CARS CORPORATION

- Take a hose clamp from the kit. Thread the hose clamp onto the short fuel line on the fuel pipe on the sub-frame
- Connect the short fuel pipe to the fuel line. Slide the pipe into the fuel line. Slide the pipe in so far that the two pipes are in contact with each other. This prevents air pockets from forming
- Squeeze the hose clamp together.

Illustration A

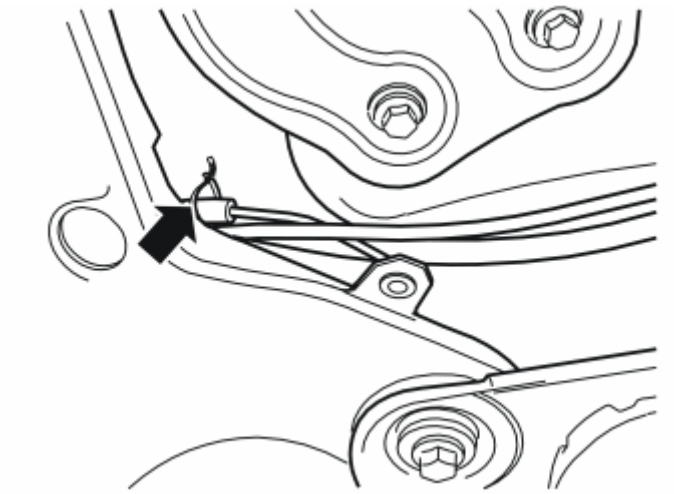

Fig. 334: Identifying Tie Strap & Protective Tube
Courtesy of VOLVO CARS CORPORATION

- Take a tie strap from the kit. Clamp the protective tube at the fuel pipe so that it is securely installed.

Illustration B

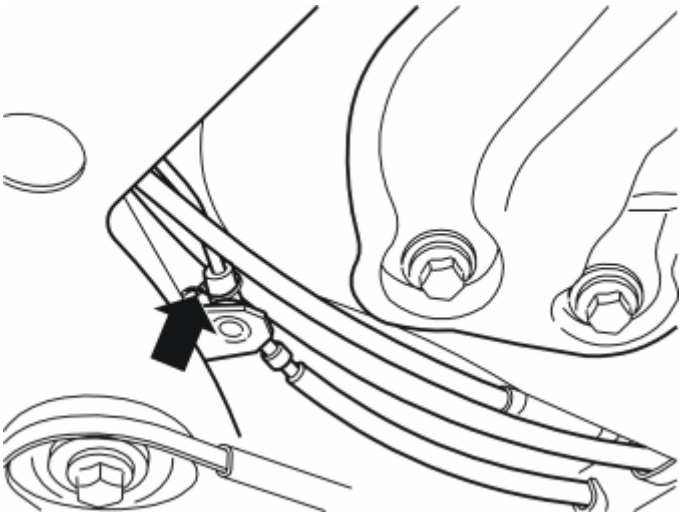

Fig. 335: Identifying Hose Clamp & Fuel Line
Courtesy of VOLVO CARS CORPORATION

- Take a hose clamp from the kit. Thread the hose clamp onto the fuel line up to the fuel pump (FP) that was routed previously. Connect the fuel line to the short fuel pipe. Slide the pipe into the fuel line. Slide the pipe so far in that the two pipes are in contact with each other. This prevents air pockets from forming
- Ensure that the fuel pipe is routed correctly and does not squeeze the plastic hose or rub against the sub-frame or other components
- Squeeze the hose clamp together.

NOTE: Fuel lines and fuel pipes must be at least 15 mm (19/32") from brake pipes.

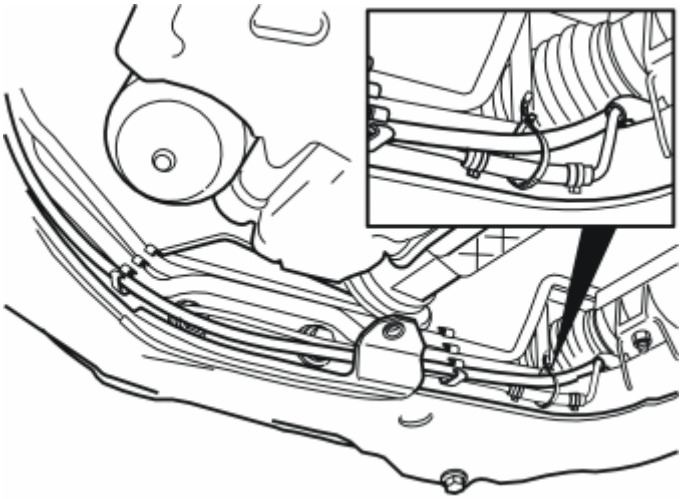

Fig. 336: Identifying Tie Strap And Fuel Pipe Clamp On Plastic Hose
Courtesy of VOLVO CARS CORPORATION

- Take a tie strap from the kit and clamp the fuel pipe at the plastic hose.

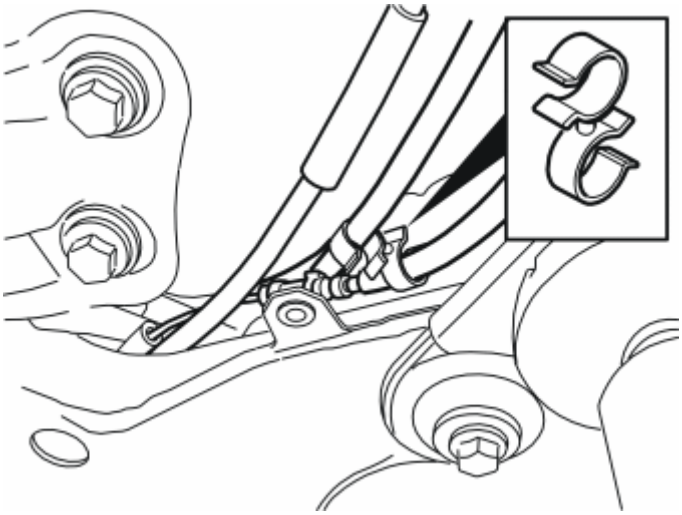

Fig. 337: Identifying Double Clamp And Fuel Line
Courtesy of VOLVO CARS CORPORATION

- Take a double clamp from the kit and clamp the fuel line for the parking heater at the ordinary fuel line.

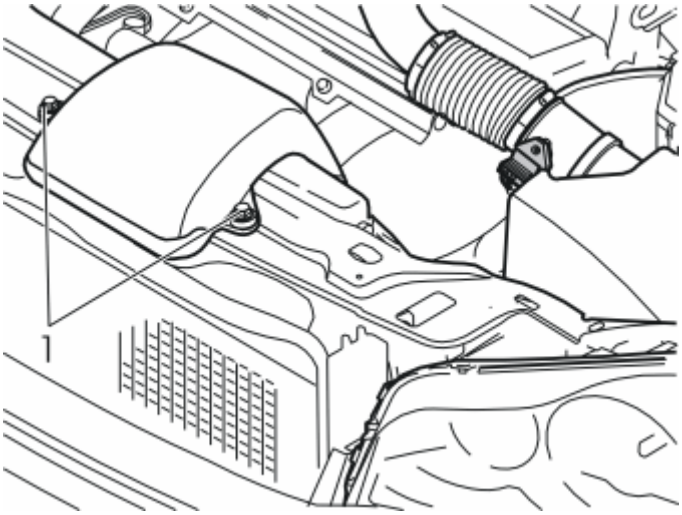

Fig. 338: Removing Air Cleaner Intake Manifold
Courtesy of VOLVO CARS CORPORATION

- Remove the two screws (1) from the intake manifold for the air cleaner (ACL)
- Remove the intake pipe. Place the intake manifold to one side.

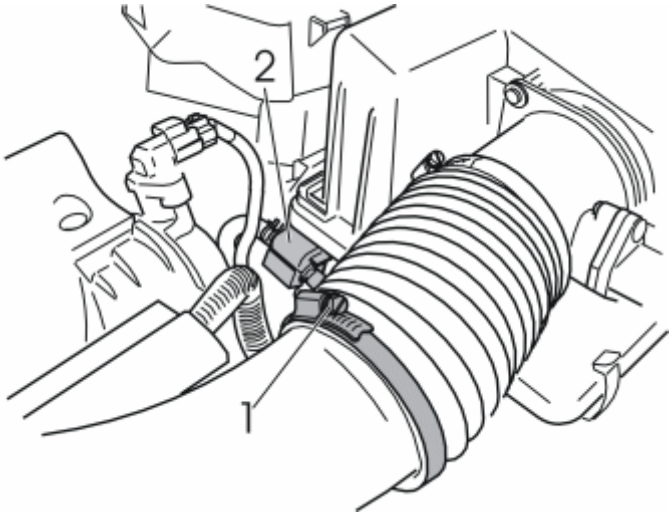

Fig. 339: Hose Clamp
Courtesy of VOLVO CARS CORPORATION

- Fully disconnect the hose clamp (1)
- Remove the vacuum valve with hoses and the line (2) from the mounting at the rear lower edge, on the right-hand side of the air filter. Move it away from the gearbox
- Pull off the air cleaner (ACL) from the mounting on top of the front member. Disconnect the air cleaner (ACL) from the pipe to the turbocharger (TC). Unless the pipe to the air cleaner (ACL) has been removed before, carefully heating it with a hot-air gun can help to release it
- Place the air cleaner (ACL) to one side. Position it so that the space by the gearbox is exposed.

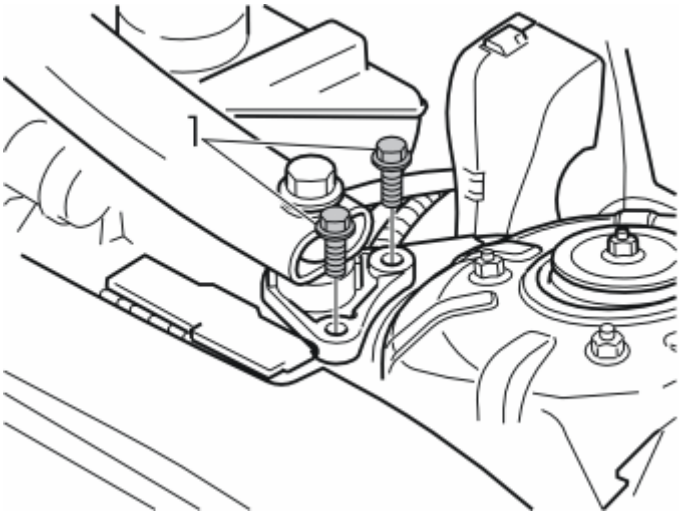

Fig. 340: Spring Strut Stay Screws
Courtesy of VOLVO CARS CORPORATION

- Remove the two screws (1) for the spring strut stay on the left-hand side to access the quick-release connector in the cowl panel.

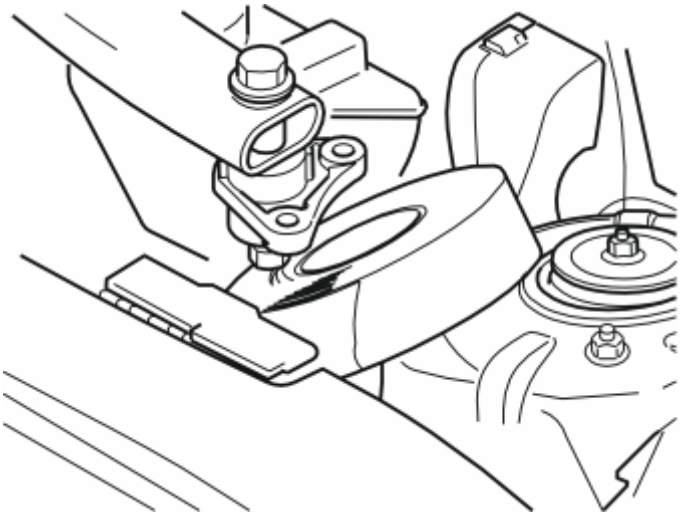

Fig. 341: Shim Between Mounting And Spring Strut Turret
Courtesy of VOLVO CARS CORPORATION

- Pull the spring strut stay up on the left-hand side. Position a shim between the mounting and the spring strut turret.

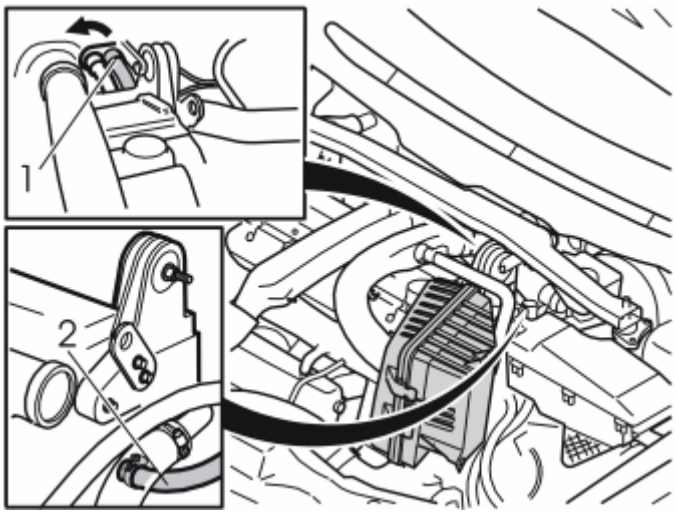

Fig. 342: Heating Hoses
Courtesy of VOLVO CARS CORPORATION

- Disconnect the quick-release connector on the left heating hose (1) for the passenger compartment heater. Press in the circlip on the quick-release connector opposite the two arrows. Turn the circlip in the direction of the arrows at the same time. Turn the quick-release connector a little and pull it out
- Disconnect the heater hose (2) on the left-hand side of the cylinder head
- Place the heater hose to one side. It will not be reused.

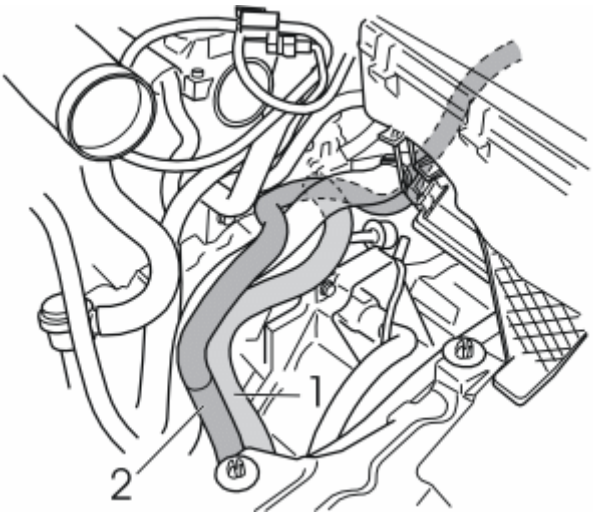

Fig. 343: Hoses Routed Over Gearbox
Courtesy of VOLVO CARS CORPORATION

- Thread the heater hoses from the kit down along the front left mounting of the sub-frame
- Route the hoses over the gearbox as illustrated
- If necessary, disconnect the thick coolant hose at the cylinder head. This facilitates the installation of the new coolant hose
- The hose (1) is connected to the left-hand side of the cylinder head using a hose clamp. Tighten the hose clamp. Connect the hose (2) to the left-hand hose connector in the cowl panel.

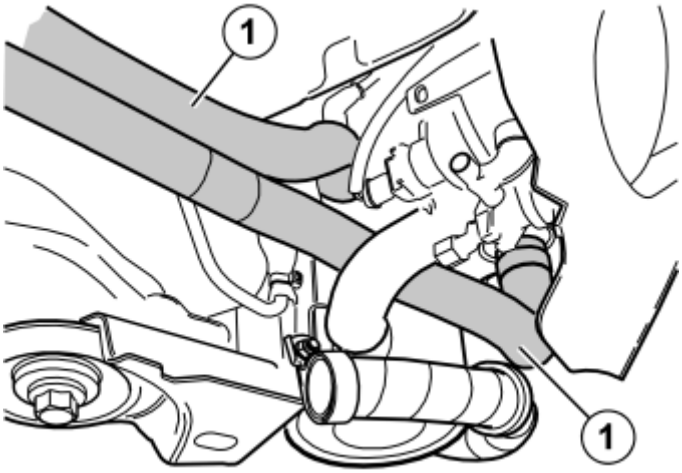

Fig. 344: Identifying Heater Hoses
Courtesy of VOLVO CARS CORPORATION

- Connect the two heater hoses (1) to the heater using the hose clamps from the kit. Tighten the hoses.
- Tighten the drain nipple on the radiator. Remove the hose
- Reinstall the engine splash guard. Tighten to **25 Nm (18 lbf. ft.)**
- Reinstall the front skid plate. Tighten to **50 Nm (37 lbf. ft.)**
- Bend the wing liner back into position. Install the small plate. Install the nuts. Tighten
- Press the wing extension back into place
- Take rivets from the kit. Rivet the front edge/lower edge of the wing lining
- Reinstall the bumper panel
- Reinstall the wheel. Tighten the screws. Tighten to **140 Nm (103 lbf. ft)** .

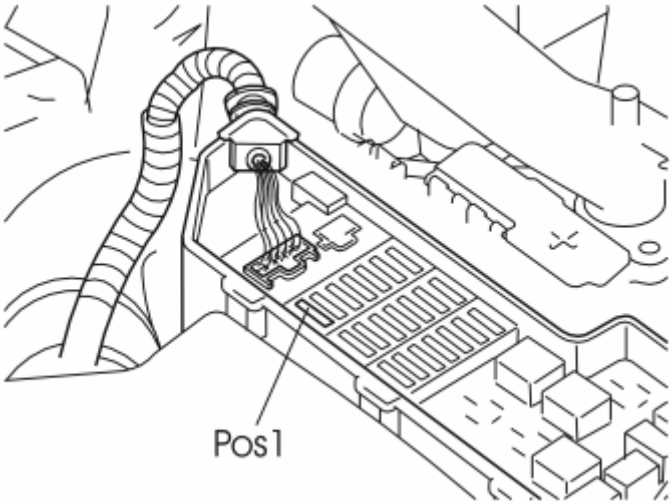

Fig. 345: Engine Compartment Fuse Holder
Courtesy of VOLVO CARS CORPORATION

- Open the cover on the fuse holder in the engine compartment. Install a 25A fuse in position 1
- Reinstall the cover
- Then tighten the left-hand mounting for the spring strut stay. Tighten the screws. Tighten to **50 Nm (37 lbf. ft.)** .

- Fill with coolant. Reinstall the expansion tank cap
- Reinstall the air cleaner (ACL). Connect any disconnected lines or hoses
- Reinstall the intake manifold on the front cover plate between the headlamps. Tighten the screws. Tighten to **10 Nm (7 lbf. ft)**
- Start the engine and bleed the cooling system
- Program the software. See the service information in VIDA (Volvo Scan Tool)
- Test the function of the heater according to separate instructions.

FUEL DRIVEN HEATER 912-B (B5254T2; 2003-2007) (AW50/51 AWD; AW55-50/51SN; 2005-2007)

FUEL DRIVEN HEATER 912-B (2003, 2004)

NOTE: This accessory requires software unique to the car.

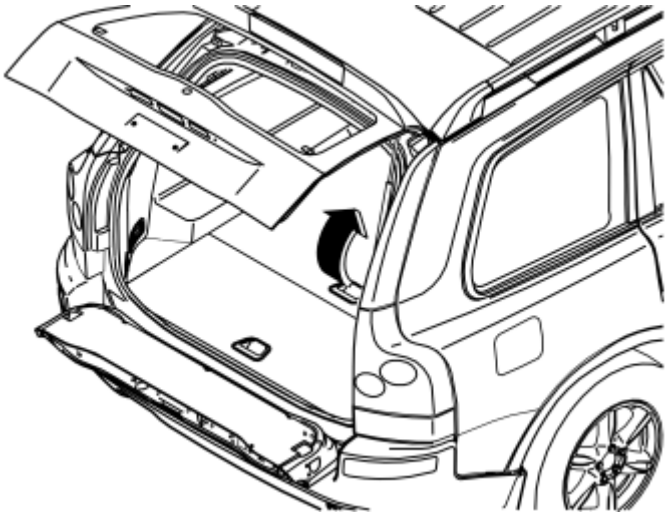

Fig. 346: Removing Front Floor Hatch
Courtesy of VOLVO CARS CORPORATION

Applies to cars with two rows of seats

- Remove the front floor hatch. First lift up slightly and then pull the hatch loose from its mountings at the front edge.

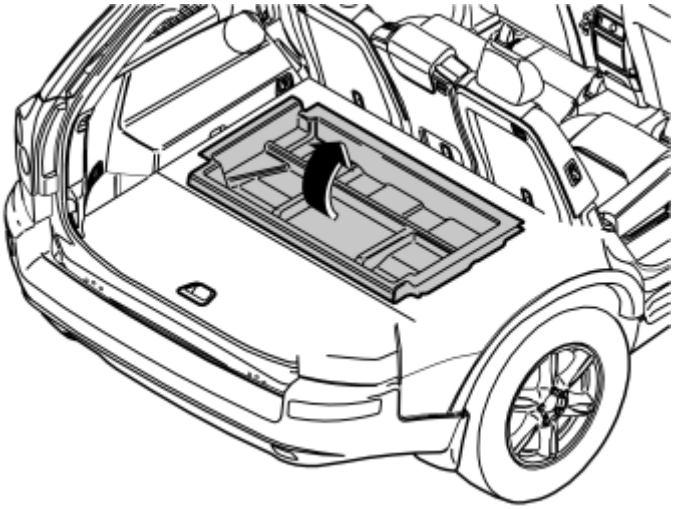

Fig. 347: Removing Front Storage Compartments
Courtesy of VOLVO CARS CORPORATION

Applies to cars with two rows of seats

- Lift out the front storage compartment.

NOTE: **Removing the right-hand seat in the second row of seats (steps 3-8) applies to all cars. For cars with three rows of seats, the left-hand and center seats in the middle row must also be removed.**

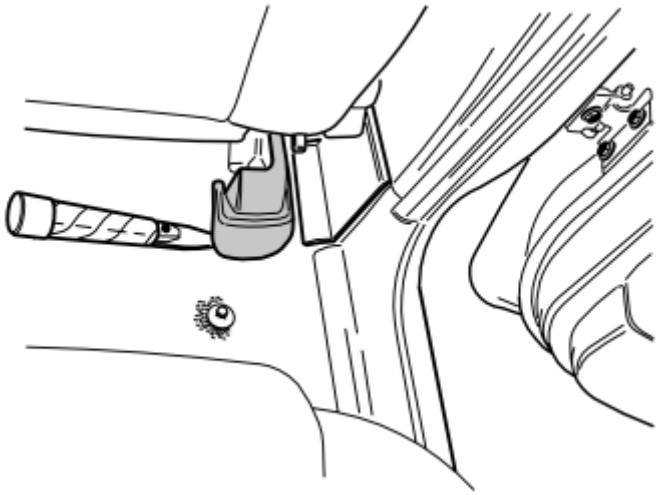

Fig. 348: Prying Right-Hand Rear Mounting Of Cover Panel
Courtesy of VOLVO CARS CORPORATION

- Remove the panel on the right rear mounting on the right-hand front seat. Pry up the rear edge of the panel slightly and then pull backwards and upwards.

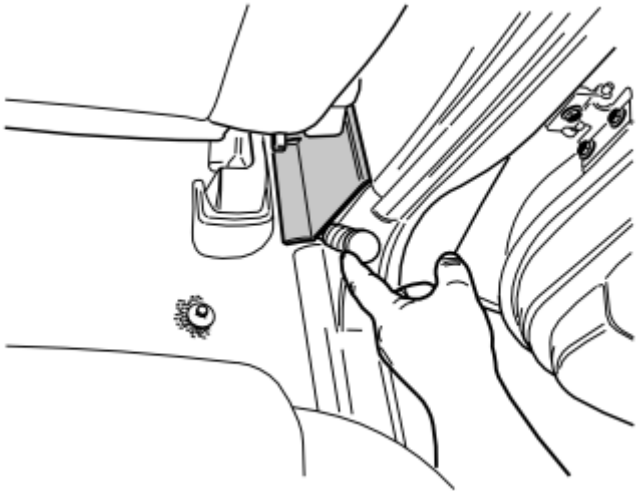

Fig. 349: Prying Away Cover Panel Over Joint Between Door Sills On Right-Hand Side, At Lower Edge, Using A Weatherstrip Tool
Courtesy of VOLVO CARS CORPORATION

- Slide the seats in the first row as far forwards as possible
- Carefully pry off and remove the panel above the joint between the right-hand door sills.

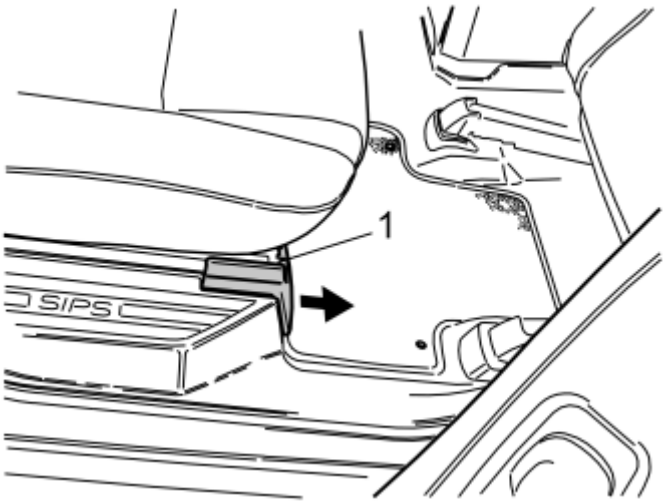

Fig. 350: Pushing Up Catch On Top Side
Courtesy of VOLVO CARS CORPORATION

- Remove the panel for the front right seat mounting on the right-hand seat in the second row. Press down the catch (1) on top and detach the panel by pulling it forward. Remove the screw underneath.

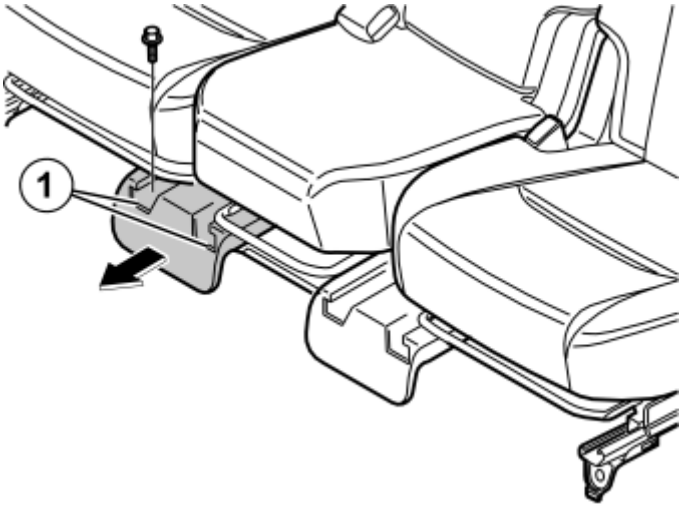

Fig. 351: Removing Front Seat Mountings
Courtesy of VOLVO CARS CORPORATION

- Remove the panel for the front seat mountings for the right-hand seat/middle seat in the second row. Press down the catches (1) on top and detach the panel by pulling it forward. Remove the screw for the right-hand seat.

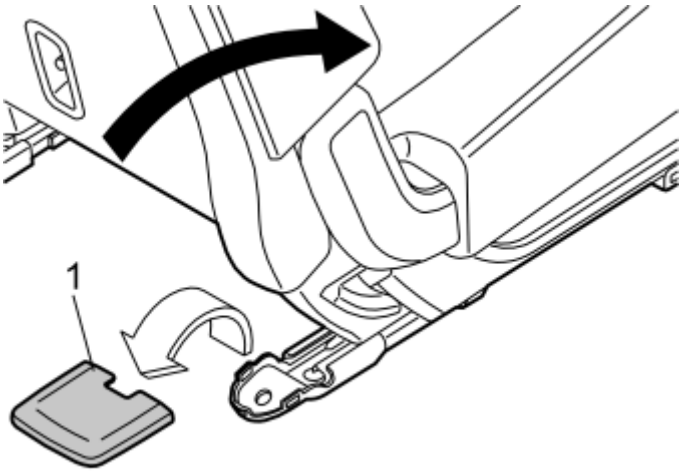

Fig. 352: Removing Rear Seat Mounting Cover
Courtesy of VOLVO CARS CORPORATION

- Fold the rear backrest forwards on the right-hand seat in the second row
- Remove the covers (1) for the rear seat mountings on the right-hand seat by prying them off the rear edge. Remove the screws.

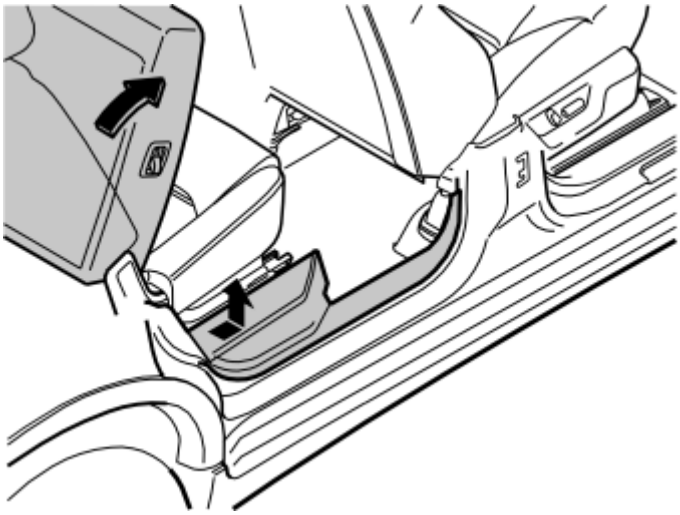

Fig. 353: Removing Seal Trim
Courtesy of VOLVO CARS CORPORATION

- Remove the sill trim panel for the right-hand rear door. Pull off the rear edge until the clips release. Continue forwards until the remaining clips have released
- Unhook the sill trim panel from the B-post panel. Place the sill trim panel in the cargo compartment
- Remove the seat.

CAUTION: Be careful when lifting the seats out of the passenger compartment. Ensure that the mountings do not damage the door panels.

Applies to cars with three rows of seats

- Remove the corresponding panels and screws as in steps 3-8, on the left-hand side, and for the left-hand and middle seats in the second row
- Remove the left-hand and center seats.

CAUTION: Be careful when lifting the seats out of the passenger compartment. Ensure that the mountings do not damage the door panels.

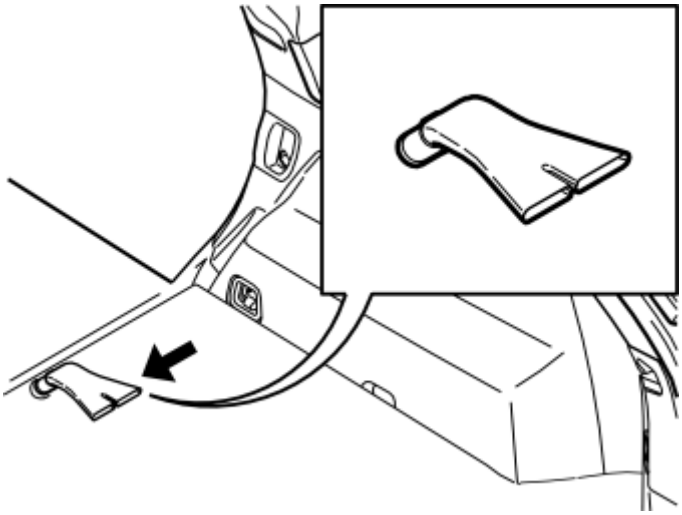

Fig. 354: Seat Mountings
Courtesy of VOLVO CARS CORPORATION

Applies to cars with three rows of seats

- Remove the vents on the right and left-hand sides.

Illustration A applies to cars with two rows of seats

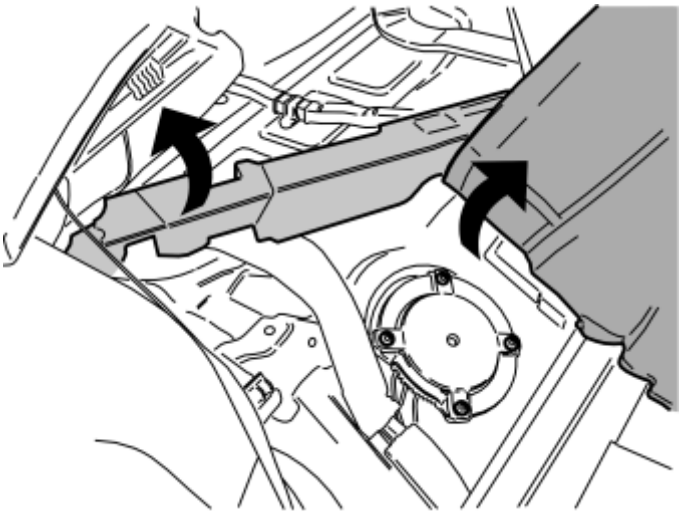

Fig. 355: Pushing Carpet And Insulation Aside
Courtesy of VOLVO CARS CORPORATION

- Push the floor carpet to one side and secure it using the seat belt on the left-hand side
- Carefully push the insulation to one side so that the cover for the fuel tank unit is accessible.

CAUTION: Take care with the insulation. It will break off easily.

Illustration applies to cars with three rows of seats

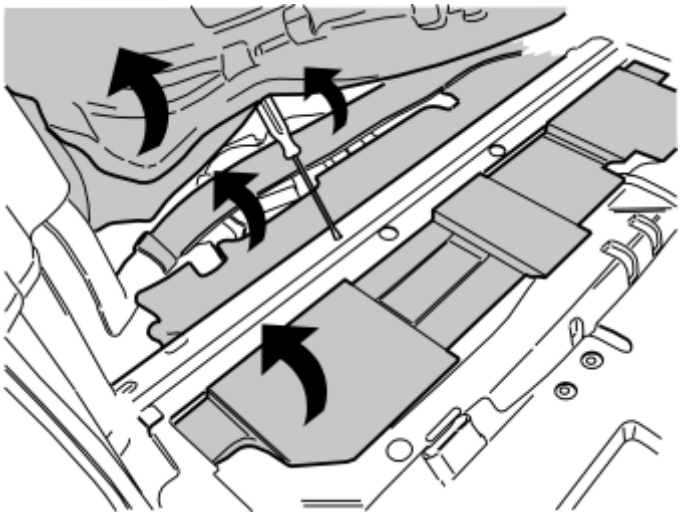

Fig. 356: Removing Insulation Panels
Courtesy of VOLVO CARS CORPORATION

- Push the floor carpet and insulation panel to one side
- Position a screwdriver or similar to hold the carpet in place
- Remove the air duct
- Remove both insulation panels.

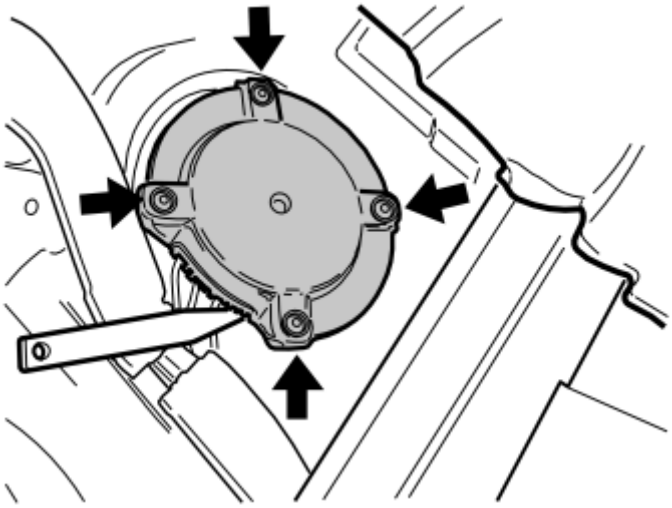

Fig. 357: Removing Fuel Tank Unit Cover
Courtesy of VOLVO CARS CORPORATION

- Remove the four screws in the cover for the fuel tank unit
- Carefully pry off the cover. Use a weatherstrip tool.

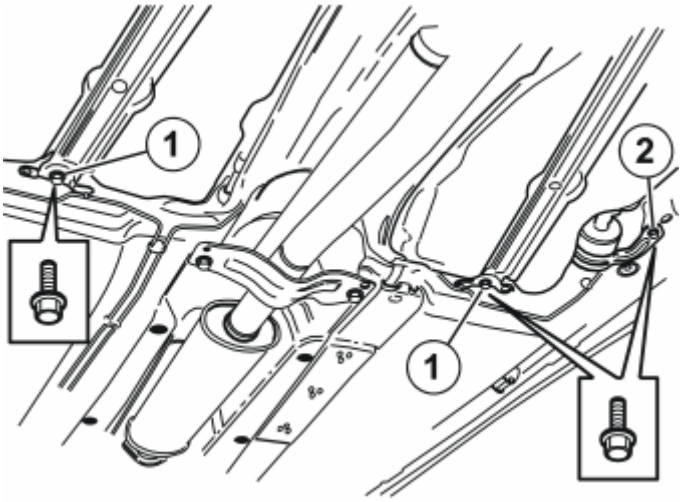

Fig. 358: Identifying Front Mounting & Fuel Filter Screws
Courtesy of VOLVO CARS CORPORATION

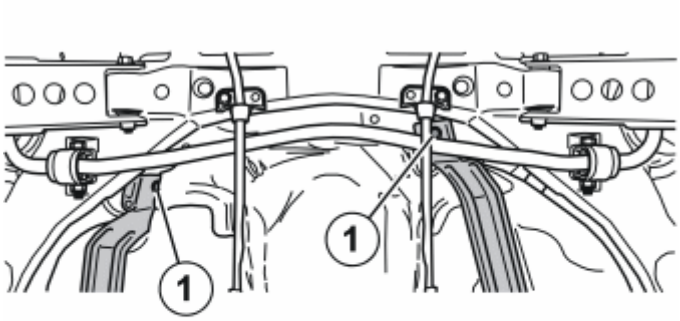

Fig. 359: Identifying Rear Mounting Screws
Courtesy of VOLVO CARS CORPORATION

- Remove the four screws (1) in the front and rear mountings for the fuel tank so that the fuel tank lowers slightly. This allows the suction pipe for the fuel tank to be installed. If necessary, remove the screw (2) for the fuel filter to lower the fuel tank further.

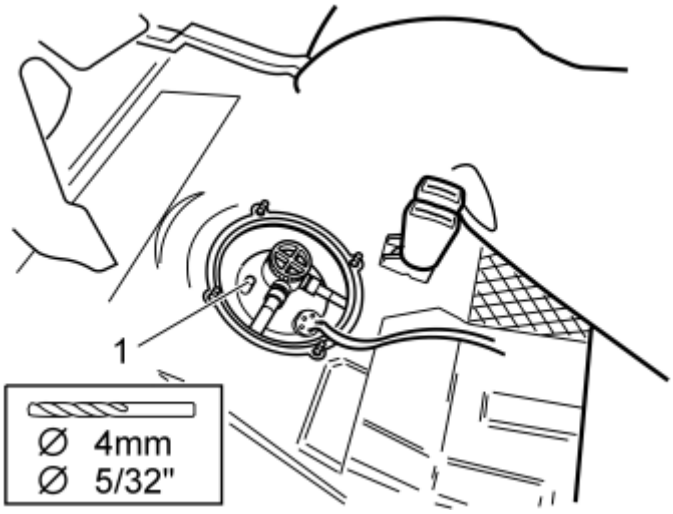

Fig. 360: Identifying Drill Hole Area And Dimensions
Courtesy of VOLVO CARS CORPORATION

- Drill out the terminal (1) in the fuel tank unit. Use a **4 mm (5/32")** diameter drill bit.

NOTE: Use a compressed air power drill with a greased bit.

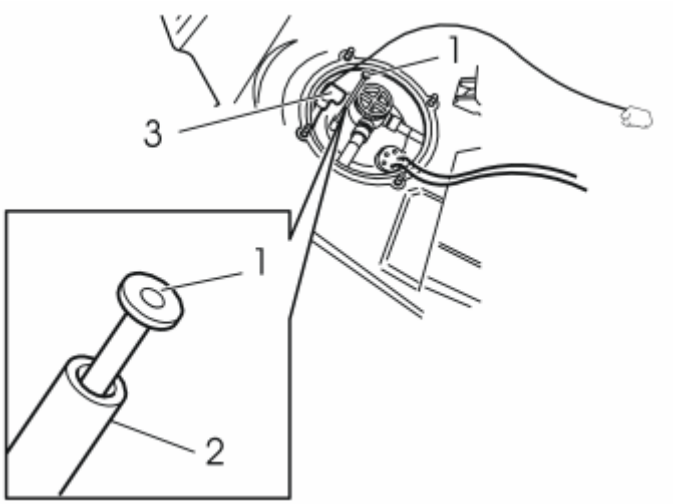

Fig. 361: Installing Pipe And Cable Assembly
Courtesy of VOLVO CARS CORPORATION

- Insert the pipe (1) from the kit into the connection (2). Press the pipe down until it is against the connection
- Take the fuel line and electrical cable from the kit. Apply masking tape on the end of the part of the fuel line that is to be inserted down through the hole in the floor (the end with the short free cable end)
- Insert the entire cable assembly (3) between the floor and the fuel tank out to the right.

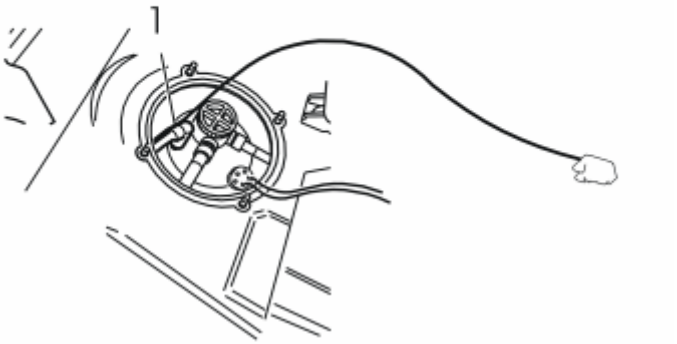

Fig. 362: Installing Quick-Release Connector
Courtesy of VOLVO CARS CORPORATION

- Press the quick-release connector (1) onto the connection until a click is heard. Check that the quick-release connector is secure.

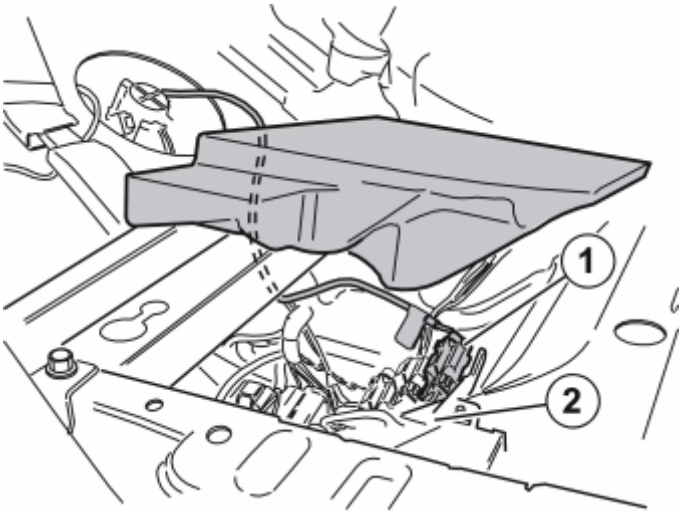

Fig. 363: Routing And Connecting Cable
Courtesy of VOLVO CARS CORPORATION

Applies to cars with two rows of seats

- Carefully push up the end of the insulation.
- Position a spacer underneath.
- Route the cable that was previously routed along with the fuel line under the seat member. Connect the cable to the front connector (1) in the connector bridge (2)
- **Applies to cars with two rows of seats:** Remove the spacer and fold down the insulation

- Position the cable in the holder in the fuel tank unit cover
- Reinstall the cover for the fuel tank unit. Secure the cover using the four screws.

- Reinstall the insulation panels
- **Applies to cars with three rows of seats:** Reinstall the air duct
- Fold back the carpet
- **Applies to cars with three rows of seats:** Reinstall the vents under the outer seats
- Reinstall the seats.

CAUTION: Be careful when lifting the seats into the passenger compartment. Ensure that the mountings do not damage the door panels.

- Secure the seats. Tighten the screws. Tighten to **48 Nm (35 lbf. ft.)**
- Reinstall the panels and covers over the seat mountings
- Reinstall the panels over the joint between the door sills.

Applies to cars with two rows of seats

- Reinstall the front storage compartment
- Reinstall the front floor hatch.

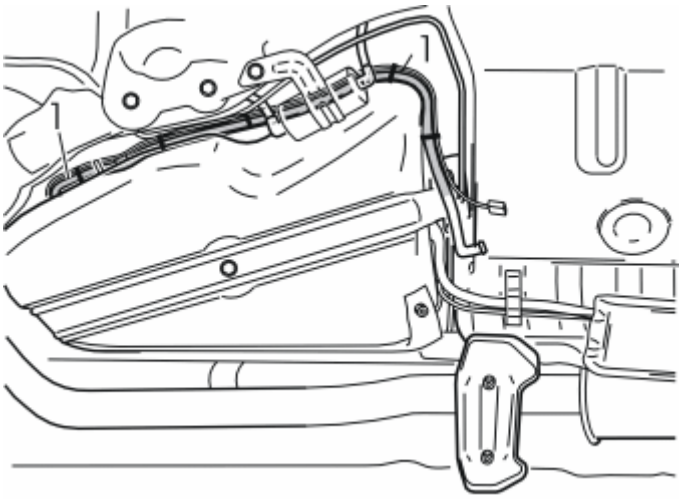

Fig. 364: Identifying Fuel Hose & Cable Harness At Rear Edge Of Fuel Tank
Courtesy of VOLVO CARS CORPORATION

- Route the fuel hose and cable harness (1) at the rear edge of the fuel tank. Route it along the right-hand side of the fuel tank and forwards. Let it hang down.

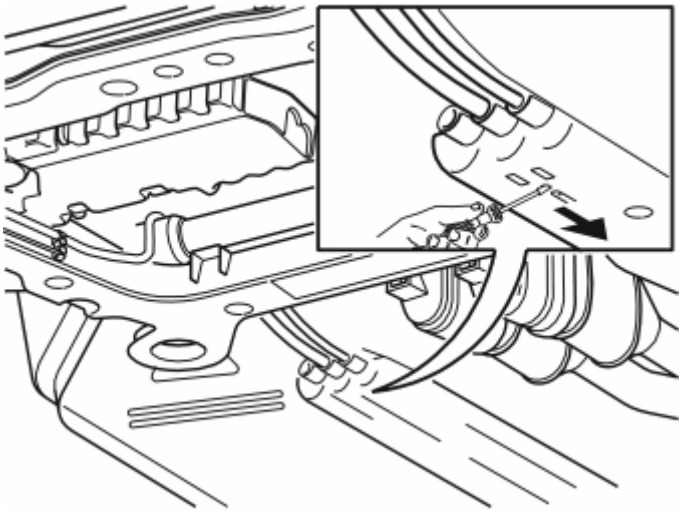

Fig. 365: Detaching Fuel Rail At Front Edge
Courtesy of VOLVO CARS CORPORATION

- Disconnect the rail for the fuel line. Insert a small screwdriver in the small hole between the rail and the yellow clip. Slide the clip in the same direction as the oval hole in the rail. The rear black clip has a small collar on the clip. Position the screwdriver against the collar and slide it forwards.

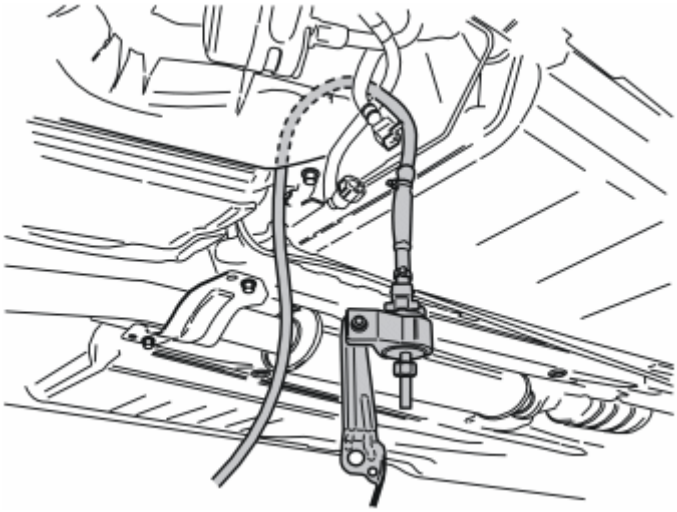

Fig. 366: Identifying Cable At Front Edge & Right-Hand Side Of Fuel Tank
Courtesy of VOLVO CARS CORPORATION

- Take the fuel pump (FP) and cable from the kit. Slide the cable up at the front edge on the right-hand side of the fuel tank
- Route the cable so that is next to the existing cable in the cut-out on top of the fuel tank. Then position the cable on the right-hand side of the wiring which runs to the engine compartment
- Pull up the wiring so that the fuel pump (FP) is positioned as approximately as illustrated.

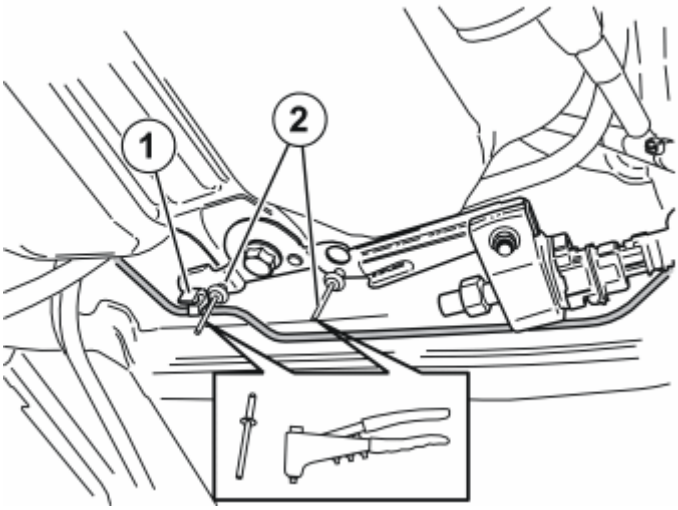

Fig. 367: Identifying Brake Pipe Clamp
Courtesy of VOLVO CARS CORPORATION

- Remove the brake pipe (1) from the clamp
- Take the fuel pump (FP) and bracket. Position the bracket on top of the bracket for the fuel tank mounting, aligned with the small holes for the rivets
- Take two metal rivets (2) from the kit. Rivet the fuel pump bracket to the bracket for the fuel tank mounting.

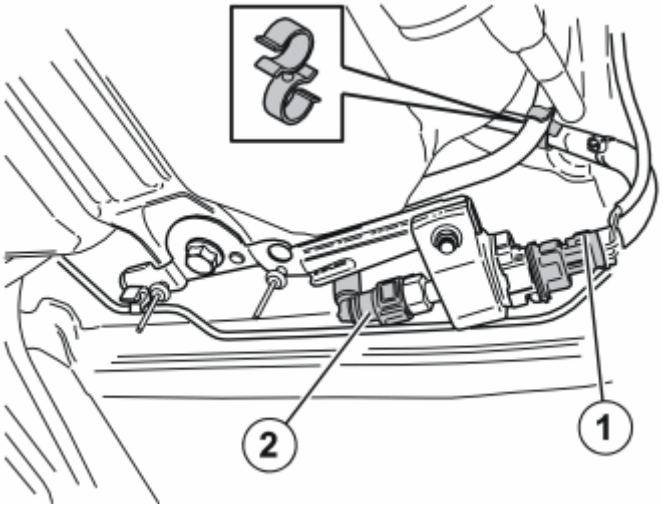

Fig. 368: Identifying Double Clamp & Fuel Lines From Fuel Pump
Courtesy of VOLVO CARS CORPORATION

- Take the double clamp from the kit. Secure the two fuel lines from the fuel pump (FP) to each other, opposite the two blue markings on the fuel lines
- Press the brake pipe back into the clamp
- Tighten the four screws securing the fuel tank. Tighten the screw for the fuel filter if it was loosened. Tighten the screws. Tighten to **24 Nm (18 lbf. ft)**
- Connect the connector (1) from the pre-routed power cable to the fuel pump (FP)

- Connect the quick-release connector (2) on the pre-routed fuel line to the fuel pump (FP).

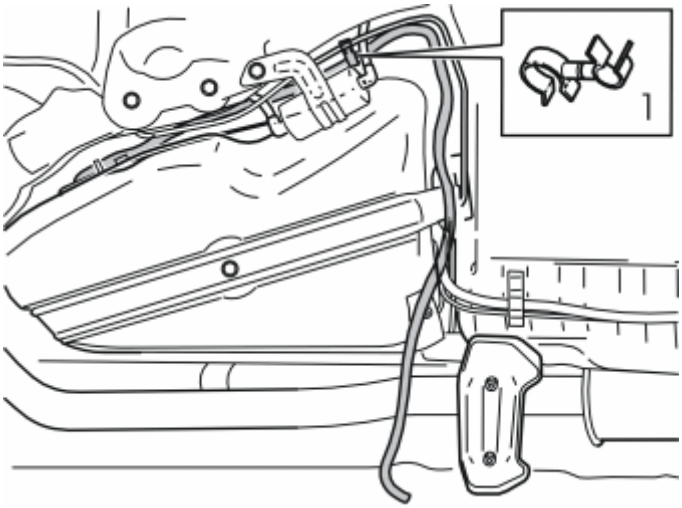

Fig. 369: Identifying Brake Pipe Fuel Line
Courtesy of VOLVO CARS CORPORATION

- Take a double clamp from the kit. Clamp the fuel line to the brake pipe at point (1).

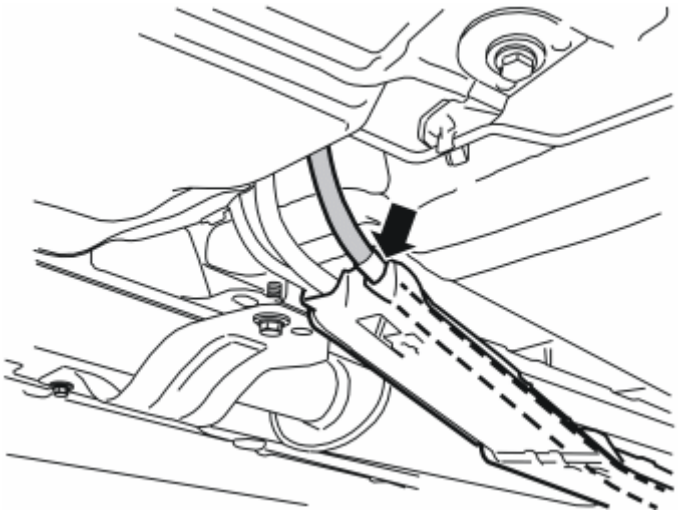

Fig. 370: Identifying Fuel Pump Hose
Courtesy of VOLVO CARS CORPORATION

- Press into place the fuel hose from the recently installed fuel pump (FP). Press into place in the bottom of the rail and forwards, in the cut-out furthest to the right.

NOTE: The marking on the fuel hose must be opposite the point where the fuel hose goes into the rail.

- Slide back the retaining clip for the rail. Press the rail against the car body. Ensure that the rail is securely installed.

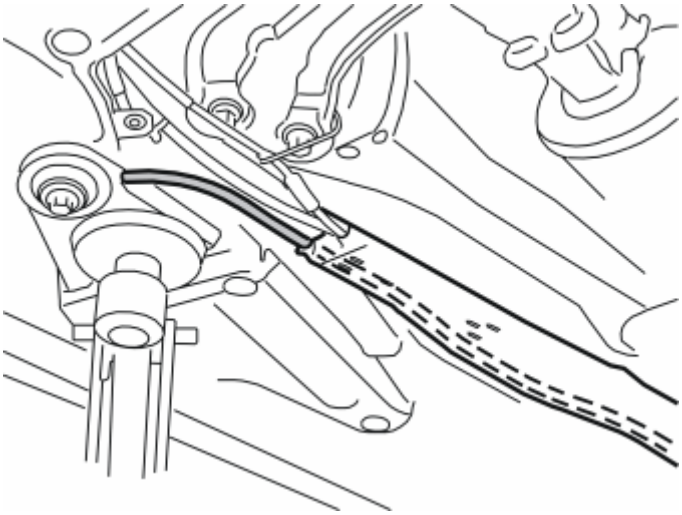

Fig. 371: Identifying Rail Retaining Clip
Courtesy of VOLVO CARS CORPORATION

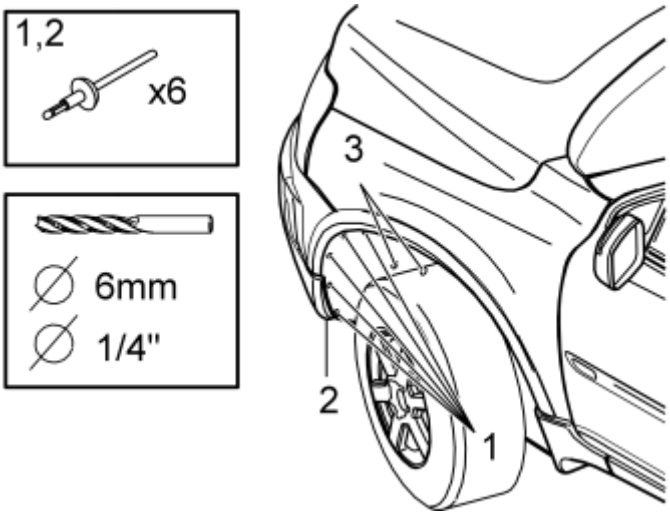

Fig. 372: Identifying Drill Hole Area And Dimensions
Courtesy of VOLVO CARS CORPORATION

- Remove the left front wheel
- Drill out the five rivets (1) holding the wheel arch lining and the rivets (2) in the lower edge of the bumper. Use a **6 mm (1/4")** diameter drill bit.

Remove:

- any rivet remains
- the plastic nuts (3) holding the wheel arch lining in place
- the small protective panel.

Applies to cars with accessory side trim

NOTE: The side trim on the front wing must not be removed.

- Only move the mounting lugs on the front wing side trim to one side so that the edge of the wheel arch lining can be exposed.

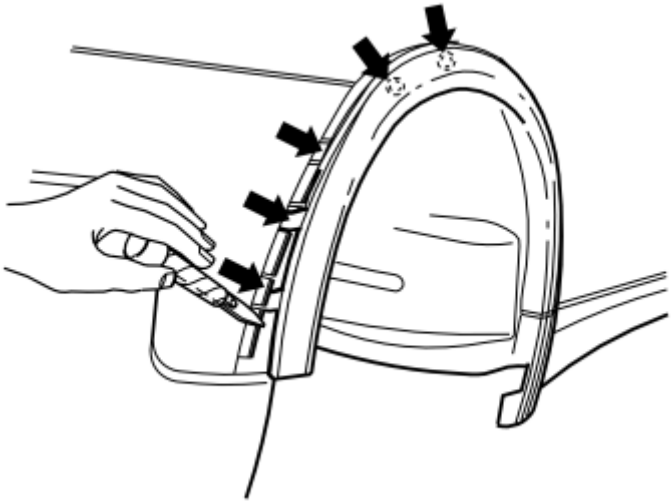

Fig. 373: Removing Side Trim
Courtesy of VOLVO CARS CORPORATION

Applies to cars without accessory side trim

- Detach the wheel arch extension. Carefully pry off the wheel arch extension using a weatherstrip tool
- Pull the wheel arch extension up to the highest point until the three catches at the lower edge and the two clips slightly higher up have released.

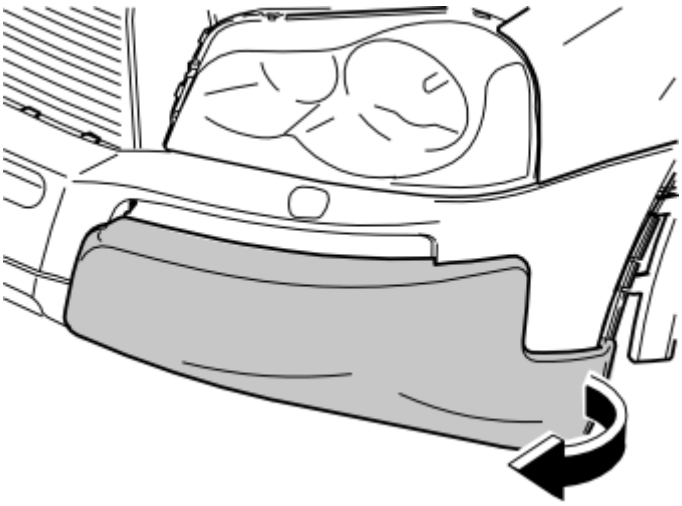

Fig. 374: Removing Bumper Left Hand Panel
Courtesy of VOLVO CARS CORPORATION

- Remove the left-hand panel on the bumper by carefully pull off the left-hand lower edge until the clip at

the bottom on the inside releases. Continue pulling until the clips around the panel release.

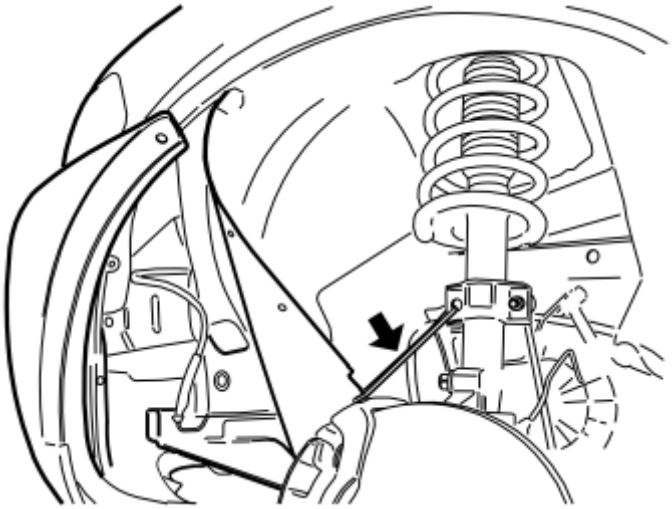

Fig. 375: Pushing Wheel Arch Lining Aside
Courtesy of VOLVO CARS CORPORATION

- Push the wheel arch lining to one side. Secure with a tie strap or similar.

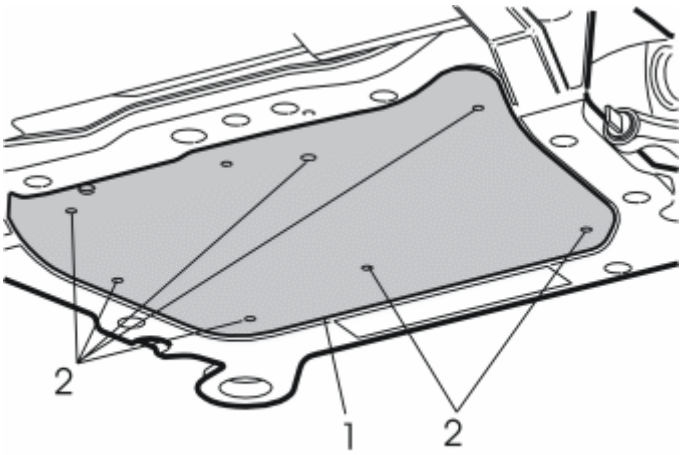

Fig. 376: Engine Splash Guard
Courtesy of VOLVO CARS CORPORATION

- Remove the engine splash guard (1) by removing the screws (2).

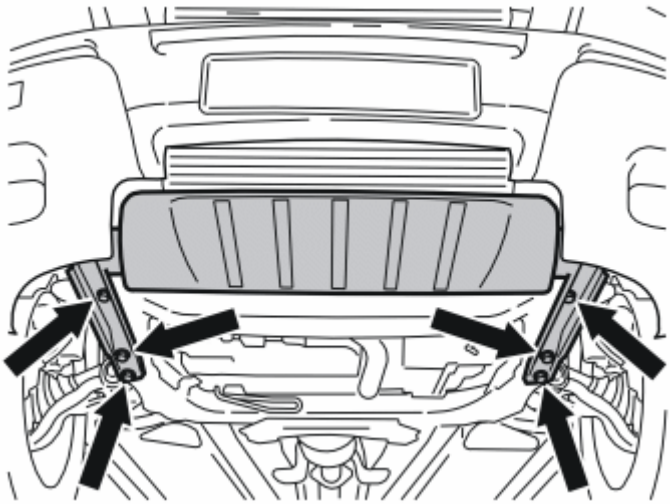

Fig. 377: Removing Front Side Plate
Courtesy of VOLVO CARS CORPORATION

- Remove the front skid plate. First remove the six screws (1) on the underneath
- With the assistance of a colleague, pull the skid plate forwards. Pull one of the corners until the mounting lug on that side of the skid plate releases from the sub-frame. Then pull off the other corner. The underside of the bumper cover may need to be carefully pushed down at the same time
- Open the cover for the radiator expansion tank
- Thread a hose onto the engine coolant drain nipple
- Open the drain nipple. Drain off the coolant.

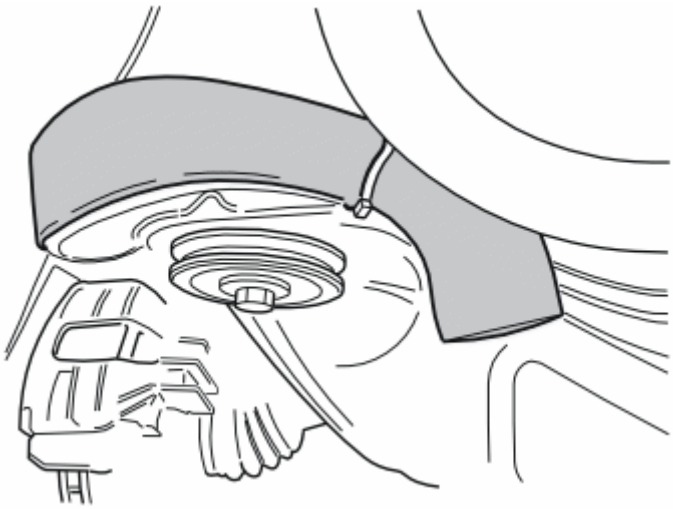

Fig. 378: Identifying Pipe Elbow
Courtesy of VOLVO CARS CORPORATION

- Pull off and push the pipe elbow to one side so that the fuel pipe can be positioned.

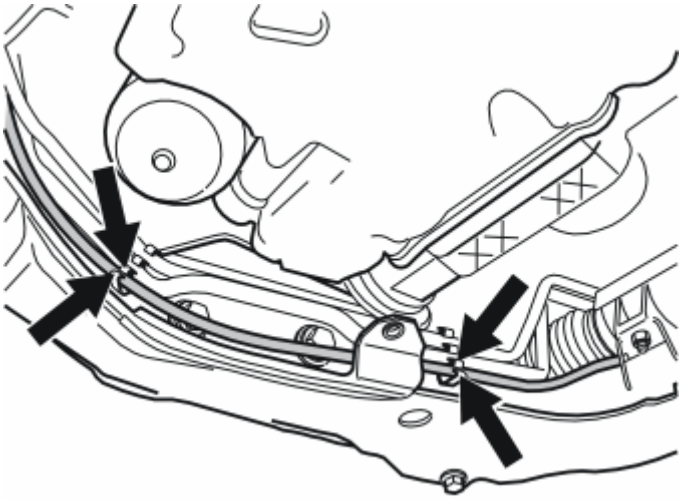

Fig. 379: Identifying Power Steering Pipes And Plastic Hose
Courtesy of VOLVO CARS CORPORATION

- Remove the power steering pipes and the plastic hose from their clips to make installing the fuel pipe easier. In order to push the upper power steering pipe to one side, the rubber coated clamp on the upper side of the front edge of the sub-frame may need to be removed.

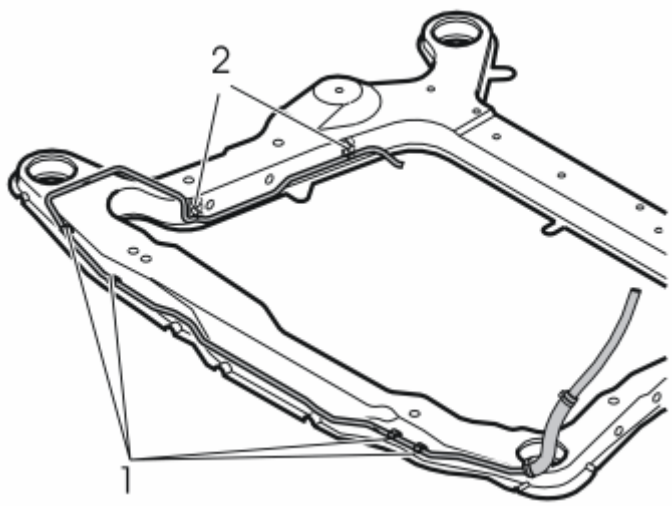

Fig. 380: Identifying Fuel Pipe And Clips
Courtesy of VOLVO CARS CORPORATION

- Install the fuel pipe using the four pre-installed clips (1) (from the kit) on the sub-frame. Insert the fuel pipe between the disconnected pipes and the sub-frame. Press the fuel pipe into place using the clips in the front edge of the sub-frame and in the bottom in the clips (2) that secured the plastic hose. Due to limited space, the fuel pipe needs to be worked slightly in order to position it.

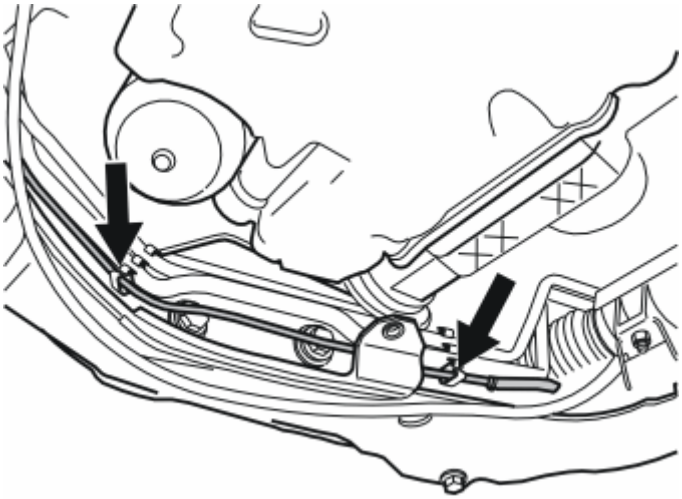

Fig. 381: Identifying Plastic Hose Clips
Courtesy of VOLVO CARS CORPORATION

- Reinstall the power steering pipes. Press the plastic hose into place on the outside of the fuel pipe. Reinstall the rubber coated clamp if this has been removed
- Check that the fuel pipe does not catch on the sub-frame. Check that the fuel pipe does not rub against pipes or screw heads for the suspension.

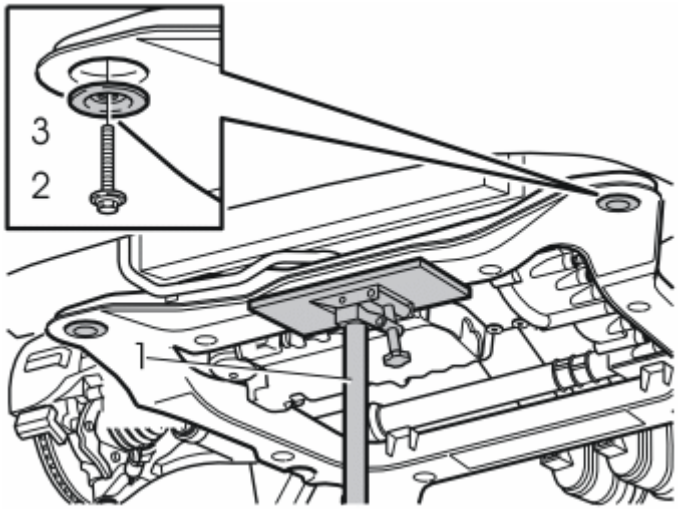

Fig. 382: Supporting Sub-Frame
Courtesy of VOLVO CARS CORPORATION

- Reinstall the pipe elbow
- Install the jack (1) under the front edge of the sub-frame
- Take the weight off the sub-frame
- Remove the screw (2) and the washer (3) from the left front mounting on the sub-frame.

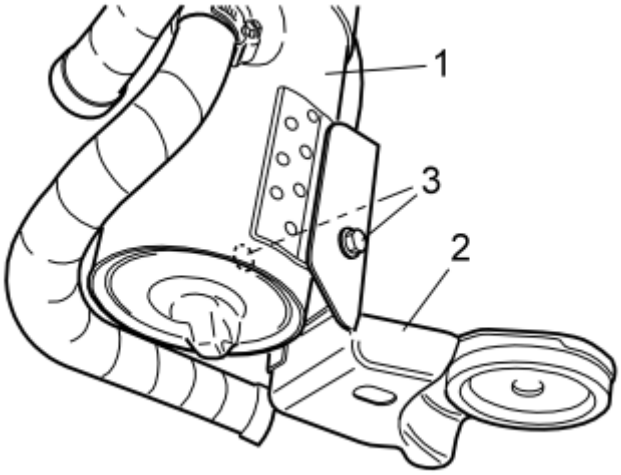

Fig. 383: Identifying Heater And Bracket
Courtesy of VOLVO CARS CORPORATION

- Install the heater (1) on the bracket (2.) Use the screws (3) from the kit. Tighten.

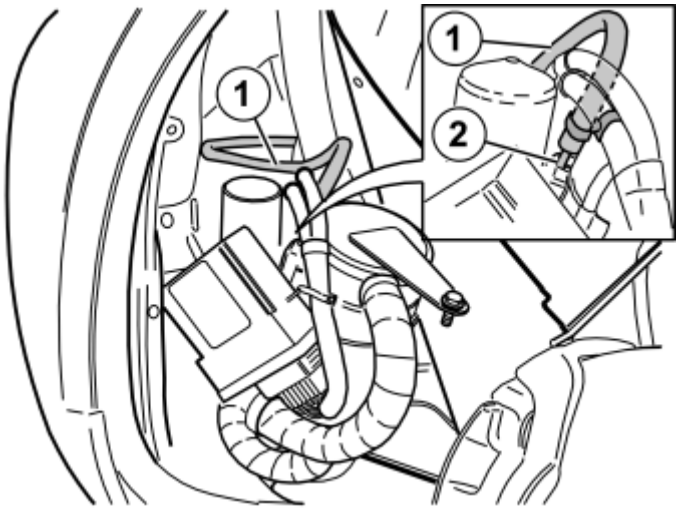

Fig. 384: Identifying Fuel Hose Clamp & Inlet
Courtesy of VOLVO CARS CORPORATION

- Slide the heater up to the installation position
- Take a small hose clamp for the fuel line from the kit. Install the hose clamp on the fuel hose (1) from the fuel pipe on the sub-frame
- Press the fuel line on the inlet (2) on the fuel pump (FP). Tighten.

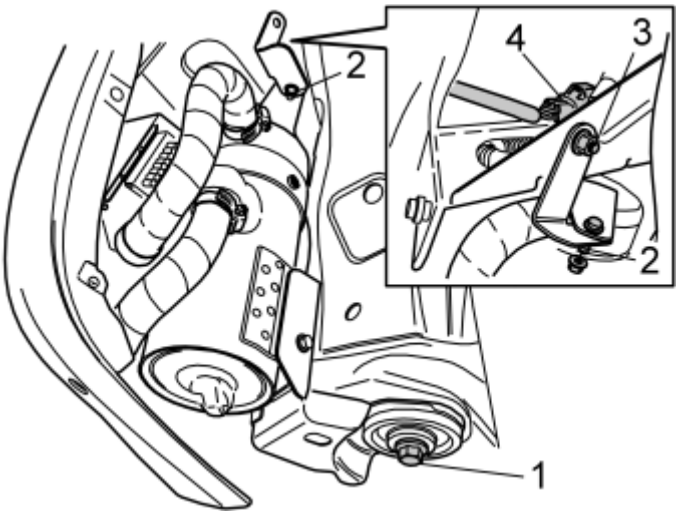

Fig. 385: Installing Bracket
Courtesy of VOLVO CARS CORPORATION

- Take a new screw (1) from the kit. Secure the heater to the left-hand front corner of the sub-frame. Do not tighten fully yet
- Take the metal bracket and two nuts from the kit
- Install one of the mounting lugs for the metal bracket on the stud (2) on the heater. Install the nut. Finger tighten
- Install the other mounting lug for the bracket on the stud (3). Install the nut
- Tighten the heater to the sub-frame and the bracket. Tighten the screw (1). Tighten to **105 Nm (78 lbf. ft)** . Angle-tighten to 120° or **max. 280 Nm (206 lbf. ft.)**
- Remove the protective cover from the pre-routed connector (4). Press in the catch on the top. Pull off the cover
- Connect the cable from the heater to the connector.

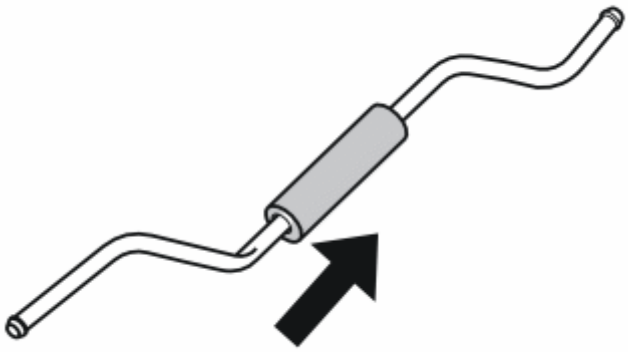

Fig. 386: Identifying Pipe Joint Cover
Courtesy of VOLVO CARS CORPORATION

- Take the chafe protection and the short fuel pipe from the kit. Install the chafe protection on the pipe.

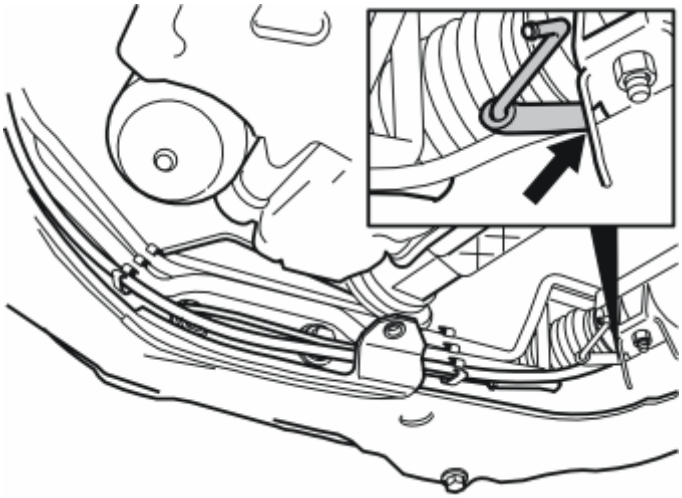

Fig. 387: Identifying Fuel Line Placement
Courtesy of VOLVO CARS CORPORATION

- Insert the end of the short fuel pipe that is bent in two different directions, under the power steering and the anti-roll bar, over the right-hand rear corner of the sub-frame.

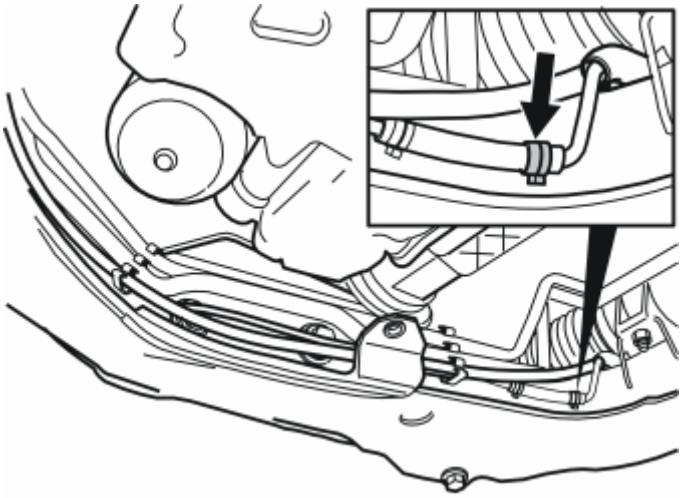

Fig. 388: Identifying Hose Clamp, Short Fuel Line & Fuel Pipe On Sub-Frame
Courtesy of VOLVO CARS CORPORATION

- Take a hose clamp from the kit. Thread the hose clamp onto the short fuel line on the fuel pipe on the sub-frame
- Connect the short fuel pipe to the fuel line. Slide the pipe into the fuel line. Slide the pipe in so far that the two pipes are in contact with each other. This prevents air pockets from forming
- Squeeze the hose clamp together.

Illustration A

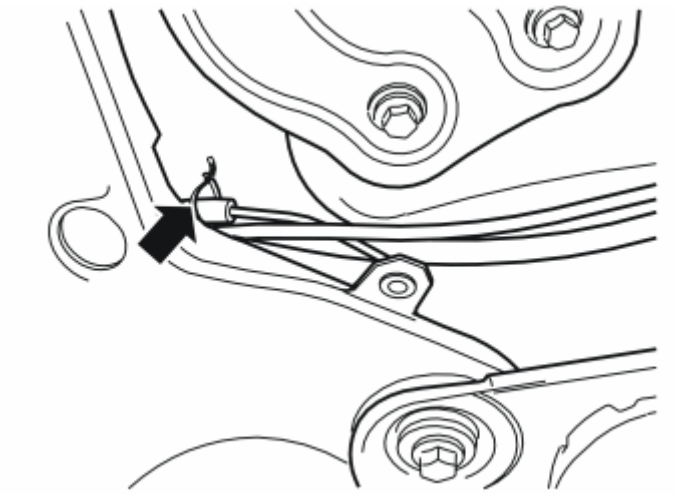

Fig. 389: Identifying Tie Strap & Protective Tube
Courtesy of VOLVO CARS CORPORATION

- Take a tie strap from the kit. Clamp the protective tube at the fuel pipe so that it is securely installed.

Illustration B

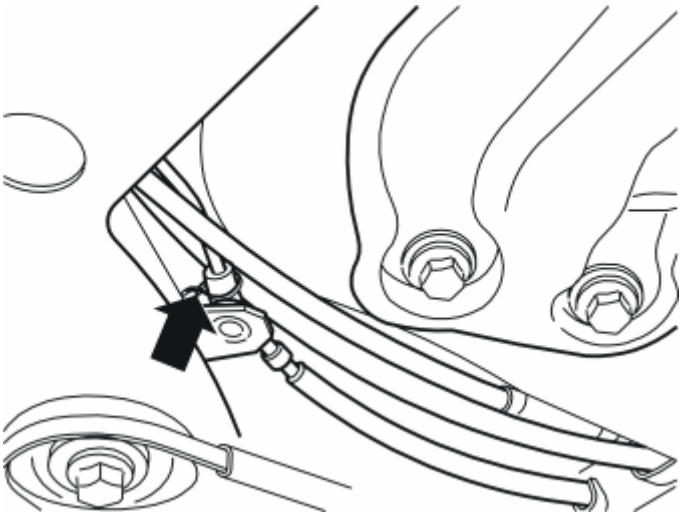

Fig. 390: Identifying Hose Clamp & Fuel Line
Courtesy of VOLVO CARS CORPORATION

- Take a hose clamp from the kit. Thread the hose clamp onto the fuel line up to the fuel pump (FP) that was routed previously. Connect the fuel line to the short fuel pipe. Slide the pipe into the fuel line. Slide the pipe so far in that the two pipes are in contact with each other. This prevents air pockets from forming
- Ensure that the fuel line is routed correctly and does not obstruct the plastic hose or rub against the sub-frame or other components
- Squeeze the hose clamp together.

NOTE: Fuel lines and fuel pipes must be at least 15 mm (19/32") from brake pipes.

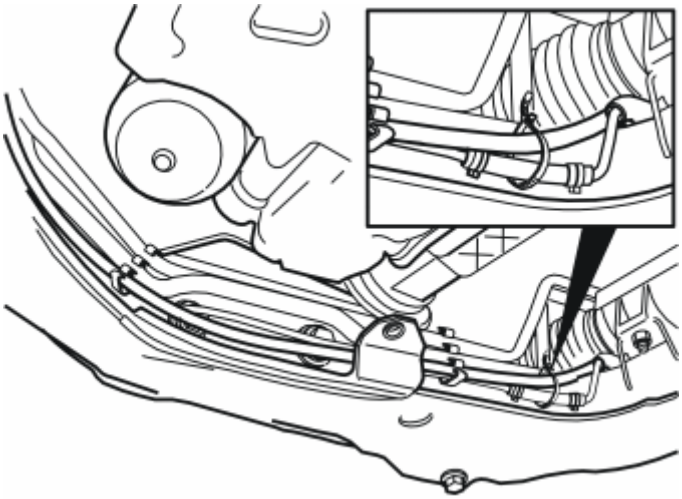

Fig. 391: Identifying Tie Strap And Fuel Pipe Clamp On Plastic Hose
Courtesy of VOLVO CARS CORPORATION

- Take a tie strap from the kit and clamp the fuel pipe at the plastic hose.

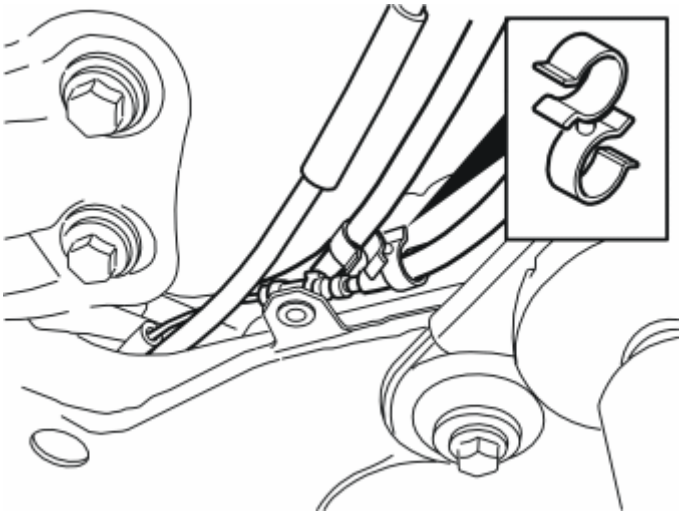

Fig. 392: Identifying Double Clamp And Fuel Line
Courtesy of VOLVO CARS CORPORATION

- Take a double clamp from the kit and clamp the fuel line for the parking heater at the ordinary fuel line.

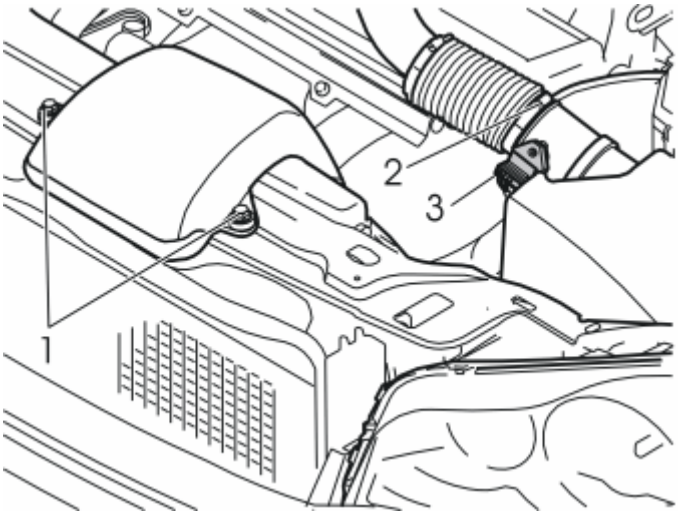

Fig. 393: Identifying ACL Screws, Hose Clamp And Connector
Courtesy of VOLVO CARS CORPORATION

- Remove the two screws (1) from the intake manifold for the air cleaner (ACL)
- Remove the intake pipe. Place the intake manifold to one side
- Disconnect the hose clamp (2)
- Remove the connector (3) from the intake manifold for the turbocharger (TC)
- Pull off the air cleaner (ACL) from its mounting in the left-hand front member.

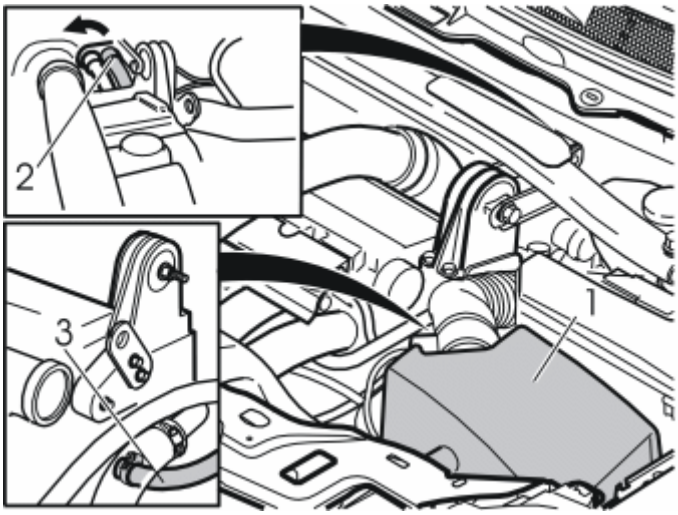

Fig. 394: Accessing Heater Hose
Courtesy of VOLVO CARS CORPORATION

- Pull the air cleaner (ACL) (1) up from its mounting on top of the front member. Turn it around in the intake hose. Move it away from the gearbox. Secure with string or similar. Depending on the version, more hoses or connectors may need to be detached from around the air cleaner (ACL)
- Disconnect the quick-release connector on the left heating hose (2) for the passenger compartment heater. Press in the circlip on the quick-release connector opposite the two arrows. Turn the circlip in the direction of the arrows at the same time. Turn the quick-release connector a little and pull it out

- Disconnect the heater hose (3) on the left-hand side of the cylinder head
- Place the heater hose to one side. It will not be reused.

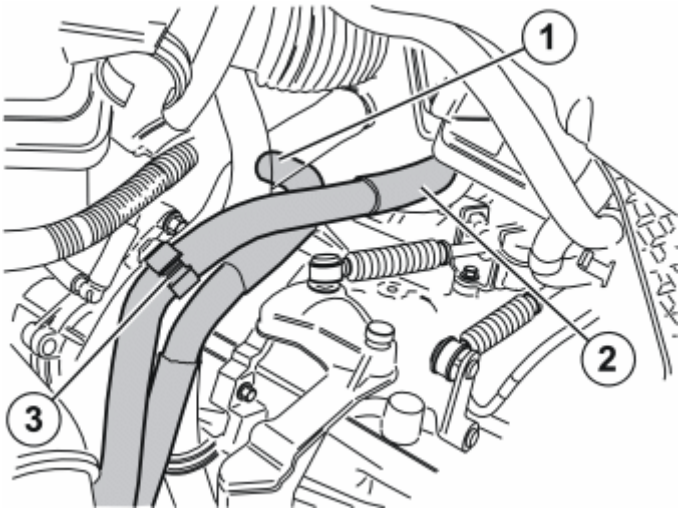

Fig. 395: Identifying Hose And Hose Clamp
Courtesy of VOLVO CARS CORPORATION

- Thread the heater hoses from the kit down along the front left mounting of the sub-frame
- Route the hoses over the gearbox as illustrated
- Disconnect the thick coolant hose at the cylinder head. This facilitates the installation of the new coolant hose
- The hose (1) is connected to the left-hand side of the cylinder head using a hose clamp. Tighten the hose clamp. Connect the hose (2) to the left-hand hose connector in the cowl panel
- Take the plastic hose clamp (3) from the kit. Press the hose clamp into the top hole in the bracket on the gearbox
- Install the hose routed to the cowl panel in the clamp. Close the clamp.

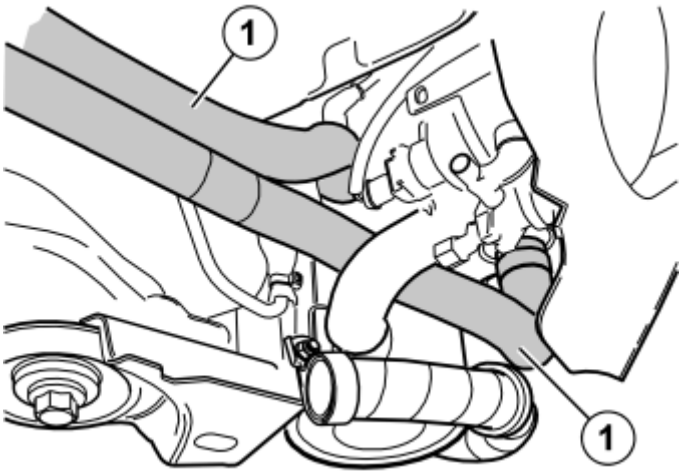

Fig. 396: Identifying Heater Hoses

Courtesy of VOLVO CARS CORPORATION

- Connect the two heater hoses (1) to the heater using the hose clamps from the kit. Tighten the hoses.

- Tighten the drain nipple on the radiator. Remove the hose
- Reinstall the engine splash guard. Tighten to **25 Nm (18 lbf. ft.)**
- Reinstall the front skid plate. Tighten to **50 Nm (37 lbf. ft.)**
- Bend back the wheel arch lining. Install the small plate. Install the nuts. Tighten
- Press the wheel arch extension into place
- Take rivets from the kit. Rivet the front edge/lower edge of the wheel arch lining
- Reinstall the bumper panel
- Reinstall the wheel. Tighten the screws. Tighten to **140 Nm (103 lbf. ft)** .

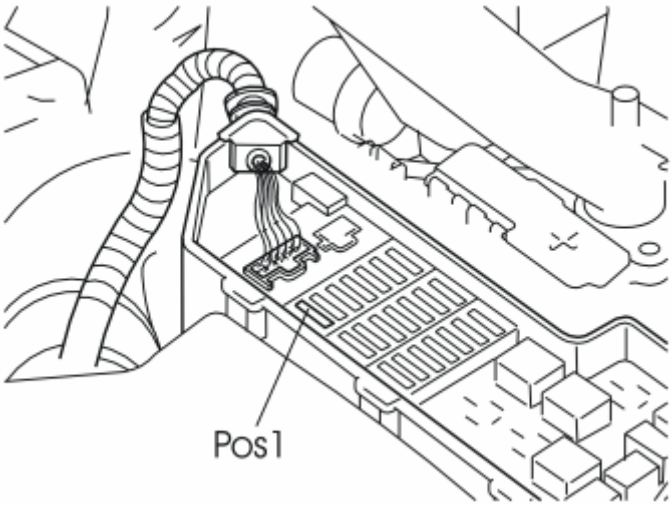

Fig. 397: Engine Compartment Fuse Holder
Courtesy of VOLVO CARS CORPORATION

- Open the cover on the fuse holder in the engine compartment. Install a 25A fuse in position 1
- Reinstall the cover.

- Fill with coolant. Reinstall the expansion tank cap
- Reinstall the air cleaner (ACL). Connect any disconnected lines or hoses
- Reinstall the intake manifold on the front cover plate between the headlamps. Tighten the screws. Tighten to **10 Nm (7 lbf. ft)**
- Start the engine and bleed the cooling system
- Program the software. See the service information in VIDA (Volvo Scan Tool)
- Test the function of the heater according to separate instructions.

LOCATION OF DECALS (2003-2008)

LOCATION OF DECALS

INSIDE FUEL TANK FILLER FLAP

Fig. 398: Identifying Warning Label
Courtesy of VOLVO CARS CORPORATION

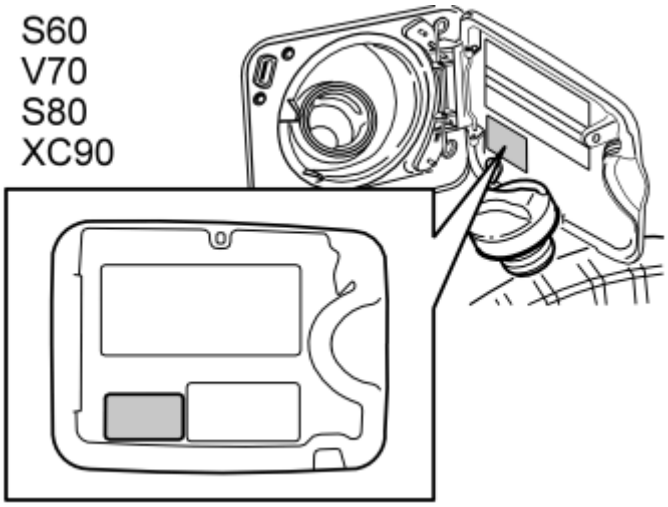

Fig. 399: Locating Warning Label
Courtesy of VOLVO CARS CORPORATION

UNDERSIDE OF BONNET

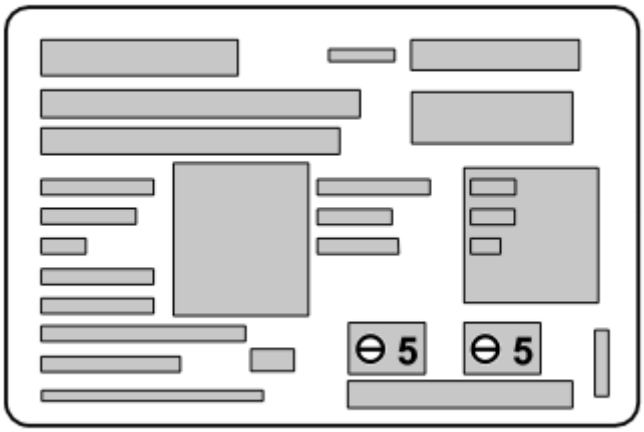

Fig. 400: Identifying Decals
Courtesy of VOLVO CARS CORPORATION

If there is already a decal on the heater:

Remove the decal from the heater and secure it at the specified location under the bonnet.

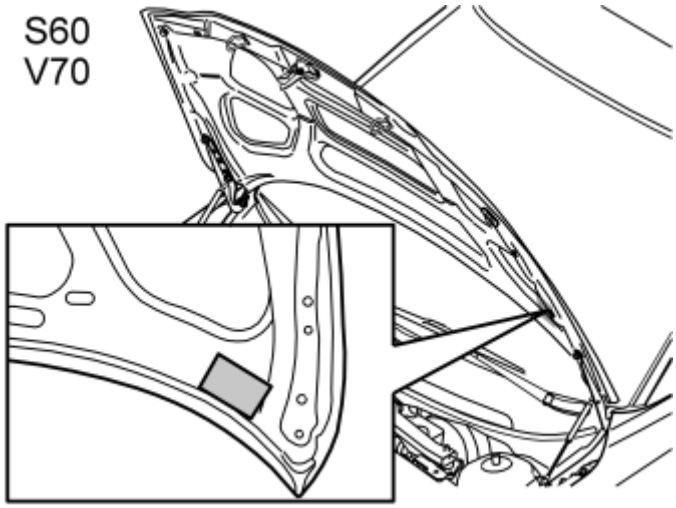

Fig. 401: Identifying Decal On Right Side Of Hood
Courtesy of VOLVO CARS CORPORATION

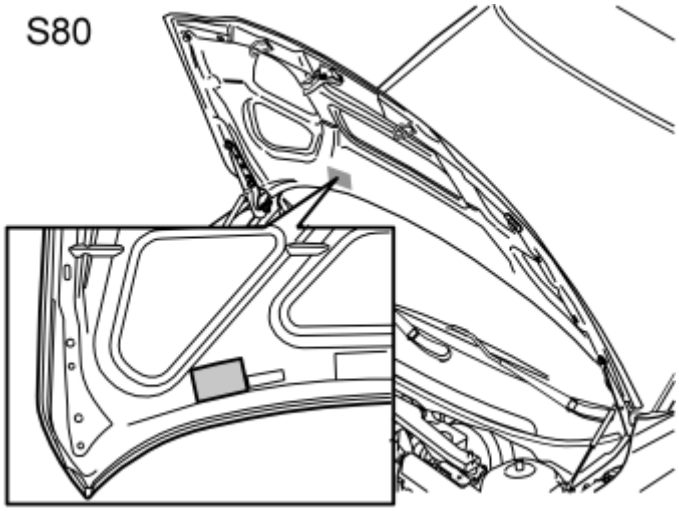

Fig. 402: Identifying Decal On Left Side Of Hood
Courtesy of VOLVO CARS CORPORATION

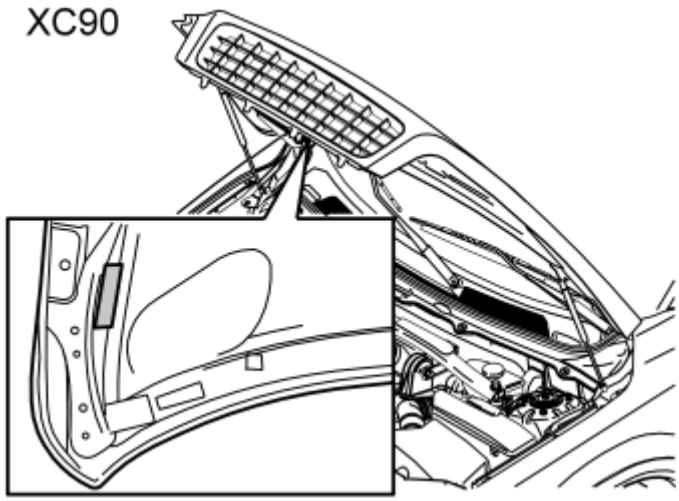

Fig. 403: Identifying Decal On Top Of Hood
Courtesy of VOLVO CARS CORPORATION

PASSENGER COMPARTMENT CONNECTOR KIT (2005-2012)

PASSENGER COMPARTMENT CONNECTOR KIT (2005-2009)

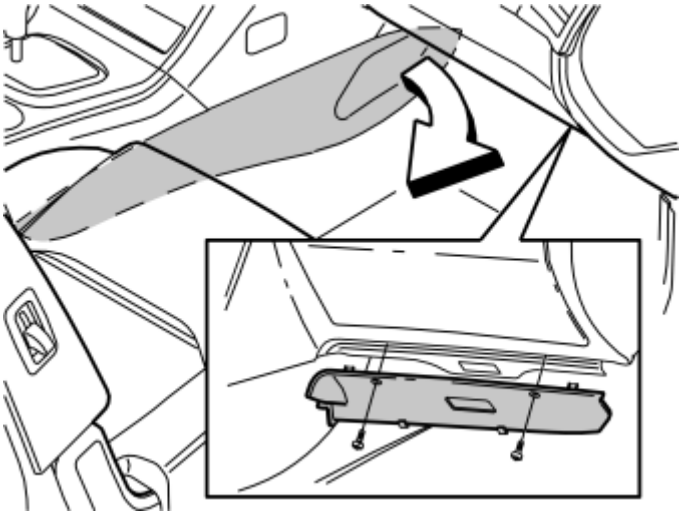

Fig. 404: Right-Hand Side Sound Barrier
Courtesy of VOLVO CARS CORPORATION

- Turn the ignition key to position 0.
- Remove the right-hand side panel of the center console by pulling it away starting at the front edge and then backwards until all clips have released.
- Remove the sound barrier on the right-hand side by first removing the two screws and then prizing it away at the top edge.

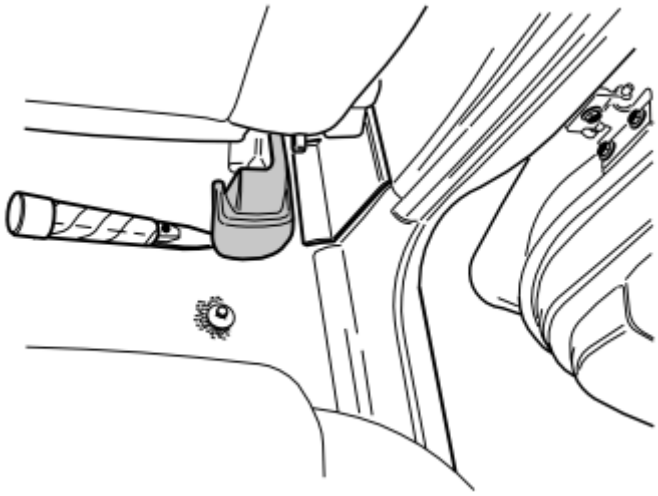

Fig. 405: Prying Right-Hand Rear Mounting Of Cover Panel
Courtesy of VOLVO CARS CORPORATION

- Remove the cover panel on the right-hand rear mounting of the right-hand front seat. Prize it up slightly at the rear edge and then pull it back/upwards.

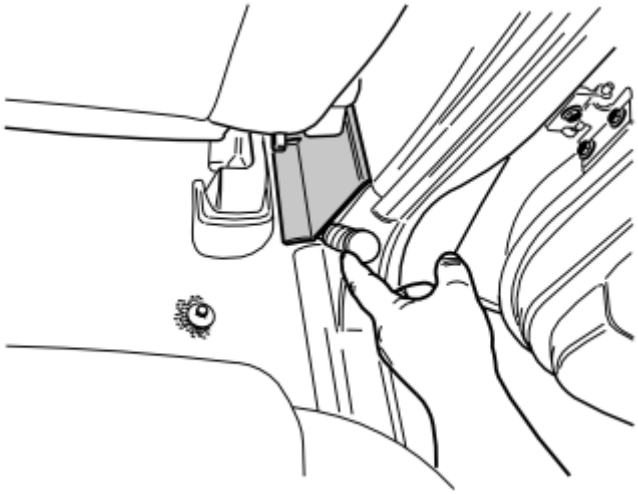

Fig. 406: Prying Away Cover Panel Over Joint Between Door Sills On Right-Hand Side, At Lower Edge, Using A Weatherstrip Tool
Courtesy of VOLVO CARS CORPORATION

- Carefully prize away the cover panel over the joint between the door sills on the right-hand side, at the lower edge, using a weatherstrip tool. Remove the cover panel.

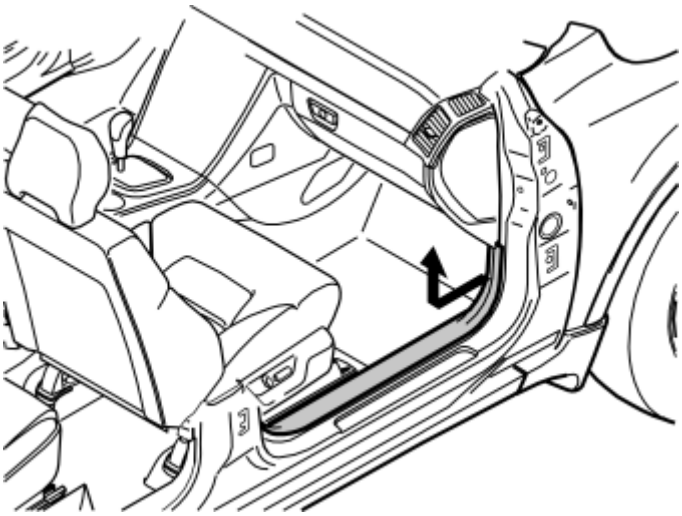

Fig. 407: Right-Hand Front Door's Sill Trim Panel
Courtesy of VOLVO CARS CORPORATION

- Detach the right-hand front door's sill trim panel. Pull it away starting at the front edge until the clip there has released. Continue backwards until the remaining clips have released.
- Unhook it from the B-pillar panel and place it to one side.

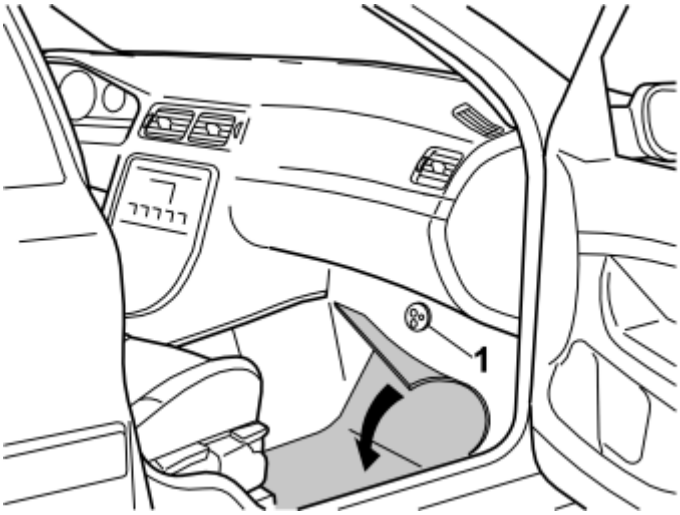

Fig. 408: Passenger Seat Rubber Grommet
Courtesy of VOLVO CARS CORPORATION

- Push the carpet to one side by the right-hand front seat.
- Press out the rubber grommet (1) under the insulation mat.

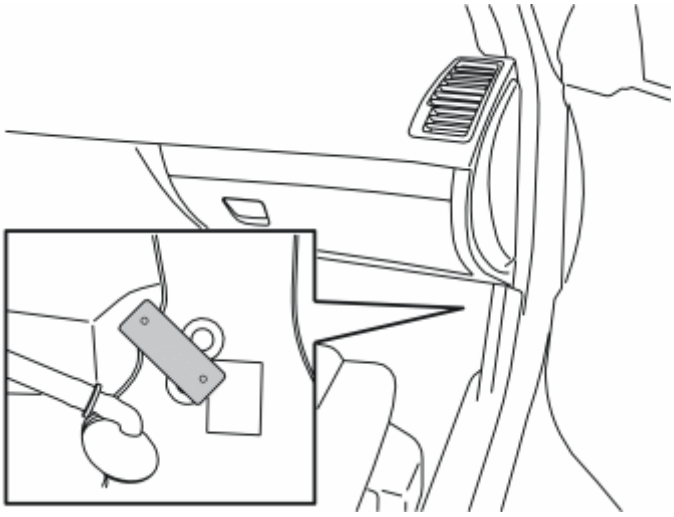

Fig. 409: Installing Connector And Bracket
Courtesy of VOLVO CARS CORPORATION

- Remove the lower piece of tape, which is fitted where the bracket shall be screwed in.
- Take the bracket and screw from the kit. Install the bracket in the existing weld nut, from where the piece of tape was removed.
- Turn the bracket so that it is fitted as illustrated.
- Install the connector loosely and check that it is fitted on straight, with the internal power connector forwards.
- Tighten the bracket to **10 Nm (7 lbf. ft.)** .
- If the car is equipped with a child seat mounting then the bracket for the passenger compartment

connector socket must be fitted over this and secured with an M6 screw. Tightening torque **10 Nm (7 lbf. ft.)** .

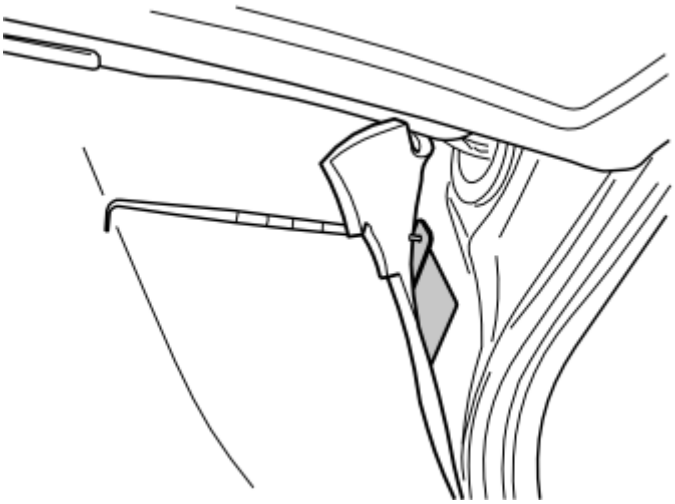

Fig. 410: Reinstalling Carpet
Courtesy of VOLVO CARS CORPORATION

- Fold the carpet back over the bracket.
- Make a hole in the carpet opposite the upper mounting hole in the bracket using a double ended scriber.

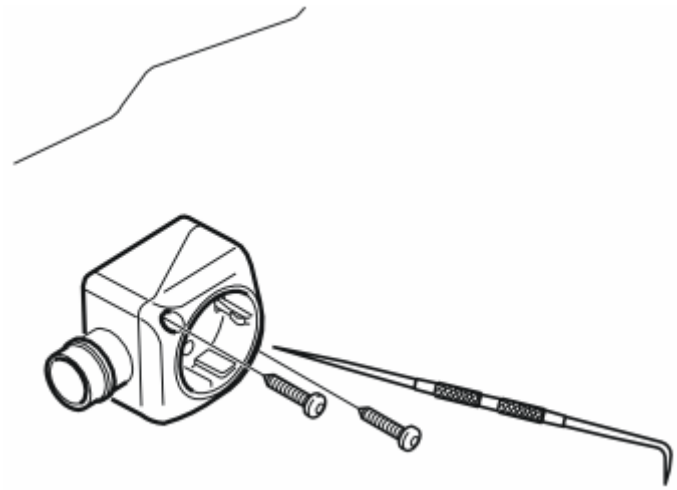

Fig. 411: Identifying Screws, Passenger Compartment Connector Socket & Double Ended Scriber
Courtesy of VOLVO CARS CORPORATION

- Take a screw and the passenger compartment connector socket from the kit. Tighten the passenger compartment connector socket to the bracket in the upper mounting.
- Insert the double ended scriber into the lower mounting for the passenger compartment connector socket. Make a hole in the carpet opposite the lower hole on the bracket.
- Tighten the lower mounting for the passenger compartment connector socket using a screw from the kit.

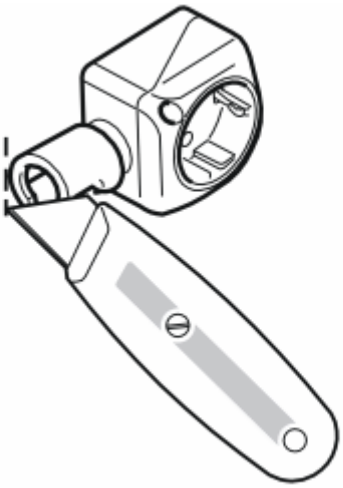

Fig. 412: Identifying Carpet Knife, Cut Slit In Carpet & Front Of Locking Sleeve
Courtesy of VOLVO CARS CORPORATION

- Press a locking sleeve (from the kit) onto the passenger compartment connector socket. Slide the locking sleeve as far along the terminal for the passenger compartment connector socket as possible.
- Take a carpet knife and cut a slit in the carpet just in front of the locking sleeve. Make the cut as long as the diameter of the locking sleeve.

NOTE: Do not damage any wiring and hoses under the carpet.

- Remove the passenger compartment connector socket from the bracket.

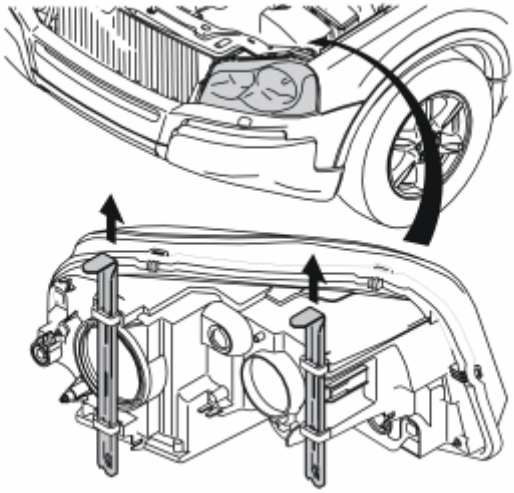

Fig. 413: Detach Left-Hand Headlamp By Pulling Up Two Locking Pins
Courtesy of VOLVO CARS CORPORATION

- Detach the left-hand headlamp by pulling up the two locking pins and then carefully pulling away the headlamp forwards.

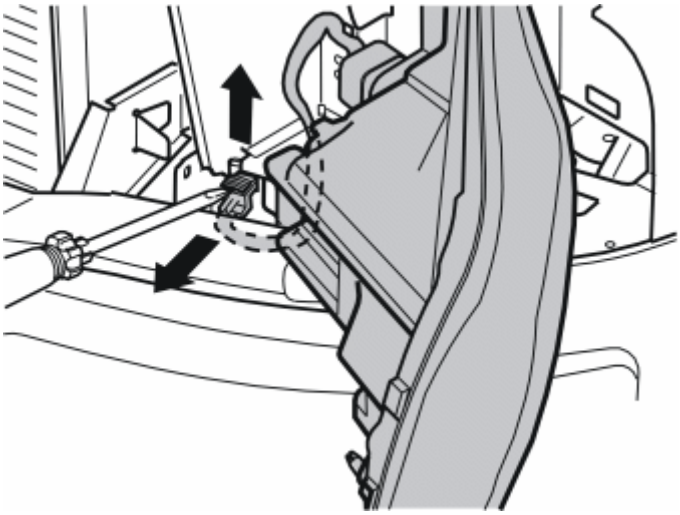

Fig. 414: Carefully Prize Up Catch On Connector For Headlamp With A Screwdriver
Courtesy of VOLVO CARS CORPORATION

- Carefully prize up the catch on the connector for the headlamp using a screwdriver.
- Pull the catch up completely, detach the connector and place the headlamp to one side.

CABLE JOINTS AND JUNCTION CONNECTOR UNDER LEFT-HAND HEADLAMP PLATE

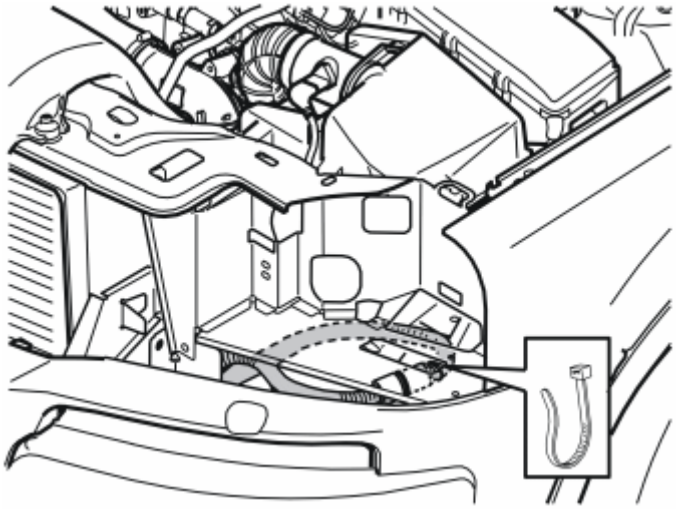

Fig. 415: Identifying Tie Strap For Cable
Courtesy of VOLVO CARS CORPORATION

Applies to cars with 8-cylinder engine where engine block heater is installed

- Remove the tie strap securing the cable to the front socket. Pull the cable forward.

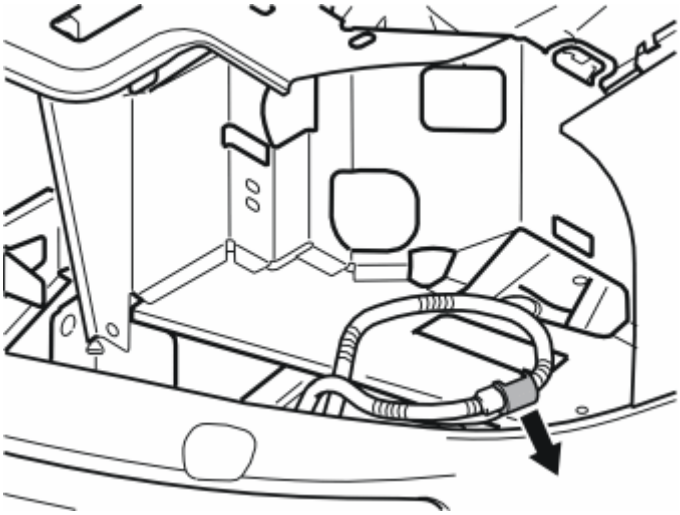

Fig. 416: Removing Locking Sleeve
Courtesy of VOLVO CARS CORPORATION

Applies to cars with 8-cylinder engine where engine block heater is installed

- Remove the locking sleeve over the joint on the cables for the engine block heater. Pull the cables away from each other.

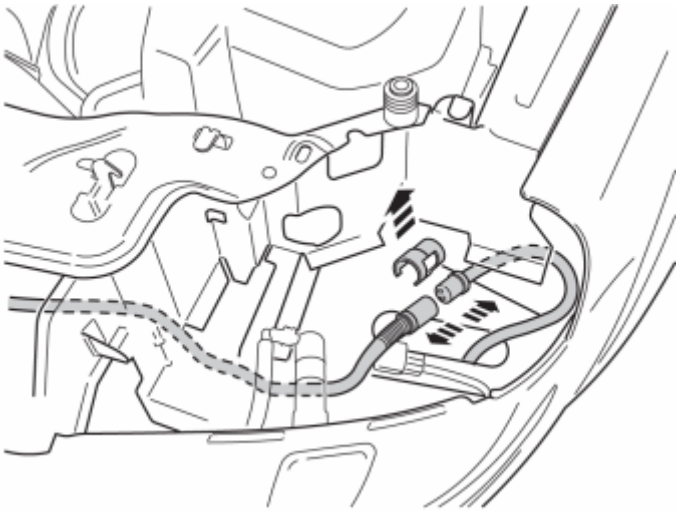

Fig. 417: Removing Cable
Courtesy of VOLVO CARS CORPORATION

Applies to cars with 6-cylinder engine where engine block heater is installed

- Remove the tie strap securing the cable to the front engine block heater socket.
- Pull the cable forward.
- Remove the locking sleeve over the joint on the cables for the engine block heater and pull the cables away from each other.

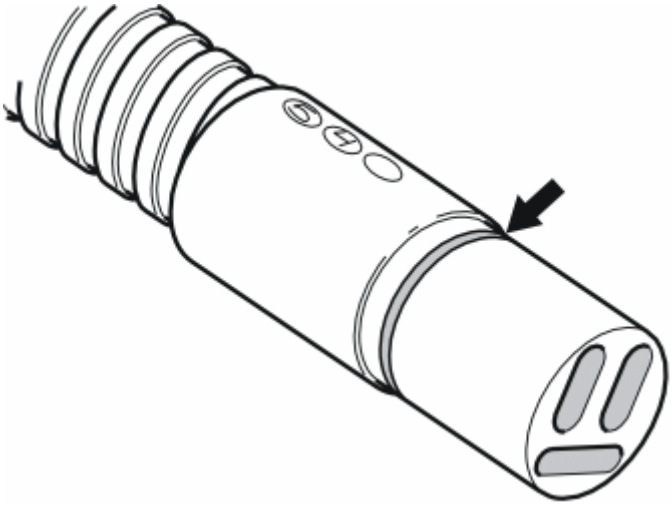

Fig. 418: Identifying O-Ring
Courtesy of VOLVO CARS CORPORATION

- Grease in the O-ring on the connector for the front engine block heater socket and both connectors on the branch connector from the kit using low temperature grease **P/N 1161427** .

NOTE: Do not get any grease on the surfaces of the connector.

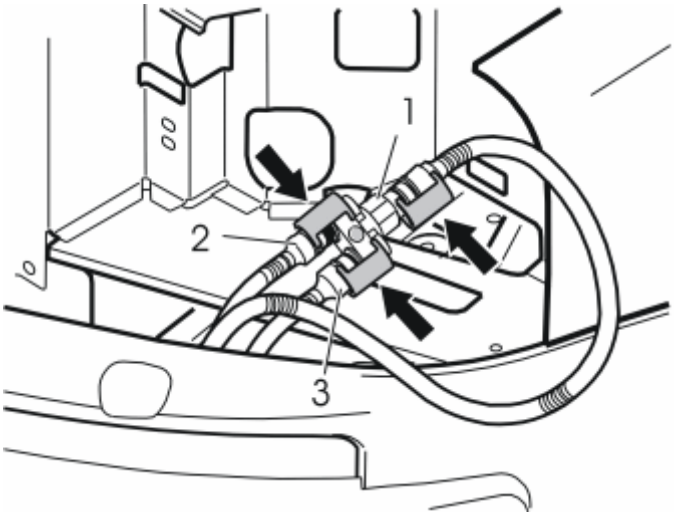

Fig. 419: Identifying Branch Connector
Courtesy of VOLVO CARS CORPORATION

- Connect the cable for the front socket to socket (1) on the branch connector. Firmly press the connector in and press in a locking sleeve from the kit over the joint.
- Connect the long cable for the passenger compartment connector socket from the kit to any connector (2 or 3) on the branch connector. Firmly press the connector in and press in a locking sleeve from the kit over the joint.
- Connect the cable for the engine block heater to the remaining connector on the branch connector. Firmly press the connector in and press in a locking sleeve from the kit over the joint.

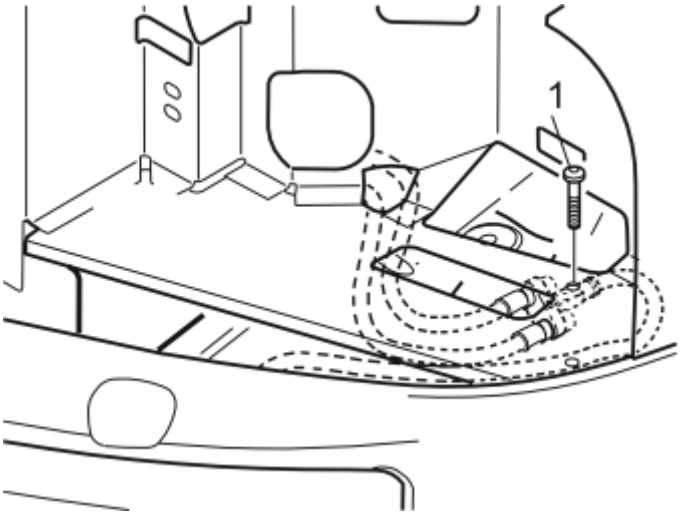

Fig. 420: Positioning Branch Connector
Courtesy of VOLVO CARS CORPORATION

- Position the branch connector with the cables underneath the plate under the headlamp. The two parallel sockets must be turned forward and the cable from the front engine block heater socket turned backward.

Applies to cars with 8-cylinder engine

- Route the new cable for the passenger compartment connector socket on to the brake fluid reservoir the same way as the existing cable for the engine block heater.

Applies to cars with 6-cylinder engine

- Route the cable as shown in Illustration 18.

- Take a screw, nut and washer from the kit. Secure the branch connector in the hole in the plate (1).
- Take a new tie strap from the kit and replace the tie strap removed in steps 12 and 14 respectively.

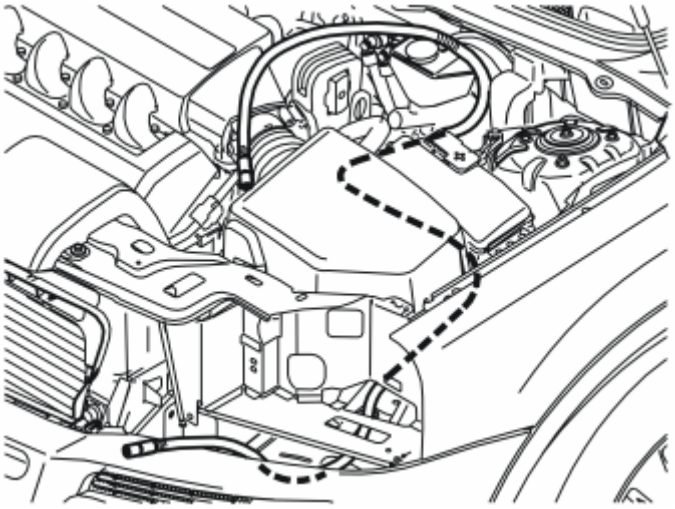

Fig. 421: Routing Cable

Courtesy of VOLVO CARS CORPORATION

- Route the cable for the passenger compartment connector socket under the left-hand headlamp. Route it backwards along the left-hand side of the air filter and between air filter and fuse holder. Continue to route it backwards, under the ABS system and up between the cable duct and brake fluid reservoir.

NOTE: Check that the cable does not chafe against sharp edges or moving parts in the engine compartment.

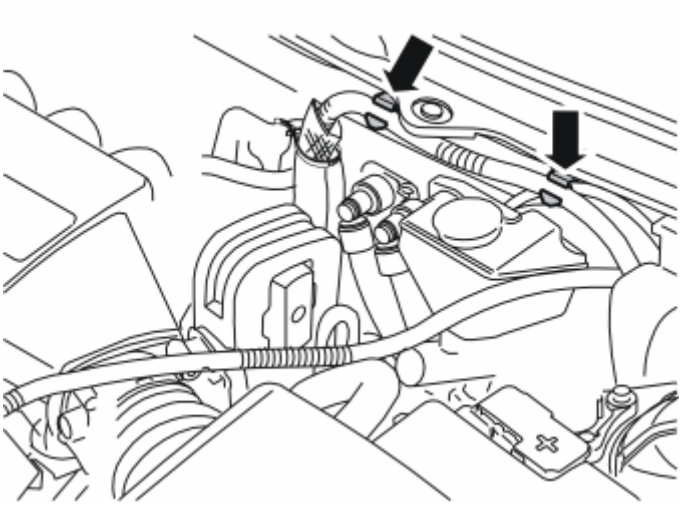

Fig. 422: Identifying Installation Clips
Courtesy of VOLVO CARS CORPORATION

Applies to cars with 8-cylinder engine

- Detach the cable from the engine block heater from the two clips above the brake fluid reservoir.

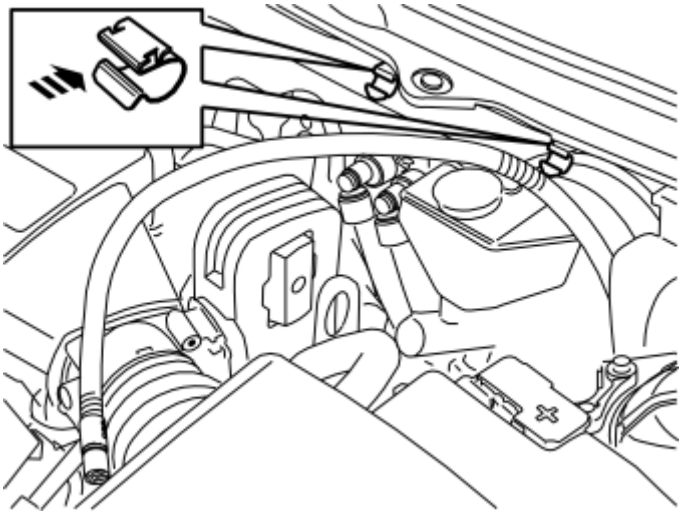

Fig. 423: Installing Clips
Courtesy of VOLVO CARS CORPORATION

Applies to cars with 6-cylinder engine

- Take two clips from the kit and install them on the edge of the plate at the front edge of the panel above the windscreen wiper arms.

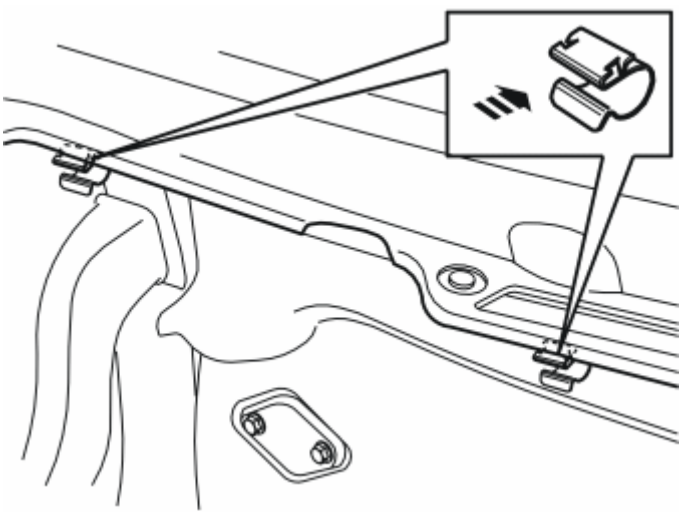

Fig. 424: Installing Clips
Courtesy of VOLVO CARS CORPORATION

- Take two new clips from the kit and press them onto the edge of the plate in front of the panel over the windscreen wiper shafts.

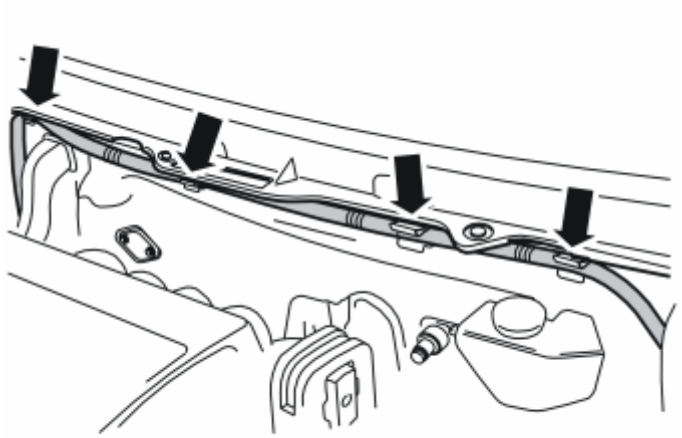

Fig. 425: Installing Cable
Courtesy of VOLVO CARS CORPORATION

- Press the cable for the passenger compartment connector socket into the four clips.
- Guide the cable down on the right-hand side of the cable duct and down through the engine compartment.

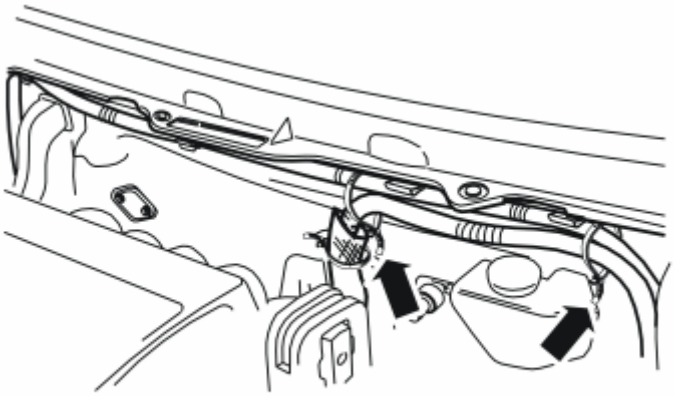

Fig. 426: Installing Cable With Tie Straps
Courtesy of VOLVO CARS CORPORATION

Applies to cars with 8-cylinder engine

- Take two tie straps from the kit and clamp the cable for the heater which was detached earlier, to the newly routed cable for the passenger compartment connector socket.

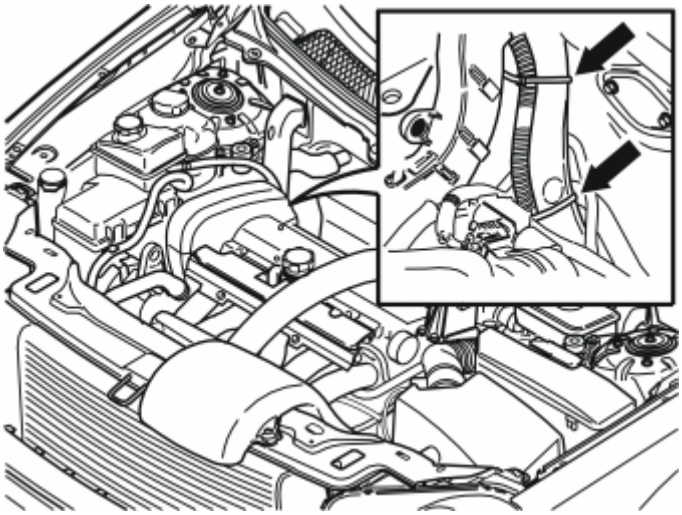

Fig. 427: Clamping Routed Cable In At Water Evacuation Pipe
Courtesy of VOLVO CARS CORPORATION

- Clamp the routed cable in at the water evacuation pipe using two tie straps from the kit.

NOTE: **Do not clamp the cable so that it is in direct contact with brake pipes, fuel lines or AC pipes.**

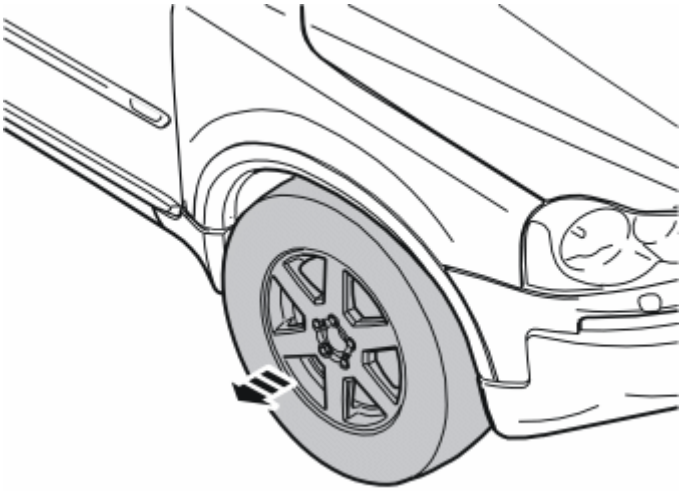

Fig. 428: Removing Wheel
Courtesy of VOLVO CARS CORPORATION

- Remove the right-hand front wheel for easier access for routing the cable to the passenger compartment connector socket.

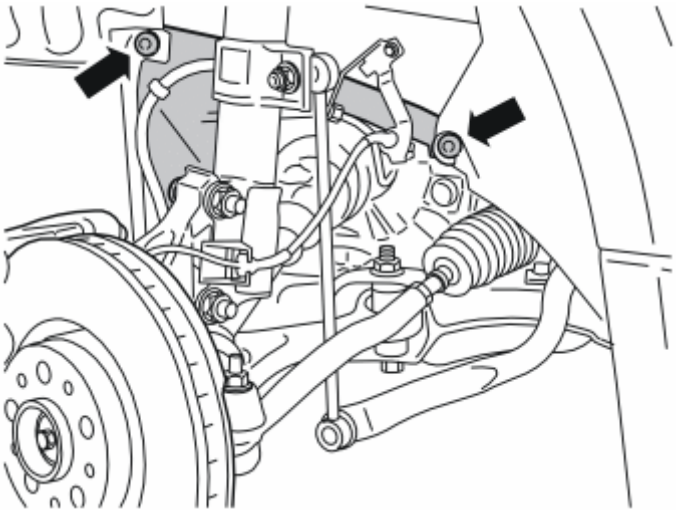

Fig. 429: Wheel Protective Cover
Courtesy of VOLVO CARS CORPORATION

- Remove the two plastic nuts securing the small protective panel in the right-hand wheel housing. Remove the panel.

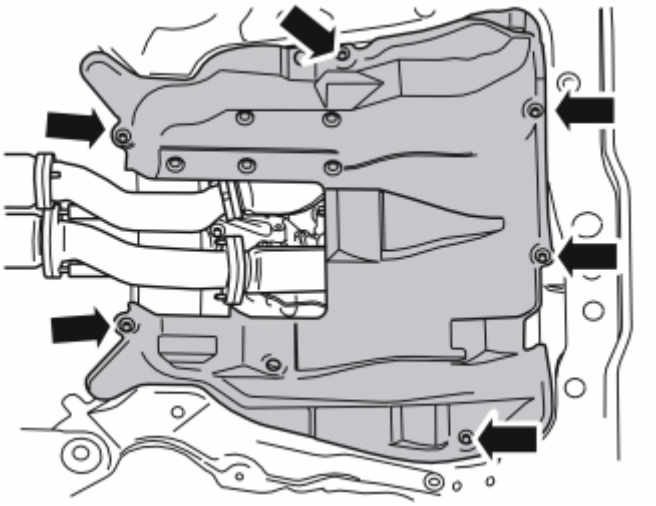

Fig. 430: Engine Splash Guard And Screws
Courtesy of VOLVO CARS CORPORATION

- Remove the six screws and the engine splash guard.

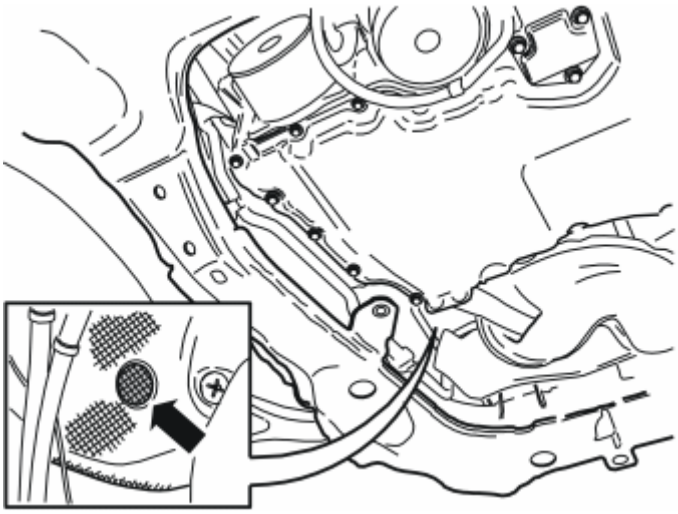

Fig. 431: Removing Pressed Out Rubber Grommet
Courtesy of VOLVO CARS CORPORATION

- Take the prepunched washer from the engine compartment insulation and remove the pressed out rubber grommet.

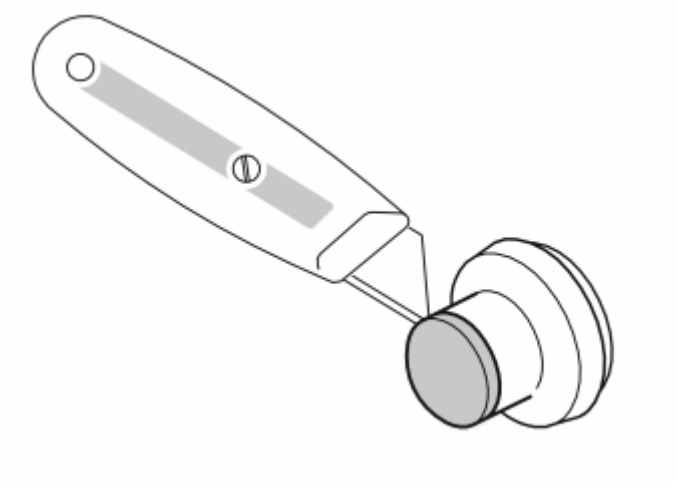

Fig. 432: Cutting Rubber Grommet
Courtesy of VOLVO CARS CORPORATION

- Take the rubber grommet and cut away the very top.

Fig. 433: Installing Clip
Courtesy of VOLVO CARS CORPORATION

- Press in a clip from the kit on the edge of the plate on the right-hand side of the wheel housing, under the bending rubber hose of the water evacuation pipe.

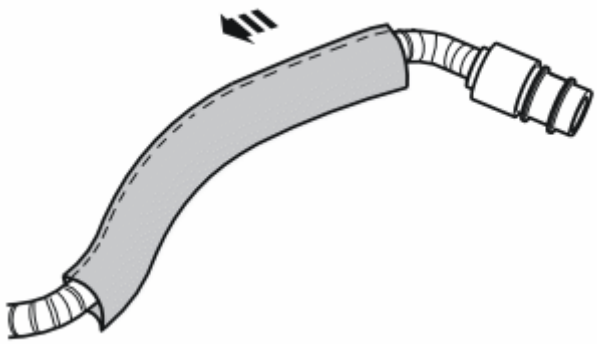

Fig. 434: Installing Radiation Shield
Courtesy of VOLVO CARS CORPORATION

- Take the radiation shield from the kit and cut it to a length of 300 mm (11 13/16").
- Pull the radiation shield onto the end of the cable.

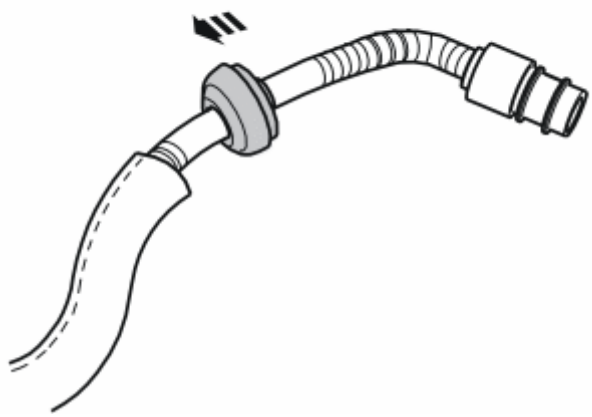

Fig. 435: Installing Rubber Grommet
Courtesy of VOLVO CARS CORPORATION

- Grease in the rubber grommet using low temperature grease **P/N 1161427** in order to make it easier to insert the cable and rubber grommet into the hole in the cowl panel.
- Guide the cable into the rubber grommet.

Fig. 436: Guiding Cable into Cowl Wall
Courtesy of VOLVO CARS CORPORATION

- Guide the cable into the hole in the cowl wall and press the rubber grommet into place in the hole, either by pulling it into place from inside the passenger compartment, or carefully pressing it into place with a long large screwdriver/wide end of a short pry bar.

NOTE: These must not be sharp or they can damage the cables/rubber grommet.

- Adapt the length of the cable from the rubber grommet, at the installed clip and out in the engine compartment.

Fig. 437: Inserting Cable Into Clamp
Courtesy of VOLVO CARS CORPORATION

- Press the cable for the passenger compartment connector socket into the installed clip. Make sure that the cable with the radiation shield is firmly pressed into the clip and does not slide out.

CAUTION: Check that the cable is routed so that it does not come into contact with the alternator belt, or chafe against sharp edges in the engine compartment.

- Reinstall the small protective panel in the wheel housing.
- Remount the wheel and tighten the bolts to **140 Nm (103 lbf. ft.)** .
- Reinstall the engine splash guard and torque tighten the screws to **25 Nm (18.5 lbf. ft.)** .
- Connect and reinstall the left-hand headlamp.

Fig. 438: Tightening Radiation Shield With Grey Tie Straps
Courtesy of VOLVO CARS CORPORATION

- Take the grey tie straps from the kit and tighten the radiation shield to the cable

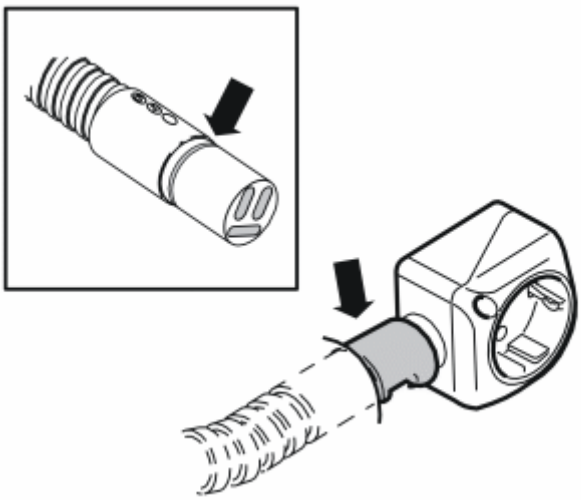

Fig. 439: Identifying Cable At Passenger Compartment Connector Socket
Courtesy of VOLVO CARS CORPORATION

- Route the cable from the engine compartment through the hole in the carpet.

- Grease in the O-ring with low temperature grease **P/N 1161427** .

NOTE: Make sure that no grease gets onto the connector surfaces.

- Connect the cable to the passenger compartment connector socket. Press a locking sleeve (from the kit) over the joint.
- Fold the carpet back into position and install the passenger compartment connector socket using both the screws.

Reinstall:

- the sound barrier
- the sill trim panel
- the cover panel in the lower edge of the B-pillar panel
- the cover panel for the seat's mounting
- the center console's right-hand side panel.

PASSENGER COMPARTMENT CONNECTOR SOCKET B8444S (B8444S; 2005-2008)

PASSENGER COMPARTMENT CONNECTOR SOCKET

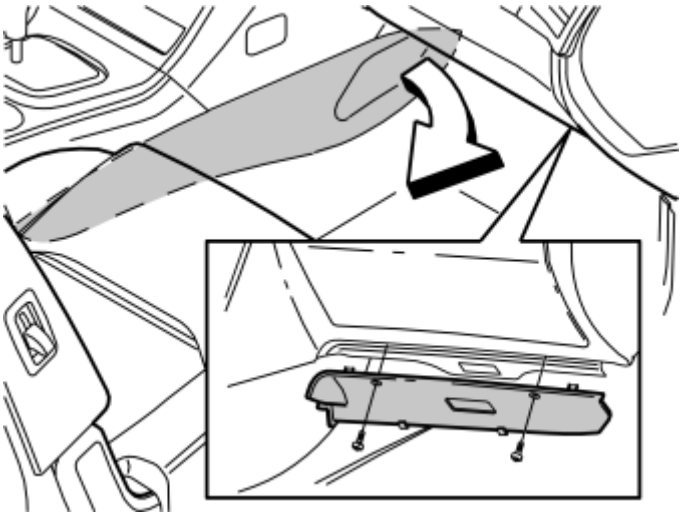

Fig. 440: Right-Hand Side Sound Barrier
Courtesy of VOLVO CARS CORPORATION

- Turn the ignition switch to position 0.
- Remove the center console's right-hand side panel by first pulling it away starting at the front edge and then backwards until all the clips have released.
- Remove the sound barrier on the right-hand side by first removing the two screws and then prizing it away at the top edge.

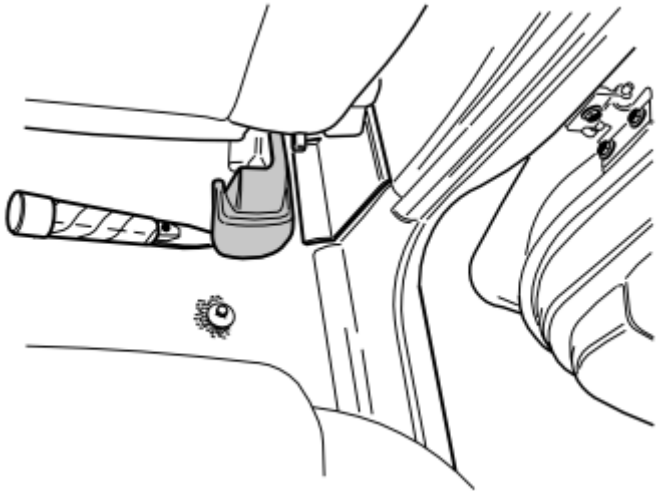

Fig. 441: Prying Right-Hand Rear Mounting Of Cover Panel
Courtesy of VOLVO CARS CORPORATION

- Remove the cover panel on the right-hand rear mounting of the right-hand front seat. Prize it up slightly at the rear edge and then pull it back/upwards.

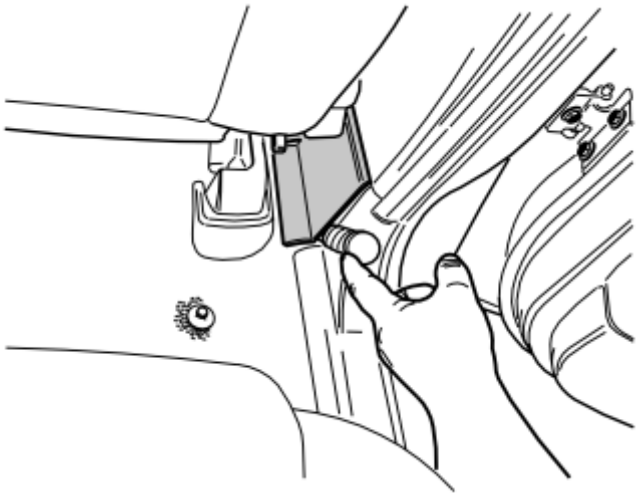

Fig. 442: Prying Away Cover Panel Over Joint Between Door Sills On Right-Hand Side, At Lower Edge, Using A Weatherstrip Tool
Courtesy of VOLVO CARS CORPORATION

- Carefully prize away the cover panel over the joint between the door sills on the right-hand side, at the lower edge, using a weatherstrip tool. Remove the cover panel.

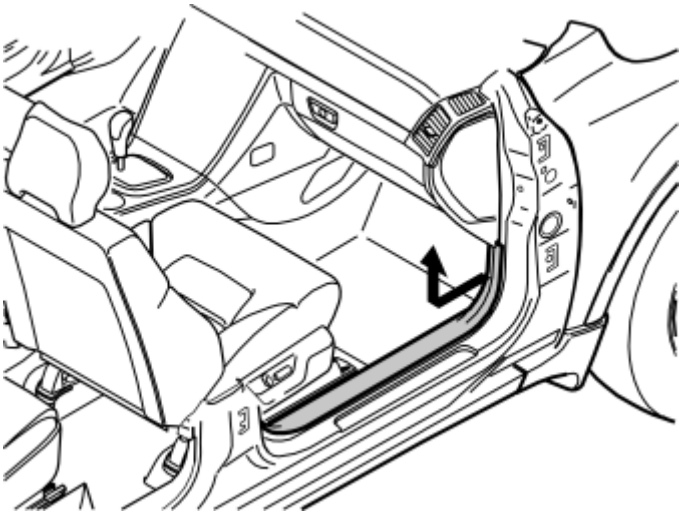

Fig. 443: Right-Hand Front Door's Sill Trim Panel
Courtesy of VOLVO CARS CORPORATION

- Detach the right-hand front door's sill trim panel. Pull it away starting at the front edge until the clip there has released. Continue backwards until the remaining clips have released.
- Unhook it from the B-pillar panel and place it to one side.

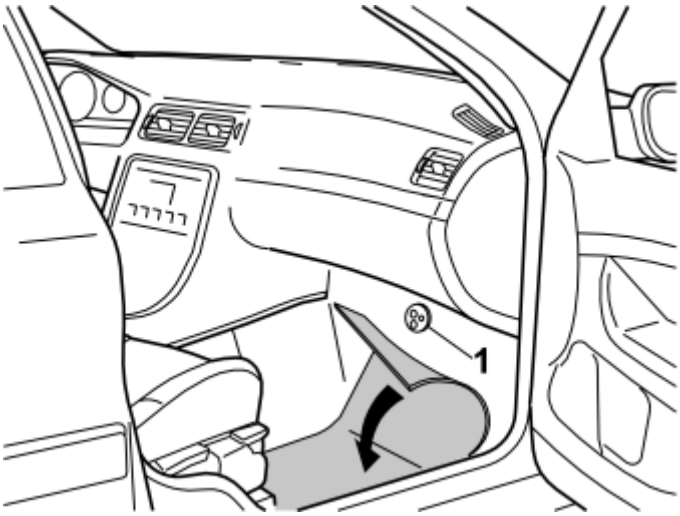

Fig. 444: Passenger Seat Rubber Grommet
Courtesy of VOLVO CARS CORPORATION

- Push the carpet to one side by the right-hand front seat.
- Press out the rubber grommet (1) under the insulation mat.

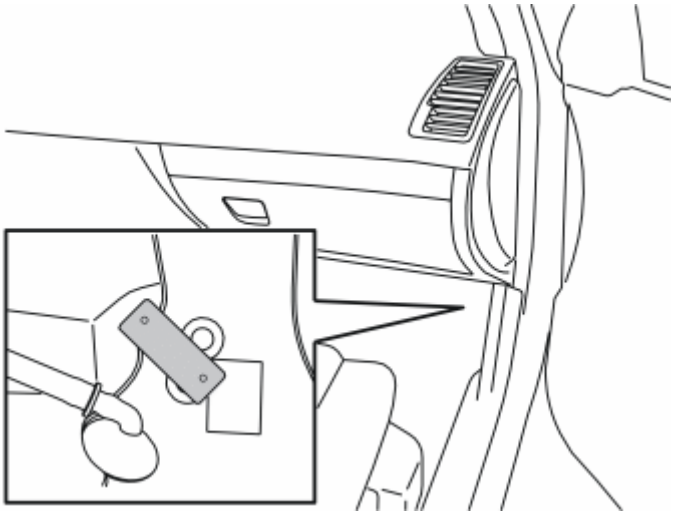

Fig. 445: Installing Bracket And Connector
Courtesy of VOLVO CARS CORPORATION

- Remove the lower piece of tape, which is fitted where the bracket shall be screwed in.
- Take the bracket and screw from the kit. Install the bracket in the existing weld nut, from where the piece of tape was removed.
- Turn the bracket so that it is fitted as illustrated.
- Install the connector loosely and check that it is fitted on straight, with the internal power connector forwards.
- Tighten the bracket to **10 Nm (7 lbf. ft.)** .
- If the car is equipped with a child seat mounting then the bracket for the passenger compartment connector socket must be fitted over this and secured with an M6 screw. Tightening torque **10 Nm (7 lbf. ft.)** .

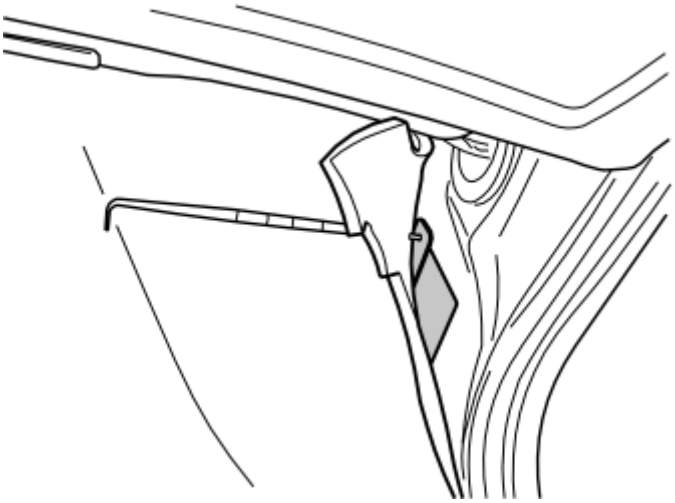

Fig. 446: Reinstalling Carpet
Courtesy of VOLVO CARS CORPORATION

- Fold the carpet back over the bracket.

- Make a hole in the carpet opposite the upper mounting hole in the bracket using a double ended scriber.

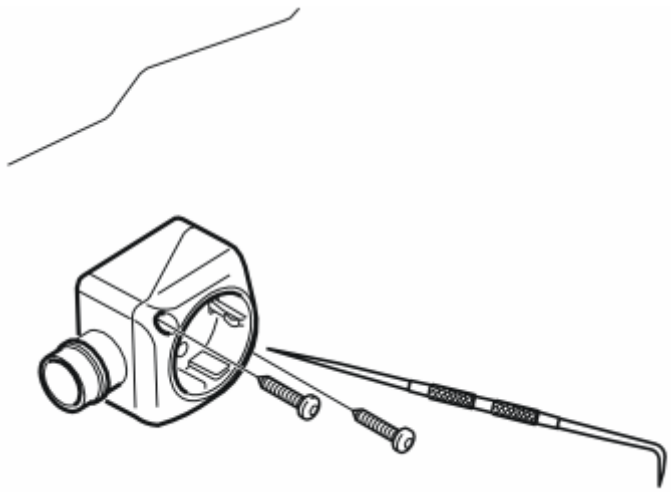

Fig. 447: Identifying Screws, Passenger Compartment Connector Socket & Double Ended Scriber
Courtesy of VOLVO CARS CORPORATION

- Take a screw and the passenger compartment connector socket from the kit. Tighten the passenger compartment connector socket to the bracket in the upper mounting.
- Insert the double ended scriber into the lower mounting for the passenger compartment connector socket. Make a hole in the carpet opposite the lower hole on the bracket.
- Tighten the lower mounting for the passenger compartment connector socket using a screw from the kit.

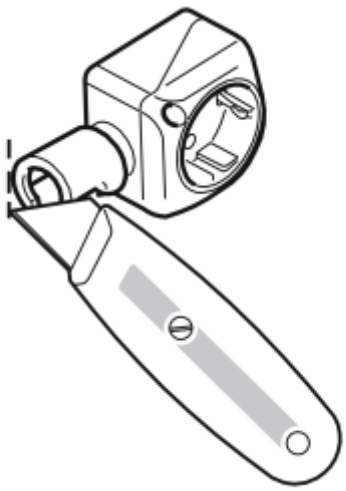

Fig. 448: Identifying Carpet Knife, Cut Slit In Carpet & Front Of Locking Sleeve
Courtesy of VOLVO CARS CORPORATION

- Press a locking sleeve (from the kit) onto the passenger compartment connector socket. Slide the locking sleeve as far along the terminal for the passenger compartment connector socket as possible.
- Take a carpet knife and cut a slit in the carpet just in front of the locking sleeve. Make the cut as long as the diameter of the locking sleeve.

NOTE: Do not damage any wiring and hoses under the carpet.

- Remove the passenger compartment connector socket from the bracket.

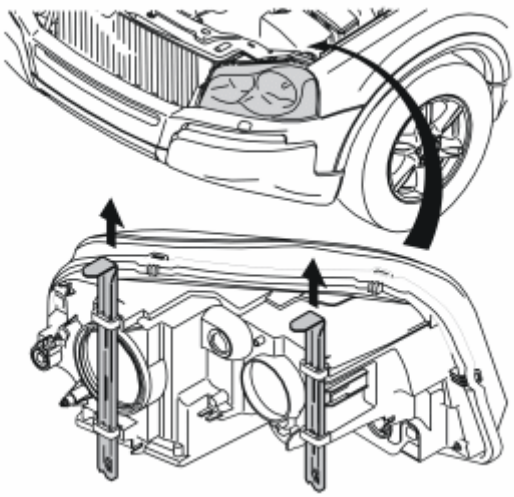

Fig. 449: Detach Left-Hand Headlamp By Pulling Up Two Locking Pins
Courtesy of VOLVO CARS CORPORATION

- Detach the left-hand headlamp by pulling up the two locking pins and then carefully pulling away the headlamp forwards.

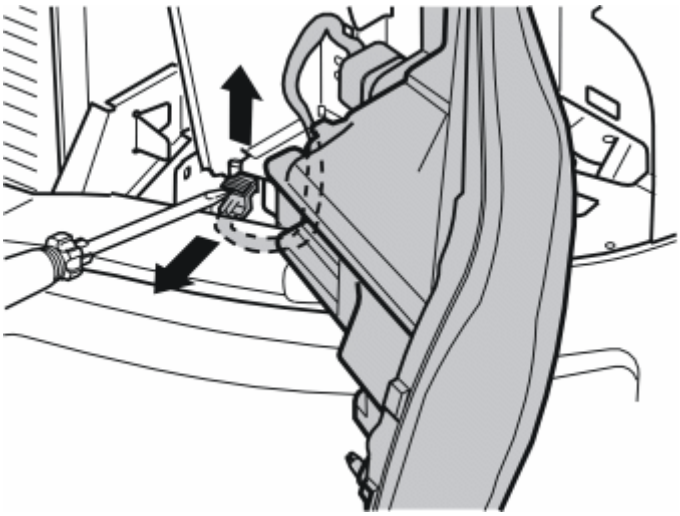

Fig. 450: Carefully Prize Up Catch On Connector For Headlamp With A Screwdriver
Courtesy of VOLVO CARS CORPORATION

- Carefully prize up the catch on the connector for the headlamp with a screwdriver.
- Pull the catch up completely, detach the connector and place the headlamp to one side.

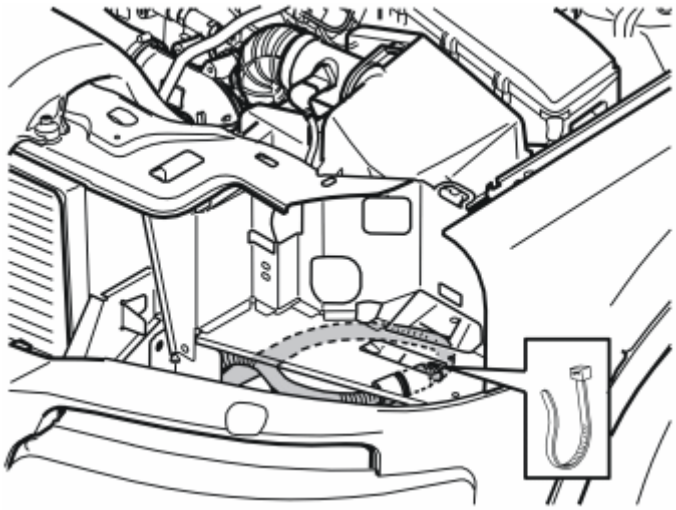

Fig. 451: Identifying Tie Strap
Courtesy of VOLVO CARS CORPORATION

Applies to cars with engine block heater installed

- Remove the tie strap securing the cable to the front socket. Pull the cable forward.

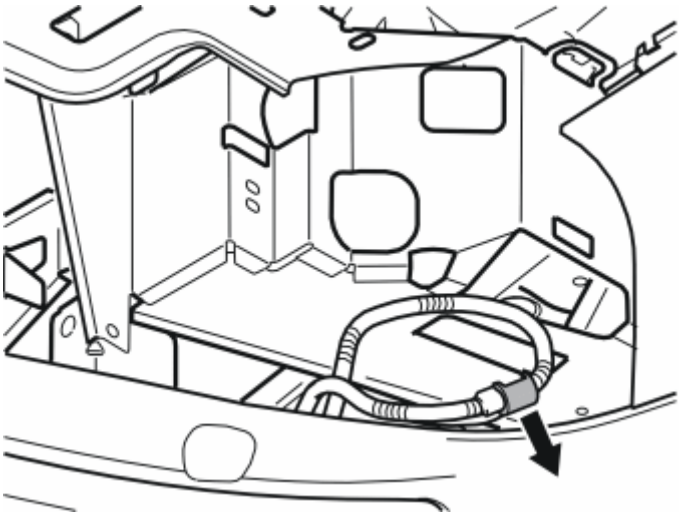

Fig. 452: Removing Locking Sleeve
Courtesy of VOLVO CARS CORPORATION

Applies to cars with engine block heater installed

- Remove the locking sleeve over the joint on the cables for the engine block heater. Pull the cables away from each other.

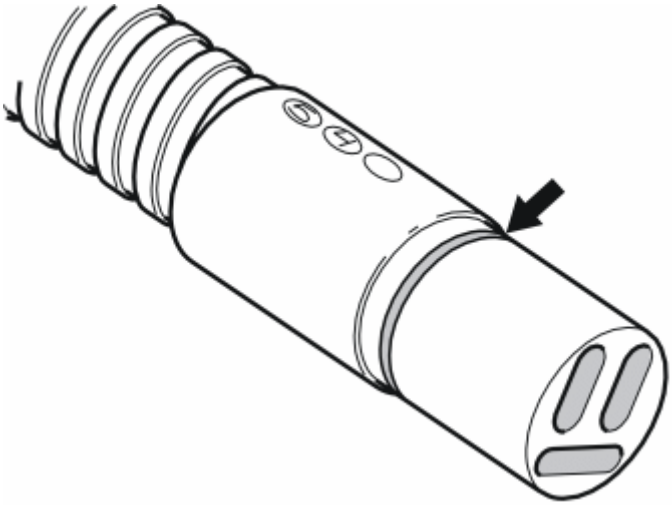

Fig. 453: Identifying O-Ring
Courtesy of VOLVO CARS CORPORATION

- Grease in the O-ring on the connector for the front socket and both connectors on the branch connector from the kit using low temperature grease (part no. 1161417-9).

NOTE: Do not get any grease on the surfaces of the connector.

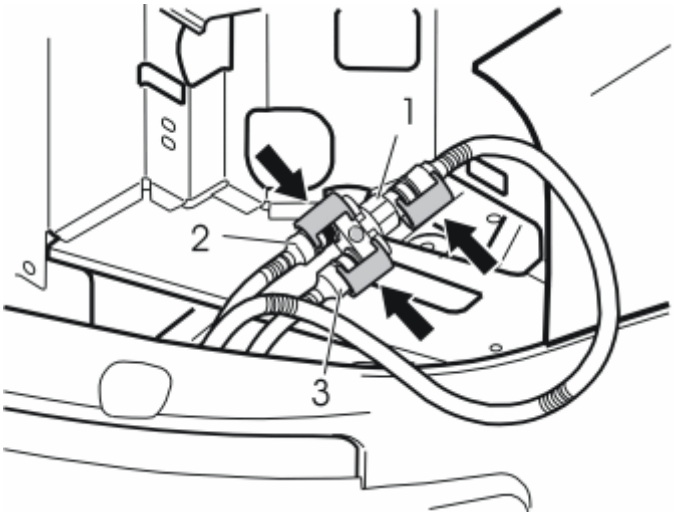

Fig. 454: Identifying Branch Connector
Courtesy of VOLVO CARS CORPORATION

- Connect the cable for the front socket to socket (1) on the branch connector. Firmly press the connector in and press in a locking sleeve from the kit over the joint.
- Connect the long cable for the passenger compartment connector socket from the kit to any connector (2 or 3) on the branch connector. Firmly press the connector in and press in a locking sleeve from the kit over the joint.
- Connect the cable for the engine block heater to the remaining connector on the branch connector. Firmly press the connector in and press in a locking sleeve from the kit over the joint.

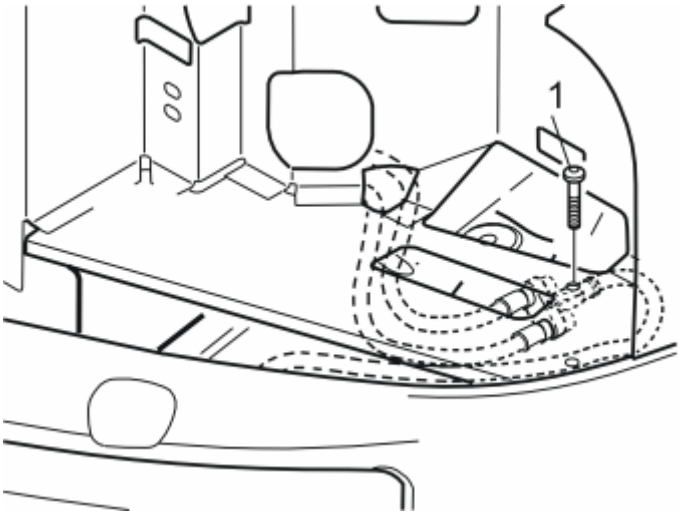

Fig. 455: Installing Branch Connector Under Plate Beneath Headlamp
Courtesy of VOLVO CARS CORPORATION

- Fit the branch connector with the cables on the underside of the plate beneath the headlamp, with the two sockets turned forwards and the cable from the front socket turned backwards. The new cable for the passenger compartment connector socket must be routed the same way as the existing cable for the engine block heater, on to the brake fluid reservoir.
- Take a screw, nut and washer from the kit. Secure the branch connector in the hole in the plate (1).

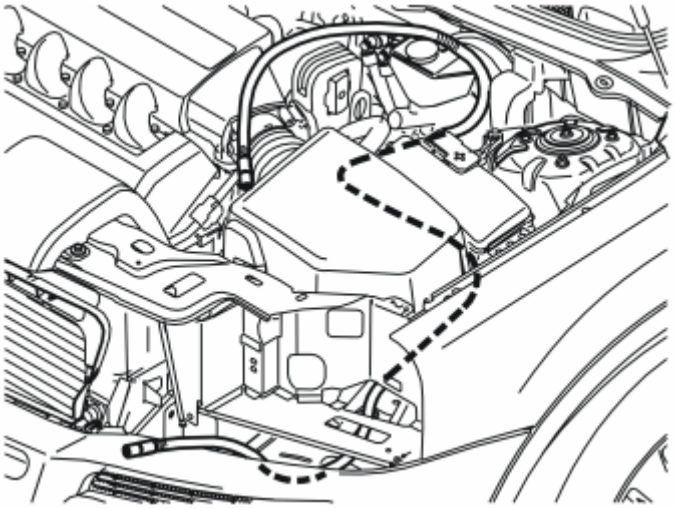

Fig. 456: Routing Cable
Courtesy of VOLVO CARS CORPORATION

- Route the cable to the passenger compartment connector socket the same way as the cable for the engine block heater under the plate, beneath the left-hand headlamp. Route it backwards along the left-hand side of the air cleaner and between the air cleaner and fuse holder. Continue to route it backwards, under the ABS system and up between the cable duct and brake fluid reservoir.

NOTE: Check that the cable does not chafe against sharp edges or moving parts

in the engine compartment.

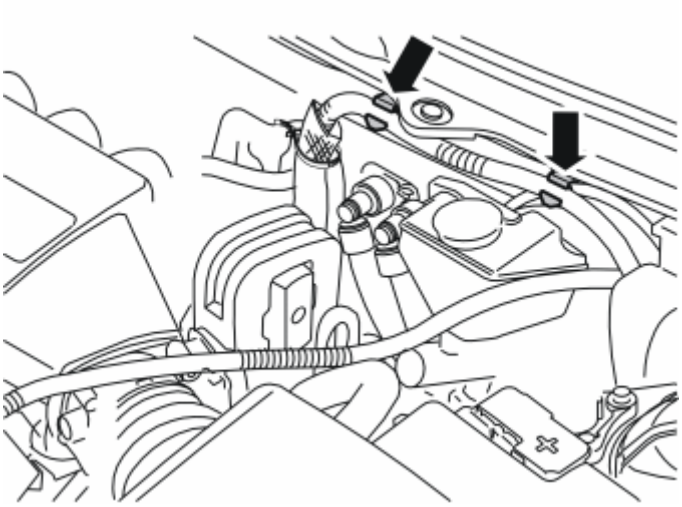

Fig. 457: Identifying Installation Clips
Courtesy of VOLVO CARS CORPORATION

- Detach the cable from the engine block heater from the two clips above the brake fluid reservoir.

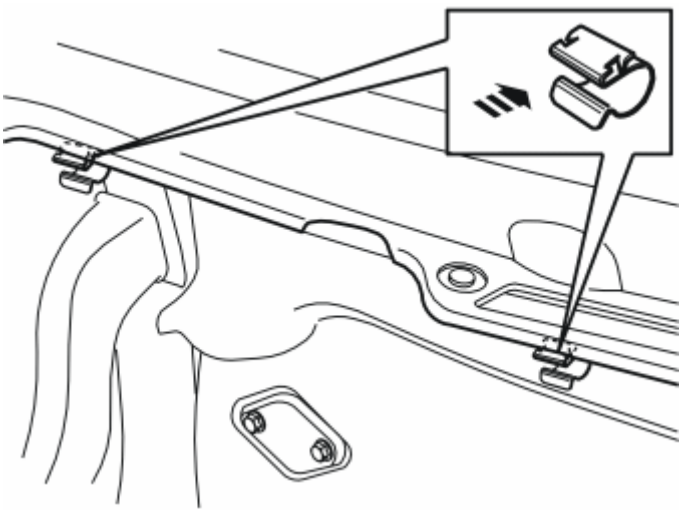

Fig. 458: Installing Clips
Courtesy of VOLVO CARS CORPORATION

- Take two new clips from the kit and press them into the edge of the plate in front of the panel over the windscreen wiper shafts.

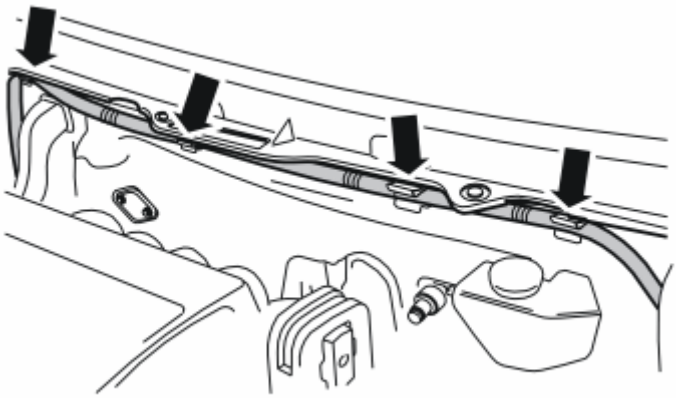

Fig. 459: Installing Cable
Courtesy of VOLVO CARS CORPORATION

- Press the cable for the passenger compartment connector socket into the four clips.
- Guide the cable down on the right-hand side of the cable duct and down through the engine compartment.

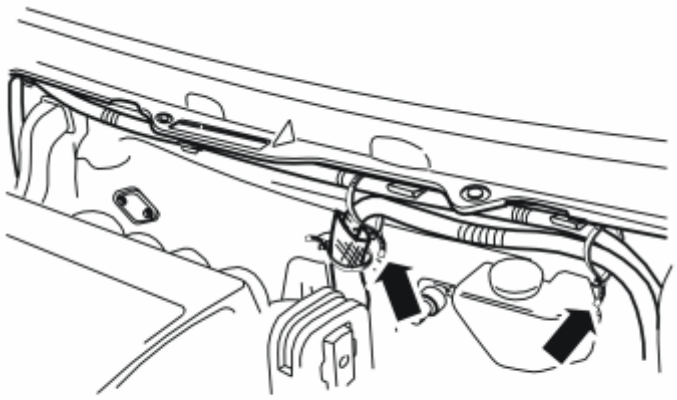

Fig. 460: Reinstalling Cable With Tie Straps
Courtesy of VOLVO CARS CORPORATION

- Take two tie straps from the kit and clamp the cable for the heater which was detached earlier, to the newly routed cable for the passenger compartment connector socket.

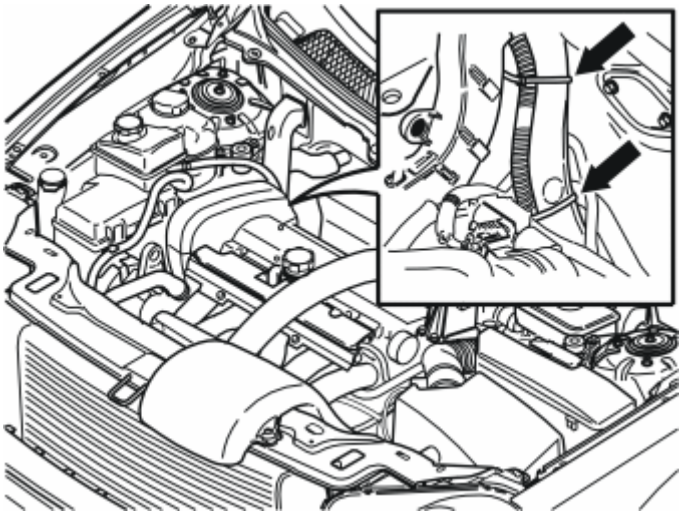

Fig. 461: Clamping Routed Cable In At Water Evacuation Pipe
Courtesy of VOLVO CARS CORPORATION

- Clamp the routed cable in at the water evacuation pipe using two tie straps from the kit.

NOTE: Do not clamp the cable against brake pipes, fuel lines or air conditioning (A/C) pipes.

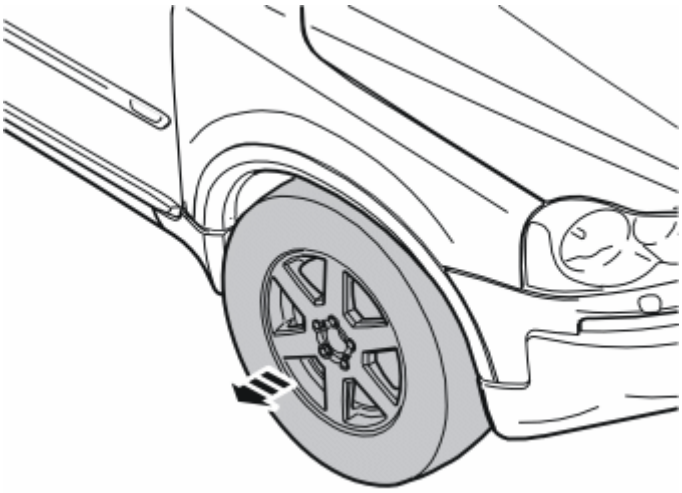

Fig. 462: Removing Wheel
Courtesy of VOLVO CARS CORPORATION

- Remove the right-hand front wheel for easier access for routing the cable to the passenger compartment connector socket.

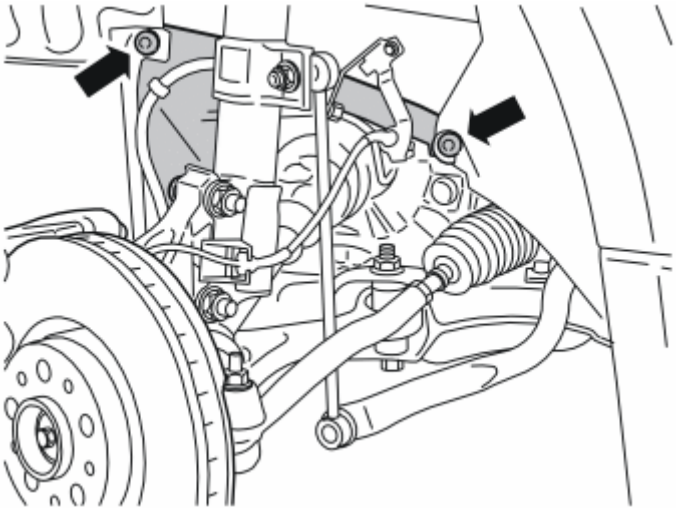

Fig. 463: Wheel Protective Cover
Courtesy of VOLVO CARS CORPORATION

- Remove the two plastic nuts securing the small protective panel in the right-hand wheel housing. Remove the panel.

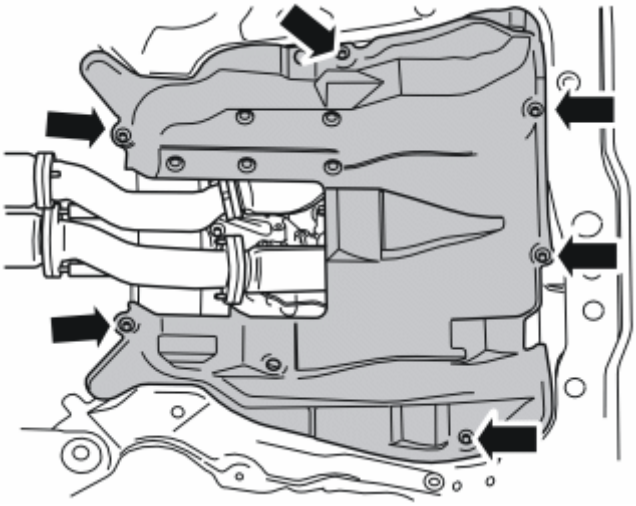

Fig. 464: Engine Splash Guard And Screws
Courtesy of VOLVO CARS CORPORATION

- Remove the six screws from the engine splash guard.

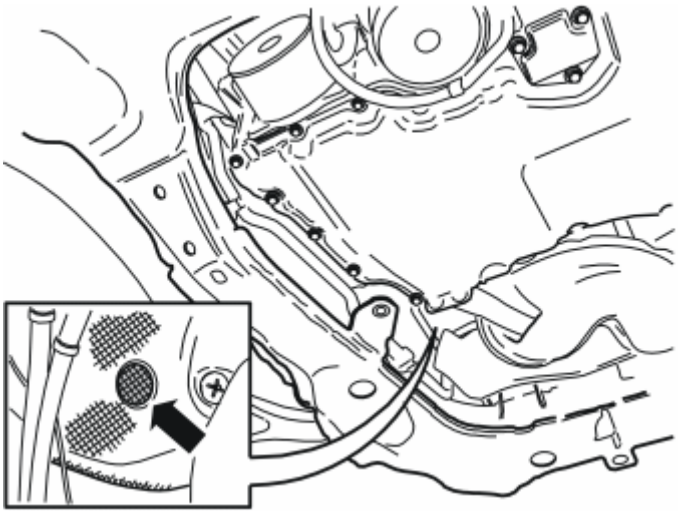

Fig. 465: Removing Pressed Out Rubber Grommet
Courtesy of VOLVO CARS CORPORATION

- Take the prepunched washer from the engine compartment insulation and remove the pressed out rubber grommet.

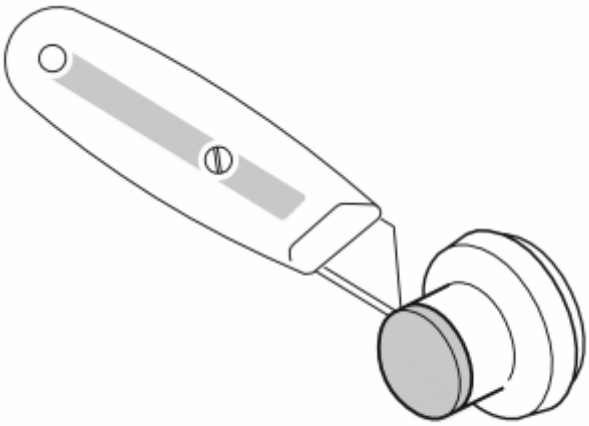

Fig. 466: Cutting Rubber Grommet
Courtesy of VOLVO CARS CORPORATION

- Take the rubber grommet and cut away the very top.

Fig. 467: Installing Clip
Courtesy of VOLVO CARS CORPORATION

- Press in a clip from the kit on the edge of the plate on the right-hand side of the wheel housing, under the bending rubber hose of the water evacuation pipe.

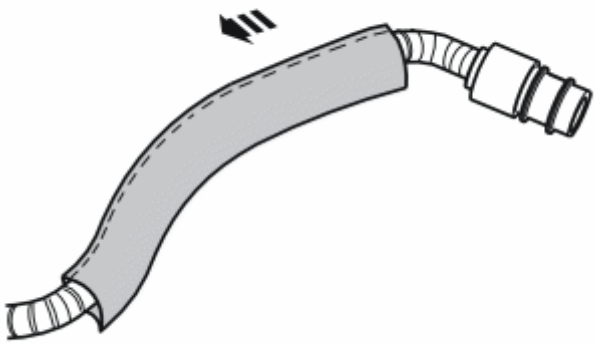

Fig. 468: Installing Radiation Shield
Courtesy of VOLVO CARS CORPORATION

- Take the radiation shield from the kit and cut it to a length of 300 mm (11 13/16").
- Pull the radiation shield onto the end of the cable.

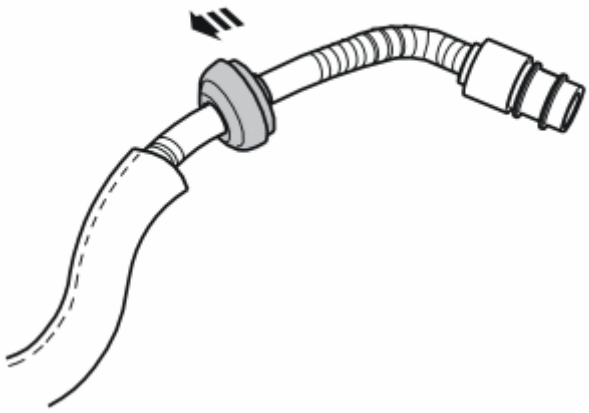

Fig. 469: Installing Rubber Grommet
Courtesy of VOLVO CARS CORPORATION

- Grease in the rubber grommet using low temperature grease part no. 1161417-9 in order to make it easier to install the rubber grommet in the hole in the cowl wall.
- Guide the cable into the rubber grommet.

Fig. 470: Guiding Cable Into Cowl Wall
Courtesy of VOLVO CARS CORPORATION

- Guide the cable into the hole in the cowl wall and press the rubber grommet into place in the hole, either by pulling it into place from inside the passenger compartment, or carefully pressing it into place with a long large screwdriver/wide end of a short pry bar.

NOTE: These must not be sharp or they can damage the cables/rubber grommet.

- Adapt the length of the cable from the rubber grommet, at the installed clip and out in the engine compartment.

Fig. 471: Inserting Cable Into Clamp
Courtesy of VOLVO CARS CORPORATION

- Press the cable for the passenger compartment connector socket into the installed clip. Make sure that the cable with the radiation shield is firmly pressed into the clip and does not slide out.

CAUTION: Check that the cable is routed so that it does not come into contact with the alternator belt, or chafe against sharp edges in the engine compartment.

- Reinstall the small protective panel in the wheel housing.
- Remount the wheel and tighten the bolts to **140 Nm (103 lbf. ft.)** .
- Reinstall the engine splash guard and torque tighten the screws to **25 Nm (18.5 lbf. ft.)** .
- Connect and reinstall the left-hand headlamp.

Fig. 472: Securing Radiation Strap With Grey Tie Straps
Courtesy of VOLVO CARS CORPORATION

- Take the grey tie straps from the kit and tighten the radiation shield to the cable

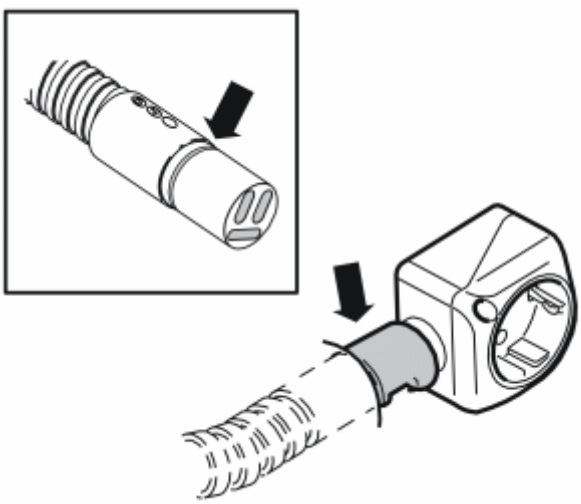

Fig. 473: Identifying Cable At Passenger Compartment Connector Socket
Courtesy of VOLVO CARS CORPORATION

- Route the cable from the engine compartment through the hole in the carpet.
- Grease in the O-ring with low temperature grease (part no. 1161417-9).

NOTE: Make sure that no grease gets onto the connector surfaces.

- Connect the cable to the passenger compartment connector socket. Press a locking sleeve (from the kit) over the joint.
- Fold the carpet back into position and install the passenger compartment connector socket using both the screws.

Reinstall:

- the sound barrier
- the sill trim panel
- the cover panel in the lower edge of the B-pillar panel
- the cover panel for the seat's mounting
- the center console's right-hand side panel.

PASSENGER COMPARTMENT SOCKET 230 V (B6294T; 2003-2006)

PASSENGER COMPARTMENT SOCKET 230V, B6294T

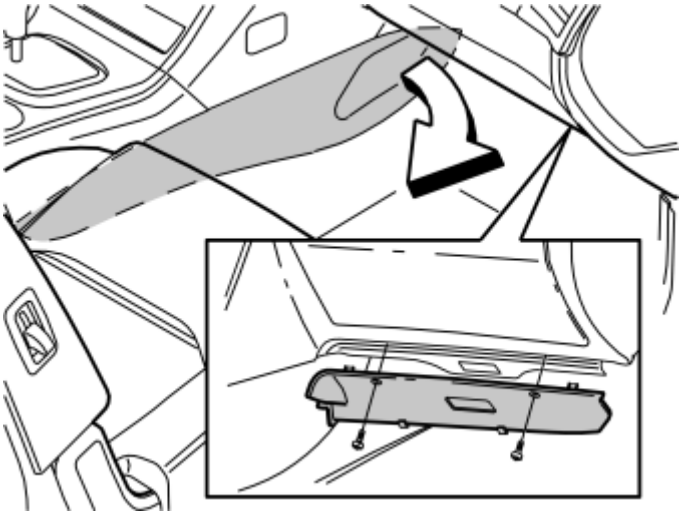

Fig. 474: Right-Hand Side Sound Barrier
Courtesy of VOLVO CARS CORPORATION

- Remove the right-hand side panel from the center console. Pull off the panel at the front edge. Then continue backwards until all the clips release
- Remove the right-hand side soundproofing panel. First remove the two screws. Then pry off the panel at the top edge.

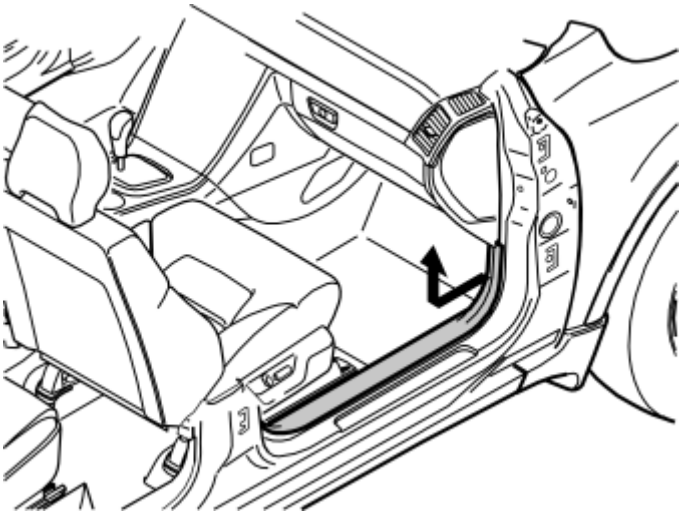

Fig. 475: Right-Hand Front Door's Sill Trim Panel
Courtesy of VOLVO CARS CORPORATION

- Remove the sill trim panel for the right-hand front door. Pull the front edge until the clip releases. Then continue backwards until the remaining clips have released
- Pull away the front edge to the right to access the edge of the carpet.

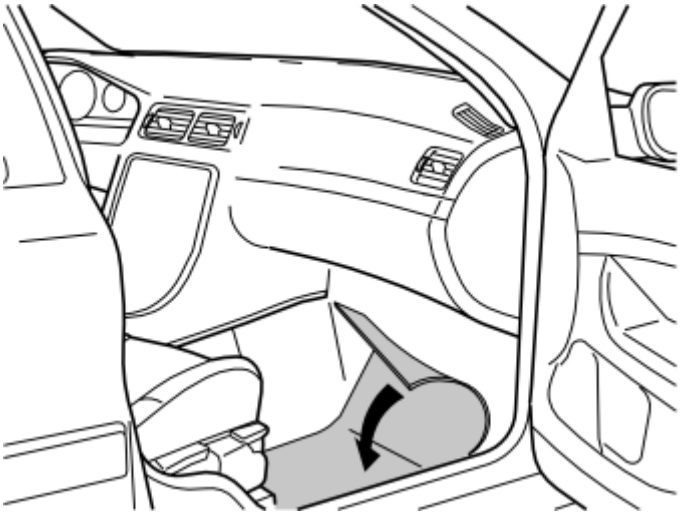

Fig. 476: Folding Carpet Aside
Courtesy of VOLVO CARS CORPORATION

- Fold the carpet to one side by the right-hand front seat.

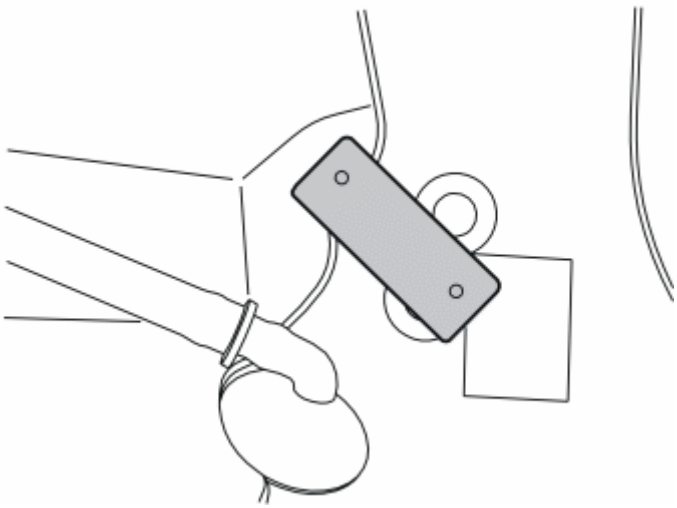

Fig. 477: Installing Bracket
Courtesy of VOLVO CARS CORPORATION

- Remove the lower piece of tape. The tape is situated where the bracket is to be screwed into place
- Take the bracket and screw from the kit. Install the bracket in the existing weld nut under the recently removed piece of tape
- Turn the bracket so that it is positioned as illustrated
- Loosely install the connector. Check that the connector is straight, with the power connector at the front
- Tighten the bracket. Tighten to **10 Nm (7 lbf. ft.)**
- If the car has a child seat mounting bracket, the passenger compartment socket bracket must be positioned above this. Secure using the M6 screw. Tighten to **10 Nm (7 lbf. ft.)** .

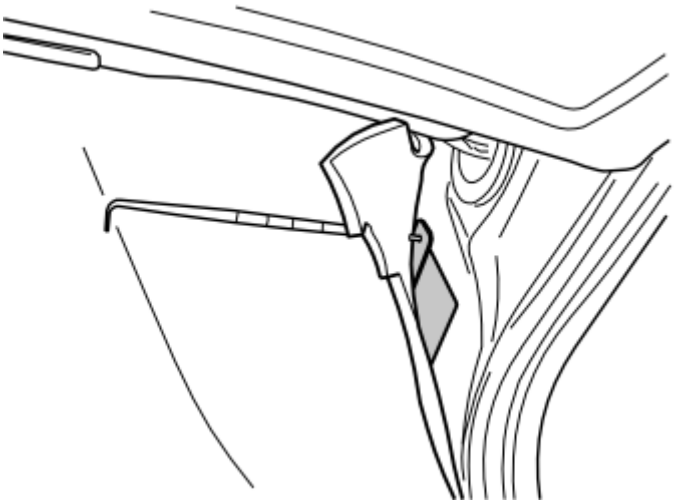

Fig. 478: Folding Carpet Back
Courtesy of VOLVO CARS CORPORATION

- Fold the carpet back over the bracket
- Make a hole in the carpet opposite the upper mounting hole in the bracket using a double ended scriber.

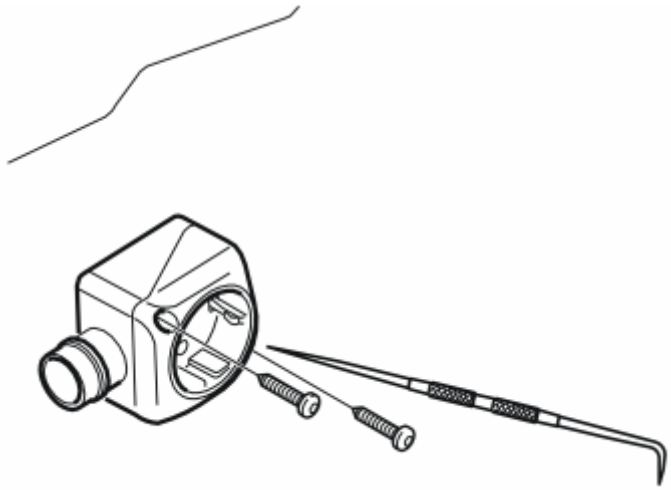

Fig. 479: Identifying Screws, Passenger Compartment Connector Socket & Double Ended Scriber
Courtesy of VOLVO CARS CORPORATION

- Take the passenger compartment socket and a screw from the kit. Tighten the passenger compartment socket to the bracket in the upper mounting
- Insert the double ended scriber into the lower mounting for the passenger compartment socket. Make a hole in the carpet opposite the lower hole on the bracket
- Tighten the lower mounting for the passenger compartment connector socket using a screw from the kit.

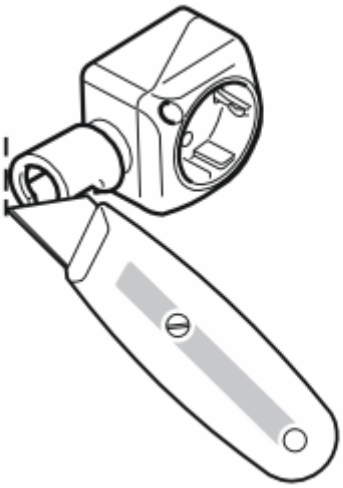

Fig. 480: Identifying Carpet Knife, Cut Slit In Carpet & Front Of Locking Sleeve
Courtesy of VOLVO CARS CORPORATION

- Press a locking sleeve (from the kit) onto the passenger compartment socket. Slide the locking sleeve as far along the terminal for the passenger compartment socket as possible
- Take a carpet knife and cut a slit in the carpet just in front of the locking sleeve. The cut must be as long as the diameter of the locking sleeve.

NOTE: Do not damage wiring or hoses under the carpet.

- Remove the passenger compartment socket from the bracket.

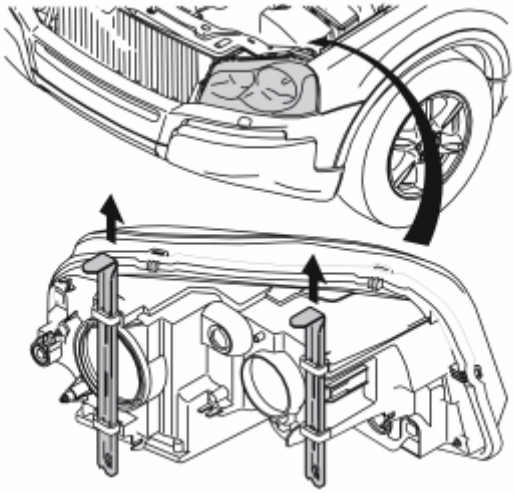

Fig. 481: Detach Left-Hand Headlamp By Pulling Up Two Locking Pins
Courtesy of VOLVO CARS CORPORATION

- Remove the left-hand headlamp by pulling up the two cotter pins and then carefully pulling the headlamp forwards.

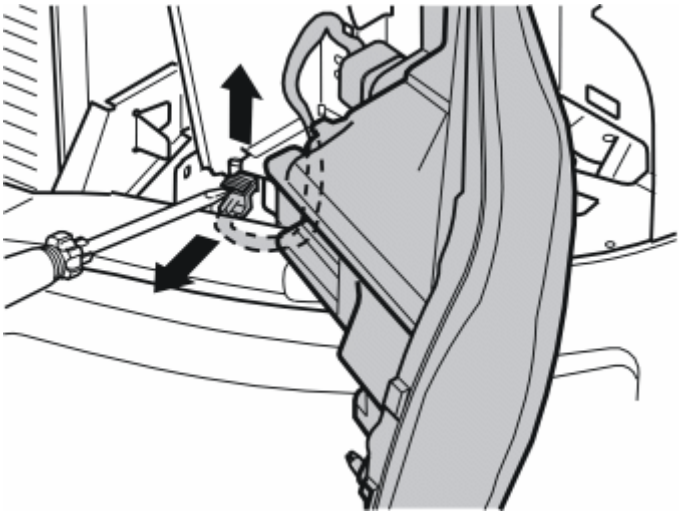

Fig. 482: Carefully Prize Up Catch On Connector For Headlamp With A Screwdriver
Courtesy of VOLVO CARS CORPORATION

- Carefully pry up the catch on the headlamp connector using a screwdriver
- Pull up the lock completely. Disconnect the connector. Place the headlamp to one side.

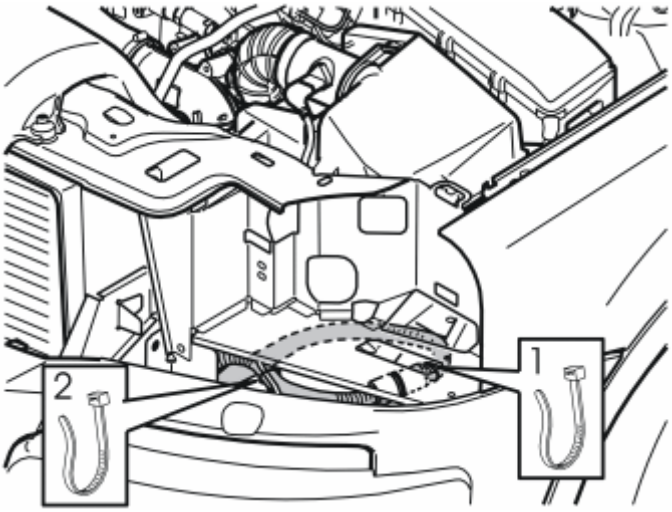

Fig. 483: Identifying Tie Straps
Courtesy of VOLVO CARS CORPORATION

Applies to cars with an engine block heater

- Remove the two tie straps that hold the cable to the front engine block heater socket. Route the cable.

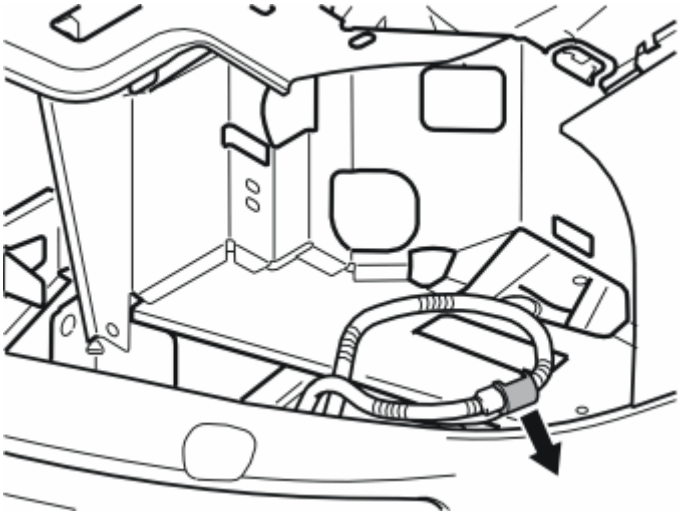

Fig. 484: Removing Locking Sleeve
Courtesy of VOLVO CARS CORPORATION

Applies to cars with an engine block heater

- Remove the locking sleeve over the joint on the wiring for the engine block heater. Disconnect the wiring from each other.

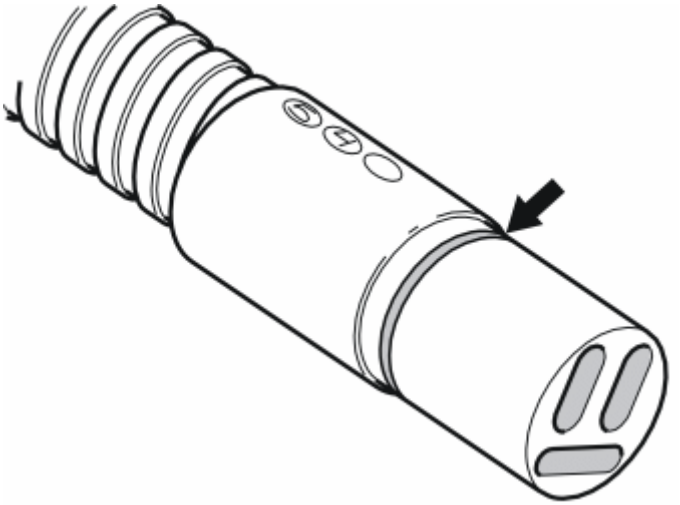

Fig. 485: Identifying O-Ring
Courtesy of VOLVO CARS CORPORATION

- Take a junction connector from the kit. Grease the O-ring using low temperature grease (P/N 1161417-9). Grease the O-ring on the connector for the front engine block heater socket.

NOTE: Do not get any grease on the contact surfaces of the connector.

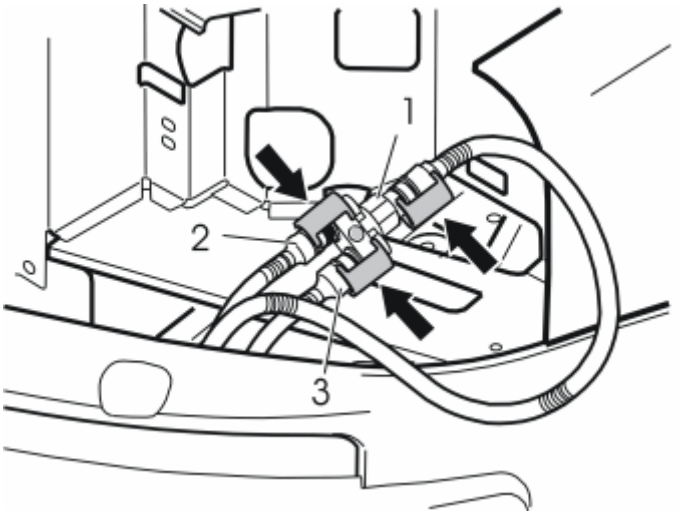

Fig. 486: Identifying Branch Connector
Courtesy of VOLVO CARS CORPORATION

- Take the long cable for the passenger compartment socket from the kit. Route it down the left-hand side of the left side member
- Connect the front engine block heater socket cable to socket (1) on the junction connector
- Connect the wiring for the engine block heater and passenger compartment connector socket to either socket (2) or (3) on the junction cable
- Press the three locking sleeves (from the kit) over the cable splices. The larger locking sleeve must be on the socket (1).

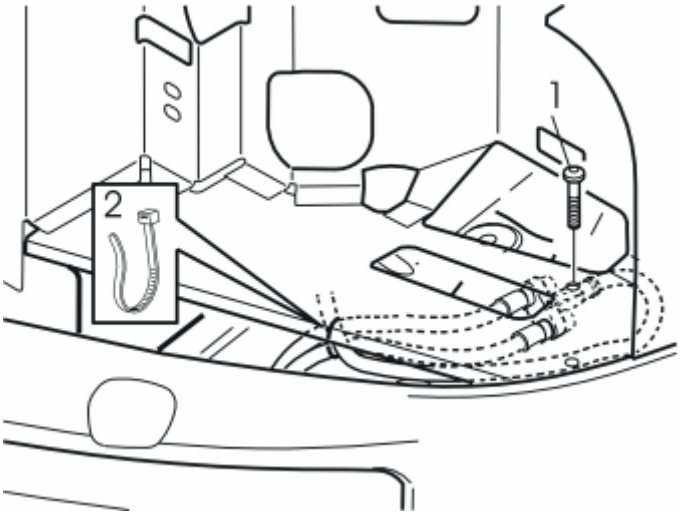

Fig. 487: Screw, Nut, Washer, Tie Strap, And Branch Connector -- 6-Cylinder Engine
Courtesy of VOLVO CARS CORPORATION

- Position the junction connector with the wiring on the underneath of the plate under the headlamp, with the two sockets pointing forward and the cable from the front engine block heater socket pointing backward
- Take the screw and the nut from the kit. Tighten the junction connector in the hole in the plate (1)

- Take a tie strap from the kit and secure the wiring at point (2)
- Connect the connector to the headlamp and reinstall it.

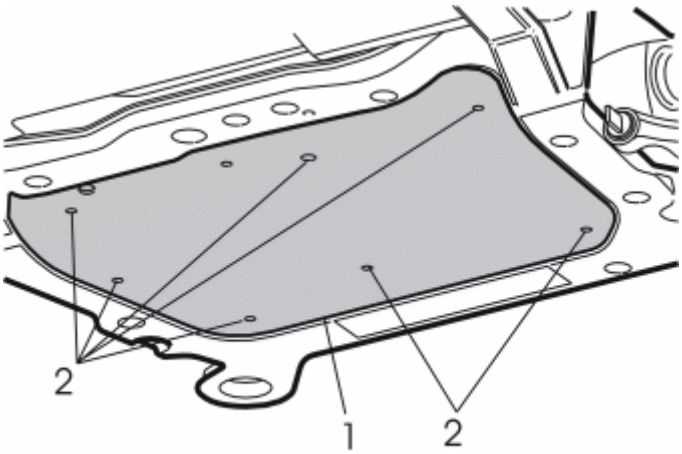

Fig. 488: Engine Splash Guard
Courtesy of VOLVO CARS CORPORATION

- Remove the engine splash guard (1) by removing the screws (2).

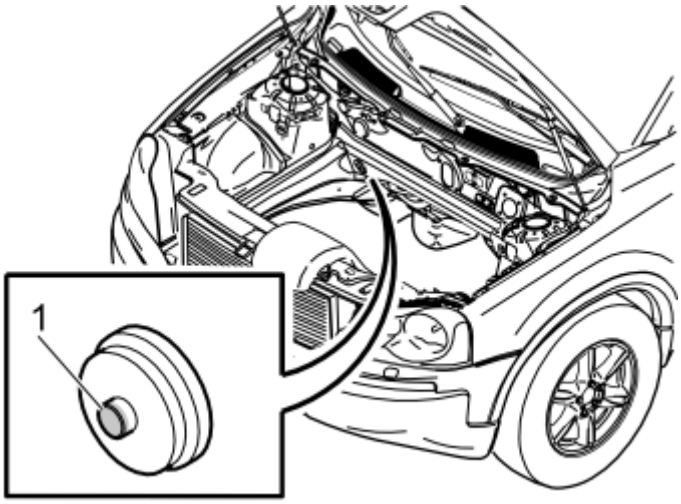

Fig. 489: Removing Rubber Grommet
Courtesy of VOLVO CARS CORPORATION

- Press out the pre-punched engine compartment insulation
- Remove the rubber grommet (1) from the cowl panel and cut off the top.

INSTALLING ELECTRICAL CABLE

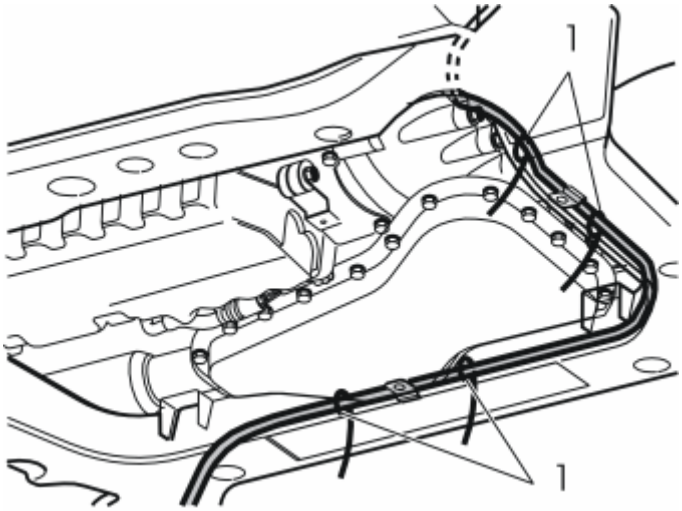

Fig. 490: Electrical Cable Secured With Tie Straps
Courtesy of VOLVO CARS CORPORATION

- Route the cable for the passenger compartment socket over the left front corner of the sub-frame, where the cable to the engine block heater runs
- Press four tie straps (1) from the kit onto the holes in the sub-frame. Position the cable in the clamps but do not tighten them yet.

Illustration A

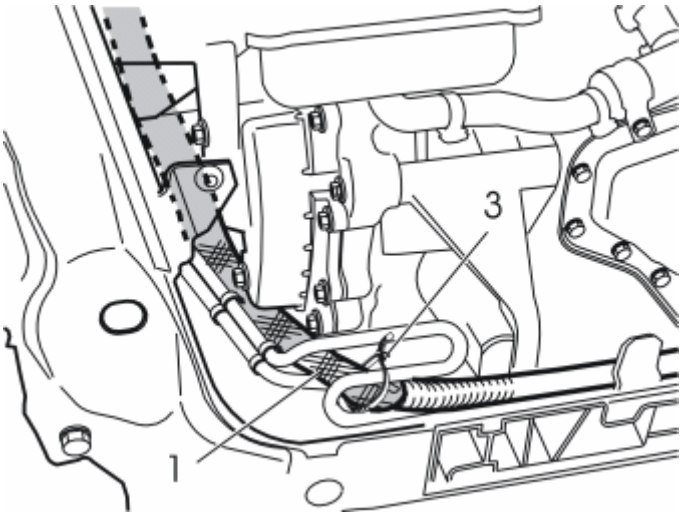

Fig. 491: Routing Cable
Courtesy of VOLVO CARS CORPORATION

- Take the insulation (1) from the kit. Thread it onto the cable
- Take the rubber grommet from the kit. Thread the cable through it
- Route the cable into the passenger compartment as illustrated
- Adjust the length of the cable to the rubber grommet.

Illustration B

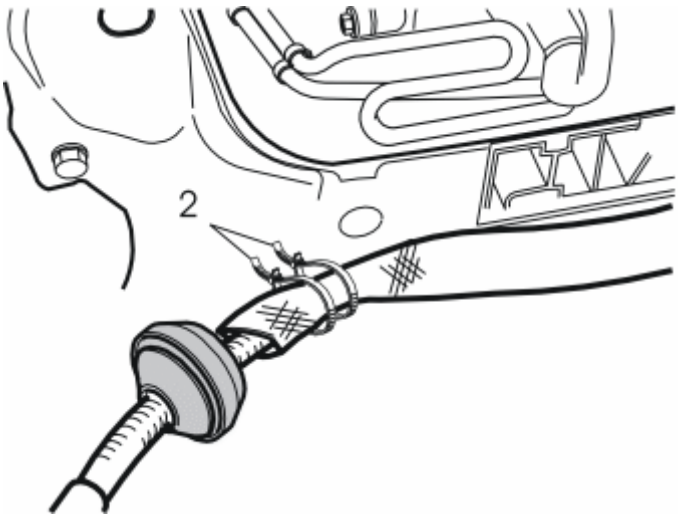

Fig. 492: Securing Cable
Courtesy of VOLVO CARS CORPORATION

- Pull back the cable leaving the insulation in position. Secure the upper end of the insulation. Use the two tie straps (2) from the kit
- Grease the side of the rubber grommet facing inwards into the passenger compartment. Use low-temperature grease
- Route the cable into the passenger compartment. Carefully pull the rubber grommet into position from inside the passenger compartment by pulling the cable for the passenger compartment connector socket.

Illustration A

- Clamp the cable at the servo pipe using a tie strap (3) from the kit
- Adjust the cable in the four tie straps in point and tighten them.

- Reinstall the engine splash guard. Tighten the screws. Tighten to **25 Nm (17 lbf. ft)** .

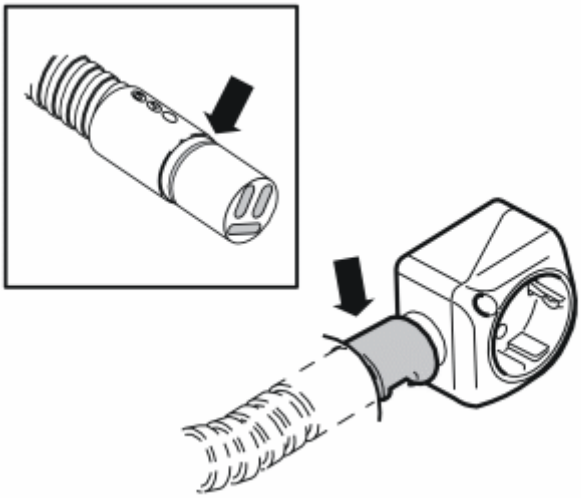

Fig. 493: Identifying Cable At Passenger Compartment Connector Socket
Courtesy of VOLVO CARS CORPORATION

- Insert the cable from the engine compartment through the hole in the carpet
- Grease the O-ring using low temperature grease, (P/N 1161417-9).

NOTE: Ensure that no grease gets onto the connector surfaces.

- Connect the cable to the passenger compartment connector socket. Press a locking sleeve (from the kit) over the joint
- Fold the carpet back into position and install the passenger compartment socket using both the screws.

Reinstall:

- the soundproofing panel
- the sill trim panel
- the right side panel for the center console.

PASSENGER COMPARTMENT SOCKET 230V (B5254T2; 2003-2007)

PASSENGER COMPARTMENT SOCKET 230V

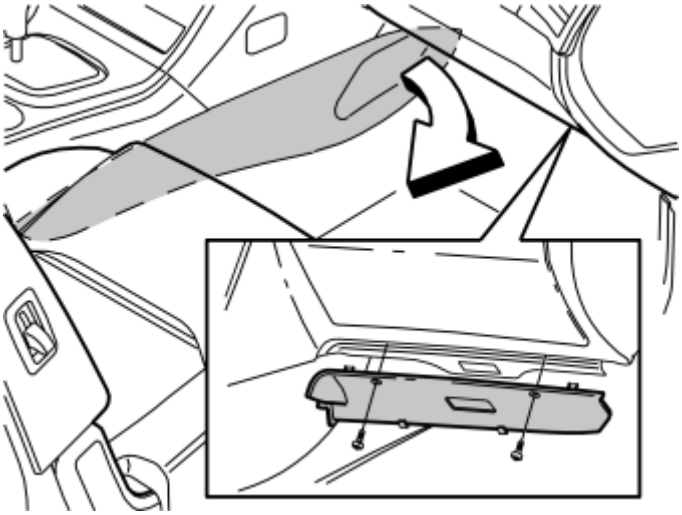

Fig. 494: Right-Hand Side Sound Barrier
Courtesy of VOLVO CARS CORPORATION

- Remove the right-hand side panel from the center console. Pull off the panel at the front edge. Then continue backwards until all the clips release
- Remove the right-hand side soundproofing panel. First remove the two screws. Then pry off the panel at the top edge.

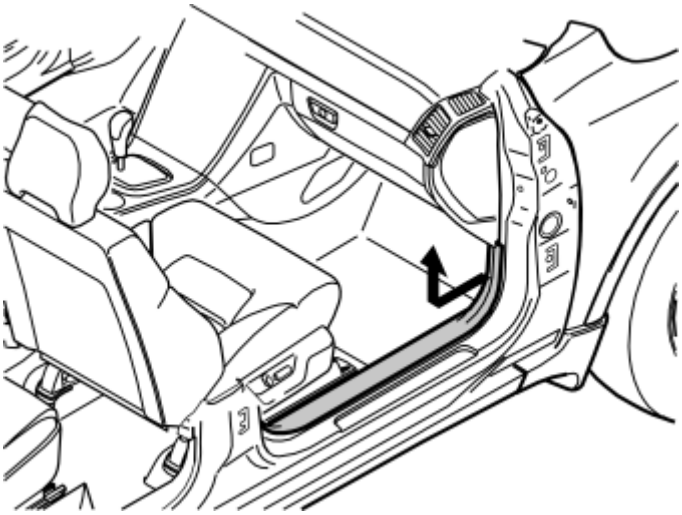

Fig. 495: Right-Hand Front Door's Sill Trim Panel
Courtesy of VOLVO CARS CORPORATION

- Remove the sill trim panel for the right-hand front door. Pull the front edge until the clip releases. Then continue backwards until the remaining clips have released
- Unhook the sill trim panel from the B-post panel and from the panel at the lower edge of the B-post panel.

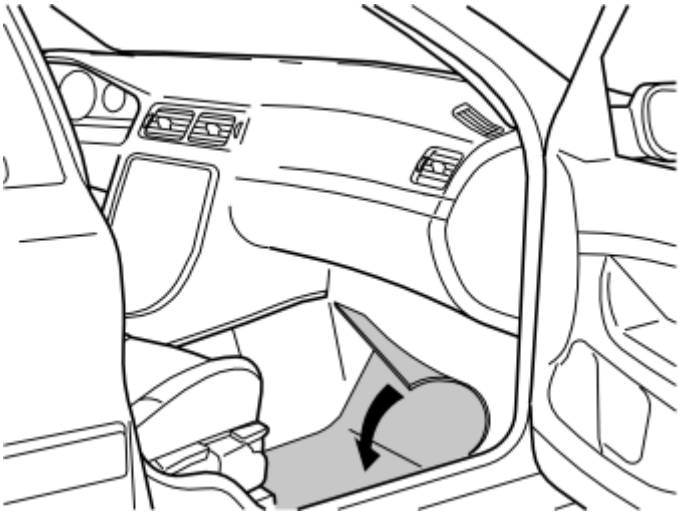

Fig. 496: Folding Carpet Back
Courtesy of VOLVO CARS CORPORATION

- Fold the carpet to one side by the right-hand front seat.

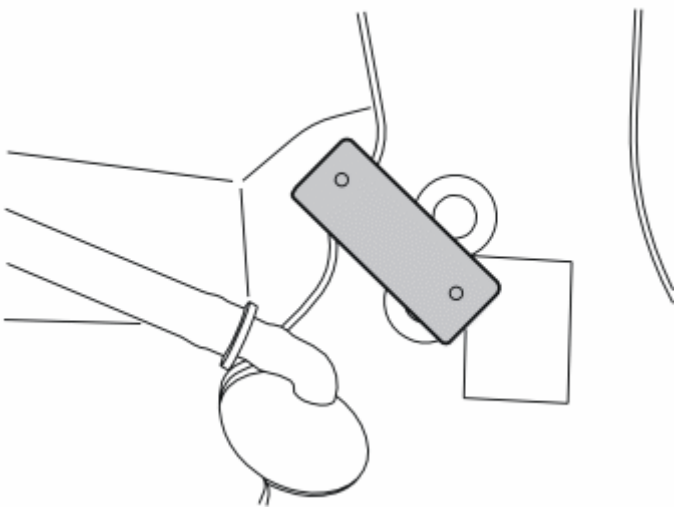

Fig. 497: Installing Bracket
Courtesy of VOLVO CARS CORPORATION

- Remove the lower piece of tape. The tape is situated where the bracket is to be screwed into place
- Take the bracket and screw from the kit. Install the bracket in the existing weld nut under the recently removed piece of tape
- Turn the bracket so that it is positioned as illustrated
- Loosely install the connector. Check that the connector is straight, with the power connector at the front
- Tighten the bracket. Tighten to **10 Nm (7 lbf. ft.)**
- If the car has a child seat mounting bracket, the passenger compartment socket bracket must be positioned above this. Secure using the M6 screw. Tighten to **10 Nm (7 lbf. ft.)** .

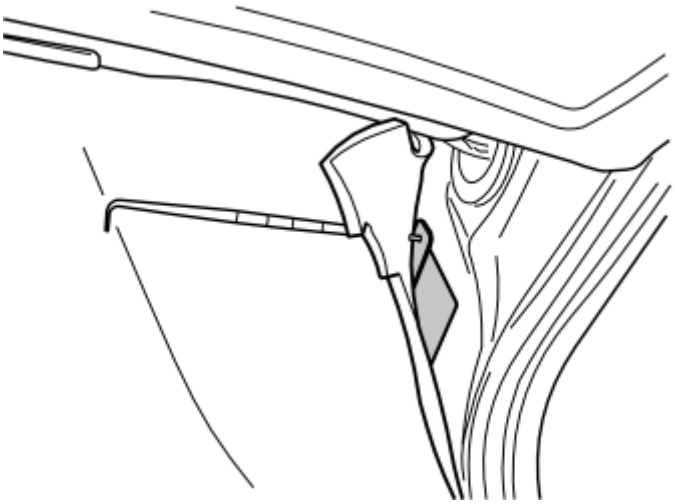

Fig. 498: Reinstalling Carpet
Courtesy of VOLVO CARS CORPORATION

- Fold the carpet back over the bracket
- Make a hole in the carpet opposite the upper mounting hole in the bracket using a double ended scriber.

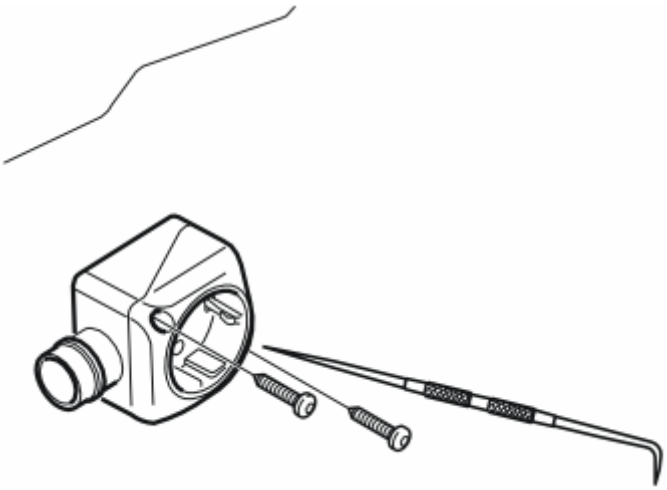

Fig. 499: Identifying Screws, Passenger Compartment Connector Socket & Double Ended Scriber
Courtesy of VOLVO CARS CORPORATION

- Take the passenger compartment socket and a screw from the kit. Tighten the passenger compartment socket to the bracket in the upper mounting
- Insert the double ended scriber into the lower mounting for the passenger compartment socket. Make a hole in the carpet opposite the lower hole on the bracket
- Tighten the lower mounting for the passenger compartment connector socket using a screw from the kit.

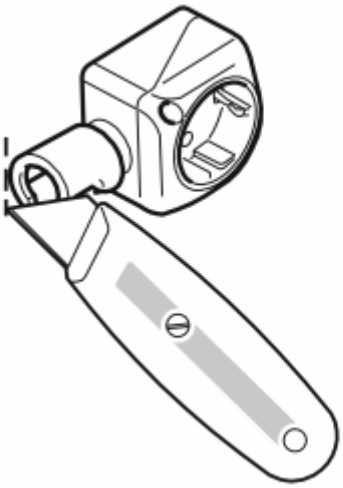

Fig. 500: Identifying Carpet Knife, Cut Slit In Carpet & Front Of Locking Sleeve
Courtesy of VOLVO CARS CORPORATION

- Press a locking sleeve (from the kit) onto the passenger compartment socket. Slide the locking sleeve as far along the terminal for the passenger compartment socket as possible
- Take a carpet knife and cut a slit in the carpet just in front of the locking sleeve. The cut must be as long as the diameter of the locking sleeve.

NOTE: Do not damage wiring or hoses under the carpet.

- Remove the passenger compartment socket from the bracket.

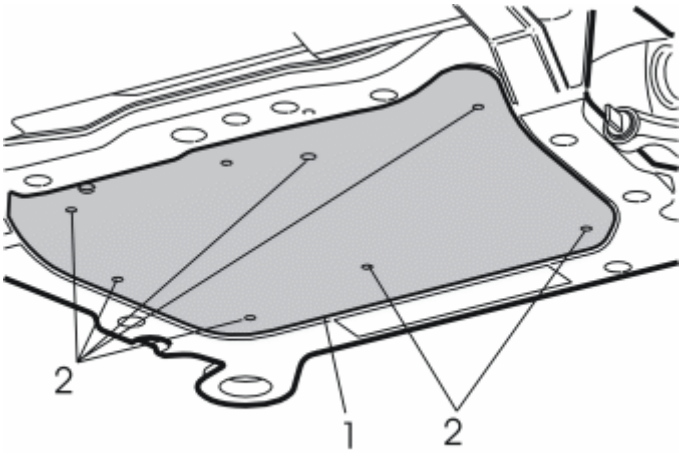

Fig. 501: Engine Splash Guard
Courtesy of VOLVO CARS CORPORATION

- Remove the engine splash guard (1) by removing the screws (2).

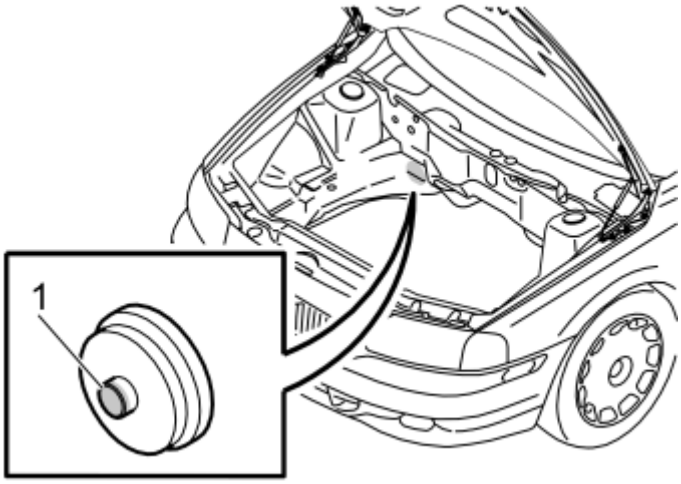

Fig. 502: Identifying Rubber Grommet Inside Insulation
Courtesy of VOLVO CARS CORPORATION

- Press out the pre-punched engine compartment insulation
- Remove the rubber grommet (1) from the cowl panel and cut off the top
- Take the cable from the kit. Insert the cable through the rubber grommet and into the passenger compartment.

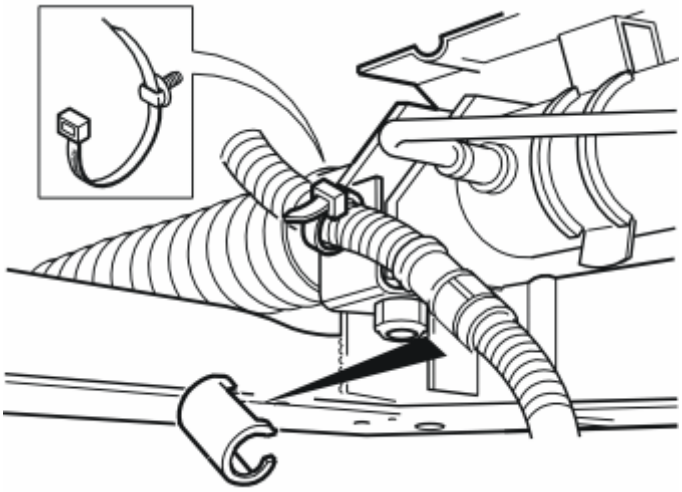

Fig. 503: Identifying Engine Block Heater Connectors & Front Engine Block Heater Socket
Courtesy of VOLVO CARS CORPORATION

If an engine block heater is installed:

- Remove the connectors for the engine block heater and the front engine block heater socket from the bracket on the steering gear.

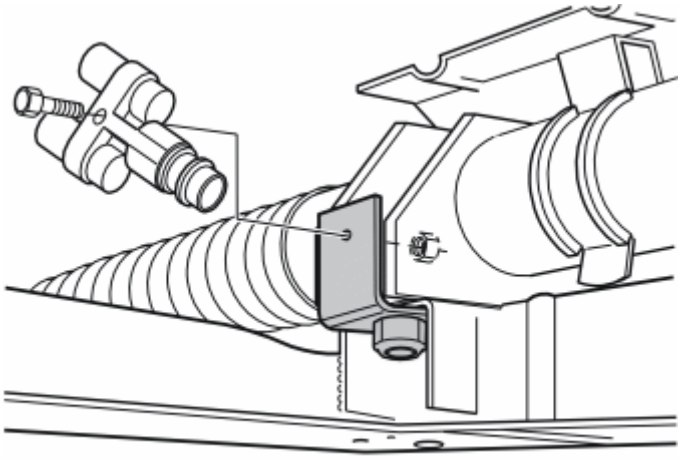

Fig. 504: Identifying Branch Connector On Bracket, Screw And Nut
Courtesy of VOLVO CARS CORPORATION

If an engine block heater is not installed:

- Remove the nut from the right-hand side of the steering gear
- Install the bracket and a new nut from the kit
- Tighten the nut. Tighten to **50 Nm (35 lbf. ft.)**
- Install the junction connector on the bracket using the screw and nut from the kit.

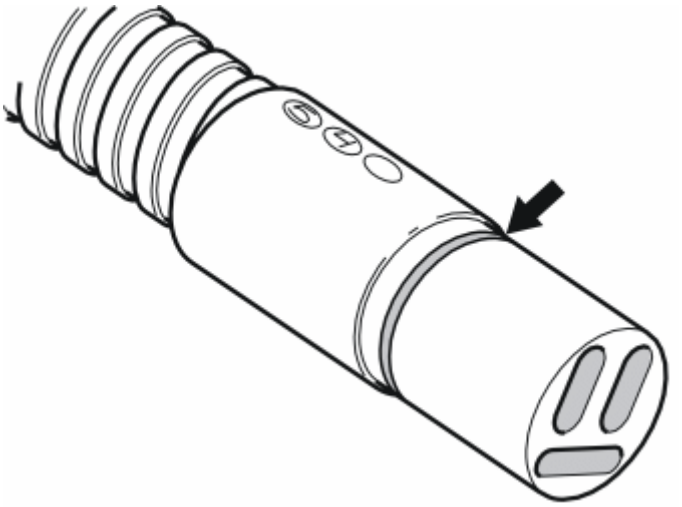

Fig. 505: Identifying O-Ring
Courtesy of VOLVO CARS CORPORATION

- Grease the O-rings on the junction connector and cable from the front engine block heater socket. Use low temperature grease, (P/N 1161417-9).

NOTE: Ensure that no grease gets onto the connector surfaces.

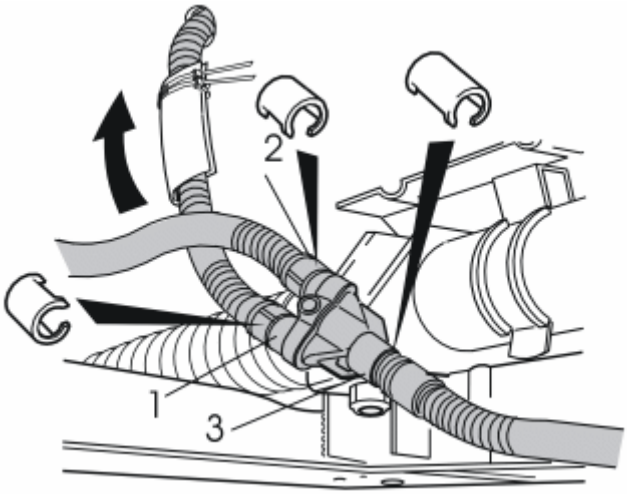

Fig. 506: Identifying Engine Block Heater Cable & Socket On Junction Connector
Courtesy of VOLVO CARS CORPORATION

- Take the heat shield sleeve and the two tie straps from the kit. Thread the heat shield sleeve onto the cable routed to the passenger compartment connector socket
- Pull the heat shield sleeve up to the rubber grommet for the passenger compartment. Tighten the two tie straps
- Connect the cable from the passenger compartment connector socket to the socket (1) on the junction connector
- Connect the cable from the engine block heater to the socket (2) on the junction connector
- Connect the cable from the front engine block heater socket to the socket (3) on the junction connector
- Press the locking sleeves (from the kit) over the cable splices. The larger locking sleeve must be on the socket (3).

NOTE: **Ensure that the cable does not rub against any sharp edges etc. The cable must not be secured to the fuel lines, air conditioning (A/C) pipes or brake pipes.**

- Reinstall the engine splash guard. Tighten the screws. Tighten to **25 Nm (17 lbf. ft.)** .

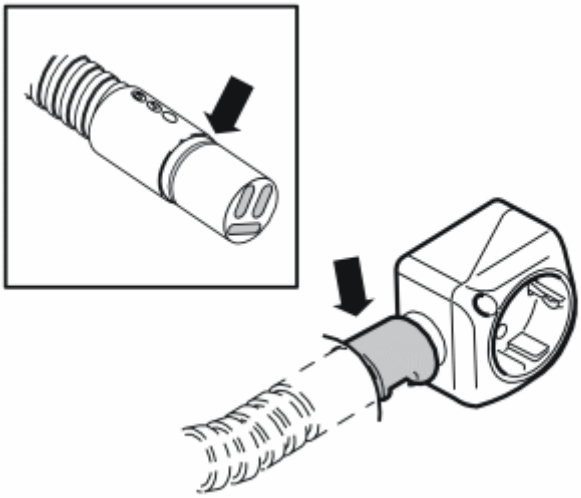

Fig. 507: Identifying Cable At Passenger Compartment Connector Socket
Courtesy of VOLVO CARS CORPORATION

- Insert the cable from the engine compartment through the hole in the carpet
- Grease the O-ring using low temperature grease, (P/N 1161417-9).

NOTE: Ensure that no grease gets onto the connector surfaces.

- Connect the cable to the passenger compartment connector socket. Press a locking sleeve (from the kit) over the joint
- Fold the carpet back into position and install the passenger compartment socket using both the screws.

Reinstall:

- the soundproofing panel
- the sill trim panel
- the right side panel for the center console.

RELAY, B6294, B8444 (B6294T; 2003-2006) (B8444S; 2005-2008)

RELAY

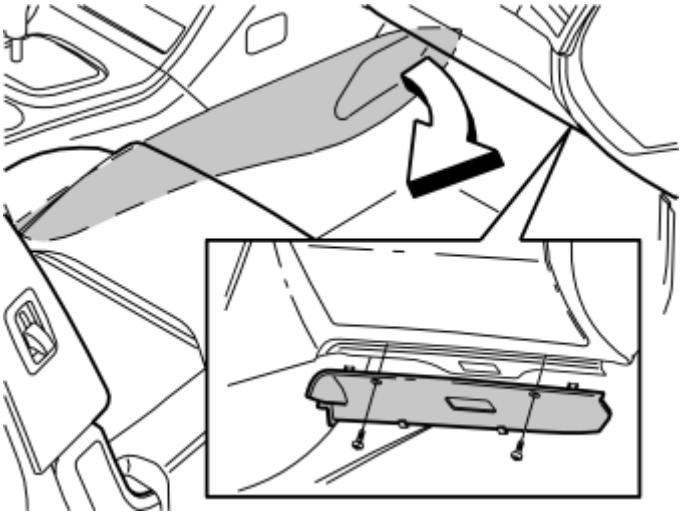

Fig. 508: Right-Hand Side Sound Barrier
Courtesy of VOLVO CARS CORPORATION

- Turn the ignition switch to position 0.
- Remove the right-hand side panel of the center console by pulling it away starting at the front edge and then backwards until all clips have released.
- Remove the sound barrier on the right-hand side by first removing the two screws and then prizing it away at the top edge.

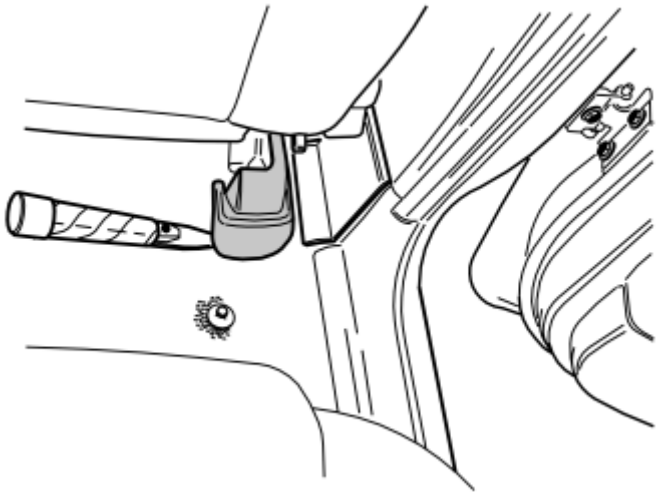

Fig. 509: Prying Right-Hand Rear Mounting Of Cover Panel
Courtesy of VOLVO CARS CORPORATION

- Remove the cover panel on the right-hand rear mounting of the right-hand front seat. Prize it up slightly at the rear edge and then pull it back/upwards.

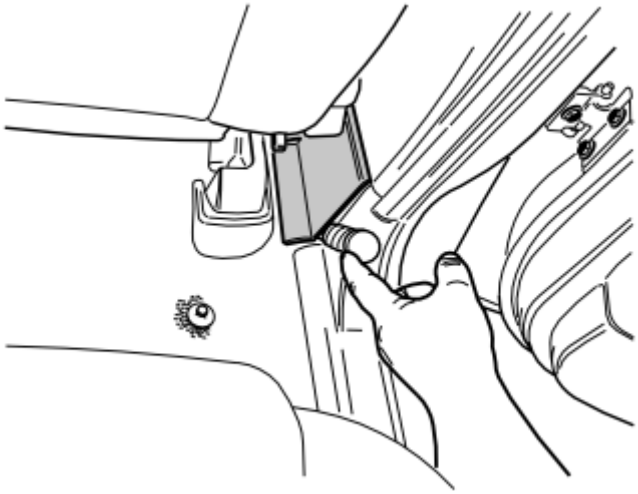

Fig. 510: Prying Away Cover Panel Over Joint Between Door Sills On Right-Hand Side, At Lower Edge, Using A Weatherstrip Tool
Courtesy of VOLVO CARS CORPORATION

- Carefully prize away the cover panel over the joint between the door sills on the right-hand side, at the lower edge, using a weatherstrip tool. Remove the cover panel.

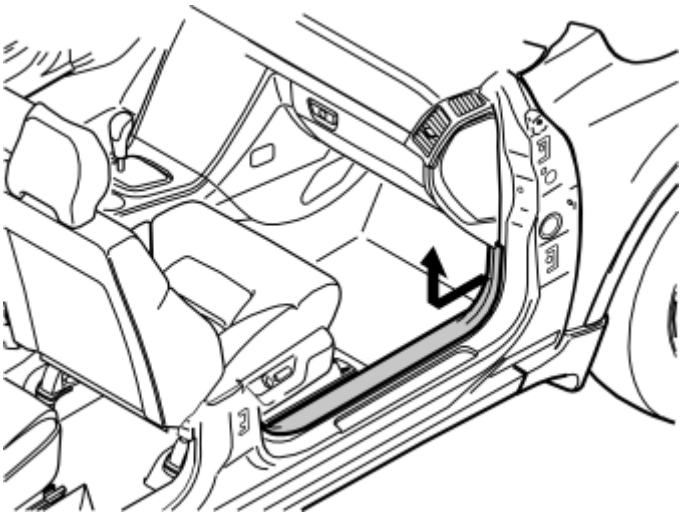

Fig. 511: Right-Hand Front Door's Sill Trim Panel
Courtesy of VOLVO CARS CORPORATION

- Detach the right-hand front door's sill trim panel. Pull it away starting at the front edge until the clip there has released. Continue backwards until the remaining clips have released.
- Unhook it from the B-pillar panel and place it to one side.

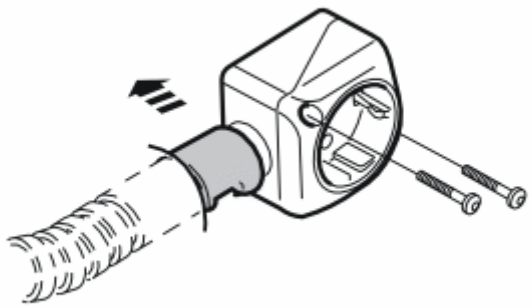

Fig. 512: Passenger Compartment Connector Socket Screws
Courtesy of VOLVO CARS CORPORATION

- Remove the screws to the passenger compartment connector socket and detach it from the bracket behind the carpet.
- Remove the locking sleeve and detach the cable from the passenger compartment connector socket.

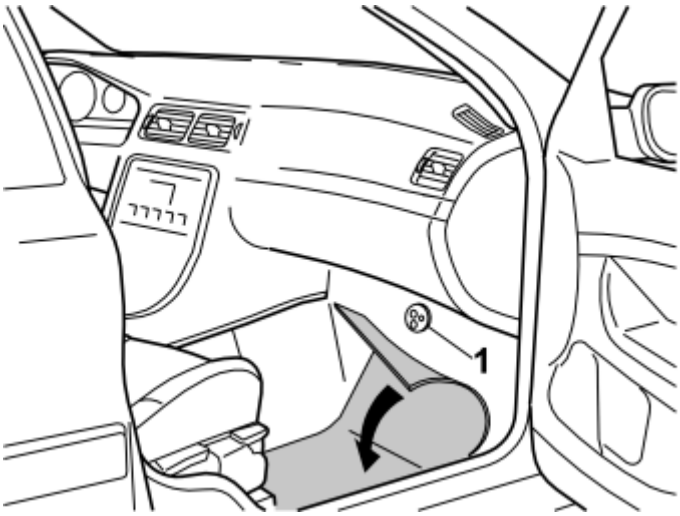

Fig. 513: Passenger Seat Rubber Grommet
Courtesy of VOLVO CARS CORPORATION

- Push the carpet to one side by the right-hand front seat.
- Press out the rubber grommet (1) under the insulation mat.

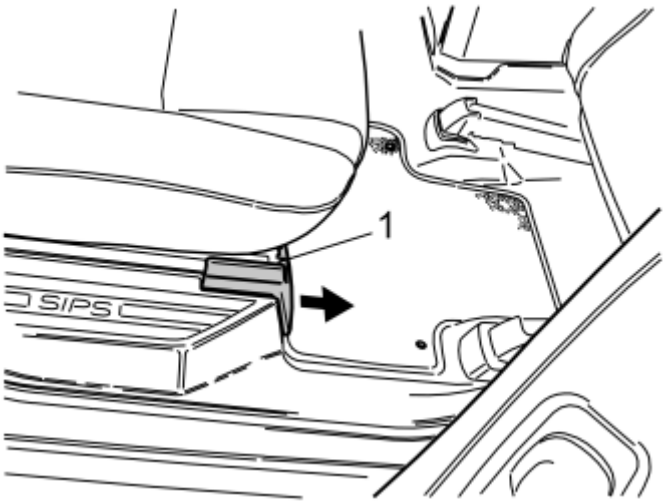

Fig. 514: Pushing Up Catch On Top Side
Courtesy of VOLVO CARS CORPORATION

- Remove the panel in the right-hand front seat mounting, on the right-hand seat in the second row of seats. Push up the catch (1) on the top side and pull the panel forward.

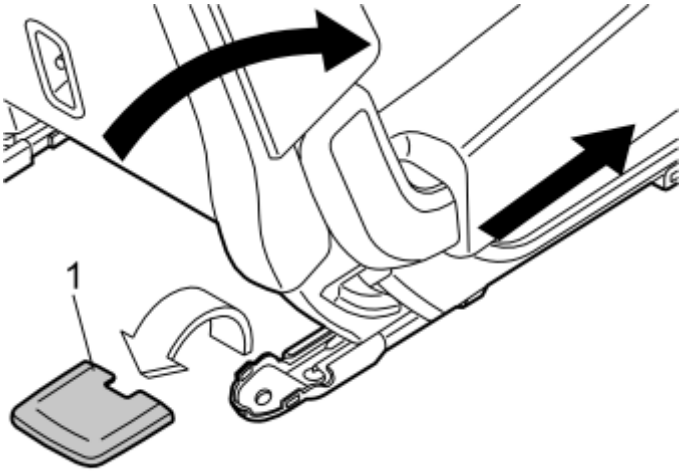

Fig. 515: Removing Cover Panel
Courtesy of VOLVO CARS CORPORATION

- Fold the backrest forward on the right-hand seat in the second row of seats as far as possible. Push the seat forward as far as possible. (On cars with two rows of seats the second row is fixed.)
- Remove the cover panel (1) for the right-hand rear seat mounting by prizing it away at the rear edge.

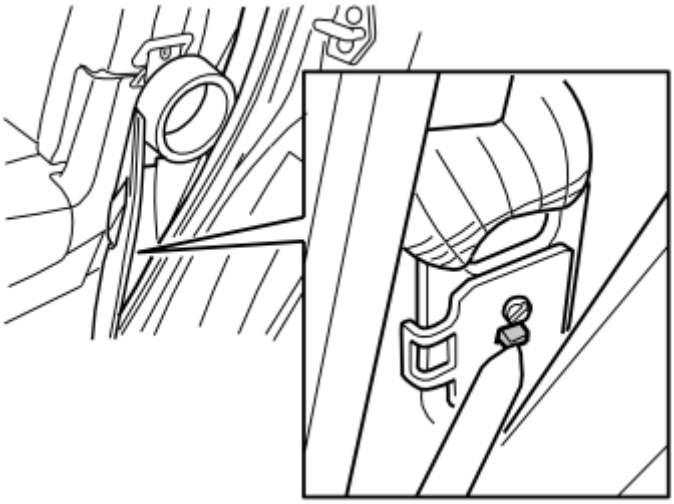

Fig. 516: Seat Belt Mounting Locking Tab
Courtesy of VOLVO CARS CORPORATION

- Disconnect the top edge of the sill trim panel. Disconnect the seat belt from the end mounting by carefully pressing the locking tab with a weatherstrip tool, as illustrated, so that the seat belt releases from the end mounting.

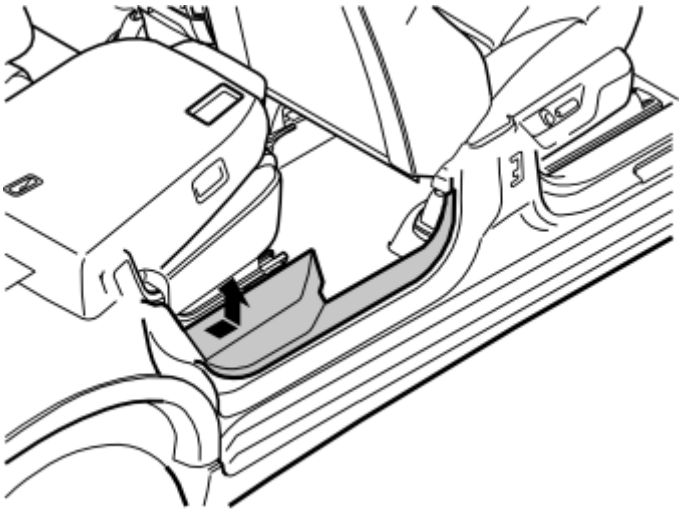

Fig. 517: Removing Sill Trim Panel
Courtesy of VOLVO CARS CORPORATION

- Remove the sill trim panel by pulling it away completely at the rear edge until the clips there have released. Continue forwards until the remaining clips have released.

Applies to cars with two rows of seats

- On cars with two rows of seats, the seat cannot be pushed forward. To remove the sill trim panel, start by folding the backrest forward as the sill trim panel is pulled away at the rear edge. Following which, move the backrest back to raise the seat cushion, and so increase space for removing the sill trim panel. It is secured firmly, so ensure that the sill trim panel and adjoining components are not damaged during

removal.

Illustration A

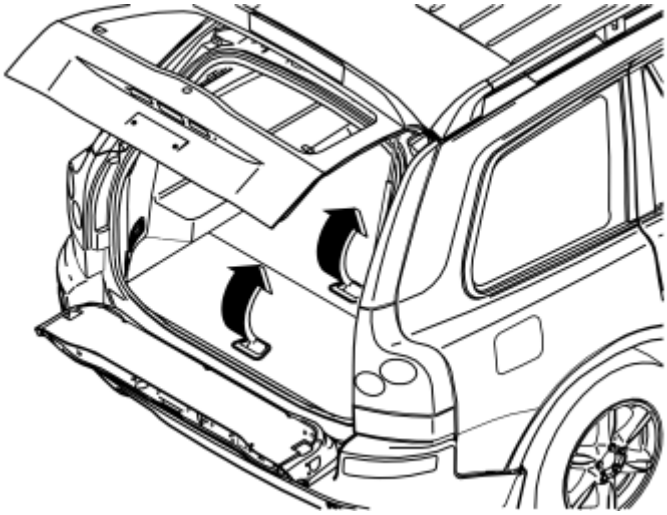

Fig. 518: Removing Two Center Floor Hatches By Lifting Them Slightly
Courtesy of VOLVO CARS CORPORATION

Applies to cars with two rows of seats

- Remove the two center floor hatches by lifting them slightly and then pulling them away from their mountings at the front edge. If the rear center floor hatch is equipped with grocery bag holder on the underside then the floor hatch is secured with a belt on each short side of the storage box. These must be detached.
- Remove the storage box.

Illustration B

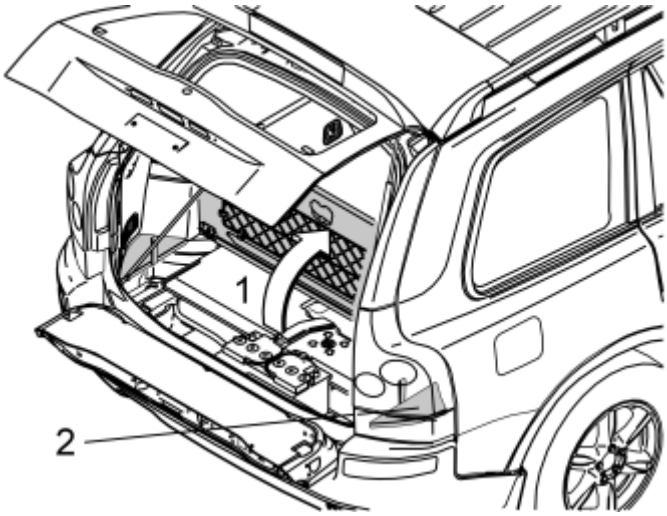

Fig. 519: Folding Up Center Rear Floor Hatch
Courtesy of VOLVO CARS CORPORATION

Applies to cars with three rows of seats and integrated carrier bag holder on the underside of the center floor hatch

- Fold up the center rear floor hatch (1).
- Detach the two straps on the underlying panel. Lift up the rear edge of the panel, fold the floor hatch back and lift out the floor hatch with the panel.

Applies to cars with three rows of seats without an integrated carrier bag holder

- Lift up the center rear floor hatch at the rear edge and lift it out.

Applies to all models

- Remove the right-hand side floor hatch (2).

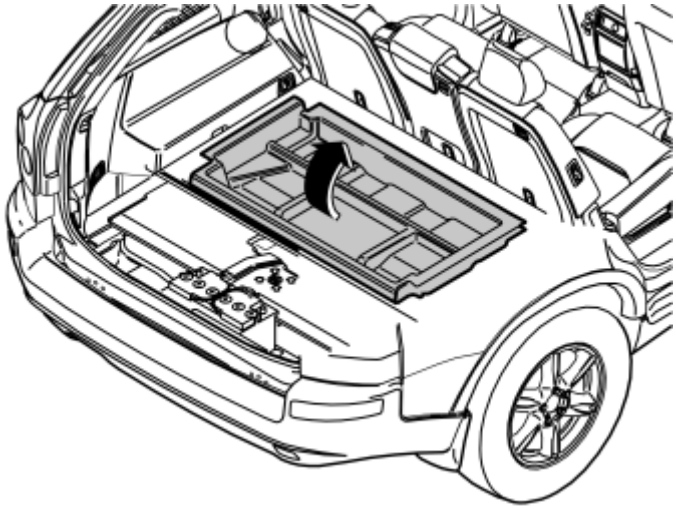

Fig. 520: Front Storage Box
Courtesy of VOLVO CARS CORPORATION

Applies to cars with two rows of seats

- Remove the front storage box.

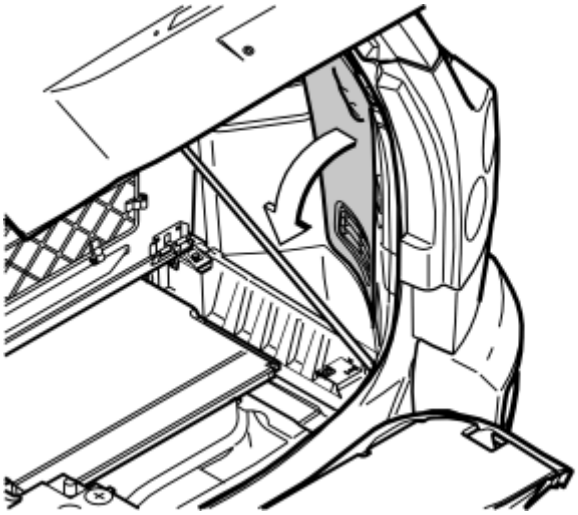

Fig. 521: Folding Side Panel From Right-Hand Side Of Cargo Compartment
Courtesy of VOLVO CARS CORPORATION

- Remove the folding side panel from the right-hand side of the cargo compartment.

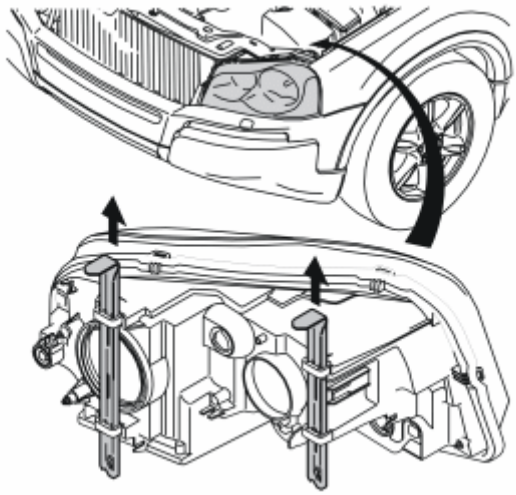

Fig. 522: Detach Left-Hand Headlamp By Pulling Up Two Locking Pins
Courtesy of VOLVO CARS CORPORATION

- Detach the left-hand headlamp by pulling up the two locking pins and then carefully pulling the headlamp away forwards.

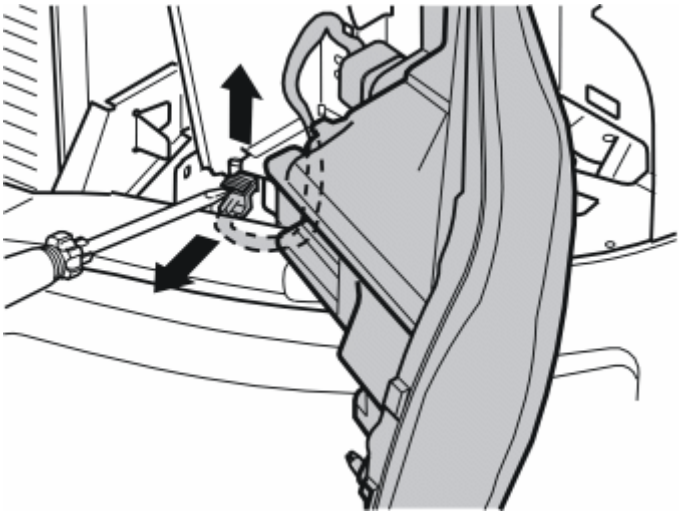

Fig. 523: Carefully Prize Up Catch On Connector For Headlamp With A Screwdriver
Courtesy of VOLVO CARS CORPORATION

- Carefully prize up the catch on the connector for the headlamp using a screwdriver.
- Pull the catch up completely, detach the connector and place the headlamp to one side.

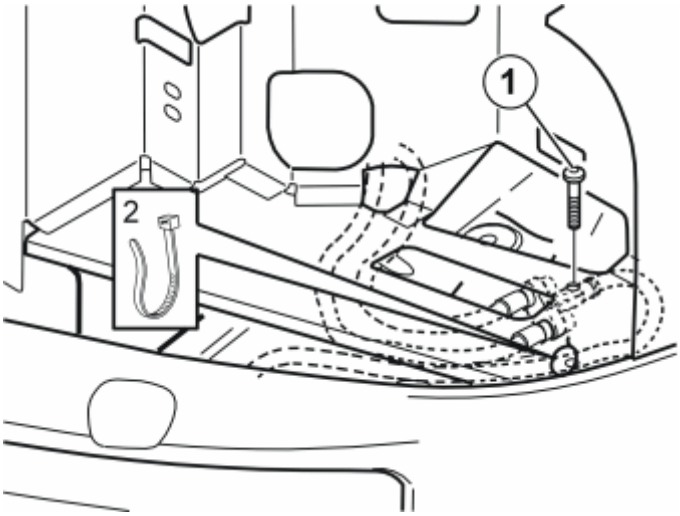

Fig. 524: Screw, Nut, Washer, Tie Strap And Branch Connector -- V8 Engine
Courtesy of VOLVO CARS CORPORATION

Applies to cars with V8 engine

- Remove the branch connector with the cables from the underside of the plate beneath the headlamp. Remove the screw, nut and washer (1) and tie strap (2), and pull the branch connector forward.

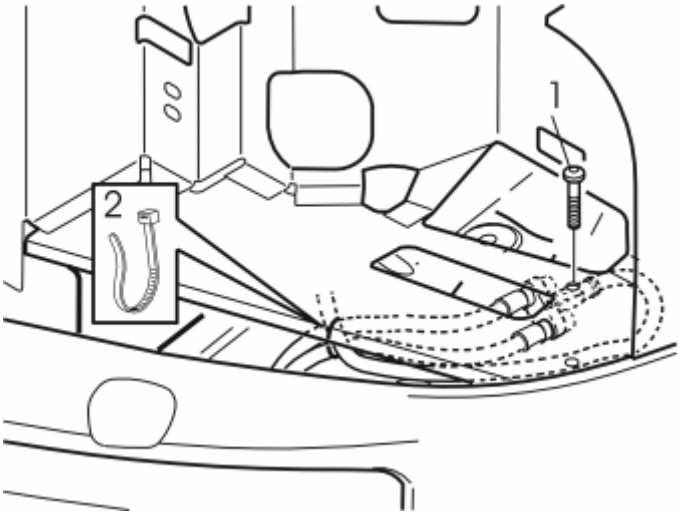

Fig. 525: Screw, Nut, Washer, Tie Strap, And Branch Connector -- 6-Cylinder Engine
Courtesy of VOLVO CARS CORPORATION

Applies to cars with 6-cylinder engine

- Remove the branch connector with the cables from the underside of the plate beneath the headlamp by removing the screw and the nut (1).
- Cut away the tie strap (2).

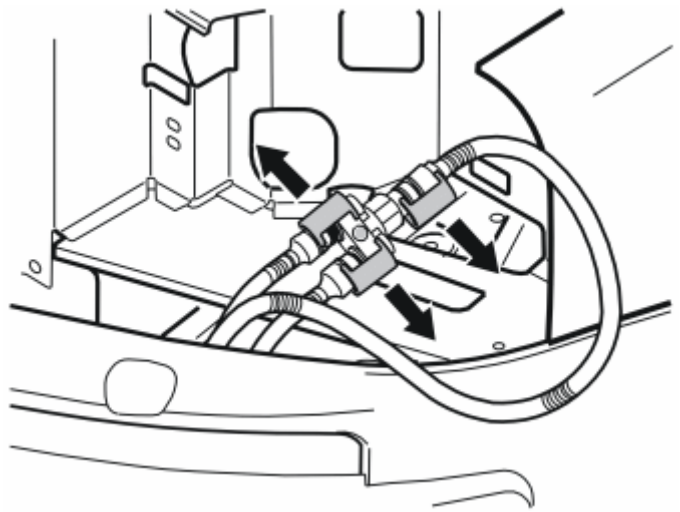

Fig. 526: Removing Locking Sleeves Over Joints On Branch Connector
Courtesy of VOLVO CARS CORPORATION

- Remove the locking sleeves over the joints on the branch connector and pull the cables away from it.
- Place the branch connector to one side, it shall not be re-used.

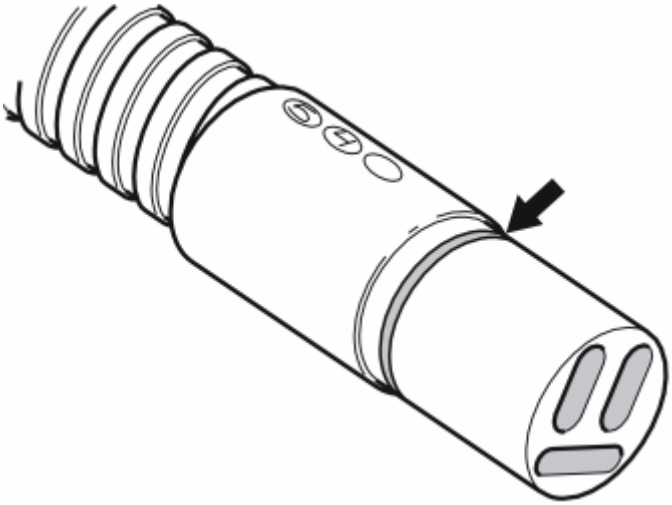

Fig. 527: Identifying O-Ring
Courtesy of VOLVO CARS CORPORATION

- Take the relay with cable from the kit.
- Grease in the O-ring on the connector for the front socket and both connectors on the relay using low temperature grease (part no. 1161417-9).

NOTE: Do not get any grease on the surfaces of the connector.

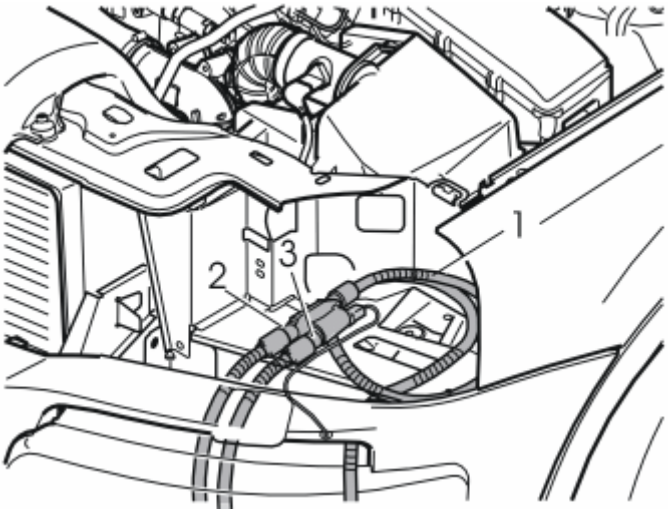

Fig. 528: Sockets And Relay -- All Models
Courtesy of VOLVO CARS CORPORATION

- Connect the cable (1) from the front socket to the relay.
- Connect the cables to the engine block heater and passenger compartment connector socket to either of the sockets (2) or (3) on the relay and press them in firmly.

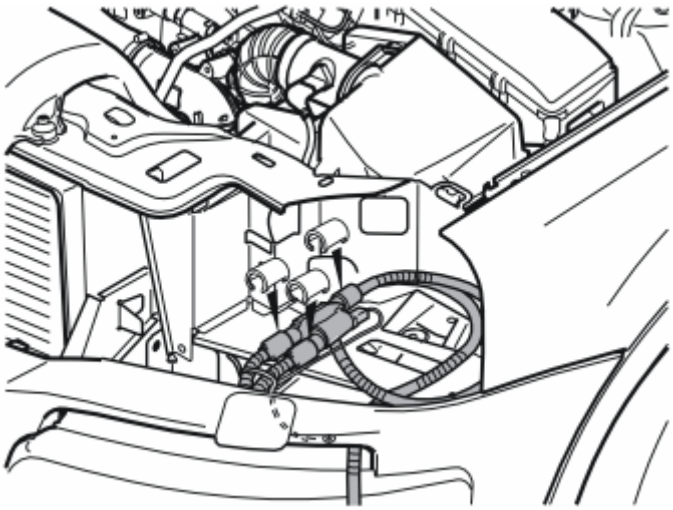

Fig. 529: Sockets And Relay -- V8 Engine
Courtesy of VOLVO CARS CORPORATION

Applies to cars with V8 engine

- Take three locking sleeves from the kit and press them in over the cable joints.

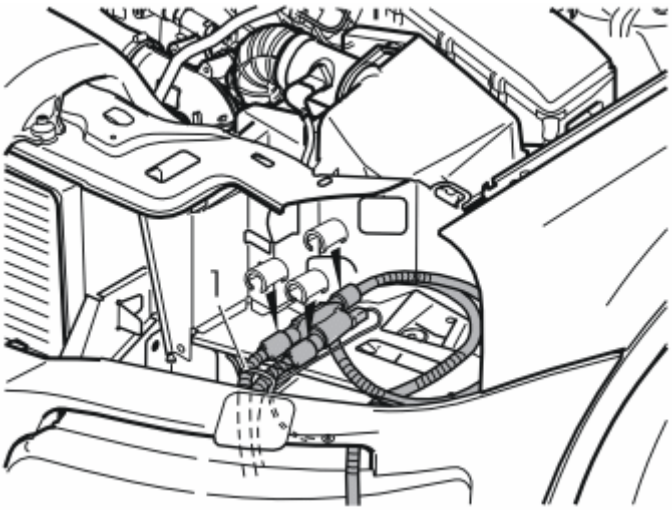

Fig. 530: Sockets And Relay -- 6-Cylinder Engine
Courtesy of VOLVO CARS CORPORATION

Applies to cars with 6-cylinder engine

- Take three locking sleeves from the kit and press them in over the cable joints.
- Take a tie strap (1) from the kit and clamp the electrical cable securely with the ground cable to one of the cables for the engine block heater/passenger compartment connector socket.

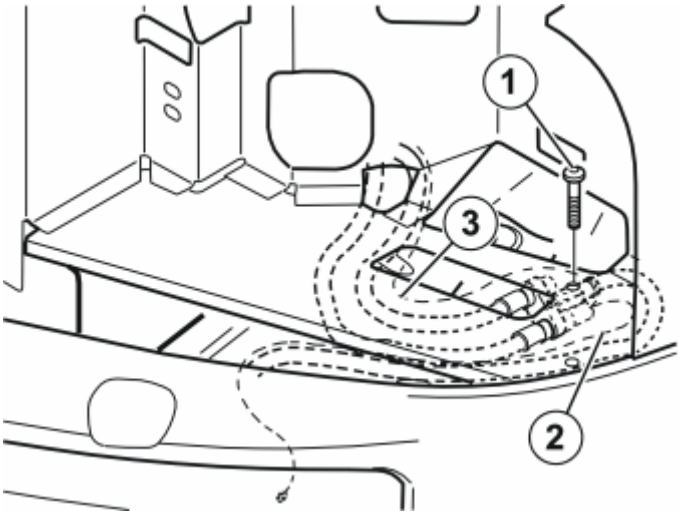

Fig. 531: Screw, Nut, Washer, Tie Strap, And Branch Connector -- V8 Engine
Courtesy of VOLVO CARS CORPORATION

Applies to cars with V8 engine

- Take the relay with cables and fit it on the underside of the plate beneath the headlamp. Fit the relay with the side against the plate that allows the connector to be accessible.
- Take a screw, washer and nut (1) from the kit. Tighten the relay to the plate.
- Guide the relay's ground cable (2) down on the left-hand side of the side member.
- The long thin cable (3) from the relay is routed the same way as the cables for the heater and the passenger compartment connector socket, to enable later connection to the Accessory Electronic Module (AEM) in the cargo compartment.
- Clamp the ground cable with the cable to the front socket using a tie strap from the kit.

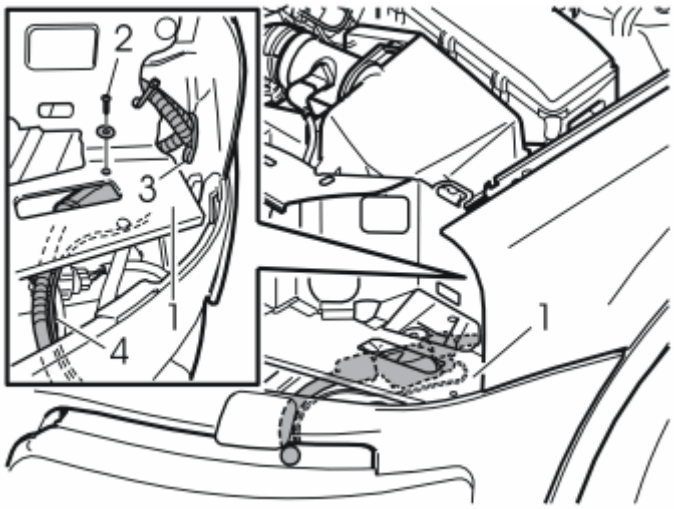

Fig. 532: Screw, Nut, Washer, Tie Strap And Branch Connector -- 6-Cylinder Engine
Courtesy of VOLVO CARS CORPORATION

Applies to cars with 6-cylinder engine

- Take the relay with cables and place it on the underside of the plate (1). Fit the relay with the side against the plate that allows the connector to be accessible.
- Take a screw, washer and nut (2) from the kit. Tighten the relay to the plate.
- Clamp the cable for the front socket at point (3) in the plastic eye for the bumper cover's mounting.
- Guide the thin cable with the ground cable from the relay down to the same location as the cables for the engine block heater/passenger compartment connector socket.
- Clamp all cables together at point (4) with a tie strap from the kit.

V8 ENGINE

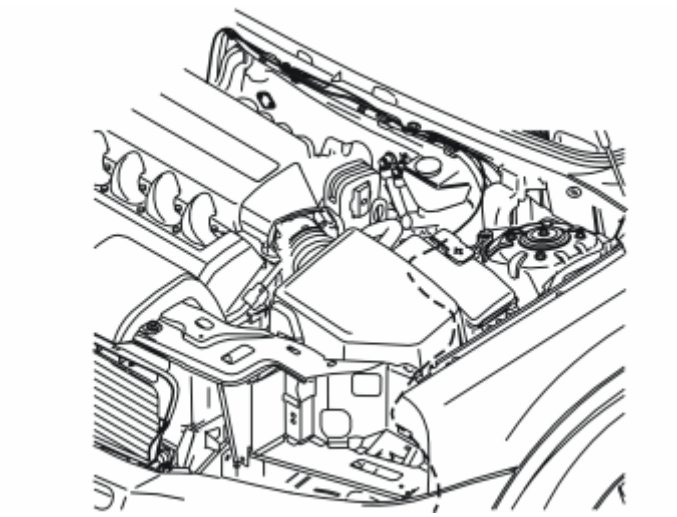

Fig. 533: Cable Routing
Courtesy of VOLVO CARS CORPORATION

- Route the cable to the Accessory Electronic Module (AEM) the same way as the cable for the passenger compartment connector socket under the plate, beneath the left-hand headlamp. Route it backwards along the left-hand side of the air cleaner and between the air cleaner and fuse holder. Continue to route it backwards, under the ABS system and up between the cable duct and brake fluid reservoir.
- Check that the cable does not chafe against sharp edges or moving parts in the engine compartment.
- Route it along the cable for the passenger compartment connector socket over to the right-hand side of the car and down through the engine compartment.
- Clamp the cable securely the whole way with the cable for the passenger compartment connector socket using tie straps from the kit.

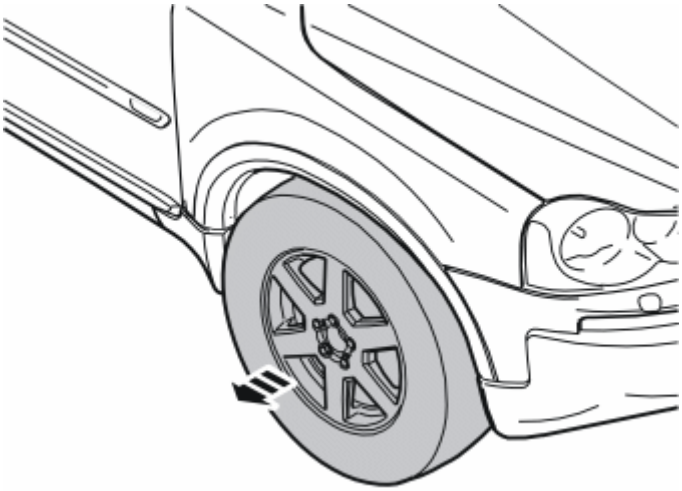

Fig. 534: Removing Wheel
Courtesy of VOLVO CARS CORPORATION

- Remove the right-hand front wheel for easier access for routing the cable to the Accessory Electronic Module (AEM).

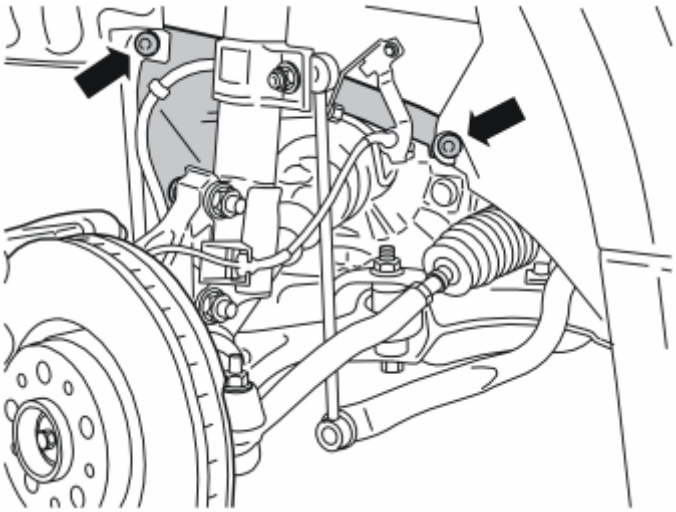

Fig. 535: Wheel Protective Cover
Courtesy of VOLVO CARS CORPORATION

- Remove the two plastic nuts which hold the small protective panel in the right-hand wheel housing, and remove the panel.

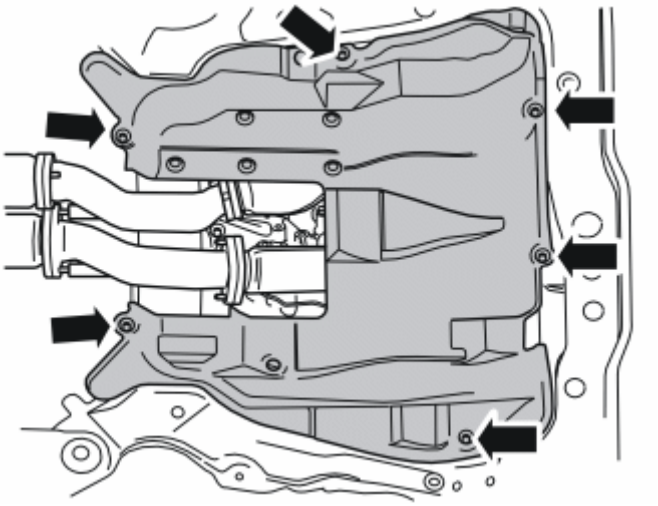

Fig. 536: Engine Splash Guard And Screws
Courtesy of VOLVO CARS CORPORATION

- Remove the six screws and the engine splash guard.

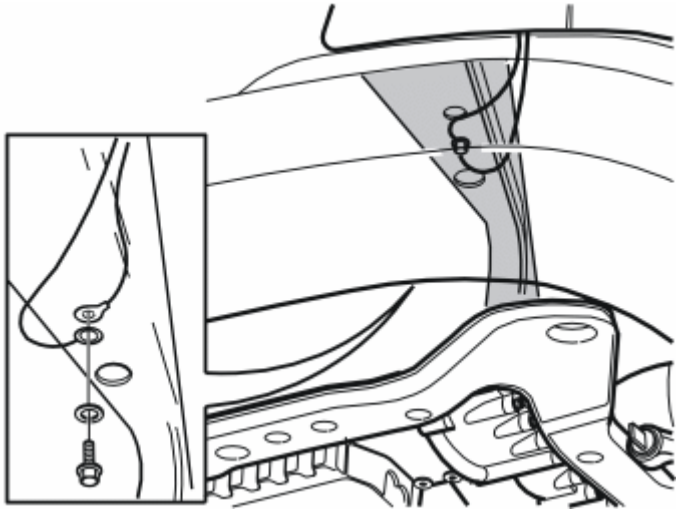

Fig. 537: Ground Cable And Screw
Courtesy of VOLVO CARS CORPORATION

- Detach the existing ground cable for the front socket on the underside of the left-hand frame member.
- Route the ground cable on from the relay. Connect both ground cables to the existing ground terminal and tighten the ground screw firmly.

Fig. 538: Cable Routing
Courtesy of VOLVO CARS CORPORATION

- Detach the cable for the passenger compartment connector socket from the clip in the edge of the plate, at the bending rubber hose for the water drainage.
- Route the rubber grommet with cable out to the passenger compartment connector socket from the passenger compartment.
- Remove the rubber grommet from the cable and place it to one side. There is a new rubber grommet on the routed cable.

Fig. 539: Cutting Rubber Grommet
Courtesy of VOLVO CARS CORPORATION

- Cut away the very top of the rubber grommet.

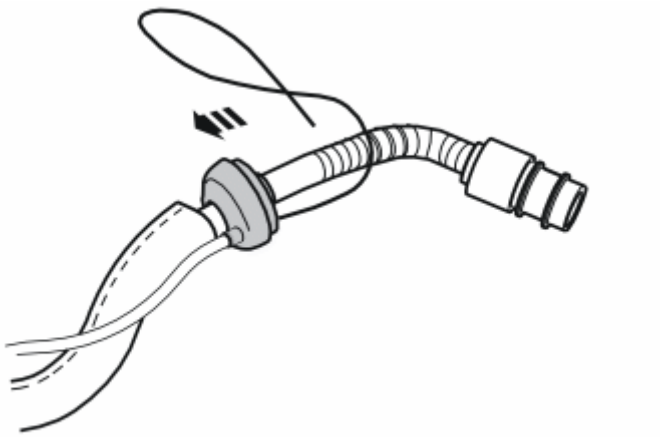

Fig. 540: Installing Cable Into Rubber Grommet
Courtesy of VOLVO CARS CORPORATION

- Grease in the rubber grommet using low temperature grease part no. 1161417-9 in order to make it easier to install the rubber grommet in the hole in the cowl.
- Guide the cable into the rubber grommet.

Fig. 541: Routing Cable
Courtesy of VOLVO CARS CORPORATION

- Guide both cables into the hole in the cowl and press the rubber grommet into place in the hole, either by pulling it into place from inside the passenger compartment, or carefully pressing it into place with a long large screw driver/wide end of a short pry bar.

NOTE: These must not be sharp or they can damage the cables/rubber grommet

- Adapt the length of the cable from the rubber grommet, at the installed clip and out in the engine compartment.

Fig. 542: Inserting Cable Into Clamp
Courtesy of VOLVO CARS CORPORATION

- Press the cables for the passenger compartment connector socket/Accessory Electronic Module (AEM) into the installed clip. Make sure that the cable with the radiation shield is firmly pressed into the clip and does not slide out.

CAUTION: Check that the cables are routed so that they do not come into contact with the alternator belt, or chafe against sharp edges in the engine compartment.

- Clamp the cable for the Accessory Electronic Module (AEM) with the thick cable using tie straps from the kit.
- Reinstall the small protective panel in the wheel housing.
- Reinstall the engine splash guard and torque tighten the screws to **25 Nm (18.5 lbf. ft.)** .
- Remount the wheel and tighten the bolts to **140 Nm (103 lbf. ft.)** .
- Connect and reinstall the left-hand headlamp.

6-CYLINDERS

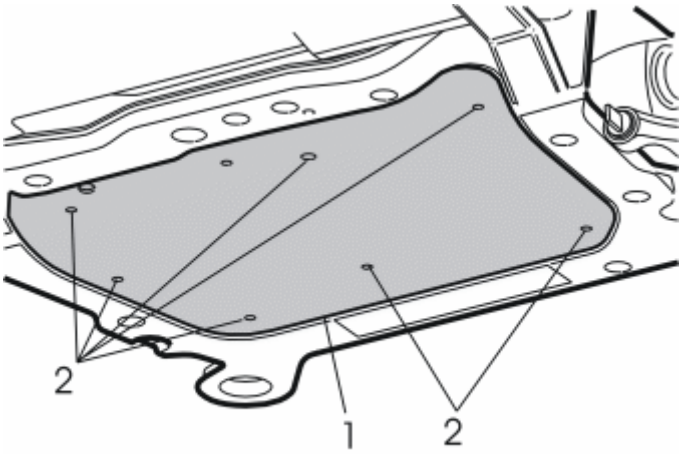

Fig. 543: Engine Splash Guard
Courtesy of VOLVO CARS CORPORATION

- Remove the screws (2) and the engine splash guard (1).

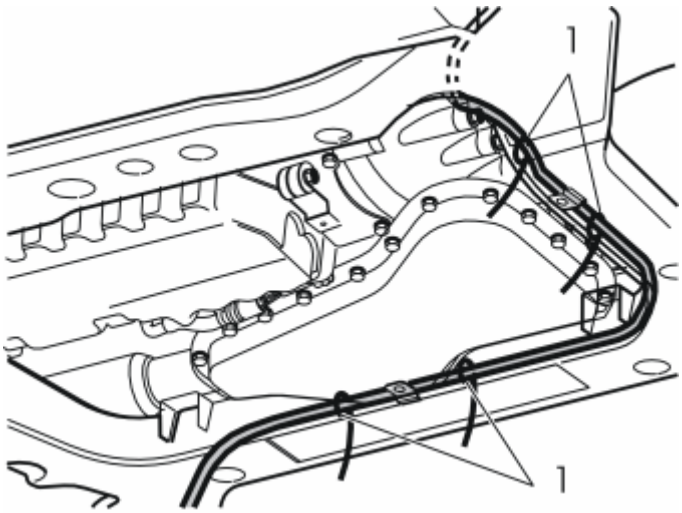

Fig. 544: Electrical Cable Secured With Tie Straps
Courtesy of VOLVO CARS CORPORATION

- Route the electrical cables down from the relay.
- Take four tie straps from the kit and clamp the thin electrical cable (not the ground cable) to the cable for the passenger compartment connector socket.

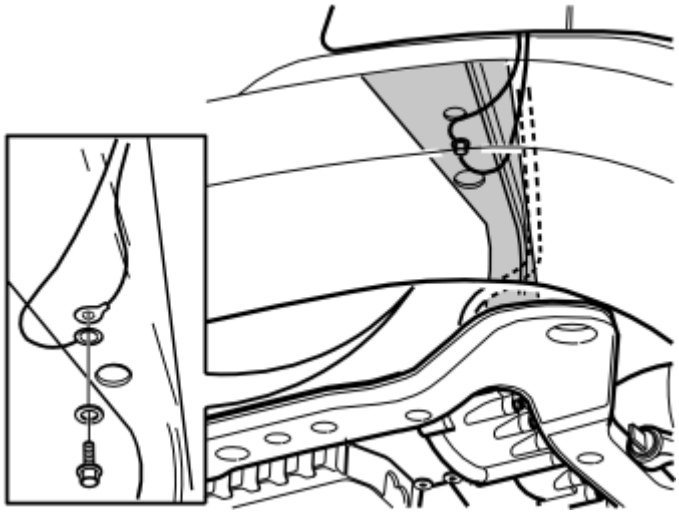

Fig. 545: Ground Cable
Courtesy of VOLVO CARS CORPORATION

- Detach the existing ground cable for the front socket on the underside of the left-hand frame member.
- Route the ground cable on to the relay. Connect both ground cables to the existing ground terminal.

Illustration A

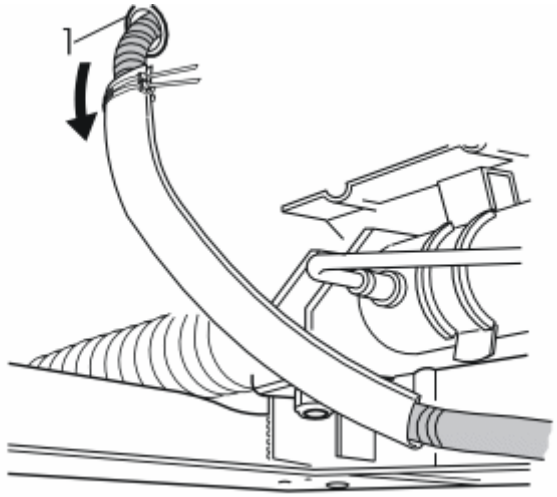

Fig. 546: Identifying Rubber Grommet
Courtesy of VOLVO CARS CORPORATION

- Pull the cable with rubber grommet (1) away from the passenger compartment connector socket.
- Pull the whole cable out from the hole in the cowl wall. Remove the rubber grommet from the cable. There is a new one on the routed electrical cable.

Illustration B

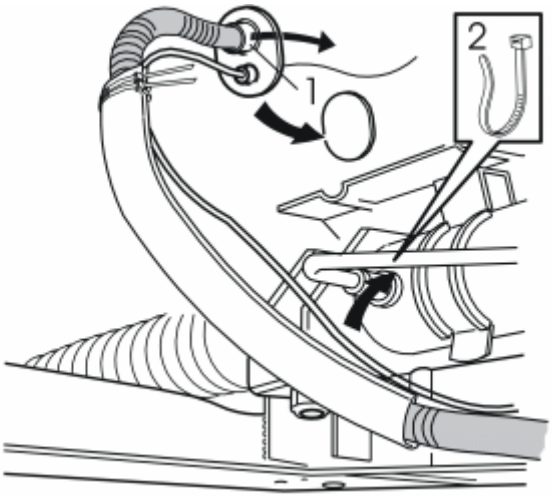

Fig. 547: Identifying Rubber Grommet And Tie Strap
Courtesy of VOLVO CARS CORPORATION

- Cut away the top of the new rubber grommet (1).
- Guide the passenger compartment connector socket's cable in through the new rubber grommet.
- Grease in the rubber grommet with low temperature grease (part no. 1161417-9) on the side turned into the passenger compartment.
- Adapt the cables up to the grommet. Guide the cables into the hole in the cowl wall.
- Carefully pull the rubber grommet into position from inside the passenger compartment by pulling in the cable for the passenger compartment connector socket.
- Clamp in the electrical cable with the servo pipe using a tie strap (2) from the kit.

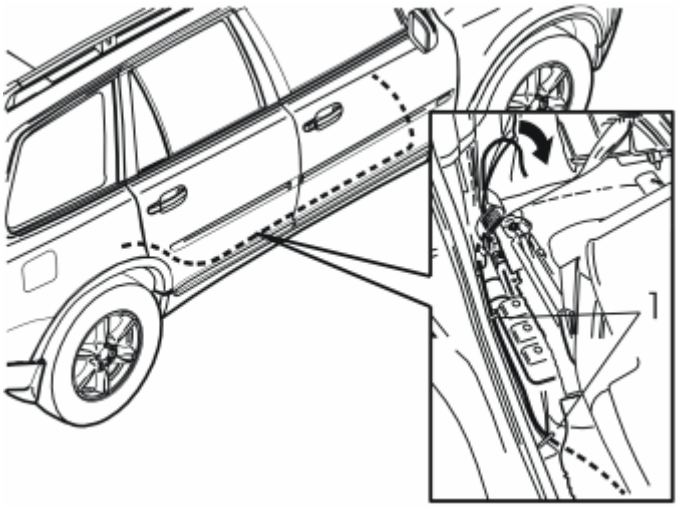

Fig. 548: Cable Clamped In At Air Duct
Courtesy of VOLVO CARS CORPORATION

- Route the cables for the passenger compartment connector socket and the Accessory Electronic Module (AEM).

- Guide the Accessory Electronic Module (AEM) cable harness down between the carpet and the door sill towards the floor as far as possible. Route it along the right-hand side of the car, on to the door opening for the right-hand rear door.
- Route the cable by the right-hand seat mounting on the right-hand seat in the second row of seats.
- Pull away the mat from the front edge of the right-hand side panel in the cargo compartment.
- Route the cable on the right-hand side of the air duct towards the front edge of the rear wheel housing. Clamp it in at the air duct using two tie straps (1) from the kit.
- Route the cable on the rear of the air duct and out at the front edge of the wheel housing.

Applies to cars with three rows of seats, Illustration A

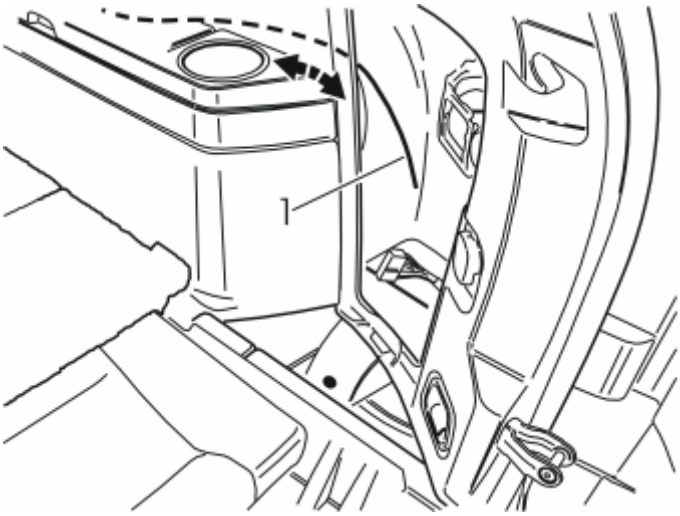

Fig. 549: Identifying Cable At Rear Edge Of Right-Hand Side Panel
Courtesy of VOLVO CARS CORPORATION

- Guide in a wire (1) at the rear edge of the right-hand side panel and along its inside, above the load securing eyelet brackets, and on to the front edge of the side panel.

Illustration B

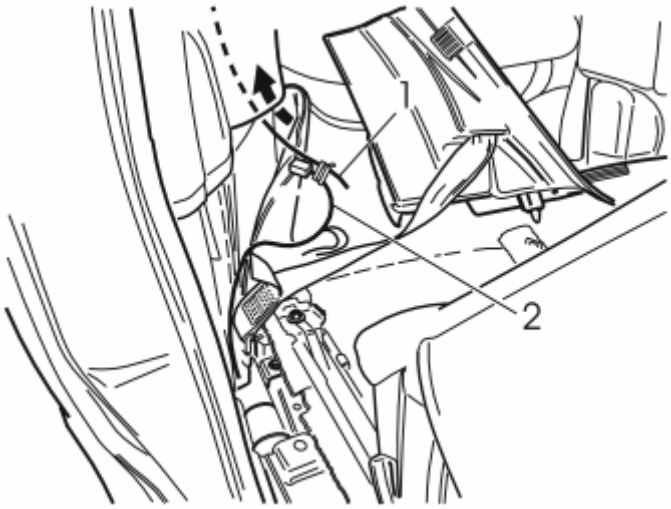

Fig. 550: Identifying Cable Harness
Courtesy of VOLVO CARS CORPORATION

- Tape the cable harness (2) to the wire and route it on from the rear edge of the side panel.

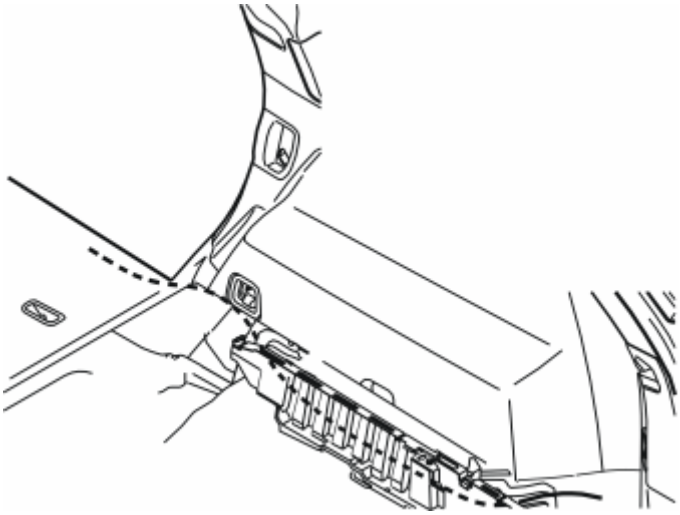

Fig. 551: Cable Routing
Courtesy of VOLVO CARS CORPORATION

Applies to cars with two rows of seats

- Route the cable on the left-hand side of the seat belt's mounting at the front edge of the wheel housing, inside the carpet at the front edge of the side panel, between the side panel and the rear cargo floor support, to the Accessory Electronic Module (AEM).

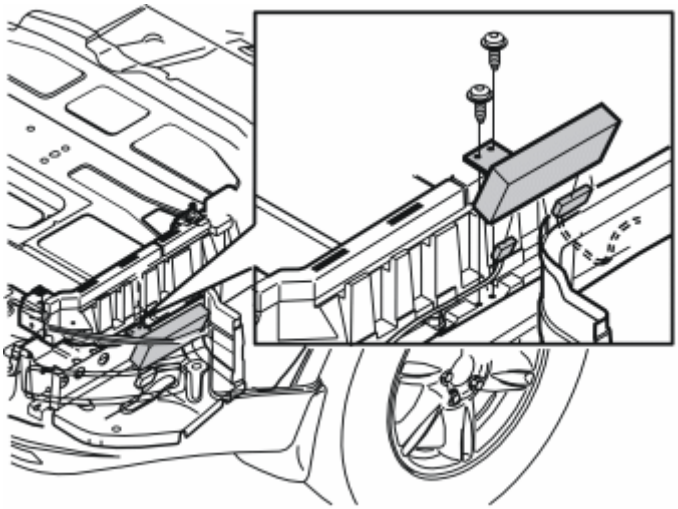

Fig. 552: Removing Panel By Pulling It Straight Up And Unhook It From Side Panel (1 Of 2)
Courtesy of VOLVO CARS CORPORATION

Applies to all models

- Remove the two screws in the Accessory Electronic Module (AEM) bracket and lift up the whole unit. Cut away the tie straps as necessary.

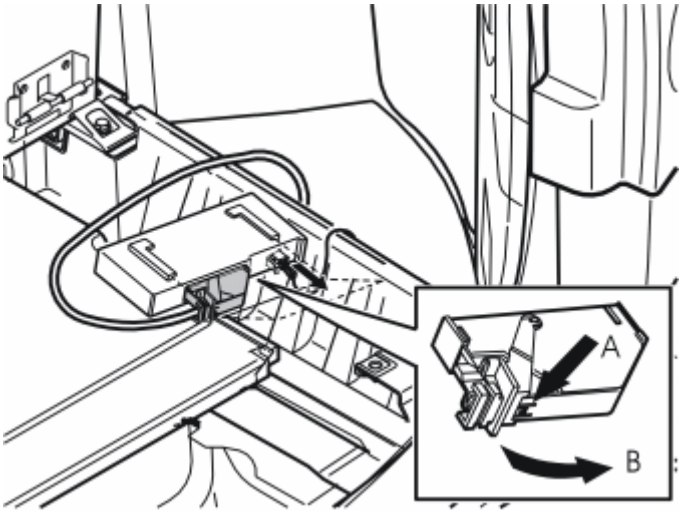

Fig. 553: Removing Panel By Pulling It Straight Up And Unhook It From Side Panel
Courtesy of VOLVO CARS CORPORATION

- Disconnect the large connector on the Accessory Electronic Module (AEM). First press in the catch (A). Pull the black locking handle (B) in the direction of the arrow until a click is heard.
- Disconnect the connector from the accessory electronic module.

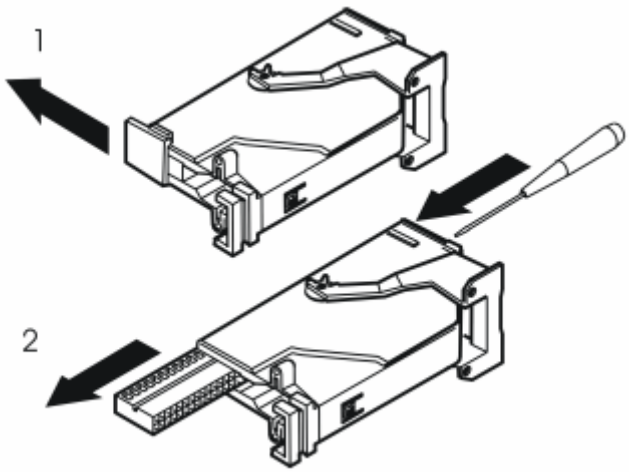

Fig. 554: Black Terminal Pin By Inserting A Pointed Object Into Hole In Other End
Courtesy of VOLVO CARS CORPORATION

- Remove the black catch holding the black connector socket in place in the connector by pulling in the direction of the arrow.
- Remove the black connector socket. Insert a pointed object in the hole on the other end of the connector. Press the connector socket out.

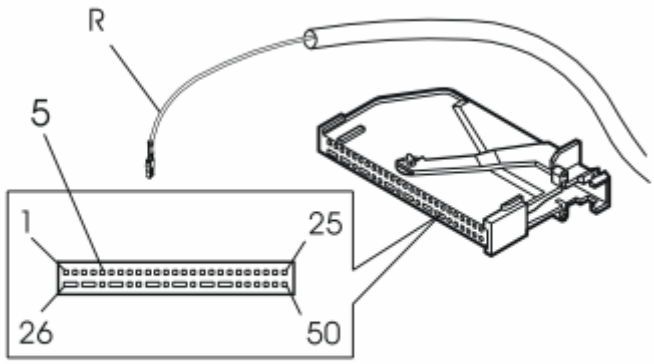

Fig. 555: Identifying Routed Cable To AEM Module's Connector In Position 5
Courtesy of VOLVO CARS CORPORATION

- Connect the pre-routed cable to terminal 5 of the Accessory Electronic Module (AEM) connector.

NOTE: **The numerical markings can be found on the top and bottom of the connector. However, the markings are extremely small so be careful when installing the cable.**

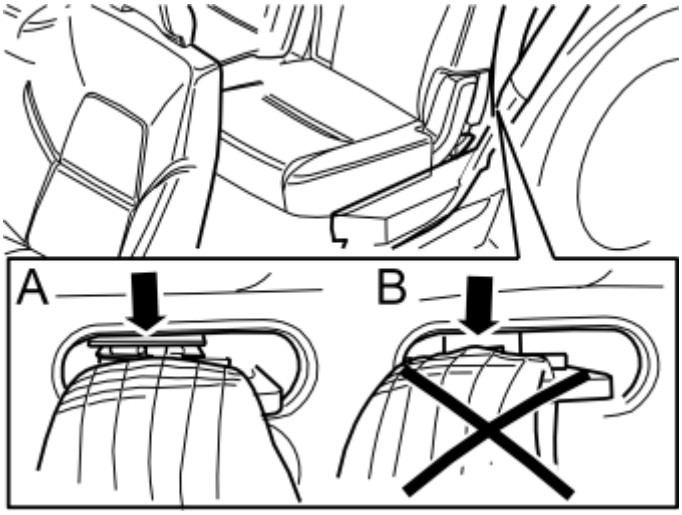

Fig. 556: Seat Belt Proper Routing
Courtesy of VOLVO CARS CORPORATION

- Reinstall the connector in the socket and refit it in the Accessory Electronic Module (AEM).
- Reinstall the Accessory Electronic Module (AEM) with bracket.
- Reinstall the storage box and floor hatches.
- Reinstall the folding panel on the rear right-hand side.
- Reinstall the sill trim panel in the right-hand rear door.
- Press the seat belt into the end mounting.

NOTE: **A clear click is heard when the seat belt has locked correctly with the end mounting.**

NOTE: **Also check that the seat belt has locked correctly with the end mounting by looking at the reverse of the end mounting.**

The position of the lock tab against the end mounting with the seat belt fully inserted must be:

A= Correct locked position. B= If the lock tab does not lock correctly against the end mounting, see A, replace the end mounting with a new one.

NOTE: **Check that the seat belt is secure by jerking it hard in an upwards direction.**

- Fold the carpet back on the front right-hand side, connect the cable for the passenger compartment connector socket and reinstall it.
- Reinstall the front sill trim panel.
- Reinstall the panel in the lower edge of the B-pillar panel.
- Reinstall the panels over the seat mountings.
- Reinstall the sound barrier and the center console's side panel on the right-hand side.

- Program the software in accordance with the service information.

REMOTE START, FUEL-DRIVEN HEATER (2003-2008)

CARS EQUIPPED WITH SRS/SIPS (AIRBAG)

see **CARS EQUIPPED WITH SRS/SIPS (AIRBAG)**

CAUTION

see **CAUTION**

REMOTE START, FUEL-DRIVEN HEATER

NOTE: This accessory requires software unique to the car.

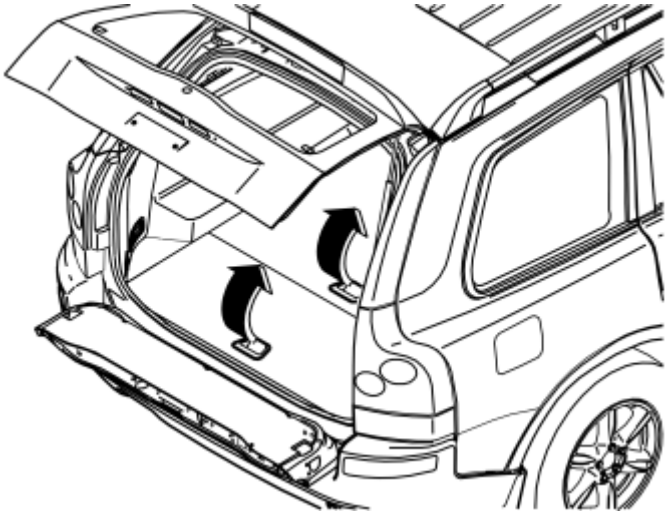

Fig. 557: Removing Two Center Floor Hatches By Lifting Them Slightly
Courtesy of VOLVO CARS CORPORATION

- Remove the two center floor hatches by lifting them slightly and then pulling them away from their mountings at the front edge. If the rear center floor hatch is equipped with grocery bag holder on the underside then the floor hatch is secured with a belt on each short side of the storage box. These must be detached.
- Remove the storage box.

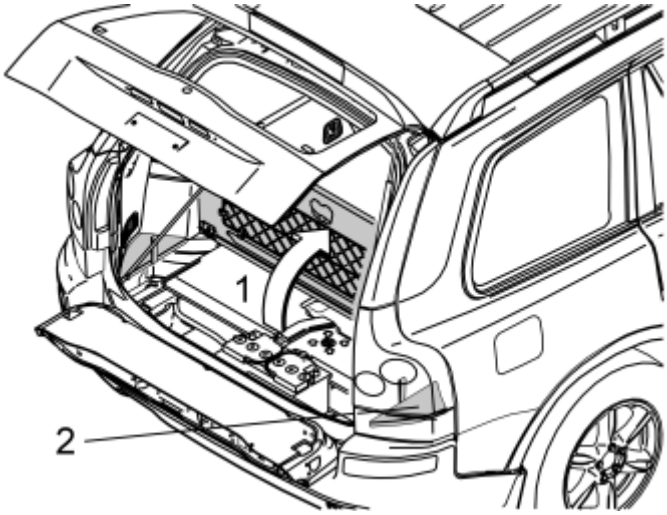

Fig. 558: Folding Up Center Rear Floor Hatch
Courtesy of VOLVO CARS CORPORATION

Applies to cars with three rows of seats and integrated carrier bag holder on the underside of the center floor hatch

- Fold up the center rear floor hatch (1).
- Detach the two straps on the underlying panel. Lift up the rear edge of the panel, fold the floor hatch back and lift out the floor hatch with the panel.

Applies to cars with three rows of seats without an integrated carrier bag holder

- Lift up the center rear floor hatch at the rear edge and lift it out.
- Remove the right-hand side floor hatch (2).

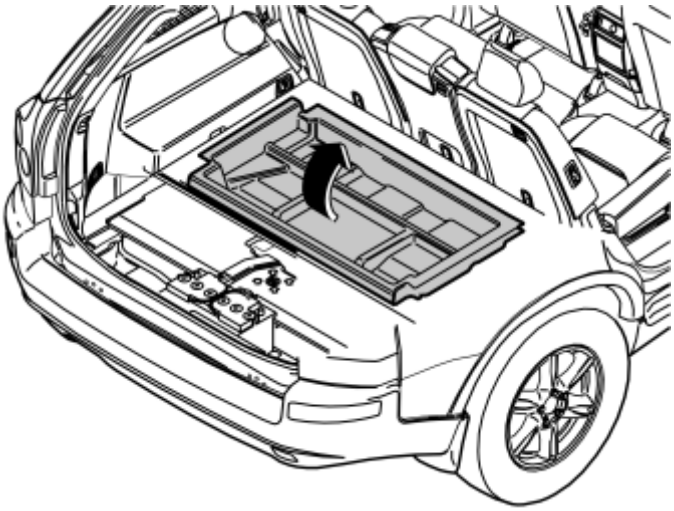

Fig. 559: Front Storage Box
Courtesy of VOLVO CARS CORPORATION

Applies to cars with two rows of seats

- Remove the front storage box.

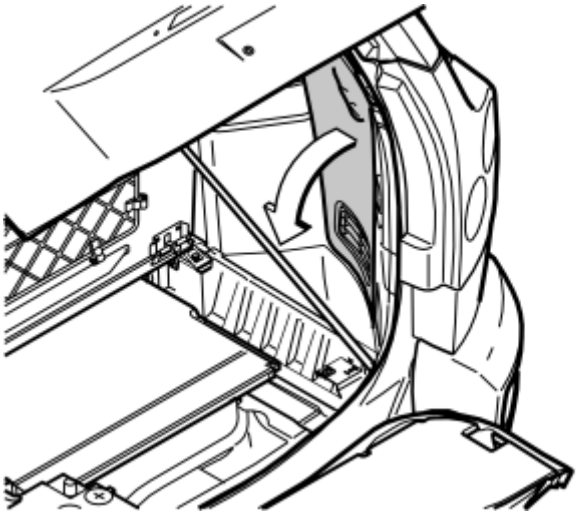

Fig. 560: Folding Side Panel From Right-Hand Side Of Cargo Compartment
Courtesy of VOLVO CARS CORPORATION

- Remove the folding side panel from the right-hand side of the cargo compartment.

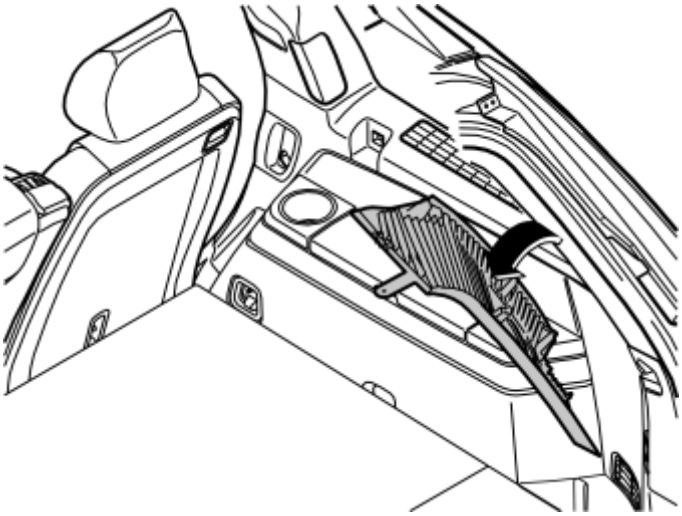

Fig. 561: Pull Off Top Edge Of Right-Hand D Pillar Panel
Courtesy of VOLVO CARS CORPORATION

- Carefully pull off the top edge of the right-hand D pillar panel. Continue down until the three clips have released.
- Remove the panel by pulling it straight up and unhook it from the side panel. If applicable, disconnect the connector for the D pillar loudspeaker.

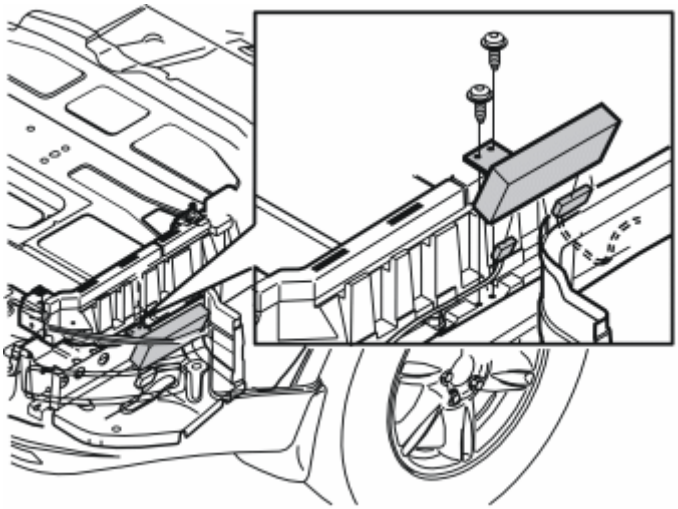

Fig. 562: Removing Panel By Pulling It Straight Up And Unhook It From Side Panel (1 Of 2)
Courtesy of VOLVO CARS CORPORATION

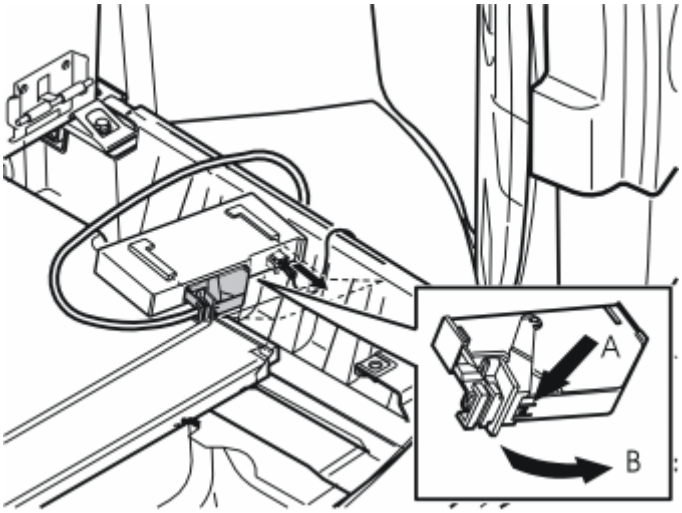

Fig. 563: Removing Module
Courtesy of VOLVO CARS CORPORATION

XC90

see **XC90**

TIMER RELAY FOR THE ELECTRICAL ENGINE BLOCK HEATER B5254T2 (B5254T2; 2003)

TIMER RELAY FOR THE ELECTRICAL ENGINE BLOCK HEATER

NOTE: This accessory requires software unique to the car.

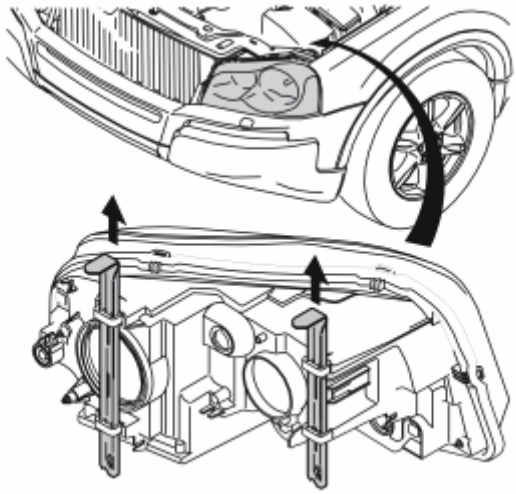

Fig. 564: Detach Left-Hand Headlamp
Courtesy of VOLVO CARS CORPORATION

- Remove the left-hand headlamp by pulling up the two cotter pins and then carefully pulling the headlamp forwards.

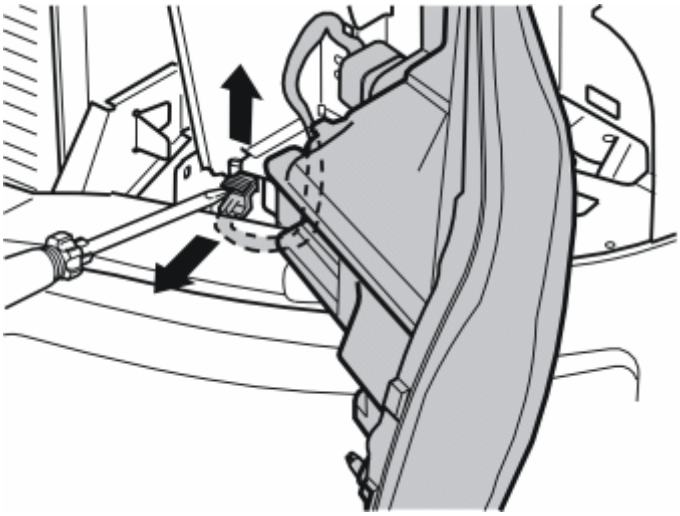

Fig. 565: Carefully Prize Up Catch On Connector For Headlamp
Courtesy of VOLVO CARS CORPORATION

- Carefully pry up the catch on the connector for the headlamp using a screwdriver
- Pull up the catch completely, disconnect the connector. Place the headlamp to one side.

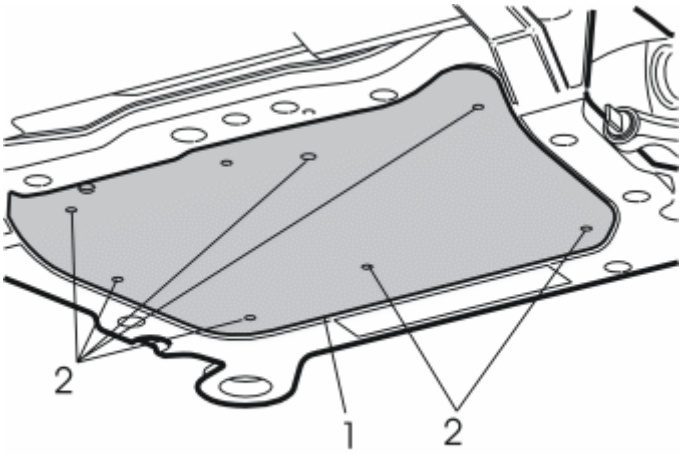

Fig. 566: Engine Splash Guard
Courtesy of VOLVO CARS CORPORATION

- Remove the engine splash guard (1) by first removing the screws (2).

Illustration A applies to cars with an engine block heater and passenger compartment connector socket

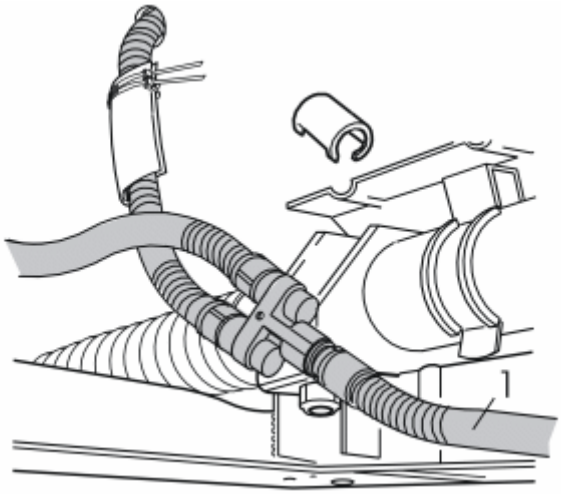

Fig. 567: Removing Locking Sleeve
Courtesy of VOLVO CARS CORPORATION

- Remove the locking sleeve over the cable splice on the cable (1) for the front engine block heater socket. Pull off the cable.

Illustration B applies to cars with an engine block heater only

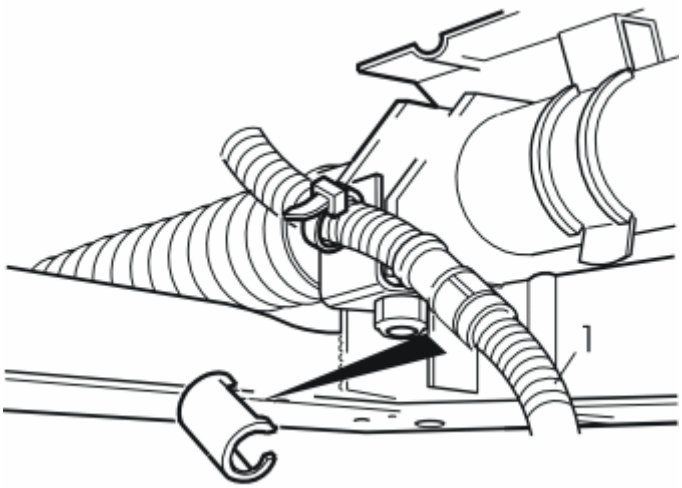

Fig. 568: Removing Locking Sleeve
Courtesy of VOLVO CARS CORPORATION

- Remove the locking sleeve over the cable splice on the cable (1) for the front engine block heater socket. Pull off the cable.

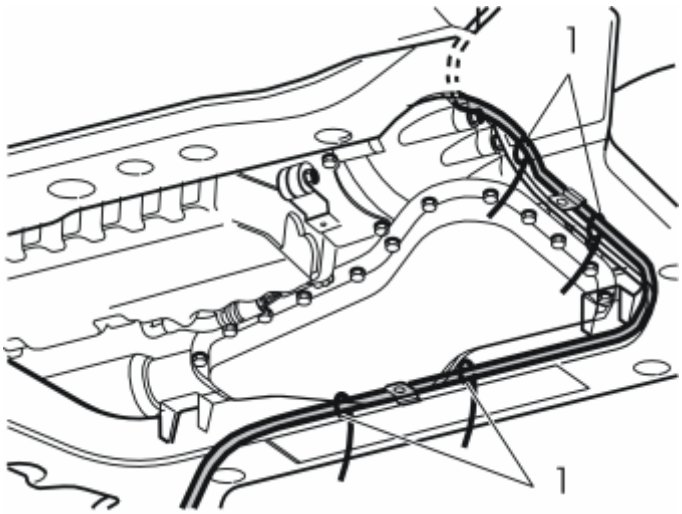

Fig. 569: Electrical Cable Secured With Tie Straps
Courtesy of VOLVO CARS CORPORATION

- Cut off the four tie straps holding the cable for the front engine block heater socket at the sub-frame. Leave the clips in the sub-frame
- Remove the cable from the sub-frame. Allow the cable to hang.

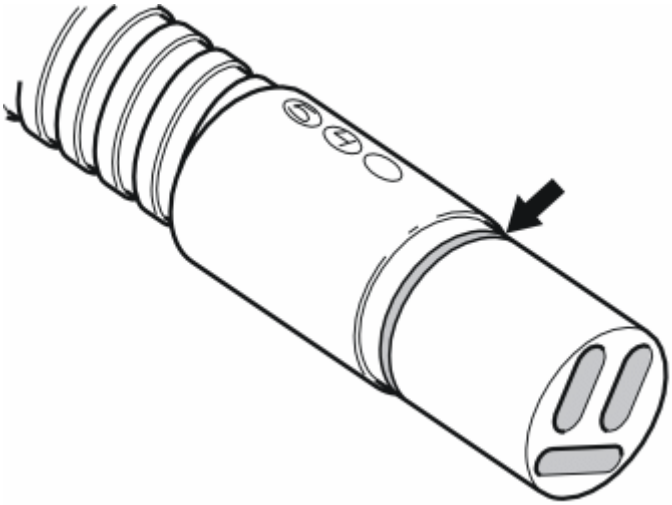

Fig. 570: Identifying O-Ring
Courtesy of VOLVO CARS CORPORATION

- Take the thick extension cable, relay and locking sleeves from the kit
- Lubricate the O-rings on the cable for the front engine block heater socket, relay and extension cable using low temperature grease.

NOTE: Do not get any grease on the surfaces of the connector.

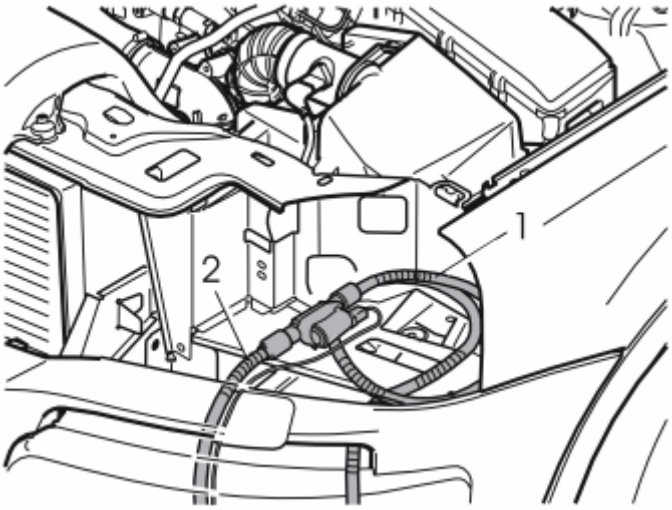

Fig. 571: Installing Cable And Relay
Courtesy of VOLVO CARS CORPORATION

- Press the cable (1) from the front engine block heater socket and extension cable (2) into the relay.

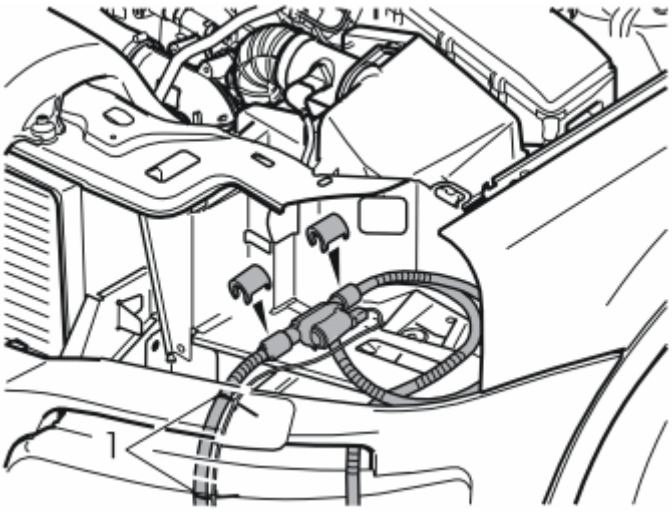

Fig. 572: Removing Locking Sleeves
Courtesy of VOLVO CARS CORPORATION

- Press the two locking sleeves (from the kit) over the cable splices
- Take two tie straps (1) from the kit. Secure the electric cable with the ground lead at the cable splice with the electrical cable for the engine block heater.

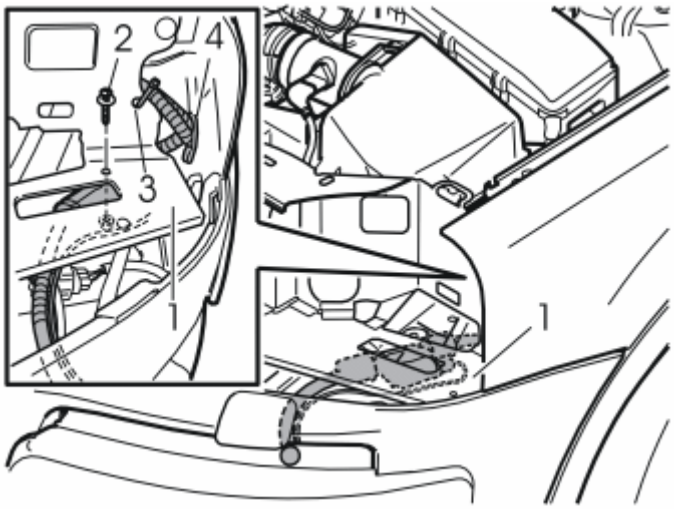

Fig. 573: Positioning Wiring Under Plate
Courtesy of VOLVO CARS CORPORATION

- Position the wiring and relay on the under side of the plate (1). Position the relay with the side against the plate to release the switch
- Take the screw, washer and nut (2) from the kit. Tighten the relay to the plate
- Connect the long cable for the front engine block heater socket on the reverse of the relay. Secure the cable in the hole at the rear edge of the plate for the headlamp mounting (3), and in the plastic lug for the bumper cover strip mounting (4)
- Press in the wiring as far in the wheel arch as possible so that it does not catch on the headlamp
- Route the extension cable down and the thin cable with the ground lead from the relay so that it follows

the cable for the front engine block heater socket.

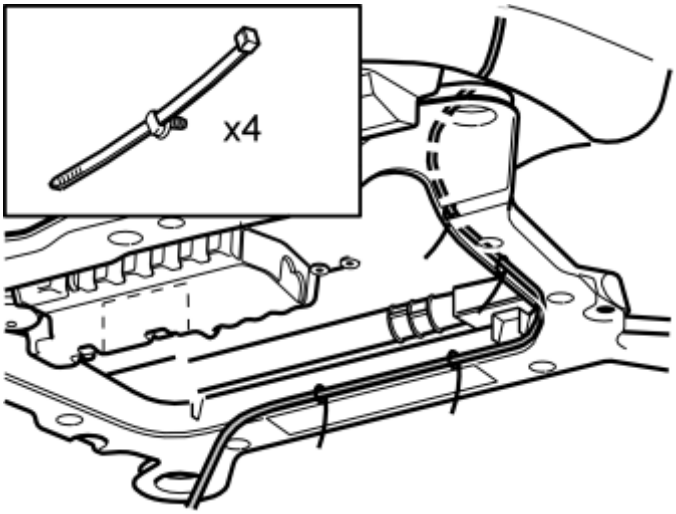

Fig. 574: Identifying Front Socket Cable Above Front Edge Of Subframe
Courtesy of VOLVO CARS CORPORATION

- Route the wiring down from the relay
- Take four tie straps from the kit. Secure the thick and thin wiring (not the ground lead) at the points where the thick cable was previously secured.

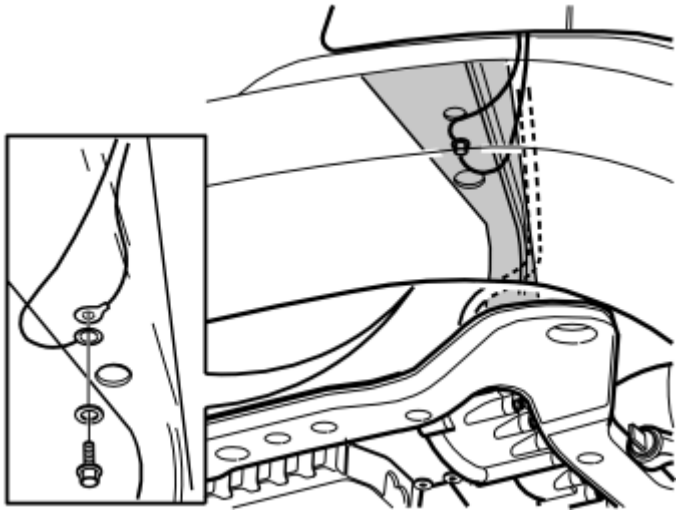

Fig. 575: Ground Cable
Courtesy of VOLVO CARS CORPORATION

- Disconnect the existing ground lead for the front engine block heater socket underneath the left-hand front member
- Route the ground lead to the relay. Connect both ground leads to the existing ground terminal.

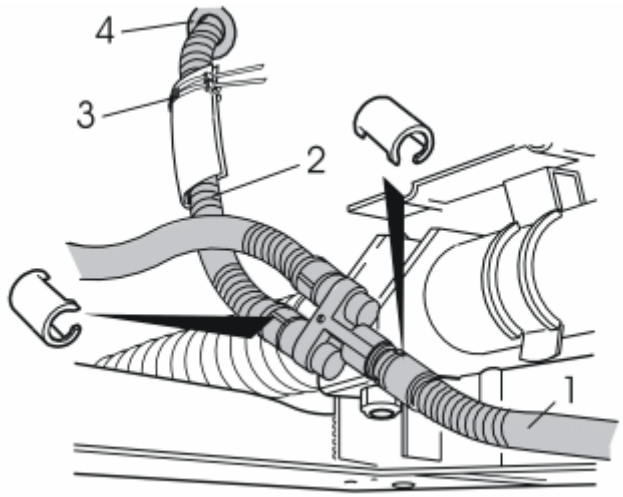

Fig. 576: Installing Connector Socket Cable, Rubber Grommet And Heat Reflector
Courtesy of VOLVO CARS CORPORATION

Applies to cars with an engine block heater and passenger compartment connector socket

- Lubricate the O-ring on the connector for the thick cable from the relay. Use low temperature grease, (P/N 1161417-9)
- Press the thick cable (1) from the relay into the junction connector. Press the existing locking sleeve over the cable splice
- Remove the locking sleeve from over the cable splice for the passenger compartment connector socket cable (2). Pull off from the junction connector
- Cut off the two tie straps on the heat deflector (3). Pull off from the cable
- Pull off the rubber grommet (4) from the cowl panel and remove from the cable
- Place the rubber grommet to one side. It will not be reused. A new rubber grommet is on the thin cable for the relay.

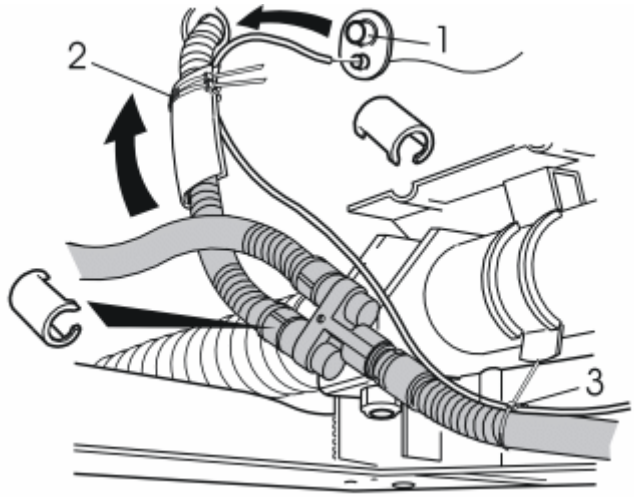

Fig. 577: Installing Rubber Grommet And Tie Straps
Courtesy of VOLVO CARS CORPORATION

Applies to cars with an engine block heater and passenger compartment connector socket

- Cut off the top (1) of the rubber grommet for the small cable. Insert the cable into the passenger compartment connector socket
- Insert the thin cable from the relay in the hole in the cowl panel, together with the cable for the passenger compartment connector socket. Press the rubber grommet into place
- Reinstall the heat deflector on the cable passenger compartment connector socket. Secure at the top edge together with the cable from the relay. Use two tie straps (2) from the kit
- Lubricate the O-ring on the junction connector using low temperature grease, (P/N 1161417-9)
- Press the cable for the passenger compartment connector socket into the junction connector. Press the locking sleeve over the cable splice
- Clamp the thin cable at using a tie strap (3) from the kit.

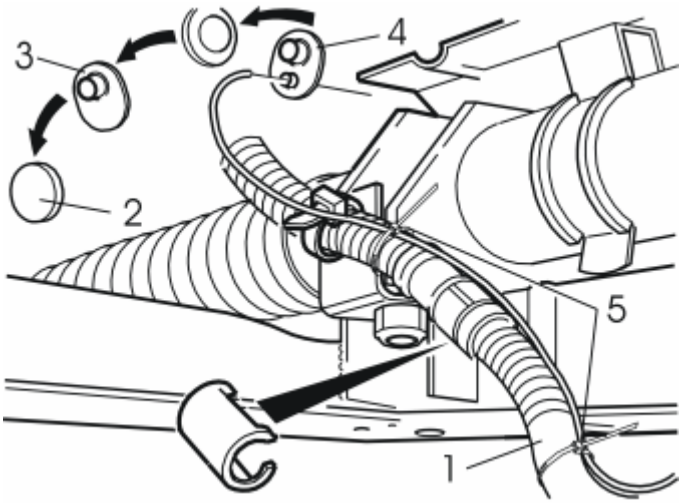

Fig. 578: Installing Rubber Grommets
Courtesy of VOLVO CARS CORPORATION

Applies to cars with only an electrical engine block

- Press the thick cable (1) from the relay into the switch on the cable for the engine block heater. Press the existing locking sleeve over the cable splice
- Remove the stamped engine compartment insulation (2) and the rubber grommet (3) underneath
- Place the rubber grommet to one side. It will not be reused. A new rubber grommet is on the thin cable for the relay
- Insert the thin cable in the hole in the cowl panel and in the passenger compartment. Press the rubber grommet (4) with the cable into the cowl panel
- Take two tie straps from the kit. Secure the thin cable from the relay at the thick cable (5).

- Reinstall the engine splash guard. Tighten the screws. Tighten to **25 Nm (18 lbf. ft.)**
- Connect the connector to the headlamp and reinstall it. Ensure that the headlamp lock pin is positioned correctly, the short thin cable innermost and the long wide cable outermost.

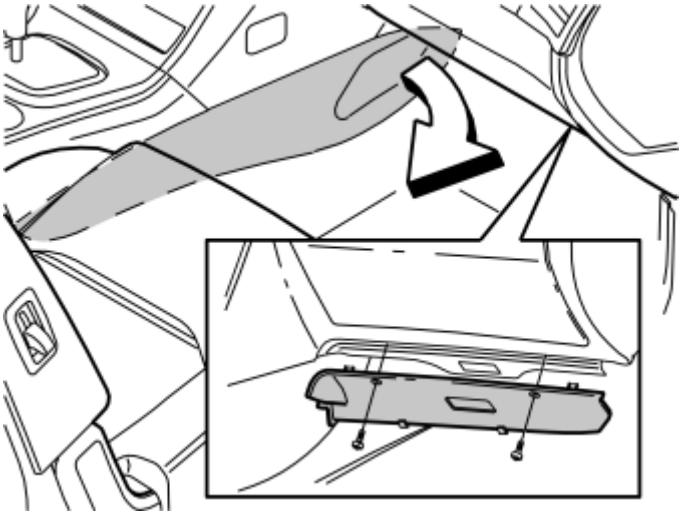

Fig. 579: Right-Hand Side Sound Barrier
Courtesy of VOLVO CARS CORPORATION

- Remove the right-hand side panel from the center console. Pull off the panel starting at the front edge. Then pull backwards until all the clips release
- Remove the right-hand side soundproofing panel. First remove the two screws. Then pry off the panel at the top edge.

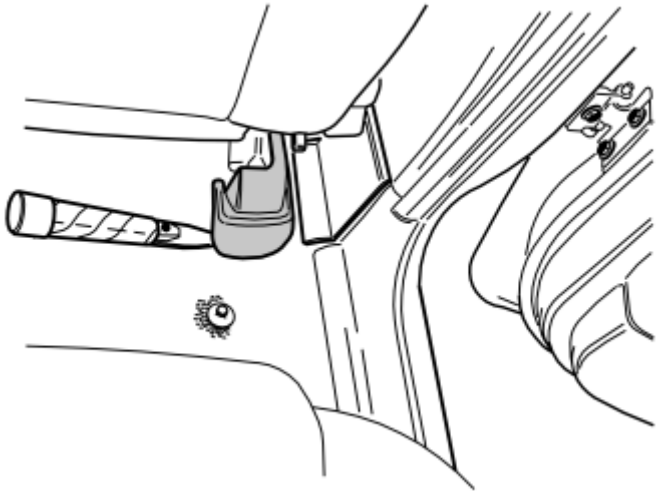

Fig. 580: Prying Right-Hand Rear Mounting Of Cover Panel
Courtesy of VOLVO CARS CORPORATION

- Remove the panel on the right rear mounting on the right-hand front seat. Pry up the rear edge of the panel slightly and then pull backwards and upwards.

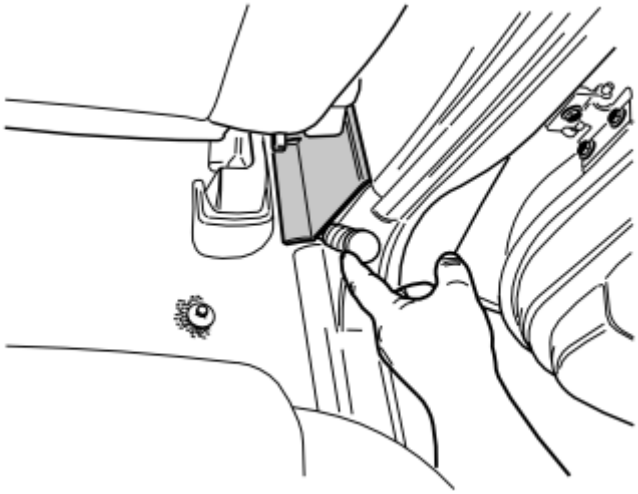

Fig. 581: Prying Away Cover Panel Over Joint Between Door Sills On Right-Hand Side, At Lower Edge, Using A Weatherstrip Tool
Courtesy of VOLVO CARS CORPORATION

- Carefully pry off the panel above the joint between the right-hand door sills, at the lower edge using a weatherstrip tool. Remove the panel.

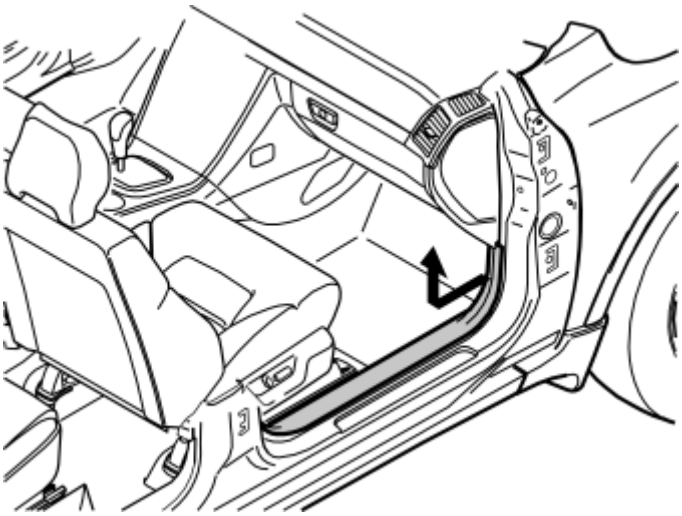

Fig. 582: Right-Hand Front Door's Sill Trim Panel
Courtesy of VOLVO CARS CORPORATION

- Detach the sill trim panel for the right-hand front door. Pull off the panel starting at the front edge until the clip releases. Continue backwards until the remaining clips have released
- Unhook the sill trim panel from the B-post panel.

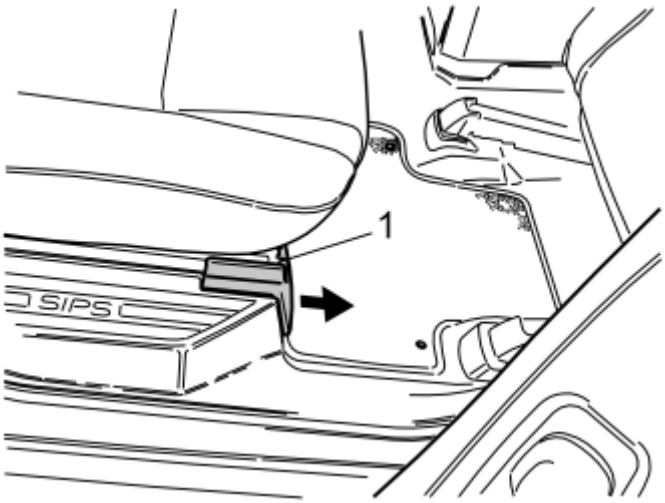

Fig. 583: Pushing Up Catch On Top Side
Courtesy of VOLVO CARS CORPORATION

- Remove the panel in the right-hand front seat mounting on the right-hand seat in the second row. Push up the catch (1) on the top. Pull the panel forward.

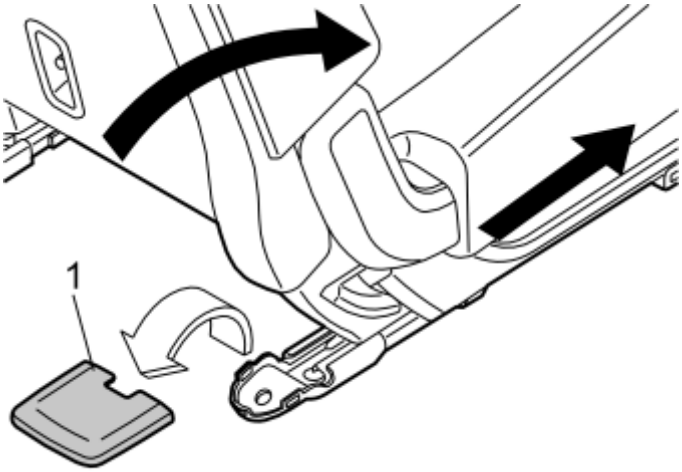

Fig. 584: Removing Cover Panel
Courtesy of VOLVO CARS CORPORATION

- Fold the backrest on the right-hand seat in the second row forward as far as possible. Slide the front seat forward as far as possible. (On cars with two rows of seats, the second row is secured.)
- Remove the cover (1) for the right rear seat mounting by prying off the front edge.

Illustration A

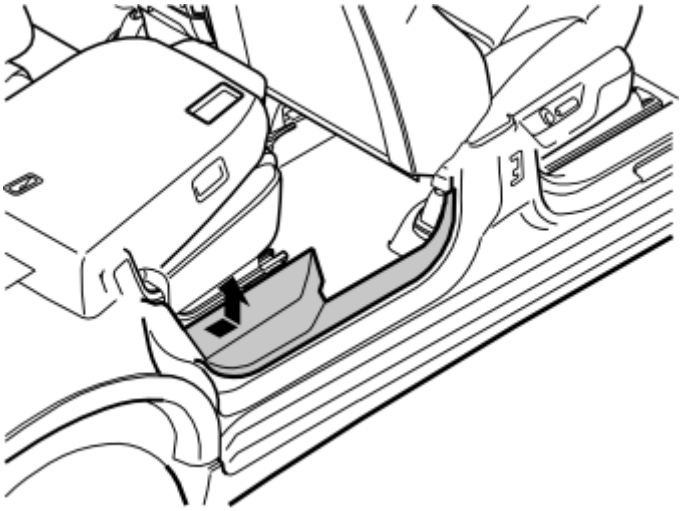

Fig. 585: Removing Sill Trim Panel
Courtesy of VOLVO CARS CORPORATION

- Remove the sill trim panel for the right-hand rear door. Pull the rear edge until the clips release. Continue forwards until the remaining clips have released.

Applies to cars with two rows of seats

- On cars with two rows of seats the seat cannot be slid forwards. To remove the sill trim panel; Start by folding the backrest forward when pulling the rear edge of sill trim panel loose. Then reposition the backrest to raise the seat cushion and provide more room to remove the sill trim panel. The sill trim panel is securely positioned. Do not damage the panel and surrounding components.

Illustration B

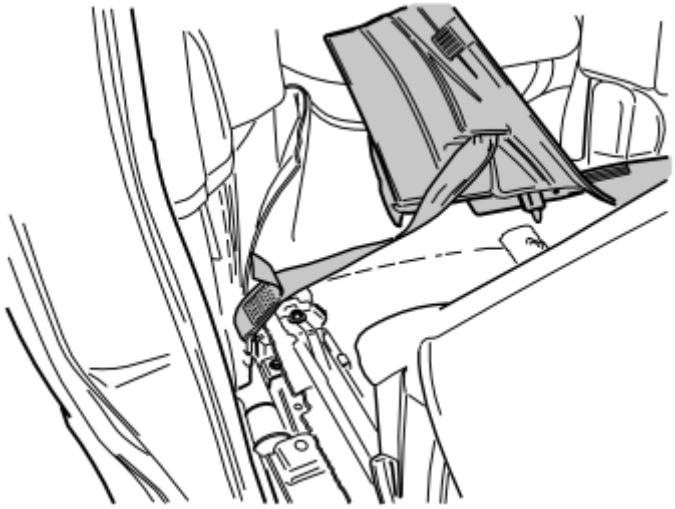

Fig. 586: Identifying Sill Trim Panel
Courtesy of VOLVO CARS CORPORATION

- Unhook the sill trim panel from the B-post panel. Position the panel in the second/third row of seats.

Illustration A

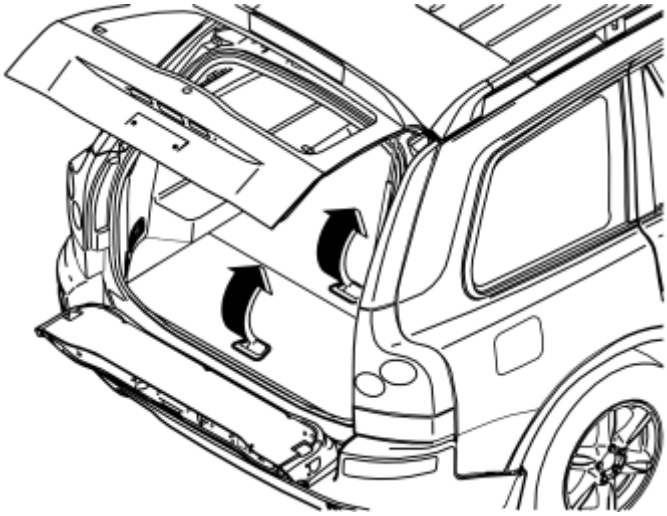

Fig. 587: Removing Two Center Floor Hatches By Lifting Them Slightly
Courtesy of VOLVO CARS CORPORATION

Applies to cars with two rows of seats

- Remove the two center floor hatches. First lift up slightly and then pull them loose from the mountings at the front edge.

If the rear center floor hatch is equipped with a carrier bag holder on the lower side, the floor hatch is secured by a strap on each of the shorter sides of the storage box. These must be removed.

- Remove the storage box underneath.

Illustration B

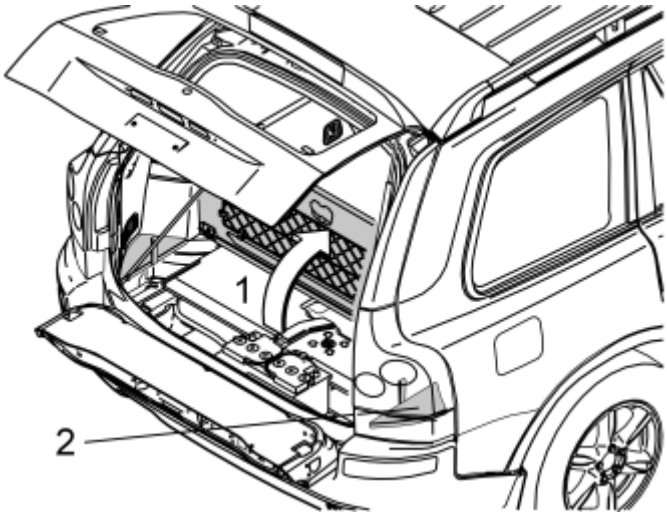

Fig. 588: Folding Up Center Rear Floor Hatch
Courtesy of VOLVO CARS CORPORATION

Applies to cars with three rows of seats and integrated carrier bag holder on the under side of the center floor hatch

- Fold up the center rear floor hatch (1)
- Detach the two straps from the panel underneath. Lift up the panel at the rear edge. Fold the floor hatch back towards the panel and lift out the floor hatch and the panel.

Applies to cars with three rows of seats without integrated carrier bag holders

- Lift up the center rear floor hatch at the rear edge and lift it out.
- Remove the right and left-hand side floor hatches (2).

Illustration C

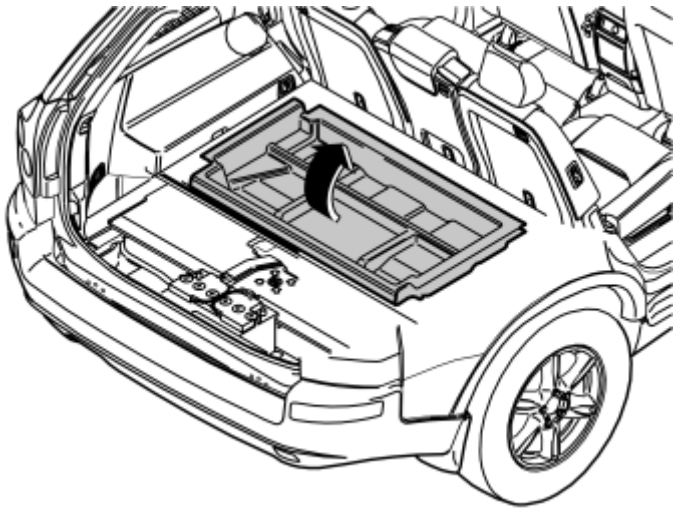

Fig. 589: Front Storage Box
Courtesy of VOLVO CARS CORPORATION

Applies to cars with two rows of seats

- Remove the front storage compartment.

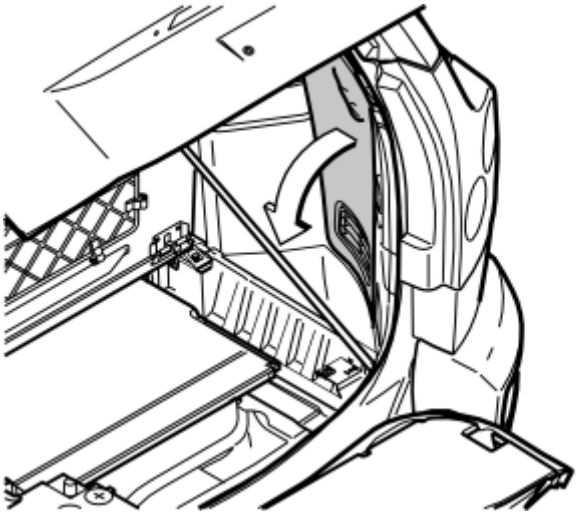

Fig. 590: Folding Side Panel From Right-Hand Side Of Cargo Compartment
Courtesy of VOLVO CARS CORPORATION

- Remove the folding side panel from the right-hand side in the cargo compartment.

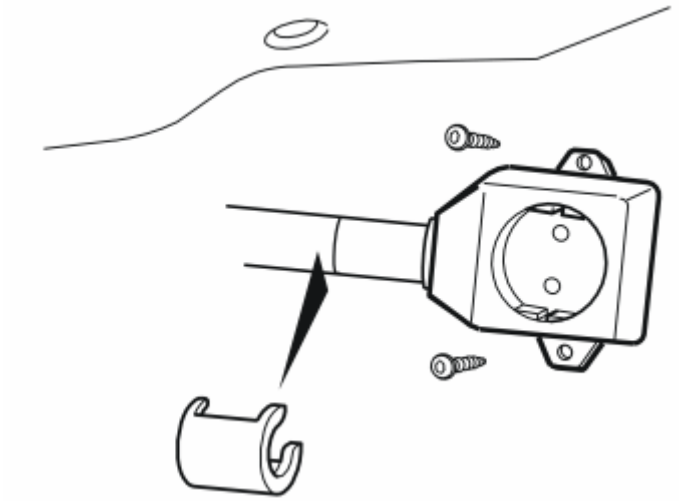

Fig. 591: Identifying Passenger Compartment Connector Socket Screws
Courtesy of VOLVO CARS CORPORATION

Applies to cars with a passenger compartment connector socket

- Remove the screws for the passenger compartment connector socket. Disconnect the passenger compartment connector socket from the bracket inside the carpet
- Remove the locking sleeve and disconnect the cable from the passenger compartment connector socket.

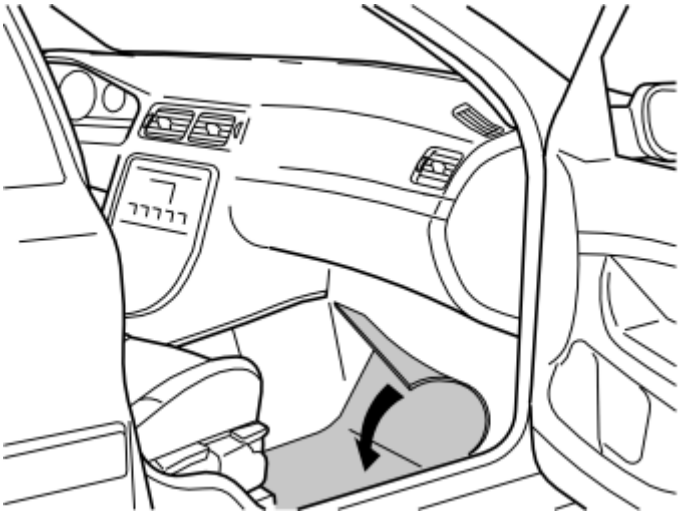

Fig. 592: Folding Carpet Aside
Courtesy of VOLVO CARS CORPORATION

- Push the carpet on the right-hand side to one side to access the cable from the relay (routed previously).

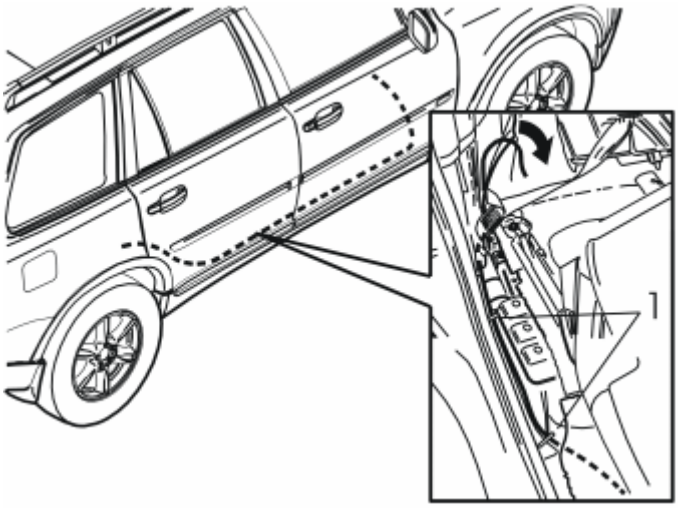

Fig. 593: Cable Clamped In At Air Duct
Courtesy of VOLVO CARS CORPORATION

- Insert the cable harness between the carpet and the door sill towards the carpet as far as it will go. Route it along the right-hand side of the car up to the door opening for the right-hand rear door
- Pull the cable up to the right-hand seat mounting on the right-hand seat in the second row of seats
- Pull away the carpet from the front edge of the right-hand side panel in the cargo compartment
- Route the cable on the right-hand side of the air duct towards the front edge of the rear wheel arch. Clamp the cable at the air duct using two tie straps (1) from the kit
- Route the cable on the reverse of the air duct and out along the front edge of the wheel arch.

Applies to cars with three rows of seats Illustration A

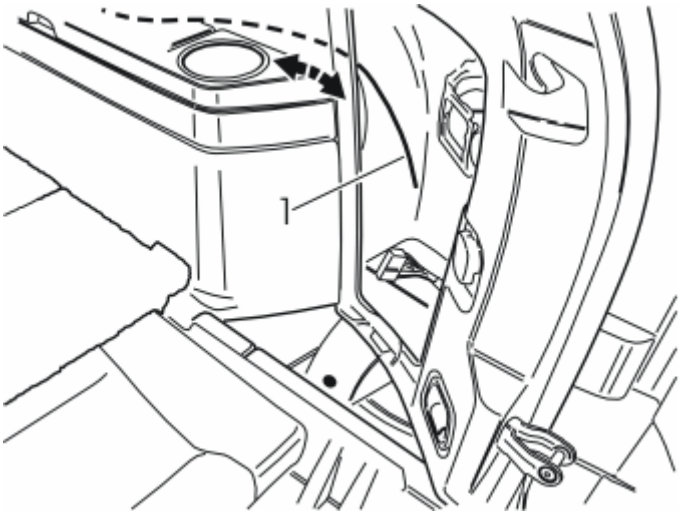

Fig. 594: Identifying Cable At Rear Edge Of Right-Hand Side Panel
Courtesy of VOLVO CARS CORPORATION

- Insert a cable (1) at the rear edge of the right-hand side panel and along the inside of the panel, above the mountings for the load securing eyelets and to the front edge of the side panel.

Illustration B

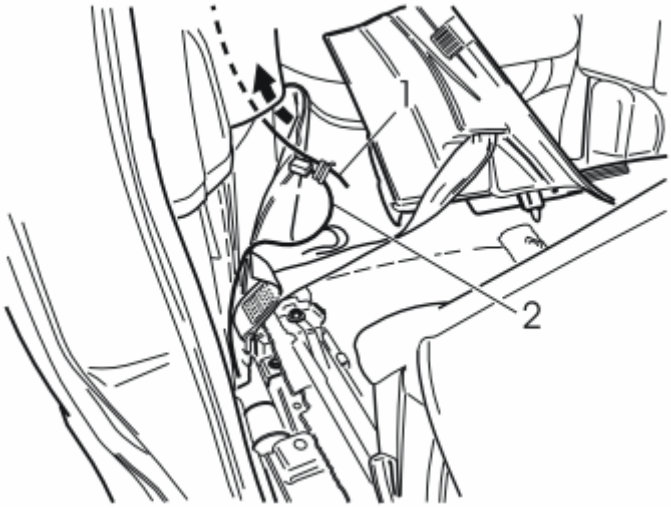

Fig. 595: Identifying Cable Harness
Courtesy of VOLVO CARS CORPORATION

- Tape the cable harness (2) to the wire and pull it out of the rear edge of the side panel.

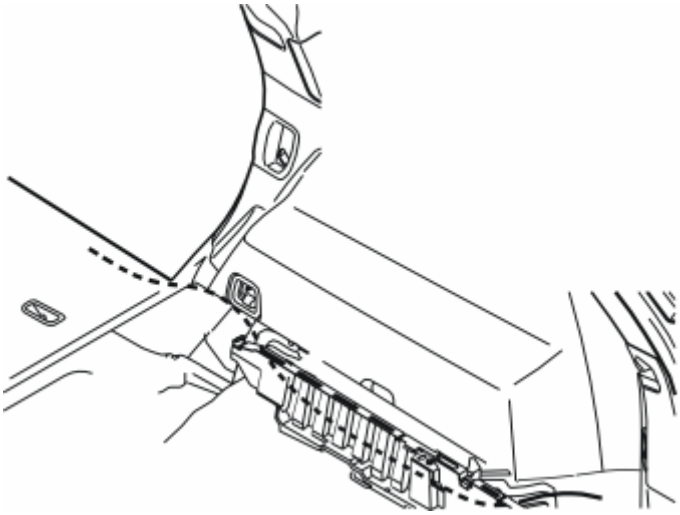

Fig. 596: Cable Routing
Courtesy of VOLVO CARS CORPORATION

Applies to cars with two rows of seats

- Route the cable on the left-hand side of the seat belt mounting at the front edge of the wheel arch, inside the carpet at the front edge of the side panel, between the side panel and the rear of the cargo floor support, to the accessory electronic module (AEM).

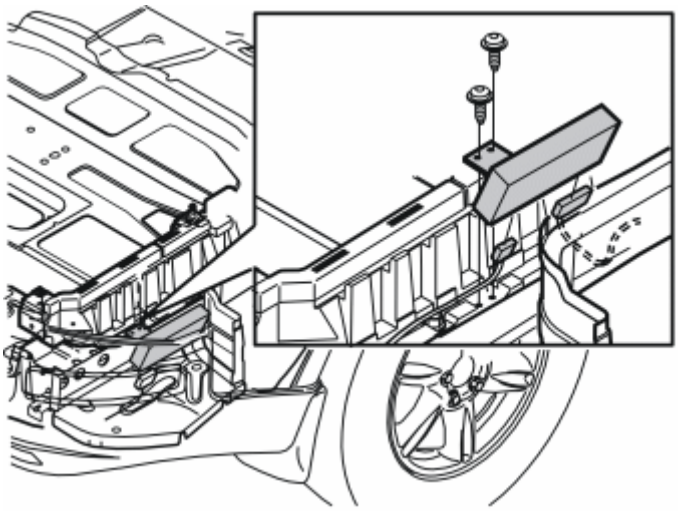

Fig. 597: Removing Panel By Pulling It Straight Up And Unhook It From Side Panel (1 Of 2)
Courtesy of VOLVO CARS CORPORATION

- Remove the two screws from the bracket for the accessory electronic module (AEM) and lift up the entire unit. Cut off the tie straps if necessary.

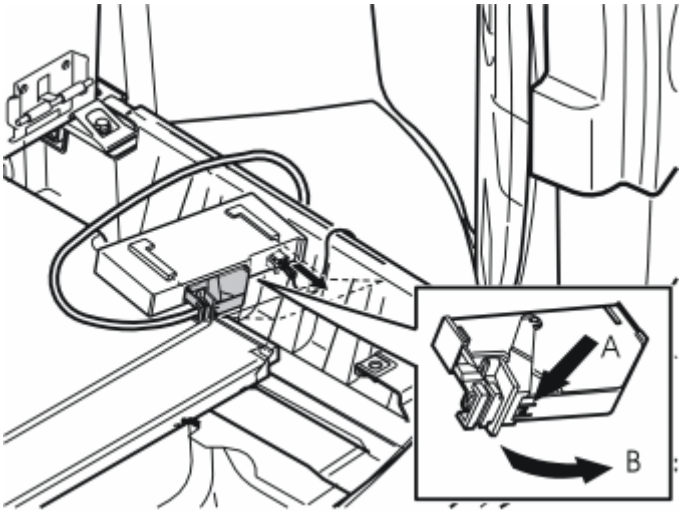

Fig. 598: Removing Panel By Pulling It Straight Up And Unhook It From Side Panel
Courtesy of VOLVO CARS CORPORATION

- Disconnect the large connector from the accessory electronic module (AEM). First press in the catch (A). Pull the black locking handle (B) in the direction of the arrow until a click is heard. Disconnect the connector
- Disconnect the connector from the accessory electronic module.

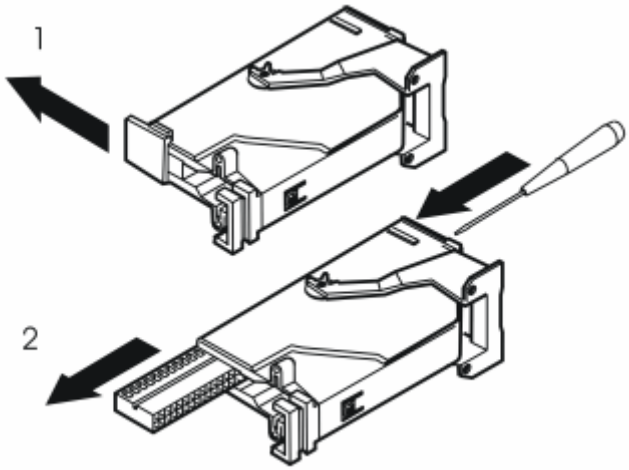

Fig. 599: Black Terminal Pin By Inserting A Pointed Object Into Hole In Other End
Courtesy of VOLVO CARS CORPORATION

- Remove the black catch holding the black switch in place in the connector by pulling in the direction of the arrow
- Remove the black switch. Insert a pointed object in the hole on the other end of the connector. Press the switch out.

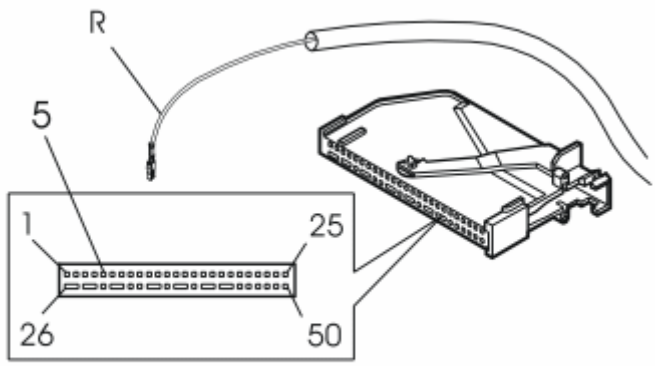

Fig. 600: Identifying Routed Cable To AEM Module's Connector In Position 5
Courtesy of VOLVO CARS CORPORATION

- Connect the pre routed cable to terminal 5 in the accessory electronic module (AEM) connector.

NOTE: **The numerical markings can be found on the top and bottom of the connector. However, the markings are extremely small so be careful when installing the cable.**

- Reinstall the black switch in the connector. Lock into place using the catch
- Press the connector into the accessory electronic module (AEM). Secure using the black locking handle
- Reinstall the accessory electronic module (AEM) and the bracket and clamp the wiring with the tie strap from the kit
- Reinstall the folding panel on the right-hand side in the cargo compartment
- Reinstall the right-hand side floor hatch
- Reinstall the storage boxes
- Reinstall the rear floor hatch(es)
- Reinstall the carpet at the front edge of the right-hand side panel
- Reinstall the sill trim panels in the doors on the right-hand side and the panel over the cable splice between them
- Reinstall the panel and cover on the right-hand mountings on the right-hand seat on the second row of seats
- Reinstall the panel on the right rear mounting on the right-hand front seat
- Fold the carpet back on the right front side
- Reinstall the passenger compartment connector socket if applicable
- Reinstall the soundproofing panel and the right-hand side panel on the center console
- Program the software according to the service information in VIDA (Volvo scan tool).

TIMER RELAY FOR THE ELECTRICAL ENGINE BLOCK HEATER B6294T

(B6294T; 2003)

TIMER RELAY FOR THE ELECTRICAL ENGINE BLOCK HEATER

NOTE: This accessory requires software unique to the car.

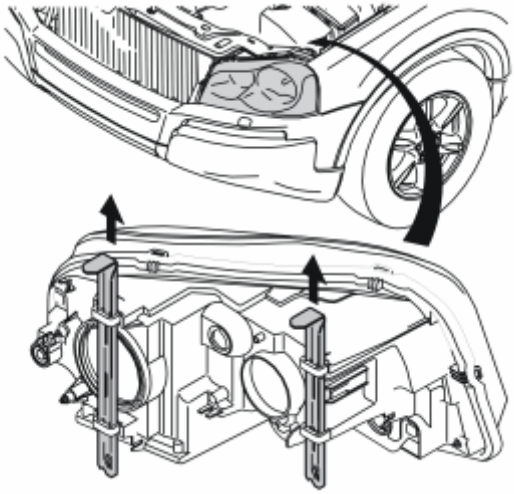

Fig. 601: Detach Left-Hand Headlamp
Courtesy of VOLVO CARS CORPORATION

- Remove the left-hand headlamp by pulling up the two cotter pins and then carefully pulling the headlamp forwards.

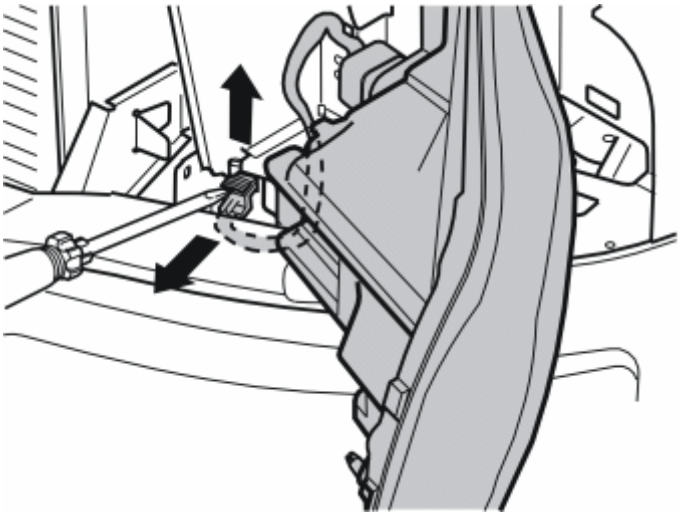

Fig. 602: Carefully Prize Up Catch On Connector For Headlamp With A Screwdriver
Courtesy of VOLVO CARS CORPORATION

- Carefully pry up the catch on the connector for the headlamp using a screwdriver
- Pull up the catch completely, disconnect the connector. Place the headlamp to one side.

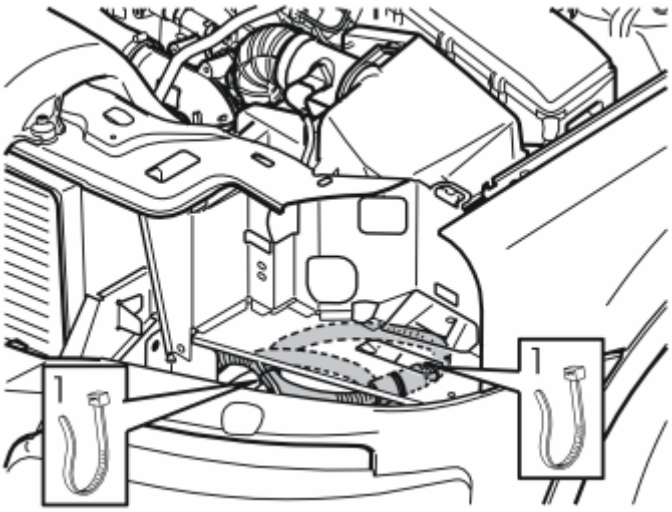

Fig. 603: Identifying Cable Ties
Courtesy of VOLVO CARS CORPORATION

Applies to cars with only an electrical engine block

- Cut off the tie straps (1). Route the cable underneath the plate under the headlamp
- Remove the locking sleeve over the cable terminal and separate the switches.

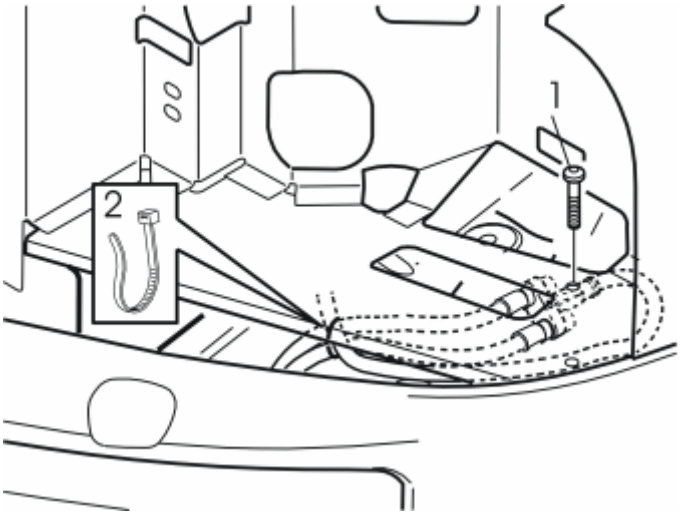

Fig. 604: Screw, Nut, Washer, Tie Strap, And Branch Connector -- 6-Cylinder Engine
Courtesy of VOLVO CARS CORPORATION

Applies to cars with an engine block heater and passenger compartment connector socket

- Remove the junction connector with the wiring from the under side of the plate underneath the headlamp. First remove the screw and the nut (1)
- Cut off the tie strap (2)
- Remove the locking sleeve over the cable splices. Pull off the wiring
- Place the floor junction connector to one side as it will not be reused.

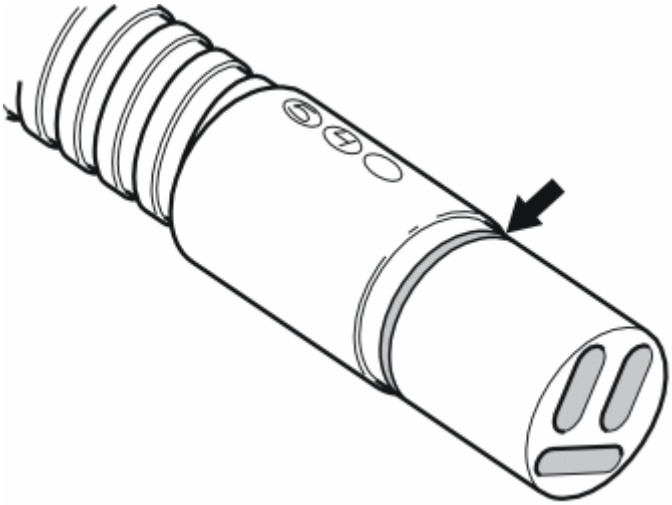

Fig. 605: Identifying O-Ring
Courtesy of VOLVO CARS CORPORATION

- Take the relay and the locking sleeves from the kit
- Grease the O-rings on the cable for the front engine block heater socket and relay. Use low temperature grease, (P/N 1161417-9).

NOTE: Do not get any grease on the contact surfaces of the connector.

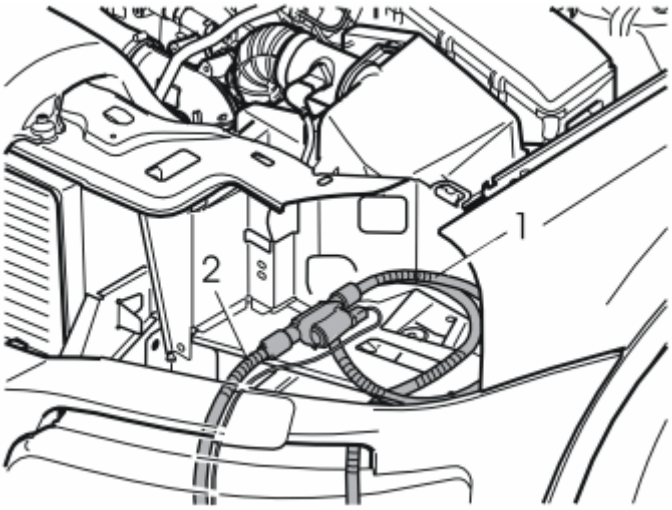

Fig. 606: Installing Relay
Courtesy of VOLVO CARS CORPORATION

Applies to cars with only an electrical engine block

- Press the cable (1) from the front engine block heater socket and the cable (2) into the relay.

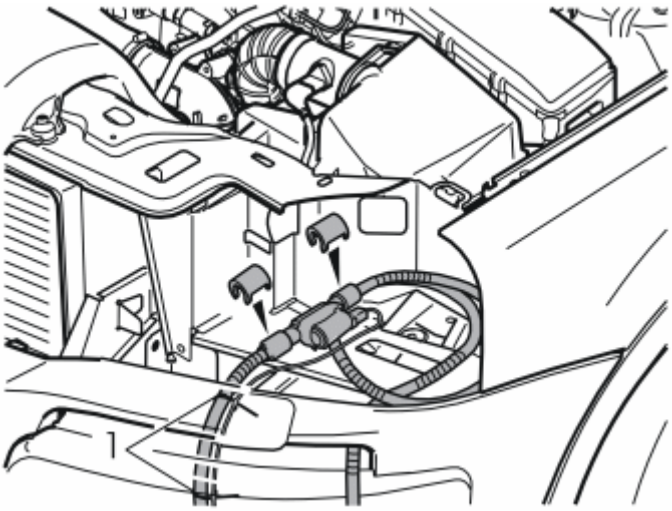

Fig. 607: Installing Locking Sleeves
Courtesy of VOLVO CARS CORPORATION

Applies to cars with only an electrical engine block

- Press the two locking sleeves (from the kit) over the cable splices
- Take two tie straps (1) from the kit. Secure the electric cable with the ground lead at the cable splice with the electrical cable for the engine block heater.

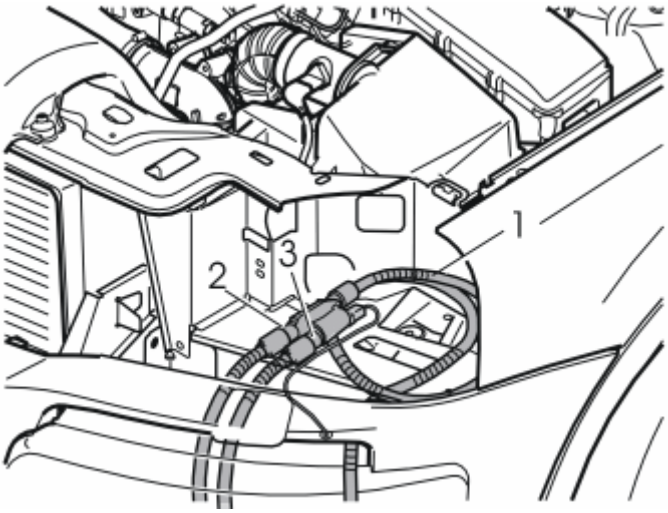

Fig. 608: Sockets And Relay -- All Models
Courtesy of VOLVO CARS CORPORATION

Applies to cars with an engine block heater and passenger compartment connector socket

- Connect the cable (1) from the front engine block heater socket to the relay
- Connect the wiring for the engine block heater and passenger compartment connector socket to either socket (2) or (3) on the relay.

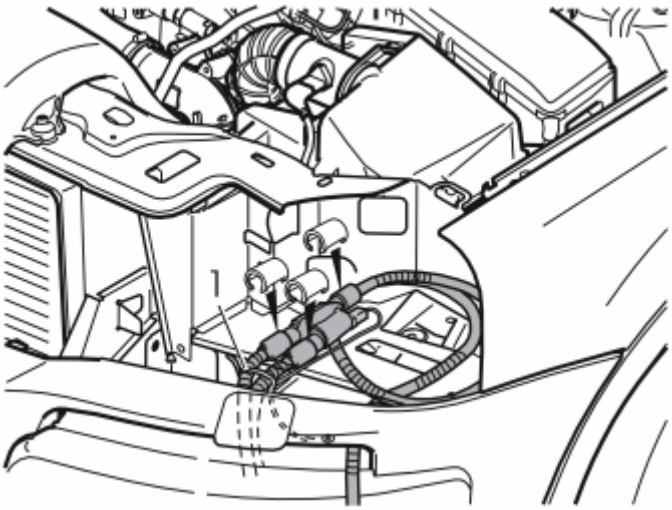

Fig. 609: Sockets And Relay -- 6-Cylinder Engine
Courtesy of VOLVO CARS CORPORATION

Applies to cars with an engine block heater and passenger compartment connector socket

- Press the three locking sleeves (from the kit) over the cable splices
- Secure the cable and the ground lead at one of the cables for the engine block heater/passenger compartment connector socket using a tie strap (1) from the kit.

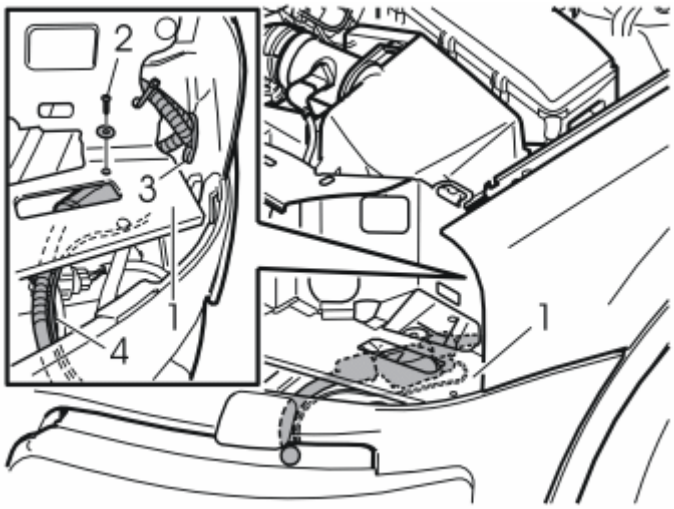

Fig. 610: Screw, Nut, Washer, Tie Strap And Branch Connector -- 6-Cylinder Engine
Courtesy of VOLVO CARS CORPORATION

- Position the wiring and relay on the under side of the plate (1). Position the relay with the side against the plate to release the switch
- Take a screw, washer and nut (2) from the kit. Tighten the relay to the plate
- Secure the cable for the front engine block heater socket at point (3) in the plastic lug for the bumper cover mounting
- Insert the thin cable with the ground lead from the relay in the same position as the engine block

heater /passenger compartment connector socket wiring
- Secure all wiring at point (4) using a tie strap from the kit.

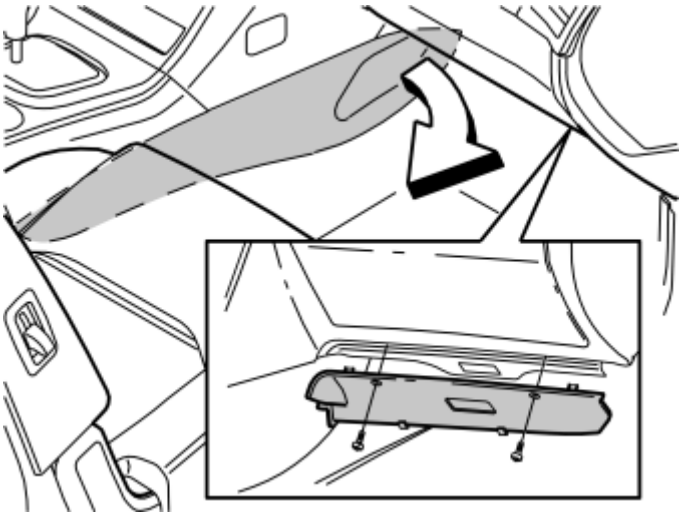

Fig. 611: Right-Hand Side Sound Barrier
Courtesy of VOLVO CARS CORPORATION

- Remove the right-hand side panel from the center console. Pull off the panel starting at the front edge. Then pull backwards until all the clips release
- Remove the right-hand side soundproofing panel. First remove the two screws. Then pry off the panel at the top edge.

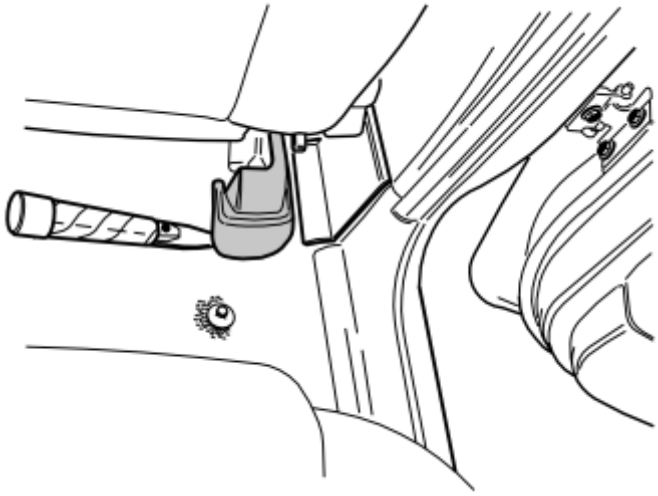

Fig. 612: Prying Right-Hand Rear Mounting Of Cover Panel
Courtesy of VOLVO CARS CORPORATION

- Remove the panel from the right rear mounting on the right-hand front seat. Pry up the rear edge of the panel slightly and then pull backwards and upwards.

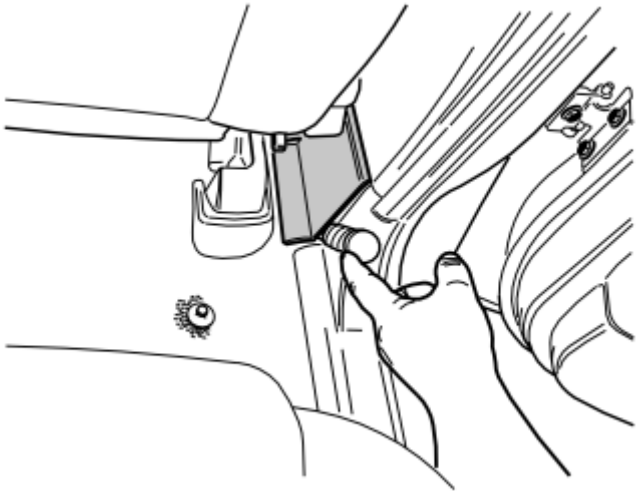

Fig. 613: Prying Away Cover Panel Over Joint Between Door Sills On Right-Hand Side, At Lower Edge, Using A Weatherstrip Tool
Courtesy of VOLVO CARS CORPORATION

- Carefully pry off the panel above the joint between the right-hand door sills, at the lower edge using a weatherstrip tool. Remove the panel.

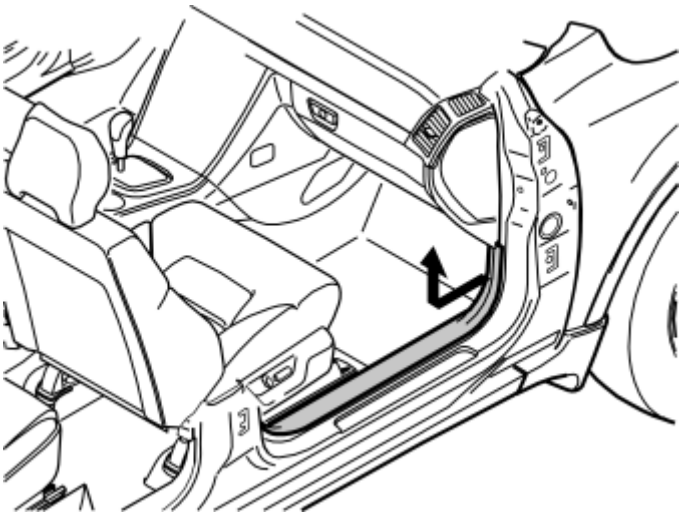

Fig. 614: Right-Hand Front Door's Sill Trim Panel
Courtesy of VOLVO CARS CORPORATION

- Detach the sill trim panel for the right-hand front door. Pull off the panel starting at the front edge until the clip releases. Continue backwards until the remaining clips have released
- Unhook the sill trim panel from the B-post panel.

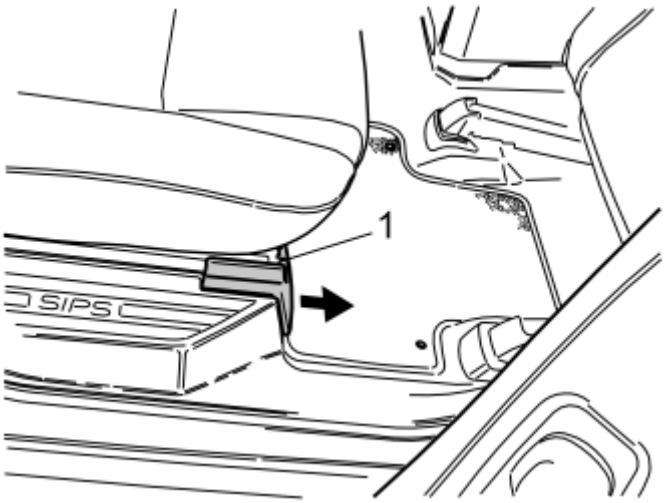

Fig. 615: Pushing Up Catch On Top Side
Courtesy of VOLVO CARS CORPORATION

- Remove the panel in the right-hand front seat mounting on the right-hand seat in the second row. Push up the catch (1) on the top. Pull the panel forward.

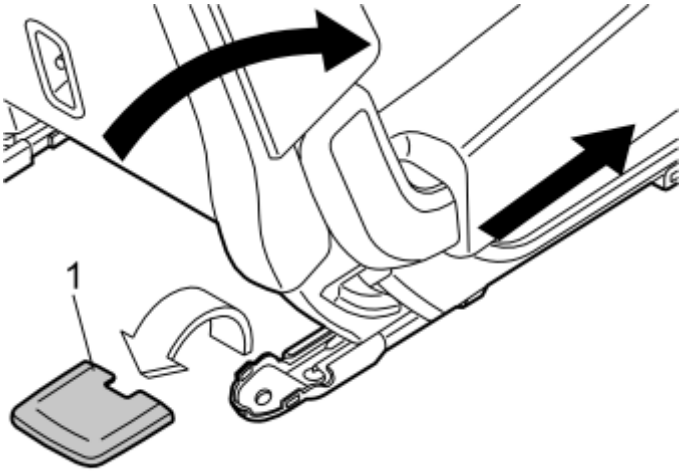

Fig. 616: Removing Cover Panel
Courtesy of VOLVO CARS CORPORATION

- Fold the backrest on the right-hand seat in the second row forward as far as possible. Slide the front seat forward as far as possible. (On cars with two rows of seats, the second row is secured.)
- Remove the cover (1) for the right rear seat mounting by prying off the rear edge.

Illustration A

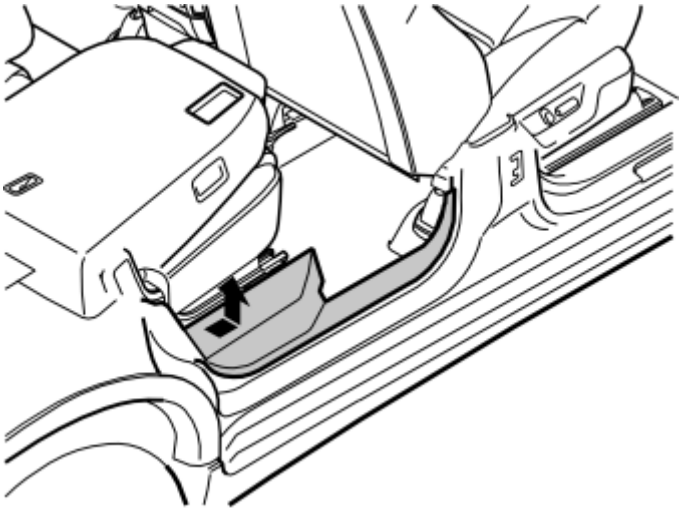

Fig. 617: Removing Sill Trim Panel
Courtesy of VOLVO CARS CORPORATION

- Remove the sill trim panel for the right-hand rear door. Pull the rear edge until the clips release. Continue forwards until the remaining clips have released.

Applies to cars with two rows of seats

- On cars with two rows of seats the seat cannot be slid forwards. To remove the sill trim panel; Start by folding the backrest forward when pulling the rear edge of sill trim panel loose. Then reposition the backrest to raise the seat cushion and provide more room to remove the sill trim panel. It is securely positioned. Do not damage the panel and surrounding components.

Illustration B

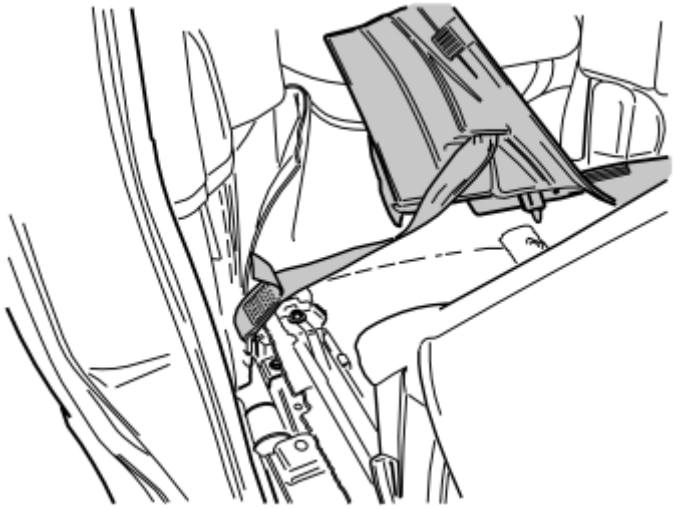

Fig. 618: Identifying Sill Trim Panel
Courtesy of VOLVO CARS CORPORATION

- Unhook the sill trim panel from the B-post panel. Position the panel in the second/third row of seats.

Illustration A

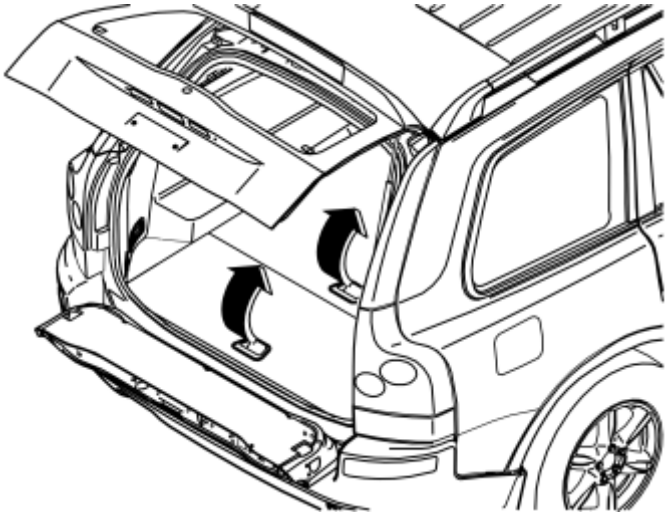

Fig. 619: Removing Two Center Floor Hatches By Lifting Them Slightly
Courtesy of VOLVO CARS CORPORATION

Applies to cars with two rows of seats

- Remove the two center floor hatches. First lift up slightly and then pull them loose from the mountings at the front edge.

If the rear center floor hatch is equipped with a carrier bag holder on the lower side, the floor hatch is secured by a strap on each of the shorter sides of the storage box. These must be removed.

- Remove the storage box underneath.

Illustration B

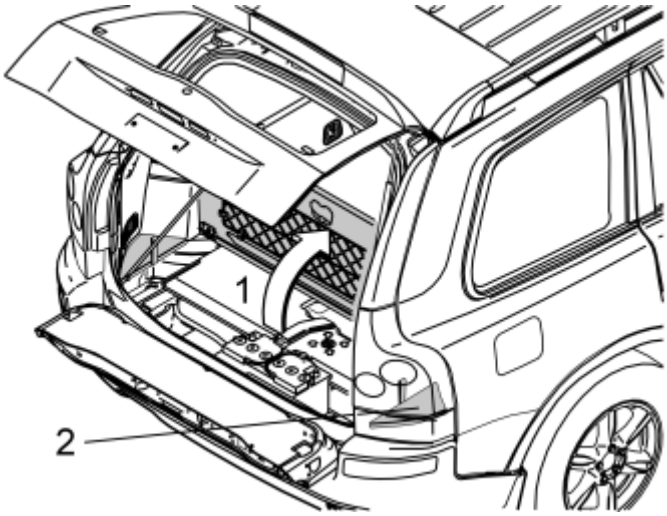

Fig. 620: Folding Up Center Rear Floor Hatch
Courtesy of VOLVO CARS CORPORATION

Applies to cars with three rows of seats and integrated carrier bag holder on the under side of the center floor hatch

- Fold up the center rear floor hatch (1)
- Detach the two straps from the panel underneath. Lift up the panel at the rear edge. Fold the floor hatch back towards the panel and lift out the floor hatch and the panel.

Applies to cars with three rows of seats without integrated carrier bag holders

- Lift up the center rear floor hatch at the rear edge and lift it out.

Applies to all models

- Remove the right and left-hand side floor hatches (2).

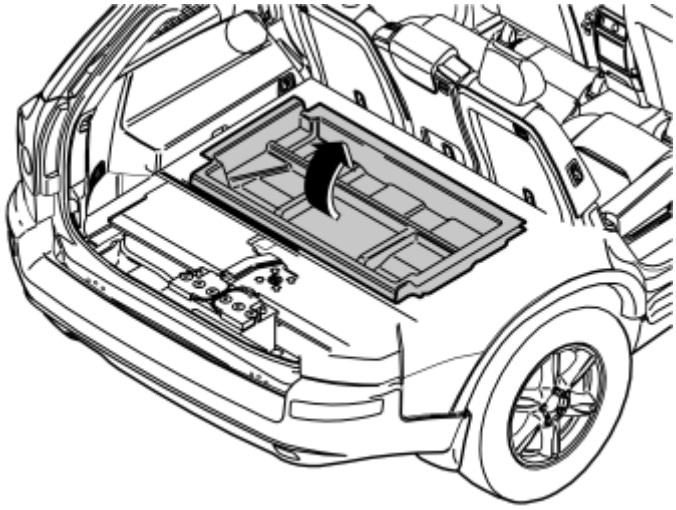

Fig. 621: Front Storage Box
Courtesy of VOLVO CARS CORPORATION

Applies to cars with two rows of seats

- Remove the front storage compartment.

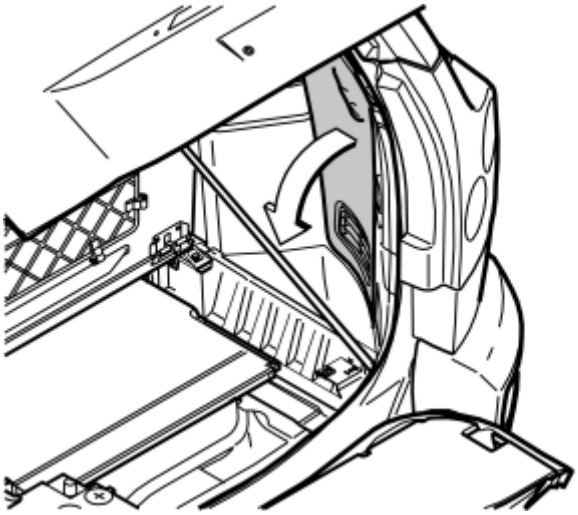

Fig. 622: Folding Side Panel From Right-Hand Side Of Cargo Compartment
Courtesy of VOLVO CARS CORPORATION

- Remove the folding side panel from the right-hand side in the cargo compartment.

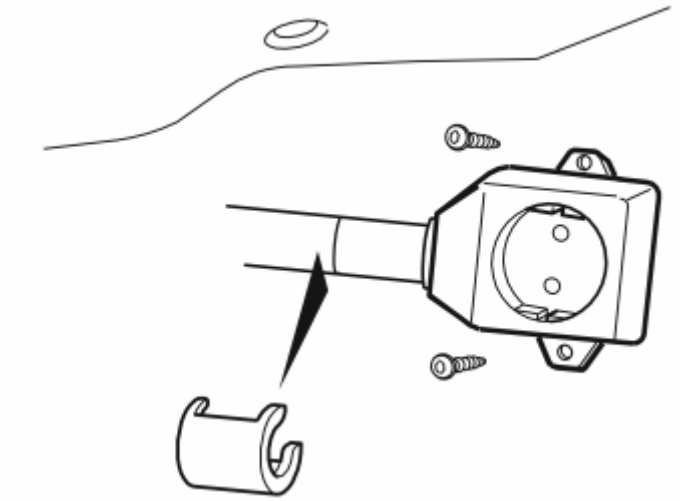

Fig. 623: Identifying Passenger Compartment Connector Socket Screws
Courtesy of VOLVO CARS CORPORATION

Applies to cars with a passenger compartment connector socket

- Remove the screws for the passenger compartment connector socket. Disconnect the passenger compartment connector socket from the bracket inside the carpet
- Remove the locking sleeve and disconnect the cable from the passenger compartment connector socket.

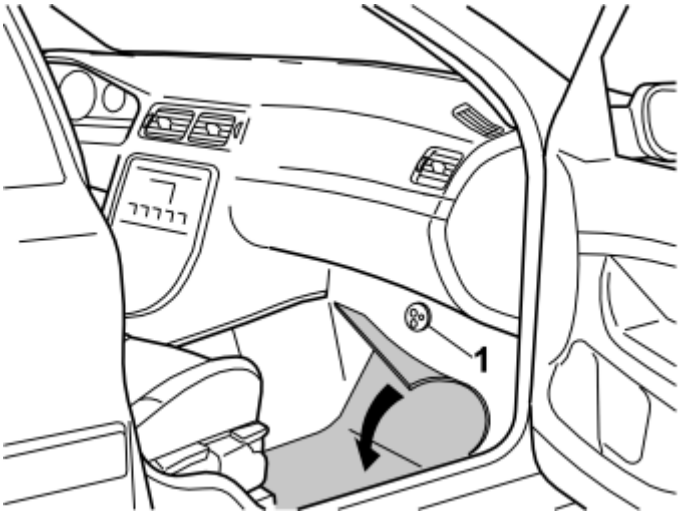

Fig. 624: Passenger Seat Rubber Grommet
Courtesy of VOLVO CARS CORPORATION

- Push the carpet at the front right hand side to one side
- Press out the rubber grommet in the cowl panel (1).

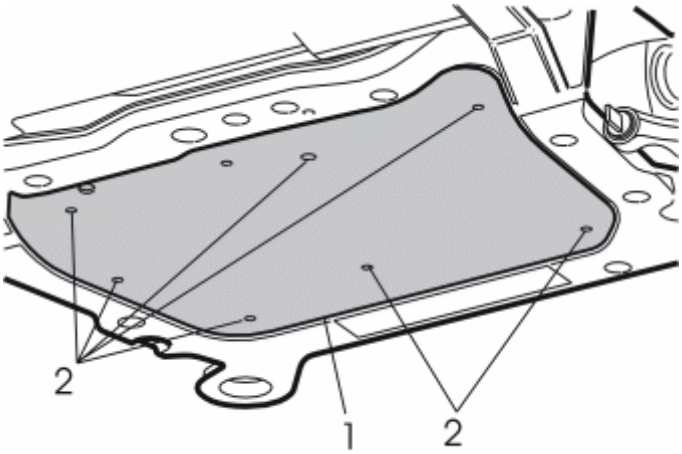

Fig. 625: Engine Splash Guard
Courtesy of VOLVO CARS CORPORATION

- Remove the engine splash guard (1) by first removing the screws (2).

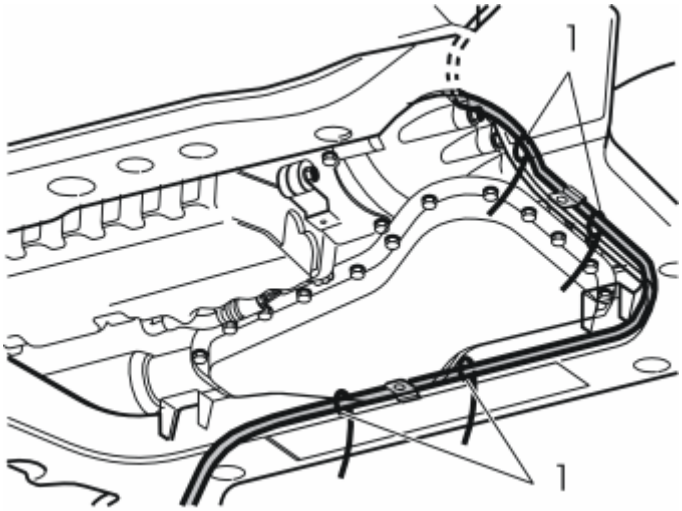

Fig. 626: Electrical Cable Secured With Tie Straps
Courtesy of VOLVO CARS CORPORATION

- Route the wiring down from the relay.

Applies to cars with an engine block heater and passenger compartment connector socket

- Take four tie straps from the kit. Secure the thin cable (not the ground lead) at the cable for the passenger compartment connector socket.

Applies to cars with only an electrical engine block

- Press the four tie-straps with clips (from the kit) into the holes on the inside of the sub-frame
- Secure the cable (not the ground lead) using tie straps.

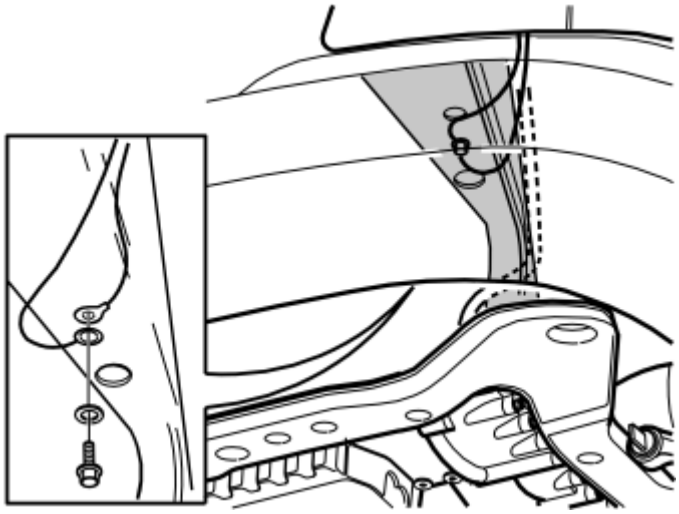

Fig. 627: Ground Cable
Courtesy of VOLVO CARS CORPORATION

- Disconnect the existing ground lead for the front engine block heater socket underneath the left-hand

front member

- Route the ground lead to the relay. Connect both ground leads to the existing ground terminal.

Illustration A

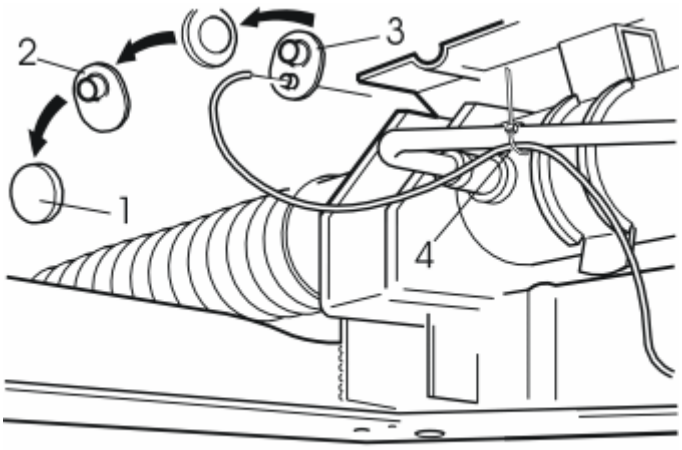

Fig. 628: Installing Rubber Grommets
Courtesy of VOLVO CARS CORPORATION

Applies to cars without a passenger compartment connector socket

- Remove the stamped section of the engine compartment insulation (1) on the right-hand side and the rubber grommet (2) from underneath
- Place the rubber grommet to one side. There is a new rubber grommet on the routed cable
- Lubricate the rubber grommet (3) using low temperature grease on the side facing in towards the passenger compartment
- Route the cable along the power steering pipes and up to the hole in the cowl as illustrated
- Insert the cable in the hole. Press the rubber grommet into place
- Clamp the cable at the servo pipe using a tie strap (4) from the kit.

Illustration B

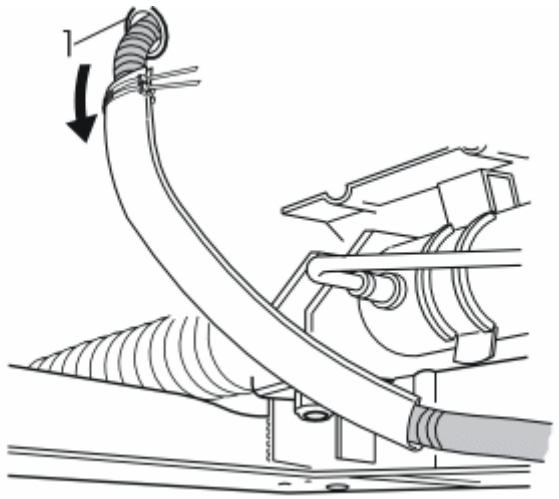

Fig. 629: Identifying Rubber Grommet
Courtesy of VOLVO CARS CORPORATION

Applies to cars with a passenger compartment connector socket

- Pull off the cable and rubber grommet (1) for the passenger compartment connector socket
- Pull out the entire cable from the hole in the cowl panel. Remove the rubber grommet from the cable. There is a new rubber grommet on the routed cable.

Illustration C

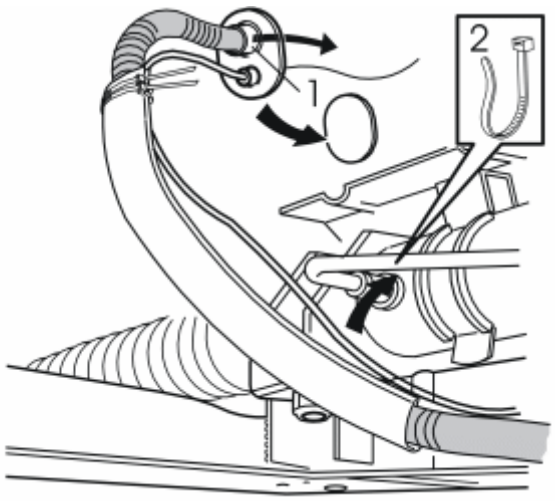

Fig. 630: Identifying Rubber Grommet And Tie Strap
Courtesy of VOLVO CARS CORPORATION

Applies to cars with a passenger compartment connector socket

- Cut off the top of the new rubber grommet (1)
- Thread the cable for the passenger compartment connector socket into the new rubber grommet

- Lubricate the rubber grommet using low temperature grease on the side facing in towards the passenger compartment
- Adjust the wiring up to the grommet. Insert the wiring into the hole in the cowl panel
- Carefully route the rubber grommet into position from inside the passenger compartment by pulling the cable for the passenger compartment connector socket
- Clamp the cable at the power steering pipe using a tie strap (2) from the kit.

- Reinstall the engine splash guard. Tighten the screws. Tighten to **25 Nm (18 lbf. ft.)**
- Connect the connector to the headlamp and reinstall it. Ensure that the headlamp lock pin is positioned correctly, the short thin cable innermost and the long wide cable outermost.

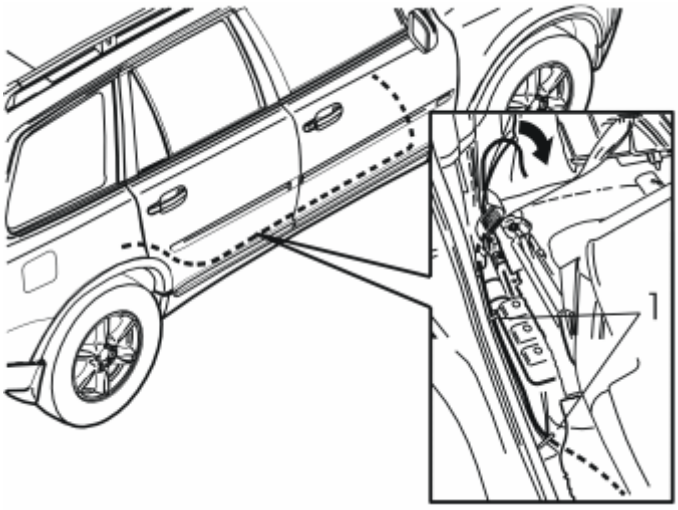

Fig. 631: Cable Clamped In At Air Duct
Courtesy of VOLVO CARS CORPORATION

- Insert the cable harness between the carpet and the door sill towards the carpet as far as it will go. Route it along the right-hand side of the car up to the door opening for the right-hand rear door
- Pull the cable up to the right-hand seat mounting on the right-hand seat in the second row of seats
- Pull away the carpet from the front edge of the right-hand side panel in the cargo compartment
- Route the cable on the right-hand side of the air duct towards the front edge of the rear wheel arch. Clamp the cable at the air duct using two tie straps (1) from the kit
- Route the cable on the reverse of the air duct and out along the front edge of the wheel arch.

Applies to cars with three rows of seats Illustration A

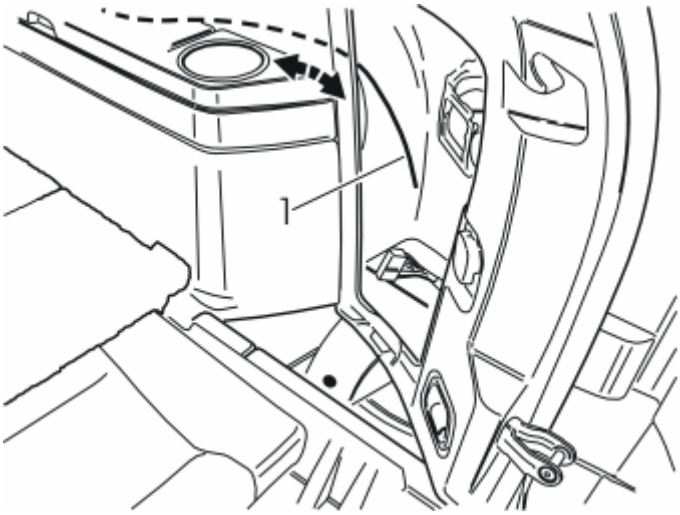

Fig. 632: Identifying Cable At Rear Edge Of Right-Hand Side Panel
Courtesy of VOLVO CARS CORPORATION

- Insert a cable (1) at the rear edge of the right-hand side panel and along the inside of the panel, above the mountings for the load securing eyelets and to the front edge of the side panel.

Illustration B

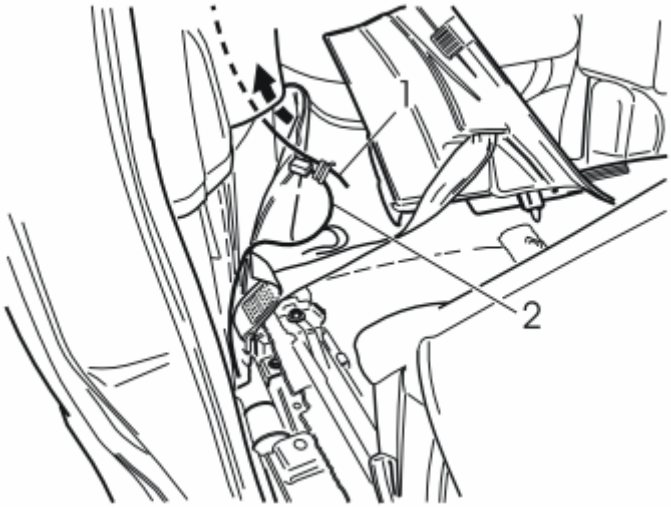

Fig. 633: Identifying Cable Harness
Courtesy of VOLVO CARS CORPORATION

- Tape the cable harness (2) to the wire and pull it out of the rear edge of the side panel.

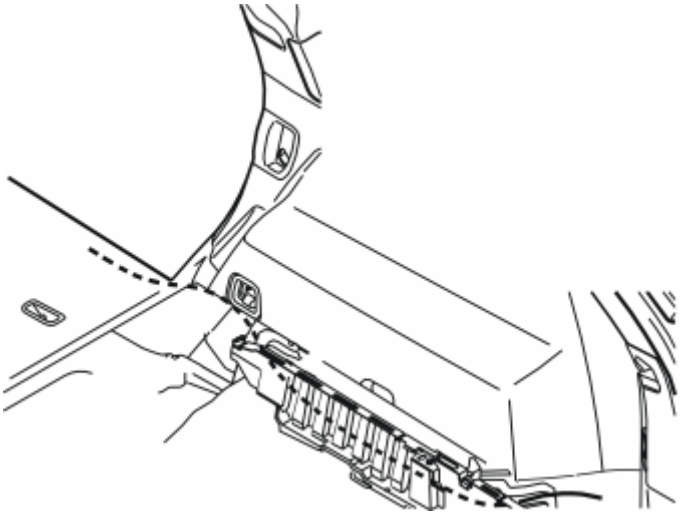

Fig. 634: Cable Routing
Courtesy of VOLVO CARS CORPORATION

Applies to cars with two rows of seats

- Route the cable on the left-hand side of the seat belt mounting at the front edge of the wheel arch, inside the carpet at the front edge of the side panel, between the side panel and the rear of the cargo floor support, to the accessory electronic module (AEM).

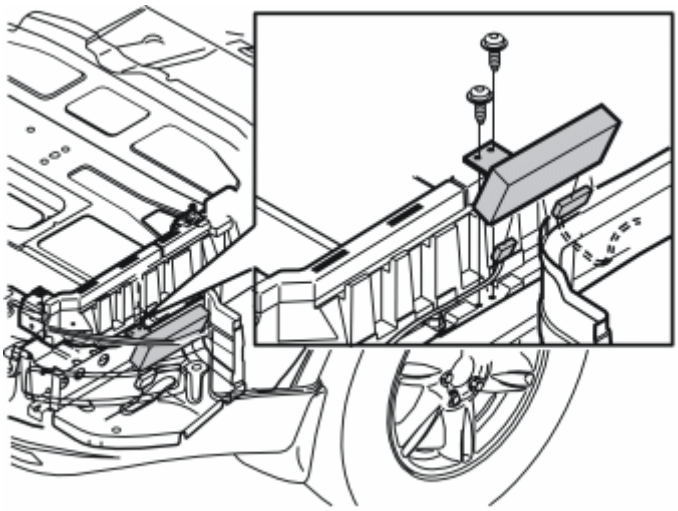

Fig. 635: Removing Panel By Pulling It Straight Up And Unhook It From Side Panel (1 Of 2)
Courtesy of VOLVO CARS CORPORATION

- Remove the two screws from the bracket for the accessory electronic module (AEM) and lift up the entire unit. Cut off the tie straps if necessary.

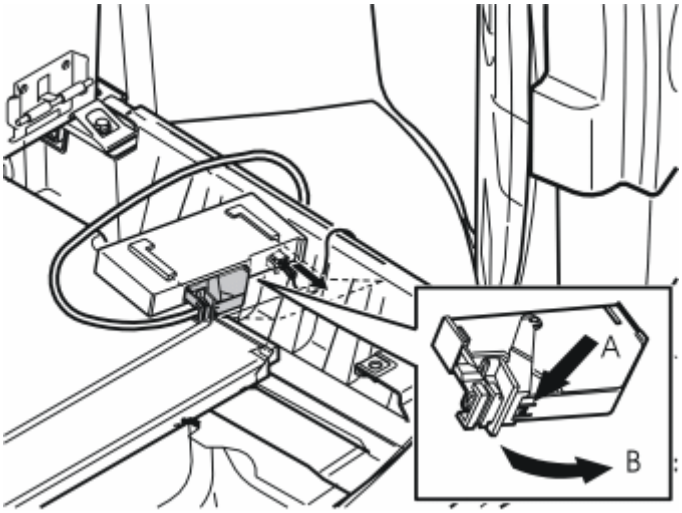

Fig. 636: Removing Panel By Pulling It Straight Up And Unhook It From Side Panel
Courtesy of VOLVO CARS CORPORATION

- Disconnect the large connector from the accessory electronic module (AEM). First press in the catch (A). Pull the black locking handle (B) in the direction of the arrow until a click is heard. Disconnect the connector
- Disconnect the connector from the accessory electronic module.

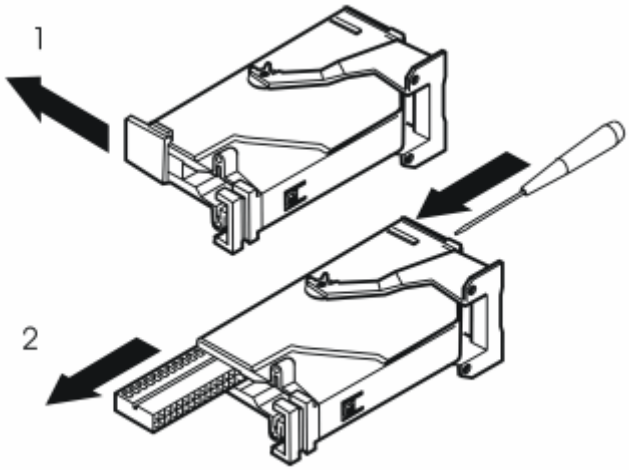

Fig. 637: Black Terminal Pin By Inserting A Pointed Object Into Hole In Other End
Courtesy of VOLVO CARS CORPORATION

- Remove the black catch holding the black switch in place in the connector by pulling in the direction of the arrow
- Remove the black switch. Insert a pointed object in the hole on the other end of the connector. Press the switch out.

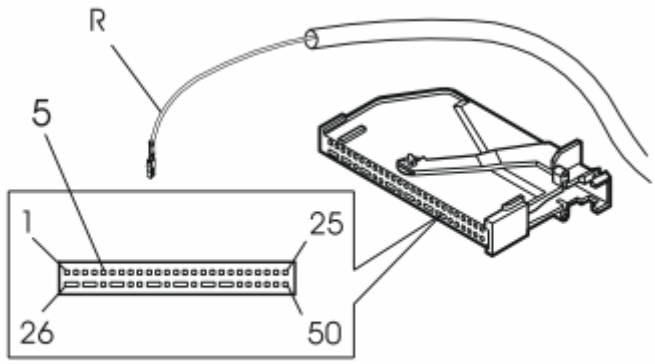

Fig. 638: Identifying Routed Cable To AEM Module's Connector In Position 5
Courtesy of VOLVO CARS CORPORATION

- Connect the pre routed cable to terminal 5 in the accessory electronic module (AEM) connector.

NOTE: **The numerical markings can be found on the top and bottom of the connector. However, the markings are extremely small so be careful when installing the cable.**

- Reinstall the black switch in the connector. Lock into place using the catch
- Press the connector into the accessory electronic module (AEM). Secure using the black locking handle
- Reinstall the accessory electronic module (AEM) and the bracket and clamp the wiring with the tie strap from the kit
- Reinstall the folding panel on the right-hand side in the cargo compartment
- Reinstall the right-hand side floor hatch
- Reinstall the storage boxes
- Reinstall the rear floor hatch(es)
- Reinstall the carpet at the front edge of the right-hand side panel
- Reinstall the sill trim panels in the doors on the right-hand side and the panel over the cable splice between them
- Reinstall the panel and cover on the right-hand mountings on the right-hand seat on the second row of seats
- Reinstall the panel on the right rear mounting on the right-hand front seat
- Fold the carpet back on the right front side
- Reinstall the passenger compartment connector socket if applicable
- Reinstall the soundproofing panel and the right-hand side panel on the center console
- Program the software according to the service information in VIDA (Volvo scan tool).

FUEL-DRIVEN HEATER V8 (B8444S; 2005-2011)

FUEL-DRIVEN HEATER

NOTE: This accessory requires software unique to the car.

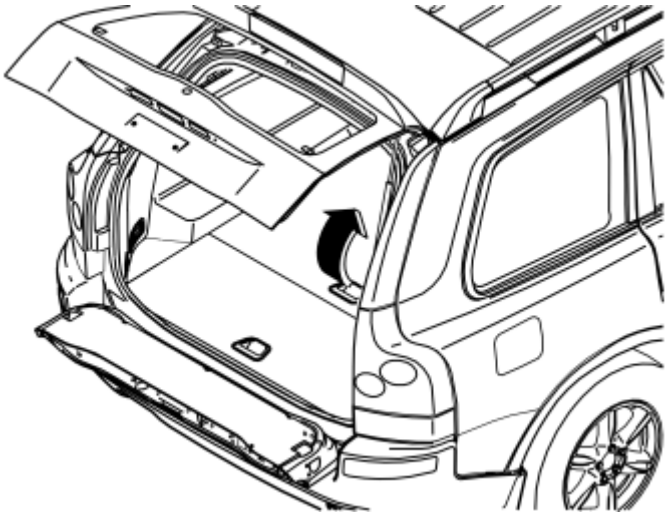

Fig. 639: Removing Front Floor Hatch
Courtesy of VOLVO CARS CORPORATION

Applies to cars with two rows of seats

- Remove the front floor hatch. Lift it up approx. 50 mm and then pull it out from its mountings in the front edge.

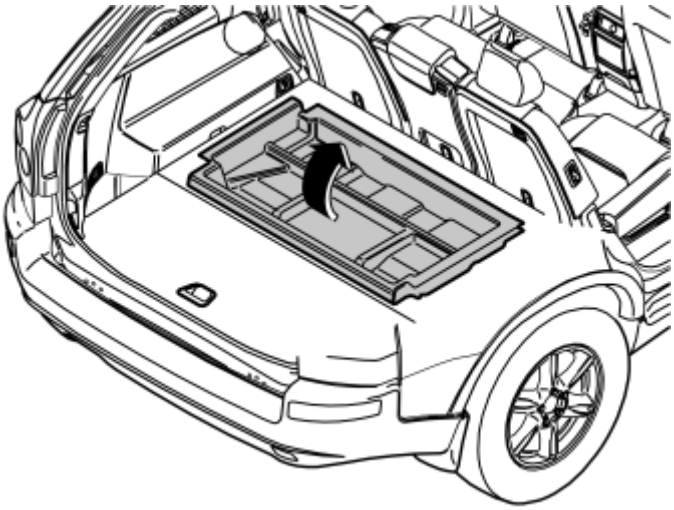

Fig. 640: Removing Front Storage Box
Courtesy of VOLVO CARS CORPORATION

Applies to cars with two rows of seats

- Lift out the front storage box.

NOTE: **Removal of the right-hand seat in the second row applies to all cars. For cars with three rows of seats, the left-hand seat and center seat of the second row must also be removed.**

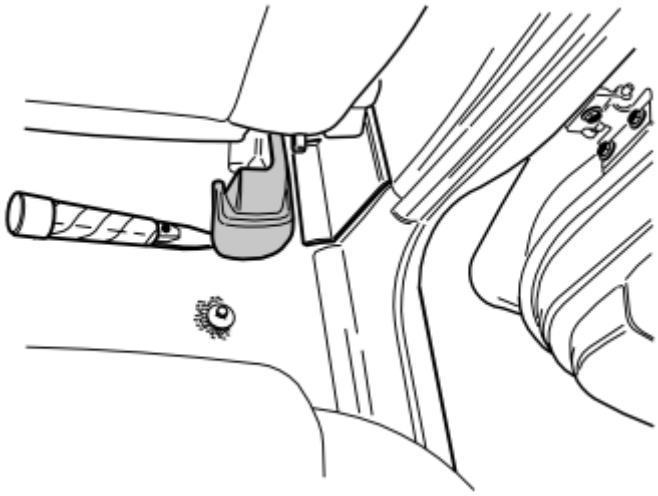

Fig. 641: Prying Right-Hand Rear Mounting Of Cover Panel
Courtesy of VOLVO CARS CORPORATION

- Remove the panel on the right rear mounting on the right-hand front seat. Pry up the rear edge of the panel slightly and then pull rearwards and upwards.

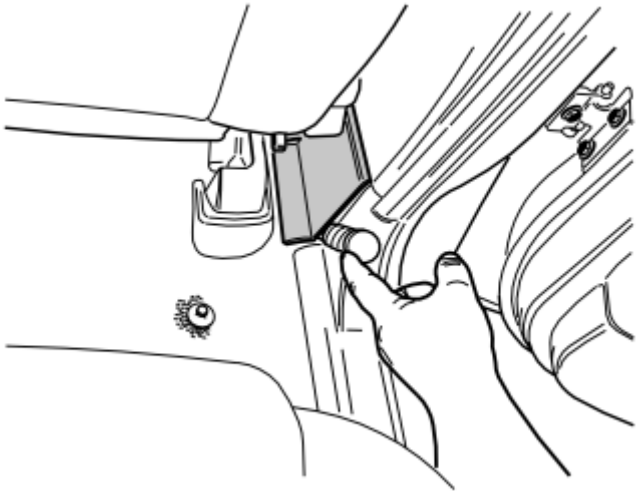

Fig. 642: Prying Away Cover Panel Over Joint Between Door Sills On Right-Hand Side, At Lower Edge, Using A Weatherstrip Tool
Courtesy of VOLVO CARS CORPORATION

- Slide the seats of the first row as far forward as possible.
- Carefully pry loose and remove the panel over the joint between the door sills on the right side.

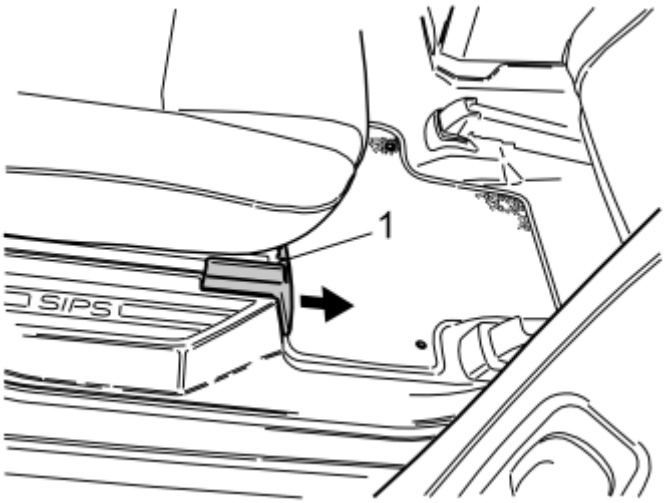

Fig. 643: Pushing Up Catch On Top Side
Courtesy of VOLVO CARS CORPORATION

- Remove the panel for the right front seat mounting of the second row's right-hand seat by pressing down the catch (1) on top and pulling the panel forward. Remove the screw underneath.

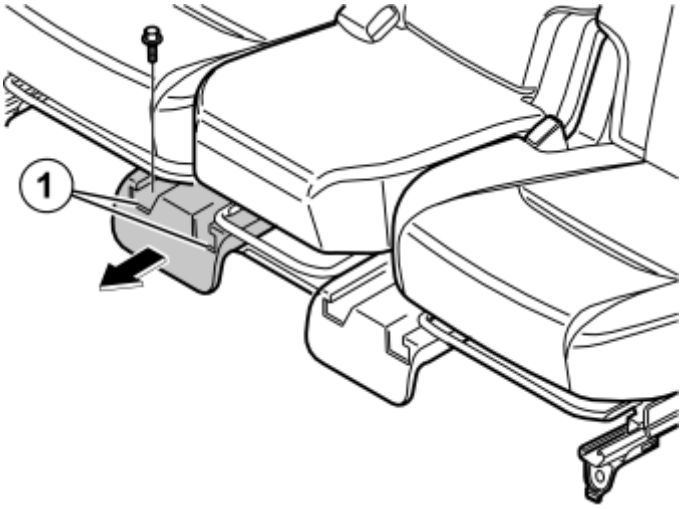

Fig. 644: Removing Front Seat Mountings
Courtesy of VOLVO CARS CORPORATION

- Remove the panel for the front seat mountings of the second row's right-hand seat/center seat by pressing down the catches (1) on top and pulling the panel forward. Remove the screw for the right-hand seat.

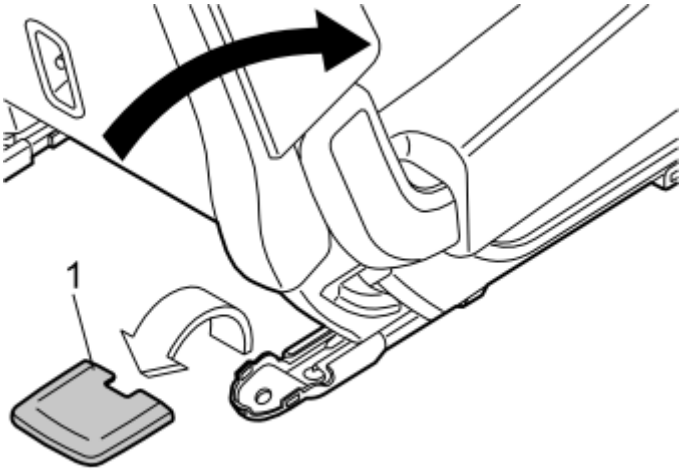

Fig. 645: Removing Rear Seat Mounting Cover
Courtesy of VOLVO CARS CORPORATION

- Lower the backrest of the right-hand seat in the second row.
- Remove the cover (1) of the rear seat mountings of the right-hand seat by prying the rear edge loose. Remove the screws.

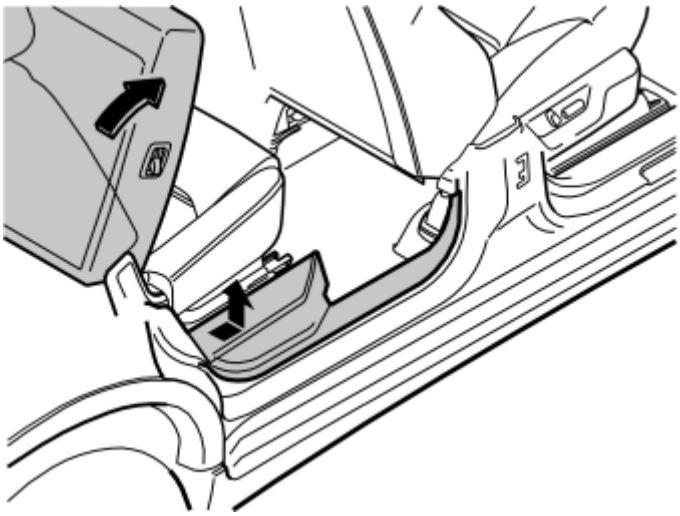

Fig. 646: Removing Sill Trim Panel
Courtesy of VOLVO CARS CORPORATION

- Undo the sill panel of the right rear door. Pull the rear edge until the clips release. Continue forward until the remaining clips release.
- Unhook the sill trim panel from the B-post panel. Place the sill trim panel in the cargo compartment.
- Remove the seat.

CAUTION: Exercise care when lifting the seats out of the passenger compartment so the mountings do not damage the door panels.

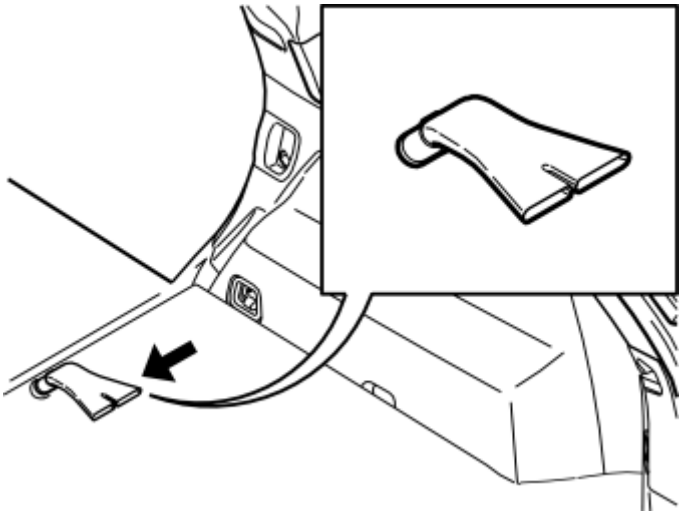

Fig. 647: Seat Mountings
Courtesy of VOLVO CARS CORPORATION

Applies to cars with three rows of seats

- Remove the corresponding panels and screws on the left-hand side and for the left-hand and center seat of the second row.
- Unplug the connector for the center console.
- Remove the left-hand and center seat.

CAUTION: Exercise care when lifting the seats out of the passenger compartment so the mountings do not damage the door panels.

- Remove the air nozzles on the right and left-hand side.

Applies to cars with two rows of seats

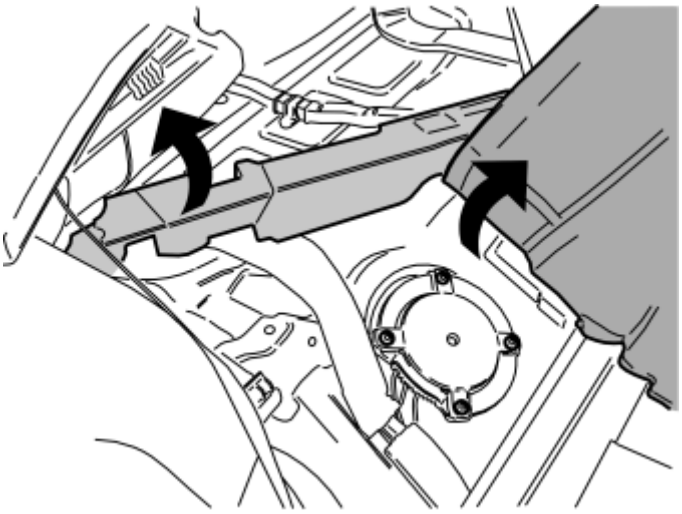

Fig. 648: Pushing Aside Floor Mat And Insulation

Courtesy of VOLVO CARS CORPORATION

- Bend aside the floor mat and secure it with the seat belt on the left-hand side.
- Carefully bend aside the styrofoam insulation to provide access to the cover of the tank unit.

CAUTION: Take care. The styrofoam insulation comes off easily.

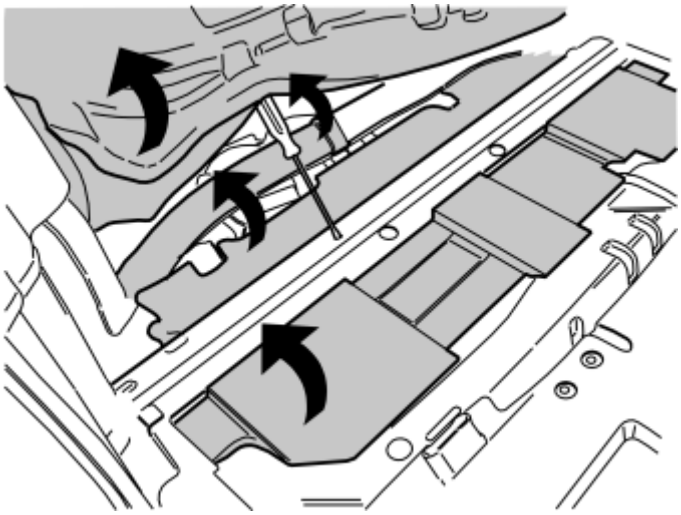

Fig. 649: Removing Insulation Panels
Courtesy of VOLVO CARS CORPORATION

Applies to cars with three rows of seats

- Bend aside the floor mat and the insulating mat.
- Use a screwdriver or the like to hold the mat in place.
- Remove the right-hand section of the air duct.
- Remove both panels of styrofoam insulation.

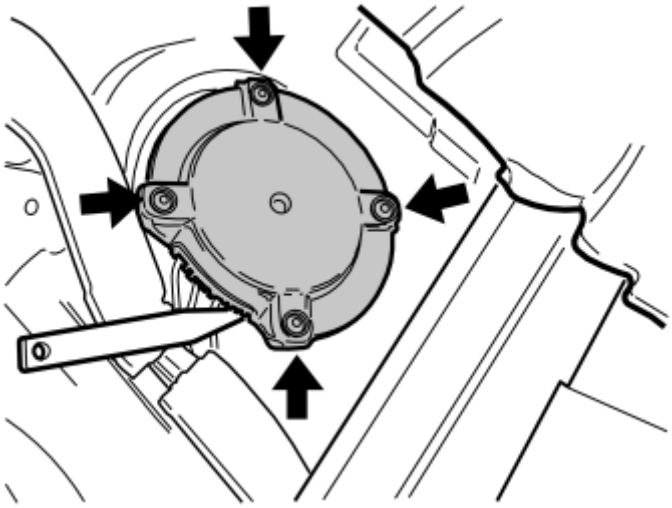

Fig. 650: Removing Tank Unit Cover
Courtesy of VOLVO CARS CORPORATION

- Remove the four nuts in the tank unit cover.
- Carefully pry loose the cover using a weatherstrip tool.

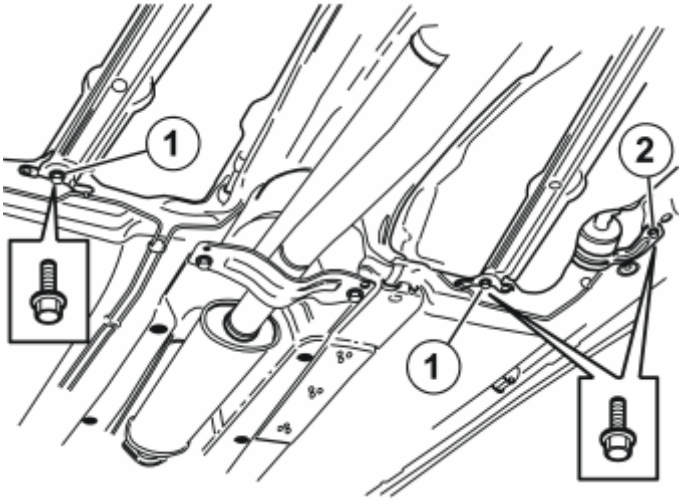

Fig. 651: Identifying Front Mounting & Fuel Filter Screws
Courtesy of VOLVO CARS CORPORATION

The tank should be lowered in order to facilitate the installation of the suction line.

- Remove the two screws (1) in the fuel tank front mountings. If necessary, screw out the screw (2) to the fuel filter.

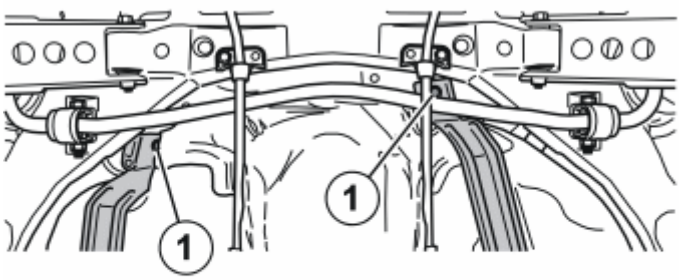

Fig. 652: Identifying Rear Mounting Screws
Courtesy of VOLVO CARS CORPORATION

- Unscrew the two screws (1) holding the tank's rear mounting, screw them out as far as possible without removing them.

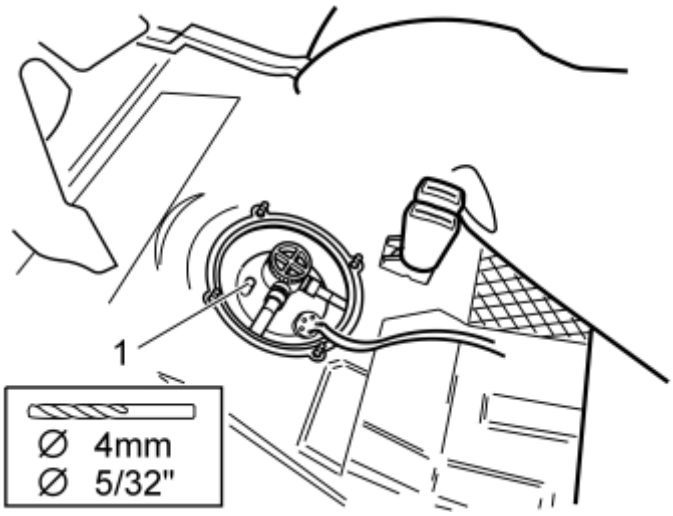

Fig. 653: Identifying Drill Area And Dimensions
Courtesy of VOLVO CARS CORPORATION

- Drill out the connection (1) in the tank unit with a **4 mm (5/32")** diameter drill bit. Apply Vaseline to the drill bit to prevent shavings falling into the fuel tank.

CAUTION: Use a compressed air power drill. An electric power drill must not be used due to the risk of sparks.

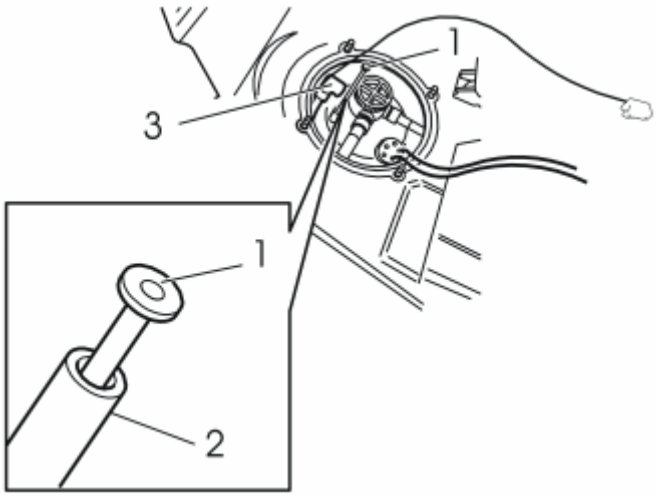

Fig. 654: Installing Fuel Line Assembly
Courtesy of VOLVO CARS CORPORATION

- Insert the pipe (1) from the kit into the connection (2). Press the pipe down until it is in contact with the connection. If necessary, use a hammer and drift to drive down the pipe.
- Take the fuel line with electrical line from the kit. Affix protective tape over the hole on the end of the fuel line that is to be inserted through the hole in the floor (the one with the short, unconnected line end).
- Guide the whole line assembly (3) between the floor and the fuel tank out to the right-hand side of the car.

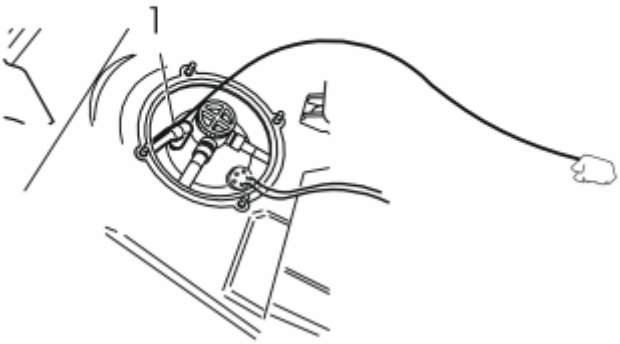

Fig. 655: Installing Quick-Release Connector
Courtesy of VOLVO CARS CORPORATION

- Press the quick-release connector (1) onto the connection until a click is heard. Check that the quick-release connector is secure.

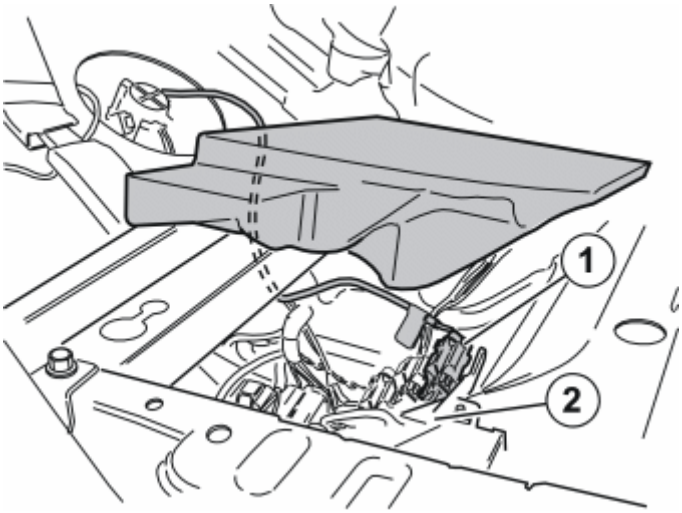

Fig. 656: Routing And Installing Cable
Courtesy of VOLVO CARS CORPORATION

Applies to cars with two rows of seats

- Carefully bend up the end of the styrofoam insulation.
- Place a spacer underneath.
- Route the line previously routed together with the fuel line under the seat frame and connect it to the front connector (1) in the contact bridge (2).

Applies to cars with two rows of seats

- Remove the spacer and bend down the styrofoam insulation.
- Place the line in the holder in the tank unit cover.
- Reinstall the tank unit cover and secure with the four nuts.
- Refit the styrofoam insulation panels.

Applies to cars with three rows of seats

- Reinstall the air duct.
- Fold back the carpet.

Applies to cars with three rows of seats

- Reinstall the air nozzles under the outer seats.
- Reinstall the seats.

CAUTION: Exercise care when lifting the seats into the passenger compartment so the mountings do not damage the door panels.

- Plug in the connector for the center console.
- Install the mounting screws for the seats and torque tighten them to **48 Nm (35 lbf. ft.)** .
- Refit the panels and the covers over the seat mountings.
- Refit the panels over the joints between the door sills.

Applies to cars with two rows of seats

- Refit the front storage box.
- Refit the front floor hatch.

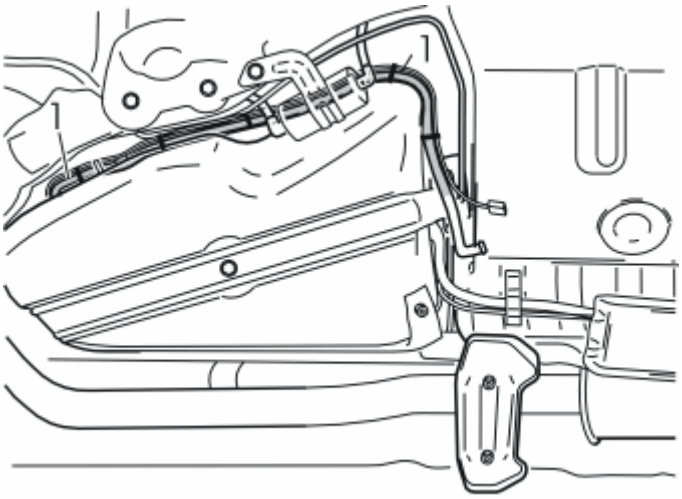

Fig. 657: Identifying Fuel Hose & Cable Harness At Rear Edge Of Fuel Tank
Courtesy of VOLVO CARS CORPORATION

- Route the fuel hose with wiring harness (1) forward in the rear edge of the fuel tank. Route it along the fuel tank's right side and forward. Let it hang down.

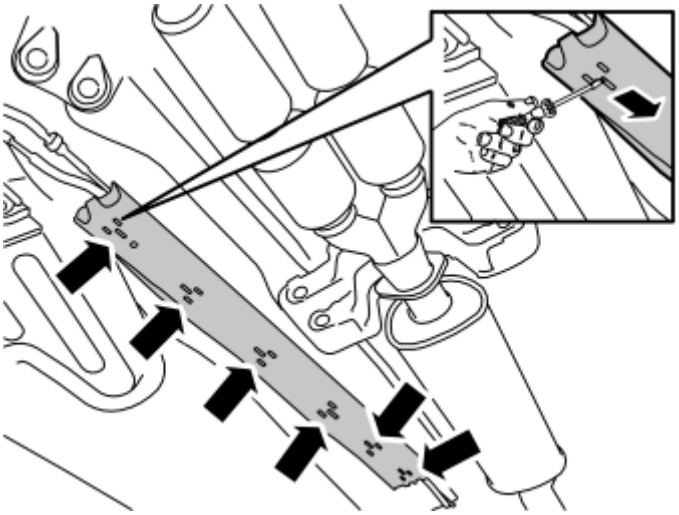

Fig. 658: Removing Fuel Line Rail
Courtesy of VOLVO CARS CORPORATION

- Undo the rail for the fuel line by inserting a small screwdriver in the small hole between the rail and the clips. Move the clips in the same direction as the oblong hole in the rail. The rear clip has a small spot on the clip where you position the screwdriver and move it forward.

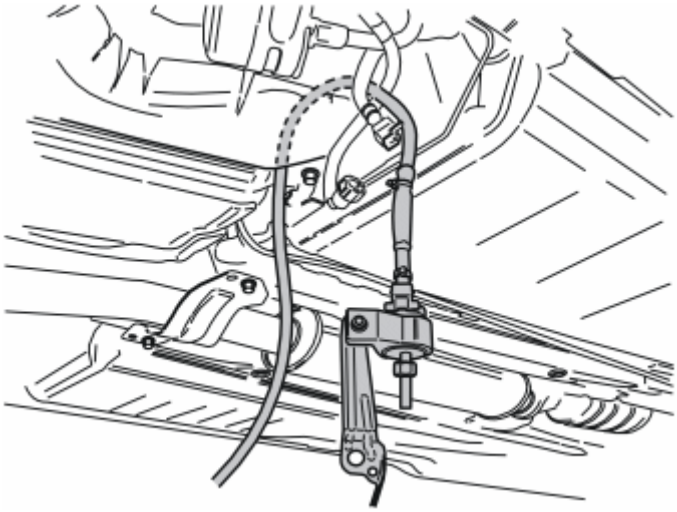

Fig. 659: Identifying Cable At Front Edge & Right-Hand Side Of Fuel Tank
Courtesy of VOLVO CARS CORPORATION

- Take the fuel pump with line from the kit. Insert the line in the front edge of the fuel tank's right side.
- Route the fuel line so that is next to the existing fuel line in the cut-out on top of the fuel tank. Then position the fuel line on the right-hand side of the wiring which runs to the engine compartment.
- Pull up the wiring so that the fuel pump (FP) is positioned as approximately as illustrated.

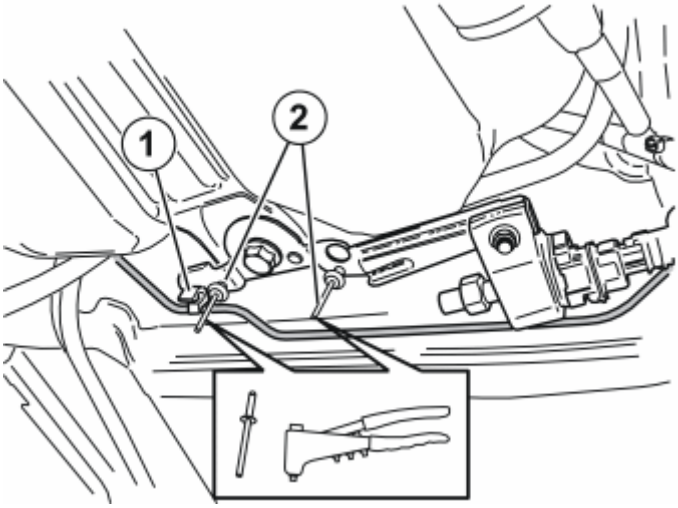

Fig. 660: Identifying Brake Pipe Clamp
Courtesy of VOLVO CARS CORPORATION

- Remove the brake pipe (1) from the clamp.
- Take the fuel pump with bracket and place the bracket on the top of the fuel tank mounting bracket in front of the small holes for the blind rivets.
- Blind rivet the fuel pump bracket using two metal blind rivets (2).

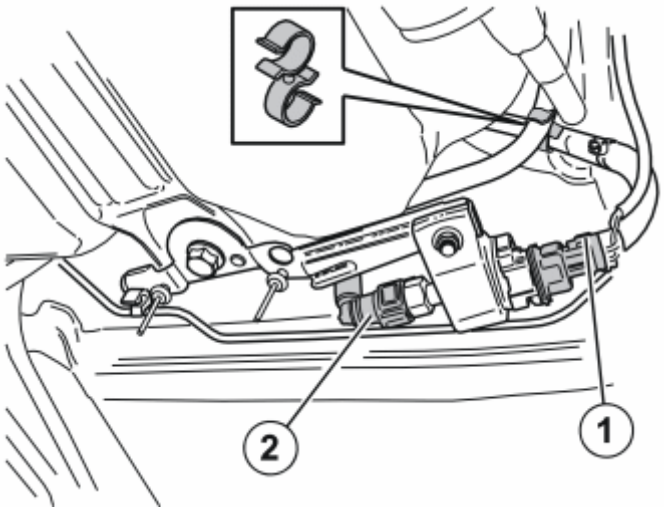

Fig. 661: Identifying Double Clamp & Fuel Lines From Fuel Pump
Courtesy of VOLVO CARS CORPORATION

- Use a double clamp from the kit to clamp the two fuel lines from the fuel pump to each other at the two blue markings on the fuel lines.
- Press the brake pipe back into the clamp.
- Install the two screws holding the tank. Install the screw to the fuel filter if it was detached. Torque tighten the five screws to **24 Nm (18 lbf. ft.)** .
- Connect the connector (1) from the pre-routed power cable to the fuel pump (FP).

- Connect the quick-release connector (2) on the pre-routed fuel line to the fuel pump (FP).

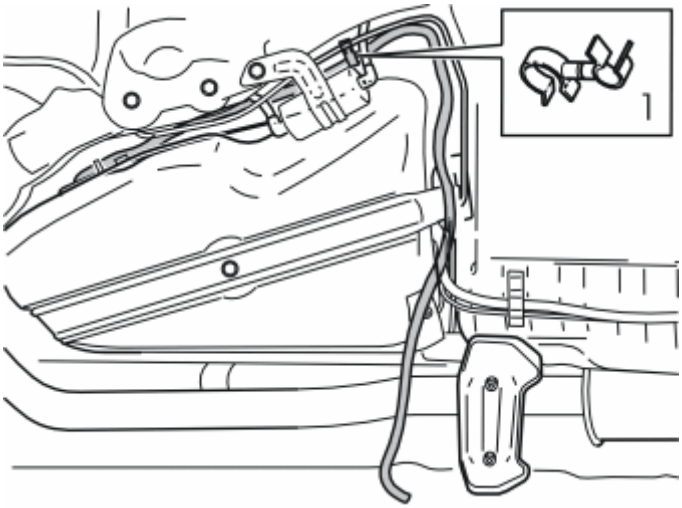

Fig. 662: Identifying Brake Pipe Fuel Line
Courtesy of VOLVO CARS CORPORATION

- Clamp in the fuel line at the brake pipe using a double clamp (1).

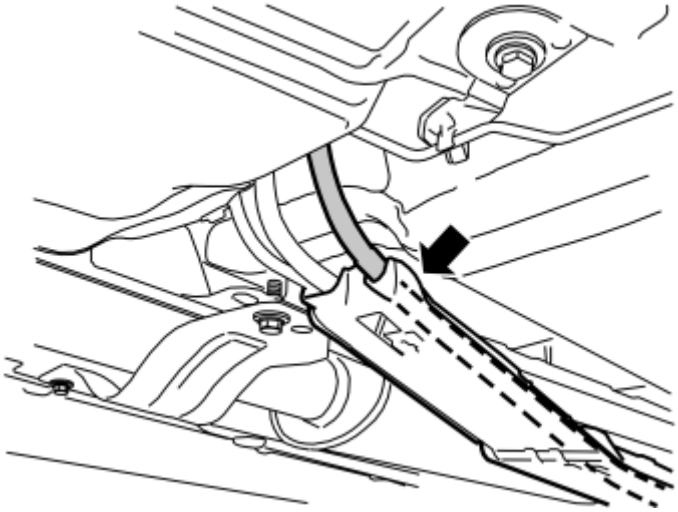

Fig. 663: Installing Fuel Hose
Courtesy of VOLVO CARS CORPORATION

- Press into place the fuel hose from the recently installed fuel pump (FP). Press into place in the bottom of the rail and forwards, in the cut-out furthest to the right.

NOTE: **The marking on the fuel hose must be 25 mm inside the edge of the rail where the fuel hose enters the rail.**

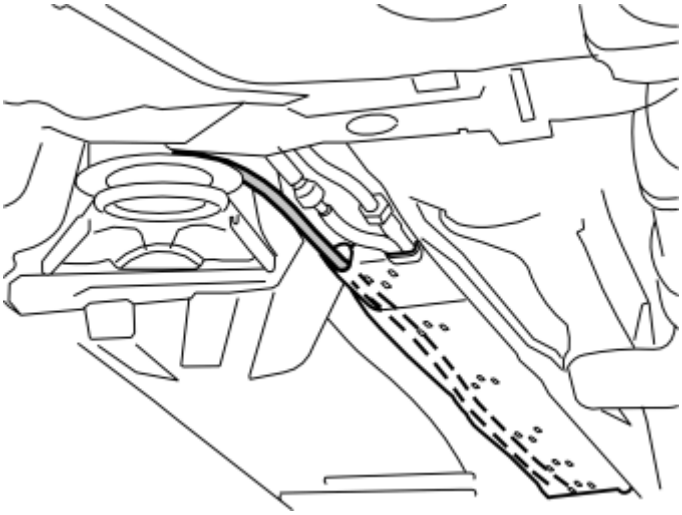

Fig. 664: Removing Retaining Clip For The Fuel Rail
Courtesy of VOLVO CARS CORPORATION

- Slide back the retaining clip for the rail. Press the rail against the car body. Ensure that the rail is securely installed.

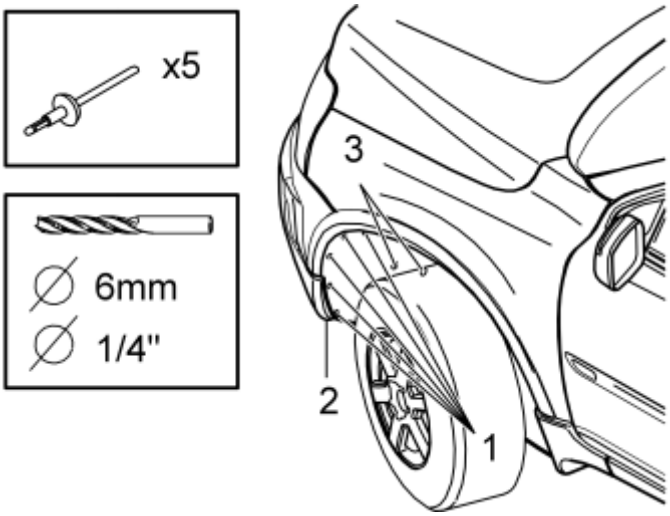

Fig. 665: Identifying Dill Area And Dimensions
Courtesy of VOLVO CARS CORPORATION

- Remove the left front wheel.
- Drill off the heads of the five blind rivets (1) holding in the wing liner using a **6 mm (1/4")** diameter drill bit.

Remove:

- the clip (2) in the lower edge of the bumper
- the plastic nuts (3) holding the wing liner in place

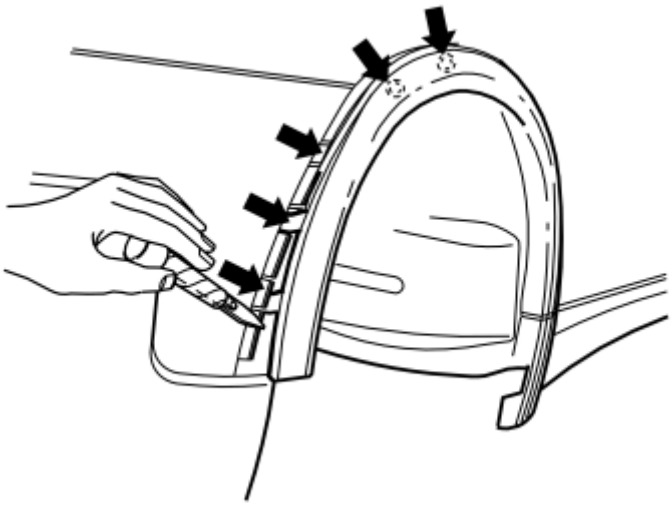

Fig. 666: Removing Wing Extension
Courtesy of VOLVO CARS CORPORATION

- Undo the wing extension by carefully prying loose the lower corner using a weatherstrip tool.
- Pull it loose up to the highest point of the wheel housing until the three catches in the lower edge and the two clips a little higher up have released.

Applies to cars with the accessory side decor

- Bend aside only the retaining lugs on the side decor of the front wing so that the edge of the wing liner can be released.

NOTE: Do not undo the side decor of the front wing.

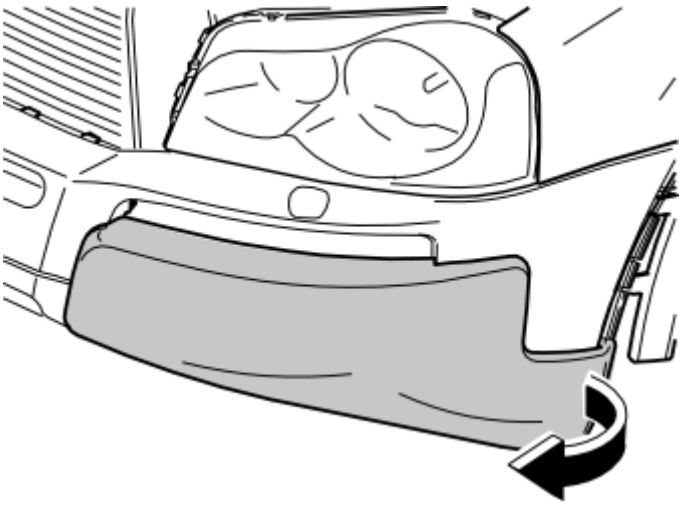

Fig. 667: Removing Bumper Left Hand Panel
Courtesy of VOLVO CARS CORPORATION

- Remove the bumper's left-hand panel by carefully pulling it away at the left-hand lower edge until the

two catches down on the inside release. Continue to pull until the clips release all around.

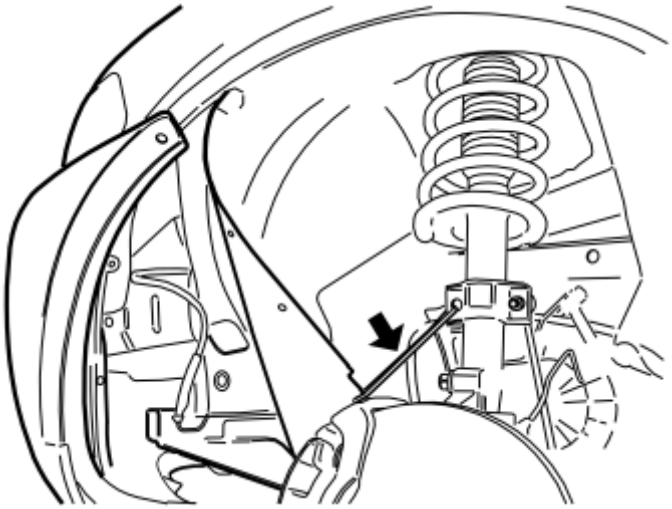

Fig. 668: Bending Aside Wheel Wing Liner
Courtesy of VOLVO CARS CORPORATION

- Bend aside the wing liner and secure it with a tie strap or the like.
- Remove the remains of the rivets.

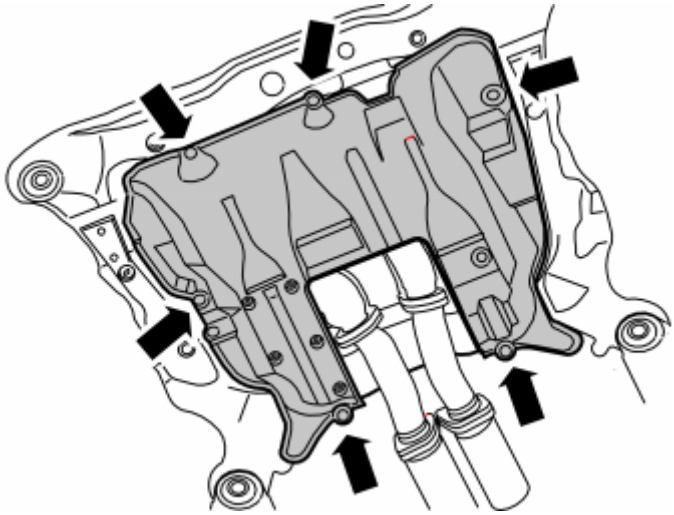

Fig. 669: Removing Engine Splash Guard
Courtesy of VOLVO CARS CORPORATION

- Remove the six screws and the engine splash guard.

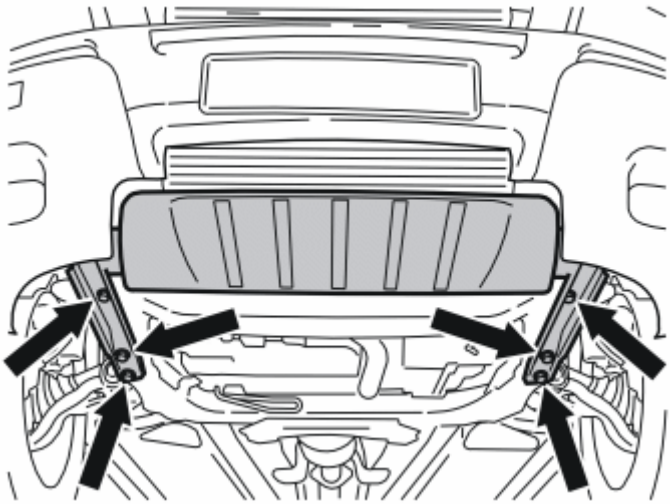

Fig. 670: Removing Skid Plate
Courtesy of VOLVO CARS CORPORATION

- Remove the front splash guard. First remove the six screws on the underside.
- Then lift the splash guard up so that the front/upper mounting's guide sleeve releases. Forcefully push the left-hand side of the skid plate forward towards the bumper cover. Push the corner forward until the splash guard's left-hand fixture mounting lug releases from the subframe.
- Repeat on the right-hand side.

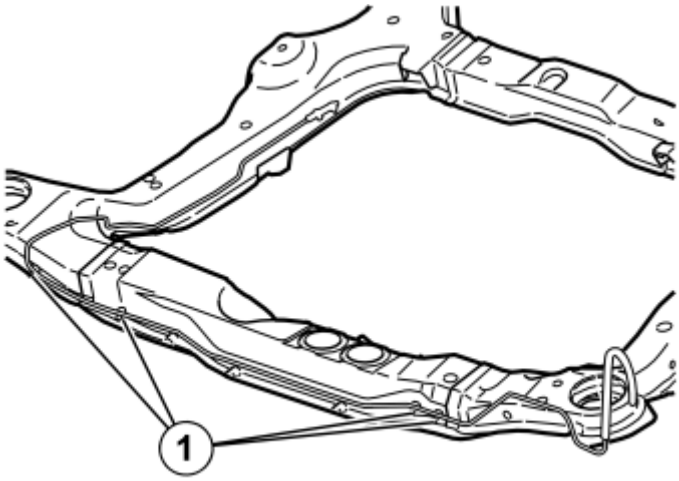

Fig. 671: Sub-Frame
Courtesy of VOLVO CARS CORPORATION

- Insert the fuel pipe with the four pre-mounted clips (1) from the front, between the engine and the subframe. Press it in with the clips in the front edge of the subframe. There is not much space for inserting the fuel pipe and it requires bending and twisting slightly to reach its position.

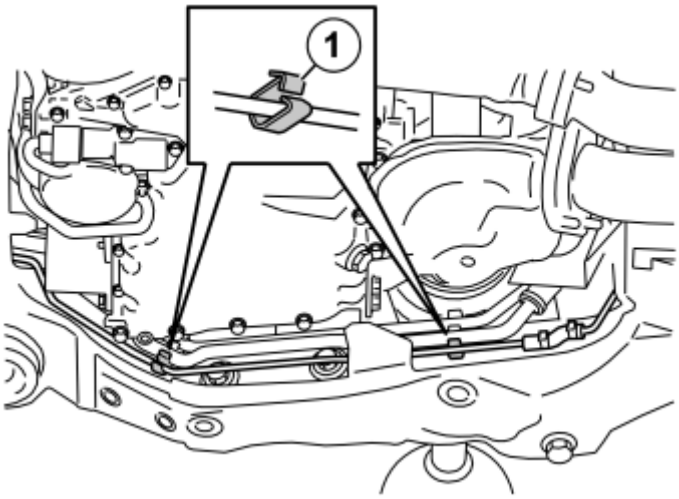

Fig. 672: Installing Fuel Pipe
Courtesy of VOLVO CARS CORPORATION

- Press in the fuel pipe into the bottom of the two clips (1) that hold the servo pipes.
- Check that the fuel pipe does not catch on the subframe. Check that the fuel pipe does not rub against pipes or screw heads for the suspension.

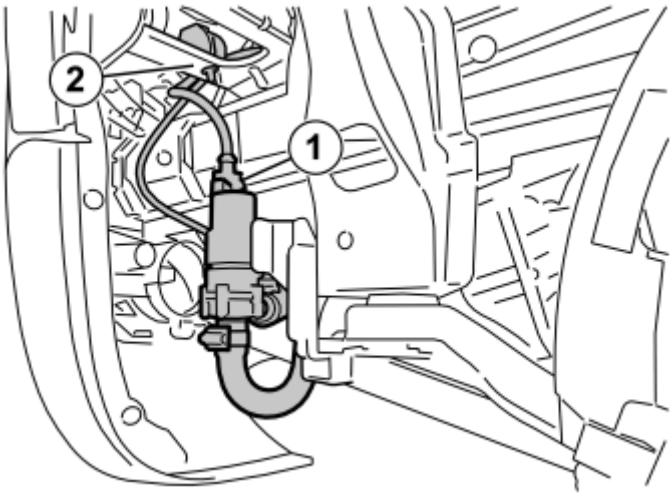

Fig. 673: Identifying Circulation Pump
Courtesy of VOLVO CARS CORPORATION

- Unplug the connector (1) on the circulation pump.
- Install a sealing plug in the connector and secure the cable above the top of the panel (2) using a tie strap.

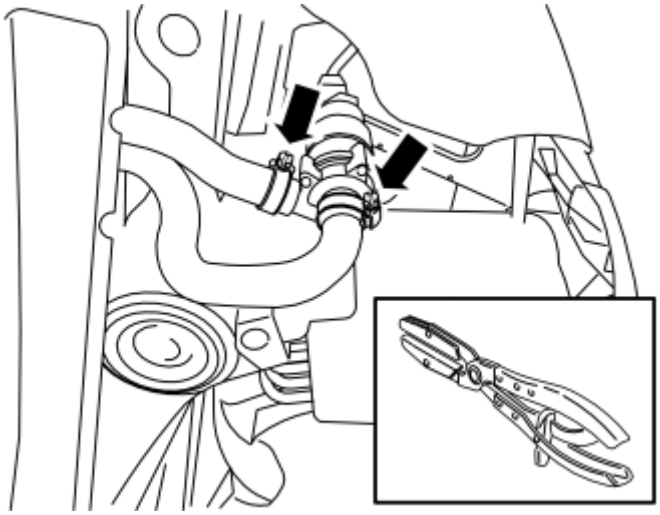

Fig. 674: Removing Hose Clamps Using Hose Pliers
Courtesy of VOLVO CARS CORPORATION

- Install hose pliers on the hose at each connection.
- Detach the hose clamps and remove the hoses.

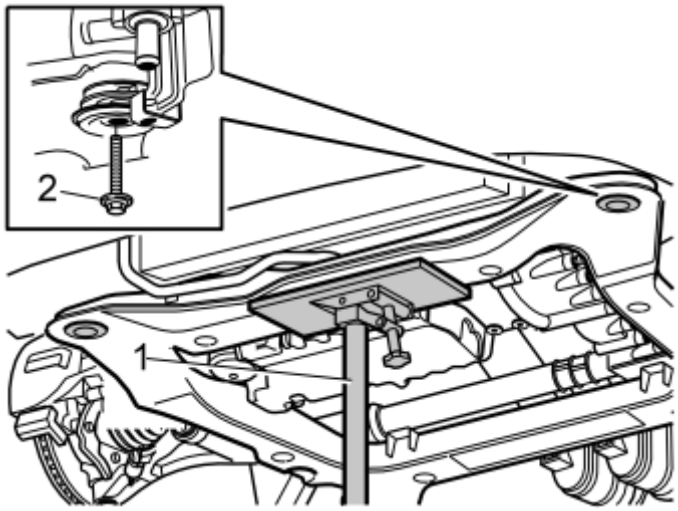

Fig. 675: Supporting Sub-Frame
Courtesy of VOLVO CARS CORPORATION

- Install a workshop hoist (1) under the front edge of the subframe.
- Take the weight off the subframe.
- Remove the screw and circulation pump with bracket from the subframe mounting.

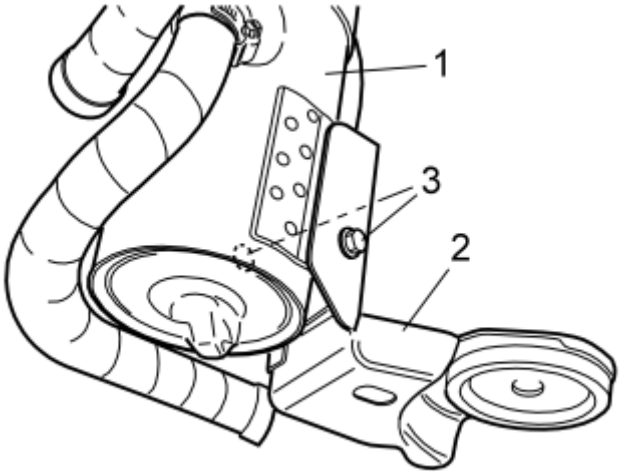

Fig. 676: Identifying Heater And Bracket
Courtesy of VOLVO CARS CORPORATION

- Install the heater (1) on the bracket (2) with two M8 screws (3). Tighten.

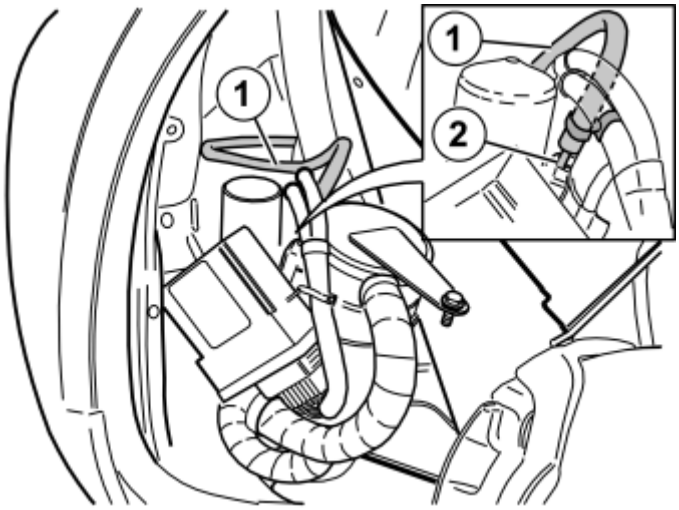

Fig. 677: Identifying Fuel Hose Clamp & Inlet
Courtesy of VOLVO CARS CORPORATION

- Take a small hose clamp for the fuel line from the kit. Install the clamp on the fuel hose (1) from the fuel pipe on the subframe.
- Remove the protective cap on the inlet (2).
- Raise the heater into its installation position.
- Press in the fuel line on the inlet (2) on the heater and squeeze the hose clamp together.

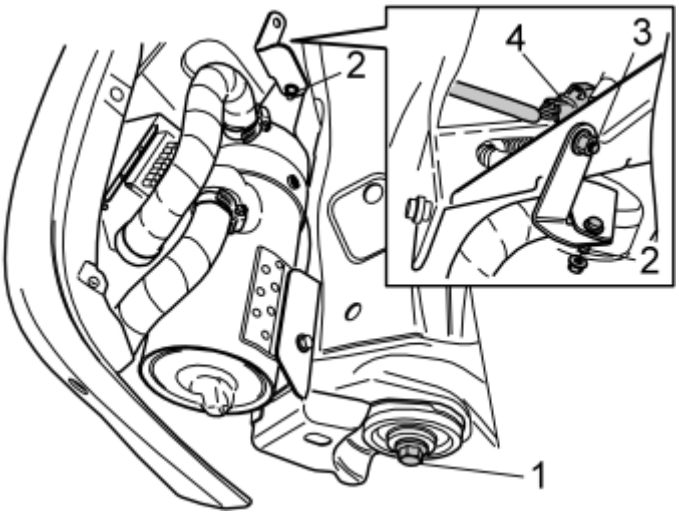

Fig. 678: Installing Bracket
Courtesy of VOLVO CARS CORPORATION

- Take a new screw (1) from the kit and tighten in the heater on the subframe mounting. Do not tighten hard yet.
- Take the metal bracket and two nuts from the kit.
- Position one of the metal bracket's retaining lugs on the stud (2) of the heater and fit the nut. Tighten loosely.
- Position the other retaining lug of the bracket on the stud (3) and fit the nut.
- Tighten the nuts.
- Torque tighten the screw (1) to **105 Nm (78 lbf. ft.)** . Then angle tighten it to **120°** or **max. 280 Nm (206 lbf. ft.)** .
- Remove the protective cap from the pre-routed connector (4). Press in the catch on the top and pull it off.
- Connect the cable from the heater to the connector.

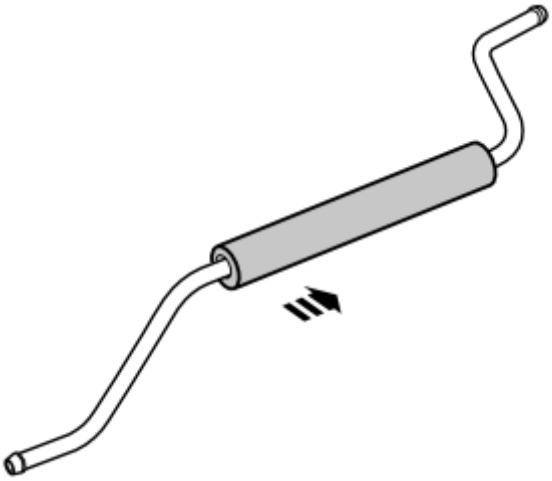

Fig. 679: Installing Chafe Guard On Short Fuel Pipe
Courtesy of VOLVO CARS CORPORATION

- Thread the chafe guard onto the short fuel pipe.

Illustration A

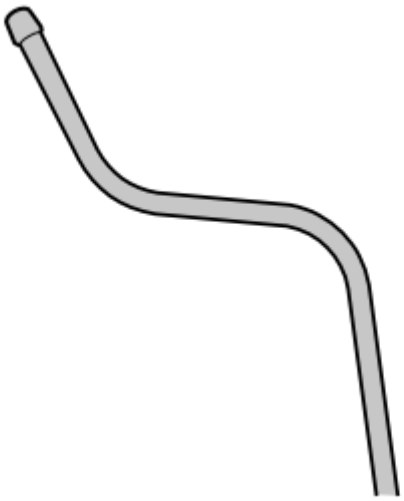

Fig. 680: Short Fuel Pipe Illustration A
Courtesy of VOLVO CARS CORPORATION

- Insert the end of the short fuel pipe that is bent at two different levels (illustration A), under the steering gear and anti-roll bar, on the top of the subframe's right-hand rear corner (illustration B).

Illustration B

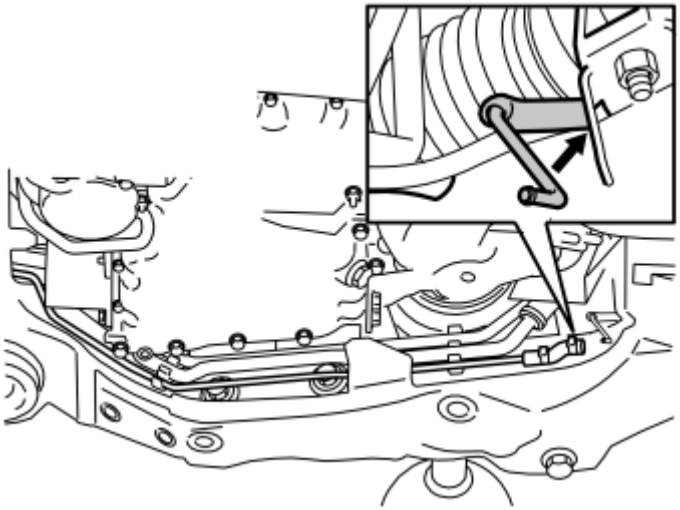

Fig. 681: Short Fuel Pipe Illustration B
Courtesy of VOLVO CARS CORPORATION

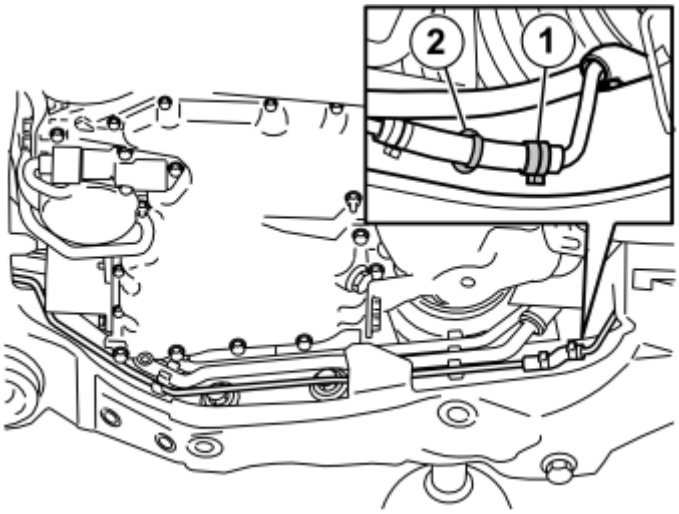

Fig. 682: Securing Short Fuel Pipe And Fuel Line
Courtesy of VOLVO CARS CORPORATION

- Take a hose clamp (1) and thread it on the short fuel line on the subframe.
- Connect the short fuel pipe to the fuel line. Slide the pipe into the fuel line. Slide the pipe in so far that the two pipes are in contact with each other. This prevents air pockets from forming.
- Squeeze the hose clamp together.
- Take a tie strap with clip and install the clip in the hole (2) on the subframe. Tighten the tie strap around the fuel line.

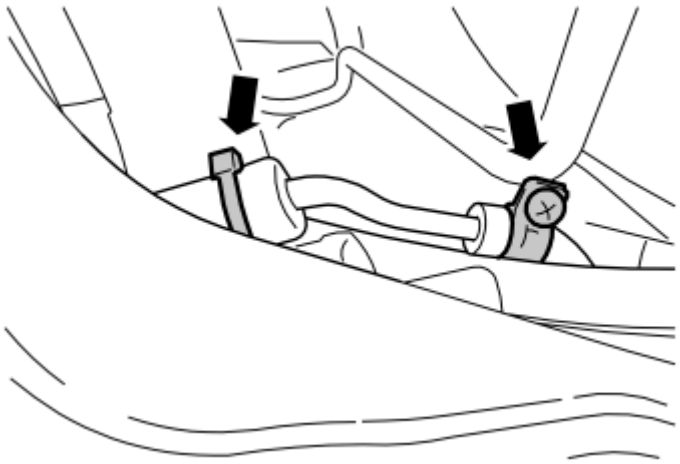

Fig. 683: Identifying Cable Tie And Hose Clamp
Courtesy of VOLVO CARS CORPORATION

- Thread a hose clamp on the fuel line.
- Connect the fuel line to the short fuel pipe.
- Tighten the hose clamp.
- Install two small tie straps in each end of the chafe guard. Check that the pipe does not chafe against the

anti-roll bar mounting.

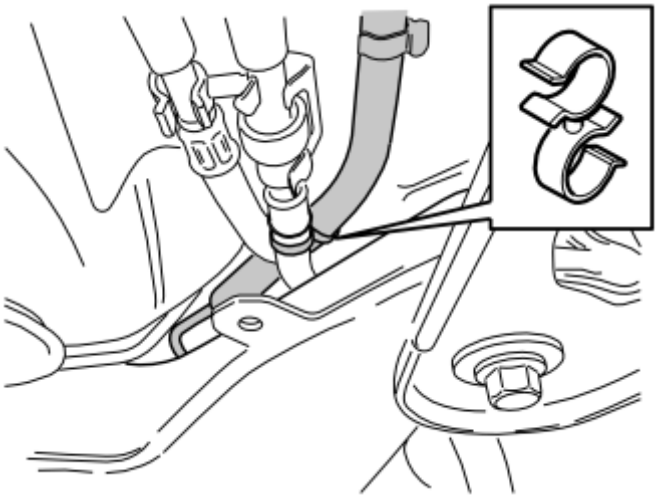

Fig. 684: Securing Heater Fuel Line Using Double Clamps
Courtesy of VOLVO CARS CORPORATION

- Secure the heater's fuel line by the car's fuel lines using two double clamps. Check that the fuel line does not chafe against any sharp edges.

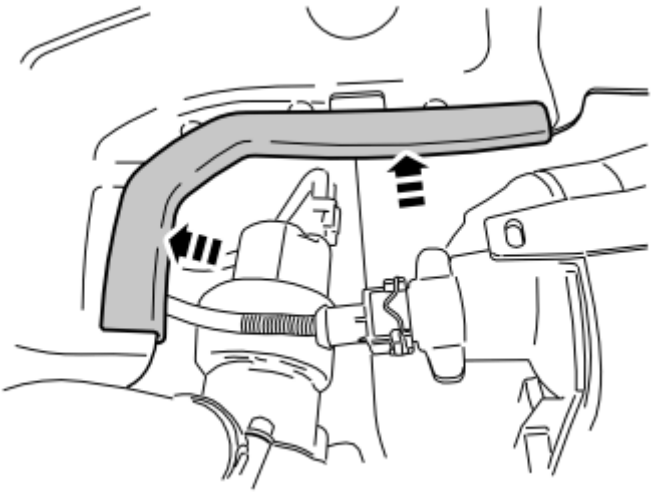

Fig. 685: Installing Edge Protection Strip
Courtesy of VOLVO CARS CORPORATION

- Install an edge protection strip on the panel edge where the heater hoses shall run from the engine compartment out to the heater.

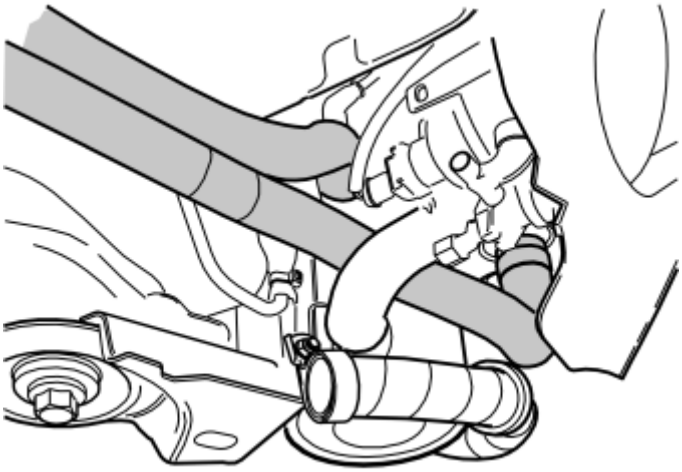

Fig. 686: Identifying Heater Hoses
Courtesy of VOLVO CARS CORPORATION

- Connect the heater hoses to the heater.
- Tighten the hose clamps. Make sure that none of the hose clamps chafe against the heater hoses.
- Remove the hose pliers.

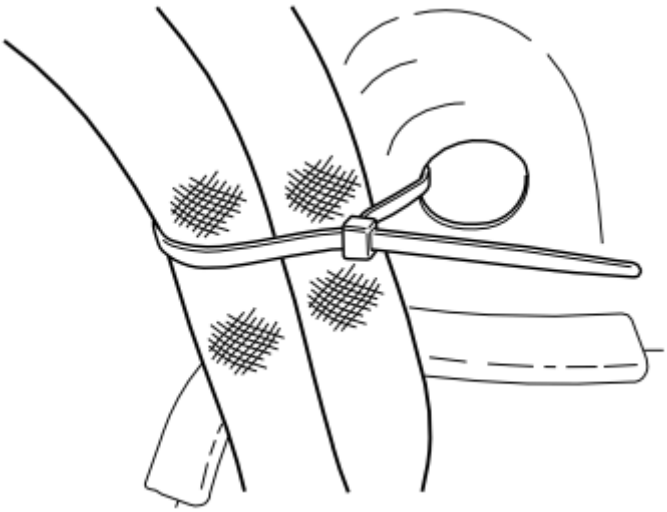

Fig. 687: Securing Hoses Using Tie Straps
Courtesy of VOLVO CARS CORPORATION

- Secure the hoses using a tie strap threaded through two holes in the member.

NOTE: Do not tighten so hard that the hoses are deformed.

- Reinstall the skid plate and torque tighten to **50 Nm (37 lbf. ft.)** .
- Reinstall the engine splash guard and torque tighten to **25 Nm (18 lbf. ft.)** .
- Fold back the wing liner. Install the nuts and tighten.

- Press the wing extension into place.
- Take blind rivets from the kit to rivet the front edge of the wing liner into place.
- Refit the bumper panel.
- Reinstall the clip in the lower edge of the bumper.
- Remount the wheel and tighten the bolts to **140 Nm (103 lbf. ft.)**
- Fill with fluid.
- Start the engine and bleed the cooling system.
- Program the software and test run the heater in accordance with the service information in VIDA (Volvo scan tool).

FUEL-DRIVEN HEATER, B6324 (B6324S, B6324S5, TF-80SC; B6324S, TF-80SC AWD; 2007-2012)

FUEL-DRIVEN HEATER

NOTE: This accessory requires software unique to the car.

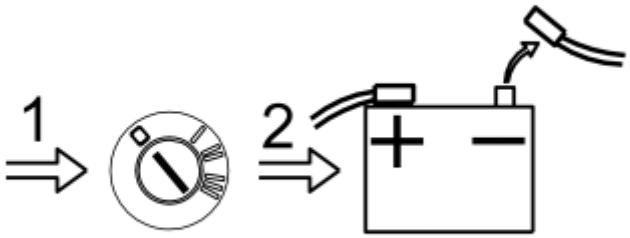

Fig. 688: Disconnect Battery Negative Lead
Courtesy of VOLVO CARS CORPORATION

- Turn the ignition switch to position 0.
- Disconnect the battery negative lead.

NOTE: Wait at least five minutes before disconnecting the connectors or removing other electrical equipment.

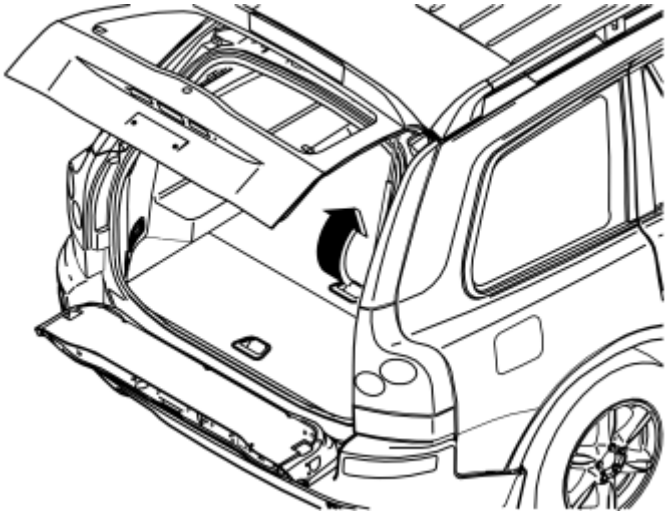

Fig. 689: Removing Front Floor Hatch
Courtesy of VOLVO CARS CORPORATION

Applies to cars with two rows of seats

- Remove the front floor hatch by first lifting it up a bit and then pulling it out of the mountings in the front edge.

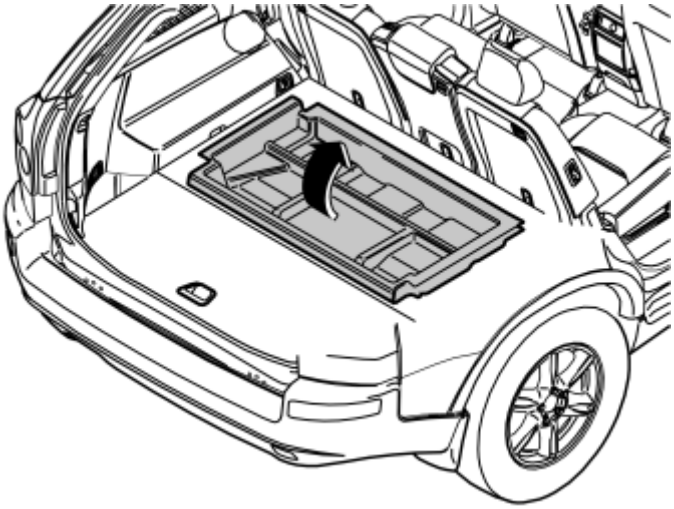

Fig. 690: Removing Front Storage Box
Courtesy of VOLVO CARS CORPORATION

Applies to cars with two rows of seats

- Lift out the front storage box.

NOTE: **Removal of the right-hand seat in the second row applies to all cars. For cars with three rows of seats, the left-hand seat and center seat of the second row must also be removed.**

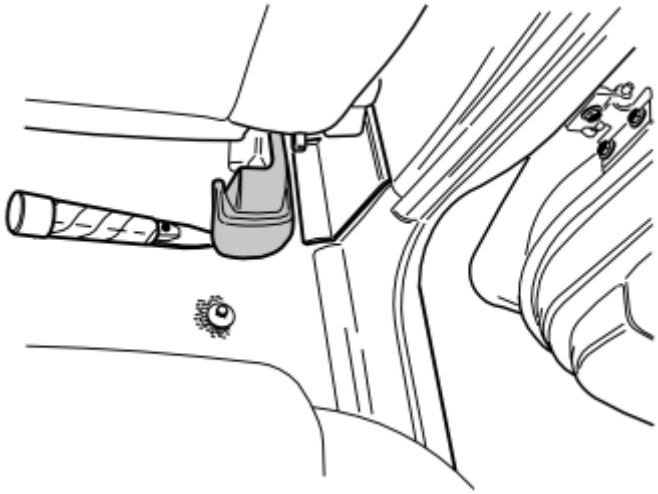

Fig. 691: Prying Right-Hand Rear Mounting Of Cover Panel
Courtesy of VOLVO CARS CORPORATION

- Remove the panel on the right rear mounting on the right-hand front seat. Pry up the rear edge of the panel slightly and then pull rearwards and upwards.

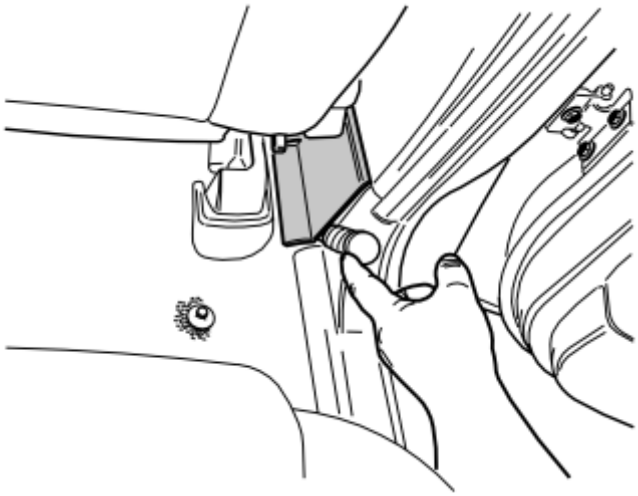

Fig. 692: Prying Away Cover Panel Over Joint Between Door Sills On Right-Hand Side, At Lower Edge, Using A Weatherstrip Tool
Courtesy of VOLVO CARS CORPORATION

- Slide the seats of the first row as far forward as possible.
- Carefully pry loose and remove the panel over the joint between the door sills on the right side.

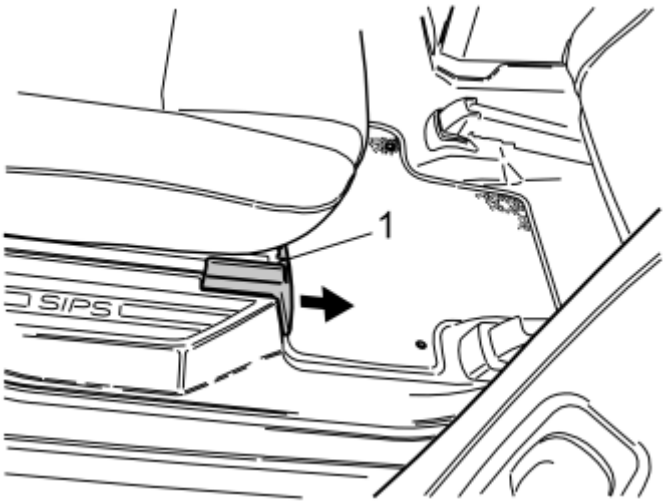

Fig. 693: Pushing Up Catch On Top Side
Courtesy of VOLVO CARS CORPORATION

- Remove the panel for the right front seat mounting of the second row's right-hand seat by pressing down the catch (1) on top and pulling the panel forward. Remove the screw underneath.

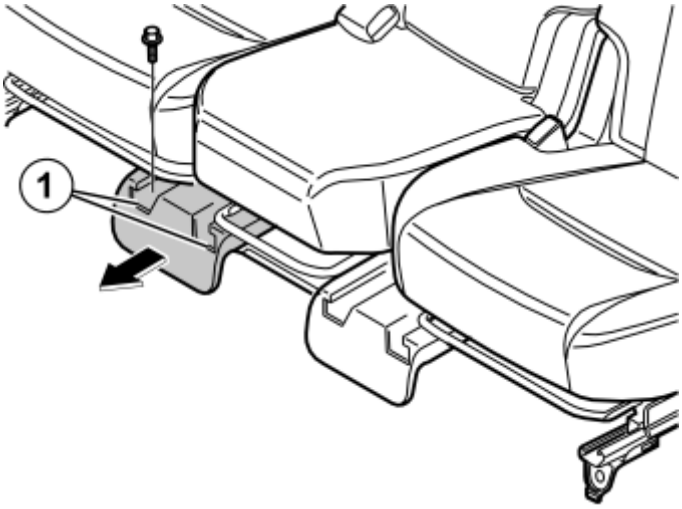

Fig. 694: Removing Front Seat Mountings
Courtesy of VOLVO CARS CORPORATION

- Remove the panel for the front seat mountings of the second row's right-hand seat/center seat by pressing down the catches (1) on top and pulling the panel forward. Remove the screw for the right-hand seat.

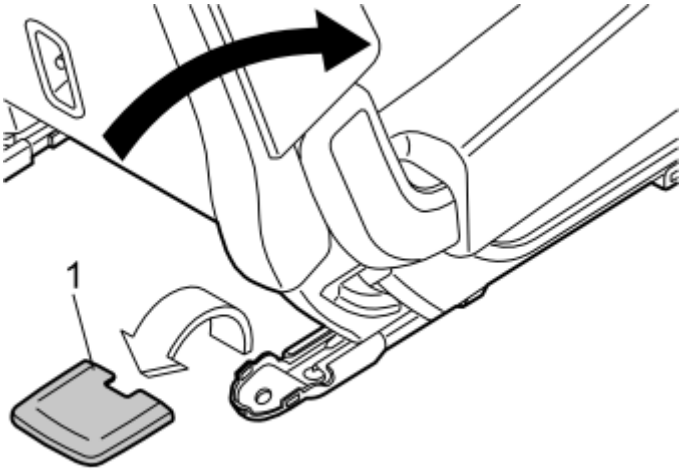

Fig. 695: Seat Mounting Cover
Courtesy of VOLVO CARS CORPORATION

- Lower the backrest of the right-hand seat in the second row.
- Remove the cover (1) of the rear seat mountings of the right-hand seat by prying the rear edge loose. Remove the screws.

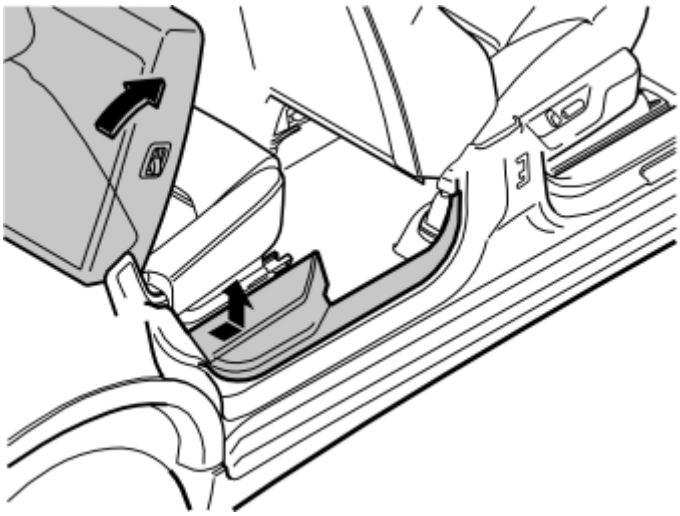

Fig. 696: Removing Sill Trim Panel
Courtesy of VOLVO CARS CORPORATION

- Undo the sill panel of the right rear door. Pull the rear edge until the clips release. Continue forward until the remaining clips release.
- Unhook the sill trim panel from the B-post panel. Place the sill trim panel in the cargo compartment.
- Remove the seat.

CAUTION: Exercise care when lifting the seats out of the passenger compartment so the mountings do not damage the door panels.

Applies to cars with three rows of seats

- Remove the corresponding panels and screws on the left-hand side and for the left-hand and center seat of the second row
- Remove the left-hand and center seat.

CAUTION: Exercise care when lifting the seats out of the passenger compartment so the mountings do not damage the door panels.

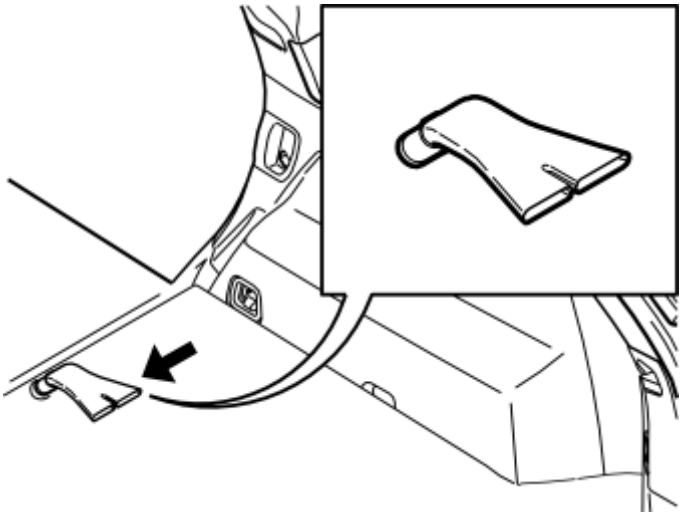

Fig. 697: Seat Mountings
Courtesy of VOLVO CARS CORPORATION

Applies to cars with three rows of seats

- Remove the air nozzles on the right and left-hand side.

Illustration A applies to cars with two rows of seats

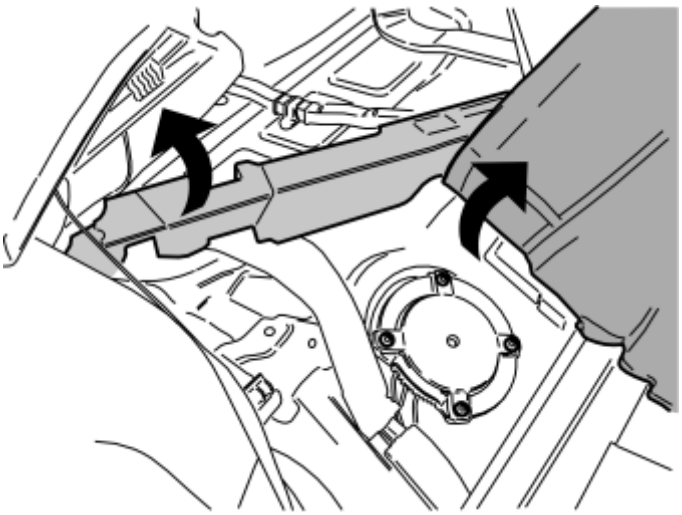

Fig. 698: Bending Aside Floor Mat And Carpet
Courtesy of VOLVO CARS CORPORATION

- Bend aside the floor mat and secure it with the seat belt on the left-hand side.
- Carefully bend aside the styrofoam insulation to provide access to the cover of the tank unit.

CAUTION: Take care. The styrofoam insulation comes off easily.

Illustration B applies to cars with three rows of seats

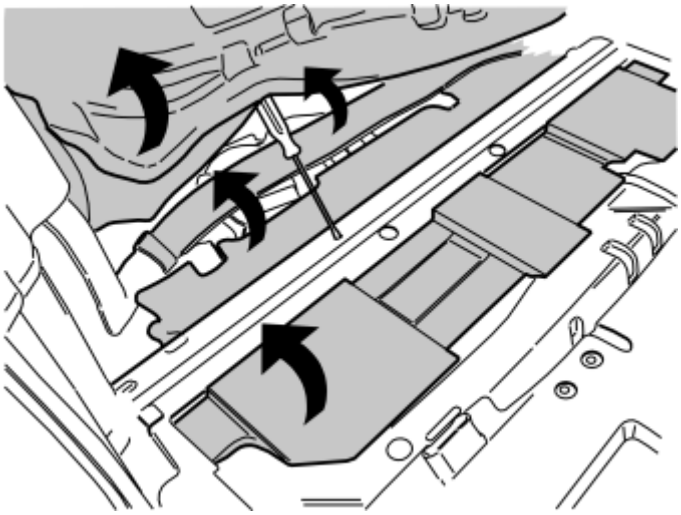

Fig. 699: Removing Insulation Panels
Courtesy of VOLVO CARS CORPORATION

- Bend aside the floor mat and the insulating mat.
- Use a screwdriver or the like to hold the mat in place.
- Remove the air duct.
- Remove both panels of styrofoam insulation.

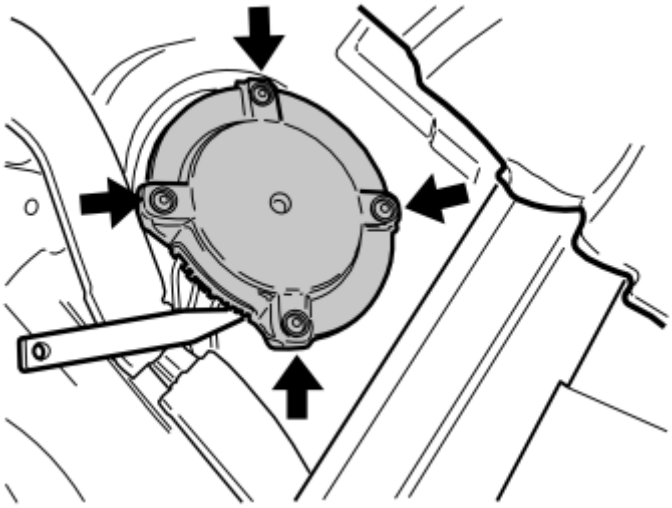

Fig. 700: Removing Tank Fitting Cover
Courtesy of VOLVO CARS CORPORATION

- Remove the four screws in the tank fitting cover.
- Carefully pry loose the cover using a weatherstrip tool.

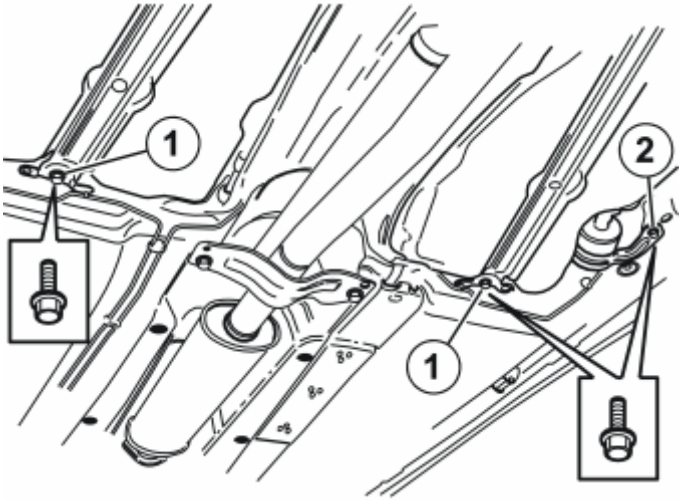

Fig. 701: Identifying Front Mounting & Fuel Filter Screws
Courtesy of VOLVO CARS CORPORATION

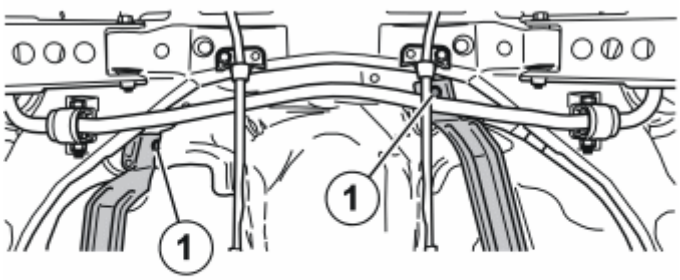

Fig. 702: Identifying Rear Mounting Screws
Courtesy of VOLVO CARS CORPORATION

- Remove the four screws (1) from the front and rear mountings of the fuel tank so that the tank is lowered a bit in order to fit a suction line to the fuel tank. If necessary, loosen and unscrew the fuel filter screw (2) to lower the fuel tank even more.

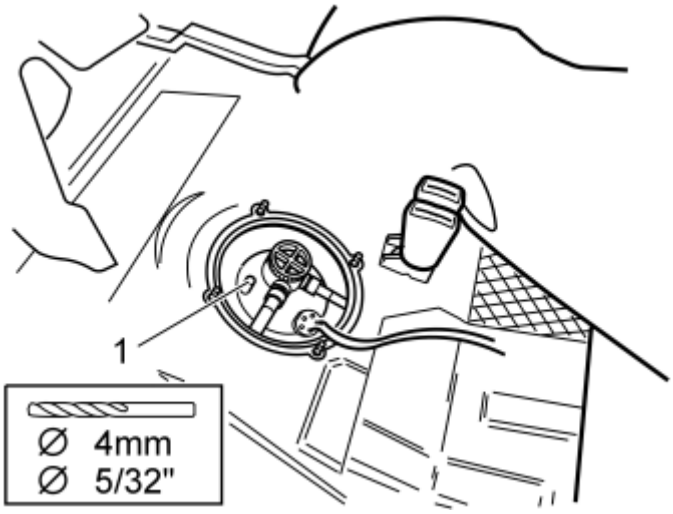

Fig. 703: Identifying Drill Area And Dimensions
Courtesy of VOLVO CARS CORPORATION

- Drill the connection (1) in the tank fitting with a **4 mm (5/32")** drill bit.

NOTE: Use a compressed air drill with a greased bit.

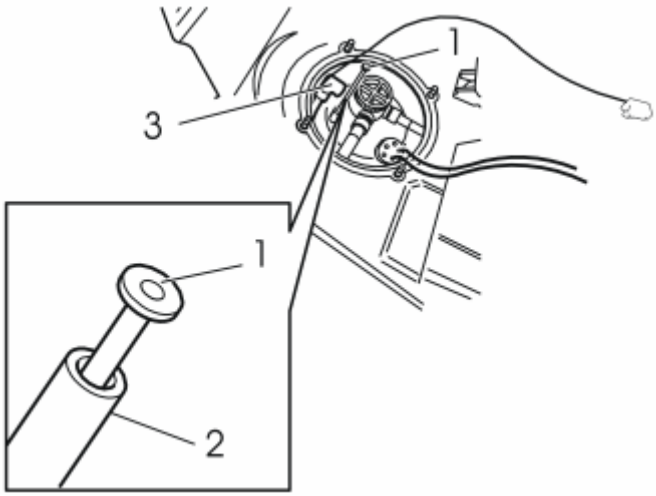

Fig. 704: Installing Fuel Line Assembly
Courtesy of VOLVO CARS CORPORATION

- Insert the pipe (1) from the kit down into the connection (2). Press the pipe down until it is flush with the connection.
- Take the fuel line with electrical line from the kit. Affix protective tape on the end of the fuel line that is to be inserted through the hole in the floor (the one with the short, unconnected line end).
- Insert the whole line assembly (3) between the floor and the fuel tank out to the right.

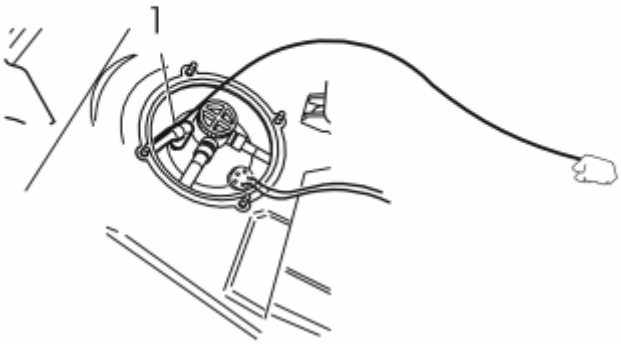

Fig. 705: Installing Quick-Release Connector
Courtesy of VOLVO CARS CORPORATION

- Press the quick-release connector (1) onto the connection until a click is heard. Check that the quick-release connector is secure.

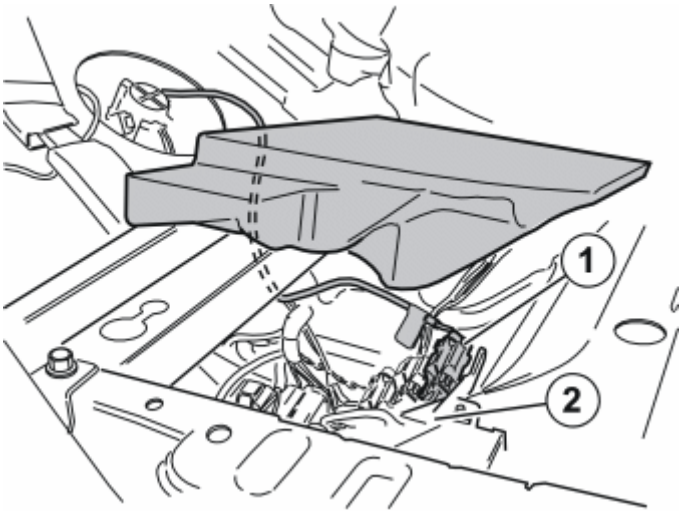

Fig. 706: Routing And Installing Cable Line
Courtesy of VOLVO CARS CORPORATION

Applies to cars with two rows of seats

- Carefully bend up the end of the styrofoam insulation.
- Place a spacer underneath.
- Route the line previously routed together with the fuel line under the seat frame and connect it to the front connector (1) in the contact bridge (2).
- **Applies to cars with two rows of seats:** Remove the spacer and fold down the styrofoam insulation.
- Place the line in the holder in the tank unit cover.
- Refit the tank fitting cover and secure with the four screws.
- Refit the styrofoam insulation panels.
- **Applies to cars with three rows of seats:** Refit the air duct.
- Fold back the carpet.
- **Applies to cars with three rows of seats:** Refit the air nozzles under the outer seats.
- Reinstall the seats.

CAUTION: Exercise care when lifting the seats into the passenger compartment so the mountings do not damage the door panels.

- Secure the seats, tightening the screws to **48 Nm (35 lbf. ft.)** .
- Refit the panels and the covers over the seat mountings.
- Refit the panels over the joints between the door sills.

Applies to cars with two rows of seats

- Refit the front storage box.
- Refit the front floor hatch.

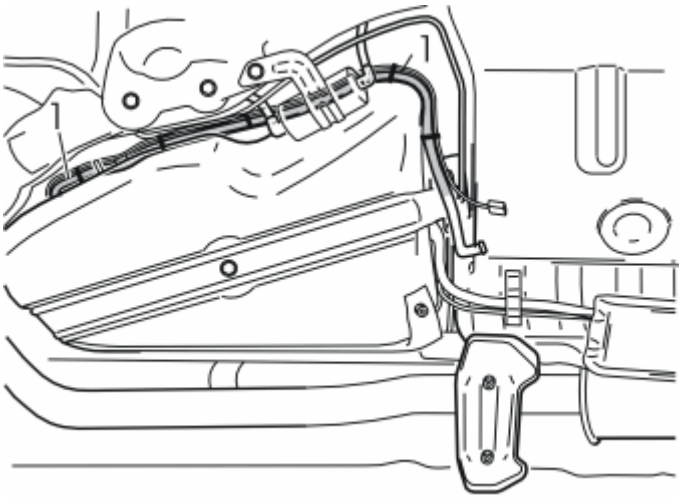

Fig. 707: Identifying Fuel Hose & Cable Harness At Rear Edge Of Fuel Tank
Courtesy of VOLVO CARS CORPORATION

- Route the fuel hose with wiring harness (1) forward in the rear edge of the fuel tank. Route it along the fuel tank's right side and forward. Let it hang down.

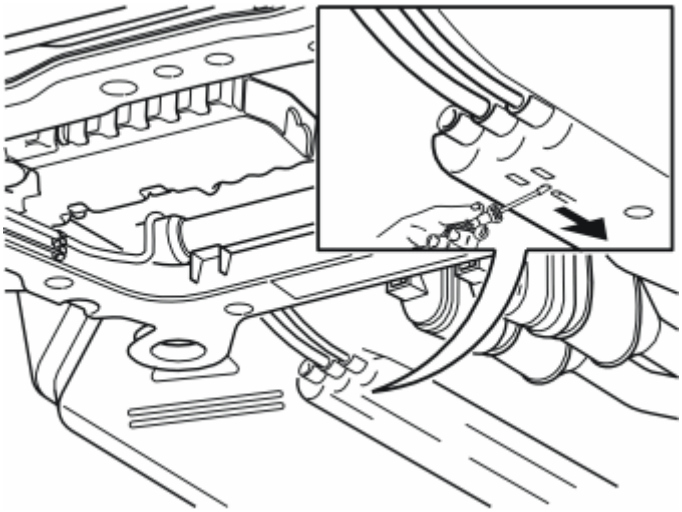

Fig. 708: Detaching Fuel Rail At Front Edge
Courtesy of VOLVO CARS CORPORATION

- Undo the rail for the fuel line by inserting a small screwdriver in the little hole between the rail and the yellow clip. Move the clip in the same direction as the oblong hole in the rail. The rear black clip has a little spot on the clip where you position the screwdriver and move it forward.

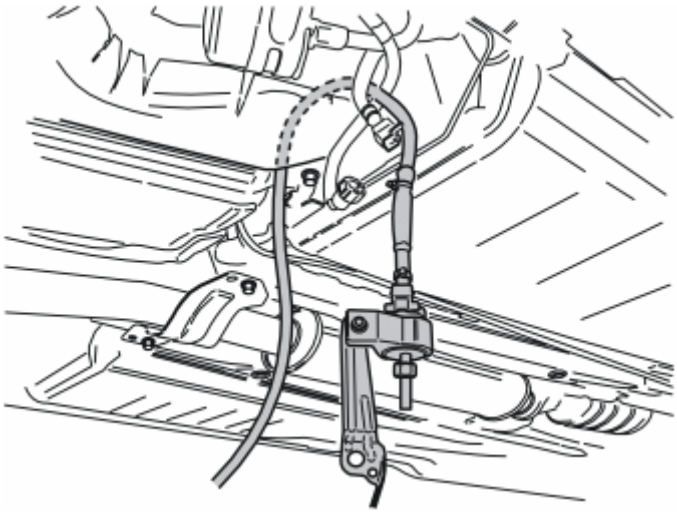

Fig. 709: Identifying Cable At Front Edge & Right-Hand Side Of Fuel Tank
Courtesy of VOLVO CARS CORPORATION

- Take the fuel pump with line from the kit. Insert the line in the front edge of the fuel tank's right side.
- Route the fuel line so that is next to the existing fuel line in the cut-out on top of the fuel tank. Then position the fuel line on the right-hand side of the wiring which runs to the engine compartment.
- Pull up the wiring so that the fuel pump (FP) is positioned as approximately as illustrated.

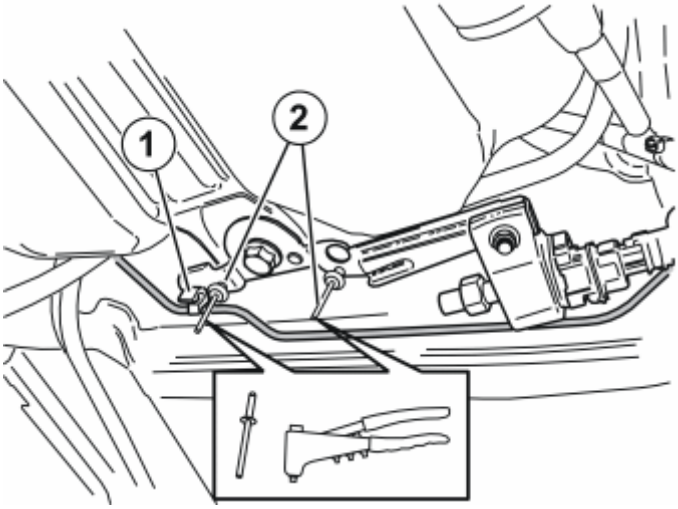

Fig. 710: Identifying Brake Pipe Clamp
Courtesy of VOLVO CARS CORPORATION

- Remove the brake pipe (1) from the clamp.
- Take the fuel pump with bracket and place the bracket on the top of the fuel tank mounting bracket in front of the small holes for the blind rivets.
- Use two metal pop rivets (2) from the kit to rivet the fuel pump bracket at the fuel tank mounting bracket.

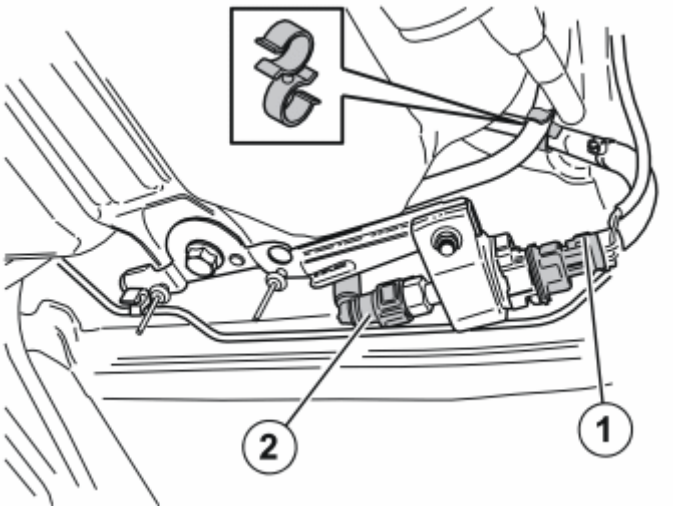

Fig. 711: Identifying Double Clamp & Fuel Lines From Fuel Pump
Courtesy of VOLVO CARS CORPORATION

- Use a double clamp from the kit to clamp the two fuel lines from the fuel pump to each other at the two blue markings on the fuel lines.
- Press the brake pipe back into the clamp.
- Tighten the four screws that hold the tank in place. Tighten the screw of the fuel filter if this was loosened. Tighten the screws to **24 Nm (18 lbf. ft.)** .
- Connect the connector (1) from the pre-routed power cable to the fuel pump (FP).
- Connect the quick-release connector (2) on the pre-routed fuel line to the fuel pump (FP).

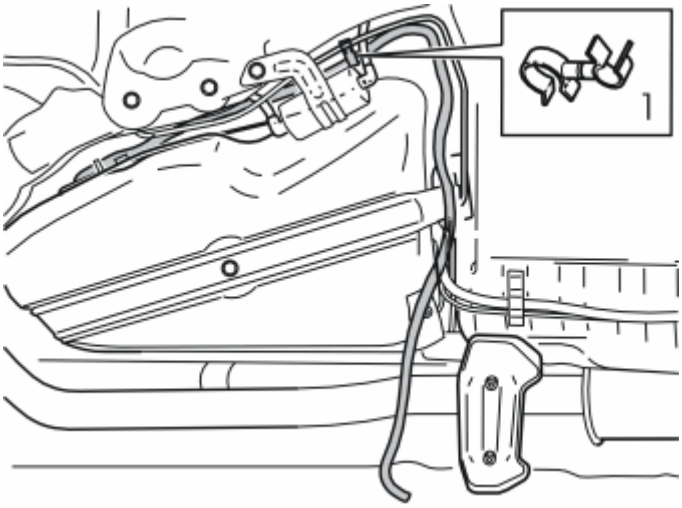

Fig. 712: Identifying Brake Pipe Fuel Line
Courtesy of VOLVO CARS CORPORATION

- Use a double clamp from the kit to clamp the fuel line at the fuel pipe at point (1).

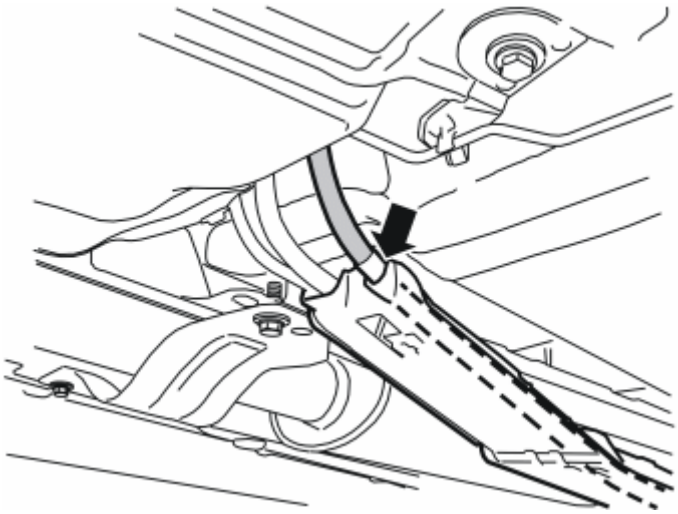

Fig. 713: Identifying Fuel Pump Hose
Courtesy of VOLVO CARS CORPORATION

- Press into place the fuel hose from the recently installed fuel pump (FP). Press into place in the bottom of the rail and forwards, in the cut-out furthest to the right.

NOTE: The marking on the fuel hose must be opposite the point where the fuel hose goes into the rail.

- Slide back the retaining clip for the rail. Press the rail against the car body. Ensure that the rail is securely installed.

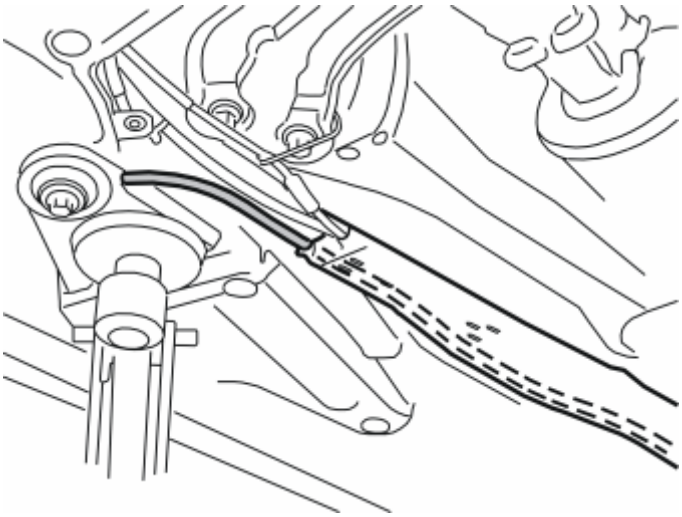

Fig. 714: Identifying Rail Retaining Clip
Courtesy of VOLVO CARS CORPORATION

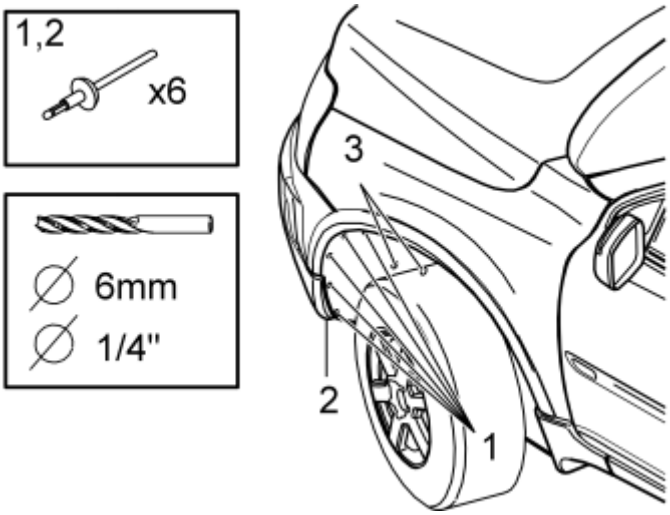

Fig. 715: Identifying Drill Area And Dimensions
Courtesy of VOLVO CARS CORPORATION

- Remove the left front wheel.
- Drill out the five pop rivets (1) holding the fender liner in place and the pop rivet (2) in the bottom edge of the bumper. Use a **6 mm (1/4")** drill bit.

Remove:

- any rivet residue
- the plastic nuts (3) holding the fender liner in place
- the small protective plate.

Applies to cars with the accessory side decor

NOTE: Do not undo the side decor of the front fender.

- Bend aside only the retaining lugs on the side decor of the front fender so that the edge of the fender liner can be released.

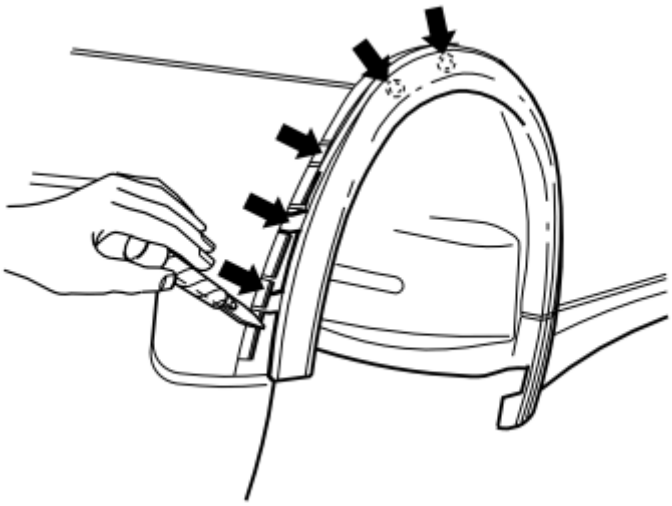

Fig. 716: Removing Side Trim
Courtesy of VOLVO CARS CORPORATION

Applies to cars without the accessory side decor

- Undo the fender extension by carefully prying loose the lower corner using a weatherstrip tool.
- Pull it loose up to the highest point of the wheel housing until the three catches in the lower edge and the two clips a little higher up have released.

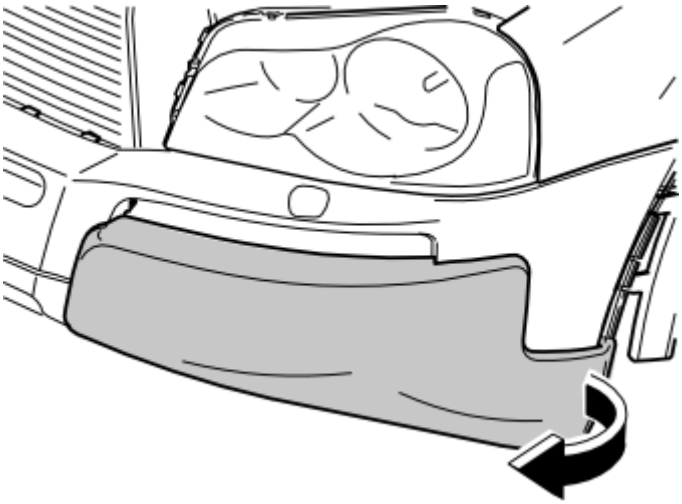

Fig. 717: Removing Left Bumper Panel
Courtesy of VOLVO CARS CORPORATION

- Remove the left bumper panel by carefully prying it loose in the left bottom edge until the clips on the bottom and inside release. Continue pulling until the clips all around release.

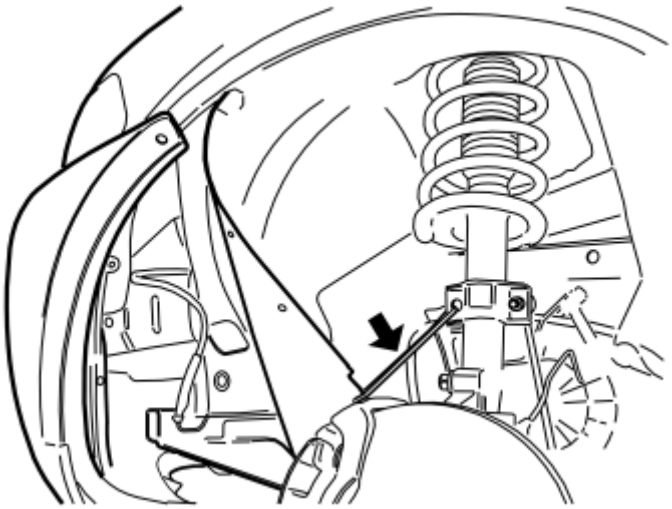

Fig. 718: Securing Wheel Fender Liner
Courtesy of VOLVO CARS CORPORATION

- Bend aside the fender liner and secure it with a tie strap or the like.

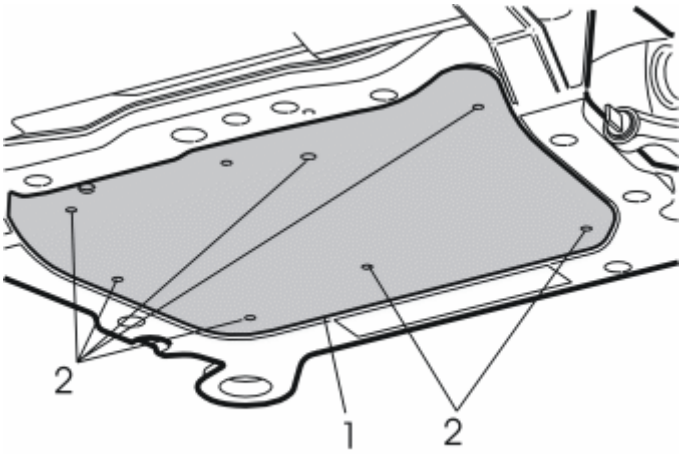

Fig. 719: Engine Splash Guard
Courtesy of VOLVO CARS CORPORATION

- Remove the protective engine plate (1) by removing the screws (2).

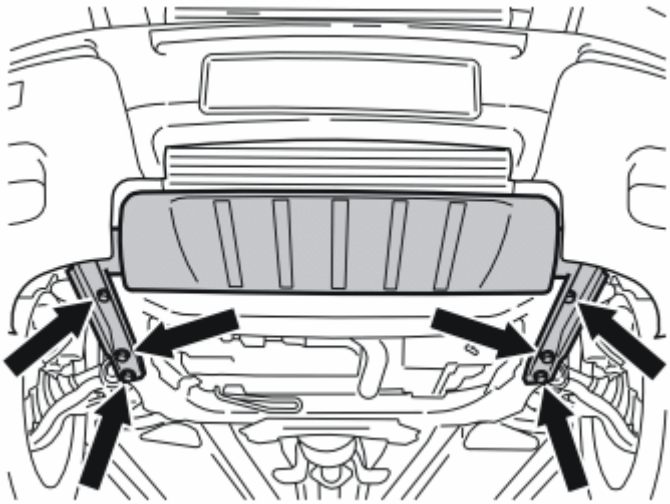

Fig. 720: Removing Front Skid Plate
Courtesy of VOLVO CARS CORPORATION

- Remove the front skid plate by first removing the six screws (1) on the bottom.
- With the aid of a helper, pull the skid plate forward. Pull one corner until one of the skid plate retaining lugs releases from the sub-frame. Then undo the other corner. At the same time, it may be necessary to carefully bend down the bottom edge of the bumper lining.
- Open the cap of the radiator expansion tank.
- Thread a hose onto the engine coolant drain nipple.
- Open the drain nipple. Drain off the coolant.

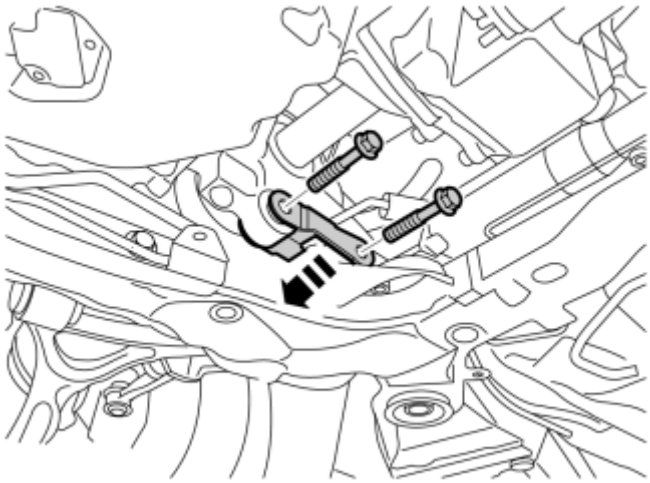

Fig. 721: Removing Lower Rear Torque Rod
Courtesy of VOLVO CARS CORPORATION

- Remove the two screws from the lower rear torque rod and remove it.

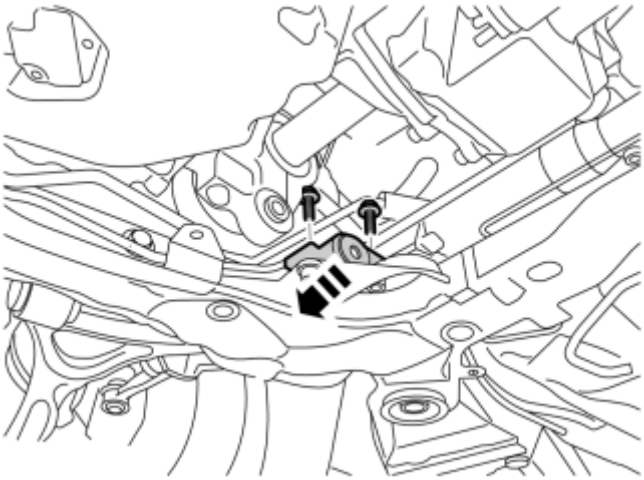

Fig. 722: Torque Rod Mounting
Courtesy of VOLVO CARS CORPORATION

- Remove the two screws of the torque rod mounting in the subframe and remove the mounting.

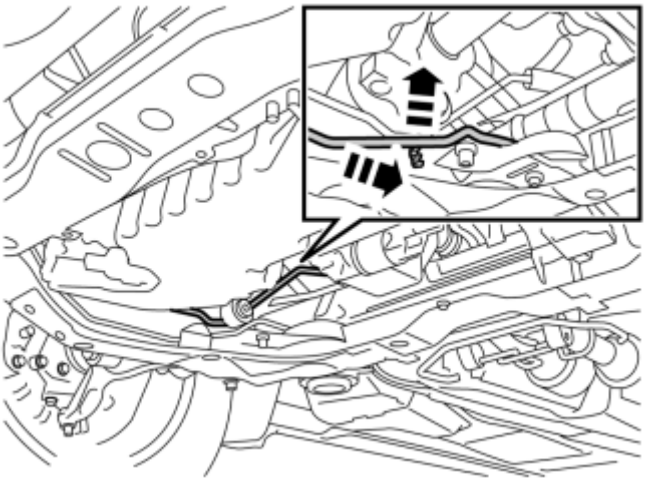

Fig. 723: Detaching Fuel Return Hose
Courtesy of VOLVO CARS CORPORATION

- Detach the fuel return hose from the clamp at the rear edge on the right inside part of the subframe.
- Remove the clamp. There is a new double clamp in the kit.

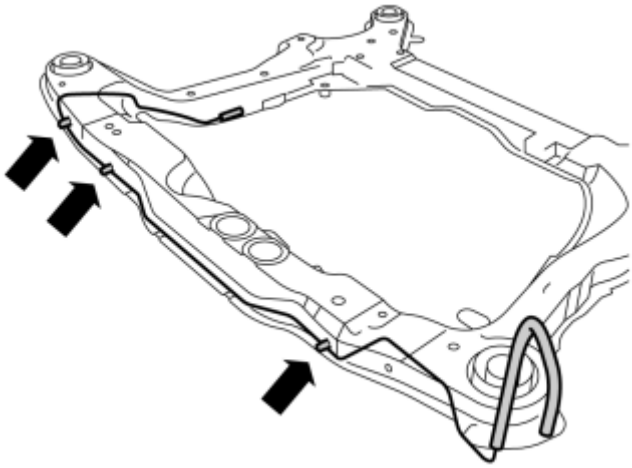

Fig. 724: Installing Fuel Pipe On Sub-Frame
Courtesy of VOLVO CARS CORPORATION

- Take the fuel pipe with the three pre-fitted clips (1) from the kit and install it on the subframe.
- Press the fuel pipe with clips into the front edge of the subframe. The pipe is a tight fit. You will need to twist and turn it somewhat to get it into place.
- Check that the fuel pipe does not catch on the subframe. Check that the fuel pipe does not rub against pipes or screw heads for the suspension.

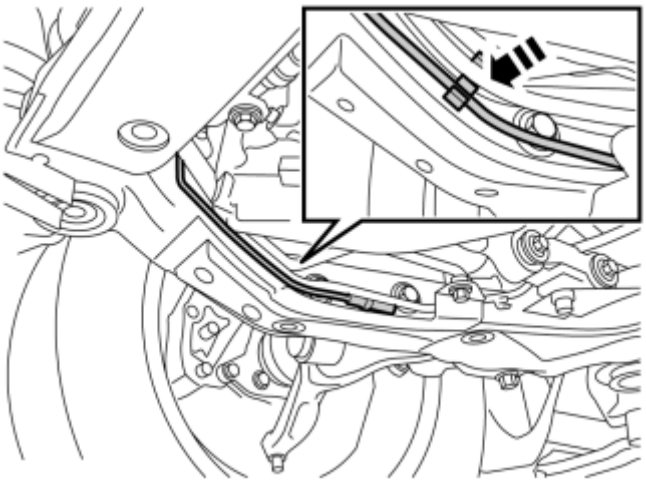

Fig. 725: Removing Existing Fuel Return Hose
Courtesy of VOLVO CARS CORPORATION

- Remove the existing fuel return hose from the clamp.
- Press the newly routed fuel pipe into the bottom of the clamp and then press the return hose into place.

Illustrations A and B

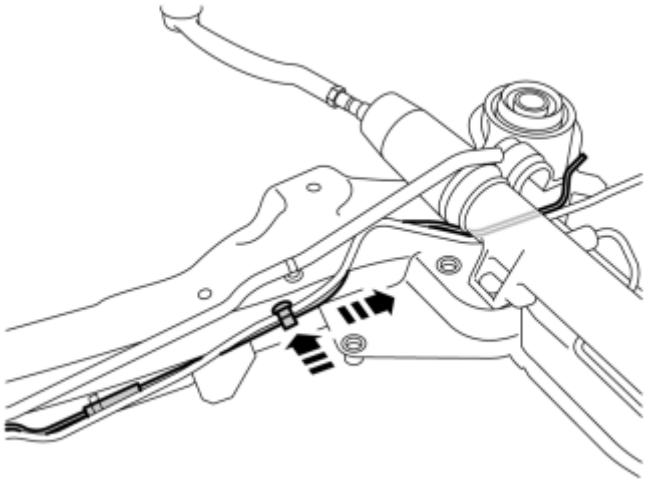

Fig. 726: Installing Short Fuel Pipe Kit - Illustration A
Courtesy of VOLVO CARS CORPORATION

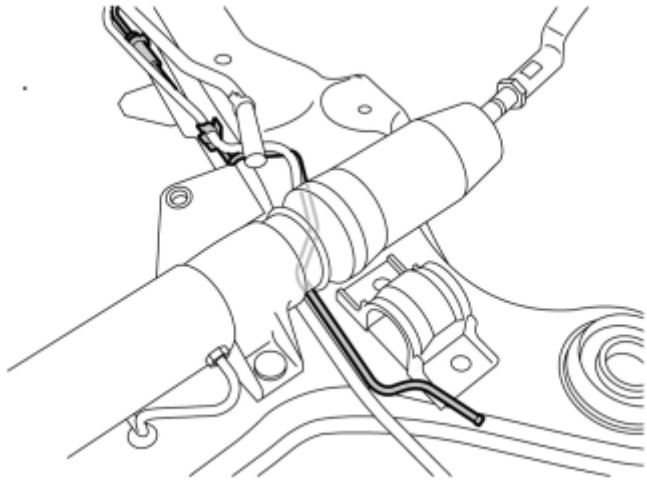

Fig. 727: Installing Short Fuel Pipe Kit - Illustration B
Courtesy of VOLVO CARS CORPORATION

- Take the short fuel pipe from the kit and (from the front) insert it under the steering gear and anti-roll bar and back toward the previously routed fuel line at the right rear mounting of the subframe. It is a tight fit. It may be necessary to twist and turn the pipe to get it into place.
- Thread a hose clamp onto the short hose end on the front pipe.
- Insert the front edge of the pipe in the rubber hose onto the front pipe. Fasten with the hose clamp.
- Press the fuel pipe with double clamp into the hose in the subframe.
- Press the fuel return hose in the other aperture in the double clamp.

Illustrations A and B

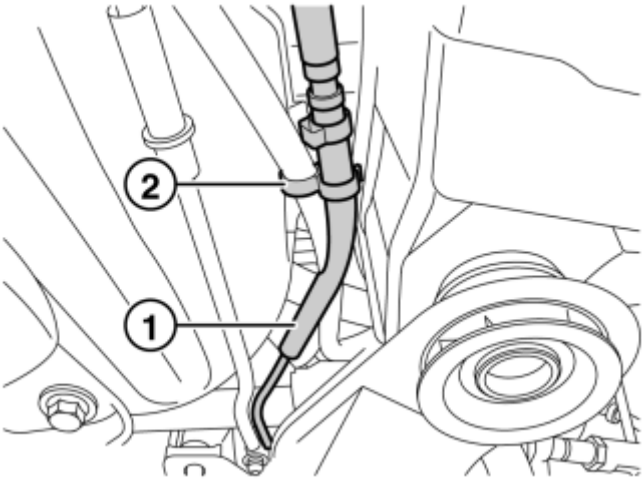

Fig. 728: Installing Short Fuel Pipe Kit - Illustration A
Courtesy of VOLVO CARS CORPORATION

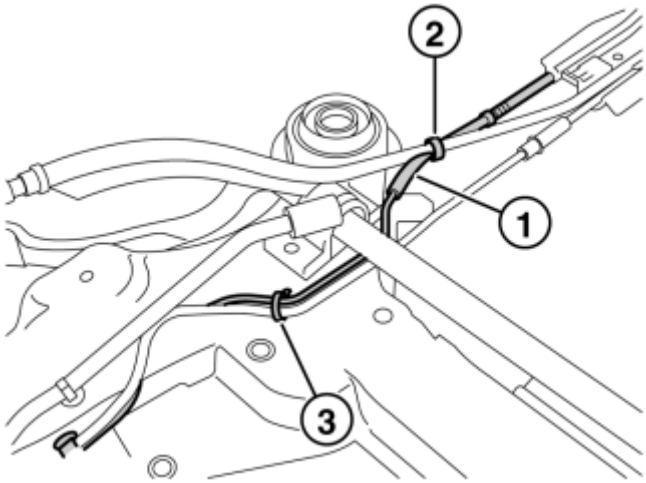

Fig. 729: Installing Short Fuel Pipe Kit - Illustration B
Courtesy of VOLVO CARS CORPORATION

- Fit a new clamp (1) on the hose end of the previously routed fuel line at the subframe's right rear mounting-
- Attach the hose end to the short pipe and tighten the clamp.
- Clamp the fuel hose at the fuel return hose using the double clamp (2).
- Clamp the fuel at the fuel return hose using the tie strap (3)

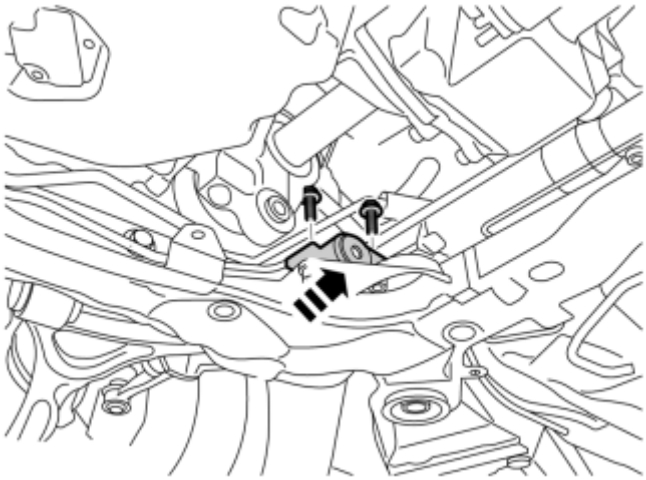

Fig. 730: Installing Lower Torque Rod Mounting
Courtesy of VOLVO CARS CORPORATION

- Refit the lower torque rod mounting. Tighten the screws to **80 Nm (59 lbf. ft.)** .

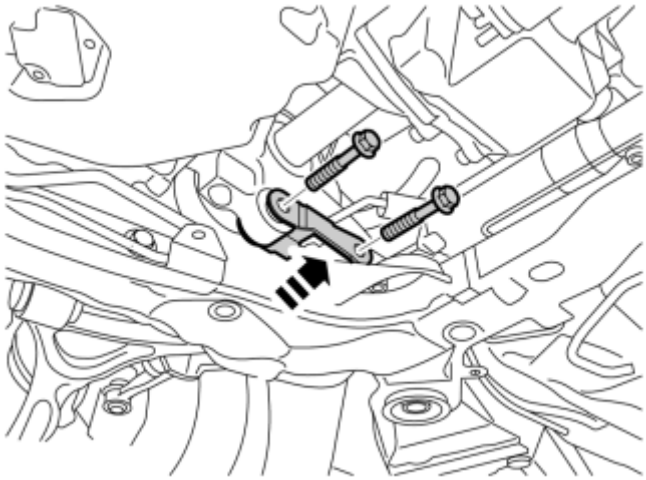

Fig. 731: Installing Lower Torque Rod
Courtesy of VOLVO CARS CORPORATION

- Refit the lower torque rod. Tighten the screws to **80 Nm (59 lbf. ft.)** .

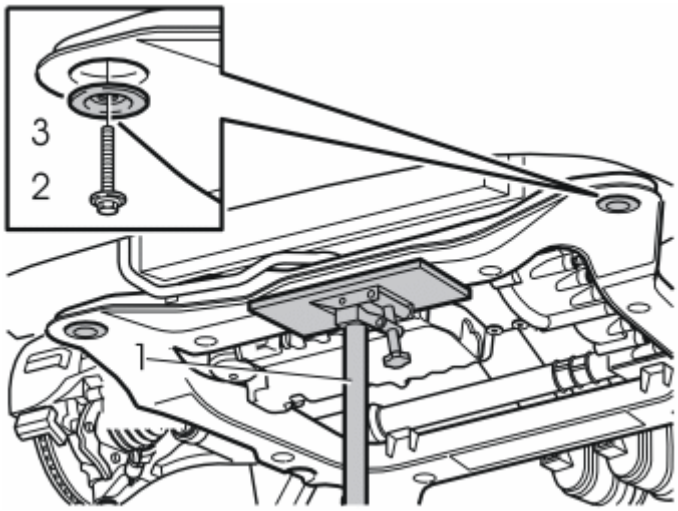

Fig. 732: Supporting Sub-Frame
Courtesy of VOLVO CARS CORPORATION

- Reinstall the pipe elbow.
- Position the workshop lift (1) under the front edge of the sub-frame.
- Take the weight off the subframe.
- Remove the screw (2) and the washer (3) from the left mounting on the sub-frame.

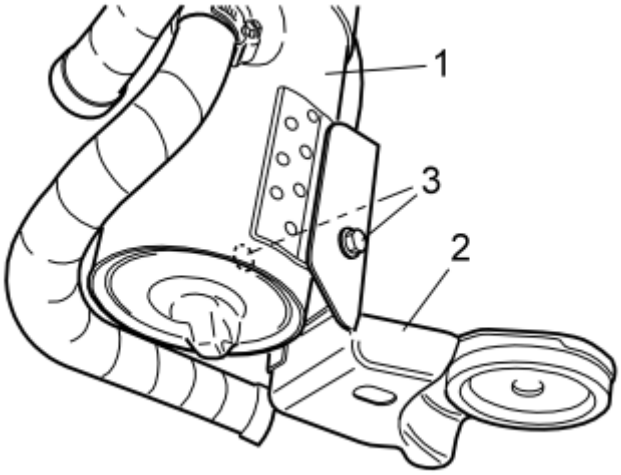

Fig. 733: Identifying Heater And Bracket
Courtesy of VOLVO CARS CORPORATION

- Fit the heater (1) on the bracket (2) with the screws (3) from the kit and tighten.

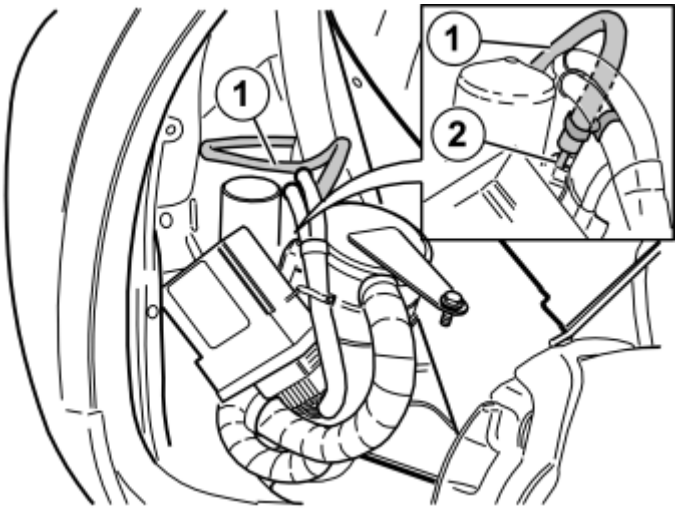

Fig. 734: Identifying Fuel Hose Clamp & Inlet
Courtesy of VOLVO CARS CORPORATION

- Raise the heater into its installation position.
- Take a small hose clamp for the fuel line from the kit. Install the clamp on the fuel hose (1) from the fuel pipe on the subframe.
- Press the fuel line on the inlet (2) on the fuel pump (FP). Tighten.

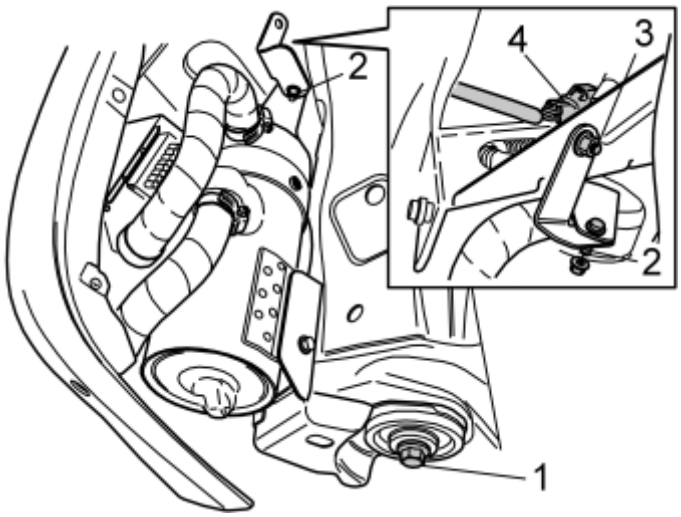

Fig. 735: Installing Bracket
Courtesy of VOLVO CARS CORPORATION

- Take a new screw (1) from the kit and secure the heater to the left front corner of the sub-frame. Do not tighten hard yet.
- Take the metal bracket and two nuts from the kit.
- Position one of the metal bracket's retaining lugs on the stud (2) of the heater and fit the nut. Tighten loosely.
- Position the other retaining lug of the bracket on the stud (3) and fit the nut.

- Tighten the heater to the sub-frame and bracket. Tighten the screw (1) to **105 Nm (78 lbf. ft.)** . Angle tighten to 120° or **max. 280 Nm (206 lbf. ft.)**
- Remove the protective cap from the pre-routed connector (4). Press in the catch on the top and pull it off.
- Connect the cable from the heater to the connector.

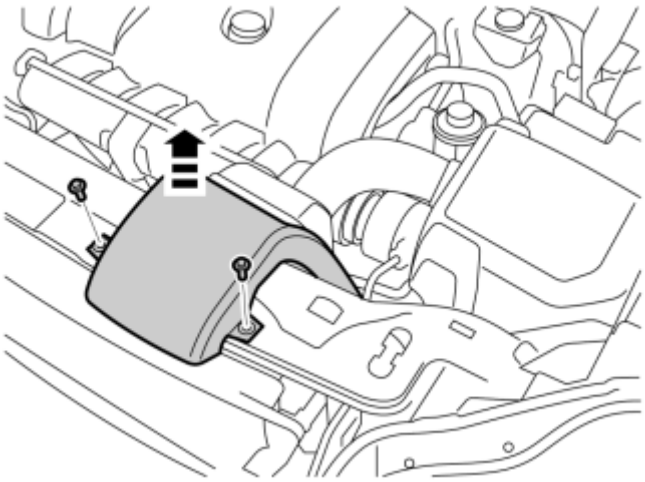

Fig. 736: Removing Air Cleaner Intake
Courtesy of VOLVO CARS CORPORATION

Remove:

- the two screws
- the air filter and put it aside.

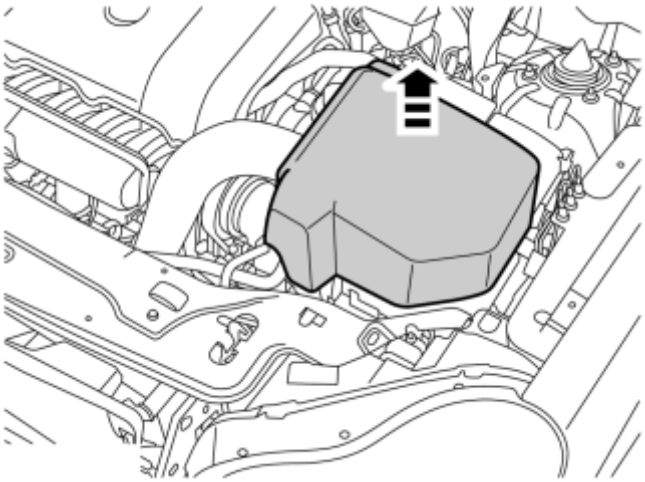

Fig. 737: Removing Protective Cover
Courtesy of VOLVO CARS CORPORATION

- Remove the protective cover over the control module.

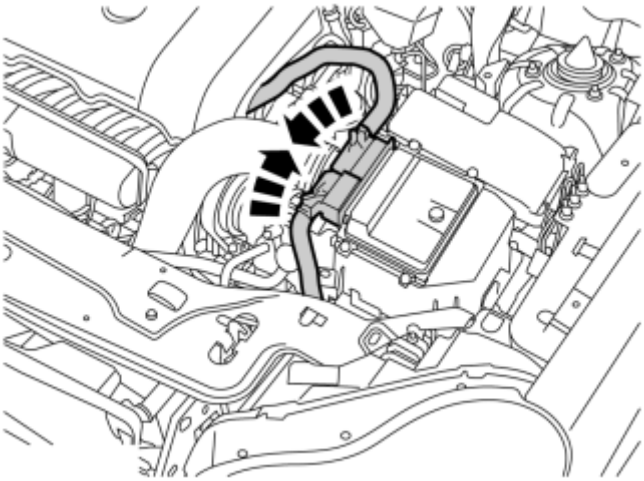

Fig. 738: Pressing In Catches For The Air Filter Control Module
Courtesy of VOLVO CARS CORPORATION

- Press in the catches on the connectors of the air filter control module, turn the handles and remove the connectors.

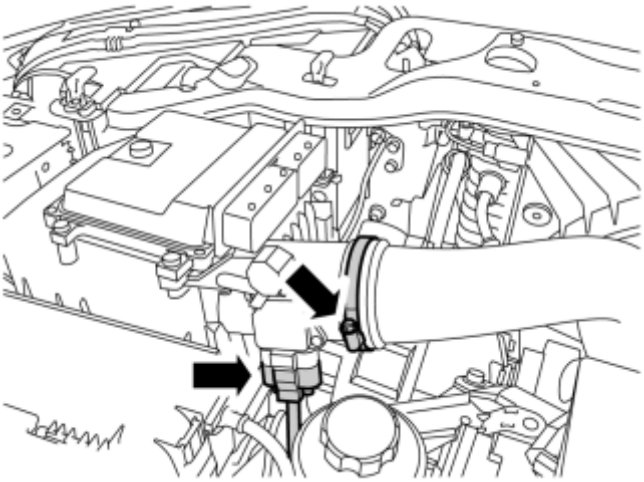

Fig. 739: Removing Connector And Hose Clamp
Courtesy of VOLVO CARS CORPORATION

- Unplug the connector and remove the hose clamp from the air filter pipe.

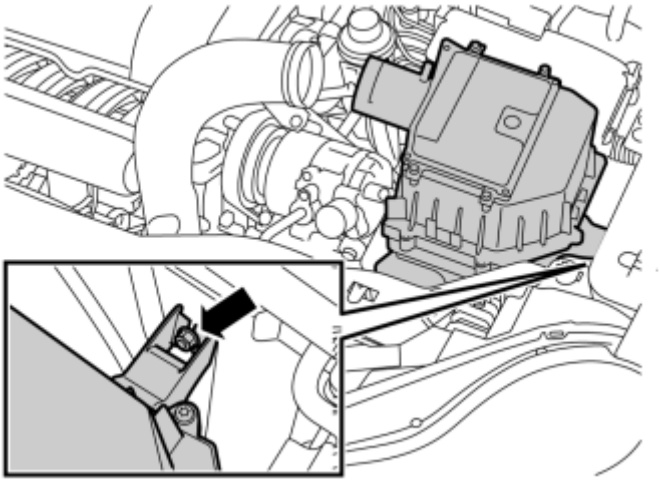

Fig. 740: Removing Air Filter Box Cap And Filter
Courtesy of VOLVO CARS CORPORATION

- Undo the plastic nut (1) on the air filter's left-hand bracket and pull the air filter from the front member.
- Unplug any remaining connectors or hoses. Put the air filter aside.

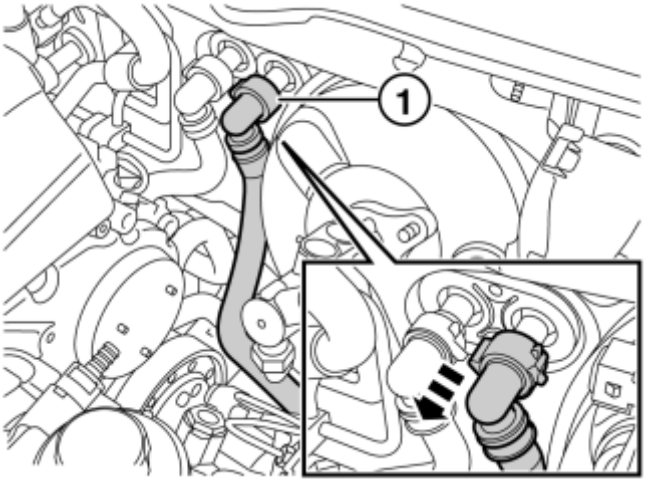

Fig. 741: Removing Quick-Release Fitting
Courtesy of VOLVO CARS CORPORATION

- Remove the quick-release fitting on the passenger compartment heater's left-hand heater hose (1) by pressing the two catches of the lock ring in opposite directions. Twist the quick-release fitting slightly and pull it out.
- Detach the heater hose on the radiator pipe at the left rear edge of the cylinder head.
- Remove the heater hose. It will not be used again.

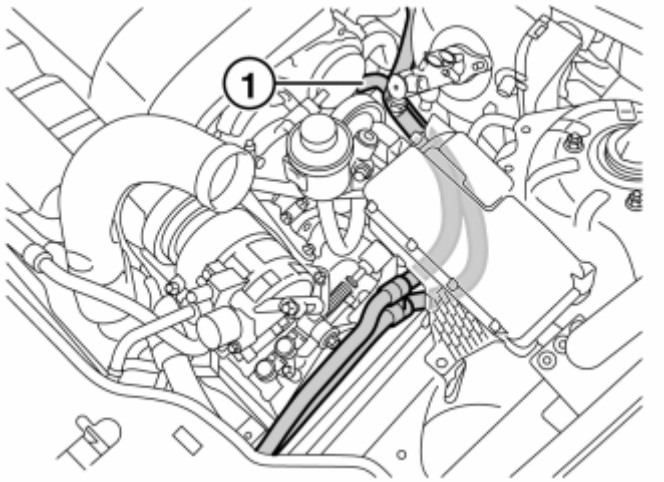

Fig. 742: Routing Heater Hose
Courtesy of VOLVO CARS CORPORATION

- Take the heater hoses from the kit. Route them down in the front edge of the transmission and though to the front edge of the left-hand wheel housing.
- Route the hoses back along the inside of the left front member and over the transmission. Continue routing them up toward the firewall.
- Using the quick-release fitting, connect the hose to the outlet in the firewall.
- Connect the other hose end to the radiator pipe (1) at the left rear edge of the cylinder head. Secure it with a hose clamp from the kit. Make sure that the hoses do not come into contact with moving parts or sharp edges in the engine compartment.

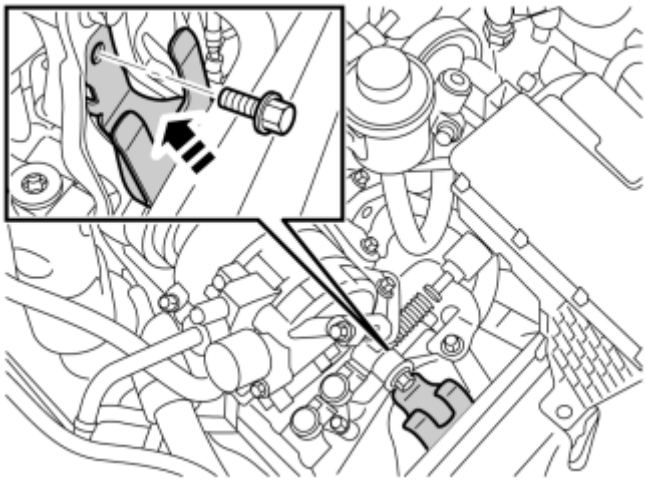

Fig. 743: Installing Holder Onto Bracket
Courtesy of VOLVO CARS CORPORATION

- Take the holder and screw for the heater hoses from the kit. Fasten the holder at the AC compressor bracket. Tighten the screw to **24 Nm (18 lbf. ft.)** .

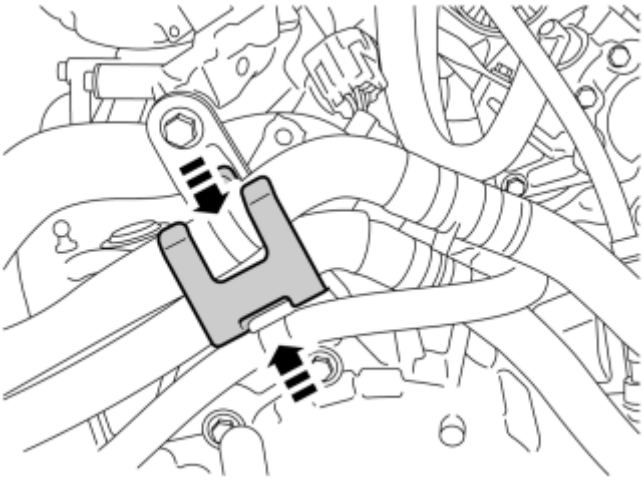

Fig. 744: Installing Hoses In Respective Holders
Courtesy of VOLVO CARS CORPORATION

- Place the heater hoses and power steering hose in their respective holders.

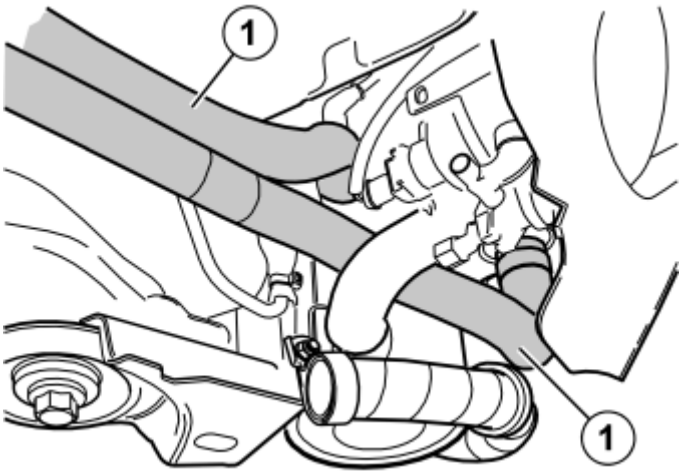

Fig. 745: Identifying Heater Hoses
Courtesy of VOLVO CARS CORPORATION

- Connect the two heater hoses (1) to the heater using hose clamps from the kit and tighten.

- Tighten the drain nipple on the radiator. Remove the hose.
- Refit the front skid plate and tighten to **50 Nm (37 lbf. ft.)**
- Reposition the fender liner. Refit and tighten the small plate and plastic nuts.
- Press the fender extension into place.
- Use the pop rivets from the kit to rivet the front/lower edge of the fender liner into place.
- Refit the bumper panel.
- Remount the wheel and tighten the bolts to **140 Nm (103 lbf. ft.)**

- Fill with coolant. Reinstall the expansion tank cap.
- Refit the air filter and reconnect disconnected cables and hoses.
- Reinstall the air filter in the fender liner using the plastic nut.
- Refit the induction pipe on the front plate between the headlamps. Tighten the screws to **10 Nm (7 lbf. ft.)**
- Plug in the connectors of the air filter connector.
- Refit the cover over the air filter.
- Reconnect the battery negative lead
- Start the engine and bleed the cooling system. Check for leaks.
- Reinstall the engine splash guard and tighten the screws to **25 Nm (18 lbf. ft.)**
- Reinstall the engine cover.
- Program the software in accordance with the service information in VIDA (Volvo scan tool).
- Test the function of the heater according to separate instructions.

REMOTE START, ELECTRIC ENGINE BLOCK HEATER (2006-2011)

ACCESSORY ELECTRONIC MODULE (AEM)

see **ACCESSORY ELECTRONIC MODULE (AEM)**

CARS EQUIPPED WITH SRS/SIPS (AIRBAG)

see **CARS EQUIPPED WITH SRS/SIPS (AIRBAG)**

REMOTE START, ELECTRIC ENGINE BLOCK HEATER

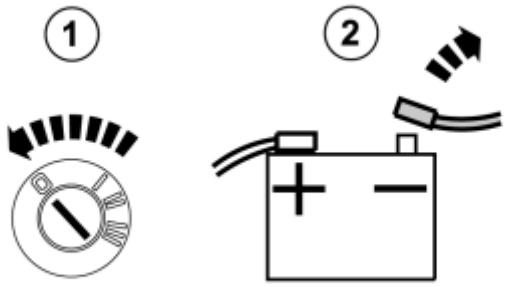

Fig. 746: Identifying Ignition Switch OFF & Disconnected Negative Battery Lead
Courtesy of VOLVO CARS CORPORATION

- Turn the ignition switch to position 0.

- Disconnect the battery negative lead.

NOTE: **Wait at least three minutes before unplugging the connectors or removing other electrical equipment.**

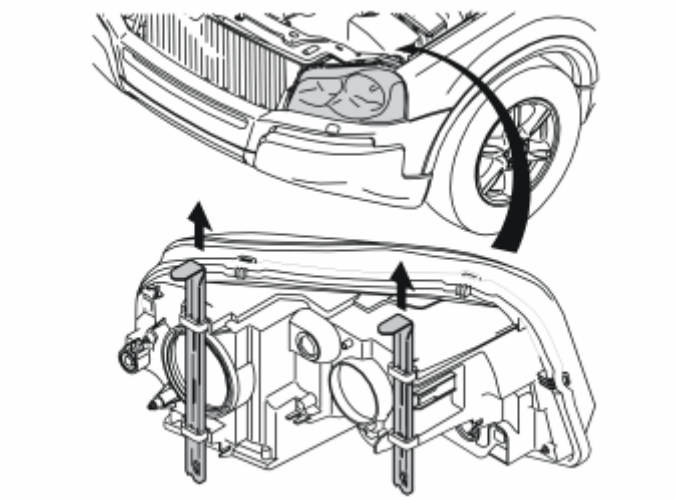

Fig. 747: Detach Left-Hand Headlamp By Pulling Up Two Locking Pins
Courtesy of VOLVO CARS CORPORATION

- Detach the left-hand headlamp by pulling up the two locking pins and then carefully pulling away the headlamp forwards.

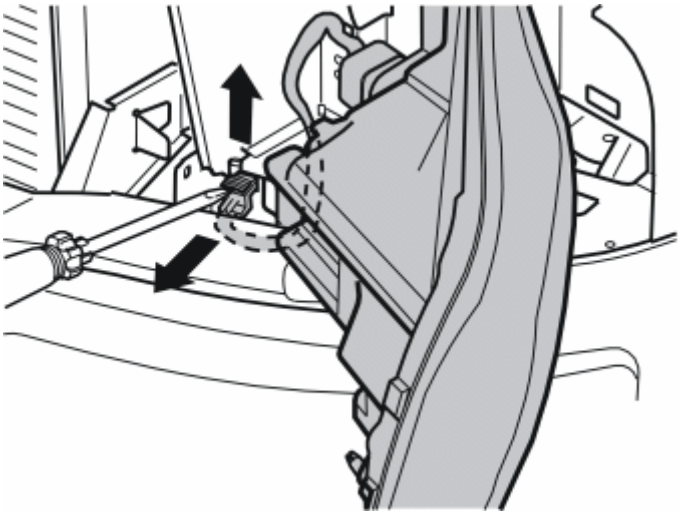

Fig. 748: Carefully Prize Up Catch On Connector For Headlamp With A Screwdriver
Courtesy of VOLVO CARS CORPORATION

- Carefully prize up the catch on the connector for the headlamp using a screwdriver.
- Pull the catch up completely, detach the connector and place the headlamp to one side.

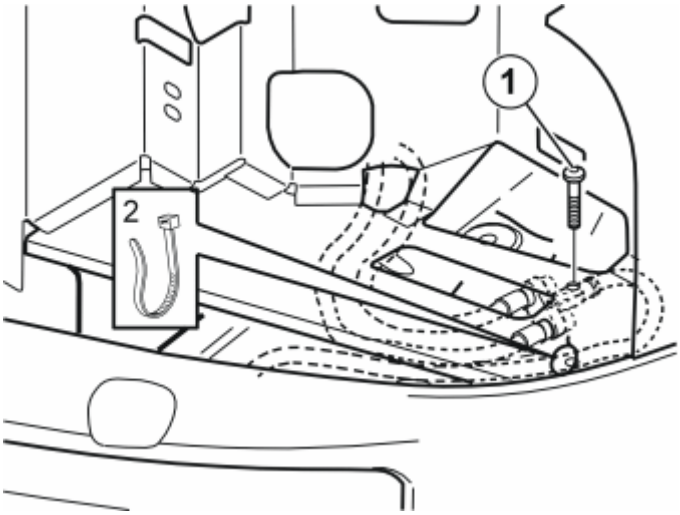

Fig. 749: Screw, Nut, Washer, Tie Strap And Branch Connector -- V8 Engine
Courtesy of VOLVO CARS CORPORATION

Applies to cars with V8 engine

- Remove the branch connector with the cables from the underside of the plate beneath the headlamp. Remove the screw, nut and washer (1) and tie strap (2), and pull the branch connector forward.

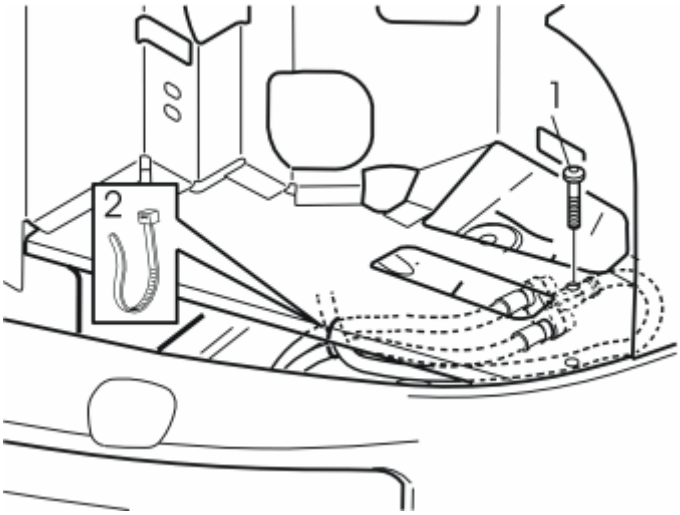

Fig. 750: Screw, Nut, Washer, Tie Strap, And Branch Connector -- 6-Cylinder Engine
Courtesy of VOLVO CARS CORPORATION

Applies to cars with 5 and 6-cylinder engines

- Remove the branch connector with the cables from the underside of the plate beneath the headlamp by removing the screw and the nut (1).
- Cut away the tie strap (2).

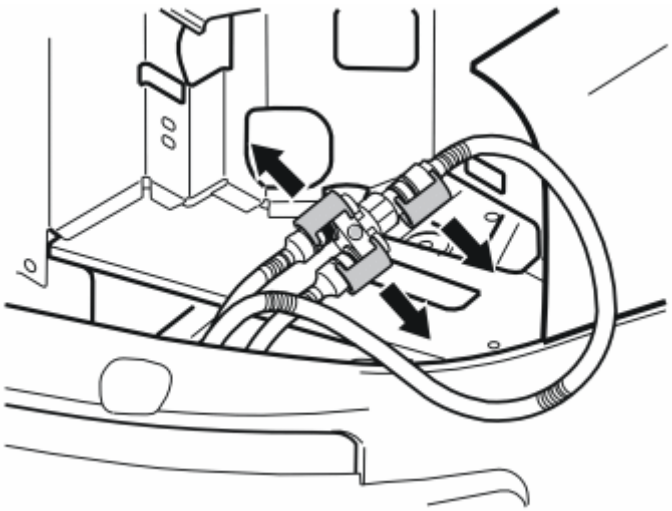

Fig. 751: Removing Locking Sleeves Over Joints On Branch Connector
Courtesy of VOLVO CARS CORPORATION

- Remove the locking sleeves over the joints on the branch connector and pull the cables away from it.
- Place the branch connector to one side, it shall not be re-used.

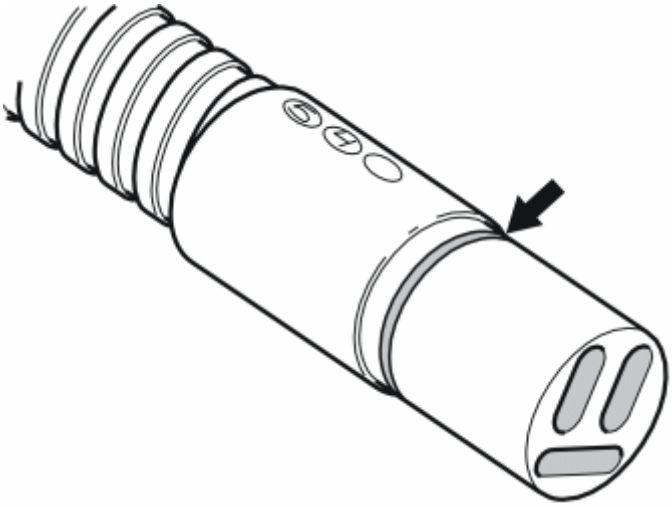

Fig. 752: Identifying O-Ring
Courtesy of VOLVO CARS CORPORATION

- Take the relay with cable from the kit.
- Grease the O-ring on the connector for the front socket and both connectors on the relay using low temperature grease, part no. 1161417-9.

NOTE: Do not get any grease on the surfaces of the connector.

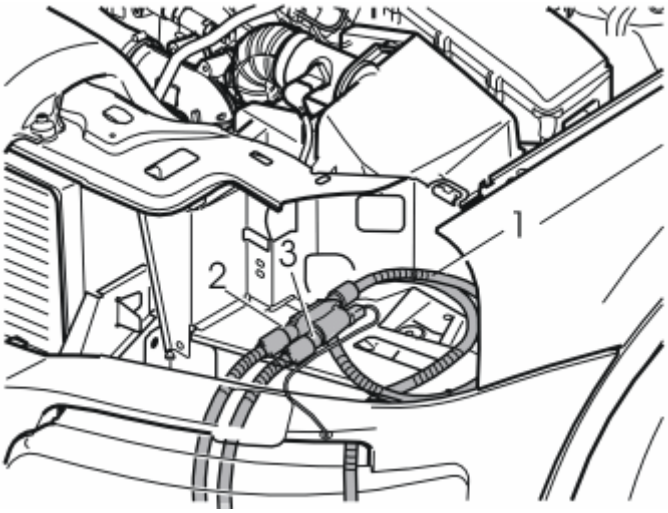

Fig. 753: Sockets And Relay -- All Models
Courtesy of VOLVO CARS CORPORATION

- Connect the cable (1) from the front socket to the relay.
- Connect the cables to the engine block heater and passenger compartment connector socket to either of the sockets (2) or (3) on the relay and press them in firmly.

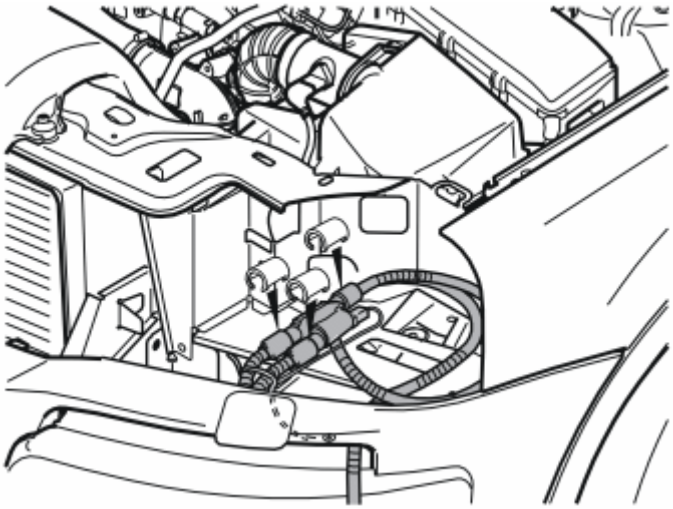

Fig. 754: Sockets And Relay -- V8 Engine
Courtesy of VOLVO CARS CORPORATION

Applies to cars with V8 engine

- Take three locking sleeves from the kit and press them in over the cable joints.

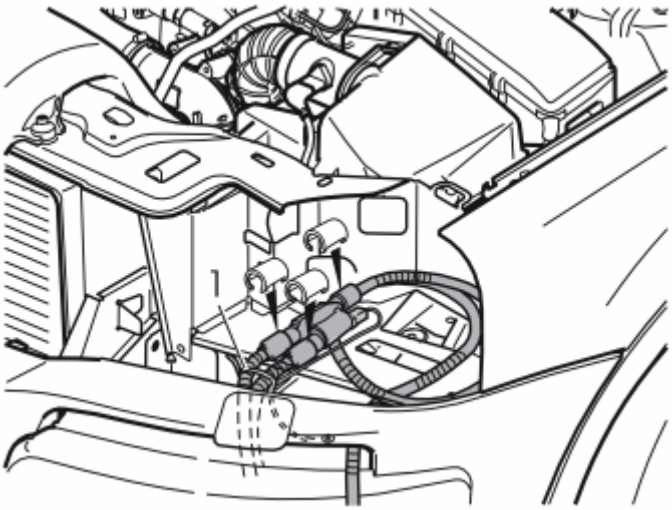

Fig. 755: Sockets And Relay -- 6-Cylinder Engine
Courtesy of VOLVO CARS CORPORATION

Applies to cars with 5 and 6-cylinder engines

- Take three locking sleeves from the kit and press them in over the cable joints.
- Take a tie strap (1) from the kit and clamp the electrical cable securely with the ground cable to one of the cables for the engine block heater/passenger compartment connector socket.

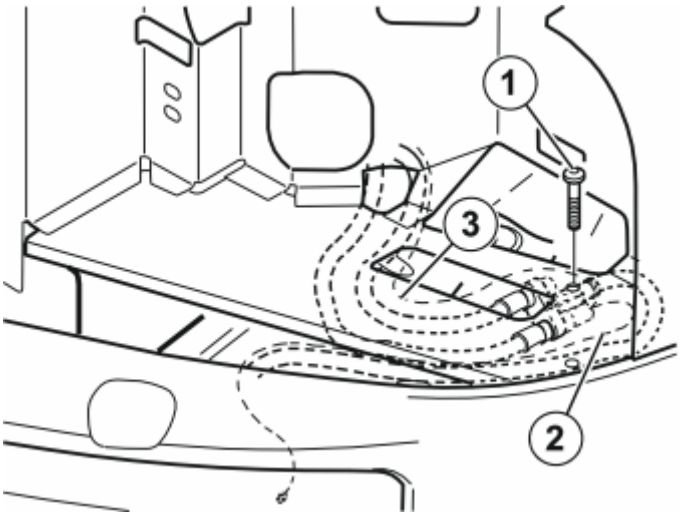

Fig. 756: Screw, Nut, Washer, Tie Strap, And Branch Connector -- V8 Engine
Courtesy of VOLVO CARS CORPORATION

Applies to cars with V8 engine

- Take the relay with cables and fit it on the underside of the plate beneath the headlamp. Fit the relay with the side against the plate that allows the connector to be accessible.
- Take a screw, washer and nut (1) from the kit. Tighten the relay to the plate.
- Guide the relay's ground cable (2) down on the left-hand side of the side member.

- The long thin cable (3) from the relay is routed in the same direction as the cable for the heater and passenger compartment socket.
- Clamp the ground cable with the cable to the front socket using a tie strap from the kit.

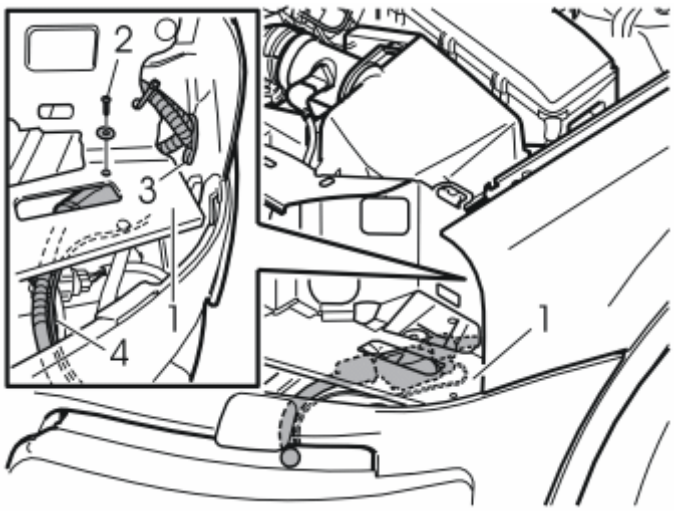

Fig. 757: Screw, Nut, Washer, Tie Strap And Branch Connector -- 6-Cylinder Engine
Courtesy of VOLVO CARS CORPORATION

Applies to cars with 5 and 6-cylinder engines

- Take the relay with cables and place it on the underside of the plate (1). Fit the relay with the side against the plate that allows the connector to be accessible.
- Take a screw, washer and nut (2) from the kit. Tighten the relay to the plate.
- Clamp the cable for the front socket at point (3) in the plastic eye for the bumper cover's mounting.
- Guide the thin cable with the ground cable from the relay down to the same location as the cables for the engine block heater/passenger compartment connector socket.
- Clamp all cables together at point (4) with a tie strap from the kit.

V8 ENGINE

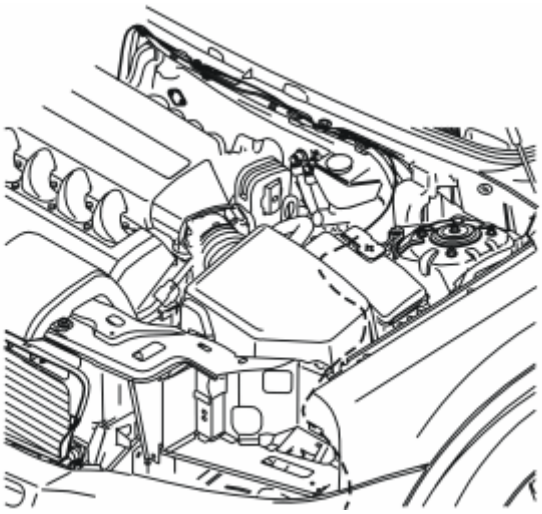

Fig. 758: Cable Routing
Courtesy of VOLVO CARS CORPORATION

- Route the cable in the same direction as the cable for the passenger compartment socket under the plate, under the left-hand headlamp. Route it backwards along the left-hand side of the air filter and between the air filter and the fuse holder. Continue to pull it backwards, under the ABS system and up between the cable duct and brake fluid reservoir.
- Check that the cable does not chafe against sharp edges or moving parts in the engine compartment.
- Route it along the cable for the passenger compartment connector socket over to the right-hand side of the car and down through the engine compartment.
- Clamp the cable securely the whole way with the cable for the passenger compartment connector socket using tie straps from the kit.

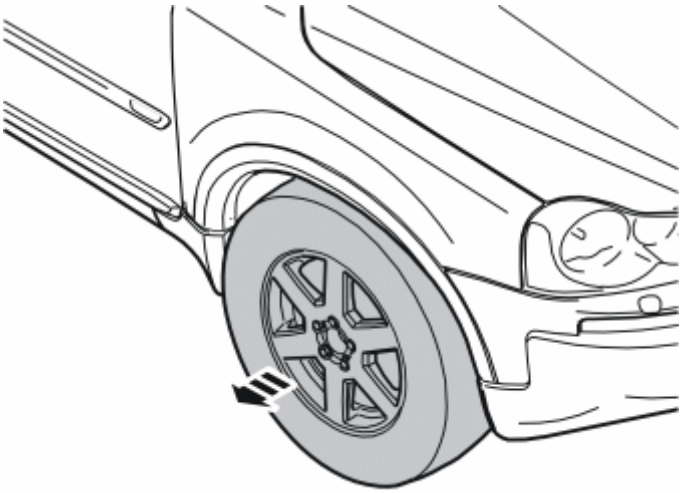

Fig. 759: Removing Wheel
Courtesy of VOLVO CARS CORPORATION

- Remove the right-hand front wheel to facilitate access for routing the cable.

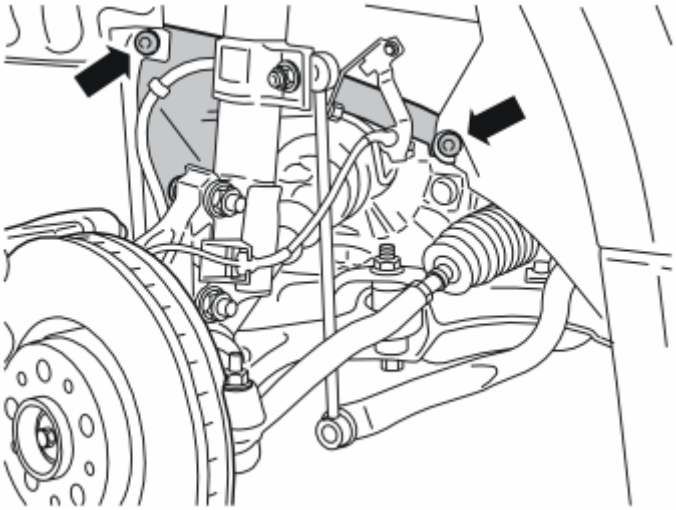

Fig. 760: Wheel Protective Cover
Courtesy of VOLVO CARS CORPORATION

- Remove the two plastic nuts which hold the small protective panel in the right-hand wheel housing, and remove the panel.

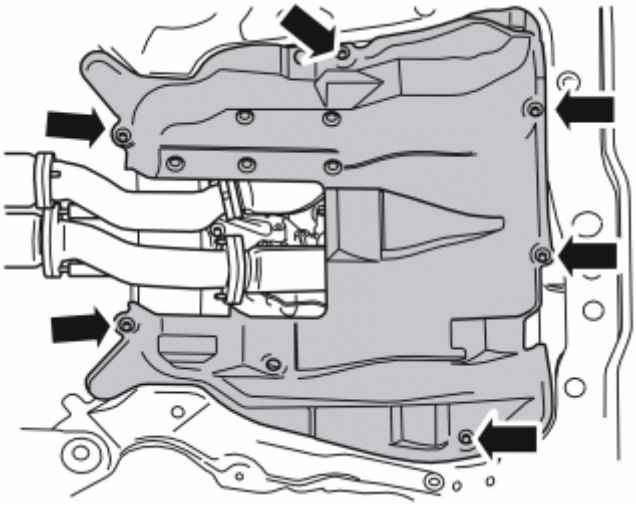

Fig. 761: Engine Splash Guard And Screws
Courtesy of VOLVO CARS CORPORATION

- Remove the six screws and the engine splash guard.

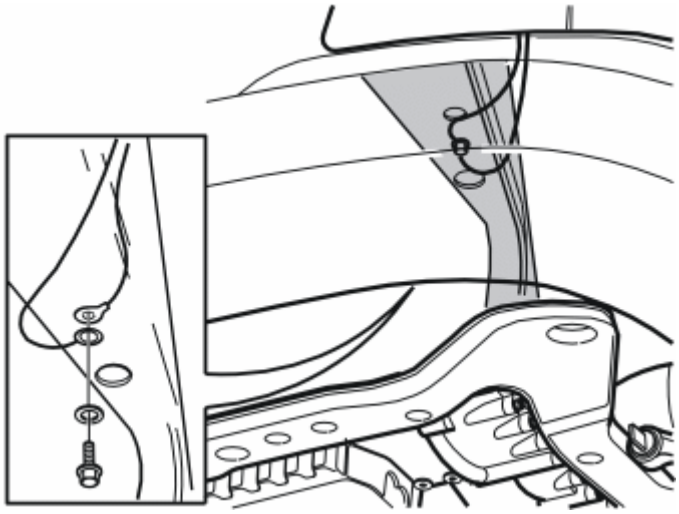

Fig. 762: Ground Cable And Screw
Courtesy of VOLVO CARS CORPORATION

- Detach the existing ground cable for the front socket on the underside of the left-hand frame member.
- Route the ground cable on from the relay. Connect both ground cables to the existing ground terminal and tighten the ground screw firmly.

Fig. 763: Cable Routing
Courtesy of VOLVO CARS CORPORATION

- Detach the cable for the passenger compartment connector socket from the clip in the edge of the plate, at the bending rubber hose for the water drainage.
- Route the rubber grommet with cable out to the passenger compartment connector socket from the passenger compartment.
- Remove the rubber grommet from the cable and place it to one side. There is a new rubber grommet on the routed cable.

Fig. 764: Cutting Rubber Grommet
Courtesy of VOLVO CARS CORPORATION

- Cut away the very top of the rubber grommet.

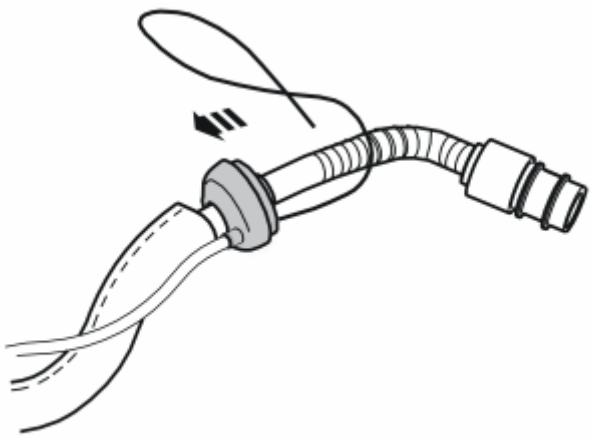

Fig. 765: Installing Cable Into Rubber Grommet
Courtesy of VOLVO CARS CORPORATION

- Grease in the rubber grommet using low temperature grease part no. 1161417-9 in order to make it easier to install the rubber grommet in the hole in the cowl.
- Guide the cable into the rubber grommet.

Fig. 766: Routing Cable
Courtesy of VOLVO CARS CORPORATION

- Guide both cables into the hole in the cowl wall and press the rubber grommet into place in the hole, either by pulling it into place from inside the passenger compartment, or carefully pressing it into place with a long large screwdriver/wide end of a short pry bar.

NOTE: These must not be sharp or they can damage the cables/rubber grommet

- Adapt the length of the cable from the rubber grommet, at the installed clip and out in the engine compartment.

Fig. 767: Inserting Cable Into Clamp
Courtesy of VOLVO CARS CORPORATION

- Press the cables for the passenger compartment connector socket into the installed clip. Make sure that the cable with the radiation shield is firmly pressed into the clip and does not slide out.

CAUTION: Check that the cables are routed so that they do not come into contact with the alternator belt, or chafe against sharp edges in the engine compartment.

- Clamp the cable at the thicker cable using tie straps from the kit.
- Reinstall the small protective panel in the wheel housing.
- Reinstall the engine splash guard and torque tighten the screws to **25 Nm (18.5 lbf. ft.)** .
- Remount the wheel and tighten the bolts to **140 Nm (103 lbf. ft.)** .
- Connect and reinstall the left-hand headlamp.

5 AND 6 CYLINDER ENGINES

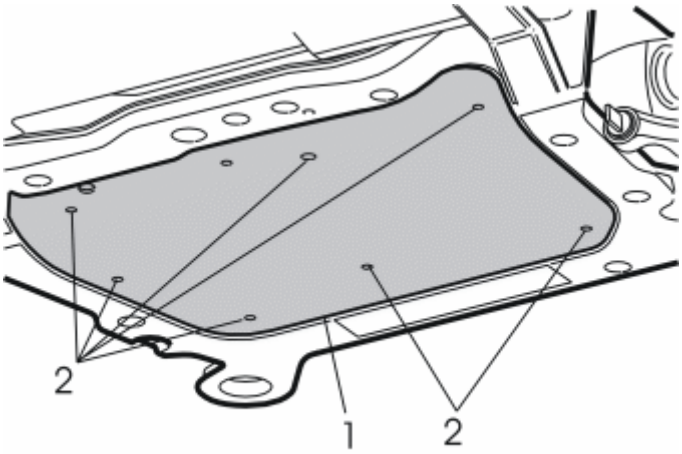

Fig. 768: Engine Splash Guard
Courtesy of VOLVO CARS CORPORATION

- Remove the screws (2) and the engine splash guard (1).

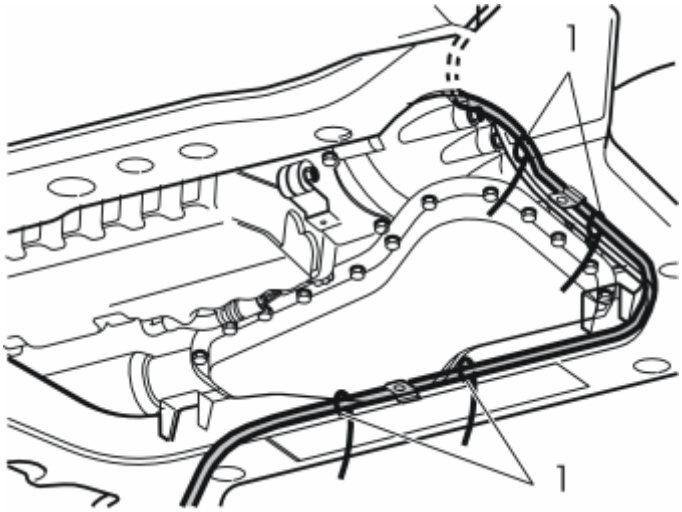

Fig. 769: Electrical Cable Secured With Tie Straps

Courtesy of VOLVO CARS CORPORATION

- Route the electrical cables down from the relay.
- Take four tie straps from the kit and clamp the thin electrical cable (not the ground cable) to the cable for the passenger compartment connector socket.

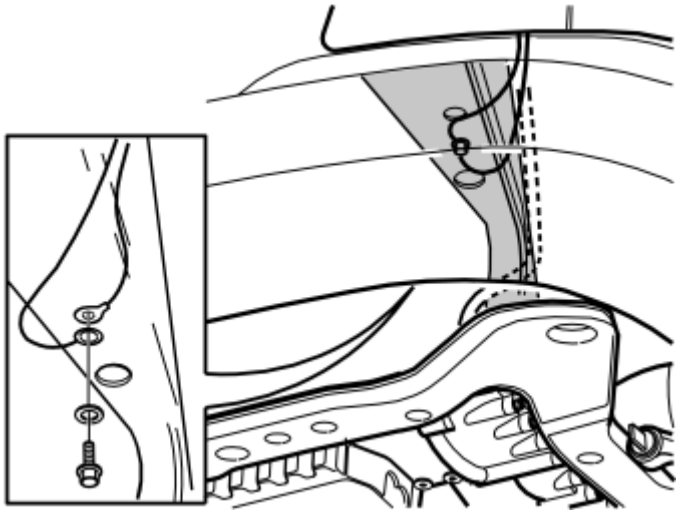

Fig. 770: Ground Cable
Courtesy of VOLVO CARS CORPORATION

- Detach the existing ground cable for the front socket on the underside of the left-hand frame member.
- Route the ground cable to the relay. Connect both ground cables to the existing ground terminal.

Illustration A

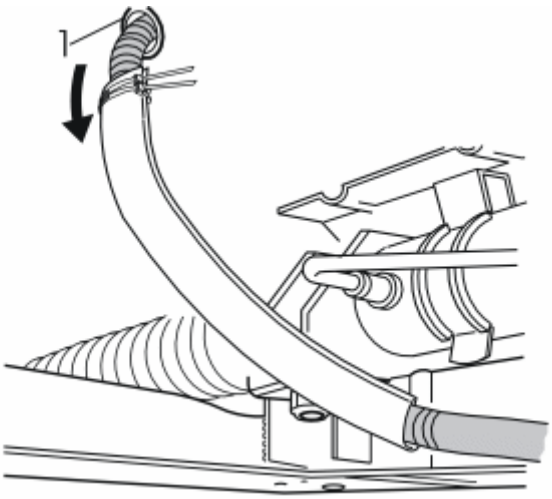

Fig. 771: Identifying Rubber Grommet
Courtesy of VOLVO CARS CORPORATION

- Pull the cable with rubber grommet (1) away from the passenger compartment connector socket.

- Pull the whole cable out from the hole in the cowl wall. Remove the rubber grommet from the cable. There is a new one on the routed electrical cable.

Illustration B

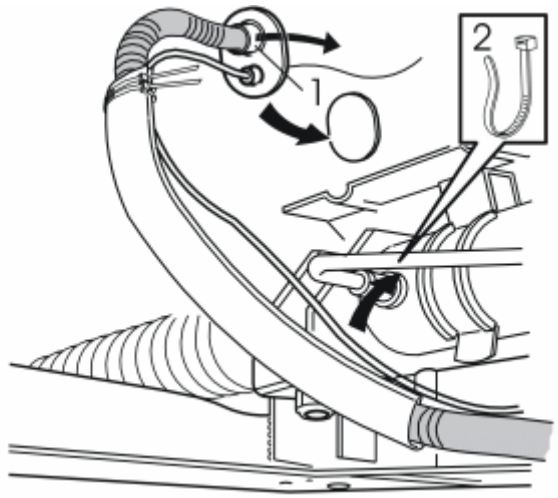

Fig. 772: Identifying Rubber Grommet And Tie Strap
Courtesy of VOLVO CARS CORPORATION

- Cut away the top of the new rubber grommet (1).
- Guide the passenger compartment connector socket's cable in through the new rubber grommet.
- Grease the rubber grommet with low temperature grease (part no. 1161417-9) on the side turned into the passenger compartment.
- Adapt the cables up to the grommet. Guide the cables into the hole in the cowl wall.
- Carefully pull the rubber grommet into position from inside the passenger compartment by pulling in the cable for the passenger compartment connector socket.
- Clamp in the electrical cable with the servo pipe using a tie strap (2) from the kit.

FOR ALL CAR MODELS

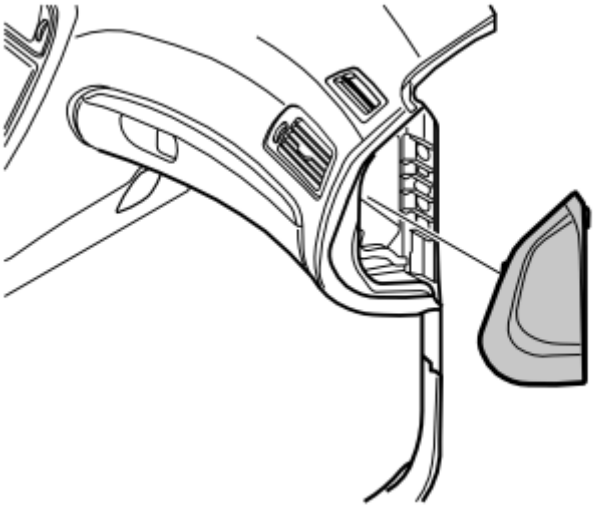

Fig. 773: Dashboard End Panel
Courtesy of VOLVO CARS CORPORATION

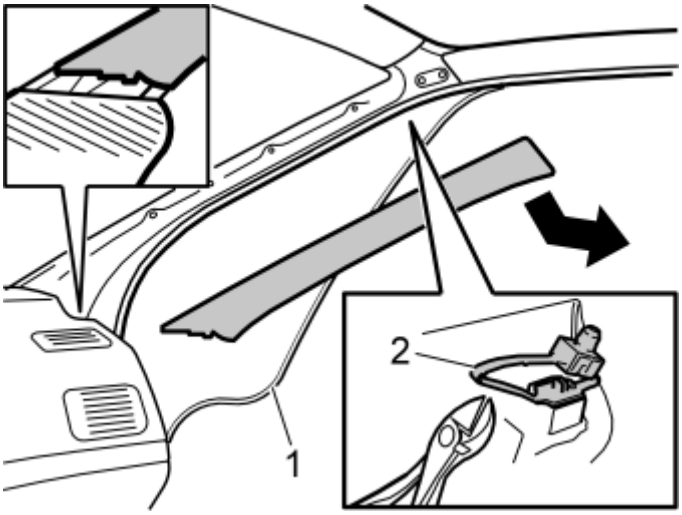

Fig. 774: Identifying Removal Of Weatherstrip And Safety Clip
Courtesy of VOLVO CARS CORPORATION

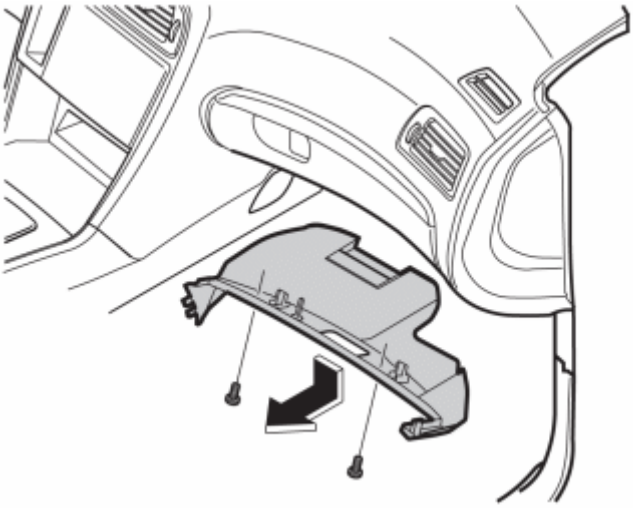

Fig. 775: Identifying Screws And Soundproofing Panel Removed
Courtesy of VOLVO CARS CORPORATION

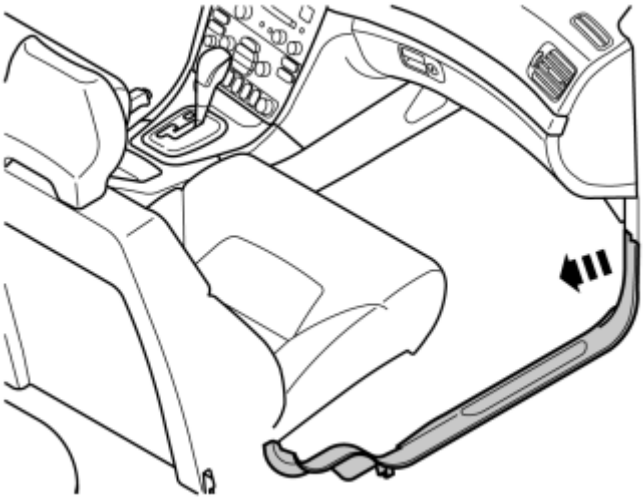

Fig. 776: Detaching Sill Trim Panel At Front Edge
Courtesy of VOLVO CARS CORPORATION

INSTALLING THE ANTENNA

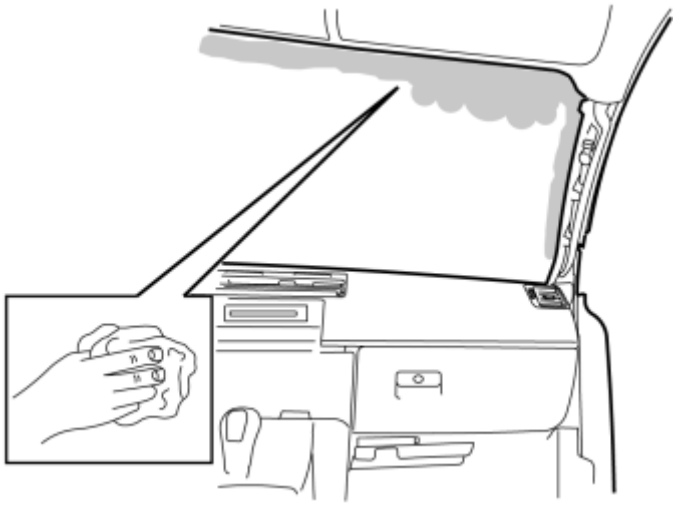

Fig. 777: Cleaning Marked Surface On Inside Of Windscreen
Courtesy of VOLVO CARS CORPORATION

- Clean the marked surface on the inside of the windscreen using isopropanol P/N 1161721. Wipe dry.

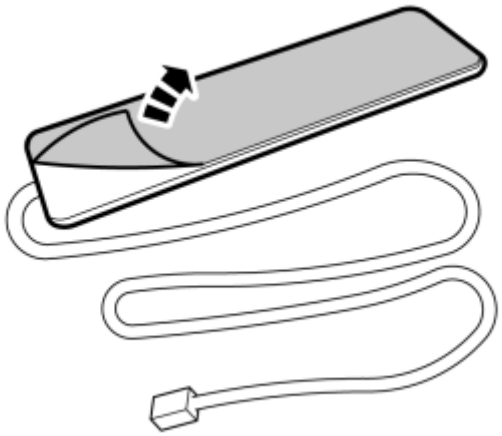

Fig. 778: Identifying Protective Backing Tape
Courtesy of VOLVO CARS CORPORATION

- Remove the protective backing tape from the antenna mounting tape.

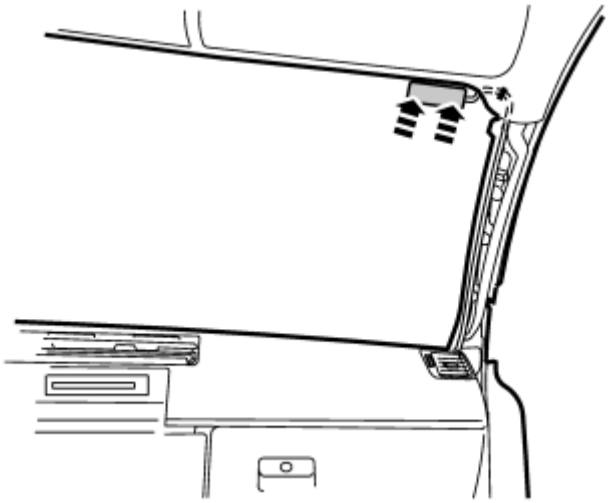

Fig. 779: Identifying Antenna
Courtesy of VOLVO CARS CORPORATION

- Press the antenna into place as close to the front edge of the roof panel as possible. Route the cable just above the edge of the roof panel.
- Carefully bend down the front edge of the roof panel and use pieces of butyl tape to secure the cable at the panel.

NOTE: Do not damage the roof panel.

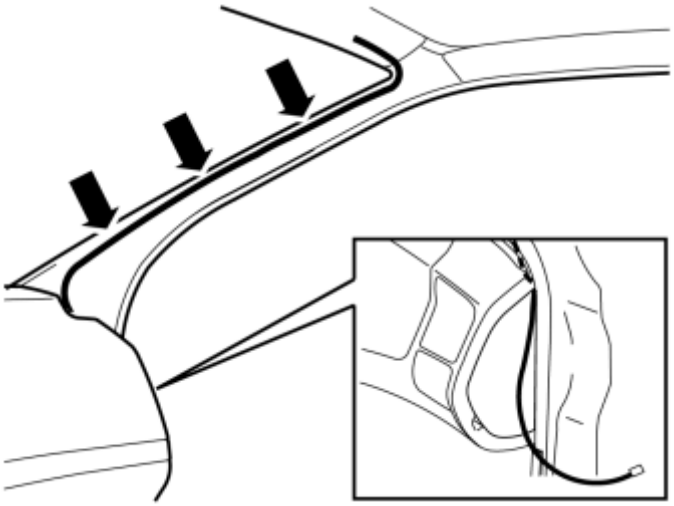

Fig. 780: Identifying Cable Secure With Tie Straps
Courtesy of VOLVO CARS CORPORATION

- Secure the cable using three tie straps.

WARNING: Make sure that the routing of the antenna cable does not interfere with the function of the inflatable curtain.

INSTALLING THE RECEIVER UNIT

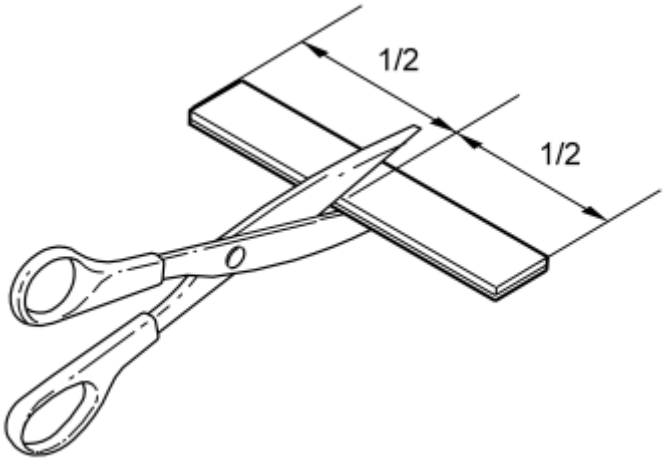

Fig. 781: Identifying Velcro Strip
Courtesy of VOLVO CARS CORPORATION

- Remove the Velcro from the kit and cut it in the center.

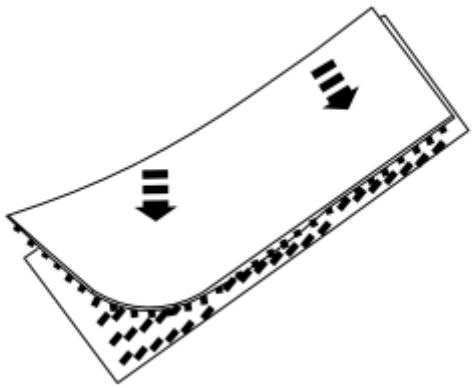

Fig. 782: Identifying Velcro Pieces Pressed Together
Courtesy of VOLVO CARS CORPORATION

- Press the Velcro pieces together.

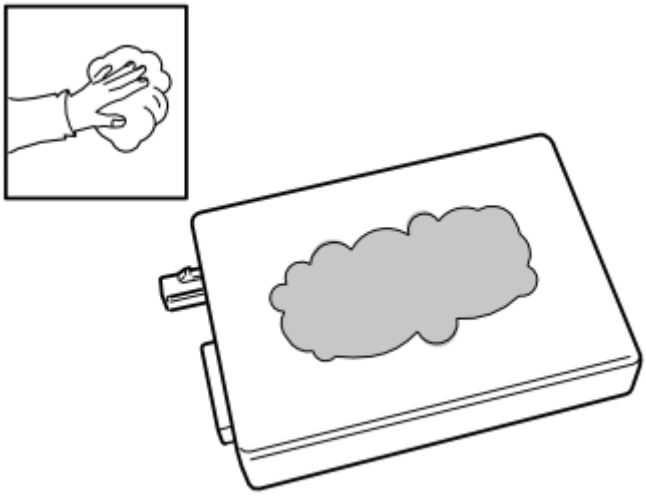

Fig. 783: Washing Plane Surface Of Receiver
Courtesy of VOLVO CARS CORPORATION

- Clean the flat surface of the receiver unit using isopropanol P/N 1161721. Wipe dry.

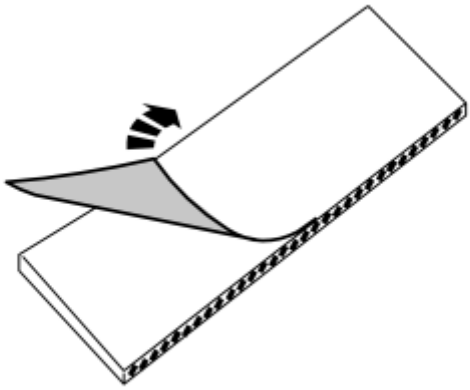

Fig. 784: Identifying Protective Backing Tape Removed From Velcro Strips
Courtesy of VOLVO CARS CORPORATION

- Remove the protective backing tape from one of the Velcro pieces.

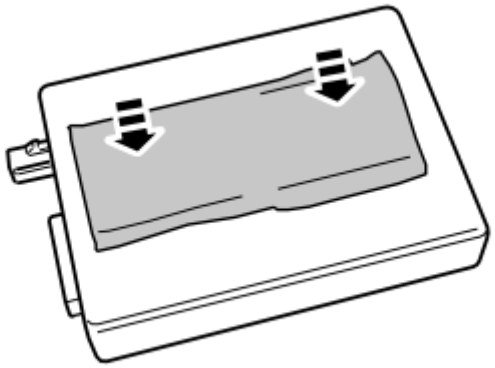

Fig. 785: Identifying Backing Removed From One Side Of Velcro Strips
Courtesy of VOLVO CARS CORPORATION

- Press the Velcro onto the receiver unit.

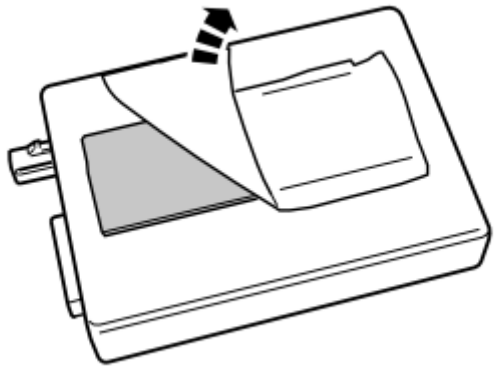

Fig. 786: Identifying Protective Backing Tape Removed From Other Velcro Piece
Courtesy of VOLVO CARS CORPORATION

- Remove the protective backing tape from the other Velcro piece.

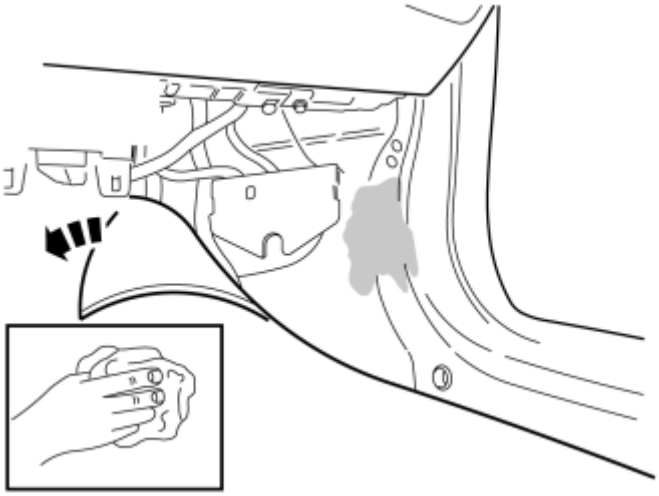

Fig. 787: Cleaning Surface
Courtesy of VOLVO CARS CORPORATION

- Move the floor and insulating mat out of the way.
- Scrape away any sealant from the flat surface at the lower edge of the A-post where the receiver unit for the remote start is to be located.
- Clean the surface using isopropanol P/N 1161721. Wipe dry.

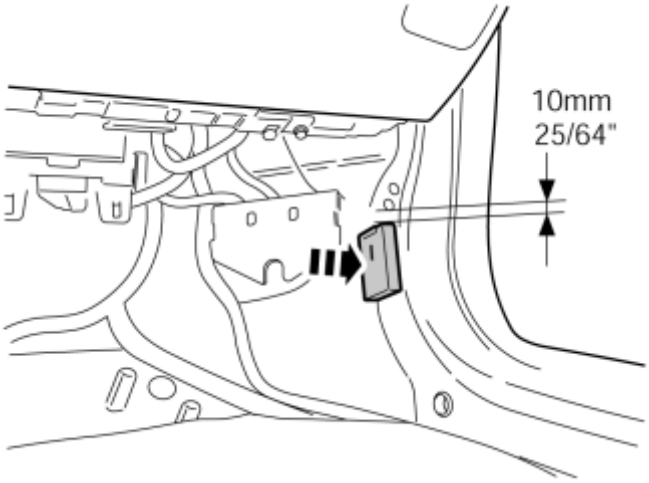

Fig. 788: Identifying Receiver Unit Secure To Panel Surface
Courtesy of VOLVO CARS CORPORATION

- Press the receiver unit securely onto the panel surface, **10 mm (25/64")** under the cable lead-in for the side door.

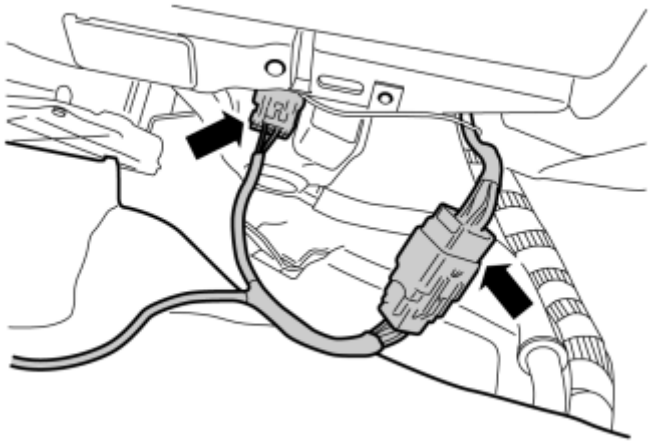

Fig. 789: Identifying Blower Fan Connector
Courtesy of VOLVO CARS CORPORATION

- Locate the connector for the blower fan and disconnect the connector.
- Connect the cable from the kit.

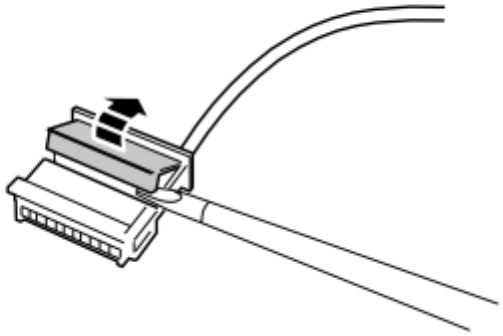

Fig. 790: Identifying Secondary Catch Of Black Six-Pin Connector
Courtesy of VOLVO CARS CORPORATION

- Carefully loosen the secondary catch of the black 6-pin connector using a small screwdriver.

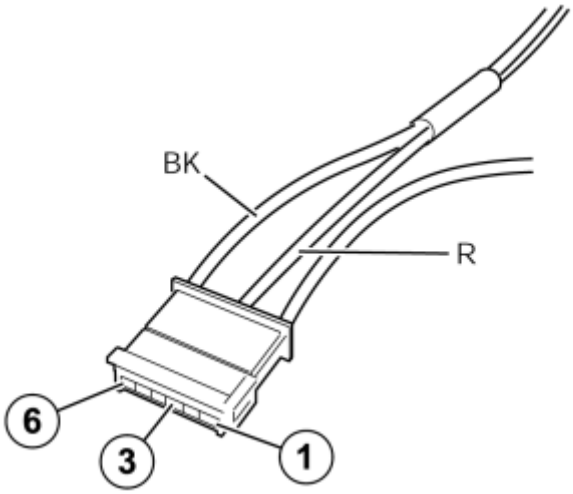

Fig. 791: Identifying Red And Black Cable Of Six Pin Connector
Courtesy of VOLVO CARS CORPORATION

- Connect the red (R) cable from the timer relay to terminal 3, and the black (BK) cable to terminal 6 in the 6-pin connector.
- Press the secondary catch together on the connector.

SYNCHRONIZING THE TRANSMITTER - RECEIVER

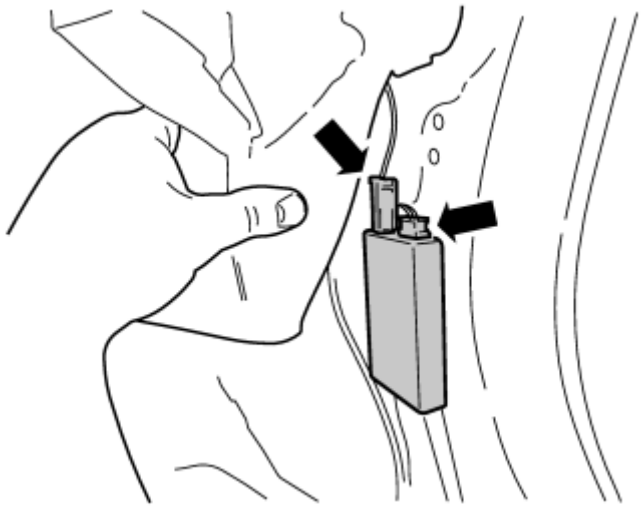

Fig. 792: Identifying Connector, Antenna Cable And Receiver Unit
Courtesy of VOLVO CARS CORPORATION

1. Connect the battery's negative lead.
2. Install batteries in the transmitter battery compartment.
3. Connect the connector and antenna cable to the receiver unit.
4. Within 5 seconds, press the "OFF" button on the transmitter until the LED goes out. Synchronization has been carried out.

- Press the receiver unit onto the Velcro on the body plate if it has loosened.
- Tape up any cable excess from the timer relay and place it next to the receiver unit under the insulation mat.

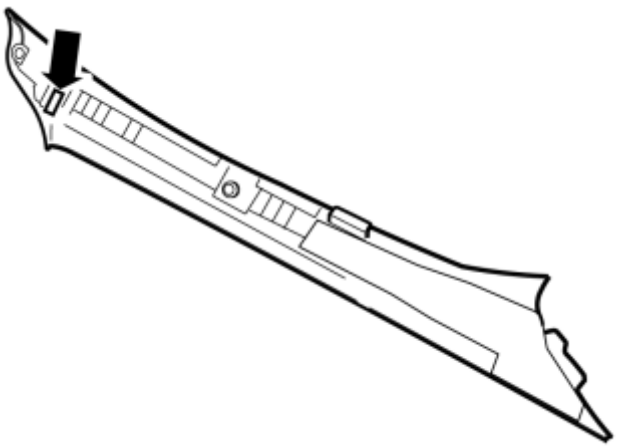

Fig. 793: Identifying Safety Clip & A Pillar Panel
Courtesy of VOLVO CARS CORPORATION

- Install a new safety clip in the A pillar panel.

NOTE: It is important to use a new safety clip when installing.

- Press the A-pillar panel into place.

WARNING: It is important to install the safety clip/hook and panel correctly so that the IC system is not affected.

Reinstall:

- the dashboard end panel
- insulation and floor carpet.
- the sound proofing.
- Turn the ignition key to position II.

SUPPLEMENTAL RESTRAINT SYSTEM MODULE, SRS

see **SUPPLEMENTAL RESTRAINT SYSTEM MODULE, SRS**

HVAC

Climate Units - Removal, Replacement And Installation

AIR CONDITIONING (B5254T2; 2003-2005)

COMPRESSOR, REPLACING

see **COMPRESSOR, REPLACING**

CONDENSER, REPLACING

see **CONDENSER, REPLACING**

EVAPORATOR REAR, REPLACING

see **EVAPORATOR REAR, REPLACING**

EVAPORATOR, REPLACING

see **EVAPORATOR, REPLACING**

EXPANSION VALVE REAR, REPLACING

see **EXPANSION VALVE REAR, REPLACING**

EXPANSION VALVE, REPLACING

see **EXPANSION VALVE, REPLACING**

MAGNET CLUTCH AC COMPRESSOR, REPLACING

see **MAGNET CLUTCH AC COMPRESSOR, REPLACING**

NEEDLE JET / SERVICE VALVE, REPLACING

see **NEEDLE JET / SERVICE VALVE, REPLACING**

PIPE/HOSE COMPRESSOR, REPLACING

see **PIPE/HOSE COMPRESSOR, REPLACING**

PIPES / HOSES, REPLACING

see **PIPES / HOSES, REPLACING**

PIPES RECEIVER DRIER, REPLACING

see **PIPES RECEIVER DRIER, REPLACING**

RECEIVER DRIER, REPLACING

see **RECEIVER DRIER, REPLACING**

AIR CONDITIONING (B5254T2; 2006-2007)

COMPRESSOR, REPLACING

NOTE: The illustrations in this service information are used for different model years and/or models. Some variation may occur. However, the essential information in the illustrations is always correct.

PREPARATORY WORK

IMPORTANT INFORMATION

WARNING: Follow the safety instructions for work on air conditioning systems. See: REFRIGERANT, SAFETY REGULATIONS .

NOTE: First read the instructions covering slow and fast leaks. See OIL AIR CONDITIONING (A/C) SYSTEM, FILLING .

NOTE: When replacing a compressor, always replace the O-rings in pipes and quick-release connectors.

NOTE: Always plug the pipes and connections when working on the climate control system.

PREPARATORY WORK

Disconnect the battery negative lead. See: **BATTERY, DISCONNECTING** .

Drain the refrigerant from the system. See **REFRIGERANT, DRAINING** .

REMOVAL

REMOVING COMPRESSOR

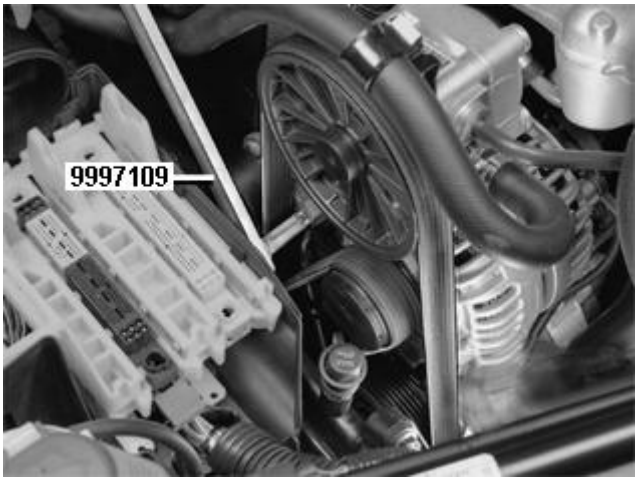

Fig. 1: Identifying Auxiliaries Belt And Special Tool 999 7109
Courtesy of VOLVO CARS CORPORATION

Remove the auxiliaries belt from the compressor. See:

- **Model year 03-04: AUXILIARIES BELT / BELT TENSIONER, REPLACING** (B5xx4xx) or: **REPLACING THE ACCESSORY DRIVE BELT / BELT TENSIONER** (B6xx4xx)
- **Model year 05- : AUXILIARIES BELT / BELT TENSIONER, REPLACING** (B5xx4Tx) or: **REPLACING THE ACCESSORY DRIVE BELT / BELT TENSIONER** (B6xx4xx).

Note the route of the belt.

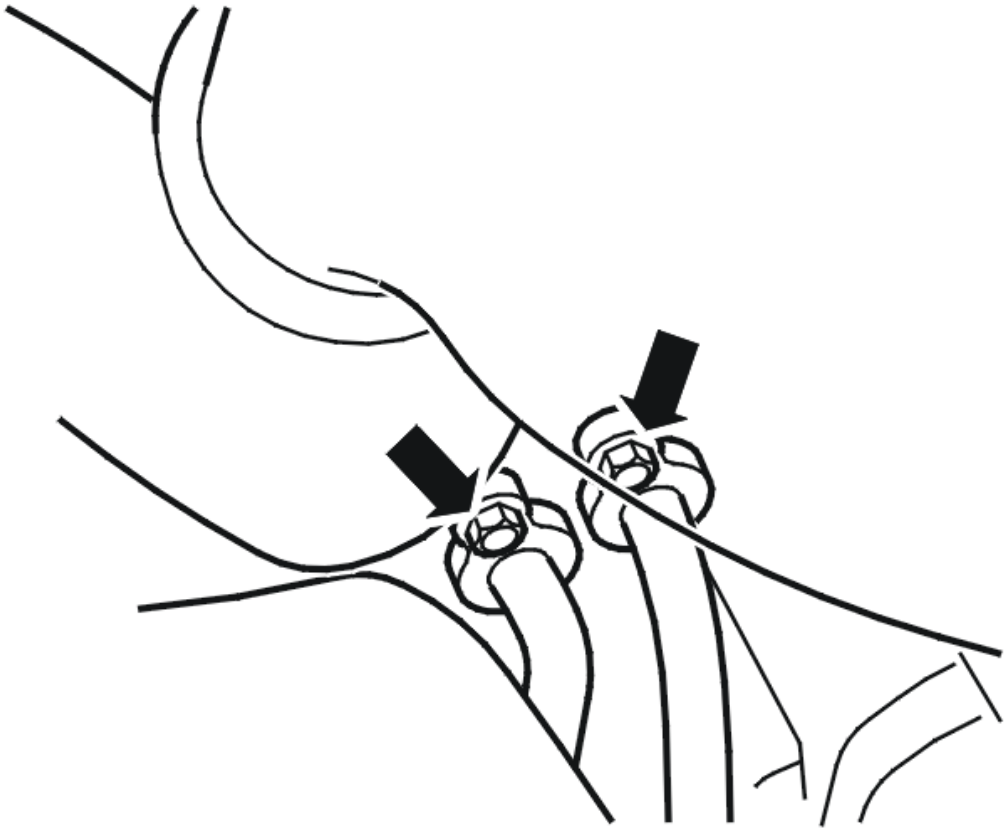

Fig. 2: Low And High Pressure Hoses
Courtesy of VOLVO CARS CORPORATION

Remove the screws for the low and high pressure hoses for the compressor.

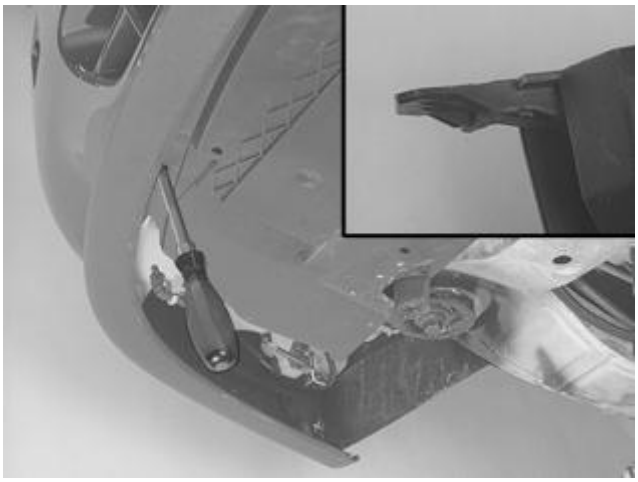

Fig. 3: Identifying Air Baffle And Splash Guard Under Engine
Courtesy of VOLVO CARS CORPORATION

NOTE: **Position the front lift arms so that they do not obstruct the sub-frame support plates.**

Raise the vehicle.

Remove:

- the protective cover under the engine
- the 2 x screws for the front splash guard. Press in the cover by pressing in the catches at the front edge. Pull the cover backwards.

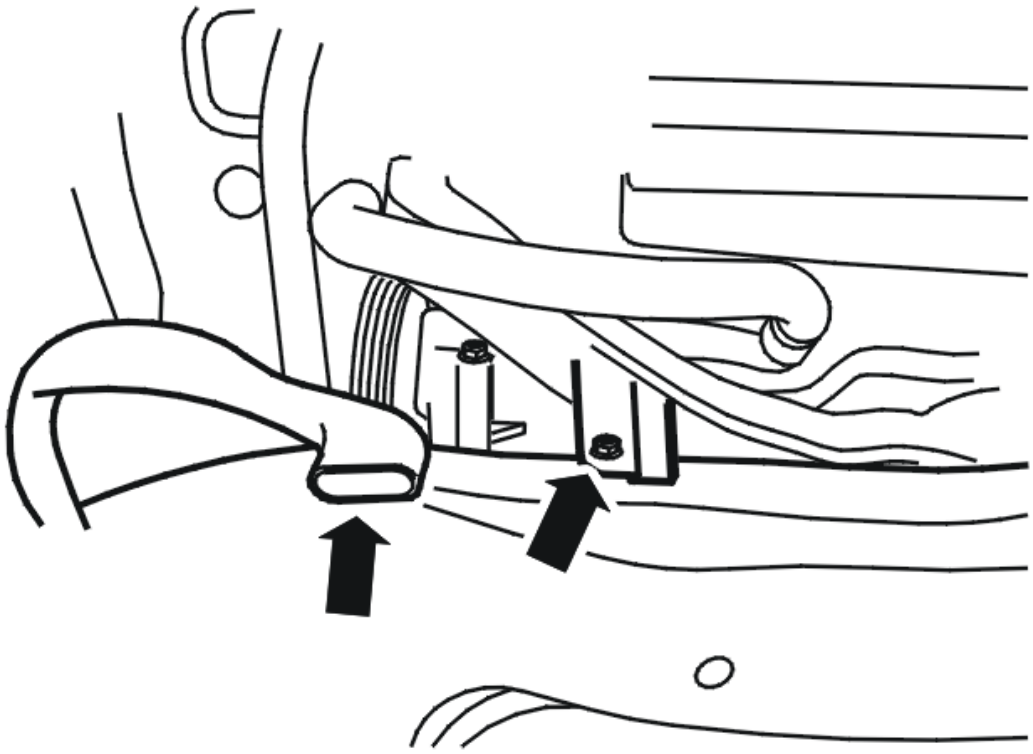

Fig. 4: Removing Cable Conduit
Courtesy of VOLVO CARS CORPORATION

Remove the screw for the cable conduit. Remove the conduit from the sub-frame.

Detach the air duct for the control module box from the sub-frame.

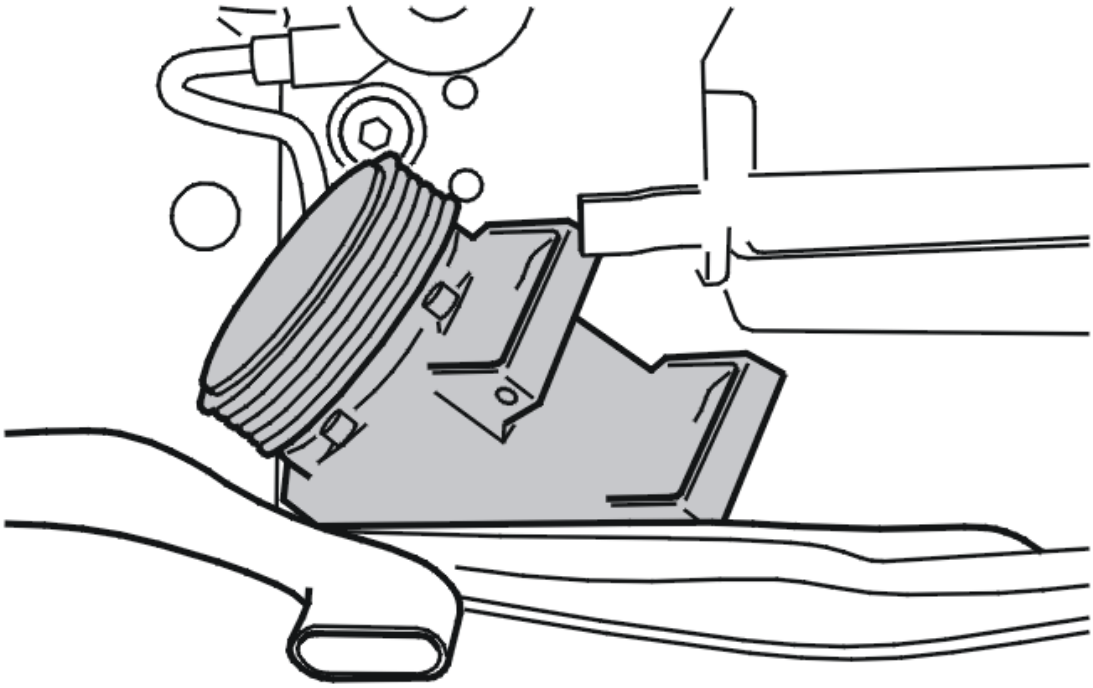

Fig. 5: Removing Compressor
Courtesy of VOLVO CARS CORPORATION

Unscrew the low and high pressure hoses from the compressor and bend them to one side.

Disconnect the connector from the magnetic clutch for the compressor.

Remove the 4 x screws from the compressor.

Hold the cable conduit to one side. Remove the compressor from between the sub-frame and the body.

INSTALLATION

INSTALLING THE COMPRESSOR

NOTE: For tightening torques, see: TIGHTENING TORQUE .

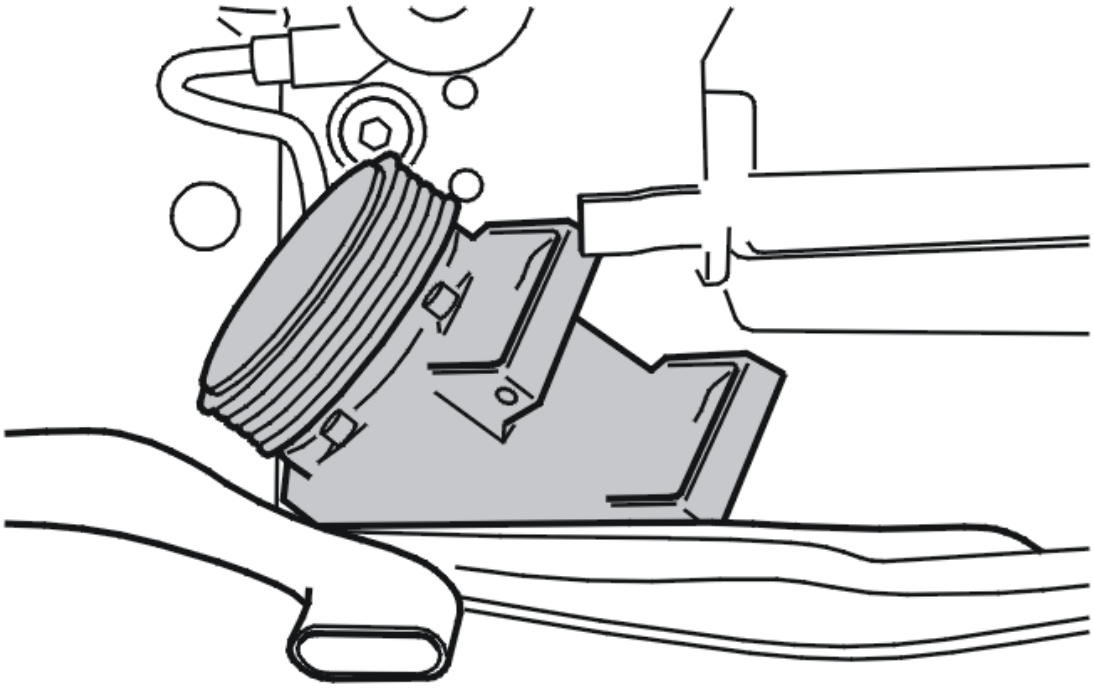

Fig. 6: Installing Compressor
Courtesy of VOLVO CARS CORPORATION

If necessary, top up the compressor oil. See: **OIL AIR CONDITIONING (A/C) SYSTEM, FILLING** .

Hold the cable conduit to one side. Install the compressor between the sub-frame and the body.

Install the mounting screws and tighten.

NOTE: Always use new O-rings lubricated with compressor oil.

Install:

- the low and high pressure hoses. On certain models it may be easier to install and tighten the screws from above.
- the magnetic clutch connector.

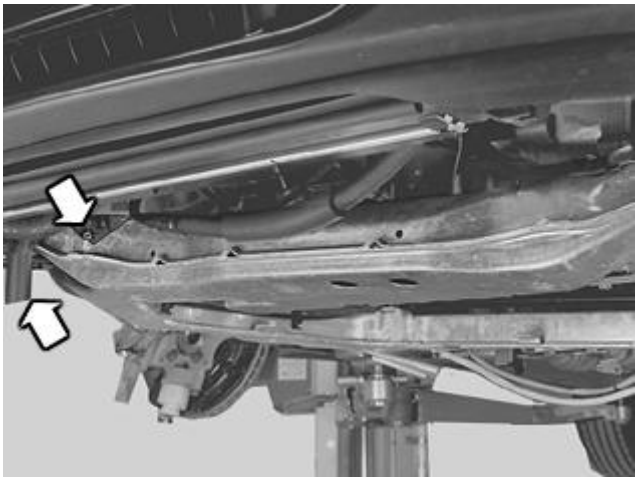

Fig. 7: Identifying Cable Conduit On The Sub-Frame
Courtesy of VOLVO CARS CORPORATION

Install:

- the cable conduit on the sub-frame. Tighten.
- the air duct on the control module box on the sub-frame.

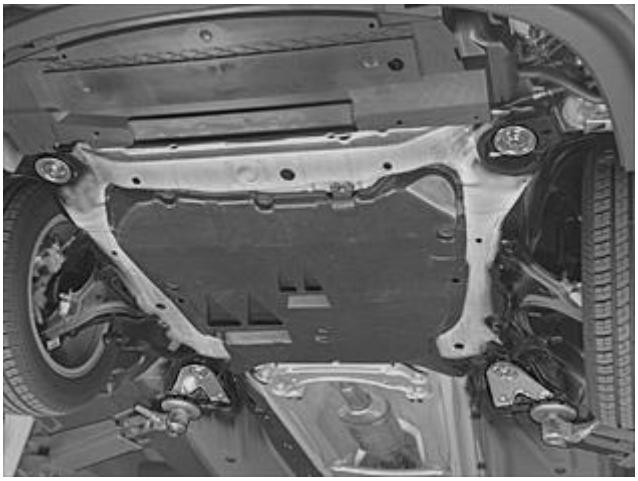

Fig. 8: Front Splash Guard
Courtesy of VOLVO CARS CORPORATION

Install:

- the protective cover under the engine
- the front splash guard.

Lower the vehicle.

Install the auxiliaries belt. See:

- **Model year 03-04: AUXILIARIES BELT / BELT TENSIONER, REPLACING** (B5xx4xx) or: **REPLACING THE ACCESSORY DRIVE BELT / BELT TENSIONER** (B6xx4xx)
- **Model year 05- : AUXILIARIES BELT / BELT TENSIONER, REPLACING** (B5xx4Tx) or: **REPLACING THE ACCESSORY DRIVE BELT / BELT TENSIONER** (B6xx4xx).

FINISHING

Install the battery negative lead according to: **BATTERY, DISCONNECTING** .

Vacuum pump side. See: **VACUUM PUMPING** .

Fill the system with refrigerant. See: **REFRIGERANT, FILLING** .

Leak trace the system. See:**LEAK TRACING, FLUORESCENT TRACING AGENT / UV LAMP** or: **LEAK TRACING, FLUORESCENT TRACING AGENT / UV LAMP** .

CONDENSER, REPLACING

NOTE: The illustrations in this service information are used for different model years and/or models. Some variation may occur. However, the essential information in the illustrations is always correct.

PREPARATORY WORK

DRAINING THE REFRIGERANT AND REMOVING THE COMPONENTS

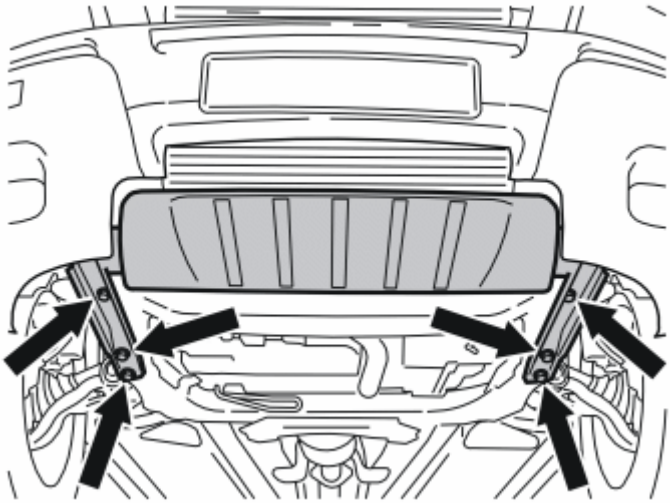

Fig. 9: Engine Under Cover
Courtesy of VOLVO CARS CORPORATION

WARNING: Follow the safety instructions for work on air conditioning systems. See: REFRIGERANT, SAFETY REGULATIONS .

NOTE: **First read the instructions covering slow and fast leaks. See: OIL AIR CONDITIONING (A/C) SYSTEM, FILLING .**

NOTE: **Always plug the pipes and connections when working on the climate control system.**

Drain the refrigerant from the system. See **REFRIGERANT, DRAINING** .

Raise the vehicle.

Removing the skidplate

Remove the 6 screws.

Lift and slide the protective plate forward.

NOTE: **There is a guide sleeve on the upper mounting for the plate. This must be lifted slightly so that the panel can be slid forward.**

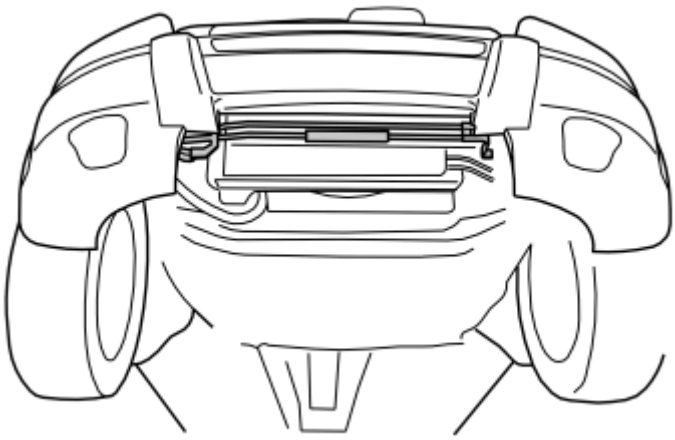

Fig. 10: Oil Cooler
Courtesy of VOLVO CARS CORPORATION

Removing the oil cooler for the power steering

Remove:

- the screws to the oil cooler
- fold down the oil cooler.

REMOVAL

REMOVING THE COMPONENTS AND CONDENSER

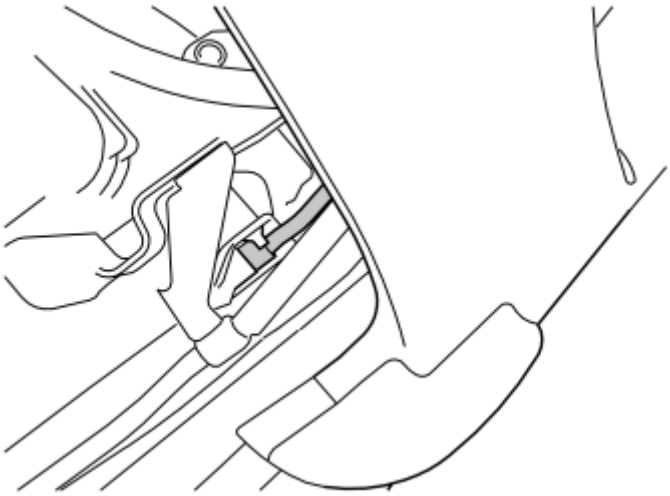

Fig. 11: Right Hand A/C Pipe Connection
Courtesy of VOLVO CARS CORPORATION

Remove:

- right-hand A/C pipe connection with the screw, x 1
- the connector to the pressure sensor
- the pressure sensor
- right-hand lower mounting screw, x 1.

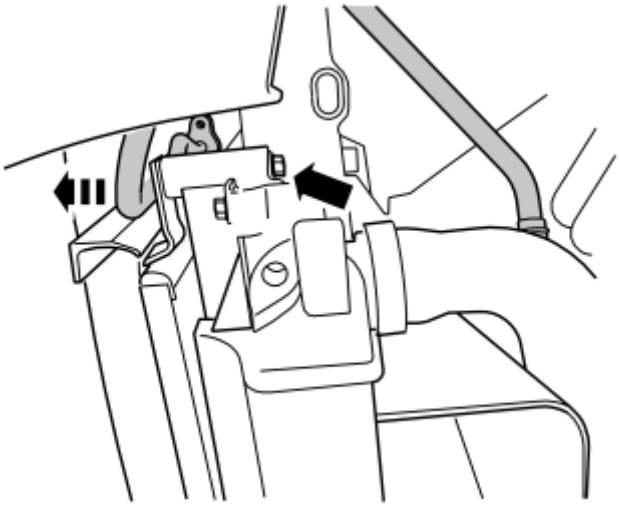

Fig. 12: Left Hand A/C Pipe
Courtesy of VOLVO CARS CORPORATION

Detach the left-hand A/C pipe from the clip/holder.

Remove the left-hand lower mounting screw, x 1.

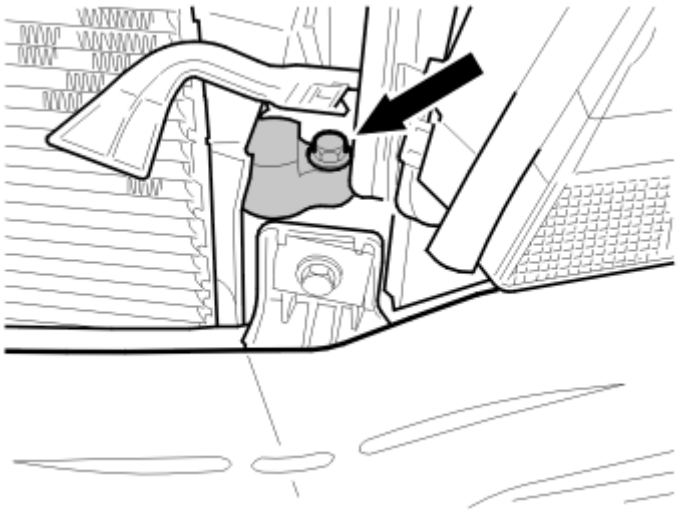

Fig. 13: A/C Pipe Installation Screw
Courtesy of VOLVO CARS CORPORATION

Lower the vehicle.

Remove the left-hand A/C pipe with the screw, x 1.

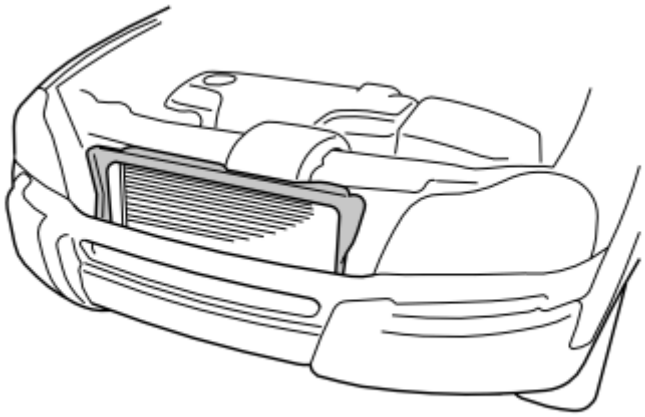

Fig. 14: Air Baffle
Courtesy of VOLVO CARS CORPORATION

Remove the air baffle.

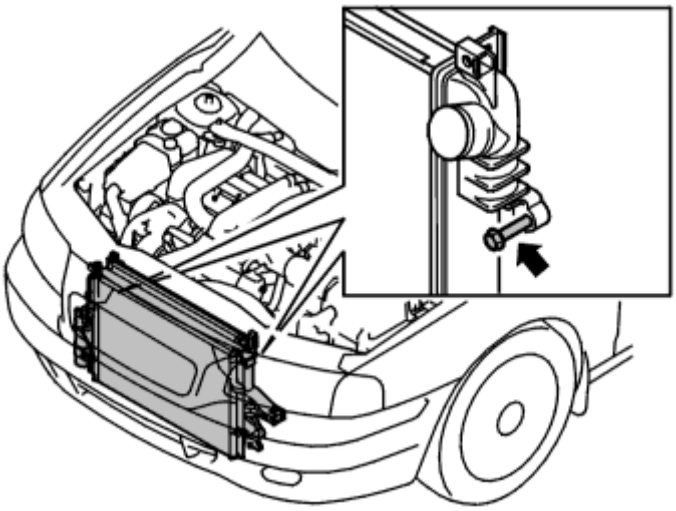

Fig. 15: Identifying Condenser Upper Mountings & Screws
Courtesy of VOLVO CARS CORPORATION

Remove the upper mountings on the condenser with the screws, x 2.

Raise the vehicle.

Remove the condenser straight down, press aside the A/C pipe slightly on the left-hand side while pulling the condenser down.

INSTALLATION

NOTE: For tightening torques, see TIGHTENING TORQUE

INSTALLING THE CONDENSER

Fill oil in the condenser, see: **OIL AIR CONDITIONING (A/C) SYSTEM, FILLING** .

NOTE: Always use new O-rings lubricated with compressor oil.

Install the condenser with the 2 x M6 lower mounting screws, and tighten.

Guide the left-hand A/C pipe to the condenser connection and in the clip/holder.

Install:

- the right-hand A/C pipe with the screw, 1 x M6, and tighten
- the pressure sensor, see: **SUMMARY OF TIGHTENING TORQUES FOR SPECIFIC COMPONENTS**
- the connector
- the oil cooler for the power steering with the screws, 2 x M6, and tighten.

Lower the vehicle.

Install:

- the condenser's upper mounting screws, 2 x M6, and tighten
- the left-hand A/C pipe with the screw, 1 x M8, and tighten
- the air baffle on the condenser.

FINISHING

FILLING REFRIGERANT AND DETECTING LEAKS

Vacuum pump the air conditioning (A/C) system. See: **VACUUM PUMPING** .

Fill the system, see: **REFRIGERANT, FILLING** .

Leak trace the system. See:**LEAK TRACING, FLUORESCENT TRACING AGENT / UV LAMP** or: **LEAK TRACING, FLUORESCENT TRACING AGENT / UV LAMP** .

INSTALLING THE SKID PLATE

Move the protective plate up in the bumper cover.

Press forward until the mounting brackets enter the subframe.

Fit the bolts, M10 x6.

EVAPORATOR REAR, REPLACING

REMOVAL

The illustrations in this service information are used for different model years and / or models. Some variation may occur. However, the essential information in the illustrations is always correct.

PREPARATIONS

Remove:

- the rear climate control unit. See **CLIMATE CONTROL UNIT REAR, REPLACING**
- the rear expansion valve. See **EXPANSION VALVE REAR, REPLACING**.

NOTE: Always plug the pipes and connections when working on the climate control system.

REMOVING THE REAR EVAPORATOR

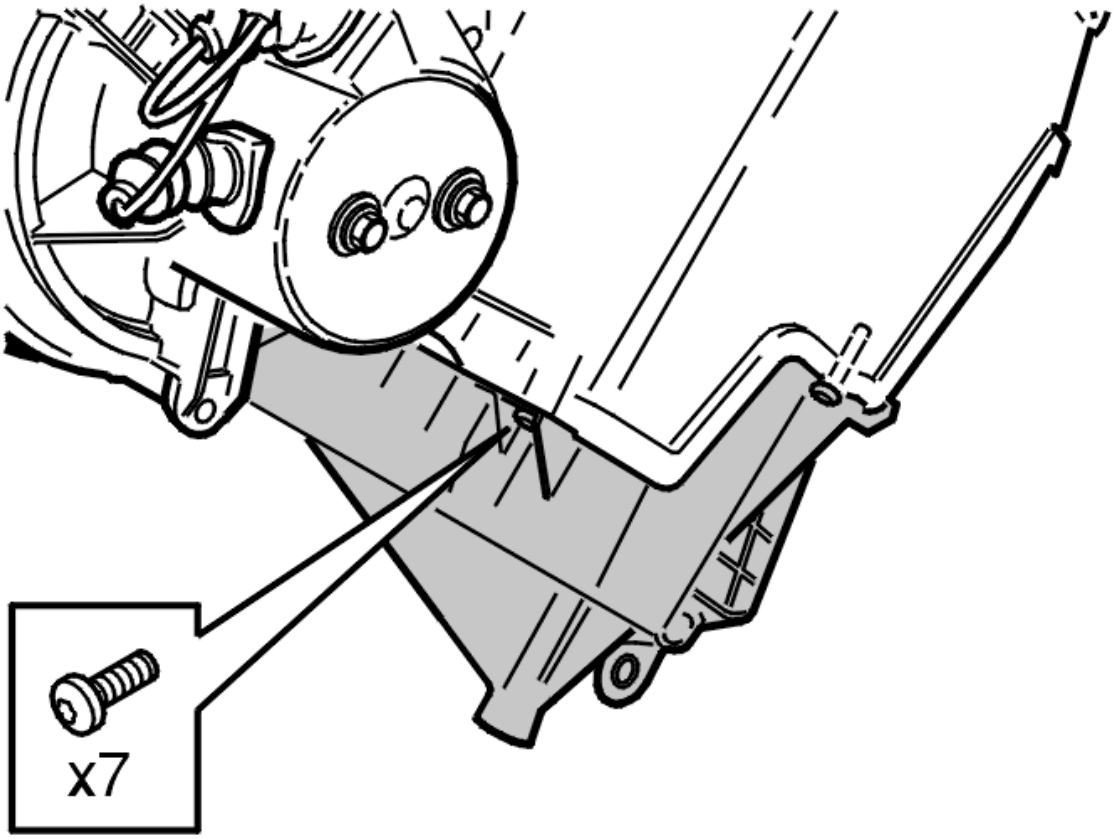

Fig. 16: Evaporator Housing Lower Cover
Courtesy of VOLVO CARS CORPORATION

Remove the 7 screws (see the illustration) and the lower cover from the evaporator housing on the rear climate control unit.

Open the snap fastener in the cover. Pull the cover straight out.

INSTALLING THE REAR EVAPORATOR

Ensure that the new insulation is correctly positioned on the evaporator. Also check the seal on the expansion valve.

Position the evaporator in the housing.

Install:

- the lower cover so that the snap fastener is secure. Install the 7 screws
- the rear expansion valve. See **EXPANSION VALVE REAR, REPLACING**
- the rear climate control module (CCM). See **CLIMATE CONTROL UNIT REAR, REPLACING**.

EVAPORATOR, REPLACING

REMOVAL

As the illustrations in this service information are used for different model years and / or models, some variation may occur. However, the essential information in the illustrations is always correct.

REMOVING THE EVAPORATOR

Remove:

- the dashboard. See **DASHBOARD, REPLACING**
- the climate control unit. See **CLIMATE UNIT, REPLACING**.

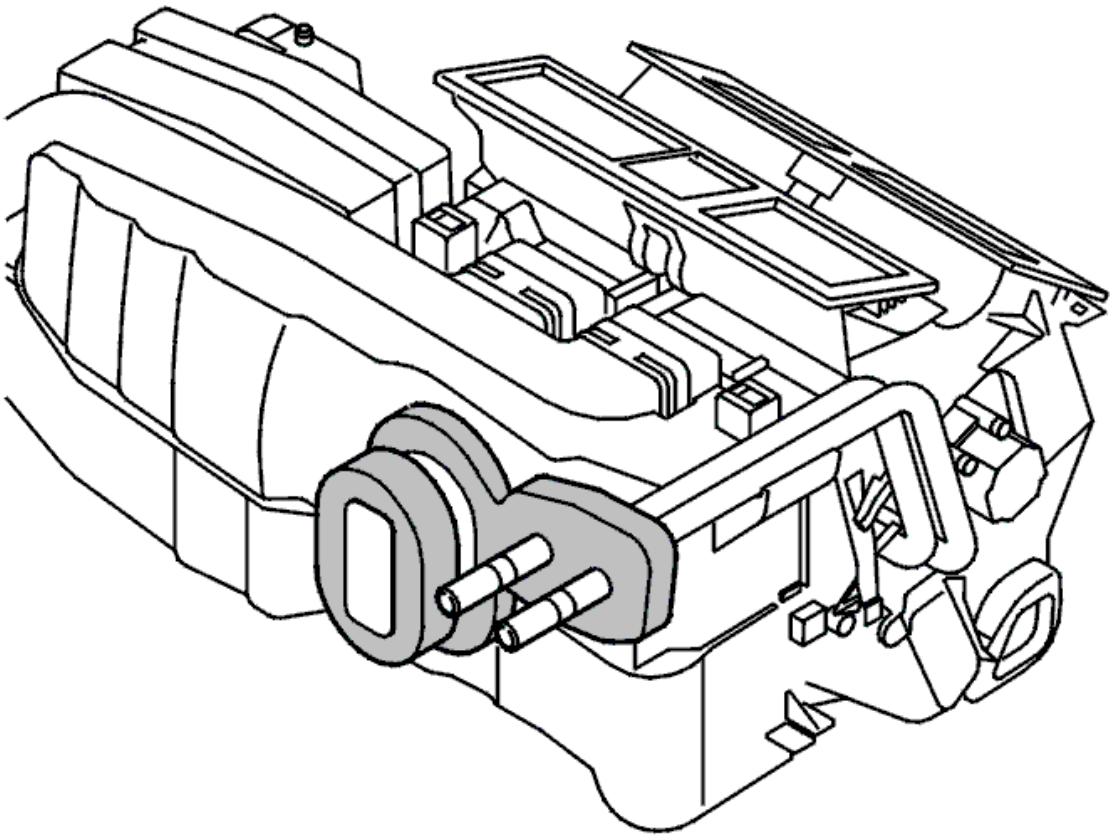

Fig. 17: Front Seal For Refrigerant Pipe
Courtesy of VOLVO CARS CORPORATION

- the inner and outer seals for the pipe grommets.

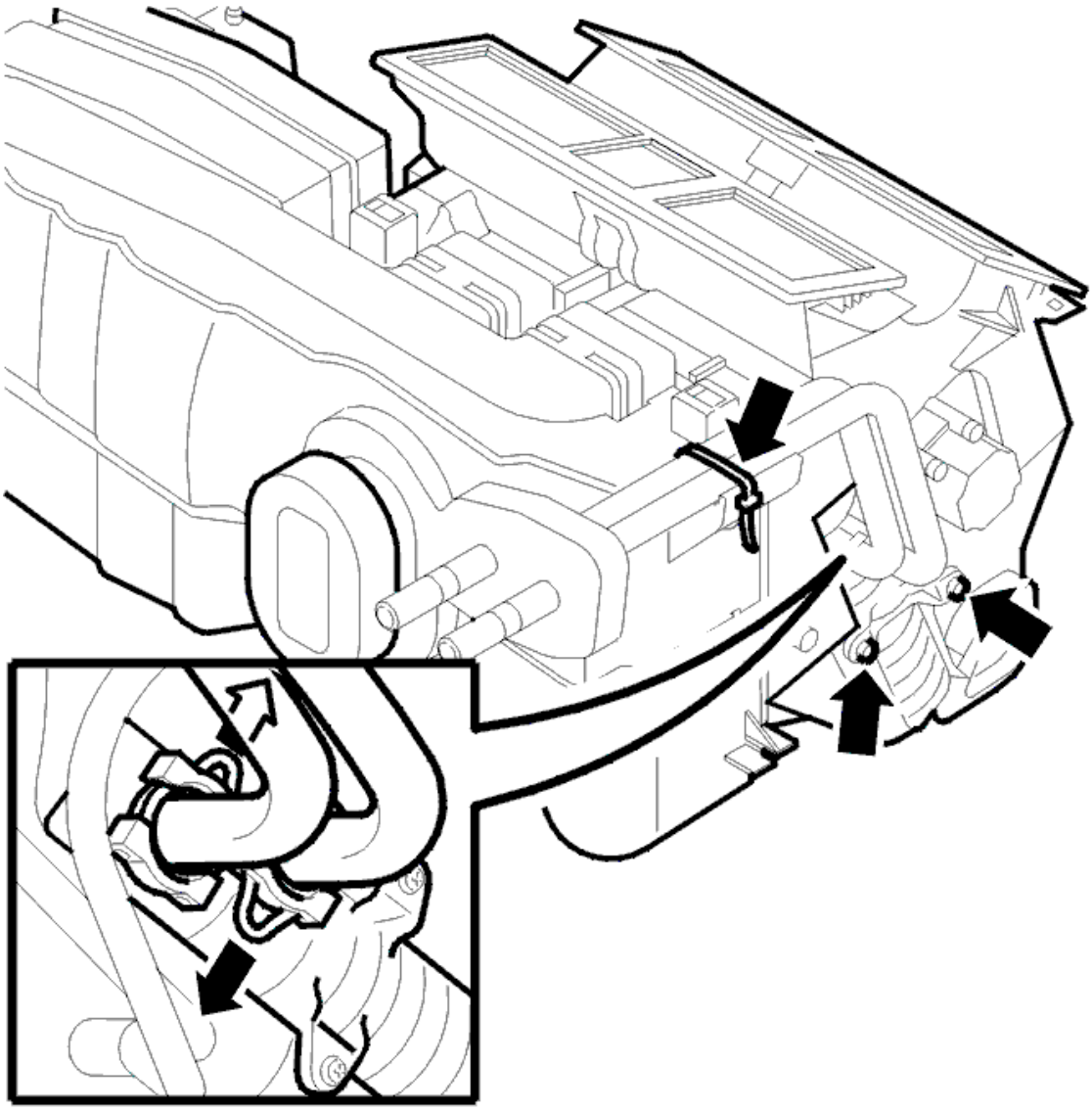

Fig. 18: Identifying Heat Exchanger Retaining Clip And Pipe
Courtesy of VOLVO CARS CORPORATION

- the retaining clip and pipes from the heat exchanger.

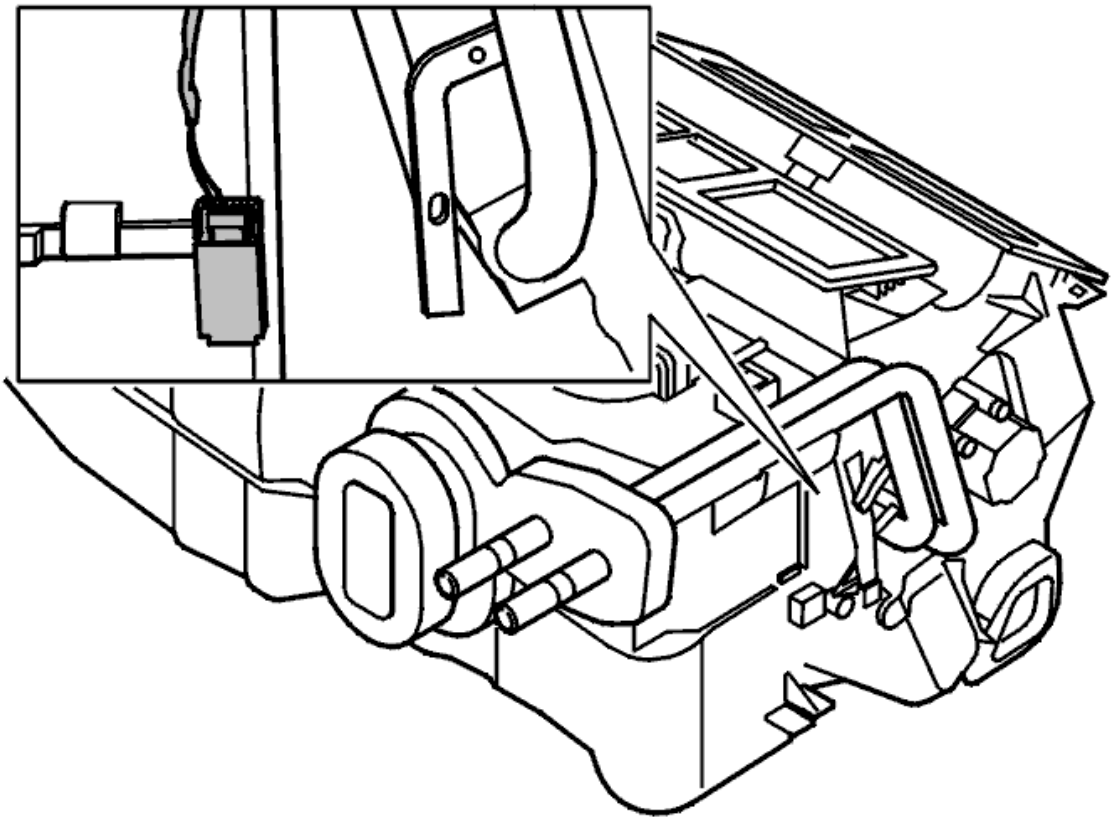

Fig. 19: Identifying Temperature Sensor
Courtesy of VOLVO CARS CORPORATION

- the sensor.

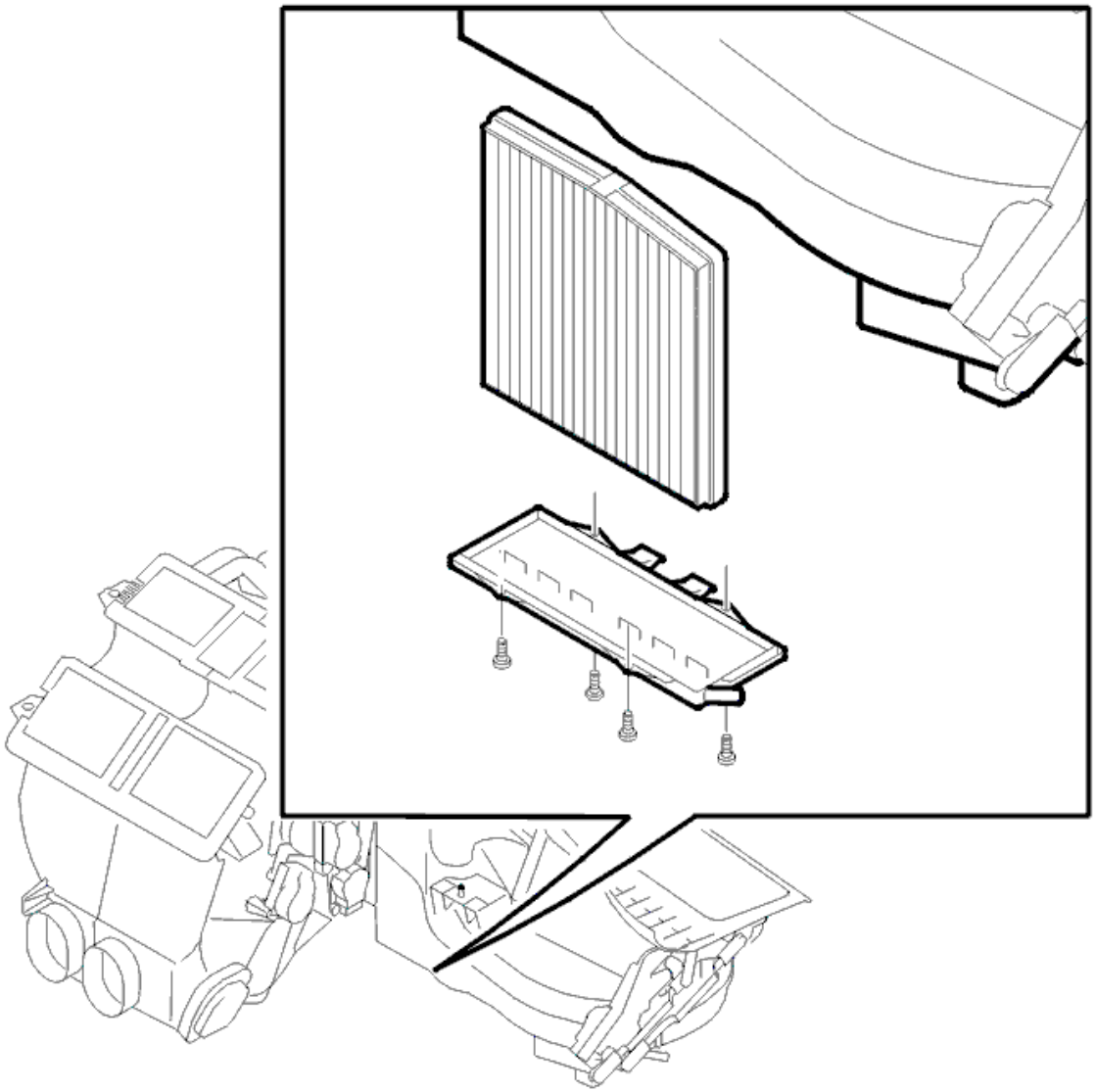

Fig. 20: Air Cleaner (ACL) And Cover
Courtesy of VOLVO CARS CORPORATION

- the 4 screws for the air cleaner (ACL) and cover.

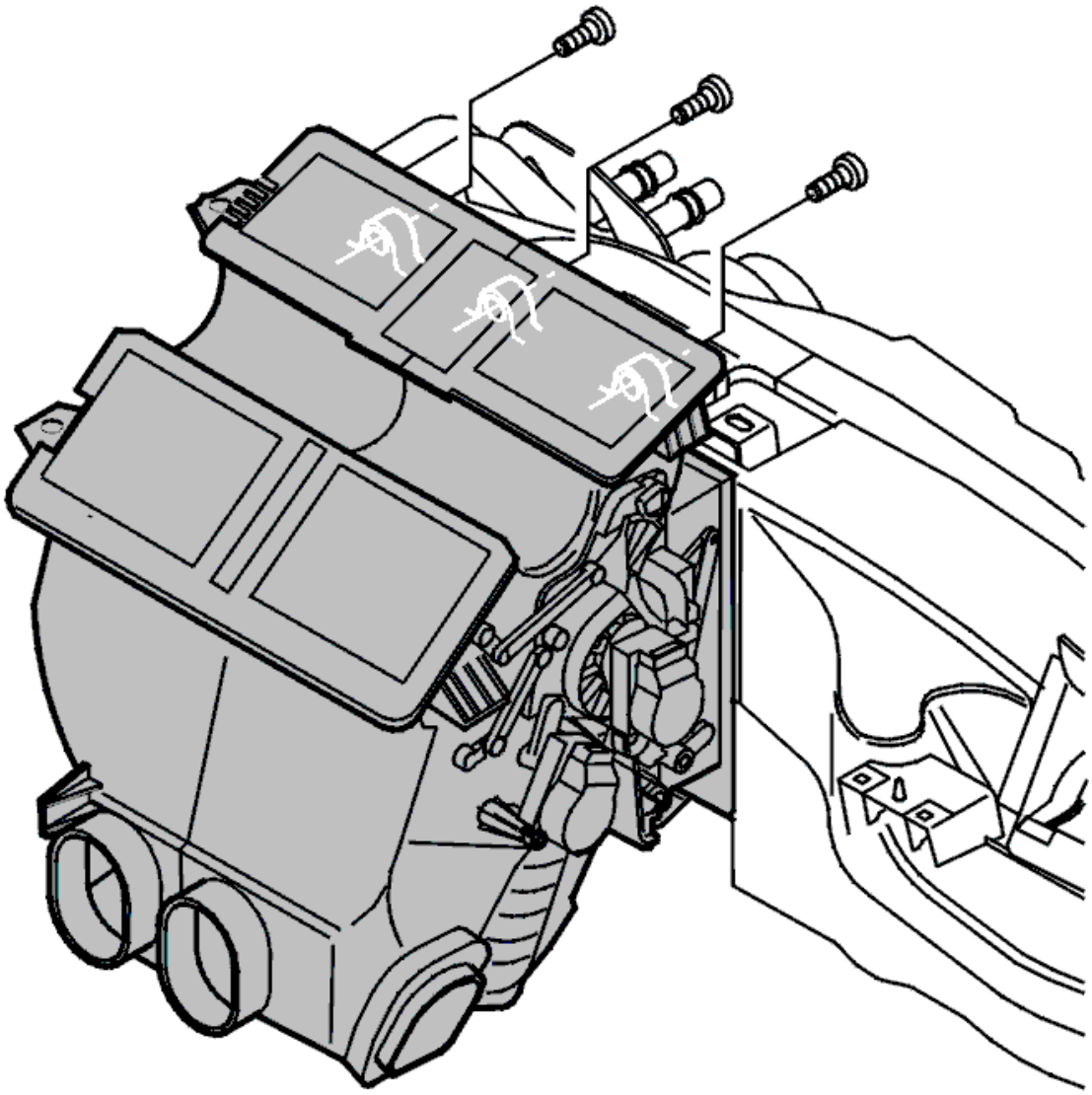

Fig. 21: Identifying Central Electrical Unit
Courtesy of VOLVO CARS CORPORATION

- the 3 screws for the central electrical unit.

Fold out the central electrical unit. Remove the seal

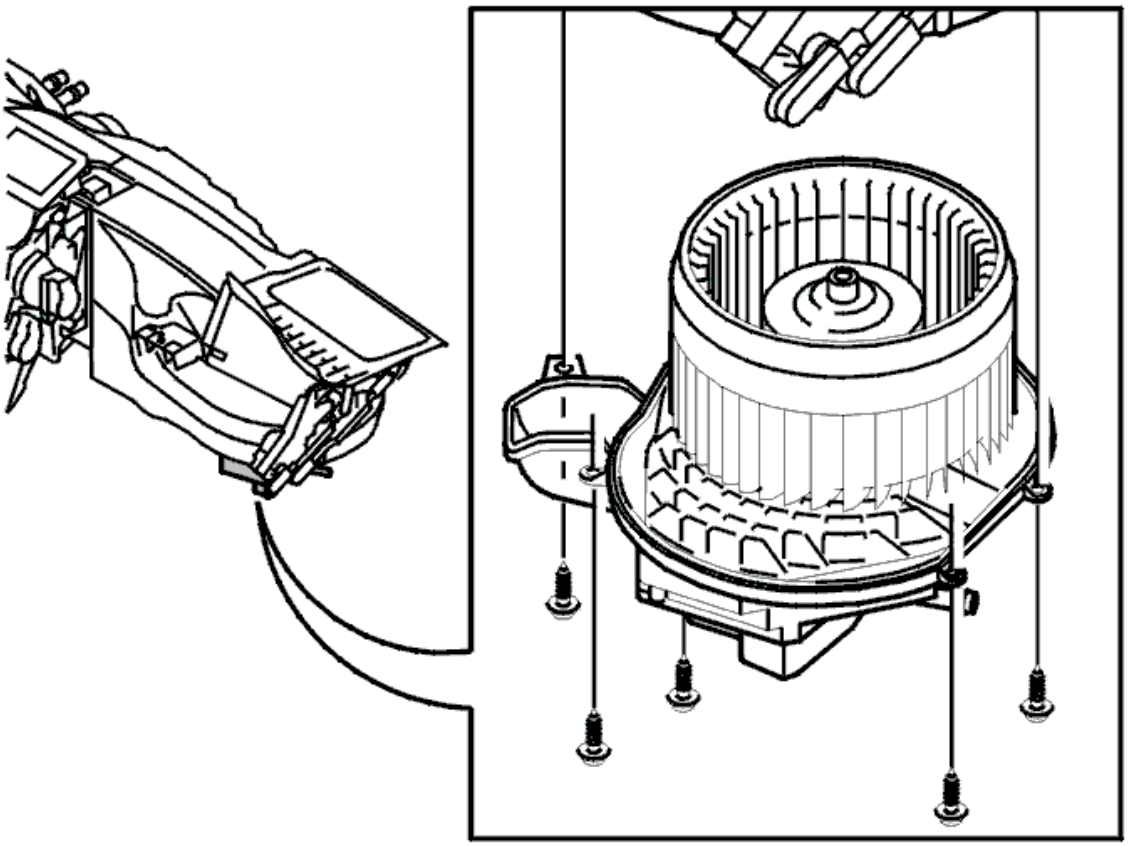

Fig. 22: Identifying Blower Fan Motor And Cover
Courtesy of VOLVO CARS CORPORATION

Remove:

- the cover for the blower fan motor. The cover is secured by one screw
- the blower fan motor which is secured by four screws.

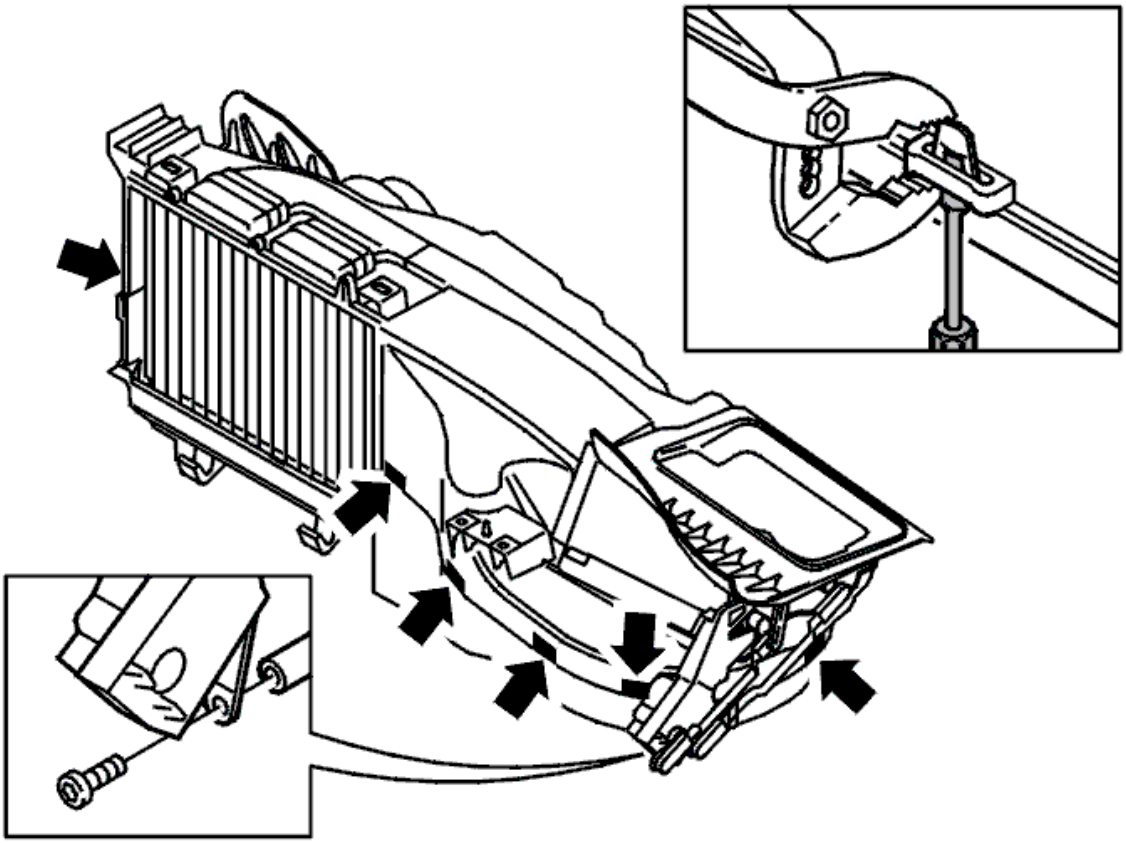

Fig. 23: Identifying Recirculation Motor Bracket Screw
Courtesy of VOLVO CARS CORPORATION

- the screw for the bracket for the recirculation motor.

Release the catches for the divisions of the upper and lower sections using a screwdriver and pipe wrench as shown in the illustration. Start at one end.

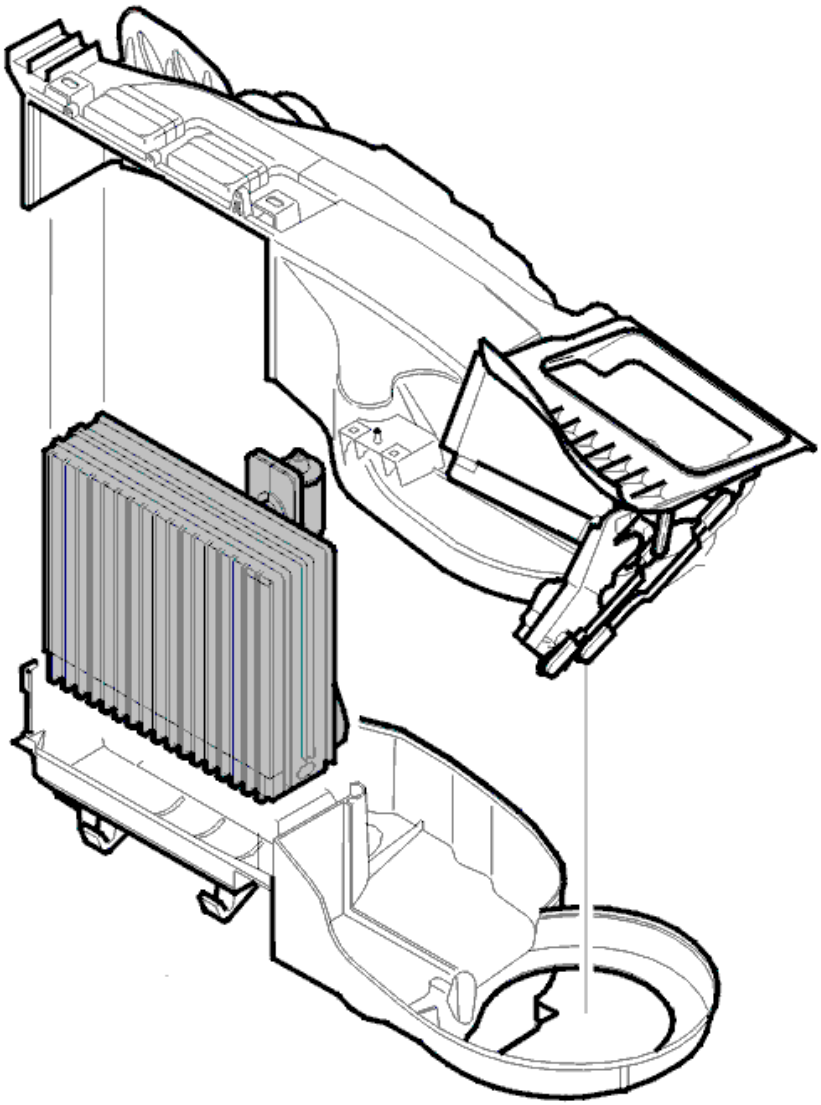

Fig. 24: Identifying Lower Section Of Evaporator
Courtesy of VOLVO CARS CORPORATION

Lift off the lower section.

Lift out the evaporator.

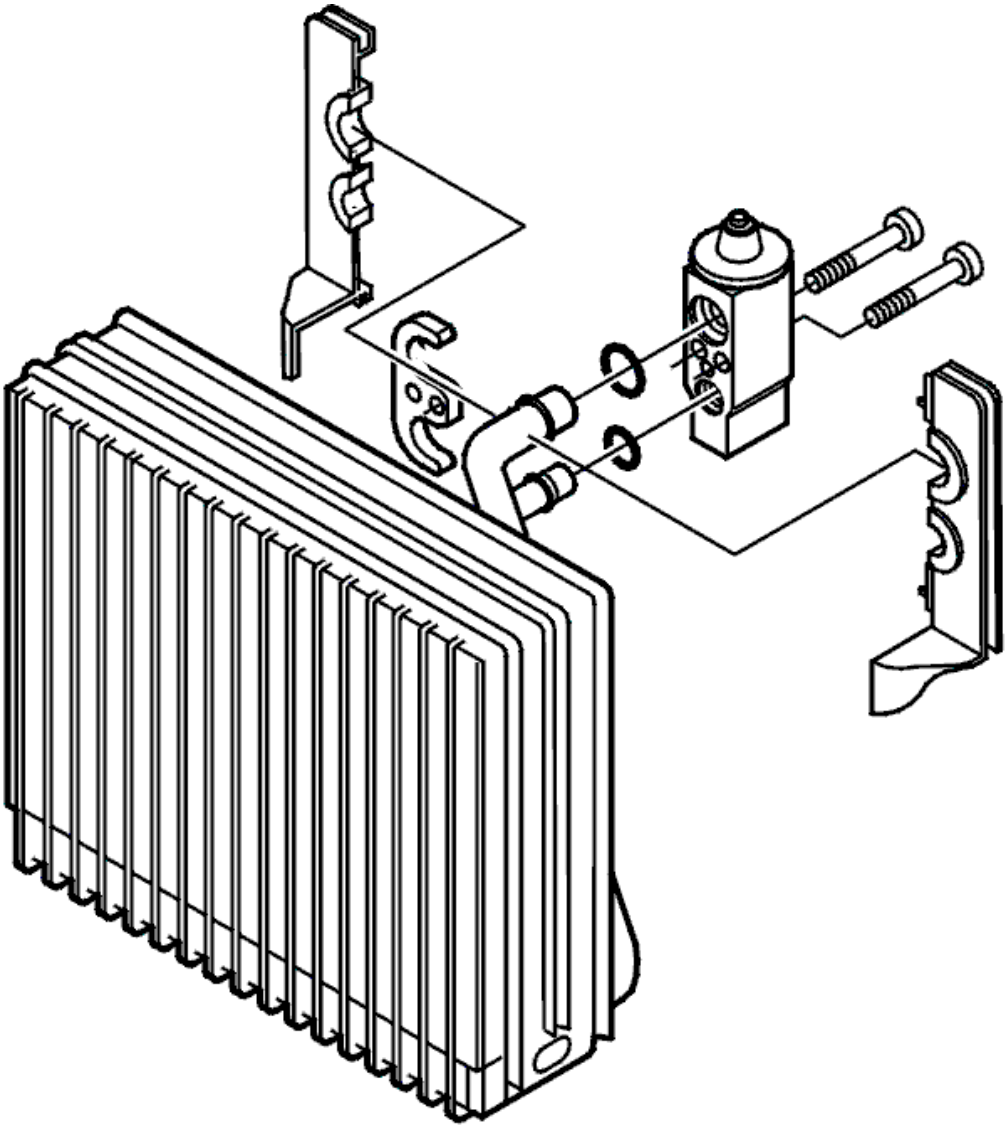

Fig. 25: Identifying Expansion Valve Block And Seal
Courtesy of VOLVO CARS CORPORATION

Remove:

- the expansion valve which is secured by two screws
- the expansion valve block
- the seal.

INSTALLING THE EVAPORATOR

NOTE: Use new O-rings lubricated with compressor oil.

Install:

- O rings on the evaporator pipe
- the expansion valve.

Position the evaporator in the upper fan housing.

Check that the seal sits in the correct groove at the expansion valve.

Install the lower fan housing and press so that the mounting lugs are in line with the upper half.

Ensure that the mounting lugs are correctly positioned.

Check that the seal sits in the correct groove at the expansion valve.

Press the upper fan housing into the lower.

Check that the upper fan housing is secured in the lower housing.

Install:

- new retaining clips around the fan housing so that the housing is sealed
- the central electrical unit seal
- the central electrical unit. Screw it into place
- the air cleaner (ACL) and cover
- new inner and outer seals for the pipe grommets around the heat exchanger-refrigerant pipe
- the climate control unit. See **CLIMATE UNIT, REPLACING**
- the dashboard in the car. See **DASHBOARD, REPLACING** .

EXPANSION VALVE REAR, REPLACING

REMOVAL

As the illustrations in this service information are used for different model years and / or models, some variation may occur. However, the essential information in the illustrations is always correct.

PREPARATIONS

NOTE: Read the safety precautions for handling refrigerant. See REFRIGERANT, SAFETY REGULATIONS .

Drain the refrigerant from the system. See **REFRIGERANT, DRAINING** .

Remove the rear left side panel. See **SIDE PANEL CARGO COMPARTMENT, REPLACEMENT** .

NOTE: Always plug the pipes and connections when working on the climate control system.

REMOVING THE REAR EXPANSION VALVE

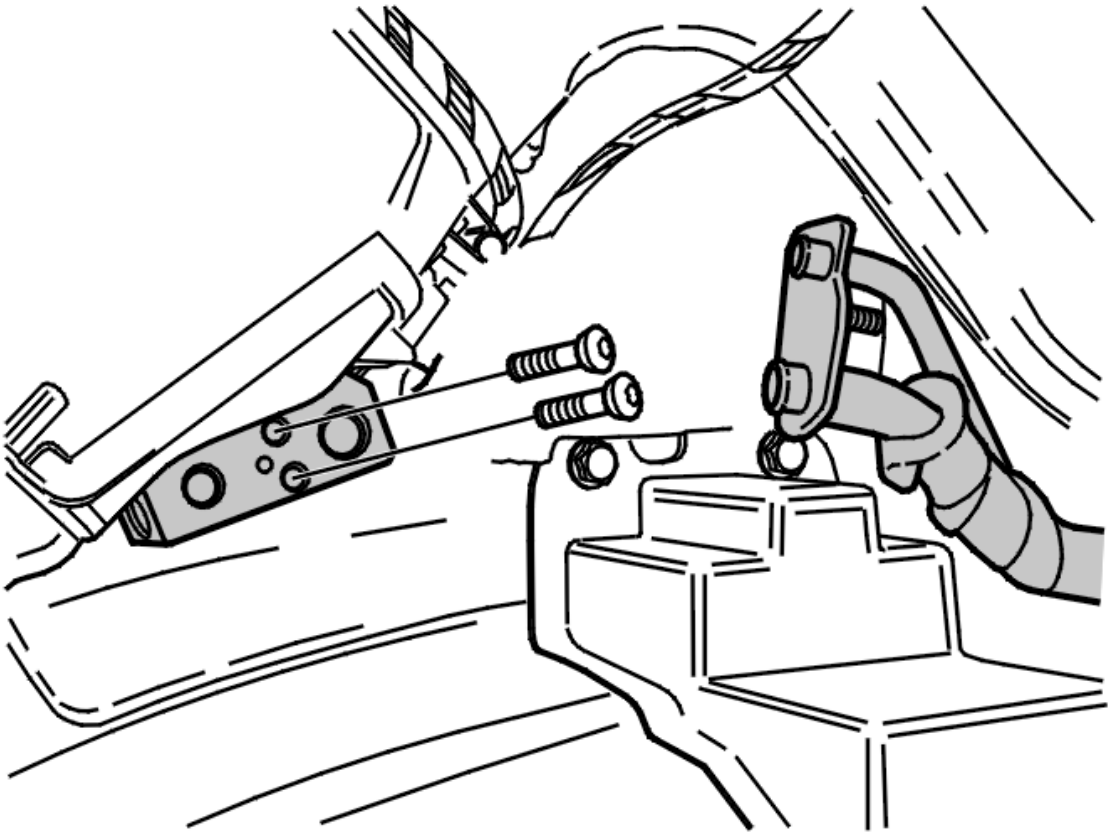

Fig. 26: Air Conditioning Junction Block
Courtesy of VOLVO CARS CORPORATION

Remove:

- the screw on the junction block for the air conditioning (A/C) pipes to the expansion valve
- the 2 screws for the expansion valve.

NOTE: the original O-rings for the expansion valve and the connecting air conditioning (A/C) pipes are violet and must be replaced with new yellow ones lubricated with compressor oil.

INSTALLING THE REAR EXPANSION VALVE

NOTE: For tightening torques, see GENERAL TIGHTENING TORQUE .

Install:

- the expansion valve using the 2 screws. Tighten. See **TIGHTENING TORQUE**
- the junction block with the air conditioning (A/C) pipes using the 1 M5 screw. Tighten.

Vacuum pump the air conditioning (A/C) system. See **VACUUM PUMPING** .

Fill the air conditioning (A/C) system with refrigerant. See **REFRIGERANT, FILLING** .

Leak trace the air conditioning (A/C) system. See **LEAK TRACING, FLUORESCENT TRACING AGENT / UV LAMP** or **LEAK TRACING, FLUORESCENT TRACING AGENT / UV LAMP** .

Install the rear left side panel. See **SIDE PANEL CARGO COMPARTMENT, REPLACEMENT** .

EXPANSION VALVE, REPLACING

REMOVAL

As the illustrations in this service information are used for different model years and / or models, some variation may occur. However, the essential information in the illustrations is always correct.

PREPARATIONS

NOTE: Read the safety precautions for handling refrigerant. See REFRIGERANT, SAFETY REGULATIONS .

Drain the refrigerant from the system. See **REFRIGERANT, DRAINING** .

NOTE: Always plug the pipes and connections when working on the climate control system.

REMOVING EXPANSION VALVE

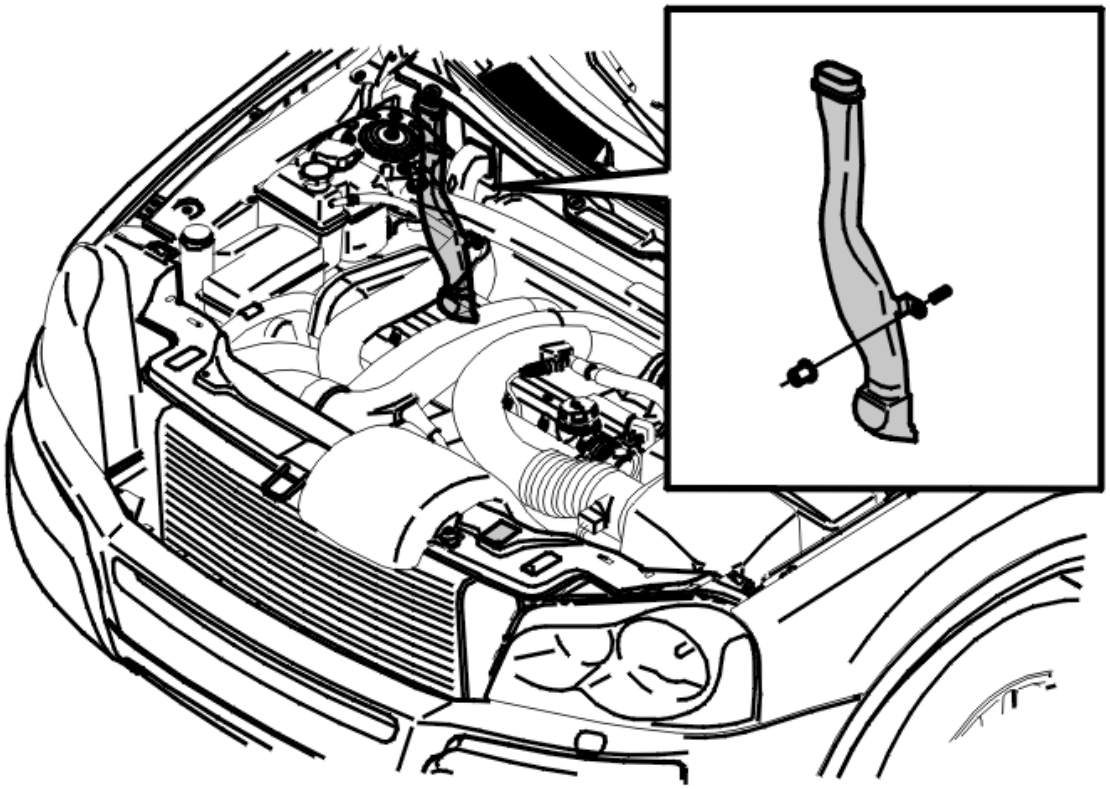

Fig. 27: Engine Stabilizer Brace
Courtesy of VOLVO CARS CORPORATION

Remove the engine stabilizer brace from the engine compartment.

Remove the mounting for the right-hand gutter.

Remove the gutter.

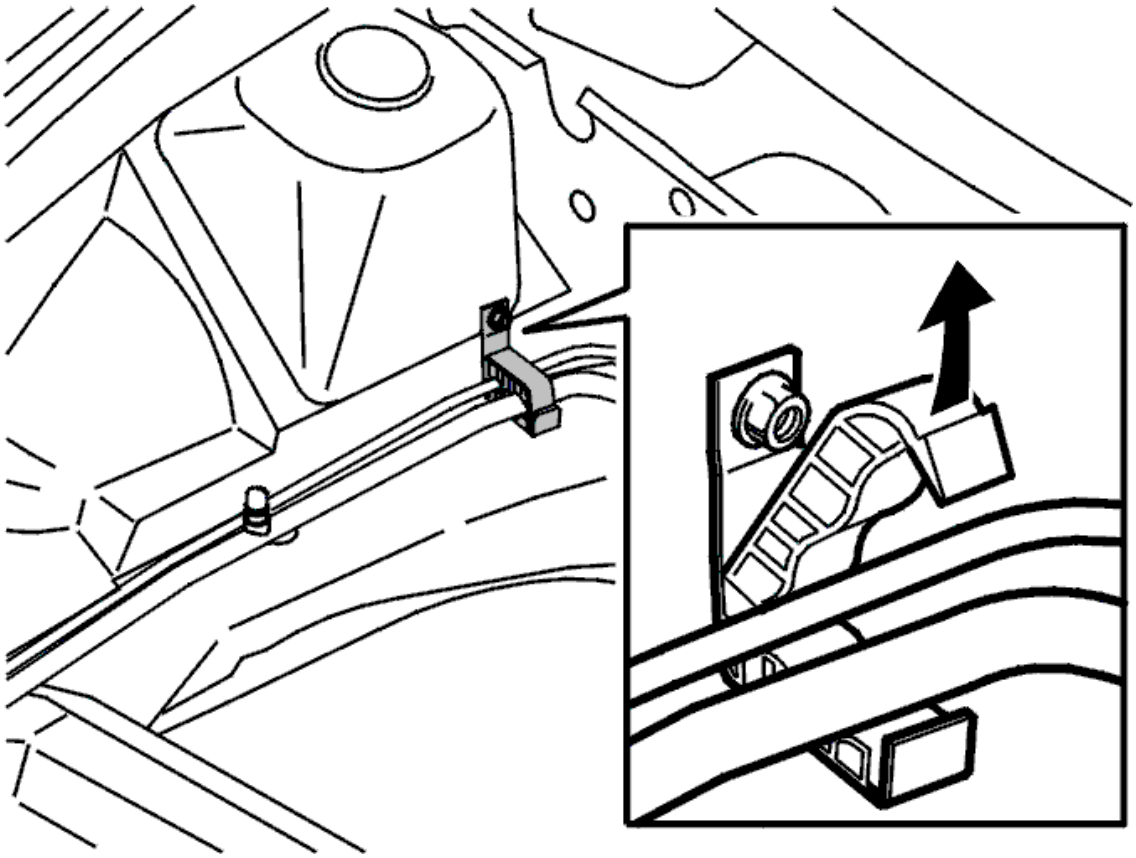

Fig. 28: Identifying Refrigerant Pipe Clamp On Side Member
Courtesy of VOLVO CARS CORPORATION

Open the clamp for the refrigerant pipe on the side member.

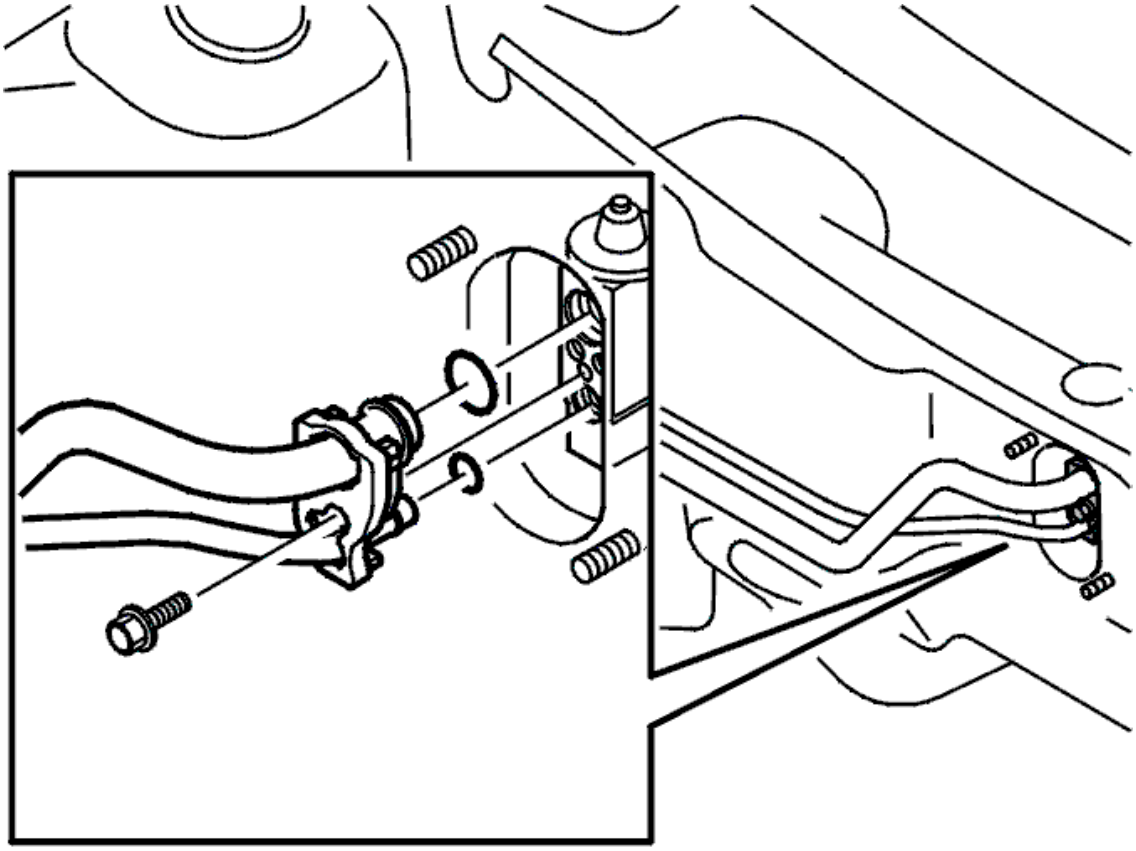

Fig. 29: Identifying Locking Bracket For Refrigerant Pipes
Courtesy of VOLVO CARS CORPORATION

Remove the heat shield over the expansion valve and remove the seal.

Remove the refrigerant pipe by slackening off the screw for the holder and pulling it back slightly.

Pull the refrigerant pipes off the expansion valve and place them carefully out of the way.

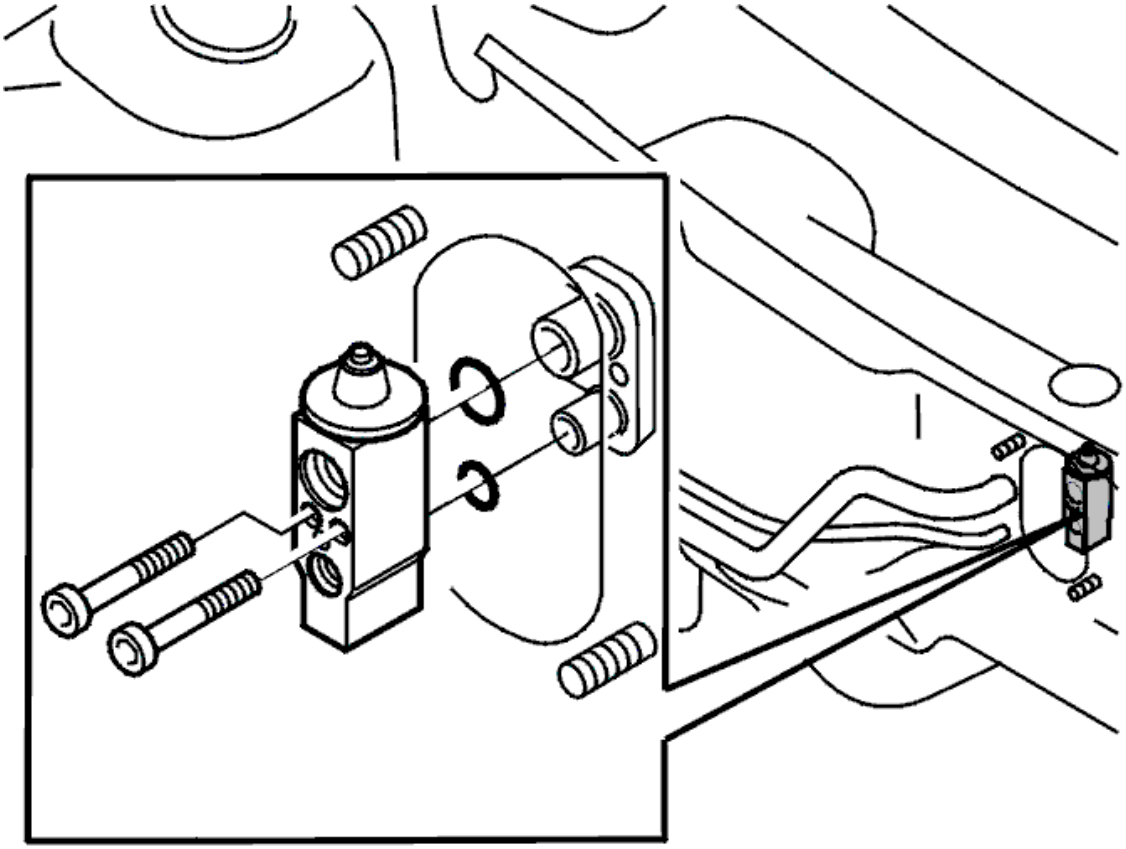

Fig. 30: Identifying Expansion Valve Screws
Courtesy of VOLVO CARS CORPORATION

Slacken off the two screws holding the expansion valve.

Remove the expansion valve.

INSTALLING THE EXPANSION VALVE

NOTE: Always use new O-rings lubricated with compressor oil.

Install:

- the O-rings on the pipe from the evaporator
- the expansion valve. Install and tighten the screws. See **TIGHTENING TORQUE**
- the O-rings on the pipes.

Position the pipes and the holder against the expansion valve. At the same time check that the pipes are correctly positioned on the holder at the member.

Install:

- the screw. Tighten the holder and the pipes on the expansion valve. See **TIGHTENING TORQUE**

- the seal and the heat shield. Screw the heat shield into place using the nuts.

Press the clamp together on the member.

Install:

- the mounting for the right-hand gutter
- the gutter
- the engine stabilizer brace in the engine compartment.

Vacuum pump the air conditioning (A/C) system. See **VACUUM PUMPING** .

Fill the air conditioning (A/C) system with refrigerant. See **REFRIGERANT, FILLING** .

Leak trace the air conditioning (A/C) system. See **LEAK TRACING, FLUORESCENT TRACING AGENT / UV LAMP** or **LEAK TRACING, FLUORESCENT TRACING AGENT / UV LAMP** .

MAGNET CLUTCH AC COMPRESSOR, REPLACING

Special tools:

see **9995596**

see **9995597**

see **9995598**

see **9995599**

see **9995600**

see **9995602**

see **9997193**

NOTE: The illustrations in this service information are used for different model years and/or models. Some variation may occur. However, the essential information in the illustrations is always correct.

PREPARATORY WORK

WARNING: Follow the safety instructions for work on air conditioning systems. See: REFRIGERANT, SAFETY REGULATIONS .

NOTE: First read the instructions covering slow and fast leaks. See OIL AIR

CONDITIONING (A/C) SYSTEM, FILLING .

NOTE: When replacing a compressor, always replace the O-rings in pipes and quick-release connectors.

NOTE: Always plug the pipes and connections when working on the climate control system.

Disconnect the battery negative lead. See: **BATTERY, DISCONNECTING** .

Drain the refrigerant from the system. See **REFRIGERANT, DRAINING** .

REMOVAL

REMOVING THE AUXILIARIES BELT

MY 2003-2004:

Remove the auxiliaries belt from the AC compressor according to: **AUXILIARIES BELT / BELT TENSIONER, REPLACING** .

Model year 2005-

Remove the auxiliaries belt from the AC compressor according to: **AUXILIARIES BELT / BELT TENSIONER, REPLACING** .

REMOVING AC COMPRESSOR

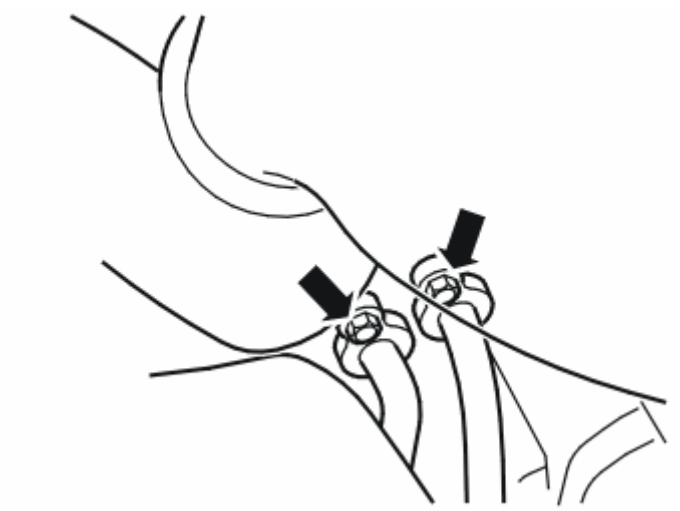

Fig. 31: Identifying AC Compressor Screws
Courtesy of VOLVO CARS CORPORATION

NOTE: The AC compressor is removed from below.

Loosen the screws, 2 pcs., for the AC compressor's low and high pressure hoses.

REMOVING THE PROTECTIVE COVER

NOTE: Install the front lift arms so that they do not block the sub-frame's support plates.

Raise the vehicle.

Loosen the protective cover under the engine by removing the screws, 7 pcs.

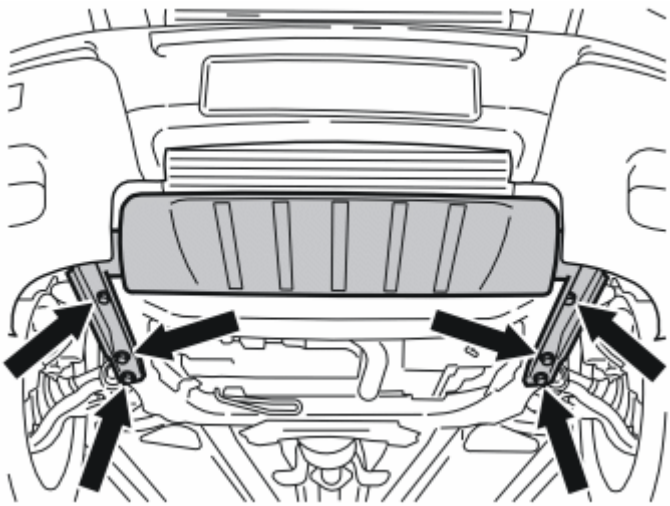

Fig. 32: Engine Under Cover Protective Panel
Courtesy of VOLVO CARS CORPORATION

Remove the 6 screws.

NOTE: There is a guide sleeve on the upper mounting for the plate. This must be lifted slightly so that the panel can be slid forward.

Lift and slide the protective panel forward.

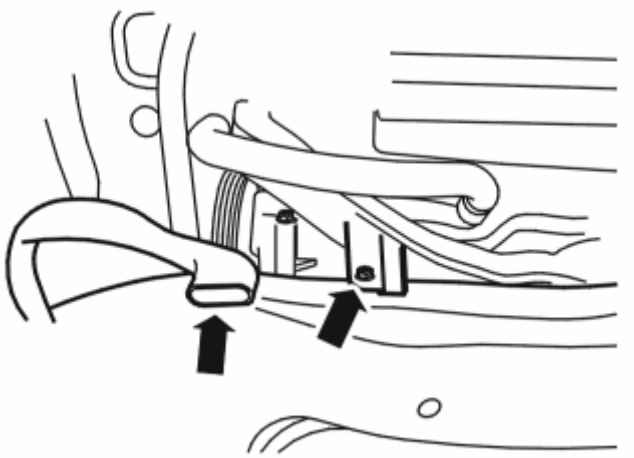

Fig. 33: Identifying Cable Channel And Sub-Frame
Courtesy of VOLVO CARS CORPORATION

Remove the screw, 1 pc., for the cable channel and loosen the cable channel from the sub-frame.

On certain variants: remove or loosen the control module box's air channel from the sub-frame.

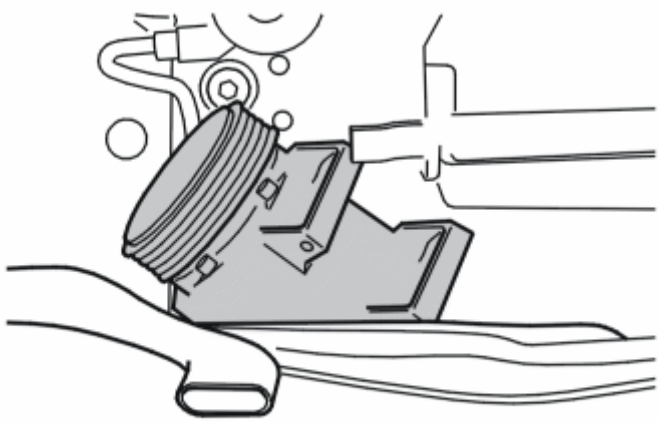

Fig. 34: Identifying Air Conditioning (A/C) Compressor
Courtesy of VOLVO CARS CORPORATION

Remove:

- low and high pressure hoses from the AC compressor and move them aside
- the connector for the AC compressor's magnet (solenoid) clutch
- the screws, 4 pcs., from the AC compressor.

Hold the cable channel to the side and remove the AC compressor by removing it between the sub-frame and the car body.

REMOVING THE DRIVE PLATE

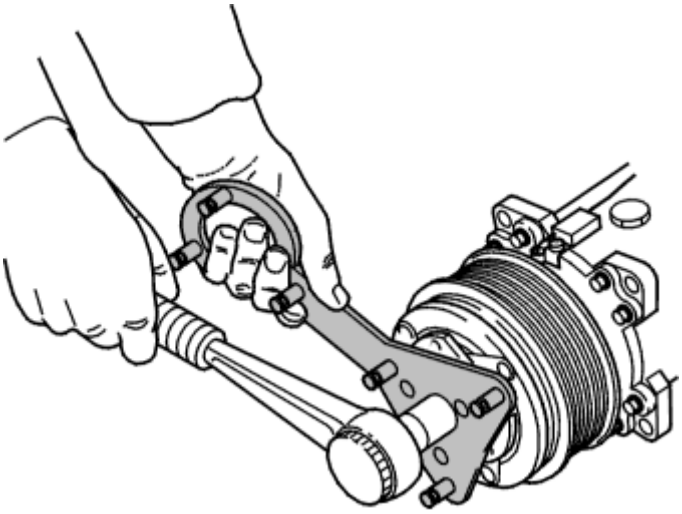

Fig. 35: Loosening Drive Plate Screw With A Counter Hold
Courtesy of VOLVO CARS CORPORATION

Loosen the screw, 1 pc., for the drive plate using a counterhold: see **9995596** .

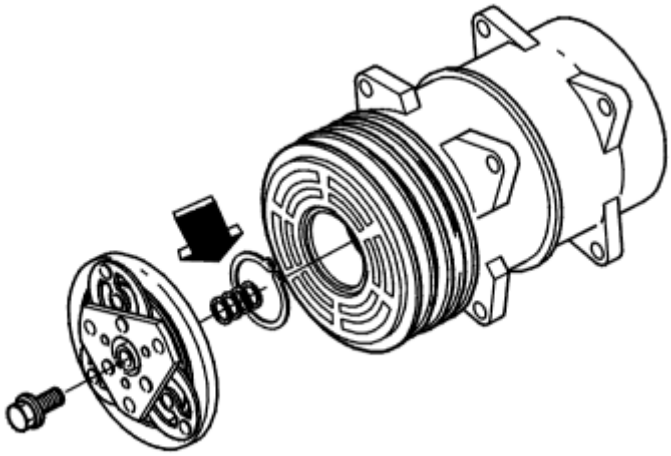

Fig. 36: Identifying Drive Plate
Courtesy of VOLVO CARS CORPORATION

Loosen the drive plate with a puller: see **9995597** .

NOTE: Keep the shims.

REMOVING BELT PULLEY'S LOCK RING

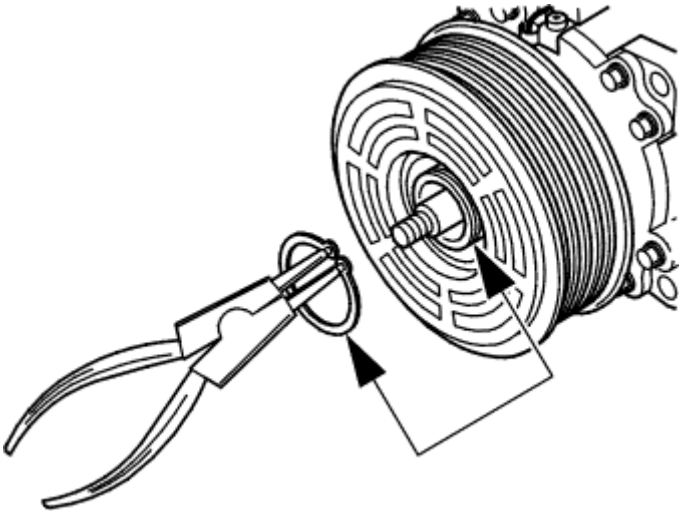

Fig. 37: Identifying Lock Ring Installation
Courtesy of VOLVO CARS CORPORATION

Remove the lock ring.

REMOVING THE PULLEY

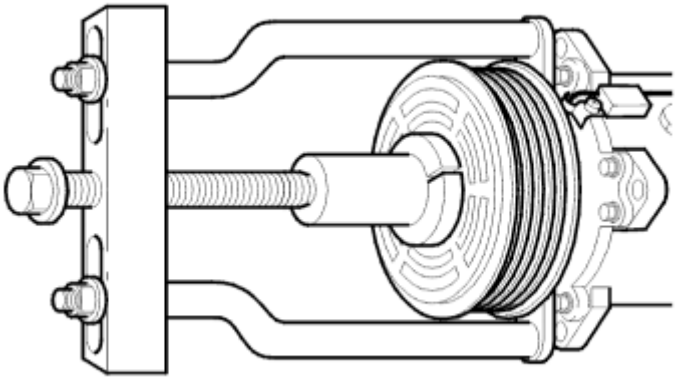

Fig. 38: Identifying Belt Pulley & Puller
Courtesy of VOLVO CARS CORPORATION

Pull loose the belt pulley with a puller: see **9995598** and sleeve: see **9995599** .

REMOVING THE SOLENOID COIL

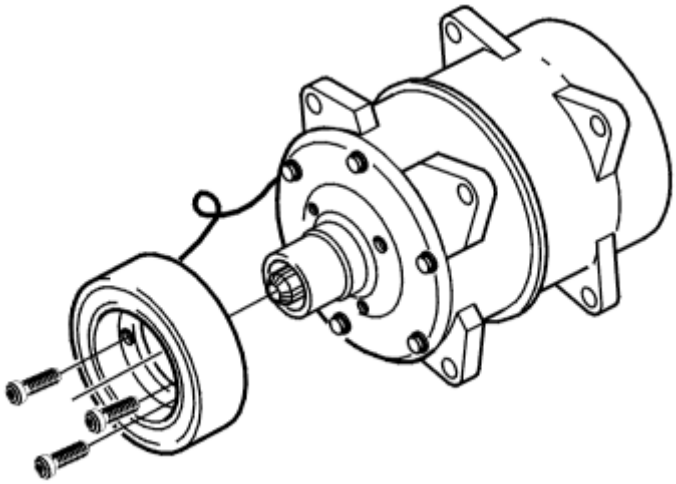

Fig. 39: Identifying Magnet Coil
Courtesy of VOLVO CARS CORPORATION

Remove the magnet coil.

INSTALLATION

INSTALLING THE SOLENOID COIL

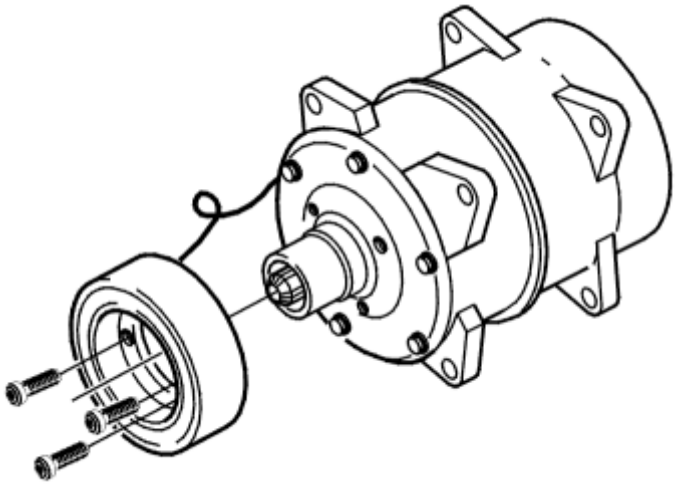

Fig. 40: Identifying Magnet Coil
Courtesy of VOLVO CARS CORPORATION

Install the screws, 3 pcs., for the new magnet coil (solenoid). Tighten with 5 Nm.

INSTALLING THE PULLEY

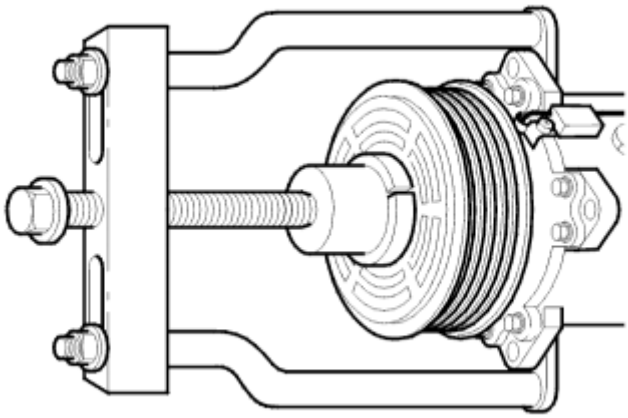

Fig. 41: Identifying Belt Pulley & Puller
Courtesy of VOLVO CARS CORPORATION

Install the new belt pulley with a puller: see **9995598** and sleeve: see **9995600** .

NOTE: Install the tools behind the AC compressor mounts.

INSTALLING THE LOCK RING

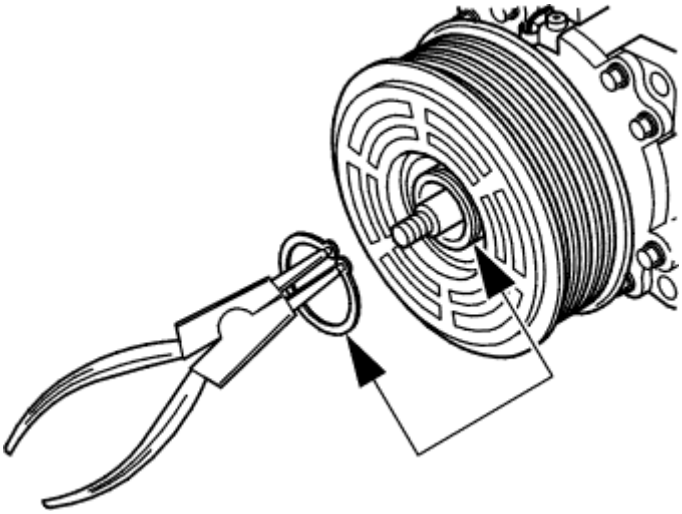

Fig. 42: Identifying Lock Ring Installation
Courtesy of VOLVO CARS CORPORATION

Install the lock ring.

INSTALLING THE DRIVE PLATE

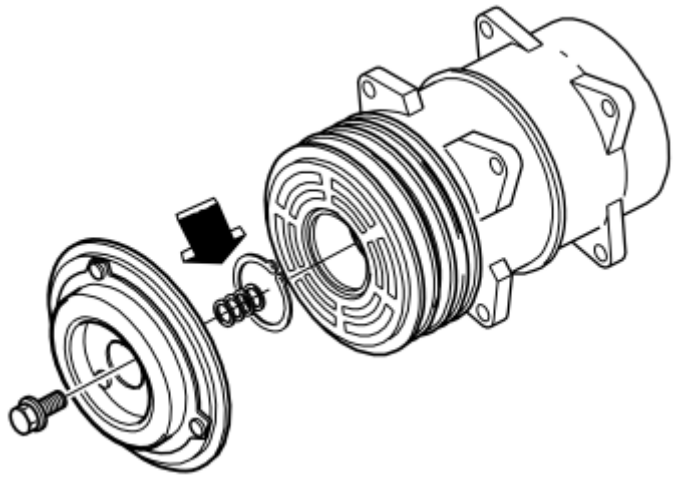

Fig. 43: Identifying Drive Plate Shims
Courtesy of VOLVO CARS CORPORATION

Install the shims.

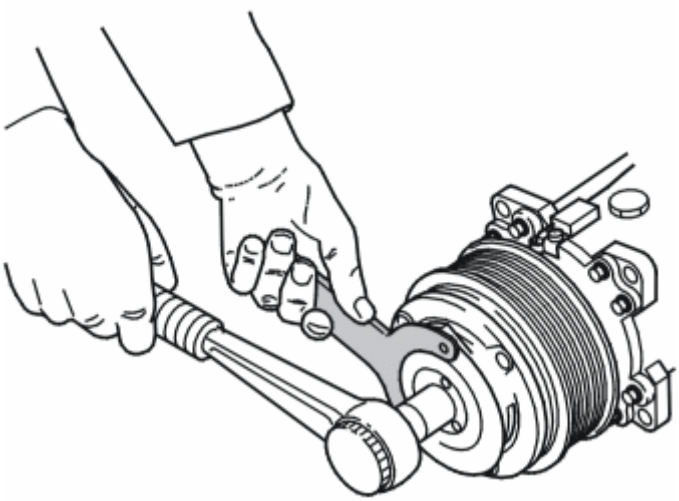

Fig. 44: Tightening Screw Using With A Counter Hold
Courtesy of VOLVO CARS CORPORATION

Install:

- the drive plate
- the screw, 1 pc., using a counterhold: see **9997193** and tighten with 13 Nm.

CHECKING THE CLEARANCE

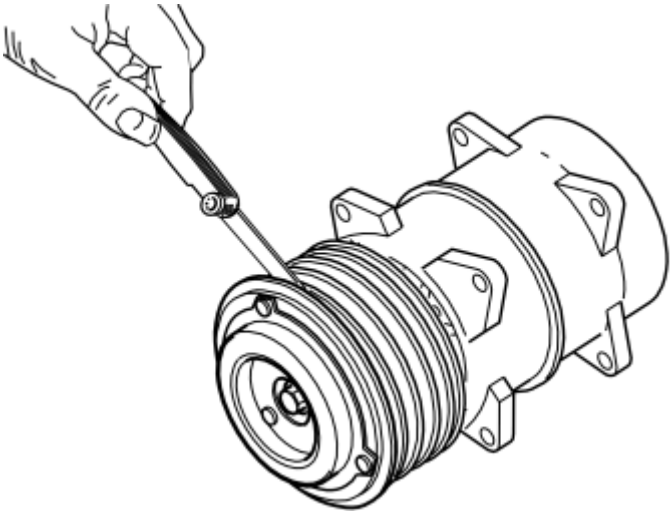

Fig. 45: Checking Turning Plate And Belt Pulley Clearance With Feeler Gauge
Courtesy of VOLVO CARS CORPORATION

Check the clearance between the turning plate and the belt pulley with a feeler gauge.

The clearance should be 0.3-0.5 mm.

0.3 mm clearance all the way round

It must not be possible to insert 0.6 mm at any point.

If clearance is not within given values, replace the shims.

The following dimensions are available:

0.2 mm

0.3 mm

1.0 mm.

INSTALLING THE AIR CONDITIONING (A/C) COMPRESSOR

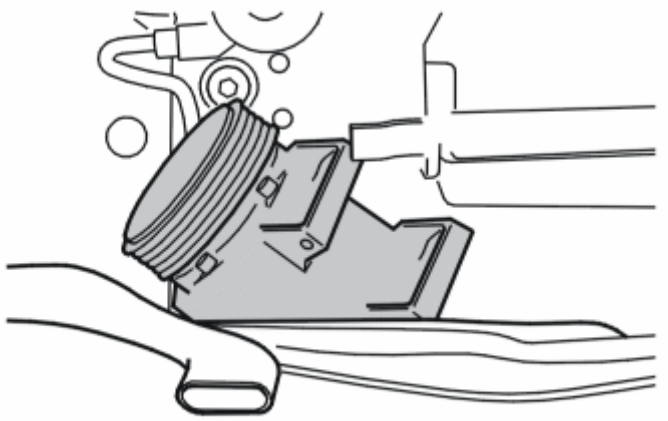

Fig. 46: Identifying Air Conditioning (A/C) Compressor
Courtesy of VOLVO CARS CORPORATION

If necessary, fill oil in the AC compressor according to: **OIL AIR CONDITIONING (A/C) SYSTEM, FILLING** .

Hold the cable channel to the side and install the AC compressor by inserting it between the sub-frame and the car body.

Install the screws, 4 pcs. M8, for the AC compressor and tighten.

NOTE: Always use new O-rings lubricated with compressor oil.

Install:

- AC compressor's low and high pressure hoses. On certain vehicle models, it may be easier to install and tighten the screws from above
- the magnetic clutch connector.

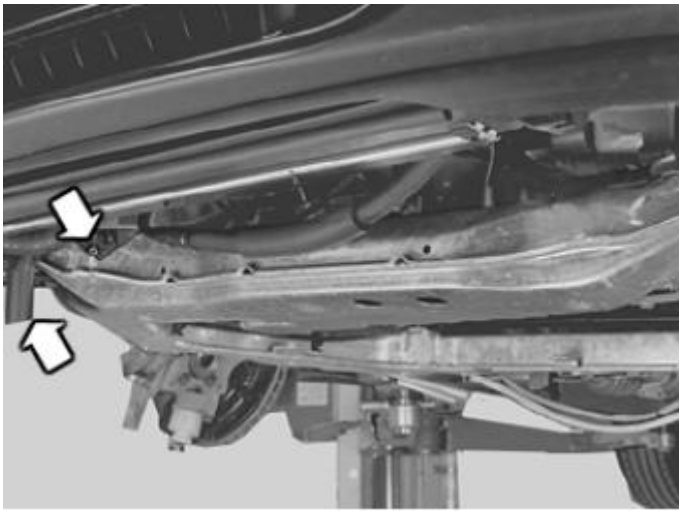

Fig. 47: Identifying Sub-Frame Cable Channel
Courtesy of VOLVO CARS CORPORATION

Install the cable channel on the sub-frame and bolt it down.

On certain variants, the cable channel is mounted on the control module box and then on the sub-frame.

INSTALLING THE AUXILIARIES BELT

MY 2003-2004

Install the auxiliaries belt on the AC compressor according to: **AUXILIARIES BELT / BELT TENSIONER, REPLACING** .

MY 2005

Install the auxiliaries belt on the AC compressor according to: **AUXILIARIES BELT / BELT TENSIONER, REPLACING** .

INSTALLING THE BATTERY NEGATIVE CABLE

Fit the battery's negative cable in accordance with: **BATTERY, DISCONNECTING** .

REFRIGERANT AND LEAK DETECTION

Vacuum pump side. See: **VACUUM PUMPING** .

Fill the system with refrigerant according to: **REFRIGERANT, FILLING** .

Check for system leaks according to: **LEAK TRACING, FLUORESCENT TRACING AGENT / UV LAMP** or according to: **LEAK TRACING, FLUORESCENT TRACING AGENT / UV LAMP** .

FINISHING

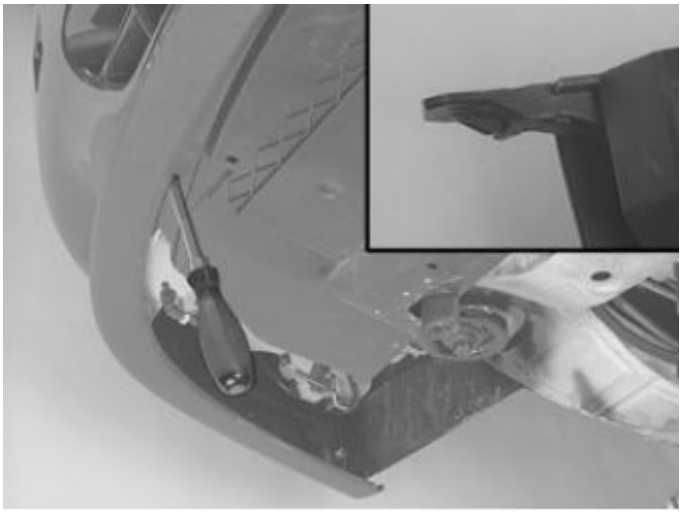

Fig. 48: Identifying Protective Engine Cover Screws
Courtesy of VOLVO CARS CORPORATION

Install:

- the catches in the protective casing's front edge and press forward
- the screws, 2 pcs., for the front protective cover.

INSTALLING THE SPLASH GUARD

Install:

- the splash guard under the engine
- the screws, 7 pcs., and tighten.

Lower the vehicle.

NEEDLE JET / SERVICE VALVE, REPLACING

Special tools:

see **9511204**

see **9811994**

REMOVAL

As the illustrations in this service information are used for different model years and / or models, some variation may occur. However, the essential information in the illustrations is always correct.

REMOVING THE NEEDLE JET / SERVICE VALVE

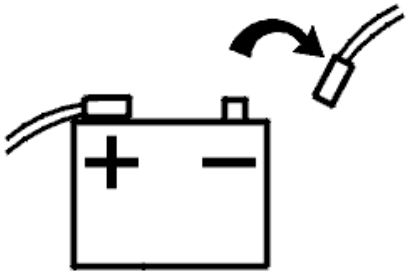

Fig. 49: Disconnecting Battery Lead
Courtesy of VOLVO CARS CORPORATION

Remove the battery lead. See **BATTERY, DISCONNECTING** .

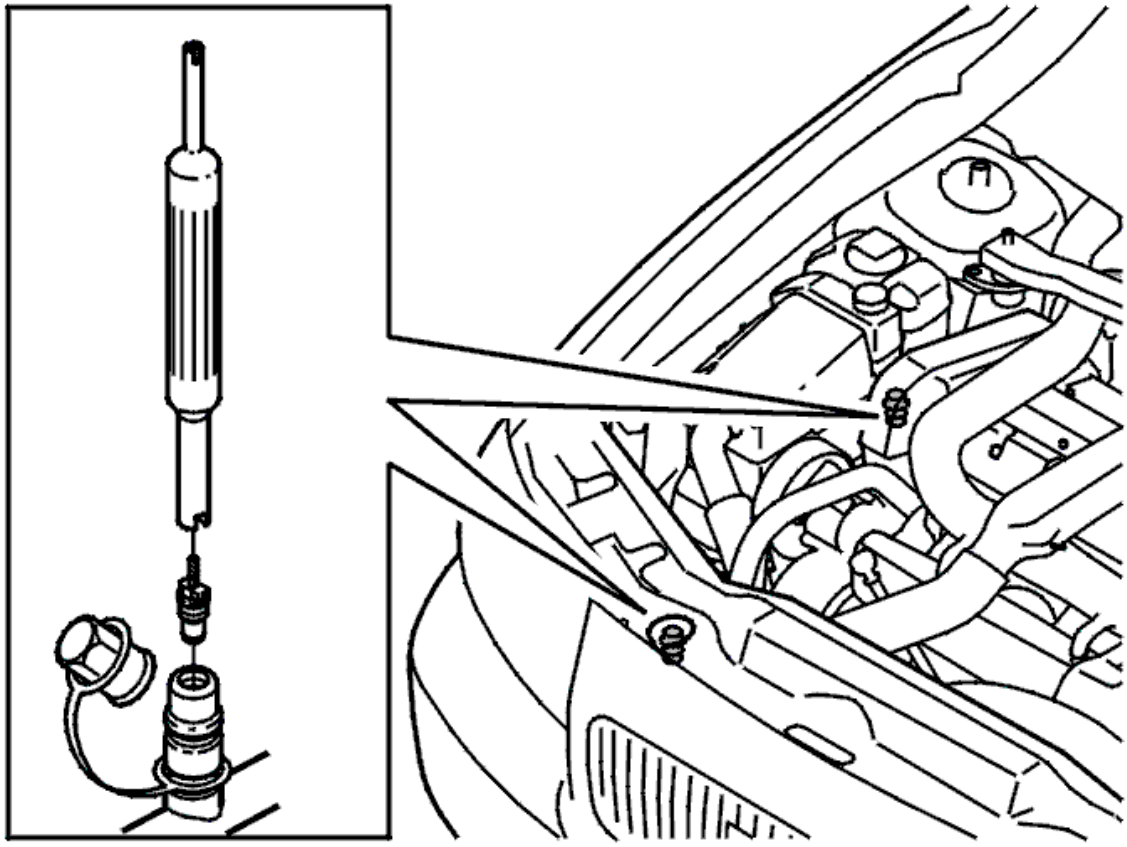

Fig. 50: Identifying Needle Valve
Courtesy of VOLVO CARS CORPORATION

Remove the valve cap.

Drain the refrigerant from the system. See **REFRIGERANT, DRAINING** .

Remove the needle jet in the service valve. Use special tool see **9511204** .

INSTALLING THE NEEDLE JET / SERVICE VALVE

Install the needle jet. Use special tool see **9511204** .

Tighten the needle jet. Use special tool see **9811994** . Tighten to **6 Nm** .

NOTE: Use only your finger and thumb when tightening the needle jet to avoid damage to the valve seal.

Vacuum pump. See **VACUUM PUMPING** .

Fill the system with refrigerant. See **REFRIGERANT, FILLING** .

Test for leaks. See **LEAK TRACING, FLUORESCENT TRACING AGENT / UV LAMP** or **LEAK TRACING, FLUORESCENT TRACING AGENT / UV LAMP** .

Install the battery lead. See **BATTERY, DISCONNECTING** .

PIPE/HOSE COMPRESSOR, REPLACING

REMOVAL

As the illustrations in this service information are used for different model years and / or models, some variation may occur. However, the essential information in the illustrations is always correct.

PREPARATIONS

WARNING: Follow the safety instructions for work on air conditioning systems. See REFRIGERANT, SAFETY REGULATIONS .

Read the instructions covering slow and fast leaks. See **OIL AIR CONDITIONING (A/C) SYSTEM, FILLING** .

Always plug the pipes and couplings when working on the climate control system.

Drain the refrigerant from the system. See **REFRIGERANT, DRAINING** .

REMOVING THE PIPE/HOSE FROM THE COMPRESSOR - CONDENSER

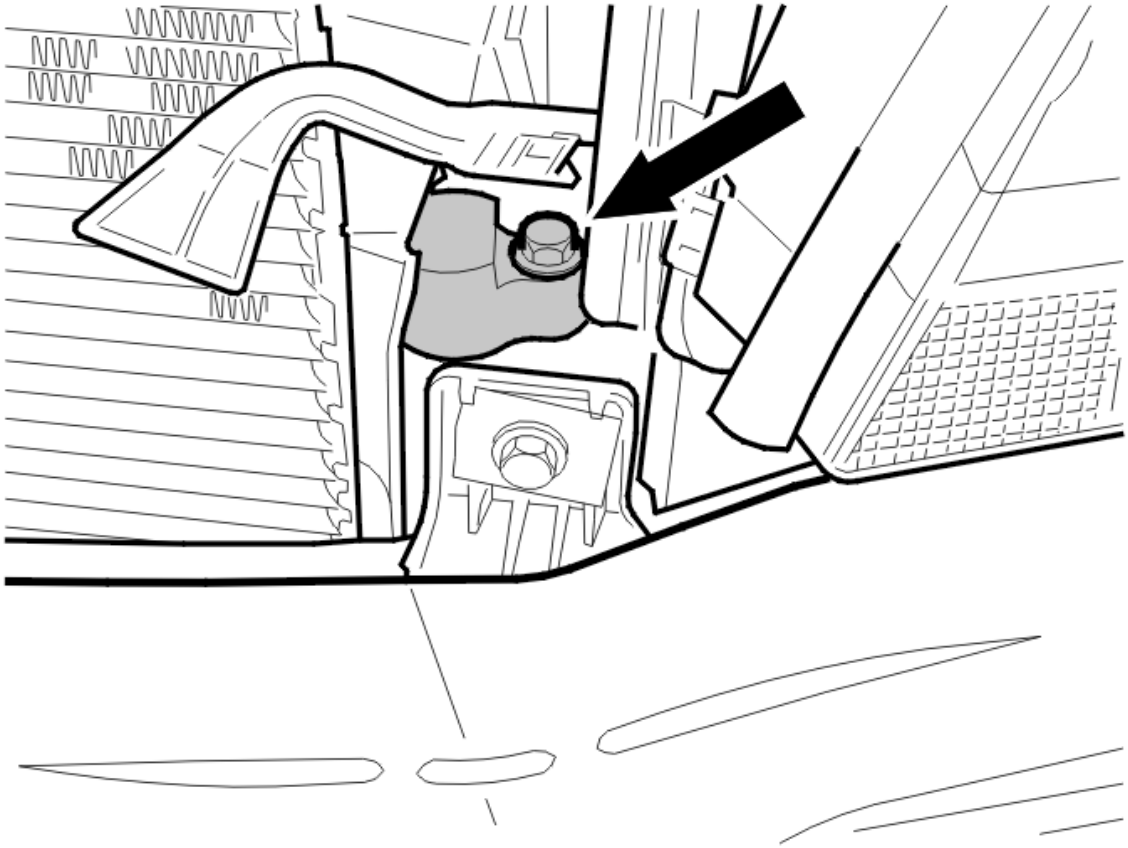

Fig. 51: Air Conditioning Pipe Installation Bolt
Courtesy of VOLVO CARS CORPORATION

Remove the charge air hose on the right-hand side.

Disconnect the pipe / hose from the compressor.

Remove:

- 1 screw from the hose / pipe coupling between the compressor and the condenser (see the illustration)
- the left-hand headlamp. See **LIGHTING - REMOVAL, REPLACEMENT AND INSTALLATION**
- the pipe from the retaining clip on the condenser. Carefully put the pipe to one side.

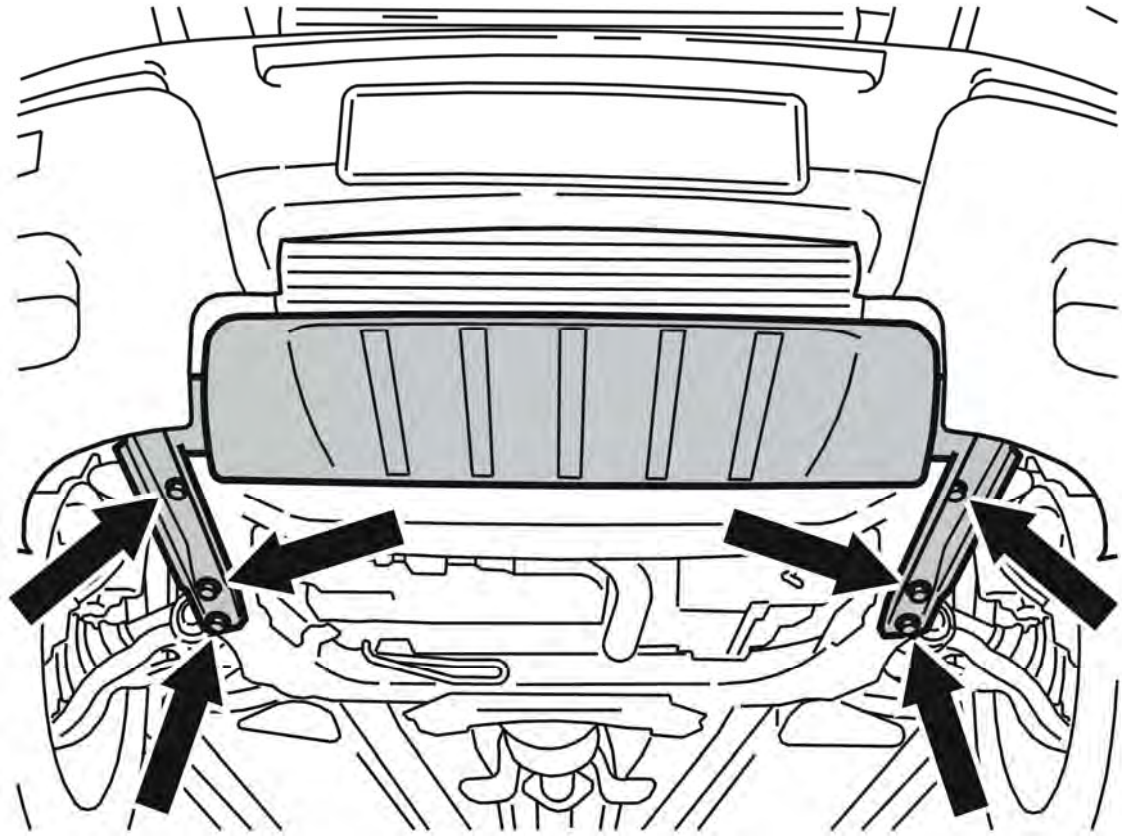

Fig. 52: Splash Guard Protective Plate And Screws
Courtesy of VOLVO CARS CORPORATION

- the splash guard under the car.

REMOVING THE PIPE/HOSE FROM THE COMPRESSOR - JUNCTION BLOCK ON THE SIDE MEMBER

Remove:

- the charge air hose on the right-hand side
- the pipe / hose from the compressor to the junction block.

INSTALLING THE PIPE/HOSE ON THE COMPRESSOR - CONDENSER

NOTE: For tightening torques, see GENERAL TIGHTENING TORQUE

NOTE: Always use new O-rings lubricated with compressor oil.

Position the pipe / hose in the mounting on the condenser and pipe coupling.

Install 1 M8 screw. Tighten.

Position the pipe and hose connection on the compressor.

Install:

- 1 M8 screw. Tighten
- the charge air hose on the right-hand side.

INSTALLING THE PIPE/HOSE PM THE COMPRESSOR - JUNCTION BLOCK ON THE SIDE MEMBER

Install the pipe / hose from the compressor to the junction block.

NOTE: Ensure that the pipe / hose is in front of the electrical ducts.

Install the charge air hose on the right-hand side.

FINISHING

Vacuum pump the air conditioning (A/C) system. See **VACUUM PUMPING** .

Fill the air conditioning (A/C) system with refrigerant. See **REFRIGERANT, FILLING** .

Leak trace the air conditioning (A/C) system. See **LEAK TRACING, FLUORESCENT TRACING AGENT / UV LAMP** or **LEAK TRACING, FLUORESCENT TRACING AGENT / UV LAMP** .

PIPES / HOSES, REPLACING

REMOVAL

The illustrations in this service information are used for different model years and/or models. Some variation may occur. However, the essential information in the illustrations is always correct.

PREPARATIONS (OPERATIONS COMMON TO ALL METHODS)

WARNING: Follow the safety instructions for work on air conditioning systems. See REFRIGERANT, SAFETY REGULATIONS .

NOTE: Read the instructions covering slow and fast leaks. See OIL AIR CONDITIONING (A/C) SYSTEM, FILLING .

Always plug the pipes and connections when working on the climate control system.

Drain the refrigerant from the air conditioning (A/C) system. See **REFRIGERANT, DRAINING** .

Remove:

- the battery lead. See **BATTERY, DISCONNECTING**
- the rear side panel. See **SIDE PANEL CARGO COMPARTMENT, REPLACEMENT** .

REMOVING PIPES / HOSES (OPERATIONS COMMON TO ALL METHODS)

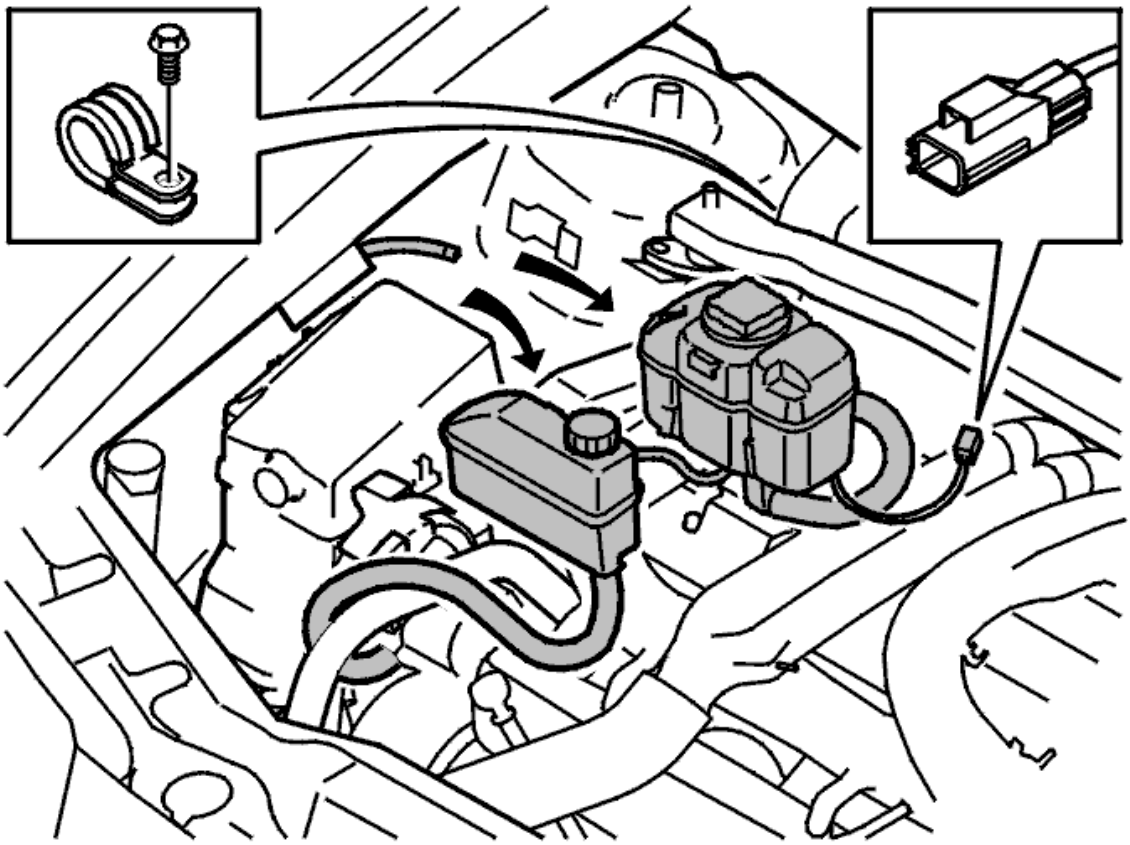

Fig. 53: Identifying Servo Oil Reservoir And Expansion Tank
Courtesy of VOLVO CARS CORPORATION

Remove:

- the engine stabilizer brace in the engine compartment
- the servo oil reservoir. Place it on top of the engine
- the hose from the expansion tank using cutting nippers or Oetiker pincers
- the connector for the level sensor
- the connector at the cable duct
- the expansion tank and place it on top of the engine
- the outlet air pipe to the firewall from the control module box.

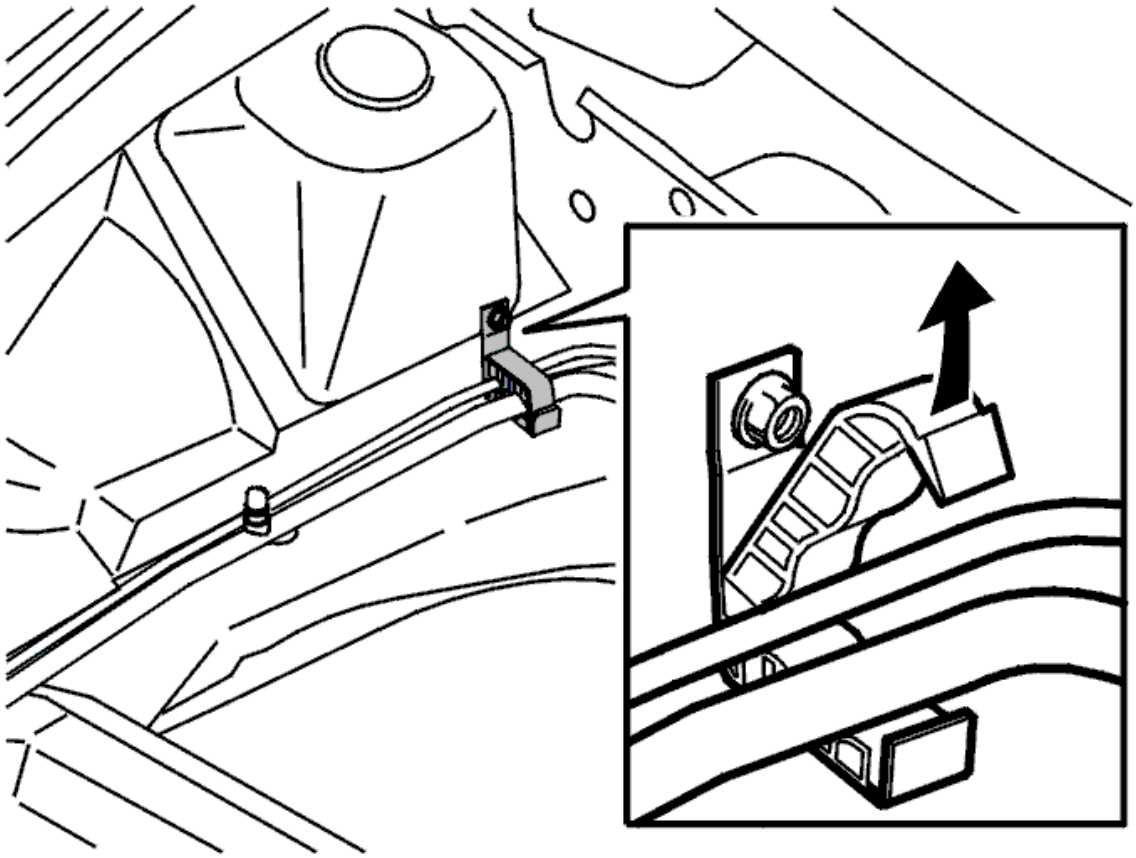

Fig. 54: Identifying Refrigerant Pipe Clamp On Side Member
Courtesy of VOLVO CARS CORPORATION

Open the clamp for the refrigerant pipe on the side member.

Remove:

- the plastic nut from the drainage duct to the gutter in the right-hand corner
- the drainage channel.

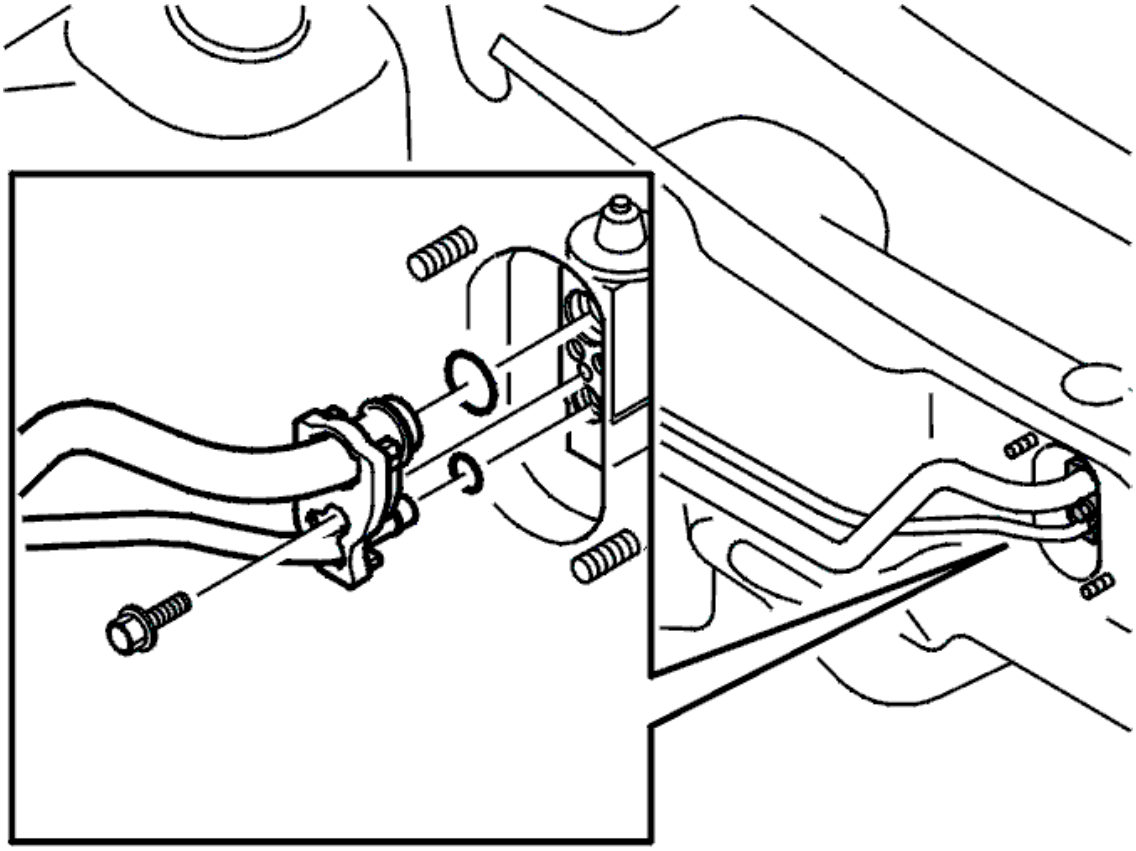

Fig. 55: Identifying Locking Bracket For Refrigerant Pipes
Courtesy of VOLVO CARS CORPORATION

- the heat shield for the expansion valve
- the screw and the pipe holder that secure the refrigerant pipes to the expansion valve.

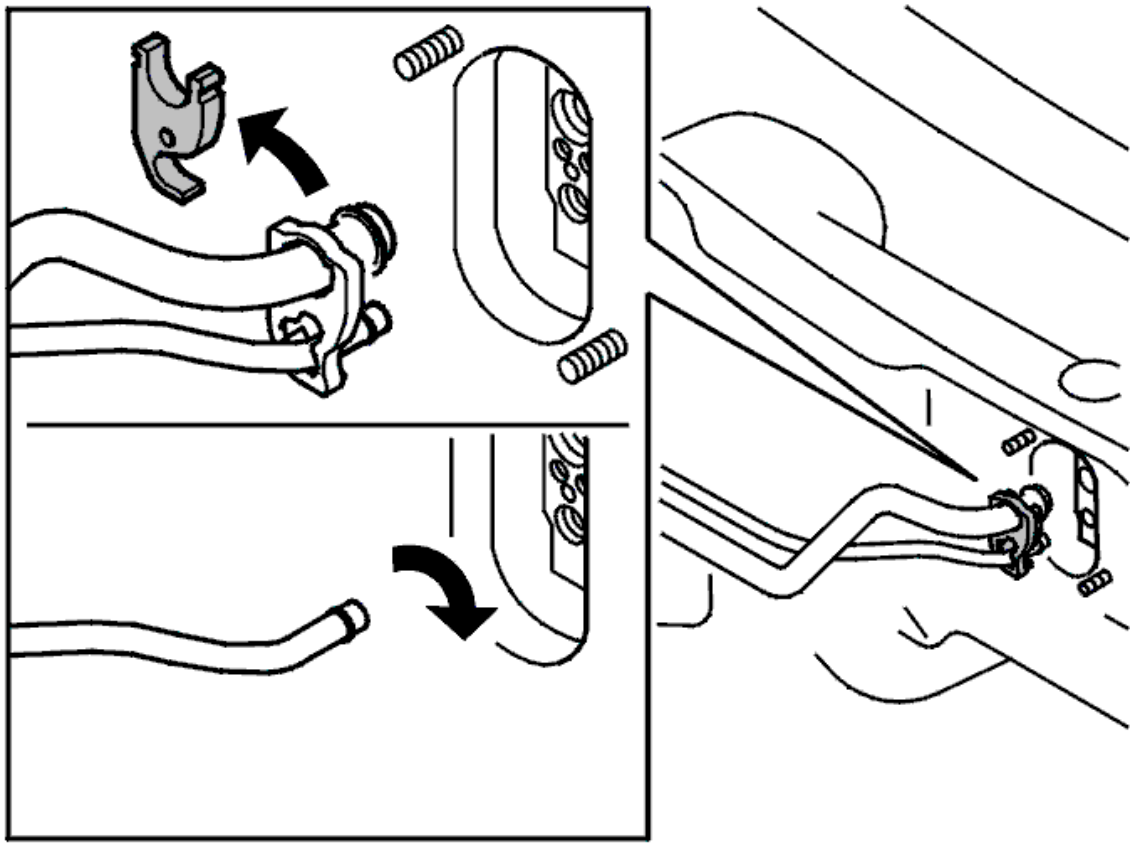

Fig. 56: Identifying Expansion Valve Pipes
Courtesy of VOLVO CARS CORPORATION

Remove:

- the pipes from the expansion valve. Pull the pipe holder backwards
- the pipe lock from the pipe holder. Remove the lock and the holder.

To replace the pipes for the expansion valve - junction block on the side member, see **PIPES EXPANSION VALVE - JUNCTION POINT SIDE MEMBER, REPLACE**.

To replace the expansion valve in the receiver drier, see **PIPES RECEIVER DRIER - EXPANSION VALVE, REPLACING**.

To replace the junction block in the cowl, rear expansion valve, see **PIPE/HOSE JUNCTION BLOCK COWL - REAR EXPANSION VALVE, REPLACING**.

FINISHING WORK (OPERATIONS COMMON TO ALL METHODS)

Install the battery lead. See **BATTERY, DISCONNECTING** .

Vacuum pump the air conditioning (A/C) system. See **VACUUM PUMPING** .

Fill the air conditioning (A/C) system with refrigerant. See **REFRIGERANT, FILLING** .

Leak trace the air conditioning (A/C) system. See **LEAK TRACING, FLUORESCENT TRACING AGENT / UV LAMP** or **LEAK TRACING, FLUORESCENT TRACING AGENT / UV LAMP** .

Install the rear side panel. See **SIDE PANEL CARGO COMPARTMENT, REPLACEMENT** .

PIPES EXPANSION VALVE - JUNCTION POINT SIDE MEMBER, REPLACE

REMOVING PIPES FROM THE EXPANSION VALVE - JUNCTION BLOCK ON THE SIDE MEMBER

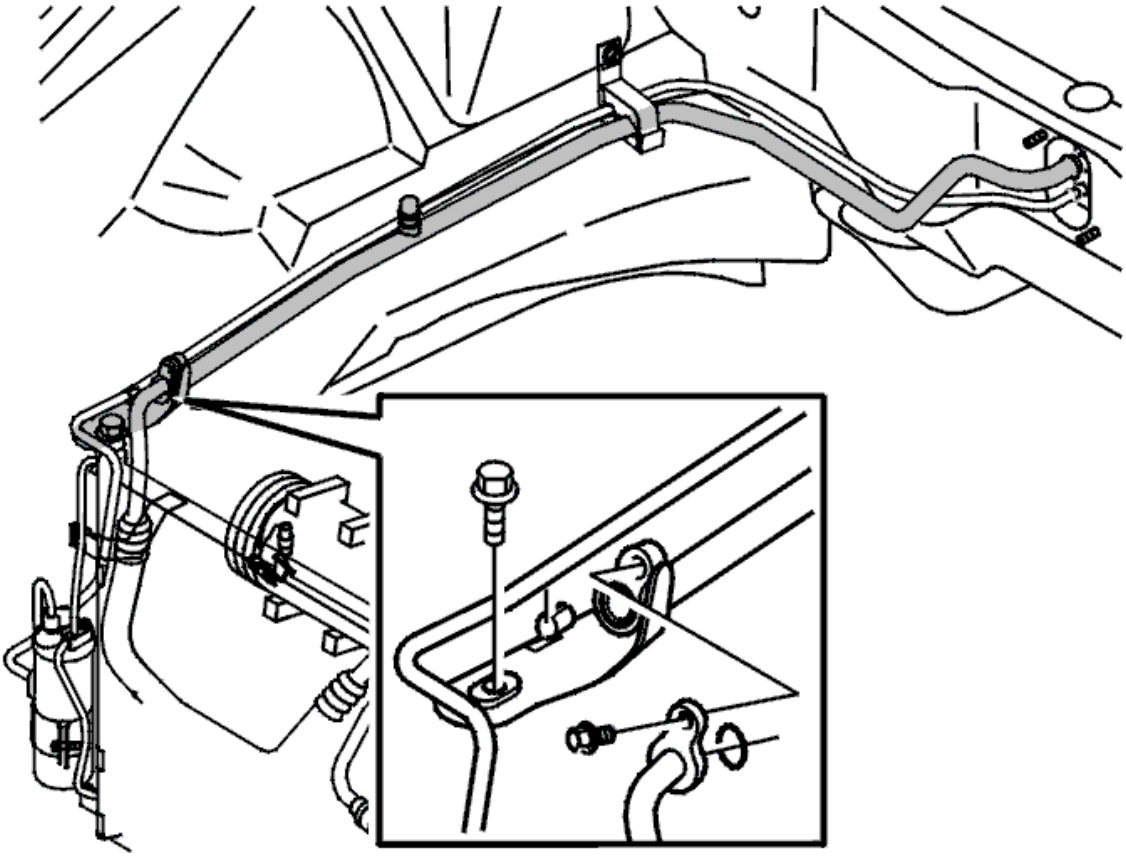

Fig. 57: Identifying Hose/Pipe From Member To Compressor
Courtesy of VOLVO CARS CORPORATION

Remove:

- the hose / pipe from the member to the compressor
- the pipe from the receiver drier to the expansion valve from the mounting at the junction block
- the pipe from the member at the pipe coupling.

Detach the pipe at the expansion valve.

Position the front section of the pipe above the front cover plate.

Pull the rear edge of the pipe up and out. Remove the pipe.

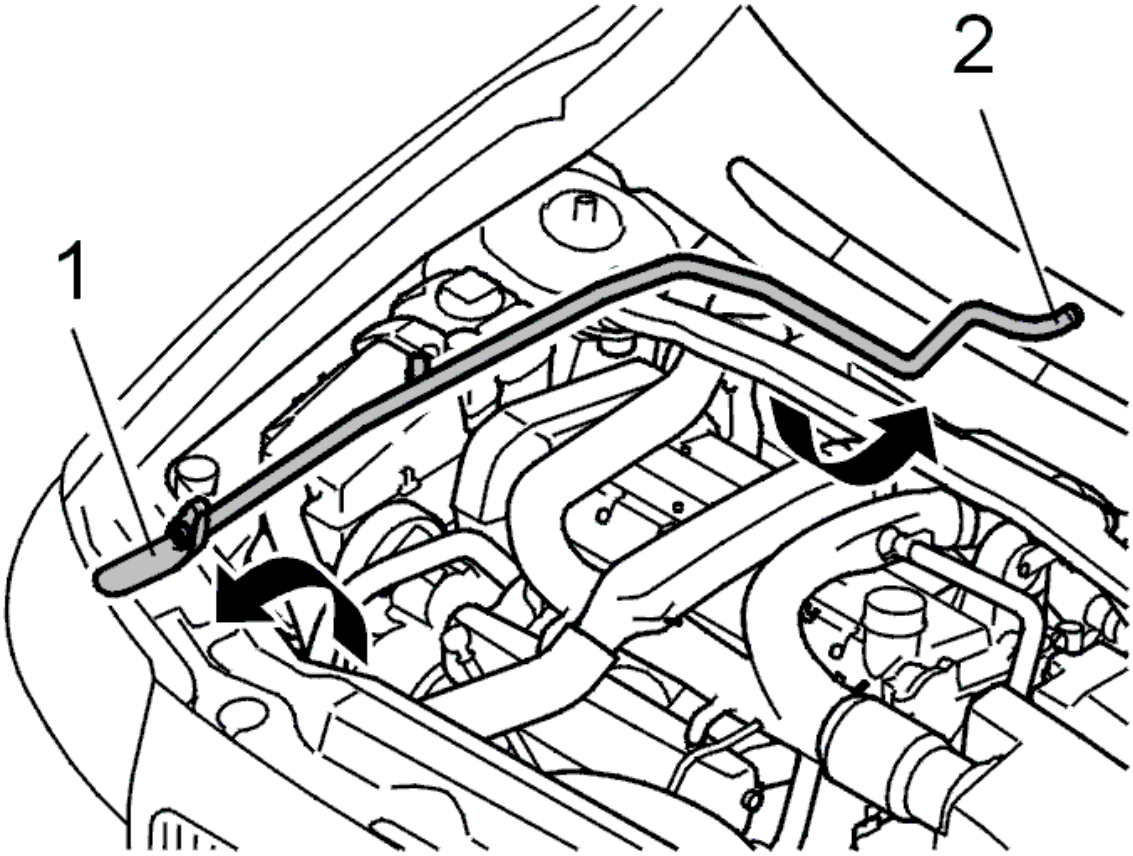

Fig. 58: Identifying Pipe Above Front Cover Plate
Courtesy of VOLVO CARS CORPORATION

INSTALLING PIPES FOR THE EXPANSION VALVE - JUNCTION BLOCK ON THE SIDE MEMBER

Position the refrigerant pipe against the firewall.

Install the front section of the pipe.

NOTE: Use new O-rings lubricated with compressor oil.

Install:

- the pipe on the member at the pipe connection using 1 M8 screw. Tighten
- the hose / pipe from the member to the compressor
- the pipe lock on the pipe holder
- the pipe on the expansion valve using 1 M6 screw. Tighten
- the heat shield for the expansion valve
- the drainage channel and the plastic nut
- the clamp for the refrigerant pipe
- the outlet air pipe

- the expansion tank
- the connector at the cable duct
- the switch for the level sensor
- the hose on the expansion valve
- the servo oil reservoir
- the engine stabilizer brace in the engine compartment.

Carry out finishing work. See **FINISHING WORK (OPERATIONS COMMON TO ALL METHODS)**.

PIPES RECEIVER DRIER - EXPANSION VALVE, REPLACING

REMOVING PIPES FROM THE RECEIVER DRIER PIPE - EXPANSION VALVE

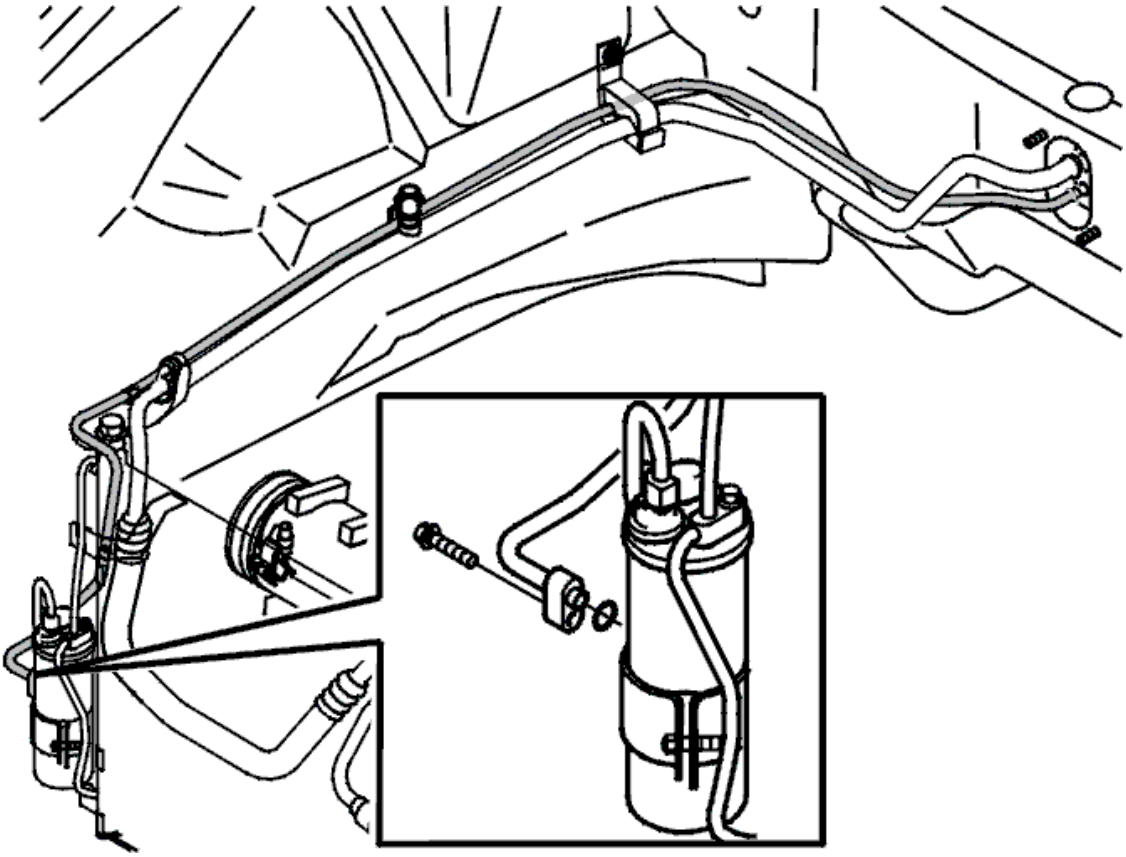

Fig. 59: Identifying Tube Removal Procedures (1 Of 2)
Courtesy of VOLVO CARS CORPORATION

Remove:

- the pipe for the expansion valve - junction block. See **PIPES EXPANSION VALVE - JUNCTION POINT SIDE MEMBER, REPLACE**
- the protective panel and the right-hand outer panel on the bumper.

Detach the pipe coupling from the receiver drier.

Position the pipe at the front.

Pull the rear edge of the pipe up and out. Remove the pipe.

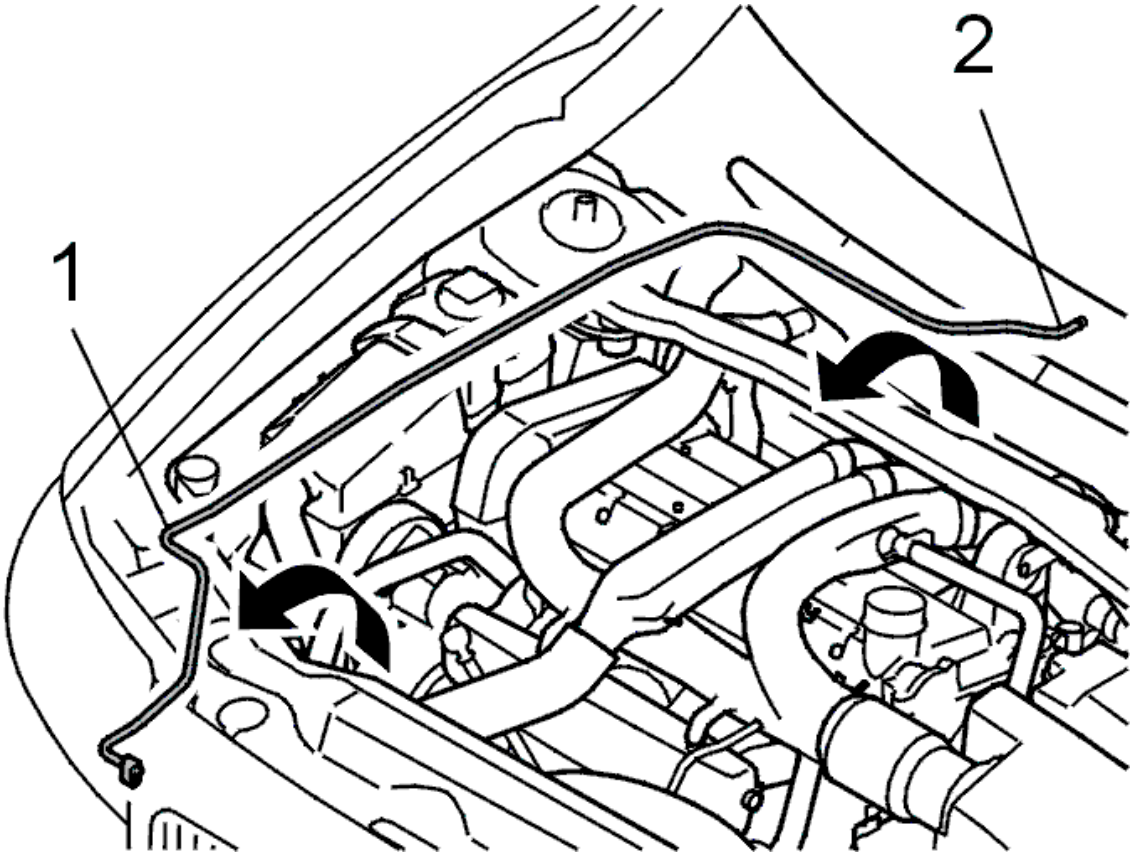

Fig. 60: Identifying Tube Removal Procedures (2 Of 2)
Courtesy of VOLVO CARS CORPORATION

INSTALLING THE PIPES FOR THE RECEIVER DRIER PIPE - EXPANSION VALVE

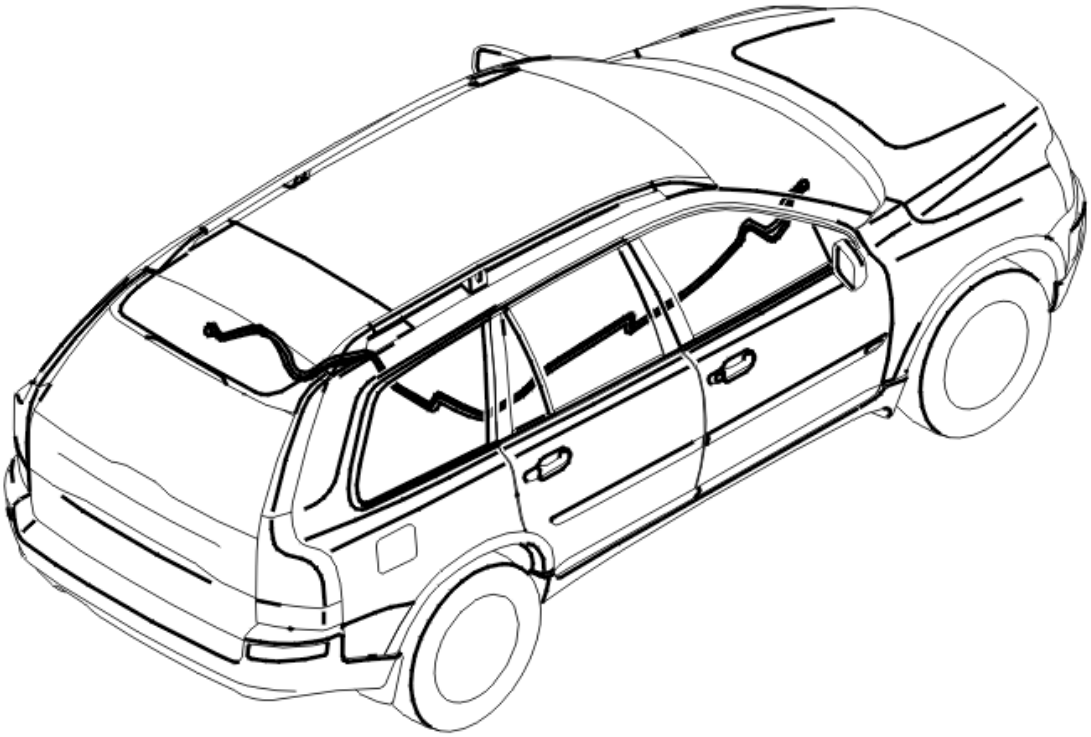

Fig. 61: Receiver Drier Pipes
Courtesy of VOLVO CARS CORPORATION

Position:

- the front section of the pipes in the engine compartment
- the rear section of the pipes against the firewall.

NOTE: Use new O-rings lubricated with compressor oil.

Connect the pipe to the receiver drier.

Install:

- the hose / pipe from the member to the compressor
- the pipe lock on the pipe holder
- the pipe on the expansion valve using 1 M6 screw. Tighten
- the heat shield for the expansion valve
- the drainage channel and the plastic nut
- the clamp for the refrigerant pipe
- the outlet air pipe

- the expansion tank
- the connector at the cable duct
- the switch for the level sensor
- the hose on the expansion valve
- the servo oil reservoir
- the engine stabilizer brace in the engine compartment.

Carry out finishing work. See **FINISHING WORK (OPERATIONS COMMON TO ALL METHODS)**.

PIPE/HOSE JUNCTION BLOCK COWL - REAR EXPANSION VALVE, REPLACING

REMOVING THE PIPE / HOSE FROM THE JUNCTION BLOCK ON THE COWL - REAR EXPANSION VALVE

Remove:

- the left front seat. See **UPHOLSTERY BACK REST, REPLACING** (-2004) or **FRONT SEAT, REPLACING** (2005-)
- the dashboard. See **DASHBOARD, REPLACING** .

Angle out the climate control unit. See **CLIMATE UNIT, REPLACING**.

Remove the rear sill trim panel. See **SILL TRIM PANEL, REPLACING** .

Lift the rear floor carpet and the lower floor surface to one side.

Remove the rear side panel. See **SIDE PANEL CARGO COMPARTMENT, REPLACEMENT** .

Detach the connection at the junction block in the engine room for the rear pipes.

Remove the heat deflector and the seal on the cowl panel.

Disconnect the terminal at the rear air conditioning (A/C) unit.

INSTALLING THE PIPE / HOSE ON THE JUNCTION BLOCK ON THE COWL - REAR EXPANSION VALVE

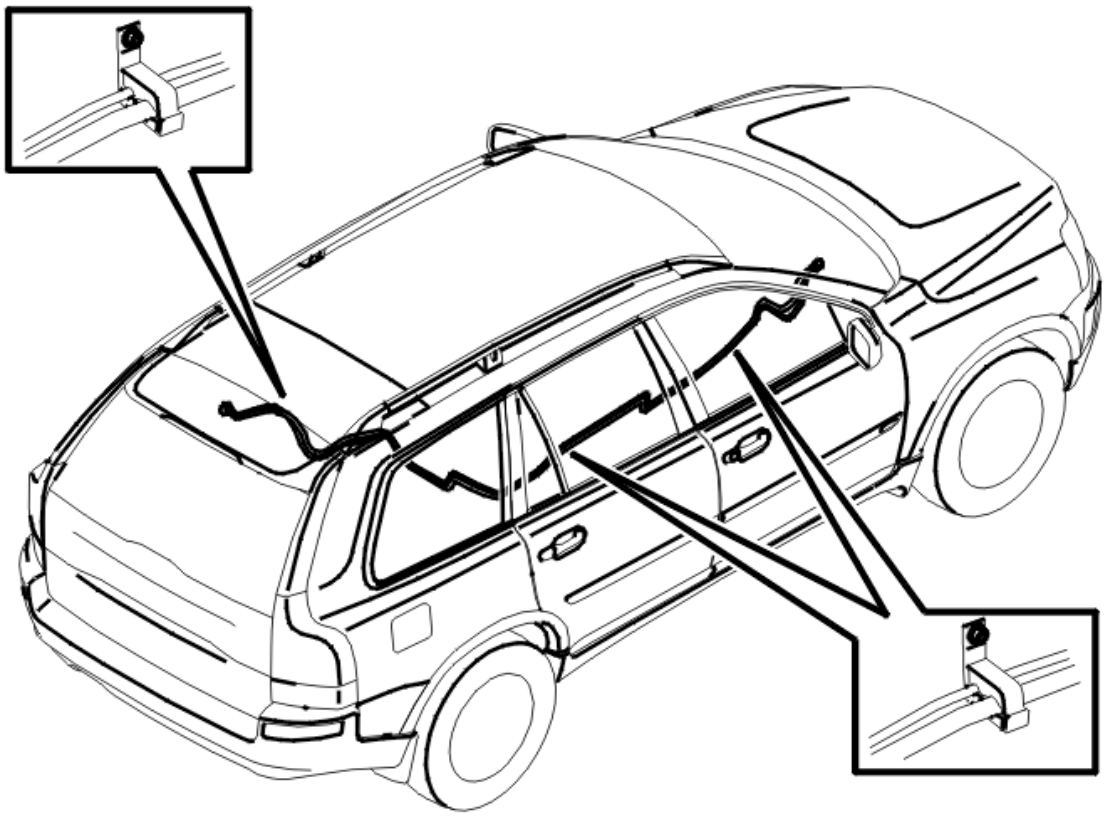

Fig. 62: Installing A/C Pipe Hoses
Courtesy of VOLVO CARS CORPORATION

Position the pipe / hose against the cowl panel. Route the pipe into the passenger compartment along the left-hand side of the center console and on along the right-hand side to the rear air conditioning (A/C) unit.

Secure the pipe at the various mounting points (see the illustration).

Connect the pipe at the rear air conditioning (A/C) unit.

Install:

- the heat deflector and the seal on the cowl panel.

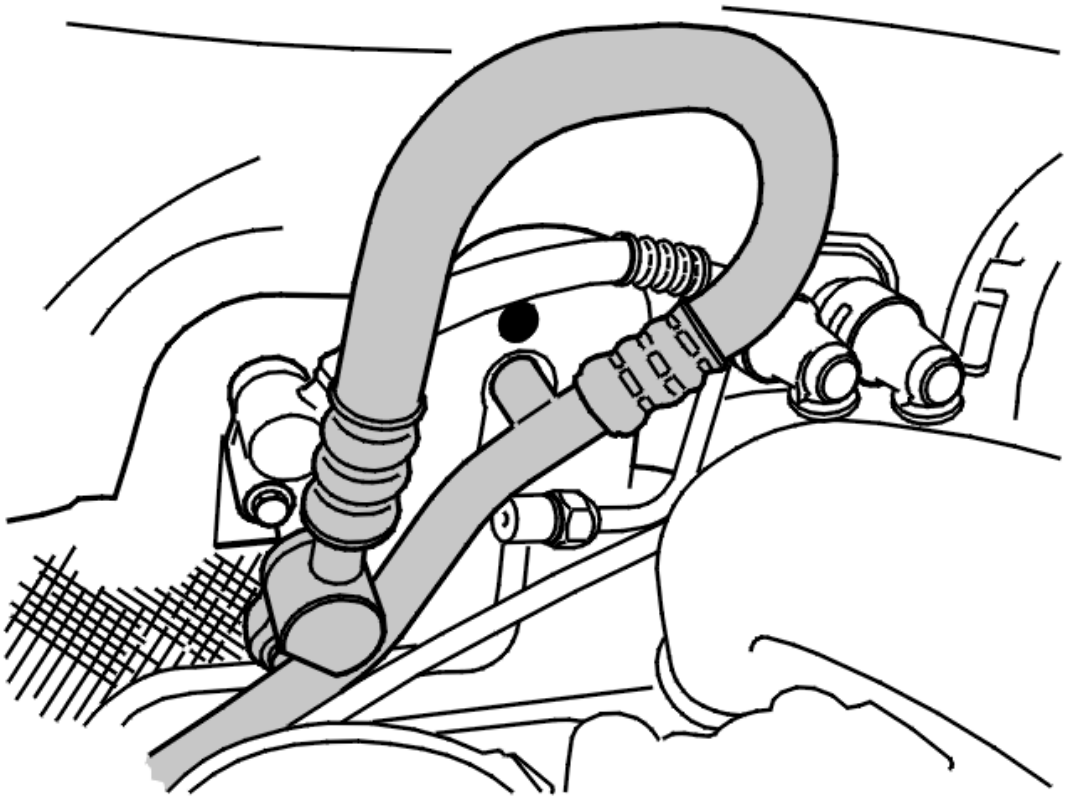

Fig. 63: Engine Compartment Junction Block Connection
Courtesy of VOLVO CARS CORPORATION

- the connection at the junction block in the engine room for the rear pipes (see the illustration).
- the rear floor carpet and the lower floor surface
- the rear sill trim panel. See **SILL TRIM PANEL, REPLACING**
- the climate control unit. See **CLIMATE UNIT, REPLACING**
- the dashboard. See **DASHBOARD, REPLACING**
- the left front seat. See **UPHOLSTERY BACK REST, REPLACING** (-2004) or **FRONT SEAT, REPLACING** (2005-).

Carry out finishing work. See **FINISHING WORK (OPERATIONS COMMON TO ALL METHODS)**.

PIPES RECEIVER DRIER, REPLACING

REMOVAL

As the illustrations in this service information are used for different model years and / or models, some variation may occur. However, the essential information in the illustrations is always correct.

PREPARATIONS

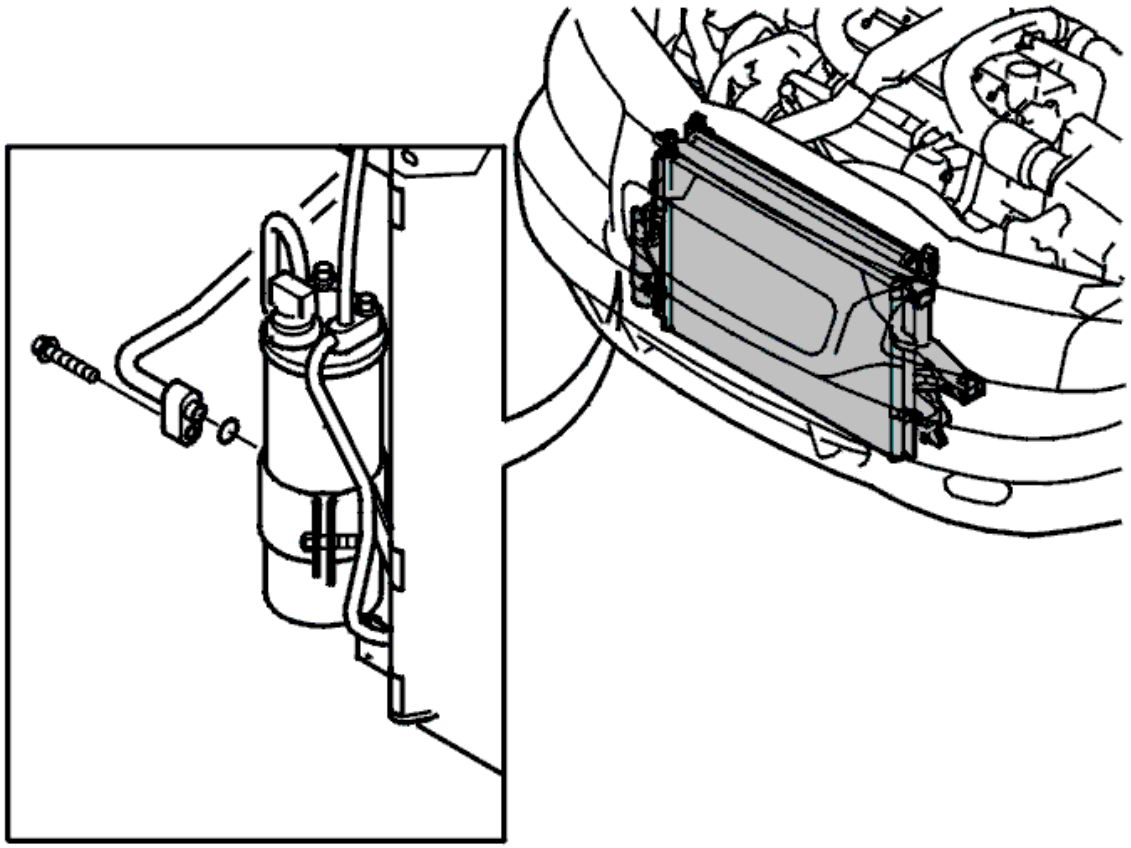

Fig. 64: Identifying Drier Hoses And Condenser
Courtesy of VOLVO CARS CORPORATION

WARNING: **Follow the safety instructions for work on air conditioning (A/C) systems. See REFRIGERANT, SAFETY REGULATIONS .**

NOTE: **Read the instructions covering slow and fast leaks. See OIL AIR CONDITIONING (A/C) SYSTEM, FILLING .**

NOTE: **Always plug the pipes and connections when working on the climate control system.**

REMOVING RECEIVER DRIER PIPE

Drain the refrigerant from the system. See **REFRIGERANT, DRAINING** .

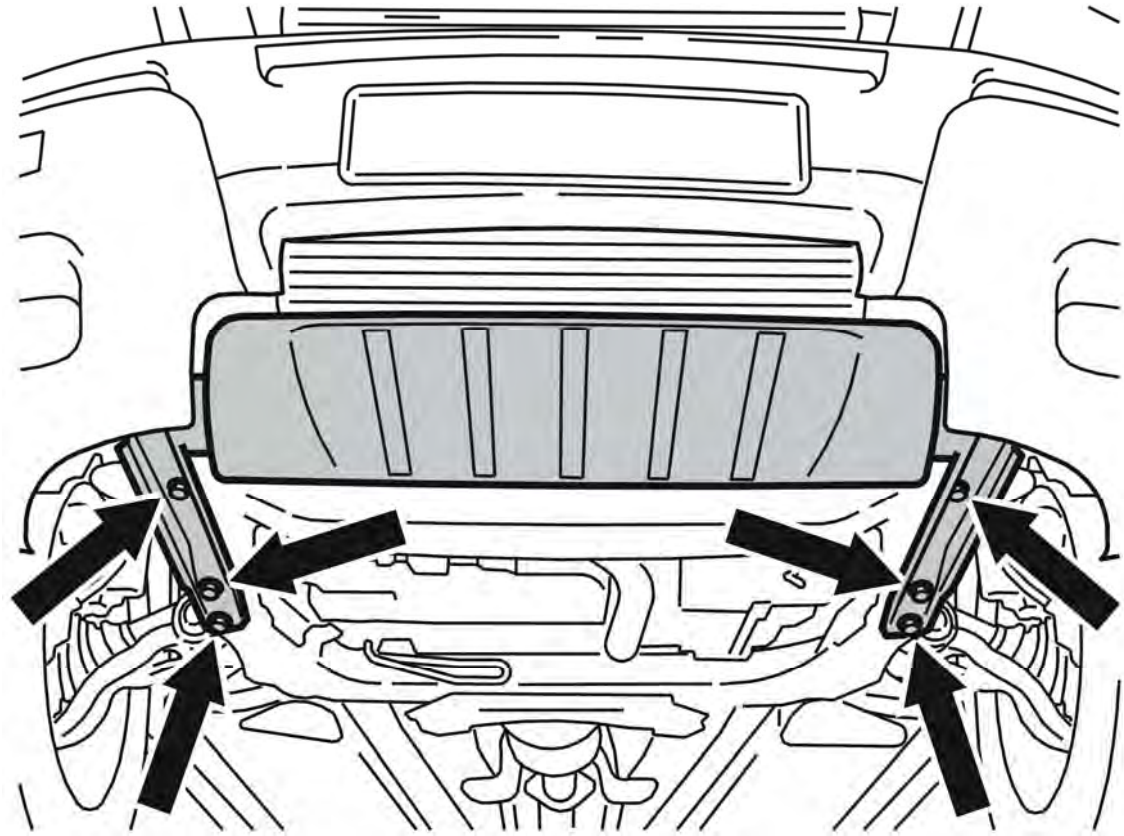

Fig. 65: Splash Guard. Protective Plate And Screws
Courtesy of VOLVO CARS CORPORATION

Remove the splash guard under the car.

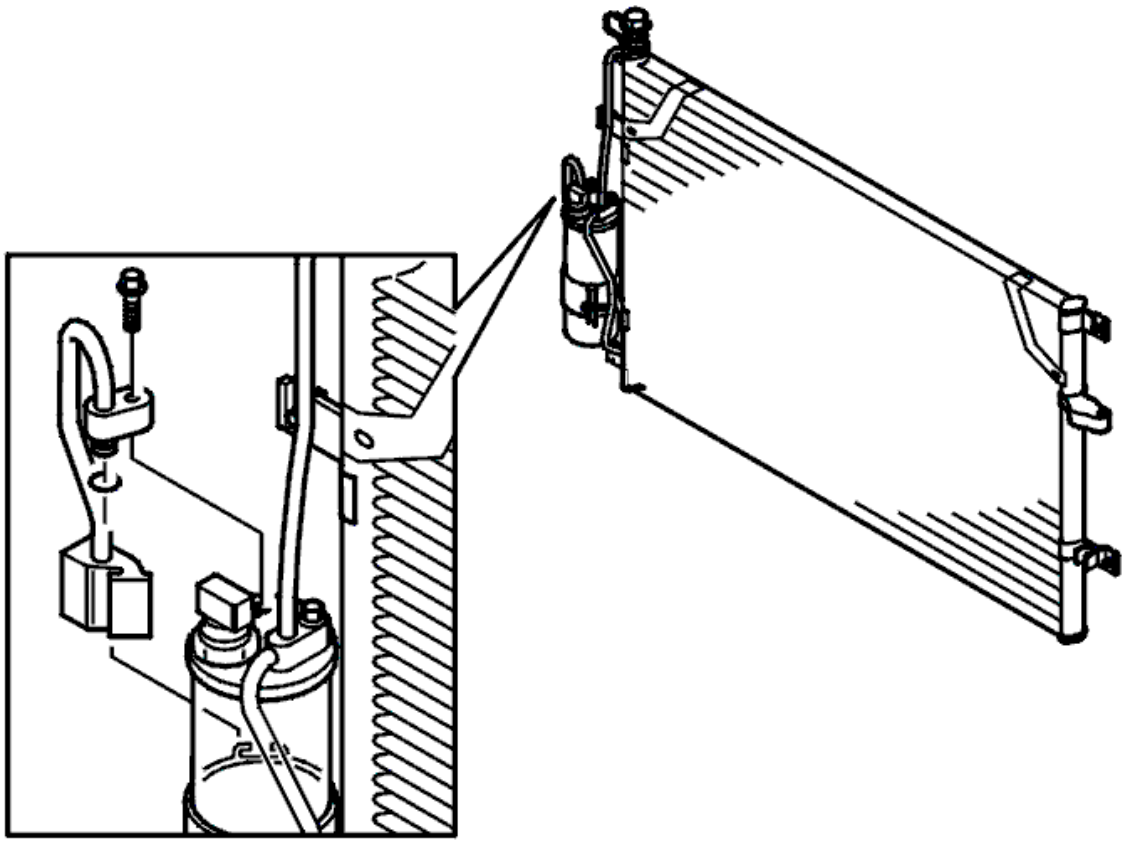

Fig. 66: Identifying Receiver/Dryer Pipe Coupling
Courtesy of VOLVO CARS CORPORATION

Detach the pipe coupling from the receiver.

Slacken off the tensioner screw in the mounting for the bracket a few turns.

Remove the right-hand headlamp. See **LIGHTING - REMOVAL, REPLACEMENT AND INSTALLATION** .

Disconnect the pipe coupling form the top of the receiver. Lift the pipe out of the mounting.

INSTALLING THE PIPE FOR THE RECEIVER / DRIER

NOTE: Use new O-rings lubricated with compressor oil.

Position the pipe on the mounting in the bracket. Position the pipe coupling on the receiver.

Tighten the tensioner screw for the mounting in the bracket a few turns. Tighten to **10 Nm** .

Secure the pipe coupling from the condenser to the receiver. Tighten to **10 Nm** .

Vacuum pump. See **VACUUM PUMPING** .

Fill the system with refrigerant. See **REFRIGERANT, FILLING** .

Test for leaks. See **LEAK TRACING, FLUORESCENT TRACING AGENT / UV LAMP** or **LEAK TRACING, FLUORESCENT TRACING AGENT / UV LAMP** .

Install the right-hand headlamp. See **LIGHTING - REMOVAL, REPLACEMENT AND INSTALLATION** .

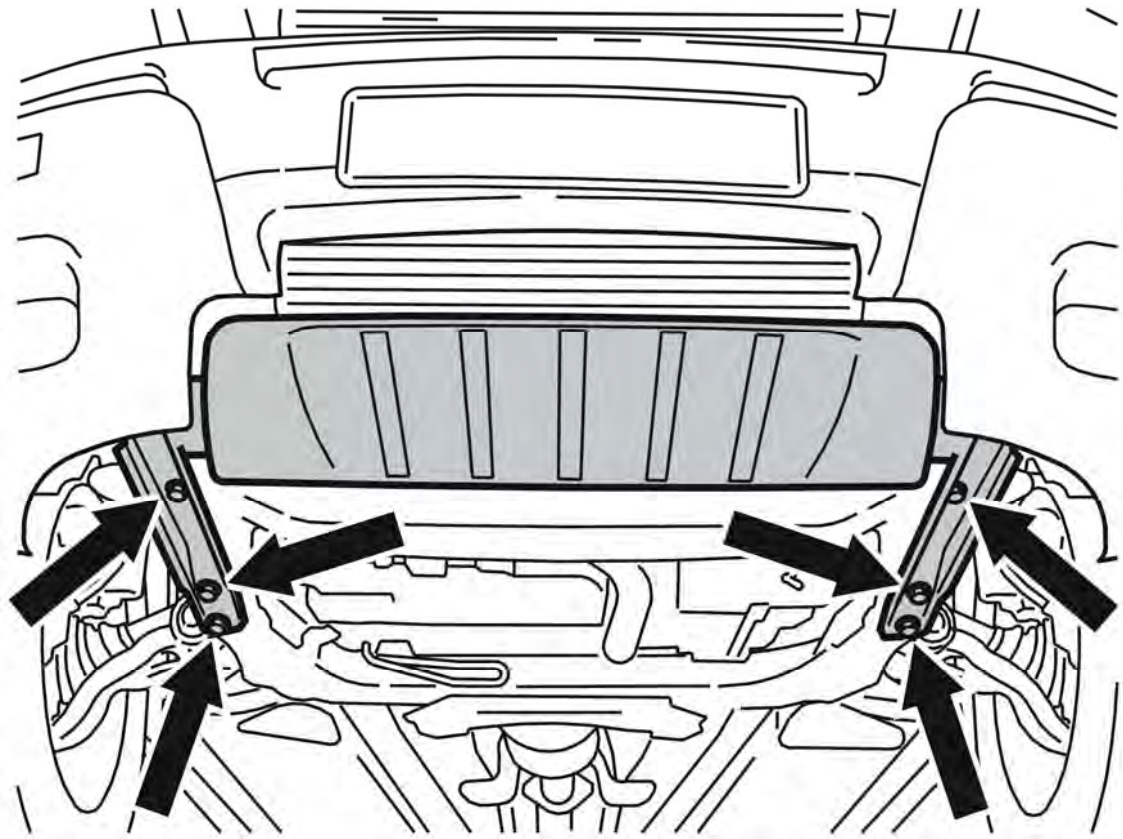

Fig. 67: Splash Guard. Protective Plate And Screws
Courtesy of VOLVO CARS CORPORATION

Install the splash guard under the car.

RECEIVER DRIER, REPLACING

NOTE: **The illustrations in this service information are used for different model years and/or models. Some variation may occur. However, the essential information in the illustrations is always correct.**

REMOVAL

DRAINING COOLANT AND REMOVING COMPONENTS

WARNING: Follow the safety instructions for work on air conditioning systems. See: REFRIGERANT, SAFETY REGULATIONS .

NOTE: First read the instructions covering slow and fast leaks. See OIL AIR CONDITIONING (A/C) SYSTEM, FILLING .

NOTE: Always plug the pipes and connections when working on the climate control system.

Drain the refrigerant from the system. See **REFRIGERANT, DRAINING** .

REMOVING THE AIR BAFFLE

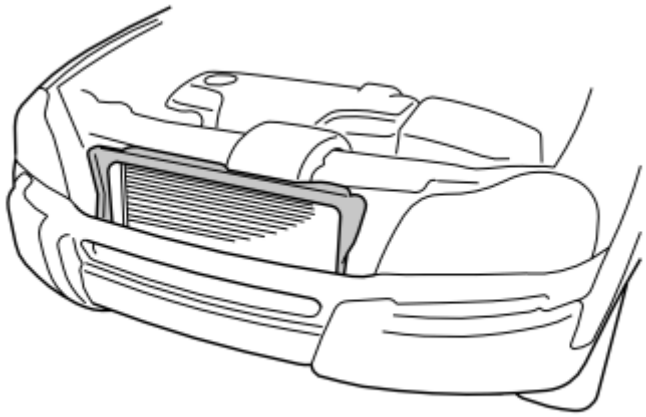

Fig. 68: Air Baffle
Courtesy of VOLVO CARS CORPORATION

Remove the air baffle.

REMOVING THE SKID PLATE

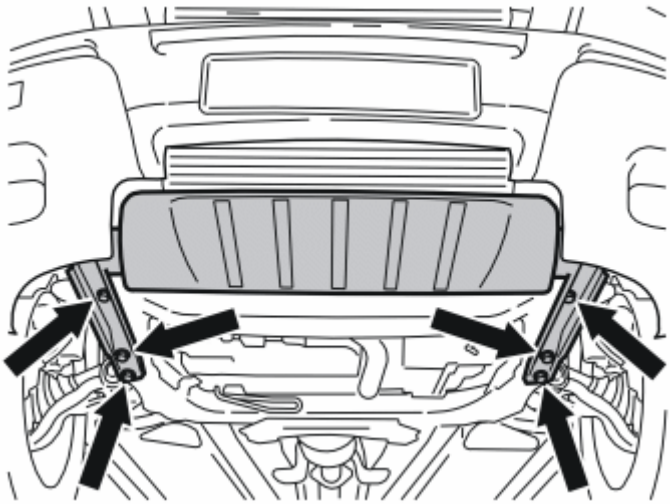

Fig. 69: Skid Plate
Courtesy of VOLVO CARS CORPORATION

Raise the vehicle.

Remove the 6 screws.

Lift and slide the splash guard forward.

NOTE: **There is a guide sleeve on the upper mounting for the plate. This must be lifted slightly so that the panel can be slid forward.**

REMOVAL

REMOVING THE PRESSURE SENSOR

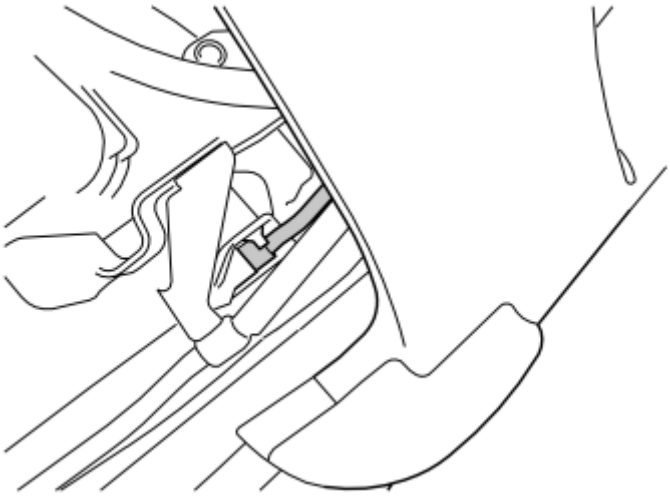

Fig. 70: Right-Hand A/C Pipe Connection
Courtesy of VOLVO CARS CORPORATION

Remove:

- right-hand A/C pipe connection sleeve, x 1
- the connector of the pressure sensor
- the pressure sensor.

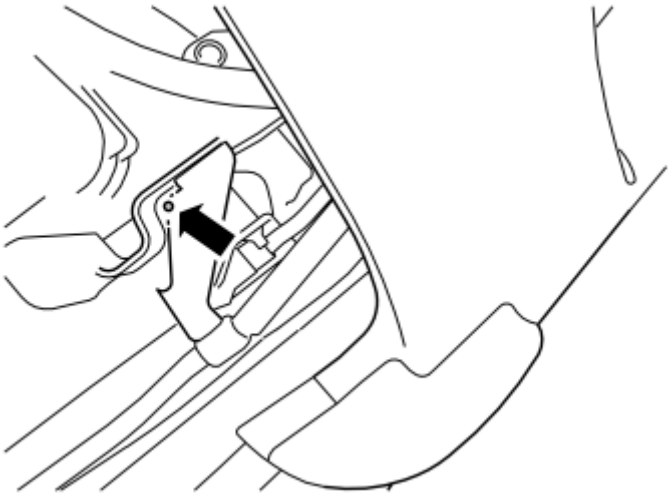

Fig. 71: Receiver Drier Installation Screw
Courtesy of VOLVO CARS CORPORATION

Remove the lower screw, x 1, holding the drier in place.

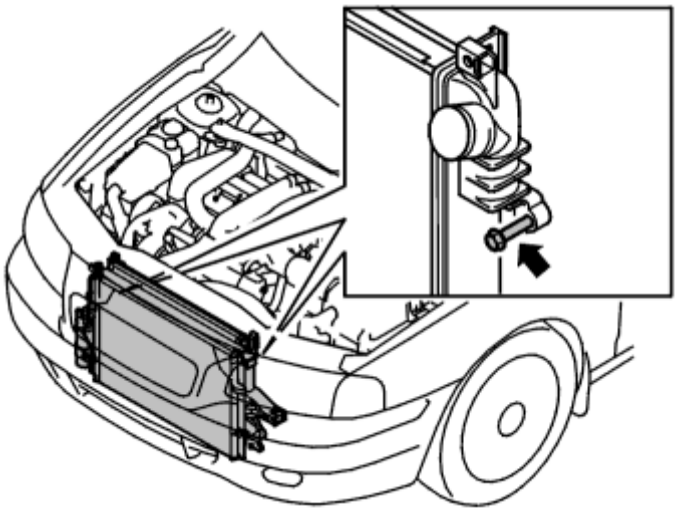

Fig. 72: Identifying Condenser Upper Mountings & Screws
Courtesy of VOLVO CARS CORPORATION

Lower the vehicle.

Remove the upper right-hand mounting screw, x 1, on the rear side of the condenser.

REMOVING THE RECEIVER DRIER

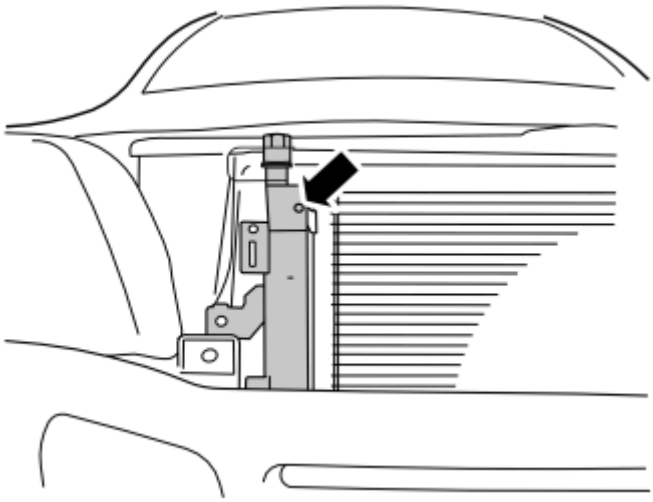

Fig. 73: Upper Right-Hand Mounting Screw
Courtesy of VOLVO CARS CORPORATION

Remove:

- the upper right-hand mounting screw, x 1, on the condenser.
- the drier by alternately pulling the drier up and carefully moving it sideways across the car.

NOTE: If the drier filter is jammed then it can be carefully pried away from the connection/lower mounting on the condenser using a slotted screwdriver.

INSTALLATION

NOTE: For tightening torques, see: TIGHTENING TORQUE .

INSTALLING THE DRIER AND COMPONENTS

Fill compressor oil in the drier, see: **OIL AIR CONDITIONING (A/C) SYSTEM, FILLING** .

NOTE: Always use new O-rings lubricated with compressor oil.

Install:

- the drier by pressing it in and screwing in the upper screw at the service valve, x 1, see: **SUMMARY OF TIGHTENING TORQUES FOR SPECIFIC COMPONENTS** and tighten
- upper right mounting screw, 1 x M6. **Use:** locking fluid, 1161075 and tighten. See: **TIGHTENING TORQUE**
- the air baffle around the condenser.

Raise the vehicle.

Install:

- the lower mounting screw to the drier, see: **SUMMARY OF TIGHTENING TORQUES FOR SPECIFIC COMPONENTS**
- the pressure sensor. See: **SUMMARY OF TIGHTENING TORQUES FOR SPECIFIC COMPONENTS**
- the connector
- the A/C pipe with the screw, 1 x M6, and tighten.

FINISHING

NOTE: For tightening torques, see: TIGHTENING TORQUE .

FILLING WITH REFRIGERANT AND LEAK TRACING

Vacuum pump the air conditioning (A/C) system. See: **VACUUM PUMPING** .

Fill the system. See: **REFRIGERANT, FILLING** .

Leak trace the system. See: **LEAK TRACING, FLUORESCENT TRACING AGENT / UV LAMP** or: **LEAK TRACING, FLUORESCENT TRACING AGENT / UV LAMP** .

INSTALLING THE SKID PLATE

Install and tighten the 6 x M10 screws crosswise.

AIR CONDITIONING (B6294T; 2003-2005)

COMPRESSOR, REPLACING

see **COMPRESSOR, REPLACING**

CONDENSER, REPLACING

NOTE: As the illustrations in this service information are used for different model years and / or models, some variation may occur. However, the essential information in the illustrations is always correct.

NOTE: Chassis number limit, see below:

XC90 with chassis no. from and including 196988, see: CONDENSER, REPLACING.

PREPARATIONS

Read the safety regulations for handling refrigerant according to: **REFRIGERANT, SAFETY REGULATIONS** .

Read the instructions for slow and fast leaks according to: **OIL AIR CONDITIONING (A/C) SYSTEM, FILLING** .

Drain the refrigerant from the AC-system according to: **REFRIGERANT, DRAINING** .

NOTE: Always plug the pipes and connections when working on the climate control system.

REMOVING THE CONDENSER

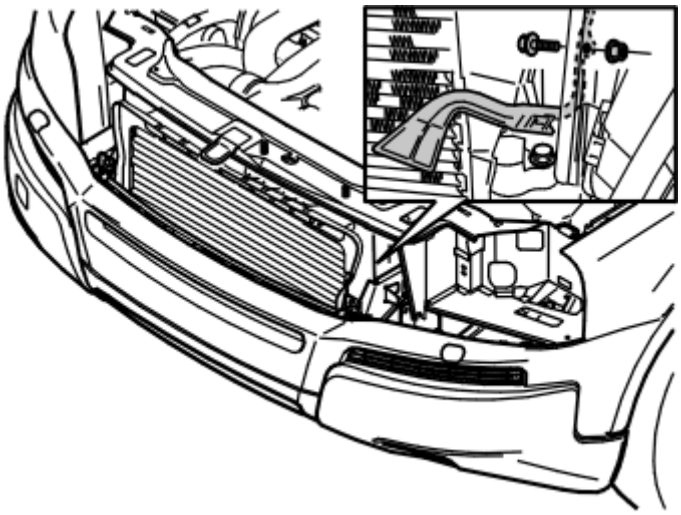

Fig. 74: Link From The Hood Release Catch
Courtesy of VOLVO CARS CORPORATION

Remove:

- the battery lead according to: **BATTERY, DISCONNECTING**
- the left and right headlights according to: **LIGHTING - REMOVAL, REPLACEMENT AND INSTALLATION**
- the connector for the pressure sensor on the drier filter
- the link for the bonnet opener
- the pipe coupling from above to the left section of the condenser.

Remove:

- the pipe from the retaining clip and move it to one side
- the two upper mountings for the condenser.

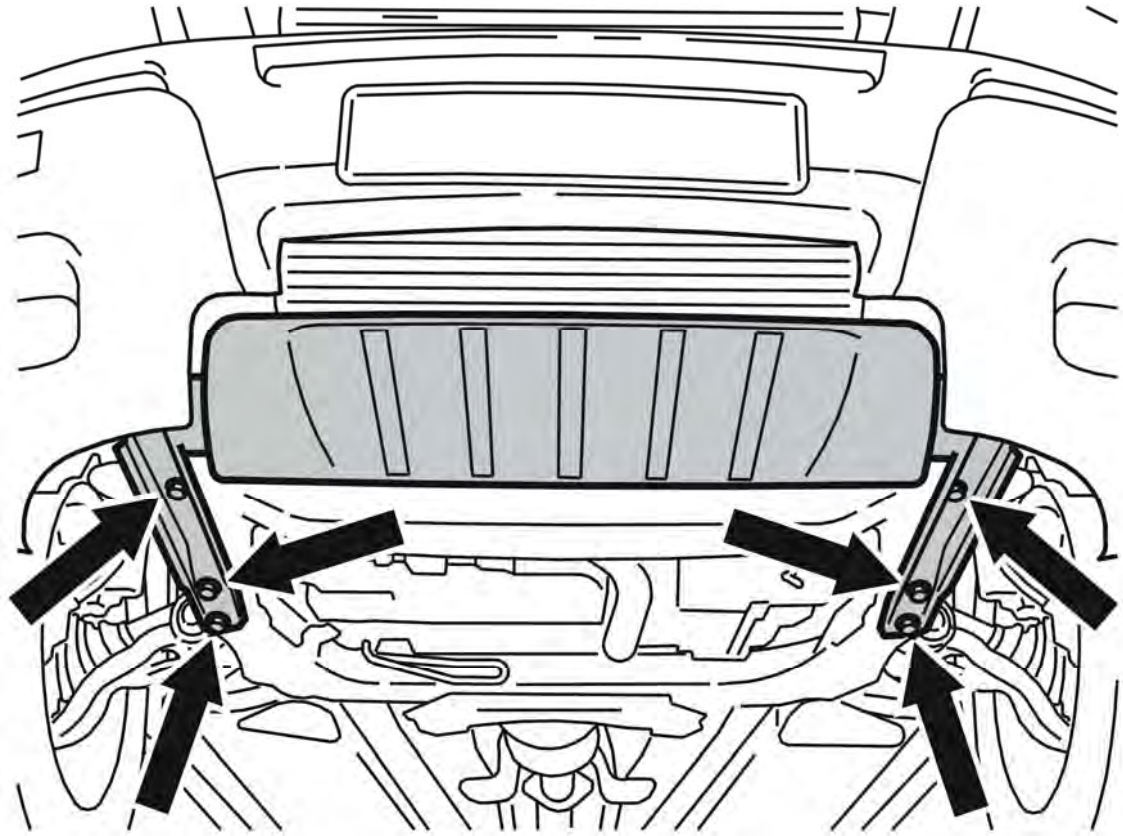

Fig. 75: Splash Guard. Protective Plate And Screws
Courtesy of VOLVO CARS CORPORATION

Remove:

- the splash guard under the car
- the bumper shell. See **CASING BUMPER FRONT, REPLACING**
- the seal on the condenser
- the pipe coupling from the receiver drier.

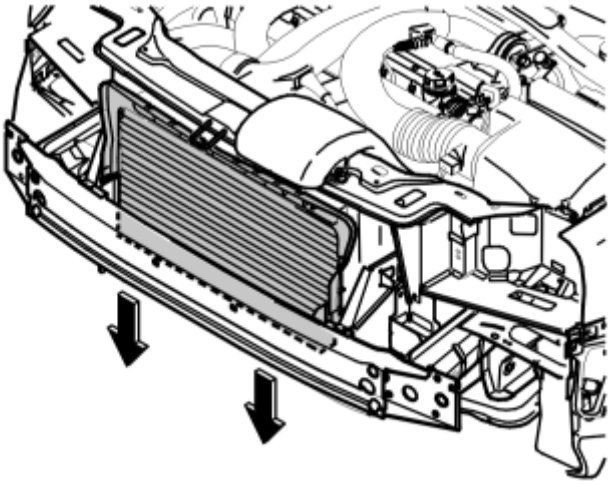

Fig. 76: Condenser 2 Lower Mounting Screws
Courtesy of VOLVO CARS CORPORATION

Slacken off the 2 lower mounting screws for the condenser.

Remove the condenser.

INSTALLING THE CONDENSER

NOTE: Always use new O-rings lubricated with oil.

Position the condenser.

Check that the condenser is in the correct position in relation to the air conditioning aggregate.

Tighten the lower 2 screws for the condenser.

Position the hose / pipe from the compressor in the mounting clips. Then place the hose / pipe in the pipe coupling on the left-hand side of the condenser.

NOTE: The hose / pipe must be secured to the retaining clip to ensure that it is correctly positioned before the protective panel is installed.

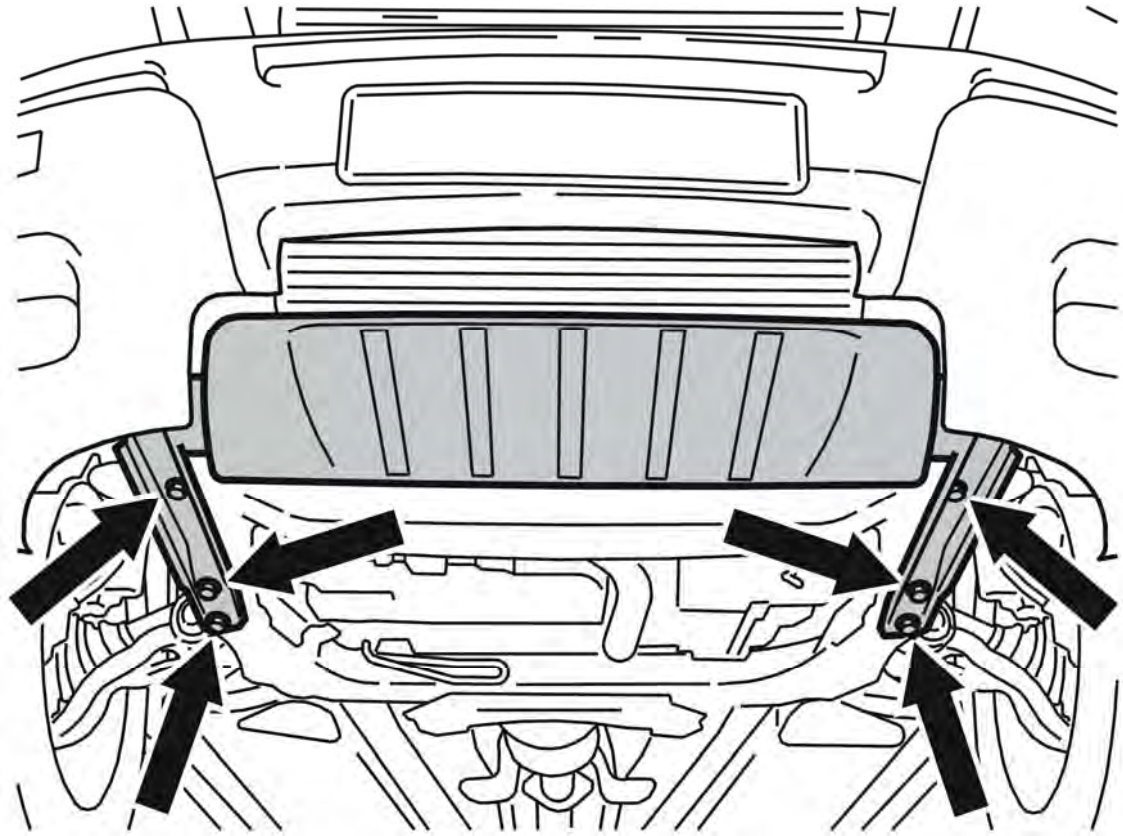

Fig. 77: Splash Guard. Protective Plate And Screws
Courtesy of VOLVO CARS CORPORATION

Install:

- the hose connector on the receiver drier and tighten
- the splash guard under the car
- the connector on the receiver drier
- the seal on the condenser.

Tighten:

- the upper mountings for the condenser
- the screw for the hose connector from the compressor on the left-hand side of the condenser.

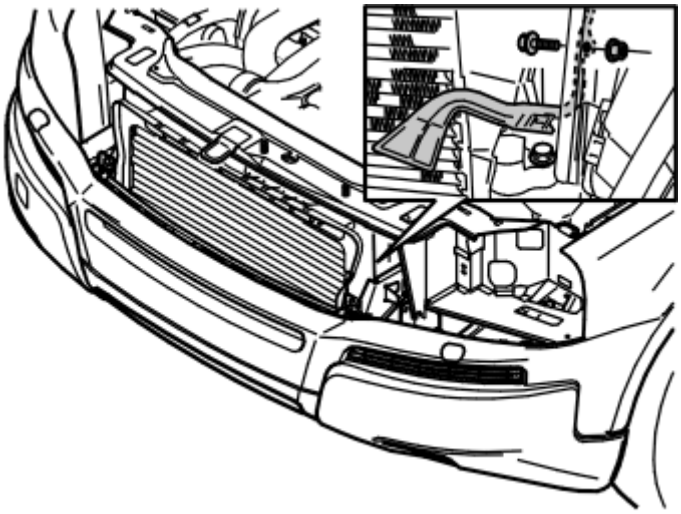

Fig. 78: Link From The Hood Release Catch
Courtesy of VOLVO CARS CORPORATION

Install:

- the link for the bonnet release catch (see the illustration)
- the headlights acc to: **LIGHTING - REMOVAL, REPLACEMENT AND INSTALLATION**
- the bumper shell. See **CASING BUMPER FRONT, REPLACING** .

FINISHING

Install the battery cable. See **BATTERY, DISCONNECTING** .

Vacuum pump the air conditioning (A/C) system. See: **VACUUM PUMPING** .

Fill the AC-system with refrigerant according to: **REFRIGERANT, FILLING** .

Check the AC-system for leaks according to: **LEAK TRACING, FLUORESCENT TRACING AGENT / UV LAMP** alternatively: **LEAK TRACING, FLUORESCENT TRACING AGENT / UV LAMP** .

EVAPORATOR REAR, REPLACING

see **EVAPORATOR REAR, REPLACING**

EVAPORATOR, REPLACING

see **EVAPORATOR, REPLACING**

EXPANSION VALVE REAR, REPLACING

see **EXPANSION VALVE REAR, REPLACING**

EXPANSION VALVE, REPLACING

see **EXPANSION VALVE, REPLACING**

MAGNETIC CLUTCH COMPRESSOR, REPLACING

Special tools:

see **9995596**

see **9995598**

see **9995599**

see **9995600**

see **9995597**

see **9995602**

REMOVAL

As the illustrations in this service information are used for different model years and / or models, some variation may occur. However, the essential information in the illustrations is always correct.

PREPARATIONS

WARNING: **Read the safety instructions for work on air conditioning systems. See REFRIGERANT, SAFETY REGULATIONS .**

Read the instructions covering slow and fast leaks. See **OIL AIR CONDITIONING (A/C) SYSTEM, FILLING** .

NOTE: **When replacing a compressor, always replace the O-rings in the pipes and quick-release connectors.**

NOTE: **Always plug the pipes and connections when working on the climate control system.**

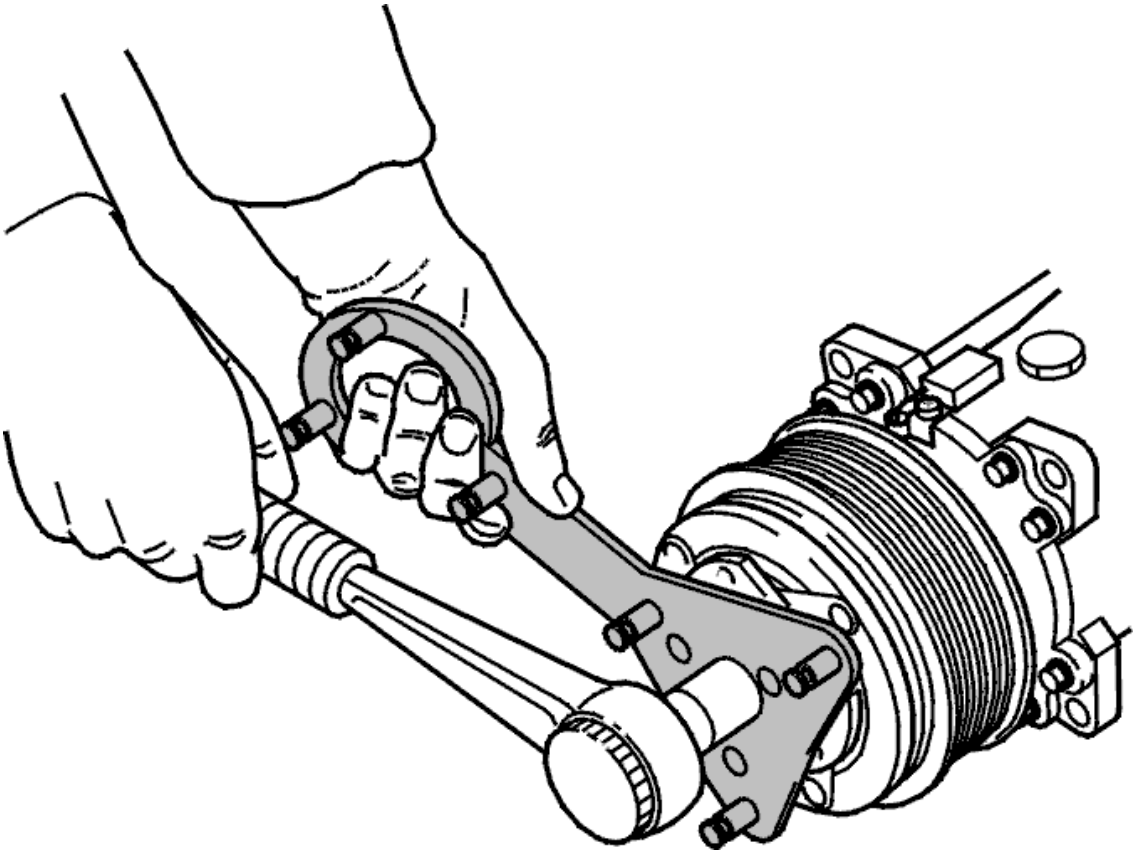

Fig. 79: Identifying Clutch Plate And Counterhold
Courtesy of VOLVO CARS CORPORATION

Remove the compressor See **COMPRESSOR, REPLACING**.

REMOVING THE MAGNETIC CLUTCH COMPRESSOR

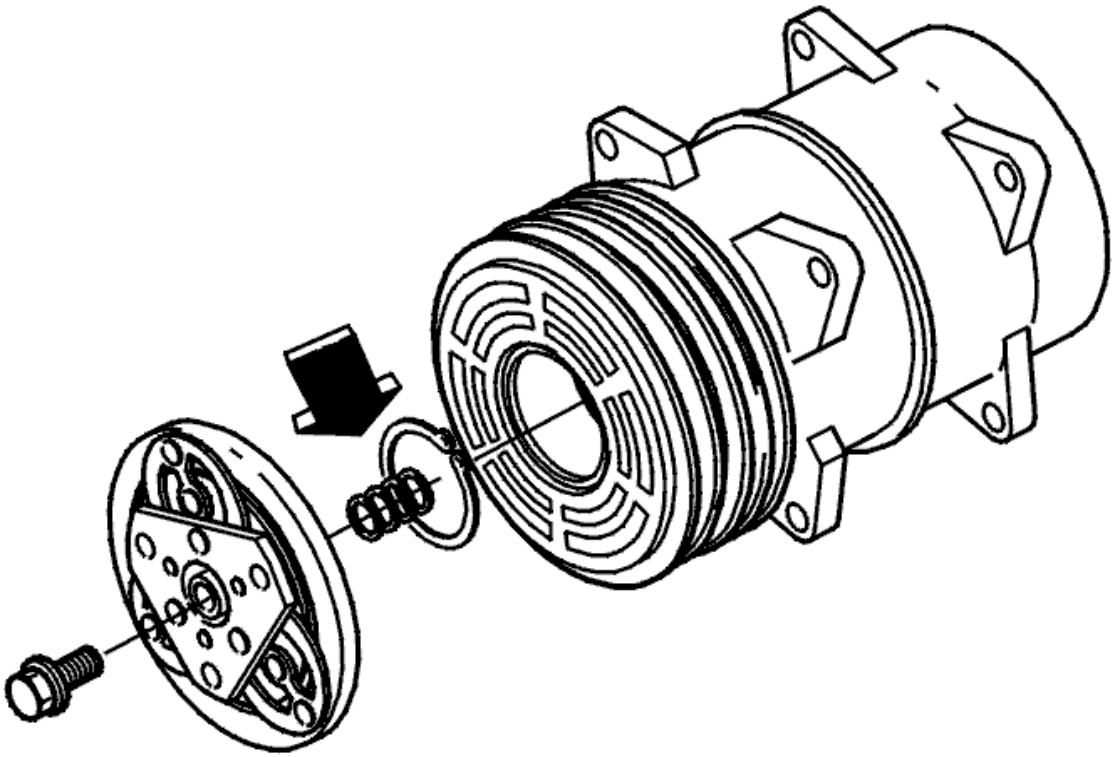

Fig. 80: Identifying Shims
Courtesy of VOLVO CARS CORPORATION

Slacken off the screw for the clutch plate. Use special tool see **9995596** .

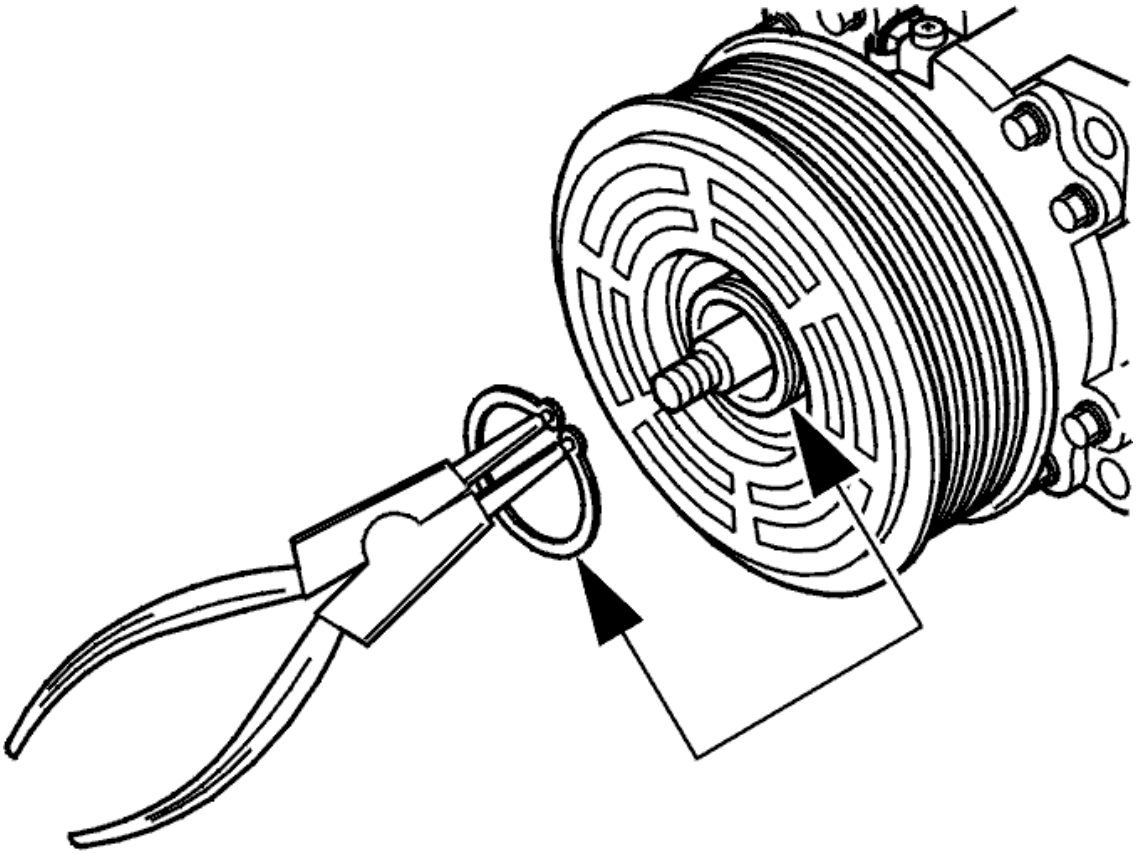

Fig. 81: Identifying Snap Ring
Courtesy of VOLVO CARS CORPORATION

Remove the clutch plate. Use a puller, special tool see **9995597** .

Keep the shims.

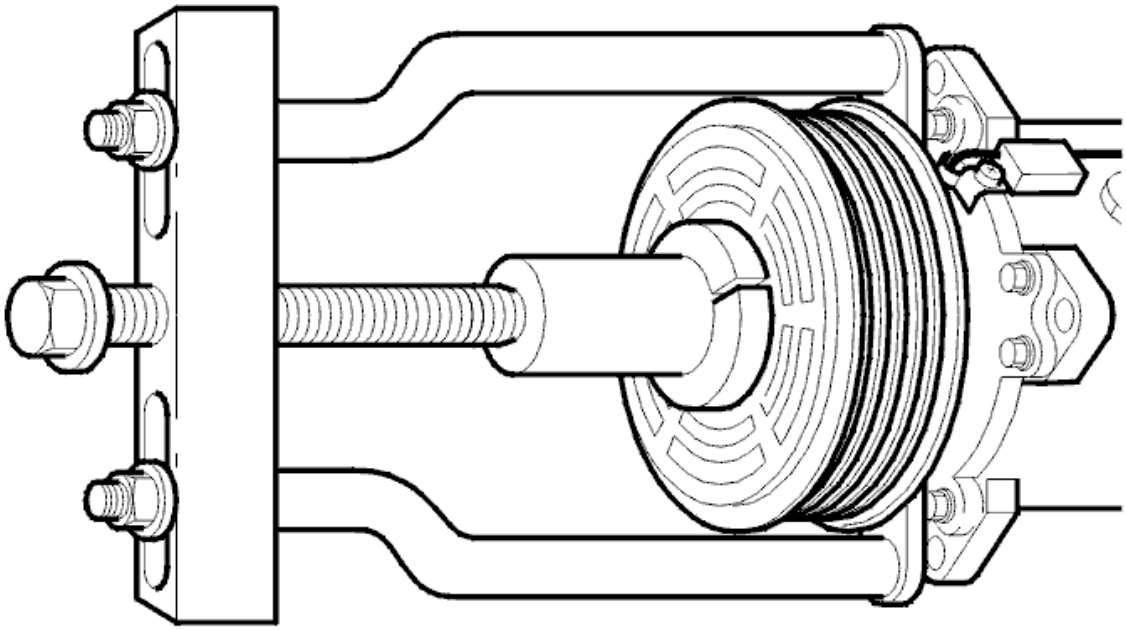

Fig. 82: Identifying Puller And Socket
Courtesy of VOLVO CARS CORPORATION

Remove the snap ring.

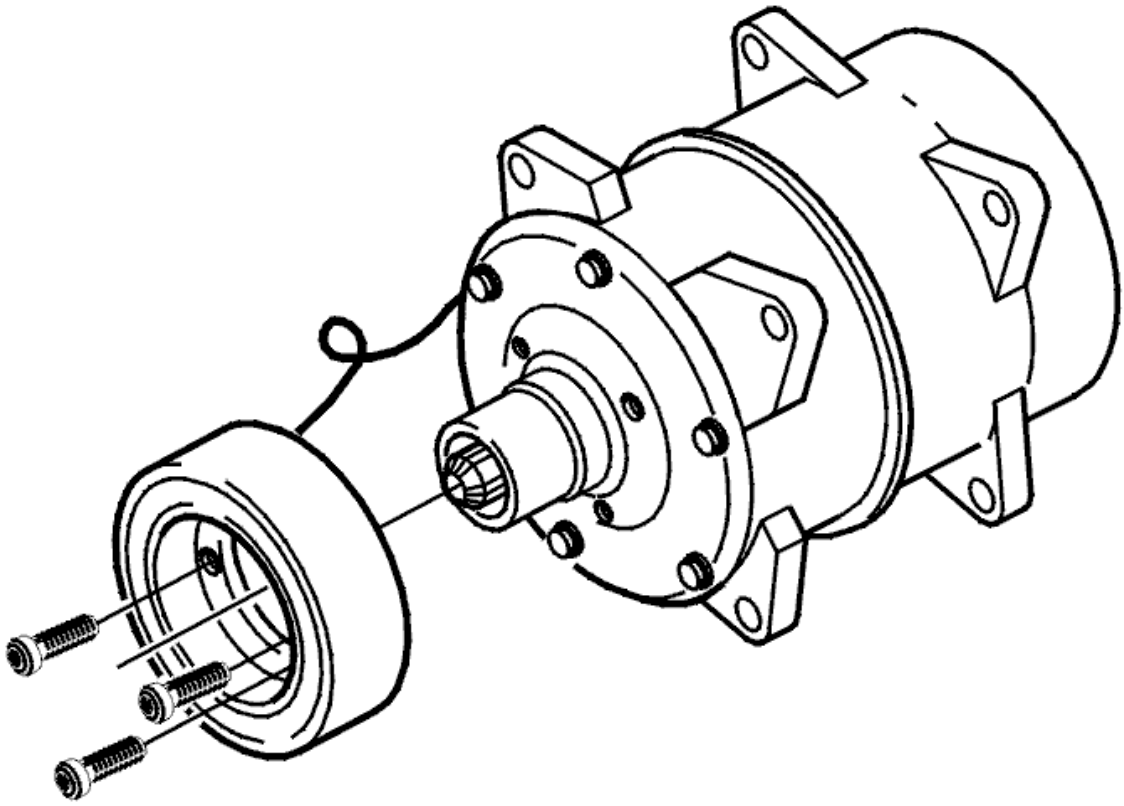

Fig. 83: Identifying Magnet Coil
Courtesy of VOLVO CARS CORPORATION

Pull off the pulley. Use a puller, special tool see **9995598** and socket, special tool see **9995599** .

Remove the magnet coil.

INSTALLING THE MAGNETIC CLUTCH FOR THE COMPRESSOR

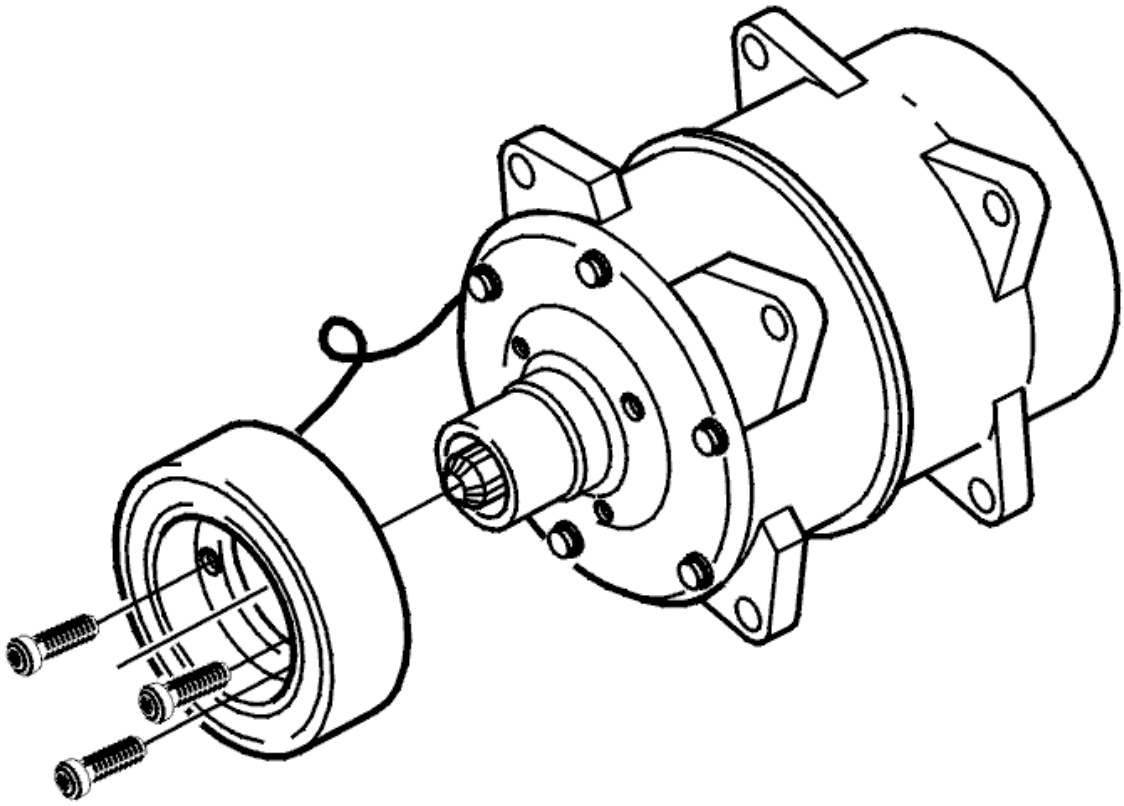

Fig. 84: Identifying Magnet Coil
Courtesy of VOLVO CARS CORPORATION

Install a new magnetic coil. Tighten. See **SUMMARY OF TIGHTENING TORQUES FOR SPECIFIC COMPONENTS** .

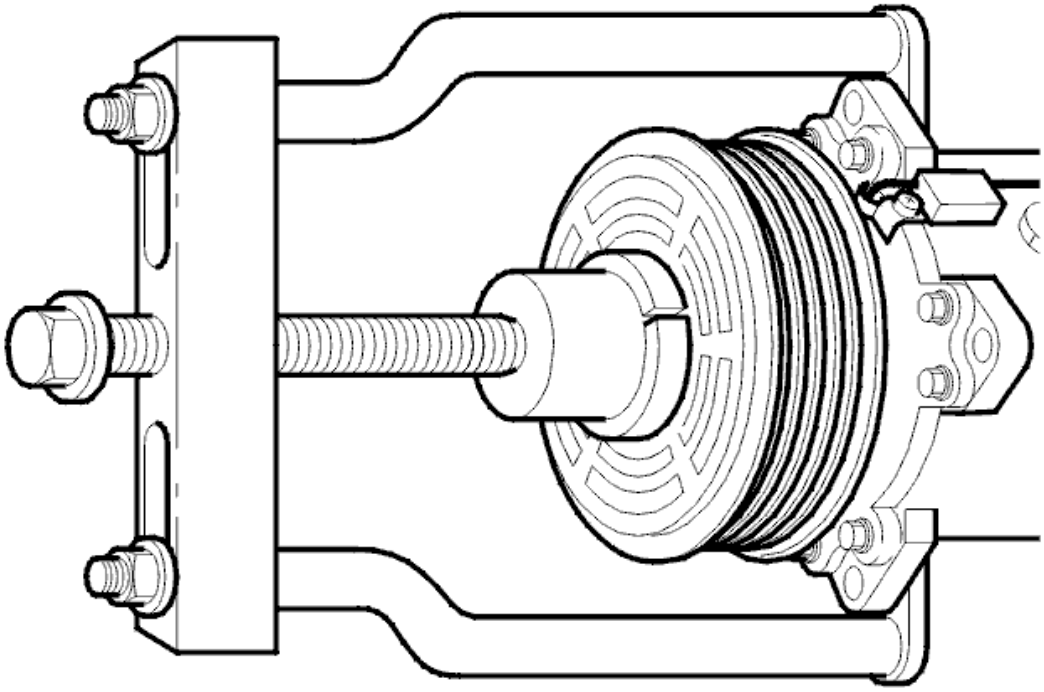

Fig. 85: Identifying Puller And Socket
Courtesy of VOLVO CARS CORPORATION

Install a new pulley. Use a puller, special tool see **9995598** and socket, special tool see **9995600** .

NOTE: Position the tools behind the compressor mountings.

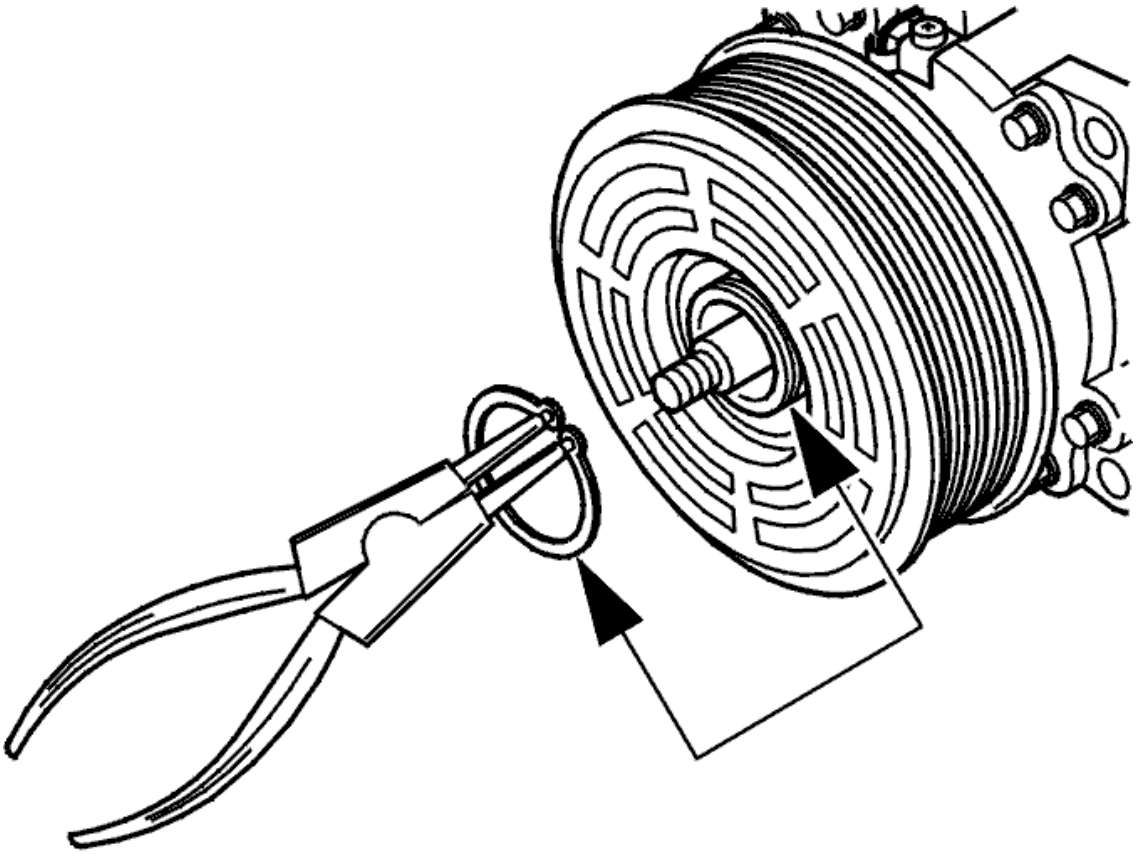

Fig. 86: Identifying Snap Ring
Courtesy of VOLVO CARS CORPORATION

Install the snap ring.

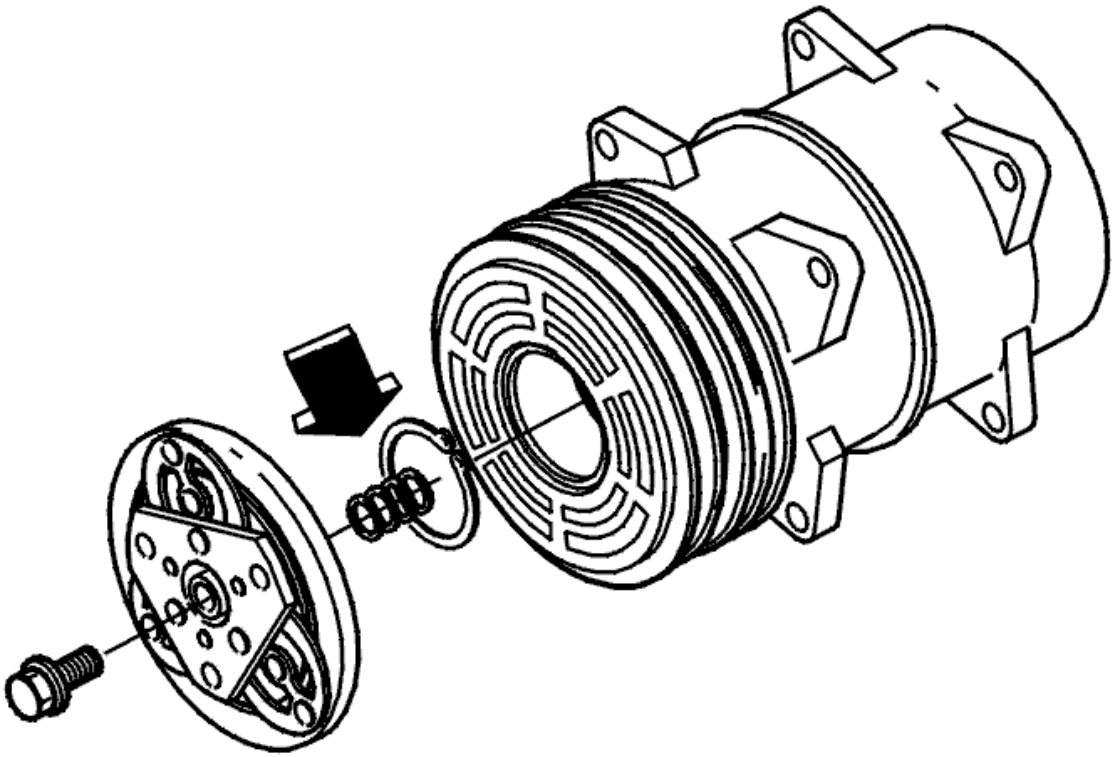

Fig. 87: Identifying Shims
Courtesy of VOLVO CARS CORPORATION

Install the shims.

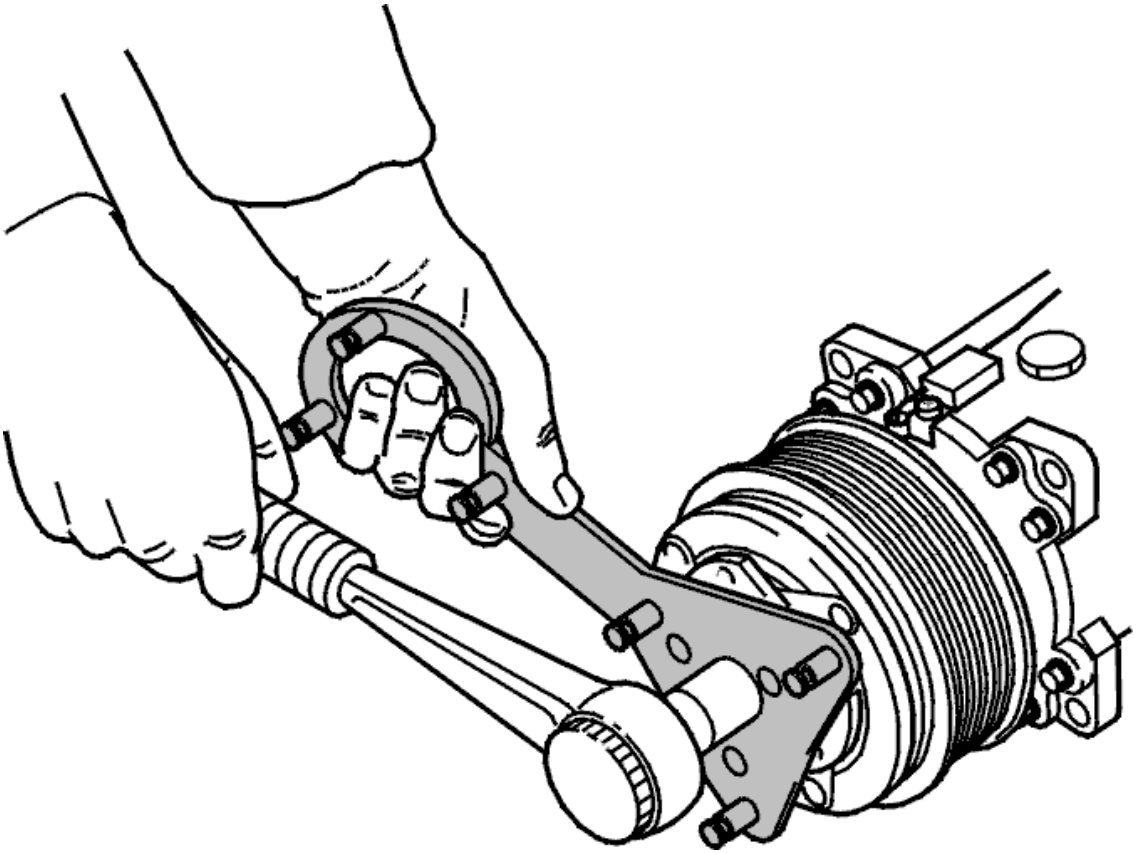

Fig. 88: Identifying Clutch Plate And Counterhold
Courtesy of VOLVO CARS CORPORATION

Install the clutch plate. Install 1 screw using a counterhold, special tool see **9995596** . Tighten. See **SUMMARY OF TIGHTENING TORQUES FOR SPECIFIC COMPONENTS** .

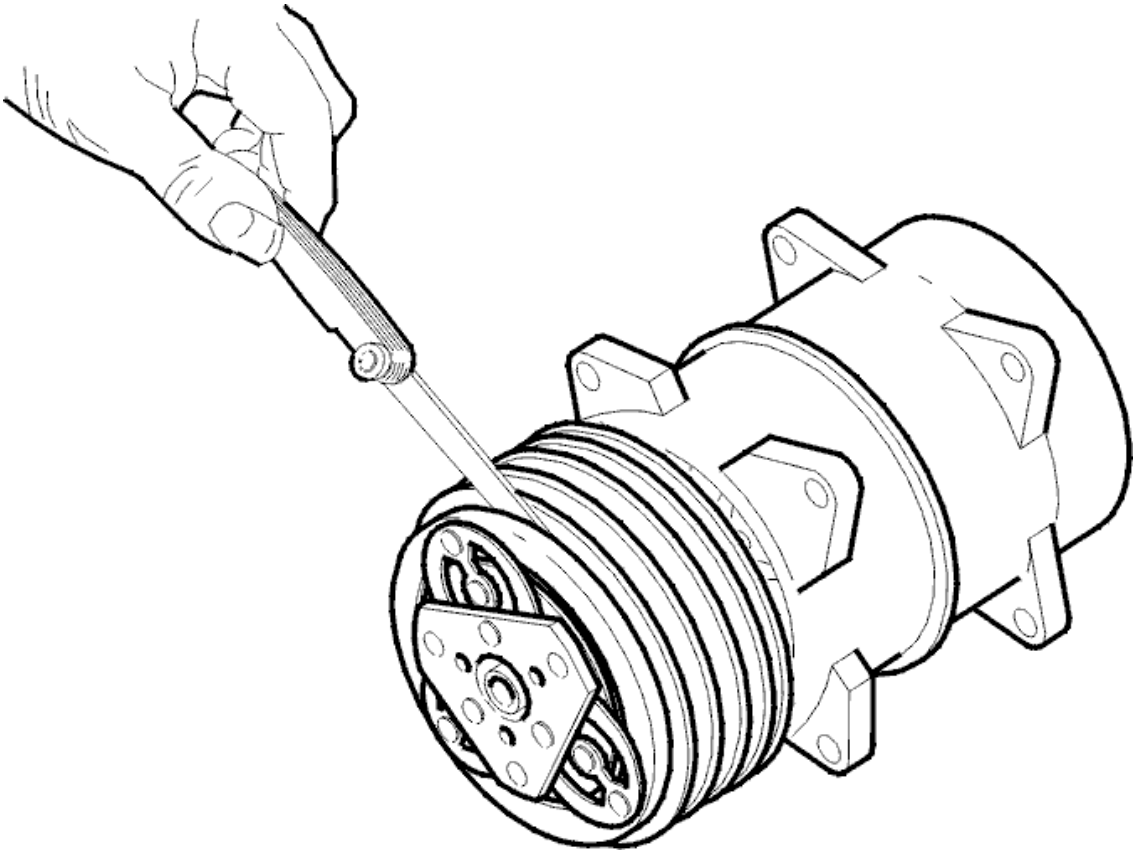

Fig. 89: Identifying Feeler Gauge Between Clutch Plate And Pulley
Courtesy of VOLVO CARS CORPORATION

Check the clearance between the clutch plate and pulley. Use a feeler gauge.

The clearance should be 0.3-0.5 mm.

There must be 0.3 mm clearance all the way around.

Replace the shims if the clearance is not within the given values. The following dimensions are available:

0.2 mm

0.3 mm

1.0 mm

Install the compressor. See **COMPRESSOR, REPLACING**.

NEEDLE JET / SERVICE VALVE, REPLACING

see **NEEDLE JET / SERVICE VALVE, REPLACING**

PIPE/HOSE COMPRESSOR, REPLACING

see **PIPE/HOSE COMPRESSOR, REPLACING**

PIPES / HOSES, REPLACING

see **PIPES / HOSES, REPLACING**

PIPES RECEIVER DRIER, REPLACING

see **PIPES RECEIVER DRIER, REPLACING**

RECEIVER DRIER, REPLACING

NOTE: **As the illustrations in this service information are used for different model years and / or models, some variation may occur. However, the essential information in the illustrations is always correct.**

NOTE: **Chassis number limit, see below.**

XC90 with chassis no. from and including 196988, see: RECEIVER DRIER, REPLACING.

PREPARATIONS

Read the safety regulations for handling refrigerant according to: **REFRIGERANT, SAFETY REGULATIONS** .

Drain the refrigerant from the AC-system according to: **REFRIGERANT, DRAINING** .

Remove the right headlight according to: **LIGHTING - REMOVAL, REPLACEMENT AND INSTALLATION** .

REMOVING THE RECEIVER DRIER

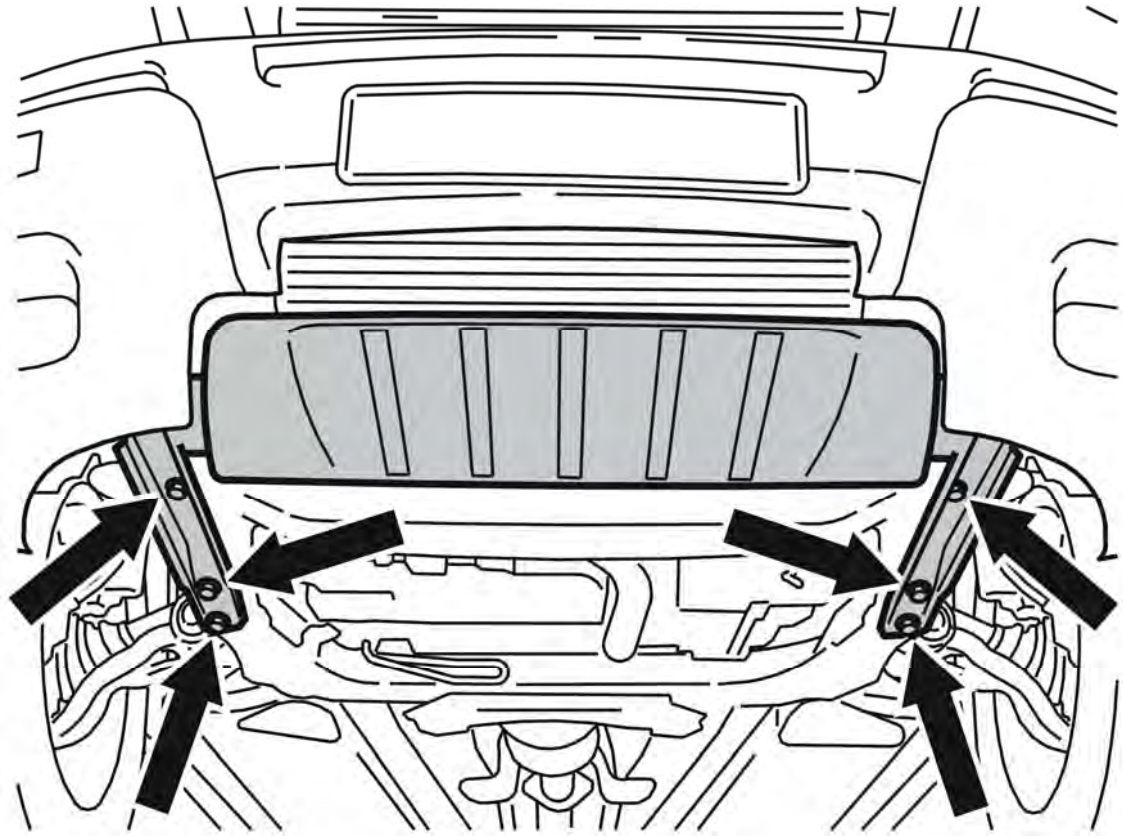

Fig. 90: Splash Guard. Protective Plate And Screws
Courtesy of VOLVO CARS CORPORATION

Remove the splash guard under the car.

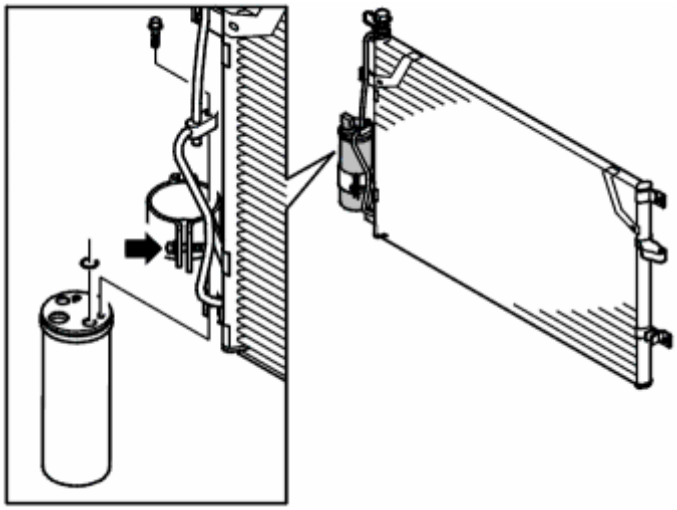

Fig. 91: Identifying Pipe Coupling & Condenser
Courtesy of VOLVO CARS CORPORATION

Remove:

- the connector for the pressure sensor
- the intermediate pipe according to: **PIPES RECEIVER DRIER, REPLACING**
- the pipe coupling from the condenser
- the screw for the bracket
- the receiver drier.

INSTALLING THE RECEIVER DRIER

NOTE: For tightening torques, see: GENERAL TIGHTENING TORQUE .

NOTE: Always use new O-rings lubricated with compressor oil.

Position the receiver drier in the bracket so that the pipe from the condenser is correctly positioned.

Install:

- the screw for the bracket
- the screw for the pipe coupling between the condenser and the receiver drier. Tighten.

Tighten the screw for the bracket.

Install:

- the intermediate pipe according to: **PIPES RECEIVER DRIER, REPLACING**
- the connector to the pressure sensor on the receiver drier.

Vacuum pump the air conditioning (A/C) system. See: **VACUUM PUMPING** .

Fill the AC-system with refrigerant according to: **REFRIGERANT, FILLING** .

Check the AC-system for leaks according to: **LEAK TRACING, FLUORESCENT TRACING AGENT / UV LAMP** alternatively: **LEAK TRACING, FLUORESCENT TRACING AGENT / UV LAMP** .

Install the right headlight according to: **LIGHTING - REMOVAL, REPLACEMENT AND INSTALLATION** .

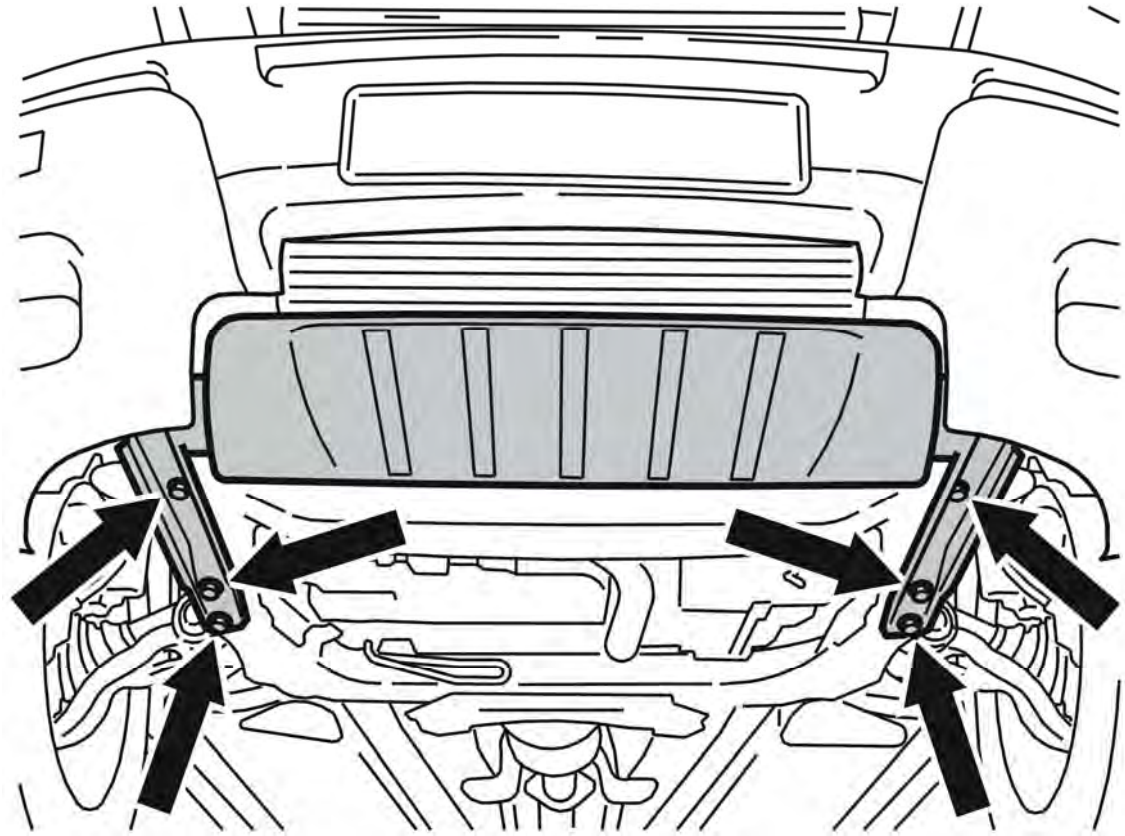

Fig. 92: Splash Guard. Protective Plate And Screws
Courtesy of VOLVO CARS CORPORATION

Install the splash guard under the car.

AIR CONDITIONING (B6294T; 2006)

COMPRESSOR, REPLACING

see **COMPRESSOR, REPLACING**

CONDENSER, REPLACING

see **CONDENSER, REPLACING**

EVAPORATOR REAR, REPLACING

see **EVAPORATOR REAR, REPLACING**

EVAPORATOR, REPLACING

see **EVAPORATOR, REPLACING**

EXPANSION VALVE REAR, REPLACING

see **EXPANSION VALVE REAR, REPLACING**

EXPANSION VALVE, REPLACING

see **EXPANSION VALVE, REPLACING**

MAGNETIC CLUTCH COMPRESSOR, REPLACING

see **MAGNETIC CLUTCH COMPRESSOR, REPLACING**

NEEDLE JET / SERVICE VALVE, REPLACING

see **NEEDLE JET / SERVICE VALVE, REPLACING**

PIPE/HOSE COMPRESSOR, REPLACING

see **PIPE/HOSE COMPRESSOR, REPLACING**

PIPES / HOSES, REPLACING

see **PIPES / HOSES, REPLACING**

PIPES RECEIVER DRIER, REPLACING

see **PIPES RECEIVER DRIER, REPLACING**

RECEIVER DRIER, REPLACING

see **RECEIVER DRIER, REPLACING**

AIR CONDITIONING (B8444S; 2005)

COMPRESSOR, REPLACING

see **COMPRESSOR, REPLACING**

CONDENSER, REPLACING

see **CONDENSER, REPLACING**

EVAPORATOR REAR, REPLACING

see **EVAPORATOR REAR, REPLACING**

EVAPORATOR, REPLACING

see **EVAPORATOR, REPLACING**

EXPANSION VALVE REAR, REPLACING

see **EXPANSION VALVE REAR, REPLACING**

EXPANSION VALVE, REPLACING

see **EXPANSION VALVE, REPLACING**

MAGNETIC CLUTCH COMPRESSOR, REPLACING

see **MAGNETIC CLUTCH COMPRESSOR, REPLACING**

NEEDLE JET / SERVICE VALVE, REPLACING

see **NEEDLE JET / SERVICE VALVE, REPLACING**

PIPE / HOSE COMPRESSOR, REPLACING

see **PIPE / HOSE COMPRESSOR, REPLACING**

PIPES / HOSES, REPLACING

see **PIPES / HOSES, REPLACING**

PIPES RECEIVER DRIER, REPLACING

see **PIPES RECEIVER DRIER, REPLACING**

RECEIVER DRIER, REPLACING

see **RECEIVER DRIER, REPLACING**

SOLENOID VALVE COMPRESSOR, REPLACING

see **SOLENOID VALVE COMPRESSOR, REPLACING**

AIR CONDITIONING (B8444S; 2006-2011)

COMPRESSOR, REPLACING

NOTE: **The illustrations in this service information are used for different model years and/or models. Some variation may occur. However, the essential information in the illustrations is always correct.**

PREPARATORY WORK

DRAINING THE AIR CONDITIONING (A/C) SYSTEM

WARNING: Follow the safety instructions for work on air conditioning systems. See: REFRIGERANT, SAFETY REGULATIONS .

Read the instructions covering slow and fast leaks. See: **OIL AIR CONDITIONING (A/C) SYSTEM, FILLING** .

CAUTION: Always use new O-rings lubricated with compressor oil.

NOTE: Always plug the pipes and connections when working on the climate control system.

Drain the air conditioning (A/C) system. See : **REFRIGERANT, DRAINING** .

Remove the drive belt. See: **AUXILIARIES BELT/BELT TENSIONER, REPLACEMENT** .

REMOVING THE ENGINE COOLING FAN

Remove the engine cooling fan (FC). See **ENGINE COOLING FAN (FC), REPLACING** .

REMOVAL

REMOVING ELECTRICAL CONNECTORS AND PIPES/HOSES TO THE COMPRESSOR

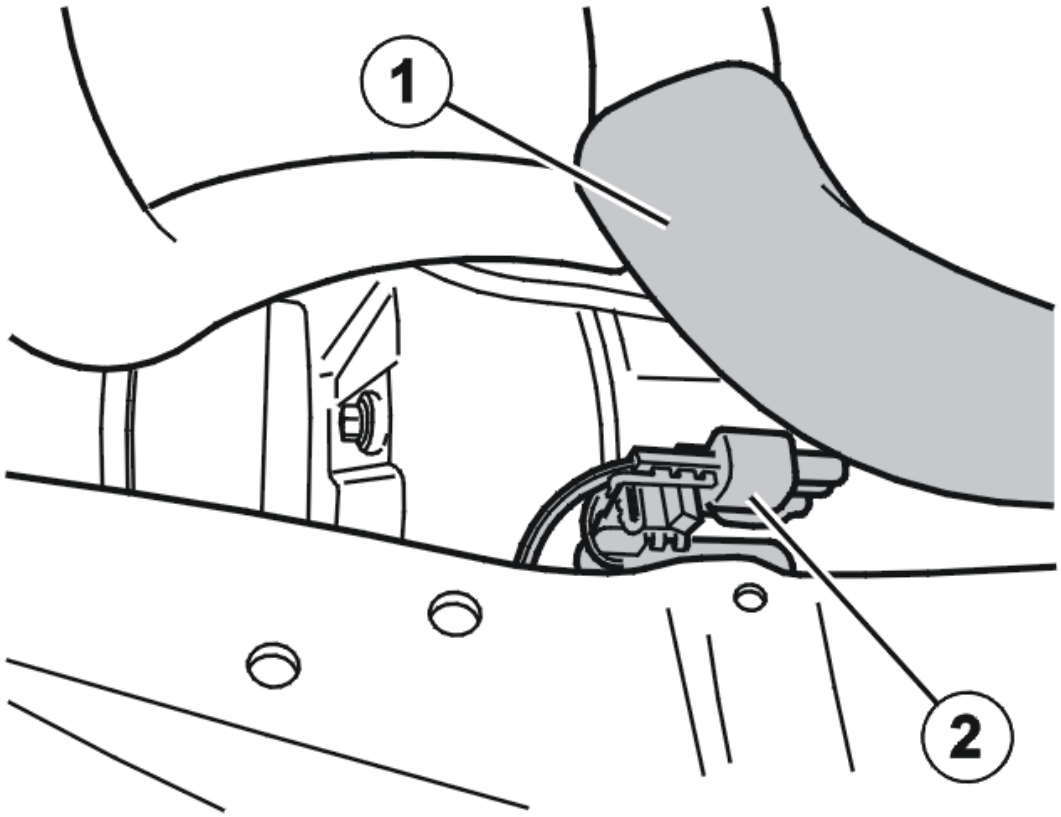

Fig. 93: Identifying Lower Coolant Hose/Connector
Courtesy of VOLVO CARS CORPORATION

Hang the lower coolant hose (1) to one side.

Remove:

- the 2 x connectors (2)
- the hose / pipe connections to the compressor and push them to one side.

HINT: Plug the terminals of the compressor using the transport plugs from the new compressor.

REMOVING THE COMPRESSOR

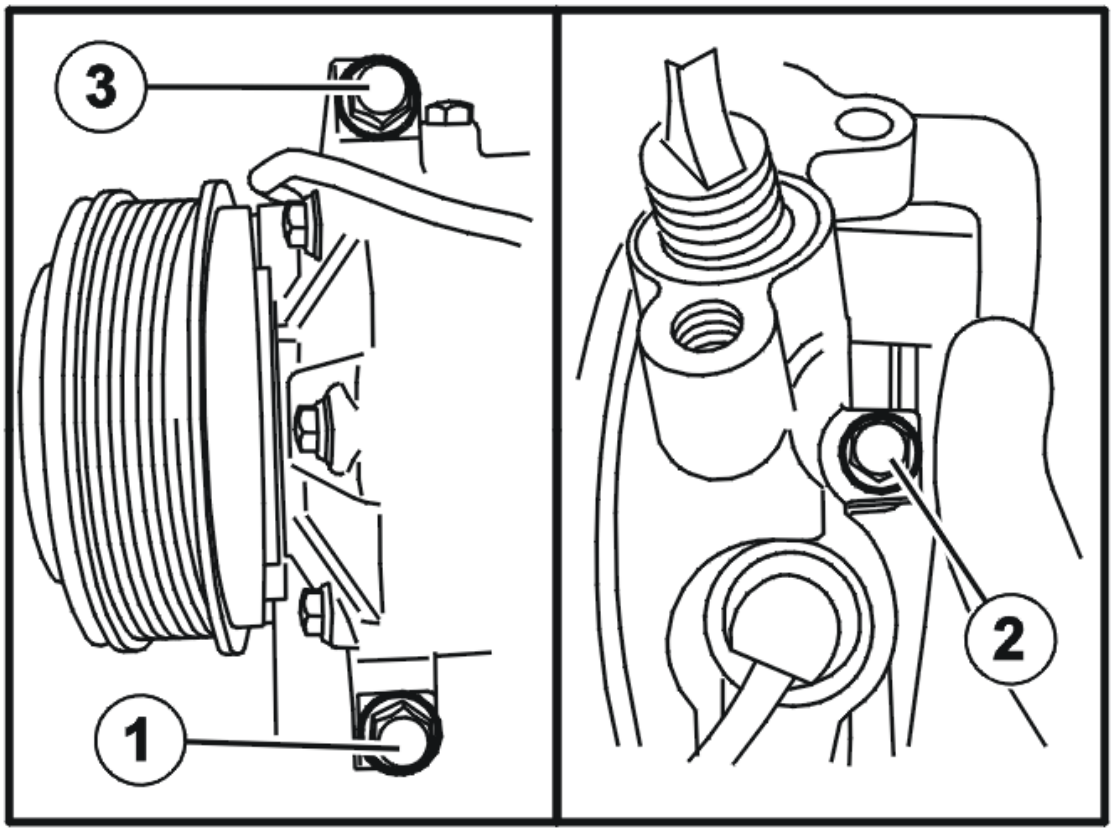

Fig. 94: Compressor Mounting Bolts
Courtesy of VOLVO CARS CORPORATION

Remove the lower mounting screw (1) at the pulley. The screw can be reached from underneath after the splash guard for the engine has been removed. The screw is in the right hand corner of the sub-frame.

NOTE: The screw cannot be removed from this position.

Remove:

- the screw (2) underneath the compressor hose / pipe terminals
- the upper mounting screw (3) at the pulley.

NOTE: This screw is longer than the other two screws.

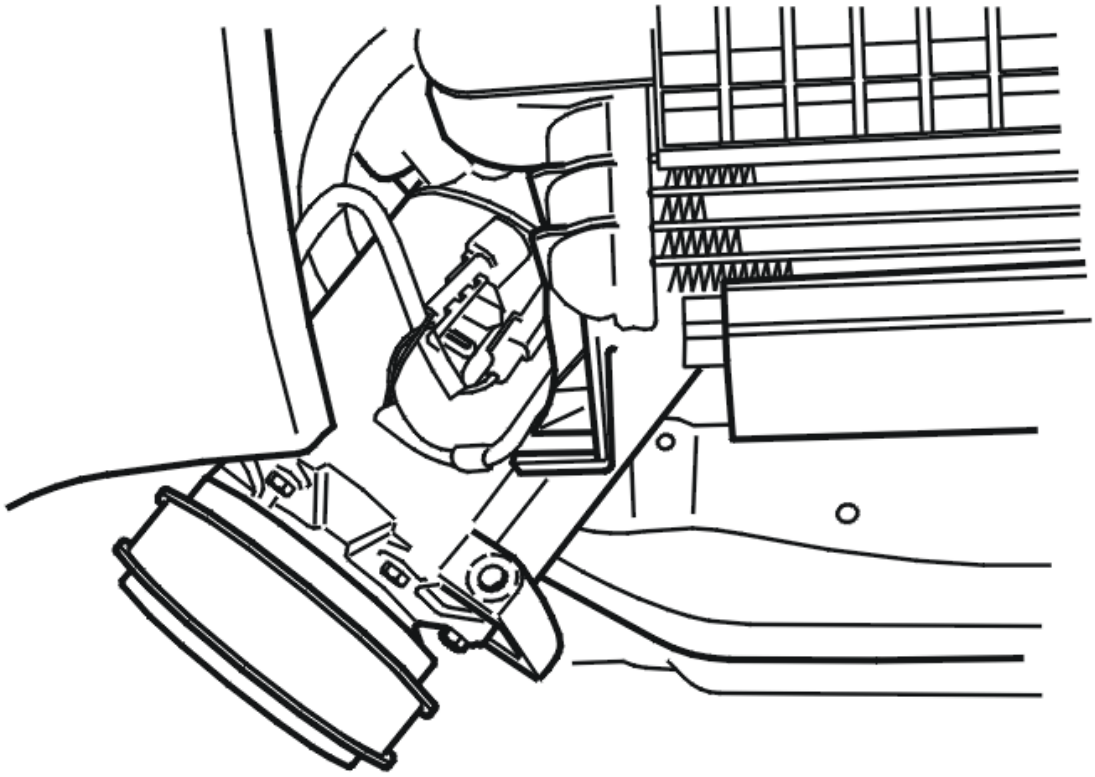

Fig. 95: Removing Compressor
Courtesy of VOLVO CARS CORPORATION

Withdraw the compressor slightly. Remove the lower left-hand mounting screw.

Remove the compressor with the connectors turned outwards (as shown in the illustration).

INSTALLATION

NOTE: For tightening torques, see: TIGHTENING TORQUE .

INSTALLING THE COMPRESSOR

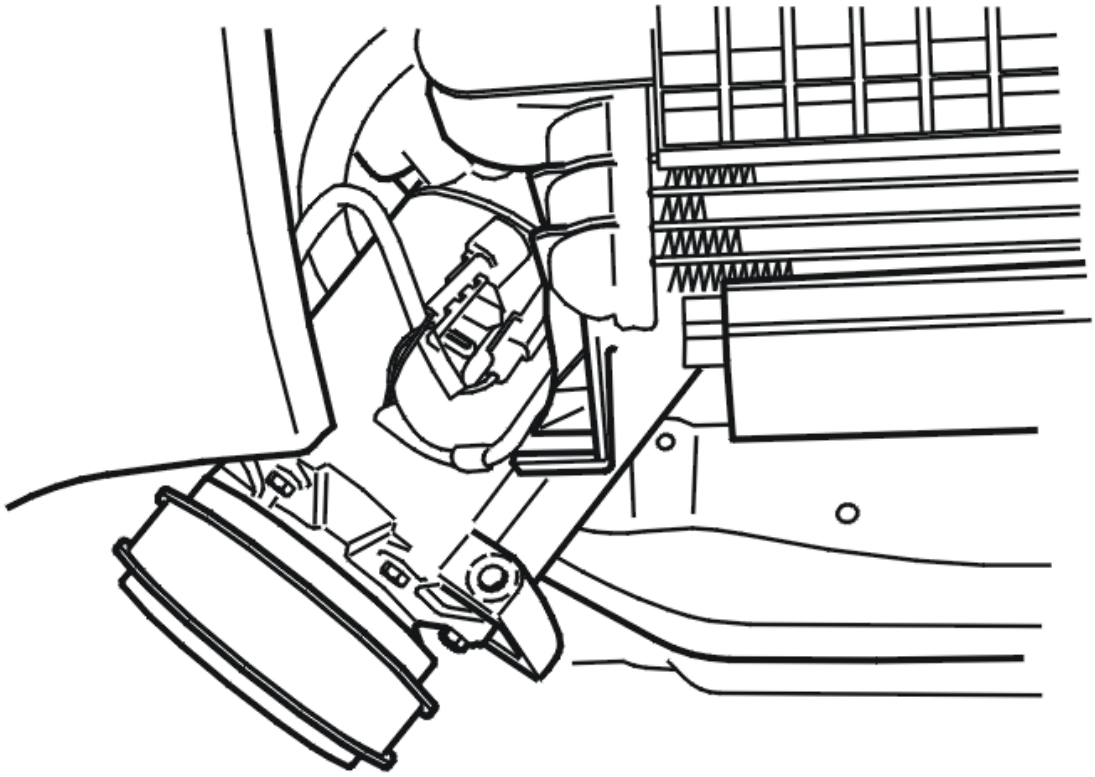

Fig. 96: Installing Compressor
Courtesy of VOLVO CARS CORPORATION

If necessary fill or check the oil in the compressor. See **OIL AIR CONDITIONING (A/C) SYSTEM, FILLING** .

Install the compressor with the connectors turned outwards (as shown in the illustration). Position the compressor in the sub-frame.

Install the lower, left hand mounting screw.

CAUTION: Ensure that the electrical cables are not trapped behind the compressor. The electrical cables must be pulled in tight to the compressor under the pipe / hose connectors.

Install:

- the compressor with 3 x M8 screws. Tighten
- the pipes/hoses to the compressor
- the connectors
- the lower coolant hose.

FINISHING

INSTALLING COMPONENTS

Install the drive belt. See: **AUXILIARIES BELT/BELT TENSIONER, REPLACEMENT** .

NOTE: Do not install the skid plate yet.

Install the engine cooling fan. See: **ENGINE COOLING FAN (FC), REPLACING** .

FUNCTION CHECK WITH LEAK TRACING

Vacuum pump the air conditioning (A/C) system. See: **VACUUM PUMPING** .

Fill the air conditioning (A/C) system with refrigerant. See: **REFRIGERANT, FILLING** .

Leak trace the air conditioning (A/C) system. See: **LEAK TRACING, FLUORESCENT TRACING AGENT / UV LAMP** or **LEAK TRACING, FLUORESCENT TRACING AGENT / UV LAMP** .

CHECKING THE PERFORMANCE

Carry out a performance test of the climate control unit. See **CLIMATE SYSTEM, PERFORMANCE TEST** .

CONDENSER, REPLACING

see **CONDENSER, REPLACING**

EVAPORATOR REAR, REPLACING

see **EVAPORATOR REAR, REPLACING**

EVAPORATOR, REPLACING

see **EVAPORATOR, REPLACING**

EXPANSION VALVE REAR, REPLACING

see **EXPANSION VALVE REAR, REPLACING**

EXPANSION VALVE, REPLACING

see **EXPANSION VALVE, REPLACING**

MAGNETIC CLUTCH COMPRESSOR, REPLACING

Special tools	
	T9997193 ANVIL BLOCK **Tool number:** T9997193 **Tool description:** ANVIL BLOCK

Tool boards:

NOTE: **The illustrations in this service information are used for different model years and/or models. Some variation may occur. However, the essential information in the illustrations is always correct.**

PREPARATORY WORK

REMOVING THE COMPRESSOR

WARNING: **Follow the safety instructions for work on air conditioning systems. See: REFRIGERANT, SAFETY REGULATIONS .**

Read the instructions for slow and fast leaks according to: **OIL AIR CONDITIONING (A/C) SYSTEM, FILLING** .

CAUTION: **When replacing a compressor, always replace the O-rings in the pipes and quick-release connectors.**

NOTE: **Always plug the pipes and connections when working on the climate control system.**

Remove the compressor. See **COMPRESSOR, REPLACING**.

REMOVAL

REMOVING THE DRIVE PLATE

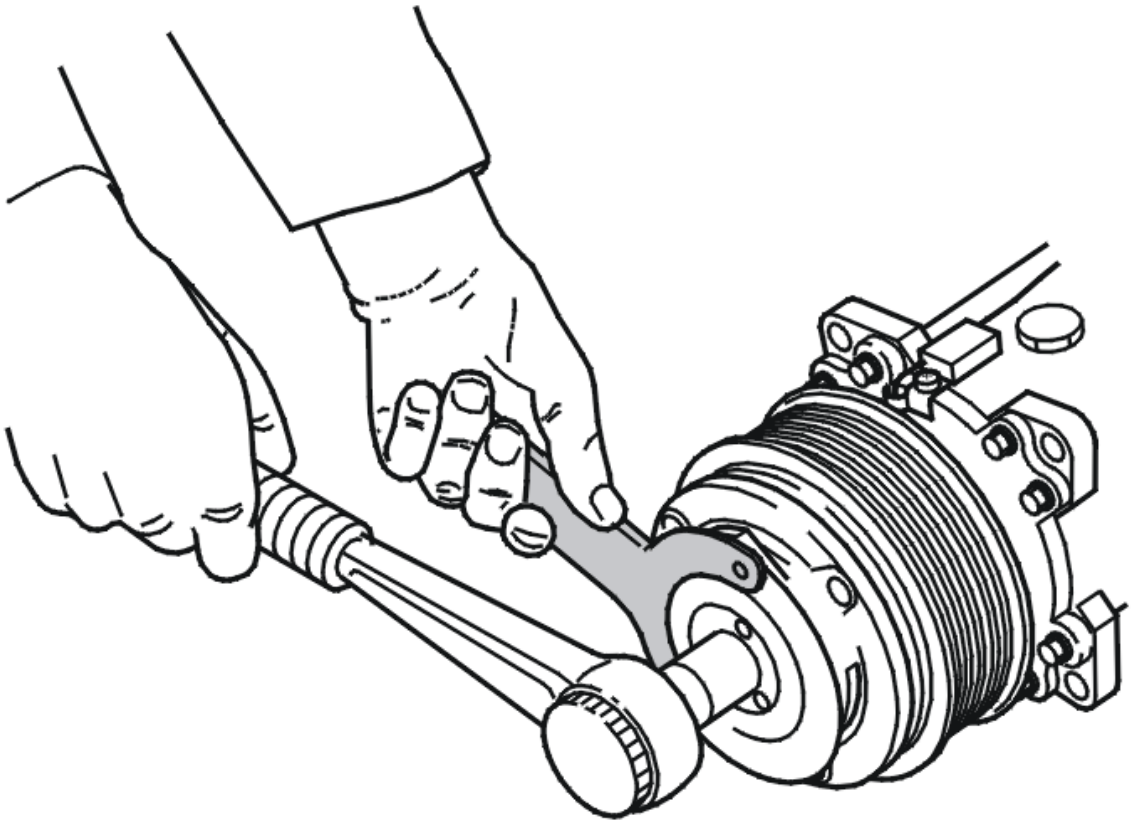

Fig. 97: Removing Drive Plate
Courtesy of VOLVO CARS CORPORATION

Loosen the screw for the drive plate. see **9997193** .

Remove the drive plate by pulling it straight out.

NOTE: **Ensure that the shims between the compressor shaft and the drive plate do not come off.**

REMOVING THE PULLEY

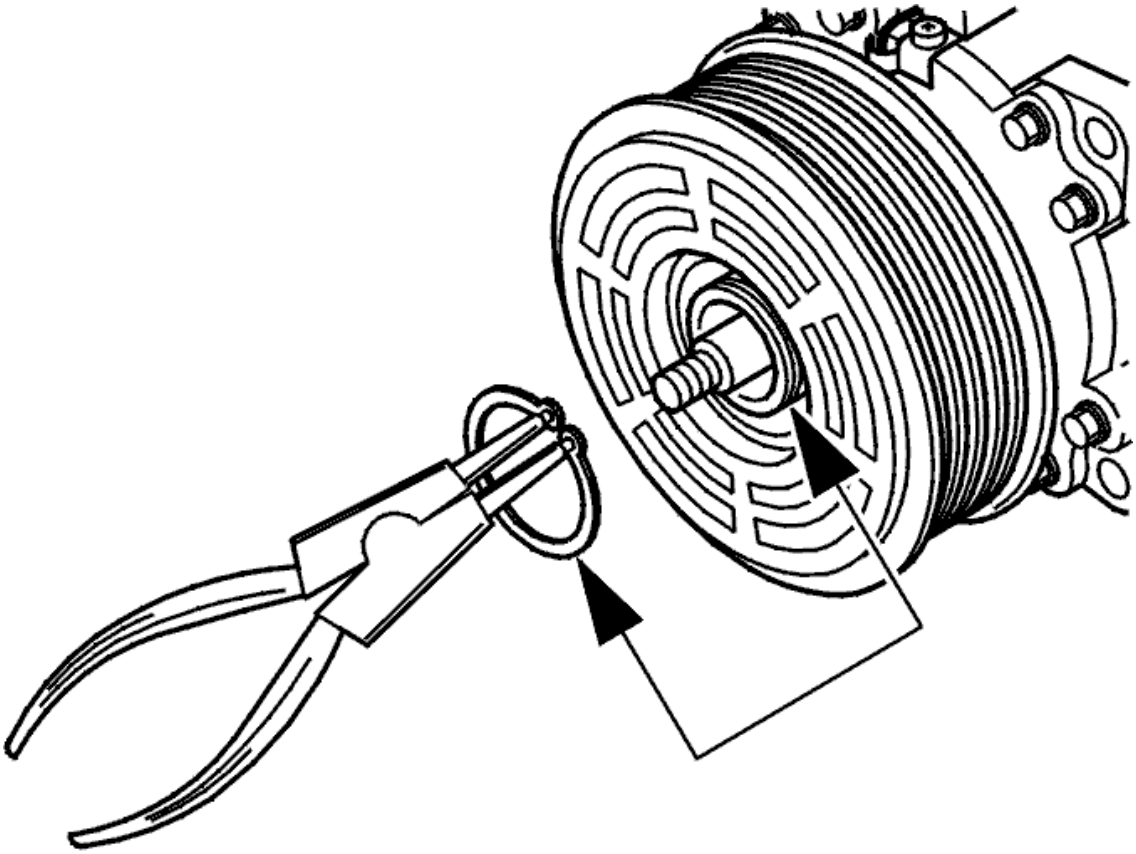

Fig. 98: Identifying Snap Ring
Courtesy of VOLVO CARS CORPORATION

Remove:

- the snap ring
- the pulley.

REMOVING THE MAGNETIC COIL AND CABLE

NOTE: **Note the position of the solenoid coil cable in relation to the compressor housing.**

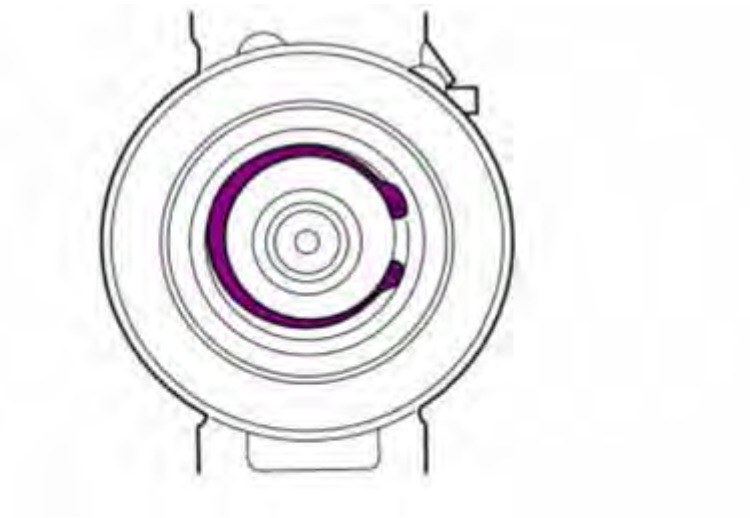

Fig. 99: Identifying Solenoid Coil Snap Ring
Courtesy of VOLVO CARS CORPORATION

Remove:

- the snap ring for the solenoid coil. See the illustration
- the solenoid coil
- the screw for the electrical cable for the solenoid coil
- the connector for the solenoid coil.

INSTALLATION

INSTALLING THE SOLENOID COIL AND THE ELECTRICAL CABLE

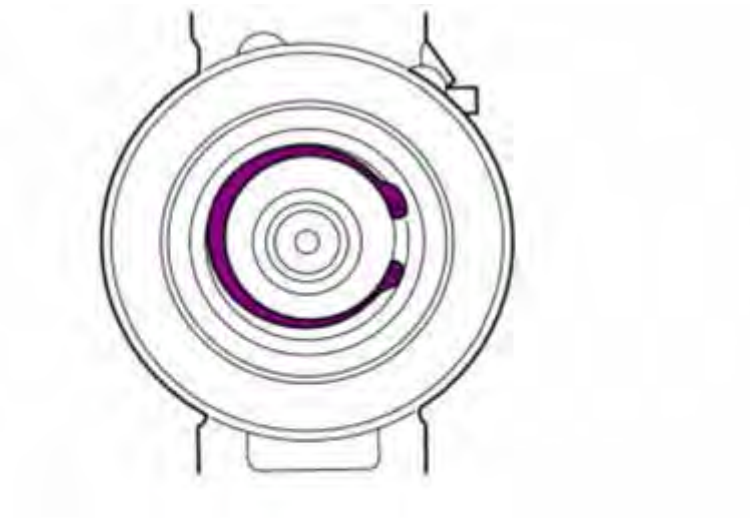

Fig. 100: Identifying Solenoid Coil Snap Ring
Courtesy of VOLVO CARS CORPORATION

Install:

- the solenoid coil as noted previously
- the snap ring for the solenoid coil. See the illustration
- the connector for the solenoid coil
- the screw for the electrical cable for the solenoid coil.

INSTALLING THE PULLEY

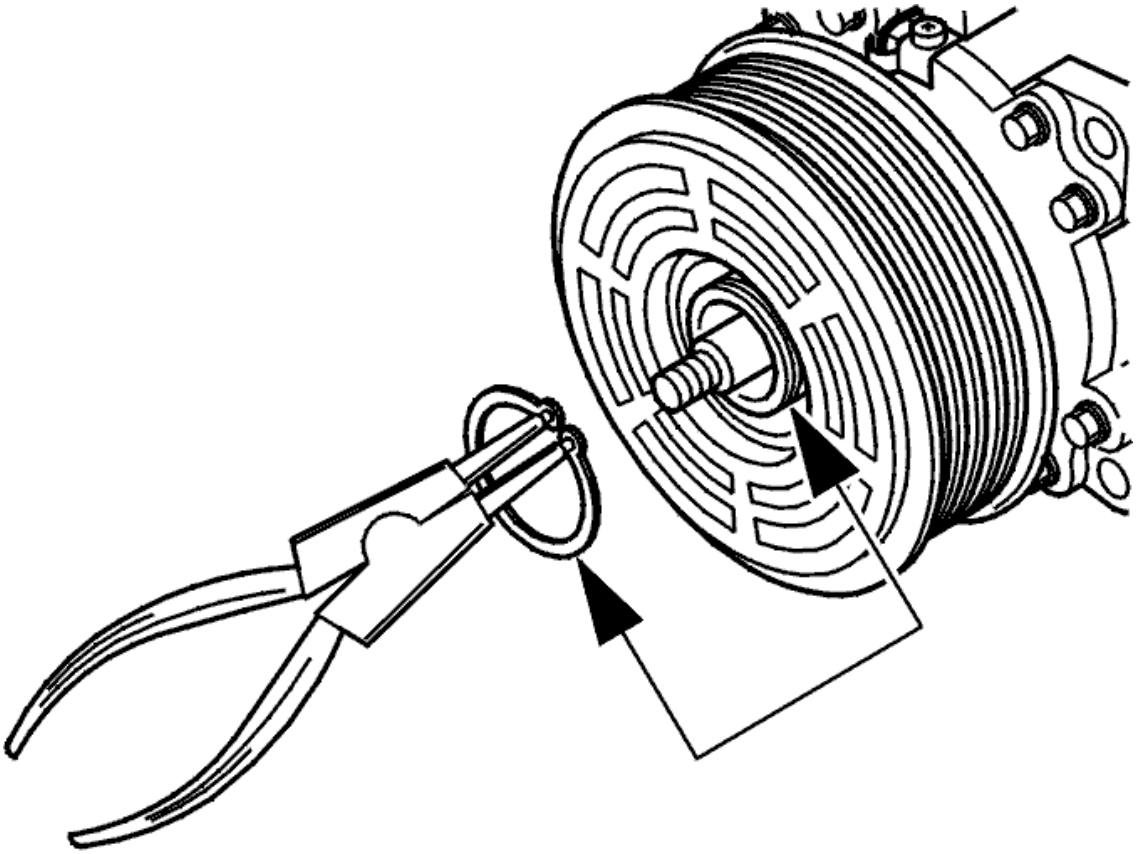

Fig. 101: Identifying Snap Ring
Courtesy of VOLVO CARS CORPORATION

Install:

- a new pulley
- the snap ring for the pulley.

INSTALLING THE DRIVE PLATE

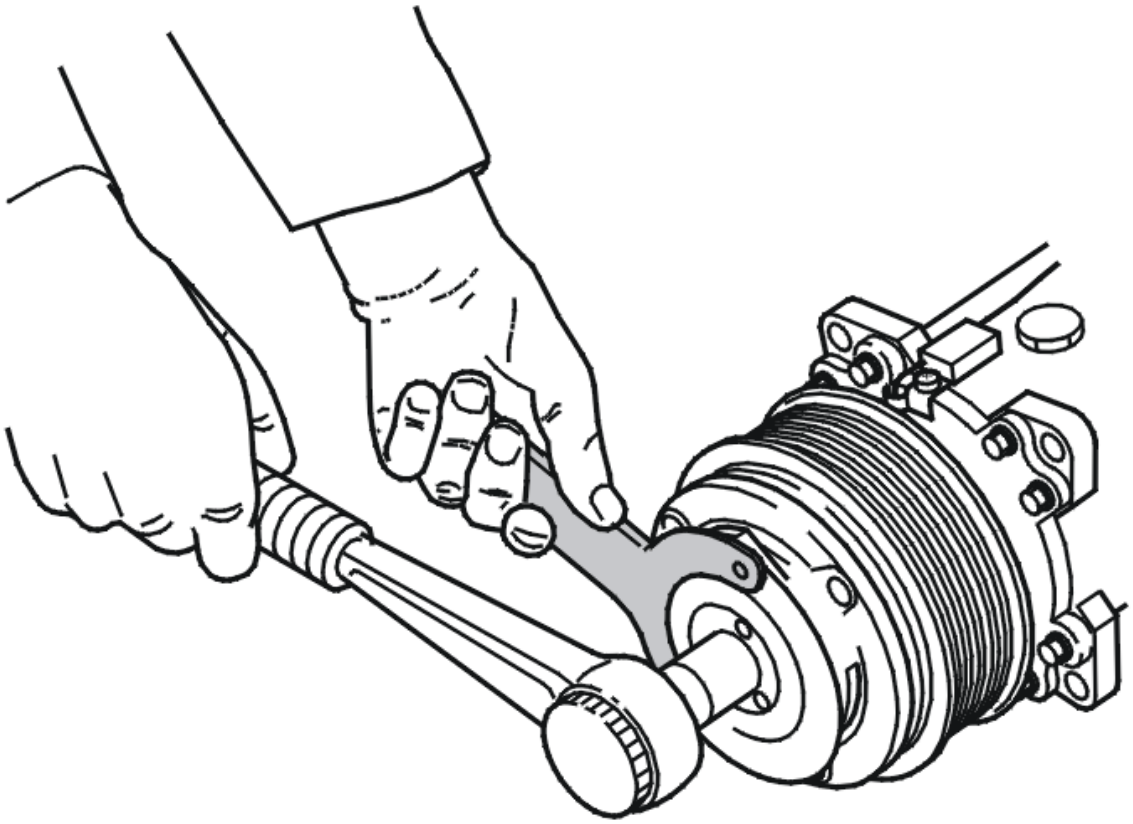

Fig. 102: Installing Drive Plate
Courtesy of VOLVO CARS CORPORATION

see **9997193** and install the drive plate with the screw, 1 pc. Tighten according to: **SUMMARY OF TIGHTENING TORQUES FOR SPECIFIC COMPONENTS** .

FINISHING

CHECKING CLEARANCE

Use a feeler gauge. Check the clearance between the turntable and the pulley. Measure at several points around the turntable.

The clearance must be between 0.4 and 0.6 mm. Replace the shims if the clearance does not lie within the given values.

INSTALLING THE COMPRESSOR

Install the compressor. See: **COMPRESSOR, REPLACING**.

Check the function.

NEEDLE JET / SERVICE VALVE, REPLACING

see **NEEDLE JET / SERVICE VALVE, REPLACING**

PIPE / HOSE COMPRESSOR, REPLACING

NOTE: **The illustrations in this service information are used for different model years and/or models. Some variation may occur. However, the essential information in the illustrations is always correct.**

PREPARATORY WORK

DRAINING THE AIR CONDITIONING (A/C) SYSTEM

WARNING: **Follow the safety instructions for work on air conditioning systems. See: REFRIGERANT, SAFETY REGULATIONS .**

Read the instructions covering slow and fast leaks. See: **OIL AIR CONDITIONING (A/C) SYSTEM, FILLING** .

NOTE: **Always plug the pipes and connections when working on the climate control system.**

CAUTION: **Always use new O-rings lubricated with compressor oil.**

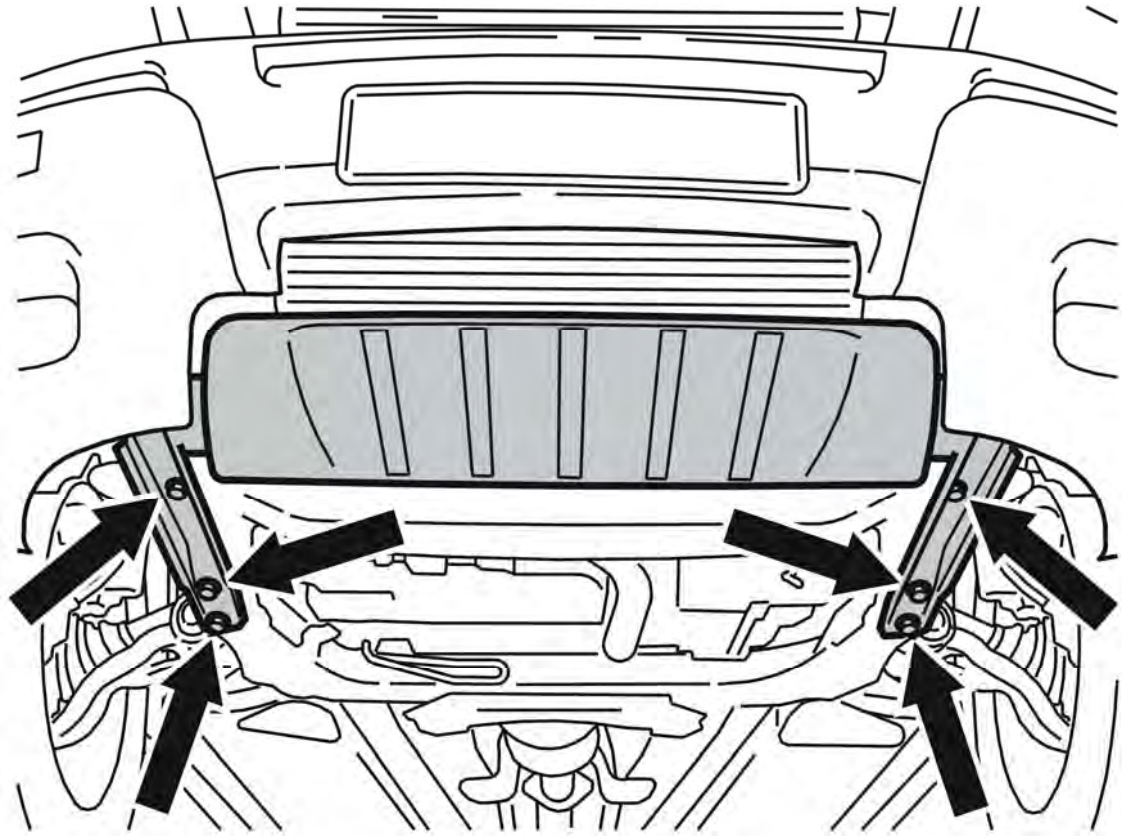

Fig. 103: Splash Guard. Protective Plate And Screws
Courtesy of VOLVO CARS CORPORATION

Remove the splash guard under the vehicle (as shown in the illustration).

METHOD CONTENT

This method consists of:

- see **PIPE/HOSE BETWEEN THE COMPRESSOR AND THE CONDENSER (PRESSURE SIDE), REPLACE**
- see **PIPE/HOSE BETWEEN THE JUNCTION POINT ON THE SIDE MEMBER AND THE COMPRESSOR (SUCTION SIDE), REPLACE**.

PIPE/HOSE BETWEEN THE COMPRESSOR AND THE CONDENSER (PRESSURE SIDE), REPLACE

REMOVING THE PIPE/HOSE BETWEEN THE COMPRESSOR AND THE CONDENSER (PRESSURE SIDE)

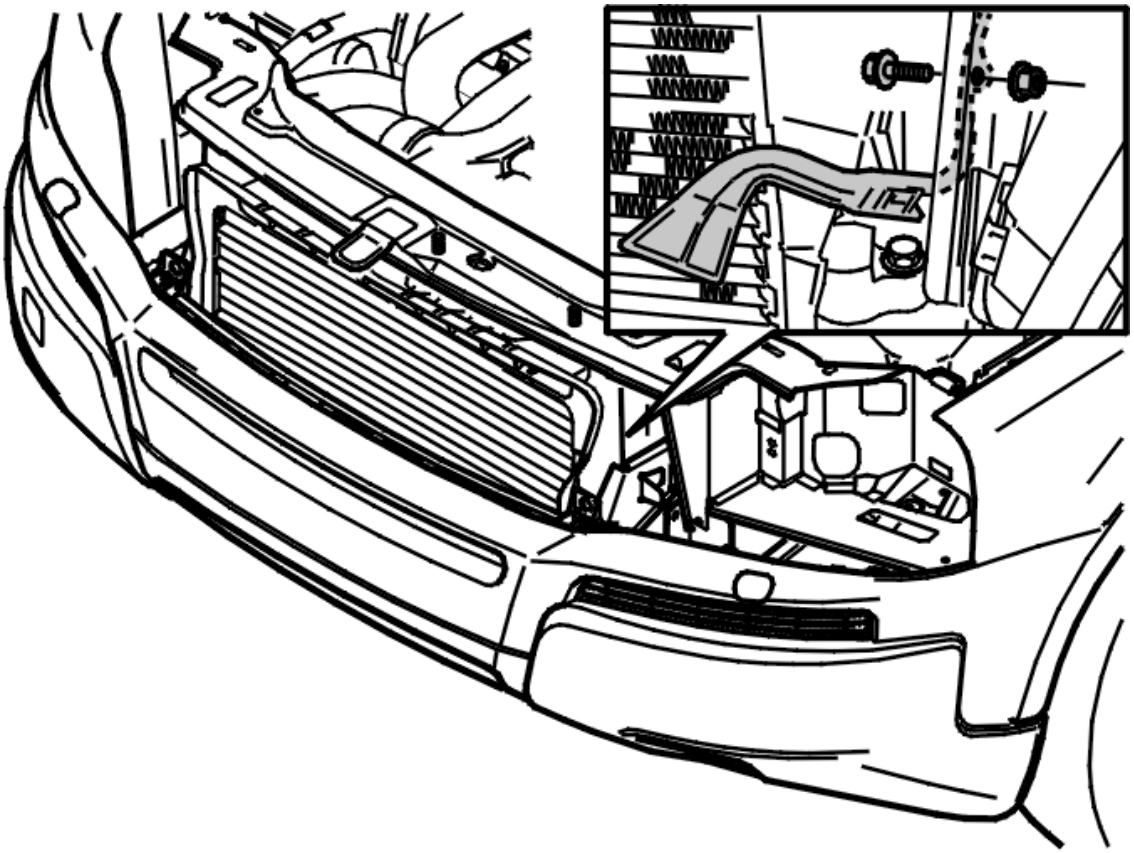

Fig. 104: Link From The Hood Release Catch
Courtesy of VOLVO CARS CORPORATION

Remove:

- the left-hand headlamp. See **LIGHTING - REMOVAL, REPLACEMENT AND INSTALLATION**
- the 1x screw and 1x nut. Remove the link from the hood release catch (as shown in the illustration)
- the 1x screw from the hose/pipe connection between the compressor and the condenser
- the pipe from the mounting clip between the condenser and twist carefully to one side.

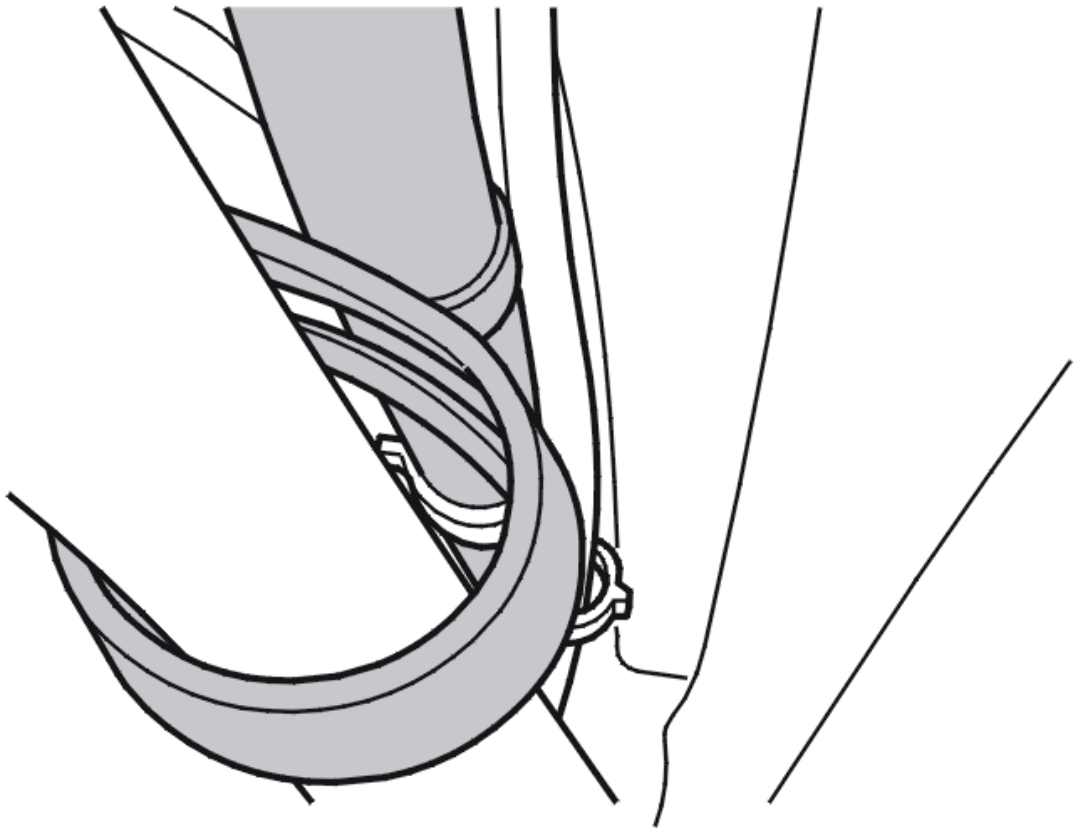

Fig. 105: Removing Hoses Away From Compressor
Courtesy of VOLVO CARS CORPORATION

Raise the car

Hang the lower coolant hose so that it is away from the air conditioning (A/C) compressor.

Remove:

- The air conditioning (A/C) compressor lower pipe/hose connection and place it to one side
- the 1x screw. Remove the upper pipe/hose connector for the air conditioning (A/C) compressor.

Lift the air conditioning (A/C) pipe (hose) off the holder on the sub-frame, above the coolant hose.

Remove the heated oxygen sensor (HO2S) cable from the air conditioning (A/C) pipe (hose).

Lower the vehicle.

Lift out the air conditioning pipe (A/C) (hose) through the engine compartment.

INSTALLING THE PIPE /HOSE BETWEEN THE COMPRESSOR AND THE CONDENSER (PRESSURE SIDE)

NOTE: For tightening torques, see: TIGHTENING TORQUE .

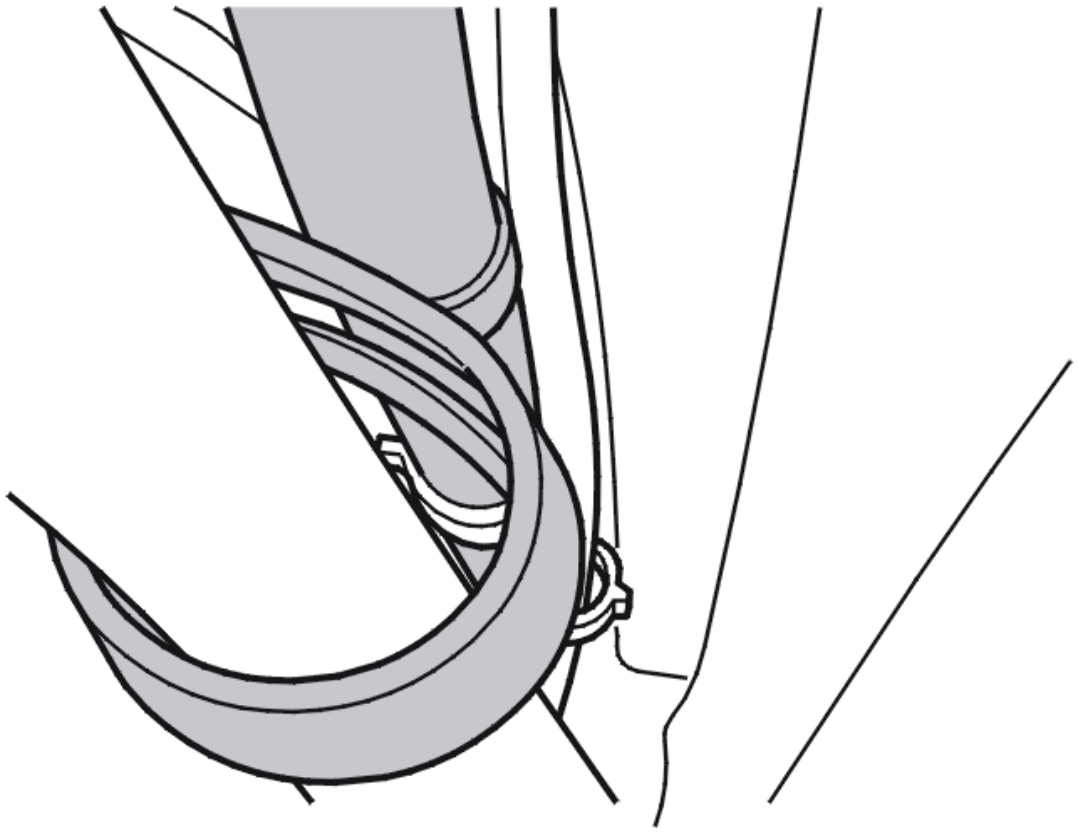

Fig. 106: Removing Hoses Away From Compressor
Courtesy of VOLVO CARS CORPORATION

Install the pipe/hose on the compressor in the mounting clip at the upper connection to the condenser and in the holder above the lower coolant hose (as shown in the illustration).

Install:

- the pipe connection 1 x M8. Ensure that the O-rings are securely positioned between the receiver and the pipe/hose. Tighten the screw
- the pipe connection at the compressor, 1 x M8. Ensure that the O-rings are securely positioned. Tighten the screw
- the heated oxygen sensor (HO2S) cable to the air conditioning (A/C) pipe (hose).

Carry out finishing work. See **FINISHING**.

PIPE/HOSE BETWEEN THE JUNCTION POINT ON THE SIDE MEMBER AND THE COMPRESSOR (SUCTION SIDE), REPLACE

REMOVING THE PIPE/HOSE BETWEEN THE JUNCTION POINT ON THE SIDE MEMBER AND THE COMPRESSOR (SUCTION SIDE)

Raise the car

Hang the lower coolant hose to one side.

Remove:

- the 1x screw. Remove the lower pipe /hose connector from the air conditioning (A/C) compressor. Lower the vehicle.
- the 1x screw. Remove the connection at the junction point on the right hand side member.

Lift up the air conditioning (A/C) pipe (hose).

INSTALLING THE PIPE/HOSE BETWEEN THE JUNCTION POINT ON THE SIDE MEMBER AND COMPRESSOR (SUCTION SIDE)

NOTE: For tightening torques, see: TIGHTENING TORQUE .

Install:

- the pipe/hose on the upper terminal to the junction point and to the air conditioning (A/C) compressor terminal
- the 1x M8 screw to the pipe terminal at the junction point. Ensure that the O-rings are securely positioned between the junction point and the pipe/hose. Tighten.

Raise the car

Install the pipe terminal at the compressor, 1 x M8. Ensure that the O-rings are securely positioned. Tighten.

Carry out finishing work. See **FINISHING**.

FINISHING

FUNCTION CHECK WITH LEAK TRACING

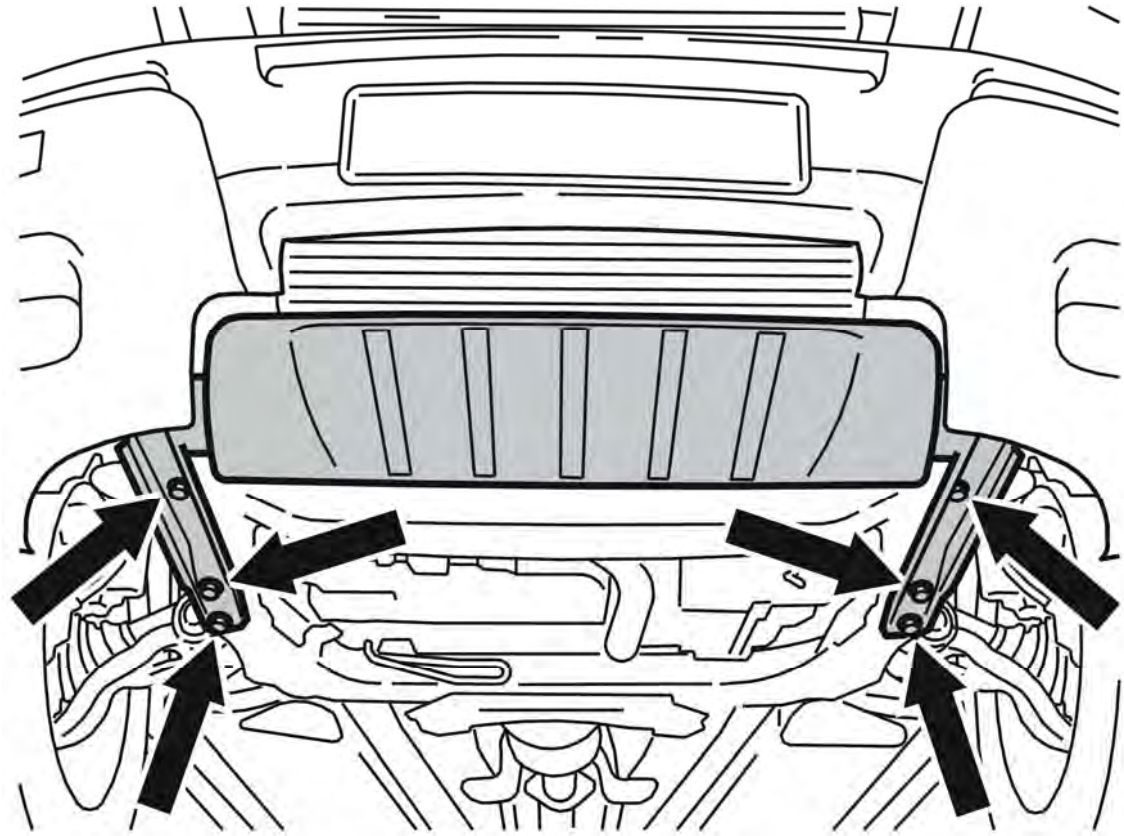

Fig. 107: Splash Guard. Protective Plate And Screws
Courtesy of VOLVO CARS CORPORATION

Vacuum pump the air conditioning (A/C) system. See: **VACUUM PUMPING** .

Fill the air conditioning (A/C) system with refrigerant. See: **REFRIGERANT, FILLING** .

Leak trace the air conditioning (A/C) system. See: **LEAK TRACING, FLUORESCENT TRACING AGENT / UV LAMP** or **LEAK TRACING, FLUORESCENT TRACING AGENT / UV LAMP** .

Install the splash guard under the vehicle (as shown in the illustration).

Carry out a performance test of the climate control unit. See **CLIMATE SYSTEM, PERFORMANCE TEST** .

PIPES / HOSES, REPLACING

see **PIPES / HOSES, REPLACING**

PIPES RECEIVER DRIER, REPLACING

see **PIPES RECEIVER DRIER, REPLACING**

RECEIVER DRIER, REPLACING

see **RECEIVER DRIER, REPLACING**

SOLENOID VALVE COMPRESSOR, REPLACING

NOTE: The illustrations in this service information are used for different model years and/or models. Some variation may occur. However, the essential information in the illustrations is always correct.

PREPARATORY WORK

DRAINING THE AIR CONDITIONING (A/C) SYSTEM

WARNING: Follow the safety instructions for work on air conditioning systems. See: REFRIGERANT, SAFETY REGULATIONS .

Read the instructions covering slow and fast leaks. See: **OIL AIR CONDITIONING (A/C) SYSTEM, FILLING** .

CAUTION: Always use new O-rings lubricated with compressor oil.

NOTE: The O-rings in the pipes and quick-release connectors must always be replaced when replacing the compressor.

NOTE: Always plug the pipes and connections when working on the climate control system.

Remove the compressor. See **COMPRESSOR, REPLACING**.

REMOVAL

REMOVING THE SOLENOID VALVE

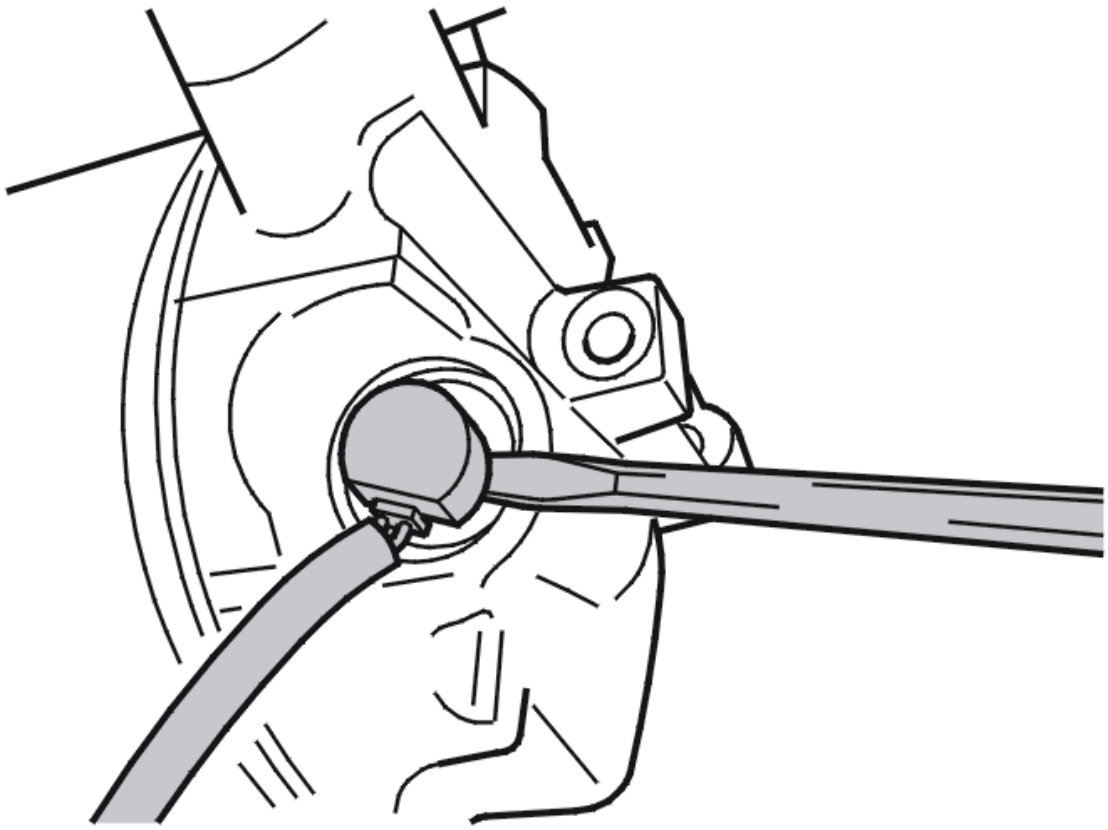

Fig. 108: Removing Solenoid Valve
Courtesy of VOLVO CARS CORPORATION

CAUTION: Always ensure cleanliness when working with the solenoid valve and surrounding components.

NOTE: Position the compressor with the solenoid valve facing upwards to prevent leaking compressor oil.

Remove:

- the solenoid valve connector
- the 1x screw. Remove the electrical cable mounting for the solenoid valve. Note how the electrical cable was routed
- the snap ring.

HINT: Pry up the solenoid valve. Use a screwdriver (as shown in the illustration).

Pull the solenoid valve straight up. Remove the solenoid valve.

INSTALLATION

NOTE: For tightening torques, see: TIGHTENING TORQUE .

INSTALLING THE SOLENOID VALVE

HINT: Lubricate the O-rings on the solenoid valve. Use compressor oil.

Install:

- the solenoid valve by twisting backwards and forwards, under light pressure, until it bottoms enough for the groove for the snap ring to be visible.
- the snap ring
- the electrical cable for the solenoid valve in its mounting as noted. Tighten the screw
- the connector

FINISHING

INSTALLING THE COMPRESSOR AND TEST RUNNING

Install the compressor. See: **COMPRESSOR, REPLACING**.

Test run the compressor. Check the function.

AIR DISTRIBUTION (2003-2012)

AIR CLEANER PASSENGER COMPARTMENT, REPLACING

REMOVING THE PASSENGER COMPARTMENT AIR CLEANER (ACL)

Remove:

- the soundproofing panel. See **SOUNDPROOFING PANEL, REPLACING** .

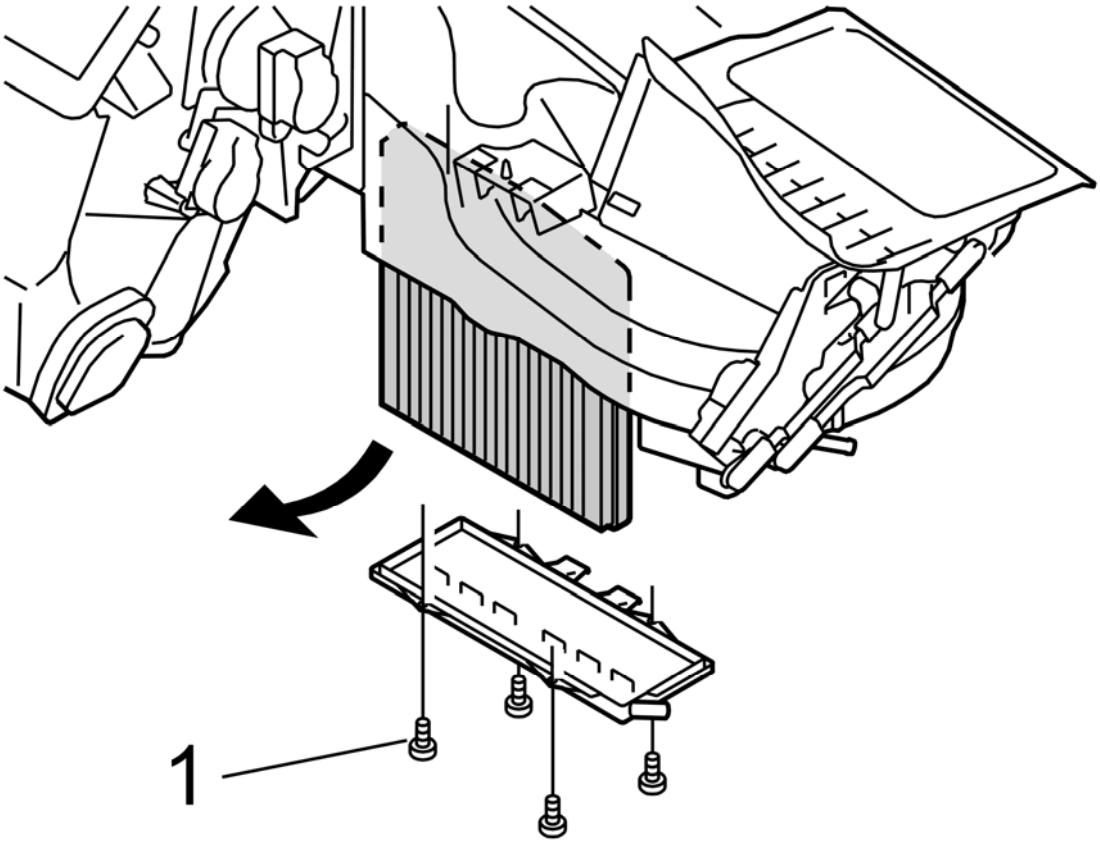

Fig. 109: Identifying Cover Screws
Courtesy of VOLVO CARS CORPORATION

- the screws for the cover
- the cover.

Pull the air cleaner (ACL) downwards / away.

INSTALLING THE PASSENGER COMPARTMENT AIR CLEANER (ACL)

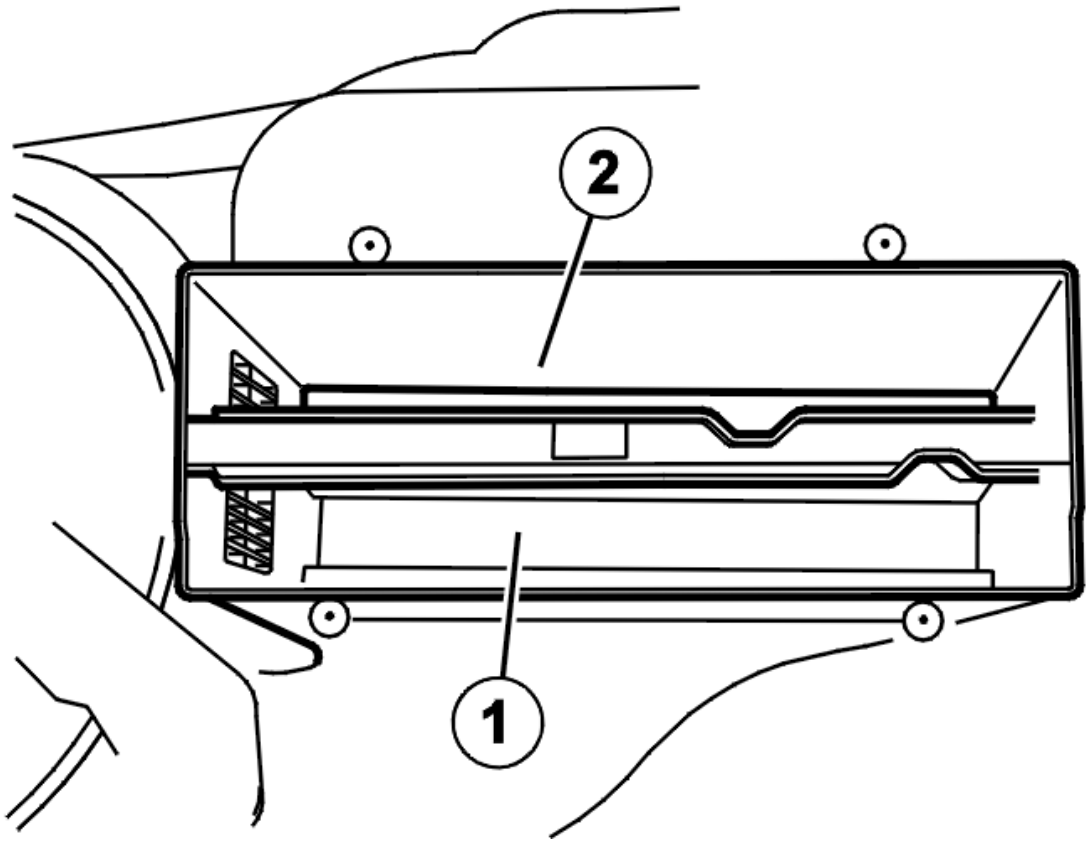

Fig. 110: Identifying Pollen And Multi Filter Compartments
Courtesy of VOLVO CARS CORPORATION

Install the air cleaner (ACL). There are 2 alternative positions for the air cleaner (ACL). See the illustration.

The pollen filter (standard) must be installed in the smaller compartment (1).

The multi filter (cars with an air quality sensor) must be installed in the wider compartment (2).

NOTE: Install either the pollen filter or the multi filter. Both filters must not be together.

Install:

- the screws. The front left screw must not be tightened to more than **0.8 Nm**
- the soundproofing panel. See **SOUNDPROOFING PANEL, REPLACING** .

AIR DUCTS PASSENGER COMPARTMENT, REPLACING

As the illustrations in this service information are used for different model years and / or models, some variation may occur. However, the essential information in the illustrations is always correct.

AIR DUCTS PANEL B-POST, REPLACING

REMOVING THE AIR DUCTS FROM THE B-POST PANEL

The air ducts are integrated in the B-post panel.

Remove:

- the B-post panel. See **PANEL B-POST, REPLACING**
- the air ducts.

INSTALLING THE AIR DUCTS IN THE B-POST PANEL

Install:

- the air ducts
- the B-post panel. See **PANEL B-POST, REPLACING** .

AIR DUCTS FOR THE VENTS DASHBOARD, REPLACING

REMOVING THE AIR DUCTS FOR THE VENTS IN THE DASHBOARD

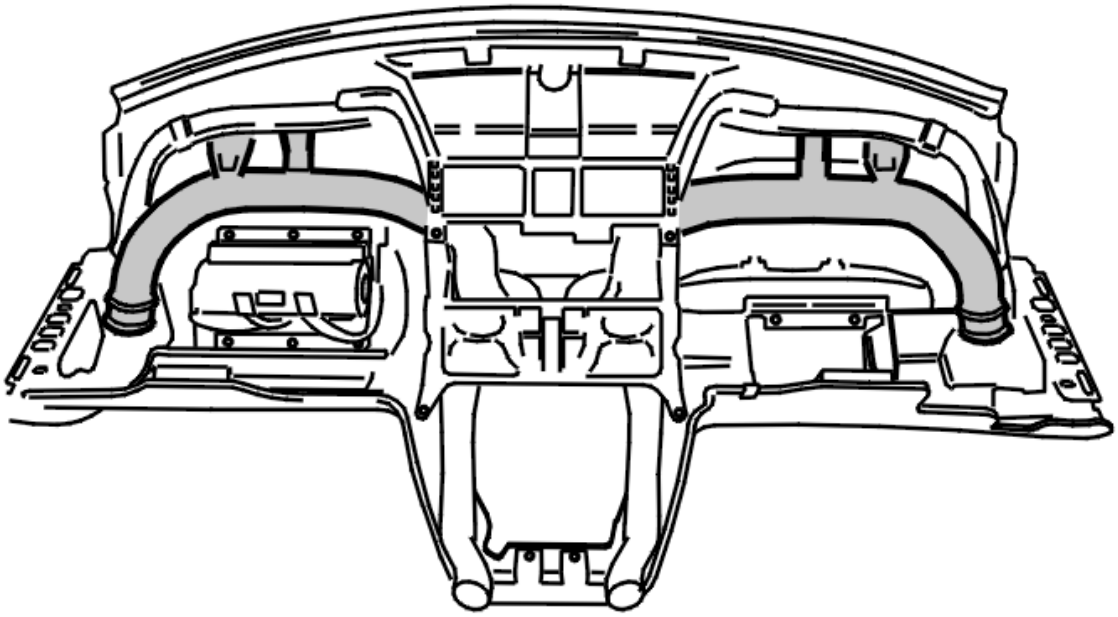

Fig. 111: Removing Air Ducts
Courtesy of VOLVO CARS CORPORATION

The air ducts for the vents are accessed from the reverse of the dashboard.

Remove the dashboard. See **DASHBOARD, REPLACING** .

Unscrew the ducts.

INSTALLING THE AIR DUCTS FOR THE VENTS IN THE DASHBOARD

Thread each duct on to the air vents and/or air distribution unit.

Screw the ducts into place.

Install the dashboard. See **DASHBOARD, REPLACING** .

AIR DISTRIBUTION UNIT DASHBOARD LOUDSPEAKER, REPLACING

REMOVING THE AIR DISTRIBUTION UNIT FROM THE DASHBOARD

Remove:

- the dashboard. See **DASHBOARD, REPLACING**
- the screws.

Remove:

- the duct from the connections
- the air duct from the air distribution unit.

Twist off the air duct from the lower mounting.

Remove the 4 screws.

INSTALLING THE AIR DISTRIBUTION UNIT IN THE DASHBOARD

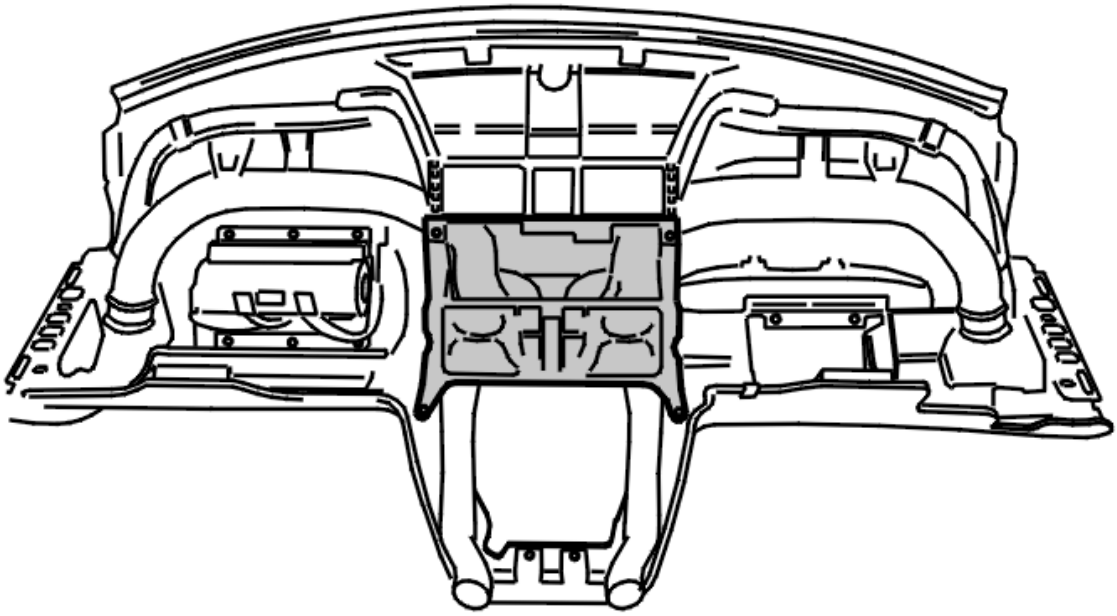

Fig. 112: Installing Distribution Unit
Courtesy of VOLVO CARS CORPORATION

Position the air distribution unit so that the connections to the adjacent ducts are correctly positioned.

Install:

- the 4 screws
- the connections
- the screws for the air ducts.

Ensure that all components are secure and that there is no risk of air leakage.

Install the dashboard. See **DASHBOARD, REPLACING** .

SEAL BETWEEN THE AIR DISTRIBUTION UNIT AND CENTRAL ELECTRICAL UNIT, REPLACING

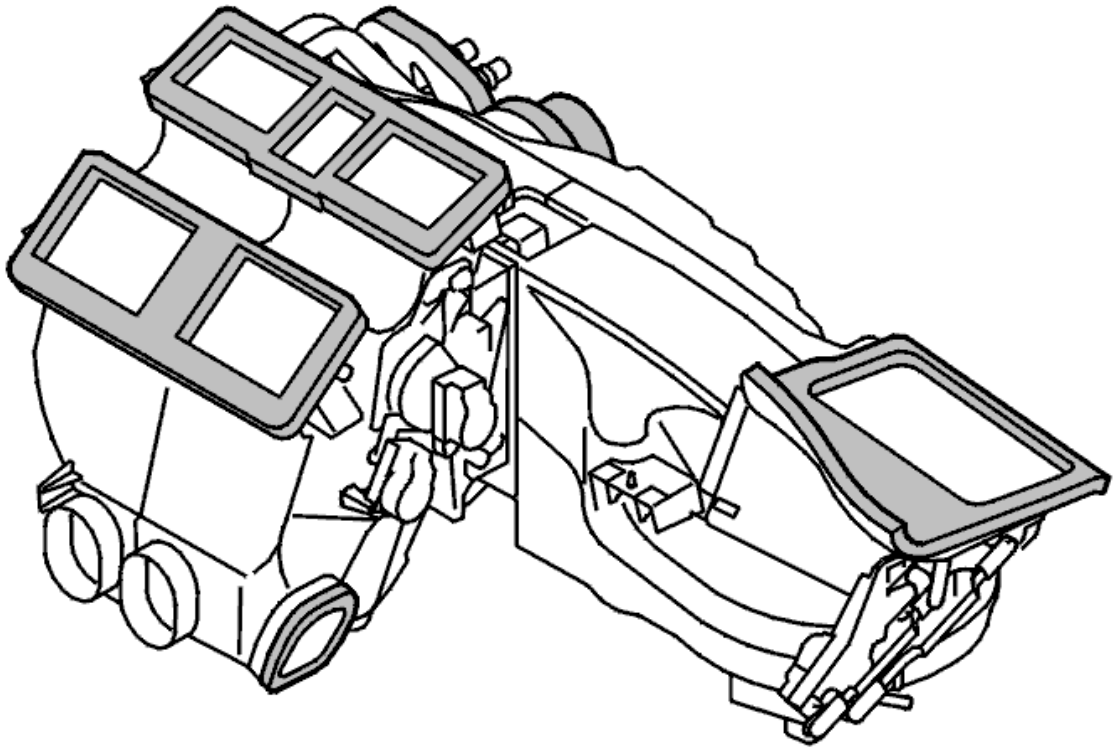

Fig. 113: Floor Seals
Courtesy of VOLVO CARS CORPORATION

Remove the dashboard. See **DASHBOARD, REPLACING** .

Replace the seal.

Install the dashboard. See **DASHBOARD, REPLACING** .

AIR DUCT FRONT AND REAR ON VENT B-POST VENT, REPLACING

REMOVING THE FRONT AND REAR AIR DUCTS ON THE VENT ON THE B-POST

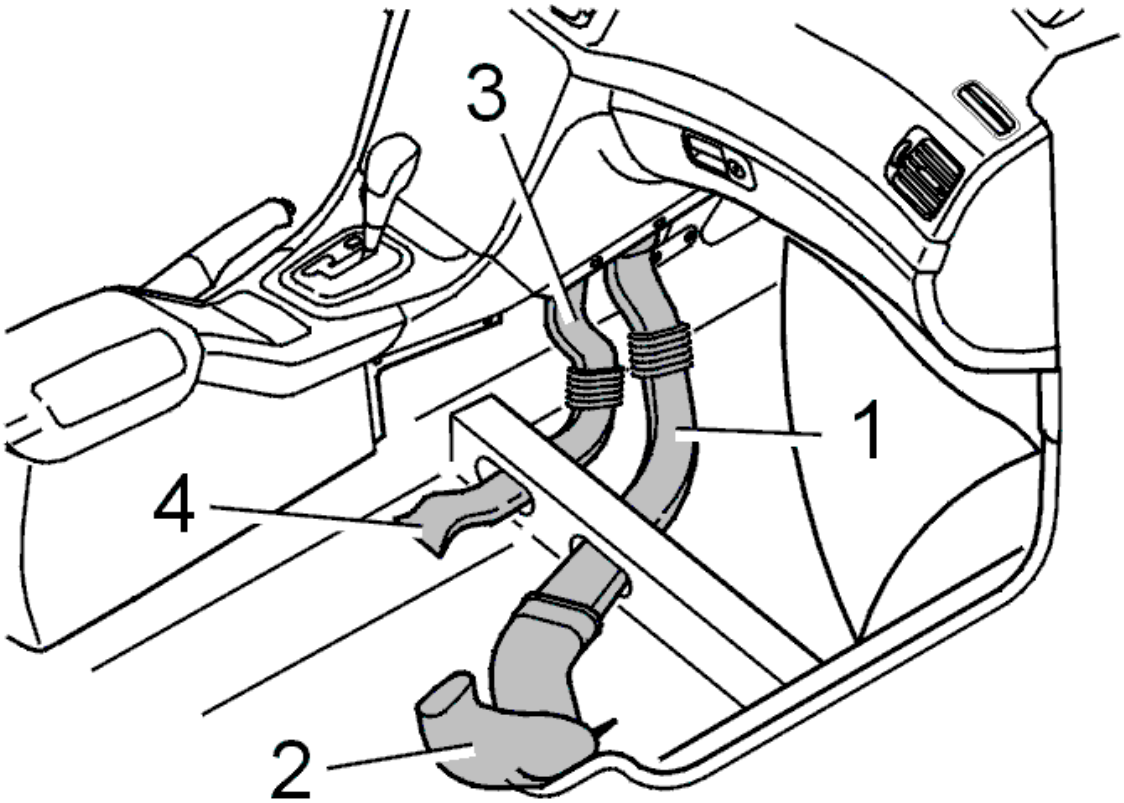

Fig. 114: Identifying Center Console Duct And Upper Mounting
Courtesy of VOLVO CARS CORPORATION

Remove:

- the front seat from the car. See **REMOVING THE FRONT SEAT** (-2004) or **FRONT SEAT, REPLACING** (2005-)
- the side panel on the center console
- the front sill trim panel. See **SILL TRIM PANEL, REPLACING**
- the front floor carpet.

Pull / bend the duct (1) at the center console. Detach the duct at the upper mounting.

Remove the duct (1) from the member.

Remove:

- the rear sill trim panel. See **SILL TRIM PANEL, REPLACING**
- the B-post panel. See **PANEL B-POST, REPLACING** .

Push the rear carpet to one side.

Remove the lower floor section.

Pull off the air duct.

INSTALLING THE FRONT AND REAR AIR DUCTS ON THE VENT ON THE B-POST

Install:

- the air duct
- the lower floor section
- the rear carpet
- the B-post panel. See **PANEL B-POST, REPLACING**
- the rear sill trim panel. See **SILL TRIM PANEL, REPLACING**
- the duct (1)
- the front floor carpet
- the front sill trim panel. See **SILL TRIM PANEL, REPLACING**
- the side panel on the center console
- the front seat. See **INSTALLING THE FRONT SEAT** (-2004) or **FRONT SEAT, REPLACING** (2005-).

AIR DUCTS FRONT TO VENT REAR, REPLACING

REMOVING THE FRONT AIR DUCTS FOR THE REAR VENT

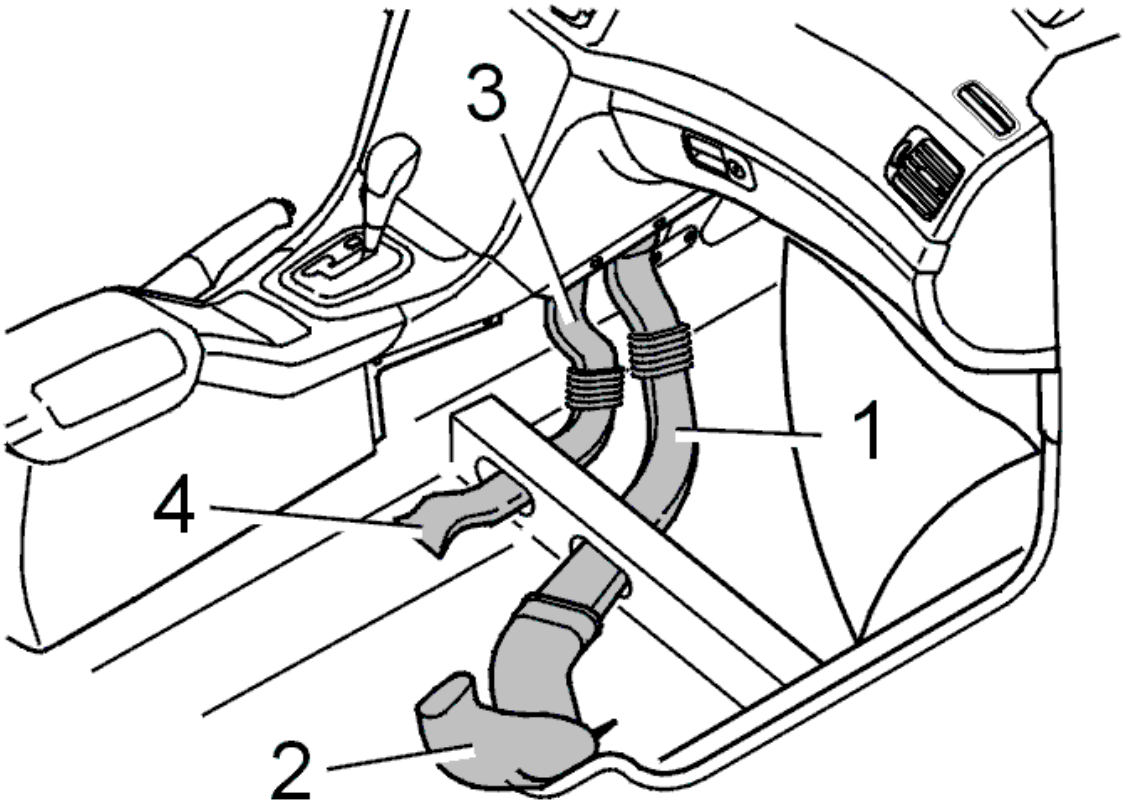

Fig. 115: Identifying Center Console Duct And Upper Mounting
Courtesy of VOLVO CARS CORPORATION

Remove:

- the front seat from the car. See **REMOVING THE FRONT SEAT** (-2004) or **FRONT SEAT, REPLACING** (2005-)
- the side panel on the center console
- the soundproofing panel. See **SOUNDPROOFING PANEL, REPLACING**
- the front sill trim panel. See **SILL TRIM PANEL, REPLACING**
- the front floor carpet
- the rear air duct (1). See **REMOVING THE FRONT AND REAR AIR DUCTS ON THE VENT ON THE B-POST**.

Pull / bend the duct (3) at the center console. Detach the duct at the upper mounting.

Detach the duct from the cross member.

INSTALLING THE FRONT AIR DUCTS FOR THE REAR VENT

Install:

- the duct (3) in the cross member and the upper mounting
- the rear air duct (1). See **INSTALLING THE FRONT AND REAR AIR DUCTS ON THE VENT ON THE B-POST**
- the front floor carpet
- the front sill trim panel. See **SILL TRIM PANEL, REPLACING**
- the soundproofing panel. See **SOUNDPROOFING PANEL, REPLACING**
- the side panel on the center console
- the front seat. See **INSTALLING THE FRONT SEAT** (-2004) or **FRONT SEAT, REPLACING** (2005-).

AIR DUCT REAR FOR VENT REAR

REMOVING THE REAR AIR DUCT FOR THE REAR VENT

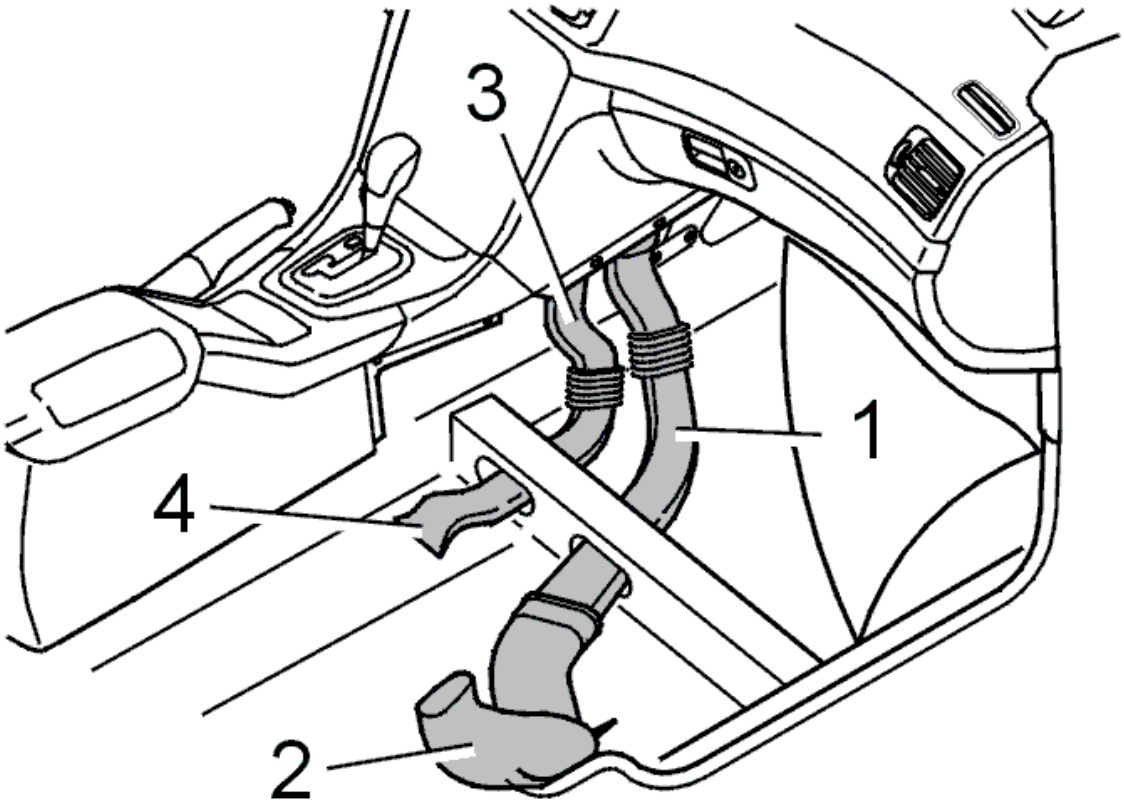

Fig. 116: Identifying Center Console Duct And Upper Mounting
Courtesy of VOLVO CARS CORPORATION

Position the front seat in the forward and highest position.

Pull off the air duct (4) by pulling it backwards.

INSTALLING THE REAR AIR DUCT FOR THE REAR VENT

Install the air duct.

Reinstall the seat in its original position.

AIR DUCT FOR VENT C-POST (SEVEN SEATER VERSION), REPLACING

REMOVING THE AIR DUCT FOR THE C-POST VENT

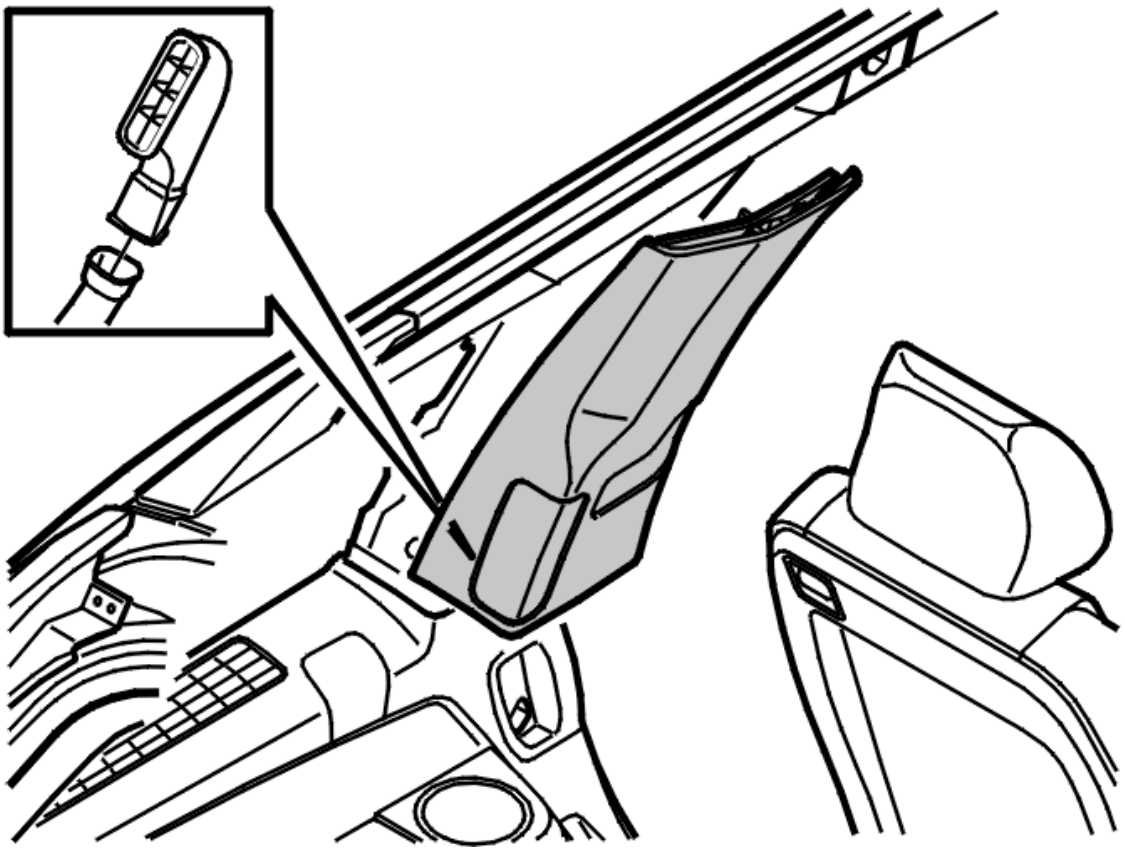

Fig. 117: Installing C-Post Panel
Courtesy of VOLVO CARS CORPORATION

Remove:

- the C-post panel. See **PANEL C-POST, REPLACING**
- the connector from the infotainment controls
- the air duct on the reverse.

INSTALLING THE AIR DUCT FOR THE C-POST VENT

Install:

- the air duct
- the connector
- the C-post panel. See **PANEL C-POST, REPLACING** .

VENTILATION VENTS PASSENGER COMPARTMENT, REPLACING

As the illustrations in this service information are used for different model years and / or models, some variation may occur. However, the essential information in the illustrations is always correct.

OUTER VENTS DASHBOARD, REPLACING

REMOVING THE OUTER VENTS FROM THE DASHBOARD

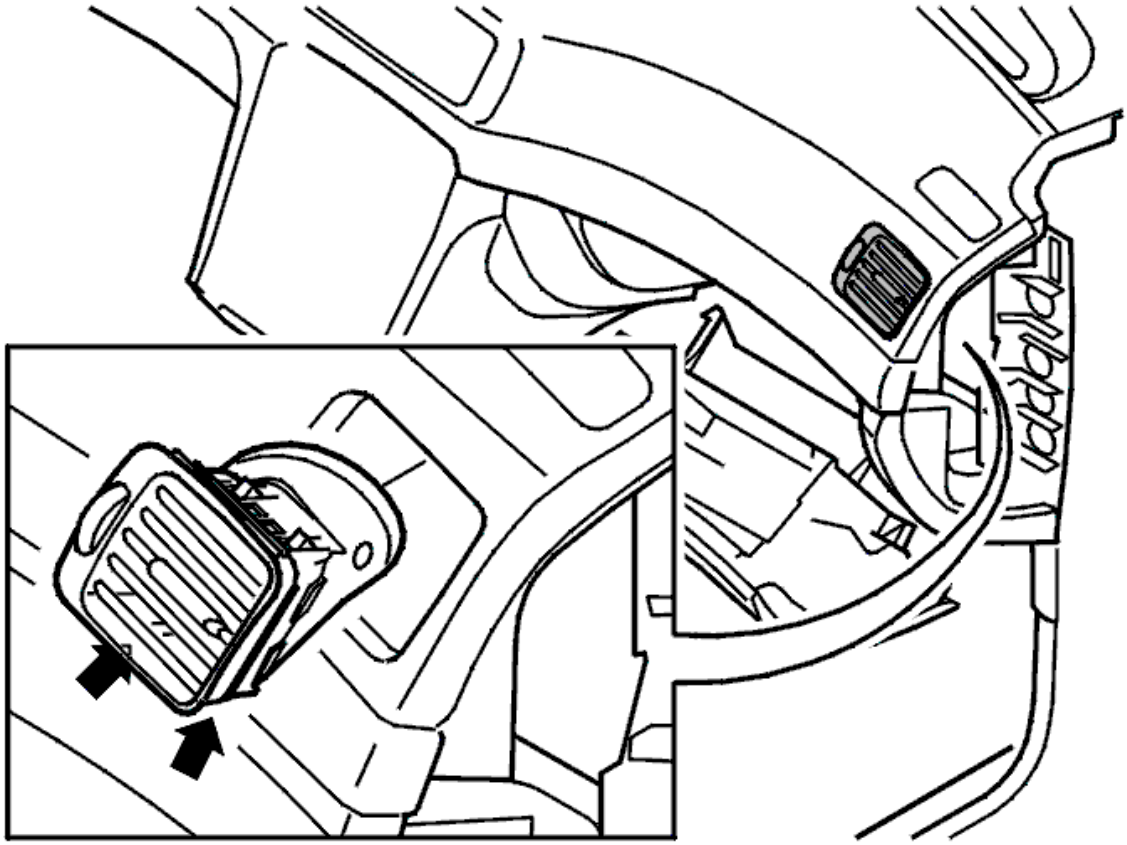

Fig. 118: Identifying Dashboard Outer Vents
Courtesy of VOLVO CARS CORPORATION

Remove the cover on the side of the dashboard.

Remove the catches from underneath and from the sides. Use a small screwdriver. At the same time press out the vent using a weatherstrip tool.

Press out the lower edge. Then detach the remainder.

INSTALLING THE OUTER VENTS IN THE DASHBOARD

Press the vent into place.

NOTE: Ensure that the vent is correctly connected to the air duct and all the catches have engaged

Check the function.

Install the cover on the side of the dashboard.

CENTER VENT AND VALVE HOUSING ON THE DASHBOARD, REPLACING

REMOVING THE CENTER VENT AND VALVE HOUSING FROM THE DASHBOARD

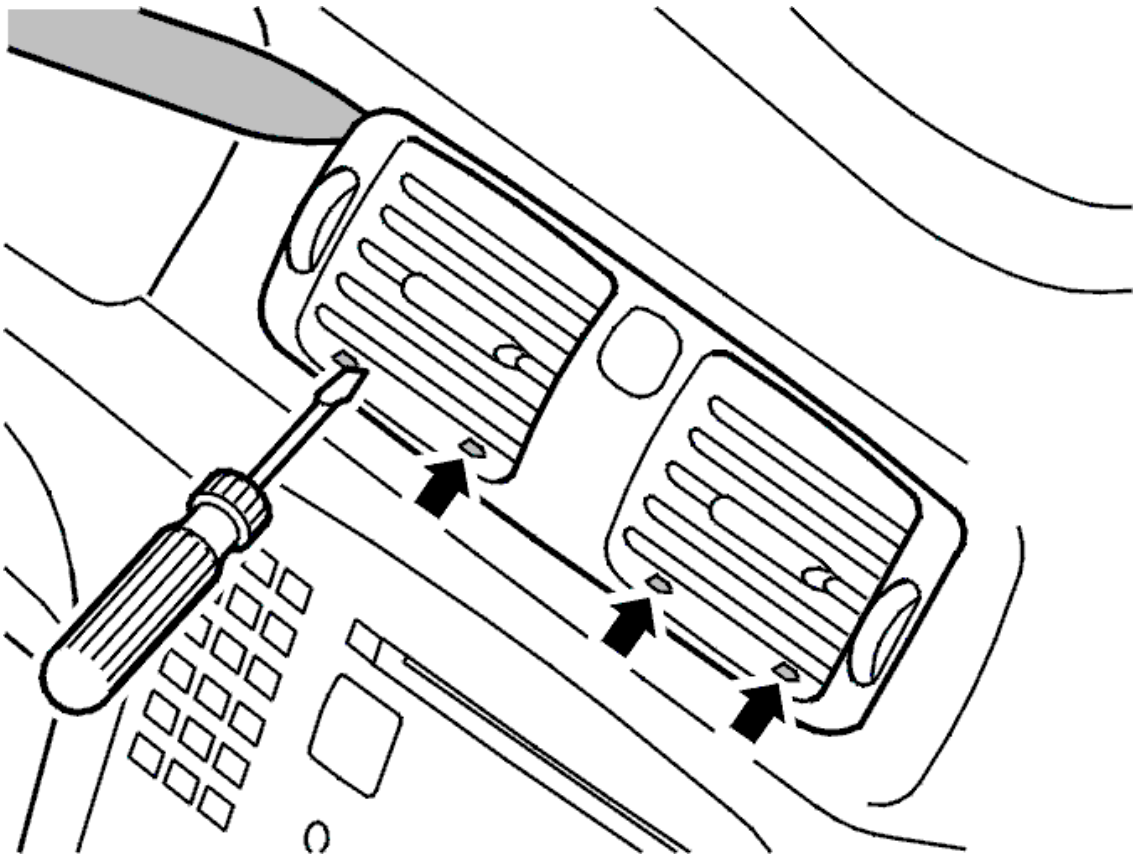

Fig. 119: Detaching Catches Closest To Weatherstrip Tool And Prying Out And Detaching Vent At Same Time
Courtesy of VOLVO CARS CORPORATION

Position a weatherstrip tool on the short side of the vent.

Release the catches closest to the weatherstrip tool using a small screwdriver. At the same time pry out the vent.

NOTE: Do not break off the small catches.

Disconnect the connector for the switch for the hazard warning signal flasher.

INSTALLING THE CENTER VENT AND VALVE HOUSING IN THE DASHBOARD

Connect the connector to the switch for the hazard warning flashers.

Press the vent and valve housing into place.

NOTE: Ensure that the vent is correctly connected to the air duct and all the catches have engaged.

Check the function.

VENTS B AND C-POST, REPLACING

Remove and install the vents. See **PANEL B-POST, REPLACING** and **PANEL C-POST, REPLACING** .

CLIMATE CONTROL UNIT (2003-2012)

CLIMATE UNIT, REPLACING

Special tools:

see **1158957**

REPLACING

The illustrations in this service information are used for different model years and / or models. Some variation may occur. However, the essential information in the illustrations is always correct.

PREPARATIONS

NOTE: Read off data from the control module before replacing the control module. This is carried out via VIDA communication. After replacing the control module, the relevant parameters must be programmed into the new control module.

Read the safety precautions for handling refrigerant. See **REFRIGERANT, SAFETY REGULATIONS** .

Read the instructions covering slow and fast leaks. See **OIL AIR CONDITIONING (A/C) SYSTEM, FILLING** .

NOTE: Always plug pipes and connectors when working on the climate control system.

Drain the refrigerant from the air conditioning (A/C) system. See **REFRIGERANT, DRAINING** .

Remove the battery lead. See **BATTERY, DISCONNECTING** .

REMOVING THE CLIMATE CONTROL UNIT

WORK IN THE ENGINE COMPARTMENT

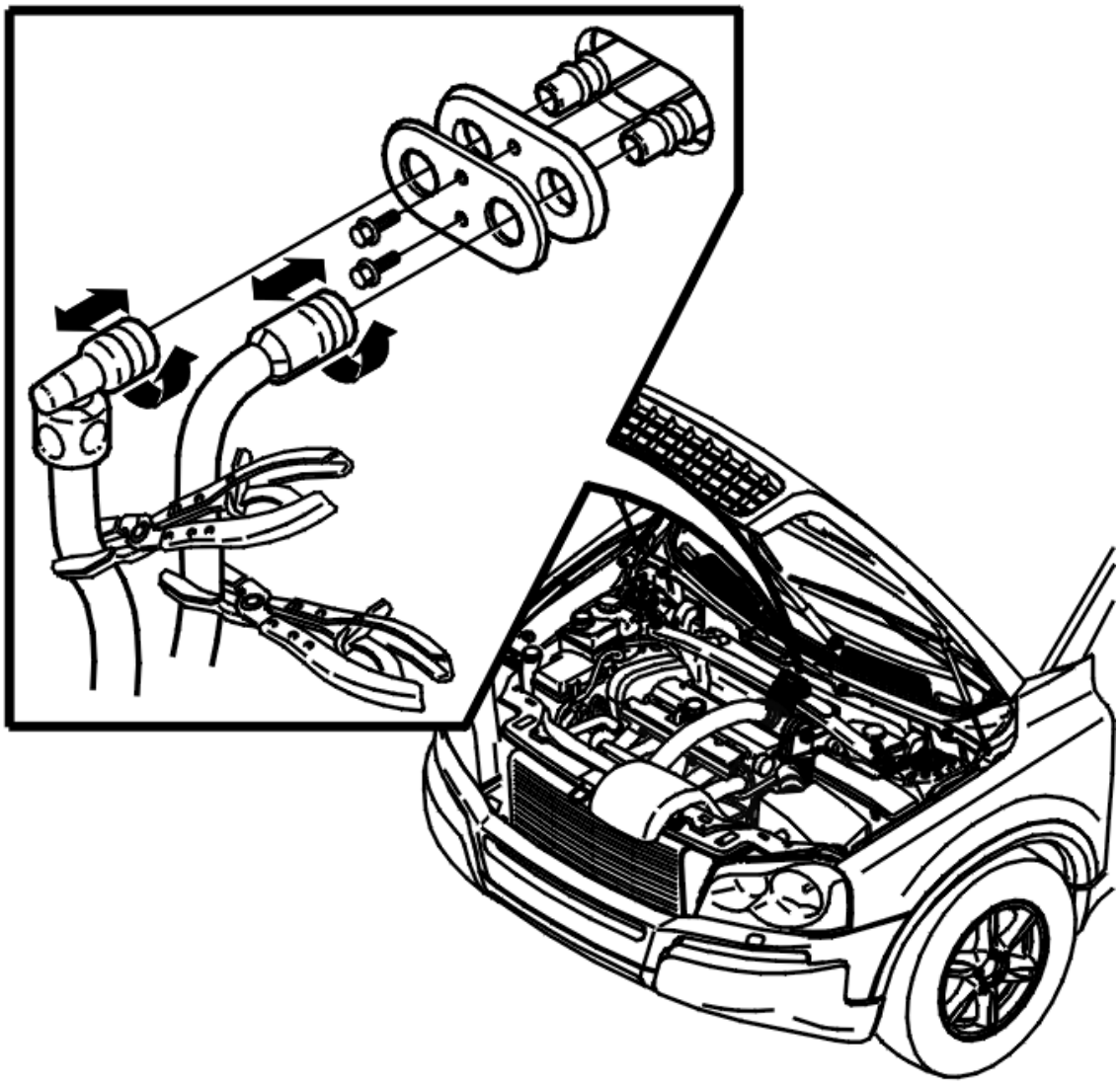

Fig. 120: Clamping Heating Hoses Using Lock Grip Pliers
Courtesy of VOLVO CARS CORPORATION

Clamp the heating hoses. Use lock grip pliers see **1158957** .

Detach the heating hoses from the heat exchanger by pressing in the hose coupling and twisting it out to the side. Then pull the hose out.

Plug the pipes for the heat exchanger.

Remove:

- the cover plate and the rubber seal for the lead-in
- the windshield wiper arm. See **WIPER MECHANISM WINDSHIELD, REPLACING**

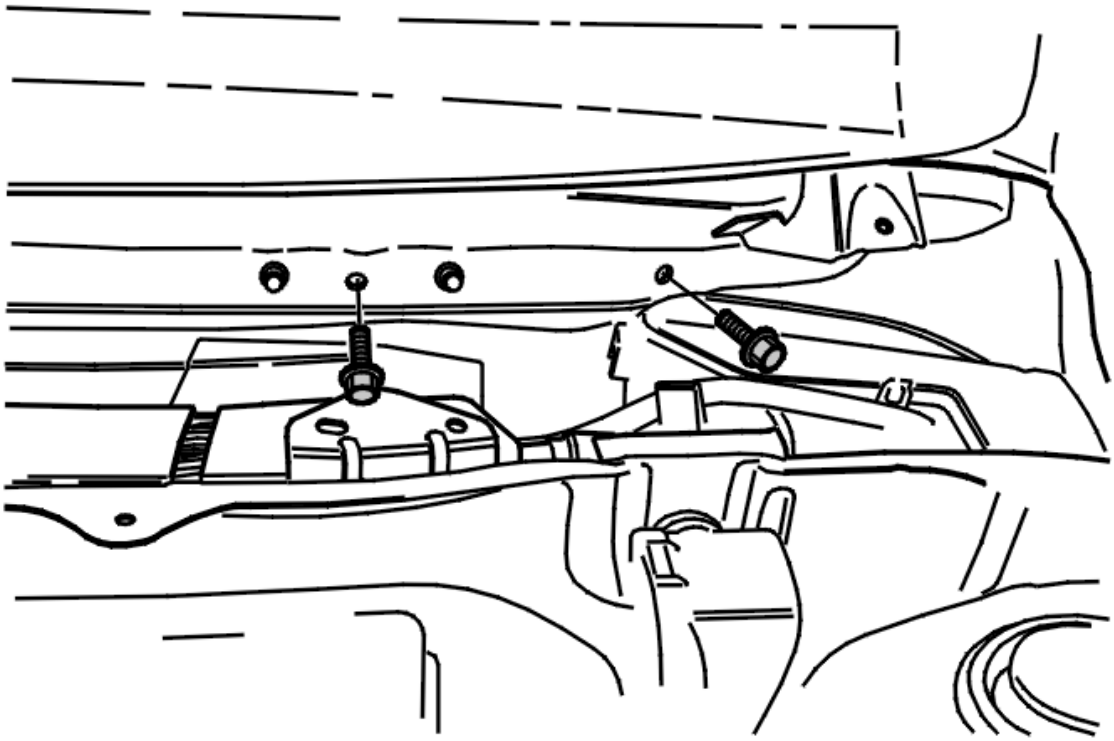

Fig. 121: Identifying Screws
Courtesy of VOLVO CARS CORPORATION

- the 2 screws.

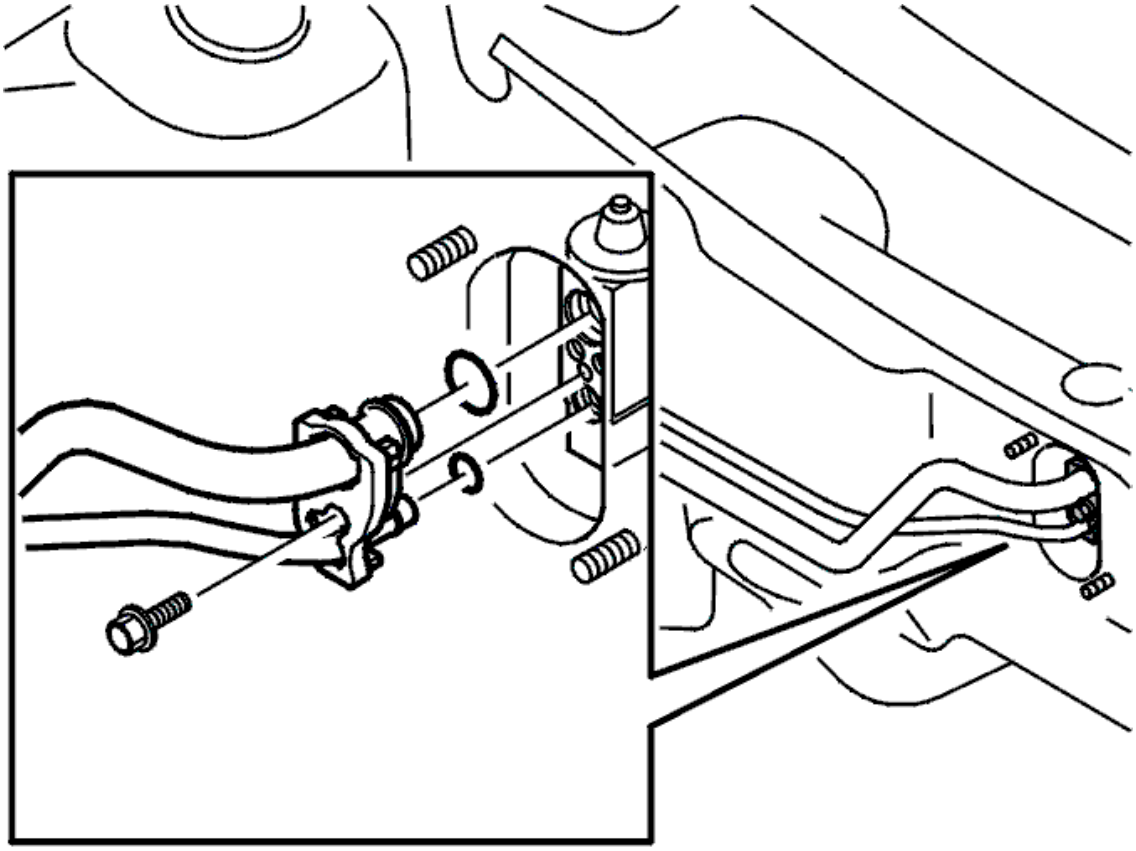

Fig. 122: Identifying Locking Bracket For Refrigerant Pipes
Courtesy of VOLVO CARS CORPORATION

Remove:

- the heat shield on the firewall above the expansion valve
- the striker plate for the refrigerant pipes
- the refrigerant pipes from the expansion valve.

WORK IN THE PASSENGER COMPARTMENT

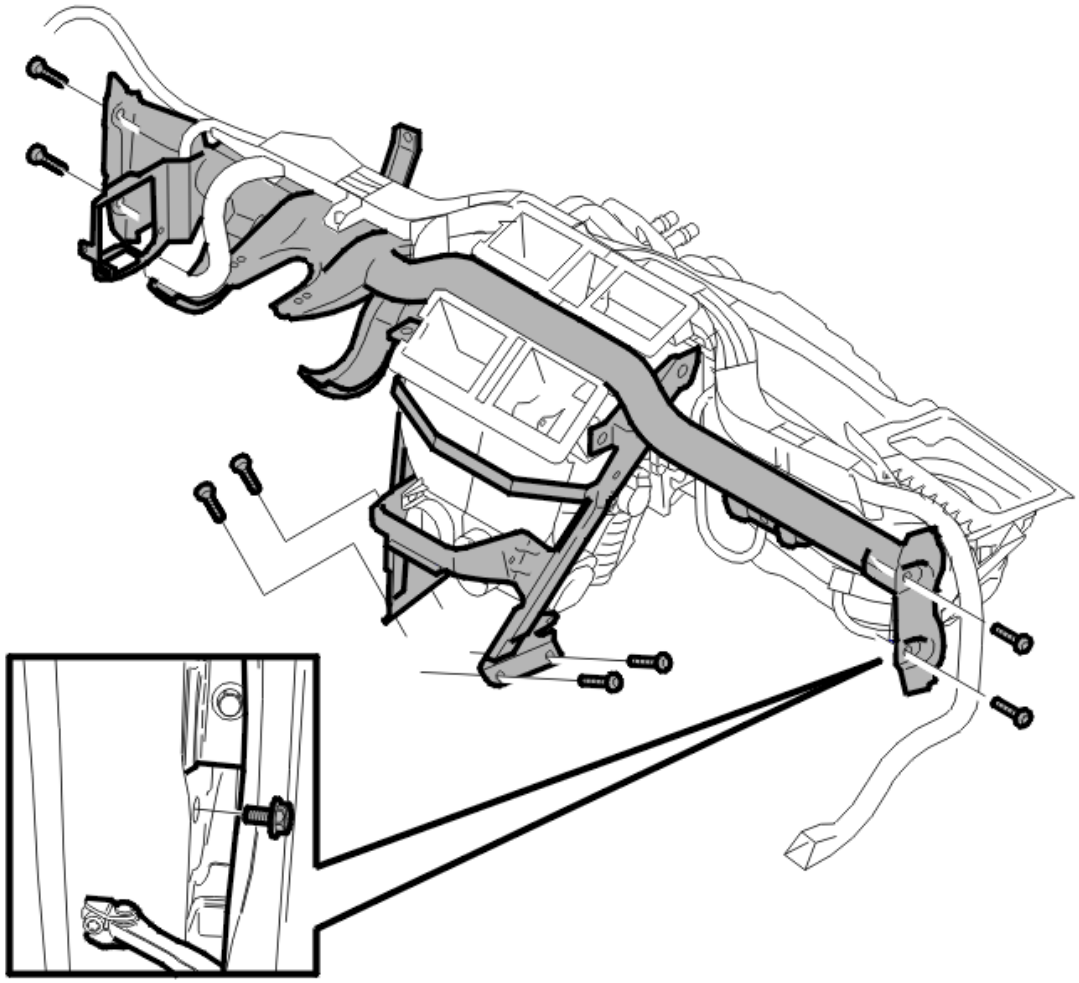

Fig. 123: Identifying Screws For A-Post And Center Console
Courtesy of VOLVO CARS CORPORATION

Remove the dashboard and the center console. See **DASHBOARD, REPLACING** .

Protect the floor and sills.

Remove:

- the 4 screws to the left and right of the A-post
- the 2 screws between the door and the A-post. Tighten the screws a little so that they protrude from the member
- the 4 screws to the left and right of the center console.

Detach the steering column / steering shaft but leave it hanging in place. See **STEERING COLUMN,**

REPLACING .

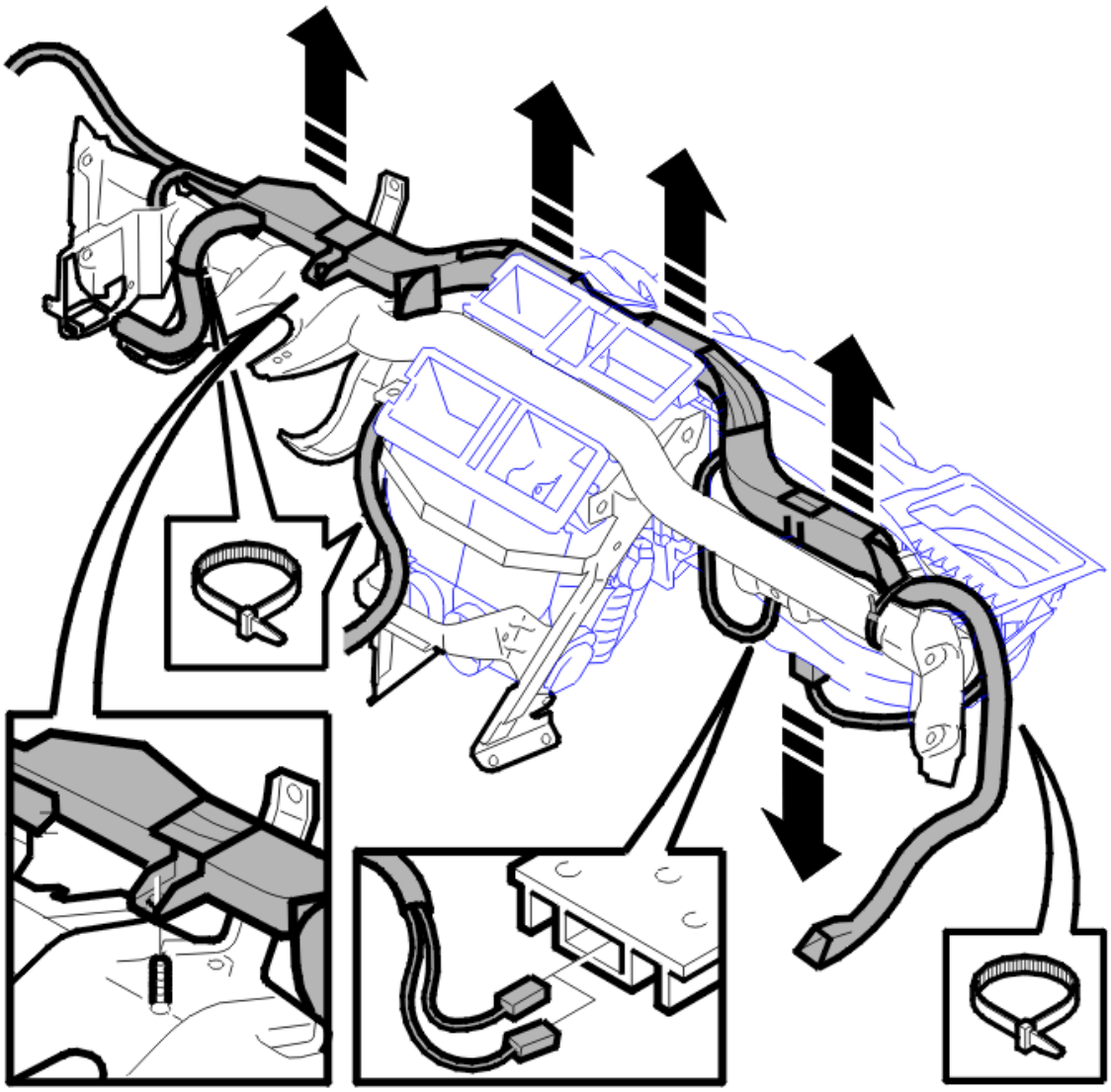

Fig. 124: Identifying Climate Control Unit, Member, Air Ducts, Cable Duct, Tie Straps, And Drainage Channels
Courtesy of VOLVO CARS CORPORATION

- the air ducts from the heater assembly to the floor
- the floor drainage channels on the left and right-hand sides.

Pull the member and the climate control unit backwards a little.

Remove:

- the tie straps for the cable harness on the driver's side
- the cable duct above the climate control unit on both sides.

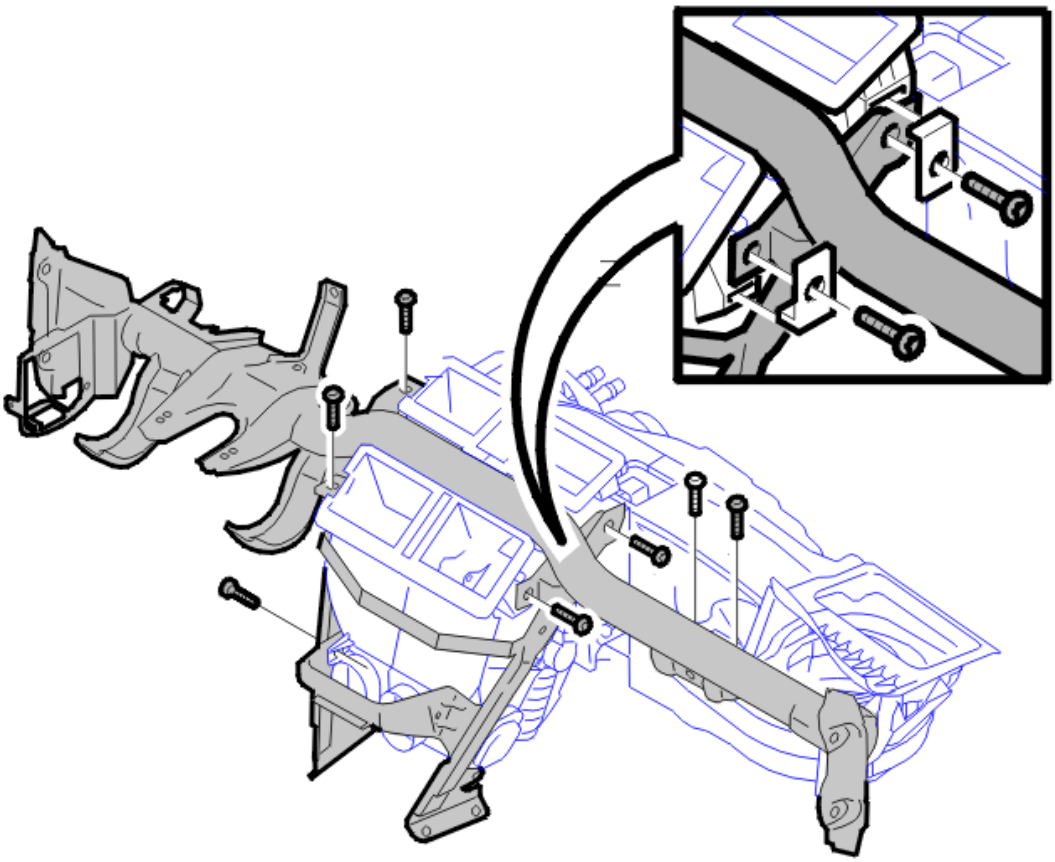

Fig. 125: Identifying Screws For Climate Control Unit And Member
Courtesy of VOLVO CARS CORPORATION

- the 2 screws from the member / climate control unit on the passenger side
- the 4 screws securing the climate control unit at the member on the left and right-hand sides
- the switch for the blower fan motor.

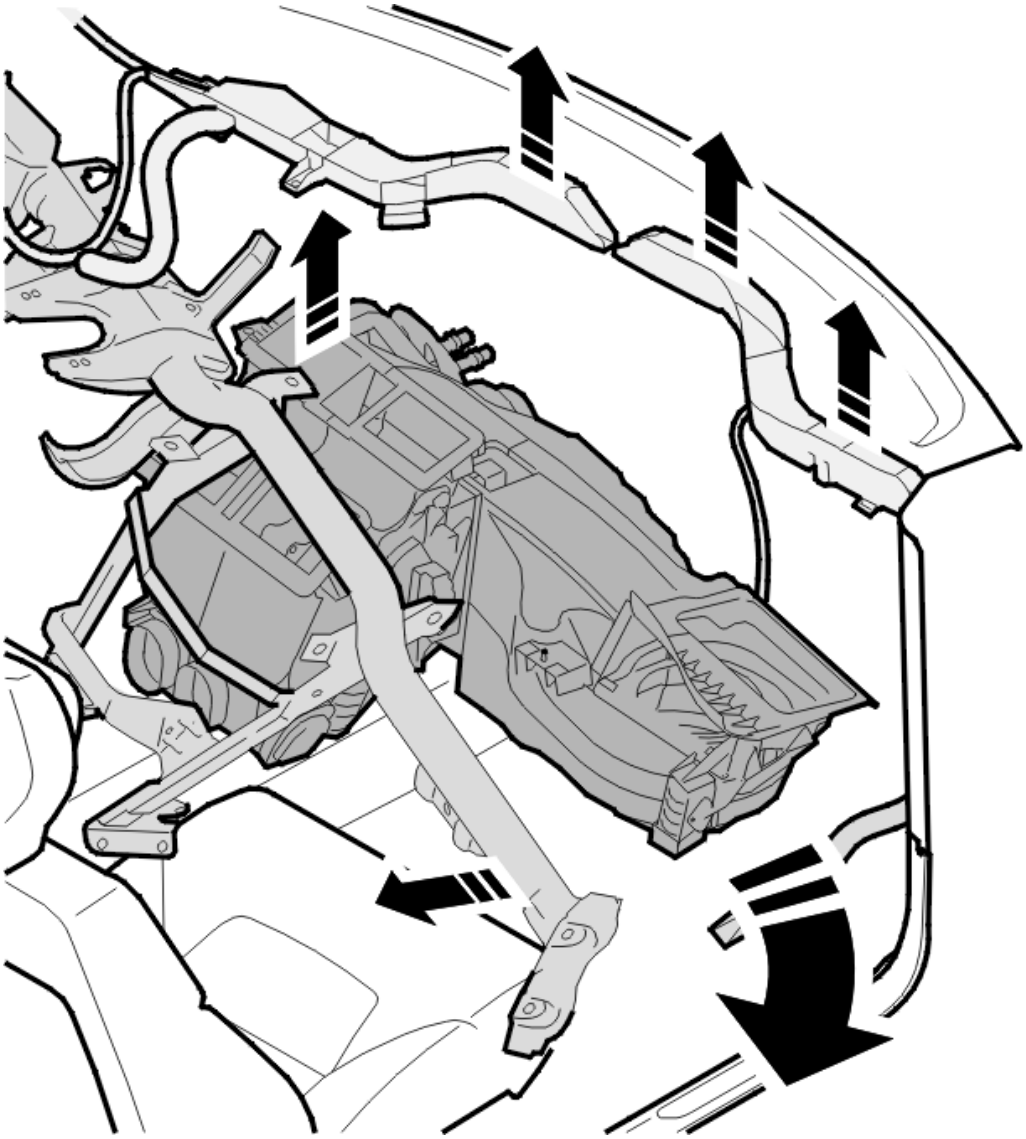

Fig. 126: Identifying Cable Ducts, Climate Control Unit, And T-Shaped Member
Courtesy of VOLVO CARS CORPORATION

- the cable duct behind / above the member mounting on the passenger side
- the cable duct above / behind the mounting for the member
- the T shaped member from the climate control unit.

Hold up the member and the cable duct on the passenger side. Remove the climate control unit on the passenger side.

NOTE: Two people are required for this job.

INSTALLING THE CLIMATE CONTROL UNIT

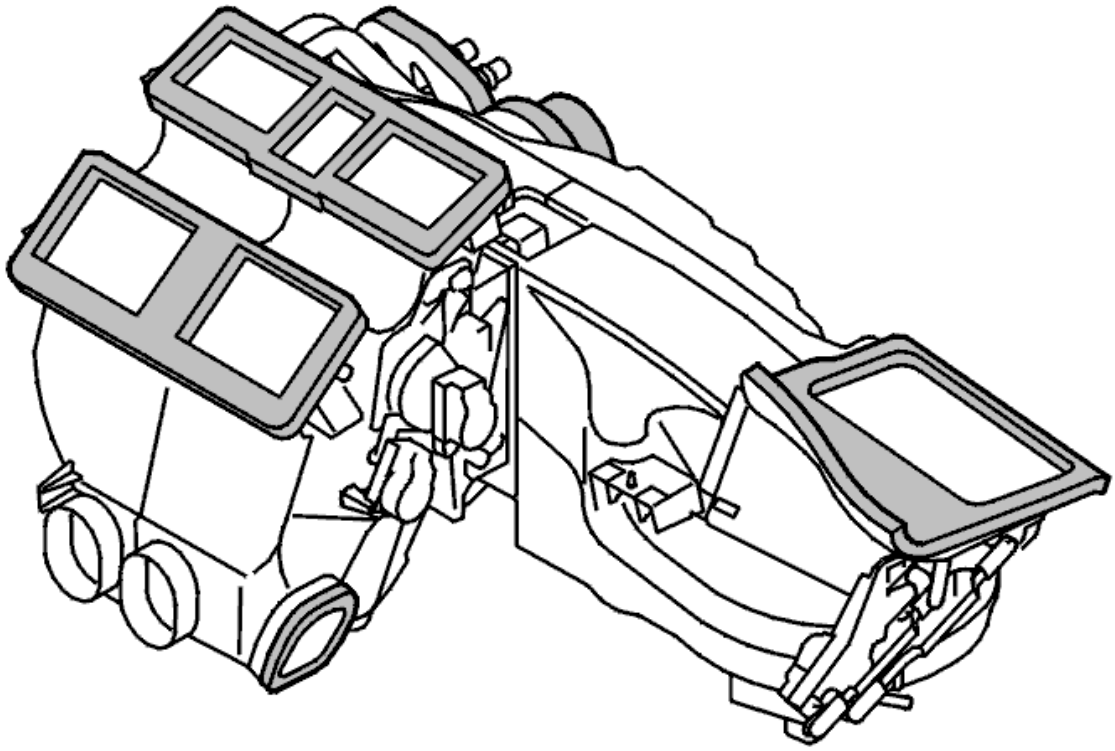

Fig. 127: Floor Seals
Courtesy of VOLVO CARS CORPORATION

Check and replace the floor seals if necessary.

Install the front seal for the refrigerant pipe.

Check and replace the O-rings.

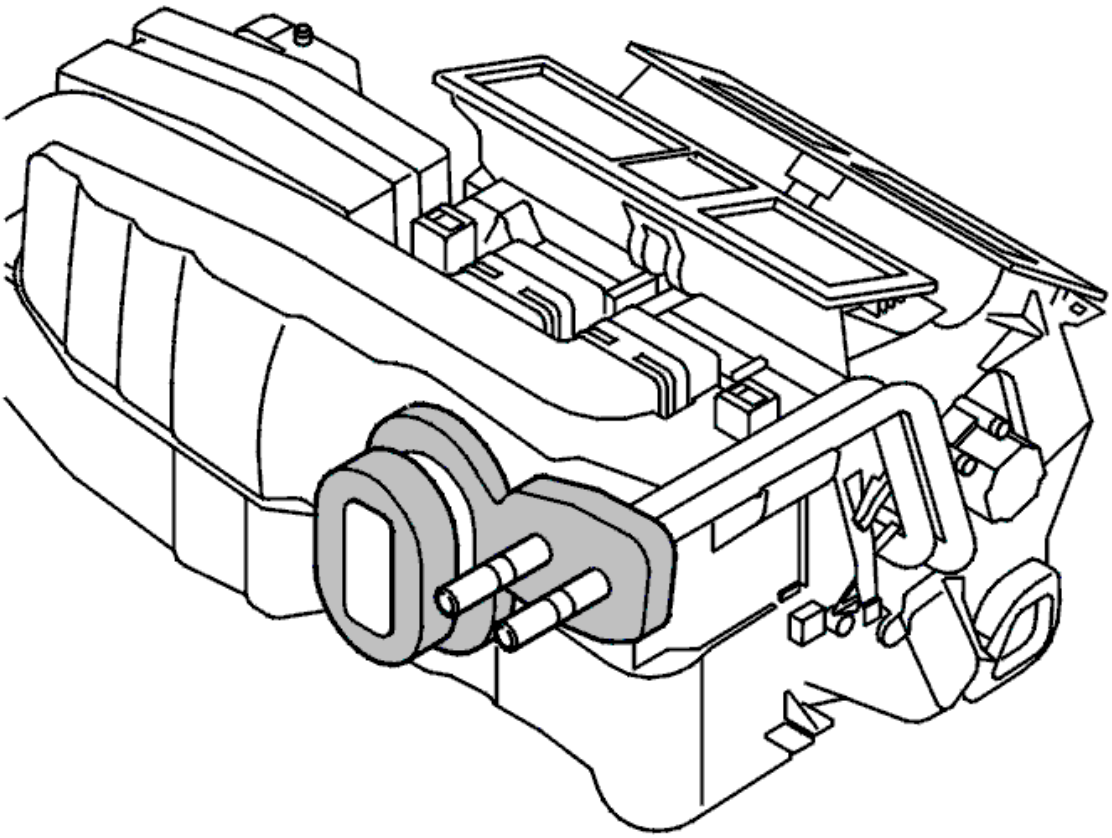

Fig. 128: Front Seal For Refrigerant Pipe
Courtesy of VOLVO CARS CORPORATION

WORK IN THE PASSENGER COMPARTMENT

Install:

- the climate control unit in the car
- the member on the climate control unit.

NOTE: Two people are required for this job.

Install:

- the screws and the bracket on the member / climate control unit
- the cable duct and secure it.

Position the wiring for the radio and the climate control unit in the cable duct.

Locate the cable for the sensor on the dashboard and the cable for the light switch.

Position the member for the climate control unit against the firewall. Check the location in relation to the openings for the coolant and heat exchange pipes.

Press the member / climate control unit into position on the A-post against the firewall.

Secure the member / climate control unit loosely on the A-post using the screws.

Secure the member / climate control unit and console loosely using the screws.

Install the member on the A-post.

Tighten the screws on the center console.

Install:

- the air ducts
- the gutter
- the cable ducts and the tie straps
- the connector for the blower fan motor
- the 2 screws for the member / climate control unit on the passenger side
- the steering column. See **STEERING COLUMN, REPLACING**
- the dashboard and the center console. See **DASHBOARD, REPLACING** .

WORK IN THE ENGINE COMPARTMENT

Install:

- the striker plate for the refrigerant pipes
- the refrigerant pipes on the expansion valve
- the heat shield over the expansion valve
- the cover plate and the rubber seal for the lead-in for the heating hoses
- the heating hoses which will click when connected
- the 2 screws for the member for the dashboard
- the windshield wiper arm. See **WIPER MECHANISM WINDSHIELD, REPLACING**

FINISHING

Install the battery lead. See **BATTERY, DISCONNECTING** .

Vacuum pump the air conditioning (A/C) system. See **VACUUM PUMPING** .

Fill the air conditioning (A/C) system with refrigerant. See **REFRIGERANT, FILLING** .

Leak trace the air conditioning (A/C) system. See **LEAK TRACING, FLUORESCENT TRACING AGENT / UV LAMP** or **LEAK TRACING, FLUORESCENT TRACING AGENT / UV LAMP** .

CLIMATE CONTROL UNIT (L. H. D; 2003-2004)

BLOWER FAN MOTOR / POWER UNIT, REPLACING

see **BLOWER FAN MOTOR / POWER UNIT, REPLACING**

BLOWER FAN MOTOR PASSENGER COMPARTMENT TEMPERATURE SENSOR, REPLACING

see **BLOWER FAN MOTOR PASSENGER COMPARTMENT TEMPERATURE SENSOR, REPLACING**

BLOWER FAN MOTOR REAR, REPLACING

see **BLOWER FAN MOTOR REAR, REPLACING**

CLIMATE CONTROL UNIT REAR, REPLACING

see **CLIMATE CONTROL UNIT REAR, REPLACING**

DAMPER MOTOR AIR DISTRIBUTION, REPLACING

As the illustrations in this service information are used for different model years and / or models, some variation may occur. However, the essential information in the illustrations is always correct.

REMOVING THE AIR DISTRIBUTION DAMPER MOTOR

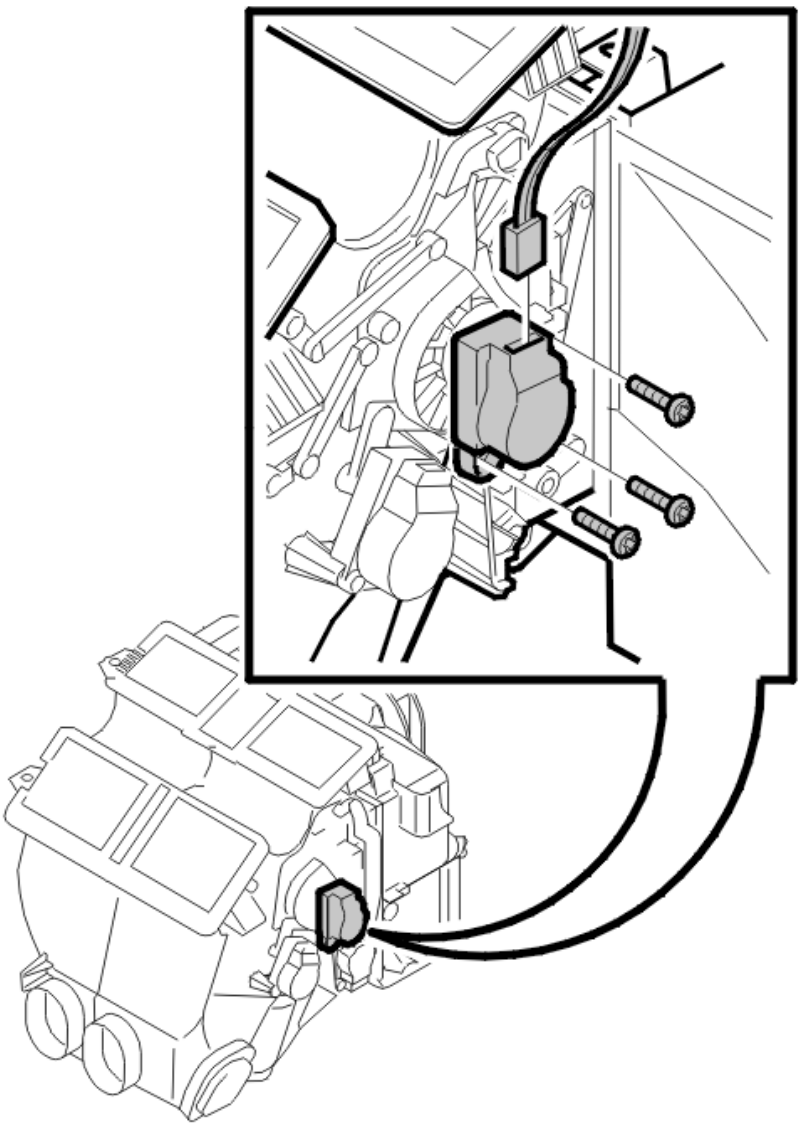

Fig. 129: Removing Air Distribution Damper Motor
Courtesy of VOLVO CARS CORPORATION

Ignition off.

Remove:

- the glove compartment. See **GLOVE COMPARTMENT, REPLACING**
- the screws for the damper motor
- the damper motor
- the connector.

INSTALLING THE AIR DISTRIBUTION DAMPER MOTOR

Position the damper motor.

Turn the pulley so that the shaft journal on the damper motor goes in.

Position the motor.

Install:

- the screws for the motor
- the connector
- the glove compartment. See **GLOVE COMPARTMENT, REPLACING** .

DAMPER MOTOR DEFROSTER, REPLACING

REPLACING

As the illustrations in this service information are used for different model years and / or models, some variation may occur. However, the essential information in the illustrations is always correct.

REMOVING THE DEFROSTER DAMPER MOTOR

NOTE: Applies only to cars with electronic climate control (ECC).

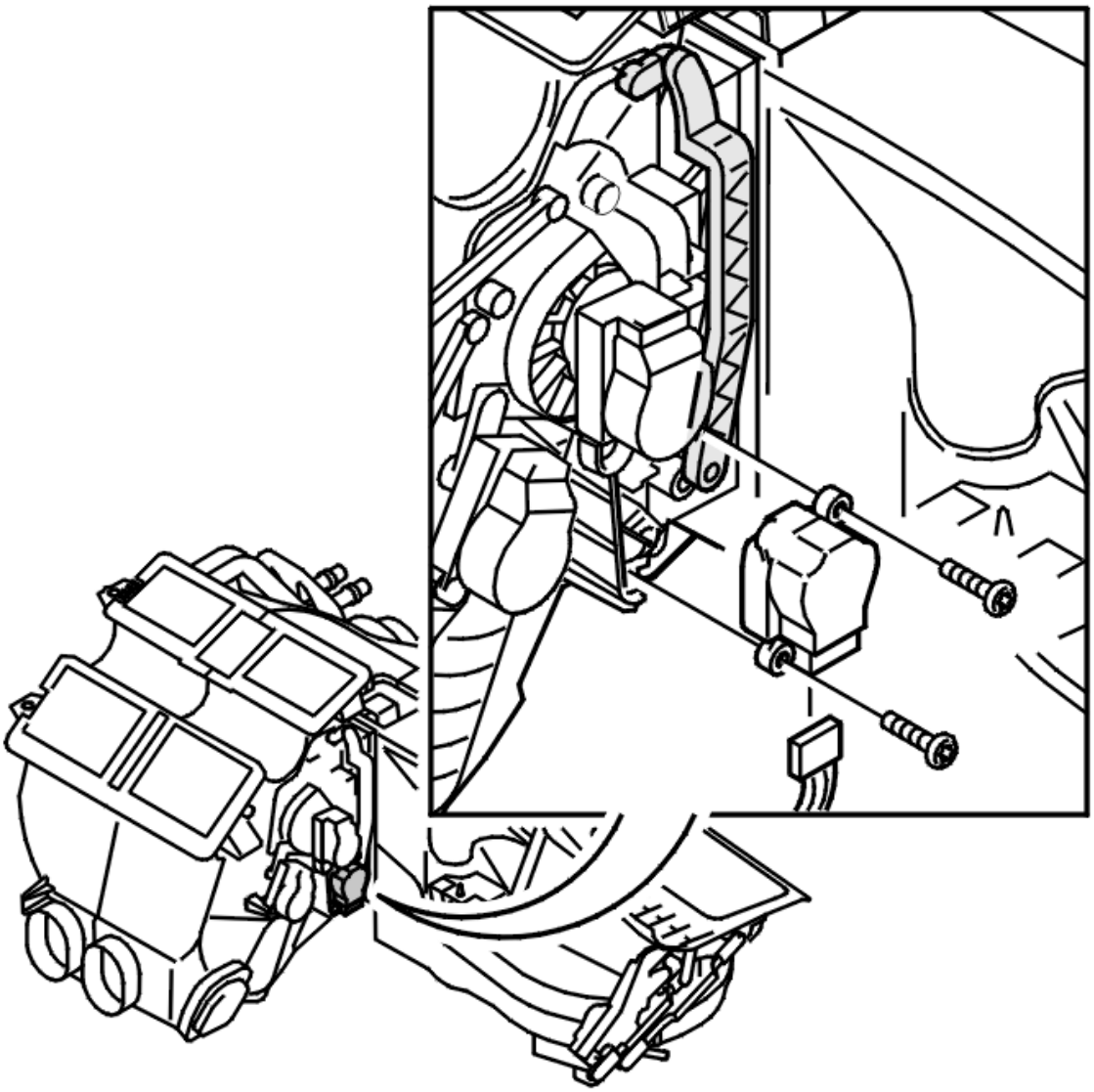

Fig. 130: Identifying Control Module And Screws
Courtesy of VOLVO CARS CORPORATION

Remove:

- the soundproofing panel. See **SOUNDPROOFING PANEL, REPLACING**
- the glove compartment. See **GLOVE COMPARTMENT, REPLACING**
- the screws for the motor
- the motor
- the switch.

INSTALLING THE DEFROSTER DAMPER MOTOR

Position the motor.

Turn the shaft on the heater unit so that the motor can be installed.

Position the motor.

Install:

- the screws for the motor
- the switch
- the glove compartment. See **GLOVE COMPARTMENT, REPLACING**
- the soundproofing panel. See **SOUNDPROOFING PANEL, REPLACING** .

Carry out self-adjustment of the damper motor end positions. This is carried out via VIDA communication.

DAMPER MOTOR RECIRCULATION, REPLACING

As the illustrations in this service information are used for different model years and / or models, some variation may occur. However, the essential information in the illustrations is always correct.

REMOVING THE RECIRCULATION DAMPER MOTOR

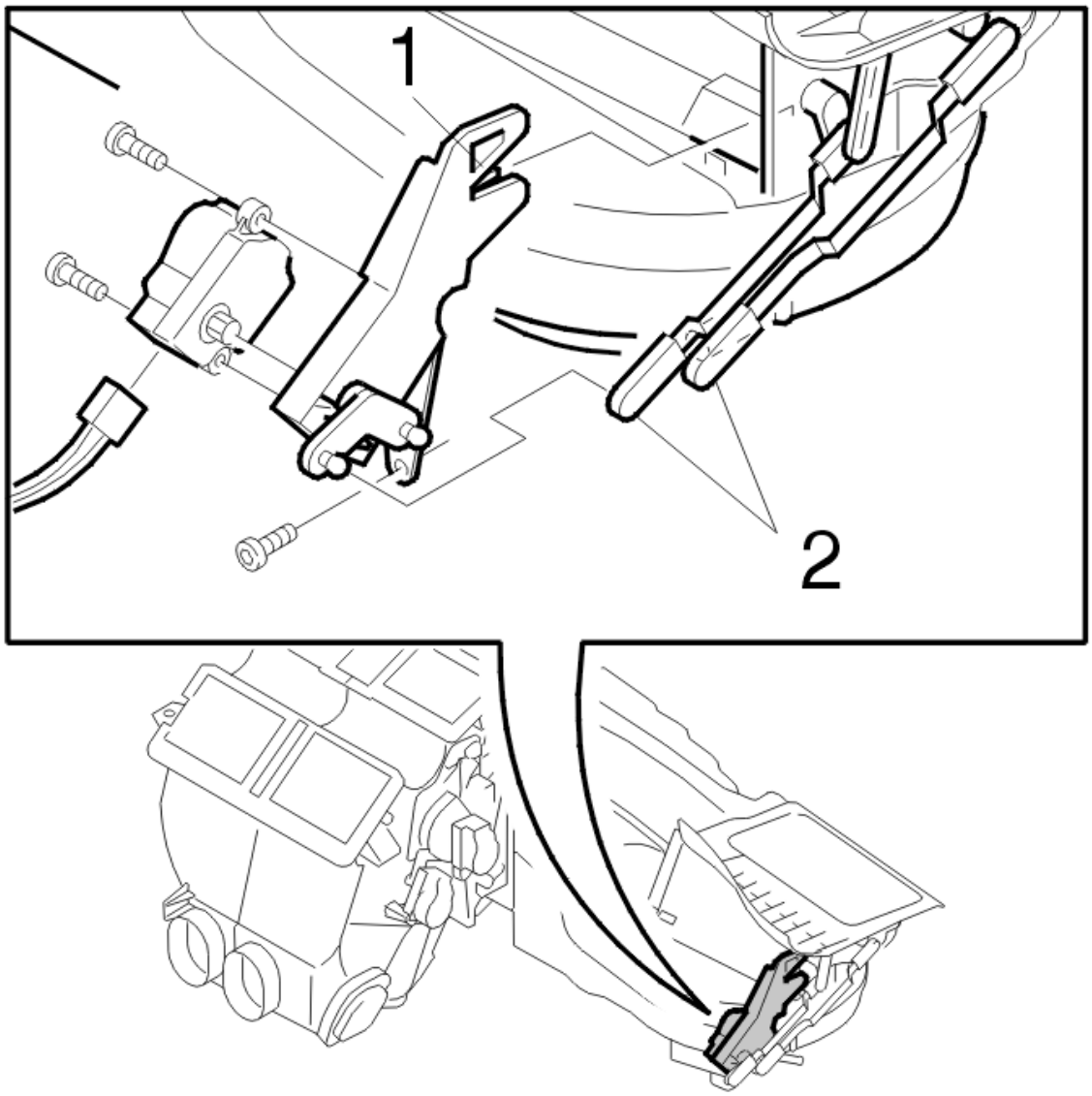

Fig. 131: Identifying Control Module Connector, Screws & Damper Arms
Courtesy of VOLVO CARS CORPORATION

Remove:

- the glove compartment. See **GLOVE COMPARTMENT, REPLACING**
- the screw from the bracket.

Remove:

- the bracket from the mounting by inserting the tip of a screwdriver between the mounting and the metal on the fan housing
- the lever from the motor. Ensure that the levers do not release from the heater unit.

Remove:

- the switch
- the motor.

INSTALLING THE RECIRCULATION DAMPER MOTOR

Position:

- the motor on the bracket
- the bracket and motor.

Press the upper mounting into place.

Install the screw for the bracket.

Place the arms from the heater unit onto the motor levers and press into place. Do not damage the arms.

Install:

- the switch
- the glove compartment. See **GLOVE COMPARTMENT, REPLACING** .

Carry out self-adjustment of the damper motor end positions. This is carried out via VIDA communication.

DAMPER MOTOR TEMPERATURE, REPLACING

As the illustrations in this service information are used for different model years and / or models, some variation may occur. However, the essential information in the illustrations is always correct.

DAMPER MOTOR TEMPERATURE PASSENGER SIDE, REPLACING

REMOVING THE PASSENGER SIDE TEMPERATURE DAMPER MOTOR

Remove:

- the glove compartment. See **GLOVE COMPARTMENT, REPLACING**
- the screws
- the motor
- the switch.

INSTALLING THE PASSENGER SIDE TEMPERATURE DAMPER MOTOR

Position the motor.

Turn the shaft on the motor so that the motor can be positioned.

Install:

- the screws
- the switch.

Carry out self-adjustment of the damper motor end positions. This is carried out via VIDA communication.

Install the glove compartment. See **GLOVE COMPARTMENT, REPLACING** .

DAMPER MOTOR TEMPERATURE DRIVER'S SIDE, REPLACING

REMOVING THE DRIVER'S SIDE TEMPERATURE DAMPER MOTOR

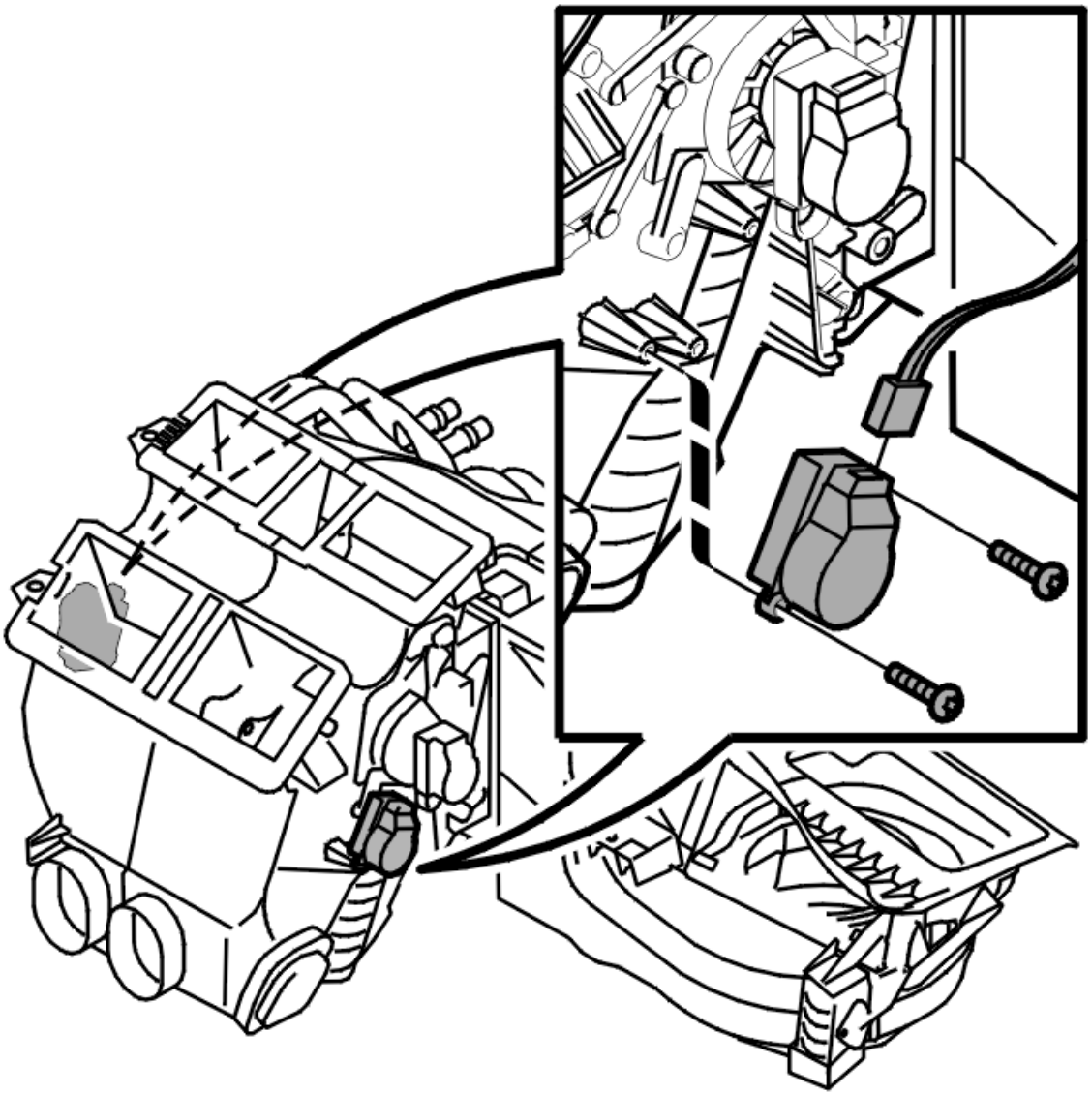

Fig. 132: Identifying Control Module And Screws
Courtesy of VOLVO CARS CORPORATION

Remove:

- the soundproofing panel. See **SOUNDPROOFING PANEL, REPLACING**
- the switch from the damper motor.

Slacken off the screws.

Pull out the damper motor slightly.

Position the point of a screwdriver between the arms on the lever control. Pry the arms away from the ball on the damper motor lever.

Remove the damper motor.

INSTALLING THE DRIVER'S SIDE TEMPERATURE DAMPER MOTOR

Position the damper motor.

Install the mechanism lever on the ball on the damper motor lever.

Insert the tip of a screwdriver behind the lever on the mechanism and the tip of, for example, a pair of round-nosed pliers behind the lever on the damper motor. Press the ball into place on the mechanism.

Position the damper motor. Tighten the screws.

Install:

- the switch
- the soundproofing panel. See **SOUNDPROOFING PANEL, REPLACING** .

Carry out self-adjustment of the damper motor end positions. This is carried out via VIDA communication.

DRAIN HOSE ENGINE / FILTER HOUSING, REPLACING

see **DRAIN HOSE ENGINE / FILTER HOUSING, REPLACING**

HEAT EXCHANGER, REPLACING

see **HEAT EXCHANGER, REPLACING**

TEMPERATURE SENSOR EVAPORATOR, REPLACING

see **TEMPERATURE SENSOR EVAPORATOR, REPLACING**

CLIMATE CONTROL UNIT (L. H. D; 2005-2012)

BLOWER FAN MOTOR / POWER UNIT, REPLACING

As the illustrations in this service information are used for different model years and / or models, some variation

may occur. However, the essential information in the illustrations is always correct.

PREPARATIONS

Remove the dashboard. See **DASHBOARD, REPLACING** .

Detach the climate control unit and member and angle it out. See **CLIMATE UNIT, REPLACING**.

REMOVING THE FAN MOTOR FROM THE CLIMATE CONTROL UNIT

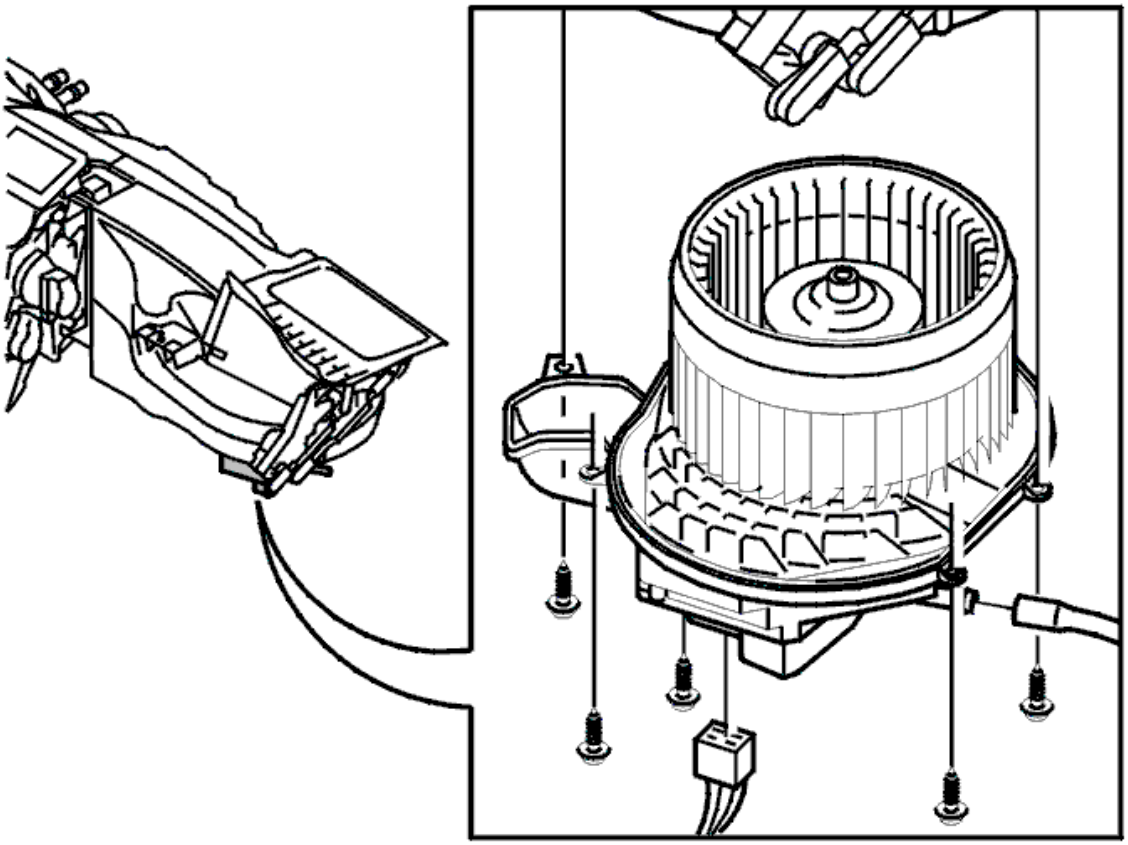

Fig. 133: Identifying Blower Fan Motor Screws
Courtesy of VOLVO CARS CORPORATION

NOTE: Do not detach the air conditioning (A/C) pipes or the engine coolant hoses.

Remove:

- the drain hoses from the engine and filter housing. Then move the drain hoses out of the way
- the connector.

Remove the 5 screws from the blower fan motor.

Detach and remove the blower fan motor and fan shroud.

REMOVING THE BLOWER FAN MOTOR

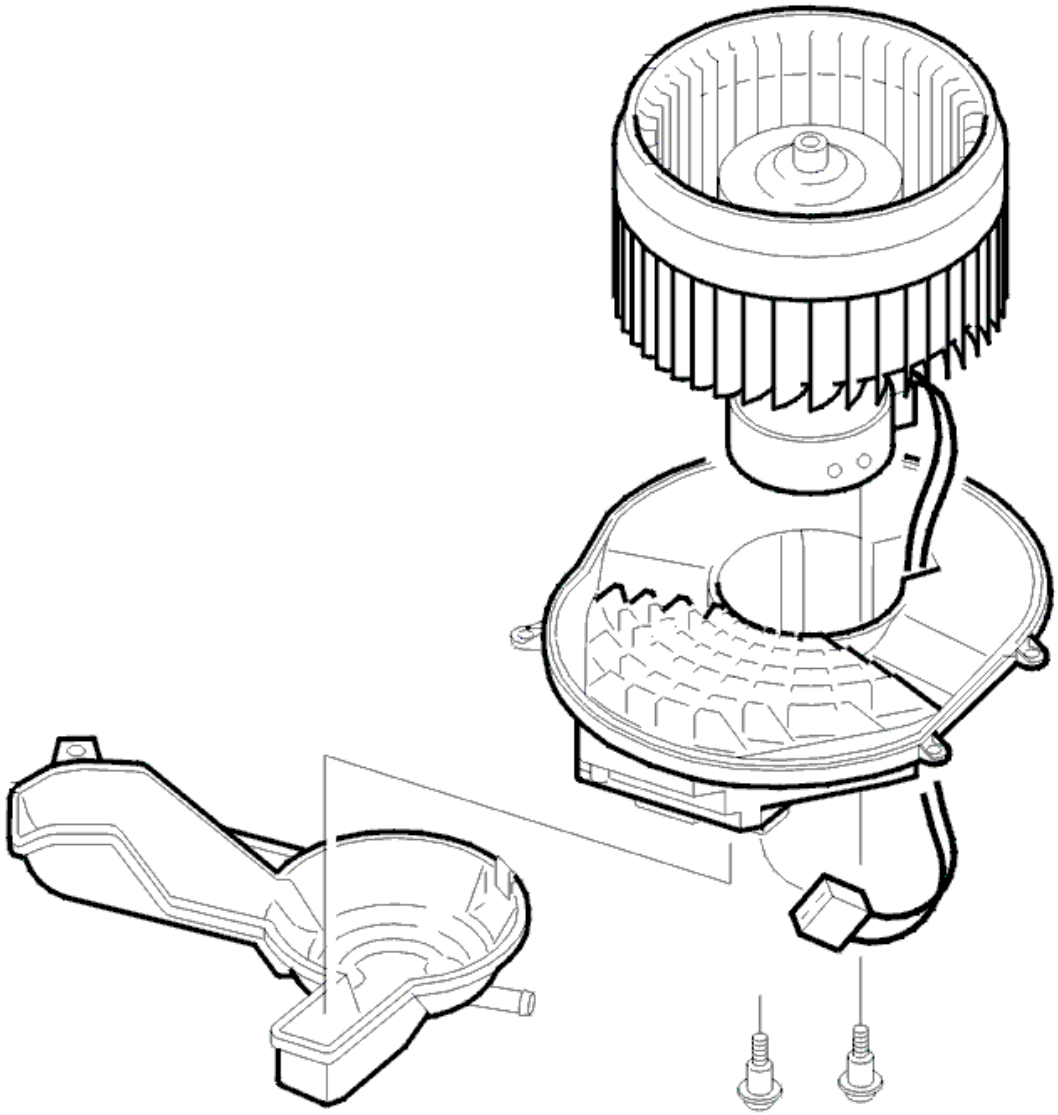

Fig. 134: Connector Cover From Motor
Courtesy of VOLVO CARS CORPORATION

Remove the connector.

Detach the cover for the blower fan motor.

Remove the 2 screws from the top of the blower fan motor.

Press and pull out the fan motor and fan hub. Use a screwdriver for example.

REMOVING THE POWER UNIT

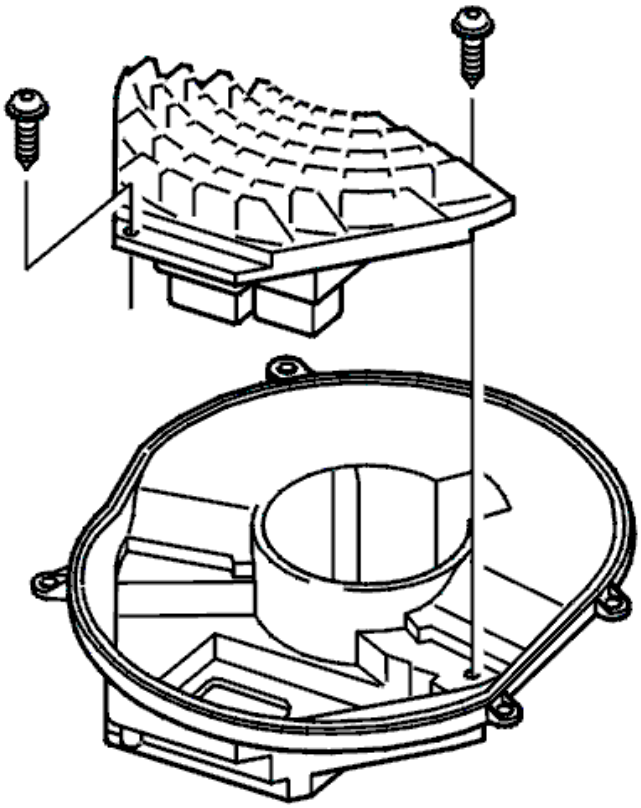

Fig. 135: Blower Fan Motor With Fan Hub
Courtesy of VOLVO CARS CORPORATION

Remove:

- the blower fan motor and the fan hub. See **REMOVING THE BLOWER FAN MOTOR**
- the power unit which is secured with 2 screws.

INSTALLING THE POWER UNIT

Install the power unit using the 2 screws.

INSTALLING THE BLOWER FAN MOTOR

Install:

- the blower fan motor and the fan hub. Use the 2 screws
- the cover for the blower fan motor
- the connector for the power unit.

INSTALLING THE BLOWER FAN MOTOR ON THE CLIMATE CONTROL UNIT

Install:

- the blower fan motor and the cover on the climate control unit using the 5 screws
- the connector
- the drain hose
- the climate control unit. See **CLIMATE UNIT, REPLACING**
- the dashboard according to **DASHBOARD, REPLACING** .

BLOWER FAN MOTOR PASSENGER COMPARTMENT TEMPERATURE SENSOR, REPLACING

As the illustrations in this service information are used for different model years and / or models, some variation may occur. However, the essential information in the illustrations is always correct.

REMOVING THE BLOWER FAN MOTOR PASSENGER COMPARTMENT TEMPERATURE SENSOR

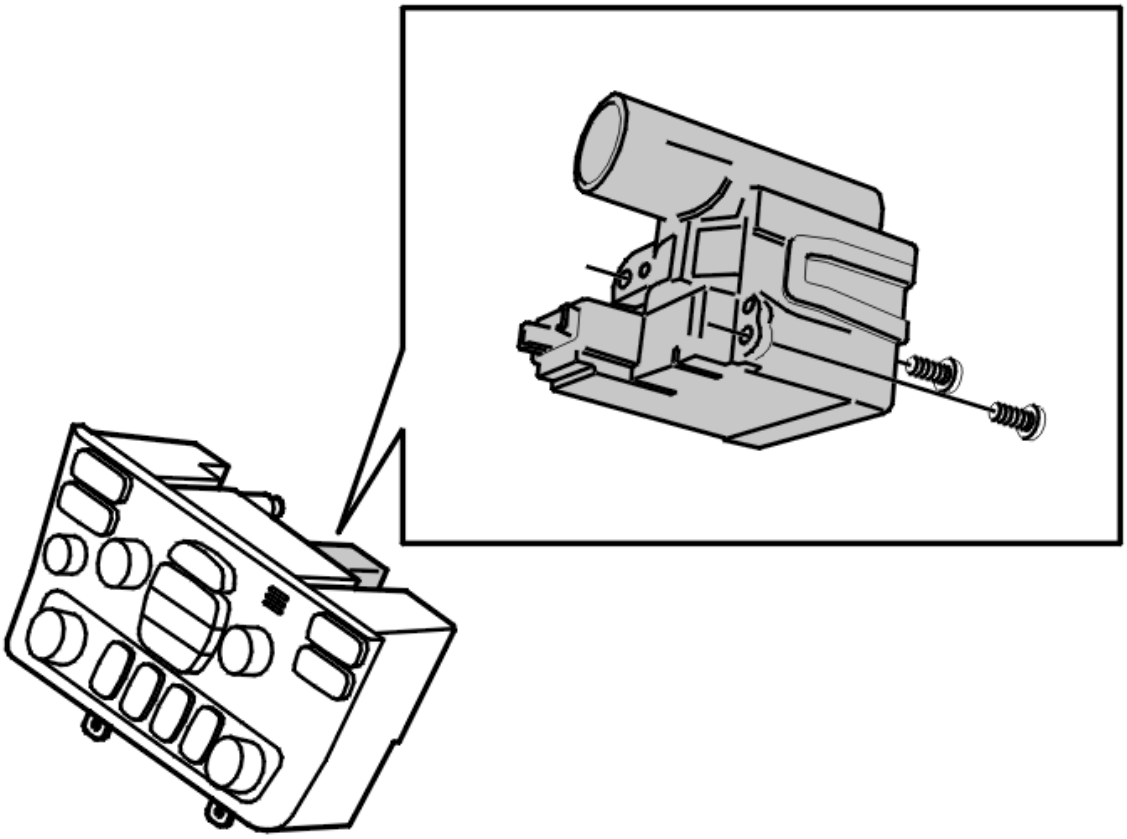

Fig. 136: Fan Motor Passenger Compartment Temperature Sensor
Courtesy of VOLVO CARS CORPORATION

Remove:

- the dashboard environment panel. See **CLIMATE CONTROL MODULE (CCM), REPLACING**
- the 2 screws.

INSTALLING THE BLOWER FAN MOTOR PASSENGER COMPARTMENT TEMPERATURE SENSOR

Position the blower fan motor.

Install:

- the 2 screws
- the dashboard environment panel. See **CLIMATE CONTROL MODULE (CCM), REPLACING**.

BLOWER FAN MOTOR REAR, REPLACING

As the illustrations in this service information are used for different model years and / or models, some variation may occur. However, the essential information in the illustrations is always correct.

PREPARATIONS

Remove the rear left side panel. See **SIDE PANEL CARGO COMPARTMENT, REPLACEMENT** .

REMOVING THE REAR BLOWER FAN MOTOR

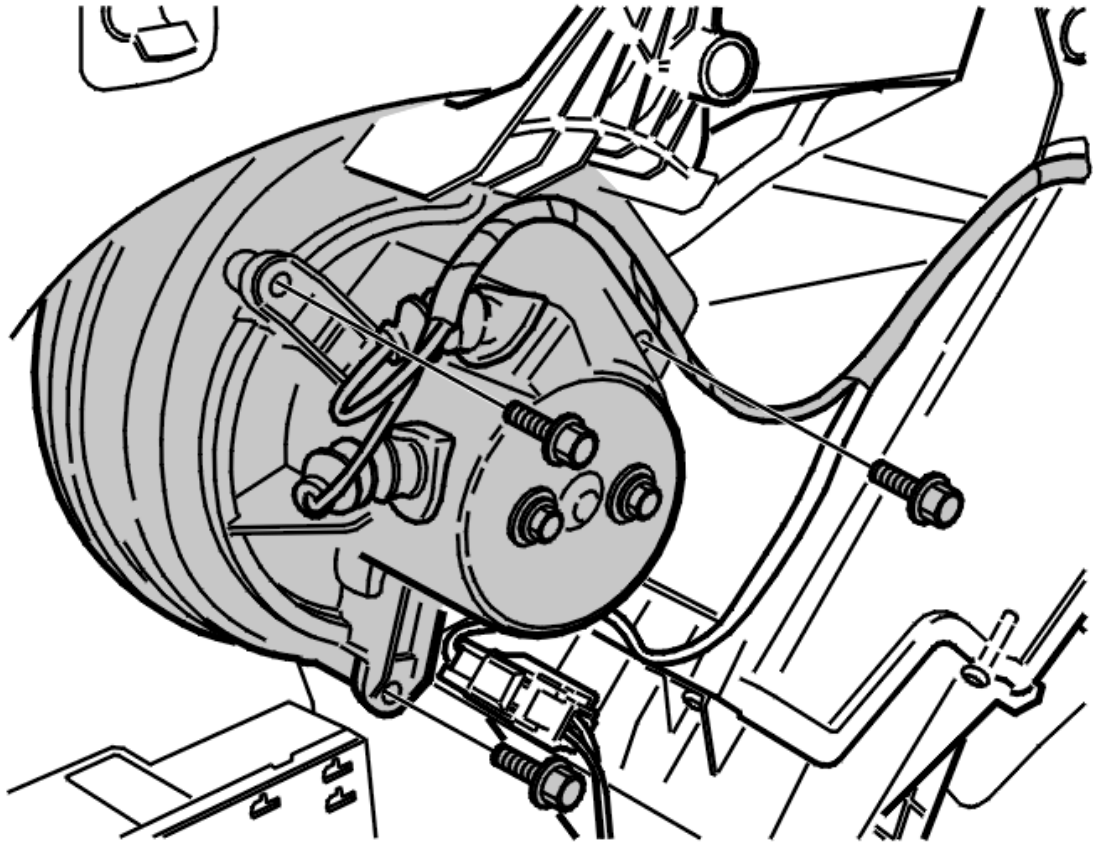

Fig. 137: Removing Rear Blower Fan Motor
Courtesy of VOLVO CARS CORPORATION

Remove the rubber seals and the cable terminals.

Remove the 3 screws for the blower fan motor (A).

INSTALLING THE REAR BLOWER FAN MOTOR

NOTE: For tightening torques, see GENERAL TIGHTENING TORQUE .

Install:

- the blower fan motor using the 3 M5 screws. Tighten
- the cable terminals and the rubber seals.

Check the function.

Install the rear left side panel. See **SIDE PANEL CARGO COMPARTMENT, REPLACEMENT** .

CLIMATE CONTROL UNIT REAR, REPLACING

The illustrations in this service information are used for different model years and / or models. Some variation may occur. However, the essential information in the illustrations is always correct.

PREPARATIONS

Read the safety precautions for handling refrigerant. See **REFRIGERANT, SAFETY REGULATIONS** .

Drain the refrigerant from the system. See **REFRIGERANT, DRAINING** .

Remove the left-hand side panel in the cargo compartment. See **SIDE PANEL CARGO COMPARTMENT, REPLACEMENT** .

NOTE: Always plug the pipes and connections when working on the climate control system.

REMOVING THE REAR CLIMATE CONTROL UNIT

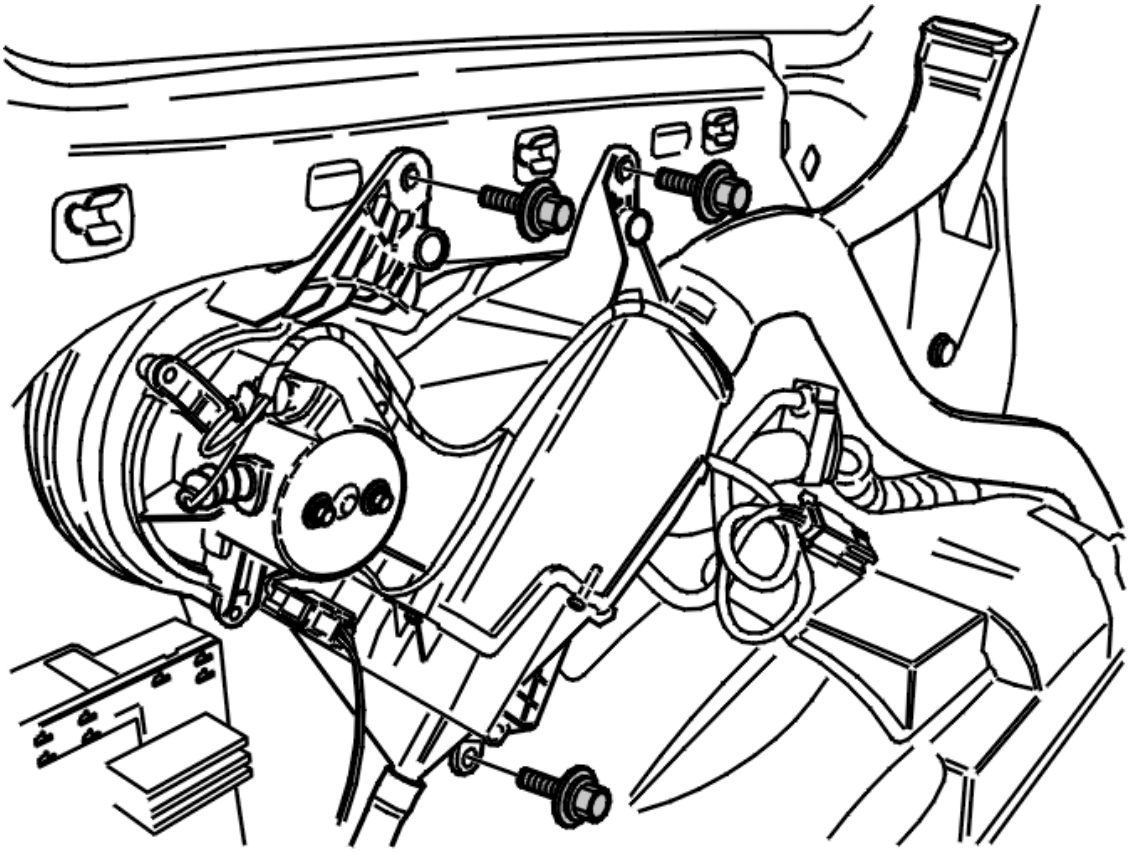

Fig. 138: Removing Climate Control Unit
Courtesy of VOLVO CARS CORPORATION

Remove:

- the nut on the junction block for the air conditioning (A/C) pipes to the expansion valve
- the drain hose at the bottom edge of the heater unit
- the connector
- the 3 screws (see the illustration).

INSTALLING THE REAR CLIMATE CONTROL UNIT

NOTE: For tightening torques, see TIGHTENING TORQUE .

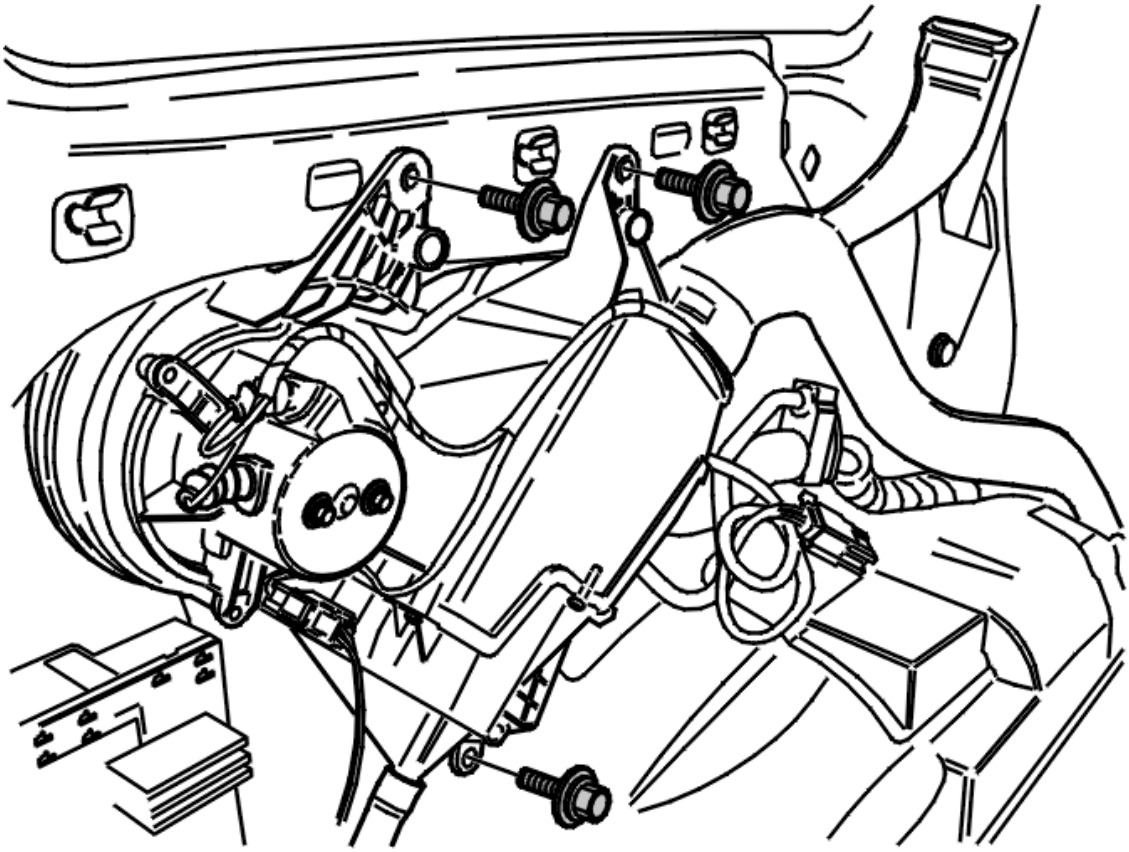

Fig. 139: Installing Rear Climate Control Unit
Courtesy of VOLVO CARS CORPORATION

Position the heater.

Install:

- the 3 screws
- the connector
- the drain hose
- the air conditioning (A/C) pipes and the junction block against the expansion valve. Use 1 nut. Tighten. See **SUMMARY OF TIGHTENING TORQUES FOR SPECIFIC COMPONENTS** .

Vacuum pump the air conditioning (A/C) system. See **VACUUM PUMPING** .

Fill the air conditioning (A/C) system with refrigerant. See **REFRIGERANT, FILLING** .

Leak trace the air conditioning (A/C) system. See **LEAK TRACING, FLUORESCENT TRACING AGENT / UV LAMP** or **LEAK TRACING, FLUORESCENT TRACING AGENT / UV LAMP** .

Install the left-hand side panel in the cargo compartment. See **SIDE PANEL CARGO COMPARTMENT, REPLACEMENT** .

DAMPER MOTOR MODULE (DMM) AIR DISTRIBUTION, REPLACING

REMOVAL

The illustrations in this service information are used for different model years and/or models. Some variation may occur. However, the essential information in the illustrations is always correct.

NOTE: The damper motor module (DMM) for air distribution is only on the right-hand side of the car.

REMOVING THE DAMPER MOTOR MODULE (DMM) FOR AIR DISTRIBUTION

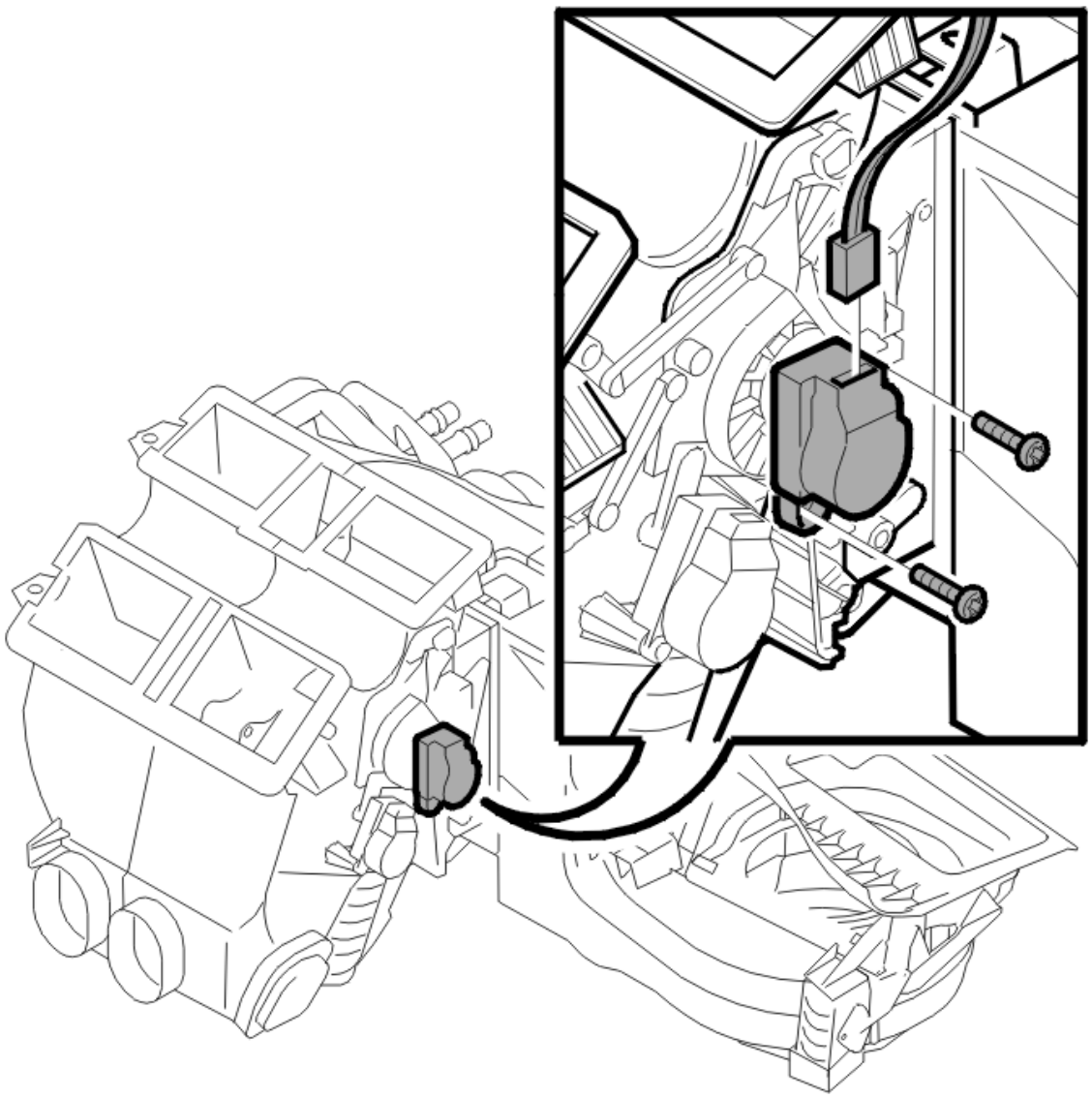

Fig. 140: Identifying Control Module Connector & Screws
Courtesy of VOLVO CARS CORPORATION

Remove:

- the glove compartment. See **GLOVE COMPARTMENT, REPLACING**
- the switch

  HINT: Use a small electrician's screwdriver to pry up the switch by the lock. Depress the switch at the rear edge. Pull straight out.

- the 2 x screws
- the control module.

INSTALLATION

INSTALLING THE DAMPER MOTOR MODULE (DMM) FOR AIR DISTRIBUTION

Install:

- the control module in position. Adjust the shaft journal so that it goes in
- the 2 screws. Tighten alternately
- the switch. Ensure that it is correctly positioned
- the glove compartment. See **GLOVE COMPARTMENT, REPLACING** .

NOTE: Identify the damper motor module (DMM) for air distribution. See VIDA vehicle communication.

FINISHING

TESTING THE CLIMATE CONTROL SYSTEM

Carry out a performance test on the climate control unit. See: **CLIMATE SYSTEM, PERFORMANCE TEST** .

DAMPER MOTOR MODULE (DMM) DEFROSTER, REPLACING

REMOVAL

The illustrations in this service information are used for different model years and/or models. Some variation may occur. However, the essential information in the illustrations is always correct.

NOTE: The damper motor module (DMM) for the defroster is only used in cars with electronic climate control (ECC). It is positioned on the right-hand side of the car.

REMOVING THE DAMPER MOTOR MODULE (DMM) FOR THE DEFROSTER

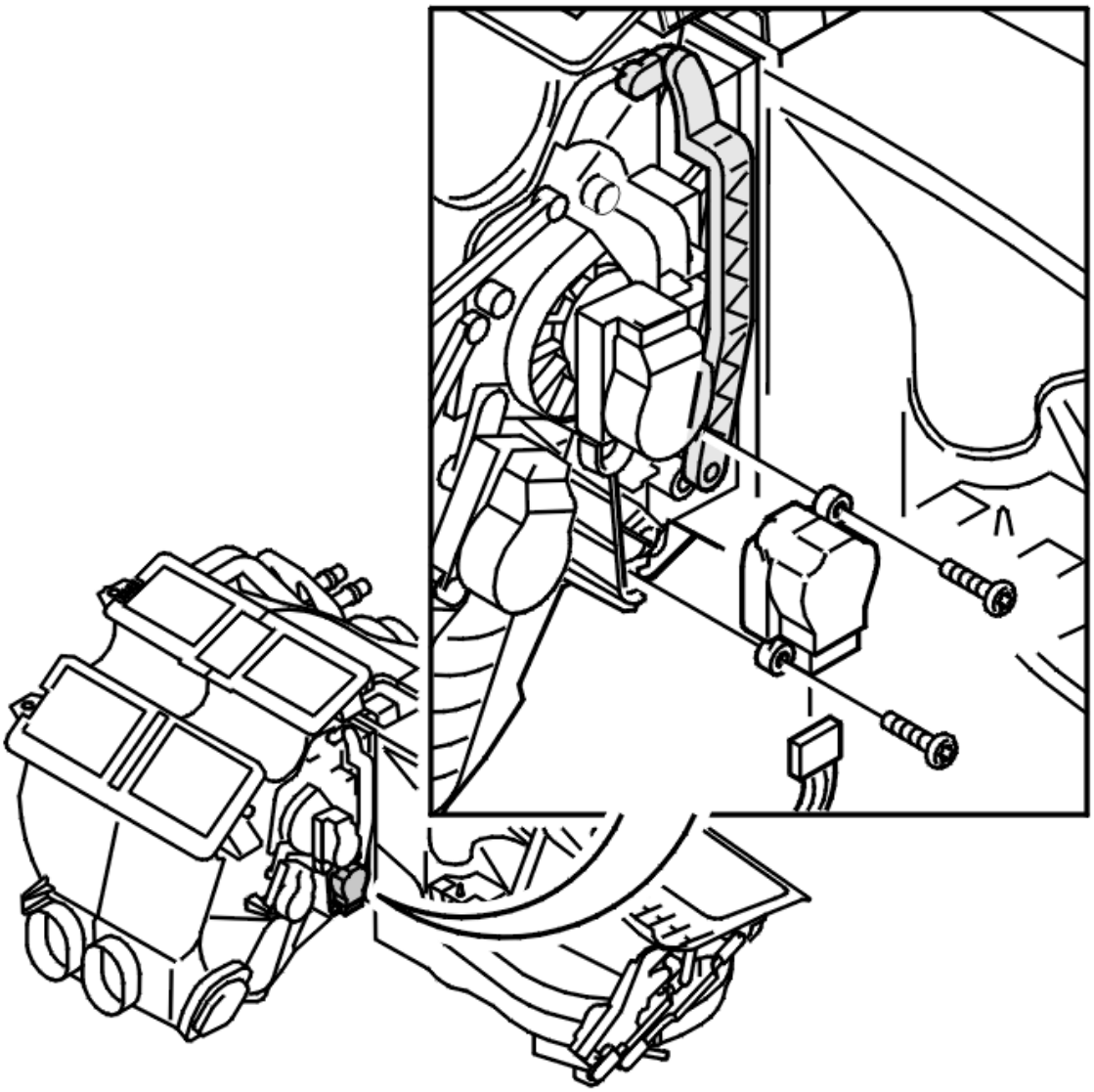

Fig. 141: Identifying Control Module And Screws
Courtesy of VOLVO CARS CORPORATION

Remove:

- the soundproofing panel. See **SOUNDPROOFING PANEL, REPLACING**
- the glove compartment. See **GLOVE COMPARTMENT, REPLACING**
- the switch

  HINT: Use a small electrician's screwdriver to pry up the switch by the lock. Depress the switch at the rear edge. Pull straight out.

- the 2 x screws
- the control module.

INSTALLATION

INSTALLING THE DAMPER MOTOR MODULE (DMM) FOR THE DEFROSTER

Install:

- the control module in position. Adjust the shaft journal so that it goes in
- the 2 screws. Tighten alternately
- the switch. Ensure that it is correctly positioned
- the glove compartment. See **GLOVE COMPARTMENT, REPLACING**
- the soundproofing panel. See **SOUNDPROOFING PANEL, REPLACING** .

NOTE: Identify the damper motor module (DMM) for the defroster. See VIDA vehicle communication.

FINISHING

TESTING THE CLIMATE CONTROL SYSTEM

Carry out a performance test on the climate control unit. See: **CLIMATE SYSTEM, PERFORMANCE TEST** .

DAMPER MOTOR MODULE (DMM) RECIRCULATION, REPLACING

REMOVAL

The illustrations in this service information are used for different model years and/or models. Some variation may occur. However, the essential information in the illustrations is always correct.

REMOVING THE DAMPER MOTOR MODULE (DMM) FOR RECIRCULATION

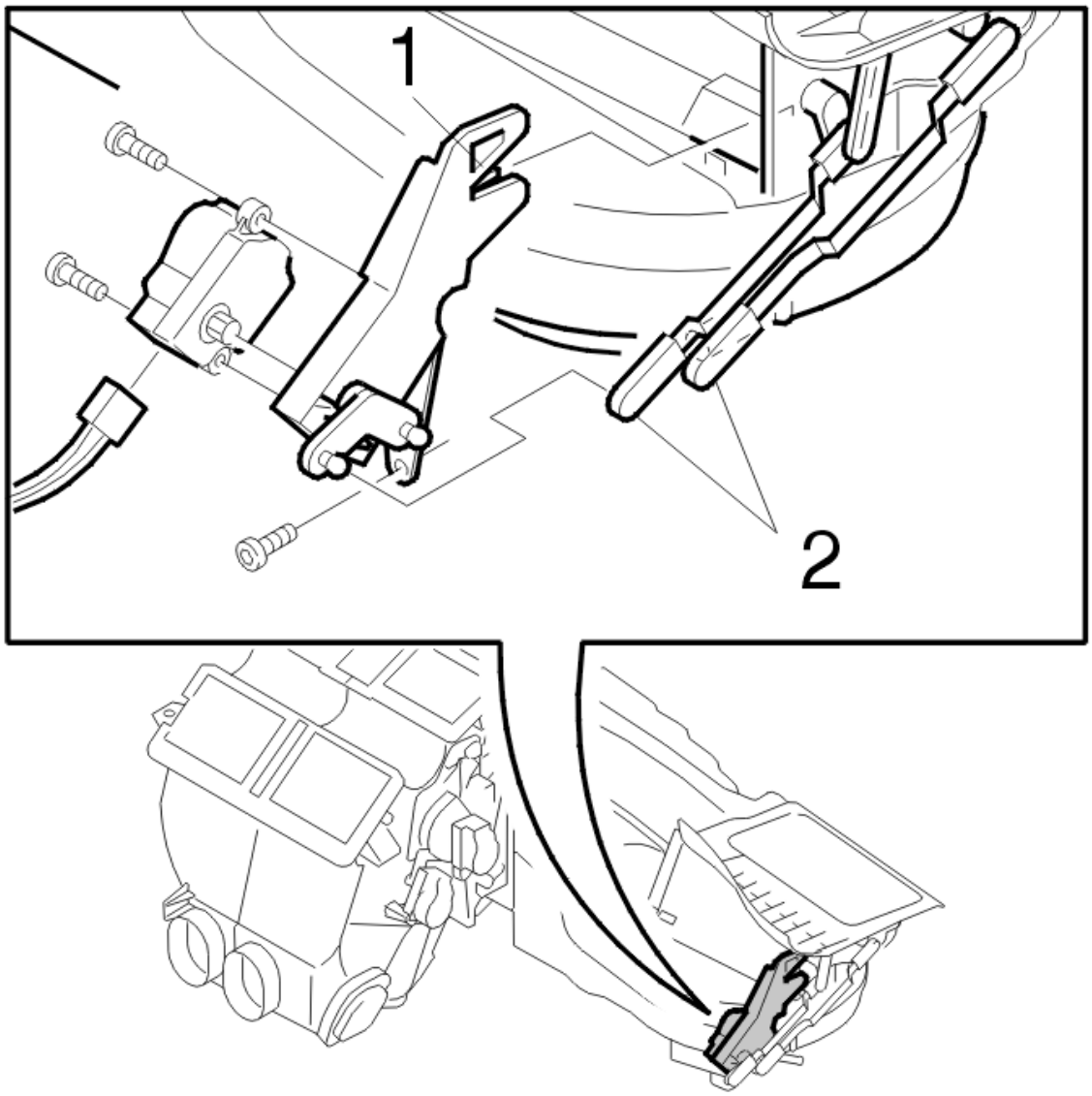

Fig. 142: Identifying Control Module Connector, Screws & Damper Arms
Courtesy of VOLVO CARS CORPORATION

Remove:

- the glove compartment. See **GLOVE COMPARTMENT, REPLACING**
- the switch

  HINT: Use a small electrician's screwdriver to pry up the switch by the lock. Depress the switch at the rear edge. Pull straight out.

- the 2 x screws
- the control module.

Check the functionality of the control module mechanism (1). Check that the arms for the dampers (2) are

secure.

INSTALLATION

INSTALLING THE DAMPER MOTOR MODULE (DMM) FOR RECIRCULATION

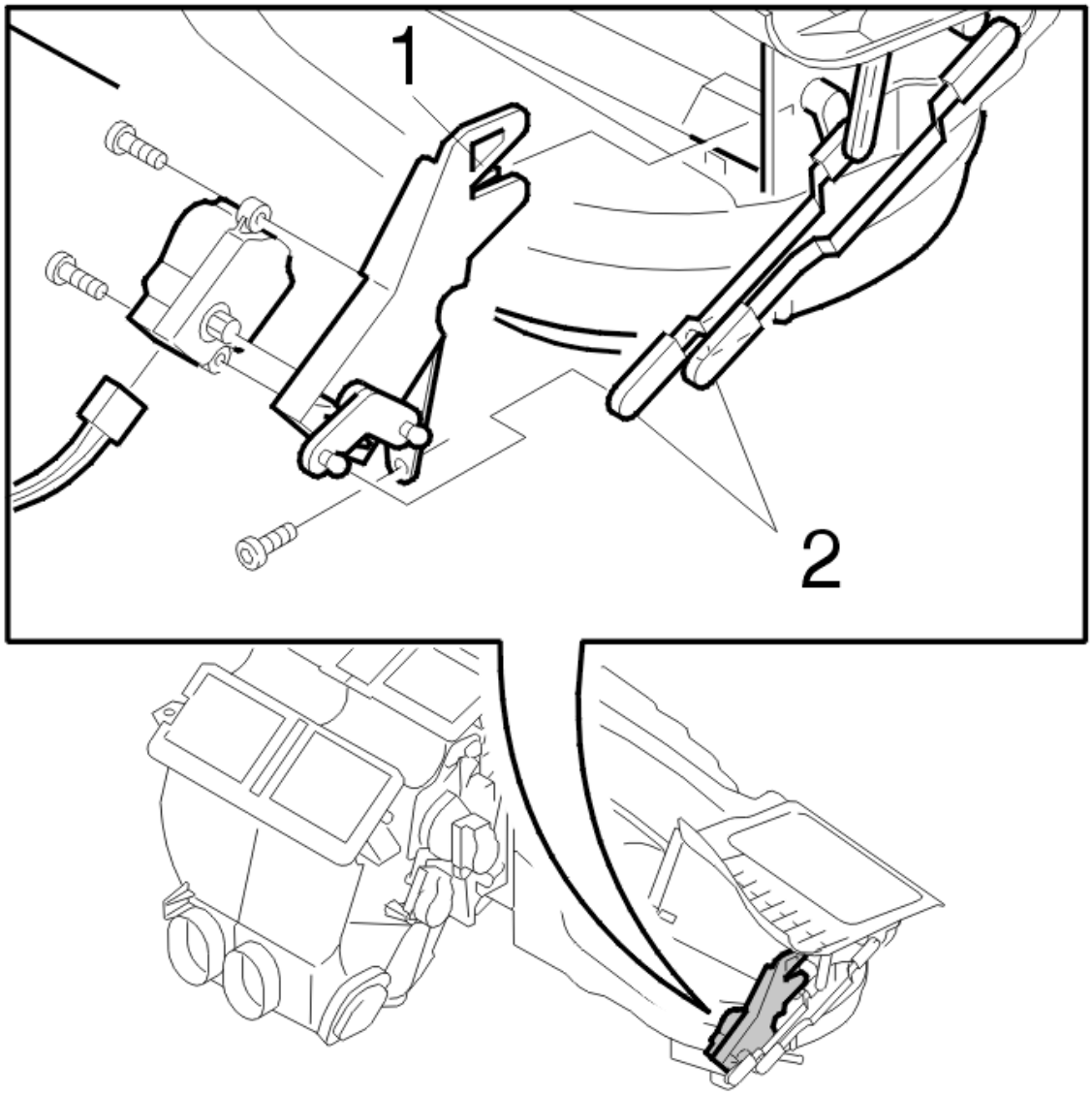

Fig. 143: Identifying Control Module Connector, Screws & Damper Arms
Courtesy of VOLVO CARS CORPORATION

Install:

- the control module in position. Adjust the shaft journal in relation to the mechanism (1) so that it goes in
- the 2 screws. Tighten alternately
- the switch. Ensure that it is correctly positioned
- the glove compartment. See **GLOVE COMPARTMENT, REPLACING** .

NOTE: **Identify the damper motor module (DMM) for recirculation. See VIDA vehicle communication.**

FINISHING

TESTING THE CLIMATE CONTROL SYSTEM

Carry out a performance test on the climate control unit. See: **CLIMATE SYSTEM, PERFORMANCE TEST** .

DAMPER MOTOR MODULE (DMM) TEMPERATURE, REPLACING

REMOVAL

The illustrations in this service information are used for different model years and/or models. Some variation may occur. However, the essential information in the illustrations is always correct.

NOTE: **The are 2 damper motor modules (DMM) for temperature, one on the right (white arm) and one on the left-hand side (black arm).**

REMOVING THE DAMPER MOTOR MODULE (DMM) FOR TEMPERATURE ON THE PASSENGER SIDE

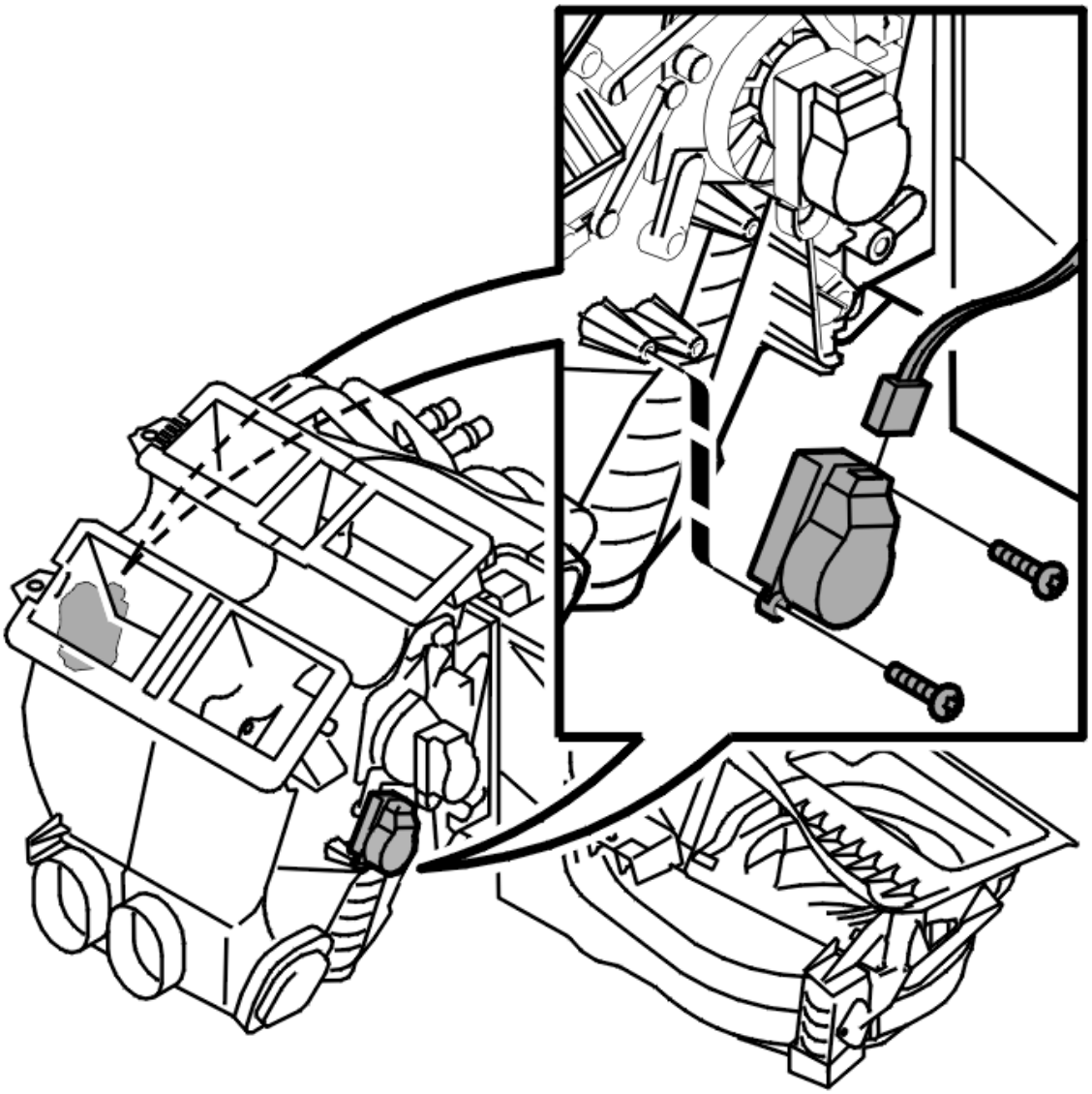

Fig. 144: Identifying Control Module And Screws
Courtesy of VOLVO CARS CORPORATION

Remove:

- the glove compartment. See **GLOVE COMPARTMENT, REPLACING**
- the switch

  HINT: Use a small electrician's screwdriver to pry up the switch by the lock. Depress the switch at the rear edge. Pull straight out.

- the 2 x screws
- the control module.

INSTALLATION

INSTALLING THE DAMPER MOTOR MODULE (DMM) FOR TEMPERATURE ON THE PASSENGER SIDE

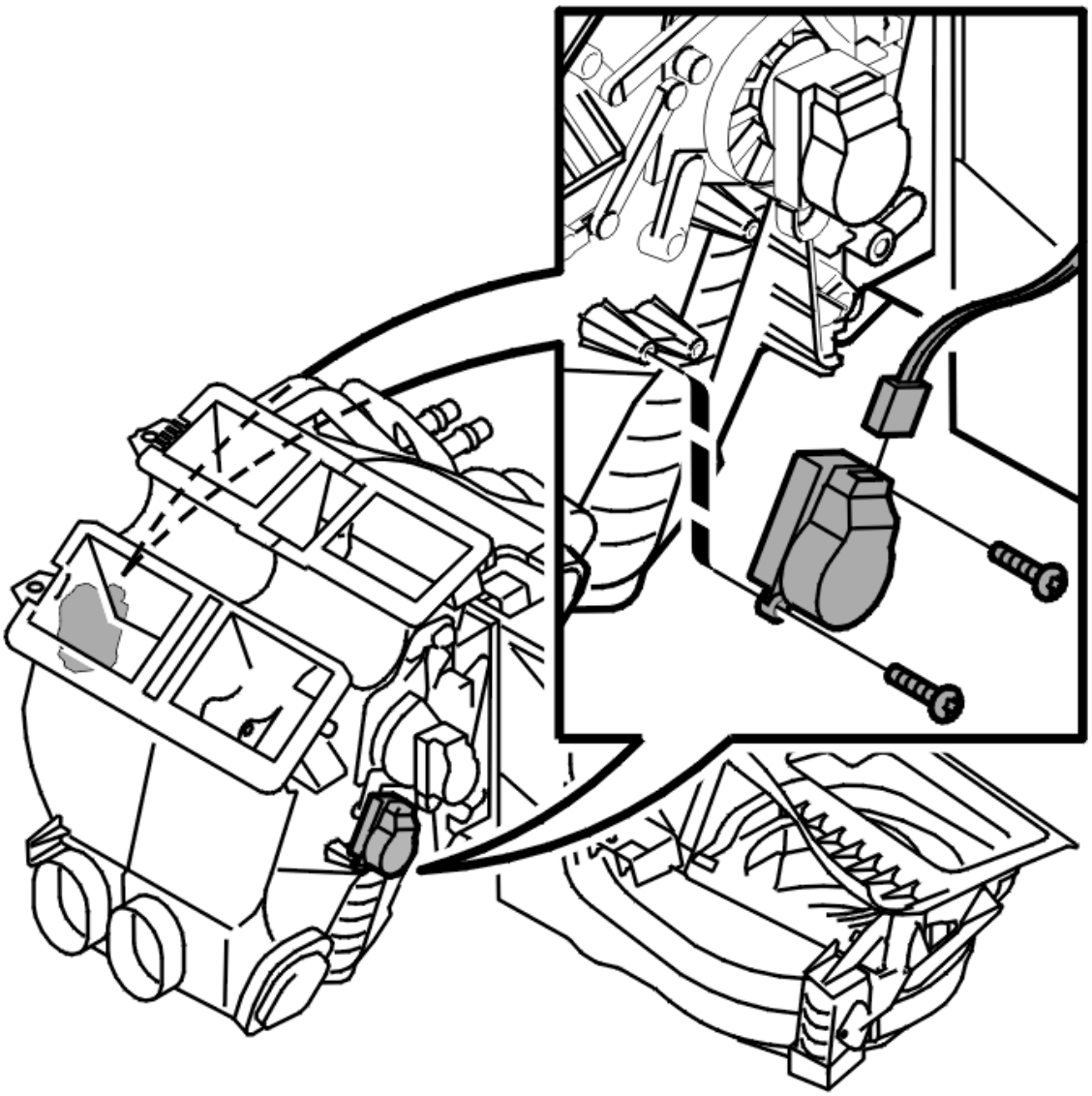

Fig. 145: Identifying Control Module And Screws
Courtesy of VOLVO CARS CORPORATION

Install:

- the control module in position. Adjust the shaft journal so that it goes in
- the 2 screws. Tighten alternately
- the switch. Ensure that it is correctly positioned
- the glove compartment. See **GLOVE COMPARTMENT, REPLACING** .

NOTE: **Identify the damper motor module (DMM) for temperature. See VIDA vehicle communication.**

REMOVAL

REMOVING THE DAMPER MOTOR MODULE (DMM) FOR TEMPERATURE ON THE DRIVER'S SIDE

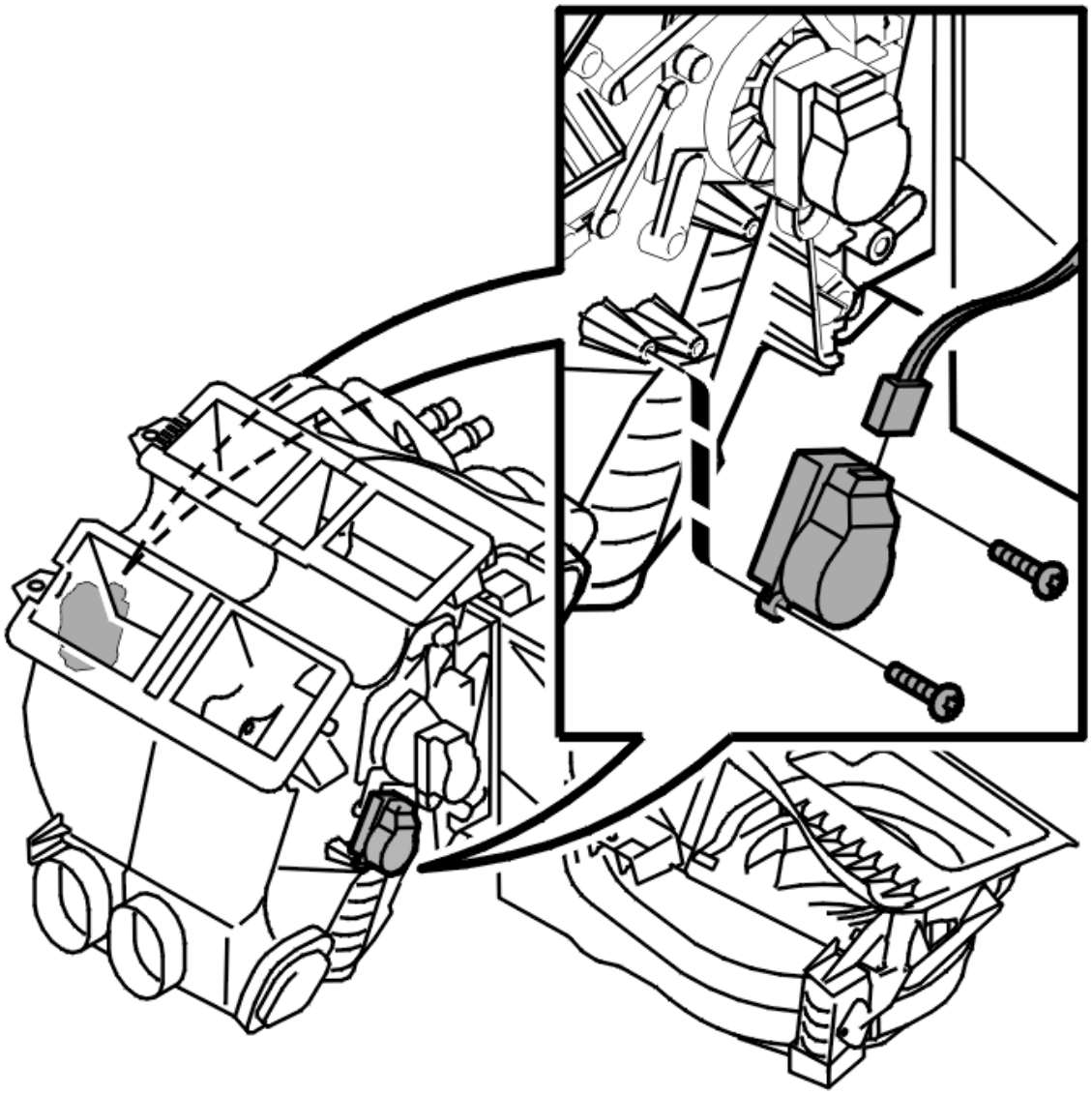

Fig. 146: Identifying Control Module And Screws
Courtesy of VOLVO CARS CORPORATION

Remove:

- the soundproofing panel. See **SOUNDPROOFING PANEL, REPLACING**
- the connector from the control module

  HINT: Use a small electrician's screwdriver to pry up the switch by the lock. Depress the switch at the rear edge. Pull straight out.

  HINT: Pull the control module out slightly. Position the point of the electrician's screwdriver

between the arms on the control for the lever. Pry the arms away from the ball on the motor lever.

- the 2 x screws
- the control module.

INSTALLATION

INSTALLING THE DAMPER MOTOR MODULE (DMM) FOR TEMPERATURE ON THE DRIVER'S SIDE

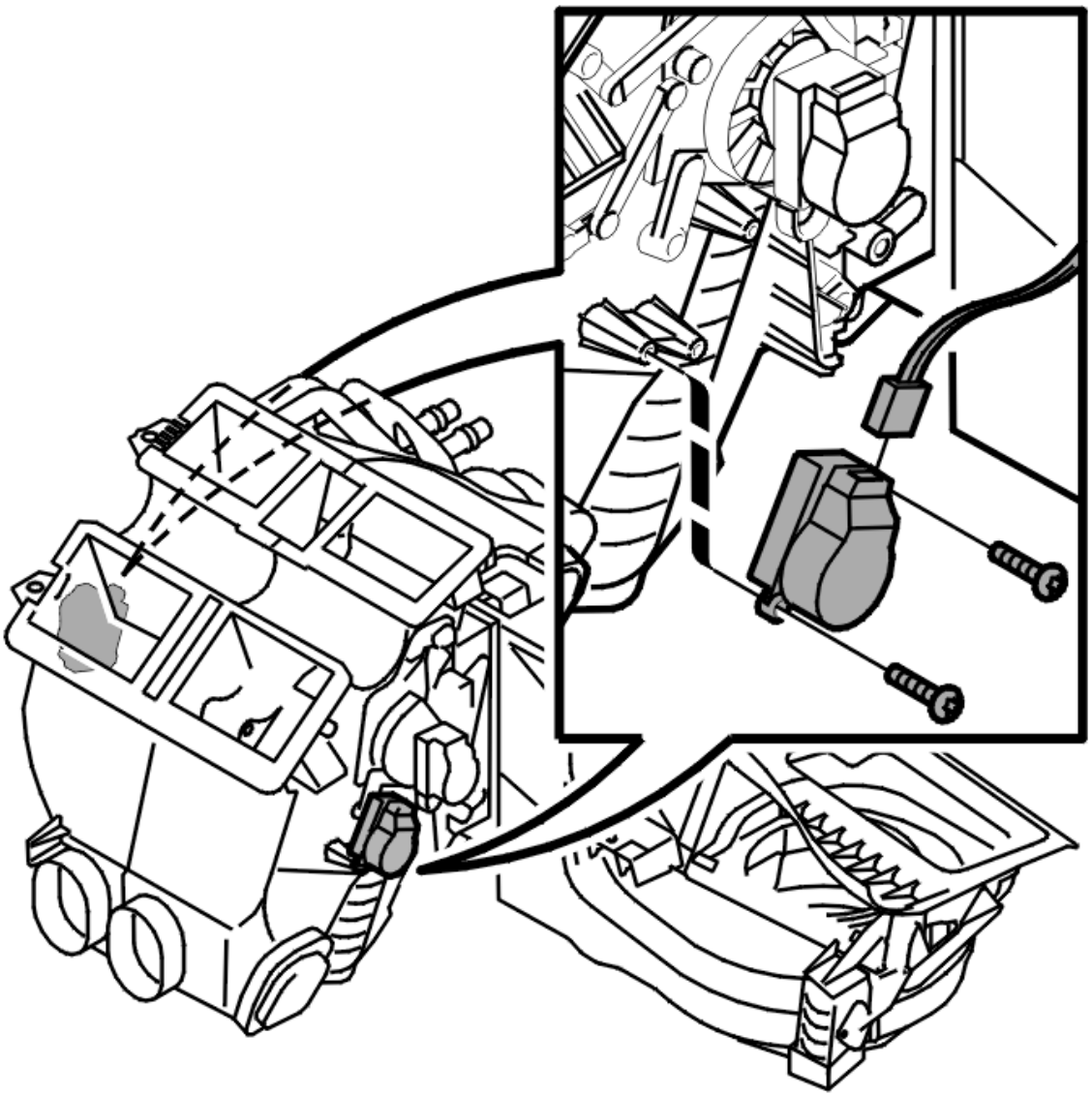

Fig. 147: Identifying Control Module And Screws
Courtesy of VOLVO CARS CORPORATION

Install:

- the control module in position. Adjust the shaft journal so that it goes in
- the lever for the mechanism on the ball for the motor lever

HINT: Insert the point of the electrician's screwdriver behind the lever and round-nosed pliers or similar behind the motor lever. Press the ball onto the mechanism.

- the 2 screws. Tighten alternately
- the switch. Ensure that it is correctly positioned
- the soundproofing panel. See **SOUNDPROOFING PANEL, REPLACING** .

NOTE: Identify the damper motor module (DMM) for temperature. See VIDA vehicle communication.

FINISHING

TESTING THE CLIMATE CONTROL SYSTEM

Carry out a performance test on the climate control unit. See: **CLIMATE SYSTEM, PERFORMANCE TEST** .

DRAIN HOSE ENGINE / FILTER HOUSING, REPLACING

As the illustrations in this service information are used for different model years and / or models, some variation may occur. However, the essential information in the illustrations is always correct.

REMOVING THE DRAIN HOSE FROM THE ENGINE / FILTER HOUSING

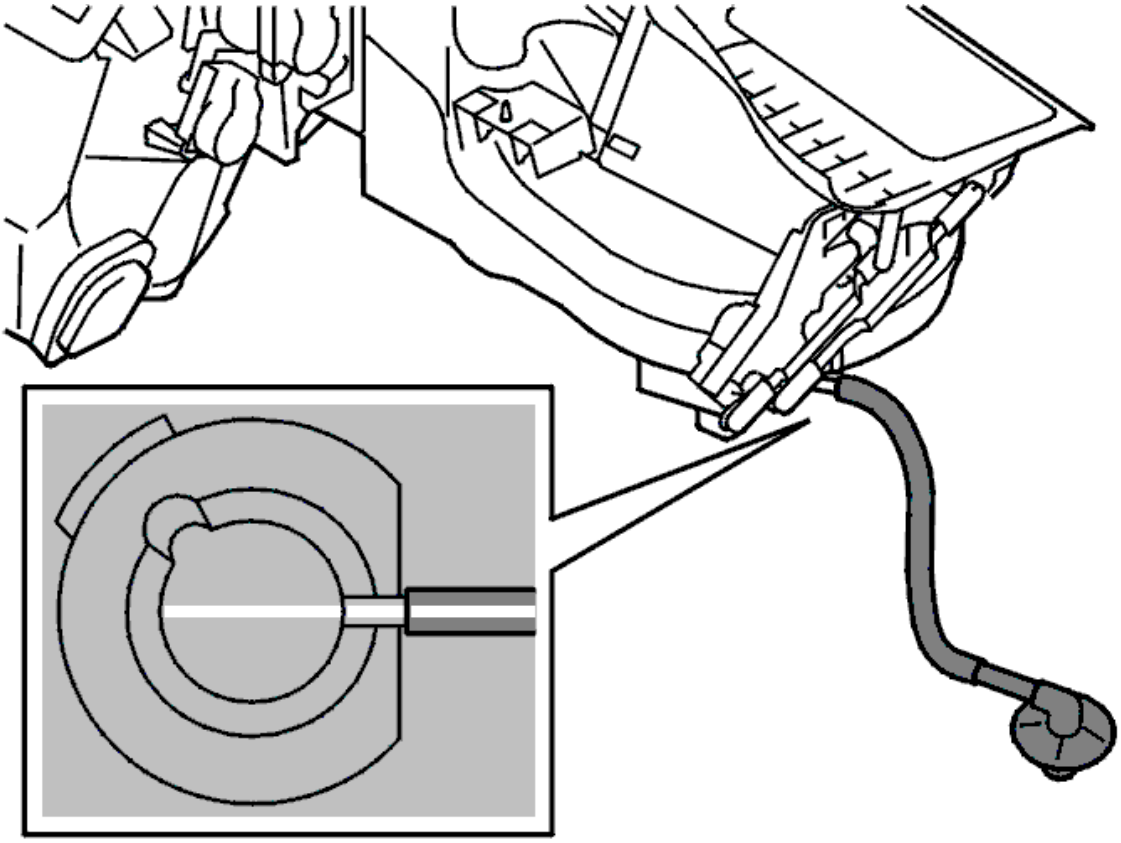

Fig. 148: Identifying Fan Motor Cover Hose
Courtesy of VOLVO CARS CORPORATION

Remove:

- the soundproofing panel on the passenger side. See **SOUNDPROOFING PANEL PASSENGER SIDE, REPLACING**
- the floor grommet
- the hoses from the blower fan motor cover.

INSTALLING THE DRAIN HOSE ON THE ENGINE / FILTER HOUSING

Press into place:

- the floor grommet
- the drain hose on the blower fan motor.

The drainage hose is marked by a colored stripe. When installing the marking must be aligned on the blower fan motor cover as shown in the illustration. This is to avoid twisting the hose.

Reinstall the floor carpet.

Install the soundproofing panel. See **SOUNDPROOFING PANEL PASSENGER SIDE, REPLACING** .

HEAT EXCHANGER, REPLACING

Special tools:

see **1158957**

The illustrations in this service information are used for different model years and / or models. Some variation may occur. However, the essential information is always correct.

PREPARATIONS

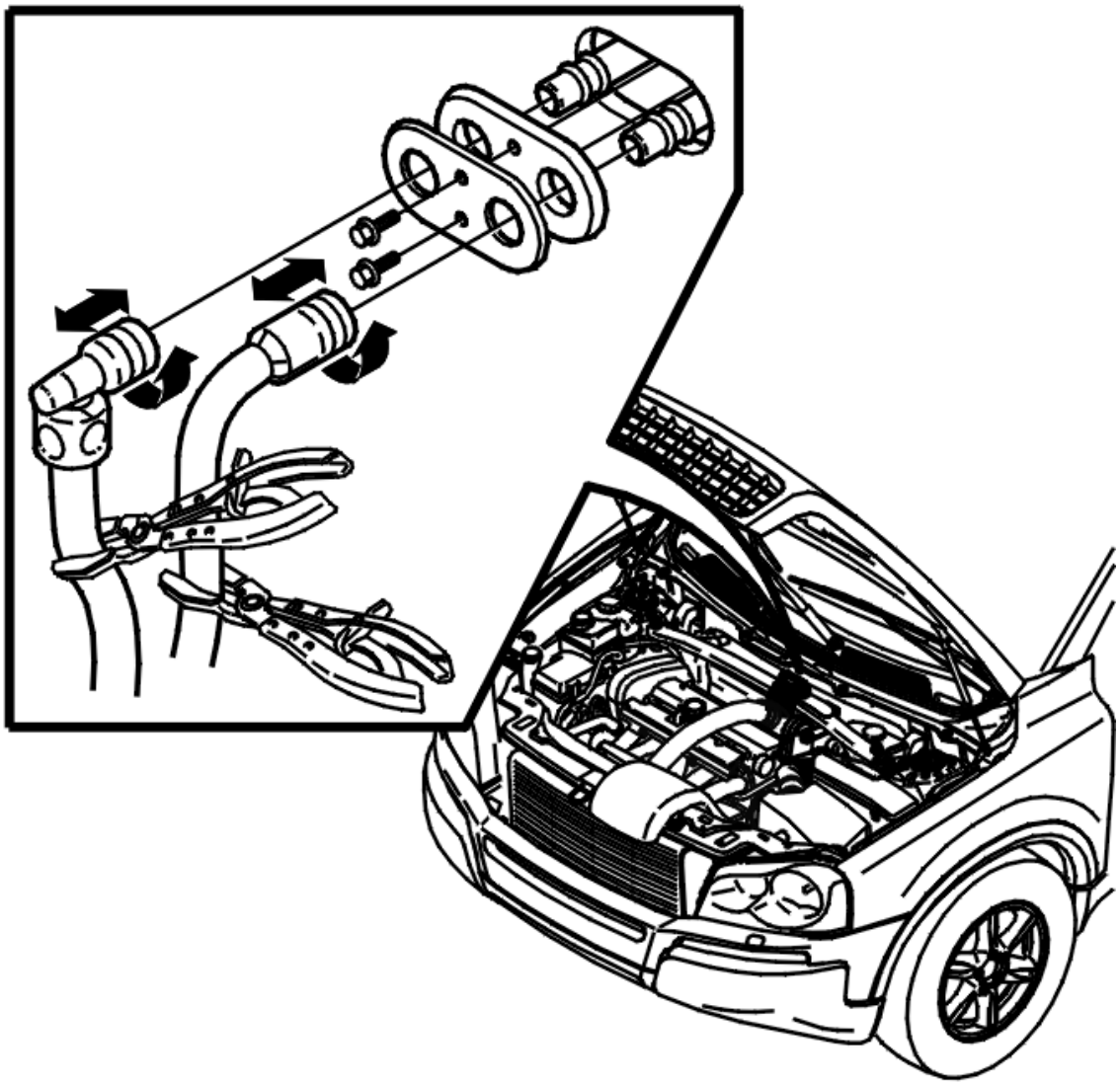

Fig. 149: Clamping Heating Hoses Using Lock Grip Pliers
Courtesy of VOLVO CARS CORPORATION

Remove:

- the heating loops in the engine compartment. Use special tool see **1158957** (pliers)
- the seal and the plate.

REMOVING THE HEAT EXCHANGER

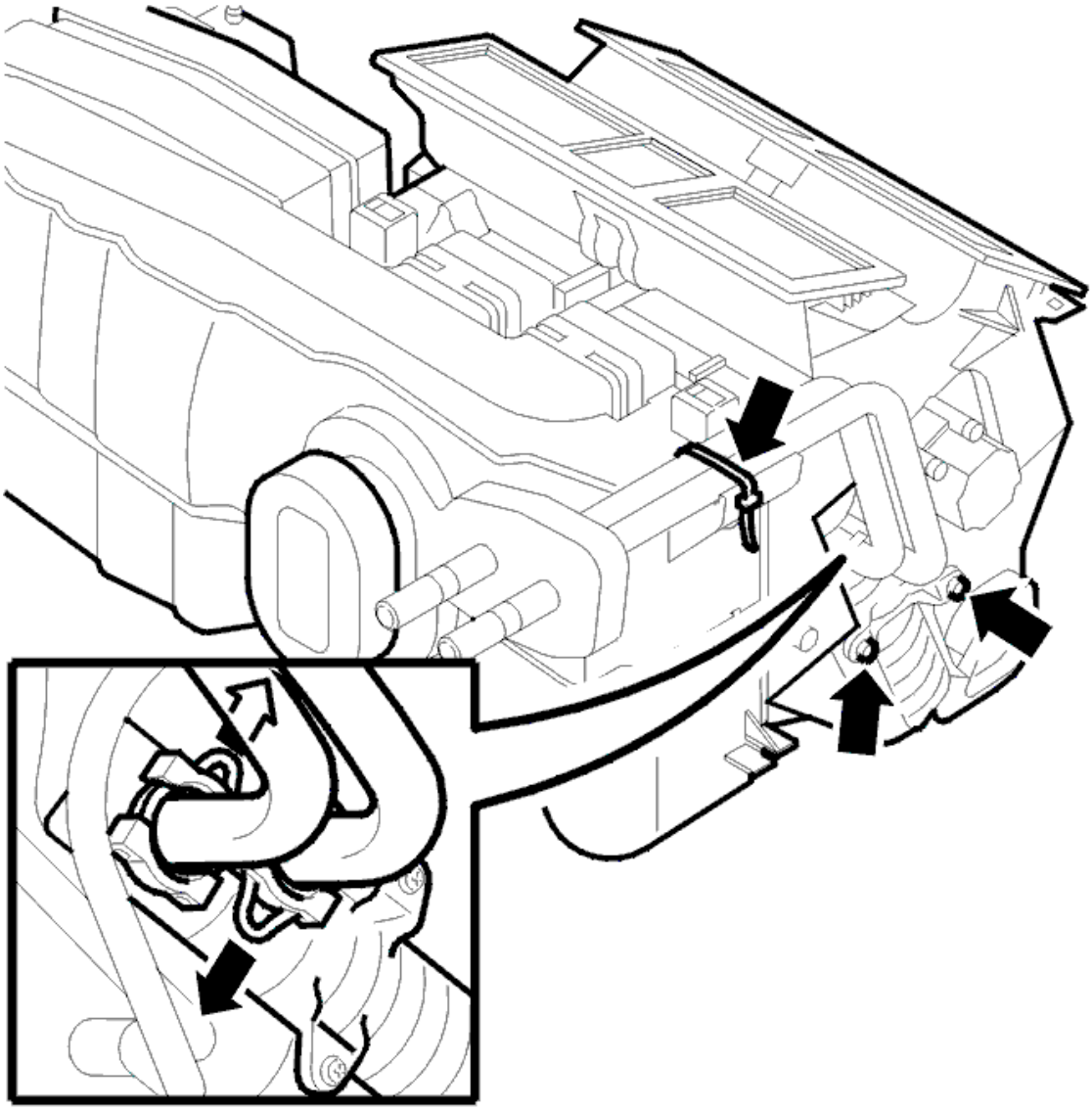

Fig. 150: Identifying Heat Exchanger Retaining Clip And Pipe
Courtesy of VOLVO CARS CORPORATION

Remove:

- the soundproofing panel. See **SOUNDPROOFING PANEL, REPLACING**
- the screw for the heat exchanger
- the mounting brackets for the pipes.

Position plenty of paper under the heat exchanger and around the pipes.

Drain the coolant into a suitable container.

Detach the pipes and move them out of the way.

Pull out the heat exchanger.

INSTALLING THE HEAT EXCHANGER

NOTE: Always use new O-rings.

Install the heat exchanger carefully.

Screw the heat exchanger into place.

Install:

- the upper pipe
- the striker plate using round-nosed pliers.

Press in:

- the pipes using a screwdriver
- the catch using a pair of pliers.

Install:

- the lower pipe
- the striker plate using round-nosed pliers.

Press in:

- the pipe using a screwdriver
- the striker plate using round-nosed pliers.

Install:

- the seal and the plate
- the heating loops in the engine compartment.

Start the engine and the heating system.

Fill the cooling system with coolant.

Check that the pipe connectors do not leak.

Install the soundproofing panel. See **SOUNDPROOFING PANEL, REPLACING** .

TEMPERATURE SENSOR EVAPORATOR, REPLACING

As the illustrations in this service information are used for different model years and / or models, some variation may occur. However, the essential information in the illustrations is always correct.

Included in this method are methods for:

- temperature sensor evaporator. See **TEMPERATURE SENSOR EVAPORATOR, REPLACING**

TEMPERATURE SENSOR EVAPORATOR, REPLACING

REMOVING THE TEMPERATURE SENSOR FOR THE EVAPORATOR

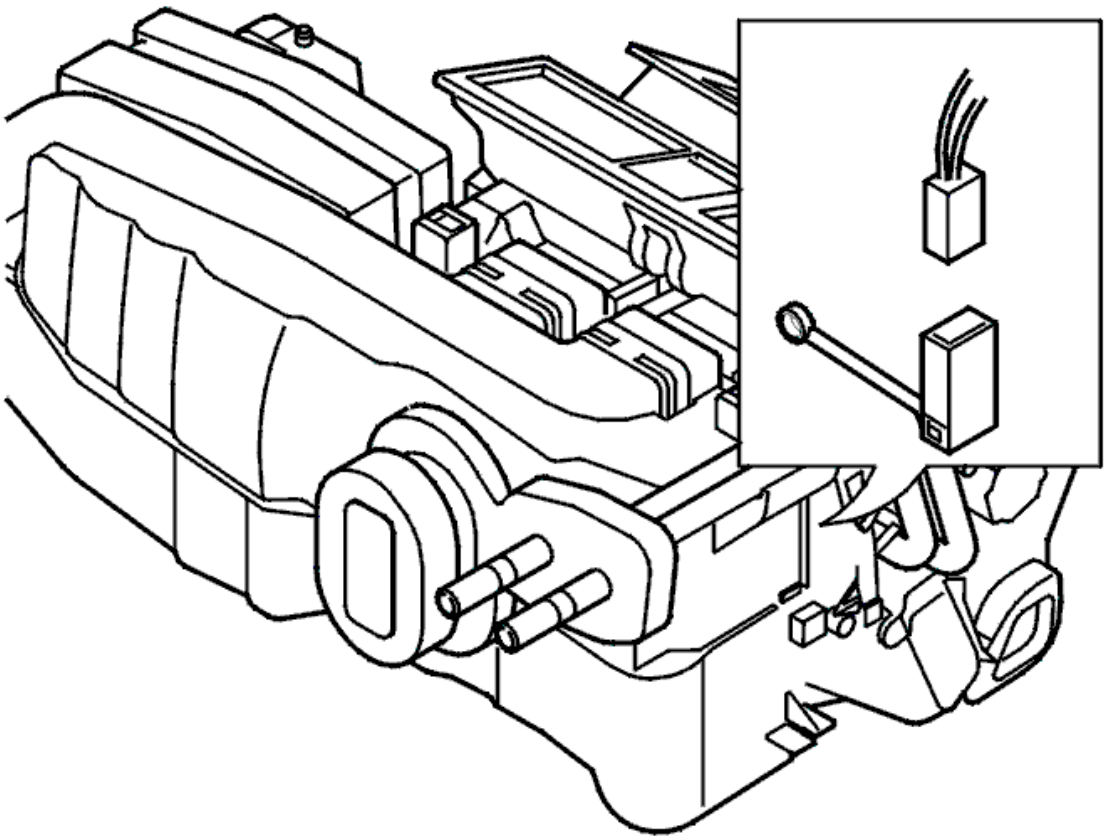

Fig. 151: Evaporator Temperature Sensor
Courtesy of VOLVO CARS CORPORATION

Remove the soundproofing panel. See **SOUNDPROOFING PANEL, REPLACING** .

Pull off the temperature sensor.

Disconnect the connector from the sensor.

Work the sensor loose.

INSTALLING THE TEMPERATURE SENSOR FOR THE EVAPORATOR

Install the connector on the sensor.

Press the temperature sensor into place.

Install the soundproofing panel. See **SOUNDPROOFING PANEL, REPLACING** .

CONTROLS, HEATER UNIT (2003-2012)

CLIMATE CONTROL MODULE (CCM), REPLACING

The illustrations in this service information are used for different model years and/or models. Some variation may occur. However, the essential information is always correct.

CLIMATE CONTROL MODULE (CCM), REPLACING

PREPARATIONS

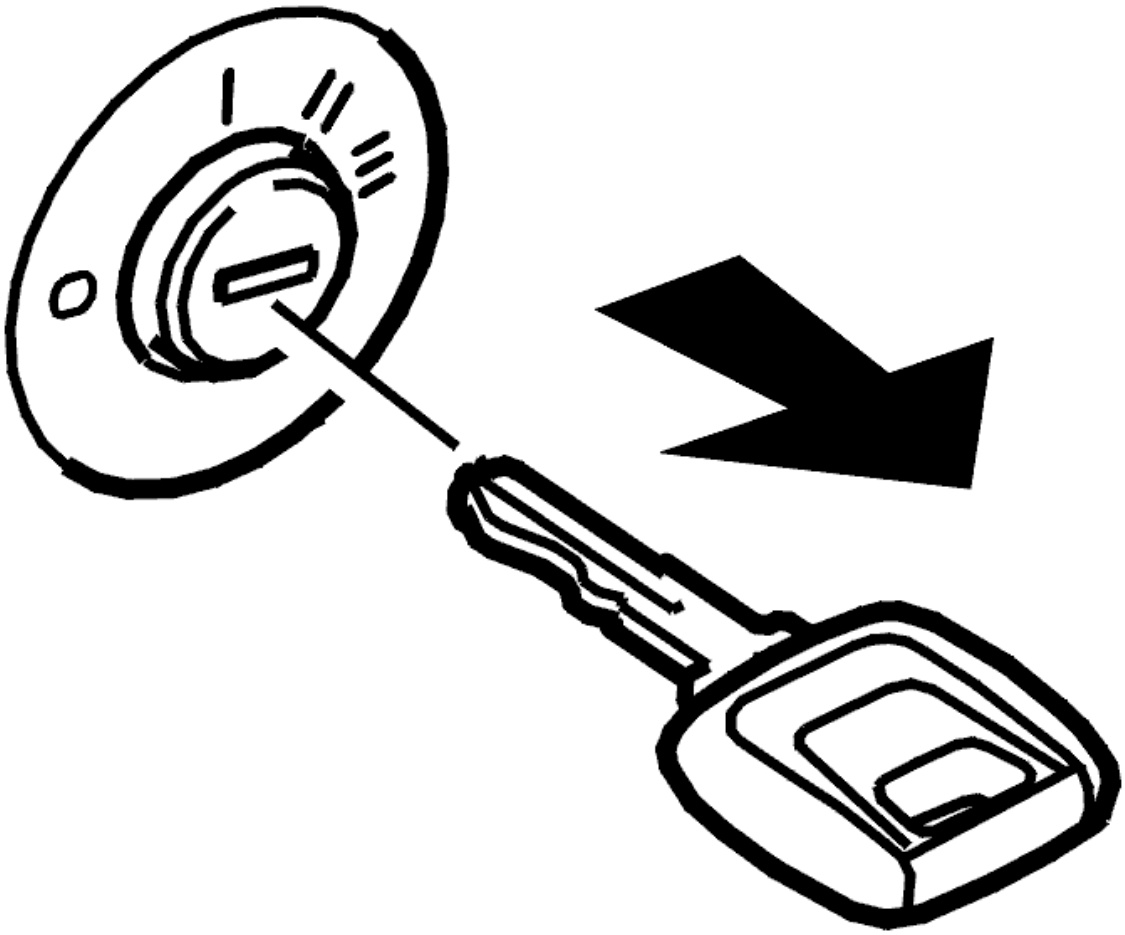

Fig. 152: Identifying Ignition Key Off
Courtesy of VOLVO CARS CORPORATION

NOTE: **Read out the programmed data before replacing the climate control module. This is done in VIDA vehicle communication.**

After replacing the climate control module (CCM), the relevant parameters must be programmed.

Move the gear selector/gear selector lever to the rearmost position.

Ignition off.

Remove the key. The key must be removed to ensure that the ignition is not switched on by mistake.

WARNING: After the key has been removed wait three minutes before starting work.

REMOVING THE CLIMATE CONTROL MODULE (CCM)

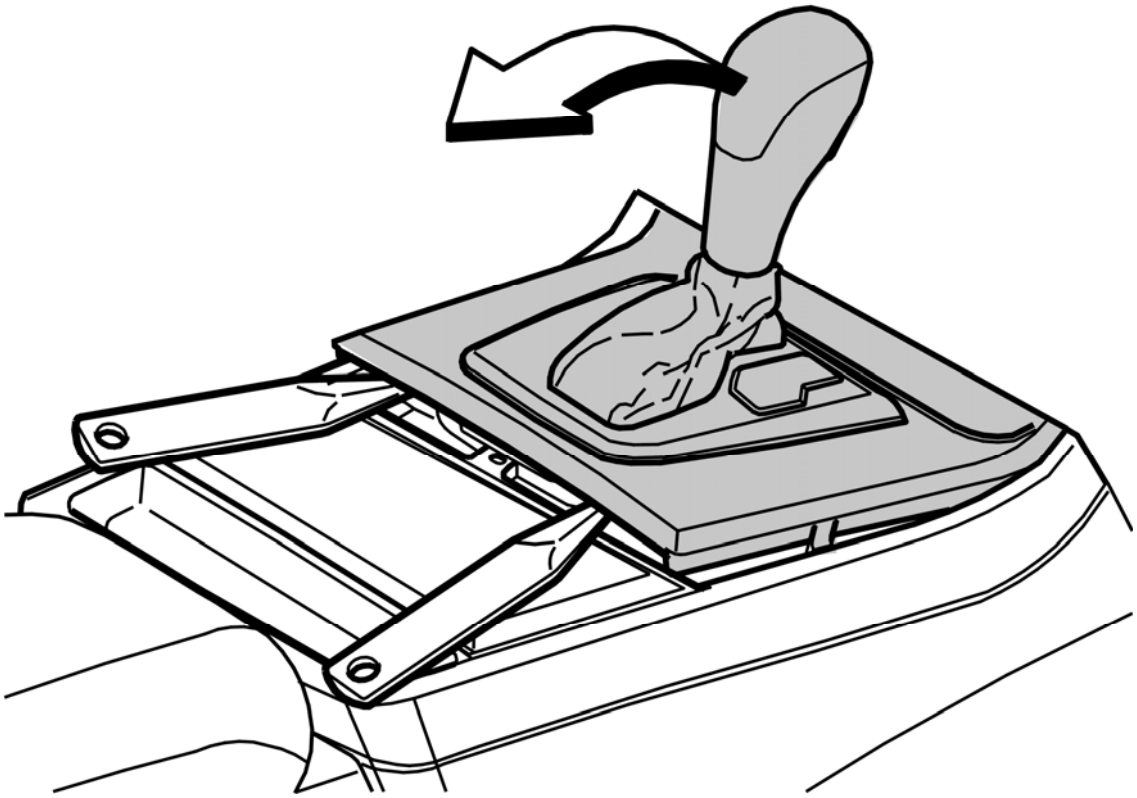

Fig. 153: Detaching Panel At Gear Selector Lever
Courtesy of VOLVO CARS CORPORATION

Detach the panel at the gear selector lever as shown in the illustration.

Twist the panel so that it is as far from the center console as possible.

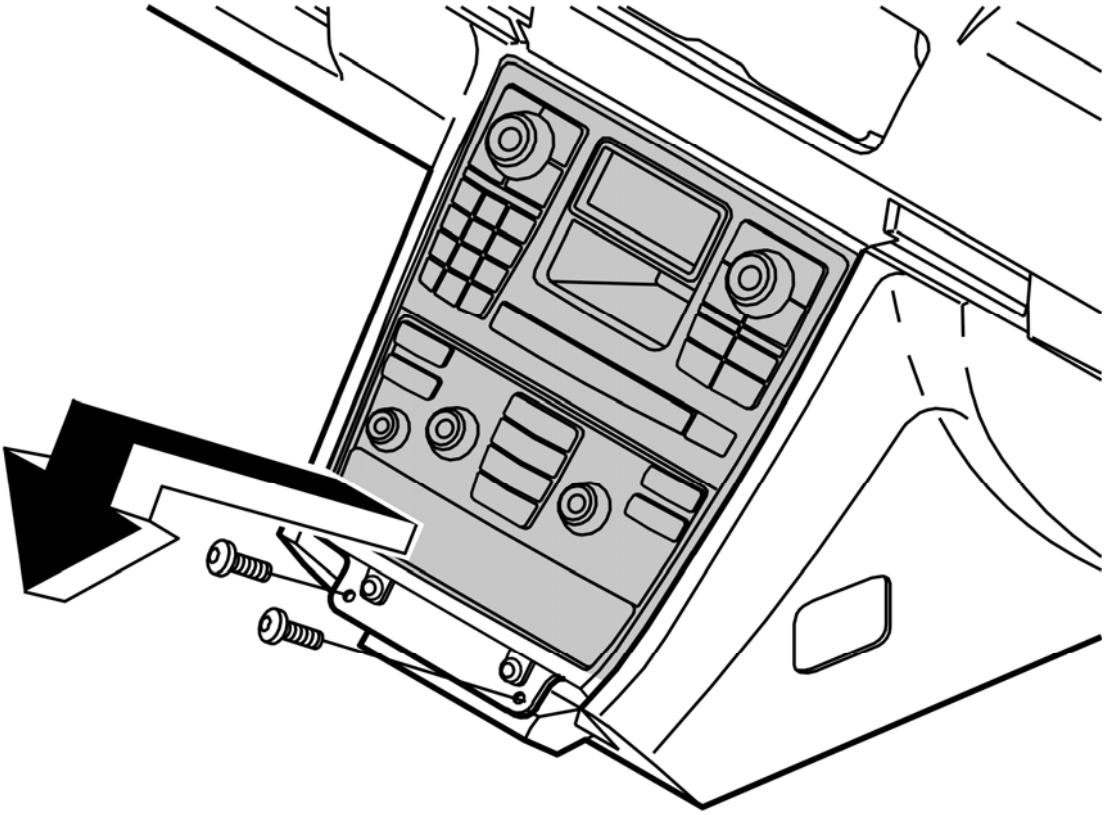

Fig. 154: Identifying Bracket Lower Screws & Infotainment Control Module (ICM)
Courtesy of VOLVO CARS CORPORATION

Remove the lower screws from the bracket.

Angle out the entire infotainment control module (ICM) and the dashboard environment panel as shown in the illustration.

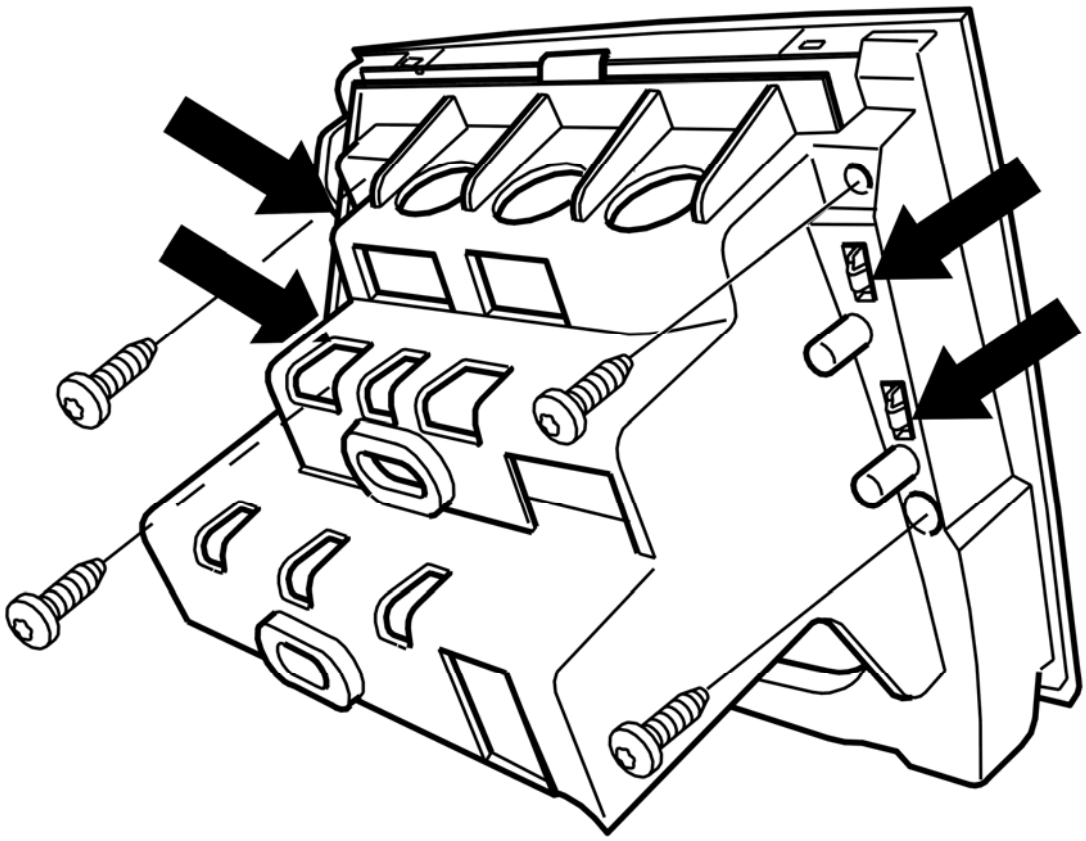

Fig. 155: Identifying Infotainment Module Connectors And Screws
Courtesy of VOLVO CARS CORPORATION

Disconnect the connectors.

Turn the infotainment module with the dashboard environment panel.

Remove the four screws as shown in the illustration.

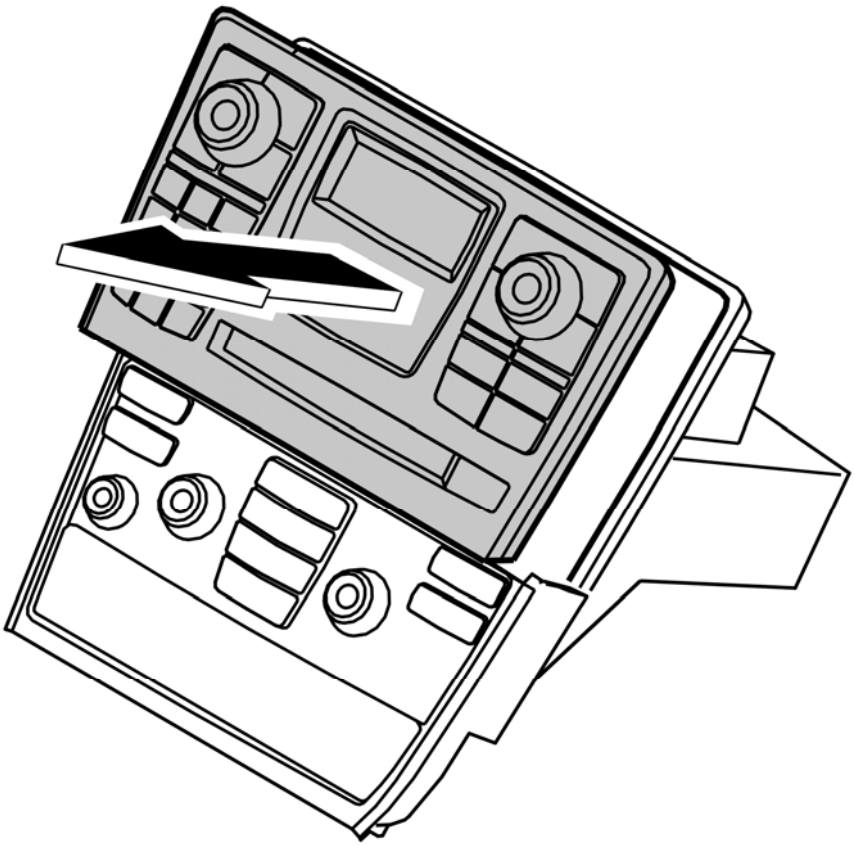

Fig. 156: Identifying Infotainment Control Module Removal
Courtesy of VOLVO CARS CORPORATION

Press the four clips and remove the infotainment control module by pulling it straight out as shown in the illustration.

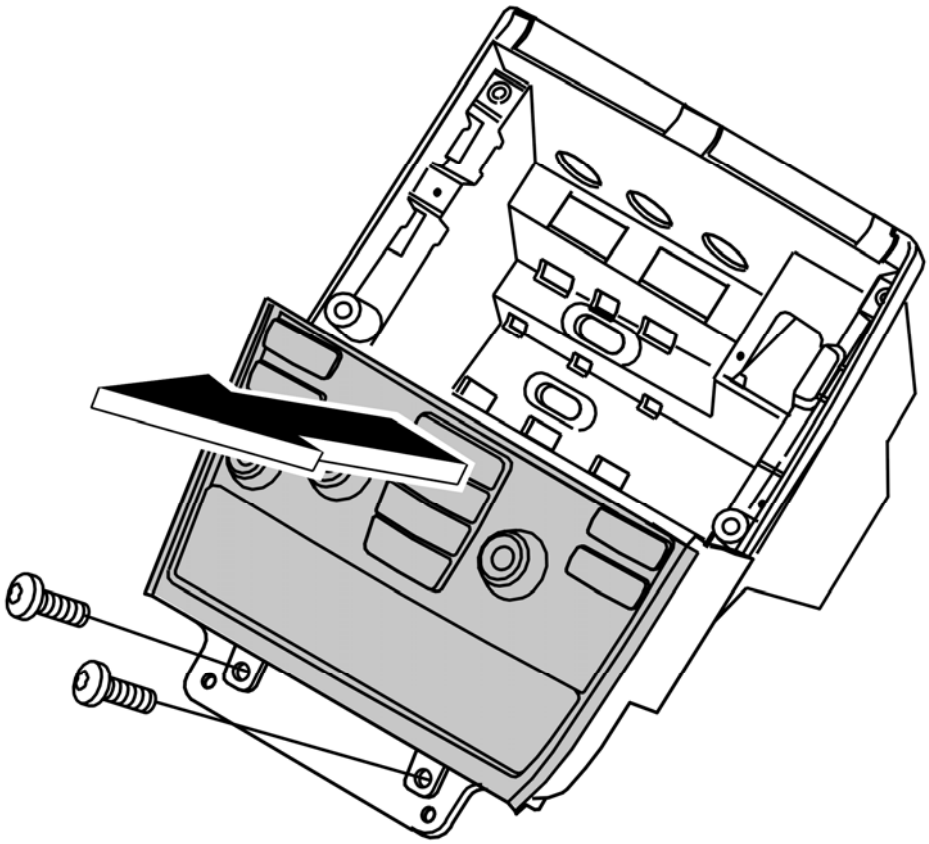

Fig. 157: Identifying Dashboard Environment Panel Removal
Courtesy of VOLVO CARS CORPORATION

Slacken off the two screws at the lower edge of the dashboard environment panel.

Pull the dashboard environment panel straight out from the bracket.

INSTALLING THE CLIMATE CONTROL MODULE (CCM)

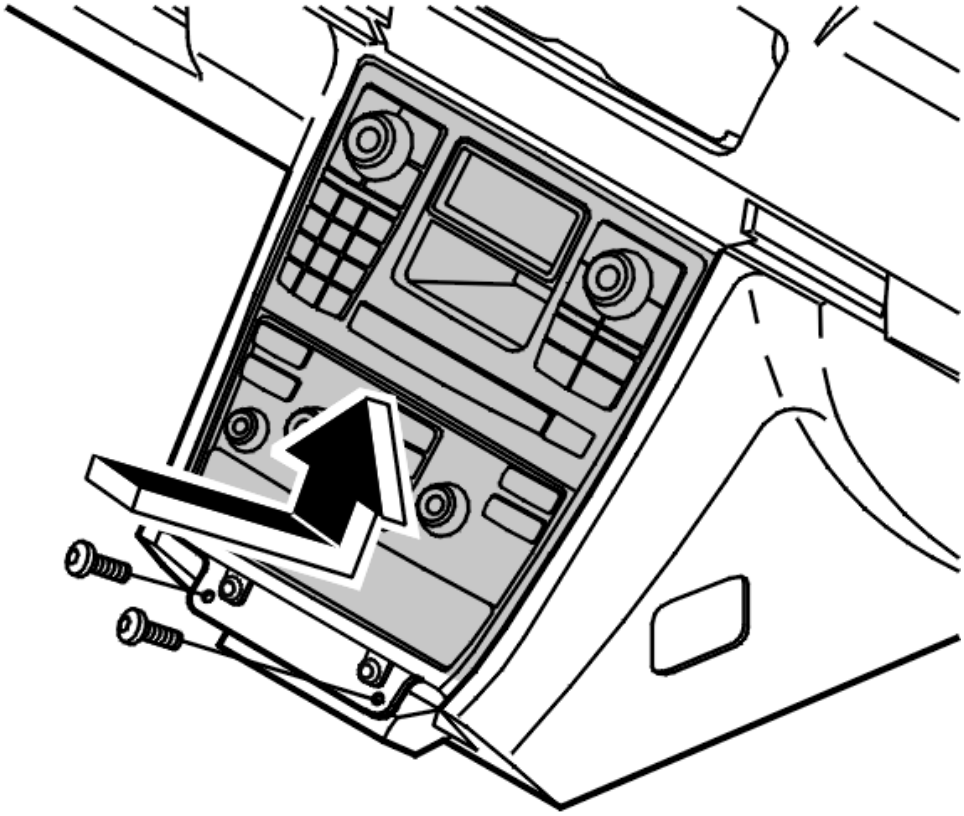

Fig. 158: Identifying Dashboard Environment Panel Screws & Infotainment Panel
Courtesy of VOLVO CARS CORPORATION

Install:

- the dashboard environment panel using the two screws
- the infotainment panel so that it hooks into the dashboard environment panel.

Screw the infotainment panel into place using the four screws.

Connect the connectors.

Angle in the upper section of the infotainment control module first. Then screw the lower edge into place using the two lower screws.

FRONT PANEL, REPLACING

REMOVING THE FRONT PANEL

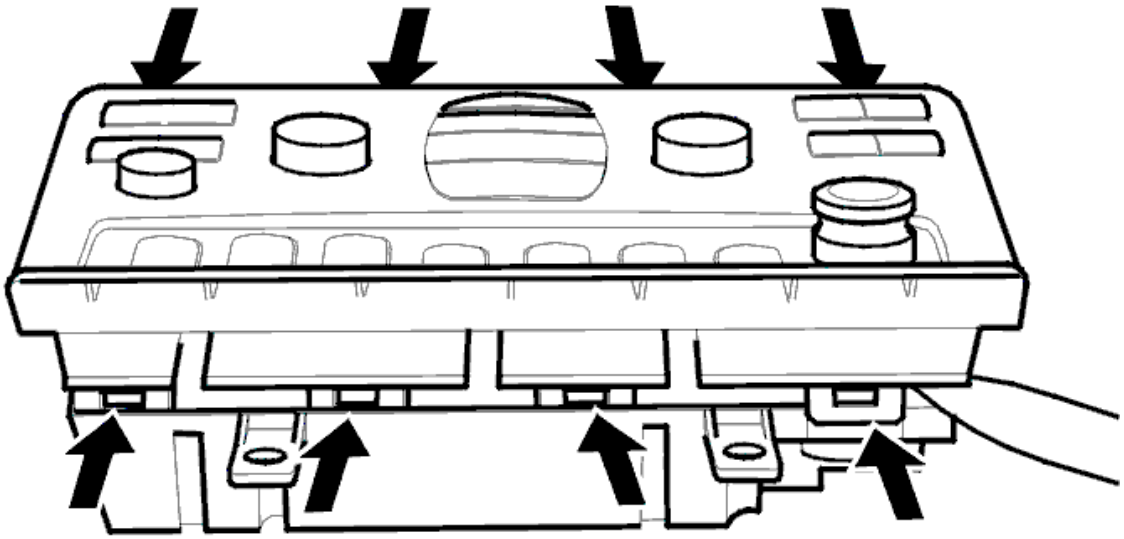

Fig. 159: Front Panel
Courtesy of VOLVO CARS CORPORATION

Release the catches. Pull off the front panel.

The front panel has double-sided adhesive tape. Ensure that any remains of the tape are removed from the black panel.

INSTALLING THE FRONT PANEL

Remove the backing paper from the tape for the front panel.

Press the front panel into place.

ORDERING SOFTWARE FOR THE CLIMATE CONTROL MODULE (CCM)

Order the software. See 9438292 .

FINISHING

After replacing the climate control module (CCM), the following must be carried out:

- Reprogram the customer programmed data
- Carry out self-adjustment of the damper motors' end positions. This is done in VIDA vehicle

communication.

Test drive the car. Check that the engine and climate control system are functioning.

ENGINE COOLANT HEATER, FUEL DRIVEN (2003-2012)

CONTROL MODULE ENGINE COOLANT HEATER, REPLACING

As the illustrations in this service information are used for different model years and / or models, some variation may occur. However, the essential information in the illustrations is always correct.

PREPARATIONS

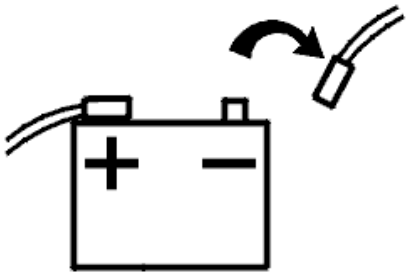

Fig. 160: Disconnecting Battery Lead
Courtesy of VOLVO CARS CORPORATION

Remove the battery lead. See **BATTERY, DISCONNECTING** .

Remove the bumper cover. See **CASING BUMPER FRONT, REPLACING** .

REMOVING THE CONTROL MODULE FOR THE ENGINE COOLANT HEATER

Points to observe when replacing the control module:

- If moving a control module from one car to another, remember to note any diagnostic trouble code (DTC) (s) and operating times before removing the control module from the car
- Always check that the terminals or pins in the control module connectors are not bent or damaged. This may have been the cause of the fault.

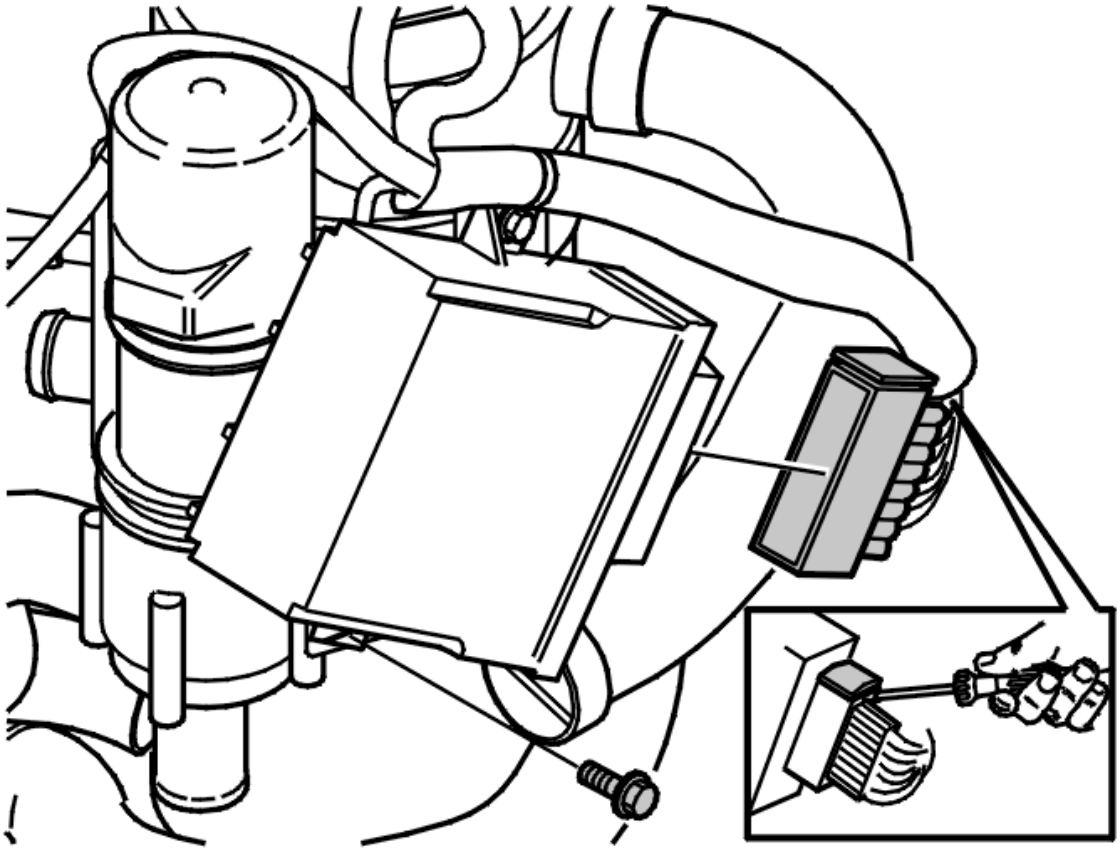

Fig. 161: Positioning Screwdriver Between Control Module Connector And Its Locking Handle
Courtesy of VOLVO CARS CORPORATION

Cut off the tie strap holding the cable section to the control module.

Remove the control module. Remove the 2 nuts.

HINT: Slacken off the uppermost nut. Leave it in place, screwed in a few turns.

Pull the control module from the mounting.

Position a screwdriver between the control module connector and its locking handle (as shown in the illustration). Turn the screwdriver to release the catch.

Continue pulling the locking handle outwards until the connector comes away from the control module.

INSTALLING THE CONTROL MODULE FOR THE ENGINE COOLANT HEATER

Install the switch by pressing in the lock handle.

Position the control module. Tighten the nuts. See **SUMMARY OF TIGHTENING TORQUES FOR SPECIFIC COMPONENTS** .

FINAL CHECK

Test run the engine coolant heater and check its function. See **ENGINE COOLANT HEATER, TEST RUNNING** .

Check that no diagnostic trouble codes (DTC) have been stored during the repair work.

Install:

- the bumper cover. See **CASING BUMPER FRONT, REPLACING**
- the battery lead. See **BATTERY, DISCONNECTING** .

ENGINE COOLANT HEATER, REPLACING

Special tools:

see **9512619**

As the illustrations in this service information are used for different model years and / or models, some variation may occur. However, the essential information in the illustrations is always correct.

PREPARATIONS

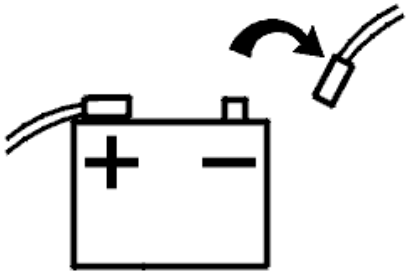

Fig. 162: Disconnecting Battery Lead
Courtesy of VOLVO CARS CORPORATION

Remove the battery lead. See **BATTERY, DISCONNECTING** .

Remove the bumper cover. See **CASING BUMPER FRONT, REPLACING** .

REMOVING THE ENGINE COOLANT HEATER

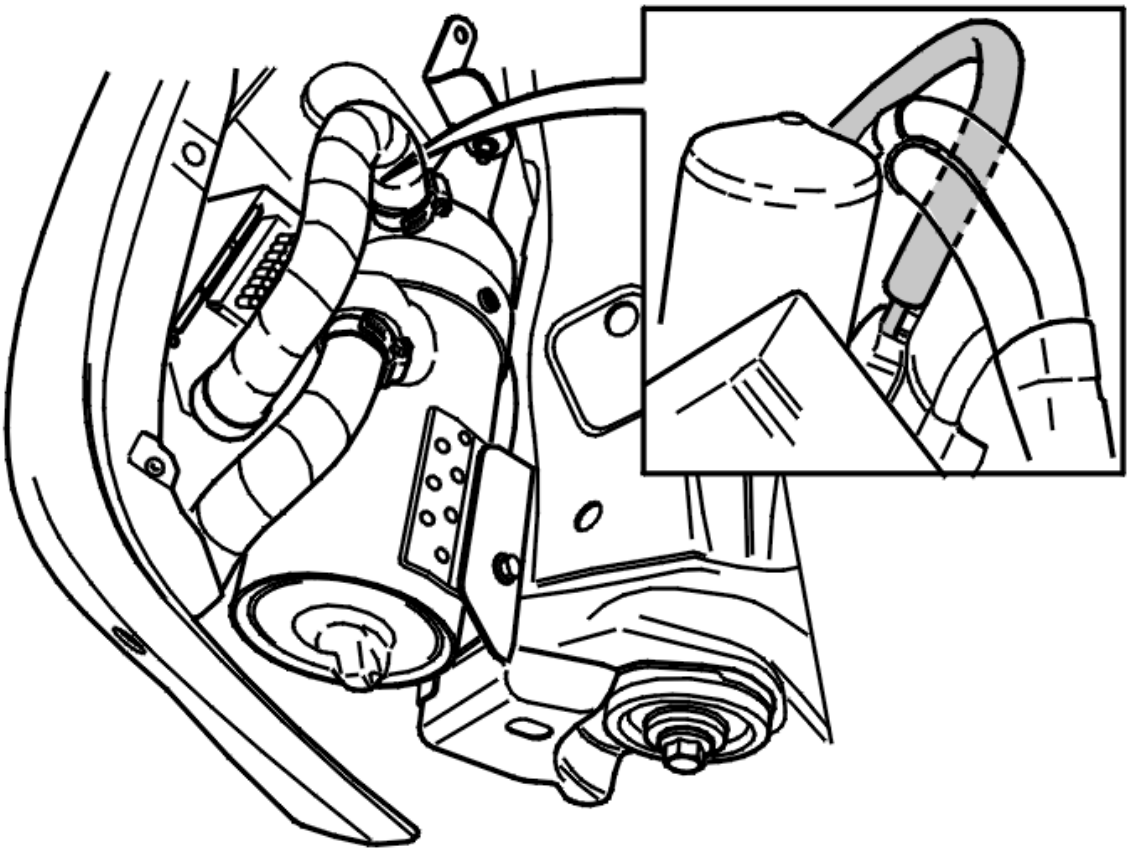

Fig. 163: Identifying Clamps & Hoses
Courtesy of VOLVO CARS CORPORATION

Install hose clips on both the engine coolant hoses by the heat exchanger.

Position a container under the heater.

Remove:

- the hoses
- the connection to the fuel hose from above. Plug the pipe because of the risk of fuel spillage.

HINT: Use special tool see 9512619 (Oetiker pliers) to remove and to fasten the clamps.

HINT: Tape or hang the fuel hose on the side member.

Disconnect the connector from above. Angle out the sliding mount for proper access.

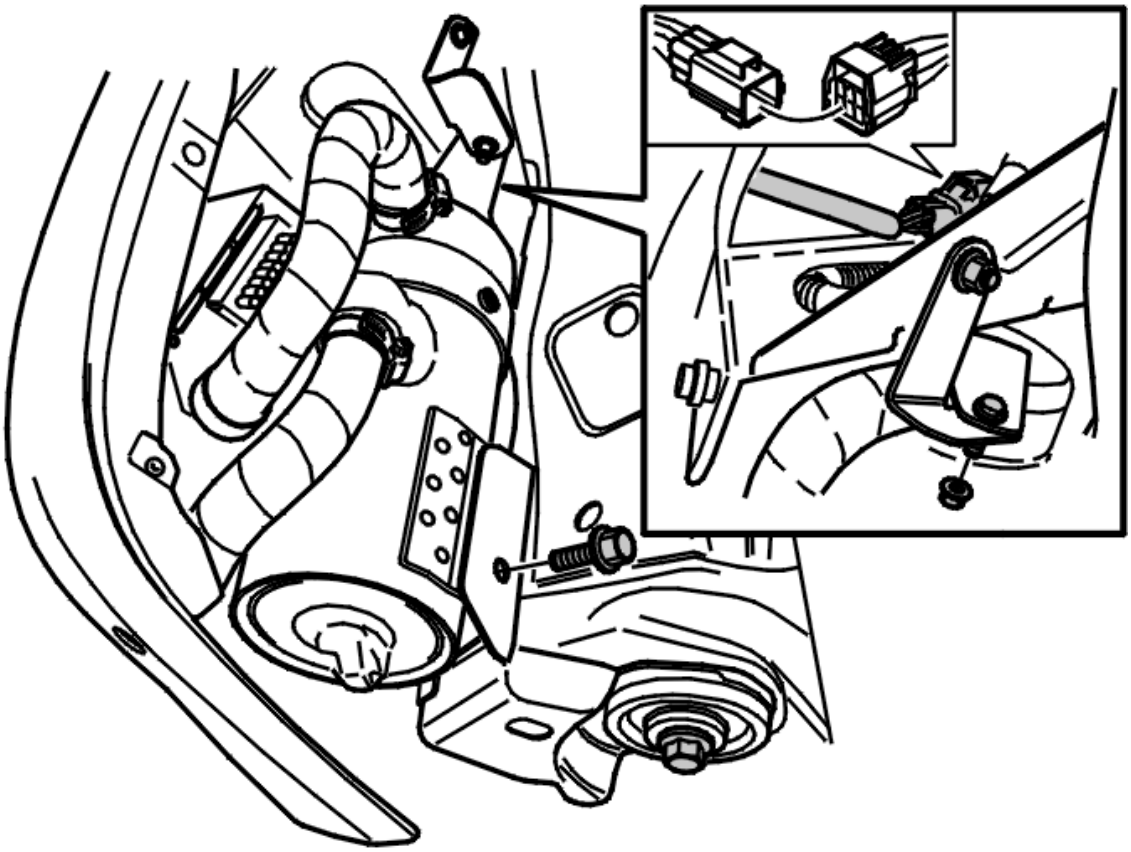

Fig. 164: Identifying Mounting Nut From Upper Edge Of Heater
Courtesy of VOLVO CARS CORPORATION

Slacken off the mounting nut from the upper edge of the heater.

Remove the two screws for the bracket. Unhook the heater from the upper mounting.

INSTALLING THE ENGINE COOLANT HEATER

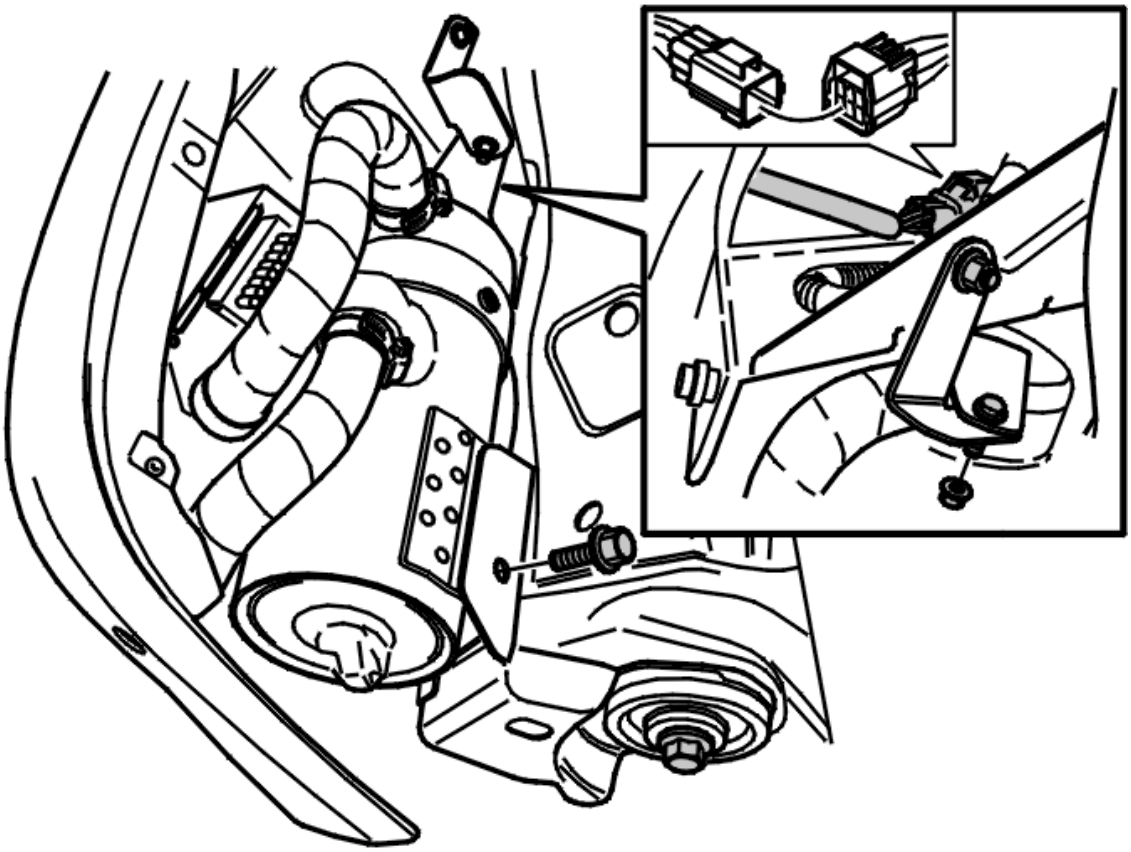

Fig. 165: Identifying Mounting Nut From Upper Edge Of Heater
Courtesy of VOLVO CARS CORPORATION

Hook the heater in the bracket and the upper mounting. Install two screws in the bracket.

Install the nut in the upper mounting (as shown in the illustration).

Install:

- the hoses
- the fuel line
- the connector.

FINAL CHECK

Test run the heater. Check the function of the heater. See **ENGINE COOLANT HEATER, TEST RUNNING** .

Check for leakage in the engine coolant hoses or fuel lines.

Top up the coolant if necessary.

Check that no diagnostic trouble codes (DTC) have been stored during the repair work.

Install the bumper cover. See **CASING BUMPER FRONT, REPLACING**

FUEL INJECTION NOZZLE / FAN MOTOR / PRESSURE EQUALIZER, REPLACING

REMOVING THE FUEL INJECTION NOZZLE, BLOWER FAN MOTOR AND PRESSURE EQUALIZER

The illustrations in this service information are used for different model years and/or models. Some variation may occur. However, the essential information in the illustrations is always correct.

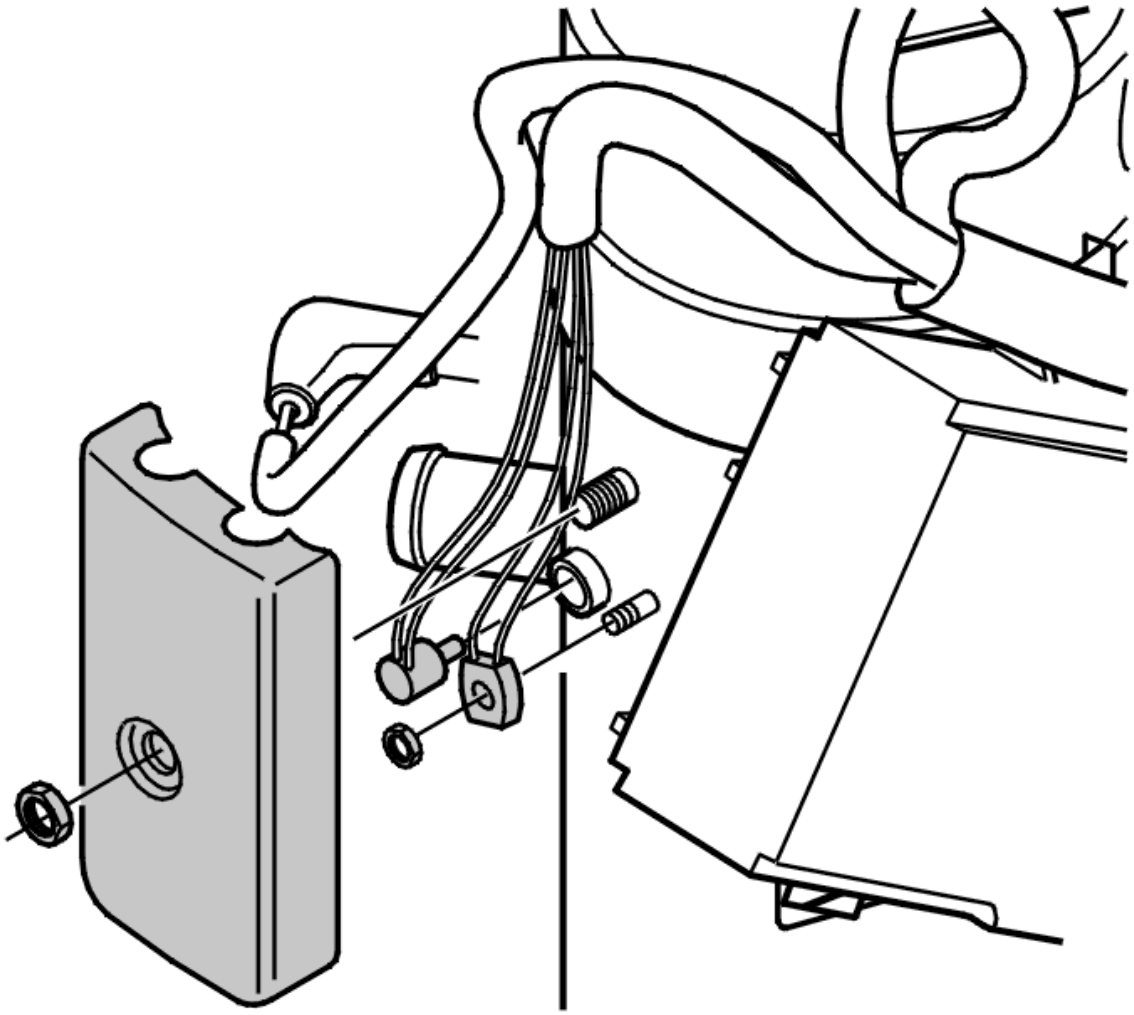

Fig. 166: Control Module
Courtesy of VOLVO CARS CORPORATION

Remove:

- the heater. See **ENGINE COOLANT HEATER, REPLACING**
- the nut and the cover.

Remove the control module. See **CONTROL MODULE ENGINE COOLANT HEATER, REPLACING**.

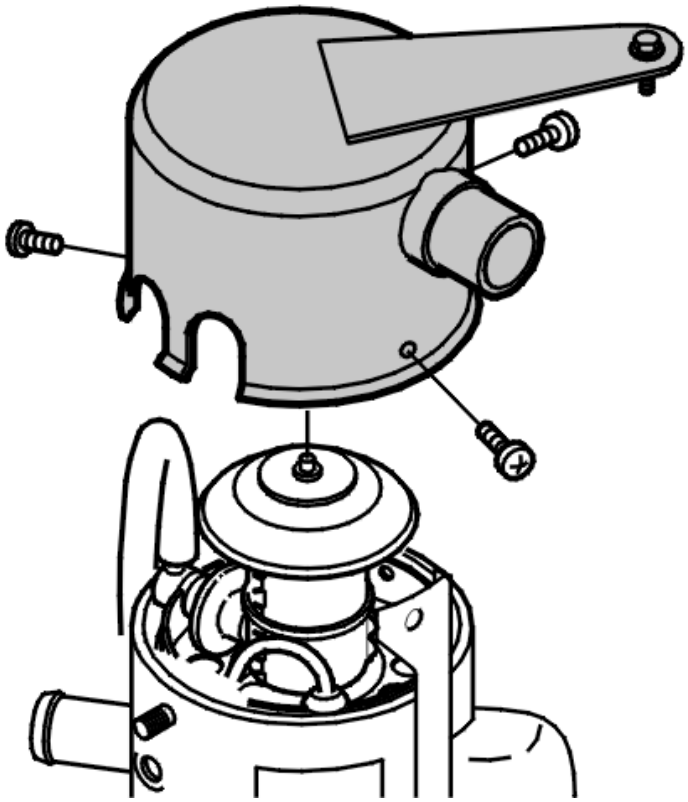

Fig. 167: Identifying Fan Shroud Screws
Courtesy of VOLVO CARS CORPORATION

Remove:

- the hose clamp from the intake hose
- the three screws from the fan shroud. Lift the fan shroud.

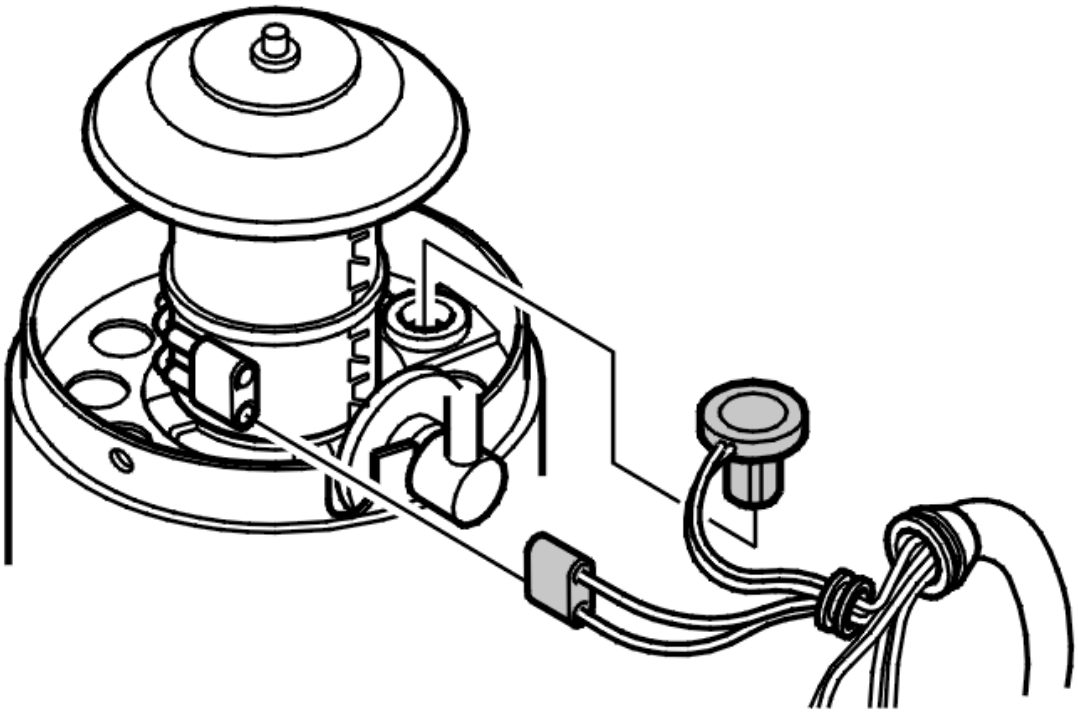

Fig. 168: Flame Sensor From Mounting
Courtesy of VOLVO CARS CORPORATION

Disconnect the fan motor connector.

Disconnect the flame sensor from the mounting.

FAN AND COMBUSTION CHAMBER

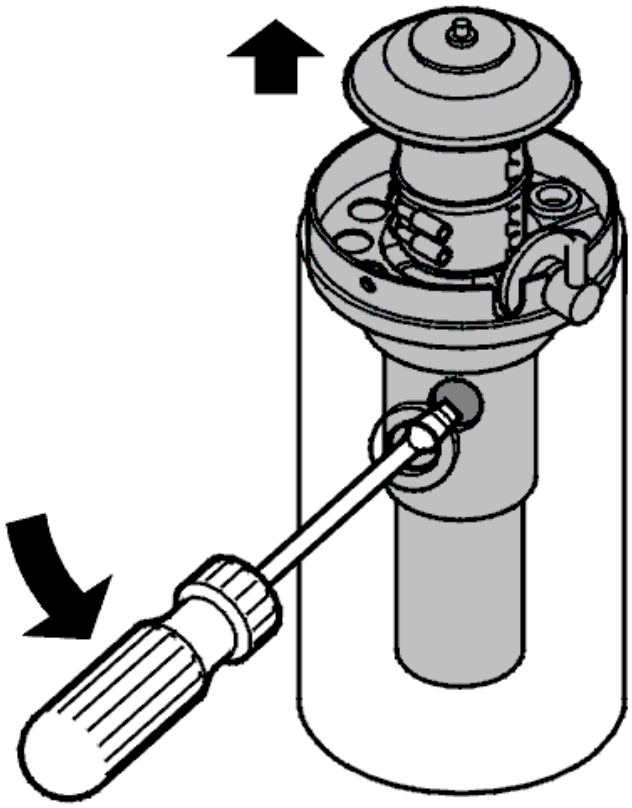

Fig. 169: Identifying Screwdriver (Round Object), Glow Plug And Combustion Unit
Courtesy of VOLVO CARS CORPORATION

Remove the glow plugs. See **GLOW PLUG ENGINE COOLANT HEATER, REPLACING**.

Insert a round object in the hole for the glow plug and press downwards so that the combustion unit is lifted up.

NOTE: Take care not to damage the thread, the edge or the nozzle unit.

A damaged nozzle unit can cause imbalance (combustion noise) and interruptions in the function. To avoid this it is important that an object with as large a diameter as possible is used. Do not insert the object too far.

COMBUSTION CHAMBER

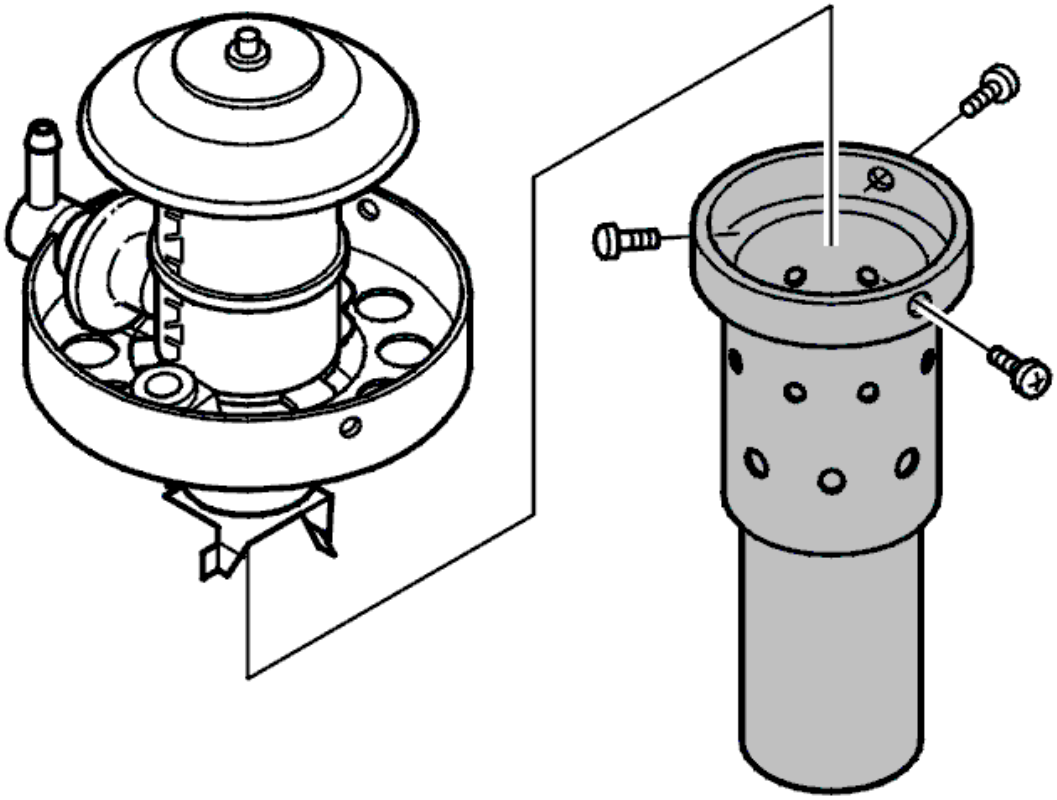

Fig. 170: Combustion Chamber
Courtesy of VOLVO CARS CORPORATION

Release the combustion chamber: Slacken off the 3 screws from the mounting.

The engine mounting and blower fan motor (and holder) internal location is determined by a lug in the engine mounting. These can only be installed in one position.

FUEL INJECTION NOZZLE, ATOMIZER AND OUTER NOZZLE HEAD

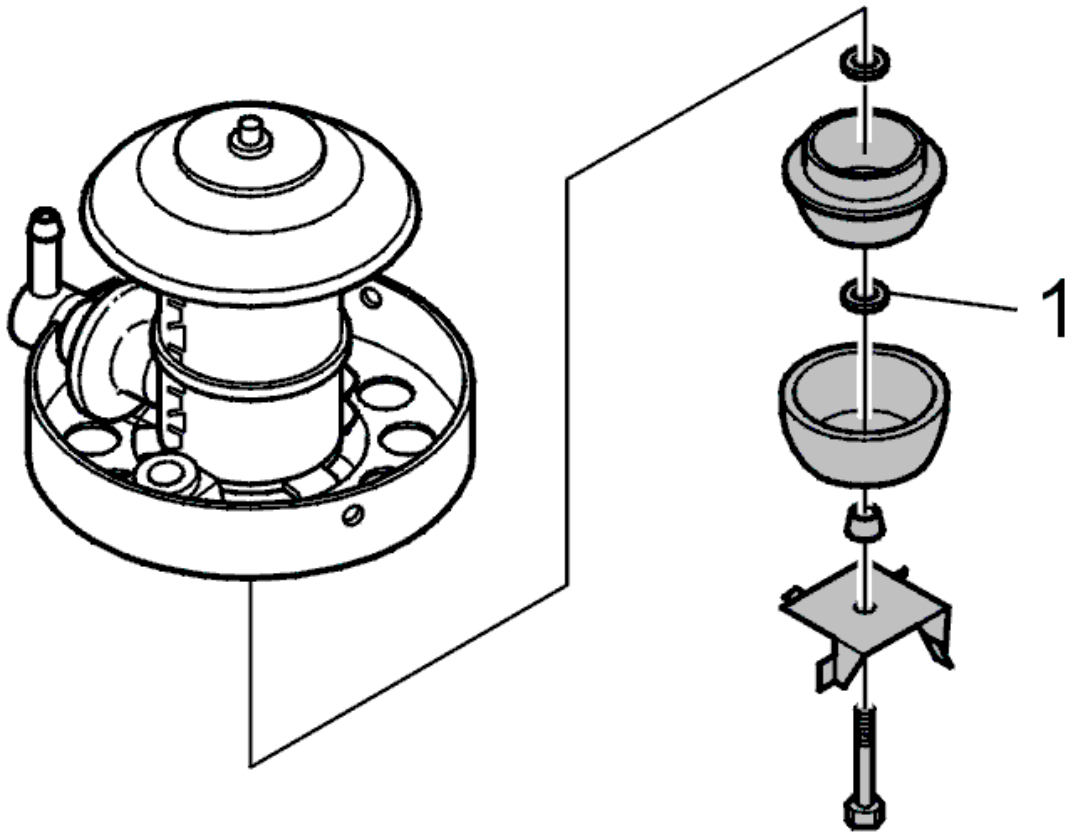

Fig. 171: Fuel Injection Nozzle, Atomizer And Outer Nozzle Head
Courtesy of VOLVO CARS CORPORATION

Remove the screw holding the atomizer to the fan motor spindle.

NOTE: **Do not use the fan wheel as a counterhold when slackening off screws. This could damage the fan wheel.**

Remove:

- the atomizer
- the spacer
- the outer nozzle head
- the fuel injection nozzle.

NOTE: **Take care of the spacers and washers (1) and note their internal order.**

BLOWER FAN MOTOR AND MOTOR MOUNTING

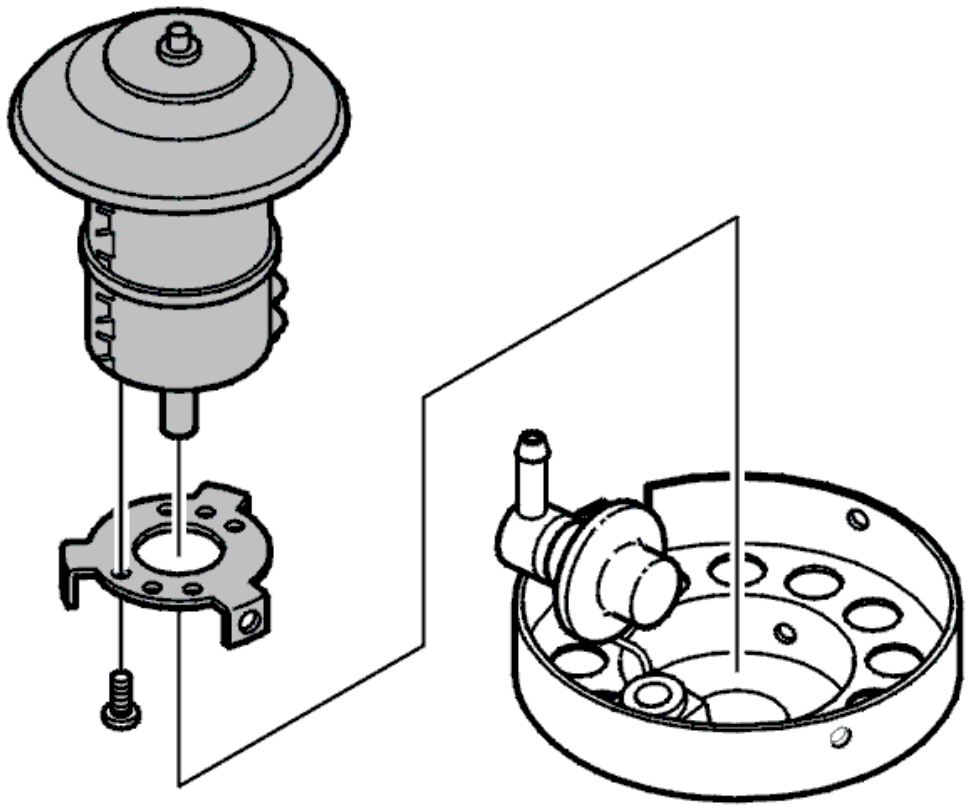

Fig. 172: Blower Fan Motor And Motor Mounting
Courtesy of VOLVO CARS CORPORATION

Remove the 3 screws between the engine mounting and the other mounting.

Remove the mounting and the fuel line.

Remove the engine mounting.

NOTE: **Note the position of the engine mounting in relation to the fan motor. It is vital that the engine mounting is correctly installed.**

PRESSURE EQUALIZER WITH FUEL LINE

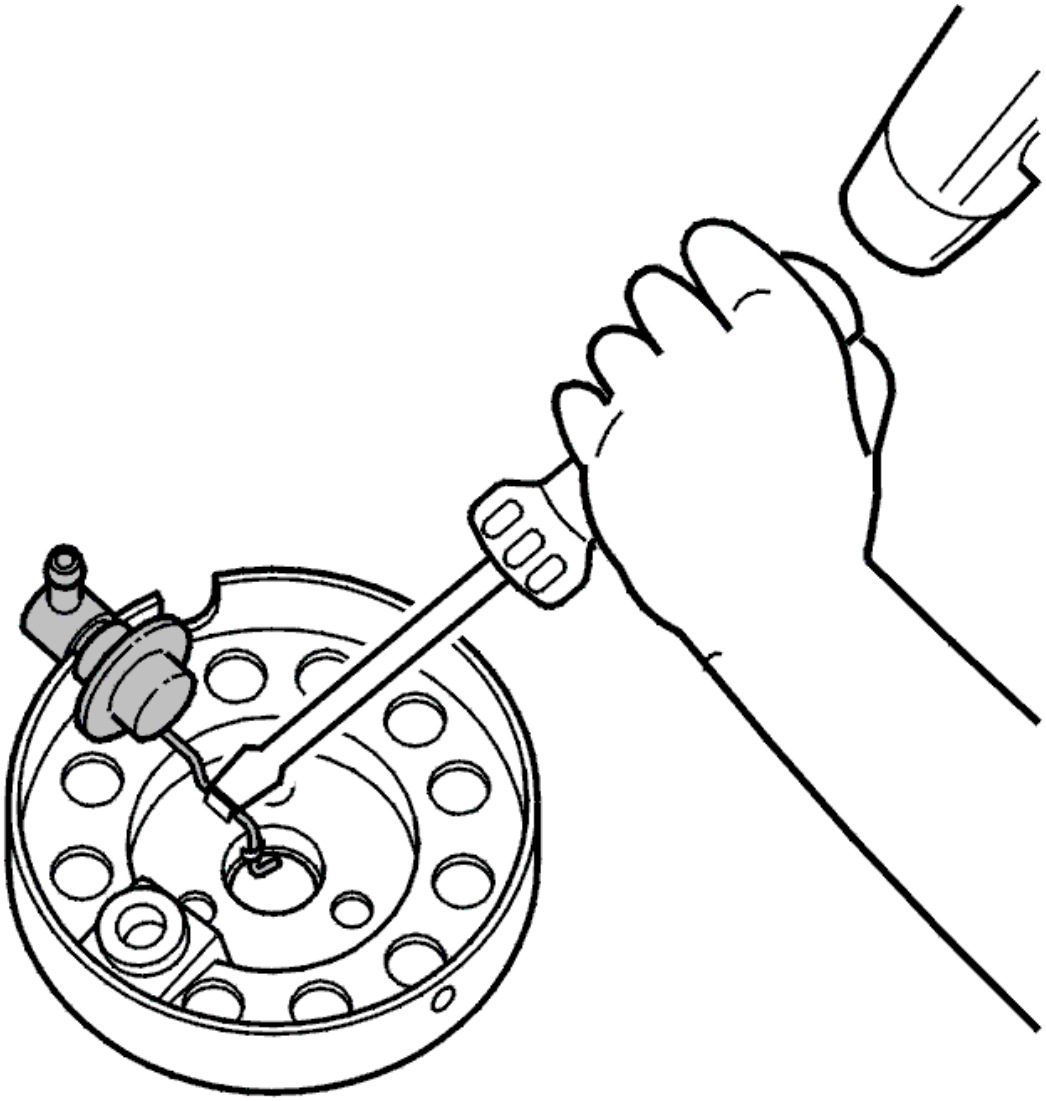

Fig. 173: Opening Fuel Line Mountings With Mallet & Screwdriver
Courtesy of VOLVO CARS CORPORATION

Open the mountings around the fuel line: Tap them carefully using a mallet and a screwdriver. Only open the mountings just enough to remove the fuel line.

Remove the pressure equalizer and the fuel line.

INSTALLING THE FUEL INJECTION NOZZLE, BLOWER FAN MOTOR AND PRESSURE EQUALIZER

PRESSURE EQUALIZER WITH FUEL LINE

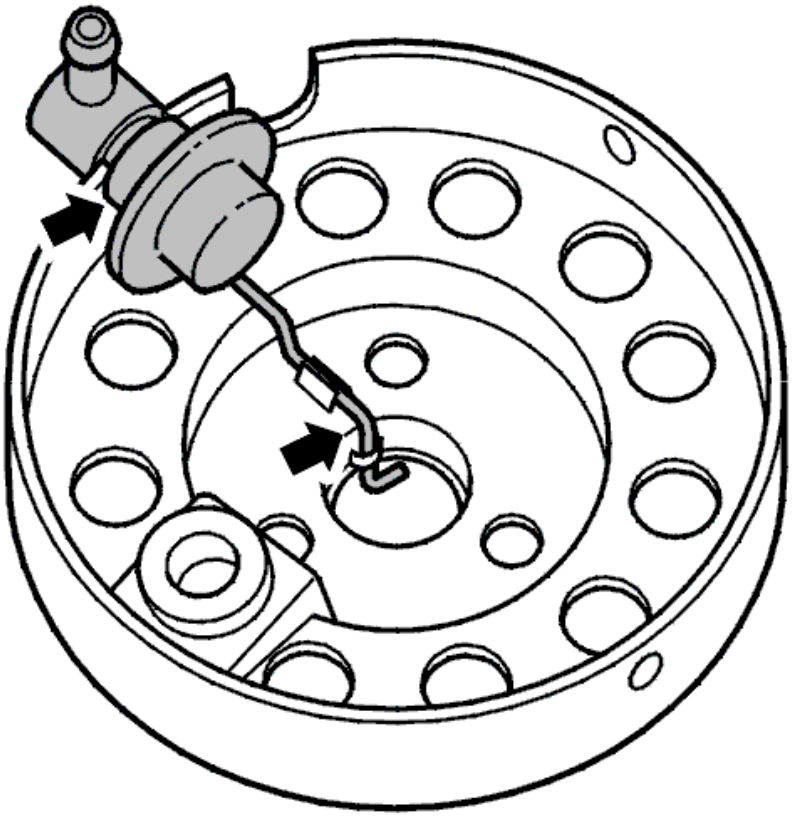

Fig. 174: Identifying New Pressure Equalizer & Fuel Line
Courtesy of VOLVO CARS CORPORATION

Install the new pressure equalizer and fuel line.

NOTE: **It is important that the fuel line is in contact with the bottom of the motor mounting. Also ensure that its connector is in contact with the bottom of the cut-out on the mounting.**

Squeeze the mountings into place around the fuel line using a pair of pliers.

BLOWER FAN MOTOR AND MOTOR MOUNTING

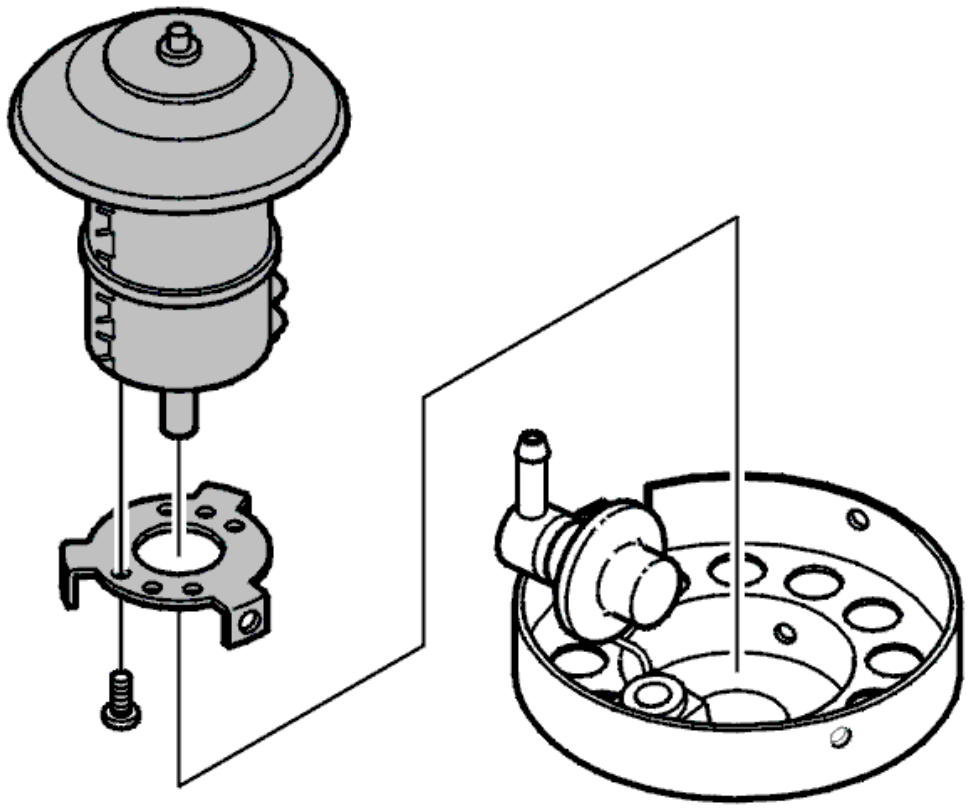

Fig. 175: Blower Fan Motor And Motor Mounting
Courtesy of VOLVO CARS CORPORATION

Install:

- motor holder on a new motor
- the motor on the motor mounting. Tighten. See **SUMMARY OF TIGHTENING TORQUES FOR SPECIFIC COMPONENTS** . Use thread sealant.

The fuel line must be lined up with the fan motor joint.

FUEL INJECTION NOZZLE, ATOMIZER AND OUTER NOZZLE HEAD

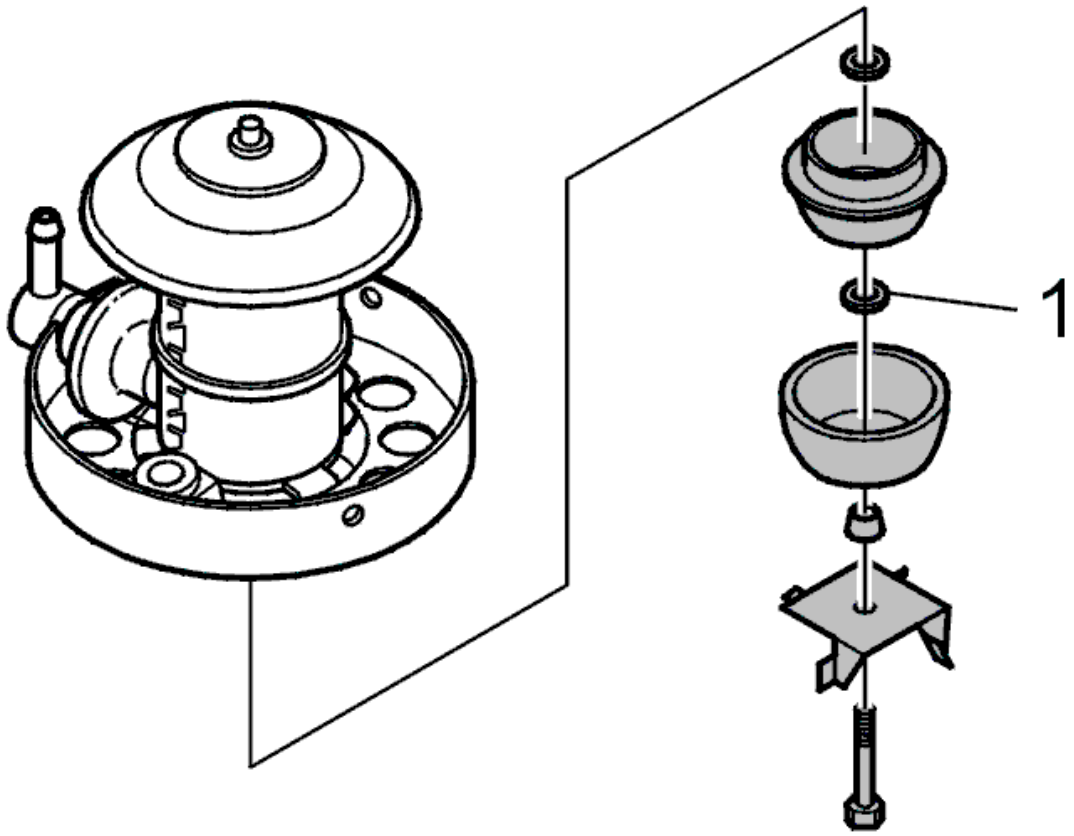

Fig. 176: Fuel Injection Nozzle, Atomizer And Outer Nozzle Head
Courtesy of VOLVO CARS CORPORATION

Install the fuel injection nozzle with washer (1).

Install:

- the outer nozzle head
- a conical spacer with the cone pointing towards the outer nozzle head
- the atomizer
- a **new** screw with all components on the shaft of the blower fan motor. Tighten. See **SUMMARY OF TIGHTENING TORQUES FOR SPECIFIC COMPONENTS** . Use thread sealant.

HEAT EXCHANGER AND GLOW PLUG

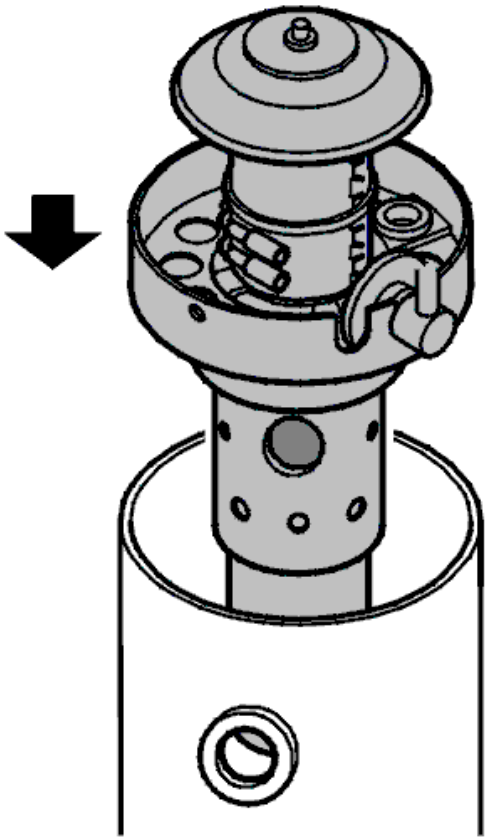

Fig. 177: Heat Exchanger And Glow Plug
Courtesy of VOLVO CARS CORPORATION

Install the combustion chamber.

Assemble the fan shroud with the combustion unit and the heat exchanger.

Center the socket for the glow plug in the flame shield with the mounting on the heat exchanger.

Position the glow plug in the heat exchanger.

If the glow plug can be screwed in by hand the glow plug socket has been centered correctly. Tighten the glow plug. See **SUMMARY OF TIGHTENING TORQUES FOR SPECIFIC COMPONENTS** .

FINISHING

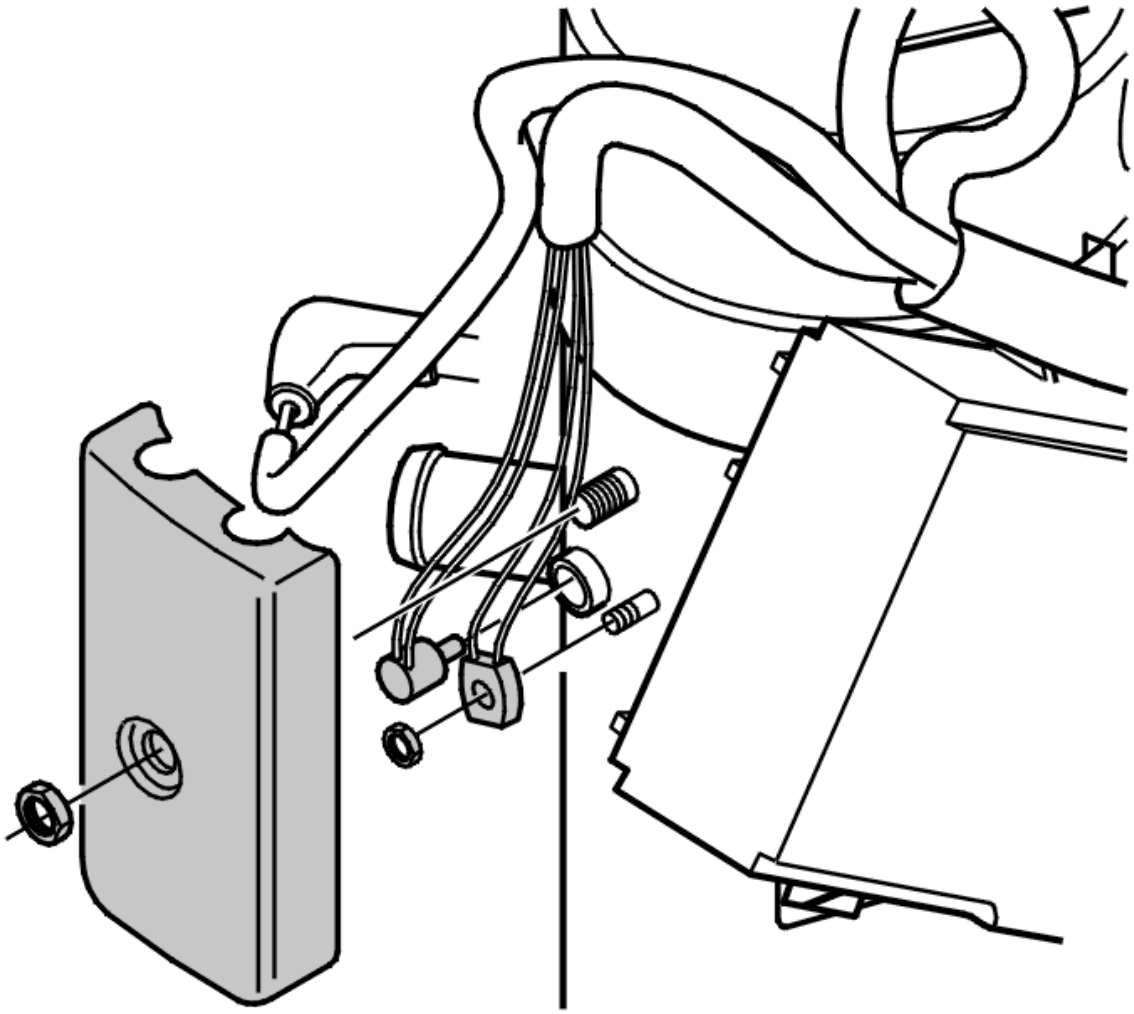

Fig. 178: Control Module
Courtesy of VOLVO CARS CORPORATION

Connect the connector to the blower fan motor. The cables must be routed under the nozzle pipe.

Install the flame sensor.

NOTE: Ensure that no cables are routed under the flame sensor.

Install:

- the fan shroud using three screws
- the cover with the nut (see the illustration). Tighten. See **SUMMARY OF TIGHTENING TORQUES FOR SPECIFIC COMPONENTS**
- the heater. See **ENGINE COOLANT HEATER, REPLACING**.

FUEL PIPE AUXILIARY HEATER, REPLACING

Special tools:

see **9512619**

The illustrations in this service information are used for different model years and / or models. Some variation may occur. However, the essential information in the illustrations is always correct.

PREPARATIONS

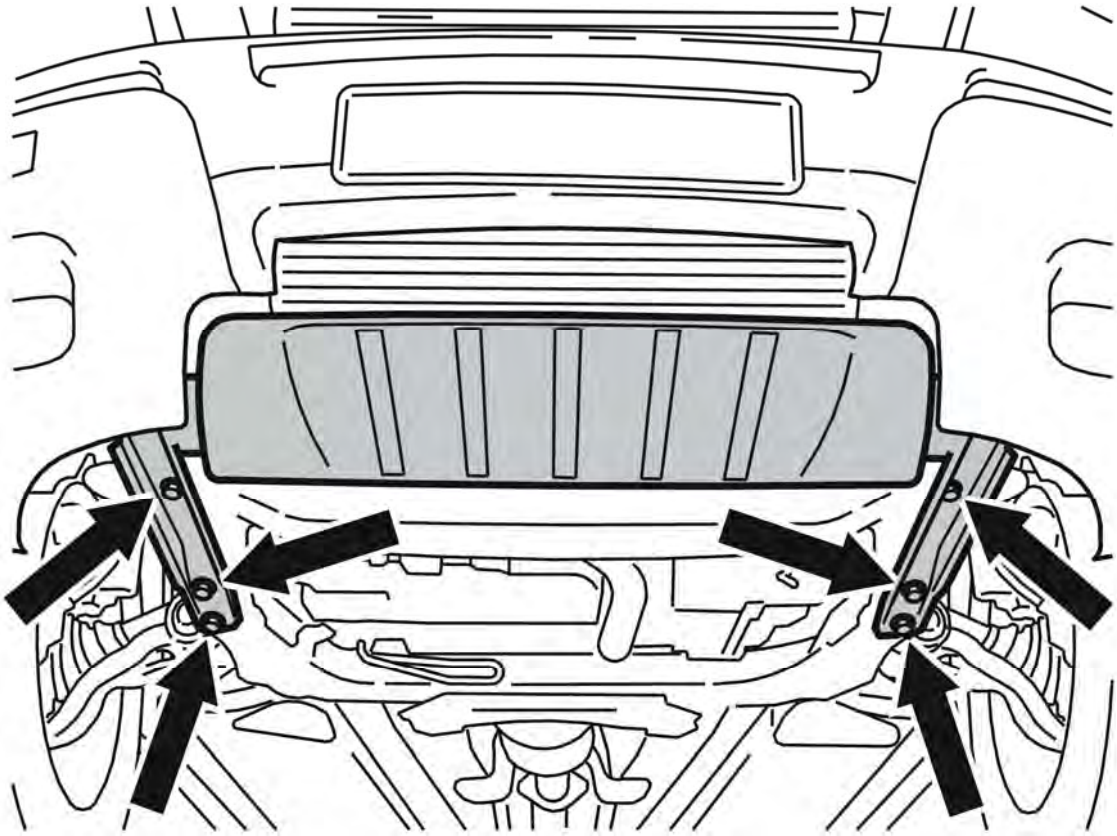

Fig. 179: Splash Guard. Protective Plate And Screws
Courtesy of VOLVO CARS CORPORATION

Remove:

- the splash guard under the engine
- the protective panel (see the illustration).

REMOVING THE FUEL LINE FOR THE ENGINE COOLANT HEATER

WARNING: **Protective gloves and protective goggles must be used for the following operations. This is due to the risk of fuel spillage.**

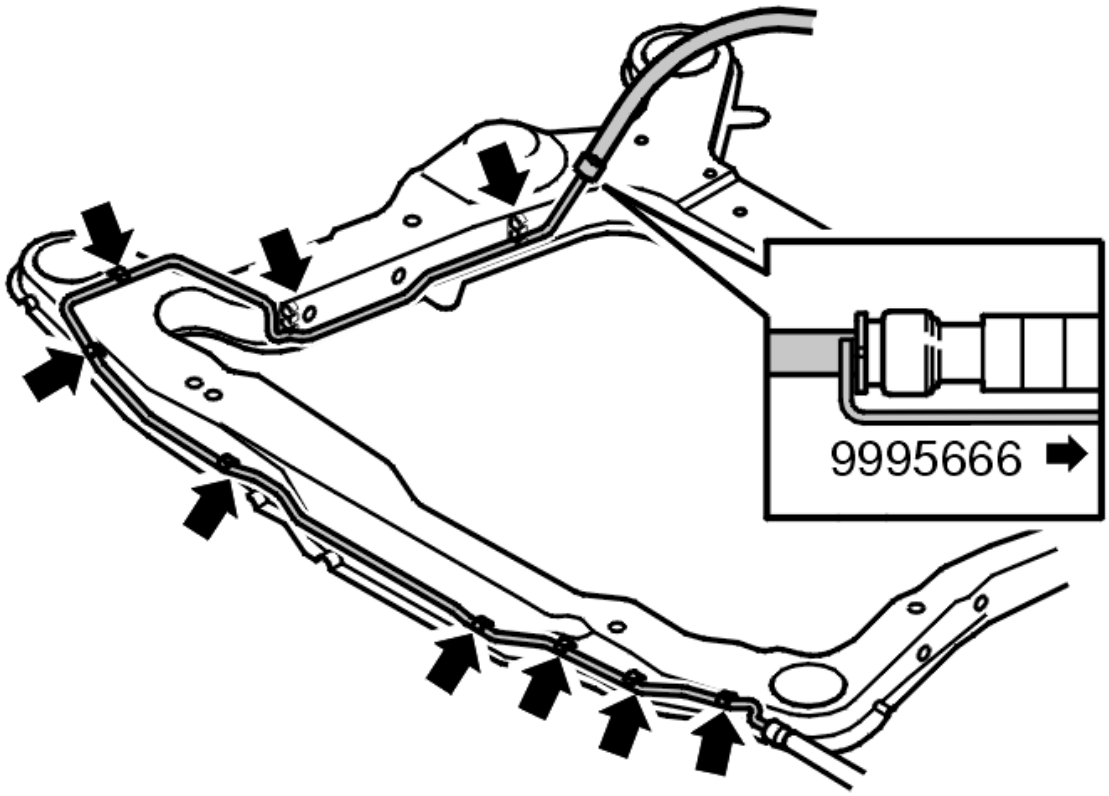

Fig. 180: Identifying Quick-Release Connector
Courtesy of VOLVO CARS CORPORATION

Remove:

- the quick-release connector at the rear edge of the sub-frame
- the hose clamp for the heater.

HINT: Use special tool see 9512619 (Oetiker pliers) to remove and to fasten the clamps.

Pull the pipe loose from the clip.

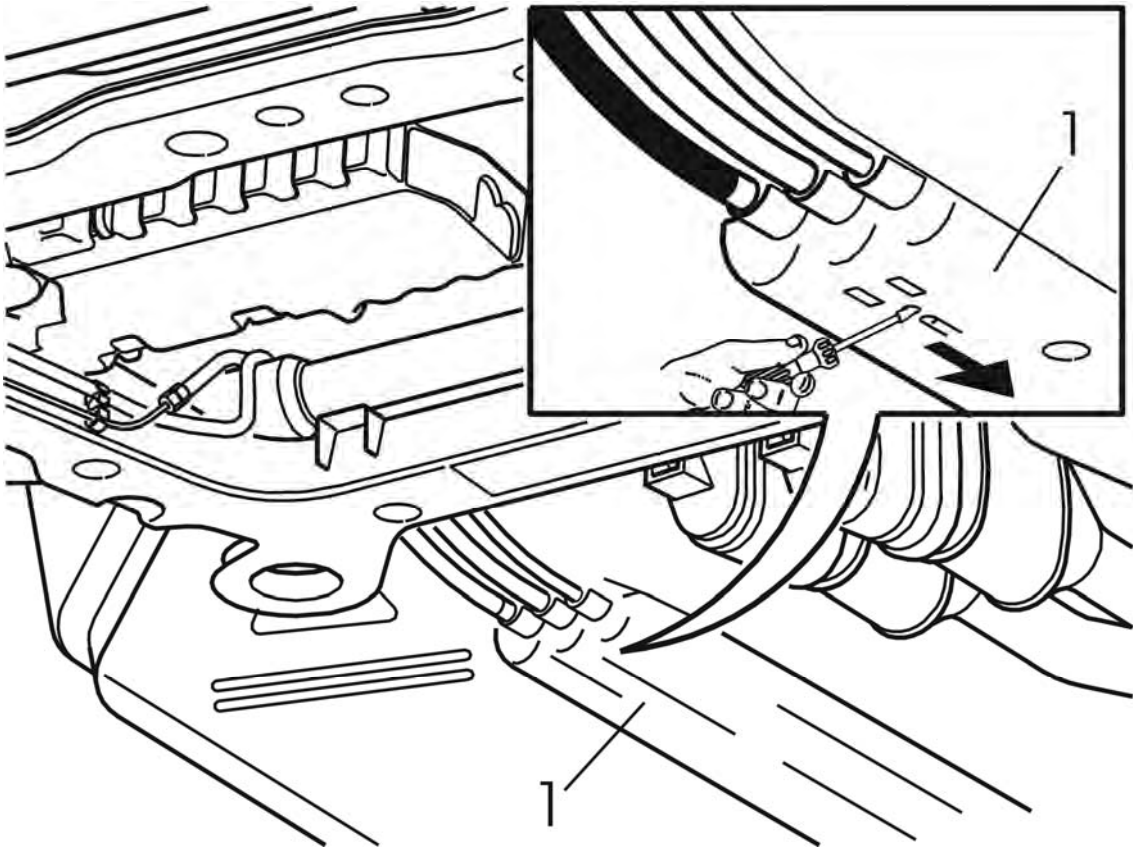

Fig. 181: Moving Clips Aside To Remove Fuel Line Cover
Courtesy of VOLVO CARS CORPORATION

Remove:

- the cover over the fuel line by moving the clips to one side (see the illustration).

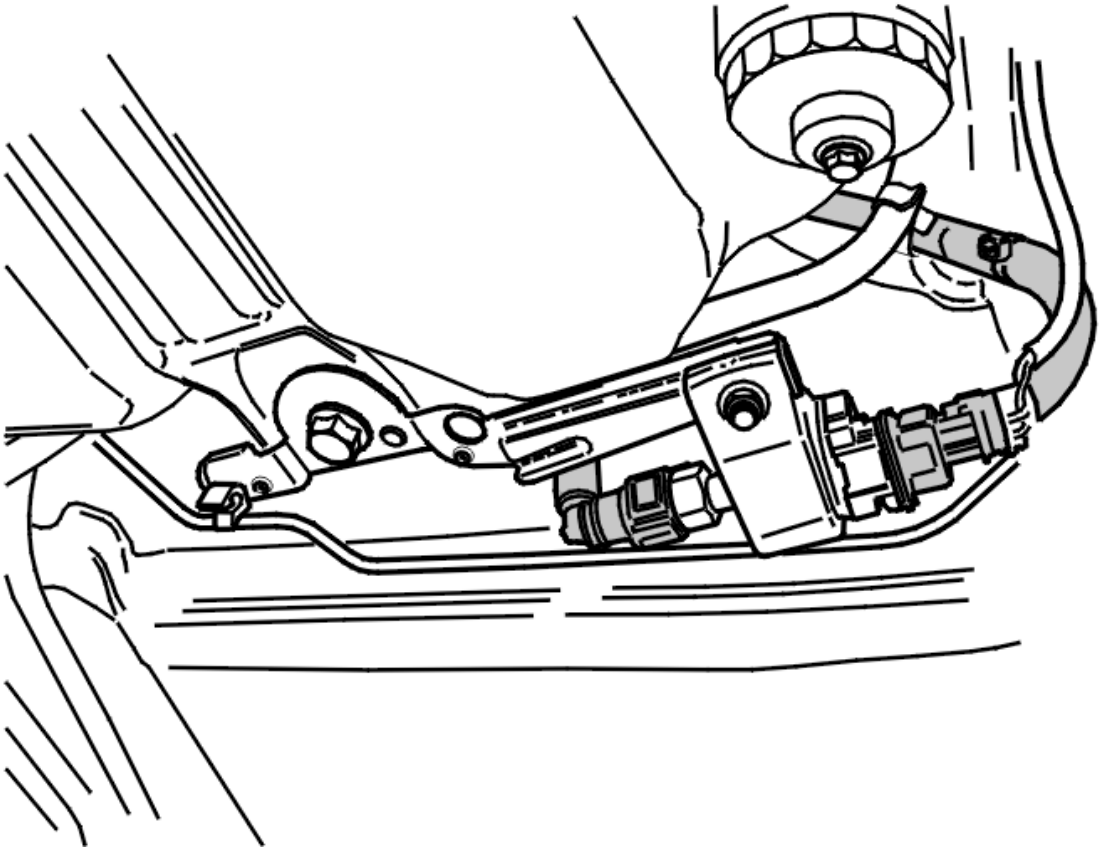

Fig. 182: Identifying Quick-Release Connector And Fuel Hose Clamp
Courtesy of VOLVO CARS CORPORATION

- the quick-release connector and the hose clamp for the fuel hoses.

Plug the hoses.

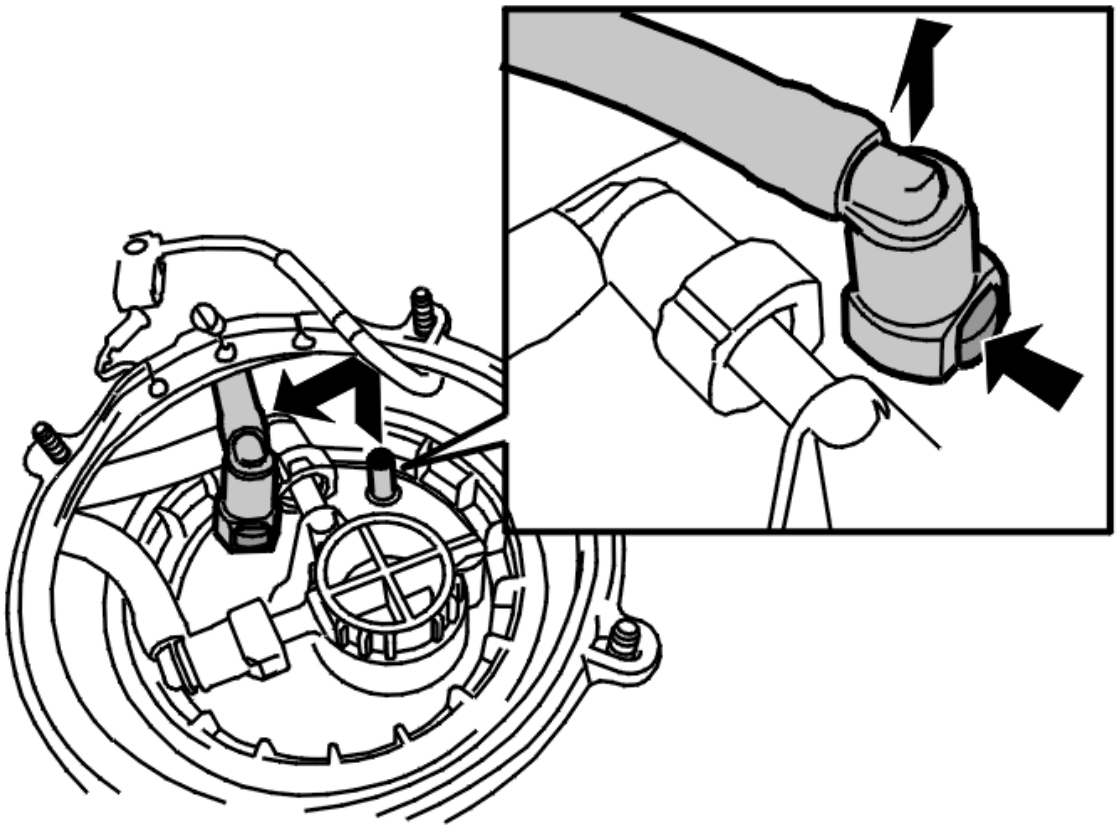

Fig. 183: Quick-Release Connector And Hose Clamp For Fuel Hoses
Courtesy of VOLVO CARS CORPORATION

Remove:

- the rear seats. See **REMOVING THE CENTER SEAT (SECOND ROW)** and **REMOVING THE OUTER SEAT (SECOND ROW)**
- the right-hand side panel in the cargo compartment / third row of seats. See **SIDE PANEL CARGO COMPARTMENT, REPLACEMENT**
- the right-hand section of the air duct to the rear right-hand air vent in the C-post
- the insulation
- the four nuts
- the inspection hatch for the fuel tank unit.

Disconnect the quick-release connector (see the illustration). Pull off the fuel hose.

INSTALLING THE FUEL LINE FOR THE ENGINE COOLANT HEATER

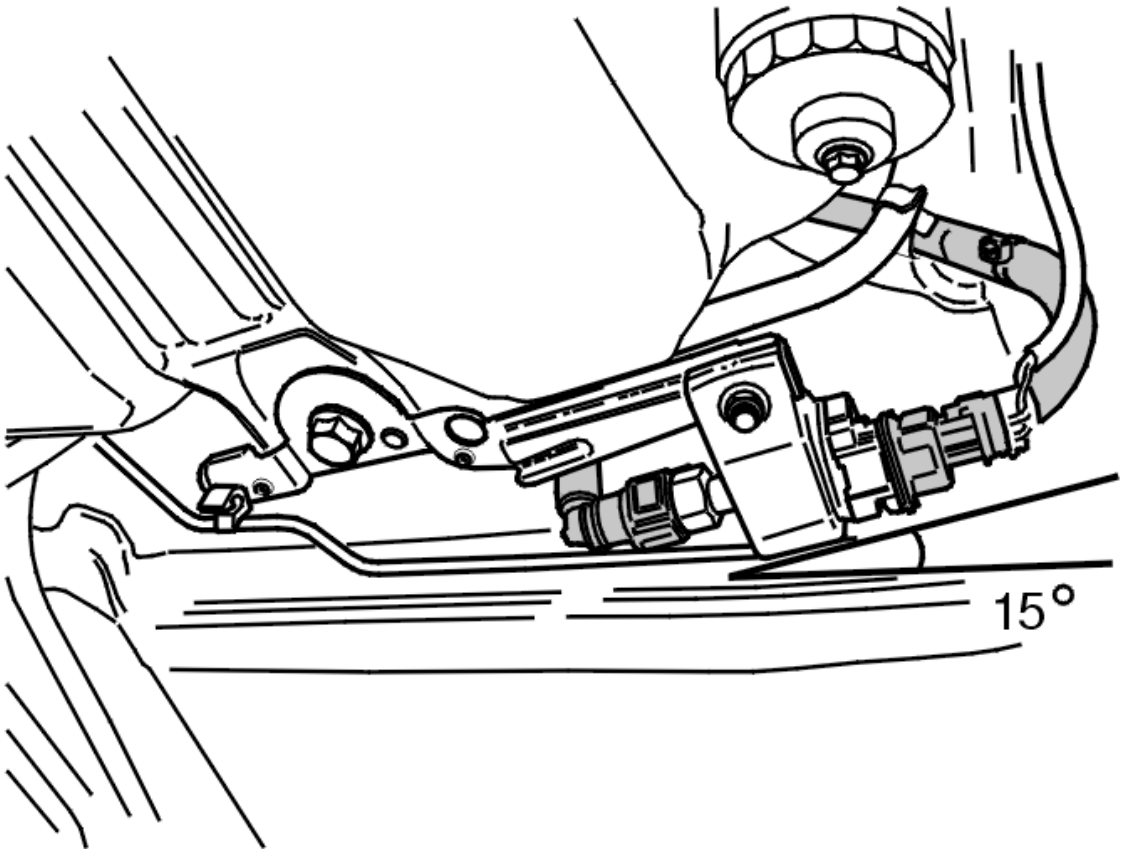

Fig. 184: Identifying Quick-Release Connector And Fuel Hose Clamp
Courtesy of VOLVO CARS CORPORATION

Install the fuel line.

Connect the fuel line to the fuel pump (FP).

Check that the tilt angle on the fuel pump (FP) is 15°.

Connect the fuel line from the fuel pump (FP) and forward to the sub-frame and fuel line.

Install the fuel line on the clip and the fuel terminals.

FINAL CHECK

Test run the heater. Check the function of the heater. See **ENGINE COOLANT HEATER, TEST RUNNING** .

Check for leakage in the fuel lines and hoses.

Check that no diagnostic trouble codes (DTC) have been stored during the repair work.

Screw the inspection hatch for the fuel tank unit into place.

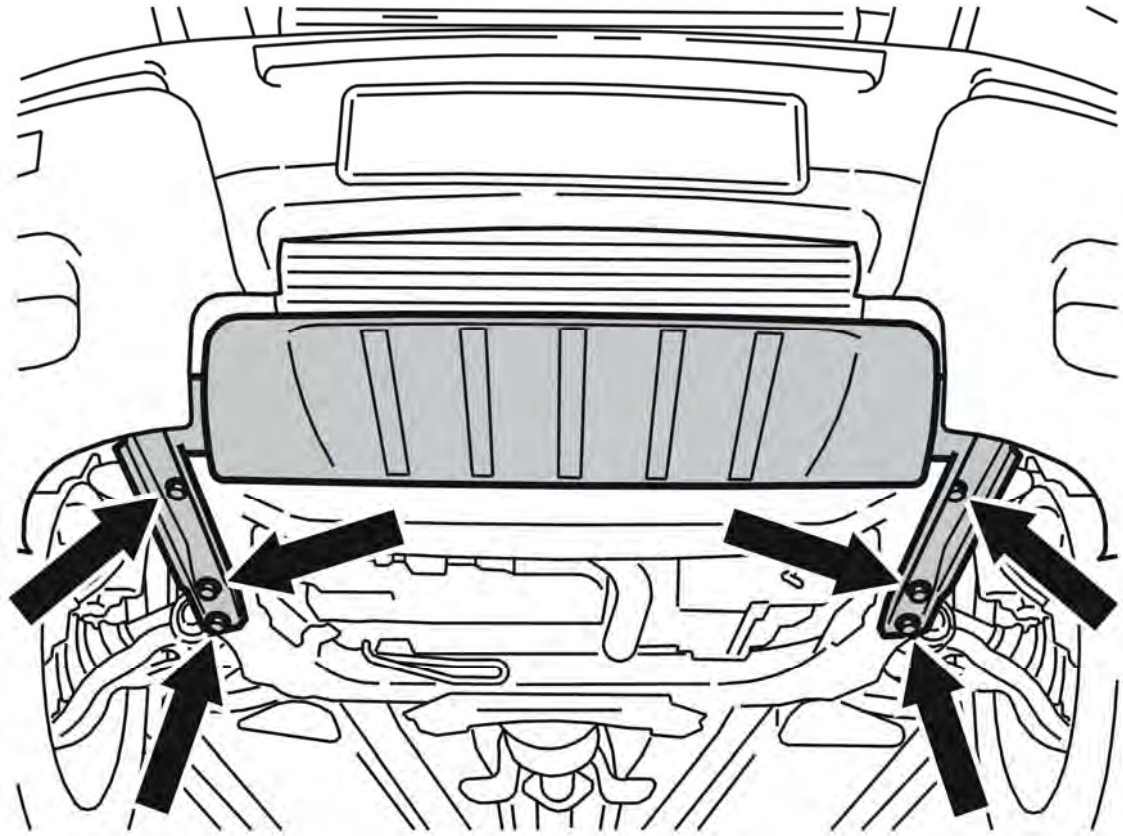

Fig. 185: Splash Guard. Protective Plate And Screws
Courtesy of VOLVO CARS CORPORATION

Install:

- the insulation
- the air duct for the vent on the right-hand C-post
- the right-hand side panel in the cargo compartment / third row of seats. See **SIDE PANEL CARGO COMPARTMENT, REPLACEMENT**
- the rear seats. See **INSTALLING THE CENTER SEAT (SECOND ROW)** and **INSTALLING THE OUTER SEAT (SECOND ROW)**
- the protective panel (see the illustration)
- the splash guard under the engine.

FUEL PUMP AUXILIARY HEATER, REPLACING

Special tools:

see **9512619**

As the illustrations in this service information are used for different model years and / or models, some variation may occur. However, the essential information in the illustrations is always correct.

REMOVING THE FUEL PUMP (FP) FOR THE ENGINE COOLANT HEATER

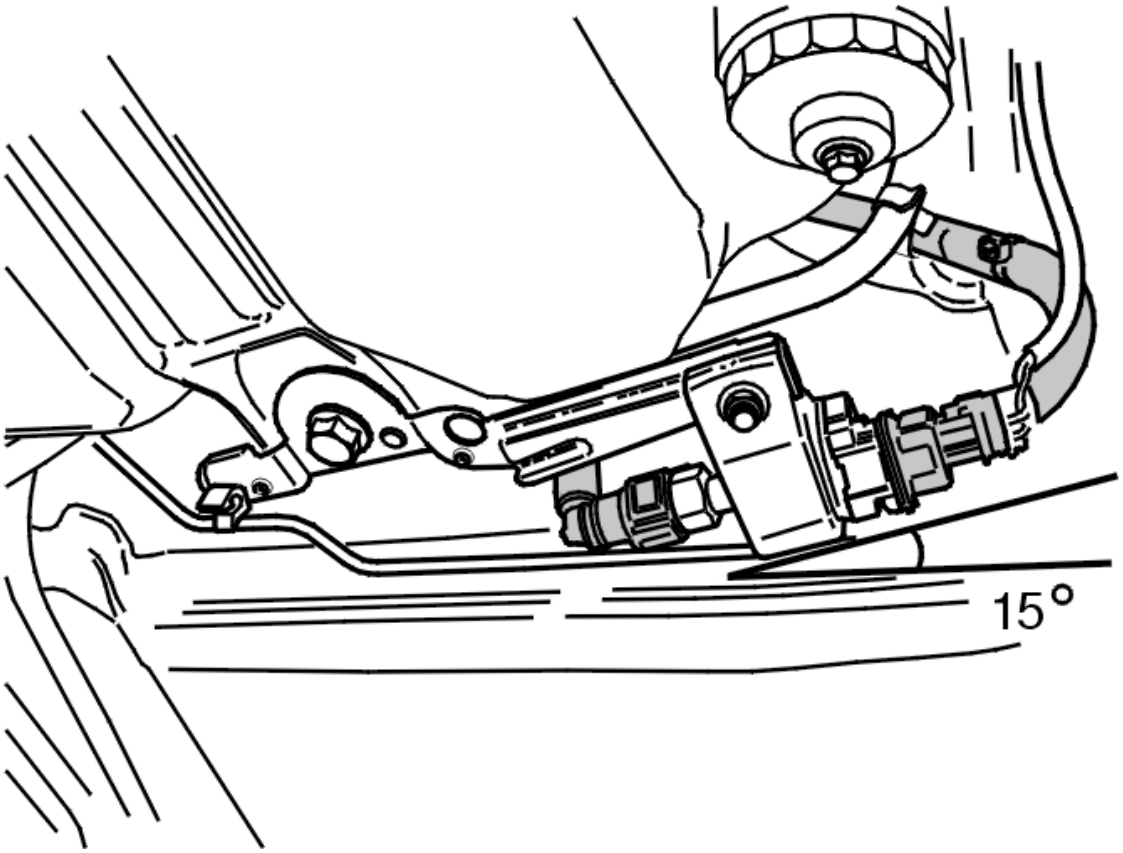

Fig. 186: Identifying Quick-Release Connector And Fuel Hose Clamp
Courtesy of VOLVO CARS CORPORATION

WARNING: **Protective gloves and protective goggles must be used for the following operations. This is due to the risk of fuel spillage.**

The fuel pump (FP) is located against the front right-hand side of the fuel tank.

NOTE: Note the tilt angle on the fuel pump (FP), 15°. It is important for the pump function that the angle is correct (see the illustration).

Remove the quick-release connector and the hose clamp for the fuel hoses.

HINT: Use special tool see 9512619 (Oetiker pliers) to remove and to fasten the clamps.

Plug the hoses.

Disconnect the fuel pump connector.

Remove one nut retaining the pump holder.

INSTALLING THE FUEL PUMP (FP) FOR THE ENGINE COOLANT HEATER

Install the fuel pump (FP) unit nut and tighten the nut to an angle of 15°. Tighten. See **SUMMARY OF TIGHTENING TORQUES FOR SPECIFIC COMPONENTS** .

Install:

- the connector
- the fuel lines.

Complete rustproofing.

FINAL CHECK

Test run the heater. Check the function of the heater. See **ENGINE COOLANT HEATER, TEST RUNNING** .

Check for leakage in the engine coolant hoses or fuel lines.

Check that no diagnostic trouble codes (DTC) have been stored during the repair work.

GLOW PLUG ENGINE COOLANT HEATER, REPLACING

As the illustrations in this service information are used for different model years and / or models, some variation may occur. However, the essential information in the illustrations is always correct.

PREPARATIONS

Remove left-hand headlamp. See **LIGHTING - REMOVAL, REPLACEMENT AND INSTALLATION** .

REMOVING THE GLOW PLUGS FOR THE ENGINE COOLANT HEATER

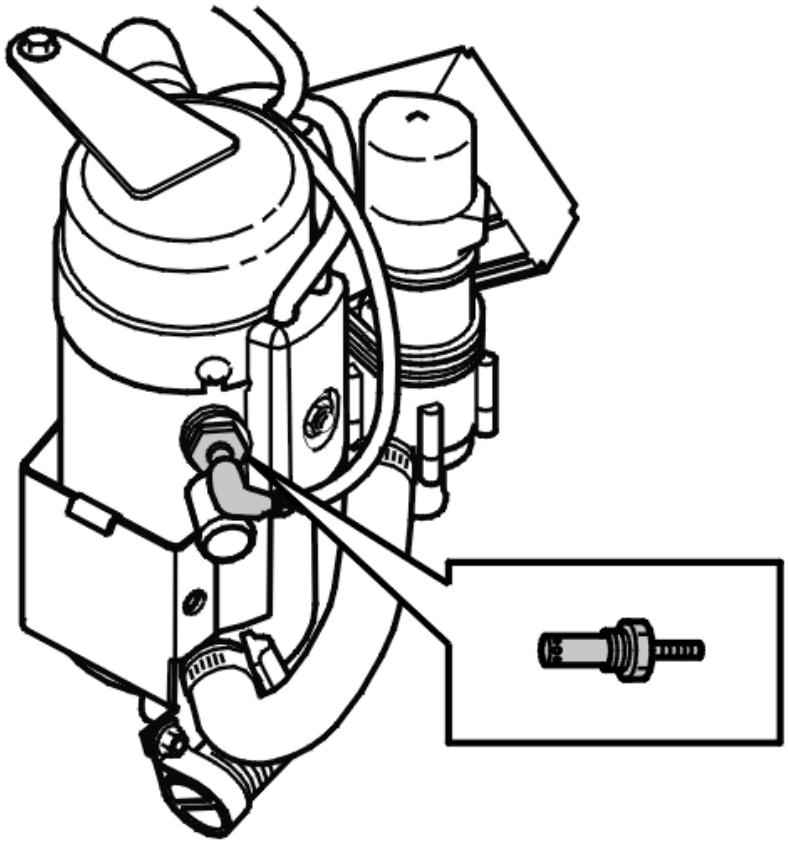

Fig. 187: Removing Glow Plug
Courtesy of VOLVO CARS CORPORATION

Remove the protective socket.

Unscrew the glow plug.

INSTALLING THE GLOW PLUG FOR THE ENGINE COOLANT HEATER

Screw the glow plug into place. Tighten to **15 Nm** .

Reconnect the protective socket.

Check that no DTCs were stored during the repair.

FINAL CHECK

Start the engine and let it idle for a few seconds before starting the heater.

Test run the heater. Check the function of the heater. See **ENGINE COOLANT HEATER, TEST RUNNING** .

Check that no DTCs were stored during the repair.

Install the left-hand headlamp. See **LIGHTING - REMOVAL, REPLACEMENT AND INSTALLATION** .

HEAT EXCHANGER, REPLACING

As the illustrations in this service information are used for different model years and / or models, some variation may occur. However, the essential information is always correct.

REMOVING THE HEAT EXCHANGER

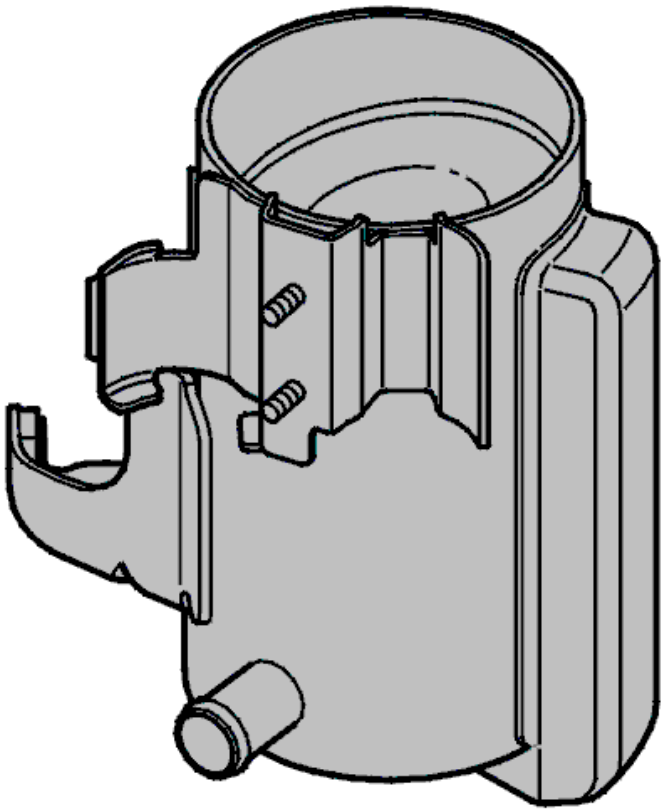

Fig. 188: Identifying Heat Exchanger
Courtesy of VOLVO CARS CORPORATION

Remove:

- the heater. See **ENGINE COOLANT HEATER, REPLACING**
- the control module. See **CONTROL MODULE ENGINE COOLANT HEATER, REPLACING**
- the water pump. See **WATER PUMP ENGINE COOLANT HEATER, REPLACING**
- the glow plug. See **GLOW PLUG ENGINE COOLANT HEATER, REPLACING**
- the cable harness.

Expose and replace the heat exchanger.

INSTALLING THE HEAT EXCHANGER

Install:

- the cable harness
- the glow plug. See **GLOW PLUG ENGINE COOLANT HEATER, REPLACING**
- the water pump. See **WATER PUMP ENGINE COOLANT HEATER, REPLACING**
- the control module. See **CONTROL MODULE ENGINE COOLANT HEATER, REPLACING**
- the heater. See **ENGINE COOLANT HEATER, REPLACING**.

NOTE: When installing, check that there is clearance between the fuel line and water hose.

FINAL CHECK

Test run the heater. Check the function of the heater. See **ENGINE COOLANT HEATER, TEST RUNNING** .

Check for leakage in the engine coolant hoses or fuel lines.

Top up the coolant if necessary.

Check that no diagnostic trouble codes (DTC) have been stored during the repair work.

OVERHEAT PROTECTION THERMOSTAT / FLAME SENSOR / ENGINE COOLANT TEMPERATURE SENSOR, REPLACING

REPLACING

As the illustrations in this service information are used for different model years and / or models, some variation may occur. However, the essential information in the illustrations is always correct.

REMOVING THE OVERHEAT PROTECTION, THERMOSTAT FLAME SENSOR AND COOLANT TEMPERATURE SENSOR

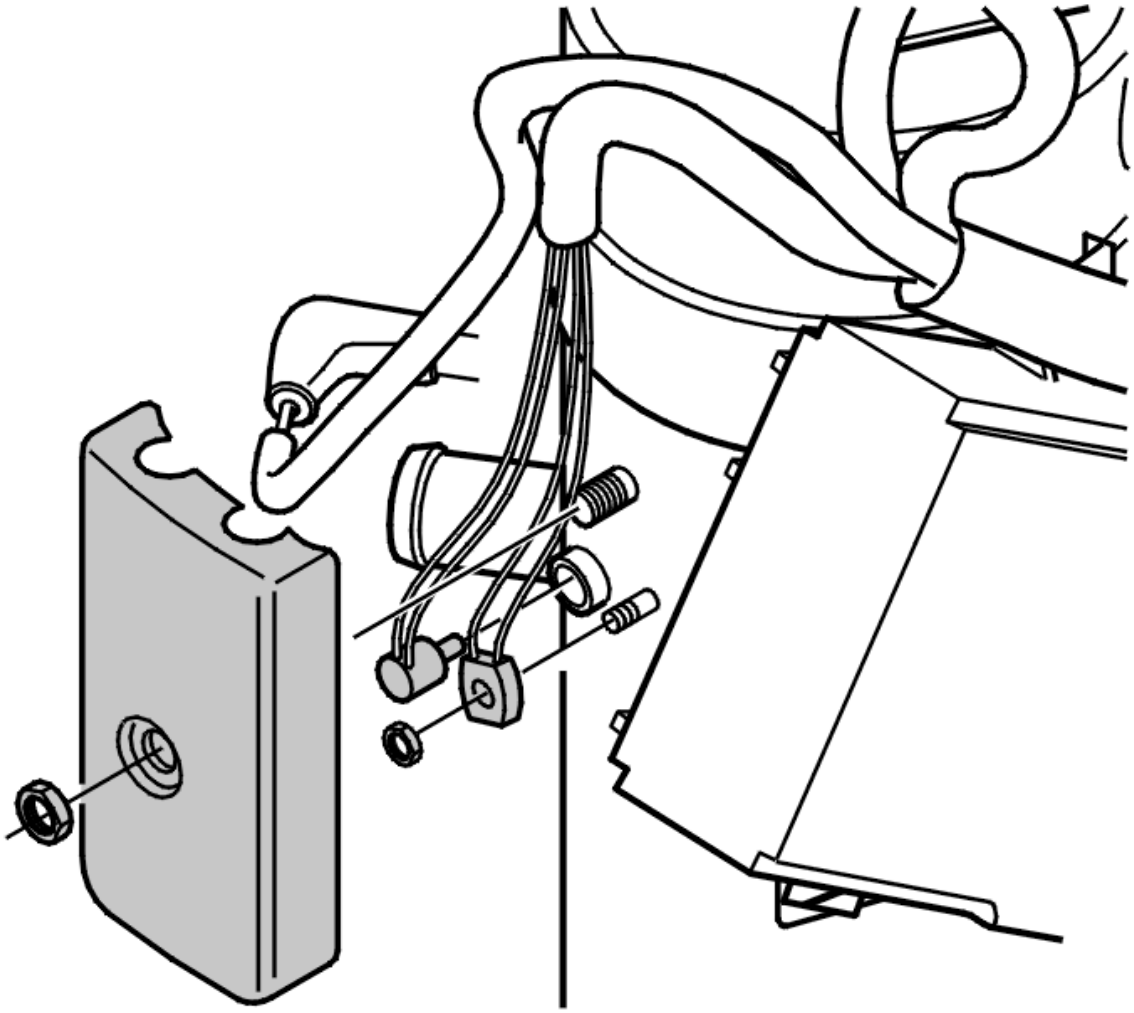

Fig. 189: Control Module
Courtesy of VOLVO CARS CORPORATION

Remove:

- the bumper cover. See **CASING BUMPER FRONT, REPLACING**
- the heater. See **ENGINE COOLANT HEATER, REPLACING**
- the nut and the cover.

Remove:

- the engine coolant temperature sensor (1) by working it loose
- the overheat protection thermostat (2) by slackening off a nut.

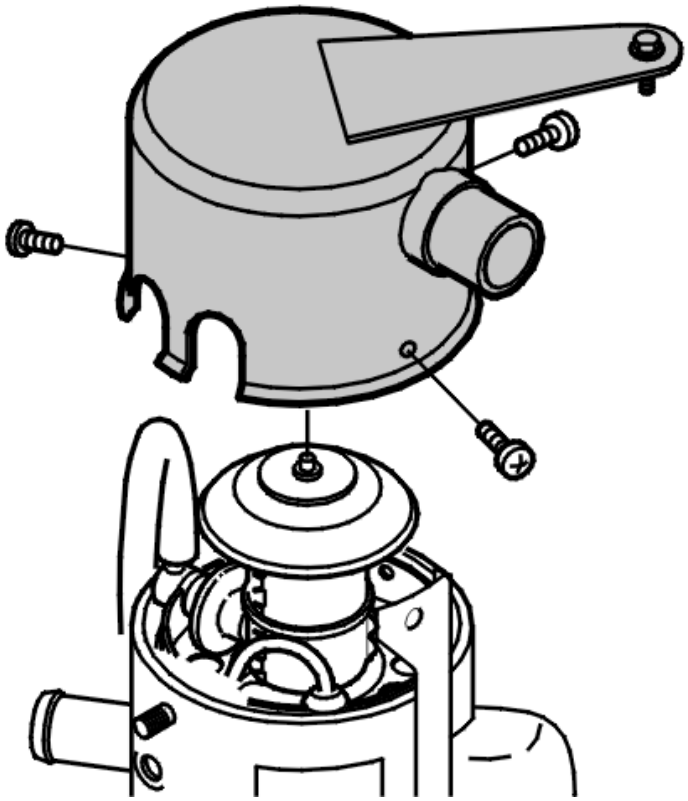

Fig. 190: Identifying Fan Shroud Screws
Courtesy of VOLVO CARS CORPORATION

- the control module. See **CONTROL MODULE ENGINE COOLANT HEATER, REPLACING**.

Remove:

- the hose clamp from the intake hose
- the three screws from the fan shroud. Lift the fan shroud out.

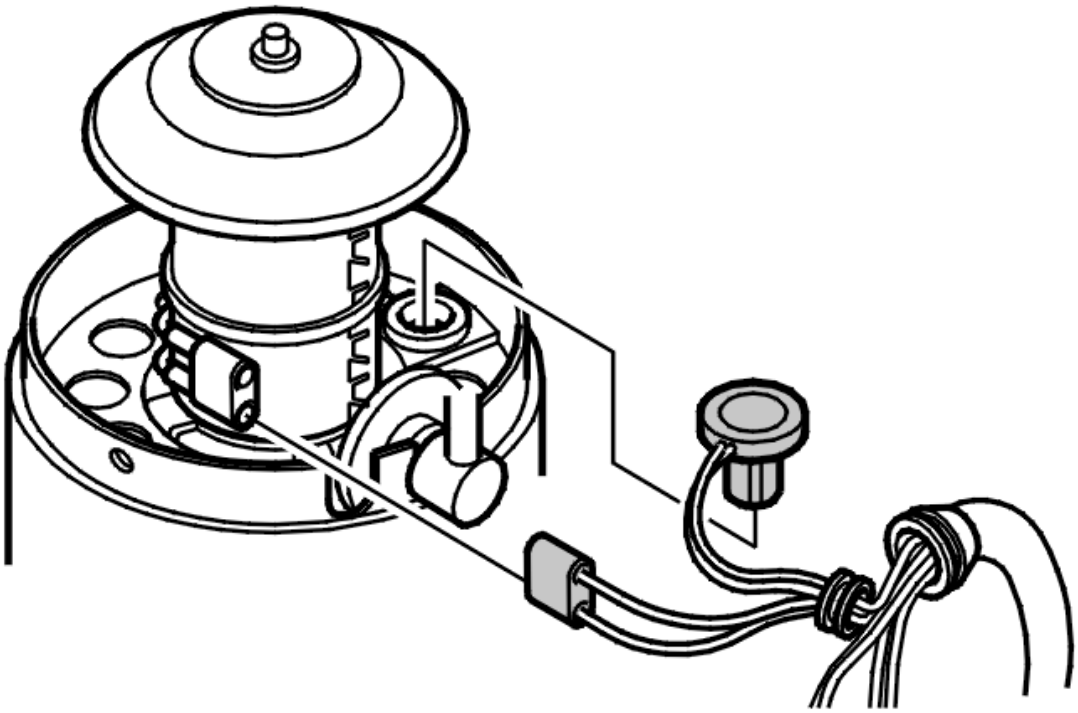

Fig. 191: Flame Sensor From Mounting
Courtesy of VOLVO CARS CORPORATION

Disconnect the fan motor connector.

Disconnect the flame sensor from the mounting.

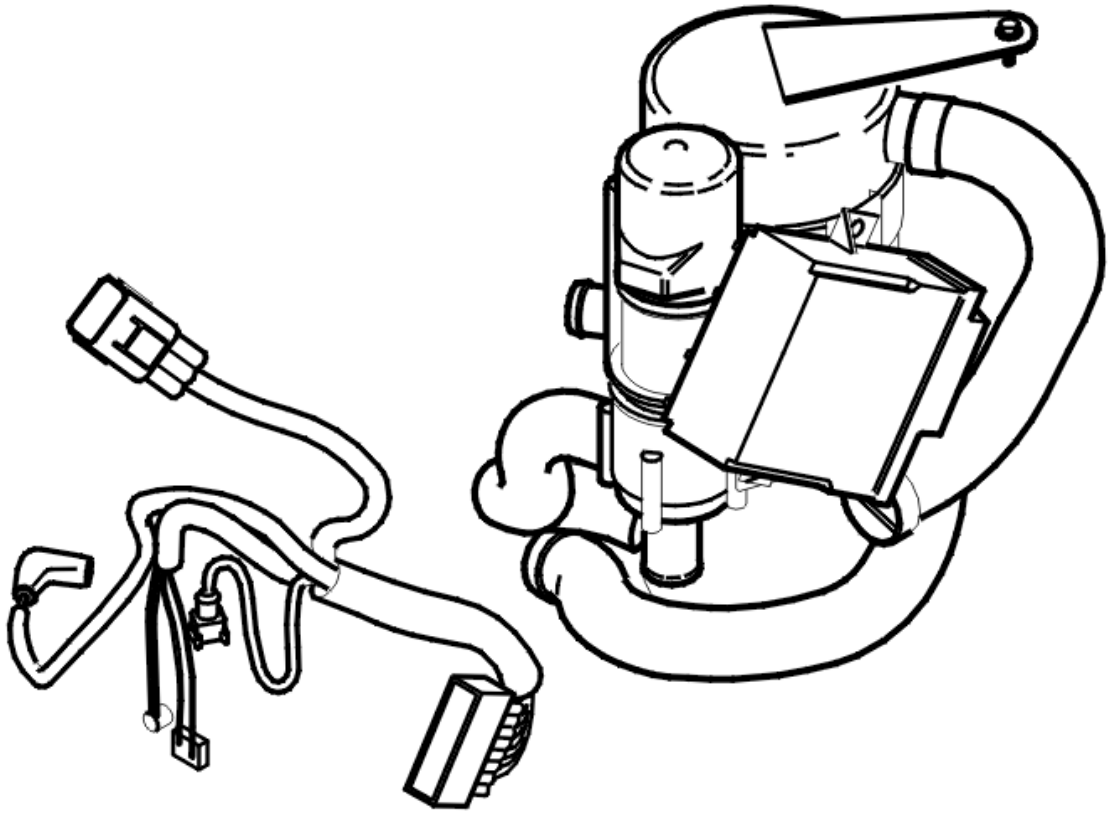

Fig. 192: Cable Harness
Courtesy of VOLVO CARS CORPORATION

Replacing the entire cable harness:

Remove the entire cable harness for **all** sensors.

HINT: Replace the cable harness by removing it piece by piece. Replace in the same order with a new cable harness so that it is correctly positioned.

Cutting and splicing the cable harness:

To replace individual sensors, cut and splice the cable harness. See **SPLICING THE CABLES**.

INSTALLING THE OVERHEAT PROTECTION, THERMOSTAT FLAME SENSOR AND COOLANT TEMPERATURE SENSOR

Install:

- the new cable harness
- all the sensors and connectors
- the fan shroud
- the intake hose

- the control module. See **CONTROL MODULE ENGINE COOLANT HEATER, REPLACING**
- the overheat protection thermostat using a nut (1xM5). Tighten. See **SUMMARY OF TIGHTENING TORQUES FOR SPECIFIC COMPONENTS**
- the engine coolant temperature sensor
- the cover with a nut. Tighten. See **SUMMARY OF TIGHTENING TORQUES FOR SPECIFIC COMPONENTS**
- the heater. See **ENGINE COOLANT HEATER, REPLACING**.

FINAL CHECK

Test run the heater. Check the function of the heater. See **ENGINE COOLANT HEATER, TEST RUNNING** .

Check that no diagnostic trouble codes (DTC) have been stored during the repair work.

Install the bumper cover. See **CASING BUMPER FRONT, REPLACING** .

SPLICING THE CABLES

STRIP THE WIRE

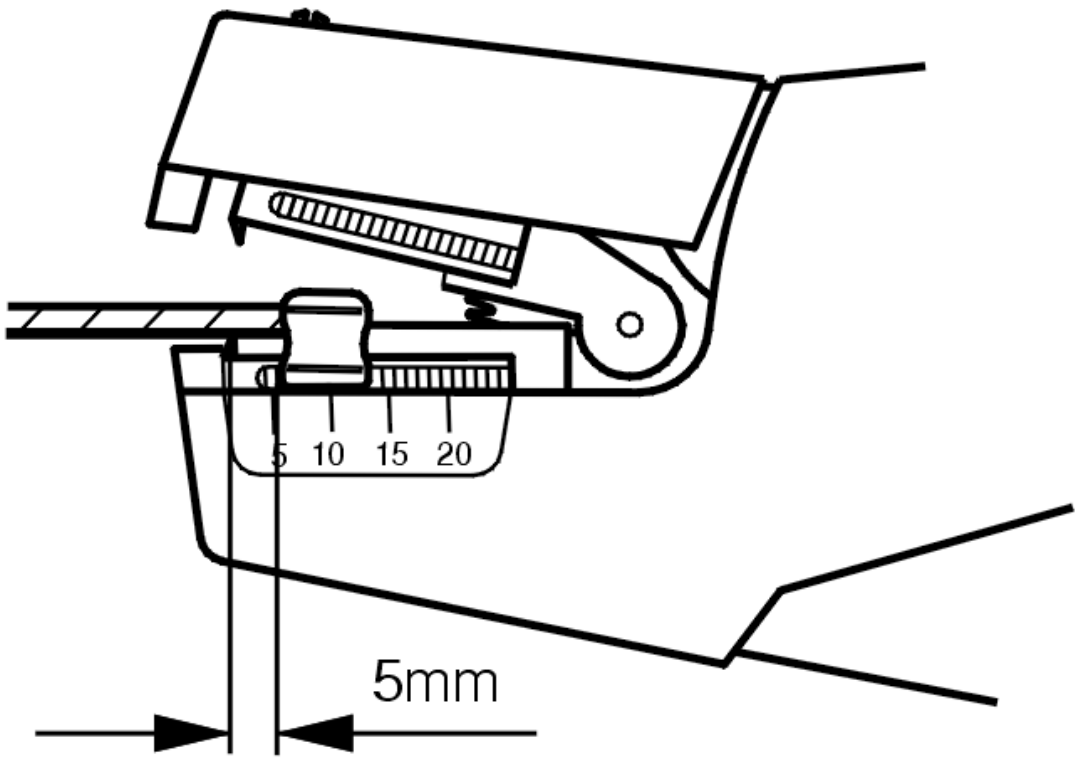

Fig. 193: Identifying Cable Strip Length
Courtesy of VOLVO CARS CORPORATION

Peel 5.0mm / 0.2 in of the insulation off the 4 cable ends (13/64 inches) using pliers see **9512620** .

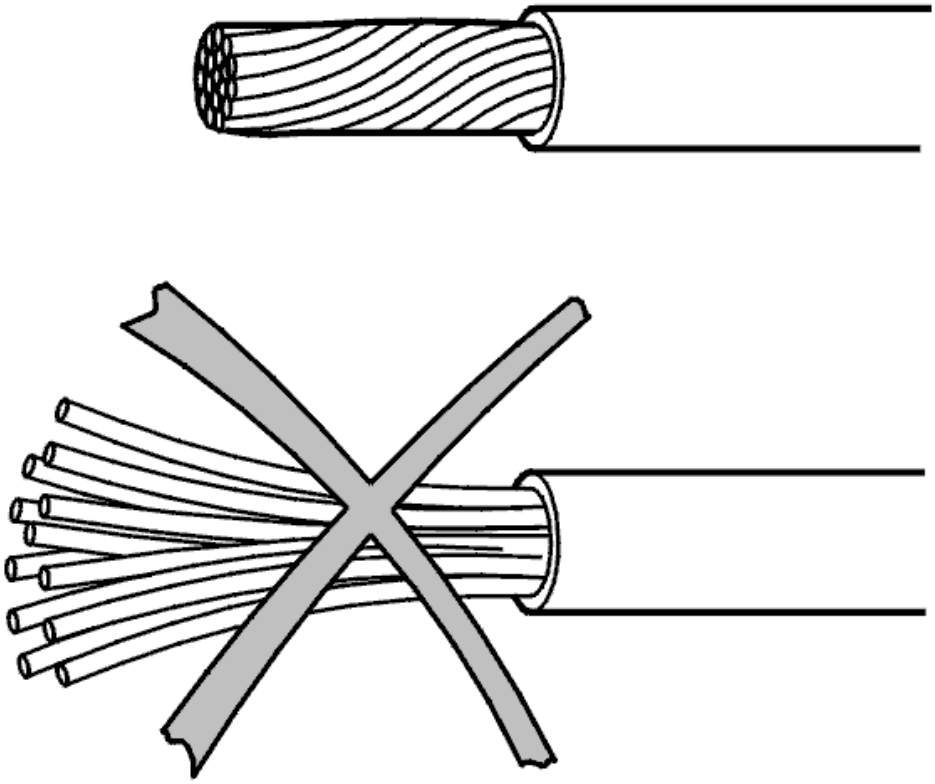

Fig. 194: Identifying Correct & Incorrect Wire End Twists
Courtesy of VOLVO CARS CORPORATION

Twist the strands on the stripped wire ends. Do NOT forget to do this on all four wire ends.

NOTE: Make sure the strands are twisted.

JOINING THE WIRE ENDS WITH THE SAME COLORS/ SINGLE OR MULTICOLORED

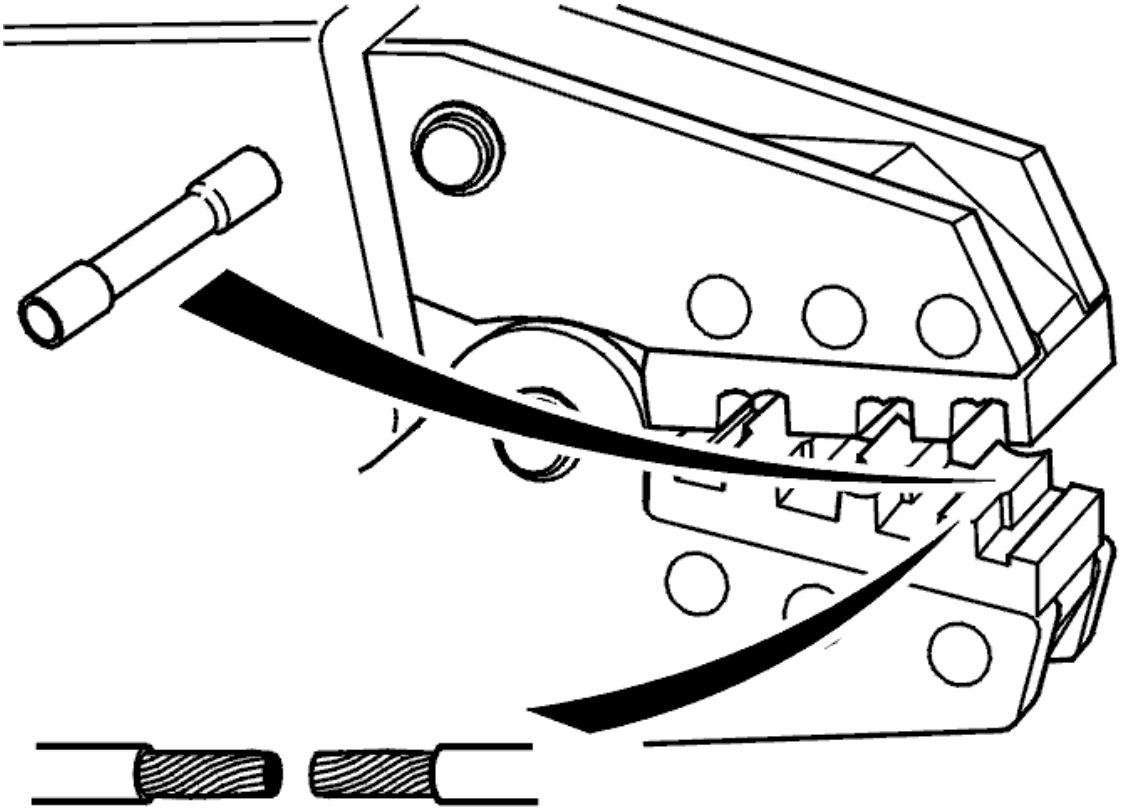

Fig. 195: Identifying Correct Cable Connection
Courtesy of VOLVO CARS CORPORATION

NOTE: Cable should always be connected color for color, single color to single color or multiple colors to multiple colors. The cables must NOT under any circumstances be incorrectly connected, always color for color.

Install the shrink tubing 951 2783 in the pressure tool see **9512785** in output "Green". Clamp the pliers enough to hold the shrink tubing.

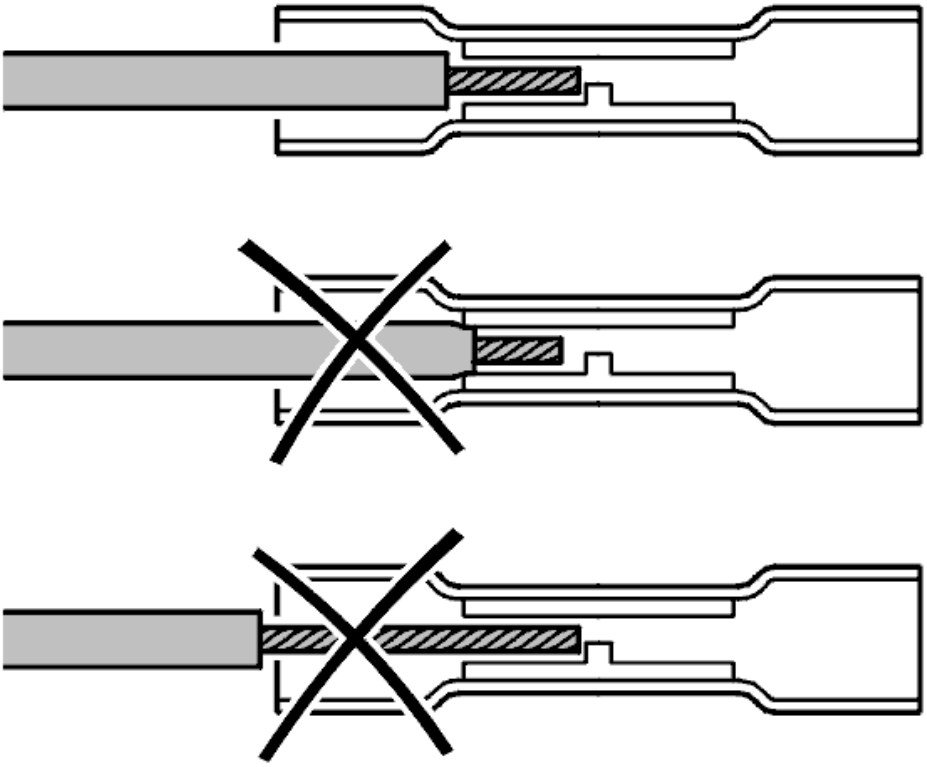

Fig. 196: Crimping Examples
Courtesy of VOLVO CARS CORPORATION

NOTE: The sleeve must sit in the correct output of the pressure tool, position "Green".

Feed the end of the wire in the shrink tubing that is held by the pliers. Feed the wire into the shrink tubing until it stops, make sure that the wire insulation does not go near the clamp on the sleeve or the stripped wire will protrude outside the sleeve.

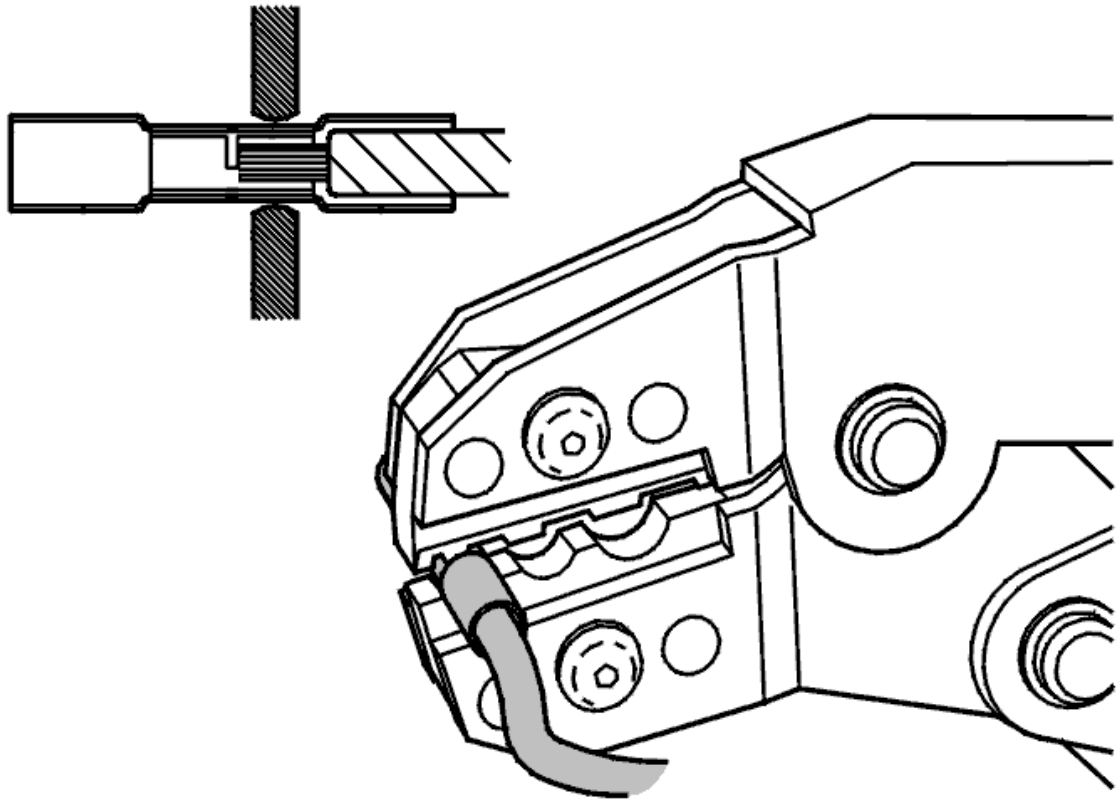

Fig. 197: Identifying Tight Shrink Tube Clamping
Courtesy of VOLVO CARS CORPORATION

Clamp the shrink tubing tightly.

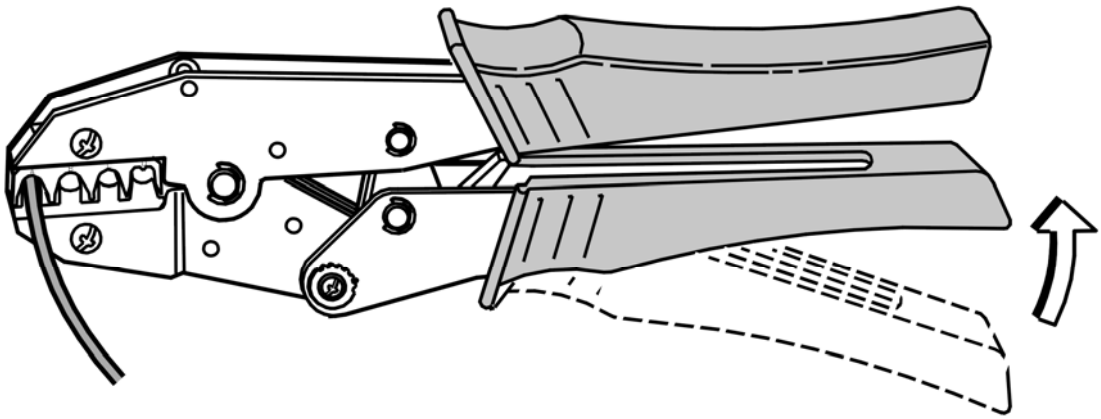

Fig. 198: Crimping Cable Terminal
Courtesy of VOLVO CARS CORPORATION

Press the handles of the pliers fully together to obtain a correct joint, the pliers automatically release their grip afterwards.

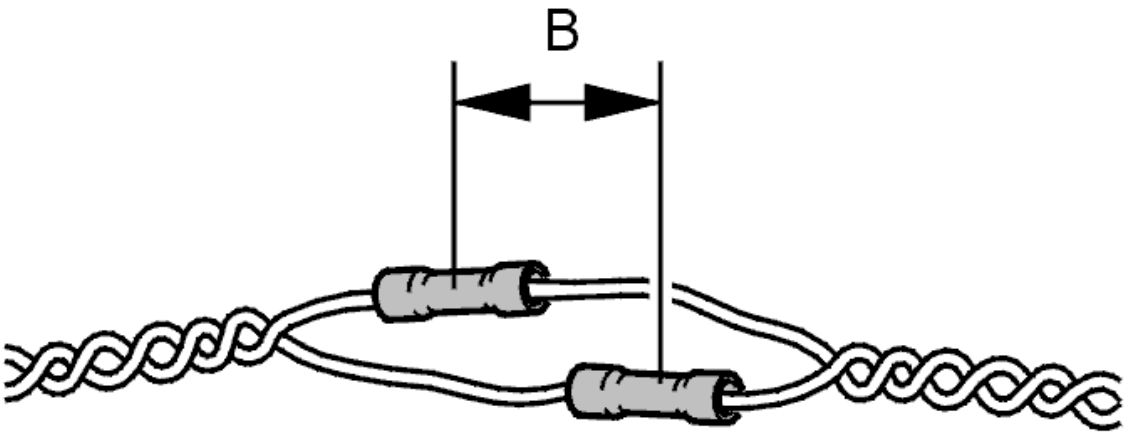

Fig. 199: Identifying Shrink Tube Offset Measurement
Courtesy of VOLVO CARS CORPORATION

Feel by hand to make sure the shrink tubing is correctly installed.

Check that measurement B is 40mm (1-1/2 inches) between the joints from center to center.

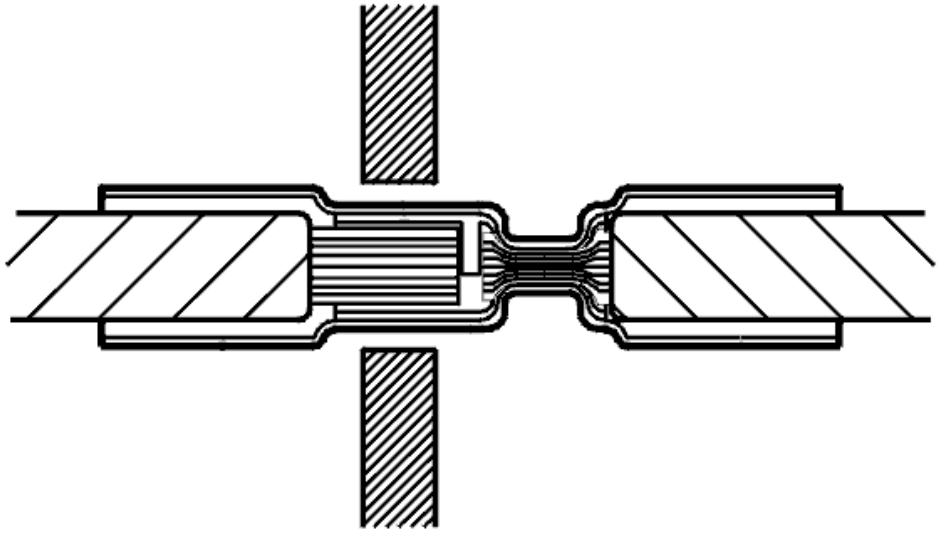

Fig. 200: Crimped Wire
Courtesy of VOLVO CARS CORPORATION

NOTE: Remember the cable, color to color (with same color/ single or multi-colored).

When the first join is completed and checked, join the rest of the wire ends in the same way.

HEATING THE SHRINK TUBING

The shrink tubing ensures the electric wire is satisfactory and provides a safe join.

Hold a pad or other item behind the shrink tubing to avoid heat escaping.

HINT: Suitable setting of heat gun see 9512777 , air distribution switch in position 2 and potentiometer for temperature setting in position between 2 and 3.

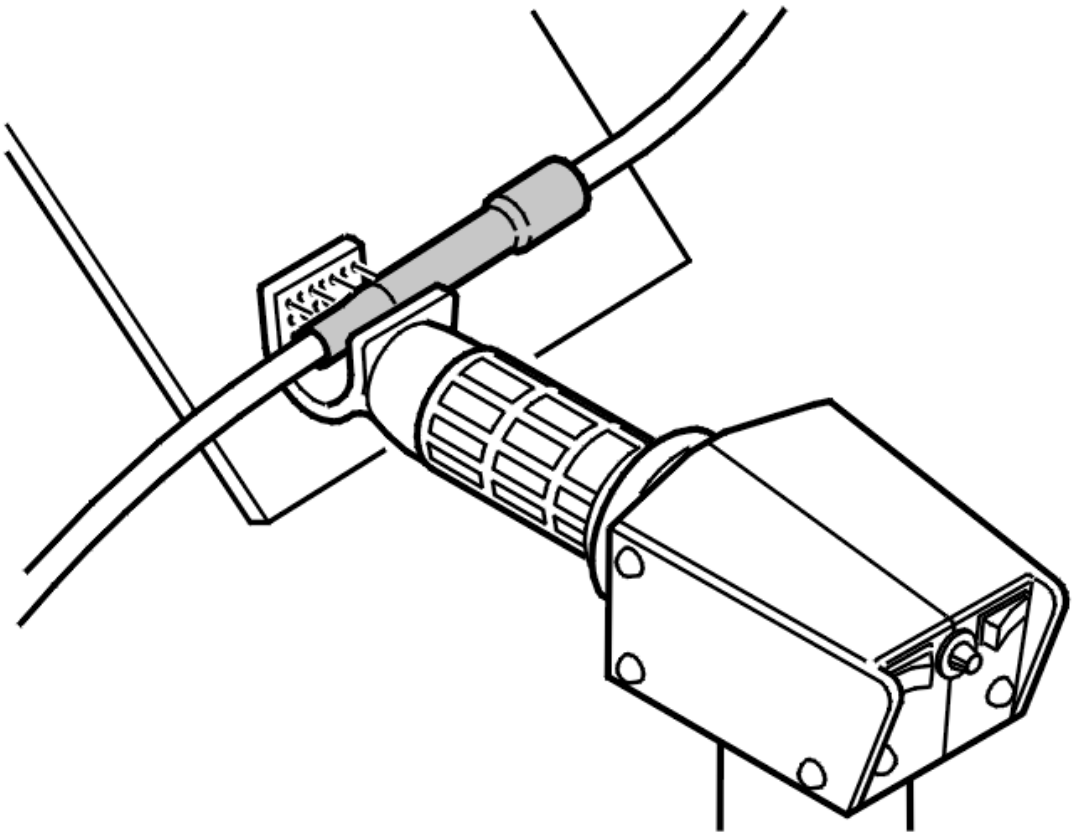

Fig. 201: Heating Heat-Shrink Tubing
Courtesy of VOLVO CARS CORPORATION

Heat the sleeve using the hot air gun see **9512777** and suitable jet kit. Heat the shrink tubing rapidly to avoid heat escaping. It is very important that the shrink tubing is correctly shrunk around the wire. It should be tight at both ends.

NOTE: Adjust the heat shield if necessary.

WATER PUMP ENGINE COOLANT HEATER, REPLACING

As the illustrations in this service information are used for different model years and / or models, some variation may occur. However, the essential information in the illustrations is always correct.

PREPARATIONS

Remove:

- the bumper cover. See **CASING BUMPER FRONT, REPLACING**
- the control module. See **CONTROL MODULE ENGINE COOLANT HEATER, REPLACING**. Allow the cable harness to remain on the control module.

REMOVING THE WATER PUMP FOR THE ENGINE COOLANT HEATER

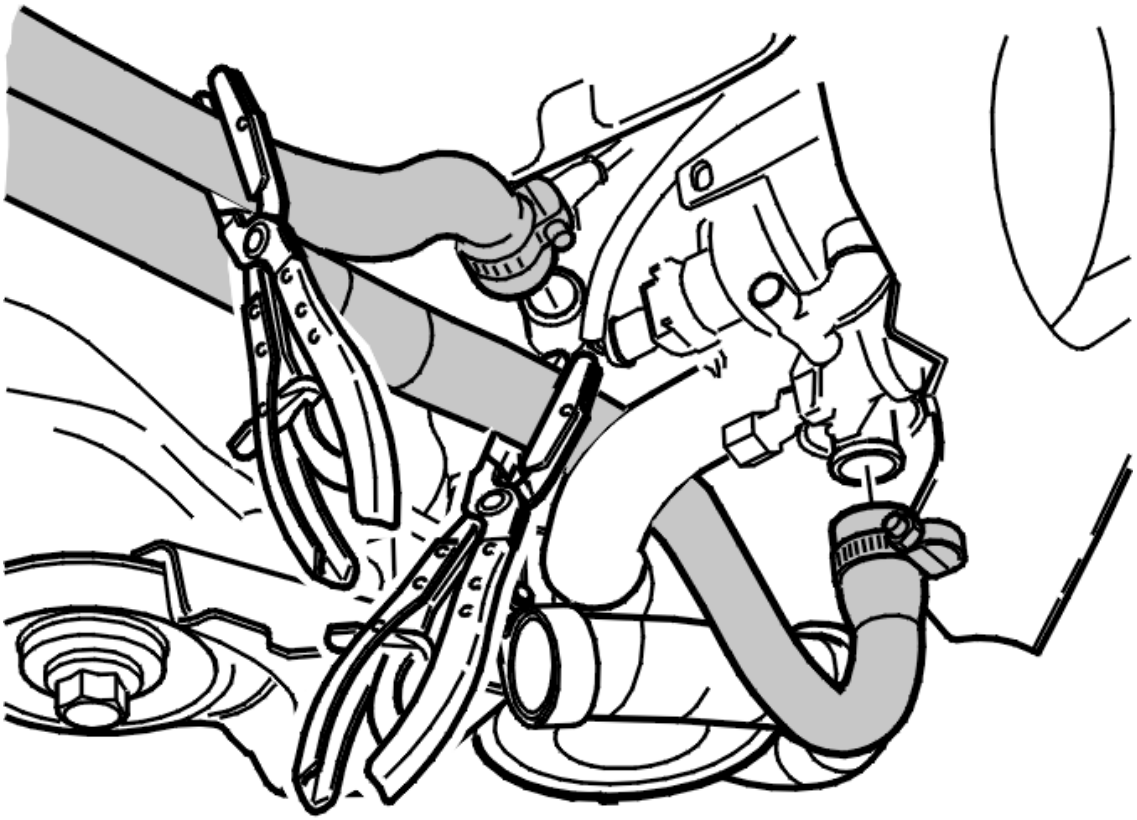

Fig. 202: Engine Coolant Heater Hose
Courtesy of VOLVO CARS CORPORATION

Install hose clips on both the engine coolant hoses by the heat exchanger.

Position a container under the heater.

Disconnect the hoses.

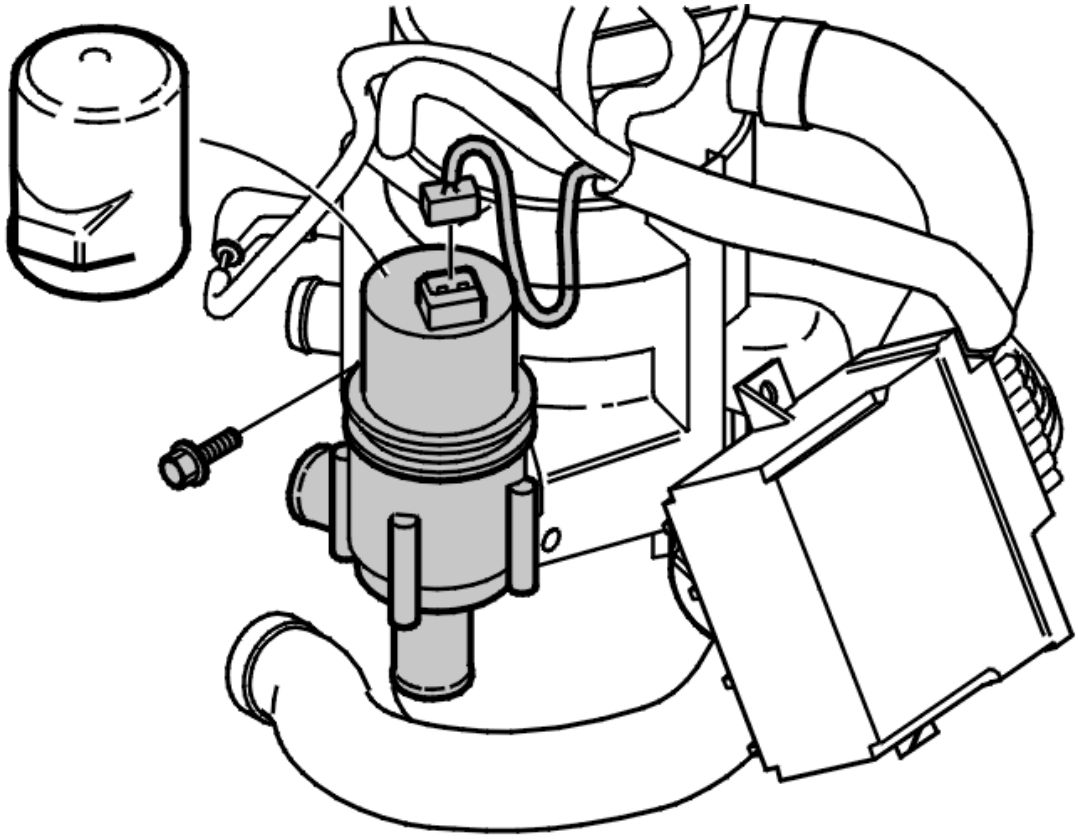

Fig. 203: Identifying Water Pump Mounting Nut
Courtesy of VOLVO CARS CORPORATION

Cut off the tie strap holding the protective cap over the control module. Lift off the protective cap.

Remove:

- the connector
- the nut for the water pump mounting. Hold the damper while removing the water pump.

NOTE: Note the position of the water pump on the holder.

INSTALLING THE WATER PUMP FOR THE ENGINE COOLANT HEATER

Position the water pump (according to the noted position) in the shutter using the shaped hoses.

Install:

- the water pump mounting using a nut (1xM6). Tighten. See **SUMMARY OF TIGHTENING TORQUES FOR SPECIFIC COMPONENTS**
- the connector
- the protective cap

- a new tie strap.

Tighten the hose clamps for both the engine coolant hoses.

Install the control module. See **CONTROL MODULE ENGINE COOLANT HEATER, REPLACING**.

FINAL CHECK

Test run the heater. Check the function of the heater. See **ENGINE COOLANT HEATER, TEST RUNNING** .

Check for leakage in the engine coolant hoses or fuel lines.

Top up the coolant if necessary.

Check that no diagnostic trouble codes (DTC) have been stored during the repair work.

Install the bumper cover. See **CASING BUMPER FRONT, REPLACING** .

AIR CONDITIONING (B6324S; 2007-2010)

AC COMPRESSOR, REPLACEMENT

REPLACING

NOTE: Removal steps in this procedure may contain installation details.

WARNING: Follow the safety instructions for work on the air conditioning system. See REFRIGERANT, SAFETY REGULATIONS .

NOTE: First read the instructions covering slow and fast leaks. See OIL AIR CONDITIONING (A/C) SYSTEM, FILLING .

Drain the refrigerant from the AC system. See **REFRIGERANT, DRAINING**

Remove the following items:

- Air cleaner housing, see **AIR CLEANER HOUSING**
- The auxiliaries belt. See **AUXILIARY BELT** .

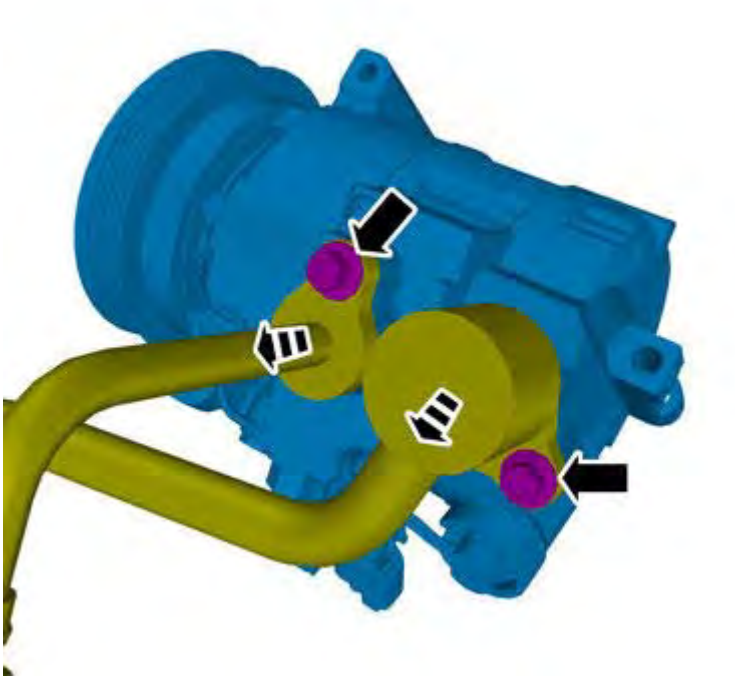

Fig. 204: Compressor Terminals
Courtesy of VOLVO CARS CORPORATION

NOTE: **Plug the terminals of the compressor using the transport plugs from the new compressor.**

Torque: M8

24 Nm

INSTALLING

To install, reverse the removal procedure.

Vacuum pump the air conditioning system. See **VACUUM PUMPING** .

Fill the air conditioning system with refrigerant. See **REFRIGERANT, FILLING** .

Leak-trace the air conditioning system. See **LEAK TRACING, FLUORESCENT TRACING AGENT / UV LAMP** .

Carry out a performance test on the climate control system. See **CLIMATE SYSTEM, PERFORMANCE TEST** .

COOLANT PIPE JUNCTION BLOCK TO COMPRESSOR

REPLACING

NOTE: **Removal steps in this procedure may contain installation details.**

WARNING: **Follow the safety instructions for work on the air conditioning system. See REFRIGERANT, SAFETY REGULATIONS .**

NOTE: **First read the instructions covering slow and fast leaks. See OIL AIR CONDITIONING (A/C) SYSTEM, FILLING**

Drain the refrigerant from the air conditioning system. See **REFRIGERANT, DRAINING** .

Fig. 205: Air Box Cover
Courtesy of VOLVO CARS CORPORATION

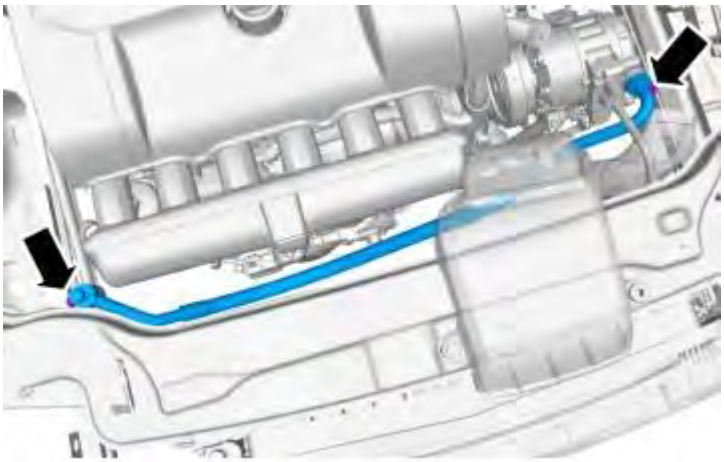

Fig. 206: Identifying Air Condition Line
Courtesy of VOLVO CARS CORPORATION

INSTALLING

To install, reverse the removal procedure

Vacuum pump the AC system. See **VACUUM PUMPING** .

Fill the AC-system with refrigerant. See **REFRIGERANT, FILLING** .

Leak-trace the air conditioning system. See **LEAK TRACING, FLUORESCENT TRACING AGENT / UV LAMP**

Or, see **LEAK TRACING, FLUORESCENT TRACING AGENT / UV LAMP** .

Carry out a performance test on the climate control system. See **CLIMATE SYSTEM, PERFORMANCE TEST** .

ELECTROMAGNETIC CLUTCH

Special tools	
	T9997404 GAUGE **Tool number:** T9997404 **Tool description:** GAUGE **Tool boards:**

REMOVAL

Remove the battery. See **BATTERY, REPLACING** .

Fig. 207: Protective Engine Cover
Courtesy of VOLVO CARS CORPORATION

Remove the air cleaner housing, see **AIR CLEANER HOUSING** .

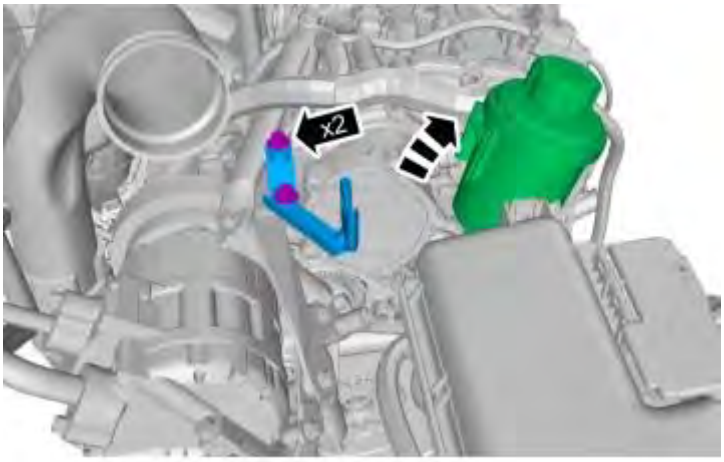

Fig. 208: Removing Reservoir Tank
Courtesy of VOLVO CARS CORPORATION

Torque: M6

10 Nm

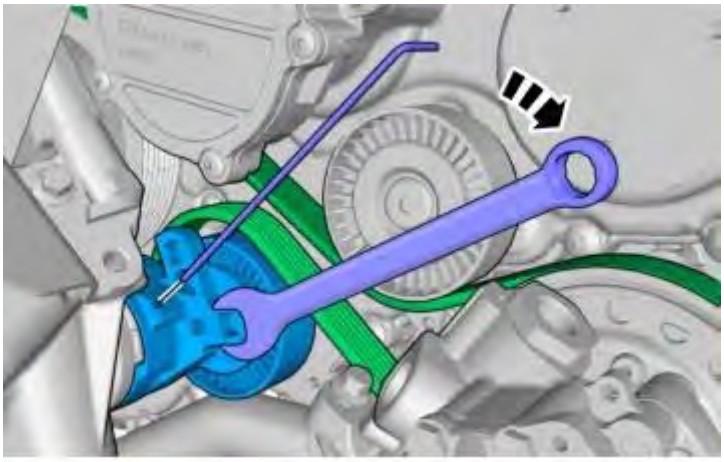

Fig. 209: Adjusting Tensioner
Courtesy of VOLVO CARS CORPORATION

Slacken the tensioner. . Lock the tensioner in the slackened position. .

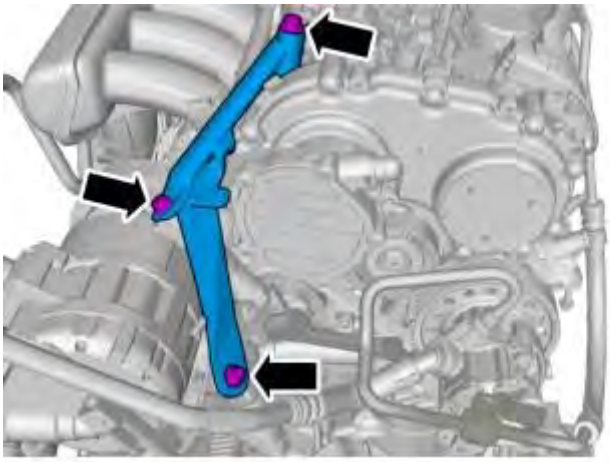

Fig. 210: Identifying Engine Bracket
Courtesy of VOLVO CARS CORPORATION

Torque: M8

24 Nm

Torque: M10

50 Nm

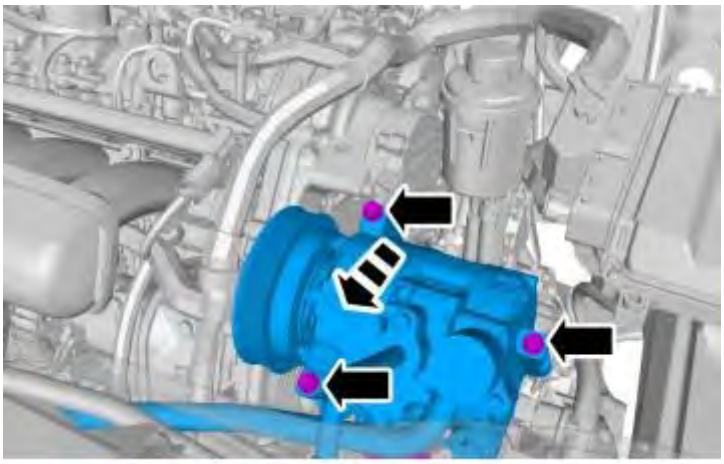

Fig. 211: Removing Compressor
Courtesy of VOLVO CARS CORPORATION

Torque: M8

24 Nm

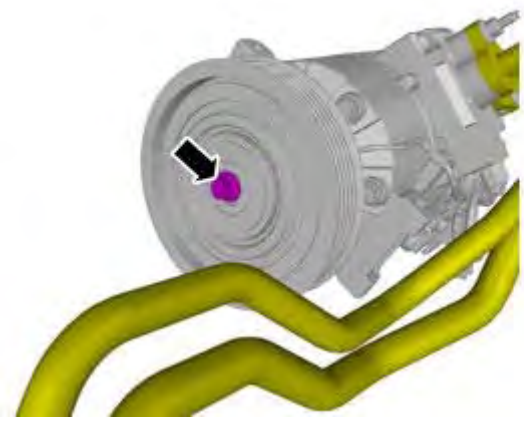

Fig. 212: Compressor Assembly Bolt
Courtesy of VOLVO CARS CORPORATION

13 Nm

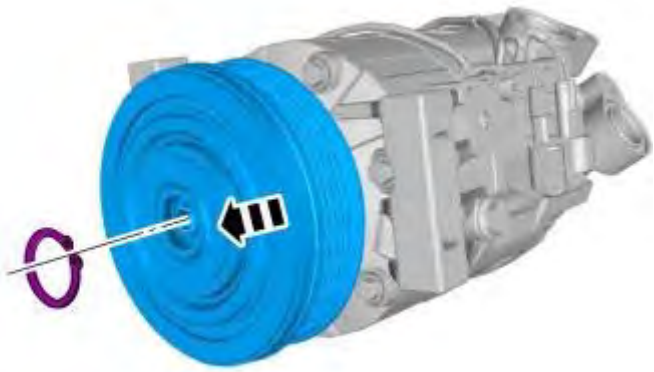

Fig. 213: Compressor Snap Ring
Courtesy of VOLVO CARS CORPORATION

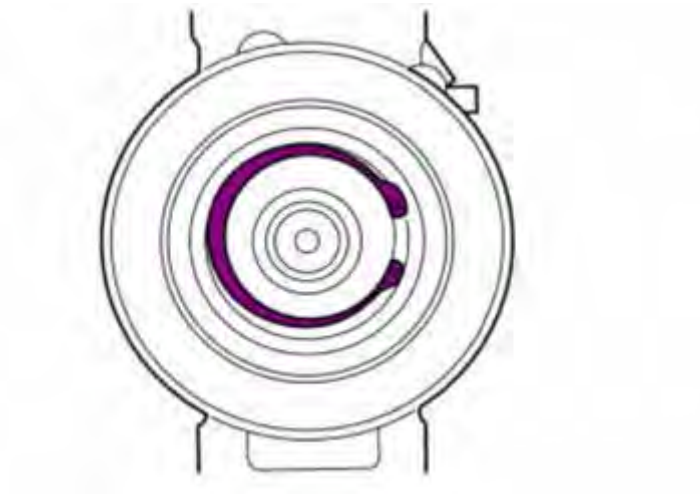

Fig. 214: Compressor Snap Ring Installed
Courtesy of VOLVO CARS CORPORATION

To install, reverse the removal procedure.

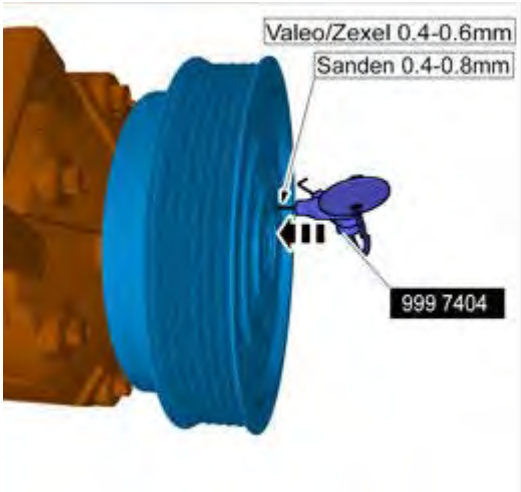

Fig. 215: Identifying Special Service Tool 999 7404
Courtesy of VOLVO CARS CORPORATION

see **9997404** to measure the distance between drive plate and belt pulley.

EVAPORATOR REAR, REPLACING

see **EVAPORATOR REAR, REPLACING**

EVAPORATOR, REPLACING

see **EVAPORATOR, REPLACING**

EXPANSION VALVE, REPLACING

see **EXPANSION VALVE, REPLACING**

NEEDLE JET / SERVICE VALVE, REPLACING

see **NEEDLE JET / SERVICE VALVE, REPLACING**

REFRIGERANT PIPE COMPRESSOR TO CONDENSER

REMOVAL

NOTE: Removal steps in this procedure may contain installation details.

WARNING: Follow the safety instructions for work on the air conditioning system. See REFRIGERANT, SAFETY REGULATIONS .

NOTE: First read the instructions covering slow and fast leaks. See OIL AIR CONDITIONING (A/C) SYSTEM, FILLING .

Drain the refrigerant from the air conditioning system. See **REFRIGERANT, DRAINING** .

Fig. 216: Removing Air Box Cover
Courtesy of VOLVO CARS CORPORATION

Fig. 217: Identifying Slid Plate
Courtesy of VOLVO CARS CORPORATION

Torque: M8

24 Nm

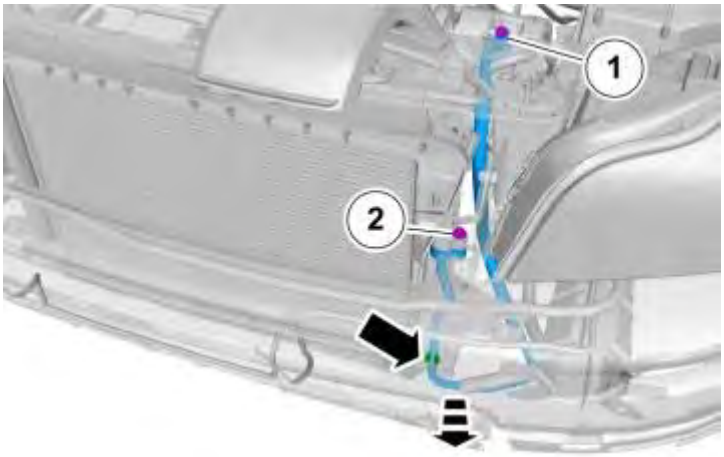

Fig. 218: Air Condition Pressure Line
Courtesy of VOLVO CARS CORPORATION

Torque: M8

24 Nm

INSTALLING

To install, reverse the removal procedure

Vacuum pump the AC system. See **VACUUM PUMPING** .

Fill the AC-system with refrigerant. See **REFRIGERANT, FILLING** .

Leak-trace the air conditioning system. See **LEAK TRACING, FLUORESCENT TRACING AGENT / UV LAMP**

Or, see **LEAK TRACING, FLUORESCENT TRACING AGENT / UV LAMP** .

Carry out a performance test on the climate control system. See **CLIMATE SYSTEM, PERFORMANCE TEST** .

REFRIGERANT PIPE CONDENSER TO EXPANSION VALVE

REMOVAL

NOTE: Removal steps in this procedure may contain installation details.

WARNING: Follow the safety instructions for work on the air conditioning system. See REFRIGERANT, SAFETY REGULATIONS .

NOTE: First read the instructions covering slow and fast leaks. See OIL AIR CONDITIONING (A/C) SYSTEM, FILLING .

Drain the refrigerant from the system. See **REFRIGERANT, DRAINING**

Remove the right headlight. See **LIGHTING - REMOVAL, REPLACEMENT AND INSTALLATION**

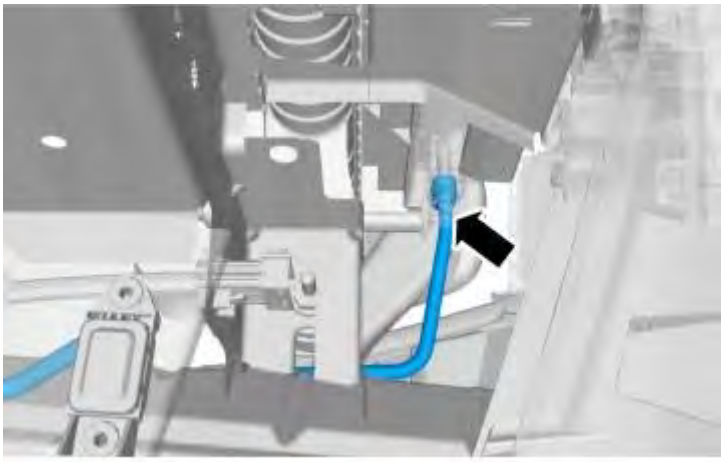

Fig. 219: Air Condition Pressure Line
Courtesy of VOLVO CARS CORPORATION

Torque: M6

10 Nm

Remove the upper torque rod. See **UPPER TORQUE ROD**

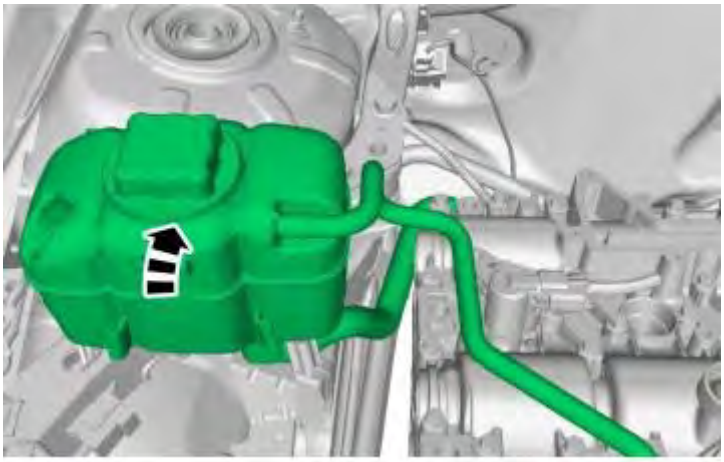

Fig. 220: Removing Engine Coolant Reservoir
Courtesy of VOLVO CARS CORPORATION

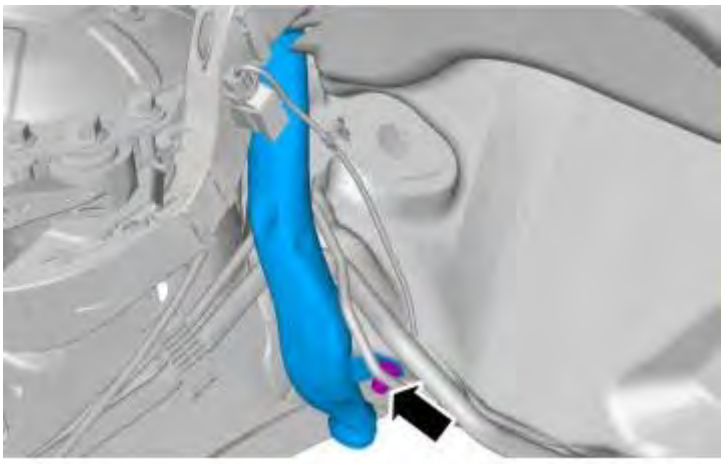

Fig. 221: Identifying Mounting Bolt
Courtesy of VOLVO CARS CORPORATION

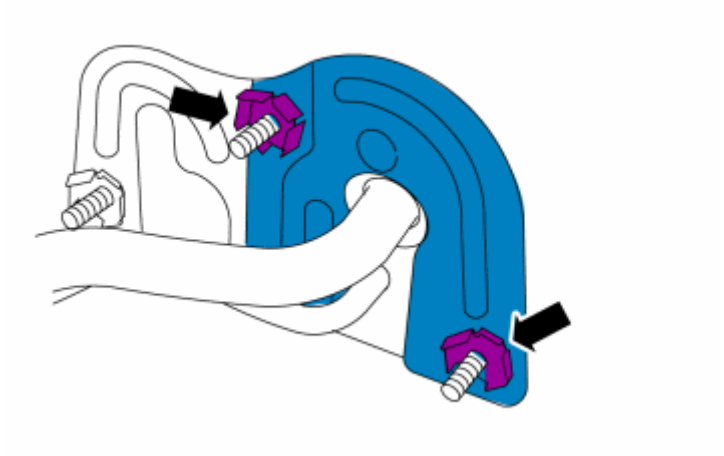

Fig. 222: Retaining Clips
Courtesy of VOLVO CARS CORPORATION

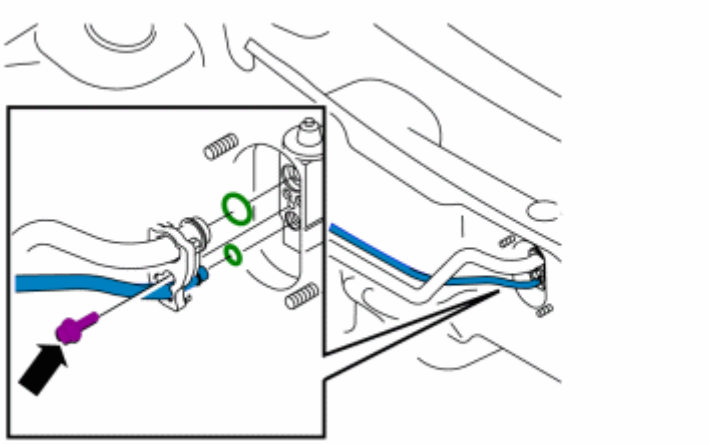

Fig. 223: Removing Plug And O-Rings
Courtesy of VOLVO CARS CORPORATION

Torque: M6

10 Nm

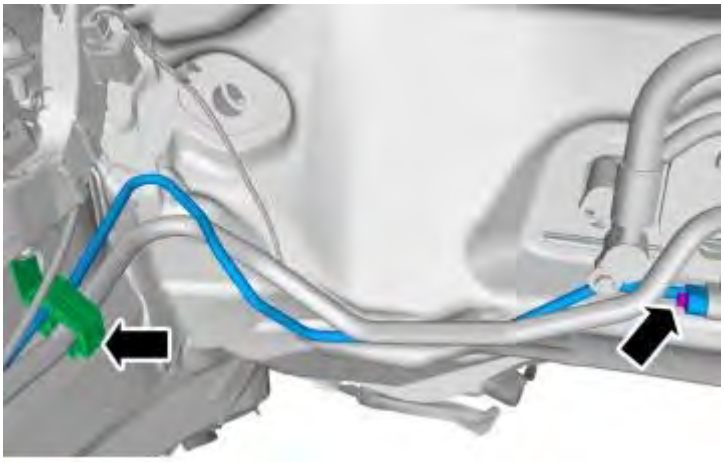

Fig. 224: Identifying Air Condition Line (Rear A/C)
Courtesy of VOLVO CARS CORPORATION

For vehicles with rear AC

Torque: M6

10 Nm

INSTALLING

To install, reverse the removal procedure.

Vacuum pump the A/C system. See **VACUUM PUMPING** .

Fill the AC-system with refrigerant. See **REFRIGERANT, FILLING**

Leak-trace the air conditioning system. See **LEAK TRACING, FLUORESCENT TRACING AGENT / UV LAMP**

Or, see **LEAK TRACING, FLUORESCENT TRACING AGENT / UV LAMP**

Carry out a performance test on the climate control system. See **CLIMATE SYSTEM, PERFORMANCE TEST**

REFRIGERANT PIPE FOR THE EXPANSION VALVE TO JUNCTION BLOCK

REMOVAL

NOTE: Removal steps in this procedure may contain installation details.

Drain the refrigerant from the AC system, see **REFRIGERANT, DRAINING** .

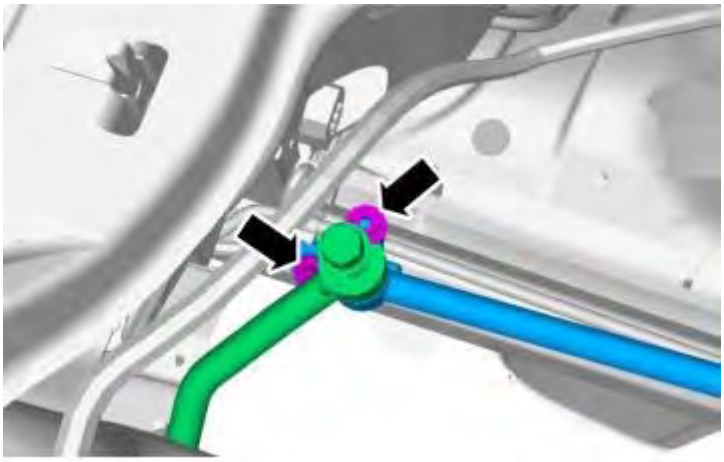

Fig. 225: Upper Torque Rod
Courtesy of VOLVO CARS CORPORATION

Remove the upper torque rod, see **UPPER TORQUE ROD** .

Torque: M8

24 Nm

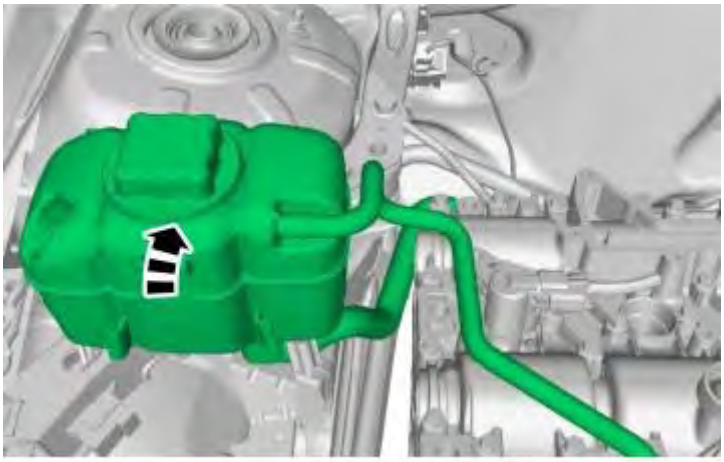

Fig. 226: Removing Engine Coolant Reservoir
Courtesy of VOLVO CARS CORPORATION

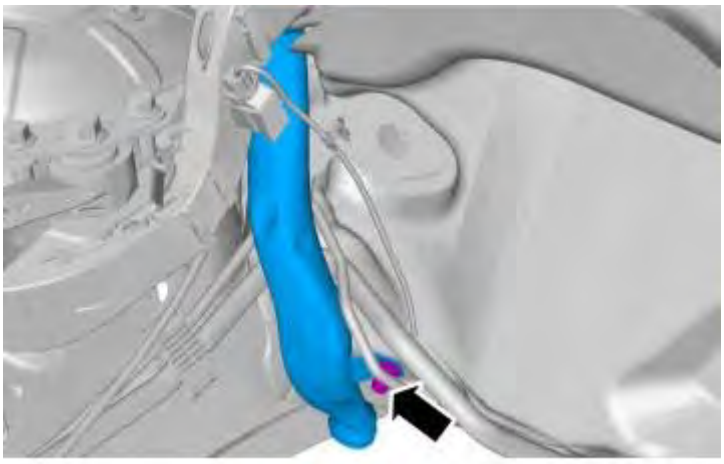

Fig. 227: Identifying Mounting Bolt
Courtesy of VOLVO CARS CORPORATION

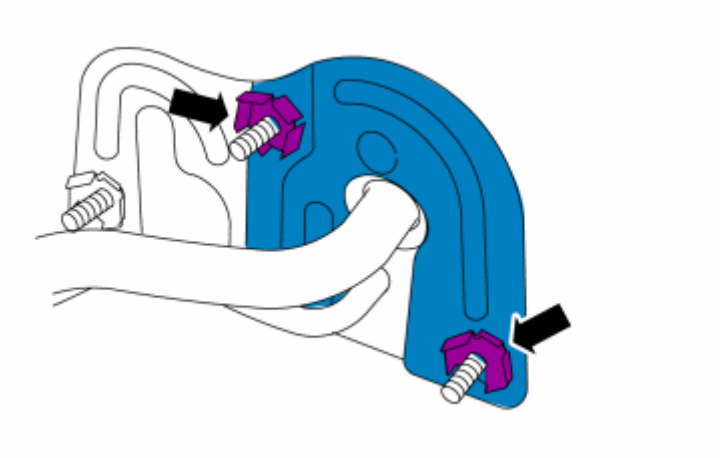

Fig. 228: Retainer Clips
Courtesy of VOLVO CARS CORPORATION

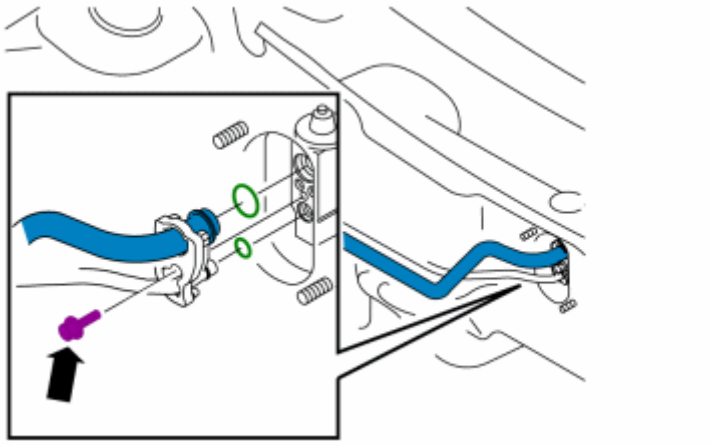

Fig. 229: Identifying Plug And O-Rings
Courtesy of VOLVO CARS CORPORATION

Torque: M6

10 Nm

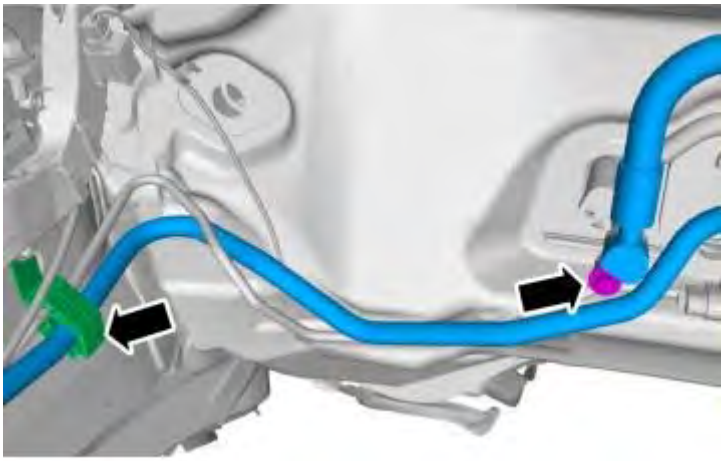

Fig. 230: Identifying Air Condition Line (Rear A/C)
Courtesy of VOLVO CARS CORPORATION

For vehicles with rear AC

Torque: M6

10 Nm

INSTALLING

To install, reverse the removal procedure

Vacuum pump the AC system. See **VACUUM PUMPING** .

Fill the AC-system with refrigerant. See **REFRIGERANT, FILLING** .

Leak-trace the air conditioning system. See **LEAK TRACING, FLUORESCENT TRACING AGENT / UV LAMP**

Or, see **LEAK TRACING, FLUORESCENT TRACING AGENT / UV LAMP** .

Carry out a performance test on the climate control system. See **CLIMATE SYSTEM, PERFORMANCE TEST** .

AIR CONDITIONING (B6324S5; 2011-2012)

AC COMPRESSOR, REPLACEMENT

see **AC COMPRESSOR, REPLACEMENT**

COOLANT PIPE JUNCTION BLOCK TO COMPRESSOR

see **COOLANT PIPE JUNCTION BLOCK TO COMPRESSOR**

ELECTROMAGNETIC CLUTCH

see **ELECTROMAGNETIC CLUTCH**

EVAPORATOR REAR, REPLACING

see **EVAPORATOR REAR, REPLACING**

EVAPORATOR, REPLACING

see **EVAPORATOR, REPLACING**

EXPANSION VALVE, REPLACING

see **EXPANSION VALVE, REPLACING**

NEEDLE JET / SERVICE VALVE, REPLACING

see **NEEDLE JET / SERVICE VALVE, REPLACING**

REFRIGERANT PIPE COMPRESSOR TO CONDENSER

see **REFRIGERANT PIPE COMPRESSOR TO CONDENSER**

REFRIGERANT PIPE CONDENSER TO EXPANSION VALVE

see **REFRIGERANT PIPE CONDENSER TO EXPANSION VALVE**

REFRIGERANT PIPE FOR THE EXPANSION VALVE TO JUNCTION BLOCK

see **REFRIGERANT PIPE FOR THE EXPANSION VALVE TO JUNCTION BLOCK**

HVAC

Climate Units - Specifications, Electrical/Electronic

COMPONENT SPECIFICATIONS (2005-12)

COMPONENT RESISTANCE VALUES

RESISTANCE VALUES, EVAPORATOR TEMPERATURE SENSOR

The component specification gives the value of the component without the connector connected.

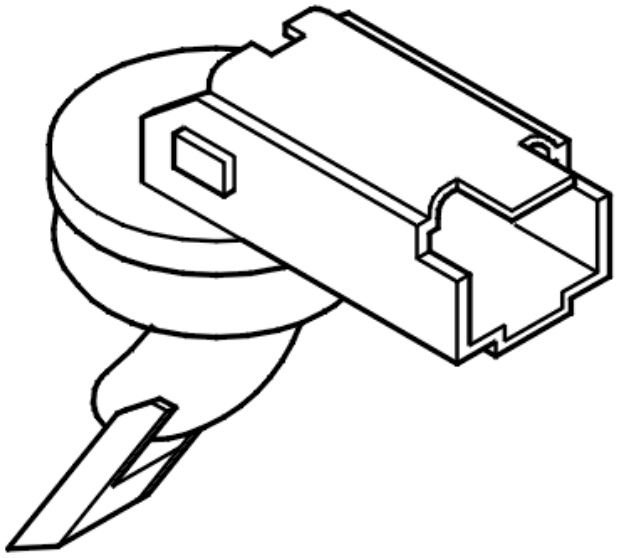

Fig. 1: Identifying Evaporator Temperature Sensor
Courtesy of VOLVO CARS CORPORATION

RESISTANCE VALUES TABLE

Measurement values, resistance	Other
-40°C = approximately 91.8 kohms -35°C = approximately 66.3 kohms -30°C = approximately 48.4 kohms -25°C = approximately 35.7 kohms -20°C = approximately 26.6 kohms -15°C = approximately 20.0 kohms	Measure the resistance between terminals #1 and #2.

-10°C = approximately 15.2 kohms -5°C = approximately 11.6 kohms 0°C = approximately 9.0 kohms 5°C = approximately 7.0 kohms 10°C = approximately 5.5 kohms 15°C = approximately 4.3 kohms 20°C = approximately 3.5 kohms 25°C = approximately 2.7 kohms 30°C = approximately 2.2 kohms 35°C = approximately 1.8 kohms 40°C = approximately 1.5 kohms 45°C = approximately 1.2 kohms 50°C = approximately 1.0 kohms 55°C = approx. 826 ohms 60°C = approx. 688 ohms 65°C = approx. 576 ohms 70°C = approx. 485 ohms 75°C = approx. 409 ohms 80°C = approx. 347 ohms 85°C = approx. 296 ohms 90°C = approx. 253 ohms 95°C = approx. 217 ohms 100°C = approx. 187 ohms	

SIGNAL SPECIFICATION (2005-12)

SIGNAL SPECIFICATION

All the values given below are between the terminals stated in column 1 and terminal #A16 in column 2 (signal ground). This applies unless otherwise indicated in brackets.

NOTE: It is important to connect the breakout box and check the ground terminals before taking readings.

For further information about:

- connection of breakout box, see "Connecting breakout box, Climate Control Module (CCM)"
- checking the ground point, "Checking the voltage/ground connection, climate control module (CCM)".

There may be several connections and connectors between the control module and components.

U =	DC voltage in volts (V)	U_{AC} =	AC voltage in volts (V)
U_{bat} =	Battery voltage (V)	f =	Frequency in Hertz (Hz)
U_{low} =	Voltage approximately 0 V	t =	Time in seconds
PWM =	Pulse width modulated signal in	-	-

%	

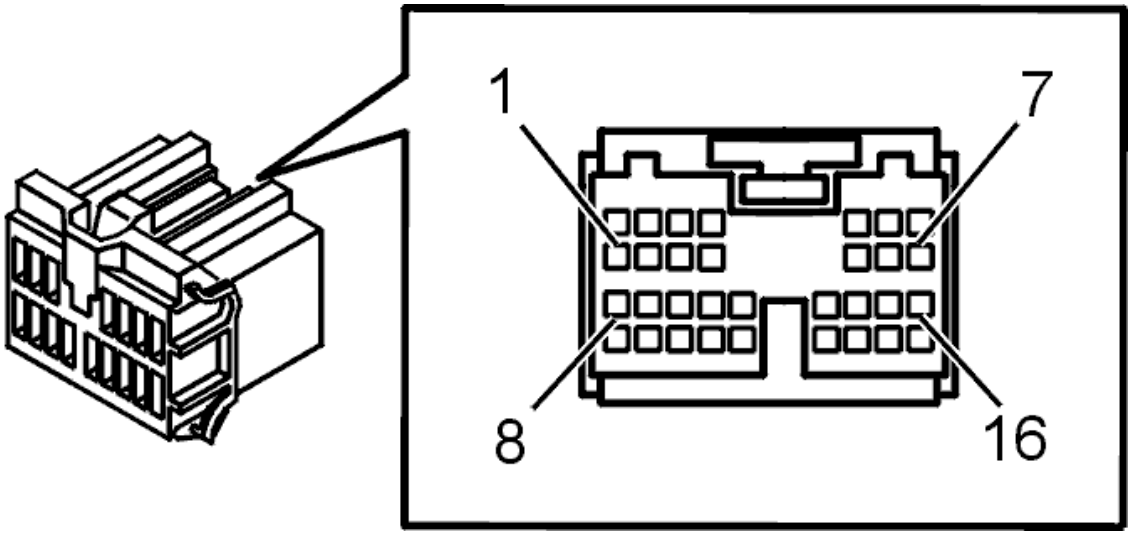

Fig. 2: Connector, Green (16-Pin)
Courtesy of VOLVO CARS CORPORATION

SIGNAL TABLE, CLIMATE CONTROL MODULE (CCM) CONNECTOR

Terminal breakout box	Terminal control module	Signal type	Ignition on	Idle	Other
#25	#A1	Signal, extended X-supply. Power supply, climate control module (CCM).	U_{bat}	U_{bat}	Powered via the relay from the central electronic module (CEM)
#26	#A2	Signal, fan diagnostics	$U=0-U_{bat}$	$U=0-U_{bat}$	-
#27	#A3	Signal, fan control	$U=0-U_{bat}$	$U=0-U_{bat}$	-
#28	#A4	-	-	-	-
#29	#A5	Signal, evaporator temperature sensor	U=0.2-4.8 V	U=0.2-4.8 V	Temperature dependent
#30	#A6	-	-	-	-
#31	#A7	LIN bus 2	Digital signal	Digital signal	Communication with components, LIN bus 2
#32	#A8	CAN L1	Digital signal	Digital signal	-
#33	#A9	CAN L2	Digital signal	Digital signal	-
#34	#A10	CAN H1	Digital signal	Digital signal	-
#35	#A11	CAN H2	Digital signal	Digital signal	-
#36	#A12	LIN bus 1	Digital	Digital	Communication with

			signal	signal	components, LIN bus 1
#37	#A13	Signal ground, evaporator temperature sensor	U_{low}	U_{low}	-
#38	#A14	-	-	-	-
#39	#A15	-	-	-	-
#40	#A16	Power ground	U_{low}	U_{low}	-

SIGNAL TABLE, SEAT HEATING MODULE (SHM) CONNECTOR A

Terminal breakout box	Terminal control module	Signal type	Ignition on	Idle	Other
-	#A1	Power ground	U_{low}	U_{low}	-
-	#A2	LIN bus	Digital signal	Digital signal	Communication with the climate control module (CCM)
-	#A3	-	-	-	-
-	#A4	Power supply, seat heating module (SHM)	U_{bat}	U_{bat}	Powered via the central electronic module (CEM)

SIGNAL TABLE, SEAT HEATING MODULE (SHM) CONNECTOR B

Terminal breakout box	Terminal control module	Signal type	Ignition on	Idle	Other
-	#B1	Power supply, heating loop seat	U_{bat}	U_{bat}	-
-	#B2	Signal, temperature sensor seat	-	-	-
-	#B3	Signal ground, temperature sensor seat	-	-	-
-	#B4	Power ground, heating loop seat	U_{low}	U_{low}	-

SIGNAL TABLE, SEAT HEATING MODULE (SHM) CONNECTOR C

Terminal breakout box	Terminal control module	Signal type	Ignition on	Idle	Other
-	#C1	Power ground, heating loop backrest	U_{low}	U_{low}	-
-	#C2	Power supply, heating loop backrest	U_{bat}	U_{bat}	-

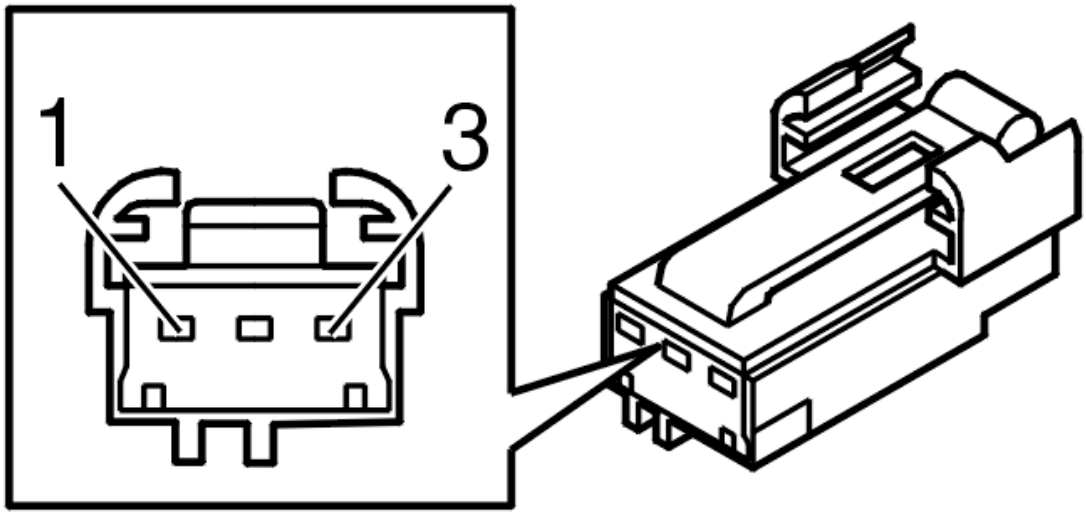

Fig. 3: Identifying Evaporator Temperature Sensor Connector Terminals
Courtesy of VOLVO CARS CORPORATION

SIGNAL TABLE, EVAPORATOR TEMPERATURE SENSOR CONNECTOR

Terminal breakout box	Terminal control module	Signal type	Ignition on	Idle	Other
-	#1	Signal, evaporator temperature sensor	0.2-4.8 V	0.2-4.8 V	Temperature dependent
-	#2	-	-	-	-
-	#3	Signal ground	U_{low}	U_{low}	-

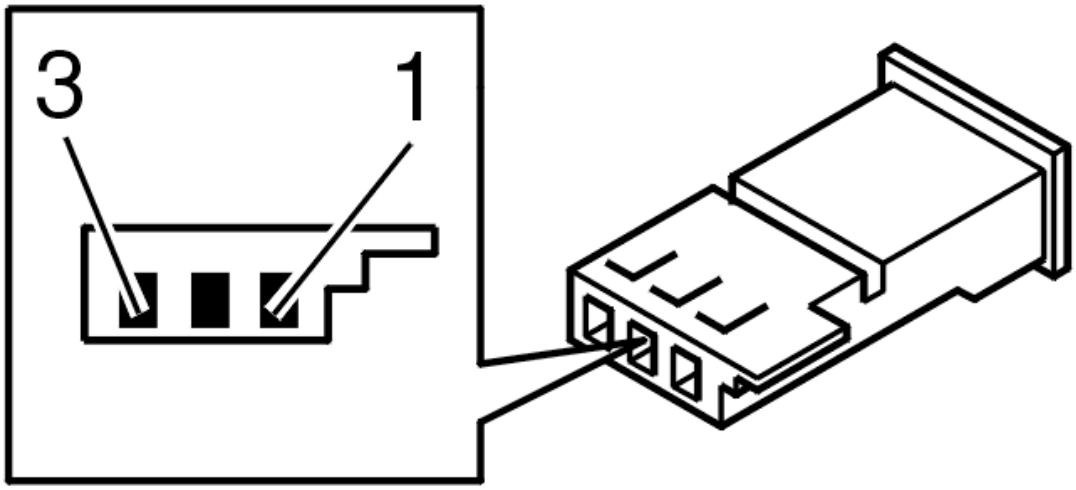

Fig. 4: Identifying Damper Motor Module (DMM) Connector Terminals
Courtesy of VOLVO CARS CORPORATION

SIGNAL TABLE, DAMPER MOTOR MODULE (DMM) CONNECTOR

Terminal	Terminal	Signal type	Ignition on	Idle	Other

breakout box	control module				
-	#1	Power supply	U_{bat}	U_{bat}	Powered via the relay on the central electronic module (CEM)
-	#2	LIN bus	Digital signal	Digital signal	Communication with the climate control module (CCM)
-	#3	Power ground	U_{low}	U_{low}	-

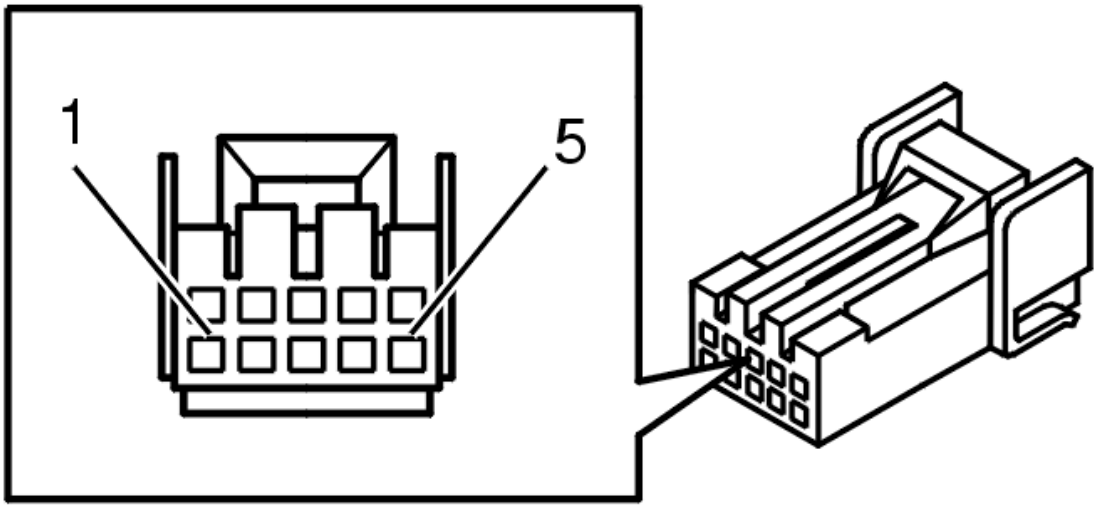

Fig. 5: 10 CD Changer Connector Terminals
Courtesy of VOLVO CARS CORPORATION

SIGNAL TABLE, AIR QUALITY SENSOR (AQS) CONNECTOR (OPTION, ONLY ECC)

Terminal breakout box	Terminal control module	Signal type	Ignition on	Idle	Other
-	#1	Power supply	U_{bat}	U_{bat}	Powered via the relay on the central electronic module (CEM)
-	#2	LIN bus	Digital signal	Digital signal	Communication with the climate control module (CCM)
-	#3	Power ground	U_{low}	U_{low}	-

SIGNAL SPECIFICATION, CLIMATE CONTROL MODULE (CCM) (2003-2004)

SIGNAL SPECIFICATION

- For connector A, see **SIGNAL DESCRIPTION, CLIMATE CONTROL MODULE (CCM), CONNECTOR A**
- For connector B, see **SIGNAL DESCRIPTION, CLIMATE CONTROL MODULE (CCM), CONNECTOR B**
- For connector C, see **SIGNAL DESCRIPTION, CLIMATE CONTROL MODULE (CCM), CONNECTOR C** .

SIGNAL DESCRIPTION, CLIMATE CONTROL MODULE (CCM), CONNECTOR C

There is no breakout box for this connector.

NOTE: **From and including w50 2001, the fan is connected directly to connector C with no wiring in-between.**

U=	DC voltage in volts (V)	U_{AC} =	AC voltage in volts (V)
U_{bat} =	Battery voltage (V)	f =	Frequency in Hertz (Hz)
U_{low} =	Voltage approximately 0 V	% duty =	Duty cycle (pulse ratio) as a percentage (%)
t =	Time in milliseconds (ms)	-	-

Control module terminal	Connecting the component	Signal type	Ignition on	Engine idling	Other
#C1	terminal #1 Hall sensor	Power supply (H+), Hall sensor	6.1-6.3 V	6.1-6.3 V	-
#C2	terminal #2 Hall sensor	Signal (H1), Hall sensor	3.7 V	3.7 V	-
#C3	terminal #3 fan motor passenger compartment temperature sensor	Signal, fan motor passenger compartment temperature sensor	1-5.2 V	1-5.2 V	Quadratic signal when the motor is running
#C4	terminal #4 fan motor passenger compartment temperature sensor	Signal, fan motor passenger compartment temperature sensor	1-5.2 V	1-5.2 V	Quadratic signal when the motor is running
#C5	terminal #5 Hall sensor	Signal ground (H-), Hall sensor	0.9-1.6 V	0.9-1.6 V	-
#C6	terminal #6 Hall sensor	Signal (H2), Hall sensor	3.7 V	3.7 V	-

SPECIFICATIONS (2003-04)

AC COMPRESSOR

Car model/ Engine	Engines	Model year:	Compressor:	Safety valve Activated at (bar):	HT sensors Opening pressure (b):	HT sensors Closing pressure (b):
XC90	All	2003-	Zexel	**38** (+/- 3)	**18**	**30**
XC90	-	2007-	Zexel/Valeo	**38** (+/- 3)	**18**	**30**
All	D5244T10	2009-	Sanden	**38** (+/- 3)	**18**	**30**
All	All (except 4-cyl, V8)	2010-	Sanden	**38** (+/- 3)	**18**	**30**

COMPONENT RESISTANCE VALUES

The resistance values assume a temperature of +20°C unless otherwise stated.

NOTE: **For the damper motors, a diode must be connected in series with each winding. This can have a great effect on the measurement value when resistance testing if measured using a tool other than VIDA (Volvo scan tool). The resistance given will be significantly higher than the value given in the table below.**

COMPONENT RESISTANCE VALUES TABLE

Component	Other
Evaporator temperature sensor	Resistance: -40°C = approximately 91.8 kohms -30°C = approximately 48.4 kohms -20°C = approximately 26.6 kohms -10°C = approximately 15.2 kohms 0°C = approximately 9.0 kohms 10°C = approximately 5.5 kohms 20°C = approximately 3.4 kohms 30°C = approximately 2.2 kohms 40°C = approximately 1.5 kohms 50°C = approximately 1.0 kohms 60°C = approximately 0.7 kohms 70°C = approximately 0.5 kohms 80°C = approximately 0.3 kohms 90°C = approximately 0.2 kohms
Blower fan motor power unit	Resistance: #A4-#A1 = 510 ohms #A3-#B1 = 4.7 kohms
Damper motor normal (temp l/r, def)	Resistance in the windings between terminals: #1-#3 = 46 ohms #1-#4 = 46 ohms #1-#5 = 46 ohms #1-#6 = 46 ohms
Damper motor fast (floor/vent, rec, mode)	Resistance in the windings between terminals: #1-#3 = 15 ohms

	#1-#4 = 15 ohms #1-#5 = 15 ohms #1-#6 = 15 ohms
Fan motor passenger compartment temperature sensor	Resistance in the windings between terminals: #3-#4 = 68 ohms #1-#5 = 450-900 ohms

SIGNAL DESCRIPTION. AUXILIARY HEATER 912-D/B (2003-04)

SIGNAL SPECIFICATION

see **SIGNAL SPECIFICATION**

SPECIFICATIONS, ELECTRIC/ELECTRONIC. AUXILIARY HEATER (2003-12)

COMPONENTS RESISTANCE VALUES

Resistance values are given at +20°C (+68°F) unless otherwise stated.

Component	Other
Water temperature sensor	Resistance: 10°C (50°F): approximately 20 k 20°C (68°F): approximately 11 k 30°C (86°F): approximately 8 k 75°C (167°F): approximately 1.5 k 90°C (194°F): approximately 900
Heater fan	Wire resistance between connections: 1-10
Water pump	Wire resistance between connections: 1-10
Fuel pump	Wire resistance between connections: approximately 8
Glow plug	Resistance: approximately 1
Overheat thermostat	Resistance: Not activated < 3 Activated > 10 k

HVAC

Climate Units - Specifications, Mechanical

CLIMATE UNITS (2003-12)

AC COMPRESSOR

Car model/ Engine	Engines	Model year:	Compressor:	Safety valve Activated at (bar):	HT sensors Opening pressure (b):	HT sensors Closing pressure (b):
XC90	All	2003-	Zexel	**38** (+/- 3)	**18**	**30**
XC90	-	2007-	Zexel/Valeo	**38** (+/- 3)	**18**	**30**
All	D5244T10	2009-	Sanden	**38** (+/- 3)	**18**	**30**
All	All (except 4-cyl, V8)	2010-	Sanden	**38** (+/- 3)	**18**	**30**

COMPONENT SPECIFICATIONS (2005-12)

AC COMPRESSOR

see **AC COMPRESSOR**

GENERAL (2003-12)

AC COMPRESSOR

see **AC COMPRESSOR**

SPECIFICATIONS, GENERAL. ADDITIONAL HEATER (2003-04)

SYSTEM SPECIFICATIONS

Type	Additional heater 912-B
Operating medium	Coolant type C
Operating temperature	-40°C to +90°C
Heat	Passenger compartment/engine
Maximum output	4700 W
Fuel	Gasoline
Fuel consumption, l/h at maximum output	0.66 l/h
Power consumption when operating	30 W
Nominal voltage	12 V
Operating range	11.3 V to 16 V

HVAC

Climate Units - Specifications, Other

DESCRIPTION OF PARAMETERS. CLIMATE CONTROL MODULE CCM (2003-04)

DESCRIPTION OF PARAMETERS

The climate control system must be active for certain values to be updated.

NOTE: In the AUTO position, the electronic climate control module (CCM) governs functions which affect certain of the parameters listed below.

SUN INTENSITY, VALUE (ELECTRONIC CLIMATE CONTROL)

Measurement range: 0 - 1000 W/m^2

The climate control module (CCM) calculates the sun intensity based on the signal from the sun sensor.

The value is used as a compensation parameter to control the passenger compartment temperature.

EVAPORATOR TEMPERATURE, VALUE (ELECTRONIC CLIMATE CONTROL, MANUAL CLIMATE CONTROL)

Measurement range: -40 - 85°C

The climate control module (CCM) calculates the temperature based on the signal from the evaporator temperature sensor.

The value is used to control the air conditioning (A/C) compressor.

In normal operation (engine running and A/C selected) the control module can regulate the compressor in the following way:

- 10°C air conditioning (A/C) compressor on
- 6.5°C air conditioning (A/C) compressor off.

At temperatures below 6°C the compressor is not permitted to operate because of the risk of freezing.

TWILIGHT INTENSITY, VALUE

Measurement range: 0 - 15

The climate control module (CCM) calculates the twilight intensity based on the signal from the twilight sensor.

This value is transmitted to the central electronic module (CEM) via the control area network (CAN) to regulate the luminance of the buttons and combined instrument panel (DIM).

The value increases with increased and falls with diminished light intensity. The luminance of the buttons and combined instrument panel (DIM) will increase with increasing light intensity and fall with diminishing light intensity.

POWER SUPPLY, DELAYED X-SUPPLY, VALUE

Measurement range: 0 - 18 V

Normal value when the generator (GEN) is charging: 13.0 - 14.5 V

The value indicates the voltage at the climate control module (CCM). Delayed X-supply means that the power supply is maintained for 1 minute after the ignition is switched off. This is so that functions such as blower fan run-on and damper motor self-adjustment can be activated.

MATRIX VOLTAGE, VALUE

Incorrect f=165±50 Hz

Measurement range: 0 - 5 V

Matrix voltage means that the climate control module (CCM) supplies the damper motors with an impulse sequence via four common cables (connected in parallel). The impulse sequence consists of power supply and signal ground. This determines which direction the damper motors should move when activated. There is also a separate cable from the climate control module (CCM) to each damper motor. This cable controls the number of stages each damper motor should be moved based on the signal from the climate control module (CCM).

CABIN TEMPERATURE (ECC)

Measurement range: -40 - 85°C

The climate control module (CCM) calculates the temperature based on the signal from the passenger compartment temperature sensor.

The value is used to control the passenger compartment temperature and as the input signal to the central electronic module (CEM).

OUTSIDE TEMPERATURE

Measurement range: -10 - 80°C

The climate control module (CCM) obtains the value via the control area network (CAN) from the passenger door module (PDM) (left-hand drive) or the driver door module (DDM) (right-hand drive).

The value is used to control the passenger compartment temperature.

BLOWER FAN MOTOR POWER UNIT, DIAGNOSTIC SIGNAL, VALUE

The climate control module (CCM) generates an analogue signal. This is converted to a current which the power unit converts back to an analogue signal. The diagnostic signal is an extremely intense signal that cannot be used when checking the blower fan.

GUIDE CURRENT FOR THE BLOWER FAN MOTOR POWER UNIT, VALUE

Measurement range: 0 - 10 mA

The climate control module (CCM) calculates the value based on the signal from the control knob for the blower fan. With electronic climate control, the value is also affected by automatic climate control (AUTO position).

The value is used to control the power supply from the power unit to the blower fan motor.

LOWER SWITCH APPROVAL, STATUS

The status displays whether the identity of a certain switch is permissible or missing compared with the permitted switch identities in the Car Configuration File.

Ok = Switch permitted

Faulty = Switch not permitted

LOWER SWITCH, STATUS

Displays the status of a certain switch.

Off = Active signal

On = Signal not active

LOWER SWITCH IDENTITY, STATUS

The status displays the function of a certain switch. The functions are as follows:

Fold down head restraints

Folding power door mirrors

Private locking (boot lid)

STC

DSTC

Auxiliary lamps

Deadlock (temporary disengagement of the movement and tilt sensors in the alarm)

Reverse warning

Bi-fuel

Child-proof lock

Rear A/C

TEMPERATURE DAMPER MOTOR, LEFT POSITION, VALUE

Measurement range: 0 - 100%

The climate control module (CCM) calculates the value based on the stage movement of the damper motor.

TEMPERATURE DAMPER MOTOR, RIGHT POSITION, VALUE

Measurement range: 0 - 100%

The climate control module (CCM) calculates the value based on the stage movement of the damper motor.

RECIRCULATION DAMPER MOTOR POSITION, VALUE

Measurement range: 0 - 100%

The climate control module (CCM) calculates the value based on the stage movement of the damper motor.

FLOOR/VENTILATION DAMPER MOTOR POSITION, VALUE (ELECTRONIC CLIMATE CONTROL)

Measurement range: 0 - 100%

The climate control module (CCM) calculates the value based on the stage movement of the damper motor.

DEFROSTER DAMPER MOTOR POSITION, VALUE (ELECTRONIC CLIMATE CONTROL)

Measurement range: 0 - 100%

The climate control module (CCM) calculates the value based on the stage movement of the damper motor.

AIR DISTRIBUTION DAMPER MOTOR POSITION, VALUE (MANUAL CLIMATE CONTROL/STANDARD)

Measurement range: 0 - 100%

The climate control module (CCM) calculates the value based on the stage movement of the damper motor.

AIR DISTRIBUTION SELECTOR, DEFROSTER POSITION, STATUS (MANUAL CLIMATE CONTROL/STANDARD)

The status displays whether the signal from the air distribution selector for the climate control module (CCM) is active or not.

Off = Inactive

On = Active

AIR DISTRIBUTION SELECTOR, VENTILATION POSITION, STATUS (MANUAL CLIMATE CONTROL/STANDARD)

The status displays whether the signal from the air distribution selector for the climate control module (CCM) is active or not.

Off = Inactive

On = Active

AIR DISTRIBUTION SELECTOR, FLOOR POSITION, STATUS (MANUAL CLIMATE CONTROL/STANDARD)

The status displays whether the signal from the air distribution selector for the climate control module (CCM) is active or not.

Off = Inactive

On = Active

AIR DISTRIBUTION SELECTOR, FLOOR/DEFROSTER POSITION, STATUS (MANUAL CLIMATE CONTROL/STANDARD)

The status displays whether the signal from the air distribution selector for the climate control module (CCM) is active or not.

Off = Inactive

On = Active

TEMPERATURE DAMPER MOTOR, LEFT ACTIVATION, VALUE

Measurement range: 0 - U_{bat}

The climate control module (CCM) transmits a signal to the damper motor for stage movement.

TEMPERATURE DAMPER MOTOR, RIGHT ACTIVATION, VALUE

Measurement range: 0 - U_{bat}

The climate control module (CCM) transmits a signal to the damper motor for stage movement.

RECIRCULATION DAMPER MOTOR ACTIVATION, VALUE

Measurement range: 0 - U_{bat}

The climate control module (CCM) transmits a signal to the damper motor for stage movement.

FLOOR/VENTILATION DAMPER MOTOR ACTIVATION, VALUE (ELECTRONIC CLIMATE CONTROL)

Measurement range: 0 - U_{bat}

The climate control module (CCM) transmits a signal to the damper motor for stage movement.

DEFROSTER DAMPER MOTOR ACTIVATION, VALUE (ELECTRONIC CLIMATE CONTROL)

Measurement range: 0 - U_{bat}

The climate control module (CCM) transmits a signal to the damper motor for stage movement.

AIR DISTRIBUTION DAMPER MOTOR ACTIVATION, VALUE (MANUAL CLIMATE CONTROL/STANDARD)

Measurement range: 0 - U_{bat}

The climate control module (CCM) transmits a signal to the damper motor for stage movement.

AIR QUALITY SENSOR, VALUE (ELECTRONIC CLIMATE CONTROL)

Measurement range 0-100%

The climate control unit calculates the air quality using the signal from the air quality sensor. The value is used to control the position of the recirculation motor.

VEHICLE COMMUNICATION INFORMATION, CLIMATE CONTROL MODULE (CCM) (2005-12)

DESCRIPTION OF PARAMETERS

PARAMETERS, STATUS

LOWER SWITCH, STATUS

The status displays whether the identity of a certain switch is permissible or missing compared with the permitted switch identities in the Car Configuration File.

Ok = Switch permitted.

Faulty = Switch not permitted.

LOWER SWITCH IDENTITY

The status displays the function of a certain switch. The functions are as follows:

Adjustable head restraint

Retracting door mirrors

Private locking (trunk lid)

STC

DSTC

BLIS

Auxiliary lamps

Reduced alarm (temporary disengagement of the movement and tilt sensors in the alarm)

Back-up warning

Bi-fuel

Child-proof lock

Rear A/C

Four-C

Blind spot detection

Not defined

LOWER SWITCH LED

The parameter indicates whether the climate control module (CCM) recognizes whether the LED for lower switches should be lit or not.

Lit = the LED must be lit.

Not lit = the LED must not be lit.

LOWER SWITCH

The parameter indicates whether the climate control module (CCM) recognizes whether the button for each switch is pressed in or not.

Not pressed = the button is not pressed in.

Pressed = the button is pressed in.

STATUS, SEAT HEATER RIGHT FRONT

The parameter indicates the status of the right-hand front seat heating module (SHM).

The following statuses are available:

OK, heating off - Seat heating module (SHM) functioning, heating off.

OK, heating on - Seat heating module (SHM) functioning, heating on.

Incorrect status 1 - Incorrect heater pad, heating off.

Incorrect status 2 - Faulty temperature sensor, heating off.

Incorrect status 3 - Seat heating module (SHM) overheated, heating off.

Incorrect status 4 - Communication problems, heating off.

Incorrect status 5 - Other fault, heating off.

Incorrect status 6 - Internal fault, heating off.

STATUS, SEAT HEATER LEFT FRONT

The parameter indicates the status of the left front seat heating module (SHM).

The following statuses are available:

OK, heating off - Seat heating module (SHM) functioning, heating off.

OK, heating on - Seat heating module (SHM) functioning, heating on.

Incorrect status 1 - Incorrect heater pad, heating off.

Incorrect status 2 - Faulty temperature sensor, heating off.

Incorrect status 3 - Seat heating module (SHM) overheated, heating off.

Incorrect status 4 - Communication problems, heating off.

Incorrect status 5 - Other fault, heating off.

Incorrect status 6 - Internal fault, heating off.

BUTTON HEATED REAR WINDSHIELD/DOOR MIRRORS

The parameter indicates whether the climate control module (CCM) recognizes whether the button for the heated rear windshield/door mirrors is pressed in or not.

The button is on the keypad for the climate control module (CCM).

Not pressed = the button is not pressed in.

Pressed = the button is pressed in.

MAX DEFROSTER BUTTON

The parameter indicates whether the climate control module (CCM) recognizes whether the button for max defroster is pressed in or not.

The button is on the keypad for the climate control module (CCM).

Not pressed = the button is not pressed in.

Pressed = the button is pressed in.

AIR DISTRIBUTION DEFROSTER BUTTON

The parameter indicates whether the climate control module (CCM) recognizes whether the button for air distribution defroster is pressed in or not.

The button is on the keypad for the climate control module (CCM).

Not pressed = the button is not pressed in.

Pressed = the button is pressed in.

AIR DISTRIBUTION VENTILATION BUTTON

The parameter indicates whether the climate control module (CCM) recognizes whether the button for air distribution ventilation is pressed in or not.

The button is on the keypad for the climate control module (CCM).

Not pressed = the button is not pressed in.

Pressed = the button is pressed in.

AIR DISTRIBUTION FLOOR BUTTON

The parameter indicates whether the climate control module (CCM) recognizes whether the button for air distribution floor is pressed in or not.

The button is on the keypad for the climate control module (CCM).

Not pressed = the button is not pressed in.

Pressed = the button is pressed in.

A/C BUTTON

The parameter indicates whether the climate control module (CCM) recognizes whether the button for air conditioning (A/C) is pressed in or not.

The button is on the keypad for the climate control module (CCM).

Not pressed = the button is not pressed in.

Pressed = the button is pressed in.

SEAT HEATER LEFT FRONT BUTTON

The parameter indicates whether the climate control module (CCM) recognizes whether the button for the left front seat heater is pressed in or not.

The button is on the keypad for the climate control module (CCM).

Not pressed = the button is not pressed in.

Pressed = the button is pressed in.

SEAT HEATER RIGHT FRONT BUTTON

The parameter indicates whether the climate control module (CCM) recognizes whether the button for the right front seat heater is pressed in or not.

The button is on the keypad for the climate control module (CCM).

Not pressed = the button is not pressed in.

Pressed = the button is pressed in.

AUTO BUTTON

The parameter indicates whether the climate control module (CCM) recognizes whether the button for AUTO mode is pressed in or not.

The button is on the keypad for the climate control module (CCM).

Not pressed = the button is not pressed in.

Pressed = the button is pressed in.

RECIRCULATION BUTTON

The parameter indicates whether the climate control module (CCM) recognizes whether the button for recirculation is pressed in or not.

The button is on the keypad for the climate control module (CCM).

Not pressed = the button is not pressed in.

Pressed = the button is pressed in.

AQS LED

The parameter indicates whether the climate control module (CCM) recognizes whether the LED for the air quality sensor (AQS) should be lit or not.

The LED is on the keypad for the climate control module (CCM).

Not lit = the LED must not be lit.

Lit = the LED must be lit.

RECIRCULATION LED

The parameter indicates whether the climate control module (CCM) recognizes whether the LED for recirculation should be lit or not.

The LED is on the keypad for the climate control module (CCM).

Not lit = the LED must not be lit.

Lit = the LED must be lit.

AUTO LED

The parameter indicates whether the climate control module (CCM) recognizes whether the LED for AUTO should be lit or not.

The LED is on the keypad for the climate control module (CCM).

Not lit = the LED must not be lit.

Lit = the LED must be lit.

HEATED REAR WINDSHIELD LED

The parameter indicates whether the climate control module (CCM) recognizes whether the LED for the heated rear windshield/door mirrors should be lit or not.

The LED is on the keypad for the climate control module (CCM).

Not lit = the LED must not be lit.

Lit = the LED must be lit.

MAX DEFROSTER LED

The parameter indicates whether the climate control module (CCM) recognizes whether the LED for maximum defrosting should be lit or not.

The LED is on the keypad for the climate control module (CCM).

Not lit = the LED must not be lit.

Lit = the LED must be lit.

DEFROSTER LED

The parameter indicates whether the climate control module (CCM) recognizes whether the LED for air distribution defroster should be lit or not.

The LED is on the keypad for the climate control module (CCM).

Not lit = the LED must not be lit.

Lit = the LED must be lit.

VENTILATION LED

The parameter indicates whether the climate control module (CCM) recognizes whether the LED for air distribution ventilation should be lit or not.

The LED is on the keypad for the climate control module (CCM).

Not lit = the LED must not be lit.

Lit = the LED must be lit.

FLOOR LED

The parameter indicates whether the climate control module (CCM) recognizes whether the LED for floor air distribution should be lit or not.

The LED is on the keypad for the climate control module (CCM).

Not lit = the LED must not be lit.

Lit = the LED must be lit.

A/C ON LED

The parameter indicates whether the climate control module (CCM) recognizes whether the LED for A/C ON should be lit or not.

The LED is on the keypad for the climate control module (CCM).

Not lit = the LED must not be lit.

Lit = the LED must be lit.

A/C OFF LED

The parameter indicates whether the climate control module (CCM) recognizes whether the LED for A/C OFF should be lit or not.

The LED is on the keypad for the climate control module (CCM).

Not lit = the LED must not be lit.

Lit = the LED must be lit.

LEFT SEAT HEATER LOW LED

The parameter indicates whether the climate control module (CCM) recognizes whether the LED for left seat heater low should be lit or not.

The LED is on the keypad for the climate control module (CCM).

Not lit = the LED must not be lit.

Lit = the LED must be lit.

LEFT SEAT HEATER HIGH LED

The parameter indicates whether the climate control module (CCM) recognizes whether the LED for left seat heater high should be lit or not.

The LED is on the keypad for the climate control module (CCM).

Not lit = the LED must not be lit.

Lit = the LED must be lit.

RIGHT SEAT HEATER LOW LED

The parameter indicates whether the climate control module (CCM) recognizes whether the LED for right seat heater low should be lit or not.

The LED is on the keypad for the climate control module (CCM).

Not lit = the LED must not be lit.

Lit = the LED must be lit.

RIGHT SEAT HEATER HIGH LED

The parameter indicates whether the climate control module (CCM) recognizes whether the LED for right seat heater high should be lit or not.

The LED is on the keypad for the climate control module (CCM).

Not lit = the LED must not be lit.

Lit = the LED must be lit.

BLOWER FAN CONTROL, RED LED

The parameter indicates whether the climate control module (CCM) recognizes whether the red LED for the blower fan control should be lit or not.

Lit = the LED must be lit.

Not lit = the LED must not be lit.

BLOWER FAN CONTROL, GREEN LED

The parameter indicates whether the climate control module (CCM) recognizes whether the green LEDs for the blower fan control should be lit or not.

Not lit = the LED must not be lit.

1 lit = 1 LED must be lit.

2 lit = 2 LEDs must be lit.

3 lit = 3 LEDs must be lit.

4 lit = 4 LEDs must be lit.

5 lit = 5 LEDs must be lit.

6 lit = 6 LEDs must be lit.

7 lit = 7 LEDs must be lit.

AQS SIGNAL (ONLY ECC)

The parameter displays the signal from the air quality sensor (AQS). The climate control module (CCM) uses the signal to regulate the damper motor module (DMM) recirculation.

Off = no increase or reduction in pollutant level.

Level 1 = slow increase in pollutant level.

Level 2 = medium increase in pollutant level.

Level 3 = rapid increase in pollutant level.

PARAMETERS, VALUE

EVAPORATOR TEMPERATURE

The value indicates the temperature from the evaporator temperature sensor. The value is used by the climate control module (CCM) to regulate activation of the air conditioning (A/C) compressor.

Measurement range -100°C-100°C.

With the ignition off and a cold engine, the value must correspond with the ambient temperature.

When the engine is running and the A/C is activated, the climate control module (CCM) will regulate the compressor as follows:

- Compressor on at 10°C.
- Compressor off at 6°C.

PASSENGER COMPARTMENT TEMPERATURE SENSOR (ONLY ECC)

The parameter indicates the value from the passenger compartment temperature sensor. The climate control module (CCM) uses the signal to regulate the climate in the passenger compartment in the AUTO position.

Measurement range -40-90°C.

The value must correspond to the ambient temperature.

DESIRED POSITION, DAMPER MOTOR, DEFROSTER

The value indicates how much the damper for the defroster should be open to correspond to the desired climate control. The climate control module (CCM) transmits the value to the damper motor module (DMM) defroster via the LIN bus.

Measurement range 0-100%.

100% is full capacity.

0% corresponds to a fully closed damper and 100% corresponds to a fully open damper.

ACTUAL POSITION, DAMPER MOTOR, DEFROSTER

The value indicates how much the damper for the defroster is open. The climate control module (CCM) receives the value from the damper motor module (DMM) for the defroster via the LIN bus.

Measurement range 0-100%.

0% corresponds to a fully closed damper and 100% corresponds to a fully open damper.

DESIRED POSITION, DAMPER MOTOR, RECIRCULATION

The value indicates how much the damper for recirculation should be open to correspond to the desired climate control. The climate control module (CCM) transmits the value to the damper motor module (DMM) recirculation via the LIN bus.

Measurement range 0-100%.

0% corresponds to a fully closed damper and 100% corresponds to a fully open damper.

ACTUAL POSITION, DAMPER MOTOR, RECIRCULATION

The value indicates how much the damper for recirculation is open. The climate control module (CCM) receives the value from the damper motor module (DMM) recirculation via the LIN bus.

Measurement range 0-100%.

0% corresponds to a fully closed damper and 100% corresponds to a fully open damper.

DESIRED POSITION, DAMPER MOTOR, TEMPERATURE LEFT

The value indicates how much the damper for temperature left should be open to correspond to the desired climate control. The climate control module (CCM) transmits the value to the damper motor module (DMM) temperature left via the LIN bus.

Measurement range 0-100%.

0% corresponds to a fully closed damper and 100% corresponds to a fully open damper.

ACTUAL POSITION, DAMPER MOTOR, TEMPERATURE LEFT

The value indicates how much the damper for temperature left is open. The climate control module (CCM) receives the value from the damper motor module (DMM) temperature left via the LIN bus.

Measurement range 0-100%.

0% corresponds to a fully closed damper and 100% corresponds to a fully open damper.

DESIRED POSITION, DAMPER MOTOR, TEMPERATURE RIGHT

The value indicates how much the damper for temperature right should be open to correspond to the desired climate control. The climate control module (CCM) transmits the value to the damper motor module (DMM) for temperature right via the LIN bus.

Measurement range 0-100%.

0% corresponds to a fully closed damper and 100% corresponds to a fully open damper.

ACTUAL POSITION, DAMPER MOTOR, TEMPERATURE RIGHT

The value indicates how much the damper for temperature right is open. The climate control module (CCM) receives the value from the damper motor module (DMM) for temperature right via the LIN bus.

Measurement range 0-100%.

0% corresponds to a fully closed damper and 100% corresponds to a fully open damper.

DESIRED POSITION, DAMPER MOTOR, AIR DISTRIBUTION

The value indicates how much the damper for air distribution should be open to correspond to the desired climate control. The climate control module (CCM) transmits the value to the damper motor module (DMM) air distribution via the LIN bus.

Measurement range 0-100%.

0% corresponds to a fully closed damper and 100% corresponds to a fully open damper.

ACTUAL POSITION, DAMPER MOTOR, AIR DISTRIBUTION

The value indicates how much the damper for air distribution is open. The climate control module (CCM) receives the value from the damper motor module (DMM) air distribution via the LIN bus.

Measurement range 0-100%.

0% corresponds to a fully closed damper and 100% corresponds to a fully open damper.

REQUESTED BLOWER FAN SPEED

The value indicates how much the blower fan must blow to correspond to the desired climate control. The climate control module (CCM) controls the blower fan speed by transmitting a signal to the central electronic module (CEM).

Measurement range 0-100%.

0% corresponds to the blower fan switched off, 100% corresponds to maximum blower fan speed.

POWER SUPPLY

The value indicates the power supply to the climate control module (CCM).

Measurement range 0-50 V.

Normal value approximately 12 V (battery voltage).

DESCRIPTION OF READING OFF EXTENDED DIAGNOSTIC TROUBLE CODE (DTC) INFORMATION

CONTENTS

Select type of description.

- See **DESCRIPTION OF FROZEN VALUES**
- See **STATUS IDENTIFIER, DESCRIPTION**
- See **COUNTERS, DESCRIPTION**

HVAC

Climate Units - Symptom Related Diagnostic Procedures

CALIBRATING THE DAMPER MOTOR MODULE (DMM) (2005-12)

CALIBRATING THE DAMPER MOTOR MODULE (DMM)

CALIBRATING THE CLIMATE CONTROL MODULE (CCM)

CAUTION: When activating this function, calibration of the Climate Control Module (CCM) starts. After carrying out calibration read off of the diagnostic trouble codes (DTCs) starts. To ensure that diagnostics for the Climate Control Module (CCM) have been carried out, delay for 30 seconds before reading out diagnostic trouble codes (DTCs) after calibration.

NOTE: Climate Control Module (CCM) and damper motors can be affected by the temperature. The vehicle should have normal room temperature when performing this service.

Fig. 1: Checking Traffic Load On CAN Cables
Courtesy of VOLVO CARS CORPORATION

Carry out calibration as follows:

- Ignition on.
- Click on the VCT2000 symbol. Wait until calibration has been carried out and diagnostic trouble codes (DTCs) read out.
- Ignition off.

This function controls the components that communicate with the Climate Control Module (CCM) via LIN bus 1 and LIN bus 2. In the event of a fault in any of the LIN buses, diagnostic trouble codes (DTCs) CCM-0070 to CCM-0071 will be stored depending on the fault. These diagnostic trouble codes (DTCs) can only be stored in conjunction with this diagnostic function.

If any of these diagnostic trouble codes (DTCs) recur, recalibrate to check if the problem was overcome. If the diagnostic trouble code (DTC) recurs, fault-trace the relevant diagnostic trouble code (DTC).

Fig. 2: Identifying VCT2000 Diagnostic Tool Symbol In VIDA
Courtesy of VOLVO CARS CORPORATION

CHECK PROGRAMMING OF PASSENGER COMPARTMENT VENTILATION FILTER (2003-04)

CHECK PROGRAMMING OF PASSENGER COMPARTMENT VENTILATION FILTER

EQUIPMENT

Which type of climate control is the car equipped with?

1. Electronic climate control. Refer to **DIAGNOSTICS NUMBER**.
2. Manual climate control (MCC)/Standard (STD). Refer to **DIAGNOSTICS NUMBER**

DIAGNOSTICS NUMBER

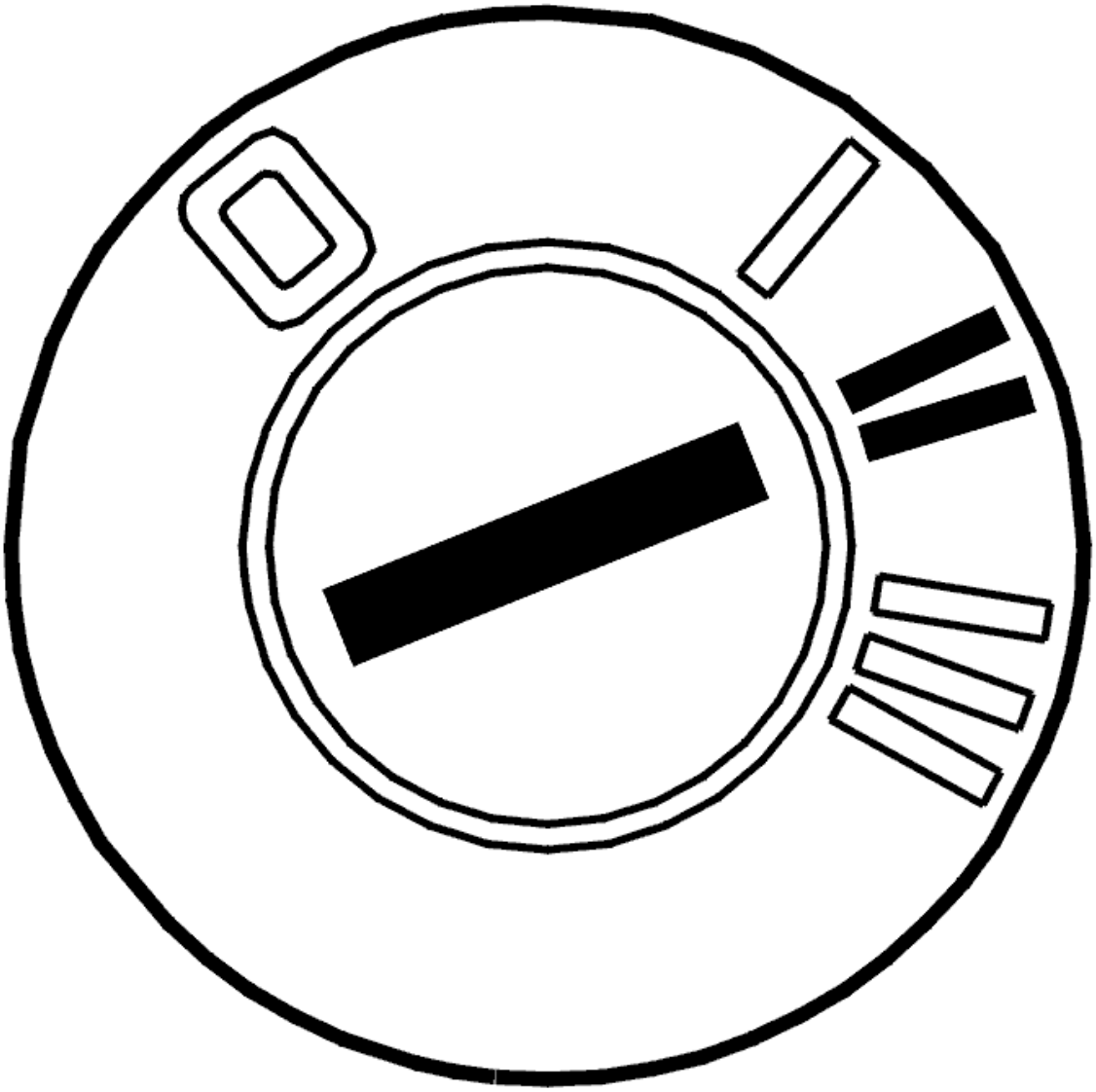

Fig. 3: Identifying Ignition ON
Courtesy of VOLVO CARS CORPORATION

- Ignition on.

  Read off the diagnostics number and check whether it is on the list.

  - A 9472875
  - A 9472877
  - A 9472899
  - A 9472901
  - A 9494245
  - A 9488859
  - A 9496616

- A 9494257
- A 9494258
- A 9496618.

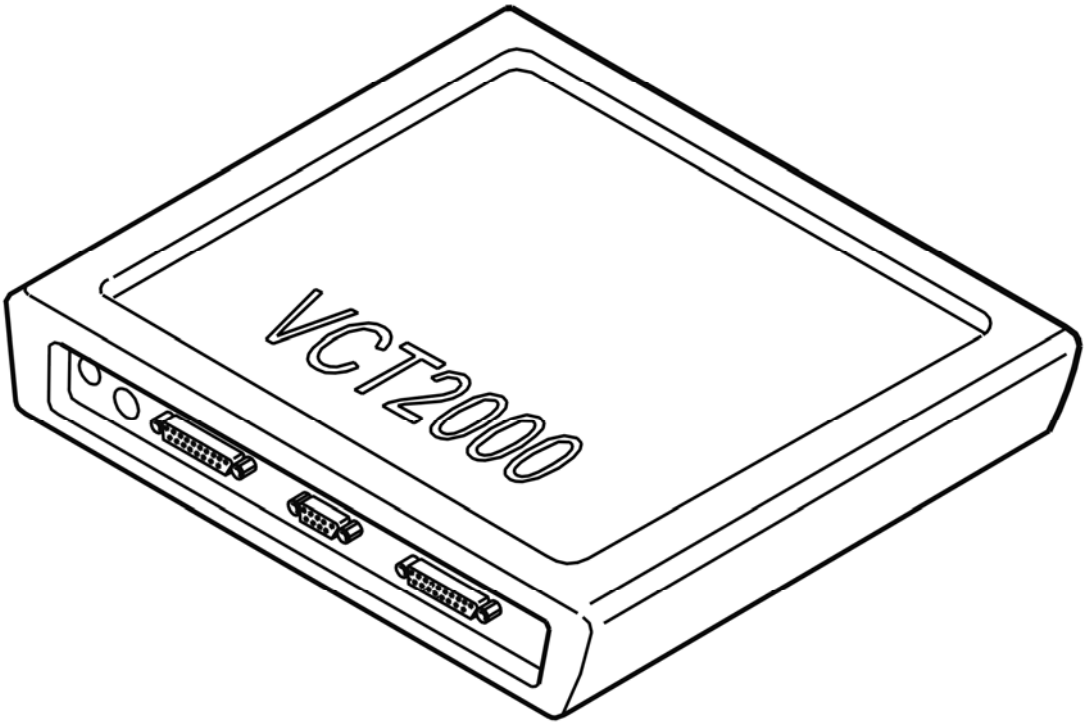

Fig. 4: Identifying VCT2000 Diagnostic Tool Symbol In VIDA
Courtesy of VOLVO CARS CORPORATION

Was the diagnostics number on the list?

- **YES**

  Refer to **READ OFF/PROGRAM PASSENGER COMPARTMENT VENTILATION FILTER COMPENSATION**

- **NO**

  Refer to **READ OFF/PROGRAM PASSENGER COMPARTMENT VENTILATION FILTER COMPENSATION**

DIAGNOSTICS NUMBER

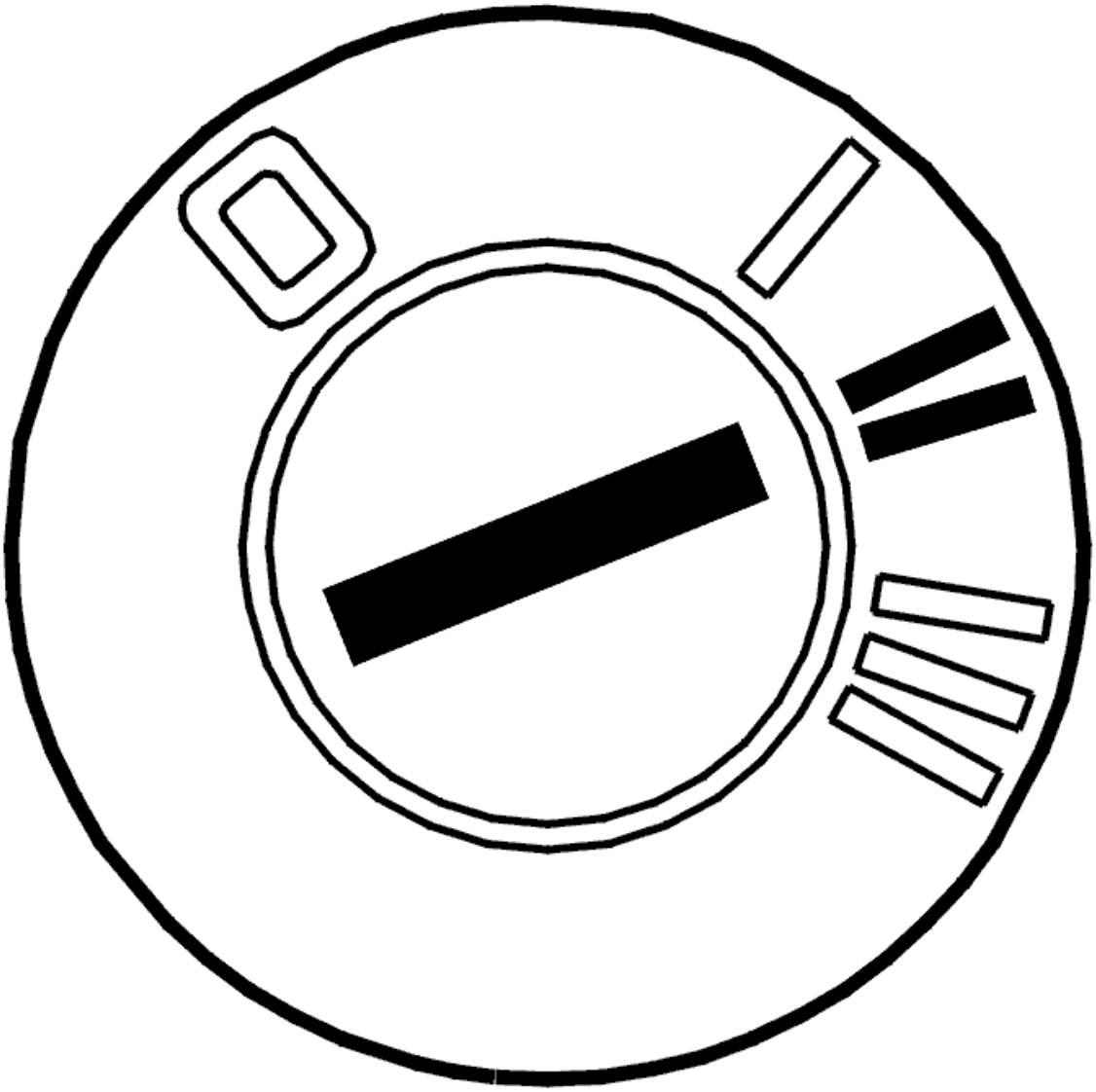

Fig. 5: Identifying Ignition ON
Courtesy of VOLVO CARS CORPORATION

- Ignition on.

  Read off the diagnostics number and check whether it is on the list.

  - A 9472874
  - A 9472876
  - A 9472898
  - A 9472900
  - A 9494243
  - A 9488858
  - A 9496615

- A 9494255
- A 9494256
- A 9496617.

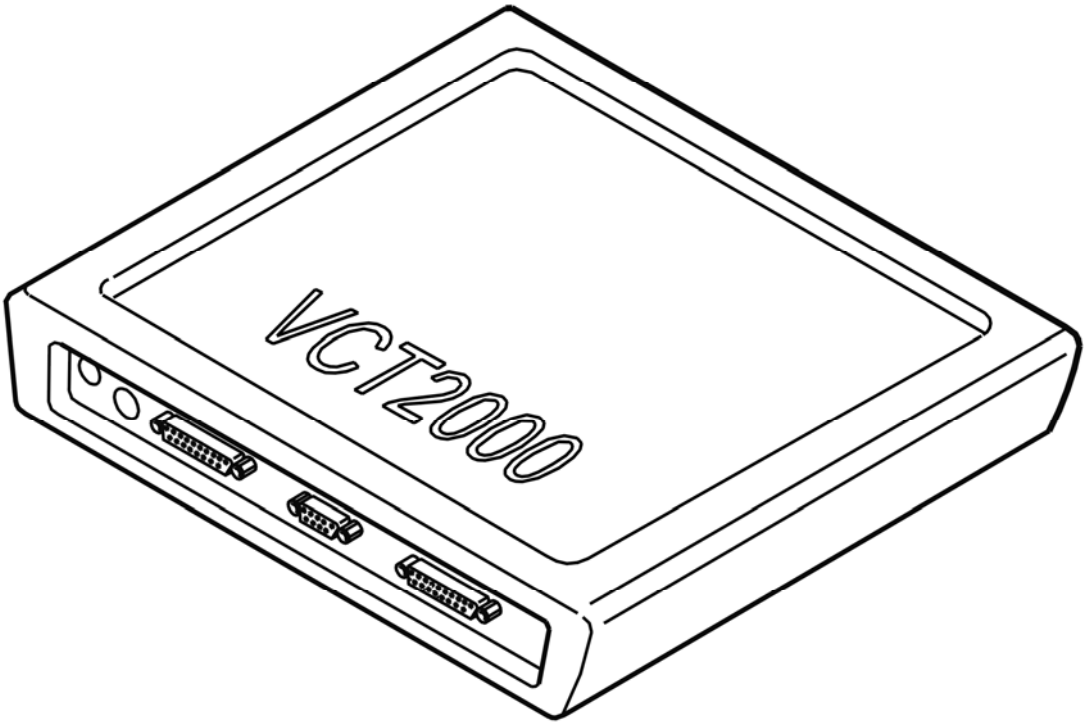

Fig. 6: Identifying VCT2000 Diagnostic Tool Symbol In VIDA
Courtesy of VOLVO CARS CORPORATION

Was the diagnostics number on the list?

- **YES**

  Refer to **READ OFF/PROGRAM PASSENGER COMPARTMENT VENTILATION FILTER COMPENSATION**

- **NO**

  Refer to **READ OFF/PROGRAM PASSENGER COMPARTMENT VENTILATION FILTER COMPENSATION**

READ OFF/PROGRAM PASSENGER COMPARTMENT VENTILATION FILTER COMPENSATION

HINT: When the car is equipped with a passenger compartment ventilation filter the climate control system must be adapted to compensate for the air flow resistance it causes. This is carried out by

programming the climate control module for increased blower fan speed and air flow.

HINT: If the climate control module is not programmed for a passenger compartment ventilation filter although a filter is installed, the air flow into the passenger compartment will be too low. This can make it harder to demist the windows. If the climate control module is programmed for a passenger compartment ventilation filter and a filter is not installed, the air flow into the passenger compartment will be high. This can cause a high noise level from the blower fan.

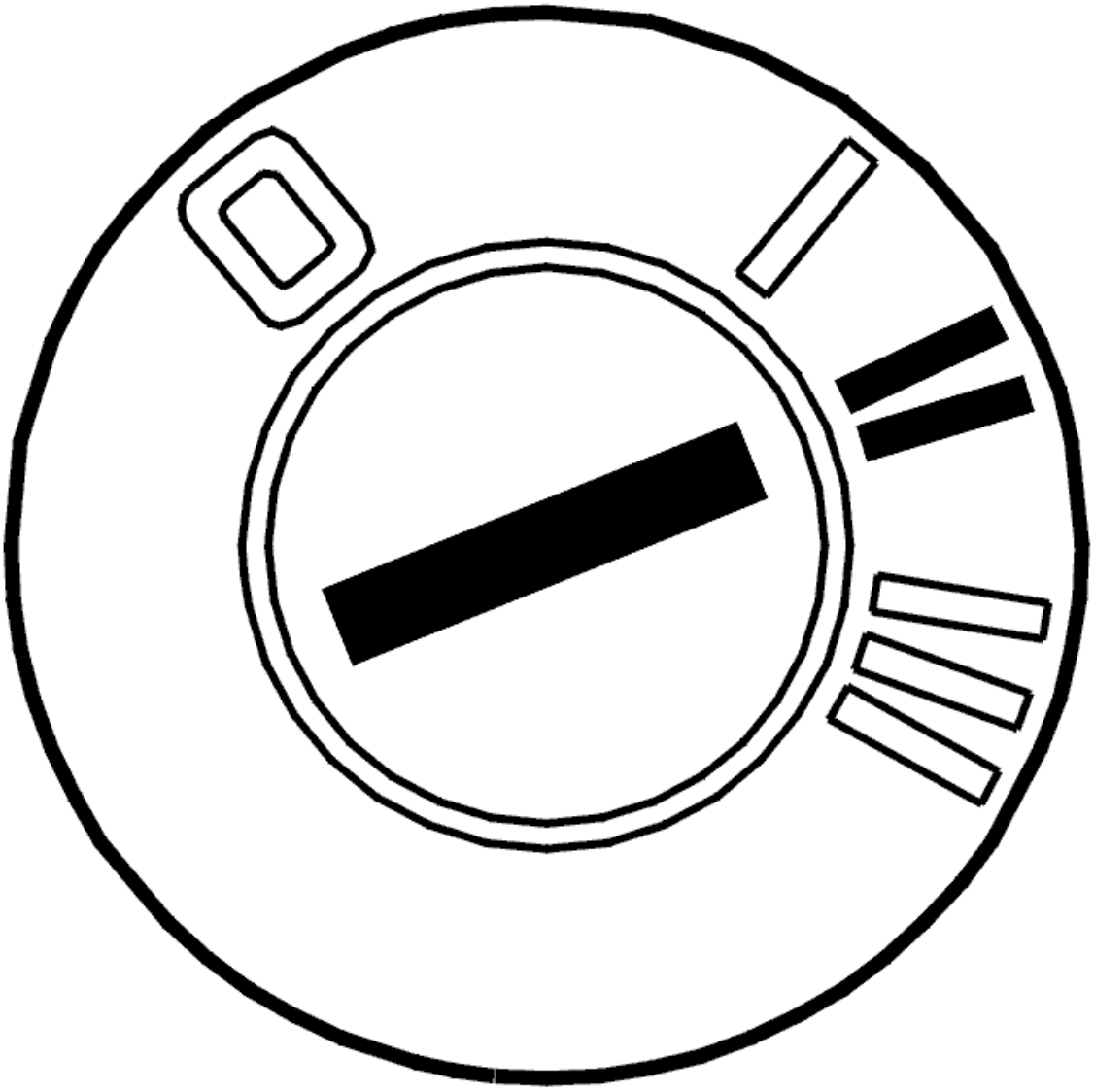

Fig. 7: Identifying Ignition ON
Courtesy of VOLVO CARS CORPORATION

- Check whether the climate control unit is equipped with a passenger compartment ventilation filter. See **AIR CLEANER PASSENGER COMPARTMENT, REPLACING**
- Ignition on.

  Read off and check the status for the activation of passenger compartment ventilation filter compensation.

Default status = ON (activated).

Remedy as necessary.

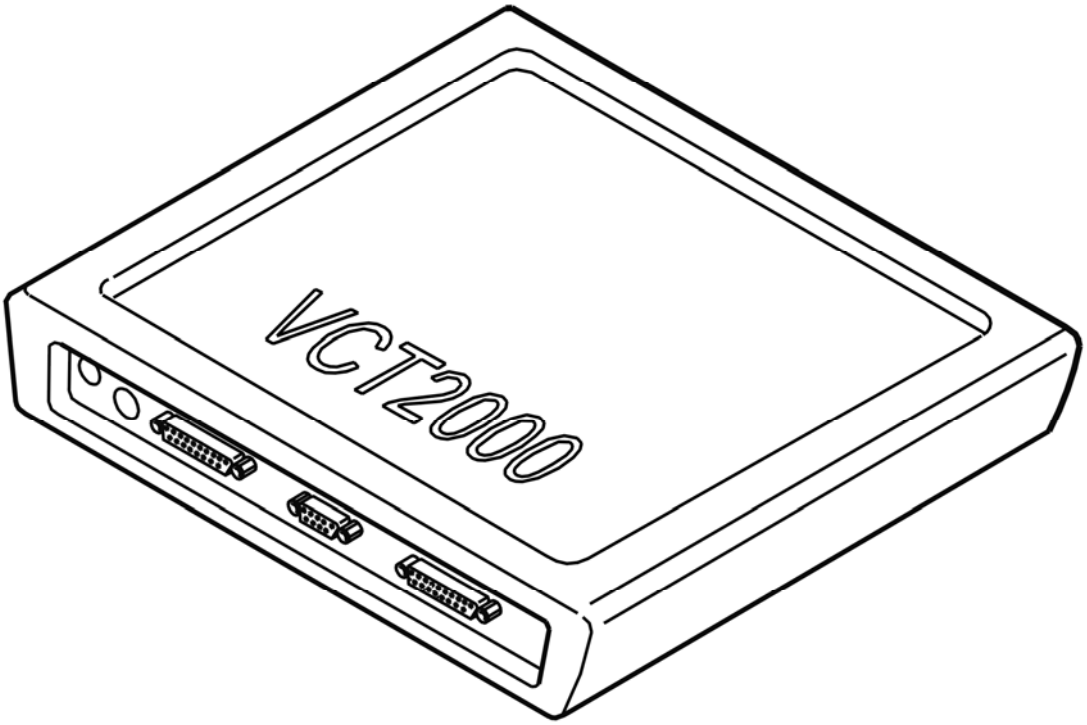

Fig. 8: Identifying VCT2000 Diagnostic Tool Symbol In VIDA
Courtesy of VOLVO CARS CORPORATION

READ OFF/PROGRAM PASSENGER COMPARTMENT VENTILATION FILTER COMPENSATION

HINT: When the car is equipped with a passenger compartment ventilation filter the climate control system must be adapted to compensate for the air flow resistance it causes. This is carried out by programming the climate control module for increased blower fan speed and air flow.

HINT: If the climate control module is not programmed for a passenger compartment ventilation filter although a filter is installed, the air flow into the passenger compartment will be too low. This can make it harder to demist the windows. If the climate control module is programmed for a passenger compartment ventilation filter and a filter is not installed, the air flow into the passenger compartment will be high. This can cause a high noise level from the blower fan.

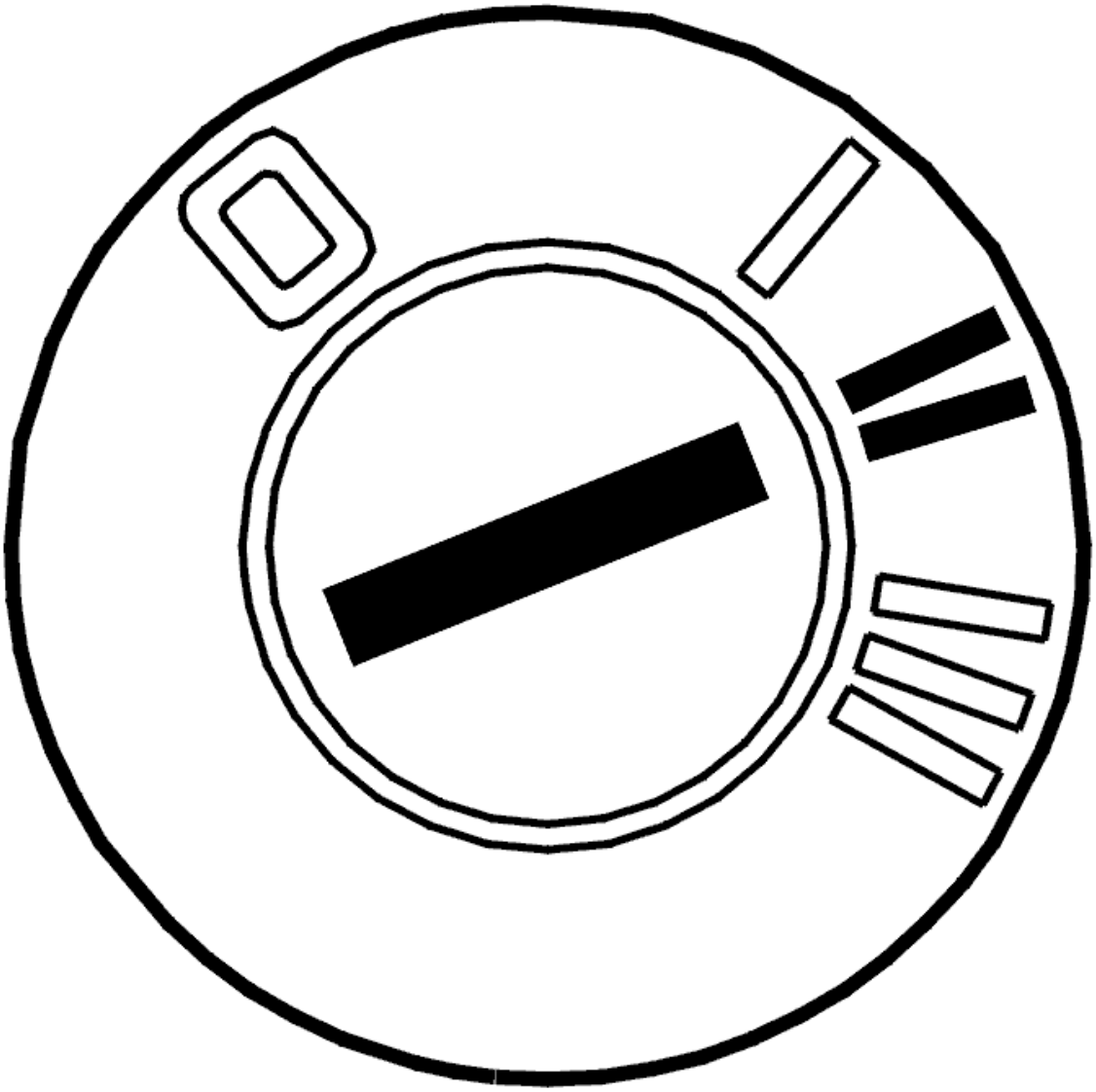

Fig. 9: Identifying Ignition ON
Courtesy of VOLVO CARS CORPORATION

- Check whether the climate control unit is equipped with a passenger compartment ventilation filter. See **AIR CLEANER PASSENGER COMPARTMENT, REPLACING**
- Ignition on.

  Read off and check the status for the activation of passenger compartment ventilation filter compensation. Default status = ON (activated).

  Remedy as necessary.

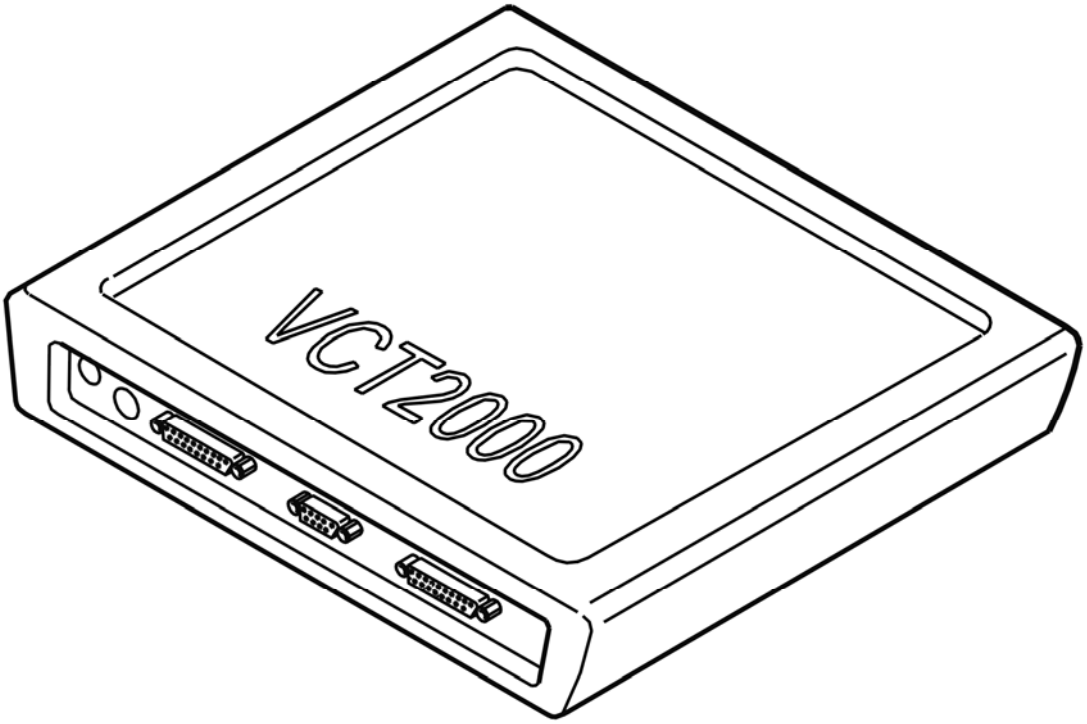

Fig. 10: Identifying VCT2000 Diagnostic Tool Symbol In VIDA
Courtesy of VOLVO CARS CORPORATION

TROUBLE-SHOOTING INFORMATION

Condition

- No diagnostic trouble codes are stored.

Possible Source

- Climate control module (CCM) interior filter incorrectly programmed.

CHECKING AIR CONDITIONING (A/C) (2003-04)

CHECKING AIR CONDITIONING (A/C)

CHECKING THE REFRIGERANT

If the level of the refrigerant is low in the climate control system, the cooling performance on the right-hand side of the passenger compartment is compromised.

Carry out a performance test. See **CLIMATE SYSTEM, PERFORMANCE TEST**.

Remedy as necessary.

NOTE: Always disconnect the battery lead when working on the climate control system. See BATTERY, REPLACING .

Other information

- For visual and physical checks, see **VISUAL AND PHYSICAL CHECK**
- To fill with refrigerant, see **REFRIGERANT, FILLING**
- For vacuum pumping, see **VACUUM PUMPING**
- To leak trace using an electronic leak tracer, see **LEAK TRACING, ELECTRONIC LEAK TRACER**
- To leak trace using fluorescent tracing agent and an UV flashlight, see **LEAK TRACING, FLUORESCENT TRACING AGENT/UV LAMP**
- To fill with fluorescent tracing agent, see **FILLING WITH FLUORESCENT TRACING AGENT WITH THE REFRIGERANT** .

CLIMATE SYSTEM, PERFORMANCE TEST

PERFORMANCE TEST

CONDITIONS

- Hood closed
- Doors and windows closed
- Start the engine
- Engine speed 1500 rpm.

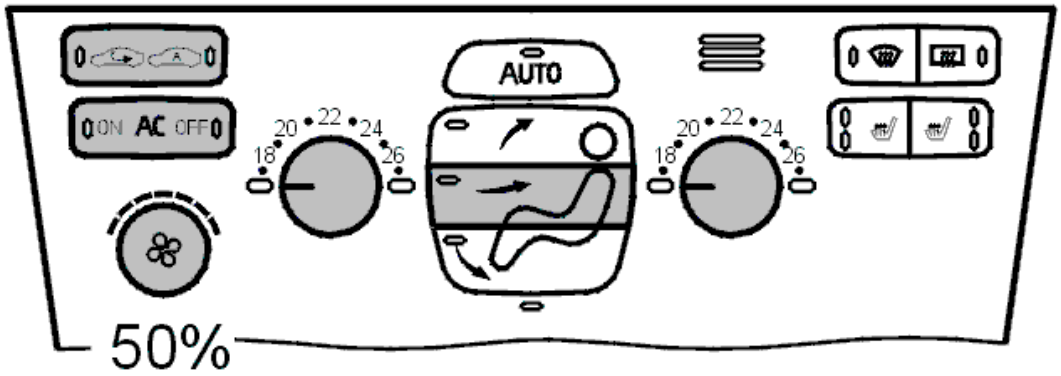

Fig. 11: Blower Switch Fan Set To 50%
Courtesy of VOLVO CARS CORPORATION

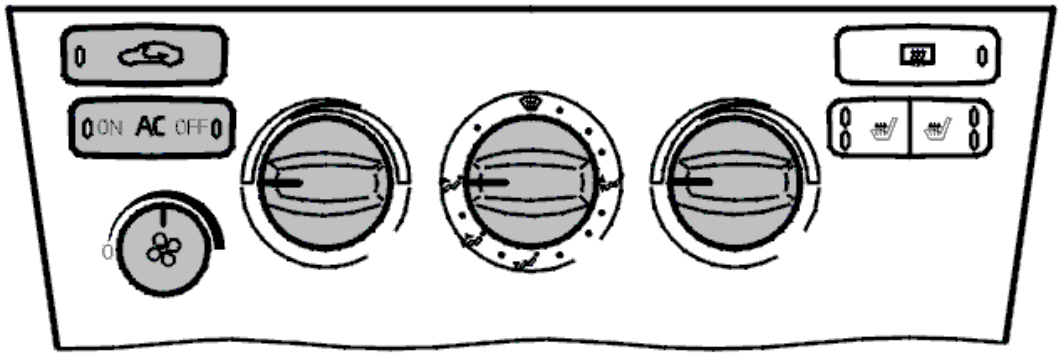

Fig. 12: Identifying Temperature Selectors For Maximum Cooling
Courtesy of VOLVO CARS CORPORATION

- Turn the temperature selector(s) to maximum cooling
- Set the air distribution selector to the **Ventilation** position
- Set the recirculation switch to the **On position**
- Set the air conditioning (A/C) button to the **On position**
- Set the blower fan switch to 50%.

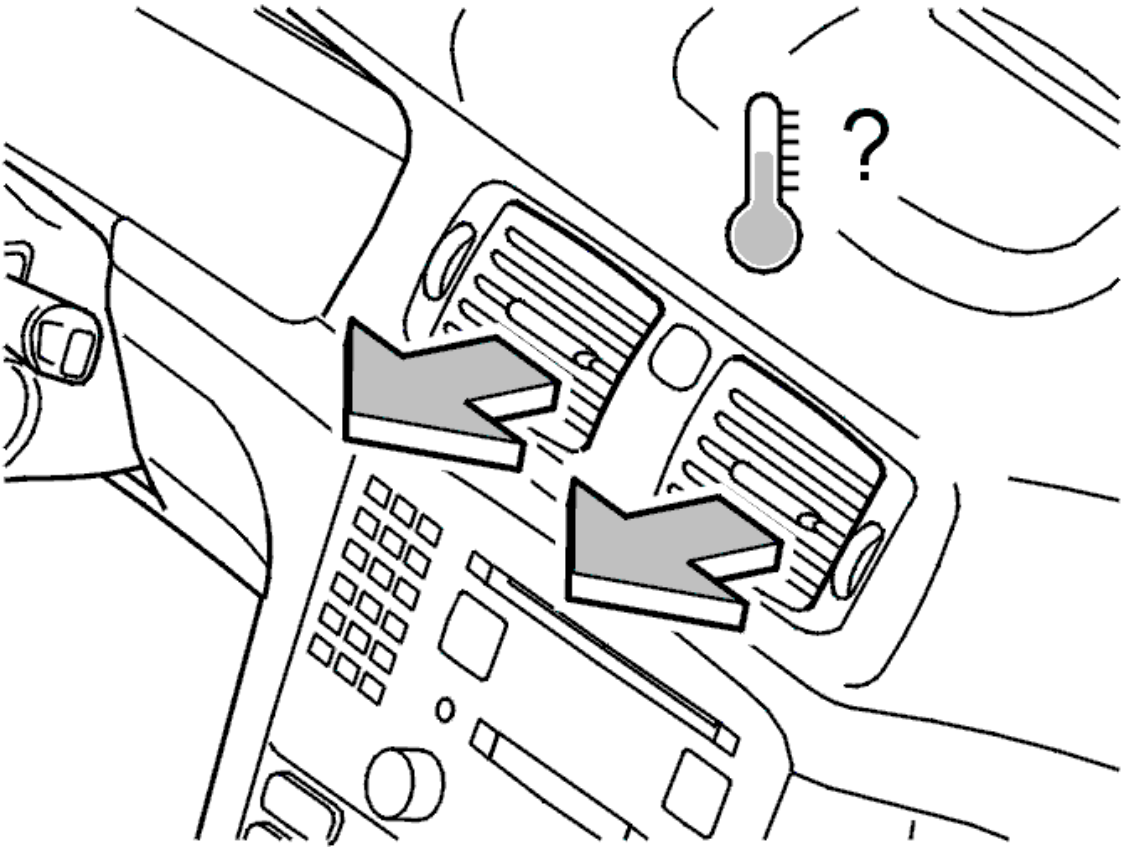

Fig. 13: Checking Temperature At Center Dashboard Vents
Courtesy of VOLVO CARS CORPORATION

- Position a thermometer at the center dashboard vents
- Allow the system to stabilize itself for at least 8 minutes.

Recorded operating conditions °C (°F)			
Ambient air temperature measured in front of the car	20°C (68°F)	30°C (86°F)	40°C (104°F)
Temperature of the expelled air measured at the center panel vents	6-9°C (43-48°F)	6-9°C (43-48°F)	6-9°C (43-48°F)

CHECKING AIR-CONDITIONING UNIT DRAINAGE (2003-04)

CHECKING AIR-CONDITIONING UNIT DRAINAGE

CHECKING DRAINAGE

HINT: If condensation, etc., cannot be drained from air-conditioning unit, the windows can mist up and may cause a bad smell inside the car.

Check that drain hose is correctly positioned, intact and not blocked. Hose is positioned in front of tunnel

bracket under air-conditioning unit.

Do the necessary corrective action.

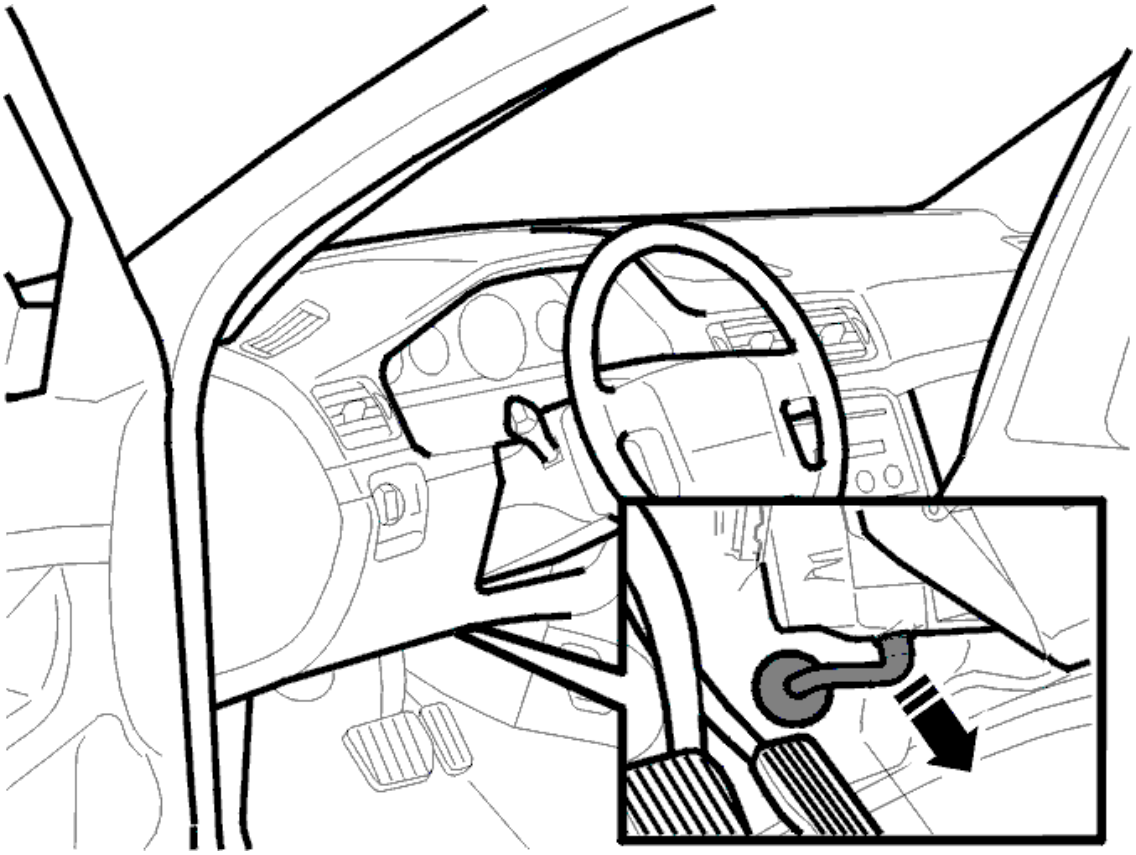

Fig. 14: Air Ducts From Floor Heater Unit
Courtesy of VOLVO CARS CORPORATION

TROUBLE-SHOOTING INFORMATION

Condition

- No diagnostic trouble codes are stored
- Fault is permanent.

Possible Source

- Blocked drainage of air conditioning unit.

CHECKING CLEANING OF EVAPORATOR (2003-04)

CHECKING CLEANING OF EVAPORATOR

Clean evaporator thoroughly.

TROUBLE-SHOOTING INFORMATION

Condition

- No diagnostic trouble codes are stored
- Fault is permanent.

Possible Source

- Evaporator has acquired a coating.

HINT: This type of coating has a "concrete" smell.

CHECKING INTERIOR FILTER (2003-04)

CHECKING PASSENGER COMPARTMENT VENTILATION FILTER

HINT: A blocked, dirty or wet passenger compartment ventilation filter can cause misting on the windshield or result in bad odor from the climate control system.

- Remove the soundproofing panel. See **AIR CLEANER PASSENGER COMPARTMENT, REPLACING** .

  Check whether the climate control unit is equipped with a passenger compartment ventilation filter. If a passenger compartment ventilation filter is installed, check that the filter is correctly installed, is intact, clean and dry.

  Remedy as necessary.

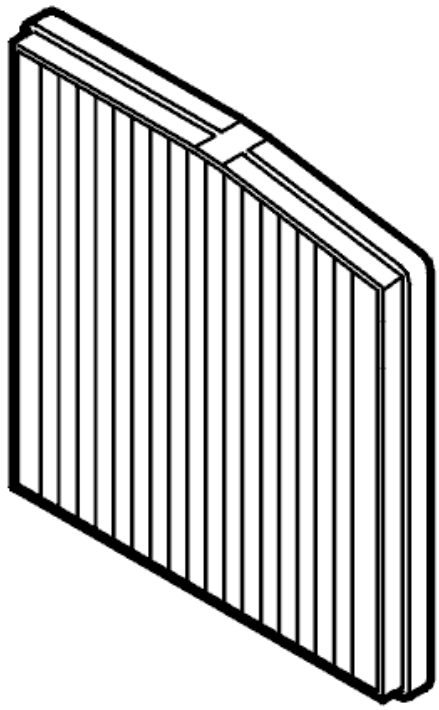

Fig. 15: Identifying Soundproofing Panel
Courtesy of VOLVO CARS CORPORATION

TROUBLE-SHOOTING INFORMATION

Condition

- No diagnostic trouble codes are stored
- Fault is permanent.

Possible Source

- Interior filter blocked
- Damp interior filter.

CHECKING INTERIOR TEMPERATURE PROGRAMMING (2003-04)

CHECKING INTERIOR TEMPERATURE PROGRAMMING

PROGRAMMING THE INTERIOR TEMPERATURE

READING/PROGRAMMING THE INTERIOR TEMPERATURE

HINT: The interior temperature can be adjusted in relation to the interior temperature switch by programming a compensation value.

HINT: Interior temperature can be raised or lowered by maximum ±2°C (±4°F) from the normal value allowing the driver to select a desired setting.

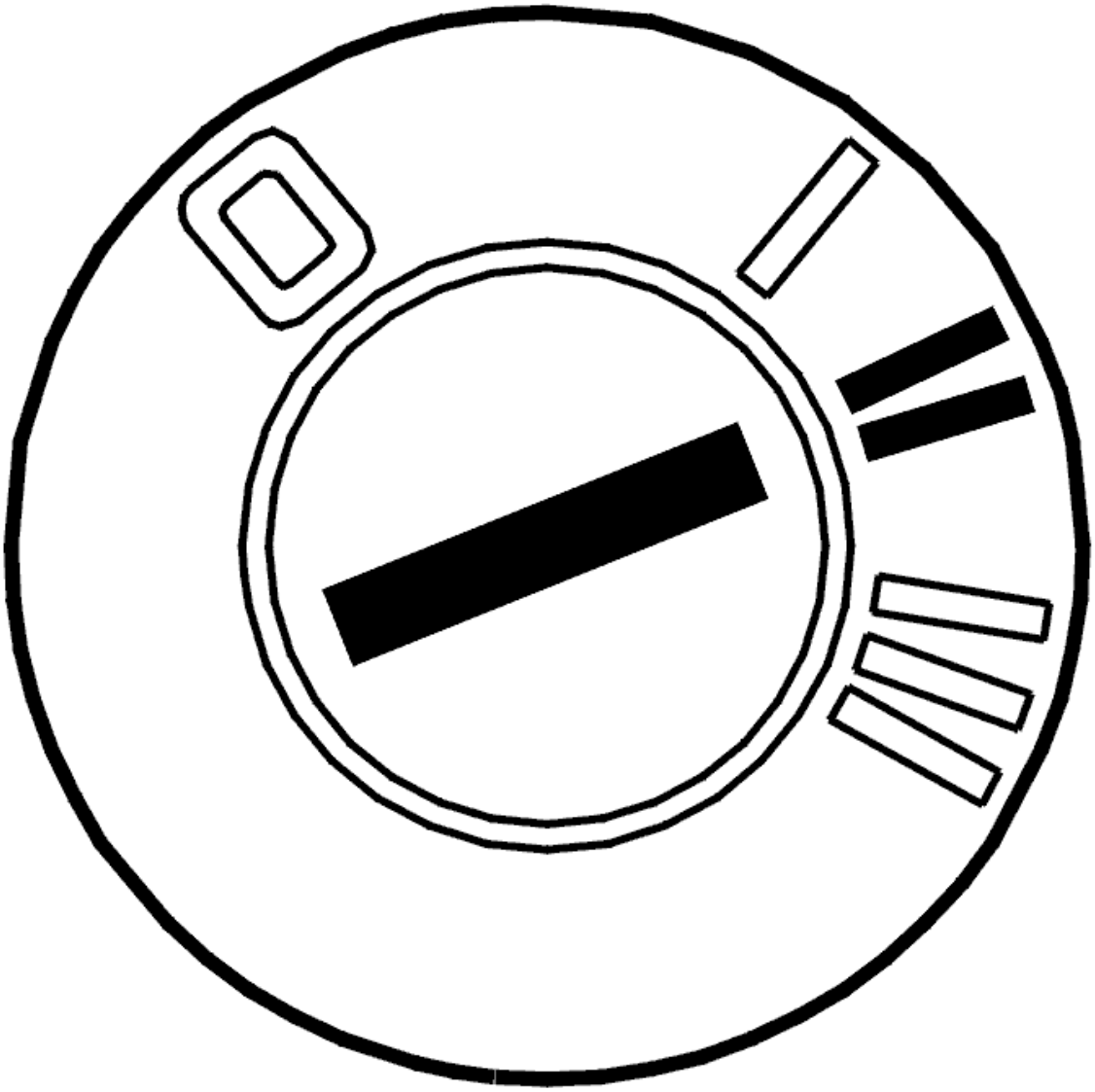

Fig. 16: Identifying Ignition ON
Courtesy of VOLVO CARS CORPORATION

- Ignition on.

  Read and make a note of the programmed value and change as required.

  - 0 = -1.0°C/-2.0°F
  - 1 = -0.5°C/-1.0°F

- 2 = 0.0°C/0.0°F (preset value)
- 3 = +0.5°C/+1.0°F
- 4 = +1.0°C/+2.0°F.

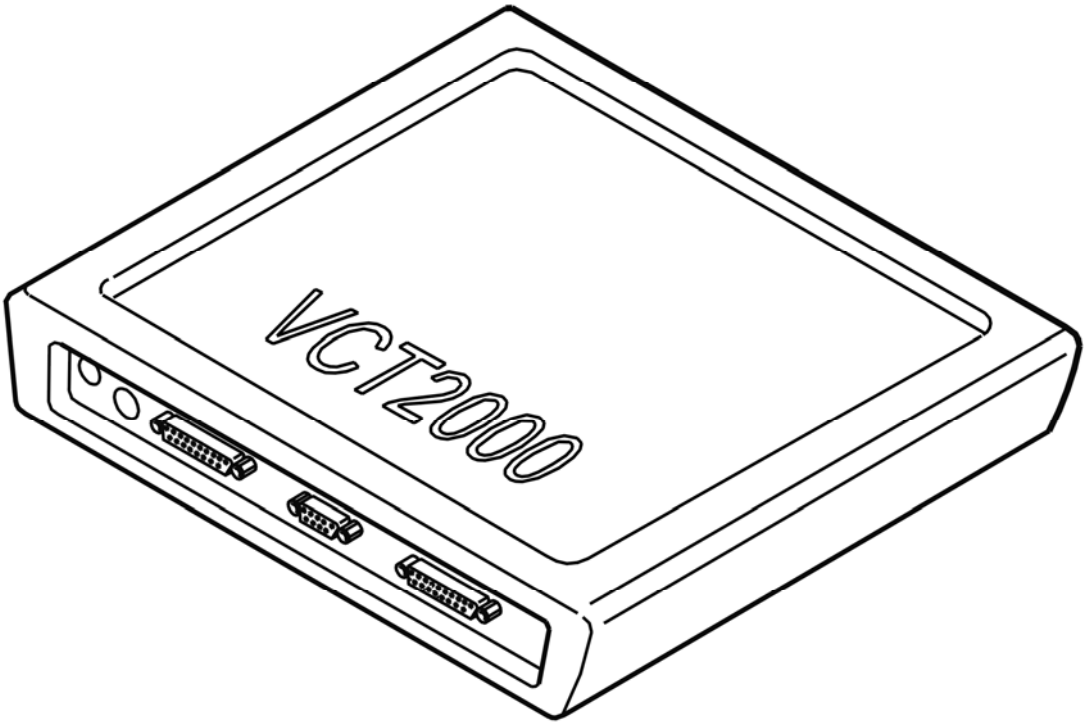

Fig. 17: Identifying VCT2000 Diagnostic Tool Symbol In VIDA
Courtesy of VOLVO CARS CORPORATION

CHECKING LIN BUS TO CLIMATE CONTROL MODULE (CCM) (L. H. D; 2005-12)

CHECKING LIN BUS TO CLIMATE CONTROL MODULE (CCM)

CHECKING COMMUNICATION FAULTS

Problems with the Damper motor module (DMM) and Air quality sensor (AQS) can be because one or more of the units transmits messages on the LIN bus continuously. This means that the LIN bus is filled with messages, which, for example, can disrupt calibration of the damper motors.

The Climate control module (CCM) checks the messages in the two different LIN busses. If the Climate control module (CCM) believes that there has been a communication error on the LIB bus, a counter counts for the Damper motor module (DMM) which has sent the message.

Click the VCT2000 symbol to check if any of the Damper motor modules (DMM) have caused a new

communication error on the LIN bus.

The registered communication faults read out should be interpreted as follows:

- Less than 10 registered communication errors is considered normal.
- If any of the Damper motor modules (DMM) have more than 10, but less than 100, registered communication errors, the difference with the Damper motor module (DMM) that has the next most registered communication errors must be greater than 10.
- If any of the Damper motor modules (DMM) have more than 100 registered communication errors, the difference with the Damper motor module (DMM) that has the next most registered communication errors must be greater than 100.

If no Damper motor module (DMM) meets the requirements, replace it.

Other information:

- see **DAMPER MOTOR MODULE (DMM) TEMPERATURE, REPLACING**
- see **DAMPER MOTOR MODULE (DMM) DEFROSTER, REPLACING**
- see **DAMPER MOTOR MODULE (DMM) RECIRCULATION, REPLACING**
- see **DAMPER MOTOR MODULE (DMM) AIR DISTRIBUTION, REPLACING**

Fig. 18: Identifying VCT2000 Diagnostic Tool Symbol In VIDA
Courtesy of VOLVO CARS CORPORATION

Was a damaged Damper motor module (DMM) found?

- **YES**

  Refer to **CHECKING THE FUNCTION**

- **NO**

  FAULT NOT FOUND: Troubleshooting has been completed.

CHECKING THE FUNCTION

After carrying out the repair, check that the fault no longer exists.

Perform a check of the climate control system.

- Ignition off.
- Restore components and connectors.
- Ignition switch position II.
- Set the climate control to AUTO and allow it to stabilize.
- Then go through the various settings for the climate control system using the switches on the Climate control module (CCM), see graphic, and allow the climate control to stabilize in each position.
- Return to AUTO and allow the vehicle to stand for a while.
- Then check that the customer symptoms no longer exist.

Click the VCT2000 symbol to check if any of the Damper motor modules (DMM) have caused a new communication error on the LIN bus. If the status is unchanged, the correct corrective action has been taken.

Fig. 19: Identifying VCT2000 Diagnostic Tool Symbol In VIDA
Courtesy of VOLVO CARS CORPORATION

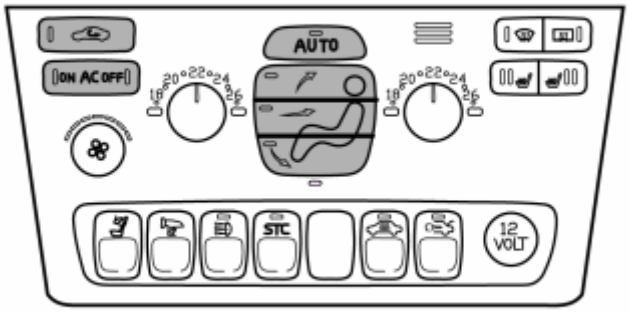

Fig. 20: Identifying Climate Control Module (CCM) Panel
Courtesy of VOLVO CARS CORPORATION

CHECKING LIN BUS TO CLIMATE CONTROL MODULE (CCM)

CHECKING COMMUNICATION FAULTS

Problems with the Damper motor module (DMM) and Air quality sensor (AQS) can be because one or more of the units transmits messages on the LIN bus continuously. This means that the LIN bus is filled with messages, which, for example, can disrupt calibration of the damper motors.

The Climate control module (CCM) checks the messages in the two different LIN busses. If the Climate control module (CCM) believes that there has been a communication error on the LIB bus, a counter counts for the Damper motor module (DMM) which has sent the message.

Click the VCT2000 symbol to check if any of the Damper motor modules (DMM) have caused a new communication error on the LIN bus.

The registered communication faults read out should be interpreted as follows:

- Less than 10 registered communication errors is considered normal.
- If any of the Damper motor modules (DMM) have more than 10, but less than 100, registered communication errors, the difference with the Damper motor module (DMM) that has the next most registered communication errors must be greater than 10.
- If any of the Damper motor modules (DMM) have more than 100 registered communication errors, the difference with the Damper motor module (DMM) that has the next most registered communication errors must be greater than 100.

If no Damper motor module (DMM) meets the requirements, replace it.

Other information:

- see **DAMPER MOTOR MODULE (DMM) TEMPERATURE, REPLACING**
- see **DAMPER MOTOR MODULE (DMM) DEFROSTER, REPLACING**
- see **DAMPER MOTOR MODULE (DMM) RECIRCULATION, REPLACING**
- see **DAMPER MOTOR MODULE (DMM) AIR DISTRIBUTION, REPLACING**

Fig. 21: Identifying VCT2000 Diagnostic Tool Symbol In VIDA
Courtesy of VOLVO CARS CORPORATION

Was a damaged Damper motor module (DMM) found?

- **YES**

  see **CHECKING THE FUNCTION**

- **NO**

  FAULT NOT FOUND: Troubleshooting has been completed.

CHECKING THE FUNCTION

After carrying out the repair, check that the fault no longer exists.

Perform a check of the climate control system.

- Ignition off.
- Restore components and connectors.
- Ignition switch position II.
- Set the climate control to AUTO and allow it to stabilize.
- Then go through the various settings for the climate control system using the switches on the Climate control module (CCM), see graphic, and allow the climate control to stabilize in each position.
- Return to AUTO and allow the vehicle to stand for a while.
- Then check that the customer symptoms no longer exist.

Click the VCT2000 symbol to check if any of the Damper motor modules (DMM) have caused a new communication error on the LIN bus. If the status is unchanged, the correct corrective action has been taken.

Fig. 22: Identifying VCT2000 Diagnostic Tool Symbol In VIDA
Courtesy of VOLVO CARS CORPORATION

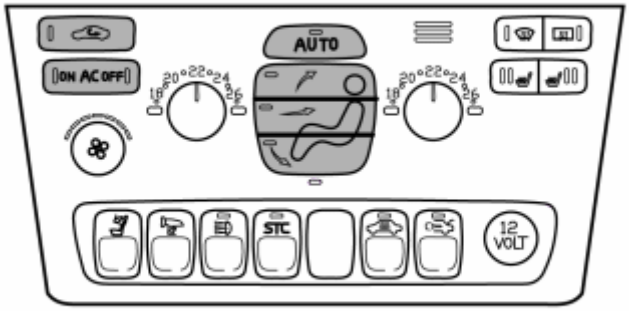

Fig. 23: Identifying Climate Control Module (CCM) Panel
Courtesy of VOLVO CARS CORPORATION

CHECKING SEAT HEATING MODULE (SHM) (2007-12)

CHECKING SEAT HEATING MODULE (SHM)

CHECKING THE SEAT HEATING

The system for seat heating consists of three different parts:

- The task of the Seat heating module (SHM) is to check the function and to communicate with the Climate control module (CCM).
- Two heating elements.
- A temperature sensor.

On certain markets, it is not permitted to have seat heating in the vehicle. Check to, see if the vehicle has seat heating by clicking the VCT2000 symbol.

Fig. 24: Identifying VCT2000 Diagnostic Tool Symbol In VIDA
Courtesy of VOLVO CARS CORPORATION

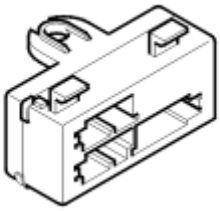

Fig. 25: Identifying Seat Heating Module (SHM)
Courtesy of VOLVO CARS CORPORATION

Does the vehicle have seat heating?

- **YES**

  Refer to **CHECKING SYMPTOMS**

CHECKING COMMUNICATION FAULTS

If the seat heating does not work, this may be because the Seat heating module (SHM) is damaged, that there is

no communication with the Seat heating module (SHM) or that the temperature sensor is damaged.

Check communication by clicking on the VCT2000 symbol and reading off the status for seat heating.

Fig. 26: Identifying VCT2000 Diagnostic Tool Symbol In VIDA
Courtesy of VOLVO CARS CORPORATION

Could the status be read out?

- **YES**

  Refer to **CHECKING THE CONTROL MODULE**

- **NO**

  Refer to **CHECKING COMMUNICATION**

CHECKING THE CONTROL MODULE

Start by replacing the left Seat heating module (SHM) with the right Seat heating module (SHM) and checking that the affected side now works. If both Seat heating modules (SHM) are damaged, replace one with a new one and check the function of each.

Replace damaged control module.

Other information:

- see **SEAT HEATING MODULE (SHM), REPLACING**

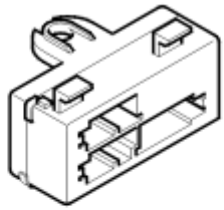

Fig. 27: Identifying Seat Heating Module (SHM)
Courtesy of VOLVO CARS CORPORATION

Is the function OK?

- **YES**

  OKAY: Troubleshooting has been completed.

- **NO**

  Refer to **CHECKING HEATER ELEMENTS**

CHECKING HEATER ELEMENTS

Continue fault tracing by replacing the temperature sensor and the two heating elements in the damaged seat. Activate the seat heating. Check that the seat heats up.

Also check the function of the Seat heating module (SHM) which was installed from the start. If seat heating works, keep the original control module.

Other information:

- see **HEATER PAD BACKREST AND CUSHION, REPLACING**
- see **SEAT HEATING MODULE (SHM), REPLACING**

CHECKING COMMUNICATION

The fault is probably communication related.

Continue checking the LIN bus to the climate control module (CCM) to fault trace the communication.

CHECKING SYMPTOMS

Check if the vehicle has problems with both seat heating and climate unit or only the seat heating.

Does the vehicle only have problems with seat heating?

- **YES**

  Refer to **CHECKING COMMUNICATION FAULTS**

- **NO**

  Refer to **FAULT-TRACING INFORMATION**

FAULT-TRACING INFORMATION

This troubleshooting only applies to vehicles that have problems with the climate units and seat heating. Example of symptoms is uneven temperature of air supply for left and right sides of the passenger compartment as well as lost function for seat heating.

NOTE: Before starting this symptom troubleshooting, check that no relevant diagnostic trouble codes are stored for the vehicle's climate unit.

Climate control module (CCM) and seat heating module communicates via standardized serial communication - LIN (Local Interconnect Network). If Seat Heating Module (SHM) is damaged, this may cause problems with both climate unit and seat heating. Then it is not possible to perform calibration of Climate control module (CCM).

To check if Seat Heating Module (SHM) driver side is damaged, do the following:

Disconnect Seat Heating Module (SHM), driver's side.

Check if the climate unit works correctly.

If the climate unit works correctly without Seat Heating Module (SHM) driver's side connected, then Seat Heating Module (SHM) driver's side shall be replaced.

Do the same check on Seat heating module (SHM), passenger side.

Remedy as necessary.

Other information

- see **SEAT HEATING MODULE (SHM), REPLACING**

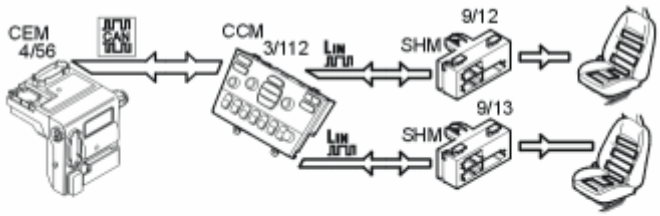

Fig. 28: Identifying Seat Heating Communication System
Courtesy of VOLVO CARS CORPORATION

CHECKING SEAT HEATING MODULE (SHM)

CHECKING THE SEAT HEATING

The system for seat heating consists of three different parts:

- The task of the Seat heating module (SHM) is to check the function and to communicate with the Climate control module (CCM).
- Two heating elements.
- A temperature sensor.

On certain markets, it is not permitted to have seat heating in the vehicle. Check to, see if the vehicle has seat heating by clicking the VCT2000 symbol.

Fig. 29: Identifying VCT2000 Diagnostic Tool Symbol In VIDA
Courtesy of VOLVO CARS CORPORATION

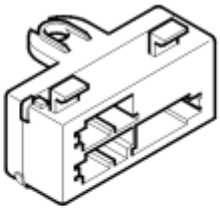

Fig. 30: Identifying Seat Heating Module (SHM)
Courtesy of VOLVO CARS CORPORATION

Does the vehicle have seat heating?

- **YES**

  see **CHECKING SYMPTOMS**

CHECKING COMMUNICATION FAULTS

If the seat heating does not work, this may be because the Seat heating module (SHM) is damaged, that there is no communication with the Seat heating module (SHM) or that the temperature sensor is damaged.

Check communication by clicking on the VCT2000 symbol and reading off the status for seat heating.

Fig. 31: Identifying VCT2000 Diagnostic Tool Symbol In VIDA
Courtesy of VOLVO CARS CORPORATION

Could the status be read out?

- **YES**

  see **CHECKING THE CONTROL MODULE**

- **NO**

see **CHECKING COMMUNICATION**

CHECKING THE CONTROL MODULE

Start by replacing the left Seat heating module (SHM) with the right Seat heating module (SHM) and checking that the affected side now works. If both Seat heating modules (SHM) are damaged, replace one with a new one and check the function of each.

Replace damaged control module.

Other information:

- see **SEAT HEATING MODULE (SHM), REPLACING**

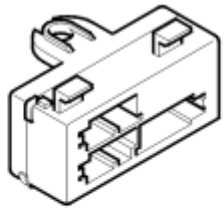

Fig. 32: Identifying Seat Heating Module (SHM)
Courtesy of VOLVO CARS CORPORATION

Is the function OK?

- **YES**

  OKAY: Troubleshooting has been completed.

- **NO**

  see **CHECKING HEATER ELEMENTS**

CHECKING HEATER ELEMENTS

Continue fault tracing by replacing the temperature sensor and the two heating elements in the damaged seat. Activate the seat heating. Check that the seat heats up.

Also check the function of the Seat heating module (SHM) which was installed from the start. If seat heating

works, keep the original control module.

Other information:

- see **SEAT HEATING MODULE (SHM), REPLACING**
- see **SEAT HEATING MODULE (SHM), REPLACING**

CHECKING COMMUNICATION

The fault is probably communication related.

Continue checking the LIN bus to the climate control module (CCM) to fault trace the communication.

CHECKING SYMPTOMS

Check if the vehicle has problems with both seat heating and climate unit or only the seat heating.

Does the vehicle only have problems with seat heating?

- **YES**

  see **CHECKING COMMUNICATION FAULTS**

- **NO**

  see **FAULT-TRACING INFORMATION**

FAULT-TRACING INFORMATION

This troubleshooting only applies to vehicles that have problems with the climate units and seat heating. Example of symptoms is uneven temperature of air supply for left and right sides of the passenger compartment as well as lost function for seat heating.

NOTE: Before starting this symptom troubleshooting, check that no relevant diagnostic trouble codes are stored for the vehicle's climate unit.

Climate control module (CCM) and seat heating module communicates via standardized serial communication - LIN (Local Interconnect Network). If Seat Heating Module (SHM) is damaged, this may cause problems with both climate unit and seat heating. Then it is not possible to perform calibration of Climate control module (CCM).

To check if Seat Heating Module (SHM) driver side is damaged, do the following:

Disconnect Seat Heating Module (SHM), driver's side.

Check if the climate unit works correctly.

If the climate unit works correctly without Seat Heating Module (SHM) driver's side connected, then Seat Heating Module (SHM) driver's side shall be replaced.

Do the same check on Seat heating module (SHM), passenger side.

Remedy as necessary.

Other information

- see **SEAT HEATING MODULE (SHM), REPLACING**

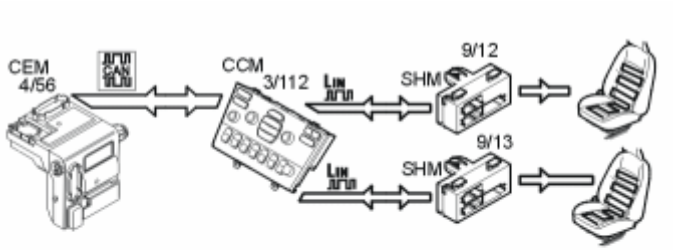

Fig. 33: Identifying Seat Heating Communication System
Courtesy of VOLVO CARS CORPORATION

CHECKING SEAT HEATING MODULE (SHM) (2005-06)

CHECKING SEAT HEATING MODULE (SHM)

CHECKING THE SEAT HEATING

The system for seat heating consists of three different parts:

- The task of the Seat heating module (SHM) is to check the function and to communicate with the Climate control module (CCM).
- Two heating elements.
- A temperature sensor.

On certain markets, it is not permitted to have seat heating in the vehicle. Check to, see if the vehicle has seat heating by clicking the VCT2000 symbol.

Fig. 34: Identifying VCT2000 Diagnostic Tool Symbol In VIDA
Courtesy of VOLVO CARS CORPORATION

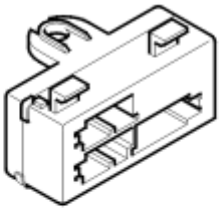

Fig. 35: Identifying Seat Heating Module (SHM)
Courtesy of VOLVO CARS CORPORATION

Does the vehicle have seat heating?

- **YES**

  Refer to **CHECKING COMMUNICATION FAULTS**

CHECKING COMMUNICATION FAULTS

If the seat heating does not work, this may be because the Seat heating module (SHM) is damaged, that there is no communication with the Seat heating module (SHM) or that the temperature sensor is damaged.

Check communication by clicking on the VCT2000 symbol and reading off the status for seat heating.

Fig. 36: Identifying VCT2000 Diagnostic Tool Symbol In VIDA
Courtesy of VOLVO CARS CORPORATION

Could the status be read out?

- **YES**

  Refer to **CHECKING THE CONTROL MODULE**

- **NO**

  Refer to **CHECKING COMMUNICATION**

CHECKING THE CONTROL MODULE

Start by replacing the left Seat heating module (SHM) with the right Seat heating module (SHM) and checking that the affected side now works. If both Seat heating modules (SHM) are damaged, replace one with a new one and check the function of each.

Replace damaged control module.

Other information:

- see **SEAT HEATING MODULE (SHM), REPLACING**

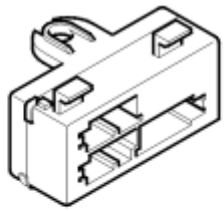

Fig. 37: Identifying Seat Heating Module (SHM)
Courtesy of VOLVO CARS CORPORATION

Is the function OK?

- **YES**

  OKAY: Troubleshooting has been completed.

- **NO**

Refer to **CHECKING HEATER ELEMENTS**

CHECKING HEATER ELEMENTS

Continue fault tracing by replacing the temperature sensor and the two heating elements in the damaged seat. Activate the seat heating. Check that the seat heats up.

Also check the function of the Seat heating module (SHM) which was installed from the start. If seat heating works, keep the original control module.

Other information:

- see **HEATER PAD BACKREST AND CUSHION, REPLACING**
- see **SEAT HEATING MODULE (SHM), REPLACING**

CHECKING COMMUNICATION

The fault is probably communication related.

Continue checking the LIN bus to the climate control module (CCM) to fault trace the communication.

CHECKING SEAT HEATING MODULE (SHM)

CHECKING THE SEAT HEATING

The system for seat heating consists of three different parts:

- The task of the Seat heating module (SHM) is to check the function and to communicate with the Climate control module (CCM).
- Two heating elements.
- A temperature sensor.

On certain markets, it is not permitted to have seat heating in the vehicle. Check to, see if the vehicle has seat heating by clicking the VCT2000 symbol.

Fig. 38: Identifying VCT2000 Diagnostic Tool Symbol In VIDA
Courtesy of VOLVO CARS CORPORATION

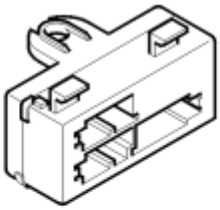

Fig. 39: Identifying Seat Heating Module (SHM)
Courtesy of VOLVO CARS CORPORATION

Does the vehicle have seat heating?

- **YES**

  see **CHECKING COMMUNICATION FAULTS**

CHECKING COMMUNICATION FAULTS

If the seat heating does not work, this may be because the Seat heating module (SHM) is damaged, that there is no communication with the Seat heating module (SHM) or that the temperature sensor is damaged.

Check communication by clicking on the VCT2000 symbol and reading off the status for seat heating.

Fig. 40: Identifying VCT2000 Diagnostic Tool Symbol In VIDA
Courtesy of VOLVO CARS CORPORATION

Could the status be read out?

- **YES**

  see **CHECKING THE CONTROL MODULE**

- **NO**

see **CHECKING COMMUNICATION**

CHECKING THE CONTROL MODULE

Start by replacing the left Seat heating module (SHM) with the right Seat heating module (SHM) and checking that the affected side now works. If both Seat heating modules (SHM) are damaged, replace one with a new one and check the function of each.

Replace damaged control module.

Other information:

- see **SEAT HEATING MODULE (SHM), REPLACING**

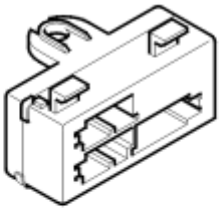

Fig. 41: Identifying Seat Heating Module (SHM)
Courtesy of VOLVO CARS CORPORATION

Is the function OK?

- **YES**

  OKAY: Troubleshooting has been completed.

- **NO**

  see **CHECKING HEATER ELEMENTS**

CHECKING HEATER ELEMENTS

Continue fault tracing by replacing the temperature sensor and the two heating elements in the damaged seat. Activate the seat heating. Check that the seat heats up.

Also check the function of the Seat heating module (SHM) which was installed from the start. If seat heating

works, keep the original control module.

Other information:

- see **SEAT HEATING MODULE (SHM), REPLACING**

CHECKING COMMUNICATION

The fault is probably communication related.

Continue checking the LIN bus to the climate control module (CCM) to fault trace the communication.

CHECKING START OF CLIMATE CONTROL MODULE (CCM) (B6324S; 2007-08)

CHECKING START OF CLIMATE CONTROL MODULE (CCM)

CHECKING SOFTWARE

Climate control module (CCM) may have problems starting correct after the engine has started. Solve this by downloading new software to Engine control module (ECM).

Possible to download new software to the module?

- **YES**

  Refer to **VERIFICATION**

- **NO**

  Refer to **INFORMATION**

VERIFICATION

Check that the Climate control module (CCM) starts correct after the engine has started.

Does the climate control system function as it should?

- **YES**

  OKAY: Troubleshooting has been completed.

- **NO**

  Refer to **INFORMATION**

INFORMATION

FAULT-TRACING INFORMATION

The fault must now be detected and remedied. As this is not the case, troubleshooting has failed.

Exit symptom symptom troubleshooting or try again.

Do you want to exit symptom troubleshooting?

- **YES**

  FAULT TRACING FAILED: The fault should have been detected and remedied. As this is not the case fault-tracing has failed. Exit fault-tracing for this diagnostic trouble code (DTC) or make another attempt.

CHECKING THE AIR QUALITY SENSOR (2003-04)

CHECKING THE AIR QUALITY SENSOR

CHECKING THE FUNCTION

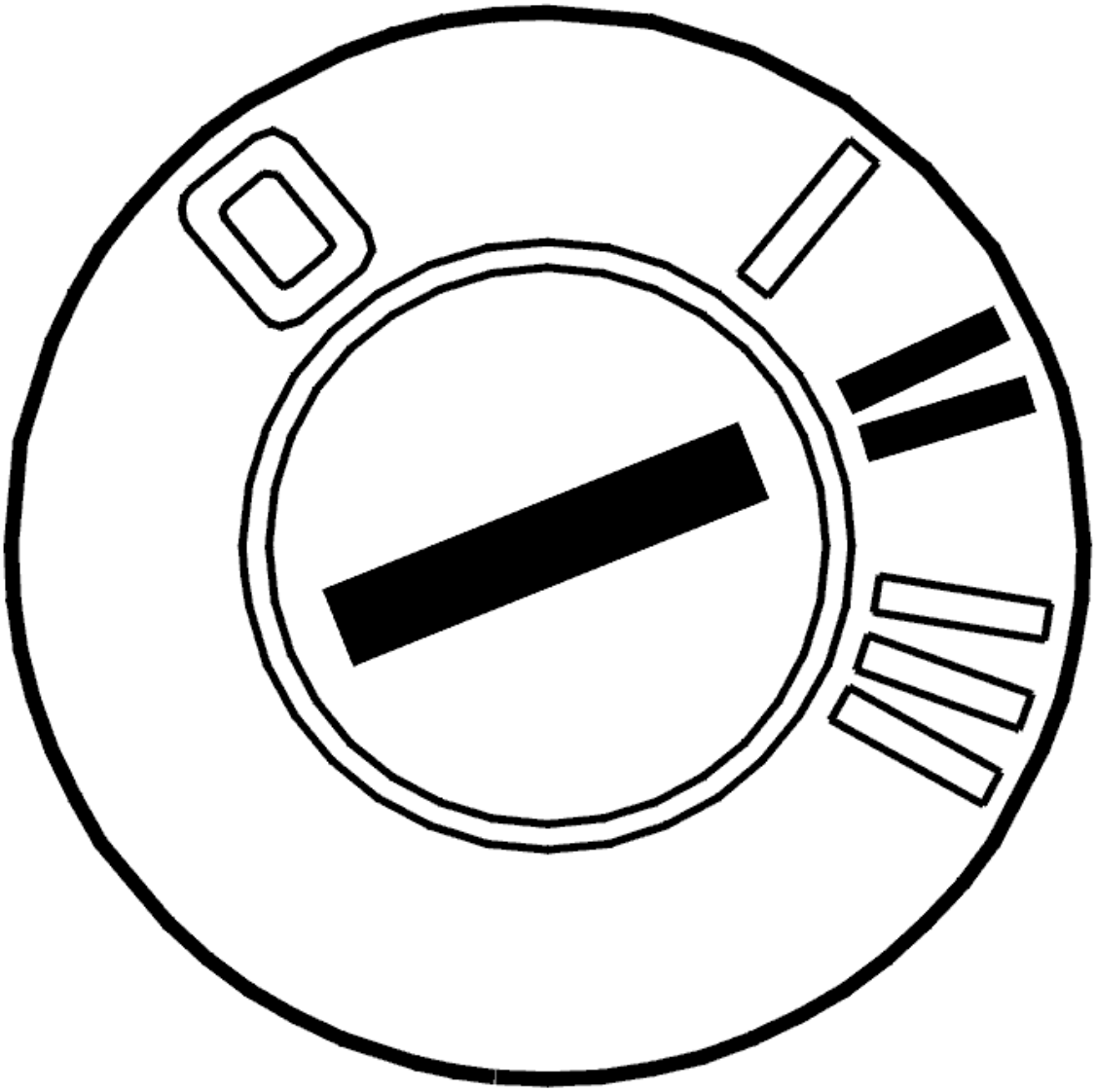

Fig. 42: Identifying Ignition ON
Courtesy of VOLVO CARS CORPORATION

- Ignition on
- Check that the values from the air quality sensor are within the permitted range.

  Soak a cloth in windshield washer fluid. Wipe it in front of the sensor or in front of the fresh air intake for the passenger compartment.

  The value must be between 4% and 96% and the OSA- cover must close.

  Other information:

  - To access and replace the air quality sensor, see **AIR QUALITY SENSOR, REPLACING**.

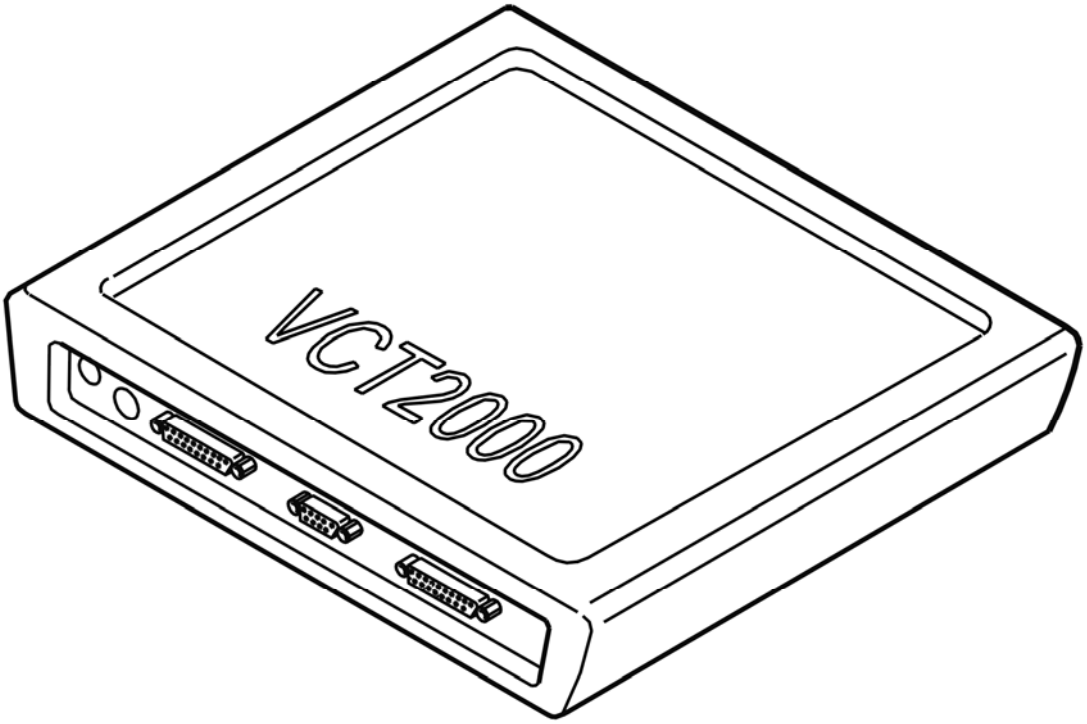

Fig. 43: Identifying VCT2000 Diagnostic Tool Symbol In VIDA
Courtesy of VOLVO CARS CORPORATION

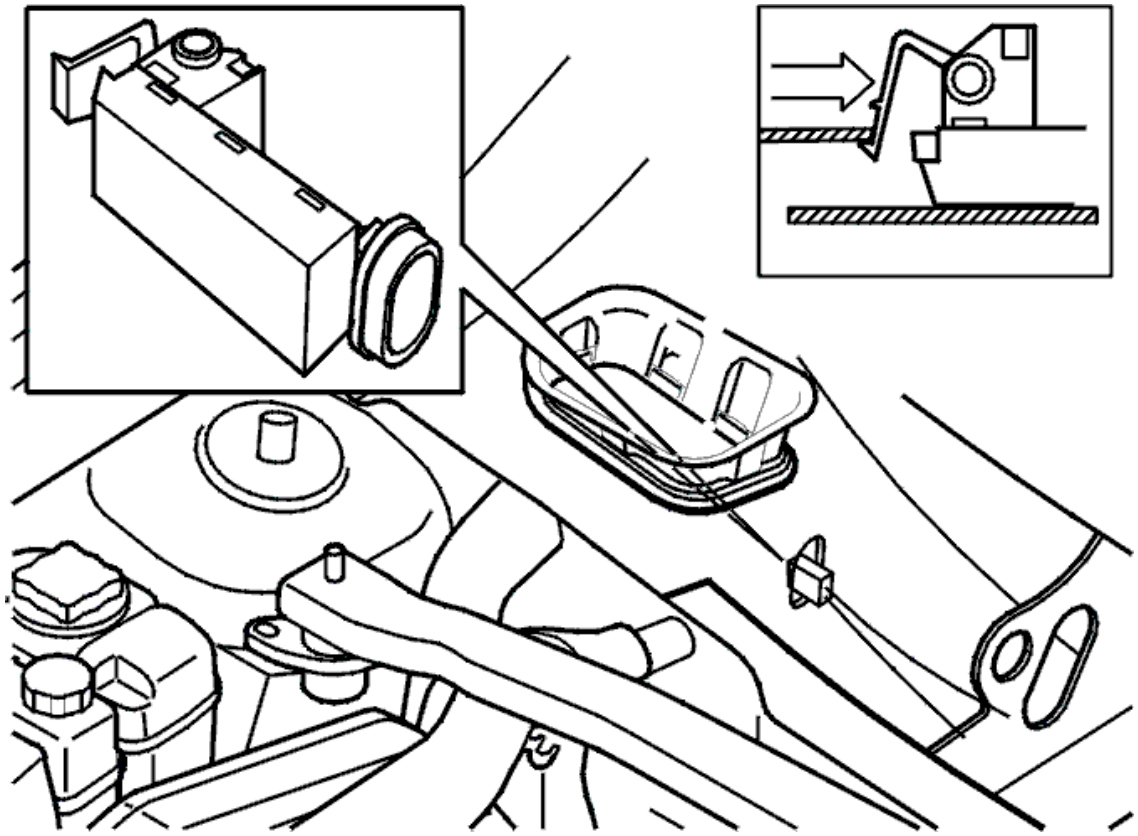

Fig. 44: Air Quality Sensor
Courtesy of VOLVO CARS CORPORATION

FAULT-TRACING INFORMATION

Condition

- No diagnostic trouble codes (DTCs) stored.

Possible Source

- Climate control module incorrectly programmed for blower fan speed.

CHECKING THE AIR QUALITY SENSOR (2005-12)

CHECKING THE AIR QUALITY SENSOR

CHECKING THE FUNCTION

The Air quality sensor (AQS) sends signals to the Climate control module (CCM) if it detects increased amounts of contaminants in the outdoor air. When this occurs the climate control module (CCM) transmits a signal to the Damper motor module (DMM) for recirculation to close the fresh air damper and to use recirculated air.

To check that the Air quality sensor (AQS) works, carry out the following test:

- Click on the symbol for VCT2000 to read off the Damper motor module's (DMM) recirculation position and degree of recirculation.
- Spray a little rust solvent or windshield washer fluid into the air intake, using a spray bottle or similar.

NOTE: Use only a small amount of rust solvent or windshield washer fluid.

- Check that the Air quality sensor (AQS) reacts and starts to close the recirculation damper.
- Shut the read out.

The fresh air intake damper closes quickly if the Air quality sensor (AQS) and other electronics are fault-free. If the air quality sensor (AQS) is fault free, the damper for the fresh air intake will gradually open after approximately 15 seconds.

Other information:

- see **AIR QUALITY SENSOR, REPLACING**

Fig. 45: Identifying VCT2000 Diagnostic Tool Symbol In VIDA
Courtesy of VOLVO CARS CORPORATION

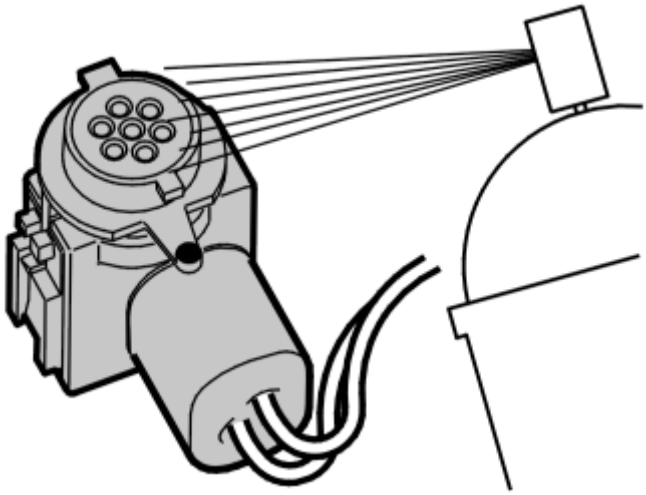

Fig. 46: Applying Cleaner To Air Quality Sensor
Courtesy of VOLVO CARS CORPORATION

Is the function OK?

- **YES**

  OKAY: Troubleshooting has been completed.

- **NO**

  Refer to **CHECKING THE DAMPER MOTOR CONTROL**

CHECKING THE DAMPER MOTOR CONTROL

Check that Damper motor module (DMM) recirculation works by opening and closing the damper using the recirculation switch. Click VCT2000 to check the movement. If the Damper motor module (DMM) does not work, or the damper for recirculation does not work, continue to check diagnostic trouble codes (DTCs) or symptom fault-trace the Damper motor module (DMM).

In the event of a faulty Air quality sensor (AQS), replace it with a new one and check the function again.

Other information:

- see **AIR QUALITY SENSOR, REPLACING**

Fig. 47: Identifying VCT2000 Diagnostic Tool Symbol In VIDA
Courtesy of VOLVO CARS CORPORATION

AIR QUALITY SENSOR, REPLACING

NOTE: **As the graphics in this service information are used for different model years and / or models, some variation may occur. However, the essential information in the graphics is always correct.**

PREPARATIONS

Remove the plenum chamber. See **COWL, REPLACING**

Open the damper for the air intake.

REMOVING THE AIR QUALITY SENSOR

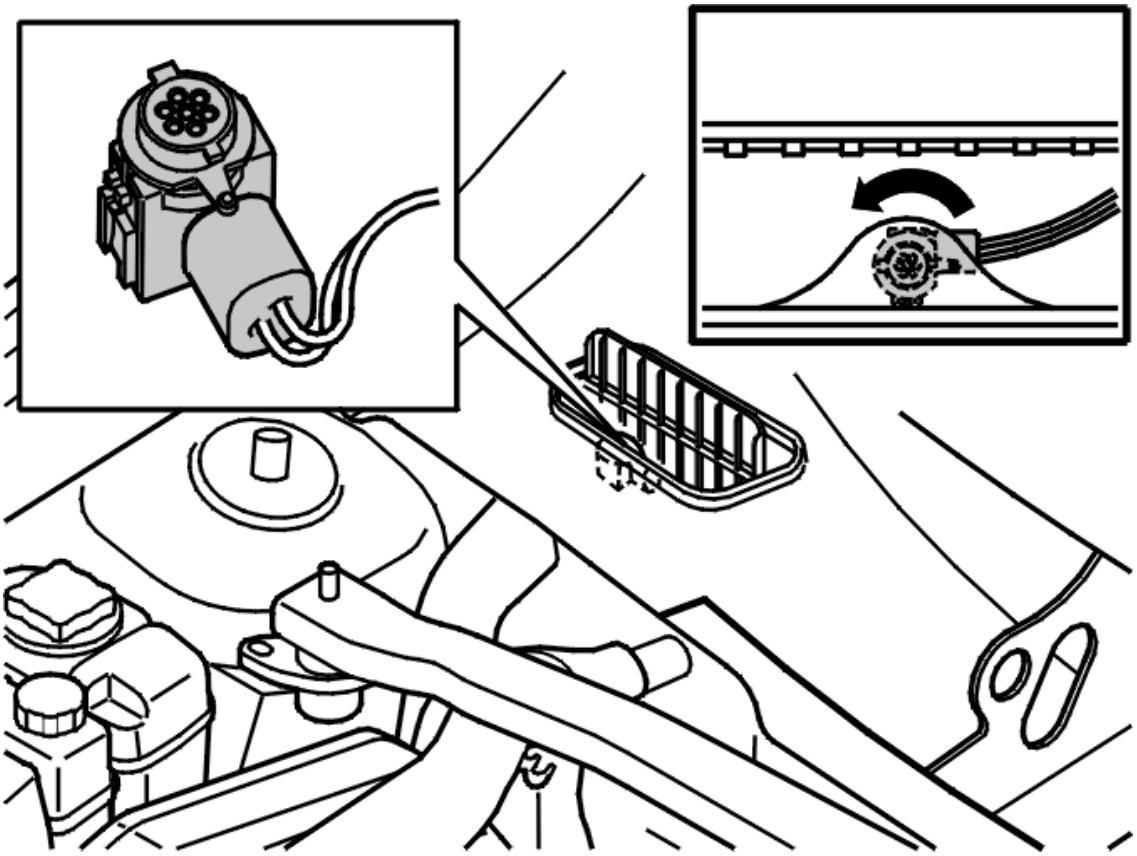

Fig. 48: Identifying Air Quality Sensor Removal
Courtesy of VOLVO CARS CORPORATION

Turn the sensor approximately 60° counter-clockwise as shown.

Slightly pull out the sensor and cable to access the connector.

Disconnect the connector.

INSTALLING THE AIR QUALITY SENSOR

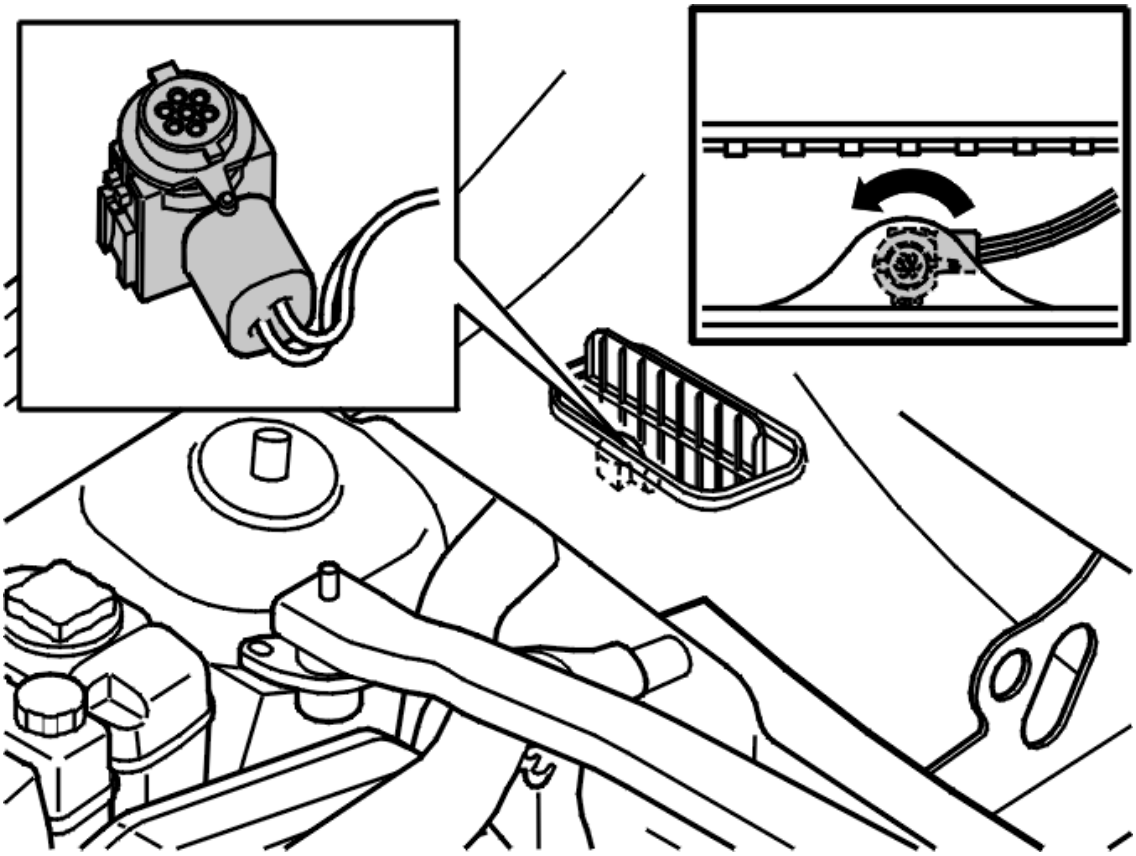

Fig. 49: Identifying Air Quality Sensor Removal
Courtesy of VOLVO CARS CORPORATION

Connect the connector.

Insert as much of the cable through the hole as possible.

Position the sensor and seal (the flat side must face upwards) in the groove. The sensor can only be positioned one way in the groove as shown.

Turn the sensor approximately 60° clockwise until it will not turn any further. Check that the air quality sensor is securely in place.

Ensure that the cable is as far in as possible.

Close the damper for the air intake.

Install the plenum chamber. See **COWL, REPLACING** .

CHECKING THE BLOWER FAN CONTROL (2003-04)

CHECKING THE BLOWER FAN CONTROL

CHECKING THE FUNCTION OF THE BLOWER FAN

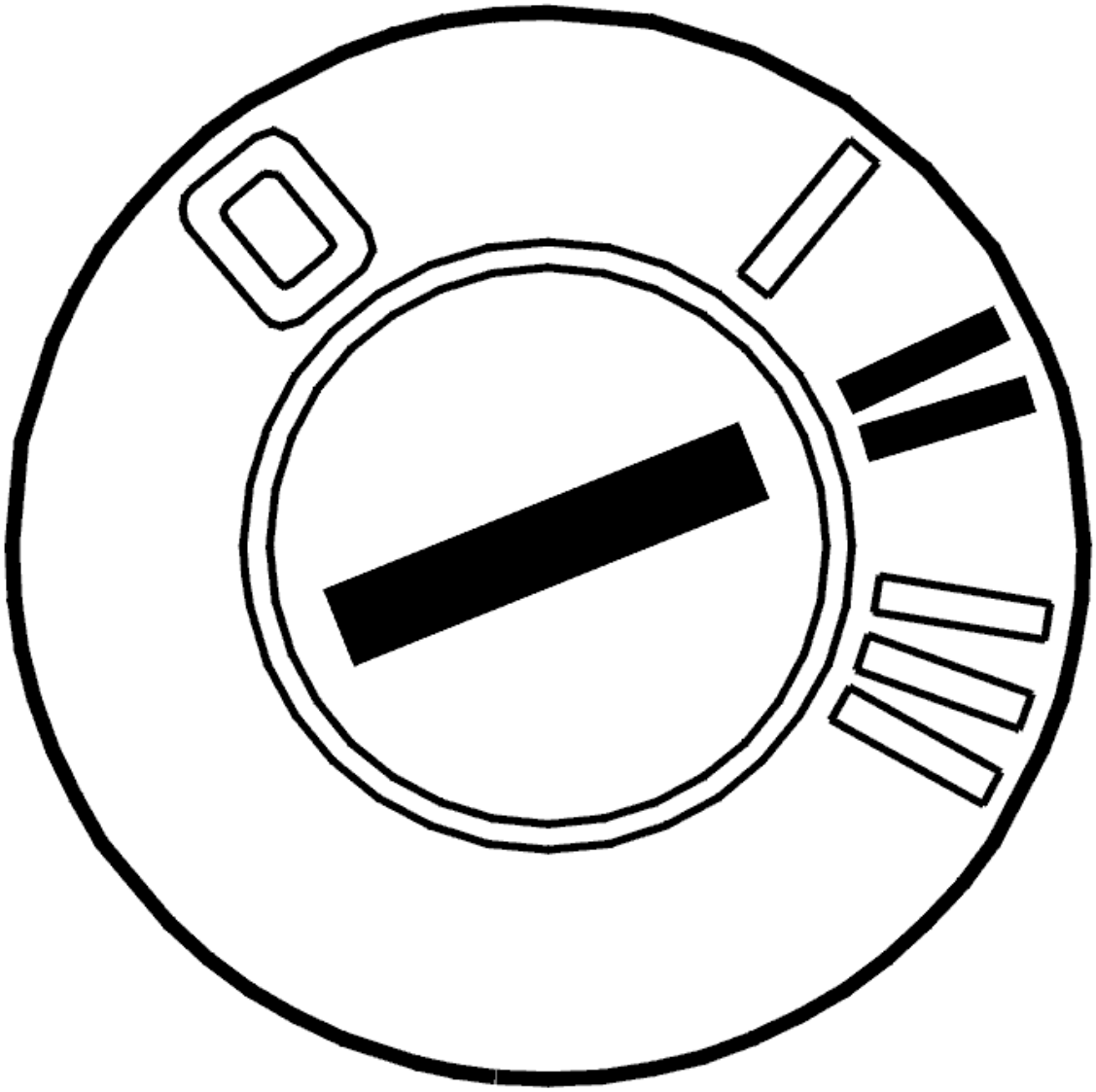

Fig. 50: Identifying Ignition ON
Courtesy of VOLVO CARS CORPORATION

- Ignition on
- Activate the blower fan: Turn the blower fan knob.

  Check whether the blower fan starts.

  1. The blower fan operates normally. Troubleshooting has been completed.
  2. The blower fan runs but at an incorrect speed (for example, half speed, full speed or constantly). Refer to **CHECKING THE CONTROL CURRENT**.
  3. The blower fan does not operate. Refer to **CHECKING COMPONENTS AND WIRING**.

CHECKING THE CONTROL CURRENT

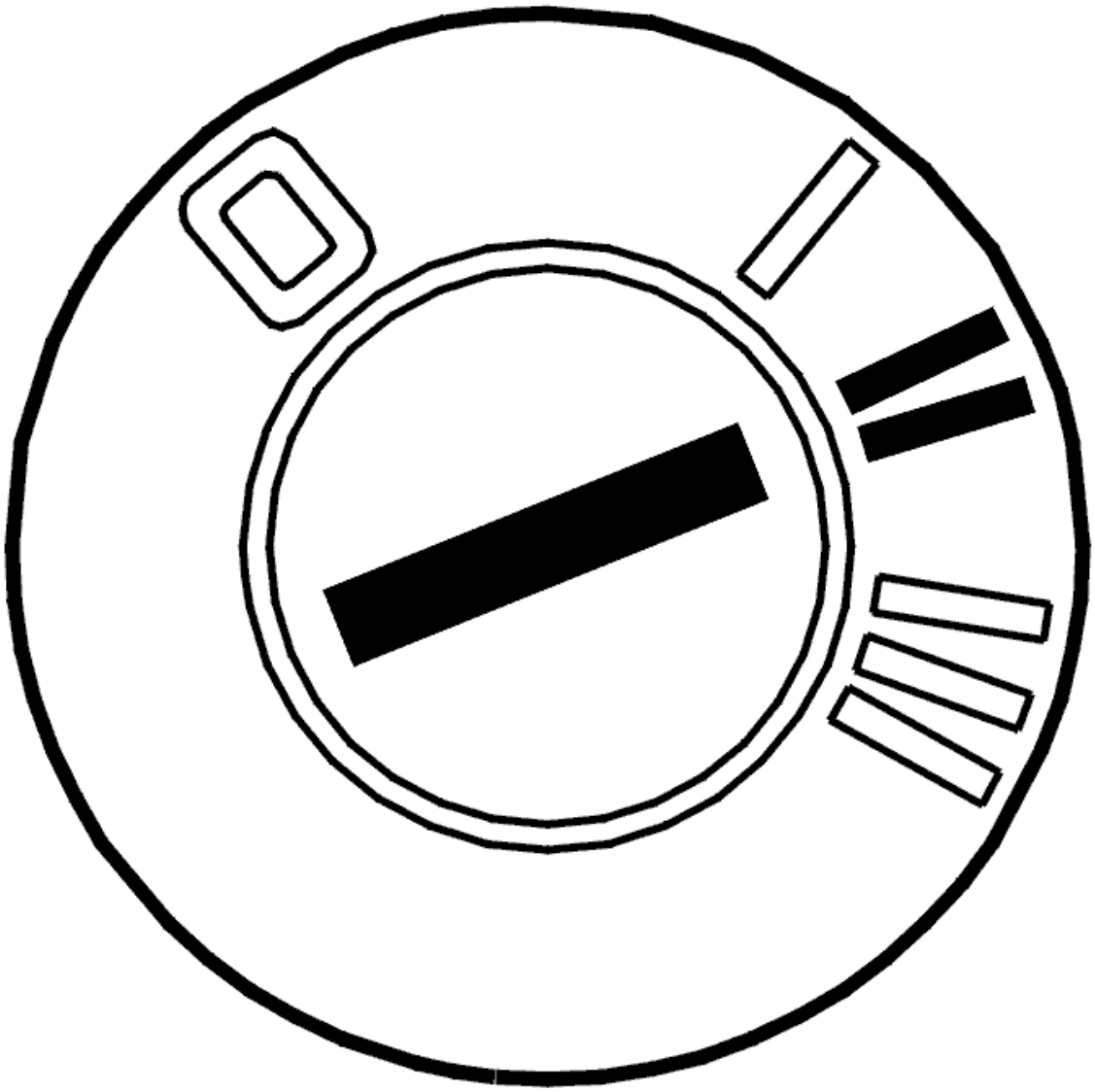

Fig. 51: Identifying Ignition ON
Courtesy of VOLVO CARS CORPORATION

- Ignition on.

  Check the control current from the climate control module to the power unit: Turn the fan speed knob between the minimum and maximum positions. The signal must vary between approximately 0 and 10 mA from the minimum to maximum positions.

  Try a new climate control unit if the control current is faulty.

  Remedy as necessary.

  Other information:

- To access or replace the climate control module, see **CLIMATE CONTROL MODULE (CCM), REPLACING**
- To access or replace the power unit, see **BLOWER FAN MOTOR/POWER UNIT, REPLACING** .

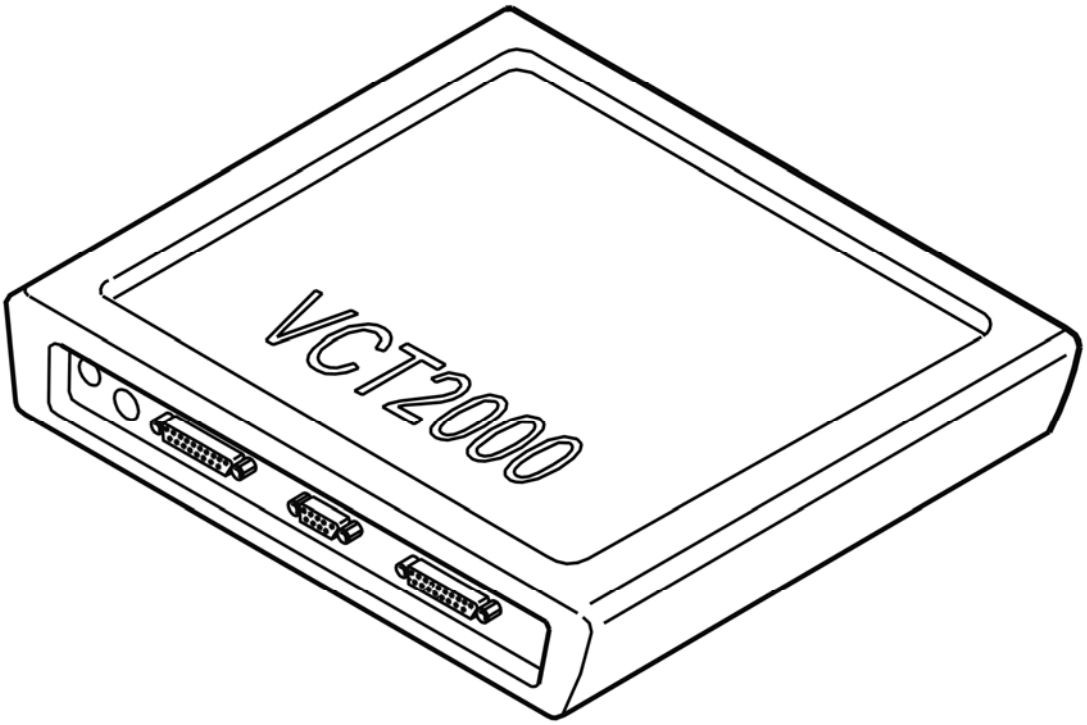

Fig. 52: Identifying VCT2000 Diagnostic Tool Symbol In VIDA
Courtesy of VOLVO CARS CORPORATION

Was a fault detected?

- **YES**

  Refer to **VERIFICATION**

- **NO**

  Refer to **CHECKING THE WIRING**

CHECKING THE WIRING

CAUTION: The blower fan motor power unit is very sensitive to short-circuits and excess current. Do not damage the power unit when taking readings. Take readings with the power unit connector disconnected when checking the

wiring.

Check the signal cable between power unit terminal #B2 and the blower fan motor positive terminal. Check for a short-circuit to supply voltage.

Check the ground cable between power unit terminal #B1 and the blower fan motor negative terminal. Check for a short-circuit to ground.

Remedy as necessary.

Other information:

- To access the climate control module or connect the breakout box, see **CONNECTING THE BREAKOUT BOX**
- To access or replace the blower fan motor or power unit, see **BLOWER FAN MOTOR/POWER UNIT, REPLACING**
- For other values, see **SIGNAL SPECIFICATION**
- see **CHECKING WIRING AND TERMINALS** .

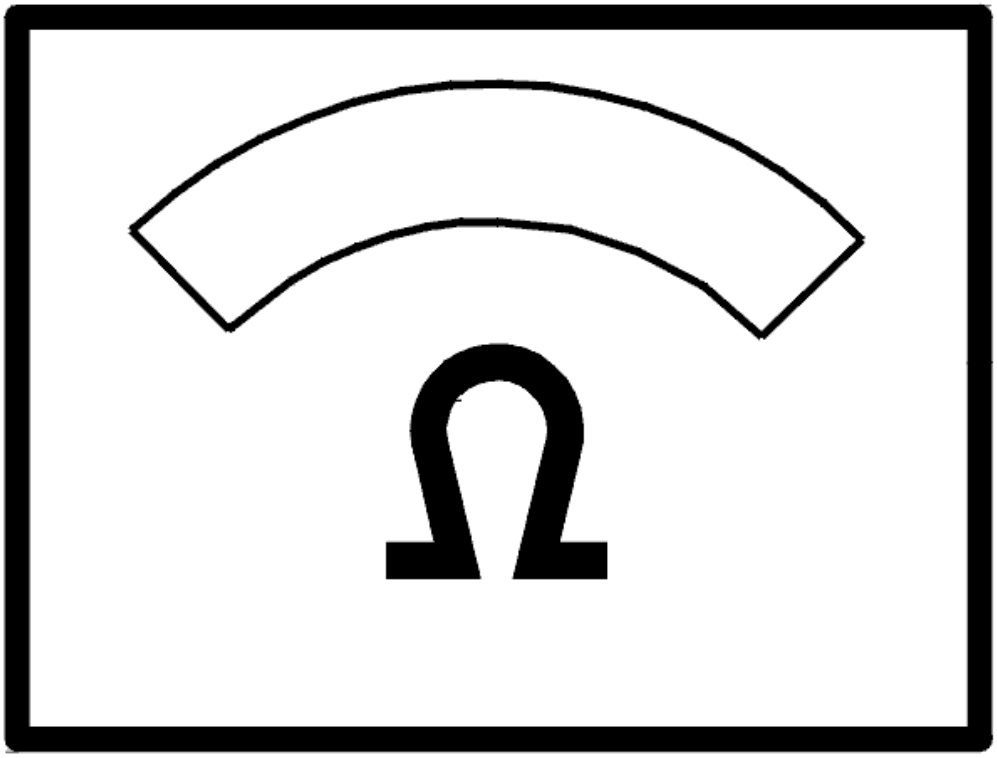

Fig. 53: Identifying Ohmmeter
Courtesy of VOLVO CARS CORPORATION

Was a fault detected?

- **YES**

  Refer to **VERIFICATION**

- **NO**

  Refer to **REPLACING THE POWER UNIT**

CHECKING COMPONENTS AND WIRING

CAUTION: The blower fan motor power unit is very sensitive to short-circuits and

excess current. Do not damage the power unit when taking readings. Take readings with the power unit connector disconnected when checking the wiring.

Check the function of the blower fan motor: Connect its positive terminal to battery voltage and the minus terminal to ground.

Check that fuse 26 in the in the fusebox in the passenger compartment is intact. If the fuse has blown, check the signal cable between fuse number 26 and power unit terminal #A2. Check for a short-circuit to ground.

If the fuse has blown, also check the signal cable between power unit terminal #B2 and the blower fan motor positive terminal. Check for a short-circuit to ground.

Check:

- the control signal cable between climate control module terminal #A3 and power unit terminal #A1
- the diagnostic signal cable between climate control module terminal #A2 and power unit terminal #A3.

check for an open-circuit. Check for a short-circuit to ground. Check for a short-circuit to supply voltage.

Remedy as necessary.

Other information:

- To access the climate control module or connect the breakout box, see **CONNECTING THE BREAKOUT BOX**
- To access or replace the blower fan motor or power unit, see **BLOWER FAN MOTOR/POWER UNIT, REPLACING**
- For other values, see **SIGNAL SPECIFICATION**
- see **CHECKING WIRING AND TERMINALS** .

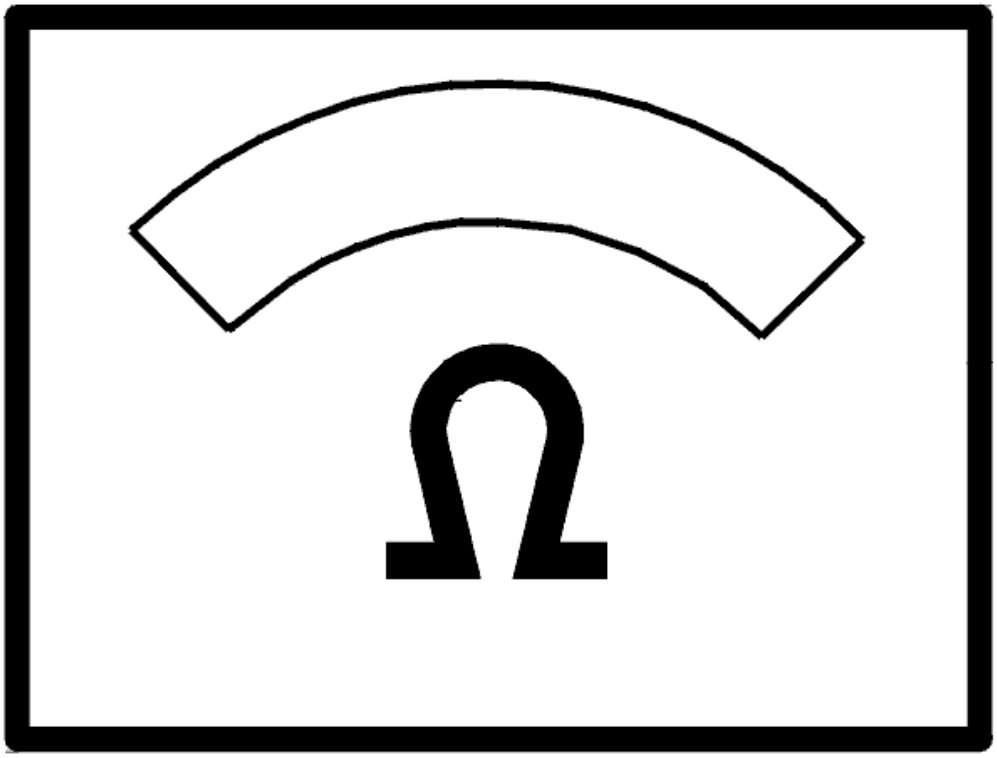

Fig. 54: Identifying Ohmmeter
Courtesy of VOLVO CARS CORPORATION

- **Continue**

  Refer to **VERIFICATION**

REPLACING THE POWER UNIT

Replace the power unit according to **BLOWER FAN MOTOR/POWER UNIT, REPLACING** .

- **Continue**

  Refer to **VERIFICATION**

VERIFICATION

HINT: After the repair it is necessary to check that the fault has been rectified.

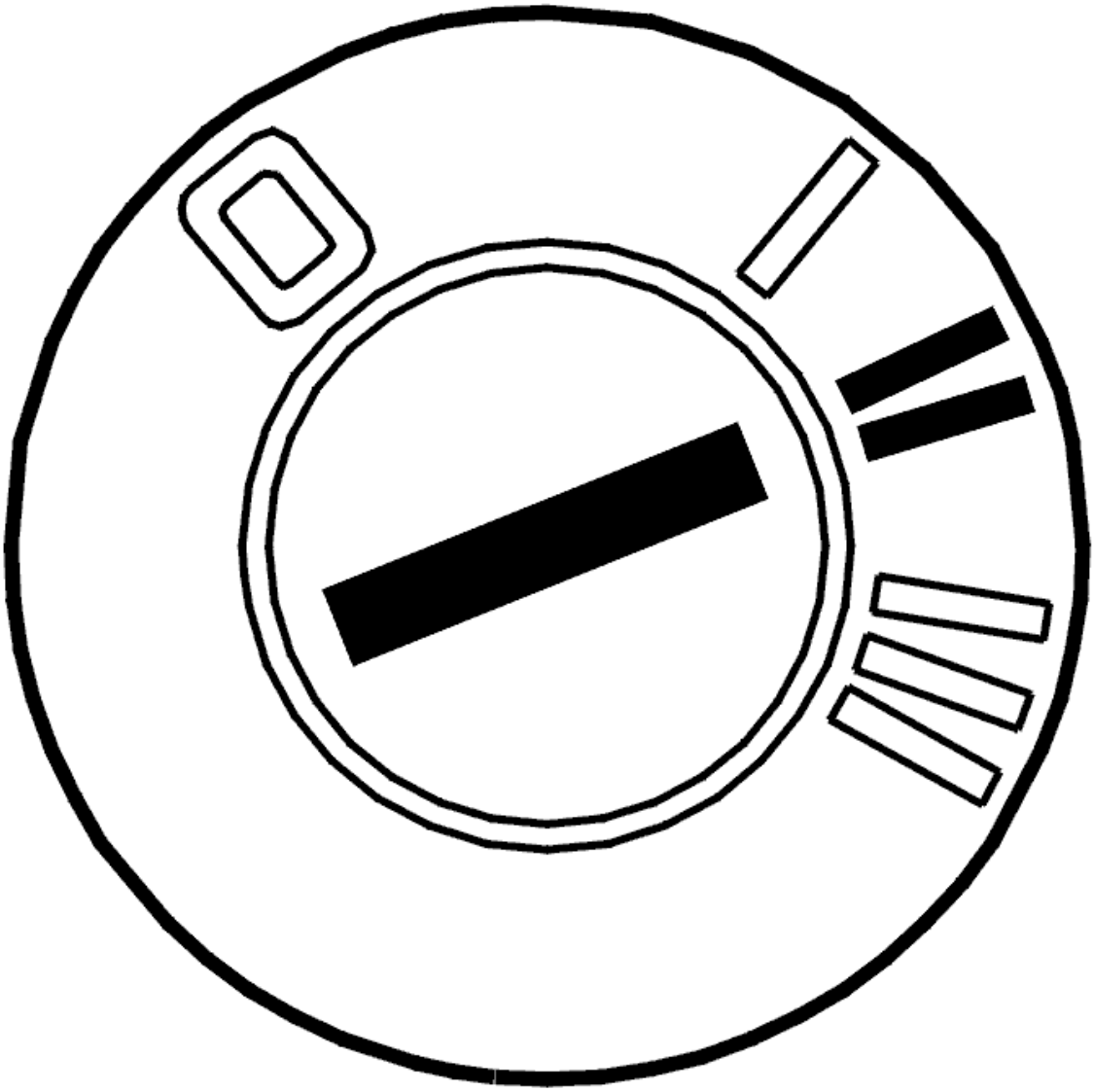

Fig. 55: Identifying Ignition ON
Courtesy of VOLVO CARS CORPORATION

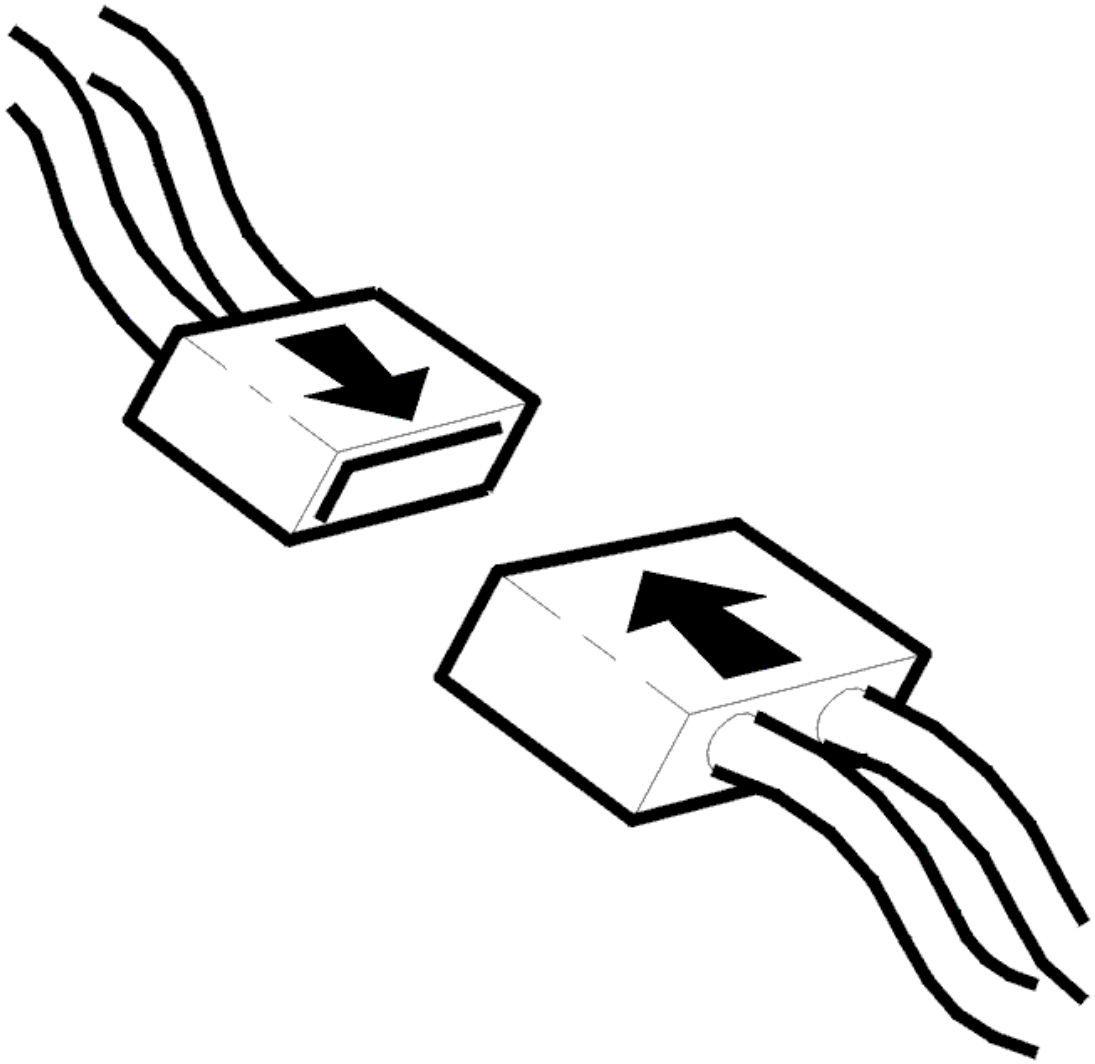

Fig. 56: Connecting Connector
Courtesy of VOLVO CARS CORPORATION

- Ignition off.
- Connect the connectors, install the components, etc.
- Ignition on.
- Read the diagnostic trouble codes.

  If the status of the diagnostic trouble code has changed to an intermittent fault this indicates that the fault has been rectified.

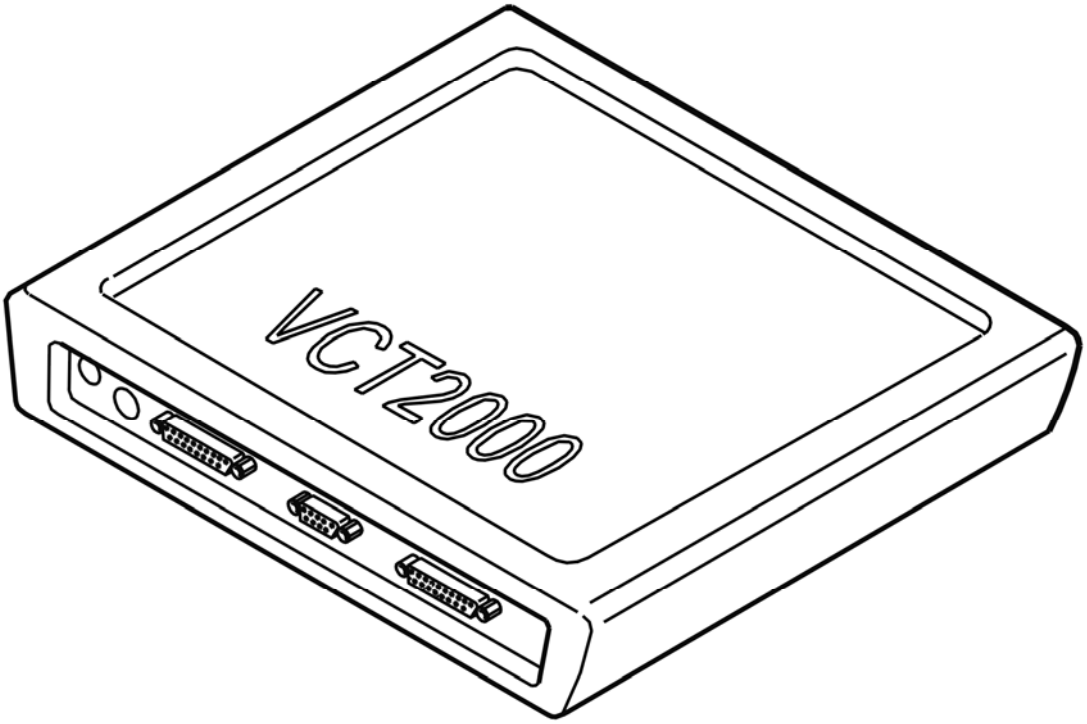

Fig. 57: Identifying VCT2000 Diagnostic Tool Symbol In VIDA
Courtesy of VOLVO CARS CORPORATION

Has the status of the diagnostic trouble code changed?

- **YES**

  VERIFIED: Troubleshooting has been completed.

- **NO**

  Refer to **INFORMATION**

INFORMATION

FAULT-TRACING INFORMATION

The fault should have been detected and remedied. As this is not the case fault-tracing has failed.

Exit fault-tracing for this diagnostic trouble code (DTC) or make another attempt.

TROUBLE-SHOOTING INFORMATION

Condition

- No diagnostic trouble codes are stored
- Fault is permanent.

Possible Source

- Motor signal wire has open circuit or short circuit to ground
- Control signal wire has open circuit or short circuit to voltage supply/ground
- Diagnostic signal wire has open circuit or short circuit to voltage supply/ground
- Motor ground wire has open circuit or short circuit to voltage supply
- Defective fan motor or power unit
- Fan motor blocked
- Contact resistance, oxidation or loose contact in connector.

CHECKING THE DAMPER MOTOR CONTROL (ELECTRONIC CLIMATE CONTROL (ECC)/MANUAL CLIMATE CONTROL (MCC)) (2003-04)

CHECKING THE DAMPER MOTOR CONTROL (ELECTRONIC CLIMATE CONTROL (ECC)/MANUAL CLIMATE CONTROL (MCC))

QUERY

Which type of climate control is the car equipped with?

1. Electronic climate control. Refer to **CHECKING THE DAMPER MOTOR SIGNAL**.
2. Manual climate control (MCC)/Standard (STD). Refer to **CHECKING THE DAMPER MOTOR CONTROL**.

CHECKING THE DAMPER MOTOR SIGNAL

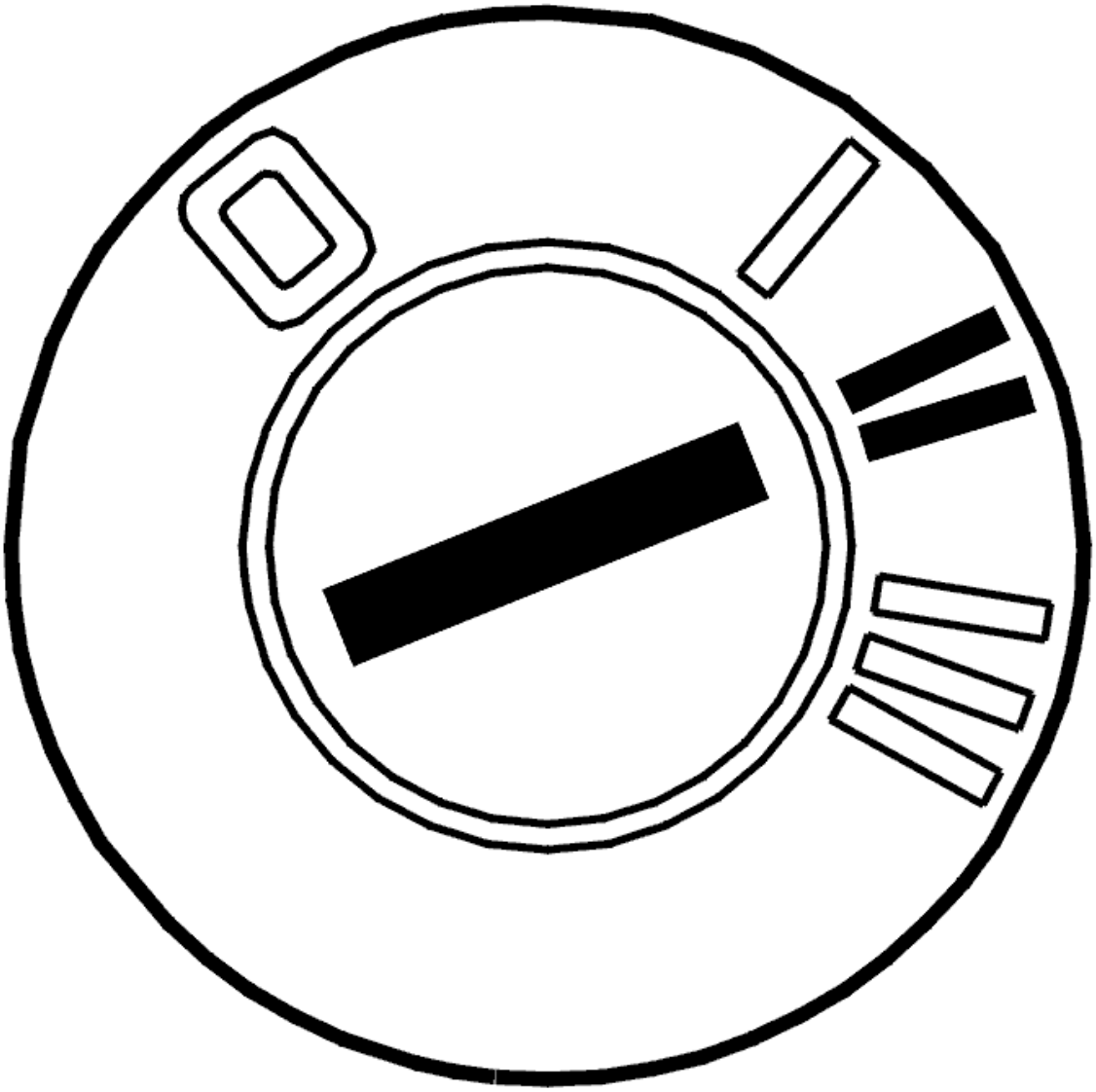

Fig. 58: Identifying Ignition ON
Courtesy of VOLVO CARS CORPORATION

- Ignition on
- Blower fan on
- Activate the damper motors using the knobs and buttons.

  Read off the positions for the different damper motors. The values listed below should be seen as guidelines for the positions which the damper motors should reach.

  - Right and left temperature damper motor and defroster, 0 - 100%
  - Recirculation damper motor, 40 - 100%
  - Floor and ventilation damper motor, floor only approximately 39%, vent only approximately 87%, both floor and vent approximately 71%.

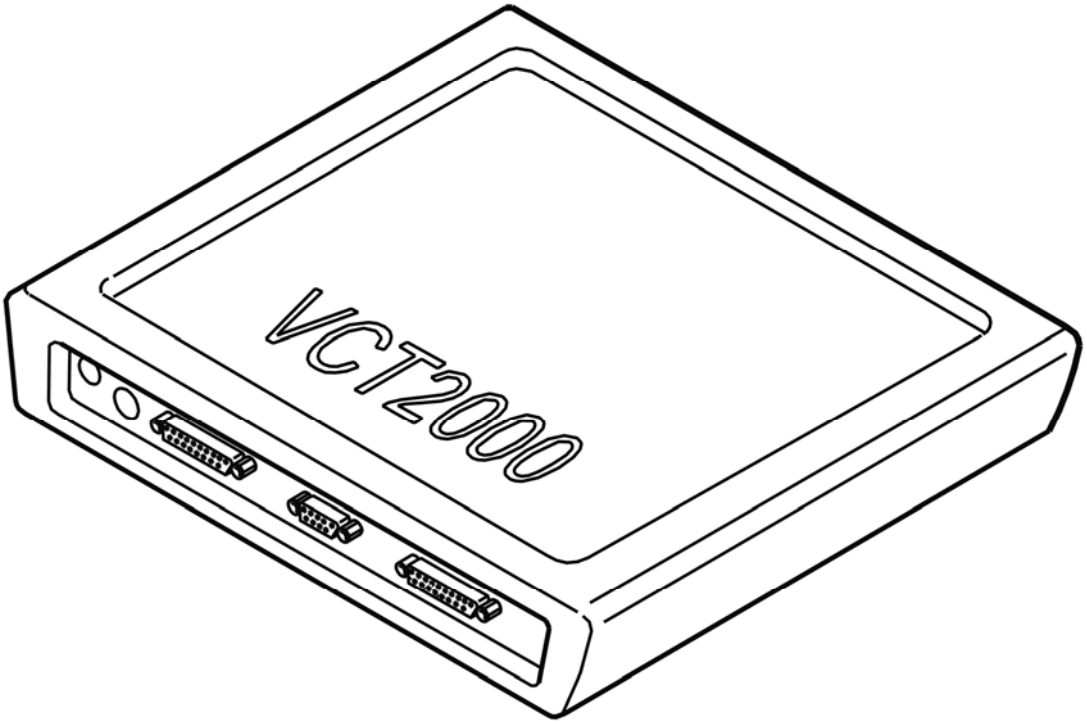

Fig. 59: Identifying VCT2000 Diagnostic Tool Symbol In VIDA
Courtesy of VOLVO CARS CORPORATION

Are the positions OK?

- **YES**

  Refer to **CHECKING THE MATRIX VOLTAGE**

- **NO**

  Refer to **REPLACING THE CLIMATE CONTROL MODULE**

CHECKING THE MATRIX VOLTAGE

- Ignition off
- Reinstall the components, reconnect the connectors etc.
- Ignition on.

  Activate the damper motors and listen to hear if the motors move.

  HINT: If none of the motors move, one or more voltage supply cables is disconnected.

Remedy as necessary.

Other information:

- To access or replace the climate control module, see **CLIMATE CONTROL MODULE (CCM), REPLACING**
- To access or replace the damper motors, see **DAMPER MOTOR TEMPERATURE, REPLACING** , **DAMPER MOTOR RECIRCULATION, REPLACING** and **DAMPER MOTOR DEFROSTER, REPLACING** .

Was a fault detected?

- **YES**

  Refer to **SELF-ADJUSTMENT**

- **NO**

  Refer to **CHECKING COMPONENTS AND WIRING**

CHECKING COMPONENTS AND WIRING

NOTE: The check covers one or more of the affected damper motors. The damper motor(s) affected by this fault-tracing should be apparent from previous checks.

Check the resistance of the windings in the damper motor(s). For the resistance values, see **COMPONENT RESISTANCE VALUES** .

Check the linkage and damper for wear and check that they do not stick.

- **Continue**

  Refer to **SELF-ADJUSTMENT**

REPLACING THE CLIMATE CONTROL MODULE

Replace the climate control module according to **CLIMATE CONTROL MODULE (CCM), REPLACING** .

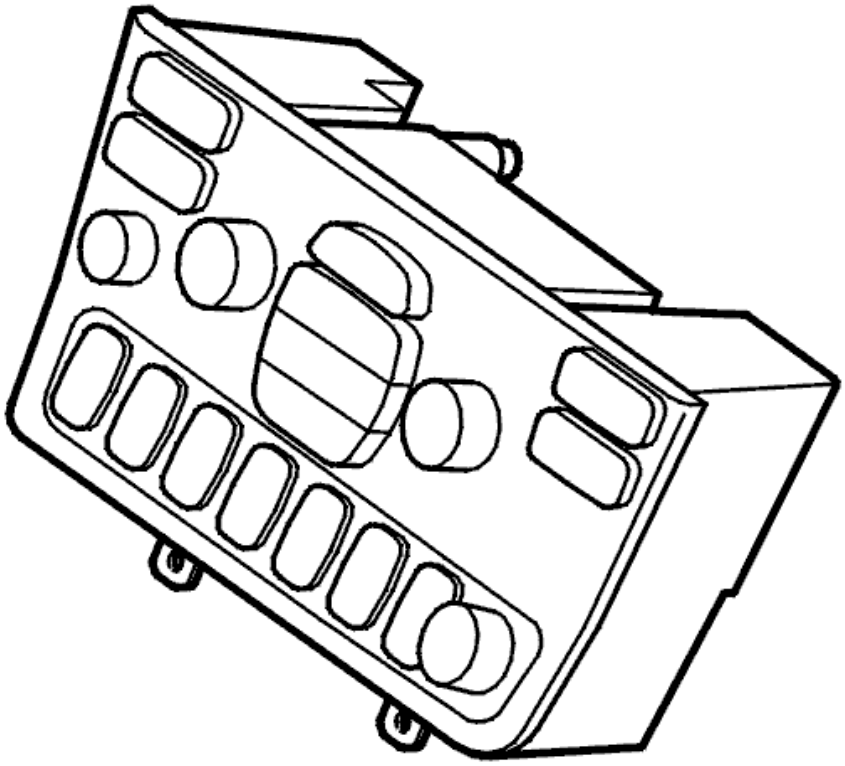

Fig. 60: Climate Control Module
Courtesy of VOLVO CARS CORPORATION

- **Continue**

  Refer to **SELF-ADJUSTMENT**

CHECKING THE DAMPER MOTOR CONTROL

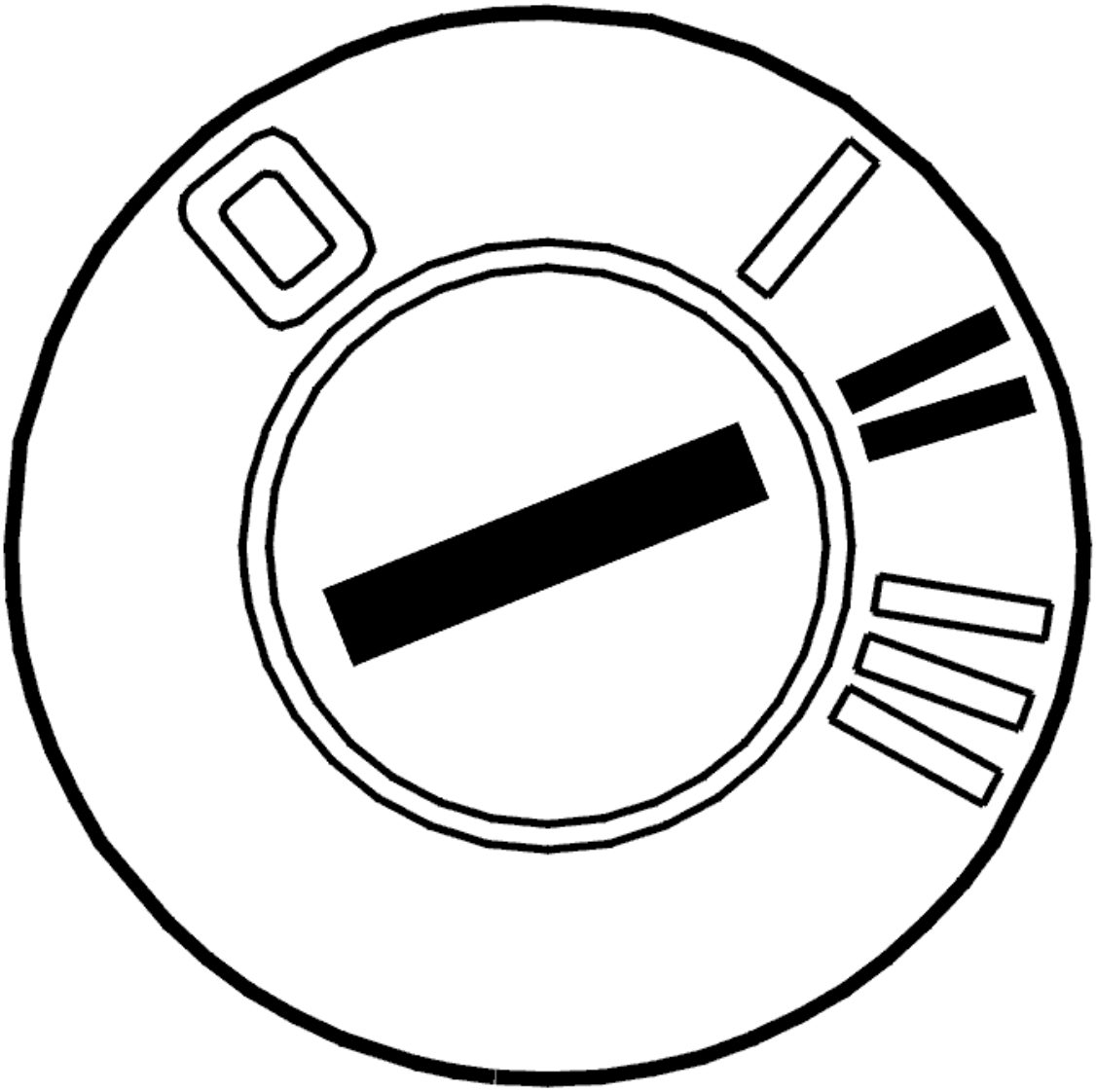

Fig. 61: Identifying Ignition ON
Courtesy of VOLVO CARS CORPORATION

- Ignition on
- Blower fan on
- Activate the damper motors using the knobs and buttons.

  Read off the positions for the different damper motors. The values listed below should be seen as guidelines for the positions which the damper motors should reach.

  - Left and right temperature damper motors, 0 - 100%
  - Recirculation damper motor, 40 - 100%
  - Air distribution knob, 0 - 100%.

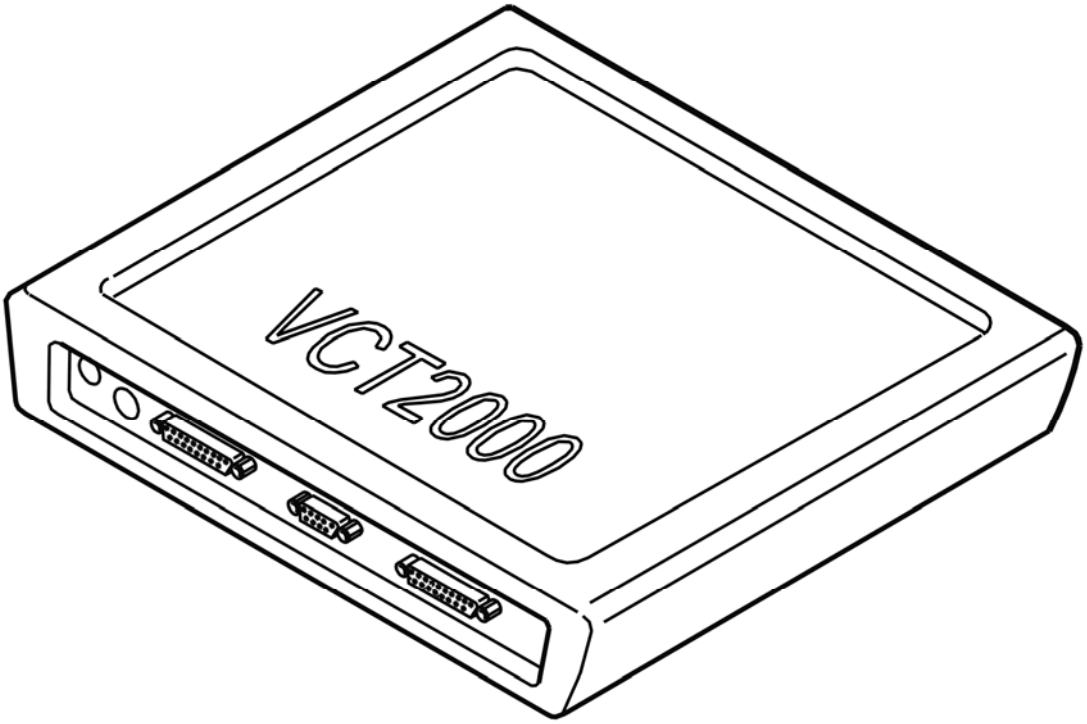

Fig. 62: Identifying VCT2000 Diagnostic Tool Symbol In VIDA
Courtesy of VOLVO CARS CORPORATION

Are the positions OK?

- **YES**

  Refer to **CHECKING THE MATRIX VOLTAGE**

- **NO**

  Refer to **REPLACING THE CLIMATE CONTROL MODULE**

CHECKING THE MATRIX VOLTAGE

- Ignition off
- Reinstall the components, reconnect the connectors etc.
- Ignition on.

  Activate the damper motors and listen to hear if the motors move.

  HINT: If none of the motors move, one or more voltage supply cables is disconnected.

Remedy as necessary.

Other information:

- To access or replace the climate control module, see **CLIMATE CONTROL MODULE (CCM), REPLACING**
- To access or replace the damper motors, see **DAMPER MOTOR TEMPERATURE, REPLACING** , **DAMPER MOTOR RECIRCULATION, REPLACING** and **DAMPER MOTOR AIR DISTRIBUTION, REPLACING** .

Was a fault detected?

- **YES**

  Refer to **SELF-ADJUSTMENT**

- **NO**

  Refer to **CHECKING COMPONENTS AND WIRING**

CHECKING COMPONENTS AND WIRING

NOTE: The check covers one or more of the affected damper motors. The damper motor(s) affected by this fault-tracing should be apparent from previous checks.

Check the resistance of the windings in the damper motor(s). For the resistance values, see **COMPONENT RESISTANCE VALUES** .

Check the linkage and damper for wear and check that they do not stick.

- **Continue**

  Refer to **SELF-ADJUSTMENT**

REPLACING THE CLIMATE CONTROL MODULE

Replace the climate control module according to **CLIMATE CONTROL MODULE (CCM), REPLACING** .

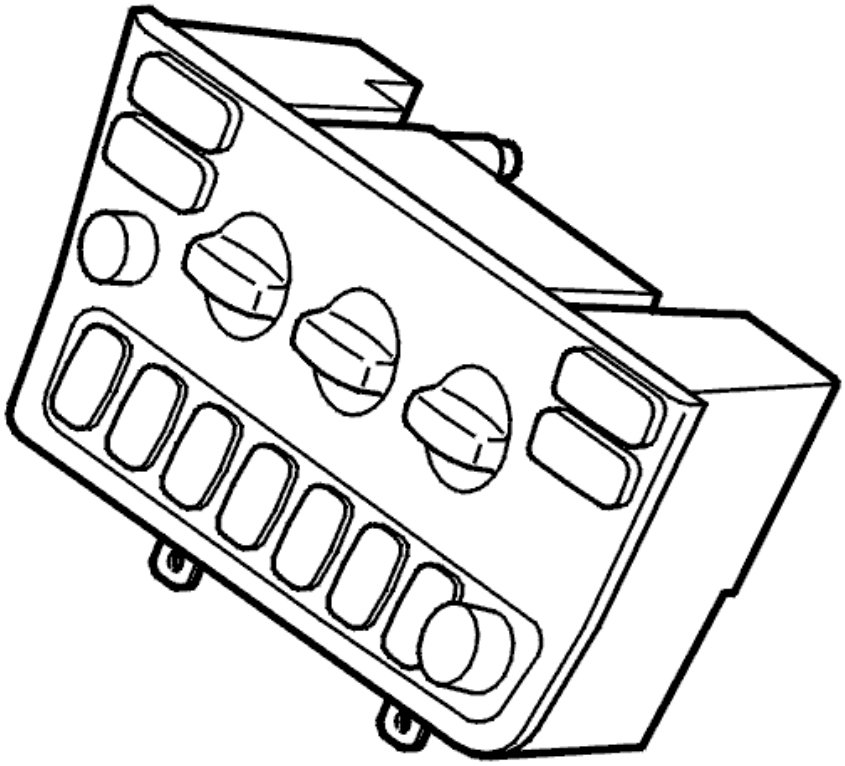

Fig. 63: Identifying Manual Climate Control Module
Courtesy of VOLVO CARS CORPORATION

- **Continue**

  Refer to **SELF-ADJUSTMENT**

SELF-ADJUSTMENT

HINT: After replacing the control module or damper motor, and when a damper motor or link has been removed, carry out self adjustment to define the damper motor limit positions.

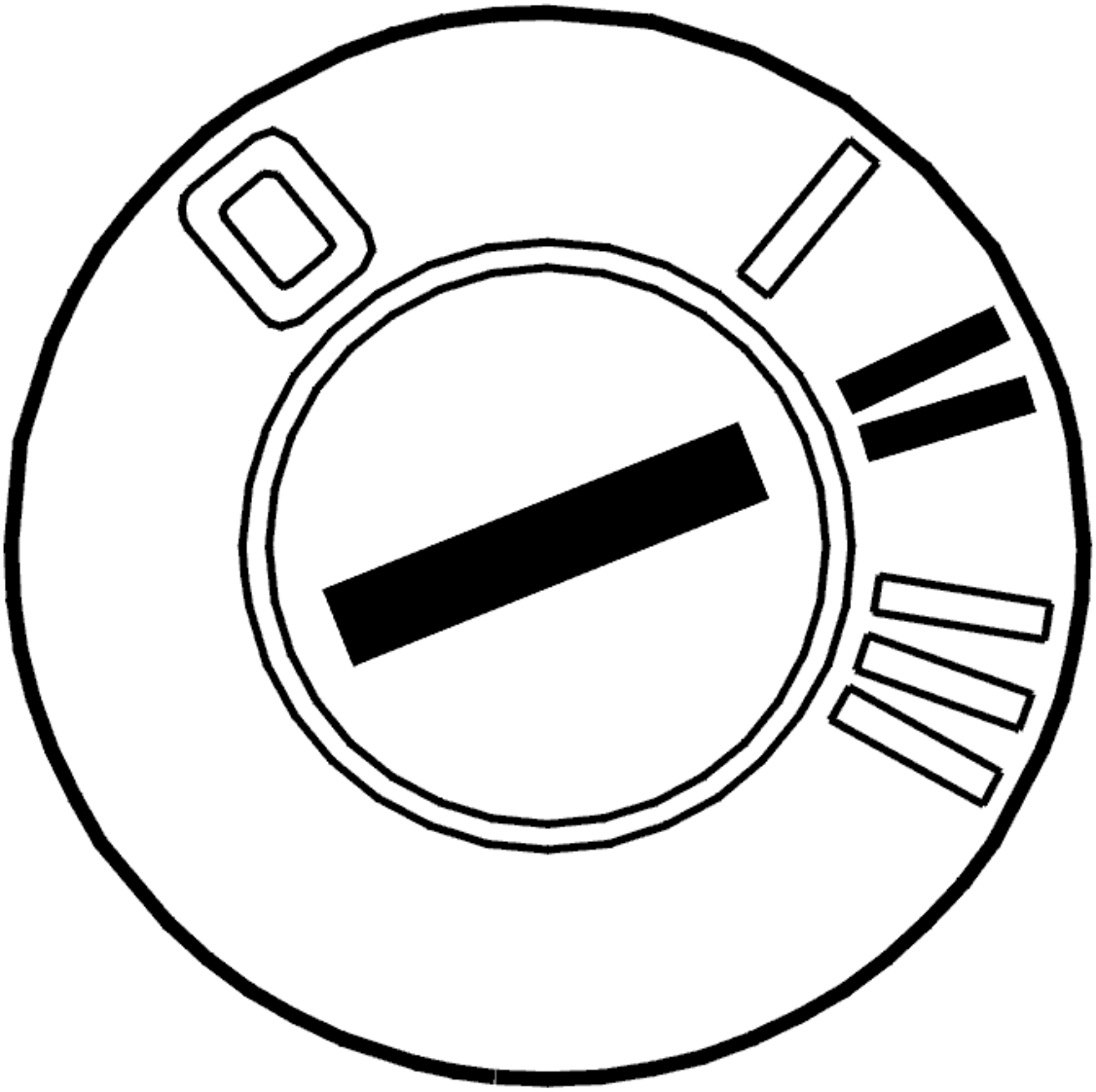

Fig. 64: Identifying Ignition ON
Courtesy of VOLVO CARS CORPORATION

- Ignition off.
- Reinstall the connectors, components etc.
- Ignition on.

  Activate self adjustment.

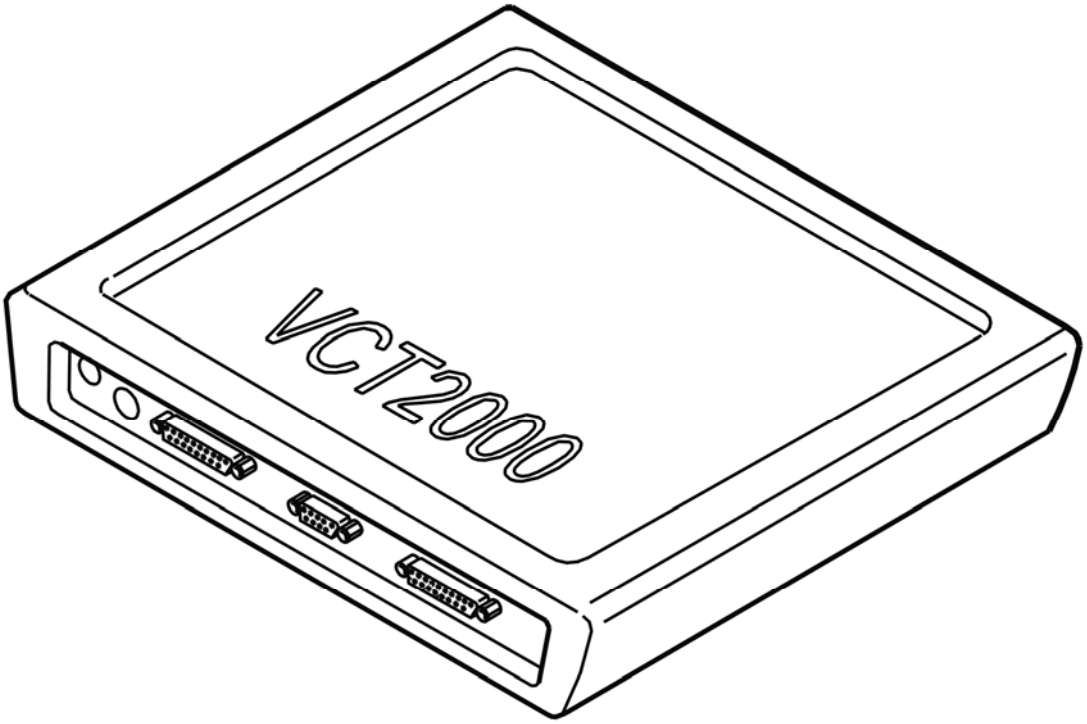

Fig. 65: Identifying VCT2000 Diagnostic Tool Symbol In VIDA
Courtesy of VOLVO CARS CORPORATION

- **Continue**

  Refer to **VERIFICATION**

SELF-ADJUSTMENT

HINT: After replacing the control module or damper motor, and when a damper motor or link has been removed, carry out self adjustment to define the damper motor limit positions.

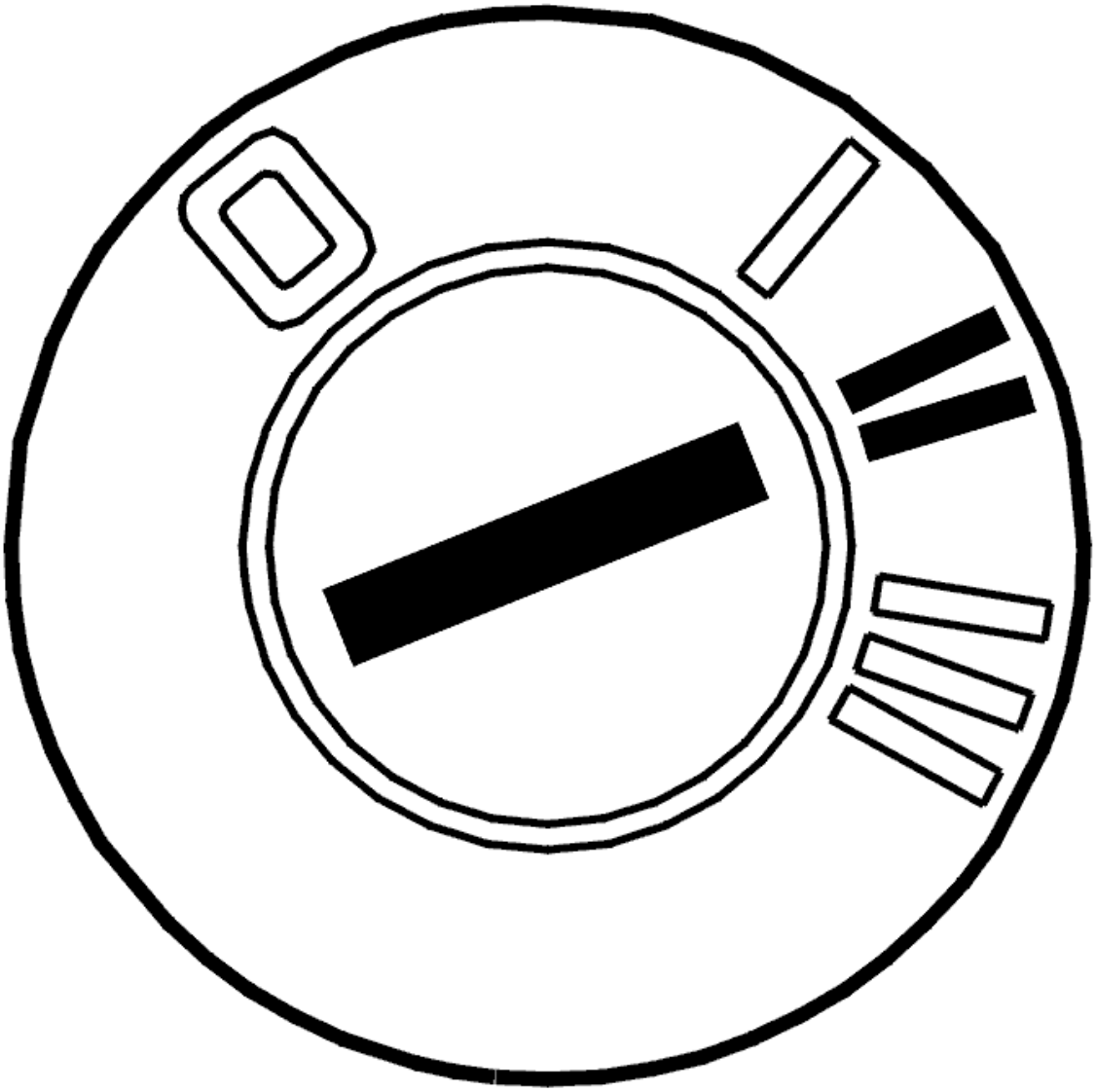

Fig. 66: Identifying Ignition ON
Courtesy of VOLVO CARS CORPORATION

- Ignition off.
- Reinstall the connectors, components etc.
- Ignition on.

  Activate self adjustment.

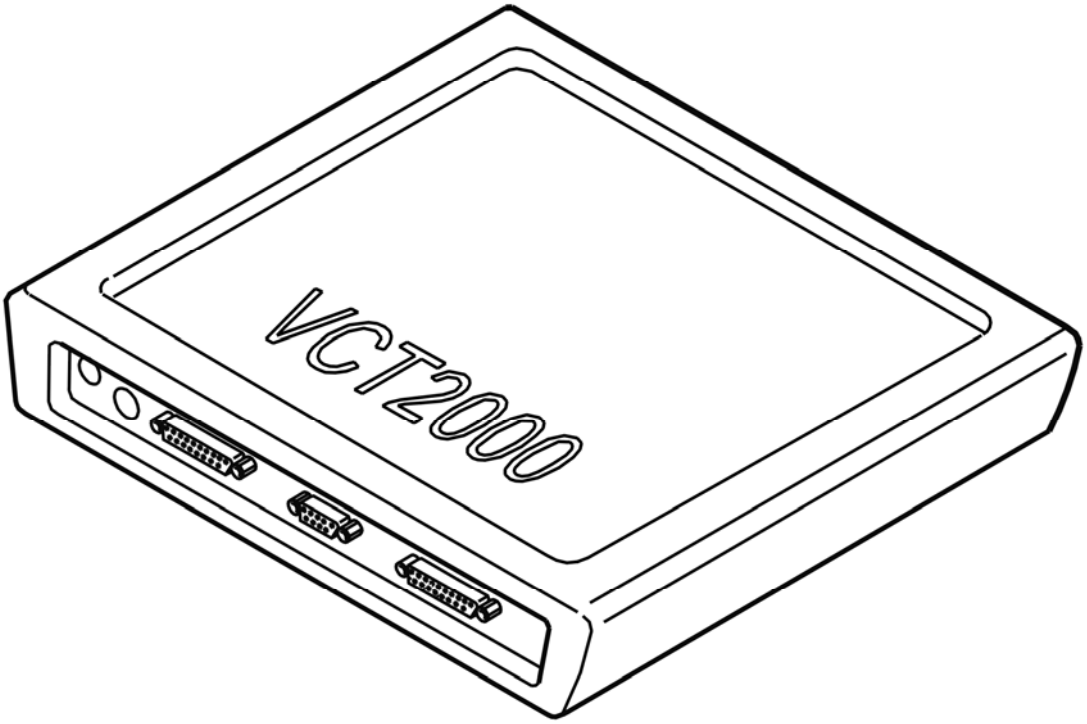

Fig. 67: Identifying VCT2000 Diagnostic Tool Symbol In VIDA
Courtesy of VOLVO CARS CORPORATION

- **Continue**

  Refer to **VERIFICATION**

VERIFICATION

HINT: After the repair it is necessary to check that the fault has been rectified.

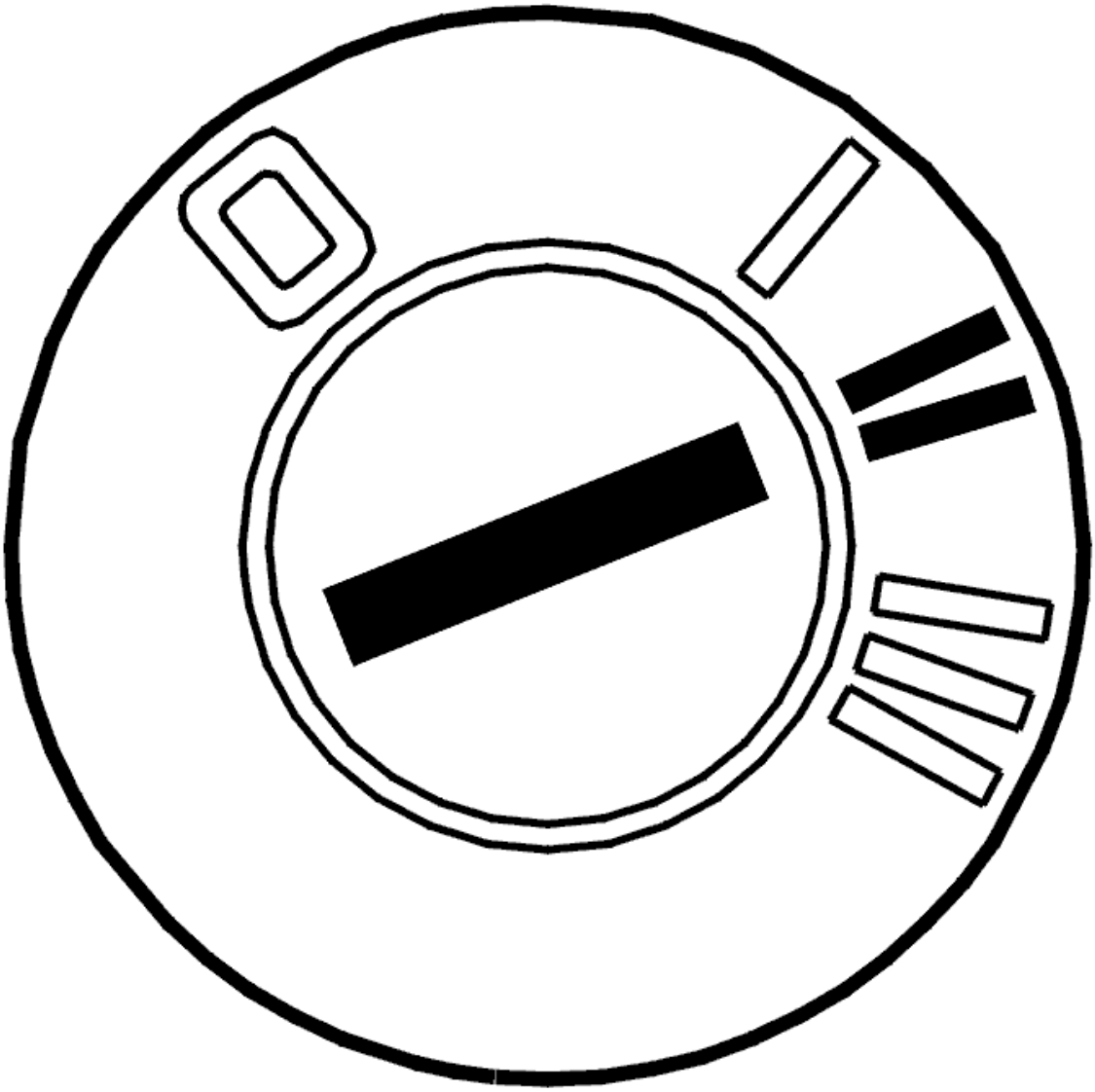

Fig. 68: Identifying Ignition ON
Courtesy of VOLVO CARS CORPORATION

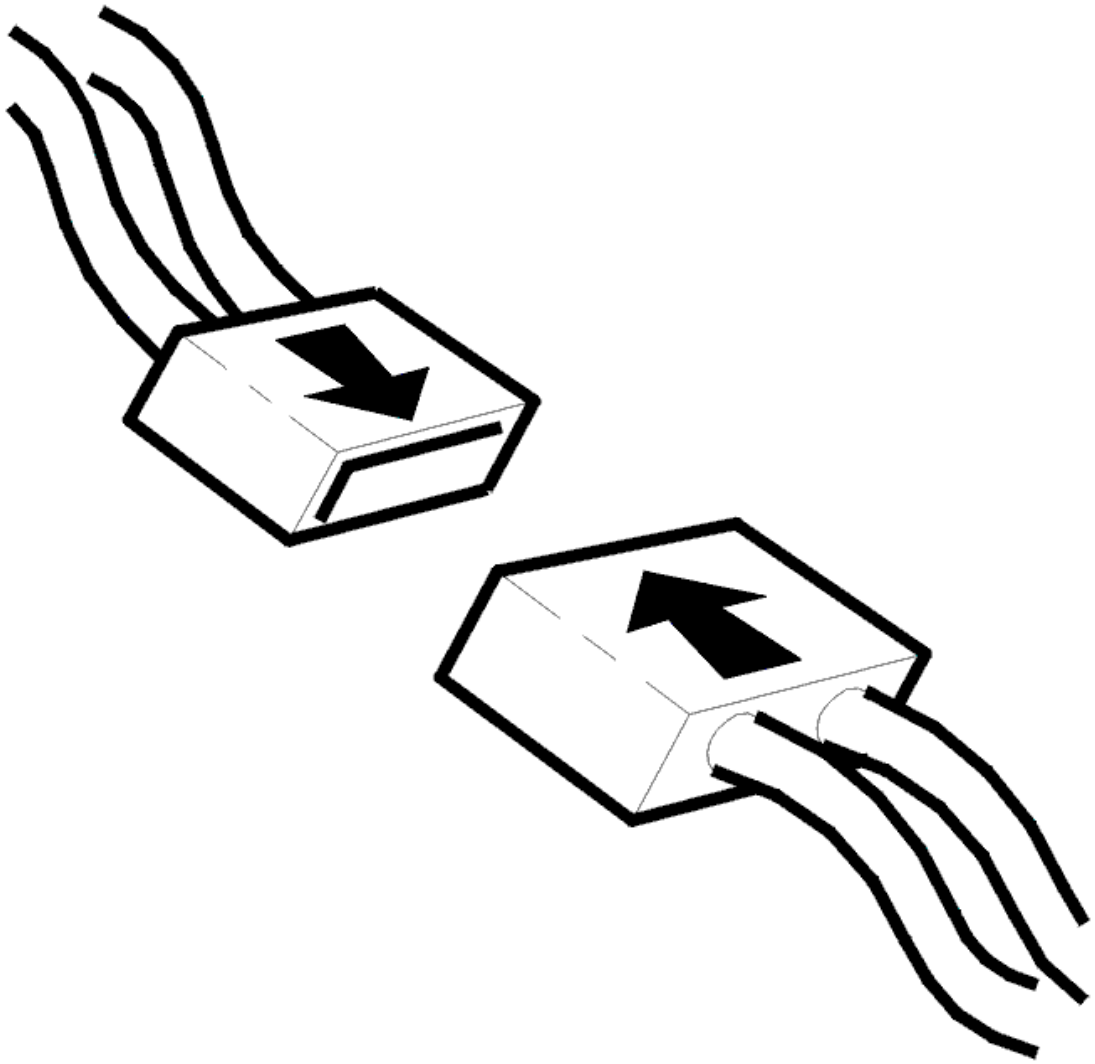

Fig. 69: Connecting Connector
Courtesy of VOLVO CARS CORPORATION

- Ignition off.
- Connect the connectors, install the components, etc.
- Ignition on.
- Blower motor on.

Check that damper motor position changes by changing control on climate control module (CCM). The values given below are the standard values that the damper motor positions should give.

NOTE: Blower motor must be in operation to activate the damper motors.

- Left/right temperature damper motor and defroster, 0-100%
- Recirculation damper motor, 40-100%

- Floor/ventilation damper motor, floor only approximately 39%, ventilation only approximately 87% and floor/ventilation approximately 71%.

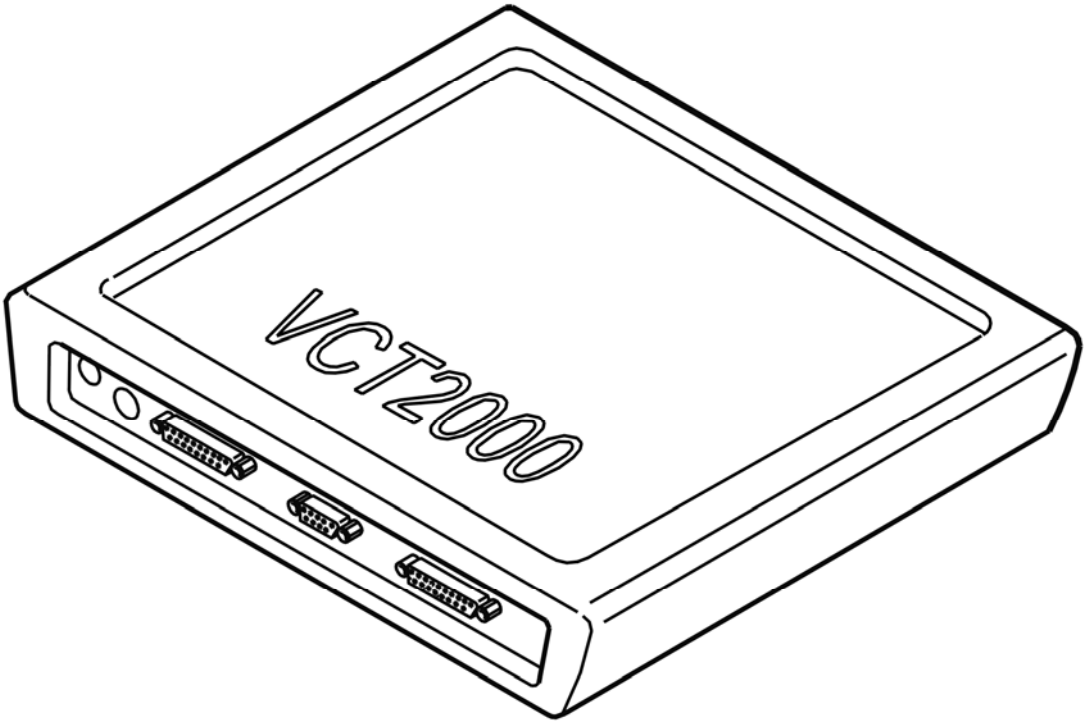

Fig. 70: Identifying VCT2000 Diagnostic Tool Symbol In VIDA
Courtesy of VOLVO CARS CORPORATION

Does damper motor work?

- **YES**

  VERIFIED: Troubleshooting has been completed.

- **NO**

  Refer to **INFORMATION**

INFORMATION

FAULT-TRACING INFORMATION

The fault should have been detected and remedied. As this is not the case fault-tracing has failed.

Exit fault-tracing for this diagnostic trouble code (DTC) or make another attempt.

TROUBLE-SHOOTING INFORMATION

Condition

- No diagnostic trouble codes are stored
- Fault is permanent.

Possible Source

- Signal wire has open circuit or short circuit to voltage supply/ground
- Blocked or defective damper motor
- Contact resistance, oxidation or loose contact in connector.

CHECKING THE DAMPER MOTOR MODULE (DMM) (L. H. D; 2005-12)

CHECKING THE DAMPER MOTOR MODULE (DMM)

CHECKING CONTROL MODULES

Fig. 71: Checking Traffic Load On CAN Cables
Courtesy of VOLVO CARS CORPORATION

The Damper motor module (DMM) consists of a control unit and a stepper motor. The climate control system can have up to 5 Damper motor modules (DMM), the amount depends on the version of climate control system. These Damper motor module (DMM) control recirculation, defroster, temperature left/right and air distribution.

- Ignition switch position II.

To check which control module/sensors are part of vehicle configuration and of Climate control module (CCM) expected/detected control modules/sensors, click on the symbol for VCT2000.

If a control module is missing according to the car configuration, check that the control module is installed and correctly connected.

Read off which control module/sensors are on LIN bus 1 and 2 and compare them with the vehicle configuration.

The control modules and sensors that are to be included and which can be presented in the vehicle configuration can be read out from the tables below.

LIN BUS 1.

Control module/sensor.	On LIN bus 1.
Damper motor module (DMM) air distribution.	Always.
Damper motor module (DMM) temperature left.	Always.
Left seat heating.	If the vehicle is equipped with seat heating.

LIN BUS 2

Control module/sensor.	On LIN bus 2.
Damper motor module (DMM) temperature right.	Always.
Damper motor module (DMM) defroster.	If the vehicle is equipped with ECC.
Damper motor module (DMM) recirculation.	If the vehicle is left-hand drive.
Seat heater, right.	If the vehicle is equipped with seat heating.
Air quality sensor (AQS).	If the vehicle is left-hand drive and equipped with an air quality sensor (AQS).

CAR CONFIGURATION

Parameter.	Options
Guide.	Left-hand drive.
Climate control.	Electronic climate control. ECC/AQS. ECC, rear AC. MCC.
Seat heating calibration.	No Low 28°C - High 35°C. Low 30°C - High 36°C. Low 31°C - High 37°C. Low 32°C - High 38°C. Low 33°C - High 39°C. Low 34°C - High 40°C. Low 35°C - High 41°C. Low 36°C - High 43°C.
Passenger compartment filter.	Pollen filter. Air quality sensor (AQS).

Fig. 72: Identifying VCT2000 Diagnostic Tool Symbol In VIDA
Courtesy of VOLVO CARS CORPORATION

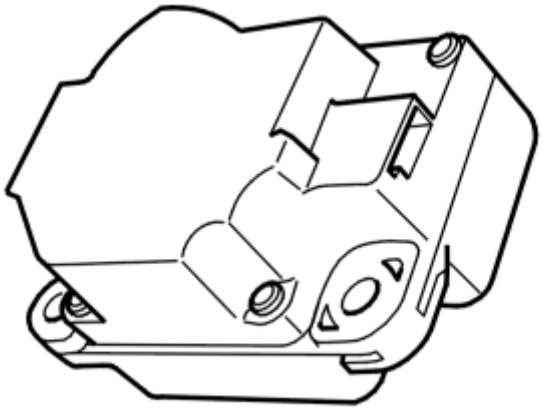

Fig. 73: Identifying Damper Motor Module (DMM)
Courtesy of VOLVO CARS CORPORATION

Was a damaged Damper motor module (DMM) found?

- **YES**

  Refer to **IDENTIFICATION OF DAMPER MOTORS**

- **NO**

  Refer to **CHECKING THE DAMPER MOTOR CONTROL**

CHECKING FUNCTIONS

- Ignition switch position II.

To check that identification and calibration rectified the fault, click VCT2000 and read out the expected and detected control modules/sensors. Check that all relevant units are present and that the customer symptoms that were present previously are now not present.

If a module is still missing, identify which one and replace it. After replacement, check whether the customer symptom remains.

If customer symptoms remain and all units are approved, continue with the next step of symptom fault-tracing.

Other information:

- see **DAMPER MOTOR MODULE (DMM) TEMPERATURE, REPLACING**
- see **DAMPER MOTOR MODULE (DMM) DEFROSTER, REPLACING**
- see **DAMPER MOTOR MODULE (DMM) RECIRCULATION, REPLACING**
- see **DAMPER MOTOR MODULE (DMM) AIR DISTRIBUTION, REPLACING**

Fig. 74: Identifying VCT2000 Diagnostic Tool Symbol In VIDA
Courtesy of VOLVO CARS CORPORATION

Do you wish to continue with symptom fault tracing?

- **YES**

  Refer to **CHECKING THE DAMPER MOTOR CONTROL**

- **NO**

  OKAY: Troubleshooting has been completed.

CHECKING THE DAMPER MOTOR CONTROL

Fig. 75: Checking Traffic Load On CAN Cables
Courtesy of VOLVO CARS CORPORATION

The Damper motor module (DMM) has a preset value for the number of steps between the limit positions. If a damper motor module (DMM) is faulty, this can be seen by the actual range being outside the preset range by more than the tolerance.

- Ignition switch position II.

Click on the symbol for VCT2000 to read off the range for the Damper motor module (DMM). Then compare each actual range of the Damper motor module (DMM) with the preset range. The Damper motor module (DMM) recirculation values depend on whether the vehicle is left hand drive. The difference between preset and actual range must not be greater than the tolerance. If there is a Damper motor module (DMM) with a greater difference, the Damper motor module (DMM) is damaged or incorrectly calibrated. If a Damper motor module (DMM) displays the value 0 or 4095, this also means that the Damper motor module (DMM) is damaged or incorrectly calibrated.

Fig. 76: Identifying VCT2000 Diagnostic Tool Symbol In VIDA
Courtesy of VOLVO CARS CORPORATION

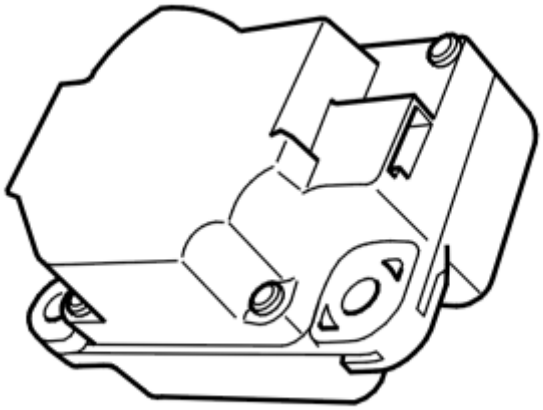

Fig. 77: Identifying Damper Motor Module (DMM)
Courtesy of VOLVO CARS CORPORATION

Was a damaged Damper motor module (DMM) found?

- **YES**

  Refer to **CALIBRATING THE DAMPER MOTOR MODULE (DMM)**

- **NO**

  Refer to **CHECKING THE DAMPER MOTOR CONTROL**

CHECKING THE DAMPER MOTOR CONTROL

Fig. 78: Checking Traffic Load On CAN Cables
Courtesy of VOLVO CARS CORPORATION

There are several parameters that describe the status of each Damper motor module (DMM). To locate the

suspected damaged Damper motor module (DMM) from this data, an analysis should be carried out where all parameters are observed.

- Ignition switch position II.
- Blower fan on.

Click on VCT2000 to read off how many times a Damper motor module (DMM) has lost its position, the number of unexpected stops for each Damper motor module (DMM), the actual and desired positions of the Damper motor module (DMM) and how many times each Damper motor module (DMM) has been calibrated.

NOTE: If the number of calibrations does not appear, this means that the software in the vehicle does not support this service. Continue with fault tracing until complete and then download new software.

The parameters that were read out should be interpreted as follows:

- The values for the number of lost positions for the control modules for temperature left and right should be the same.
- Also check to, see if any of the damper motors has a considerably greater number of lost positions than another. This is indicated by how difficult it is for the Damper motor module (DMM) to maintain its position.
- If a Damper motor module (DMM) stops unexpectedly a number of times, the motor has difficulty in reaching the position requested by the Climate control module (CCM).
- Also compare the desired position and actual position and check that the difference is not too great for any of the Damper motor modules (DMM). This is indicated by how difficult it is for the motor to reach the requested position.
- If a control module has many calibrations, it is probably damaged.

If a Damper motor module (DMM) has a combination of the above problems and has a serial number between:051101XXXXXX - 060430XXXXXX as well as 060801XXXXXX - 060930XXXXXX the replace the unit.

Even if only a combination of the above problems arise, the motor may still be damaged.

Other information:

- see **DAMPER MOTOR MODULE (DMM) TEMPERATURE, REPLACING**
- see **DAMPER MOTOR MODULE (DMM) DEFROSTER, REPLACING**
- see **DAMPER MOTOR MODULE (DMM) RECIRCULATION, REPLACING**
- see **DAMPER MOTOR MODULE (DMM) AIR DISTRIBUTION, REPLACING**

Fig. 79: Identifying VCT2000 Diagnostic Tool Symbol In VIDA
Courtesy of VOLVO CARS CORPORATION

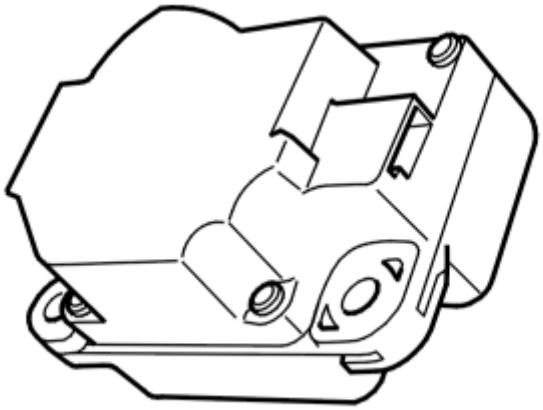

Fig. 80: Identifying Damper Motor Module (DMM)
Courtesy of VOLVO CARS CORPORATION

Was a damaged Damper motor module (DMM) found?

- **YES**

  Refer to **CALIBRATING THE DAMPER MOTOR MODULE (DMM)**

- **NO**

  Refer to **INFORMATION**

CHECKING FUNCTIONS

- Ignition switch position II.

To check that calibration rectified the fault, click VCT2000 and read off the range for the Damper motor module (DMM). Check that all units have the correct range and that the customer symptoms that were present previously are now not present.

If the range is still incorrect for any of the Damper motor modules (DMM), identify which control module it is and replace it. After replacement, check whether the customer symptom remains.

If customer symptoms remain and all units are approved, continue with the next step of symptom fault-tracing.

Other information:

- see **DAMPER MOTOR MODULE (DMM) TEMPERATURE, REPLACING**
- see **DAMPER MOTOR MODULE (DMM) DEFROSTER, REPLACING**
- see **DAMPER MOTOR MODULE (DMM) RECIRCULATION, REPLACING**
- see **DAMPER MOTOR MODULE (DMM) AIR DISTRIBUTION, REPLACING**

Fig. 81: Identifying VCT2000 Diagnostic Tool Symbol In VIDA
Courtesy of VOLVO CARS CORPORATION

Do you wish to continue with symptom fault tracing?

- **YES**

  Refer to **CHECKING THE DAMPER MOTOR CONTROL**

- **NO**

  OKAY: Troubleshooting has been completed.

INFORMATION

The fault must now be detected and remedied. As this is not the case, the fault-tracing has failed.

Exit symptom fault-tracing or try again.

REPLACING THE CONTROL MODULE

Replace the located and damaged Damper motor module (DMM). After replacement, check that the customer symptom no longer remains.

If customer symptoms remain, check that the Climate control module (CCM) has the latest software. Check this by purchasing an upgrade for the Climate control module (CCM) and downloading it to the control module.

NOTE: **After downloading new software, all parameters are reset and further fault tracing becomes harder.**

After downloading, check whether the customer symptoms remains.

The fault must now be detected and remedied. If this is not the case, the fault-tracing has failed. Exit symptom fault-tracing or try again.

Other information:

- see **DAMPER MOTOR MODULE (DMM) TEMPERATURE, REPLACING**
- see **DAMPER MOTOR MODULE (DMM) DEFROSTER, REPLACING**
- see **DAMPER MOTOR MODULE (DMM) RECIRCULATION, REPLACING**
- see **DAMPER MOTOR MODULE (DMM) AIR DISTRIBUTION, REPLACING**

IDENTIFICATION OF DAMPER MOTORS

CHECKING THE FUNCTION

Damper motor module (DMM) faults may be due to something obstructing the damper, which means that the Damper motor module (DMM) cannot calibrate itself. Check that the damper is not blocked and that is has not become stuck. Look, for example, for a screw, cable or foam rubber gasket. Check that the damper motor is correctly installed. Also check that the damper can move freely.

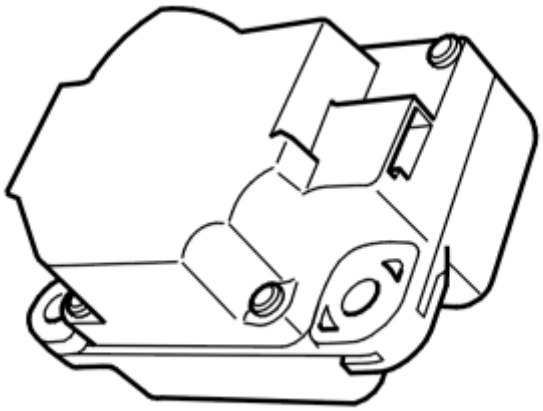

Fig. 82: Identifying Damper Motor Module (DMM)
Courtesy of VOLVO CARS CORPORATION

- **Continue**

  Refer to **IDENTIFYING THE DAMPER MOTOR MODULE (DMM)**

IDENTIFYING THE DAMPER MOTOR MODULE (DMM)

HINT: When identifying damper motors, each damper motor must be run to its limit position. These operations can take up to 30 seconds. When identifying the damper motors it is important that a battery charger is connected.

Fig. 83: Checking Traffic Load On CAN Cables
Courtesy of VOLVO CARS CORPORATION

- Ignition off
- Reinstall the connectors, components etc.

NOTE: **Climate Control Module (CCM) and damper motors can be affected by the temperature. The vehicle should have normal room temperature when performing this service.**

Carry out identification as follows:

- Ignition on.
- Click on the VCT2000 symbol. Wait until identification has been carried out.
- Ignition off.

Fig. 84: Identifying VCT2000 Diagnostic Tool Symbol In VIDA
Courtesy of VOLVO CARS CORPORATION

- **Continue**

Refer to **CALIBRATING THE CLIMATE CONTROL MODULE (CCM)**

CALIBRATING THE CLIMATE CONTROL MODULE (CCM)

CAUTION: **When activating this function, calibration of the Climate Control Module (CCM) starts. After carrying out calibration read off of the diagnostic trouble codes (DTCs) starts. To ensure that diagnostics for the Climate Control Module (CCM) have been carried out, delay for 30 seconds before reading out diagnostic trouble codes (DTCs) after calibration.**

NOTE: **Climate Control Module (CCM) and damper motors can be affected by the temperature. The vehicle should have normal room temperature when performing this service.**

Fig. 85: Checking Traffic Load On CAN Cables
Courtesy of VOLVO CARS CORPORATION

Carry out calibration as follows:

- Ignition on.
- Click on the VCT2000 symbol. Wait until calibration has been carried out and diagnostic trouble codes (DTCs) read out.
- Ignition off.

This function controls the components that communicate with the Climate Control Module (CCM) via LIN bus 1 and LIN bus 2. In the event of a fault in any of the LIN buses, diagnostic trouble codes (DTCs) CCM-0070 to CCM-0071 will be stored depending on the fault. These diagnostic trouble codes (DTCs) can only be stored in conjunction with this diagnostic function.

If any of these diagnostic trouble codes (DTCs) recur, recalibrate to check if the problem was overcome. If the diagnostic trouble code (DTC) recurs, fault-trace the relevant diagnostic trouble code (DTC).

Fig. 86: Identifying VCT2000 Diagnostic Tool Symbol In VIDA
Courtesy of VOLVO CARS CORPORATION

- **Continue**

  Refer to **CHECKING FUNCTIONS**

CALIBRATING THE DAMPER MOTOR MODULE (DMM)

CALIBRATING THE CLIMATE CONTROL MODULE (CCM)

CAUTION: When activating this function, calibration of the Climate Control Module (CCM) starts. After carrying out calibration read off of the diagnostic trouble codes (DTCs) starts. To ensure that diagnostics for the Climate Control Module (CCM) have been carried out, delay for 30 seconds before reading out diagnostic trouble codes (DTCs) after calibration.

NOTE: Climate Control Module (CCM) and damper motors can be affected by the temperature. The vehicle should have normal room temperature when performing this service.

Fig. 87: Checking Traffic Load On CAN Cables
Courtesy of VOLVO CARS CORPORATION

Carry out calibration as follows:

- Ignition on.
- Click on the VCT2000 symbol. Wait until calibration has been carried out and diagnostic trouble codes (DTCs) read out.
- Ignition off.

This function controls the components that communicate with the Climate Control Module (CCM) via LIN bus 1 and LIN bus 2. In the event of a fault in any of the LIN buses, diagnostic trouble codes (DTCs) CCM-0070 to CCM-0071 will be stored depending on the fault. These diagnostic trouble codes (DTCs) can only be stored in conjunction with this diagnostic function.

If any of these diagnostic trouble codes (DTCs) recur, recalibrate to check if the problem was overcome. If the diagnostic trouble code (DTC) recurs, fault-trace the relevant diagnostic trouble code (DTC).

Fig. 88: Identifying VCT2000 Diagnostic Tool Symbol In VIDA
Courtesy of VOLVO CARS CORPORATION

- **Continue**

  Refer to **CHECKING FUNCTIONS**

CALIBRATING THE DAMPER MOTOR MODULE (DMM)

CALIBRATING THE CLIMATE CONTROL MODULE (CCM)

CAUTION: When activating this function, calibration of the Climate Control Module (CCM) starts. After carrying out calibration read off of the diagnostic

trouble codes (DTCs) starts. To ensure that diagnostics for the Climate Control Module (CCM) have been carried out, delay for 30 seconds before reading out diagnostic trouble codes (DTCs) after calibration.

NOTE: Climate Control Module (CCM) and damper motors can be affected by the temperature. The vehicle should have normal room temperature when performing this service.

Fig. 89: Checking Traffic Load On CAN Cables
Courtesy of VOLVO CARS CORPORATION

Carry out calibration as follows:

- Ignition on.
- Click on the VCT2000 symbol. Wait until calibration has been carried out and diagnostic trouble codes (DTCs) read out.
- Ignition off.

This function controls the components that communicate with the Climate Control Module (CCM) via LIN bus 1 and LIN bus 2. In the event of a fault in any of the LIN buses, diagnostic trouble codes (DTCs) CCM-0070 to CCM-0071 will be stored depending on the fault. These diagnostic trouble codes (DTCs) can only be stored in conjunction with this diagnostic function.

If any of these diagnostic trouble codes (DTCs) recur, recalibrate to check if the problem was overcome. If the diagnostic trouble code (DTC) recurs, fault-trace the relevant diagnostic trouble code (DTC).

Fig. 90: Identifying VCT2000 Diagnostic Tool Symbol In VIDA
Courtesy of VOLVO CARS CORPORATION

- **Continue**

  Refer to **REPLACING THE CONTROL MODULE**

CHECKING THE DAMPER MOTOR MODULE (DMM)

CHECKING CONTROL MODULES

Fig. 91: Checking Traffic Load On CAN Cables
Courtesy of VOLVO CARS CORPORATION

The Damper motor module (DMM) consists of a control unit and a stepper motor. The climate control system can have up to 5 Damper motor modules (DMM), the amount depends on the version of climate control system. These Damper motor module (DMM) control recirculation, defroster, temperature left/right and air distribution.

- Ignition switch position II.

To check which control module/sensors are part of vehicle configuration and of Climate control module (CCM) expected/detected control modules/sensors, click on the symbol for VCT2000.

If a control module is missing according to the car configuration, check that the control module is installed and correctly connected.

Read off which control module/sensors are on LIN bus 1 and 2 and compare them with the vehicle configuration.

The control modules and sensors that are to be included and which can be presented in the vehicle configuration can be read out from the tables below.

LIN BUS 1.

Control module/sensor.	On LIN bus 1.
Damper motor module (DMM) air distribution.	Always.
Damper motor module (DMM) temperature left.	Always.
Left seat heating.	If the vehicle is equipped with seat heating.

LIN BUS 2

Control module/sensor.	On LIN bus 2.
Damper motor module (DMM) temperature right.	Always.
Damper motor module (DMM) defroster.	If the vehicle is equipped with ECC.
Damper motor module (DMM) recirculation.	If the vehicle is left-hand drive.
Seat heater, right.	If the vehicle is equipped with seat heating.
Air quality sensor (AQS).	If the vehicle is left-hand drive and equipped with an air quality sensor (AQS).

CAR CONFIGURATION

Parameter.	Options

Guide.	Left-hand drive.
Climate control.	Electronic climate control. ECC/AQS. ECC, rear AC. MCC.
Seat heating calibration.	No Low 28°C - High 35°C. Low 30°C - High 36°C. Low 31°C - High 37°C. Low 32°C - High 38°C. Low 33°C - High 39°C. Low 34°C - High 40°C. Low 35°C - High 41°C. Low 36°C - High 43°C.
Passenger compartment filter.	Pollen filter. Air quality sensor (AQS).

Fig. 92: Identifying VCT2000 Diagnostic Tool Symbol In VIDA
Courtesy of VOLVO CARS CORPORATION

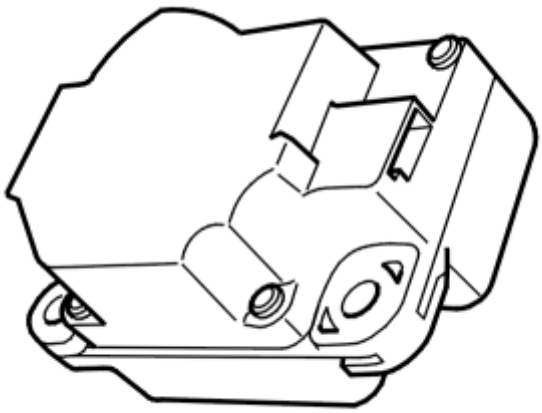

Fig. 93: Identifying Damper Motor Module (DMM)
Courtesy of VOLVO CARS CORPORATION

Was a damaged Damper motor module (DMM) found?

- **YES**

see **CHECKING THE DAMPER MOTOR CONTROL**

- **NO**

  see **CHECKING THE DAMPER MOTOR CONTROL**

CHECKING FUNCTIONS

- Ignition switch position II.

To check that identification and calibration rectified the fault, click VCT2000 and read out the expected and detected control modules/sensors. Check that all relevant units are present and that the customer symptoms that were present previously are now not present.

If a module is still missing, identify which one and replace it. After replacement, check whether the customer symptom remains.

If customer symptoms remain and all units are approved, continue with the next step of symptom fault-tracing.

Other information:

- see **DAMPER MOTOR MODULE (DMM) TEMPERATURE, REPLACING**
- see **DAMPER MOTOR MODULE (DMM) DEFROSTER, REPLACING**
- see **DAMPER MOTOR MODULE (DMM) RECIRCULATION, REPLACING**
- see **DAMPER MOTOR MODULE (DMM) AIR DISTRIBUTION, REPLACING**

Fig. 94: Identifying VCT2000 Diagnostic Tool Symbol In VIDA
Courtesy of VOLVO CARS CORPORATION

Do you wish to continue with symptom fault tracing?

- **YES**

  see **CHECKING THE DAMPER MOTOR CONTROL**

- **NO**

  OKAY: Troubleshooting has been completed.

CHECKING THE DAMPER MOTOR CONTROL

Fig. 95: Checking Traffic Load On CAN Cables
Courtesy of VOLVO CARS CORPORATION

The Damper motor module (DMM) has a preset value for the number of steps between the limit positions. If a damper motor module (DMM) is faulty, this can be seen by the actual range being outside the preset range by more than the tolerance.

- Ignition switch position II.

Click on the symbol for VCT2000 to read off the range for the Damper motor module (DMM). Then compare each actual range of the Damper motor module (DMM) with the preset range. The Damper motor module (DMM) recirculation values depend on whether the vehicle is left hand drive. The difference between preset and actual range must not be greater than the tolerance. If there is a Damper motor module (DMM) with a greater difference, the Damper motor module (DMM) is damaged or incorrectly calibrated. If a Damper motor module (DMM) displays the value 0 or 4095, this also means that the Damper motor module (DMM) is damaged or incorrectly calibrated.

Fig. 96: Identifying VCT2000 Diagnostic Tool Symbol In VIDA
Courtesy of VOLVO CARS CORPORATION

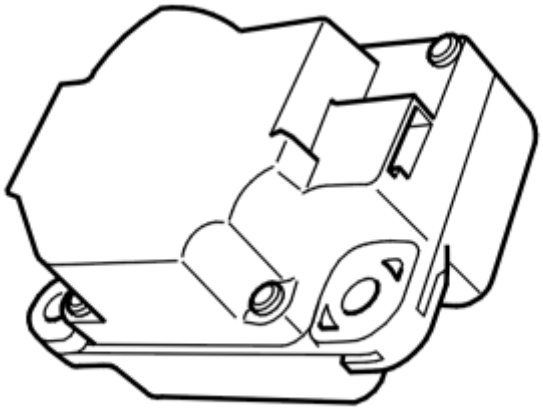

Fig. 97: Identifying Damper Motor Module (DMM)
Courtesy of VOLVO CARS CORPORATION

Was a damaged Damper motor module (DMM) found?

- **YES**

  see **CHECKING THE DAMPER MOTOR CONTROL**

- **NO**

  see **CHECKING THE DAMPER MOTOR CONTROL**

Damper motor module (DMM) faults may be due to something obstructing the damper, which means that the Damper motor module (DMM) cannot calibrate itself. Check that the damper is not blocked and that is has not become stuck. Look, for example, for a screw, cable or foam rubber gasket. Check that the damper motor is correctly installed. Also check that the damper can move freely.

- **DONE**

  see **CHECKING FUNCTIONS**

CAUTION: When activating this function, calibration of the Climate Control Module (CCM) starts. After carrying out calibration read off of the diagnostic trouble codes (DTCs) starts. To ensure that diagnostics for the Climate Control Module (CCM) have been carried out, delay for 30 seconds before reading out diagnostic trouble codes (DTCs) after calibration.

NOTE: Climate Control Module (CCM) and damper motors can be affected by the temperature. The vehicle should have normal room temperature when performing this service.

Carry out calibration as follows:

- Ignition on.
- Click on the VCT2000 symbol. Wait until calibration has been carried out and diagnostic trouble codes (DTCs) read out.
- Ignition off.

This function controls the components that communicate with the Climate Control Module (CCM) via LIN bus 1 and LIN bus 2. In the event of a fault in any of the LIN buses, diagnostic trouble codes (DTCs) CCM-0070 to CCM-0071 will be stored depending on the fault. These diagnostic trouble codes (DTCs) can only be stored in conjunction with this diagnostic function.

If any of these diagnostic trouble codes (DTCs) recur, recalibrate to check if the problem was overcome. If the diagnostic trouble code (DTC) recurs, fault-trace the relevant diagnostic trouble code (DTC).

- **DONE**

see **CHECKING FUNCTIONS**

CHECKING THE DAMPER MOTOR CONTROL

Fig. 98: Checking Traffic Load On CAN Cables
Courtesy of VOLVO CARS CORPORATION

There are several parameters that describe the status of each Damper motor module (DMM). To locate the suspected damaged Damper motor module (DMM) from this data, an analysis should be carried out where all parameters are observed.

- Ignition switch position II.
- Blower fan on.

Click on VCT2000 to read off how many times a Damper motor module (DMM) has lost its position, the number of unexpected stops for each Damper motor module (DMM), the actual and desired positions of the Damper motor module (DMM) and how many times each Damper motor module (DMM) has been calibrated.

NOTE: **If the number of calibrations does not appear, this means that the software in the vehicle does not support this service. Continue with fault tracing until complete and then download new software.**

The parameters that were read out should be interpreted as follows:

- The values for the number of lost positions for the control modules for temperature left and right should be the same.
- Also check to, see if any of the damper motors has a considerably greater number of lost positions than another. This is indicated by how difficult it is for the Damper motor module (DMM) to maintain its position.
- If a Damper motor module (DMM) stops unexpectedly a number of times, the motor has difficulty in reaching the position requested by the Climate control module (CCM).
- Also compare the desired position and actual position and check that the difference is not too great for any of the Damper motor modules (DMM). This is indicated by how difficult it is for the motor to reach the requested position.
- If a control module has many calibrations, it is probably damaged.

If a Damper motor module (DMM) has a combination of the above problems and has a serial number between: 051101XXXXXX - 060430XXXXXX as well as 060801XXXXXX - 060930XXXXXX the replace the unit.

Even if only a combination of the above problems arise, the motor may still be damaged.

Other information:

- see **DAMPER MOTOR MODULE (DMM) TEMPERATURE, REPLACING**
- see **DAMPER MOTOR MODULE (DMM) DEFROSTER, REPLACING**
- see **DAMPER MOTOR MODULE (DMM) RECIRCULATION, REPLACING**
- see **DAMPER MOTOR MODULE (DMM) AIR DISTRIBUTION, REPLACING**

Fig. 99: Identifying VCT2000 Diagnostic Tool Symbol In VIDA
Courtesy of VOLVO CARS CORPORATION

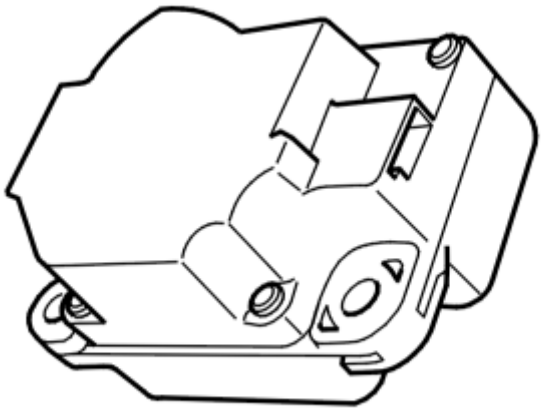

Fig. 100: Identifying Damper Motor Module (DMM)
Courtesy of VOLVO CARS CORPORATION

Was a damaged Damper motor module (DMM) found?

- **YES**

  see **INFORMATION**

- **NO**

  see **INFORMATION**

CHECKING FUNCTIONS

- Ignition switch position II.

To check that calibration rectified the fault, click VCT2000 and read off the range for the Damper motor module (DMM). Check that all units have the correct range and that the customer symptoms that were present previously are now not present.

If the range is still incorrect for any of the Damper motor modules (DMM), identify which control module it is and replace it. After replacement, check whether the customer symptom remains.

If customer symptoms remain and all units are approved, continue with the next step of symptom fault-tracing.

Other information:

- see **DAMPER MOTOR MODULE (DMM) TEMPERATURE, REPLACING**
- see **DAMPER MOTOR MODULE (DMM) DEFROSTER, REPLACING**
- see **DAMPER MOTOR MODULE (DMM) RECIRCULATION, REPLACING**
- see **DAMPER MOTOR MODULE (DMM) AIR DISTRIBUTION, REPLACING**

Fig. 101: Identifying VCT2000 Diagnostic Tool Symbol In VIDA
Courtesy of VOLVO CARS CORPORATION

Do you wish to continue with symptom fault tracing?

- **YES**

  see **CHECKING THE DAMPER MOTOR CONTROL**

- **NO**

  OKAY: Troubleshooting has been completed.

INFORMATION

The fault must now be detected and remedied. As this is not the case, the fault-tracing has failed.

Exit symptom fault-tracing or try again.

CAUTION: When activating this function, calibration of the Climate Control Module (CCM) starts. After carrying out calibration read off of the diagnostic trouble codes (DTCs) starts. To ensure that diagnostics for the Climate Control Module (CCM) have been carried out, delay for 30 seconds before reading out diagnostic trouble codes (DTCs) after calibration.

NOTE: Climate Control Module (CCM) and damper motors can be affected by the temperature. The vehicle should have normal room temperature when performing this service.

Carry out calibration as follows:

- Ignition on.
- Click on the VCT2000 symbol. Wait until calibration has been carried out and diagnostic trouble codes (DTCs) read out.
- Ignition off.

This function controls the components that communicate with the Climate Control Module (CCM) via LIN bus 1 and LIN bus 2. In the event of a fault in any of the LIN buses, diagnostic trouble codes (DTCs) CCM-0070 to CCM-0071 will be stored depending on the fault. These diagnostic trouble codes (DTCs) can only be stored in conjunction with this diagnostic function.

If any of these diagnostic trouble codes (DTCs) recur, recalibrate to check if the problem was overcome. If the diagnostic trouble code (DTC) recurs, fault-trace the relevant diagnostic trouble code (DTC).

- **DONE**

  See **REPLACING THE CONTROL MODULE**

REPLACING THE CONTROL MODULE

Replace the located and damaged Damper motor module (DMM). After replacement, check that the customer symptom no longer remains.

If customer symptoms remain, check that the Climate control module (CCM) has the latest software. Check this by purchasing an upgrade for the Climate control module (CCM) and downloading it to the control module.

NOTE: After downloading new software, all parameters are reset and further fault tracing becomes harder.

After downloading, check whether the customer symptoms remains.

The fault must now be detected and remedied. If this is not the case, the fault-tracing has failed. Exit symptom fault-tracing or try again.

Other information:

- see **DAMPER MOTOR MODULE (DMM) TEMPERATURE, REPLACING**
- see **DAMPER MOTOR MODULE (DMM) DEFROSTER, REPLACING**
- see **DAMPER MOTOR MODULE (DMM) RECIRCULATION, REPLACING**
- see **DAMPER MOTOR MODULE (DMM) AIR DISTRIBUTION, REPLACING**

CHECKING THE ENGINE COOLING FAN (FC) (B5254T2; 2005-07)

CHECKING THE ENGINE COOLING FAN (FC)

NOTE: **The electric cooling fan may have a post-running time of up to approx. 6 minutes after the engine has been shut off. The time for the electric cooling fan's post-running depends on the engine's temperature, temperature in the engine compartment as well as the pressure level in the AC system.**

Fig. 102: Checking Traffic Load On CAN Cables
Courtesy of VOLVO CARS CORPORATION

- Ignition on.
- Activate the engine cooling fan (FC) by clicking the VCT2000 symbol.

  If the electric cooling fan can be activated in all selectable speeds:

  - There is no malfunction in the electric cooling fan.
  - Check the AC pressure sensor.

  Remedy as necessary.

  Other information:

  - The electric cooling fan can be activated at different speeds. Possible speeds for the electric cooling fan is dependent on model year and engine.

Fig. 103: Identifying VCT2000 Diagnostic Tool Symbol In VIDA
Courtesy of VOLVO CARS CORPORATION

Is the engine cooling fan (FC) working?

- **YES**

  OKAY: Troubleshooting has been completed.

- **NO**

  Refer to **CHECKING COMPONENTS AND CONNECTIONS**

CHECKING COMPONENTS AND CONNECTIONS

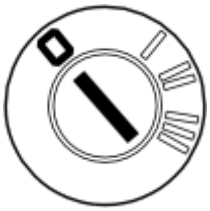

Fig. 104: Identifying Ignition In Off Position
Courtesy of VOLVO CARS CORPORATION

- Ignition off.

If the electric cooling fan cannot be activated in all selectable speeds:

- Check the fuse, power supply cable and ground lead for the engine cooling fan (FC).
- Check the wiring between the engine control module (ECM) and the engine cooling fan (FC) module. Check for damage.
- Check the connectors to the engine cooling fan (FC) control module and Engine Control Module (ECM). Check for damage to pins and connections.

Remedy as necessary.

Then check:

- Function of engine cooling fan.

- Ignition on.
- Activate the engine cooling fan (FC) by clicking the VCT2000 symbol.

Other information:

- see **CHECKING WIRING AND TERMINALS**

Fig. 105: Identifying VCT2000 Diagnostic Tool Symbol In VIDA
Courtesy of VOLVO CARS CORPORATION

CHECKING THE ENGINE COOLING FAN (FC) (B6294T; 2005-06)

CHECKING THE ENGINE COOLING FAN (FC)

see **CHECKING THE ENGINE COOLING FAN (FC)**

CHECKING THE ENGINE COOLING FAN (FC) (B8444S; 2005-11)

CHECKING THE ENGINE COOLING FAN (FC)

NOTE: **The electric cooling fan may have a post-running time of up to approx. 6 minutes after the engine has been shut off. The time for the electric cooling fan's post-running depends on the engine's temperature, temperature in the engine compartment as well as the pressure level in the AC system.**

Fig. 106: Checking Traffic Load On CAN Cables
Courtesy of VOLVO CARS CORPORATION

- Ignition on.
- Activate the engine cooling fan (FC) by clicking the VCT2000 symbol.

If the electric cooling fan can be activated in all selectable speeds:

- There is no malfunction in the electric cooling fan.
- Check the AC pressure sensor.

Remedy as necessary.

Other information:

- The electric cooling fan can be activated at different speeds. Possible speeds for the electric cooling fan is dependent on model year and engine.

Fig. 107: Identifying VCT2000 Diagnostic Tool Symbol In VIDA

Courtesy of VOLVO CARS CORPORATION

Is the engine cooling fan (FC) working?

- **YES**

  OKAY: Troubleshooting has been completed.

- **NO**

  Refer to **CHECKING COMPONENTS AND CONNECTIONS**

CHECKING COMPONENTS AND CONNECTIONS

Fig. 108: Identifying Ignition In Off Position
Courtesy of VOLVO CARS CORPORATION

- Ignition off.

If the electric cooling fan cannot be activated in all selectable speeds:

- Check the fuse, power supply cable and ground lead for the engine cooling fan (FC).
- Check the wiring between the engine control module (ECM) and the engine cooling fan (FC) module. Check for damage.
- Check the connectors to the engine cooling fan (FC) control module and Engine Control Module (ECM). Check for damage to pins and connections.

Remedy as necessary.

Then check:

- Function of engine cooling fan.

- Ignition on.
- Activate the engine cooling fan (FC) by clicking the VCT2000 symbol.

Other information:

- see **CHECKING WIRING AND TERMINALS**

Fig. 109: Identifying VCT2000 Diagnostic Tool Symbol In VIDA
Courtesy of VOLVO CARS CORPORATION

CHECKING THE FAN FOR THE PASSENGER COMPARTMENT TEMPERATURE SENSOR (2003-04)

CHECKING THE FAN FOR THE PASSENGER COMPARTMENT TEMPERATURE SENSOR

REPLACING THE COMPONENT

Noise from the fan for the passenger compartment temperature sensor is caused by a defective component.

To replace fan motor for the passenger compartment temperature sensor, see **BLOWER FAN MOTOR PASSENGER COMPARTMENT TEMPERATURE SENSOR, REPLACING** .

Remedy as necessary

CHECKING THE INTERIOR HEAT (2003-04)

CHECKING THE INTERIOR HEAT

HINT: After a fault is detected, it is necessary to check that the symptom no longer exists.

HINT: Check interior heat as follows:

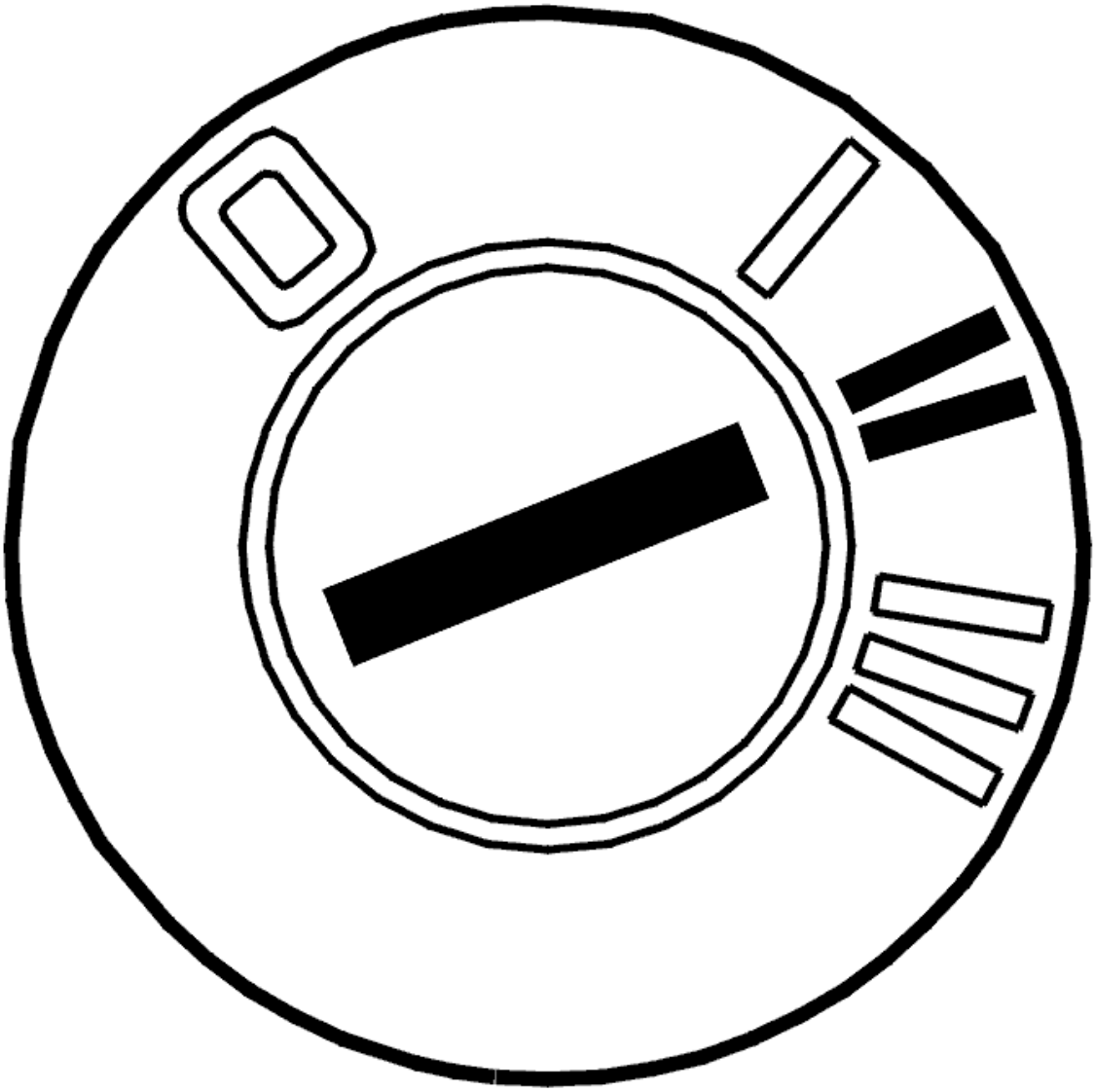

Fig. 110: Identifying Ignition ON
Courtesy of VOLVO CARS CORPORATION

- Ignition off.
- Connect the connectors, install the components etc.
- Ignition on.
- Start engine and let it warm up.
- Operate interior temperature switch to obtain maximum heat.
- Check that heat is coming from the air outlets and that high interior temperature is obtained.

CHECKING THE PASSENGER COMPARTMENT TEMPERATURE SENSOR (ELECTRONIC CLIMATE CONTROL (ECC)) (2003-04)

CHECKING THE PASSENGER COMPARTMENT TEMPERATURE SENSOR (ELECTRONIC

CLIMATE CONTROL (ECC))

CHECKING THE PASSENGER COMPARTMENT TEMPERATURE SENSOR SIGNAL

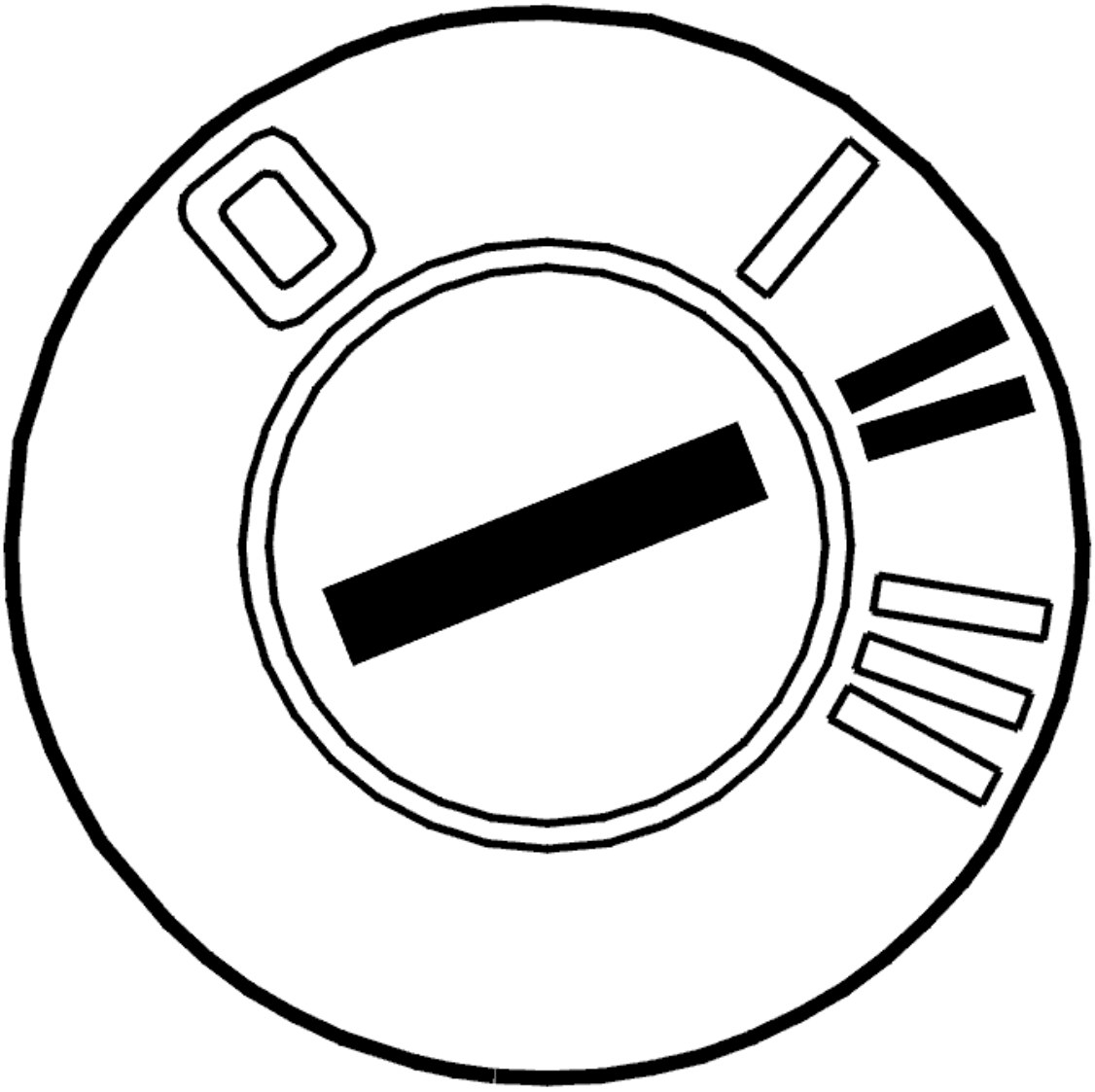

Fig. 111: Identifying Ignition ON
Courtesy of VOLVO CARS CORPORATION

- Ignition on.

  Read off the passenger compartment temperature (climate control module) and vary the temperature at the passenger compartment temperature sensor to check that the value changes. Also check that the value is within its permitted range: Compare the values from the outside temperature sensor and the passenger compartment temperature sensor (upper electronic module) or thermometer.

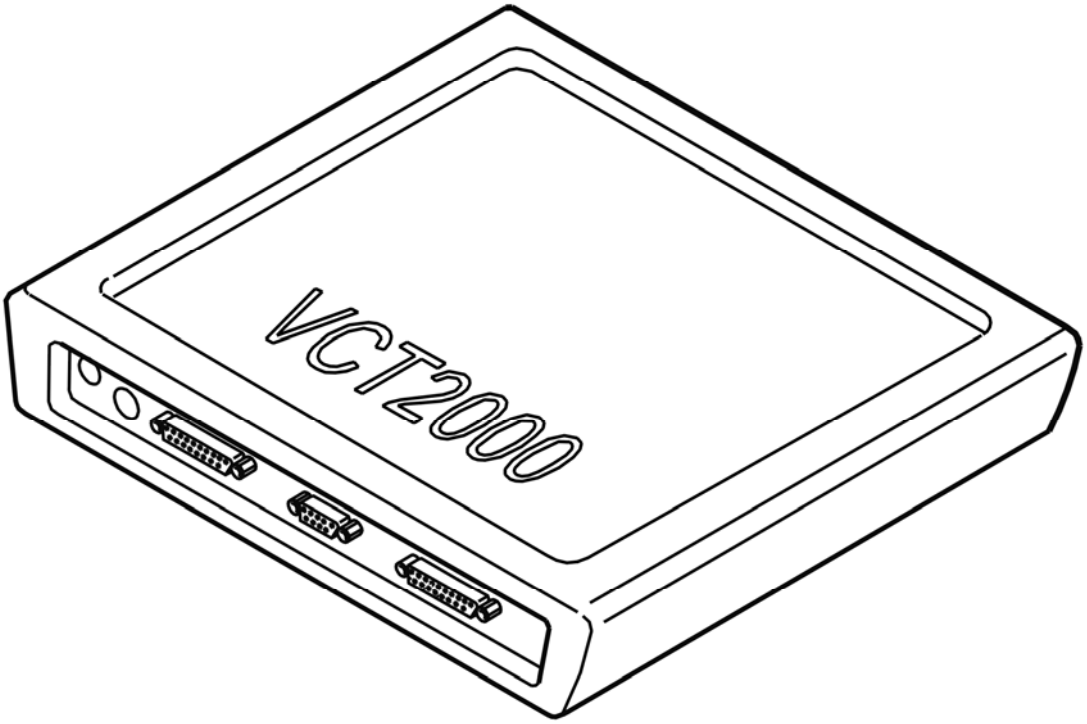

Fig. 112: Identifying VCT2000 Diagnostic Tool Symbol In VIDA
Courtesy of VOLVO CARS CORPORATION

Is the temperature reading OK?

- **YES**

  FAULT NOT FOUND: Troubleshooting has been completed.

- **NO**

  Refer to **CHECKING THE COMPONENT**

CHECKING THE COMPONENT

Check that neither the grille nor the pipe for the passenger compartment temperature sensor are blocked.

Other information:

- To access or replace the climate control module, see **CLIMATE CONTROL MODULE (CCM), REPLACING** .

Was a fault detected?

- **YES**

  Refer to **VERIFICATION**

- **NO**

  Refer to **CHECKING THE COMPONENT**

CHECKING THE COMPONENT

The fault has probably occurred as a result of a defective power circuit in the climate control system. This type of fault means that the climate control system unit must be replaced. The passenger compartment temperature sensor cannot be replaced independently.

Other information:

- To access or replace the climate control module, see **CLIMATE CONTROL MODULE (CCM), REPLACING** .

SELF-ADJUSTMENT

HINT: After replacing the control module or damper motor, and when a damper motor or link has been removed, carry out self adjustment to define the damper motor limit positions.

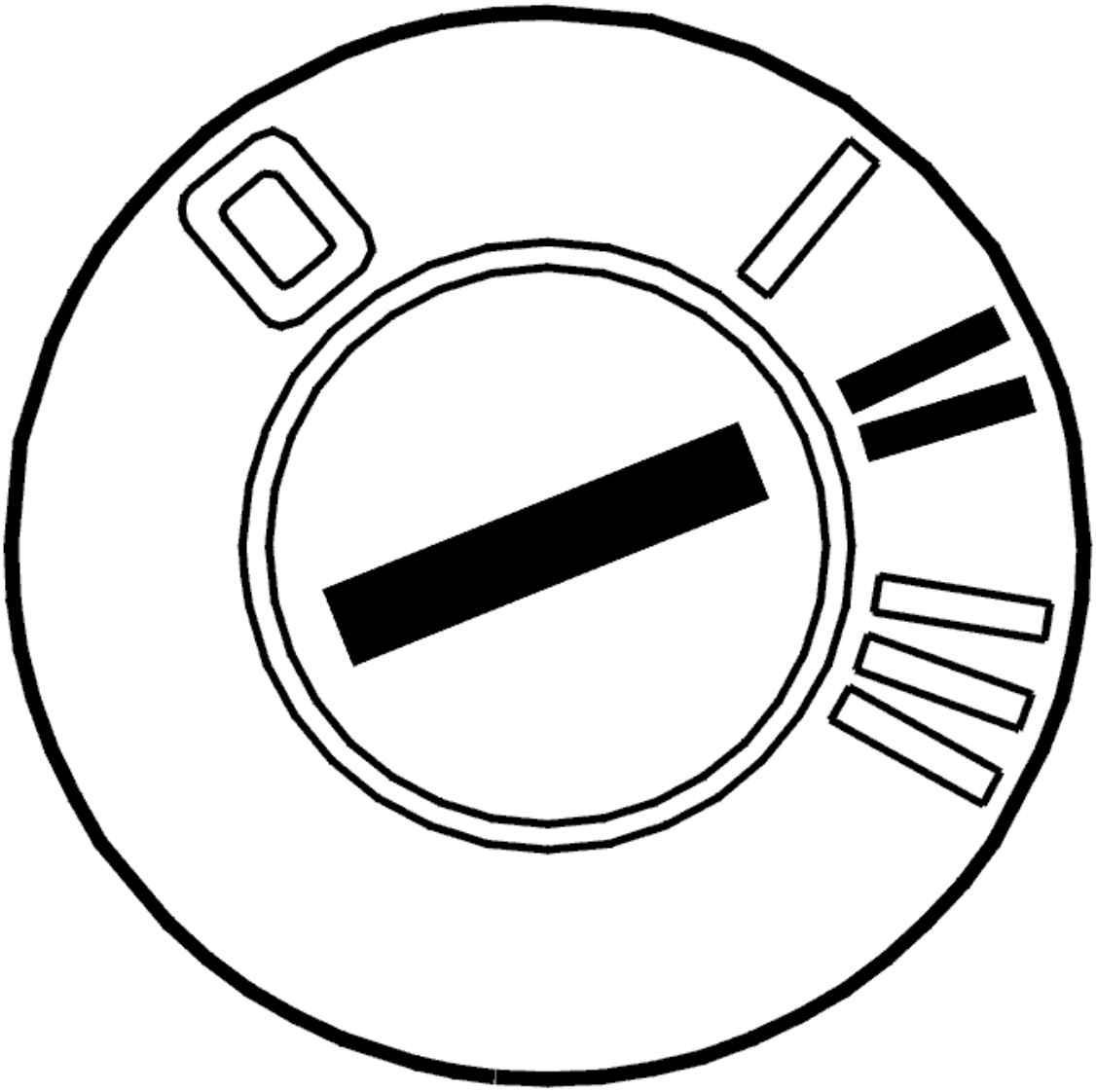

Fig. 113: Identifying Ignition ON
Courtesy of VOLVO CARS CORPORATION

- Ignition off.
- Reinstall the connectors, components etc.
- Ignition on.

  Activate self adjustment.

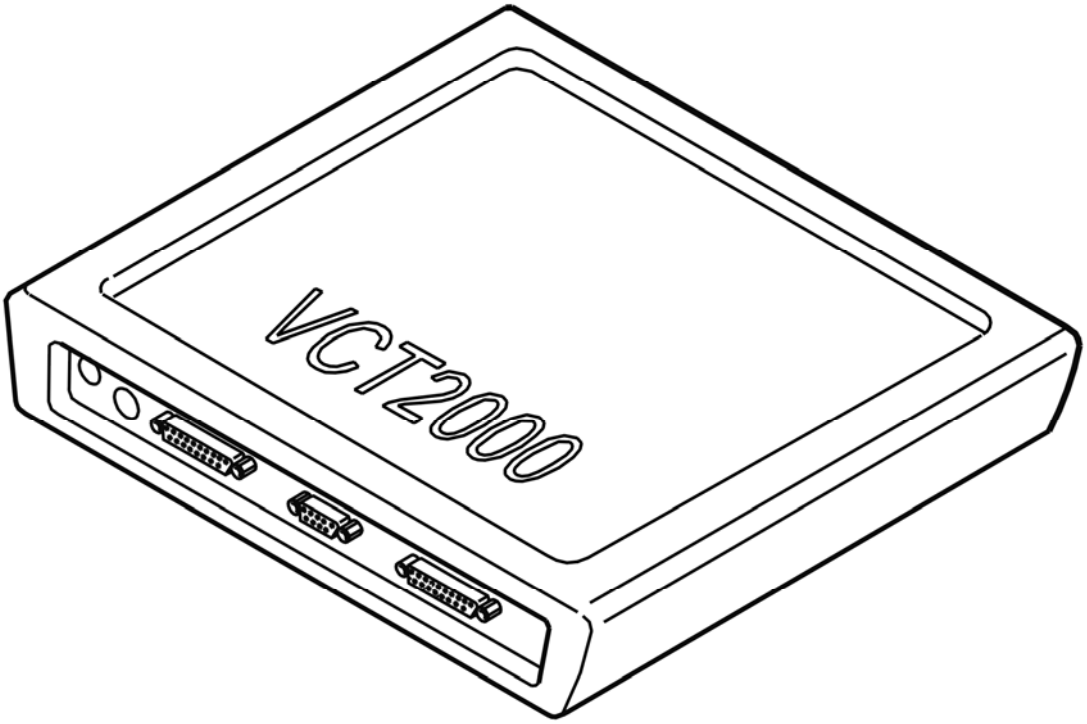

Fig. 114: Identifying VCT2000 Diagnostic Tool Symbol In VIDA
Courtesy of VOLVO CARS CORPORATION

- **Continue**

  Refer to **VERIFICATION**

VERIFICATION

HINT: After the repair it is necessary to check that the fault has been rectified.

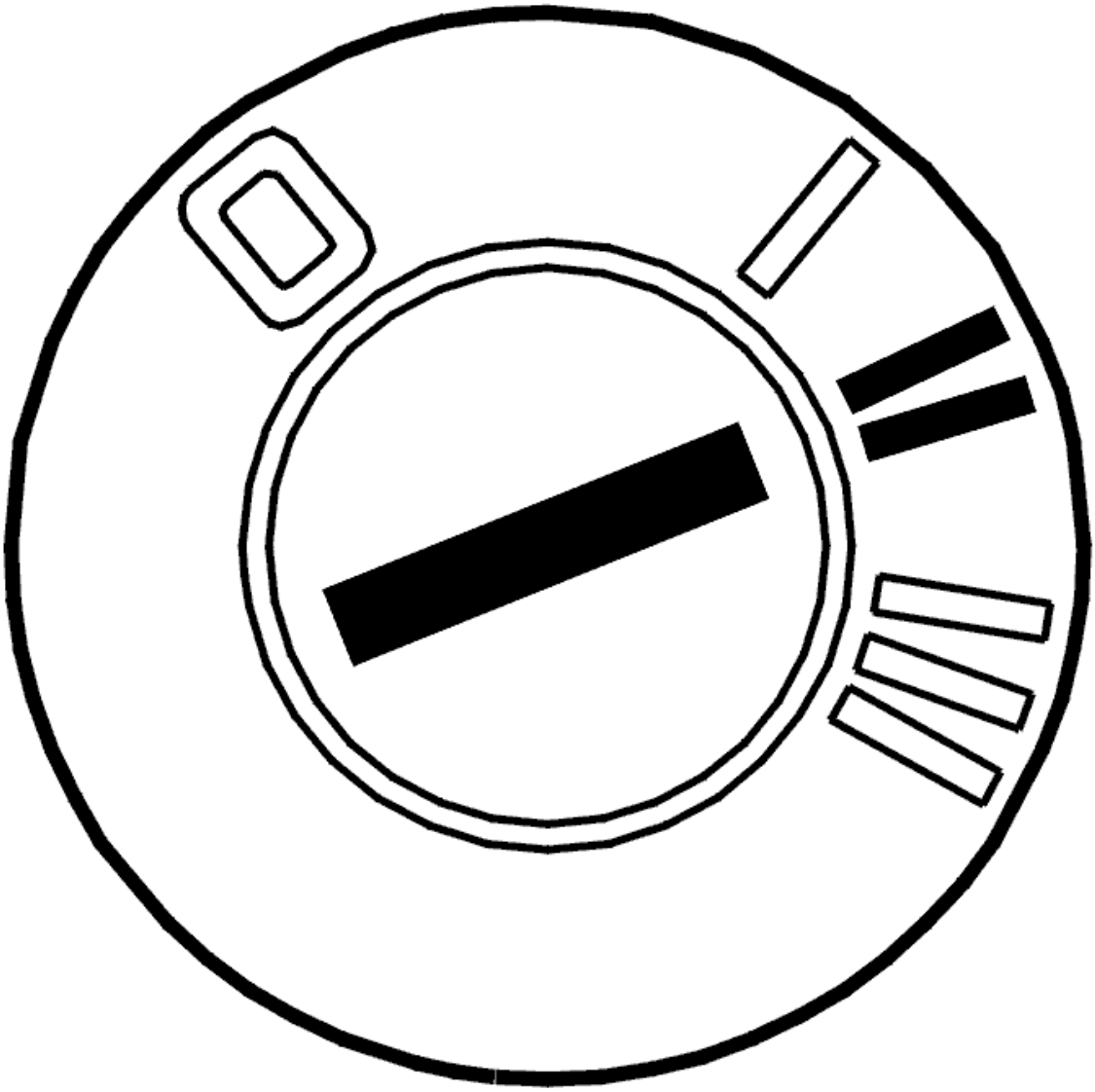

Fig. 115: Identifying Ignition ON
Courtesy of VOLVO CARS CORPORATION

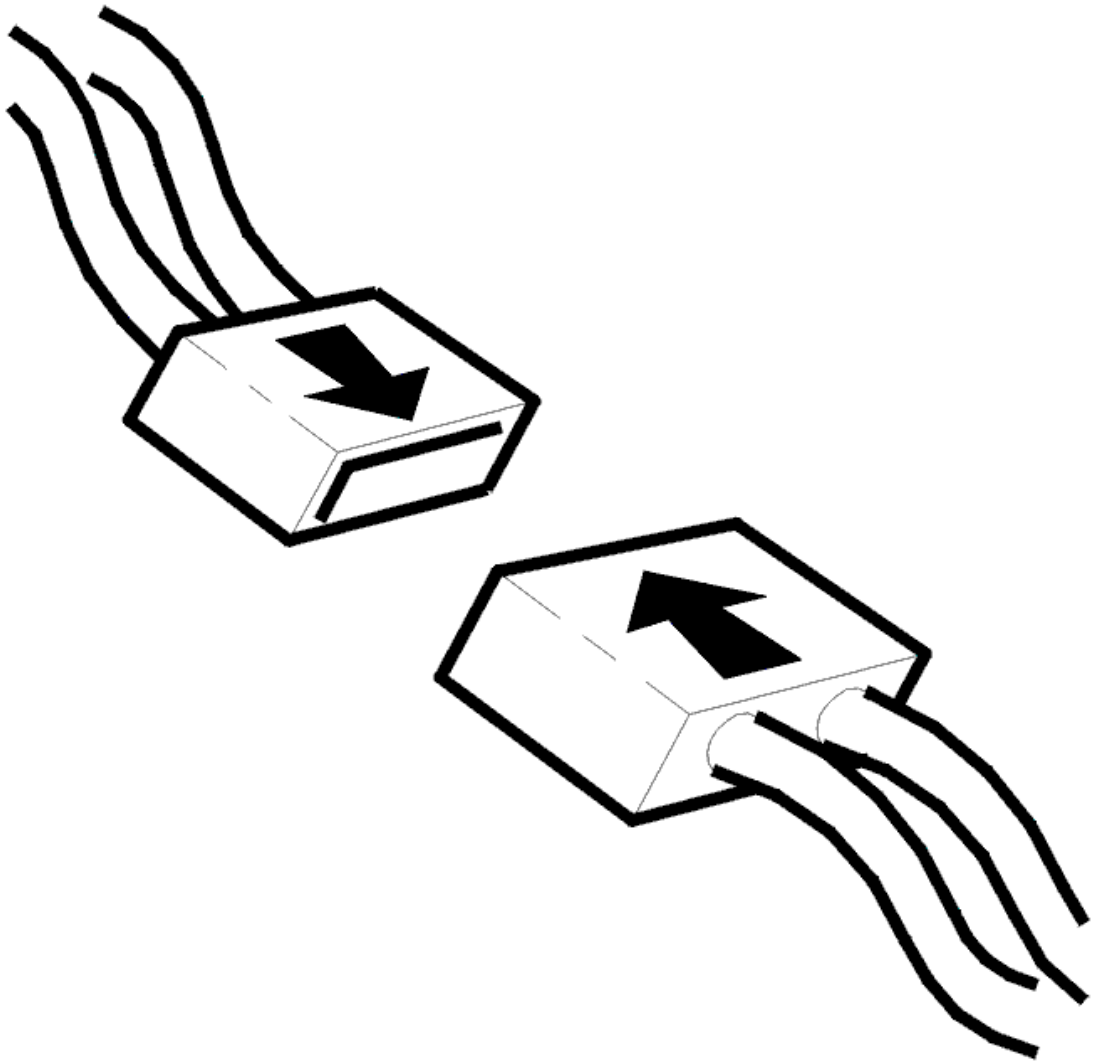

Fig. 116: Connecting Connector
Courtesy of VOLVO CARS CORPORATION

- Ignition off.
- Connect the connectors, install the components, etc.
- Ignition on.

  Read the interior temperature and vary the temperature with the interior temperature sensor to, see if the value changes. Check that the value is normal using a thermometer.

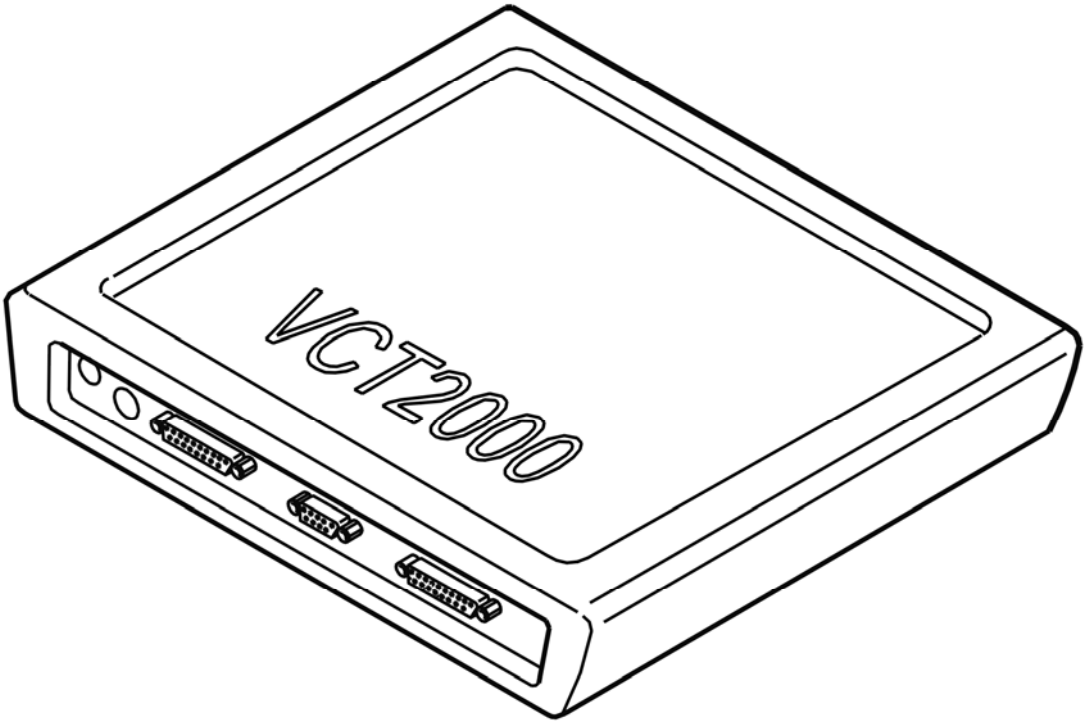

Fig. 117: Identifying VCT2000 Diagnostic Tool Symbol In VIDA
Courtesy of VOLVO CARS CORPORATION

TROUBLE-SHOOTING INFORMATION

Condition

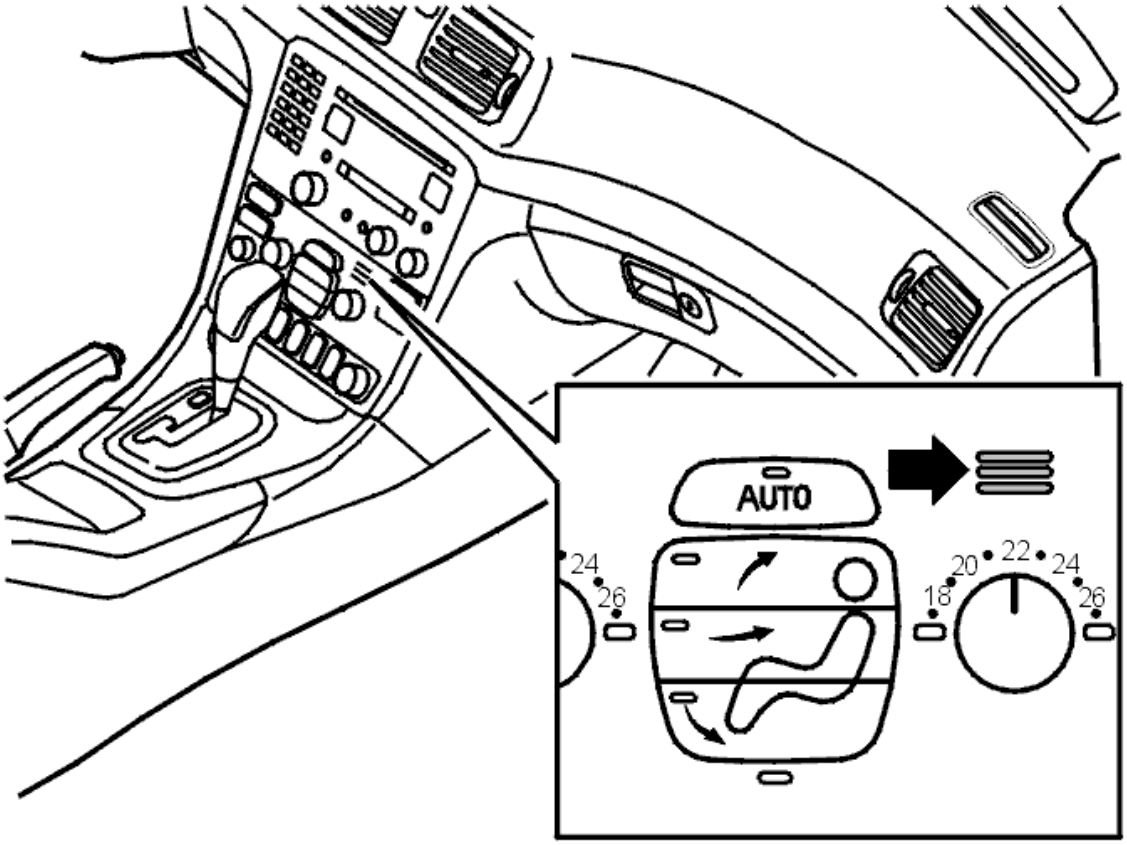

Fig. 118: Identifying Interior Temperature Sensor Air Inlet
Courtesy of VOLVO CARS CORPORATION

- No diagnostic trouble codes are stored
- Fault is permanent

NOTE: **If the interior temperature sensor air inlet is covered, the climate control module (CCM) will not receive the correct interior temperature value so the temperature cannot be correctly regulated. These types of error are not included in trouble-shooting.**

Possible Source

- Blocked blower motor
- Defective measuring instrument or interior temperature sensor.

CHECKING THE PROGRAMMING OF BLOWER MOTOR DELAY (2003-04)

CHECKING THE PROGRAMMING OF THE BLOWER FAN RUN-ON (ELECTRONIC CLIMATE CONTROL (ECC), MANUAL CLIMATE CONTROL (MCC))

EQUIPMENT

Which type of climate control is the car equipped with?

1. Electronic climate control. Refer to **DIAGNOSTICS NUMBER**
2. Manual climate control (MCC). Refer to **DIAGNOSTICS NUMBER**

DIAGNOSTICS NUMBER

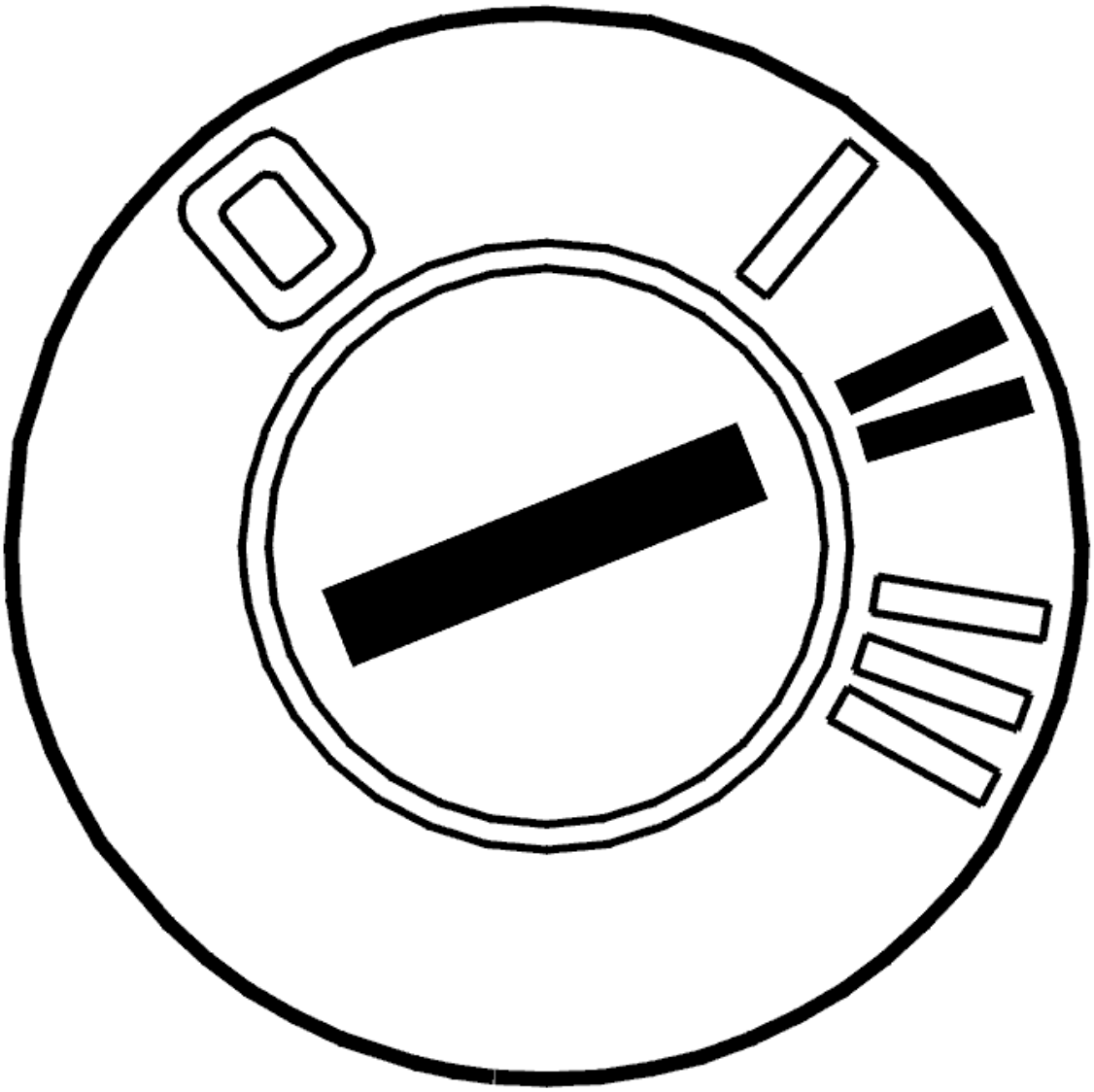

Fig. 119: Identifying Ignition ON
Courtesy of VOLVO CARS CORPORATION

- Ignition on.

  Read off the diagnostics number and check whether it is on the list.

  - A 9472875

- A 9472877
- A 9472899
- A 9472901
- A 9494245
- A 9488859
- A 9496616
- A 9494257
- A 9494258
- A 9496618.

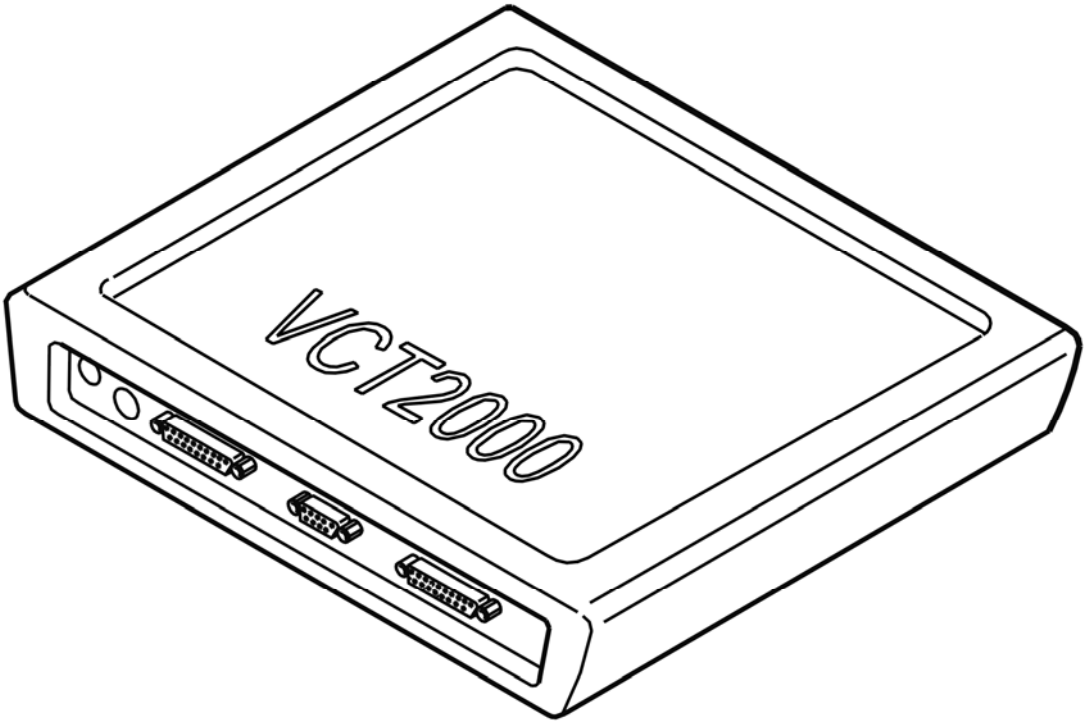

Fig. 120: Identifying VCT2000 Diagnostic Tool Symbol In VIDA
Courtesy of VOLVO CARS CORPORATION

Was the diagnostics number on the list?

- **YES**

  Refer to **READ OFF/PROGRAM THE BLOWER FAN RUN-ON (ELECTRONIC CLIMATE CONTROL, MANUAL CLIMATE CONTROL)**

- **NO**

Refer to **READ OFF/PROGRAM THE BLOWER FAN RUN-ON (ELECTRONIC CLIMATE CONTROL, MANUAL CLIMATE CONTROL)**

DIAGNOSTICS NUMBER

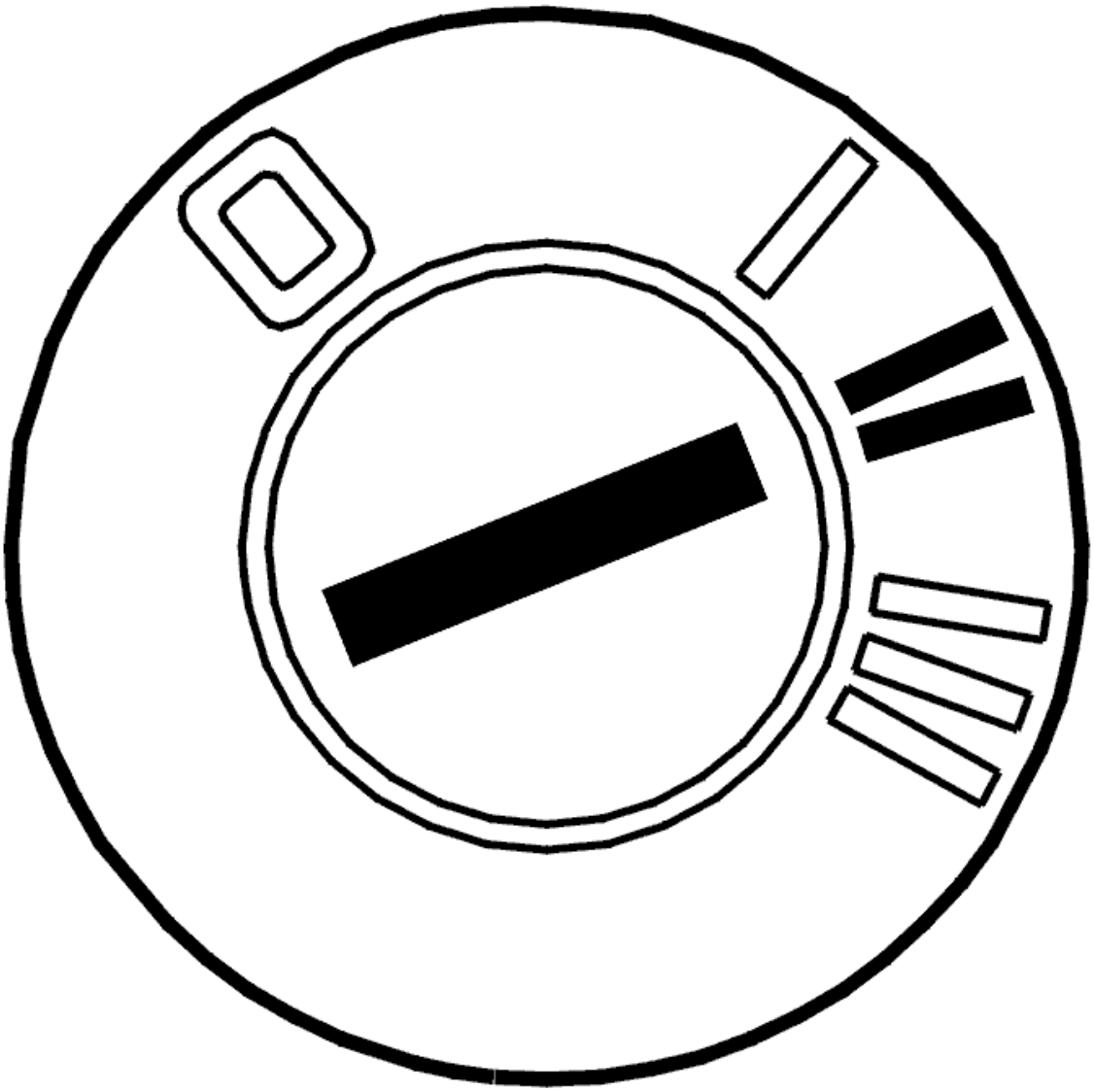

Fig. 121: Identifying Ignition ON
Courtesy of VOLVO CARS CORPORATION

- Ignition on.

  Read off the diagnostics number and check whether it is on the list.

  - A 9472874
  - A 9472876
  - A 9472898

- A 9472900
- A 9494243
- A 9488858
- A 9496615
- A 9494255
- A 9494256
- A 9496617.

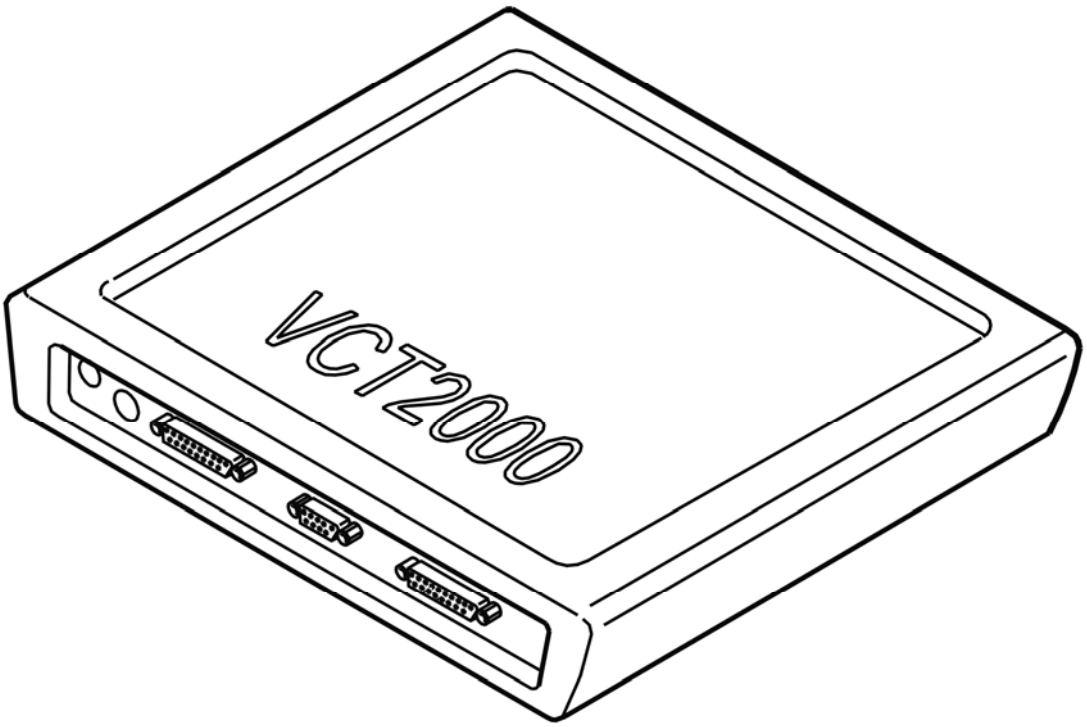

Fig. 122: Identifying VCT2000 Diagnostic Tool Symbol In VIDA
Courtesy of VOLVO CARS CORPORATION

Was the diagnostics number on the list?

- **YES**

  Refer to **READ OFF/PROGRAM THE BLOWER FAN RUN-ON (ELECTRONIC CLIMATE CONTROL, MANUAL CLIMATE CONTROL)**

- **NO**

  Refer to **READ OFF/PROGRAM THE BLOWER FAN RUN-ON (ELECTRONIC CLIMATE CONTROL, MANUAL CLIMATE CONTROL)**

READ OFF/PROGRAM THE BLOWER FAN RUN-ON (ELECTRONIC CLIMATE CONTROL, MANUAL CLIMATE CONTROL)

HINT: In certain circumstances it may be necessary to allow the blower fan to run on. This dries the evaporator and prevents bad odors which can otherwise be caused by residual water in the system.

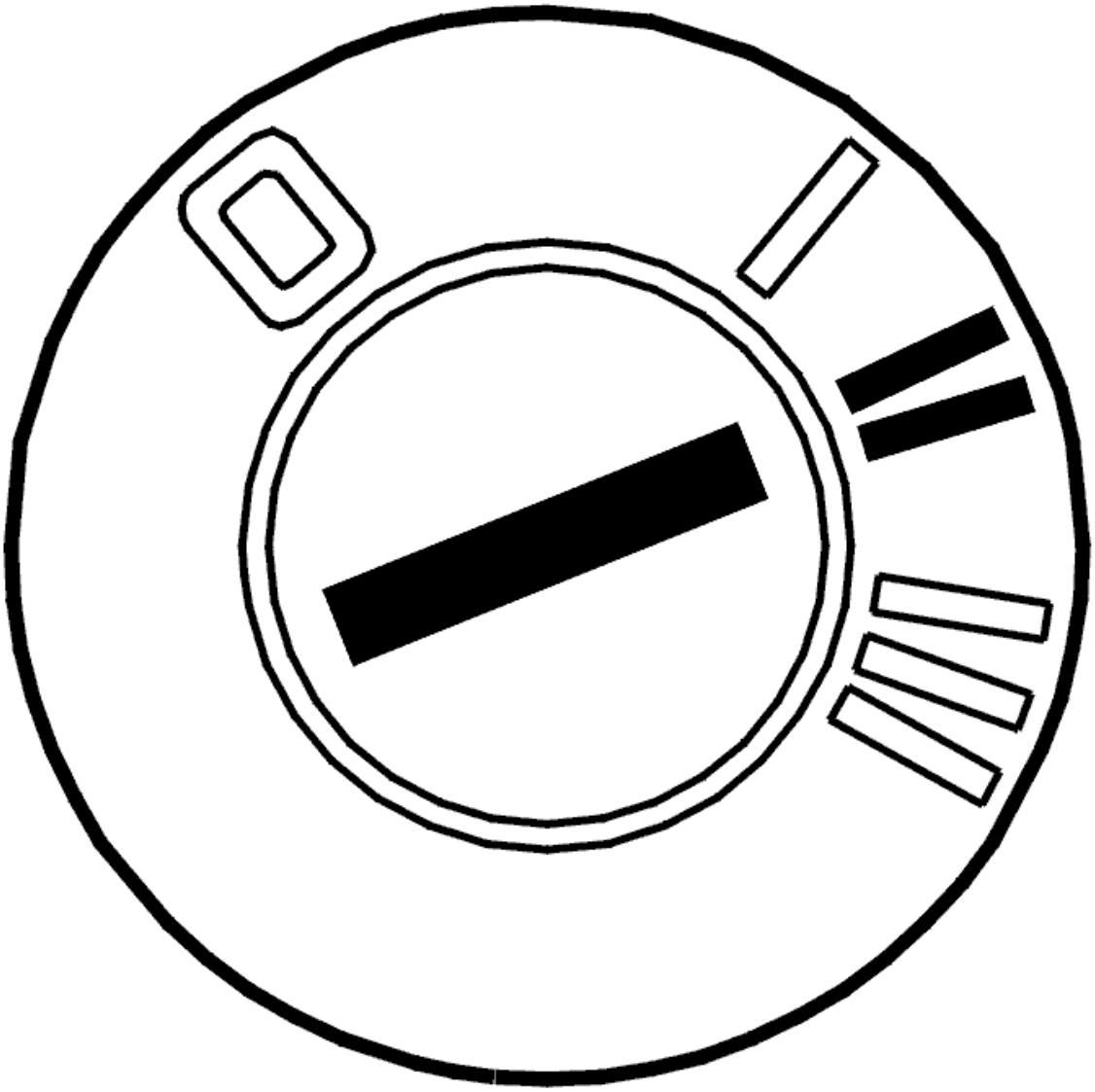

Fig. 123: Identifying Ignition ON
Courtesy of VOLVO CARS CORPORATION

- Ignition on
- Use the Programming function for to read off and program blower fan speed compensation. For further information about programming, see **DIAGNOSTIC FUNCTIONS** .

  Read off the programmed value and compare with the programmable values below.

  - 0 = No run-on

- 1 = Run-on (default value).

Program as necessary.

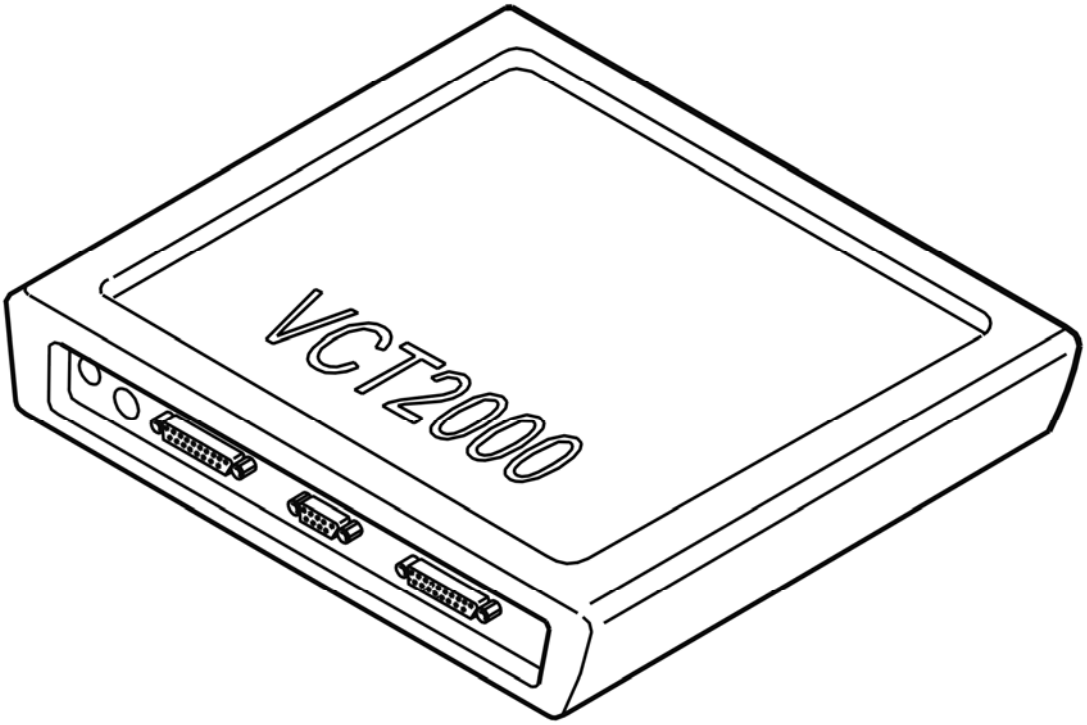

Fig. 124: Identifying VCT2000 Diagnostic Tool Symbol In VIDA
Courtesy of VOLVO CARS CORPORATION

READ OFF/PROGRAM THE BLOWER FAN RUN-ON (ELECTRONIC CLIMATE CONTROL, MANUAL CLIMATE CONTROL)

HINT: In certain circumstances it may be necessary to allow the blower fan to run on. This dries the evaporator and prevents bad odors which can otherwise be caused by residual water in the system.

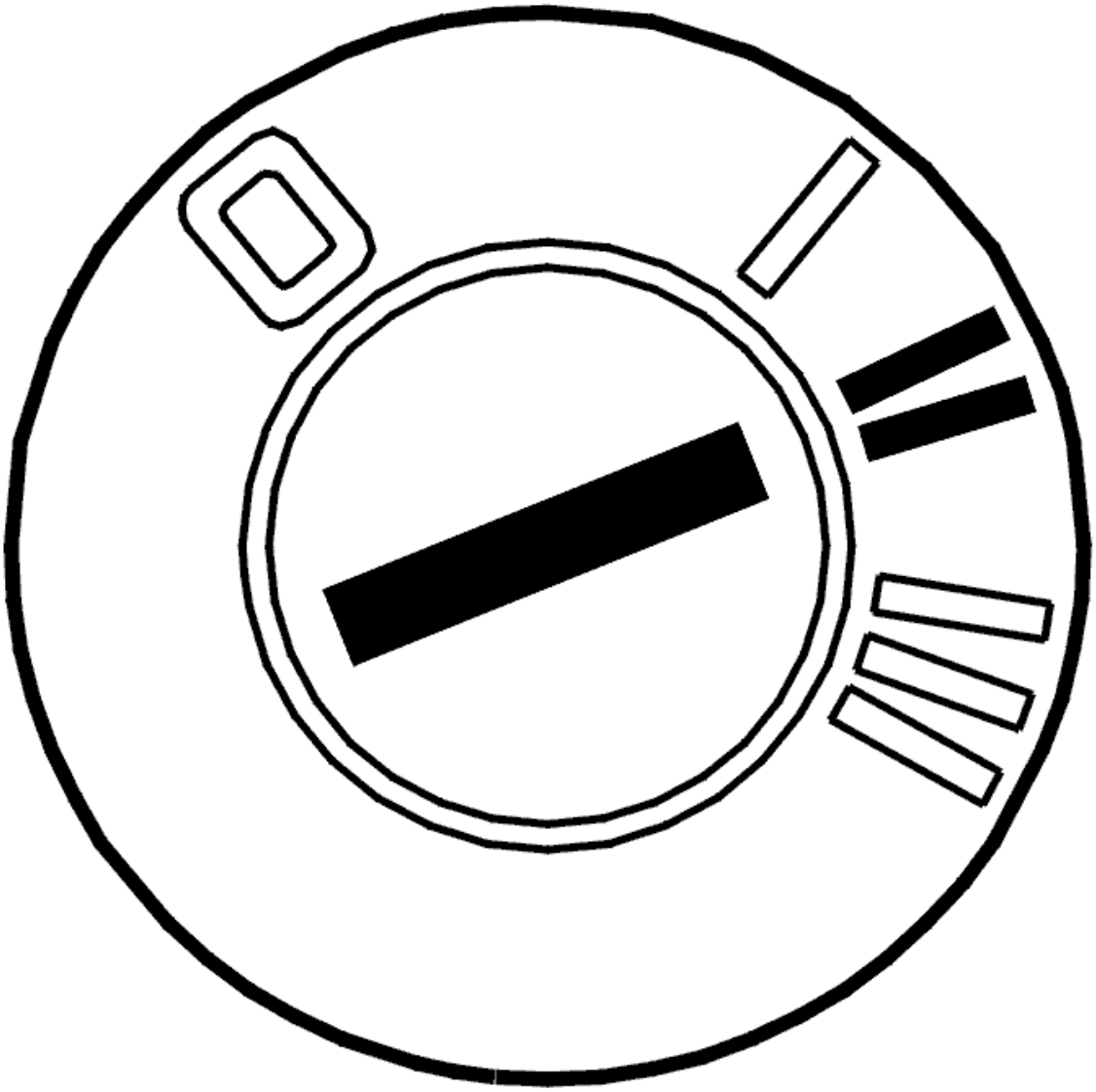

Fig. 125: Identifying Ignition ON
Courtesy of VOLVO CARS CORPORATION

- Ignition on
- Use the Programming function for to read off and program blower fan speed compensation. For further information about programming, see **DIAGNOSTIC FUNCTIONS** .

  Read off the programmed value and compare with the programmable values below.

  - 0 = No run-on
  - 1 = Run-on (default value).

  Program as necessary.

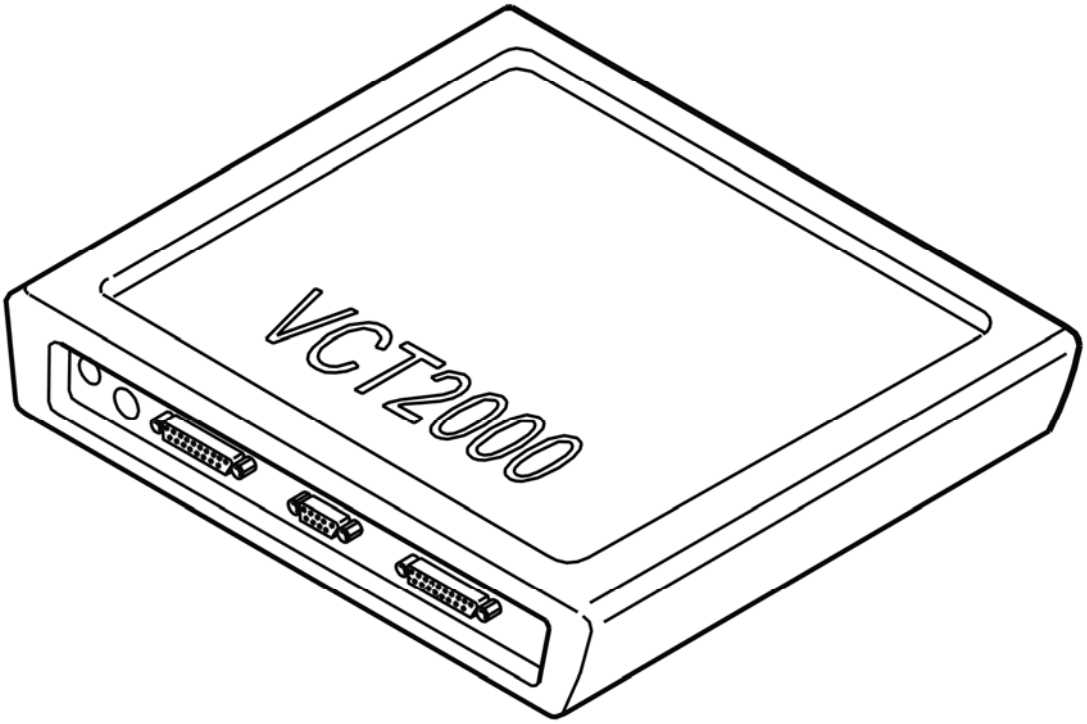

Fig. 126: Identifying VCT2000 Diagnostic Tool Symbol In VIDA
Courtesy of VOLVO CARS CORPORATION

TROUBLE-SHOOTING INFORMATION

Condition

- No diagnostic trouble codes are stored.

Possible Source

- Climate control module (CCM) incorrectly programmed regarding blower motor delay.

CHECKING THE PROGRAMMING OF BLOWER MOTOR SPEED (2003-04)

CHECKING PROGRAMMING OF BLOWER MOTOR SPEED

READING/PROGRAMMING THE BLOWER MOTOR SPEED

HINT: Blower motor speed and air-distribution can be adjusted to air-conditioning AUTO-position. Adjustment is done by programming climate control module (CCM) which allows changes in air-distribution of approximately +/- 8 liters/second compared with normal position.

- 0= -1.0 V
- 1= -0.5 V
- 2= 0 V (preset value)
- 3= +0.5 V
- 4= +1.0 V.

HINT: If the climate control module (CCM) is programmed to a lower blower motor speed than normal (-V), interior air-distribution is reduced which can make de-misting of windows difficult.

HINT: If climate control module (CCM) is programmed to higher blower motor speed than normal (+V), an increased de-misting of windows is maintained but with a higher noise-level from the blower motor.

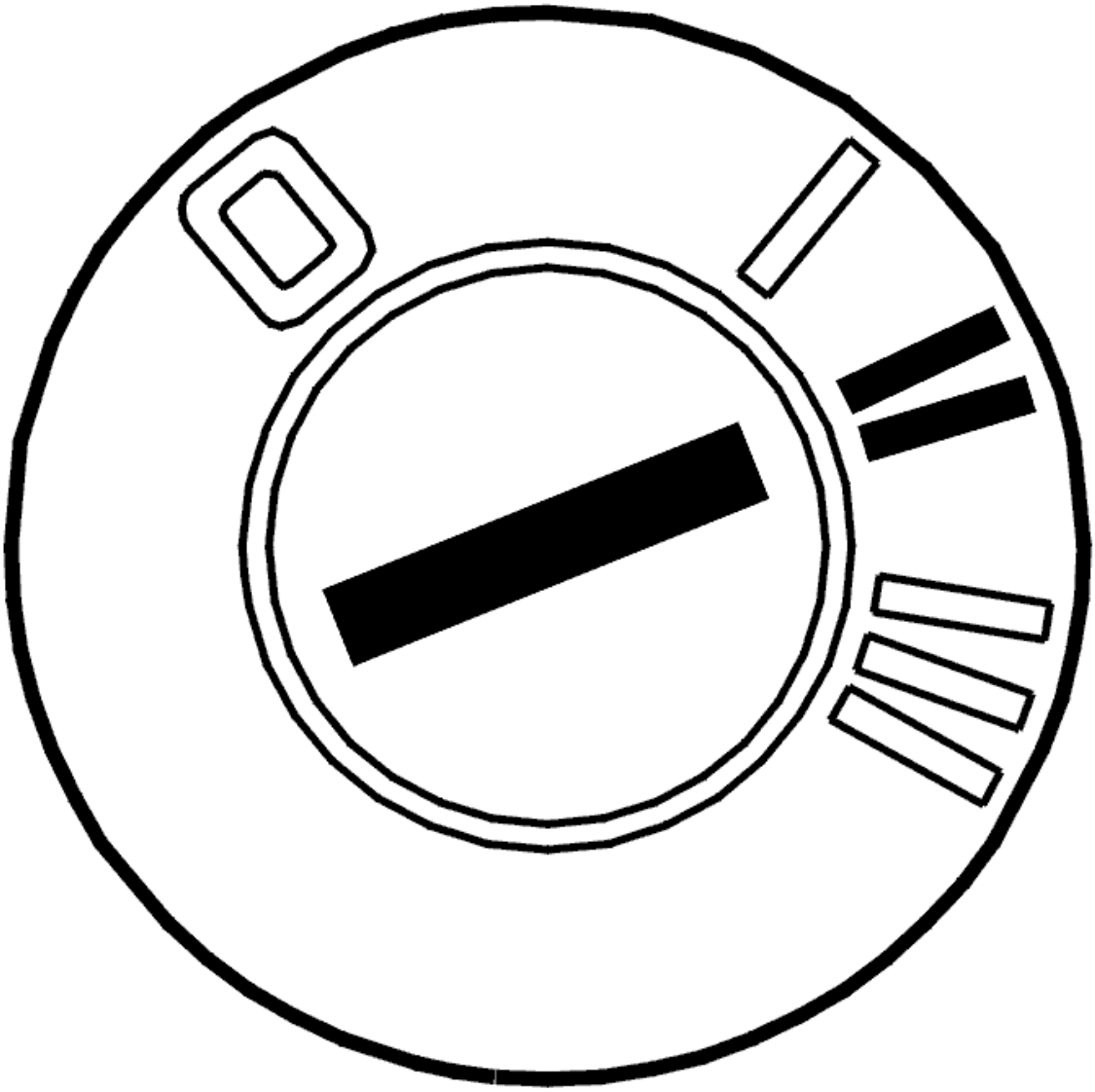

Fig. 127: Identifying Ignition ON
Courtesy of VOLVO CARS CORPORATION

- Ignition on.

  Checking the programming of blower motor speed.

  Do the necessary corrective action.

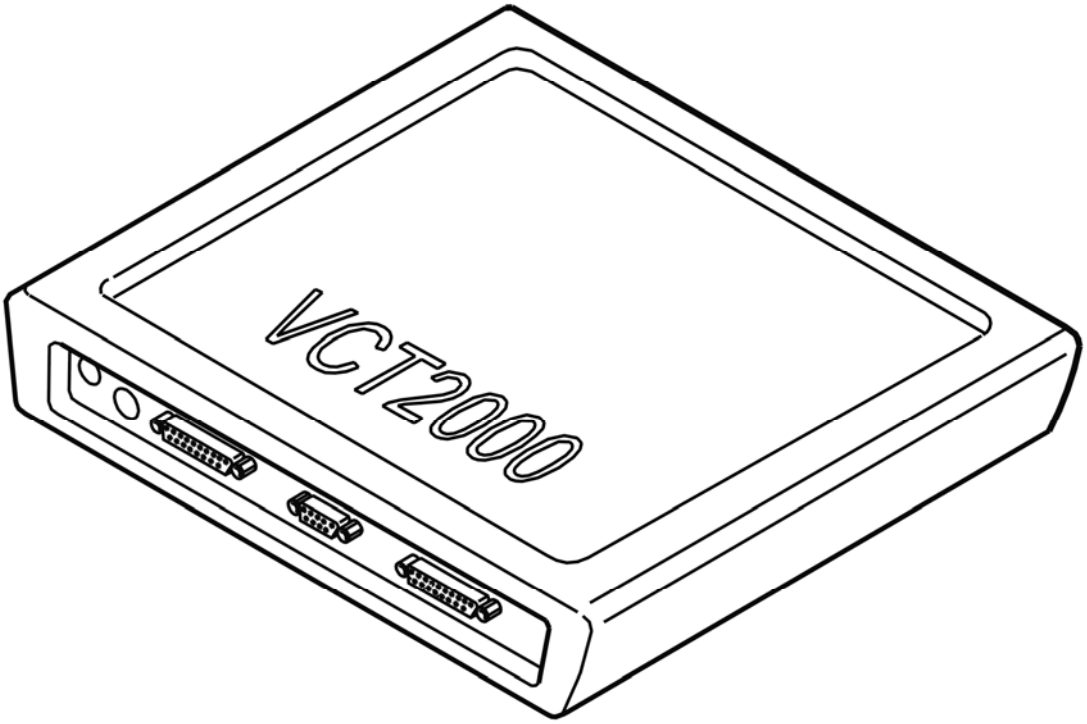

Fig. 128: Identifying VCT2000 Diagnostic Tool Symbol In VIDA
Courtesy of VOLVO CARS CORPORATION

TROUBLE-SHOOTING INFORMATION

Condition

- No diagnostic trouble codes are stored.

Possible Source

- Climate control module (CCM) blower motor speed incorrectly programmed.

CHECKING THE REAR AIR CONDITIONING (A/C) (2003-04)

CHECKING THE REAR AIR CONDITIONING (A/C)

FAULT-TRACING INFORMATION

The rear air conditioning (A/C) is activated using the switch on the dashboard environment panel. The climate control module (CCM) then transmits a signal to the rear electronic module (REM) which controls the power to the rear air conditioning (A/C) via a relay.

The only way to regulate cooling output for the third row of seats is to control the fan speed using the blower fan switch.

The front air conditioning, which is controlled by the climate control union (CCM) is directly connected to the rear air conditioning (A/C) using high and low pressure pipes and hoses.

Causes of non-function may be:

- Faulty switch on the dashboard environment panel
- The power stage in the rear air conditioning (A/C) is not working
- The blower fan switch for the rear air conditioning (A/C) is not working
- The fan in the rear air conditioning (A/C) is not working
- The expansion valve in the rear air conditioning (A/C) is not working
- Refrigerant leakage.

- **Continue**

  Refer to **CHECKING THE FAULT CAUSE**

CHECKING THE FAULT CAUSE

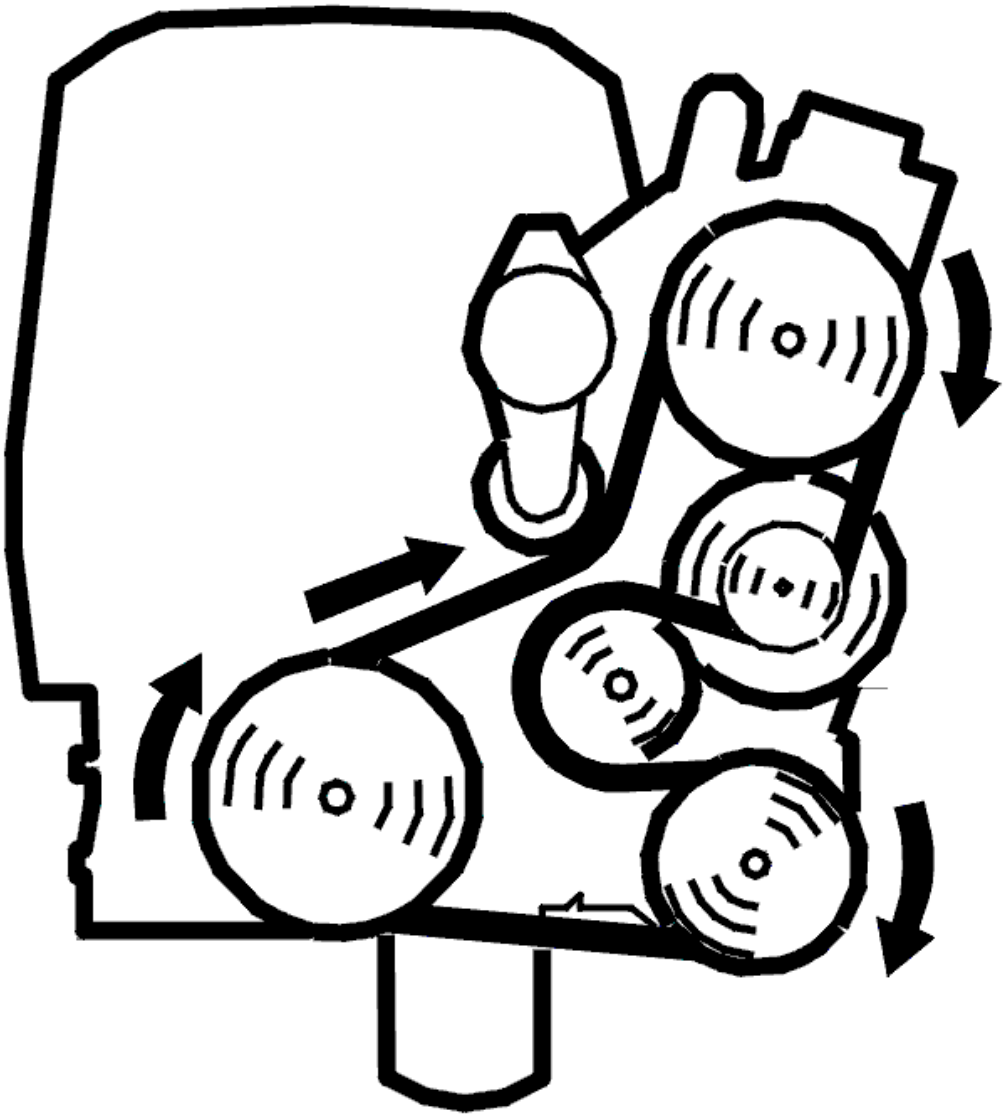

Fig. 129: Belt Routing/Engine Idling - Volvo
Courtesy of VOLVO CARS CORPORATION

- Engine running.

  Check whether the rear air conditioning (A/C) is not working due to mechanical or electrical faults by:

  - activating the rear air conditioning (A/C) via the switch on the dashboard environment panel
  - changing the position of the blower fan switch for the rear air conditioning (A/C) between the minimum and maximum positions and checking that the fan changes speed by listening to the noise it makes.

Is the fan working properly?

- **YES**

Refer to **CHECKING THE AIR CONDITIONING SYSTEM**

- **NO**

  Refer to **CHECKING THE SWITCH ON THE DASHBOARD ENVIRONMENT PANEL**

CHECKING THE AIR CONDITIONING SYSTEM

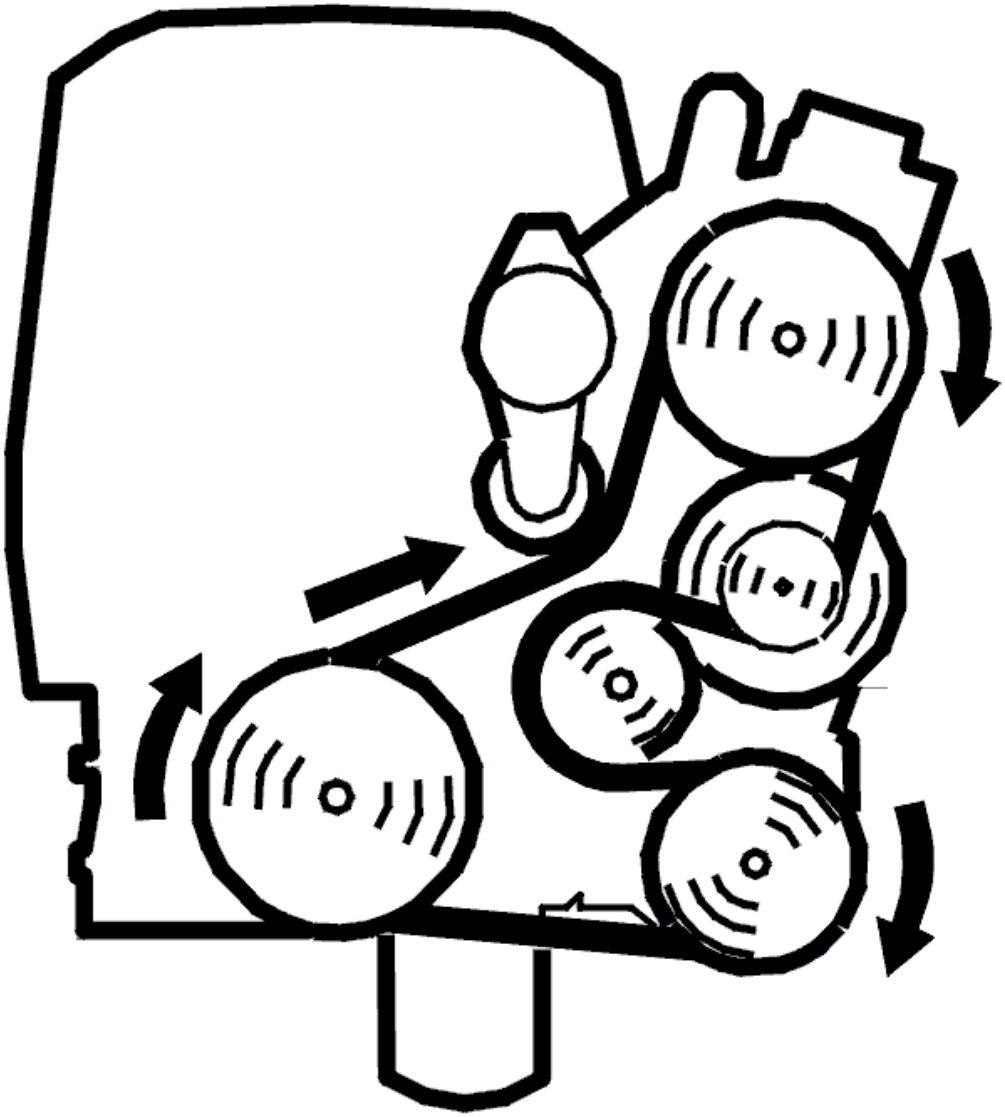

Fig. 130: Belt Routing/Engine Idling - Volvo
Courtesy of VOLVO CARS CORPORATION

- Engine running.

  The front air conditioning, which is controlled by the climate control union (CCM) is directly connected to the rear air conditioning (A/C) using high and low pressure pipes and hoses. Check for leakage or for low refrigerant level by lowering the temperature on the climate control module (CCM). If the cooling

effect is generally poor for both the front and rear sections of the passenger compartment, the cause of the fault is either leakage or low refrigerant level.

Is the cooling effect generally poor throughout the passenger compartment?

- **YES**

  Refer to **CHECKING THE REFRIGERANT LEVEL AND CHECKING FOR LEAKAGE**

- **NO**

  Refer to **CHECKING THE REAR EXPANSION VALVE**

CHECKING THE REFRIGERANT LEVEL AND CHECKING FOR LEAKAGE

Check the function of the climate control system. See **CLIMATE SYSTEM, PERFORMANCE TEST**.

Before working on the air conditioning system, read the safety instructions. See **REFRIGERANT, SAFETY REGULATIONS** .

If the function is not satisfactory and the cooling effect is still cool, leak trace the entire system. See **LEAK TRACING, FLUORESCENT TRACING AGENT/UV LAMP** .

NOTE: The XC90 already has tracing agent in the system.

Check the refrigerant pipe connections in the condenser and in the expansion valves.

Drain the system completely. See **REFRIGERANT, DRAINING** . Replace defective components.

Vacuum pump the entire system. See **VACUUM PUMPING** . Fill the system with 1300 g refrigerant. See **REFRIGERANT, FILLING** .

Check the performance again.

CHECKING THE REAR EXPANSION VALVE

Replace the rear expansion valve. See **EXPANSION VALVE REAR, REPLACING** .

CHECKING THE SWITCH ON THE DASHBOARD ENVIRONMENT PANEL

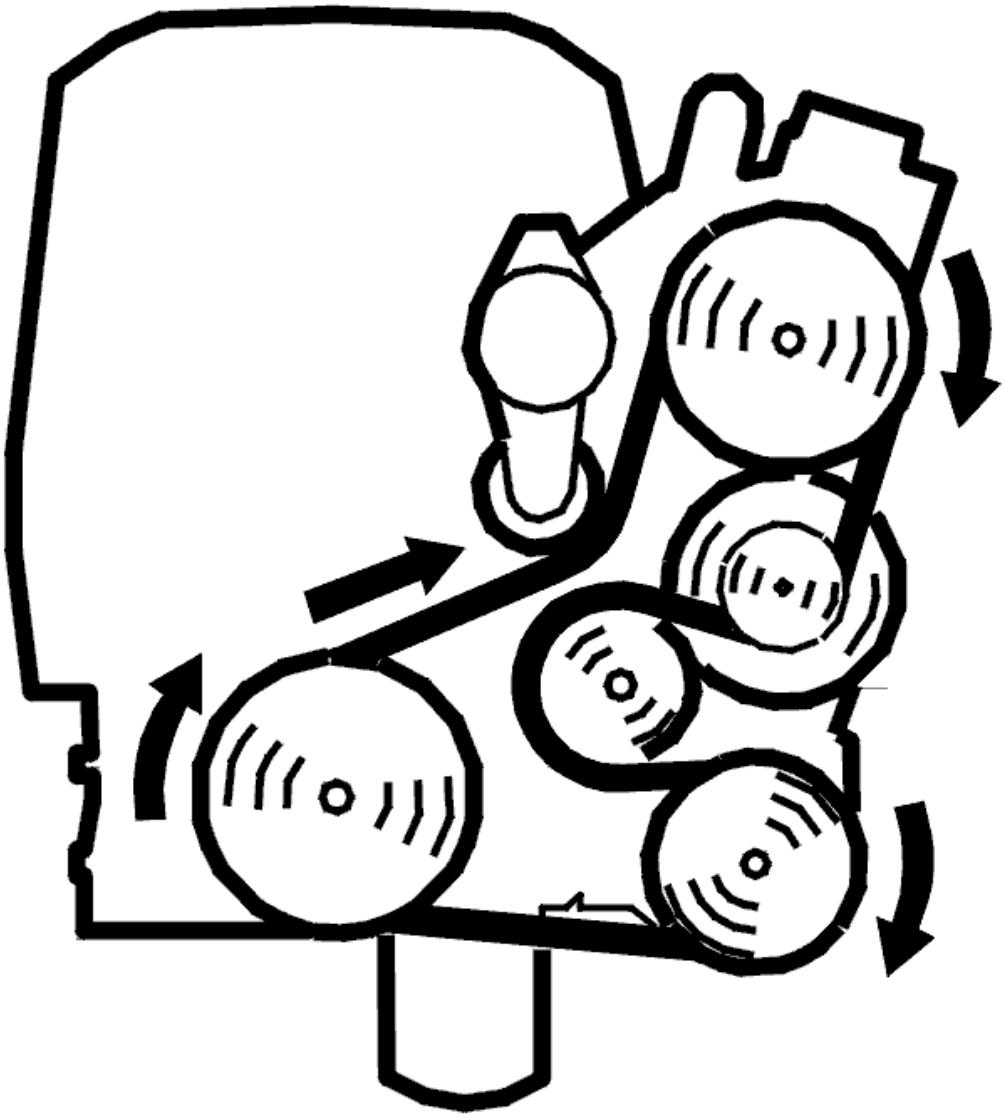

Fig. 131: Belt Routing/Engine Idling - Volvo
Courtesy of VOLVO CARS CORPORATION

- Engine running.

  Checking the signal

  When the rear air conditioning (A/C) is activated, a signal is sent from the climate control module (CCM) to the rear electronic module (REM). If all conditions are met to activate the rear air conditioning (A/C), for example the engine is running, the rear electronic module (REM) transmits a signal to the climate control module (CCM) indicating that the function is activated. The climate control module (CCM) uses this signal to light the LED in the switch on the dashboard environment panel.

  Press the switch for the rear air conditioning (A/C) on the dashboard environment panel and check that the LED lights or goes out

Does the LED light or go out?

- **YES**

  Refer to **CHECKING THE POWER SUPPLY AND GROUND TERMINAL**

- **NO**

  Refer to **CHECKING THE SWITCH ON THE DASHBOARD ENVIRONMENT PANEL**

CHECKING THE SWITCH ON THE DASHBOARD ENVIRONMENT PANEL

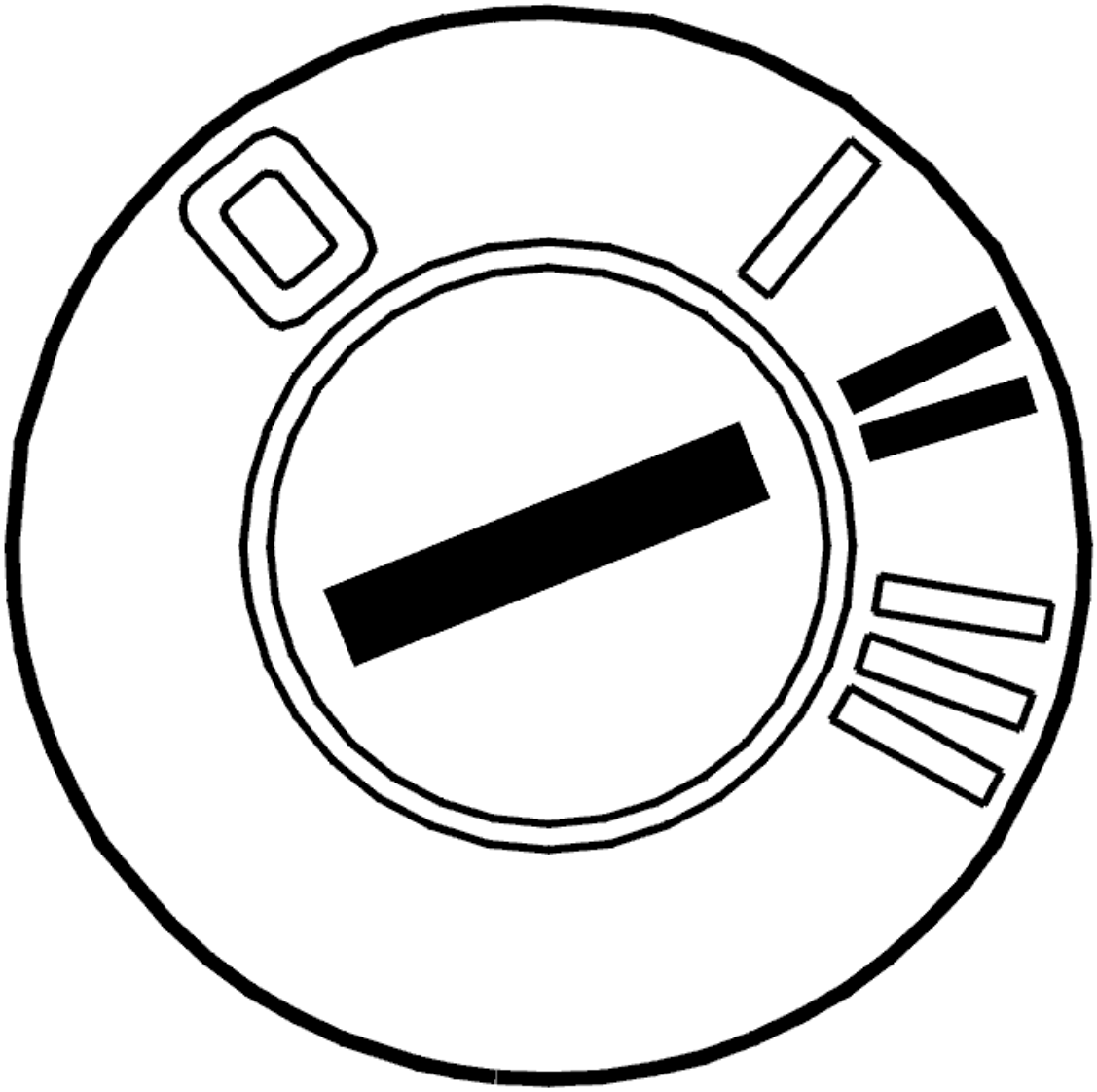

Fig. 132: Identifying Ignition ON
Courtesy of VOLVO CARS CORPORATION

- Ignition on.

Checking the switch

Press the switch for the rear air conditioning (A/C) on the dashboard environment panel. Check that it is working by reading off and changing the status between off and on.

To read off the status of the switch, click on the VCT2000 symbol.

NOTE: **The switches can be placed in any internal order. Select the correct switch position when reading off. Position 1 is the switch to the far left, position 7 furthest to the right.**

If the status of the switch does not change, the switch is probably defective.

Remedy as necessary.

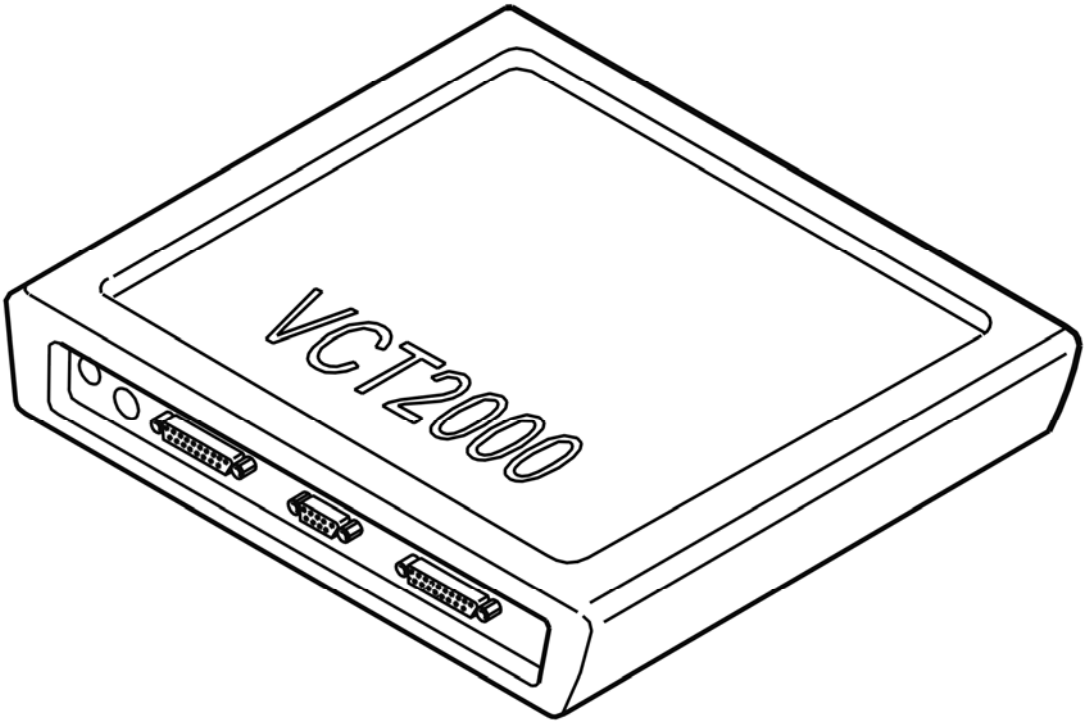

Fig. 133: Identifying VCT2000 Diagnostic Tool Symbol In VIDA
Courtesy of VOLVO CARS CORPORATION

Was a fault detected?

- **YES**

  OKAY: Troubleshooting has been completed.

- **NO**

  Refer to **CHECKING THE POWER SUPPLY AND GROUND TERMINAL**

CHECKING THE POWER SUPPLY AND GROUND TERMINAL

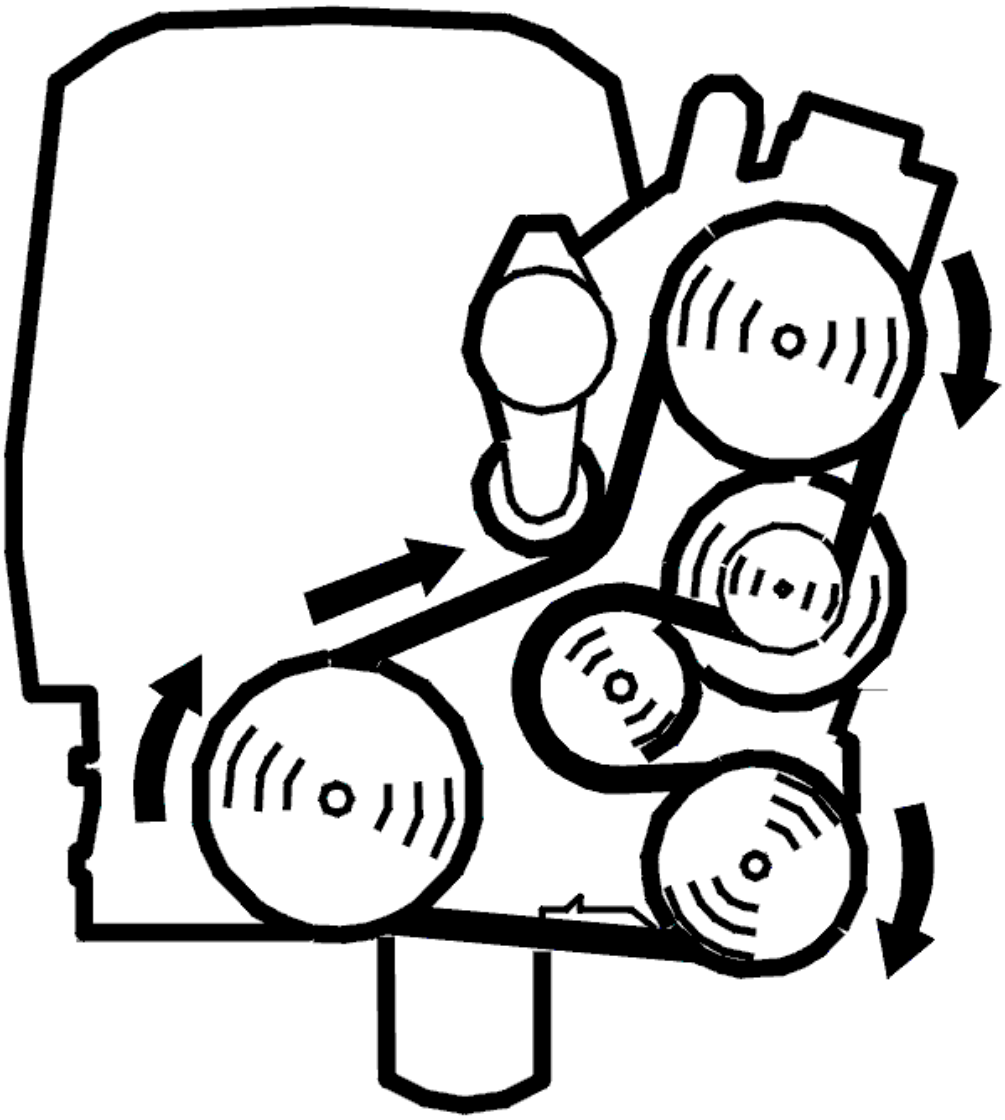

Fig. 134: Belt Routing/Engine Idling - Volvo
Courtesy of VOLVO CARS CORPORATION

- Engine running.

  Power supply, rear air conditioning (A/C)

  The rear air conditioning (A/C) is powered via a relay on the rear electronic module (REM).

  Checking the voltage

Check the power supply cable from the battery to the rear air conditioning (A/C). Check for an open-circuit. Check for loose connections. Check for contact resistance and oxidation. Check the fuse. The voltage should be approximately battery voltage.

Ground terminal, rear air conditioning (A/C)

The rear air conditioning (A/C) has a ground input. The ground input from the unit is power ground and is connected to the ground terminal in the car body.

Checking ground terminal

Check the ground lead between the rear air conditioning (A/C) and the ground terminal. Check for an open-circuit. Check for loose connections. Check for contact resistance and oxidation. With the ignition on, the drop in voltage between the ground connection for the rear air conditioning (A/C) and the ground terminal must not be greater than 0.5 V.

Remedy as necessary.

Other information

- see **CHECKING WIRING AND TERMINALS** .

Was a fault detected?

- **YES**

  OKAY: Troubleshooting has been completed.

- **NO**

  Refer to **CHECKING COMPONENTS**

CHECKING COMPONENTS

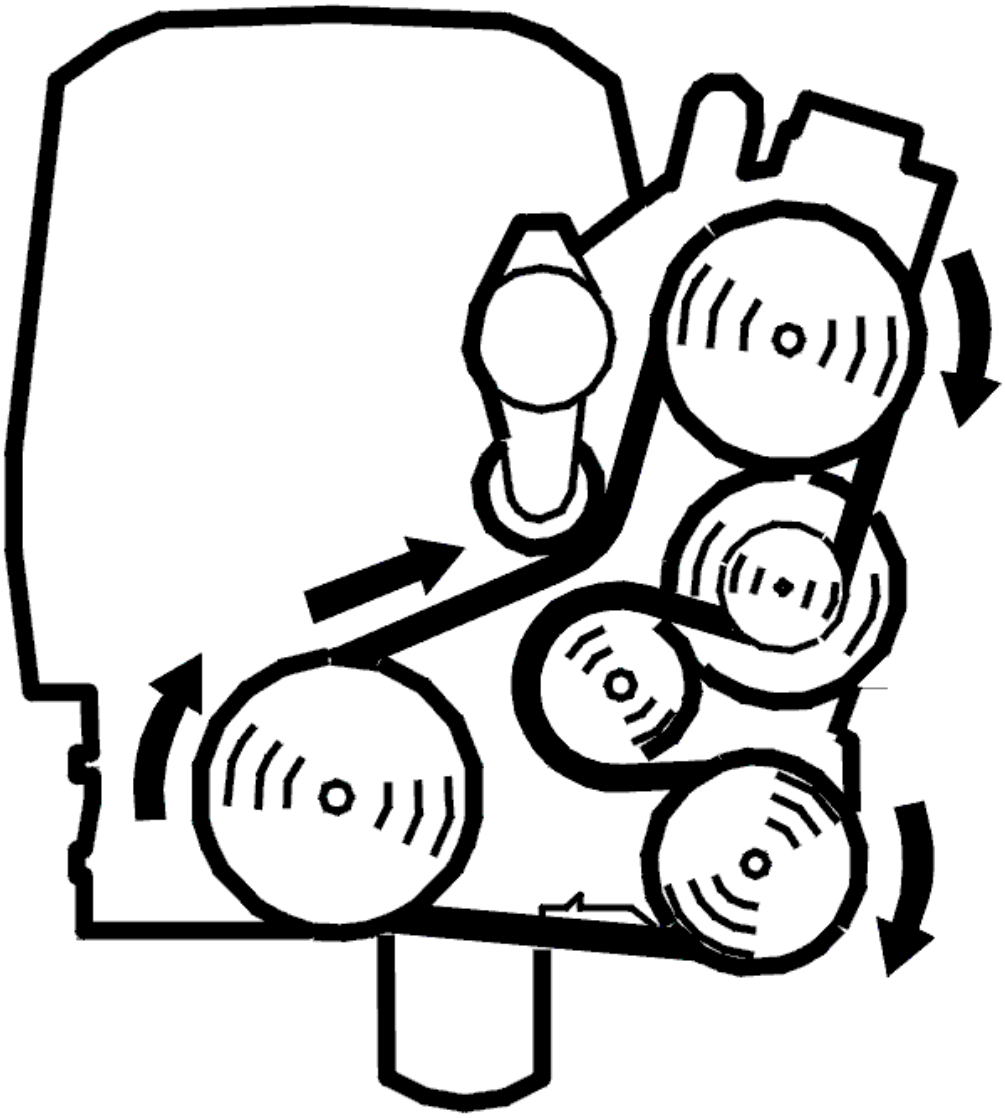

Fig. 135: Belt Routing/Engine Idling - Volvo
Courtesy of VOLVO CARS CORPORATION

- Engine running.

  Checking the blower fan switch

  Check that the blower fan switch is working by changing the fan speed between minimum and maximum. If the blower fan switch is working, the LED lights or goes out depending on the selected fan speed.

  If the LEDs do not light or go out, proceed as follows:

  - check the wiring and connectors between the power stage and the blower fan switch
  - check the blower fan switch by trying a new switch.

  Checking the engine cooling fan (FC) motor

The blower fan motor is powered by the power unit. The supply voltage must be between 2.5-12 V. If the blower fan motor sticks, the power unit will reduce the power to the fan.

Ensure that the fan is **not** powered. Check that it is not sticking.

WARNING: There is a risk of injury if the fan is powered during this test.

If the fan is sticking, check that there are no objects blocking it.

Check that the blower fan motor is powered as follows:

- activate the switch for the rear air conditioning (A/C) on the dashboard environment panel
- expose the fan and remove the rubber seal for the cable connectors
- using the switch, vary the blower fan speed between maximum and minimum. Measure the voltage between both cable connections on the fan motor.

  The supply voltage can vary between 2.5 -12 V.

  NOTE: Do not disconnect the cable connections to the fan motor when taking readings.

If the blower fan motor is powered but is not working, there is probably a fault in the motor.

Checking the power unit

The power stage receives a control voltage from the blower fan switch in the form of an input signal. The power stage uses this signal to control the power supply to the fan motor.

If the fan is not powered by the power unit, proceed as follows:

- check the cable and connectors between the power stage and the blower fan switch
- check the power stage switch by trying a new one.

Remedy as necessary.

Other information

- To access or replace the blower fan motor, see **BLOWER FAN MOTOR REAR, REPLACING** .

INFORMATION

FAULT-TRACING INFORMATION

The fault should have been detected and remedied. As this is not the case fault-tracing has failed.

Exit fault-tracing for this diagnostic trouble code (DTC) or make another attempt.

CHECKING THE SUN SENSOR (2003-04)

CHECKING THE SUN SENSOR

CHECKING THE SUN SENSOR SIGNAL

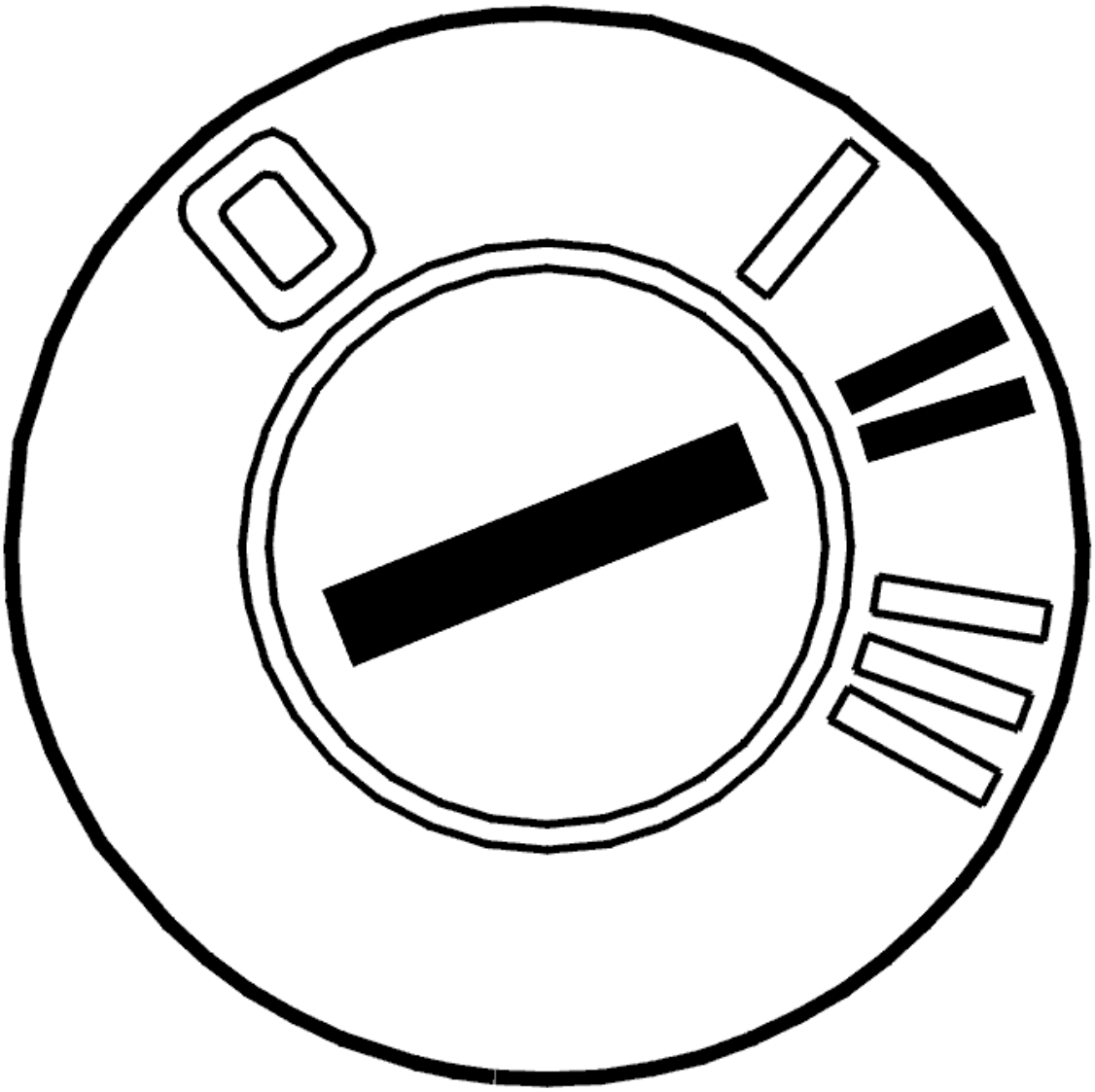

Fig. 136: Identifying Ignition ON
Courtesy of VOLVO CARS CORPORATION

- Ignition on.

  Check the solar heat signal by varying the light intensity at the sun sensor. Cover the sun sensor with your hand to reduce the signal. Then aim a strong light source (for example a flashlight) at the sun sensor from close range to obtain the maximum signal.

The value should vary between approximately 0 and 1, 000.

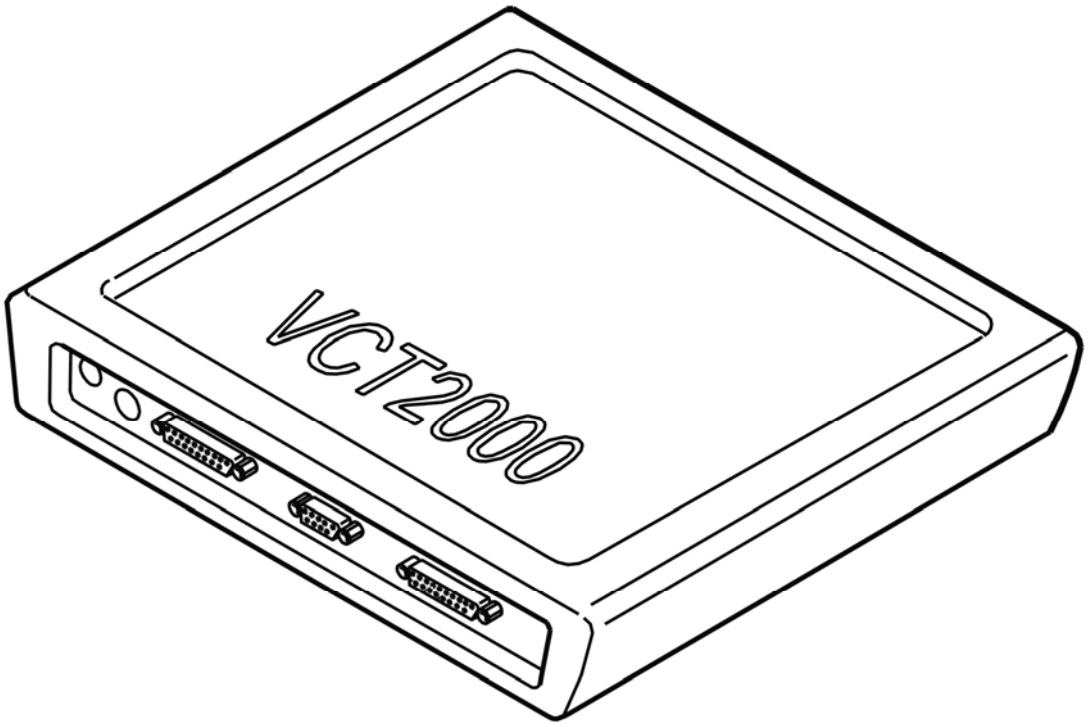

Fig. 137: Identifying VCT2000 Diagnostic Tool Symbol In VIDA
Courtesy of VOLVO CARS CORPORATION

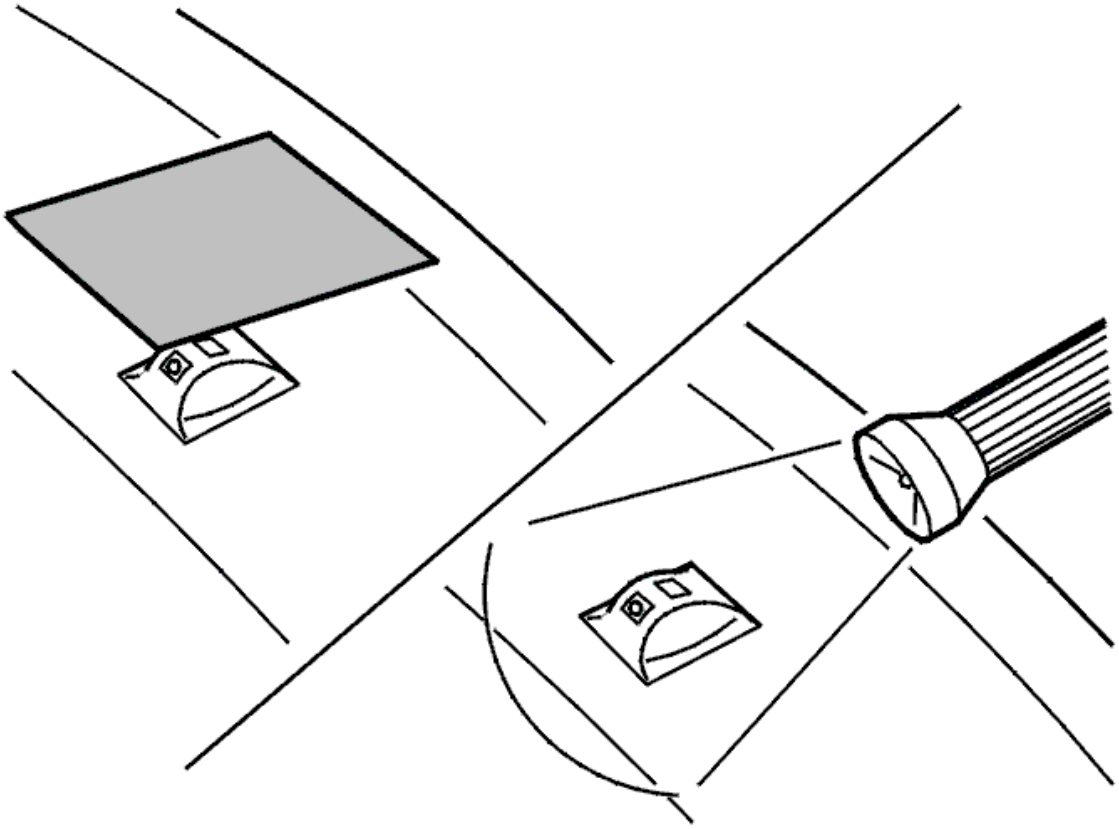

Fig. 138: Identifying Sun Sensor
Courtesy of VOLVO CARS CORPORATION

Are these values OK?

- **YES**

  FAULT NOT FOUND: Troubleshooting has been completed.

- **NO**

  Refer to **CHECKING THE WIRING**

CHECKING THE WIRING

Check the climate control module (CCM) (terminals #B4, #B5) and the sun sensor connectors. Check for contact resistance and oxidation.

Check the signal cable between climate control module (CCM) terminal #B4 and sun sensor terminal #1. Check for an open-circuit. Check for a short-circuit to supply voltage. Check for a short-circuit to ground.

Check the ground lead between climate control terminal #B5 and sun sensor terminal #5. Check for an open-circuit. Check for a short-circuit to supply voltage.

If the wiring is OK, try a new sun sensor.

Remedy as necessary.

Other information:

- To access the climate control module (CCM) or connect the breakout box, see **CONNECTING THE BREAKOUT BOX**
- To access or replace the sun sensor, see **SUN SENSOR/ALARM LED, REPLACING**
- For other values, see **SIGNAL DESCRIPTION, CLIMATE CONTROL MODULE (CCM), CONNECTOR B**
- see **CHECKING WIRING AND TERMINALS** .

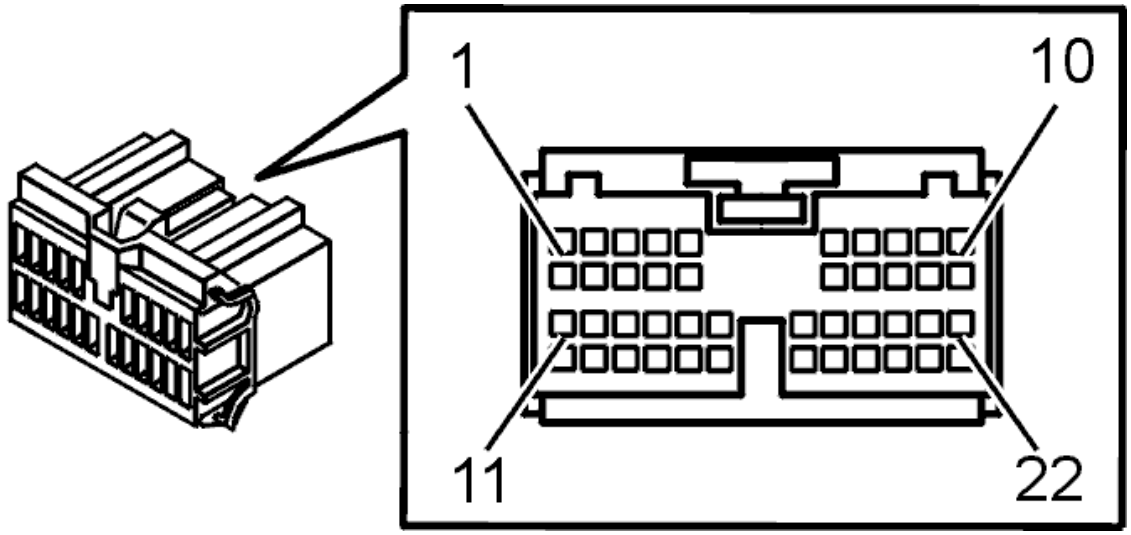

Fig. 139: Identifying Connector (F) Terminals
Courtesy of VOLVO CARS CORPORATION

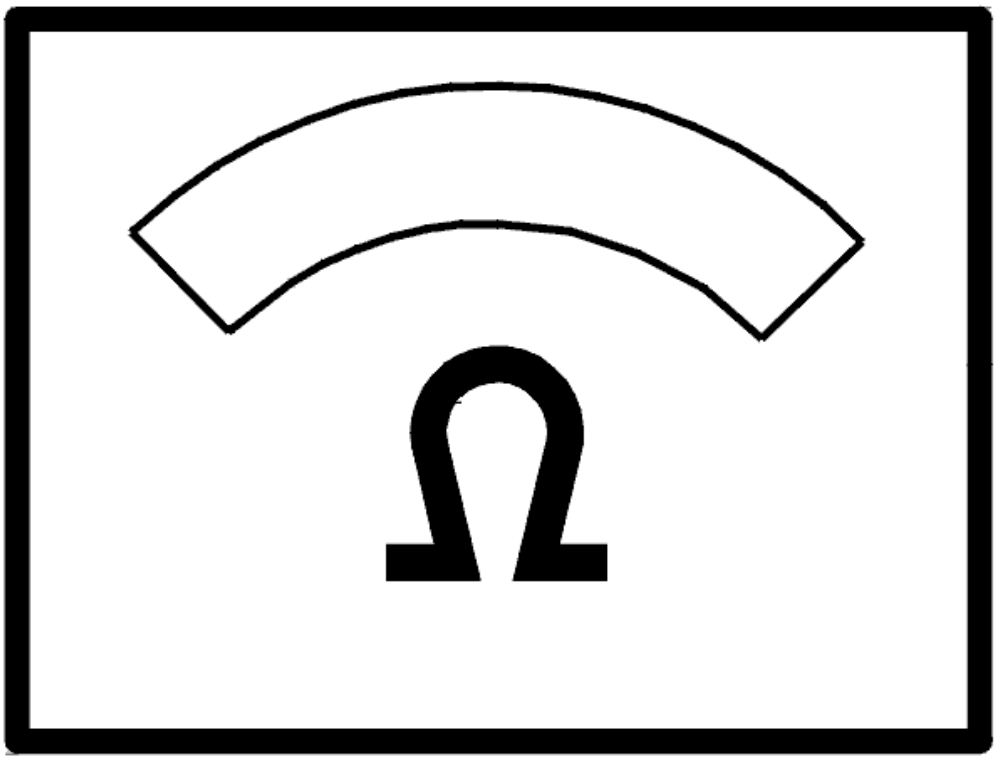

Fig. 140: Identifying Ohmmeter
Courtesy of VOLVO CARS CORPORATION

TROUBLE-SHOOTING INFORMATION

Condition

- No diagnostic trouble codes are stored
- Fault is permanent

NOTE: **If the solar sensor is covered, the climate control module (CCM) does not receive any signals regarding the solar intensity and there is therefore no temperature compensation. These types of error are not included in trouble-shooting.**

Possible Source

- Contact resistance, oxidation or loose contact in connector
- Signal wire has open circuit or short circuit to voltage supply/ground
- Ground connection has open circuit or short circuit to voltage supply
- Defective solar sensor.

CHECKING THE SWITCH, CLIMATE CONTROL MODULE (CCM) (2003-04)

CHECKING THE SWITCH, CLIMATE CONTROL MODULE (CCM)

ACTIVATING AND READING OFF THE SWITCH

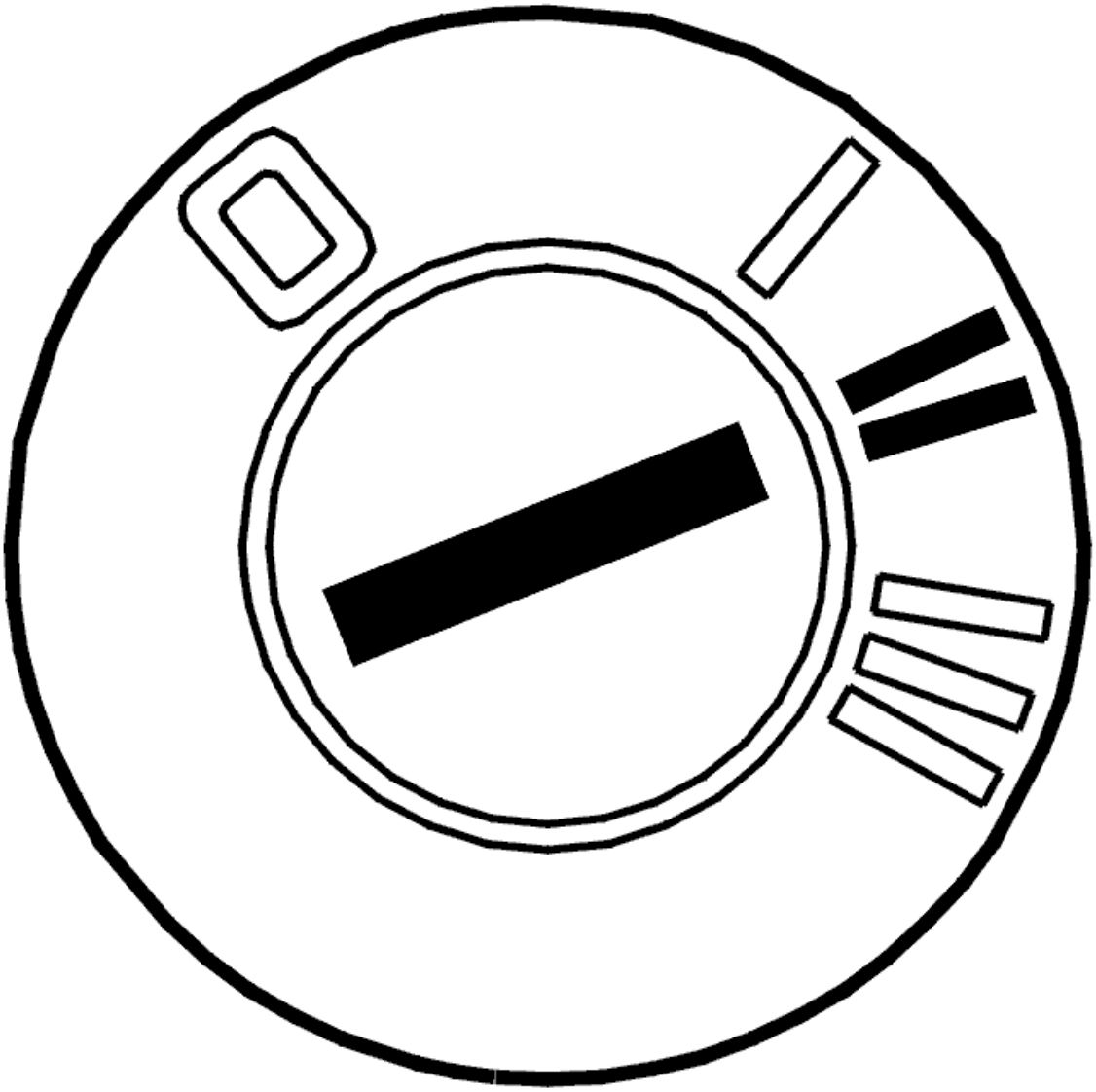

Fig. 141: Identifying Ignition ON
Courtesy of VOLVO CARS CORPORATION

- Ignition on.

  Check the switches on the climate control module (CCM) as follows:

  - Activate reading off the switch status
  - Hold the relevant switch pressed in and check that the status changes.

  Click the VCT2000 symbol to read off activating the switches.

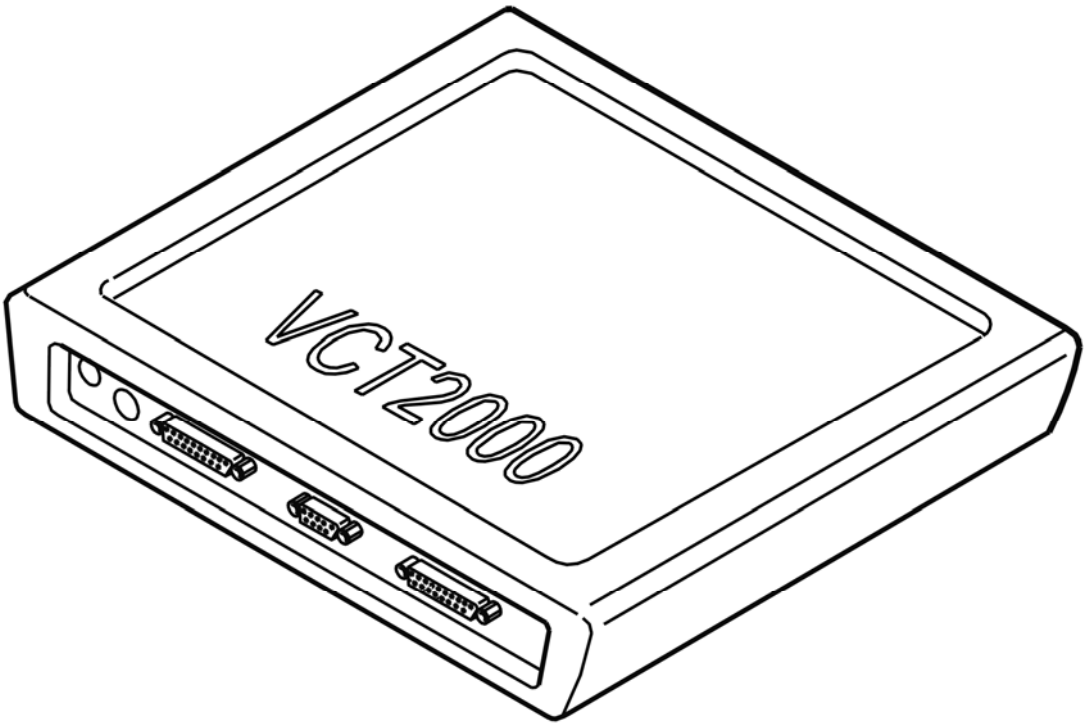

Fig. 142: Identifying VCT2000 Diagnostic Tool Symbol In VIDA
Courtesy of VOLVO CARS CORPORATION

Are the switches OK?

- **YES**

  FAULT NOT FOUND: Troubleshooting has been completed.

- **NO**

  Refer to **REPLACING THE COMPONENT**

REPLACING THE COMPONENT

The fault has probably occurred as a result of a defective switch. For switches located in the lower part of the dashboard environment panel, continue fault-tracing by replacing the switch to determine whether the fault is in the switch or the control module. Other switches are fixed to the climate control module (CCM) and cannot be replaced separately.

Other information:

- To access or replace the climate control module (CCM), see **CLIMATE CONTROL MODULE (CCM), REPLACING** .

CHECKING THE TWILIGHT SENSOR (2003-04)

CHECKING THE TWILIGHT SENSOR

CHECKING THE TWILIGHT SENSOR SIGNAL

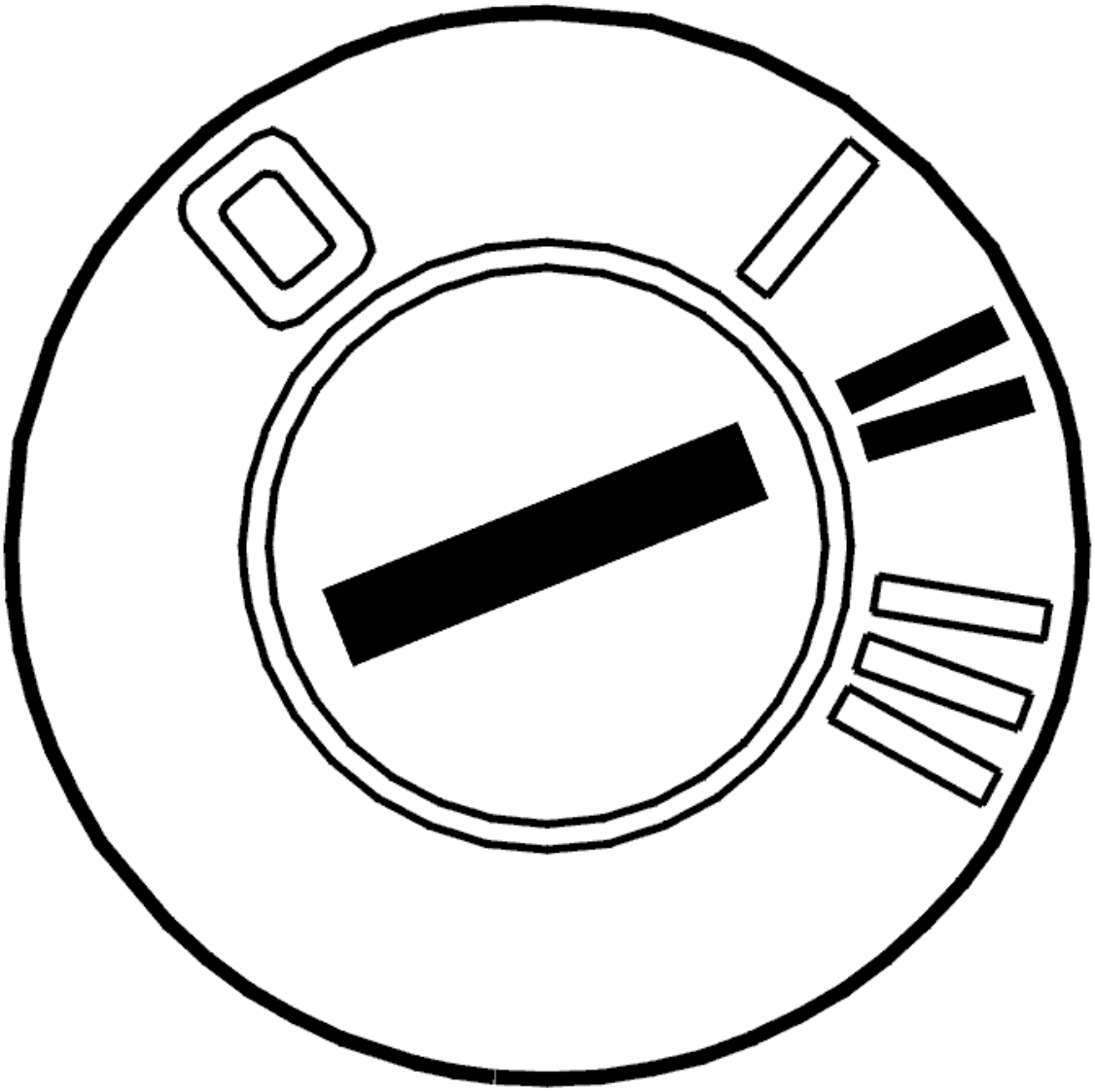

Fig. 143: Identifying Ignition ON
Courtesy of VOLVO CARS CORPORATION

- Ignition on.

  Check the twilight intensity signal by varying the light intensity at the twilight sensor. Cover the twilight sensor with a finger to obtain the minimum signal. Then aim a strong light source (for example a flashlight) at the twilight sensor from close range to obtain the maximum signal.

  The value should vary between approximately 0 and 15.

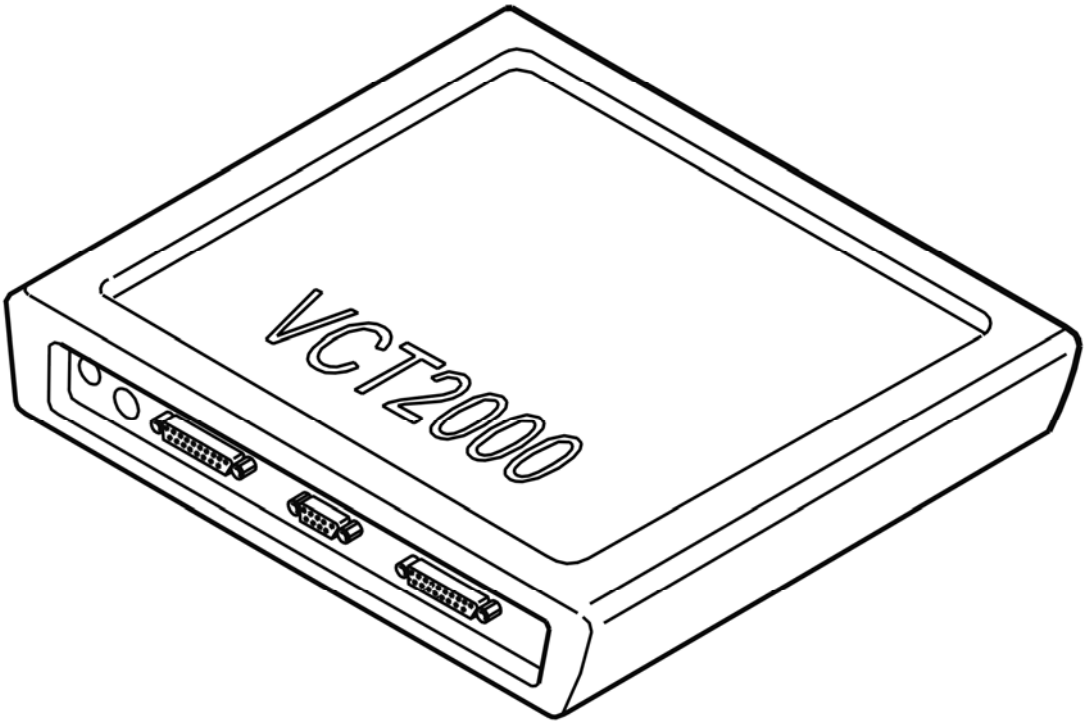

Fig. 144: Identifying VCT2000 Diagnostic Tool Symbol In VIDA
Courtesy of VOLVO CARS CORPORATION

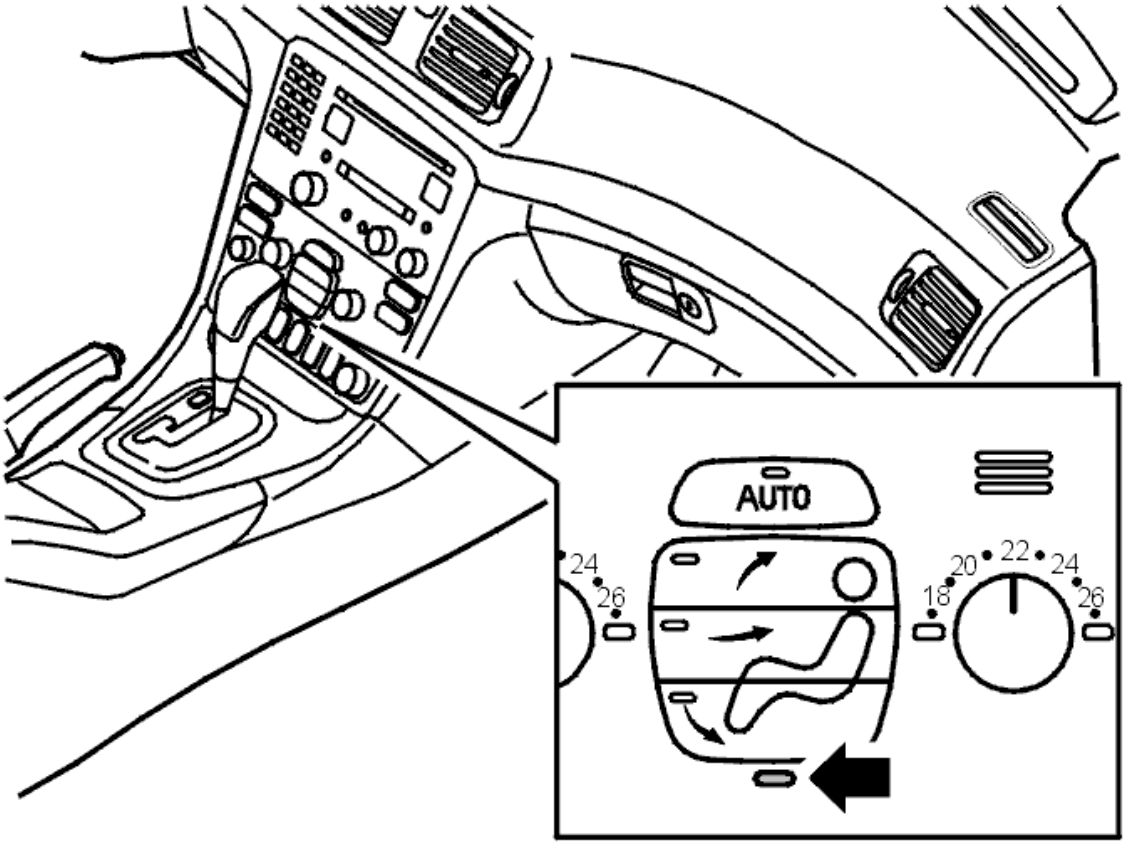

Fig. 145: Identifying Twilight Sensor
Courtesy of VOLVO CARS CORPORATION

Are these values OK?

- **YES**

  OKAY: Troubleshooting has been completed.

- **NO**

  Refer to **REPLACING THE COMPONENT**

REPLACING THE COMPONENT

The fault has probably occurred as a result of a defective twilight sensor or a defective supply circuit in the climate control module. This type of fault means that the climate control system unit must be replaced. The twilight sensor cannot be replaced independently.

Other vinformation:

- To access or replace the climate control module, see **CLIMATE CONTROL MODULE (CCM), REPLACING** .

TROUBLE-SHOOTING INFORMATION

Condition

- No diagnostic trouble codes are stored
- Fault is permanent

NOTE: **If the nightfall sensor is covered, the climate control module (CCM) does not receive any signals regarding light intensity, and the brightness of the LED buttons cannot be regulated. These types of error are not included in trouble-shooting.**

Possible Source

- Defective measuring instrument
- Defective nightfall sensor.

CHECKING THE WINDOWS (2003-04)

CHECKING THE WINDOWS

HINT: A dirty inner side of window can mist up again more easily. Check and clean any dirt from the inside.

Do the necessary corrective action.

Fig. 146: Cleaning Inner Side Of Window
Courtesy of VOLVO CARS CORPORATION

TROUBLE-SHOOTING INFORMATION

Condition

Fig. 147: Cleaning Inner Side Of Window
Courtesy of VOLVO CARS CORPORATION

- No diagnostic trouble codes are stored
- Fault is permanent.

Possible Source

- Dirt on inner side of window can cause mist build-up.

IDENTIFICATION OF DAMPER MOTORS (2005-12)

IDENTIFICATION OF DAMPER MOTORS

CHECKING THE FUNCTION

Damper motor module (DMM) faults may be due to something obstructing the damper, which means that the Damper motor module (DMM) cannot calibrate itself. Check that the damper is not blocked and that is has not become stuck. Look, for example, for a screw, cable or foam rubber gasket. Check that the damper motor is correctly installed. Also check that the damper can move freely.

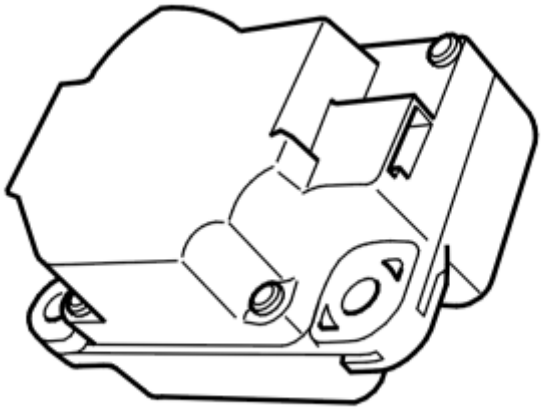

Fig. 148: Identifying Damper Motor Module (DMM)
Courtesy of VOLVO CARS CORPORATION

- **Continue**

  Refer to **IDENTIFYING THE DAMPER MOTOR MODULE (DMM)**

IDENTIFYING THE DAMPER MOTOR MODULE (DMM)

HINT: When identifying damper motors, each damper motor must be run to its limit position. These operations can take up to 30 seconds. When identifying the damper motors it is important that a battery charger is connected.

Fig. 149: Checking Traffic Load On CAN Cables
Courtesy of VOLVO CARS CORPORATION

- Ignition off
- Reinstall the connectors, components etc.

NOTE: **Climate Control Module (CCM) and damper motors can be affected by the temperature. The vehicle should have normal room temperature when performing this service.**

Carry out identification as follows:

- Ignition on.
- Click on the VCT2000 symbol. Wait until identification has been carried out.

- Ignition off.

Fig. 150: Identifying VCT2000 Diagnostic Tool Symbol In VIDA
Courtesy of VOLVO CARS CORPORATION

- **Continue**

Refer to **CALIBRATING THE CLIMATE CONTROL MODULE (CCM)**

CALIBRATING THE CLIMATE CONTROL MODULE (CCM)

CAUTION: When activating this function, calibration of the Climate Control Module (CCM) starts. After carrying out calibration read off of the diagnostic trouble codes (DTCs) starts. To ensure that diagnostics for the Climate Control Module (CCM) have been carried out, delay for 30 seconds before reading out diagnostic trouble codes (DTCs) after calibration.

NOTE: Climate Control Module (CCM) and damper motors can be affected by the temperature. The vehicle should have normal room temperature when performing this service.

Fig. 151: Checking Traffic Load On CAN Cables
Courtesy of VOLVO CARS CORPORATION

Carry out calibration as follows:

- Ignition on.
- Click on the VCT2000 symbol. Wait until calibration has been carried out and diagnostic trouble codes (DTCs) read out.
- Ignition off.

This function controls the components that communicate with the Climate Control Module (CCM) via LIN bus 1 and LIN bus 2. In the event of a fault in any of the LIN buses, diagnostic trouble codes (DTCs) CCM-0070 to CCM-0071 will be stored depending on the fault. These diagnostic trouble codes (DTCs) can only be stored in

conjunction with this diagnostic function.

If any of these diagnostic trouble codes (DTCs) recur, recalibrate to check if the problem was overcome. If the diagnostic trouble code (DTC) recurs, fault-trace the relevant diagnostic trouble code (DTC).

Fig. 152: Identifying VCT2000 Diagnostic Tool Symbol In VIDA
Courtesy of VOLVO CARS CORPORATION

CHECKING AIR LEAKAGE, COMBUSTION PREHEATER MODULE (CPM) (2003-12)

CHECKING AIR LEAKAGE, COMBUSTION PREHEATER MODULE (CPM)

see **CHECKING AIR LEAKAGE, COMBUSTION PREHEATER MODULE (CPM)**

CHECKING IMPACT STATUS (2005-12)

CHECKING IMPACT STATUS

see **CHECKING IMPACT STATUS**

HVAC

Climate Units - Symptom Verification

INFORMATION AND VERIFICATION, TEMPERATURE CONTROL (2007-11)

INFORMATION AND VERIFICATION, TEMPERATURE CONTROL

Symptom and function description

The climate control unit cools or heats as well as dehumidifies the air in the passenger compartment.

The temperature selected corresponds to the physical experience with reference to the air speed, humidity, exposure to sun etc. which affect the interior and exterior of the vehicle.

For the air conditioning to work satisfactorily, the side windows and sun roof (if applicable) must be closed.

Location of the sensors

- The sun sensor is on top of the dashboard.
- The temperature sensor for the passenger compartment is behind the air conditioning (A/C) panel.

HINT: Do not cover or block the sensors with cloth or other objects

Acceleration

At full acceleration, the air conditioning (A/C) system switches off temporarily. You may feel a temporary temperature rise.

Verification

Access to the vehicle is necessary for the following checks.

Conditions

- Close the hood, doors, side windows and sun roof, if applicable.
- Start the engine.
- Engine speed should be approximately 1500 RPM.

Performance test

- Set the temperature control to max. cooling.
- Set the air distribution selector to "Ventilation".
- Set the recirculation button to "On".
- Set the A/C button to "On".

- Set the fan speed selector to 50%.

Reading the temperature

Allow the system to stabilize for at least 8 minutes.

Place the thermometer by the central panel vents.

READ OFF OPERATING CONDITIONS IN °C (°F).

Outdoor temperature in front of the vehicle.	20°C (68°F).	30°C (86°F).	40°C (104°F).
Temperature at central panel vents:	6-9°C (43-48°F).	6-9°C (43-48°F).	6-9°C (43-48°F).

INFORMATION AND VERIFICATION, TEMPERATURE CONTROL (2003-06)

INFORMATION AND VERIFICATION, TEMPERATURE CONTROL

Symptom and function description

The climate control unit cools or heats as well as dehumidifies the air in the passenger compartment. The vehicle is equipped with either manual (A/C) or automatic climate control (ECC).

ECC (option)

The temperature selected corresponds to the physical experience with reference to the air speed, humidity, exposure to sun etc. which affect the interior and exterior of the vehicle.

For the air conditioning to work satisfactorily, the side windows and sun roof (if applicable) must be closed.

Location of the sensors

- The sun sensor is on top of the dashboard.
- The temperature sensor for the passenger compartment is behind the air conditioning (A/C) panel.

HINT: Do not cover or block the sensors with cloth or other objects

Acceleration

At full acceleration, the air conditioning (A/C) system switches off temporarily. You may feel a temporary temperature rise.

Verification

Access to the vehicle is necessary for the following checks.

Conditions

- Close the hood, doors, side windows and sun roof, if applicable.
- Start the engine.
- Engine speed should be approximately 1500 RPM.

Performance test

- Set the temperature control to max. cooling.
- Set the air distribution selector to "Ventilation".
- Set the recirculation button to "On".
- Set the A/C button to "On".
- Set the fan speed selector to 50%.

Reading the temperature

Allow the system to stabilize for at least 8 minutes.

Place the thermometer by the central panel vents.

READ OFF OPERATING CONDITIONS IN °C (°F).

Outdoor temperature in front of the vehicle.	20°C (68°F).	30°C (86°F).	40°C (104°F).
Temperature at central panel vents:	6-9°C (43-48°F).	6-9°C (43-48°F).	6-9°C (43-48°F).

INFORMATION AND VERIFICATION. CLIMATE CONTROL SYSTEM/A/C WATER LEAKS/CONDENSATION (2006-12)

CLIMATE CONTROL SYSTEM/A/C WATER LEAKS/CONDENSATION

SYMPTOM AND FUNCTION DESCRIPTION

NOTE: The symptom should always be verified together with the customer.

The following tips may be of help to decide if the symptom is due to a product feature or if continued troubleshooting is needed.

HINT: Condensation water shall run out under the vehicle.

INFORMATION AND VERIFICATION. CLIMATE CONTROL SYSTEM/UNUSUAL NOISE (2006-12)

CLIMATE CONTROL SYSTEM/UNUSUAL NOISE

SYMPTOM AND FUNCTION DESCRIPTION

NOTE: The symptom should always be verified together with the customer.

The following tips may be of help to decide if the symptom is due to a product feature or if continued troubleshooting is needed.

HINT: Working sound from damper motors may exist.

INFORMATION AND VERIFICATION. PARKING HEATER/SMOKE (2006-12)

PARKING HEATER/SMOKE

SYMPTOM AND FUNCTION DESCRIPTION

NOTE: The symptom should always be verified together with the customer.

The following tips may be of help to decide if the symptom is due to a product feature or if continued troubleshooting is needed.

HINT: Slight smoke at start-up is normal.

HINT: There may be some smell in the passenger compartment for a short time after start.

INFORMATION AND VERIFICATION. PARKING HEATER/UNUSUAL NOISE (2006-12)

PARKING HEATER/UNUSUAL NOISE

SYMPTOM AND FUNCTION DESCRIPTION

NOTE: The symptom should always be verified together with the customer.

The following tips may be of help to decide if the symptom is due to a product feature or if continued troubleshooting is needed.

HINT: Ticking from the fuel pump as well as humming sound from the combustion is OK.

HVAC

Body and interior

HVAC

DAMPER MOTOR MODULE (DMM), AIR DISTRIBUTION, REPLACING

The illustrations in this service information are used for different model years and/or models. Some variation may occur. However, the essential information in the illustrations is always correct.

NOTE: **The damper motor module (DMM) for air distribution is only on the right-hand side of the car.**

REMOVAL

REMOVING THE DAMPER MOTOR MODULE (DMM) FOR AIR DISTRIBUTION

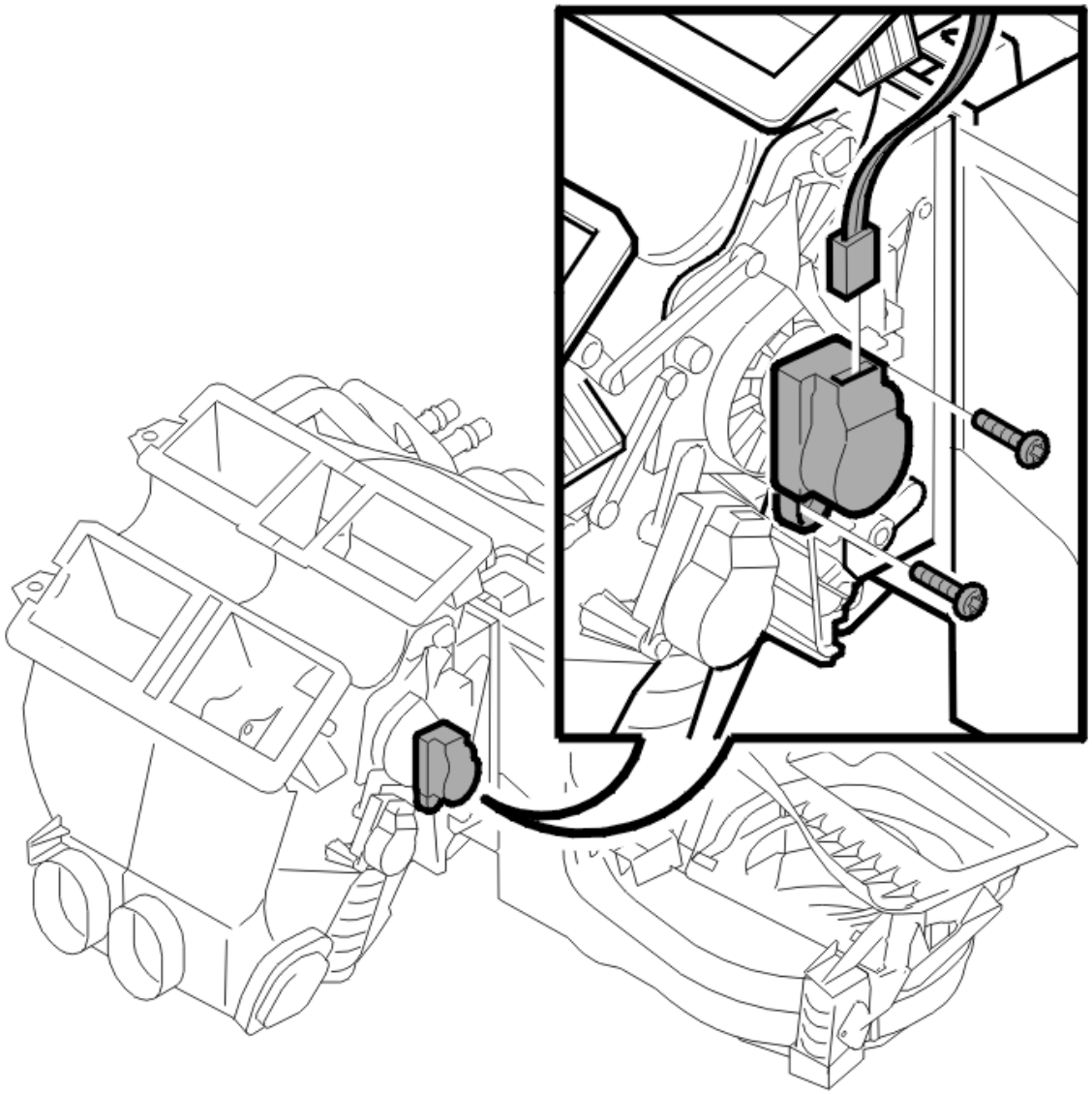

Fig. 1: Identifying Control Module Connector & Screws
Courtesy of VOLVO CARS CORPORATION

Remove:

- the glove compartment. See **GLOVE COMPARTMENT, REPLACING**
- the switch

  HINT: Use a small electrician's screwdriver to pry up the switch by the lock. Depress the switch at the rear edge. Pull straight out.

- the 2 x screws
- the control module.

INSTALLATION

INSTALLING THE DAMPER MOTOR MODULE (DMM) FOR AIR DISTRIBUTION

Install:

- the control module in position. Adjust the shaft journal so that it goes in
- the 2 screws. Tighten alternately
- the switch. Ensure that it is correctly positioned
- the glove compartment. See **GLOVE COMPARTMENT, REPLACING**

NOTE: Identify the damper motor module (DMM) for air distribution using VIDA (Volvo scan tool).

FINISHING

TESTING THE CLIMATE CONTROL SYSTEM

Carry out a performance test on the climate control unit. See: **CLIMATE SYSTEM, PERFORMANCE TEST**

DAMPER MOTOR MODULE (DMM), DEFROSTER, REPLACING

The illustrations in this service information are used for different model years and/or models. Some variation may occur. However, the essential information in the illustrations is always correct.

NOTE: The damper motor module (DMM) for the defroster is only used in cars with electronic climate control (ECC). It is positioned on the right-hand side of the car.

REMOVAL

REMOVING THE DAMPER MOTOR MODULE (DMM) FOR THE DEFROSTER

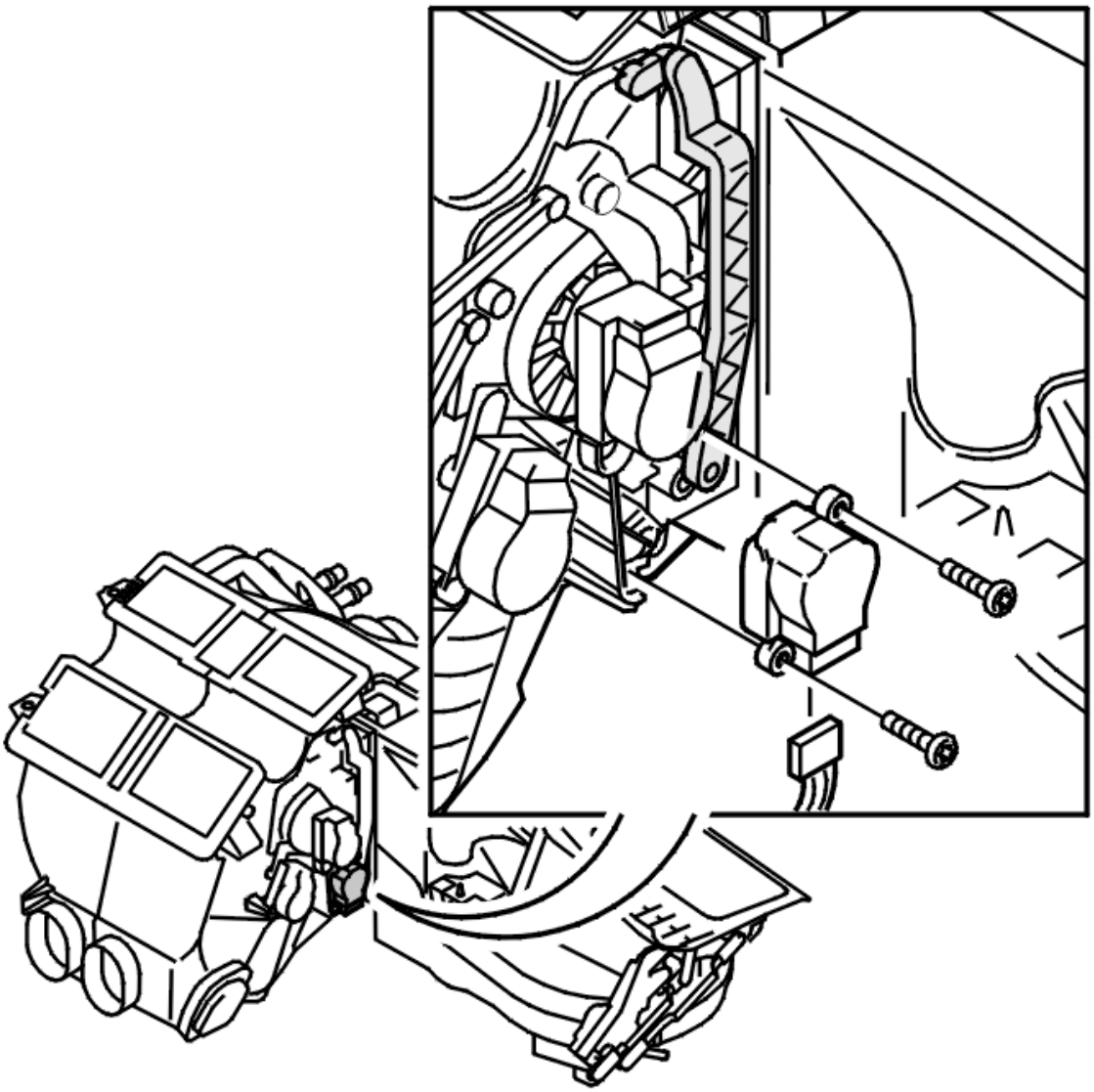

Fig. 2: Identifying Control Module And Screws
Courtesy of VOLVO CARS CORPORATION

Remove:

- the soundproofing panel. See **SOUNDPROOFING PANEL, REPLACING**
- the glove compartment. See **GLOVE COMPARTMENT, REPLACING**
- the switch

  HINT: Use a small electrician's screwdriver to pry up the switch by the lock. Depress the switch at the rear edge. Pull straight out.

- the 2 x screws
- the control module.

INSTALLATION

INSTALLING THE DAMPER MOTOR MODULE (DMM) FOR THE DEFROSTER

Install:

- the control module in position. Adjust the shaft journal so that it goes in
- the 2 screws. Tighten alternately
- the switch. Ensure that it is correctly positioned
- the glove compartment. See **GLOVE COMPARTMENT, REPLACING**
- the soundproofing panel. See **SOUNDPROOFING PANEL, REPLACING**

NOTE: Identify the damper motor module (DMM) for the defroster using VIDA (Volvo scan tool).

FINISHING

TESTING THE CLIMATE CONTROL SYSTEM

Carry out a performance test on the climate control unit. See: **CLIMATE SYSTEM, PERFORMANCE TEST**

DAMPER MOTOR MODULE (DMM), RECIRCULATION, REPLACING

The illustrations in this service information are used for different model years and/or models. Some variation may occur. However, the essential information in the illustrations is always correct.

REMOVAL

REMOVING THE DAMPER MOTOR MODULE (DMM) FOR RECIRCULATION

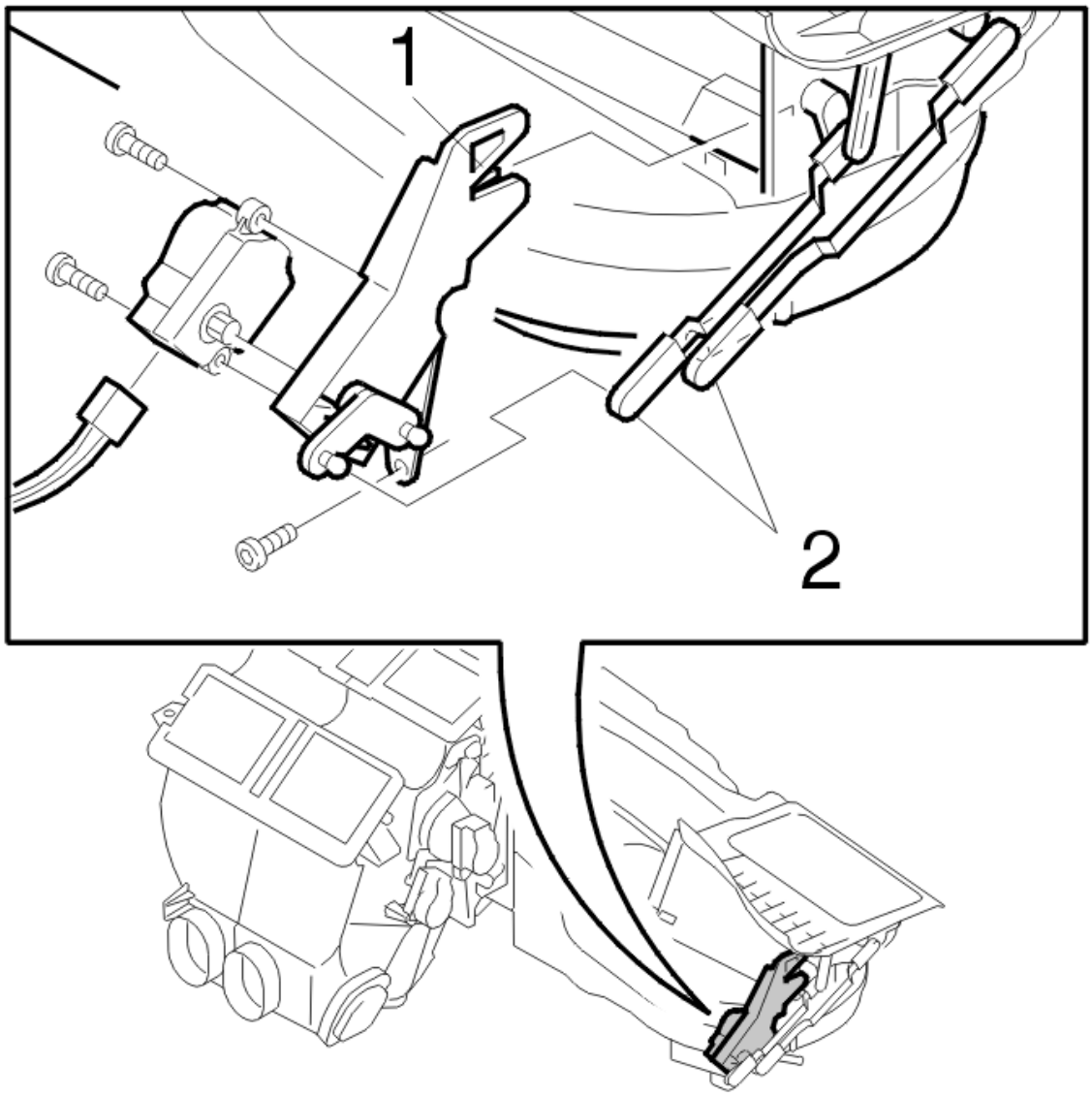

Fig. 3: Identifying Control Module Connector, Screws & Damper Arms
Courtesy of VOLVO CARS CORPORATION

Remove:

- the glove compartment. See **GLOVE COMPARTMENT, REPLACING**
- the switch

  HINT: Use a small electrician's screwdriver to pry up the switch by the lock. Depress the switch at the rear edge. Pull straight out.

- the 2 x screws
- the control module.

Check the functionality of the control module mechanism (1). Check that the arms for the dampers (2) are

secure.

INSTALLATION

INSTALLING THE DAMPER MOTOR MODULE (DMM) FOR RECIRCULATION

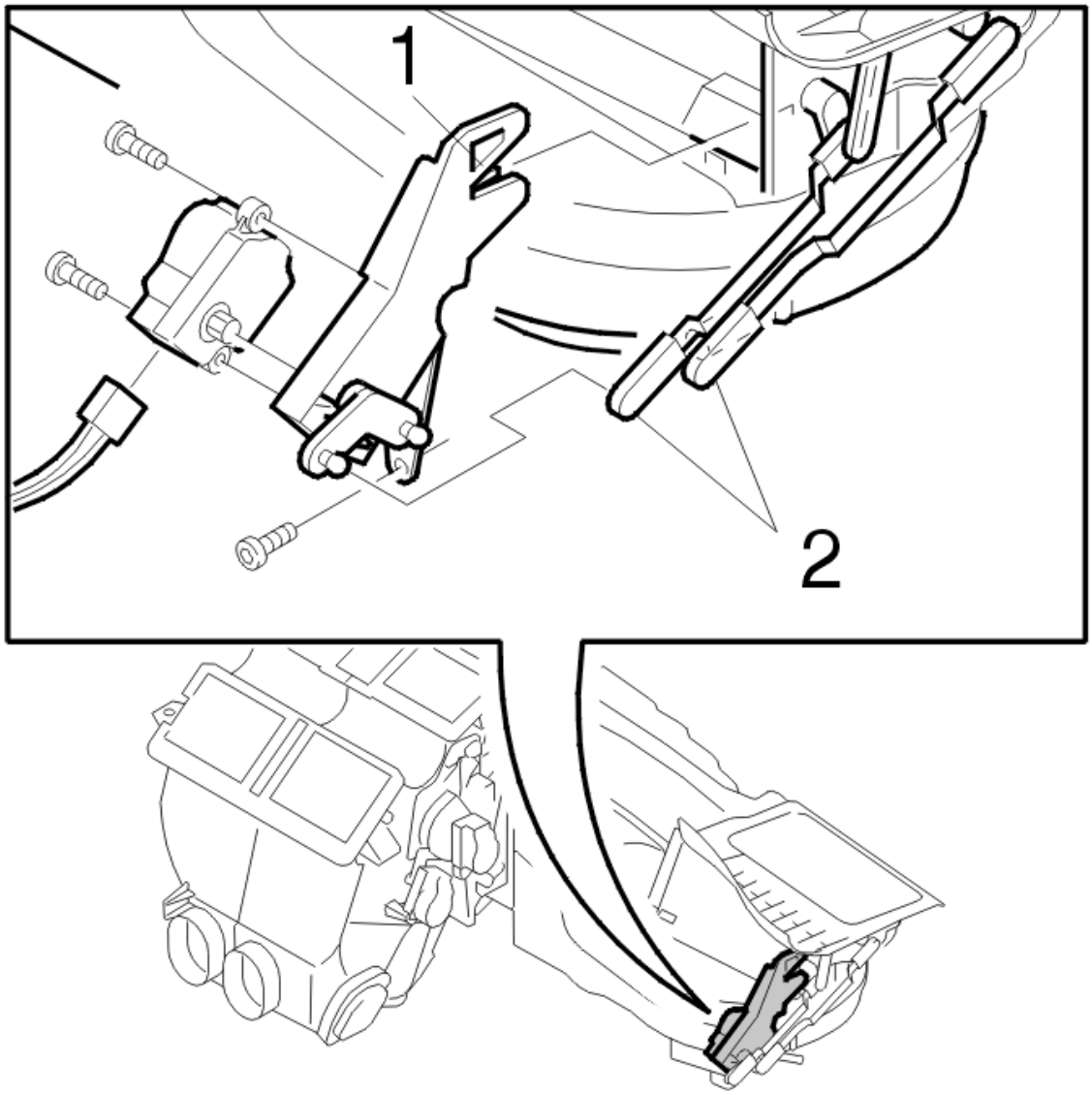

Fig. 4: Identifying Control Module Connector, Screws & Damper Arms
Courtesy of VOLVO CARS CORPORATION

Install:

- the control module in position. Adjust the shaft journal in relation to the mechanism (1) so that it goes in
- the 2 screws. Tighten alternately
- the switch. Ensure that it is correctly positioned
- the glove compartment. See **GLOVE COMPARTMENT, REPLACING**

NOTE: **Identify the damper motor module (DMM) for recirculation using VIDA (Volvo scan tool).**

FINISHING

TESTING THE CLIMATE CONTROL SYSTEM

Carry out a performance test on the climate control unit. See: **CLIMATE SYSTEM, PERFORMANCE TEST**

DAMPER MOTOR MODULE (DMM), TEMPERATURE, REPLACING

The illustrations in this service information are used for different model years and/or models. Some variation may occur. However, the essential information in the illustrations is always correct.

NOTE: **The are 2 damper motor modules (DMM) for temperature, one on the right (white arm) and one on the left-hand side (black arm).**

REMOVAL

REMOVING THE DAMPER MOTOR MODULE (DMM) FOR TEMPERATURE ON THE PASSENGER SIDE

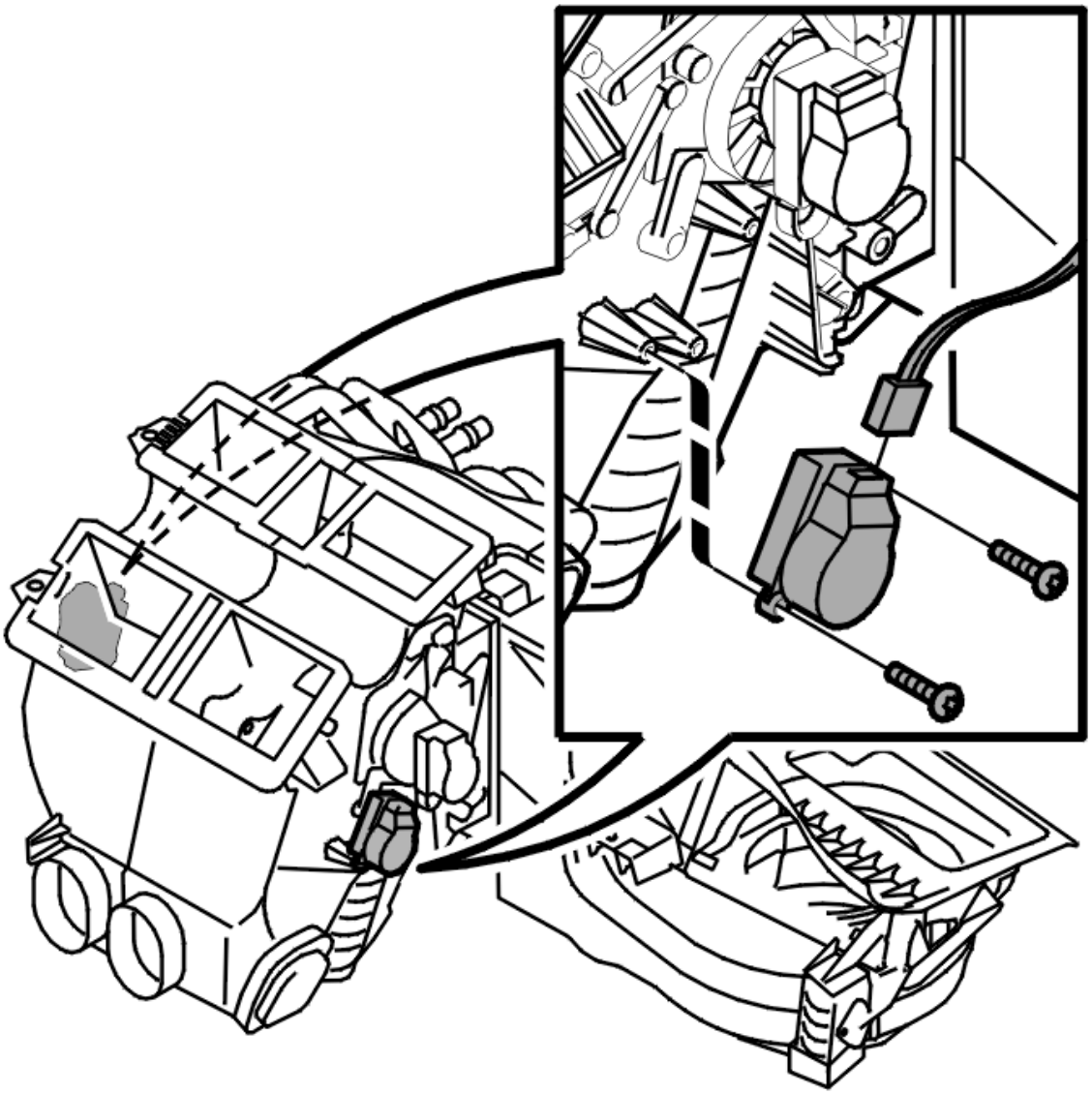

Fig. 5: Identifying Control Module And Screws
Courtesy of VOLVO CARS CORPORATION

Remove:

- the glove compartment. See **GLOVE COMPARTMENT, REPLACING**
- the switch

  HINT: Use a small electrician's screwdriver to pry up the switch by the lock. Depress the switch at the rear edge. Pull straight out.

- the 2 x screws
- the control module.

INSTALLATION

INSTALLING THE DAMPER MOTOR MODULE (DMM) FOR TEMPERATURE ON THE PASSENGER SIDE

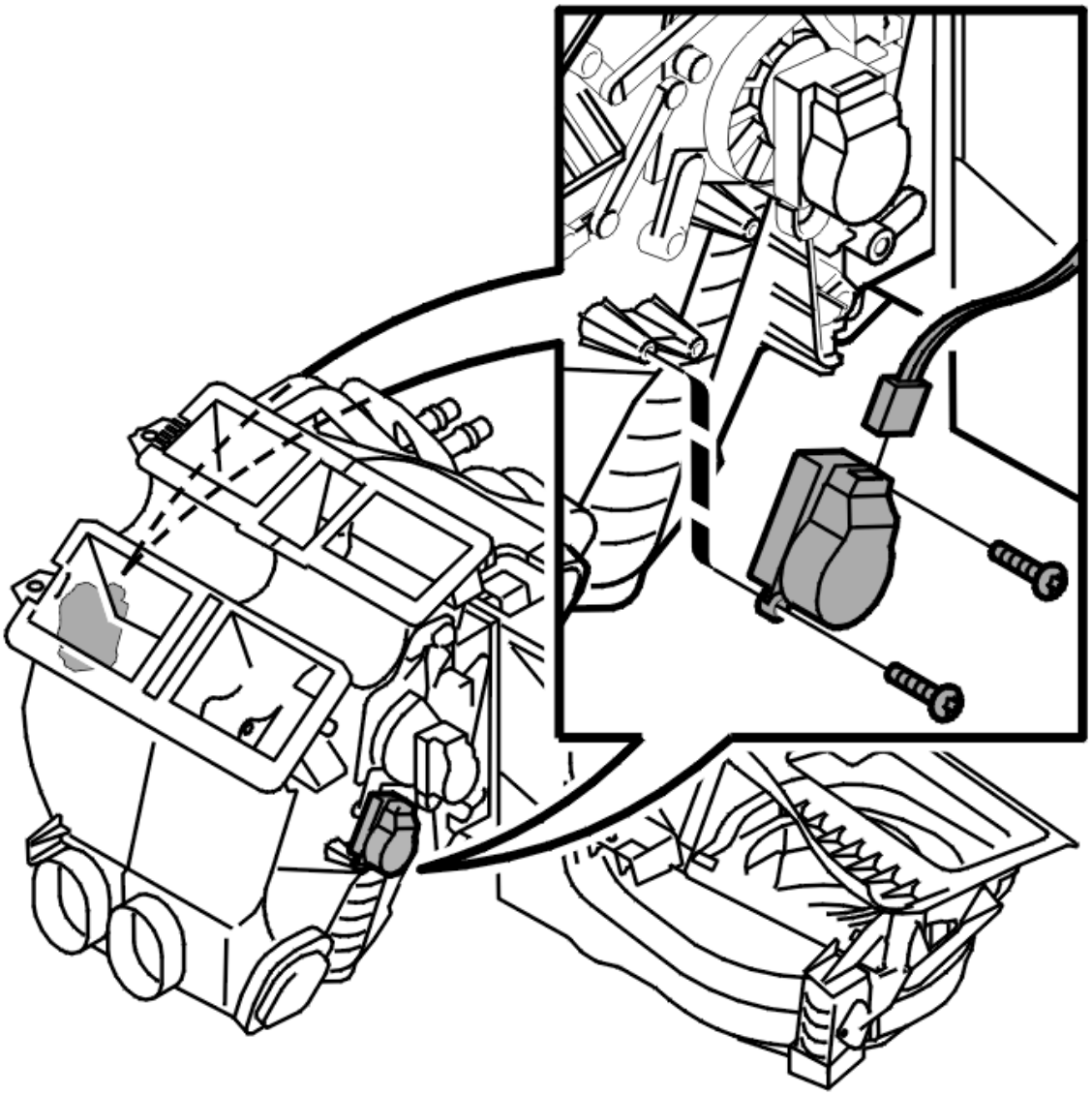

Fig. 6: Identifying Control Module And Screws
Courtesy of VOLVO CARS CORPORATION

Install:

- the control module in position. Adjust the shaft journal so that it goes in
- the 2 screws. Tighten alternately
- the switch. Ensure that it is correctly positioned
- the glove compartment. See **GLOVE COMPARTMENT, REPLACING** .

NOTE: **Identify the damper motor module (DMM) for temperature using VIDA (Volvo scan tool).**

REMOVAL

REMOVING THE DAMPER MOTOR MODULE (DMM) FOR TEMPERATURE ON THE DRIVER'S SIDE

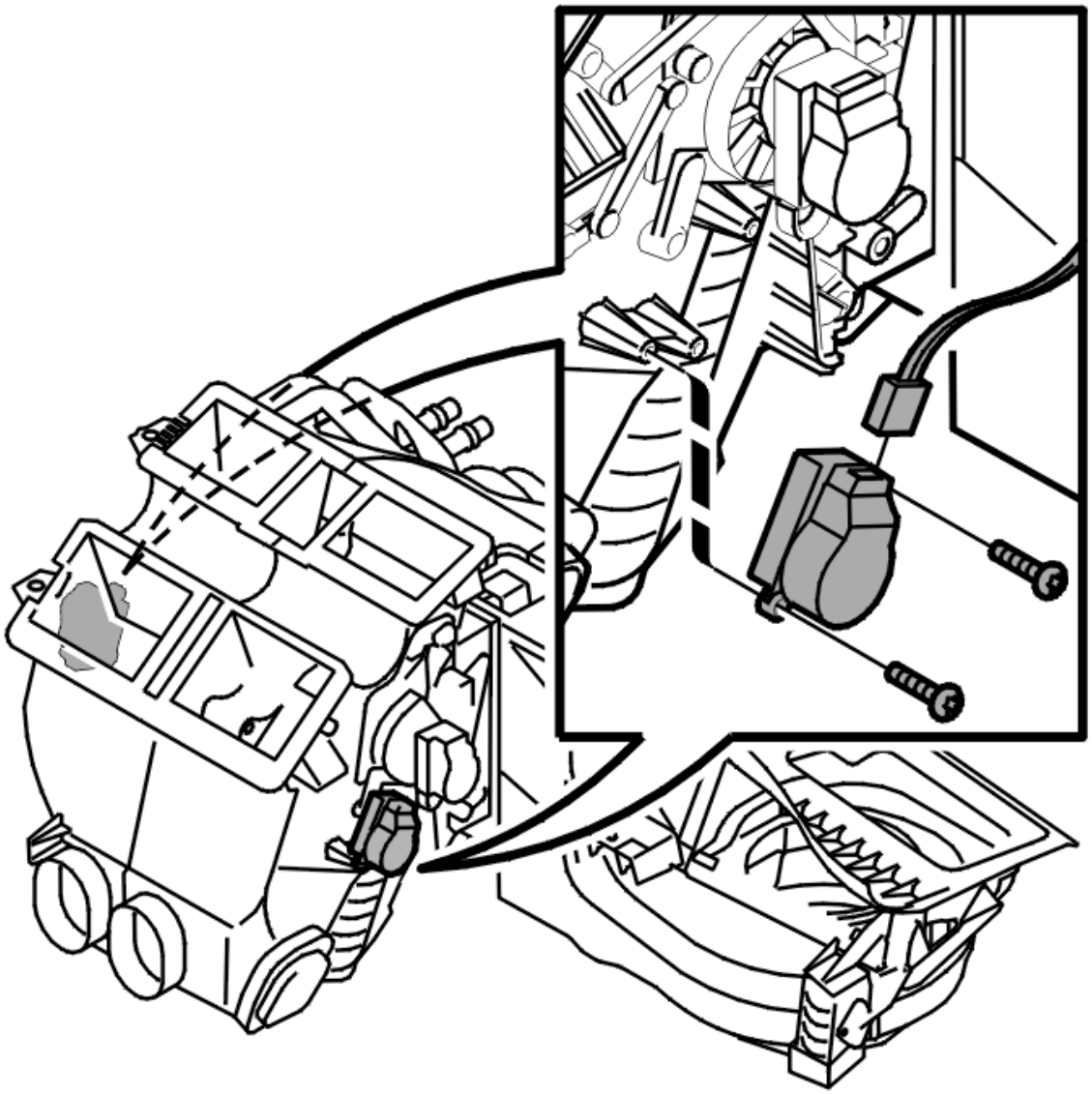

Fig. 7: Identifying Control Module And Screws
Courtesy of VOLVO CARS CORPORATION

Remove:

- the soundproofing panel. See **SOUNDPROOFING PANEL, REPLACING**
- the connector from the control module

  HINT: Use a small electrician's screwdriver to pry up the switch by the lock. Depress the switch at the rear edge. Pull straight out.

  HINT: Pull the control module out slightly. Position the point of the electrician's screwdriver

between the arms on the control for the lever. Pry the arms away from the ball on the motor lever.

- the 2 x screws
- the control module.

INSTALLATION

INSTALLING THE DAMPER MOTOR MODULE (DMM) FOR TEMPERATURE ON THE DRIVER'S SIDE

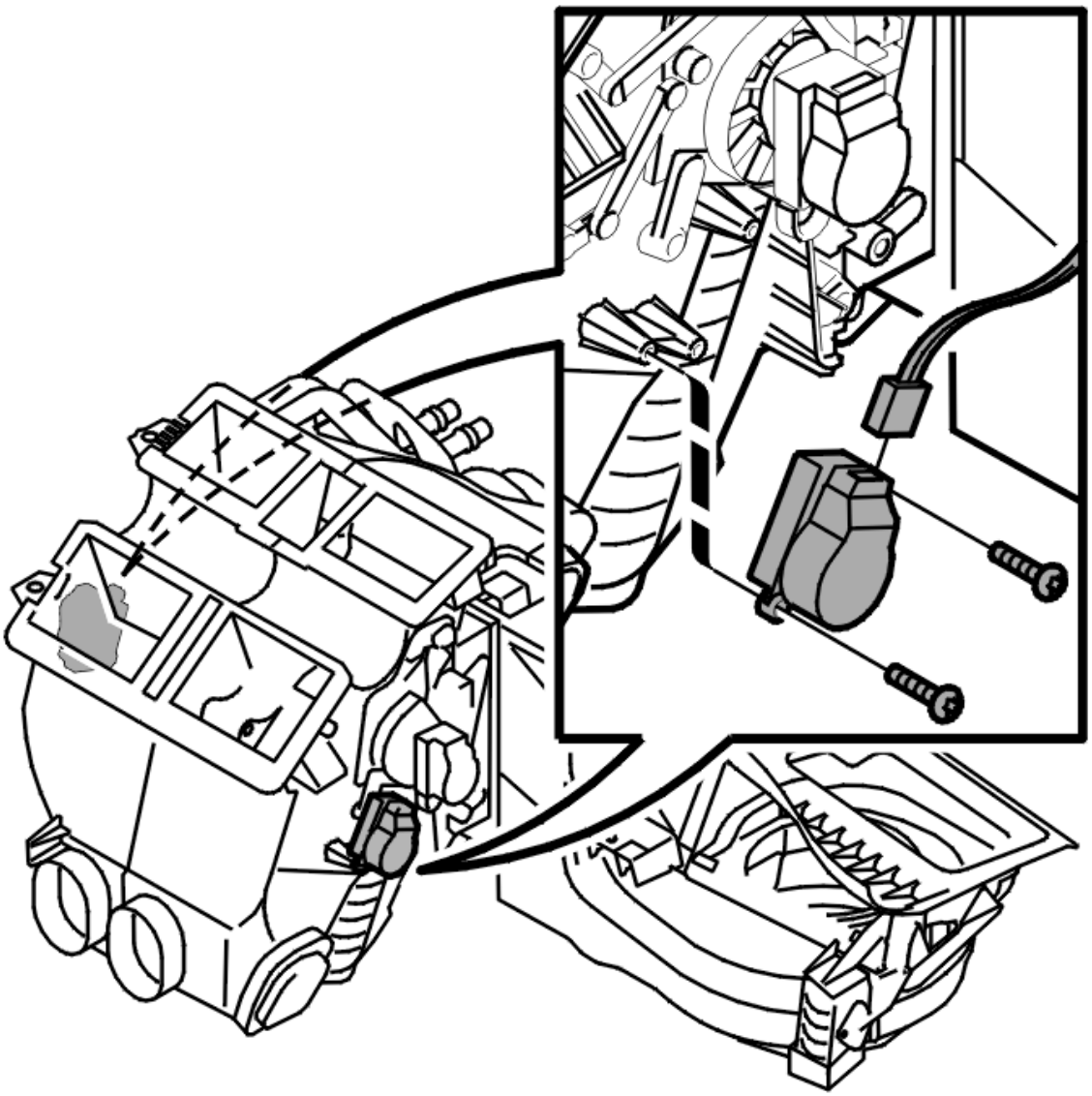

Fig. 8: Identifying Control Module And Screws
Courtesy of VOLVO CARS CORPORATION

Install:

- the control module in position. Adjust the shaft journal so that it goes in
- the lever for the mechanism on the ball for the motor lever

HINT: Insert the point of the electrician's screwdriver behind the lever and round-nosed pliers or similar behind the motor lever. Press the ball onto the mechanism.

- the 2 screws. Tighten alternately
- the switch. Ensure that it is correctly positioned
- the soundproofing panel. See **SOUNDPROOFING PANEL, REPLACING** .

NOTE: Identify the damper motor module (DMM) for temperature using VIDA (Volvo scan tool).

FINISHING

TESTING THE CLIMATE CONTROL SYSTEM

Carry out a performance test on the climate control unit. See: **CLIMATE SYSTEM, PERFORMANCE TEST**

DASHBOARD ENVIRONMENT PANEL (INCLUDING CLIMATE CONTROL MODULE (CCM)), REPLACING

PREPARATIONS

NOTE: Read off data from the control module before replacing the control module. This is carried out via VIDA vehicle communication. After replacing the control module, the relevant parameters must be programmed into the new control module.

REPLACING DASHBOARD ENVIRONMENT PANEL

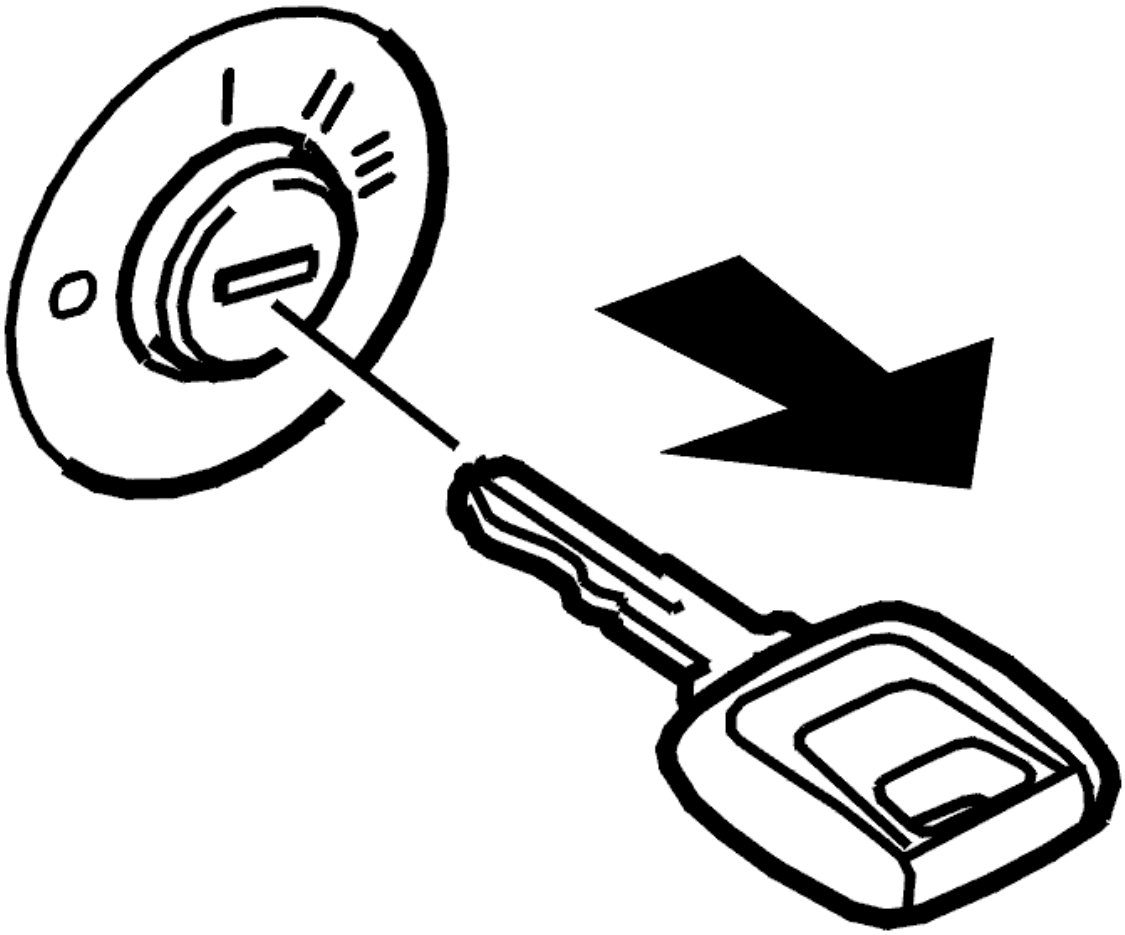

Fig. 9: Identifying Ignition Key Off
Courtesy of VOLVO CARS CORPORATION

Ignition off.

Remove the key.

NOTE: **The key must be removed to ensure that the ignition is not switched on by mistake.**

NOTE: **After the key has been removed: Wait 3minutes before starting work.**

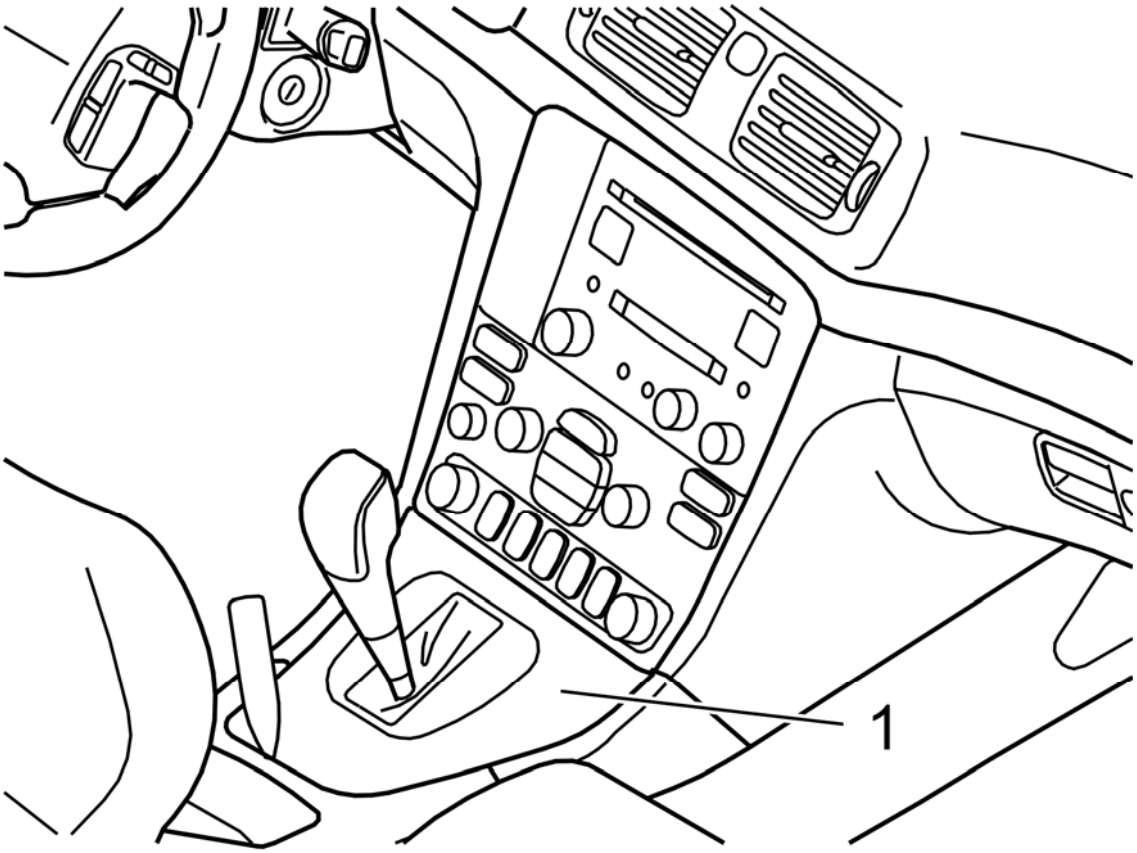

Fig. 10: Identifying Panel Above Gear Selector & Weatherstrip Tool
Courtesy of VOLVO CARS CORPORATION

NOTE: **The gear selector must be in the rearmost position before the dashboard environment panel can be removed.**

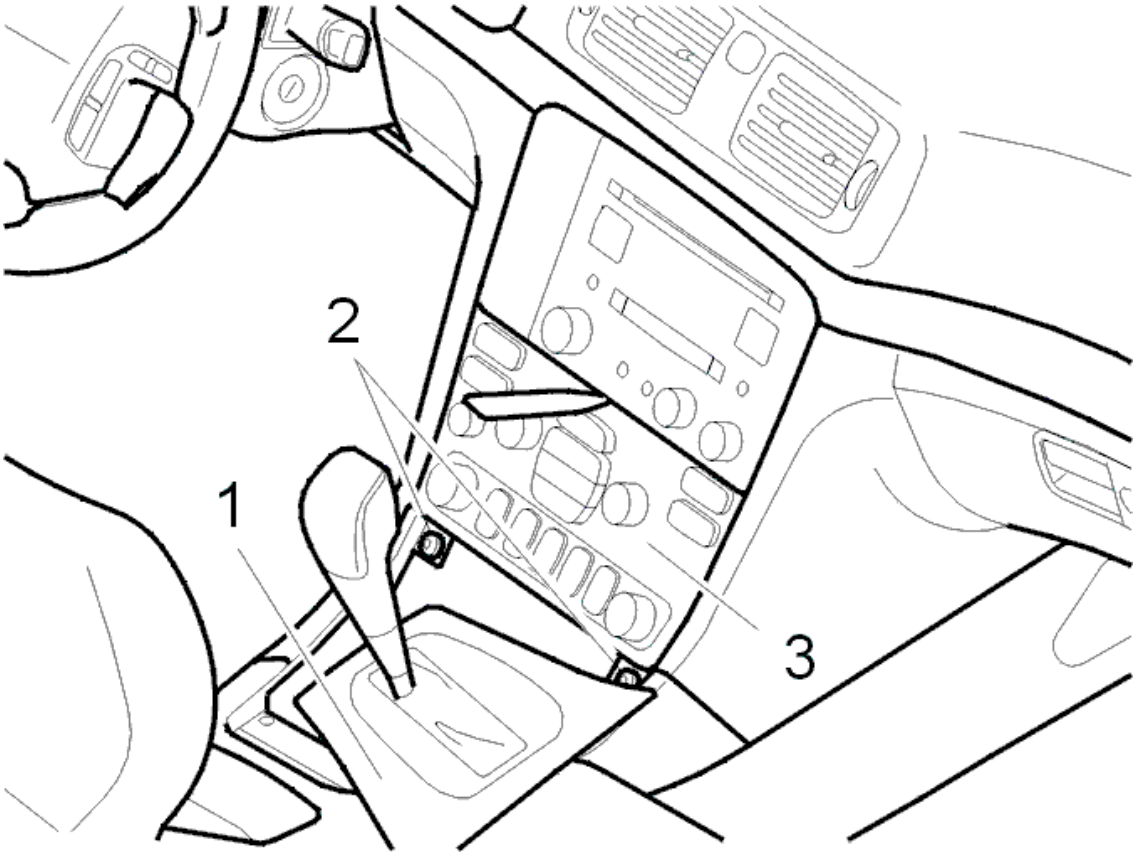

Fig. 11: Identifying Panel Above Gear Selector And Weatherstrip Tool
Courtesy of VOLVO CARS CORPORATION

Remove:

- the two screws (2) on the lower edge of the panel.
- the panel (3).

NOTE: The radio component and the dashboard environment panel are complementary and are mounted at the join with hooked mountings.

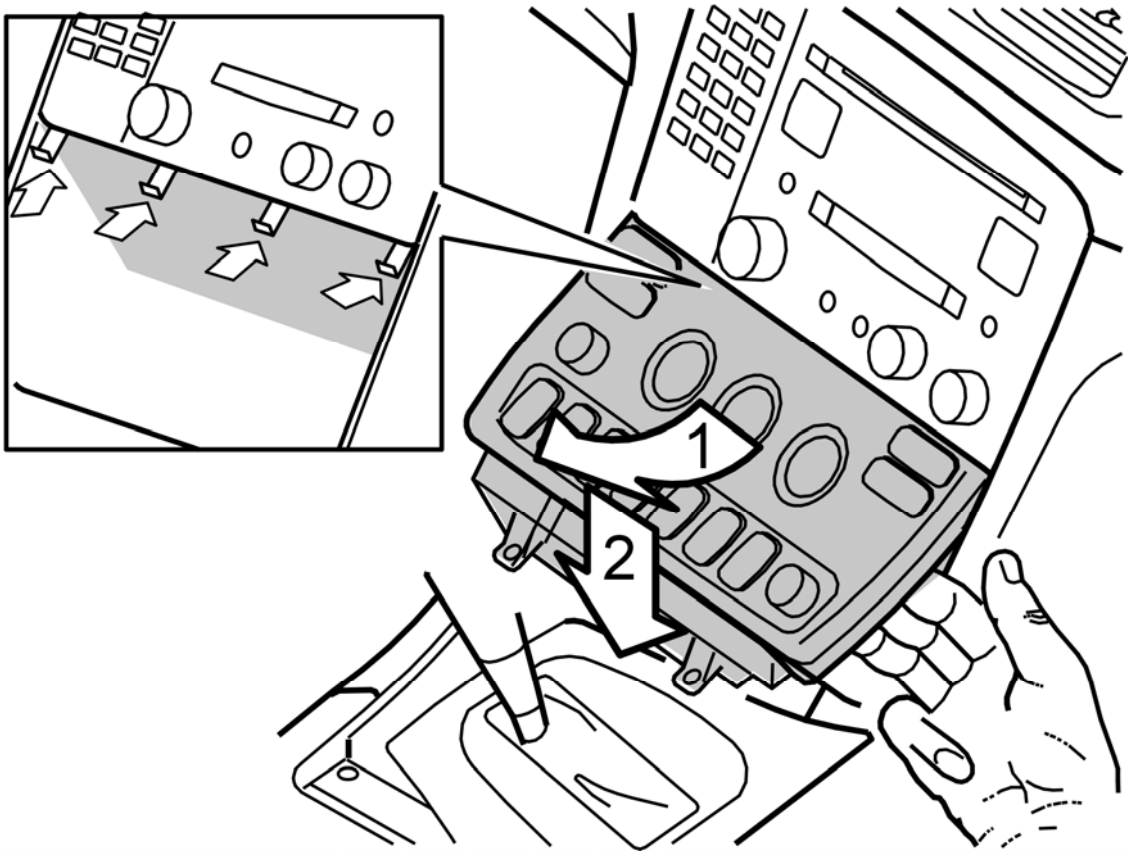

Fig. 12: Angling Dashboard Environment Panel Outwards
Courtesy of VOLVO CARS CORPORATION

HINT: To facilitate removal: Angle the dashboard environment panel outwards so that it is possible to insert a couple of fingers between the center console and the dashboard environment panel.

HINT: Pull the dashboard environment panel downwards at the same angle.

HINT: The dashboard environment panel is correctly secured. Force is required to remove it.

- connectors.

Lift out the panel.

Install:

In reverse order.

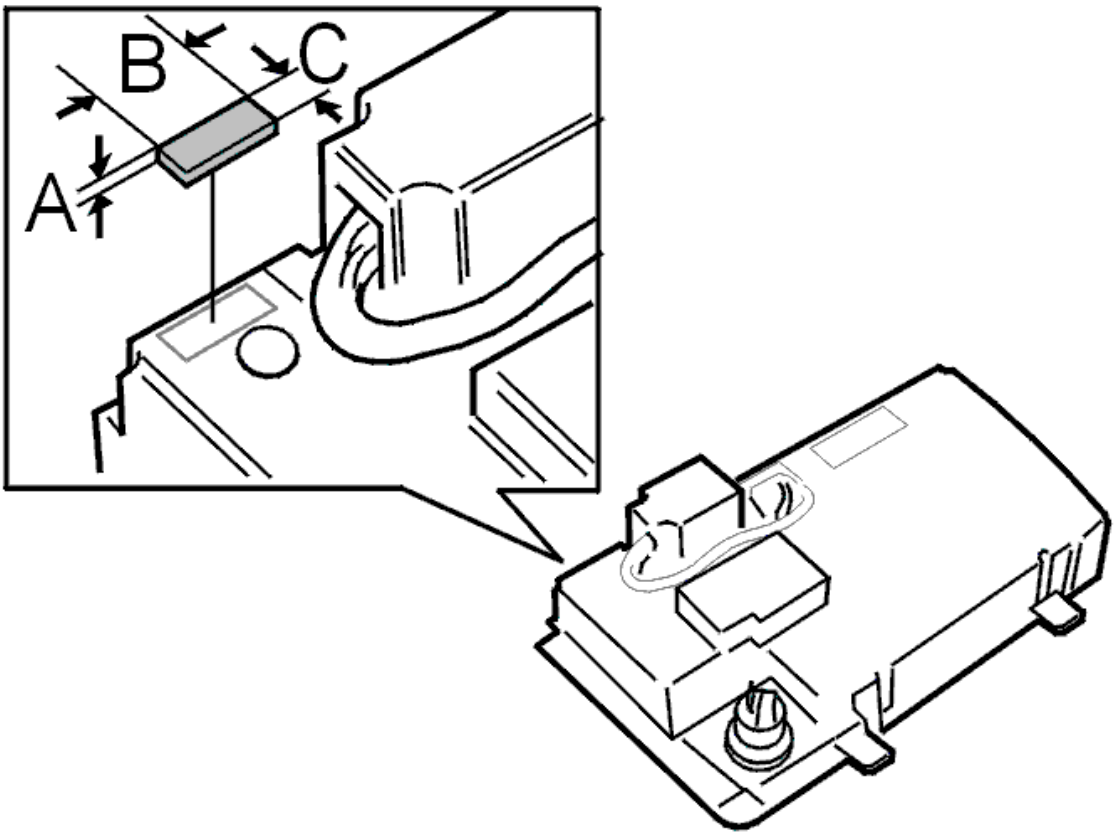

Fig. 13: Identifying Component Taped On Back Of Dashboard Environment Panel
Courtesy of VOLVO CARS CORPORATION

NOTE: **If any of the outer hooks break off, this must be "rectified".**

Tape the 3.5mm thick component measuring 20 X 20mm to the reverse of the dashboard environment panel. Use double-sided adhesive tape.

Fix the other side of the piece with double-sided adhesive tape so that there is a solid anchorage when reinstalling against the center console.

FRONT PANEL, REPLACING

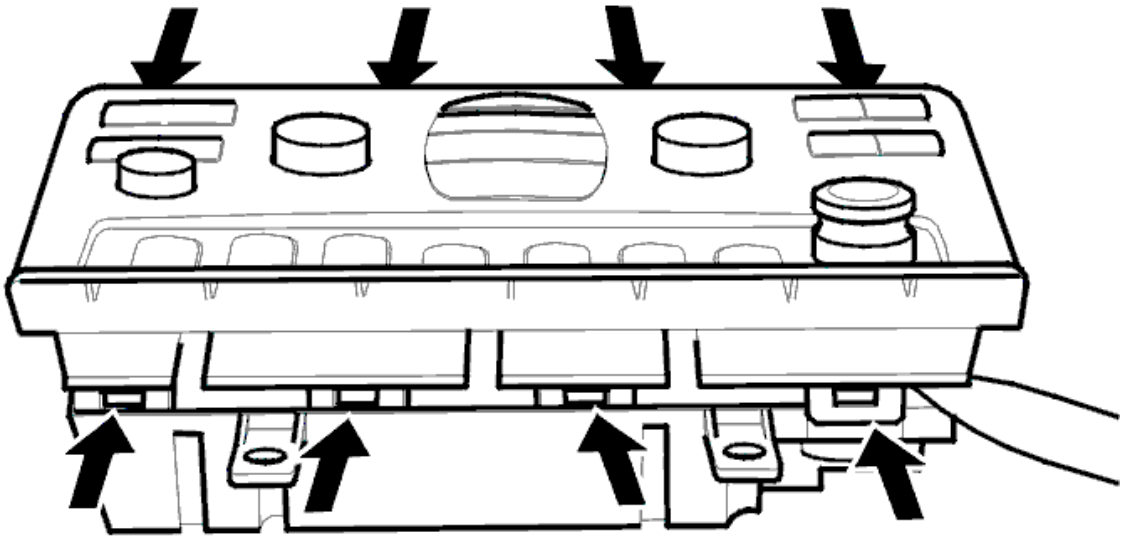

Fig. 14: Front Panel
Courtesy of VOLVO CARS CORPORATION

Removal

- Remove the dashboard environment panel. See **REPLACING DASHBOARD ENVIRONMENT PANEL**.
- Remove the panel for the switches. See **REPLACING CLIMATE CONTROL UNIT SWITCHES** .
- Remove the rear cover.

Front panel

- Release the catches. Pull off the front panel.

NOTE: **Be careful if the front panel is to be reused. The panel has double-sided adhesive tape on the reverse.**

Installation

- When reusing the front panel, check that the tape is intact and secures correctly. Replace the tape if necessary.
- For a new front panel, remove the masking tape from the double-sided adhesive tape and press the front panel into place.

Install in reverse order.

ORDERING SOFTWARE

Order the software. See 9438292 .

FINISHING

After replacing the control module, the following must be carried out.

- Reprogram the customer programmed data.
- Carry out self-adjustment of the damper motor end positions.
- Test drive the car. Check that the function of the climate control system is OK.
- Then check that no diagnostic trouble codes have been stored during the replacement.

Information about programming the control module, damper motor self-adjustment and reading off diagnostic trouble codes can be found under VIDA vehicle communication.

DASHBOARD ENVIRONMENT PANEL SWITCHES

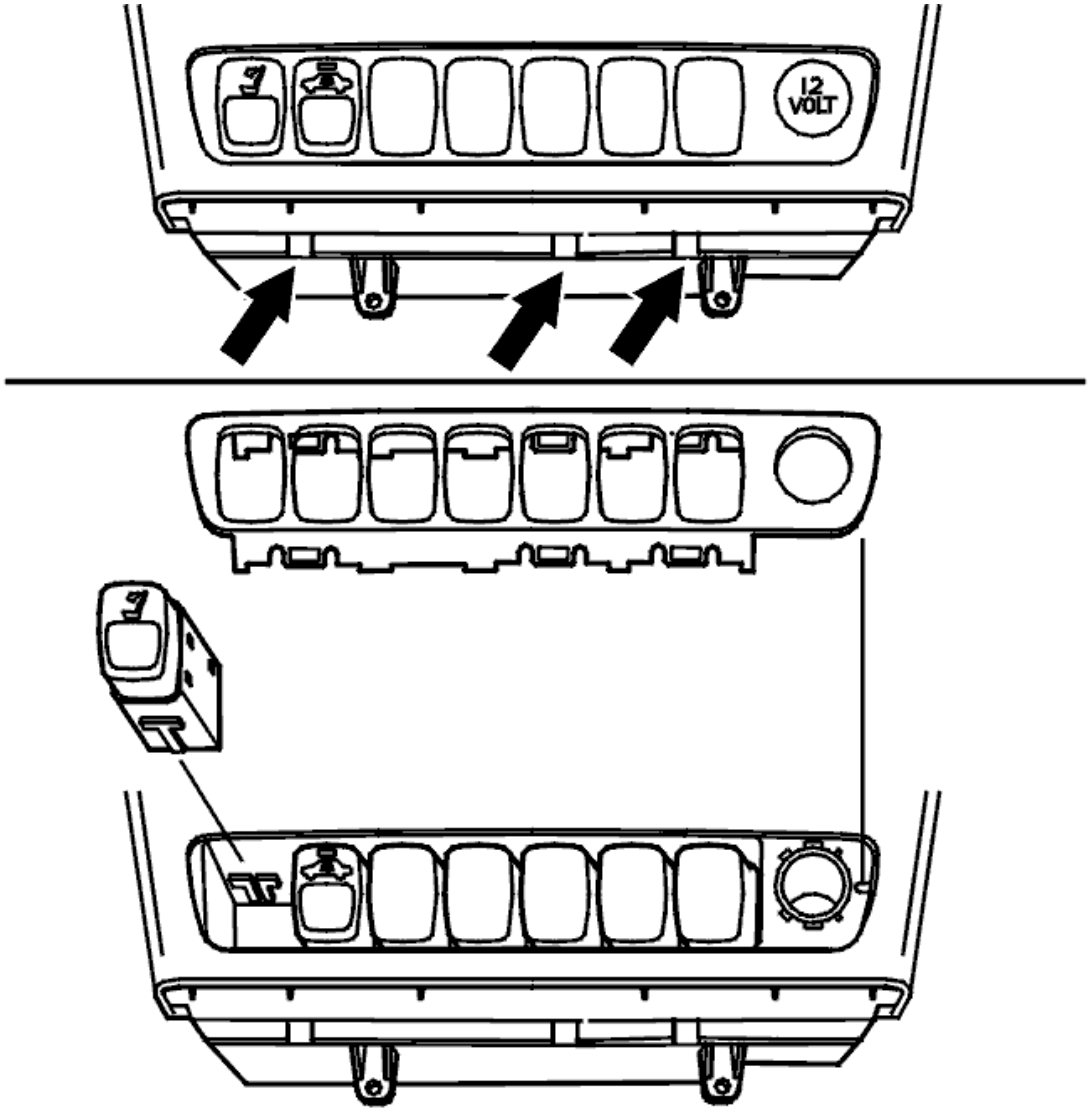

Fig. 15: Dashboard Environment Panel Switches
Courtesy of VOLVO CARS CORPORATION

Remove:

- the switches. See **REPLACING CLIMATE CONTROL UNIT SWITCHES**

Install:

In reverse order.

FILLING WITH FLUORESCENT TRACING AGENT WITH THE REFRIGERANT

REGULATIONS

Filling and leak tracing the climate control system with tracing agent and an UV lamp from Bright Solutions

Inc.

NOTE: **The coloring agent may discolor the car paintwork. Therefore extreme caution must be taken when handling the tracing agent.**

NOTE: **Carefully follow the manufacturers instructions when handling the UV lamp and the tracing agent.**

NOTE: **After filling with the tracing agent, the decal supplied by the manufacturer / supplier must be applied at the point indicated.**

FILLING WITH FLUORESCENT TRACING AGENT

When replacing components in the climate control system, the component (for example the drier) can be filled with tracing agent.

Filling an empty climate control system with tracing agent when a leak cannot be localized

- Fill with 225g of refrigerant with fluorescent tracing agent according to the manufacturers instructions for leak tracing.

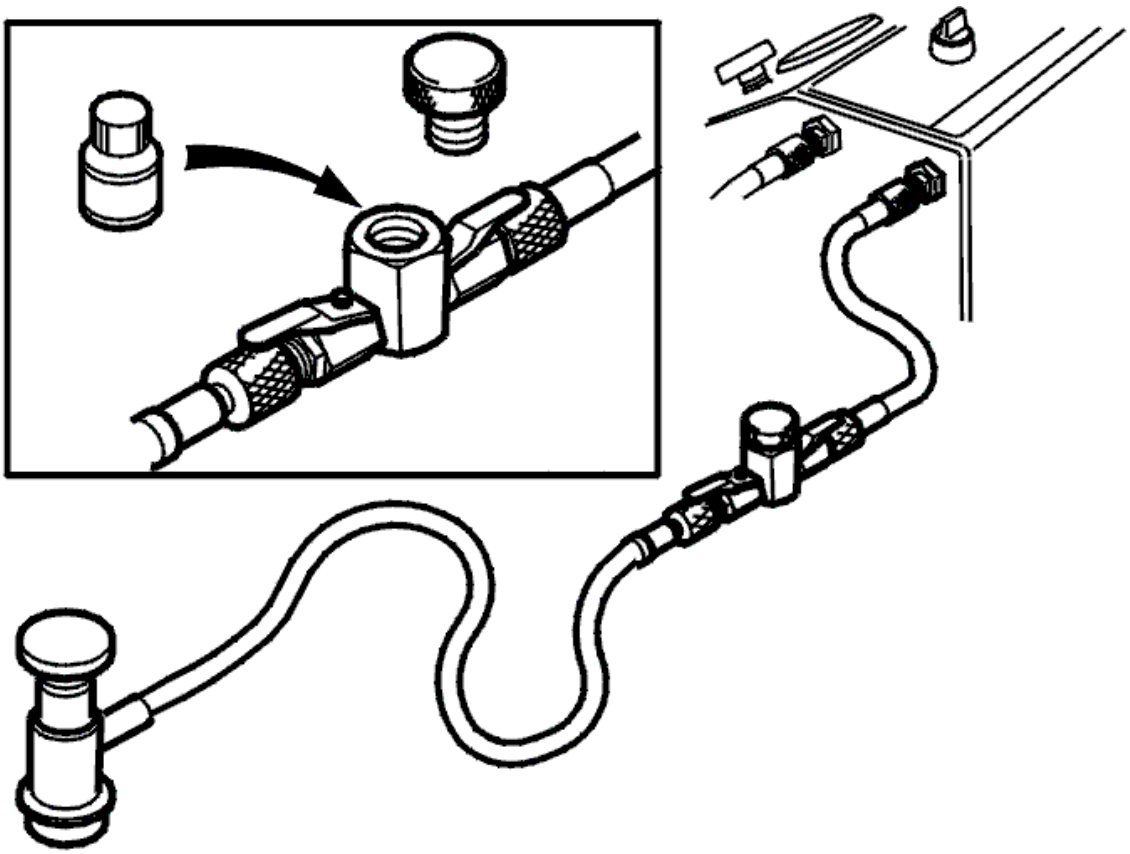

Fig. 16: Filling Climate Control System With Refrigerant Containing Tracing Agent
Courtesy of VOLVO CARS CORPORATION

If the climate control system is filled

- Drain off 225 g of refrigerant, see **REFRIGERANT, DRAINING**
- Fill the climate control system with refrigerant with tracing agent according to the manufacturers instructions
- Leak trace according to **LEAK TRACING, FLUORESCENT TRACING AGENT / UV LAMP** .

If the amount of refrigerant in the climate control unit cannot be determined

- Drain the climate control system according to **REFRIGERANT, DRAINING**
- Fill the climate control system with refrigerant with tracing agent according to the manufacturers instructions
- Leak trace according to **LEAK TRACING, FLUORESCENT TRACING AGENT / UV LAMP** .

HVAC

Electrical system

HVAC

PRESSURE SENSOR, RECEIVER DRIER, REPLACING

As the illustrations in this service information are used for different model years and / or models, some variation may occur. However, the essential information in the illustrations is always correct.

PREPARATIONS

Read the safety regulations covering the handling of refrigerant. See **REFRIGERANT, SAFETY REGULATIONS** .

Drain the refrigerant from the system. See **REFRIGERANT, DRAINING** .

REMOVING THE PRESSURE SENSOR FOR THE RECEIVER DRIER

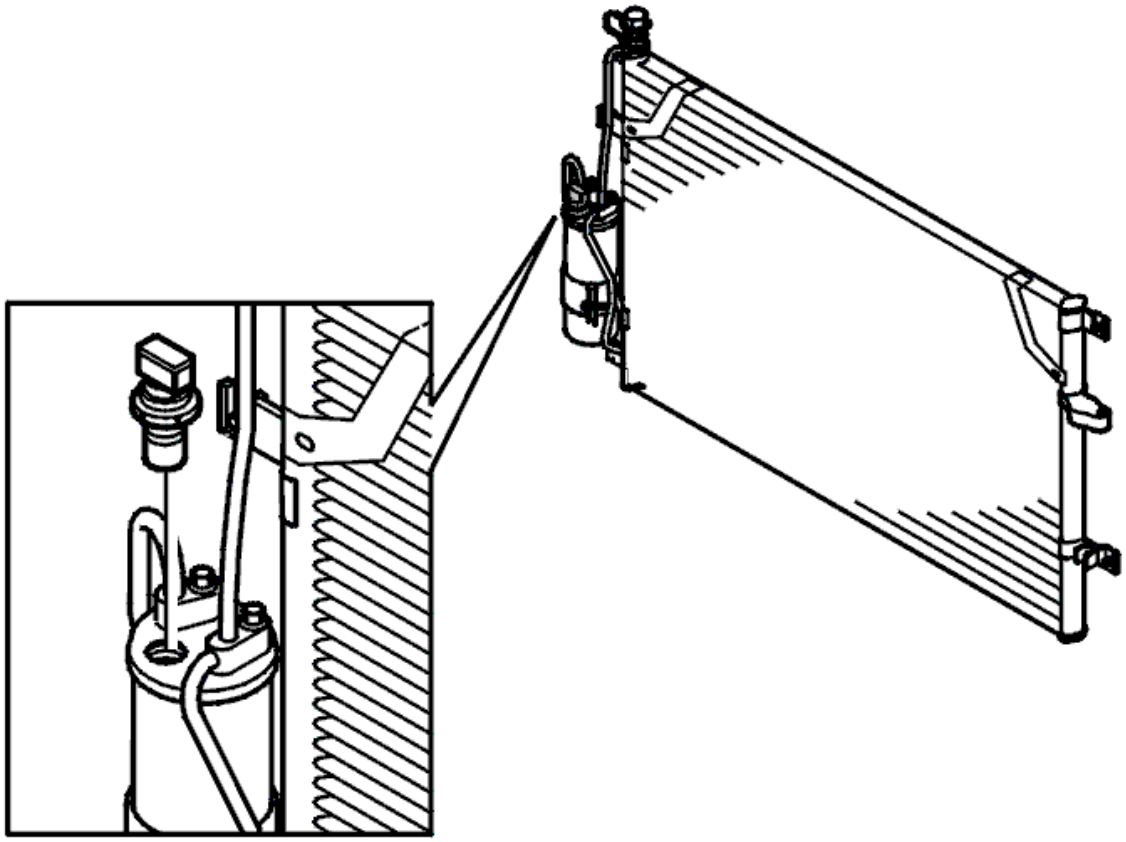

Fig. 1: Locating Pressure Sensor
Courtesy of VOLVO CARS CORPORATION

Remove:

- the right-hand headlamp. For **2003-2006** , see **HEADLIGHT/BULB, REPLACING** . For **2007-2012** , see **HEADLIGHT/BULB, REPLACING** .
- the connector from the pressure sensor
- the pressure sensor.

INSTALLING THE PRESSURE SENSOR FOR THE RECEIVER DRIER

NOTE: For tightening torques, see TIGHTENING TORQUE .

NOTE: Always use new O-rings lubricated with compressor oil.

Place the pressure sensor in the correct position and tighten.

Vacuum pump the air conditioning (A/C) system. See **VACUUM PUMPING** .

Fill the air conditioning (A/C) system with refrigerant. See **REFRIGERANT, FILLING** .

Leak trace the air conditioning (A/C) system. See **LEAK TRACING, FLUORESCENT TRACING AGENT / UV LAMP** .

Install the right-hand headlamp. For **2003-2006** , see **HEADLIGHT/BULB, REPLACING** . For **2007-2012** , see **HEADLIGHT/BULB, REPLACING** .

HVAC

Power transmission

HVAC

FLUORESCENT TRACING AGENT, FILLING

REGULATIONS

Filling and leak tracing the climate control system with tracing agent and an UV lamp from Bright Solutions Inc.

NOTE: **The coloring agent may discolor the car paintwork. Therefore extreme caution must be taken when handling the tracing agent.**

NOTE: **Carefully follow the manufacturers instructions when handling the UV lamp and the tracing agent.**

NOTE: **After filling with the tracing agent, the decal supplied by the manufacturer / supplier must be applied at the point indicated.**

FILLING WITH FLUORESCENT TRACING AGENT

When replacing components in the climate control system, the component (for example the drier) can be filled with tracing agent.

Filling an empty climate control system with tracing agent when a leak cannot be localized

- Fill with 225 g of refrigerant with fluorescent tracing agent according to the manufacturers instructions for leak tracing.

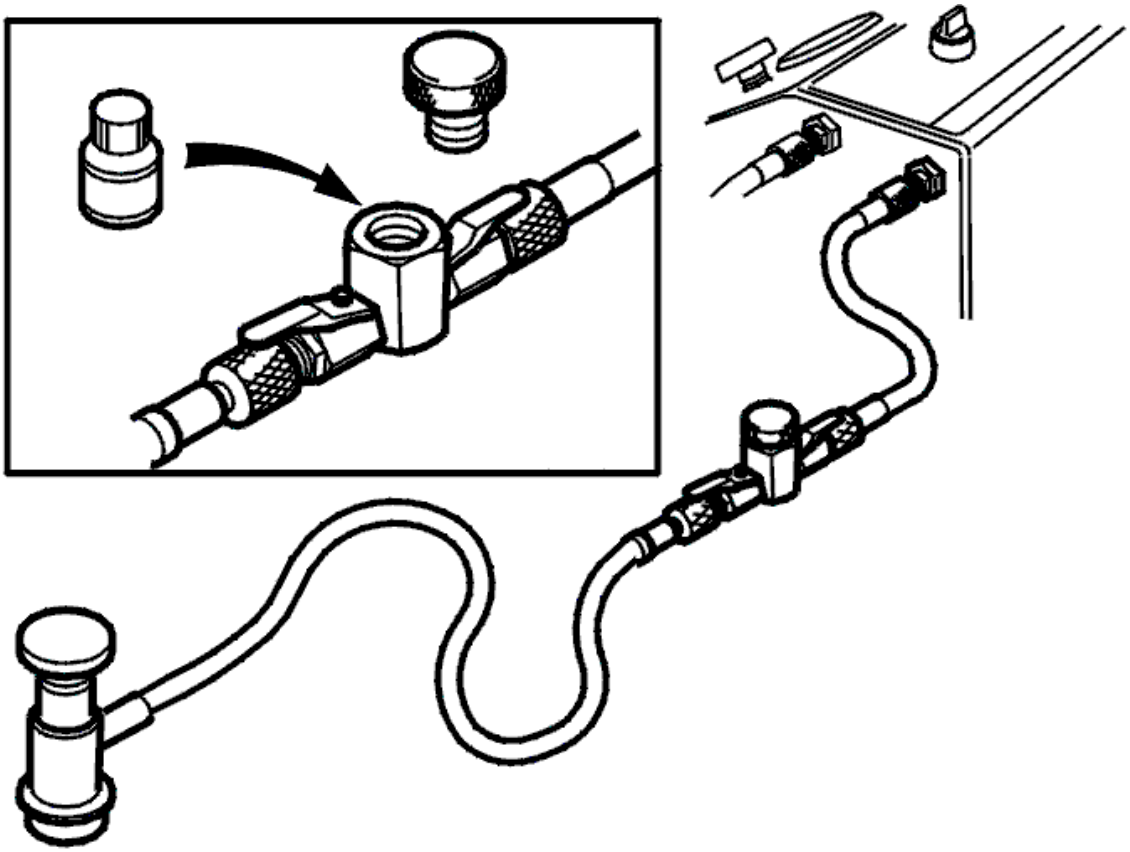

Fig. 1: Filling Climate Control System With Refrigerant Containing Tracing Agent
Courtesy of VOLVO CARS CORPORATION

If the climate control system is filled

- Drain off 225 g of refrigerant, see **REFRIGERANT, DRAINING** .
- Fill the climate control system with refrigerant with tracing agent according to the manufacturers instructions
- Leak-trace. See **LEAK DETECTION, TRACER AGENT** .

If the amount of refrigerant in the climate control unit cannot be determined

- Drain the climate control system. See **REFRIGERANT, DRAINING** .
- Fill the climate control system with refrigerant with tracing agent according to the manufacturers instructions
- Leak-trace. See **LEAK DETECTION, TRACER AGENT** .

ACCESSORIES AND EQUIPMENT

General - Specifications, Mechanical

TIGHTENING TORQUE

GENERAL TIGHTENING TORQUE

NOTE: Screws coated with a locking fluid or self locking nuts must be replaced with new when reinstalled.

See the table below to find the tightening torques for components not included in the summary.

Nuts and screws which are not self locking can be reused provided that they are in good condition.

Thread	Tightening torque (Nm)
M5	5
M6	10
M7	17
M8	24
M10	50
M12	80
M14	130

SUMMARY OF TIGHTENING TORQUES FOR SPECIFIC COMPONENTS

NOTE: Screws coated with locking fluid or sealant must be replaced with new ones when reinstalled.

Always use **new screws and nuts** when angle tightening. Any exceptions to this rule will be indicated in the method.

Angle-tightening in tight spaces. See **SCREWED JOINT, TORQUE/ANGLE TIGHTENING**.

Seat belts	
Seatbelt front: seatbelt reel Seatbelt front: bracket Seatbelt rear center: seatbelt reel Seatbelt rear center: upper seatbelt mounting Seatbelt (third row): seatbelt reel	40 Nm 48 Nm 24 Nm 48 Nm
Collision sensor	
Collision sensor Collision sensor front	6 Nm 6 Nm
Buckle seatbelt	

Buckle seatbelt front Buckle seatbelt rear (second row) Buckle seatbelt rear (third row)	48 Nm 48 Nm 48 Nm
End plate	
End plate front Endplate rear (second row) End plate center seat (second row) End plate rear (third row)	48 Nm 48 Nm 48 Nm 48 Nm
Whiplash unit	
Deformation element Whiplash element: self tapping Torx-screw, fixed seat Whiplash element: lock nut	17 Nm 9 Nm 18 Nm
Rails	
Rails front mounting Rails center mounting Rails rear mounting	8 Nm 8 Nm 8 Nm
Engine coolant heater	
Control module Water pump holder/clamp Cover (over engine coolant temperature sensor and overheat protection thermostat) Overheat protection thermostat Engine cooling fan (FC) mounting Engine cooling fan (FC) shaft Glow plug	2 Nm 3 Nm 2 Nm 2 Nm 2 Nm 3 Nm 15 Nm
AC compressor	
Magnetic clutch compressor - magnetic coil Magnetic clutch compressor - drive plate (5 and 6 cylinder engines) Magnetic clutch compressor - drive plate (8 cylinder engine)	5 Nm 13 Nm 24 Nm
Air conditioning (A/C) condenser with integrated drier	
Pressure sensor Drier, lower mounting	13 Nm 13 Nm
Drier, upper mounting	Step 1: 6 Nm. Step 2: Loosen 90°.
Rear air conditioning (A/C)	
Upper mounting points (climate control unit assembly) Lower mounting point (climate control unit assembly) Fan motor Pipe connection to expansion valve Covers around evaporator	6 Nm 6 Nm 1.7 ± 0.3 Nm 4.5 ± 0.5 Nm 1.5 ± 0.3 Nm
Seats	
Upper screw seat frame	50 Nm
Lower screw seat frame	24 Nm
Floor hatch	
Sems screw M6 x 20	6 Nm

Center arm rest rear seat	
Screw for the bracket	1 Nm
Screw for the shaft and cover	4 Nm

SCREWED JOINT, TORQUE/ANGLE TIGHTENING

Special tools:

9512050

SCREWED JOINT

There are a great number of torque spanner systems available on the market where the spanner grip can be replaced with other types. These wench grips are normally ideally suited to torque tightening screwed joints in poorly accessible places.

There may be occasions when torque tightening of a screwed joint must be followed by angle tightening and space does not allow the use of protractor (part number **9512050**). In these cases, use either a nut, a screw head or a tool. These are usually hexagonal and each corner is **60°** . If there are twelve edges, each corner is **30°** .

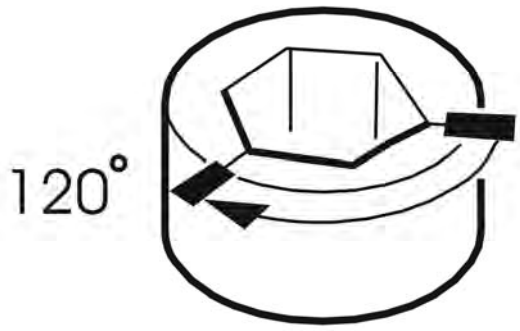

Fig. 1: Identifying Marked Nut

To angle tighten, mark the material and nut for example as illustrated and then tighten so that the markings are

opposite each other.

SURFACE TREATMENT MATERIAL

PAINT, SANDING AND POLISHING

MATERIAL STARTER KIT

Fig. 2: Identifying Material Starter Kit
Courtesy of VOLVO CARS CORPORATION

USA/Asia reference number: VC-NA-0108-3M

1. 3M 05927
2. 3M 06068
3. 3M 05703
4. 3M 05738
5. 3M 05733
6. 3M 00950
7. 3M 02085
8. 3M Blue 06020, Yellow 06016

EU reference number: VC-EMEA-0208-3M

1. 3M 80349

2. 3M 50383
3. 3M 50390
4. 3M 09550
5. 3M 50388
6. 3M 50238/62011
7. 3M 50414
8. 3M Blue 50486, Yellow 50400

Japan reference number: VP-JPN-0308-3M

1. 3M 05939
2. 3M 05969
3. 3M 05755
4. 3M 05766
5. 3M 05734
6. 3M O/D DF2 1500
7. 3M 02034
8. 3M 05351

ISOPROPANOL

Fig. 3: Identifying Spray Bottle
Courtesy of VOLVO CARS CORPORATION

Use: Isopropanol, 1161721

Mix 30% isopropanol and 70% water in a spray bottle.

UV-LIGHT

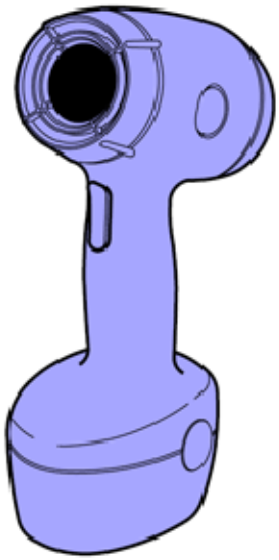

Fig. 4: Identifying UV-Light
Courtesy of VOLVO CARS CORPORATION

US/Asia: 3M 16400

EU: 3M 16407

Japan: 3M 16400

PAINT CODE (2007-12)

Exterior color, color codes

Fig. 5: Identifying Paint Code Locations
Courtesy of VOLVO CARS CORPORATION

Fig. 6: Identifying Exterior Color Code
Courtesy of VOLVO CARS CORPORATION

Exterior color, code/supplier/paint type. Written in two groups divided by a -.

The first group (3 digits) is the exterior colour, the last group (2 digits) is the supplier and paint type.

If the car has 2 colours, both codes are written, divided by a "/". Then the main color is to the left of "/".

Information about exterior colors

Fig. 7: Identifying Paint Manufacturer Code
Courtesy of VOLVO CARS CORPORATION

Manufacturer

1. BASF
2. Herberts
3. PPG
4. DuPont

Fig. 8: Identifying Lacquer Type Code
Courtesy of VOLVO CARS CORPORATION

Lacquer type

1. Solvent-based solid/metallic/pearl
2. Water-based metallic/pearl + 1K clear lacquer
3. Water-based solid + 1K clear lacquer
4. Solvent-based + 1K clear lacquer

5. Solvent-based pearl + 2K clear lacquer*
6. Water-based solid/metallic/pearl + 2K clear lacquer

*Depending on the transparent pearl paint, it contains a solid colour that is to be applied before the pearl paint.

Fig. 9: Identifying Two-Colored Exterior Code
Courtesy of VOLVO CARS CORPORATION

Two-colored exterior

If the car has two colours, both codes are written, divided by a "/". Then the main color is to the left of "/".

HVAC

Power transmission

HVAC

LEAK DETECTION, TRACER AGENT

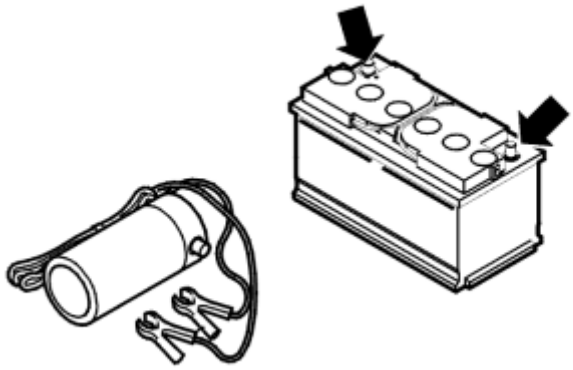

Fig. 1: Identifying UV Lamp, Cables & Battery
Courtesy of VOLVO CARS CORPORATION

NOTE: **The coloring agent may discolor the vehicle paintwork. Therefore extreme caution must be taken when handling the tracing agent.**

NOTE: **Carefully follow the manufacturers instructions when handling the UV lamp and the tracing agent.**

NOTE: **After filling with the tracing agent, the decal supplied by the manufacturer / supplier must be applied at the point indicated.**

NOTE: **When leak tracing, always use the protective goggles supplied with the equipment. The goggles make the color more visible.**

Fill the climate control system with fluorescent tracing agent. See **FLUORESCENT TRACING AGENT, FILLING** .

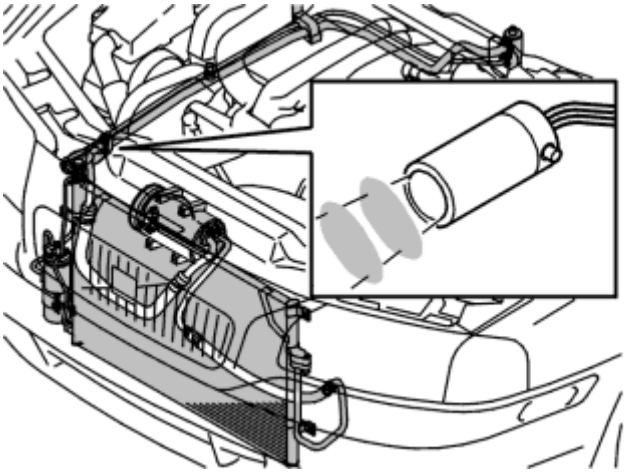

Fig. 2: Identifying UV Lamp & Coolant System
Courtesy of VOLVO CARS CORPORATION

Connect the UV lamp. See the manufacturer's instructions.

Leak trace using the UV lamp.

The fluorescent tracing agent is light green when leak tracing with a UV lamp.

NOTE: This light green color may be mistaken for leaked or spilled coolant which Volvo uses in its products.

The method for leak tracing using fluorescent tracing agent is the same for both factory filled and aftermarket filled climate control systems.

HVAC

Body and interior

HVAC

LEAK TRACING, ELECTRONIC LEAK TRACER

Special tools:

see **9511207**

LEAK TRACING WITH AN ELECTRONIC LEAK TRACER USING REFRIGERANT AS A TRACING AGENT

When fault tracing using refrigerant as a tracing agent, we recommend that leak tracer see **9511207** is used.

PREPARATIONS

NOTE: The engine must always be switched off when leak tracing.

An electronic leak tracer can be used if there is still refrigerant in the climate control system.

If the climate control system is empty and a visual or physical test has not identified the leak.

LEAK TRACING

- Fill the climate control system with 200 grams of refrigerant
- There must not be any strong smells or fumes in the engine compartment. These can affect the leak tracing
- Leak-trace using a leak tracer.

IF NO LEAKAGE IS FOUND

- Fill with the remaining amount of refrigerant
- Add fluorescent tracing agent according to **FILLING WITH FLUORESCENT TRACING AGENT WITH THE REFRIGERANT**
- If leakage is suspected, ask the customer to drive the car and then return for new leak tracing / repairs.

IF LEAKAGE IS DETECTED

- Remedy the cause of the leak
- Vacuum pump according to **VACUUM PUMPING**
- Add fluorescent tracing agent with the refrigerant according to **FILLING WITH FLUORESCENT TRACING AGENT WITH THE REFRIGERANT** .

Or:

- Fill with refrigerant according to **REFRIGERANT, FILLING**
- Leak trace according to **LEAK TRACING WITH AN ELECTRONIC LEAK TRACER USING REFRIGERANT AS A TRACING AGENT**.

Or:

- Leak trace according to **LEAK TRACING, FLUORESCENT TRACING AGENT / UV LAMP** .

OIL IN THE A/C SYSTEM

Special tools:

see **9511204**

ADDITION OF LUBRICATING OIL

WARNING: Oils should not be mixed. Always use the correct type of compressor oil.

NOTE: Too much lubricating oil will impair cooling. Too little lubricating oil will damage the compressor.

When repairing leaks, or when a component is replaced, lubricating oil must be added. The amount of oil for each component depends on whether the leak happened slowly or quickly.

Slow leak (more than 24 hours)

There is not normally a great risk of oil loss with a slow leak.

The following procedures apply when replacing the components:

Fast leak (hose burst for example)

A fast leak often means that lubricating oil is drawn out with the coolant.

- **HVAC OIL AMOUNT SPECIFICATIONS**

Receiver	$30cm^3$
Evaporator	$50cm^3$
Condenser	$30cm^3$
Pipe	$10cm^3$
Hose	$10cm^3$

Compressor

Preparatory stage for oil change

- Measure the volume of oil drained from the compressor
- Replace the drained oil volume according to the table below:

Drained oil volume	Reusing the compressor	New compressor
More than 60% of the total oil volume	Replace the drained oil volume with the equivalent volume	$180cm^3$ - (drained oil volume + $20cm^3$)
Less than 60% of the total oil volume	Fill up 60% of the total oil volume of the system	Fill up $180cm^3$ * 40% - $20cm^3$

CAUTION: When installing a completely new system:

Check that there is oil in the compressor. The other components should contain no oil.

REPLACING THE RECEIVER

Replace the receiver in the following case:

- When replacing the compressor (compressor breakdown for example).
- For coolant leaks in which nearly 100% has leaked out of the system. (System not under pressure).
- When replacing an A/C component after the warranty period.

FILLING THE A/C SYSTEM WITH OIL

NOTE: Fill with oil before vacuum pumping.

FILLING WITH PAG OIL

When replacing pipes or hoses the oil can be filled through the service valve.

When filling with PAG oil (part number 8708581-7) in the vehicle, do the following:

- Remove the needle valve in the service valve using valve tool see **9511204**

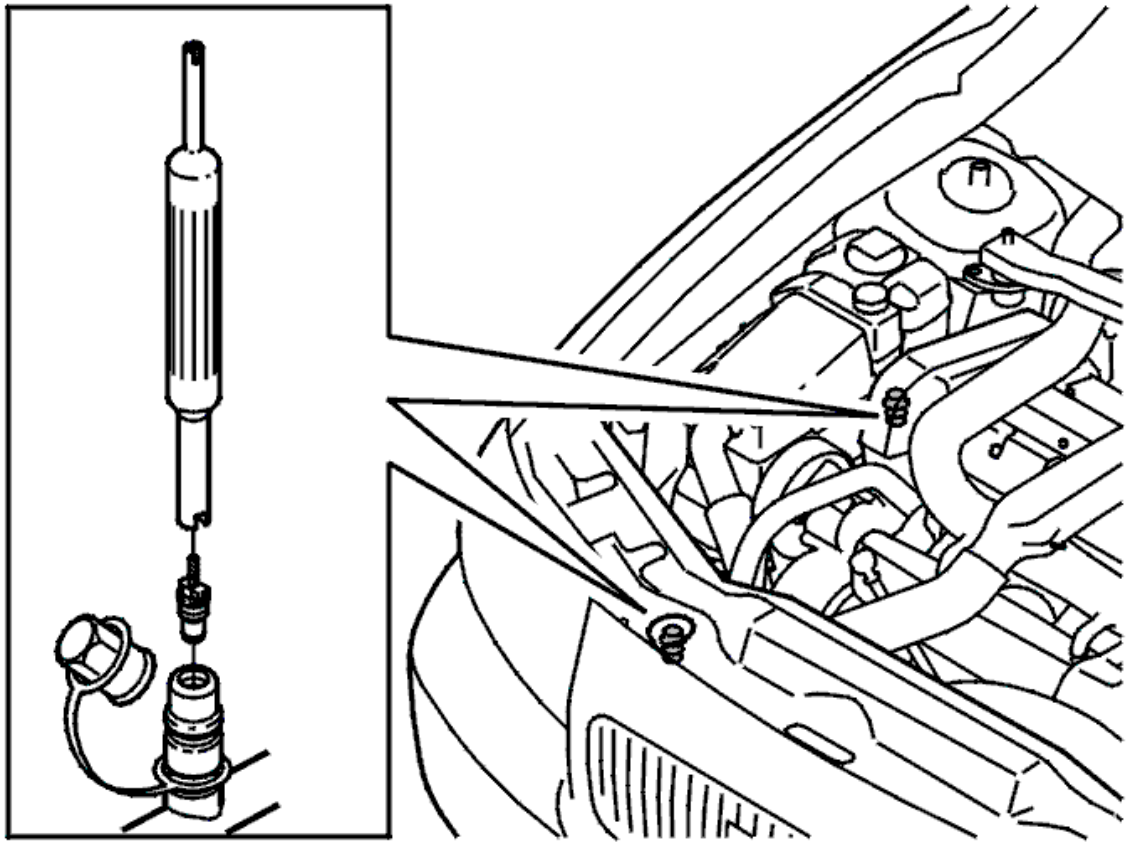

Fig. 1: Identifying Needle Valve
Courtesy of VOLVO CARS CORPORATION

Use the filler sprayer (without plastic hose) which is supplied with the station. The sprayer may need to be cleaned so that different oils are not mixed.

- Check according to the table above and measure how much oil should be filled. After filling with oil, re-install the needle valve.

NOTE: Use only your thumb and index finger when tightening the service valve using valve needle tool see 9511204 . This is to prevent damage to the seal on the valve.

REFRIGERANT, VACUUM PUMPING

VACUUM PUMPING

VACUUM PUMPING REFRIGERANT

CAUTION: Check and, if necessary, top up with new compressor oil according to REFRIGERANT, SAFETY REGULATIONS before vacuum-pumping the car's climate control system.

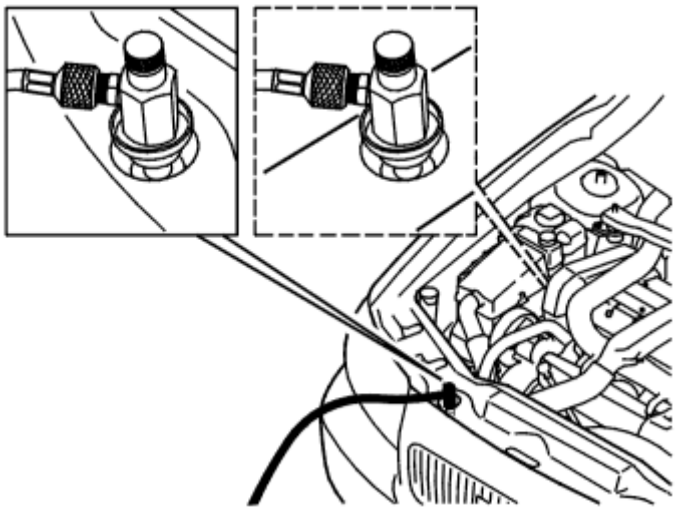

Fig. 2: Identifying Recycling Unit Attached To Service Valve
Courtesy of VOLVO CARS CORPORATION

- During vacuum pumping, the vacuum pump can be connected to both the high pressure (HP) and low pressure (LP) sides
- Operate the vacuum pump for at least 50 minutes.

VACUUM TEST

The vacuum must be checked after vacuum pumping.

- The vacuum gauge's value may only increase by 0.2 mbar one dash (0.1-0.3 mbar) during a period of 4 minutes.

NOTE: The vacuum test is not a substitute for leak tracing.

REPLACING CLIMATE CONTROL UNIT SWITCHES

REMOVAL

PREPARATIONS

- Ignition off
- Remove the dashboard environment panel according to **DASHBOARD ENVIRONMENT PANEL (INCLUDING CLIMATE CONTROL MODULE (CCM)), REPLACING** .

SWITCHES, LOWER ROW

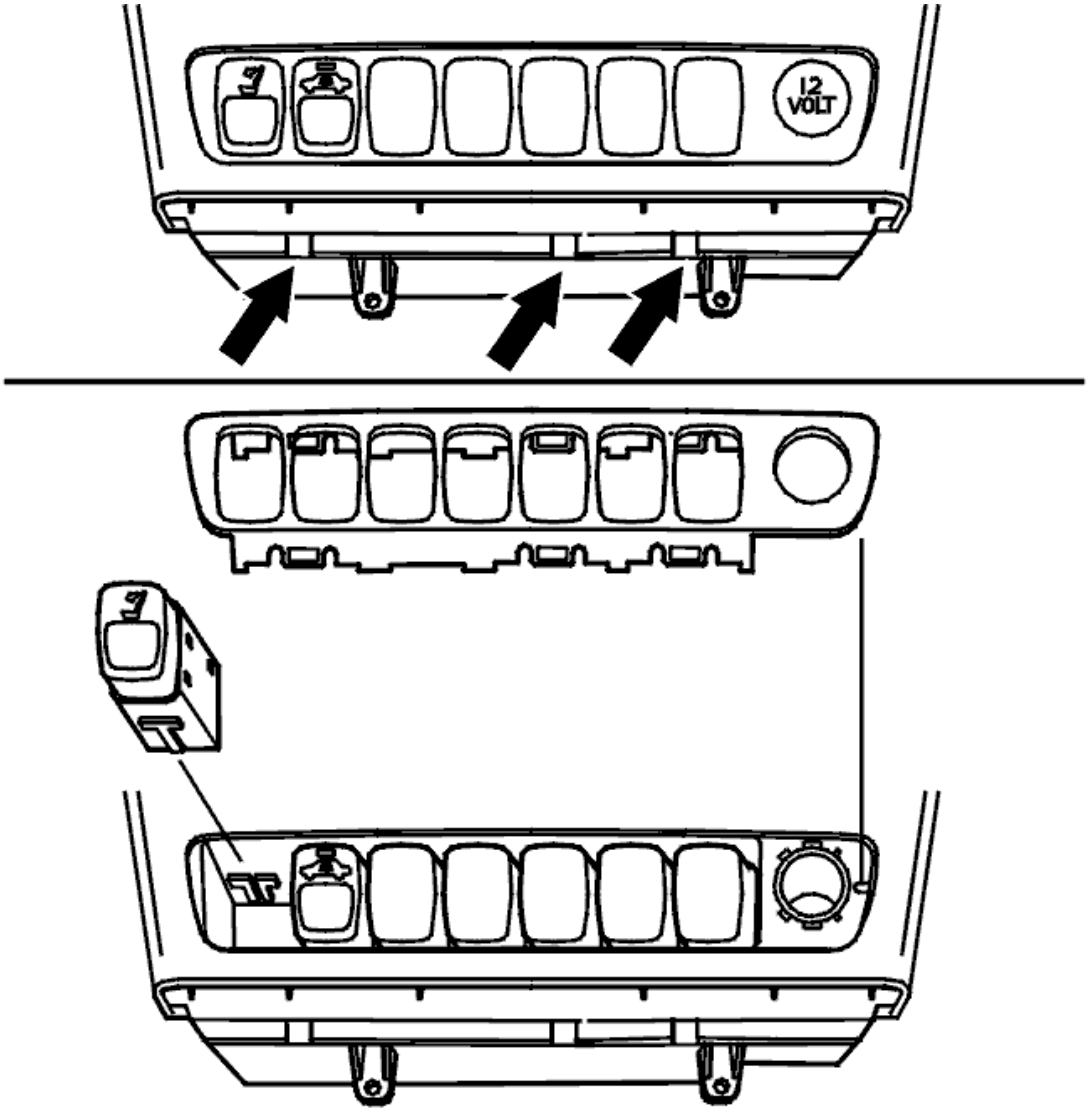

Fig. 3: Dashboard Environment Panel Switches
Courtesy of VOLVO CARS CORPORATION

- Release the panel by pressing up the catches from underneath. See the illustration, upper half
- Remove any blind switches (covers where there is no switch) to make removing the switches easier
- Remove the switch by carefully pulling it straight out. See the illustration, lower half.

INSTALLATION

SWITCHES, LOWER ROW

In reverse order.

CAUTION: Carefully press the switch down when installing it. The terminal pins on the printed circuit board are fragile.

REPLACING HEAT SHIELD FOR THE TXV VALVE

REMOVAL

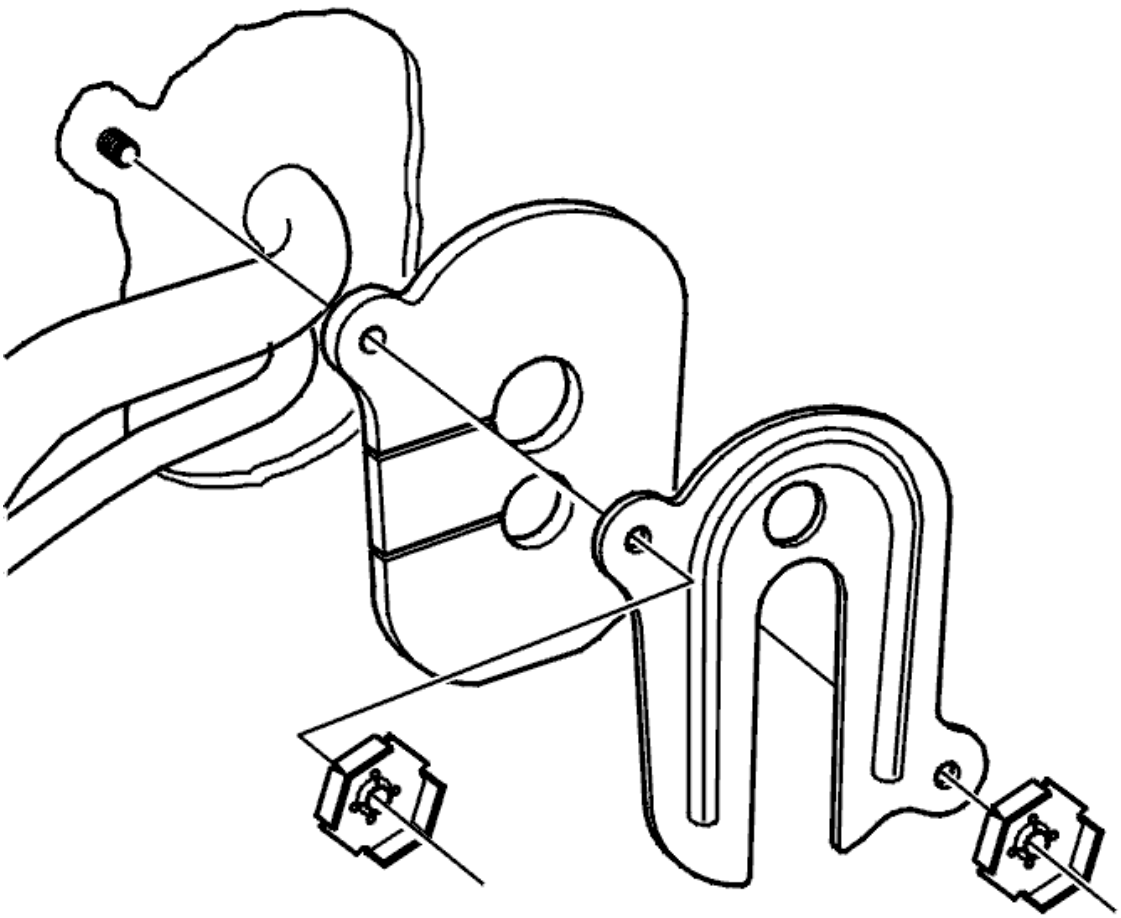

Fig. 4: Heat Shield For TXV Valve
Courtesy of VOLVO CARS CORPORATION

Remove

- the nuts
- the panel
- the seal.

INSTALLATION

In reverse order.

NOTE: **The heat shield is a replacement part for previous models. In these cases the firewall insulation in the engine compartment should be cut to the size of the heat shield.**

VISUAL AND PHYSICAL CHECK

Large and slow leaks will often result in air conditioning (A/C) compressor oil being drawn out with the refrigerant.

A visual inspection can localize the point where the oil gathers and identify the source of the leak.

- Check the system for corrosion which could cause refrigerant to leak
- Check that there are no loose components.

ACCESSORIES AND BODY, CAB

Miscellaneous - Design and Function

CLIMATE CONTROL MODULE (2003-2004)

DESIGN

CLIMATE CONTROL UNIT

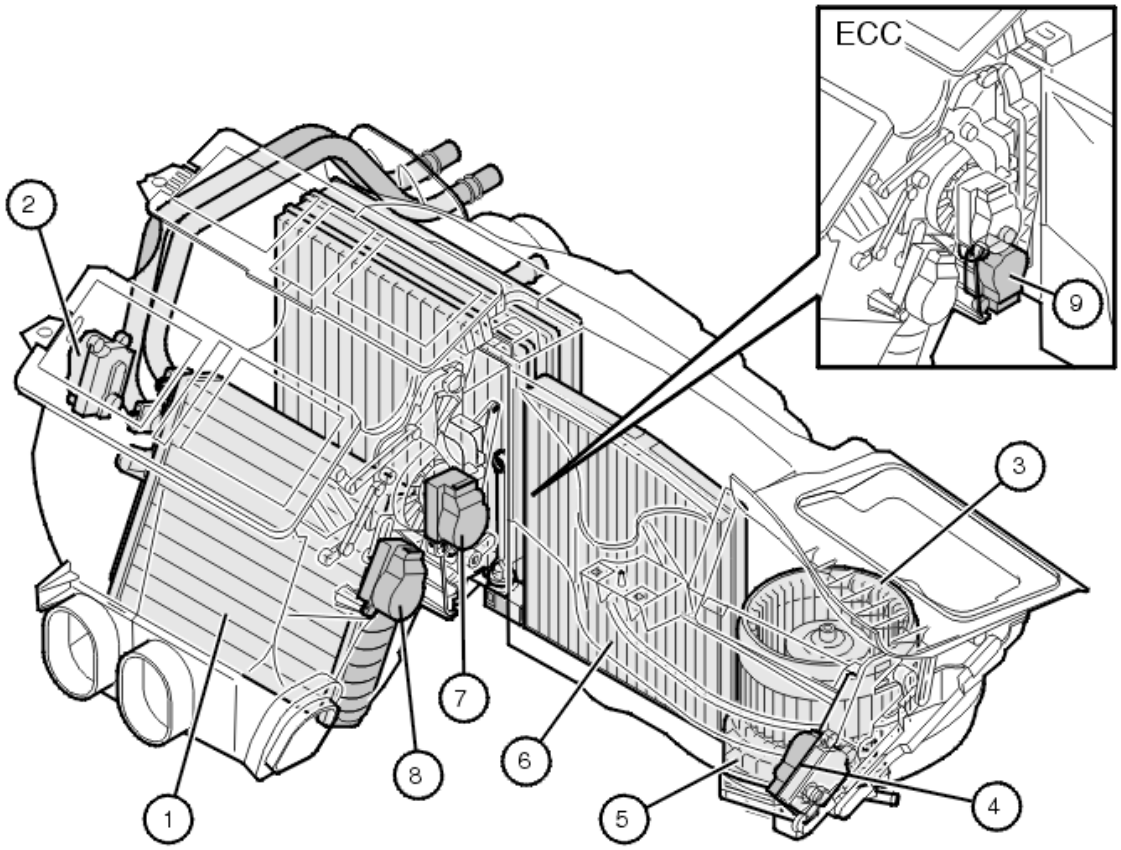

Fig. 1: Climate Control Unit Components
Courtesy of VOLVO CARS CORPORATION

The climate control unit consists of the following components:

1. Heater element
2. Damper motor, temperature, left
3. Blower fan
4. Damper motor, fresh air / recirculation
5. Power unit for blower fan motor
6. Particle filter
7. Damper motor, ventilation and floor (also defroster for MCC/STD)

8. Damper motor, temperature, right
9. Damper motor defroster (ECC).

Engine coolant constantly flows through the heater element. There is no valve to regulate the flow. The selected temperature is achieved using dampers for the right and left-hand sides of the car installed upstream and downstream of the heater element. These control the amount of air to be warmed. There are also dampers downstream of the heater element that guide the airflow to the correct air vent.

The climate control module provides infinitely variable electronic blower fan control. When AUTO mode (only electronic climate control) is engaged the climate control module (CCM) adapts the blower fan speed to the setting of the controls and the vehicle speed. The blower fan can be set to run-on in order to reduce residual moisture in the evaporator.

A timer located in the central electronic module (CEM) controls the run-on time. 50 minutes after the engine has been switched off and the ignition has been turned to position 0 or I the central electronic module (CEM) supplies power to the climate control module (CCM) and the blower fan is activated at full speed for 7 minutes. This run-on dries the evaporator and prevents bad odors.

This function is programmed at the factory, but can be deactivated in the event of customer complaints via programming of customer parameters. Programming is carried out via VIDA (Volvo scan tool).

The function is only available to cars of structure week 199850 and later.

All damper motors are of the stepper type. Their position and speed is controlled electronically.

Manual climate control and standard climate control have four stepper motors controlling the following dampers:

- Ventilation / floor / defroster via a link system
- Recirculation and fresh air via a link system
- Temperature left
- Temperature right.

For electronic climate control (ECC) there is an extra stepper motor which controls the defroster. The wiring between the damper motors and the climate control module (CCM) consists of four cables for supply voltage and directional control and a separate cable for each motor which controls the motor to be activated. Each motor has four coils. The corresponding coils in each motor are supplied with power at the same time. The motors are only supplied with power if they are grounded at the same time. When a new position is selected for the damper motor, the climate control module (CCM) calculates how many steps are required to complete the movement. The climate control module (CCM) then activates the damper motor with the necessary number of steps. When the motor is instructed to move to an end position, the motor is activated until it stops. This end position is then used as a limit position. This means that the damper motors are self-adjusting, but only after the limit positions have been reached. When replacing the damper motors, ensure that the self-adjustment is carried out. Otherwise the customer may experience defective climate control.

There are diagnostics for the blower fan and damper motors.

AIR CONDITIONING (ECC AND MCC ONLY)

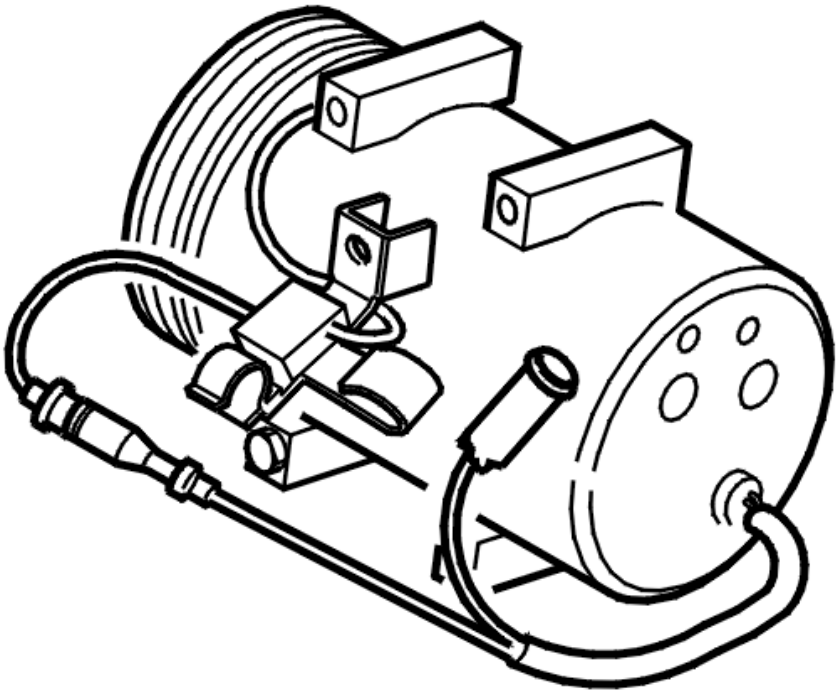

Fig. 2: Identifying A/C Compressor
Courtesy of VOLVO CARS CORPORATION

The engine control module (ECM) controls the A/C compressor. When the A/C switch on the dashboard environment panel is activated, a request to activate the compressor is transmitted via Control area network (CAN) to the engine control module (ECM). The engine control module (ECM) determines when the compressor must operate.

If any of the following conditions are met the compressor is disconnected:

- High engine coolant temperature (ECT)
- Wide open throttle (WOT)
- The engine has just been started
- Overpressure in the air conditioning (A/C) system.

When the engine is started the engine control module (ECM) activates the air conditioning compressor for a short period even if the climate control module (CCM) has not transmitted a request about this. This is carried out for diagnosis. This check is carried out at all temperatures exceeding -6 °C.

The advantage in allowing the engine control module (ECM) to control the air conditioning compressor is that it can delay compressor activation somewhat, if the idling speed must be compensated for the extra load for

example.

SUN SENSOR (ELECTRONIC CLIMATE CONTROL ONLY)

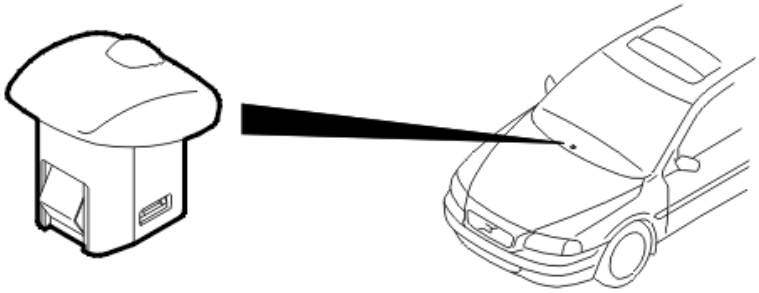

Fig. 3: Locating Sun Sensor
Courtesy of VOLVO CARS CORPORATION

The sun sensor transmits information about sun intensity to the climate control module (CCM).

The sun sensor consists of a photo diode which is supplied with power from the control module. The conductivity of the diode depends on the amount of light to which it is exposed. The diode is located under a diffusing lens which reduces the sensitivity of the photo diode to the angle of the light hitting it. Increased sun intensity reduces the voltage over the photo diode. The control module measures the voltage over the photo diode and compensates for high sun intensity by lowering the ventilation air temperature, changing the distribution of air and increasing the speed of the blower fan.

The climate control module (CCM) starts to compensate the blower fan speed at a sun intensity of 400 W/m^2 and reaches maximum compensation at a sun intensity of 1000 W/m^2 .

The sun sensor is located in the middle of the dashboard by the windshield.

There are diagnostics for the sun sensor.

AIR QUALITY SENSOR (ELECTRONIC CLIMATE CONTROL ONLY, OPTION)

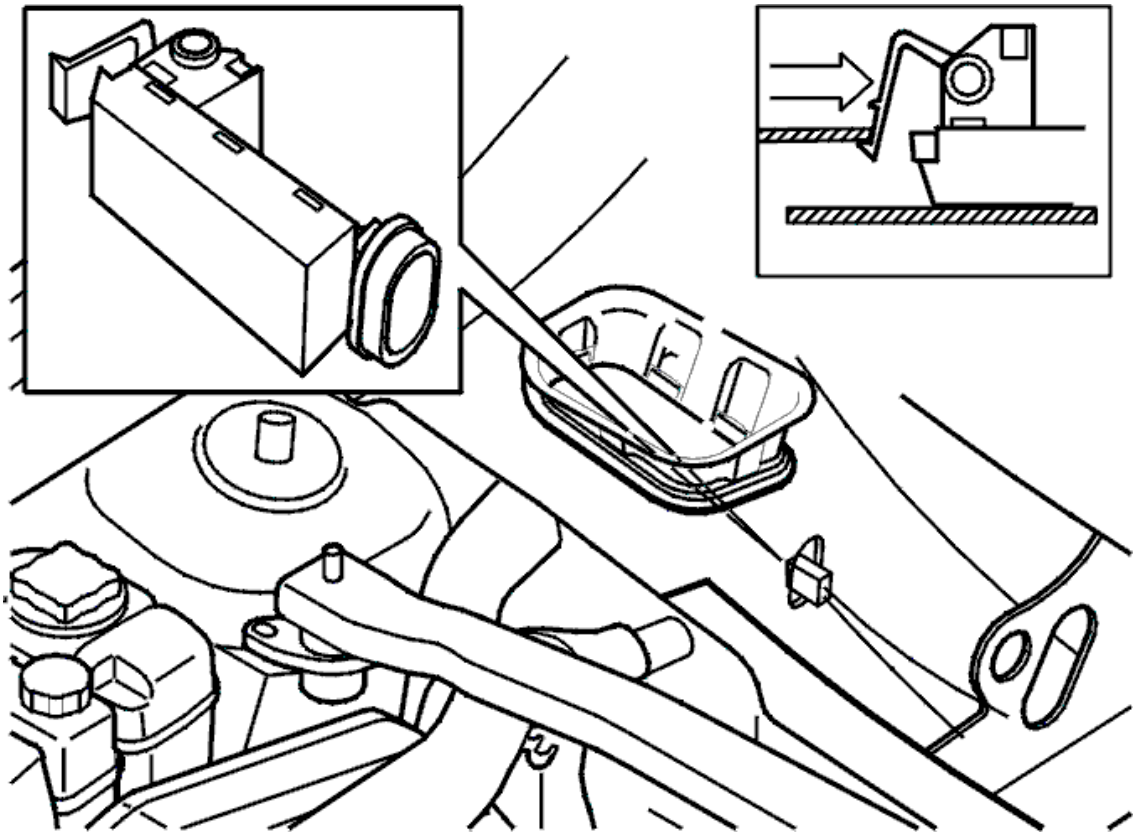

Fig. 4: Air Quality Sensor
Courtesy of VOLVO CARS CORPORATION

The air quality sensor is available as an option for the electronic climate control from model year 2000. Its function is to transmit a signal to the climate control module (CCM) if it detects increased concentrations of pollutants in the outside air.

The air quality sensor measures the CO_x and NO_x content.

The air quality sensor compares current values with previous ones and can calculate changes in pollutant concentrations.

The signal from the air quality sensor to the climate control module (CCM) is a pulse width modulation (PWM) signal and has four stages, 0-3:

- signal 0= no increase in or reduced pollutant level
- signal 1=gradual increase in pollutant level
- signal 2=moderate increase in pollutant level
- signal 3=rapid increase in pollutant level.

The control module uses the signal to control the recirculation damper motor.

The air quality sensor is located on the right-hand side of the fresh air intake under the cowl.

There are diagnostics for the air quality sensor.

SWITCHES, DASHBOARD ENVIRONMENT PANEL, (LOWER SECTION)

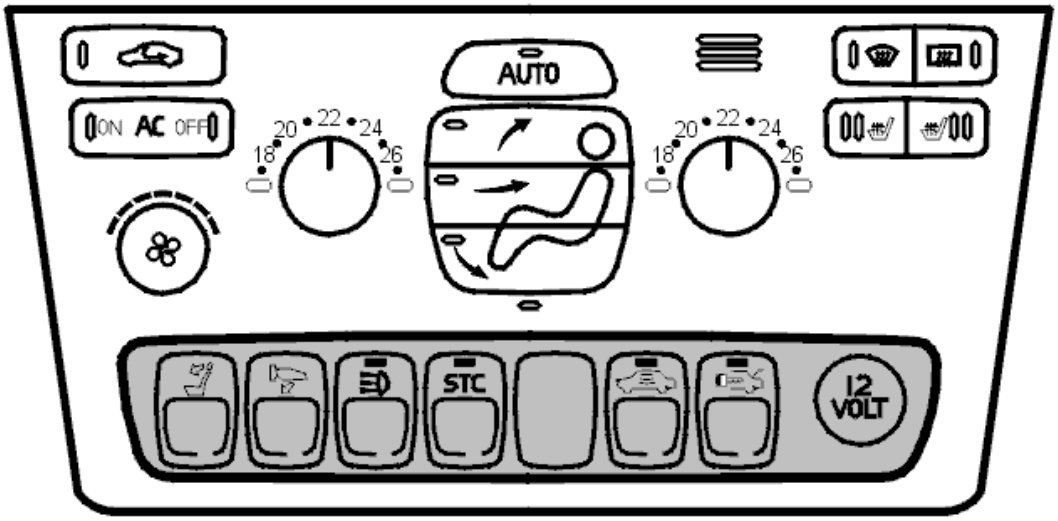

Fig. 5: Identifying Climate Control Module (CCM)
Courtesy of VOLVO CARS CORPORATION

Across the lower section of the dashboard environment panel there is a 12V socket and space for a maximum of seven switches.

Each switch has its own identity. This is unique for the relevant function. The switches can therefore be positioned in any location on the dashboard environment panel, as long as they are installed in the off position. They do not have to be in any particular order. However, the identity of the installed switches must correspond with the car configuration file so that they can be activated.

There are diagnostics for the switches.

REAR A/C (ONLY XC90 WITH THREE ROWS OF SEATS)

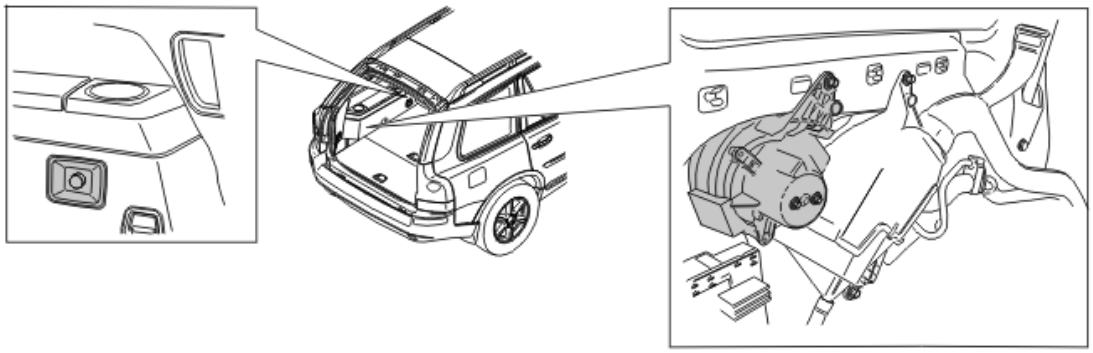

Fig. 6: Identifying Rear A/C
Courtesy of VOLVO CARS CORPORATION

XC90 with three rows of seats is equipped with a rear A/C system. This consists of:

- power unit
- fan
- expansion valve
- blower fan switch.

The rear A/C system is controlled by a switch in the lower section of the dashboard environment panel. When the switch is activated the climate control unit (CCM) transmits a signal to the rear electronic module (REM) via the Control area network (CAN). The rear electronic module (REM) supplies the power unit and the blower fan switch with voltage via a relay. The blower fan switch sends control voltage to the power unit based on the position of the control. The power unit converts the control voltage to supply voltage for the blower fan motor.

The rear A/C is directly connected to the front air conditioning via the high and low pressure pipes and hoses. The only way to control the cooling in the third row of seats is to control the fan speed using the rear fan switch.

The rear electronic module (REM) diagnoses the relay supply, otherwise the rear A/C cannot be diagnosed.

DIAGNOSTIC FUNCTIONS

CLIMATE CONTROL MODULE (CCM)

The climate control module (CCM) has a built-in diagnostic system which continuously monitors internal functions and input and output signals.

DIAGNOSTIC TROUBLE CODES (DTCS)

Diagnostic trouble codes (DTCs) are stored in the control module if the climate control module (CCM) detects a fault. Every diagnostic trouble code (DTC) has a counter which records the number of cycles which have been "fault-free" since the diagnostic trouble code (DTC) was stored. A fault which is detected in each operating cycle is defined as permanent. A fault which is detected in one or more operating cycles (although not the present one) is defined as intermittent.

An operating cycle is the period from when the ignition was switched on, remained on for at least 10 seconds and was finally switched off for at least 10 seconds.

READING AND ERASING DIAGNOSTIC TROUBLE CODES (DTCS)

Stored diagnostic trouble codes (DTCs) can be read off and erased using this function.

READING OFF INPUT AND OUTPUT SIGNALS

Using this function, the status or value of parameters can be read off. The presentation of the status or value can be obtained graphically or digitally.

For further information about the different parameters, see **DESCRIPTION OF PARAMETERS** .

READING OFF EXTENDED FAULT-TRACING INFORMATION

This function can be used to read parameters, status identifiers and counters stored at the same time as a diagnostic trouble code (DTC). These are called frozen values.

For further information, see **FROZEN VALUES CLIMATE CONTROL MODULE, DESCRIPTION**.

DESCRIPTION OF PROGRAMMABLE PARAMETERS, CUSTOMER ADAPTATION

Certain parameters for the climate control module (CCM) can be read off and programmed using this function. The purpose of this programming is to:

- read the programmed parameters before replacing the control module. This is so the same parameters can be entered into the new control module
- to adapt the function of the control module for the equipment levels of the car (passenger compartment ventilation filter, parking heater)
- to adapt the function of the control module to the requirements of the driver.

Passenger compartment ventilation filter compensation, status

Indicates the status for the activation of passenger compartment ventilation filter compensation.

OFF = Compensation not active

ON = Compensation active (preset)

Blower fan run-on, status

Provides the status for activation of the blower fan run-on. The run-on dries the evaporator and prevents bad odors which may otherwise result from residual moisture in the system.

OFF = Run-on inactive

ON = Run-on active (preset)

Blower fan speed, value

Allows the speed to be modified for the blower fan when the climate control system is in AUTO mode. Modifying the parameters means that the climate control system either blows more or less air than the preprogrammed value, to correspond to the request of the driver.

Gives the voltage value for adaptation of the blower fan speed.

-1.0 - +1.0 V (0 V preset)

Setting for air distribution for the floor / defroster residual heat, value

Indicates the setting of the air distribution between the floor and defroster.

10/90 - 90/10% (70/30% preset)

Setting for air distribution for the floor / defroster parking heater, value

Indicates the setting of the air distribution between the floor and defroster.

10/90 - 90/10% (70/30% preset)

Passenger compartment temperature, value

The passenger compartment temperature in relation to the passenger compartment temperature switch position can be adjusted by programming a compensation value.

The passenger compartment temperature can be raised or lowered by a maximum of ±2 °C (±4 °F) from the normal value. This allows the temperature to be adjusted in accordance with the driver's wishes.

0 = -1.0 °C/-2.0 °F

1 = -0.5 °C/-1.0 °F

2 = 0.0 °C / 0.0 °F (default value)

3 = +0.5 °C/+1.0 °F

4 = +1.0 °C/+2.0 °F

DESCRIPTION OF COMPONENTS/FUNCTIONS ACTIVATION

Self-adjustment of damper motors

This function can be used to carry out self adjustment of the limit positions for all the damper motors. Self

adjustment must be carried out if, after checks, one or more of the damper motors do not reach their limit positions or the climate control module (CCM) is replaced. There are a number of possible reasons for a damper motor not reaching its end position. For example, the motor or the damper has been turned manually, the voltage supply may have been cut, or a component has been replaced.

FROZEN VALUES CLIMATE CONTROL MODULE, DESCRIPTION

EXPLANATION

Not all the parameters described need to be implemented in the control module. This varies from system to system.

Parameters can also vary depending on which type of climate control module the car is equipped with.

Frozen values are parameter values that are stored when a diagnostic trouble code (DTC) is stored.

BATTERY VOLTAGE, VALUE

Measurement range: 0-18 V

Normal value when the generator (GEN) is charging: 13.0-14.5 V

The value indicates the voltage at the climate control module. Delayed X supply means that voltage supply is retained for 1 minute after the ignition is switched off. Activation of functions such as blower fan run-on and damper motor self-adjustment must be possible during this time.

DISTANCE, VALUE

Indicates the total mileage of the vehicle. The value is given in km.

TIME, VALUE

The value displays the time that has passed since the diagnostic trouble code (DTC) was stored.

FAN CURRENT, VALUE

Measurement range: 0-10 mA

The climate control module calculates the value based on the signal from the control knob for the blower fan. With electronic climate control, the value is also affected by automatic climate control (AUTO position).

The value is used to control the power supply from the power unit to the blower fan motor.

FAN SWITCH, VALUE

Measurement range: 0-100 %

The value indicates the control signal from the climate control module to the blower fan motor.

BLOWER FAN DIAGNOSTIC SIGNAL, VALUE

Measurement range: 0-5 V

The climate control module generates an analog signal. This is converted to a current which the power unit converts back to an analog signal. The diagnostic signal is an extremely intense signal that cannot be used when checking the blower fan.

PASSENGER COMPARTMENT TEMPERATURE, VALUE

Measurement range: -40 to +85 °C

The climate control module calculates the temperature based on the signal from the passenger compartment temperature sensor.

The value is used to control the passenger compartment temperature and as the input signal to the central electronic module (CEM).

FAN LEVEL, VALUE

Measurement range: 0-7 step

The value indicates the position of the blower fan switch and is used by the climate control module to calculate the control signal to the blower fan motor.

VOLTAGE FAN, VALUE

Measurement range: 1-5 V

The value indicates the position of the blower fan switch and is used by the climate control module to calculate the control signal to the blower fan motor.

LEFT TEMPERATURE DAMPER MOTOR, STATUS

The status displays if the damper motor is activated or not.

Off = not activated

On = activated

RIGHT TEMPERATURE DAMPER MOTOR, STATUS

The status displays if the damper motor is activated or not.

Off = not activated

On = activated

RECIRCULATION DAMPER MOTOR, STATUS

The status displays if the damper motor is activated or not.

Off = not activated

On = activated

DAMPER MOTOR FLOOR / VENTILATION STATUS

The status displays if the damper motor is activated or not.

Off = not activated

On = activated

DAMPER MOTOR, DEFROSTER, STATUS

The status displays if the damper motor is activated or not.

Off = not activated

On = activated

ENGINE RUNNING, STATUS

The status displays if the engine was running when the diagnostic trouble code (DTC) was stored.

No = engine not running

Yes = engine running

PULSES FROM THE TEMPERATURE SENSOR FOR THE FAN MOTOR, VALUE

Measurement range: 0-15 pulses/65 ms

The value indicates the speed of the fan for the passenger compartment temperature sensor. The standard number of pulses is 12-13/65 ms.

TEMPERATURE, VALUE

Measurement range: -60 to +195 °C

The value indicates the engine coolant temperature (ECT). The climate control module uses the value to control the blower fan during cold start when AUTO is selected.

OUTSIDE TEMPERATURE, VALUE

Measurement range: -40 to +80 °C

The climate control module obtains the value via the control area network (CAN) from the passenger door module.

The value is used to control the passenger compartment temperature.

EVAPORATOR TEMPERATURE SENSOR, VALUE

Measurement range: 0-5 V

The climate control module uses the value from the evaporator temperature sensor to calculate the temperature.

The value is used to control the air conditioning (A/C) compressor. The compressor is switched off when there is a risk of freezing.

AIR CONDITIONING (A/C), STATUS, COMPRESSOR STATUS

The status displays if the compressor was running when the diagnostic trouble code (DTC) was stored.

Off = compressor off

On = compressor on

LINEAR PRESSURE, VALUE

Measurement range 0-3100 kPa

The value indicates the pressure in the compressor.

VOLTAGE, PASSENGER COMPARTMENT TEMPERATURE SENSOR, VALUE

Measurement range: 0-5 V

The climate control module uses the value from the passenger compartment temperature sensor to calculate the passenger compartment temperature. The value is used as a compensation parameter to control the passenger compartment temperature.

SUN SENSOR, SENSOR SIGNAL, VALUE

Measurement range: 0-5 V

The climate control module uses the value from the sun sensor to calculate the sun intensity. The value is used as a compensation parameter to control the passenger compartment temperature.

TWILIGHT SENSOR, SENSOR SIGNAL, VALUE

Measurement range: 0-5 V

The climate control module uses the value from the twilight sensor to calculate the degree of darkness. The value is used to control the strength of the lighting of the button LEDs.

TEMPERATURE DAMPER MOTOR, LEFT POSITION, VALUE

Measurement range: 0-100 %

The value indicates how much the damper is open.

The climate control module calculates the value based on the stage movement of the damper motor.

DAMPER MOTOR, TEMPERATURE RIGHT POSITION, VALUE

Measurement range: 0-100 %

The value indicates how much the damper is open.

The climate control module calculates the value based on the stage movement of the damper motor.

RECIRCULATION DAMPER MOTOR POSITION, VALUE

Measurement range: 0-100 %

The value indicates how much the damper is open.

The climate control module calculates the value based on the stage movement of the damper motor.

FLOOR / VENTILATION DAMPER MOTOR POSITION, VALUE

Measurement range: 0-100 %

The value indicates how much the damper is open.

The climate control module calculates the value based on the stage movement of the damper motor.

DAMPER MOTOR DEFROSTER POSITION, VALUE

Measurement range: 0-100%

The value indicates how much the damper is open.

The climate control module calculates the value based on the stage movement of the damper motor.

AUTOMATIC BREAKER, ACTIVATED, STATUS

The status displays if the signal from the air distribution selector to the climate control module was activated when the diagnostic trouble code (DTC) was stored.

Yes = activated

No = not activated

FLOOR, ACTIVATED, STATUS

The status displays if the signal from the air distribution selector to the climate control module was activated when the diagnostic trouble code (DTC) was stored.

Yes = activated

No = not activated

DEFROSTER, ACTIVATED, STATUS

The status displays if the signal from the air distribution selector to the climate control module was activated when the diagnostic trouble code (DTC) was stored.

Yes = activated

No = not activated

MAX DEFROSTER, ACTIVATED, STATUS

The status displays if the signal from the air distribution selector to the climate control module was activated when the diagnostic trouble code (DTC) was stored.

Yes = activated

No = not activated

AIR CONDITIONING (A/C) ON, ACTIVATED, STATUS

The status displays if the signal from the air distribution selector to the climate control module was activated when the diagnostic trouble code (DTC) was stored.

Yes = activated

No = not activated

AIR CONDITIONING (A/C) OFF, ACTIVATED, STATUS

The status displays if the signal from the air distribution selector to the climate control module was activated when the diagnostic trouble code (DTC) was stored.

Yes = activated

No = not activated

RECIRCULATION ACTIVATED, STATUS

The status displays if the signal from the air distribution selector to the climate control module was activated when the diagnostic trouble code (DTC) was stored.

Yes = activated

No = not activated

VENTILATION, ACTIVATED, STATUS

The status displays if the signal from the air distribution selector to the climate control module was activated when the diagnostic trouble code (DTC) was stored.

Yes = activated

No = not activated

SEAT HEATER LEFT FRONT ACTIVATED, STATUS

The status displays if the signal from the seat heater to the climate control module was activated when the diagnostic trouble code (DTC) was stored.

Yes = activated

No = not activated

SEAT HEATER RIGHT FRONT ACTIVATED, STATUS

The status displays if the signal from the seat heater to the climate control module was activated when the diagnostic trouble code (DTC) was stored.

Yes = activated

No = not activated

DEFROSTER / HEATED REAR WINDSHIELD, ACTIVATED, STATUS

The status displays if the signal from the defroster / heated rear windshield to the climate control module was activated when the diagnostic trouble code (DTC) was stored.

Yes = activated

No = not activated

SENSOR SIGNAL, AIR QUALITY SENSOR (AQS), STATUS

The climate control module interprets the pulse width of the air quality sensor and presents it as different levels.

Off

Level 1

Level 2

Level 3

AIR QUALITY SENSOR PULSE WIDTH, VALUE

Measurement range 0-100 %

The climate control unit calculates the air quality using the signal from the air quality sensor. The value is used to control the position of the recirculation motor.

GENERAL INFORMATION ABOUT READING OFF THE STATUS OF THE BUTTONS ON THE DASHBOARD ENVIRONMENT PANEL

The result from reading off the status for buttons on the dashboard environment panel in order from left to right.

DASHBOARD ENVIRONMENT PANEL, BUTTON IDENTITY, STATUS

The status indicates the function of the button.

The following alternatives are available:

- Empty position

  Adjustable head restraints

  Folding door mirrors

  Private locking

  STC

  DSTC

  Auxiliary lamps

  Reduced alarm

  Bi-fuel

  Child-proof lock.

DASHBOARD ENVIRONMENT PANEL, BUTTON ACTIVATED, STATUS

The status displays if the button was activated when the diagnostic trouble code (DTC) was stored.

Yes = activated

No = not activated

DASHBOARD ENVIRONMENT PANEL, BUTTON STATUS

The status displays if the function for the button corresponds to the configuration for the central electronic module (CEM).

Unknown = the status could not be determined

Not permitted = the button function does not correspond to the configuration of the central electronic module

Permitted = the button function corresponds to the configuration of the central electronic module

CARCONFIGSTATUS, ADJUSTABLE HEAD RESTRAINT, STATUS

The status displays whether the identity of a certain switch is permissible or missing compared with the permitted switch identities in the Car Configuration File.

Not defined = comparison failed

Not permitted = identity not permitted

OK = identity permitted

Button missing = button missing on the dashboard environment panel in comparison to the information in the Car Config File

CARCONFIGSTATUS, FOLDING DOOR MIRRORS, STATUS

The status displays whether the identity of a certain switch is permissible or missing compared with the permitted switch identities in the Car Configuration File.

Not defined = comparison failed

Not permitted = identity not permitted

OK = identity permitted

Button missing = button missing on the dashboard environment panel in comparison to the information in the Car Config File

CARCONFIGSTATUS, BIFUEL, STATUS

The status displays whether the identity of a certain switch is permissible or missing compared with the

permitted switch identities in the Car Configuration File.

Not defined = comparison failed

Not permitted = identity not permitted

OK = identity permitted

Button missing = button missing on the dashboard environment panel in comparison to the information in the Car Config File

CARCONFIGSTATUS, PRIVATE LOCKING, STATUS

The status displays whether the identity of a certain switch is permissible or missing compared with the permitted switch identities in the Car Configuration File.

Not defined = comparison failed

Not permitted = identity not permitted

OK = identity permitted

Button missing = button missing on the dashboard environment panel in comparison to the information in the Car Config File

CARCONFIGSTATUS, STC (STABILITY AND TRACTION CONTROL), STATUS

The status displays whether the identity of a certain switch is permissible or missing compared with the permitted switch identities in the Car Configuration File.

Not defined = comparison failed

Not permitted = identity not permitted

OK = identity permitted

Button missing = button missing on the dashboard environment panel in comparison to the information in the Car Config File

CARCONFIGSTATUS, DSTC (DYNAMIC STABILITY AND TRACTION CONTROL), STATUS

The status displays whether the identity of a certain switch is permissible or missing compared with the permitted switch identities in the Car Configuration File.

Not defined = comparison failed

Not permitted = identity not permitted

OK = identity permitted

Button missing = button missing on the dashboard environment panel in comparison to the information in the Car Config File

CARCONFIGSTATUS, AUXILIARY LAMPS, STATUS

The status displays whether the identity of a certain switch is permissible or missing compared with the permitted switch identities in the Car Configuration File.

Not defined = comparison failed

Not permitted = identity not permitted

OK = identity permitted

Button missing = button missing on the dashboard environment panel in comparison to the information in the Car Config File

CARCONFIGSTATUS, REDUCED ALARM, STATUS

The status displays whether the identity of a certain switch is permissible or missing compared with the permitted switch identities in the Car Configuration File.

Not defined = comparison failed

Not permitted = identity not permitted

OK = identity permitted

Button missing = button missing on the dashboard environment panel in comparison to the information in the Car Config File

CARCONFIGSTATUS, CHILD-PROOF LOCK, STATUS

The status displays whether the identity of a certain switch is permissible or missing compared with the permitted switch identities in the Car Configuration File.

Not defined = comparison failed

Not permitted = identity not permitted

OK = identity permitted

Button missing = button missing on the dashboard environment panel in comparison to the information in the Car Config File

DOWNLOADING SOFTWARE AND REPLACING THE CONTROL MODULE

New software can be downloaded into the climate control module. When ordering software, the hardware and the software in the car is compared to the Volvo central database. If the comparison is OK the software is downloaded to the control module.

If the comparison between the car and Volvo central database is not OK, the database is updated with the car configuration. When this is complete the software is downloaded.

The entire climate control module must be replaced as one unit. The exceptions are the fan for the passenger compartment temperature sensor and the switches on the lower section of the dashboard environment panel.

Five customer parameters can be programmed into the climate control module. These customer parameters are stored in the control module but not in the Volvo central database. This means that the customer parameters must be reprogrammed when the hardware is replaced.

FUNCTION

CONTROLLING THE CLIMATE IN THE PASSENGER COMPARTMENT

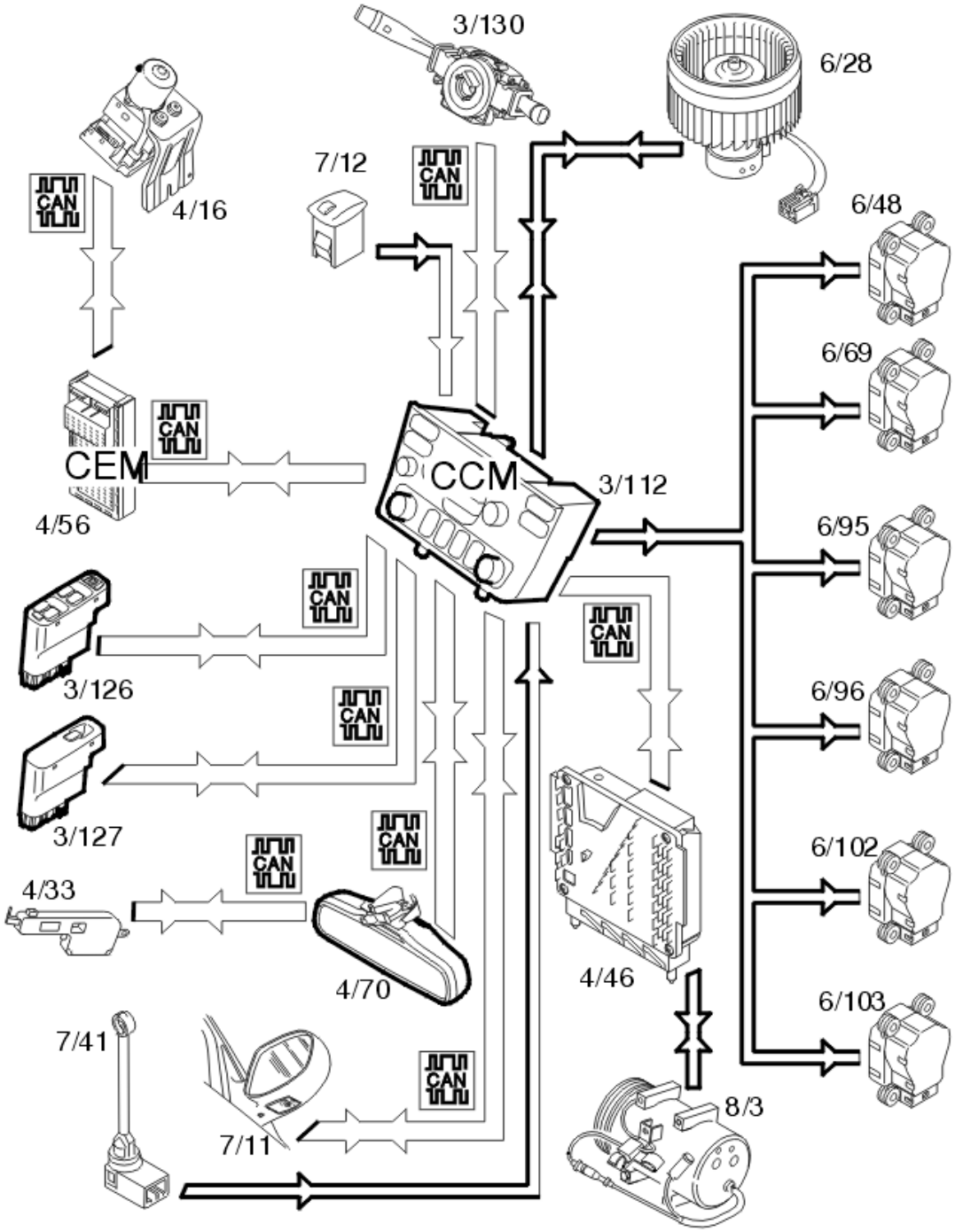

Fig. 7: Climate Control Module Input And Output Signals
Courtesy of VOLVO CARS CORPORATION

The way in which the climate in the passenger compartment is regulated depends on the type of climate control module (CCM) in the car.

Electronic climate control

Electronic climate control means that either manual settings or the AUTO function can be used. In the latter case the control module automatically regulates heat, air conditioning, recirculation and air distribution until the selected temperature is achieved.

Manual climate control

Manual climate control means that heat, air conditioning, recirculation and air distribution must be selected manually.

STD

STD means that heat, recirculation and air distribution must be selected manually.

The climate control module (CCM) (3/112) regulates the following:

- Activation of the air conditioning (A/C) compressor (8/3) with a request via the Controller area network (CAN) to the engine control module (ECM) (4/46)
- Controlling the damper motors. For electronic climate control (6/48), (6/95), (6/96), (6/102) and (6/103). For manual climate control; (6/48), (6/69), (6/95) and (6/96)
- Blower fan speed (6/28).

The climate control module (CCM) regulates the climate in the passenger compartment based on the following input signals:

- The passenger compartment temperature, signal from the internal passenger compartment temperature sensor
- The outside temperature, signal from the outside temperature sensor (7/11)
- The evaporator temperature, signal from the evaporator temperature sensor (7/41)
- Sun roof status. Signal from the sun roof control module (4/33) via the upper electronic module (UEM) (4/70) over the Controller area network (CAN)
- Side window status. Signals from the driver door module (DDM) (3/126) and passenger door module (PDM) (3/127) via the Controller area network (CAN)
- Door status. Signal from the central electronic module (CEM) (4/56) via the Controller area network (CAN)
- Sun intensity. Signal from the sun sensor (7/12)
- Speed. Signal from the brake control module (BCM) (4/16) (previously ABS), via the Controller area network (CAN)
- Windshield wiper status. Signal from the steering wheel module (SWM) (3/130) via the Controller area network (CAN).

The climate control module (CCM) (for electronic climate control) uses information about the status of the sun roof, side windows and doors to determine how it should compensate for changes in the passenger compartment temperature. If side windows, doors or the sun roof are opened, the climate control module (CCM) will not compensate for a change in passenger compartment temperature. Instead it maintains the same level of climate control for the compressor and blower fan as before.

The climate control module (CCM) (for electronic climate control) uses the signal from the steering wheel module (SWM) to establish whether the windshield wipers are switched on. This is to regulate the blower fan and the damper motor to remove any mist from the inside of the windshield when it rains.

The climate control module (CCM) (for electronic climate control) uses the signal from the sun sensor to compensate for high sun intensity by decreasing the temperature of ventilation air, changing air distribution and increasing the speed of the blower fan.

The climate control module (CCM) (for electronic climate control and manual climate control) uses the signal from the evaporator temperature sensor to control the activation of the air conditioning (A/C) compressor. If the signal from the evaporator temperature sensor indicates an evaporator temperature below 6 °C, the compressor cannot be activated because of the risk of freezing.

To maintain a constant flow of air in the passenger compartment the climate control module (CCM) (for electronic climate control) uses the speed signal from the brake control module (BCM) to regulate the speed of the blower fan. Generally, as the speed of the car increases the speed of the blower fan decreases.

At higher speeds the flow of air into the fresh air damper is adjusted.

SEAT HEATERS

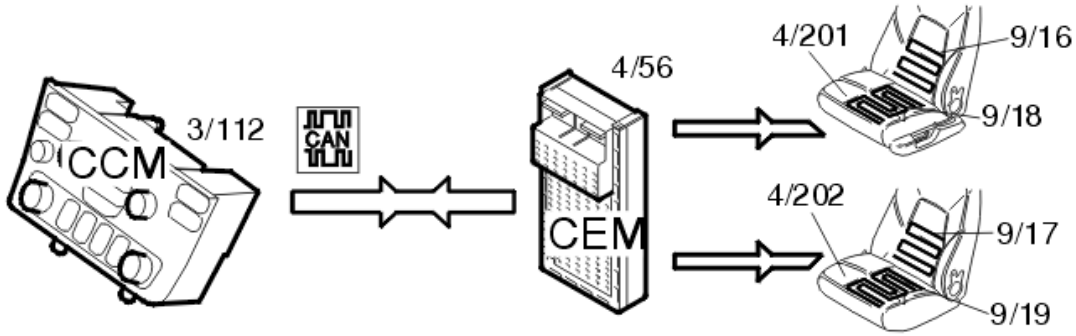

Fig. 8: Seat Heaters Input And Output Signals
Courtesy of VOLVO CARS CORPORATION

The seat heaters are activated by pressing the switches on the climate control module (CCM) (3/112). The climate control module (CCM) transmits information via the Controller area network (CAN) about the status selected for each seat to the central electronic module (CEM) (4/56). The central electronic module (CEM) then transmits the information to the relevant control module for seat heating (4/201, 4/202). The control modules for the seat heaters then control the current to the heater pad for the left-hand seat (9/16, 9/18) and right-hand seat (9/17, 9/19).

The central electronic module (CEM) also transmits information to the climate control module (CCM) about whether the seat heaters are activated or not. The climate control module (CCM) uses this information to light / turn off the LEDs on the buttons.

RECIRCULATION CONTROL (ELECTRONIC CLIMATE CONTROL ONLY)

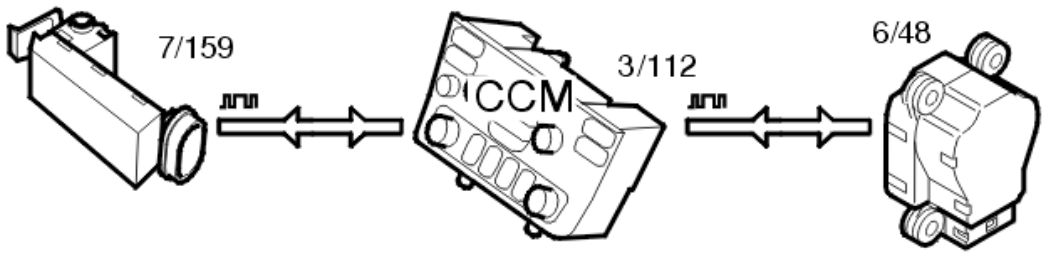

Fig. 9: Recirculation Control Input And Output Signals
Courtesy of VOLVO CARS CORPORATION

The climate control module (CCM) (3/112) controls the recirculation during the following conditions for electronic climate control:

- The recirculation switch is on (the LED lights orange)
- The system is in AUTO position and there is a large difference between the desired and current temperature
- The car is equipped with an air quality sensor, and the recirculation switch is on (the LED light green).

The air quality sensor transmits a signal to the climate control module (CCM) if it detects high concentrations of pollutants in the outside air. When this occurs the climate control module (CCM) transmits a signal to the damper motor for recirculation (6/48) to close the fresh air damper and to use recirculated air. The level of recirculation is controlled by the signal from the air quality sensor:

- signal 1 provides partial recirculation for speeds below 85 km/h, no recirculation for speeds exceeding 85 km/h
- signals 2 and 3 provide 100% recirculation.

If the high level of pollutants remains the system stays in recirculation for a certain time, maximum of 10 minutes. The time that the system is recirculating is determined by the outside temperature, if the air conditioning (A/C) is on and if the windshield wipers are activated. The system returns to fresh air for a short time before recirculation is resumed. The particle filter absorbs most of the pollutants entering the passenger compartment during this time. The maximum time prevents misting and musty air.

The air quality transmits information about the content of pollutants to the climate control module (CCM). This information is graded into four levels, and the information used for diagnosis.

Recirculation is never permitted if the defroster is selected. The climate control module (CCM) requests the compressor when the evaporator temperature exceeds 3 °C.

HEATED REAR WINDSHIELD AND DOOR MIRRORS

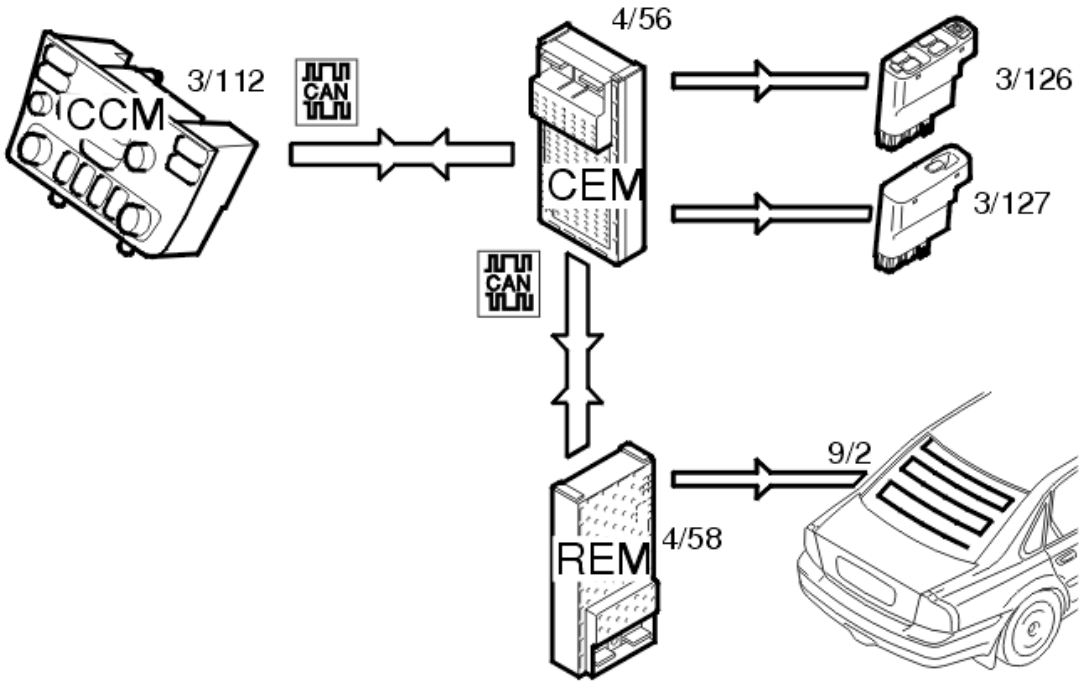

Fig. 10: Heated Rear Windshield And Door Mirrors Input And Output Signals
Courtesy of VOLVO CARS CORPORATION

The heated rear windshield and door mirrors are activated by pressing the switch on the climate control module (CCM) (3/112). The climate control module (CCM) transmits information to the central electronic module (CEM) (4/56) about the selected heating status. The central electronic module (CEM) transmits a signal to the driver's door module (3/126) and passenger door module (PDM) (3/127) for the heated door mirrors and to the rear electronic module (REM) (4/58) for the heated rear windshield.

The central electronic module (CEM) also transmits information to the climate control module (CCM) about whether the seat heaters are activated or not. The climate control module (CCM) uses this information to light / turn off the LED on the button.

SWITCH FUNCTIONS, DASHBOARD ENVIRONMENT PANEL, (LOWER SECTION)

The following functions can be activated using the switches on the dashboard environment panel:

- Folding head restraint, rear seat (S60/S80)
- Folding door mirrors (market dependent)
- Bi-fuel, on / off (market dependent)
- Valet lock, on/off
- Child lock, on / off (market dependent)
- STC, off / on (option)
- DSTC, off / on (option)
- Auxiliary lamps, off / on (option)

- Reduced alarm, on / off (option).

In order for certain functions to be activated the engine must be switched on and/or the master key must be in position II.

Folding head restraints, rear seat

When the switch for the folding head restraints is activated, information is transmitted by the climate control module (CCM) (3/112) to the rear electrical module (4/58) via the Controller area network (CAN).

Folding door mirrors

When the switch for the folding door mirrors is activated, information is transmitted by the climate control module (CCM) to the driver's door module (3/126) and the passenger door module (PDM) (3/127) via the Controller area network (CAN).

Bi-fuel

When the bi-fuel switch is activated, a signal is transmitted from the climate control module (CCM) to the engine control module (ECM) (4/46) on the Controller area network (CAN) via the central electronic module (CEM). The engine control module (ECM) transmits a signal to the climate control module (CCM) about the type of fuel being used. The climate control module (CCM) uses this signal to light / turn off the LED on the switch.

Valet lock / child-proof lock

When activating the valet lock switch or the child lock switch information is transmitted to the rear electronic module (REM) via the Controller area network (CAN).

STC or DSTC

When the STC or DSTC switch is activated, a signal is transmitted from the climate control module (CCM) to the brake control module (BCM) (previously ABS) (4/16) via the Controller area network (CAN). The brake control module (BCM) transmits a signal to the climate control module (CCM) about whether the STC or DSTC functions are operating. The climate control module (CCM) uses this signal to light / turn off the LED on the switch.

Auxiliary lamps

When the auxiliary lamps switch is activated, information is transmitted from the climate control module (CCM) to the central electronic module (CEM). The central electronic module (CEM) transmits a signal to the climate control module (CCM) about whether the auxiliary lamps are on or not. The climate control module (CCM) uses this information to light / turn off the LED on the switch

Reduced alarm

When activating the reduced alarm switch information is transmitted via the Controller area network (CAN) to

the upper electronic module (UEM) and rear electronic module (REM).

Rear A/C

When activating the switch for rear A/C information is transmitted via the Controller area network (CAN) to the rear electronic module (REM). From this signal and the signal from the engine control module (ECM) indicating whether the engine is running or not, the rear electronic module (REM) will activate/deactivate the relay supply to the rear A/C system. The rear electronic module (REM) transmits a signal indicating whether the rear A/C is on or not to the climate control module (CCM) via the control area network (CAN). The climate control module (CCM) uses this information to light / turn off the LED in the switch.

SYSTEM OVERVIEW

CONTROL MODULE

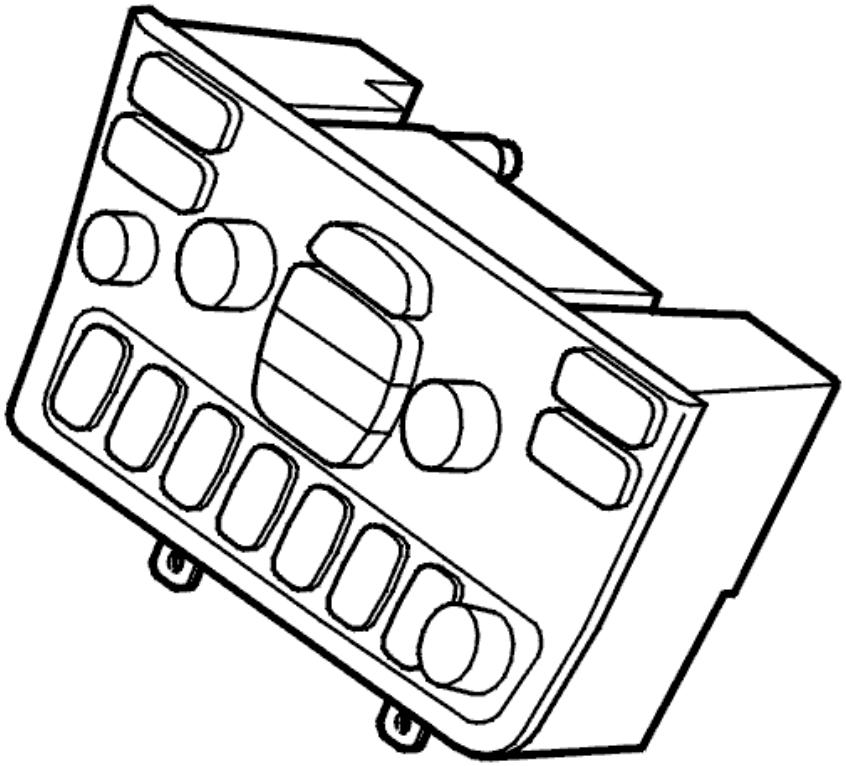

Fig. 11: Climate Control Module
Courtesy of VOLVO CARS CORPORATION

The climate control module controls the climate control system and the buttons in the dashboard environment panel.

The climate control module is located in the center console. There are three versions of control module (market dependent). These are:

- Electronic Climate Control. This fully automatic climate control system has air conditioning and the option of manual settings
- Manual Climate Control. A manual climate control system with air conditioning
- Standard Heater. A manual climate control system without air conditioning.

The climate control module (for the electronic climate control and manual climate control) obtains the current passenger compartment temperature from a sensor integrated into the control module.

The intensity of the dashboard lighting is regulated based on a signal from the twilight sensor. The twilight sensor is located at the front of the dashboard environment panel under the button for air distribution to the floor.

The climate control module communicates with components which are directly connected and with other control modules and also with components via serial communication and Control area network (CAN).

The control module checks input and output signals and carried out activations via an integrated diagnostic system. A diagnostic trouble code (DTC) is stored if the control module detects an error. In certain cases the control module replaces the faulty signal with a substitute value.

Diagnostic trouble codes (DTC) are stored in the control module memory. This information can be read off using the diagnostic tool via the data link connector (DLC) in the car.

A simple method for checking that the climate control module has a power supply and is grounded is to increase or decrease the blower fan speed. Another method is to activate one of the functions controlled by the buttons on the dashboard environment panel.

SIGNALS

The table below summarizes input and output signals to and from the climate control module. The signal types are divided into directly connected signals, serial communication and Controller area network (CAN) communication. The illustration below displays the same information with the Volvo component designations.

Input signals	Output signals
Directly connected:	**Directly connected:**
Sun sensor (7/12), (ECC)	Blower fan motor (6/28), control signal
Blower fan motor (6/28), diagnostic signal	Damper motors for electronic climate control (6/48, 6/95-96, 6/102-103), control signal
Evaporator temperature sensor (7/41), control signal	Damper motors for manual climate control (6/48, 6/69, 6/95-96), control signal
Air quality sensor (7/159), (ECC, option)	Sun sensor (7/12), (ECC)
Via Controller Area Network (CAN):	**Via Controller Area Network (CAN):**
The central electronic module (CEM) (4/56)	The central electronic module (CEM) (4/56)
The engine control module (ECM) (4/46)	Driver's door module (DDM) (3/126)
Rear electronic module (4/58)	Passenger door module (3/127)
Brake control module (ABS-control module) (4/16)	Brake control module (ABS-control module) (4/16)
Driver's door module (DDM) (3/126)	Rear electronic module (4/58)

Passenger door module (3/127) Upper electronic module (4/70) Steering wheel module (3/130)	The engine control module (ECM) (4/46)

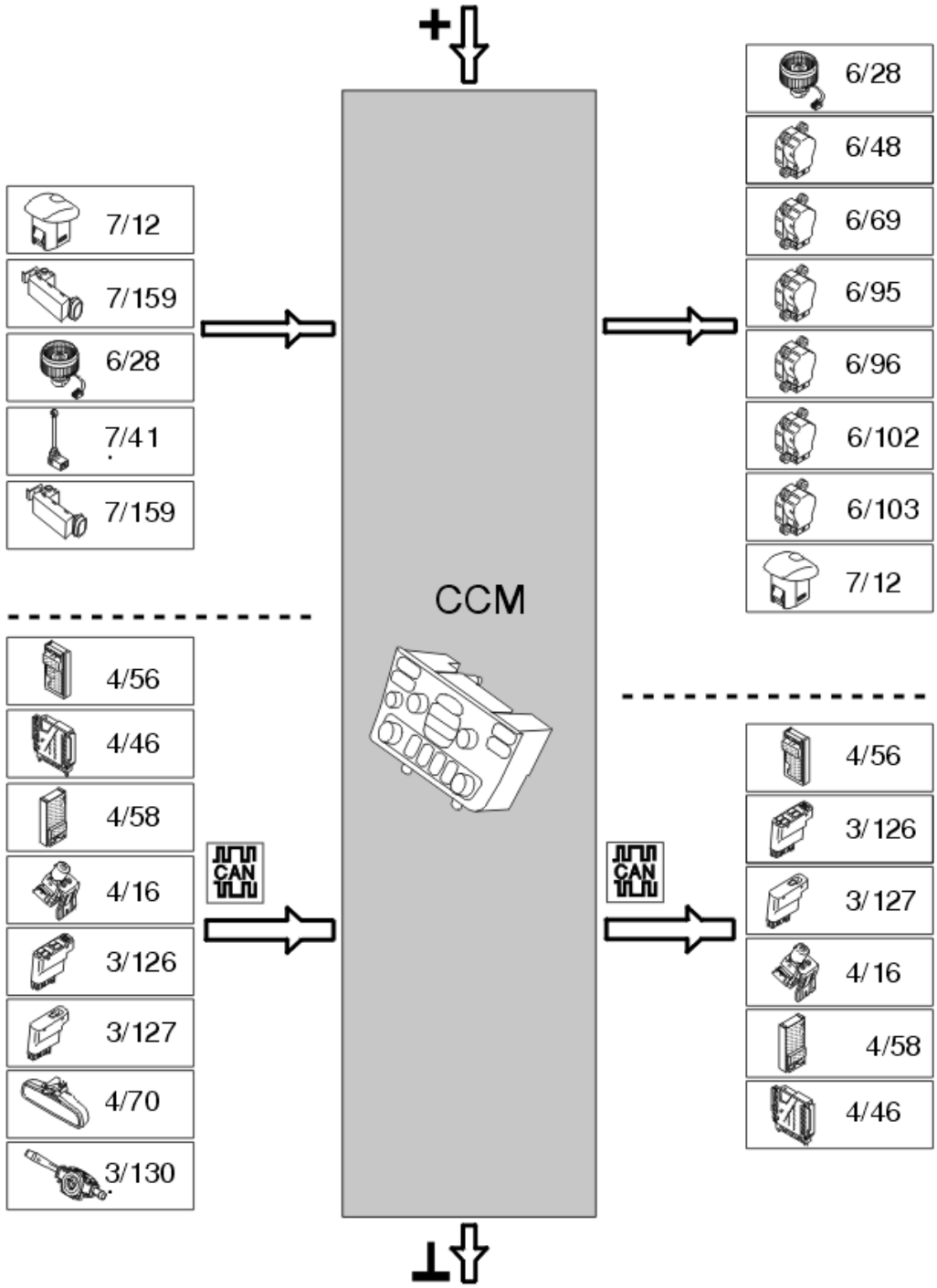

Fig. 12: Climate Control Module Input And Output Signals
Courtesy of VOLVO CARS CORPORATION

CLIMATE CONTROL MODULE (CCM) (2005-2012)

DESIGN

CLIMATE CONTROL UNIT

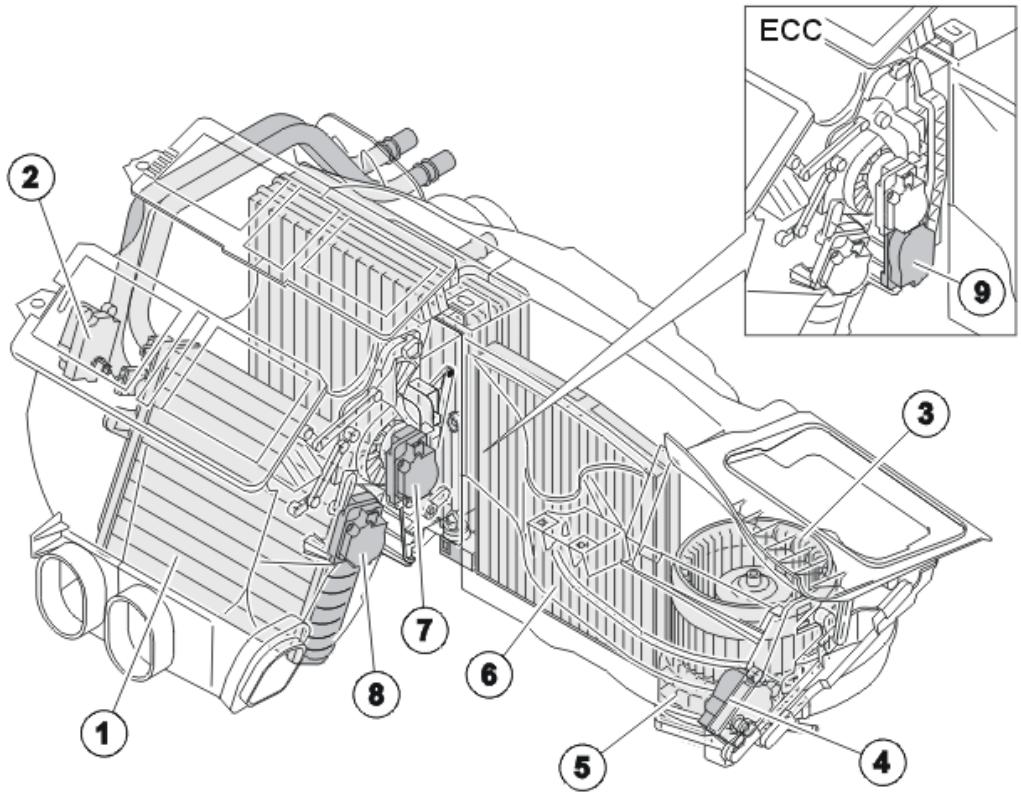

Fig. 13: Climate Control Unit
Courtesy of VOLVO CARS CORPORATION

The climate control unit consists of the following components:

1. Heater element
2. Damper motor module (DMM), temperature left
3. Blower fan
4. Damper motor module (DMM), fresh air/recirculation
5. Power unit for blower fan motor
6. Particle filter
7. Damper motor module, ventilation and floor (also defroster for MCC)
8. Damper motor module (DMM), temperature right
9. Damper motor module (DMM), defroster (ECC).

Engine coolant constantly flows through the heater element. There is no valve to regulate the flow. The selected temperature is achieved using dampers for the right and left-hand sides of the car installed upstream and downstream of the heater element. These control the amount of air to be warmed. There are also dampers downstream of the heater element that guide the airflow to the correct air vent.

The climate control module provides infinitely variable electronic blower fan control. When AUTO mode (ECC only) is engaged the climate control module (CCM) adapts the blower fan speed to the setting of the controls and the vehicle speed. The blower fan can be set to run-on in order to reduce residual moisture in the evaporator (the function is not available for vehicle's with engine B8444S).

A timer located in the central electronic module (CEM) controls the run-on time. 50 minutes after the engine has been switched off and the ignition has been turned to position 0 or I, the central electronic module (CEM) supplies power to the climate control module (CCM) and the blower fan is activated at full speed for 7 minutes. This run-on dries the evaporator and prevents bad odors.

This function is programmed at the factory, but can be deactivated in the event of customer complaints via programming of customer parameters. Programming is carried out via VIDA (Volvo scan tool).

DAMPER MOTOR MODULE (DMM)

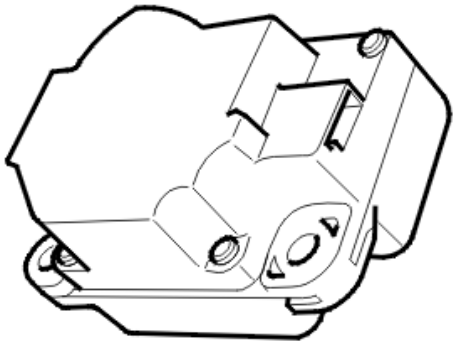

Fig. 14: Damper Motor Module
Courtesy of VOLVO CARS CORPORATION

The damper motor module (DMM) consists of a control unit and a stepper motor. The different versions of the climate control system have up to 5 damper motor modules (DMM). These are for the different functions such as defroster and recirculation. The climate control module (CCM) communicates with the other damper motor modules (DMM) via two LIN buses, LIN bus 1 and LIN bus 2.

When regulating the different dampers, the climate control module (CCM) transmits a request for a new damper position to the each damper motor module (DMM). The damper motor module (DMM) calculates and then regulates the required direction and number of steps required to obtain the requested position. The damper motor module (DMM) then transmits information to the climate control module (CCM) indicating the actual damper position and status.

When replacing the damper motor module (DMM), the new damper motor must be identified by the climate control module (CCM). This is carried out via VIDA (Volvo scan tool). When replacing the damper motors,

ensure that identification is carried out.

Each damper motor module (DMM) is powered via a relay in the central electronic module (CEM).

There are diagnostics for the damper motor module (DMM).

COOLING SYSTEM (NOT B8444S)

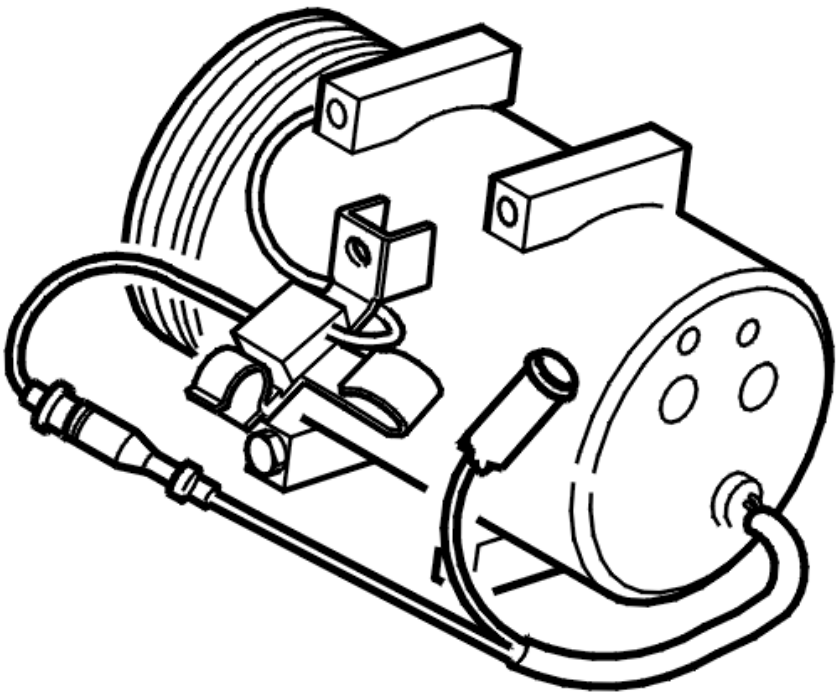

Fig. 15: Identifying A/C Compressor
Courtesy of VOLVO CARS CORPORATION

The engine control module (ECM) controls the A/C compressor. When the air conditioning (A/C) compressor on the dashboard environment panel is activated, a request is transmitted via the control area network (CAN) to the engine control module (ECM) about the activation of the compressor. The engine control module (ECM) determines when the compressor must operate. If any of the following conditions are met the compressor is disconnected:

- high engine coolant temperature (ECT)
- wide open throttle (WOT)
- the engine has just been started
- overpressure in the air conditioning (A/C) system.

When the engine is started the engine control module (ECM) activates the air conditioning compressor for a

short period even if the climate control module (CCM) has not transmitted a request for this. This is carried out for diagnosis. This check is carried out at all temperatures exceeding -6 °C.

The advantage in allowing the engine control module (ECM) to control the air conditioning compressor is that it can delay compressor activation somewhat, if the idling speed must be compensated for the extra load for example.

COOLING SYSTEM (B8444S ONLY)

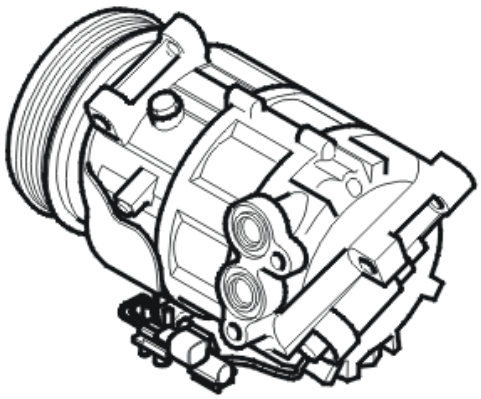

Fig. 16: Identifying A/C Compressor (B8444S Only)
Courtesy of VOLVO CARS CORPORATION

The engine control module (ECM) controls the variable A/C compressor. When the A/C switch on the dashboard environment panel is activated, a request is transmitted via the control area network (CAN) to the engine control module (ECM) about the activation of the compressor. The engine control module (ECM) calculates the current to open the valve to control the variable A/C compressor. If any of the following conditions are met, the valve that activates the compressor is not opened:

- high engine coolant temperature (ECT)
- wide open throttle (WOT)
- the engine has just been started
- overpressure in the air conditioning (A/C) system.

When the engine is started the engine control module (ECM) activates the air conditioning compressor for a short period even if the climate control module (CCM) has not transmitted a request for this.

This is carried out for diagnosis and maintenance at all temperatures exceeding 0 °C.

SUN SENSOR (ELECTRONIC CLIMATE CONTROL ONLY)

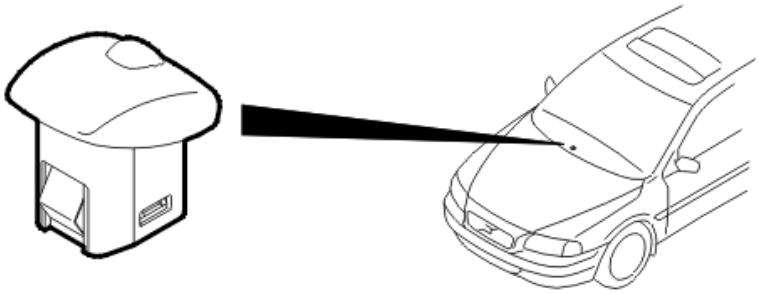

Fig. 17: Locating Sun Sensor
Courtesy of VOLVO CARS CORPORATION

TWILIGHT SENSOR

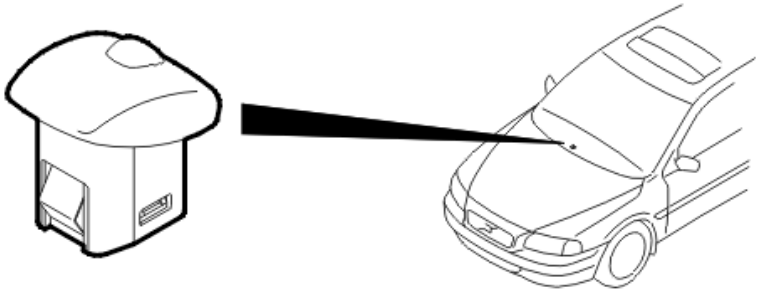

Fig. 18: Locating Sun Sensor
Courtesy of VOLVO CARS CORPORATION

EVAPORATOR TEMPERATURE SENSOR

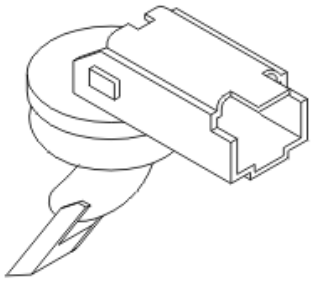

Fig. 19: Identifying Evaporator Temperature Sensor
Courtesy of VOLVO CARS CORPORATION

The evaporator temperature sensor is installed on the heater. Its role is to inform the climate control module (CCM) of the temperature of the refrigerant. The climate control module (CCM) controls the request from the evaporator temperature sensor to activate the air conditioning compressor. The evaporator temperature sensor is directly connected to the climate control module (CCM).

There are diagnostics for the evaporator temperature sensor.

AIR QUALITY SENSOR (AQS) (ECC ONLY, OPTION)

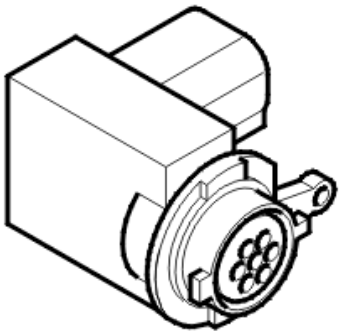

Fig. 20: Air Quality Sensor
Courtesy of VOLVO CARS CORPORATION

The air quality sensor (AQS) is available as an option for ECC. The air quality sensor (AQS) is, together with a particle filter, part of a system which has the role of ensuring that the air in the passenger compartment is free of pollutants. The role of the air quality sensor (AQS) is to transmit a signal to the climate control module (CCM) if it detects increased concentrations of pollutants in the outside air.

The air quality sensor (AQS) measures concentrations of COx and NOx.

The air quality sensor (AQS) compares the present values with previous ones and can calculate changes in pollutant concentrations.

The air quality sensor (AQS) communicates with the climate control module (CCM) via a LIN bus.

The signal from the air quality sensor (AQS) to the climate control module (CCM) has four steps, 0-3:

- off = no increase or reduction in pollutant level
- signal 1 = gradual increase in pollutant level
- signal 2 = medium increase in pollutant level
- signal 3 = rapid increase in pollutant level.

The climate control module (CCM) uses the signal to control the recirculation damper motor.

There are diagnostics for the air quality sensor (AQS).

SEAT HEATERS

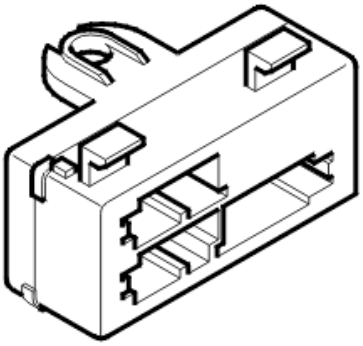

Fig. 21: Identifying Left Seat Heating Module (SHM)
Courtesy of VOLVO CARS CORPORATION

The system for the seat heaters consists of three different parts:

- a seat heating module (SHM) which controls the function for communicating with the climate control module (CCM)
- two heater pads
- a temperature sensor.

The seat heating module (SHM) is under the left and right-hand front seat. The heater pads are in the seat and backrest. The temperature sensor is in the seat.

The seat heating module (SHM) is directly connected to the heater pad and temperature sensor. The seat heating module (SHM) communicates with the climate control module (CCM) via a LIN bus.

There are diagnostics for the seat heating module (SHM).

SWITCHES, DASHBOARD ENVIRONMENT PANEL, (LOWER SECTION)

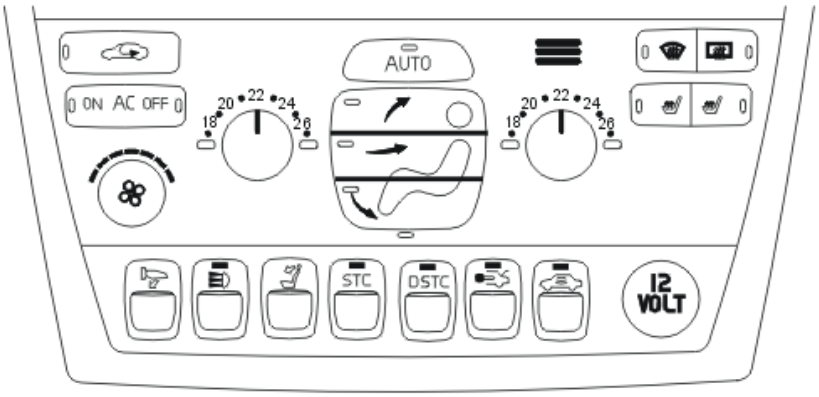

Fig. 22: Dashboard Environment Panel

Courtesy of VOLVO CARS CORPORATION

Across the lower section of the dashboard environment panel there is a 12V socket and space for a maximum of seven switches.

Each switch has its own identity. This is unique for the relevant function. The switches can therefore be positioned in any location on the dashboard environment panel, as long as they are installed in the off position. They do not have to be in any particular order. However, the identity of the installed switches must correspond with the car configuration file so that they can be activated.

There are diagnostics for the switches.

REAR A/C (ONLY XC90 WITH THREE ROWS OF SEATS)

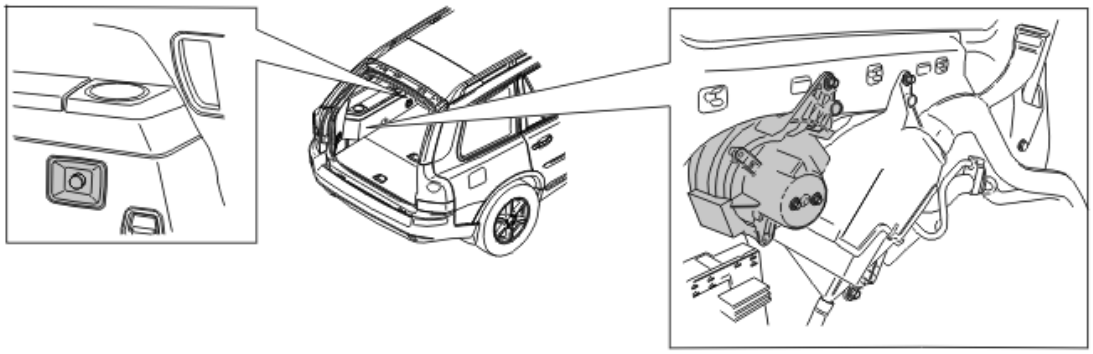

Fig. 23: Identifying Rear A/C
Courtesy of VOLVO CARS CORPORATION

XC90 with three rows of seats is equipped with a rear A/C system. This consists of:

- power unit
- fan
- expansion valve
- blower fan switch.

The rear A/C system is controlled by a switch in the lower section of the dashboard environment panel. When the switch is activated, the climate control unit (CCM) transmits a signal to the rear electronic module (REM) via the controller area network (CAN). The rear electronic module (REM) supplies the power unit and the blower fan switch with voltage via a relay. The blower fan switch sends control voltage to the power unit based on the position of the control. The power unit converts the control voltage to supply voltage for the blower fan motor.

The rear A/C is directly connected to the front air conditioning via the high and low pressure pipes and hoses. The only way to control the cooling in the third row of seats is to control the fan speed using the rear fan switch.

The rear electronic module (REM) diagnoses the relay supply, otherwise the rear A/C cannot be diagnosed.

DIAGNOSTIC FUNCTIONS

CLIMATE CONTROL MODULE (CCM)

The climate control module (CCM) has a built-in diagnostic system which continuously monitors internal functions and input and output signals.

DIAGNOSTIC TROUBLE CODES (DTCS)

Diagnostic trouble codes (DTCs) are stored in the control module if the climate control module (CCM) detects a fault. Each diagnostic trouble code (DTC) has a counter which records the number of operating cycles which have been fault-free since the diagnostic trouble code (DTC) was last stored. A fault which is detected in the present operating cycle is defined as permanent. A fault which is detected in one or more operating cycles (although not the present one) is defined as intermittent.

An operating cycle is the period from when the ignition has been off, then on for at least 10 seconds and finally off for at least 10 seconds.

READING AND ERASING DIAGNOSTIC TROUBLE CODES (DTCS)

Stored diagnostic trouble codes (DTCs) can be read off and erased using this function.

READING OFF INPUT AND OUTPUT SIGNALS

Using this function, the status or value of parameters can be read off. The presentation of the status or value can be graphic or digital.

For further information about the different parameters, see: **DESCRIPTION OF PARAMETERS**

READING OFF EXTENDED FAULT-TRACING INFORMATION

This function can be used to read parameters, status identifiers and counters stored at the same time as a diagnostic trouble code (DTC). These are called frozen values.

For further information, see: **DESCRIPTION OF FROZEN VALUES**

PROGRAMMING THE CLIMATE CONTROL MODULE (CCM), CUSTOMER ADAPTATION

Certain parameters for the climate control module (CCM) can be read off and programmed using this function. The purpose of this programming is to:

- read the programmed parameters before replacing the control module. This is so the same parameters can be entered into the new control module
- adapt the function of the control module to the requirements of the driver (customer adaptation)
- adapt the function of the control module for the equipment levels of the vehicle (passenger compartment ventilation filter, parking heater).

Blower fan run-on, status

Provides the status for activation of the blower fan run-on. The run-on dries the evaporator and prevents bad odors which may otherwise result from residual moisture in the system.

OFF = Run-on inactive

ON = Run-on active (preset)

Air distribution floor/defroster when residual heater is active (NOTE Accessory)

Parameter programming controls the desired setting of air distribution between the floor and defroster when the residual heater is active.

The function means that the coolant can circulate for around 20 minutes after the engine has been switched off. In this way, the passenger compartment can be heated for up to 20 minutes without the engine having to be running. The function is started via the control stalk.

The function can be activated for a further 20 minutes, however, the temperature of the coolant will have cooled considerably and the residual heat will therefore be lower.

Possible settings (70/30% preset):

- 90/10 (90% floor, 10% defroster)
- 80/20 (80% floor, 20% defroster)
- 70/30 (70% floor, 30% defroster)
- 60/40 (60% floor, 40% defroster)
- 50/50 (50% floor, 50% defroster)
- 30/70 (30% floor, 70% defroster)
- 10/90 (10% floor, 90% defroster).

Programming the seat temperature

Enter the setting for the high and low temperature levels for heating the front seat.

IDENTIFYING THE DAMPER MOTORS

This function is used to identify the damper motor module (DMM) after a replacement. When replacing the damper motor module (DMM), the new unit will have a general identity on the LIN bus. The damper motor module (DMM) must then be run to its limit positions. The number of steps the motor can be run between the limit positions is unique for each damper. This determines the functionality of the new damper motor module (DMM) for the climate control module (CCM).

CALIBRATION OF CLIMATE CONTROL MODULE (CCM)

This function is used to check the components communicating with the climate control module (CCM) via LIN bus 1 and LIN bus 2. A diagnostic trouble code (DTC) between CCM-0070 and CCM-0072 will be stored, depending on the fault, if there is a fault in one of the LIN buses. These diagnostic trouble codes (DTCs) can

only be stored for this diagnostic function.

DOWNLOADING SOFTWARE AND REPLACING THE CONTROL MODULE

New software can be downloaded into the climate control module (CCM). When ordering software, the hardware and the software in the car is compared to the information in the Volvo central database. If the comparison is OK the software is downloaded to the control module.

If the comparison between the car and Volvo central database is not OK, the database is updated with the car configuration. When this is complete the software is downloaded.

The entire climate control module (CCM) must be replaced as one unit.

Different customer parameters can be programmed into the climate control module (CCM). These customer parameters are stored in the control module but not in the Volvo central database. This means that the customer parameters must be reprogrammed when hardware is replaced.

For further information about programmable customer parameters, see: **DIAGNOSTIC FUNCTIONS**

FUNCTION

CONTROLLING THE CLIMATE IN THE PASSENGER COMPARTMENT

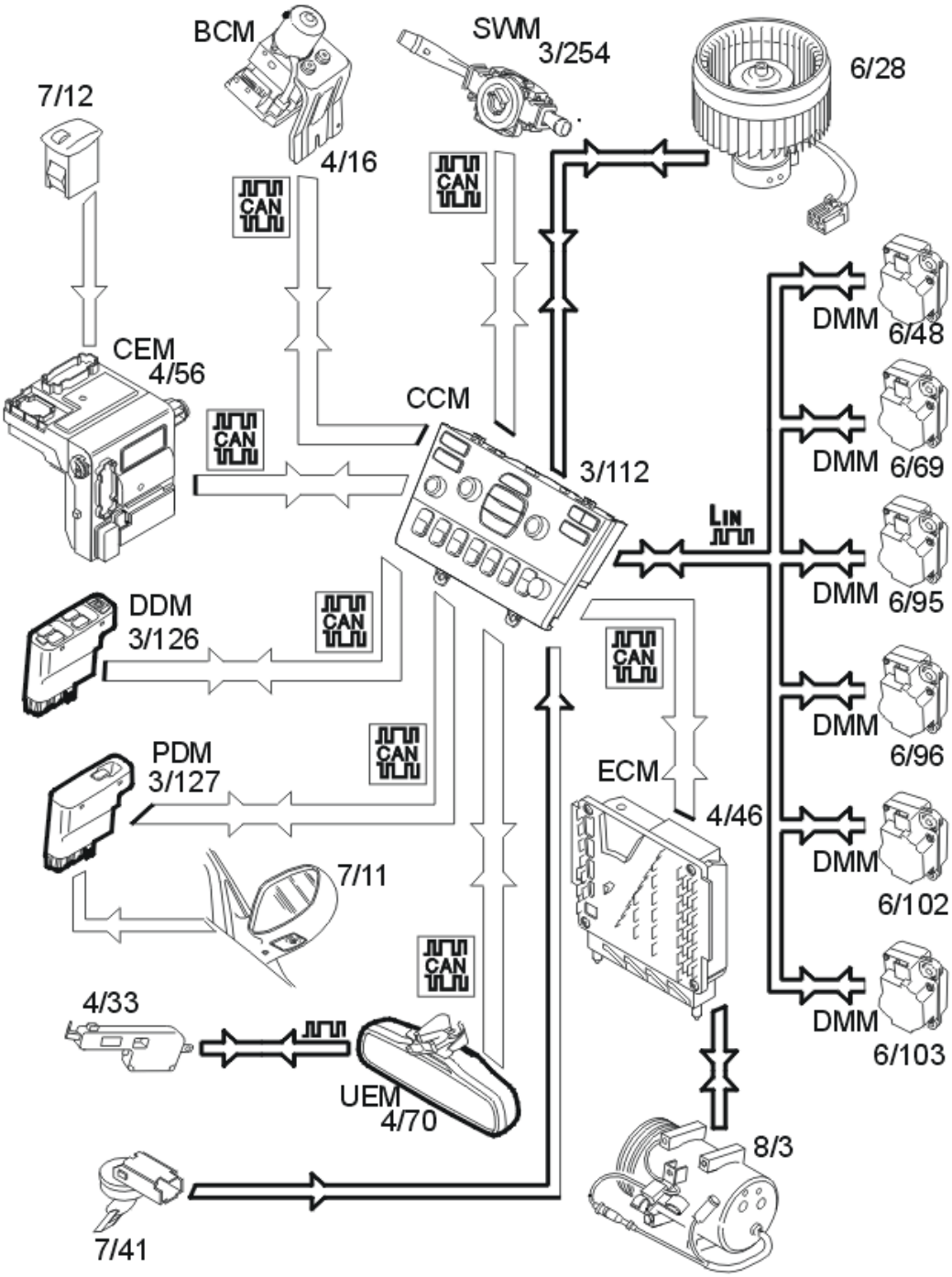

Fig. 24: Identifying Climate Control System & Components
Courtesy of VOLVO CARS CORPORATION

The way in which the climate in the passenger compartment is regulated depends on the type of climate control module (CCM) in the car.

Electronic climate control (ECC)

Electronic climate control means that either manual settings or the AUTO function can be used. In the latter case the control module automatically regulates heat, air conditioning, recirculation and air distribution until the selected temperature is achieved.

Manual climate control (MCC)

Manual climate control means that heat, air conditioning, recirculation and air distribution must be selected manually.

Climate control module (CCM) (3/112) regulates the following:

- Activation of the air conditioning (A/C) compressor (8/3) using a request via the controller area network (CAN) to the engine control module (ECM) (4/46)
- Controlling the damper motors. For ECC (6/48), (6/95), (6/96), (6/102) and (6/103). For MCC (6/48), (6/69), (6/95) and (6/96)
- Blower fan speed (6/28).

The climate control module (CCM) regulates the climate in the passenger compartment based on the following input signals:

- The passenger compartment temperature, signal from the internal passenger compartment temperature sensor
- Outside temperature, signal from the outside temperature sensor (7/11) via the passenger door module (PDM) (3/127) on the controller area network (CAN)
- The evaporator temperature, signal from the evaporator temperature sensor (7/41)
- Sun roof status. Signal from the sun roof control module (4/33) via the upper electronic module (UEM) (4/70) over the controller area network (CAN)
- Status of the side window, signals from the driver door module (DDM) (3/126) and passenger door module (PDM) (3/127) via the controller area network (CAN)
- Status of the doors, signal from the central electronic module (CEM) via the controller area network (CAN)
- Sun intensity, signal from the sun sensor (7/12) via the central electronic module (CEM)
- Speed, signal from the brake control module (BCM) (4/16) via the controller area network (CAN)
- Status of the windshield wipers, signal from the steering wheel module (SWM) (3/254) via the controller area network (CAN).

The climate control module (CCM) (for ECC) uses information about the status of the sun roof, side windows and doors to determine how it should compensate for changes in the passenger compartment temperature. If any side windows, doors or the sun roof are opened, the climate control module (CCM) will not compensate for a change in the passenger compartment temperature. Instead it maintains the same level of climate control for the compressor and blower fan as before.

The climate control module (CCM) (for ECC) uses the signal from the steering wheel module (SWM) indicating that the windshield wipers are on. This is to regulate the blower fan and the damper motor to remove any mist from the inside of the windshield when it rains.

The climate control module (CCM) (for ECC) uses the signal from the sun sensor to compensate for high sun intensity. This is done by lowering the temperature of the ventilation air, altering air distribution and increasing the speed of the blower fan.

The climate control module (CCM) uses the signal from the evaporator temperature sensor to control a request for:

- activation of the A/C compressor (not B8444S)
- control of the A/C compressor (B8444S only)

If the signal from the evaporator temperature sensor displays an evaporator temperature of below 4.5 °C, the compressor is not permitted to run due to the risk of ice formation.

To maintain a constant flow of air in the passenger compartment, the climate control module (CCM) (for ECC) uses the speed signal from the brake control module (BCM) to regulate the speed of the blower fan. Generally, as the speed of the car increases the speed of the blower fan decreases.

At higher speeds the flow of air into the fresh air damper is adjusted.

REGULATING SEAT HEAT

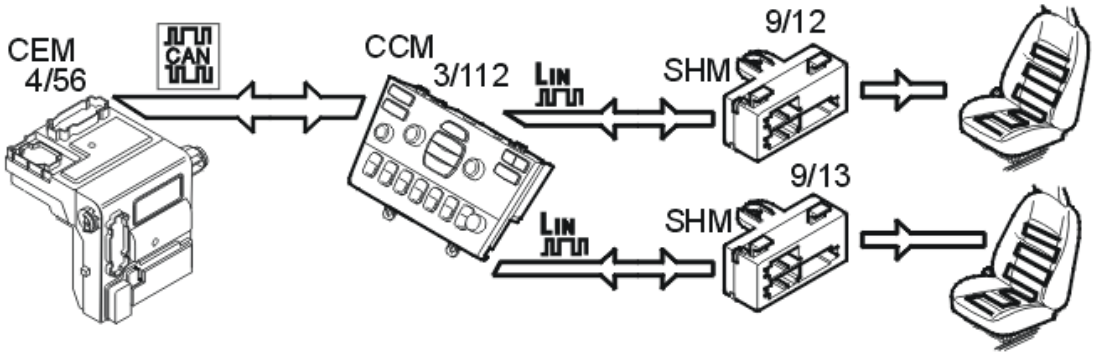

Fig. 25: Identifying Seat Heat Regulation System & Components
Courtesy of VOLVO CARS CORPORATION

The seat heaters are activated using the switches on the climate control module (CCM) (3/112). The function is normally switched off. When activating the seat heaters, the first position is high temperature. If the button is pressed again, the temperature will be low. The status of the indication is displayed via LEDs. The climate control module (CCM) transmits information about the selected temperature to the relevant seat heating module (SHM) on the relevant LIN bus. The seat heating module (SHM) then controls the current to the heater pads.

Each seat heating module (SHM) then transmits its present status to the climate control module (CCM).

Communication between the climate control module (CCM) and each seat heating module (SHM) takes place in the following way:

- seat heating module (SHM), driver's side (9/12) on LIN bus 1
- seat heating module (SHM), passenger side (9/13) on LIN bus 2.

The climate control module (CCM) receives information from the central electronic module (CEM) (4/56) about the type of seat and upholstery via the controller area network (CAN). The levels for high and low temperature are adapted for the relevant seat and upholstery by the climate control module (CCM). To a certain extent, the levels for high and low temperature can be adapted to the wishes of the customer using VIDA (Volvo scan tool).

RECIRCULATION CONTROL (ELECTRONIC CLIMATE CONTROL ONLY)

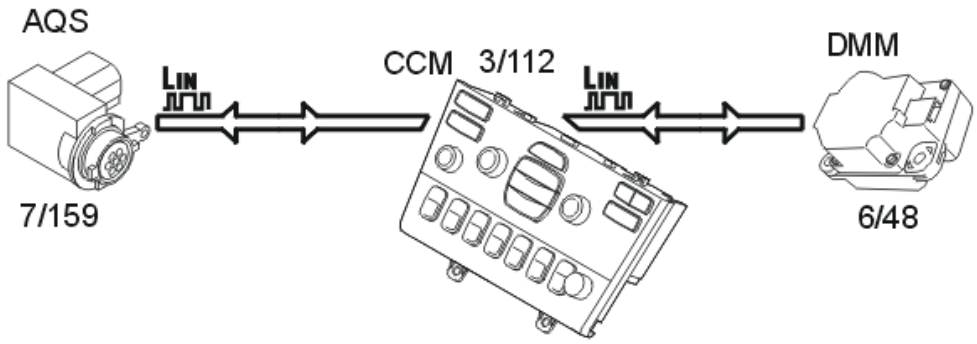

Fig. 26: Identifying Air Recirculation Control System & Components
Courtesy of VOLVO CARS CORPORATION

For ECC, the climate control module (CCM) (3/112) controls the recirculation during the following conditions:

- the recirculation switch is on (the LED lights orange)
- the system is in AUTO mode and there is a large difference between the desired and current temperature
- the car is equipped with an air quality sensor (AQS), and the recirculation switch is on (the LED lights green).

The air quality sensor (AQS) (7/159) transmits a signal to the climate control module (CCM) if it detects raised concentrations of pollutants in the outside air. When this occurs, the climate control module (CCM) transmits a signal to the damper motor for recirculation (6/48) to close the fresh air damper and to use recirculated air.

The degree of recirculation is controlled by the signal from the air quality sensor (AQS):

- signal 1 provides partial recirculation for speeds below 85 km/h, no recirculation for speeds exceeding 85 km/h
- signals 2 and 3 provide 100% recirculation.

If the high level of pollutants remains, the system stays in recirculation for a certain time, maximum of 10 minutes. The time that the system is recirculating is determined by the outside temperature, whether the air conditioning (A/C) is on or if the windshield wipers are activated. The system returns to fresh air for a short

time before recirculation is resumed. The particle filter absorbs most of the pollutants entering the passenger compartment during this time. The maximum time prevents misting and musty air.

The air quality sensor (AQS) transmits information about the content of pollutants to the climate control module (CCM). This information is graded into four levels, and the information used for diagnosis.

Recirculation is never permitted if the defroster is selected. The climate control module (CCM) also requests compressor activation when the evaporator temperature exceeds 3 °C.

HEATED REAR WINDSHIELD AND DOOR MIRRORS

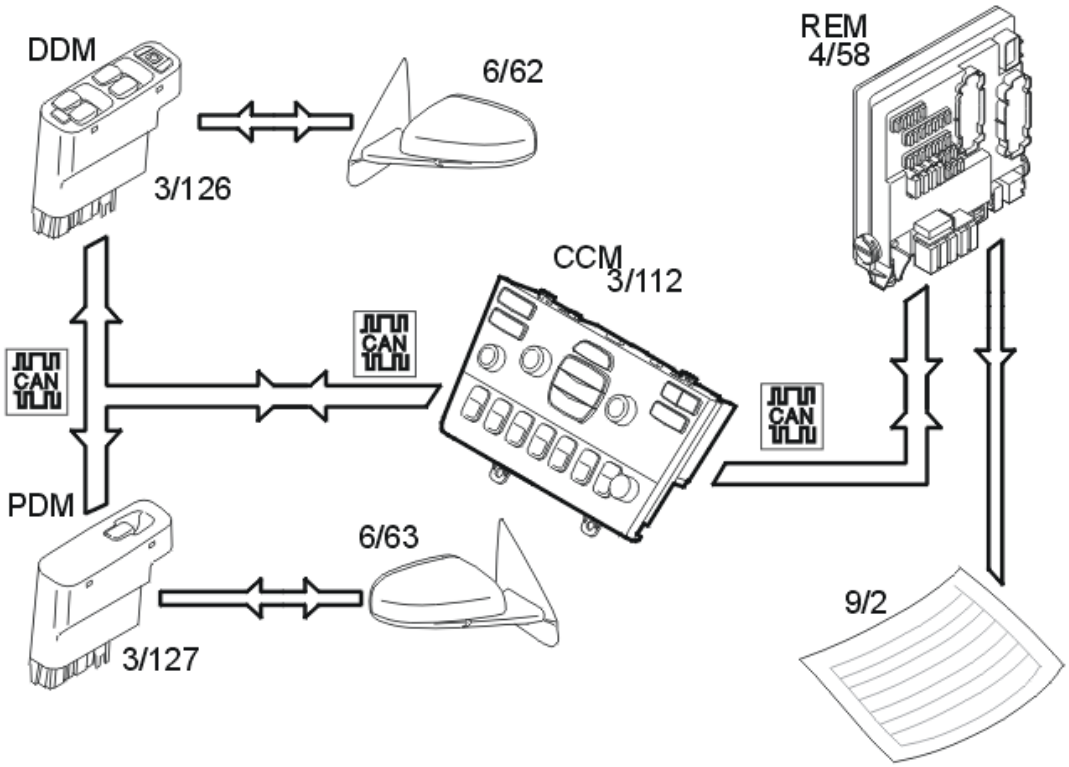

Fig. 27: Identifying Heated Rear Windshield & Door Mirror System Components
Courtesy of VOLVO CARS CORPORATION

The heated rear windshield and door mirrors are activated by pressing the switch on the climate control module (CCM) (3/112). The climate control module (CCM) transmits information via the controller area network (CAN) indicating the status of the electrical heating to the following:

- rear electronic module (REM) (4/58)
- driver door module (DDM) (3/126)
- passenger door module (PDM) (3/127).

SWITCH FUNCTIONS, DASHBOARD ENVIRONMENT PANEL, (LOWER SECTION)

The following functions can be activated using the switches on the dashboard environment panel:

- Folding head restraint, rear seat (S60/S80)
- Folding door mirrors (market dependent)
- Bi-fuel, on / off (market dependent)
- Valet lock, on/off
- Child-proof lock, on/off (market dependent)
- Rear air conditioning (A/C) (XC90, option)
- STC, off / on (option)
- DSTC, off / on (option)
- BLIS, off / on (option)
- Auxiliary lamps, off / on (option)
- Parking assistance (option)
- Reduced alarm, on / off (option)
- Four-C (Continuously Controlled Chassis Concept), (option).

In order for certain functions to be activated the engine must be switched on and/or the master key must be in position II.

Folding head restraints, rear seat

When the switch for the folding head restraints is activated, information is transmitted by the climate control module (CCM) (3/112) to the rear electrical module (4/58) via the control area network (CAN).

Folding door mirrors

When the switch for the folding door mirrors is activated, information is transmitted by the climate control module (CCM) to the driver door module (3/126) and the passenger door module (PDM) (3/127) via the control area network (CAN).

Bi-fuel

When the bi-fuel switch is activated, a signal is transmitted from the climate control module (CCM) to the engine control module (ECM) (4/46) on the control area network (CAN) via the central electronic module (CEM) (4/56). The engine control module (ECM) transmits a signal to the climate control module (CCM) about the type of fuel being used. The climate control module (CCM) uses this information to light and turn off the LED in the switch.

Valet lock / child-proof lock

When activating the valet lock switch or the child lock switch information is transmitted to the rear electronic module (REM) via the control area network (CAN).

Rear A/C

When activating the switch for rear A/C information is transmitted via the Controller area network (CAN) to the rear electronic module (REM). From this signal and the signal from the engine control module (ECM) indicating whether the engine is running or not, the rear electronic module (REM) will activate/deactivate the relay supply to the rear A/C system. The rear electronic module (REM) transmits a signal indicating whether the rear A/C is on or not to the climate control module (CCM) via the control area network (CAN). The climate control module (CCM) uses this information to light and turn off the LED in the switch.

STC or DSTC (applies to model year -2006)

When the STC or DSTC switch is activated, a signal is transmitted from the climate control module (CCM) to the brake control module (BCM) (4/16) via the controller area network (CAN). The brake control module (BCM) then transmits a signal to the climate control module (CCM) indicating that the STC or DSTC function is on or off. The climate control module (CCM) uses this information to light and turn off the LED in the switch.

BLIS (applies to model year 2007-)

When activating the switch for Blind Spot Information System, the information is transmitted via the CAN network to the Driver door module (DDM) / Passenger door module (PDM). The Driver door module (DDM) / Passenger door module (PDM) transmit the signal to the Climate control module (CCM) about whether the BLIS function is on or off.

The Climate control module (CCM) uses the signal to switch the LED on or off the switch

Auxiliary lamps

When the auxiliary lamps switch is activated, information is transmitted from the climate control module (CCM) to the central electronic module (CEM). The central electronic module (CEM) transmits a signal to the climate control module (CCM) about whether the auxiliary lamps are on or not. The climate control module (CCM) uses this information to light and turn off the LED in the switch.

Back-up warning

When activating the switch for parking assistance, information is transmitted via the Controller area network (CAN) to the rear electronic module (REM).

Reduced alarm

When activating the switch for reduced alarm, information is transmitted via the Controller area network (CAN) to the rear electronic module (REM).

Four-C (Continuously Controlled Chassis Concept)

When activating the switch for Four-C, information is transmitted via the Controller area network (CAN) to the suspension module (SUM).

SYSTEM OVERVIEW

CONTROL MODULE

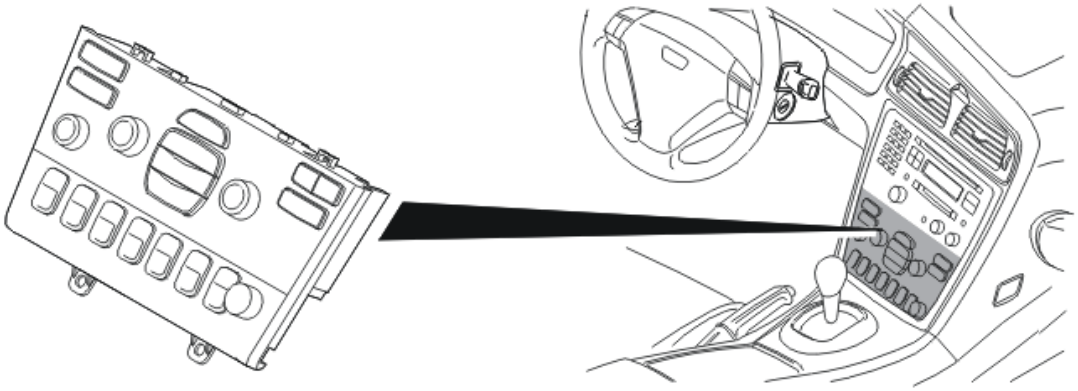

Fig. 28: Identifying Climate Control Module (CCM)
Courtesy of VOLVO CARS CORPORATION

The climate control module (CCM) controls the climate control system and the buttons in the dashboard environment panel.

The climate control module (CCM) is located in the center console. There are two versions of control module (market dependent). These are:

- Electronic climate control (ECC)
- Manual climate control (MCC).

ECC is a fully automatic climate control system with air conditioning. It also allows manual settings.

MCC is a manual climate control system with air conditioning.

The climate control module (CCM) communicates with components which are directly connected and also with other control modules and components via LIN and CAN communication.

The climate control module (CCM) communicates with the damper motors, air quality sensor (AQS) and the seat heaters via two separate LIN buses. The number of components on the LIN buses varies, depending on the equipment level of the car (ECC/MCC and any accessories).

The following components communicate on LIN bus 1:

- the damper motor module (DMM) for air distribution
- the damper motor module (DMM) for temperature left
- the left-hand seat heater.

The following components communicate on LIN bus 2:

- the damper motor module (DMM) for the defroster (ECC only)

- the damper motor module (DMM) for temperature right
- the damper motor module (DMM) for recirculation
- the air quality sensor (AQS)
- the right-hand seat heater.

The control module checks input and output signals and carries out activations via an integrated diagnostic system. A diagnostic trouble code (DTC) is stored if the control module detects an error. In certain cases the control module replaces the faulty signal with a substitute value.

Any diagnostic trouble codes (DTCs) are stored in the control module memory. This information can be read off using VIDA via the data link connector (DLC) in the vehicle.

A simple method for checking that the climate control module (CCM) has a power supply and is grounded is to increase or decrease the blower fan speed. Another method is to activate one of the functions controlled by the buttons on the dashboard environment panel.

SIGNALS

The table below summarizes the input signals to and output signals from the climate control module (CCM). The signal types are divided into directly connected signals, LIN and CAN communication. The illustration below displays the same information with the Volvo component designations.

Input signals	Output signals
Directly connected: • Blower fan motor (6/28), diagnostic signal • Evaporator temperature sensor (7/41), control signal.	**Directly connected:** • Blower fan motor (6/28), control signal.
Via LIN communication: • Damper motor module (DMM) for ECC (6/48, 6/95-96, 6/102-103) • Damper motor module (DMM) for MCC (6/48, 6/69, 6/95-96) • Air quality sensor (AQS) (7/159) • Seat heating module (SHM), passenger side (9/13) • Seat heating module (SHM), driver's side (9/12).	**Via LIN communication:** • Damper motor module (DMM) for ECC (6/48, 6/95-96, 6/102-103) • Damper motor module (DMM) for MCC (6/48, 6/69, 6/95-96) • Air quality sensor (AQS) (7/159) • Seat heating module (SHM), passenger side (9/13) • Seat heating module (SHM), driver's side (9/12).
Via Controller Area Network (CAN) communication: • Central electronic module (CEM) (4/56) • Engine control module (ECM) (4/46) • Rear electronic module (REM) (4/58) • Brake control module (BCM) (4/16)	**Via Controller Area Network (CAN) communication:** • Central electronic module (CEM) (4/56) • Driver door module (DDM) (3/126) • Passenger door module (PDM) (3/127) • Brake control module (BCM) (4/16)

• Driver door module (DDM) (3/126) • Passenger door module (PDM) (3/127) • Upper electronic module (UEM) (4/70) • Steering wheel module (SWM) (3/254).	• Rear electronic module (REM) (4/58) • Engine control module (ECM) (4/46).

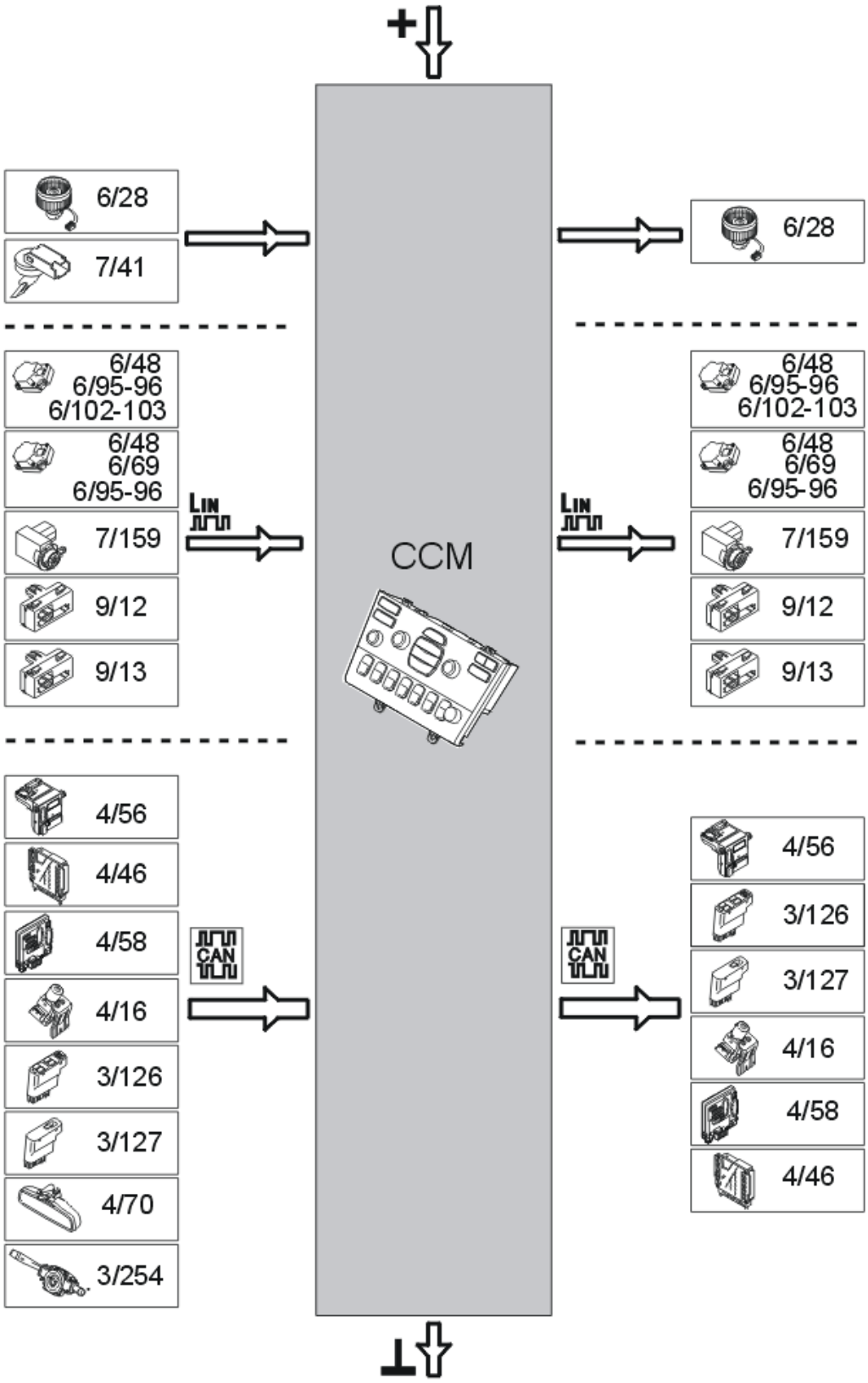
+
6/28
7/41
6/28
6/48
6/95-96
6/102-103
6/48
6/69
6/95-96
7/159
9/12
9/13
LIN
CCM
6/48
6/95-96
6/102-103
6/48
6/69
6/95-96
7/159
9/12
9/13
LIN
4/56
4/46
4/58
4/16
3/126
3/127
4/70
3/254
CAN
CAN
4/56
3/126
3/127
4/16
4/58
4/46
⊥

Fig. 29: Identifying Volvo Component Designations (Climate Control)
Courtesy of VOLVO CARS CORPORATION

COMBUSTION PREHEATER MODULE (CPM) (2005-2012)

INFORMATION

GENERAL

Combustion preheater module (CPM) is not a CAN-node, it is a slave node for Central electronic module (CEM), that communicates via serial communication (LIN).

CONTROL MODULE FOR THE STEERING WHEEL ANGLE SENSOR (2003-2004)

DESIGN

CONTROL MODULE FOR THE STEERING WHEEL ANGLE SENSOR

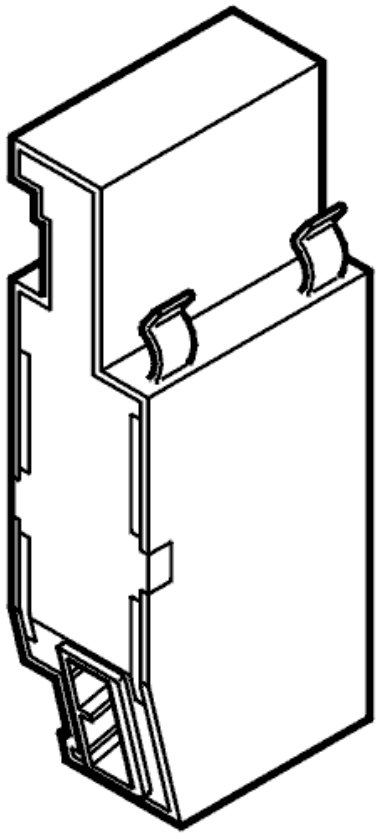

Fig. 30: Control Module For Steering Wheel Angle Sensor
Courtesy of VOLVO CARS CORPORATION

After initiation, with the ignition key in position II and when the steering wheel is turned 4.5 degrees in any

direction, the control module for the steering wheel angle sensor continuously transmits information about the steering wheel angle position to the brake control unit to calculate the driving style of the driver. The brake control module was called ABS-control module up to and including model year 2001.

Communication between the Steering wheel angle sensor control module and the brake control module occurs on the high speed side of the Controller area network (CAN). The control module for the steering wheel angle sensor is positioned on a bracket inside the central electronic module.

The control module for the steering wheel angle sensor is supplied with power from the overload relay.

STEERING WHEEL ANGLE SENSOR

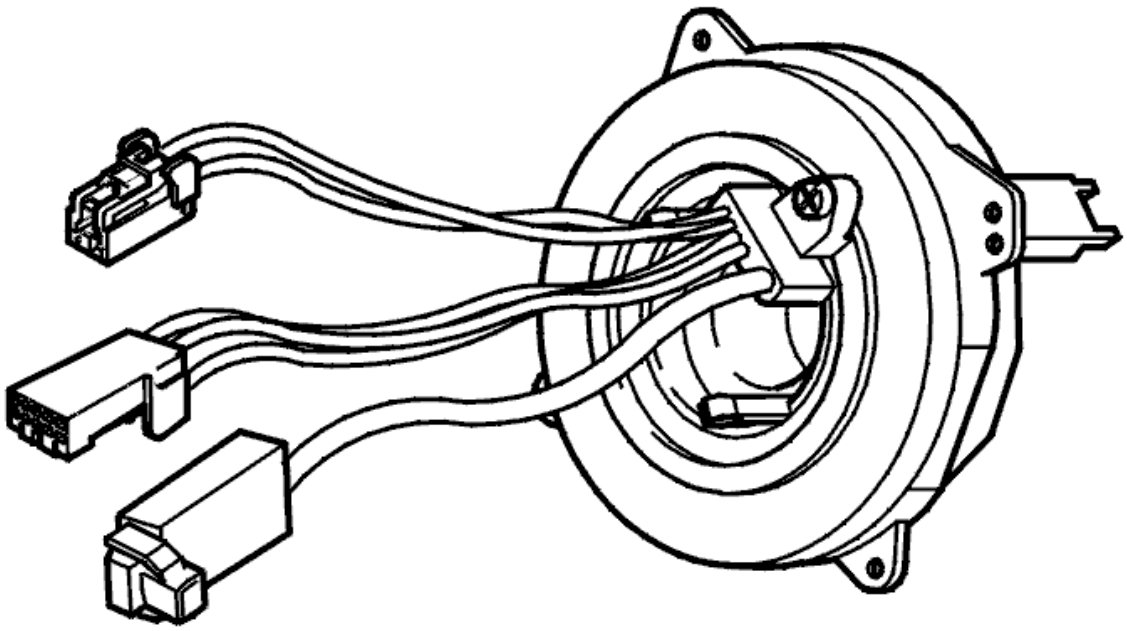

Fig. 31: Identifying Steering Wheel Angle Sensor
Courtesy of VOLVO CARS CORPORATION

The steering wheel angle sensor is incorporated with the SRS contact reel, which in turn is installed on the steering wheel module. The steering wheel angle sensor is equipped with a disc with two code paths. Two circuits with light diodes read off a code path each. One circuit measures the steering angle up to 360 degrees and the other records how many complete turns the steering wheel has turned. Both circuits measure within +/- 700 degrees with a precision of 4.5 degrees. This information is transmitted to the control module for the Steering wheel angle sensor as digital signals.

Due to the reliance of the DSTC (Dynamic stability and traction control) on information from the steering angle sensor it is extremely important that the contact reel has been centered correctly and that only an original Volvo

steering wheel is used.

SRS

SAS DIAGNOSTIC FUNCTIONS

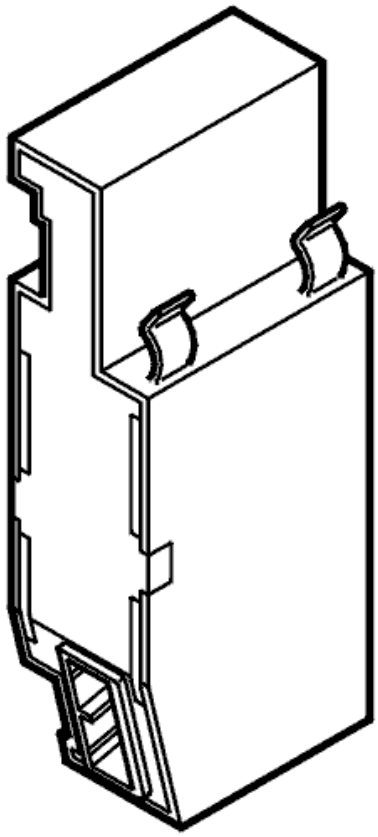

Fig. 32: Control Module For Steering Wheel Angle Sensor
Courtesy of VOLVO CARS CORPORATION

General

The control unit has built-in diagnostics, Volvo Diagnostics, which continually monitor the unit and the input and output signals.

Diagnostic trouble codes

If the control unit detects a fault, it stores a diagnostic trouble code. If, for any reason, a fault disappears after the diagnostic trouble code has been permanently stored in the control unit, information about the trouble code still remains in the control unit.

Reading and erasing diagnostic trouble codes

Stored diagnostic trouble codes can be read from the control unit using this facility.

Diagnostic trouble codes may be erased but only after they have been read at least once.

Reading input and output signals

Status of control unit input and output signals can be continually read using this facility.

For more information about parameters, see **DESCRIPTION OF PARAMETERS (STEERING ANGLE SENSOR)**.

Reading the control unit identity

VIDA identifies control units by reading the number of codes from the control unit memory. The codes contain information on the control unit as follows:

- hardware component number (control units without software)
- software component number (control units without software)
- software component number
- diagnostic software component number

DESCRIPTION OF PARAMETERS (STEERING ANGLE SENSOR)

INTRODUCTION / STATUS

INTRODUCTION

The steering angle sensor is integrated with the contact roller for the SRS-system and is installed on the steering wheel lever module. The function of the sensor is to sense the driver's steering wheel movements. The steering angle sensor consists of a steel disc with two hole-patterned grooves illuminated by several installed pairs of light-emitting diodes and phototransistors. The disc is mounted so that it follows the steering column's movements and then the phototransistors can sense the disc's movement. One pair of light-emitting diodes (IY, IX) reads an index groove with a unique groove pattern. The other pair (A, B) reads a groove with a repeated pattern around the disc (dark, light, dark, light, etc. The grooves' resolution is 1.5 degrees. Since the steering wheel can be turned several revolutions an additional two groups of light-emitting diodes must be used (R1, R2, R3, R4) to read off which steering wheel revolution one is at (normal <3). During the movement the SAS control module (Steering Angle Sensor) processes all information about the steering wheel's absolute position. In connection with start of the vehicle one has to turn the steering wheel a small angle, approx. 5 degrees in any direction to enable the control module to determine the steering wheel's position. This means that the wheel's angle and direction can be determined in relation to the driving direction. The information is used in the DSTC-system (together with other information about the vehicle's driving situation) to decide if the vehicle is driven stable and safe or is in a skid situation.

STEERING WHEEL ANGLE

The value displays the steering wheel angle in degrees.

0° = Steering wheel in the straight forward position

1° to 720° = Angle of the steering wheel when turning to the left

-1° to -720° = Angle of the steering wheel when turning to the right

LED IY STATUS

The value displays the status of LED IY.

ON = LED IY active

OFF = LED IY not active

LED IX STATUS

The value displays the IX status.

ON = LED IX active

OFF = LED IX not active

LED A STATUS

The value displays the A status.

ON = LED A active

OFF = LED A not active

LED B STATUS

The value displays the B status.

ON = LED B active

OFF = LED B not active

LED R1 STATUS

The value displays the R1 status.

ON = LED R1 active

OFF = LED R1 not active

LED R2 STATUS

The value displays the R2 status.

ON = LED R2 active

OFF = LED R2 not active

LED R3 STATUS

The value displays the R3 status.

ON = LED R3 active

OFF = LED R3 not active

LED R4 STATUS

The value displays the R4 status.

ON = LED R4 active

OFF = LED R4 not active

POWER SUPPLY, STEERING WHEEL ANGLE SENSOR MODULE (SAS)

The value indicates battery voltage at the steering wheel angle sensor module (SAS).

Measurement range: 5 to 15 V

POWER SUPPLY, CENTRAL ELECTRONIC MODULE (CEM)

The value indicates battery voltage at the Central electronic module (CEM).

Measurement range: 5 to 15 V

LED CIRCUIT 1 STATUS

The value displays the status of LED circuit 1

ON = LED circuit 1 is active

OFF = LED circuit 1 is not activate

LED CIRCUIT 2 STATUS

The value displays the status of LED circuit 1

ON = LED circuit 2 is active

OFF = LED circuit 2 is not activate

SIGNAL VOLTAGE, SIGNAL A

The value indicates the signal voltage for signal A.

Measurement range: 0 to 16 V

SIGNAL VOLTAGE, SIGNAL B

The value indicates the signal voltage for signal B.

Measurement range: 0 to 16 V

LED CIRCUIT 1 CURRENT

The value displays the current through LED circuit 1.

Measurement range: 0 to 50 mA

LED CIRCUIT 2 CURRENT

The value displays the current through LED circuit 2.

Measurement range: 0 to 50 mA

SOFTWARE DOWNLOADING

New software can be downloaded into the control module for the Steering wheel angle sensor. When ordering software, the hardware and the software in the car is compared to the Volvo central database. If the comparison is OK the software is downloaded to the control module. If the comparison between the car and Volvo central database is not OK, the database is updated with the car configuration. When this is complete the software is downloaded.

SYSTEM OVERVIEW

CONTROL MODULE

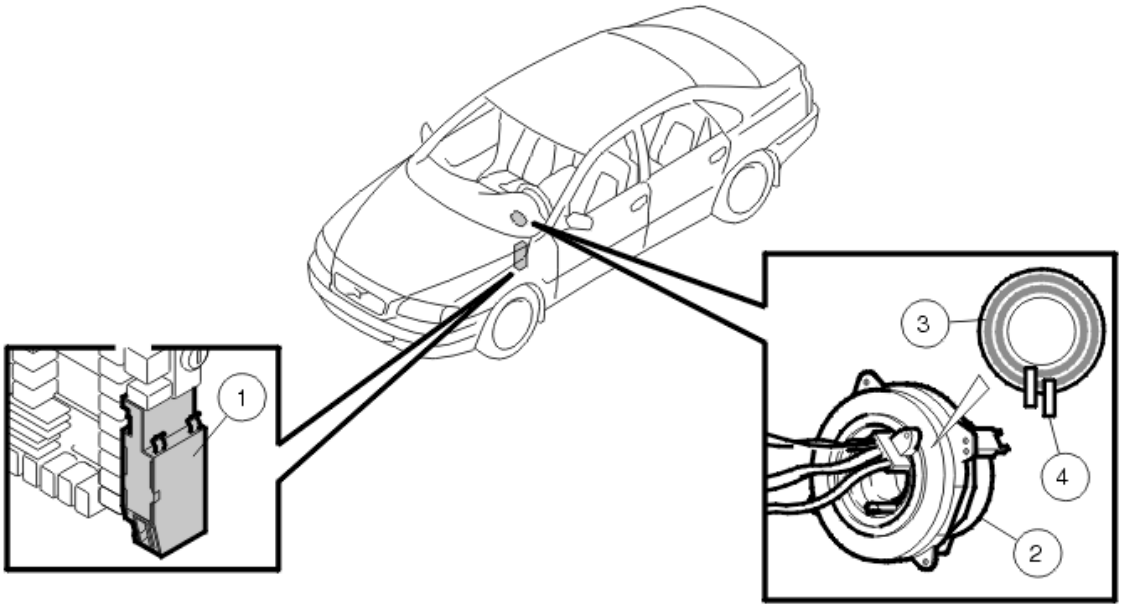

Fig. 33: Control Module For Steering Wheel Angle Sensor
Courtesy of VOLVO CARS CORPORATION

1. Control module for the steering wheel angle sensor
2. Steering wheel angle sensor
3. Reference groove
4. Encoder for steering movements.

Only cars equipped with DSTC (dynamic stability and traction control) have a steering wheel angle sensor control module. The easiest way to determine if a car is equipped with DSTC (Dynamic stability and traction control) is to search for a switch, marked DSTC, positioned in the panel on the climate control module.

The Steering wheel Angle Sensor Module is positioned on the side of the central electronic module. The only function of the steering wheel angle sensor is to process the signals from the steering wheel angle sensor. The signals used by the DSTC system. The steering wheel angle sensor is mounted on the steering wheel module and is directly connected to the steering angle sensor via a connector on the steering wheel module. The Steering wheel angle sensor control module transmits signal information via the high-speed side of the Controller area network (CAN) to the brake control module, model year 2002-or the ABS control module, model year 1999-2001.

If a fault occurs the control module for the steering angle sensor detects this and a diagnostic trouble code (DTC) is stored at the same time as the DSTC function is switched off.

Diagnostic trouble codes (DTCs) stored in the control module for the steering wheel angle sensor. This information can be read off using the diagnostic tool via the data link connector (DLC) in the car.

SIGNALS FOR THE CONTROL MODULE FOR THE STEERING WHEEL ANGLE SENSOR

The table below summarizes input and output signals to and from the Steering wheel angle sensor control module. The signal types are divided into directly connected signals, serial communication and Controller area

network (CAN) communication.

Input signals	Output signals
Via Controller Area Network (CAN): -	**Via Controller Area Network (CAN):** **The brake control module (or ABS-control module)** (4/16). Transmits relevant information about the steering wheel angle from the straight ahead position, the speed of the steering wheel movements and about which direction the steering wheel is turned.
Directly connected: **The steering wheel angle sensor** (7/91). Provides the control module with relevant information about the steering wheel angle from the straight ahead position, the speed of the steering wheel movements and about which direction the steering wheel is turned.	**Directly connected:** -

DIAGNOSIS (2003-2012)

BACKGROUND

GENERAL

Factors that have improved safety, increased comfort, added functions and increased environmental friendliness, have made modern vehicles more and more complicated.

The more complicated the vehicle is, the more important is the diagnostics system in the vehicle with the diagnostics tool when it comes to ensuring fast, safe and economic test, service and repair.

To reduce emissions from the vehicle, the diagnostic systems shall also, according to legislation, detect emission-influencing problems as well as defects that may cause follow-up damage on emission-related components.

LEGAL REQUIREMENTS EMISSIONS

OBD I - On Board Diagnostic I

On Board Diagnostic I (diagnostic system in the vehicle) was 1988 a requirement from CARB (California Air Resource Board) which is an air quality board. The purpose of these regulations was to ensure that component or function defects that affected exhaust emissions are detected by the control module's diagnostic functions.

OBD I included diagnosis of control module, emission-related components connected to the control module as well as exhaust gas recirculation.

Using the diagnostic socket in the engine compartment, the information about the system was accessible to all, both brand-name workshops and independent workshops.

In case of a detected emission-related problem, a warning light is activated in the driver information module (MIL= Malfunction Indicator Light), when the problem is confirmed as a real malfunction. Thus, the light is not activated immediately upon detection, only first when the malfunction is confirmed, which may be, e. g., following a few driving cycles.

OBD II - On Board Diagnostic II

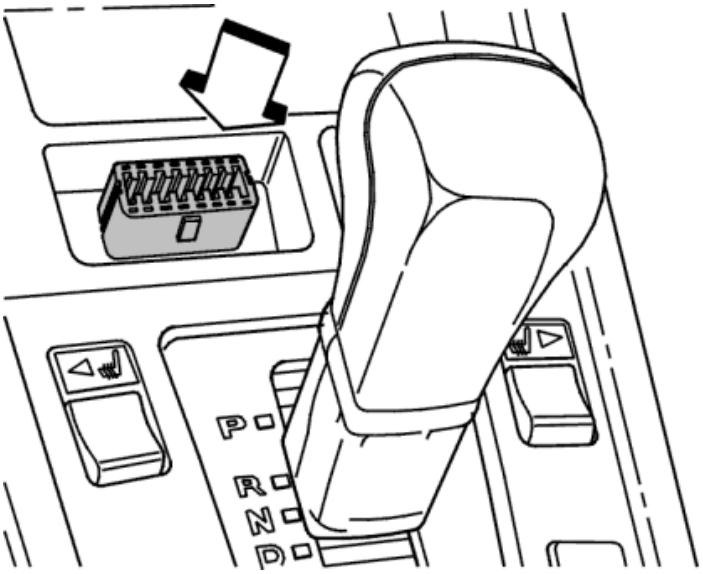

Fig. 34: Locating OBD II - On Board Diagnostic II
Courtesy of VOLVO CARS CORPORATION

On Board Diagnostic II was another requirement from CARB that applied from 1996. CARB demanded additional and refined diagnosis for emission-related component and systems in the drivetrain (engine and transmission).

Also, a standardized communication method was required for reading out of diagnosis (Standard SAE J1979 and J2190, where J2190 is voluntary and includes Enhanced Diagnostics - the vehicle manufacturer's own diagnosis in addition to legal requirements).

It should be possible to read out diagnostic trouble codes and their format, information connected to diagnostic trouble codes as well as parameters*, according to this standard. OBD II's diagnostic trouble codes are five-digit and begin with the letter P followed by four digits.

This standardized communication method means that anyone shall be able to manufacture and sell an instrument for reading out, a so-called Generic Scan Tool. Thus, the vehicle owner is not dependent on using a brand-name workshop.

The standard OBD II requires a standardized diagnostic socket in the passenger compartment near the driver's seat, where this instrument is to be plugged in. This means that the diagnostic socket (connector) is the same on all vehicles regardless of manufacturer or model.

However, there is a difference between manufacturers regarding which pins are used in the connector. This depends on the OBD II standard supports four types of communication protocols.

A protocol may be said to be the "language" that is to be used for communication with the control module.

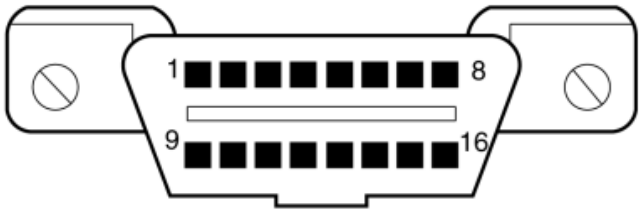

Fig. 35: Identifying Standardized Pins On OBD II-Connector
Courtesy of VOLVO CARS CORPORATION

Standardized pins on OBD II-connector:

- Pin 2 SAE J-1850 bus +
- Pin 4 Chassis ground
- Pin 5 Signal ground
- Pin 6 SAE J-2284, CAN-bus (CAN-H)
- Pin 7 SAE J1979, ISO 9141-2 / ISO14230-4, K-line
- Pin 10 SAE J-1850 bus -
- Pin 14 SAE J.2284, CAN-bus (CAN-L)
- Pin 15 ISO 9141-2 / ISO14230-4, L-line
- Pin 16 Voltage feed

Other pins in the connector are permitted for the vehicle manufacturer's own specific use. On pin 7 (K-line), two-way communication is permitted, on pin 15 (L-line) only one-way communication is permitted to the control module. Therefore, the L-line is missing in many vehicles.

ISO14230-4 = Protocol KWP2000.

OBD II was first introduced for Volvo on engine management system Motronic 4.3, Motronic 4.4, and automatic transmission AW 50 42, AW 30 40/43 in model 850/960 for market USA/CDN.

With time, OBD II-communication with control modules via CAN is introduced.

The legal requirement also includes the function Readiness Monitoring.

* Parameter refers to, e. g., rpm, engine temperature, battery voltage, etc., with associated value 800 rpm, 87 °C as well as 14, 2 V, etc.

DIAGNOSTIC VERSIONS AND COMMUNICATION METHODS

GENERAL

Since the end of the 1980s, the control module's diagnosis has developed from detecting simple problems and storing a small amount of information to including more complicated tests and checks.

Today a large amount of information can be read out both about the detected problem as well as parameters from the control module's input and output signals.

VOLVO DIAGNOSTICS II - FIRST VERSION

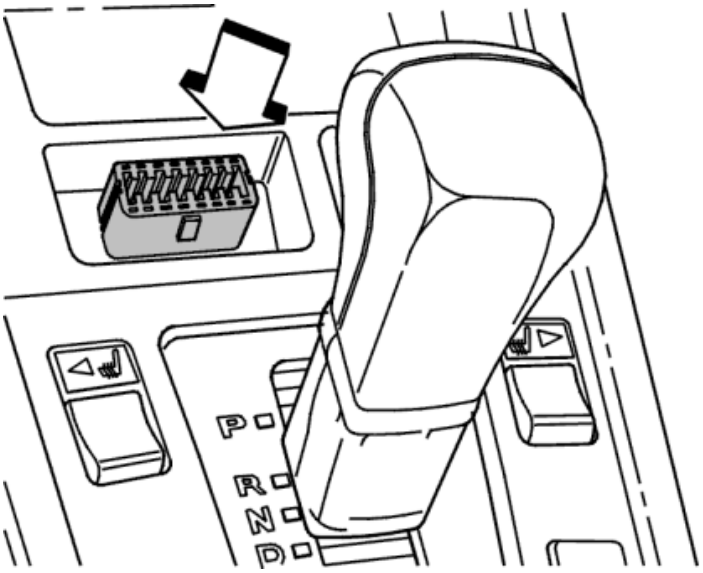

Fig. 36: Locating OBD II - On Board Diagnostic II
Courtesy of VOLVO CARS CORPORATION

Volvo Diagnostics II - first version was a new Volvo standard introduced in *1996* . This meant that control modules communicated serially in the same way, and that diagnostic functions in the different systems were designed in a similar manner.

The communication cable in the vehicle used for this communication is common to all control modules in question. The control modules are connected to the same connection in the diagnostic socket (pin 7).

The diagnostic socket is located in the passenger compartment and for certain markets it is common with the diagnostics system OBD II.

Volvo Diagnostics II, first version, was introduced in 1996 on, among others:

- Engine management system Motronic 4.4
- Automatic transmission AW 50 42/AW 30 40/43
- Control module Airbag SRS6.2
- Immobilizer

- Control module Brakes ABS 850
- Combined instrument panel 850
- Power seat 850/960
- and was gradually introduced for additional systems and car models.

For certain models, the diagnostics tool for this diagnosis is still Volvo System Tester (car models from and incl. model year 1998 as well as certain systems for model year 1999).

The diagnostics tool VIDA, now replacing VADIS, is used for car models of model year 1999 and later.

VOLVO DIAGNOSTICS II - SECOND VERSION

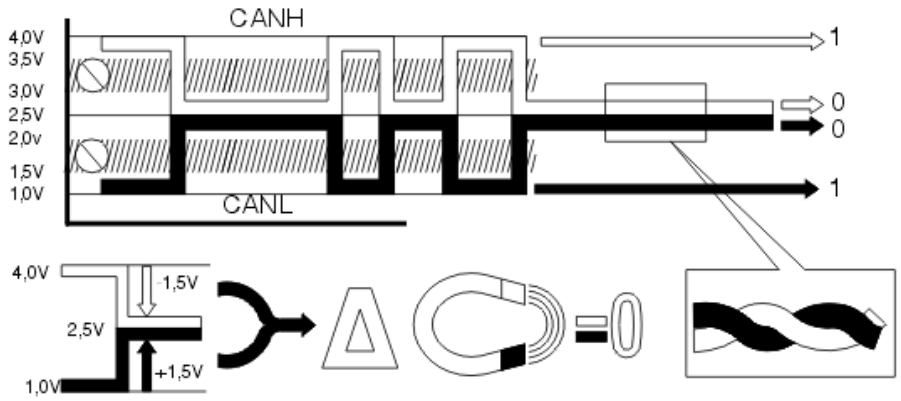

Fig. 37: Communication Via CAN-Communication
Courtesy of VOLVO CARS CORPORATION

Volvo Diagnostics II - second version was introduced in *1999* and is a development of the first version. The major difference is that communication between the diagnostics tool and the control modules takes place via CAN-communication instead of on a communication cable.

The control modules also communicate with each other to exchange information on the CAN-net instead of via separate cables between the control modules.

This version introduced the possibility to download software to the control modules.

With the introduction of this version, the rate in the low-speed network was (LS CAN) 125 kbit/s and the rate in the low-speed network was (HS CAN) 250 kbit/s. Depending on model and model year, the speed of the network has increased with time.

The diagnostics tool VIDA, now replacing VADIS, is used for car models of model year 1999 and later.

GENERIC GLOBAL DIAGNOSTICS (GGD)

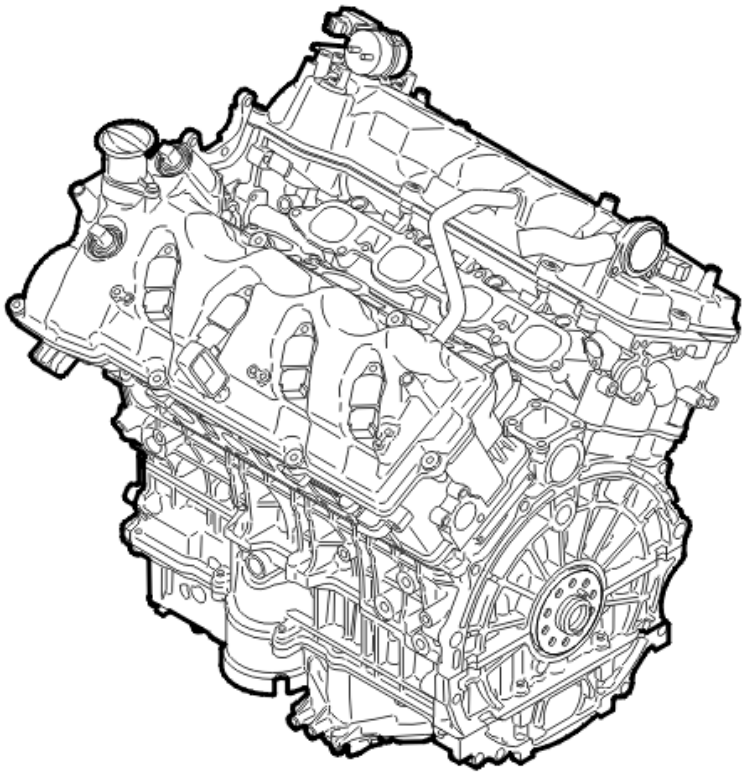

Fig. 38: Engine Block
Courtesy of VOLVO CARS CORPORATION

Generic Global Diagnostics (GGD) is a mutually developed diagnostics concept within the Ford company.

Communication and services are similar to Volvo Diagnostics II - first version. Communication between the diagnostics tool and control modules takes place via CAN-communication. The services that can be performed are similar.

Designation of trouble codes adheres to standard ISO/DIS 15031-6.4 and consist of a letter and six characters.

The control modules also communicate on the CAN-net with each other to exchange information.

It is also possible to download other software to the control modules.

Volvo Diagnostics, fifth version, was introduced in model XC90 model year *2005* with engine B8444S (only high-speed network) and then in model S80 (07-).

The diagnostics tool VIDA, now replacing VADIS, is used for car models of model year 2005 and later.

DIAGNOSTICS AND SERVICES

GENERAL

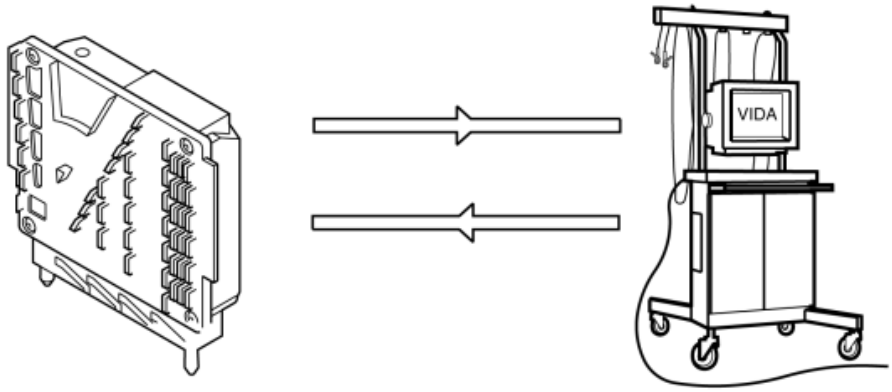

Fig. 39: Control Module And Diagnostics Tool
Courtesy of VOLVO CARS CORPORATION

The control module's diagnostics can perform and present the following using a connected diagnostics tool:

- Store malfunction indicator (diagnostic trouble codes) and in certain cases activate warning light or show text message.
  - Counter that indicates how frequent the malfunction is
  - Status indicators for the diagnostic trouble code test.
  - Frozen values that were generated when malfunction was detected for the first time.
- Store information about the nature of the malfunction:
  - Counter that indicates how frequent the malfunction is
  - Status indicators for the diagnostic trouble code test.
  - Frozen values that were generated when malfunction was detected for the first time.
- Erase information about malfunction and its information.
- Present values (parameters) for different connected input signals and output signals from, e. g., components as well as other calculated values.
- Present part number, version number, component number, etc. for both software and hardware.
- Present and change certain special customer settings and configurations.
- Trigger/control (activate) the connected output signals.
- Start special built-in check programs/tester such as, e. g., calibrations of gear position sensor, quick-test of tank system.
- Access check to limit access to certain parameters and functions. Accessible first after unlocking with, e. g., PIN-code.

Exactly what each control module's diagnostics can perform depends both on model year and system.

DIAGNOSTIC TROUBLE CODES (MALFUNCTION INDICATOR)

- see **IDENTIFYING MALFUNCTION**
- see **CONDITIONS FOR DIAGNOSIS TO FIND A MALFUNCTION**

- see **DRIVING CYCLE/OPERATION CYCLE**
- see **EMERGENCY MODE, BACK-UP MODE "LIMP-HOME"**
- see **CLASSIFICATION OF DIAGNOSTIC TROUBLE CODES**
- see **DESIGNATION OF TROUBLE CODES**
- see **STATUS IDENTIFIER**
- see **COUNTER**
- see **FROZEN VALUES**
- see **ERASING DIAGNOSTIC TROUBLE CODES**
- see **READINESS MONITOR (CERTAIN MARKETS ONLY)**

PARAMETERS

Parameters or values are data that are read out from the control module's memory positions to, e. g., check the signal from a sensor or identify the control module's software version.

In principle, parameters can be divided into two parts:

- one for **dynamic values** continuously updated in the control module
- one for **static values** not changed by the control module and always stored.

Parameters, dynamic

Fig. 40: Dynamic Parameters
Courtesy of VOLVO CARS CORPORATION

The *dynamic values* are stored in the control module's RAM-memory, which means that the values disappear when the memory's power supply is turned off (control module is turned off). As soon as the control module's power is turned on (ignition on), values are stored again.

Example of values are:

- Outside temperature
- Engine speed

- Load
- Coolant temperature
- Vehicle speed
- Battery voltage

Values are updated continuously after a pre-determined time interval. This means that certain values are updated with very short time interval, while other values are updated more seldom. Update rate is determined by how important the value is to the control module.

By reading off the value from, e. g., a sensor or switch, it can be decided if the signal is correct or not.

NOTE: **When a malfunction is detected and a diagnostic trouble code is stored, it may well be that the displayed value is a replacement value and not the real value. If the value does not change, e. g., if the sensor is disconnected, it may be the replacement value that is shown.**

Parameters, static

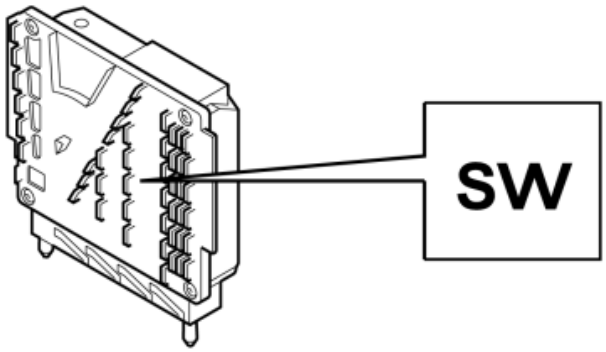

Fig. 41: Identifying Static Parameters
Courtesy of VOLVO CARS CORPORATION

The *static values* are stored in the control module's EEPROM, which means that these values are always stored regardless of if the control module is on or off. These values are normally not updated by the control module, instead they are only changed using, e. g., the diagnostics tool at vehicle manufacture in the factory or reprogramming during a workshop visit.

Example of values are:

- Hardware P/N (control module without software).
- Hardware serial number (control module without software).
- Software P/N.
- Diagnostic software P/N.
- Customer-programmed values, e. g., passenger compartment temperature, alarm on and off.

- The vehicle's configuration, that is, the vehicle's content and equipment that can be used to compare the vehicle's equipment physically with how the vehicle is configured. The configuration may be affected/changed, e. g., when downloading software.

ACTIVATIONS

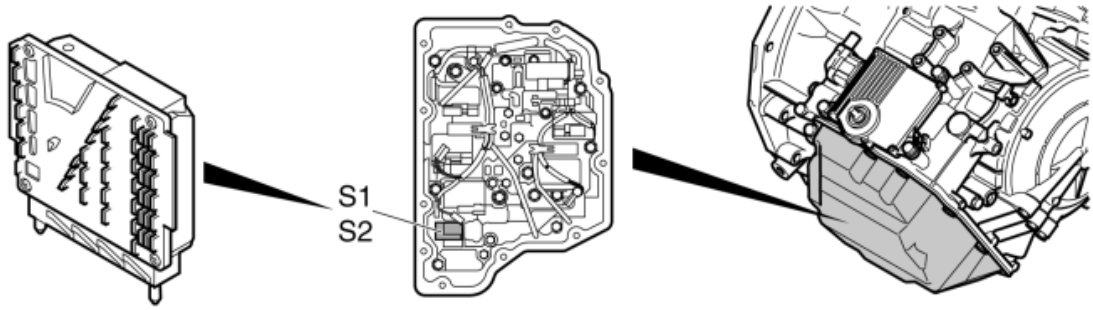

Fig. 42: Control Module Activation Of Components
Courtesy of VOLVO CARS CORPORATION

Wit this service it is possible to trigger (activate) the components that are connected to the control module. Examples of components are:

- Relays
- Solenoids
- Lock motors
- Damper motors
- Signals to other control modules.

NOTE: If a malfunction is detected, diagnostic trouble code is stored and emergency functions or modes, etc. are activated to "protect" the system, the control module can prevent activation.

Depending on the system, the control module or diagnostics tool can perform activations in different ways, for some the component is activated according to a certain pattern, e. g., OFF, ON, OFF, ON, OF, ON, etc. in a sequence.

For other systems, the component is activated, e. g., ON, and remain on until the activation is stopped.

QUICK-TESTS, CALIBRATIONS

Quick-tests or calibrations are functions or checks that are integrated in the control module's software and are started by the control module using commands from the diagnostics tool.

Wit this service it is possible to start certain pre-defined checks or teach-ins. Examples of these are:

- Quick-test of fuel tank system
- Quick-test of camshaft control
- Resetting of adaptions and counter for oil
- Calibration of gear position sensor
- Calibration of components for Brake control module (BCM)

NOTE: To enable start and running of these services, it is often that certain start conditions must be fulfilled.

SOFTWARE DOWNLOADING

New software can be downloaded to the control modules. When ordering software the vehicle software and hardware are compared to Volvo's central database. If the comparison corresponds the new software is downloaded to the control module.

If the comparison between the car and Volvo's central database does not correspond, then the database is updated with the vehicle's configuration. When this is complete the software is downloaded.

ERASING DIAGNOSTIC TROUBLE CODES

Stored diagnostic trouble codes (DTCs) can be read off and erased using this function. Diagnostic trouble codes (DTCs) can only be erased once all the diagnostic trouble codes (DTCs) have been read off at least once.

When erasing diagnostic trouble codes, the diagnostic trouble code's counter, status identifier as well as frozen values are also erased.

For certain systems, stored adaptions may also be reset when erasing.

DRIVING CYCLE/OPERATION CYCLE

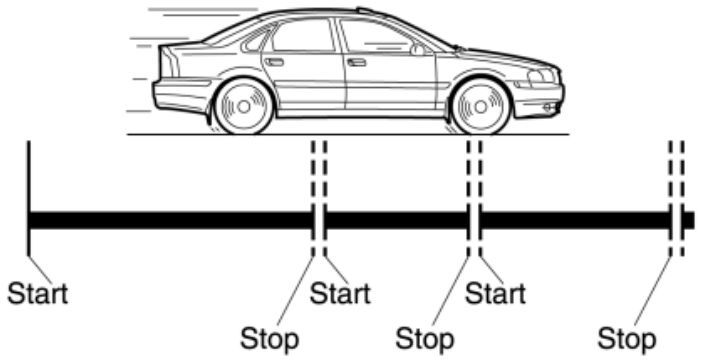

Fig. 43: Driving Cycle/Operation Cycle
Courtesy of VOLVO CARS CORPORATION

All control modules' diagnostics require that some form of driving cycle or operation cycle is run for

diagnostics to be considered as complete. The terms driving cycle or operation cycle appear, these mean the same, they are only different designations.

Example

The illustration above shows an example of a driving cycle or operation cycle. The vehicle is started and driven *(Start)* , is stopped sometime and the ignition is turned off *(Stop)* . When the ignition is turned on again *(Start)* a new driving cycle starts.

A new driving cycle or operation cycle usually starts every time the ignition is turned on, which means that you should turn on the ignition, turn off the ignition, and then turn on the ignition again.

However, the condition varies from control module to control module, there are also, e. g., speed and temperature conditions, before a driving cycle or operation cycle is considered to be complete.

When a malfunction is detected and then is confirmed as a real malfunction and is stored, various counters are also stored, indicating how frequent the malfunction is. These counters use driving cycles or operation cycles as basis for updating the counters' values.

READINESS MONITOR (CERTAIN MARKETS ONLY)

This is a function in Engine control module (ECM) that controls the control module's emission-related sub-system. With the function you can read out if the control module has run all diagnostics for the following sub-systems:

- Misfiring
- Fuel system
- Catalytic converter
- Evaporative emission (EVAP) system
- Heated oxygen sensors (HO2S)
- Other related components

Thus, Readiness refers only to if the diagnostics (tests) have been run or not, not if a malfunction was found or not. If a malfunction is found during the test, a diagnostic trouble code is stored and the malfunction light (MIL-light) is lit.

If the tests are run in the driving cycle without detecting a malfunction, then "Readiness" is immediately generated to OK.

However, if a malfunction is found in the driving cycle, then Readiness is generated to Not Ok, and another driving cycle is required where the test is run to generate Readiness to Ok.

The following alternatives are possible:

- Readiness is run (Ok), no malfunction detected, which means that the vehicle can be approved in a check.
- Readiness is run (Ok), with malfunction detected, which means that the vehicle cannot be approved in a

check.
- Readiness is not run (Not ok), which means that the vehicle cannot be approved in a check.

Readiness was originally a requirement from the American authority, United States Environmental Protection Agency (EPA), and is used there for Inspection and maintenance test (IM-test) (corresponds to annual inspection). Depending on legal requirements, the function may also be found on other markets.

EMERGENCY MODE, BACK-UP MODE "LIMP-HOME"

When a malfunction has occurred in the system that is confirmed (permanent malfunction) and is registered by the control module, modes are activated for certain systems and functions to handle the malfunction.

The purpose of these actions is to "protect" the control system and at the same time retain as much functionality or driving function as possible.

The minor malfunctions do not activate any back-up modes, there are different programs depending on type of malfunction and which control system to which it applies. All control systems do not have emergency modes or back-up modes.

Sometimes emergency modes must be activated immediately when a malfunction is detected, even if there has been no time to confirm and store any diagnostic trouble code. This is to maintain certain function, e. g., in case of malfunction of the mass air floe sensor for the engine management system, when the emergency program tries to prevent the engine from stopping.

HINT: Limp-home, emergency mode or back-up mode that may appear in case of malfunction is described in diagnostic trouble code information under replacement values.

For, e. g., automatic transmission TF-80SC AWD (XC90, B8444S) there are two back-up modes:

- Failsafe action (temporary action)
- Emergency/limp-home mode

Failsafe action is activated at the first detection of the malfunction, if the malfunction disappears the system returns to normal function.

Emergency mode is activated in case of less serious malfunctions Limp-home mode is activated for the most serious malfunctions.

The warning light in the driver information module lights up, and a text message is shown in the text window in the driver information module that emergency/limp-home mode has been activated. When the ignition is turned off and on again, no text is shown until the malfunction is detected again.

NOTE: If the malfunction disappears (intermittent malfunction) the control module returns to normal function first when the ignition is turned on the next time.

For automatic transmission's emergency mode, the following may take place, e. g.:

- Adaption function is blocked.
- Lock-up function is blocked.
- Function slipping lock-up is blocked.
- Function neutral check is blocked.
- The transmission only shifts to 3rd gear and reverse gear. All other shifting is blocked.

The above actions will be noticed by the driver since only one gear can be sued. Some may also notice that lock-up is not engaged. Then the vehicle comes to the workshop with a *symptom* for some form of lost driving function, probably also with the warning light on.

This symptom shall not be confused with the malfunction itself, instead it is a symptom of the back-up mode. The symptom that the malfunction itself causes (it it causes any) may be noticed briefly or not at all.

NOTE: If the malfunction is confirmed (permanent) it may be that the control module resumes normal function at ignition off and on again (symptom does not exist any longer). First when the malfunction is detected again (diagnostic trouble code test started and conditions fulfilled), the back-up mode is activated. The malfunction may then first be interpreted as if it was intermittent (non-existent or not active).

FROZEN VALUES

For every diagnostic trouble code, pre-defined parameters are frozen and stored in the control module. The frozen values are stored immediately after the malfunction has been detected and gives a "picture" of the conditions when the malfunction was stored.

NOTE: Status identifier, Counter and Frozen values are the most important factors to deciding the malfunction's nature, that is, to decide:

- when the malfunction was detected (frozen values, counters)
- what the driving conditions were at the time (frozen values)
- status for the test (self-diagnosis) (status identifier)
- how frequent the malfunction is (counter).

In newer car models, frozen values consist of a number of global (common) general parameters as well as a number of control model-unique parameters. Global may be:

- Road distance
- Battery voltage
- Passenger compartment temperature
- Outside temperature
- Engine running

In addition to these, the diagnostic trouble code-unique parameters are stored which are especially selected

parameters for the diagnostic trouble code.

Most parameters in the frozen values are the same for all malfunctions and indicate a general condition when a malfunction was detected, for example:

- Road distance
- Outside temperature
- Engine speed
- Load
- Coolant temperature
- Vehicle speed
- Battery voltage
- etc.

Some of them have been selected to give a better understanding of the specific malfunction.

NOTE: When erasing diagnostic trouble codes, stored frozen values are also erased.

HINT: Reading out and interpreting these frozen values make it easier to understand when in time the malfunction occurred, as well as under what driving and environment conditions the malfunction was detected, related to when and how the customer experienced the symptom.

IDENTIFYING MALFUNCTION

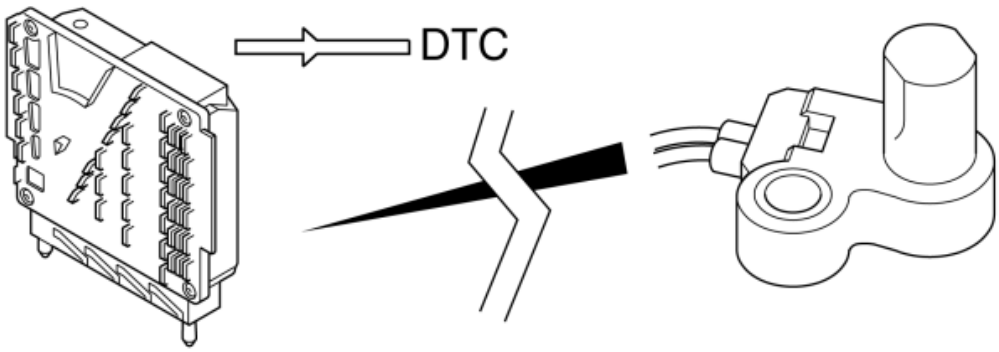

Fig. 44: Identifying Detected Malfunction
Courtesy of VOLVO CARS CORPORATION

A malfunction that is detected is assessed by the control module's self-diagnosis. First after, e. g., a certain time, a certain number of driving cycles, certain driving/operation or other conditions, the control module decides if it is a real malfunction or not.

When self-diagnosis has determined that a real malfunction exists, you can say that the *malfunction is confirmed* and the malfunction is stored in the control module's trouble code memory in the form of diagnostic

trouble codes.

If a malfunction disappears, the diagnostic trouble code will remain for a tome in the diagnostic trouble code memory, but the status of the diagnostic trouble code changes. How long the diagnostic trouble code is stored in the diagnostic trouble code memory is different from control module to control module, as well as between different vehicle models (generation of vehicle model).

In some systems the diagnostic trouble code will be stored until it is erased with the diagnostics tool. In other systems the diagnostic trouble code is erased automatically by the control module after, e. g., a certain number of malfunction-free driving cycles. A new driving cycle (operation cycle) is usually started every time the ignition is turned on.

Information about the nature of the malfunction is stored for every diagnostic trouble code:

- when the malfunction was detected (frozen values, counters)
- what the driving conditions were at the time (frozen values)
- status for the test (diagnosis) (status identifier)
- how frequent the malfunction is (counter).

Exactly what is stored is different from control module to control module,, as well as between different vehicle models (generation of vehicle model).

If the system is provided with warning light, it is lit when the ignition key is turned to position II. The warning light will go off after a certain number of seconds when no malfunction is detected on the control system.

The warning light will be on in case of a malfunction of the control system. The warning light will be lit first after the malfunction is confirmed as a real malfunction.

DESIGNATION OF TROUBLE CODES

The diagnostics tool VIDA shows the diagnostic trouble code in plain text according to the following example:

TCM-001F Speed sensor Signal missing Permanent malfunction

This diagnostic trouble code consists of the following parts:

- Prefix for control system in question (**TCM**) to show what system the diagnostic trouble code belongs to. *
    - If the qualifier is, e. g., "Too high signal", the control module interprets that the signal from the sensor is too high. This may mean that, e. g., the voltage is too high, current is too high, frequency is too high, or the pulse ratio (% duty) is too high, all depending on which type of signal it is. Malfunction causes may be, e. g., open circuit or short-circuiting to voltage.
    - If the qualifier is "Too low signal", the control module interprets that the signal from the sensor is too low. Malfunction causes may be, e. g., open circuit, short-circuiting to ground, contact resistance in connections.

NOTE: **Information about which type of signal that the control module detects and what conditions are required to detect that a malfunction is found again in the diagnostic trouble code information.**

- Diagnostic trouble code number (**001F**) to decide which diagnostic trouble code is stored. Number of digits in the diagnostic trouble code number may vary. *, **
  - If the qualifier is, e. g., "Too high signal", the control module interprets that the signal from the sensor is too high. This may mean that, e. g., the voltage is too high, current is too high, frequency is too high, or the pulse ratio (% duty) is too high, all depending on which type of signal it is. Malfunction causes may be, e. g., open circuit or short-circuiting to voltage.
  - If the qualifier is "Too low signal", the control module interprets that the signal from the sensor is too low. Malfunction causes may be, e. g., open circuit, short-circuiting to ground, contact resistance in connections.

NOTE: **Information about which type of signal that the control module detects and what conditions are required to detect that a malfunction is found again in the diagnostic trouble code information.**

- Title (**Speed sensor**) is a text that shows to which component/function the diagnostic trouble code refers. *
  - If the qualifier is, e. g., "Too high signal", the control module interprets that the signal from the sensor is too high. This may mean that, e. g., the voltage is too high, current is too high, frequency is too high, or the pulse ratio (% duty) is too high, all depending on which type of signal it is. Malfunction causes may be, e. g., open circuit or short-circuiting to voltage.
  - If the qualifier is "Too low signal", the control module interprets that the signal from the sensor is too low. Malfunction causes may be, e. g., open circuit, short-circuiting to ground, contact resistance in connections.

NOTE: **Information about which type of signal that the control module detects and what conditions are required to detect that a malfunction is found again in the diagnostic trouble code information.**

- Qualifier (**Signal missing**) is used to show *how the control module has perceived the signal from, e. g., the sensor, or how it detected the monitored function.* In this case, the control module has perceived that the signal is missing. There a re a number of other qualifiers for, e. g., too high signal, incorrect signal, too high flow, too low flow, etc. *, **.
  - If the qualifier is, e. g., "Too high signal", the control module interprets that the signal from the sensor is too high. This may mean that, e. g., the voltage is too high, current is too high, frequency is too high, or the pulse ratio (% duty) is too high, all depending on which type of signal it is. Malfunction causes may be, e. g., open circuit or short-circuiting to voltage.
  - If the qualifier is "Too low signal", the control module interprets that the signal from the sensor is

too low. Malfunction causes may be, e. g., open circuit, short-circuiting to ground, contact resistance in connections.

NOTE: Information about which type of signal that the control module detects and what conditions are required to detect that a malfunction is found again in the diagnostic trouble code information.

-
- Status (**Permanent malfunction**) to show the malfunction's status, that is, if the malfunction has been detected in the present driving cycle or not. There are two different status texts, permanent or intermittent. When the control module's diagnosis cannot decide the malfunction's status, the diagnostic trouble code is shown without status text. *

* When reading out diagnostic trouble codes using diagnostic socket with light-emitting diode, you get a three-digit flash code. Then this code is translated to a diagnostic trouble code text using the service information.

For example, if the control module flashes the code 1-2-3 from Engine control module (ECM), it can be translated to, e. g., diagnostic trouble code 1-2-3 Engine temperature sensor. Volvo Diagnostic Key and Volvo System Tester translate these flash codes directly to plain text (add a title). In these diagnostic systems it is not possible to show qualifier or status.

** For systems with diagnostic version called Generic Global Diagnostics (GGD) (adheres to standard ISO/DIS 15031-6.4) the diagnostic trouble code number consists of a letter and six characters. The letter alternatives are B, C, P and N, which means Body, Chassis, Powertrain and Network and indicate to which "function" in the vehicle the diagnostic trouble code belongs. The six following characters may consist of both letters (A-F) and digits (0-9) and indicate the component to which the malfunction refers as well as what type of malfunction. See following example.

BCM-C006A16 Multi-axial acceleration sensor. General electric malfunction. Too low voltage

CLASSIFICATION OF DIAGNOSTIC TROUBLE CODES

In principle, malfunctions can be classified in two categories, intermittent or permanent.

Permanent malfunctions.

The easiest malfunctions to identify and confirm as a malfunction are the permanent malfunctions. A permanent malfunction is a malfunction when something has "broken" and remains like that until it is repaired.

Intermittent malfunctions.

The intermittent malfunctions are, as opposed to the permanent malfunctions, are both difficult to identify and confirm. The malfunction exists but is neither active nor present all the time. The malfunction comes and goes briefly under very rare conditions.

For the intermittent malfunctions, the degree of intermittence can also be determined, that is, how intermittent the malfunction is (how often/seldom the malfunction appears).

HINT: For assessment of intermittence, stored counters are used together with the diagnostic trouble code.

Common permanent malfunction causes are:

- Open circuits or short-circuits on cables or in connectors caused by mechanical damage, vibrations, corrosion, oxidation, moisture, etc.

Common intermittent malfunction causes are:

- Loose connections or contact resistance caused by vibrations, corrosion, oxidation, moisture, etc.
- Brief short-circuits to both ground and voltage caused by damage to cables, moisture in connectors, etc.
- Electro-magnetic interference.

Malfunction causes may be both electrical, mechanical or related to software.

Intermittent malfunctions (or malfunctions that occur under unknown conditions) may also be malfunctions that only occur during certain operation or ambient conditions.

E. g., that the window or seat for some reason jams in its end-position when using automatic function, or that the climate control unit supplies poor heat in a certain position when it rains outside.

CONDITIONS FOR DIAGNOSIS TO FIND A MALFUNCTION

For the control module's self-diagnosis of a component or function to start and run (one or several times) special conditions must be fulfilled. Conditions for diagnosis varies depending on which component or function is to be monitored. When the diagnosis has started and is run, the signal, value or function must go above or below the limit value for the control module to detect a malfunction.

Example of conditions for the control module to start the diagnosis/test:

- Engine speed higher than 500 rpm.
- Ignition position II.
- Speed above 40 km/h.
- 4th gear selected.

Example of limit values for detecting malfunction:

- Direct voltage from outside temperature sensor lower than 0.495 V for a time longer than 1 second.
- After the engine has run for approx. 10 minutes, the control module receives an unchanged signal from the oil temperature sensor even though the signal should have changed according to a set pattern.
- Malfunction shall be active (permanent) for at least 2 driving cycles.

Example

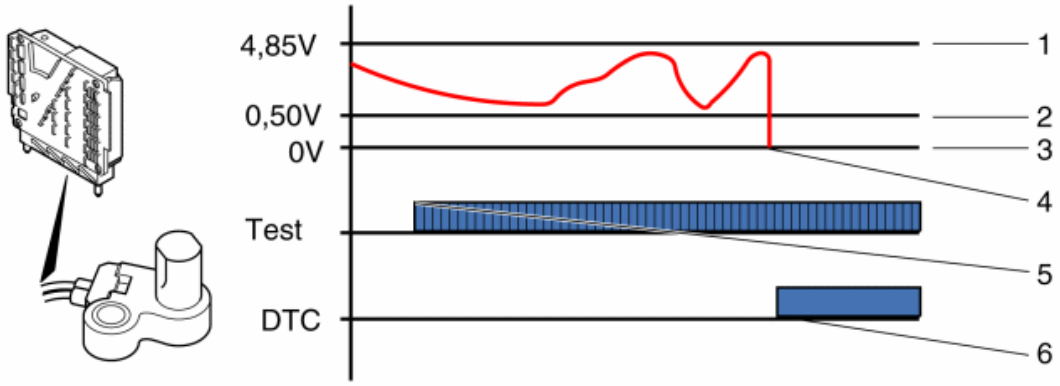

Fig. 45: Example Of Limit Values For Detecting Malfunction (1 Of 2)
Courtesy of VOLVO CARS CORPORATION

The illustration shows an imagined scenario when a malfunction occurs in a circuit for a signal.

First the signal varies normally during driving. The diagnostic trouble code test starts after some time (5), is then run cyclically in a pre-defined pattern and monitors the signal. Limit values for monitoring to consider the signal as incorrect is a voltage lower than 0.50 V (2) or higher than 4.85 V (1). An open circuit occurs in the circuit and the signal becomes 0 V (4). Monitoring detects this, waits so that the malfunction is confirmed and then stores a diagnostic trouble code (6).

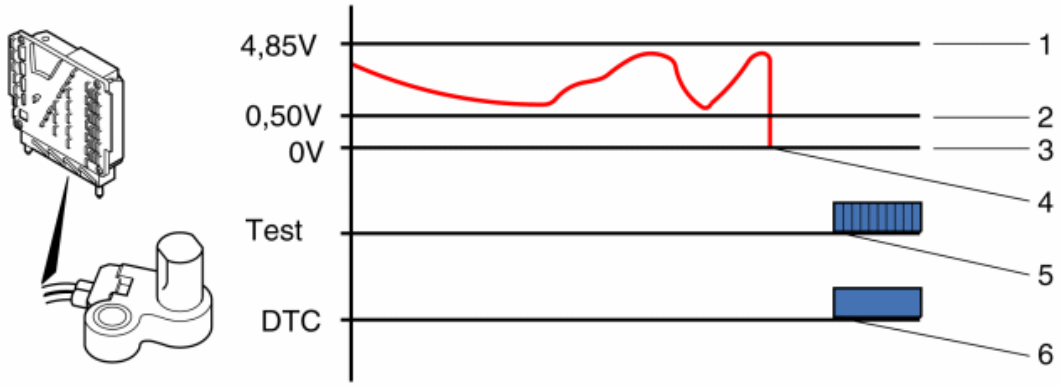

Fig. 46: Example Of Limit Values For Detecting Malfunction (2 Of 2)
Courtesy of VOLVO CARS CORPORATION

If the diagnostic trouble code test (5) starts after the malfunction (4) occurs, then monitoring will detect the malfunction fist when the test starts. Then monitoring waits so that the malfunction is confirmed and then stores a diagnostic trouble code (6). If you want the control module to detect a malfunction in the vehicle, you have to make sure that the control module's diagnostic trouble code test starts or is started.

HINT: If a malfunction occurs which has not yet been detected by the control module's monitoring, since the diagnostic trouble code test has not started, the vehicle may still exhibit a symptom.

NOTE: Conditions for diagnosis are described in the diagnostic trouble code

information for every diagnostic trouble code.

Most diagnosis (at least non-emission-related diagnosis) are repeated periodically during the driving cycle, and every time they are repeated, a test is run that either results in a malfunction being detected or no malfunction being detected.

To enable the emission-related diagnosis to be completed and the diagnostic trouble code to be confirmed (with MIL-light activated as a result), several driving cycles in a row must be completed with a detected malfunction.

To enable the non-emission-related diagnosis to be completed (at least once), in principle the start conditions must be fulfilled for a certain time (from fractions of a second to a number of seconds).

Certain diagnoses require a completed driving cycle (e. g., ignition on, ignition off, and ignition on again) for the diagnosis to be considered as complete. Other diagnoses requires several other conditions to be fulfilled, e. g., with regards to:

- vehicle speed
- engine coolant temperature (ECT)
- time since start
- different load and engine speed relationships in the same trip
- a certain event (for example, that the component operates).

HINT: To assess if a test/diagnosis for the diagnostic trouble code is started or completed, status identifiers can be used. Turning off the ignition and then turning it on again often results in start of a new driving cycle/operation cycle, which results in update of status identifiers.

When, e. g., the engine control module (ECM) has run all diagnostics, the control module has completed a "trip". An extensive driving schedule in various conditions is required to complete a trip. The engine may also need to be shut off for a certain amount of time and then switched on again to complete a trip.

Emissions related diagnostic functions

Control modules that have and control emission-related components or functions, e. g., Engine control module (ECM) and Transmission control module (TCM), check that emission-related systems work. These systems are checked by running a diagnostic function. The diagnostic function checks the included components and that the function itself works in the system.

Lighting the malfunction indicator lamp (MIL)

In the event of emissions related diagnostic trouble codes (DTCs), a counter counts down to determine when to light the malfunction indicator lamp (MIL). The conditions for lighting the malfunction indicator lamp (MIL) vary depending on which diagnostic trouble code (DTC) is stored.

NOTE: **If a malfunction becomes intermittent or the malfunction disappears, then the MIL-light turns off first after 3 driving cycles in a row are completed with malfunction detection.**

Self-erasing of emission-related diagnostic trouble codes

After 40 driving cycles without detected malfunction with start of cool engine, where the engine temperature (coolant temperature) increases more than 5 °C (approx. 9 °F) and the final temperature is above approx. +71 ° C (159.8 °F), then the diagnostic trouble code is erased. Diagnoses (diagnostic trouble code tests) for misfire and fuel adaptions require 80 driving cycles. These driving cycles are defined as a "warm-up cycle".

COUNTER

GENERAL

For every diagnostic trouble code, the control modules stores a number of counters. These counters count the number of driving cycles that have been performed in the control module with or without malfunctions, if the malfunction is detected or not. In control systems older than model year 1999, there may be control systems, depending on control system, without counters or with few counters. From model year 1999, there are systems with several counters. The following counters may appear:

- Counter 1
- Counter 2 *
- Counter 3
- Counter 4
- Counter 5**
- Counter 6
- Counter 7
- Counter 8

The text uses the term driving cycle, which may also be called Operation cycle.

* In principle, only systems with the diagnostic concept Generic Global Diagnostic (GGD).

** Only for emission-related systems.

When erasing diagnostic trouble codes, the diagnostic trouble code's counter is erased.

NOTE: Status identifier, Counter and Frozen values are the most important factors to deciding the malfunction's nature, that is, to decide:

- when the malfunction was detected (frozen values, counters)
- what the driving conditions were at the time (frozen values)
- status for the test (self-diagnosis) (status identifier)
- how frequent the malfunction is (counter).

COUNTER VOLVO DIAGNOSTICS II

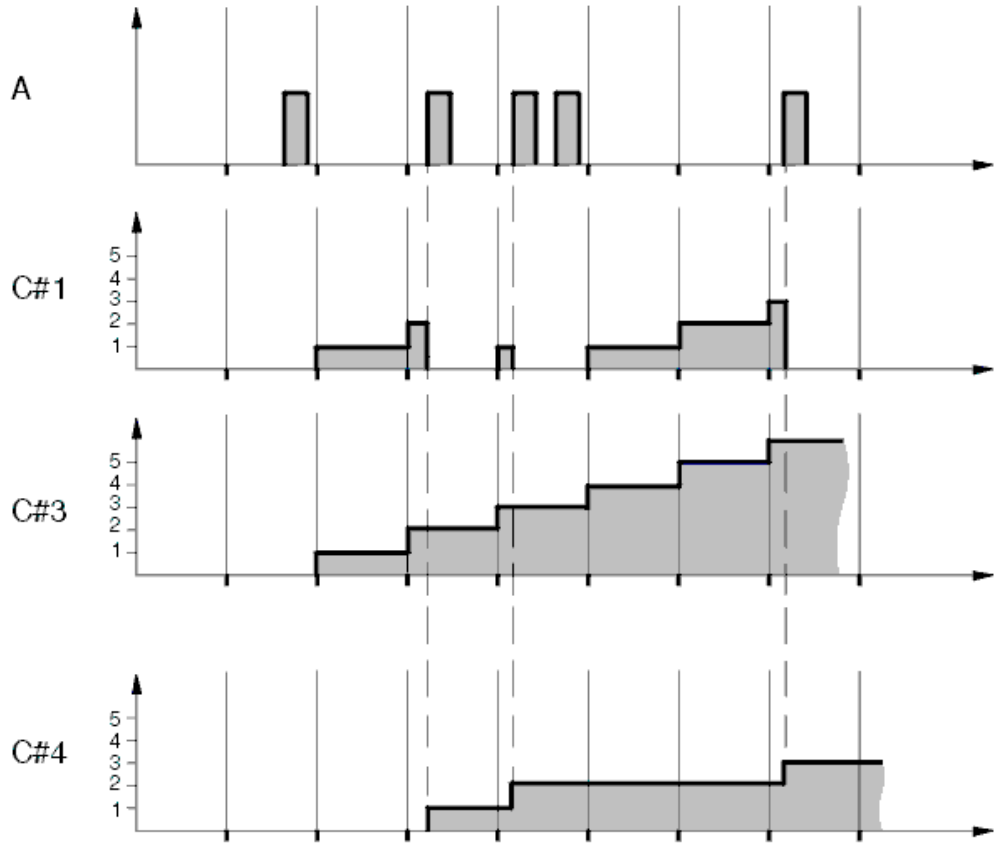

Fig. 47: Counter Volvo Diagnostics II Graph
Courtesy of VOLVO CARS CORPORATION

Graph A illustrates when in time that the malfunction occurs. In the illustration, the control module has detected a malfunction in the second driving cycle (graph's x-axis) and this malfunction then appears 4 more times, a total of 5 times. Counters can be read out for every diagnostic trouble code in the control module which have this introduced. Driving cycles are marked with vertical lines. A driving cycle often begins with ignition on and ends with ignition off.

Counter 1 (C#1). Counts number of cycles performed since the malfunction was confirmed *last* . As soon as a malfunction is detected and confirmed, the value is reset.

When the malfunction is both detected and disappears in the second driving cycle (graph A), counter 1 will count up to 1 first in the following driving cycle (driving cycle 3), that is, a driving cycle has been run through since the last time the malfunction was confirmed.

In driving cycle 4, the counter is updated again, now to value 2. Just after that, the malfunction is detected (graph A), the malfunction is confirmed and the counter's value is reset. This sequence is repeated once again in driving cycle 5.

With other words, one can say that if the value is zero, the malfunction exists now or has existed earlier in the current driving cycle. If the vehicle is restarted so that a new driving cycle is initiated (often requires ignition off and on again) in this position and the counter's value still is 0, then you probably have a permanent malfunction.

Values near zero indicate that the malfunction has been detected recently. It may also be that the malfunction exists but the diagnostic trouble code test has not started in these driving cycles, which means that the counter has not been reset. A high counter value indicates that the malfunction was last detected a number of driving cycles ago.

Counter 3 (C#3) (see graph). Counts the number of driving cycles performed since the malfunction was confirmed the *first* time. When a malfunction is confirmed the first time, the counter will count up by 1 for every subsequent driving cycle, regardless of if the malfunction is detected or not. Thus, the counter tracks the number of driving cycles since the malfunction was detected the first time. See graph where the counter increases by 1 for every subsequent driving cycle and the value of the counter is finally 6.

A low value indicates that the malfunction was detected for the first time relatively recently. However, a high value indicates that a first detection was performed some time ago.

Counter 4 (C#4) (see graph). Counts the number of driving cycles in which the malfunction has been confirmed since it was confirmed the first time. The graph shows that after the malfunction was detected the first time, the malfunction has been detected in 3 driving cycles. Thus, after the malfunction was detected the first time, another 6 driving cycles (counter 3), have passed and in these the malfunction has been detected 3 times (counter 3). Simplified, one can say that in this example, the malfunction has occurred/been detected in every other driving cycle, and the malfunction can be assessed as relatively frequent.

A certain indication of a malfunction's intensity can be obtained if you compare the value for counter 4 with counter 3. The closer the value for counter 4 the value is to the value of counter 3, the more frequent the malfunction.

If counters 3 and 4 have the same value, the malfunction has been detected in every driving cycle, which means that the malfunction is frequent.

Counter 5 (C#5). The counter sums up the time in seconds that *the control module has been operating* since the malfunction first was confirmed and the diagnostic trouble code was stored. The time that the control module has been operating is only counted when it is active, not in "sleep mode". The counter is not shown in the illustration.

Counter 6 (C#6). The counter sums up the time in seconds that *the diagnostic trouble code test has been in progress* since the malfunction first was confirmed and the diagnostic trouble code was stored. The counter is not shown in the illustration.

Counter 7 (C#7). The counter sums up the time in seconds that *malfunction has been confirmed* since it first was confirmed and the diagnostic trouble code was stored. The counter is not shown in the illustration.

COUNTER GENERIC GLOBAL DIAGNOSTICS (GGD)

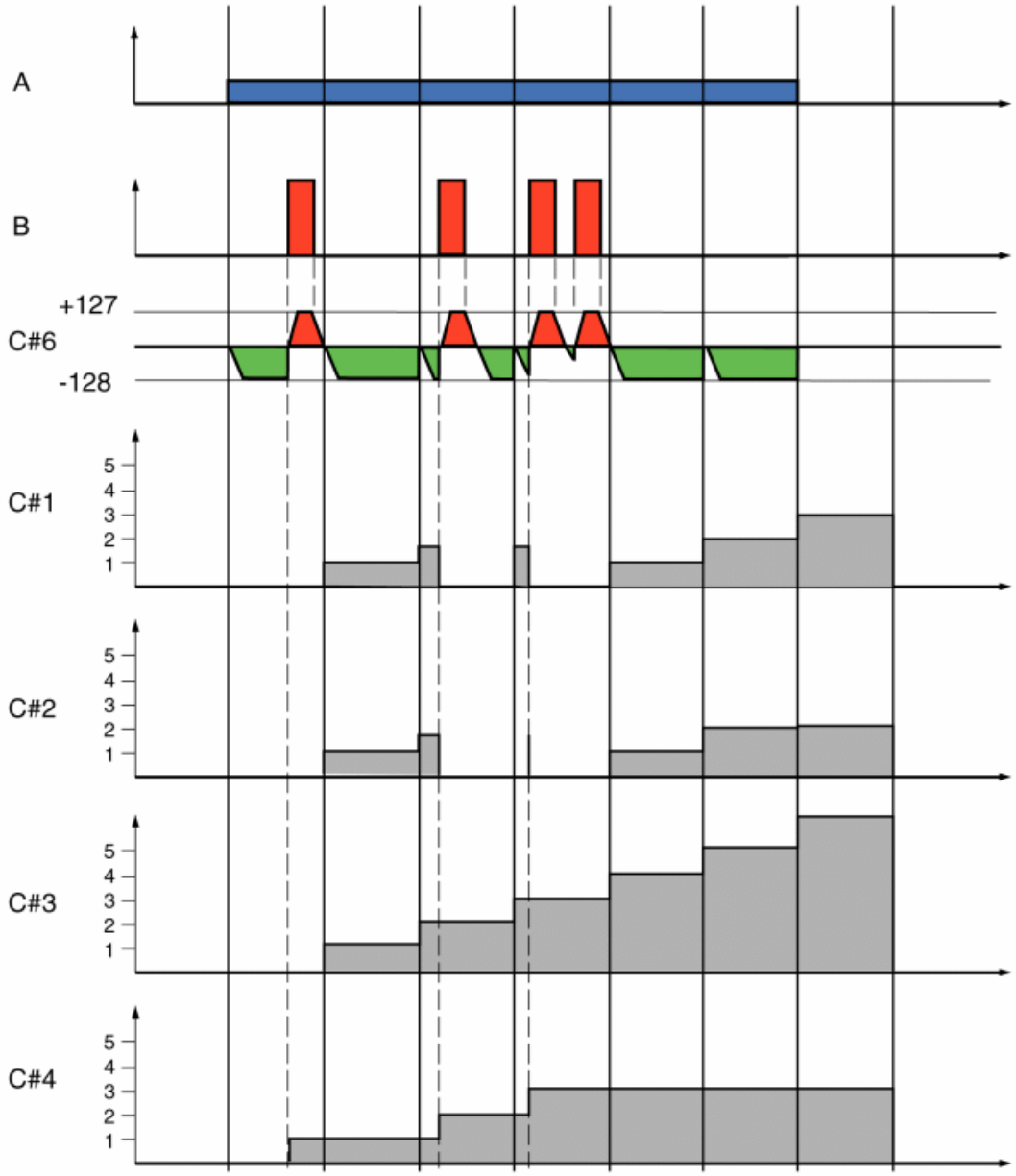

Fig. 48: Counter Generic Global Diagnostics (GGD) Graph
Courtesy of VOLVO CARS CORPORATION

Graph A. Diagnostic trouble code test active

Shows if the control module's diagnostic trouble code test is active or not. The blue surface indicates when the test is active. Not included as a status identifier.

Graph B. Malfunction active

Shows if the malfunction in the vehicle is active or not. The red surface indicates when the malfunction is present (active). Not included as a status identifier.

In the illustration, the control module has detected a malfunction in the second driving cycle, and this malfunction occurs a total of 4 times. Counters can be read out for every diagnostic trouble code in the control module which has this implemented. Driving cycles are indicated with vertical lines. A driving cycle often begins with ignition on and ends with ignition off.

Counter 1 (C#1). Counts number of driving cycles performed since the malfunction was confirmed *last* . As soon as a malfunction is detected and confirmed, the value is reset. When the malfunction is both detected and disappears in the second driving cycle (graph A), counter 1 will count up to 1 first in the following driving cycle (driving cycle 3), that is, a driving cycle has been run through since the last time the malfunction was confirmed.

In driving cycle 4, the counter is updated again, now to value 2. Just after that, the malfunction is detected (graph A), the malfunction is confirmed and the counter's value is reset. This sequence is repeated once again in driving cycle 5.

With other words, one can say that if the value is zero, the malfunction exists now or has existed earlier in the current driving cycle. If the vehicle is restarted (often requires ignition off and on again) in this position and the counter's value still is 0, then you probably have a permanent malfunction.

Values near zero indicate that the malfunction has been detected recently. It may also be that the malfunction exists but the diagnostic trouble code test has not started in these driving cycles, which means that the counter has not been reset. A high counter value indicates that the malfunction was last detected a number of driving cycles ago.

Counter 2 (C#2). Counts the number of driving cycles since the last confirmation of the malfunction and where the diagnostic trouble code was performed *without* detecting malfunction and confirmation of malfunction. Thus, when diagnostic trouble code is performed and no malfunction is detected, the counter will count up by 1 for every driving cycle. As soon as a malfunction is detected and confirmed, the value is reset.

When the malfunction is detected and disappears in the second driving cycle (graph A), counter 2 will count up to 1 first in the following driving cycle (run cycle 3). In driving cycle 4 the counter is updated again (diagnostic trouble code test has been run without detecting malfunction), now to value 2. Immediately after that the malfunction is detected (graph A), the malfunction is confirmed and the counter's value is reset. This sequence is repeated once again in driving cycle 5.

During driving cycle 6 and 7, the diagnostic trouble code test was run without detecting malfunction and the counter receives the value 2. In driving cycle 8, the diagnostic trouble code test is not run and thus the counter is not updated.

Counter 3 (C#3) . Counts the number of driving cycles performed since the malfunction was confirmed the *first* time. When a malfunction is confirmed the first time, the counter will count up by 1 for every subsequent driving cycle, regardless of if the malfunction is detected or not. Thus, the counter tracks the number of driving cycles since the malfunction was detected the first time. See graph where the counter increases by 1 for every subsequent driving cycle and the value of the counter is finally 6.

A low value indicates that the malfunction was detected for the first time relatively recently. However, a high value indicates that a first detection was performed some time ago.

Counter 4 (C#4). Counts the number of driving cycles in which the counter's value has been updated first when the malfunction was detected in the driving cycle. The counter has a final value of 3.

A certain indication of a malfunction's intensity can be obtained if you compare the value for counter 4 with counter 3. The closer the value for counter 4 the value is to the value of counter 3, the more frequent the malfunction.

Counter 5 warm-up (C#5). Counts the number of warm-up cycles that have been run since the malfunction light (MIL) has gone off. The counter is not shown in the illustration. Note: Only applies to emission-related systems.

Counter 6 malfunction detection (C#6). The counter counts the number of internal detections of the malfunction that have been run for the diagnostic trouble code. When this counter reaches value +127, the control modules decides that the malfunction is active right now.

When the counter is at value -128, the malfunction is not active. The value is reset for every new driving cycle.

If the value increases towards +127, the control module has detected a malfunction, and for every internal test the value is counted up. When the malfunction no longer exists, the control module counts down to minimum -128.

The value on the control module can only be changed when it has started the test for the diagnostic trouble code. How big each step is that the control module counts up or down the value by to reach the limits +127 or -128 may vary between control modules. Limits +127 and -128 are pre-defined limits in the control module.

In the graph, the counter first counts down to -128 when the diagnostic trouble code test starts. When a malfunction occurs (graph B) and the diagnostic trouble code test detects the malfunction, first the counter's value is reset to 0, then it scrolls up to +127. Only then the malfunction is considered to exist. If the malfunction disappears and the diagnostic trouble code test is active, the counter counts down to -128.

Counter 7 malfunction detection - max. current (C#7). Shows maximal value that counter 6 has in the present driving cycle.

The counter is not shown in the illustration.

Counter 8 malfunction detection - max. earlier (C#8). Shows maximal value that counter 6 has in the present and/or has had in earlier driving cycle.

The counter is not shown in the illustration.

STATUS IDENTIFIER

GENERAL

There are status indicator (status identifiers) that can be read out for every diagnostic trouble code. The control module tests every connection (signal) or function more or less periodically, depending on the self-diagnosis' conditions for start.

By reading out the diagnostic trouble code with associated status identifier, then you obtain *status for the diagnostic trouble code test that detects the malfunction, as well as if the malfunction exists now or not.*

NOTE: Status identifier, Counter and Frozen values are the most important factors to deciding the malfunction's nature, that is, to decide:

- when the malfunction was detected (frozen values, counters)
- what the driving conditions were at the time (frozen values)
- status for the test (self-diagnosis) (status identifier)
- how frequent the malfunction is (counter).

All status identifiers (or malfunction detection counters) do not have to be introduced in one control module, this varies from system too system. All status identifiers restarts the count every time a new driving cycle/operation cycle starts or when erasing diagnostic trouble codes. Status identifiers should be read off continuously as the different identifiers can be updated later on.

The following describes possible status identifiers.

NOTE: Status identifiers for systems with diagnostics Volvo Diagnoses II is slightly different from status identifiers for diagnostic version Generic Global Diagnostics (GGD).

When erasing diagnostic trouble codes, the diagnostic trouble code's status identifier is erased.

STATUS IDENTIFIER VOLVO DIAGNOSTICS II

The following identifiers are available (showed values apply until updated with a new read-out):

- SB 01 Diagnostic trouble code test run in progress.
- SB 02 Diagnostic trouble code test run at least once during current driving cycle.
- SB 03 Sporadic/single malfunctions found the last time diagnostic trouble code test was run during current driving cycle/operation cycle.
- SB 04 Sporadic/single malfunctions found at least once during current driving cycle.
- SB 05 Request light warning light/text message due to detected malfunction.
- SB 06 Diagnostic trouble code test blocked due to malfunction found by another diagnostic trouble code test.
- SB 08 Malfunction detection counter, current value.
- SB 09 Malfunction detection counter, maximum value reached some time during current operation cycle.

Abbreviation SB is from the English 'Status Bit'.

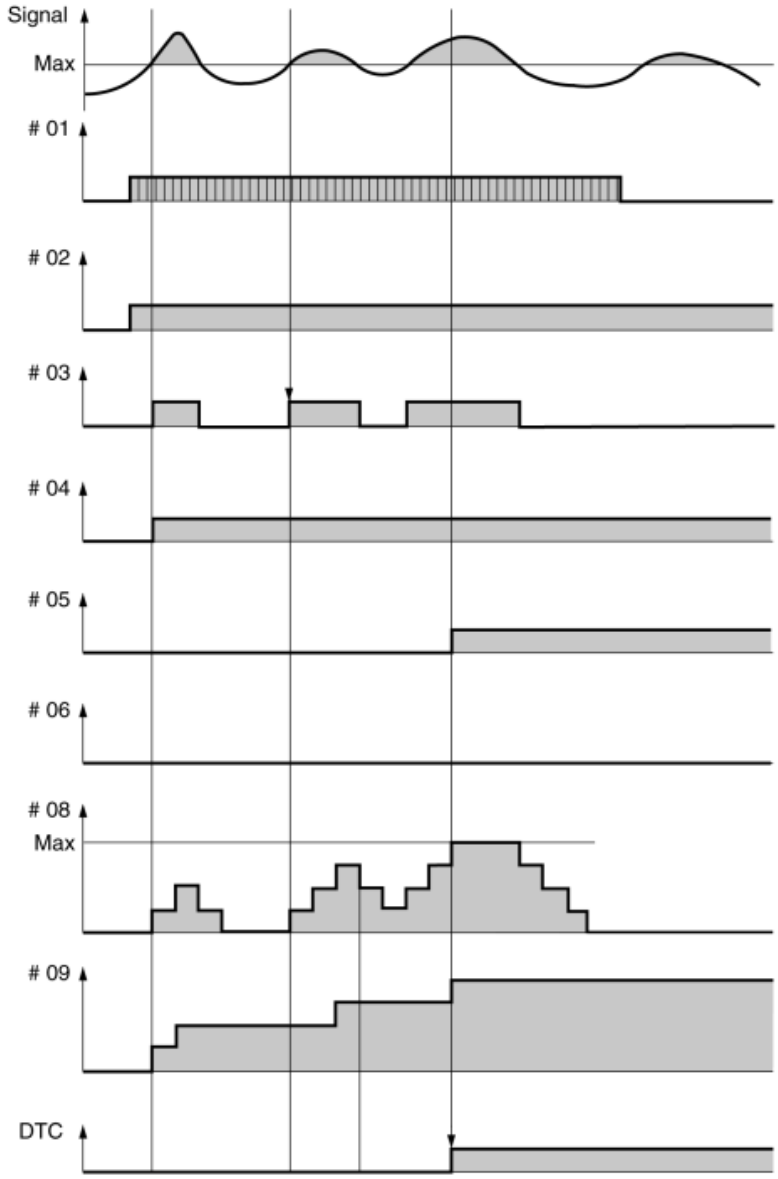

Fig. 49: Identifying Status Identifier Volvo Diagnostics II Graph
Courtesy of VOLVO CARS CORPORATION

The upper graph shows a varying signal value. If the signal value exceeds a max. value, which is considered a malfunction by the control module, then a sporadic malfunction is registered, that is, a malfunction is about to occur. Then the grey-marked surface indicates the signal considered to be incorrect.

The text below uses the term Driving cycle, which may also be called Operation cycle.

NOTE: If the diagnostic trouble codes are erased, the status identifiers are also erased

SB01 Diagnostic trouble code test run in progress (second paragraph from top).

Shows if the diagnostic trouble code test runs or not right now (in current driving cycle). It is only when the test runs that the control module can detect malfunctions and generate diagnostic trouble codes.

Grey-marked surface means that the test runs and can detect a malfunction if it occurs. The surface is "dashed", showing that when the diagnostic trouble codes runs, it runs in a cyclic, pre-determined pattern.

Status identifier 03 and 04 shows if a malfunction is detected or not. In this case, a malfunction is detected 3 times.

Status alternative when reading out is Yes (test runs now) or No (test is not run now).

SB02 Diagnostic trouble code test run at least once during current driving cycle (third graph from the top).

Shows if the diagnostic trouble code test has been run or not during the current driving cycle. If it has been possible for the control module to detect malfunctions and generate diagnostic trouble code any time during the current driving cycle.

Grey-marked surface means that the diagnostic trouble code test has been run at some time. If the diagnostic trouble code test has been run at some time in this driving cycle, status will always be Yes and remain so until the ignition is turned on off and a new driving cycle starts. When a new driving cycle starts, status identifiers are "reset" and is initially No.

Status identifier 03 and 04 shows if a malfunction is detected or not.

Status alternative when reading out is Yes (test completed) or No (test not completed).

SB03 Sporadic/single malfunctions found the last time diagnostic trouble code test was run during current driving cycle (fourth graph from the top).

A sporadic malfunction (intermittent malfunction) has been detected 3 times *the last* time the diagnostic trouble code test was run during current driving cycle. During the diagnostic trouble code test run the last time (status identifier 01) a malfunction has been detected 3 times.

Status alternative when reading out is Yes (sporadic malfunction found) or No (no sporadic malfunction found).

NOTE: **When the control module detects the malfunction for the first time(status identifier 03 and 04), a diagnostic trouble code has not yet been stored. It is first when the malfunction detection counter 08 reaches a certain value that the control module considers that a real malfunction exists (a confirmed malfunction) and the diagnostic trouble code is stored.**

SB 04 Sporadic/single malfunctions found at least once during current driving cycle (fifth graph from the top).

A sporadic malfunction (intermittent malfunction) has been detected at some time during current driving cycle. Grey. marked surface means that a malfunction has been detected at some time.

If the diagnostic trouble code test has been run at some time in this driving cycle, status will always be Yes and remain so until the ignition is turned on off and a new driving cycle starts. When a new driving cycle starts, status identifiers are "reset" and is initially No. Status identifier 03 and 04 shows if a malfunction is detected or not.

Status alternative when reading out is Yes (test has been run earlier) or No (test has not been run).

SB 05 Request light warning light/text message due to detected malfunction (sixth paragraph from the top).

Information that diagnostic trouble code activates a warning light or text message in driver information module. In this case, lighting of warning light is requested when the diagnostic trouble code has been confirmed and stored.

Status alternative when reading out is Yes (request performed) or No (no request).

SB06 Diagnostic trouble code test blocked (seventh graph from top).

Information that diagnostic trouble code test is turned off as a result of another malfunction and diagnostic trouble code is generated where the root cause is detected. If this in turn results in subsequent malfunctions, it prevents generation of subsequent diagnostic trouble codes. In this case, the diagnostic trouble code test is not blocked.

Status alternative when reading out is Yes (diagnostic trouble code test blocked) or No (diagnostic trouble code test not blocked).

SB08 Malfunction detection counter, current value (eight graph from top).

When a sporadic malfunction is detected by the control module the malfunction detection counter counts up as long as the malfunction exists.

When the malfunction no longer exists the counter counts down again. This is the basis for the control module's decision to store the diagnostic trouble code and the diagnostic trouble code is stored in the vehicle first when the counter reaches a certain max. value. This max. value varies between different diagnostic trouble codes.

Count rate of the counter is controlled as long as the malfunction exists before it causes customer symptom. The counter is used to decide if it is a real malfunction that has occurred and that has existed for some time. It is the control module's way of confirming the diagnostic trouble code, that is, confirming that a real malfunction exists.

SB09 Malfunction detection counter, max. value during current operation cycle

Shows max. value that status identifier 08 has reached during current driving cycle. When a new driving cycle starts, the counter is "reset".

STATUS IDENTIFIER GENERIC GLOBAL DIAGNOSTICS (GGD)

The following identifiers are available (showed values apply until updated with a new read-out):

- SB 00 Malfunction found the last time that the diagnostic trouble code test was run during current driving cycle
- SB 01 Malfunction found at least once during the current driving cycle
- SB 02 Malfunction found at least once during the current and previous driving cycles
- SB 03 Malfunction found recently since erasing of diagnostic trouble codes
- SB 04 Diagnostic trouble code test run at least once since erasing of diagnostic trouble codes
- SB 05 Malfunction found at least once since erasing of diagnostic trouble codes
- SB 06 Diagnostic trouble code test run at least once during current operation cycle.
- SB 07 Request light warning light/text message due to detected malfunction.

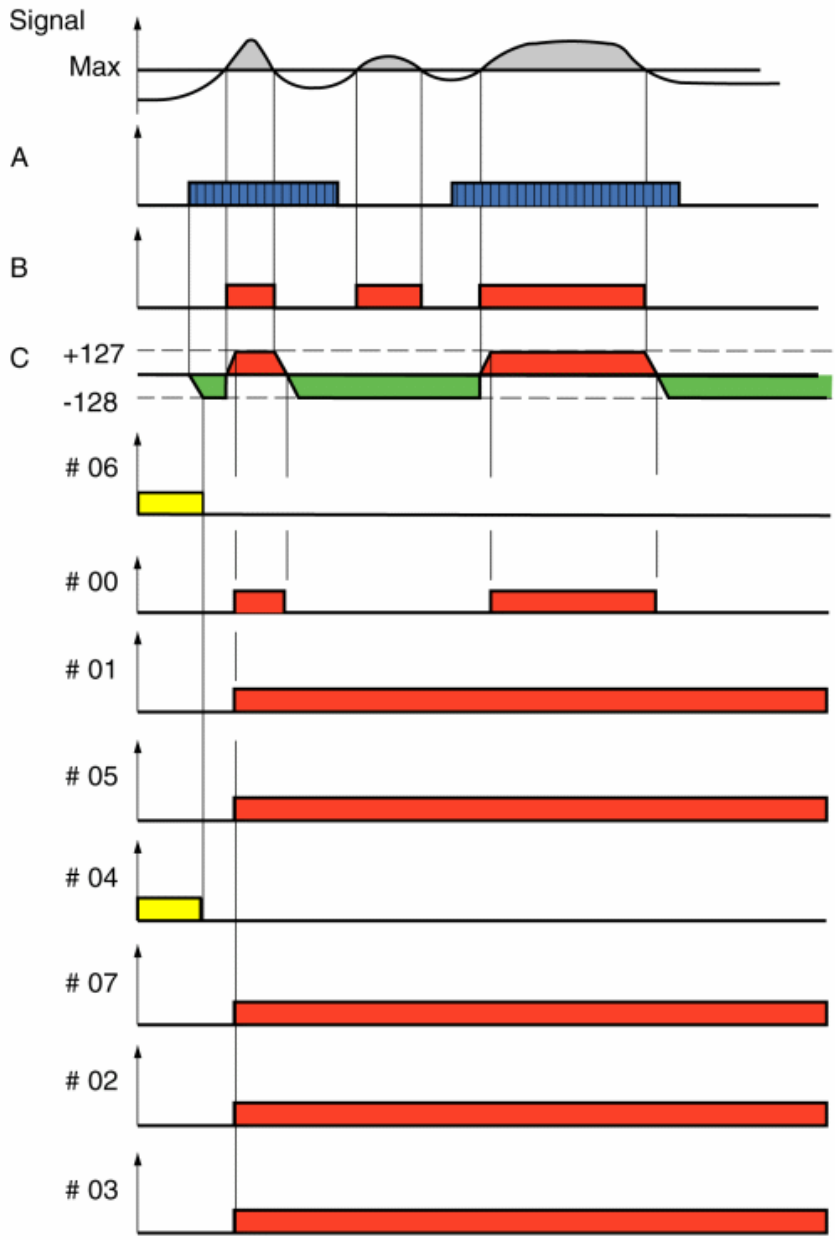

Fig. 50: Identifying Status Identifier Generic Global Diagnostics (GGD) Graph
Courtesy of VOLVO CARS CORPORATION

The upper graph shows a varying signal value. If the signal value exceeds a max. value, which is considered a malfunction by the control module, then a sporadic malfunction is registered, that is, a malfunction is about to occur. Then the grey-marked surface indicates the signal considered to be incorrect.

The text below uses the term Driving cycle, which may also be called Operation cycle. The order of status identifiers in illustration and in the list below are presented as they belong to each other, not in numerical order.

NOTE: If the diagnostic trouble codes are restored, the status identifiers are also restored

Graph A Diagnostic trouble code test active

Shows if the control module's diagnostic trouble code test is active or not. The blue surface indicates when the test is active. The surface is "dashed", which shows when the diagnostic trouble code test runs it runs in a cyclically pre-determined pattern. Not included as a status identifier.

Graph B Malfunction active

Shows if the malfunction in the vehicle is active or not. The red surface indicates when the malfunction is present (active). Not included as a status identifier.

Graph C Counter 6 malfunction detection (C#6)

The counter counts the number of internal detections of the malfunction that have been performed for the diagnostic trouble code. Not included as a status identifier. When this counter reaches value +127 the control module considers the malfunction to be active right now.

When the counter is at value -128, the malfunction is not active. The value is reset for every new driving cycle.

If the value increases towards +127, the control module has detected a malfunction and for every internal test the value is counted up. When the malfunction no longer exists, the control module counts down to minimum -128.

The value on the control module can only be changed when it has started the test for the diagnostic trouble code. How big each step is that the control module counts up or down the value by to reach the limits +127 or -128 may vary between control modules. Limits +127 and -128 are pre-defined limits in the control module.

In the graph, the counter first counts down to -128 when the diagnostic trouble code test starts (graph A). When a malfunction occurs (graph B) and the diagnostic trouble code test detects the malfunction, first the counter's value is reset to 0, then it scrolls up to +127. Only then the malfunction is considered to exist. If the malfunction disappears and the diagnostic trouble code test is active, the counter counts down to -128.

SB **06 Diagnostic trouble code test run at least once during current operation cycle**

Shows if the control module has performed diagnostic trouble code test for this diagnostic trouble code in *current* driving cycle. When the diagnostic trouble code test starts and counter 6 (malfunction detection) counts down to -128 (no malfunction found) or up to +127 (malfunction found), the control module considers that diagnostic trouble code test has been run.

Yellow-marked surface means that diagnostic trouble code test *is not yet* run.

Status alternative when reading out is Run or Not run.

SB **00 Malfunction found the last time that the diagnostic trouble code test was run during current driving cycle**

Shows if the control module detects the malfunction right now. It is only when the test runs that the control module can detect malfunctions and generate diagnostic trouble codes. A malfunction has been detected 2 times during the current driving cycle. Note that only when counter 6 (malfunction detection) reaches the value +127 is it considered to be a malfunction. When the value gas dropped from +127 to 0, it is considered that there is no longer a malfunction.

Status alternative when reading out is Yes (malfunction detected right now) or No (no malfunction detected right now).

SB **01 Malfunction found at least once during the current driving cycle**

Shows if the control module has detected the malfunction *anytime during the current driving cycle.* It is only when the test runs that the control module can detect malfunctions and generate diagnostic trouble codes. The diagnostic trouble code test has started and a malfunction has been detected at least 1 time during the current driving cycle.

Status alternative when reading out is Yes (malfunction found) or No (malfunction not found).

This status identifier is generated at the same time as status identifier SB00 and will remain in status Yes for the rest of the current driving cycle. At start of a new driving cycle, it has changed to status No until a malfunction is detected again.

SB **05 Malfunction found at least once since erasing of diagnostic trouble codes**

Shows if the control module has detected the malfunction during *earlier* driving cycle. A malfunction has been detected at least 1 time since the diagnostic trouble code was erased the last time.

Status alternative when reading out is Yes (malfunction found) or No (malfunction not found).

This status identifier is generated at the same time as status identifier SB 00 and will remain in status Yes until diagnostic trouble codes are erased once again.

SB **04 Diagnostic trouble code test run at least once since erasing of diagnostic trouble codes**

Shows if the control module has performed diagnostic trouble code test for this diagnostic trouble code in

current and/or earlier driving cycle since the diagnostic trouble code was erased the last time. This means that if diagnostic trouble code test has been run after erasing of diagnostic trouble codes, it will remain in Run until diagnostic trouble codes are erased once again.

Yellow-marked surface means that diagnostic trouble code test *has been* run.

Status alternative when reading out is Run or Not run.

This status identifier is generated at the same time as status identifier SB 06.

SB **07 Request for lit warning light/text message**

Information about the diagnostic trouble code activates a warning light or text message. In this case, lighting of the warning light is requested when a diagnostic trouble code is stored.

Status alternative when reading out is Yes (request performed) or No (no request).

SB **02 Malfunction found at least once during the current and previous driving cycles**

Pending not yet confirmed diagnostic trouble code.

Status alternative when reading out is Yes (malfunction found but not confirmed) or No (no malfunction found).

This status identifier is generated at the same time as status identifier SB 00 is generated for the first time and will remain in status Yes until certain driving cycle conditions are fulfilled and no malfunctions are detected. After a certain number of driving cycles without detected malfunction, it returns to status No. Number of driving cycles required depends on the system.

SB **03 Malfunction found recently since erasing of diagnostic trouble codes**

Confirmed diagnostic trouble code.

Status alternative when reading out is Yes (malfunction found and confirmed) or No (no malfunction found).

This status identifier is generated at the same time as status identifier SB 00 is generated for the first time and will remain in status Yes until certain driving cycle conditions are fulfilled and no malfunctions are detected. After a certain number of driving cycles without detected malfunction, it returns to status No. That is, if a malfunction becomes intermittent and no longer is detected, the status will change to No. Number of driving cycles required depends on the system.

NOTE: **For emission-related control system, this status identifier is generated to status Yes (Malfunction found and confirmed), first after status identifier SB02 has had status Yes (Malfunction found but not confirmed) for 2 driving cycles in a row with malfunction detected.**

INTRODUCTION

Volvo has developed a wide range of tools and information for easier and faster troubleshooting of the vehicle and its different systems. The range includes service and troubleshooting information, integrated self-diagnostics in control modules, measuring instrument for exhaust analysis, diagnostic tools, etc.

Troubleshooting or diagnostics are performed by the mechanic using two different concepts; Off Board Diagnostics (diagnostics outside the vehicle) or On Board Diagnostics (diagnostics system in the vehicle).

Off Board Diagnostics (diagnostics outside the vehicle) is done *without* help from the control module's self-diagnosis. Examples of these are:

- Breakout box and multimeter to measure signals.
- Mechanic's troubleshooting using hearing, touch, and vision as well as experience.
- Diagnostic tools that are connected in parallel between control module and connector.
- Cylinder leak tester.

On Board Diagnostics (diagnostic systems in the vehicle) *is done using the control module's self-diagnosis* and is read out and presented using a diagnostics tool.

	Off Board Diagnostics	On Board Diagnostics
Advantages	• A few tools to develop compared to functionality/software in all control modules. • Can probably be used for several models.	• Store information about the nature of the malfunction (malfunction frequency, test status, driving conditions), making it possible to troubleshoot intermittent malfunctions. • Require a diagnostic tool to convey information to the mechanic.
Disadvantages	• If the malfunction has disappeared (intermittent), the malfunction will probably not be found.	• Software and its functionality must be in every control module (great quantity). • If a malfunction in the software is detected, many units must be updated.

Fig. 51: Identifying Vehicle Diagnostics
Courtesy of VOLVO CARS CORPORATION

The term **Diagnostics** refers to true recognition and designation of an illness. The term comes from the Greek **dia** = through, and **gnosis** = knowledge. The purpose of a diagnosis is to give a summarized term for the different symptoms that the "sick" describes, and thus be able to give a specific treatment.

The control module in the vehicle includes software to manage intended function (e. g., control all functions of an engine), to monitor the system's components and functions. Monitoring (self-diagnosis) detects any malfunctions, stores these, activates protective actions (back-up modes) and, in some cases, warns the driver.

Monitoring (diagnosis) is always activated when the system is on but tests are started and run according to different pre-defined conditions. A malfunction that is detected is first assessed by monitoring, after, e. g., a certain time, a certain number of driving cycles, certain driving/operation cases or other conditions, the control module decides if it is a real malfunction or not. When monitoring determines that a real malfunction exists, it can be said that the malfunction is confirmed and the malfunction is stored.

The basic goal of self-diagnosis in control modules is to detect and report malfunctions in a control module or its connected components and cables. Part of the goal (found in legal requirements) is also to detect malfunctions that affect emissions as well as malfunctions that may cause subsequent damage to emission-related components.

Self-diagnosis shall also warn for malfunctions that mean a safety risk for drivers, passengers, and vehicles that otherwise would not cause a symptom and thus not be detected. This applies to, e. g., brake system and SRS-system.

Self-diagnosis shall be used by workshops as one of the tools for taking care of the symptom (property/malfunction) that the customer experiences. After the malfunction cause is found (via troubleshooting) and taken care of (via repair), self-diagnosis can also be used to verify that the malfunction cause has been fixed and that the customer's symptom does not exist any longer.

NOTE: **The control module's self-diagnosis (diagnostic trouble code tests) cannot detect all malfunctions that may occur in a vehicle. This primarily applies to mechanical malfunctions but also some electrical malfunctions, e. g., poor connection to battery, or relay spools for a relay are monitored but the**

function/circuit that the relay controls is not monitored.

Unfortunately, sometimes the control module's self-diagnosis can *miss to generate* a diagnostic trouble code for a malfunction where the customer experiences a symptom (malfunction), and sometimes it may generate a diagnostic trouble code despite the customer *not* experiencing any symptom (malfunction). This is because customers have different sensitivity to malfunctions (how easily the symptom is detected) and because it is not always to optimize self-diagnosis for all conditions that may occur during the vehicle's life. That is why you should *not entirely rely* on the vehicle's diagnostic trouble codes.

Diagnostic trouble codes should only be regarded as *indicators* of probably malfunction sources. *If the customer experiences a symptom (malfunction) but diagnostic trouble codes are not stored, this does not mean that the vehicle is trouble-free.*

Worth keeping in mind when troubleshooting:

- When there is so much electronic equipment in the vehicles, it is easy to blame the "complex" electronics and forget the normal basics for, e. g., an engine's function. But the basics are the same today as when we had carburetor engines.
- A common mistake in troubleshooting is to quickly restricting yourself to a certain area without having checked basic functions, e. g., that the ignition system and engine are in good mechanical condition, the battery is fully charged, fuses are intact.
- Troubleshooting information gives very good guidance when troubleshooting and is almost impossible to do without. By using the customer's symptom, developed troubleshooting methods with, e. g., diagnostic trouble code information, you are quickly guided to being able to pin-point the malfunction.

NOTE: The electronic components in the control systems are very reliable and seldom cause any malfunctions.

This document describes the following:

- Background to why self-diagnosis is found in the vehicle.
- Diagnostic services, what they do.
- Using the self-diagnosis.
- Diagnostic versions and its communication method.
- Tools for reading out diagnosis.
- Where I find the information.

PRACTICAL USE OF DIAGNOSTICS

GENERAL

There are several ways to decide if the malfunction is active right now or not as well as when the malfunction occurred:

- **Read off the diagnostic trouble code's counter, status identifier and frozen values.** By interpreting these you can find out when the malfunction was stored, how often the malfunction has occurred (intermittence) and what the driving conditions were when the malfunction was stored.
- **Read off a parameter** for component/system and decide if the value is correct or not. By, e. g., manually affecting the sensor or the switch, you can decide immediately if the parameter (signal) with its circuit is correct.
- **Trigger a component** (activate) and decide if the component/function is affected or not. By triggering, e. g., the relay and listening for its clicking sound or the function which is to be affected, it is possible to decide immediately if the component is correct.
- **Decide if the vehicle shows any symptom (malfunction).** If the vehicle no longer shows the symptom, one may suspect that the malfunction no longer is active.

The following accounts in detail for some of the above.

TO DECIDE THE INTENSITY OF A MALFUNCTION

NOTE: Examples 1-5 (below) are based on counters for diagnostic concept Generic Global Diagnostic (GGD).

When a malfunction is intermittent or has unknown status, the diagnostic trouble code's counter is very useful to decide:

- How many driving cycles that have passed since the malfunction was detected the first time as well as since the malfunction was detected.
- During how many driving cycles that the control module has detected the malfunction during a certain period, as well as how many driving cycles that the control module has not detected the malfunction. That the control module has not detected the malfunction may be due to the control module not having started the test for the malfunction, conditions to detect the malfunction are not fulfilled, or that the malfunction no longer exists.

The purpose of interpreting the counters is that it is possible to understand the malfunction's intensity, that is, show "how much" intermittent the malfunction is, as well as help in assessing if the chances to repeat the malfunction and customer symptom, and then succeed with troubleshooting.

If you read out the diagnostic trouble code information and it shows that the diagnostic trouble code test runs at least once every driving cycle (e. g., when driving), the counters' value may be very important when assessing the diagnostic trouble code's status and actions. However, if start of diagnostic trouble code test and its conditions are difficult to achieve, the counters' values should be considered to be of less importance.

Counters 1 and 3 show driving cycles. Counters 2 and 4 also show driving cycles, but then really a "share" of counters 1 and 3, respectively. In principle, counter 4 shows how many times that the customer should have detected symptoms.

NOTE: ***For systems with diagnostic concept Generic Global Diagnostics (GGD).*** **If many diagnostic trouble codes are stored at the same time, then certain diagnostic trouble codes (the oldest) will have these frozen values/counters erased, this to save memory in the control module. These diagnostic trouble codes will then only have counter 2 left. Note also that counter 2 will also be erased when the memory is full, but often later than when other counters are erased.**

NOTE: ***For system with diagnostic concept Volvo Diagnostics II.*** **If many diagnostic trouble codes are stored at the same time, the control module keeps at least half of the oldest and half of the newest diagnostic trouble codes in the trouble code memory.**

NOTE: **For diagnostic trouble codes where the malfunction is not detected for many driving cycles and where the malfunction is detected again, then frozen values and counter values are written over with new values, that is, the diagnostic trouble code is considered "new".**

Example 1, Intermittent malfunction

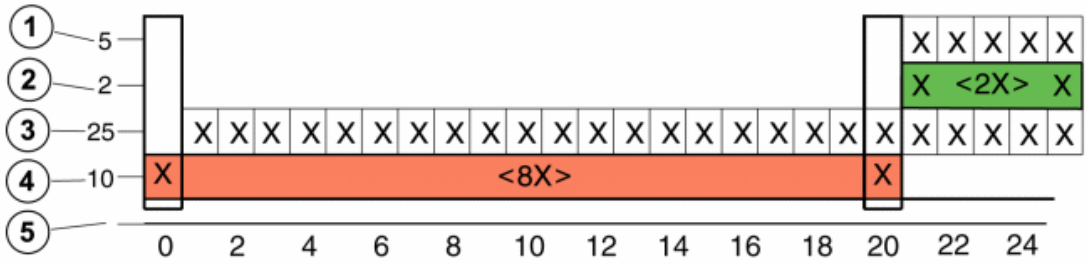

Fig. 52: Identifying Intermittent Malfunction Example 1
Courtesy of VOLVO CARS CORPORATION

1. Counter 1 = 5
2. Counter 2 = 2
3. Counter 3 = 25
4. Counter 4 = 10
5. Driving cycles

After the malfunction has been detected for the first time (driving cycle 0) the malfunction has been detected again in 9 of the first 20 driving cycles. Using this, the conclusion can be drawn that in 11 driving cycles the test has not been run or the malfunction has not been found, or a combination of these. After the last time that the malfunction was detected, 5 driving cycles have passed, where the test was run in 2 driving cycles without

detecting a malfunction.

Conclusion: Intermittent malfunction

Assessment: Good possibility to repeat the malfunction and customer symptom, and thus succeed with troubleshooting, as the malfunction has been found quite recently in several driving cycles.

Example 2, Permanent malfunction

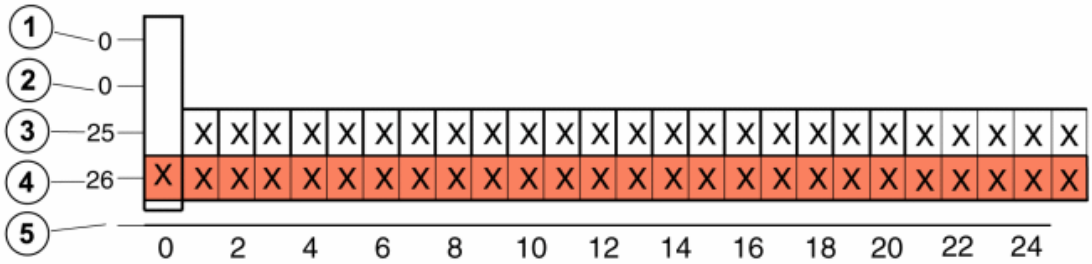

Fig. 53: Identifying Permanent Malfunction Example 2
Courtesy of VOLVO CARS CORPORATION

1. Counter 1 = 0
2. Counter 2 = 0
3. Counter 3 = 25
4. Counter 4 = 26
5. Driving cycles

After the malfunction has been detected for the first time the malfunction has been detected again in all following driving cycles.

Conclusion: Permanent malfunction

Assessment: Very good possibility to repeat the customer symptom and thus succeed with troubleshooting, as the malfunction has been found in every driving cycle. Since the malfunction has been detected during the present driving cycle it does not really matter for troubleshooting if the malfunction has been detected in all previous driving cycles or not.

The counter show more how "sure" the malfunction is as well as that it can confirm if the customer experienced the malfunction as the counter indicates.

Example 3, Intermittent malfunction

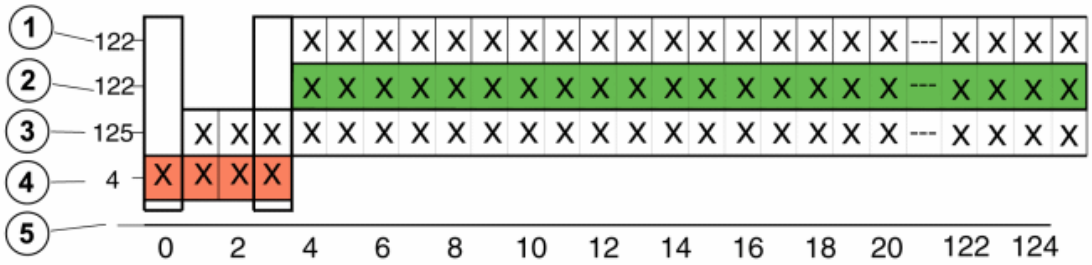

Fig. 54: Identifying Intermittent Malfunction Example 3
Courtesy of VOLVO CARS CORPORATION

1. Counter 1 = 122
2. Counter 2 = 122
3. Counter 3 = 125
4. Counter 4 = 4
5. Driving cycles

After the malfunction has been detected for the first time the malfunction has been detected again in the 3 following driving cycles. After the last time that the malfunction was detected, 122 driving cycles have passed, where the test has been run in 122 driving cycles without detecting a malfunction.

Conclusion: Intermittent malfunction

Assessment: Not very good chance to repeat the malfunction and the customer symptom and thus succeed with troubleshooting, as the malfunction has only been detected in a few driving cycles a very long time ago.

The less driving cycles a malfunction has been detected in and the greater the number of driving cycles since the malfunction was detected the last time, the more difficult it is expected to be to repeat the malfunction and the customer symptom and thus succeed with troubleshooting.

This can be read off by the lower value is on counter 4 and the higher the value is on counter 1 and 2, as well as the lower the difference is between the value on counter 3 and counter 2, the more difficult it is expected to be to repeat the malfunction and the customer symptom and thus succeed with troubleshooting.

Example 4, Intermittent malfunction

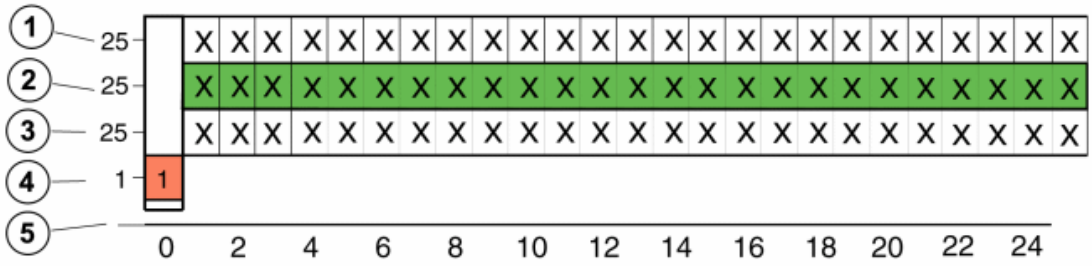

Fig. 55: Identifying Intermittent Malfunction Example 4
Courtesy of VOLVO CARS CORPORATION

1. Counter 1 = 25
2. Counter 2 = 25
3. Counter 3 = 25
4. Counter 4 = 1
5. Driving cycles

After the malfunction has been detected for the first time, the malfunction has never been detected again. After the last time that the malfunction was detected, 25 driving cycles have passed, where the test has run in 25 driving cycles without detecting a malfunction.

Conclusion: Intermittent malfunction

Assessment: Not very good chance to repeat the malfunction and the customer symptom and thus succeed with troubleshooting, as the malfunction has only been detected in one driving cycle quite a long time ago.

Example 5 Unknown status

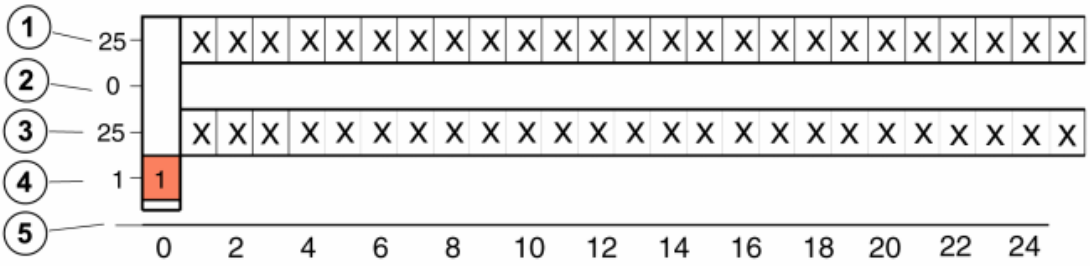

Fig. 56: Identifying Unknown Status Example 5
Courtesy of VOLVO CARS CORPORATION

1. Counter 1 = 25
2. Counter 2 = 0
3. Counter 3 = 25
4. Counter 4 = 1
5. Driving cycles

After the malfunction has been detected for the first time, the malfunction has never been tested and/or detected. After the last time that the malfunction was detected, 25 driving cycles have passed where the test has not been started. Since the diagnostic trouble code test has not started anymore, it cannot be decided if the malfunction exists or not.

Conclusion: Unknown status

Assessment: Read diagnostic trouble code information and try to achieve condition so that the diagnostic trouble code test is started and run, which makes it possible to detect the malfunction. If the malfunction is detected, chances are very good to repeat the customer symptom, and thus succeed with troubleshooting when the malfunction has been found in the current driving cycle.

If the malfunction was not detected even though conditions are fulfilled, then chances are less good to repeat the customer symptom, and thus succeed with troubleshooting as the malfunction has not been found in the current driving cycle.

TO DECIDE DIAGNOSTIC TROUBLE CODE TEST'S STATUS

By reading out the diagnostic trouble code with associated status identifier, then *status for the diagnostic trouble code test that detects the malfunction and generates the diagnostic trouble code, is obtained.*

Example 1, Permanent malfunction

Status identifier:

	Malfunction found the last time that the diagnostic trouble code test was run during current driving cycle	=	Yes
	Malfunction found at least once during the current driving cycle	=	Yes
	Malfunction found at least once during the current and previous driving cycles	=	Yes
	Malfunction found recently since erasing of diagnostic trouble codes	=	Yes
	Diagnostic trouble code test run at least once since erasing of diagnostic trouble codes	=	Test run
	Malfunction found at least once since erasing of diagnostic trouble codes	=	Yes
	Diagnostic trouble code test run at least once during the current driving cycle	=	Test run

	Request for lit warning light/text message	=	Yes

The diagnostic trouble code test has been run in both current driving cycle and in earlier driving cycles. Malfunction has been detected both in current driving cycle and in previous driving cycle, which indicates that the malfunction is active right now. The control module has requested lighting of the warning light.

Conclusion: Permanent malfunction.

Assessment: Very good chance to repeat the customer symptom and thus succeed with troubleshooting, as the malfunction has been found in current and in previous driving cycle. Since the malfunction has been detected during the present run cycle, it does not really matter for troubleshooting if the malfunction has been detected in all previous driving cycles or not. If this information is supplemented with the counters' values you can decide how "permanent" the malfunction is.

If the vehicle is stationary, e. g., with the ignition on, this means that the test runs directly when the ignition is turned on. This makes it easier to both fins the malfunction and to verify that the malfunction cause has been take care of.

Example 2, Unknown status

Status identifier:

	Malfunction found the last time that the diagnostic trouble code test was run during current driving cycle	=	No
	Malfunction found at least once during the current driving cycle	=	No
	Malfunction found at least once during the current and previous driving cycles	=	Yes
	Malfunction found recently since erasing of diagnostic trouble codes	=	Yes
	Diagnostic trouble code test run at least once since erasing of diagnostic trouble codes	=	Test run
	Malfunction found at least once since erasing of diagnostic trouble codes	=	Yes
	Diagnostic trouble code test run at least once during the current driving cycle	=	Test not run
	Request for lit warning light/text message	=	No

The diagnostic trouble code test has been run in previous run cycles but not in current driving cycle. Malfunction has been detected in previous run cycle, but not in current driving cycle since the test has not started. Warning light is on.

Conclusion: Unknown status

Assessment: Since the test has not started in the current driving cycle it is not possible to decide if the malfunction is "active" right now. First read the diagnostic trouble code information and try to obtain conditions

so that the test is started and run, which enables detection of the malfunction. If the malfunction is detected, chances are very good to repeat the customer symptom, and thus succeed with troubleshooting as the malfunction has been found in the current driving cycle.

If the malfunction was not detected even though conditions are fulfilled, then chances are less good to repeat the customer symptom, and thus succeed with troubleshooting as the malfunction has not been found in the current driving cycle.

TO DECIDE OPERATION CONDITIONS WHEN THE MALFUNCTION WAS DETECTED

Malfunctions in a system may be intermittent. It is important to remember this when troubleshooting a possible malfunction cause. If the malfunction is not in the vehicle when it is in the workshop you can miss a malfunction cause since the values may be correct when troubleshooting takes place. A good indication of when the malfunction first occurred for the first time are the frozen values that can be read out for every diagnostic trouble code.

The frozen values are stored immediately after a malfunction has been detected. Most parameters in the frozen values are the same for all malfunctions and indicate a general condition when a malfunction has been detected, e. g., engine rpm, load, coolant temperature, vehicle speed and battery voltage. Some of them have been selected to give a better understanding of the specific malfunction.

Diagnostic trouble code *ECM-903F Electronic throttle unit, internal malfunction* cam be used as an example of how frozen values can be used.

The first possible source indicated in VIDA is the voltage feed to the electronic throttle unit and then continues by suggesting that you check the battery and charging system. However, the battery's condition when the vehicle is in the workshop does not necessarily show the battery voltage when the malfunction was detected.

Instead, the best information is found in the frozen values, that is, voltage that the Engine control module (ECM) detects when Electronic throttle module (ETM) indicated the malfunction.

However, you should remember that this is not an indication of voltage feed to Electronic throttle module (ETM), it is voltage feed to Engine control module (ECM). If Engine control module (ECM) according to frozen values has had good voltage the battery was okay. Therefore, voltage feed to Electronic throttle module (ETM) should be checked separately.

Frozen values for ECM 903F:

- Condition, heated oxygen sensor control bank 1 = LR: Closed circuit with two sensors
- Condition, heated oxygen sensor control bank 2 = LR: Closed circuit with two sensors
- Calculated load = 4.71%
- Engine temperature = 87 °C
- Fuel adaption, quick adjustment, bank 1 = 15.63%
- Fuel adaption, slow adjustment, bank 1 = -0.78%
- Fuel adaption, quick adjustment, bank 2 = 23.44%
- Fuel adaption, slow adjustment, bank 2 = -0.78%

- Engine speed = 760 rpm
- Vehicle speed = 0 km/h
- Boost pressure = 30%
- Battery voltage = 12.50 V
- Throttle angle, desired value = 14.84%
- Air mass = 23.8 kg/h
- Outside temperature = 33 °C

In this case we assume that the vehicle had low battery voltage in the workshop. However, as can be seen in the frozen values, battery voltage was okay when the malfunction occurred, so this was probably not the cause.

This is an example of how frozen values can be used to increase efficiency of troubleshooting and avoid using too much time for incorrect troubleshooting. This prevents troubleshooting and fixing a malfunction that was not the real cause of the problem that was to be solved.

The odometer reading (km) is sometimes included in frozen values in Engine control module (ECM). This enables a quick comparison with the odometer so that you can assess if the malfunction occurred as part of the troubleshooting and can be ignored. For example, CAN-network-related diagnostic trouble codes are saved when the battery voltage drops during work on the vehicle since passenger compartment lighting and other loads drain the battery.

The frozen values indicate odometer reading in km. If you multiply this value by factor 0.62 you obtain driving distance in miles. Current driving distance in both miles and km can be read out with VIDA (Volvo scan tool).

Keep the following in mind when using frozen values for troubleshooting.

The frozen values to be used with care are those stored for the CAN-net and are related to diagnostic trouble codes for Electronic throttle module (ETM).

If Electronic throttle module (ETM) detects that communication to Engine control module (ECM) is interrupted, then malfunction flags will be generated in Electronic throttle module (ETM). These malfunction flags will be sent to Engine control module (ECM) first when communication on the CAN-net works again.

This means that Engine control module (ECM) will store the diagnostic trouble codes first when Electronic throttle module (ETM) delivers them, which in turn means that it is at this point in time that the frozen values are saved. For Electronic throttle module (ETM) this means that the frozen values will be from a point in time after the malfunction first occurred.

DIFFERENTIAL ELECTRONIC MODULE (DEM) (4T65 AWD; 2005-2006)

DESIGN

see **DESIGN**

DIAGNOSTIC FUNCTIONS

GENERAL

The control module has a built-in diagnostic system, Volvo Diagnostic, which continuously monitors internal functions as well as input and output signals.

DIAGNOSTIC TROUBLE CODES (DTCS)

A diagnostic trouble code (DTC) is stored if the control module detects a fault. Should a fault disappear for any reason after being permanently stored in the control module as a diagnostic trouble code (DTC), the information remains stored in the control module.

READING AND ERASING DIAGNOSTIC TROUBLE CODES (DTCS)

Stored diagnostic trouble codes (DTCs) can be read off and erased using this function.

Diagnostic trouble codes (DTCs) can only be erased once all the diagnostic trouble codes (DTCs) have been read off at least once.

READING OFF INPUT AND OUTPUT SIGNALS

This function can be used to continuously read off the status of the control module's input and output signals.

For further information about parameters, see **DESCRIPTION OF PARAMETERS**

READING OFF THE CONTROL MODULE IDENTIFICATION

VIDA identifies control modules by reading off a number of codes from the control module memory.

The codes contain information about the control module:

- hardware P/N (control module without software)
- hardware serial number (control module without software)
- software P/N
- diagnostic software P/N.

DOWNLOADING SOFTWARE AND REPLACING THE CONTROL MODULE

see **DOWNLOADING SOFTWARE AND REPLACING THE CONTROL MODULE**

FUNCTION

see **FUNCTION**

SYSTEM OVERVIEW

see **SYSTEM OVERVIEW**

DIFFERENTIAL ELECTRONIC MODULE (DEM) (AW50/51 AWD; 2005-2007)

DESIGN

see **DESIGN**

DIAGNOSTIC FUNCTIONS

see **DIAGNOSTIC FUNCTIONS**

DOWNLOADING SOFTWARE AND REPLACING THE CONTROL MODULE

see **DOWNLOADING SOFTWARE AND REPLACING THE CONTROL MODULE**

FUNCTION

see **FUNCTION**

SYSTEM OVERVIEW

see **SYSTEM OVERVIEW**

DIFFERENTIAL ELECTRONIC MODULE (DEM) (TF-80SC AWD; 2005-2008)

DESIGN

CONTROL MODULE

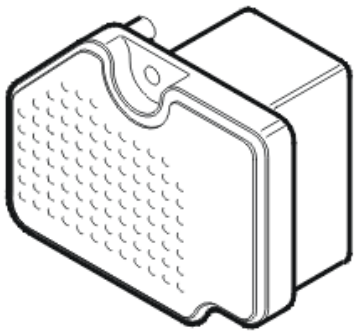

Fig. 57: Identifying Differential Electronic Module (DEM)
Courtesy of VOLVO CARS CORPORATION

Differential Electronic Module (DEM) is directly secured onto the clutch unit housing and together with the axial solenoid constitutes one unit. The axial solenoid controls the control valve.

The Differential Electronic Module (DEM) receives signals via the Controller Area Network (CAN)

from:

- Engine Control Module (ECM)
- Central Electronic Module (CEM)
- Brake Control Module (BCM)
- Driver Information Module (DIM).

Conducted by these signals, the Differential Electronic Module (DEM) determines how high the oil pressure to the clutch unit should be. The oil pressure to the clutch driven plates is decisive for how much torque can be transferred to the rear wheels.

Four-wheel drive does not function in the event of a fault in the Differential Electronic Module (DEM).

OIL PRESSURE AND TEMPERATURE SENSOR

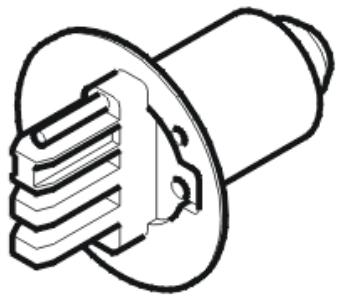

Fig. 58: Identifying Oil Pressure And Temperature Sensor
Courtesy of VOLVO CARS CORPORATION

The oil pressure and temperature sensor is fitted close to the axial solenoid in the Differential Electronic Module (DEM) housing. The sensor is flushed with hydraulic oil. The sensor measures the temperature and pressure (measurement range 0 - 4 MPa) of the hydraulic oil. The sensor sends a signal on temperature and pressure to the control module. The control module uses the signal to adapt the function of the system when the temperature of the oil and its subsequent viscosity is changed.

If the temperature of the oil exceeds 105 °C then the clutch is depressurized and four-wheel drive is disconnected. When the temperature falls below 101 °C the clutch is pressurized again. The pressure of the oil is limited to max. 10.3 MPa by the safety valve.

Four-wheel drive does not function in the event of any fault in the temperature sensor, and the function is significantly reduced in the event of a fault in the pressure sensor.

The oil pressure and temperature sensor can be diagnosed.

CONTROL VALVE/AXIAL SOLENOID

Fig. 59: Identifying Control Valve / Axial Solenoid
Courtesy of VOLVO CARS CORPORATION

The control valve/axial solenoid is located in the Differential Electronic Module (DEM) housing.

The control module supplies a variable pulse width modulated (PWM) signal to the axial solenoid. The solenoid changes the position of the control valve in accordance with the control signal. The pressure to the working piston of the clutch driven plates is controlled in this way.

Four-wheel drive does not function in the event of a fault in the control valve/axial solenoid.

The control valve/axial solenoid can be diagnosed.

ELECTRICAL FEED PUMP

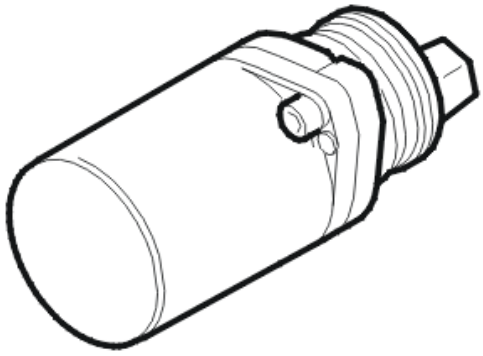

Fig. 60: Identifying Electrical Feed Pump
Courtesy of VOLVO CARS CORPORATION

The electrical feed pump is fitted on the clutch unit and is supplied with voltage from the Differential Electronic Module (DEM). When the engine is started and reaches an engine speed of over 400 rpm the electrical feed pump is supplied with voltage from the control module.

The feed pump pumps oil to the axial pistons whose rollers are applied to the cam disc. At the same time oil flows to the working piston so that the play in the disc package is eliminated and the clutch's capacity for rapid

reaction and control is prepared.

Four-wheel drive does not function in the event of a fault in the feed pump.

The feed pump can be diagnosed.

DIAGNOSTIC FUNCTIONS

GENERAL

The control module has an integrated diagnostic system, which continuously monitors its own system as well as the input and output signals.

DIAGNOSTIC TROUBLE CODES (DTC)

If the control module detects a fault then it stores a diagnostic trouble code (DTC). If a fault disappears for any reason after a diagnostic trouble code (DTC) has been permanently stored in the control module then the information on the diagnostic trouble code (DTC) remains in the control module.

READING AND ERASING DIAGNOSTIC TROUBLE CODES (DTC)

Stored diagnostic trouble codes (DTC) can be read off and erased using this function.

NOTE: Diagnostic trouble codes (DTC) can be erased even if all diagnostic trouble codes (DTC) have not been read off at least once.

READING OFF INPUT AND OUTPUT SIGNALS

The status for the control module input and output signals can be continuously read off using this function.

For more information on parameters, see: **DESCRIPTION OF PARAMETERS**

READING OFF THE CONTROL MODULE IDENTIFICATION

The control module can be identified by means of reading off a number of codes.

The codes contain information about the control module:

- hardware P/N (control module without software)
- hardware serial number (control module without software)
- software P/N
- diagnostic software P/N

DOWNLOADING SOFTWARE AND REPLACING THE CONTROL MODULE

New software can be downloaded into the Differential Electronic Module (DEM). When software is ordered the software and hardware of the vehicle are compared with Volvo's central database. If the comparison

corresponds then the software is downloaded into the control module.

If the comparison between the car and Volvo's central database does not correspond, then the database is updated with the vehicle's configuration. When this is complete the software is downloaded.

The control module is fitted on the clutch unit and can be replaced. Control module replacement also involves replacing the control valve/axial solenoid, this is because the control module and control valve/axial solenoid are fitted and calibrated in the factory as one unit.

FUNCTION

ELECTRONIC FUNCTION

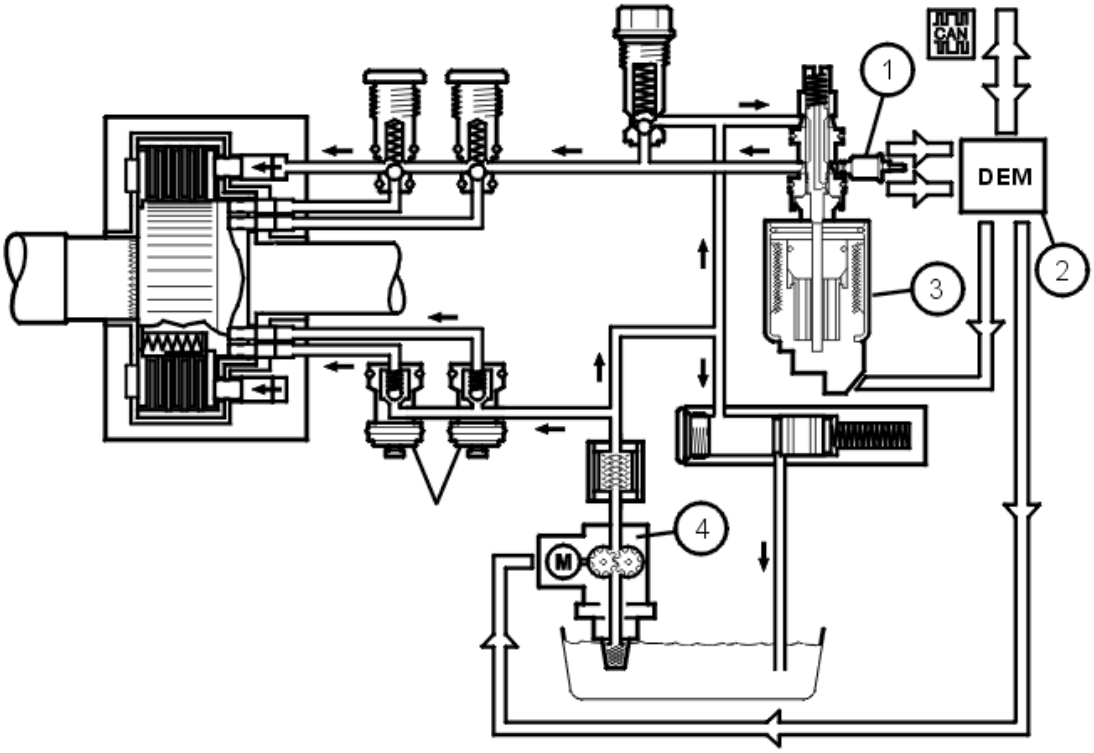

Fig. 61: Active On Demand Coupling Electronic Function
Courtesy of VOLVO CARS CORPORATION

1. Oil pressure and temperature sensor
2. Differential Electronic Module (DEM)
3. Control valve/axial solenoid
4. Electrical feed pump

The Differential Electronic Module (DEM) is directly secured onto the clutch unit and together with the axial solenoid and control valve constitutes one unit. Amongst other things the Differential Electronic Module

(DEM) communicates with the Engine Control Module (ECM) and the Brake Control Module (BCM) via the Controller Area Network (CAN). Conducted by the sensor signals, the Differential Electronic Module (DEM) controls the oil pressure to the clutch driven plates by adjusting the axial solenoid. The axial solenoid has variable control over the control valve by means of a pulse width modulated (PWM) signal. The basic pressure in the system is built up by the electrical feed pump. The oil pressure to the clutch driven plates is decisive for how much torque can be transferred to the rear wheels.

NOTE: If the car has dynamic stability and traction control (DSTC), the required stability control is applied before four wheel drive.

Active On demand Coupling (AOC) is equipped with an oil pressure and temperature sensor, which measures the prevailing temperature and pressure in the hydraulic oil. The oil pressure and temperature sensor informs the Differential Electronic Module (DEM) on the temperature and the pressure. If the temperature is too high, above 105 °C, then the four-wheel drive is disconnected to protect the clutch unit from damage. When the temperature falls below 101 °C the clutch unit is reconnected with full functionality.

To protect driveshafts and joints, the Differential Electronic Module (DEM) has functions that reduce the torque that is transferred to the rear wheels in certain situations.

"Trailer detection" is an example of one of these functions. This function is based means that if a trailer is coupled to the vehicle and the driving conditions are such that the front wheels slip on the surface, the Differential Electronic Module (DEM) will transfer less torque to the rear wheels than it would have done without a trailer.

This results in most of the torque remaining on the front wheels, which protects the rear wheel driveshafts and drive joints from extreme loads.

MECHANICAL FUNCTION, OVERVIEW

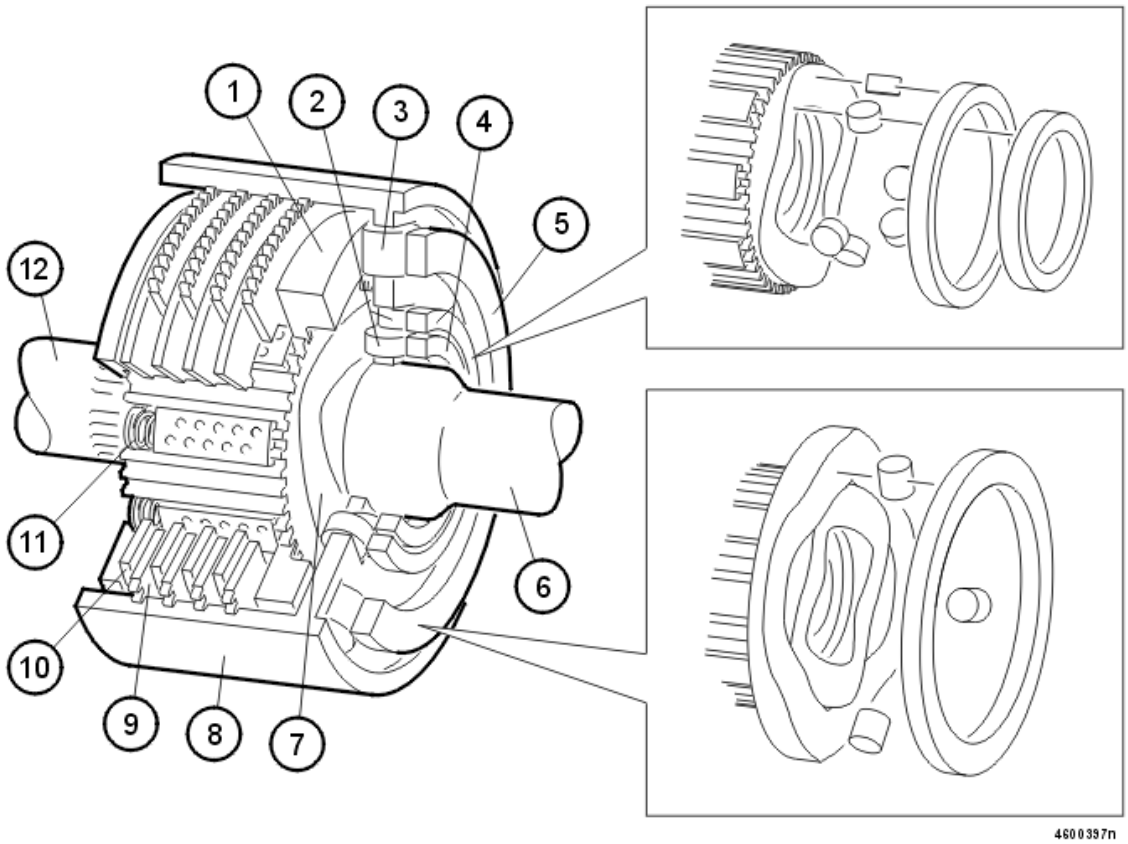

Fig. 62: Active On Demand Coupling Mechanical Function Overview
Courtesy of VOLVO CARS CORPORATION

1. Pressure plate
2. Rollers for axial piston
3. Rollers for working piston
4. Axial piston
5. Working piston
6. Input shaft
7. Cam disc
8. Housing for outer clutch driven plates
9. Outer clutch driven plates
10. Inner clutch driven plates
11. Compression springs
12. Output shaft

The engine torque is transferred to the propeller shaft via the transmission. The input shaft is separated from the output shaft. The disc package must be applied to transfer torque to the rear axle. Inner and outer wet clutch plates are the power transmission points between the input and output shafts.

The cam disc, which is sine shaped, rotates at the same speed as the propeller shaft. The axial piston rollers run

on the cam disc's roller coaster and press the axial piston in and out, which creates an oil pressure which acts on the working piston, which in turn applies the disc package.

HYDRAULIC FUNCTION, OVERVIEW

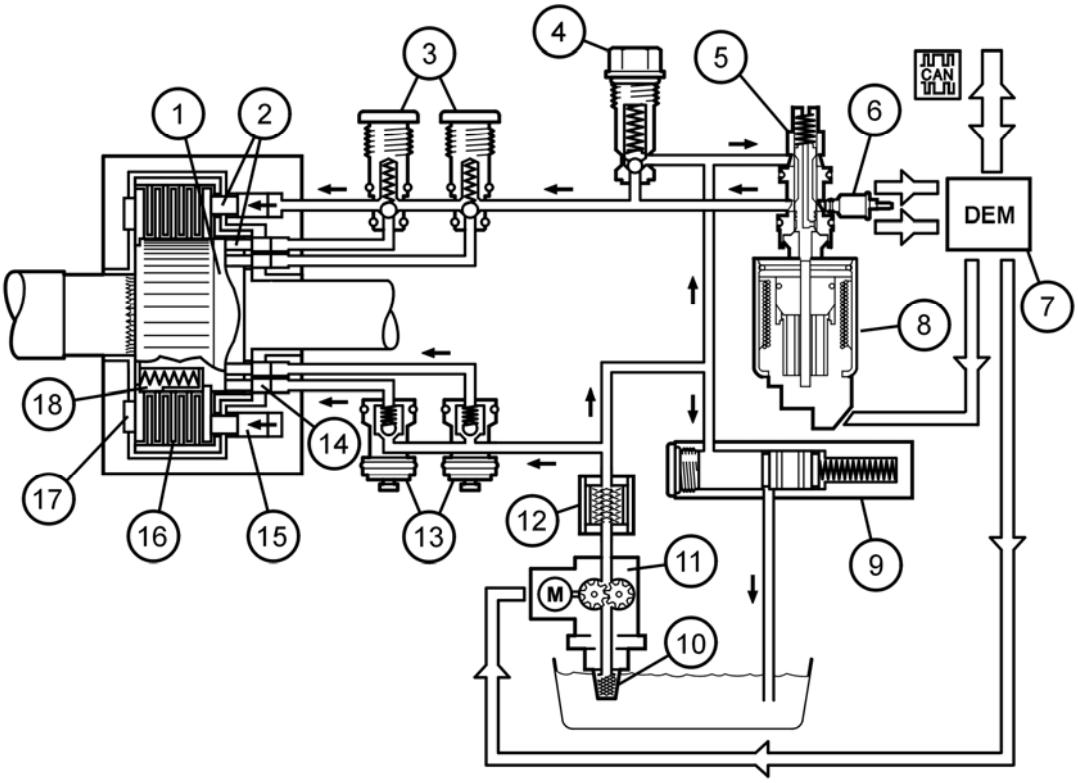

Fig. 63: Identifying Hydraulic Function Overview
Courtesy of VOLVO CARS CORPORATION

1. Cam disc
2. Rollers
3. Pressure valves
4. Pressure limiting valve
5. Control valve cover
6. Oil pressure and temperature sensor
7. Differential Electronic Module (DEM)
8. Control valve/axial solenoid
9. Accumulator
10. Oil strainer
11. Electrical feed pump
12. Oil filter
13. Suction valves

14. Piston pump
15. Working piston
16. Wet disc package
17. Bearings
18. Compression springs

Active On demand Coupling (AOC) can be explained as a hydraulic pump.

The basic pressure in the system is built up by the electrical feed pump. This way the axial pistons are pressurized with oil so that they are pressed against the cam disc via the rollers. The axial piston builds up a working pressure which is conducted to the working piston via the pressure valves. This pressure creates a fixed connection between the input and output shafts. The maximum pressure is limited by the pressure limiting valve. The difference in speed between the input and output shafts is proportional in accordance with the oil pressure to the axial pistons. A large difference in speed between the input and output shafts provides high oil pressure to the axial pistons. The same speed on the input and output shafts provides lower oil pressure to the axial pistons. The oil pressure on the clutch driven plates is controlled by the control valve. The axial solenoid controls the control valve. A closed control valve provides maximum pressure to the clutch driven plates, which provides maximum power transmission. An open control valve provides minimum pressure to the clutch driven plates, which provides a limited power transmission.

The accumulator maintains the basic pressure in the system. The oil filter keeps the oil free from dirt and small particles which can damage the system.

PRETENSIONING

The function of the four-wheel drive system is based in there being a difference in speed between front and rear wheels. This difference in speed can affect traction performance in certain driving situations. The role of the pretensioning function is to improve traction performance, primarily in starting off from being stationary, without affecting other properties of the system to achieve this.

The pretensioning function is obtained by means of the feed pump building up a basic pressure. A pretensioning of the clutch unit is generated by means of this increase in pressure, and the engine torque can be transferred to both rear and front wheels. The pretensioning functionality is controlled by software so that activation only takes place when necessary.

SYSTEM OVERVIEW

ACTIVE ON DEMAND COUPLING (AOC)

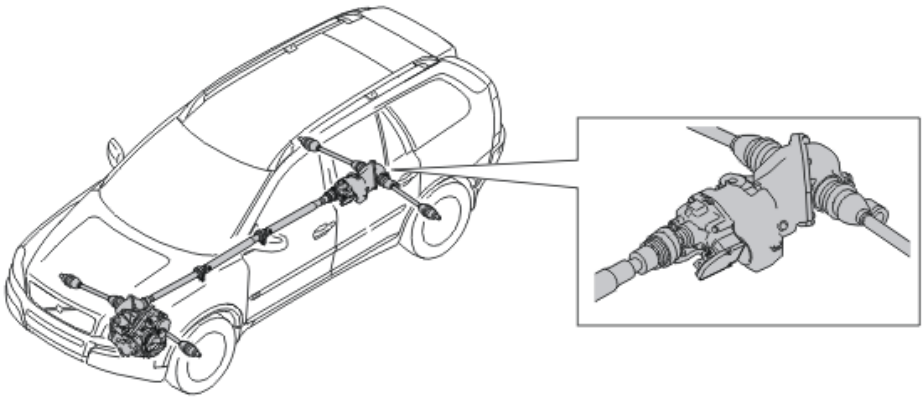

Fig. 64: Active On Demand Coupling (AOC)
Courtesy of VOLVO CARS CORPORATION

The most important function of Active On demand Coupling (AOC) and its Differential Electronic Module (DEM) is to control the four-wheel drive function, i. e. power distribution between front and rear axles. The system consists of a clutch assembly with a mechanical, hydraulic and electronic section. The clutch unit is located on the rear axle, between the final drive and the propeller shaft. The mechanical section is driven by the propeller shaft. The hydraulic section is driven by the difference in speed arising between propeller shaft rotation and rear axle rotation.

Active On demand Coupling (AOC) enables the following characteristics:

- Permanent four-wheel drive with electronic control of transferred torque.
- A driving character equivalent to front-wheel drive.
- Rapid reactions.
- No opposing forces when maneuvering or parking.
- The system is not so sensitive to differences between the tires, e. g. when driving with the spare wheel.
- Not sensitive to towing with an axle lifted.
- Not sensitive to brake testing on a chassis dynamometer.

CLUTCH UNIT AND CONTROL MODULE

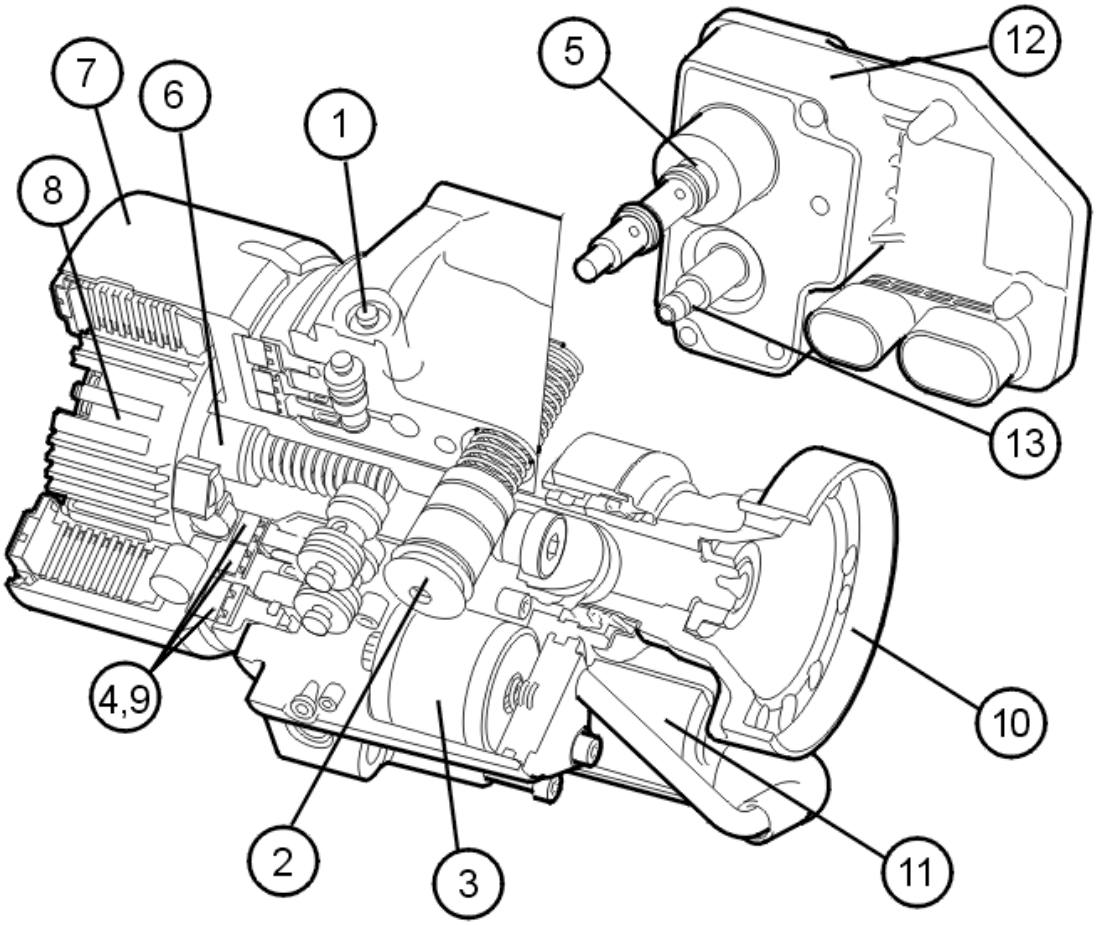

Fig. 65: Coupling Unit And Control Module
Courtesy of VOLVO CARS CORPORATION

The hydraulic section consists of 1-5, the mechanical consists of 6-10 and the electronic section consists of 11-13:

1. Pressure valves
2. Accumulator
3. Oil filter
4. Ring pistons
5. Control valve/axial solenoid
6. Input shaft
7. Inner and outer wet clutch plates
8. Inner clutch hub with sine shape cam disc
9. Rollers with ring pistons
10. Output shaft
11. Electrical feed pump

12. Differential Electronic Module (DEM)
13. Oil pressure and temperature sensor

The Differential Electronic Module (DEM) is fitted on the clutch unit housing.

The Differential Electronic Module (DEM) communicates with other control modules via Controller Area Network (CAN) communication:

The control module has an integrated diagnostic system.

SIGNALS

The table below summarizes input and output signals to and from the Differential Electronic Module (DEM). The illustration below displays the same information with the Volvo component designations.

Input signals	Output signals
Directly connected: • **Oil pressure and temperature sensor**	**Directly connected:** (supply voltage unless otherwise specified) • **Electrical feed pump** • **Axial solenoid** - pulse width modulated (PWM) signal
Via Controller Area Network (CAN) communication: • **Central Electronic Module (CEM)** (4/56), informs on the position of the ignition key and reverse gear status amongst other things. • **Brake Control Module (BCM)** (4/16), informs on the speed of the wheels from the wheel speed sensors and ABS modulation status amongst other things. • **Driver Information Module (DIM)** (5/1), informs on parking brake switch status. • **Engine Control Module (ECM)** (4/46), informs on engine speed, driver engine torque request, calculated engine torque, accelerator pedal position, stop lamp switch status and clutch pedal switch status, amongst other things.	**Via Controller Area Network (CAN) communication:** • **Brake Control Module (BCM)** (4/16), receives information on clutch unit status and torque transferred to the rear axle. • **Central Electronic Module (CEM)** (4/56), receives information on the diagnostic status of the Differential Electronic Module (DEM).

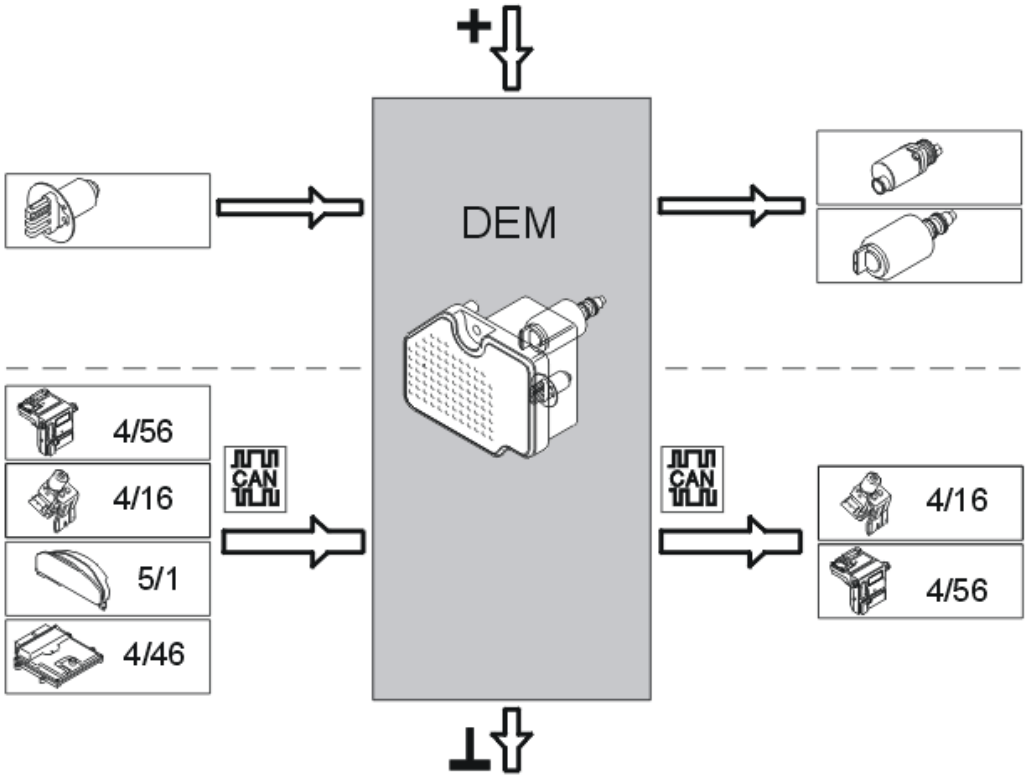

Fig. 66: Differential Electronic Module (DEM) Network
Courtesy of VOLVO CARS CORPORATION

DIFFERENTIAL ELECTRONIC MODULE (DEM) (TF-80SC AWD; 2009-2012)

DESIGN

CONTROL MODULE

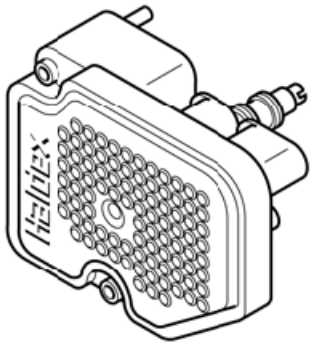

Fig. 67: Differential Electronic Module (DEM)
Courtesy of VOLVO CARS CORPORATION

The differential electronic module (DEM) is secured directly to the coupling unit's housing and makes up unit with the pressure reducing valve. The control module and the pressure reducing valve are calibrated together at the factory and can therefore only be replaced together.

Via the controller area network (CAN), the differential electronic module (DEM) receives signals from:

- engine control module (ECM).
- central electronic module (CEM)
- brake system control module (BCM)
- driver information module (DIM).

Conducted by these signals, the Differential Electronic Module (DEM) determines how high the oil pressure to the clutch unit should be. The oil pressure to the clutch driven plates is decisive for how much torque can be transferred to the rear wheels.

In case of Differential electronic module (DEM) failure, four-wheel drive may be reduced or lost completely.

PRESSURE REDUCING VALVE

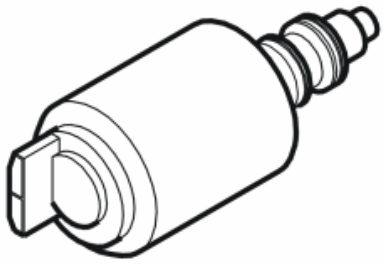

Fig. 68: View of Pressure Reducing Valve
Courtesy of VOLVO CARS CORPORATION

The pressure reducing valve is located in the Differential electronic module (DEM).

The pressure reducing valve receives a constant pulse width modulated (PWM) signal from the control module. The control signal from the control module changes the position of the pressure reducing valve. This regulates the pressure to the discs' operating piston.

In case of diagnostics failure of the pressure reducing valve, four-wheel drive is lost.

The pressure reducing valve can be diagnosed.

ELECTRICAL FEED PUMP.

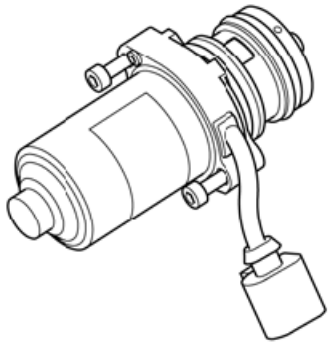

Fig. 69: View of Electrical Feed Pump
Courtesy of VOLVO CARS CORPORATION

The electric feed pump is located on the clutch unit and is supplied with voltage from the Differential electronic module (DEM).

The pump starts at ignition on and then works up a max. oil pressure of 35 bar. This is to always enable request for full torque. Then the pump is shut off until the pressure has dropped to 50%, then it starts again. If the pump does not reach max. pressure within 15 seconds, it is shut off and is then started again. This is calculated via a current measuring algorithm in the Differential electronic module (DEM). The pump works in intervals so that it is not damaged in case of a malfunction, e. g., leakage, in the system. The time interval that the pump works between depends on the temperature. At normal room temperature the pump runs at approx. 20-30 second intervals.

Four-wheel drive does not function in the event of a fault in the feed pump.

The feed pump can be diagnosed.

OIL FILTER WITH NON-RETURN VALVE

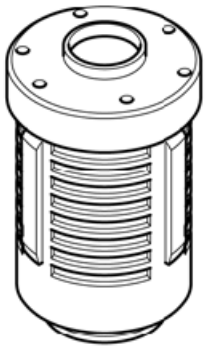

Fig. 70: View of Oil Filter With Non-Return Valve
Courtesy of VOLVO CARS CORPORATION

The hydraulic oil is pumped to the accumulator tank via an oil filter. The oil filter keeps the oil free from dirt

and small particles that can damage the system. There is a non-return valve installed in the oil filter.

In case of oil filter malfunction, a trouble code may be generated.

The oil filter can be diagnosed

DIAGNOSTIC FUNCTIONS

GENERAL

The control module has an integrated diagnostic system, which continuously monitors its own system as well as the input and output signals.

DIAGNOSTIC TROUBLE CODES (DTCS)

If the control module detects a fault then it stores a diagnostic trouble code. If a fault disappears for any reason after a diagnostic trouble code has been permanently stored in the control module then the information on the diagnostic trouble code remains in the control module in a number of driving cycles that can be calibrated.

READING AND ERASING DIAGNOSTIC TROUBLE CODES (DTCS)

Stored diagnostic trouble codes (DTCs) can be read off and erased using this function.

NOTE: Diagnostic trouble codes (DTCs) can be erased without having been read off.

READING OFF INPUT AND OUTPUT SIGNALS

This function can be used to continuously read off the status of the control module's input and output signals.

READING OFF THE CONTROL MODULE IDENTIFICATION

The control module can be identified by means of reading off a number of codes.

The codes contain information about the control module:

- hardware P/N (control module without software)
- hardware serial number (control module without software)
- software P/N
- diagnostic software P/N.

DOWNLOADING SOFTWARE AND REPLACING THE CONTROL MODULE

New software can be downloaded into the Differential Electronic Module (DEM). When software is ordered the software and hardware of the vehicle are compared with Volvo's central database. If the comparison corresponds then the software is downloaded into the control module.

If the comparison between the car and Volvo's central database does not correspond, then the database is

updated with the vehicle's configuration. When this is complete the software is downloaded.

The control module is fitted on the clutch unit and can be replaced. Control module replacement also involves replacing the pressure reducing valve, this is because the control module and pressure reducing valve are installed and calibrated in the factory as one unit.

FUNCTION

ELECTRONIC HYDRAULIC FUNCTION

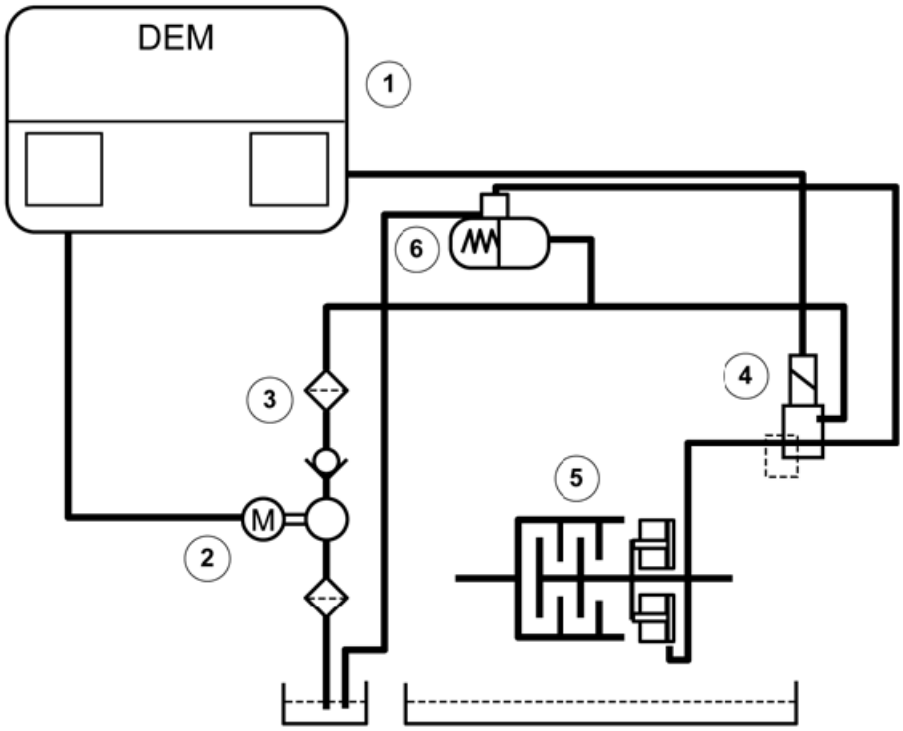

Fig. 71: Electronic Hydraulic Schematic
Courtesy of VOLVO CARS CORPORATION

1. Differential electronic module (DEM)
2. Electrical feed pump.
3. Oil filter with non-return valve
4. Pressure reducing valve (installed on Differential electronic module (DEM))
5. Disc pack
6. Accumulator tank

Differential electronic module (DEM) is mounted directly on the clutch unit and makes up a unit together with the pressure reducing valve.

Differential electronic module (DEM) communicates with, among others, Engine control module (ECM) and Brake control module (BCM) via the CAN-net. With guidance of the sensor signals, Differential Electronic Module (DEM) controls the oil pressure to the discs through the pressure reducing valve.

The pressure reducing valve is controlled endlessly by a pulse-width modulated (PWM)-signal.

The electric feed pump starts at ignition on and immediately works up a maximal hydraulic pressure in the accumulator. When max. pressure has been reached, the feed pump shuts off until the pressure has dropped below 50% again. Then the feed pump starts again and builds up the max. pressure.

This procedure is calculated by Differential electronic module (DEM) using various parameters. In the accumulator the pressurized oil is routed to the clutch via the pressure reducing valve. Differential electronic module (DEM) controls the valve so that correct working pressure is obtained, 0-27.5 bar. The oil pressure to the discs is decisive to how much torque can be transmitted to the rear wheels.

MECHANICAL FUNCTION, OVERVIEW

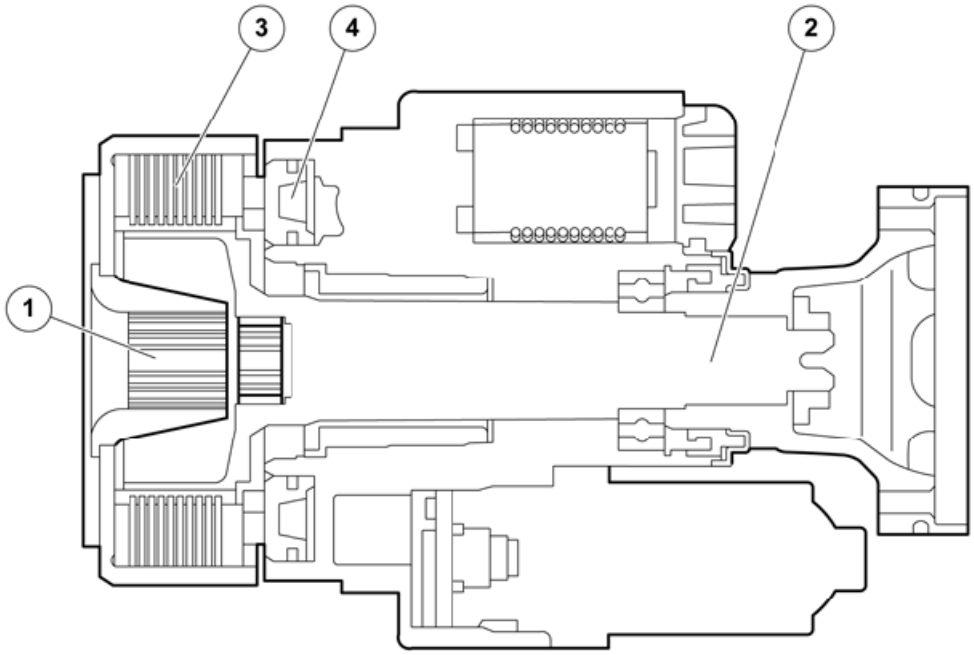

Fig. 72: Cutaway View
Courtesy of VOLVO CARS CORPORATION

1. Output shaft.
2. Input shaft
3. Inner and outer wet clutch plates

4. Operating piston

The transmission and bevel gear transfers engine torque to the propeller shaft. The input shaft is joined to the clutch's output shaft via the multi-plate clutch pack. The multi-plate clutch in the coupling must be engaged to transfer torque to the rear axle. The inner and outer wet multi-plate clutch are the transfer point between the input and output shafts.

The feed pump builds up an oil pressure which then Differential electronic module (DEM) controls via the pressure reducing valve, so that correct pressure is obtained. Then the working piston is applied against the disc pack so that the clearance is eliminated and the clutch is prepared to enable quick reaction and control. At 27.5 bar deployed pressure from the pressure reducing valve max. torque is reached, 1, 500 Nm, through the clutch to the rear wheels already at start.

SYSTEM OVERVIEW

POWER TRANSMISSION

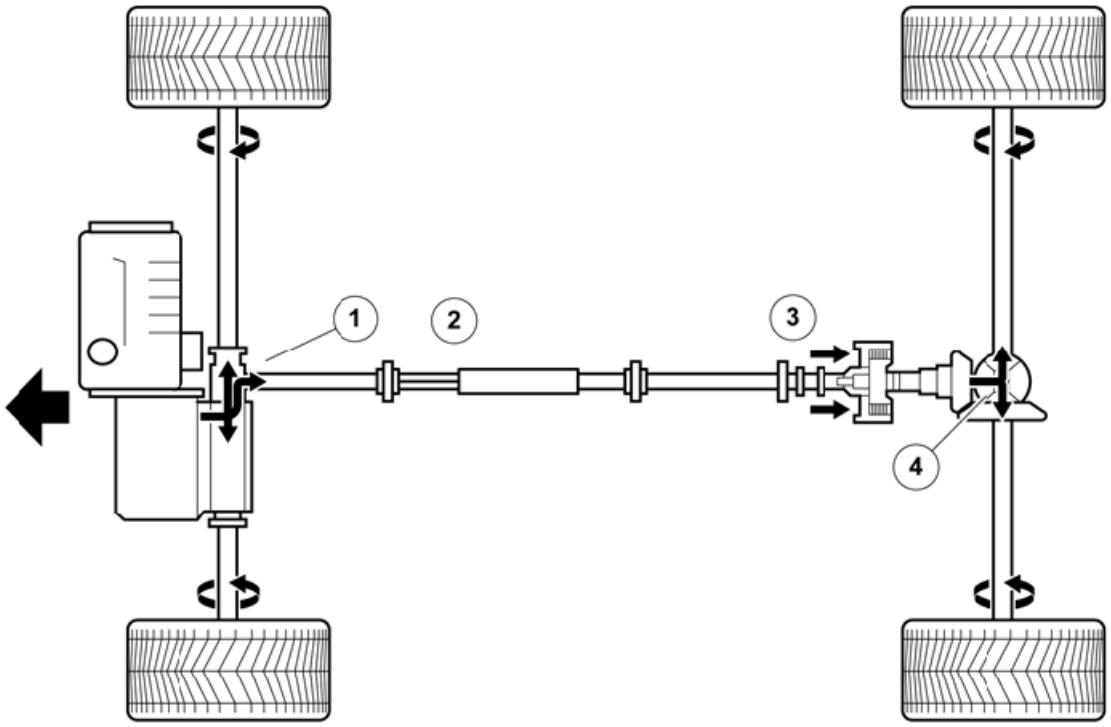

Fig. 73: Power Transmission Overview
Courtesy of VOLVO CARS CORPORATION

1. **Bevel gear:** Transmits torque from transmission to propeller shaft. Always rotates at the same rate as the front wheel pair.
2. **Propeller shaft:** Transmits torque from front axle (bevel gear) to rear axle. Always rotates at the same

rate as the front wheel pair.

3. **Active On demand Coupling (AOC):** At four-wheel drive, the AOC transmits torque from the propeller shaft to the rear wheel pair. Rotates at four-wheel drive.
4. **Differential gear:** Transmits the force to the rear wheel pairs. Rotates at the same rate as the front wheels at four-wheel drive.

ACTIVE ON DEMAND COUPLING (AOC)

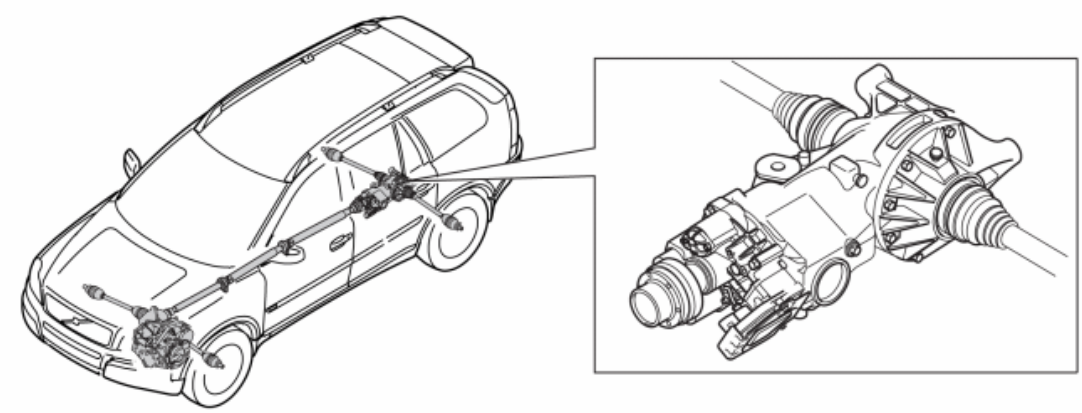

Fig. 74: View of Active On Demand Coupling (AOC)
Courtesy of VOLVO CARS CORPORATION

Active On demand Coupling (AOC) and its Differential electronic module (DEM), has as its most important function to control the function for four-wheel drive, that is, power distribution between front and rear axle.

The system consists of an integrated clutch with a mechanical, a hydraulic, and an electronic part.

The clutch unit is located on the rear axle, between the final drive and the propeller shaft. The mechanical part is driven by the propeller shaft. The hydraulic part is driven by an electric pump.

Active On demand Coupling (AOC) generation 4 enables the following characteristics:

- Continuous control of four wheel drive, with electronic control of torque transfer.
- Rapid reactions
- No opposing forces when maneuvering or parking.
- Improved stability.
- Reduction of oversteering/understeering.
- Permanent capacity for four-wheel drive.

CLUTCH UNIT AND CONTROL MODULE

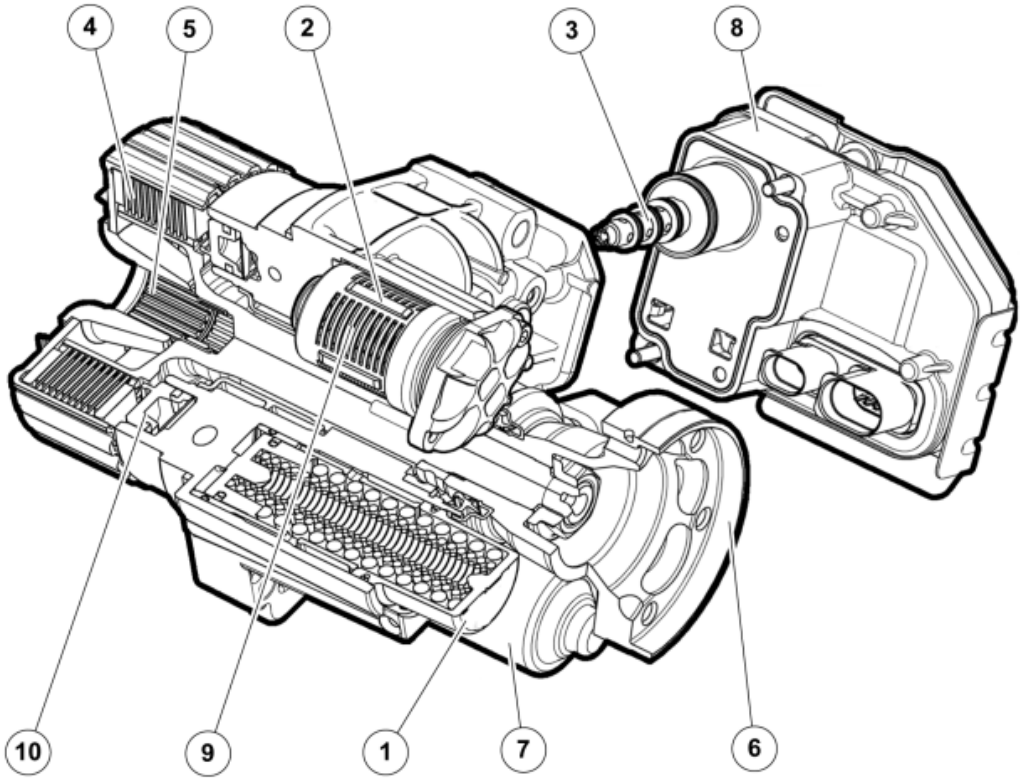

Fig. 75: Cutaway View of Clutch Unit And Control Module
Courtesy of VOLVO CARS CORPORATION

1. Accumulator
2. Oil filter
3. Pressure reducing valve
4. Inner and outer wet clutch plates
5. Inner connection hub with splines for output shaft. The hub has a sinusoidal cam curve
6. Input shaft
7. Electrical feed pump.
8. Differential electronic module (DEM)
9. Non-return valve
10. Annular piston

The Differential Electronic Module (DEM) is fitted on the clutch unit housing.

The Differential Electronic Module (DEM) communicates with other control modules via Controller Area Network (CAN) communication:

The control module has integrated diagnostics for its own components and functions.

SIGNALS

The table below summarizes input and output signals to and from the Differential Electronic Module (DEM). The illustration below displays the same information with the Volvo component designations.

Input signals	Output signals
Directly connected: -	**Directly connected:** (power supply unless otherwise stated) • **Electric feed pump** (internal in AOC) - pulse-width modulated (PWM) signal • **Pressure reducing valve** (internal in AOC) - pulse-width modulated (PWM) signal
Via Controller Area Network (CAN) communication: • **central electronic module (CEM)** (4/56), provides the status of, among other things, the ignition position and the back-up (reverse) gear. • **Brake Control Module (BCM)** (4/16), informs on the speed of the wheels from the wheel speed sensors and ABS modulation status amongst other things. • **Driver Information Module (DIM)** (5/1), informs on parking brake switch status. • **Engine Control Module (ECM)** (4/46), informs on engine speed, driver engine torque request, calculated engine torque, accelerator pedal position, stop lamp switch status and clutch pedal switch status, amongst other things. • **Trailer module (TRM)** (4/110), provides information about whether a trailer is connected to the vehicle or not.	**Via Controller Area Network (CAN) communication:** • **Brake control module (BCM)** (4/16), receives information about the status of the coupling unit and current torque capacity for the rear axle. • **Central Electronic Module (CEM)** (4/56), receives information on the diagnostic status of the Differential Electronic Module (DEM). • **Driver information module (DIM)** (5/1), via Central electronic module (CEM) receives information about malfunction messages from Differential electronic module (DEM). These are shown to the driver as text messages and warning symbols.

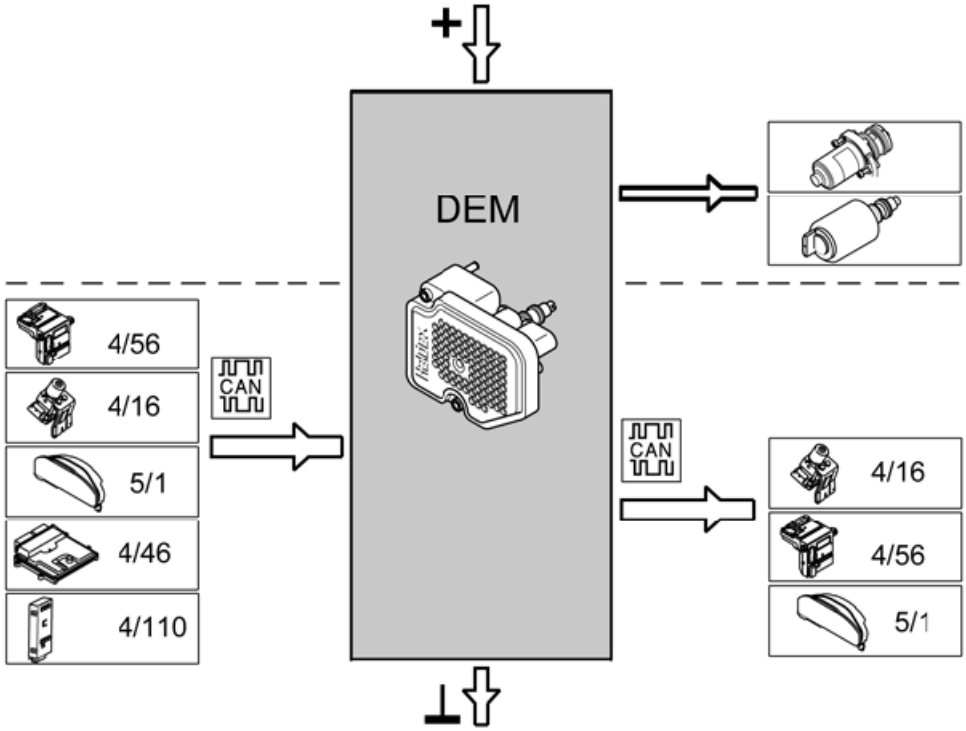

Fig. 76: Network Diagram
Courtesy of VOLVO CARS CORPORATION

DRIVER DOOR MODULE (DDM) AND PASSENGER DOOR MODULE (PDM) (2003-2012)

DESIGN

THE DOOR LOCK

The passenger door module (PDM) and driver door module (DDM) have diagnostics for the front door locks.

THE POWER WINDOW MECHANISM

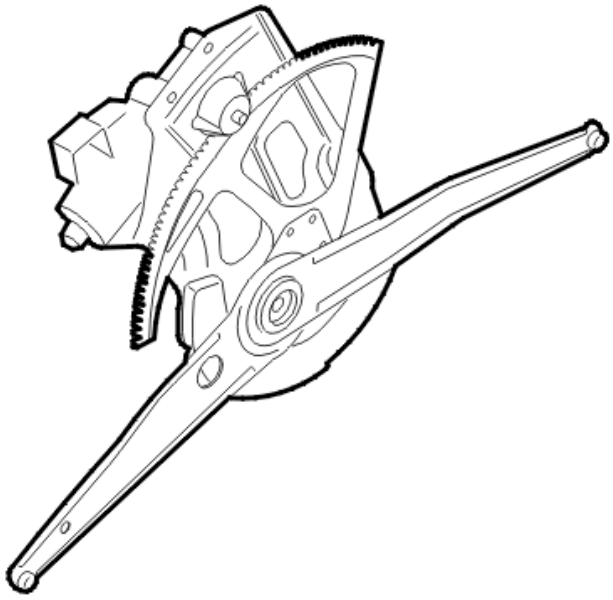

Fig. 77: Identifying Power Window Mechanism
Courtesy of VOLVO CARS CORPORATION

The window lift mechanism on the driver's side is operated via the driver door module (DDM). The window lift mechanism on the passenger side is operated either via the passenger door module (PDM) or via the driver door module (DDM).

The window lift mechanisms in both rear doors can be operated via the driver door module (DDM). The window lift mechanisms in the front and rear doors can be operated when the ignition key is in position I or II. The power windows can be operated from when the ignition is switched off until one of the front doors is opened.

The driver door module (DDM) has four spring loaded switches which operate the individual front and rear windows.

The passenger door module (PDM) has a spring loaded switch which operates the window in the front passenger door. The switches in the driver door module (DDM) which control the rear windows can only be activated up or down. The rear windows move up or down for as long as the switch is activated.

The switches for the front windows have five positions which control the position of the window:

0) Normal position where the function is passive.

1) step 1 upwards, raises the window for as long as the button is activated.

2) step 2 upwards, automatically fully closes the window (AUTO-UP).

-1) step 1 downwards, lowers the window for as long as the button is activated.

-2) step 2 downwards, fully opens the window automatically (AUTO-DOWN).

The rear windows are powered via the central electronic module (CEM). However they can be disabled using a child lock switch on the driver door module (DDM). When the child lock is activated, the rear windows cannot be operated from the rear seats. They can still be operated however from the driver door module (DDM).

The front window lift mechanisms have a Hall sensor which measures the rotation speed of each lift mechanism, allowing them to determine the position of the window. If a Hall sensor is not functioning in one of the window lift mechanisms, the AUTO-UP or AUTO-DOWN function for that window is not available. The power window lift mechanism, power window lift motor and Hall sensor form one unit and cannot be replaced separately.

The window lift mechanisms in the front doors have an inbuilt function to prevent trapping. When AUTO-UP is activated, the window lift mechanism detects whether there is any resistance, i. e. whether too much force is required to close the window. If so, the window stops and then lowers slightly. The anti-trapping system is active during AUTO-UP if the window is open more than 3 mm.

A diagnostic trouble code (DTC) is stored if for any reason the power window mechanism is unable to determine the window position. If this should happen, the power window mechanism must be re-initialized. This is carried out via a diagnostic function in VIDA (Volvo scan tool).

The passenger door module (PDM) and driver door module (DDM) have diagnostics for the window lift mechanisms and Hall sensors in the front doors.

DOOR MIRROR

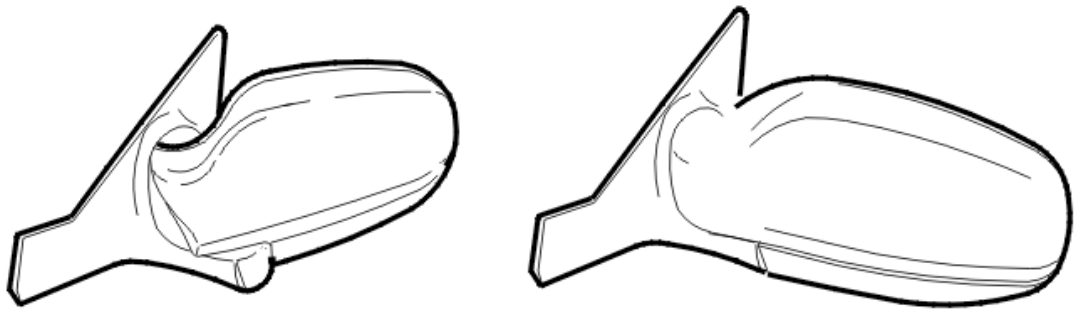

Fig. 78: Door Mirror
Courtesy of VOLVO CARS CORPORATION

Motors

The motors for the door mirrors are operated via the driver door module (DDM).

The mirrors can be adjusted in the X and Y axes via the two motors for each mirror. Two buttons on the driver door module (DDM), marked L and R, are used to select either the right or left-hand mirror for adjustment. An LED lights in the button that is activated. Only one button can be activated at any one time (left or right). X and Y axis adjustment is made using a control which maneuvers the mirror in the selected direction for as long as the button is pressed (or until the mirror reaches a limit position). To deactivate the adjustment control, press the

left or right-hand button again so that the LEDs are off. The mirrors can be adjusted when the ignition key is in position I or II.

Power seats with memories for the door mirrors are optional equipment. This function requires that the position of the mirrors is saved when the car is locked. Two sensors in each mirror register the mirror position in the X and Y axes. This function has been available as an option since structure week 199950.

The door windows can be equipped as an option with a motor that allows the mirror housing to be folded in. The driver door module (DDM) and passenger door module (PDM) have diagnostics for the motor for folding in the door mirrors. However the activation signal is transmitted by the climate control module (CCM).

The motors and sensors used to set the position of the door mirrors form one unit and cannot be replaced separately.

Heating

The door mirrors contain a heating loop to defrost the glass. The heating loop is on the reverse of the mirror glass. In the event of a fault, the entire mirror glass must be replaced. The heating loops are supplied with power and ground by the driver door module (DDM) and passenger door module (PDM), which also have diagnostics for the loops. However the function is activated by the climate control module (CCM).

Lights in the door mirrors

As an option, the door mirrors can be equipped with lights. The lights are mounted on the underneath of the mirror housing. The driver door module (DDM) and passenger door module (PDM) have diagnostics for the outputs for the lights. However the function is activated by the upper electronic module (UEM) and the remote control.

Outside temperature

In the right-hand mirror there is a temperature sensor which measures the outside temperature. This temperature data is used by the combined instrument panel.

NOTE: This temperature sensor must not be confused with the temperature sensor in the left-hand mirror housing which is used by the engine control module (ECM).

The temperature sensor in the right-hand mirror housing can be replaced separately. The passenger door module (PDM) has diagnostics for the temperature sensor.

DOOR OPEN WARNING LAMP

Fig. 79: Door Open Warning Lamp
Courtesy of VOLVO CARS CORPORATION

There is a door open warning lamp in each front door which lights when the door is opened. The lamps are supplied with power via the driver door module (DDM) and passenger door module (PDM).

Since structure week 199950 door open warning lamps are no longer installed.

The driver door module (DDM) and passenger door module (PDM) have diagnostics for the door open warning lamps.

DIAGNOSTIC FUNCTIONS

DRIVER'S DOOR MODULE

See **DIAGNOSTIC FUNCTIONS, DRIVER'S DOOR MODULE (DDM)**.

PASSENGER DOOR MODULE (PDM)

See **DIAGNOSTIC FUNCTIONS, PASSENGER DOOR MODULE (PDM)**.

DIAGNOSTIC FUNCTIONS, PASSENGER DOOR MODULE (PDM)

GENERAL

The control module has a built-in diagnostic system, Volvo Diagnostic, which continuously monitors internal functions as well as input and output signals.

DIAGNOSTIC TROUBLE CODES (DTCS)

A diagnostic trouble code (DTC) is stored if the control module detects a fault. The passenger door module can store up to 10 diagnostic trouble codes (DTCs).

Should a fault disappear for any reason after being permanently stored in the control module as a diagnostic trouble code (DTC), the information remains stored in the control module.

READING AND ERASING DIAGNOSTIC TROUBLE CODES (DTCS)

Diagnostic trouble codes (DTCs) can only be erased once all the diagnostic trouble codes (DTCs) have been read off at least once.

READING OFF INPUT AND OUTPUT SIGNALS

This function can be used to continuously read off the values and status of the control module's input and output signals.

The key must not be in the ignition when reading off the status of the door mirror lamp.

Lock cable M1, status, is active while locking the central locking

Lock cable M2, status, is active while unlocking the central locking and / or deadlocks

Lock cable M3, status, is active while locking the deadlocks

The following parameters can be read off:

- The status of the front passenger window up-control
- The status of the front passenger window down-control
- The status of the front passenger window auto-control
- The status of the up-motor for the power window
- The status of the down-motor for the power window
- Lock cable M1, status
- Lock cable M2, status
- Lock cable M3, status
- The status of the door open warning lamp (does not apply to all cars)
- The status of the control for the door mirror
- Defroster, status
- Door mirror lamp, status
- Outside temperature, value

NOTE: The outside temperature can only be read off from the control module on the right-hand side of the car.

- Power supply, value
- Signal supply, value
- Door mirror position X axis, value (does not apply to all cars)
- Door mirror position Y axis, value (does not apply to all cars).

ACTIVATING COMPONENTS AND FUNCTIONS

Use this option to activate components / functions in the passenger door module.

The following components / parameters can be activated in alternative ways:

- The up / down control for the front passenger window
- Power window motor, up / down
- Lock cable M1
- Lock cable M2
- Door mirror motor
- Defroster
- Door mirror lamp
- Door open warning lamp (does not apply to all cars).

READING OFF AND PROGRAMMING DATA

With this option it is possible to read programmed data and to program in data.

NOTE: If the control module has been replaced, the position of the windows must be initiated using a diagnostic function. A window must be in its uppermost position before it can be initiated.

No customer related programming is available in the control module.

READING OFF THE CONTROL MODULE IDENTIFICATION

The diagnostic tool identifies control modules by reading off a number of codes from the control module memory.

The codes contain information about the control module:

- hardware P/N (control module without software)
- hardware serial number (control module without software)
- software P/N
- diagnostic software P/N.

DIAGNOSTIC FUNCTIONS, DRIVER'S DOOR MODULE (DDM)

GENERAL

The control module has a built-in diagnostic system, Volvo Diagnostic, which continuously monitors internal functions as well as input and output signals.

DIAGNOSTIC TROUBLE CODES (DTCS)

The control module will store a diagnostic trouble code (DTC) if it detects a fault. The driver's door module can

store up to 10 diagnostic trouble codes (DTCs).

Should a fault disappear for any reason after being permanently stored in the control module as a diagnostic trouble code (DTC), the information remains stored in the control module.

READING AND ERASING DIAGNOSTIC TROUBLE CODES (DTCS)

Diagnostic trouble codes (DTCs) can only be erased once all the diagnostic trouble codes (DTCs) have been read off at least once.

READING OFF INPUT AND OUTPUT SIGNALS

This function can be used to continuously read off the values and status of the control module's input and output signals.

The key must not be in the ignition when reading off the status of the door mirror lamp.

Lock cable M1, status, is active while locking the central locking

Lock cable M2, status, is active while unlocking the central locking and / or deadlocks

Lock cable M3, status, is active while locking the deadlocks

The following parameters can be read off:

- The status of the front left window up-control
- The status of the front left window down-control
- The status of the front left window auto-control
- The status of the front right window up-control
- The status of the front right window down-control
- The status of the front right window auto-control
- The status of the rear left window up-control
- The status of the rear left window down-control
- The status of the rear right window up-control
- The status of the rear right window down-control
- The status of the child safety button

NOTE: A diagnostic trouble code (DTC) is stored if the child safety button is activated for 10 seconds.

- The status of the selection of control for the left door mirror
- The status of the selection of control for the right door mirror
- The status of the upward control for the door mirror
- The status of the downward control for the door mirror

- The status of the control for the left door mirror
- The status of the control for the right door mirror
- The status of the up-motor for the power window
- The status of the down-motor for the power window
- Lock cable M1, status
- Lock cable M2, status
- Lock cable M3, status
- The status of the door open warning lamp (does not apply to all cars)
- Defroster, status
- Door mirror lamp, status
- Outside temperature, value

NOTE: The outside temperature can only be read off from the control module on the right-hand side of the car.

- Power supply, value
- Signal supply, value
- Door mirror position X axis, value (does not apply to all cars)
- Door mirror position Y axis, value (does not apply to all cars).

ACTIVATING COMPONENTS AND FUNCTIONS

Use this option to activate components / functions in the driver's door module.

The following components / parameters can be activated in alternative ways:

- The up / down control for the front left window
- The up / down control for the front right window
- The up / down control for the rear windows
- The selection of the left or right door mirror control
- Upwards / downwards / left / right door mirror control
- Power window motor, up / down
- Lock cable M1
- Lock cable M2
- Door mirror motor
- Defroster
- Door mirror lamp
- Door open warning lamp (does not apply to all cars).

READING OFF AND PROGRAMMING DATA

With this option it is possible to read programmed data and to program in data.

NOTE: **If the control module has been replaced, the position of the windows must be initiated using a diagnostic function. A window must be in its uppermost position before it can be initiated.**

No customer related programming is available in the control module.

READING OFF THE CONTROL MODULE IDENTIFICATION

The diagnostic tool identifies control modules by reading off a number of codes from the control module memory.

The codes contain information about the control module:

- hardware P/N (control module without software)
- hardware serial number (control module without software)
- software P/N
- diagnostic software P/N.

DOWNLOADING SOFTWARE AND REPLACING THE CONTROL MODULE

New software can be downloaded into the driver door module (DDM) and passenger door module (PDM). When ordering software, the hardware and the software in the car is compared to the data in the Volvo central database. If the comparison is OK the software is downloaded to the control module.

If the comparison between the car and Volvo central database is not OK, the database is updated with the car configuration. When this is complete the software is downloaded.

The window positions must be re-initialized after the driver door module (DDM) or passenger door module (PDM) is replaced. This is so that the new control module stores the closed position of the window. Initialization is carried out using VIDA (Volvo scan tool).

If the car has power seats with memory for the door mirrors, this function can be switched off. This means that the personal settings for the door mirrors, based on the remote control used to unlock the door, can be deactivated. Deactivation is carried out using VIDA (Volvo scan tool). This function can be switched off on cars from model year 2003. This setting will be stored in the control module after deactivation, but not in the Volvo Central Database. This means that the deactivation must be repeated when hardware is replaced.

FUNCTION

OPERATING WINDOWS

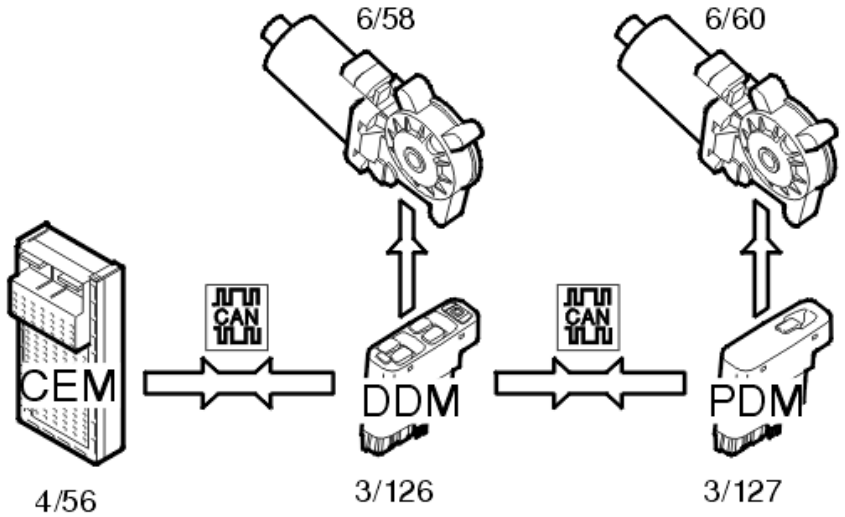

Fig. 80: Identifying Window Control Input And Output Signals
Courtesy of VOLVO CARS CORPORATION

Window control is activated via switches on the driver door module (DDM) (3/126) and passenger door module (PDM) (3/127). The motor for the power window on the driver's side (6/58) is controlled directly from the driver door module (DDM). The motor for the power window on the passenger side (6/60) is controlled via CAN communication from the driver door module (DDM) to the passenger door module (PDM). The signals for operating the rear windows are transmitted from the driver door module (DDM) via the controller area network (CAN) to the central electronic module (CEM) (4/56), which manages the rear window functions.

The passenger door module (PDM) only operates the front window on the passenger side. The signal for operating the front passenger window is transmitted from the passenger door module (PDM) to the window lift mechanism motor on the passenger side (6/60).

If the child lock is activated from the driver door module (DDM), the rear windows cannot be operated from the rear seat. When the child lock switch is activated, a signal is transmitted from the driver door module (DDM) on the controller area network (CAN) to the central electronic module (CEM) which disables rear window operation.

FUNCTIONS IN THE DOOR MIRRORS

The functions in the door mirrors (6/62 left) (6/63 right) which are controlled from the driver door module (DDM) (3/126) or passenger door module (PDM) (3/127) are: mirror position adjustment, folding in the mirrors, mirror heating, local lighting/guide lighting, and temperature measurement.

Adjusting the mirror position

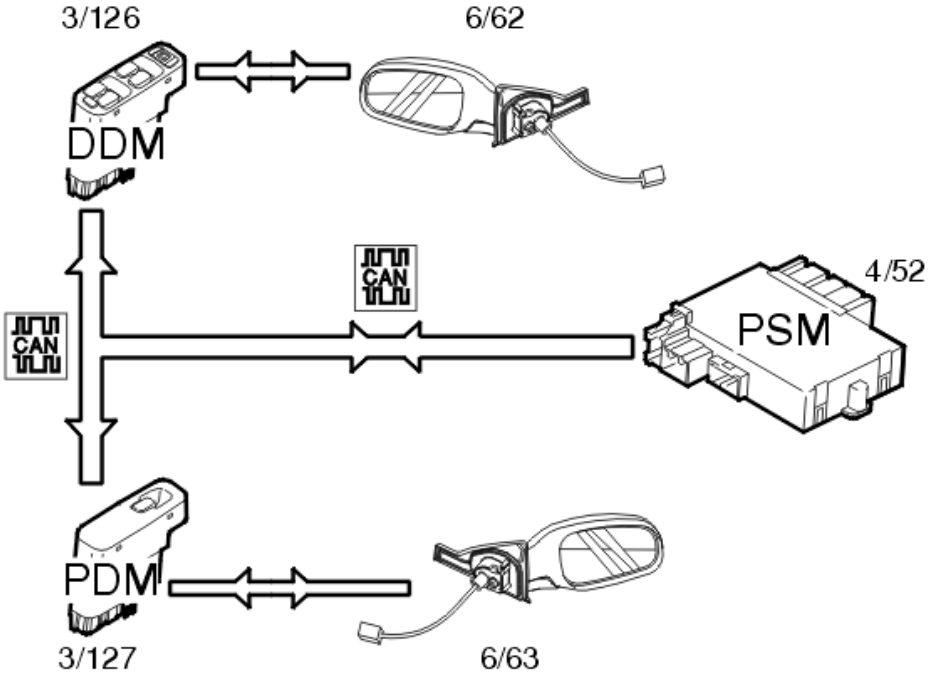

Fig. 81: Identifying Mirror Position Adjusting Input And Output Signals
Courtesy of VOLVO CARS CORPORATION

The position of the mirror is controlled using buttons on the driver door module (DDM) (3/126). The driver door module (DDM) transmits a signal directly to the mirror on the driver's side (6/62). When adjusting the mirror on the passenger side (6/63), a signal is transmitted from the driver door module (DDM) to the passenger door module (PDM) (3/127) on the Controller area network (CAN).

If the car has power seats with memory for the door mirrors, the position of the mirrors is stored by two potentiometers. The signal indicating the position in the X and Y axes is received by the driver door module (DDM) and passenger door module (PDM). When one of the buttons on the control unit for the power seat is activated, a signal is transmitted from the power seat module (PSM) (4/52) to the driver door module (DDM) and passenger door module (PDM). This adjusts the door mirrors to the stored position. The stored position can also be set according to which remote control is used to unlock the car.

Folding in the door mirrors

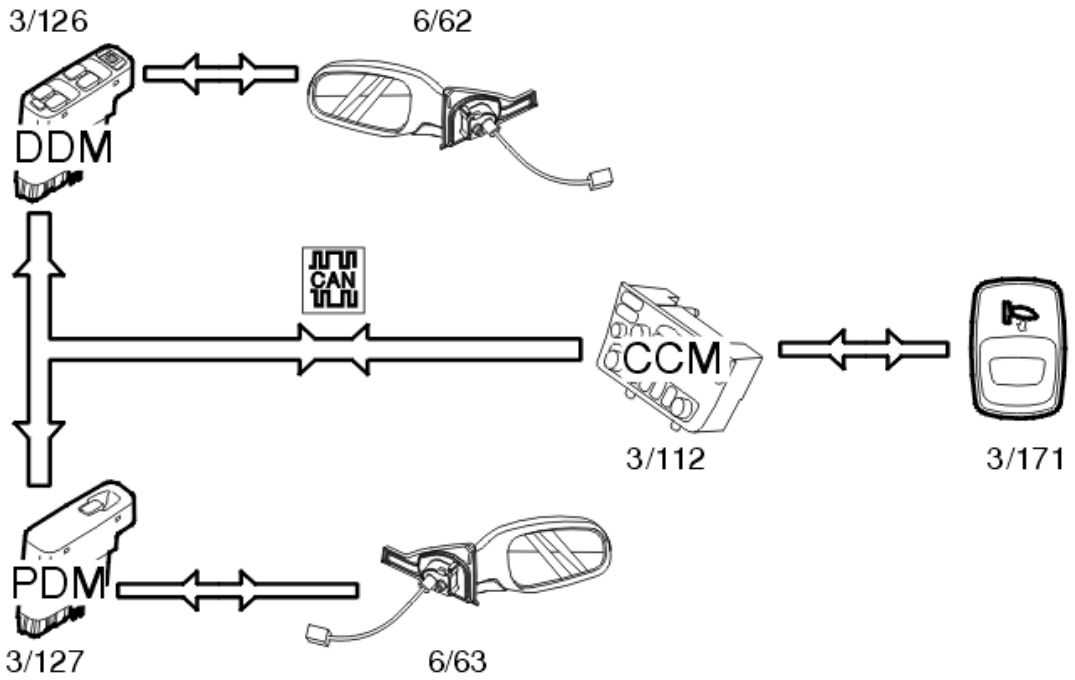

Fig. 82: Door Mirrors Folding Input And Output Signals
Courtesy of VOLVO CARS CORPORATION

Mirror folding is activated via the switch for folding door mirrors (3/171), which is on the climate control module (CCM) (3/112). A signal is transmitted via the Controller area network (CAN) to the driver door module (DDM) (3/126) and passenger door module (PDM) (3/127). These in turn send the signal on to each door mirror (6/62 and 6/63), which fold each mirror in or out. There is a delay between the button being pressed and the door mirrors folding in or out.

Heating the mirrors

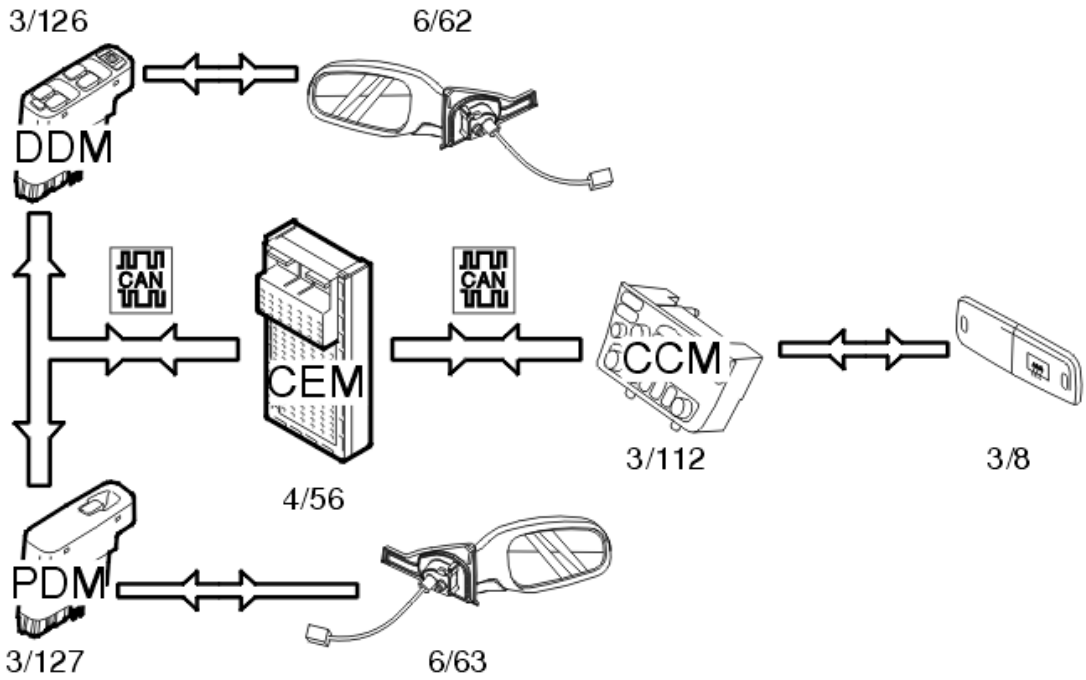

Fig. 83: Identifying Mirrors Input Heating And Output Signals
Courtesy of VOLVO CARS CORPORATION

Mirror heating is activated at the same time as the rear windshield defroster. When the switch for rear demist/mirror demist (3/8) is pressed, the climate control module (CCM) (3/112) transmits a signal to the central electronic module (CEM) (4/56). The central electronic module (CEM) activates the rear demist and transmits a signal to the driver door module (DDM) (3/126) and passenger door module (PDM) (3/127) to activate mirror heating. When the driver door module (DDM) and passenger door module (PDM) receive the signal, the outputs for each door mirror are powered (6/62 and 6/63). The function is switch off at the same time as the rear demist. This can happen in three different ways:

- If the switch for rear demist/mirror demist is pressed again after activation the function is switched off, using a signal from the central electronic module (CEM)
- The heating switches off automatically 12 minutes after activation. The driver door module (DDM) and passenger door module (PDM) then receive a signal from the central electronic module (CEM) requesting that the function be deactivated
- The heating is also switched off if the ignition is switched off.

Local lighting/Guide lighting

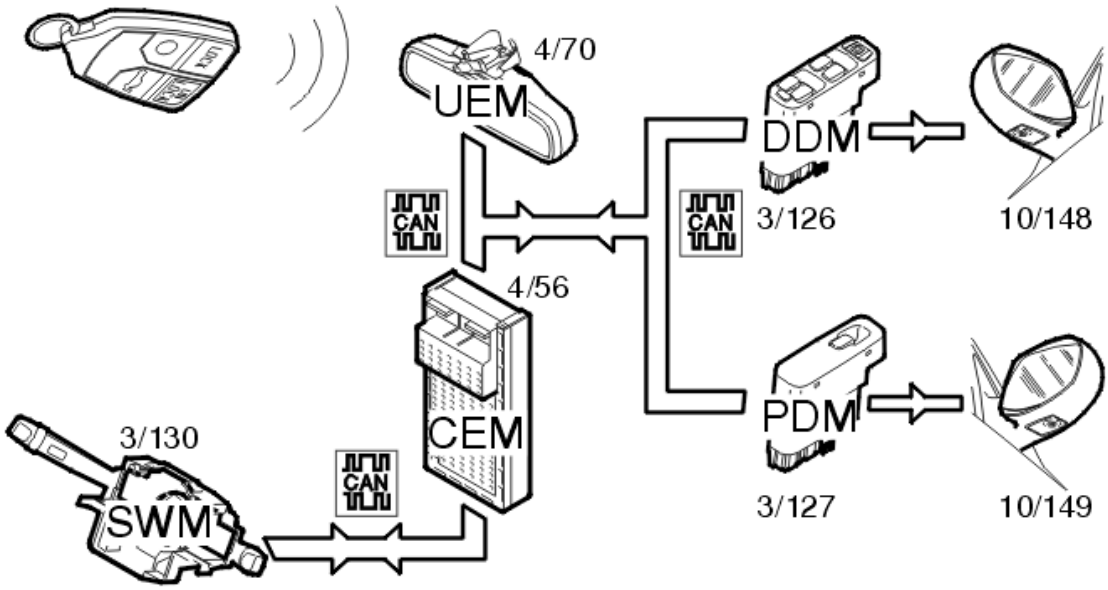

Fig. 84: Identifying Local Lighting / Guide Lighting Input And Output Signals
Courtesy of VOLVO CARS CORPORATION

The local lighting is activated using the remote control for the car. The function can only be activated when the ignition is off. When the yellow button on the remote control is pressed, the upper electronic module (UEM) (4/70) receives an activation signal which is sent onwards on the Controller area network (CAN). The driver door module (DDM) (3/126) and passenger door module (PDM) (3/127) receive the signal and switch on the lighting for the left door mirror (10/148) and the lighting for the right door mirror (10/149). The function is deactivated by pressing the button on the remote control again. A signal is then sent from the upper electronic module (UEM) to the driver door module (DDM) and passenger door module (PDM) requesting that the function is switched off. The function is also switched off when the ignition is switched on.

The guide lighting is activated using the left-hand control stalk (the key must be removed from the ignition switch). The steering wheel module (SWM) (3/130) then transmits a signal via the controller area network (CAN) to the central electronic module (CEM) (4/56). When the car is then locked, the central electronic module (CEM) sends a signal onwards via the controller area network to the driver door module (DDM) (3/126) and passenger door module (PDM) (3/127), which turn on the lights in the door mirrors (10/148 and 10/149). The lights are part of the guide lighting function and remain on for a set time (30, 60 or 90 seconds).

Measuring the outside temperature

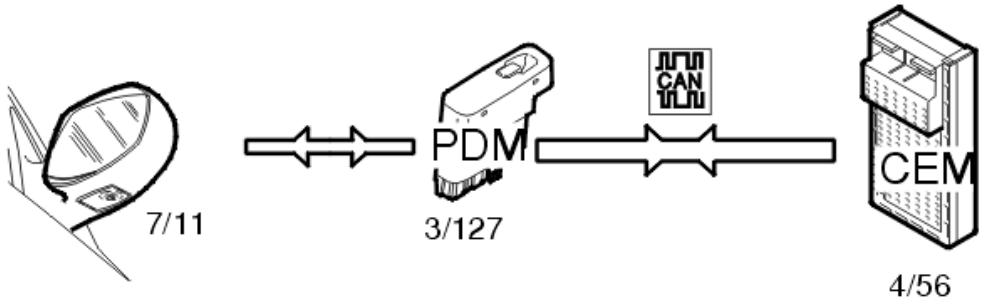

Fig. 85: Identifying Outside Temperature Measuring Input And Output Signals
Courtesy of VOLVO CARS CORPORATION

The outside temperature is continuously measured (in ignition positions I and II) by the outside temperature sensor (7/11), which is always in the right-hand door mirror. The analog signal is received by the passenger door module. The signal is converted to a digital signal. This signal is then transmitted on the controller area network (CAN) and used by the central electronic module (CEM) (4/56), which sends the signal on to the driver information module (DIM) (5/1).

DOOR OPEN WARNING LAMP

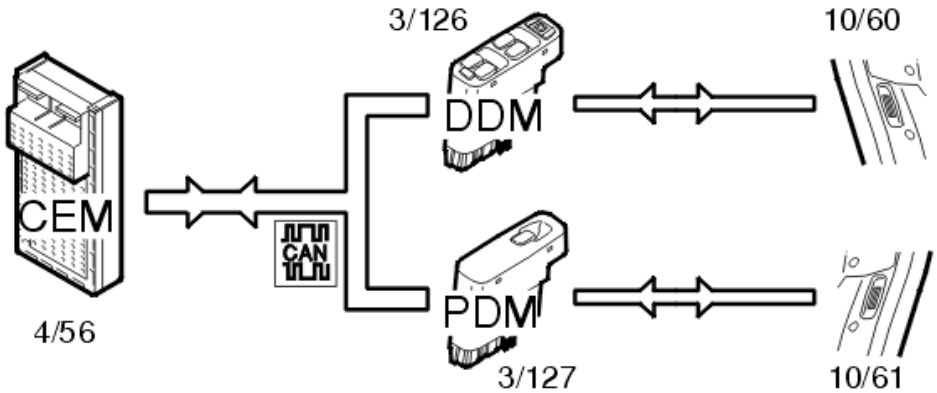

Fig. 86: Door Open Warning Lamp Input And Output Signals
Courtesy of VOLVO CARS CORPORATION

The door open warning lamp function is on cars from between structure weeks 199820 and 199950. The function utilizes the signal transmitted by the central electronic module (CEM) (4/56) on the controller area network (CAN) when a door is opened. The signal is received by the driver door module (DDM) and passenger door module (PDM). The door open warning lamp is then lit in the left (10/60) and right-hand (10/61) front doors. When the door is closed, the central electronic module (CEM) transmits a new signal on the controller area network (CAN). The signal is received by the driver door module (DDM) and passenger door module (PDM) which turns off the relevant door open warning lamp.

SYSTEM OVERVIEW

CONTROL MODULE

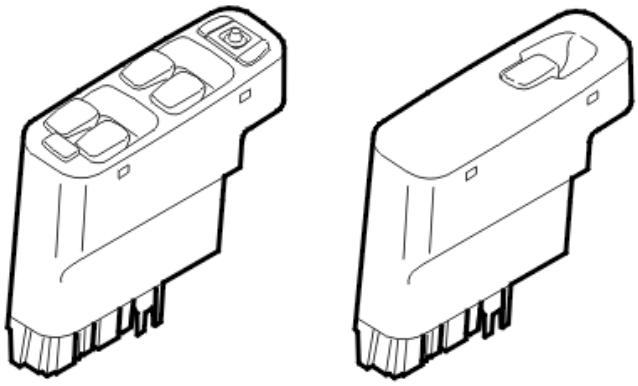

Fig. 87: Driver Door Module And Passenger Door Module Control Modules
Courtesy of VOLVO CARS CORPORATION

The driver door module (DDM) and the passenger door module (PDM) are broadly similar in terms of functionality. The information in this document is common to both the driver door module (DDM) and the passenger door module (PDM) unless otherwise indicated. The main task of both control modules is to manage:

- The power window mechanism
- The door lock
- Door mirror adjustment
- Door mirror folding
- Door mirror heating
- Outside temperature measurement
- Local lighting
- Door open warning lamp.

The control modules are in their respective doors. The driver door module (DDM) is on the driver's side and the passenger door module (PDM) is on the passenger side. The switches for the power windows are mounted directly on top of the control modules. The appearance and physical versions of the two control modules is different.

The driver door module (DDM) and passenger door module (PDM) communicate with directly connected components and with other control modules and components connected via Controller area network (CAN) communication.

Both control modules check activations and input and output signals via an integrated diagnostic system. A diagnostic trouble code (DTC) is stored if either of the control module detects a fault.

Any diagnostic trouble codes (DTCs) are stored in the relevant control module memory. The data can be read off using VIDA (Volvo scan tool).

A simple way to ensure that the control modules are powered and grounded is to activate one of the functions

that are operated via the switches on the driver door module (DDM) or passenger door module (PDM). The control module is powered and grounded if any of the functions are working.

SIGNALS

The following table summarizes the input signals to and output signals from the driver door module (DDM) and the passenger door module (PDM). The signal types are divided into directly connected signals and Controller area network (CAN) communication. The following illustration displays the same information with the Volvo component designations.

Input signals	Output signals
Directly connected: • Door lock (3/74, 3/75) • Sensors used to set the position of the door mirror (2 per mirror) • Outside temperature sensor (7/11).	**Directly connected:** (power supply unless otherwise stated) • Window lift mechanisms (Front doors) (6/58, 6/60) • Door locks (Front doors) (3/74, 3/75) • Door mirror motors (3 per mirror) (6/62, 6/63) • Heating, door mirror (9/33, 9/34) • Lights in the door mirrors (10/148, 10/149) (optional equipment) • Door open warning lamps (10/60, 10/61).
Via Controller Area Network (CAN) communication: • Climate control module (CCM) (3/112) • Central electronic module (CEM) (4/56) • Driver door module (DDM) (3/126) (Applies only to the passenger door module (PDM)) • Power seat module (PSM) (4/52) • Upper electronic module (UEM) (4/70).	**Via Controller Area Network (CAN) communication:** • Climate control module (CCM) (3/112) • Central electronic module (CEM) (4/56) • Passenger door module (PDM) (3/127) (Applies only to the driver door module (DDM)) • Phone module (PHM) (16/60) (optional equipment) • Upper electronic module (UEM) (4/70) (Applies only to the driver door module (DDM)).

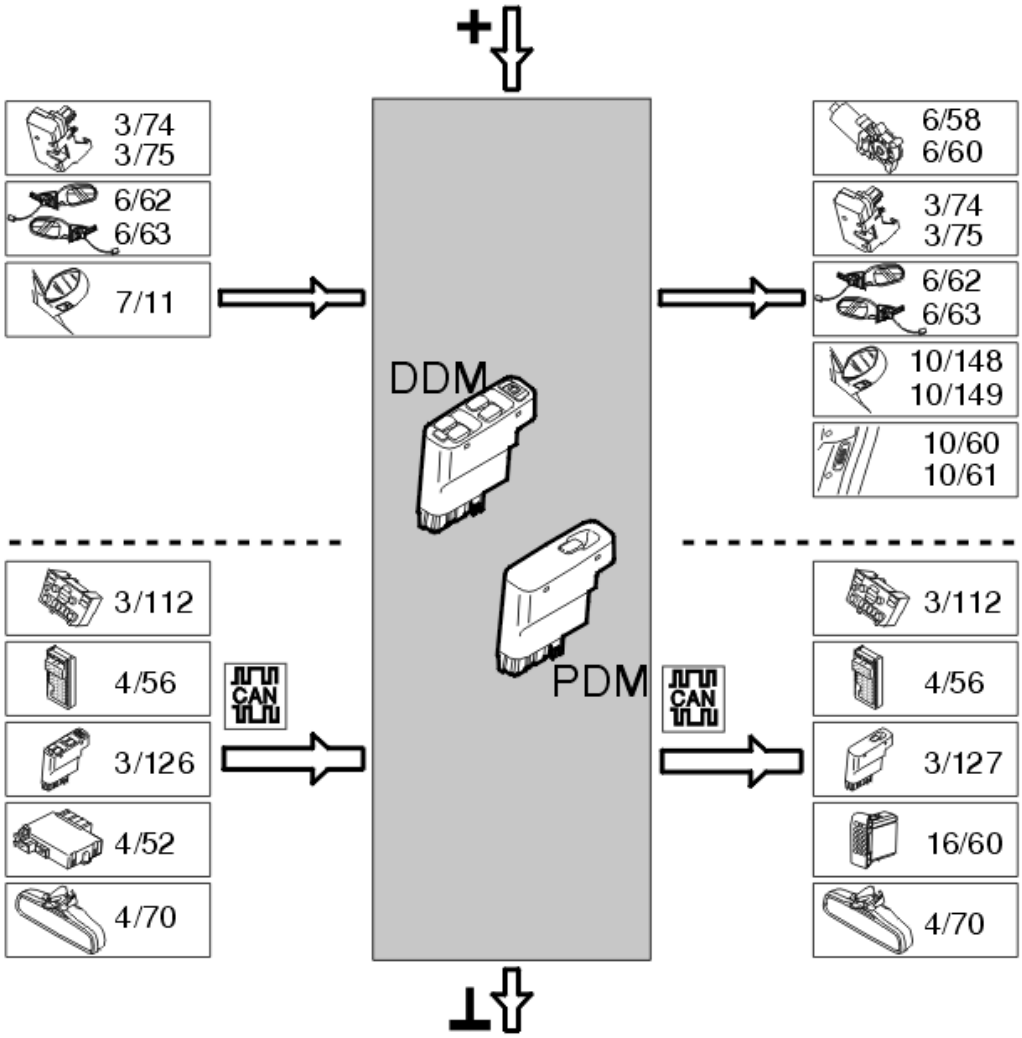

Fig. 88: Driver Door Module And Passenger Door Module Input And Output Signals
Courtesy of VOLVO CARS CORPORATION

DRIVER INFORMATION MODULE (DIM). (2003-2012)

DESIGN

ILLUMINATION IN DRIVER INFORMATION MODULE (DIM)

Up to and including model year 2003, filament bulbs were used for illuminating the Driver Information Module (DIM). These bulbs can be changed separately.

LEDs have been used for illumination purposes as from model year 2004. If any of the LEDs blow, the entire Driver Information Module (DIM) will have to be changed.

DIAGNOSTIC FUNCTIONS

DESCRIPTION OF THE SCROLLING VALUES (LAMPS)

Warning lamp seat belts, value

Indicates whether the lamp is on or off according to the control module.

SRS warning lamp, value

Indicates whether the lamp is on or off according to the control module.

Brake system warning lamp, value

The ABS control module lights or extinguishes the lamp via the control area network. The lamp may assume the value on or off.

Lamp parking brake warning, value

Indicates whether the lamp is on or off according to the control module.

Lamp low oil pressure, value

The oil pressure signal can be read off. The signal comes from the engine control module (ECM). One can read off whether the low oil pressure lamp should be on or off.

Charge lamp, value

Indicates whether the lamp is on or off according to the control module.

Indicator lamp fog lamp rear, value

Indicates whether the lamp is on or off according to the control module.

Malfunction indicator lamp (MIL), value

Indicates whether the lamp is on or off according to the control module.

ABS warning lamp, value

Indicates whether the lamp is on or off according to the control module.

Traction control warning lamp, value

The Brake Control Module (BCM) transmits the lamp signal to the driver information module (DIM) via the Control area network (CAN). Indicates whether the lamp is on or off according to the Driver Information Module (DIM).

Trailer warning lamp, value

Indicates whether the lamp is on or off according to the control module.

General orange warning lamp, value

Indicates whether the lamp is on or off according to the control module.

General red warning lamp, value

Indicates whether the lamp is on or off according to the control module.

High beam, value

Indicates whether the lamp is on or off according to the control module.

Lamp low fuel level, value

Indicates whether the lamp is on or off according to the control module.

DESCRIPTION OF THE SCROLLING VALUES (OTHER SIGNALS)

Fuel level, value

Signal from the two fuel level sensors in the rear electronic module (REM). The value displays between 0 and 80 liters depending on the amount of fuel in the tank.

Engine coolant temperature, value

An engine coolant temperature (ECT) display. The signal comes from the engine control module (ECM) and the temperature is displayed in Celsius.

Engine speed (RPM), value

An engine speed (RPM) display. The signal is between 0 and 8000 rpm and comes from the engine control module (ECM).

Vehicle speed, value

The vehicle speed can be read off. The signal comes from the Brake Control Module (BCM) or the transmission control module (TCM) via the Control area network (CAN).

Brake fluid level, value

The sensor is directly connected to the driver information module (DIM). Indicates whether the control module interprets the signal as low or high level.

Parking brake, value

The sensor is directly connected to the driver information module (DIM). Indicates whether the control module interprets the signal as activated or not activated. With the parking brake applied the sensor is activated.

The SRS indicator lamp status, value

The Driver Information Module (DIM) informs the Supplemental Restraint System Module (SRS) if the indicator lamp is working or is defective.

Cruise control, value

Indicates whether the cruise control status is on or off.

DESCRIPTION OF THE CUSTOMER PARAMETERS IN THE DRIVER INFORMATION MODULE (DIM)

Total mileage, value

Measurement range 0-999999 km, 0-999999 miles. The parameter can only be programmed once before the read off mileage exceeds 500 km or 310 miles. Programmed by the Central Electronic Module (CEM) after the control module has been replaced.

Distance conditions for service, value

Indicates the mileage required to display the service indicator message. The available values for metric calibrated instruments are 5000, 7500, 10000, 12000, 15000 or 20000 km. The available values for imperial calibrated instruments are 2500, 5000, 6000, 7500, 10000 or 12500 miles.

Time conditions for service, value

Indicates the time required to display the service indication message. The values set are 6, 12, 18 or 24 months.

Engine run time conditions for service, value

Indicates the time the engine must have been running before the service indication message will be displayed. The value set is 500, 750 or 1000 hours.

Displaying zeroes, value

Setting the instrument panel to display or not display the zeroes.

Temperature unit, value

The temperature unit of measurement can be selected. The temperature display can be selected between Celsius or Fahrenheit.

Unit trip computer, value

Setting the trip computer (applies only to cars with trip computer). It is possible to select liters, Imperial gallons or US gallons.

Clock position, value

12- or 24- hour display.

Mileage at service, value

Reading off the mileage at service. The parameter can be programmed between 0-999999 km or miles. When resetting the service reminder indicator (SRI) the parameter is reprogrammed by copying the mileage.

CAUTION: Mileage at service should be used with total mileage to determine whether a service is due

Time at service, value

Reading off global time at service. The parameter can be between 0 -163 months (13.6 years). When resetting the service reminder message, the parameter is reprogrammed by copying the global time in the central electronic module (CEM) to the driver information module (DIM).

CAUTION: Time at service and global time should be used with time conditions to determine whether a service is due.

Engine hours since service, value

Parameter read off. Indicates how many hours the engine has run since the last service. The parameter can be between 0 -65536 hours. Resets when service reminder message is reset.

CAUTION: Engine time since service should be used with engine hours to service to determine whether a service is due

Global time, value

Reading off the clock in the central electronic module (CEM). The parameter can be between 0 -163 months (13.6 years).

CAUTION: Time at service and global time should be used with time conditions to determine whether a service is due.

Parking brake warning

Setting the sound signal for the parking brake warning. Parking brake warning can be on or off. The default position is on.

DESCRIPTION OF COMPONENT / FUNCTION ACTIVATION

Lamps and displays

The combined instrument panel lamps flash and the gauges sweep from minimum to maximum for 4 seconds.

Warning lamp seat belts, value

Activating the instrument lamp.

SRS warning lamp, value

Activating the instrument lamp.

Brake system warning lamp, value

Activating the instrument lamp.

Lamp parking brake warning, value

Activating the instrument lamp.

Lamp low oil pressure, value

Activating the instrument lamp.

Charge lamp, value

Activating the instrument lamp.

Indicator lamp fog lamp rear, value

Activating the instrument lamp.

Malfunction indicator lamp (MIL), value

Activating the instrument lamp.

ABS warning lamp, value

Activating the instrument lamp.

Traction control warning lamp, value

Activating the instrument lamp.

Trailer warning lamp, value

Activating the instrument lamp.

General orange warning lamp, value

The orange triangular warning lamp in the center of the instrument panel is activated.

General red warning lamp, value

The red triangular warning lamp in the center of the instrument panel is activated.

High beam indicator lamp, value 1

Activating the instrument lamp.

Lamp low fuel level, value

Activating the instrument lamp.

DOWNLOADING SOFTWARE AND REPLACING THE CONTROL MODULE

New software can be downloaded into the driver information module. When ordering software, the hardware and the software in the car is compared to the Volvo central database. If the comparison is OK the software is downloaded to the control module.

If the comparison between the car and Volvo central database does not correspond, the database is updated with the configuration of the car. The software download then begins.

The driver information module is integrated in the combined instrument panel. When replacing the control module the entire combined instrument panel must also be replaced.

The language in the combined instrument panel can be changed. This is done by ordering new software for the driver information module from the replacement parts catalogue. In the replacement parts catalogue there is software for reloading the driver information module (reloading driver information module) and software for changing to 15 different languages. Reloading reloads the same software that was installed before the control module was replaced.

There are other functions for the combined control module which can be ordered. However, these are not downloaded into the driver information module but into the central electronic module. There are functions such as the trip computer.

A number of customer parameters can be programmed into the driver information module.

The following data can be programmed into the driver information module. Programming:

- Conditions for the service reminder indicator (SRI) to light, mileage, time and engine hours
- If the instrument panel should display zeroes for the mileage
- Unit for temperature. Fahrenheit or Celsius
- Unit in the trip computer (only applies to cars with trip computers). Fuel consumption can be displayed in liters per 100 km, miles per GB Gallon, miles per US Gallon and kilometers per liter
- 12 or 24 hour clock display.

These customer parameters are stored in the control module but not in the Volvo central database. This means that the customer parameters must be reprogrammed when the hardware is replaced.

FUNCTION

TEXT MESSAGES

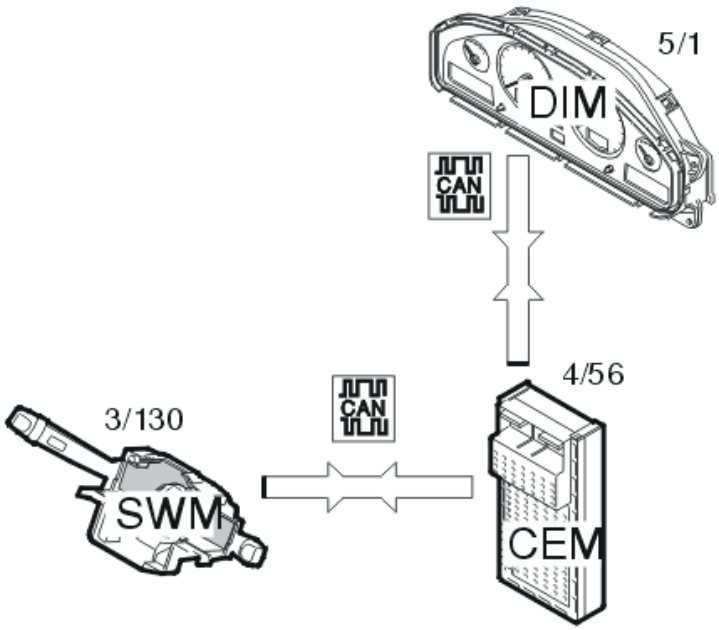

Fig. 89: Identifying Text Messages Input And Output Signals
Courtesy of VOLVO CARS CORPORATION

In the lower left section of the combined instrument panel (driver information module) (5/1) there is a small window where text messages are displayed. This gives the driver supplementary information for the different warning symbols in order to reduce the number of different symbols in the combined instrument panel. Other types of messages are also displayed, such as the functions of the trip odometer. There is an order of priority where warning signals are displayed first.

Depending on the circumstances, a request for these messages may come from the central electronic module (4/56) or the steering wheel module (3/130). The signals are transmitted via the Control Area Network (CAN).

OUTSIDE TEMPERATURE

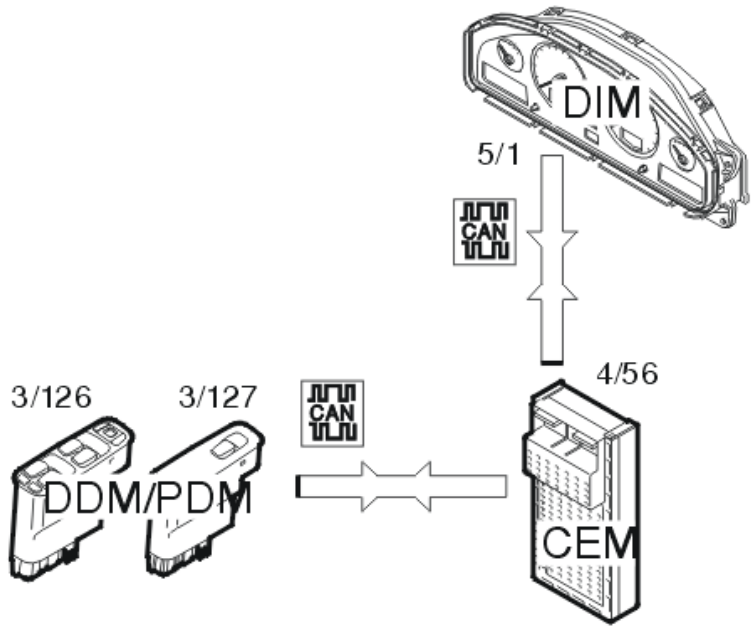

Fig. 90: Identifying Outside Temperature Input And Output Signals
Courtesy of VOLVO CARS CORPORATION

The outside temperature gauge is integrated in the tachometer. Its function is to display the outside temperature and to warn the driver when the conditions are icy by displaying a symbol of a snowflake. The snowflake is displayed at a range of -5 to +2 °C.

A sensor which detects the outside temperature is mounted in the right-hand door mirror. The temperature signal is then read off by either the passenger door module (3/127). The value is transmitted via the Control area network (CAN) to the central electronic module (4/56) which then forwards the message to the driver's information module (5/1). The temperature is displayed in Celsius or Fahrenheit, depending on the market, in increments of one degree. The temperature unit can be changed when reprogramming.

CLOCK

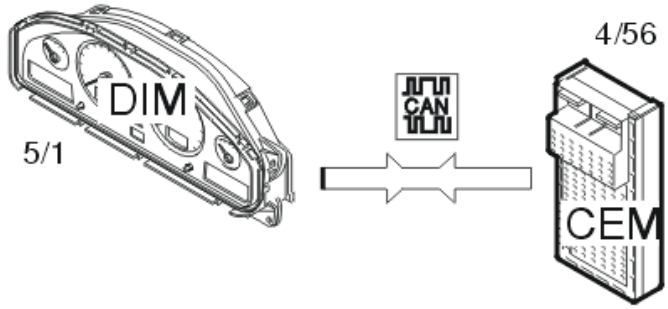

Fig. 91: Clock Input And Output Signals
Courtesy of VOLVO CARS CORPORATION

The only function of the clock is to display the time in hours and minutes.

The data is transmitted via the control area network (CAN) from the central electronic module (4/56) to the driver information module (5/1).

The customer can adjust the time using a knob on the clock display. The driver information module then transmits the new time to the central electronic module which registers the new data and updates its clock accordingly. The customer can select whether the time will be displayed using the 12 or 24 hour clock. If the 12 hour clock is selected AM or PM is automatically displayed.

SEAT BELT REMINDER

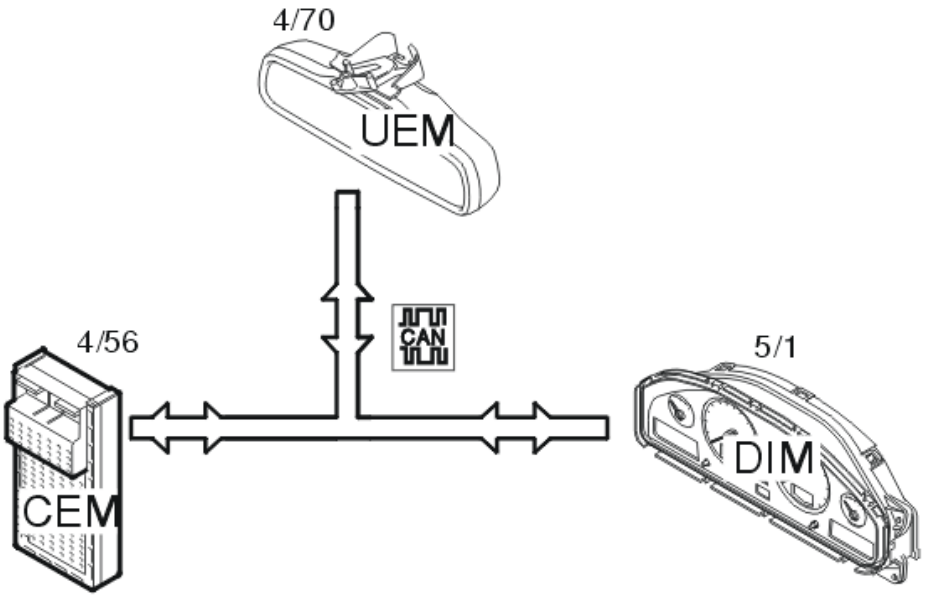

Fig. 92: Identifying Seat Belt Reminder Input And Output Signals
Courtesy of VOLVO CARS CORPORATION

The seat belt reminder reminds the driver to put on the seat belt. There are two versions of the seat belt reminder - European and American. They are slightly different, which is outlined below. The signals which indicate the variant in the car (European or American) are transmitted by the central electronic module (4/56) via the Control Area Network (CAN). Two small symbols light in the upper electronic module (4/70) and indicate when a seat belt is not fastened. The driver information module (5/1) emits an audible signal to warn the driver that no seat belt is fastened. From model year 2002 inclusive, there is also a display on the combined instrument

panel (5/1) which warns the driver if their belt is not fastened.

European version

If the seat belt is not fastened when the ignition is switched on, the symbols in the upper electronic module will light and there will be an audible signal from the driver information module. This continues for 6 seconds until either the seat belt is fastened or reverse gear is selected. If the car travels at 10 km/h or more, the audible signal reactivates if the driver has not fastened his/her seat belt.

American version

When the ignition is switched on, the symbols in the upper electronic module will light continuously for 6 seconds, or until the driver's seat belt is fastened. At the same time there will be a ringing sound from the driver information module for the same period of time. If the driver releases the belt after fastening it, the audible signal will not resume if more than 6 seconds have passed since the ignition was switched on.

TRIP ODOMETER / ODOMETER

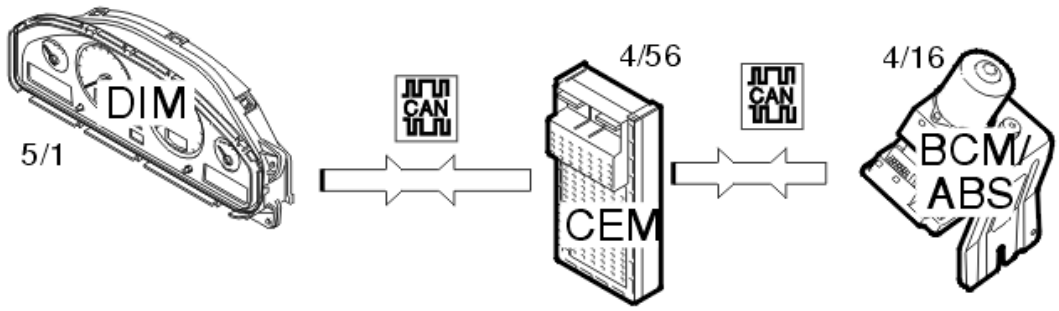

Fig. 93: Brake Warning Lamp Input And Output Signals
Courtesy of VOLVO CARS CORPORATION

The function of the trip odometers and the odometer is to display the three available odometer modes. The two settings are the total mileage of the car and the mileage since the two trip odometers were last set to zero. These two can be reset individually. The odometer and one of the two trip odometers are always displayed. The central electronic module (4/56) receives a speed signal from the brake control module (ABS) (4/16) which is transmitted on the high speed section of the Control Area Network (CAN). The central electronic module then transmits the signal on to the driver information module (5/1) via the low speed section of the Control Area Network (CAN). The distance traveled is saved every fourth kilometre and the value is stored in the central electronic module (4/56). Press the button briefly to switch between the two trip odometers. Hold the button in longer to reset the trip odometer. There must be a power supply to the driver information module (5/1) before the odometer can be reset.

SERVICE REMINDER INDICATOR (SRI)

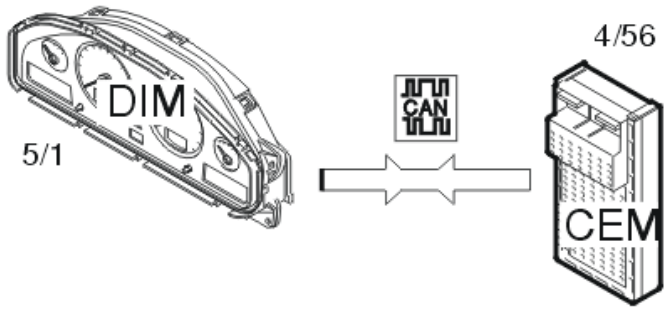

Fig. 94: Clock Input And Output Signals
Courtesy of VOLVO CARS CORPORATION

The service reminder indicator (SRI) lights the first time the ignition is switched on after the service interval has been reached. The service reminder indicator (SRI) will continue to light and remain lit for 2 minutes, every time the ignition is switched on until it is reset. The service indicator has changed from model year 2002. The need for a service is indicated partly by a lamp and partly by a text message - "time for service". Previously only the lamp indicated "Service". The service reminder indicator (SRI) can be programmed in three different ways: distance traveled, time since last service and engine hours since last service. The service reminder indicator (SRI) can be reset using VIDA or as follows:

Hold down the reset button for the trip odometer and turn the key to position II. Continue holding the button down until the service reminder indicator (SRI) begins to flash. Release the button.

ENGINE COOLANT TEMPERATURE (ECT) GAUGE

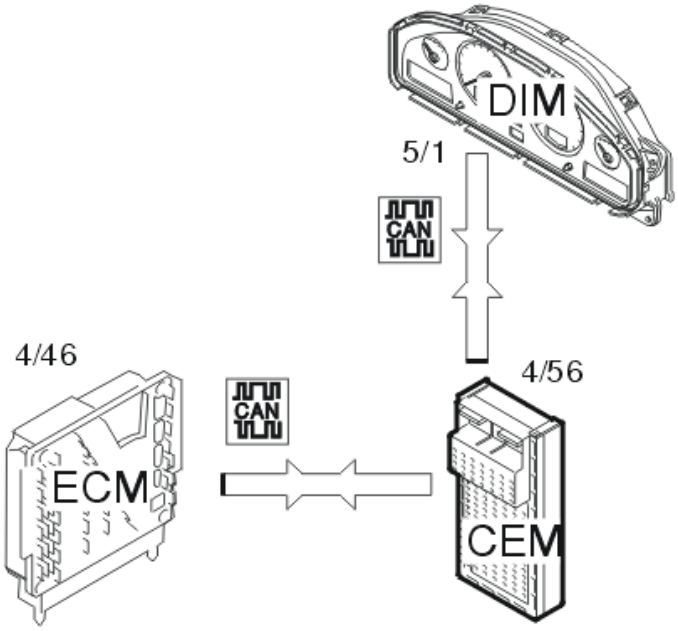

Fig. 95: Engine Coolant Temperature Gauge Input And Output Signals
Courtesy of VOLVO CARS CORPORATION

The engine control module (ECM), (4/46) processes the value from the coolant temperature sensor (7/16). The processed value is then transmitted to the central electronic module (4/56) on the high speed section of the Control Area Network (CAN). The central electronic module receives the signal and generates a corresponding signal on the low speed section of the Control Area Network (CAN). The driver information module (5/1) reads the signal from the low speed section of the Control Area Network (CAN). The driver receives information about the temperature from the engine coolant temperature gauge in the combined instrument panel. If the value is too high a red lamp lights and a text message is displayed outlining the fault.

HANDBRAKE

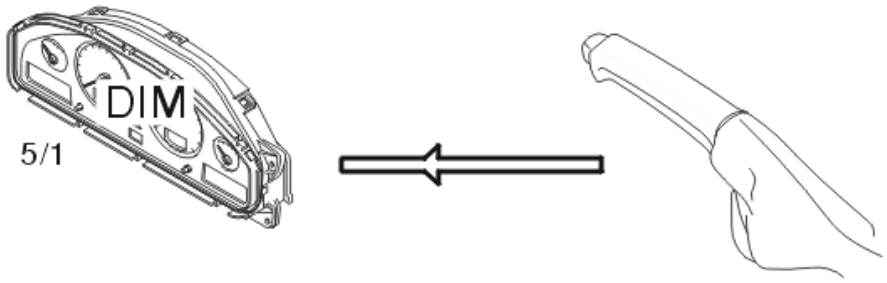

Fig. 96: Hand Brake Input And Output Signals
Courtesy of VOLVO CARS CORPORATION

A switch is connected to the combined instrument panel (driver information module) (5/1) which detects the incoming signal indicating whether the handbrake is applied or not. The switch is activated and the lamp is lit when the handbrake is applied. This signal is directly connected.

SRS LAMP

Fig. 97: Identifying SRS Lamp Input And Output Signals
Courtesy of VOLVO CARS CORPORATION

The supplementary restraint system (SRS) (4/9) contacts the driver information module (5/1) if there is a problem in the system. A signal is transmitted via the Control area network (CAN) and the driver information module lights a lamp and displays a text message. The combined instrument panel also informs the supplementary restraint system (SRS) whether the lamp is working or not.

BRAKE WARNING LAMP

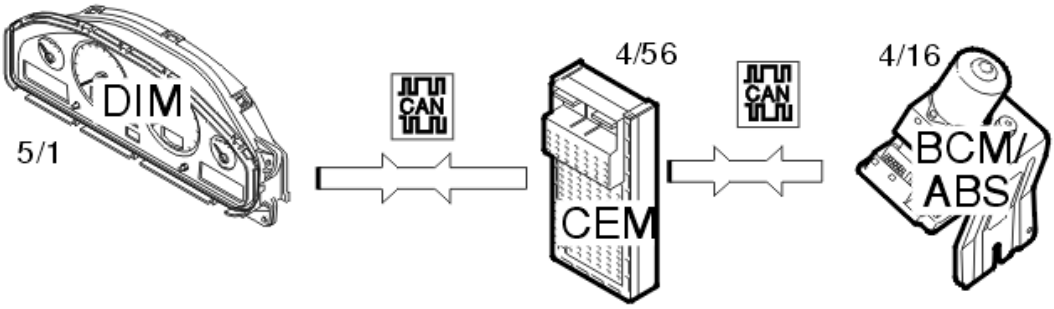

Fig. 98: Brake Warning Lamp Input And Output Signals
Courtesy of VOLVO CARS CORPORATION

The brake control module (4/16) (called ABS module on model years up to and including 2001) informs the driver information module (5/1) via the Control area network (CAN) if there is a fault in the brake system. The

driver information module indicates this to the driver by lighting the red general warning lamp and displaying a text message.

The brake fluid level sensor detects the level of the brake fluid in the reservoir. When the level is low, a switch in the sensor closes and the warning lamp lights. This function is directly connected to the driver information module.

FUEL GAUGE

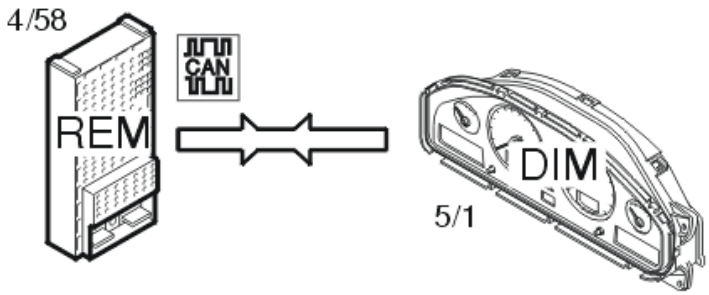

Fig. 99: Fuel Gauge Input And Output Signals
Courtesy of VOLVO CARS CORPORATION

There are two sensors in the fuel tank which transmit signals about the fuel level to the rear electronic module (REM). The rear electronic module (4/58) sends the values on to the driver information module (5/1), which receives the signals, interprets them and displays the fuel level on the fuel gauge. When the fuel level is low a yellow lamp lights to inform the driver.

The fuel gauge is not sensitive to rapid change. This is to prevent incorrect values being displayed when cornering or driving on slopes for example.

SPEEDOMETER

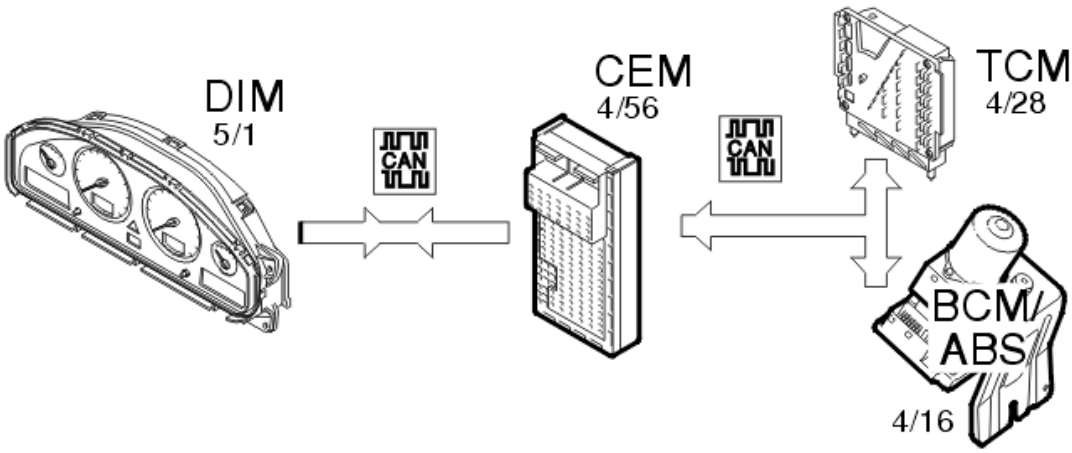

Fig. 100: Identifying Speedometer Input And Output Signals

Courtesy of VOLVO CARS CORPORATION

The speedometer displays the actual speed the car is traveling at.

Information about the vehicle speed comes from the speed sensor which is connected to the brake control module (BCM) (called the ABS module on cars up to and including model year 2001) and the gearbox control module (TCM) (4/28). The brake control module (BCM) (4/16) and the gearbox control module (TCM) calculate an average speed based on the signals sent from the two front wheels by the speed sensors. The calculated speed signal is then transmitted to the central electronic module (CEM) (4/56) from the brake control module and the gearbox control module on the high speed section of the Control Area Network (CAN). Depending on the quality of the signal, the central electronic module uses the signal from the brake control module or the gearbox control module (TCM). The central electronic module then transmits this data on to the driver information module (DIM) (5/1) where it is displayed.

Only cars with automatic gearbox have a gearbox control module (TCM). In cars with manual transmissions, the speed signal is transmitted to the central electronic module by only the brake control module on the high speed section of the Control Area Network (CAN).

TACHOMETER

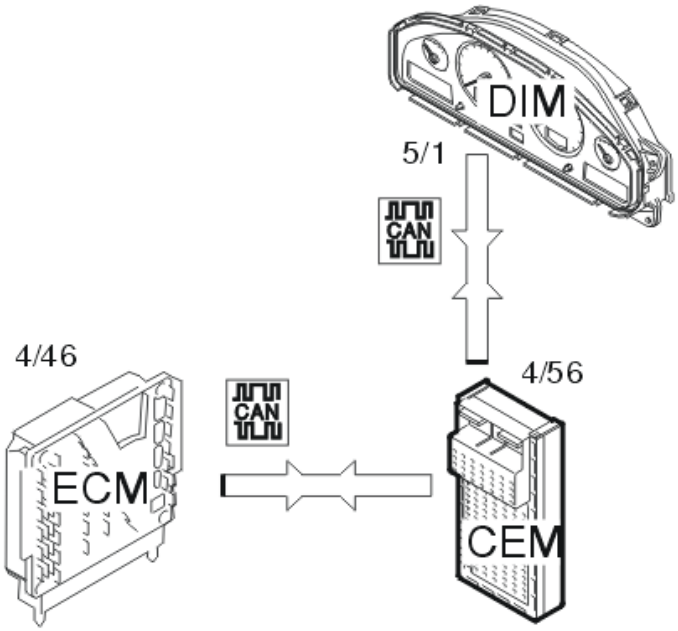

Fig. 101: Engine Coolant Temperature Gauge Input And Output Signals
Courtesy of VOLVO CARS CORPORATION

A flywheel sensor (7/25) is connected to the engine control module (ECM) (4/46). The engine control module (ECM) transmits the engine speed signal onwards via the high speed section of the Control Area Network (CAN). The central electronic module (CEM) (4/56) receives the signal and generates a corresponding signal on the low speed section of the Control Area Network (CAN). The driver information module (DIM) (5/1) reads the signal from the low speed section of the Control Area Network (CAN). The driver information module

receives the value and presents the actual engine speed for the driver.

LAMP FOR LOW OIL PRESSURE (ONLY APPLIES TO VERSIONS WITH OIL PRESSURE SENSOR)

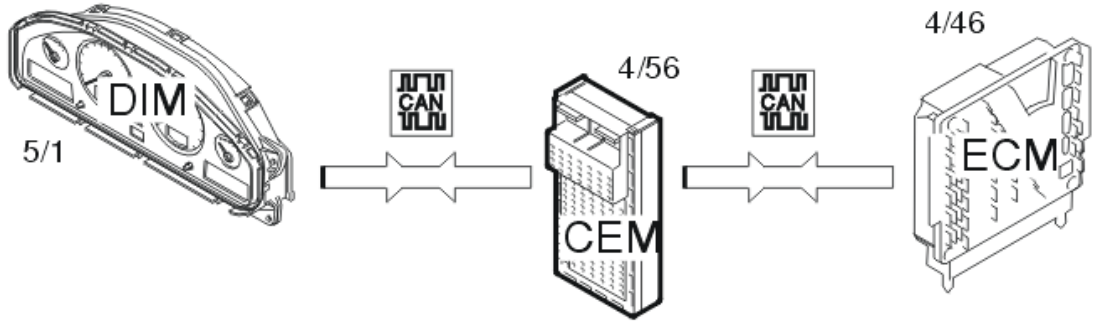

Fig. 102: Identifying Lamp For Low Oil Pressure Input And Output Signals
Courtesy of VOLVO CARS CORPORATION

The oil pressure sensor (7/6) is connected to the engine control module (ECM) (4/46). The engine control module transmits the oil pressure signal onwards via the high speed section of the Control Area Network (CAN). The central electronic module (4/56) receives the signal, and generates a corresponding signal on the low speed section of the Control Area Network (CAN). If the oil pressure is low, the driver information module (DIM) (5/1) reads the signal from the low speed section of the Control Area Network (CAN). The driver information module indicates this to the driver by lighting a red warning lamp and displaying a text string with explanatory information.

HINT: In vehicles with an oil level sensor, the general warning lamp comes on and a text message appears when the oil level is too low.

GENERAL WARNING LAMP

The function is to display different "faults" in the car. When a lamp lights this is followed by a text message which presents the driver with additional information about why the lamp has lit. From model year 2002 inclusive the color of the lamp has changed from orange to yellow / red. The lamp lights red in the event of serious faults, or yellow for less serious faults.

MALFUNCTION INDICATOR LAMP (MIL)

The malfunction indicator lamp (MIL) only lights in the combined instrument panel (driver information module) (5/1), if certain emissions related diagnostic trouble codes (DTCs) are stored in the engine control module (ECM) (4/46) or gearbox control module (TCM) (4/28). The signal between the driver information module and engine control module (ECM) is directly connected.

SYSTEM OVERVIEW

CONTROL MODULE

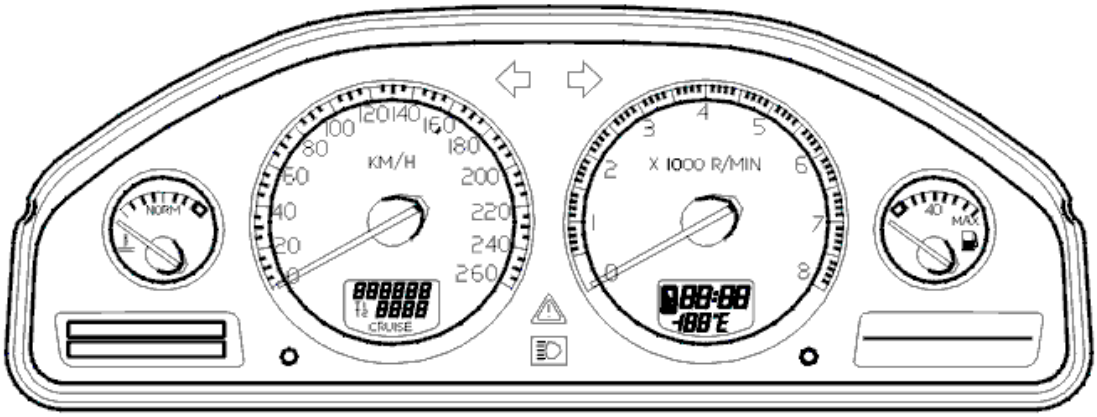

Fig. 103: Driver Information Module
Courtesy of VOLVO CARS CORPORATION

The most important role of the Driver Information Module is to display the status of the systems in the car for the driver. This covers functions such as:

- Vehicle speed
- Engine speed
- Fuel level
- Engine coolant temperature (ECT)
- Various warning signals.

The control module is integrated in the combined instrument panel. When replacing the driver information module, the entire combined instrument panel must also be replaced.

The driver information module mostly communicates with other control modules and components via CAN communication. However some functions are connected directly.

The control module checks input and output signals through an integrated diagnostic system. A diagnostic trouble code (DTC) is stored if the control module detects an error. In certain cases the driver information module replaces the faulty signal with a substitute signal.

Diagnostic trouble codes (DTC) are stored in the control module memory. The data can be read off using the diagnostic tool.

An easy way of checking that the driver information module is both powered and grounded is to check whether the following warning lamps light when the ignition is switched on: Parking brake, Malfunction indicator lamp

and Brake fluid level.

SIGNALS

The table below summarizes input and output signals to and from the driver information module. The signal types are divided into directly connected signals, serial communication and Control area network (CAN) communication. The illustration below displays the same information with the Volvo part numbers.

Input signals	Output signals
Directly connected: Parking brake switch, 3/47 Malfunction indicator lamp (MIL) Brake fluid level sensor, 7/4	**Directly connected:**
Via Control Area Network (CAN): Brake control module (ABS), 4/16 Central electronic module, 4/56 ECM, 4/46 Phone module, 16/60 SRS, 4/9 TCM (4/28) Rear electrical module, 4/58 Steering wheel module, 3/130	**Via Control Area Network (CAN):** Brake control module (ABS), 4/16 Central electronic module, 4/56 Phone module, 16/60 SRS, 4/9 RTI, 16/45 Climate control module, 3/112

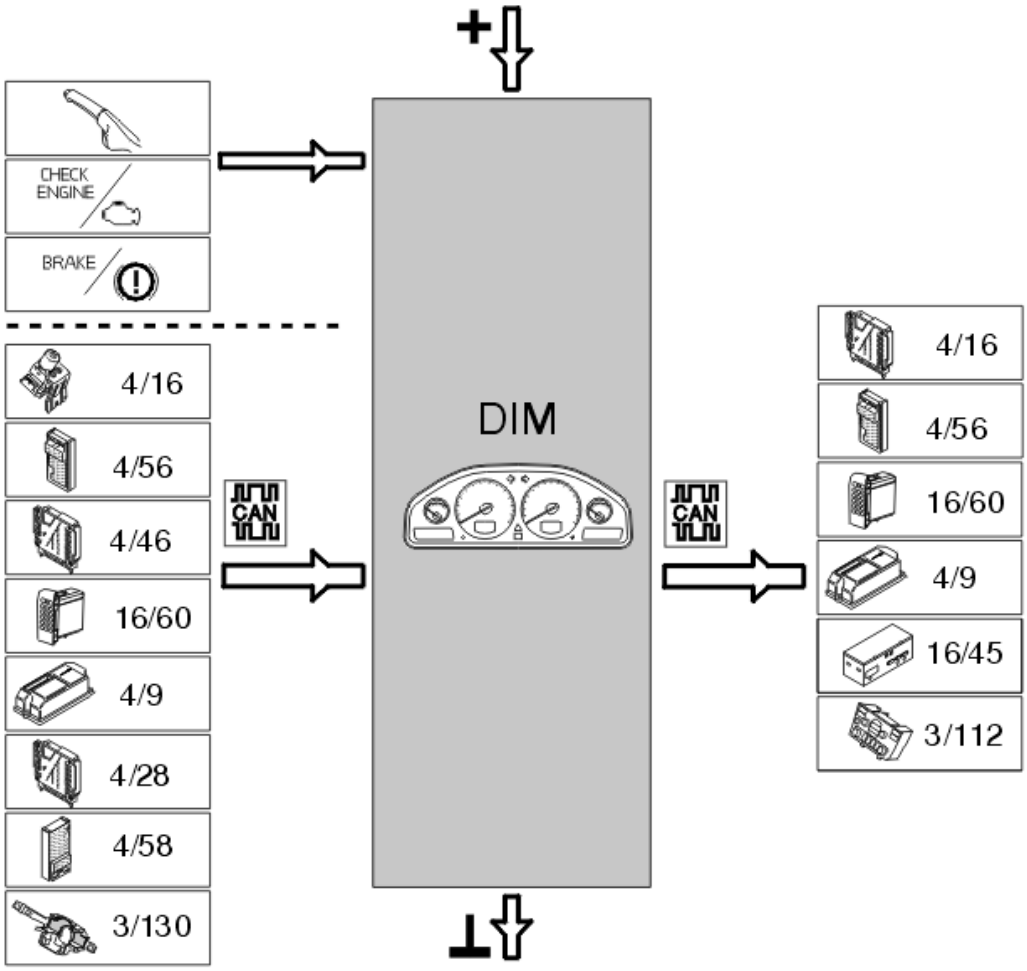

Fig. 104: Driver Information Module Input And Output Signals
Courtesy of VOLVO CARS CORPORATION

ENGINE (B6324S; 2007-2010)

DESIGN AND FUNCTION

ENGINE BLOCK

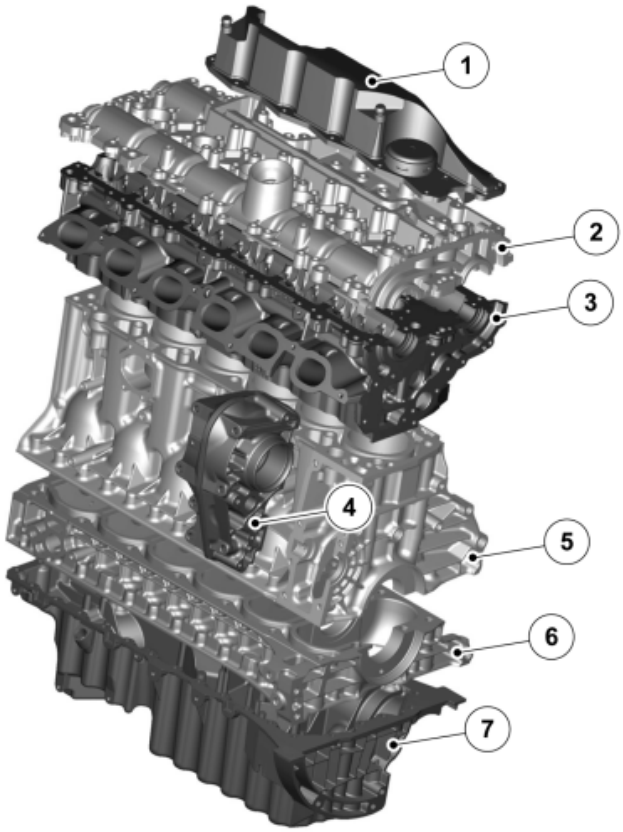

Fig. 105: Expanded View of Engine Components
Courtesy of VOLVO CARS CORPORATION

Number	Designation	Number	Designation
1	Oil separator	5	Cylinder block
2	Camshaft cover	6	Intermediate section
3	Cylinder head	7	Oil pan
4	Gear housing		

CYLINDER HEAD, CAMSHAFT BEARING HOUSING

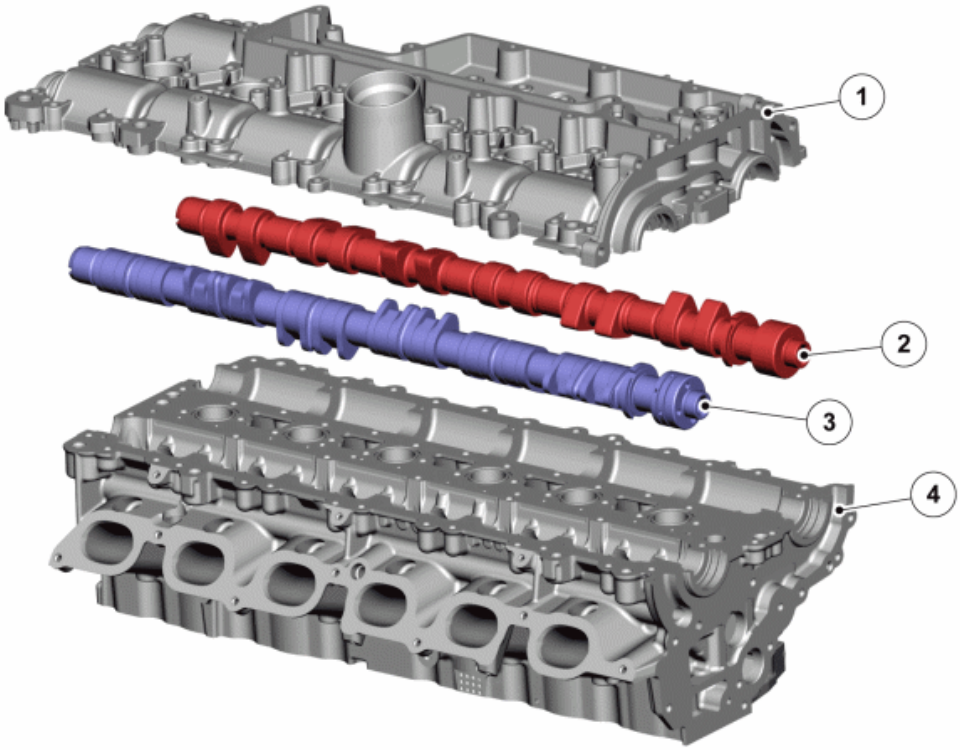

Fig. 106: View of Cylinder Head, Camshaft Bearing Housing
Courtesy of VOLVO CARS CORPORATION

Number	Designation	Number	Designation
1	Camshaft cover	3	Induction camshaft
2	Exhaust camshaft	4	Cylinder head

The cylinder head is of the cross-flow type, (Cross-flow = in from one side and out from the other side).

The two camshafts are supported by seven bearing caps each, directly in the cylinder head and camshaft cover. The camshaft cover works like a combined valve cover and camshaft bearing cap. The camshaft cover has cast oil ducts on the underneath which ensure good oil supply to the camshafts and the valve lifters.

The maintenance-free valve lifters, valve springs and valves are in the cylinder head.

CYLINDER HEAD GASKET

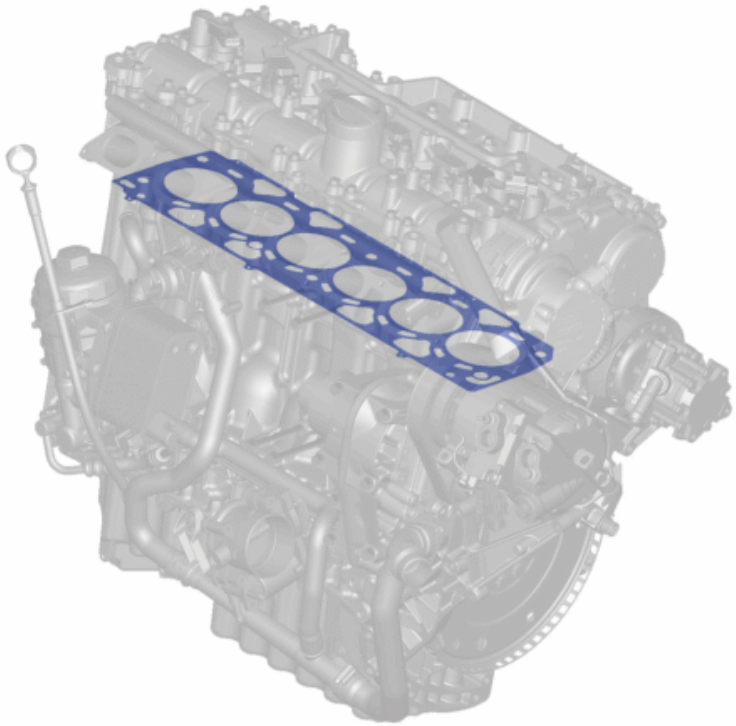

Fig. 107: Identifying Cylinder Head Gasket
Courtesy of VOLVO CARS CORPORATION

The seal between the cylinder head and cylinder block is a conventional cylinder head gasket. The seal between the other gasket faces is a liquid gasket.

The cylinder head gasket is made of steel and has multiple layers.

For exact adaptation to the relevant piston height there are different thicknesses available. This is to absorb the differences between pistons, connecting rods etc and thereby obtain the correct compression.

CYLINDER BLOCK

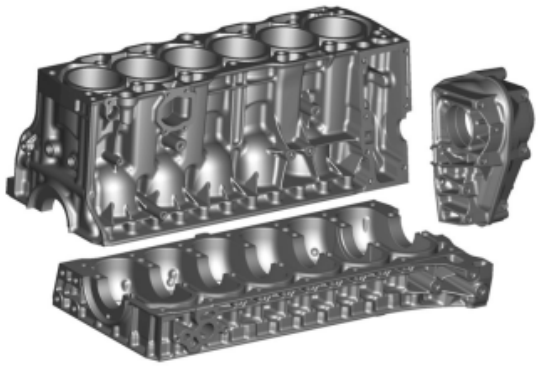

Fig. 108: View Of Cylinder Block
Courtesy of VOLVO CARS CORPORATION

The cylinder block consists of 3 sections.

- Cylinder block
- Intermediate section
- Gear housing

All three sections are made of die cast aluminum, molded under high pressure.

The mating flange between the cylinder block and intermediate section is in the center line of the crankshaft. The gear housing for the camshaft drive is secured on top of the cylinder block.

The cylinder block houses six cast iron cylinder sleeves. These cylinder sleeves cannot be replaced. The stroke length of the cylinders is greater than the cylinder diameter. This produces good torque and competitive power.

The intermediate section's seven main bearing caps have cast iron reinforcements.

On the top of the intermediate section there are cast oil channels which distribute the oil to the main bearings and on via the crankshaft to the big ends.

OIL PAN

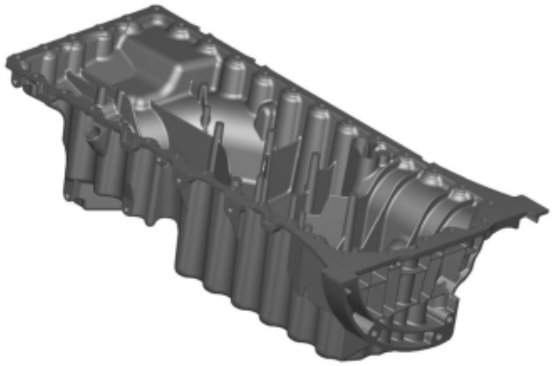

Fig. 109: Identifying Engine Oil Pan
Courtesy of VOLVO CARS CORPORATION

The oil pan is made of die cast aluminum with baffles. This is so that the oil does not splash excessively. Liquid gasket creates a seal between the cylinder block and the oil sump.

The oil pan is designed to reduce mechanical noise from the engine, at the same time as providing a reliable supply of oil at different angles. A composite oil scraper keeps the larger section of the oil volume away from the rotating crankshaft. It minimizes power loss, improves fuel economy and prevents the oil from foaming.

The oil suction line, which runs from the oil pan, is made of plastic. The oil pan is equipped with an oil level sensor.

The oil pan contributes to the rigid design and operates as an extra reinforcement of the cylinder block.

PISTON

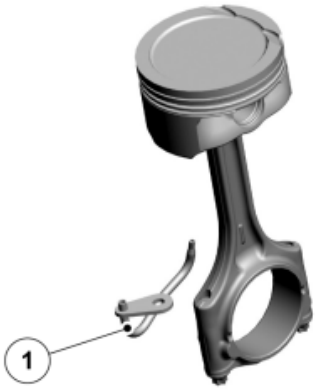

Fig. 110: Identifying Piston Cooling Nozzle
Courtesy of VOLVO CARS CORPORATION

1. Piston cooling nozzle

The pistons are die cast in aluminum and the connecting rods are forged in steel.

The heat received by the pistons from combustion, is cooled, partly via the coolant jacket in the block but also by the oil from the six piston cooling nozzles.

CRANK SYSTEM

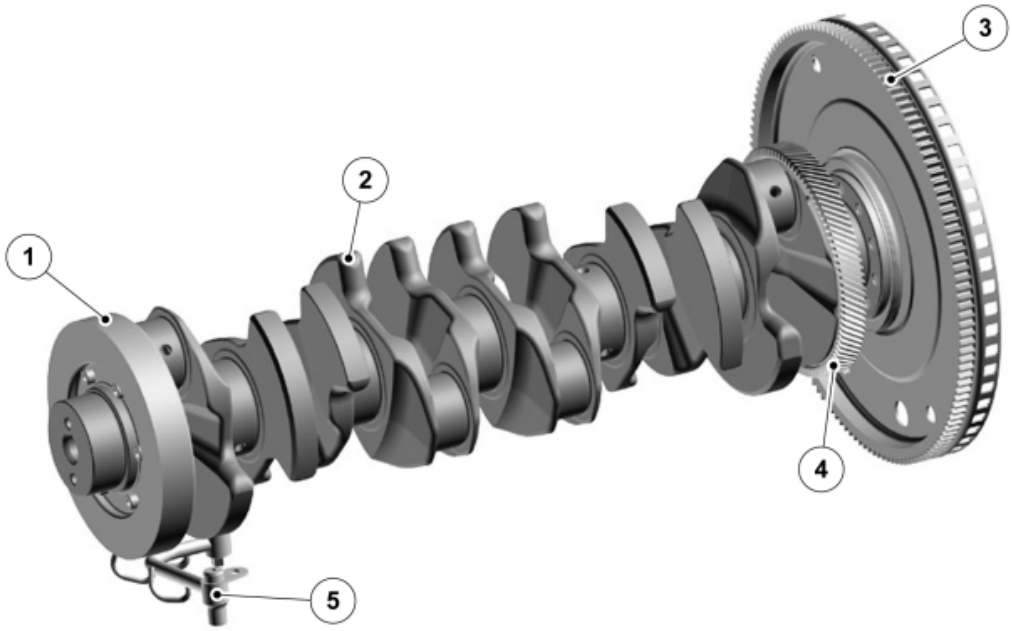

Fig. 111: Identifying Crankshaft System
Courtesy of VOLVO CARS CORPORATION

Number	Designation	Number	Designation
1	Vibration damper	4	Gear wheel
2	Crankshaft	5	Oil cooler pipe
3	Carrier plate		

The crankshaft is made from forged steel with induction hardened bearing surfaces.

The sprocket is crimped on the crankshaft's rearmost shank.

The crankshaft is supported by seven main bearings. The main bearings are replaceable main bearing shells. The sixth main bearing is a thrust bearing that holds the crankshaft in a determined position along the length of

the axle.

An internal vibration damper is on the front end of the crankshaft. Inside the enclosed vibration damper, a circular flywheel works on a silicone fluid, which dampens the crankshaft torsion oscillations. The vibration damper gives longer service life for the crankshaft and smoother engine operation.

The energy that is generated in the vibration damper, is converted to heat, therefore, the unit is cooled with oil via the oil cooler pipe.

INTERMEDIATE SHAFT

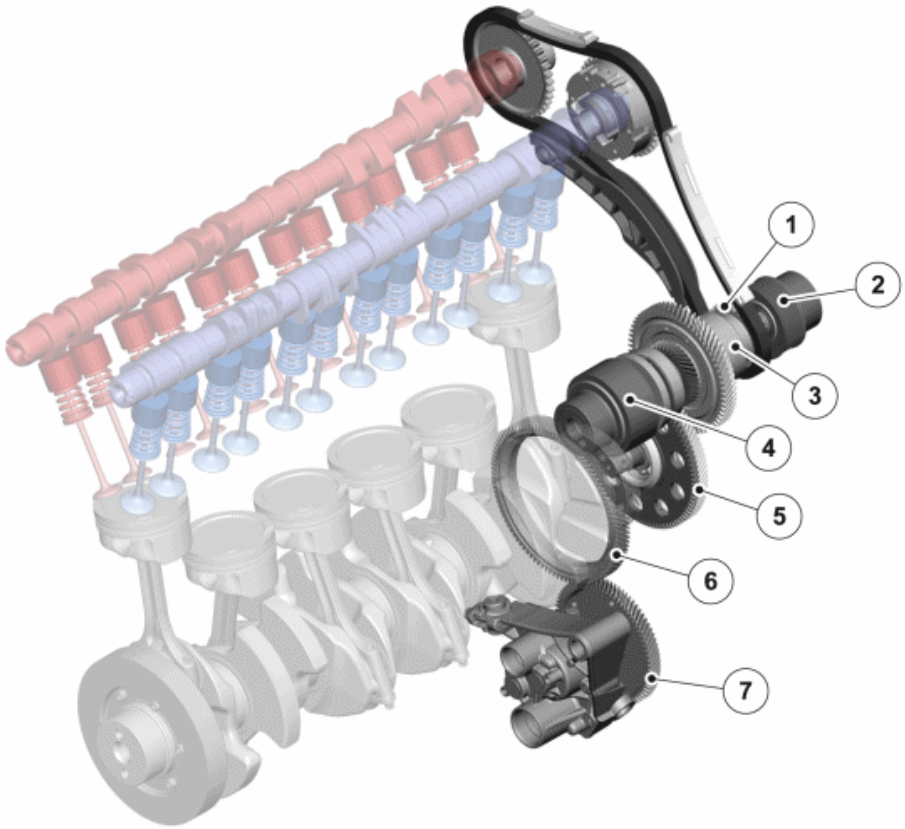

Fig. 112: Identifying Intermediate Shaft
Courtesy of VOLVO CARS CORPORATION

Number	Designation	Number	Designation
1	Camshaft transmission sprocket	5	Intermediate wheel
2	Drive wheel for the auxiliary unit	6	Crankshaft sprocket
3	Intermediate shaft	7	Oil pump
4	Freewheel clutch		

The intermediate shaft is located in the gear housing on the cylinder block. The intermediate shaft drives the

camshafts and the auxiliary unit.

There is a sprocket on the rear section of the crankshaft, which drives the intermediate shaft via an intermediate wheel. The intermediate wheel drives the intermediate shaft via the intermediate shaft's centrally mounted gear. The intermediate shaft has a further two gear wheels of different sizes.

The intermediate shaft's front gear wheel has a freewheel clutch that drives the alternator at 2.7 times the engine speed. A free wheel clutch drives in one direction and slips/freewheels in the other direction.

The rear gear wheel drives the overhead camshafts.

CAMSHAFT TRANSMISSION

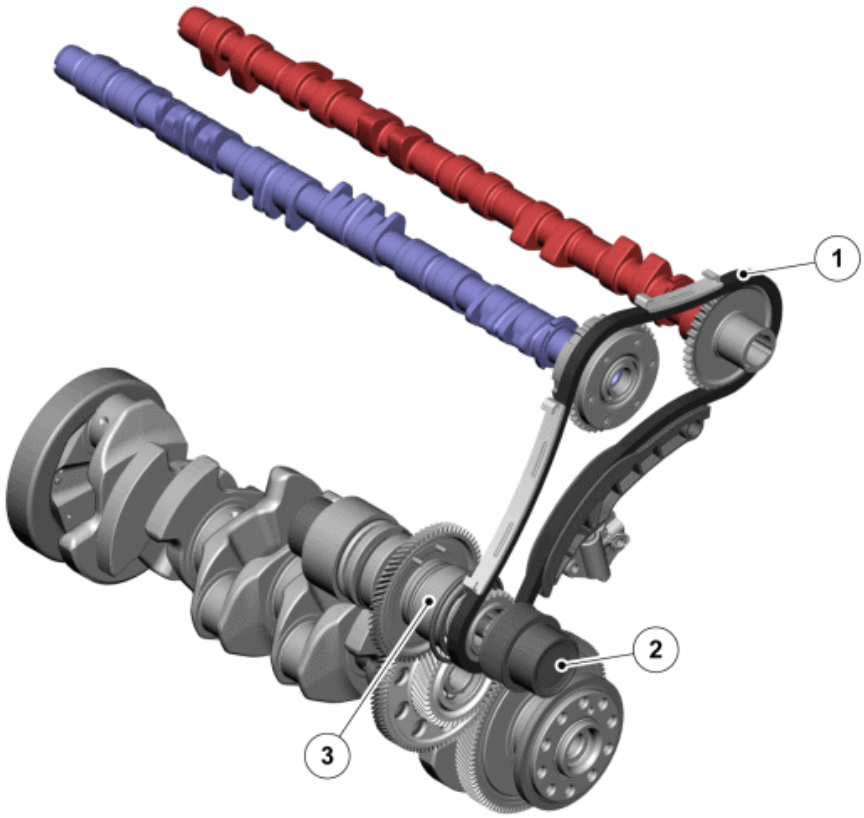

Fig. 113: Identifying Camshaft Transmission
Courtesy of VOLVO CARS CORPORATION

Number	Designation	Number	Designation
1	Camshaft chain	3	Intermediate shaft
2	Auxiliary unit sprocket		

Both camshafts are driven by a camshaft chain, which in turn, is driven by the crankshaft via the intermediate shaft. The camshaft chain has inverted teeth, so called, "silent chain".

The chain drive is maintenance free.

The exhaust side's camshaft has a vibration damper, which guarantees optimum balance in the gear and chain sprockets.

Timing cover

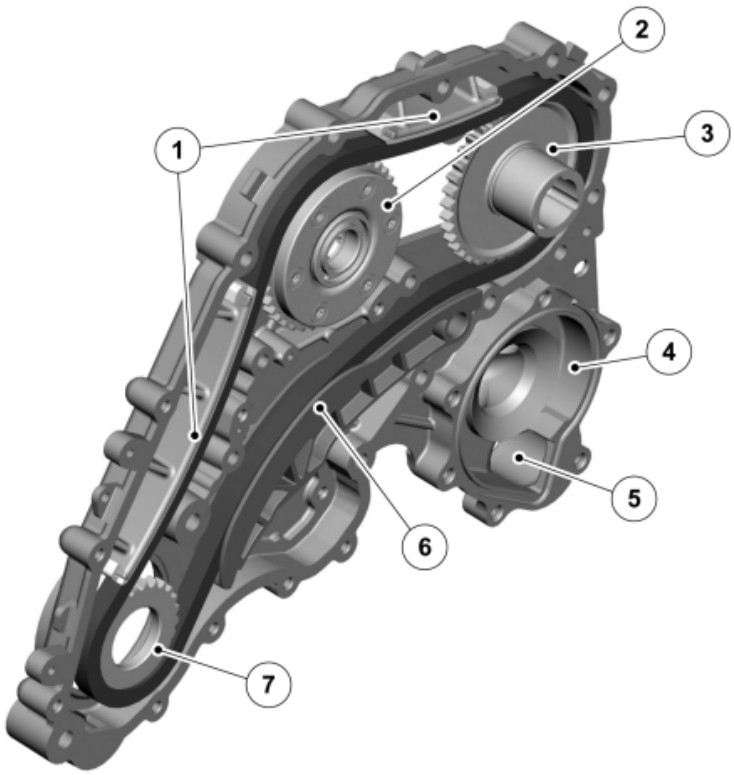

Fig. 114: Identifying Timing Chain Cover
Courtesy of VOLVO CARS CORPORATION

Number	Designation	Number	Designation
1	Chain guide	5	Coolant pump outlet
2	Induction camshaft	6	Hydraulic chain tensioner
3	Exhaust camshaft	7	Intermediate shaft
4	Coolant pump shell		

The timing cover is cast in aluminum.

The coolant pump shell is integrated in the timing cover. This saves weight. The coolant pump is still driven by the auxiliary unit's transmission.

The chain us tensioned by a hydraulic chain tensioner, which is located in the timing cover. Oil injection pipes supply the chain with oil.

VARIABLE CAMSHAFT PROFILE (CPS), ONLY APPLIES TO B6324S

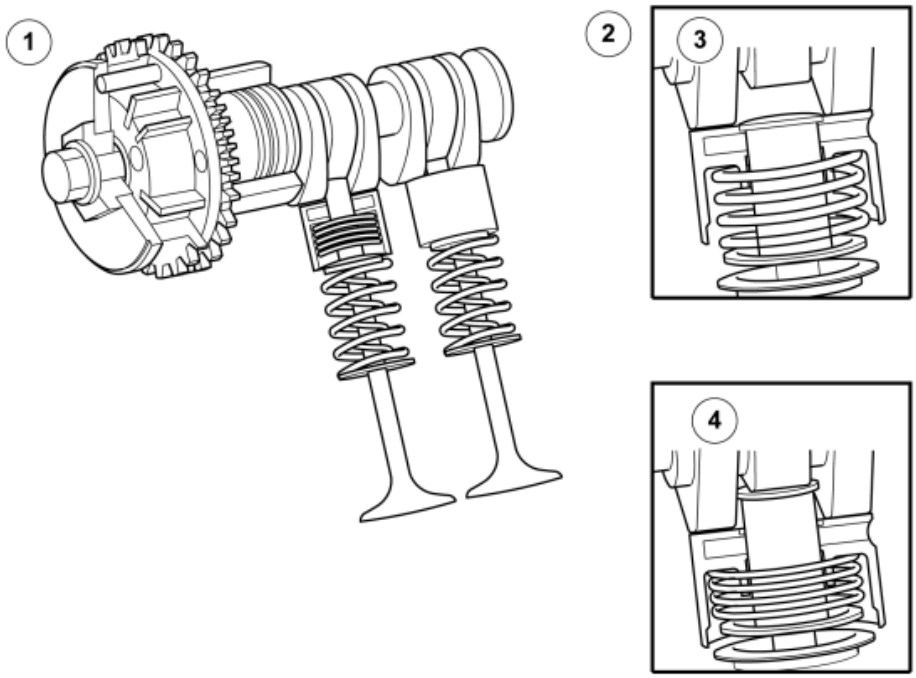

Fig. 115: Identifying Variable Camshaft
Courtesy of VOLVO CARS CORPORATION

Number	Designation	Number	Designation
1	Camshaft phase setting	3	High lift
2	Shift lobe	4	Low lift

The ideal engine should have low valve lift for low engine RPMs and loads, and high valve lift at high RPMs and loads.

To achieve this, an engine with two completely different camshaft profiles is required.

This engine has a patented system for camshaft profile switching. The system uses two completely different cam profiles designed on the same camshaft.

The inlet camshaft is provided with three cams for each valve, one centrally located with small lift height, 3.6 mm, and two equally sized outer cams with big lift height, 10.0 mm. With a small lift height at low load and at engine speeds up to approx. 3000 rpm, the primary benefit is lower fuel consumption.

In principle, during the time that the lift height is small, the air damper is completely open. Control of the incoming air volume to the cylinders takes place through control of the camshaft's opening times. Hereby the

pump losses are reduced, which in turn gives lower fuel consumption.

Low lift

At small lift height (4), only the centrally placed cam acts on the valve, which takes place through the inner valve depressor. The outer cams act on the outer valve depressors, which follow the cams' movement. Since the centrally located valve depressor and the outer depressor are not connected, the outer depressor moves without affecting the valve. Thus, lift height becomes small.

High lift

At high lift height (3), the inner valve depressor is connected with the outer valve depressor with lock pins. The outer camshaft cams' movement is transmitted through the outer valve depressor, on through the lock pins and the inner valve depressor to the valve. Thus, lift height becomes big.

The position of the lock pins is controlled hydraulically with two electro-hydraulic valves. One electro-hydraulic valve controls the valves for cylinders 1, 2 and 4, while the other controls the valve for cylinders 3, 5 and 6. Thus, the electro-hydraulic valves control 6 valves each (as the engine has 2 inlet valves and 2 exhaust valves per cylinder).

The position, on/off, of the electro-hydraulic valves is controlled by the Engine control module (ECM).

The inner valve depressor works like a hydraulic valve depressor, which compensates any wear. Thus the valve clearance is "0".

The exhaust camshaft is conventional and has a lift height of 10.0 mm. The valve depressors are mechanical, that is, they "have" valve clearance.

LUBRICATION SYSTEM

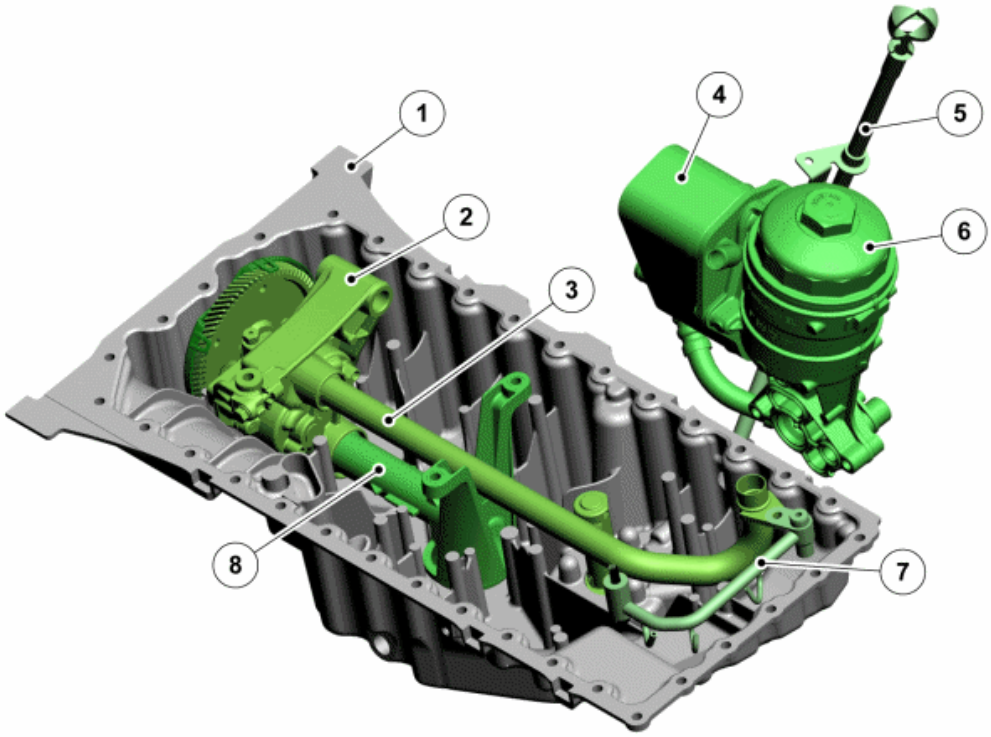

Fig. 116: Identifying Lubrication System
Courtesy of VOLVO CARS CORPORATION

Number	Designation	Number	Designation
1	Oil pan	5	Oil dipstick
2	Oil pump	6	Housing for the oil filter
3	Oil pressure line	7	Supply to the vibration damper's cooling nozzle.
4	Oil cooler	8	Oil suction line

The task of the lubrication system is to build-up a protective film of oil between the moving parts of the engine. The lubrication system must also transport dirt particles away from the moving parts and cool hot engine parts.

This is carried out by the oil pump supplying oil to the oil filter through an oil pressure line of treated steel.

Clean oil is supplied to the oil cooler from the oil filter to the oil cooler. From there the oil is further distributed, through a duct system, out to the various engine functions.

A pressure sensitive valve controls the oil flow to the vibration damper's oil cooler pipe if necessary.

Oil pump

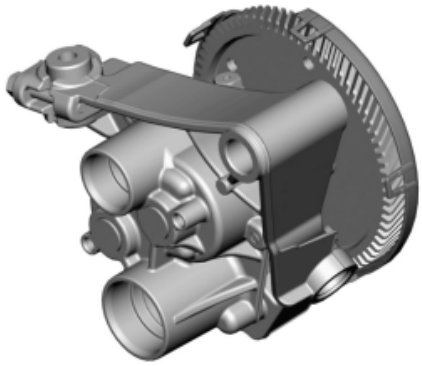

Fig. 117: Identifying Oil Pump
Courtesy of VOLVO CARS CORPORATION

The oil pump is in the oil pan, mounted underneath the intermediate section. The oil pump has an integrated relief valve. The pump is directly driven by the sprocket on the rear end of the crankshaft.

The oil pump draws oil from a centrally located nozzle in the sump.

The pump increases the pressure of the oil for lubrication, cooling and hydraulic functions.

Oil filter module

Fig. 118: Identifying Oil Filter Module
Courtesy of VOLVO CARS CORPORATION

The oil filter module consists of an oil filter reservoir and an oil cooler. It is mounted on the intermediate section. The oil filter module is element based and can be taken apart.

The oil cooler is connected to the coolant system. Coolant is led through the oil cooler.

COOLING SYSTEM

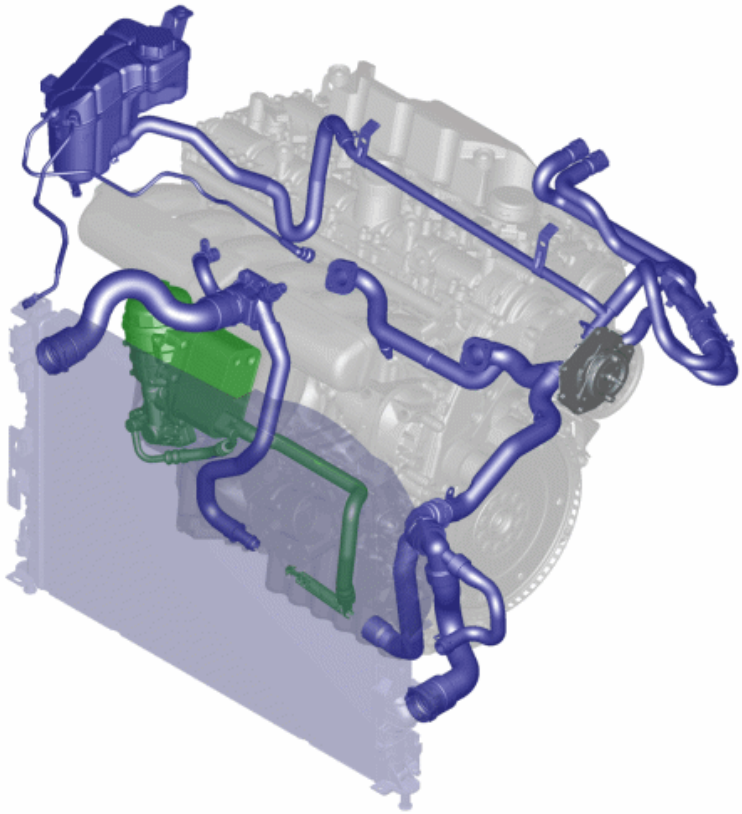

Fig. 119: Identifying Cooling System
Courtesy of VOLVO CARS CORPORATION

The coolant pump shell is integrated in the timing cover. The pump wheel is still driven by the auxiliary unit's transmission.

The coolant pump pumps coolant through the cylinder block, and also cools the cylinder head, cylinder sleeves, spark plug wells, intake ducts and fuel injection nozzles.

The coolant flows in at the coolant pump and passes through a number of channels before it collects and then flows out to the thermostat housing. If the thermostat housing is closed, the coolant passes via the by-pass channel directly to the coolant pump to then circulate through the cylinder block again.

For the turbocharged engine, the task of the cooling system is to supply the turbocharger with coolant.

CRANKCASE VENTILATION

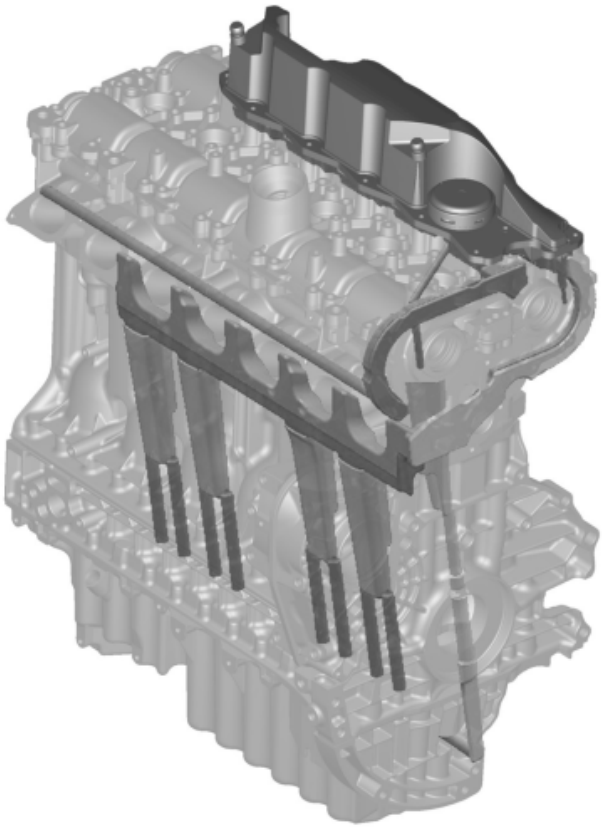

Fig. 120: Identifying Crankcase Ventilation System
Courtesy of VOLVO CARS CORPORATION

The crankcase ventilation is maintained internally in the engine.

An oil separator is on top of the engine's camshaft cover. It separates the oil drops from the air in the crankcase. The drops are collected in a separator and flow back inside the engine to the oil pan. This prevents extra weight and space for external pipes.

AUXILIARY UNIT TRANSMISSION

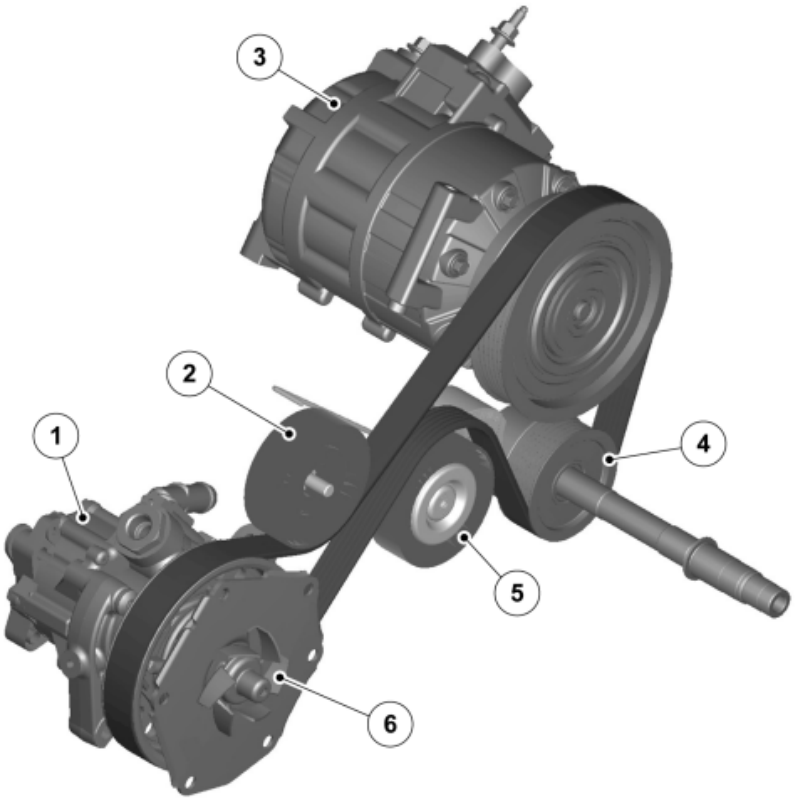

Fig. 121: Auxiliary Unit Drive
Courtesy of VOLVO CARS CORPORATION

Number	Designation	Number	Designation
1	Servo pump	4	Intermediate shaft
2	Guide pulley	5	Belt tensioner
3	Air conditioning (A/C) compressor	6	Coolant pump

The auxiliary units are located at the upper edge of the cylinder block, above the transmission. They are driven by two systems, a Poly-V-belt driven system and a clutch system. These two systems are driven by the intermediate shaft transmission.

The belt system consists of a 6-ribbed Poly-V belt, an automatic belt tensioner and a guide pulley. This system drives the servo pump and AC compressor. The coolant pump is driven by the servo pump via the clutch system.

TURBOCHARGER (TC)

NOTE: Only applies to turbocharged engines.

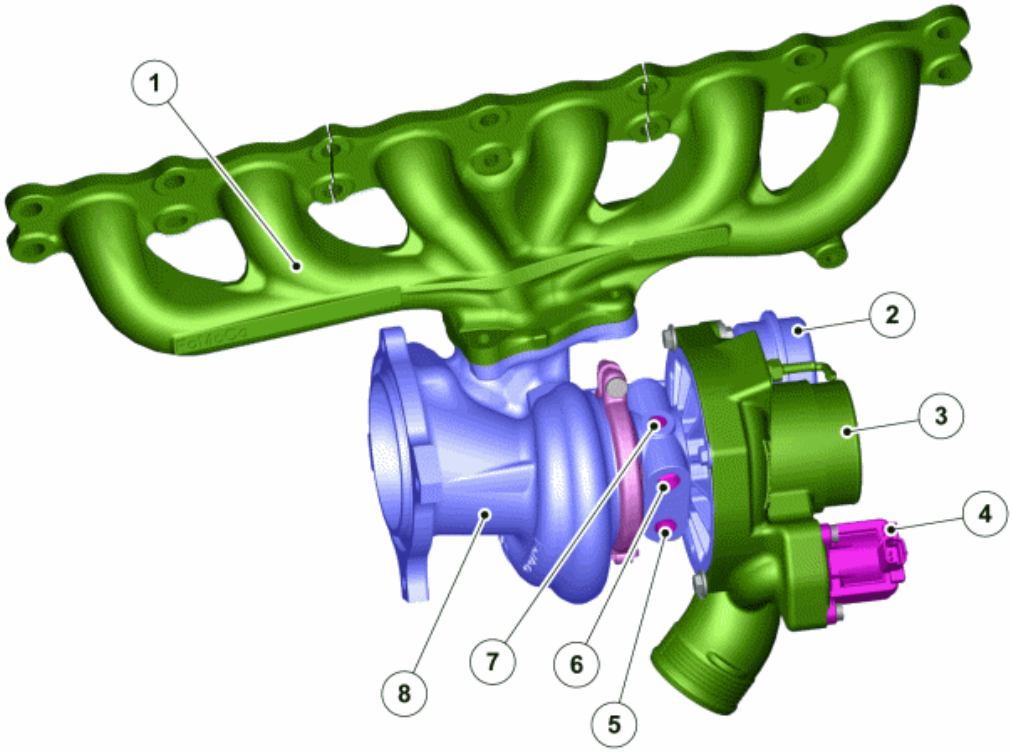

Fig. 122: View of Turbocharger System
Courtesy of VOLVO CARS CORPORATION

The exhaust gases enter via the manifold (1) down to the turbine housing (8) and out to the exhaust system via a downpipe and catalytic converter.

The turbine expels the exhaust gases and rotates the compressor wheel (3). The compressor wheel creates a certain amount of suction using the intake air. This intake air enters the compressor via the air filter and uses a rotational movement to speed up the air, creating the boost pressure. The air then continues into the intake system via the charge air pipe and charge air cooler.

The electronically controlled By-pass valve (4) then controls the boost pressure in the turbocharger by determining the amount of exhaust gases which must pass the turbine. The turbine transfers drive to the compressor. The wastegate valve (2) is a membrane which equalizes the pressure of the intake and exhaust air to eliminate noise.

The turbocharger is lubricated by the engine's oil system (7). The oil system also acts as a supplement to the coolant system (5 and 6).

OVERVIEW

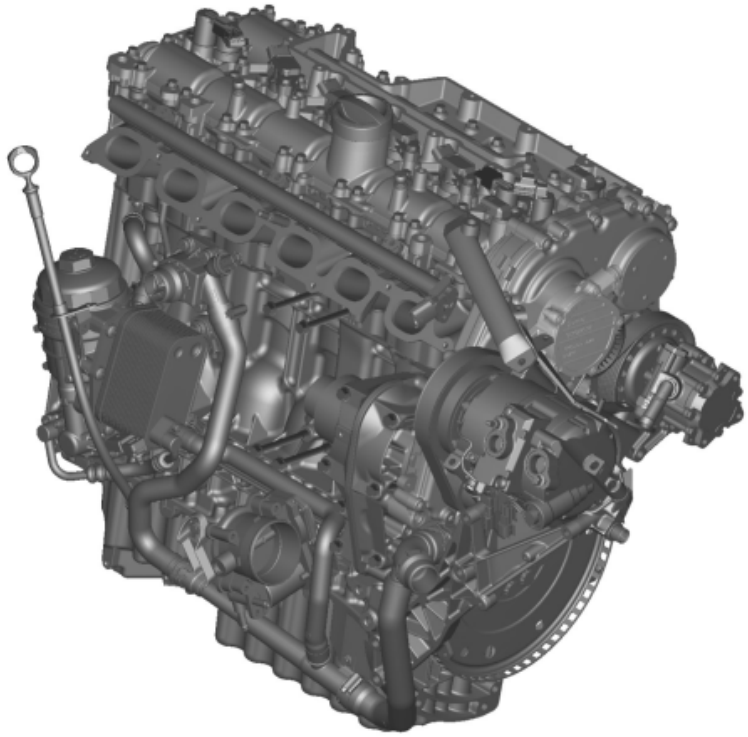

Fig. 123: ENGINE (B6324S; 2007-2010)
Courtesy of VOLVO CARS CORPORATION

The engine has been developed by Volvo.

It is a 6 cylinder transverse in-line engine with a cylinder capacity of 3.2 L for naturally aspirated engines and 3.0 L for turbocharged engines.

The engine is extremely compact. When it was introduced it was the shortest 6-cylinder engine of 3.2 L on the market. Conventional straight 6-cylinder engines are too long to fit between the collision members in the engine compartment. The special design of this engine solves the problem.

The engine has an extremely short drive train, its length is only 625 mm from the front edge of the engine block to the rear edge of the carrier plate.

Great attention has been paid to creating a very rigid engine. Middle part, cylinder block and cylinder head have been structurally optimized to combine low weight with high rigidity.

Even the camshaft cover is structurally optimized.

The engine has double overhead camshafts and 24 valves.

Camshafts, servo pump, AC-compressor, coolant pump and alternator are driven by an auxiliary unit drive, mounted on the back of the engine.

This placement of the auxiliary unit drive gives completely new possibilities of creating a good collision-protective structure around the straight 6-cylinder drive unit.

The entire engine block and the cylinder head is made from aluminum.

The engine has a compact "pent-roof" designed combustion chamber and V-arranged valves. This gives optimal and fast filling and direct flushing via the inlet manifold followed by the combustion chamber (cross-flow) and the exhaust channel.

The squish surfaces together with the centrally positioned spark plug provide optimal combustion of the air/fuel mixture, low knock sensitivity and low, stable exhaust emissions.

The engine's firing order is 1 - 5 - 3 - 6 - 2 - 4. The firings occur every 120 degrees that the crankshaft rotates.

ENGINE (B6324S5; 2011-2012)

DESIGN AND FUNCTION

ENGINE BLOCK

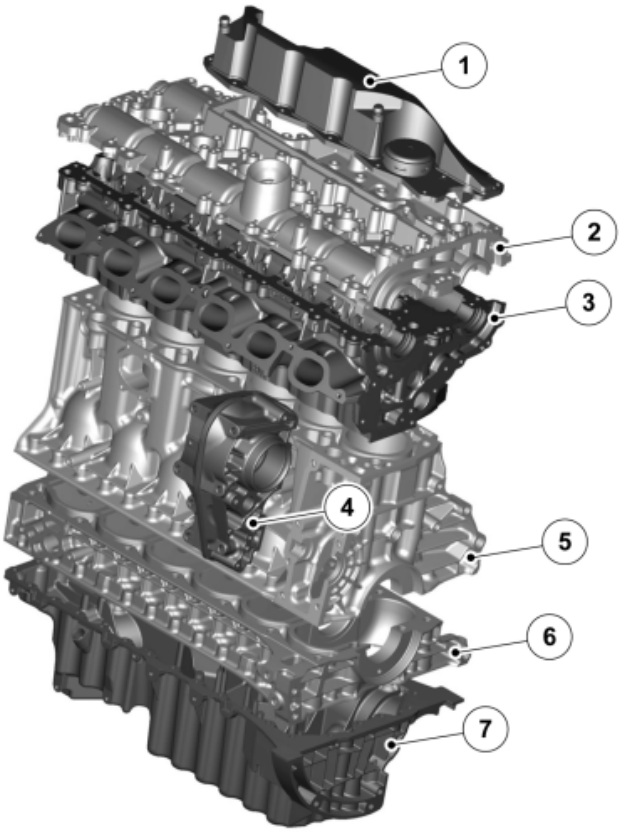

Fig. 124: Expanded View of Engine Components
Courtesy of VOLVO CARS CORPORATION

Number	Designation	Number	Designation
1	Oil separator	5	Cylinder block
2	Camshaft cover	6	Intermediate section
3	Cylinder head	7	Oil pan
4	Gear housing		

CYLINDER HEAD, CAMSHAFT BEARING HOUSING

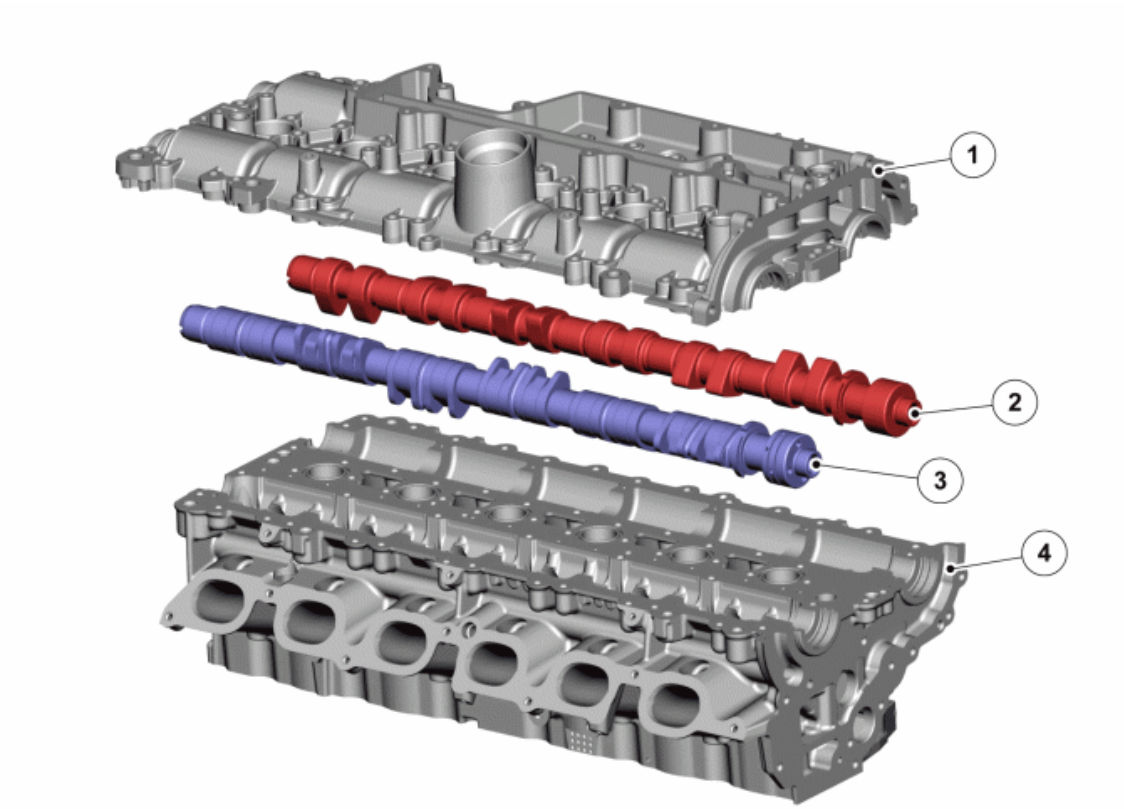

Fig. 125: View of Cylinder Head, Camshaft Bearing Housing
Courtesy of VOLVO CARS CORPORATION

Number	Designation	Number	Designation
1	Camshaft cover	3	Induction camshaft
2	Exhaust camshaft	4	Cylinder head

The cylinder head is of the cross-flow type, (Cross-flow = in from one side and out from the other side).

The two camshafts are supported by seven bearing caps each, directly in the cylinder head and camshaft cover. The camshaft cover works like a combined valve cover and camshaft bearing cap. The camshaft cover has cast oil ducts on the underneath which ensure good oil supply to the camshafts and the valve lifters.

The maintenance-free valve lifters, valve springs and valves are in the cylinder head.

CYLINDER HEAD GASKET

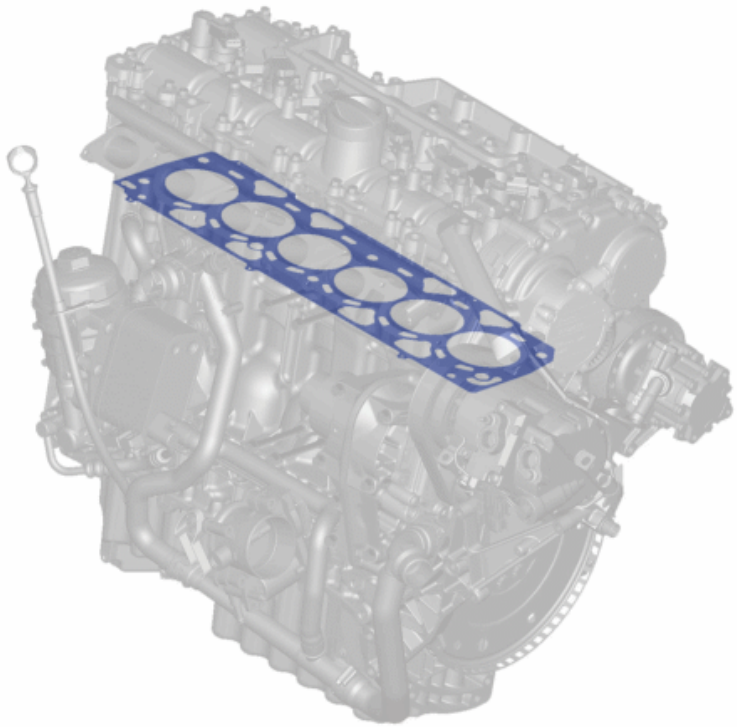

Fig. 126: Identifying Cylinder Head Gasket
Courtesy of VOLVO CARS CORPORATION

The seal between the cylinder head and cylinder block is a conventional cylinder head gasket. The seal between the other gasket faces is a liquid gasket.

The cylinder head gasket is made of steel and has multiple layers.

CYLINDER BLOCK

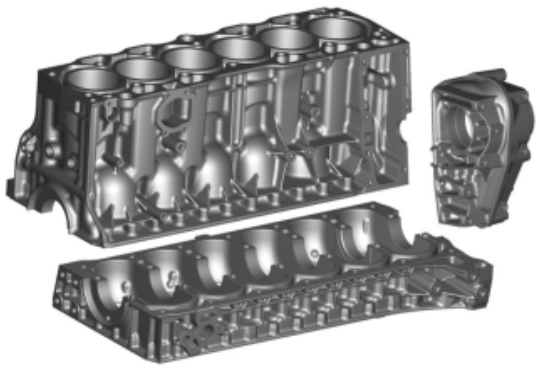

Fig. 127: View Of Cylinder Block
Courtesy of VOLVO CARS CORPORATION

The cylinder block consists of 3 sections.

- Cylinder block
- Intermediate section
- Gear housing

All three sections are made of die cast aluminum, molded under high pressure.

The mating flange between the cylinder block and intermediate section is in the center line of the crankshaft. The gear housing for the camshaft drive is secured on top of the cylinder block.

The cylinder block houses six cast iron cylinder sleeves. These cylinder sleeves cannot be replaced. The stroke length of the cylinders is greater than the cylinder diameter. This produces good torque and competitive power.

The intermediate section's seven main bearing caps have cast iron reinforcements.

On the top of the intermediate section there are cast oil channels which distribute the oil to the main bearings and on via the crankshaft to the big ends.

OIL SUMP AND OIL VOLUME

Fig. 128: View of Oil Sump and Dipstick
Courtesy of VOLVO CARS CORPORATION

The oil sump is made of die-cast aluminum with baffles (splash walls). This is so that the oil stays in the sump during active driving (heavy braking/acceleration, sharp turns, etc). Liquid gasket ensures the seal between the cylinder block and the oil sump.

The oil pan is designed to reduce mechanical noise from the engine, at the same time as providing a reliable supply of oil at different angles. A composite oil scraper keeps the larger section of the oil volume away from the rotating crankshaft. It minimizes power loss, improves fuel economy and prevents the oil from foaming.

The oil suction line, which runs from the oil pan, is made of plastic. The oil pan is equipped with an oil level sensor.

The oil pan contributes to the rigid design and operates as an extra reinforcement of the cylinder block.

The oil volume for engines B6324S4/S5 and B6304T4 have been reduced by 0.6 litres. Reasons for reducing the oil volume are, among others, lower service costs (cost of ownership), lower friction, and increased power. Lower friction and higher power are attained by facilitating the engine's internal 'breathing' with a lower oil surface, that is, easier evacuation of gases under the pistons.

The change of the oil volume is partly connected to a changed oil scraper plate, which means that the oil system also works with a reduced oil volume, as well as cooling for **IVD** (**I** nternal **V** iscous **D** amper), which is removed since 09w11. Since the volume reduction is partly connected to IVD-cooling it is not possible to

reduce the oil volume on an older engine with IVD-cooling, even if the new oil scraper plate is retrofitted. Due to the volume reduction, a new oil dipstick is introduced with adapted markings.

OIL SCRAPER PLATE

Fig. 129: Identifying Oil Scraper Plate
Courtesy of VOLVO CARS CORPORATION

Under the crankshaft there is an oil scraper plate that is to prevent the oil from following along with the crankshaft in the crank movement. The plate is updated and is now located closer to the crankshaft and has integrated drain pipes. With these changes it has been possible to reduce the oil volume.

PISTON

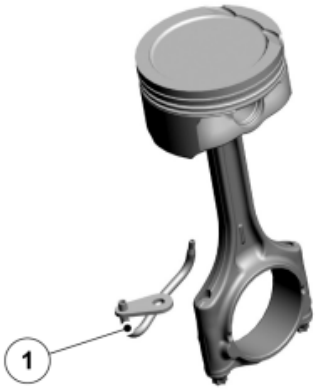

Fig. 130: Identifying Piston Cooling Nozzle
Courtesy of VOLVO CARS CORPORATION

1. Piston cooling nozzle

The pistons are die cast in aluminum and the connecting rods are forged in steel.

The heat received by the pistons from combustion, is cooled, partly via the coolant jacket in the block but also by the oil from the six piston cooling nozzles.

SPARKPLUGS

Fig. 131: View of SIP-spark plug
Courtesy of VOLVO CARS CORPORATION

To further improve the engine's features, a new type of spark plug is used, from Denso. The designation is "**SIP** " which means **S** uper **I** gnition spark **P** lug.

An SIP-spark plug has a special design which improves a number of features with a more stable spark. By using a special alloy for both the centre and side electrode, these can have a smaller diameter than normally. The smaller diameter of the electrodes minimizes heat losses during the flame build process, concentrates the electric field, and gives a stronger spark. The stronger spark gives higher engine power, improved fuel economy, better cold-cranking performance, and longer service life. It is the same spark plug for all versions of engine B63x4x, and can also be used for older versions. Electrode gap is 1.0 mm.

CRANK SYSTEM

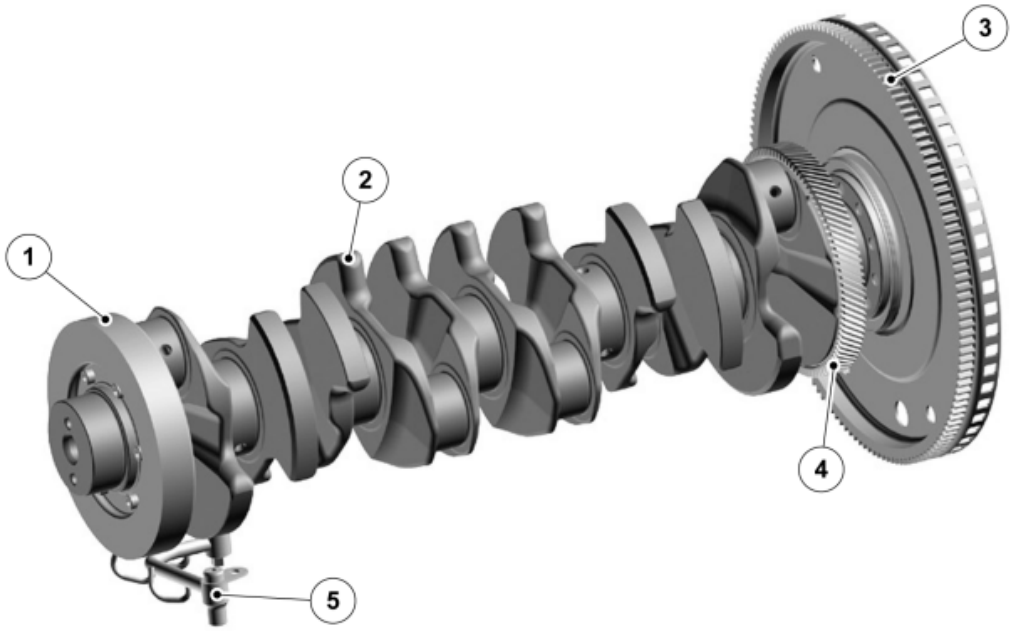

Fig. 132: Identifying Crankshaft System
Courtesy of VOLVO CARS CORPORATION

Number	Designation	Number	Designation
1	Vibration damper	4	Gear wheel
2	Crankshaft	5	Oil cooler pipe
3	Carrier plate		

The crankshaft is made from forged steel with induction hardened bearing surfaces.

The sprocket is crimped on the crankshaft's rearmost shank.

The crankshaft is supported by seven main bearings. The main bearings are replaceable main bearing shells. The sixth main bearing is a thrust bearing that holds the crankshaft in a determined position along the length of the axle.

An internal vibration damper is on the front end of the crankshaft. Inside the enclosed vibration damper, a circular flywheel works on a silicone fluid, which dampens the crankshaft torsion oscillations. The vibration damper gives longer service life for the crankshaft and smoother engine operation.

Engine versions without turbo were changed 10w20 with a modified crankshaft. The goal is to reduce the crankshaft's torsion vibrations at high engine speeds (4, 500 rpm and up) and to save weight. The reduced torsion vibration means reduced noise level at high RPMs at the same time as it reduces the load (torque) on the

geartrain that drives the camshafts and auxiliary unit drive. It is the crankshaft's forged blank that is changed, reworking is unchanged.

To reduce vibrations material has been added between crank pin and main pin for the rear cylinders, which gives increased stiffness. At the crankshaft's front end, material has been removed instead, to reduce the crankshaft's oscillating mass. A new strategy has been used to design the crankshaft's balance weights to reduce weight. This can be seen by some balance weights having become small while others have become bigger. The changes have reduced the crankshaft's weight by a total of 1 kg. The change does not apply to turbo engines, but can be used on earlier versions of aspiration engines.

Main bearing

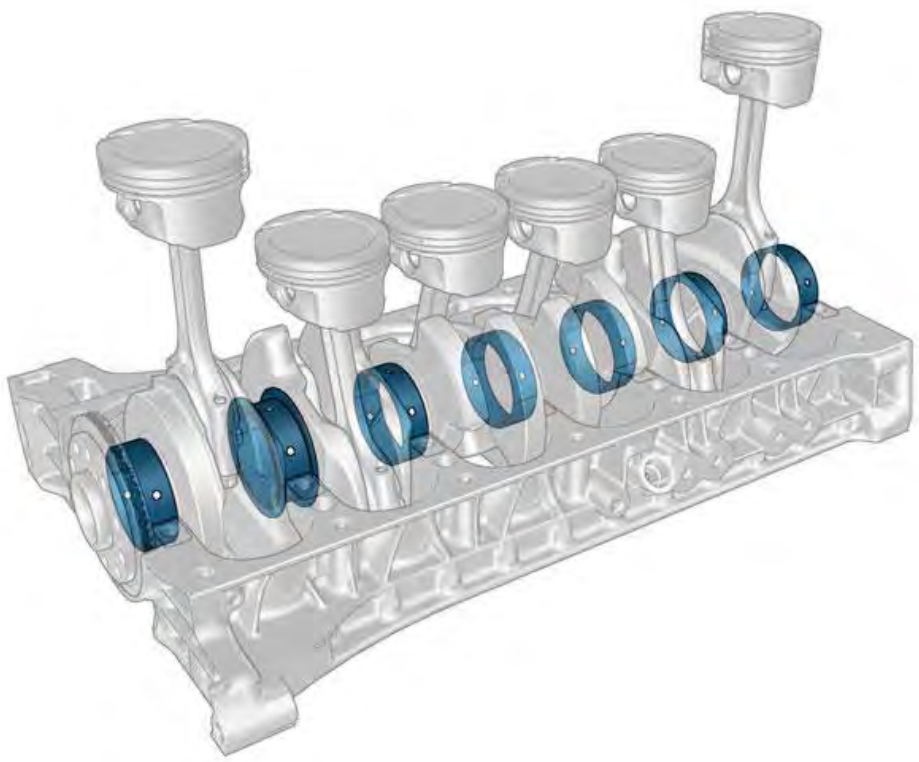

Fig. 133: Identifying Main Bearings
Courtesy of VOLVO CARS CORPORATION

To improve the cold-cranking capacity, all main bearings have a changed appearance. In the middle of the bearing the thickness is unchanged but toward the end of the bearing the thickness is approx. 10µm thinner. The new type of bearing is possible to use on all versions of engine B63x4x, also those built earlier than 10w20.

INTERMEDIATE SHAFT

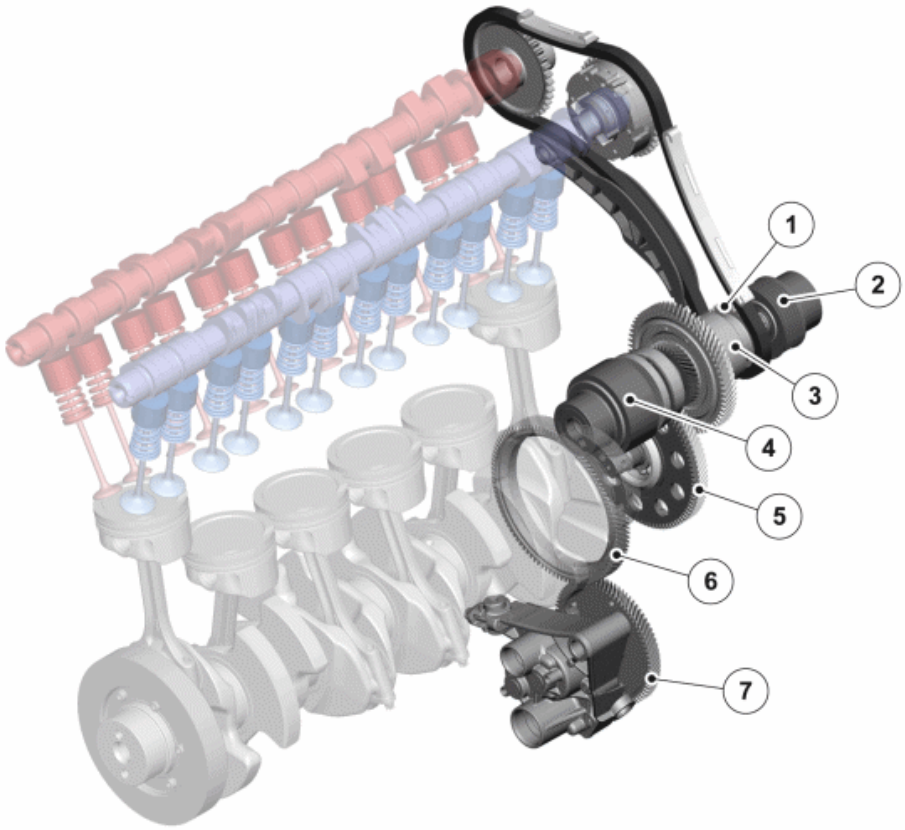

Fig. 134: Identifying Intermediate Shaft
Courtesy of VOLVO CARS CORPORATION

Number	Designation	Number	Designation
1	Camshaft transmission sprocket	5	Intermediate wheel
2	Drive wheel for the auxiliary unit	6	Crankshaft sprocket
3	Intermediate shaft	7	Oil pump
4	Freewheel clutch		

The intermediate shaft is located in the gear housing on the cylinder block. The intermediate shaft drives the camshafts and the auxiliary unit.

There is a sprocket on the rear section of the crankshaft, which drives the intermediate shaft via an intermediate wheel. The intermediate wheel drives the intermediate shaft via the intermediate shaft's centrally mounted gear. The intermediate shaft has a further two gear wheels of different sizes.

The intermediate shaft's front gear wheel has a freewheel clutch that drives the alternator at 2.7 times the engine speed. A free wheel clutch drives in one direction and slips/freewheels in the other direction.

The rear gear wheel drives the overhead camshafts.

CAMSHAFT TRANSMISSION

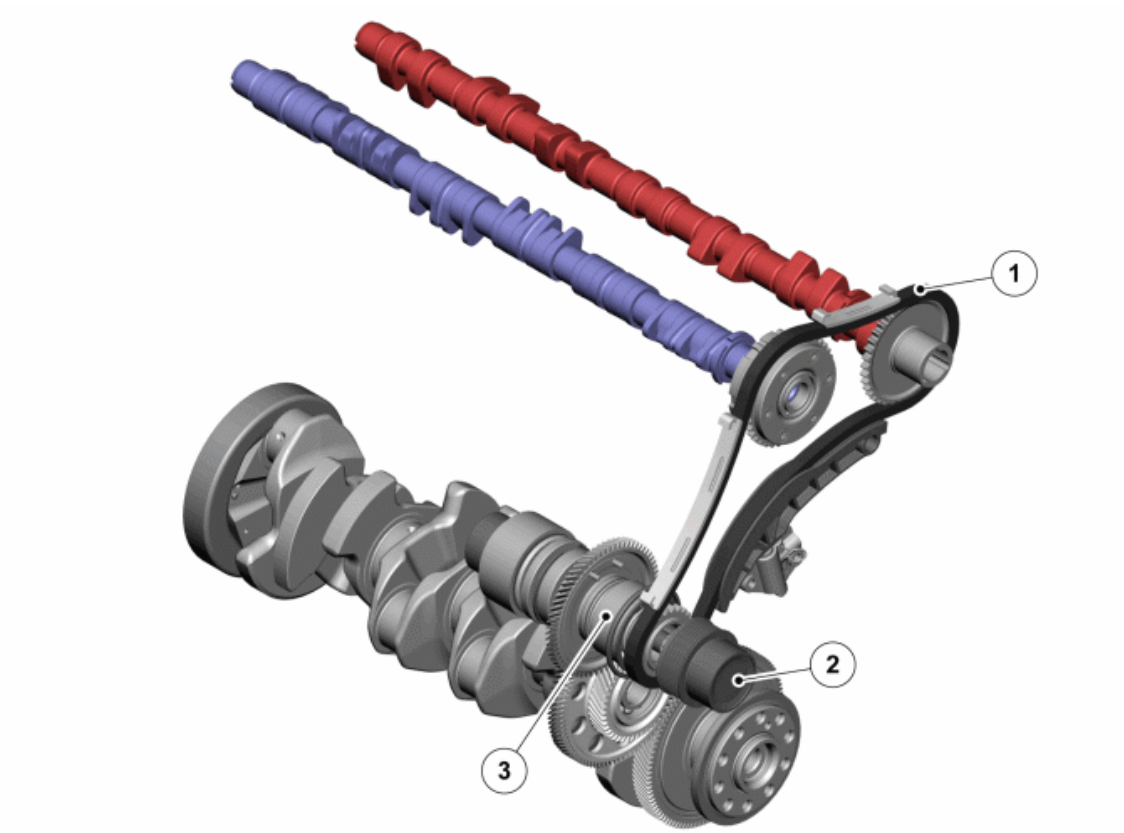

Fig. 135: Identifying Camshaft Transmission
Courtesy of VOLVO CARS CORPORATION

Number	Designation	Number	Designation
1	Camshaft chain	3	Intermediate shaft
2	Auxiliary unit sprocket		

Both camshafts are driven by a camshaft chain, which in turn is driven by the crankshaft via the intermediate shaft. The camshaft chain has inverted teeth, so called, "silent chain".

The chain drive is maintenance free.

The exhaust side's camshaft has a vibration damper, which guarantees optimum balance in the gear and chain sprockets.

Timing cover

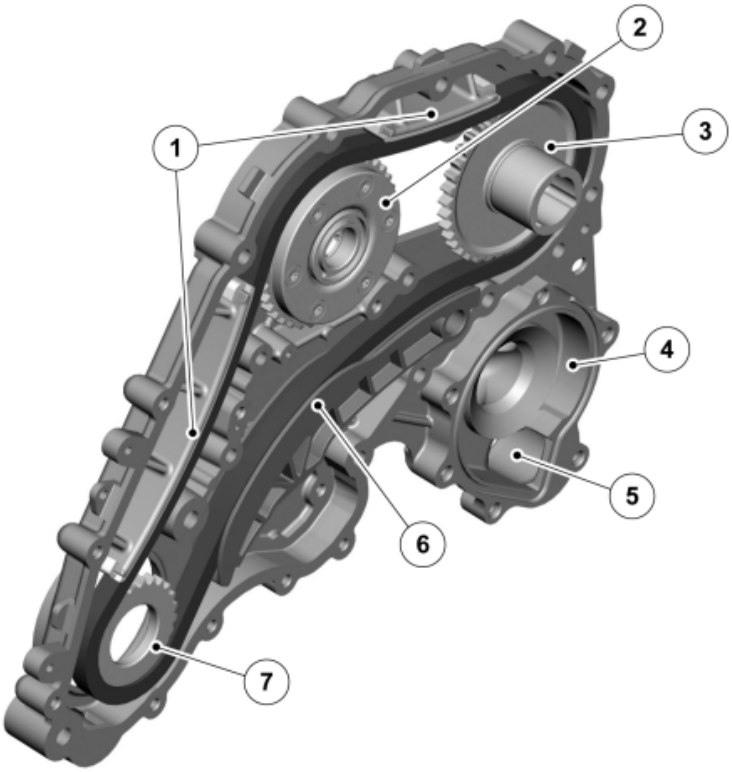

Fig. 136: Identifying Timing Chain Cover
Courtesy of VOLVO CARS CORPORATION

Number	Designation	Number	Designation
1	Chain guide	5	Coolant pump outlet
2	Induction camshaft	6	Hydraulic chain tensioner
3	Exhaust camshaft	7	Intermediate shaft
4	Coolant pump shell		

The timing cover is cast in aluminum.

The coolant pump shell is integrated in the timing cover. This saves weight. The coolant pump is still driven by the auxiliary unit's transmission.

The chain us tensioned by a hydraulic chain tensioner, which is located in the timing cover. Oil injection pipes supply the chain with oil.

VARIABLE CAMSHAFT PROFILE (CPS), ONLY APPLIES TO B6324S5

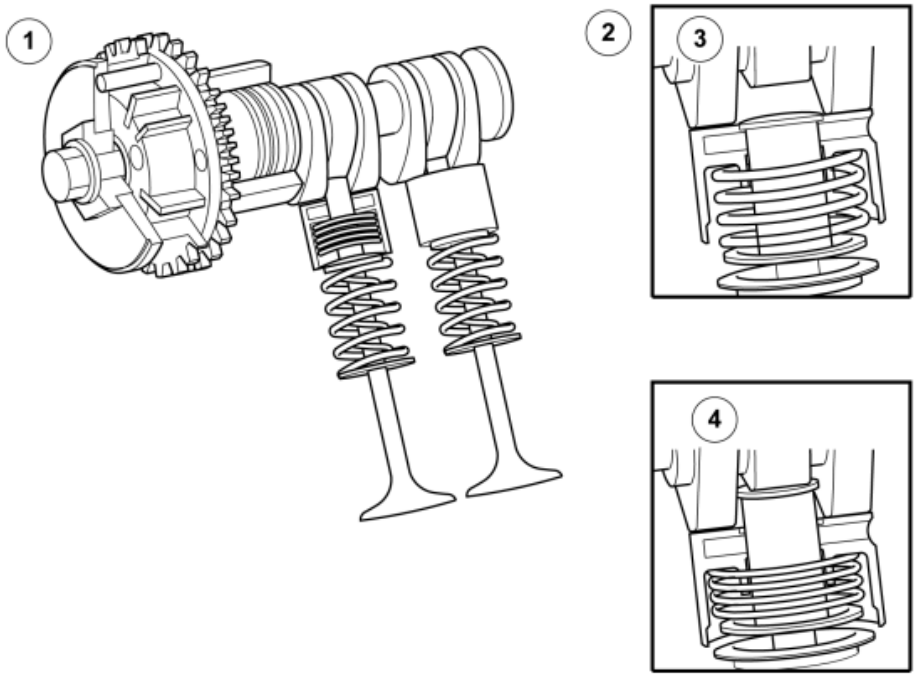

Fig. 137: Identifying Variable Camshaft
Courtesy of VOLVO CARS CORPORATION

Number	Designation	Number	Designation
1	Camshaft phase setting	3	High lift
2	Shift lobe	4	Low lift

The ideal engine should have low valve lift for low engine RPMs and loads, and high valve lift at high RPMs and loads.

To achieve this, an engine with two completely different camshaft profiles is required.

This engine has a patented system for camshaft profile switching. The system uses two completely different cam profiles designed on the same camshaft.

The inlet camshaft is provided with three cams for each valve, one centrally located with small lift height, 3.6 mm, and two equally sized outer cams with big lift height, 10.0 mm. With a small lift height at low load and at engine speeds up to approx. 3000 rpm, the primary benefit is lower fuel consumption.

In principle, during the time that the lift height is small, the air damper is completely open. Control of the incoming air volume to the cylinders takes place through control of the camshaft's opening times. Hereby the pump losses are reduced, which in turn gives lower fuel consumption.

Low lift

At small lift height (4), only the centrally placed cam acts on the valve, which takes place trough the inner valve depressor. The outer cams act on the outer valve depressors, which follow the cams' movement. Since the centrally located valve depressor and the outer depressor are not connected, the outer depressor moves without affecting the valve. Thus, lift height becomes small.

High lift

At high lift height (3), the inner valve depressor is connected with the outer valve depressor with lock pins. The outer camshaft cams' movement is transmitted through the outer valve depressor, on through the lock pins and the inner valve depressor to the valve. Thus, lift height becomes big.

The position of the lock pins is controlled hydraulically with two electro-hydraulic valves. One electro-hydraulic valve controls the valves for cylinders 1, 2 and 4, while the other controls the valve for cylinders 3, 5 and 6. Thus, the electro-hydraulic valves control 6 valves each (as the engine has 2 inlet valves and 2 exhaust valves per cylinder).

The position, on/off, of the electro-hydraulic valves is controlled by the Engine control module (ECM).

The inner valve depressor works like a hydraulic valve depressor, which compensates any wear. Thus, the valve clearance is "0".

The exhaust camshaft is conventional and has a lift height of 10.0 mm. The valve depressors are mechanical, that is, they "have" valve clearance.

VALVE DEPRESSOR

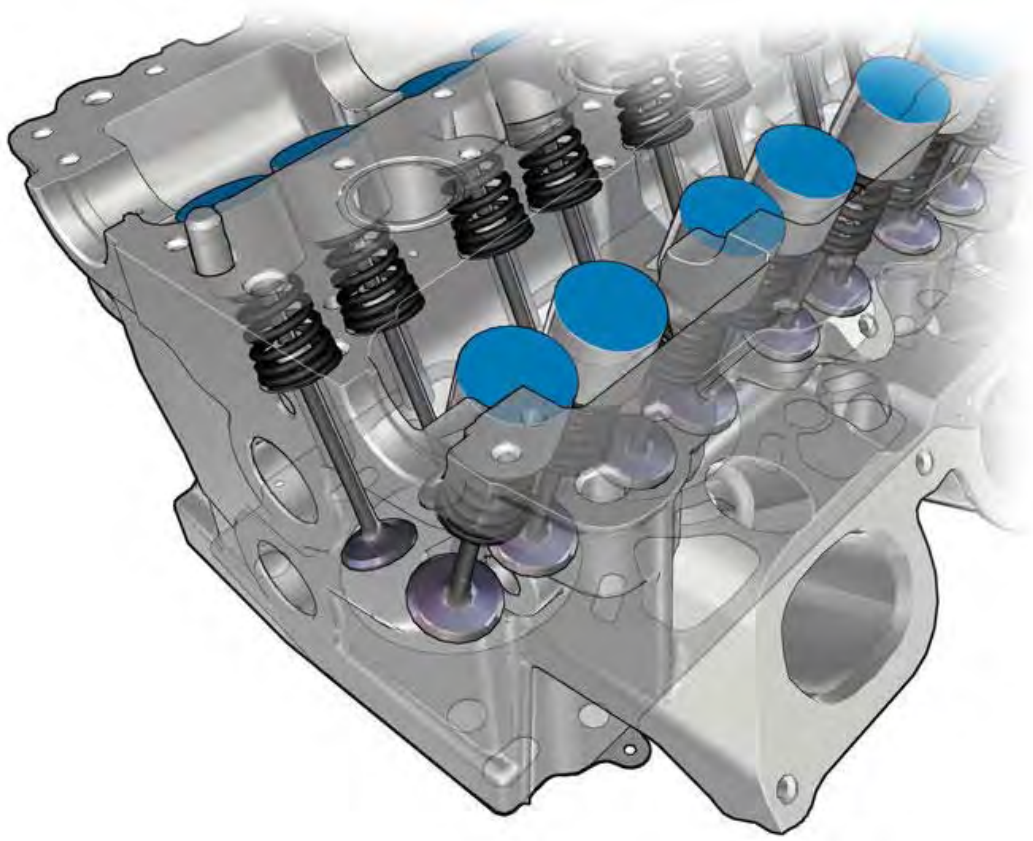

Fig. 138: Identifying Valve Depressors
Courtesy of VOLVO CARS CORPORATION

Valve depressors without **CPS** -functionality (**C** amshaft **P** rofile **S** hifting) have a coating of **DLC** (**D** iamond **L** ike **C** arbon).

It is the tops of the valve depressors that are coated with DLC. The layer with diamond-like carbon structure has a depth of 2µm, is very hard and has self-lubricating properties. The surface reduces the friction against the camshaft lobes and thus gives lower fuel consumption and longer service life.

Thanks to very good adhesion and toughness the DLC-coating can handle very high loads. The change applies to valve depressors without CPS-functionality.

This means that it concerns depressors in position:

- Engine B6304T4 (Ulev2) Exhaust, inlet
- Engine B6324S4 (Pzev) Exhaust, inlet
- Engine B6324S5 (Ulev) Exhaust

If needed the DLC-coated depressors can also be used on older engines.

LUBRICATION SYSTEM

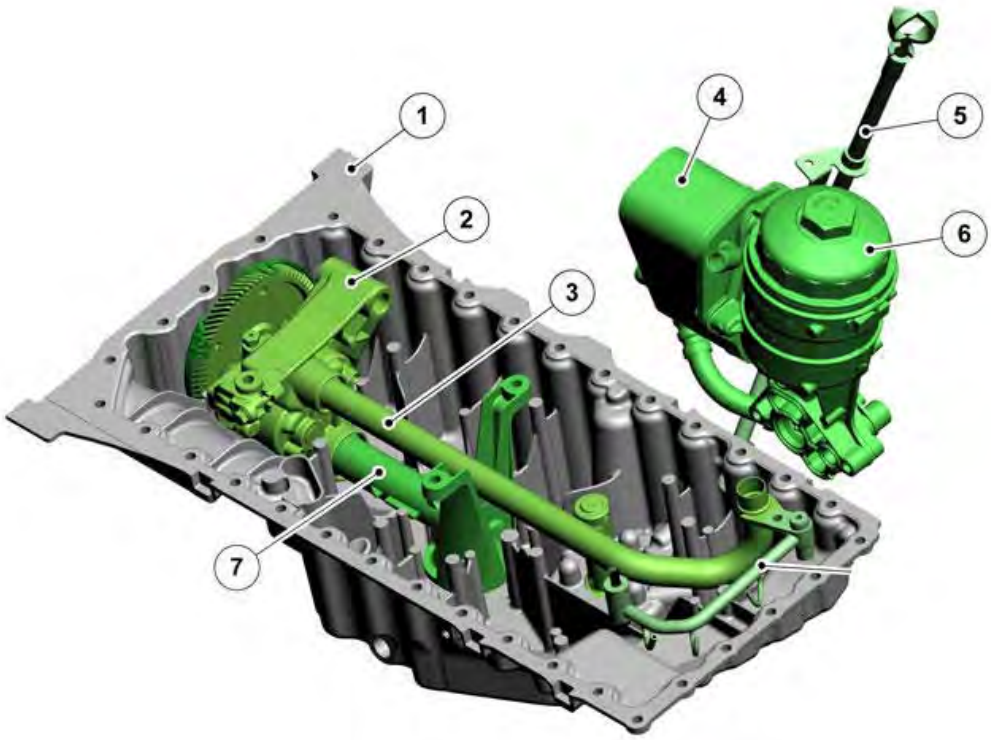

Fig. 139: View Of Lubrication System
Courtesy of VOLVO CARS CORPORATION

Number	Designation	Number	Designation
1	Oil pan	5	Oil dipstick
2	Oil pump	6	Housing for the oil filter
3	Oil pressure line	7	Oil suction line
4	Oil cooler		

The task of the lubrication system is to build-up a protective film of oil between the moving parts of the engine. The lubrication system must also transport dirt particles away from the moving parts and cool hot engine parts.

This is carried out by the oil pump supplying oil to the oil filter through an oil pressure line of treated steel.

Clean oil is supplied from the oil filter to the oil cooler. From there the oil is further distributed, through a duct system, out to the various engine functions.

A pressure sensitive valve controls the oil flow to the vibration damper's oil cooler pipe if necessary.

Oil pump

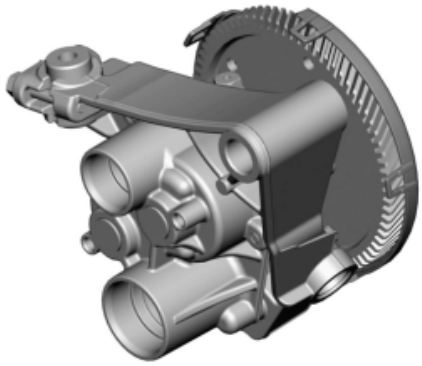

Fig. 140: Identifying Oil Pump
Courtesy of VOLVO CARS CORPORATION

The oil pump is in the oil pan, mounted underneath the intermediate section. The oil pump has an integrated relief valve. The pump is directly driven by the sprocket on the rear end of the crankshaft.

The oil pump draws oil from a centrally located nozzle in the sump.

The pump increases the pressure of the oil for lubrication, cooling and hydraulic functions.

Oil filter module

Fig. 141: Identifying Oil Filter Module
Courtesy of VOLVO CARS CORPORATION

The oil filter module consists of an oil filter reservoir and an oil cooler. It is mounted on the intermediate section. The oil filter module is element based and can be taken apart.

The oil cooler is connected to the coolant system. Coolant is led through the oil cooler.

COOLING SYSTEM

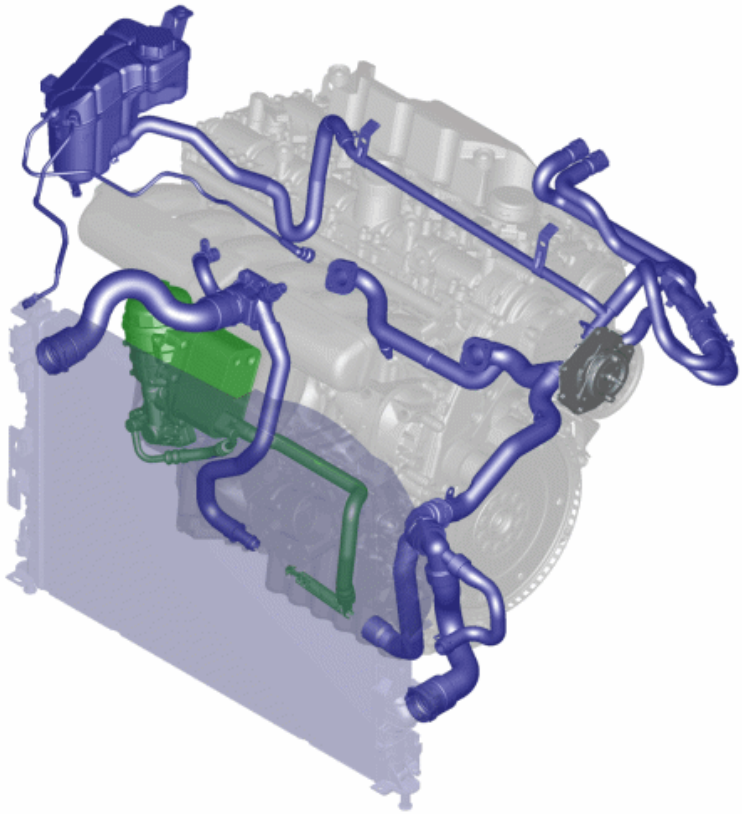

Fig. 142: Identifying Cooling System
Courtesy of VOLVO CARS CORPORATION

The coolant pump shell is integrated in the timing cover. The pump wheel is still driven by the auxiliary unit's transmission.

The coolant pump pumps coolant through the cylinder block, and also cools the cylinder head, cylinder sleeves, spark plug wells, intake ducts and fuel injection nozzles.

The coolant flows in at the coolant pump and passes through a number of channels before it collects and then flows out to the thermostat housing. If the thermostat housing is closed, the coolant passes via the by-pass channel directly to the coolant pump to then circulate through the cylinder block again.

For the turbocharged engine, the task of the cooling system is to supply the turbocharger with coolant.

Coolant pump and drive gear

Fig. 143: Identifying Coolant Pump And Pulley
Courtesy of VOLVO CARS CORPORATION

Alternator/clutch

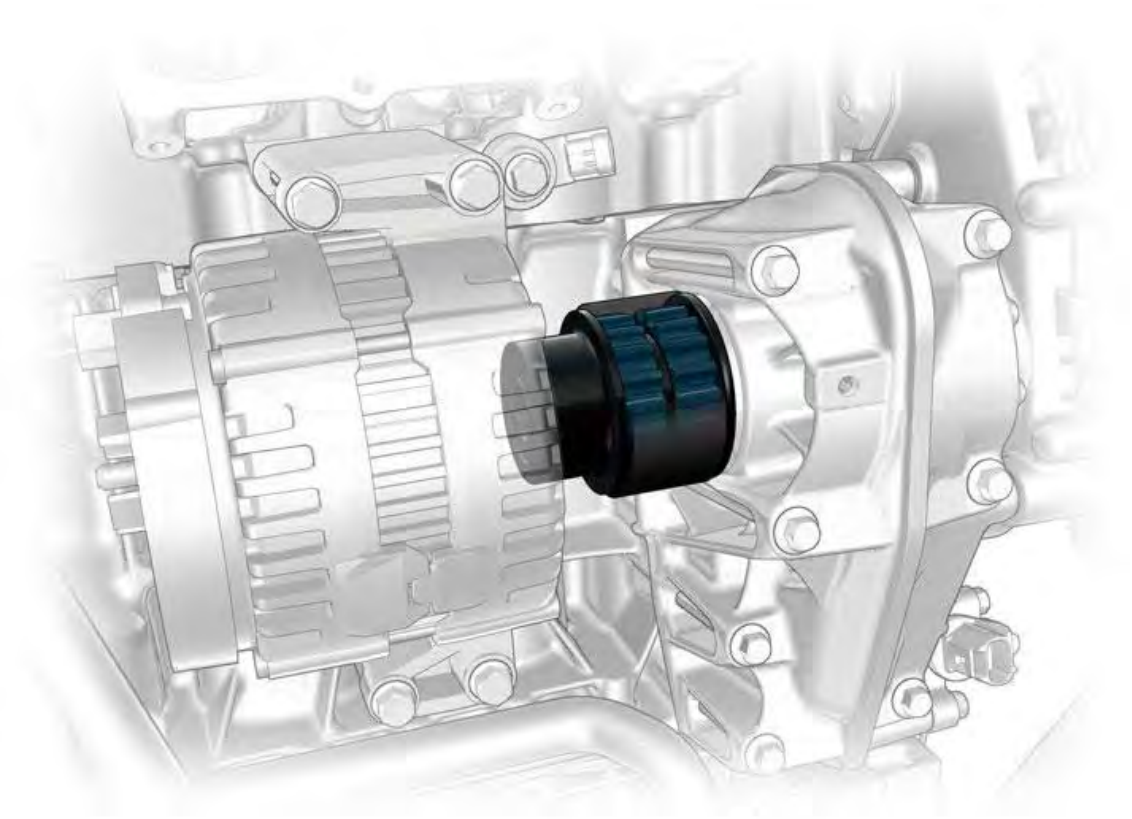

Fig. 144: View of Alternator and Freewheel
Courtesy of VOLVO CARS CORPORATION

The belt pulleys on alternator and intermediate shaft have improved surface treatment.

On the alternator shaft between alternator and intermediate shaft there is a clutch with a freewheel (one-way clutch) at each end. The function is to filter the engine's different irregular shape and thus avoid gear rattle/noise in the geartrain.

In connection with introduction of **EHPAS** (electric servo pump), the belt-driven servo pump with its heavy steel belt pulley is discontinued as well as the clutch for the coolant pump. The reduced rotating moment of inertia means more freewheeling, primarily when idling.

To reduce/avoid wear, the drive gears' outer ring (against the one-way clutch's friction band), are treated with nitride.

AC bracket

Fig. 145: Identifying A/C Compressor Bracket
Courtesy of VOLVO CARS CORPORATION

The AC compressor's fastening bracket is simplified. Earlier solution with a main bracket and three separate stays, is replaced by a modified bracket which has the front reinforcement stay integrated and a new fastening point in the transmission. The change means, except that the fastener assembly has 9 fewer bolts, that the installation method becomes easier and there is no longer a need for any special tools when assembling.

CRANKCASE VENTILATION

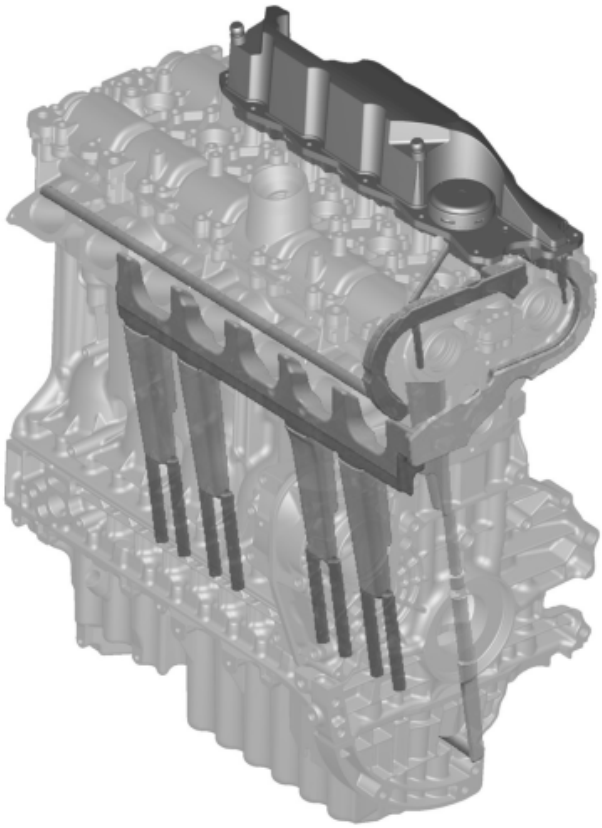

Fig. 146: Identifying Crankcase Ventilation System
Courtesy of VOLVO CARS CORPORATION

The crankcase ventilation is maintained internally in the engine.

An oil separator is on top of the engine's camshaft cover. It separates the oil drops from the air in the crankcase. The drops are collected in a separator and flow back inside the engine to the oil pan. This prevents extra weight and space for external pipes.

AUXILIARY UNIT TRANSMISSION

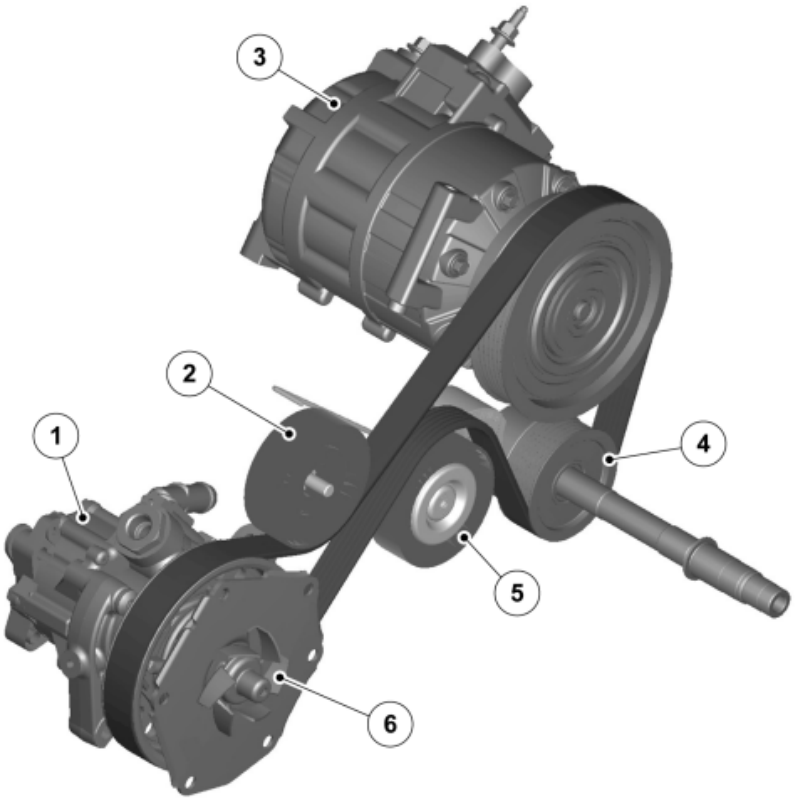

Fig. 147: Auxiliary Unit Drive
Courtesy of VOLVO CARS CORPORATION

Number	Designation	Number	Designation
1	Servo pump (only XC90)	4	Intermediate shaft
2	Guide pulley	5	Belt tensioner
3	Air conditioning (A/C) compressor	6	Coolant Pump

The auxiliary units are located at the upper edge of the cylinder block, above the transmission. They are driven by two systems, a Poly-V-belt driven system and a clutch system. These two systems are driven by the intermediate shaft transmission.

The belt system consists of a 6-ribbed Poly-V belt, an automatic belt tensioner and a guide pulley. This system drives the servo pump and AC compressor. The coolant pump is driven by the servo pump via the clutch system.

TURBOCHARGER (TC)

NOTE: Only applies to turbocharged engines.

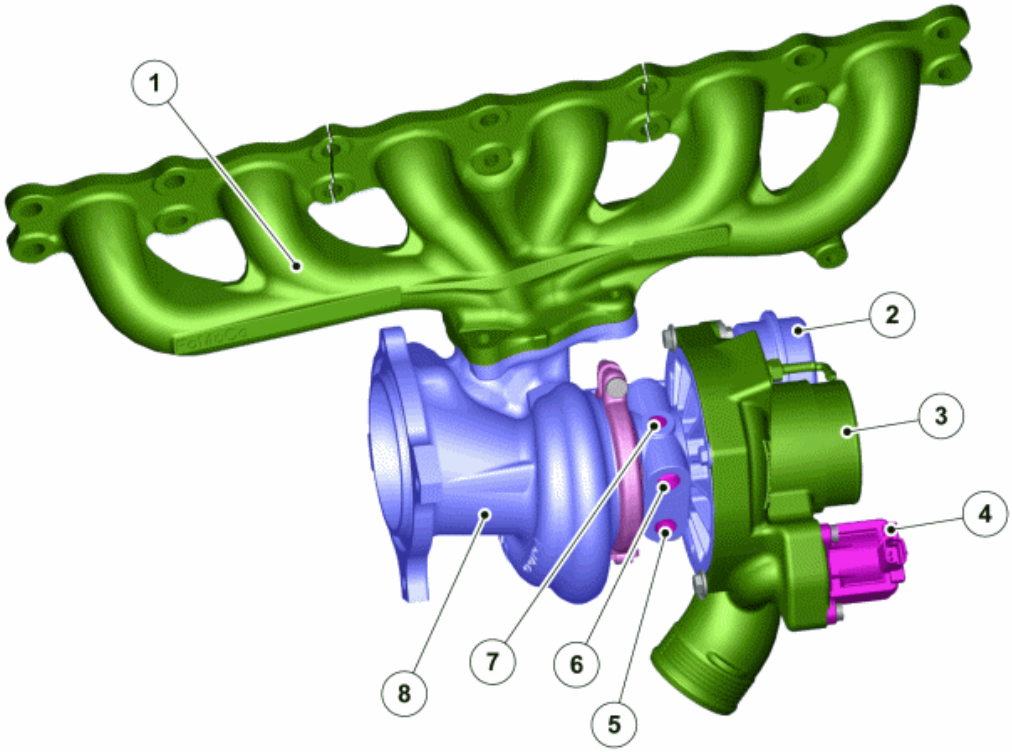

Fig. 148: View of Turbocharger System
Courtesy of VOLVO CARS CORPORATION

The exhaust gases enter via the manifold (1) down to the turbine housing (8) and out to the exhaust system via a downpipe and catalytic converter.

The turbine expels the exhaust gases and rotates the compressor wheel (3). The compressor wheel creates a certain amount of suction using the intake air. This intake air enters the compressor via the air filter and uses a rotational movement to speed up the air, creating the boost pressure. The air then continues into the intake system via the charge air pipe and charge air cooler.

The electronically controlled By-pass valve (4) then controls the boost pressure in the turbocharger by determining the amount of exhaust gases which must pass the turbine. The turbine transfers drive to the compressor. The wastegate valve (2) is a membrane which equalizes the pressure of the intake and exhaust air to eliminate noise.

The turbocharger is lubricated by the engine's oil system (7). The oil system also acts as a supplement to the coolant system (5 and 6).

EXHAUST MANIFOLD / CATALYTIC CONVERTER

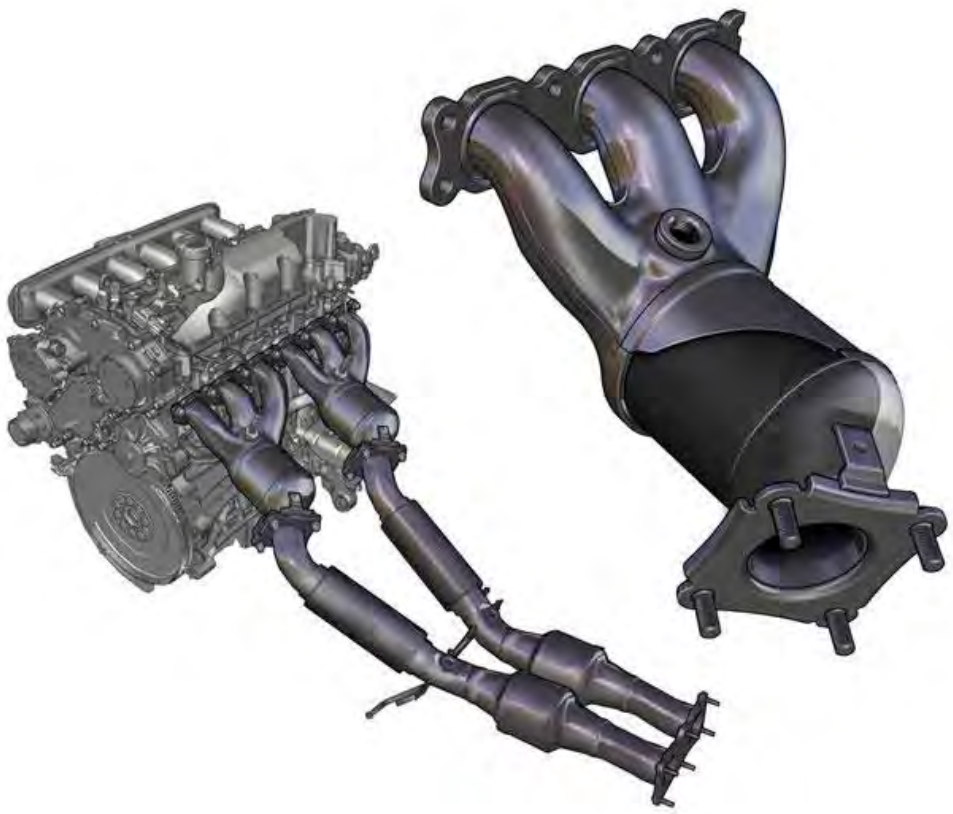

Fig. 149: Identifying Manifold With Catalytic Converter
Courtesy of VOLVO CARS CORPORATION

Exhaust manifold/**CCC** (**C** lose **C** oupled **C** atalyst) and front exhaust pipe/catalytic converter for engine are improved with regards to weight and efficiency. Heat shield plates are modified.

Manifold with catalytic converter

The catalytic converter's cross-section is changed from oval to round, which means better contact pattern of the exhaust flow against the catalytic converter's substrate. This means that the amount of precious metals in the coating on the catalytic converter can be reduced at the same time as the emission standards are fulfilled. In addition to a great cost-saving, reducing the need for precious metals also results in less environmental impact.

The outlet flange is changed from a thickness of 8 mm with threaded holes (x4) to a 4 mm thick plate with press bolts (x4). This gives weight and cost-savings. Gaskets are changed to 1.2 mm flat gaskets.

Downpipe/Catalytic converter

The catalytic converter's inlet flange is also changed from 8 mm to 4 mm thick, which gives a weight and cost-saving. The bellows is more flexible which gives less noise from resonance and vibrations as well as longer service life. Also, the rear catalytic converters have a reduced amount of precious metals in the substrate's coating at the same time as the emission standards still are fulfilled, which gives another big cost-saving.

OVERVIEW

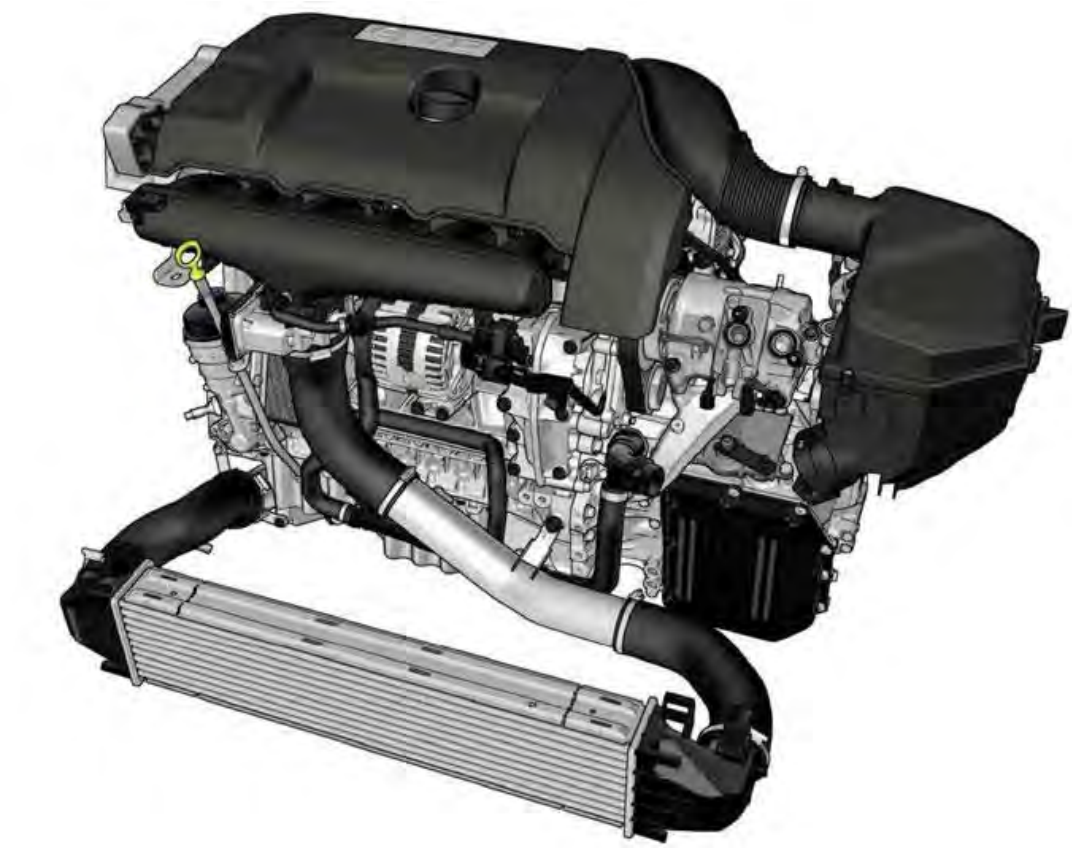

Fig. 150: ENGINE (B6324S5; 2011-2012)
Courtesy of VOLVO CARS CORPORATION

The engine has been developed by Volvo.

It is a 6 cylinder transverse in-line engine with a cylinder capacity of 3.2 L for naturally aspirated engines and 3.0 L for turbocharged engines.

After having been relatively unchanged since the introduction 0620, this engine family has been updated on several points. Most modifications have their basis in an effort to achieve lower fuel consumption and thus less environmental impact.

Engine power has increased, at the same time as fuel consumption has decreased.

- B6304T4: (ULEV2 Ultra Low Emission Vehicle): 300(US)/ 304 hp / 440 Nm
- B6324S4 (PZEV - Partial Zero Emission Vehicle): 230(US) 233 hp (torque unchanged 300 Nm)
- B6324S5 (ULEV - Ultra Low Emission Vehicle): 240(US) /243 hp (torque unchanged 320 Nm)

All of these engines meet the emission standards for Euro5.

The engines' idle speed 650 rpm.

The engine is extremely compact. When it was introduced it was the shortest 6-cylinder engine of 3.2 L on the

market. Conventional straight 6-cylinder engines are too long to fit between the collision members in the engine compartment. The special design of this engine solves the problem.

The engine has an extremely short drive train, its length is only 625 mm from the front edge of the engine block to the rear edge of the carrier plate.

Great attention has been paid to creating a very rigid engine. Middle part, cylinder block and cylinder head have been structurally optimized to combine low weight with high rigidity.

Even the camshaft cover is structurally optimized.

The engine has double overhead camshafts and 24 valves.

Camshafts, AC-compressor, coolant pump and alternator are driven by an auxiliary unit drive, mounted on the back of the engine.

This placement of the auxiliary unit drive enables new possibilities for creating a good collision-protecting structure around the straight 6-cylinder drive unit. In the latest update of the engine family the servo pump has been replaced by an electrically driven pump (EHPAS).

The entire engine block and the cylinder head is made from aluminum.

The engine has a compact "pent-roof" designed combustion chamber and V-arranged valves. This gives optimal and fast filling and direct flushing via the inlet manifold followed by the combustion chamber (cross-flow) and the exhaust channel.

The squish surfaces together with the centrally positioned spark plug provide optimal combustion of the air/fuel mixture, low knock sensitivity and low, stable exhaust emissions.

The engine's firing order is 1 - 5 - 3 - 6 - 2 - 4. The firings occur every 120 degrees that the crankshaft rotates.

ENGINE (B8444S; 2005-2011)

DESIGN

ENGINE BLOCK

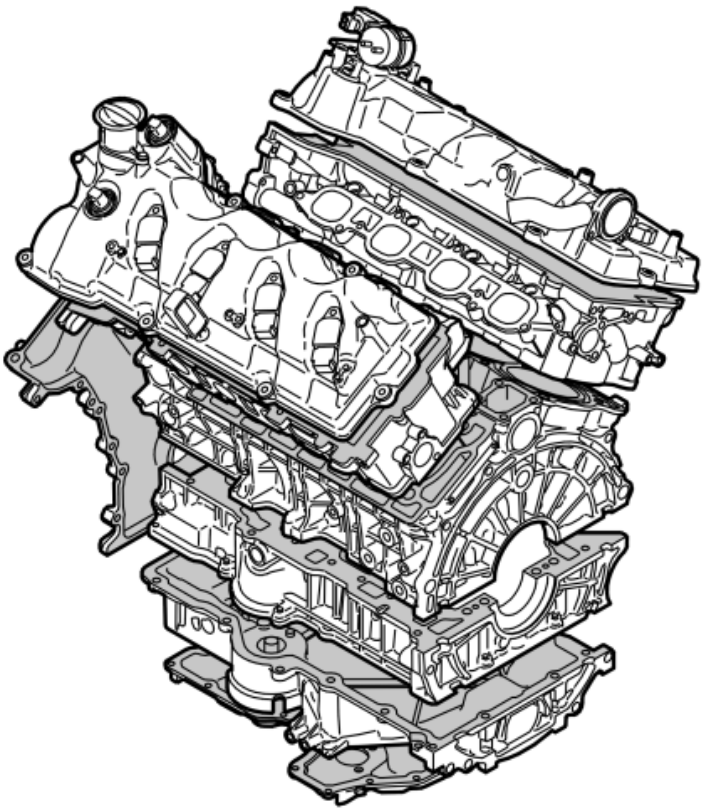

Fig. 151: Engine (B8444S; 2005-2011)
Courtesy of VOLVO CARS CORPORATION

The cylinder heads and valve covers are made of aluminum.

The seal between the cylinder head and cylinder block occurs using two cylinder head gaskets, one for each cylinder head. The cylinder head gasket is made up of three layers of stainless steel. Two outer and a center which act as a seal around the cylinders. The outer surfaces of the gasket are covered by a rubber layer which functions as a seal. The seal between the other planes is made using liquid gasket.

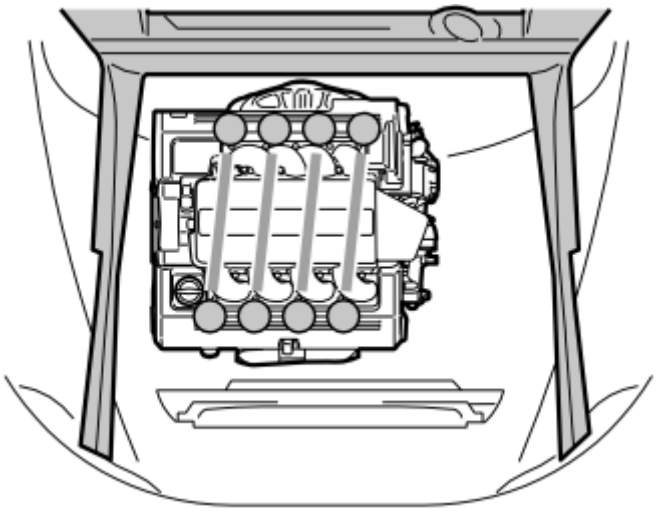

Fig. 152: Identifying Cylinder Bank Offset
Courtesy of VOLVO CARS CORPORATION

The engine has two cylinder banks. The left cylinder bank is slightly offset compared to the right. This allows the use of the vehicle's existing member system and crumple zones.

The engine has double pairs of overhead camshafts - one intake camshaft and one exhaust camshaft in each cylinder head. The camshafts are chain-driven.

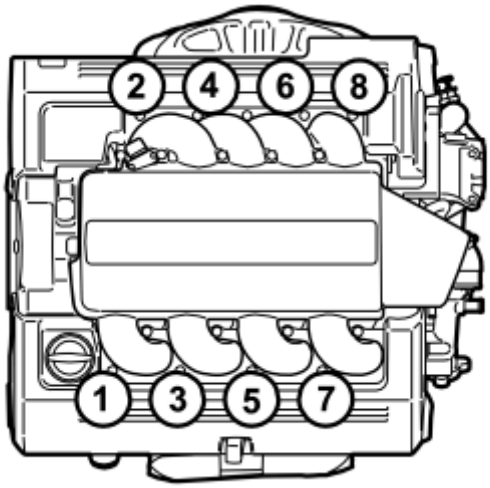

Fig. 153: Identifying Cylinder Number
Courtesy of VOLVO CARS CORPORATION

The cylinders are numbered in the order in which they are installed on the crankshaft when seen from the front (from the camshaft's timing gear).

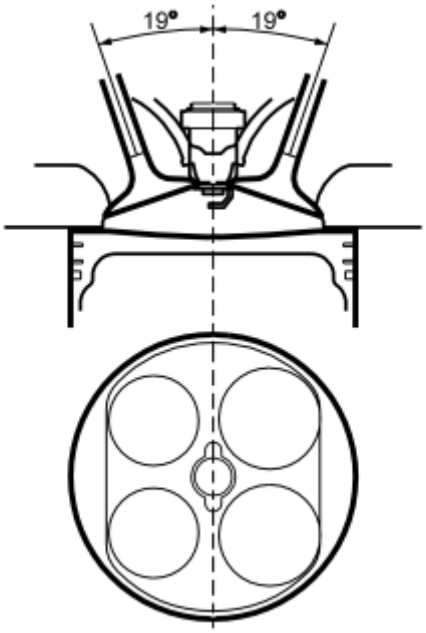

Fig. 154: View of Four Valves Per Cylinder
Courtesy of VOLVO CARS CORPORATION

The engine has four valves per cylinder. The valves are angled at 19 degrees. The valve diameter of the intake valves is 35 mm and the exhaust valve's is 30 mm. The valves are stellite coated. The valve stem diameter for both inlet and exhaust is 5.5 mm.

The combustion chamber is the "Pent roof" type. Together with the V arranged valves this gives optimal and fast filling and direct flushing via the intake channel followed by the combustion chamber (cross-flow) and exhaust channel.

The squish surfaces together with the centrally positioned spark plug provide optimal combustion of the air/fuel mixture, low knock sensitivity and low, stable exhaust emissions.

CYLINDER HEAD

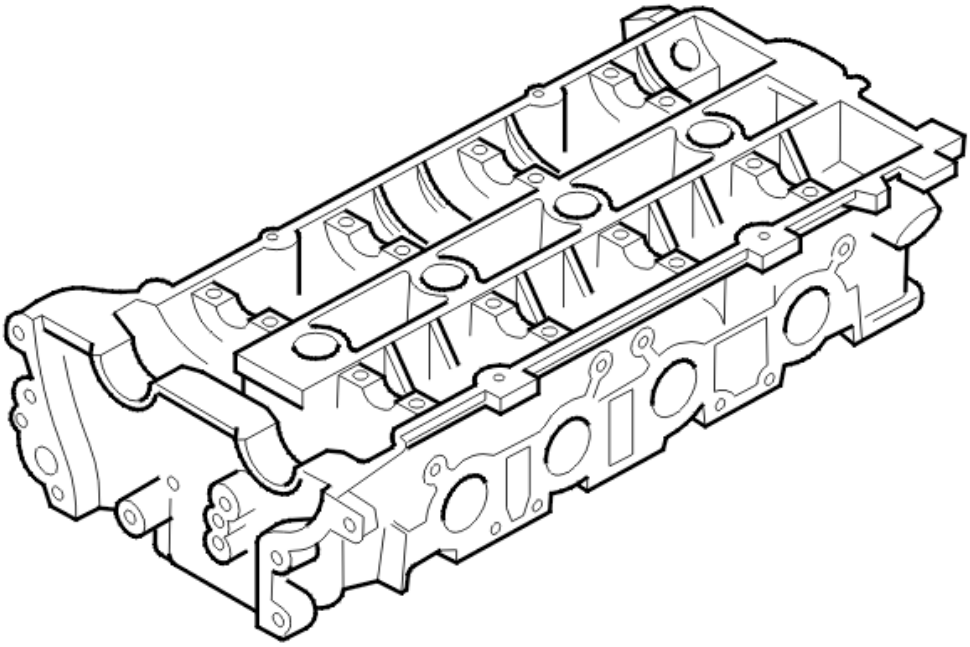

Fig. 155: Identifying Cylinder Head
Courtesy of VOLVO CARS CORPORATION

The engine's two cylinder heads are in principle mirror images of each other. The cast oil galleries in the cylinder head ensures good oil supply to the camshafts and the mechanical valve lifters.

CYLINDER BLOCK

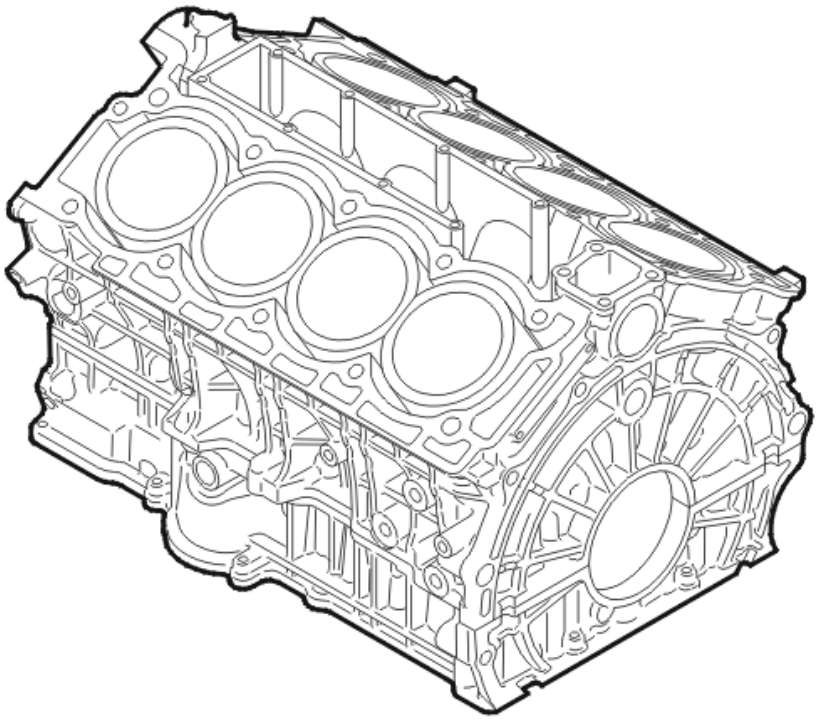

Fig. 156: Identifying Cylinder Block
Courtesy of VOLVO CARS CORPORATION

The cylinder block is made of cast aluminum. It has a stiff rib structure for better rigidity and thereby better sound and vibration properties.

The cylinder block has eight cast-iron cylinder liners molded into the cylinder block. They cannot be replaced.

The coolant jacket goes halfway down the cylinders to ensure quicker heating and thereby reduce hydrocarbon emissions. Certain sections of the coolant jacket are deeper to reduce the risk of the cylinder deformation.

INTERMEDIATE SECTION

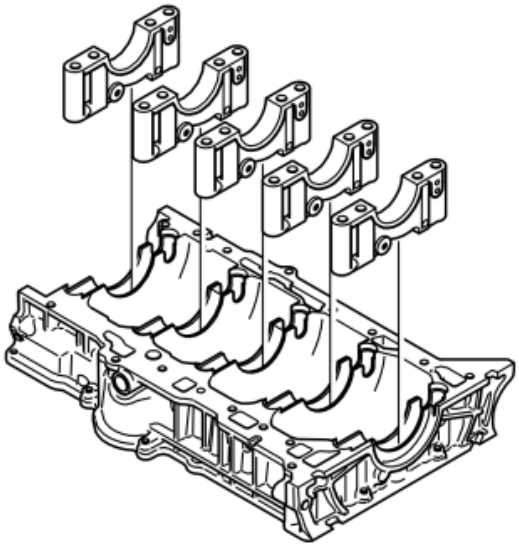

Fig. 157: Identifying Intermediate Section
Courtesy of VOLVO CARS CORPORATION

The intermediate section is made of aluminum. The crankshaft bearing caps are integrated in the intermediate section. The bearing caps are made of cast iron. The caps are fixed with four screws per cap.

OIL SUMP

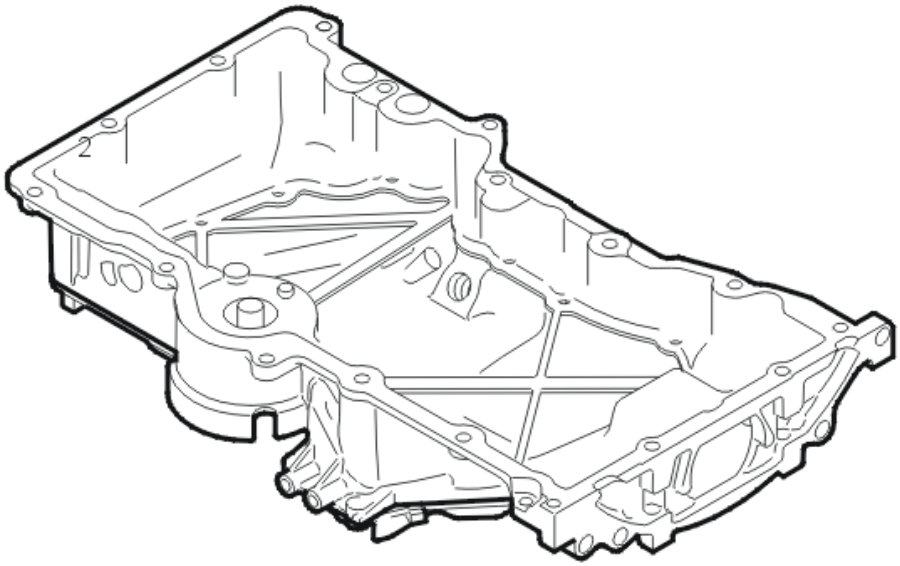

Fig. 158: Identifying Oil Pan
Courtesy of VOLVO CARS CORPORATION

The oil pan is made of pressed aluminum. It has baffles to prevent the oil moving too much. Because of the exterior dimensions of the engine, the oil pan has a unique shape in order to hold the necessary oil volume. The oil pan is made in two parts for manufacturing reasons.

An electric oil level sensor is located in the pan. There is also a normal oil dipstick for manual checks of the oil volume.

PISTONS AND CONNECTING RODS

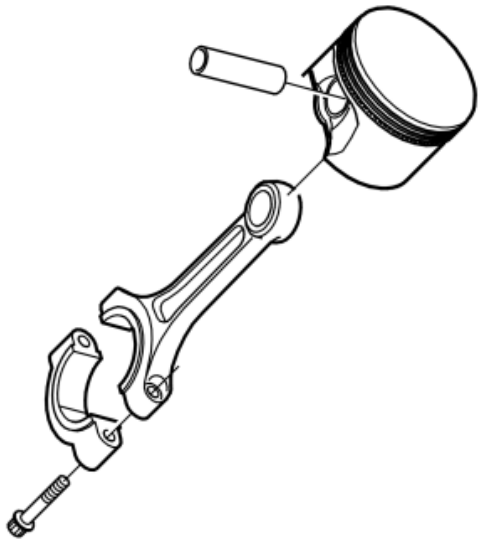

Fig. 159: Identifying Piston And Connecting Rod
Courtesy of VOLVO CARS CORPORATION

The pistons are cast and are made of a light metal alloy. The piston mantle is coated with graphite. The first groove is hard anodized to minimize wear.

The piston is equipped with two compression rings and a three piece oil ring.

The connecting rods are forged. The contact surface between the bearing cap and the connecting rod is treated. Guide pins contribute to good alignment. The connecting rod bearings are aluminum bearings. The bearings are lead free.

The piston transfers the compressive force of the ignited fuel/air mixture to the crankshaft via the connecting rod. The piston rings form a seal so that the fuel/air mixture does not force its way down past the piston. The top ring ensures a seal between the piston and the cylinder. The second ring also seals and scrapes away any oil during the downward movement of the piston. The third ring makes sure the oil drains via the drain hole.

The pistons are oil-cooled. This is necessitated by the short distance between the piston head and the top piston ring.

CRANKSHAFT AND BALANCER SHAFT

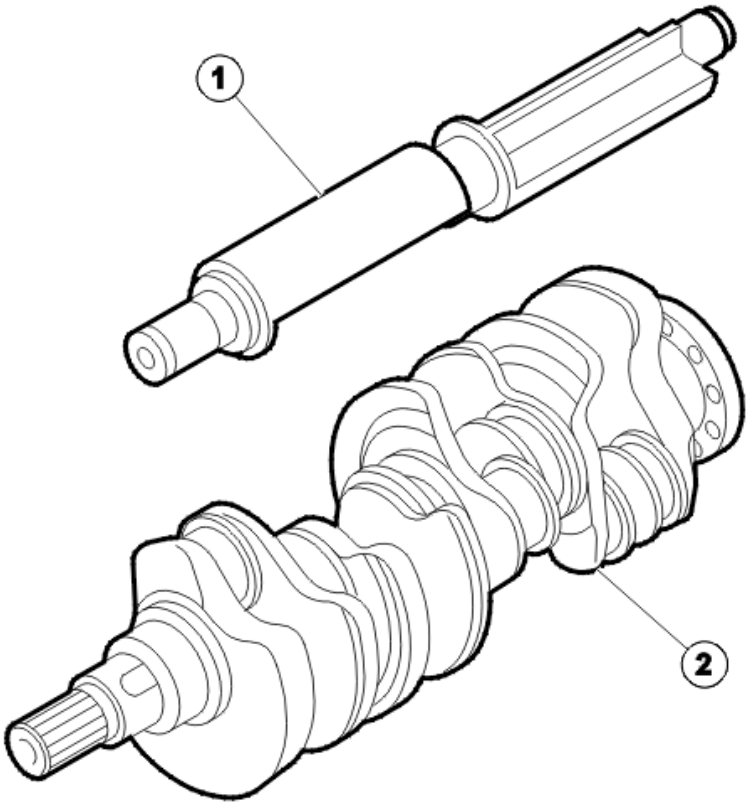

Fig. 160: Identifying Crank and Balancer Shafts
Courtesy of VOLVO CARS CORPORATION

1. Balancer shaft
2. Crankshaft

The crankshaft is made of carbon steel with a nitride hardened surface. The crankshaft bearings have separate caps, the intermediate section of the cylinder block makes up the lower half of the bearing. The crankshaft has five main bearings where the third also acts as an axial bearing. The main bearings are aluminum bearings.

The crankshaft has offset pins. Two connecting rods are mounted on each crankshaft pin with an internal offset of 30°.

Big-end bearings and axial bearings are lead-free.

Two splined joints are located at the front end of the crankshaft, the inner one drives the oil pump. The timing chain gear is located on the outer joint.

The crankshaft has a three part vibration damper consisting of a hub and two active masses. The hub is located between the inner and outer masses. The crankshaft vibration damper drives the auxiliary belt.

The 60 degree angle between the two cylinder banks means that the engine is equipped with a balancer shaft.

This is to give the vibration characteristic which corresponds to a 90 degree V8. The balancer shaft is located in the center of the engine, above the crankshaft. The balancer shaft rotates in the opposite direction to the crankshaft. It is driven by the crankshaft using the same chain that drives the intake camshafts. The balancer shaft rotates at the same speed as the crankshaft.

The balancer shaft is made of spherolitic cast iron (nodular iron).

CAMSHAFTS AND VALVE SYSTEM

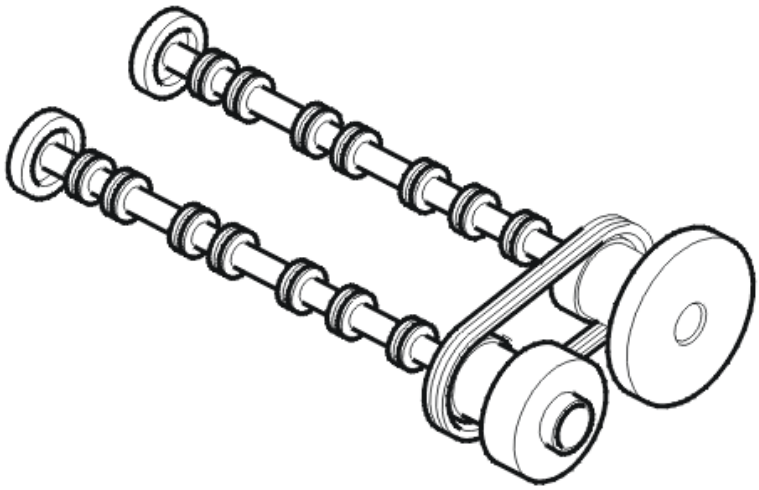

Fig. 161: Identifying Camshafts
Courtesy of VOLVO CARS CORPORATION

The engine has double pairs of overhead camshafts, one intake camshaft and one exhaust camshaft in each cylinder bank. The intake camshafts are located in the middle of the engine while the exhaust camshafts are placed on the outside.

The camshafts are made of cast iron. They are hollow to keep the weight down. Each camshaft pair is mounted in its respective cylinder head with five loose bearing caps per camshaft.

The camshafts work directly on the valve stem via the valve lifters. There is a certain amount of play (valve play) between the valve depressors and the cam lobes. Valve play is adjusted to make up for the longitudinal differences between the valve and cylinder head that occur upon warm-up. The valve depressors are solid and made of steel.

Each camshaft has a CVVT unit. The reset angle is 40.5 crankshaft degrees for the intake camshafts and 42.5 crankshaft degrees for exhaust camshafts.

- Intake camshafts open -8° to 32, 5° before top dead center (BTDC) and close 60° to 19.5° after the bottom dead center.
- Exhaust camshafts open 62° to 19.5° before bottom dead center and close -10° to 32.5° after the top dead center (TDC).

CAMSHAFT CHAIN DRIVE

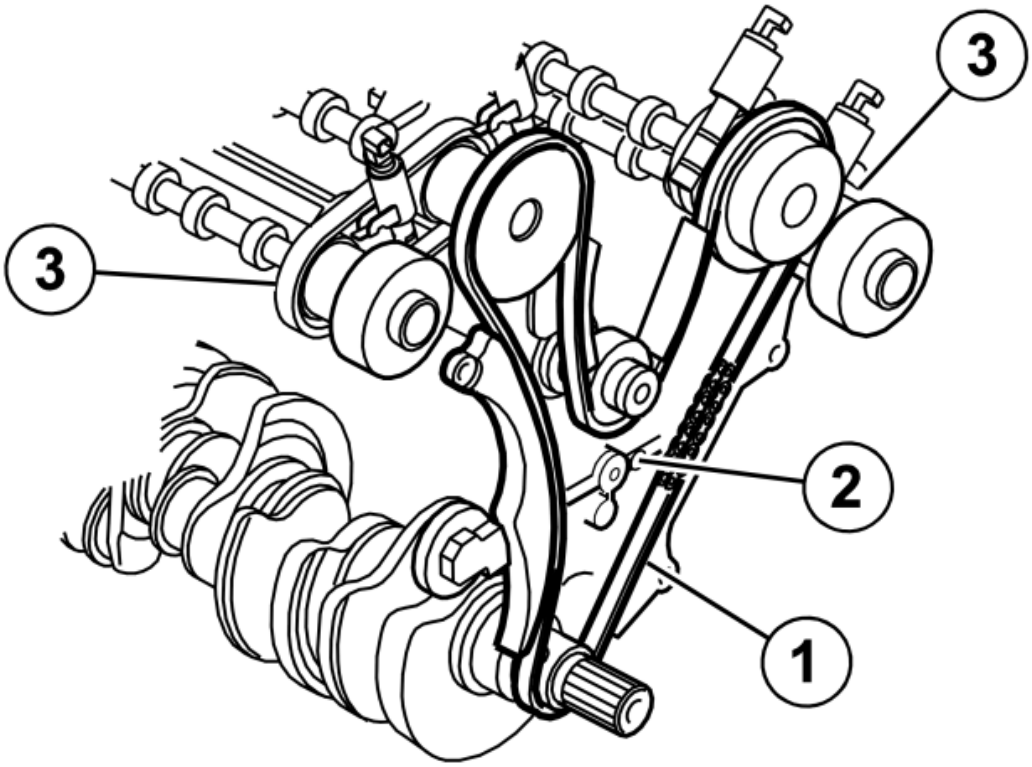

Fig. 162: Identifying Camshaft Chain Drive
Courtesy of VOLVO CARS CORPORATION

The crankshaft drives the intake camshafts and the balancer shaft using a camshaft chain (1). The camshaft is tensioned by a hydraulic chain tensioner. The tensioner is supplied with oil from the normal lubrication system. The camshaft chain is lubricated with oil via a separate nozzle (2).

The intake camshafts in turn drive the respective exhaust camshafts via their chain (3). This intermediate drive means that the outer exhaust camshafts can have smaller pulley wheels which reduces the size of the engine. The intermediate drive chains each have their own hydraulic tensioner. The tensioner is supplied with oil from the normal lubrication system.

A cover seals the area for the camshaft chain drive.

The system requires no maintenance during the entire life of the engine. Both the chain guide and the chain tensioner have plastic inserts on the treads for quiet operation.

LUBRICATION SYSTEM

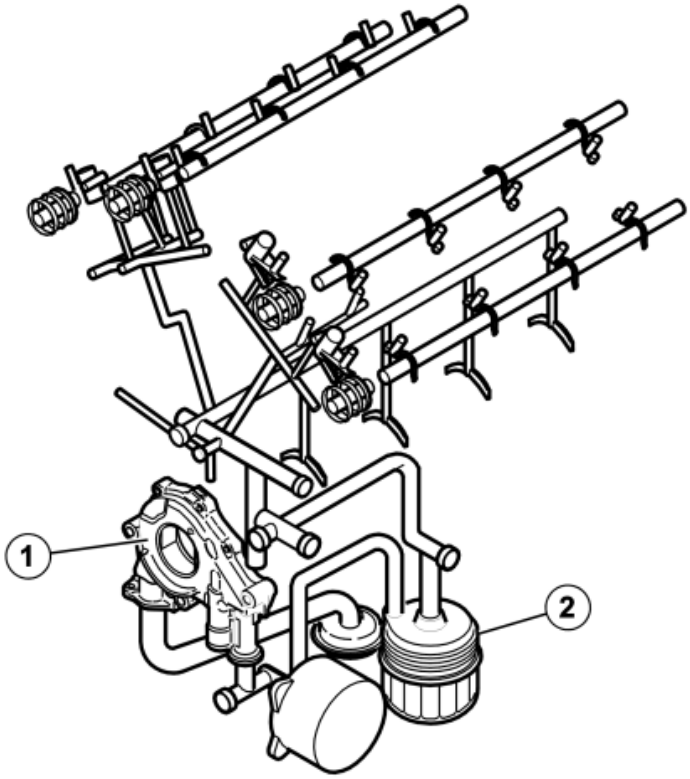

Fig. 163: View of Lubrication System
Courtesy of VOLVO CARS CORPORATION

The lubrication system has a large supply line with a strainer which prevents large contaminants from reaching the oil pump.

The oil pump (1) is driven by the crankshaft. The oil pump is a rotor pump with integrated pressure control valve. The valve opens at approximately 5.0 bar and prevents excessively high pressure which could damage the oil cooler.

The oil cooler is a flat oil cooler. The space for oil and coolant is divided alternately between the plates.

The oil filter (2) is a loose filter element placed in a housing. The overflow valve for a blocked filter is in the cover.

FUEL SYSTEM

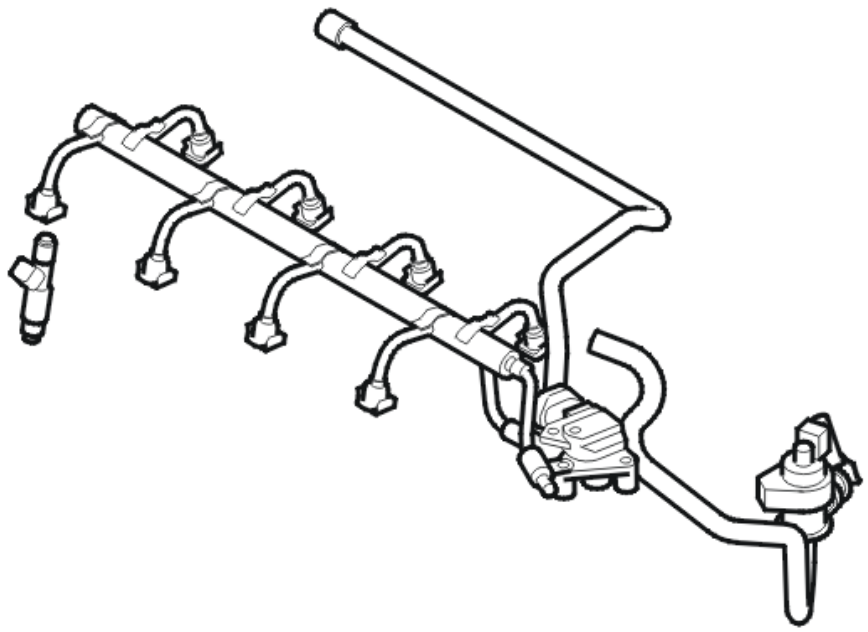

Fig. 164: Identifying Fuel Injection System
Courtesy of VOLVO CARS CORPORATION

A specially designed fuel system is used to reduce the height of the engine.

The fuel system is made of stainless steel to ensure reliability. The fuel hose is made of nylon to reduce the weight of the engine.

INTAKE SYSTEM

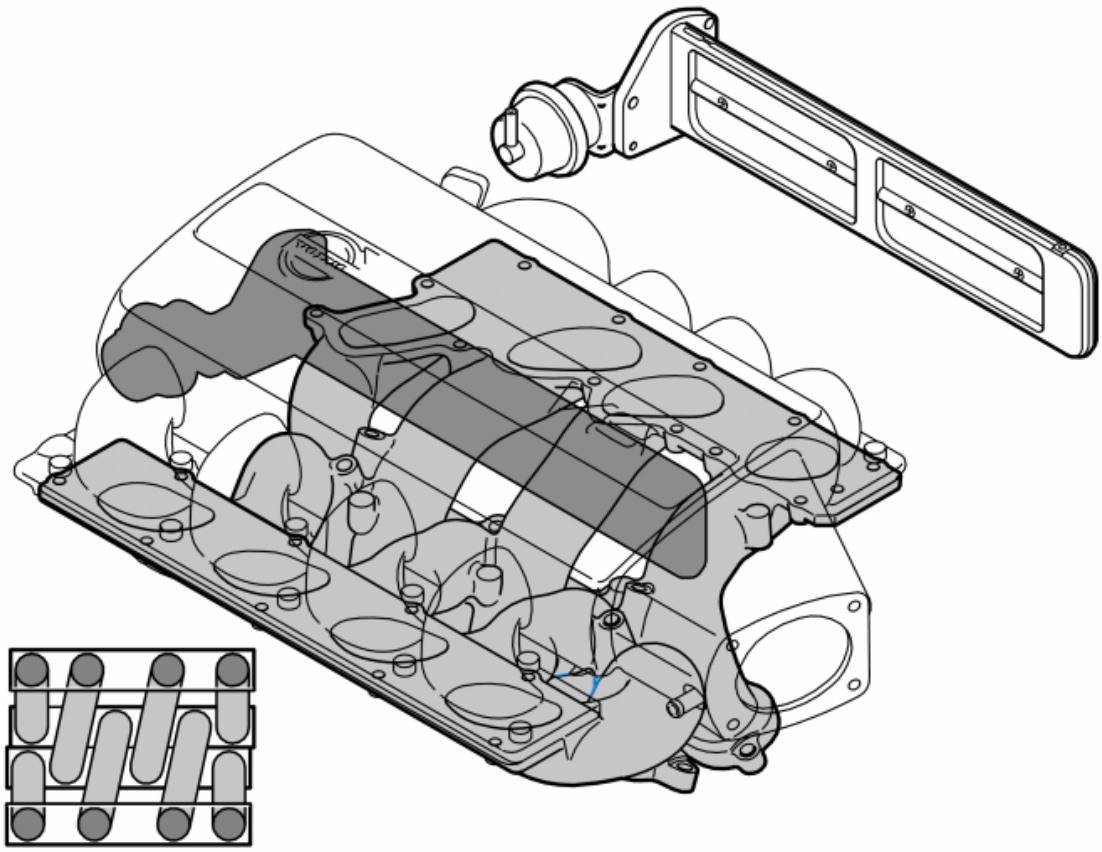

Fig. 165: View of Two Mode Induction System
Courtesy of VOLVO CARS CORPORATION

An induction system with two modes is used to increase torque at low engine speed. Both the intake manifold and the equalizer tank are made of aluminum.

A moveable damper is located in the common area of the intake pipe. The damper separates the area lengthways into two chambers. The damper is controlled from completely closed to completely open, with no intermediate position. Up to an engine speed of 3200 rpm the damper is closed and the damper is open at higher engine speeds.

By dividing the area into two separate chambers, the area functions as two secondary intake pipes. The primary pipes are the cast pipes which lead to the inlet valves of the respective cylinder's intake valves from the collection volume. A closed damper provides secondary pipes while an open damper gives short secondary pipes.

Engine speeds up to 3200 rpm

The combined length and volume of the pipes is tuned to the piston movement and the valve opening times. The result is that the air pulses in time with the valve opening times. this means that the air is pumped into the cylinders when the inlet valves are open. The system gives a high a volumetric efficiency, that is, fills the cylinders and therefore produces a high torque.

In order not to disturb the pulse frequency the left chamber supplies 1, 4, 6 and 7 while the right chamber

supplies cylinders 8, 3, 5 and 2, this is to interact with the firing order 1-8-4-3-6-5-7-2.

Engine speed (RPM) greater than 3200 rpm

At engine speeds greater than 3200 rpm the throttle opens. At these speeds the character of the pulses change character at the same time as a greater volume is required to supply the cylinders with air. The whole area/volume now supplies all cylinders. The common volume and the shape of the pipes is designed to exploit the pulses which occur in this engine speed (rpm) range.

If the damper does not open at 3200 rpm there is marked deterioration in performance from 3200 rpm up to 5000 rpm.

THROTTLE BODY

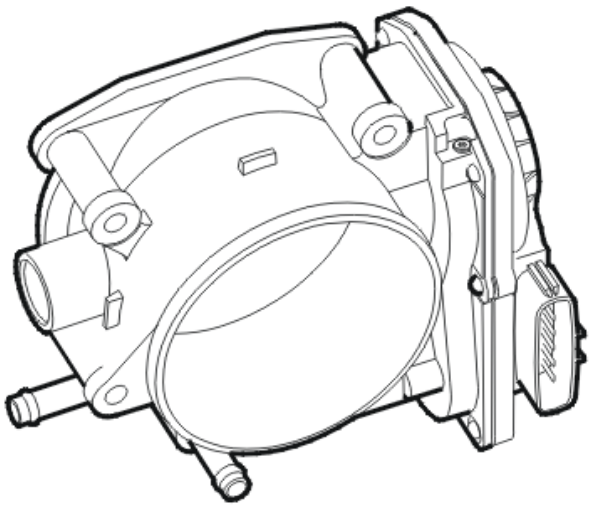

Fig. 166: Identifying Throttle Body
Courtesy of VOLVO CARS CORPORATION

The throttle body is made of cast aluminum. The position sensor, which is located under the plastic cover, reads the position of the throttle disc and two engine connections that turn the throttle disc. The throttle disc position is determined by how much the driver depresses the accelerator pedal. The throttle body is warmed via engine coolant.

COOLING SYSTEM

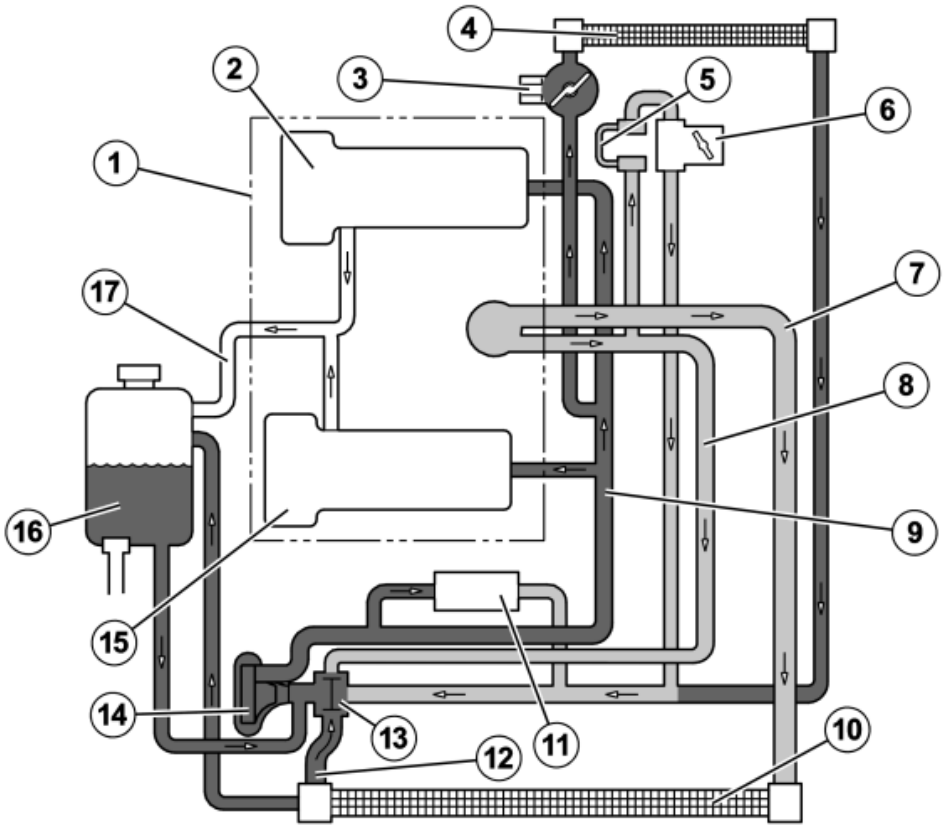

Fig. 167: Schematic of Cooling System
Courtesy of VOLVO CARS CORPORATION

1. Cylinder block
2. Right cylinder head
3. Electric coolant pump
4. Heat exchanger (passenger compartment)
5. Preheating crankcase ventilation
6. Throttle body
7. Upper cooling hose
8. Bypass pipe
9. To cylinder head
10. Radiator
11. Oil cooler
12. Lower cooling hose
13. Thermostat housing
14. Coolant pump
15. Left cylinder head
16. Expansion tank with level sensor
17. Air bleed circuit

The engine is cooled used reversed cooling, that is, the cylinder head is cooled first. The system gives fast heating and contributes to reducing emissions.

The radiator is made of aluminum to withstand thermal fatigue as the radiator is alternately cooled with cold air and heated with hot coolant. The cooling system is regulated by a mechanical thermostat, which is located in the thermostat housing. The thermostat housing, in turn, is located on the inlet side of the coolant pump, between the radiator and the coolant pump.

The heart of the thermostat is a wax body which expands when energy, in the form of heat, is applied. A jiggle pin is located in the thermostat. Any air in the cooling system can be evacuated from the system using the jiggle pin.

Cold air is sucked through the cooler using an electric engine cooling fan installed on the fan shroud behind the radiator. The engine cooling fan is brushless and has six fixed stages. It is controlled by the engine control module (ECM).

Oil cooler

The oil cooler is round and has an inlet and outlet for oil as well as for coolant. The oil cooler is structured in layers, with alternating layers of coolant and oil flow. Because the oil cooler has very small slits, there is a large pressure drop here.

AUXILIARIES BELT

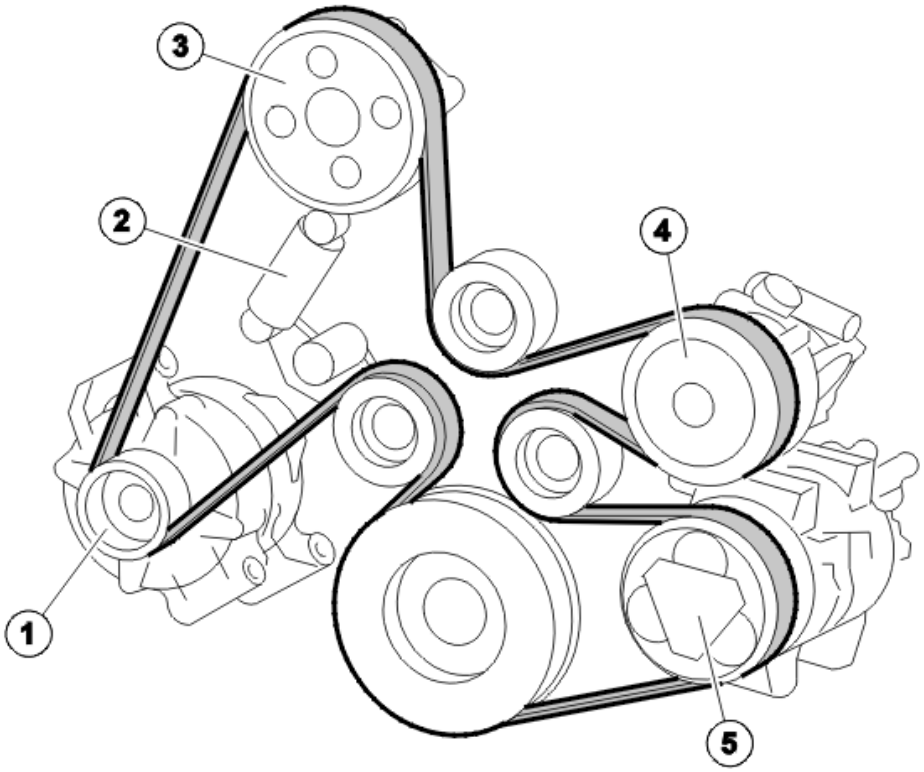

Fig. 168: Auxiliaries Belt Routing
Courtesy of VOLVO CARS CORPORATION

1. Generator (GEN)
2. Belt tensioner
3. Servo pump
4. Water pump
5. air conditioning (A/C) compressor.

All auxiliary units, the alternator, servo pump and A/C compressor are directly mounted in the engine block. They are driven by the vibration damper via an auxiliaries belt. This solution gives a compact design.

The coolant pump is also driven by the auxiliaries belt.

The auxiliaries belt has a mechanical belt tensioner.

EXHAUST SYSTEM

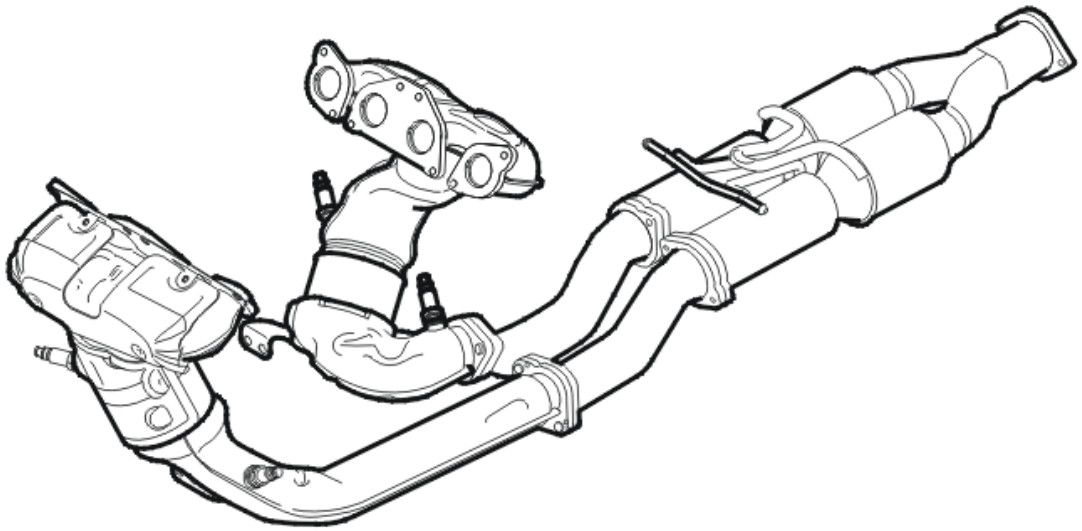

Fig. 169: Identifying Exhaust System
Courtesy of VOLVO CARS CORPORATION

HINT: The illustration displays the exhaust system for the XC90.

The exhaust system is made of double-layer sheeting to keep the temperature down. The inner sheet is 1.0 mm thick while the outer is 1.5 mm thick. There is 4-8 mm of space between the sheets.

An exhaust system extends from each cylinder bank. Each side consists of a manifold with close-coupled catalytic converter, pipes, bellows and a rear catalytic converter. Both sides join to form a common pipe after the rear catalytic converter.

The pipes are designed in such a way that the gas flow from the cylinders is not disruptive and there is good flow distribution to the catalytic converters. Bellows in front of the two rear catalytic converters absorb engine movements and compensate for manufacturing and assembly tolerances.

A catalytic converter consists of perforated stones of ceramic or metal (known as substrate). These are coated with a surface enlarger (washcoat) on which the precious metals platinum, palladium and rhodium, the catalysts, are applied.

The catalytic converter has an extra heat shield toward the radiator fan to reduce the temperature.

Four oxygen sensors are used to regulate the engine and monitor the catalytic converter. There is an oxygen sensor upstream and downstream of each close-coupled catalytic converter.

The two banks are almost exactly the same length to ensure good sound. The exhaust system provides the engine's characteristic V8 sound.

FUNCTION

CRANKSHAFT MOVEMENT

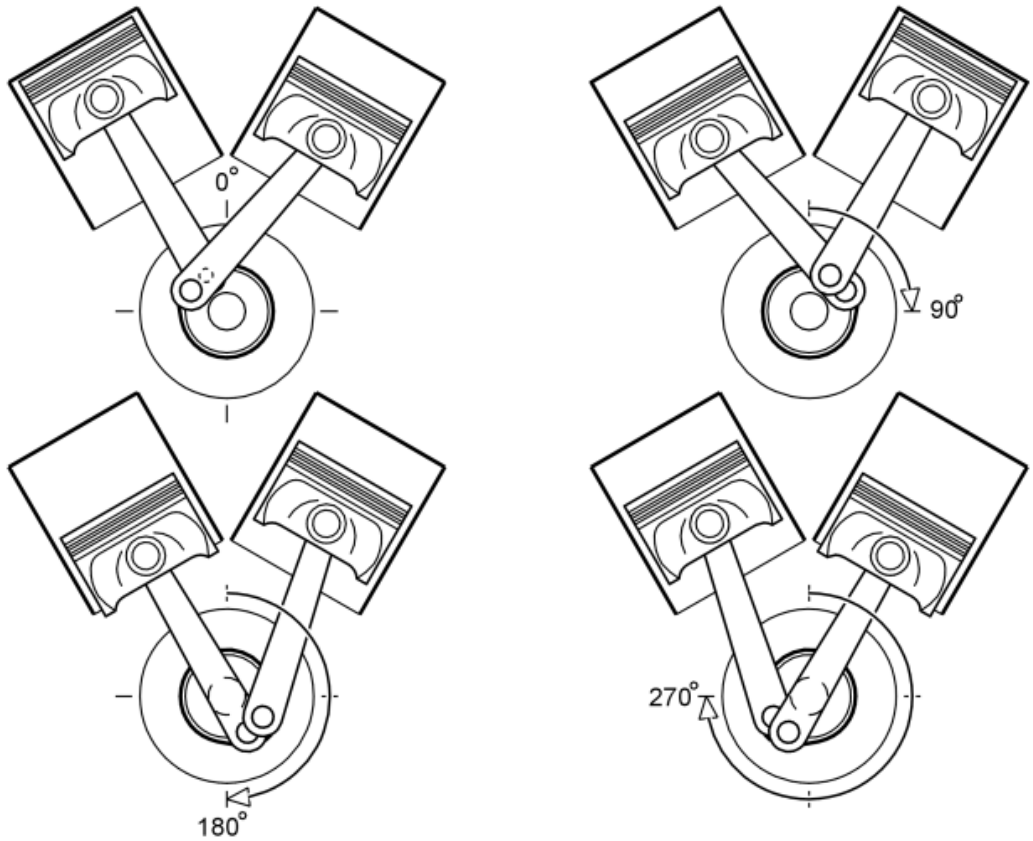

Fig. 170: View Of Crankshaft Relationships
Courtesy of VOLVO CARS CORPORATION

To achieve an even running and characteristic V8 sound, the ignition impulse interval is 90 crankshaft degrees. To reach this in an engine with a 60 degree angle between the cylinder banks, the crankshaft pins for the opposing cylinder pairs are offset by 30 degrees.

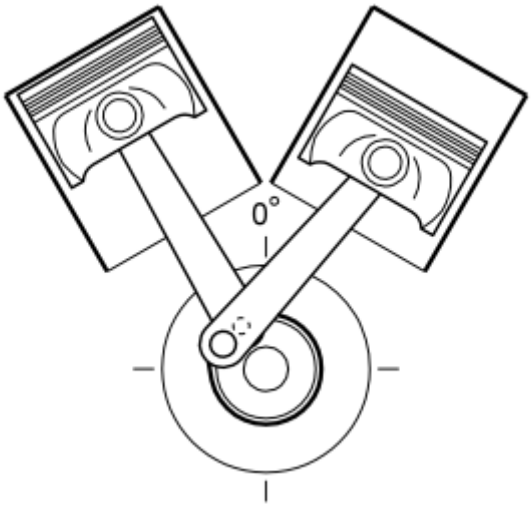

Fig. 171: Identifying Crankshaft Pins Offset By 30 Degrees.
Courtesy of VOLVO CARS CORPORATION

When the left hand piston is at the top, the right hand piston is halfway between the upper and lower turn points. This is because the crankshaft pins are internally offset by 30 degrees.

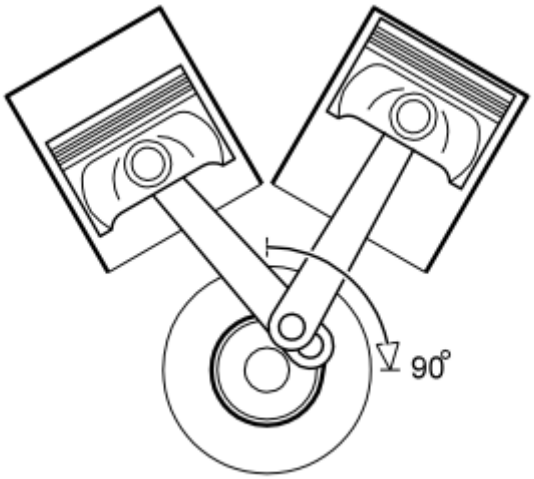

Fig. 172: Crankshaft Rotated 90 Degrees
Courtesy of VOLVO CARS CORPORATION

When the crankshaft has rotated 90 degrees the right hand piston is at the top and the left hand piston is halfway between the upper and lower turning points.

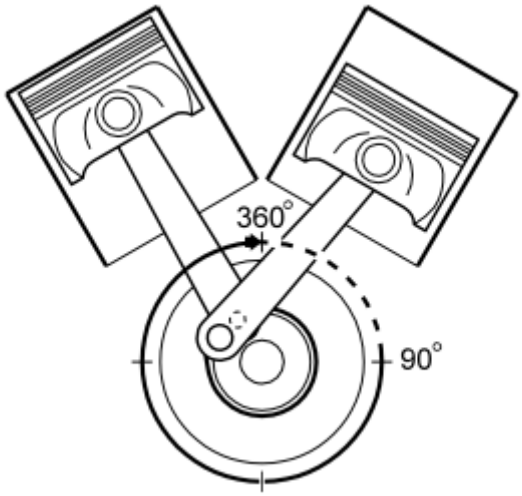

Fig. 173: Ignition Impulses Occur Every 90° Crankshaft Rotation
Courtesy of VOLVO CARS CORPORATION

When the crankshaft has rotated a further 270 degrees the left hand piston is at the top and the right hand piston is halfway between the upper and lower turning points.

By offsetting the crankshaft pins by 30 degrees in this way the ignition impulses will occur every 90th crankshaft degree.

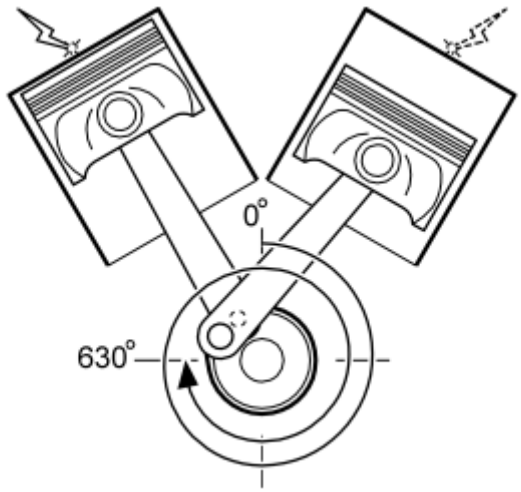

Fig. 174: Identifying Ignition Impulses
Courtesy of VOLVO CARS CORPORATION

The Example shows the principle for cylinder 1 and 2. With the firing order 1-8-4-3-6-5-7-2 the following occurs:

- Cylinder 1 fires.
- The crankshaft then rotates 360°+270°=630° until cylinder 2 fires.
- The next ignition impulse, now again for cylinder 1, occurs when the crankshaft has rotated a further 90 degrees.

LUBRICATION SYSTEM

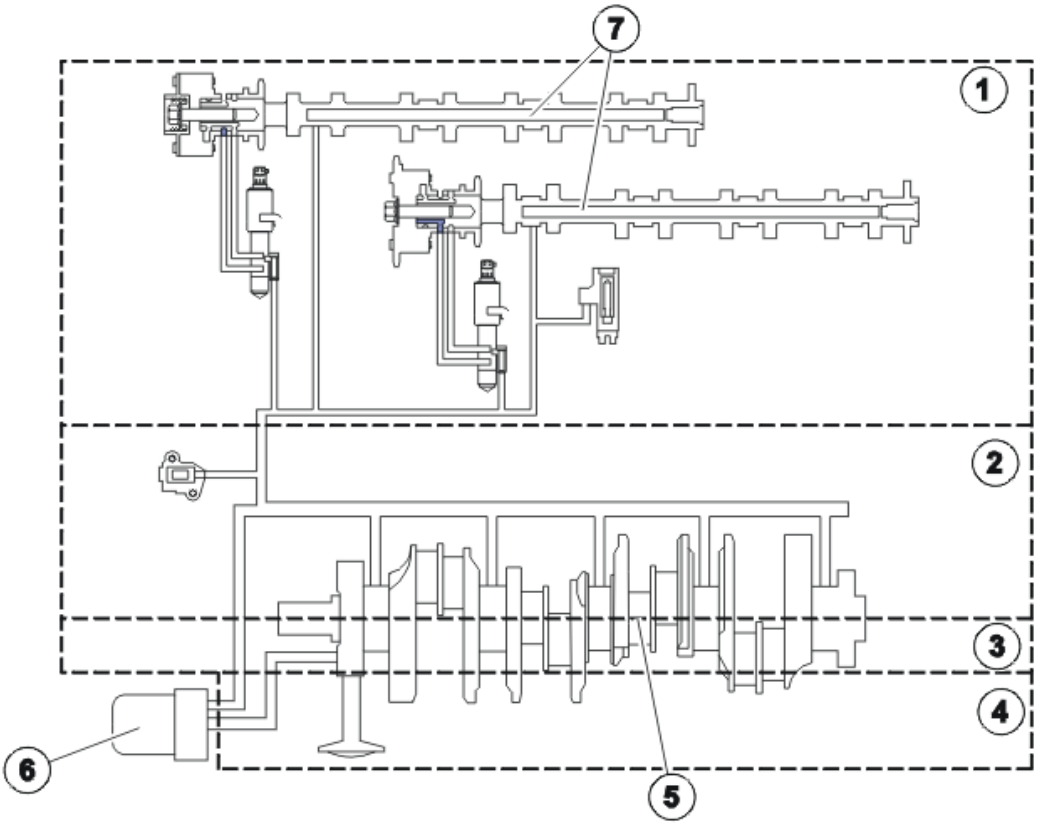

Fig. 175: Identifying Lubrication System
Courtesy of VOLVO CARS CORPORATION

1. Cylinder head
2. Cylinder block
3. Intermediate section
4. Oil sump
5. Crankshaft
6. Oil filter
7. Camshafts

Oil is led from the oil sump via a suction nozzle to the oil pump, which is located on the crankshaft. The oil pump suction function is facilitated by a purge valve that eliminates any air from the system.

The oil is pumped on to the oil cooler system and then on to the oil filter. The oil is led from the filter through a cast oil duct in the intermediate section to the main bearings. The oil is distributed to the big-end bearings via drilled channels in the crankshaft.

The camshafts receive their oil supply via drilled channels in the cylinder block. The channels continue up through the cylinder heads where they open out on the underside of the lower half of the cylinder head. There is a cross channel in the channels to the cylinder heads which leads oil to the pistons. From here the oil is moved further via the oil channels to the intake camshaft bearings and valve lifters.

The exhaust camshaft bearings are supplied via two cast cross channels at the front of the upper halves. The oil is led via drains in the block from the cylinder heads and from the crankshaft bearings back to the oil pan.

CRANKCASE VENTILATION

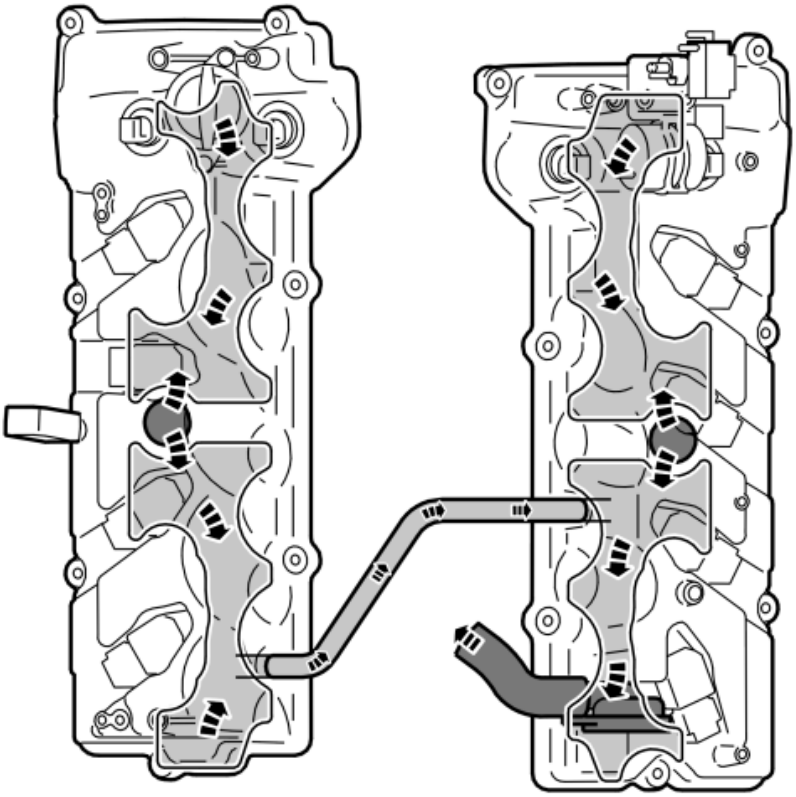

Fig. 176: Identifying Crankcase Ventilation
Courtesy of VOLVO CARS CORPORATION

The system is pressure controlled and completely enclosed.

Crankcase gases flow up to both the valve covers. There is a hose connecting the valve covers. A labyrinth system of plates is installed in the valve covers. The oil in the gases condenses on the plates and drains back to the oil pan.

The ventilation is pressure controlled to retain stable pressure in the crankcase. A pressure regulator is installed on the rear edge of the right valve cover. The gases which are evacuated are led from the regulator through a hose to a connection on the inlet pipe. Coolant is circulated around the connection to prevent freezing.

The pressure in the crankcase is approximately - 0.03 bar.

COOLING SYSTEM

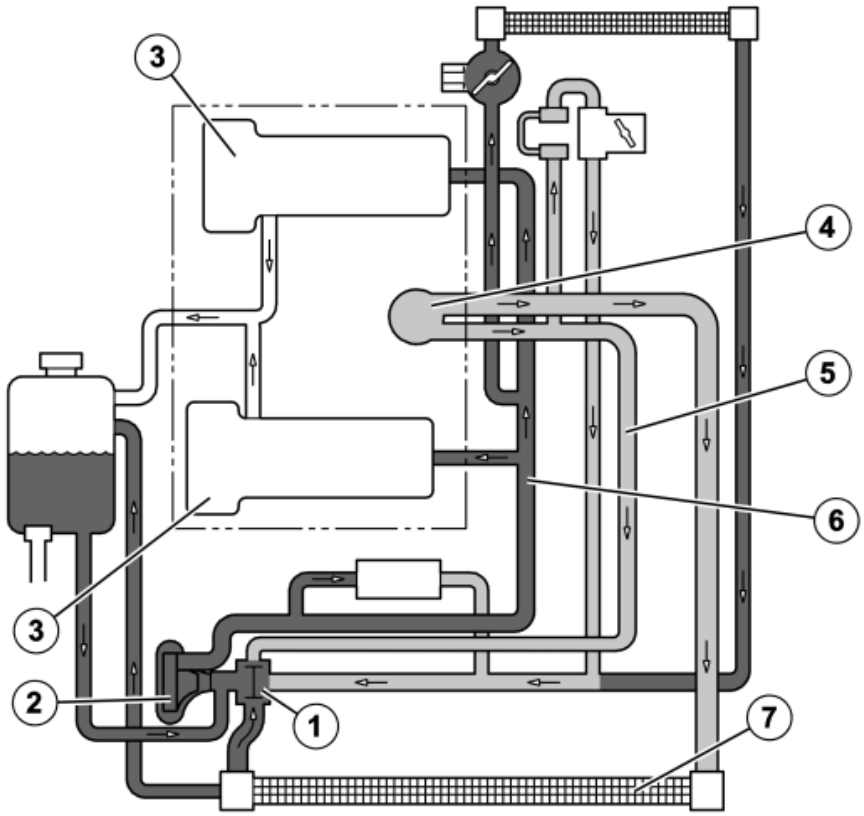

Fig. 177: Diagram Of Cooling System
Courtesy of VOLVO CARS CORPORATION

The combustion of fuel in the vehicle engine produces both mechanical motion and excess energy. The excess energy takes the form of heat that is led away from the engine via:

- exhaust gases
- convection to the air in the engine compartment
- transfer to the coolant in the cooling system
- the engine oil.

The thermostat (1) regulates the amount of coolant to the engine. The wax body in the thermostat expands when subjected to heat.

The coolant is pumped by the coolant pump (2) to the inlets (6) for the cylinder heads (3). The coolant flows forward through the relevant cylinder head and on through the cylinder banks back to the common outlet (4). After passing the engine the coolant flows by:

- Closed thermostat through the bypass pipe (5) back to the coolant pump without cooling off.
- Open thermostat through the radiator (7) to the coolant pump. The coolant also flows through the bypass pipe back to the coolant pump.

EXHAUST SYSTEM

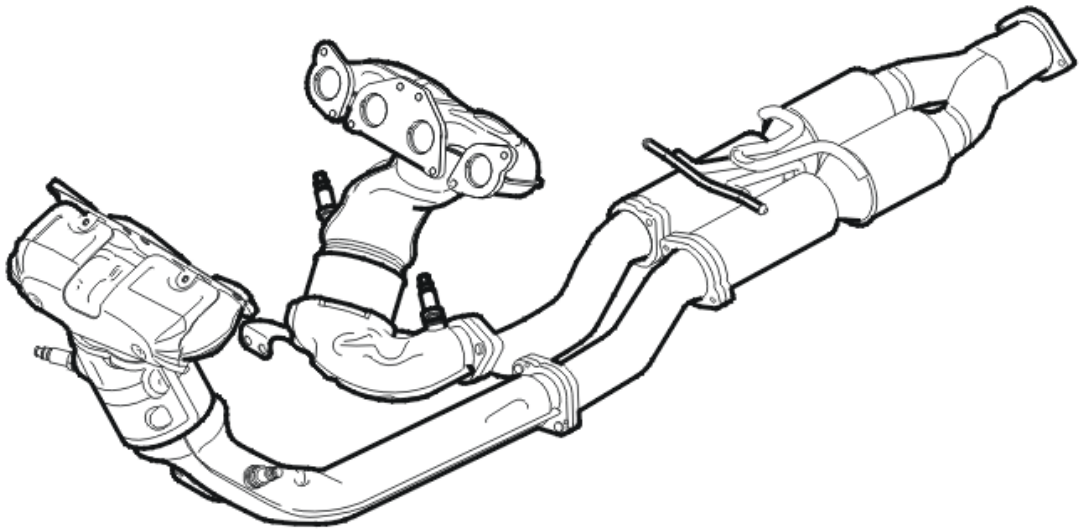

Fig. 178: Identifying Exhaust System
Courtesy of VOLVO CARS CORPORATION

HINT: The illustration displays the exhaust system for the XC90.

The three-way catalytic converters clean by oxidizing carbon monoxide (CO) and hydrocarbons (HC) to water and carbon dioxide (CO_2). Nitrous oxides (NO_x) are reduced to nitrogen and water. The catalytic converter transforms over 98 percent of these substances during normal operation. Lead contaminates in the fuel can damage the catalytic converter, quickly rendering it inoperable.

OVERVIEW

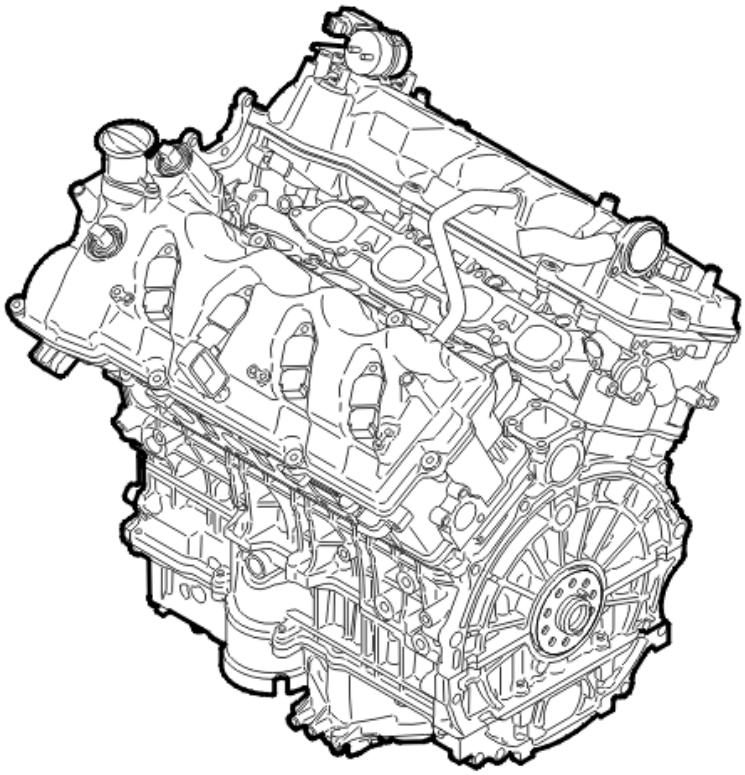

Fig. 179: ENGINE (B8444S; 2005-2011)
Courtesy of VOLVO CARS CORPORATION

The engine is an 8 cylinder V-engine with 60 degrees angle between the two cylinder banks. A specially adapted exhaust system together with the offset crankshaft pins gives the characteristic V8 sound. The engine is transverse and is only available in combination with AWD.

The engine is mounted vertically on the subframe.

Displacement is 4.4 dm^3 . Each cylinder has four valves.

The engine has a variable intake system which gives high torque at low engine speeds (rpm) and high performance at high engine speeds (rpm).

The ignition system has directly installed ignition coils.

The engine has mechanical valve lifters and electronic throttle. The throttle body is heated by coolant which means that pre-heating of intake air is not required.

The engine has double pairs of overhead camshafts, driven by three maintenance-free chains.

The engine has a counter rotating balancer shaft which gives vibration free running.

The cylinder block is made of a light metal alloy.

The direction of cooling system flow allows the coolant to first cool the cylinder heads and then the engine block.

All auxiliary units, the alternator, servo pump and A/C compressor are directly mounted on the engine block.

95 RON fuel can be used for normal operation. 98 RON is recommend for maximum performance and lowest possible fuel consumption. When driving in climates hotter than +38 °C, fuel with the highest possible octane rating is recommended to ensure the best possible performance and fuel consumption.

The engine is regulated by the Engine Control Module (ECM).

ENGINE CONTROL MODULE (ECM) (B6324S; 2007-2010)

DESIGN

IGNITION SWITCH

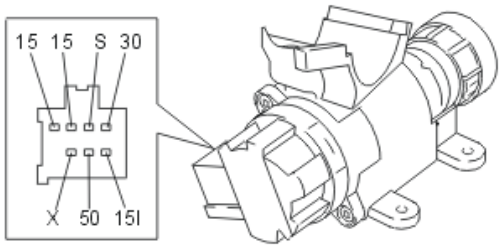

Fig. 180: Identifying Ignition Switch
Courtesy of VOLVO CARS CORPORATION

The Engine Control Module (ECM) uses the signal from the ignition switch to detect when the ignition key has been turned to position II or III. When the key is in the ignition position (position II) or starting position (position III) a high signal (U_{bat}) is transmitted from the ignition switch to the engine control module (ECM).
The engine management system prepares for start-up (for example, temporarily activates the fuel pump (FP) relay). When the flywheel in the engine rotates, the engine speed (RPM) sensor signal is used to keep the fuel pump (FP) relay activated.

The fuse in the fusebox in the passenger compartment supplies current to the ignition switch.

The central electronic module (CEM) has diagnostics for the ignition switch.

TRANSMISSION CONTROL MODULE (TCM)

The engine control module (ECM) uses a directly connected signal from the transmission control module (TCM) in the start function (activating the starter motor).

ENGINE SPEED (RPM) SENSOR

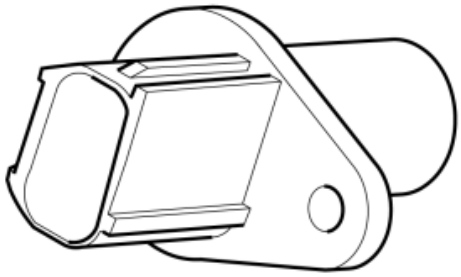

Fig. 181: Identifying Engine Speed (RPM) Sensor
Courtesy of VOLVO CARS CORPORATION

The engine speed (RPM) sensor provides the engine control module (ECM) with information about the speed and position of the crankshaft. The engine control module (ECM) is able to use the signal from the engine speed (RPM) sensor to determine when a piston is approaching top dead center (TDC).

The signal from the engine speed (RPM) sensor is also used to check the engine for misfires. For further information, see: **MISFIRE DIAGNOSTIC**

The impulse sensor is located on the engine's flywheel side, pointing forward. The sensor is inductive with permanent magnet. When the flywheel/drive flange plate passes the impulse sensor, an alternating voltage is induced in the sensor. The generated voltage and frequency increase when the engine speed increases.

The signal varies between 0.1-100 V depending on the engine speed (RPM).

The Engine Control Module (ECM) is able to determine the engine speed (RPM) by counting the number of holes per time unit. When the reference position passes the engine speed (RPM) sensor, the voltage and frequency drop momentarily to zero, even though the engine is still running. This allows the engine control module (ECM) to determine the position of the crankshaft.

If the signal from the engine speed (RPM) sensor is incorrect or missing, the control module will use signals from the camshaft position (CMP) sensor.

The engine speed sensor can be diagnosed by the engine control module (ECM) and the sensor signal (engine speed) can be read out.

CAMSHAFT POSITION (CMP) SENSOR

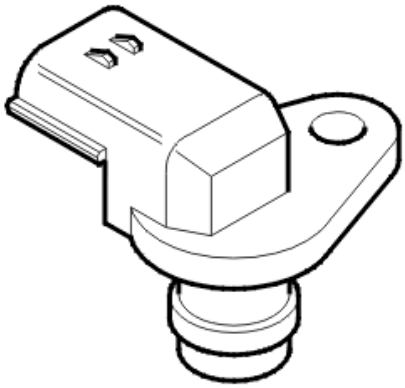

Fig. 182: Identifying Camshaft Position (CMP) Sensor
Courtesy of VOLVO CARS CORPORATION

The function of the camshaft position (CMP) sensor is to detect the flanks of the camshaft rotor. The signal from the sensor is used by the engine control module (ECM) to determine the angle of the camshaft.

Each camshaft is divided into a number of flanks (segments) per camshaft revolution. A pulse wheel on the camshaft consisting of teeth (the teeth are positioned by each flank) is used by the camshaft position sensor (CMP) to detect the flanks and the position of the camshaft.

In the event of misfire or engine knock, the control module is able to determine which cylinder is misfiring or knocking using the camshaft position (CMP) sensor's signal.

Data about the camshaft position is used during camshaft control (CVVT). See: **CAMSHAFT CONTROL (CVVT)**

The sensor, which is a magnetic resistor with a permanent magnet, is grounded in the control module and supplied with 5 V from the control module. When one of the teeth on the camshaft pulse wheel passes the camshaft position (CMP) sensor, a signal is transmitted to the control module from the camshaft position (CMP) sensor. The signal varies between 0 and 5 V and is high when a tooth is in contact with the camshaft position (CMP) sensor and low when the tooth leaves the camshaft position (CMP) sensor.

There is camshaft position (CMP) sensor for each camshaft.

The camshaft sensors are located by the camshafts on the engine's left side, closest to the flywheel.

The engine control module (ECM) can diagnose the camshaft position (CMP) sensors.

KNOCK SENSOR (KS)

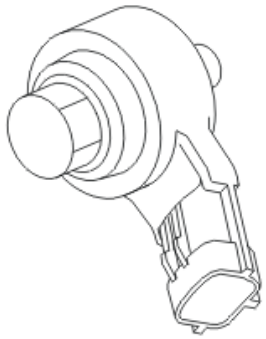

Fig. 183: Identifying Knock Sensor (Ks)
Courtesy of VOLVO CARS CORPORATION

The function of the knock sensor (KS) is to monitor combustion knocking from the engine. Knocking may damage the engine and reduces the efficiency of engine combustion.

If the engine control module (ECM) registers knocking from any of the cylinders, the ignition will be retarded for that cylinder at the next combustion stage. If repeated ignition retardation does not prevent knocking, the injection period will be increased. This has a cooling effect.

The sensor is made up of a piezo electrical crystal. If there is engine knock, vibrations (sound waves) spread through the cylinder block to the knock sensor (KS). The resultant mechanical stress in the piezo electrical material in the knock sensors generates a voltage. This signal is transmitted to the Engine Control Module (ECM). The signal corresponds to the frequency and amplitude of the sound waves. This allows the Engine Control Module (ECM) to determine if the engine is knocking. The camshaft position (CMP) sensor and engine speed (RPM) sensor are used to determine the operating cycle of the engine (which cylinder is igniting) and thereby which cylinder is knocking.

The knock sensors (KS) are located on the cylinder block under the intake manifold.

The engine control module (ECM) can diagnose the knock sensors (KS).

ENGINE COOLANT TEMPERATURE (ECT) SENSOR

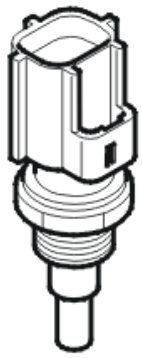

Fig. 184: Identifying Engine Coolant Temperature (ECT) Sensor
Courtesy of VOLVO CARS CORPORATION

The engine coolant temperature (ECT) sensor checks the temperature of the engine coolant. The temperature of the engine coolant is required so that the engine control module (ECM) can regulate:

- the injection period
- the idle speed
- the engine cooling fan (FC)
- the ignition advance
- engagement and disengagement of the A/C compressor
- diagnostic functions.

The sensor is a negative temperature coefficient (NTC) type which is supplied with power from the control module (signal) and is grounded in the control module.

The resistance in the sensor changes depending on the temperature of the coolant. Depending on the resistance in the sensor, voltage (signal) is transmitted to the engine control module (ECM). The lower the temperature the higher the voltage (high resistance). A high temperature results in low voltage (low resistance).

The engine temperature sensor is located by the thermostat under the intake manifold.

The engine temperature sensor can be diagnosed by the engine control module (ECM) and the sensor value can be read out.

MASS AIR FLOW (MAF) SENSOR/INTAKE AIR TEMPERATURE (IAT) SENSOR

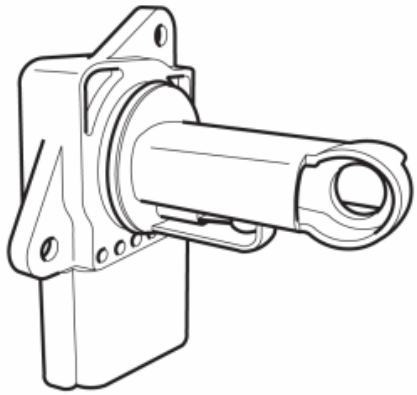

Fig. 185: Identifying Mass Air Flow (MAF) Sensor/Intake Air Temperature (IAT) Sensor
Courtesy of VOLVO CARS CORPORATION

Overview

The mass air flow (MAF) sensor is a combined sensor and contains two sensors in the same component:

- Mass air flow (MAF) sensor
- intake air temperature (IAT) sensor.

The mass air flow sensor is located by the air filter housing.

Mass air flow (MAF) sensor

The mass air flow (MAF) sensor gauges the air mass sucked into the engine. It continuously transmits signals to the engine control module (ECM) about the mass of the intake air. This data is used by the engine control module (ECM) to calculate:

- the injection period
- the fuel pressure
- the ignition timing
- the engine load.

The gearbox control module (TCM) also uses this data for its gear shift calculations. This data is transmitted to the gearbox control module (TCM) from the engine control module (ECM) via the high speed side of the Controller area network (CAN).

The mass air flow (MAF) sensor is a hot wire type. Unlike other hot wire types, the mass air flow sensor in the Denso system uses a hot wire which has a ceramic casing. This eliminates the need for a clean burn function.

The mass air flow (MAF) sensor is supplied with battery voltage by the system relay and is grounded in the engine control module (ECM). The signal from the sensor is analog and varies between approximately between 0.5 - 4.5 V. Low air flow (low mass) results in low voltage, high air flow (high mass) gives high voltage.

The mass air flow (MAF) sensor can be diagnosed by the engine control module (ECM) and the sensor signal can be read off.

Intake air temperature (IAT) sensor

The temperature sensor checks the temperature of the intake air in the intake manifold. This data is used by the engine control module (ECM) to calculate injection period. The control module also controls certain diagnostic functions using the signal from the temperature sensor.

The sensor, which is an NTC resistor, is grounded in the control module and supplied with power (signal) from the control module.

The resistance in the sensor changes according to the intake air temperature. This provides the control module with a signal of between 0.5 - 5 V. The lower the temperature the higher the voltage (high resistance). A high temperature results in low voltage (low resistance).

The temperature sensor can be diagnosed by the engine control module (ECM) and the sensor signal can be read off.

HEATED OXYGEN SENSORS (HO2S)

Front heated oxygen sensor (HO2S)

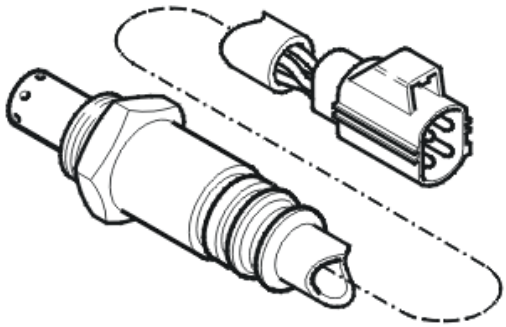

Fig. 186: Identifying Heated Oxygen Sensors (HO2S)
Courtesy of VOLVO CARS CORPORATION

CAUTION: The air lines for the heated oxygen sensors (HO2S) must not be trapped or damaged in any way. The connectors for the heated oxygen sensors (HO2S) must not be greased under any circumstances. The oil in the grease would disrupt the reference air and the function of the heated oxygen sensors (HO2S).

Front heated oxygen sensor (HO2S) is used to provide the engine control module (ECM) with information about the remaining oxygen content of the exhaust gases before the three-way catalytic converter (TWC). This is so that the engine control module (ECM) can continually check the combustion so that lambda=1 is achieved. lambda=1 is the ideal fuel-air ratio, with 14.7 kg air per 1 kg fuel.

The heated oxygen sensor uses current regulation and its signal characteristic is linear. With a linear signal characteristic, the amplitude of the signal curve is low when changing the oxygen content in the exhaust gases. The probe consists of a preheating element and the actual lambda sensor. The lambda sensor is an oxygen sensitive ceramic body consisting of zirconium oxide. The control module supplies power to the ceramic body, which reacts to the oxygen content of the exhaust gases. This in turn affects the signal to the engine control module (ECM). In order to determine the oxygen content in the exhaust pipe, the heated oxygen sensor needs reference air from the surrounding air. This reference air reaches the heated oxygen sensor via the air lines.

There are two front heated oxygen sensors; one for bank 1 and one for bank 2.

The heated oxygen sensors (HO2S) are diagnosed by the engine control module (ECM) and the signals from them can be read off. For further information, see: **HEATED OXYGEN SENSOR (HO2S) DIAGNOSTIC**

The control module can be used to read off the calculated lambda value from the heated oxygen sensor (HO2S) signal.

Rear heated oxygen sensor (HO2S)

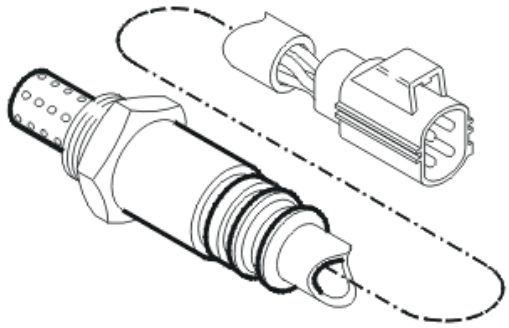

Fig. 187: Identifying Heated Oxygen Sensors (HO2S)
Courtesy of VOLVO CARS CORPORATION

CAUTION: The air lines for the heated oxygen sensors (HO2S) must not be trapped or damaged in any way. The connectors for the heated oxygen sensors (HO2S) must not be greased under any circumstances. The oil in the grease would disrupt the reference air and the function of the heated oxygen sensors (HO2S).

The rear heated oxygen sensor (HO2S) is used to provide the Engine Control Module (ECM) with information about the remaining oxygen content of the exhaust gases behind the three-way catalytic converter (TWC). This information is used by the Engine Control Module (ECM) to check the function of the three-way catalytic converter (TWC). This check is carried out when the conditions for the Rear heated oxygen sensors (HO2S) are used to provide the Engine Control Module (ECM) with information about the remaining oxygen content of the exhaust gases behind the three-way catalytic converter (TWC). This information is used by the Engine Control Module (ECM) to check the function of the three-way catalytic converter (TWC). This check is carried out when the conditions for the catalytic converter diagnostics have been met. Rear heated oxygen sensors (HO2S) have no direct effect on regulation of the fuel/air mixture. However the Engine Control Module (ECM) uses the signal to optimize the signal from front heated oxygen sensors (HO2S). For further information, see: **THREE-WAY CATALYTIC CONVERTER (TWC) DIAGNOSTICS**

The heated oxygen sensor (HO2S) uses voltage control. The signal characteristic is binary. With a binary signal characteristic, the amplitude of the signal curve changes considerably when changing the oxygen content in the exhaust gases. Otherwise its components and function are the same as the front heated oxygen sensor (HO2S).

There are two rear heated oxygen sensors; one for bank 1 and one for bank 2.

The heated oxygen sensors (HO2S) can be diagnosed by the engine control module (ECM), and signals from them can be read off

Preheating of the heated oxygen sensors (HO2S)

The heated oxygen sensor (HO2S) only functions above a certain temperature, approximately 300 °C. The normal operating temperature is between 300-900 °C. The heated oxygen sensors (HO2S) are electrically pre-heated so that operating temperature is rapidly reached. They are also pre-heated to ensure that the heated

oxygen sensors (HO2S) maintain a normal operating temperature and to prevent condensation which could damage the heated oxygen sensor (HO2S).

The sensor's heating coil consists of a PTC-resistor. The heating coil is supplied with voltage from the system relay and is grounded internally in the Engine control module (ECM).

When the control module grounds the connection, a current will pass through the PTC-resistor. When the heated oxygen sensor is cold, the resistance in the PTC-resistor is low and a high current will pass through the circuit. To avoid condensation damage to the heated oxygen sensor the current is pulsed from the Engine control module (ECM) in the beginning. Depending on the temperature, consideration is given to dew point and, as the temperature increases in the PTC-resistor, the resistance increases in the resistor, the current is reduced and transfers gradually to non-pulsing current.

The heating period for the front heated oxygen sensor is short, approx. 20 seconds.

The heater element heats the heated oxygen sensors (HO2S) to approximately 350 °C. The probes maintain this as a minimum temperature.

The engine control module (ECM) can diagnose the heater element.

BRAKE LIGHT SWITCH

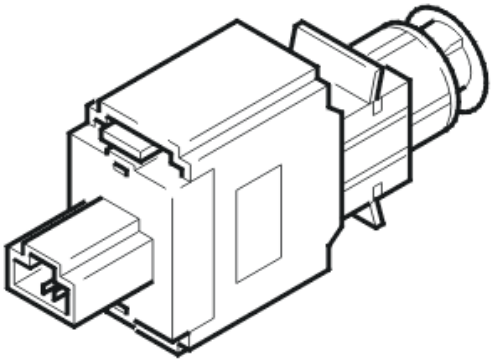

Fig. 188: Identifying Brake Light Switch
Courtesy of VOLVO CARS CORPORATION

The purpose of the brake light switch is to provide the engine control module (ECM) with information indicating whether the brake pedal is depressed.

When the brake pedal is pressed down, a signal is sent to the Engine control module (ECM), which turns off the cruise control (if it is activated). The brake pedal position sensor also handles the function for switching off cruise control.

The brake light switch is supplied with power from the ignition switch (terminal 30). When the brake pedal is depressed the switch closes and a high signal (12 V) is transmitted to the engine control module (ECM).

The stop lamp switch can be diagnosed by the engine control module (ECM) and its status (depressed or not)

can be read off.

The brake light switch is on the pedal box by the brake pedal.

A/C PRESSURE SENSOR

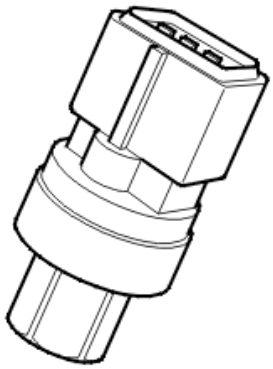

Fig. 189: Identifying A/C Pressure Sensor
Courtesy of VOLVO CARS CORPORATION

The air conditioning (A/C) pressure sensor detects the pressure in the high-pressure side of the air conditioning (A/C) system. See: **REGULATING THE AIR CONDITIONING (A/C) COMPRESSOR**

The sensor is linear. It is grounded in the control module and supplied with a 5 Volt current from the control module. A linear signal (between 0-5 V depending on the pressure in the air conditioning (A/C)) is transmitted to the control module. Low pressure produces low voltage, high pressure produces high voltage. The air conditioning (A/C) pressure sensor is affected by the pressure in the high-pressure pipe of the air conditioning (A/C) system (narrow pipe).

The engine control module (ECM) can diagnose the air conditioning (A/C) pressure sensor. The sensor value can be read off using the diagnostic tool.

ACCELERATOR PEDAL (AP) POSITION SENSOR

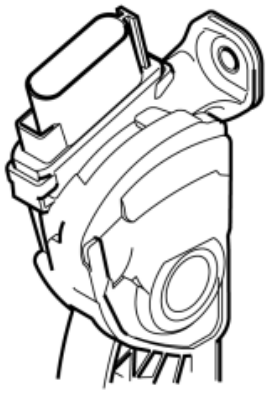

Fig. 190: Identifying Accelerator Pedal (AP) Position Sensor

Courtesy of VOLVO CARS CORPORATION

The function of the accelerator pedal position sensor is to provide the engine control module (ECM) and central electronic module (CEM) information on the position of the accelerator pedal. The engine control module (ECM) uses this data to deploy the shutter in the throttle unit to the correct angle.

The accelerator pedal position sensor consists of a plastic housing with two potentiometers, and an Analog/Digital converter. The potentiometers are connected to a common shaft which is affected by the position of the accelerator pedal.

The accelerator pedal (AP) position sensor transmits an analog and a pulse width modulated (PWM-signal to the engine control module (ECM). These signals indicate the position of the accelerator pedal (AP). The digital signal is generated by the sensors Analog/Digital converter.

The analog and digital signals are used at the same time by the engine control module (ECM) to regulate the throttle shutter angle.

The power supply to the two potentiometers is different. The analog potentiometer is supplied with 5 V via the engine control module (ECM). The digital potentiometer is supplied with 12 V via the system relay and is grounded in the car body.

The digital signal is used together with the analog signal for diagnostics of the accelerator pedal position sensor.

Accelerator pedal (AP) position sensor's signals can be read off.

A diagnostic trouble code (DTC) is stored if the engine control module (ECM) detects a difference between the analog and digital signals. The engine control module (ECM) then uses a minimal value to ensure the function (limp home).

The accelerator pedal (AP) position sensor is located on the accelerator pedal bracket.

OUTSIDE TEMPERATURE SENSOR

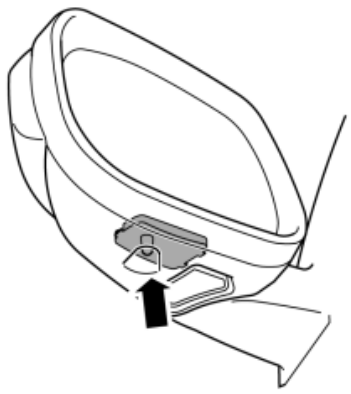

Fig. 191: Locating Outside Temperature Sensor
Courtesy of VOLVO CARS CORPORATION

The outside temperature sensor detects the temperature in the surrounding air. The signal is used by the engine control module (ECM) as a substitute value in the event of a fault in certain components or functions and to control certain diagnostic functions.

The sensor is a negative temperature coefficient (NTC) type which is supplied with power from the control module (signal). The resistance in the sensor changes with the outside temperature. This alters the signal to the engine control module (ECM). The lower the temperature the higher the voltage (high resistance). A high temperature results in low voltage (low resistance).

The outside temperature sensor is positioned in the left door mirror.

The outside temperature sensor can be diagnosed by the engine control module (ECM) and the sensor value can be read off.

ENGINE COOLANT LEVEL SENSOR

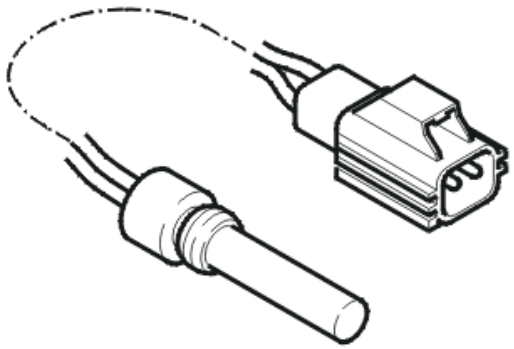

Fig. 192: Identifying Engine Coolant Level Sensor
Courtesy of VOLVO CARS CORPORATION

The function of the engine coolant level sensor is to alert the driver if the engine coolant level in the expansion tank is too low.

The sensor is a magnetic reed switch, which is enclosed in a pipe on the bottom of the expansion tank. Around the pipe, on the inside of the expansion tank is a float. This float contains a magnet. When the engine coolant level is above minimum, the float is too high in the tank to affect the switch. However if the engine coolant level falls below the minimum level, the magnetic field acts on the switch.

The sensor is supplied with voltage (signal) from the engine control module (ECM) and grounded in the body. When the engine coolant level in the expansion tank is over a certain level the circuit closes, which produces a low signal. When the engine coolant level is below a certain level the circuit is opened by the engine coolant level sensor, which produces a high signal. When the engine control module (ECM) detects a high signal the information about low engine coolant level is transmitted via the Controller area network (CAN) to the driver information module (DIM), which warns the driver.

NOTE: There are no functions controlled by the engine which are directly connected to

the low coolant level warning lamp. The Engine Control Module (ECM) only transfers the signal which is used by the Driver Information Module (DIM).

The engine control module (ECM) cannot diagnose the engine coolant level sensor.

MANIFOLD ABSOLUTE PRESSURE (MAP) SENSOR, INTAKE

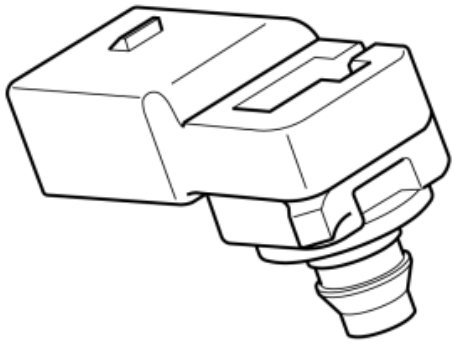

Fig. 193: Identifying Manifold Absolute Pressure (Map) Sensor
Courtesy of VOLVO CARS CORPORATION

The manifold absolute pressure (MAP) sensor detects quick pressure changes in the intake manifold after the throttle. The signal from the sensor is used by the engine control module (ECM) to supplement the mass air flow (MAF) sensor when calculating injection period.

Manifold absolute pressure (MAP) sensor, intake is located on the lower part of the intake manifold at the electronic throttle module.

The semi-conductor sensor is grounded in the control module and is supplied with power from the control module.

The resistance in the intake manifold moves the silicone membrane in the sensor, giving a signal of 0.5 - 4.5 V to the control module. Low pressure results in low voltage, high pressure gives high voltage.

The pressure sensor can be diagnosed by the engine control module (ECM) and the sensor signal can be read off.

FUEL PRESSURE SENSOR / FUEL TEMPERATURE SENSOR

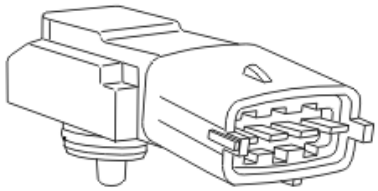

Fig. 194: Identifying Fuel Pressure Sensor / Fuel Temperature Sensor
Courtesy of VOLVO CARS CORPORATION

Overview

The fuel pressure, fuel temperature sensor is combined and consists of both the fuel pressure sensor and the fuel temperature sensor. The sensor detects the fuel pressure (the absolute pressure) and the temperature of the fuel in the fuel rail.

The fuel pressure sensor is located on the fuel rail's end.

The fuel pressure-/fuel temperature sensor can be diagnosed by the engine control module (ECM) and its signals (pressure and temperature) can be read off.

Fuel pressure sensor

The pressure sensor is a Piezo resistive type resistor, the resistance of which changes with the pressure. Depending on the pressure in the fuel rail, an analog signal of 0 - 5 V is transmitted to the engine control module (ECM). Low pressure results in low voltage, high pressure gives high voltage.

The engine control module (ECM) then uses this signal to adjust the pressure in the fuel rail using the fuel pump control module. See also: **FUEL PRESSURE REGULATION**

The pressure sensor is supplied with 5 V and grounded in the engine control module (ECM). The pressure sensor transmits a signal indicating the fuel pressure to the engine control module (ECM) on a separate cable.

NOTE: The absolute pressure is displayed when using parameter read outs to read off the fuel pressure. If there is no pressure at the fuel rail, the atmospheric pressure will be displayed.

HINT: The relative pressure (absolute pressure minus atmospheric pressure) is displayed when reading off the fuel pressure via a manometer connected to the fuel rail.

Fuel temperature sensor

The temperature sensor is an NTC sensor. The sensor is supplied with voltage (signal) from and grounded in the engine control module (ECM).

The resistance in the sensor changes according to the temperature of the fuel. This provides the engine control module (ECM) with a signal of between 0 - 5 V. Low temperature results in high voltage (high resistance). High temperature results in low voltage (low resistance).

The engine control module (ECM) uses the signal to calculate the volume of the fuel.

OIL LEVEL SENSOR

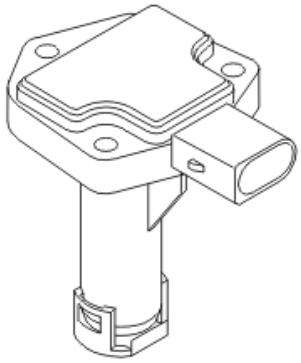

Fig. 195: Identifying Oil Level Sensor
Courtesy of VOLVO CARS CORPORATION

The function of the oil level sensor is to provide the engine control module (ECM) with information regarding the level of engine oil in the oil sump.

The sensor consists of:

- a terminal with three pins
- integrated electronics
- 2 capacitive gauge elements
- a PTC resistor.

The oil level sensor is supplied with 5 V by the engine control module (ECM). The oil level sensor generates a pulse width modulated (PWM) signal for the engine control module (ECM).

The oil level sensor can be diagnosed by the engine control module (ECM).

The pulse-width modulated (PWM) signal from the oil level sensor can be read using parameter readout.

MAIN RELAY (SYSTEM RELAY)

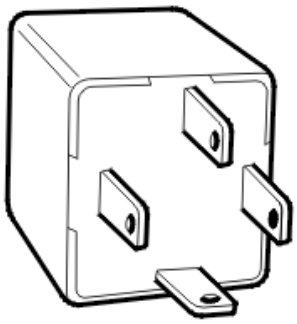

Fig. 196: Identifying Main Relay
Courtesy of VOLVO CARS CORPORATION

The function of the main relay (system relay) is to supply certain components with voltage.

The relay is mechanical and has a closing and opening function. In the rest position the circuit in the relay is open.

The main relay terminals (#30 and #86) are supplied with voltage by the battery. When the ignition key has been turned and the engine control module (ECM) is powered, the terminal (#85) on the main relay is grounded by the engine control module (ECM).

When the terminal (#85) is grounded, the relay is activated and a number of components are powered via the relay terminal (#87).

The main relay is in the integrated relay/fuse box in the engine compartment and is diagnosed by the engine control module (ECM).

INJECTORS

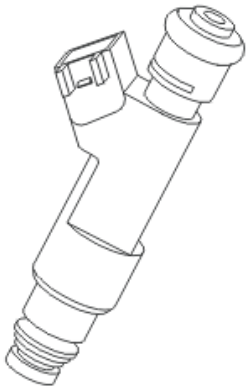

Fig. 197: Identifying Fuel Injector
Courtesy of VOLVO CARS CORPORATION

The function of the injectors is to spray fuel into the cylinders in the correct spray patterns. This happens

sequentially.

The injectors are located along the intake pipe.

The engine control module (ECM) controls the injectors by grounding the valves in pulses.

The injectors can be diagnosed by the engine control module (ECM) and can be activated.

IGNITION COILS

Fig. 198: Identifying Ignition Coil
Courtesy of VOLVO CARS CORPORATION

The ignition coils supply the spark plugs with high voltage to produce sparks. The engine control module (ECM) controls the ignition coils so that sparks are generated at the correct time. The signal reconnects to the engine control module (ECM) so that diagnostics can be carried out.

Each ignition coil has an integrated power stage.

The ignition coils are in the sparkplug wells above each spark plug.

The control module checks the ignition coils' function using one separate diagnostic lead.

CAMSHAFT RESET VALVE (CVVT)

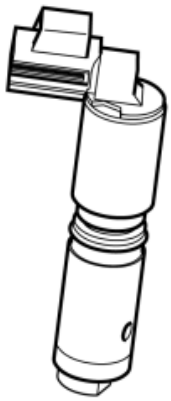

Fig. 199: Identifying Camshaft Reset Valve
Courtesy of VOLVO CARS CORPORATION

The camshaft reset valve controls the oil flow to the CVVT unit (camshaft pulley).

The valve consists of an electro-magnetic valve with a spring-loaded piston. There are slits in the piston which channel the engine lubricating oil to the CVVT unit by moving the piston in the reset valve. The continuous variable valve timing (CVVT) unit turns the camshaft (the camshaft timing changes). The direction in which the camshaft turns depends on the chamber in the CVVT unit which is supplied with oil (pressure). See also: **CAMSHAFT CONTROL (CVVT)**

An oil filter is mounted at the intake channel for the valves to prevent oil contaminants from affecting the function of the reset valves.

The system relay supplies the reset valve with voltage via a fuse. The valve is grounded (control stage) internally in the engine control module (ECM). When the valve is grounded using a pulse width modulation (PWM) signal, the oil flow in the valve can be regulated to the different chambers in the continuous variable valve timing (CVVT) unit at variable rates. This allows the angle position to be changed precisely and steplessly.

The engine control module (ECM) can diagnose the camshaft reset valve.

The valve is located on the cylinder head above the camshaft. There is a valve for intake camshaft.

There is no valve for the exhaust camshaft.

EVAPORATIVE EMISSION SYSTEM (EVAP) VALVE

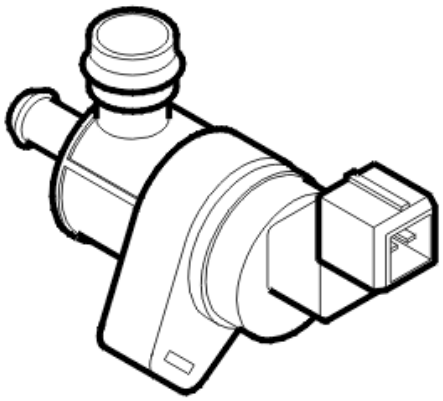

Fig. 200: Identifying Evaporative Emission System (EVAP) Valve
Courtesy of VOLVO CARS CORPORATION

The evaporative emission system (EVAP) valve is used to open and close the connection between the EVAP canister and the intake manifold. The valve controls the flow of hydro-carbons (fuel vapor) from the EVAP canister to the engine intake manifold using the vacuum in the intake manifold. This ensures that hydro-carbons stored in the EVAP canister are used in the engine combustion process.

The valve is an electromagnetic valve and is powered from the system relay. When the valve needs to be opened, it is grounded internally in the engine control module (ECM). The evaporative emission system (EVAP) valve is closed when in the standby position (open-circuit).

When the control module requests that the EVAP canister should be drained (the hydrocarbons stored in the canister should be released into the engine), the control module deploys the evaporative emission system (EVAP) valve by grounding it. A pulse width modulation (PWM) signal is used to ground the valve and to control the degree to which the valve will open. In this way, the drainage of the EVAP canister is matched to the volumetric efficiency of the EVAP canister, the engine speed (RPM) and the engine load.

The evaporative emission system (EVAP) valve can be diagnosed by the engine control module (ECM) and can be activated.

The EVAP-valve is located by the intake manifold (by the electronic throttle module) on the front of the engine.

LEAK DIAGNOSTIC UNIT

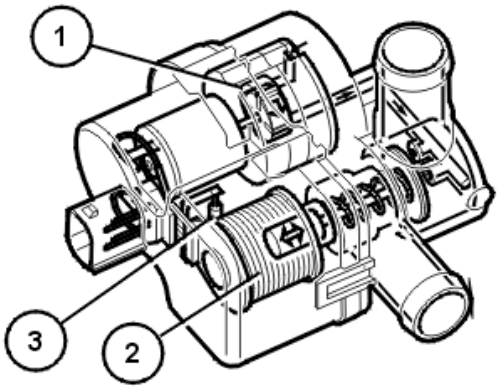

Fig. 201: View of Leak Diagnostic Unit
Courtesy of VOLVO CARS CORPORATION

The function of the leak diagnostic unit is to pressurize the fuel tank system during leak diagnostics and to open the fuel tank system to the surrounding air during evaporative emissions control.

The leak diagnostic unit consists of a plastic housing with:

1. electrical air pump
2. a valve / solenoid which governs the air flow in the unit
3. a heater element (PTC resistor) which warms up the pump.

The electrical pump, valve and heater element in the unit are supplied with voltage by the system relay. The pump, valve and heater element are grounded (control) in the engine control module (ECM).

During leak diagnostics the pump in the leak diagnostic unit starts. The valve in the unit is operated by the engine control module (ECM) by grounding the different circuits internally in the engine control module (ECM). Operation depends on whether the diagnostic phase is checking for leakage or checking the function of the diagnostic system. The engine control module (ECM) gauges the power consumption of the pump during pressurization. The power consumption corresponds to a certain pressure in the fuel tank system. See also:**LEAK DIAGNOSTIC UNIT**

The engine control module (ECM) can diagnose the leak diagnostic unit.

The valve in the leak diagnostic unit can be activated and the power consumption of the pump can be read off.

The leak diagnostic unit is at the upper front edge of the fuel tank.

AIR CONDITIONING (A/C) COMPRESSOR.

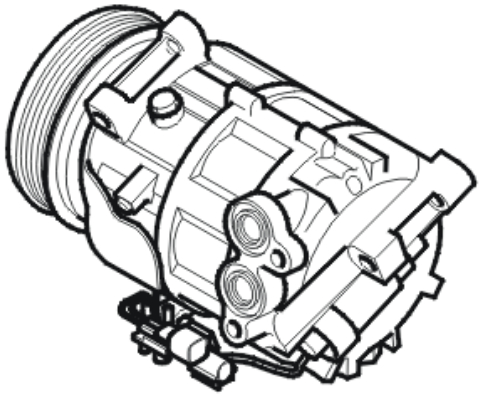

Fig. 202: Identifying (A/C) Compressor
Courtesy of VOLVO CARS CORPORATION

The air conditioning (A/C) compressor transports refrigerant, which is necessary for air conditioning (A/C) operation. It is an axial piston compressor with variable displacement. I. E. The compressor has adjustable cylinder displacement which is controlled by a check valve (solenoid). The valve, which is underneath the compressor, can be replaced.

The A/C compressor is mounted on the cylinder block and is driven by the engine's crankshaft via the auxiliaries belt.

AIR CONDITIONING (A/C) RELAY

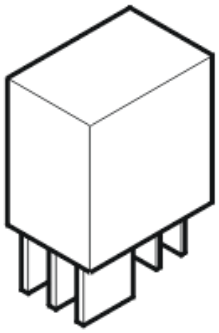

Fig. 203: Identifying (A/C) relay
Courtesy of VOLVO CARS CORPORATION

The air conditioning (A/C) relay supplies the A/C compressor with voltage. The relay is controlled by the engine control module (ECM) based on information from different signals:

- the climate control module (CCM) (via the control area network (CAN))
- the engine coolant temperature
- the position of the accelerator pedal (AP)
- the pressure in the system.

The engine control module (ECM) can temporarily disengage the A/C compressor during wide open throttle (WOT) acceleration.

The relay is mechanical. It has a closing / opening function and is supplied with power from the system relay.

In the rest position the circuit in the relay is open.

The system relay supplies the coil and the relay with power. The relay activates when the coil is grounded in the engine control module (ECM), the circuit closes and the A/C compressor is supplied with power via the relay voltage output.

The relay coil is grounded (signal) when the engine control module (ECM) receives a signal via the CAN network from the climate control module (CCM) to activate the relay and start the compressor.

STARTER MOTOR RELAY

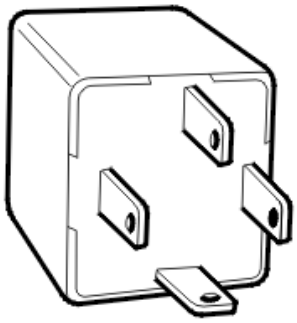

Fig. 204: Identifying Main Relay
Courtesy of VOLVO CARS CORPORATION

The function of the starter motor relay is to supply power to the starter motor. See also: **START**

The starter motor relay is in the relay/fusebox in the engine compartment.

ENGINE COOLING FAN (FC) / ENGINE COOLING FAN (FC) CONTROL MODULE

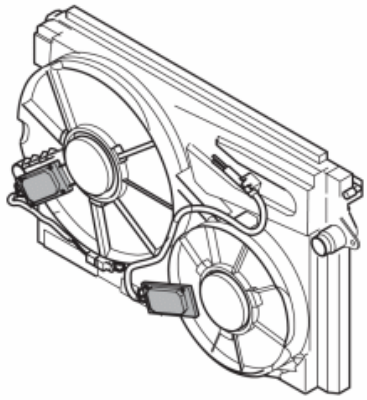

Fig. 205: Identifying Engine Cooling Fans (FC) and Control Modules
Courtesy of VOLVO CARS CORPORATION

NOTE: The engine cooling fan may have a post-run of up to approx. 6 minutes after the engine has been turned off. The time for the fan's post-run depends on engine temperature, temperature in the engine compartment and pressure level in the AC-system.

WARNING: Be careful since the engine cooling fan may have a post-run after the engine has been turned off.

The engine cooling fan (FC) consists of two fans and two control modules. The control modules are controlled by the same signal from the engine control module (ECM).

HINT: For different reasons, there are variants where the engine cooling fan consists of two fans and one control module.

The engine cooling fan (FC) has two functions. One is to cool the engine compartment, the other is to cool the condenser when the air conditioning (A/C) compressor is working.

The engine control module (ECM) transmits a pulse width modulated (PWM) signal to the engine cooling fan (FC) control modules. The control modules then activate the fans at different speeds. The speed is determined by the engine control module (ECM), depending on the coolant temperature and the vehicle speed.

The temperature conditions for engagement of the different engine cooling fan (FC) stages may vary slightly, depending on the engine variant and the equipment level. The temperature conditions apply when:

- the A/C is off
- no faults are detected by the engine control module (ECM).

The engine cooling fan (FC) is located behind the radiator and its control module is grounded and powered with battery voltage via a fuse.

There are diagnostics for the engine cooling fan (FC). The engine cooling fan (FC) transmits a diagnostic signal

to the engine control module (ECM).

FUEL PUMP (ONLY US)

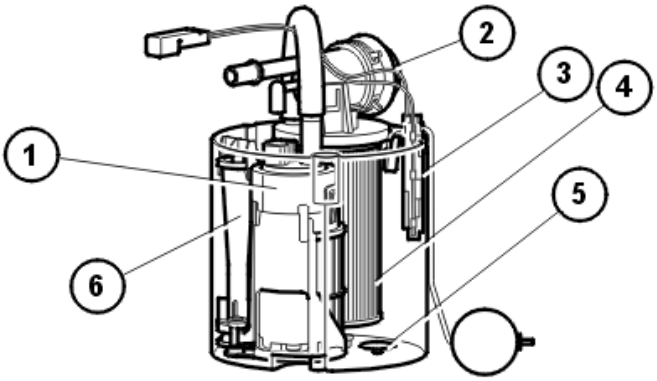

Fig. 206: Identifying Fuel Pump Module
Courtesy of VOLVO CARS CORPORATION

The function of the fuel pump is to ensure that the pressure is correct at the delivery lines for the injectors when requested by the fuel pump control module.

The fuel pump consists of:

1. An electrical pump with an integrated safety valve
2. A pressure equalization valve. This valve equalizes rapid pressure peaks which occur, for example, when the injectors close during engine braking. It also contains a non-return valve which ensures that the pressure in the system does not drop when the engine is switched off
3. Fuel level sensor
4. Fuel filter, cannot be replaced separately
5. Relief valve, releases fuel into the pump housing
6. Ejector pump, continuously fills the pump housing with fuel. The fuel always flows from the fuel pump through the ejector and back to the pump housing.

The fuel pump is supplied with battery voltage by the fuel pump control module and is grounded in the car body via the fuel pump control module.

The engine control module (ECM) has diagnostics for the fuel pump function to ensure that the pressure is correct. See also: **FUEL PRESSURE REGULATION, DIAGNOSTICS**

The fuel pump can be activated and its status can be read off.

The pressure in the fuel rail can be measured by connecting a manometer to a nipple. This nipple is on the right-hand end of the fuel rail.

FUEL PUMP CONTROL MODULE

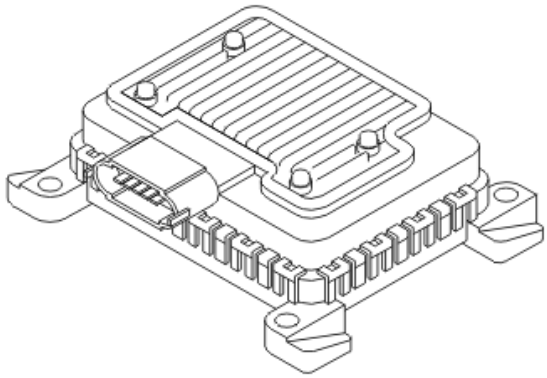

Fig. 207: Identifying Fuel Pump
Courtesy of VOLVO CARS CORPORATION

The fuel pump control module is called PEM (Pump Electronic Module). It powers the fuel pump and regulates the output of the pump. The fuel pressure changes with the output of the pump.

The fuel pump control module is supplied with battery voltage by the fuel pump (FP) relay and is grounded in the car body. The fuel pump (FP) relay is controlled by the central electronic module (CEM) when requested by the engine control module (ECM).

The engine cannot be started if the power supply to the fuel pump control module is faulty because the fuel pump will not then be powered.

The fuel pump control module is controlled by the engine control module (ECM) via serial communication. The fuel pump control module then controls the fuel pump by transmitting pulse width modulated (PWM) voltage on the ground lead for the fuel pump. This means that the voltage drop across the pump changes, and with it the output of the fuel pump. See also: **FUEL PRESSURE REGULATION**

There are no diagnostics for the fuel pump control module. The engine control module (ECM) has diagnostics for fuel pressure regulation and the associated components. See also: **FUEL PRESSURE REGULATION, DIAGNOSTICS**

The pulse width modulated (PWM) signal from the engine control module (ECM) to the fuel pump control module can be read off using the diagnostic tool.

The fuel pump control module is on the outside on the right-hand side of the fuel tank.

ACTUATOR VARIABLE INTAKE MANIFOLD

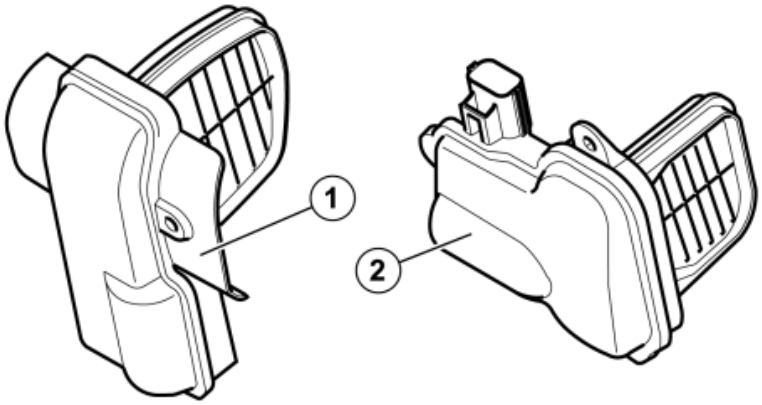

Fig. 208: Identifying Actuators, Variable, Intake Manifold
Courtesy of VOLVO CARS CORPORATION

1. Primary actuator with throttle (upper)
2. Secondary actuator with throttle (lower)

The function of the actuators is to vary the length of the intake manifold, via throttles installed in the intake manifold.

The actuators are supplied with voltage from the system relay via fuse and ground (control) internally in the engine control module (ECM).

see **VARIABLE INTAKE SYSTEM**

The actuators for variable intake can be diagnosed by the engine control module (ECM).

The actuators are bolted directly to the intake manifold.

CAM PROFILE SOLENOID (CPS)

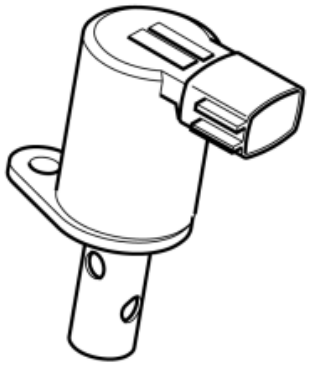

Fig. 209: Identifying Cam Profile Solenoid (CPS)
Courtesy of VOLVO CARS CORPORATION

The function of the solenoid is to control (trigger) oil pressure to the hydraulic valve depressors.

The solenoid is supplied with voltage from the system relay via fuse and ground (control) internally in the engine control module (ECM).

The system has two solenoids that each supplies a number of cylinders.

The solenoids are located on each side of the engine between the camshafts.

The solenoids can be diagnosed by the Engine control module (ECM).

see **VARIABLE CAMSHAFT PROFILE (CPS)**

EMISSIONS WARNING LAMP

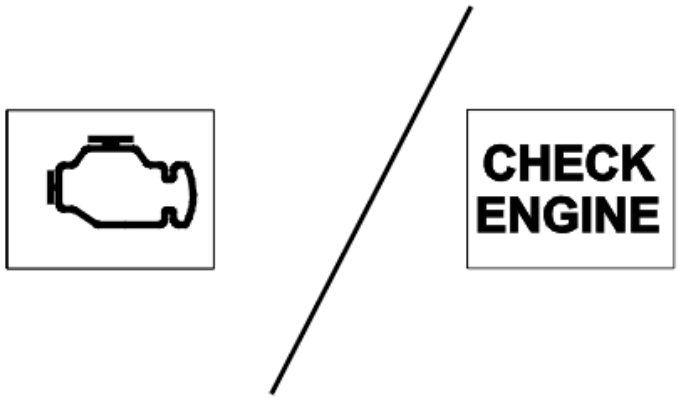

Fig. 210: Identifying Malfunction Indicator Lamp
Courtesy of VOLVO CARS CORPORATION

The emissions warning lamp in the Driver Information Module (DIM) has a warning symbol. This warning symbol varies depending on the market. The warning symbols are:

- "Engine symbol" (not USA)
- "CHECK ENGINE" (MIL - Malfunction Indicator Lamp, USA only).

The warning lamp lights when the ignition key is turned to position II. The warning lamp will go out after approximately 15 seconds or if the engine is started when no fault is found in the engine management system.

If Readiness is not complete (certain diagnostic functions not completed), the warning lamp will flash instead of going out when the ignition key is in position II.

The warning lamp will light if there is a fault in one of the parameters in the engine management system. The warning lamp will also light in response to a request transmitted via the control area network (CAN) if there is a fault in the transmission control module (TCM) which affects emissions.

ELECTRONIC THROTTLE UNIT

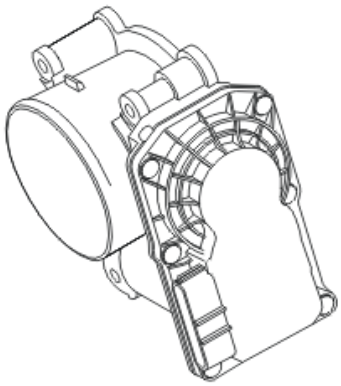

Fig. 211: Identifying Electronic Throttle Unit
Courtesy of VOLVO CARS CORPORATION

The electronic throttle unit, using the PWM control signal from the engine control module (ECM), regulates the amount of air for engine combustion. This is done using an electronically controlled shutter.

The aluminum electronic throttle unit consists of a round throttle disc on a spindle. The spindle is driven by a DC motor (damper motor), gear wheel and two springs; one for opening and one for return.

By changing the polarity of the power supply, the DC motor can be run in both directions. At one of the limit positions the throttle disc is closed so that minimal air can pass the throttle unit. In the other limit position, the throttle disc is parallel to the air flow. This provides maximum airflow through the electronic throttle unit.

Two permanent magnets in the gear sector on the throttle spindle are used to check the position of the throttle disc. The permanent magnets affect two throttle position (TP) Hall sensors in the cover. The analog signals from the two sensors are transmitted to the engine control module (ECM). The signals are offset. The engine control module (ECM) compares these signals with the stored desired values to check if they are plausible.

The electronic throttle unit is located on the engine intake manifold. In the event of a fault, the throttle unit must be replaced as a single unit.

The engine control module (ECM) can diagnose the electronic throttle unit.

THROTTLE POSITION (TP) SENSOR

Electronic throttle unit.

LEAK DIAGNOSTICS (CERTAIN MARKETS ONLY)

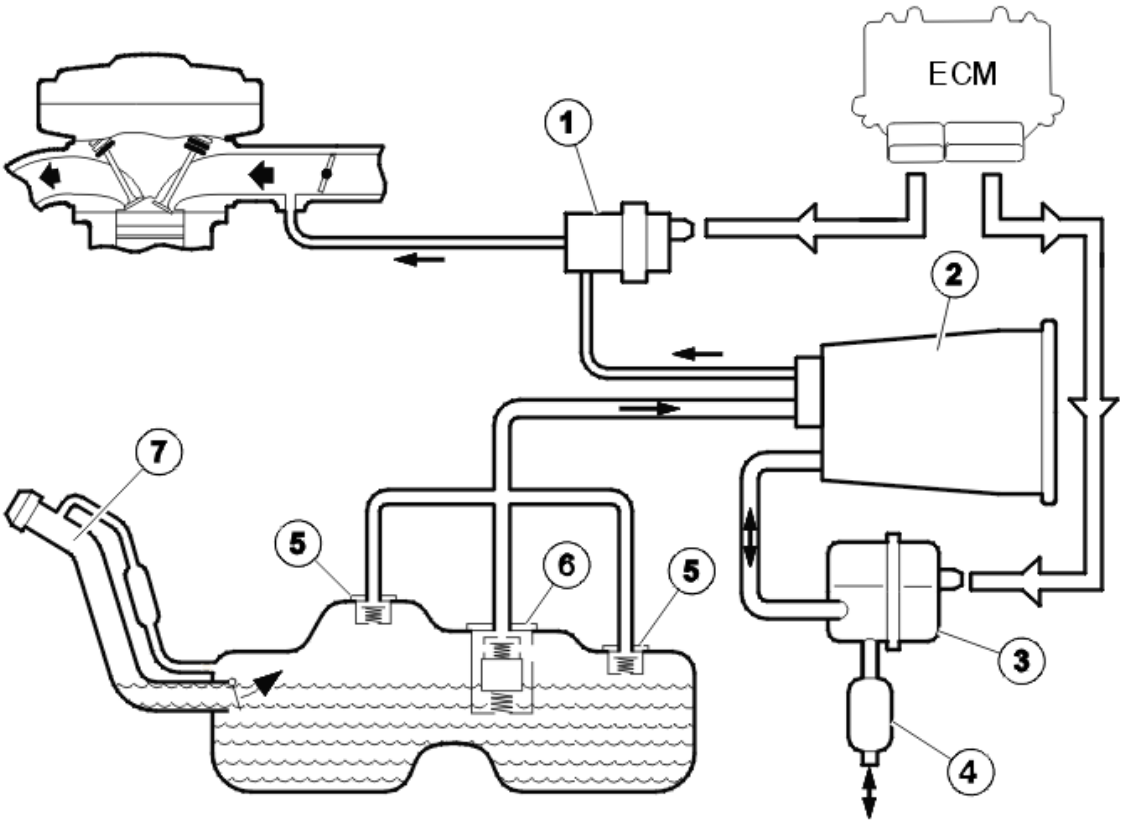

Fig. 212: Fuel Tank System Leak Overview
Courtesy of VOLVO CARS CORPORATION

All gases that evaporate from fuel in the fuel tank must be led to and stored in the evaporative emission system (EVAP) canister so that they can be directed into the engine for combustion. In order to detect leakages which cause evaporation of gases into the air, the fuel tank system is diagnosed for leakage. The fuel tank system consists of:

- fuel tank
- Canister purge (CP) valve (1)
- EVAP canister (2)
- leak diagnostic unit (3)
- air cleaner (ACL) (4)
- Roll-over valve (5)
- Float Limit Vent Valve (6)
- fuel filler pipe (7)
- all lines between the above components.

The fuel tank system has a leak diagnostic unit to diagnose any leakage. The leak diagnostic unit pressurizes the fuel tank system when the ignition is off, if the conditions for diagnosis have been met. The control module can detect faults in the function of the leak diagnostic unit and leakage that is 0.5 mm or greater. Minor leak; leakage greater than 0.5 mm but less than 1.0 mm. Major leak; leakage greater than 1.0 mm.

The leak diagnostic unit consists of a pump and a valve that controls the air flow in the unit. The fuel tank system tests for leaks by measuring the power consumption of the pump. The power consumption of the pump corresponds to a certain pressure in the fuel tank system. During diagnosis, the rate at which the pressure can build up is checked, taking into account the quantity of fuel in the tank. The quicker the pressurization the better the fuel tank system is sealed.

Conditions for diagnosis

The diagnosis begins when all the following conditions are met:

- There must be no diagnostic trouble code (DTC) stored for the following components or functions:
  - the power stage for the pump in the leak diagnostic unit
  - the power stage for the valve in the leak diagnostic unit
  - the power stage for the EVAP canister purge valve
  - the EVAP canister purge valve.
  - the engine coolant temperature (ECT) sensor
  - atmospheric pressure sensor
  - outside temperature sensor.
- The engine is switched off until the engine coolant temperature (ECT) has fallen to a few degrees above the outside temperature, then engine running for at least 10 minutes.
- Ignition off
- Vehicle speed 0 km/h
- Engine coolant temperature (ECT) -5 °C or higher.
- Maximum altitude of 2500 meters above sea level
- Outside temperature between -5 and +35 °C.
- Fuel volume in the tank less than 85%. The engine control module (ECM) ignores these parameters if a diagnostic trouble code (DTC) is stored for the fuel level sensor and the fuel volume cannot be determined.
- Battery voltage between 11.0-15.0 V. The voltage must be stable.
- EVAP canister purge valve closed
- Low volume in the canister.
- Fuel tank filler cap locked. Tip. Locking occurs when the vehicle speed exceeds approximately 20 km/h.

Diagnostic phases

The diagnostic is divided into the following phases and is carried out in sequence when all conditions for the diagnostic have been met.

- reference phase
- function test
- Leak diagnostic

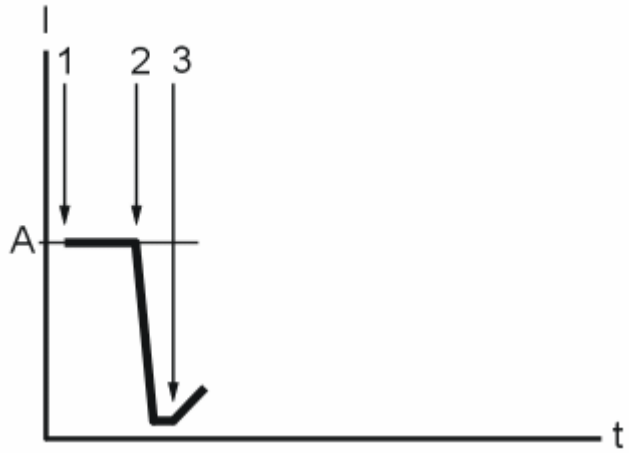

Fig. 213: Identifying Fault Free Fuel Tank System Diagram Phase 1
Courtesy of VOLVO CARS CORPORATION

Reference phase (1-2)

The illustration is a diagram of a fault free fuel tank system.

Before the leak diagnostic begins, the control module runs reference phase for leakage. Reference phase (1-2) for leakage that is 0.5 mm is carried out by the pump in the leak diagnostic unit pumping ambient air through a 0.5 mm hole and back out to the ambient air. At the same time, the power consumption (A) of the pump is measured and stored in the control module. The stored value (A) for the power consumption of the pump corresponds to a leakage of 0.5 mm. This value is then compared by the engine control module (ECM) to determine the leak status of the fuel tank system.

Function test (1-3)

If the value for the power consumption of the pump is too high or low during reference phase (1-2), or if the value for pump power consumption varies too much during reference phase (1-2), the diagnostic is cancelled and starts again the next time the conditions for the diagnostic are met. A diagnostic trouble code (DTC) is stored if the diagnostic is cancelled because the power consumption of the pump is varying excessively.

After reference phase the valve (2) in the leak diagnostic unit is activated and controls the air flow to the fuel tank to pressurize the fuel tank system. This change of air flow will cause the power consumption of the pump to fall briefly before the pressure builds up in the fuel tank system (3). A diagnostic trouble code is stored if the value for the power consumption of the pump drops too quickly, slowly or not at all.

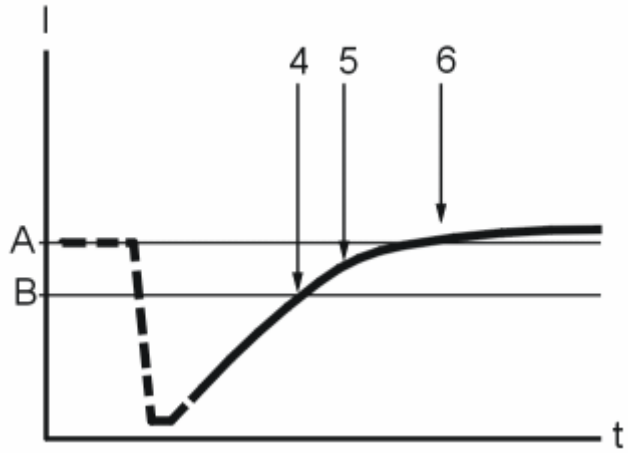

Fig. 214: Identifying Leak Diagnostic, Major Leak Diagram
Courtesy of VOLVO CARS CORPORATION

Leak diagnostic, major leak (leakage greater than 1.0 mm)

The diagnostic for "major leaks" is carried out each time when the conditions for the diagnostic are met. The leak diagnostic unit pressurizes the fuel tank system, measures the power consumption of the pump (4) and compares this with a calculated desired value (B). A diagnostic trouble code (DTC) for a major leak is stored if the measured value does not reach the calculated desired value within a certain time (the time is determined by the fuel level in the tank).

Leak diagnostic, minor leak (leakage greater than 0.5 mm but less than 1.0 mm)

The diagnostic for minor leaks is run every other time that the conditions for the diagnostic are met. The diagnostic for major leaks is always run before the diagnostic for minor leaks. The leak diagnostic unit continues to pressurize the fuel tank system (5-6). After a certain amount of time (the time varies depending on the fuel level in the tank), the engine control module (ECM) checks the fuel tank system for leaks. This is determined from calculations based on:

- time
- the measured reference current consumption of the pump (A)
- the measured power consumption of the pump when the assessment is made
- the shape and character of the current curve during pressurization.

A diagnostic trouble code (DTC) is stored if a minor leak is detected.

DIAGNOSTIC FUNCTIONS

LEAK DIAGNOSTICS, ORIGINAL VERSION (CERTAIN MARKETS ONLY)

LEAK DIAGNOSTICS, ORIGINAL VERSION

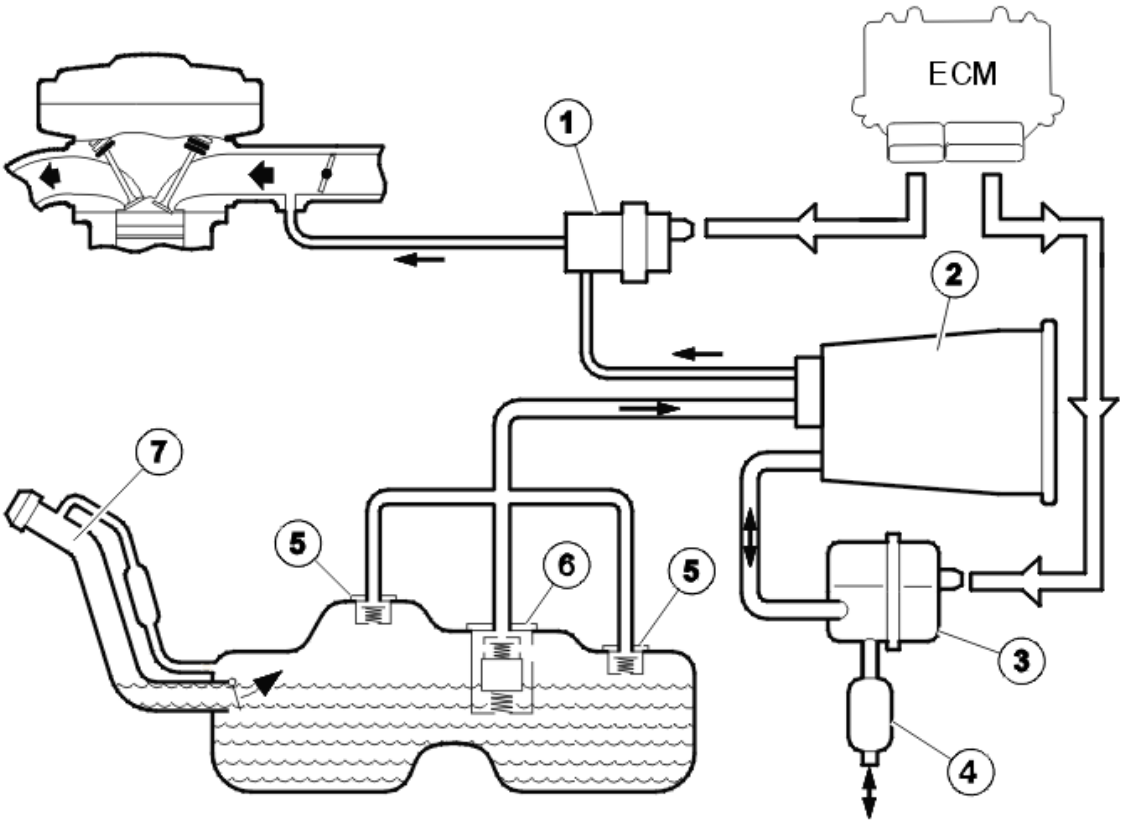

Fig. 215: Fuel Tank System Leak Overview
Courtesy of VOLVO CARS CORPORATION

To minimize false detection of leakage, new software has been released for the Engine control module (ECM). The software has been released afterwards, in order of priority, started at the end of 2006.

The improved software version makes diagnostics more robust and durable against aging and wear of the leak diagnostic unit. It affects strategies, behavior and to a degree also read off parameters.

All gases that evaporate from fuel in the fuel tank must be led to and stored in the evaporative emission system (EVAP) canister so that they can be directed into the engine for combustion. In order to detect leakages which cause evaporation of gases into the air, the fuel tank system is diagnosed for leakage. The fuel tank system consists of:

- fuel tank
- Canister purge (CP) valve (1)
- EVAP canister (2)
- leak diagnostic unit (3)
- air cleaner (ACL) (4)
- Roll-over valve (5)
- Float Limit Vent Valve (6)
- fuel filler pipe (7)

- all lines between the above components.

The fuel tank system has a leak diagnostic unit to diagnose any leakage. The leak diagnostic unit pressurizes the fuel tank system when the ignition is off, if the conditions for diagnosis have been met. The control module can detect faults in the function of the leak diagnostic unit and leakage that is 0.5 mm or greater. Minor leak; leakage greater than 0.5 mm but less than 1.0 mm. Major leak; leakage greater than 1.0 mm.

The leak diagnostic unit consists of a pump and a valve that controls the air flow in the unit. The fuel tank system tests for leaks by measuring the power consumption of the pump. The power consumption of the pump corresponds to a certain pressure in the fuel tank system. During diagnosis, the rate at which the pressure can build up is checked, taking into account the quantity of fuel in the tank. The quicker the pressurization the better the fuel tank system is sealed.

Conditions for diagnosis

The diagnosis begins when all the following conditions are met:

- There must be no diagnostic trouble code (DTC) stored for the following components or functions:
  - the power stage for the pump in the leak diagnostic unit
  - the power stage for the valve in the leak diagnostic unit
  - the power stage for the EVAP canister purge valve
  - the EVAP canister purge valve.
  - the engine coolant temperature (ECT) sensor
  - atmospheric pressure sensor
  - outside temperature sensor.
- The engine is switched off until the engine coolant temperature (ECT) has fallen to a few degrees above the outside temperature, then engine running for at least 10 minutes.
- Ignition off
- Vehicle speed 0 km/h
- Engine coolant temperature (ECT) -5°C or higher.
- Maximum altitude of 2500 meters above sea level.
- Outside temperature between -5 and +35°C.
- Fuel volume in the tank less than 85%. The engine control module (ECM) ignores these parameters if a diagnostic trouble code (DTC) is stored for the fuel level sensor and the fuel volume cannot be determined.
- Battery voltage between 11.0-15.0 V. The voltage must be stable.
- EVAP canister purge valve closed
- Low volume in the canister.
- Fuel tank filler cap locked. Tip. Locking occurs when the vehicle speed exceeds approximately 20 km/h.

Diagnostic phases

The diagnostic is divided into the following phases and is carried out in sequence when all conditions for the

diagnostic have been met.

- reference phase
- function test
- leak diagnostic

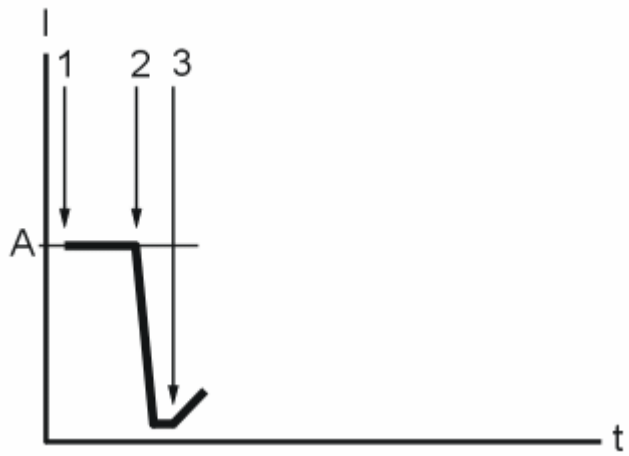

Fig. 216: Identifying Fault Free Fuel Tank System Diagram Phase 1
Courtesy of VOLVO CARS CORPORATION

Reference phase (1-2)

The illustration is a diagram of a fault free fuel tank system.

Before the leak diagnostic begins, the control module runs a reference phase for leakage. During the reference phase (1-2) for leakage that is 0.5 mm, the pump in the leak diagnostic unit pumps ambient air through a 0.5 mm hole and back out to the ambient air. At the same time, the power consumption (A) of the pump is measured and stored in the control module. The stored value (A) for the power consumption of the pump corresponds to a leakage of 0.5 mm. This value is then used by the engine control module (ECM) to determine the leak status of the fuel tank system.

Function test (1-3)

If the value for the power consumption of the pump is too high or low during reference phase (1-2), or if the value for pump power consumption varies too much during reference phase (1-2), the diagnostic is cancelled and starts again the next time the conditions for the diagnostic are met. A diagnostic trouble code (DTC) is stored if the diagnostic is cancelled because the power consumption of the pump is varying excessively.

After the reference phase, the valve (2) in the leak diagnostic unit is activated and controls the air flow to the fuel tank to pressurize the fuel tank system. This change of air flow will cause the power consumption of the pump to fall briefly before the pressure builds up in the fuel tank system (3). A diagnostic trouble code is stored if the value for the power consumption of the pump drops too quickly, slowly or not at all.

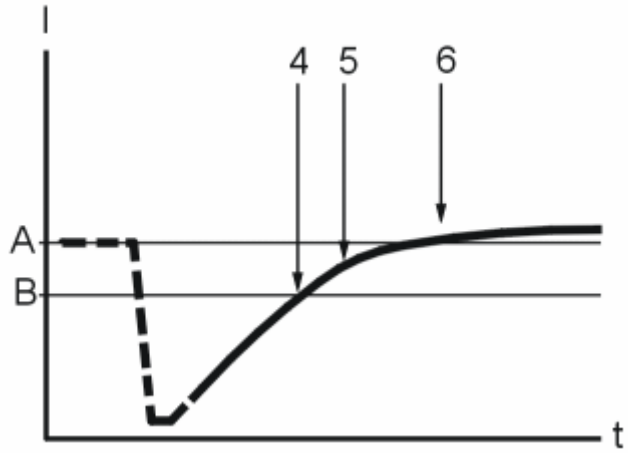

Fig. 217: Identifying Leak Diagnostic, Major Leak Diagram
Courtesy of VOLVO CARS CORPORATION

Leak diagnostic, major leak (leakage greater than 1.0 mm)

The diagnostic for "major leaks" is carried out each time when the conditions for the diagnostic are met. The leak diagnostic unit pressurizes the fuel tank system, measures the power consumption of the pump (4) and compares this with a calculated desired value (B). A diagnostic trouble code (DTC) for a major leak is stored if the measured value does not reach the calculated desired value within a certain time (the time is determined by atmospheric pressure and the fuel level in the tank).

Leak diagnostic, minor leak (leakage greater than 0.5 mm but less than 1.0 mm)

The diagnostic for minor leaks is run every other time that the conditions for the diagnostic are met. The diagnostic for major leaks is always run before the diagnostic for minor leaks. The leak diagnostic unit continues to pressurize the fuel tank system (5-6). After a certain amount of time (the time varies depending on the fuel level in the tank), the engine control module (ECM) checks that the fuel tank system for leaks. This is determined based on:

- time
- the measured reference current consumption of the pump (A)
- the measured power consumption of the pump when the assessment is made
- the shape and character of the current curve during pressurization.

A diagnostic trouble code (DTC) is stored if a minor leak is detected.

OVERVIEW

OVERVIEW

General

The engine control module (ECM) diagnoses both internal signals and functions as well as signals and functions

from connected components.

Conditions for diagnosis

For the diagnosis of a component or function to start, certain specific conditions must be met. The conditions for diagnostics vary depending on the component or function being diagnosed.

Conditions must be met during the diagnostic in order for the diagnostic to be completed. The time and conditions for the diagnostic vary depending on the component or function being diagnosed. Certain diagnostics only require the ignition to be switched on and off for a diagnostic to be run. Other diagnostics require that several different conditions are met. For example:

- vehicle speed
- engine coolant temperature (ECT)
- time since start
- different load and engine speed relationships in the same trip
- a certain event (for example the evaporative emission system (EVAP) valve is operating).

When the engine control module (ECM) has run all the implemented diagnostics, the control module has completed a "trip". An extensive driving schedule in various conditions is required to complete a trip. The engine may also need to be shut off for a certain amount of time and then switched on again to complete a trip.

Emissions related diagnostic functions

The engine control module (ECM) checks that the emissions related systems are working. These systems are checked by running a diagnostic function. The diagnostic function checks the components and that the system is functioning.

Diagnostic trouble code (DTC) memory

When the engine control module (ECM) detects a fault, the diagnostic trouble code and status are stored in the diagnostic trouble code memory and are visible during normal diagnostic trouble code readout. If the diagnostic trouble code (DTC) lights the malfunction indicator lamp (MIL), this occurs at the same time. If an existing fault disappears and does not recur, the engine control module changes the status of the diagnostic trouble code after a certain number of fault-free operating cycles (depending on the nature of the diagnostic trouble code). This means that it can no longer be read during normal diagnostic trouble code readout. In this status, the diagnostic trouble code remains until the engine control module (ECM) erases diagnostic trouble codes or is disconnected from power.

Substitute value

For certain types of diagnostic trouble codes (DTCs), the missing signal is replaced with a substitute value so that the system can continue functioning.

LEAK DIAGNOSIS, IMPROVED VERSION (CERTAIN MARKETS ONLY)

LEAK DIAGNOSTICS, IMPROVED VERSION

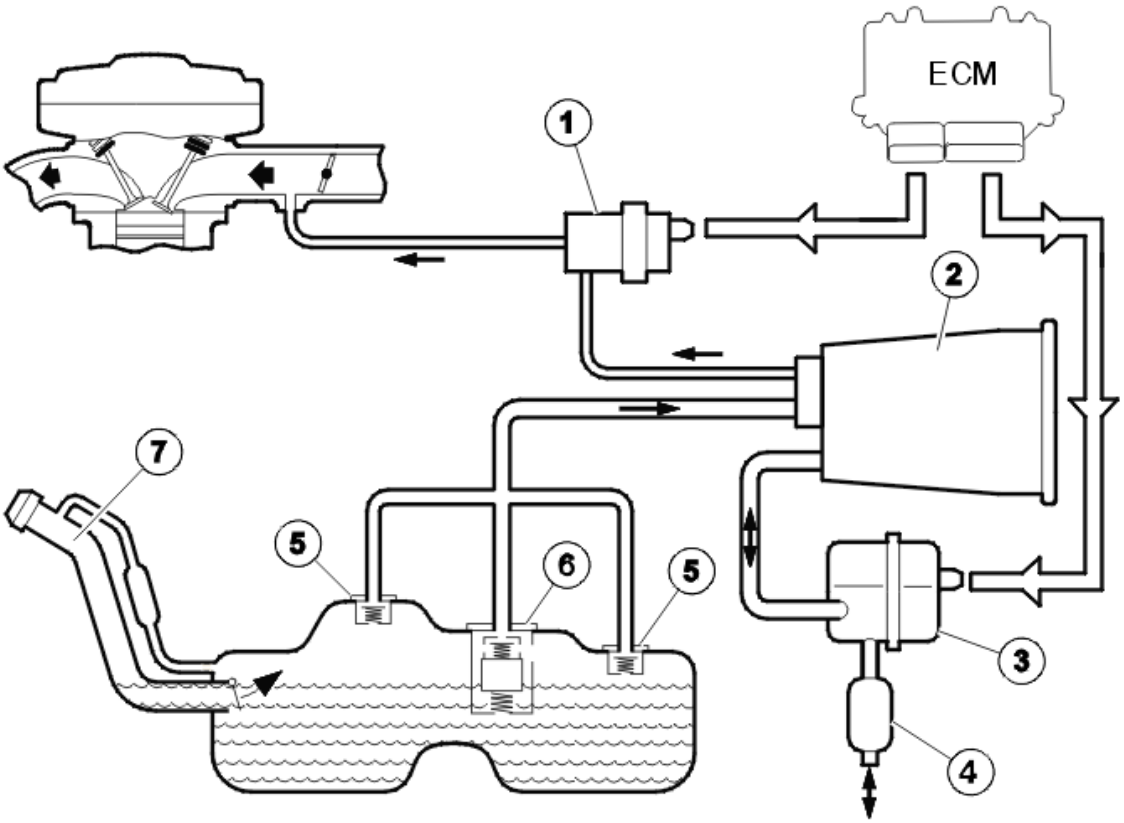

Fig. 218: Fuel Tank System Leak Overview
Courtesy of VOLVO CARS CORPORATION

All gases that evaporate from fuel in the fuel tank must be led to and stored in the evaporative emission system (EVAP) canister so that they can be directed into the engine for combustion. In order to detect leakages which cause evaporation of gases into the air, the fuel tank system is diagnosed for leakage. The fuel tank system consists of:

- fuel tank
- Canister purge (CP) valve (1)
- EVAP canister (2)
- leak diagnostic unit (3)
- air cleaner (ACL) (4)
- Roll-over valve (5)
- Float Limit Vent Valve (6)
- fuel filler pipe (7)
- all lines between the above components.

The fuel tank system has a leak diagnostic unit to diagnose any leakage. The leak diagnostic unit pressurizes the fuel tank system when the conditions for diagnosis have been met. The control module can detect faults in the function of the leak diagnostic unit and leakage that is 0.5 mm or greater. Minor leak; leakage greater than 0.5 mm but less than 1.0 mm. Major leak; leakage greater than 1.0 mm.

The leakage diagnostic consists of a pump and a valve that control the flow in the unit. Engine control module (ECM) checks sealing in the tank system by measuring the relationship between obtained pressure and flow from the leakage diagnostic pump when pressurized.

If a certain pressure is not obtained with a pre-determined (with known mass) the Engine control module (ECM) interprets it as a leakage from the fuel tank system.

Leakage diagnostics start in normal operation when specific conditions have been fulfilled, see below. Diagnostics can also be started by command using VIDA when you disregard some of these conditions.

Conditions for diagnosis

The diagnosis begins when all the following conditions are met:

NOTE: Slightly different conditions apply when diagnostics are started by command using VIDA (Volvo scan tool).

- No diagnostic trouble codes for EVAP-valve or atmospheric pressure sensor may be stored.
- The engine is switched off until the engine coolant temperature (ECT) has fallen to a few degrees above the outside temperature, then engine running for at least 10 minutes.
- Ignition off
- Vehicle speed 0 km/h
- Engine temperature 4-35 °C.
- Maximum altitude of 2500 meters above sea level.
- Outdoor temperature between 4-35 °C.
- Fuel volume in the tank between 0-85%. The engine control module (ECM) ignores these parameters if a diagnostic trouble code (DTC) is stored for the fuel level sensor and the fuel volume cannot be determined.
- Battery voltage between 11-15 V. The voltage must be stable.
- EVAP canister purge valve closed
- Low volume in the canister.
- Tank hatch locked.

NOTE: Locking occurs when the vehicle speed exceeds 20 km/h.

Diagnostic phases

The diagnostic is divided into the following phases and is carried out in sequence when all conditions for the diagnostic have been met.

- reference phase
- function test
- checking tank system.

Reference phase

Before leakage diagnosis itself can be started, the control module performs a reference phase for leakage. Reference phase for leakage which is 0.5 mm is performed by the leakage diagnostic unit's pump pumping ambient air through a hole which is 0.5 mm and back out to the ambient air. During that time, the pump is monitored n the leakage diagnostic unit and reference values are stored away for later use in assessing the tank system's sealing.

If any reference value for the pump is unreasonably high or low, or varies too much, then diagnosis is interrupted and a diagnostic trouble code is generated.

Function test

After the reference phase, the leakage diagnostic unit's valve is activated and the air flow is controlled to the tank system to pressurize the tank system. This shift in air flow means that the pump load drops briefly before the pressure builds up in the tank system. If the load does not change within reasonable limits within reasonable time, then diagnosis is interrupted and a diagnostic trouble code is generated.

Checking tank system, major leakage (leakage bigger than 1.0 mm)

Diagnosis are performed every time conditions for diagnosis are fulfilled.

The leakage diagnostic unit pressurizes the tank system and checks sealing by monitoring the pressure in the tank system. The pressure is a calculated pressure, calculated using measured power consumption on the pump. If the pressure stabilizes and/or does not go above 1500 Pa within 450 seconds, this is interpreted as a leakage from the fuel tank system. Diagnosis is interrupted and a diagnostic trouble code for major leakage is generated.

Checking tank system, minor leakage (leakage bigger than 0.5 mm but smaller than 1.0 mm)

Diagnosis for minor leakage is performed every other time conditions for diagnosis are fulfilled. Otherwise, diagnosis finishes after checking for major leakage.

The leakage diagnosis unit continues pressurizing the tank system. Engine control module (ECM) checks sealing in the tank system by measuring the relationship between reached pressure and flow from the leakage diagnosis pump when pressurizing. In a sealed system the relationship between these shall be linear. Any deviations from the linear relationship is calculated and used to assess the tank system's sealing.

If the assessment, performed within 15 minutes, is that a minor leakage has been detected in the tank system, a diagnostic trouble code for minor leakage is generated.

DOWNLOADING SOFTWARE AND REPLACING THE CONTROL MODULE

New software can be downloaded into the engine control module (ECM). When ordering software, the hardware and the software in the car is compared to the information in the Volvo central database. If the comparison is OK the software is downloaded to the control module. If the comparison between the car and Volvo central database is not OK, the database is updated with the car configuration. When this is complete the software is downloaded.

The Engine control module (ECM) is located on the air filter box, under a plastic cover.

The engine control module (ECM) contains a unique code for each car for the immobilizer. The central electronic module (CEM) checks this code at engine start up. The engine will not start if the central electronic module (CEM) detects an incorrect code for the immobilizer. This means that the engine control module (ECM) cannot be switched from vehicle to vehicle.

The engine control module (ECM) must first be "unlocked" using a unique PIN for each car before it can be programmed with a code for the immobilizer. When the PIN has been approved by the engine control module (ECM), the code for the immobilizer can be programmed.

The PIN and the code for the immobilizer are obtained from the Volvo central database and sent out with the software package when software for downloading has been ordered.

All new engine control modules (ECM) have the same PIN which is preprogrammed by the control module supplier. When the engine control module (ECM) has been programmed successfully the original PIN for the car will be programmed in the engine control module (ECM) memory and will replace the preprogrammed PIN code.

FUNCTION

START

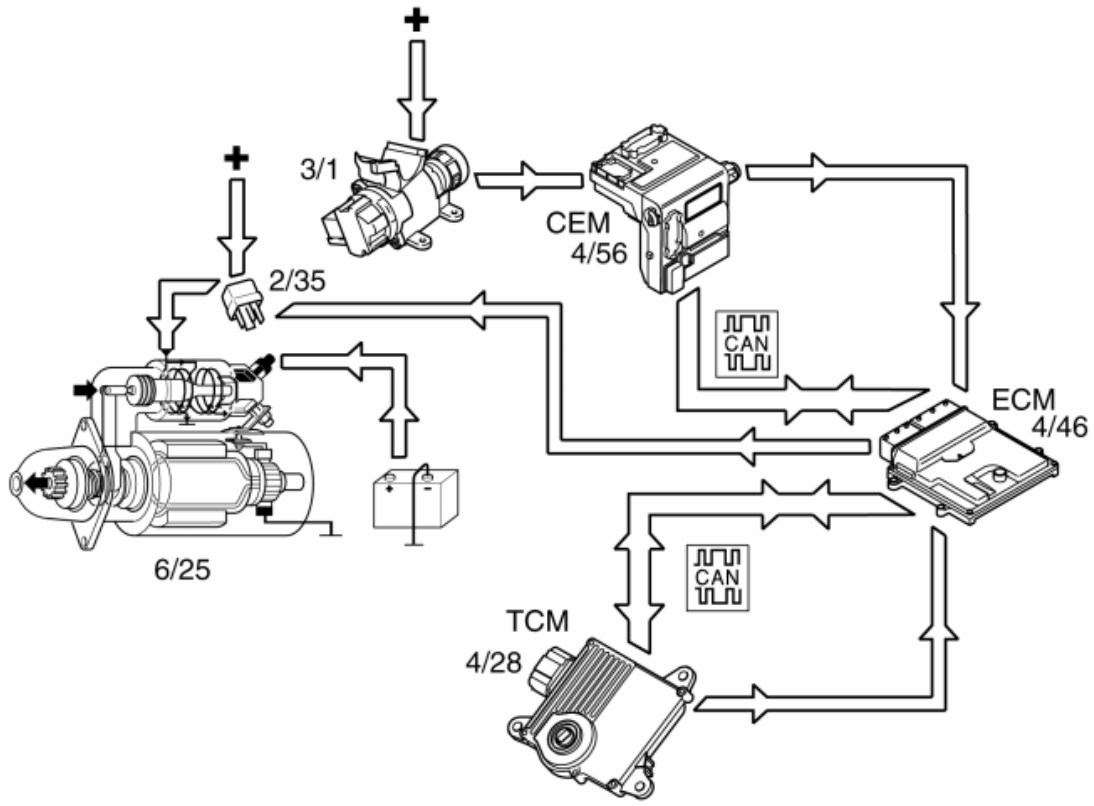

Fig. 219: Identifying Starting System

Courtesy of VOLVO CARS CORPORATION

The starter motor (6/25) is supplied with power via the starter motor relay (2/35), the starter motor relay is controlled by the engine control module (ECM) (4/46).

The start process is as follows:

1. The ignition key is turned to start position (position III)
2. A high signal (U_{bat}) from the ignition switch (3/1) is transmitted to the engine control module (ECM) via the central electronic module (CEM) (4/56). The engine control module (ECM) interprets this high signal as a request to activate the starter motor.
3. The engine control module (ECM) activates the starter motor solenoid by grounding and powering the coil for the starter motor relay.
4. The relay closes the circuit between the starter motor solenoid and the fuse in the relay/fuse box in the engine compartment, activating the starter motor.
5. The engine control module (ECM) activates the starter motor until the engine starts (the engine speed (rpm) exceeds a certain value)

Auto start

If the ignition key returns to ignition position (position II) before the engine is started, the starter motor continues to run. The starter motor runs until the engine is started or until a certain time has elapsed. The engine temperature dictates the running time of the starter motor:

- 0 °C or higher, approximately 3 seconds
- less than 0 °C, up to approximately 5 seconds.

If the engine does not turn or if the engine speed is extremely low when the start relay is activated, the engine control module (ECM) interrupts start relay activation.

Activation of the starter motor is not permitted or is interrupted if:

- the engine is running (the engine speed (RPM) above a certain value)
- the immobilizer function does not allow a start.
- the gear selector is not in position "P" or "N" (automatic transmissions). The engine control module (ECM) receives a signal indicating the position of the gear selector from the transmission control module (TCM) (4/28) via both the controller area network (CAN) and from a directly connected cable between the engine control module (ECM) and transmission control module (TCM).

CAMSHAFT CONTROL (CVVT)

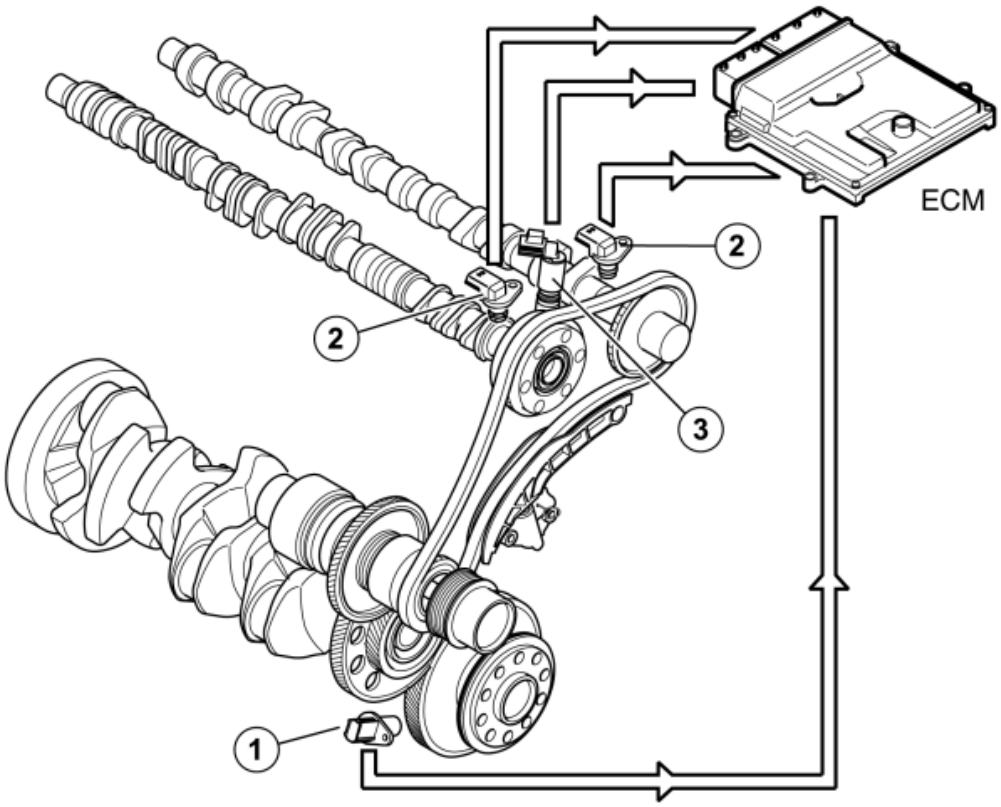

Fig. 220: Identifying Camshaft Control (CVVT) System
Courtesy of VOLVO CARS CORPORATION

Only the intake camshaft can be controlled by the Engine control module (ECM) via a reset valve.

The intake camshaft is located in the engine's leading edge (in the travel direction) and the exhaust camshaft in the trailing edge (towards the passenger compartment).

The camshafts are driven by the crankshaft via a gear housing located on the engine's top side.

When each camshaft is adjusted in the factory, its position is aligned with the crankshaft's position. The camshaft's position at alignment against the crankshaft is called the **camshaft's 0-position** (basic setting).

At camshaft control (CVVT), the camshaft's 0-position is displaced so that the camshaft's angle position is changed. Thus, opening and closing of the exhaust and inlet valves changes relative to the crankshaft.

By controlling the camshaft's angle position, the engine's performance can be increased, idle quality can be improved, and emissions can be reduced.

The engine control module (ECM) detects the position of the camshafts by comparing the signals from the engine speed (RPM) sensor (1) (crankshaft position) and the camshaft position (CMP) sensors (2) (camshaft positions). The engine control module (ECM) then controls the angle of the camshaft by controlling the oil flow to the CVVT unit using the reset valve camshaft (3).

There are diagnostics for this function. See also: **CAMSHAFT DIAGNOSTICS (CVVT)**

Controlling, reset valve camshaft

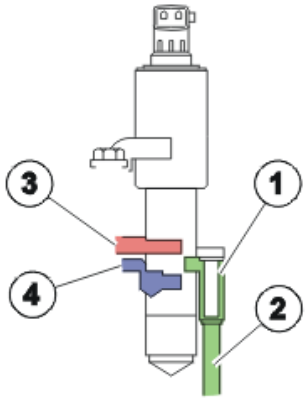

Fig. 221: Diagram of Camshaft Reset Valve
Courtesy of VOLVO CARS CORPORATION

1. Oil filter reset valve camshaft.
2. Oil channel (pressure, inlet).
3. Channel connected with CVVT-unit's chamber (triggering).
4. Channel connected with CVVT-unit's chamber (re-triggering).

The camshaft reset valve controls the oil flow to the continuous variable valve timing (CVVT) unit. The engine control module (ECM) uses a pulse width modulation (PWM) signal to control the valve. See also: **CAMSHAFT RESET VALVE (CVVT)**

The continuous variable valve timing (CVVT) unit allows the position of the camshaft to be adjusted relative to the crankshaft.

The camshaft is secured to the CVVT-unit's rotor. The rotor (and thus, the camshaft) can rotate in relation to the timing belt pulley by the oil pressure building up on one or the other side of the rotor's vanes in the CVVT-unit.

Control occurs according to the following during deployment/return of the camshaft.

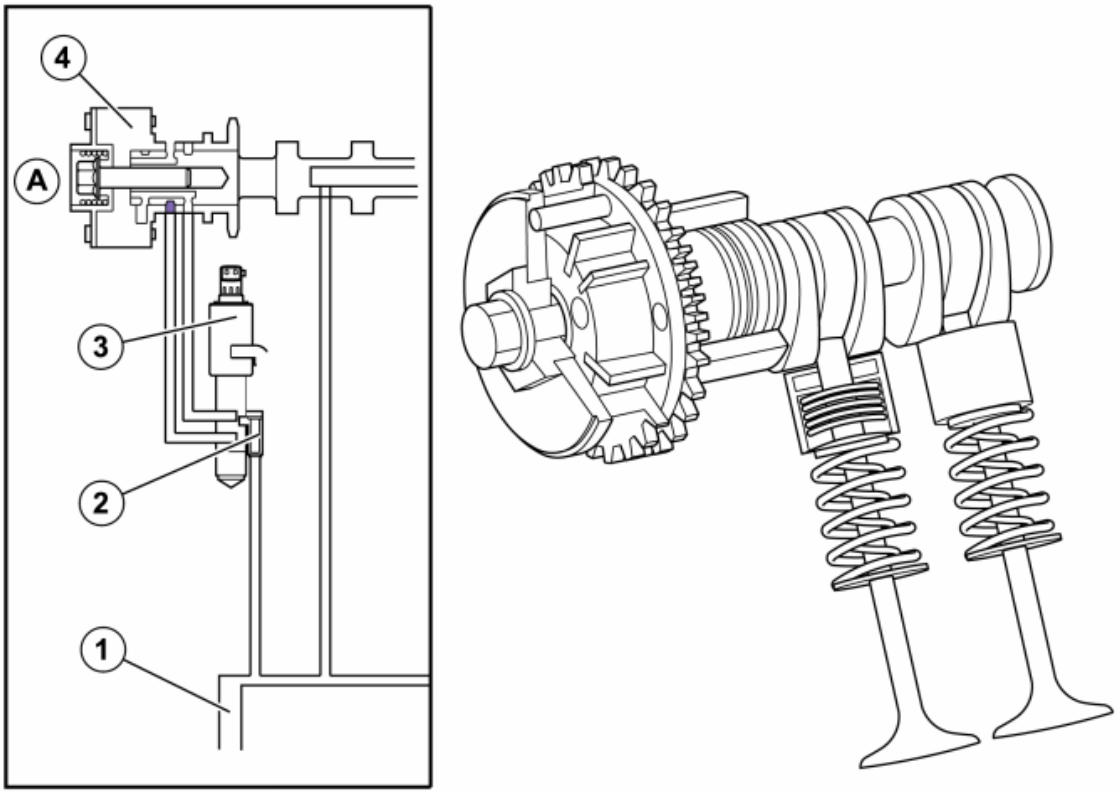

Fig. 222: Action of Camshaft Reset Valve
Courtesy of VOLVO CARS CORPORATION

A: Inlet camshaft

- Oil pressure from the lubrication system (1) of the engine.
- The oil passes the filter for the camshaft reset valve (2) and then on to the reset valve (3).
- The engine control module (ECM) controls the oil flow to one of the CVVT unit chambers (4) depending on whether it is to be deployed/returned by the camshaft.

The reset valve is controlled by the engine control module (ECM) by high frequency, switching for deployment and return. This results in rapid and precise control. The inlet camshaft can be triggered up to approx. 40 crankshaft degrees.

CONTROLLING THE GENERATOR

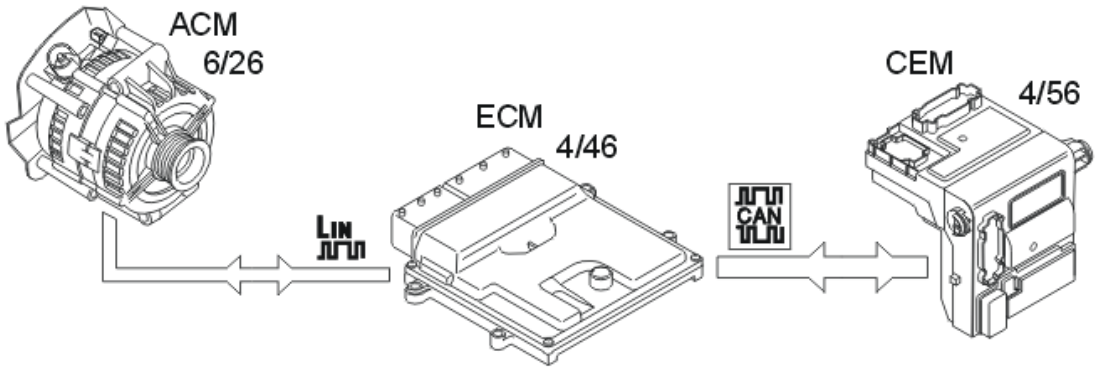

Fig. 223: Controlling The Generator
Courtesy of VOLVO CARS CORPORATION

The engine control module (ECM) (4/46) regulates the charge voltage of the alternator (GEN) (6/26) (via LIN communication) when requested by the central electronic module (CEM) (4/56) (via CAN communication).

The engine control module (ECM) can change the requested charging voltage from the central electronic module (CEM) in order to adapt it to certain operating conditions such as starting, idling or high engine loads.

The value of requested charge voltage from the engine control module (ECM) and the charge current of the generator can be read off.

The alternator control module (ACM) (6/26) transmits information to the engine control module (ECM) regarding any faults). The diagnostic trouble codes (DTCs) are stored in the engine control module (ECM) in the event of a fault. In the event of certain faults, information about these faults is also transmitted to the central electronic module (CEM).

VARIABLE INTAKE SYSTEM

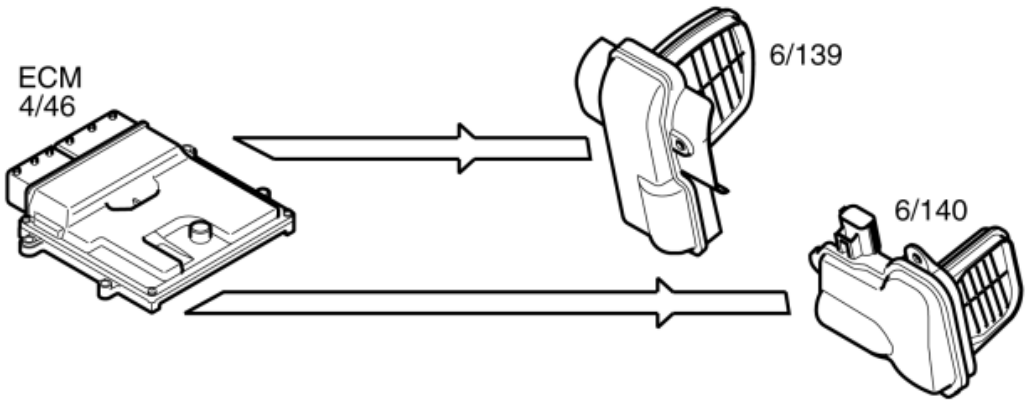

Fig. 224: Controlling The Variable Intake System
Courtesy of VOLVO CARS CORPORATION

General

Today's modern car engines often utilize systems with variable length of the intake manifolds.

In older engines with fixed lengths, the length had to be adapted to a certain specific engine speed range.

Today's system gives greater flexibility as well as additional torque without any costs in the form of, e. g., fuel consumption or emissions.

In the variable intake system, there are two actuators with associated throttles to change the length of the intake manifolds. These are:

- Actuator variable intake manifold, upper (6/139)
- Actuator variable intake manifold, lower (6/140)

The primary throttle is activated at engine speed over approx. 4800 rpm and the secondary throttle is activated between approx. 3800 rpm and 4800 rpm (applies at + 20 °C).

Different throttle combinations:

- **Position 1:** Both throttles are closed at engine speeds lower than approx. 3800 rpm.
- **Position 2:** The secondary throttle opens at approx. 3800 rpm and this shortens the length some more.
- **Position 3:** Both throttles are fully open to minimize the length at higher engine speeds (over 4800 rpm).

The valve for variable intake is controlled by the engine control module (ECM) (4/46).

The actuators for variable intake function can be activated and the function for variable intake can be diagnosed by the engine control module (ECM).

VARIABLE CAMSHAFT PROFILE (CPS)

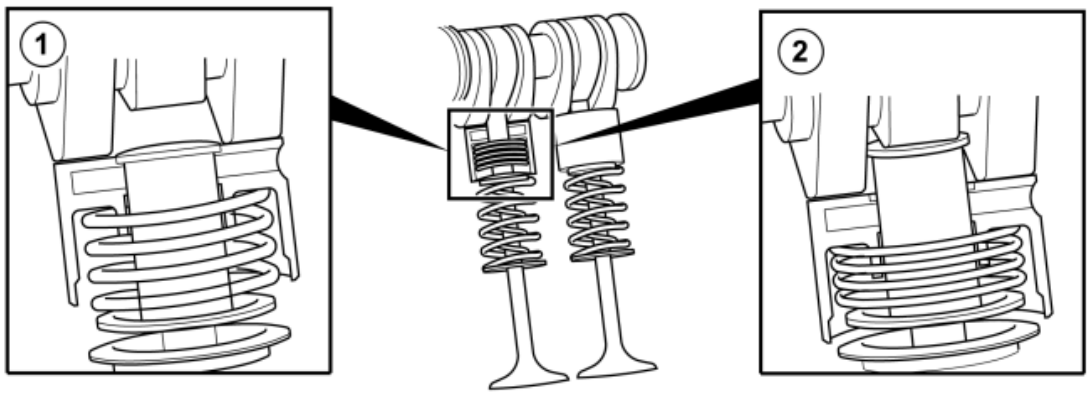

Fig. 225: Viewing Variable Camshaft Profile (CPS)
Courtesy of VOLVO CARS CORPORATION

1. High lift
2. Low lift

To maintain low fuel consumption at different loads and engine speeds, there is a system for variable camshaft profile (CPS, Cam Profile Shifting) that can vary the duration and lift height of the valves on the intake camshaft.

Duration = part of the rotating camshaft's revolution that the camshaft acts on the valve.

The system is made up of hydraulic valve depressors where the Engine control module (ECM), via oil channels, can set the valve depressors in two positions, one low position and one high position.

At start and at low temperatures (oil temperature below +40 °C, the system is pressureless and thus in its low position (spring loaded).

To minimize stresses the Engine control module (ECM) pressurizes the depressors that are not loaded at the moment. For this, two cam profile solenoids are needed.

Cam profile solenoid 1 (CPS1) supplies cylinder 1, 2, and 4, and cam profile solenoid 2 (CPS2) supplies cylinder 3, 5, and 6 with pressurized oil.

OIL MONITORING

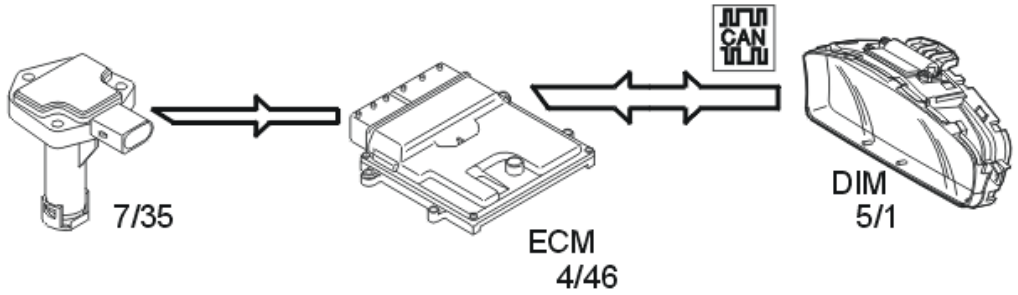

Fig. 226: Monitoring Oil Level
Courtesy of VOLVO CARS CORPORATION

General

The following components are used for oil monitoring:

- oil level sensor (7/35)
- engine control module (ECM) (4/46)
- driver information module (DIM) (5/1).

The oil level sensor, via the driver information module (DIM), is used to inform the driver if oil filling is required.

Detecting the oil level

The integrated electronics of the sensor calculates the oil level using the measured value for the oil temperature.

For the correct oil level to be calculated, temporary oil level changes in the oil trough must also be included in the calculation, which can occur when driving on hills, around bends or similar for example. The engine control module (ECM) makes these calculations using the oil level sensor signal and a number of other parameters, for example, vehicle speed signal and load signal.

CONTROLLING THE CRUISE CONTROL

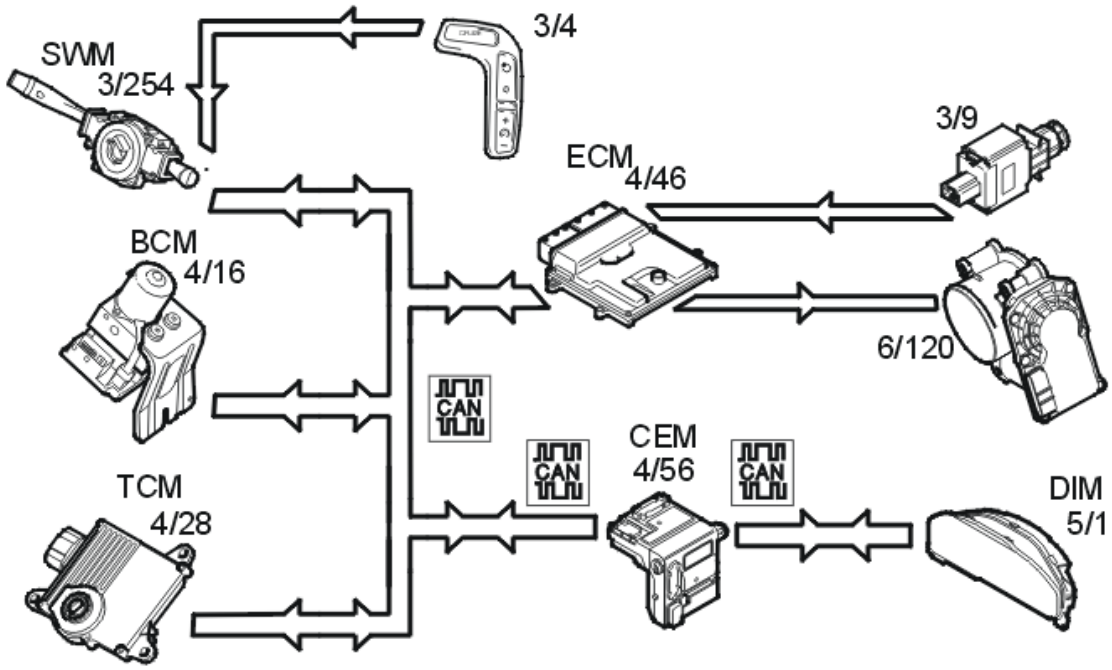

Fig. 227: Identifying Cruise Control Components
Courtesy of VOLVO CARS CORPORATION

The following components are used when controlling the cruise control:

- engine control module (ECM) (4/46)
- steering wheel module (SWM) (3/254)
- control unit cruise control (3/4)
- central electronic module (CEM) (4/56)
- brake control module (BCM) (4/16) (brake pedal position, speed signal)
- driver information module (DIM) (5/1) (cruise control light)
- transmission control module (TCM) (4/28)
- electronic throttle unit (6/120)

- brake light switch (3/9).

To activate cruise control, the function must be switched on using the "CRUISE" button. Then a light is activated in the driver information module (DIM).

The driver activates the function by pressing the SET+ or SET- button. A message is then transmitted via the low speed side of the CAN network to the central electronic module (CEM) which then transmits the message on via the high speed side of the CAN network to the engine control module (ECM).

The engine control module (ECM) controls the throttle angle so that a constant speed is maintained using the vehicle speed signal from the Brake Control Module (BCM). The transmission control module (TCM) also receives a message indicating that cruise control is active via the Controller area network (CAN), so that the transmission follows certain shifting patterns when the cruise control is active.

If the accelerator pedal (AP) is depressed the vehicle speed increases as normal and then resumes the stored value when the driver releases the accelerator pedal (AP) again.

The engine control module (ECM) continually stores the speed. If the cruise control is disengaged, for example, if the driver depresses the brake pedal, the previous speed can be resumed by pressing the "RESUME" button.

The cruise control cannot be activated below a certain speed.

Cruise control is switched off:

- when the driver depresses the brake pedal
- when the driver presses the "CRUISE" button on the steering wheel
- when the driver depresses the "0" button on the steering wheel
- if "P" or "N" position is transmitted on the controller area network (CAN)
- if the speed deviates too much from the set value
- when the control system detects a fault that prevents activation.

FUEL TRIM

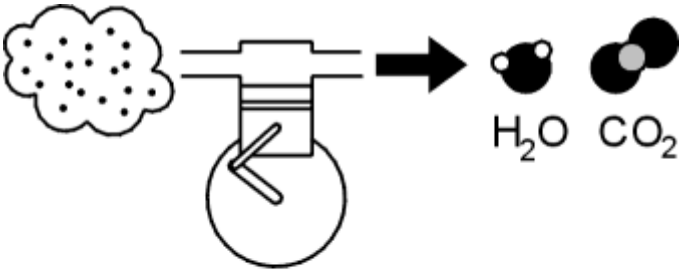

Fig. 228: Graphic of Exhaust Emissions
Courtesy of VOLVO CARS CORPORATION

Overview

Fuel trim reduces exhaust emissions. Fuel trim reduces nitrous oxides (NO_x), carbon monoxide (CO) and hydrocarbon (HC) emissions.

Theoretically, if the correct amount of oxygen is added during combustion, fuel can be converted to water (H_2O) and carbon dioxide (CO_2). Emissions would then be completely safe.

In practice considerable amounts of hydro-carbons (HC) and varying amounts of carbon monoxide (CO) and carbon dioxide (CO_2) remain.

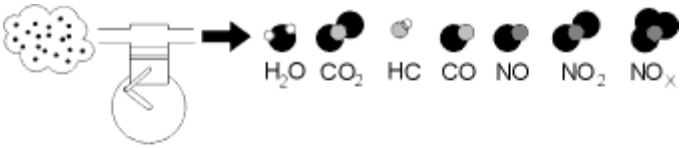

Fig. 229: Identifying Nitrous Oxides
Courtesy of VOLVO CARS CORPORATION

Due to the high temperature and pressure, nitrous oxides such as NO and NO_2 are also formed. The common designation for these gases is nitrous oxides NO_x .

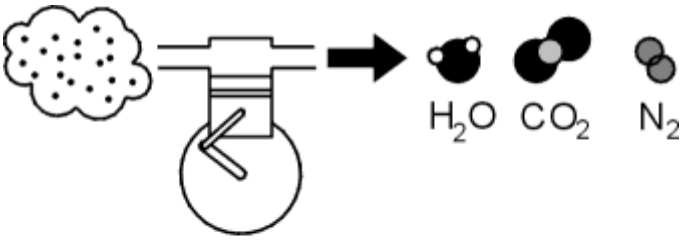

Fig. 230: Graphic of Exhaust Emissions
Courtesy of VOLVO CARS CORPORATION

By speeding up the reaction between the remaining reactive components using a catalytic converter, these can be converted to water (H_2 O), carbon dioxide (CO_2) and nitrogen (N_2).

However this can only happen if the balance of hydro-carbons (HC), carbon monoxide (CO), oxygen (O_2) and nitrous oxides (NO_x) is exactly right in the exhaust. This happens when the fuel air mixture before combustion is 14.7 kg of air per kg of fuel. The Lambda value is then said to be one, (lambda=1).

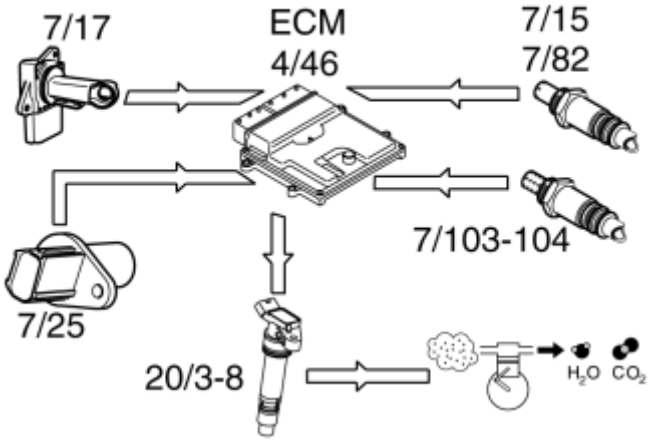

Fig. 231: Diagram of Engine Control Components
Courtesy of VOLVO CARS CORPORATION

A base program in the engine control module (ECM) calculates the injection period based on data about load, i.

e. the measured air mass and engine speed (rpm). The calculated injection time (from the base program) is then modified by a circuit (short-term fuel trim). The signal from the heated oxygen sensor (HO2S) is used to finely adjust the injection period so that lambda=1 is reached. The short-term fuel trim is a circuit that finely adjusts the injection period so that the fuel/air mixture is optimized (lambda=1). The control module also used the signals from the front and rear heated oxygen sensors (HO2S) to correct the front heated oxygen sensor (HO2S) (offset adjustment) and thereby the injection period. This gives a higher degree of accuracy during fuel trim. Fuel trim is a rapid process which may take place several times a second. Adjustment of the injection period calculated in the base program is limited.

The short-term fuel trim can be read off.

Adaptive functions

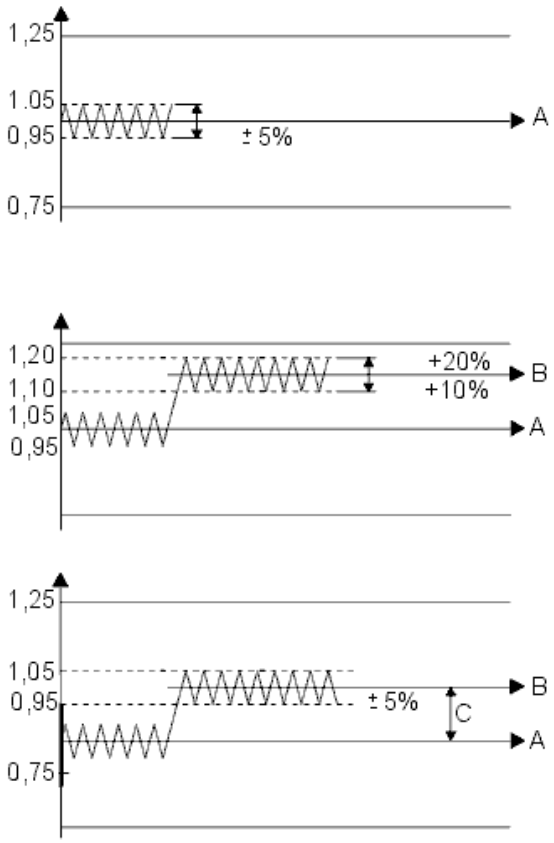

Fig. 232: Graphed View Of Adaptive Function
Courtesy of VOLVO CARS CORPORATION

Certain factors, for example, tolerance deviations on certain components such as mass air flow (MAF) sensor and injectors, air leakage on the intake side, fuel pressure etc. affect the fuel / air mix. In order to compensate for this, the engine control module (ECM) has adaptive (self learning) functions. When the engine is new the short term fuel trim varies cyclically around a nominal central line (A) 1.00, with, for example, a ±5% change of injection time when fuel trim is in operation.

If there is air leakage for example, the short-term fuel trim will quickly be offset to a new position (B) and will then work for example between 1.10 (+10%) and 1.20 (+20%), although still at an amplitude of 5%, but with an

offset in relation to the original center line (A). The injection period has then been increased to compensate the increase in the amount of air.

The adaptive functions will correct the change, so that the short-term fuel trim will work around the new center line (B) where it will again have its full range of control available.

Put simply, fuel trim is a measurement of the difference (C) between the original short-term fuel trim center line (A) and the new center line (B).

The adaptive functions are split into various operational ranges based on the load and speed of the engine.

The different adaption ranges can be read off.

The adaptive adjustments of injection time are continuously stored in the engine control module (ECM). This means that, at different operating ratios, the correct mixture ratio is achieved before the heated oxygen sensor (HO2S) reaches operating temperature.

The diagnostic trouble code (DTC) is stored in the engine control module (ECM) if any adaption value is too high or too low.

INDIVIDUAL CYLINDER FUEL TRIM (-2009)

General

The Engine control module (ECM) controls the fuel according to the description in Fuel trim above, but has another refined system for improving exhaust values, namely individual cylinder fuel trim.

In short, this means that the Engine control module (ECM) can detect the fuel/air mixture composition for each individual (6 cylinders).

To achieve this requires, among others, refined heated oxygen sensors that are very sensitive to the oxygen content in the exhausts.

Should problems occur, which would mean that the sensors, "lose" their extra sensitivity, the Engine control module (ECM) will return to traditional fuel trim.

This will not force the vehicle outside any limit values for exhausts, since this is more than enough to give "clean" exhausts.

FUEL PRESSURE REGULATION

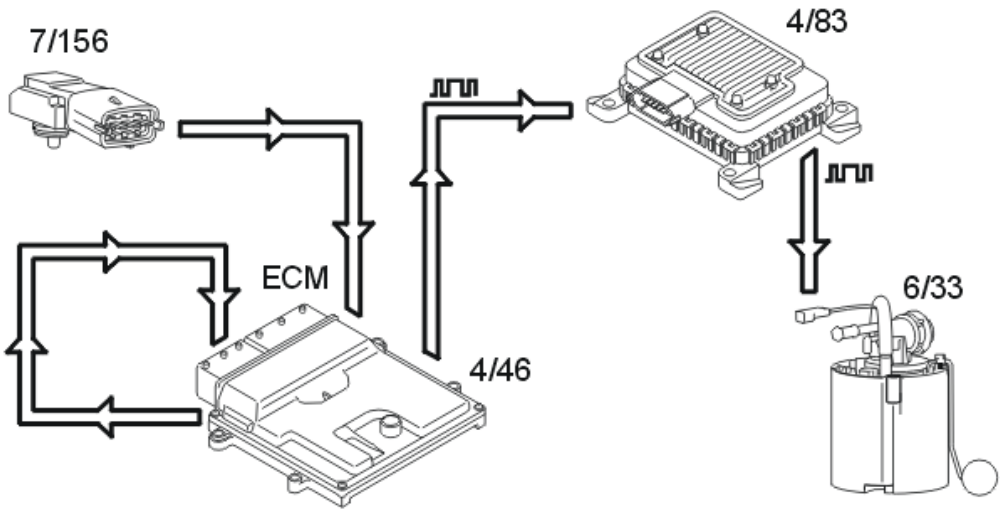

Fig. 233: Identifying Fuel Pressure Control Components
Courtesy of VOLVO CARS CORPORATION

General

Fuel pressure regulation for demand controlled fuel pumps (DECOS - DEmand COntrolled fuel Supply) means that the fuel pressure is controlled steplessly by varying the output of the fuel pump. The design of the system allows a greater maximum pressure (approximately 650kPa) in the fuel pump. This pressure is used in extreme situations, such as heavy engine load for example

The following components are used for fuel pressure regulation:

- engine control module (ECM) (4/46) with integrated atmospheric pressure sensor
- fuel pump control module (4/83)
- fuel pressure sensor with fuel temperature sensor (7/156)
- fuel pump with by-pass valve (6/33).

The time taken for the engine start procedure can be reduced by rapidly increasing the pressure in the fuel rail when the engine control module (ECM) receives a signal about the position of the ignition switch from the central electronic module (CEM).

The engine control module (ECM) is better able to calculate the injection period using the signal from the atmospheric pressure sensor and fuel pressure sensor. This particularly improves the cold starting characteristics of the engine.

The advantages of varying the output of the fuel pump so that it is not always at full power are:

- the total power consumption of the fuel pump (FP) is reduced, reducing the load on the power supply system
- the service life of the fuel pump (FP) is increased

- fuel pump noise is reduced.

Control

The engine control module (ECM) calculates the desired fuel pressure. A signal is then transmitted to the fuel pump control module indicating the desired fuel pressure. Serial communication between the engine control module (ECM) and the fuel pump control module is used to carry the signal. The fuel pump control module then operates the fuel pump unit to obtain the desired pressure using a pulse width modulation voltage on the ground lead. The fuel pump (FP) can be controlled steplessly by changing the pulse width modulation (PWM) signal. Only that pressure which is required at that specific time will then be released to the fuel rail/injectors. The value of the pulse width modulation (PWM) signal is a measurement of the operational load of the fuel pump (FP) (% duty, 100% = maximum pressure).

The engine control module (ECM) continuously monitors the fuel pressure using the signal from the fuel pressure sensor. This allows the desired fuel pressure to be reached, and if necessary a signal is transmitted to the fuel pump control module requesting that the fuel pressure is adjusted.

The engine control module (ECM) attempts too obtain a constant fuel pressure (approximately 380kPa relative to atmospheric pressure with the engine running).

By-pass valve

When the injectors close when the pressure is too great (during engine braking for example) there is a pressure peak. The by-pass valve in the fuel pump (FP) is used to even out the pressure peak. The opening pressure of the valve is approximately 650 kPa.

The by-pass valve also functions as a non-return valve, ensuring that the fuel pressure in the system is maintained when the engine is switched off.

There is high pressure before the engine is started. This high pressure means that the valve in the by-pass valve opens and the system is "flushed".

Passive safety

For safety reasons, the engine control module (ECM) shuts off the fuel pump (FP) if the supplemental restraint system module (SRS) detects a collision.

KNOCK CONTROL

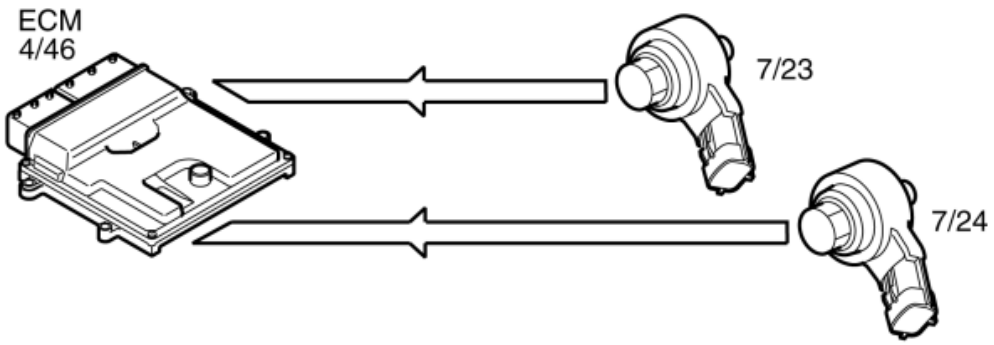

Fig. 234: Identifying Knock Sensors
Courtesy of VOLVO CARS CORPORATION

Knock occurs in the combustion chamber when the fuel and air mixture self ignites. This can occur either before or after the spark plug has produced an ignition spark. In both cases the gas in two or more places ignites in the combustion chamber.

This results in an extremely fast combustion process with flames from several directions. When these flames collide, the pressure in the cylinder increases rapidly and there is a mechanical knocking sound.

If any cylinder knocks, then certain types of vibrations in the engine block. These vibrations are transmitted to the knock sensors (7/23-24), which are bolted in the engine block.

One knock sensor detects knock on cylinders 1, 2, 3. The other knock sensor detects knock on cylinders 4, 5, and 6.

The mechanical stress generated in the knock sensors' piezo-electric materials result in generation of a voltage. The Engine control module (ECM) (4/46) can then, using the camshaft sensors (7/172-173) and the impulse sensor (7/25), decide which cylinder is knocking.

The knock sensors (KS) also interpret a proportion of normal engine sound. The control module is able to recognize the vibrations which correspond to knocking by filtering, amplifying and using software to evaluate the signal.

If the knock sensors (KS) detect knocking in the engine above a certain threshold value, the ignition timing is first retarded and then the fuel/air mixture is enriched to eliminate knocking.

IGNITION CONTROL

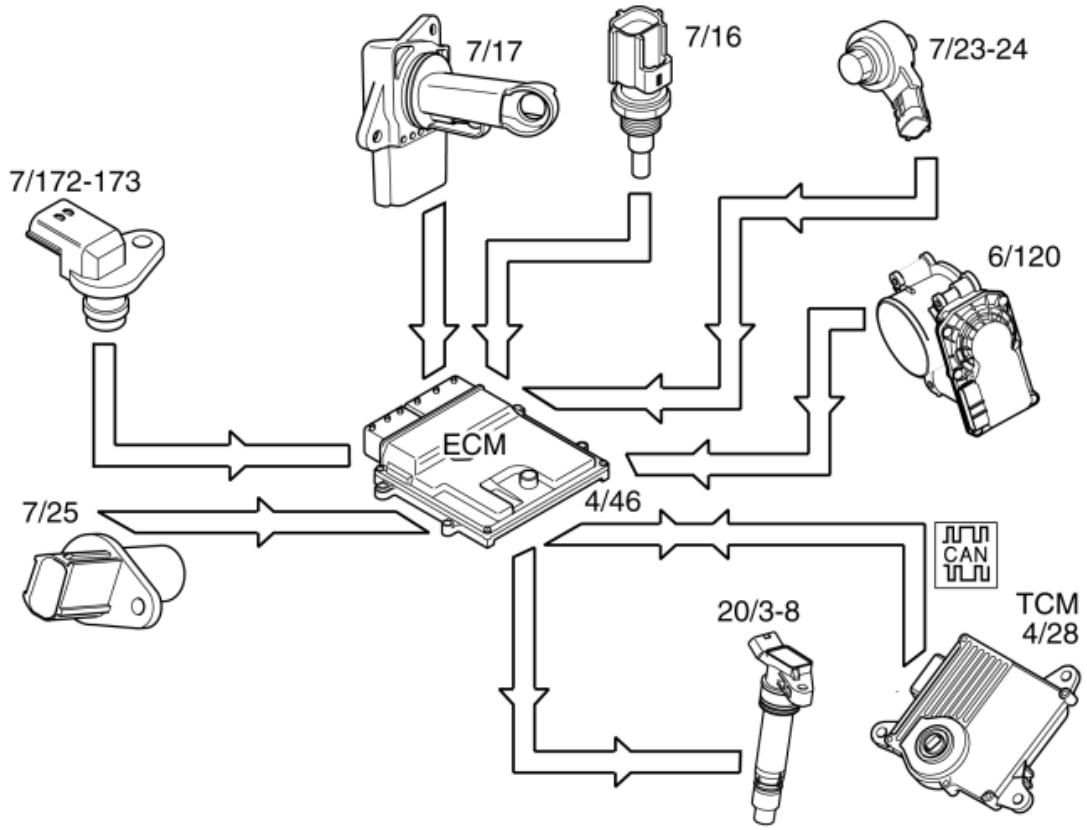

Fig. 235: Identifying Ignition Control Components
Courtesy of VOLVO CARS CORPORATION

The following components are used for ignition control:

- engine speed (RPM) sensor (7/25)
- Camshaft sensor (7/172-173)
- mass air flow (MAF) sensor (7/17)
- engine coolant temperature (ECT) sensor (7/16)
- throttle position (TP) sensor on the electronic throttle unit (6/120)
- knock sensor (KS) (7/23-24)
- transmission control module (TCM) (4/28)
- spark plugs with ignition coils (20/3-8).

The engine control module (ECM) calculates the optimum ignition advance based on the software and information from the sensors. The engine control module (ECM) cuts the current to the ignition coil mounted on the cylinder to be ignited and produces a spark.

During the starting phase the engine control module (ECM) produces a fixed ignition setting. When the engine has started and the vehicle is being driven, the engine control module (ECM) calculates the optimum ignition setting, taking factors such as the following into account:

- engine speed (RPM)
- load
- temperature.

The engine control module (ECM) analyses the signal from the knock sensors (KS) when the engine reaches operating temperature. If any of the cylinders knock, the ignition is retarded for that specific cylinder until the knocking ceases.

The ignition then advanced to the normal position or until the knock recurs.

Before the Transmission control module (TCM) is going to shift, sometimes it sends a request for torque limitation to the Engine control module (ECM). Which then lowers the ignition momentarily to reduce the torque and thus give smoother shifting and reduced load on the transmission.

Lowering of ignition can be done in several levels, where the levels depend on the signals from the Transmission control module (TCM). The return signal from the Engine control module (ECM) to the Transmission control module (TCM) confirms that the signal reached the Engine control module (ECM).

For further information, also see: **MISFIRE DIAGNOSTIC**

The engine misfires if the fuel does not ignite correctly. For further information, also see: **MISFIRE DIAGNOSTIC**

REGULATING THE AIR CONDITIONING (A/C) COMPRESSOR

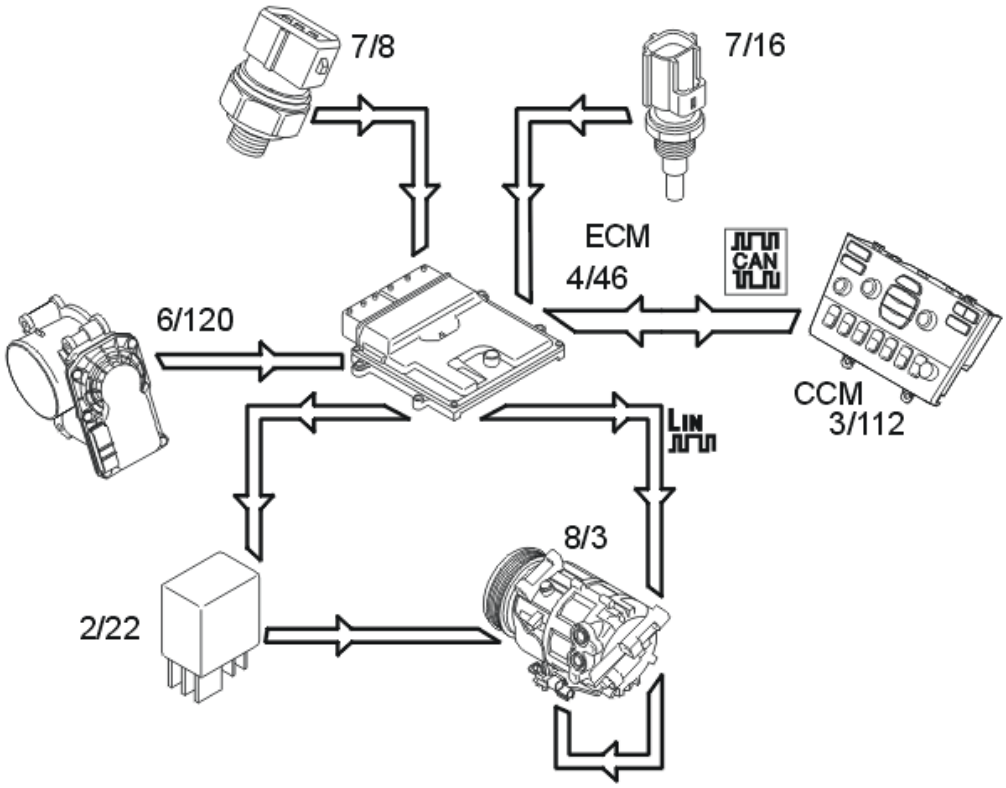

Fig. 236: (A/C) Compressor Regulating System
Courtesy of VOLVO CARS CORPORATION

The air conditioning (A/C) compressor is controlled by the engine control module (ECM) (4/46) on request from the climate control module (CCM) (4/6) via the controller area network (CAN). When the engine control module (ECM) receives a signal from the climate control module (CCM) to activate the air conditioning (A/C) compressor, the engine control module (ECM) grounds the circuit for the relay coil for the A/C compressor. See also: **AIR CONDITIONING (A/C) RELAY**

The relay (2/22) closes the circuit between the integrated relay/fusebox in the engine compartment and the clutch for the air conditioning (A/C) compressor (8/3). The air conditioning (A/C) compressor which has a variable cylinder displacement is always running during normal driving. Displacement in the compressor is regulated by a solenoid which is controlled by the engine control module (ECM).

The engine control module (ECM) controls the solenoid (displacement) from the driver's and vehicle's various driving characteristics. On Startup of the engine, pulling off and at acceleration etc, displacement is controlled so that the A/C compressor has the least possible effect on the engine torque. The climate control module (CCM) controls all functions in the climate control system that are related to the vehicle's interface for driver and passenger. I. E. the climate control system buttons on the dashboard environment panel.

The climate control module (CCM) transmits information to the engine control module (ECM), which determines what must be prioritized. For example, the air conditioning (A/C) compressor in certain extreme cases is switched off completely, regardless of the climate control module (CCM) request. This is to prevent negative engine performance and to protect the air conditioning (A/C) system. As well as the information from

the climate control module (CCM), the engine control module (ECM) controls the air conditioning (A/C) compressor based on the information from:

- Air conditioning (A/C) pressure sensor (high pressure side) (7/8)
- the throttle position (TP) sensor (6/120)
- the engine coolant temperature (ECT) sensor (7/16).

THROTTLE CONTROL

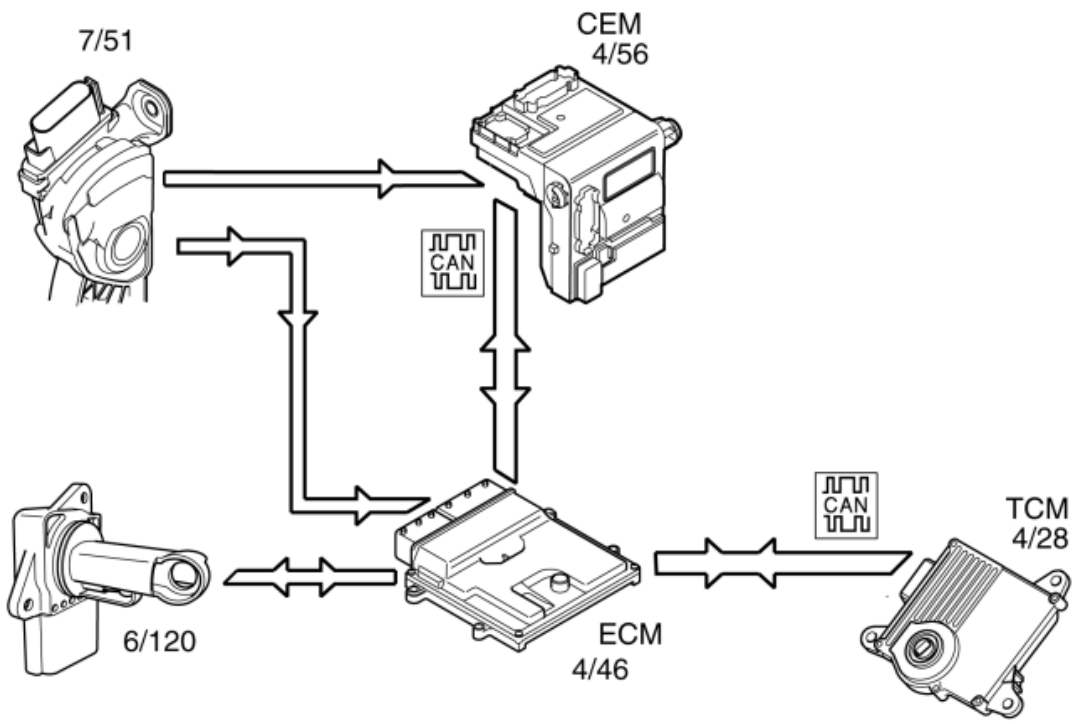

Fig. 237: Identifying Throttle Control
Courtesy of VOLVO CARS CORPORATION

To ensure that the correct throttle angle is reached, the engine control module (ECM) (4/46) controls the throttle shutter in the throttle unit (6/120), mainly using the signal from:

- Accelerator pedal (AP) position sensor (7/51)
- the throttle position (TP) sensor on the electronic throttle unit.

Additional signals and parameters are used to ensure optimum throttle control. By example by compensating for:

- the load from the air conditioning (A/C) compressor
- the load from the transmission depending on the selected gear mode

- engine coolant temperature (ECT)
- mass air flow through the intake manifold
- manifold absolute pressure (MAP) in the intake manifold.

The position of the throttle is measured by two potentiometers, in the throttle position (TP) sensor, which are on the throttle unit. These are connected, so that potentiometer 1 produces a higher voltage as the throttle angle increases, while potentiometer 2 does the opposite.

In a combustion engine, the difference between the minimum and maximum airflow is considerable. The smaller air flows need more thorough regulation, so the potentiometer signal from potentiometer 1 is amplified approximately 4 times in the engine control module (ECM) before it reaches the AC/DC converter in the engine control module (ECM). This means that there are three, two real and one fictitious, input signals available to the engine control module (ECM). These signals are used to determine the position of the throttle and to deploy the damper motor to the correct position. In general the amplified signal is primarily used for small throttle angles (small air flows), which are desirable when a high degree of accuracy is required, for idle air trim for example.

Because the signal is amplified, it reaches its maximum value as early as approximately a quarter of maximum deployment.

The engine control module (ECM) primarily uses the signal from potentiometer 1 as a measurement of throttle opening. The signal from potentiometer 2 is mainly to check that potentiometer 1 is working. The engine control module (ECM) then uses the signal to calculate a throttle angle (actual value). This is the actual throttle angle. The value for the actual throttle angle is used by those functions in the engine control module (ECM) which depend on this information so that the throttle can be correctly regulated.

There is an adaptation (learning) in the engine control module (ECM) so that the control module can calculate how the damper motor needs to be controlled. See "Adaptation of the throttle unit" below.

The throttle angle is regulated so that the actual angle (actual value) is the same as the angle calculated by the engine control module (ECM) (desired value). The engine control module (ECM) also uses the values that were stored during adaptation of the throttle angle, and the actual signals from the potentiometers.

The damper motor is deployed by the integrated power stage in the engine control module (ECM) using a pulse width modulation (PWM) signal. The torsion from the opening and return springs in the electronic throttle unit is also used. If there is a fault in the engine control module (ECM) so that the throttle unit cannot be operated or powered, the springs in the throttle unit will turn the throttle disc to the limp home position (return position). This return position gives a throttle angle large enough to allow the car to be driven to a workshop, although with considerably reduced driveability.

Throttle angle

The throttle angle is usually gauged by potentiometer 1. For small angles the amplified signal is used to obtain a clearer signal. The engine control module (ECM) also monitors the throttle unit signals from the potentiometers to check that they are plausible, that they are within the minimum and maximum limits and that the signals correspond to the same throttle angle. If there is a difference in the signals, a fictitious throttle signal is calculated from the load signal, the engine speed (rpm) and the prevailing conditions, particularly pressure and temperature.

The potentiometer whose signal is closest to the calculated throttle angle will then be assumed to be correct. The other potentiometer is then classified as not functioning and a diagnostic trouble code (DTC) is generated. The system then constantly monitors the throttle angle of the remaining potentiometer in comparison to the calculated throttle angle. If there is a difference between these values, the engine control module (ECM) will not rely on any of the throttle unit potentiometers. The power stage in the throttle unit is then disengaged, and the throttle switches to limp home mode.

Adaptation of the throttle unit

In ignition position II, the engine control module (ECM) carries out adaptation of the electronic throttle unit. Adaptation is carried out by the throttle disc being mechanically controlled to the closed position and the current throttle position being read off. If previous adaptation values are missing in the engine control module (ECM), for example, if the control module has not been powered, the current throttle angle is stored as the adaptation value. If, in addition, there is a previously stored value, the average value of the previous one and the current throttle angle is stored as the new adaptation value.

HINT: When replacing the electronic throttle unit, the engine control module (ECM) must therefore always be switched off.

SYSTEM OVERVIEW

CONTROL MODULE

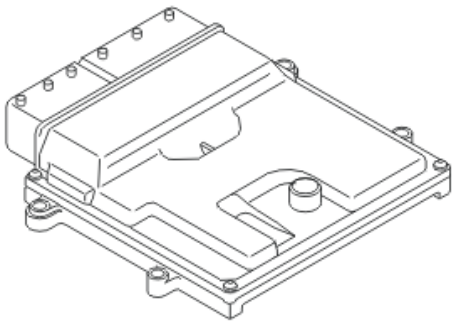

Fig. 238: Identifying Engine Control Module (ECM)
Courtesy of VOLVO CARS CORPORATION

The engine control module (ECM) controls, amongst others, the following functions:

- injectors
- ignition
- camshafts (CVVT)
- Evaporative emission system (EVAP) valve
- throttle angle
- engine cooling fan (FC)

- air conditioning (A/C) compressor.
- fuel pump
- Variable intake system
- variable camshaft profile.

The engine control module (ECM) is supplied with battery voltage (U_{bat}) via fuses in the central electronic module (CEM) and in the integrated relay/fusebox in the engine compartment.

To prevent certain stored date from being erased from the engine control module (ECM) when the ignition is switched off, the control module also has a 30-supply. This supply is from the integrated relay/fusebox in the engine compartment.

The control module is grounded via the wiring which is connected at the right-hand suspension turret.

The engine control module (ECM) contains a voltage regulator which maintains a low voltage (5 V) in internal components in the control module such as:

- Analog/Digital converter
- Digital/Analog converter
- Micro-processor.

Functions which require battery power (U_{bat}) and high output are controlled by external or internal power stages. For example ignition coils have external power stages (integrated into the ignition coils) while the power stages for the injectors are integrated in the engine control module (ECM).

The micro-processor in the engine control module (ECM) receives signals from the different sensors and control modules in the vehicle. The micro-processor uses a program which interprets the signals from the different sensors and how the components and functions should be controlled.

The engine control module (ECM) has several self-learning (adaptive) functions. It continually adapts ongoing calculations to changing circumstances (such as wear, air leaks, differences between different fuels).

Emissions are kept low through efficient management of the injection period, ignition, evaporative emission system (EVAP) valve and camshafts etc. Faults which affect emissions can be detected by running diagnostics for functions and components.

The Engine control module (ECM) is located on the air filter box, under a plastic cover.

The engine control module (ECM) communicates with other control modules using controller area network (CAN) communication or LIN communication.

The engine control module (ECM) checks activations, input and output signals and functions using an integrated diagnostic system. A diagnostic trouble code (DTC) is stored if, after validation, the control module detects a fault. In certain cases the faulty signal is also replaced with a substitute value or certain functions are limited.

For example, substitute values can be set for:

- engine coolant temperature (ECT) sensor
- Mass air flow (MAF) sensor
- throttle position (TP) sensor
- air pressure
- fuel pressure.

Mathematical calculations and signals from certain components are used to calculate the substitute values. Other substitute values are fixed, predefined values in the engine control module (ECM).

The substitute value allows the vehicle to be driven and for the emissions to be kept at a reasonable level even though vital functions or components are malfunctioning.

Functions which may be limited are for example:

- camshaft control (CVVT)
- fuel trim
- throttle angle
- fuel pressure regulation.

The substitute values are used and functions restricted so that the system is still able to work while protecting components that are required for safety reasons (for example the throttle angle).

Any diagnostic trouble codes (DTCs) are stored in the internal memory of the engine control module (ECM). The information can be read off via the data link connector (DLC) in the vehicle.

SIGNALS

The table below summarizes the input signals to and output signals from the Engine Control Module (ECM). The signal types are divided into directly connected signals, LIN and CAN communication. The illustration below gives the same information as the Volvo component designations.

Input signals	Output signals
Directly connected: • Ignition switch (3/1) • Air conditioning (A/C) pressure sensor (7/8) • Brake light switch (from the central electronic module (CEM)) (3/9) • Accelerator pedal (AP) position sensor (7/51) • Electronic throttle unit (6/120)	**Directly connected:** • Air conditioning (A/C) relay (2/22) • Air conditioning (A/C) compressor (8/3) • Electronic throttle unit (6/120) • Engine cooling fan (FC) control module (4/71) • Evaporative emission system (EVAP) valve (8/18) • Injectors (8/6-11)

• Camshaft position sensor, intake (7/172) • Camshaft position sensor, exhaust (7/173) • Engine coolant temperature (ECT) sensor (7/16) • Engine speed (RPM) sensor (7/25) • Fuel pressure sensor / fuel temperature sensor (7/156) • Knock sensor (KS) (7/23-24) • Mass air flow (MAF) sensor/air temperature sensor (7/17) • Manifold absolute pressure (MAP) sensor (7/81) • Front oxygen sensor, bank 1 (7/15) • Front oxygen sensor, bank 2 (7/82) • Rear oxygen sensor, bank 1 (7/103) • Rear oxygen sensor, bank 2 (7/104) • Oil level sensor (7/35) • Outside temperature sensor (6/62) • Ignition coils (20/3-8) • Engine cooling fan (FC) control module (4/71) • Leak diagnostic unit (6/67), (certain markets only). • Gear position status (P/N engaged/disengaged) (from the transmission control module (TCM) (4/28)) • Engine coolant level sensor (7/73)	• Fuel pump (FP) control module (4/83) • Ignition coils (20/3-8) • Leak diagnostic unit (6/67), (certain markets only). • Front oxygen sensor, bank 1 preheating (7/15) • Front oxygen sensor, bank 2 preheating (7/82) • Rear oxygen sensor, bank 1 preheating (7/103) • Rear oxygen sensor, bank 2 preheating (7/104) • Main relay (system relay) (2/32) • Starter motor relay (2/35) • Camshaft reset valve (CVVT), intake (8/19) • Emissions warning lamp (5/1) • Actuator variable intake manifold, upper (6/139) • Actuator variable intake manifold, lower (6/140) • Cam profile solenoid 1 (CPS1) (8/125) • Cam profile solenoid 2 (CPS2) (8/126)

Via LIN communication:
• **Alternator control module (ACM) (6/26):**
  • fault status
  • magnetization for charging
	Via LIN communication:
	• **Alternator control module (ACM) (6/26):**
	  • requested voltage for charging.

Via CAN communication:	**Via CAN communication:**
	• **Central electronic module (CEM) (4/56):**
	  • outside temperature
	  • request for fuel pump (FP)
	  • engine speed
	  • load
	  • request for the malfunction indicator lamp (MIL) to be lit
	  • engine status (on/off)
	  • immobilizer codes

- **Central electronic module (CEM) (4/56):**
  - accelerator pedal position, (analog and PWM-signal)
  - quantity of fuel in the tank
  - start function inhibiting
  - the time since the engine was switched off
  - request for increased idle speed
  - request for battery charging
  - charging status
  - request for cruise control
  - steering angle
  - status engine heater (on/off)
- **Brake control module (BCM) (4/16):**
  - status brake pedal
  - vehicle speed
  - active control function
  - front wheel spin to detect "rough roads"
  - torque limiting request
- **Climate control module (CCM) (3/112):**
  - air conditioning (A/C) compressor request
  - request for increased fan speed
  - request for lowest permitted idle speed
  - evaporator temperature
- **Transmission control module (TCM) (4/28):**
  - vehicle speed
  - torque limiting request
  - transmission oil temperature
  - gear position
  - status gear position (P/N engaged/disengaged)
  - "Lock-up" status (engaged/disengaged)
  - request for lowest permitted idle speed
  - gear ratio
  - torque loss in transmission
- **Rear electronic module (REM) (4/58).**
  - status cruise control (on/off)
  - alternator control module (ACM) load
  - fault status alternator control module (ACM)
- **Climate control module (CCM) (3/112):**
  - air conditioning (A/C) compressor status
  - atmospheric pressure
  - engine coolant temperature (ECT)
  - engine speed
  - engine status (on/off)
- **Transmission control module (TCM) (4/28):**
  - gear position
  - load
  - status cruise control (on/off)
  - engine coolant temperature (ECT)
  - engine speed
  - accelerator pedal position
  - status brake pedal
  - speed set in the cruise control
  - engine status (on/off)
  - "kickdown" request
- **Driver information module (DIM) (5/1):**
  - engine coolant temperature (ECT)
  - warning texts related to the engine control module (ECM)
  - engine speed
  - status cruise control (on/off)
  - calculated fuel consumption
  - engine status (on/off)
  - oil pressure status
  - oil level

• **Steering wheel module (SWM) (3/254).**	• time for service
	• **Brake control module (BCM) (4/16):**
	  • torque after transmission
	  • engine speed
	  • accelerator pedal position
	  • engine status (on/off)
	• **Differential electronic module (DEM) (4/82):**
	  • engine speed
	  • engine torque (calculated)
	  • accelerator pedal position
	  • status brake pedal
	• **Rear electronic module (REM) (4/58).**
	• **Steering wheel module (SWM) (3/254).**

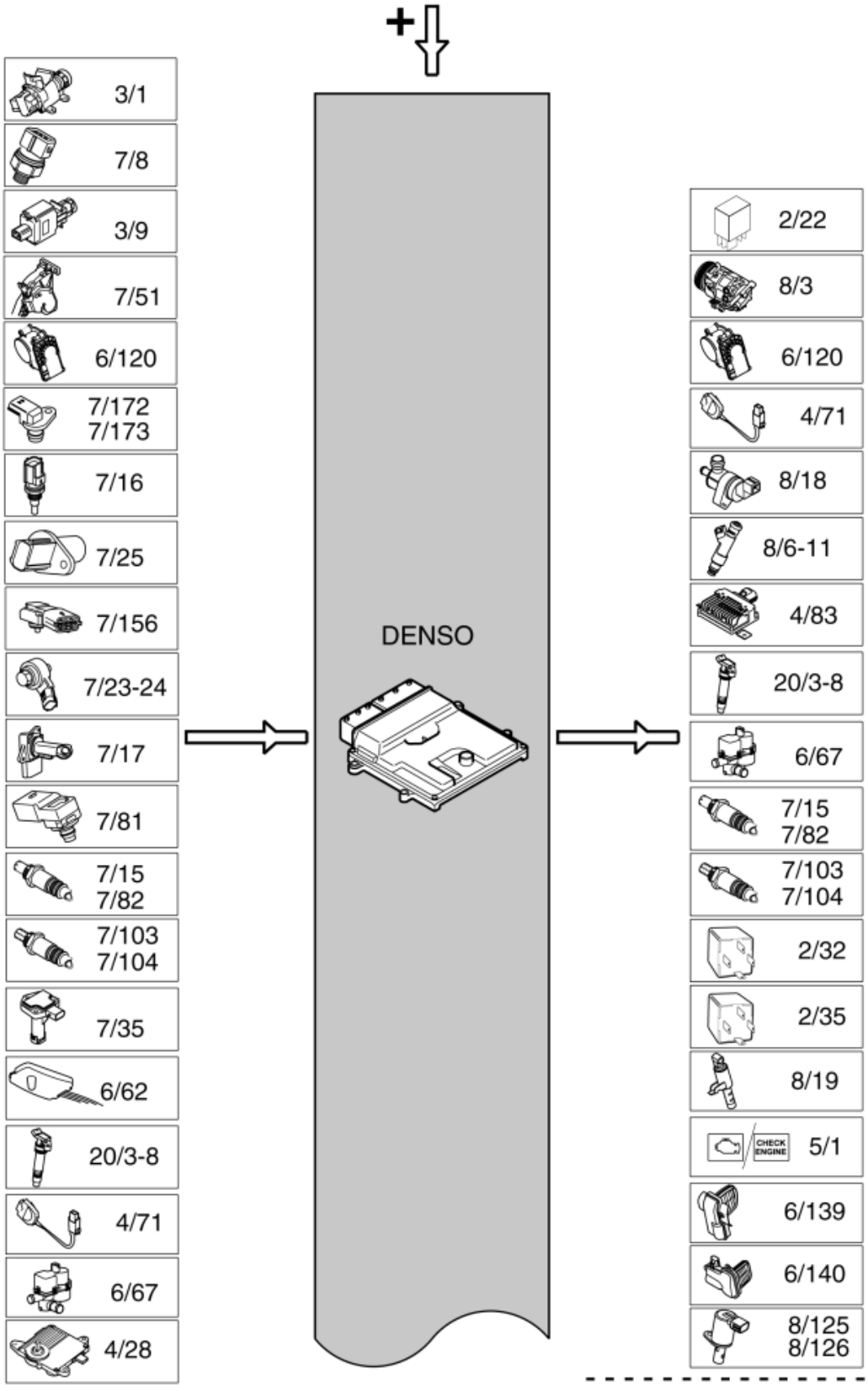
+
3/1
7/8
3/9
7/51
6/120
7/172
7/173
7/16
7/25
7/156
7/23-24
7/17
7/81
7/15
7/82
7/103
7/104
7/35
6/62
20/3-8
4/71
6/67
4/28
DENSO
2/22
8/3
6/120
4/71
8/18
8/6-11
4/83
20/3-8
6/67
7/15
7/82
7/103
7/104
2/32
2/35
8/19
CHECK ENGINE
5/1
6/139
6/140
8/125
8/126

Fig. 239: Identifying Volvo Component Designations
Courtesy of VOLVO CARS CORPORATION

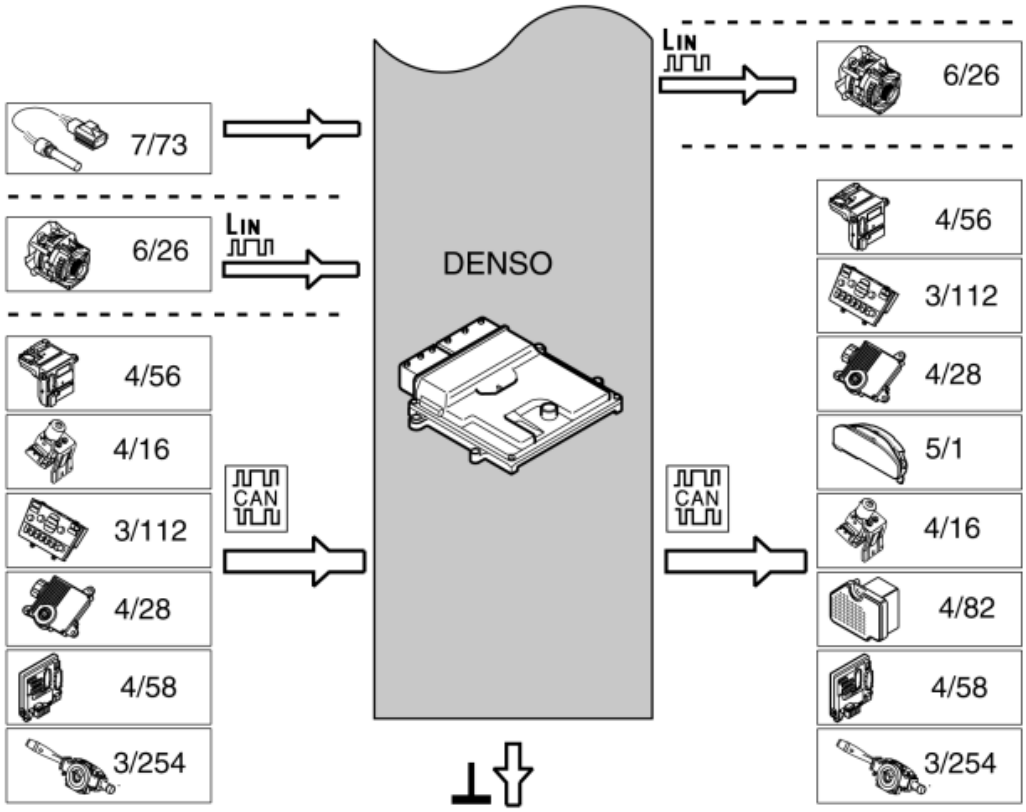

Fig. 240: Identifying Volvo Component Designations
Courtesy of VOLVO CARS CORPORATION

ENGINE CONTROL MODULE (ECM) (B6324S5; 2011-2012)

DESIGN

see **DESIGN**

DIAGNOSTIC FUNCTIONS

see **DIAGNOSTIC FUNCTIONS**

DOWNLOADING SOFTWARE AND REPLACING THE CONTROL MODULE

see **DOWNLOADING SOFTWARE AND REPLACING THE CONTROL MODULE**

FUNCTION

see **FUNCTION**

SYSTEM OVERVIEW

see **SYSTEM OVERVIEW**

ENGINE CONTROL MODULE (ECM) (B8444S; 2005-2011)

DESIGN

IGNITION SWITCH

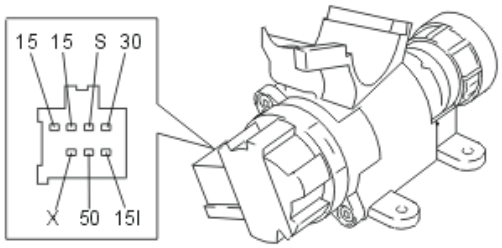

Fig. 241: Identifying Ignition Switch And Connector Terminals
Courtesy of VOLVO CARS CORPORATION

The Engine Control Module (ECM) uses the signal from the ignition switch to detect when the ignition key has been turned to position II or III. When the key is in the ignition position (position II) or starting position (position III) a high signal (U_{bat}) is transmitted from the ignition switch to the engine control module (ECM).

The engine management system prepares for start-up (for example, temporarily activates the fuel pump (FP) relay). When the flywheel in the engine rotates, the engine speed (RPM) sensor signal is used to keep the fuel pump (FP) relay activated.

The fuse in the fuse box in the passenger compartment supplies current to the ignition switch.

The central electronic module (CEM) has diagnostics for the ignition switch.

ENGINE SPEED (RPM) SENSOR

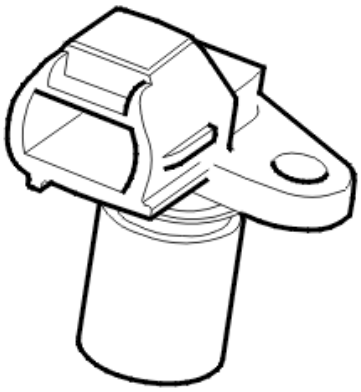

Fig. 242: Identifying Engine Speed (RPM) Sensor
Courtesy of VOLVO CARS CORPORATION

The engine speed (RPM) sensor provides the engine control module (ECM) with information about the speed and position of the crankshaft. The engine control module (ECM) is able to use the signal from the engine speed (RPM) sensor to determine when a piston is approaching top dead center (TDC).

The signal from the engine speed (RPM) sensor is also used to check the engine for misfires. For further information, see: **MISFIRE DIAGNOSTIC**

The engine speed (RPM) sensor is at the rear of the engine above the flywheel.

The sensor is inductive with a permanent magnet. An alternating current is induced in the sensor when the flywheel/carrier plate passes the engine speed (RPM) sensor. The generated voltage and frequency increases with the engine speed (rpm).

The signal varies between 0.1-100 V depending on the engine speed (RPM).

The Engine Control Module (ECM) is able to determine the engine speed (RPM) by counting the number of holes per time unit. When the reference position passes the engine speed (RPM) sensor, the voltage and frequency drop momentarily to zero, even though the engine is still running. This allows the engine control module (ECM) to determine the position of the crankshaft.

If the signal from the engine speed (RPM) sensor is incorrect or missing, the control module will use signals from the camshaft position (CMP) sensor.

The engine speed (RPM) sensor can be diagnosed by the engine control module (ECM) and the sensor signal (engine speed (RPM)) can be read off.

CAMSHAFT POSITION (CMP) SENSOR

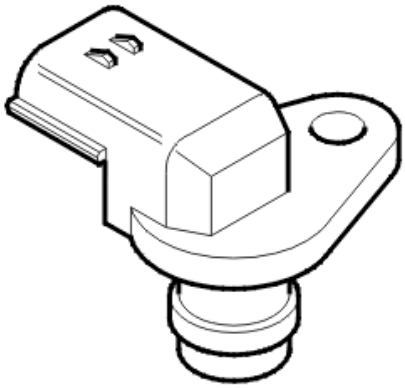

Fig. 243: Camshaft Position Sensor
Courtesy of VOLVO CARS CORPORATION

The function of the camshaft position (CMP) sensor is to detect the flanks of the camshaft rotor. The signal from the sensor is used by the engine control module (ECM) to determine the angle of the camshaft.

Each camshaft is divided into a number of flanks (segments) per camshaft revolution. A pulse wheel on the camshaft consisting of teeth (the teeth are positioned by each flank) is used by the camshaft position sensor (CMP) to detect the flanks and the position of the camshaft.

In the event of misfire or engine knock, the control module is able to determine which cylinder is misfiring or knocking using the camshaft position (CMP) sensor signal. Also, see **KNOCK SENSOR (KS)** and **ENGINE SPEED (RPM) SENSOR**.

Data about the camshaft position is used during camshaft control (CVVT). See: **CAMSHAFT CONTROL (CVVT)**

The sensor, which is a magnetic resistor with a permanent magnet, is grounded in the control module and supplied with 5 V from the control module. When one of the teeth on the camshaft pulse wheel passes the camshaft position (CMP) sensor, a signal is transmitted to the control module from the camshaft position (CMP) sensor. The signal varies between 0 - 5 V and is high when a tooth is close to the camshaft position (CMP) sensor and low when the tooth leaves the camshaft position (CMP) sensor.

There is camshaft position (CMP) sensor for each camshaft.

The camshaft position (CMP) sensors are located by the camshafts on the rear edge of the engine (left-hand side of the vehicle, closest to the flywheel).

The engine control module (ECM) can diagnose the camshaft position (CMP) sensors.

KNOCK SENSOR (KS)

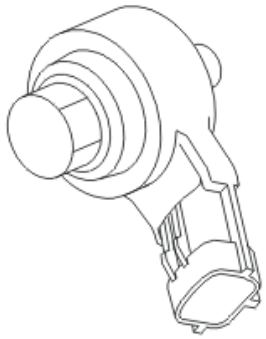

Fig. 244: Identifying Knock Sensor
Courtesy of VOLVO CARS CORPORATION

The function of the knock sensor (KS) is to monitor combustion knocking from the engine. Knocking may damage the engine and reduces the efficiency of engine combustion.

If the engine control module (ECM) registers knocking from any of the cylinders, the ignition will be retarded for that cylinder at the next combustion stage. If repeated ignition retardation does not prevent knocking, the injection period will be increased. This has a cooling effect.

The sensor is made up of Piezo electrical crystals. If there is engine knock, vibrations (sound waves) spread through the cylinder block to the knock sensor (KS). The resultant mechanical stress in the Piezo electrical material in the knock sensors generates a voltage. This signal is transmitted to the engine control module (ECM). The signal corresponds to the frequency and amplitude of the sound waves. This allows the Engine Control Module (ECM) to determine if the engine is knocking. The camshaft position (CMP) sensor and engine speed (RPM) sensor are used to determine the operating cycle of the engine (which cylinder is igniting) and therefore which cylinder is knocking.

The knock sensors are located on the engine block between the cylinder rows.

Knock sensor 1 detects knock on cylinders 5, 6, 7 and 8. Knock sensor 2 detects knock on cylinders 1, 2, 3 and 4.

The engine control module (ECM) can diagnose the knock sensors (KS).

ENGINE COOLANT TEMPERATURE (ECT) SENSOR

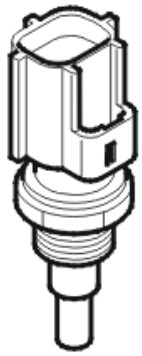

Fig. 245: View of Engine Coolant Temperature (ECT) Sensor
Courtesy of VOLVO CARS CORPORATION

The engine coolant temperature (ECT) sensor checks the temperature of the engine coolant. The temperature of the engine coolant is required so that the engine control module (ECM) can regulate:

- the injection period
- the idle speed
- the engine cooling fan (FC)
- the ignition advance
- engagement and disengagement of the A/C compressor
- diagnostic functions.

The sensor is a negative temperature coefficient (NTC) type which is supplied with power from the control module (signal) and is grounded in the control module.

The resistance in the sensor changes depending on the temperature of the coolant. Depending on the resistance in the sensor, voltage (signal) is transmitted to the engine control module (ECM). The lower the temperature the higher the voltage (high resistance). A high temperature results in low voltage (low resistance).

The engine coolant temperature (ECT) sensor is located beside the thermostat.

The engine coolant temperature (ECT) can be diagnosed by the engine control module (ECM) and the value of the sensor can be read off.

MASS AIR FLOW (MAF) SENSOR/INTAKE AIR TEMPERATURE (IAT) SENSOR

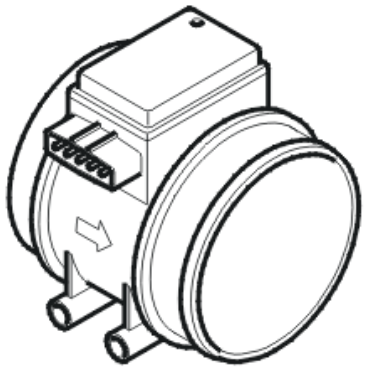

Fig. 246: Identifying Mass Air Flow Sensor
Courtesy of VOLVO CARS CORPORATION

Overview

The mass air flow (MAF) sensor is a combined sensor and contains two sensors in the same component:

- mass air flow (MAF) sensor
- intake air temperature (IAT) sensor.

The mass air flow (MAF) sensor is positioned between the air cleaner (ACL) housing and the intake manifold.

Mass air flow (MAF) sensor

The mass air flow (MAF) sensor gauges the air mass sucked into the engine. It continuously transmits signals to the engine control module (ECM) about the mass of the intake air. This data is used by the engine control module (ECM) to calculate:

- the injection period
- the fuel pressure
- the ignition timing
- the engine load.

The transmission control module (TCM) also uses this data for its gear shift calculations. This data is transmitted to the transmission control module (TCM) from the engine control module (ECM) via the high speed side of the Controller area network (CAN).

The mass air flow (MAF) sensor is a hot wire type. Unlike other hot wire types, the mass air flow sensor in the Denso system uses a hot wire which has a ceramic casing. This eliminates the need for a clean burn function.

The mass air flow (MAF) sensor is supplied with battery voltage by the system relay and is grounded in the engine control module (ECM). The signal from the sensor is analog and varies between approximately between 0.5 - 4.5 V. Low air flow (low mass) results in low voltage, high air flow (high mass) gives high voltage.

The mass air flow (MAF) sensor can be diagnosed by the engine control module (ECM) and the sensor signal can be read off.

Intake air temperature (IAT) sensor

The temperature sensor checks the temperature of the intake air in the intake manifold. This data is used by the engine control module (ECM) to calculate injection period. The control module also controls certain diagnostic functions using the signal from the temperature sensor.

The sensor, which is an NTC resistor, is grounded in the control module and supplied with power (signal) from the control module.

The resistance in the sensor changes according to the intake air temperature. This provides the control module with a signal of between 0.5 - 5 V. The lower the temperature the higher the voltage (high resistance). A high temperature results in low voltage (low resistance).

The temperature sensor can be diagnosed by the engine control module (ECM) and the sensor signal can be read off.

HEATED OXYGEN SENSORS (HO2S)

Front heated oxygen sensor (HO2S)

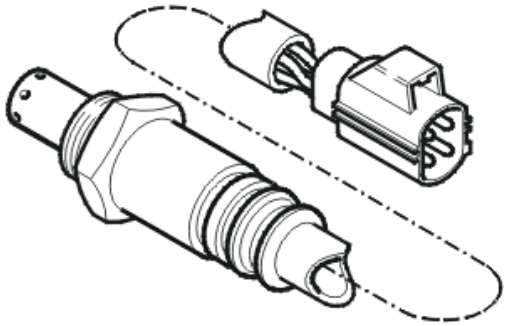

Fig. 247: View of Heated Oxygen Sensor (HO2S)
Courtesy of VOLVO CARS CORPORATION

CAUTION: The air lines for the heated oxygen sensors (HO2S) must not be trapped or damaged in any way. The connectors for the heated oxygen sensors (HO2S) must not be greased under any circumstances. The oil in the grease would disrupt the reference air and the function of the heated oxygen sensors (HO2S).

Front heated oxygen sensor (HO2S) is used to provide the engine control module (ECM) with information about the remaining oxygen content of the exhaust gases before the three-way catalytic converter (TWC). This is so that the engine control module (ECM) can continually check the combustion so that lambda=1 is achieved.

lambda=1 is the ideal fuel-air ratio, with 14.7 kg air per 1 kg fuel.

The heated oxygen sensor (HO2S) uses current control and its signal characteristic is linear. With a linear signal characteristic, the amplitude of the signal curve is low when changing the oxygen content in the exhaust gases. The probe consists of a preheating element and the actual lambda sensor. The lambda sensor is an oxygen sensitive ceramic body consisting of zirconium oxide. The control module supplies power to the ceramic body, which reacts to the oxygen content of the exhaust gases. This in turn affects the signal to the engine control module (ECM). In order to determine the oxygen content in the exhaust pipe, the heated oxygen sensor (HO2S) needs reference air from the surrounding air. This reference air reaches the heated oxygen sensor (HO2S) via the air lines.

CAUTION: The air lines for the heated oxygen sensors (HO2S) must not be trapped or damaged in any way. The connectors for the heated oxygen sensors (HO2S) must not be greased under any circumstances. The oil in the grease would disrupt the reference air and the function of the heated oxygen sensors (HO2S).

There are two front heated oxygen sensors; one for bank 1 and one for bank 2.

Bank 1 (front cylinder row); cylinders 1, 3, 5 and 7.

Bank 2 (rear cylinder row, closest to the passenger compartment); cylinders 2, 4, 6 and 8.

The heated oxygen sensors (HO2S) can be diagnosed by the engine control module (ECM), and signals from them can be read off. For further information: **HEATED OXYGEN SENSOR (HO2S) DIAGNOSTIC**

The control module can be used to read off the calculated lambda value from the heated oxygen sensor (HO2S) signal.

Rear heated oxygen sensor (HO2S)

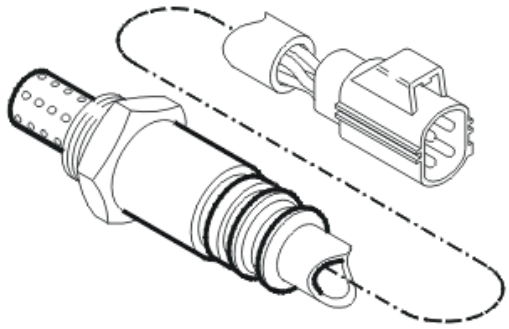

Fig. 248: View of Heated Oxygen Sensor (HO2S)
Courtesy of VOLVO CARS CORPORATION

CAUTION: The air lines for the heated oxygen sensors (HO2S) must not be trapped or

damaged in any way. The connectors for the heated oxygen sensors (HO2S) must not be greased under any circumstances. The oil in the grease would disrupt the reference air and the function of the heated oxygen sensors (HO2S).

The rear heated oxygen sensor (HO2S) is used to provide the engine control module (ECM) with information about the remaining oxygen content of the exhaust gases beyond the three-way catalytic converter (TWC). This information is used by the Engine Control Module (ECM) to check the function of the three-way catalytic converter (TWC). This check is carried out when the conditions for the catalytic converter diagnostics have been met. The rear heated oxygen sensor (HO2S) has no direct effect on regulation of the fuel/air mixture. However the engine control module (ECM) uses the signal to optimize the signal from the front heated oxygen sensor (HO2S). For further information, see: **THREE-WAY CATALYTIC CONVERTER (TWC) DIAGNOSTICS**

The heated oxygen sensor (HO2S) uses voltage control. The signal characteristic is binary. With a binary signal characteristic, the amplitude of the signal curve changes considerably when changing the oxygen content in the exhaust gases. Otherwise its components and function are the same as the front heated oxygen sensor (HO2S).

CAUTION: The air lines for the heated oxygen sensors (HO2S) must not be trapped or damaged in any way. The connectors for the heated oxygen sensors (HO2S) must not be greased under any circumstances. The oil in the grease would disrupt the reference air and the function of the heated oxygen sensors (HO2S).

There are two rear heated oxygen sensors; one for bank 1 and one for bank 2.

Bank 1 (front cylinder row); cylinders 1, 3, 5 and 7.

Bank 2 (rear cylinder row, closest to the passenger compartment); cylinders 2, 4, 6 and 8.

The heated oxygen sensors (HO2S) can be diagnosed by the engine control module (ECM), and signals from them can be read off

Preheating of the heated oxygen sensors (HO2S)

The heated oxygen sensor (HO2S) only functions above a certain temperature, approximately 300 °C. The normal operating temperature is between 300-900 °C. The heated oxygen sensors (HO2S) are electrically pre-heated so that operating temperature is rapidly reached. They are also pre-heated to ensure that the heated oxygen sensors (HO2S) maintain a normal operating temperature and to prevent condensation which could damage the heated oxygen sensor (HO2S).

The heater element in the probe consists of a positive temperature coefficient (PTC) resistor. The system relay supplies the heater element with voltage. The element is grounded in the engine control module (ECM). When the control module grounds the connection a current flows through the PTC resistor. When the heated oxygen sensor (HO2S) is cold, the resistance in the PTC resistor is low and a large current will flow through the circuit. The current from the engine control module (ECM) is pulsed at first to prevent condensation damage to the heated oxygen sensor (HO2S). Depending on the temperature, allowances are made for factors such as the dew

point. As the temperature in the PTC resistor rises, the resistance rises, the current falls and switches in stages to a constant current. The pre-heating time for front heated oxygen sensor (HO2S) is short, approximately 20 seconds.

The heater element heats the heated oxygen sensors (HO2S) to approximately 350 °C. The probes maintain this as a minimum temperature.

The engine control module (ECM) can diagnose the heater element.

STOP LAMP SWITCH

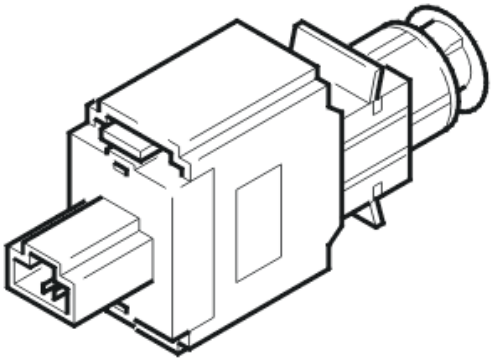

Fig. 249: Brake Light Switch
Courtesy of VOLVO CARS CORPORATION

The purpose of the stop lamp switch is to provide the engine control module (ECM) with information indicating whether the brake pedal is depressed or not.

A signal is transmitted to the engine control module (ECM) when the brake pedal is pressed. The engine control module (ECM) disengages the cruise control (if activated). The brake pedal sensor also disengages cruise control.

The stop lamp switch is supplied with power from the ignition switch (terminal 30). When the brake pedal is depressed the switch closes and a high signal (12 V) is transmitted to the engine control module (ECM).

The stop lamp switch can be diagnosed by the engine control module (ECM) and its status (depressed or not) can be read off.

The stop lamp switch is on the pedal box by the brake pedal.

A/C PRESSURE SENSOR

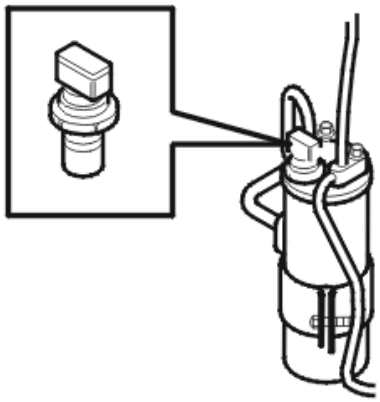

Fig. 250: A/C Pressure Sensor
Courtesy of VOLVO CARS CORPORATION

The air conditioning (A/C) pressure sensor detects the pressure in the high-pressure side of the air conditioning (A/C) system.

The sensor is linear. It is grounded in the control module and supplied with 5 V from the control module. A linear signal (which depends on the pressure in the air conditioning (A/C) system) is transmitted to the engine control module (ECM). Low pressure produces low voltage, high pressure produces high voltage.

The air conditioning (A/C) pressure sensor can be diagnosed by the engine control module (ECM) and the sensor value can be read off.

The air conditioning (A/C) pressure sensor is directly mounted on the air conditioning receiver drier.

TRANSMISSION CONTROL MODULE (TCM)

The engine control module (ECM) uses a directly connected signal from the transmission control module (TCM) in the start function (activating the starter motor).

ACCELERATOR PEDAL (AP) POSITION SENSOR

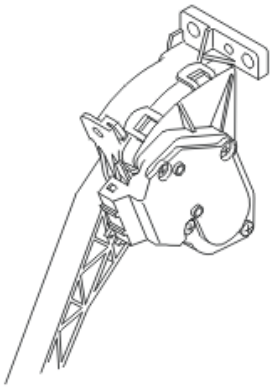

Fig. 251: Identifying Accelerator Pedal (AP) Position Sensor
Courtesy of VOLVO CARS CORPORATION

The function of the accelerator pedal (AP) position sensor is to provide the engine control module (ECM) and central electronic module (CEM) with information about the position of the accelerator pedal. This data is used by the engine control module (ECM) to deploy the shutter in the throttle unit to the correct angle.

The accelerator pedal (AP) position sensor consists of a plastic housing with two potentiometers, and an Analog/Digital converter. The potentiometers are connected to a common shaft which is affected by the position of the accelerator pedal (AP).

The accelerator pedal (AP) position sensor transmits an analog and a pulse width modulated (PWM signal to the engine control module (ECM). These signals indicate the position of the accelerator pedal (AP). The digital signal is generated by the sensors Analog/Digital converter.

The analog and digital signals are used at the same time by the engine control module (ECM) to regulate the throttle shutter angle.

The power supply to the two potentiometers is different. The analog potentiometer is supplied with 5 V via the engine control module (ECM). The digital potentiometer is supplied with 12 V via the system relay and is grounded in the car body.

The digital signal is also used in conjunction with the analog signal for accelerator pedal (AP) position sensor diagnostics.

Accelerator pedal (AP) position sensor signals can be read off.

A diagnostic trouble code (DTC) is stored if the engine control module (ECM) detects a difference between the analog and digital signals. The engine control module (ECM) then uses a minimal value to ensure the function (limp home).

The accelerator pedal (AP) position sensor is located on the accelerator pedal bracket.

OUTSIDE TEMPERATURE SENSOR

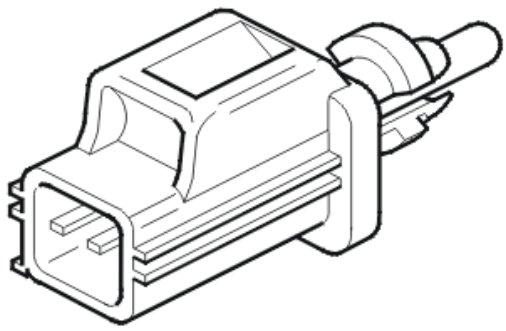

Fig. 252: Identifying Outside Temperature Sensor
Courtesy of VOLVO CARS CORPORATION

The outside temperature sensor detects the temperature in the surrounding air. The signal is used by the engine

control module (ECM) as a substitute value in the event of a fault in certain components or functions and to control certain diagnostic functions.

The sensor is a negative temperature coefficient (NTC) type which is supplied with power from the control module (signal). The resistance in the sensor changes with the outside temperature. This alters the signal to the engine control module (ECM). The lower the temperature the higher the voltage (high resistance). A high temperature results in low voltage (low resistance).

The outside temperature sensor is positioned in the left door mirror.

The outside temperature sensor can be diagnosed by the engine control module (ECM) and the sensor value can be read off.

ENGINE COOLANT LEVEL SENSOR

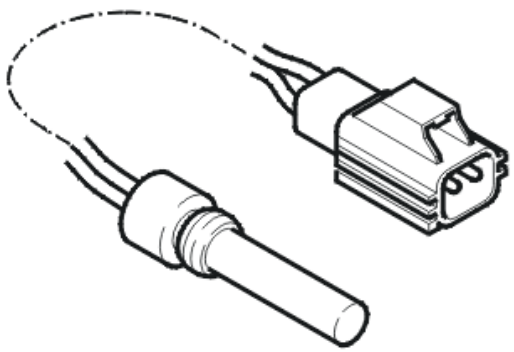

Fig. 253: Engine Coolant Level Sensor
Courtesy of VOLVO CARS CORPORATION

The function of the engine coolant level sensor is to alert the driver if the engine coolant level in the expansion tank is too low.

The sensor is a magnetic reed switch, which is enclosed in a pipe on the bottom of the expansion tank. Around the pipe, on the inside of the expansion tank is a float. This float contains a magnet. When the engine coolant level is above minimum, the float is too high in the tank to affect the switch. However if the engine coolant level falls below the minimum level, the magnetic field acts on the switch.

The sensor is supplied with voltage (signal) from the engine control module (ECM) and grounded in the body. When the engine coolant level in the expansion tank is over a certain level the circuit closes, which produces a low signal. When the engine coolant level is below a certain level the circuit is opened by the engine coolant level sensor, which produces a high signal. When the engine control module (ECM) detects a high signal the information about low engine coolant level is transmitted via the Controller area network (CAN) to the driver information module (DIM), which warns the driver.

NOTE: There are no functions controlled by the engine which are directly connected to the low coolant level warning lamp. The Engine Control Module (ECM) only

transfers the signal which is used by the Driver Information Module (DIM).

The engine control module (ECM) cannot diagnose the engine coolant level sensor.

OIL PRESSURE SWITCH

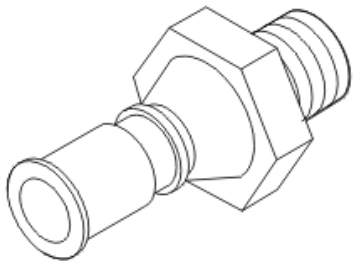

Fig. 254: Identifying Oil Pressure Sensor
Courtesy of VOLVO CARS CORPORATION

The function of the oil pressure switch is to warn the driver about low oil pressure via the driver information module (DIM).

The oil pressure switch has a pressure sensing switch which is powered (signal) by the engine control module (ECM) and grounded in the cylinder block. The oil pressure switch is affected by the oil pressure of the engine.

When the oil pressure exceeds a certain value, the switch in the oil pressure switch will open. A high signal is then sent to the engine control module (ECM).

If the oil pressure is below a certain value, the switch in the oil pressure switch will close and a low signal will be sent to the engine control module (ECM). The engine control module (ECM) then transmits a CAN signal to the driver information module (DIM) to light the indicator lamp for low oil pressure.

The oil pressure sensor is on the cylinder block.

The engine control module (ECM) cannot diagnose the oil pressure switch.

MANIFOLD ABSOLUTE PRESSURE (MAP) SENSOR, INTAKE

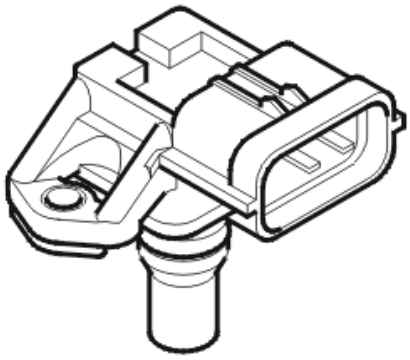

Fig. 255: Identifying Manifold Absolute Pressure (MAP) Sensor
Courtesy of VOLVO CARS CORPORATION

The manifold absolute pressure (MAP) sensor detects quick pressure changes in the intake manifold after the throttle. The signal from the sensor is used by the engine control module (ECM) to supplement the mass air flow (MAF) sensor when calculating injection period.

The manifold absolute pressure (MAP) sensor intake is located on the upper rear edge of the engine (passenger compartment side).

The semi-conductor sensor is grounded in the control module and is supplied with power from the control module.

The resistance in the intake manifold moves the silicone membrane in the sensor, giving a signal of 0.5 - 4.5 V to the control module. Low pressure results in low voltage, high pressure gives high voltage.

The pressure sensor can be diagnosed by the engine control module (ECM) and the sensor signal can be read off.

FUEL PRESSURE SENSOR / FUEL TEMPERATURE SENSOR

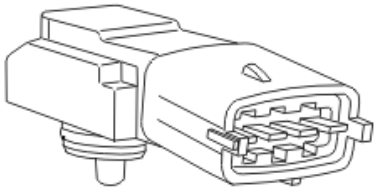

Fig. 256: Fuel Pressure Sensor And Fuel Temperature Sensor
Courtesy of VOLVO CARS CORPORATION

Overview

The fuel pressure and fuel temperature sensors are combined.

The sensor detects the fuel pressure (absolute pressure) and the temperature of the fuel in the fuel rail.

The fuel pressure sensor is on the right-hand end of the fuel rail.

The fuel pressure-/fuel temperature sensor can be diagnosed by the engine control module (ECM) and its signals (pressure and temperature) can be read off.

Fuel pressure sensor

The pressure sensor is a Piezo resistive type resistor, the resistance of which changes with the pressure. Depending on the pressure in the fuel rail, an analog signal of 0 - 5 V is transmitted to the engine control module (ECM). Low pressure results in low voltage, high pressure gives high voltage.

The engine control module (ECM) then uses this signal to adjust the pressure in the fuel rail using the fuel pump control module. See also: **FUEL PRESSURE REGULATION**

The pressure sensor is supplied with 5 V and grounded in the engine control module (ECM). The pressure sensor transmits a signal indicating the fuel pressure to the engine control module (ECM) on a separate cable.

NOTE: The absolute pressure is displayed when using parameter read outs to read off the fuel pressure. If there is no pressure at the fuel rail, the atmospheric pressure will be displayed.

HINT: The relative pressure (absolute pressure minus atmospheric pressure) is displayed when reading off the fuel pressure via a manometer connected to the fuel rail.

Fuel temperature sensor

The temperature sensor is an NTC sensor. The sensor is supplied with voltage (signal) from and grounded in the engine control module (ECM).

The resistance in the sensor changes according to the temperature of the fuel. This provides the engine control module (ECM) with a signal of between 0 - 5 V. Low temperature results in high voltage (high resistance). High temperature results in low voltage (low resistance).

The engine control module (ECM) uses the signal to calculate the volume of the fuel.

OIL LEVEL SENSOR

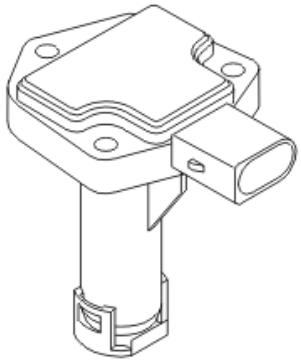

Fig. 257: Identifying Oil Level Sensor
Courtesy of VOLVO CARS CORPORATION

The function of the oil level sensor is to provide the engine control module (ECM) with information regarding the level of engine oil in the oil sump.

The sensor consists of:

- a terminal with three pins
- integrated electronics
- 2 capacitive gauge elements
- a PTC resistor.

The oil level sensor is supplied with 5 V by the engine control module (ECM). The oil level sensor generates a pulse width modulated (PWM) signal for the engine control module (ECM).

The oil level sensor can be diagnosed by the engine control module (ECM).

The pulse-width modulated (PWM) signal from the oil level sensor can be read using parameter readout.

MAIN RELAY (SYSTEM RELAY)

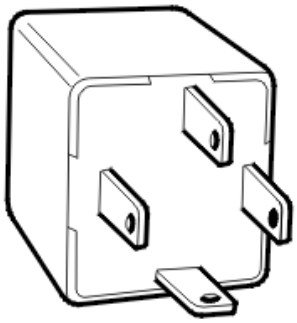

Fig. 258: Identifying Main Relay

Courtesy of VOLVO CARS CORPORATION

The function of the main relay (system relay) is to supply certain components with voltage.

The relay is mechanical and has a closing and opening function. In the rest position the circuit in the relay is open.

The main relay terminals (#30 and #86) are supplied with voltage by the battery. When the ignition key has been turned and the engine control module (ECM) is powered, the terminal (#85) on the main relay is grounded by the engine control module (ECM).

When the terminal (#85) is grounded, the relay is activated and a number of components are powered via the relay terminal (#87).

The main relay is in the integrated relay/fuse box in the engine compartment and is diagnosed by the engine control module (ECM).

INJECTORS

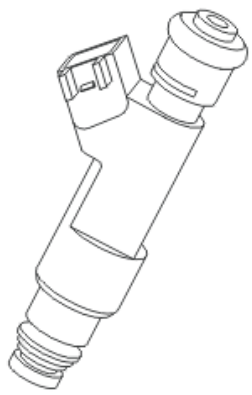

Fig. 259: Identifying Fuel Injector
Courtesy of VOLVO CARS CORPORATION

The function of the injectors is to spray fuel into the cylinders in the correct spray patterns. This happens sequentially.

The injectors are located under the intake manifold.

The engine control module (ECM) controls the injectors by grounding the valves in pulses.

The injectors can be diagnosed by the engine control module (ECM) and can be activated.

IGNITION COILS

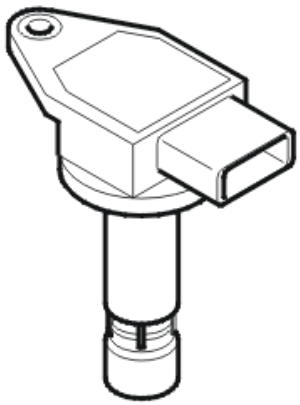

Fig. 260: Identifying Ignition Coil
Courtesy of VOLVO CARS CORPORATION

The ignition coils supply the spark plugs with high voltage to produce sparks. The engine control module (ECM) controls the ignition coils so that sparks are generated at the correct time. The signal reconnects to the engine control module (ECM) so that diagnostics can be carried out.

Each ignition coil has an integrated power stage.

The ignition coils are in the sparkplug wells above each spark plug.

The engine control module (ECM) can diagnose the ignition coils.

CAMSHAFT RESET VALVE (CONTINUOUS VARIABLE VALVE TIMING (CVVT))

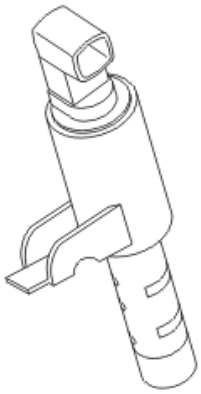

Fig. 261: Identifying Camshaft Reset Valve
Courtesy of VOLVO CARS CORPORATION

The camshaft reset valve controls the oil flow to the CVVT unit (camshaft pulley).

The valve consists of an electro-magnetic valve with a spring-loaded piston. There are slits in the piston which channel the engine lubricating oil to the CVVT unit by moving the piston in the reset valve. The continuous variable valve timing (CVVT) unit turns the camshaft (the camshaft timing changes). The direction in which the camshaft turns depends on the chamber in the CVVT unit which is supplied with oil (pressure). See also:

CAMSHAFT CONTROL (CVVT)

An oil filter is mounted at the intake channel for the valves to prevent oil contaminants from affecting the function of the reset valves.

The system relay supplies the reset valve with voltage via a fuse. The valve is grounded (control) in the engine control module (ECM). When the valve is grounded using a pulse width modulation (PWM) signal, the oil flow in the valve can be regulated to the different chambers in the continuous variable valve timing (CVVT) unit at variable rates. This allows the cam timing to be changed precisely and steplessly.

It is important not to mix up the pipes for the valves when removing/installing the reset valve camshaft.

The engine control module (ECM) can diagnose the camshaft reset valve.

The valves are on the cylinder head above the camshafts. There are four reset valves, two for the inlet camshaft and two for the exhaust camshaft.

EVAPORATIVE EMISSION SYSTEM (EVAP) VALVE

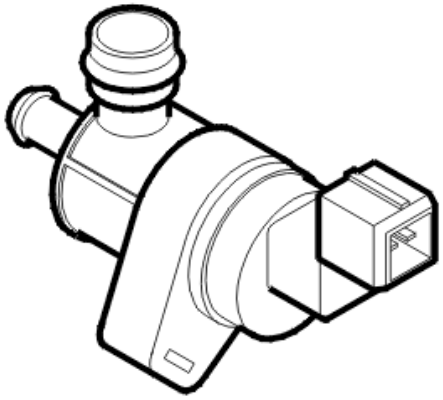

Fig. 262: Evaporative Emission System Valve
Courtesy of VOLVO CARS CORPORATION

The evaporative emission system (EVAP) valve is used to open and close the connection between the EVAP canister and the intake manifold. The valve controls the flow of hydro-carbons (fuel vapor) from the EVAP canister to the engine intake manifold using the vacuum in the intake manifold. This ensures that hydro-carbons stored in the EVAP canister are used in the engine combustion process.

The valve is an electromagnetic valve and is powered from the system relay. When the valve needs to be opened, it is grounded internally in the engine control module (ECM). The evaporative emission system (EVAP) valve is closed when in the standby position (open-circuit).

When the control module requests that the EVAP canister should be drained (the hydrocarbons stored in the canister should be released into the engine), the control module deploys the evaporative emission system (EVAP) valve by grounding it. A pulse width modulation (PWM) signal is used to ground the valve and to control the degree to which the valve will open. In this way, the drainage of the EVAP canister is matched to the volumetric efficiency of the EVAP canister, the engine speed (RPM) and the engine load.

The evaporative emission system (EVAP) valve can be diagnosed by the engine control module (ECM) and can be activated.

The evaporative emission system (EVAP) valve is on the rear edge of the engine (passenger compartment side).

LEAK DIAGNOSTIC UNIT (CERTAIN MARKETS ONLY)

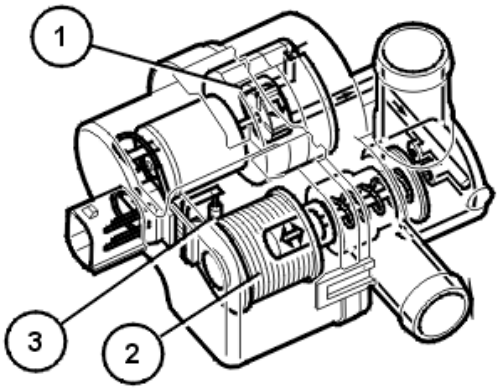

Fig. 263: Identifying Leak Diagnostic Unit
Courtesy of VOLVO CARS CORPORATION

The function of the leak diagnostic unit is to pressurize the fuel tank system during leak diagnostics.

The leak diagnostic unit consists of a plastic housing with:

1. electrical air pump
2. a valve / solenoid which governs the air flow in the unit
3. a heater element (PTC resistor) which warms up the pump.

The electrical pump, valve and heater element in the unit are supplied with voltage by the system relay. The pump, valve and heater element are grounded (control) in the engine control module (ECM).

When leak diagnostics are not active, the valve is held open to ambient air for EVAP control to be carried out.

During leak diagnostics the pump in the leak diagnostic unit starts. The valve in the unit is operated by the engine control module (ECM) by grounding the different circuits internally in the engine control module (ECM).

The Engine control module (ECM) checks the fuel tanks system for leaks by pressurizing the system and at the same time monitoring a number of relevant parameters. Also see: **LEAK DIAGNOSTICS (CERTAIN MARKETS ONLY)**

The engine control module (ECM) can diagnose the leak diagnostic unit.

The valve in the leak diagnostic unit can be activated.

The leak diagnostic unit is at the upper front edge of the fuel tank.

AIR CONDITIONING (A/C) COMPRESSOR (CHECK VALVE AIR CONDITIONING (A/C) COMPRESSOR)

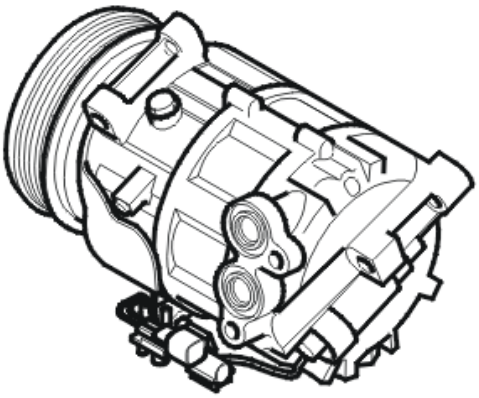

Fig. 264: Identifying A/C Compressor (B8444S Only)
Courtesy of VOLVO CARS CORPORATION

The air conditioning (A/C) compressor transports refrigerant, which is necessary for air conditioning (A/C) operation. It is an axial piston compressor with variable displacement. I. E. The compressor has adjustable cylinder displacement which is controlled by a check valve (solenoid). The valve, which is underneath the compressor, can be replaced.

The air conditioning (A/C) compressor is directly mounted on the engine block and is powered by the engine crankshaft via the auxiliaries belt.

AIR CONDITIONING (A/C) RELAY

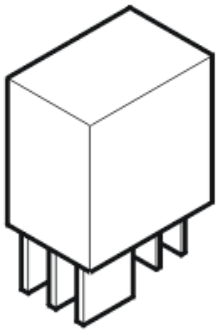

Fig. 265: Air Conditioning Relay
Courtesy of VOLVO CARS CORPORATION

The air conditioning (A/C) relay supplies the A/C compressor with voltage. The relay is controlled by the engine control module (ECM) based on information from different signals:

- the climate control module (CCM) (via the control area network (CAN))

- the engine coolant temperature
- the position of the accelerator pedal (AP)
- the pressure in the system.

The engine control module (ECM) can temporarily disengage the A/C compressor during wide open throttle (WOT) acceleration.

The relay is mechanical. It has a closing / opening function and is supplied with power from the system relay.

In the rest position the circuit in the relay is open.

The system relay supplies the coil and the relay with power. The relay activates when the coil is grounded in the engine control module (ECM), the circuit closes and the A/C compressor is supplied with power via the relay voltage output.

The relay coil is grounded (signal) when the engine control module (ECM) receives a signal via the Controller area network (CAN) from the climate control module (CCM) to activate the relay and start the compressor.

STARTER MOTOR RELAY

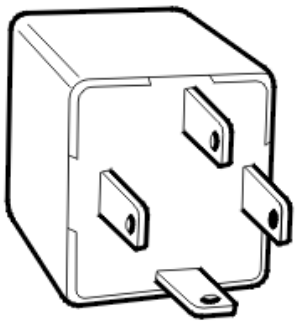

Fig. 266: Identifying Main Relay
Courtesy of VOLVO CARS CORPORATION

The function of the starter motor relay is to supply power to the starter motor. See also: **START**

The starter motor relay is in the relay/fuse box in the engine compartment.

ENGINE COOLING FAN (FC) / ENGINE COOLING FAN (FC) CONTROL MODULE

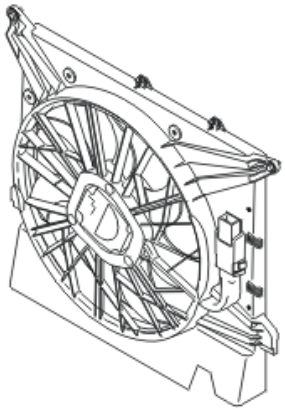

Fig. 267: Identifying Engine Cooling Fans (FC) and Control Modules
Courtesy of VOLVO CARS CORPORATION

NOTE: The engine cooling fan may have a post-run of up to approx. 6 minutes after the engine has been turned off. The time for the fan's post-run depends on engine temperature, temperature in the engine compartment and pressure level in the AC-system.

WARNING: Be careful since the engine cooling fan may have a post-run after the engine has been turned off.

The engine cooling fan (FC) cools the coolant, engine compartment and the condenser when the air conditioning (A/C) compressor is running.

The engine control module (ECM) transmits a pulse width modulated (PWM) signal to the engine cooling fan (FC) control module. The control module then activates the fan at different speeds. The speed of the engine cooling fan (FC) is determined by the engine control module (ECM), depending on the coolant temperature (based on the signal from the engine coolant temperature (ECT) sensor) and the vehicle speed.

The temperature conditions for engagement of the different engine cooling fan (FC) stages may vary slightly, depending on the engine variant and the equipment level. The temperature conditions apply when:

- the A/C is off
- no faults are detected by the Engine Control Module (ECM).

There is an internal diagnostic function in the engine cooling fan (FC). This function transmits a signal to the engine control module (ECM) if the fan is partially or fully blocked. To do this, the engine cooling fan (FC) control module grounds the pulse width modulation (PWM) signal based on a predetermined pattern.

The engine cooling fan (FC) and its control module are behind the radiator.

The engine cooling fan (FC) can be diagnosed by the engine control module (ECM) and can be activated.

FUEL PUMP

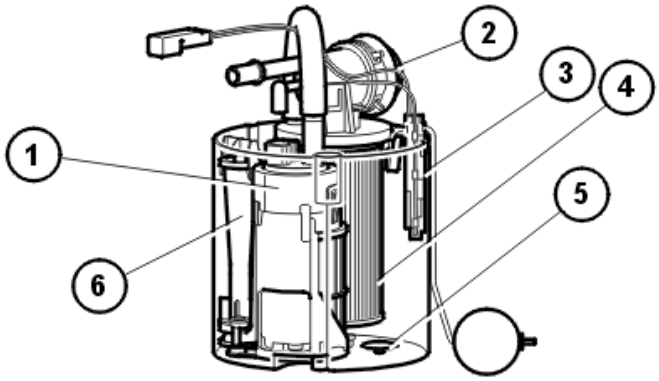

Fig. 268: Fuel Pump
Courtesy of VOLVO CARS CORPORATION

The function of the fuel pump is to ensure that the pressure is correct at the delivery lines for the injectors when requested by the fuel pump control module.

The fuel pump consists of:

1. An electrical pump with an integrated safety valve
2. A pressure equalization valve. This valve equalizes rapid pressure peaks which occur, for example, when the injectors close during engine braking. It also contains a non-return valve which ensures that the pressure in the system does not drop when the engine is switched off
3. Fuel level sensor
4. Fuel filter, cannot be replaced separately
5. Relief valve, releases fuel into the pump housing
6. Ejector pump, continuously fills the pump housing with fuel. The fuel always flows from the fuel pump through the ejector and back to the pump housing.

The fuel pump is supplied with battery voltage by the fuel pump control module and is grounded in the car body via the fuel pump control module.

The engine control module (ECM) has diagnostics for the fuel pump function to ensure that the pressure is correct. See also: **FUEL PRESSURE REGULATION, DIAGNOSTICS**

The fuel pump can be activated and its status can be read off.

The pressure in the fuel rail can be measured by connecting a manometer to a nipple. This nipple is on the right-hand end of the fuel rail.

FUEL PUMP (FP) CONTROL MODULE

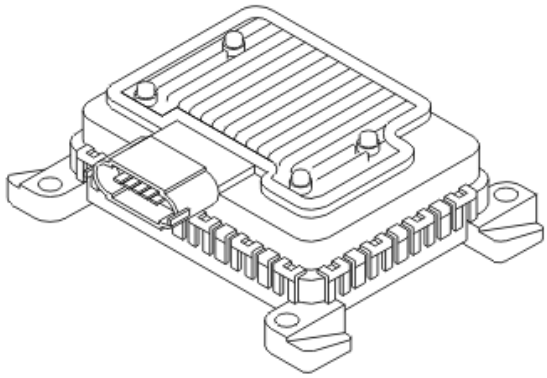

Fig. 269: Fuel Pump Control Module
Courtesy of VOLVO CARS CORPORATION

The fuel pump control module powers the fuel pump and regulates the output of the pump. The fuel pressure changes with the output of the pump.

The fuel pump (FP) control module is supplied with battery voltage by the fuel pump relay and grounded in the car body. The fuel pump relay is controlled by the central electronic module (CEM) at the request of the engine control module (ECM).

The engine cannot be started if the power supply to the fuel pump control module is faulty because the fuel pump will not then be powered.

The fuel pump control module is controlled by the engine control module (ECM) via serial communication. The fuel pump control module then controls the fuel pump by transmitting pulse width modulated (PWM) voltage on the ground lead for the fuel pump. This means that the voltage drop across the pump changes, and with it the output of the fuel pump. See also: **FUEL PRESSURE REGULATION**

There are no diagnostics for the fuel pump control module. The engine control module (ECM) has diagnostics for fuel pressure regulation and the associated components. See also: **FUEL PRESSURE REGULATION, DIAGNOSTICS**

The pulse width modulated (PWM) signal from the engine control module (ECM) to the fuel pump control module can be read off.

The fuel pump control module is on the outside on the right-hand side of the fuel tank.

VALVE VARIABLE INTAKE

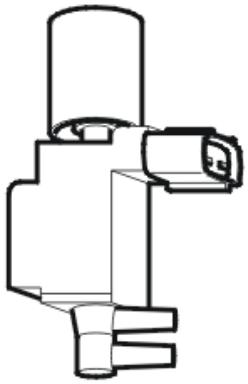

Fig. 270: Identifying Variable Intake Control Valve
Courtesy of VOLVO CARS CORPORATION

The valve for variable intake controls the vacuum motor for the damper in the variable intake manifold.

The valve consists of an electro-magnetic valve which controls the air flow between the vacuum tank and the vacuum valve for the damper in the variable intake manifold.

The valve is supplied with voltage from the system relay via fuse and ground (control) internally in the engine control module (ECM). Also see: **VARIABLE INTAKE SYSTEM**

The valve for variable intake can be diagnosed by the engine control module (ECM).

The valve for variable intake is on the right-hand side of the engine beside the intake manifold.

EMISSIONS WARNING LAMP

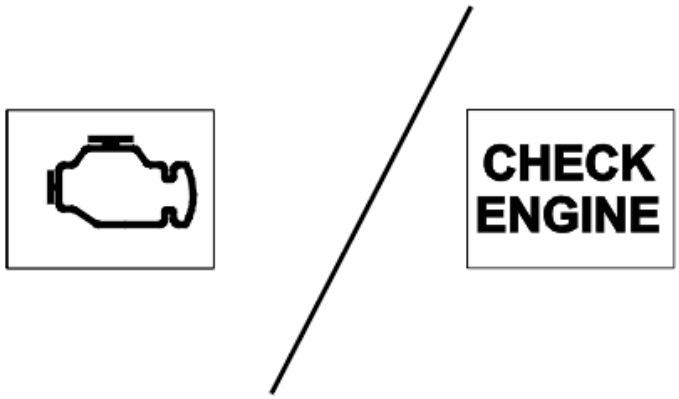

Fig. 271: Emissions Warning Lamp
Courtesy of VOLVO CARS CORPORATION

The emissions warning lamp in the Driver Information Module (DIM) has a warning symbol. This warning symbol varies depending on the market. The warning symbols are:

- "Engine symbol" (not USA)

- "CHECK ENGINE" (MIL - Malfunction Indicator Lamp, USA only).

The warning lamp lights when the ignition key is turned to position II. The warning lamp will go out after approximately 15 seconds or if the engine is started when no fault is found in the engine management system.

If Readiness is not complete (certain diagnostic functions not completed), the warning lamp will flash instead of going out when the ignition key is in position II.

The warning lamp will light if there is a fault in one of the parameters in the engine management system. The warning lamp will also light in response to a request transmitted via the control area network (CAN) if there is a fault in the transmission control module (TCM) which affects emissions.

ELECTRONIC THROTTLE UNIT

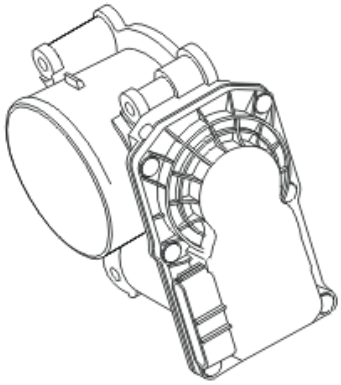

Fig. 272: Electronic Throttle Unit
Courtesy of VOLVO CARS CORPORATION

The electronic throttle unit, using the PWM control signal from the engine control module (ECM), regulates the amount of air for engine combustion. This is done using an electronically controlled shutter.

The aluminum electronic throttle unit consists of a round throttle disc on a spindle. The spindle is driven by a DC motor (damper motor), gear wheel and two springs; one for opening and one for return.

By changing the polarity of the power supply, the DC motor can be run in both directions. At one of the limit positions the throttle disc is closed so that minimal air can pass the throttle unit. In the other limit position, the throttle disc is parallel to the air flow. This provides maximum airflow through the electronic throttle unit.

Two permanent magnets in the gear sector on the throttle spindle are used to check the position of the throttle disc. The permanent magnets affect two throttle position (TP) Hall sensors in the cover. The analog signals from the two sensors are transmitted to the engine control module (ECM). The signals are offset. The engine control module (ECM) compares these signals with the stored desired values to check if they are plausible.

The electronic throttle unit is located on the engine intake manifold. In the event of a fault, the throttle unit must be replaced as a single unit.

The engine control module (ECM) can diagnose the electronic throttle unit.

THROTTLE POSITION (TP) SENSOR

Electronic throttle unit.

DIAGNOSTIC FUNCTIONS

OVERVIEW

See: **OVERVIEW**

MISFIRE DIAGNOSTIC

See: **MISFIRE DIAGNOSTIC**

CAMSHAFT DIAGNOSTICS (CVVT)

See: **CAMSHAFT DIAGNOSTICS (CVVT)**

LEAK DIAGNOSTICS (CERTAIN MARKETS ONLY)

See: **LEAK DIAGNOSTICS (CERTAIN MARKETS ONLY)**

HEATED OXYGEN SENSOR (HO2S) DIAGNOSTIC

See: **HEATED OXYGEN SENSOR (HO2S) DIAGNOSTIC**

THREE-WAY CATALYTIC CONVERTER (TWC) DIAGNOSTICS

See: **THREE-WAY CATALYTIC CONVERTER (TWC) DIAGNOSTICS**

FUEL PRESSURE REGULATION, DIAGNOSTICS

See: **FUEL PRESSURE REGULATION, DIAGNOSTICS**

OVERVIEW

GENERAL

The engine control module (ECM) diagnoses both internal signals and functions as well as signals and functions from connected components.

CONDITIONS FOR DIAGNOSIS

For the diagnosis of a component or function to start, certain specific conditions must be met. The conditions for diagnostics vary depending on the component or function being diagnosed.

Conditions must be met during the diagnostic in order for the diagnostic to be completed. The time and conditions for the diagnostic vary depending on the component or function being diagnosed. Certain diagnostics only require the ignition to be switched on and off for a diagnostic to be run. Other diagnostics require that several different conditions are met. For example:

- vehicle speed
- engine coolant temperature (ECT)
- time since start
- different load and engine speed relationships in the same trip
- a certain event (for example the evaporative emission system (EVAP) valve is operating).

When the engine control module (ECM) has run all the implemented diagnostics, the control module has completed a "trip". An extensive driving schedule in various conditions is required to complete a trip. The engine may also need to be shut off for a certain amount of time and then switched on again to complete a trip.

EMISSION-RELATED DIAGNOSTIC FUNCTIONS

The engine control module (ECM) checks that the emission-related systems are working. These systems are checked by running a diagnostic function. The diagnostic function checks the components and that the system is functioning.

DIAGNOSTIC TROUBLE CODE MEMORY

When the engine control module (ECM) detects a fault, the diagnostic trouble code (DTC) and status are stored in the diagnostic trouble code (DTC) memory and are now visible at normal diagnostic trouble code (DTC) read out. If the diagnostic trouble code (DTC) lights the malfunction indicator lamp (MIL) this occurs at the same time. If an existing fault disappears and does not recur, the engine control module, after a certain number of fault-free operating cycles and depending on the DTC, changes the status of the diagnostic trouble code (DTC). This means that it can no longer be read off at normal DTC read out. In this status, the diagnostic trouble code (DTC) remains until the engine control module (ECM) erases diagnostic trouble code (DTC) or is disconnected from power.

SUBSTITUTE VALUE

For certain types of diagnostic trouble codes (DTCs), the missing signal is replaced with a substitute value so that the system can continue functioning.

DOWNLOADING SOFTWARE AND REPLACING THE CONTROL MODULE

New software can be downloaded into the engine control module (ECM). When ordering software, the hardware and the software in the car is compared to the information in the Volvo central database. If the comparison is OK the software is downloaded to the control module. If the comparison between the car and Volvo central database is not OK, the database is updated with the car configuration. When this is complete the software is downloaded.

The engine control module (ECM) is located on the air cleaner (ACL) box in the engine compartment.

The engine control module (ECM) contains a unique code for each car for the immobilizer. The central electronic module (CEM) checks this code at engine start up. The engine will not start if the central electronic module (CEM) detects an incorrect code for the immobilizer. This means that the engine control module (ECM) cannot be switched from vehicle to vehicle.

The engine control module (ECM) must first be "unlocked" using a unique PIN for each car before it can be programmed with a code for the immobilizer. When the PIN has been approved by the engine control module (ECM), the code for the immobilizer can be programmed.

The PIN and the code for the immobilizer are obtained from the Volvo central database and sent out with the software package when software for downloading has been ordered.

All new engine control modules (ECM) have the same PIN which is preprogrammed by the control module supplier. When the engine control module (ECM) has been programmed successfully the original PIN for the car will be programmed in the engine control module (ECM) memory and will replace the preprogrammed PIN code.

FUNCTION

STARTING MOTOR

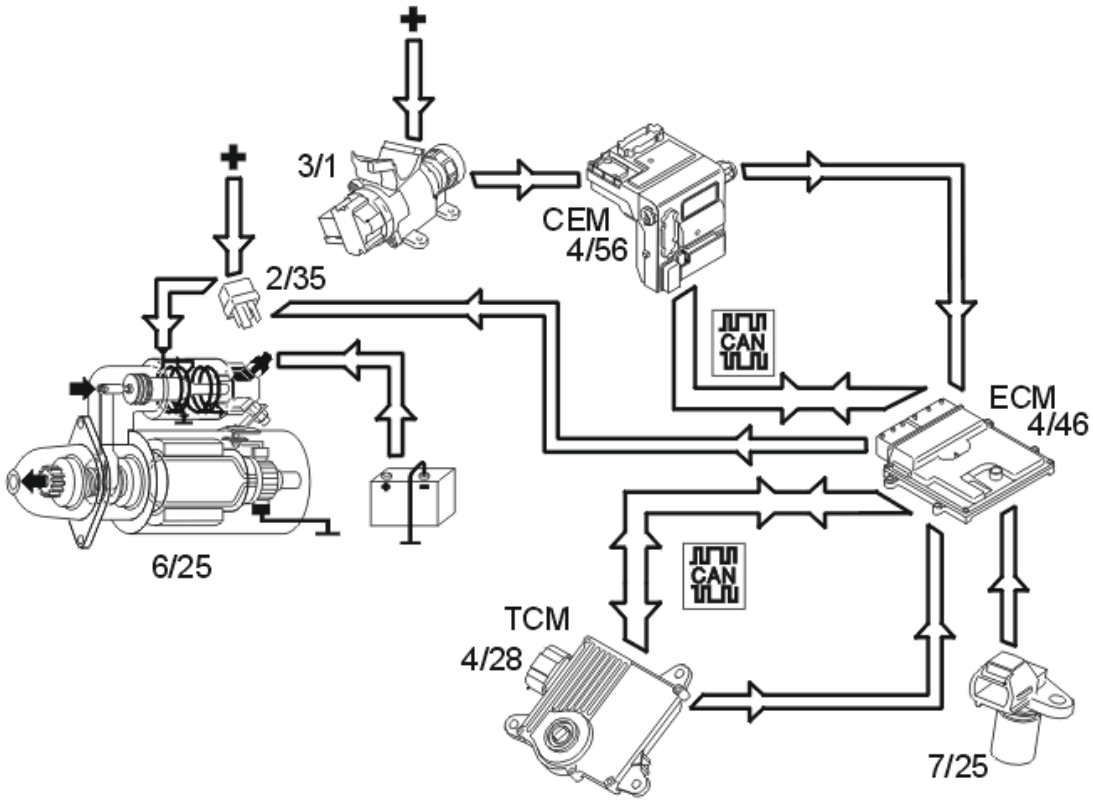

Fig. 273: Identifying Starter Motor System
Courtesy of VOLVO CARS CORPORATION

The starter motor (6/25) is supplied with power via the starter motor relay (2/35), the starter motor relay is controlled by the engine control module (ECM) (4/46).

The start process is as follows:

1. The ignition key is turned to start position (position III)
2. A high signal (U_{bat}) from the ignition switch (3/1) is transmitted to the engine control module (ECM) via the central electronic module (CEM). The engine control module (ECM) interprets this high signal as a request to activate the starter motor.
3. The engine control module (ECM) activates the starter motor solenoid by grounding and powering the coil for the starter motor relay.
4. The relay closes the circuit between the starter motor solenoid and the fuse in the relay/fuse box in the engine compartment, activating the starter motor.
5. The engine control module (ECM) activates the starter motor until the engine starts (the engine speed (rpm) exceeds a certain value)

Auto start

If the ignition key returns to ignition position (position II) before the engine is started, the starter motor continues to run. The starter motor runs until the engine is started or until a certain time has elapsed. The engine temperature dictates the running time of the starter motor:

- 0 °C or higher, approximately 3 seconds
- less than 0 °C, up to approximately 5 seconds.

If the engine does not turn or if the engine speed is extremely low when the start relay is activated, the engine control module (ECM) interrupts start relay activation.

Activation of the starter motor is not permitted or is interrupted if:

- the engine is running (the engine speed (RPM) above a certain value)
- the immobilizer function does not allow a start.
- the gear selector is not in position "P" or "N" (automatic transmissions). The engine control module (ECM) receives a signal indicating the position of the gear selector from the transmission control module (TCM) (4/28) via both the controller area network (CAN) and from a directly connected cable between the engine control module (ECM) and transmission control module (TCM).

CAMSHAFT CONTROL (CVVT)

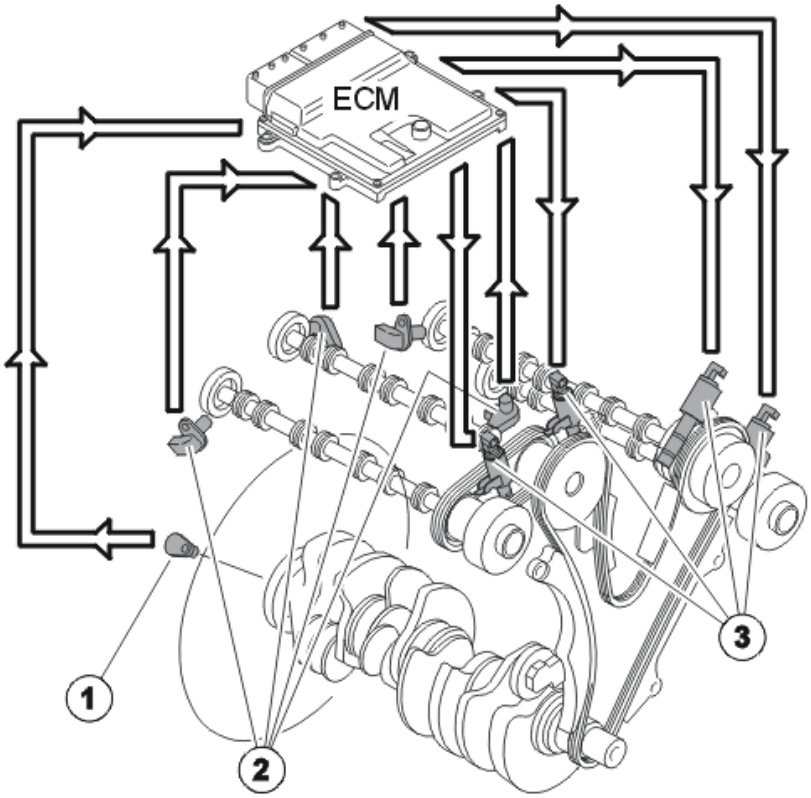

Fig. 274: Identifying Camshaft Control (CVVT System)
Courtesy of VOLVO CARS CORPORATION

Both intake camshafts and exhaust camshafts are regulated by the Engine Control Module (ECM). The intake camshafts are located in the middle of the engine, while the exhaust camshafts are located furthest out. The camshafts are divided into two banks.

Bank 1 (front cylinder row); cylinders 1, 3, 5 and 7.

Bank 2 (rear cylinder row, closest to the passenger compartment); cylinders 2, 4, 6 and 8.

The inlet camshafts are driven primarily by the crankshaft and chain, while the exhaust camshafts are driven by a chain from the inlet camshafts.

When each camshaft is set at the factory, it is aligned with the position of the crankshaft. The position of the camshaft in relation to the crankshaft is designated **the camshaft 0 position** (default setting). During camshaft control (CVVT) the camshaft 0-position is offset so that the cam timing changes. The opening and closing of the intake and exhaust valves can be changed to match the camshaft. Engine performance can be increased, idle quality increased and emissions reduced by regulating the camshaft timing changes.

The engine control module (ECM) detects the position of the camshafts by comparing the signals from the engine speed (RPM) sensor (1) (crankshaft position) and the camshaft position (CMP) sensors (2) (camshaft positions). The engine control module (ECM) then controls the angle of the camshaft by controlling the oil flow to the CVVT unit using the reset valve camshaft (3).

There are diagnostics for this function. See also: **CAMSHAFT DIAGNOSTICS (CVVT)**

Controlling, reset valve camshaft

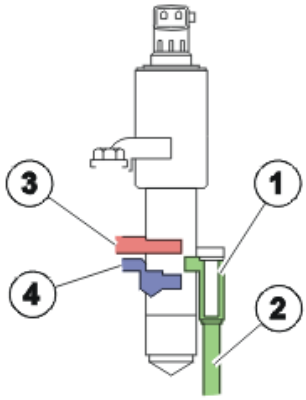

Fig. 275: Diagram of Camshaft Reset Valve
Courtesy of VOLVO CARS CORPORATION

1: Oil filter reset valve camshaft.

2: Oil duct (pressure, inlet).

3: Duct leading to CVVT unit chamber (deployment).

4: Duct leading to CVVT unit chamber (deployment).

The camshaft reset valve controls the oil flow to the continuous variable valve timing (CVVT) unit. The engine control module (ECM) uses a pulse width modulation (PWM) signal to control the valve. See also: **CAMSHAFT RESET VALVE (CONTINUOUS VARIABLE VALVE TIMING (CVVT))**

Controlling, CVVT units

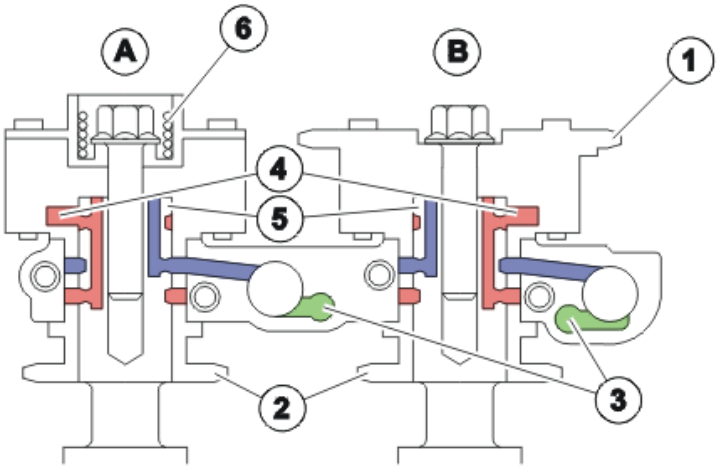

Fig. 276: Diagram Of The Continuous Variable Valve Timing CVVT Units
Courtesy of VOLVO CARS CORPORATION

The CVVT units are the "Vane" type which means that the CVVT unit rotors are turned by oil pressure on one, or the other, side of the rotor wings.

A: CVVT unit exhaust

B: CVVT unit inlet

1: Timing belt pulley inlet camshaft (primary, inlet camshaft driven by the crankshaft).

2: Timing belt pulley inlet -/exhaust camshaft (secondary, exhaust camshaft driven by inlet camshaft).

3: Oil duct reset valve camshaft (pressure).

4: Oil duct for controlling CVVT unit.

5: Oil duct for return CVVT unit.

6: Spring (CVVT unit exhaust camshaft only).

The continuous variable valve timing (CVVT) unit allows the position of the camshaft to be adjusted relative to the crankshaft.

The camshaft is secured to the CVVT unit rotor. The rotor (and with it the camshaft) rotates in relation to the timing belt pulley (1) by the oil pressure building up on one or both sides of the rotor vanes in the CVVT unit.

The difference in function between the exhaust camshaft (A) and inlet camshaft (B) CVVT unit is that the exhaust camshaft CVVT unit is equipped with a spring. The force of the spring makes the CVVT unit deploy the camshaft. The function causes faster deployment of the exhaust camshaft at engine start-up, before the oil pressure build in the engine.

Control occurs according to the following during deployment/return of the camshaft.

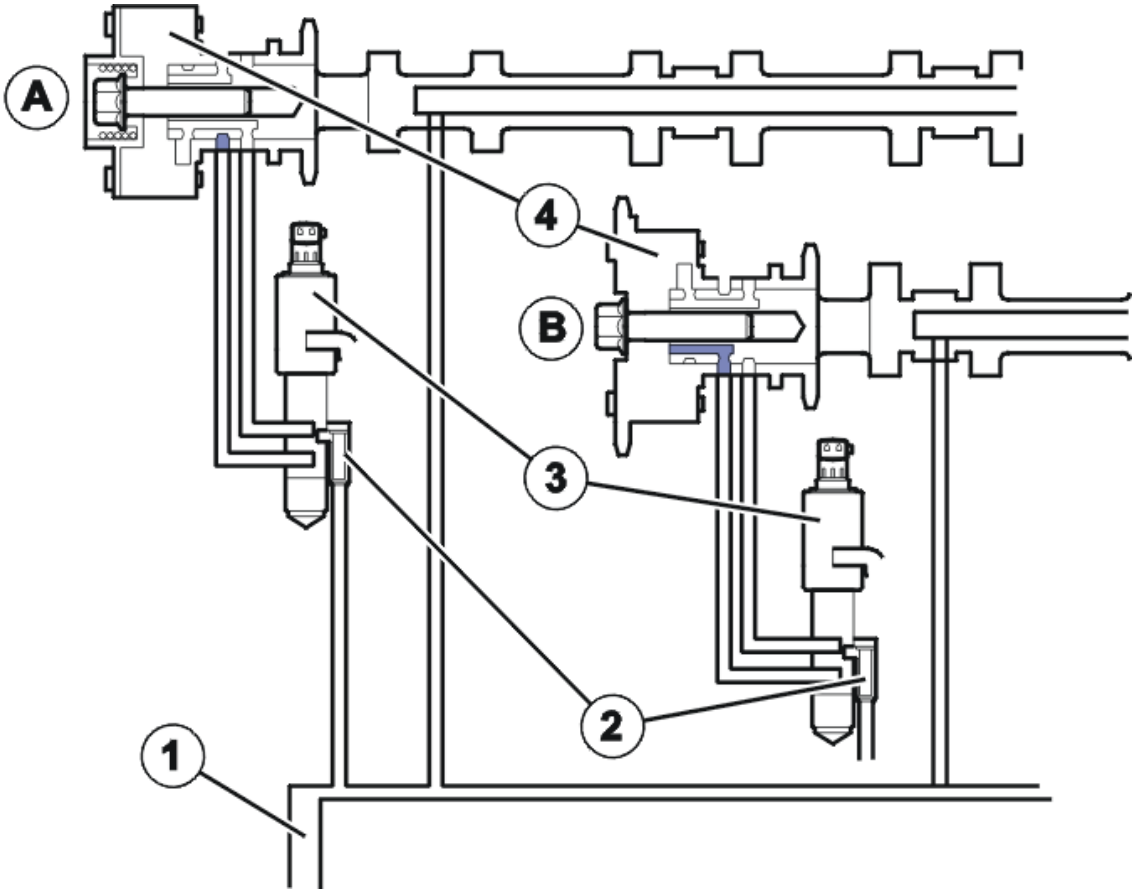

Fig. 277: Diagram Of The Continuous Variable Valve Timing CVVT System
Courtesy of VOLVO CARS CORPORATION

A: Exhaust camshaft

B: Inlet camshaft

- Oil pressure from the lubrication system (1) of the engine.
- The oil passes the filter for the camshaft reset valve (2) and then on to the reset valve (3).
- The engine control module (ECM) controls the oil flow to one of the CVVT unit chambers (4) depending on whether it is to be deployed/returned by the camshaft.

The reset valve is controlled by the engine control module (ECM) by high frequency, switching for deployment and return. This results in rapid and precise control. Both camshafts can be controlled up to 40 crankshaft degrees.

CONTROLLING THE GENERATOR

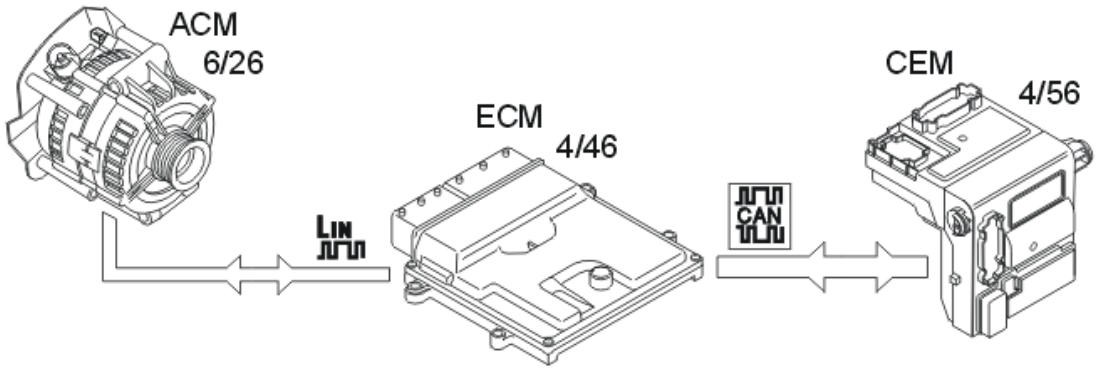

Fig. 278: Identifying ACM, ECM & CEM Communication Link
Courtesy of VOLVO CARS CORPORATION

The engine control module (ECM) (4/46) regulates the charge voltage of the generator (GEN) (6/26) (via LIN communication) when requested by the central electronic module (CEM) (4/46) (via CAN communication).

The engine control module (ECM) can change the charge voltage requested by the central electronic module (CEM). to suit certain operating conditions such as engine start, idle speed or high engine load.

The value of requested charge voltage from the engine control module (ECM) and the charge current of the generator can be read off.

The alternator control module (ACM) (6/26) transmits information to the engine control module (ECM) regarding any faults). The diagnostic trouble codes (DTCs) are stored in the engine control module (ECM) in the event of a fault. In the event of certain faults, information about these faults is also transmitted to the central electronic module (CEM).

VARIABLE INTAKE SYSTEM

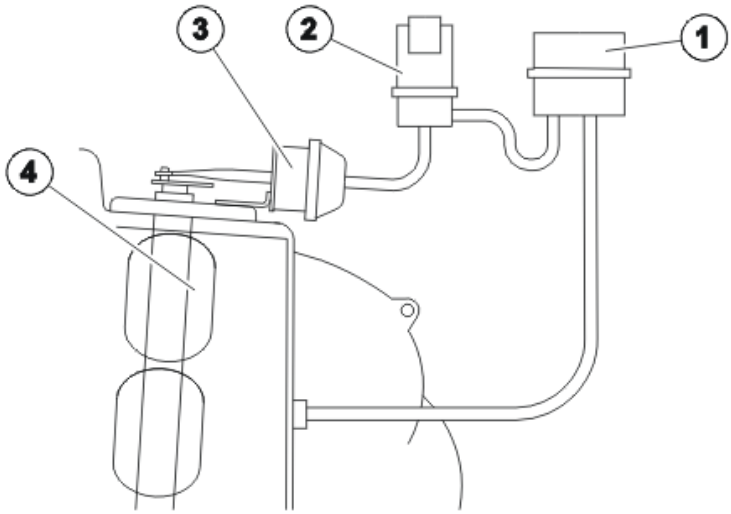

Fig. 279: View of Variable Intake System Components

Courtesy of VOLVO CARS CORPORATION

The variable intake system components consist mainly of:

1. Vacuum tank
2. Valve for variable intake
3. Vacuum motor
4. Throttle discs

In order to maintain a high volume of intake air at different engine speeds (RPM) and engine loads, B8444S is equipped with the Variable Intake System. The Variable Intake System divides drawn in air into two volumes. The engine control module (ECM) then regulates the air flow between these volumes using dampers in order to achieve the optimum air flow at specific operating temperatures.

The vacuum from the engine is stored in a vacuum tank (1). The vacuum is then guided to the vacuum motor (3) using the variable intake valves (2). The vacuum motor affects the damper in the intake system.

The variable intake valve is controlled by the engine control module (ECM) (4/46).

The variable intake valve can be activated and the variable intake function can be diagnosed by the engine control module (ECM).

OIL MONITORING

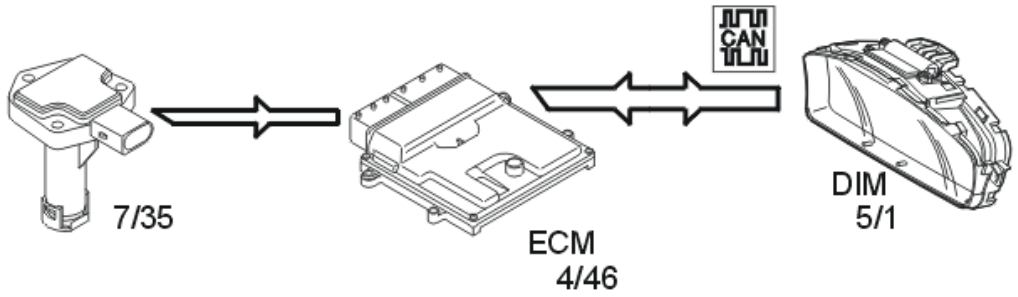

Fig. 280: Identifying oil monitoring components
Courtesy of VOLVO CARS CORPORATION

General

The following components are used for oil monitoring:

- oil level sensor (7/35)
- engine control module (ECM) (4/46)
- driver information module (DIM) (5/1).

The oil level sensor, via the driver information module (DIM), is used to inform the driver if oil filling is required.

Detecting the oil level

The integrated electronics of the sensor calculates the oil level using the measured value for the oil temperature.

In order for the correct oil level to be calculated, temporary oil level changes in the oil sump must be added to the calculation, for example when driving on an incline, during cornering and the like. These calculations are performed by the engine control module (ECM) using the oil level sensor signal and a number of other parameters such as the vehicle speed signal and load signal.

REGULATING THE CRUISE CONTROL

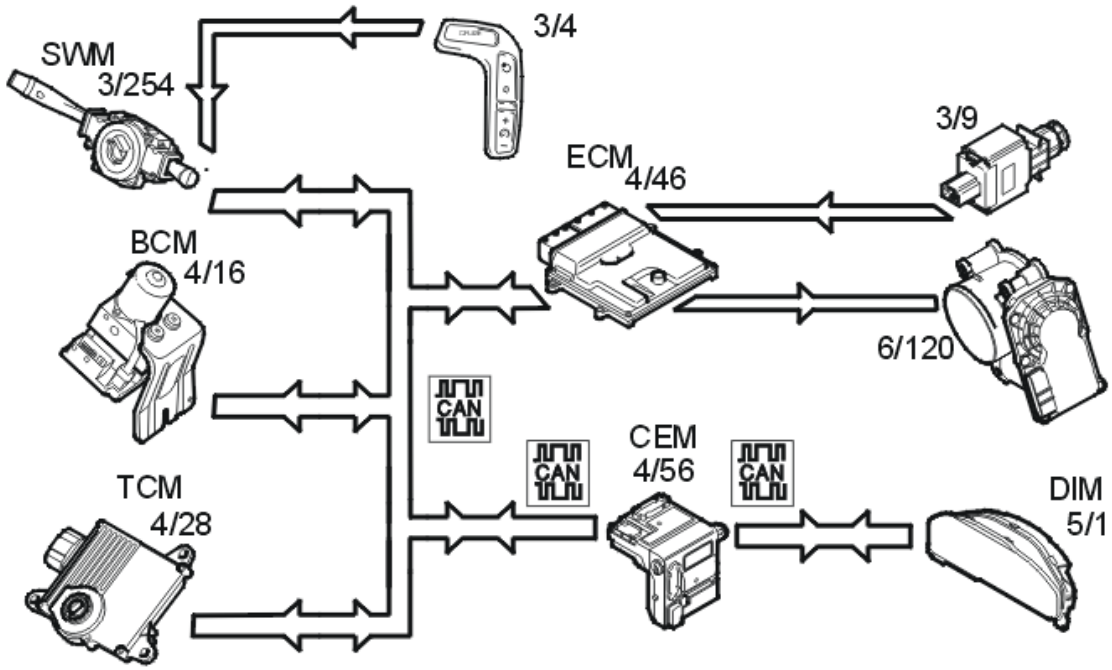

Fig. 281: Components Regulating Cruise Control
Courtesy of VOLVO CARS CORPORATION

The cruise control function is an example of distributed functionality.

The following components are used when regulating the cruise control:

- engine control module (ECM) (4/46)
- steering wheel module (SWM) (3/254)
- cruise control, control unit (3/4)
- central electronic module (CEM) (4/56)
- brake control module (BCM) (4/16) (brake pedal position, speed signal)

- driver information module (DIM) (5/1) (cruise control lamp)
- transmission control module (TCM) (4/28)
- electronic throttle unit (6/120)
- stop lamp switch (3/9).

To activate cruise control the function must be switched on using the "CRUISE" button. A lamp lights up in the driver information module (DIM).

The driver activates the function by pressing the SET+ or SET- button. A message is then transmitted via the low speed side of the Controller area network (CAN) to the central electronic module (CEM) which then transmits the message on via the high speed side of the Controller area network (CAN) to the engine control module (ECM).

The engine control module (ECM) controls the throttle angle so that a constant speed is maintained using the vehicle speed signal from the Brake Control Module (BCM). The transmission control module (TCM) also receives a message indicating that cruise control is active via the Controller area network (CAN), so that the transmission follows certain shifting patterns when the cruise control is active.

If the accelerator pedal (AP) is depressed the speed increases as normal and then resumes to the stored value when the driver releases the accelerator pedal (AP) again.

The engine control module (ECM) continually stores the speed. If the cruise control is disengaged, if for example the driver depresses the brake pedal, the previous speed can be resumed by pressing the "RESUME" button.

The cruise control cannot be activated below a certain speed.

Cruise control is disengaged:

- when the driver depresses the brake pedal
- when the driver presses the "CRUISE" button on the steering wheel
- when the driver depresses the "0" button on the steering wheel
- if "P" or "N" position is transmitted on the controller area network (CAN)
- if the speed deviates too much from the set value
- when the control system detects a fault that prevents activation.

FUEL TRIM

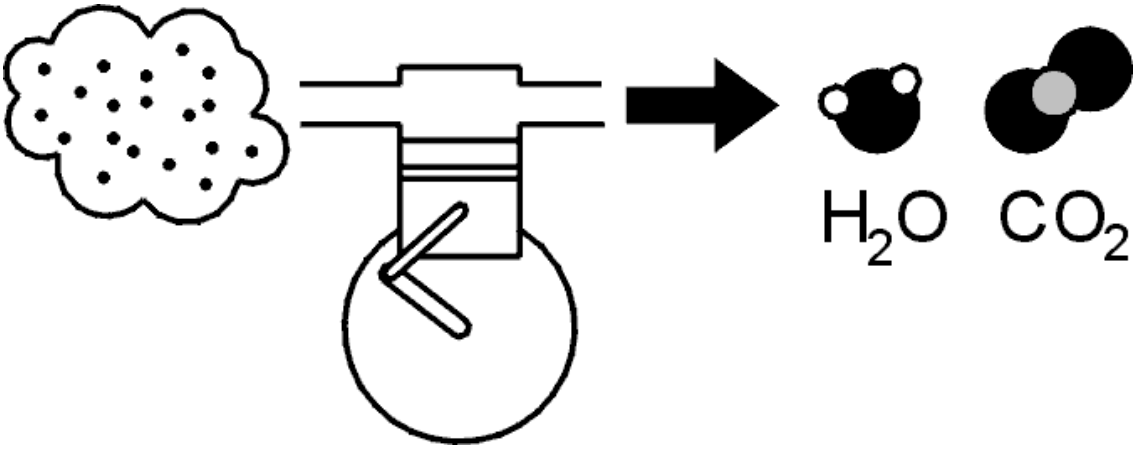

Fig. 282: Fuel Trim
Courtesy of VOLVO CARS CORPORATION

Overview

Fuel trim reduces exhaust emissions. Fuel trim reduces nitrous oxides (NO_x), carbon monoxide (CO) and hydrocarbon (HC) emissions.

Theoretically, if the correct amount of oxygen is added during combustion, fuel can be converted to water (H_2O) and carbon dioxide (CO_2). Emissions would then be completely safe.

In practice considerable amounts of hydro-carbons (HC) and varying amounts of carbon monoxide (CO) and carbon dioxide (CO_2) remain.

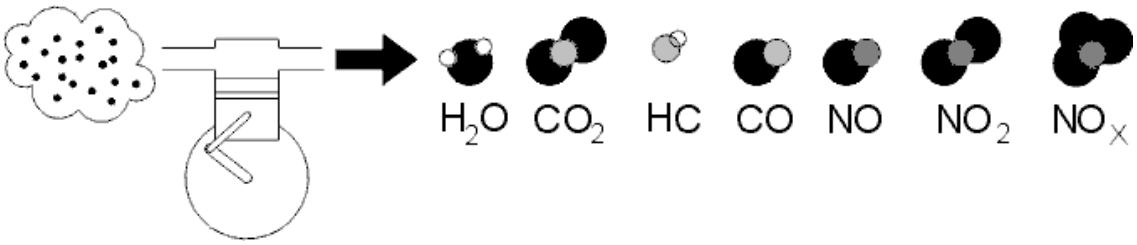

Fig. 283: Fuel Trim
Courtesy of VOLVO CARS CORPORATION

Due to the high temperature and pressure, nitrous oxides such as NO and NO_2 are also formed. The common designation for these gases is nitrous oxides NO_x .

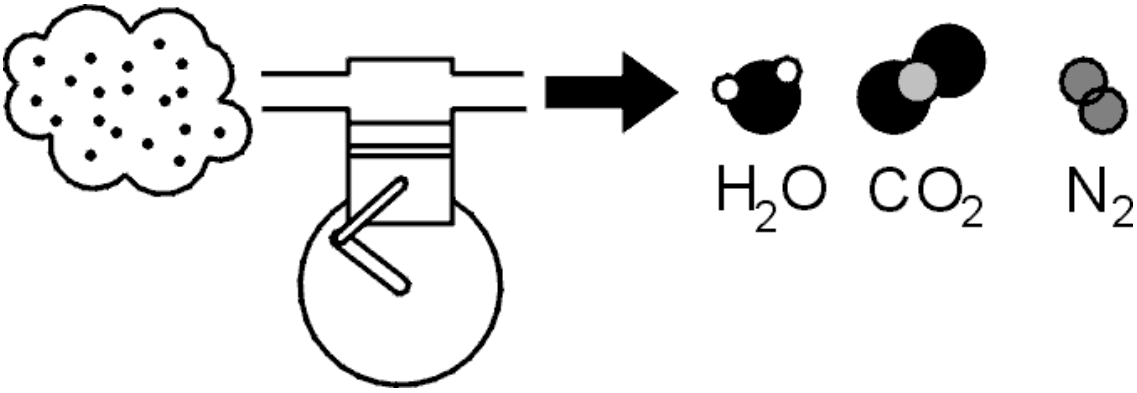

Fig. 284: Converting Exhaust To H2O And CO2
Courtesy of VOLVO CARS CORPORATION

By speeding up the reaction between the remaining reactive components using a catalytic converter, these can be converted to water (H_2 O), carbon dioxide (CO_2) and nitrogen (N_2).

However this can only happen if the balance of hydro-carbons (HC), carbon monoxide (CO), oxygen (O_2) and nitrous oxides (NO_x) is exactly right in the exhaust. This happens when the fuel air mixture before combustion is 14.7 kg of air per kg of fuel. The Lambda value is then said to be one, (lambda=1).

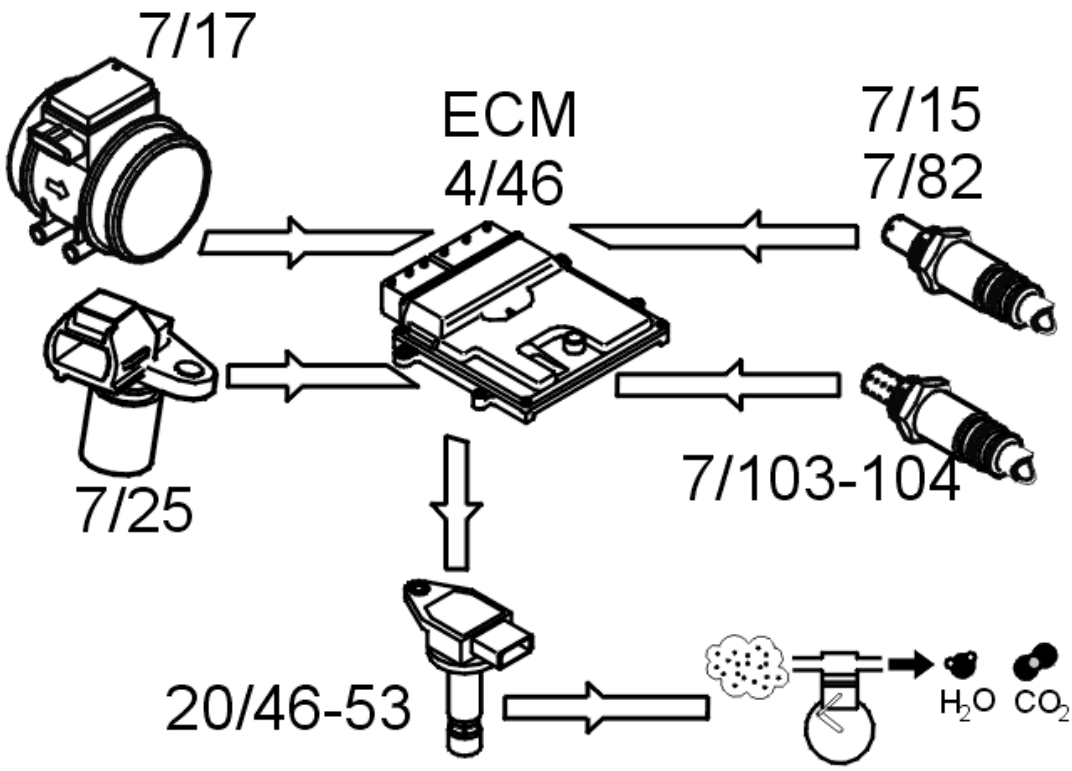

Fig. 285: Fuel Control Components
Courtesy of VOLVO CARS CORPORATION

A base program in the engine control module (ECM) calculates the injection period based on data about load, i. e. the measured air mass and engine speed (rpm). The calculated injection time (from the base program) is then modified by a circuit (short-term fuel trim). The signal from the heated oxygen sensor (HO2S) is used to finely adjust the injection period so that lambda=1 is reached. The short-term fuel trim is a circuit that finely adjusts the injection period so that the fuel/air mixture is optimized (lambda=1). The control module also used the signals from the front and rear heated oxygen sensors (HO2S) to correct the front heated oxygen sensor (HO2S) (offset adjustment) and thereby the injection period. This gives a higher degree of accuracy during fuel trim. Fuel trim is a rapid process which may take place several times a second. Adjustment of the injection period calculated in the base program is limited.

The short-term fuel trim can be read off.

Adaptive functions

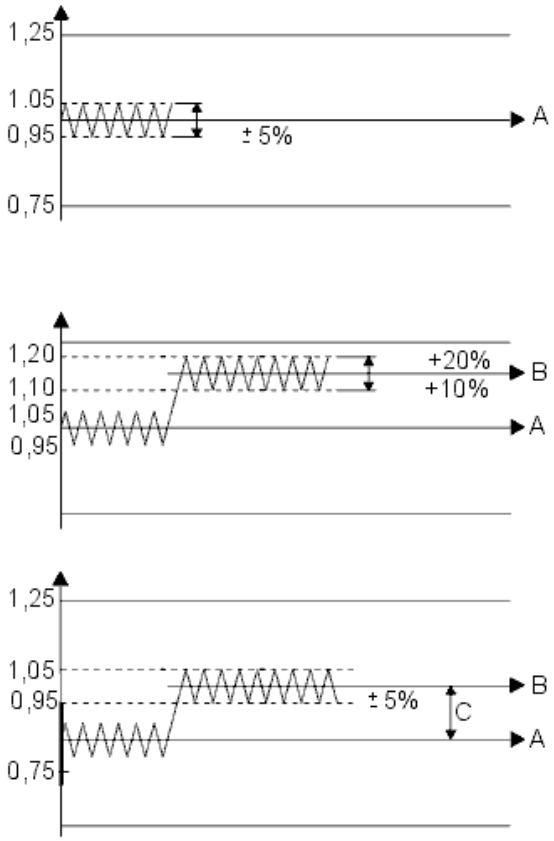

Fig. 286: Adaptive Function Charts
Courtesy of VOLVO CARS CORPORATION

Certain factors, for example, tolerance deviations on certain components such as mass air flow (MAF) sensor and injectors, air leakage on the intake side, fuel pressure etc. affect the fuel / air mix. In order to compensate for this, the engine control module (ECM) has adaptive (self learning) functions. When the engine is new the short term fuel trim varies cyclically around a nominal central line (A) 1.00, with, for example, a 5% change of injection time when fuel trim is in operation.

If there is air leakage for example, the short-term fuel trim will quickly be offset to a new position (B) and will

then work for example between 1.10 (+10%) and 1.20 (+20%), although still at an amplitude of 5%, but with an offset in relation to the original center line (A). The injection period has then been increased to compensate the increase in the amount of air.

The adaptive functions will correct the change, so that the short-term fuel trim will work around the new center line (B) where it will again have its full range of control available.

Put simply, fuel trim is a measurement of the difference (C) between the original short-term fuel trim center line (A) and the new center line (B).

The adaptive functions are split into various operational ranges based on the load and speed of the engine.

The different adaption ranges can be read off.

The adaptive adjustments of injection time are continuously stored in the engine control module (ECM). This means that, at different operating ratios, the correct mixture ratio is achieved before the heated oxygen sensor (HO2S) reaches operating temperature.

The diagnostic trouble code (DTC) is stored in the engine control module (ECM) if any adaption value is too high or too low.

FUEL PRESSURE REGULATION

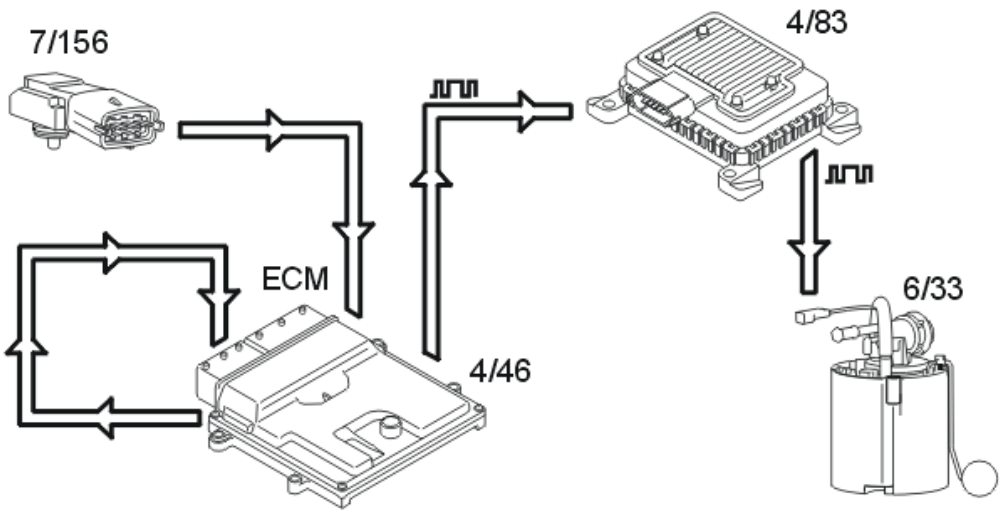

Fig. 287: Identifying Fuel Pressure Control Components
Courtesy of VOLVO CARS CORPORATION

General

Fuel pressure regulation for demand controlled fuel pumps (DECOS - DEmand COntrolled fuel Supply) means that the fuel pressure is controlled steplessly by varying the output of the fuel pump. The design of the system allows a greater maximum pressure (approximately 650kPa) in the fuel pump. This pressure is used in extreme situations, such as heavy engine load for example

The following components are used for fuel pressure regulation:

- engine control module (ECM) (4/46) with integrated atmospheric pressure sensor
- fuel pump control module (4/83)
- fuel pressure sensor with fuel temperature sensor (7/156)
- fuel pump with by-pass valve (6/33).

The time taken for the engine start procedure can be reduced by rapidly increasing the pressure in the fuel rail when the engine control module (ECM) receives a signal about the position of the ignition switch from the central electronic module (CEM).

The engine control module (ECM) is better able to calculate the injection period using the signal from the atmospheric pressure sensor and fuel pressure sensor. This particularly improves the cold starting characteristics of the engine.

The advantages of varying the output of the fuel pump so that it is not always at full power are:

- the total power consumption of the fuel pump (FP) is reduced, reducing the load on the power supply system
- the service life of the fuel pump (FP) is increased
- fuel pump noise is reduced.

Control

The engine control module (ECM) calculates the desired fuel pressure. A signal is then transmitted to the fuel pump control module indicating the desired fuel pressure. Serial communication between the engine control module (ECM) and the fuel pump control module is used to carry the signal. The fuel pump control module then operates the fuel pump unit to obtain the desired pressure using a pulse width modulation voltage on the ground lead. The fuel pump (FP) can be controlled steplessly by changing the pulse width modulation (PWM) signal. Only that pressure which is required at that specific time will then be released to the fuel rail/injectors. The value of the pulse width modulation (PWM) signal is a measurement of the operational load of the fuel pump (FP) (% duty, 100% = maximum pressure).

The engine control module (ECM) continuously monitors the fuel pressure using the signal from the fuel pressure sensor. This allows the desired fuel pressure to be reached, and if necessary a signal is transmitted to the fuel pump control module requesting that the fuel pressure is adjusted.

The engine control module (ECM) attempts too obtain a constant fuel pressure (approximately 380kPa relative to atmospheric pressure with the engine running).

By-pass valve

When the injectors close when the pressure is too great (during engine braking for example) there is a pressure peak. The by-pass valve in the fuel pump (FP) is used to even out the pressure peak. The opening pressure of the valve is approximately 650 kPa.

The by-pass valve also functions as a non-return valve, ensuring that the fuel pressure in the system is maintained when the engine is switched off.

There is high pressure before the engine is started. This high pressure means that the valve in the by-pass valve opens and the system is "flushed".

Passive safety

For safety reasons, the engine control module (ECM) shuts off the fuel pump (FP) if the supplemental restraint system module (SRS) detects a collision.

KNOCK CONTROL

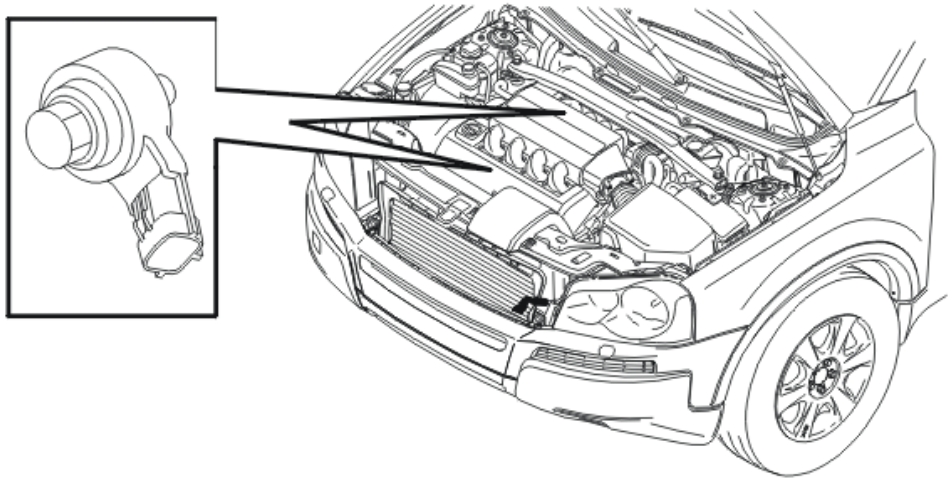

Fig. 288: Locating Knock Sensors
Courtesy of VOLVO CARS CORPORATION

Knock occurs in the combustion chamber when the fuel and air mixture self ignites. This can occur either before or after the spark plug has produced an ignition spark. In both cases the gas in two or more places ignites in the combustion chamber.

This results in an extremely fast combustion process with flames from several directions. When these flames collide, the pressure in the cylinder increases rapidly and there is a mechanical knocking sound.

If one of the cylinders starts knocking there will be a certain type of vibration in the engine block. This vibration is transferred to the knock sensor, which are screwed to the engine block. One knock sensor detects knocking on cylinders 1, 2, 3 and 4. The other one detects knocking on cylinders 5, 6, 7 and 8. The mechanical stress that arises in the piezoelectric material of the knock sensors makes them generate a voltage. With the help of the camshaft position sensor and the impulse sensor, the Engine Control Module (ECM) can then determine which cylinder is knocking.

The knock sensors (KS) also interpret a proportion of normal engine sound. The control module is able to recognize the vibrations which correspond to knocking by filtering, amplifying and using software to evaluate

the signal.

If the knock sensors (KS) detect knocking in the engine above a certain threshold value, the ignition timing is first retarded and then the fuel/air mixture is enriched to eliminate knocking.

IGNITION CONTROL

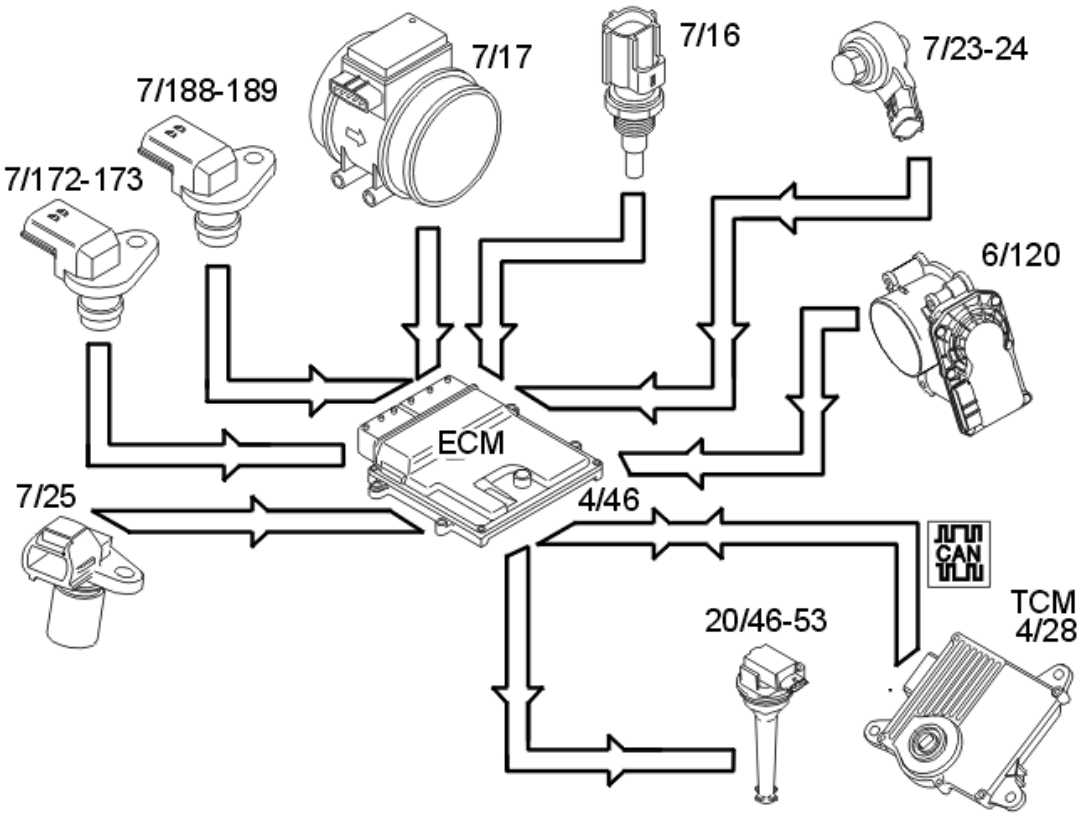

Fig. 289: Components Used For Ignition Control
Courtesy of VOLVO CARS CORPORATION

The following components are used for ignition control:

- engine speed (RPM) sensor (7/25)
- camshaft position (CMP) sensor (7/172-173, 7/188-189)
- mass air flow (MAF) sensor (7/17)
- engine coolant temperature (ECT) sensor (7/16)
- throttle position (TP) sensor on the electronic throttle unit (6/120)
- knock sensor (KS) (7/23-24)
- transmission control module (TCM) (4/28)
- spark plugs with ignition coils (20/46-53).

The engine control module (ECM) calculates the optimum ignition advance based on the software and

information from the sensors. The engine control module (ECM) cuts the current to the ignition coil mounted on the cylinder to be ignited and produces a spark.

During the starting phase the engine control module (ECM) produces a fixed ignition setting. When the engine has started and the vehicle is being driven, the engine control module (ECM) calculates the optimum ignition setting, taking factors such as the following into account:

- engine speed (RPM)
- load
- temperature.

The engine control module (ECM) analyses the signal from the knock sensors (KS) when the engine reaches operating temperature. If any of the cylinders knock, the ignition is retarded for that specific cylinder until the knocking ceases.

The ignition then advanced to the normal position or until the knock recurs.

Before the transmission control module (TCM) changes gear, it sometimes transmits a torque limiting request to the engine control module (ECM). The engine control module (ECM) then retards the ignition momentarily to reduce the torque, resulting in smoother gear changes and reducing the load on the transmission. There are different ignition retardation levels depending on the signals from the transmission control module (TCM). The return signal from the engine control module (ECM) to the transmission control module (TCM) confirms that the signal reached the engine control module (ECM).

For further information, also see: **MISFIRE DIAGNOSTIC**

The engine misfires if the fuel does not ignite correctly. For further information, also see: **MISFIRE DIAGNOSTIC**

REGULATING THE AIR CONDITIONING (A/C) COMPRESSOR

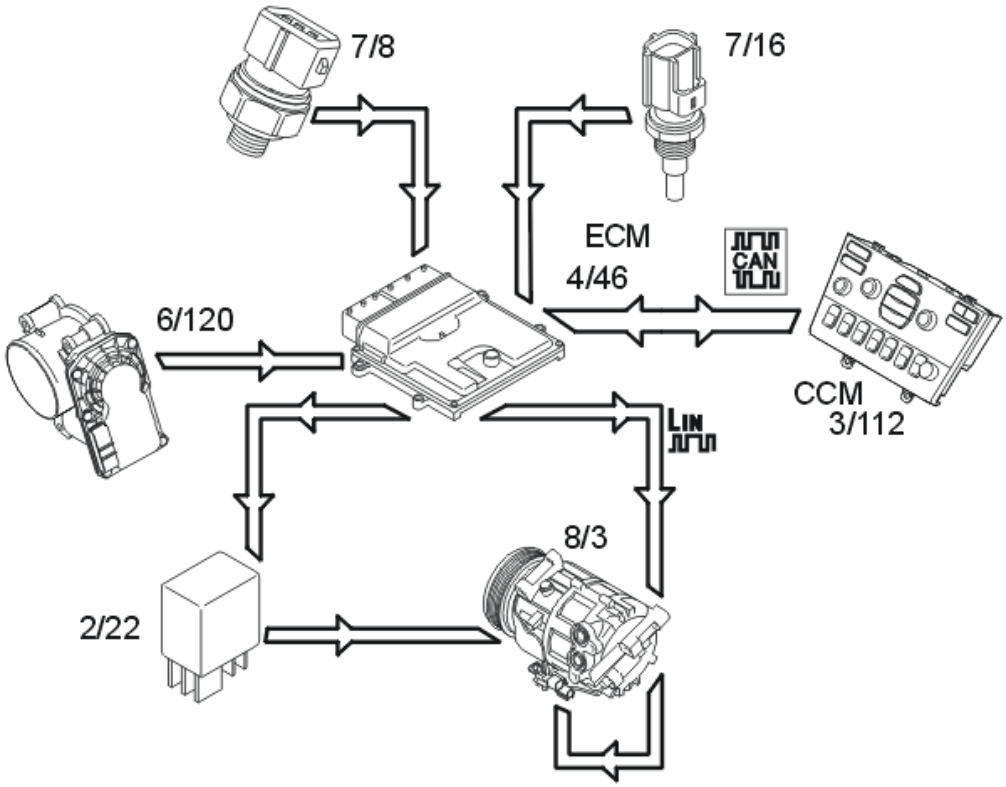

Fig. 290: (A/C) Compressor Regulating Components
Courtesy of VOLVO CARS CORPORATION

The air conditioning (A/C) compressor is controlled by the engine control module (ECM) (4/46) on request from the climate control module (CCM) (3/112) via the controller area network (CAN). When the engine control module (ECM) receives a signal from the climate control module (CCM) to activate the air conditioning (A/C) compressor, the engine control module (ECM) grounds the circuit for the relay coil for the A/C compressor. See also: **AIR CONDITIONING (A/C) RELAY**

The relay (2/22) closes the circuit between the integrated relay/fusebox in the engine compartment and the clutch for the air conditioning (A/C) compressor (8/3). The air conditioning (A/C) compressor which has a variable cylinder displacement is always running during normal driving. Displacement in the compressor is regulated by a solenoid which is controlled by the engine control module (ECM).

The engine control module (ECM) regulates the solenoid (displacement) in relation to the driver's and vehicles' different driving styles. Starting the engine, moving off and acceleration means more regulated displacement so that the A/C compressor has less possible effect on engine torque. The climate control module (CCM) controls all functions in the climate control module which are related to the vehicle interface with the driver and passenger. I. E. the climate control buttons on the dashboard environment panel.

The climate control module (CCM) transmits information to the engine control module (ECM), which determines what must be prioritized. For example, the air conditioning (A/C) compressor in certain extreme cases is switched off completely, regardless of the climate control module (CCM) request. This is to prevent negative engine performance and to protect the air conditioning (A/C) system. As well as the information from

the climate control module (CCM), the engine control module (ECM) controls the air conditioning (A/C) compressor based on the information from:

- Air conditioning (A/C) pressure sensor (high pressure side) (7/8)
- the throttle position (TP) sensor (6/120)
- the engine coolant temperature (ECT) sensor (7/16).

SYSTEM OVERVIEW

CONTROL MODULE

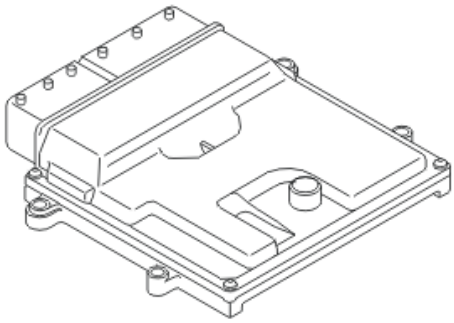

Fig. 291: Identifying Engine Control Module (ECM)
Courtesy of VOLVO CARS CORPORATION

The engine control module (ECM) controls, amongst others, the following functions:

- injectors
- ignition
- camshafts (CVVT)
- Evaporative emission system (EVAP) valve
- throttle angle
- engine cooling fan (FC)
- Air conditioning (A/C) compressor
- fuel pump.

The engine control module (ECM) is supplied with battery power (U_{bat}) via fuses in the central electronic module (CEM) and in the relay/fuse box, engine compartment.

To prevent certain stored data from being erased from the engine control module (ECM) when the ignition is switched off, the control module also has a 30-supply. This supply is from the integrated relay/fusebox, engine compartment.

The control module is grounded via the wiring which is connected at the right-hand suspension turret.

The engine control module (ECM) contains a voltage regulator which maintains a low voltage (5 V) in internal components in the control module such as:

- AC/DC converter
- DC/AC converter
- Micro-processor.

The functions which require battery power (U_{bat}) and high output are controlled by external or internal power stages. For example, ignition coils have external power stages (integrated into the ignition coils) while the power stages for the injectors are integrated in the engine control module (ECM).

The micro-processor in the engine control module (ECM) receives signals from the different sensors and control modules in the vehicle. The micro-processor uses a program which interprets the signals from the different sensors and how the components and functions should be controlled.

The engine control module (ECM) has several self-learning (adaptive) functions. It continually adapts ongoing calculations to changing circumstances (such as wear, air leaks, differences in fuel).

Emissions are kept low through efficient management of the injection period, ignition, evaporative emission system (EVAP) valve, camshafts etc. Faults which affect emissions for example can be detected by running diagnostics for functions and components.

The engine control module (ECM) is located on the air cleaner (ACL) box in the engine compartment. A temperature sensor and atmospheric pressure sensor are integrated in the engine control module (ECM).

The engine control module (ECM) communicates with other control modules using controller area network (CAN) communication or LIN communication.

The engine control module (ECM) checks activations, input and output signals and functions using an integrated diagnostic system. A diagnostic trouble code (DTC) is stored if, after validation, the control module detects a fault. In certain cases the faulty signal is also replaced with a substitute value or certain functions are limited.

For example, substitute values can be set for:

- engine temperature sensor
- mass air flow (MAF) sensor
- throttle position (TP) sensor
- air pressure
- fuel pressure.

Mathematical calculations and signals from certain components are used to calculate the substitute values. Other substitute values are fixed, predefined values in the engine control module (ECM).

The substitute value allows the vehicle to be driven and the emissions to be kept at a reasonable level, even though vital functions or components are malfunctioning.

Functions which may be limited are for example:

- camshaft control (CVVT)
- fuel trim
- throttle angle
- fuel pressure regulation.

The substitute values are used and functions restricted so that the system is still able to work while protecting components that are required for safety reasons (for example the throttle angle).

Any diagnostic trouble codes (DTCs) are stored in the internal memory of the engine control module (ECM). The information can be read off via the data link connector (DLC) in the vehicle.

SIGNALS

The table below summarizes the input signals to and output signals from the Engine Control Module (ECM). The signal types are divided into directly connected signals, LIN and controller area network (CAN) communication. The illustration below displays the same information with the Volvo component designations.

Input signals	Output signals
Directly connected: • Ignition switch (3/1) • Air conditioning (A/C) pressure sensor (7/8) • Stop lamp switch (3/9) • Accelerator pedal (AP) position sensor (7/51) • Electronic throttle unit (6/120) • Camshaft position (CMP) sensor, intake bank 2 (7/172) • Camshaft position (CMP) sensor, intake bank 1 (7/188) • Camshaft position (CMP) sensor, exhaust bank 2 (7/173) • Camshaft position (CMP) sensor, exhaust bank 1 (7/189) • Engine coolant temperature (ECT) sensor (7/16) • Engine speed (RPM) sensor (7/25) • Fuel pressure sensor / fuel temperature sensor (7/156) • Knock sensor (KS) (7/23-24) • Mass air flow (MAF) sensor/air temperature sensor (7/17)	**Directly connected:** • Air conditioning (A/C) relay (2/22) • Air conditioning (A/C) compressor (8/3) • Electronic throttle unit (6/120) • Engine cooling fan (FC) control module (4/71) • Evaporative emission system (EVAP) valve (8/18) • Injectors (8/146-153) • Fuel pump (FP) control module (4/83) • Ignition coils (20/46-53) • Leak diagnostic unit (6/67) (certain markets only) • Front oxygen sensor, bank 2 preheating (7/15) • Front oxygen sensor, bank 1 preheating (7/82) • Rear oxygen sensor, bank 2 preheating (7/103) • Rear oxygen sensor, bank 1 preheating (7/104) • Main relay (system relay) (2/32) • Starter motor relay (2/35) • Camshaft reset valve (Continuous variable

• Manifold absolute pressure (MAP) sensor (7/81) • Oil pressure switch (7/6) • Front oxygen sensor, bank 2 (7/15) • Front oxygen sensor, bank 1 (7/82) • Rear oxygen sensor, bank 2 (7/103) • Rear oxygen sensor, bank 1 (7/104) • Oil level sensor (7/35) • Outside temperature sensor (7/105) • Engine coolant level sensor (7/73) • Ignition coils (20/46-53) • Engine cooling fan (FC) control module (4/71) • Leak diagnostic unit (6/67) (certain markets only)	valve timing (CVVT)), intake bank 2 (8/19) • Camshaft reset valve (Continuous variable valve timing (CVVT)), intake bank 1 (8/117) • Camshaft reset valve (Continuous variable valve timing (CVVT)), exhaust bank 2 (8/81) • Camshaft reset valve (Continuous variable valve timing (CVVT)), exhaust bank 1 (8/118) • Emissions warning lamp (5/1) • Valve variable intake (8/107)
Via LIN communication: • Alternator control module (ACM) (6/26)	**Via LIN communication:** • Alternator control module (ACM) (6/26)
Via Controller Area Network (CAN) communication: • Central electronic module (CEM) (4/56) • Brake Control Module (BCM) (4/16) • Climate Control Module (CCM) (3/112) • Rear electronic module (REM) (4/58) • Transmission control module (TCM) (4/28) • Steering wheel module (SWM) (3/254)	**Via Controller Area Network (CAN) communication:** • Central electronic module (CEM) (4/56) • Brake Control Module (BCM) (4/16) • Climate Control Module (CCM) (3/112) • Rear electronic module (REM) (4/58) • Transmission control module (TCM) (4/28) • Steering wheel module (SWM) (3/254) • Driver Information Module (DIM) (5/1)

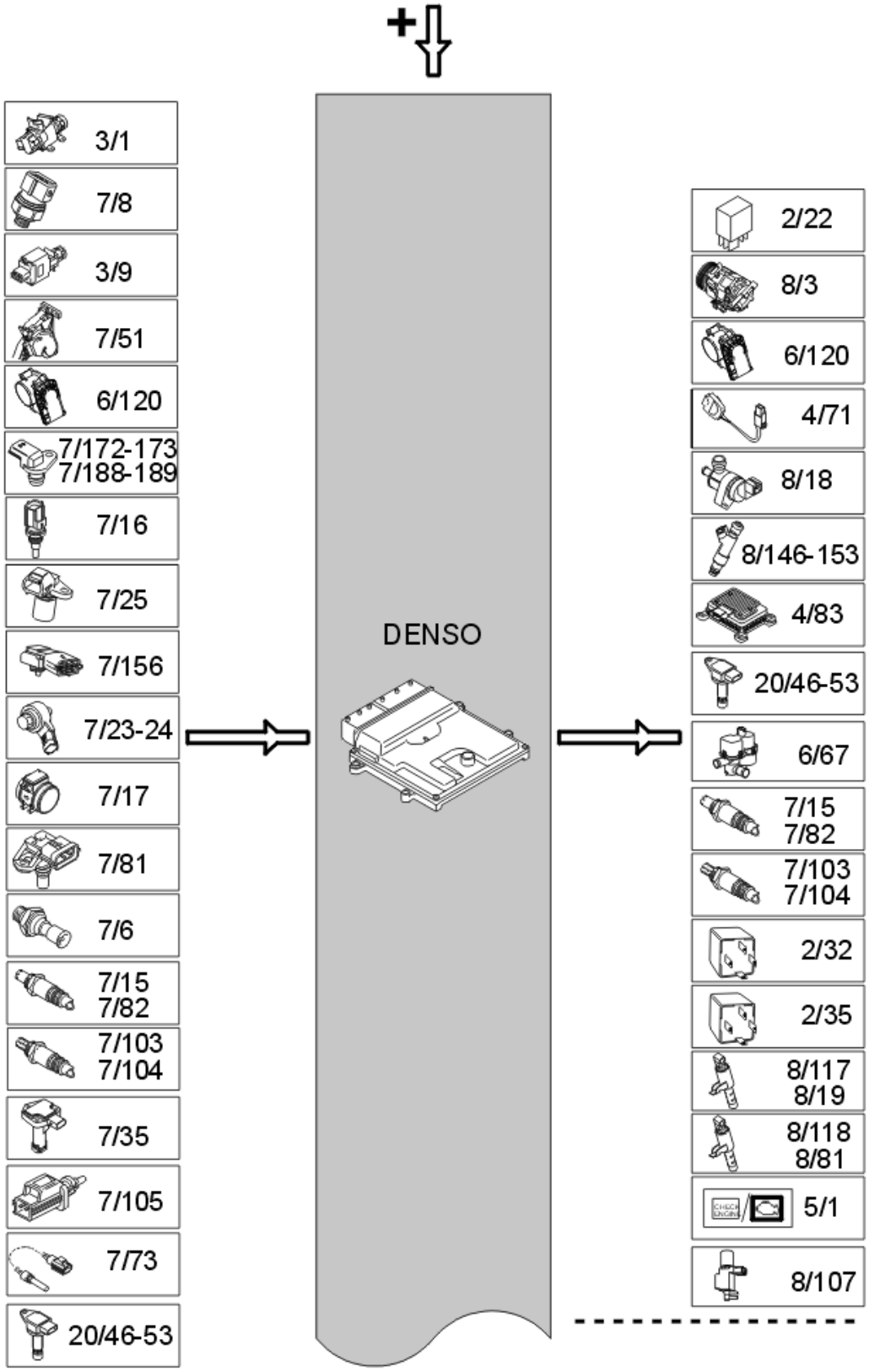
+
3/1
7/8
3/9
7/51
6/120
7/172-173
7/188-189
7/16
7/25
7/156
7/23-24
7/17
7/81
7/6
7/15
7/82
7/103
7/104
7/35
7/105
7/73
20/46-53
DENSO
2/22
8/3
6/120
4/71
8/18
8/146-153
4/83
20/46-53
6/67
7/15
7/82
7/103
7/104
2/32
2/35
8/117
8/19
8/118
8/81
5/1
8/107

Fig. 292: Identifying Volvo Component Designations
Courtesy of VOLVO CARS CORPORATION

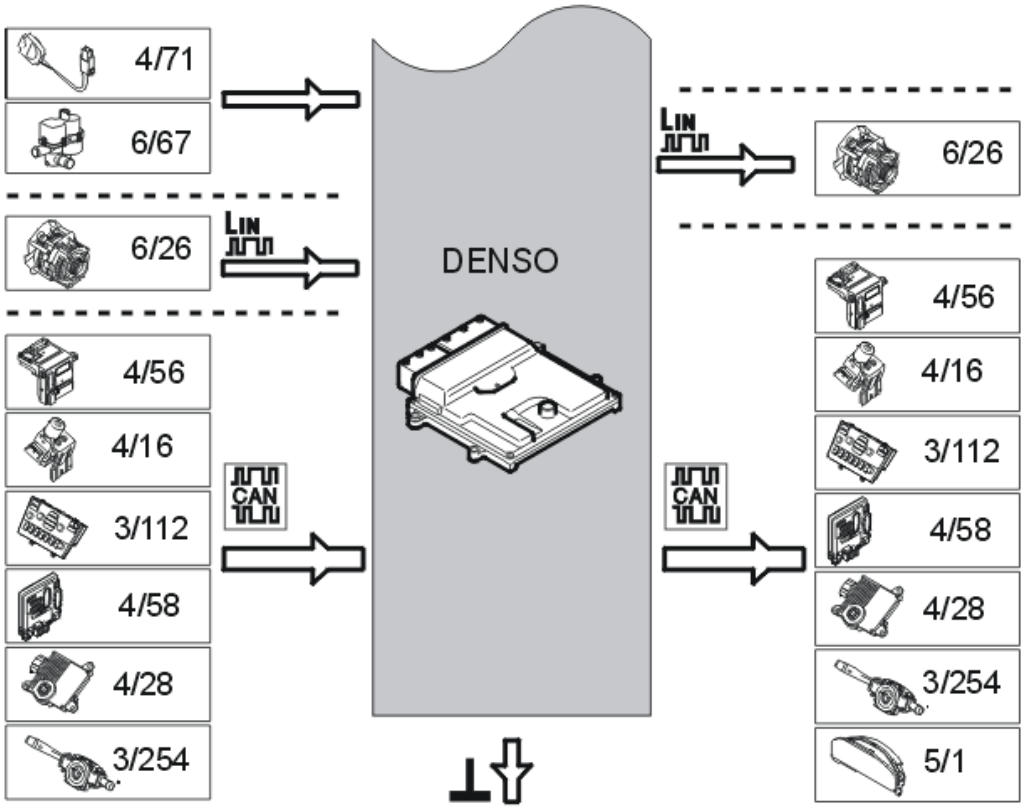

Fig. 293: Identifying Volvo Component Designations
Courtesy of VOLVO CARS CORPORATION

GDL BULBS (2003-2004)

DESIGN

HEADLAMP SYSTEM, BI-XENON

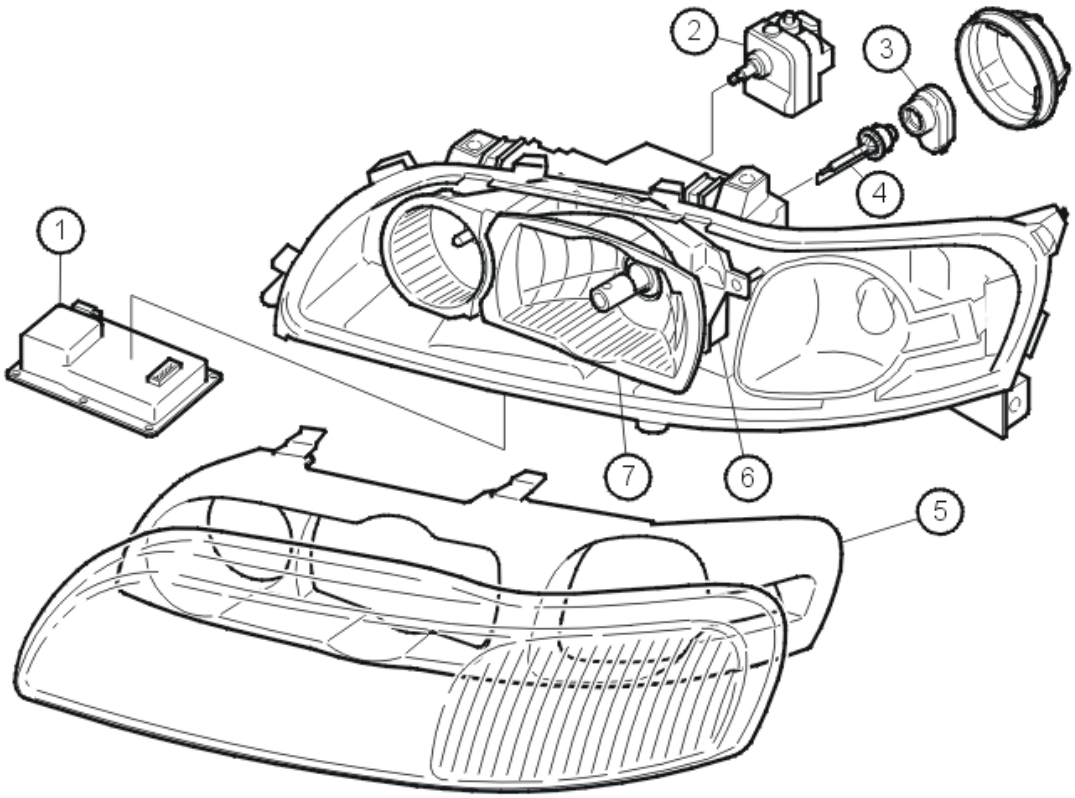

Fig. 294: Bi-Xenon Headlamp System
Courtesy of VOLVO CARS CORPORATION

1.	Ballast	5.	Internal headlamp surround
2.	Motor, headlamp range adjustment	6.	Motor, high and low beam
3.	Bulb connector, high tension	7.	Moving reflector
4.	Bulb		

Bi-Xenon uses gas discharge technology and is a headlamp system with moving reflectors. The system combines high and low beams in the same bulb.

It is a statutory requirement (for low beam) for vehicles with this type of bulb to be equipped with headlamps with automatic level control.

Xenon versus Halogen

Xenon:

- has higher color temperature which gives a whiter light
- reflects from road signs and markings better
- has lower power consumption. (approximately 2/3).

Worth knowing:

- Daylight has a color temperature of approximately 5000°K. The nearer to natural light, the easier the light is on the eye. Normal H4 bulb: approximately 3200 °K. Volvos gas discharge lamp : approximately 4200 °K
- The Bi-Xenon system also has the advantage of the high and low beam having the same color light. The human eye finds it easier to react between changes.

BULB

The light source consists of a discharge pipe surrounded by glass which filters out damaging UV radiation.

- The discharge tube is filled with a number of chemical compounds including the noble gas Xenon
- A light arc is created by an electrical discharge between two tungsten electrodes
- Because the bulb does not have a filament it is less susceptible to bumps and vibration
- Bulb designation: (special for reflector system).
- Power consumption: 35 W.

CAUTION: The bulb contains mercury (less than 0.5 mg) and when discarded must be treated as hazardous waste. Hazardous waste must be handled according to the relevant statutory regulations.

BALLAST

An electronic ballast is connected to each headlamp. The ballast functions as a voltage regulator and generates alternating current (AC).

Main tasks:

1. Light the bulb
2. Control the light during operation.

To light the bulb an initial voltage of approximately 24, 000 V is required for a very short time (less than 1ms).

The ballast transforms the vehicles 12 V (DC) to 1000 V (AC).

The high tension switch amplifies the voltage a further 25 times.

When the lamp is lit the voltage is reduced to the 100 V required to keep the lamp lit.

Power consumption: 10 W.

FUNCTION

HEADLAMPS, BI-XENON

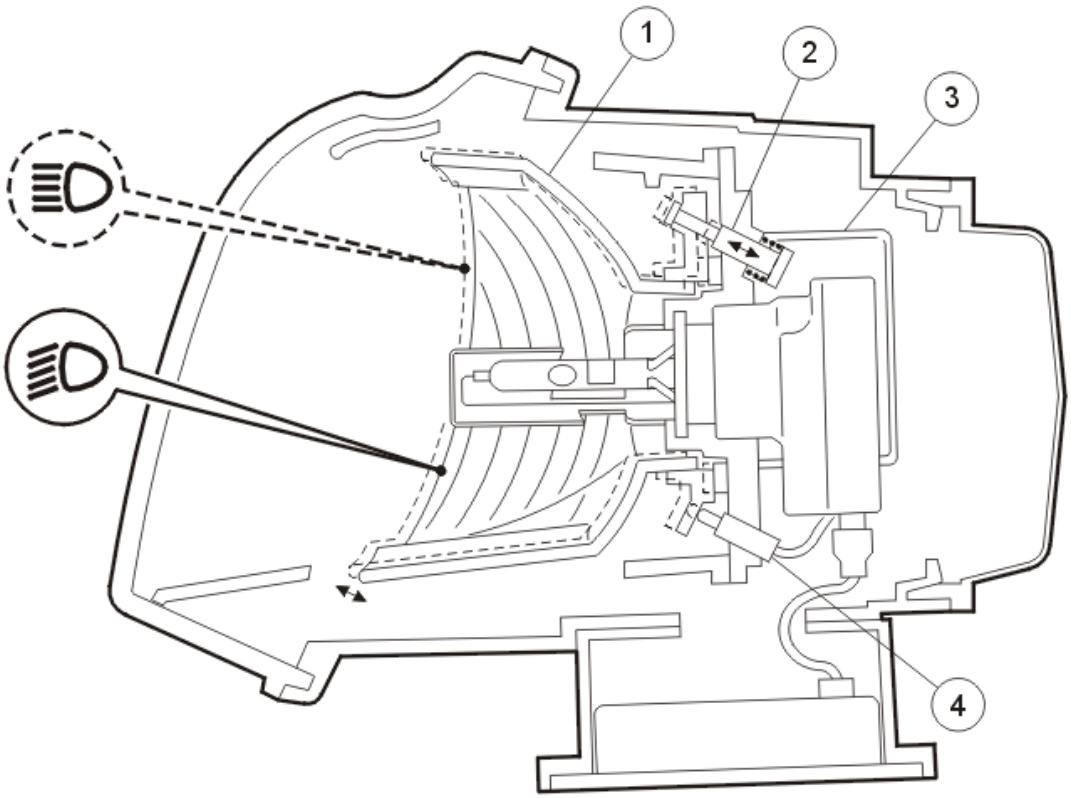

Fig. 295: Bi-Xenon Headlamps
Courtesy of VOLVO CARS CORPORATION

1.	Moving reflector	3.	Motor, high and low beam
2.	Controls for reflector	4.	Position sensor, reflector

LIGHTING THE HEADLAMP

It normally takes 3 seconds from activation at the light switch with the ignition on to the lamp lighting.

- Like conventional headlamps the headlamps are out while the engine is cranking and do not light until the engine is running

- On each occasion that voltage is supplied to the ballast 3 attempts, within 1 second, are made to light the lamp.

COMBINED HIGH AND LOW BEAM

Reflector, left-hand headlamp

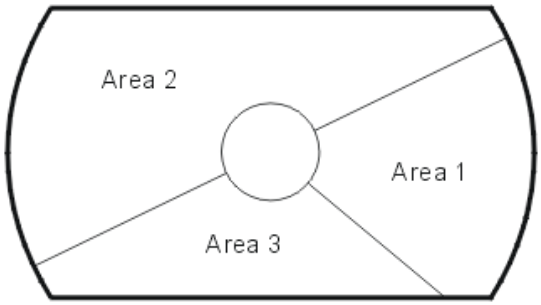

Fig. 296: Identifying Left-Hand Headlamp Reflector
Courtesy of VOLVO CARS CORPORATION

The illustration is a principle sketch showing the different segments of the moving reflector.

The reflector has a complex design where different segments are used depending on whether in high or low beam position.

The reflector is adjustable and can be moved between two fixed points.

- The reflector is moved 2 mm axially in relation to the bulb
- The direction of the movement means that position of reflector is also moved slightly vertically.

The bulb is fixed.

The headlamp lens is clear.

AUTOMATIC LEVEL CONTROL

Sensor

The following applies to vehicles without Four-C (Continuously Controlled Chassis Concept)

An inductive position sensor reads off the angle between the bodywork and the left rear control arm. The angle is a measurement of how much the vehicle is leaning (chassis height) and is dependent on weight distribution.

- The sensor is mounted differently in FWD to AWD
- The rear electronic module (REM) reads an analog signal (0.5-4.5 V) from the position sensor and

converts it to an angle value (±35°), which is transmitted to the central electronic module (CEM)
- Fully laden vehicles give a signal of 0.5 V which corresponds to minus 35°.
- The central electronic module (CEM) controls the motors for the headlamp range adjustment (PWM signal) and sets the headlamps vertically.

The following applies to vehicles with Four-C

Two sensors read off the angle between the bodywork and the left and right rear control arms. The angle is a measurement of how much the vehicle is leaning (chassis height) and is dependent on weight distribution.

The sensors are mounted differently in FWD to AWD.

The suspension module (SUM) reads the signals from the sensors and converts them to an angle value. The value is transmitted via the control area network (CAN) to the central electronic module (CEM). The central electronic module (CEM) uses this information to control the motors for headlamp range adjustment.

Level control

Controlled at speeds *below 4 km/h*

When the ignition is switched on, the position sensor is read off and the headlamp range adjustment motors set the headlamps.

Controlled at speeds *above 4 km/h*

At greater angle changes during driving the headlamps are controlled. Control is dependent on the time for the system not to react to short term changes such as uneven road surfaces etc.

Calibration

The position sensor must be calibrated after work on the rear suspension. Carry out calibration according to tab DIAGNOSTICS/VEHICLE COMMUNICATION, rear electronic module (REM).

CAUTION: Calibration must be carried out after work such as removing/installing the sensors and replacing the sensors, rear axle, bushings, shock absorbers or springs.

In vehicles with Four C, calibration is carried out via the suspension module (SUM).

Beam adjustment is carried out conventionally (via adjustment screws by the headlamp).

The light switch must be in the "on" position while calibrating.

SAFETY

- In the event of a short-circuit on the high tension side the power supply cuts in less than 10 ms
- If the high tension circuit is broken (for example by a broken cable, blown bulb or no bulb in the bulb connector) the system attempts to activate the lamp for a time of 700 ms. During this time the high voltage is outside the ballast
- Approximate temperatures on the components during operation are; Ballast = 130 °C, Bulb holder = 170 ° C, Bulb = 400 °C
- The glass body of the Bi-Xenon-lamp is filled with different gases and metal vapors which are under pressure. The lamp can explode as it is under gas pressure.

WARNING: **Follow the safety instructions and recommendations in VIDA carefully when working with high voltage.**

Use safety goggles when handling the bulb. Risk of explosion

The electrical system must be switched off before starting work.

Risk of burn injury. The components operate at very high temperatures.

HIGH VOLTAGE UNIT

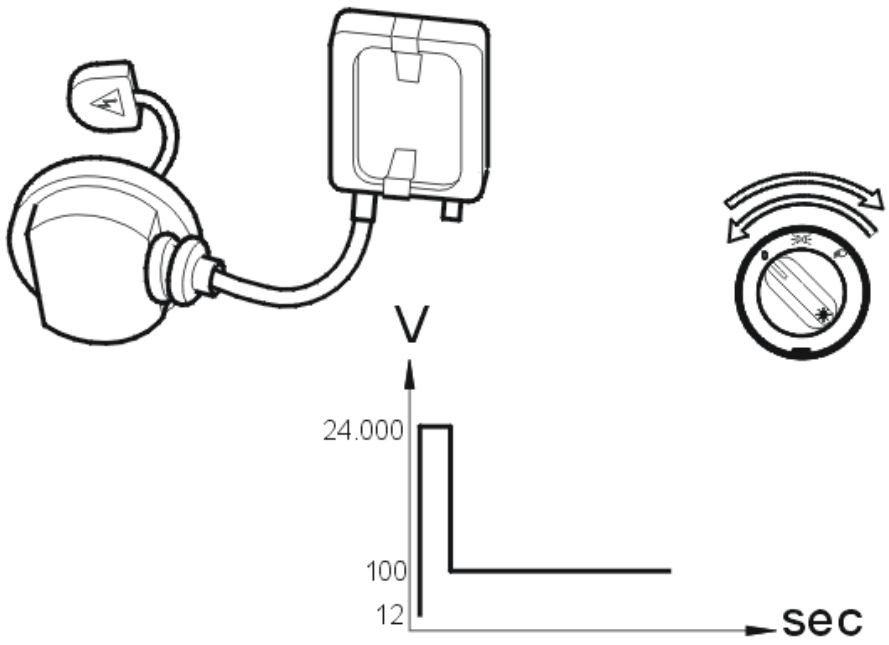

Fig. 297: High Voltage Unit
Courtesy of VOLVO CARS CORPORATION

- High voltage is required to light the Xenon lamp
- A high voltage unit is attached to each Xenon lamp. It transforms 12 V voltage to approximately 24 000 V, which is necessary to light the lamp. When the lamp is lit the voltage is reduced to the 100 V required to keep the lamp lit
- On each occasion that voltage is supplied to the high voltage unit an attempt is made to light the Xenon lamp. If this voltage does not exceed 9.5 V within a time span of 200 ms the lamp does not light. If the voltage is too low, after a power consuming start for cold start, the lamp does not light until the engine is running and the generator starts to charge. A new start attempt of the lamp must be made by turning the knob of the light switch till "0" position or parking lamp position and then back to low beam again.

WARNING: Because of the high voltage it is important to follow the instructions for working with the Xenon lamps and high voltage unit

SYSTEM OVERVIEW

HEADLAMPS, BI-XENON

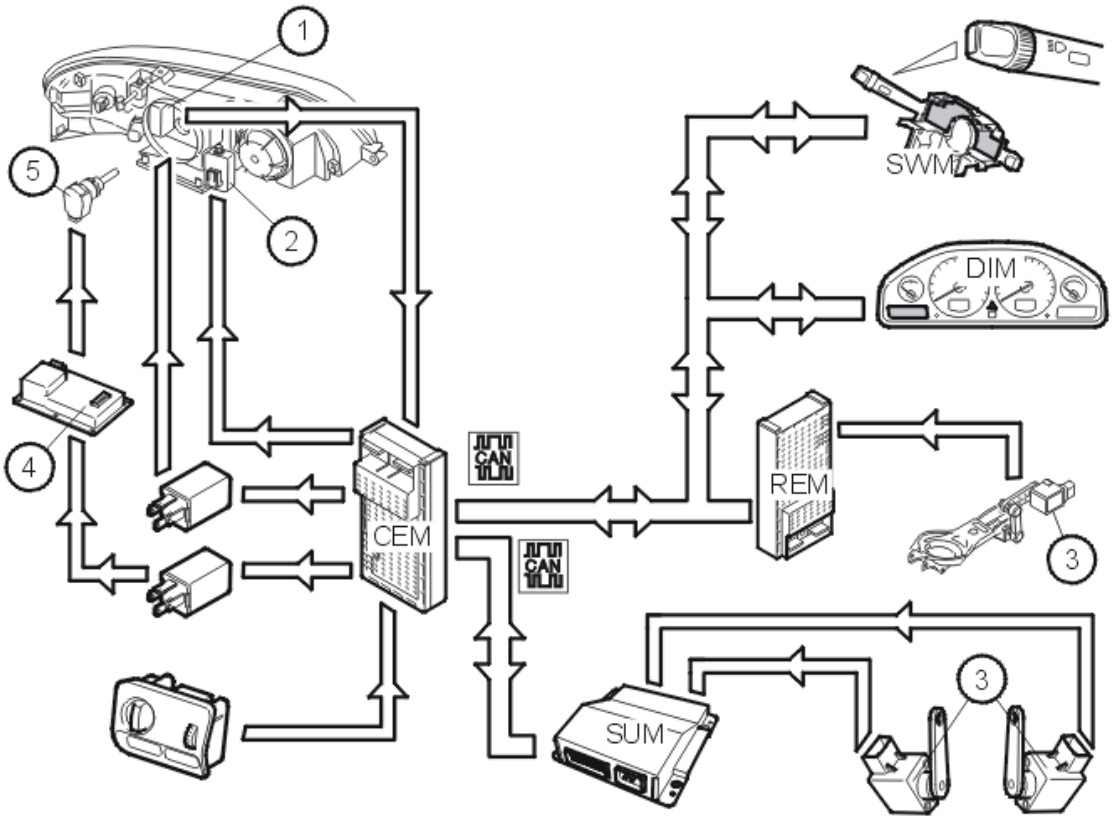

Fig. 298: Bi-Xenon Headlamps Input And Output Signals
Courtesy of VOLVO CARS CORPORATION

		Power supply via relay.

1.	Motor, high / low beam	Reconnected PWM signal provides information about the position of the reflector to the central electronic module (CEM).
2.	Motor, headlamp range adjustment	Controlled by the central electronic module (CEM) using a PWM signal.
3.	Position sensor	Inductive sensor which sends an analog signal (voltage) to the rear electronic module (REM) (Does not apply to vehicles with Four-C (Continuously Controlled Chassis Concept)). In vehicles with Four C the signal travels via the suspension module.
4.	Ballast	High voltage regulator for switch and lamp.
5.	Gas discharge lamp	Socket

CONTROL

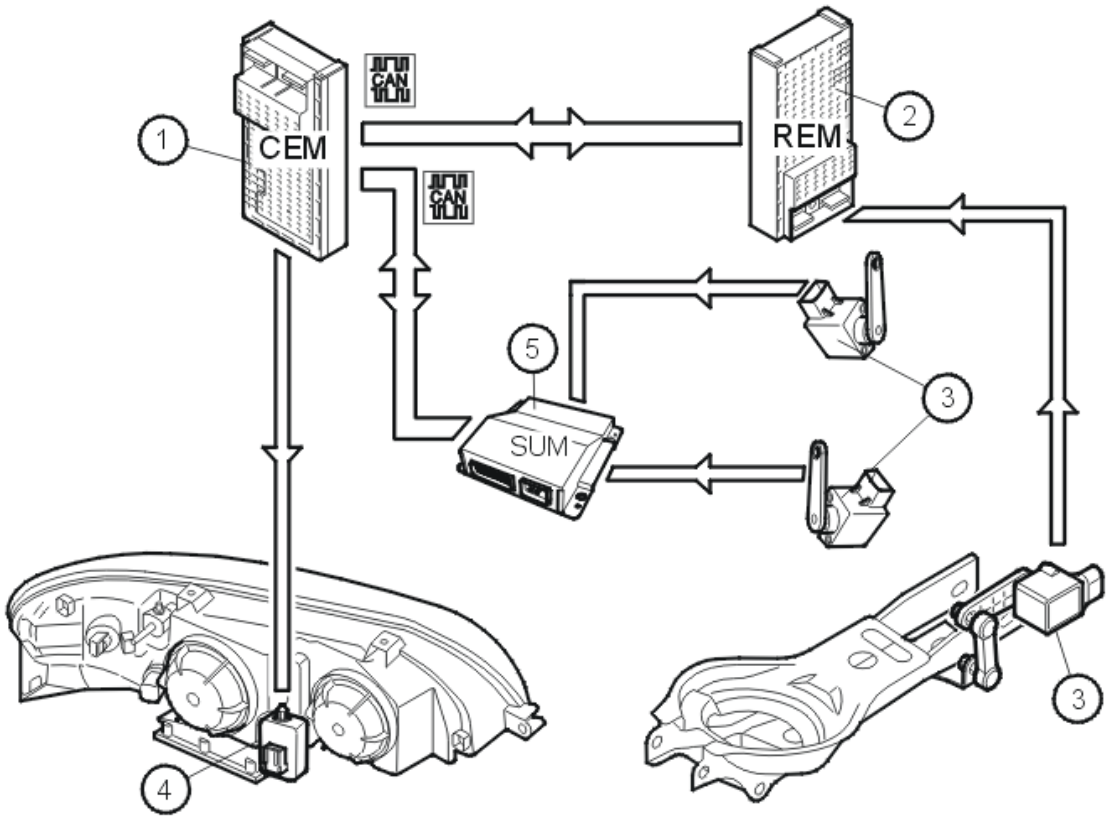

Fig. 299: Bi-Xenon Headlamps Control Input And Output Signals
Courtesy of VOLVO CARS CORPORATION

1.	Central electronic module (CEM)	4.	Motor, headlamp range adjustment
2.	Rear electronic module (REM)	5.	Suspension module (SUM) (vehicles with Four-C (Continuously Controlled Chassis Concept) only)
3.	Position sensor		

An electric motor is controlled by the central electronic module (CEM) via a relay (ordinary high beam relay).

The motor drives a gear wheel which moves the reflector along its guides.

A sensor which detects the position of the reflector is connected to the motor.

- The electronics in the motor interprets the sensor information and generates a signal
- The signal is reconnected to the central electronic module (CEM).

If the reflectors are in the wrong position during high beam the reflectors are forced into a safety position;

- the warning lamp (orange) lights in the driver information module (DIM)
- an error message is also shown in the display in the driver information module (DIM).

If the high beam is activated with the light switch in 0 position, the high beam is only activated as long as the high beam lever is activated for a high beam flash. The headlamp switch must be in the "on" position in order for the high beam lamps to remain active.

GDL BULBS (2005-2012)

DESIGN

BI-XENON HEADLIGHT SYSTEM

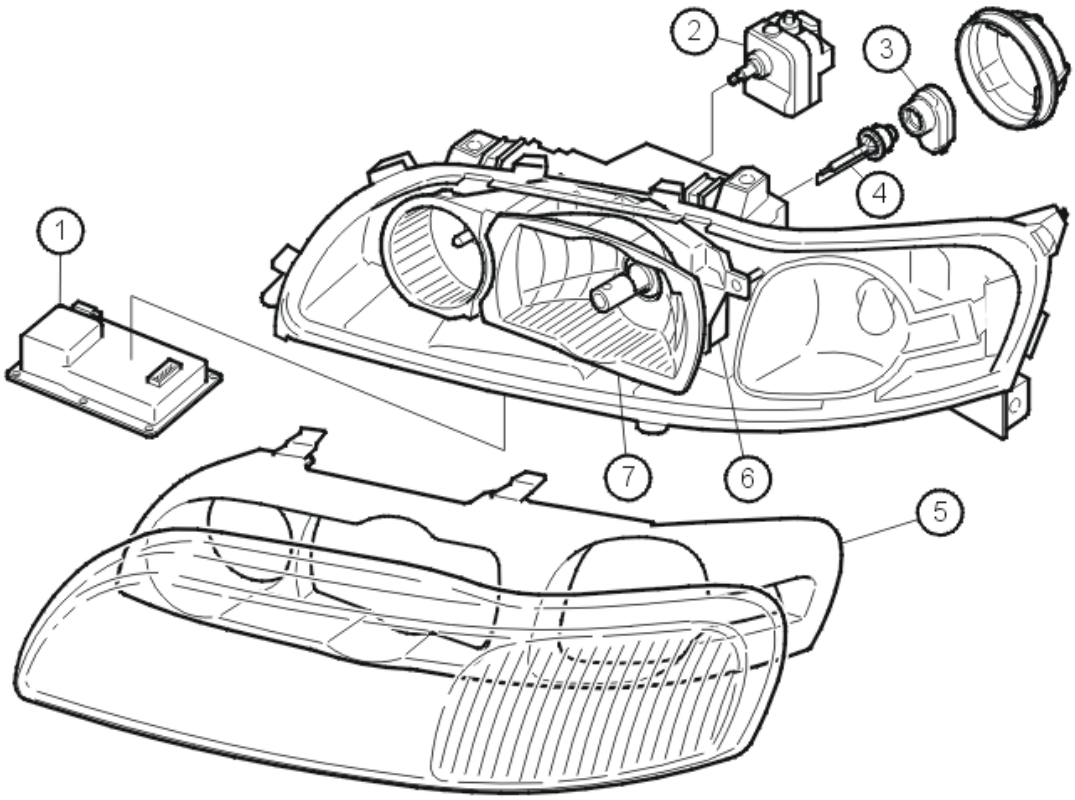

Fig. 300: Identifying Bi-Xenon Headlight System Assembly

Courtesy of VOLVO CARS CORPORATION

1.	Ballast	5.	Internal headlight edge
2.	Motor, headlight levelling	6.	Motor, high and low beam
3.	Lamp contact, high voltage	7.	Movable reflector
4.	Lamp		

Bi-Xenon, a headlight system with moveable reflector, is based on gas discharge technology. The system combines high and low beam into the same lamp.

Due to legal requirements (regarding low beam) for this type of lamp, the vehicle must be equipped with automatic headlight levelling.

Xenon vs. Halogen

Xenon:

- higher color temperature, which produces a whiter light
- better reflection of road signs and road markings
- has lower power consumption.

Good to know:

- Daylight has a color temperature of about 5000 °K. The closer to natural light, the less strain on the eyes. Standard H4 bulb: 3200 °K. Volvo's gas discharge bulb: about 4200 °K.
- With the Bi-Xenon system, high and low beam generates the same light color. The human eye thus has an easier time adjusting to switches between high and low beam.

LAMP

The light source consists of a discharge tube surrounded by a glass that filters out harmful UV radiation.

- The discharge tube is filled with a blend of chemical compounds, including the inert gas Xenon.
- An electric arch is created through an electrical discharge between two tungsten electrodes.
- Because the lamp does not have a filament, it is less sensitive to bumps and vibrations.
- Bulb designation: (special for reflector system).
- Power consumption: 35 W.

CAUTION: The bulb contains mercury (less than 0.5 mg) and when discarded must be treated as hazardous waste. Hazardous waste must be handled according to the relevant statutory regulations.

BALLAST

An electronic ballast is connected to each headlight. The ballast serves as a voltage regulator and generates

alternating current (AC).

Primary tasks:

1. Light the bulb.
2. Regulate light during operation.

A initial voltage of about 24, 000 V for a very brief period (less than 1 ms) is required to light the bulb.

The ballast transforms the vehicle's 12 V (DC) to 1000 V (AC).

The high voltage contact amplifies the voltage an addition 25 times.

Once the bulb has been lit, voltage is regulated down to about 100 V, which is required to keep the bulb lit.

Power consumption: 10 W.

FUNCTION

BI-XENON HEADLIGHTS

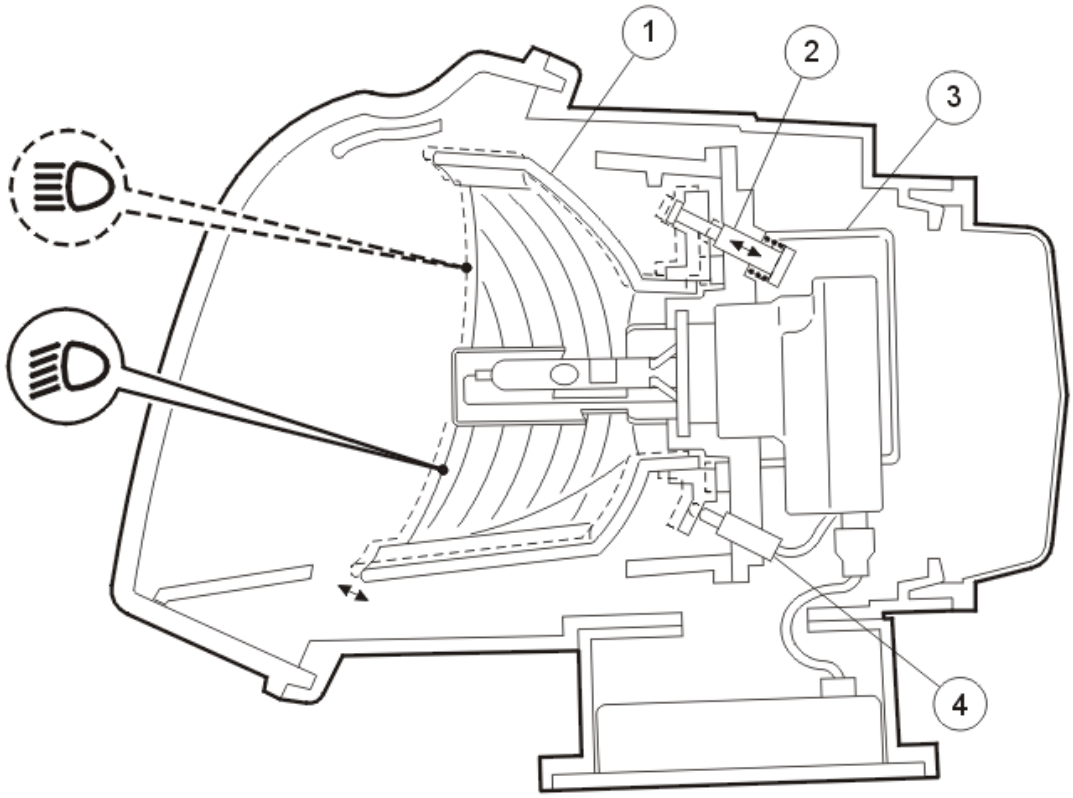

Fig. 301: Identifying Bi-Xenon Headlight Assembly
Courtesy of VOLVO CARS CORPORATION

1.	Movable reflector	3.	Motor, high and low beam
2.	Reflector control	4.	Reflector position sensor

LIGHTING THE LAMP

There is normally a 3 second delay between activation with the light switch or ignition on and the lamp coming on.

- As with normal headlights, the lamps remain off while the starter motor is cranking and come on once the engine is running.
- Each time voltage is supplied to the ballast, 3 one-second attempts are made to light the lamp.

COMBINED HIGH AND LOW BEAM

Reflector, left headlight

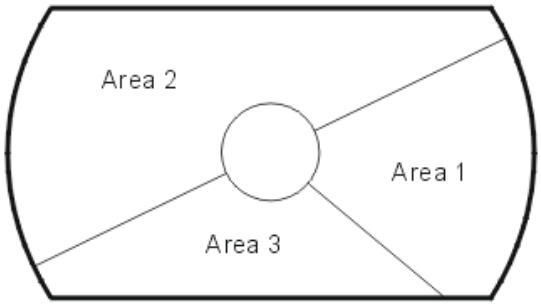

Fig. 302: Identifying Segments Of Moveable Reflector
Courtesy of VOLVO CARS CORPORATION

The illustration is an outline diagram showing the various segments of the moveable reflector.

The reflector has a complex shape in which different segments are used depending on whether high beam or low beam is in use.

The reflector is moveable suspended and is moved between two fixed positions.

- The reflector is moved 2 mm (0.08 in) axially in relationship to the lamp.
- The direction of the movements also causes the reflector to shift slightly vertically.

The lamp remains in a fixed position.

The headlight lens is clear.

AUTOMATIC LEVEL CONTROL

Sensor

The following applies to cars without Four-C (Continuously Controlled Chassis Concept)

An inductive position sensor reads the angle between the body and the left rear control arm. The angle is a indication of how much the vehicle is leaning (chassis height) and depends on weight distribution.

- The sensor is mounted slightly differently for FWD and AWD.
- The rear electronic module (REM) reads off an analog signal (0.5 - 4.5 V) from the position sensor and converts it to an angle value (±35°), which is sent to the central electronic module (CEM).
- A fully loaded vehicle generates a signal of 0.5 V, which corresponds to negative 35°.
- The central electronic module (CEM) regulates the headlight levelling motors (PWM signal) to adjust the headlights vertically.

The following applies to vehicles with Four-C

Two sensors read the angle between the body and the left and right rear control arm. The angle is a indication of how much the vehicle is leaning (chassis height) and depends on weight distribution.

The sensors are mounted slightly differently for FWD and AWD.

The suspension module (SUM) reads off the signals from the sensors and converts them to an angle value. The value is sent to the central electronic module (CEM) via the CAN network. The central electronic module (CEM) uses the information to regulate the headlight levelling motors.

Level control

Regulation at speeds *below 4 km/h (2.5 mph)*

When the ignition is switched on, the position sensor is read and the headlight levelling motors adjust the headlights.

Regulation at speeds *above 4 km/h (2.5 mph)*

The headlights are regulated if there are great angle changes while driving. Regulation is time-dependant so that the system does not react to short changes, such as unevenness in the road surface.

Calibration

The position sensor must be calibrated after work on the rear suspension. Perform calibration as described in the tab DIAGNOSTICS/VEHICLE COMMUNICATION, Rear electronic module (REM).

CAUTION: Calibration must be carried out after work such as removing/installing the sensors and replacing the sensors, rear axle, bushings, shock absorbers or springs.

In vehicles with Four C, calibration is carried out via the suspension module (SUM).

Beam adjustment is carried out conventionally (via adjustment screws by the headlight).

The light switch must be in the "on" position while calibrating.

SAFETY

- In the event of a short-circuit on the high voltage side, the power supply is cut off for less than 10 ms.
- If the high voltage circuit is broken (such as due to an open circuit, defective bulb or no bulb in the lamp socket), during each activation the system attempts to light the lamp for a period of 700 ms. During the period, there is high voltage across the ballast.
- Approximate component temperatures during operation: Ballast = 130 °C (266 °F), Bulb holder = 170 °C (338 °F), Bulb = 400 °C (752 °F).
- The glass body of the Bi-Xenon lamp is filled with various gases and metal vapors and is under pressure. Because the lamp is subjected to gas pressure, it could explode.

WARNING: **Follow the safety instructions and recommendations in VIDA carefully when working with high voltage.**

Use safety goggles when handling the bulb. Risk of explosion

The electrical system must be switched off before starting work.

Risk of burn injury. The components operate at very high temperatures.

HIGH VOLTAGE UNIT

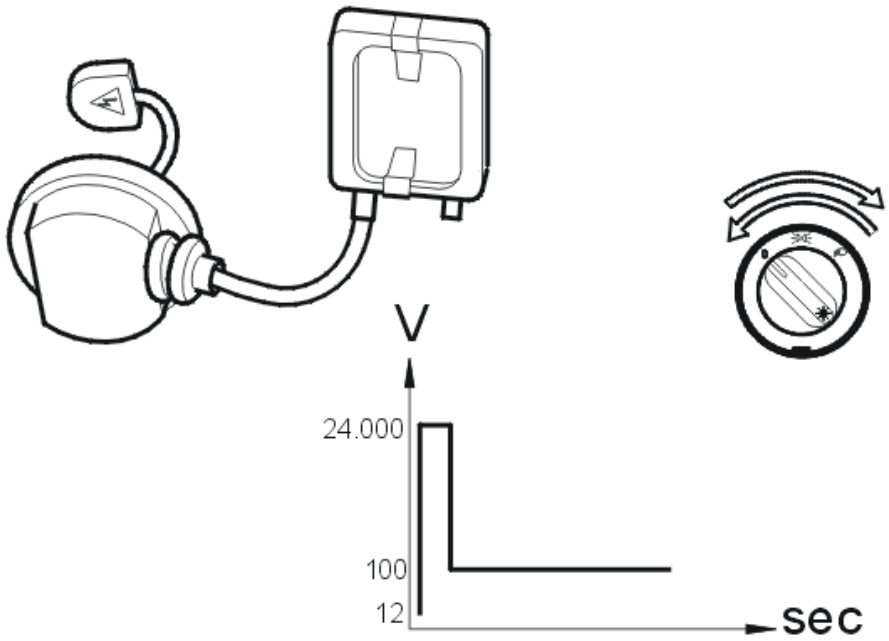

Fig. 303: Identifying High Voltage Unit & Graph
Courtesy of VOLVO CARS CORPORATION

- High voltage is required to light the Xenon lamp.
- A high voltage unit is connected to each Xenon lamp. This transforms 12-V voltage to the approximately 24, 000 V required to light the lamp. Once the lamp is on, voltage is lowered to the approximately 100 V required to keep the lamp lit.
- Each time voltage is supplied to the high voltage unit, an attempt is made to light the Xenon lamp. If this voltage does not exceed 9.5 V during a time period of 200 ms, the lamp does not light. If voltage is too low, such as after a voltage-consuming cold start, the lamp does not light just because the engine is running and the alternator begins charging. A new attempt must be made to start the lamp by turning the light switch to the "0" or parking light position and then back to the low beam position.

WARNING: **Because of the high voltage it is important to follow the instructions for working with the Xenon lamps and high voltage unit**

SYSTEM OVERVIEW

BI-XENON HEADLIGHTS

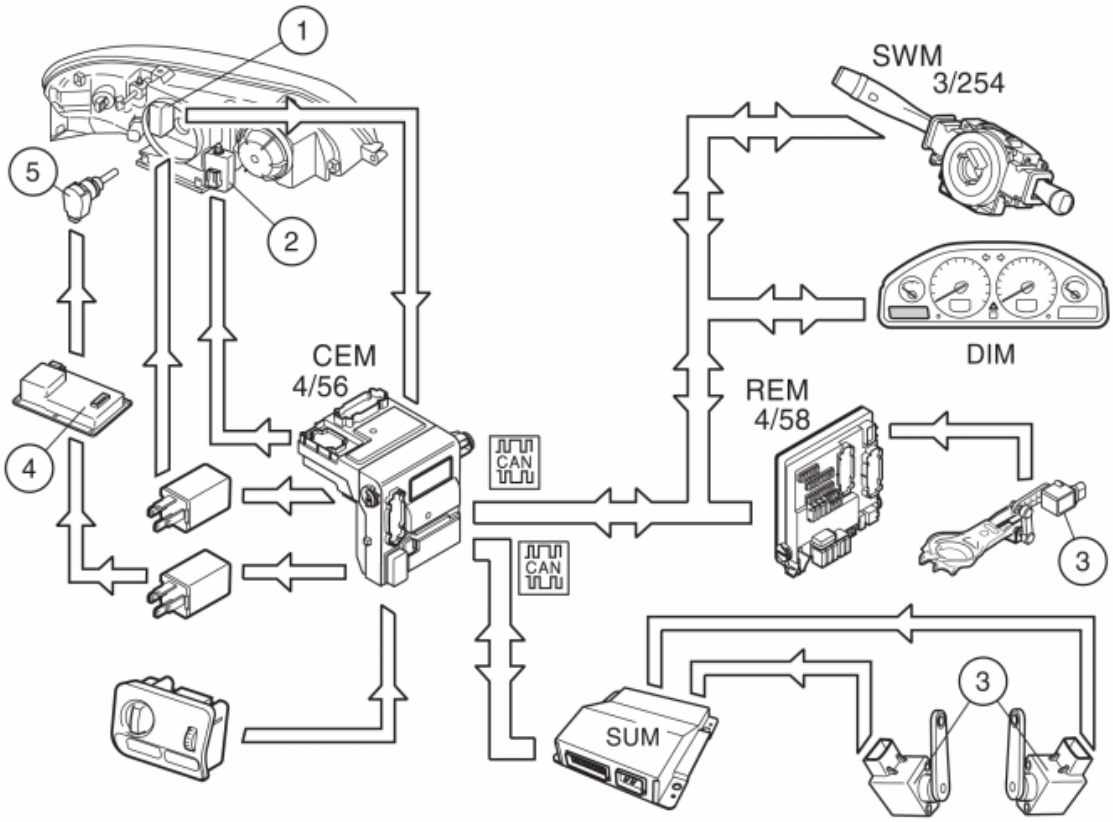

Fig. 304: Identifying Bi-Xenon Headlight Communication System & Components
Courtesy of VOLVO CARS CORPORATION

1.	Motor, high/low beam	Power supply via relay. Feedback PWM signal gives central electronic module (CEM) information on reflector position.
2.	Motor, headlight levelling	Regulated by central electronic module (CEM) via PWM signal.
3.	Position sensors	Inductive sensor that transmits an analogue signal (voltage) to the rear electronic module (REM) (not vehicles equipped with Four-C (Continuously Controlled Chassis Concept)). On vehicles with Four-C, the signal travels via the suspension module.
4.	Ballast	High voltage regulator for contact and lamp.
5.	Gas discharge lamp	Socket

CONTROL

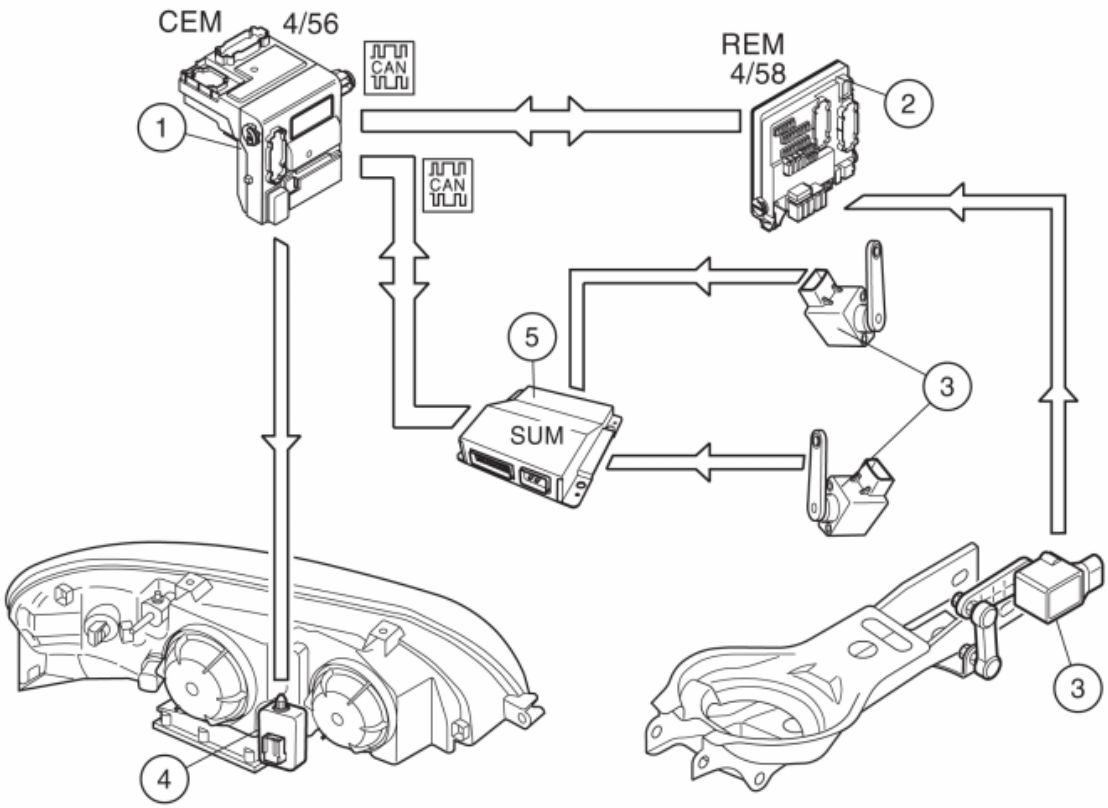

Fig. 305: Identifying Bi-Xenon Headlight Control System Diagram
Courtesy of VOLVO CARS CORPORATION

1.	Central electronic module (CEM)	4.	Motor, headlight levelling
2.	Rear electronic module (REM)	5.	Suspension module (SUM) (only vehicles with Four-C (Continuously Controlled Chassis Concept))
3.	Position sensors		

An electric motor is controlled by the central electronic module (CEM) via a relay (standard high beam relay).

The motor drives a gear that moves the reflector along its guides.

A sensor connected to the motor detects the position of the reflector.

- The motor electronics interpret the sensor information and generate a signal.
- The signal is fed back to the central electronic module (CEM).

If the reflectors are in the wrong position for high beam, the are forced down into a so-called safety position;

- the warning lamp (orange) in the driver information module (DIM) illuminates
- an error message appears in the driver information module (DIM) display.

If high beam is activated with the light switch in position 0, high beam is only activated while the stalk is in the high beam position, so-called high beam flash. In order for high beam to remain on, the light switch must be in the "On" position.

GENERATOR (GEN) (2003-2004)

DESIGN

GENERATOR (GEN) DESIGN

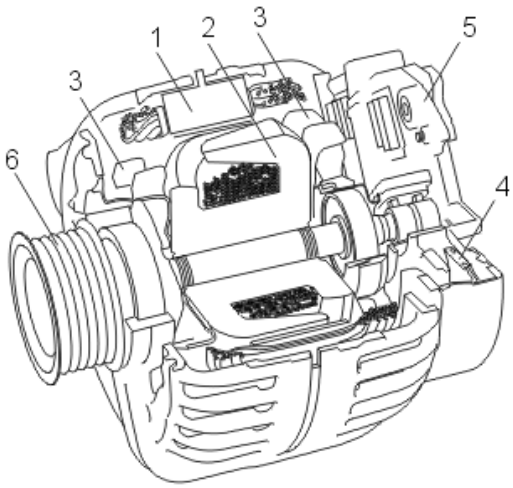

Fig. 306: Cutaway View of Generator
Courtesy of VOLVO CARS CORPORATION

The main components of the generator (GEN) consist of:

1. Stator
2. Rotor with slip rings
3. Integrated cooling fans
4. DC bridge
5. Charge regulator
6. Pulley.

Generator (GEN) terminals:

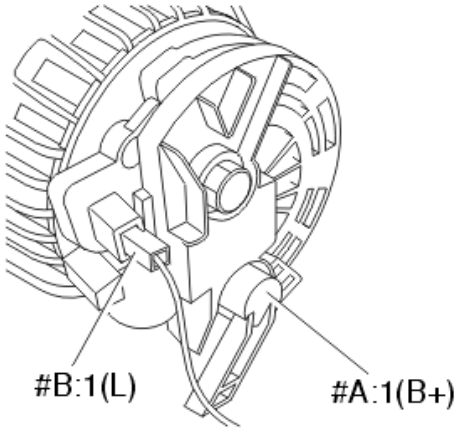

Fig. 307: Generator Terminals
Courtesy of VOLVO CARS CORPORATION

- #A:1 (B+)
- #B:1 (L)

Ground terminal via the cylinder block.

STATOR

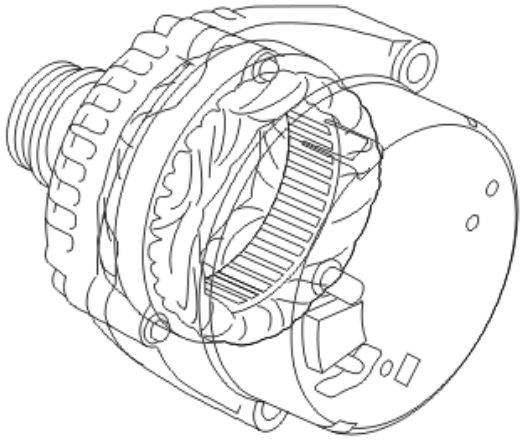

Fig. 308: Identifying Stator
Courtesy of VOLVO CARS CORPORATION

The stator is secured and consists of grooved plates which are insulated and pressed onto a secured plate unit. The stator winding coils are positioned in the grooves. They are delta connected at 120° and provide a three phase alternating current to the DC bridge.

ROTOR WITH SLIP RINGS

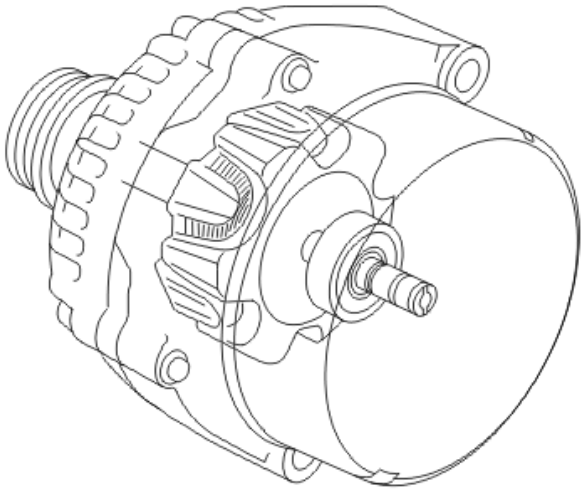

Fig. 309: Identifying Rotor With Slip Rings
Courtesy of VOLVO CARS CORPORATION

The rotor consists of two halves (claw-poles) which engage each other. The halves are pressed onto the rotor shaft. There are twelve claws on the rotor, i. e twelve poles. One half consists of six north poles and the other half six south poles. The excitation winding is secured on the rotor shaft between the claw-pole halves. The excitation winding (also known as rotor winding) consists of a circular coil winding which is connected to the slip rings and surrounded by the claw-poles. The charge regulator supplies a current to the rotor winding through the brushes which lie against the slip rings. The greater the current in the rotor the stronger the magnetic field in the rotor becomes, and thus a greater current is generated in the stator windings.

COOLING FANS

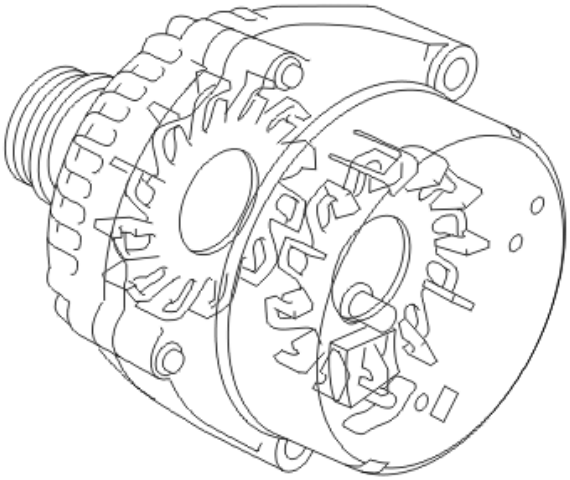

Fig. 310: Cooling Fans
Courtesy of VOLVO CARS CORPORATION

The heat distributed in the generator (GEN) is, in principle, proportional to the current generated and must be

directed away so that the insulation and diodes are not damaged. The generator (GEN) is therefore air cooled and equipped with two integrated cooling fans on the rotor shaft.

RECTIFIER

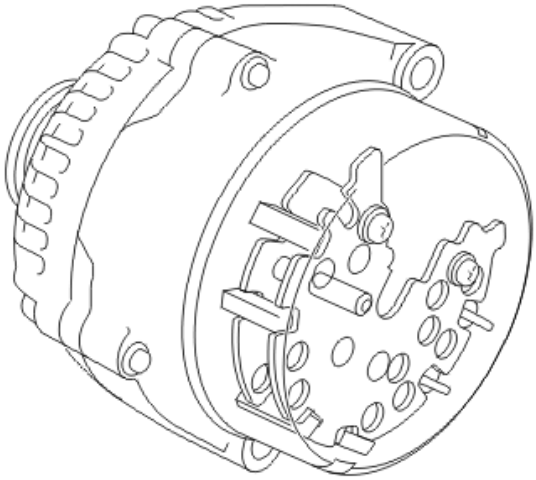

Fig. 311: Identifying Rectifier
Courtesy of VOLVO CARS CORPORATION

The current created in the generator (GEN) stator winding is AC and must be converted to DC before it can be used in the electrical system of the car. The conversion (rectifying) occurs using a DC bridge consisting of six diodes, two diodes per phase windings.

The stator windings generate three phases and are delta connected An exciter diode is connected to each of the three stator windings. The six rectifier diodes are bridge connected. The diodes are pressed into a diode holder.

CHARGE REGULATOR

General

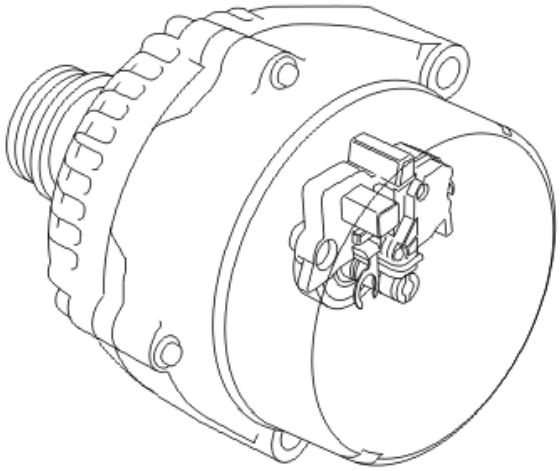

Fig. 312: Charge Regulator
Courtesy of VOLVO CARS CORPORATION

The charge regulator is mounted at the rear edge of the generator (GEN). The role of the charge regulator is to constantly maintain the generator current at engine speeds, depending on the load and speed of the generator.

If the voltage produced exceeds the preset desired value depending on the load, the charge regulator reduces or cuts the magnetic current to the rotor. This, in turn, lowers the magnetic field. The voltage from the stator windings decreases. When the voltage is below the desired value, the current increases through the rotor so that magnetization increases as does the generator voltage until the desired value is exceeded again. This process is repeated continuously.

Charge voltage

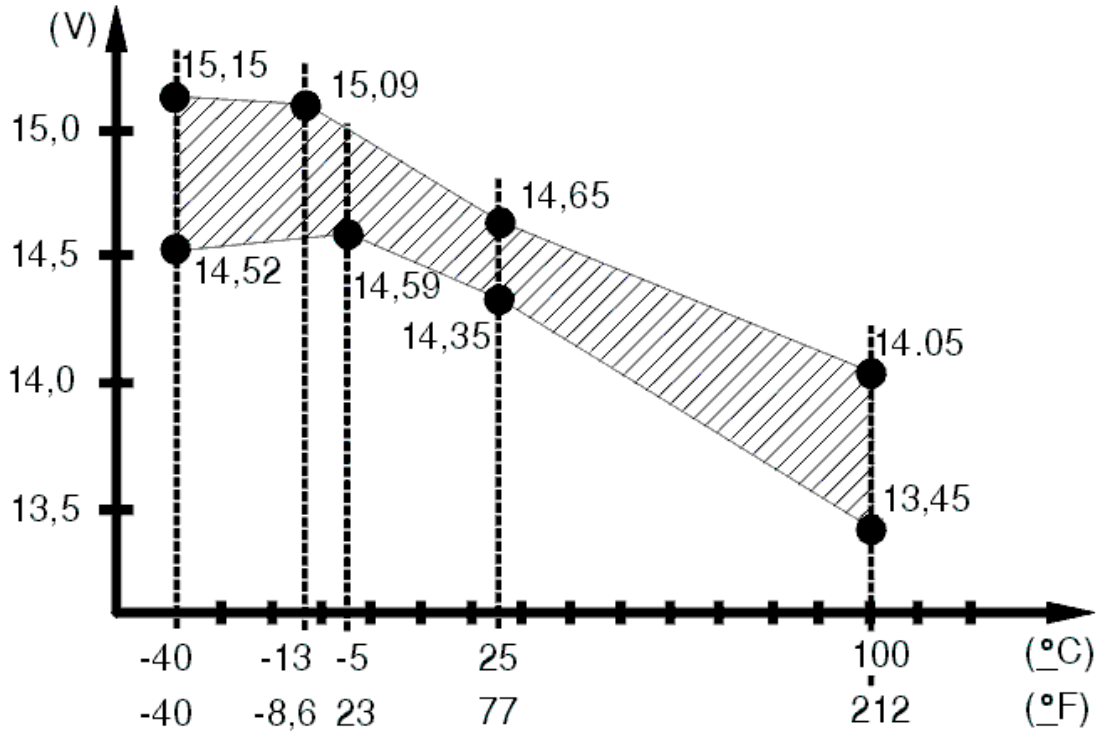

Fig. 313: Charge Regulator Graph
Courtesy of VOLVO CARS CORPORATION

At room temperature a fully charged battery cell produces 2.12 V. A 12 V battery has 6 cells and therefore produces 12.72 V when the battery is fully charged. The battery has an internal resistance which must be overcome for charging to occur. At room temperature 0.2 V per cell or 1.2 V for the entire battery is required. 13.92 V (12.72 V+1.2 V) is required to charge a battery at room temperature. In cold weather conditions the chemical reactions are slower and the inner resistance becomes higher. This requires a greater voltage when charging to overcome the internal resistance.

The charge regulator controls the output voltage, depending on the engine compartment temperature, following a predetermined curve, see the illustration.

The charge regulator calculates the engine compartment temperature using integrated semi-conductor electronics. In cold conditions the charge regulator allows a higher voltage. At higher temperatures the voltage is lowered. This ensures full battery charging regardless of the temperature. A battery must have a greater charge voltage at lower temperature for charging to occur.

L-signal for the central electronic module (CEM)

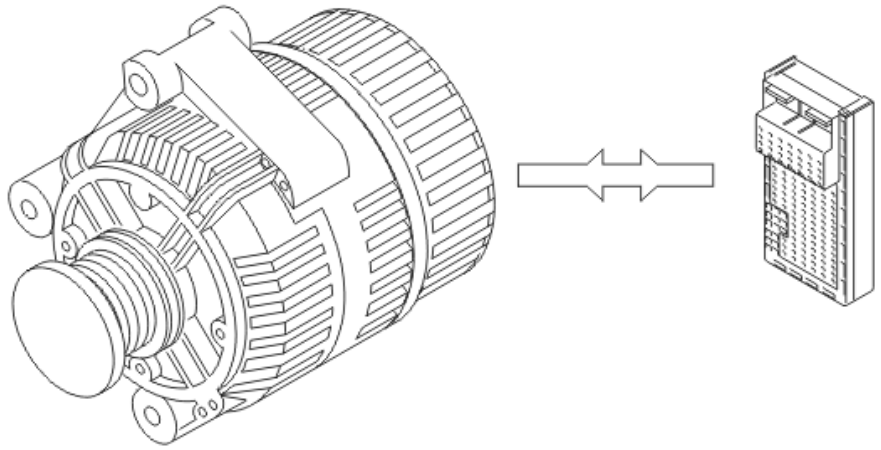

Fig. 314: Generator And CEM Input And Output Signals
Courtesy of VOLVO CARS CORPORATION

The charge regulator is connected to the central electronic module via an L-signal.

The L-signal is used to pre-magnetize the generator rotor and to transmit signals to the central electronic module telling the central electronic module that the generator is charging or not when the engine is running.

When the engine is starting, the generator (GEN) does not charge. When the engine speed (RPM) passes approximately 550 rpm a delay of approximately 3 seconds occurs. After the delay a successive increase of charging begins. When the generator (GEN) is at full load the increase ranges from 0-100% for a period of 6 seconds.

If the engine speed (RPM) passes approximately 1300 rpm during the delay or the successive increase breaks the increase, full charging is obtained immediately. This is to successively increase the load on the engine during the start-up phase and to ensure the engine starts.

If the L-signal is missing the generator will not start charging on start-up. Charge regulator can self magnetize the rotor and start charging in this way. This only happens at speeds in excess of approximately 2300 rpm. There is no successive charge engagement with self magnetization, the generator operates at full charge immediately.

DF-signal to the engine control module (ECM)

FREEWHEEL

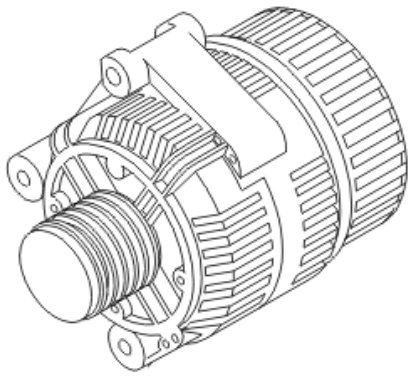

Fig. 315: Freewheel Generator
Courtesy of VOLVO CARS CORPORATION

Certain generators are equipped with a freewheel between the rotor shaft and the pulley. The cover over the pulley nut in the center of the pulley indicates whether a freewheel is installed. Using the freewheel, the generator rotor shaft can only rotate freely in one direction. This means that any jerking in the belt transmission is minimized.

FUNCTION

CHARGING

When the ignition key is turned to position II (and III) current goes from the central electronic module to connection L on the charge regulator. The regulator directs current to the excitation winding rotor and is then grounded via the regulator. When the current travels through the rotor a magnetic field is formed around the rotor. When the engine is started and the rotor begins to rotate, the magnetic field also rotates and then produces alternating current in the stator windings.

Alternating current is rectified when it passes the diodes and is then fed to the electrical system of the car. The voltage obtained from the stator winding also passes to the regulator via the rectifier and affects the control functions.

When the voltage exceeds the permitted value, the charge regulator reduces the current through the excitation winding. The strength of the magnetic field decreases as does the stator winding supplied alternating current.

The charge indicator lamp in the combined instrument panel is controlled by the driver information module via signals from the Controller area network (CAN).

SYSTEM OVERVIEW

GENERAL

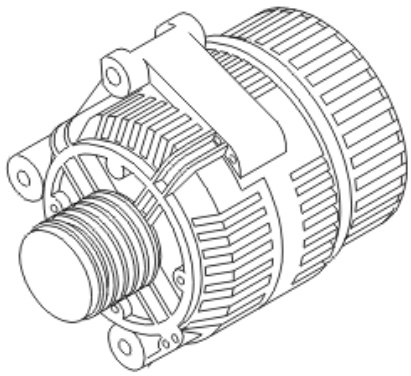

Fig. 316: Freewheel Generator
Courtesy of VOLVO CARS CORPORATION

The purpose of the generator (GEN) is to supply the power consumers with power and to ensure that the battery remains charged. The generator (GEN) is mounted on the front edge of the engine.

The power handling capacity of the generator (GEN) depends on the engine speed (RPM). When the engine is idling the generator (GEN) only supplies approximately half the maximum power handling capacity. When the engine is idling with many power consumers connected battery recharge is negatively affected i. e, the battery does not charge. Battery charging is less efficient in cold conditions than at room temperature. This means that when the engine is idling for a long time, with large power consumers connected the battery can drain.

If the generator fails to charge the power consuming components will take their supply exclusively from the battery. In the end this will drain the battery completely.

The generator (GEN) first generates AC current which is converted to DC current in the DC bridge. the generator (GEN) has a built-in charge regulator.

The auxiliaries belt transfers power from the crankshaft pulley to the auxiliaries such as the power steering pump, air conditioning (A/C) compressor and generator (GEN). The belt tension is tensioned using an automatic belt tensioner. The belt is a Poly-v-belt.

The generator (GEN) with charge regulator can be diagnosed through the central electronic module.

HVAC

Power transmission

HVAC

REFRIGERANT, DRAINING

WARNING: Follow the safety instructions for work on the air conditioning system. See CLIMATE UNITS - GENERAL SAFETY INFORMATION .

NOTE: First read the instructions covering slow and fast leaks. See AC-SYSTEM, OIL, REFILLING

NOTE: Always plug the pipes and connections when working on the climate control system.

NOTE: The recycling unit must have an oil separator. The oil separator must be of a type that allows the amount of run out oil to be measured.

NOTE: The ambient temperature must be above 20°C when draining the system.

NOTE: Always disconnect the battery ground cable when working with the climate control system. See BATTERY - DISCONNECTING AND CONNECTING

NOTE: Always use new O-rings lubricated with compressor oil.

When draining refrigerant, the recycling unit can be attached to the service valve for both the high pressure side (HP) (1) and the low pressure side (LP) (2) at the same time. This is the quickest method.

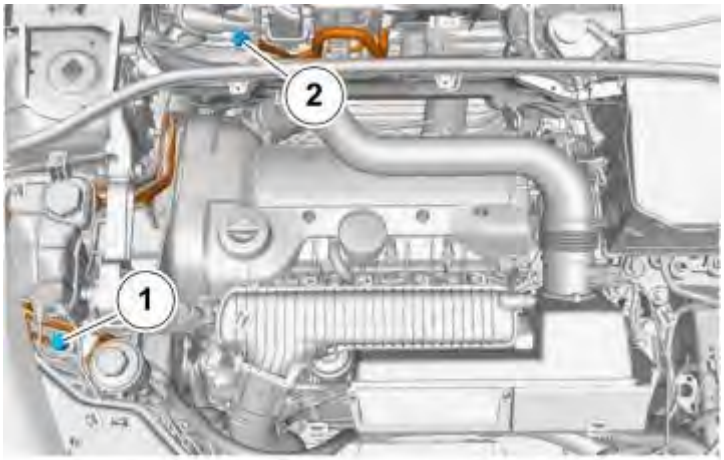

Fig. 1: Identifying Oil Check Points When Draining Refrigerant

Courtesy of VOLVO CARS CORPORATION

Check the amount of oil (if any) that has run out when draining the refrigerant.

BACK-UP LAMP SWITCH

Electrical system

BACK-UP LAMP SWITCH

BACK-UP LAMP SWITCH, REPLACING

NOTE: **As the illustrations in this service information are used for different model years and / or models, some variation may occur. However, the essential information in the illustrations is always correct.**

PREPARATORY WORK

REMOVING THE GEAR SELECTOR CABLES

Ignition off.

Remove the air cleaner (ACL) housing and the gear selector cables from the levers and the bracket on the gearbox. See **GEARBOX CABLES, REPLACING** .

NOTE: **Ensure that the mechanical cables do not crack or break.**

REMOVAL

REMOVING THE BRACKET FOR THE GEAR SELECTOR CABLES

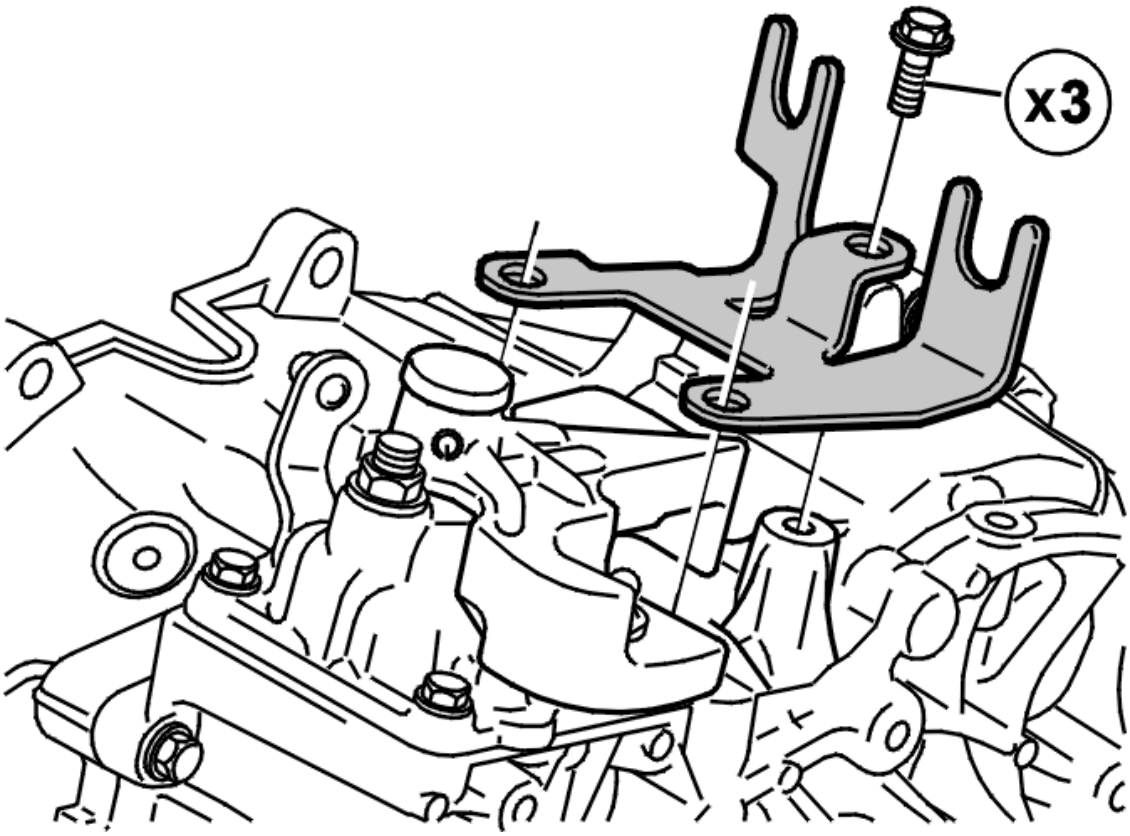

Fig. 1: Identifying Bracket And Bolt Locations
Courtesy of VOLVO CARS CORPORATION

Remove the bracket from the gearbox.

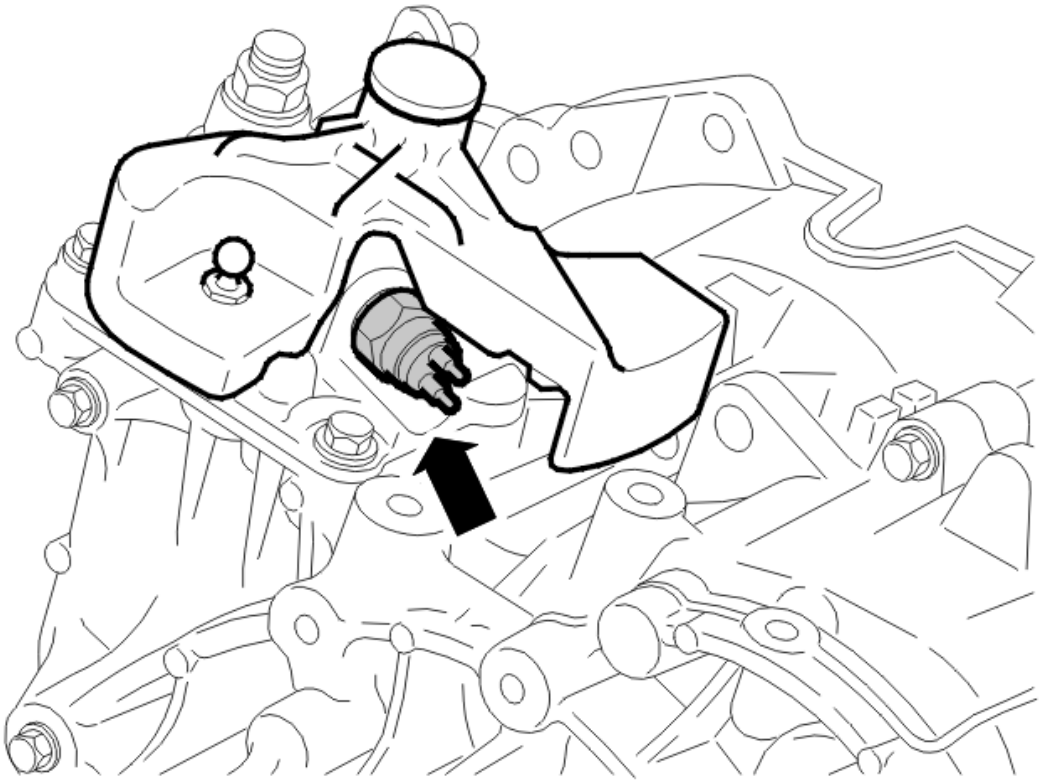

Fig. 2: Back-Up Lamp Switch
Courtesy of VOLVO CARS CORPORATION

Clean thoroughly around the connectors.

Remove the connector and the back-up lamp switch from the gearbox.

INSTALLATION

NOTE: For tightening torques, see TIGHTENING TORQUE .

INSTALLING BACK-UP LAMP SWITCH

Install the back-up lamp switch. Tighten. See **SUMMARY OF TIGHTENING TORQUES FOR SPECIFIC COMPONENTS** .

INSTALLING THE LEADS

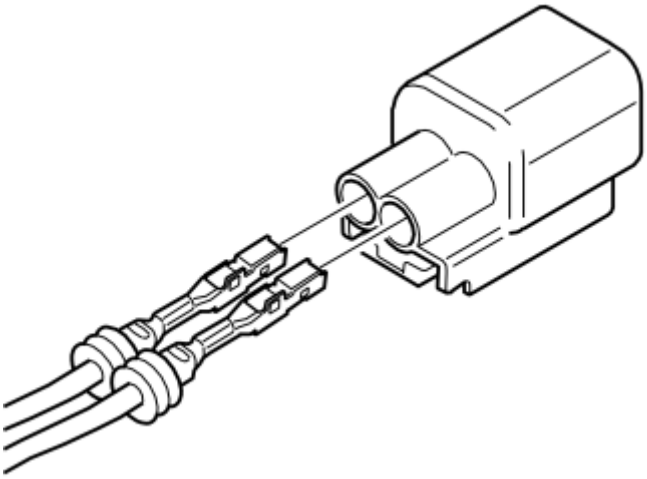

Fig. 3: Back-Up Lamp Switch Leads
Courtesy of VOLVO CARS CORPORATION

Install the cables in the connector with the opening for the primary lock facing up as shown in the illustration. Press in the secondary lock.

JOINING CABLES

Splice the new connector with cables to the existing wiring. See: **JOINING THE CABLES**

INSTALLING CONNECTORS

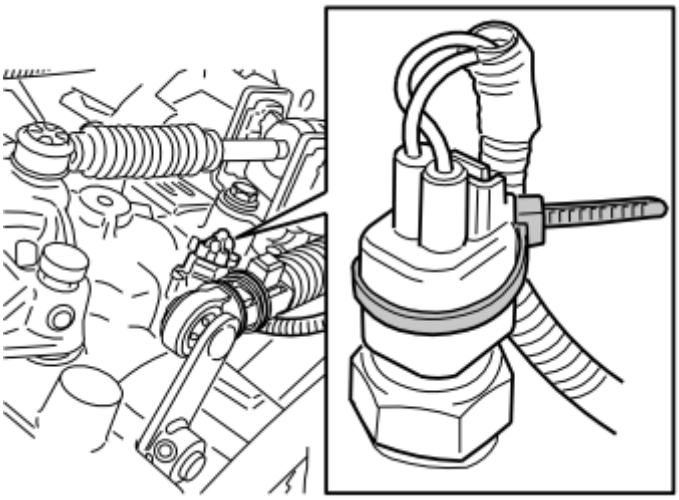

Fig. 4: Identifying Tie-Strap Installed
Courtesy of VOLVO CARS CORPORATION

Install the connector with cables on the back-up lamp switch.

Install a tie-strap as shown in the illustration so that the cable harness is not in contact with the gear selector cable.

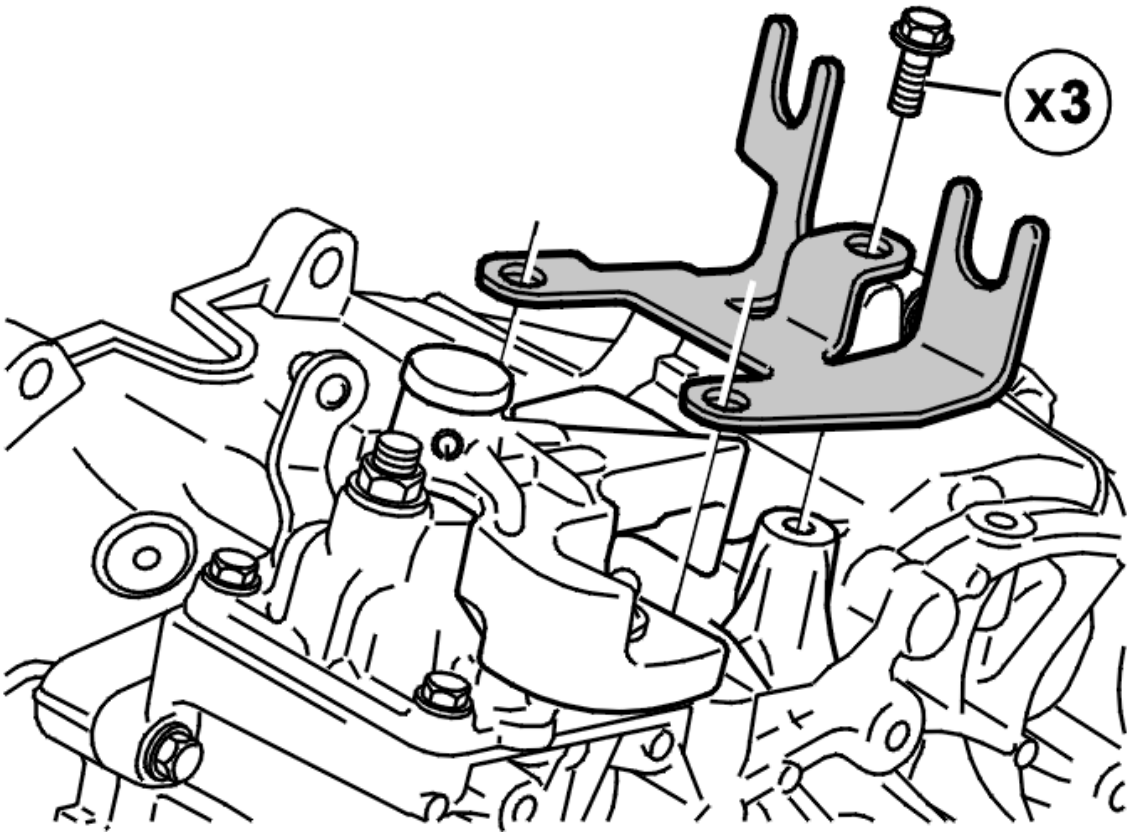

Fig. 5: Identifying Bracket And Bolt Locations
Courtesy of VOLVO CARS CORPORATION

Install the bracket on the gearbox using the 3 M8 screws. Tighten.

FINISHING

INSTALLING THE GEAR SELECTOR CABLES

Install the air cleaner (ACL) housing and the gear selector cables. See **GEARBOX CABLES, REPLACING** .

BRAKE LAMP SWITCH

Power transmission

BRAKE LAMP SWITCH

REMOVING THE BRAKE LAMP SWITCH

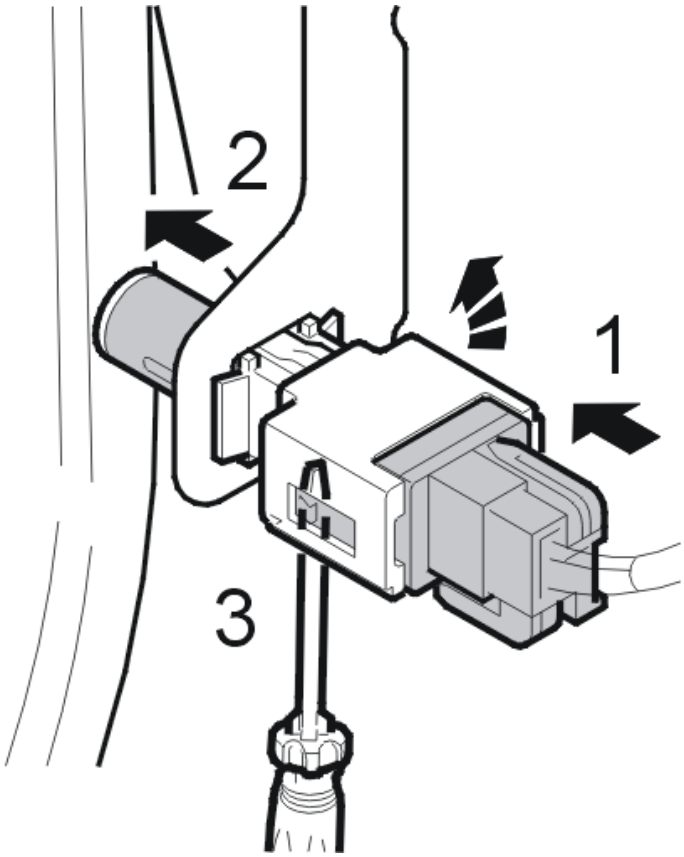

Fig. 1: Identifying Brake Lamp Switch Removal
Courtesy of VOLVO CARS CORPORATION

Remove the connector.

Press the brake lamp switch housing (1) forward towards the pedal box bracket. This is to release the white locking sleeve (2).

Pull the white locking sleeve towards the tip of the brake lamp switch as far as it will go.

Press in the brake lamp switch lock catch (3) from below with a small screwdriver. Bend the switch up, pull out.

ELECTRICAL

Cables And Fuses - Symptom Related Diagnostic Procedures

CHECK THE START SYSTEM (2005-12)

CHECK THE START SYSTEM

If the vehicle does not always start first time, at the same time that a message appears in the Driver information module (DIM), the problem can be rectified with new software in the Central electronic module (CEM).

Action

- Upgrade the software in the central electronic module (CEM).

CHECKING ACCESSORY USB UNIT (AUU) (2007-12)

CHECKING ACCESSORY USB UNIT (AUU)

INFORMATION

The fault may be caused by:

- Malfunction in external sound source.
- Faulty software.
- Loose connections in leads.
- Internal fault in the Accessory USB unit (AUU).

Remedy in the following order.

Check function of the external sound source.

Load the Accessory USB Unit (AUU) with new software.

- **Continue**

  Refer to **VERIFICATION**

VERIFICATION

Corrective actions

- Ignition switch position II.
- Check that the external sound source is connected correctly to the control module.
- Check function of the Accessory USB Unit (AUU).

Is the function OK?

- **YES**

  OKAY: Troubleshooting has been completed.

- **NO**

  Refer to **INFORMATION**

INFORMATION

Remedy in the following order.

- Check the connectors and cables. Check especially the USB-connection for loose connection.

Other information:

- see **SIGNAL SPECIFICATION**
- see **LOCATION OF COMPONENTS**
- For left-hand drive vehicles, see **UNIVERSAL BUS MODULE (USB)**

- **Continue**

  Refer to **VERIFICATION**

VERIFICATION

Corrective actions

- Ignition switch position II.
- Check that the external sound source is connected correctly to the control module.
- Check function of the Accessory USB Unit (AUU).

Is the function OK?

- **YES**

  OKAY: Troubleshooting has been completed.

- **NO**

  Refer to **INFORMATION**

INFORMATION

Replace Accessory USB Unit (AUU).

Other information:

- see **SIGNAL SPECIFICATION**
- see **LOCATION OF COMPONENTS**
- For left-hand drive vehicles, see **UNIVERSAL BUS MODULE (USB)**

- **Continue**

  Refer to **VERIFICATION**

VERIFICATION

Corrective actions

- Ignition switch position II.
- Check that the external sound source is connected correctly to the control module.
- Check function of the Accessory USB Unit (AUU).

Is the function OK?

- **YES**

  OKAY: Troubleshooting has been completed.

- **NO**

  Refer to **INFORMATION**

INFORMATION

FAULT-TRACING INFORMATION

The fault should have been detected and remedied. As this is not the case fault-tracing has failed.

Exit fault-tracing for this diagnostic trouble code (DTC) or make another attempt.

CHECKING AIR LEAKAGE, COMBUSTION PREHEATER MODULE (CPM) (2003-12)

CHECKING AIR LEAKAGE, COMBUSTION PREHEATER MODULE (CPM)

FAULT-TRACING INFORMATION

NOTE: This symptom troubleshooting only applies to vehicles with Combustion

preheater module (CPM).

If a customer has problems with the fuel heater not working optimally, it may be due to air leakage.

Probable symptoms in case of air leakage:

- Failed start attempt of fuel heater.
- Smoke development from the fuel heater at standstill or after driving a short distance.

Use mechanical troubleshooting to search for air leakage, see link below.

Other

- see **FUEL-POWERED PREHEATER, CHECKING**

CHECKING ALARM CAUSE (2003-04)

READING OFF THE ALARM CAUSE

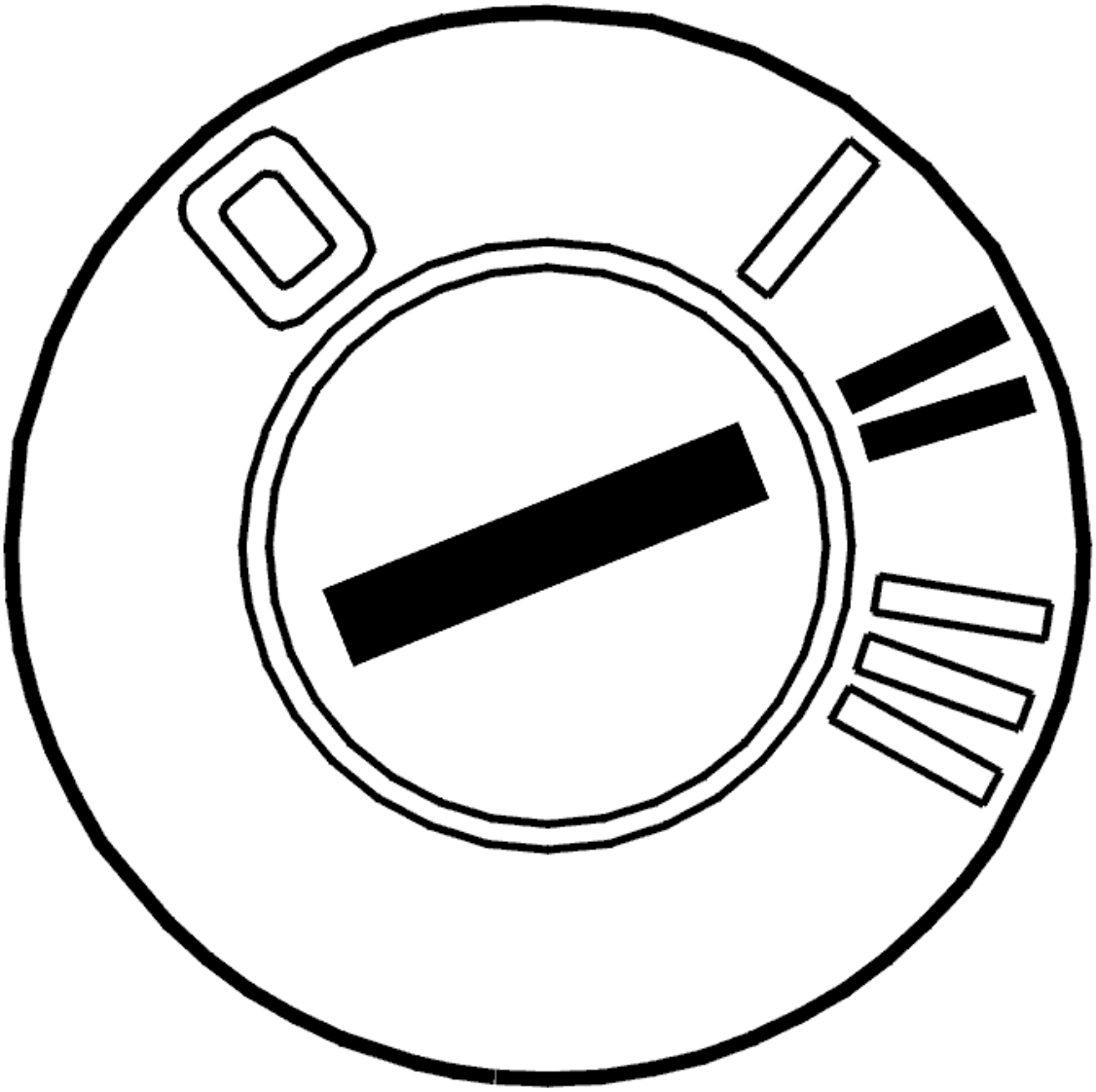

Fig. 1: Identifying Ignition ON
Courtesy of VOLVO CARS CORPORATION

- Ignition on.

  Read off the cause of the alarm by clicking on the VCT2000 symbol.

  The alarm can be triggered by up to 12 different components in the vehicle, depending on the equipment level. Each time the alarm is triggered, information is saved which makes it easier to determine the reason it was triggered. Click on the VCT2000 symbol to find out which components triggered the alarm. Other information retained is the time, temperature and power supply when the alarm was triggered.

  NOTE: **The alarm occurrences are not presented in chronological order. Read off the Actual time and Time parameters to determine the last time the alarm deployed. The parameter in Actual time gives a reference value which displays how long the internal clock in the central electronic module**

(CEM) has calculated at the time of the read off. The value of Actual time minus the value in Time gives the number of days since the last alarm. The alarm cause is erased when the diagnostic trouble codes (DTCs) are erased in the central electronic module (CEM).

Other information

- For XC90 with mass movement sensor (MMS) and sunroof, see **INFORMATION**
- see **DESCRIPTION OF READING OFF ALARM CAUSES**

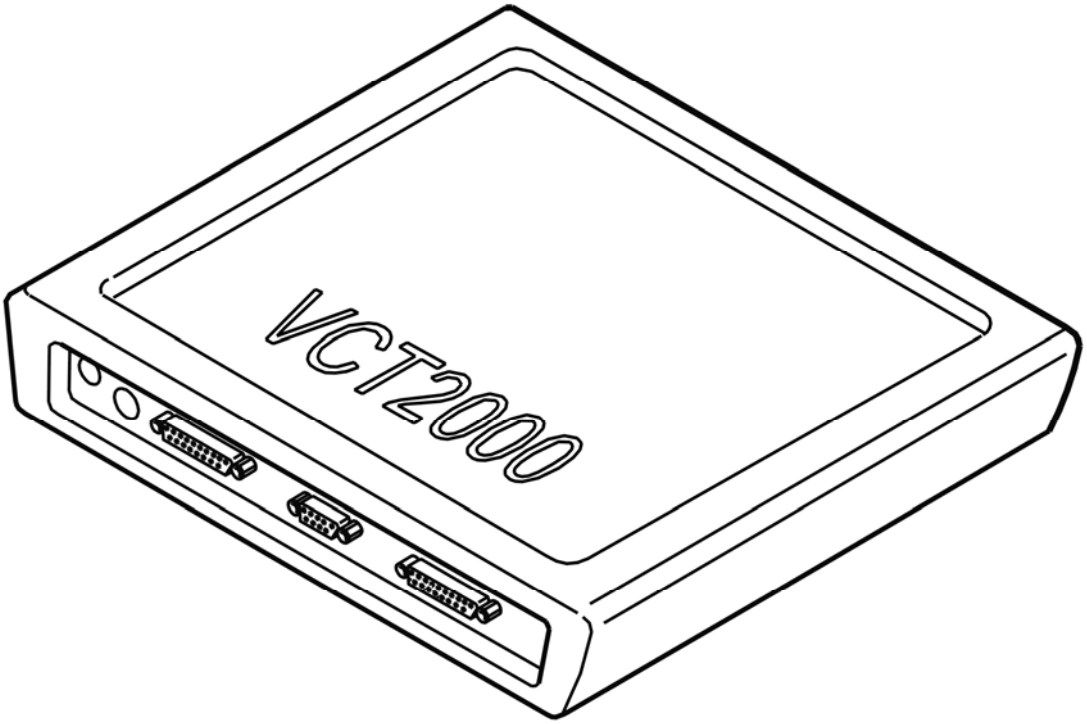

Fig. 2: Identifying VCT2000 Diagnostic Tool Symbol In VIDA
Courtesy of VOLVO CARS CORPORATION

- **Continue**

OKAY: Troubleshooting has been completed.

NOT OKAY:

- Refer to **COMMUNICATION FAULT**

COMMUNICATION FAULT

Communication has been interrupted for one of the following reasons:

- The ignition is switched off
- VCT2000 disconnected from the data link connector (DLC)
- VCT2000 disconnected from the VIDA cart
- Communication problems in VIDA application or in car.
- No voltage in the data link connector (DLC).

Check therefore:

- That the control module power supply and ground terminal are fault-free.
- That the fuse for the data link connector (DLC) is intact.
- that the ignition is on
- that the battery voltage (system voltage) is normal (approximately 12 V).

  If necessary a battery charger can be connected during the test.

  For information about charge currents and the battery, see **BATTERY, CHARGING**

- that VCT2000 is correctly connected to the VIDA cart and the data link connector (DLC)
- that VCT2000 and the wiring is fault-free.

Other information

Try to establish communication again or exit reading off diagnostic trouble codes (DTCs). Depending on the communication fault, select one of the following options.

1. Try again. Refer to **READING OFF THE ALARM CAUSE**.
2. Fault-trace more comprehensively for the communication problem that has occurred. Refer to **CHECKING COMMUNICATION ERRORS**.
3. Exit fault-tracing/Read off from the next system. Troubleshooting has been completed.

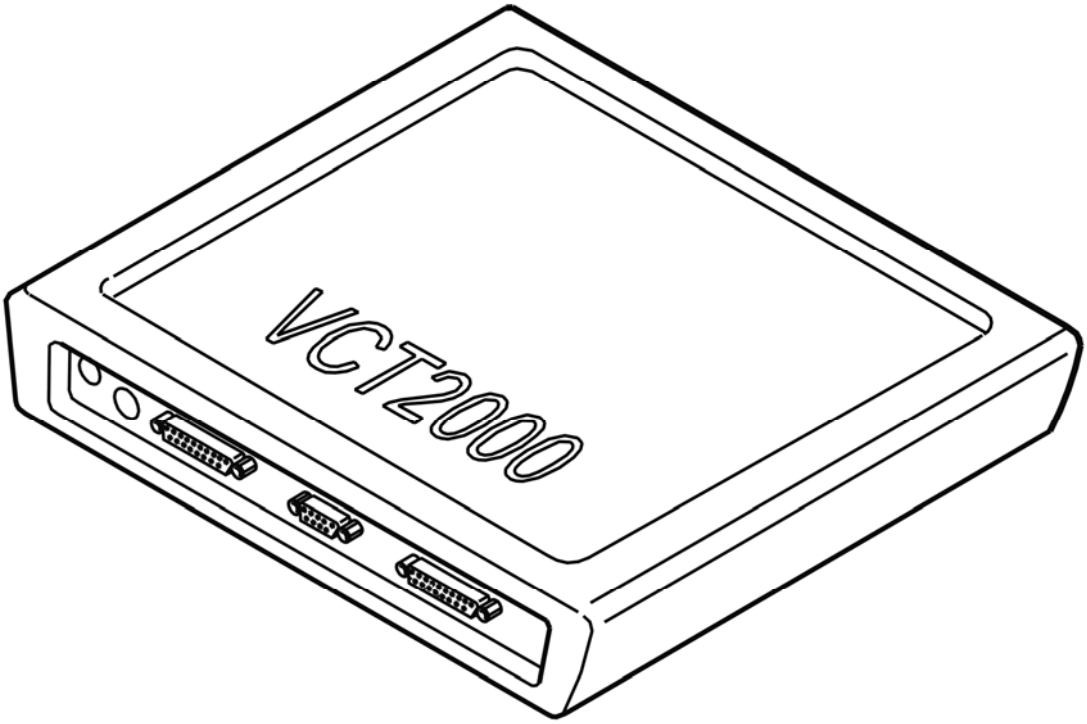

Fig. 3: Identifying VCT2000 Diagnostic Tool Symbol In VIDA
Courtesy of VOLVO CARS CORPORATION

CHECKING COMMUNICATION ERRORS

Refer to **CHECKING COMMUNICATION ERRORS**.

CHECKING COMMUNICATION ERRORS

HINT: Test the communication with another corresponding vehicle to decide if the malfunction is in the vehicle or in VIDA/VCT/cable harness. If the communication works on another vehicle, the malfunction is in the vehicle.

Different speed on the CAN-communication can lead to problems

Volvo's vehicles have different speed of communication on the high-speed part of the CAN-network (HS-CAN), depending on model year.

- Model year -2004 communicates with 250 kbit/s.
- Model year 2005- communicates with 500 kbit/s.

Due to this, it is very important to specify correct vehicle profile before any communication is started with the vehicle's HS-CAN. This is normally done by pressing on "Retrieve VIN" or by manually specifying vehicle parameters under "Vehicle profile".

If the wrong model year has been selected, it may lead to blocking of the CAN-net, diagnostic trouble codes being stored in several control modules or missing response from control modules at continued communication. The following control modules may be affected by this problem:

- Brake control module (BCM)/(ABS)
- Engine control module (ECM)
- Electronic Throttle Module (ETM)
- Suspension Module (SUM)
- Central electronic module (CEM)
- Transmission control module (TCM)
- Steering wheel angle sensor module (SAS)
- Steering Wheel Module (SWM)
- Electrical Power Steering Module (EPS)

If this happens, take the following action:

- Turn off the ignition and remove the ignition key. Insert the key again in position II.
- If the above does not work, remove the battery cable and connect it again after a minute to reset the control modules.
- Select the correct vehicle profile in VIDA and erase the diagnostic trouble codes. Check that the symptoms have disappeared.

Diagnostic outlet

- Check the voltage feed to diagnostic outlet #16. The voltage shall match battery voltage.
- Check the cable for power ground and signal ground to diagnostic outlet #4 and #5.

HINT: When VCT2000 is connected to the diagnostic outlet (is supplied with voltage), the indicator diode shall be activated with a green light. Then the indicator diode flashes quickly when communication takes place with a control module. In case of certain internal malfunctions on VCT2000 the indicator diode is activated with a red light.

Communication cables

- Check the communication cable (k-line) between diagnostic outlet #7 and central electronic module (CEM) #D6 and other connected control modules for open circuit, short-circuit to ground and short-circuit to voltage.

CAUTION: In case of malfunction on this communication cable, communication cannot be established on either the low or high-speed network. First when communication takes place on this cable, the low and high-speed cables between the diagnostic outlet and central electronic module (CEM) are connected to the rest of the network in the vehicle. This is controlled via a relay in the central electronic module (CEM).

This relay is only found on vehicles of model year -2004.

- For communication problems with control units on **the high-speed network** , check communication cables between diagnostic outlet #6/ #14 and central electronic module (CEM) #B7/#B8 for open circuit, short-circuit to ground and short-circuit to voltage according to references above.
- For communication problems with control units on **the low-speed network** , check communication cables between diagnostic outlet #3/#11 and central electronic module (CEM) #B19/#B20 for open circuit, short-circuit to ground and short-circuit to voltage according to references above.
- Also check the communication cables for the low and high-speed net between the central electronic module (CEM) and the other connected control modules according to troubleshooting above.

Control modules

- Check that the control module's voltage feed and ground connection are trouble-free.

CAUTION: If none of the above checks help, try reading out diagnostic trouble codes in the central electronic module (CEM). Done via VIDA vehicle communication. A prerequisite for being able to communicate with the control modules in the car is that the central electronic module (CEM) is active and can be communicated with. If communication is not possible with the central electronic module (CEM), check the voltage feed and ground for the central electronic module (CEM).

VCT2000 and cable harness

- Connect VCT2000 to the vehicle so that it is supplied with voltage. Test VCT2000 by selecting the system's self-test and VCT Test in the VIDA main menu. If any malfunction is found according to the test, first replace the cable harness then the VCT2000, if the test still indicates a malfunction.
- If no malfunctions were found after troubleshooting according to above, try with a new cable harness and/or new VCT2000.

VIDA

- If no malfunctions were found after troubleshooting according to above, try performing a complete system reset of VIDA (Volvo scan tool).

Other information

- see **CONTENTS**

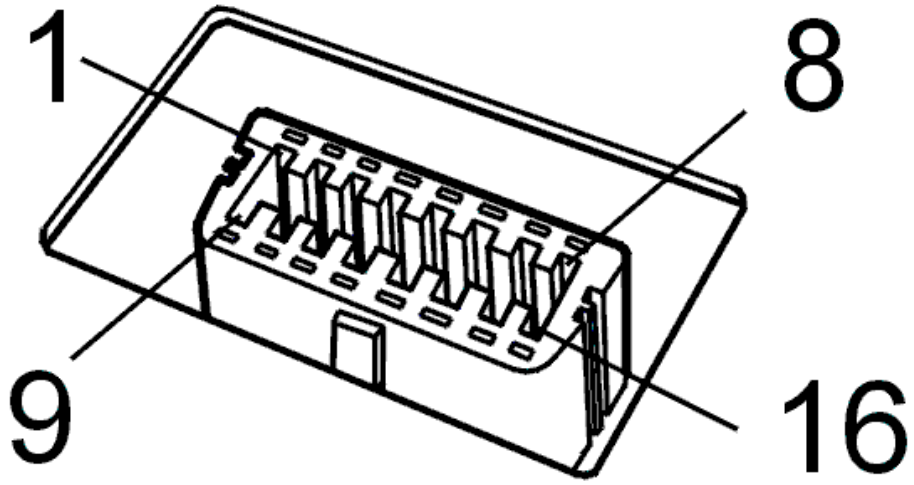

Fig. 4: Identifying Data Link Connector
Courtesy of VOLVO CARS CORPORATION

- **Continue**

  Refer to **INFORMATION**

INFORMATION

INFORMATION ABOUT FALSE ALARM, XC90 WITH MASS MOVEMENT SENSOR (MMS) AND SUN ROOF

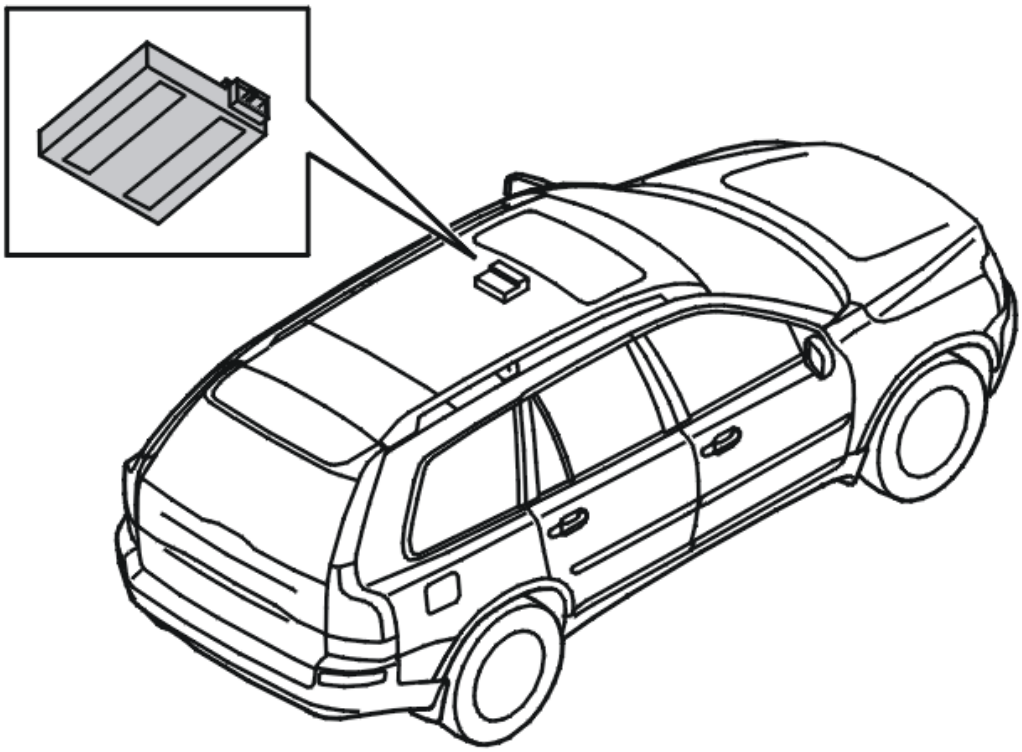

Fig. 5: Locating Mass Movement Sensor
Courtesy of VOLVO CARS CORPORATION

On certain vehicles the alarm can be triggered by the mass movement sensor (MMS 2) in the event of heavy rain. This is due to the position of the senor in relation to the sun roof. To remedy this problem a repair method and repair kit have been introduced. If mass movement sensor (MMS 2) has triggered the alarm on several occasions and no other fault has been found, the position of the mass movement sensor (MMS 2) should be altered. See the Service bulletin for reducing false alarms.

DESCRIPTION OF READING OFF ALARM CAUSES

THE DATA IS READ OUT AS FOLLOWS:

ACTUAL TIME

Indicates how long the internal clock in the central electronic module (CEM) has counted, displayed in days. The actual time gives a reference value which can be used to calculate the number of days since the last alarm. Subtract the value in Time from the value of Actual time to calculate the number of days since the last alarm.

TIME

Indicates how long the internal clock in the central electronic module (CEM) had counted until the time the alarm deployed. The highest number is the latest alarm.

OUTSIDE TEMPERATURE

Indicates the temperature when the alarm deployed.

30 SUPPLY

Indicates the power supply when the alarm deployed.

ALARM CAUSE

Indicates the component in the car that caused the alarm.

- Front door right
- Front door left
- Rear door right
- Rear door left
- Hood
- Tailgate/Glass breakage loop
- Ignition switch
- Tilt sensor
- Siren
- Glass breakage loop
- MMS 1, standard mass movement sensor module (MMS) for the S60, S80, V70 and XC70. Rear mass movement sensor module (MMS) for the XC90
- MMS 2, front mass movement sensor module (MMS) for the XC90.

CHECKING BATTERY CHARGING FOR EXTERNAL IPOD-UNITS (2007-08)

CHECKING BATTERY CHARGING FOR EXTERNAL IPOD-UNITS

FAULT-TRACING INFORMATION

Accessory USB unit (AUU) has the function of acting as interface between the vehicle's infotainment system and external USB- and iPod-units. Since later generations of iPod and iPhone use 5 V-charging, instead of 12 V-charging, it is not possible to charge the iPod-battery using the original cable intended for iPod devices. The iPOD-battery can be charged using the USB-outlet, but then Accessory USB unit (AUU) does not handle playback of media stored on the external iPOD-unit.

Check:

- What charging applies to the external iPOD-unit.
- If there is a need for an adapter cable that supports 5 V charging.

Fault-tracing

To replace the adapter cable, see installation instructions for the installation of iPod cable in the Accessory USB unit (AUU) on the Accessory Business Unit's homepage, http://vccs. volvocars. se/accessories/ii/

Fault symptom

- Audio other/Other audio problems

CHECKING CAN-NET REST STATUS (2003-12)

CHECKING CAN-NET REST STATUS

PREPARATIONS FOR POWER SUPPLY, CAN NETWORK

When the vehicle sets the communication buses and the control modules in "sleep mode", power consumption drops. Factors such as whether the vehicle is locked, the alarm is on or off or whether any doors are open affect the rate at which the vehicle will reach standby power consumption. The lowest power consumption is achieved the quickest when the vehicle is locked, the alarm is on and the vehicle's doors are closed.

Preparations

Ensure that all lighting is switched off.

Ensure that the diagnostic tool is not connected in the vehicle.

Open the tailgate or trunk lid and bonnet and set the locks to the deadlocked position using a screwdriver for example.

Open the driver's and passenger doors and set the locks to the deadlocked position using a screwdriver for example.

Close the rear doors, remove the key and lock and alarm the vehicle. Never use reduced alarm as it then takes longer for the CAN network to continue in "sleep mode".

Wait approximately 3 minutes so that the vehicle's standby current consumption drops.

NOTE: Do not open any doors or the test will have to be restarted from the beginning.

- **Continue**

  Refer to **MEASURING THE VOLTAGE LEVEL ON THE CAN NETWORK.**

MEASURING THE VOLTAGE LEVEL ON THE CAN NETWORK.

When measuring the voltage level on the CAN network, it will soon become evident if there are modules in the vehicle that do not continue in "sleep mode".

The method for measuring the voltage on the CAN network is described below.

The voltage level on the CAN network is carried out using a multimeter.

Measuring

The CAN network must have continued in "sleep mode" after approximately 3 minutes. The voltage on the network must be 0 V with the CAN network in "sleep mode".

The voltage is 0.5 to 4 V for a vehicle that communicates over the CAN network.

Voltage measure the CAN network as follows:

Prepare the multimeter for power supply 10 V.

NOTE: Do not carry out work inside a vehicle equipped with mass movement sensors as the alarm may be triggered.

Measure the voltage on the low speed CAN network by connecting the hand terminal, component number 30656638, in diagnostic tool socket terminals #3 and #11. Connect the multimeter to the hand terminal and read off the voltage.

Measure the voltage on the high speed CAN network by connecting the hand terminal, component number 30656638, in diagnostic tool socket terminals #6 and #14. Connect the multimeter to the hand terminal and read off the voltage.

CHECKING CLOCK IN THE INFORMATION MODULE (2003-04)

CHECKING CLOCK IN THE INFORMATION MODULE

CHECKING THE REAL TIME CLOCK IN CENTRAL ELECTRONIC MODULE (CEM)

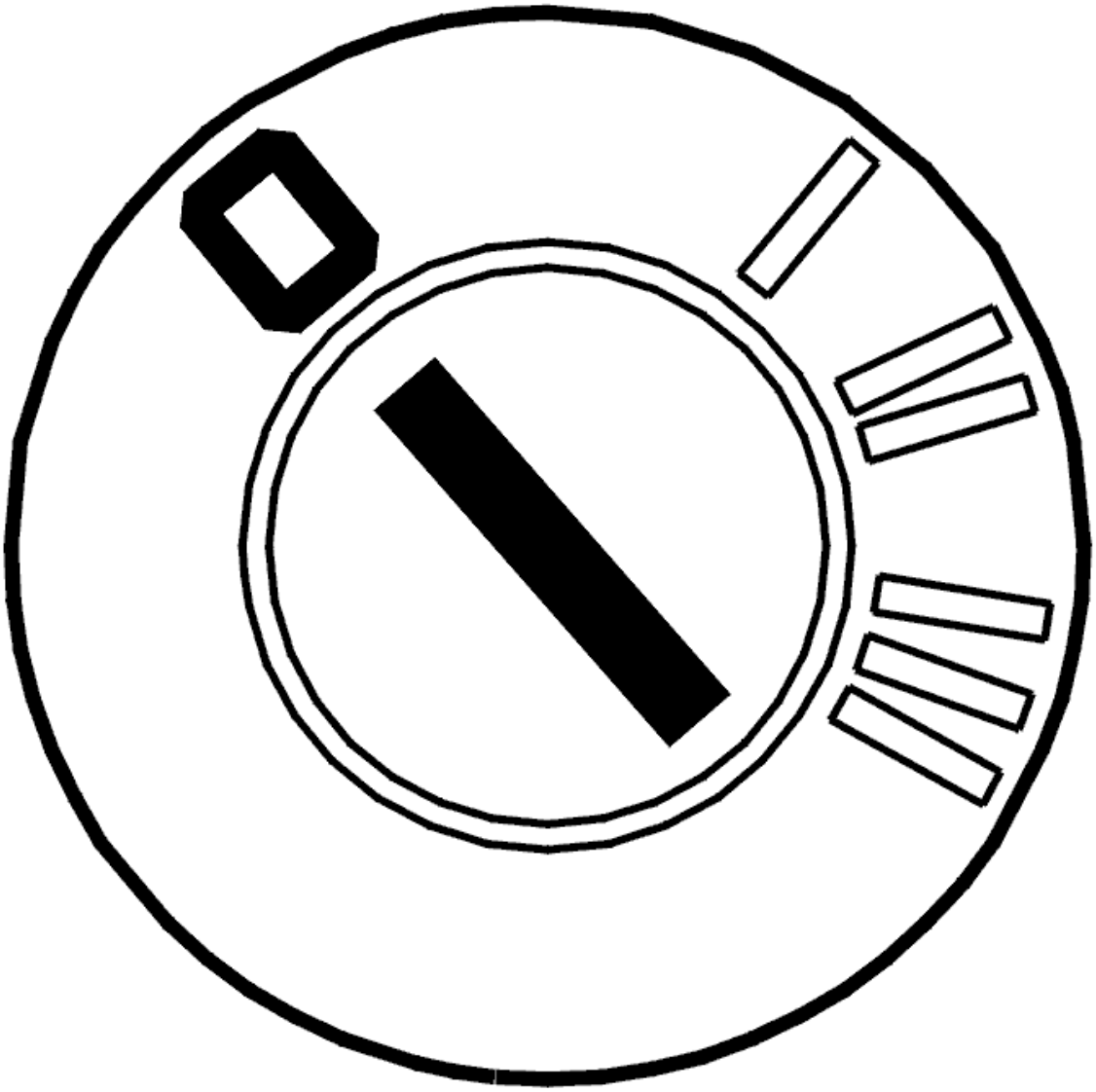

Fig. 6: Identifying Ignition OFF
Courtesy of VOLVO CARS CORPORATION

- Ignition off.

  Try to set the correct time for the clock in the information module. Wait a few minutes and check whether the clock is still showing the correct time.

Does the clock show correct time?

- **YES**

  Refer to **VERIFICATION**

- **NO**

Refer to **REPLACEMENT OF CONTROL UNIT**

REPLACEMENT OF CONTROL UNIT

A diagnostic trouble code indicates a fault in the central electronic module (CEM), which means that the control unit should be replaced.

Read the programmed customer parameters. Note the values.

Other information

- see **CENTRAL ELECTRONIC MODULE (CEM), REPLACING**

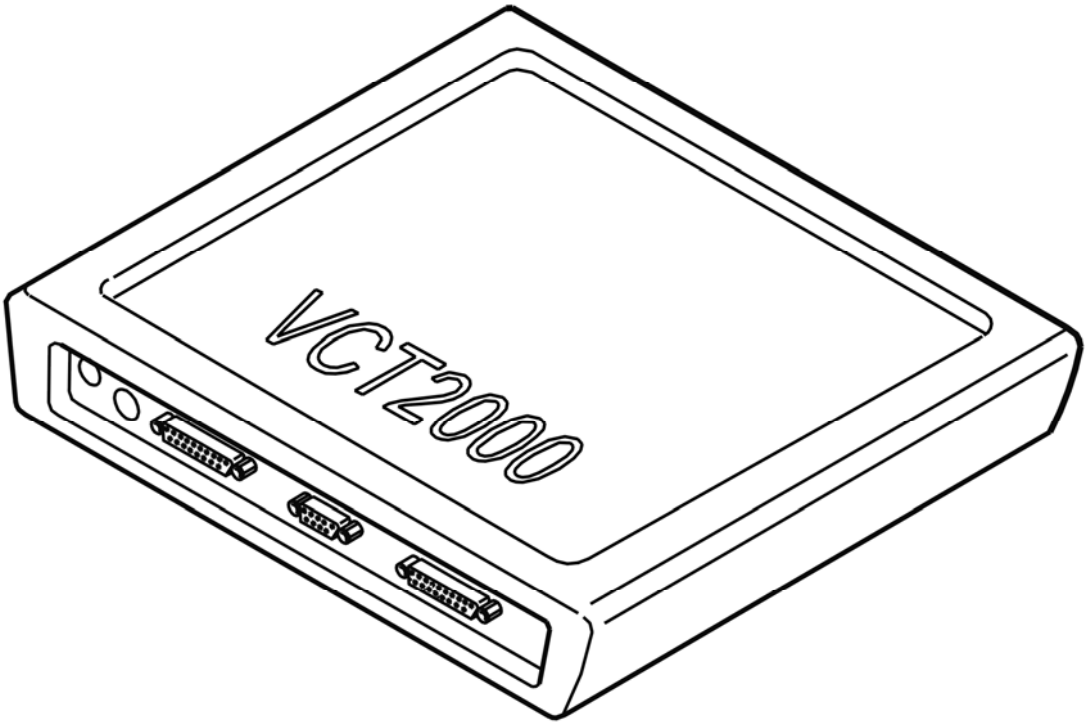

Fig. 7: Identifying VCT2000 Diagnostic Tool Symbol In VIDA
Courtesy of VOLVO CARS CORPORATION

- **Continue**

  Refer to **VERIFICATION**

VERIFICATION

HINT: After the repair it is necessary to check that the fault has been rectified.

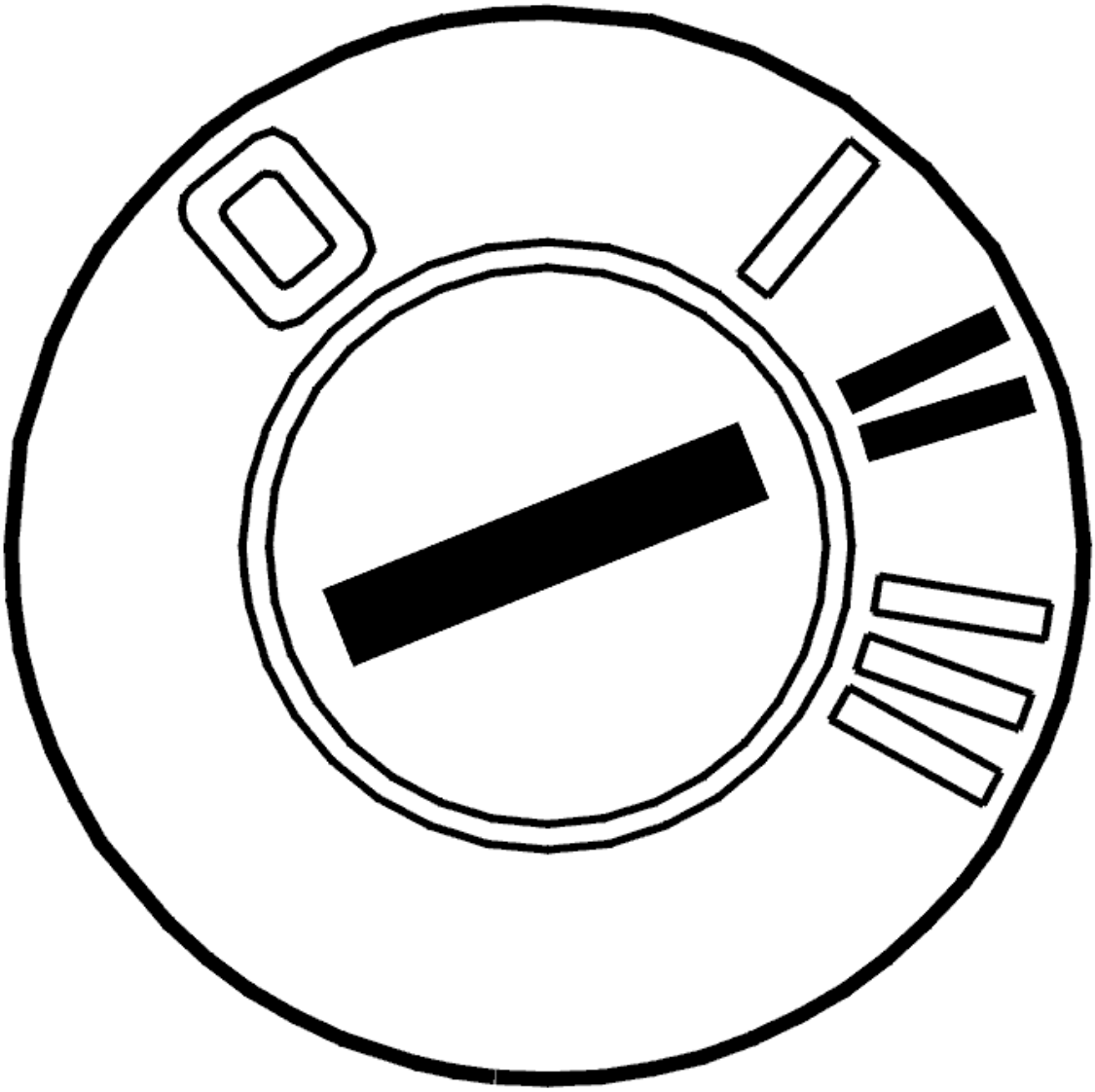

Fig. 8: Identifying Ignition ON
Courtesy of VOLVO CARS CORPORATION

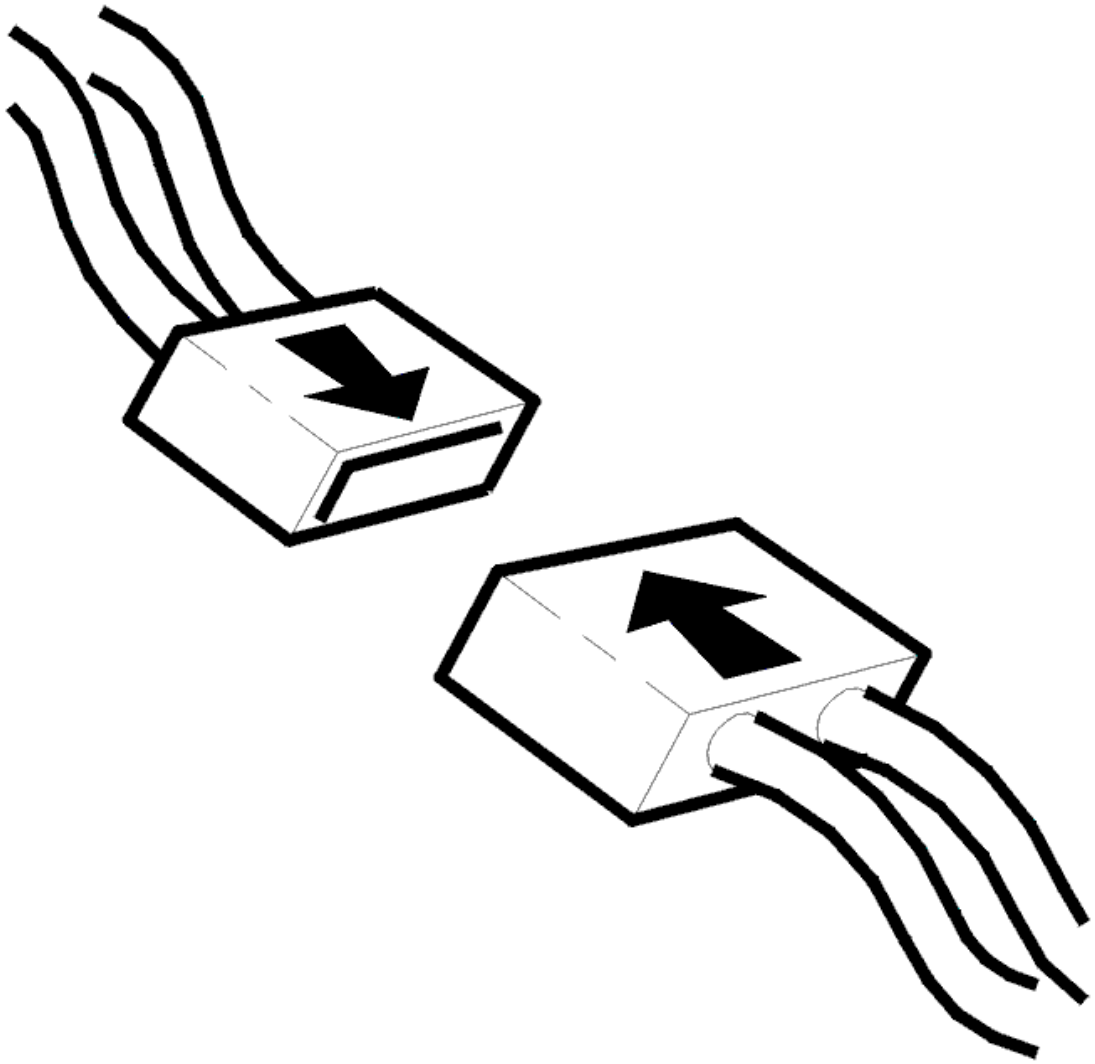

Fig. 9: Connecting Connector
Courtesy of VOLVO CARS CORPORATION

- Ignition off.
- Connect connectors, install components etc.
- Ignition on.

  Check that the clock is working by setting the correct time and waiting a few minutes.

Is the clock working?

- **YES**

  VERIFIED: Troubleshooting has been completed.

- **NO**

  Refer to **INFORMATION**

INFORMATION

FAULT-TRACING INFORMATION

The fault should have been detected and remedied. As this is not the case fault-tracing has failed.

Exit fault-tracing for this diagnostic trouble code (DTC) or make another attempt.

CHECKING COMPASS (2007-10)

CHECKING COMPASS

FAULT-TRACING INFORMATION

In the event of a problem with the compass in the Upper electronic module (UEM), for example, if the compass shows incorrect direction or the direction freezes, a software download can solve the problem.

Fault-tracing

NOTE: Replacing components does not solve the problem.

- Download the latest software to the Upper electronic module (UEM).
- Perform a compass calibration.

Other information

see **COMPASS, CALIBRATION**

Fault symptom

- Compass/Does not work

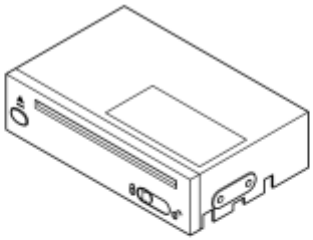

Fig. 10: Identifying TMC Receiver
Courtesy of VOLVO CARS CORPORATION

CHECKING COURTESY LIGHTING (2003-04)

CHECKING COURTESY LIGHTING

CHECKING THE BULBS

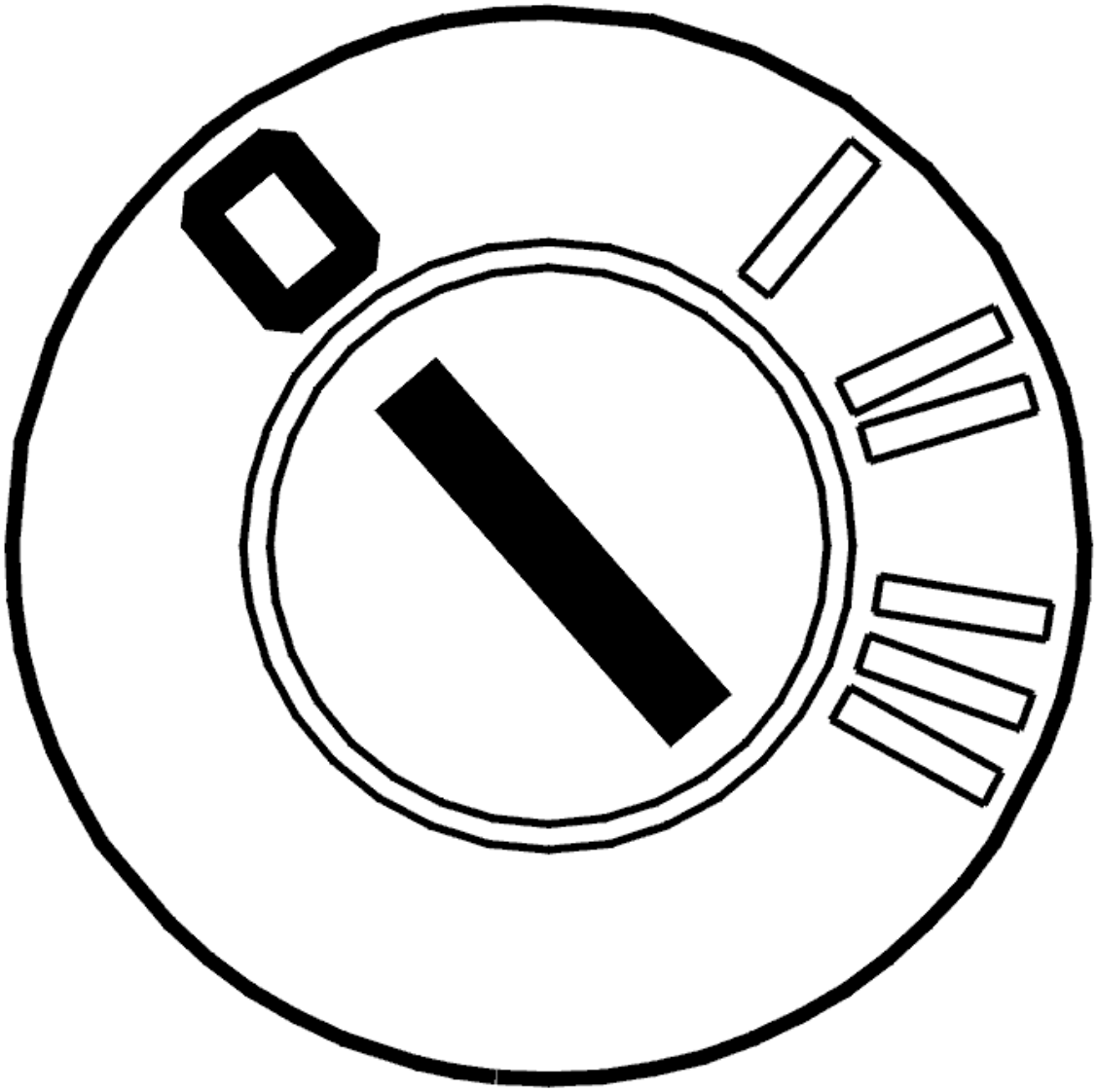

Fig. 11: Identifying Ignition OFF
Courtesy of VOLVO CARS CORPORATION

- Ignition off.

  Check that the courtesy lighting light bulbs are undamaged.

  There are two lamps; left front and right front.

  Remedy as necessary.

  Other information:

  - To access or replace the front courtesy lighting, see **COURTESY LIGHTING, FRONT, REPLACING** .

Does the courtesy lighting function?

- **YES**

  Refer to **VERIFICATION**

- **NO**

  Refer to **CHECKING CABLE TO GROUND**

CHECKING CABLE TO GROUND

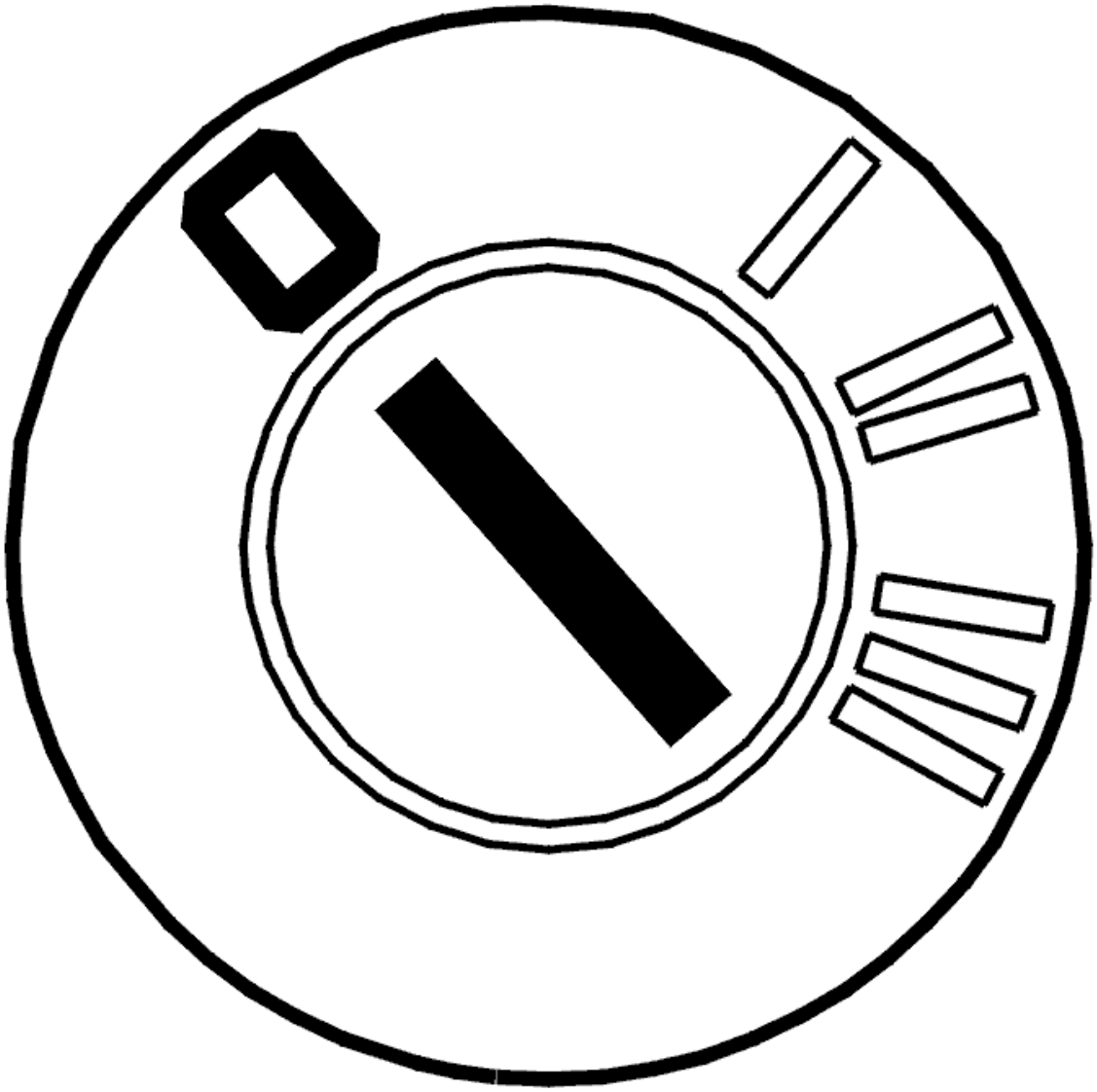

Fig. 12: Identifying Ignition OFF
Courtesy of VOLVO CARS CORPORATION

- Ignition off.

Check that there is a ground for each lamp. Measure the resistance between the relevant lamp terminal #4 and ground.

The resistance must be approximately 0 ohms.

There are two lamps; left front and right front.

Remedy as necessary.

Other information:

- To access or replace the front courtesy lighting, see **COURTESY LIGHTING, FRONT, REPLACING** .

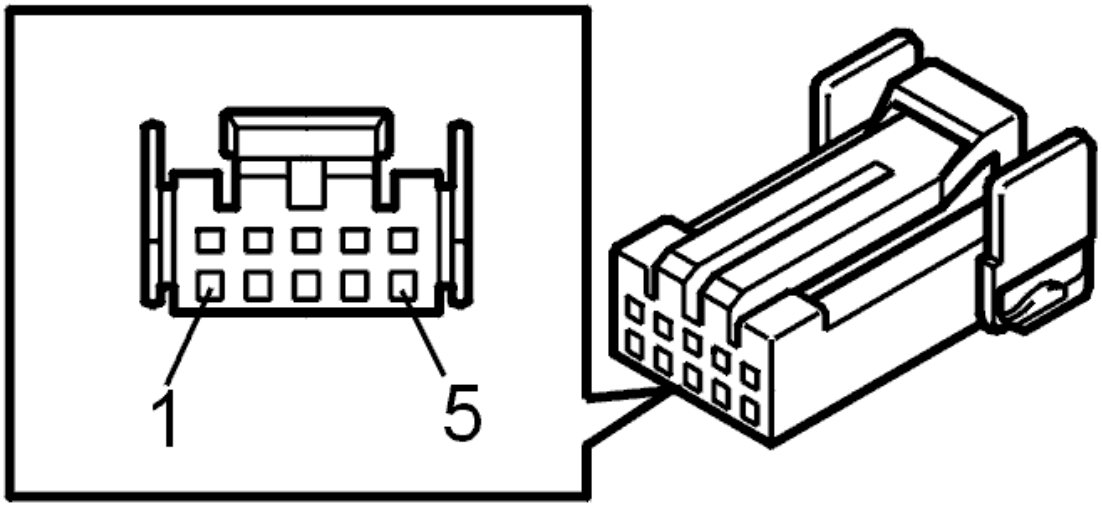

Fig. 13: Electronic Throttle Module (ETM) Connector Terminal Identification
Courtesy of VOLVO CARS CORPORATION

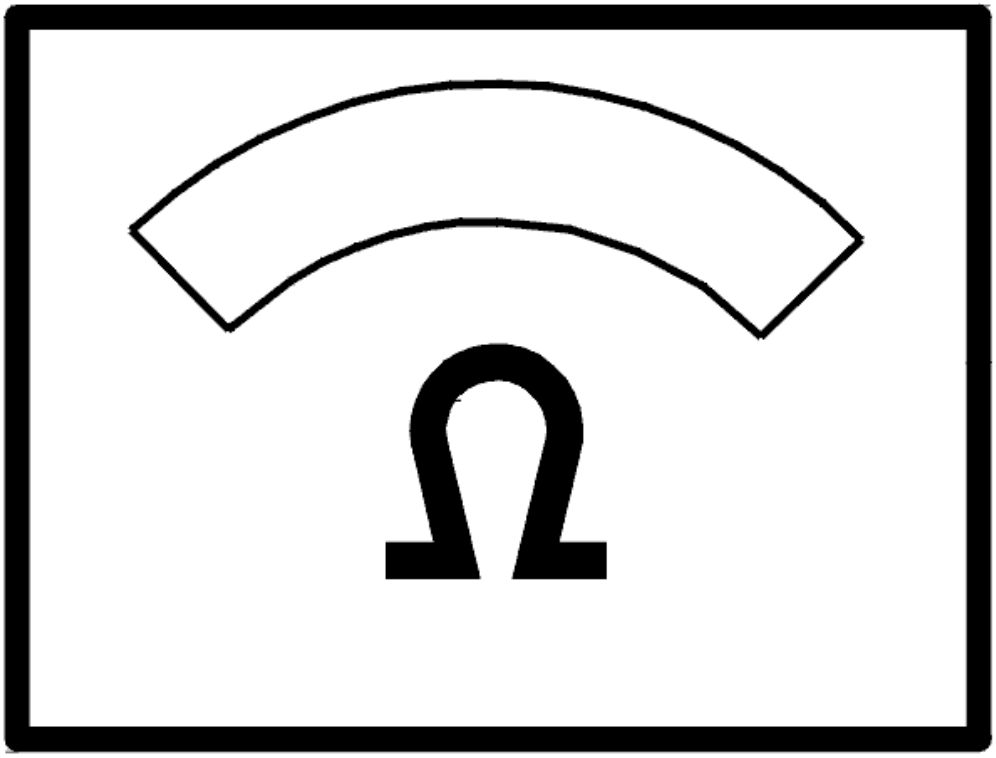

Fig. 14: Identifying Ohmmeter
Courtesy of VOLVO CARS CORPORATION

Does the courtesy lighting function?

- **YES**

  Refer to **VERIFICATION**

- **NO**

  Refer to **CHECKING THE POWER SUPPLY WIRING**

CHECKING THE POWER SUPPLY WIRING

Check the wiring between the central electronic module (CEM) #2E (#B22), to the relevant courtesy lighting

#2. Check for an open-circuit. Check for a short-circuit to ground.

Remedy as necessary.

Other information:

- To connect the breakout box, see **CONNECTING THE BREAKOUT BOX**
- For information about signals, see **SIGNAL SPECIFICATION**
- To access or replace the front courtesy lighting, see **COURTESY LIGHTING, FRONT, REPLACING** .

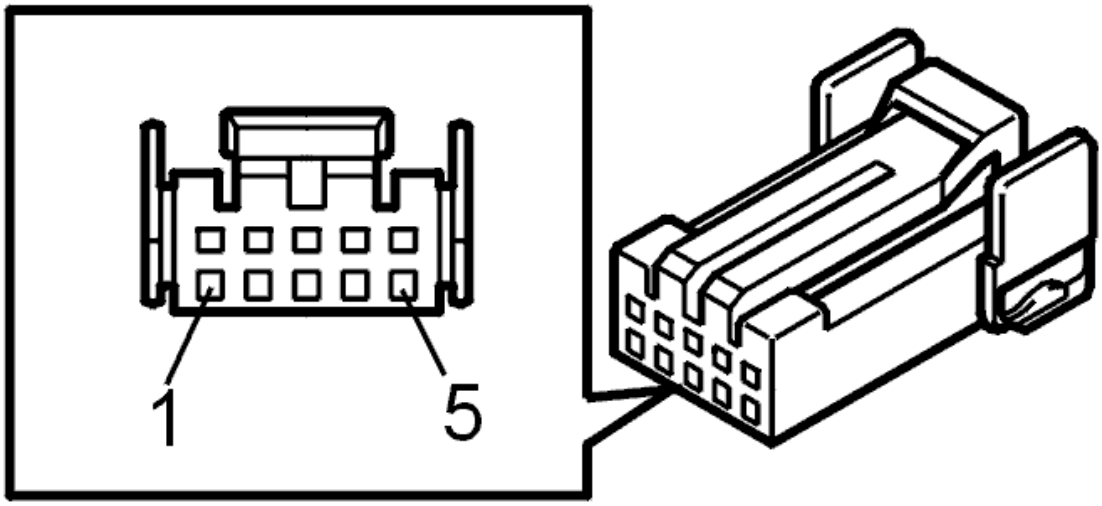

Fig. 15: Electronic Throttle Module (ETM) Connector Terminal Identification
Courtesy of VOLVO CARS CORPORATION

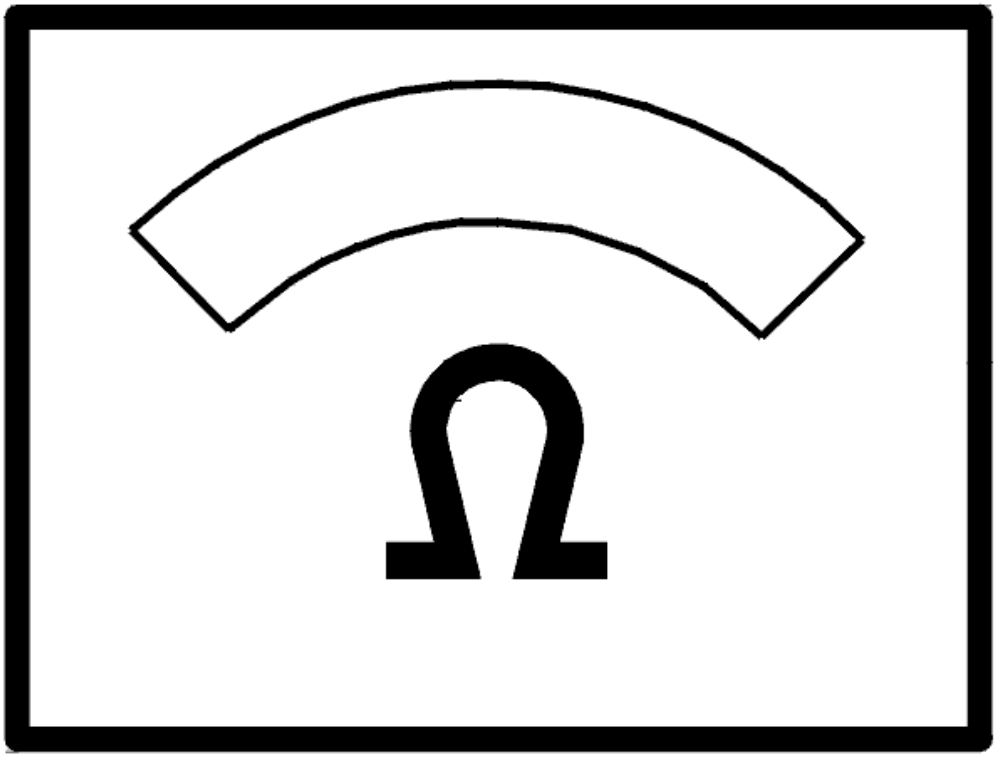

Fig. 16: Identifying Ohmmeter
Courtesy of VOLVO CARS CORPORATION

Does the courtesy lighting function?

- **YES**

  Refer to **VERIFICATION**

- **NO**

  Refer to **LIGHT SWITCH REPLACEMENT**

LIGHT SWITCH REPLACEMENT

Try replacing the light switch 3/111.

Other information:

- To access or replace the light switch, see **SWITCHES LIGHTS, REPLACING** .

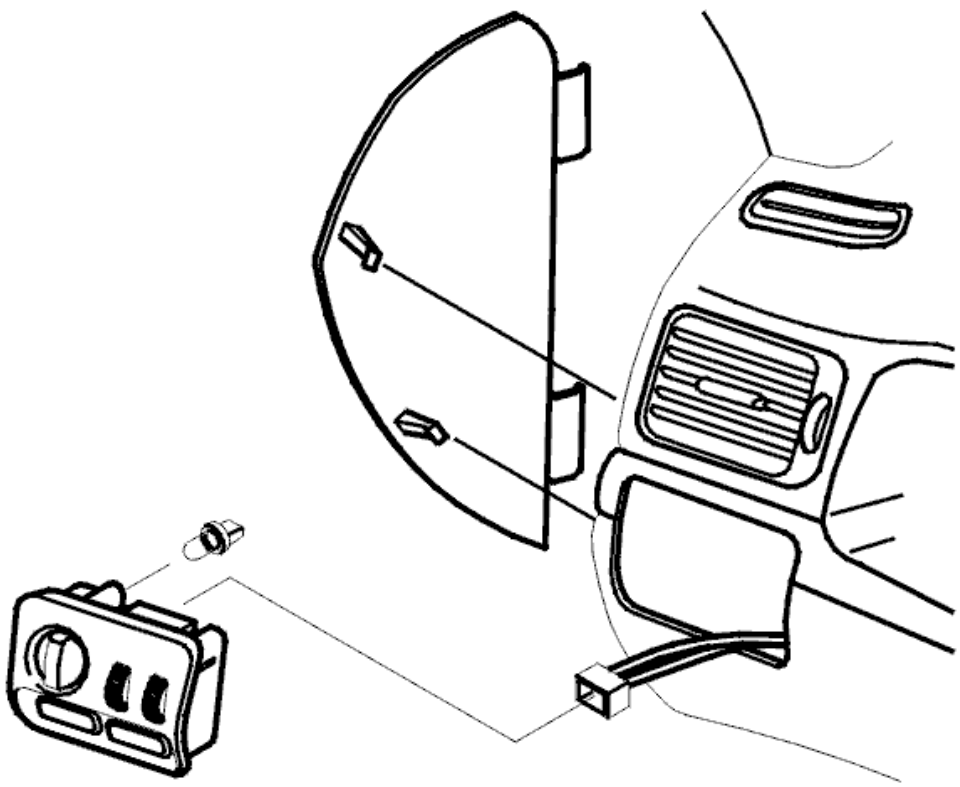

Fig. 17: Identifying Headlight Switch Assembly
Courtesy of VOLVO CARS CORPORATION

- **Continue**

  Refer to **VERIFICATION**

VERIFICATION

HINT: After the repair it is necessary to check that the fault has been rectified.

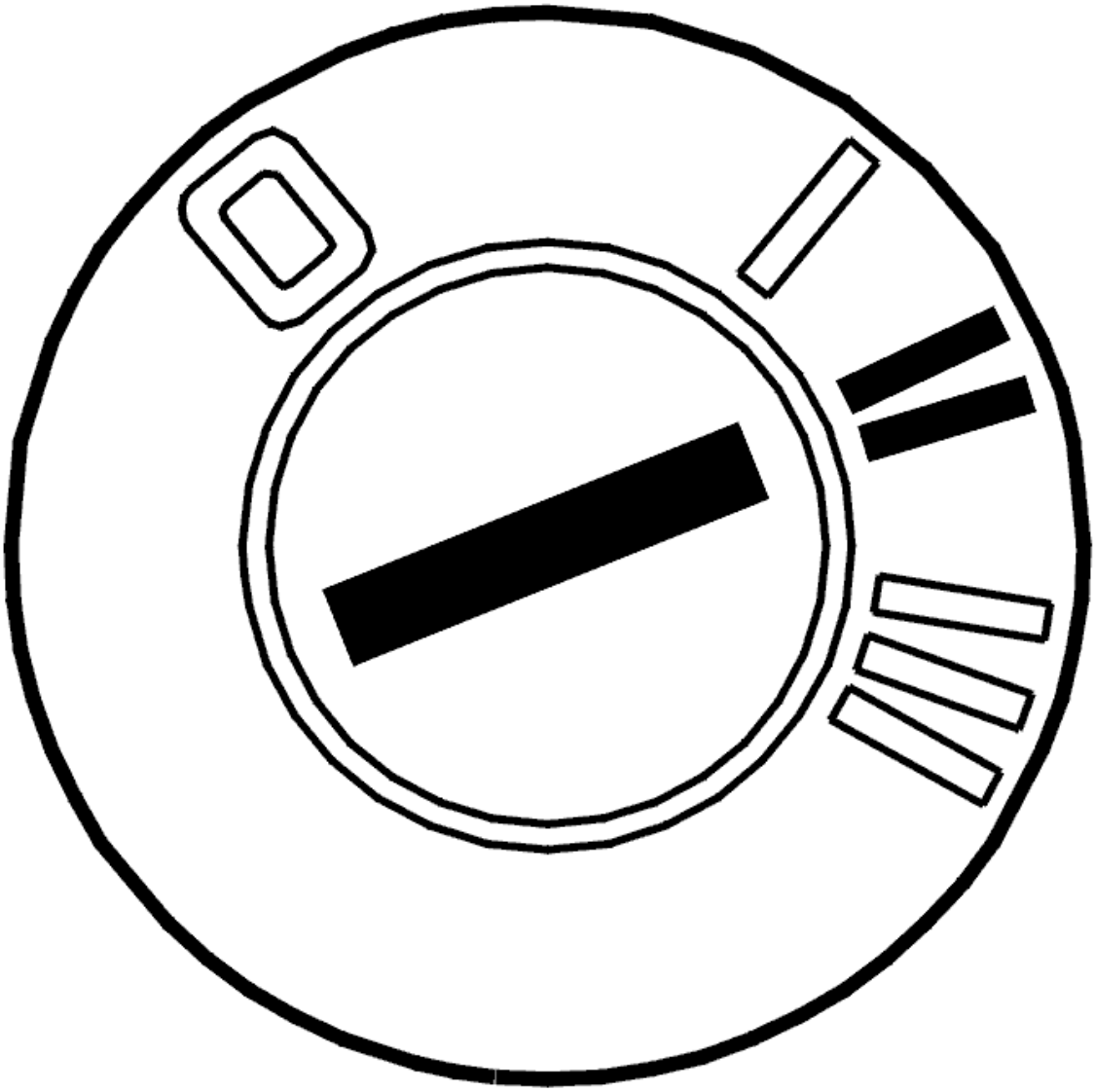

Fig. 18: Identifying Ignition ON
Courtesy of VOLVO CARS CORPORATION

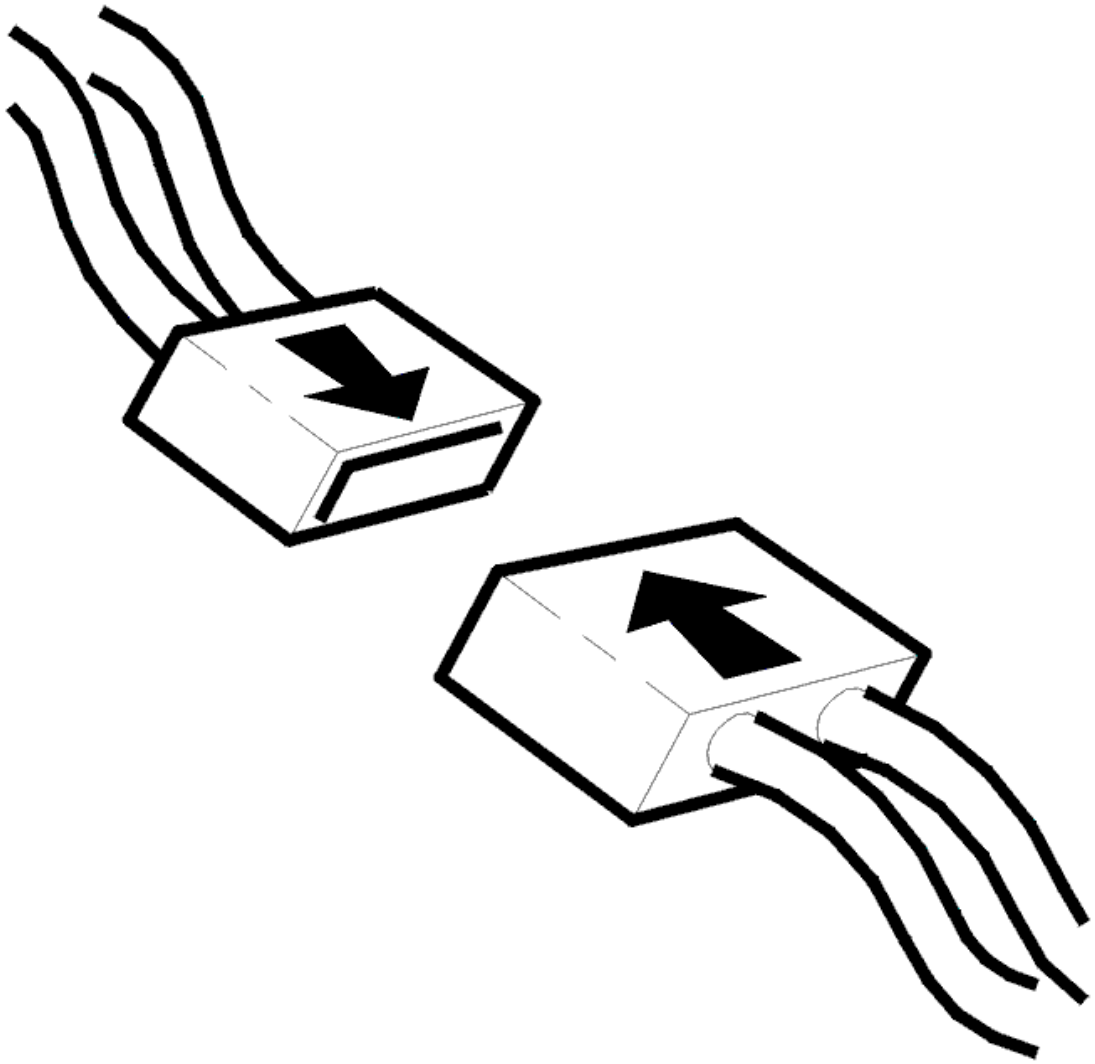

Fig. 19: Connecting Connector
Courtesy of VOLVO CARS CORPORATION

- Ignition off.
- Connect connectors, install components etc.
- Ignition on.

  Check that the courtesy lights operate by opening each door.

Does the courtesy light work?

- **YES**

  VERIFIED: Troubleshooting has been completed.

- **NO**

  Refer to **INFORMATION**

INFORMATION

FAULT-TRACING INFORMATION

The fault should have been detected and remedied. As this is not the case fault-tracing has failed.

Exit fault-tracing for this diagnostic trouble code (DTC) or make another attempt.

CHECKING DIPPED BEAM ADJUSTMENT (2003-04)

CHECKING DIPPED BEAM ADJUSTMENT

PROGRAMMING CONTROL MODULE

PROGRAMMING PROCEDURES

The following can be programmed in the Central electronic module (CEM) according to customer's wishes.

Programming

1. Seat temperature. Refer to **PROGRAMMING THE SEAT TEMPERATURE (CENTRAL ELECTRONIC MODULE)**.
2. Approach lights. Refer to **PROGRAMMING THE HOME SAFE LIGHTS**.
3. Daytime running lights. Refer to **PROGRAMMING DAYTIME RUNNING LAMPS**.
4. Tailgate window wiper (5 DRS). Refer to **PROGRAMMING THE WIPER FUNCTION FOR THE REAR WINDSHIELD (5 DOOR MODELS)**

Do you want to program any more parameters?

- **YES**

  Refer to **PROGRAMMING PROCEDURES**

- **NO**

  OKAY: Troubleshooting has been completed.

Do you want to program any more parameters?

- **YES**

  Refer to **PROGRAMMING PROCEDURES**

- **NO**

  OKAY: Troubleshooting has been completed.

Do you want to program any more parameters?

- **YES**

  Refer to **PROGRAMMING PROCEDURES**

- **NO**

  OKAY: Troubleshooting has been completed.

Do you want to program any more parameters?

- **YES**

  Refer to **PROGRAMMING PROCEDURES**

- **NO**

  OKAY: Troubleshooting has been completed.

PROGRAMMING THE SEAT TEMPERATURE (CENTRAL ELECTRONIC MODULE)

The heated seat temperature can be adjusted.

This can be carried out for both the left and right seats.

There are two values that can be programmed: low temperature and high temperature.

Programming must be carried out so that the high temperature setting is higher than the low temperature setting.

Do you want to program in Celsius or Fahrenheit?

1. Celsius. Refer to **CELSIUS**.
2. Fahrenheit. Refer to **FAHRENHEIT**

CELSIUS

The seat temperature can be set between 0°C and 43°C.

Which seat do you want to reprogram:

1. Left seat. Refer to **CHECKING THE LEFT SEAT**
2. Right seat. Refer to **CHECKING THE RIGHT SEAT**

FAHRENHEIT

The seat temperature can be set between 32°F and 109.4°F.

Which seat do you want to reprogram:

1. Left seat. Refer to **CHECKING THE LEFT SEAT**
2. Right seat. Refer to **CHECKING THE RIGHT SEAT**.

CHECKING THE LEFT SEAT

Read off the programming by clicking on the VCT2000 symbol.

To change the seat temperature, mark the desired value in the scrolling list and start programming.

Programming must be carried out so that the high temperature setting is higher than the low temperature setting.

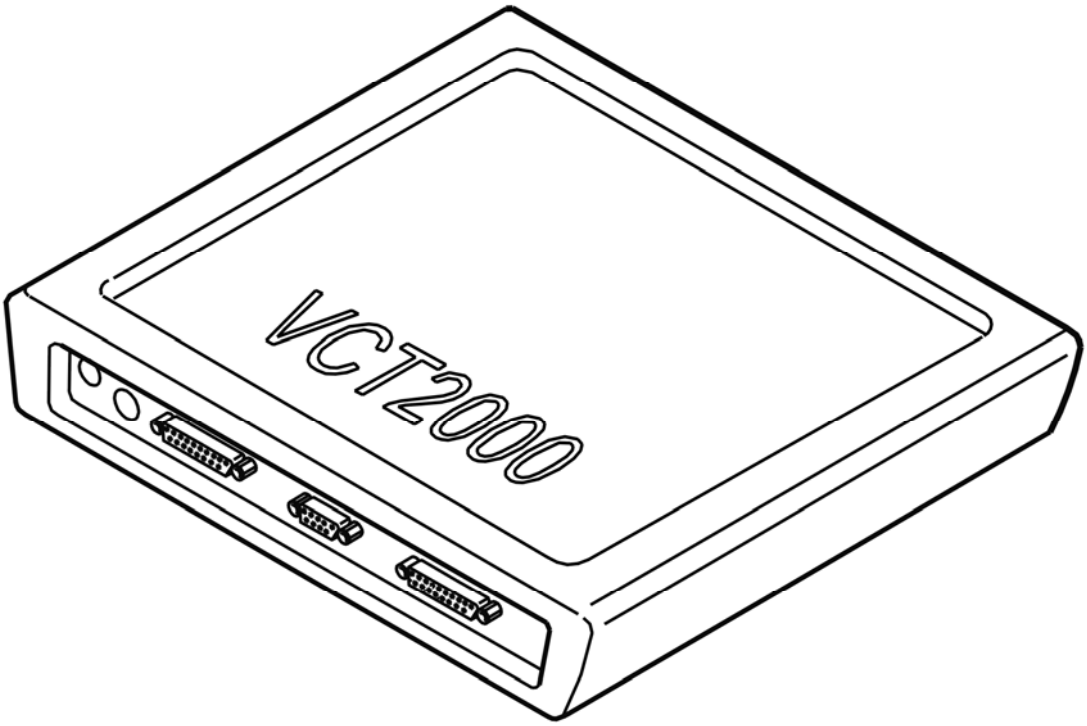

Fig. 20: Identifying VCT2000 Diagnostic Tool Symbol In VIDA
Courtesy of VOLVO CARS CORPORATION

- **Continue**

  Refer to **SAVE THE PROGRAMMED VALUE**

CHECKING THE RIGHT SEAT

Read off the programming by clicking on the VCT2000 symbol.

To change the seat temperature, mark the desired value in the scrolling list and start programming.

Programming must be carried out so that the high temperature setting is higher than the low temperature setting.

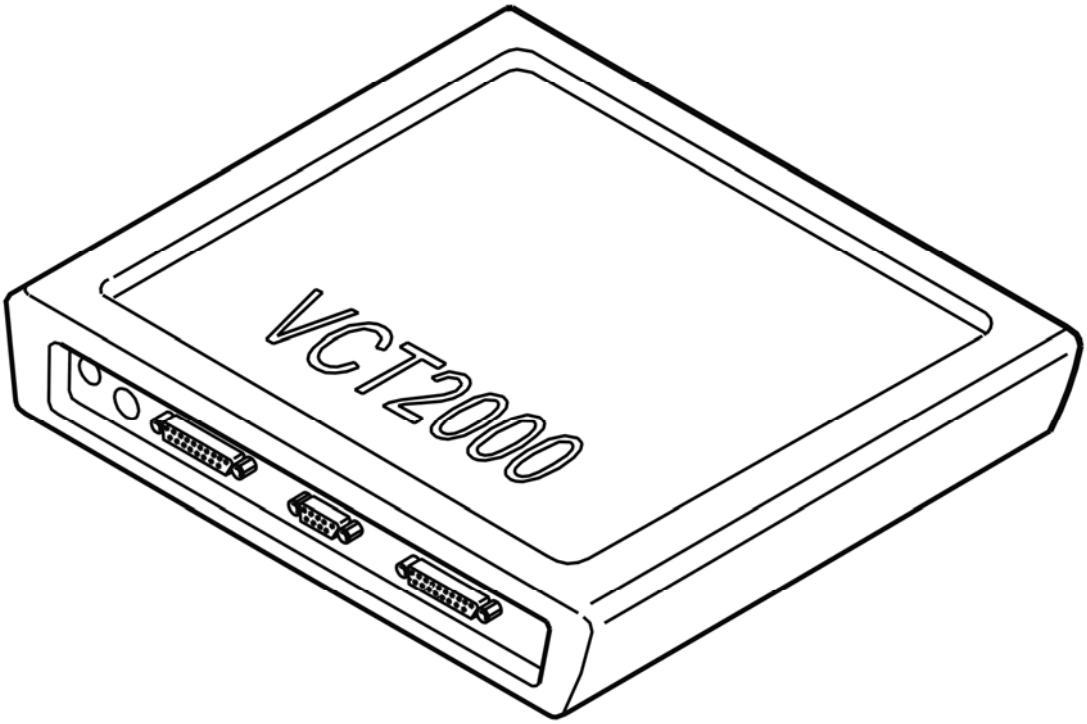

Fig. 21: Identifying VCT2000 Diagnostic Tool Symbol In VIDA
Courtesy of VOLVO CARS CORPORATION

- **Continue**

  Refer to **SAVE THE PROGRAMMED VALUE**

CHECKING THE LEFT SEAT

Read off the programming by clicking on the VCT2000 symbol.

To change the seat temperature, mark the desired value in the scrolling list and start programming.

Programming must be carried out so that the high temperature setting is higher than the low temperature setting.

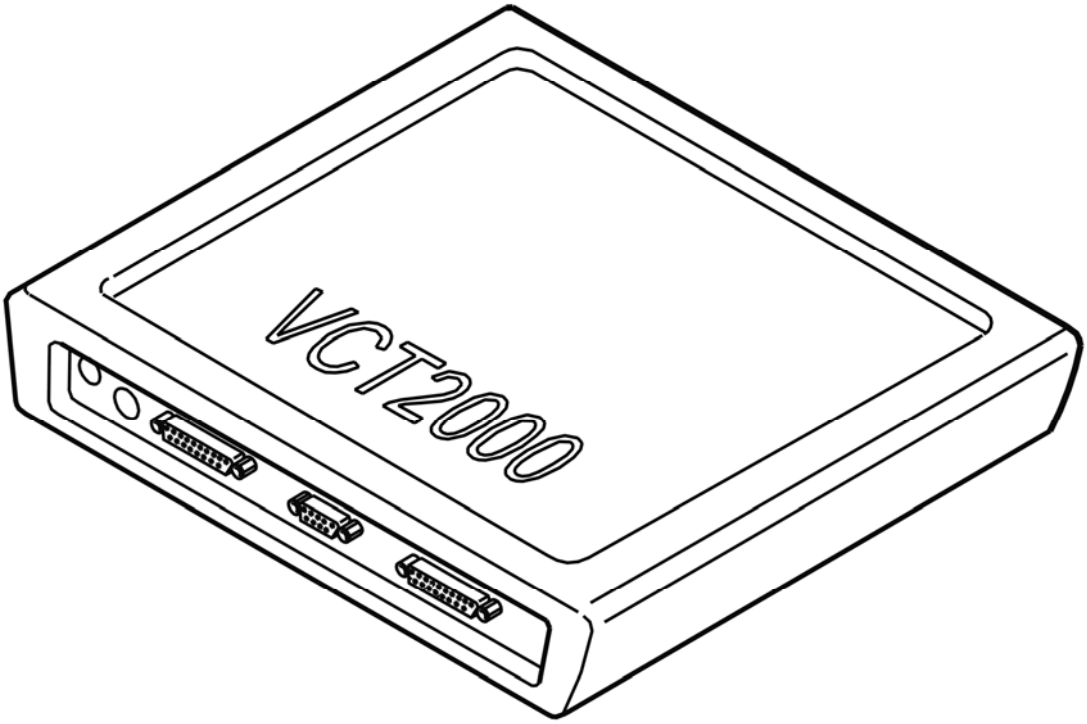

Fig. 22: Identifying VCT2000 Diagnostic Tool Symbol In VIDA
Courtesy of VOLVO CARS CORPORATION

- **Continue**

  Refer to **SAVE THE PROGRAMMED VALUE**

CHECKING THE RIGHT SEAT

Read off the programming by clicking on the VCT2000 symbol.

To change the seat temperature, mark the desired value in the scrolling list and start programming.

Programming must be carried out so that the high temperature setting is higher than the low temperature setting.

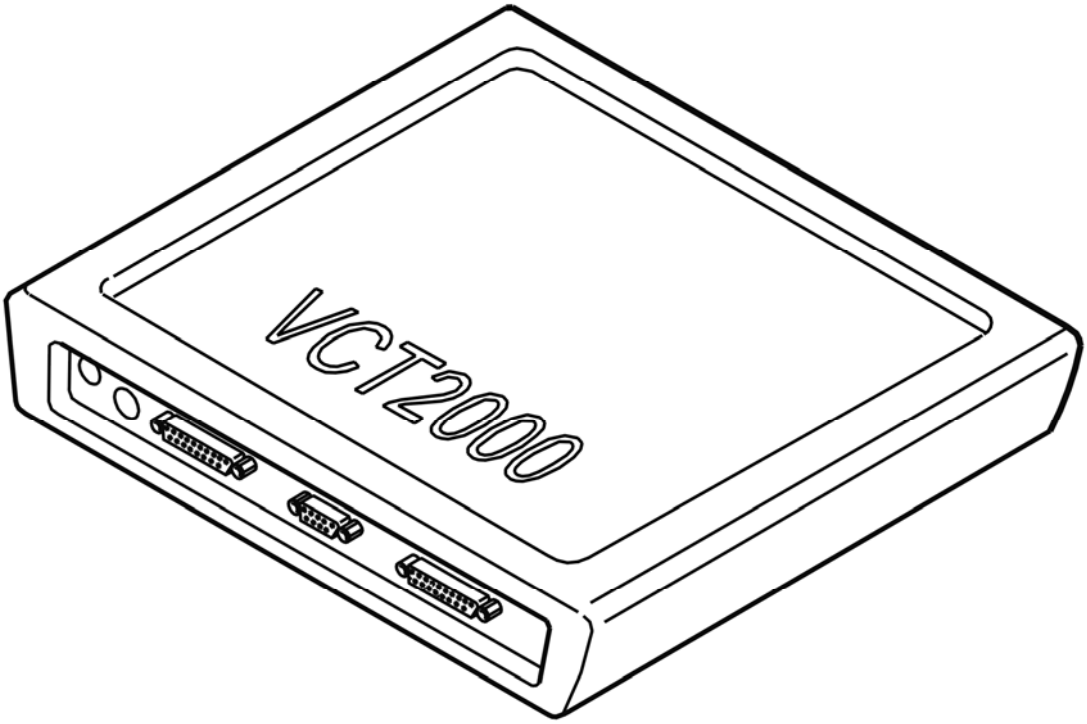

Fig. 23: Identifying VCT2000 Diagnostic Tool Symbol In VIDA
Courtesy of VOLVO CARS CORPORATION

- **Continue**

  Refer to **SAVE THE PROGRAMMED VALUE**

SAVE THE PROGRAMMED VALUE

To ensure that the programmed information is stored, click on the VCT2000 symbol to force the entry.

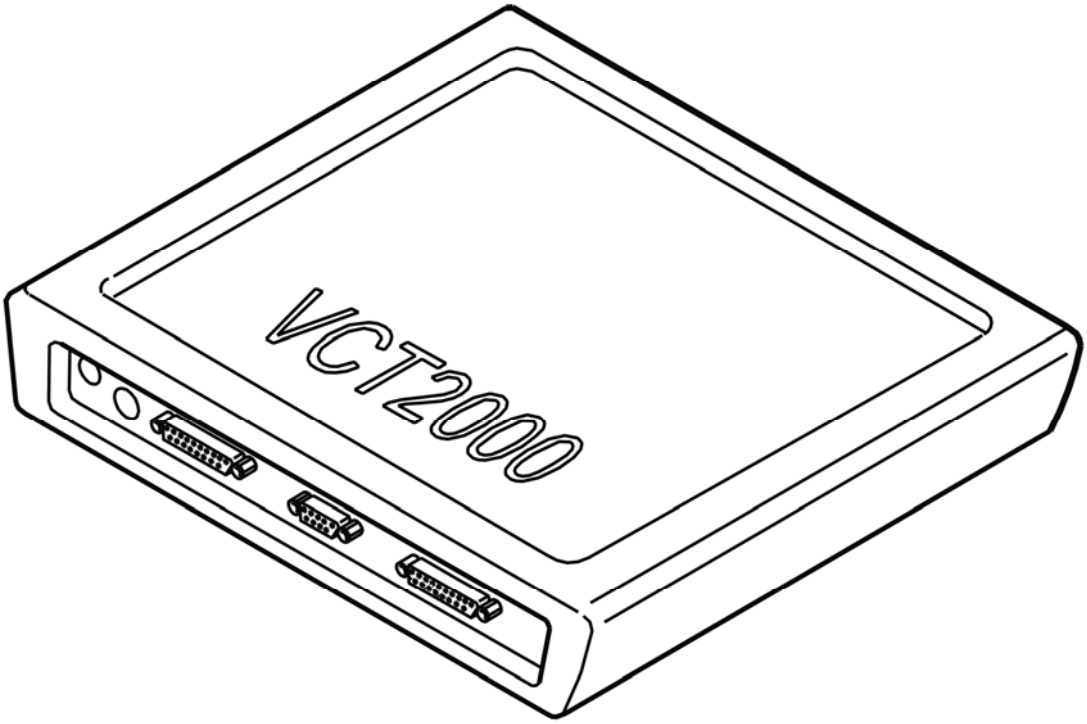

Fig. 24: Identifying VCT2000 Diagnostic Tool Symbol In VIDA
Courtesy of VOLVO CARS CORPORATION

- **Continue**

  Refer to **PROGRAMMING THE HOME SAFE LIGHTS**

PROGRAMMING THE HOME SAFE LIGHTS

The home safe lights can be programmed to stay on for a longer or shorter time according to the wishes of the customer.

The factory setting is 30 seconds. The time can be set to 0, 30, 60 or 90 seconds.

Read off the programming by clicking on the VCT2000 symbol.

To change the time set, mark the desired value in the scrolling list and start programming.

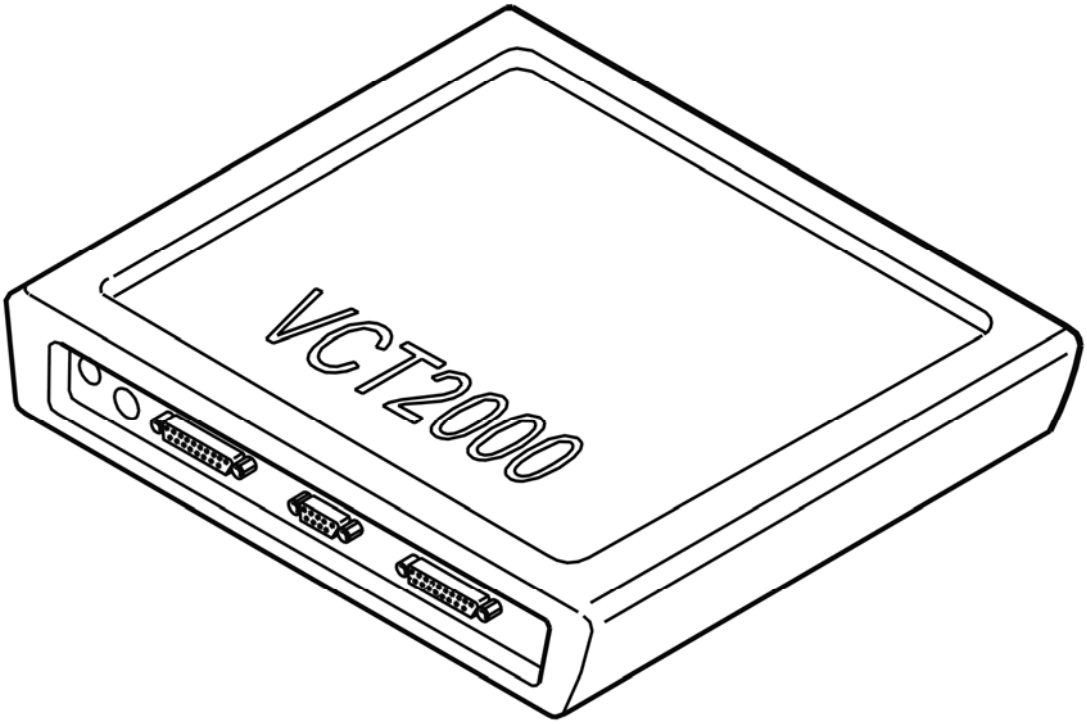

Fig. 25: Identifying VCT2000 Diagnostic Tool Symbol In VIDA
Courtesy of VOLVO CARS CORPORATION

- **Continue**

  Refer to **SAVE THE PROGRAMMED VALUE**

SAVE THE PROGRAMMED VALUE

To ensure that the programmed information is stored, click on the VCT2000 symbol to force the entry.

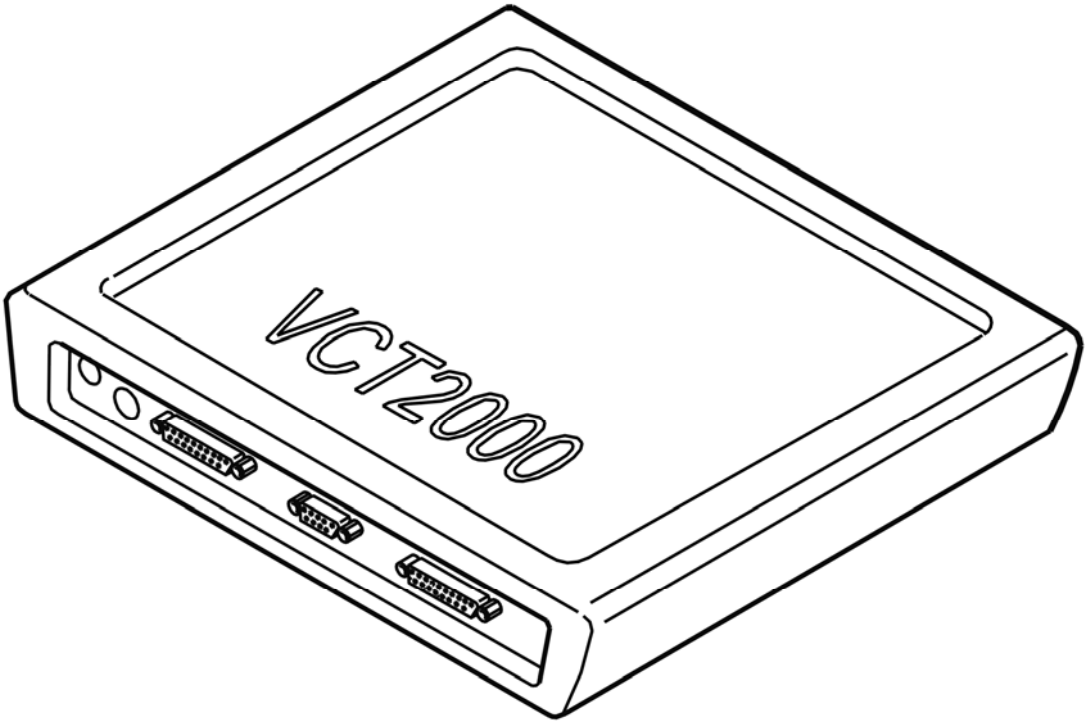

Fig. 26: Identifying VCT2000 Diagnostic Tool Symbol In VIDA
Courtesy of VOLVO CARS CORPORATION

- **Continue**

  Refer to **PROGRAMMING DAYTIME RUNNING LAMPS**

PROGRAMMING DAYTIME RUNNING LAMPS

Three different daytime running light functions can be programmed:

1. Low beam in all switch positions except the parking light position (Flex zero)

Position light switch:

OFF: Parking and daytime running lamps or Xenon lamps are activated depending on the signal from the twilight sensor.

Parking lamps: Only parking lamps activated.

On: Parking and Xenon lamps are activated.

2. The light switch functioning on the basis of: off, parking light and low beam (Flex standard)

Position light switch:

OFF: Daytime running lamps are activated. If the twilight sensor registers insufficient light, all lighting is switched off (Xenon lamps are not activated).

Parking lamps: Only parking lamps activated.

On: Parking and Xenon lamps are activated.

3. Low beam always on regardless of the position of the light switch (Flex low)

Position light switch:

OFF: Parking and daytime running lamps or Xenon lamps are activated depending on the signal from the twilight sensor.

Parking lamps: Parking and Xenon lamps are activated.

On: Parking and Xenon lamps are activated.

It is essential that the legal requirements of each country are followed.

NOTE: It is not permitted to change this programming in the Canadian market.

Read off the programming by clicking on the VCT2000 symbol.

To change the setting, mark the desired value in the scrolling list and start programming.

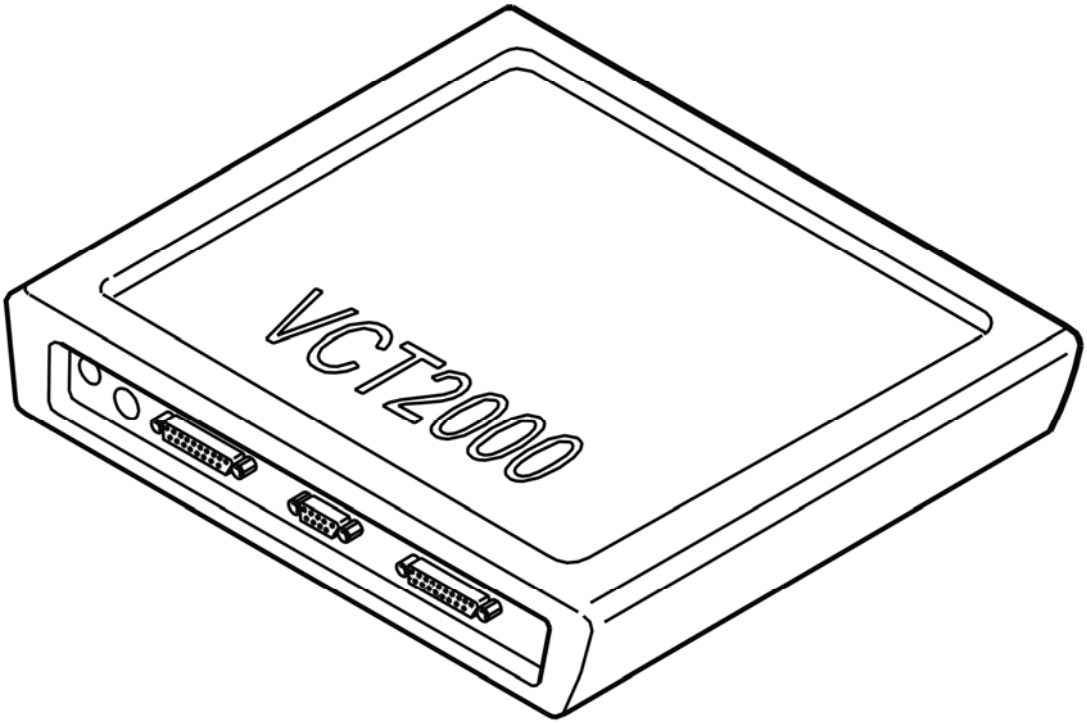

Fig. 27: Identifying VCT2000 Diagnostic Tool Symbol In VIDA
Courtesy of VOLVO CARS CORPORATION

- **Continue**

  Refer to **SAVE THE PROGRAMMED VALUE**

SAVE THE PROGRAMMED VALUE

To ensure that the programmed information is stored, click on the VCT2000 symbol to force the entry.

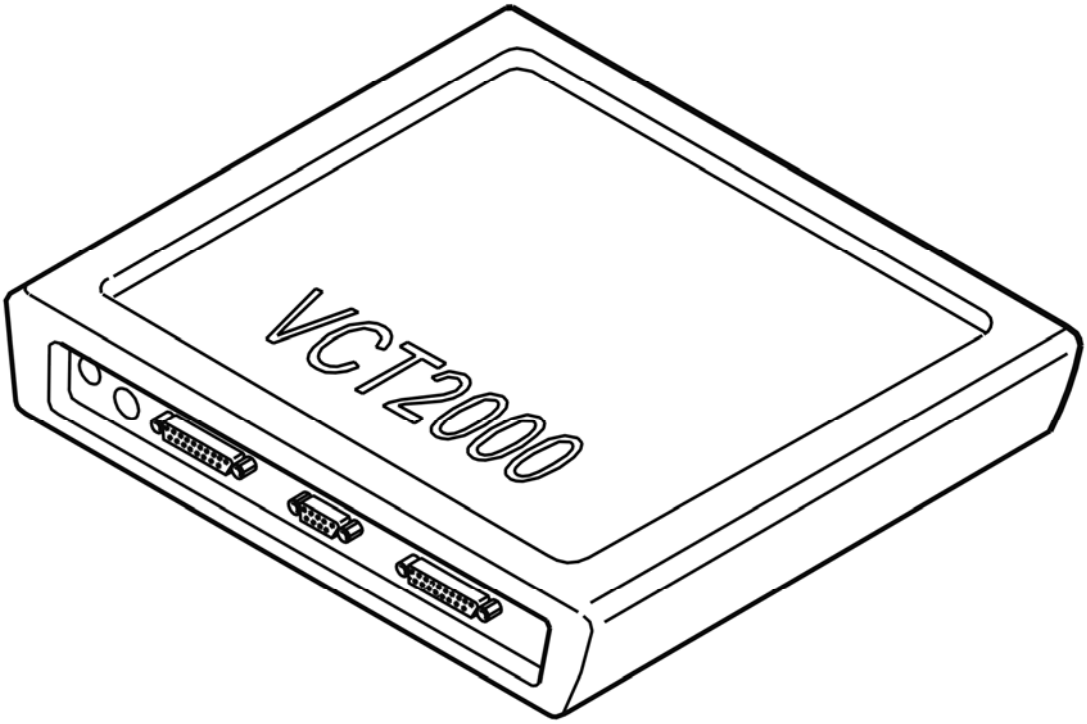

Fig. 28: Identifying VCT2000 Diagnostic Tool Symbol In VIDA
Courtesy of VOLVO CARS CORPORATION

- **Continue**

  Refer to **PROGRAMMING THE WIPER FUNCTION FOR THE REAR WINDSHIELD (5 DOOR MODELS)**

PROGRAMMING THE WIPER FUNCTION FOR THE REAR WINDSHIELD (5 DOOR MODELS)

- The wiper function for the rear windshield can be programmed. There are two versions:
  1. The rear windshield wiper can only be activated manually.
  2. The rear windshield wiper can be activated automatically when back-up (reverse) gear is selected and the front wipers are activated.

  Read off the programming by clicking on the VCT2000 symbol.

  To change the setting, mark the desired value in the scrolling list and start programming.

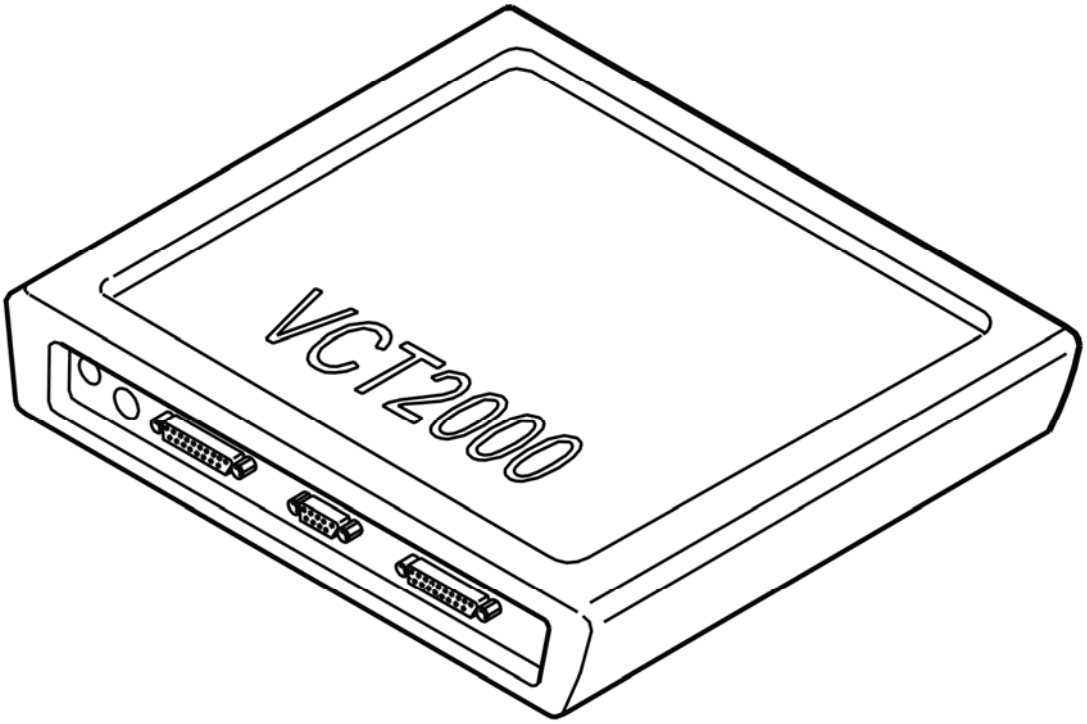

Fig. 29: Identifying VCT2000 Diagnostic Tool Symbol In VIDA
Courtesy of VOLVO CARS CORPORATION

- **Continue**

  Refer to **SAVE THE PROGRAMMED VALUE**

SAVE THE PROGRAMMED VALUE

To ensure that the programmed information is stored, click on the VCT2000 symbol to force the entry.

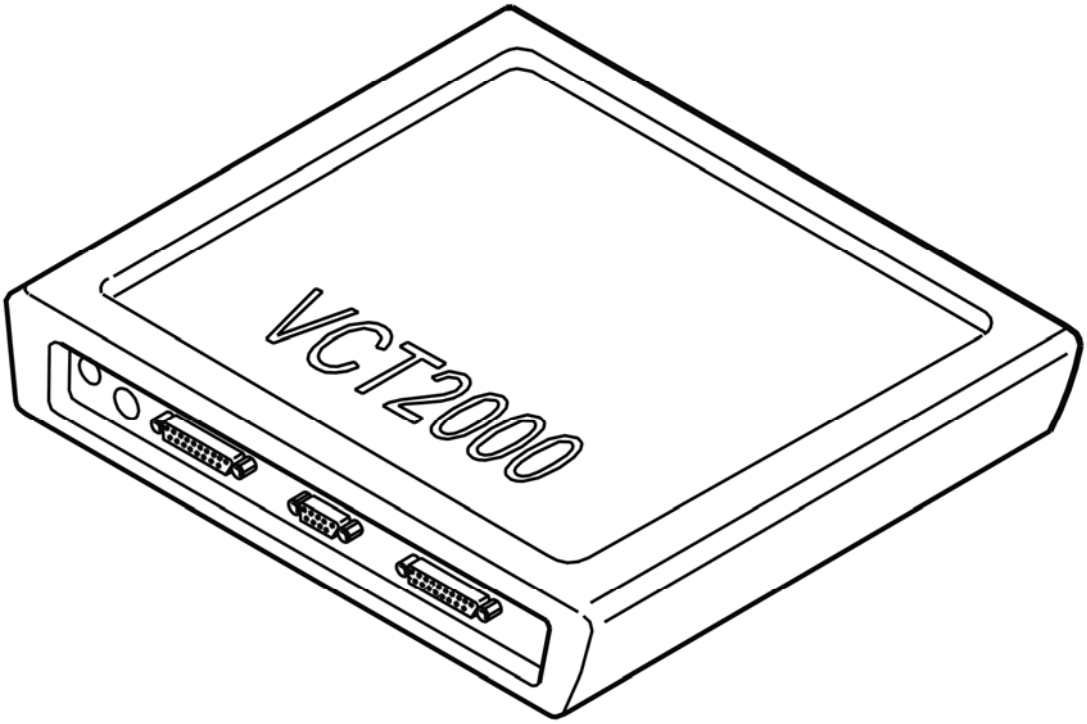

Fig. 30: Identifying VCT2000 Diagnostic Tool Symbol In VIDA
Courtesy of VOLVO CARS CORPORATION

CHECKING DIPPED HEADLAMP (2003-04)

CHECKING LOW BEAM

CHECKING THE WIRING AND THE RELAY

Check the signal cables to the low beam. Check for an open-circuit. Check for contact resistance and oxidation.

Check the relay (2/62).

HINT: The voltage over the relay must be 12 V on pins #1 and #3 when the low beam is switched on.

Check the cable between terminal #3 and fuse 2, fusebox in the engine compartment (11B/2).

Check that fuse is intact.

Check the connector.

Check the cable between relay #1 (2/62) and shunt low beam #3 (20/27).

Check shunt (20/27).

HINT: The voltage must be 12 V at the shunt terminals, i. e. #3 and #2.

Check the cable between shunt low beam #2 (20/27) and fuses low beam.

Check that the fuses are intact.

HINT: Passenger compartment fuse no. 1 for left low beam and no. 2 for right low beam.

Remedy as necessary.

Other information

- see **CHECKING WIRING AND TERMINALS** .

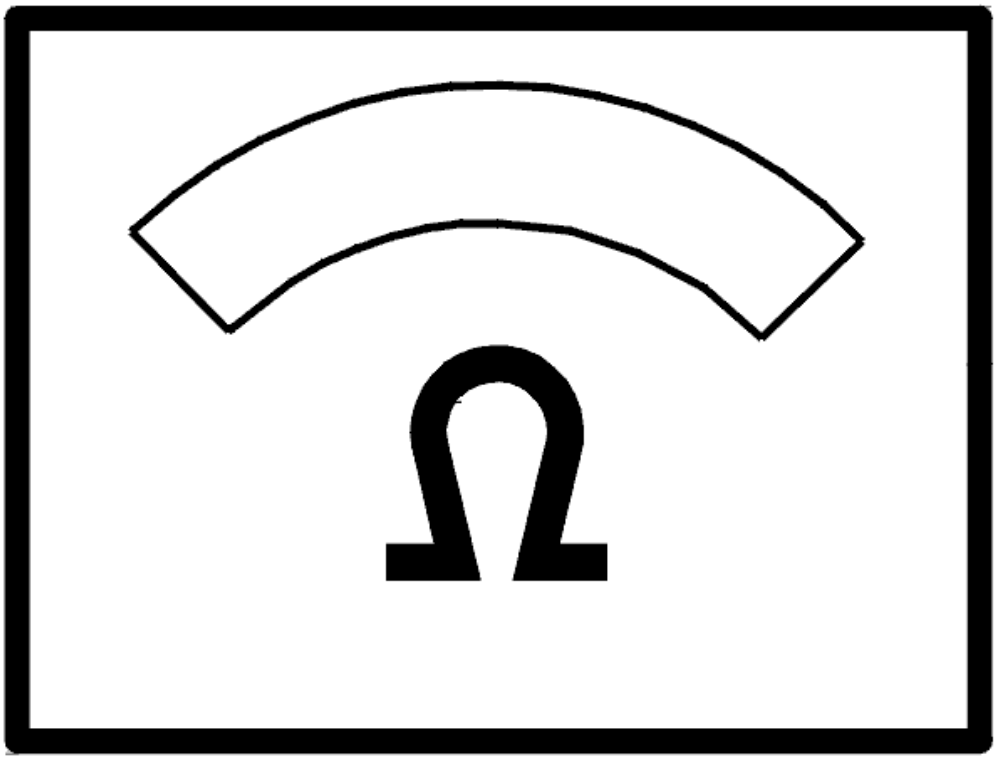

Fig. 31: Identifying Ohmmeter
Courtesy of VOLVO CARS CORPORATION

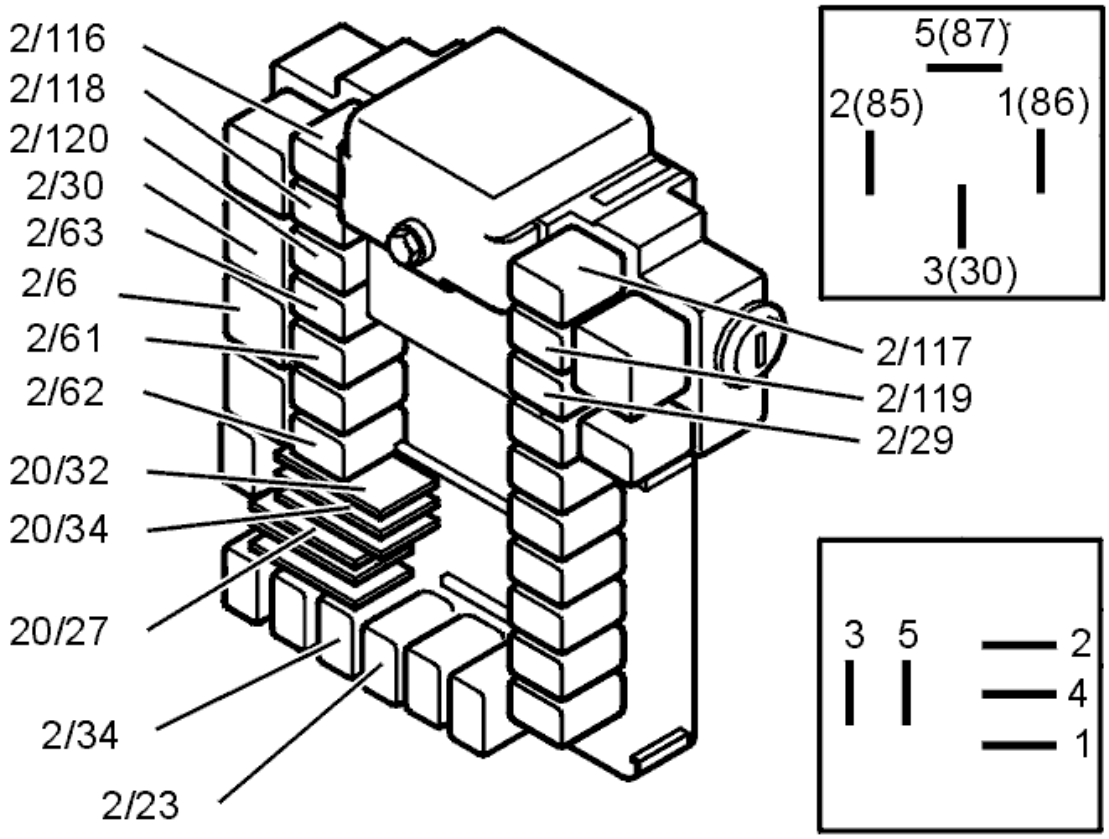

Fig. 32: Identifying Relays
Courtesy of VOLVO CARS CORPORATION

Was a fault detected?

- **YES**

  OKAY: Troubleshooting has been completed.

- **NO**

  Refer to **CHECKING THE WIRING FOR THE LAMP HOUSING**

CHECKING THE WIRING FOR THE LAMP HOUSING

Check the signal cables to the low beam. Check for an open-circuit. Check for contact resistance and oxidation.

Check the cable between the passenger compartment fuse and terminal #3 of the lamp housing for each headlamp.

For the left low beam, check lamp housing 10/1.

For the right low beam, check 10/2.

Check the ground supply between lamp housing #1 and the ground terminal.

Also check the connectors: 54/3L, 54/4.

Remedy as necessary.

If no fault was found, replace the lamp housing.

Other information

- To replace the lamp housing, see **HEADLIGHT/BULB, REPLACING** (2005-2012) or **HEADLIGHT/BULB, REPLACING** (2003-2004).
- see **CHECKING WIRING AND TERMINALS** .

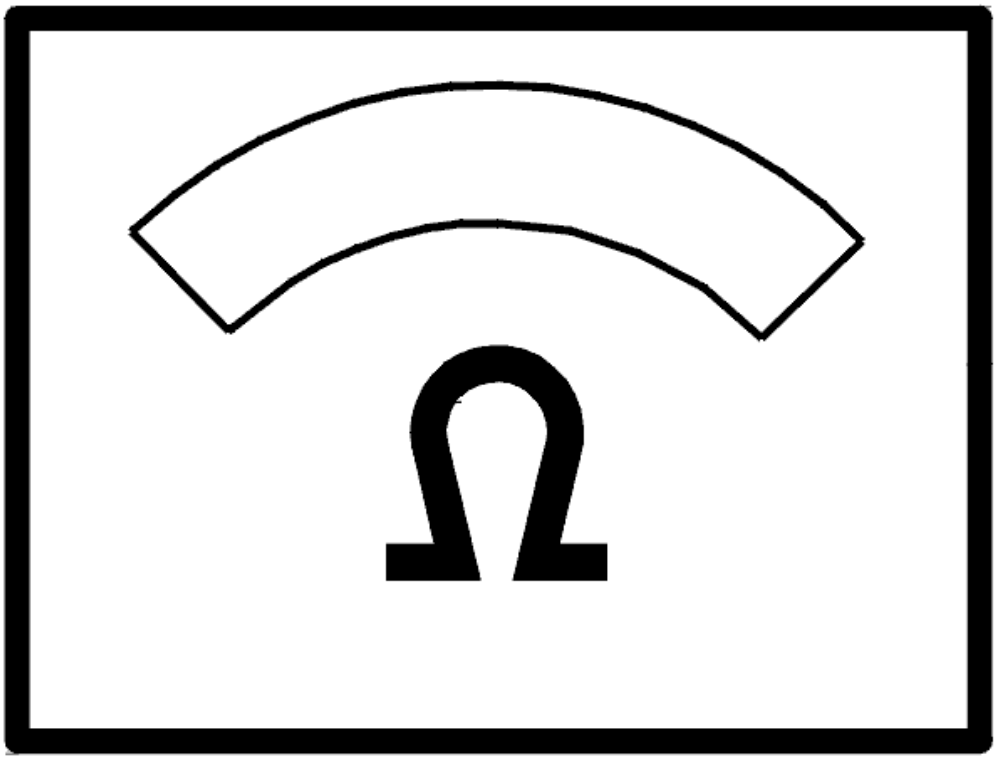

Fig. 33: Identifying Ohmmeter
Courtesy of VOLVO CARS CORPORATION

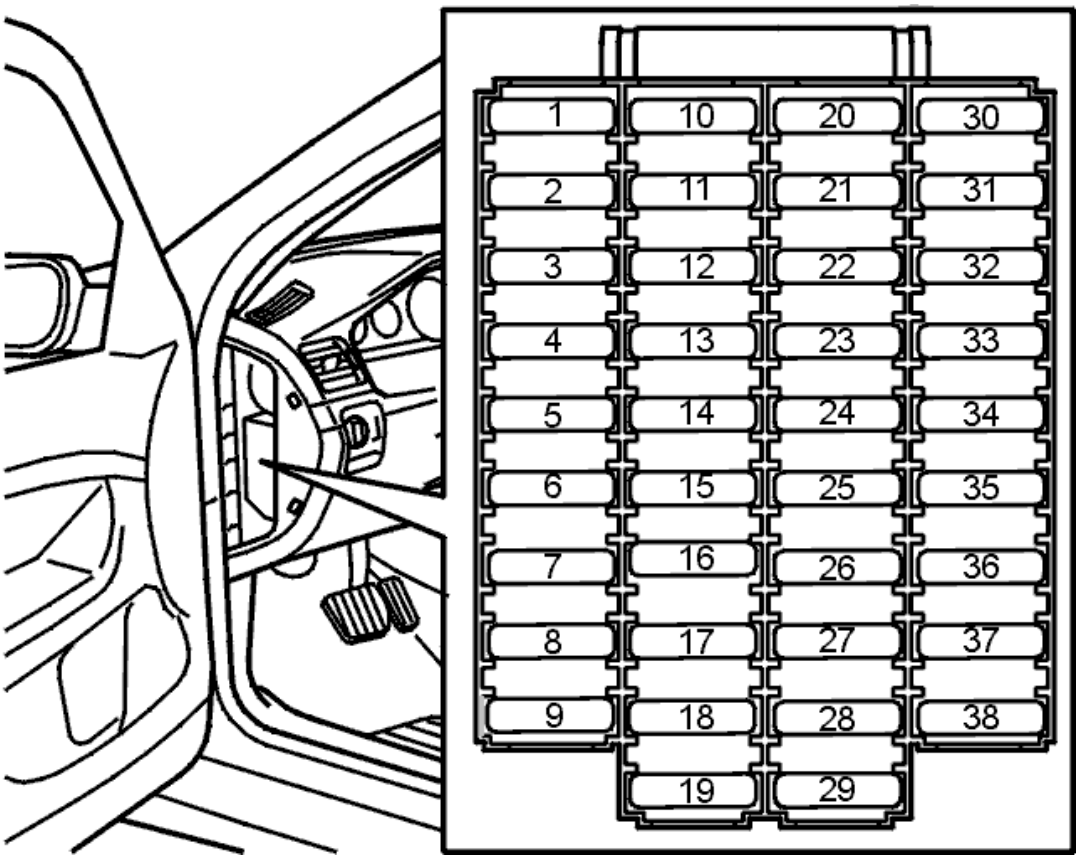

Fig. 34: Fuse Holder (Passenger Compartment)
Courtesy of VOLVO CARS CORPORATION

FAULT-TRACING INFORMATION

Condition

No diagnostic trouble codes (DTCs) are stored.

Substitute Value

None.

Possible Source

- Defective relay.
- Defective shunt low beam.
- Open-circuit or short-circuit to ground in the cable.

Fault symptom[s]

- The front lighting does not function.

CHECKING ELECTRONIC CHILD LOCKS (2003-04)

CHECKING ELECTRONIC CHILD LOCKS

CHECKING THE SWITCH

Check the switch for the child-proof lock by clicking on the VCT2000 symbol.

- Note the number of the switch that corresponds to the location of each switch for the child-proof lock in the car. Start the read off
- Press the switch for electronic child-proof locking several times
- Check on the display that there is a signal from the switch.

Remedy as necessary.

Other information:

- To access or replace the climate control module (CCM), see **CLIMATE CONTROL MODULE (CCM), REPLACING** .

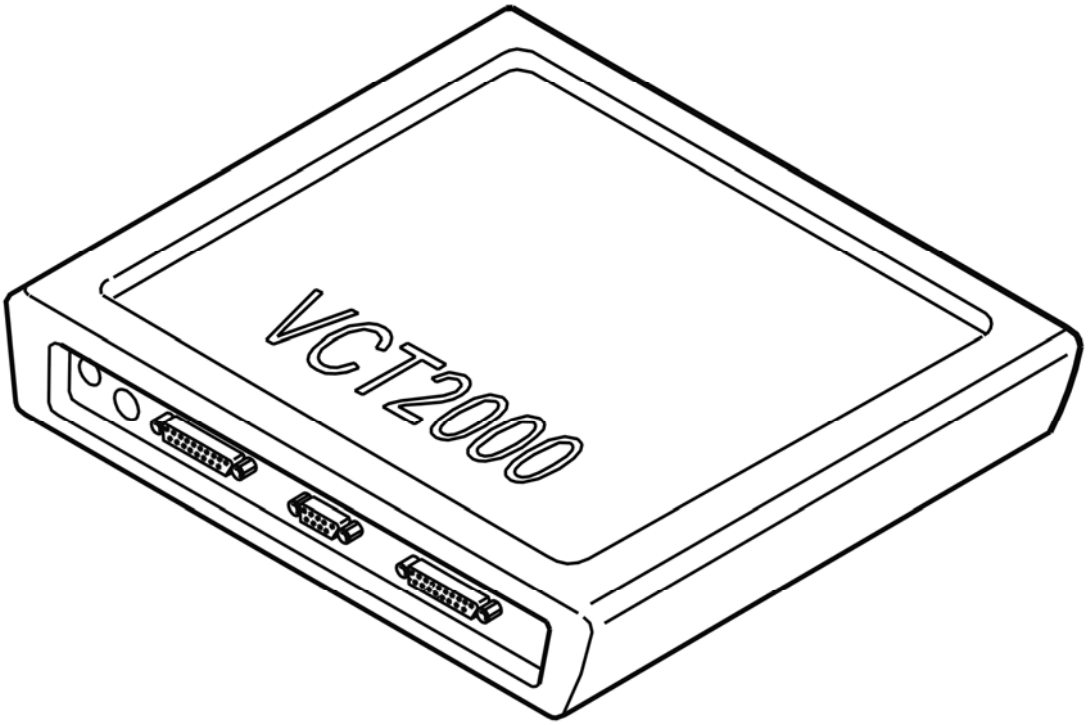

Fig. 35: Identifying VCT2000 Diagnostic Tool Symbol In VIDA

Courtesy of VOLVO CARS CORPORATION

- **Continue**

  Refer to **CHECKING FUSES**

CHECKING FUSES

Check fuses 11C/37 and 11D/8.

Remedy as necessary.

Other information:

- To access and replace the fuses, 11D, see **RELAY/FUSE BOX CARGO COMPARTMENT/REAR ELECTRONIC MODULE (REM), REPLACING**
- Fuse 11C is in the passenger compartment.

- **Continue**

  Refer to **CHECKING THE RELAY**

CHECKING THE RELAY

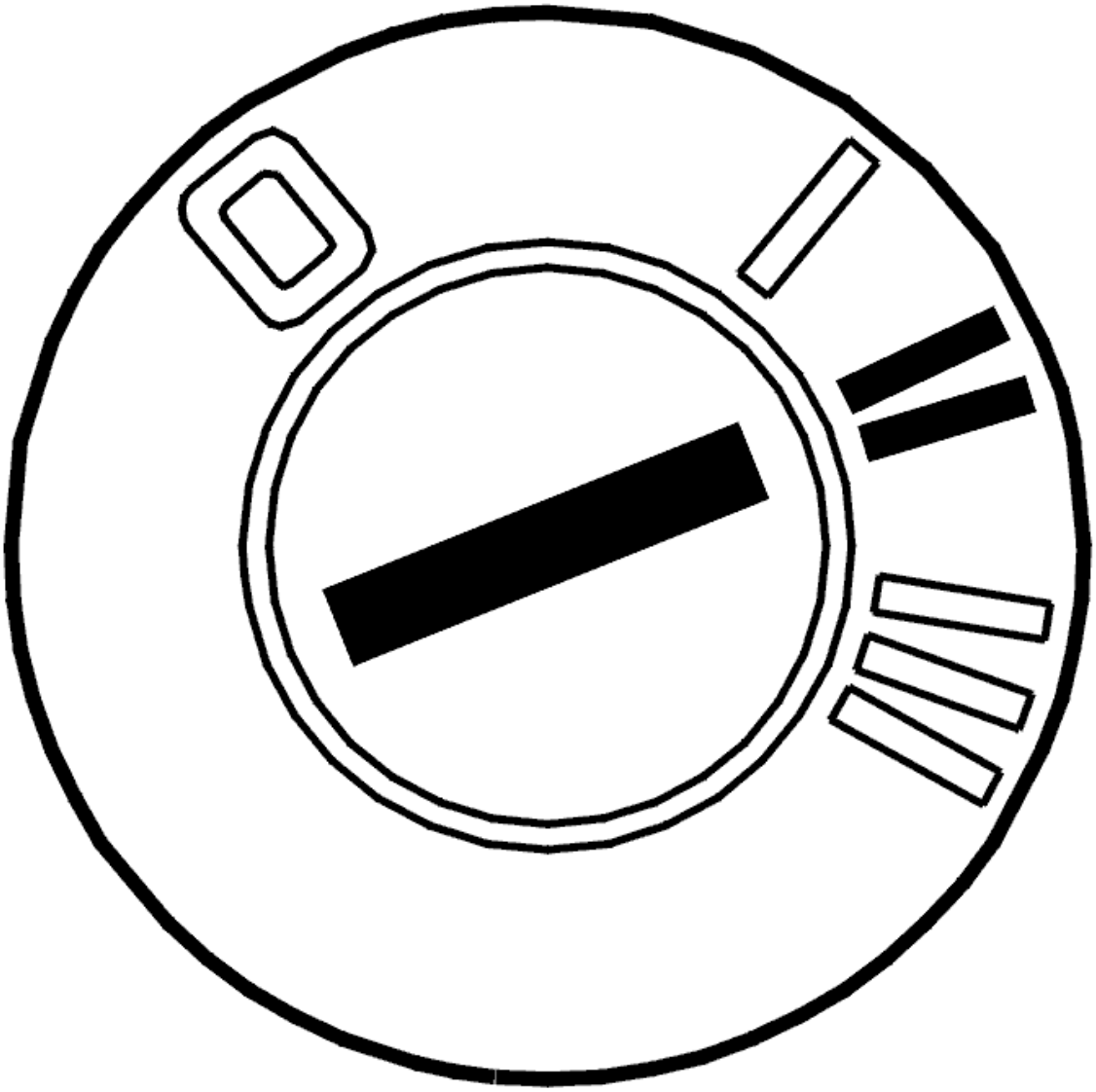

Fig. 36: Identifying Ignition ON
Courtesy of VOLVO CARS CORPORATION

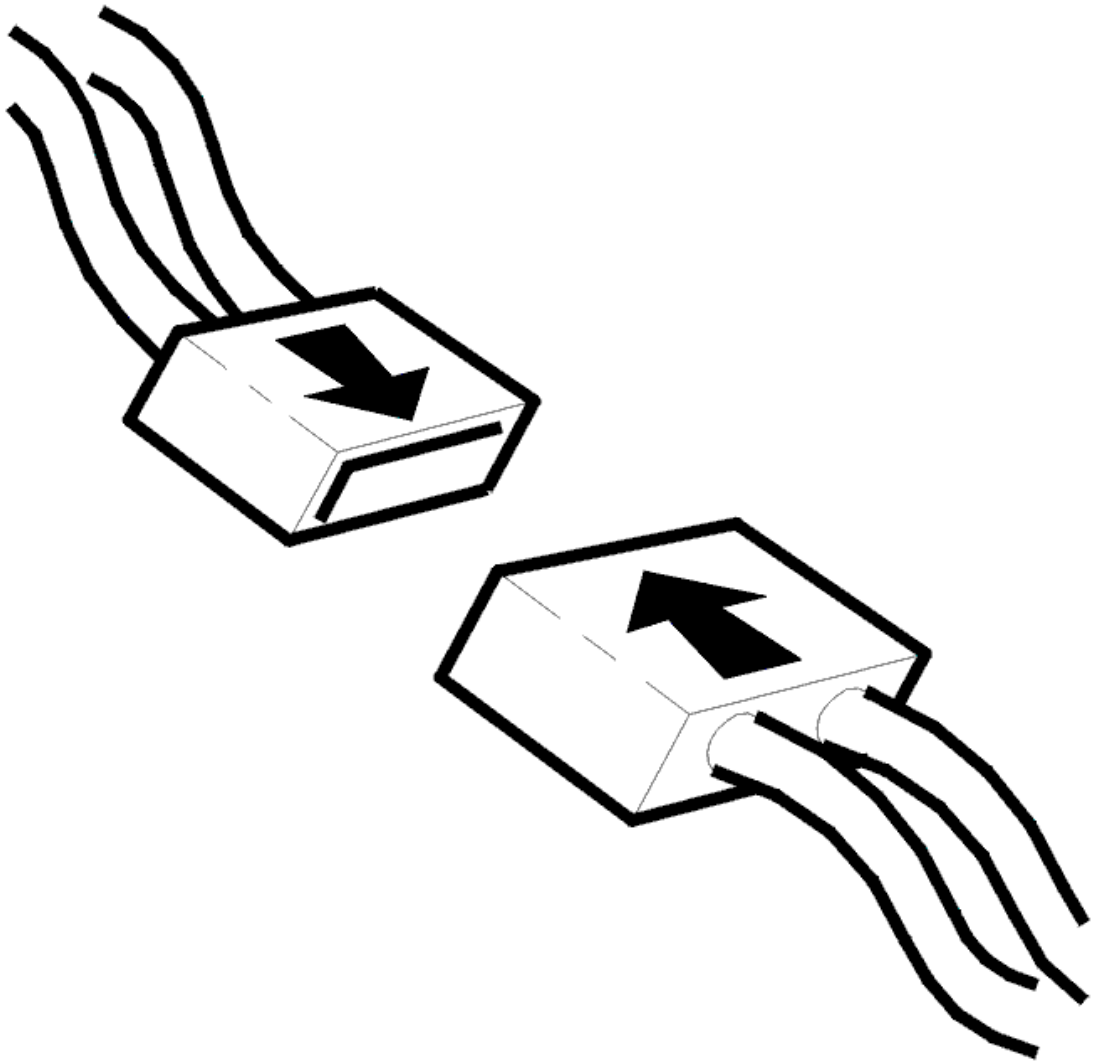

Fig. 37: Connecting Connector
Courtesy of VOLVO CARS CORPORATION

- Ignition off
- Reinstall the connectors, components etc.
- Ignition on.

  Close the rear doors. Activate the child-proof lock using the switch.

Can the doors be opened from the inside?

- **YES**

  Refer to **CHECKING THE SIGNAL CABLE**

- **NO**

  Refer to **CHECKING THE SIGNAL CABLE**

CHECKING THE SIGNAL CABLE

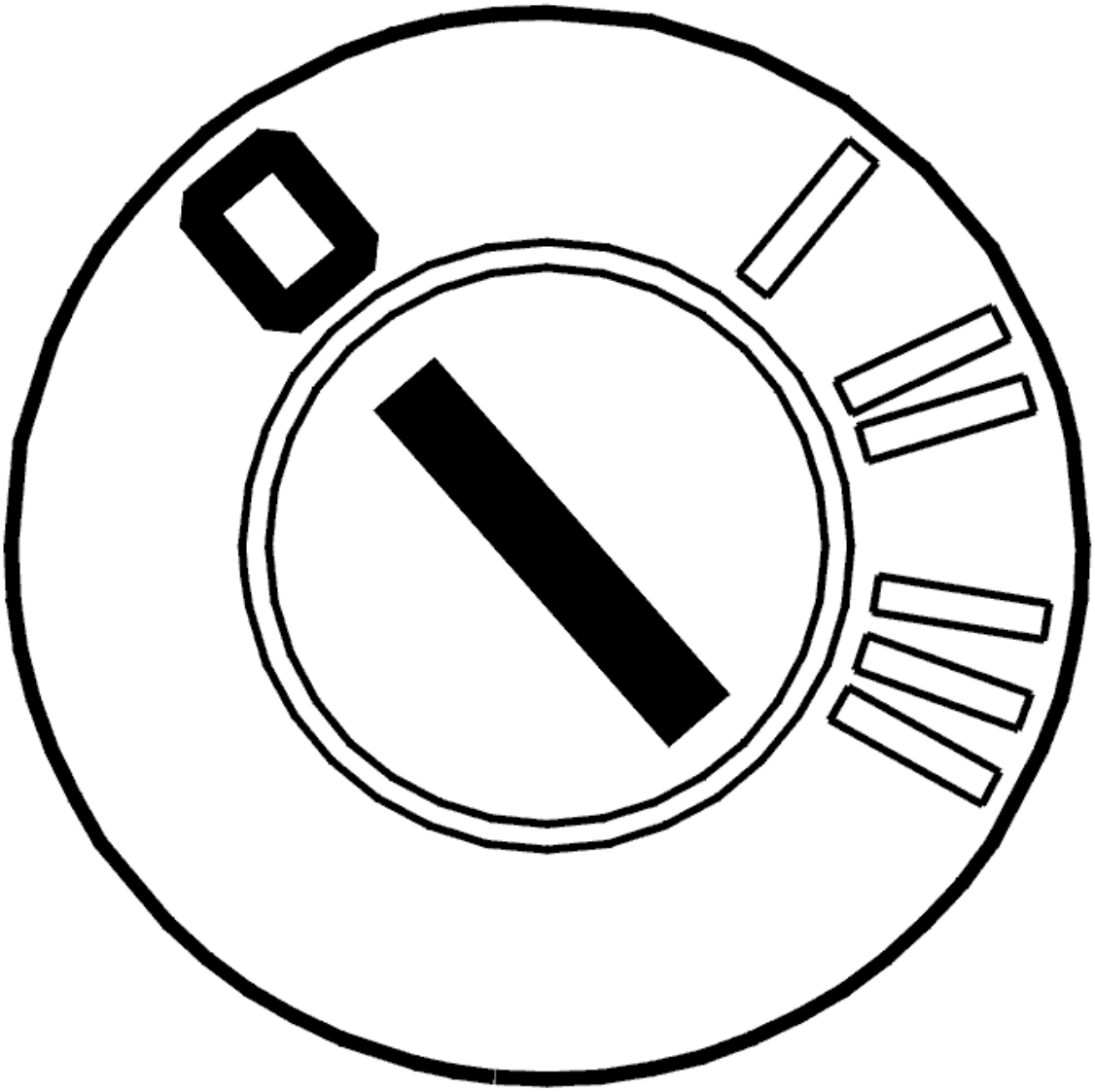

Fig. 38: Identifying Ignition OFF
Courtesy of VOLVO CARS CORPORATION

- Ignition off.

  Check the signal cables below for both the rear doors. Check for a short-circuit to supply voltage. Check for an open-circuit. Check for a short-circuit to ground.

  - Between lock unit connector terminal #3 and the relay holder in the door, terminal #4

- Between the relay holder in the door, terminal #3 and rear electronic module (REM) relay position 2/115 terminal #3.

Remedy as necessary.

Other information:

- To access the lock unit in the rear door, see **LOCK MECHANISM REAR SIDE DOOR, REPLACING**
- To access the integrated relay/fusebox in the cargo compartment:
  - For -2004, see: **RELAY/FUSE BOX CARGO COMPARTMENT/REAR ELECTRONIC MODULE (REM), REPLACING**
  - For 2005-, see: **REAR ELECTRONIC MODULE (REM), REPLACING** .
- see **CHECKING WIRING AND TERMINALS** .

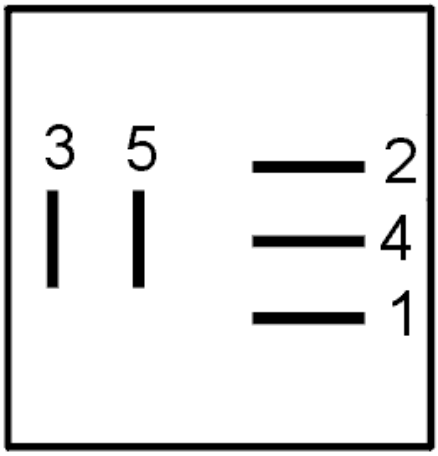

Fig. 39: Identifying Terminals
Courtesy of VOLVO CARS CORPORATION

- **Continue**

Refer to **VERIFICATION**

CHECKING THE SIGNAL CABLE

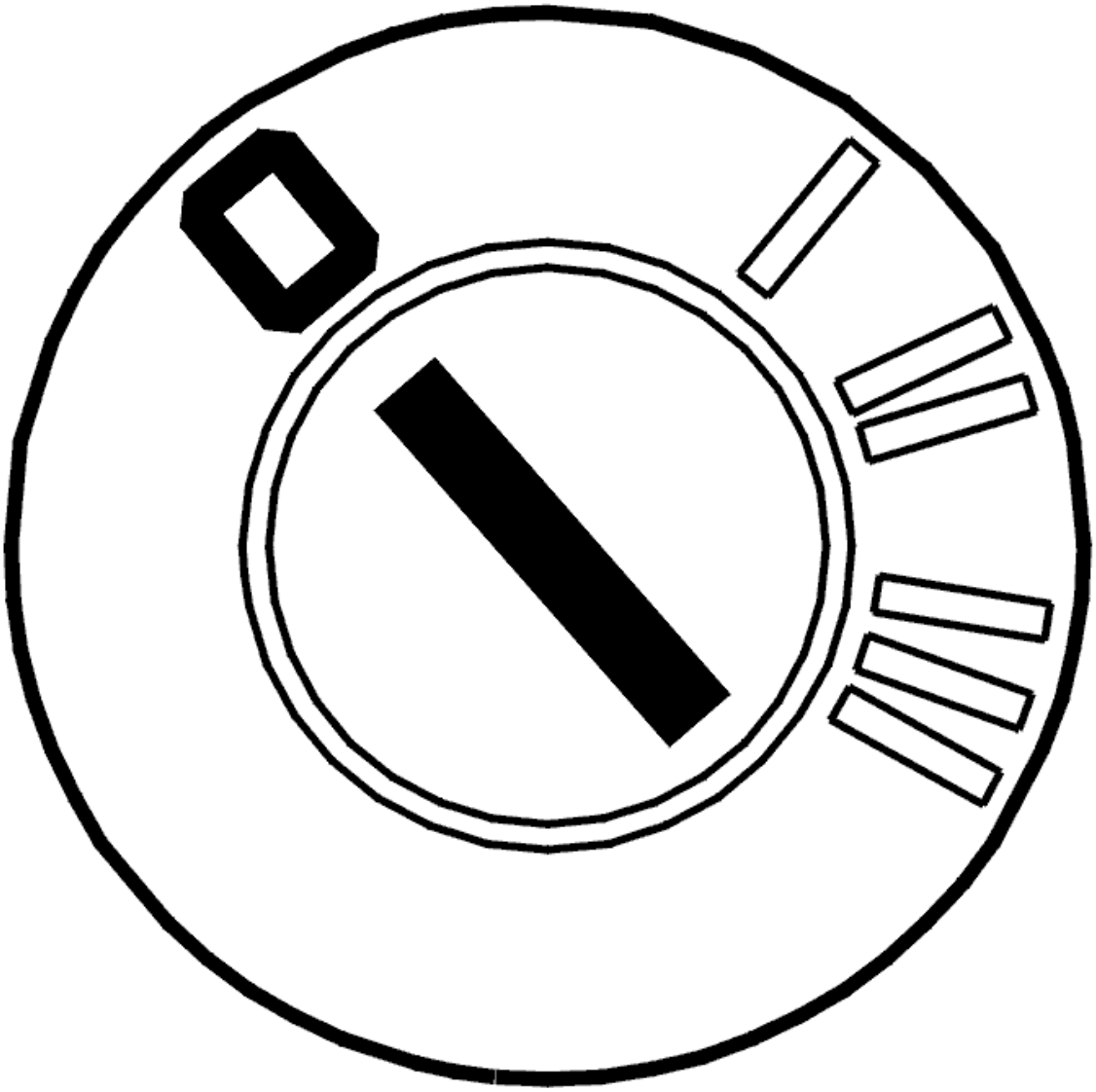

Fig. 40: Identifying Ignition OFF
Courtesy of VOLVO CARS CORPORATION

- Ignition off.

  Check the signal cables below for both the rear doors. Check for a short-circuit to supply voltage. Check for an open-circuit. Check for a short-circuit to ground.

  - Between the relay holder in the door, terminal #2 and ground
  - Between the relay holder in the door, terminal #1 and central electronic module (CEM) relay position 2/120 terminal #3.

  Remedy as necessary.

  Other information:

- To access the central electronic module (CEM), see **CENTRAL ELECTRONIC MODULE (CEM), REPLACING**
- To connect the breakout box, see **CONNECTING THE BREAKOUT BOX**
- see **CHECKING WIRING AND TERMINALS** .

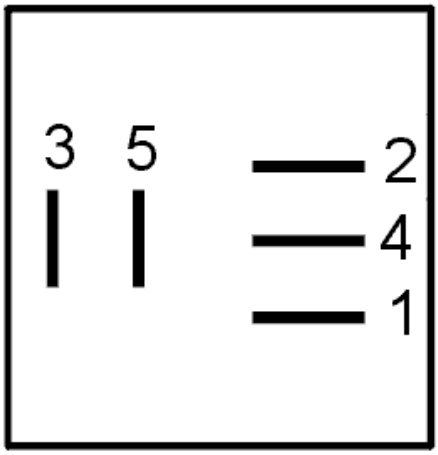

Fig. 41: Identifying Terminals
Courtesy of VOLVO CARS CORPORATION

- **Continue**

  Refer to **VERIFICATION**

VERIFICATION

HINT: After the repair it is necessary to check that the fault has been rectified.

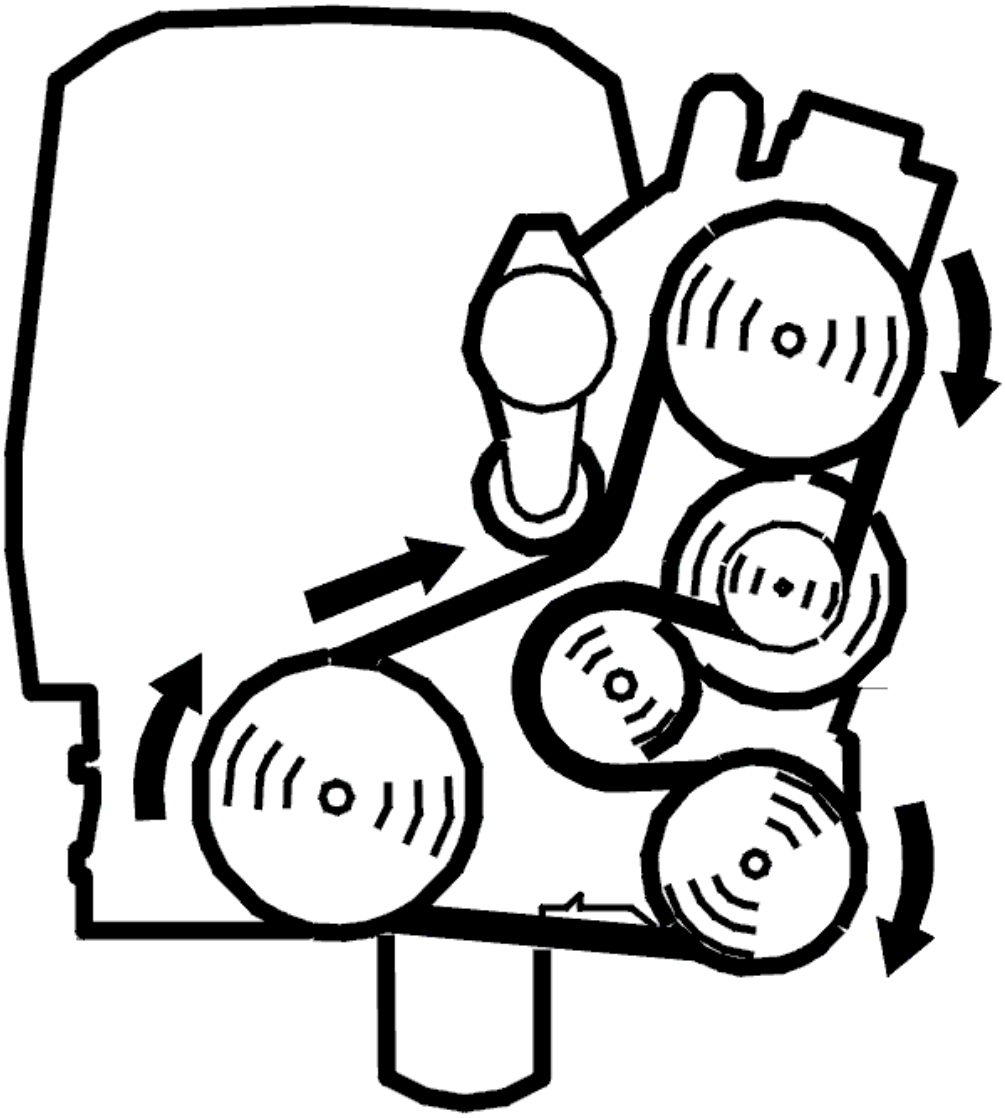

Fig. 42: Belt Routing/Engine Idling - Volvo
Courtesy of VOLVO CARS CORPORATION

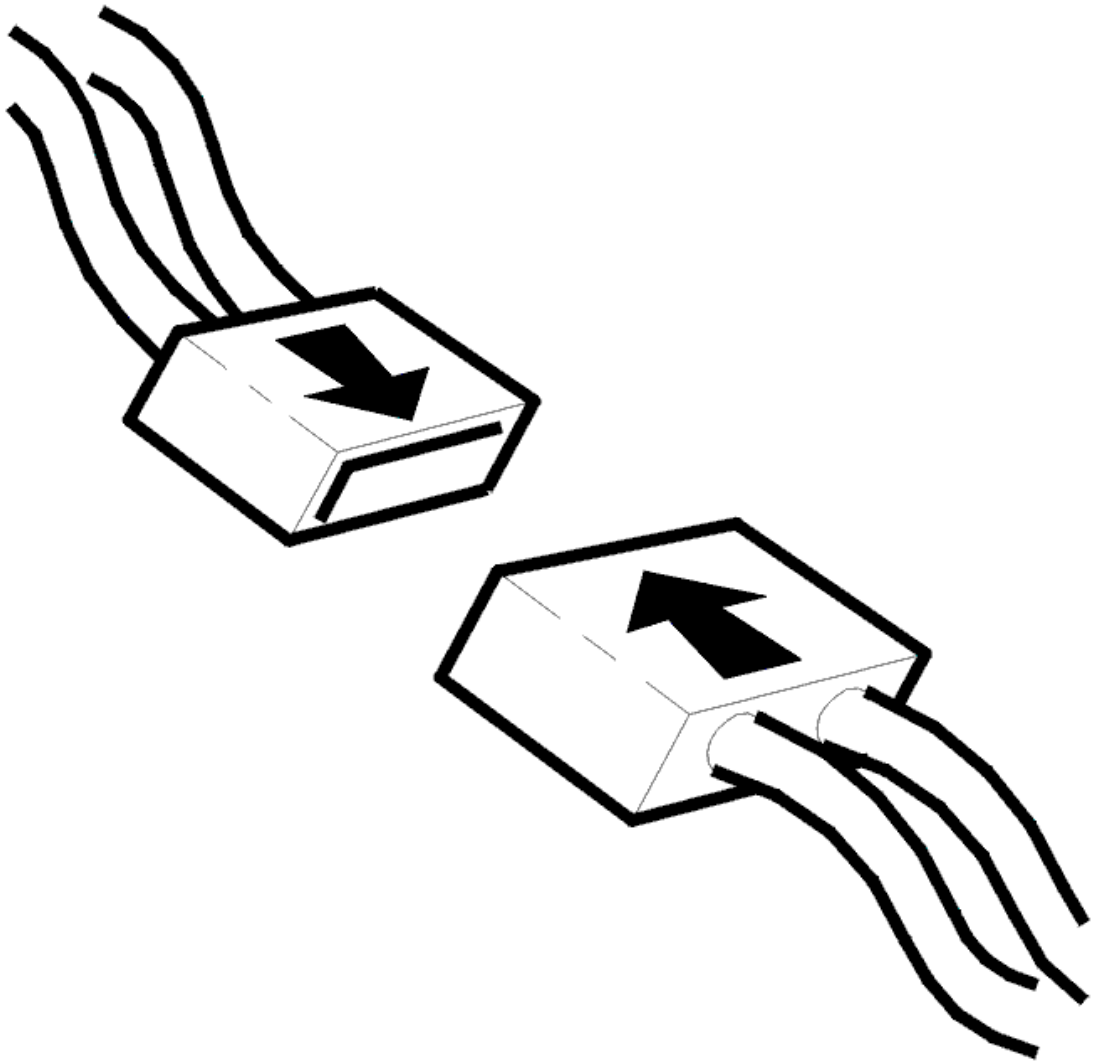

Fig. 43: Connecting Connector
Courtesy of VOLVO CARS CORPORATION

- Ignition off.
- Connect connectors, install components, etc.
- Disconnect the starter motor connector.
- Try to start the engine with the gear lever in any position other than P or N.
- Connect the starter motor connector.

Check that diagnostic trouble code status changes from permanent to intermittent.

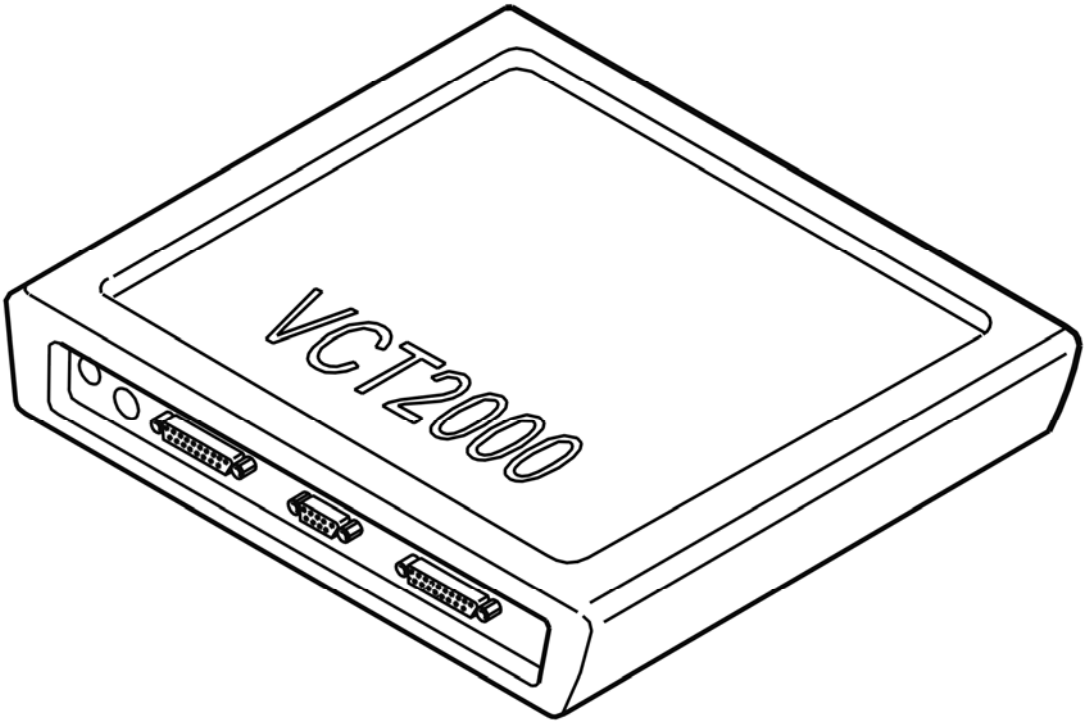

Fig. 44: Identifying VCT2000 Diagnostic Tool Symbol In VIDA
Courtesy of VOLVO CARS CORPORATION

Is the diagnostic trouble code status intermittent?

- **YES**

  VERIFIED: Troubleshooting has been completed.

- **NO**

  Refer to **INFORMATION**

INFORMATION

FAULT-TRACING INFORMATION

The fault should have been detected and remedied. As this is not the case fault-tracing has failed.

Exit fault-tracing for this diagnostic trouble code (DTC) or make another attempt.

FAULT-TRACING INFORMATION

Condition

No DTCs stored.

Possible Source

- Open-circuit, short-circuit to ground or short-circuit to supply voltage in the cable.
- Defective relay.

Fault symptom[s]

- The child-proof lock does not function.

CHECKING EXTRA LAMP (2003-04)

CHECKING EXTRA LAMP

CHECKING RELAY AND WIRES

NOTE: Trouble-shooting is only relevant to vehicles equipped with an extra lamp. The relay to the extra lamp is part of the cable to the extra lamp. The extra lamp is connected to connector 54/8.

Check relay (2/64).

HINT: The voltage on coil supply 2 should be 12 V.

HINT: The voltage on the relay contacts should be 12 V on pin 4. With the extra lamp switched on the voltage should also be 12 V on 3.

Check the wire between relay contact 4 and fuse 10 in the engine compartment fuse box (11B/10).

Check that the fuse is intact.

Check the wire between relay contact 3 (2/64) and front extra lamp 1 (10/69 front left extra lamp and 10/65 front right extra lamp respectively).

HINT: Ground connection to extra lamp at 2.

Check the connector.

Additional information

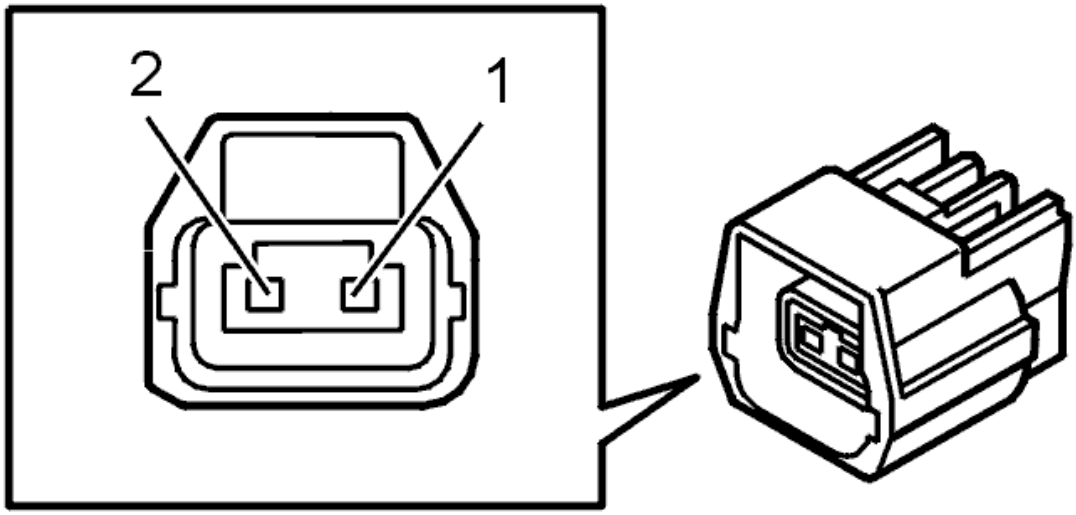

Fig. 45: Identifying Connector Terminals
Courtesy of VOLVO CARS CORPORATION

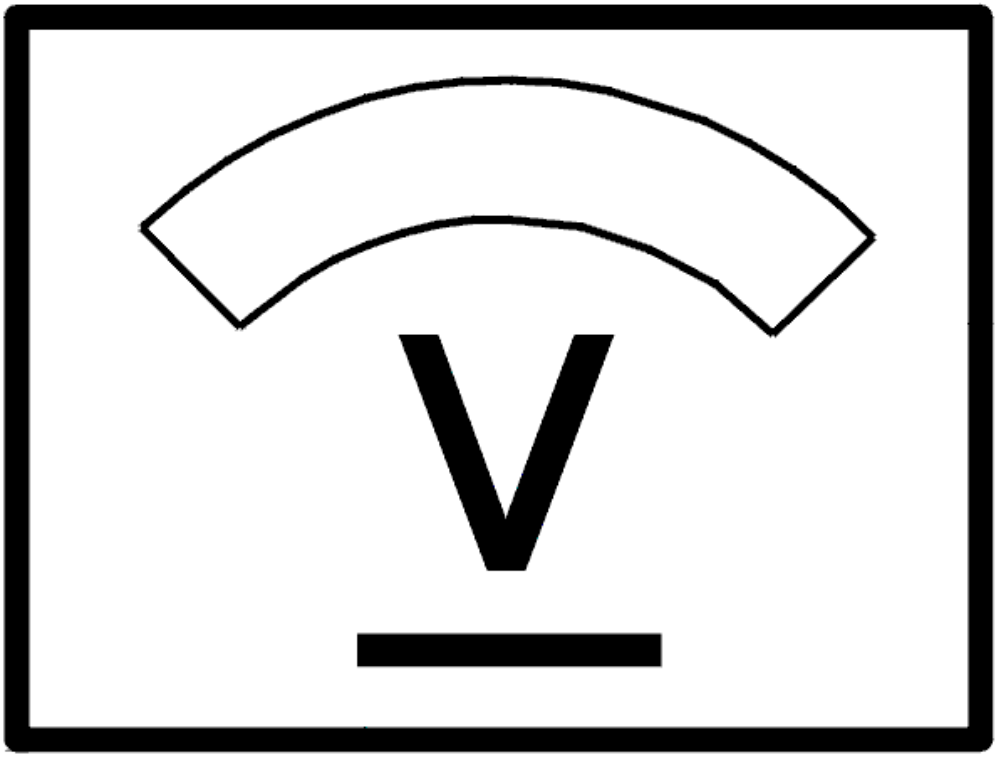

Fig. 46: Identifying Voltage Display
Courtesy of VOLVO CARS CORPORATION

TROUBLE-SHOOTING INFORMATION

Condition

No diagnostic trouble codes are stored.

The vehicle is fitted with an extra lamp.

Substitute Value

None.

Possible Source

- Faulty relay.
- Open circuit or short-circuit to ground in the wire.
- Faulty extra lamp.

Fault symptom[s]

- Front lamp is not working.

CHECKING FOR SHORT CIRCUIT ON CAN BUS SYSTEM, LOW SPEED NETWORK (2003-04)

CHECKING FOR A SHORT-CIRCUIT IN THE CAN BUS SYSTEM, LOW SPEED NETWORK

CHECKING FOR A SHORT-CIRCUIT

Disconnect the upper electronic module from the bus cable (disconnect the connector from the control module).

Measure the resistance at the connector between terminals #3 and #5. The resistance must be 120 ohms.

NOTE: Take care that you measure directly at the connector so that it is not damaged.

If the resistance is 0 ohms between the terminals, there short-circuit somewhere in the bus system.

Other information:

- To connect the breakout box to the upper electronic module, see **CONNECTING THE BREAKOUT BOX**

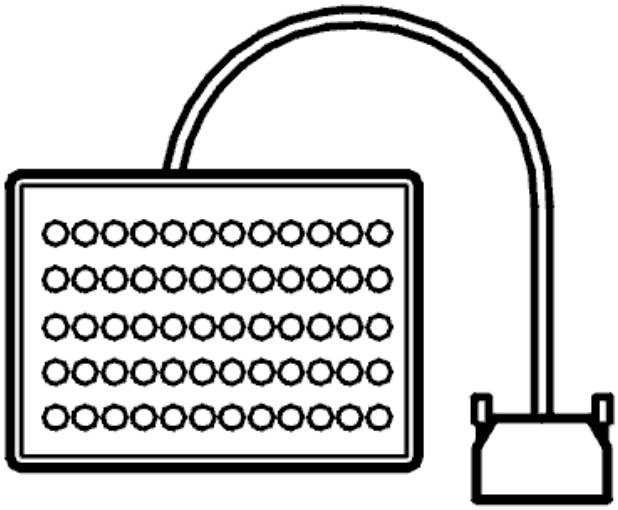

Fig. 47: Breakout Box
Courtesy of VOLVO CARS CORPORATION

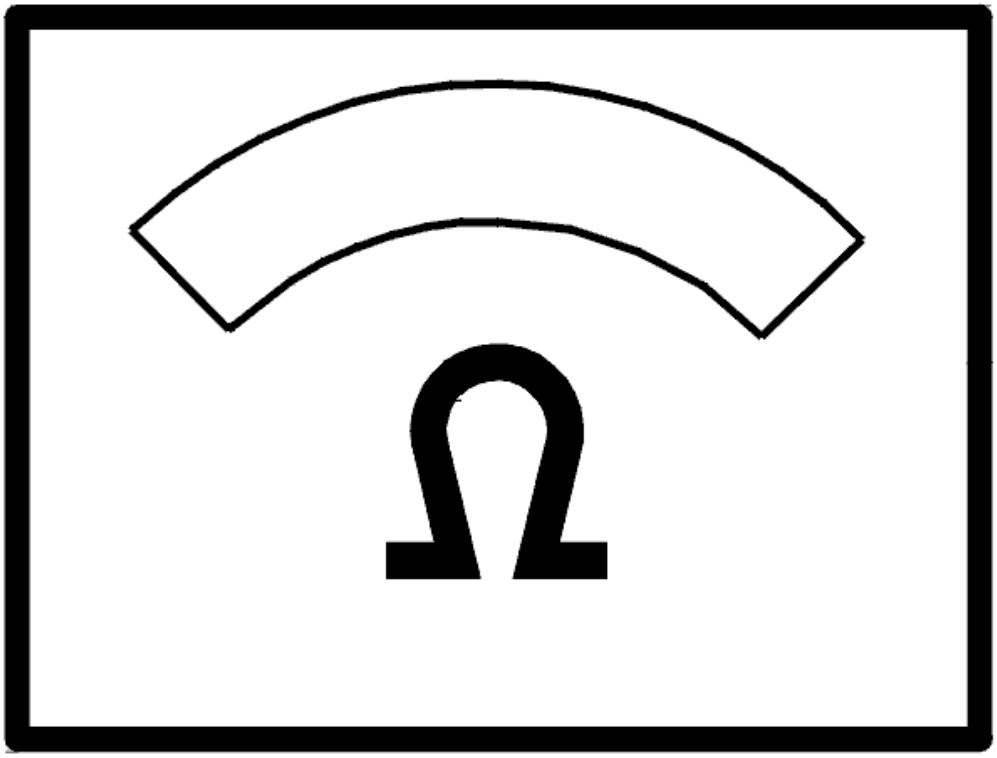

Fig. 48: Identifying Ohmmeter
Courtesy of VOLVO CARS CORPORATION

Is the resistance 0 ohms?

- **YES**

  Refer to **CHECKING THE CONNECTORS AND BUS CABLE, PERMANENT**

- **NO**

  Refer to **FAULT-TRACING INFORMATION**

CHECKING THE CONNECTORS AND BUS CABLE, PERMANENT

Locate the bus cable. Check the wiring in different stages to localize where in the bus the fault is (the fault may

be anywhere in the bus cable).

HINT: It is possible to get an approximate location of the fault by checking which functions are not working in the car and then relating the functions to the relevant control module.

HINT: Remember that the CAN bus is a communication network. There are no fuses, switches or sensors.

Short-circuit between the bus cables: Use an ohmmeter between the cables to find short-circuits between them. If the reading is 0 ohms between the CAN bus cables there is a short-circuit between them. In particular check the pins and terminals in this way. See **CONTACT RESISTANCE AND OXIDATION** .

Other information:

- To connect the breakout box to the upper electronic module, see **CONNECTING THE BREAKOUT BOX**

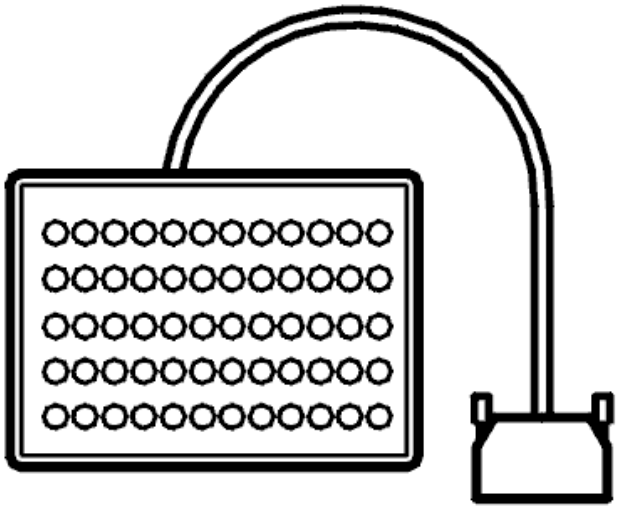

Fig. 49: Breakout Box
Courtesy of VOLVO CARS CORPORATION

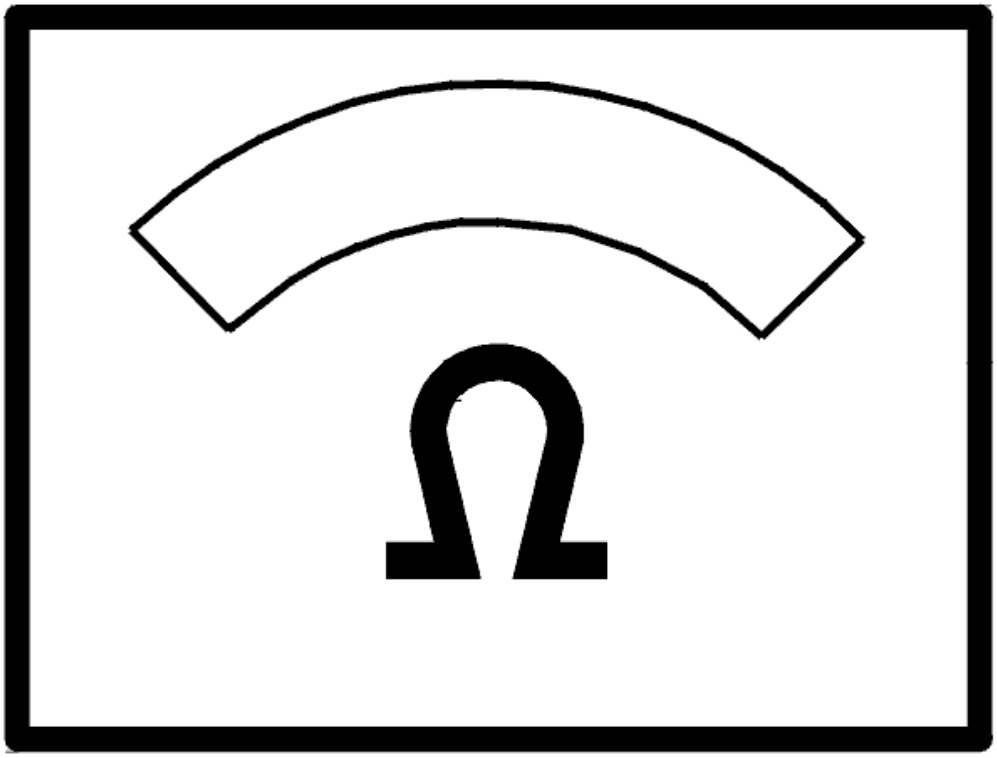

Fig. 50: Identifying Ohmmeter
Courtesy of VOLVO CARS CORPORATION

FAULT-TRACING INFORMATION

No fault detected in this fault-tracing.

TROUBLE-SHOOTING INFORMATION

Condition

No diagnostic trouble codes are displayed.

Possible Source

- Short circuit between bus wires

- Contact resistance and oxidation.

Fault symptom[s]

- No indicators are working
- Central locking does not work
- Interior lighting does not work.

CHECKING FRONT FOG LAMP (2003-04)

CHECKING FRONT FOG LAMP

CHECKING RELAY AND WIRES

Check wires to fog lamp for, see **OPEN-CIRCUIT, PERMANENT FAULTS** , **SHORT-CIRCUIT TO GROUND, PERMANENT FAULTS** and **CONTACT RESISTANCE AND OXIDATION** .

Check relay (2/34).

HINT: The voltage across the relay should be 12 V at pins 1 and 3 when the fog lamp is on.

Check the wire between 3 and fuse number 3 in the interior compartment fuse box (11 C/3).

Check that the fuse is intact.

Check the wire between relay 1 (2/34) and front fog lamp 1 (10/5 left front fog lamp and 10/6 right front fog lamp).

HINT: Ground connection to fog lamp at 2.

Check the connector.

Additional information

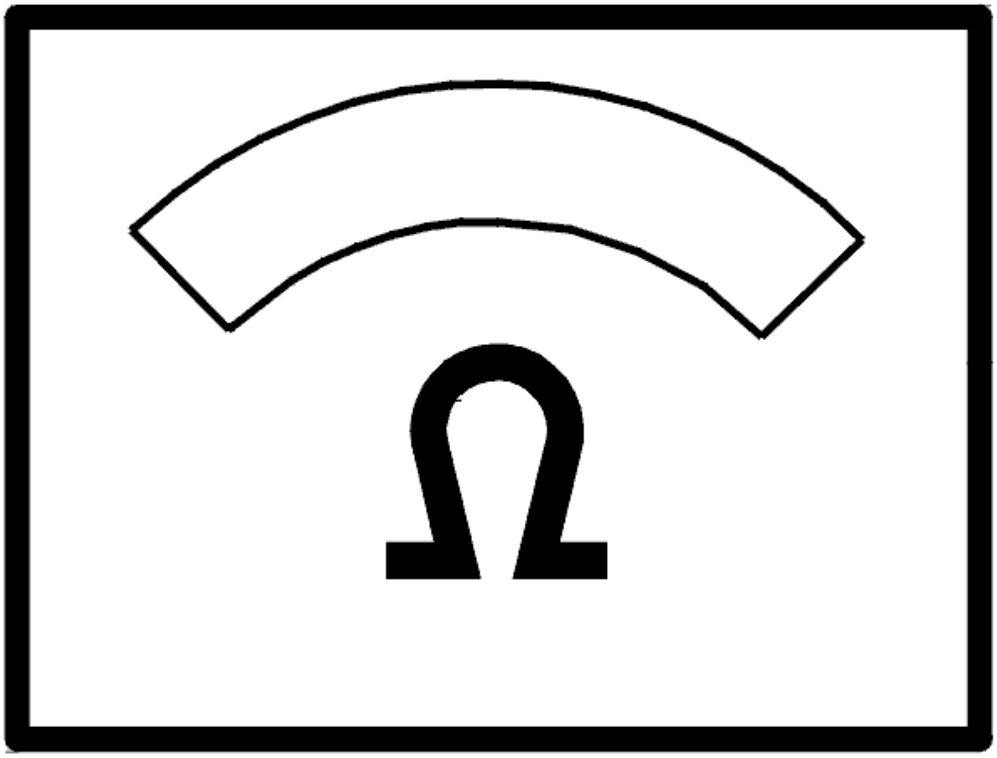

Fig. 51: Identifying Ohmmeter
Courtesy of VOLVO CARS CORPORATION

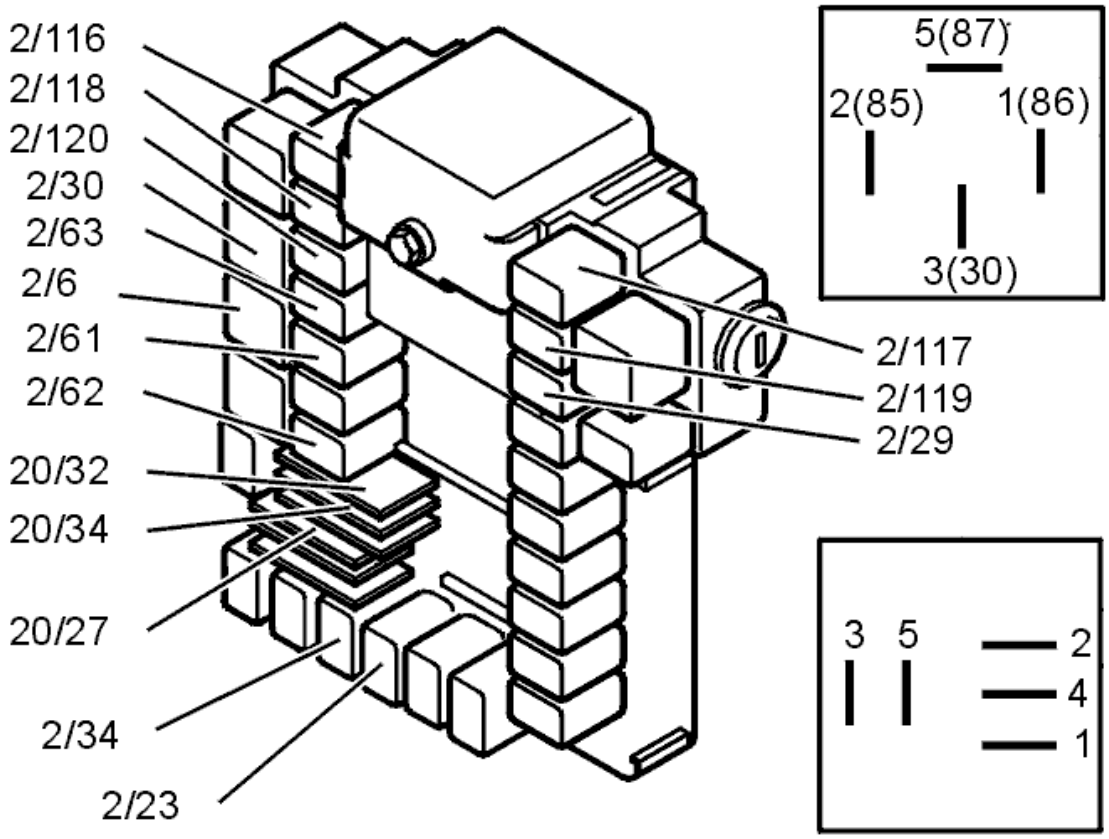

Fig. 52: Identifying Relays
Courtesy of VOLVO CARS CORPORATION

TROUBLE-SHOOTING INFORMATION

Condition

No diagnostic trouble codes are stored.

Substitute Value

None.

Possible Source

- Faulty relay
- Open circuit or short-circuit to ground in the wire.

Fault symptom[s]

- Front fog lamp is not working.

CHECKING FUSES (2005-12)

CHECKING FUSES

FAULT-TRACING INFORMATION

Missing function may be due to a blown fuse.

Check that the fuse for the function in question is intact.

- **Continue**

  Refer to **VERIFICATION**

VERIFICATION

HINT: After carrying out the repair, check that the fault has been remedied.

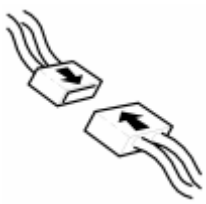

Fig. 53: Identifying Connector(s) Reinstallation
Courtesy of VOLVO CARS CORPORATION

Fig. 54: Checking Traffic Load On CAN Cables
Courtesy of VOLVO CARS CORPORATION

- Ignition off.
- Reinstall the connectors, components etc.
- Ignition on.

  Check that the function in question is OK.

Is the function OK?

- **YES**

  VERIFIED: Troubleshooting has been completed.

- **NO**

Refer to **INFORMATION**

INFORMATION

FAULT-TRACING INFORMATION

The fault should have been detected and remedied. As this is not the case fault-tracing has failed.

Exit fault-tracing for this diagnostic trouble code (DTC) or make another attempt.

CHECKING FUSES (2005-12)

CHECKING FUSES

FAULT-TRACING INFORMATION

Loss of power steering function may be due to a blown fuse.

Check that fuse is intact.

If the fuse has blown, check the circuit after the fuse before replacing the fuse. Check for a short-circuit to ground.

It is important that all cables and components are checked.

- **Continue**

  Refer to **VERIFICATION**

VERIFICATION

HINT: After carrying out the repair, check that the fault has been remedied.

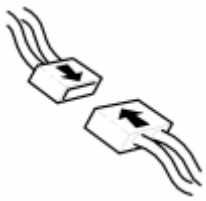

Fig. 55: Identifying Connector(s) Reinstallation
Courtesy of VOLVO CARS CORPORATION

Fig. 56: Checking Traffic Load On CAN Cables
Courtesy of VOLVO CARS CORPORATION

- Ignition off.
- Reinstall the connectors, components etc.
- Ignition on.

  Check that the function in question is OK.

Is the function OK?

- **YES**

  VERIFIED: Troubleshooting has been completed.

- **NO**

  Refer to **INFORMATION**

INFORMATION

FAULT-TRACING INFORMATION

The fault should have been detected and remedied. As this is not the case fault-tracing has failed.

Exit fault-tracing for this diagnostic trouble code (DTC) or make another attempt.

CHECKING HEADLAMP (2003-04)

CHECKING HEADLAMP

CHECKING RELAY AND WIRES

Check relay (2/63).

HINT: The voltage should be 12 V at pins 1 and 3 when main beam is on.

Check the wire between 3 and fuse number 1 in the engine compartment fuse box (11B/1).

Also check the connector and fuse.

Check the wire between 1 (2/63) and interior compartment fuse number 10 (left main beam) and number 11 (right main beam) and the fuses.

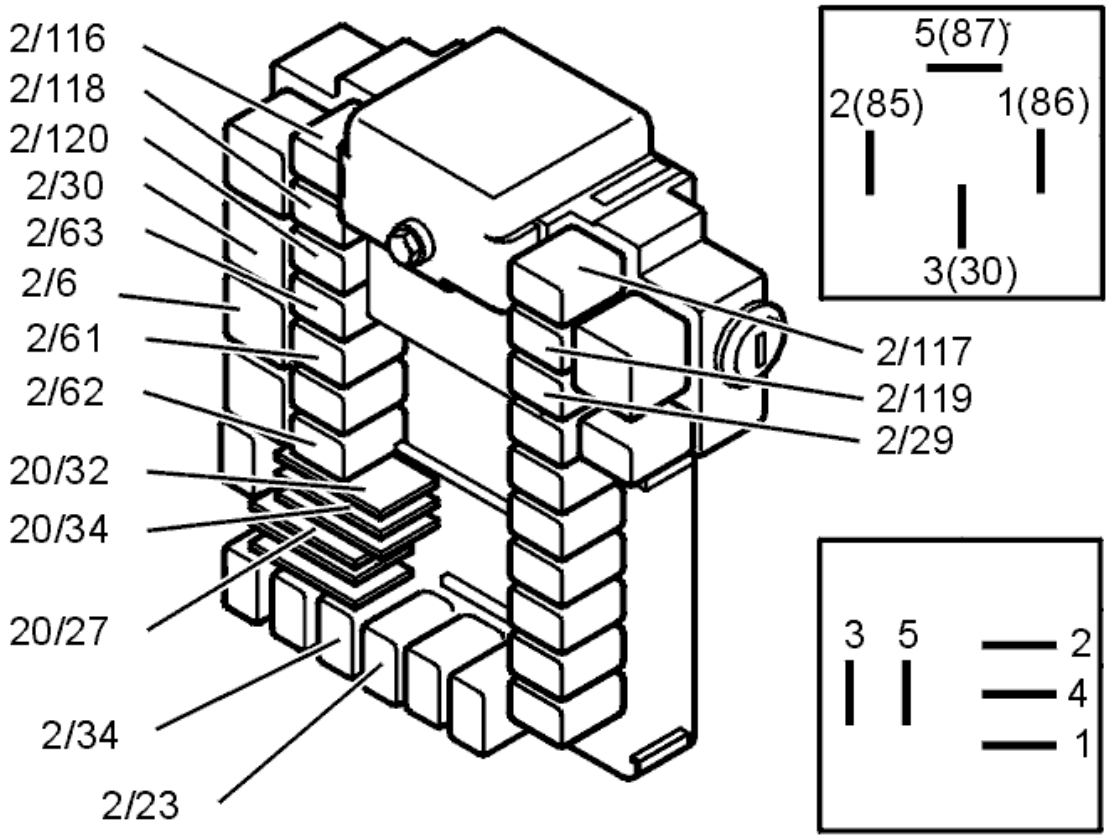

Fig. 57: Identifying Relays
Courtesy of VOLVO CARS CORPORATION

Is there a fault?

- **YES**

  OKAY: Troubleshooting has been completed.

- **NO**

  Refer to **CHECKING THE WIRES**

CHECKING THE WIRES

HINT: Depending on which headlamp is not working, check for faults on the left or right headlamp.

Check interior compartment fuse number 10 (left main beam) and number 11 (right main beam).

Check the wire between the interior compartment fuse and front lamp housing 4 (10/1 for left main beam and 10/2 for right main beam).

Also check the connectors

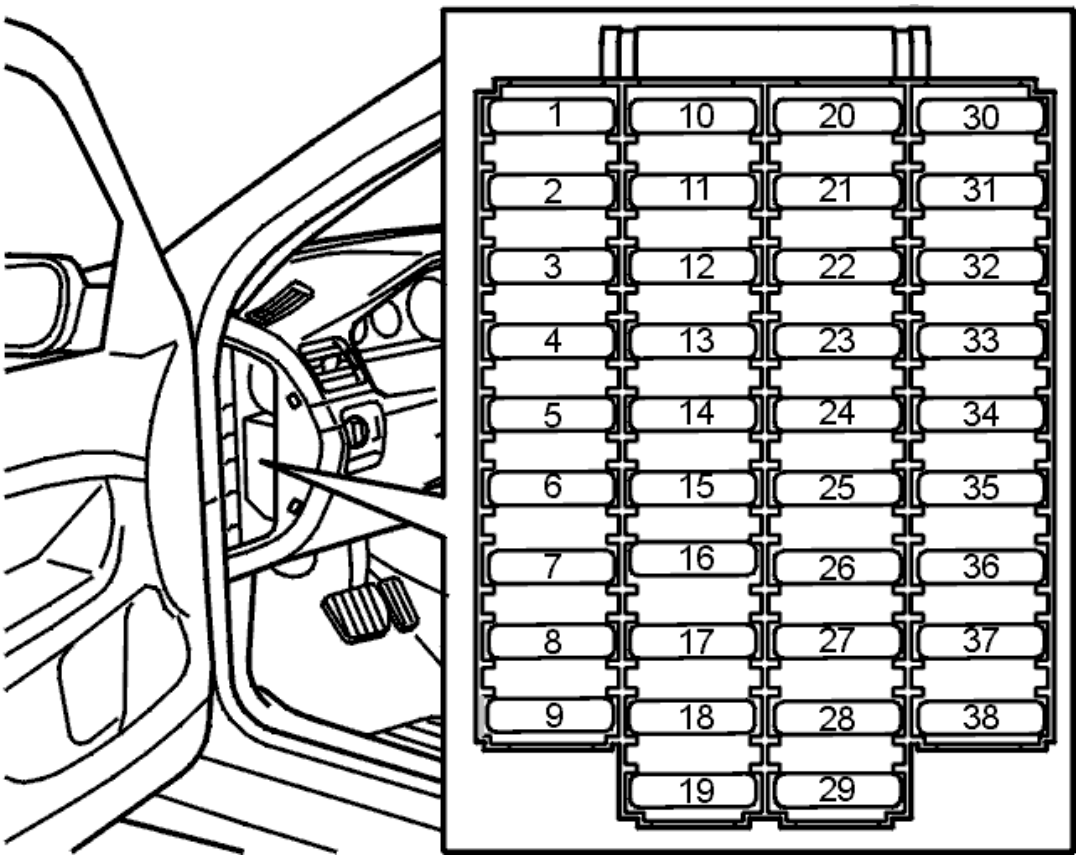

Fig. 58: Fuse Holder (Passenger Compartment)
Courtesy of VOLVO CARS CORPORATION

TROUBLE-SHOOTING INFORMATION

Condition

No diagnostic trouble codes are stored.

Substitute Value

None.

Possible Source

- Faulty relay
- Open circuit or short-circuit to ground in the wire.

Fault symptom[s]

- Front lamp is not working.

CHECKING IMPACT STATUS (2005-12)

CHECKING IMPACT STATUS

Fig. 59: Checking Traffic Load On CAN Cables
Courtesy of VOLVO CARS CORPORATION

It may occur that the Central electronic module (CEM) incorrectly perceives that the vehicle's impact protection has been activated, without that being the case. This means that Central electronic module (CEM) does not allow operation of the fuel pump in ignition position II, and does not allow start of parking-/auxiliary heater.

Correct function is returned by resetting impact status in Central electronic module (CEM).

Fig. 60: Identifying VCT2000 Diagnostic Tool Symbol In VIDA
Courtesy of VOLVO CARS CORPORATION

- Click the VCT2000 symbol to read off the value. If the value is "Airbag deployed", reset shall be performed.
- Click on Restore if the value is to be changed.
- Read and then delete all diagnostic trouble codes for Engine control module (ECM) (when other troubleshooting is done).

NOTE: It is important to reset impact status for Engine control module (ECM).

- Then turn off the ignition and wait for at least 2 minutes. Turn on the ignition again and check the function.

CHECKING LEAKS FROM THE SUN ROOF (2003-12)

CHECKING LEAKS FROM THE SUN ROOF

CHECKING WATER LEAKS

If water stops in the drainage frame, check that the drain hoses are not clogged.

Check that the glass panel is properly adjusted and the sun roof is properly calibrated.

If the glass panel or its seal is damaged, replace the glass panel.

Check the connection to the front drain channel for leaks. Remedy any leaks with sealant.

Check drain hoses and their connections.

Remedy as necessary:

Other information

- see **SUN ROOF, ADJUSTING**
- see **SUN ROOF, LEAK TEST**
- see **GLASS SUN ROOF, REPLACEMENT**

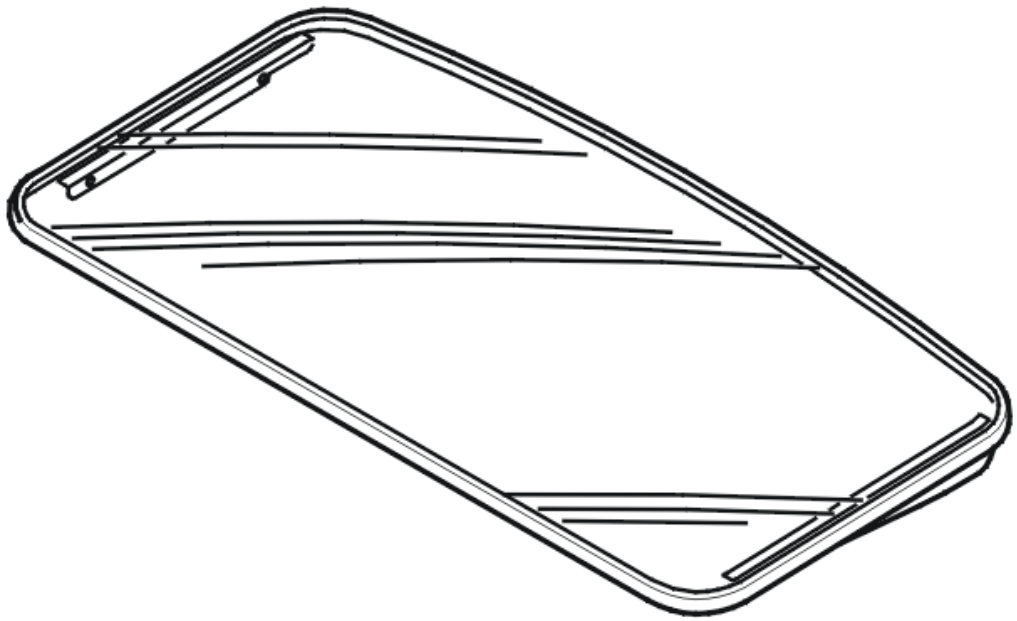

Fig. 61: Identifying Sun Roof Glass Panel
Courtesy of VOLVO CARS CORPORATION

- **Continue**

  Refer to **FUNCTIONALITY CHECK**

FUNCTIONALITY CHECK

Check that the sun roof does not leak.

Is the sun roof function OK?

- **YES**

  OKAY: Troubleshooting has been completed.

- **NO**

  Refer to **INFORMATION**

INFORMATION

FAULT-TRACING INFORMATION

The fault should be diagnosed and remedied. Since this is not the case the fault-tracing process has failed.

Complete the fault-tracing for those fault or try again.

SUN ROOF, LEAK TEST

- See **SUN ROOF, LEAK TEST** .

TROUBLE-SHOOTING INFORMATION

Condition

No diagnostic trouble codes are displayed.

Substitute Value

None.

Possible Source

- Improperly adjusted sun roof.
- Cracks in the sun roof.
- Poorly fastened sealing strip.

Fault symptom[s]

- Water leaks from the sun roof.

CHECKING LOCKING TO DEADLOCK (2003-04)

CHECKING LOCKING TO DEADLOCK

SELECTING A DOOR

NOTE: The fault-tracing assumes that unlocking / locking with the central locking system functions normally.

Which door does it apply to?

1. Front door. Refer to **CHECKING THE FRONT DOOR**
2. Rear door. Refer to **CHECKING REAR DOORS**.

CHECKING THE FRONT DOOR

Check the control module connector terminal #B1 and the lock unit connector terminal #6. Check for contact resistance and oxidation. Check the intermediate cable. Check for an open-circuit.

Other information

- see **CHECKING WIRING AND TERMINALS** .

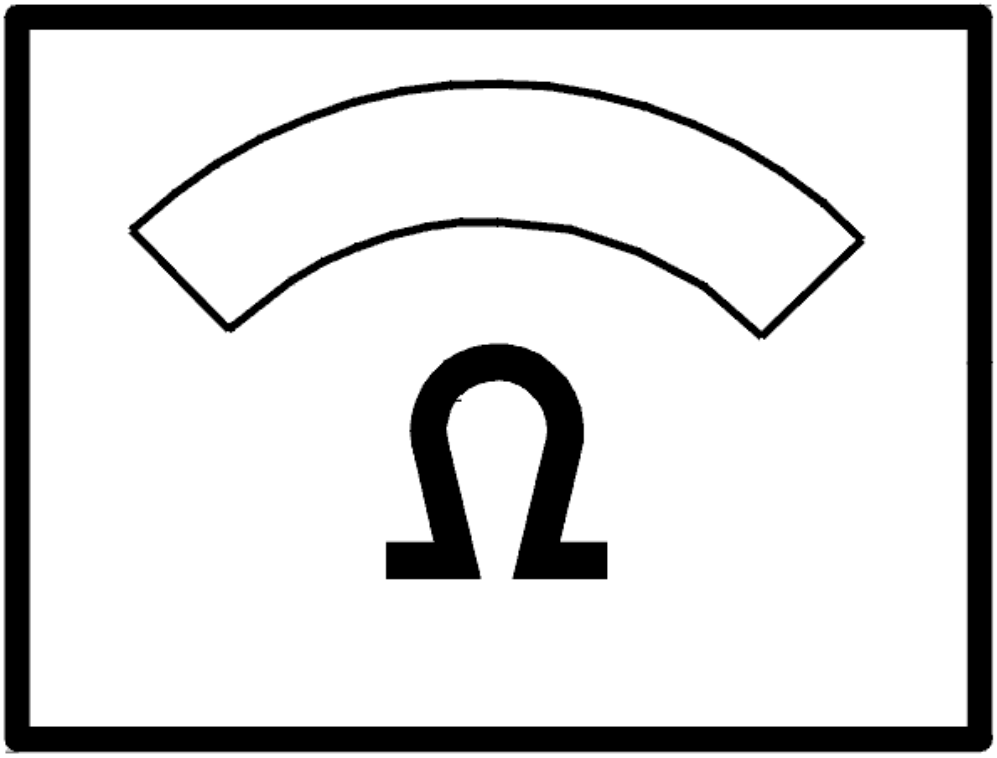

Fig. 62: Identifying Ohmmeter
Courtesy of VOLVO CARS CORPORATION

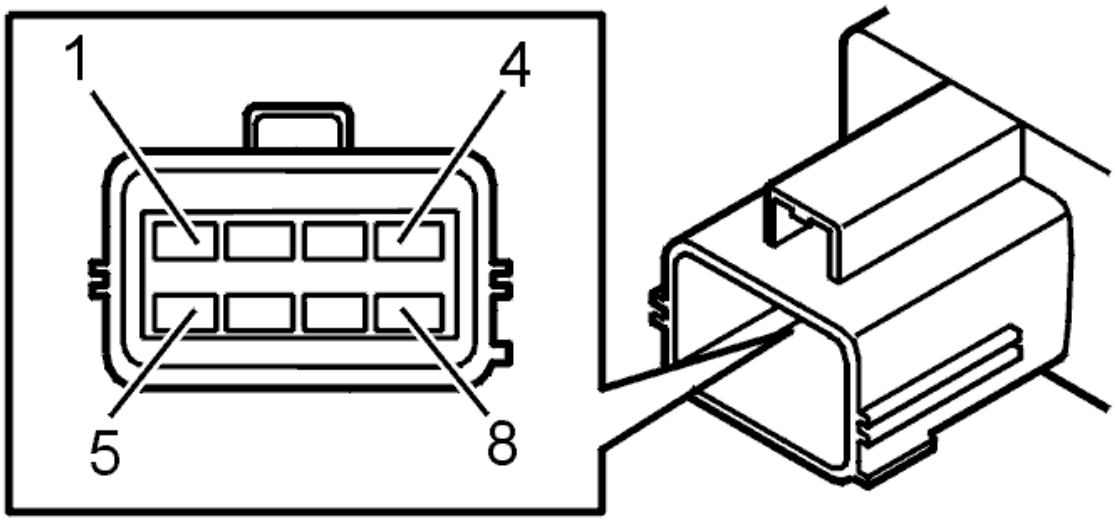

Fig. 63: Identifying Connector Terminals
Courtesy of VOLVO CARS CORPORATION

Was a fault detected?

- **YES**

  OKAY: Troubleshooting has been completed.

- **NO**

  Refer to **CHECKING THE COMPONENT**

CHECKING REAR DOORS

Which door does it apply to?

1. A rear door. Refer to **CIRCUIT TEST**.
2. Both the rear doors. Refer to **CIRCUIT TEST**

CIRCUIT TEST

The fault is caused by an open-circuit in the cable to (or in) the lock unit. To determine in which circuit the fault is:

Remove the deadlock relay (2/115).

Remove the lock unit connector. Check the connector for contact resistance and oxidation.

Other information

- To expose the integrated relay/fusebox in the cargo compartment, see **RELAY/FUSE BOX CARGO COMPARTMENT/REAR ELECTRONIC MODULE (REM), REPLACING**

- To expose the lock unit, see **LOCK MECHANISM, TAILGATE, REPLACING**
- see **CHECKING WIRING AND TERMINALS** .

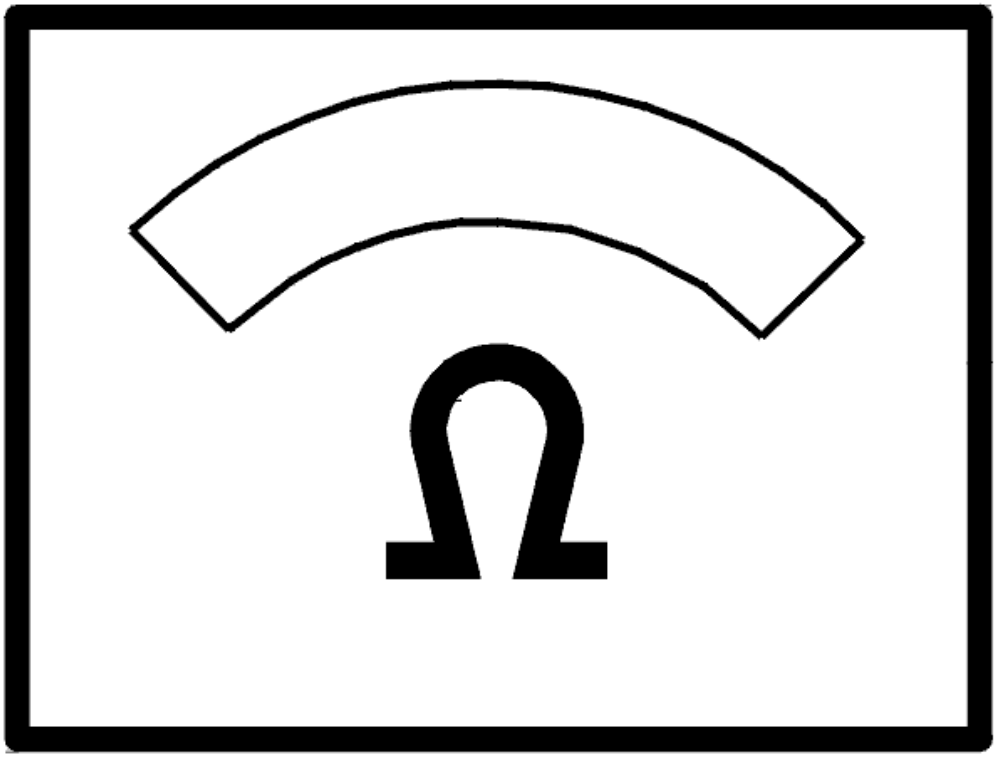

Fig. 64: Identifying Ohmmeter
Courtesy of VOLVO CARS CORPORATION

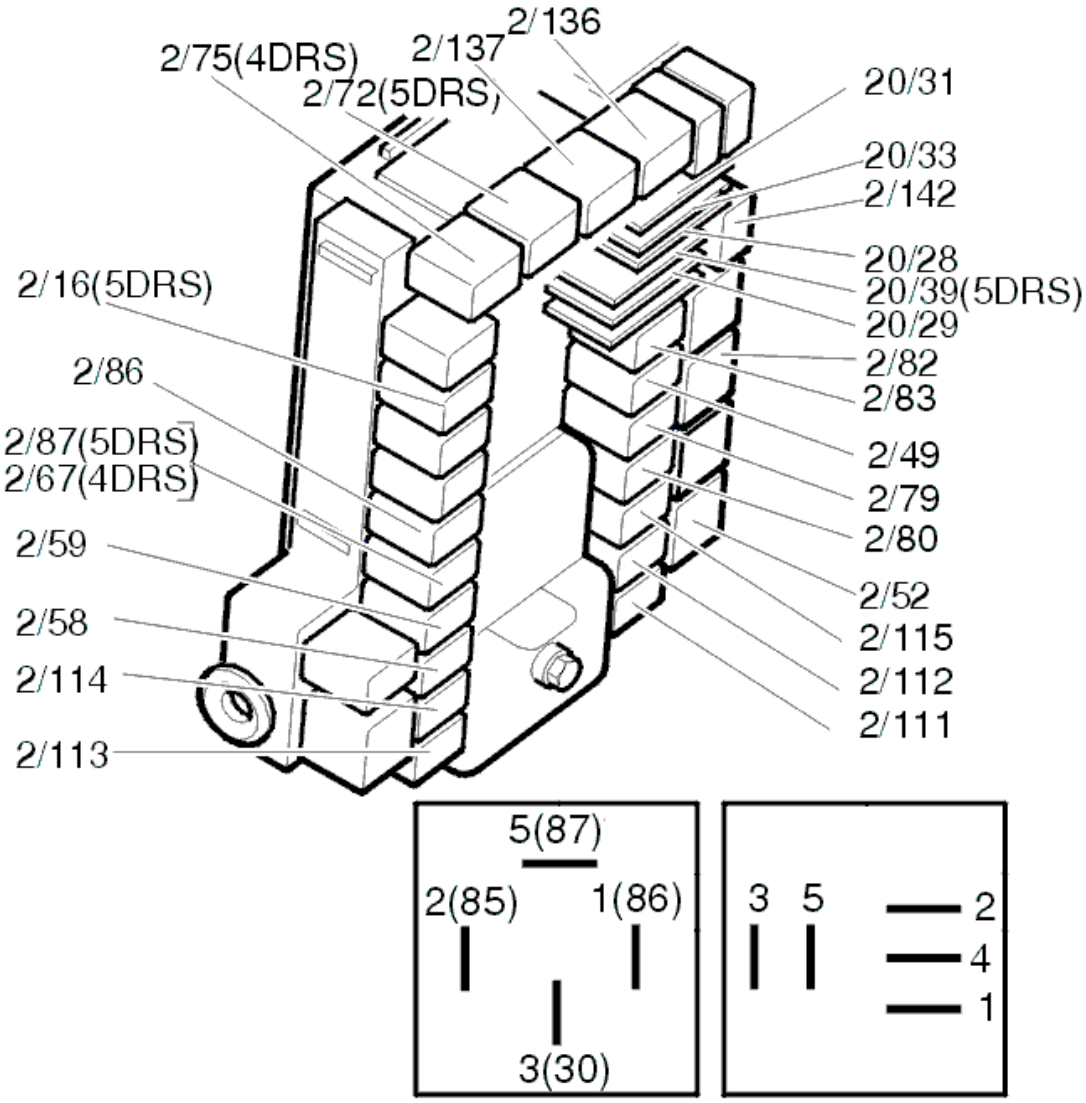

Fig. 65: Identifying Relays
Courtesy of VOLVO CARS CORPORATION

Was a fault detected?

- **YES**

  OKAY: Troubleshooting has been completed.

- **NO**

  Refer to **CIRCUIT TEST (CONT.)**

CIRCUIT TEST (CONT.)

Check the cable between terminal #8 the cable and connector and terminal #3 on the relay base. Check for an

open-circuit. If a fault is detected, check in particular the 2 intermediate connectors in the cable harness. Check for contact resistance and oxidation.

Other information

- To expose the integrated relay/fusebox in the cargo compartment, see **RELAY/FUSE BOX CARGO COMPARTMENT/REAR ELECTRONIC MODULE (REM), REPLACING**
- To expose the lock unit, see **LOCK MECHANISM, TAILGATE, REPLACING**
- see **CHECKING WIRING AND TERMINALS** .

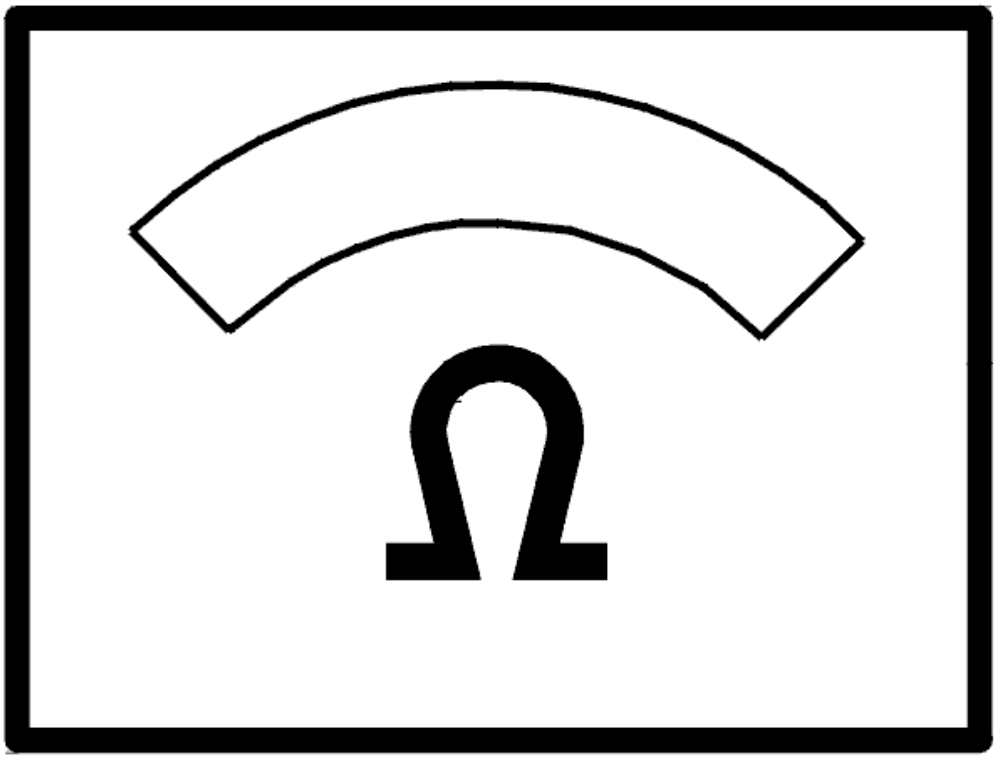

Fig. 66: Identifying Ohmmeter
Courtesy of VOLVO CARS CORPORATION

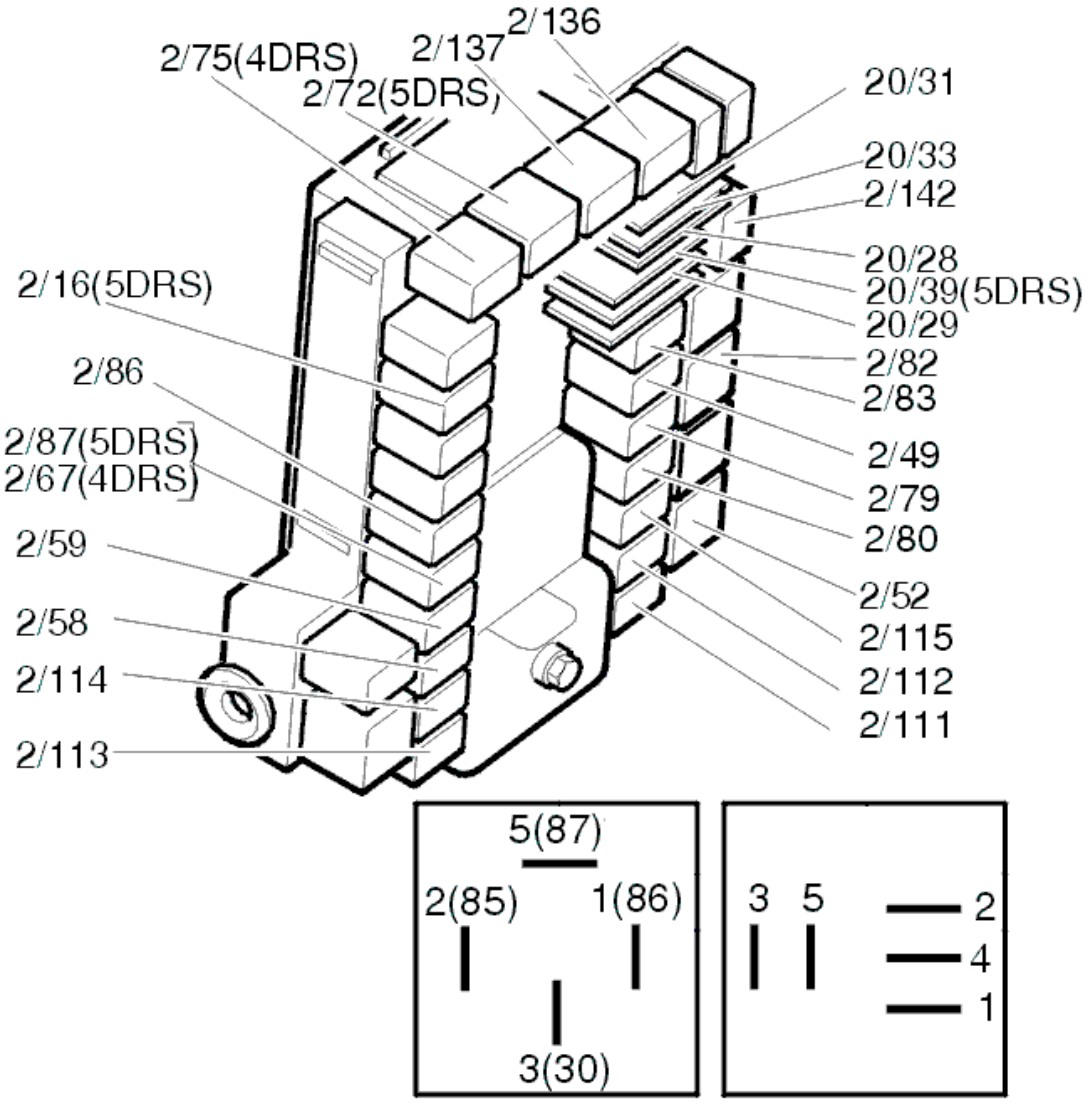

Fig. 67: Identifying Relays
Courtesy of VOLVO CARS CORPORATION

Was a fault detected?

- **YES**

  OKAY: Troubleshooting has been completed.

- **NO**

  Refer to **CHECKING THE COMPONENT**

CIRCUIT TEST

The fault indicates an open-circuit in the common relay circuit (relay 2/115 or the power supply to the relay).

Begin by replacing the relay for deadlocking (2/115) in the integrated relay/fusebox in the cargo compartment. Check the relay base switches. Check for contact resistance and oxidation.

Other information

- To expose the integrated relay/fusebox in the cargo compartment, see **RELAY/FUSE BOX CARGO COMPARTMENT/REAR ELECTRONIC MODULE (REM), REPLACING**
- see **CHECKING WIRING AND TERMINALS** .

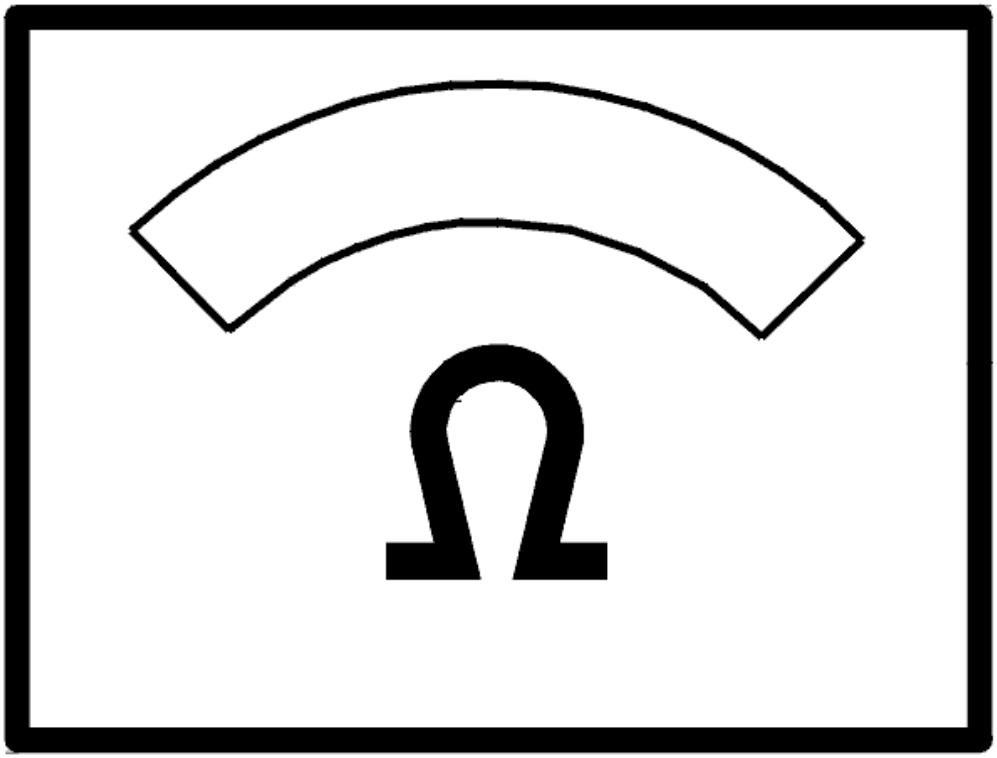

Fig. 68: Identifying Ohmmeter
Courtesy of VOLVO CARS CORPORATION

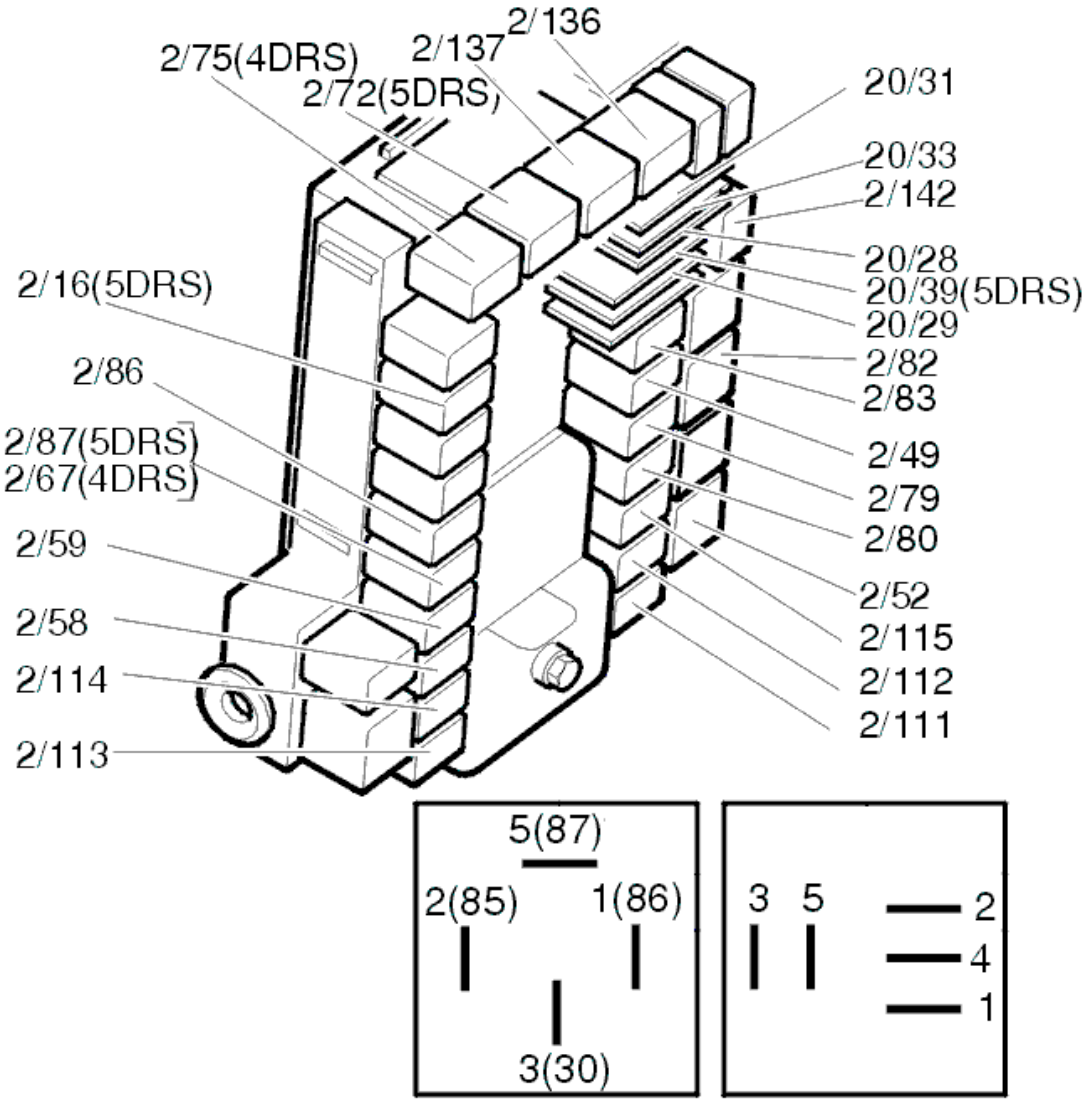

Fig. 69: Identifying Relays
Courtesy of VOLVO CARS CORPORATION

Was a fault detected?

- **YES**

  OKAY: Troubleshooting has been completed.

- **NO**

  Refer to **CHECKING RELAY POWER SUPPLY**

CHECKING THE COMPONENT

Measure the resistance between pins terminals #8 and #6 on the chassis switch lock unit.

The ohmmeter should read approximately 5 ohm

Other information

- To remove the lock unit, see **LOCK MECHANISM, TAILGATE, REPLACING**
- For information about signals, see **SIGNAL SPECIFICATION** .

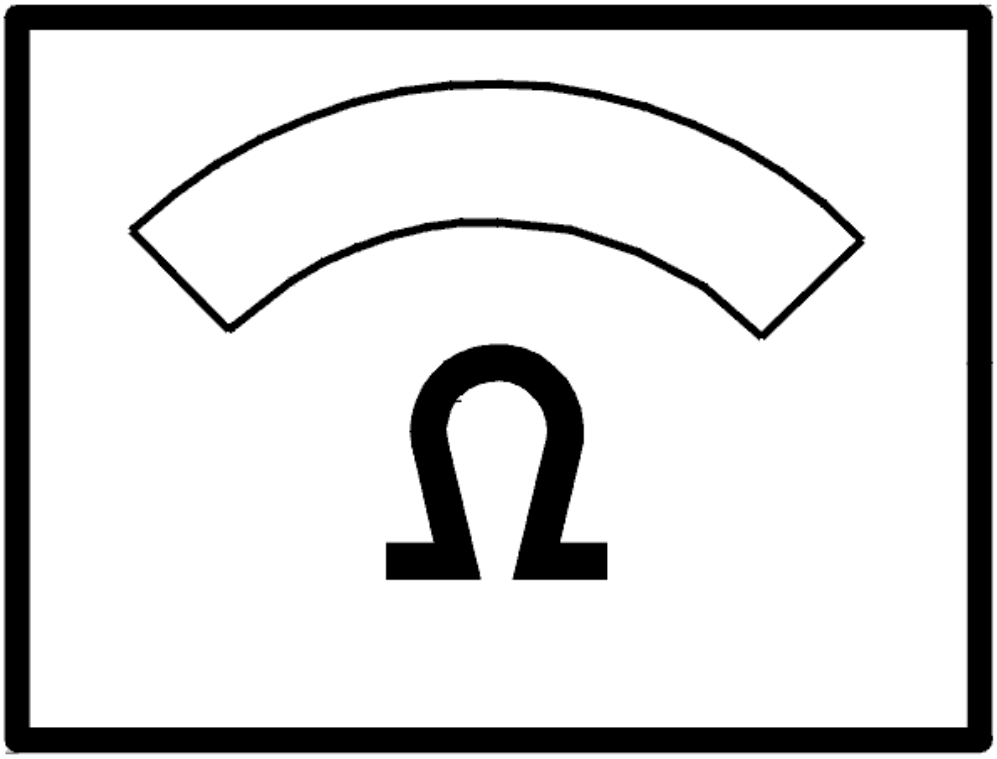

Fig. 70: Identifying Ohmmeter
Courtesy of VOLVO CARS CORPORATION

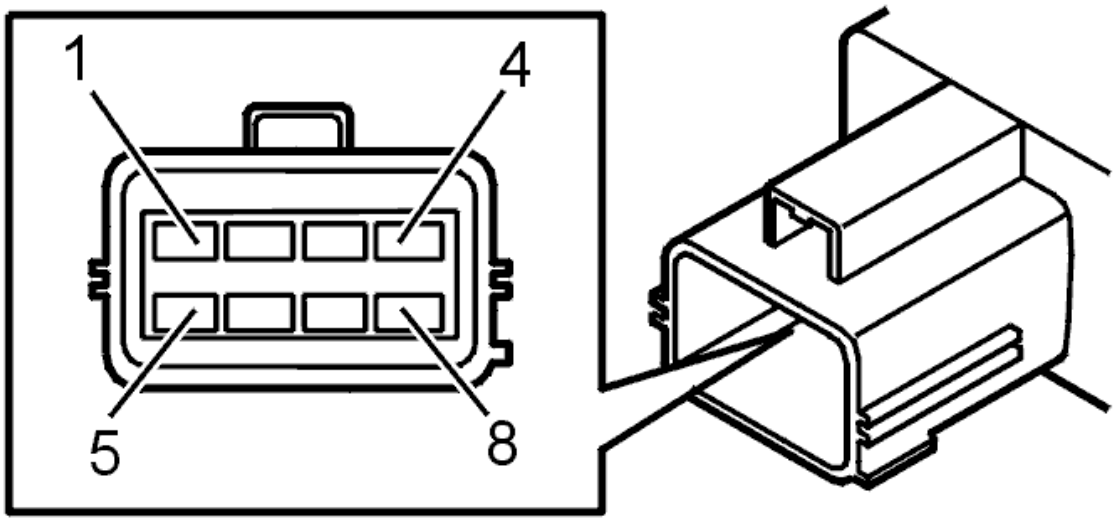

Fig. 71: Identifying Connector Terminals
Courtesy of VOLVO CARS CORPORATION

Is the value correct?

- **YES**

  Refer to **FUNCTION TEST**

- **NO**

  Refer to **REPLACING THE COMPONENT**

FUNCTION TEST

Check that the mechanical/electrical function of the lock unit is OK before the lock unit is reinstalled.

Is the function OK?

- **YES**

  OKAY: Troubleshooting has been completed.

- **NO**

  Refer to **REPLACING THE COMPONENT**

REPLACING THE COMPONENT

Replace the lock unit. See **LOCK MECHANISM, TAILGATE, REPLACING** .

CHECKING THE COMPONENT

Measure the resistance between pins terminals #7 and #6 on the chassis switch lock unit.

The ohmmeter should read approximately 5 ohm

Other information

- To remove the lock unit, see **LOCK MECHANISM, TAILGATE, REPLACING**
- For information about signals, see **SIGNAL SPECIFICATION** .

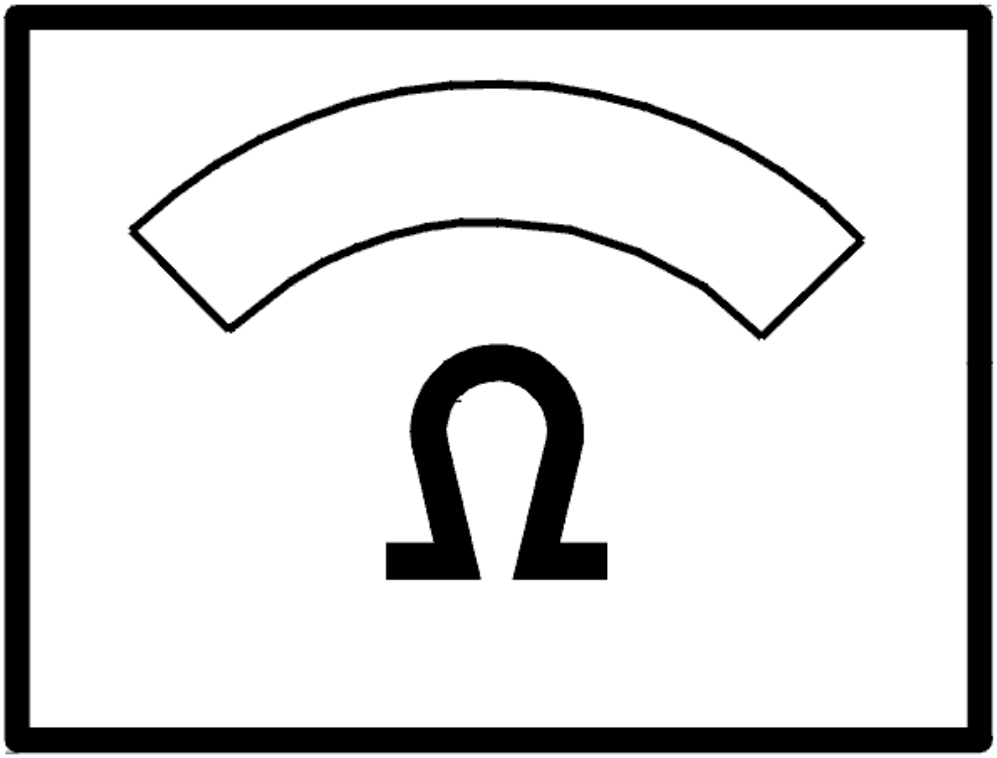

Fig. 72: Identifying Ohmmeter
Courtesy of VOLVO CARS CORPORATION

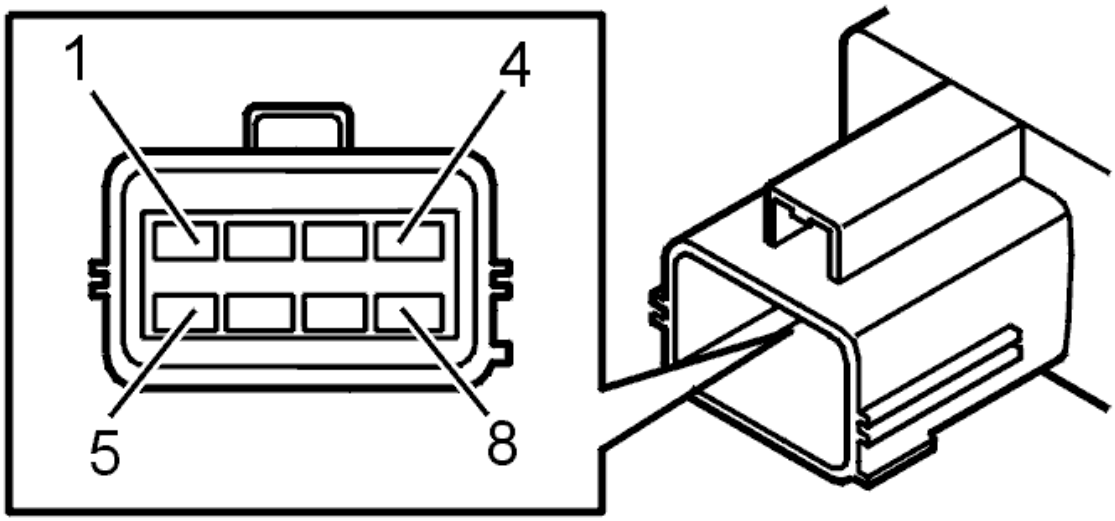

Fig. 73: Identifying Connector Terminals
Courtesy of VOLVO CARS CORPORATION

Is the value correct?

- **YES**

  Refer to **FUNCTION TEST**

- **NO**

  Refer to **REPLACING THE COMPONENT**

FUNCTION TEST

Check that the mechanical/electrical function of the lock unit is OK before the lock unit is reinstalled.

Is the function OK?

- **YES**

  Refer to **REPLACING THE COMPONENT**

- **NO**

  Refer to **REPLACING THE COMPONENT**

REPLACING THE COMPONENT

Replace the rear electronic module (REM). See **RELAY/FUSE BOX CARGO COMPARTMENT/REAR ELECTRONIC MODULE (REM), REPLACING** .

REPLACING THE COMPONENT

Replace the lock unit. See **LOCK MECHANISM, TAILGATE, REPLACING** .

CHECKING RELAY POWER SUPPLY

- Remove the deadlock relay (2/115)
- Measure the voltage between terminal #5 in the relay base and ground.

  The voltmeter should read battery voltage

  HINT: If the value is OK but the fault remains, bridge between terminals #3 and #5 in the relay base to force a supply to the locking motor when continuing to take measurements

  Other information

  - To expose the integrated relay/fusebox in the cargo compartment, see **RELAY/FUSE BOX CARGO COMPARTMENT/REAR ELECTRONIC MODULE (REM), REPLACING** .

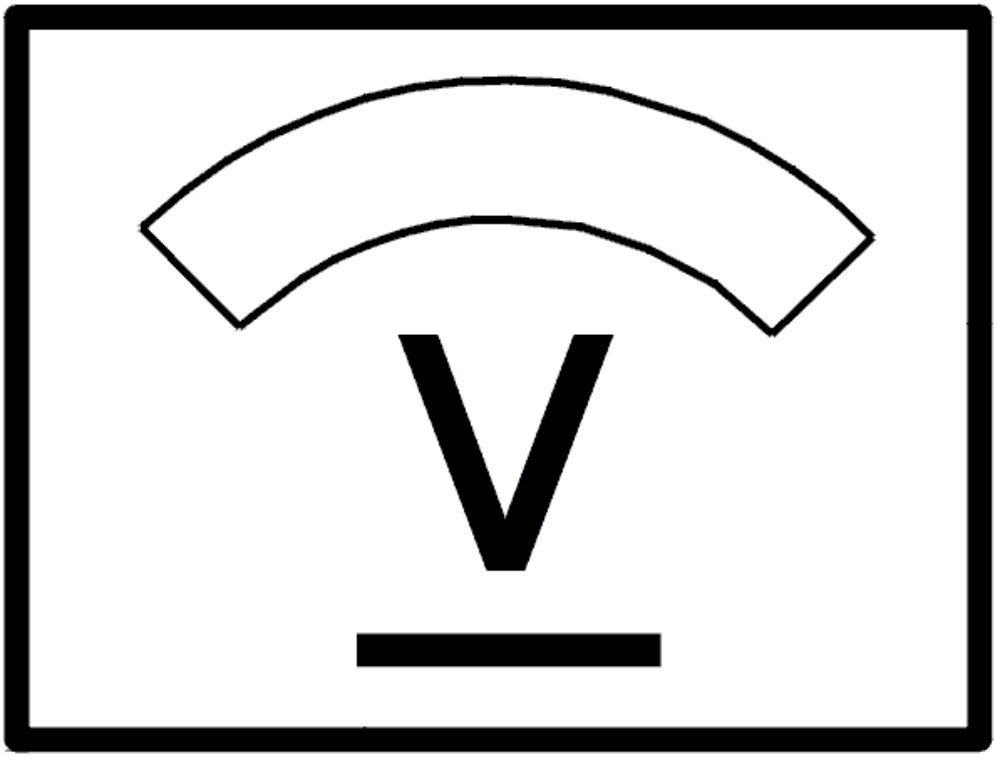

Fig. 74: Identifying Voltage Display
Courtesy of VOLVO CARS CORPORATION

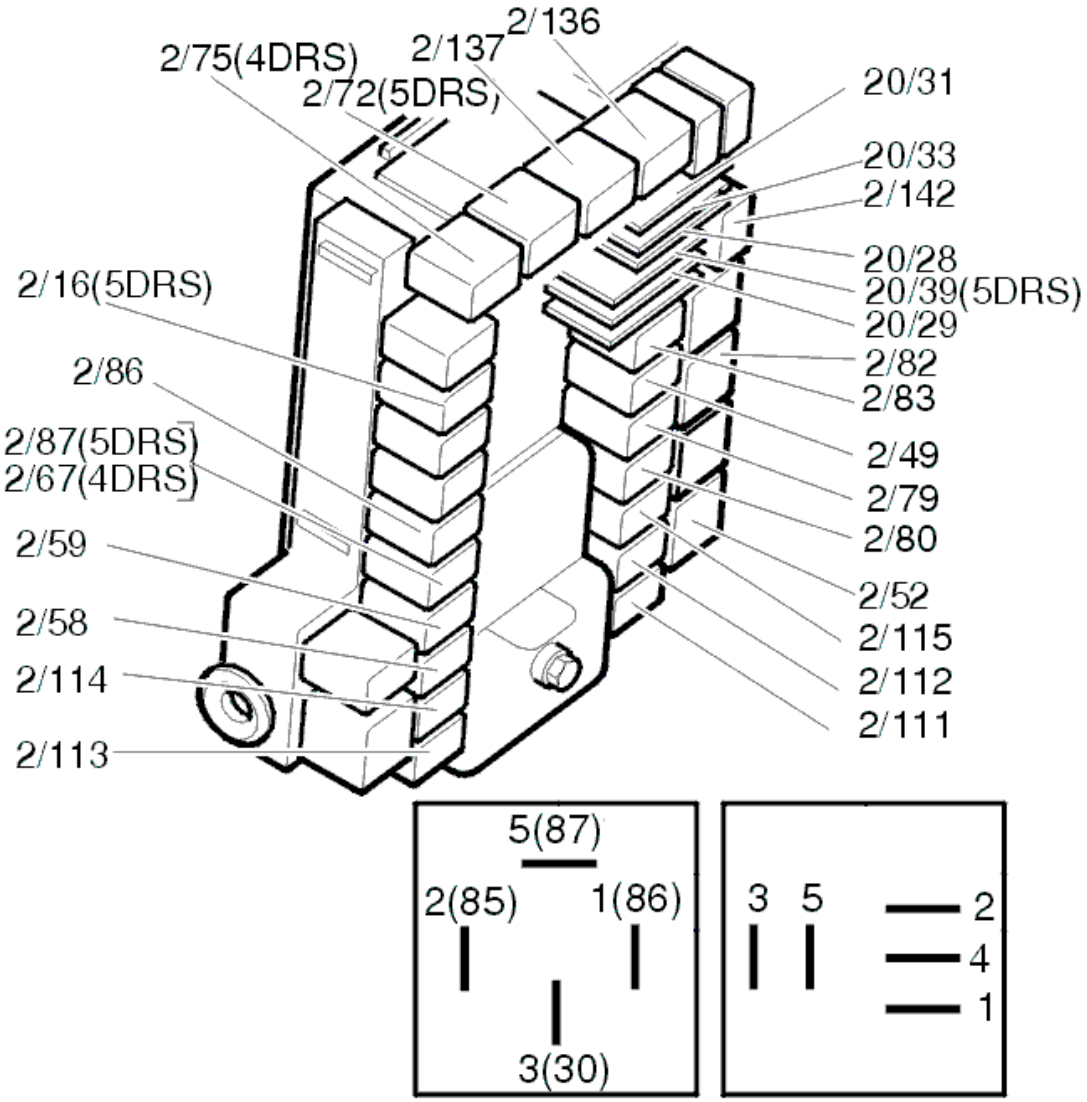

Fig. 75: Identifying Relays
Courtesy of VOLVO CARS CORPORATION

Is the value correct?

- **YES**

  OKAY: Troubleshooting has been completed.

- **NO**

  Refer to **CHECKING FUSES**

CHECKING FUSES

Remove fuse 11D/8 from the cargo compartment fusebox

Check that fuse 11D/8 is intact. Check for contact resistance and oxidation.

Other information

- To expose the integrated relay/fusebox in the cargo compartment, see **RELAY/FUSE BOX CARGO COMPARTMENT/REAR ELECTRONIC MODULE (REM), REPLACING**
- see **CHECKING WIRING AND TERMINALS** .

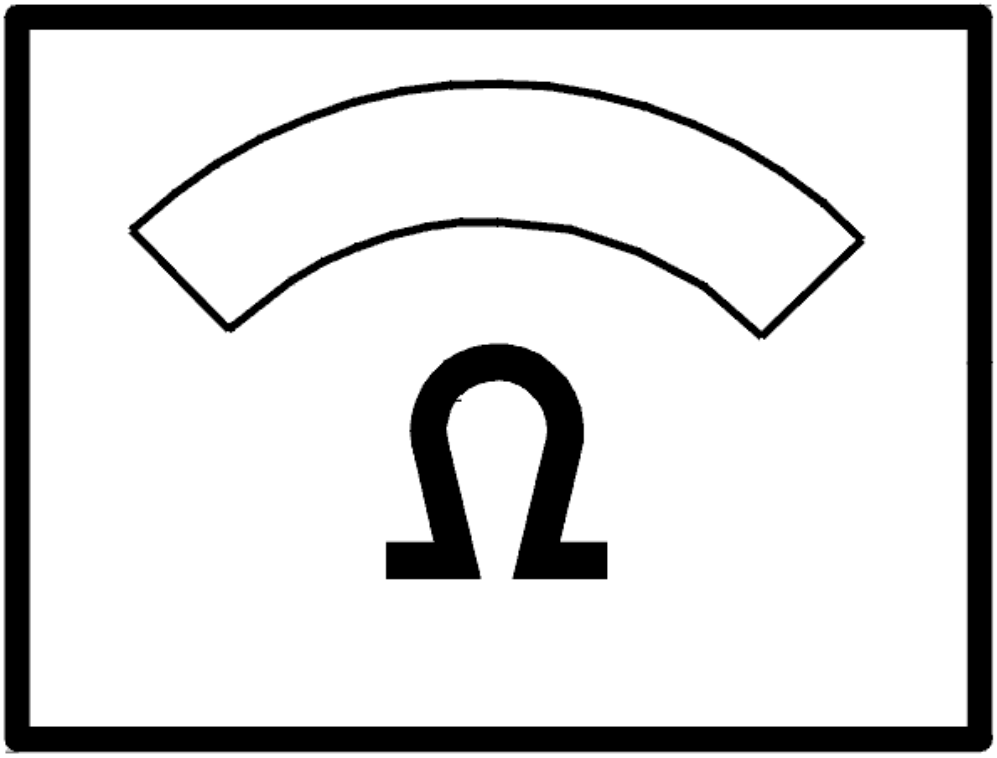

Fig. 76: Identifying Ohmmeter
Courtesy of VOLVO CARS CORPORATION

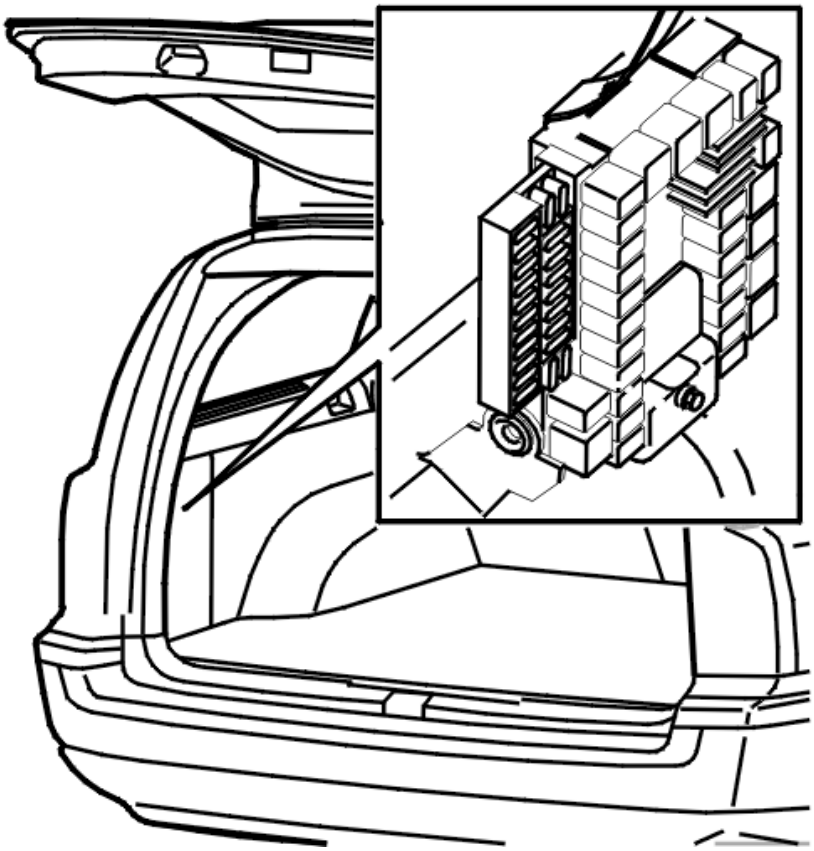

Fig. 77: Locating Integrated Relay/Fusebox In Cargo Compartment
Courtesy of VOLVO CARS CORPORATION

Is the fuse intact?

- **YES**

  Refer to **CHECKING FOR OPEN-CIRCUITS**

- **NO**

  Refer to **CHECKING FOR SHORT-CIRCUITS**

CHECKING FOR OPEN-CIRCUITS

Remove the relay 2/115 from the integrated relay/fusebox in the cargo compartment.

Check the cable between the fuse holder secondary side (left) and terminal #5 in the relay base. Check for an open-circuit.

Other information

- To expose the integrated relay/fusebox in the cargo compartment, see **RELAY/FUSE BOX CARGO COMPARTMENT/REAR ELECTRONIC MODULE (REM), REPLACING**

- see **CHECKING WIRING AND TERMINALS** .

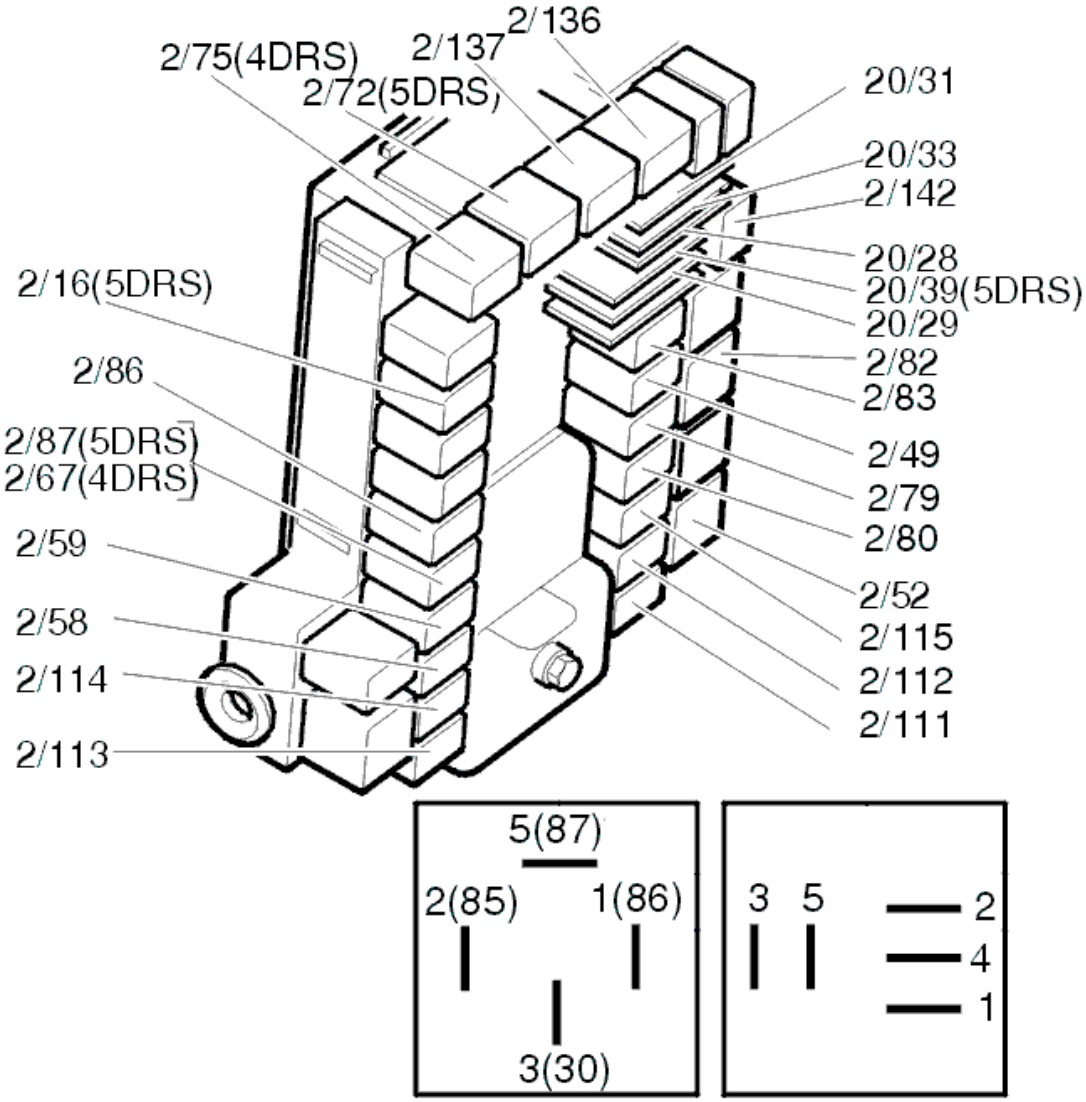

Fig. 78: Identifying Relays
Courtesy of VOLVO CARS CORPORATION

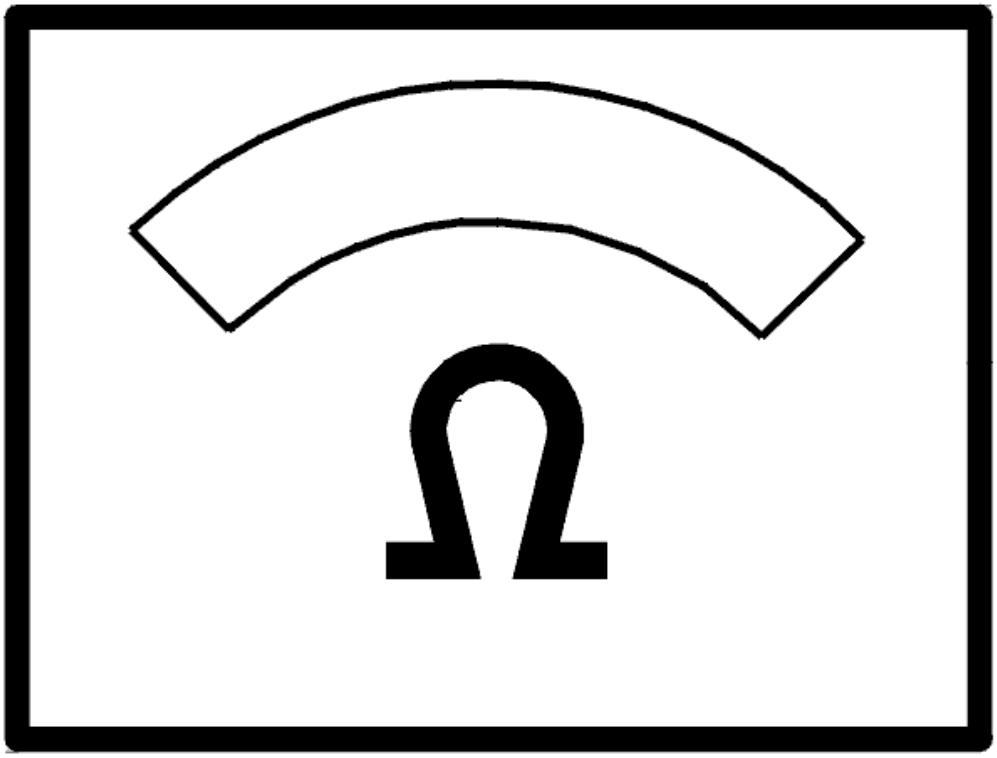

Fig. 79: Identifying Ohmmeter
Courtesy of VOLVO CARS CORPORATION

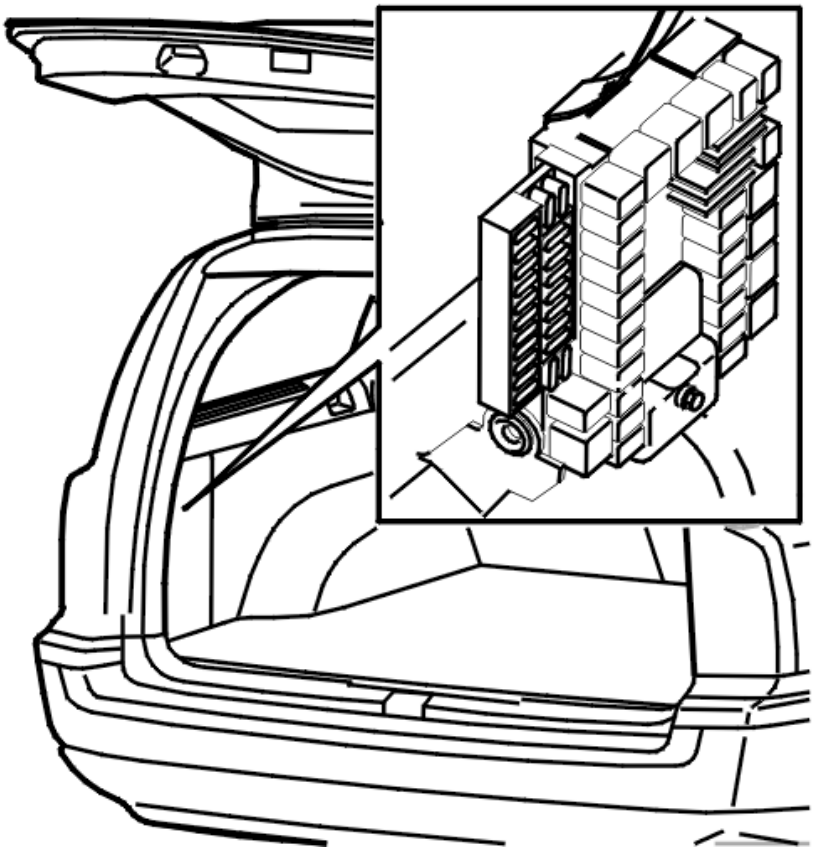

Fig. 80: Locating Integrated Relay/Fusebox In Cargo Compartment
Courtesy of VOLVO CARS CORPORATION

CHECKING FOR SHORT-CIRCUITS

Measure the resistance between the fuse holder secondary side (left) and ground.

The ohmmeter should indicate an open-circuit.

If the value is correct, replace the fuse.

NOTE: The fault could be intermittent

If the ohmmeter displays a fault (short-circuit), fault-trace all affected relay circuits for a short-circuit to ground.

HINT: The relay circuits affected are from relays 2/111, 2/112, 2/113, 2/114, 2/115, 2/56, 2/59 and 2/67.

Remove one relay at a time and measure resistance to ground from terminal #5 and #3 on the relay base to determine which loop the fault is in.

Other information

- To expose the integrated relay/fusebox in the cargo compartment, see **RELAY/FUSE BOX CARGO**

COMPARTMENT/REAR ELECTRONIC MODULE (REM), REPLACING

- see **CHECKING WIRING AND TERMINALS** .

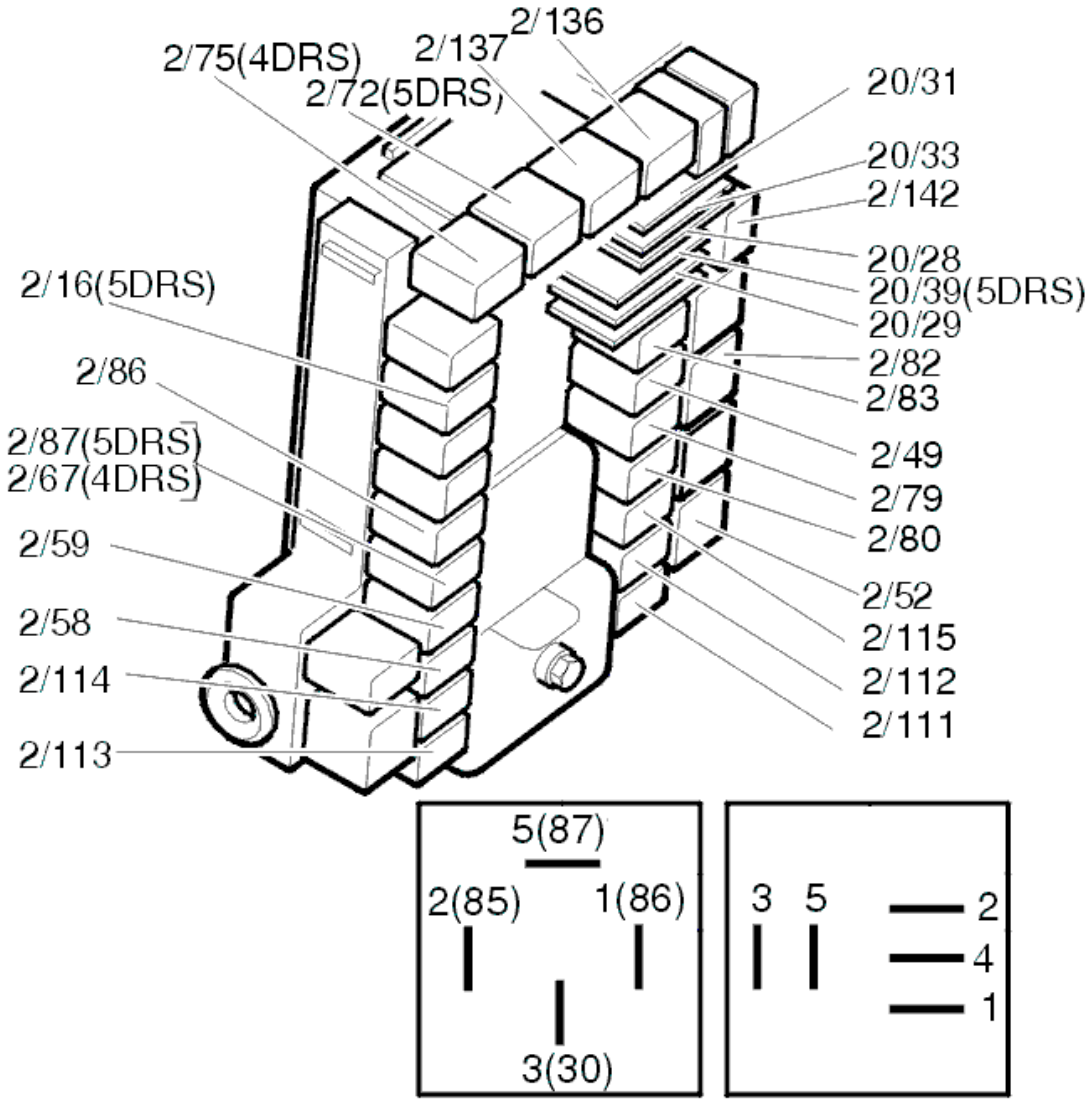

Fig. 81: Identifying Relays
Courtesy of VOLVO CARS CORPORATION

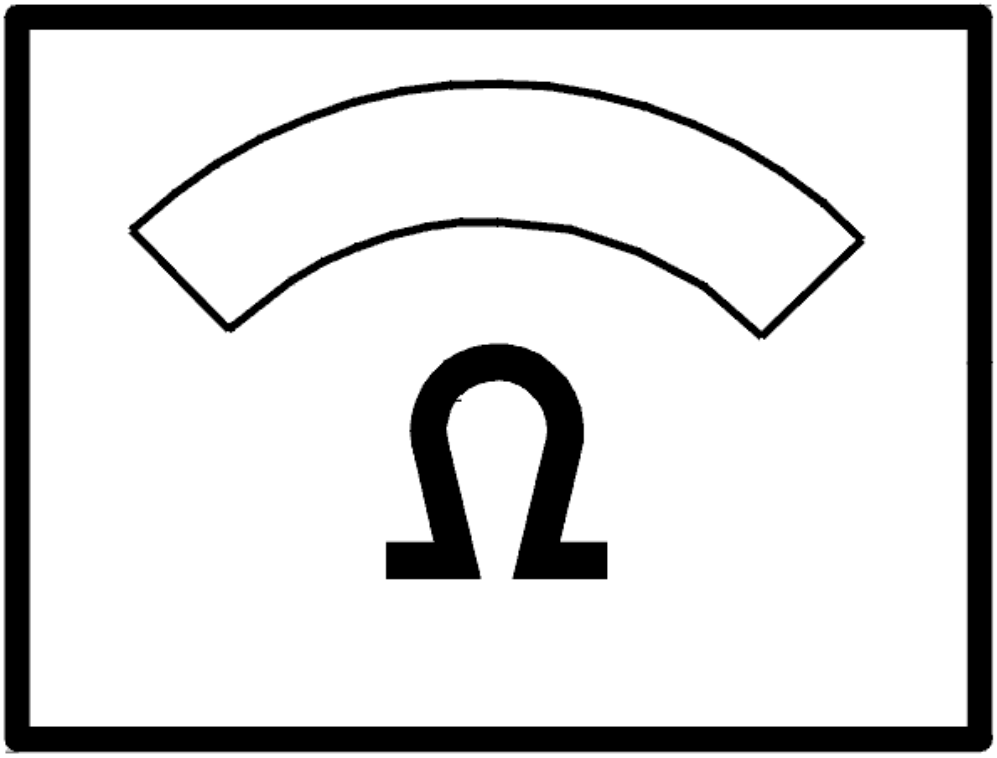

Fig. 82: Identifying Ohmmeter
Courtesy of VOLVO CARS CORPORATION

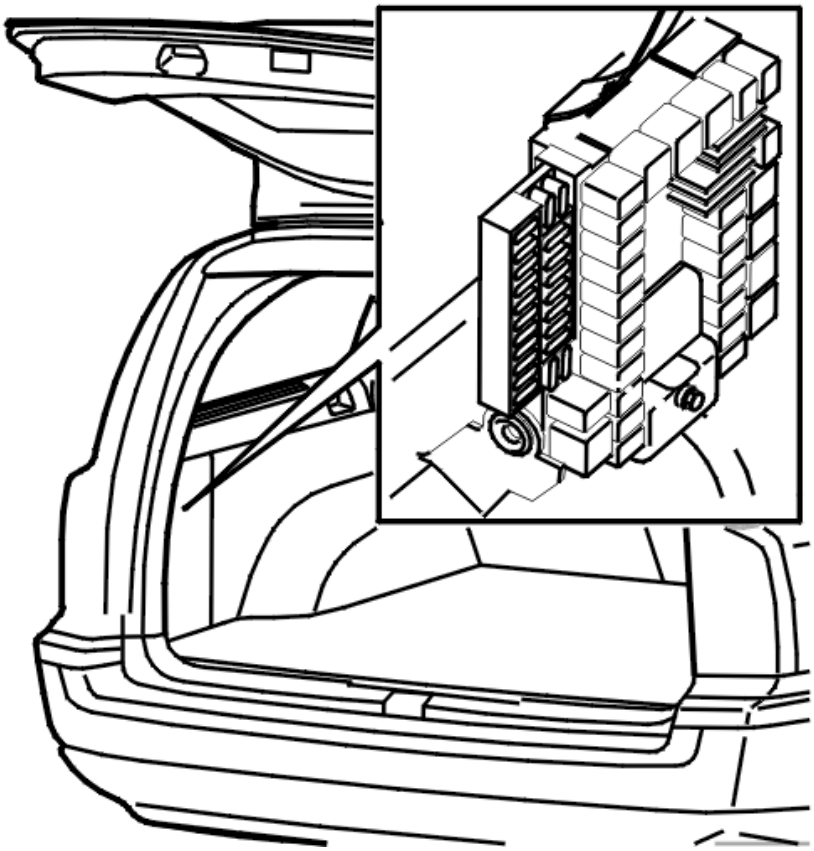

Fig. 83: Locating Integrated Relay/Fusebox In Cargo Compartment
Courtesy of VOLVO CARS CORPORATION

TROUBLE-SHOOTING INFORMATION

Condition

No diagnostic trouble codes are displayed.

Possible Source

- Faulty lock unit
- Faulty relay
- Fault in relay supply
- Contact resistance and oxidation in the connectors
- Fault in locking to lock unit
- Fault in control unit.

Fault symptom[s]

- Does not lock to the deadlock position BLL.

CHECKING NOISE FROM THE SUN ROOF (2003-12)

CHECKING NOISE FROM THE SUN ROOF

NOISE FROM THE SUN ROOF

Noise occurs:

1. When the sun roof is operated. Refer to **CHECKING THE SUN ROOF**
2. When the car is driven. Refer to **CHECKING THE SUN ROOF**

CHECKING THE SUN ROOF

If the noise is sporadic (clicking), check the mechanism, rails and drive for unevenness.

HINT: Adjusting the glass panel may remedy the problem.

If there are squeaks coming from the front of the sun roof, check the motor and drive.

Clean and lubricate the rails and mechanism.

Remedy as necessary:

Other information

- For glass panel adjustment: see **SUN ROOF, ADJUSTING**
- see **MECHANISM/MECHANICAL CABLE SUN ROOF, REPLACEMENT**

- **Continue**

  Refer to **FUNCTIONALITY CHECK**

CHECKING THE SUN ROOF

If there is rattling from the sun roof, check that all components are properly mounted and check that all bolts and screws are securely tightened.

Replace any damaged components. Use new bolts when mounting.

If there is rattling, but no loose or damaged components are found, try replacing the mechanism.

An improperly adjusted sun roof can cause wind noise. If this is the case, adjust the sun roof vertically as well as the front and rear position.

Check that the sun roof seal is undamaged. If the seal is damaged, replace the sun roof.

Laterally adjust the entire sun roof cassette in the body.

Remedy as necessary:

Other information

- see **SUN ROOF, ADJUSTING**
- see **MECHANISM/MECHANICAL CABLE SUN ROOF, REPLACEMENT**
- see **GLASS SUN ROOF, REPLACEMENT**

- **Continue**

  Refer to **FUNCTIONALITY CHECK**

FUNCTIONALITY CHECK

Check that there is no noise from the sun roof during operation.

Is the sun roof function OK?

- **YES**

  OKAY: Troubleshooting has been completed.

- **NO**

  Refer to **INFORMATION**

FUNCTIONALITY CHECK

Test drive the car and check that there is no noise from the sun roof.

Is there noise from the sun roof?

- **YES**

  Refer to **INFORMATION**

- **NO**

  OKAY: Troubleshooting has been completed.

INFORMATION

FAULT-TRACING INFORMATION

The fault should be diagnosed and remedied. Since this is not the case the fault-tracing process has failed.

Complete the fault-tracing for those fault or try again.

TROUBLE-SHOOTING INFORMATION

Condition

No diagnostic trouble codes are displayed.

Substitute Value

None.

Possible Source

- Improperly adjusted sun roof.
- Improperly mounted sun roof.
- Coating or dirt on the guide rail.
- Uneven guide rail.

Fault symptom[s]

- Noise from the sun roof.

CHECKING REAR WINDOW LIFT (2003-04)

CHECKING REAR WINDOW LIFT

CHECKING FUSE 11C/37 (30A)

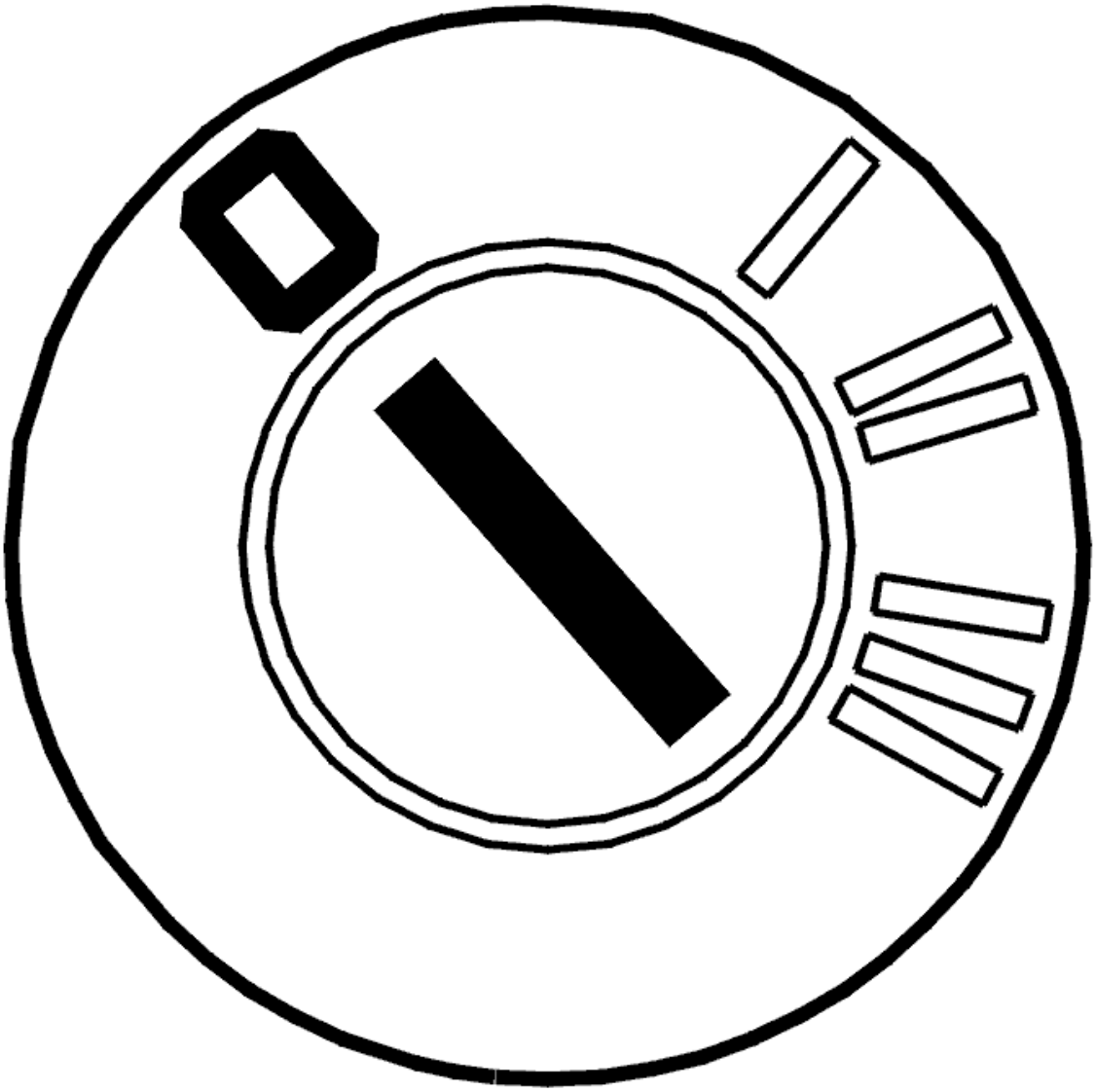

Fig. 84: Identifying Ignition OFF
Courtesy of VOLVO CARS CORPORATION

- Ignition off.

  Check that fuse 11C/37 (30A) is intact.

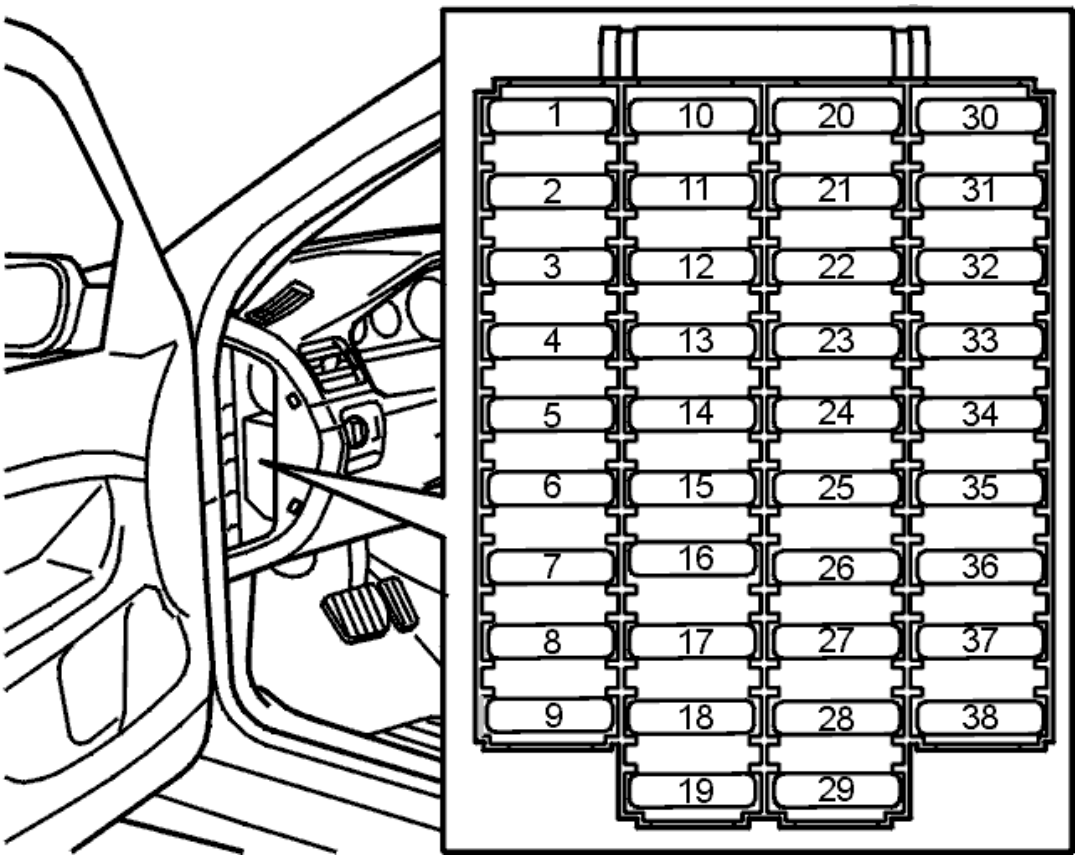

Fig. 85: Fuse Holder (Passenger Compartment)
Courtesy of VOLVO CARS CORPORATION

Is the fuse OK?

- **YES**

  Refer to **CHECKING POWER SUPPLY WIRE**

- **NO**

  Refer to **CHECKING THE POWER SUPPLY WIRES**

CHECKING POWER SUPPLY WIRE

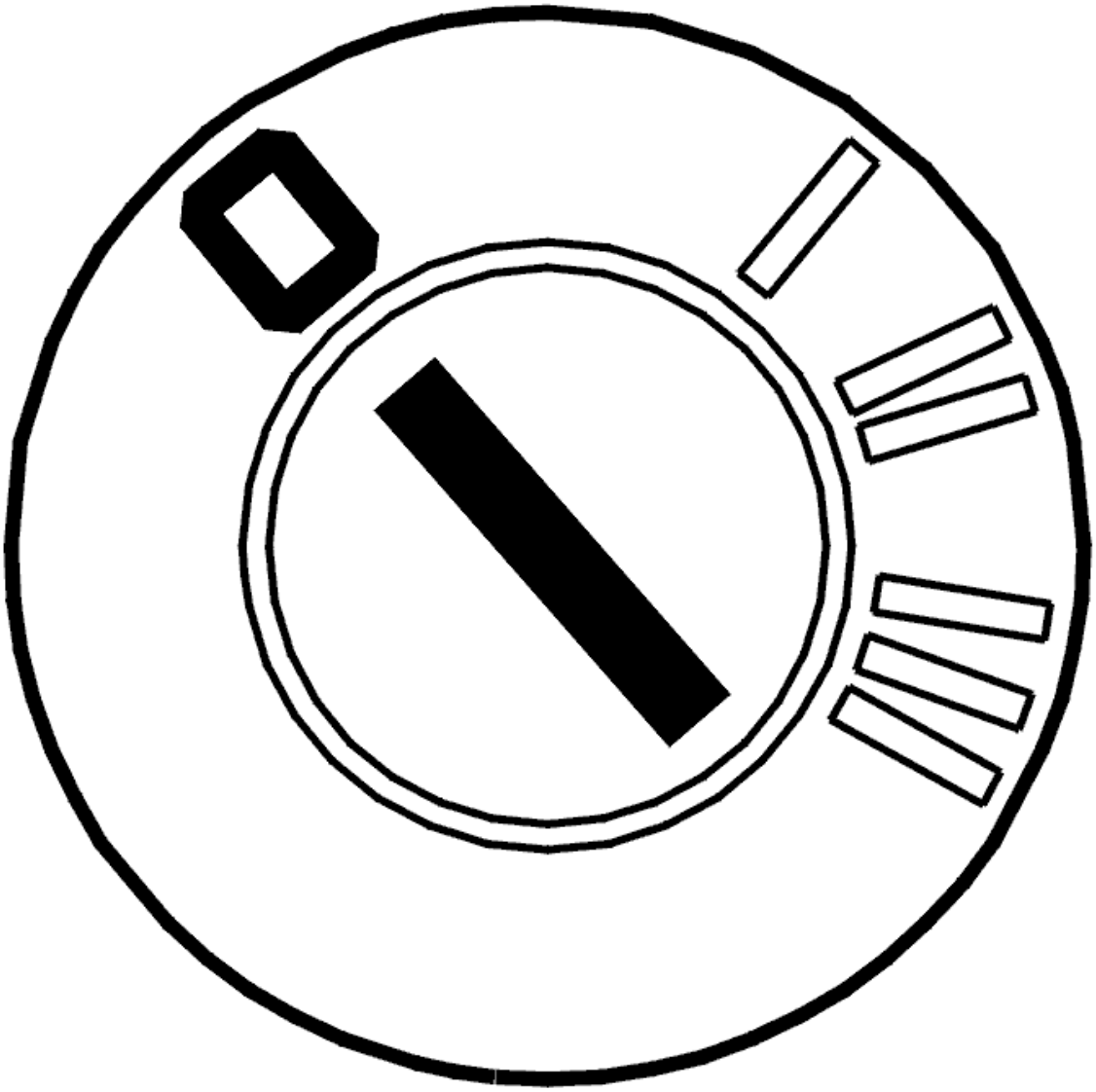

Fig. 86: Identifying Ignition OFF
Courtesy of VOLVO CARS CORPORATION

- Ignition off.

  Remove window lift relay from relay holder.

  - Relay 2/116 for LH rear door, up.
  - Relay 2/118 for LH rear door, down.
  - Relay 2/117 for RH rear door, up.
  - Relay 2/119 for RH rear door, down.
  - Relay 2/120 for child catch.

  Remove fuse 11C/37.

Check wire between fuse 11C/37 #2 and relay holder #3 (for each function) for an open circuit as described in, see **OPEN-CIRCUIT, PERMANENT FAULTS** .

Install relay and fuse.

Activate relay with switch unit on rear door, up/down.

Additional information:

- To connect the test box, see **CONNECTING THE BREAKOUT BOX** .
- For information on signals, see **SIGNAL SPECIFICATION** .

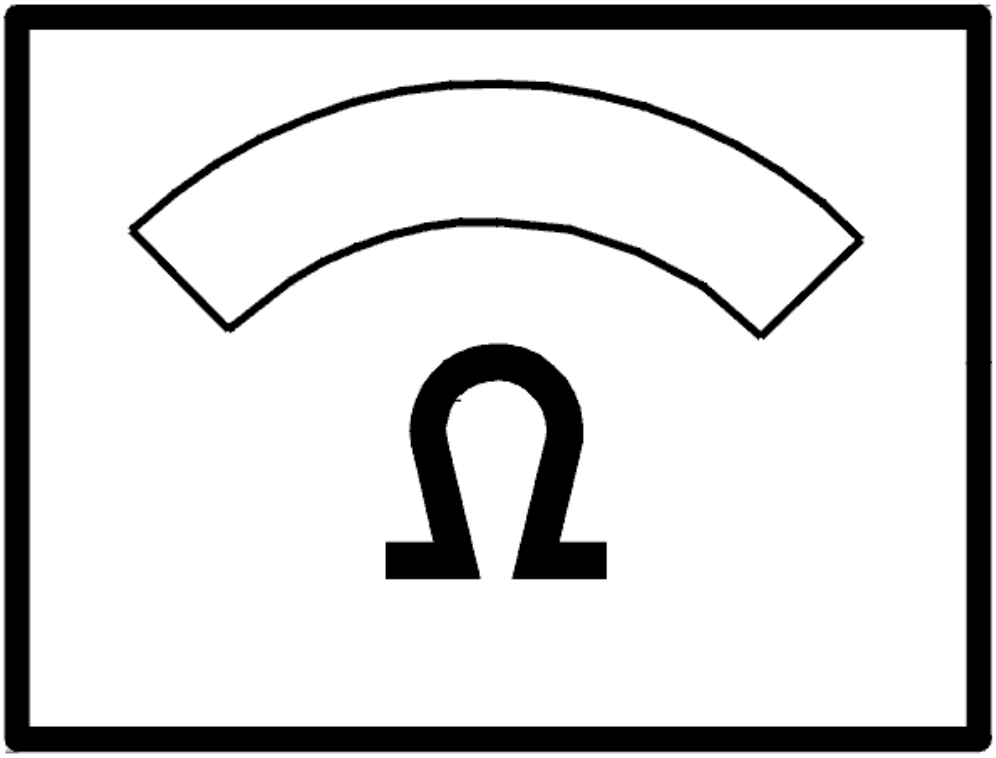

Fig. 87: Identifying Ohmmeter
Courtesy of VOLVO CARS CORPORATION

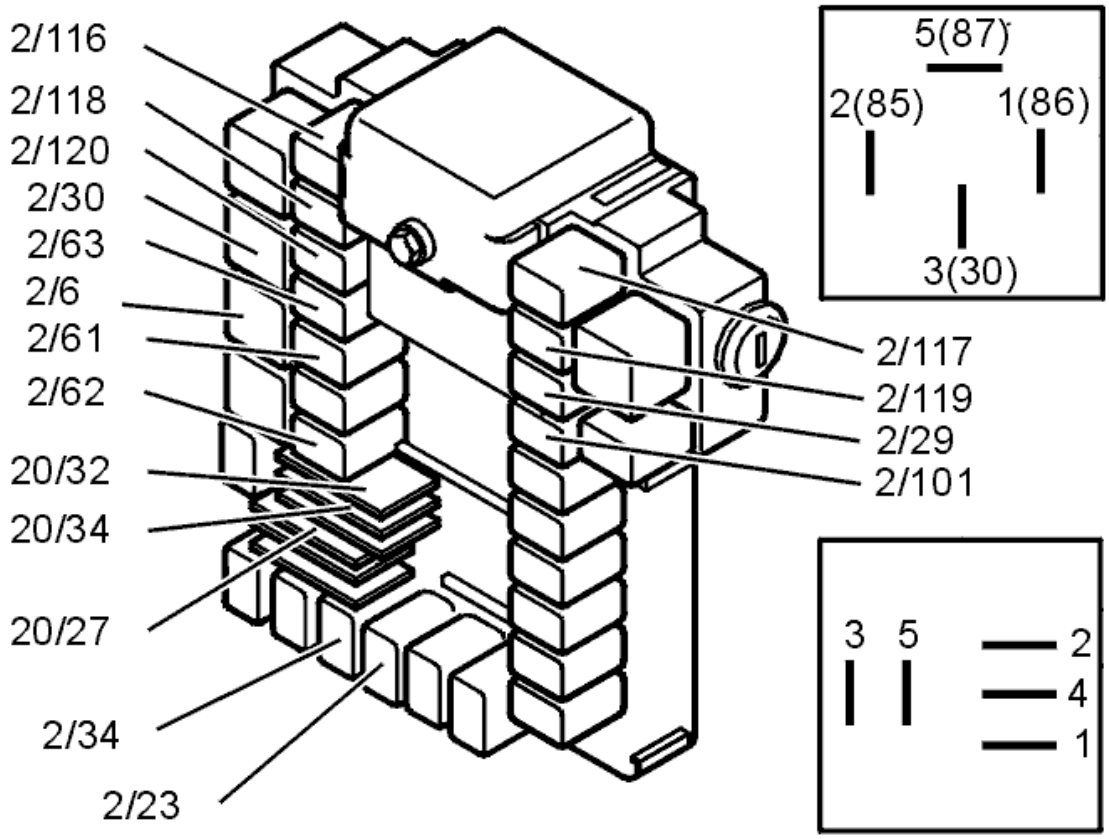

Fig. 88: Identifying Relays
Courtesy of VOLVO CARS CORPORATION

Is function OK?

- **YES**

  Refer to **VERIFICATION**

- **NO**

  Refer to **CHECKING CONTACT RESISTANCE, OXIDATION**

CHECKING CONTACT RESISTANCE, OXIDATION

Remove relay and check relay socket contacts for contact resistance and oxidation as described in, see **CONTACT RESISTANCE AND OXIDATION** .

Also check switch 54/20 or 54/21 (LH/RH) for contact resistance and oxidation as described in, see **CONTACT RESISTANCE AND OXIDATION** .

Reassemble relay and switch.

Activate relay with switch unit on rear door, up/down.

If the function is now OK, this means that the fault was probably caused by a faulty contact in the relay socket.

Additional information:

- To access the window lift relay, see **CENTRAL ELECTRONIC MODULE (CEM), REPLACING** .

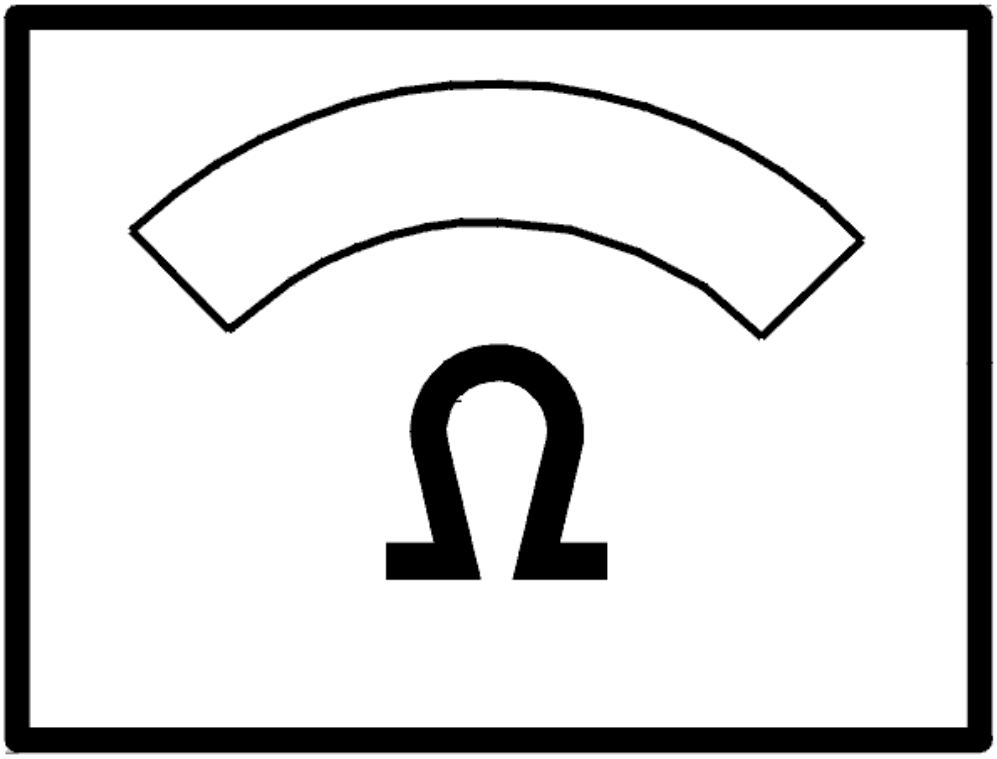

Fig. 89: Identifying Ohmmeter
Courtesy of VOLVO CARS CORPORATION

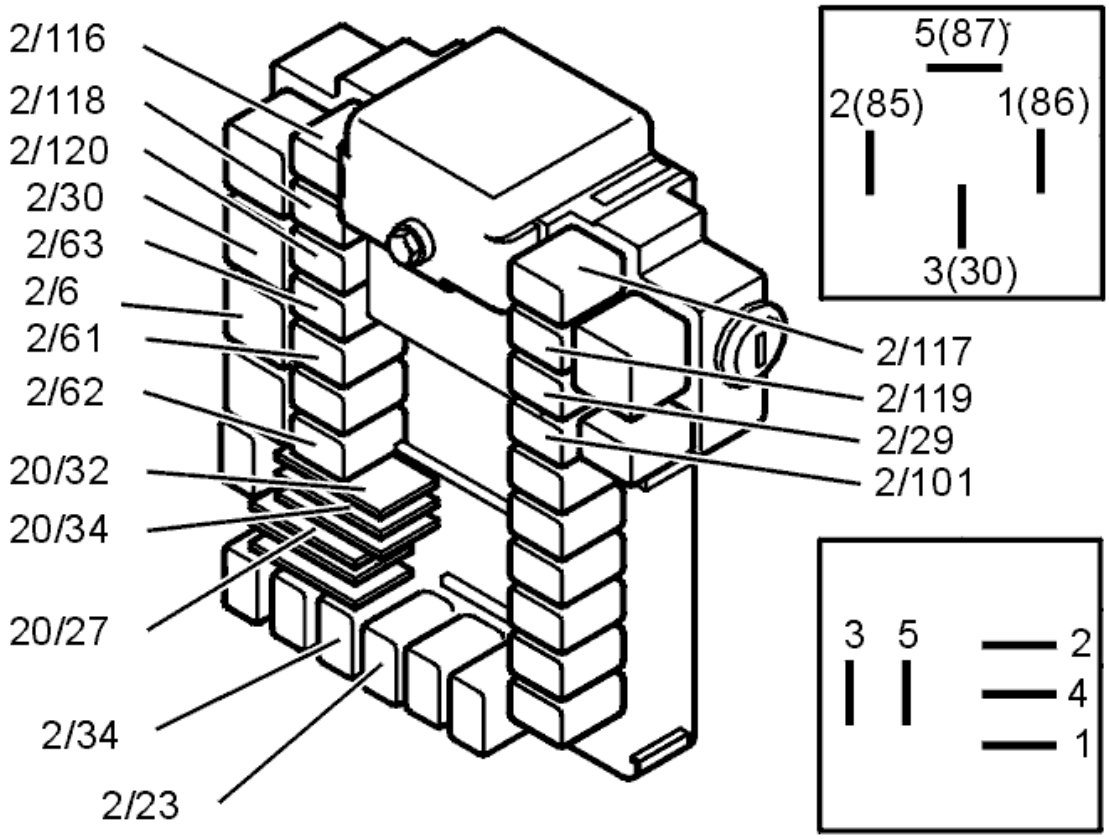

Fig. 90: Identifying Relays
Courtesy of VOLVO CARS CORPORATION

Does it work?

- **YES**

  Refer to **VERIFICATION**

- **NO**

  Refer to **CHECKING FOR OPEN CIRCUITS FROM RELAY TO MOTOR**

CHECKING FOR OPEN CIRCUITS FROM RELAY TO MOTOR

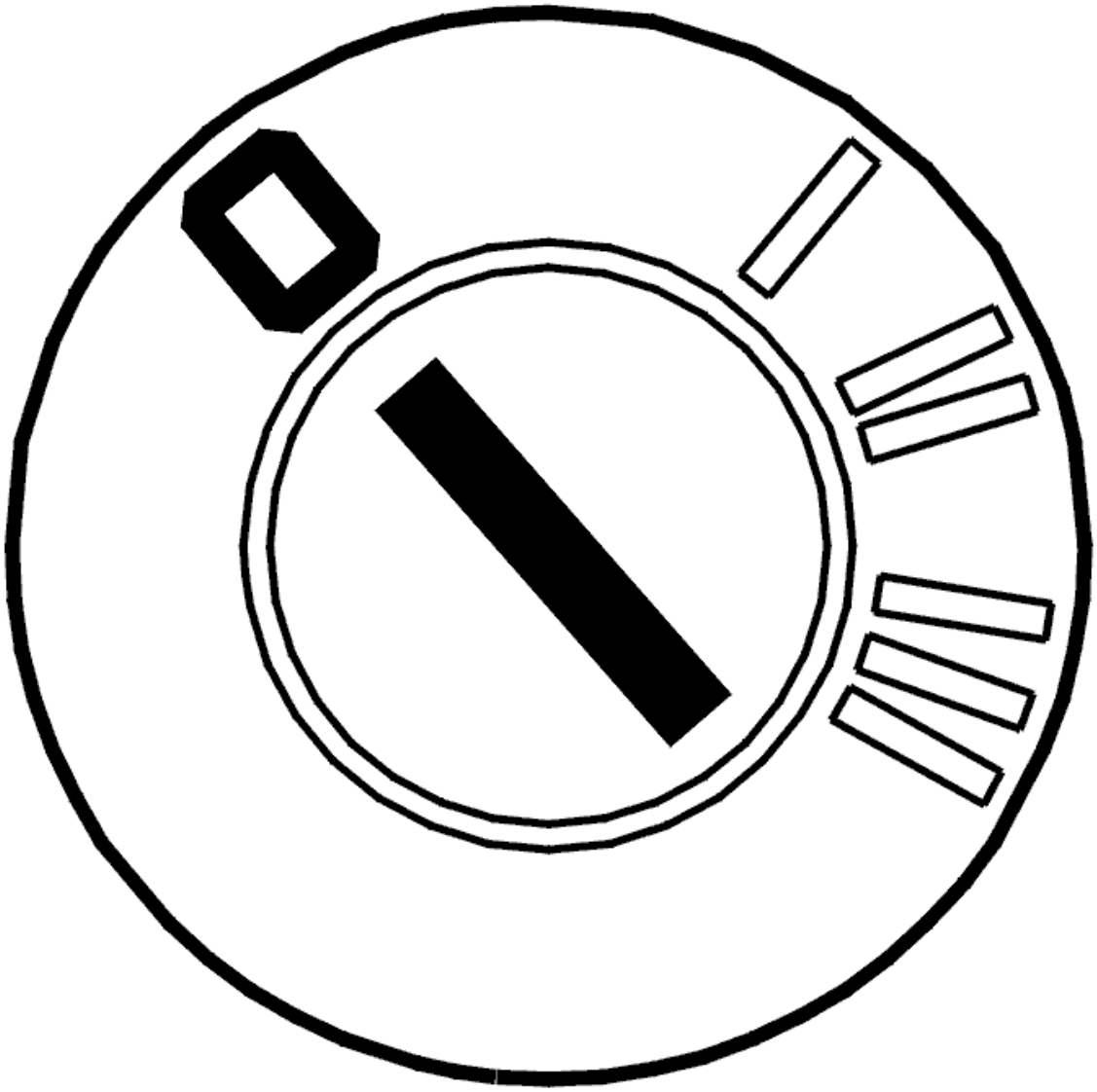

Fig. 91: Identifying Ignition OFF
Courtesy of VOLVO CARS CORPORATION

- Ignition off.

  For window lift control rear LH door up, remove window lift relay 2/116 from relay holder. Check wire for open circuit between relay holder #1, switch 54/20 #8, and switch 3/85 #5, as described in, see **OPEN-CIRCUIT, PERMANENT FAULTS** . Also check wire from 3/85 #4 and #6, and motor 6/92 #1 and #2 for open circuit.

  For window lift control rear LH door down, remove window lift relay 2/118 from relay holder. Check wire for open circuit between relay holder #1 switch 54/20 #6, and switch 3/85 #3, as described in, see **OPEN-CIRCUIT, PERMANENT FAULTS** . Also check wire from 3/85 #4 and #6, and motor 6/92 #1 and #2.

  For window lift control rear RH door up, remove window lift relay 2/117 from relay holder. Check wire

for open circuit between relay holder #1, switch 54/21 #8 and switch 3/86 #5, as described in, see **OPEN-CIRCUIT, PERMANENT FAULTS** . Also check wire from 3/86 #4 and #6, and motor 6/93 #1 and #2.

For window lift control rear RH door down, remove window lift relay 2/119 from relay holder. Check wire for open circuit between relay holder #, switch 54/21 #6, and switch 3/86 #3, as described in, see **OPEN-CIRCUIT, PERMANENT FAULTS** . Also check wire from 3/86 #4 and #6, and motor 6/93 #1 and #2.

For child lock, remove window lift relay 2/120 from relay holder. Check wire for open circuit between relay holder #1 switch 54/20, switch 54/21 #5, switch 3/85 and 3/86 #1, as described in, see **OPEN-CIRCUIT, PERMANENT FAULTS** . Also check wire from 3/85 #4 and #6, motor 6/92 #1 and #2. Also check wire from 3/86 #4 and #6, motor 6/93 #1 and #2.

Do the necessary corrective action.

If no fault is found, replace control panel, (switch unit).

Additional information:

- To access the window lift relay, see **CENTRAL ELECTRONIC MODULE (CEM), REPLACING** .

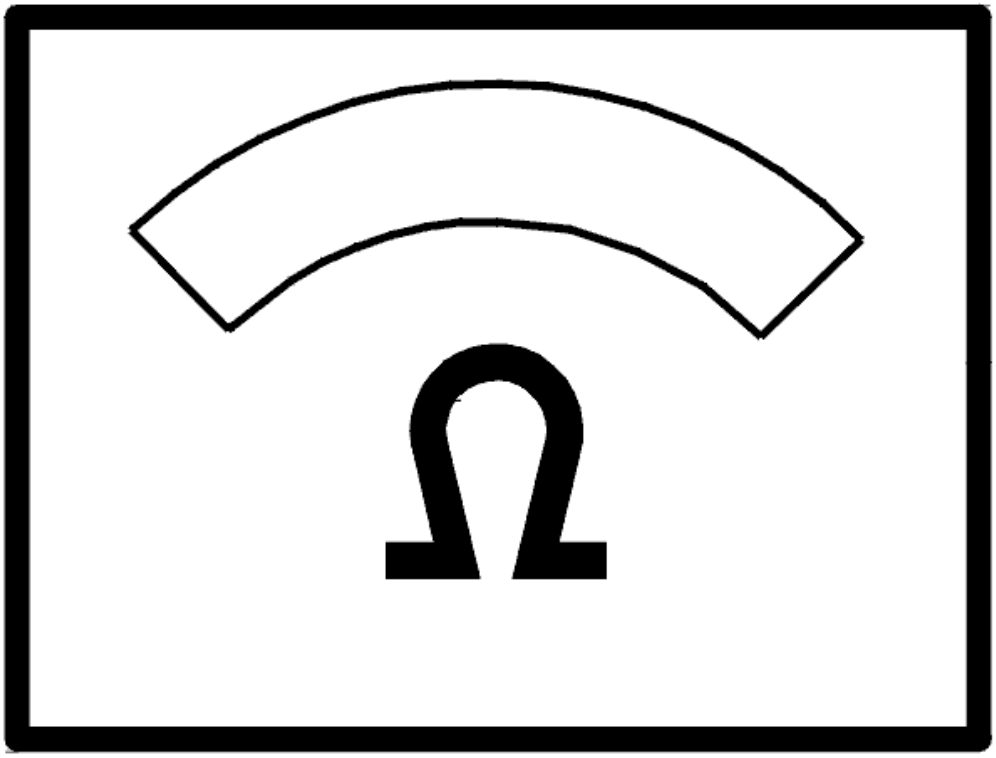

Fig. 92: Identifying Ohmmeter
Courtesy of VOLVO CARS CORPORATION

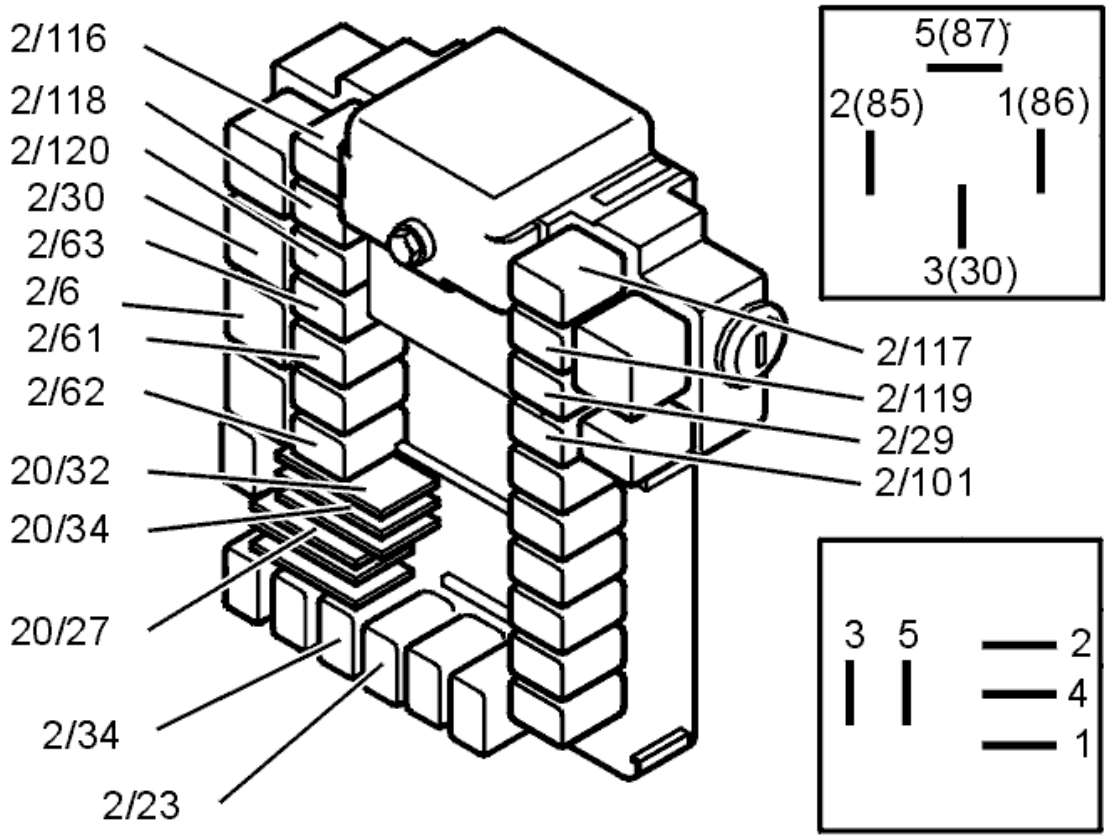

Fig. 93: Identifying Relays
Courtesy of VOLVO CARS CORPORATION

- **Continue**

  Refer to **VERIFICATION**

CHECKING THE POWER SUPPLY WIRES

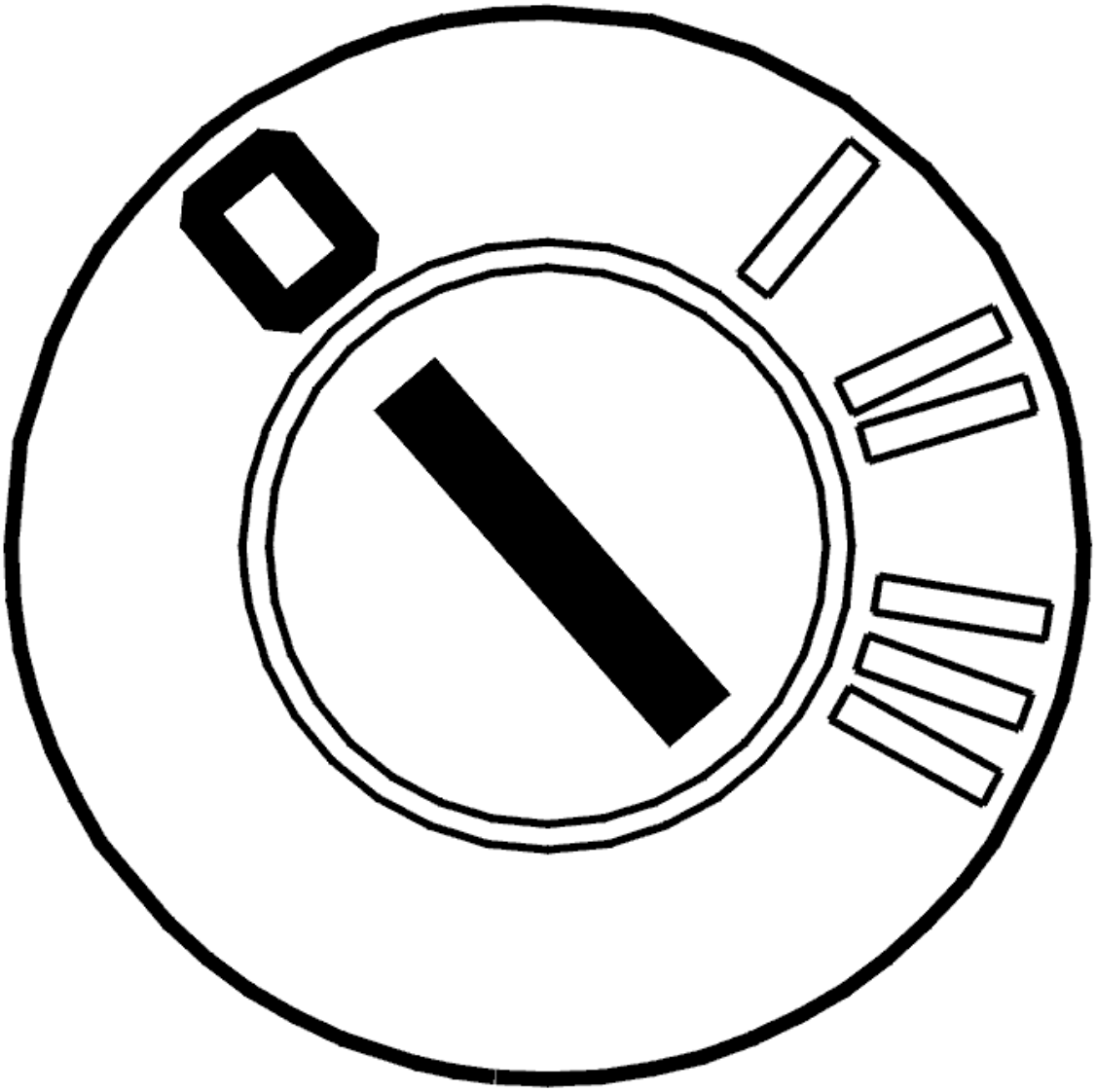

Fig. 94: Identifying Ignition OFF
Courtesy of VOLVO CARS CORPORATION

- Ignition off.

  Remove relay from relay holder.

  Check wire between 11C/37 #2 and relay holder #3 for short circuit to ground, as described in, see **SHORT-CIRCUIT TO GROUND, PERMANENT FAULTS** . Also check the wire circuit between relay #3 and motor #2 for short circuit to ground, see **SHORT-CIRCUIT TO GROUND, PERMANENT FAULTS** .

  Additional information:

  - To access the window lift relay, see **CENTRAL ELECTRONIC MODULE (CEM), REPLACING** .

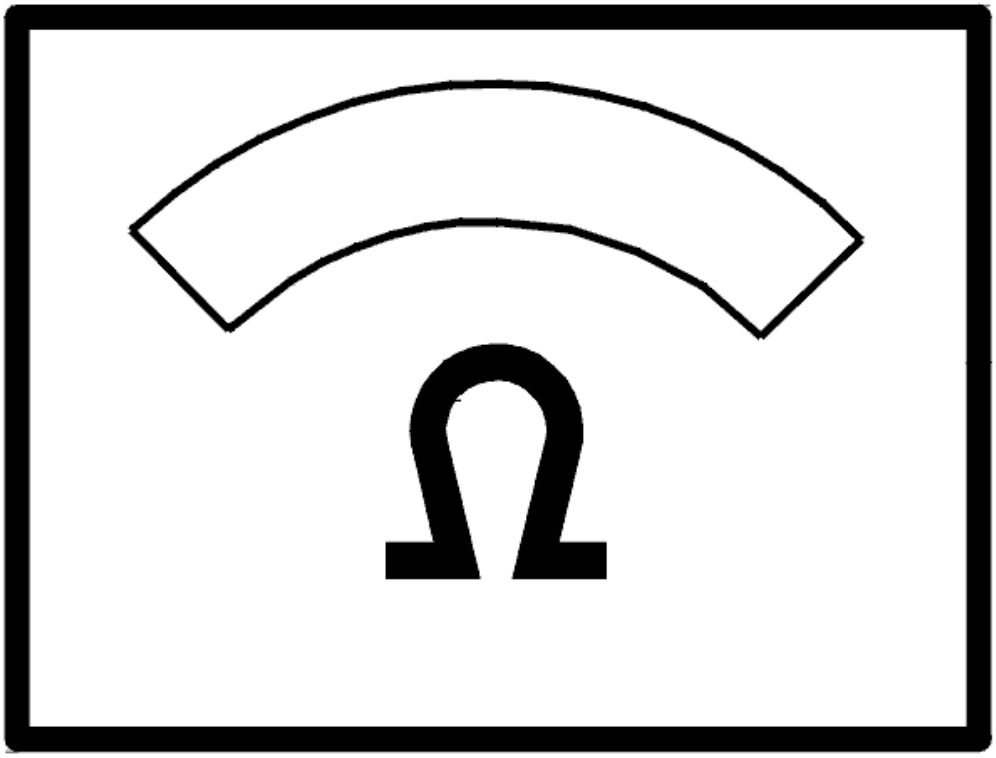

Fig. 95: Identifying Ohmmeter
Courtesy of VOLVO CARS CORPORATION

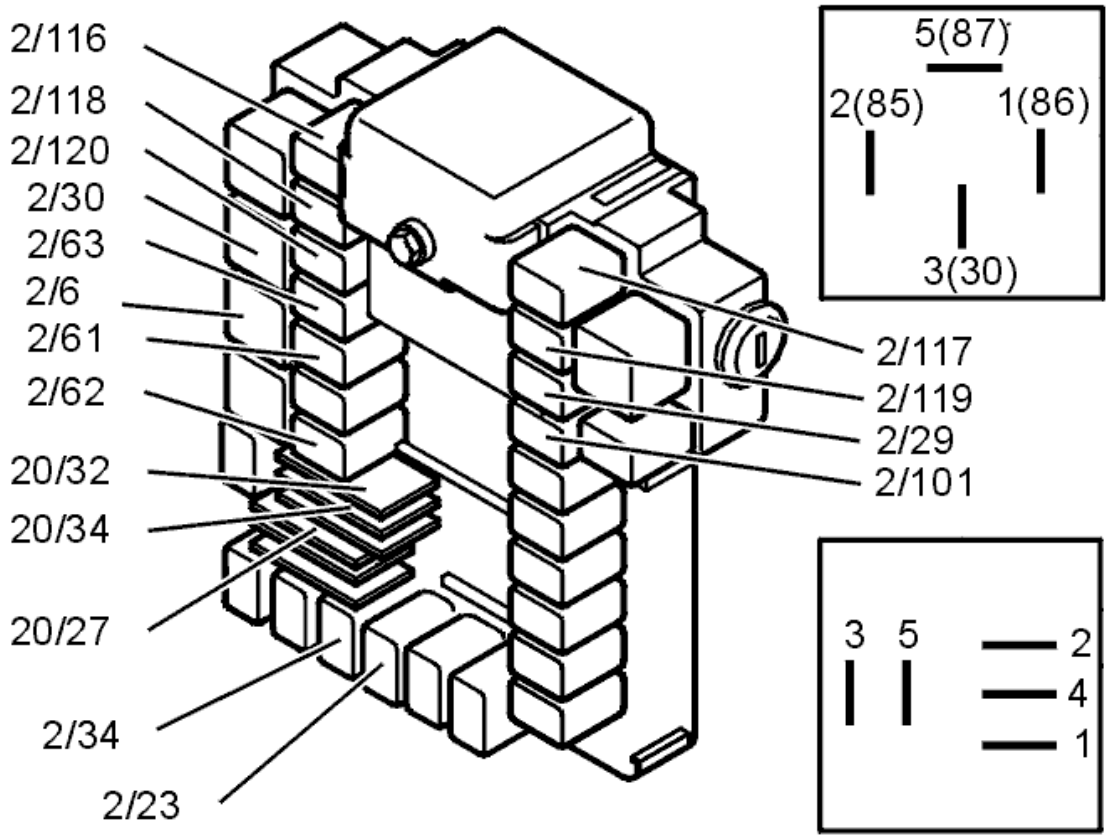

Fig. 96: Identifying Relays
Courtesy of VOLVO CARS CORPORATION

Is there a fault?

- **YES**

  Refer to **VERIFICATION**

- **NO**

  Refer to **CHECKING INTERMITTENT SHORT CIRCUIT TO GROUND**

CHECKING INTERMITTENT SHORT CIRCUIT TO GROUND

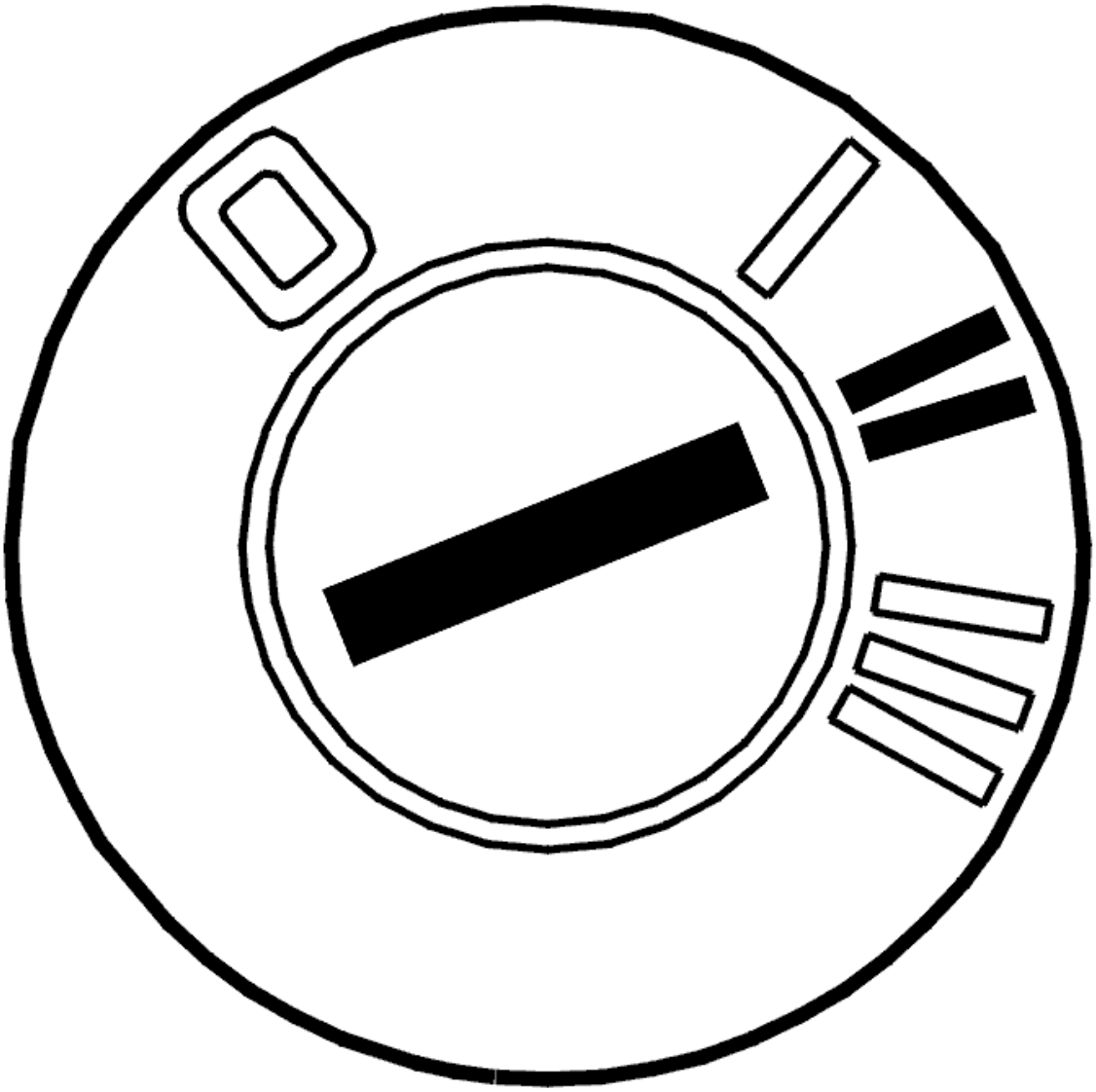

Fig. 97: Identifying Ignition ON
Courtesy of VOLVO CARS CORPORATION

- Ignition on.

  Activate window by clicking on the VCT 2000 symbol.

  Bring up the relay so that it is still connected.

  Check power supply to relay by measuring voltage between #3 in the relay socket and ground.

  HINT: The voltage between #3 and ground should be battery voltage.

  If value deviates from this, check wire for intermittent open circuit, as described in, see **OPEN-CIRCUIT, INTERMITTENT FAULTS** .

Additional information:

- To access the window lift relay, see **CENTRAL ELECTRONIC MODULE (CEM), REPLACING** .
- Do the necessary corrective action.

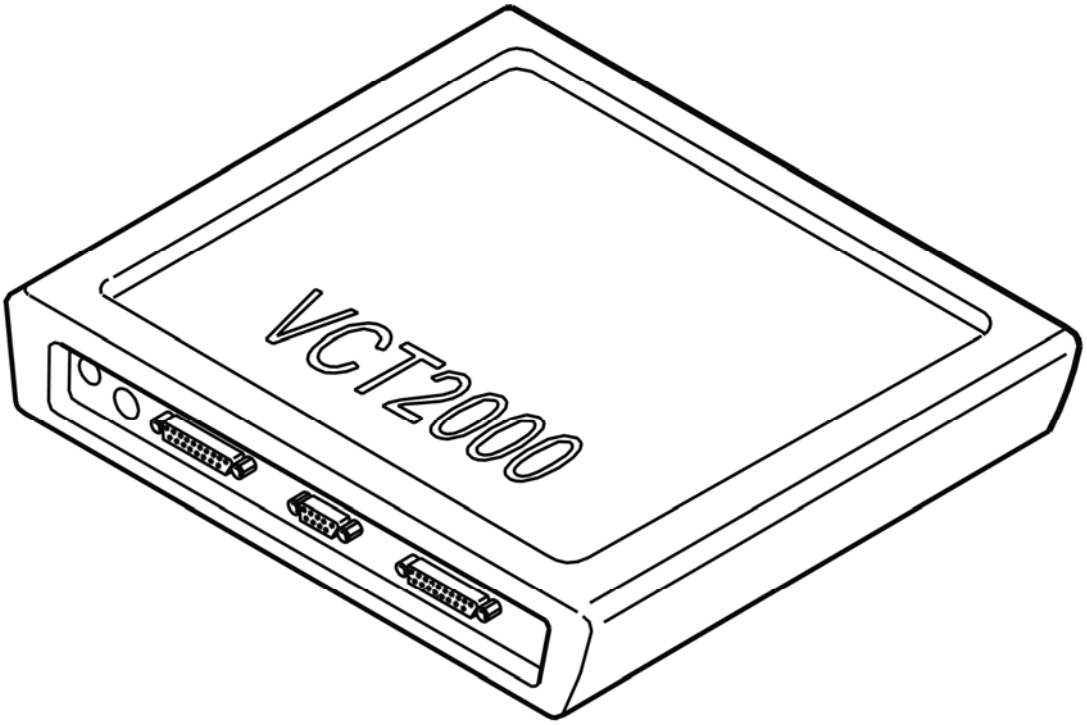

Fig. 98: Identifying VCT2000 Diagnostic Tool Symbol In VIDA
Courtesy of VOLVO CARS CORPORATION

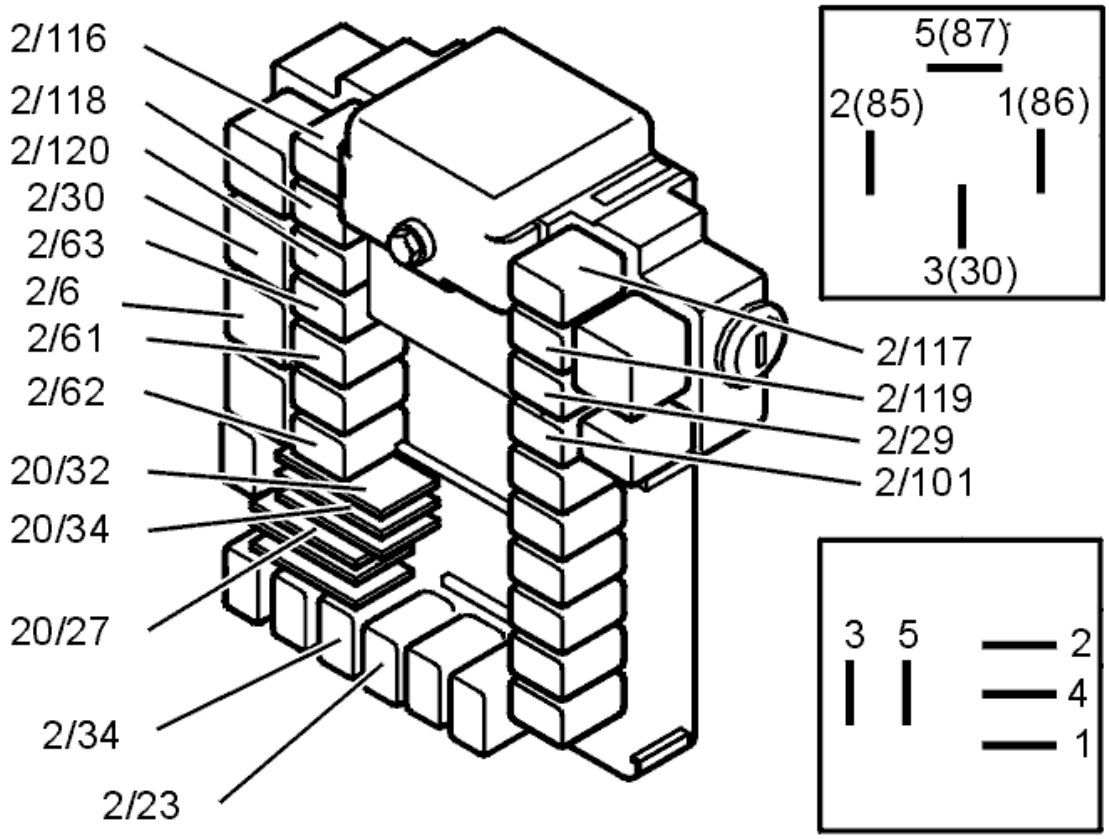

Fig. 99: Identifying Relays
Courtesy of VOLVO CARS CORPORATION

- **Continue**

  Refer to **INFORMATION**

VERIFICATION

HINT: After the repair it is necessary to check that the fault has been rectified.

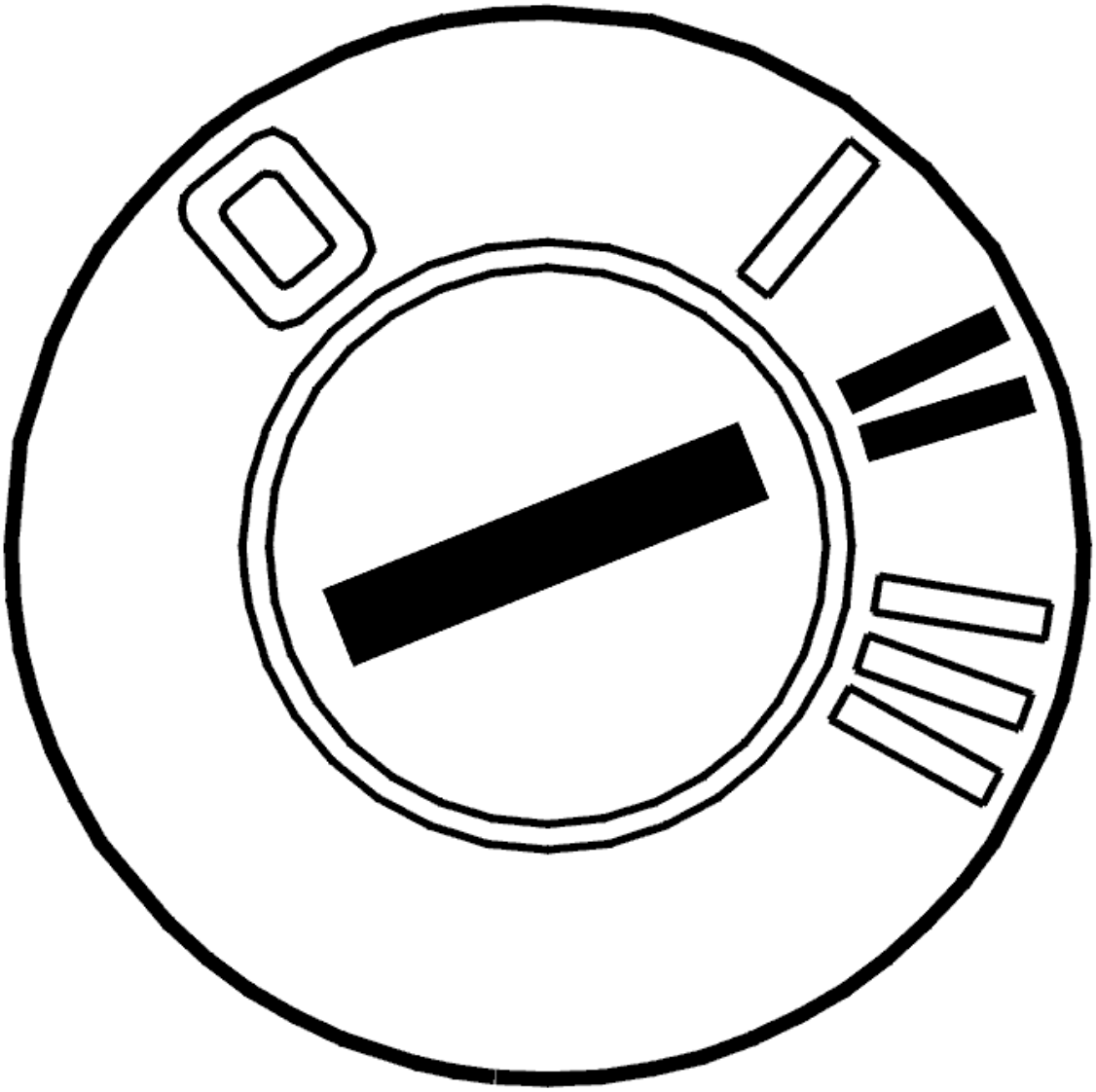

Fig. 100: Identifying Ignition ON
Courtesy of VOLVO CARS CORPORATION

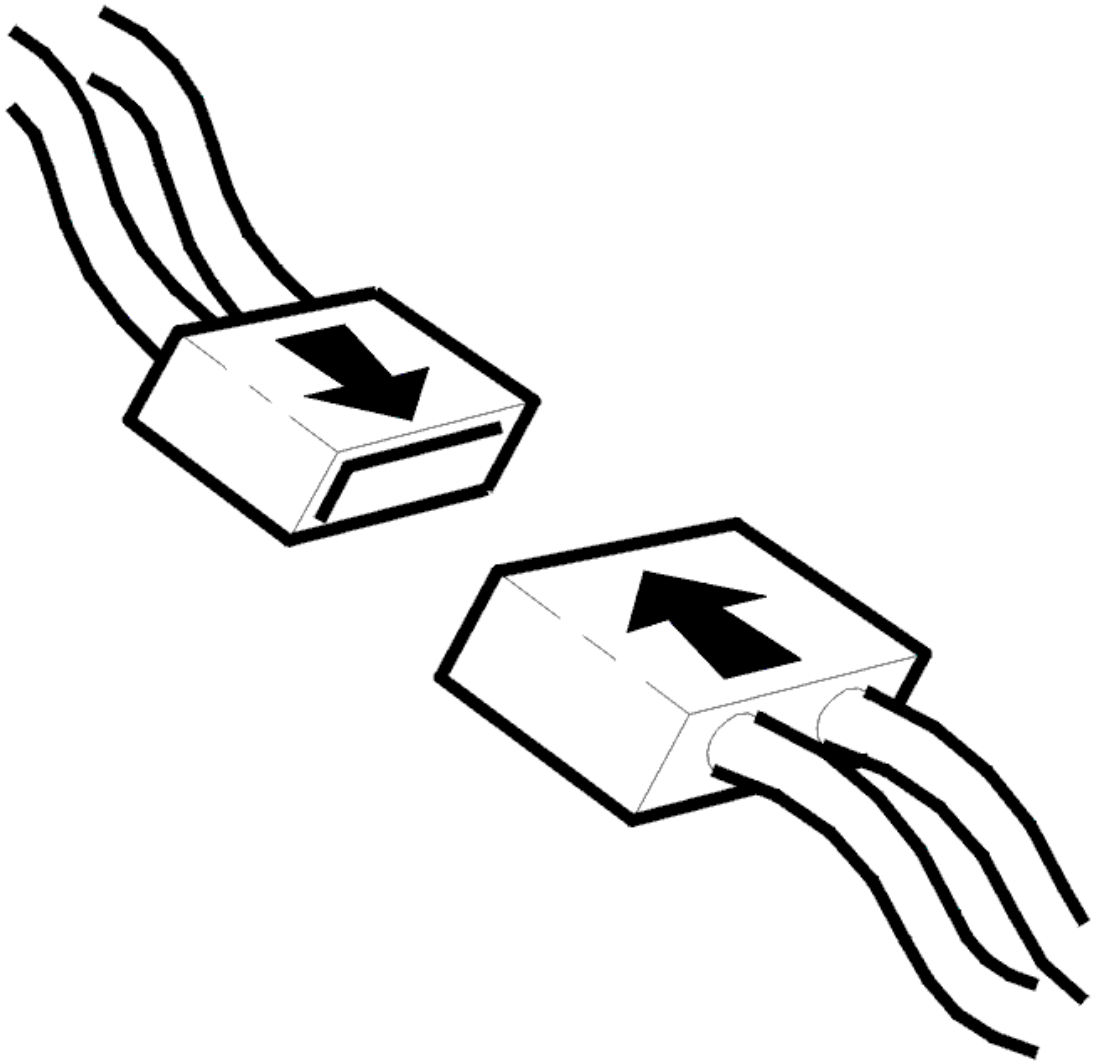

Fig. 101: Connecting Connector
Courtesy of VOLVO CARS CORPORATION

- Ignition off.
- Connect connectors, install components etc.
- Ignition on.

  Activate relay on control switch unit, window up/down.

Does it work?

- **YES**

  VERIFIED: Troubleshooting has been completed.

- **NO**

  Refer to **INFORMATION**

INFORMATION

FAULT-TRACING INFORMATION

The fault should have been detected and remedied. As this is not the case fault-tracing has failed.

Exit fault-tracing for this diagnostic trouble code (DTC) or make another attempt.

CHECKING REMOTE CONTROL, POOR CONTACT WITH BATTERY (2005-06)

CHECKING REMOTE CONTROL, POOR CONTACT WITH BATTERY

This symptom troubleshooting only applies to vehicles that show any or some of the following symptoms:

- Alarm/Arming does not work/No visible indication
- Locking/unlocking/Other central locking problems
- Locking/unlocking/Central locking does not work

Problems with the remote control's function may be due to poor contact between the battery and the connecting pins in the remote control.

To solve problems with poor contact:

- Open the remote control's battery cover and remove the battery.
- Carefully bend the connecting pin upward (approx. 0.5 - 1 mm) for the battery's plus terminal.
- Carefully bend the connecting pins upward (approx. 1 - 2 mm) for the battery's minus terminal.
- Reinstall the battery in the remote control.
- Hold the remote control upside-down and shake it carefully.
- If the battery works loose, bend the connecting pins upward a little more for the battery's plus terminal.
- If the battery is still in the remote control, reinstall the battery cover.
- Verify the remote control's function.

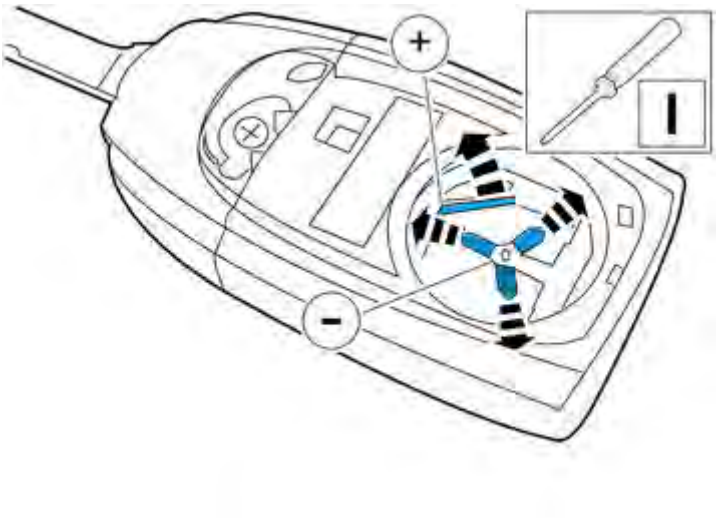

Fig. 102: Checking Contact Of Remote Control Battery
Courtesy of VOLVO CARS CORPORATION

CHECKING REMOTE CONTROLLED IMMOBILIZING (2011-12)

CHECKING REMOTE CONTROLLED IMMOBILIZING

NOTE: **This fault tracing only applies to vehicles with the function for remote controlled immobilizing. Is DTC CEM-6C57 stored? Fault trace this diagnostic DTC first.**

HINT: Function for remote controlled immobilizing is only available on certain markets and only in combination with Volvo On Call.

If the vehicle cannot be started, the cause may be that the vehicle has been remote-immobilized via Volvo On Call Service Center. The vehicle may also have been remotely immobilized if the Central electronic module (CEM) identified problems with the components used for the function.

To read out the status for remote controlled immobilizing, see

The following options are available:

- Vehicle immobilised by remote control.
- Vehicle mobilised by remote control.
- Vehicle mobilised by remote control but remote controlled immobilising continues.

If the vehicle is remotely immobilised, the cause can be read out, see

The following options are available:

- Vehicle remotely immobilised by Volvo On Call Service Center.

- No or incorrect communication between the Phone module (PHM) and Central electronic module (CEM).
- Vehicle remotely immobilised by VIDA (Volvo scan tool).

To cancel a remote-controlled immobilization, Volvo On Call Service Center has to remobilize the vehicle.

Remedy as necessary.

CHECKING REMOTE CONTROLS (2003-12)

CHECKING THE REMOTE CONTROL

Check with the customer if the remote control's function ceases in certain places or if the problem can occur at any place.

Does the remote control's function cease to work in certain places?

- **YES**

  Refer to **INFORMATION ABOUT "DEAD ZONES" FOR WIRELESS COMMUNICATION**

- **NO**

  Refer to **CHECKING THE FUNCTION**

CHECKING THE WIRES AND COMPONENTS

Check that all the remote controls work by pressing any button on the remote control and activating the Smart-tool.

Options

1. None of the remote controls work. Refer to **REPLACING THE COMPONENT**.
2. One or more of the remote controls work, but not all. Refer to **CHECKING THE REMOTE CONTROL**.
3. All the remote controls work. Troubleshooting has been completed.

Fig. 103: Identifying VCT2000 Diagnostic Tool Symbol In VIDA
Courtesy of VOLVO CARS CORPORATION

REPLACING THE COMPONENT

Replace control unit.

Before replacing the control unit all the program data should be read from the control unit, make a note of it. This is done from VIDA vehicle communication.

Additional information

- see **INTERIOR LIGHTING AND UPPER ELECTRONIC MODULE (UEM), REPLACING**

CHECKING THE REMOTE CONTROL

Check that the battery in the remote control has not discharged.

Do the necessary corrective action.

If no fault is found, replace the remote control.

If a faulty remote control is replaced by a new one, the old one has to be erased first.

Additional information

- see **IGNITION KEY/REMOTE CONTROL, ADDITION/REPLACING/ERASING**

CHECKING THE FUNCTION

Check if the vehicle can be unlocked but not locked with the remote control.

HINT: Lower a side window, turn off the ignition and pull out the ignition key slowly. That the vehicle cannot be locked with the remote control may depend on a switch at the ignition jamming.

Can the vehicle be locked with the remote control?

- **YES**

  Refer to **CHECKING THE WIRES AND COMPONENTS**

- **NO**

  Refer to **CHECKING S-VOLTAGE FEED**

CHECKING S-VOLTAGE FEED

HINT: If the switch for S-feed in the ignition jams in active position, the vehicle assumes that the ignition key is in the ignition and will then not lock the central lock on command from the remote control.

- Ignition off.
- Activate reading off the status. Click the VCT2000 symbol.

- Insert and remove the ignition key a number of times.

  Check that the status changes.

  NOTE: S voltage supply to the central electronic module (CEM) must be approximately battery voltage when the ignition key is in the ignition switch.

  Remedy as necessary.

  Other information

  - see **STEERING WHEEL LOCK, REPLACING**

Fig. 104: Identifying VCT2000 Diagnostic Tool Symbol In VIDA
Courtesy of VOLVO CARS CORPORATION

Was a fault detected?

- **YES**

  OKAY: Troubleshooting has been completed.

- **NO**

  Refer to **INFORMATION**

INFORMATION

FAULT-TRACING INFORMATION

The fault should have been detected and remedied. As this is not the case fault-tracing has failed.

Exit fault-tracing for this diagnostic trouble code (DTC) or make another attempt.

INTERIOR LIGHTING AND UPPER ELECTRONIC MODULE (UEM), REPLACING

REPLACING THE LENS AND THE BULB

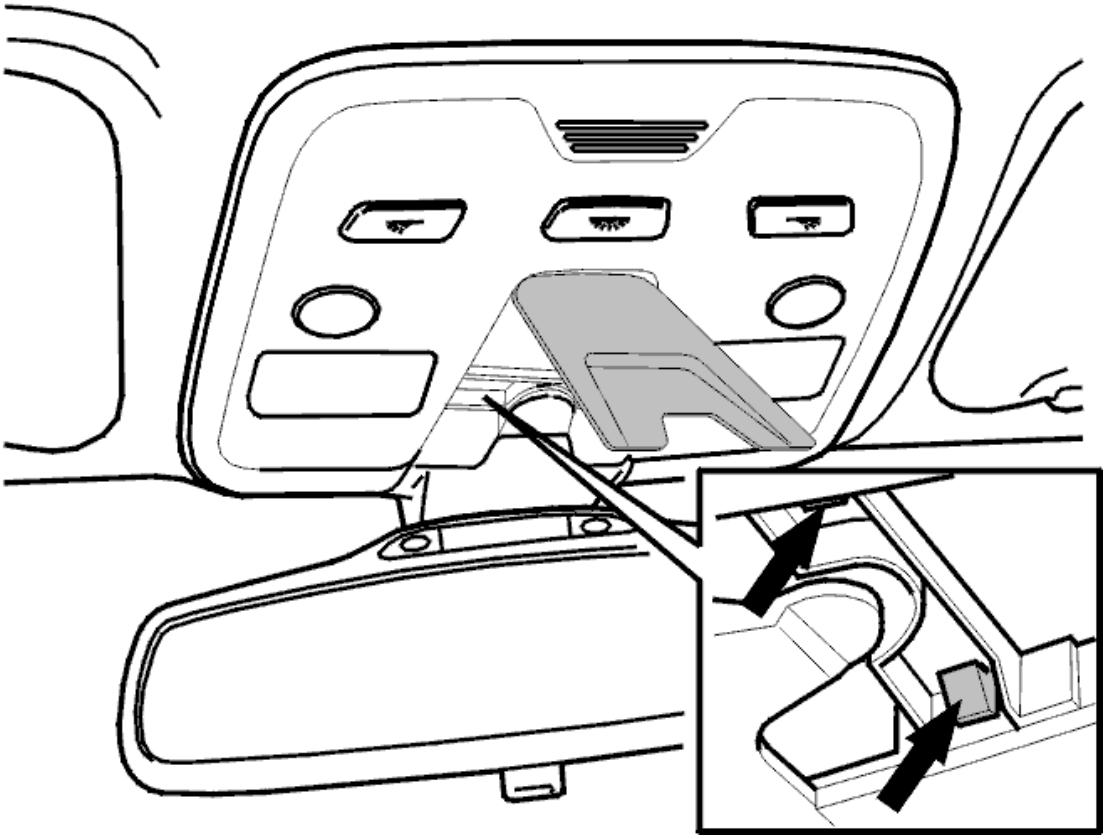

Fig. 105: Identifying Courtesy Light And Catches
Courtesy of VOLVO CARS CORPORATION

Removal

- Fold down the cover as shown.
- Press the catches outwards. Remove the lens.
- Remove the bulb. Use a weatherstrip tool or similar.

Installation

- Install the bulb.
- Press the lens into place.
- Press the cover into place.

REPLACING THE BULB HOLDER IN THE REAR VIEW MIRROR UNIT

The upper electronic module (UEM) is integrated in the rear view mirror. For more information about removing the rear view mirror, see **REPLACING THE UPPER ELECTRONIC MODULE (UEM), OR THE REAR VIEW MIRROR**.

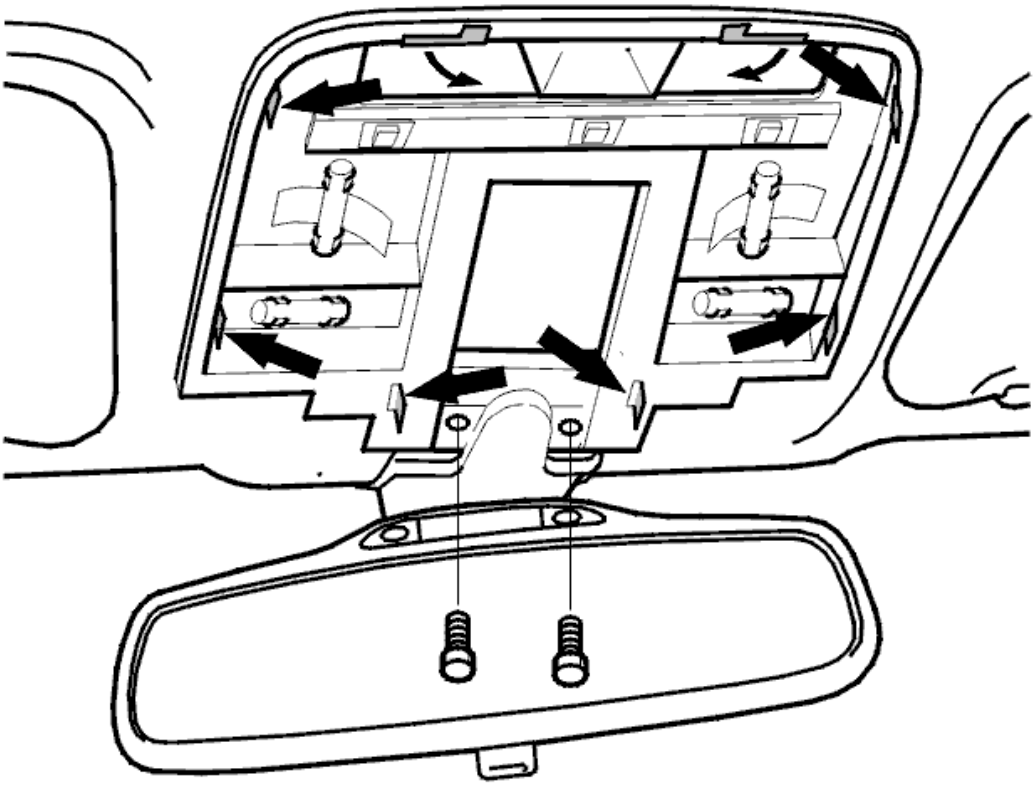

Fig. 106: Identifying Bulb Holder
Courtesy of VOLVO CARS CORPORATION

Removal

- Remove the lens.
- Remove the 2 screws at the front edge.
- Press the 2 rear catches forward.
- Press two of the catches on one side inwards. Remove the bulb holder.
- Disconnect the 2 connectors.
- Disconnect the ground lead.

HINT: Only certain versions of the upper electronic module (UEM) have a ground lead.

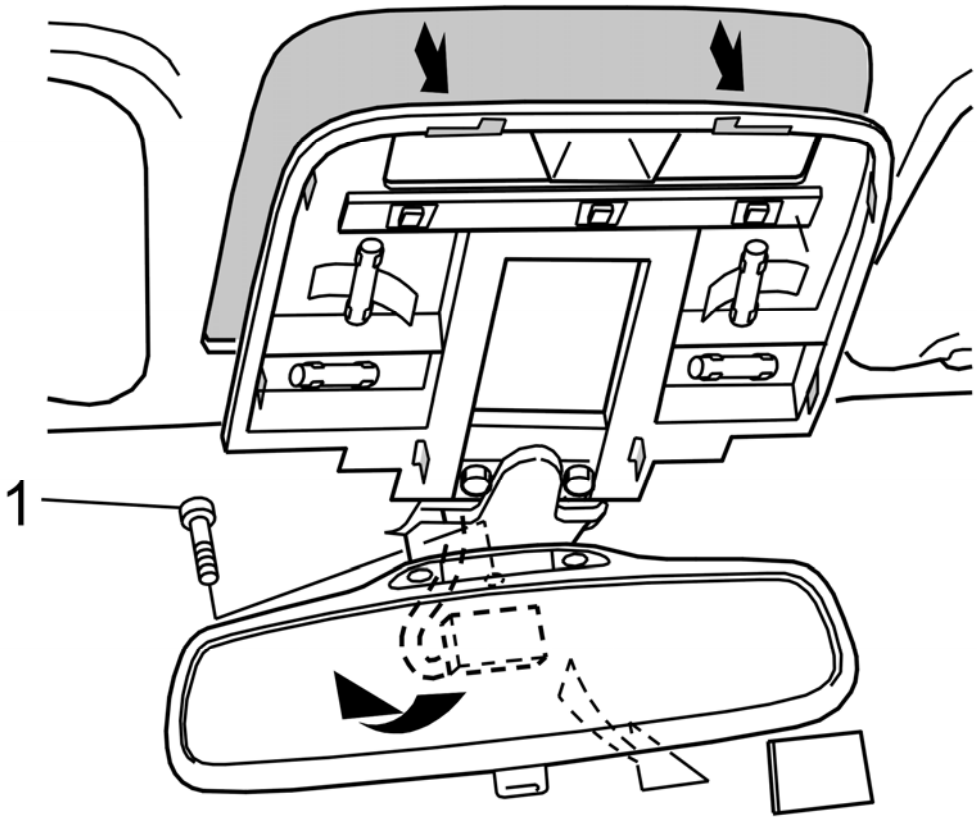

Fig. 107: Identifying Removal Of Rear View Mirror/Control Module
Courtesy of VOLVO CARS CORPORATION

- Remove the cover over the connector for the rear view mirror and control module.

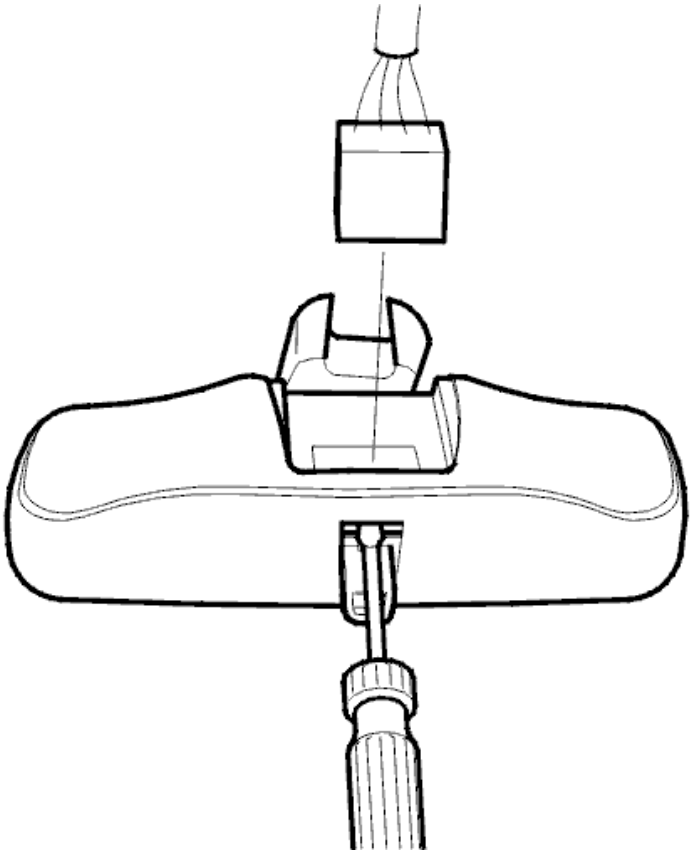

Fig. 108: Identifying Removal Of Rear View Mirror Connector
Courtesy of VOLVO CARS CORPORATION

- Flip the anti-dazzle button toward the lens. Disconnect the connector in the rear view mirror and control module by pressing the catch through the opening. Use a screwdriver.
- Remove the bulb holder together with the rear view mirror and control module.

Installation

- Connect the connector for the rear view mirror and control module.
- Reinstall the cover for the rear view mirror and control module connector.
- Connect the 2 connectors.
- Install the ground lead.
- Press the bulb holder into place.
- Install the 2 screws at the front edge.

CAUTION: Check that the microphone cable is not trapped (if applicable).

- Install the lens.

HINT: Only certain versions of the upper electronic module (UEM) have a ground lead.

REPLACING THE SWITCH FOR THE INTERIOR LIGHTING

Removal

- Remove the lens. See **REPLACING THE LENS AND THE BULB**.
- Remove the bulb holder. See **REPLACING THE BULB HOLDER IN THE REAR VIEW MIRROR UNIT**.
- Remove the bulbs.
- Remove the screws.
- Remove the back piece from the switch.
- Detach and remove the printed circuit board and switch.

To replace the switch for the sun roof, see **SWITCH, SUN ROOF, REPLACING** .

Installation

- In reverse order.

REAR VIEW MIRROR, REPLACING

NOTE: A rear view mirror with manual function cannot be replaced with automatic anti-dazzle or vice versa. The car will store diagnostic trouble codes (DTCs).

The upper electronic module (UEM) is integrated in the rear view mirror. To remove the rear view mirror, see **REPLACING THE UPPER ELECTRONIC MODULE (UEM), OR THE REAR VIEW MIRROR**.

REPLACING THE UPPER ELECTRONIC MODULE (UEM), OR THE REAR VIEW MIRROR

PREPARATIONS

NOTE: Read off data from the control module before replacing the control module. Program this data back into the new control module.

Programmed data is read off via VIDA vehicle communication.

CAUTION: New software can only be ordered when the control module is installed in the car. VIDA reads off the new control module identity which is required to order the correct software.

Always check the control module and connector on the control module box for bent or damaged pins or sockets. This may have caused the fault.

REMOVING THE CONTROL MODULE

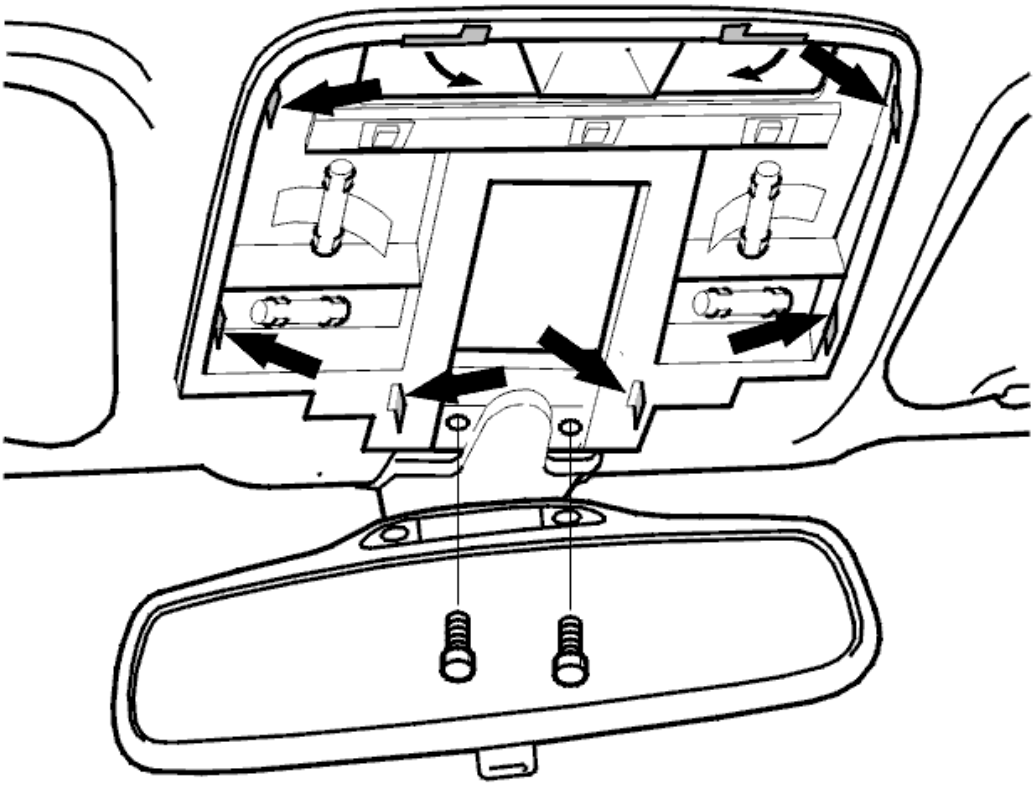

Fig. 109: Identifying Bulb Holder
Courtesy of VOLVO CARS CORPORATION

- Remove the lens.
- Remove the 2 screws at the front edge.
- Press the 2 rear catches forward.
- Press two of the catches on one side inwards. Remove the bulb holder.
- Disconnect the 2 connectors.
- Disconnect the ground lead.

HINT: Only certain versions of the upper electronic module (UEM) have a ground lead.

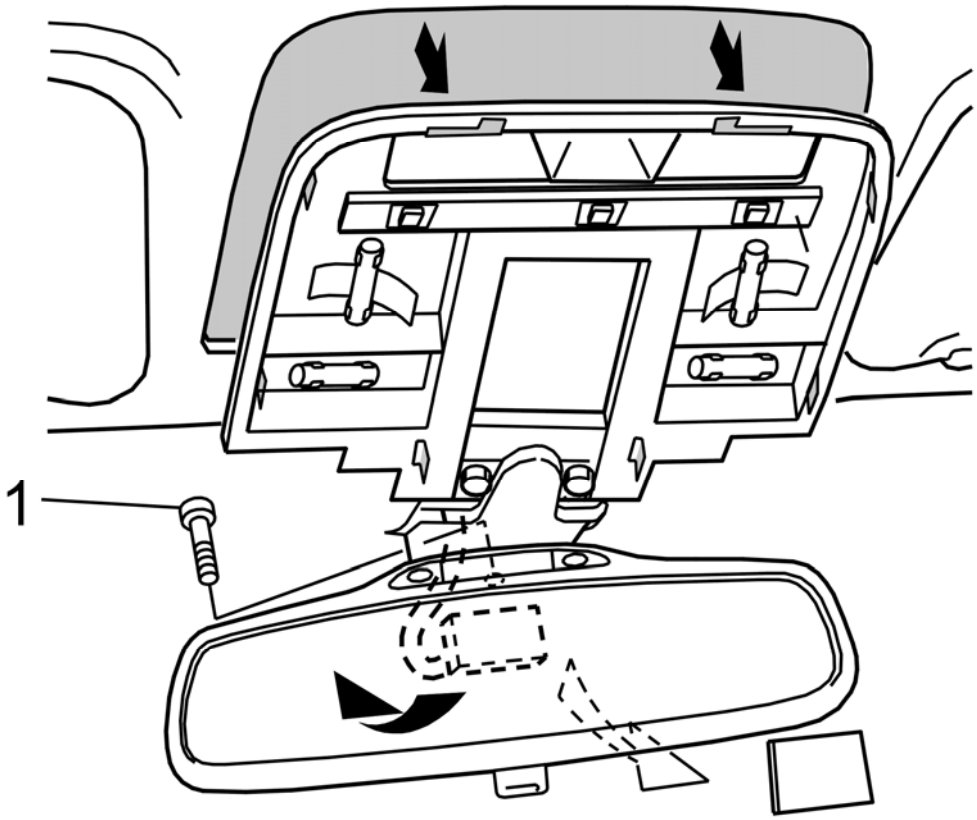

Fig. 110: Identifying Removal Of Rear View Mirror/Control Module
Courtesy of VOLVO CARS CORPORATION

- Remove the control module connector cover.

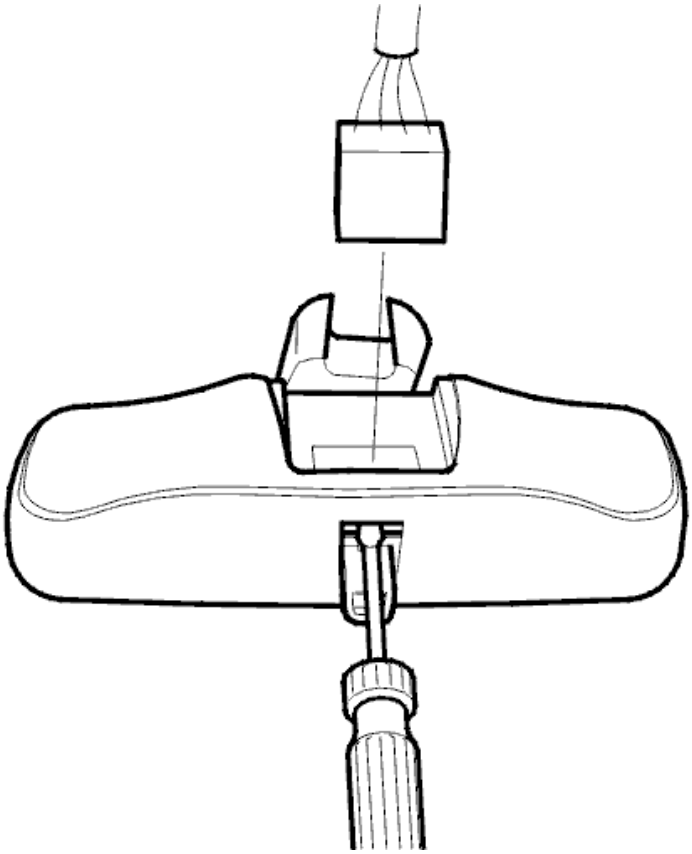

Fig. 111: Identifying Removal Of Rear View Mirror Connector
Courtesy of VOLVO CARS CORPORATION

- Flip the anti-dazzle button toward the lens. Disconnect the connector in the control module by pressing the catch through the opening. Use a screwdriver.
- Remove the screw from the control module.
- Remove the control module.

CHECK

Check that the control module connectors are intact.

INSTALLING THE CONTROL MODULE

- Screw the control module screw into place.
- Connect the connector for the control module.
- Reinstall the cover for the control module connector.
- Connect the 2 connectors.
- Press the bulb holder into place.
- Install the ground lead.
- Install the 2 screws at the front edge.
- Install the lens.

ORDERING SOFTWARE

Order software. See 8637414

FINISHING

Program in the data read off from the old control module.

INFORMATION ABOUT "DEAD ZONES" FOR WIRELESS COMMUNICATION

Due to increased radiation in the surroundings from various forms of transmitters, in rare instance, the signal from the remote control can be interrupted. In such cases it is often in locations where the external signals mean that the transmission and reception conditions become unfavorable. The effect can be so severe that total loss can occur in some places, which means that no wireless communication can occur. This can affect all types of wireless communication, not only signals from the remote control and depends on many different units sending information within the open frequency band. If these signals negatively affect each other, wireless communication in certain places is impossible.

Examples of interfering radiation sources are:

- Mobile telephones
- Radio/TV masts
- Wireless readable electric meters
- Wireless headsets
- Microwave ovens
- Remote controls for garage door opening
- Wireless supervision cameras
- Remote controls for other vehicles
- Wireless weather stations

Inform the customer about these conditions. If the customer is regularly in the vicinity of such locations, the cause of the fault has been found. See if the vehicle can be unlocked by moving the remote control closer to the receiver (in the upper electronic module (UEM)). Alternatively the vehicle can be unlocked using the keyblade.

NOTE: If the vehicle is unlocked using the key blade, the alarm functions are deployed if the vehicle is equipped with an alarm. The alarm can be reset in such cases by inserting the ignition key in the ignition switch and turning to position II.

Applies to vehicles of model year 2005 and 2006.

Check that the upper electronic module (UEM) is up to date. If it is not, some of the above problems can be solved by downloading new software to the upper electronic module (UEM). The software increases the range for the remote control and increases the tolerances against these types of interference.

NOTE: Downloading new software can solve some problems experienced by the

customer. It will not solve all problems.

TROUBLE-SHOOTING INFORMATION

Condition

No diagnostic trouble codes are displayed.

Substitute Value

Nothing.

Possible Source

- Communication between upper electronic module (UEM) and remote control is interfered with by external frequency sources.
- Internal fault in control unit.
- Low battery in remote control.
- Internal fault in remote control.

Fault symptom[s]

- Cannot be operated using remote control.
- Central locking does not work.

CHECKING REVERSE LIGHT CONTACT (2003-04)

CHECKING REVERSE LIGHT CONTACT

CHECKING WIRE AND REPLACEMENT OF COMPONENT

Check the wire between the control unit 1A and reverse light contact 2 (3/10) for a short-circuit to voltage supply as described in, see **SHORT-CIRCUIT TO SUPPLY VOLTAGE. PERMANENT FAULTS** , and for an open circuit as described in **OPEN-CIRCUIT, PERMANENT FAULTS** .

Also check the connectors for a short circuit to voltage supply, as described in, see **SHORT-CIRCUIT TO SUPPLY VOLTAGE. PERMANENT FAULTS** , and for an open circuit as described in **OPEN-CIRCUIT, PERMANENT FAULTS** .

If no fault is found on the wire, check the function of the reversing lamp switch.

HINT: If reverse light contact is closed, the voltage between 1 and 2 on the contact is 0 V.

Do the necessary corrective action.

Additional information

- To access/replace the central electronic module (CEM), see **CENTRAL ELECTRONIC MODULE (CEM), REPLACING** .
- For information on signals and additional values, see **SIGNAL SPECIFICATION** .
- To connect the test box, see **CONNECTING THE BREAKOUT BOX** .

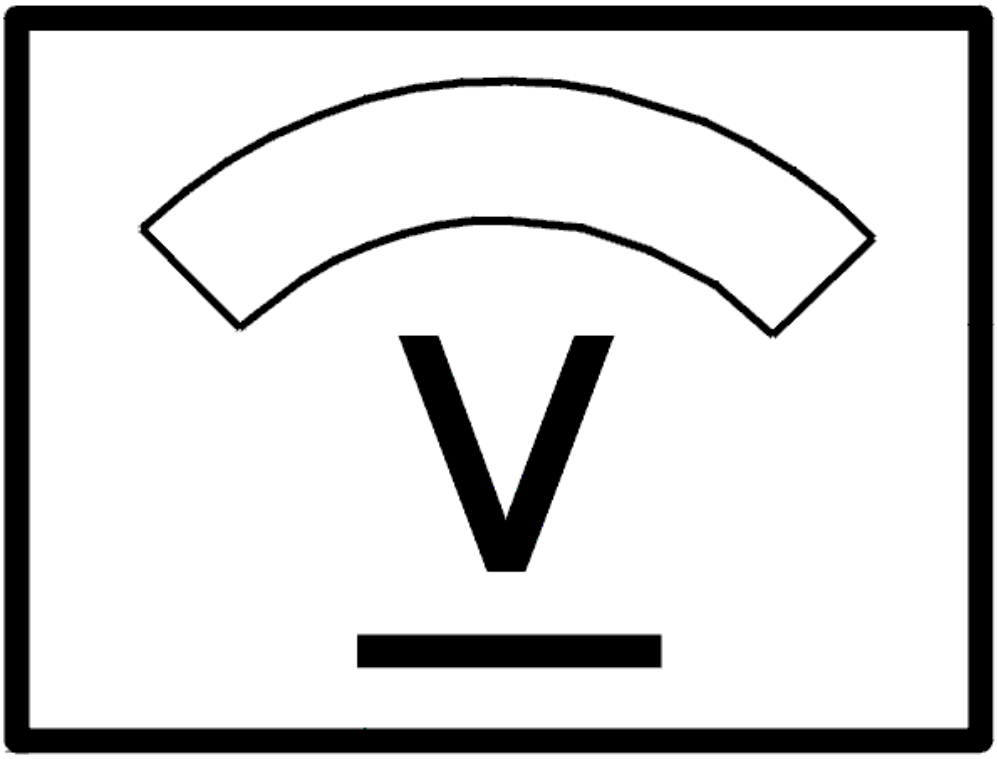

Fig. 112: Identifying Voltage Display
Courtesy of VOLVO CARS CORPORATION

TROUBLE-SHOOTING INFORMATION

Condition

No diagnostic trouble codes are displayed.

Possible Source

- Faulty switch
- Short circuit to voltage supply
- Open circuit.

Fault symptom[s]

- Reverse light remains on.

CHECKING REVERSE LIGHT CONTACT (2003-04)

CHECKING REVERSE LIGHT CONTACT

CHECKING WIRE AND REPLACEMENT OF COMPONENT

Check the wire between the central electronic module (CEM) 1A and reverse light contact 2 (3/10) for a short circuit to ground as described in, see **SHORT-CIRCUIT TO GROUND, PERMANENT FAULTS** .

Also check the connector for a short circuit to ground as described in, see **SHORT-CIRCUIT TO GROUND, PERMANENT FAULTS** .

If no fault is found on the wire, check the function of the reversing lamp switch.

HINT: If brake light contact is closed, the voltage between 1 and 2 on the contact is 0 V.

Do the necessary corrective action.

Additional information

- To access/replace the CEM connector, see **CENTRAL ELECTRONIC MODULE (CEM), REPLACING**
- For information on signals and additional values, see **SIGNAL SPECIFICATION**
- To connect a test box, see **CONNECTING THE BREAKOUT BOX** .

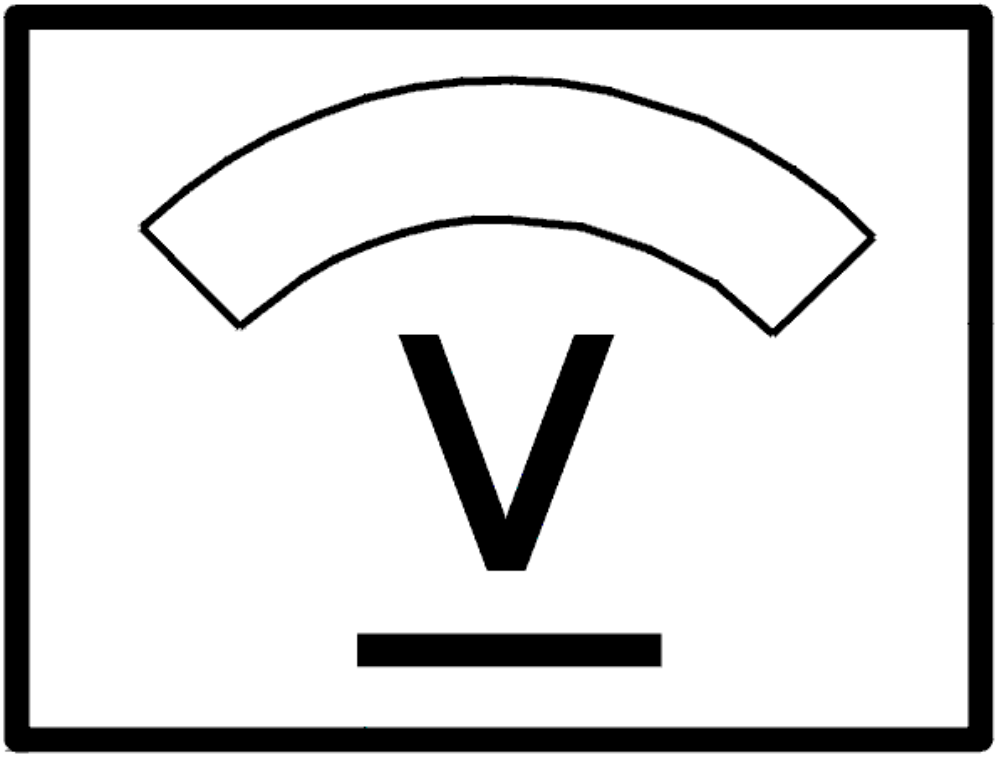

Fig. 113: Identifying Voltage Display
Courtesy of VOLVO CARS CORPORATION

TROUBLE-SHOOTING INFORMATION

Condition

No diagnostic trouble codes are displayed.

Possible Source

- Short circuit to ground.

Fault symptom[s]

- Reverse light does not work when reverse is selected.

CHECKING SPEED RELATED POWER STEERING (2003-12)

CHECKING SPEED RELATED POWER STEERING (2003-04)

CHECKING SPEED RELATED POWER STEERING

A fault in the speed related power steering can result in the steering becoming abnormally stiff at low speed or abnormally light at high speed.

Fault causes could be:

- No power supply to the speed related power steering control module
- Open-circuit or loose connection in the wiring between the control module and the central electronic module (CEM)
- Open-circuit or loose connection in the wiring between the control module and the solenoid on the steering gear
- Contact resistance and oxidation in the control module or solenoid connectors
- Defective control module for speed related power steering.

- **Continue**

  Refer to **CHECKING THE POWER SUPPLY**

CHECKING THE POWER SUPPLY

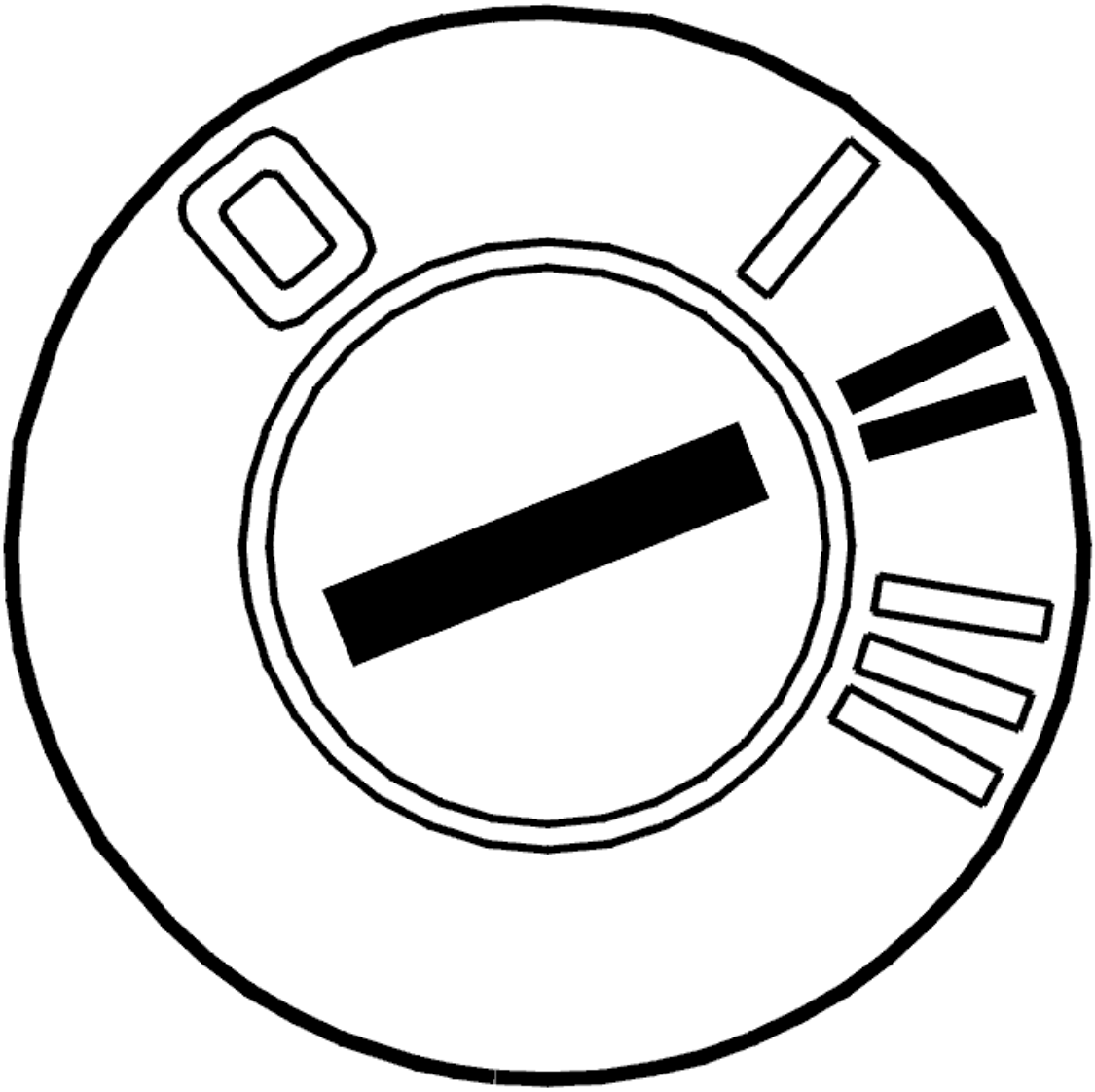

Fig. 114: Identifying Ignition ON
Courtesy of VOLVO CARS CORPORATION

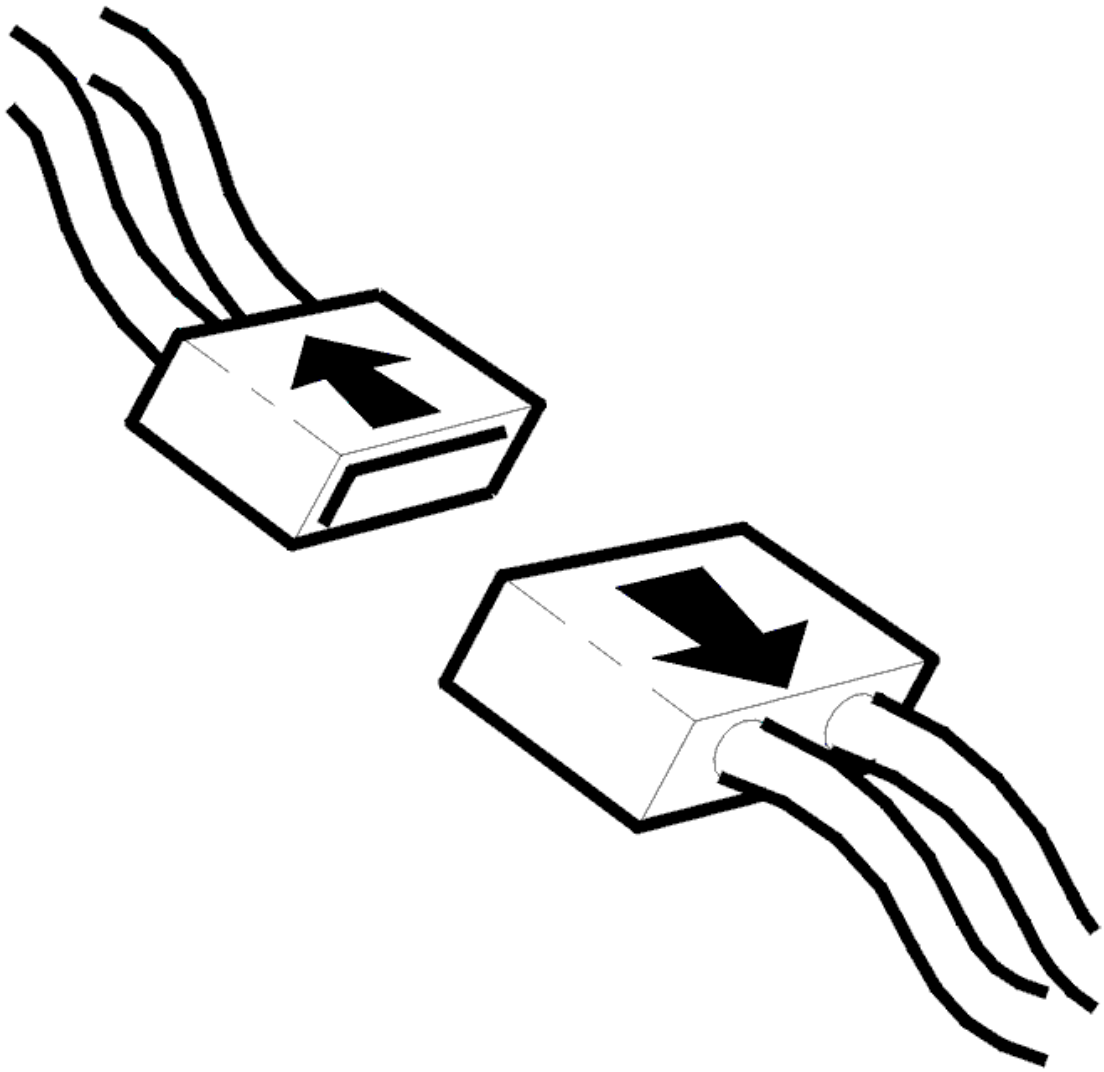

Fig. 115: Disconnecting Connector
Courtesy of VOLVO CARS CORPORATION

- Ignition off
- Check the control module connector for speed related power steering. Check for contact resistance and oxidation. In particular, check for any damage
- Ignition on.

  Measure the voltage between terminals #4 and #3 in the control module connector for speed related power steering. The voltage should be battery voltage.

  Other information

  - To access the control module for speed related power steering, see **CONTROL MODULE STEERING GEAR, REPLACING** .

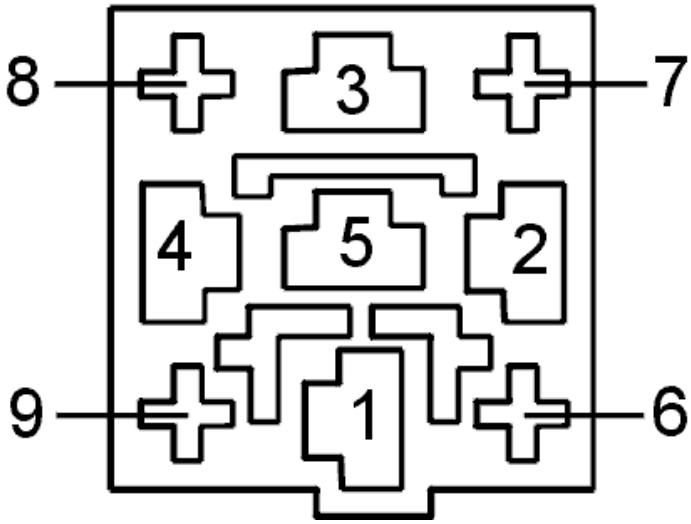

Fig. 116: Identifying Connector Terminals
Courtesy of VOLVO CARS CORPORATION

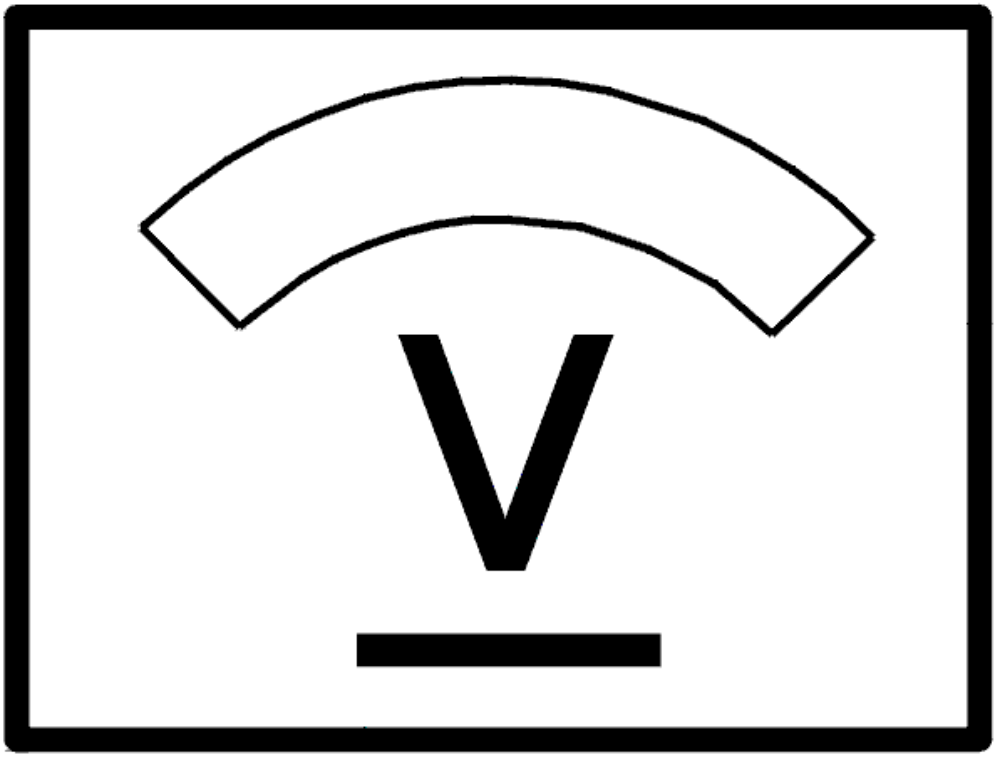

Fig. 117: Identifying Voltage Display
Courtesy of VOLVO CARS CORPORATION

Was the voltage correct?

- **YES**

  Refer to **CHECKING THE SIGNAL CABLE**

- **NO**

  Refer to **CHECKING THE WIRING**

CHECKING THE WIRING

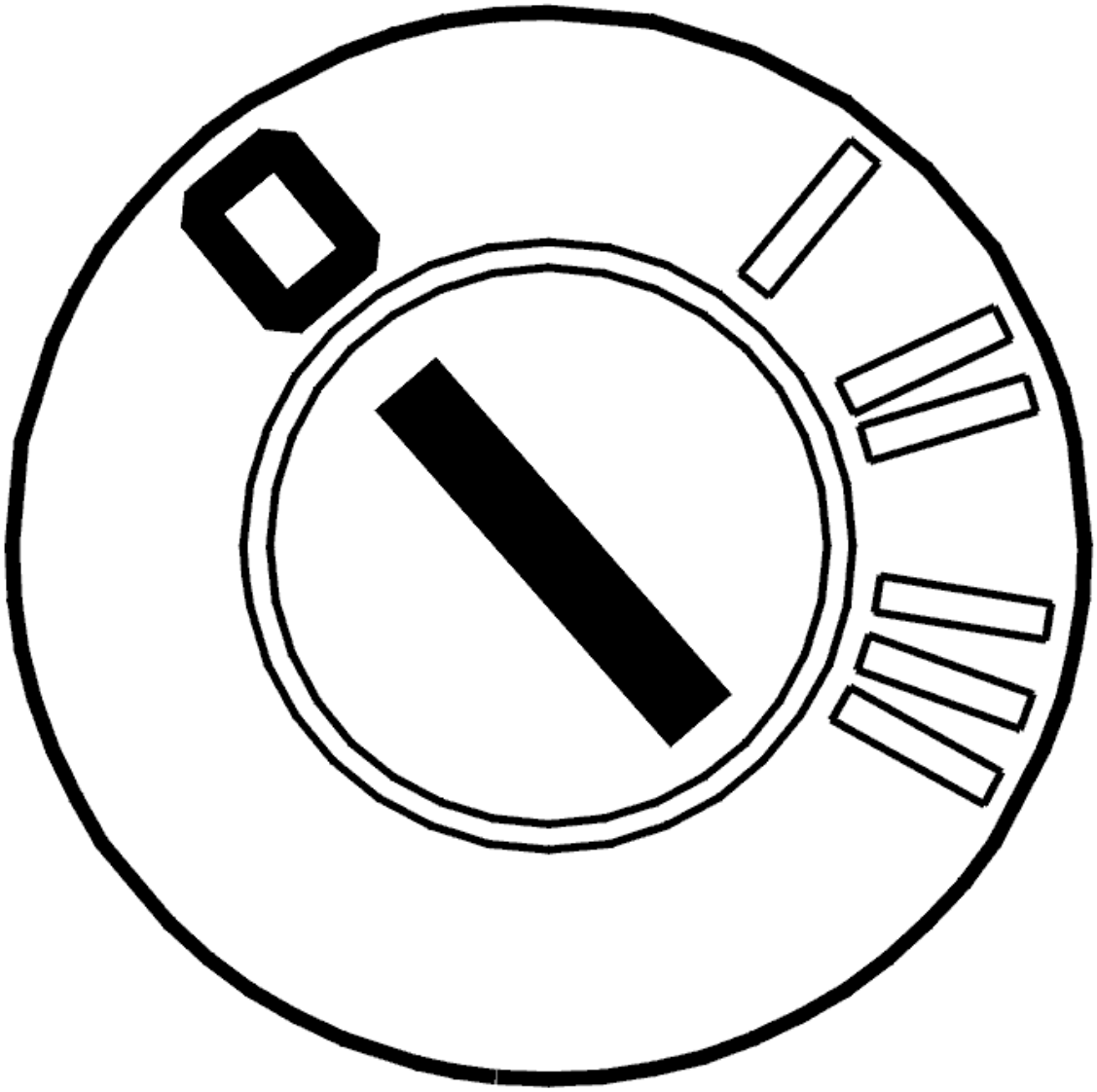

Fig. 118: Identifying Ignition OFF
Courtesy of VOLVO CARS CORPORATION

- Ignition off.

  Check the fuse for the control module for speed related power steering.

  Check the cable between the fuse and control module terminal #4. Check for an open-circuit. Check for a short-circuit to ground.

  Check the cable between the control module and ground terminal. Check for an open-circuit. Check for a short-circuit to supply voltage.

  Also check the ground terminal. Check for contact resistance and oxidation.

  Remedy as necessary.

Other information

- see **CHECKING WIRING AND TERMINALS** .

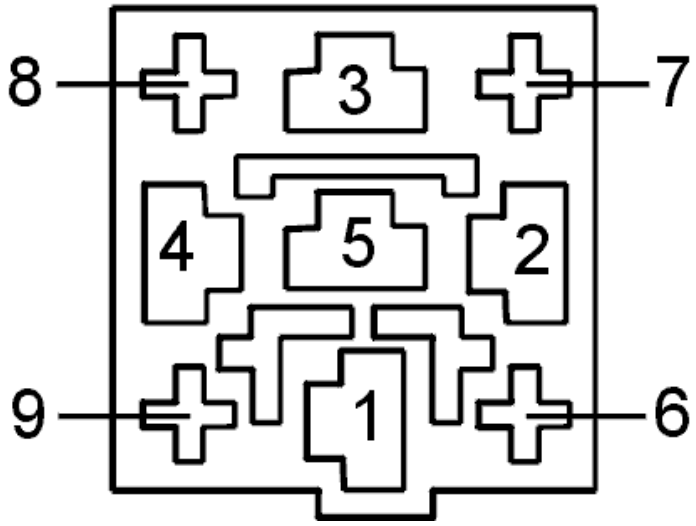

Fig. 119: Identifying Connector Terminals
Courtesy of VOLVO CARS CORPORATION

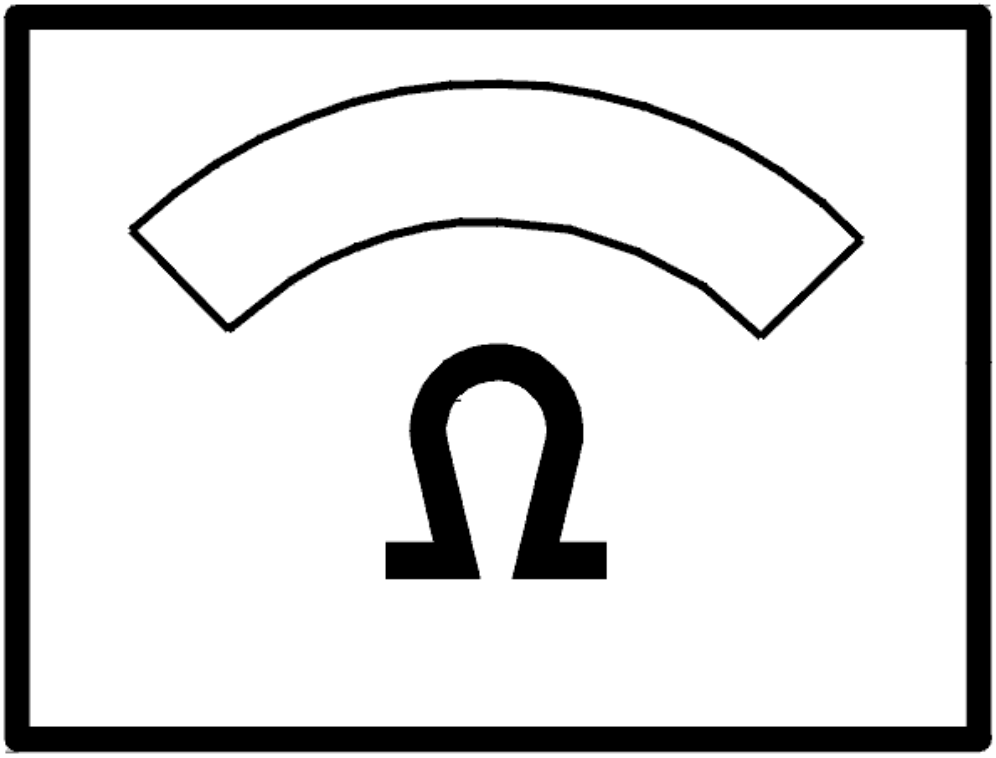

Fig. 120: Identifying Ohmmeter
Courtesy of VOLVO CARS CORPORATION

- **Continue**

  Refer to **VERIFICATION**

CHECKING THE SIGNAL CABLE

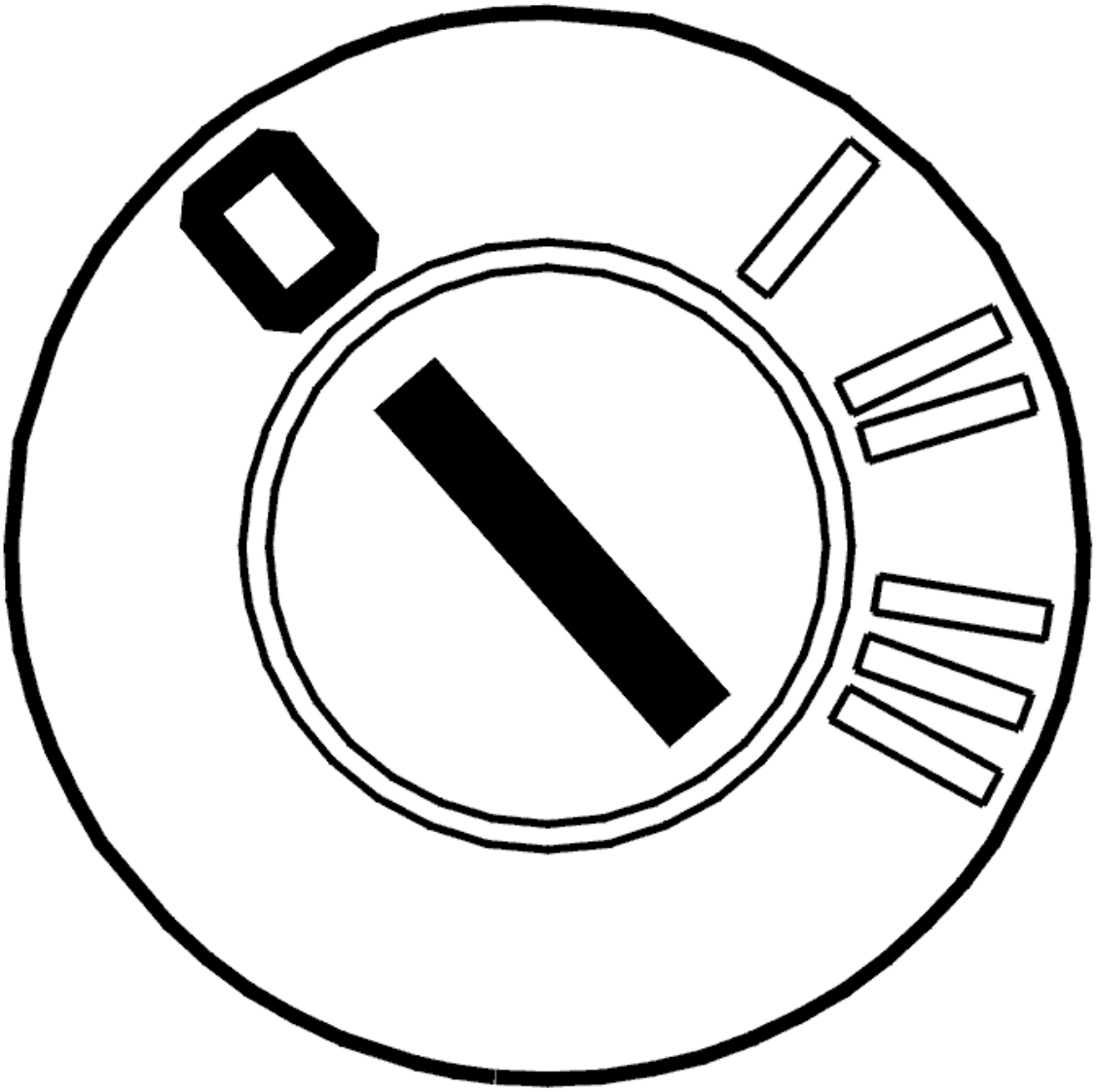

Fig. 121: Identifying Ignition OFF
Courtesy of VOLVO CARS CORPORATION

- Ignition off.

  Check the cable for the vehicle speed signal between the central electronic module (CEM) terminal #10D (#B10) and the control module for speed related power steering terminal #2. Check for an open-circuit. Check for a short-circuit to supply voltage. Check for a short-circuit to ground.

  Remedy as necessary.

  Other information

  - To access the central electronic module (CEM) connector, see **CENTRAL ELECTRONIC MODULE (CEM), REPLACING**
  - see **CONNECTING THE BREAKOUT BOX**

- For information about signals, see **SIGNAL SPECIFICATION**
- see **CHECKING WIRING AND TERMINALS** .

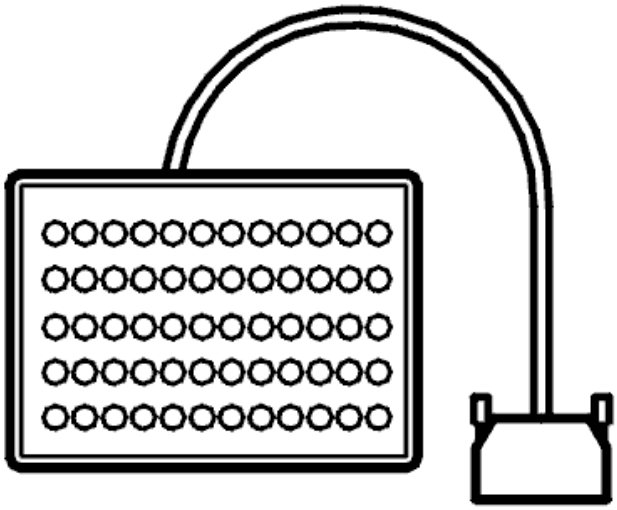

Fig. 122: Breakout Box
Courtesy of VOLVO CARS CORPORATION

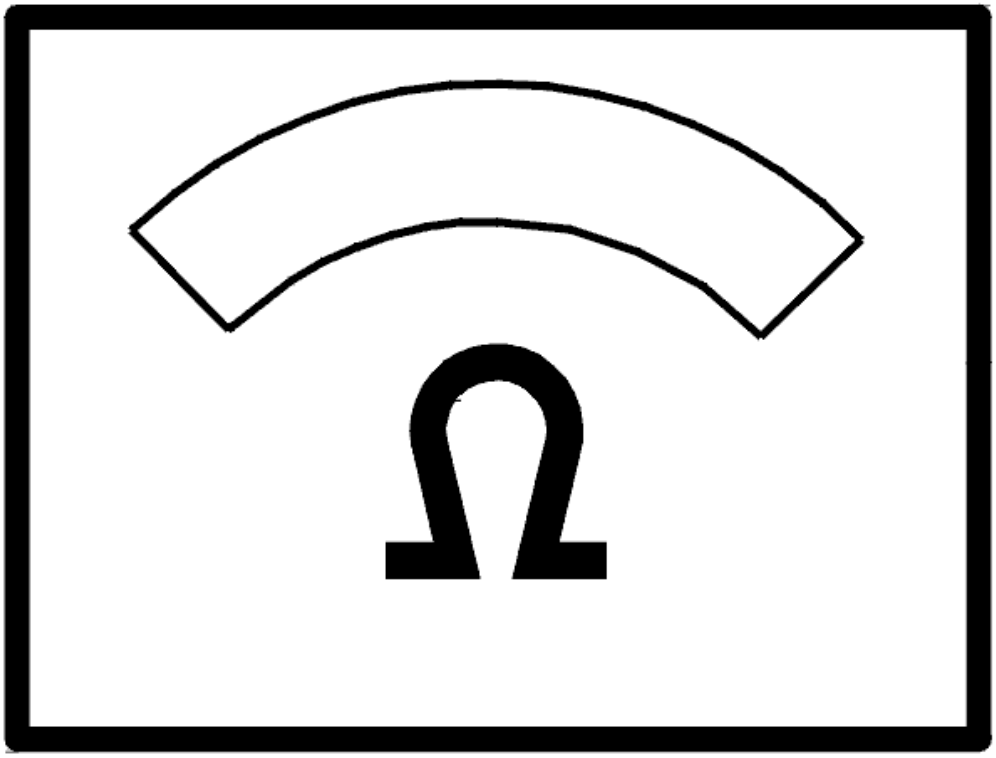

Fig. 123: Identifying Ohmmeter
Courtesy of VOLVO CARS CORPORATION

Was a fault detected?

- **YES**

  Refer to **VERIFICATION**

- **NO**

  Refer to **CHECKING SIGNAL CABLES**

CHECKING SIGNAL CABLES

Check the connector for the solenoid on the steering gear. Check for contact resistance and oxidation.

Check for damage carefully.

Check the signal cable between the control module for speed related power steering terminal #5 and the solenoid connector terminal #1. Check for an open-circuit. Check for a short-circuit to supply voltage. Check for a short-circuit to ground.

Check the signal cable between the control module for speed related power steering and the solenoid connector terminal #2. Check for an open-circuit. Check for a short-circuit to supply voltage. Check for a short-circuit to ground.

Remedy as necessary.

Other information

- To access the solenoid connector, see **STEERING GEAR, REPLACING**
- see **CHECKING WIRING AND TERMINALS** .

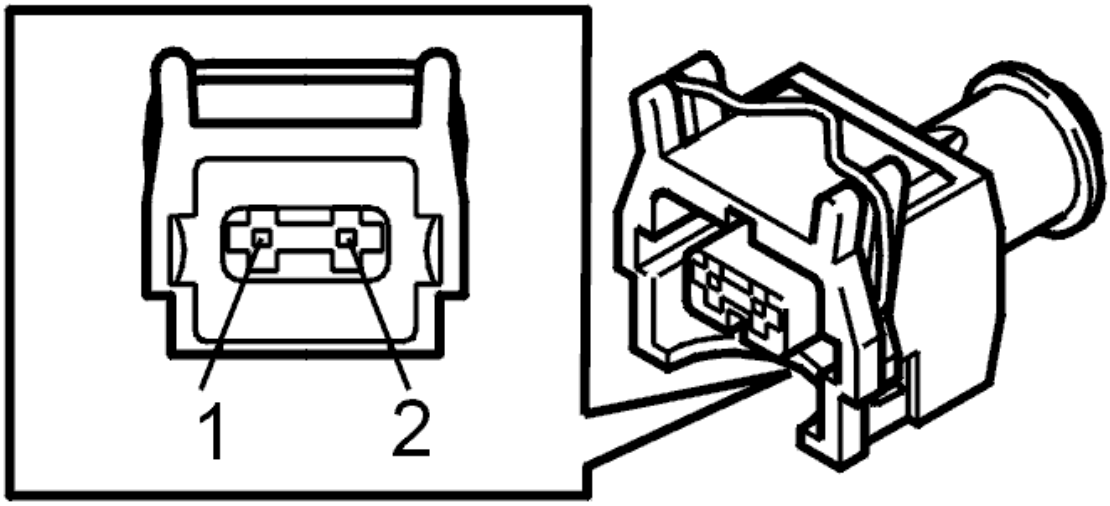

Fig. 124: Identifying Injector Connector Terminals
Courtesy of VOLVO CARS CORPORATION

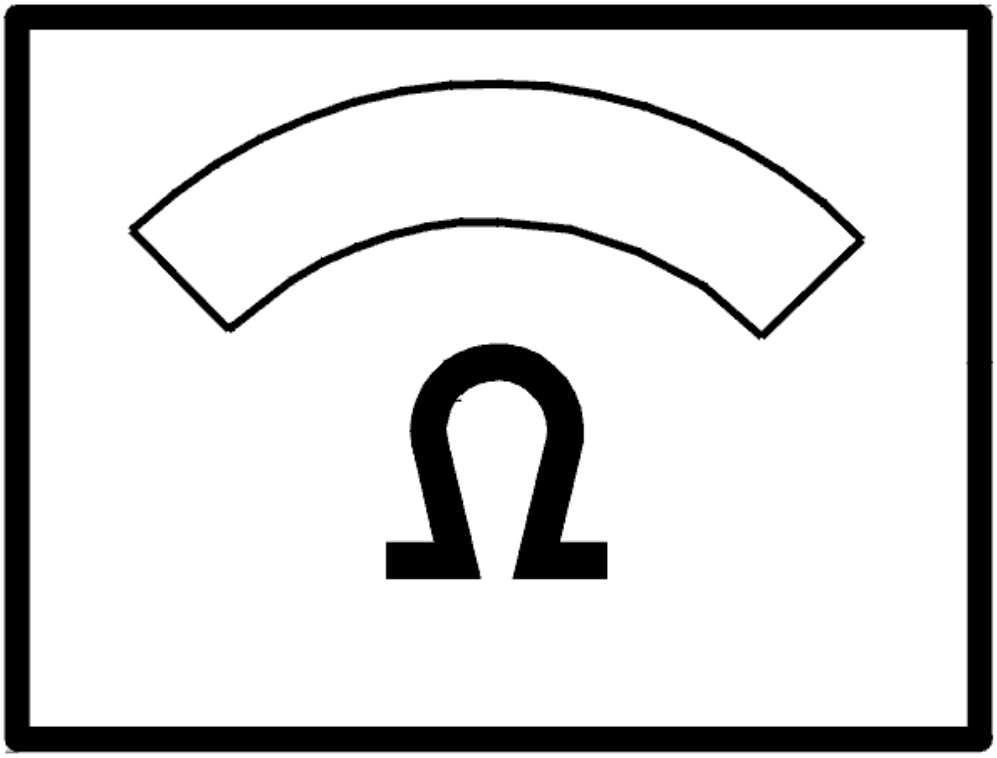

Fig. 125: Identifying Ohmmeter
Courtesy of VOLVO CARS CORPORATION

Was a fault detected?

- **YES**

  Refer to **VERIFICATION**

- **NO**

  Refer to **REPLACING COMPONENT**

REPLACING COMPONENT

Replace the control module for speed related power steering.

Other information

- To replace the control module for speed related power steering, see **CONTROL MODULE STEERING GEAR, REPLACING** .
- **Continue**

  Refer to **VERIFICATION**

VERIFICATION

HINT: After carrying out the repair, check that the fault has been remedied.

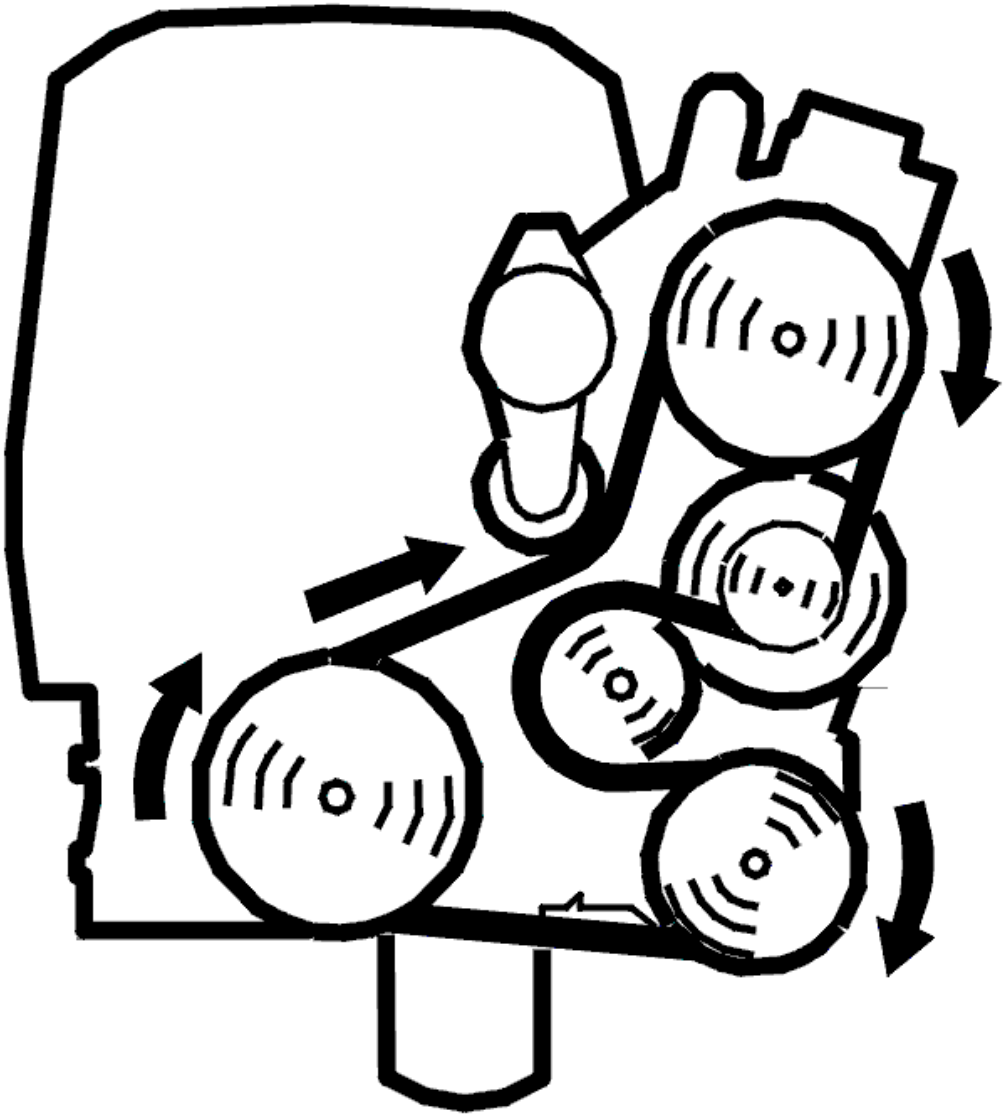

Fig. 126: Belt Routing/Engine Idling - Volvo
Courtesy of VOLVO CARS CORPORATION

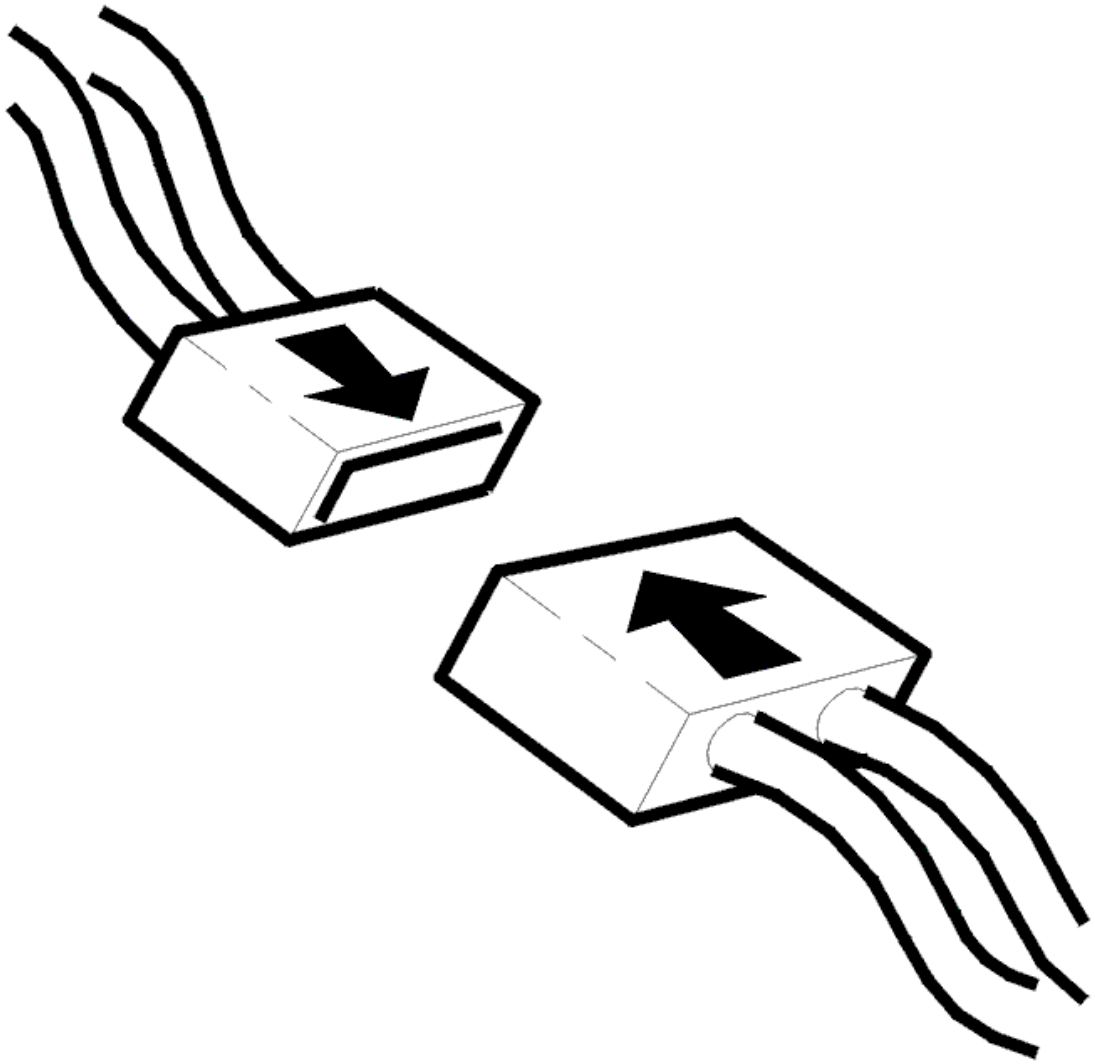

Fig. 127: Connecting Connector
Courtesy of VOLVO CARS CORPORATION

- Ignition off
- Reinstall the connectors, components etc.
- Engine running.

  Change the vehicle speed signal from the central electronic module (CEM) by clicking on the VCT2000 symbol.

  Switch between 0 km/h and 110 km/h and test at the same time, by turning the steering wheel, that the servo assistance for the steering changes in relation to the speed.

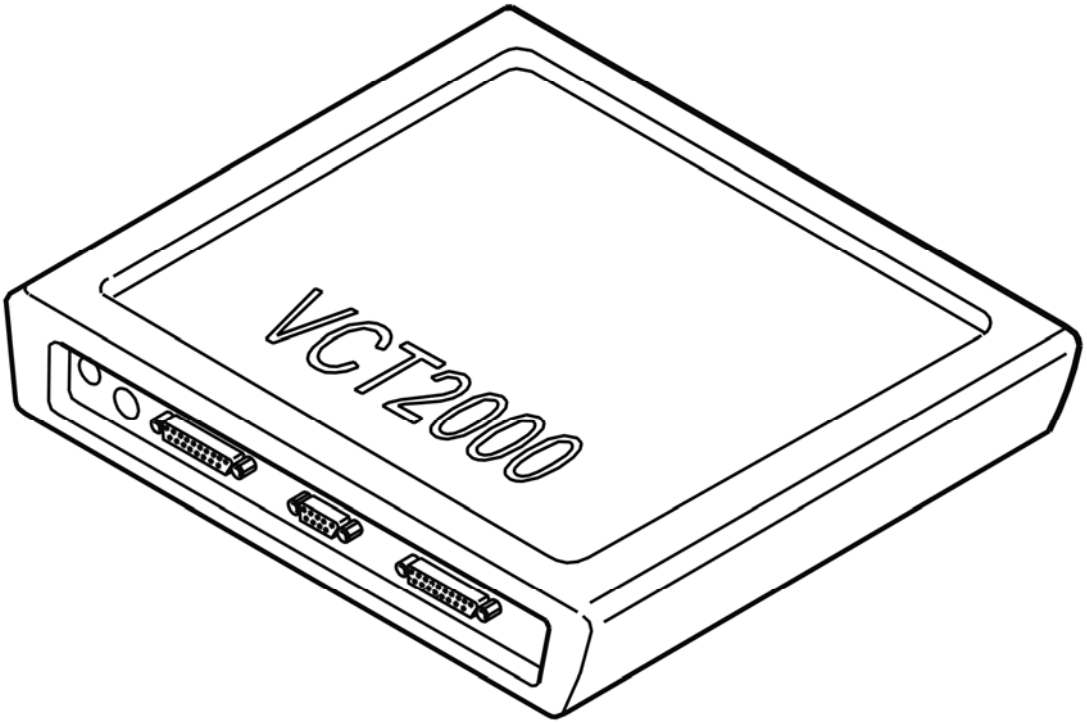

Fig. 128: Identifying VCT2000 Diagnostic Tool Symbol In VIDA
Courtesy of VOLVO CARS CORPORATION

Does the servo assistance change in relation to the speed?

- **YES**

  VERIFIED: Troubleshooting has been completed.

- **NO**

  Refer to **INFORMATION**

INFORMATION

FAULT-TRACING INFORMATION

The fault should have been detected and remedied. As this is not the case fault-tracing has failed.

Exit fault-tracing for this diagnostic trouble code (DTC) or make another attempt.

CHECKING SPEED RELATED POWER STEERING (2005-12)

CHECKING SPEED RELATED POWER STEERING

A fault in the speed related power steering can result in the steering becoming abnormally stiff at low speed or abnormally light at high speed.

Fault causes could be:

- No power supply to the speed related power steering control module
- Open-circuit or loose connection in the wiring between the control module and the central electronic module (CEM)
- Open-circuit or loose connection in the wiring between the control module and the solenoid on the steering gear
- Contact resistance and oxidation in the control module or solenoid connectors
- Defective control module for speed related power steering.

- **Continue**

  Refer to **CHECKING THE POWER SUPPLY**

CHECKING THE POWER SUPPLY

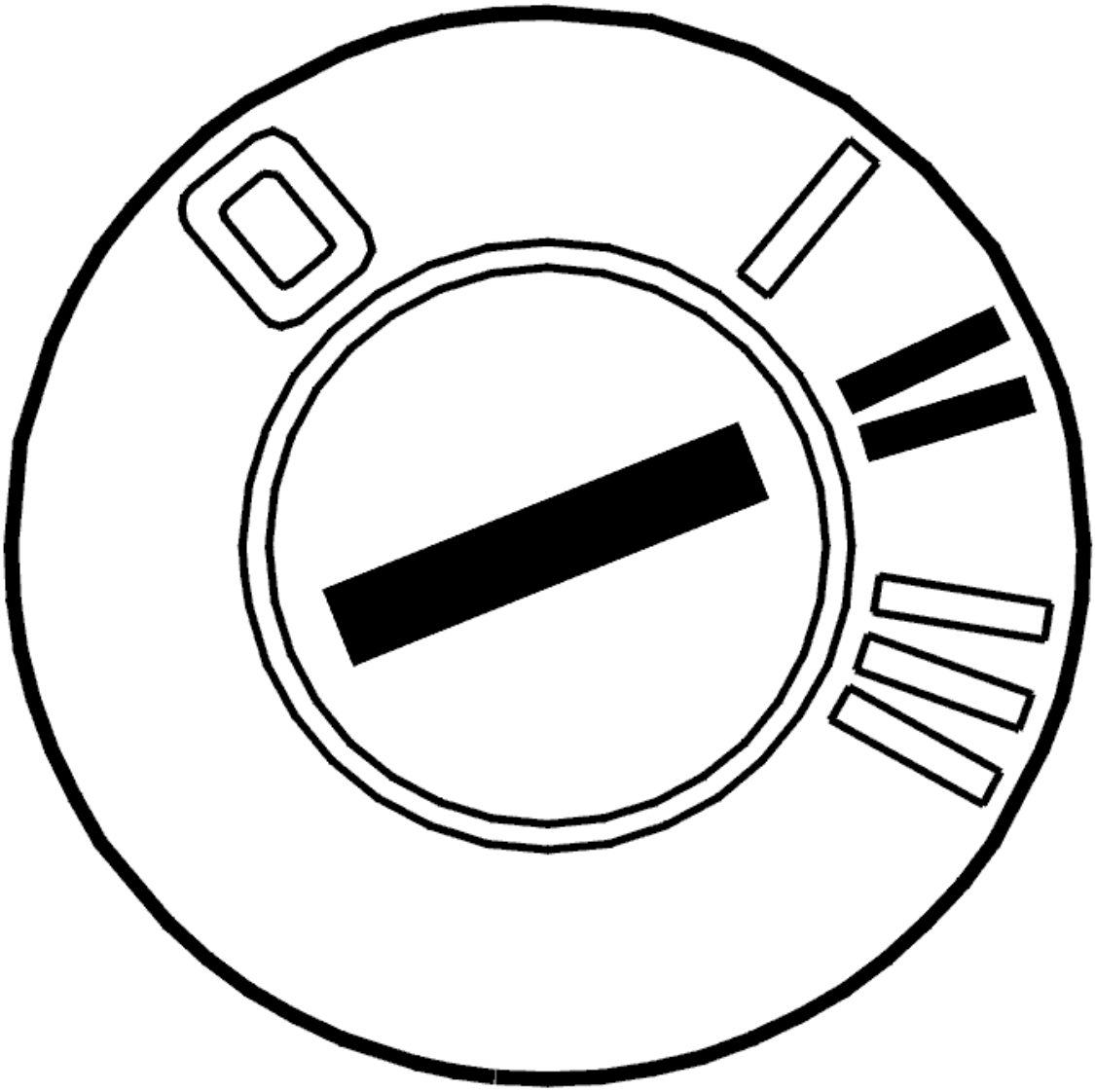

Fig. 129: Identifying Ignition ON
Courtesy of VOLVO CARS CORPORATION

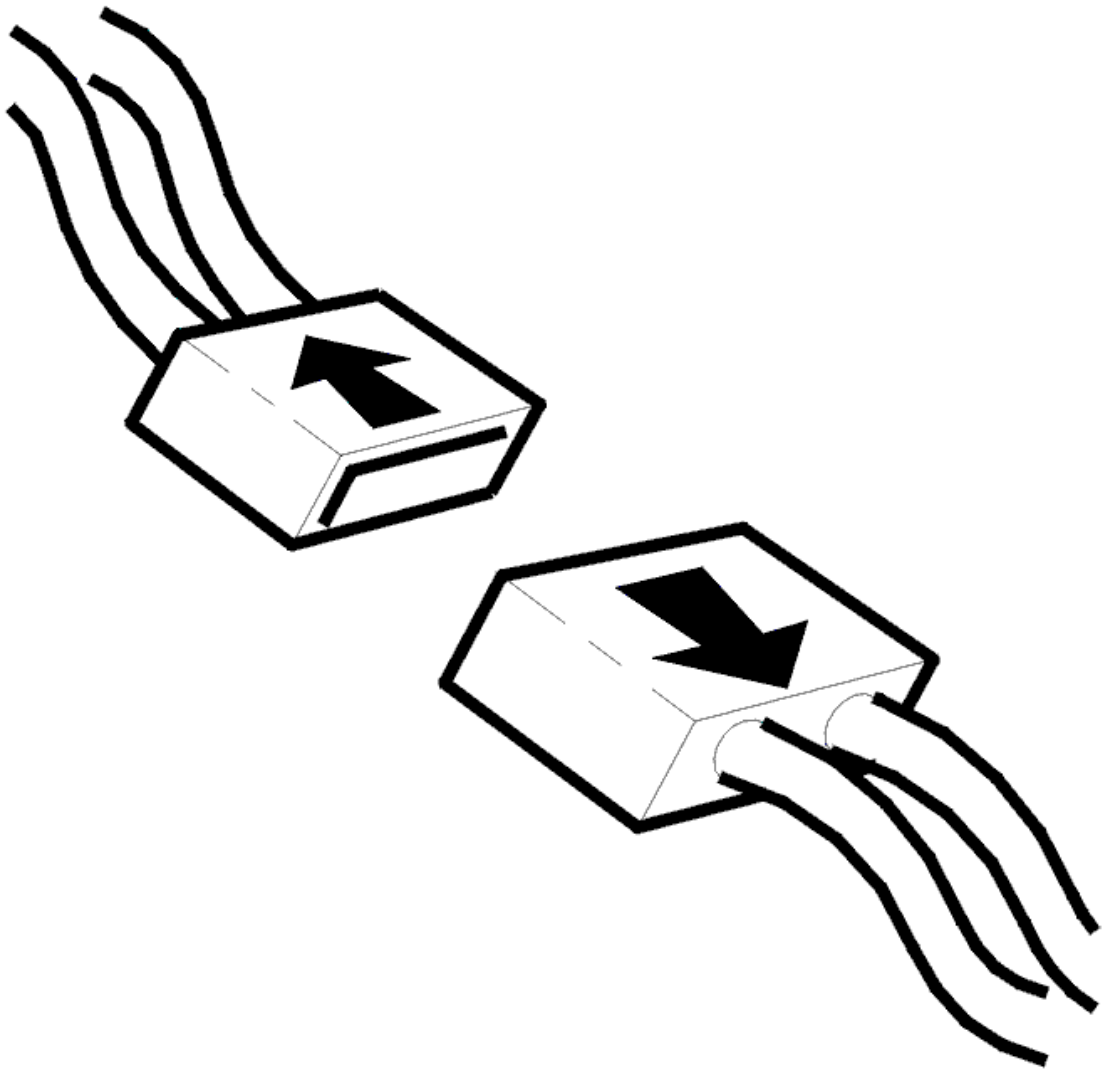

Fig. 130: Disconnecting Connector
Courtesy of VOLVO CARS CORPORATION

- Ignition off
- Check the control module connector for speed related power steering. Check for contact resistance and oxidation. In particular, check for any damage
- Ignition on.

  Measure the voltage between terminals #4 and #3 in the control module connector for speed related power steering. The voltage should be battery voltage.

  Other information

  - To access the control module for speed related power steering, see **CONTROL MODULE STEERING GEAR, REPLACING** .

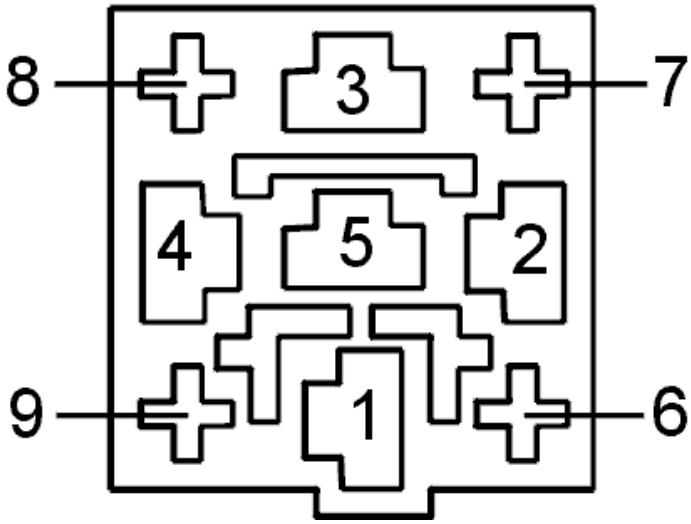

Fig. 131: Identifying Connector Terminals
Courtesy of VOLVO CARS CORPORATION

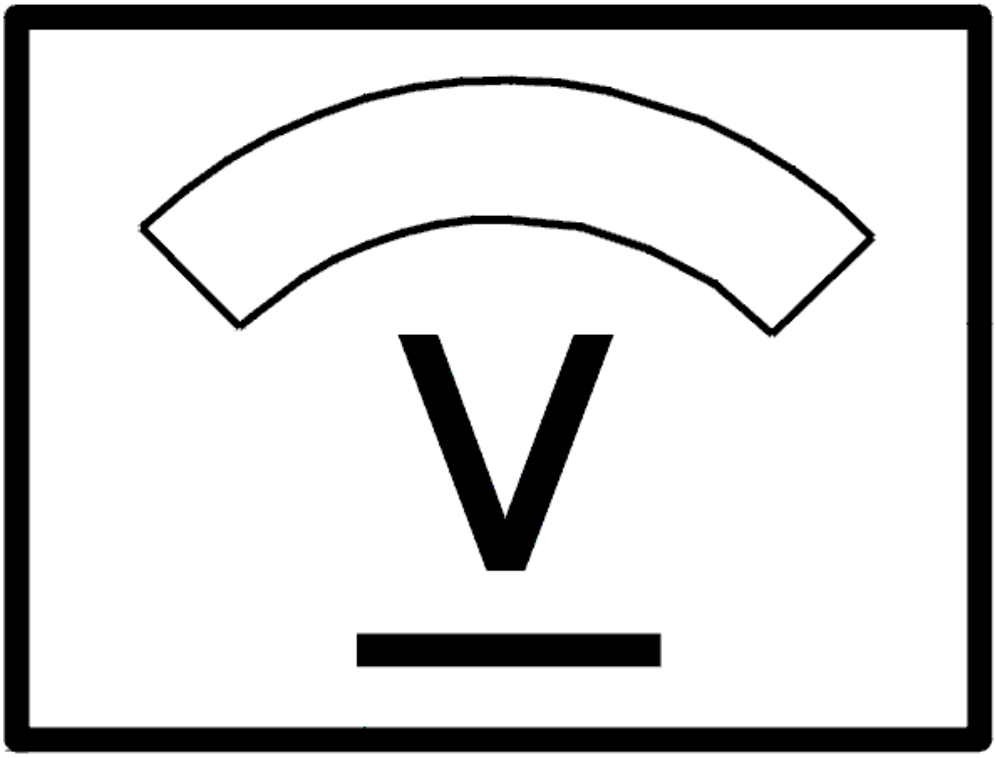

Fig. 132: Identifying Voltage Display
Courtesy of VOLVO CARS CORPORATION

Was the voltage correct?

- **YES**

  Refer to **CHECKING THE SIGNAL CABLE**

- **NO**

  Refer to **CHECKING THE WIRING**

CHECKING THE WIRING

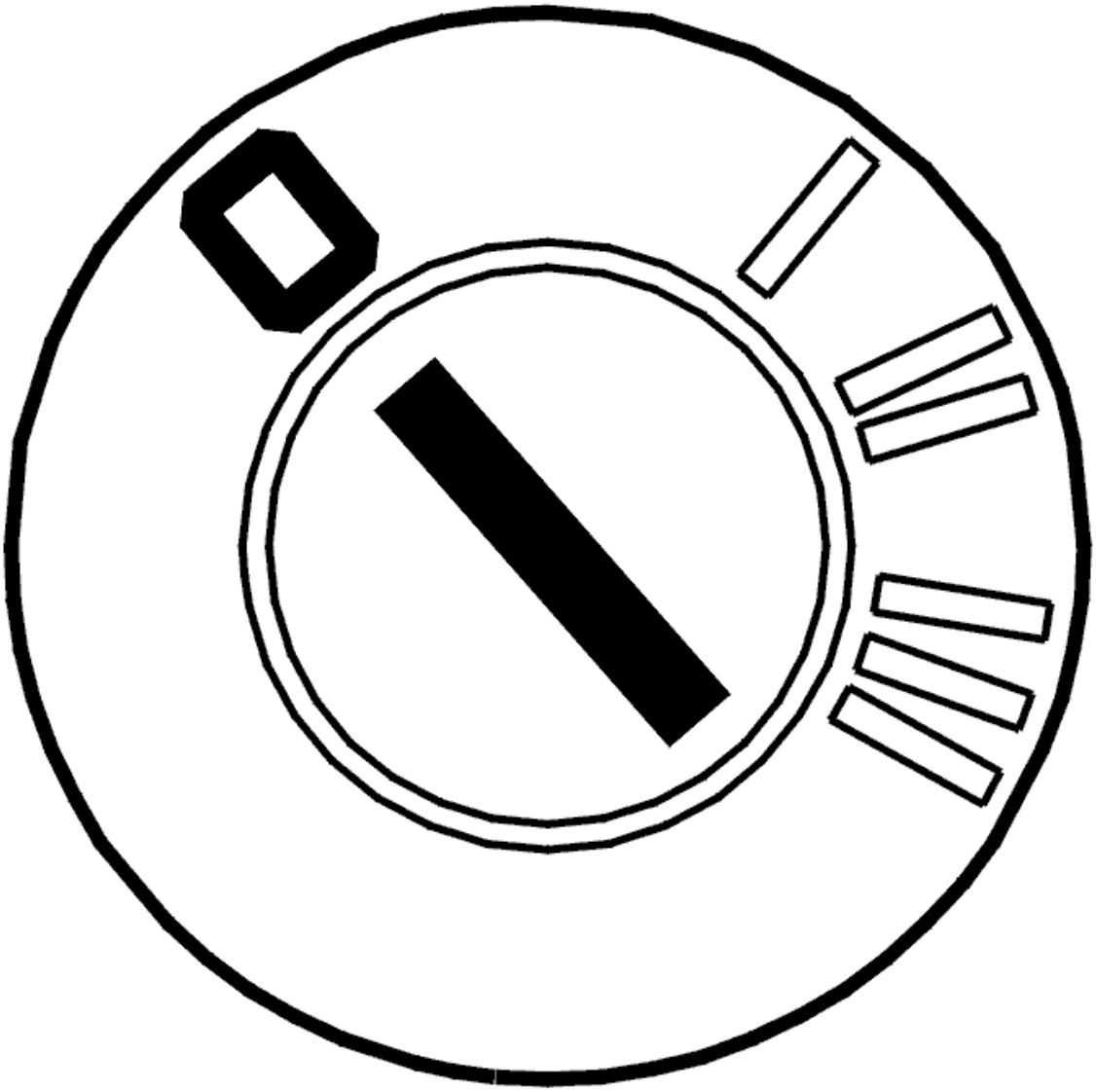

Fig. 133: Identifying Ignition OFF
Courtesy of VOLVO CARS CORPORATION

- Ignition off.

  Check the fuse for the control module for speed related power steering.

  Check the cable between the fuse and control module terminal #4. Check for an open-circuit. Check for a short-circuit to ground.

  Check the cable between the control module and ground terminal. Check for an open-circuit. Check for a short-circuit to supply voltage.

  Also check the ground terminal. Check for contact resistance and oxidation.

  Remedy as necessary.

Other information

- see **CHECKING WIRING AND TERMINALS** .

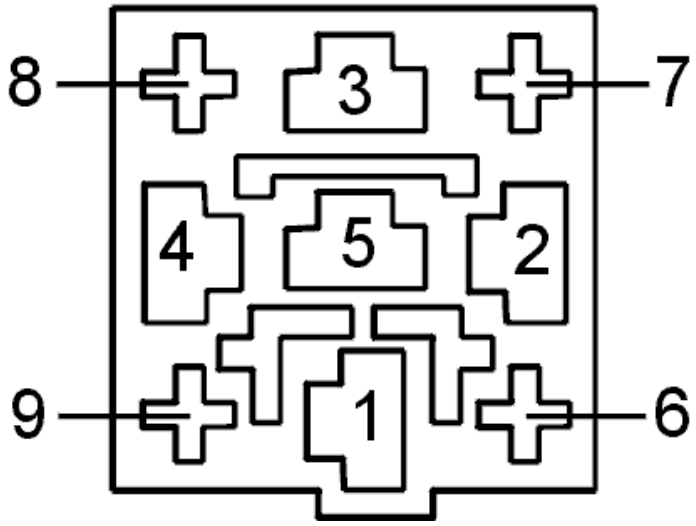

Fig. 134: Identifying Connector Terminals
Courtesy of VOLVO CARS CORPORATION

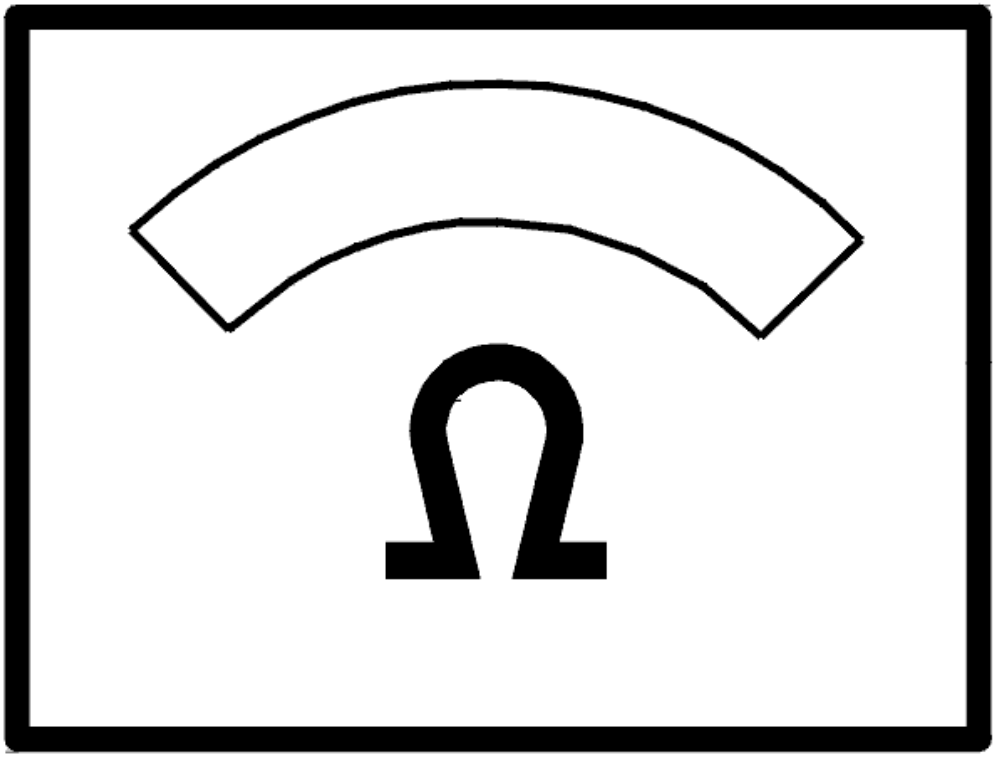

Fig. 135: Identifying Ohmmeter
Courtesy of VOLVO CARS CORPORATION

- **Continue**

  Refer to **VERIFICATION**

CHECKING THE SIGNAL CABLE

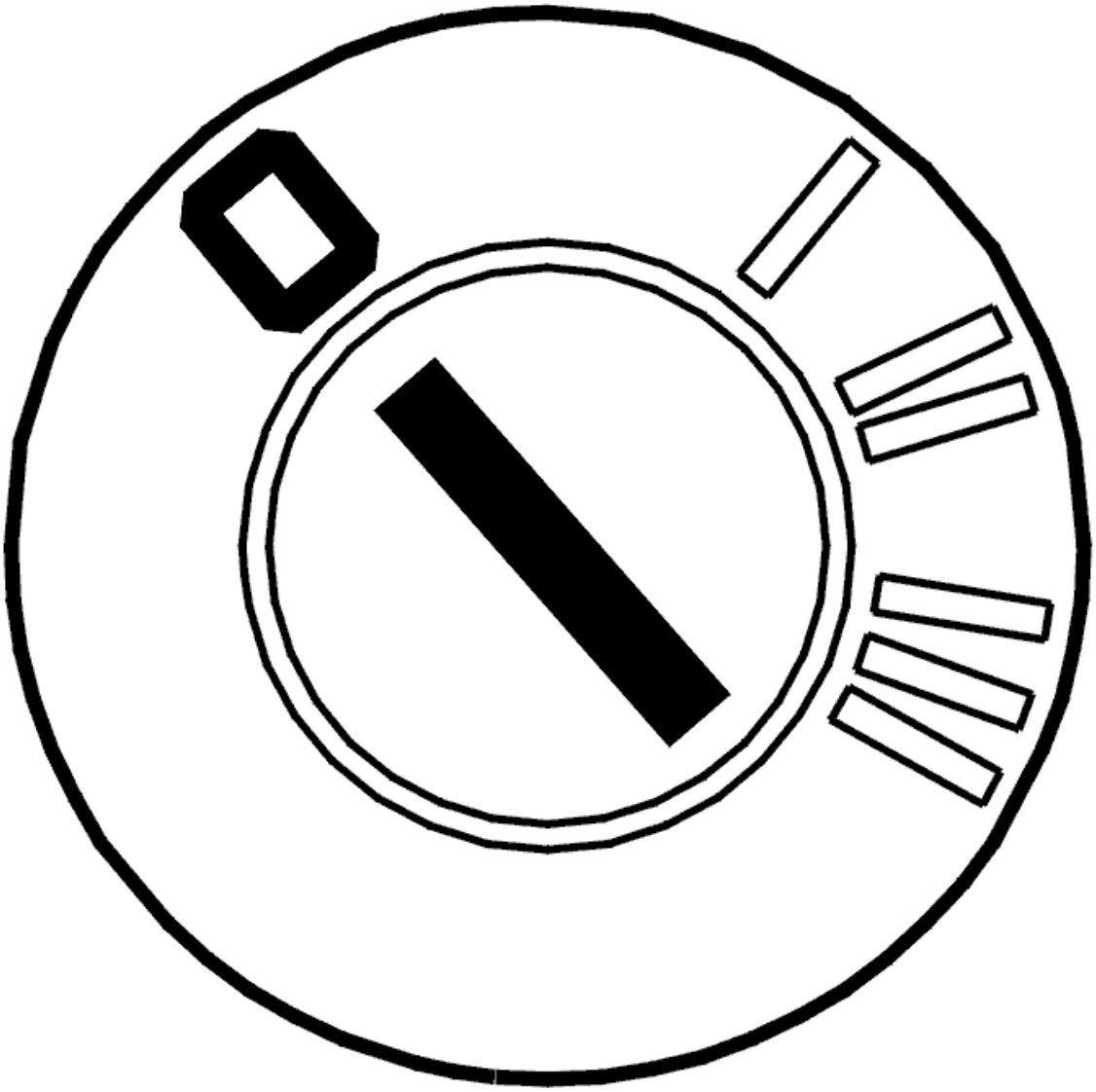

Fig. 136: Identifying Ignition OFF
Courtesy of VOLVO CARS CORPORATION

- Ignition off.

  Check the cable for the vehicle speed signal between the central electronic module (CEM) terminal #10D (#B10) and the control module for speed related power steering terminal #2. Check for an open-circuit. Check for a short-circuit to supply voltage. Check for a short-circuit to ground.

  Remedy as necessary.

  Other information

  - To access the central electronic module (CEM) connector, see **CENTRAL ELECTRONIC MODULE (CEM), REPLACING**
  - see **CONNECTING THE BREAKOUT BOX**

- For information about signals, see **SIGNAL SPECIFICATION**
- see **CHECKING WIRING AND TERMINALS** .

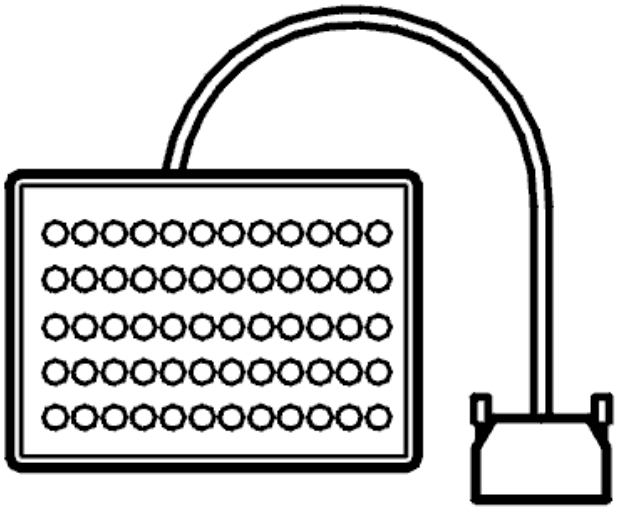

Fig. 137: Breakout Box
Courtesy of VOLVO CARS CORPORATION

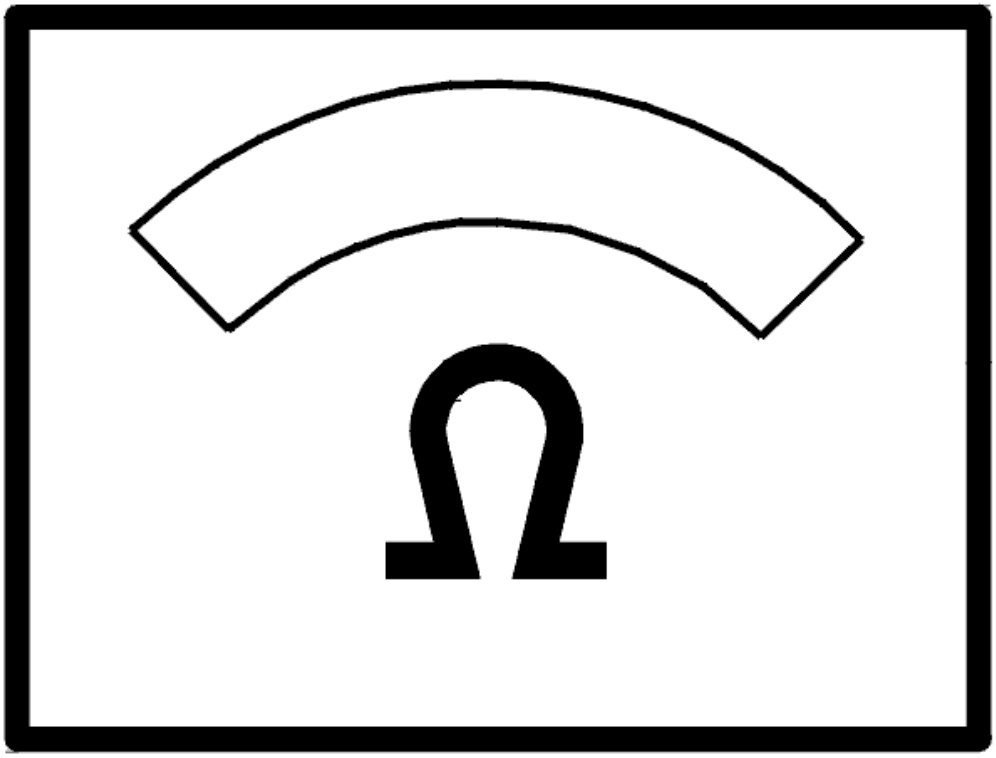

Fig. 138: Identifying Ohmmeter
Courtesy of VOLVO CARS CORPORATION

Was a fault detected?

- **YES**

  Refer to **VERIFICATION**

- **NO**

  Refer to **CHECKING SIGNAL CABLES**

CHECKING SIGNAL CABLES

Check the connector for the solenoid on the steering gear. Check for contact resistance and oxidation.

Check for damage carefully.

Check the signal cable between the control module for speed related power steering terminal #5 and the solenoid connector terminal #1. Check for an open-circuit. Check for a short-circuit to supply voltage. Check for a short-circuit to ground.

Check the signal cable between the control module for speed related power steering and the solenoid connector terminal #2. Check for an open-circuit. Check for a short-circuit to supply voltage. Check for a short-circuit to ground.

Remedy as necessary.

Other information

- To access the solenoid connector, see STEERING GEAR, REPLACING in **STEERING - REMOVAL, REPLACEMENT AND INSTALLATION** .
- see **CHECKING WIRING AND TERMINALS** .

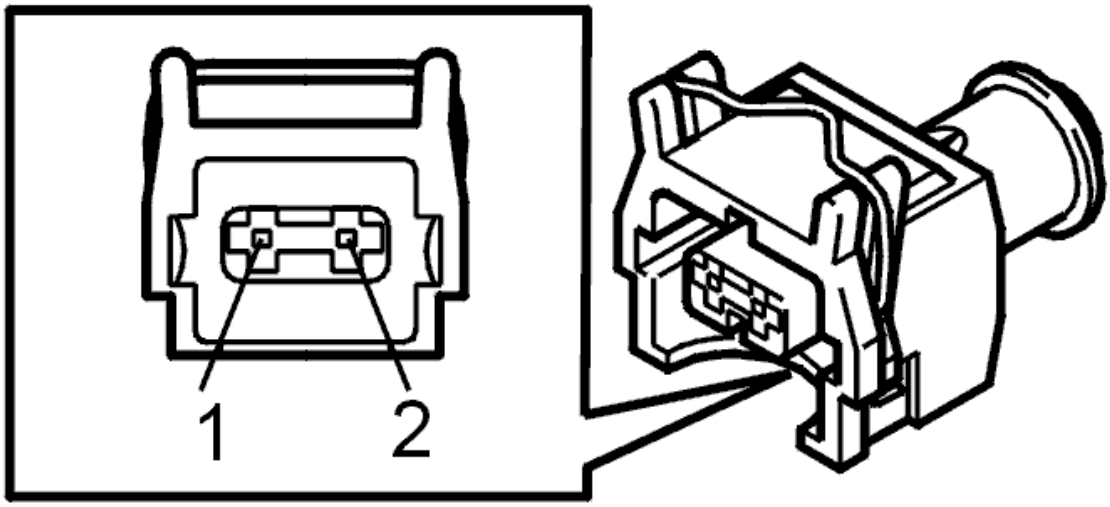

Fig. 139: Identifying Injector Connector Terminals
Courtesy of VOLVO CARS CORPORATION

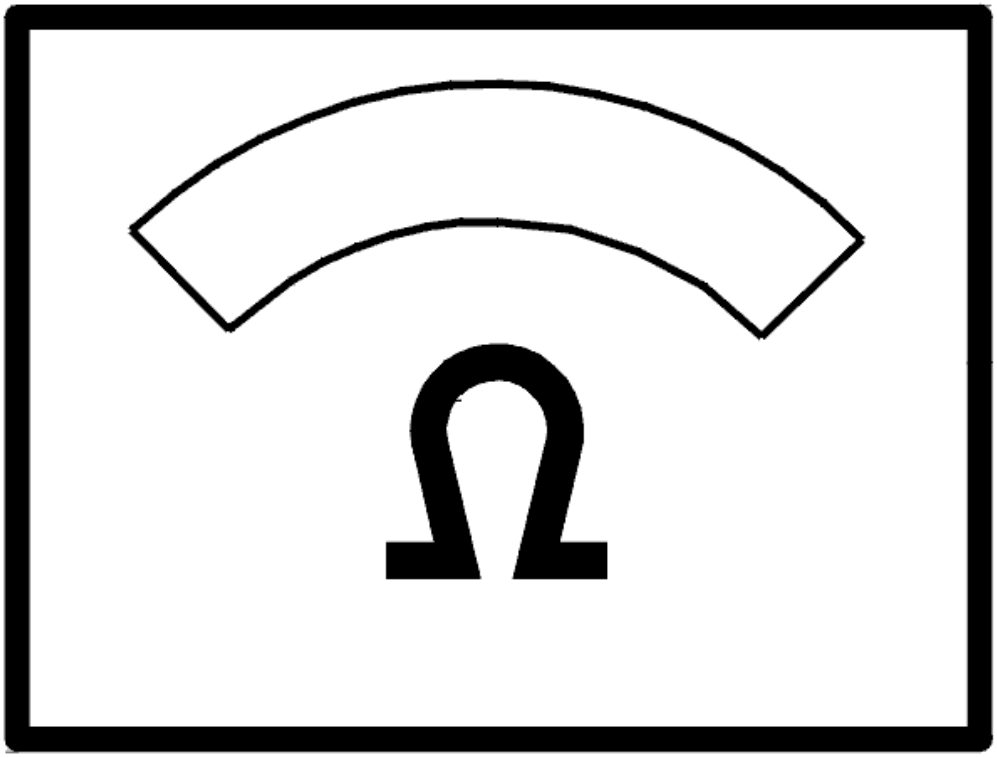

Fig. 140: Identifying Ohmmeter
Courtesy of VOLVO CARS CORPORATION

Was a fault detected?

- **YES**

  Refer to **VERIFICATION**

- **NO**

  Refer to **REPLACING COMPONENT**

REPLACING COMPONENT

Replace the control module for speed related power steering.

Other information

- To replace the control module for speed related power steering, see **CONTROL MODULE STEERING GEAR, REPLACING** .
- **Continue**

  Refer to **VERIFICATION**

VERIFICATION

HINT: After carrying out the repair, check that the fault has been remedied.

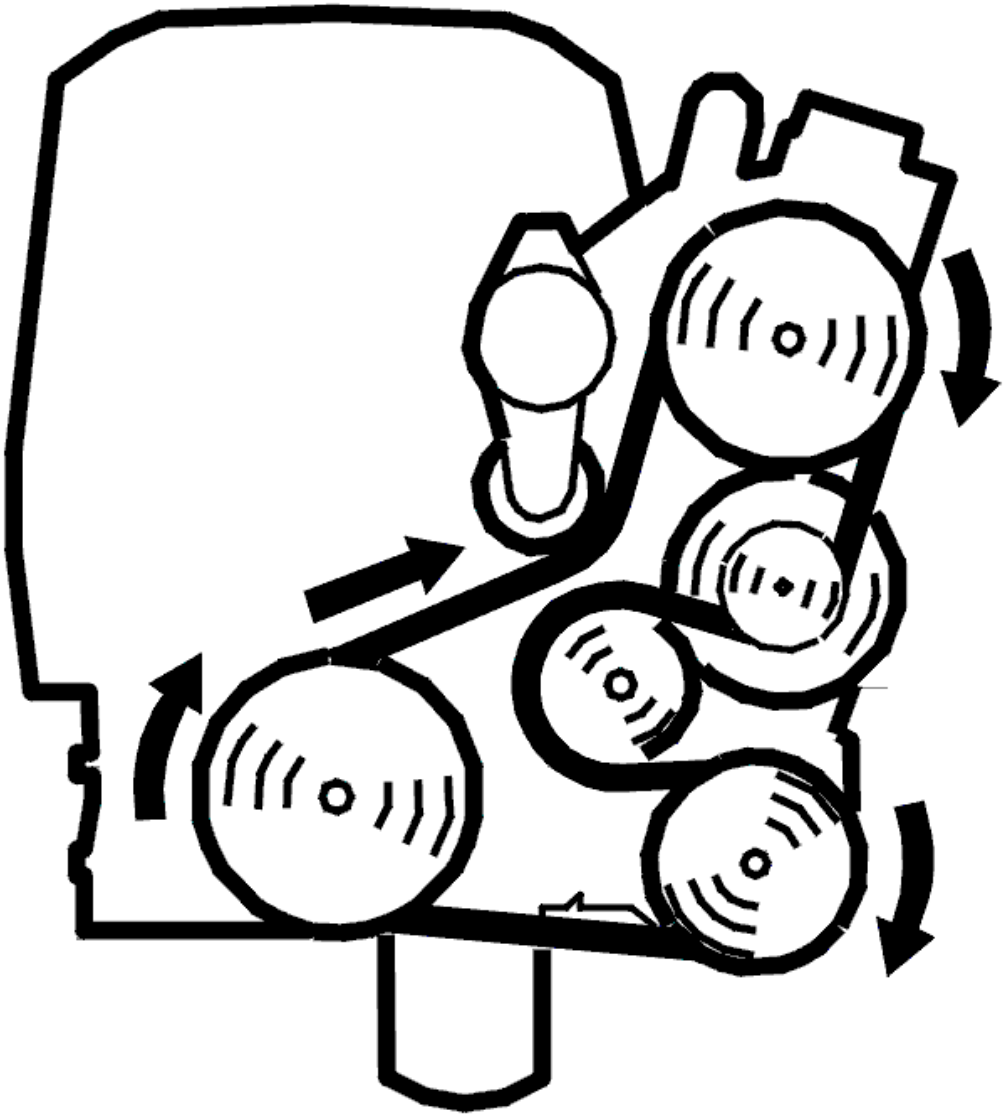

Fig. 141: Belt Routing/Engine Idling - Volvo
Courtesy of VOLVO CARS CORPORATION

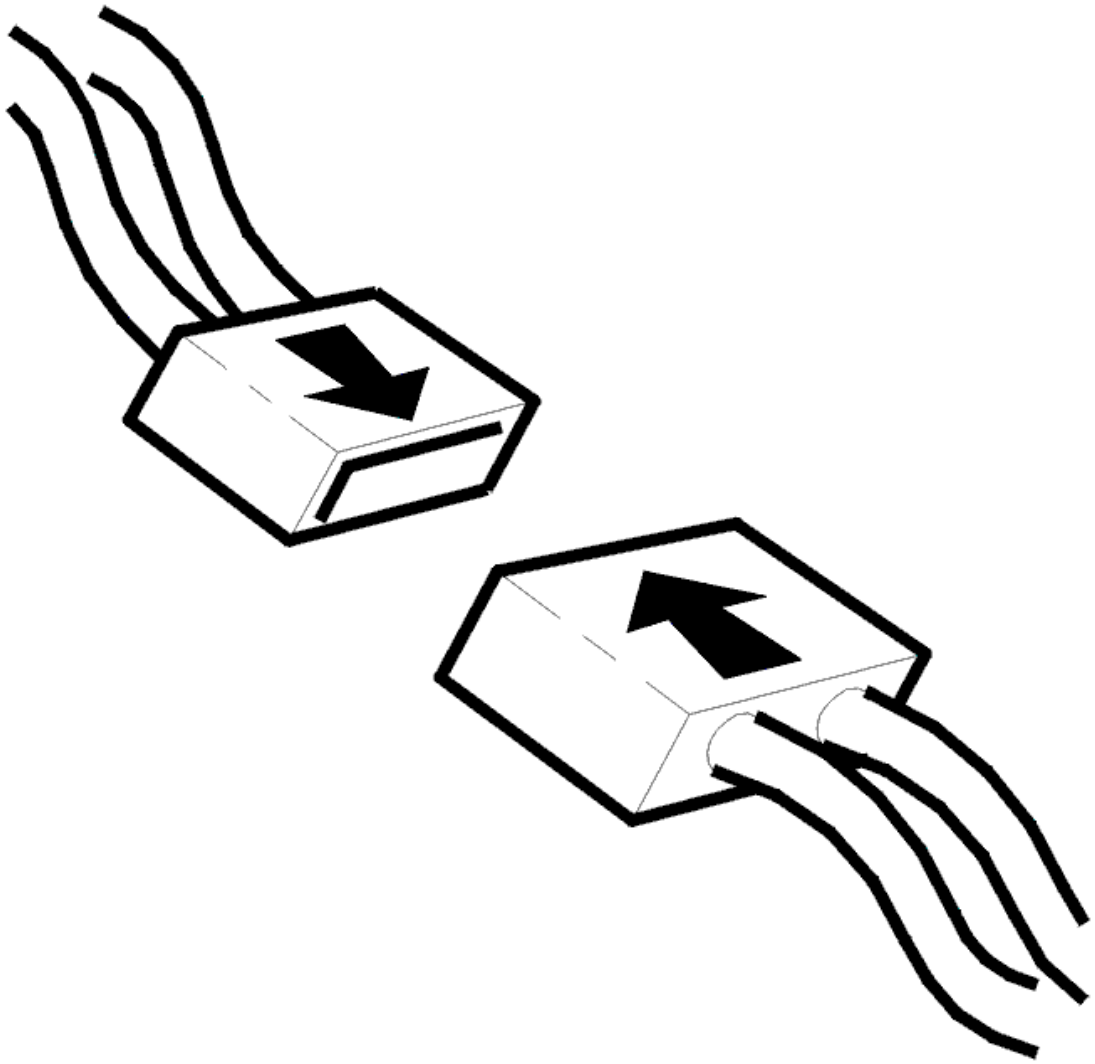

Fig. 142: Connecting Connector
Courtesy of VOLVO CARS CORPORATION

- Ignition off
- Reinstall the connectors, components etc.
- Engine running.

  Change the vehicle speed signal from the central electronic module (CEM) by clicking on the VCT2000 symbol.

  Switch between 0 km/h and 110 km/h and test at the same time, by turning the steering wheel, that the servo assistance for the steering changes in relation to the speed.

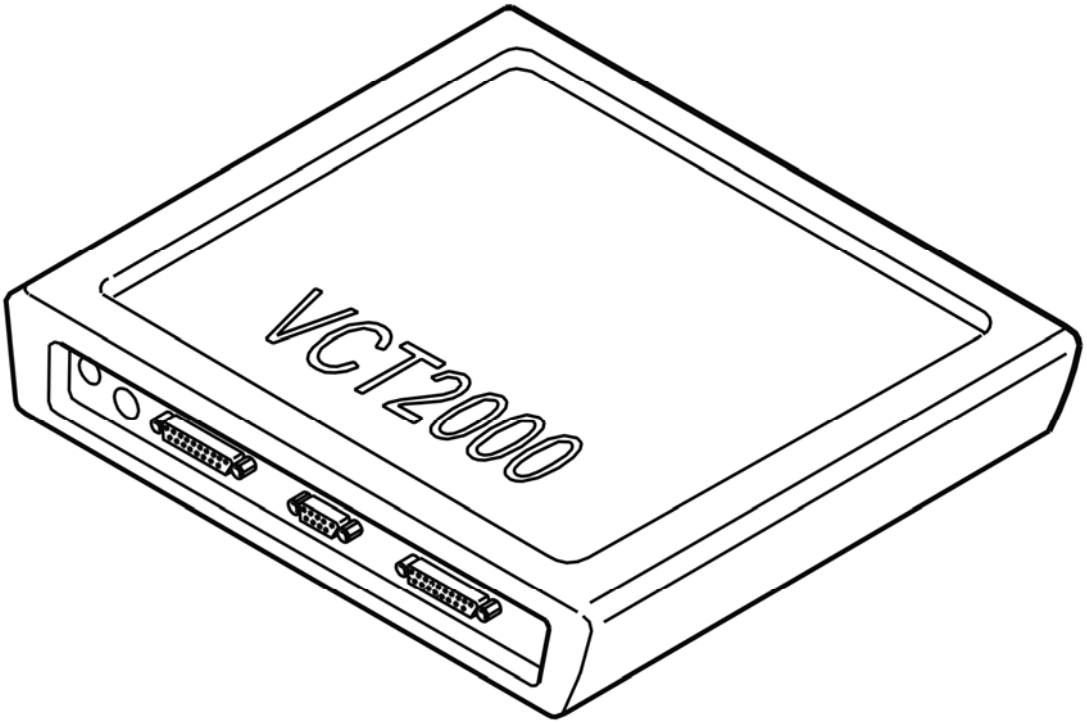

Fig. 143: Identifying VCT2000 Diagnostic Tool Symbol In VIDA
Courtesy of VOLVO CARS CORPORATION

Does the servo assistance change in relation to the speed?

- **YES**

  VERIFIED: Troubleshooting has been completed.

- **NO**

  Refer to **INFORMATION**

INFORMATION

FAULT-TRACING INFORMATION

The fault should have been detected and remedied. As this is not the case fault-tracing has failed.

Exit fault-tracing for this diagnostic trouble code (DTC) or make another attempt.

CHECKING STANDBY CURRENT (2005-12)

CHECKING STANDBY CURRENT

PREPARATIONS FOR STANDBY CURRENT MEASUREMENT

When the vehicle sets the communication buses and the control modules in "sleep mode", power consumption drops. Factors such as whether the vehicle is locked, the alarm is on or off or whether any doors are open affect the rate at which the vehicle will reach standby power consumption. The lowest power consumption is achieved the quickest when the vehicle is locked, the alarm is on and the vehicle's doors are closed.

Preparations

Ensure that all lighting is switched off.

Ensure that the diagnostic tool is not connected in the vehicle.

Open the tailgate or trunk lid and bonnet and set the locks to the deadlocked position using a screwdriver for example.

Open the driver's and passenger doors and set the locks to the deadlocked position using a screwdriver for example.

Close the rear doors, remove the key and lock and alarm the vehicle. Never use reduced alarm as it then takes longer for the CAN network to continue in "sleep mode".

Wait until the vehicle has come down in standby current consumption, which can take up to 10 minutes.

NOTE: Do not open any doors or the test will have to be restarted from the beginning.

- **Continue**

  Refer to **CONNECTING THE MEASURING INSTRUMENT**

CONNECTING THE MEASURING INSTRUMENT

When measuring the power consumption, it will soon become evident if there is a power consuming component in the car drawing an excessive amount of the battery capacity. If it is clear that the power consumption is greater than the specified limit values, fault trace by successive elimination.

The method for measuring the total standby current consumption is described below.

The vehicle's standby current is measured using a multimeter.

NOTE: If the vehicle has been run to operating temperature, check that the system relay has been activated. An activated system relay causes increased standby current consumption. This is normal under certain circumstances.

- **Continue**

  Refer to **MEASUREMENT METHOD**

MEASUREMENT METHOD

When measuring the vehicle's total power consumption, connect the measuring instrument in series with the battery at the battery's negative pole.

Connecting the multimeter at the battery negative pole

NOTE: To avoid current surges that could damage the measuring instrument when the battery cable is connected, carry out the following. Never connect the measuring instrument if the engine cooling fan is in operation as this can damage the instrument.

Ensure that the multimeter is equipped with a clamp and a probe.

Check that the multimeter is set for current measurement.

Disconnect the nut on the battery cable's negative pole.

NOTE: Do not lift the battery cable so that the circuit is broken.

Secure the clamp on the negative pole's battery cable terminal.

NOTE: Check that the connections are installed correctly. If the circuit is broken, the standby current must be re-checked from the beginning

Place the end of the probe on the battery's negative pole.

Slowly lift the battery negative cable without removing the probe.

Stop when the battery negative cable hangs freely without touching the battery or the probe.

Measuring and reading off the total standby current.

Read off the standby current consumption. The total standby current should be less 25 mA.

NOTE: If the car is equipped with "Volvo on call" and the standby current is too high, wait 5 minutes and measure again. The "Volvo on call" system is active for short periods and then increases the short-term standby current above the normal value.

Reinstall the battery's negative cable.

Look and listen for unusual vehicle behavior. Check, for example, if a relay is hot, if it is this can indicate that current is flowing through it.

NOTE: Do not carry out work inside a vehicle equipped with mass movement sensors

as the alarm may be triggered.

Check that the CAN network has continued in "sleep mode", see instructions. See **CHECKING CAN-NET'S REST STATUS**

If the standby current is OK and the CAN network is still in "sleep mode", reset the vehicle.

NOTE: Do not forget to unlock the trunk lid or tailgate and doors.

If a fault is detected, fault-trace the relevant system. Otherwise continue fault tracing by successive elimination.

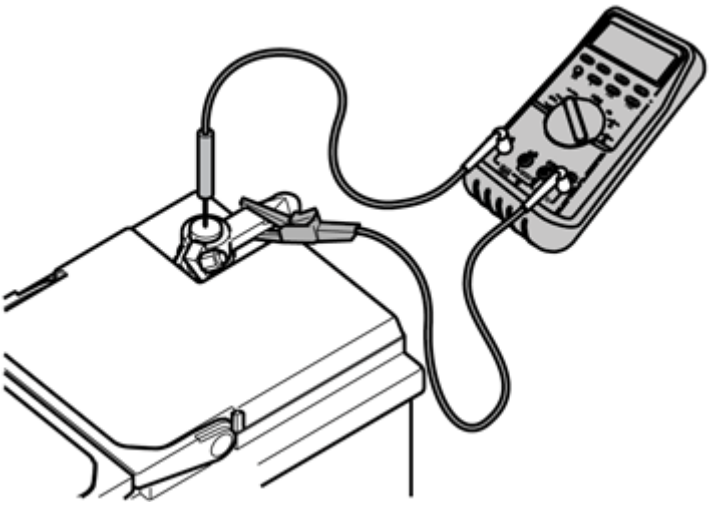

Fig. 144: Identifying Multimeter (1 Of 2)
Courtesy of VOLVO CARS CORPORATION

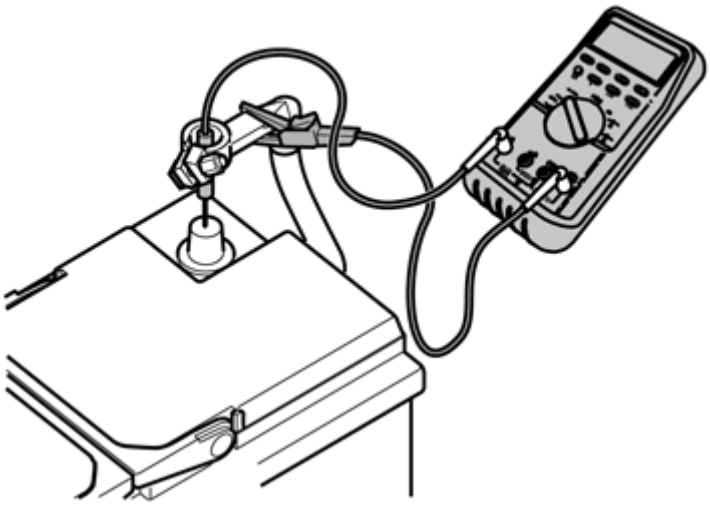

Fig. 145: Identifying Multimeter (2 Of 2)
Courtesy of VOLVO CARS CORPORATION

- **Continue**

  Refer to **FAULT TRACING BY SUCCESSIVE ELIMINATION**

FAULT TRACING BY SUCCESSIVE ELIMINATION

During fault tracing by successive elimination, try to localise the problem by measuring the power consumption at the same time as removing one fuse at a time in the vehicle.

Procedure

Expose the integrated relay/fusebox in the engine compartment and the fuses in the Central electronic module (CEM).

Use the multimeter and check that the relays and fuses have the correct voltage. Measure between fuses and suitable ground terminals. If any problem is detected, troubleshoot the system in question.

Remove a fuse and read off the standby consumption according to the instructions above. If the power consumption has dropped to less than 25 mA, fault trace the system that the fuse corresponds to. if power consumption has not reduced, repeat the procedure with another fuse.

NOTE: **Remove one fuse at a time and measure. Do not reinstall the fuses until the fault has been found, because it could awaken the car from "sleep mode" and restore the problem. If the vehicle was going to woken from "sleep mode" anyway, repeat the preparations for standby power consumption before continuing successive elimination.**

If the fault has not occurred, continue with successive elimination on relays and the connectors for the vehicle's control modules.

CHECKING STARTING CONDITIONS (2003-04)

CHECKING THE START REQUIREMENTS

CHECKING THE FUEL PUMP (FP)

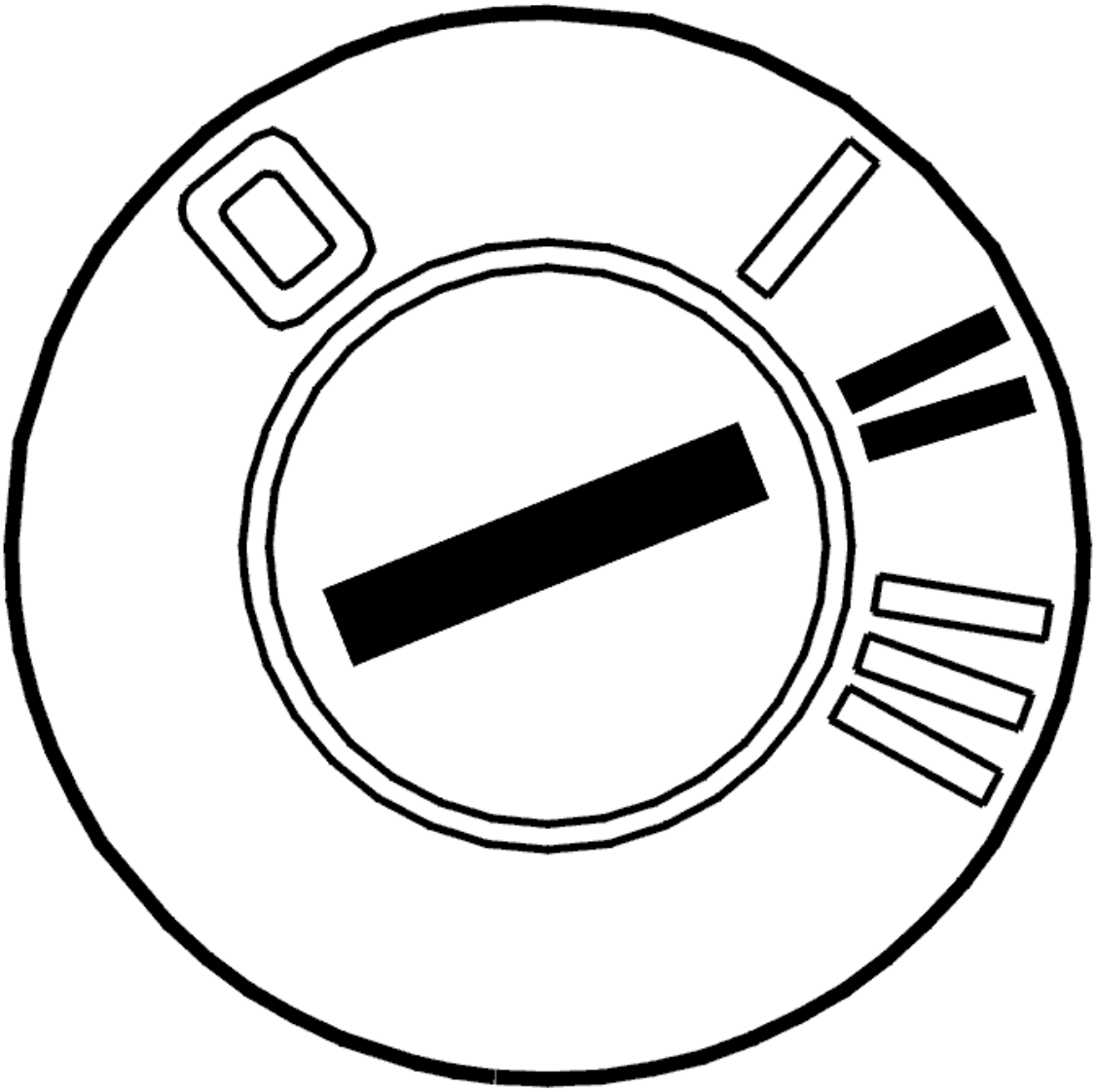

Fig. 146: Identifying Ignition ON
Courtesy of VOLVO CARS CORPORATION

- Ignition on.

  Activate the fuel pump (FP): Click on the VCT 2000 symbol.

  WARNING: **Great care must be taken when activating the fuel pump (FP). If fuel is filled for an excessive amount of time, smoke may be generated or the heater may be damaged.**

  Check that the fuel pump (FP) is working. The heater cannot be started if the pump is not working. The basic problem is then in the fuel system / fuel pump (FP).

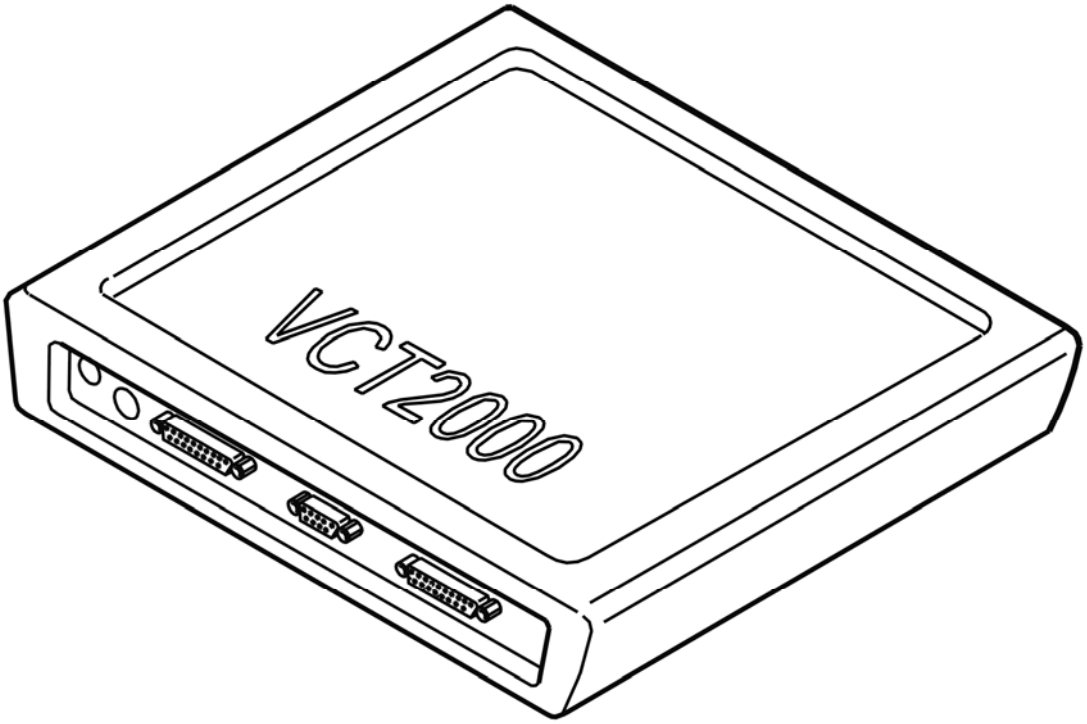

Fig. 147: Identifying VCT2000 Diagnostic Tool Symbol In VIDA
Courtesy of VOLVO CARS CORPORATION

Is the fuel pump (FP) working?

- **YES**

  Refer to **CHECKING THE START PARAMETERS**

- **NO**

  Perform additional troubleshooting.

CHECKING THE START PARAMETERS

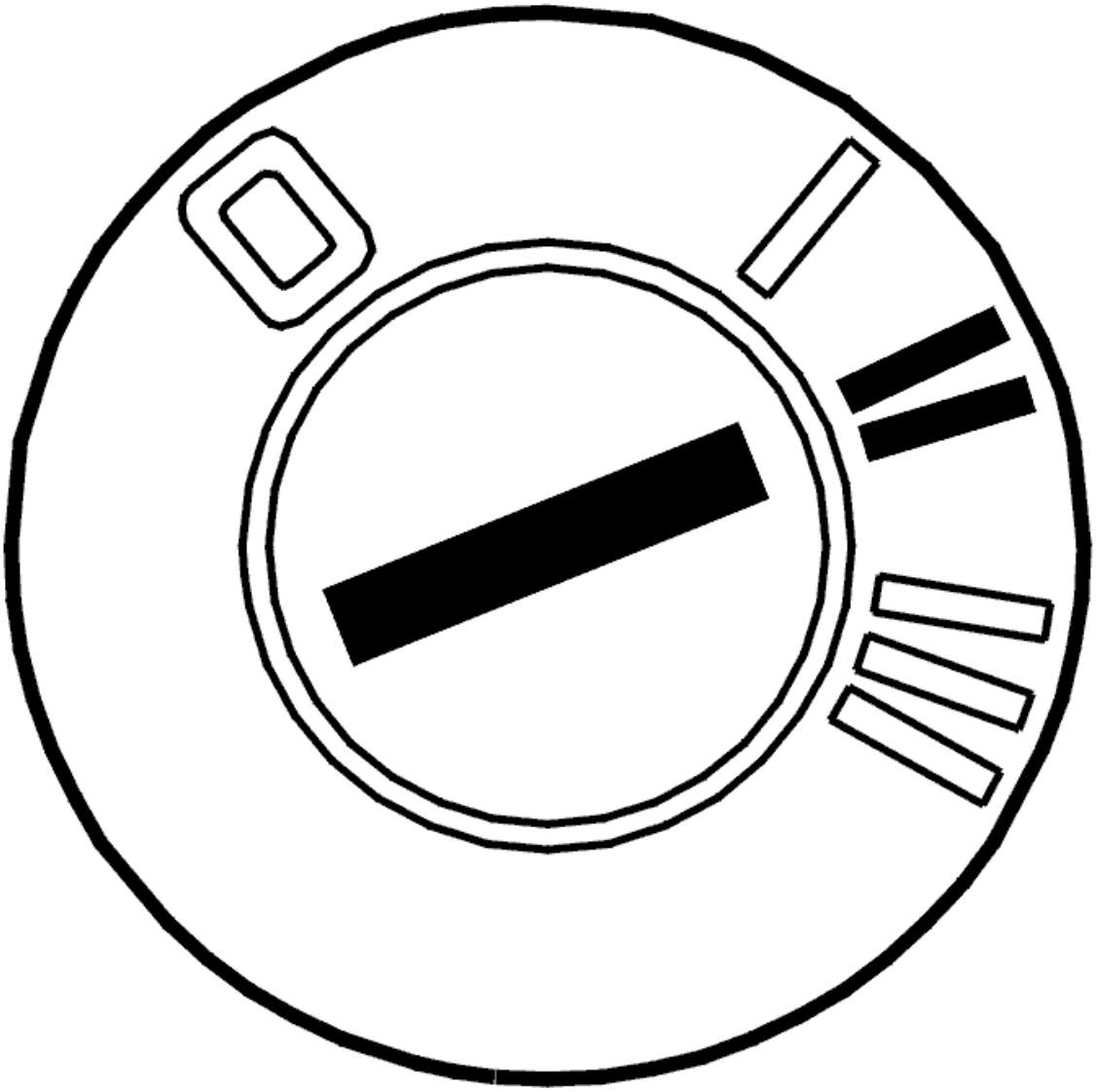

Fig. 148: Identifying Ignition ON
Courtesy of VOLVO CARS CORPORATION

- Ignition on.

NOTE: The heater must be switched off when reading off

Read out the values for quantity of fuel, battery voltage and number of failed start attempts.

The fuel level should be sufficient and the voltage to the heater must not be too low in order for the heater to be started. If the number of failed start attempts is excessive the heater prevents starting.

Remedy as necessary.

Other information:

- For a description of parameters, see **DESCRIPTION OF PARAMETERS** .

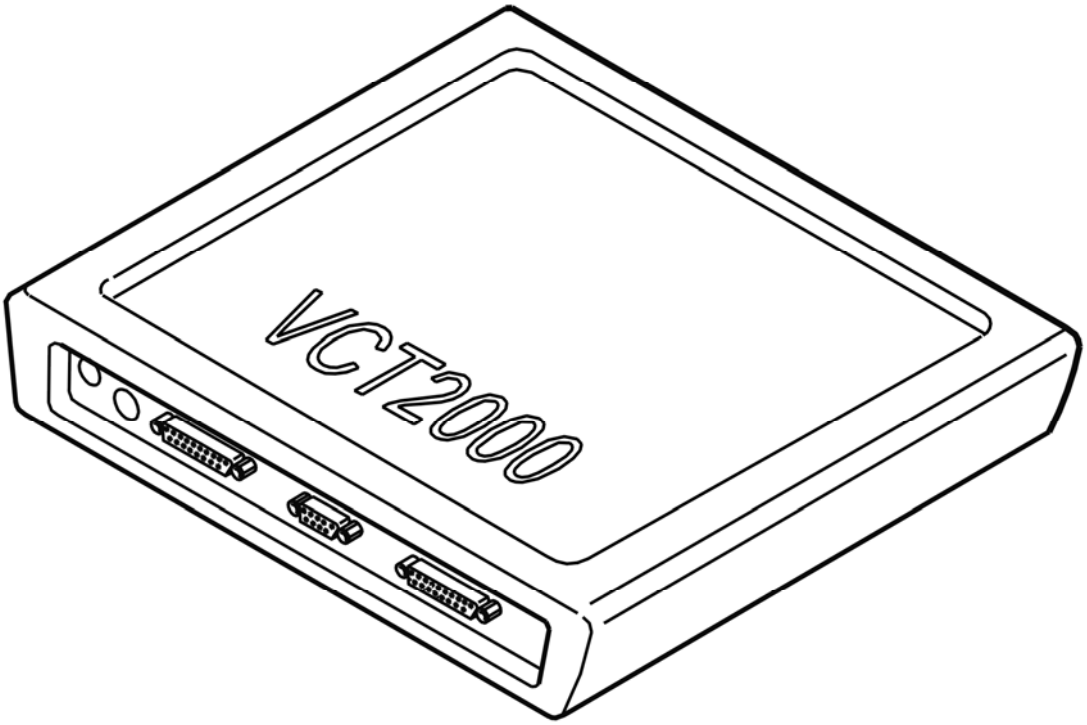

Fig. 149: Identifying VCT2000 Diagnostic Tool Symbol In VIDA
Courtesy of VOLVO CARS CORPORATION

TROUBLE-SHOOTING INFORMATION

Condition

No diagnostic trouble codes are stored.

Substitute Value

None.

Possible Source

- Fault in fuel system
- Voltage too low in control unit (CPM)
- Fuel level too low
- Airbag deployed (blocks fuel pump)

Fault symptom[s]

- Poor interior heating.
- Parking heater does not work.

CHECKING SUN ROOF OPERATION (2003-12)

CHECKING SUN ROOF OPERATION

CALIBRATING THE SUN ROOF MODULE (SRM)

To ensure that the sun roof is correctly calibrated, try recalibrating it.

Then test sun roof operation.

Other information

- see **SUN ROOF MODULE (SRM), CALIBRATING**

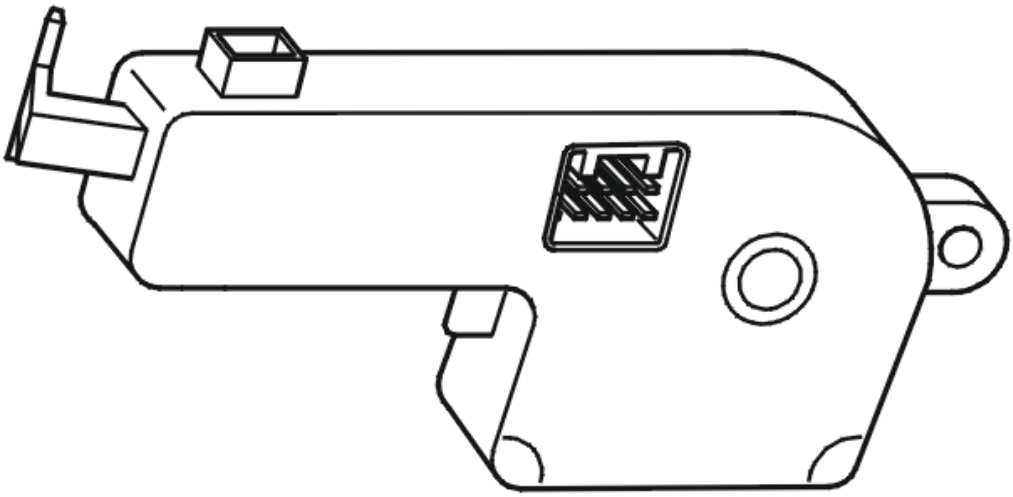

Fig. 150: Identifying Sun Roof Module (SRM)
Courtesy of VOLVO CARS CORPORATION

Can the sun roof be operated?

- **YES**

Refer to **CHECKING OPERATION**

- **NO**

  Refer to **CHECKING THE MECHANISM**

CHECKING OPERATION

Check that the sun roof makes smooth movements during operation.

Is the sun roof function OK?

- **YES**

  Refer to **CHECKING SUN ROOF CLOSURE**

- **NO**

  Refer to **CHECKING CABLES**

CHECKING SUN ROOF CLOSURE

Check that the sun roof closes properly and tightly.

Is the sun roof function OK?

- **YES**

  FAULT NOT FOUND: Troubleshooting has been completed.

- **NO**

  Refer to **CHECKING CLOSURE**

CHECKING THE MECHANISM

Check whether the mechanism moves during sun roof operation.

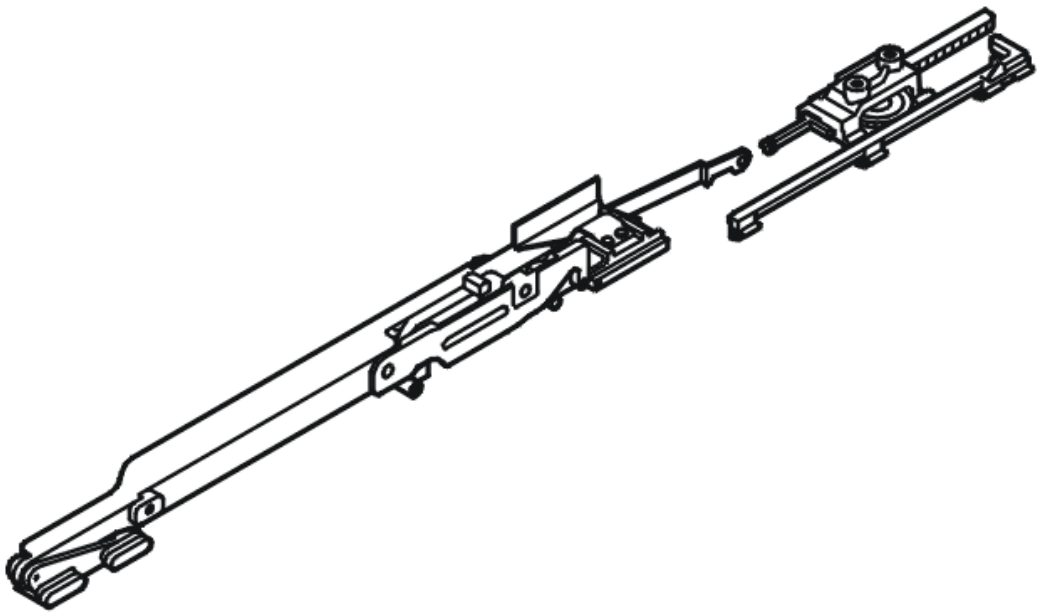

Fig. 151: Identifying Sun Roof Mechanism
Courtesy of VOLVO CARS CORPORATION

Does the mechanism move?

- **YES**

  Refer to **CHECKING SUN ROOF INSTALLATION**

- **NO**

  Refer to **CHECKING VOLTAGE**

CHECKING SUN ROOF INSTALLATION

Check that the sun roof is properly mounted.

Remedy as necessary.

Other information

- For checking sun roof installation: **SUN ROOF, REPLACING**
- **Continue**

Refer to **FUNCTIONALITY CHECK**

CHECKING VOLTAGE

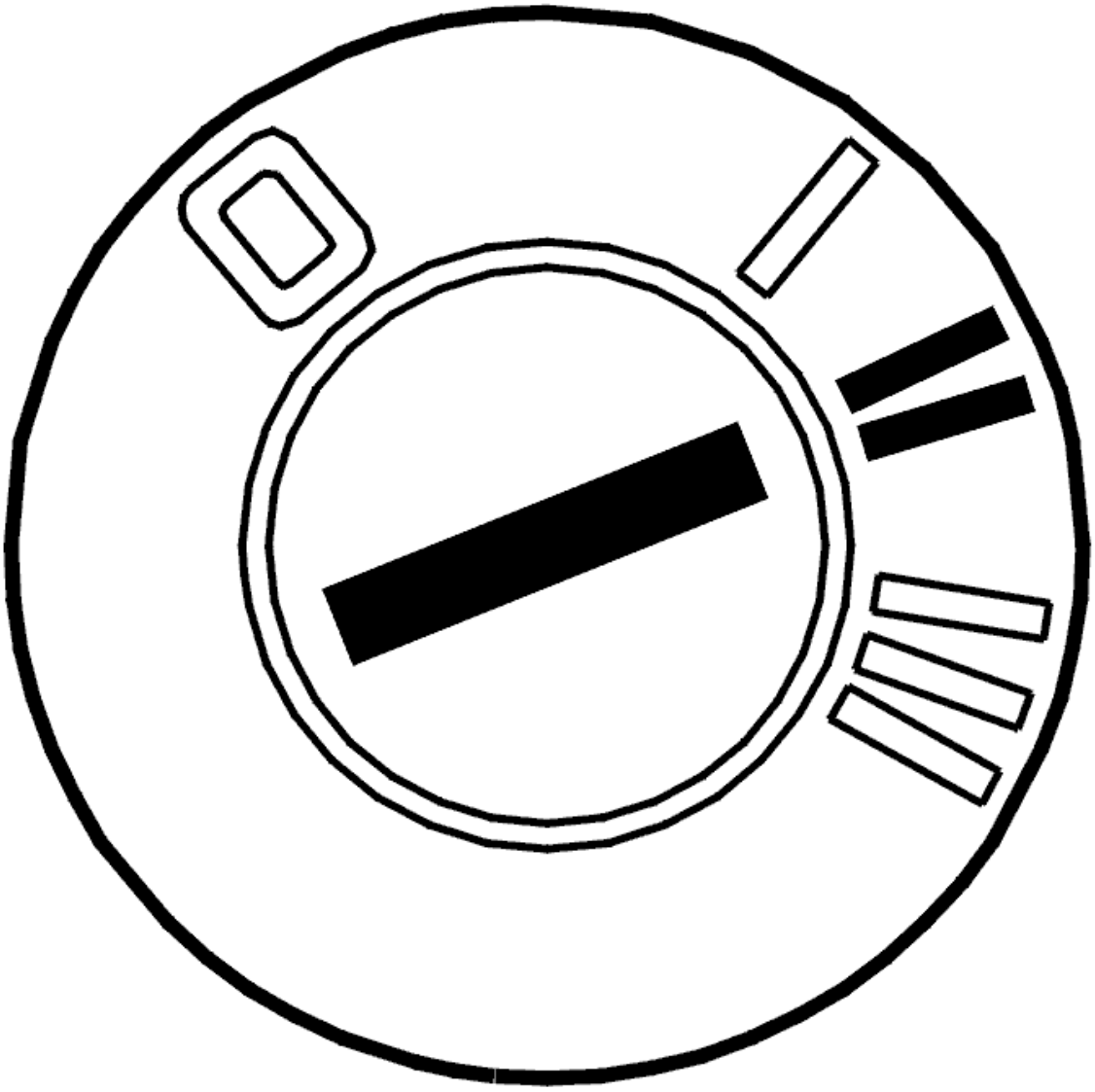

Fig. 152: Identifying Ignition ON
Courtesy of VOLVO CARS CORPORATION

- Ignition on.

  Check the voltage to the motor. It should be 9-16 V.

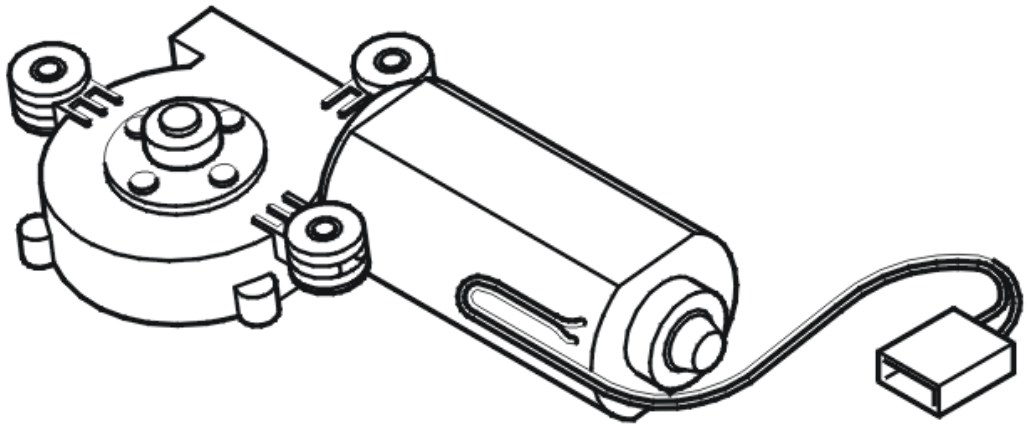

Fig. 153: Identifying Sunroof Motor
Courtesy of VOLVO CARS CORPORATION

Is the voltage OK?

- **YES**

  Refer to **CHECKING SUN ROOF INSTALLATION**

- **NO**

  Refer to **CHECKING VOLTAGE**

CHECKING SUN ROOF INSTALLATION

Check that the motor is properly installed. If no fault is found, replace the motor.

Remedy as necessary.

Other information

- see **ELECTRIC MOTOR, SUN ROOF, REPLACING**
- **Continue**

Refer to **FUNCTIONALITY CHECK**

CHECKING VOLTAGE

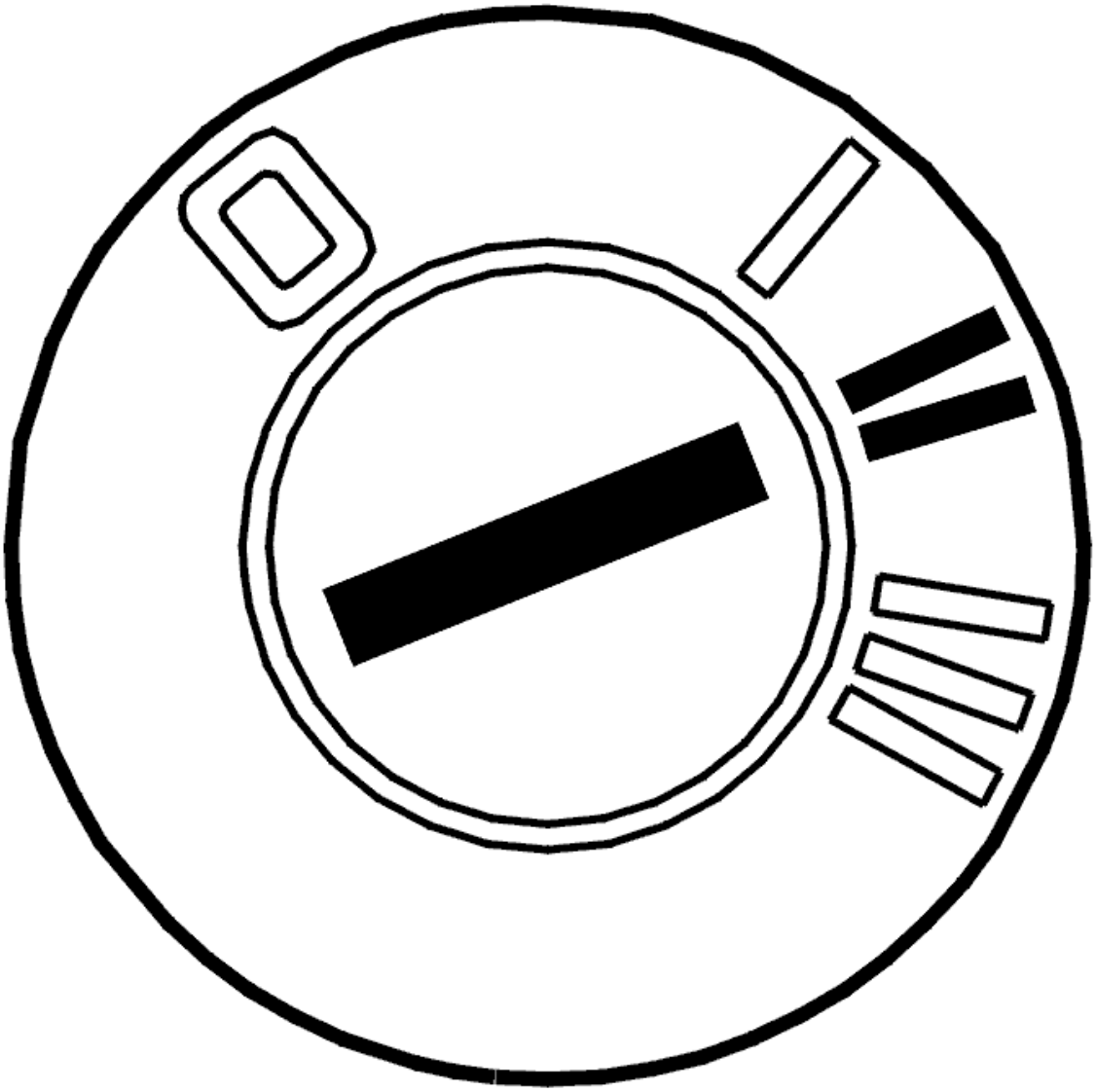

Fig. 154: Identifying Ignition ON
Courtesy of VOLVO CARS CORPORATION

- Ignition on.

  Check the voltage to the sun roof module (SRM). Voltage between #1A and #10A should be between 9-16 V.

  Other information

  - see **SIGNAL DESCRIPTION, UPPER ELECTRONIC MODULE (UEM)**

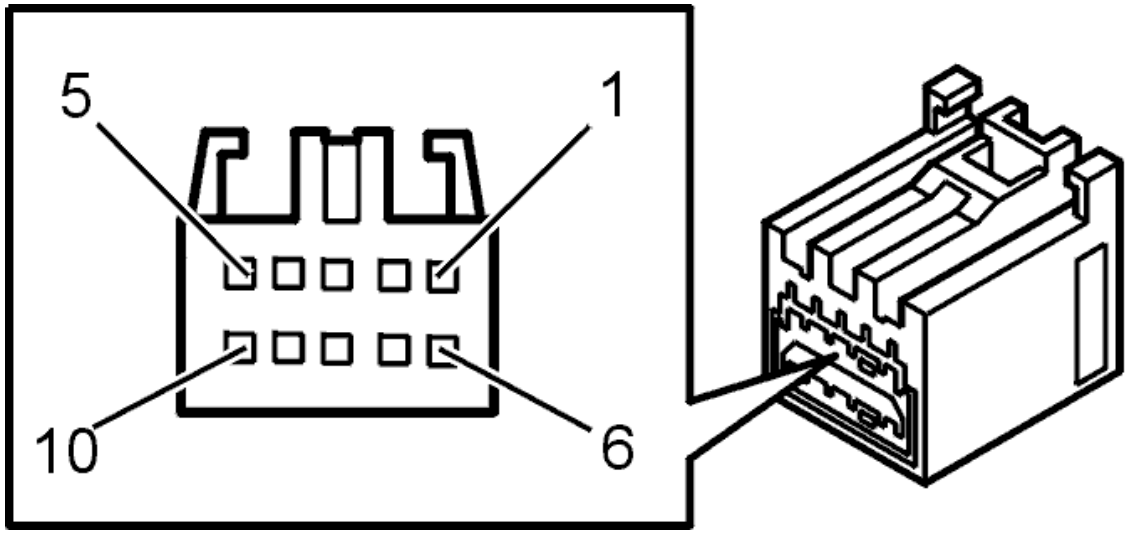

Fig. 155: Identifying Sunroof Module Connector A Terminals
Courtesy of VOLVO CARS CORPORATION

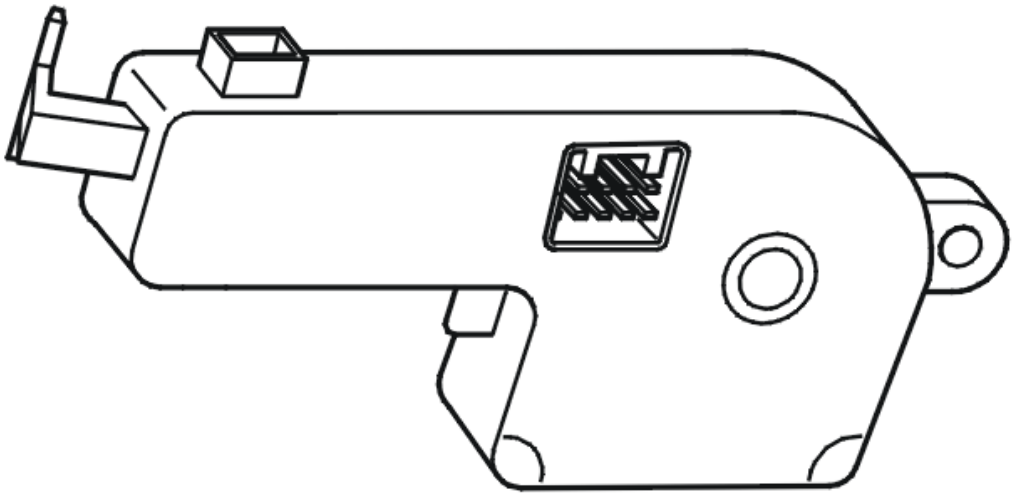

Fig. 156: Identifying Sun Roof Module (SRM)
Courtesy of VOLVO CARS CORPORATION

Is the voltage OK?

- **YES**

Refer to **CHECKING CABLES**

- **NO**

  Refer to **CHECKING CABLES AND BATTERY VOLTAGE**

CHECKING CABLES

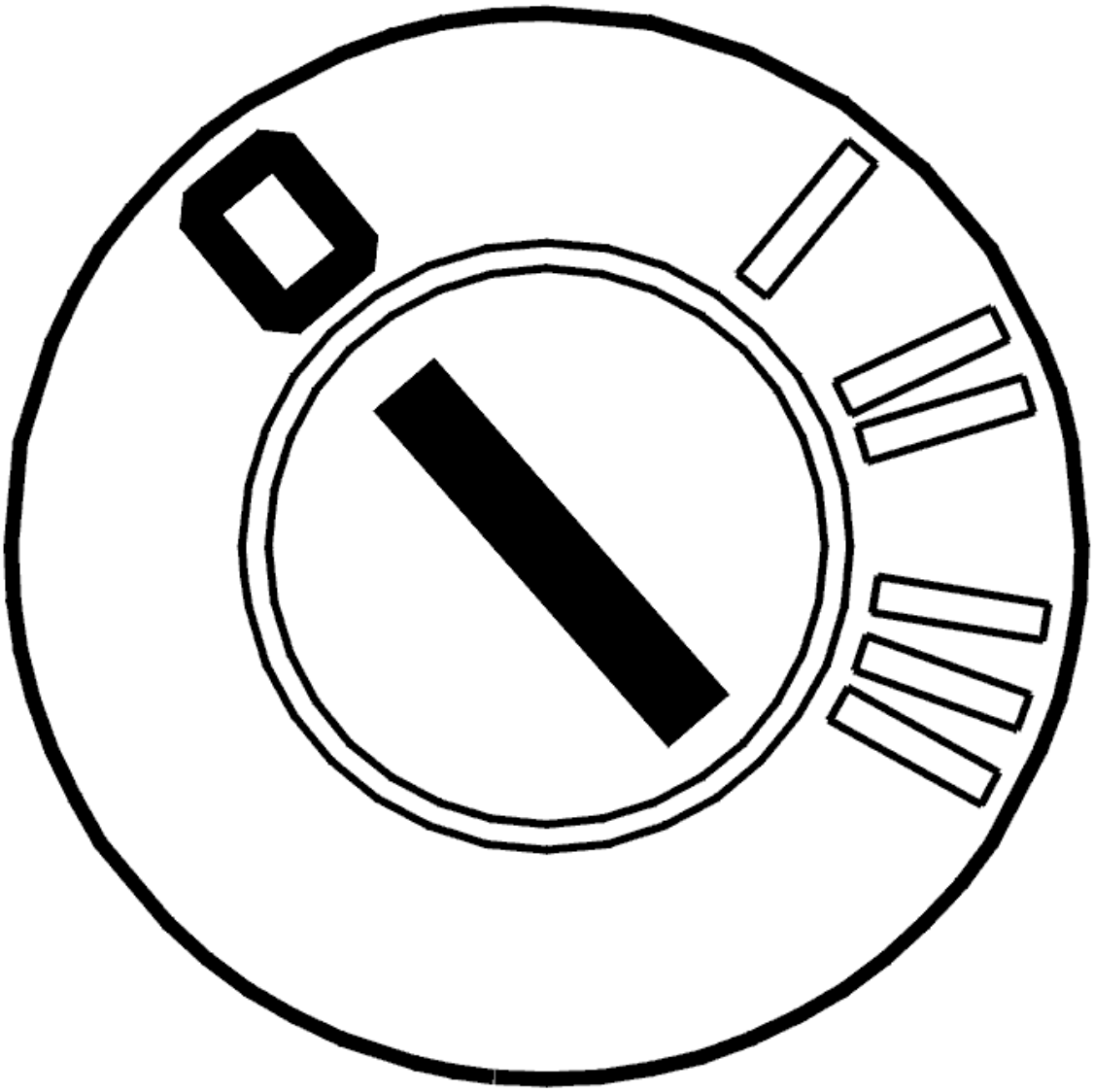

Fig. 157: Identifying Ignition OFF
Courtesy of VOLVO CARS CORPORATION

- Ignition off

  Check cables and connectors to the motor. If no fault is found, replace the sun roof module (SRM).

  Remedy as necessary.

Other information

- see **CONTROL MODULE, SUN ROOF, REPLACING**
- see **CHECKING WIRING AND TERMINALS**

- **Continue**

  Refer to **FUNCTIONALITY CHECK**

CHECKING VOLTAGE

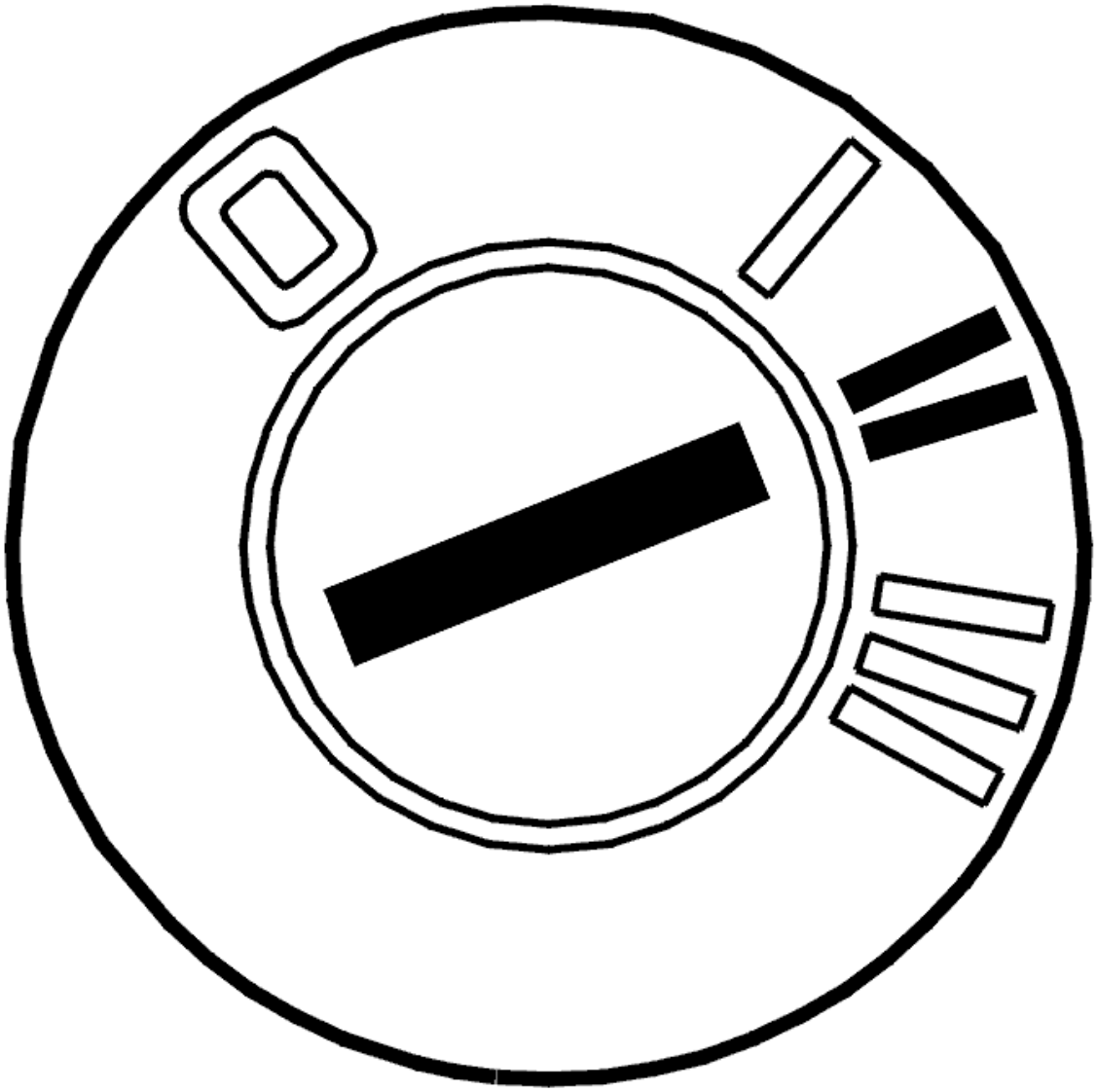

Fig. 158: Identifying Ignition ON
Courtesy of VOLVO CARS CORPORATION

- Ignition on.

Check the voltage to the sun roof switch. It should be 9-16 V.

Other information

- see **SIGNAL DESCRIPTION, UPPER ELECTRONIC MODULE (UEM)**

Is the voltage OK?

- **YES**

  Refer to **CHECKING CABLES AND BATTERY VOLTAGE**

- **NO**

  Refer to **CHECKING CABLES**

CHECKING CABLES AND BATTERY VOLTAGE

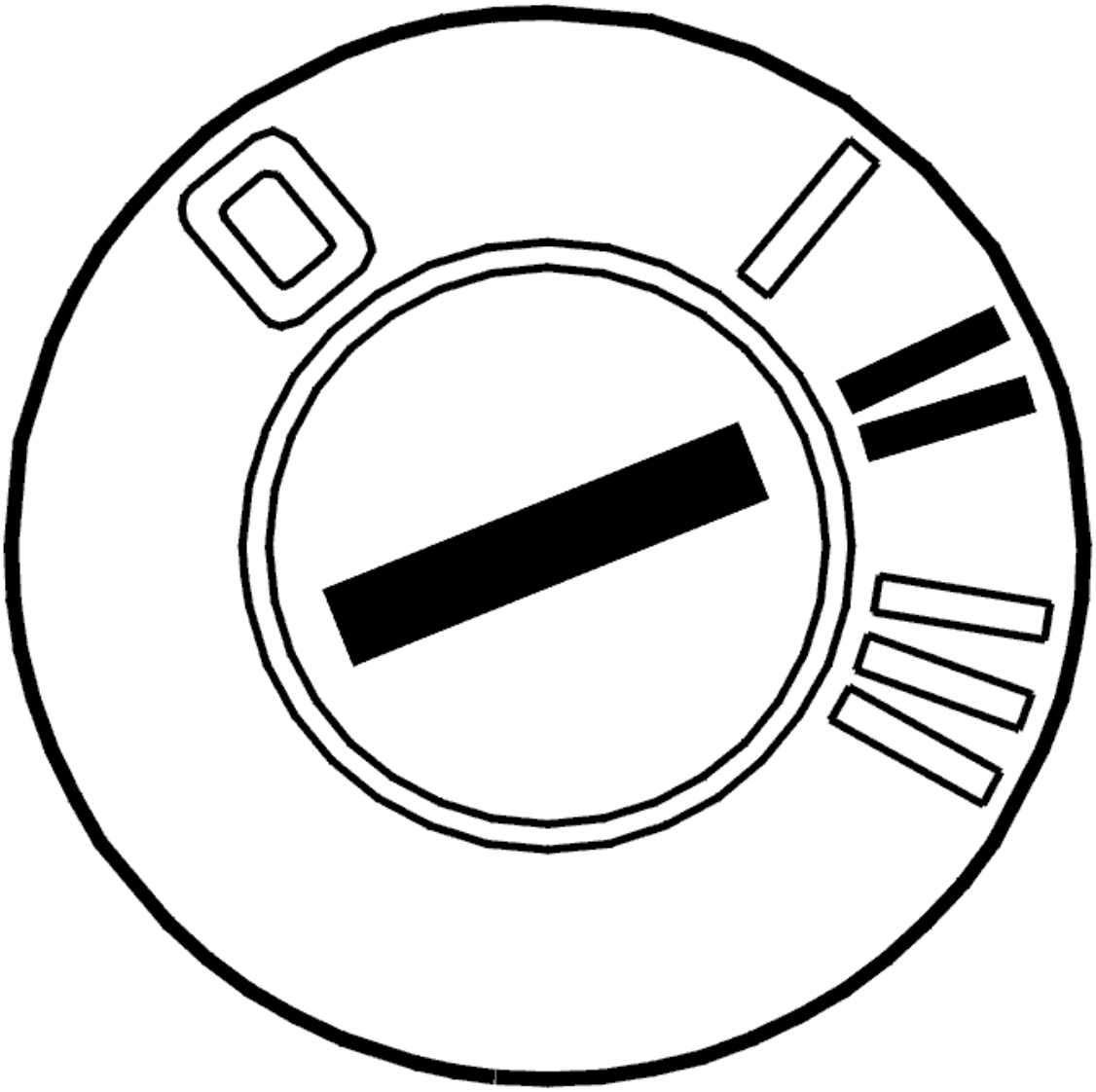

Fig. 159: Identifying Ignition ON
Courtesy of VOLVO CARS CORPORATION

- Ignition on.

  Check the battery voltage to the sun roof module (SRM).

  Check the fuse:

  - 11C/26 (XC90).

  Check cables and connectors for contact resistance and open-circuit.

  Remedy as necessary.

  Other information

- see **SIGNAL DESCRIPTION, UPPER ELECTRONIC MODULE (UEM)**
- see **CHECKING WIRING AND TERMINALS**

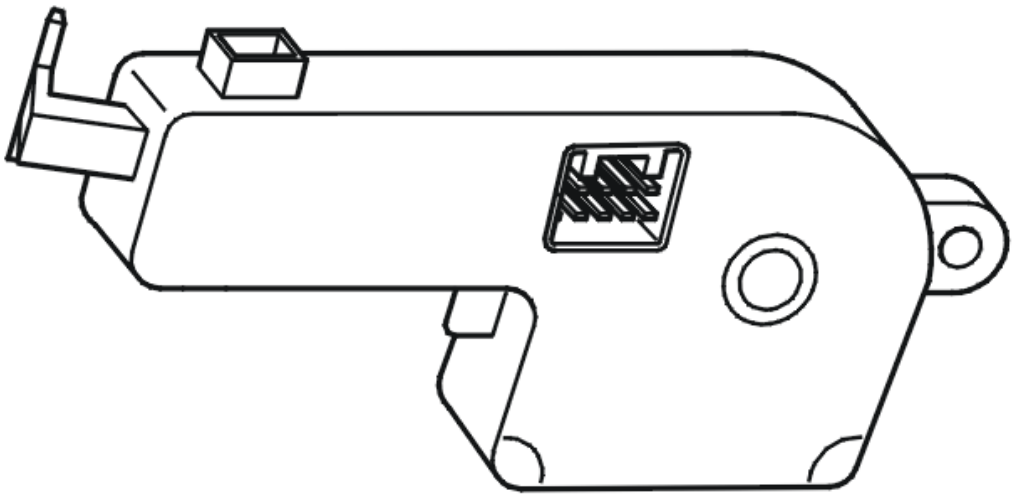

Fig. 160: Identifying Sun Roof Module (SRM)
Courtesy of VOLVO CARS CORPORATION

- **Continue**

  Refer to **FUNCTIONALITY CHECK**

CHECKING CABLES

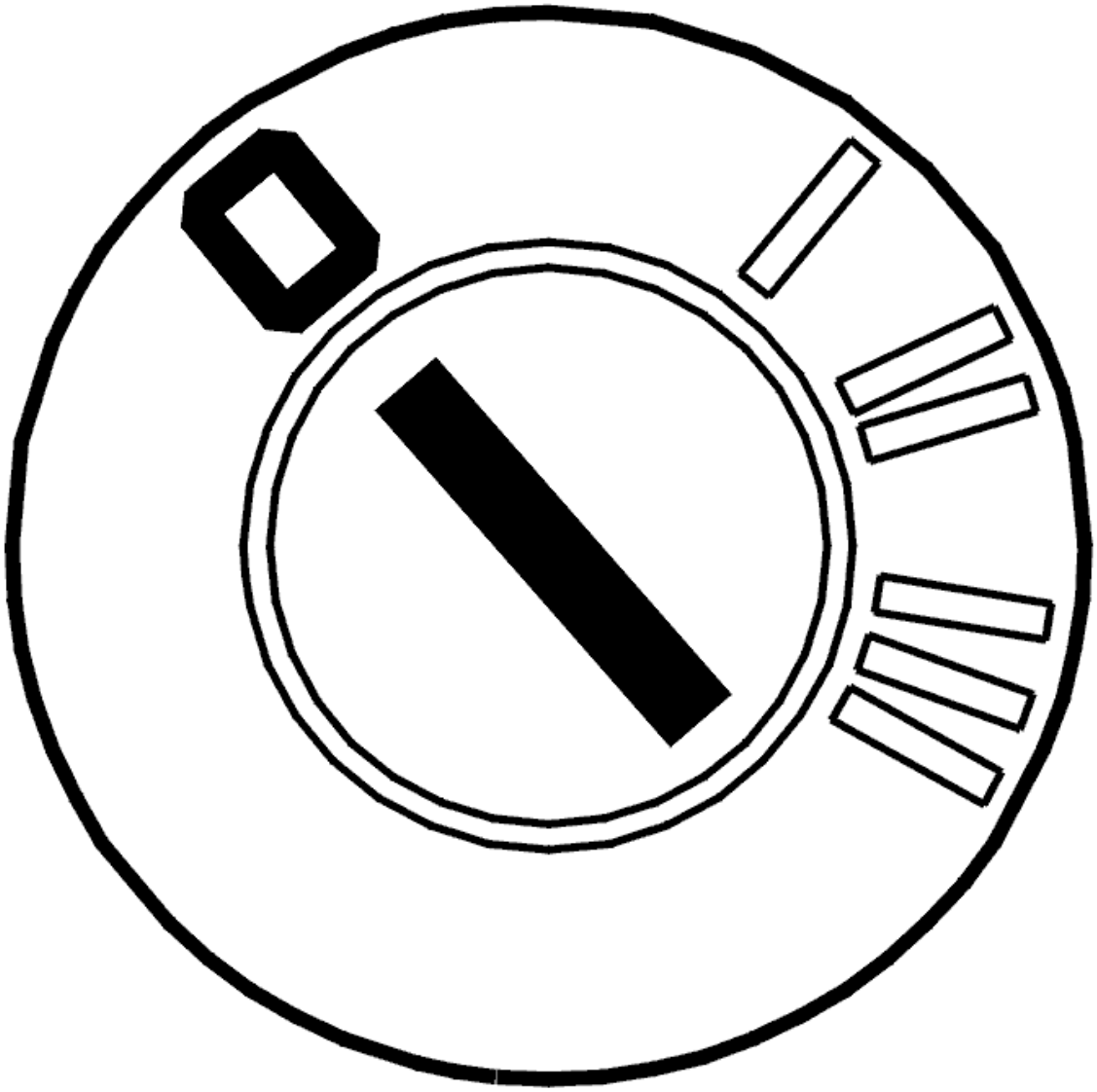

Fig. 161: Identifying Ignition OFF
Courtesy of VOLVO CARS CORPORATION

- Ignition off

  Check the cables and connectors of the sun roof module (SRM) for contact resistance and open-circuit.

  Remedy as necessary.

  Other information

  - see **SWITCH SUN ROOF, REPLACING**
  - see **CHECKING WIRING AND TERMINALS**

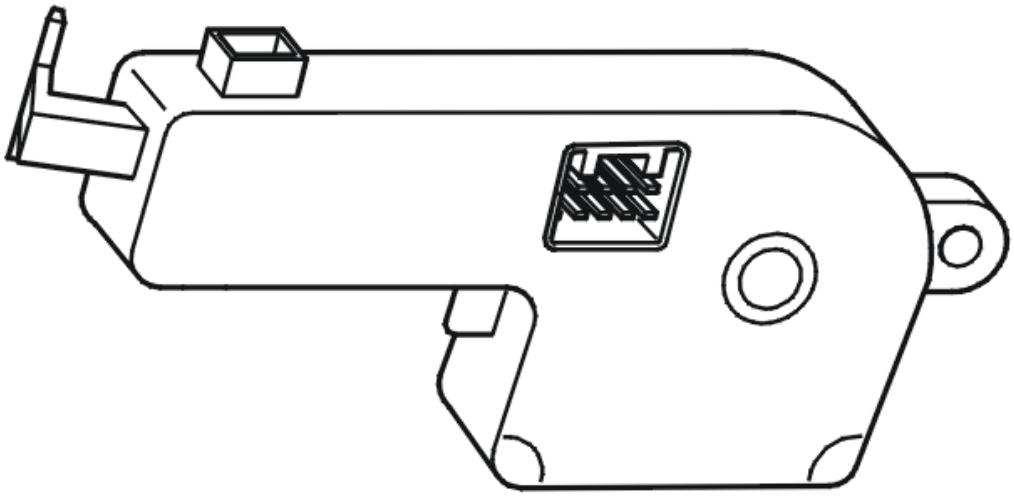

Fig. 162: Identifying Sun Roof Module (SRM)
Courtesy of VOLVO CARS CORPORATION

- **Continue**

  Refer to **FUNCTIONALITY CHECK**

CHECKING CABLES

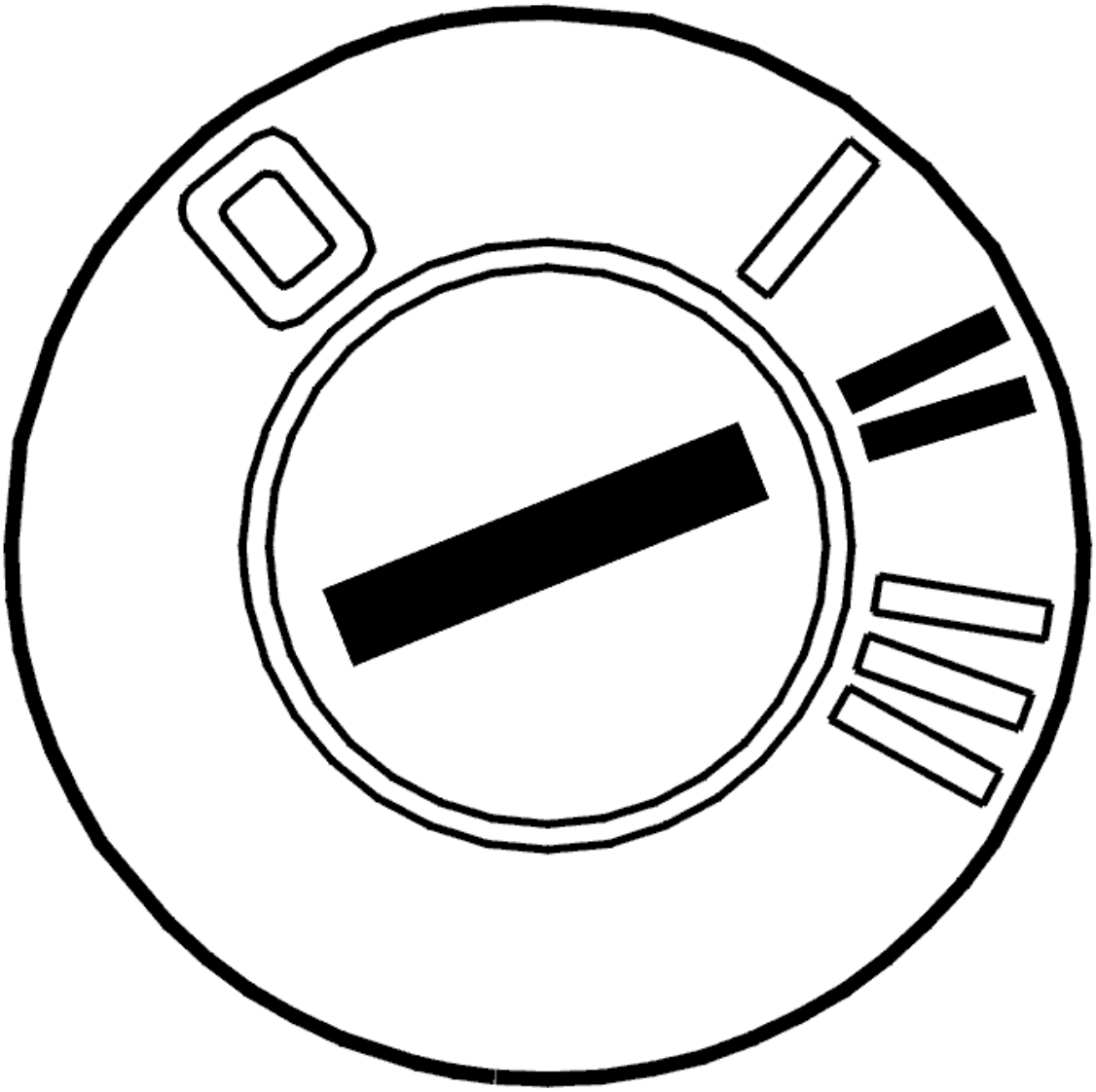

Fig. 163: Identifying Ignition ON
Courtesy of VOLVO CARS CORPORATION

- Ignition on.

  Check that the motor runs smoothly. Replace the motor as necessary.

  Check that the sun roof opens properly. It should take approx. 6 seconds for the sun roof to completely open from the closed position. Check the mechanism as necessary. Clean and lubricate the rail.

  Check the mechanism, rails and drive for unevenness. Replace the drive and/or mechanism as necessary.

  Remedy as necessary.

  Other information

- see **ELECTRIC MOTOR, SUN ROOF, REPLACING**
- see **MECHANISM/MECHANICAL CABLE SUN ROOF, REPLACEMENT**

- **Continue**

  Refer to **FUNCTIONALITY CHECK**

CHECKING CLOSURE

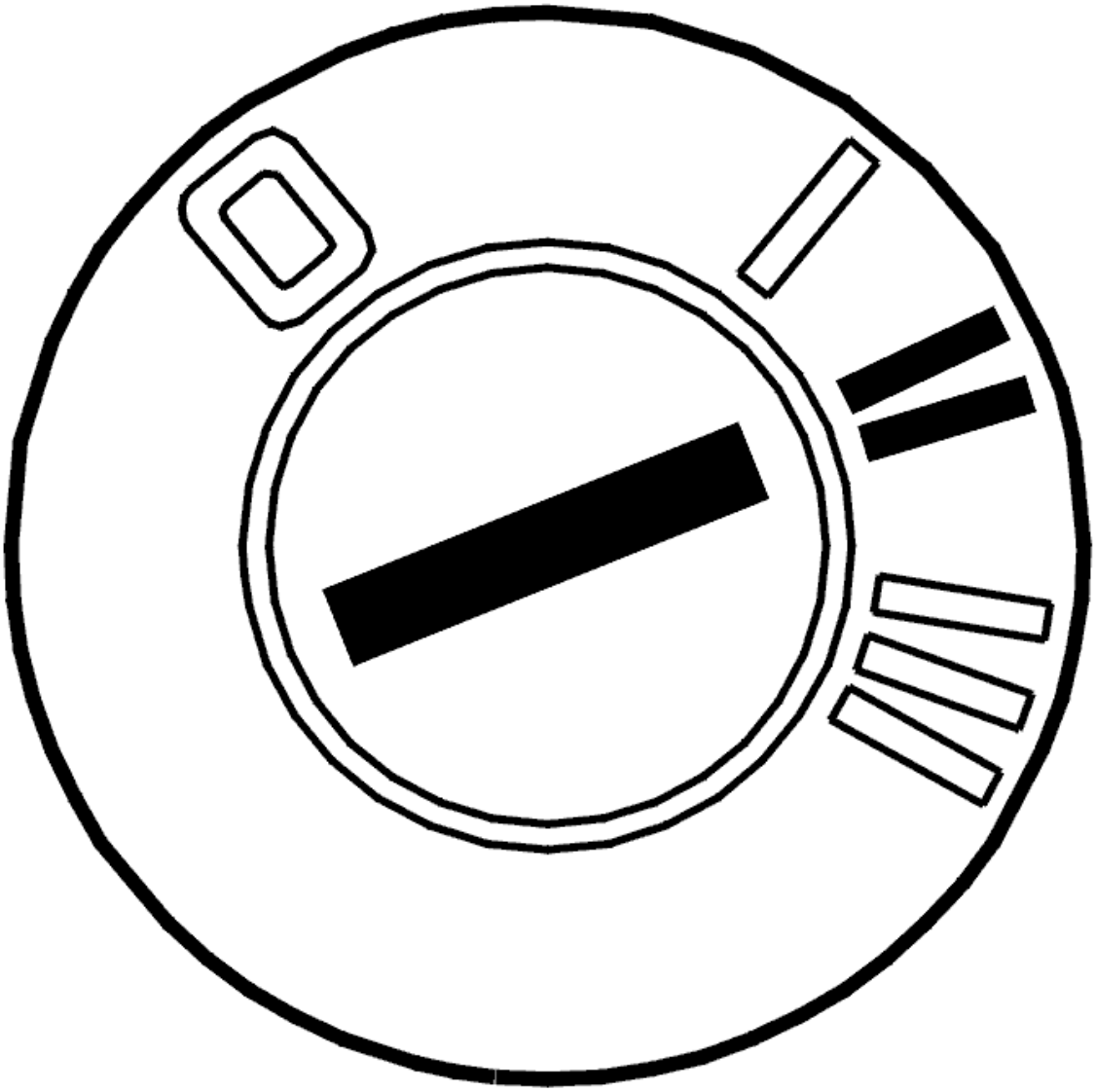

Fig. 164: Identifying Ignition ON
Courtesy of VOLVO CARS CORPORATION

- Ignition on.

  When closing, check if the sun roof stops or returns to the open position.

Does the sun roof stop at the wrong position?

- **YES**

  Refer to **CHECKING THE SUN ROOF**

- **NO**

  Refer to **CHECKING THE MECHANISM**

CHECKING THE SUN ROOF

Try recalibrating the sun roof module (SRM).

Check the function of the sun roof motor. Replace the motor as necessary. If the motor works properly, check the sun roof mechanism for friction-free travel and blockage.

HINT: If there is a problem with ATS (pinch protection function), the cause of the fault is usually mechanical. It is therefore important to perform a comprehensive check of the sun roof mechanics. If the cause of the fault is not found, replace the control module.

Remedy as necessary.

Other information

- see **SUN ROOF MODULE (SRM), CALIBRATING**
- see **ELECTRIC MOTOR, SUN ROOF, REPLACING**
- see **CONTROL MODULE, SUN ROOF, REPLACING**

- **Continue**

  Refer to **FUNCTIONALITY CHECK**

CHECKING THE MECHANISM

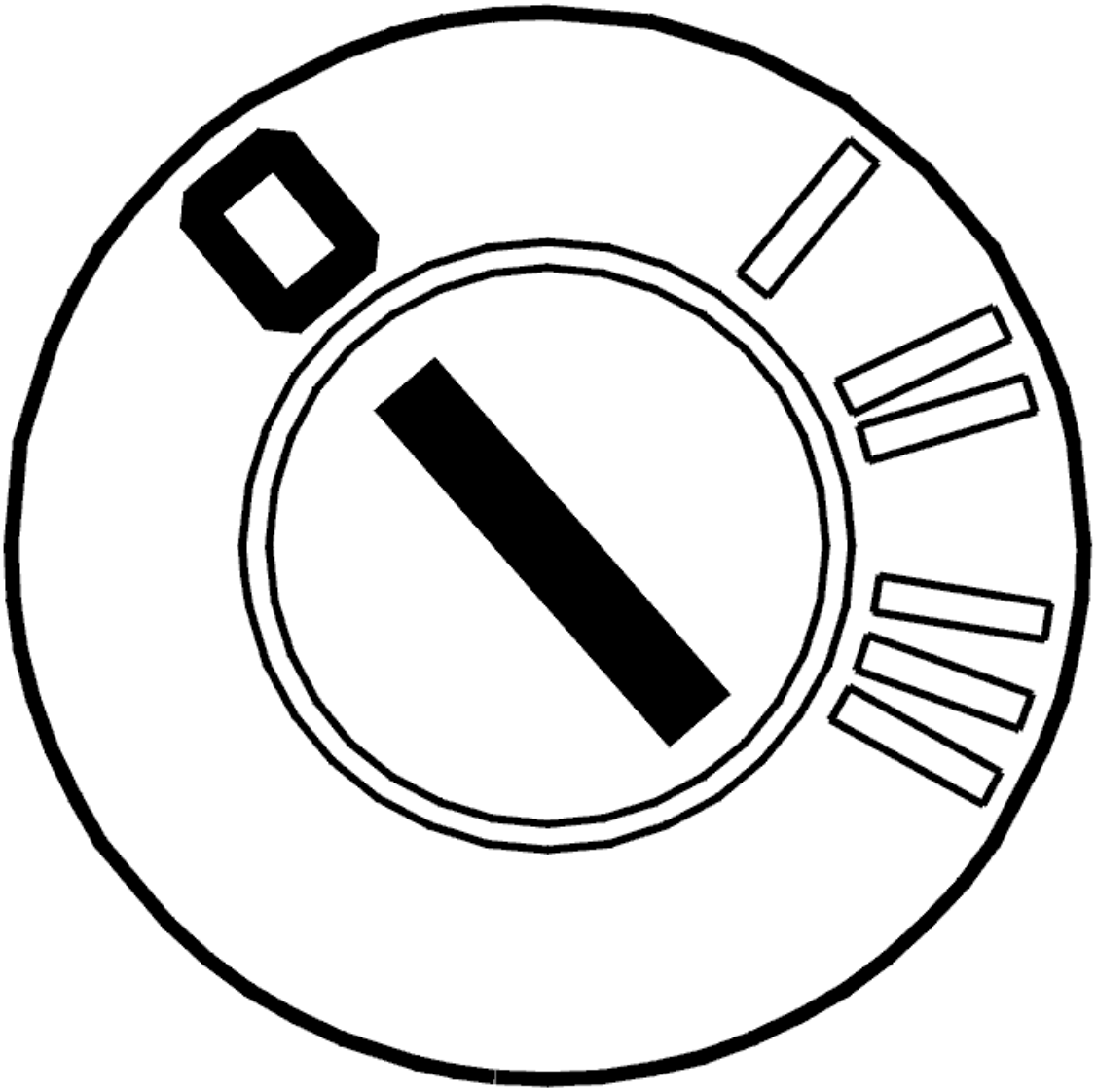

Fig. 165: Identifying Ignition OFF
Courtesy of VOLVO CARS CORPORATION

- Ignition off

  Check the sun roof mechanism.

  Remedy as necessary.

  Other information

  - see **MECHANISM/MECHANICAL CABLE SUN ROOF, REPLACEMENT**

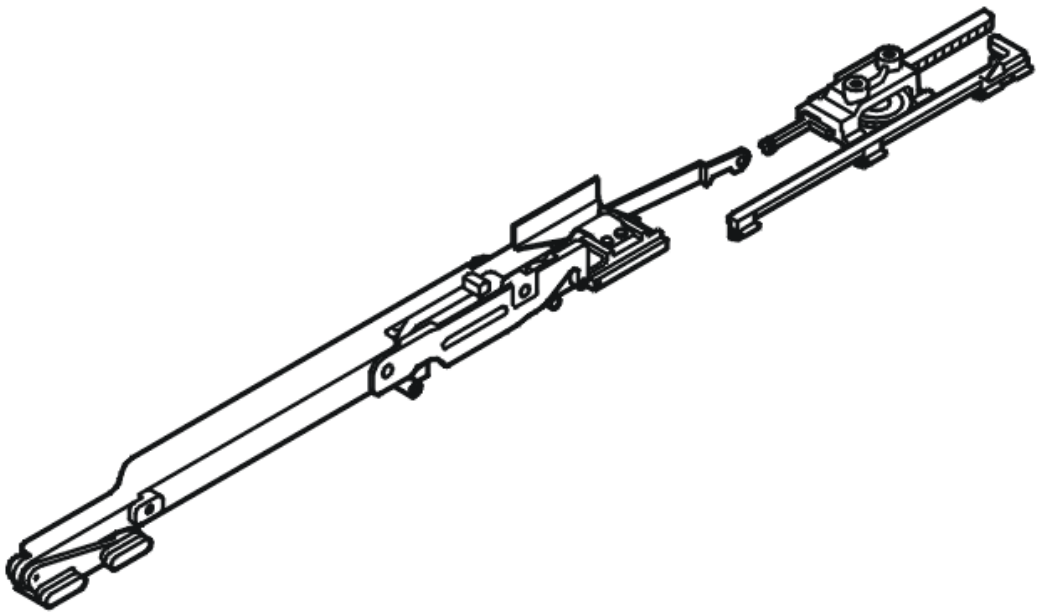

Fig. 166: Identifying Sun Roof Mechanism
Courtesy of VOLVO CARS CORPORATION

- **Continue**

  Refer to **FUNCTIONALITY CHECK**

FUNCTIONALITY CHECK

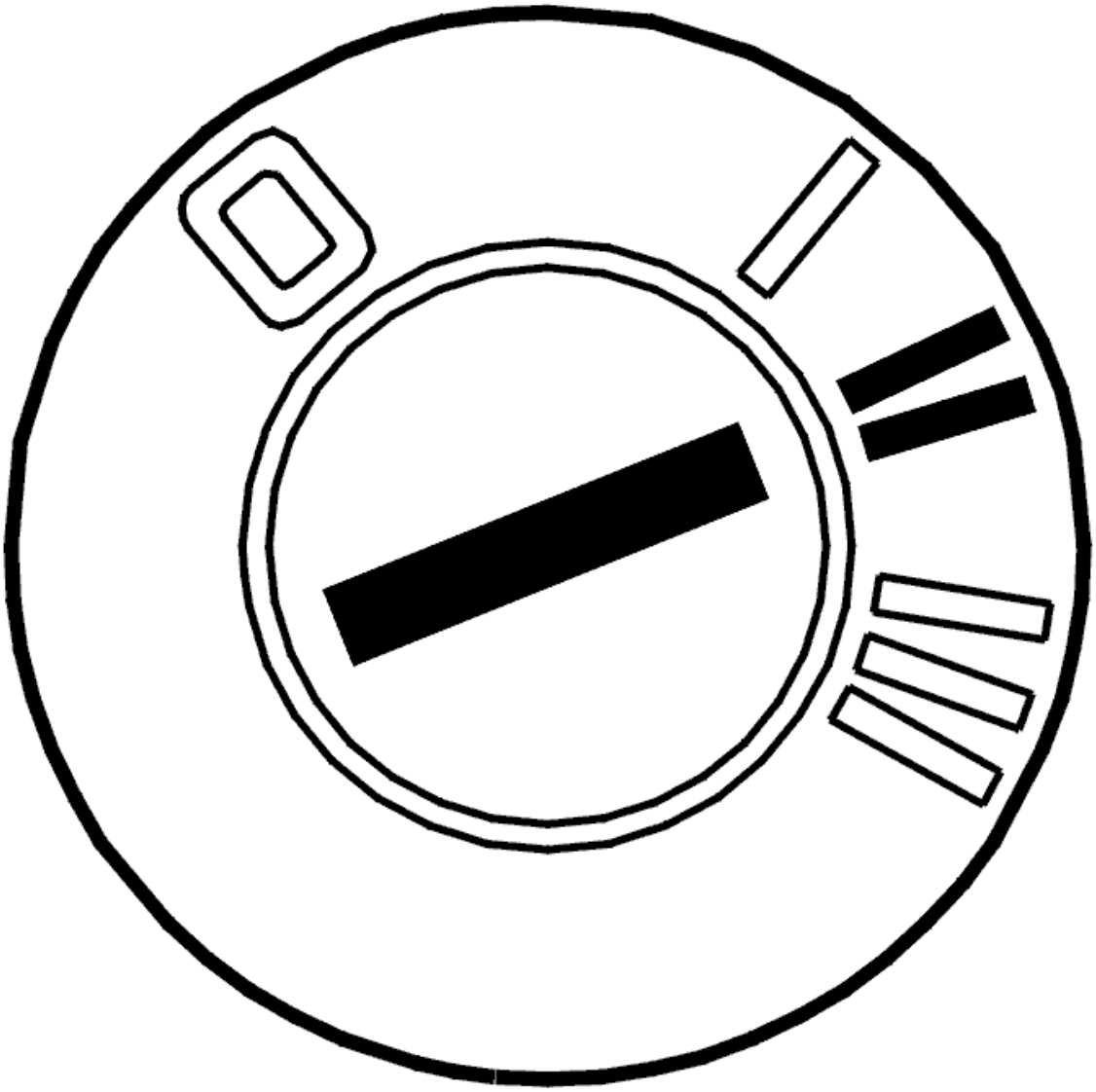

Fig. 167: Identifying Ignition ON
Courtesy of VOLVO CARS CORPORATION

- Ignition on.

  Check that sun roof function is OK. Check that the sun roof operates and closes properly.

Is the sun roof function OK?

- **YES**

  OKAY: Troubleshooting has been completed.

- **NO**

  Refer to **INFORMATION**

INFORMATION

FAULT-TRACING INFORMATION

The fault should be diagnosed and remedied. Since this is not the case the fault-tracing process has failed.

Complete the fault-tracing for those fault or try again.

TROUBLE-SHOOTING INFORMATION

Condition

No diagnostic trouble codes are displayed.

Substitute Value

None.

Possible Source

- Improperly mounted sun roof.
- No battery voltage - sun roof module (SRM) to or from electric motor.
- Wrong electric motor for sun roof.
- Sun roof improperly calibrated.

Fault symptom[s]

- Power sun roof does not work.

CHECKING SUPPLIES (B5254T2; B6294T; 2003-04)

CHECKING THE FEEDS

CHECKING SUPPLY

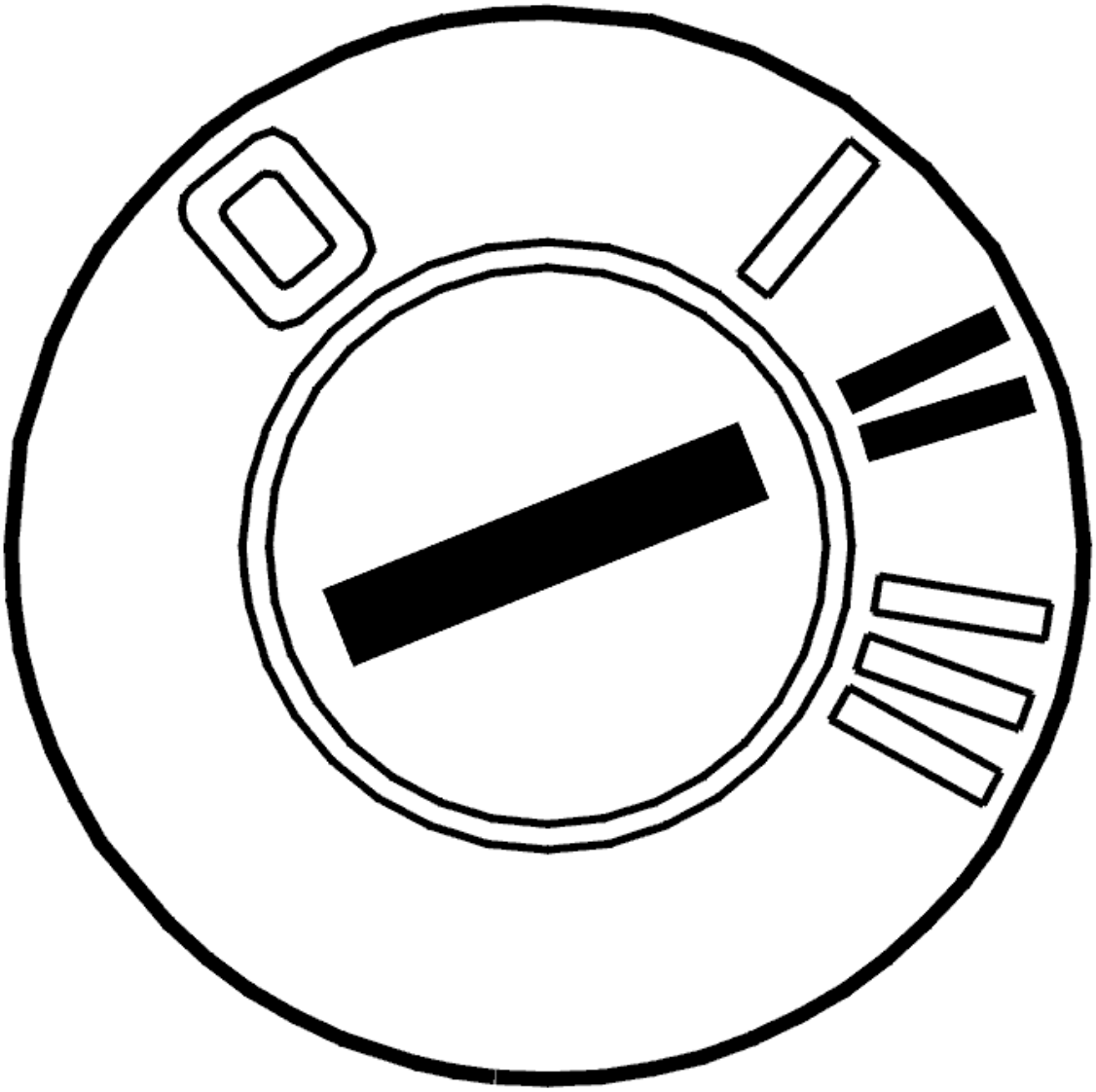

Fig. 168: Identifying Ignition ON
Courtesy of VOLVO CARS CORPORATION

- Ignition on.

  Check the supply to Combustion Preheater Module (CPM) #9 for contact resistance and oxidation as described in, see **CONTACT RESISTANCE AND OXIDATION** , or a loose connection as described in **LOOSE CONNECTIONS (TERMINALS)** . Also check fuse 9 in the engine compartment.

  Check the cable between #1 on the Ext-X relay (2/29) and #15 on the Combustion Preheater Module (CPM) for contact resistance and oxidation as described in, see **CONTACT RESISTANCE AND OXIDATION** , or for a loose connection as described in **LOOSE CONNECTIONS (TERMINALS)** . Also check the relay (2/29), the supply to the relay and passenger compartment fuse 24.

  Check that the ground lead is undamaged by checking the cable between additional heater #3 and the ground terminal.

Also check the intermediate connectors.

Other information:

- To replace the relay, see **CENTRAL ELECTRONIC MODULE (CEM), REPLACING** .
- For other values, see **SIGNAL SPECIFICATION** .

Remedy as necessary.

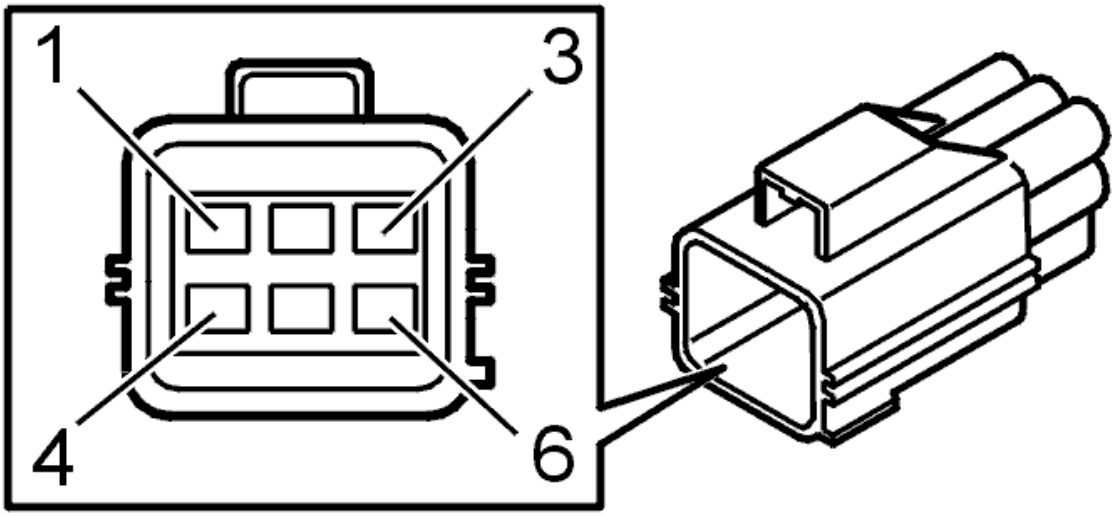

Fig. 169: Identifying Connector Terminals
Courtesy of VOLVO CARS CORPORATION

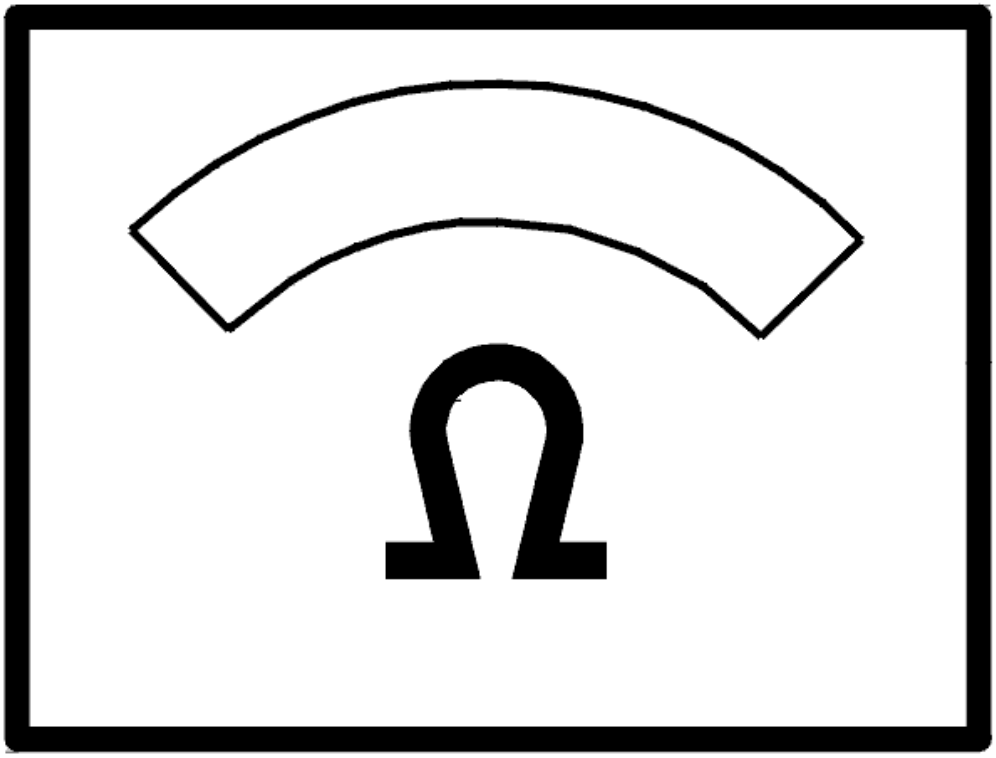

Fig. 170: Identifying Ohmmeter
Courtesy of VOLVO CARS CORPORATION

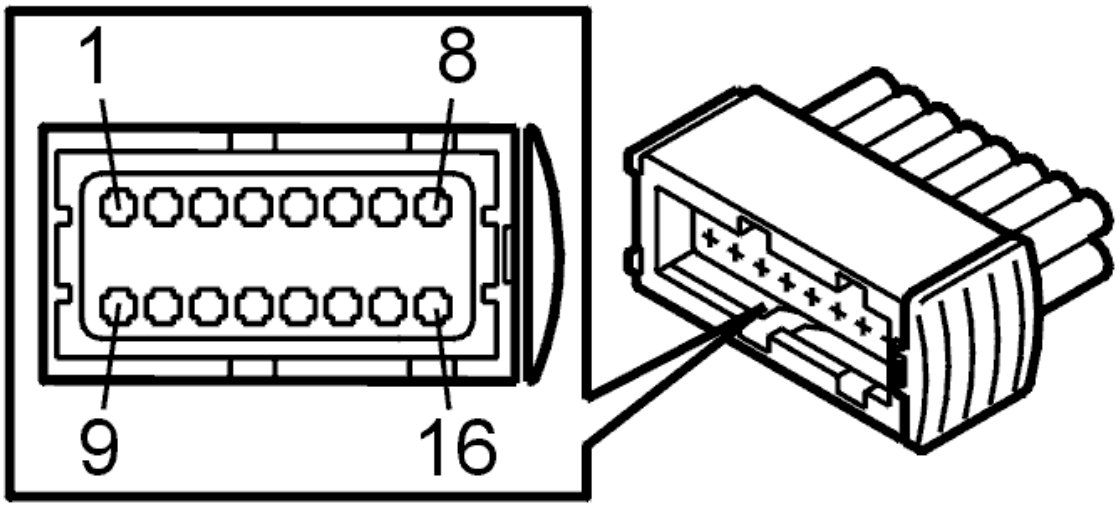

Fig. 171: Identifying Connector Terminals
Courtesy of VOLVO CARS CORPORATION

- **Continue**

  Refer to **VERIFICATION**

VERIFICATION

HINT: After the repair it is necessary to check that the fault has been rectified.

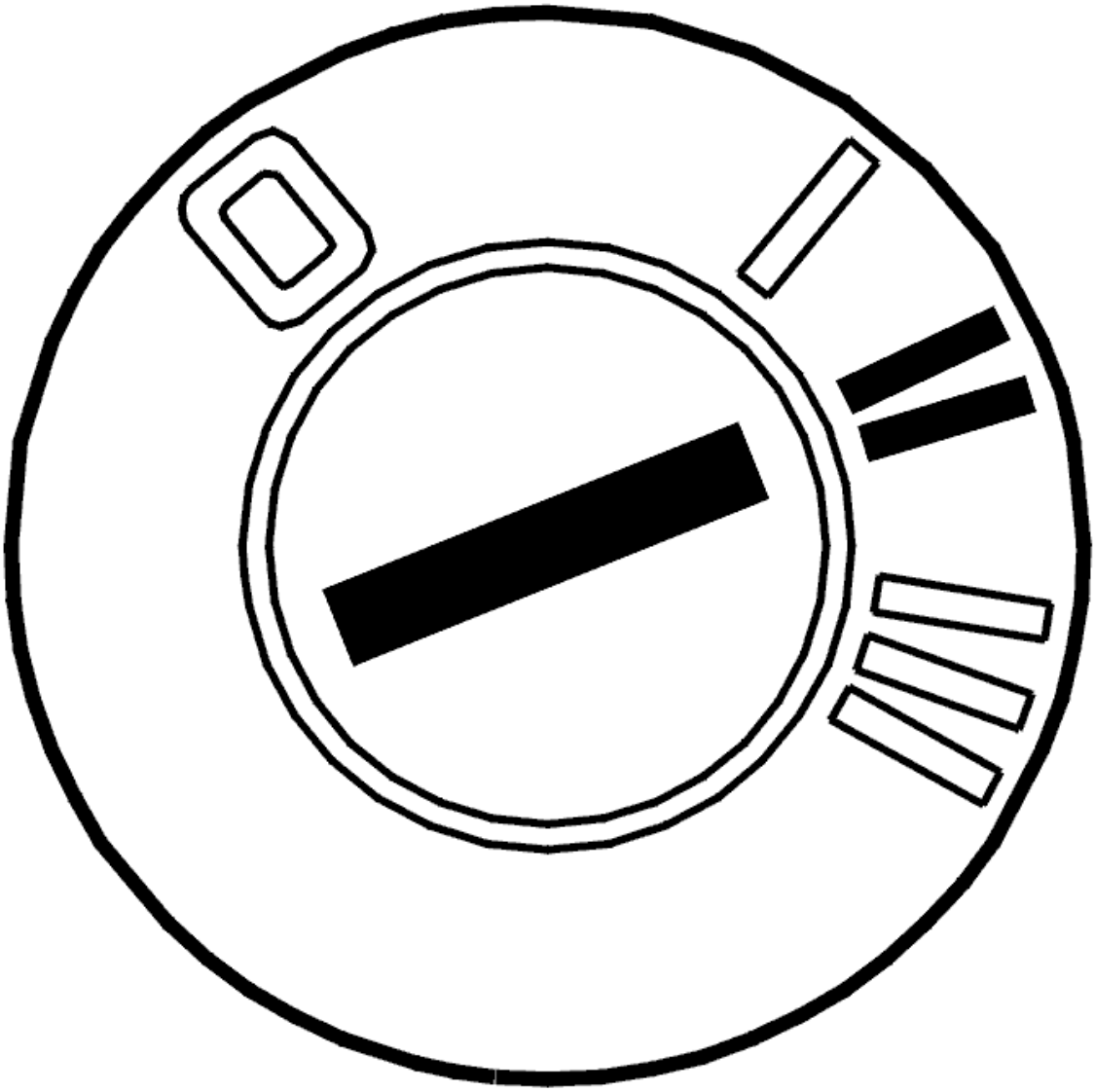

Fig. 172: Identifying Ignition ON
Courtesy of VOLVO CARS CORPORATION

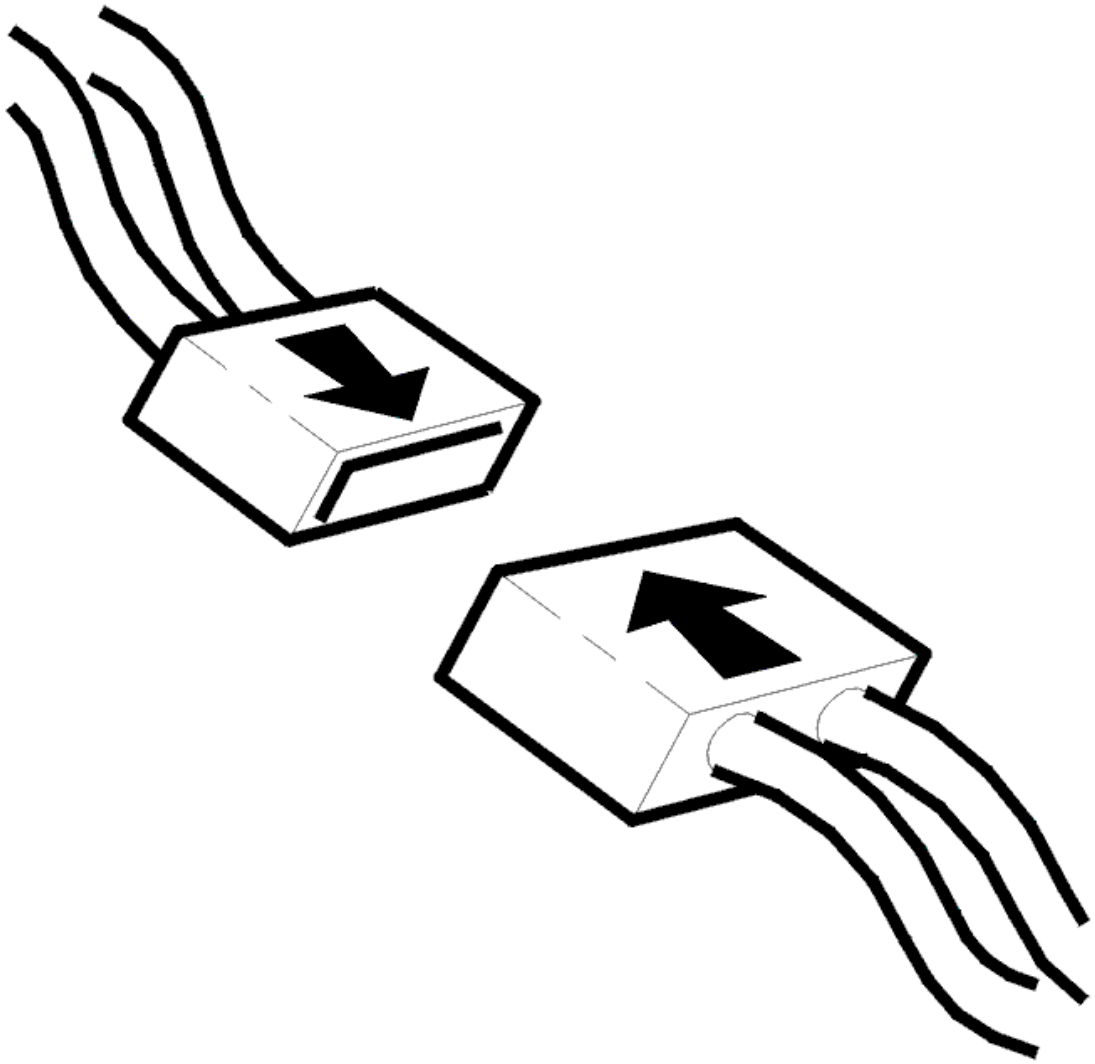

Fig. 173: Connecting Connector
Courtesy of VOLVO CARS CORPORATION

- Ignition off.
- Connect connector, install components etc.
- Ignition on.

NOTE: It is important that only the ignition is on for the heater to start up.

- Activate the heater.

  A buzzing sound should be heard from the heater.

  Check the function of the heater as described in, see **ENGINE COOLANT HEATER, TEST RUNNING** .

Additional information:

- For a description of the parameters, see **DESCRIPTION OF PARAMETERS** .
- For a description of activations, see **ACTIVATING COMPONENTS/FUNCTIONS** .

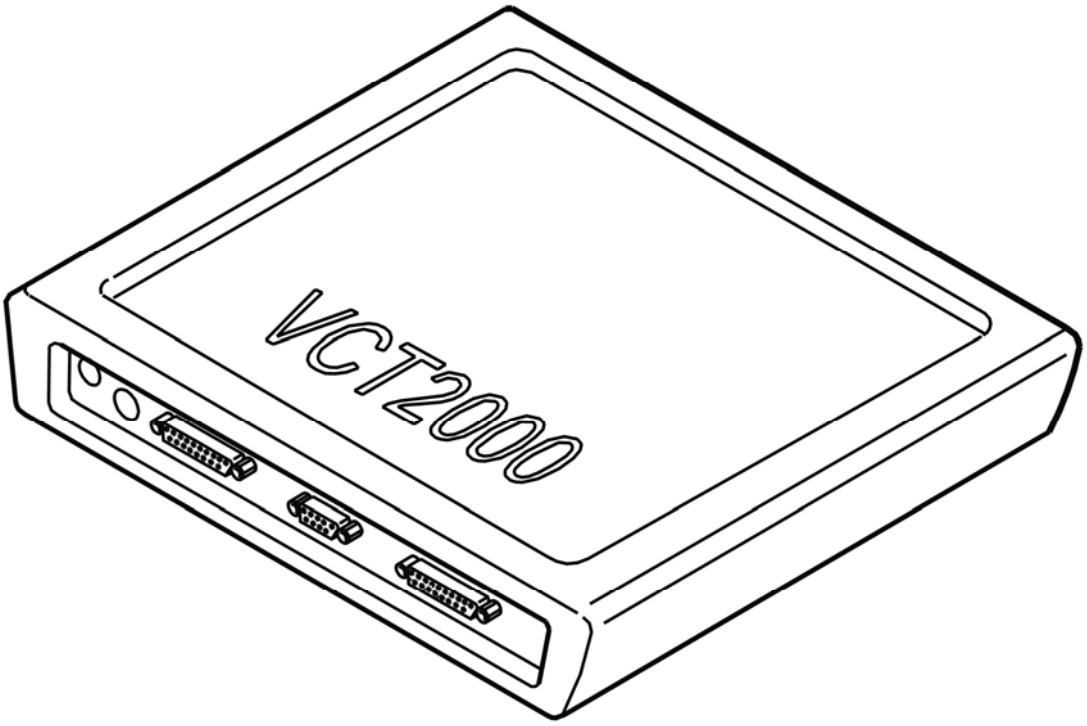

Fig. 174: Identifying VCT2000 Diagnostic Tool Symbol In VIDA
Courtesy of VOLVO CARS CORPORATION

Does the heater work?

- **YES**

  VERIFIED: Troubleshooting has been completed.

- **NO**

  Refer to **INFORMATION**

INFORMATION

FAULT-TRACING INFORMATION

The fault should have been detected and remedied. As this is not the case fault-tracing has failed.

Exit fault-tracing for this diagnostic trouble code (DTC) or make another attempt.

TROUBLE-SHOOTING INFORMATION

Condition

No diagnostic trouble code has been stored.

Substitute Value

None.

Possible Source

- Weak battery
- Low voltage
- Contact resistance in the control unit connectors

Fault symptom[s]

- Parking heater does not work.

CHECKING THE 30 AND 15-SUPPLY (2003-04)

CHECKING THE 30 AND 15-SUPPLY

CHECKING THE 30-SUPPLY

Check fuses 11A/4 and 11C/25.

Check the power cable between fuse 11A/4 and fuse 11C/25 for an open-circuit or a short-circuit to ground.

HINT: If the VCT2000 is connected and the green LED lights then fuse 11A/4 is OK.

Remedy as necessary.

Other information:

- see **CHECKING WIRING AND TERMINALS** .

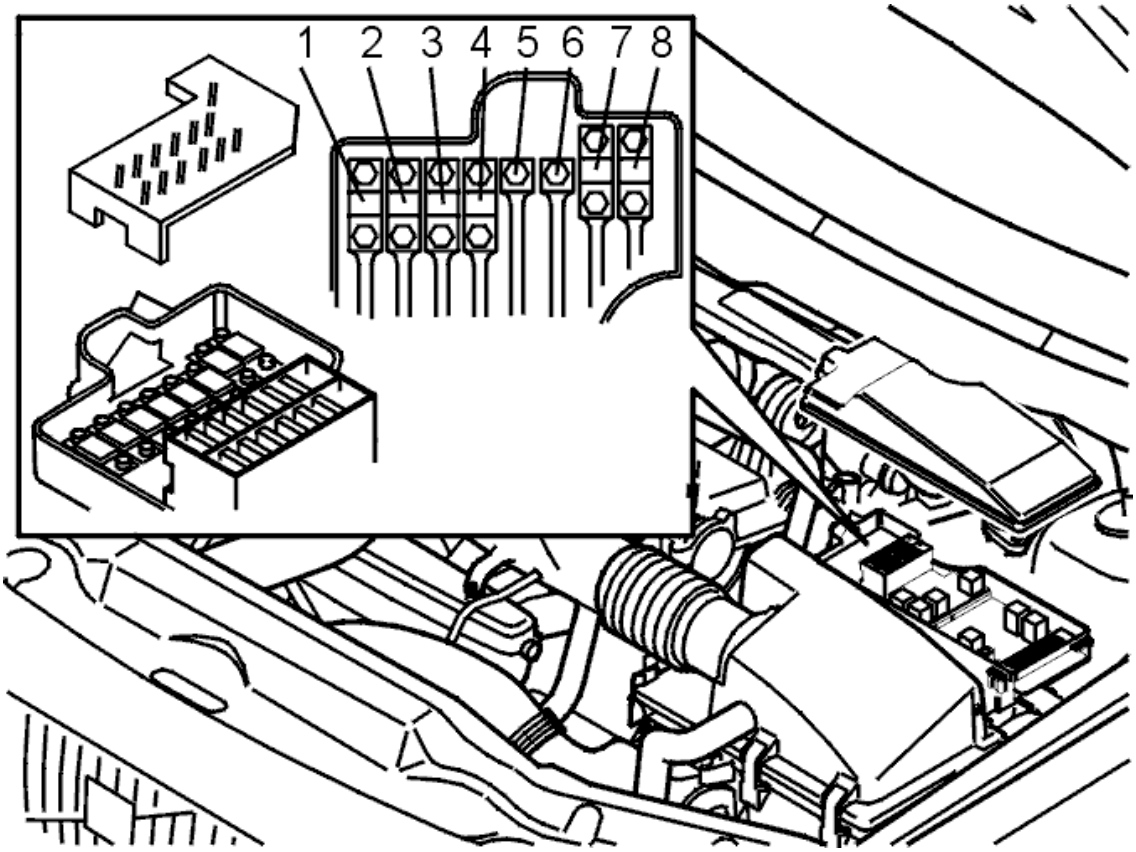

Fig. 175: Identifying Main Fuse
Courtesy of VOLVO CARS CORPORATION

- **Continue**

  Refer to **CHECKING THE 30-SUPPLY CONTINUED**

CHECKING THE 30-SUPPLY CONTINUED

Check the power cable between fuse 11C/25 and the start switch terminal #30 for an open-circuit or a short-circuit to ground.

Remedy as necessary.

Other information:

- see **CHECKING WIRING AND TERMINALS** .

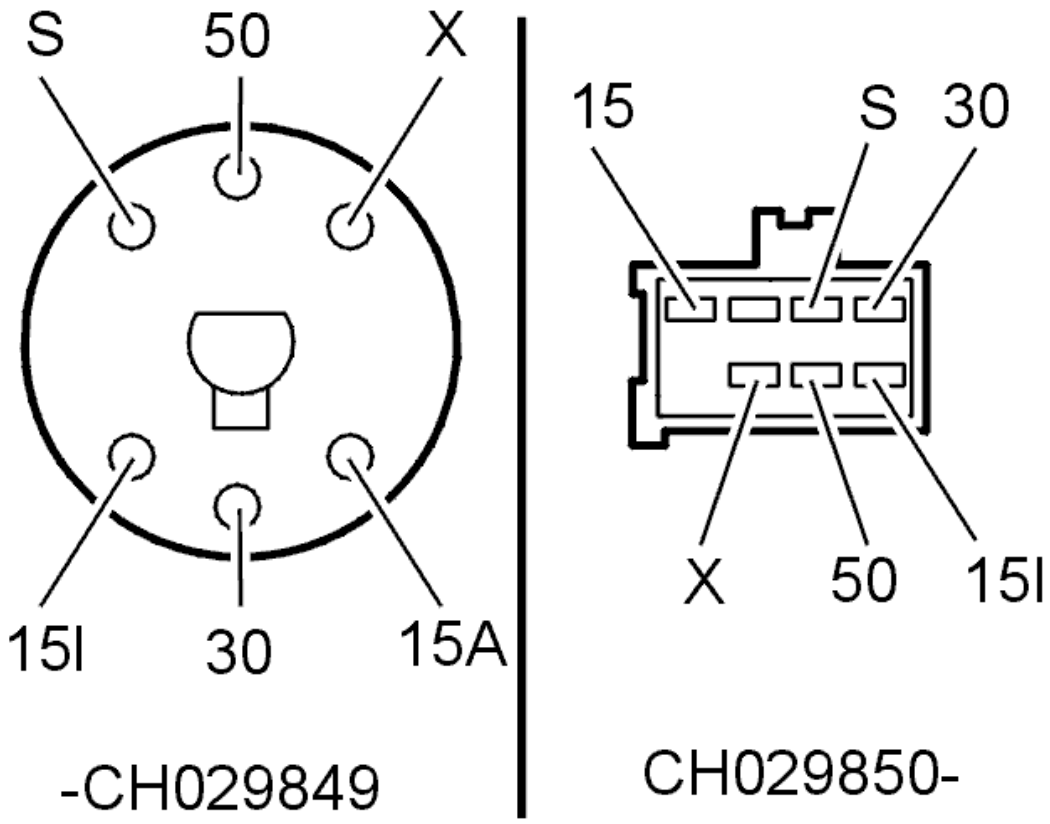

Fig. 176: Identifying Power Cable Terminals
Courtesy of VOLVO CARS CORPORATION

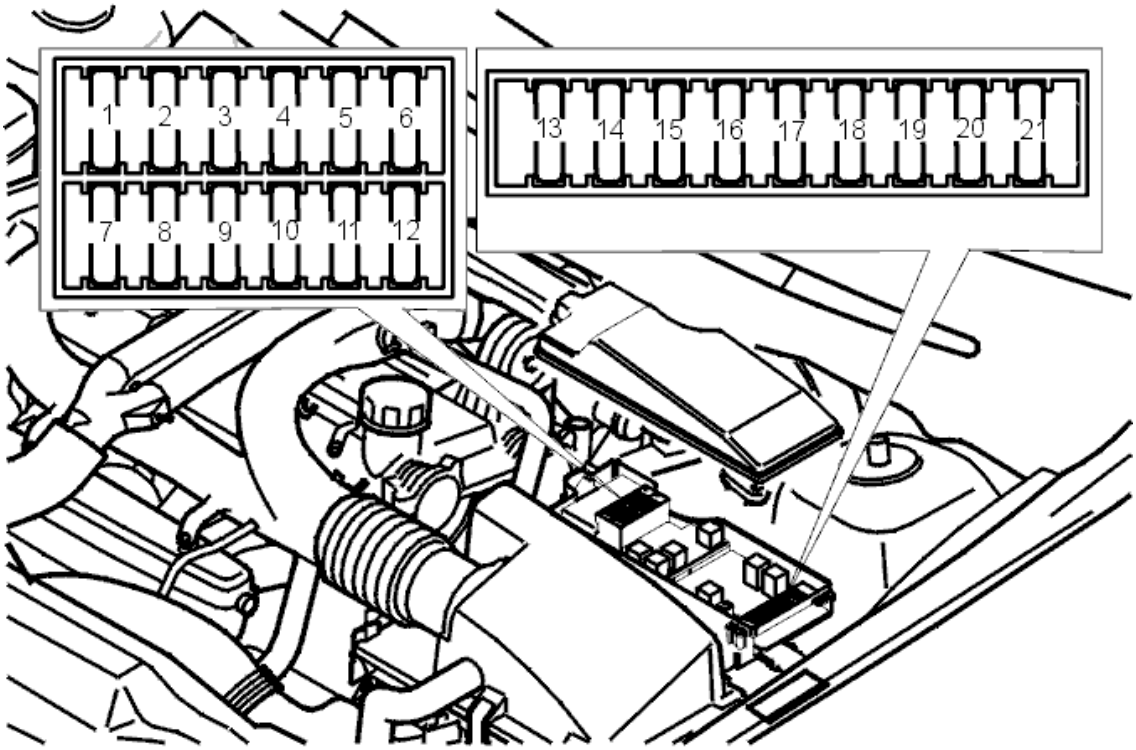

Fig. 177: Identifying Fuses In Engine Compartment Integrated Relay/Fusebox
Courtesy of VOLVO CARS CORPORATION

- **Continue**

  Refer to **CHECKING THE 15-SUPPLY**

CHECKING THE 15-SUPPLY

- Ignition switch position II.

Check that there is contact between start switch terminals #30 and #15.

- Ignition switch position III.

Check that there is contact between start switch terminals #30 and #15.

Check that there is 15-supply from the start switch during the vehicle start attempt. Check the power supply from start switch terminal #15.

If a fault is found during the above fault tracing, replace the start switch.

If no fault is found, check the signal cable between start switch connector #15A and:

- engine control module (ECM) #B37
- central electronic module (CEM) #3B
- relay 2/31, central electronic module (CEM) #2
- Immobilizer antenna unit #1
- supplemental restraint system module (SRS) #28B for open-circuit or short-circuit to ground.

Remedy as necessary.

Other information:

- For connection of breakout box to engine control module (ECM): see **CONNECTING THE BREAKOUT BOX** .
- For connection of breakout box to central electronic module (CEM): see **CONNECTING THE BREAKOUT BOX** .
- For connection of breakout box to supplemental restraint system module (SRS): see **CONNECTING THE BREAKOUT BOX** .
- To replace the start switch, see **STARTER SWITCH, REPLACING** .
- see **CHECKING WIRING AND TERMINALS** .

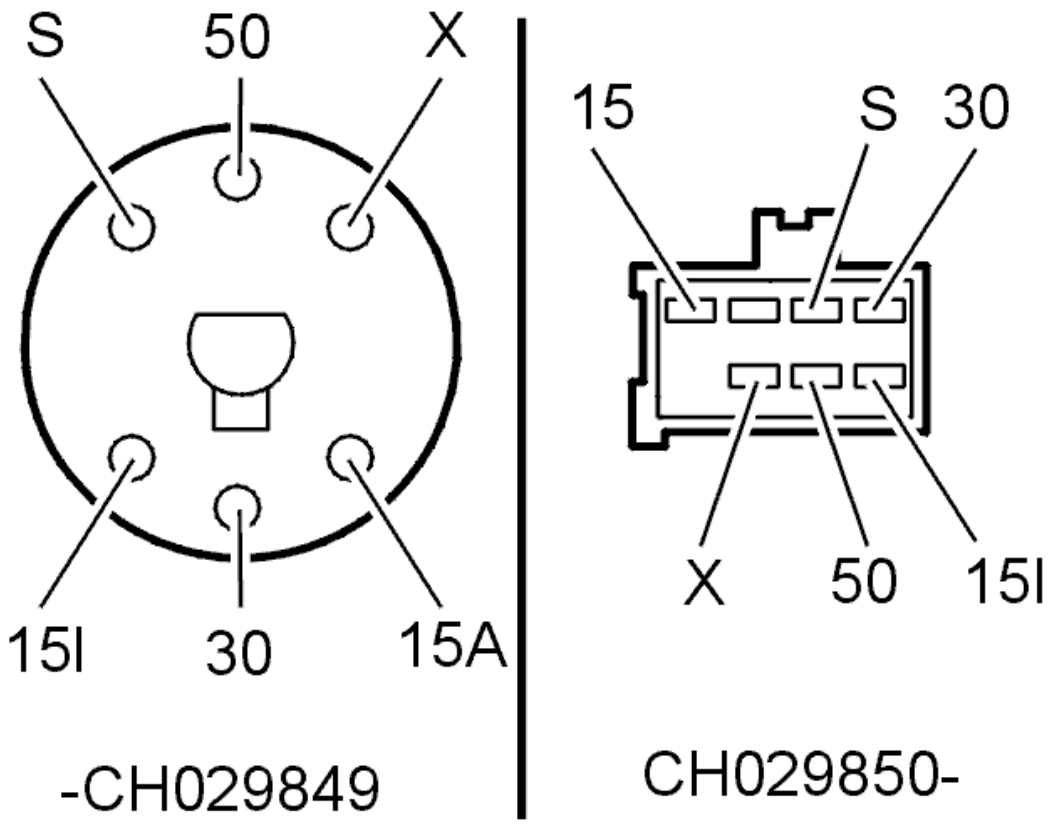

Fig. 178: Identifying Power Cable Terminals
Courtesy of VOLVO CARS CORPORATION

Position	Terminal						
	30	15	15	X	15I	S	50
KeyOut	X						
0	X					X	
I	X			X		X	
II	X	X	X	X	X	X	
III	X	X	X			X	X

Fig. 179: Identifying Reference Chart For Checking Power Terminals
Courtesy of VOLVO CARS CORPORATION

- **Continue**

  Refer to **VERIFICATION**

VERIFICATION

HINT: After carrying out the repair, check that the fault has been remedied.

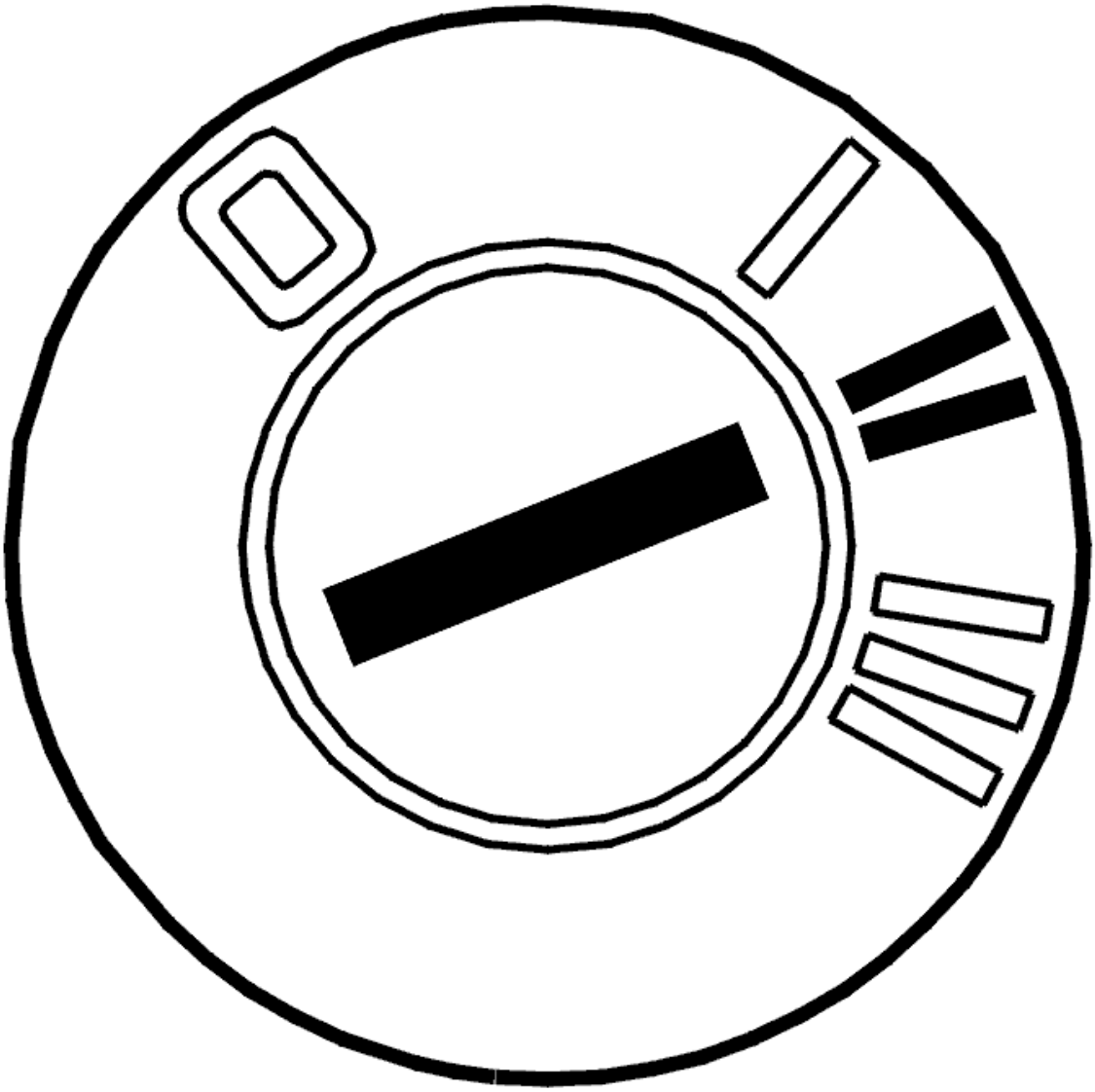

Fig. 180: Identifying Ignition ON
Courtesy of VOLVO CARS CORPORATION

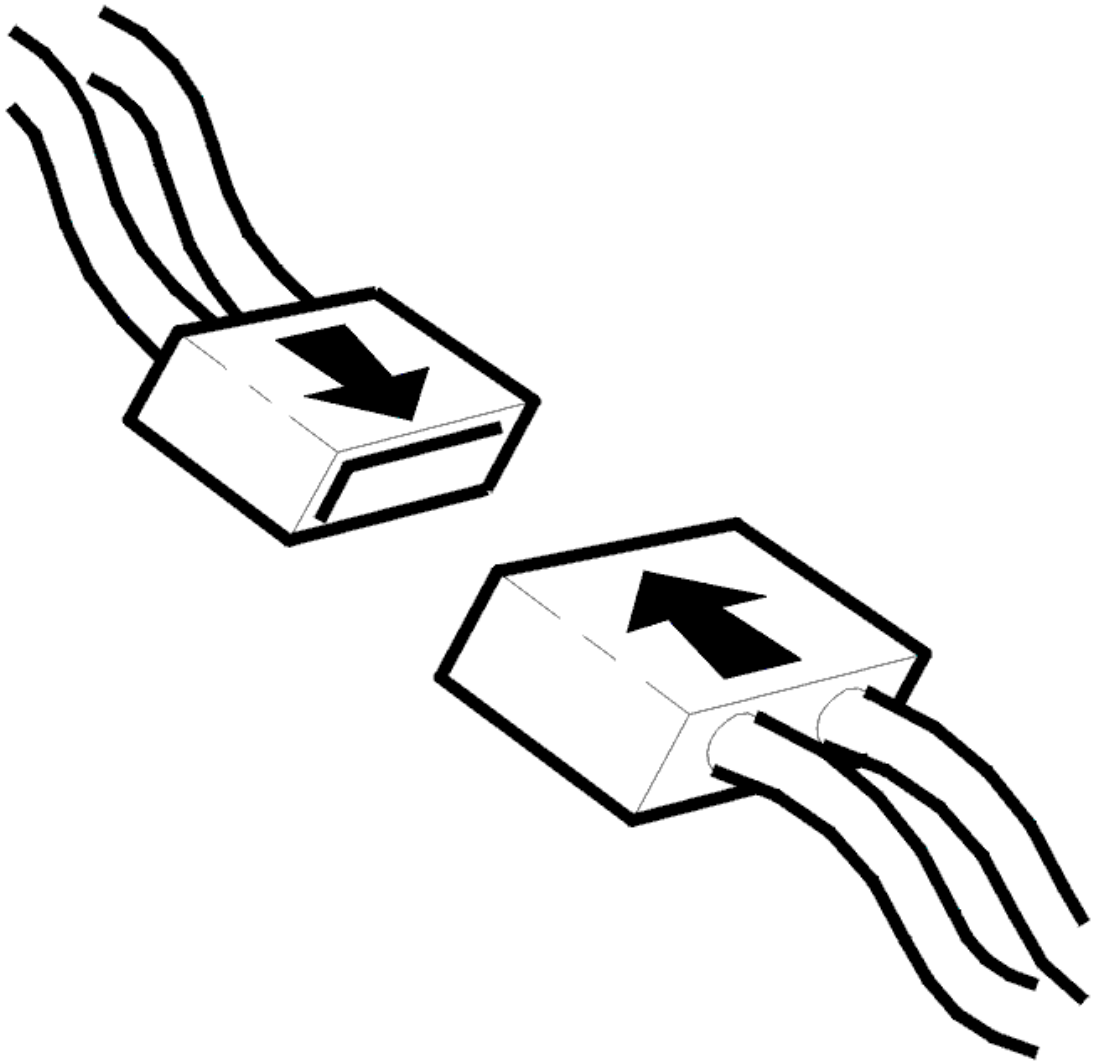

Fig. 181: Connecting Connector
Courtesy of VOLVO CARS CORPORATION

- Reinstall the connectors, components etc.
- Start the engine.

Does the engine start?

- **YES**

  OKAY: Troubleshooting has been completed.

- **NO**

  Refer to **INFORMATION**

INFORMATION

FAULT-TRACING INFORMATION

The fault should have been detected and remedied. As this is not the case fault-tracing has failed.

Exit fault-tracing for this diagnostic trouble code (DTC) or make another attempt.

STARTER SWITCH, REPLACING

XC90

- See **STARTER SWITCH, REPLACING** .

CHECKING THE ALARM (2003-12)

CHECKING THE ALARM

CHECKING THE CONNECTORS

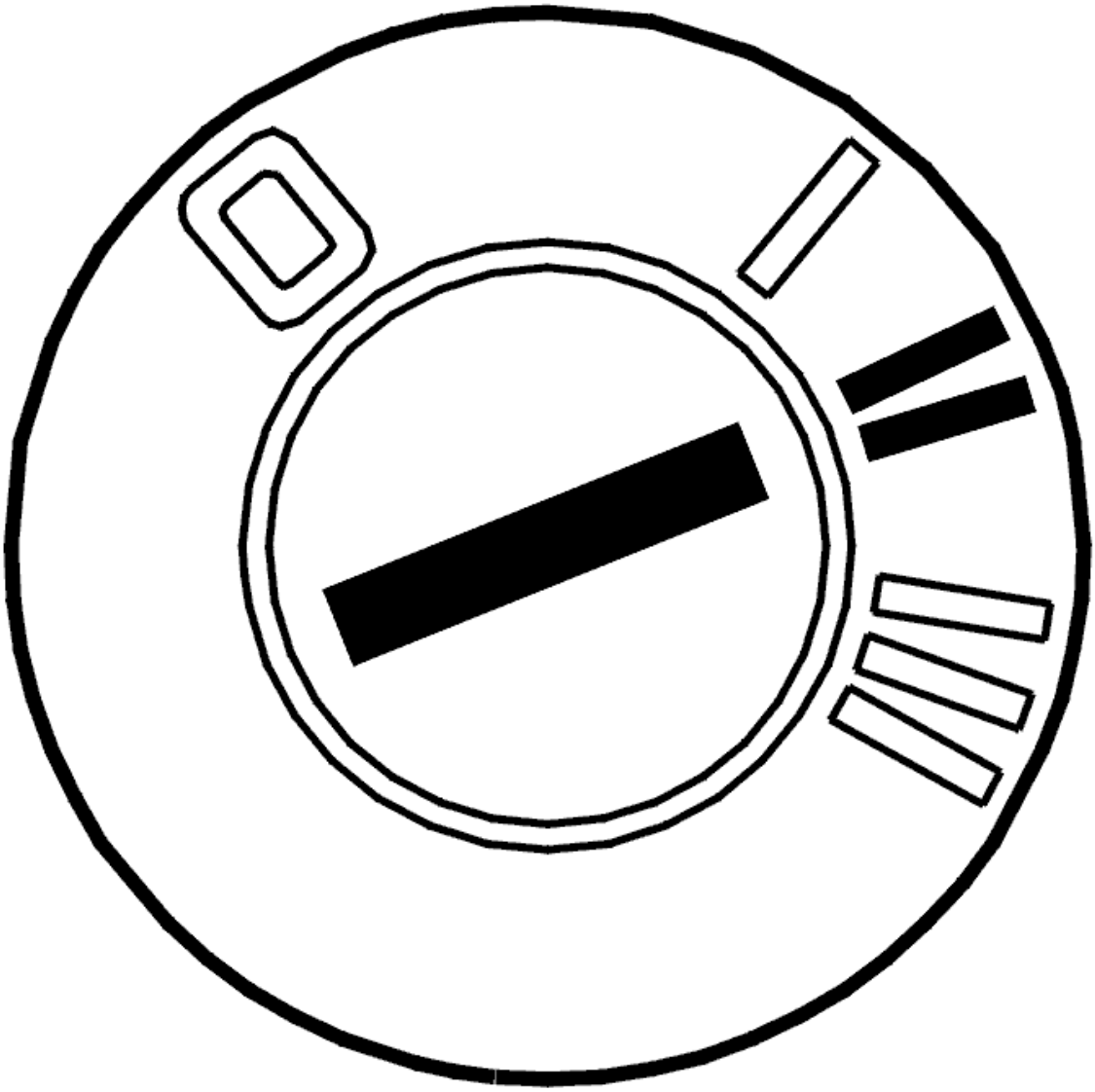

Fig. 182: Identifying Ignition ON
Courtesy of VOLVO CARS CORPORATION

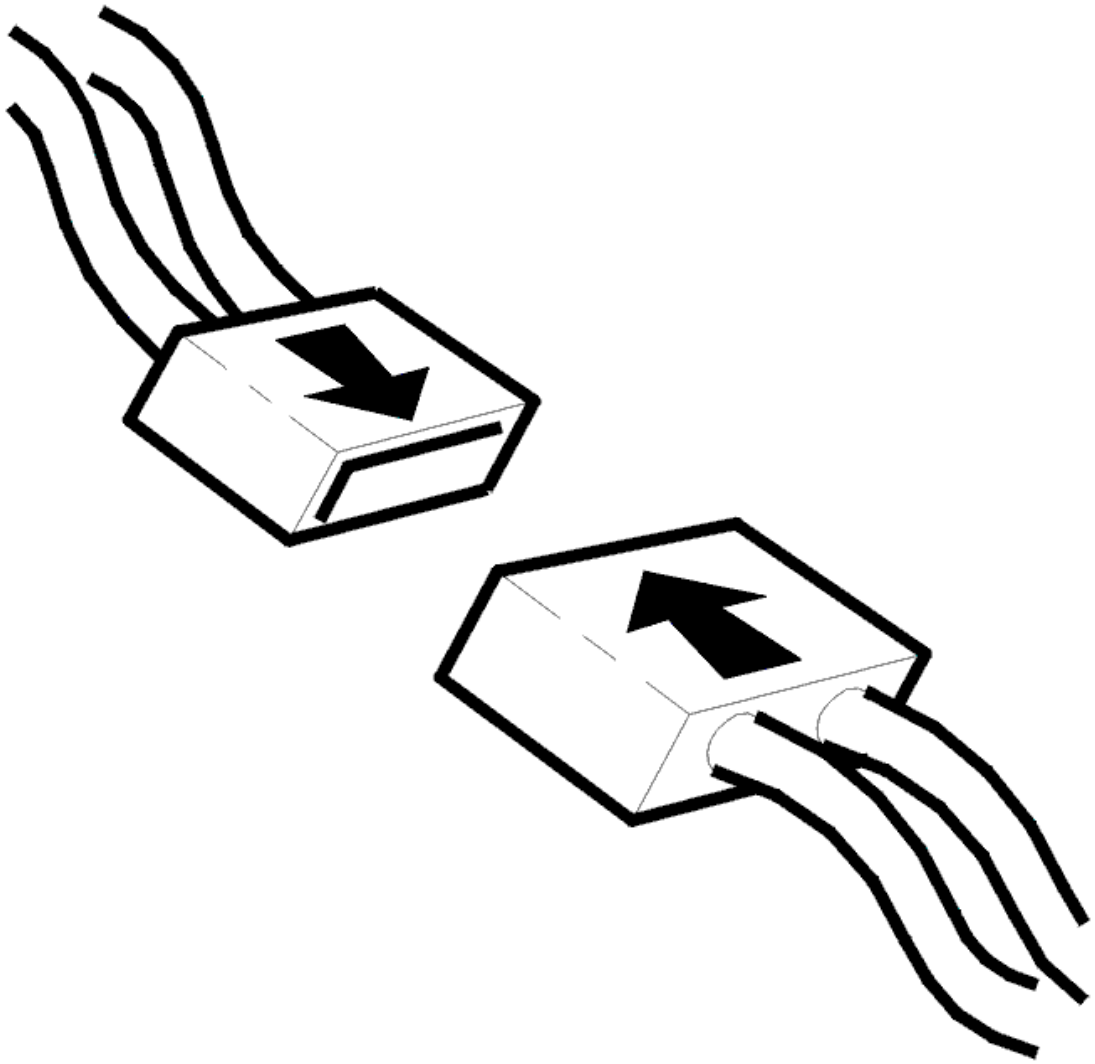

Fig. 183: Connecting Connector
Courtesy of VOLVO CARS CORPORATION

- Ignition off
- Check the connectors for the siren, upper electronic control module and cable harness. Check for contact resistance and oxidation.

  In particular, check for any damage

- Reinstall the components, reconnect the connectors etc.
- Ignition on.

  Open the driver's door window. Lock the car using the remote control.

  Wait 25 seconds until the vehicle has been alarmed. Trigger the alarm by extending your hand into the

passenger compartment and opening the bonnet.

Other information:

- See **SIREN, REPLACING** (for cars with structure week -201127)
- To access the connector for the upper electronic module (UEM), see **UPPER ELECTRONIC MODULE (UEM)/REARVIEW MIRROR, REPLACING** (for vehicles with structure week -201127)
- See **ANTI-THEFT PROTECTION SIREN** (for cars with structure week 201128-)
- To access the connector, see **REAR ELECTRONIC MODULE (REM), REPLACING** (for vehicles with structure week 201128-)
- see **CHECKING WIRING AND TERMINALS** .

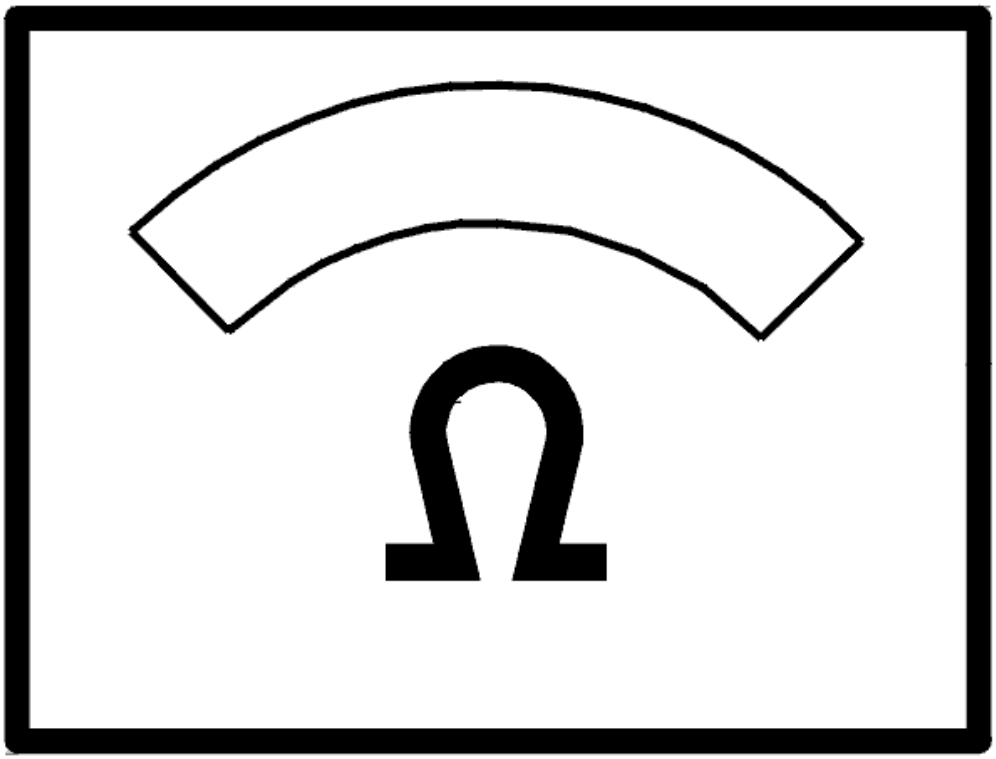

Fig. 184: Identifying Ohmmeter
Courtesy of VOLVO CARS CORPORATION

Is the siren functioning?

- **YES**

  OKAY: Troubleshooting has been completed.

- **NO**

  Refer to **CHECKING COMPONENTS AND WIRING**

CHECKING COMPONENTS AND WIRING

Check that the fuses in the fusebox in the passenger compartment are intact.

Check the cable between the control module's and siren's connector for open-circuits and short circuits to ground.

Check the wiring from the fuse in the passenger compartment to siren connector terminal #1. Check for an open-circuit. Check for a short-circuit to ground.

Remedy as necessary.

Other information:

- See **SIREN, REPLACING** (for cars with structure week -201127)
- See **ANTI-THEFT PROTECTION SIREN** (for cars with structure week 201128-)
- see **CHECKING WIRING AND TERMINALS** .

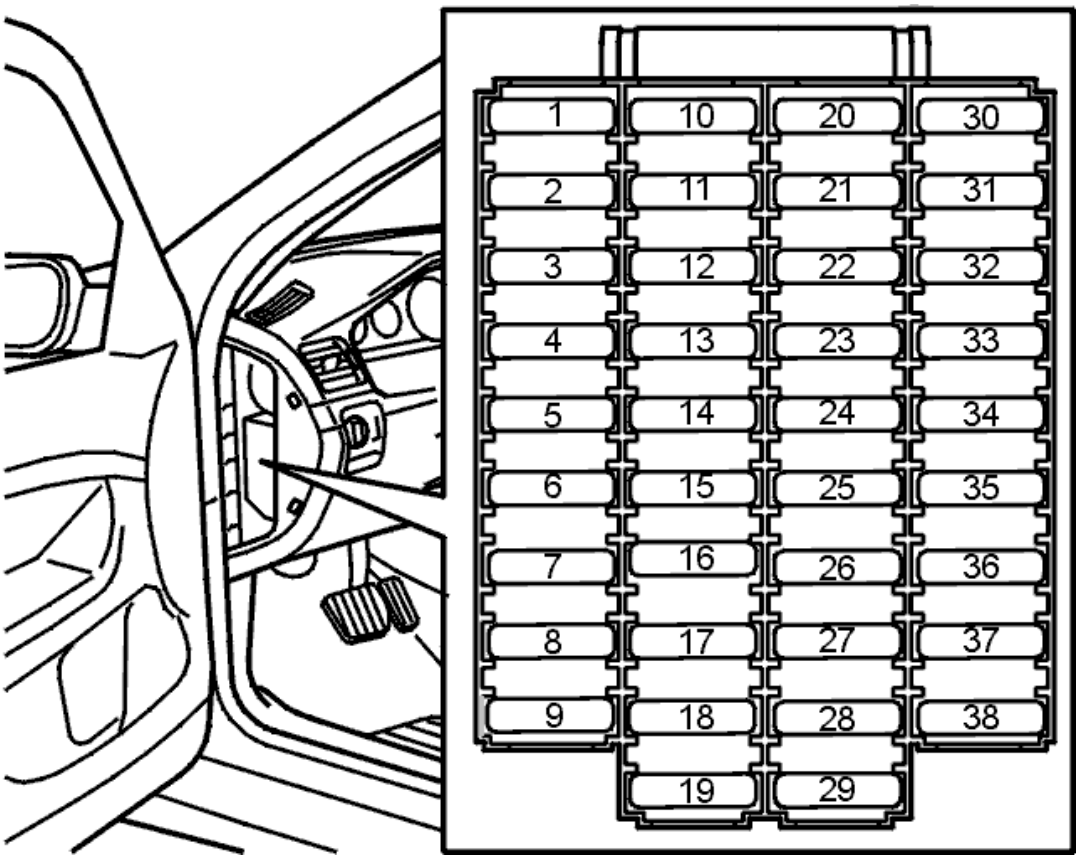

Fig. 185: Fuse Holder (Passenger Compartment)
Courtesy of VOLVO CARS CORPORATION

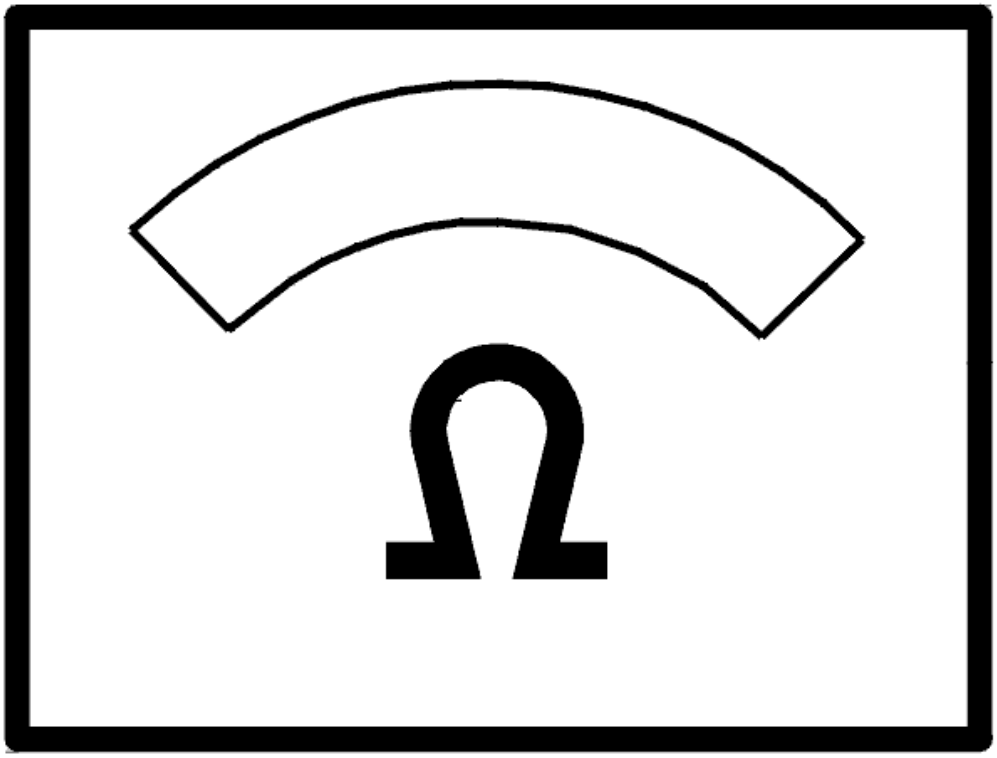

Fig. 186: Identifying Ohmmeter
Courtesy of VOLVO CARS CORPORATION

TROUBLE-SHOOTING INFORMATION

Condition

No diagnostic trouble codes are displayed.

The alarm is fitted.

Possible Source

- Open circuit or short circuit to ground on the wire.

  Faulty siren.

Fault symptom[s]

- Alarm does not work.

CHECKING THE ALARM CAUSE (2005-12)

READING OFF THE ALARM CAUSE

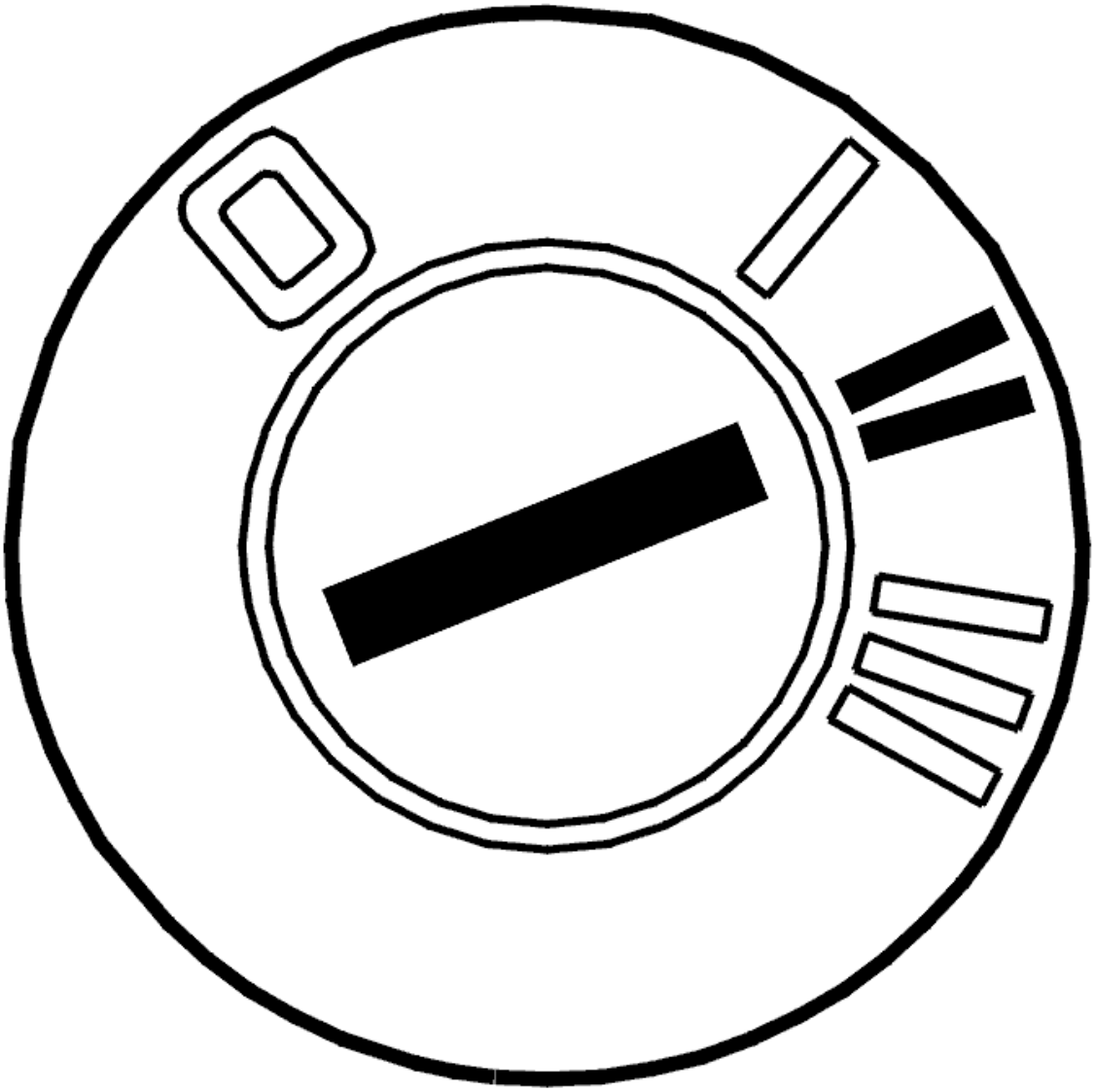

Fig. 187: Identifying Ignition ON
Courtesy of VOLVO CARS CORPORATION

- Ignition on.

  Read off the cause of the alarm by clicking on the VCT2000 symbol.

  The alarm can be deployed by up to 12 different components in the car, depending on the equipment

level. Each time the alarm is deployed, information is saved which makes it easier to determine the reason for deployment. Click on the VCT2000 symbol to find out which components deployed the alarm. Other information obtained is the time when the alarm deployed.

NOTE: **The alarm occurrences are not presented in chronological order. Read off the Actual time and Time parameters to determine the last time the alarm deployed. The parameter in Actual time gives a reference value which displays how long the internal clock in the central electronic module (CEM) has calculated at the time of the read off. The value of Actual time minus the value in Time gives the number of days since the last alarm.**

For more information: **DESCRIPTION OF READING OFF ALARM CAUSES**

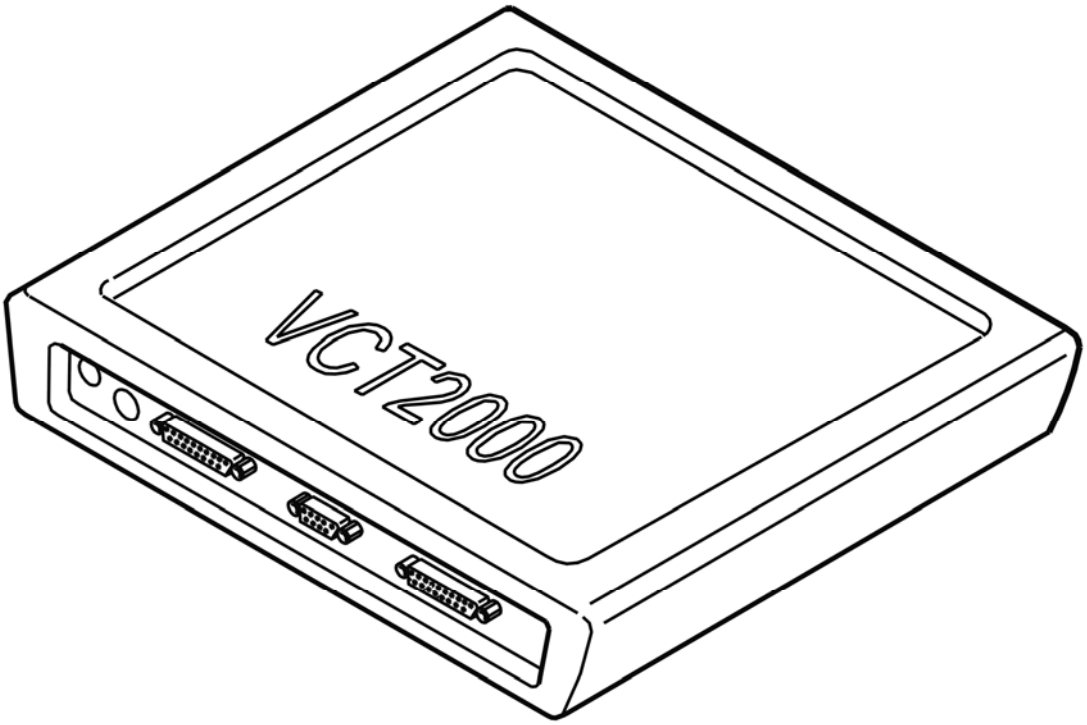

Fig. 188: Identifying VCT2000 Diagnostic Tool Symbol In VIDA
Courtesy of VOLVO CARS CORPORATION

- **Continue**

OKAY: Troubleshooting has been completed.

NOT OKAY: Refer to **COMMUNICATION FAULT**

COMMUNICATION FAULT

Communication has been interrupted for one of the following reasons:

- The ignition is switched off
- VCT2000 disconnected from the data link connector (DLC)
- VCT2000 disconnected from the VIDA cart
- Communication problems in VIDA application or in car.
- No voltage in the data link connector (DLC).

Check therefore:

- That the control module power supply and ground terminal are fault-free.
- That the fuse for the data link connector (DLC) is intact.
- that the ignition is on
- that the battery voltage (system voltage) is normal (approximately 12 V).

  If necessary a battery charger can be connected during the test.

  For information about charge currents and the battery, see **BATTERY, CHARGING**

- that VCT2000 is correctly connected to the VIDA cart and the data link connector (DLC)
- that VCT2000 and the wiring is fault-free.

Other information

Try to establish communication again or exit reading off diagnostic trouble codes (DTCs). Depending on the communication fault, select one of the following options.

1. Try again. Refer to **READING OFF THE ALARM CAUSE**.
2. Fault-trace more comprehensively for the communication problem that has occurred. Refer to **CHECKING COMMUNICATION ERRORS**.
3. Exit fault-tracing/Read off from the next system. Troubleshooting has been completed.

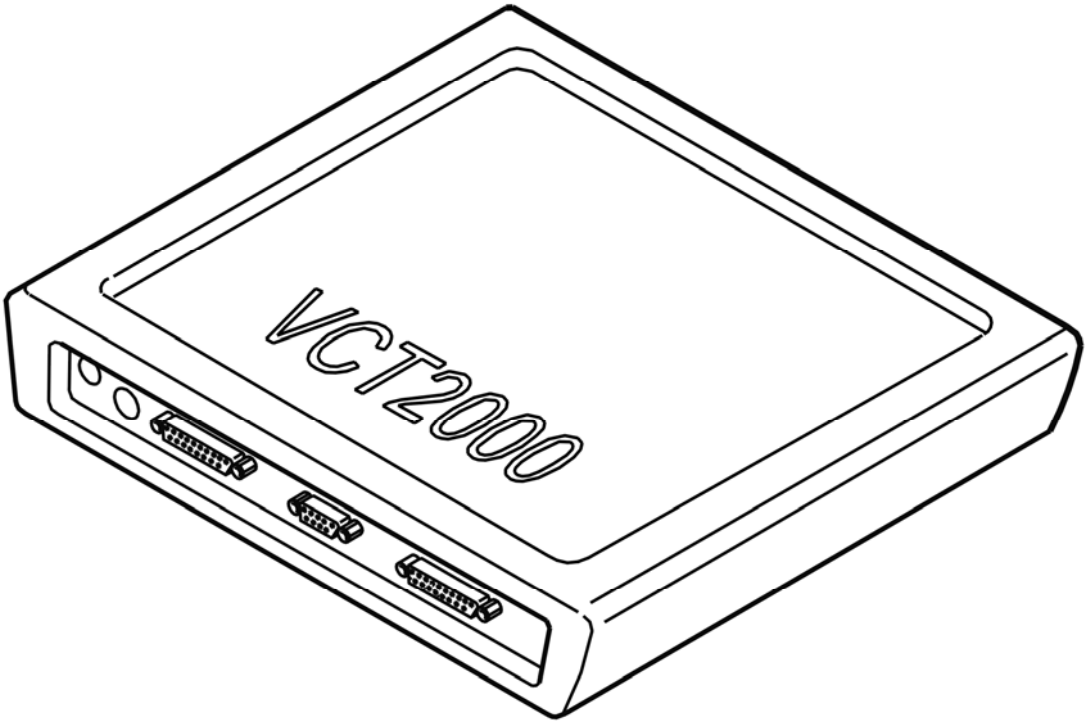

Fig. 189: Identifying VCT2000 Diagnostic Tool Symbol In VIDA
Courtesy of VOLVO CARS CORPORATION

CHECKING COMMUNICATION ERRORS

CHECKING COMMUNICATION ERRORS

HINT: Test the communication with another corresponding vehicle to decide if the malfunction is in the vehicle or in VIDA/VCT/cable harness. If the communication works on another vehicle, the malfunction is in the vehicle.

HINT: For current information about each circuit and signals, see signal description for each system.

Different speed on the CAN-communication can lead to problems

Volvo's vehicles have different speed of communication on the high-speed part of the CAN-network (HS-CAN), depending on model year.

- Model year -2004 communicates with 250 kbit/s.
- Model year 2005- communicates with 500 kbit/s.

Due to this, it is very important to specify correct vehicle profile before any communication is started with the vehicle's HS-CAN. This is normally done by pressing on "Retrieve VIN" or by manually specifying vehicle parameters under "Vehicle profile".

If the wrong model year has been selected, it may lead to blocking of the CAN-net, diagnostic trouble codes being stored in several control modules or missing response from control modules at continued communication. The following control modules may be affected by this problem:

- Brake control module (BCM)/(ABS)
- Engine control module (ECM)
- Electronic Throttle Module (ETM)
- Suspension Module (SUM)
- Central electronic module (CEM)
- Transmission control module (TCM)
- Steering wheel angle sensor module (SAS)
- Steering Wheel Module (SWM)
- Electrical Power Steering Module (EPS)

If this happens, take the following action:

- Turn off the ignition and remove the ignition key. Insert the key again in position II.
- If the above does not work, remove the battery cable and connect it again after a minute to reset the control modules.
- Select the correct vehicle profile in VIDA and erase the diagnostic trouble codes. Check that the symptoms have disappeared.

Diagnostic outlet

- Check the voltage feed to diagnostic outlet #16. The voltage shall match battery voltage.
- Check the cable for power ground and signal ground to diagnostic outlet #4 and #5.

HINT: When VCT2000 is connected to the diagnostic outlet (is supplied with voltage), the indicator diode shall be activated with a green light. Then the indicator diode flashes quickly when communication takes place with a control module. In case of certain internal malfunctions on VCT2000 the indicator diode is activated with a red light.

Communication cables

- Check the communication cable (k-line) between diagnostic outlet #7 and central electronic module (CEM) #D6 and other connected control modules for open circuit, short-circuit to ground and short-circuit to voltage.

CAUTION: In case of malfunction on this communication cable, communication cannot be established on either the low or high-speed network. First when communication takes place on this cable, the low and high-speed cables between the diagnostic outlet and central electronic module (CEM) are connected to the rest of the network in the vehicle. This is controlled via a relay in the central electronic module (CEM).

This relay is only found on vehicles of model year -2004.

- For communication problems with control units on **the high-speed network** , check communication cables between diagnostic outlet #6/ #14 and central electronic module (CEM) #B7/ #B8 for open circuit, short-circuit to ground and short-circuit to voltage according to references above.
- For communication problems with control units on **the low-speed network** , check communication cables between diagnostic outlet #3/#11 and central electronic module (CEM) #B19/#B20 for open circuit, short-circuit to ground and short-circuit to voltage according to references above.
- Also check the communication cables for the low and high-speed net between the central electronic module (CEM) and the other connected control modules according to troubleshooting above.

Control modules

- Check that the control module's voltage feed and ground connection are trouble-free.

CAUTION: If none of the above checks help, try reading out diagnostic trouble codes in the central electronic module (CEM). Done via VIDA vehicle communication. A prerequisite for being able to communicate with the control modules in the car is that the central electronic module (CEM) is active and can be communicated with. If communication is not possible with the central electronic module (CEM), check the voltage feed and ground for the central electronic module (CEM).

VCT2000 and cable harness

- Connect VCT2000 to the vehicle so that it is supplied with voltage. Test VCT2000 by selecting the system's self-test and VCT Test in the VIDA main menu. If any malfunction is found according to the test, first replace the cable harness then the VCT2000, if the test still indicates a malfunction.
- If no malfunctions were found after troubleshooting according to above, try with a new cable harness and/or new VCT2000.

VIDA

- If no malfunctions were found after troubleshooting according to above, try performing a complete system reset of VIDA (Volvo scan tool).

Other information

- see **CONTENTS**

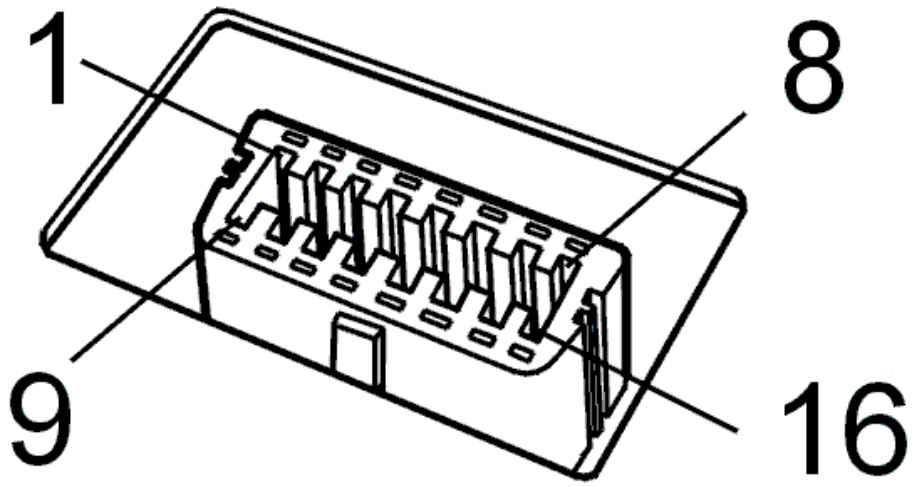

Fig. 190: Identifying Data Link Connector
Courtesy of VOLVO CARS CORPORATION

- **Continue**

  Refer to **FAULT-TRACING INFORMATION**

FAULT-TRACING INFORMATION

Fault-tracing communication problems is now finished.

Do you want to try establishing communication again?

- **YES**

  see **DESCRIPTION OF READING OFF ALARM CAUSES**

- **NO**

  Troubleshooting has been completed.

DESCRIPTION OF READING OFF ALARM CAUSES

THE DATA IS READ OUT AS FOLLOWS

ACTUAL TIME

Indicates how long the internal clock in the central electronic module (CEM) has counted, displayed in days. The actual time gives a reference value which can be used to calculate the number of days since the last alarm. Subtract the value in Time from the value of Actual time to calculate the number of days since the last alarm.

TIME

Indicates how long the internal clock in the central electronic module (CEM) had counted until the time the alarm deployed. The highest number is the latest alarm.

ALARM CAUSE

Indicates the component in the car that caused the alarm.

- Front door right
- Front door left
- Rear door right
- Rear door left
- Hood
- Luggage Compartment Lid
- Ignition switch
- Vehicle tilt sensor
- Voltage drop siren
- Glass breakage sensor activated
- Rear MMS for XC90, or movement sensor (IMS) (IMS replaces MMS for XC90 from and incl. model year 2012).
- Mass movement sensor front, front MMS for XC90 (IMS replaces MMS for XC90 from and incl. model year 2012).

ELECTRICAL

Cables And Fuses - Symptom Related Diagnostic Procedures

CHECKING THE BACK-UP (REVERSING) LAMP (1) (2003-04)

CHECKING THE BACK-UP (REVERSING) LAMP (1)

CHECKING THE RELAY

Check the function of relay 2/80: Activate and deactivate the relay a number of times. The relay is functioning if there is a clicking sound when the relay is activated and deactivated.

Replace with a new relay if the relay does not function.

Other information:

- To access and replace the integrated relay/fusebox in the cargo compartment, see **RELAY/FUSE BOX CARGO COMPARTMENT/REAR ELECTRONIC MODULE (REM), REPLACING** .

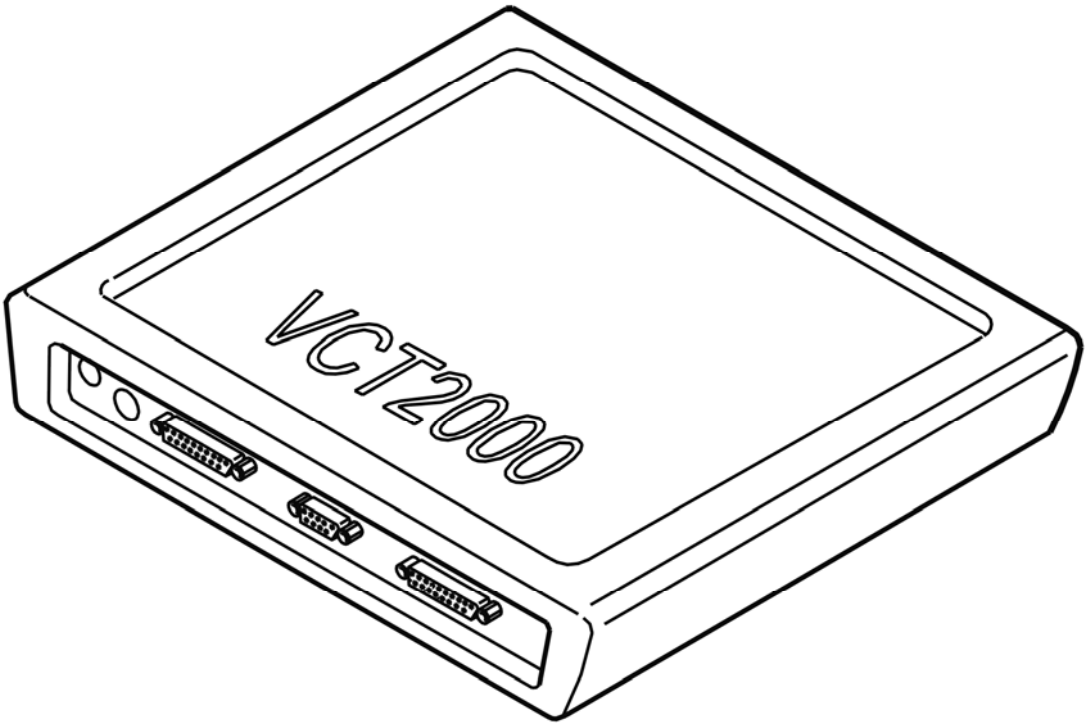

Fig. 1: Identifying VCT2000 Diagnostic Tool Symbol In VIDA
Courtesy of VOLVO CARS CORPORATION

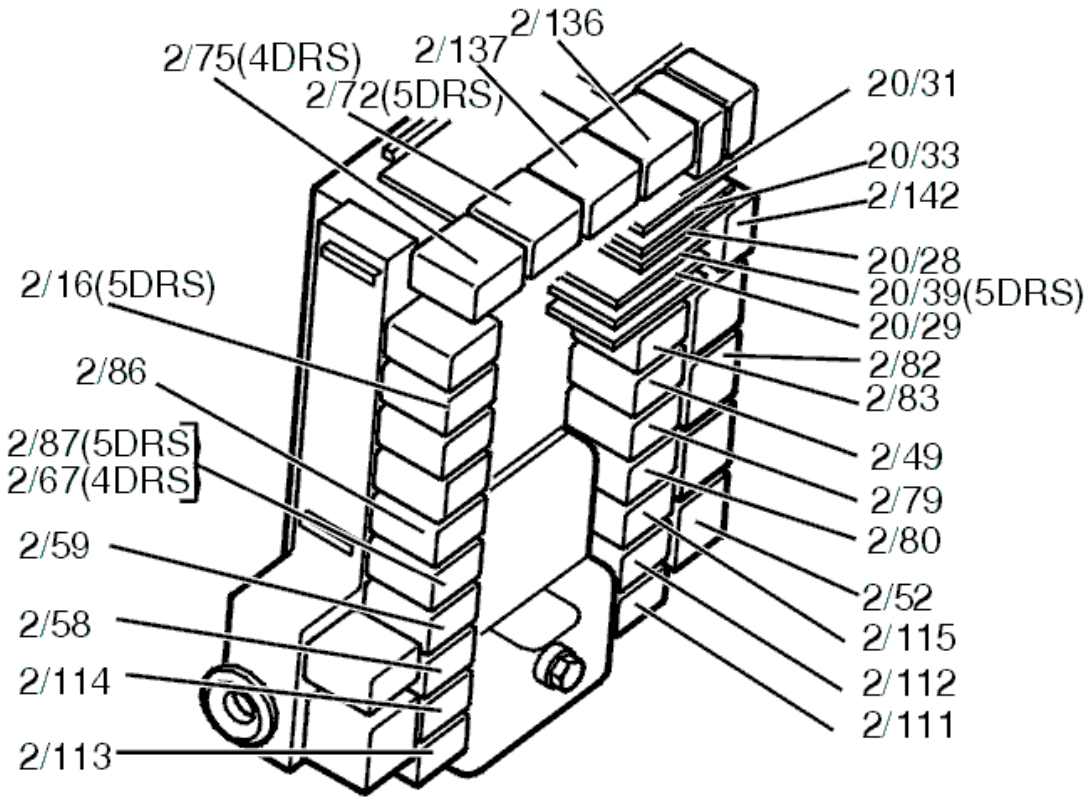

Fig. 2: Identifying Relays
Courtesy of VOLVO CARS CORPORATION

Was a fault detected?

- **YES**

  OKAY: Troubleshooting has been completed.

- **NO**

  Refer to **CHECKING COMPONENTS AND WIRING**

CHECKING COMPONENTS AND WIRING

Check that fuse 11D/4 is intact.

Check that the back-up (reversing) lamp bulbs are intact.

Check the cable between fuse 11D/4 terminal #2 and relay 2/80 terminal #5. Check the cable between relay 2/80 terminal #3 and the left and right upper lamp housing switches terminal #3. Check these cables for an open-circuit according to **OPEN-CIRCUIT, PERMANENT FAULTS** . Check these cables for a short-circuit to ground according to **SHORT-CIRCUIT TO GROUND, PERMANENT FAULTS** .

Check the cable between the left and right upper lamp housing switch terminal #1 and the ground terminal for an open-circuit according to **OPEN-CIRCUIT, PERMANENT FAULTS** .

Remedy as necessary.

Other information:

- For further information about signals and other values, see **SIGNAL SPECIFICATION**
- To connect the breakout box, see **CONNECTING THE BREAKOUT BOX** .
- To access the integrated relay/fusebox in the cargo compartment, see **RELAY/FUSE BOX CARGO COMPARTMENT/REAR ELECTRONIC MODULE (REM), REPLACING** .

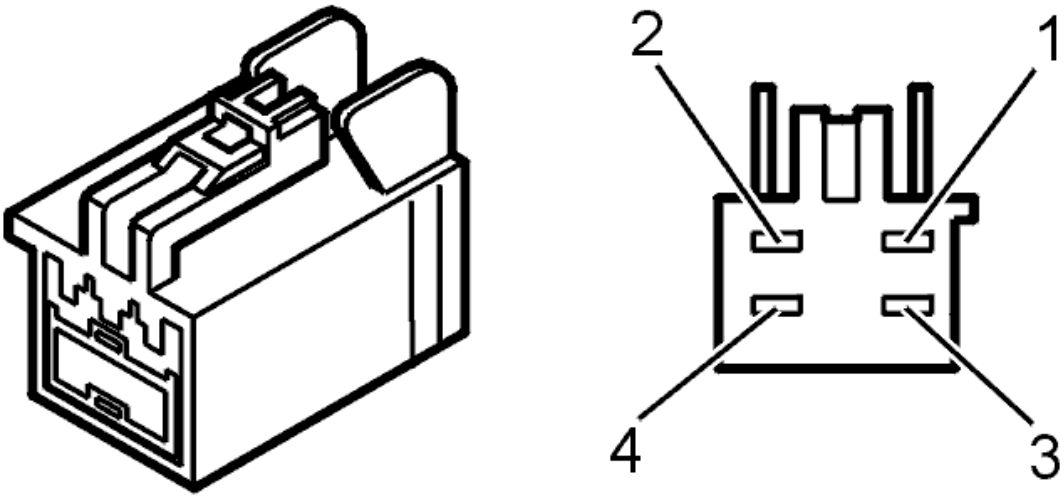

Fig. 3: Identifying Terminals
Courtesy of VOLVO CARS CORPORATION

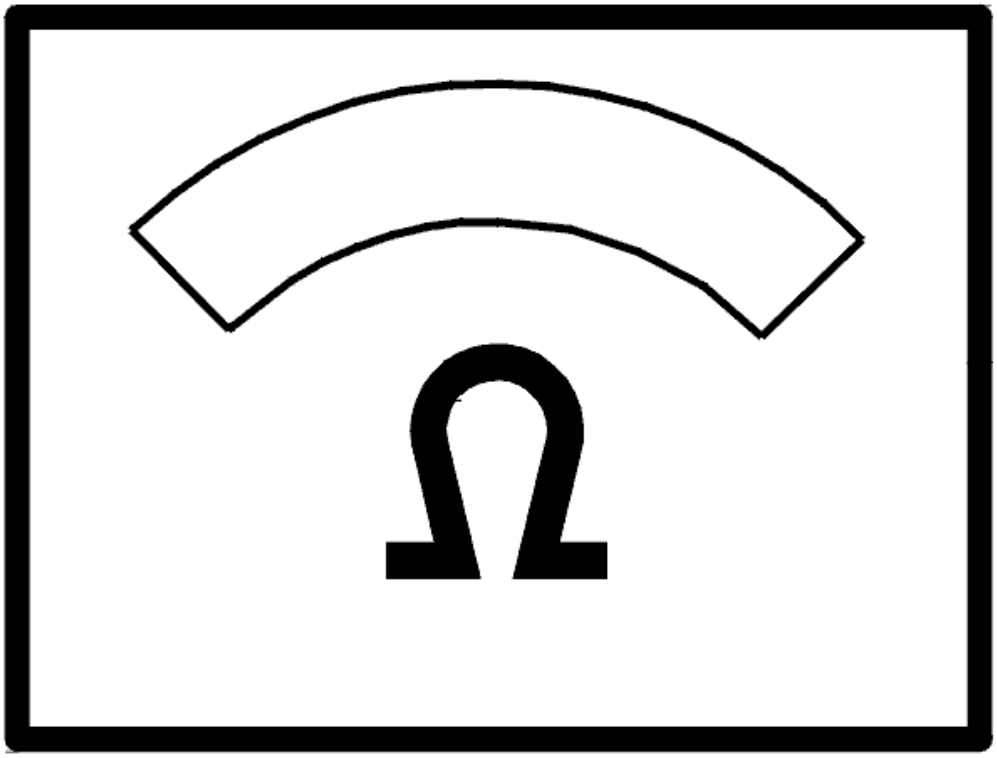

Fig. 4: Identifying Ohmmeter
Courtesy of VOLVO CARS CORPORATION

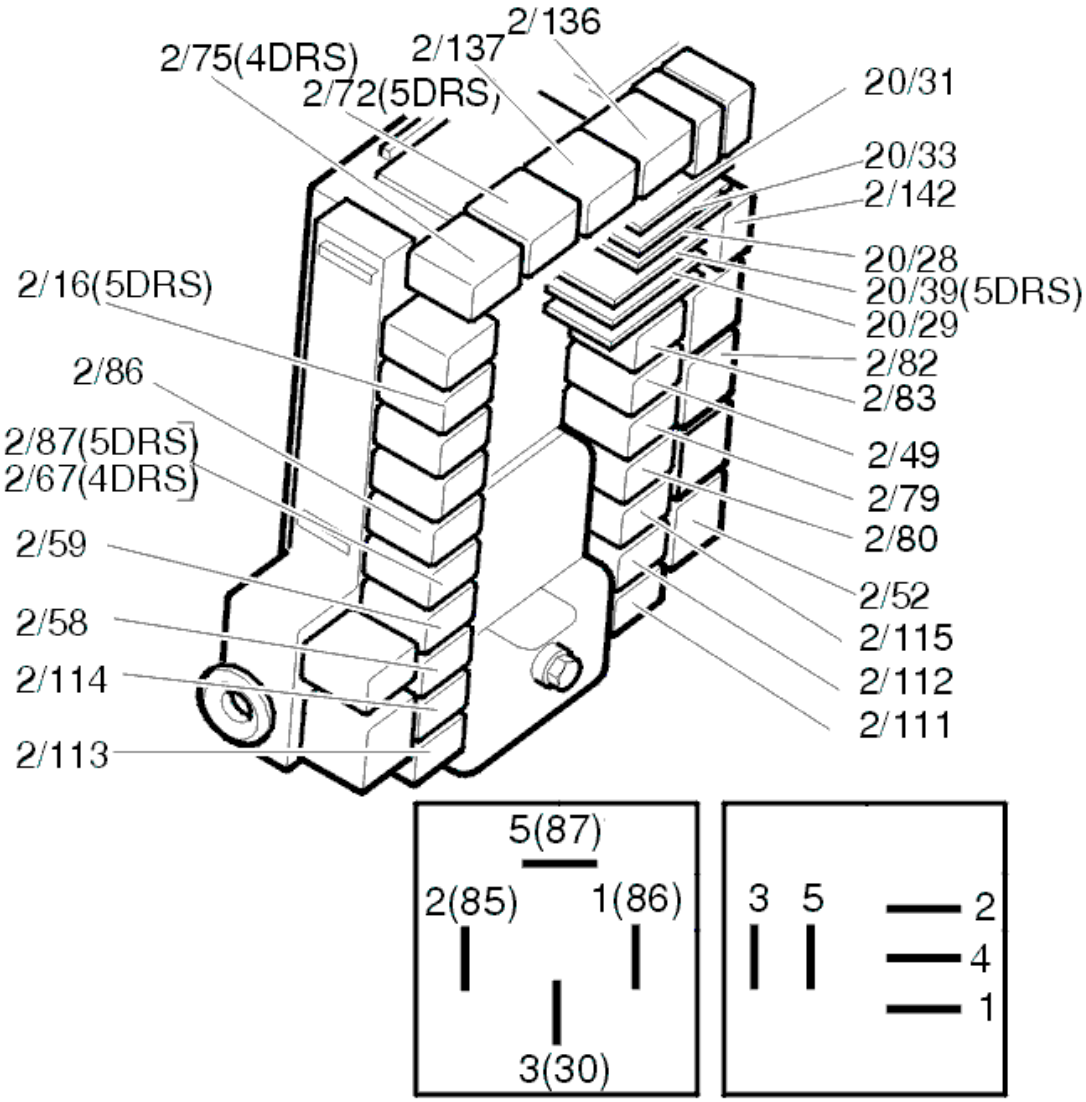

Fig. 5: Identifying Relays
Courtesy of VOLVO CARS CORPORATION

TROUBLE-SHOOTING INFORMATION

Condition

No diagnostic trouble codes are displayed.

Possible Source

- Open circuit/short circuit to ground in power supply
- Open circuit in ground wire
- Faulty relay
- Defective lamp.

Fault symptom[s]

- Reversing light not working.

CHECKING THE BACK-UP (REVERSING) LAMP (2) (2003-04)

CHECKING THE BACK-UP (REVERSING) LAMP (2)

CHECKING THE RELAY

Check the function of relay 2/80: Activate and deactivate the relay a number of times. The relay is functioning if there is a clicking sound when the relay is activated and deactivated.

Replace with a new relay if the relay does not function.

Other information:

- To access the integrated relay/fusebox in the cargo compartment, see **RELAY/FUSE BOX CARGO COMPARTMENT/REAR ELECTRONIC MODULE (REM), REPLACING** .

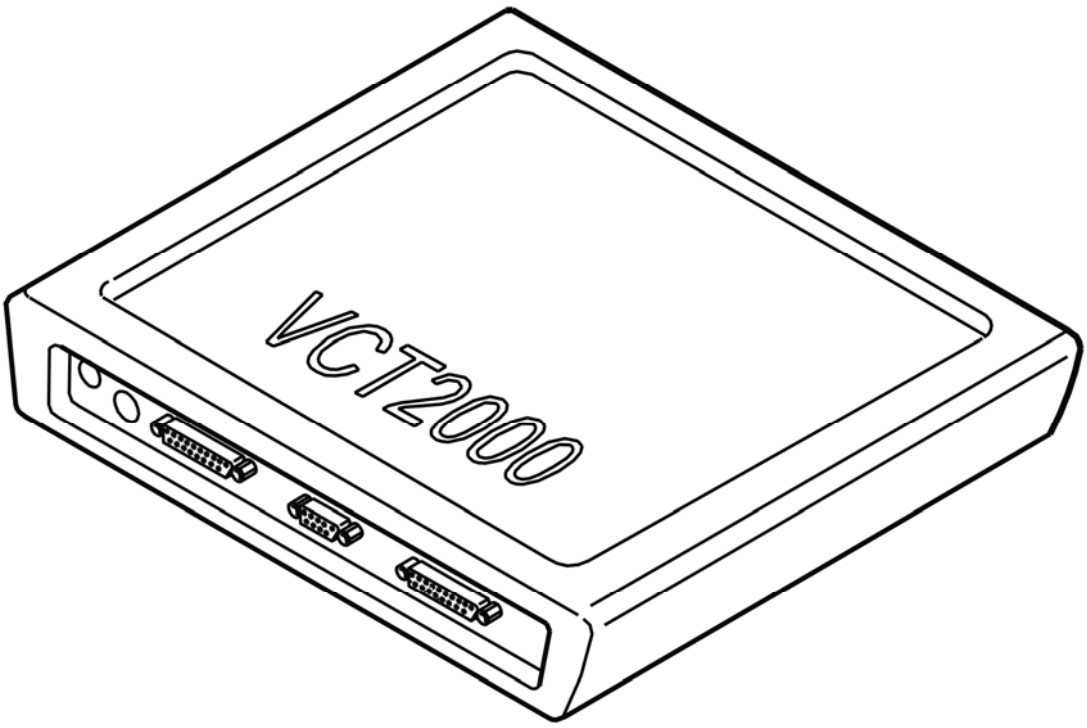

Fig. 6: Identifying VCT2000 Diagnostic Tool Symbol In VIDA
Courtesy of VOLVO CARS CORPORATION

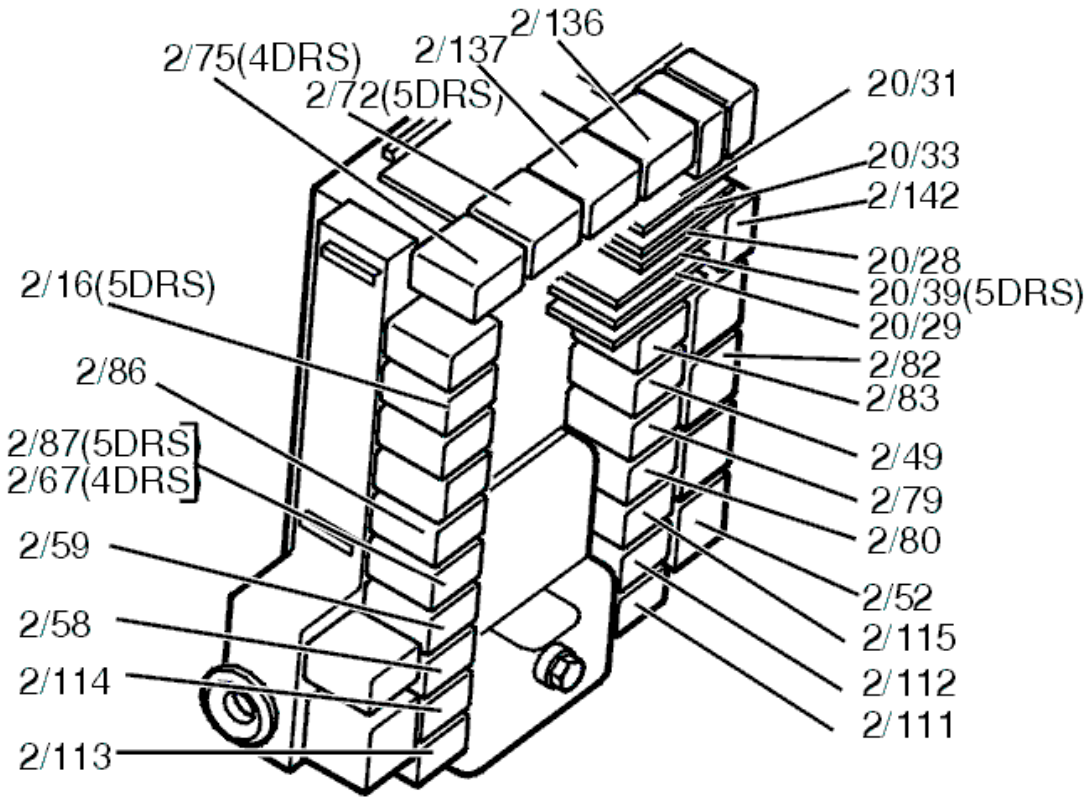

Fig. 7: Identifying Relays
Courtesy of VOLVO CARS CORPORATION

Was a fault detected?

- **YES**

  OKAY: Troubleshooting has been completed.

- **NO**

  Refer to **CHECKING THE WIRING**

CHECKING THE WIRING

Check the cable between fuse 11D/4 terminal #2 and relay 2/80 terminal #5. Check the cable between relay 2/80 terminal #3 and the left and right upper lamp housing switches terminal #3. Check these cables for a short-circuit to supply voltage according to **SHORT-CIRCUIT TO SUPPLY VOLTAGE. PERMANENT FAULTS** .

Remedy as necessary.

Other information:

- For further information about signals and other values, see **SIGNAL SPECIFICATION**
- To connect the breakout box, see **CONNECTING THE BREAKOUT BOX** .
- To access the integrated relay/fusebox in the cargo compartment, see **RELAY/FUSE BOX CARGO COMPARTMENT/REAR ELECTRONIC MODULE (REM), REPLACING** .

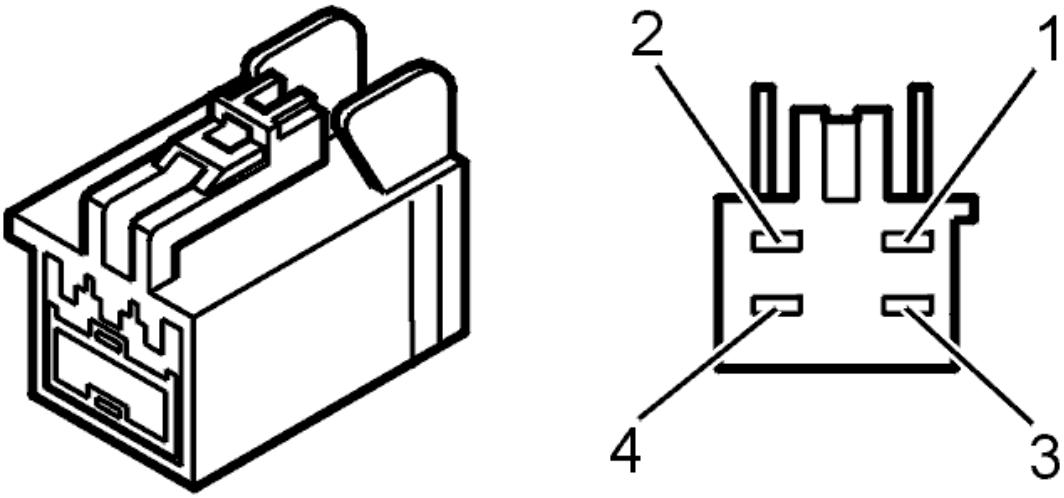

Fig. 8: Identifying Terminals
Courtesy of VOLVO CARS CORPORATION

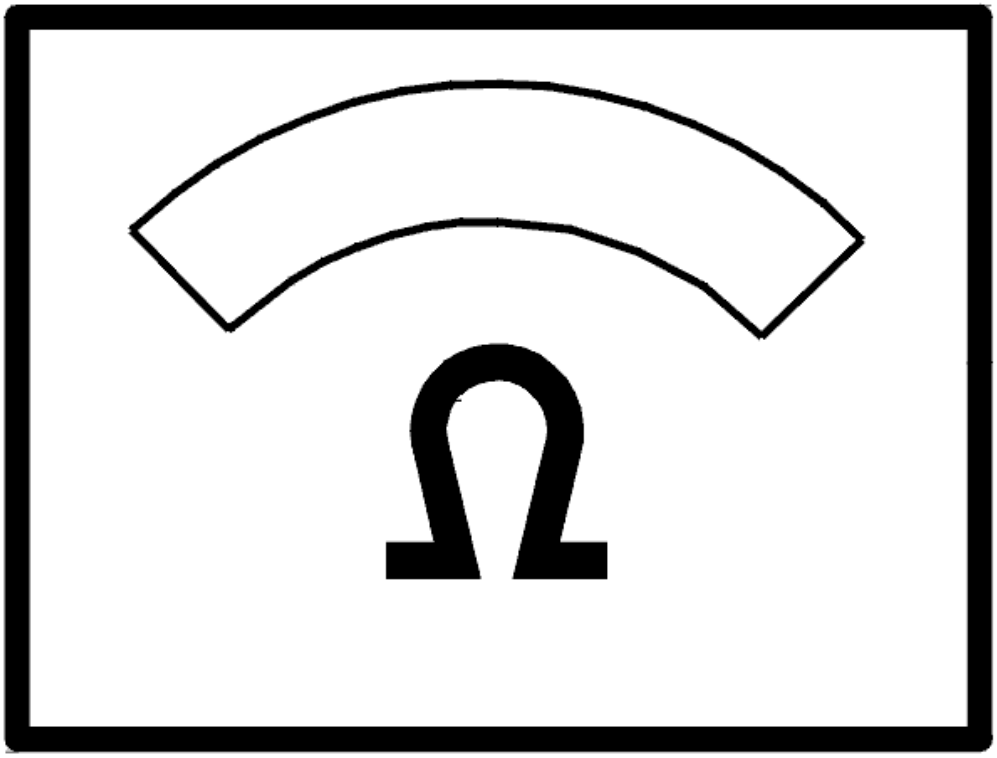

Fig. 9: Identifying Ohmmeter
Courtesy of VOLVO CARS CORPORATION

TROUBLE-SHOOTING INFORMATION

Condition

No diagnostic trouble codes are displayed.

Possible Source

- Wire between relay and lamp body short circuited to voltage supply
- Faulty relay.

Fault symptom[s]

- Reversing light remains on.

CHECKING THE BEAM SETTING ADJUSTMENT (2003-04)

CHECKING HEADLAMP BEAM HEIGHT CONTROL

Check the cable between the central electronic module (CEM) terminal #9A and the beam adjustment unit #2. Check for a short-circuit to supply voltage. Check for a short-circuit to ground. Check for an open-circuit. 6/38 for left motor and 6/39 for right motor.

HINT: Headlamp beam height control receives power and terminal #3 and is grounded at terminal #1.

If no faults are found, try replacing the switch and the beam adjustment unit.

Other information

- To replace light switches, see **SWITCHES LIGHTS, REPLACING**
- To replace beam adjustment unit, see **MOTOR HEIGHT CONTROL HEADLAMP, REPLACING**.

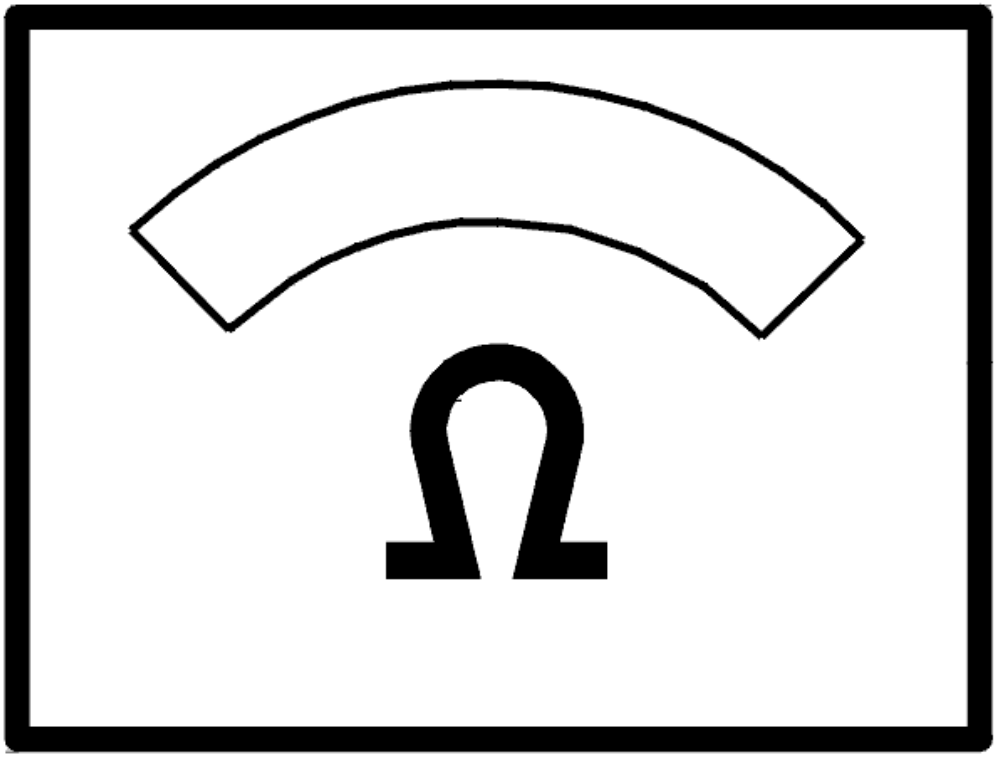

Fig. 10: Identifying Ohmmeter
Courtesy of VOLVO CARS CORPORATION

MOTOR HEIGHT CONTROL HEADLAMP, REPLACING

- See **MOTOR HEIGHT CONTROL HEADLAMP, REPLACING** .

TROUBLE-SHOOTING INFORMATION

Condition

No diagnostic trouble codes are stored.

Possible Source

- Short circuit to voltage supply, ground or open circuit.

Fault symptom[s]

Beam setting adjustment does not work.

CHECKING THE BOOT LID AUTOMATIC CLOSING (2003-12)

CHECKING AUTOMATIC CLOSING OF THE SUN ROOF

CHECKING COMPONENTS AND WIRING

Check the wiring between sun roof switch and roof lamp module (RCM). Check for an open-circuit. Check for a short-circuit to ground.

Check the cable between the sun roof module (SRM) terminal #7 and the roof lamp module (RCM) terminal #1B. Check for an open-circuit. Check for a short-circuit to ground.

Check the cable between the sun roof module (SRM) terminal #9 and the roof lamp module (RCM) terminal #9A. Check for an open-circuit. Check for a short-circuit to ground.

Remedy as necessary.

If no fault was found, try replacing the sun roof switch.

Other information

- To connect the breakout box, see **CONNECTING THE BREAKOUT BOX**
- For further information about signals and other values, see **SIGNAL DESCRIPTION, UPPER ELECTRONIC MODULE (UEM)**
- To access or replace the sun roof module (SRM), see **INTERIOR LIGHTING, REPLACING**
- To access or replace the sun roof switch, see **SWITCH SUN ROOF, REPLACING**
- see **CHECKING WIRING AND TERMINALS** .

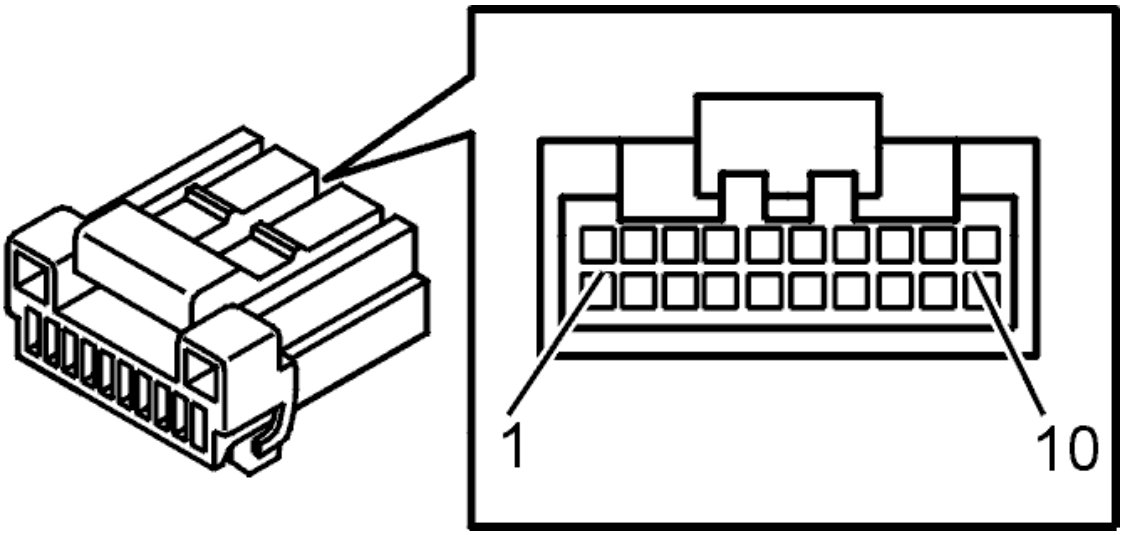

Fig. 11: Identifying Connector (D) Terminals
Courtesy of VOLVO CARS CORPORATION

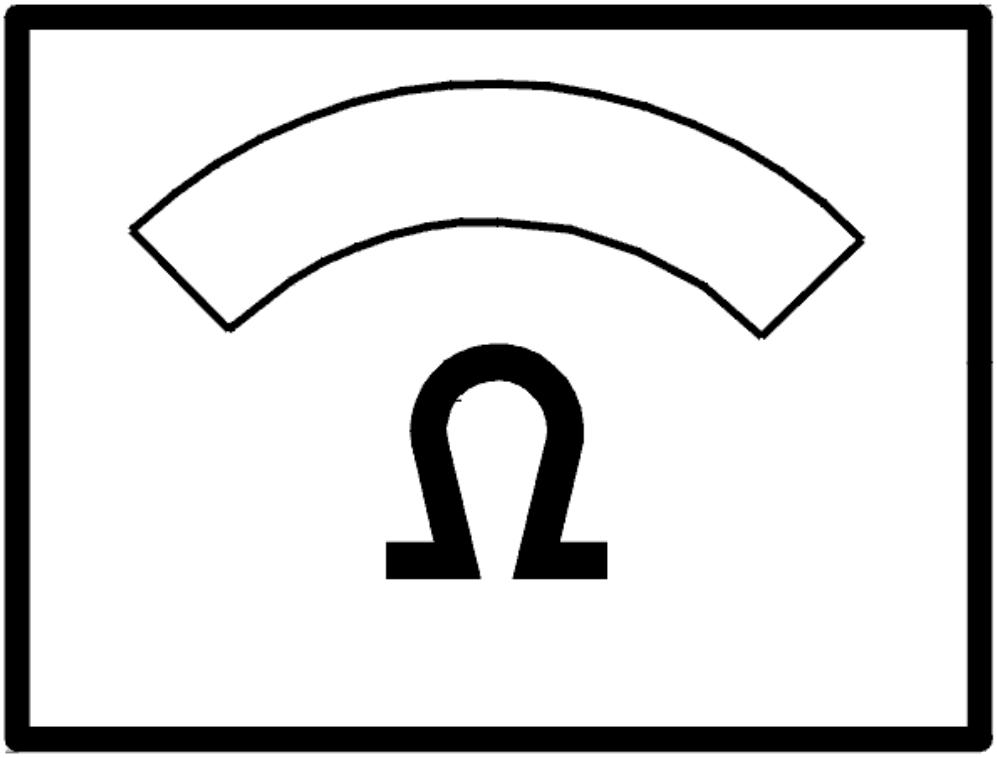

Fig. 12: Identifying Ohmmeter
Courtesy of VOLVO CARS CORPORATION

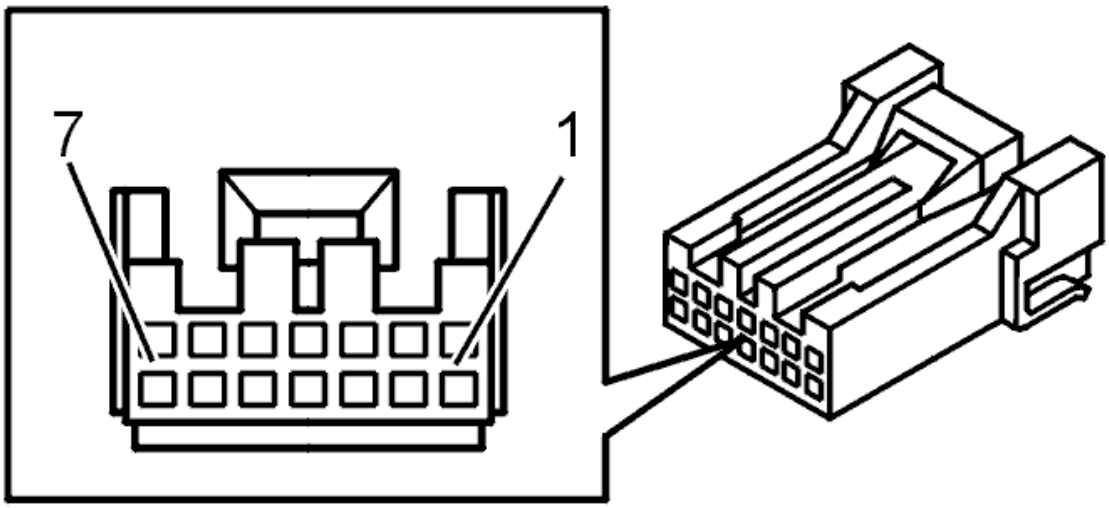

Fig. 13: Identifying Connector Terminals
Courtesy of VOLVO CARS CORPORATION

TROUBLE-SHOOTING INFORMATION

Condition

No diagnostic trouble codes are displayed.

Boot lid OK.

Substitute Value

-

Possible Source

- Open circuit or short circuit to ground on the wire
- Defective diodes.

Fault symptom[s]

- Automatic sunroof closing does not work.

CHECKING THE BRAKE LIGHT (2003-04)

CHECKING THE STOP LAMP

CHECKING THE WIRING AND THE RELAY

If the brake light does not light up, check the cable between the central electronic module (CEM) terminal #6B and the rear electronic module (REM) terminal #4A. Check for an open-circuit. Check for a short-circuit to

supply voltage.

If the brake light is constantly lit, check the cable between the central electronic module (CEM) terminal #6B and the rear electronic module (REM) terminal #4A. Check for a short-circuit to ground.

HINT: When the brake pedal is depressed, there should be 0 V in the connections, otherwise 12 V in the connections.

Check the relay (2/79).

HINT: There should be a 12 V supply to the relay switch to terminal #5 and in the supply to coil #2. When the brake pedal is depressed, there should be 12 V in the relay switch #3.

Check the cable between terminal #5 and fuse 3 in the cargo compartment fusebox (11D/3).

Check that fuse is intact.

Check the cable between relay #3 (2/79) and shunt brake light #3 (20/31).

Check shunt (20/31).

HINT: The voltage must be 12 V at the shunt terminals, i. e. at terminals #3 and #2 when the brake light is active.

Check the cable between shunt brake light #2 (20/31) and brake light #2B (10/54 for left brake light and 10/48 for right brake light).

Check the ground supply between the brake light terminal #1B and the ground terminal.

If no fault was found, replace the brake light.

Other information:

- For information about signals, see **SIGNAL SPECIFICATION**
- To replace the brake light, see **BULB TAIL LAMP/STOP LAMP/BACK-UP LAMP/FOG LAMP, REPLACING**
- see **CHECKING WIRING AND TERMINALS** .

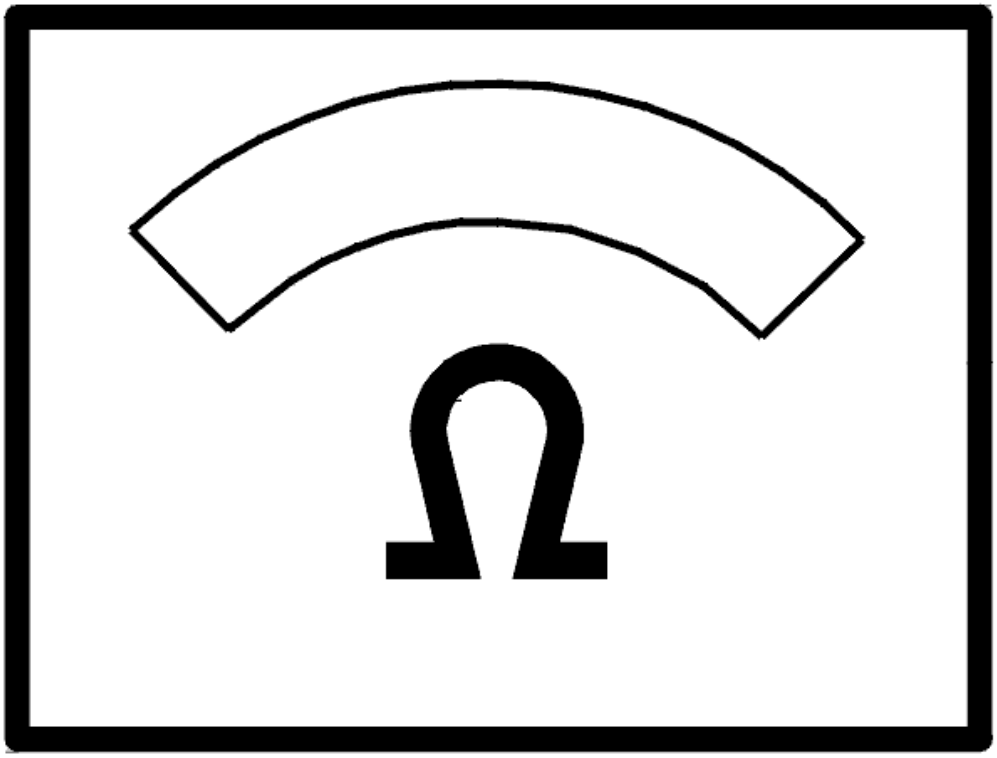

Fig. 14: Identifying Ohmmeter
Courtesy of VOLVO CARS CORPORATION

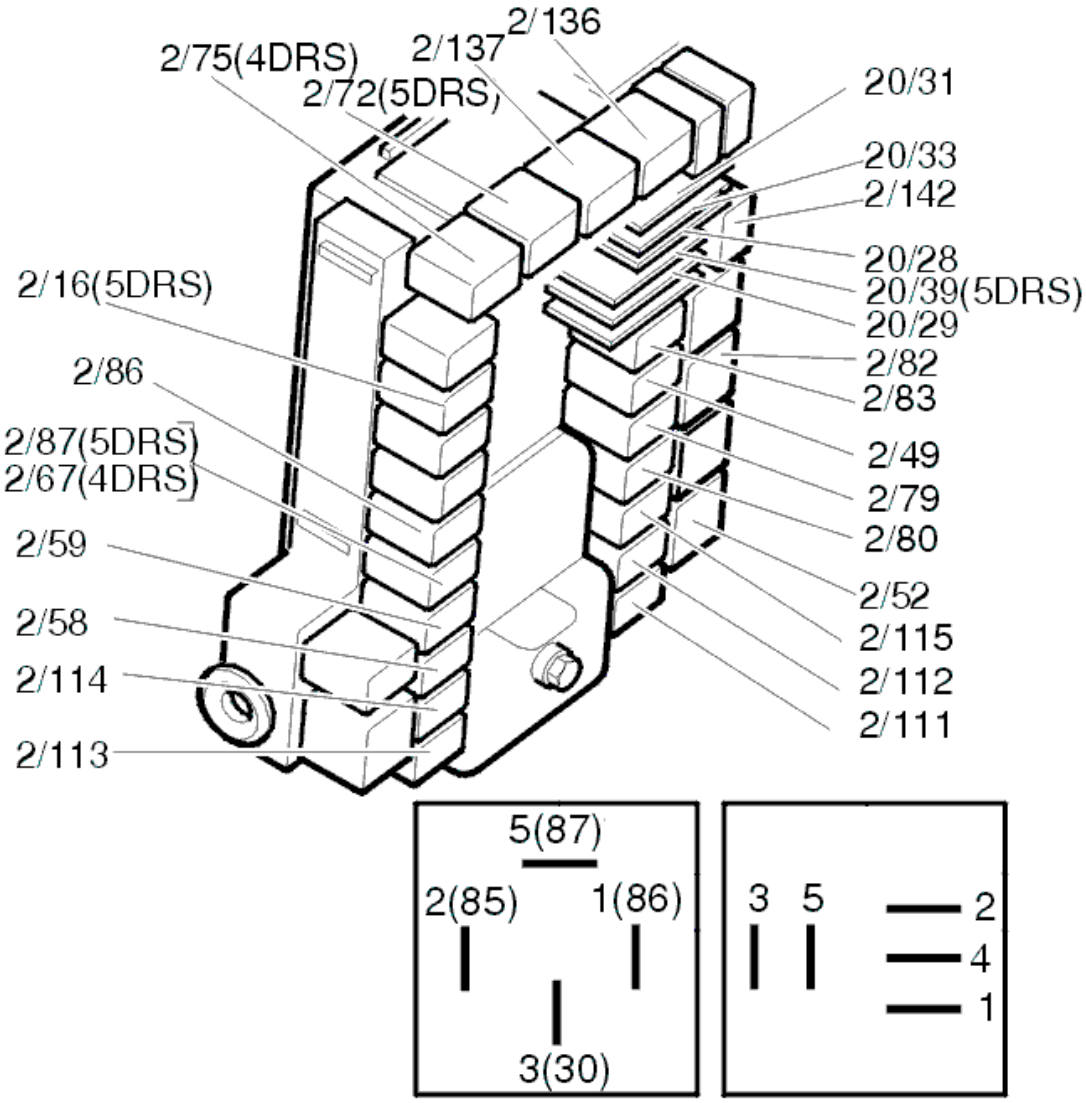

Fig. 15: Identifying Relays
Courtesy of VOLVO CARS CORPORATION

BULB TAIL LAMP/STOP LAMP/BACK-UP LAMP/FOG LAMP, REPLACING

- See **BULB TAIL LAMP/STOP LAMP/BACK-UP LAMP/FOG LAMP, REPLACING** .

TROUBLE-SHOOTING INFORMATION

Condition

No diagnostic trouble codes are stored.

Possible Source

- Faulty relay

- Faulty brake light shunt
- Open circuit
- Short circuit to ground on the wire
- Short circuit to voltage supply on wire.

Fault symptom[s]

Brake light does not come on when brake pedal is pressed.

Brake light remains on.

CHECKING THE BUTTON DIODES (2003-12)

CHECKING BUTTON LEDS

CHECKING COMPONENTS AND WIRING

Check the cable between the control module terminal #8 and roof lamp module terminal #2A. Check for an open-circuit. Check for a short-circuit to ground.

Check the cable between the roof lamp module terminal #10A and the ground terminal 31/83 (A-post, left). Check for an open-circuit.

Remedy as necessary.

Replace the printed circuit board if no fault was found

Other information

- To connect the breakout box, see **CONNECTING THE BREAKOUT BOX**
- For further information about signals and other values, see **SIGNAL DESCRIPTION, UPPER ELECTRONIC MODULE (UEM)**
- To access or replace the printed circuit board, see **INTERIOR LIGHTING, REPLACING**
- To access the sun roof control module, see **CONTROL MODULE, SUN ROOF, REPLACING**
- see **CHECKING WIRING AND TERMINALS** .

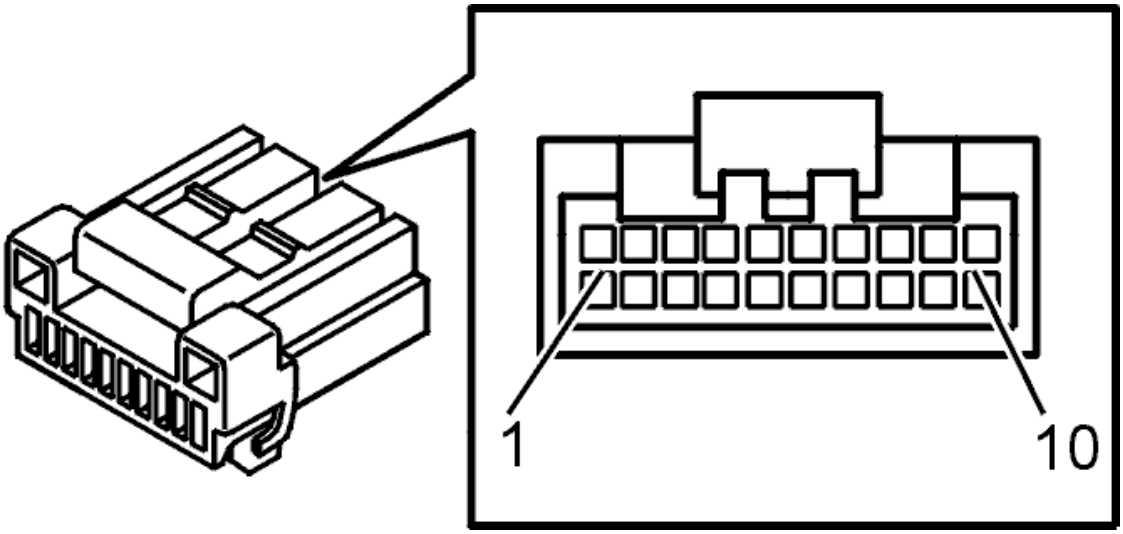

Fig. 16: Identifying Connector (D) Terminals
Courtesy of VOLVO CARS CORPORATION

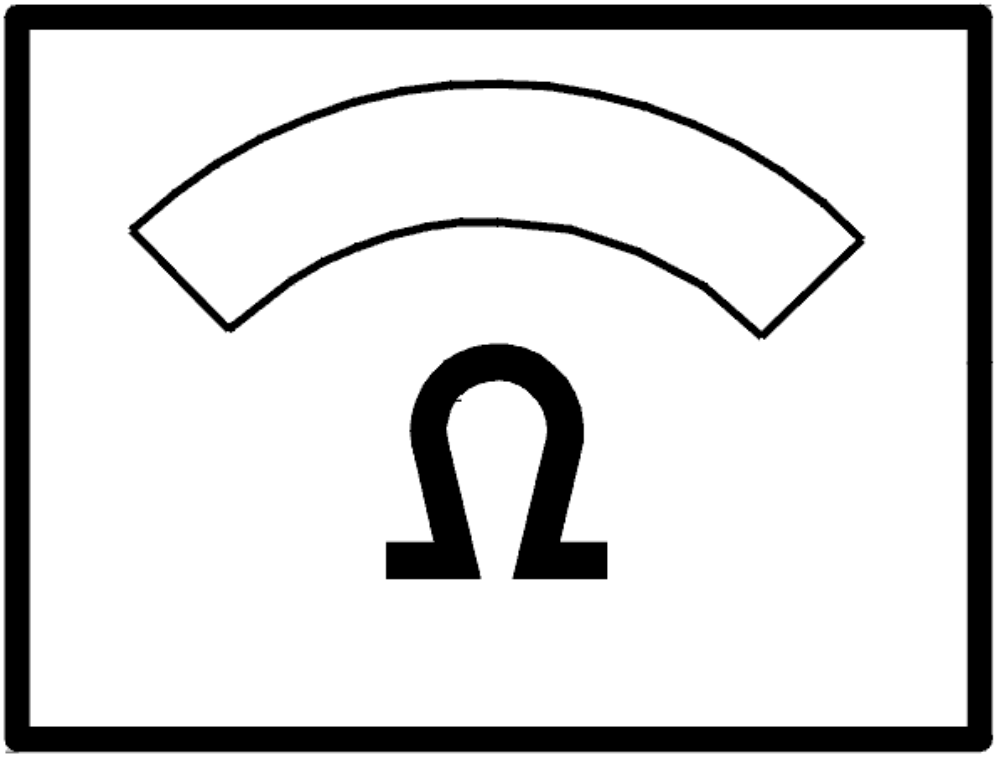

Fig. 17: Identifying Ohmmeter
Courtesy of VOLVO CARS CORPORATION

TROUBLE-SHOOTING INFORMATION

Condition

No diagnostic trouble codes are displayed.

Substitute Value

-

Possible Source

- Open circuit in wire

- Defective diodes.

Fault symptom[s]

- Button diodes do not light.

CHECKING THE COURTESY LIGHT (2003-04)

CHECKING THE COURTESY LIGHT

PROGRAMMING THE HOME SAFE LIGHTS

The home safe lights can be programmed to stay on for a longer or shorter time according to the wishes of the customer.

The factory setting is 30 seconds. The time can be set to 0, 30, 60 or 90 seconds.

Read off the programming by clicking on the VCT2000 symbol.

To change the time set, mark the desired value in the scrolling list and start programming.

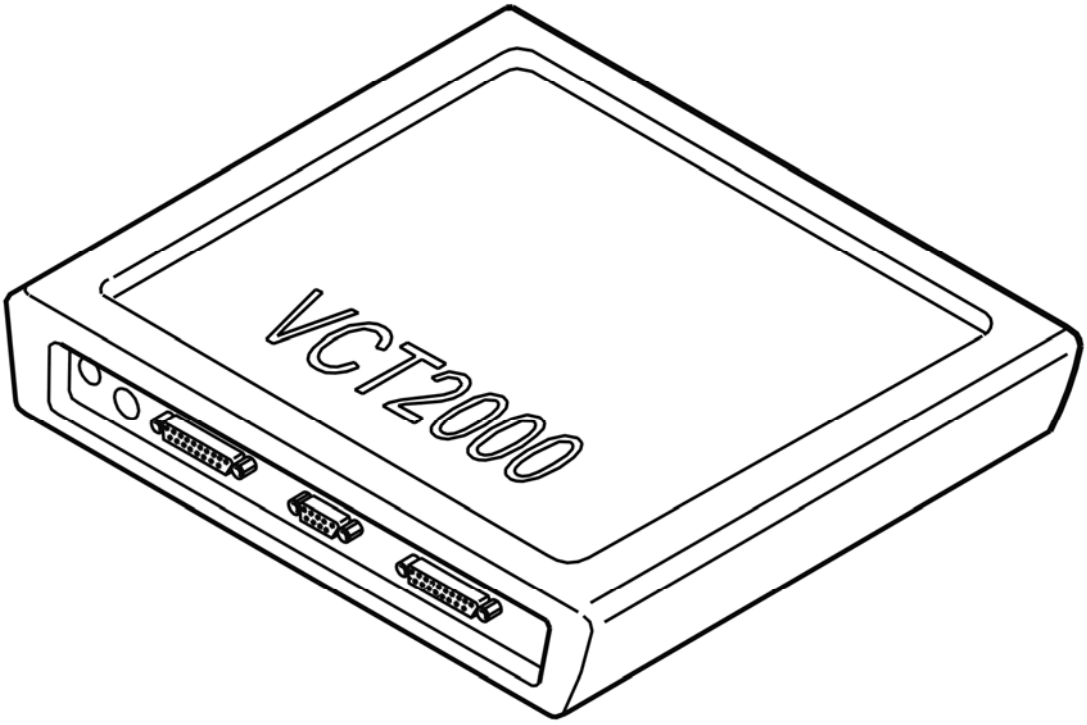

Fig. 18: Identifying VCT2000 Diagnostic Tool Symbol In VIDA
Courtesy of VOLVO CARS CORPORATION

- **Continue**

  Refer to **SAVE THE PROGRAMMED VALUE**

SAVE THE PROGRAMMED VALUE

To ensure that the programmed information is stored, click on the VCT2000 symbol to force the entry.

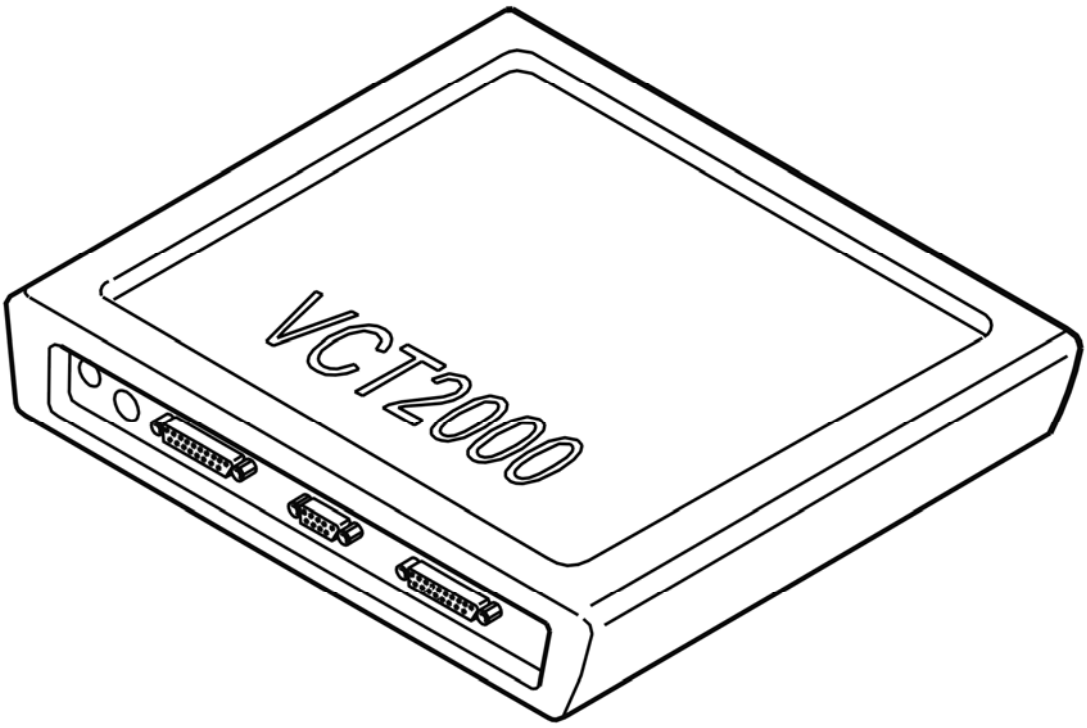

Fig. 19: Identifying VCT2000 Diagnostic Tool Symbol In VIDA
Courtesy of VOLVO CARS CORPORATION

CHECKING THE DIRECTION INDICATOR DISPLAY (2003-04)

CHECKING THE DIRECTION INDICATOR DISPLAY

CHECKING THE SHUNT AND WIRES

Check the fuse 11C/21.

Check the connection between the fuse 11C/21 and the central electronic module (CEM) B23 (E3).

Check that the shunt 2 has a flasher signal, 20/32 for left direction indicator and 20/34 for right direction indicator.

Check the wire between the shunt 2 and each direction indicator as shown in the table below.

Front left flasher	10/9 2
Front left side flasher	10/15 2
Rear left flasher	10/54 4B
Front right flasher	10/10 2
Front right side flasher	10/16 2
Rear right flasher	10/47 4B

Check relevant ground connection.

HINT: Ground connection is 3 for front flasher, 1 for side flasher and 1B for rear flasher.

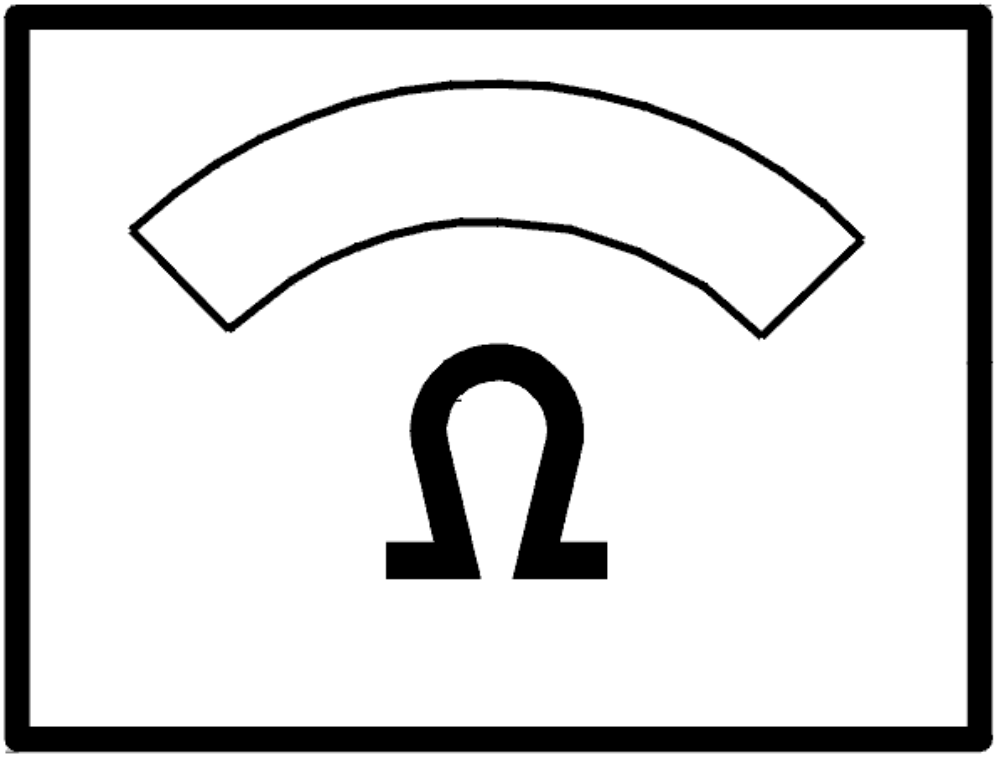

Fig. 20: Identifying Ohmmeter
Courtesy of VOLVO CARS CORPORATION

TROUBLE-SHOOTING INFORMATION

Condition

No diagnostic trouble codes are stored.

Possible Source

- Faulty shunt
- Open circuit in wire
- Short circuit to voltage supply or ground on the wire.

Fault symptom[s]

Indicator does not work.

CHECKING THE DOOR LOCKING FUNCTION (2003-04)

CHECKING THE DOOR LOCKING FUNCTION

QUERY

Which door does the problem affect?

1. Driver's door. Refer to **CHECKING THE DRIVER'S DOOR**
2. Passenger door. Refer to **CHECKING THE PASSENGER DOOR**
3. Left rear door. Refer to **CHECKING THE LEFT REAR DOOR**
4. Right rear door. Refer to **CHECKING THE RIGHT REAR DOOR**

CHECKING THE DRIVER'S DOOR

CHECK

Is the lock for the passenger door also not functioning?

- **YES**

  Refer to **CHECKING FUSES**

- **NO**

  Refer to **CHECK**

CHECKING FUSES

Remove fuse 11C/27 from the cargo compartment fusebox.

Check that the fuse is intact. Check for contact resistance and oxidation.

Other information

- To access the integrated relay/fusebox in the cargo compartment, see **RELAY/FUSE BOX CARGO COMPARTMENT/REAR ELECTRONIC MODULE (REM), REPLACING**
- see **CHECKING WIRING AND TERMINALS** .

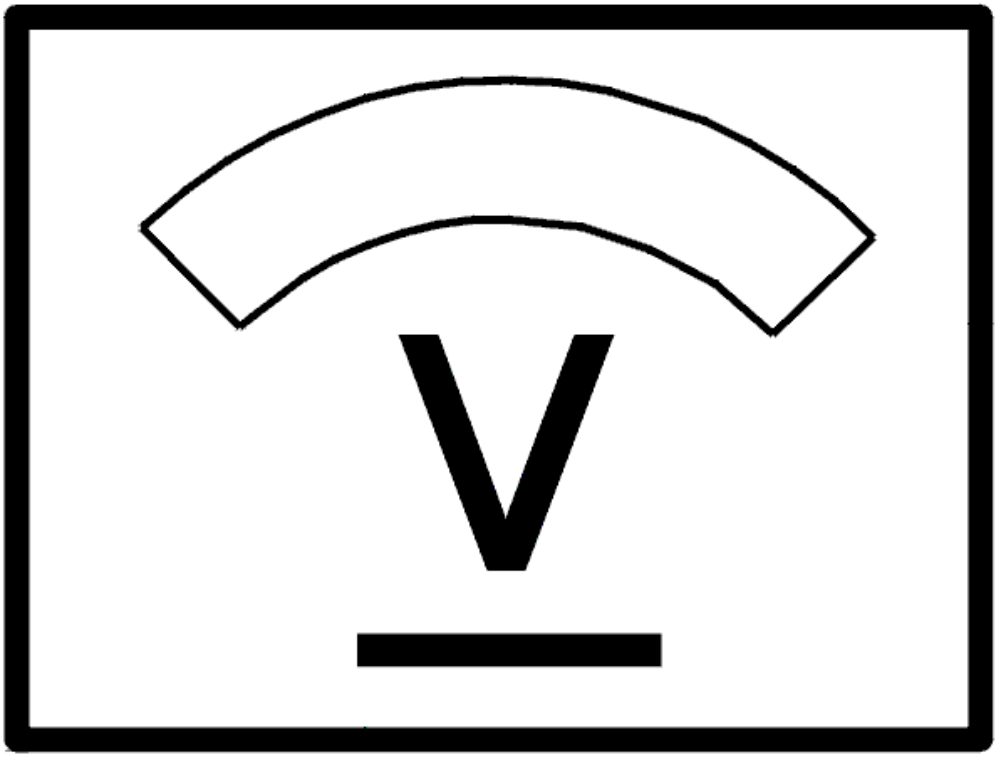

Fig. 21: Identifying Voltage Display
Courtesy of VOLVO CARS CORPORATION

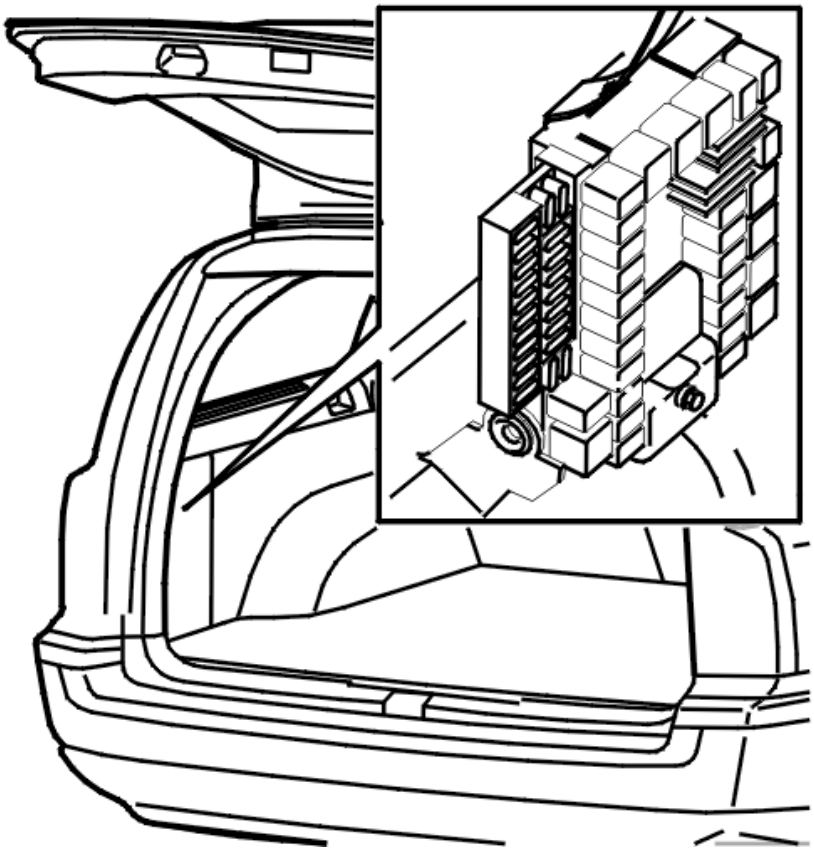

Fig. 22: Locating Integrated Relay/Fusebox In Cargo Compartment
Courtesy of VOLVO CARS CORPORATION

Is the fuse intact?

- **YES**

  Refer to **CHECKING FOR AN OPEN-CIRCUIT**

- **NO**

  Refer to **CHECKING FOR A SHORT-CIRCUIT**

CHECK

1. The window lift mechanism functions in the relevant door. Refer to **CHECKING THE CABLES FOR THE LOCK MOTOR**
2. The window lift mechanism does not function in the relevant door. Refer to **CHECK**.

CHECK

1. The car is left-hand drive. Refer to **CHECKING FUSES**

CHECKING FUSES

Remove fuse 11C/35 from the cargo compartment fusebox.

Check that the fuse is intact. Check for contact resistance and oxidation.

Other information

- To access the integrated relay/fusebox in the cargo compartment, see **RELAY/FUSE BOX CARGO COMPARTMENT/REAR ELECTRONIC MODULE (REM), REPLACING**
- see **CHECKING WIRING AND TERMINALS** .

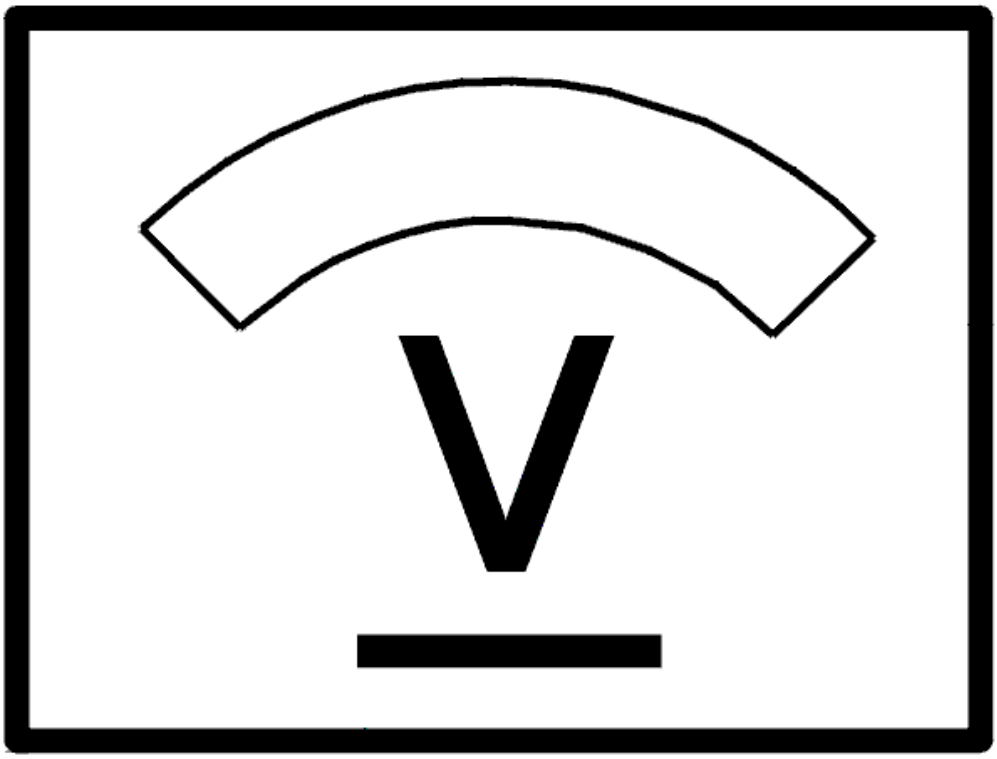

Fig. 23: Identifying Voltage Display
Courtesy of VOLVO CARS CORPORATION

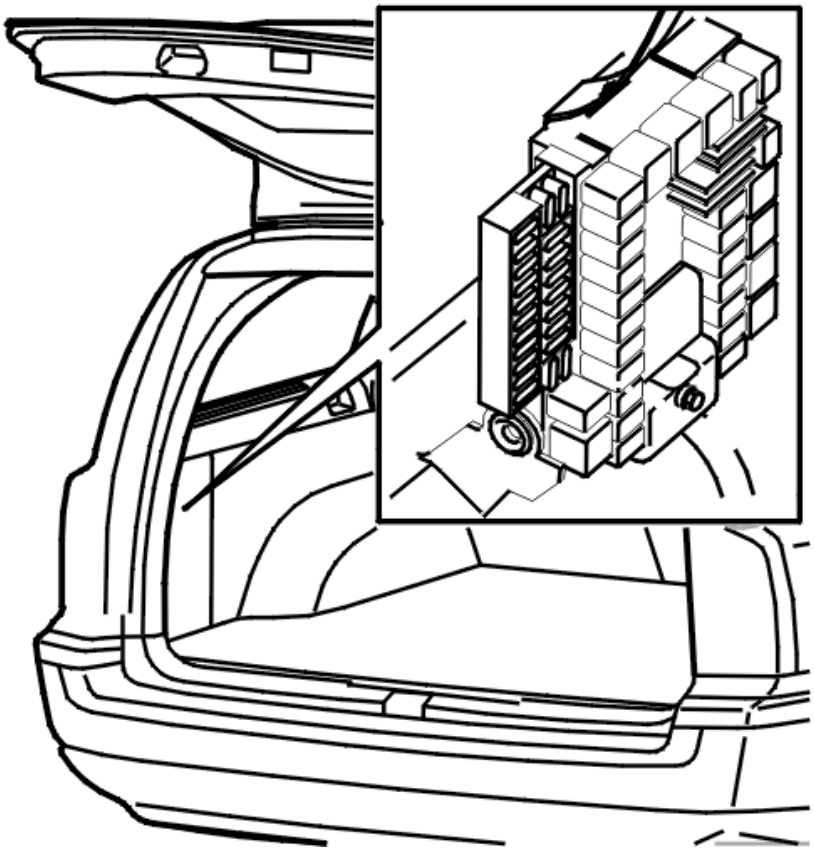

Fig. 24: Locating Integrated Relay/Fusebox In Cargo Compartment
Courtesy of VOLVO CARS CORPORATION

Is the fuse intact?

- **YES**

  Refer to **CHECKING THE VOLTAGE**

- **NO**

  Refer to **CHECKING FOR A SHORT-CIRCUIT**

CHECKING FUSES

Remove fuse 11C/36 from the cargo compartment fusebox.

Check that the fuse is intact. Check for contact resistance and oxidation.

Other information

- To access the integrated relay/fusebox in the cargo compartment, see **RELAY/FUSE BOX CARGO COMPARTMENT/REAR ELECTRONIC MODULE (REM), REPLACING**
- see **CHECKING WIRING AND TERMINALS** .

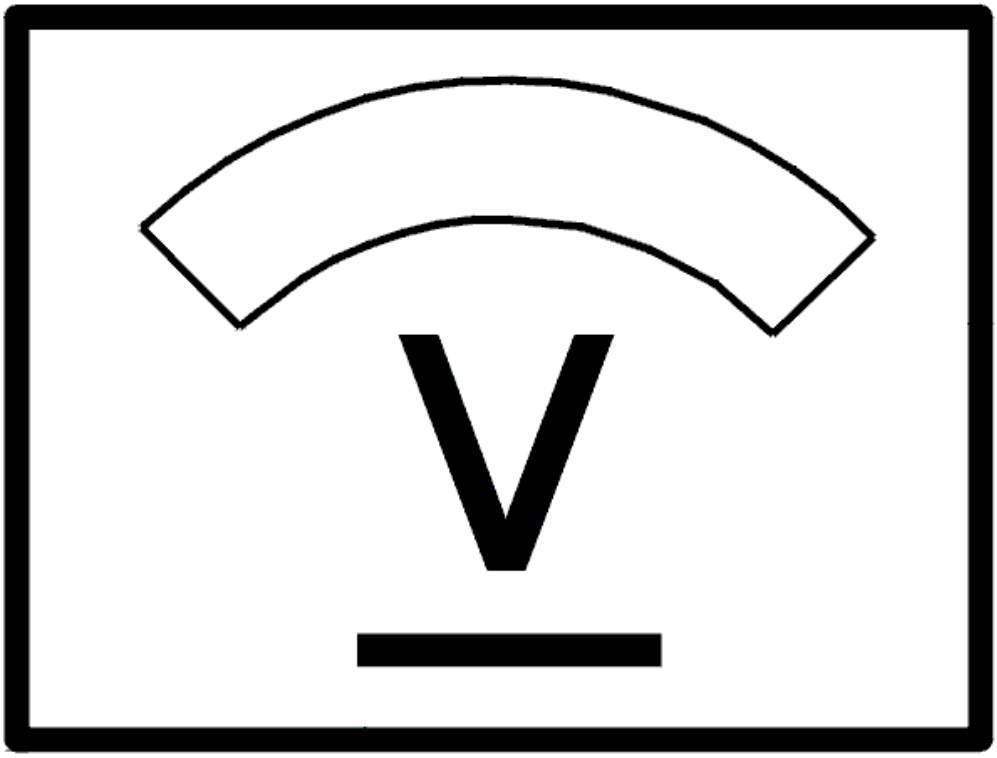

Fig. 25: Identifying Voltage Display
Courtesy of VOLVO CARS CORPORATION

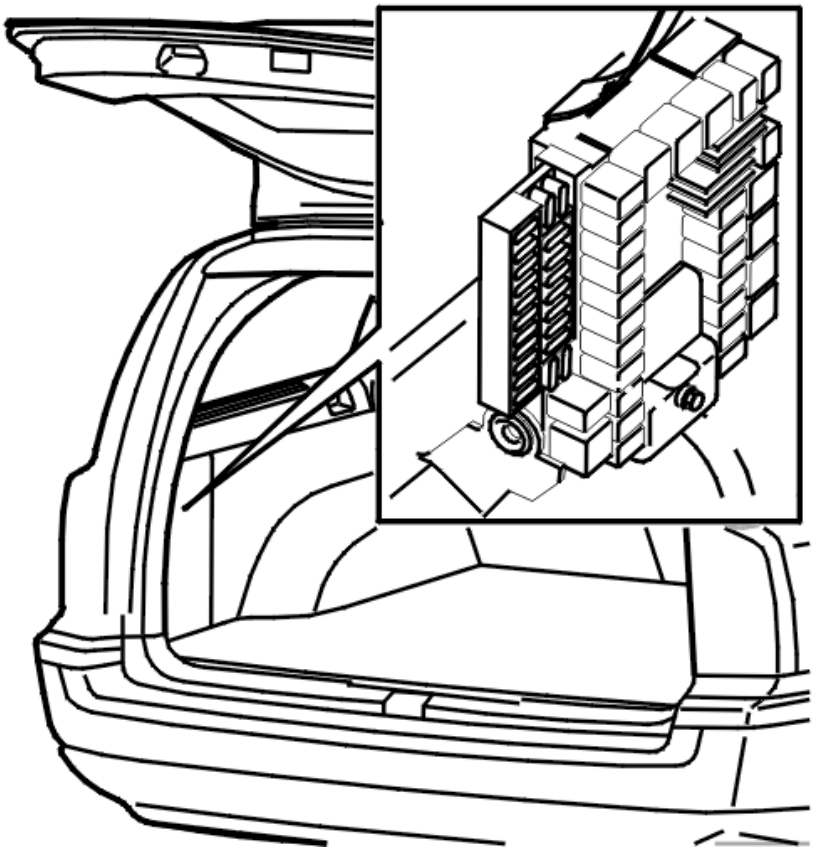

Fig. 26: Locating Integrated Relay/Fusebox In Cargo Compartment
Courtesy of VOLVO CARS CORPORATION

Is the fuse intact?

- **YES**

  Refer to **CHECKING THE VOLTAGE**

- **NO**

  Refer to **CHECKING FOR A SHORT-CIRCUIT**

CHECKING FOR AN OPEN-CIRCUIT

Check terminal #B7 in the connectors for the door control modules. Check for contact resistance and oxidation.

Check the cable between the secondary side of the fuse holder (left) and terminal #B7 in the connectors for the door control modules. Check for an open-circuit.

If a fault is detected, check in particular the intermediate connector in the cable harness (1 connector per control module). Check for contact resistance and oxidation.

If there is an open-circuit, the fault is probably between the fuse and the common junction point 53/427.

Other information

- see **CHECKING WIRING AND TERMINALS** .

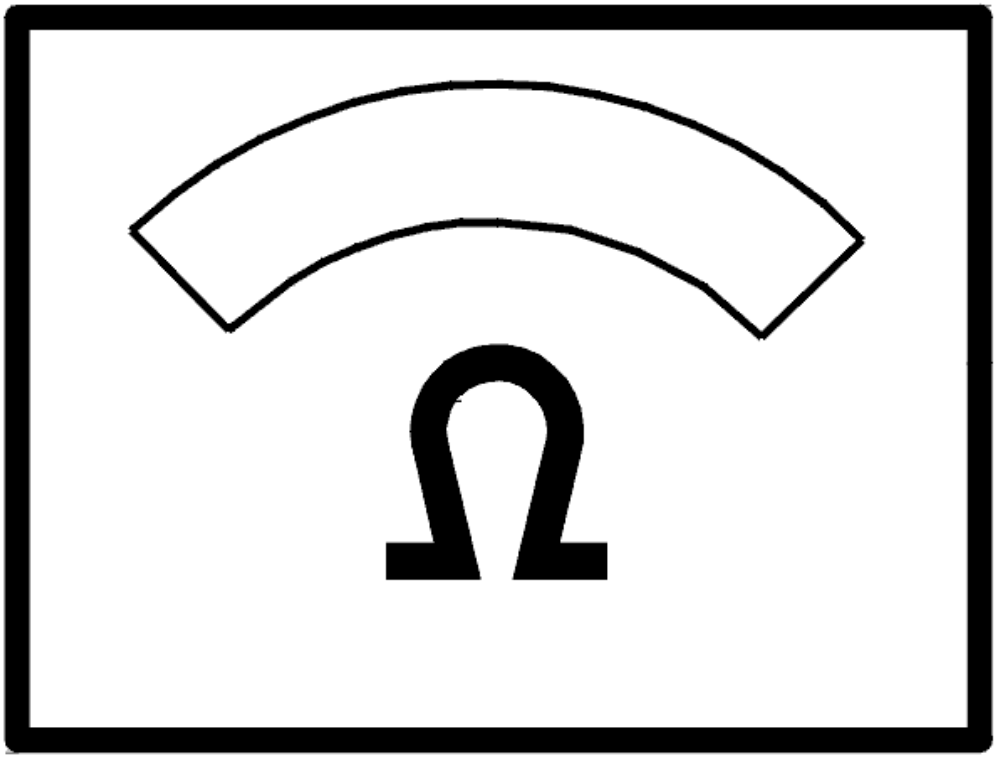

Fig. 27: Identifying Ohmmeter
Courtesy of VOLVO CARS CORPORATION

CHECKING FOR A SHORT-CIRCUIT

Measure the resistance between the fuse holder secondary side (left) and ground.

The ohmmeter should read infinite resistance.

NOTE: If the value is correct the fault may be intermittent.

Now fault-trace for an intermittent short-circuit to ground.

If the ohmmeter displays a fault (short-circuit), fault-trace the cables between the fuse and terminal #B7 on the connectors for the driver/passenger door module (DDM/PDM). Check for a short-circuit to ground.

The fault is probably between the fuse and the common junction point 53/427.

Replace fuse.

Other information

- see **CHECKING WIRING AND TERMINALS** .

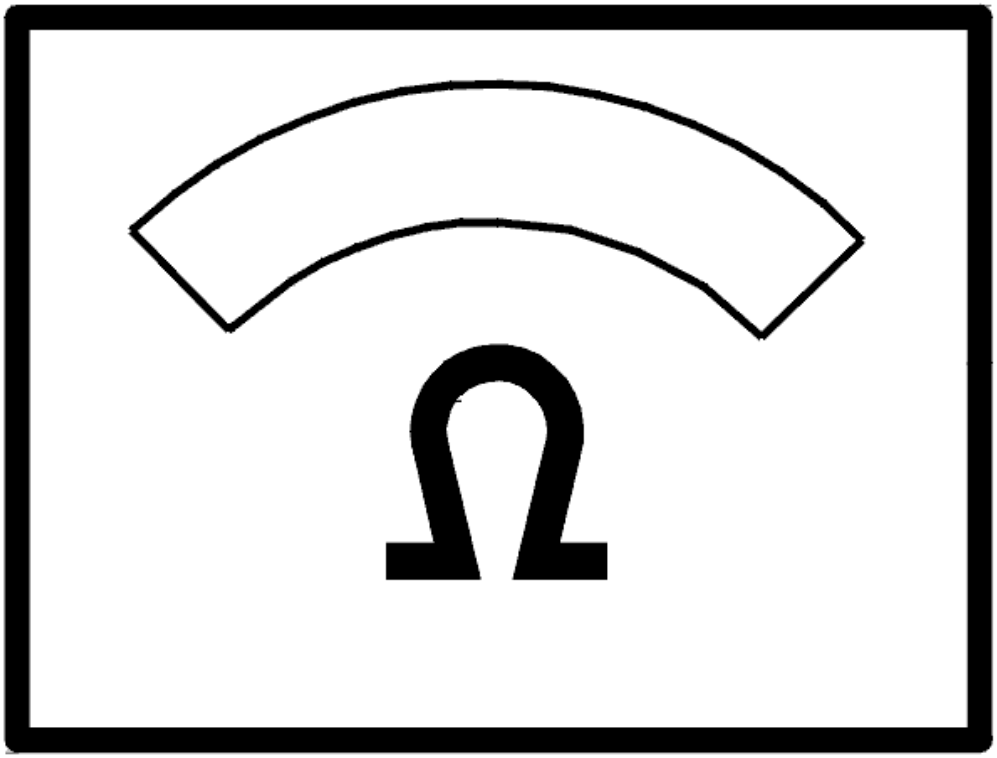

Fig. 28: Identifying Ohmmeter
Courtesy of VOLVO CARS CORPORATION

CHECKING THE VOLTAGE

Check the voltage in door control module connector terminal #B12.

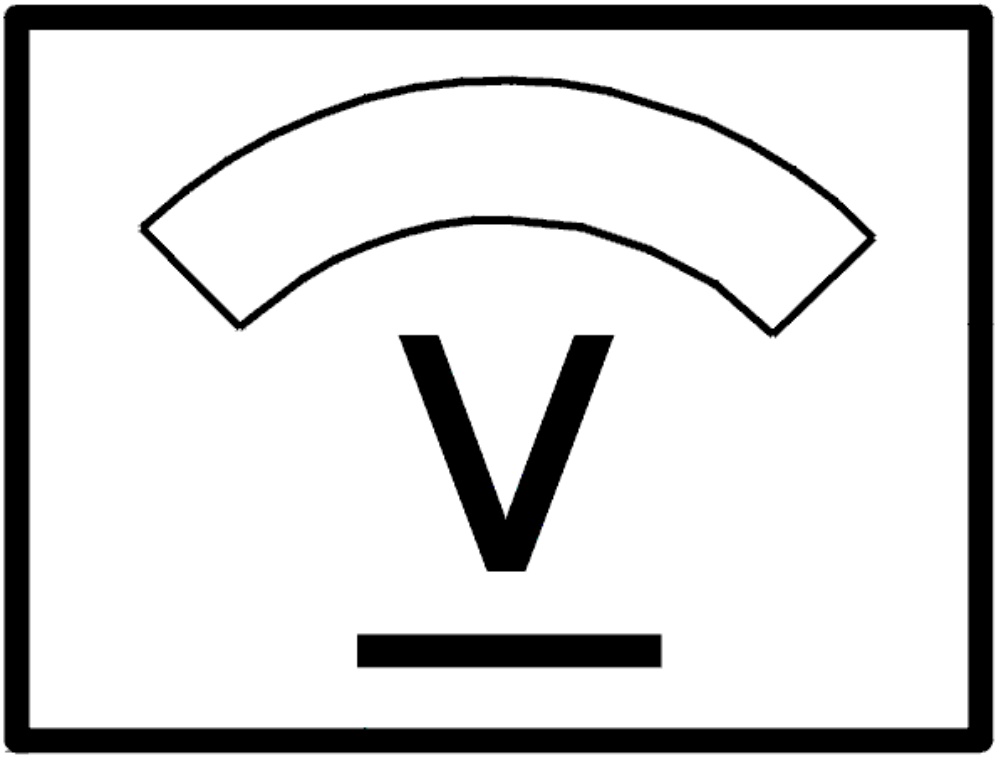

Fig. 29: Identifying Voltage Display
Courtesy of VOLVO CARS CORPORATION

Does the voltmeter read battery voltage?

- **YES**

  Refer to **CHECKING THE CABLES FOR THE LOCK MOTOR**

- **NO**

  Refer to **CHECKING FOR AN OPEN-CIRCUIT**

CHECKING FOR AN OPEN-CIRCUIT

Check door control module connector terminal #B12. Check for contact resistance and oxidation.

Check the cable between the secondary side of the fuse holder (left) and terminal #B12 in the connectors for the door control modules. Check for an open-circuit.

If a fault is detected, check in particular the intermediate connector in the cable harness. Check for contact resistance and oxidation.

Other information

- see **CHECKING WIRING AND TERMINALS** .

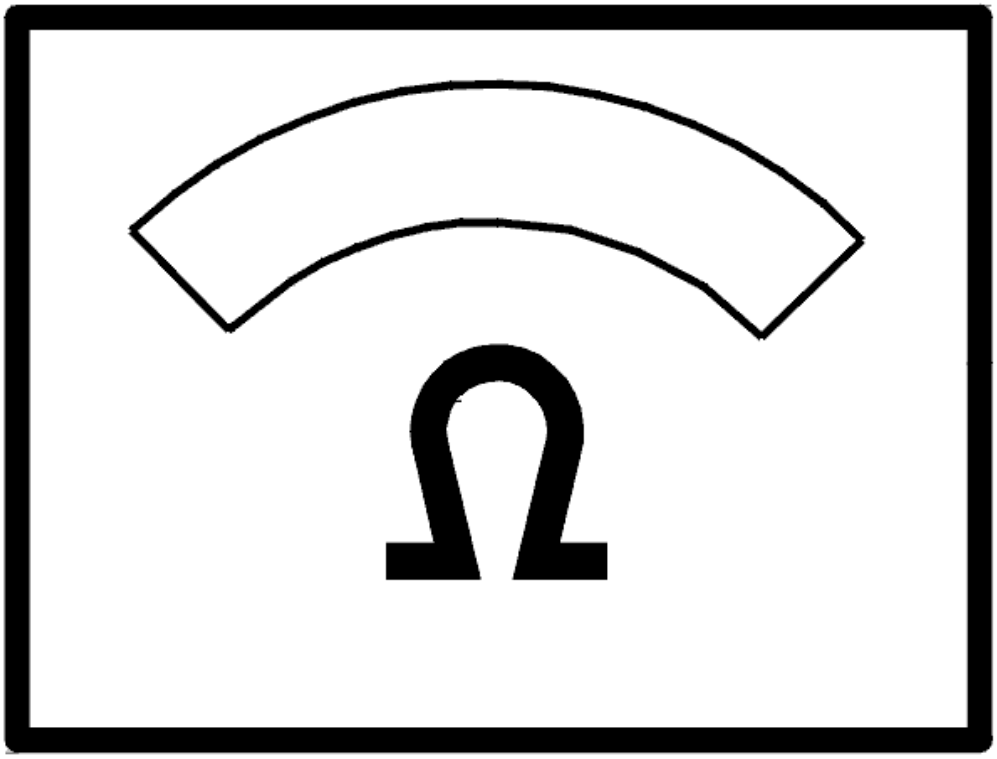

Fig. 30: Identifying Ohmmeter
Courtesy of VOLVO CARS CORPORATION

CHECKING FOR A SHORT-CIRCUIT

Measure the resistance between the fuse holder secondary side (left) and ground.

The ohmmeter should read infinite resistance.

NOTE: If the value is correct the fault may be intermittent.

Now fault-trace for an intermittent short-circuit to ground.

If the ohmmeter displays a fault (short-circuit), fault-trace the cables between the fuse and terminal #B12 on the connectors for the door control modules. Check for a short-circuit to ground.

Replace fuse.

Other information

- To access the integrated relay/fusebox in the cargo compartment, see **RELAY/FUSE BOX CARGO COMPARTMENT/REAR ELECTRONIC MODULE (REM), REPLACING**
- see **CHECKING WIRING AND TERMINALS** .

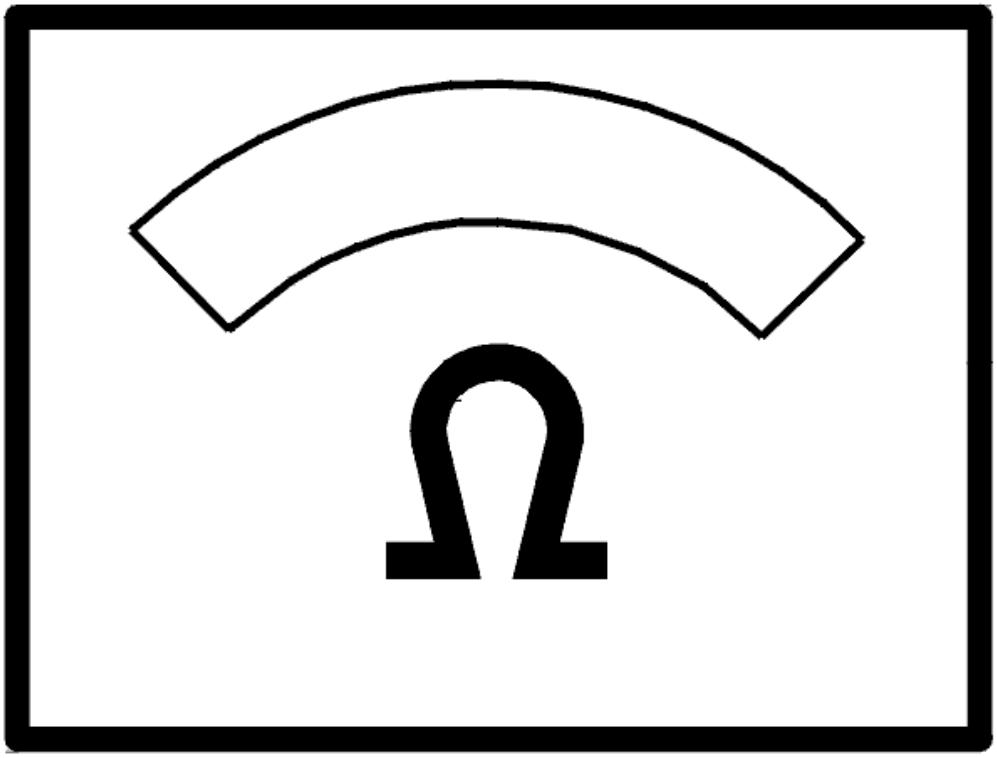

Fig. 31: Identifying Ohmmeter
Courtesy of VOLVO CARS CORPORATION

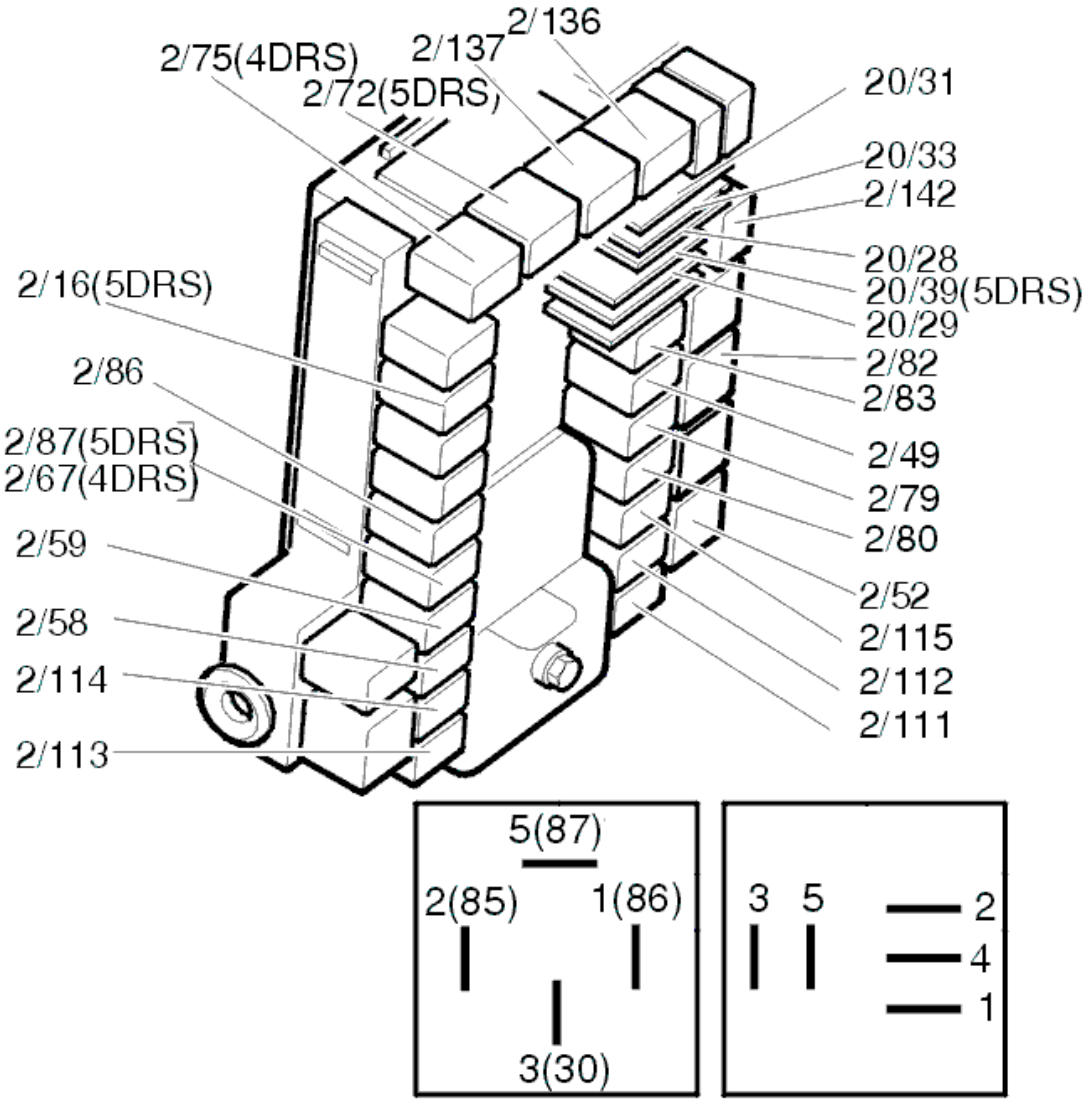

Fig. 32: Identifying Relays
Courtesy of VOLVO CARS CORPORATION

CHECKING THE CABLES FOR THE LOCK MOTOR

Check the connectors for the door control module and lock unit. Check for contact resistance and oxidation.

Check the cable between door control module connector terminal #B2 and lock unit connector terminal #8. Check for an open-circuit.

Check the cable between door control module connector terminal #B6 and lock unit connector terminal #7. Check for an open-circuit.

Other information

- To access and replace the rear electronic module (REM), see **RELAY/FUSE BOX CARGO**

COMPARTMENT/REAR ELECTRONIC MODULE (REM), REPLACING

- see **CHECKING WIRING AND TERMINALS** .

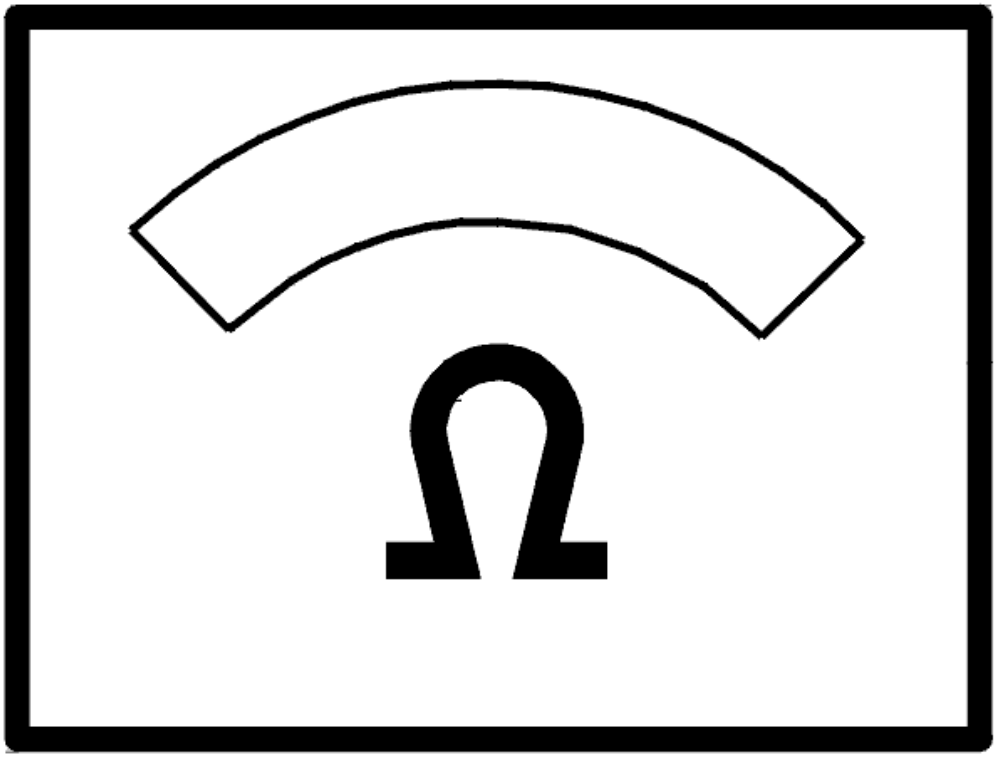

Fig. 33: Identifying Ohmmeter
Courtesy of VOLVO CARS CORPORATION

Was a fault detected?

- **YES**

  OKAY: Troubleshooting has been completed.

- **NO**

  Refer to **REPLACING THE COMPONENT**

REPLACING THE COMPONENT

Replace the lock unit. See **LOCK MECHANISM FRONT SIDE DOOR, REPLACING** .

Was a fault detected?

- **YES**

  OKAY: Troubleshooting has been completed.

- **NO**

  Refer to **REPLACING THE COMPONENT**

REPLACING THE COMPONENT

Replace the rear electronic module (REM). See **RELAY/FUSE BOX CARGO COMPARTMENT/REAR ELECTRONIC MODULE (REM), REPLACING** .

CHECKING THE PASSENGER DOOR

CHECK

Is the lock for the driver's door also not functioning?

- **YES**

  Refer to **CHECKING FUSES**

- **NO**

  Refer to **CHECK**

CHECKING FUSES

Remove fuse 11C/27 from the cargo compartment fusebox.

Check that the fuse is intact. Check for contact resistance and oxidation.

Other information

- To access the integrated relay/fusebox in the cargo compartment, see **RELAY/FUSE BOX CARGO COMPARTMENT/REAR ELECTRONIC MODULE (REM), REPLACING**
- see **CHECKING WIRING AND TERMINALS** .

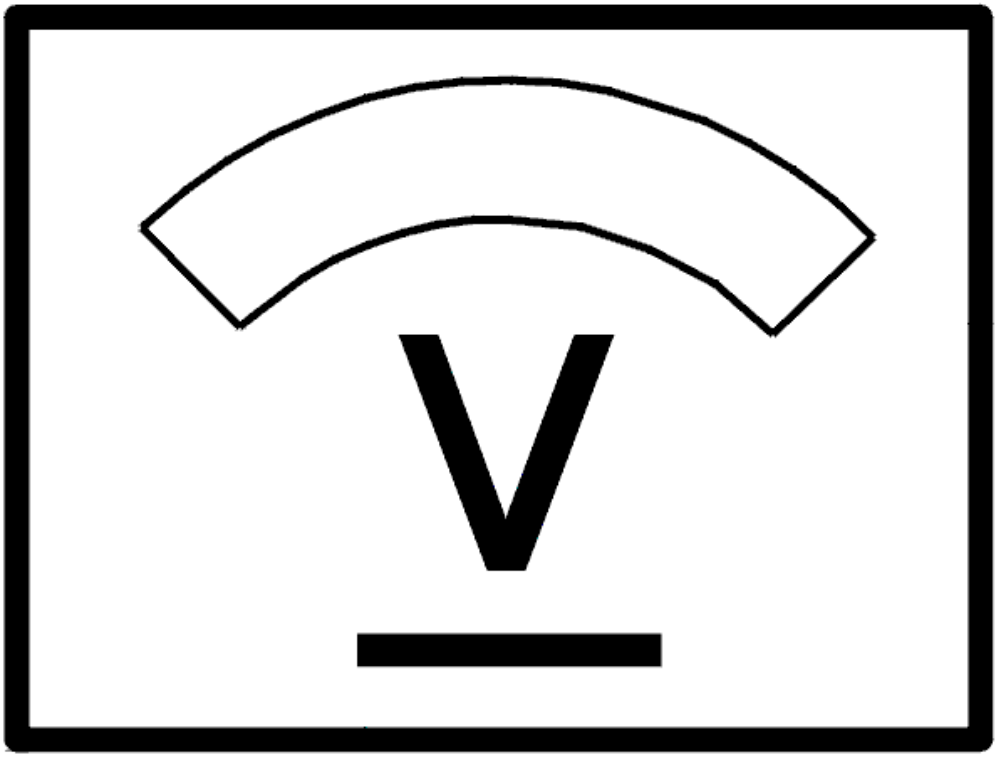

Fig. 34: Identifying Voltage Display
Courtesy of VOLVO CARS CORPORATION

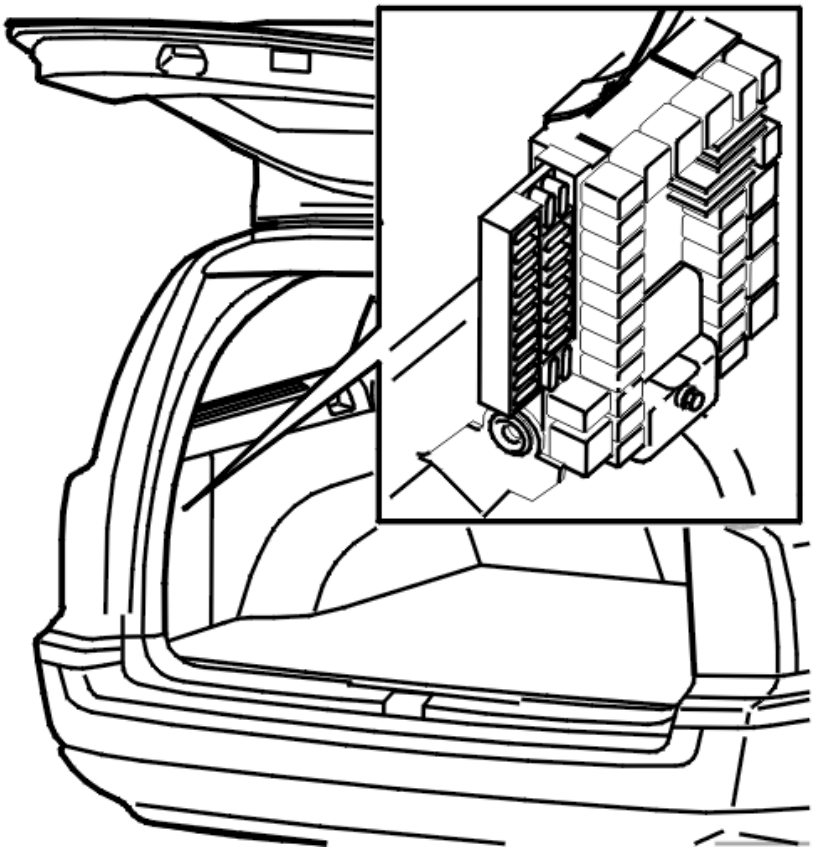

Fig. 35: Locating Integrated Relay/Fusebox In Cargo Compartment
Courtesy of VOLVO CARS CORPORATION

Is the fuse intact?

- **YES**

  Refer to **CHECKING FOR AN OPEN-CIRCUIT**

- **NO**

  Refer to **CHECKING FOR A SHORT-CIRCUIT**

CHECK

1. The window lift mechanism functions in the relevant door. Refer to **CHECKING THE CABLES FOR THE LOCK MOTOR**.
2. The window lift mechanism does not function in the relevant door. Refer to **CHECK**.

CHECK

1. The car is left-hand drive. Refer to **CHECKING FUSES**.

CHECKING FUSES

Remove fuse 11C/35 from the cargo compartment fusebox.

Check that the fuse is intact. Check for contact resistance and oxidation.

Other information

- To access the integrated relay/fusebox in the cargo compartment, see **RELAY/FUSE BOX CARGO COMPARTMENT/REAR ELECTRONIC MODULE (REM), REPLACING**
- see **CHECKING WIRING AND TERMINALS** .

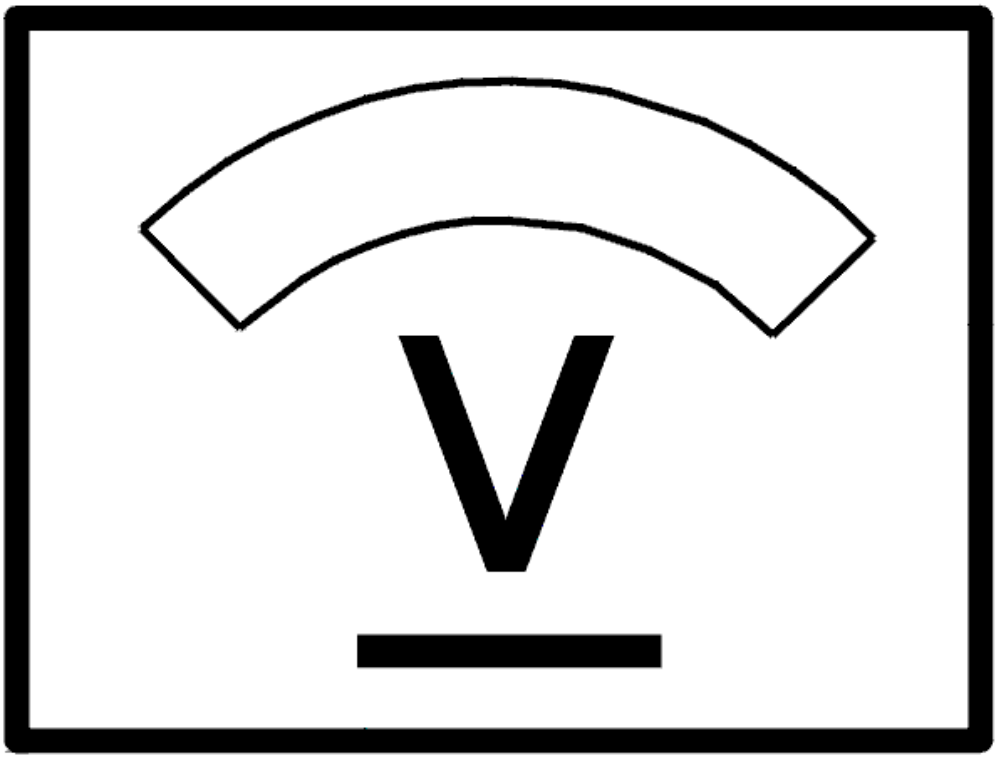

Fig. 36: Identifying Voltage Display
Courtesy of VOLVO CARS CORPORATION

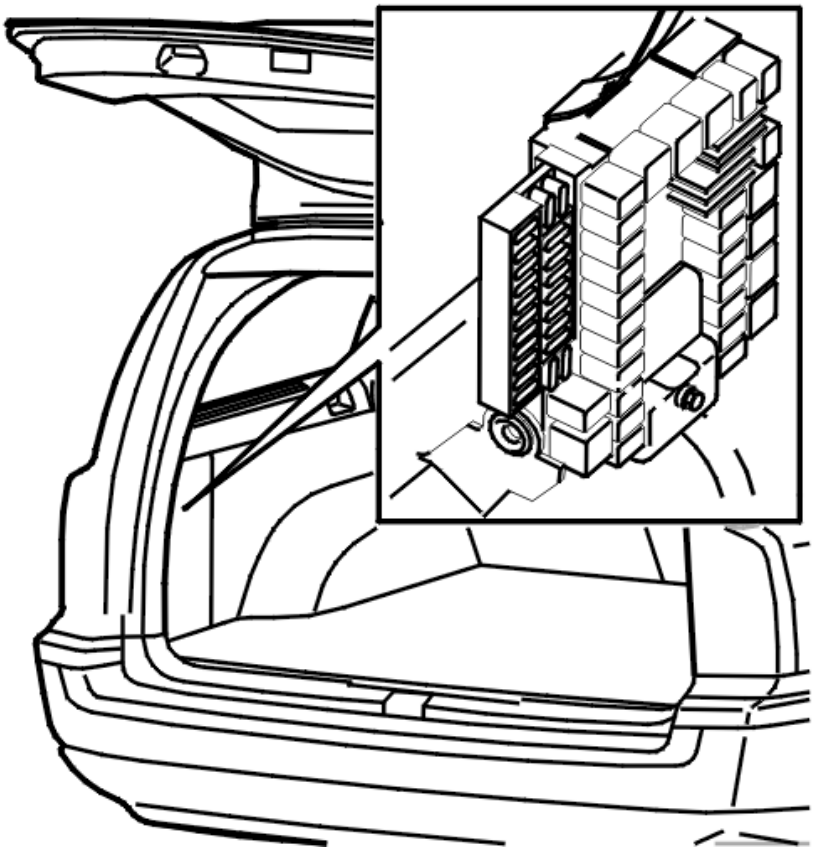

Fig. 37: Locating Integrated Relay/Fusebox In Cargo Compartment
Courtesy of VOLVO CARS CORPORATION

Is the fuse intact?

- **YES**

  Refer to **CHECKING THE VOLTAGE**

- **NO**

  Refer to **CHECKING FOR A SHORT-CIRCUIT**

CHECKING FUSES

Remove fuse 11C/36 from the cargo compartment fusebox.

Check that the fuse is intact. Check for contact resistance and oxidation.

Other information

- To access the integrated relay/fusebox in the cargo compartment, see **RELAY/FUSE BOX CARGO COMPARTMENT/REAR ELECTRONIC MODULE (REM), REPLACING**
- see **CHECKING WIRING AND TERMINALS** .

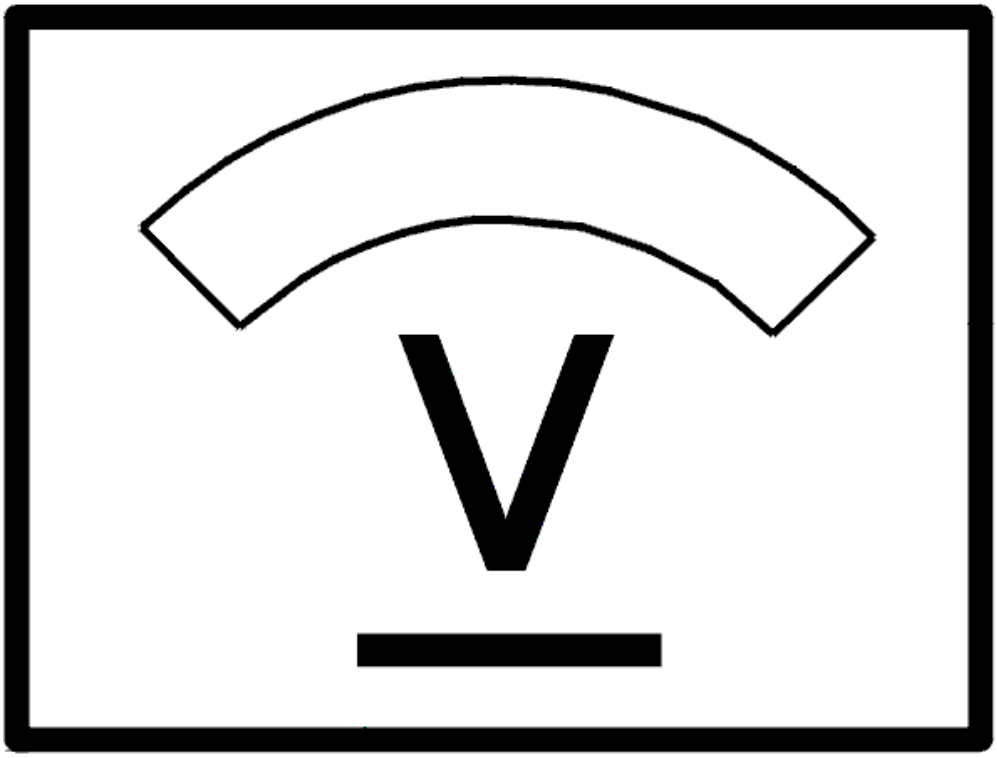

Fig. 38: Identifying Voltage Display
Courtesy of VOLVO CARS CORPORATION

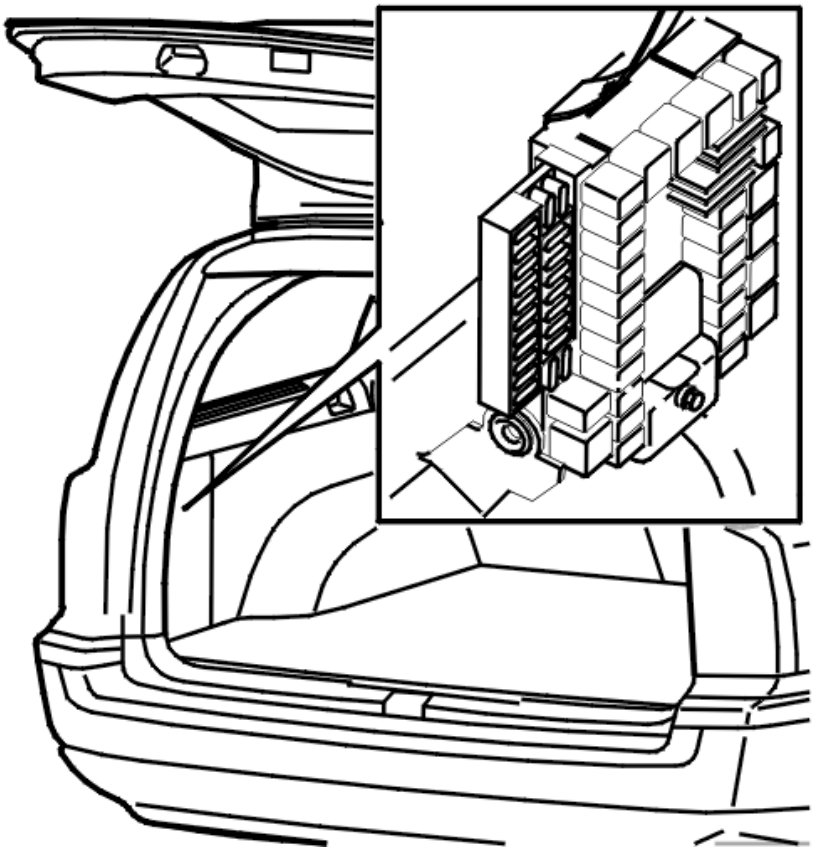

Fig. 39: Locating Integrated Relay/Fusebox In Cargo Compartment
Courtesy of VOLVO CARS CORPORATION

Is the fuse intact?

- **YES**

  Refer to **CHECKING THE VOLTAGE**

- **NO**

  Refer to **CHECKING FOR A SHORT-CIRCUIT**

CHECKING FOR AN OPEN-CIRCUIT

Check terminal #B7 in the connectors for the door control modules. Check for contact resistance and oxidation.

Check the cable between the secondary side of the fuse holder (left) and terminal #B7 in the connectors for the door control modules. Check for an open-circuit.

If a fault is detected, check in particular the intermediate connector in the cable harness (1 connector per control module). Check for contact resistance and oxidation.

If there is an open-circuit, the fault is probably between the fuse and the common junction point 53/427.

Other information

- see **CHECKING WIRING AND TERMINALS** .

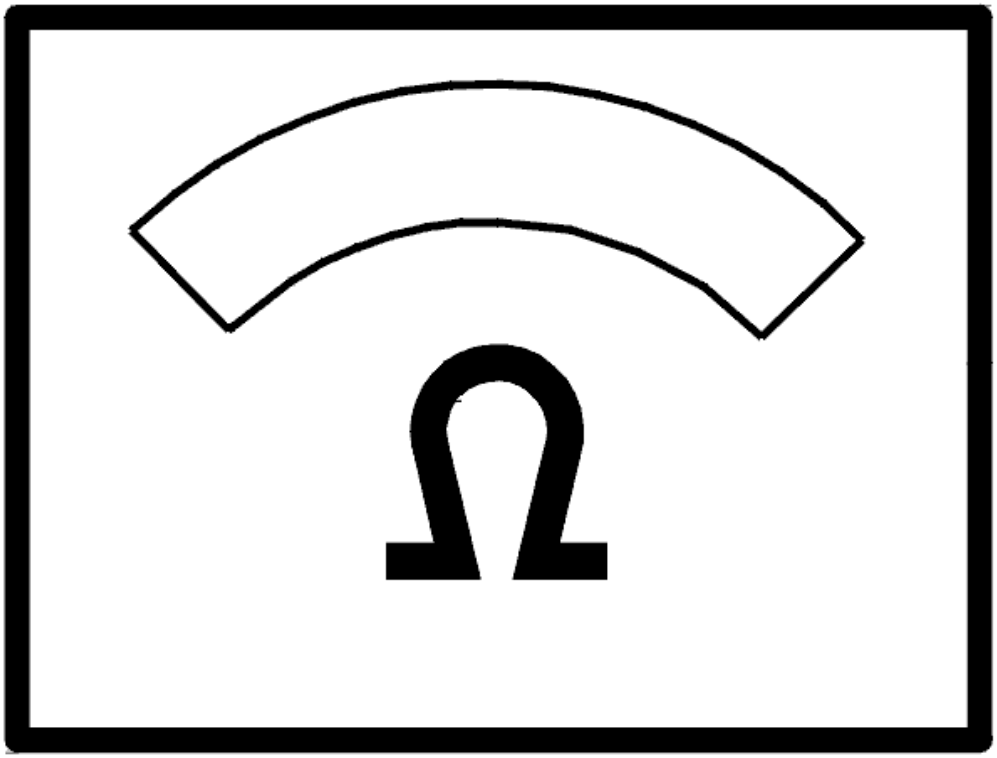

Fig. 40: Identifying Ohmmeter
Courtesy of VOLVO CARS CORPORATION

CHECKING FOR A SHORT-CIRCUIT

Measure the resistance between the fuse holder secondary side (left) and ground.

The ohmmeter should read infinite resistance.

NOTE: If the value is correct the fault may be intermittent.

Now fault-trace for an intermittent short-circuit to ground.

If the ohmmeter displays a fault (short-circuit), fault-trace the cables between the fuse and terminal #B7 on the connectors for the door control modules. Check for a short-circuit to ground.

The fault is probably between the fuse and the common junction point 53/427.

Replace fuse.

Other information

- see **CHECKING WIRING AND TERMINALS** .

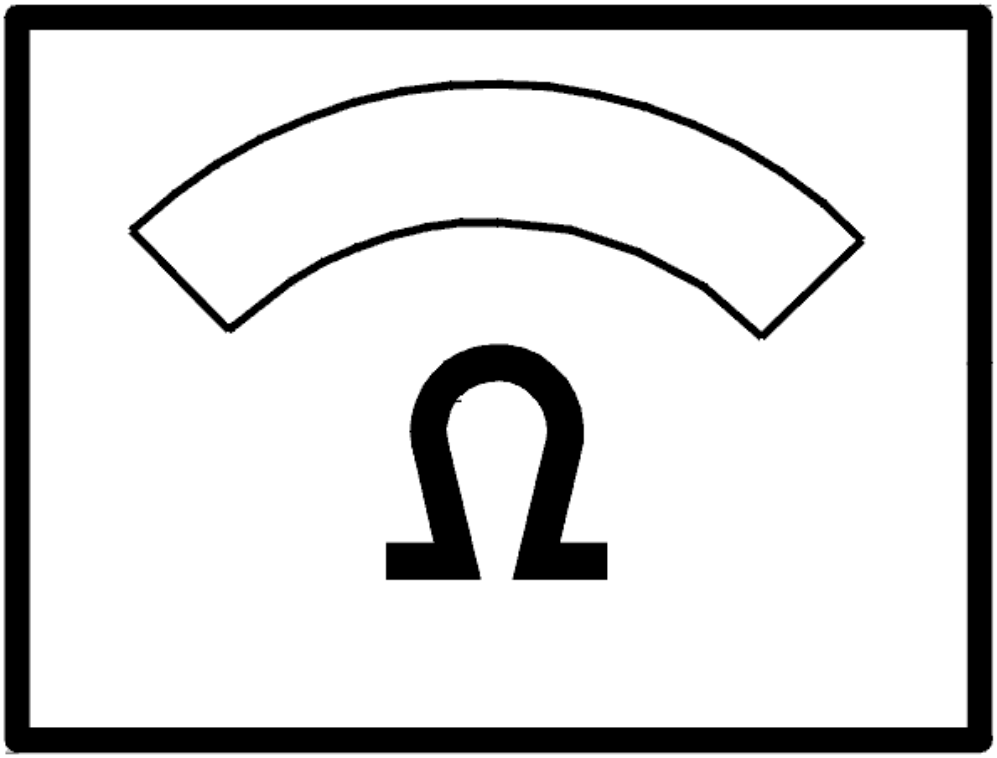

Fig. 41: Identifying Ohmmeter
Courtesy of VOLVO CARS CORPORATION

CHECKING THE VOLTAGE

Check the voltage in door control module connector terminal #B12.

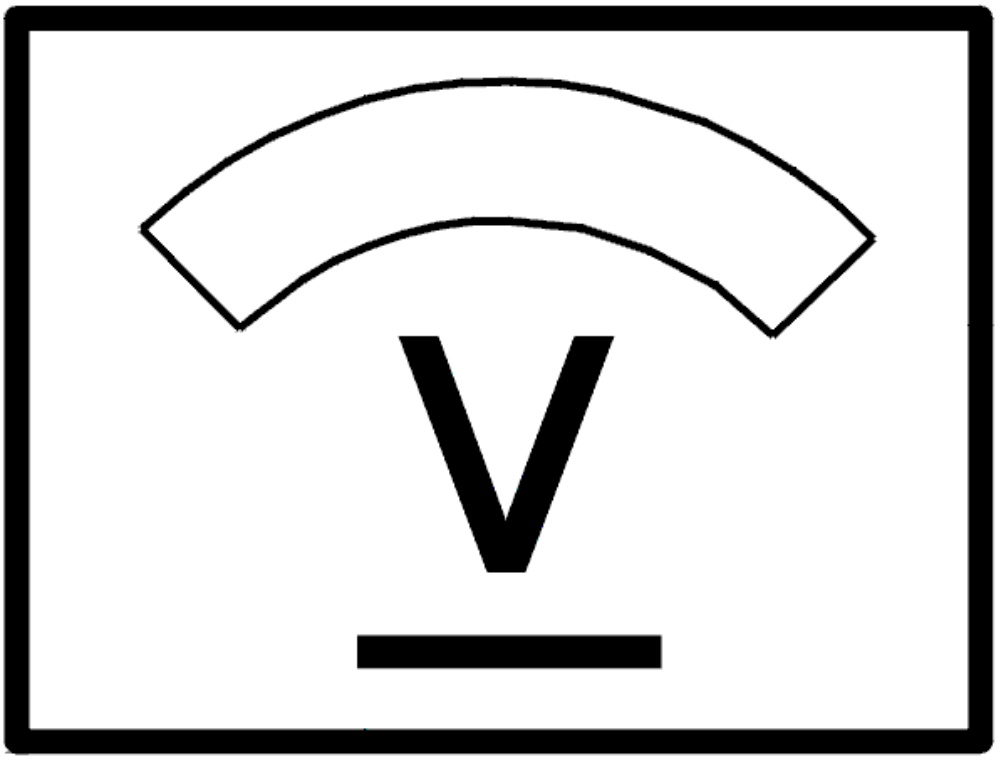

Fig. 42: Identifying Voltage Display
Courtesy of VOLVO CARS CORPORATION

Does the voltmeter read battery voltage?

- **YES**

  Refer to **CHECKING THE CABLES FOR THE LOCK MOTOR**

- **NO**

  Refer to **CHECKING FOR AN OPEN-CIRCUIT**

CHECKING FOR AN OPEN-CIRCUIT

Check door control module connector terminal #B12. Check for contact resistance and oxidation.

Check the cable between the secondary side of the fuse holder (left) and terminal #B12 in the connectors for the door control modules. Check for an open-circuit.

If a fault is detected, check in particular the intermediate connector in the cable harness. Check for contact resistance and oxidation.

Other information

- see **CHECKING WIRING AND TERMINALS** .

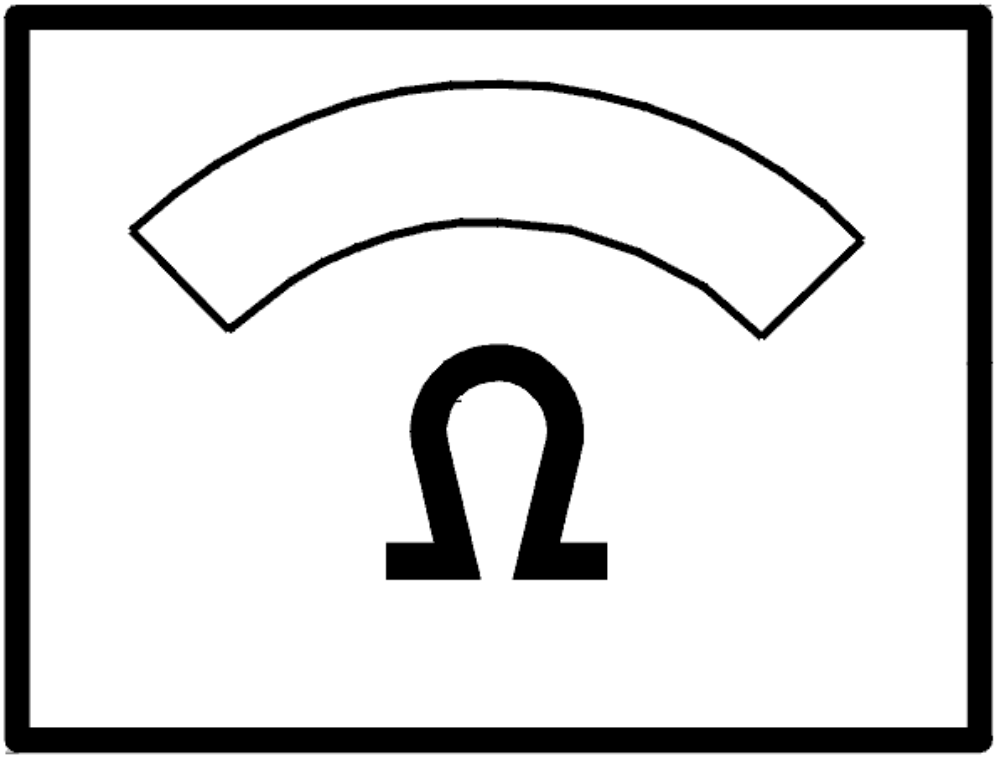

Fig. 43: Identifying Ohmmeter
Courtesy of VOLVO CARS CORPORATION

CHECKING FOR A SHORT-CIRCUIT

Measure the resistance between the fuse holder secondary side (left) and ground.

The ohmmeter should read infinite resistance.

NOTE: If the value is correct the fault may be intermittent.

Now fault-trace for an intermittent short-circuit to ground.

If the ohmmeter displays a fault (short-circuit), fault-trace the cables between the fuse and terminal #B12 on the connectors for the door control modules. Check for a short-circuit to ground.

Replace fuse.

Other information

- To access the integrated relay/fusebox in the cargo compartment, see **RELAY/FUSE BOX CARGO COMPARTMENT/REAR ELECTRONIC MODULE (REM), REPLACING**
- see **CHECKING WIRING AND TERMINALS** .

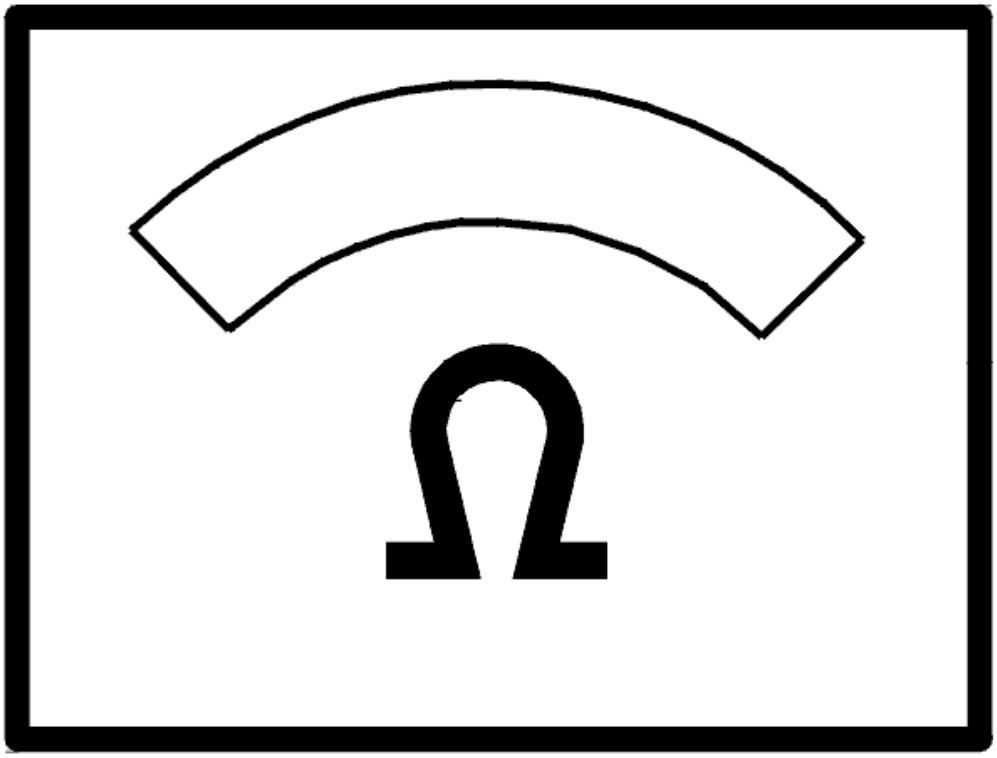

Fig. 44: Identifying Ohmmeter
Courtesy of VOLVO CARS CORPORATION

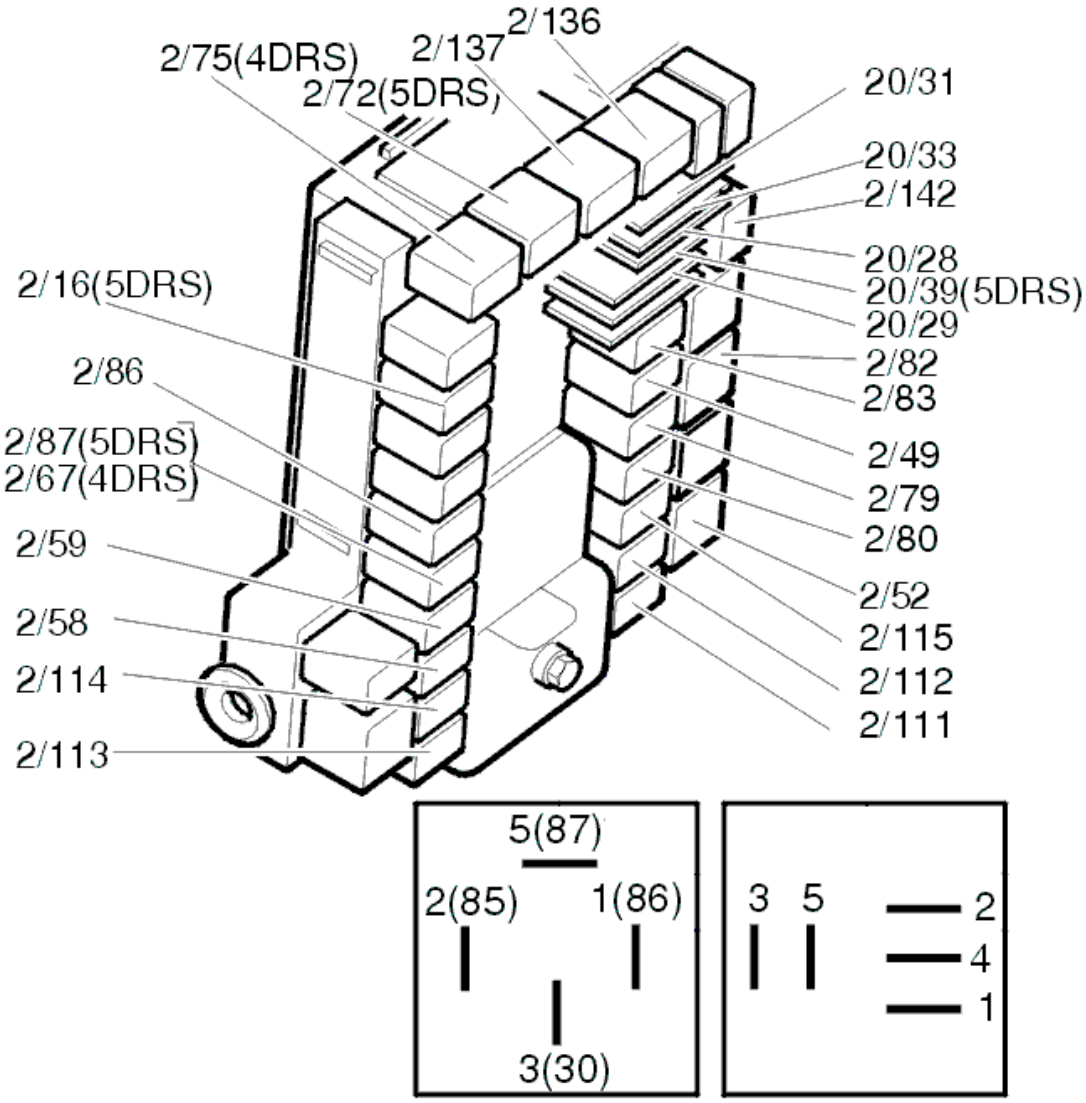

Fig. 45: Identifying Relays
Courtesy of VOLVO CARS CORPORATION

CHECKING THE CABLES FOR THE LOCK MOTOR

Check the connectors for the door control module and lock unit. Check for contact resistance and oxidation.

Check the cable between door control module connector terminal #B2 and lock unit connector terminal #8. Check for an open-circuit.

Check the cable between door control module connector terminal #B6 and lock unit connector terminal #7. Check for an open-circuit.

Other information

- To access and replace the rear electronic module (REM), see **RELAY/FUSE BOX CARGO**

COMPARTMENT/REAR ELECTRONIC MODULE (REM), REPLACING

- see **CHECKING WIRING AND TERMINALS** .

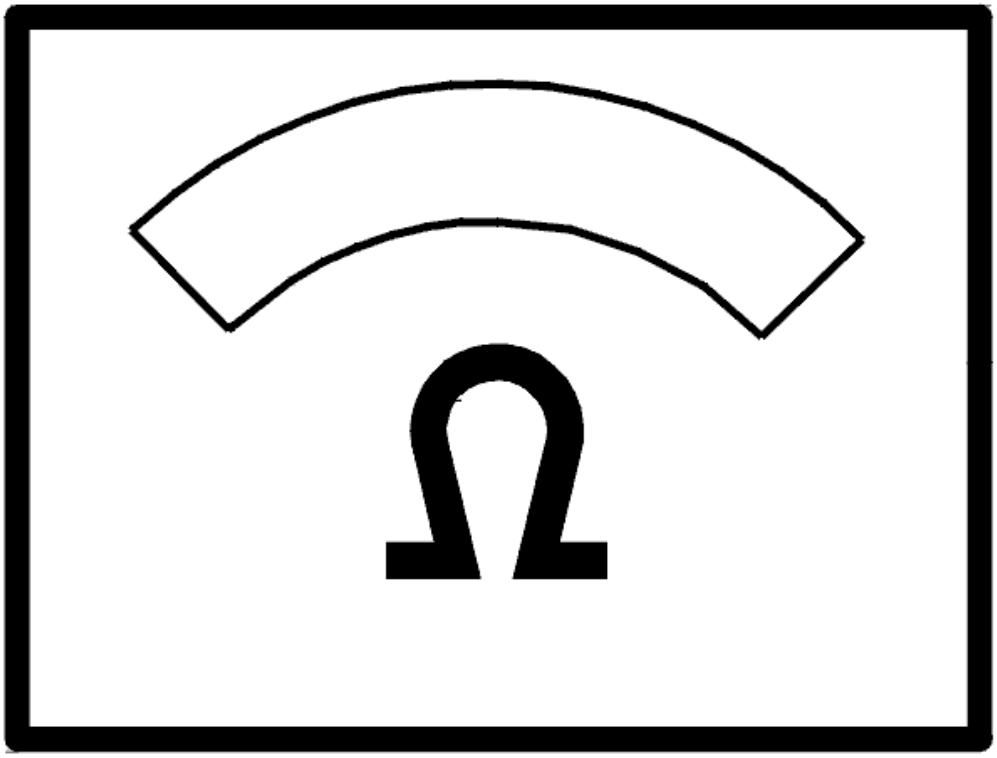

Fig. 46: Identifying Ohmmeter
Courtesy of VOLVO CARS CORPORATION

Was a fault detected?

- **YES**

  OKAY: Troubleshooting has been completed.

- **NO**

  Refer to **REPLACING THE COMPONENT**

REPLACING THE COMPONENT

Replace the lock unit. See **LOCK MECHANISM FRONT SIDE DOOR, REPLACING** .

Was a fault detected?

- **YES**

  OKAY: Troubleshooting has been completed.

- **NO**

  Refer to **REPLACING THE COMPONENT**

REPLACING THE COMPONENT

Replace the rear electronic module (REM). See **RELAY/FUSE BOX CARGO COMPARTMENT/REAR ELECTRONIC MODULE (REM), REPLACING** .

CHECKING THE LEFT REAR DOOR

CHECK

Is the lock for the right rear door also not functioning?

- **YES**

  Refer to **REPLACING THE COMPONENT**

- **NO**

  Refer to **CIRCUIT TEST**

REPLACING THE COMPONENT

Replace the relays for locking and unlocking in the integrated relay/fusebox in the cargo compartment. Check the relay base switches. Check for contact resistance and oxidation.

Other information

- To access the integrated relay/fusebox in the cargo compartment, see **RELAY/FUSE BOX CARGO COMPARTMENT/REAR ELECTRONIC MODULE (REM), REPLACING**
- see **CHECKING WIRING AND TERMINALS** .

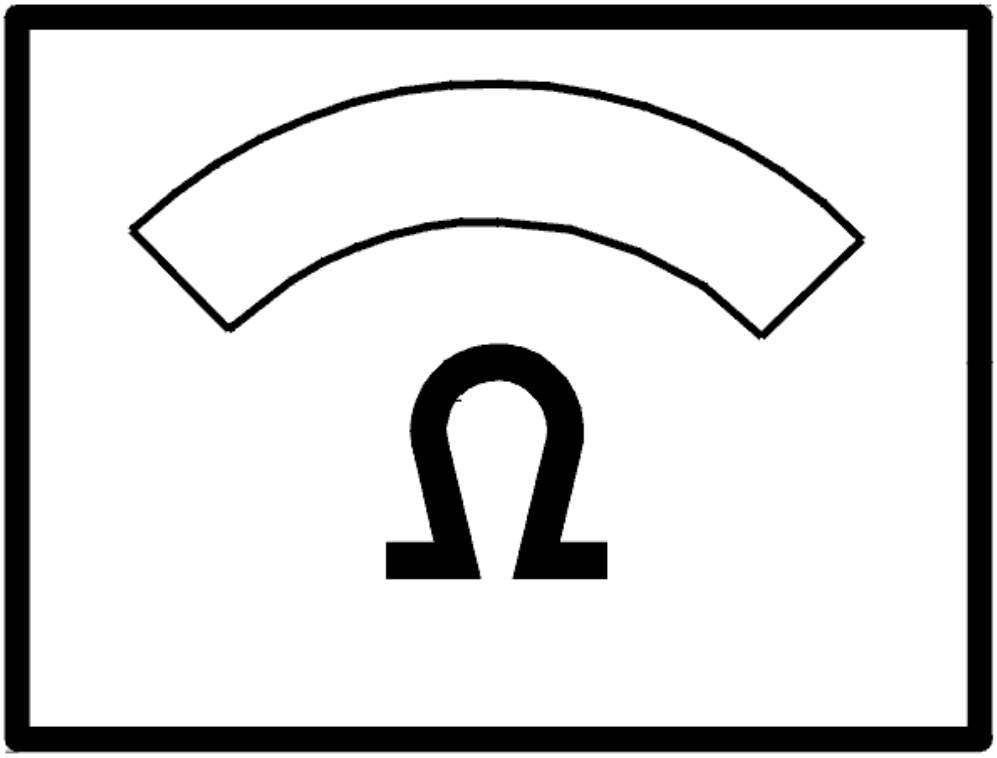

Fig. 47: Identifying Ohmmeter
Courtesy of VOLVO CARS CORPORATION

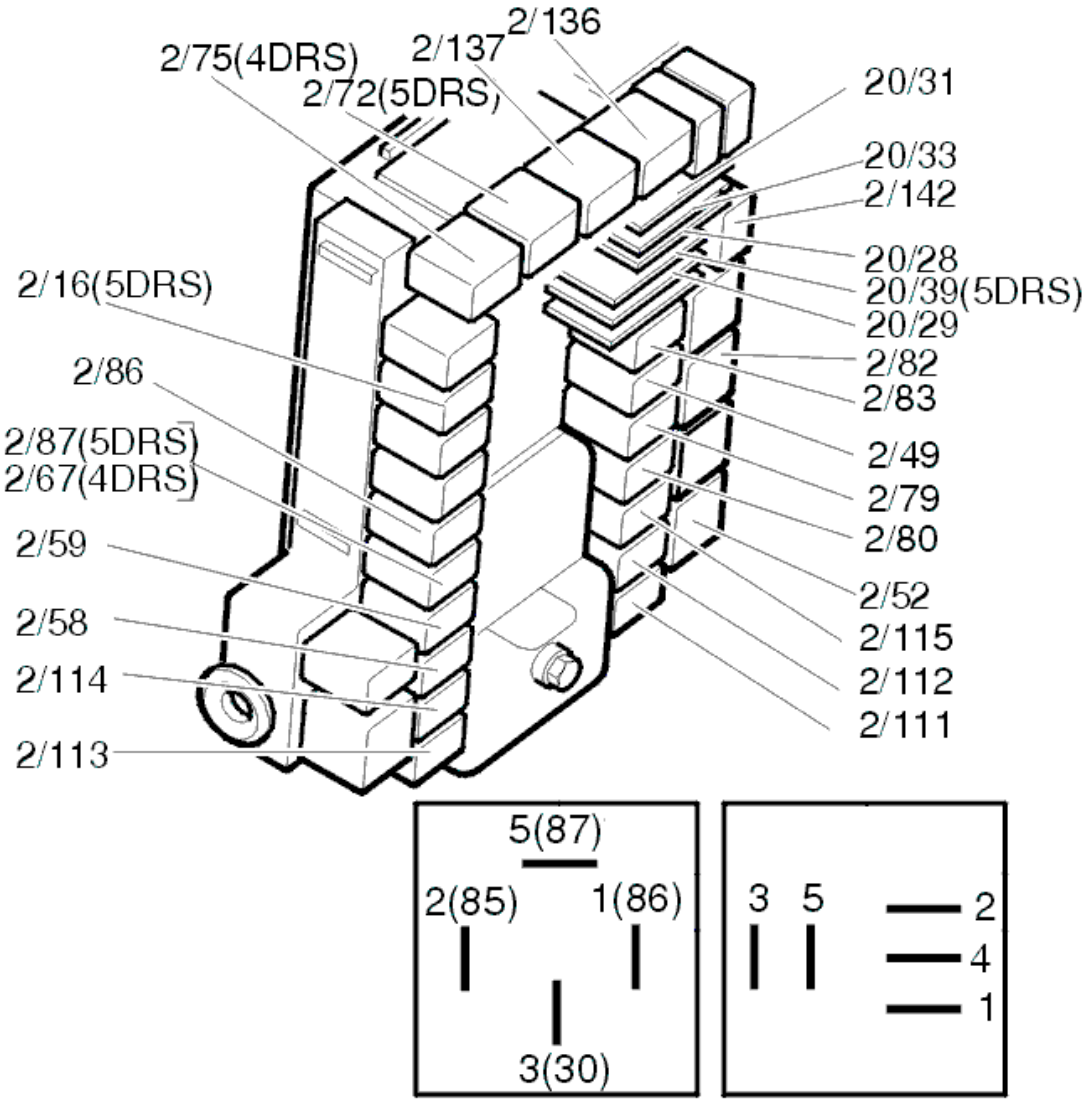

Fig. 48: Identifying Relays
Courtesy of VOLVO CARS CORPORATION

Was a fault detected?

- **YES**

  OKAY: Troubleshooting has been completed.

- **NO**

  Refer to **CHECKING FUSES**

CIRCUIT TEST

The fault indicates an open-circuit in the lock unit circuit.

Disconnect the connector at the lock unit.

Check the connectors for contact resistance and oxidation.

Measure the resistance between terminals terminal #4 and #6 on the cable connector.

Other information

- To access and replace the lock unit, see **LOCK MECHANISM REAR SIDE DOOR, REPLACING**
- see **CHECKING WIRING AND TERMINALS** .

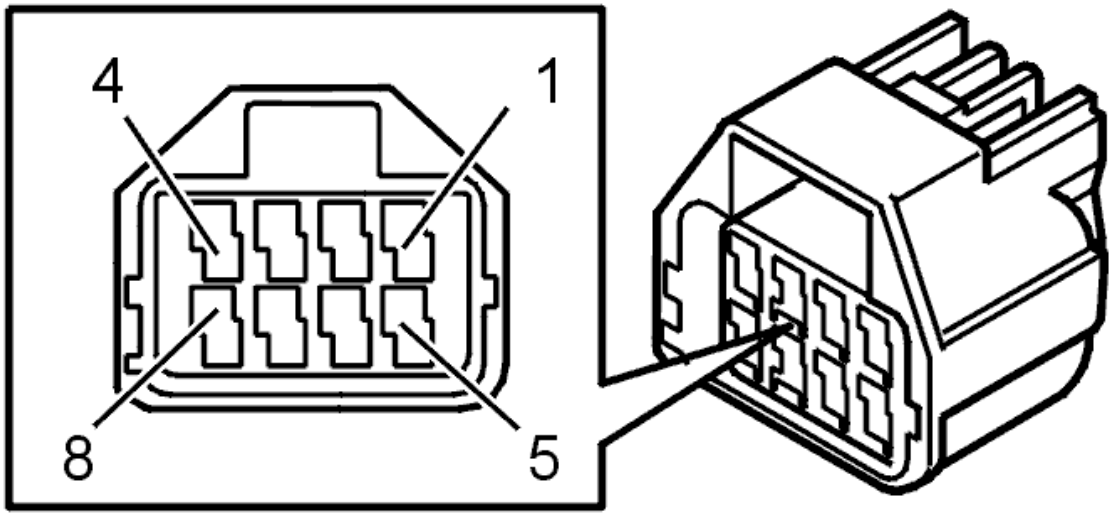

Fig. 49: Identifying Connector Terminals
Courtesy of VOLVO CARS CORPORATION

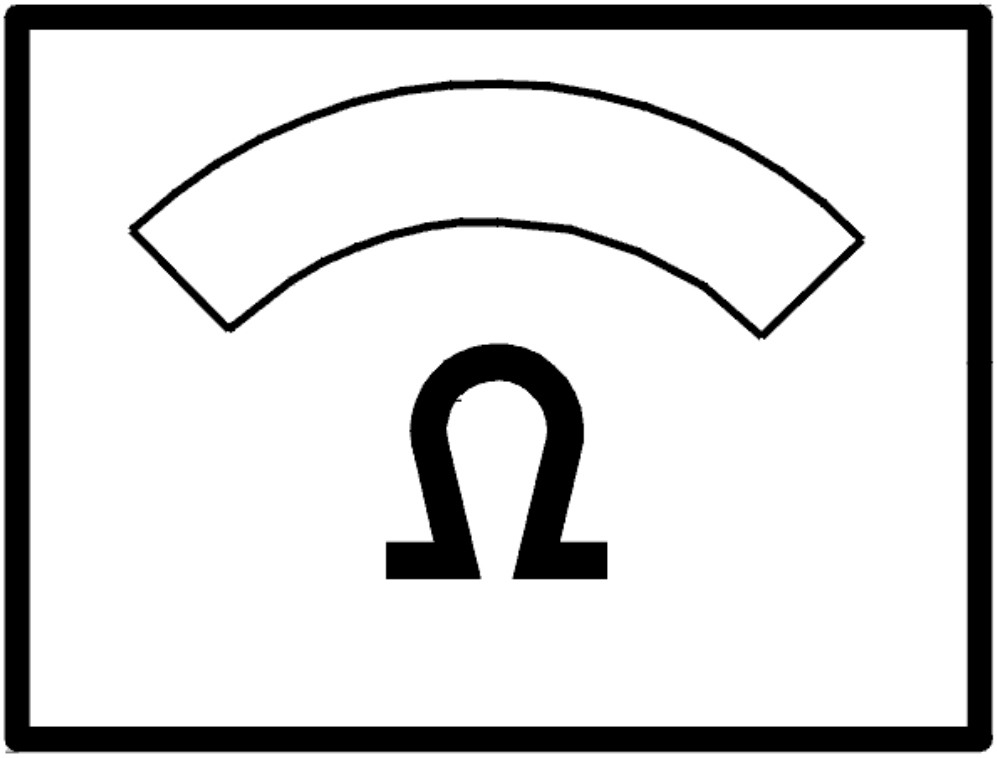

Fig. 50: Identifying Ohmmeter
Courtesy of VOLVO CARS CORPORATION

The ohmmeter should read 0 ohms.

- **OK**

  Refer to **CHECKING THE COMPONENT**

- **NOT OK**

  Refer to **CIRCUIT TEST CONTINUED**

CIRCUIT TEST CONTINUED

Measure the resistance between terminal #4 and ground and between terminal #6 and ground on the cable

connector.

The ohmmeter should read 0 ohms.

1. The ohmmeter displays a fault between terminal #4 and ground. Refer to **CHECKING THE LOCKING RELAY CIRCUIT**.
2. The ohmmeter displays a fault between terminal #4 and ground. Refer to **CHECKING THE UNLOCKING RELAY CIRCUIT**.

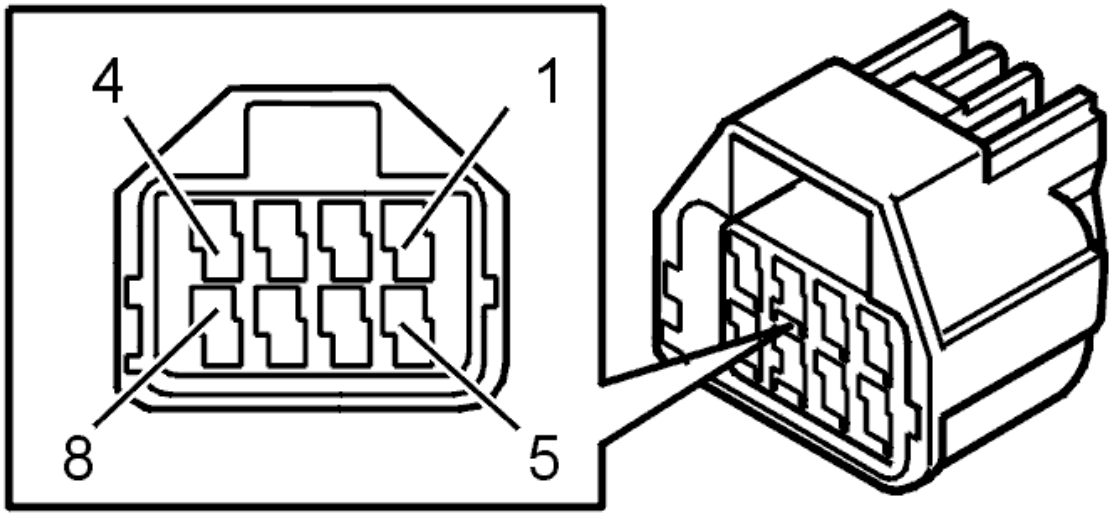

Fig. 51: Identifying Connector Terminals
Courtesy of VOLVO CARS CORPORATION

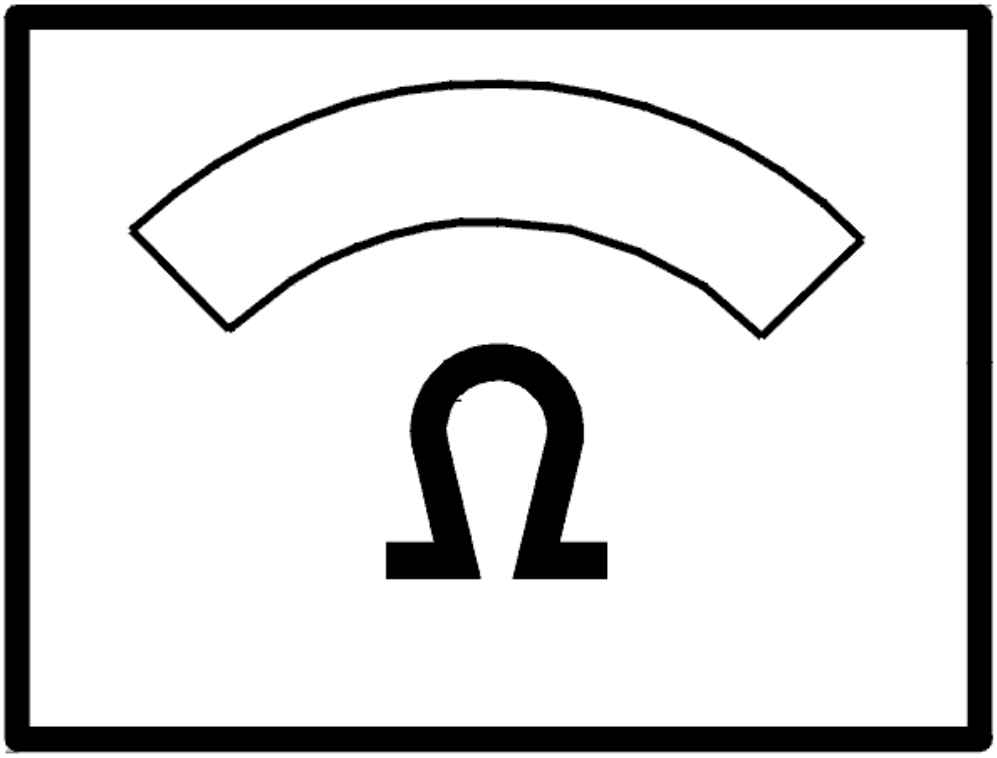

Fig. 52: Identifying Ohmmeter
Courtesy of VOLVO CARS CORPORATION

CHECKING THE UNLOCKING RELAY CIRCUIT

Remove the relay for unlocking the left rear door.

Check the cable between terminal #4 the cable and connector and terminal #3 on the relay base. Check for an open-circuit.

If a fault is detected, check in particular the 2 intermediate connectors in the cable harness. Check for contact resistance and oxidation.

Remedy as necessary.

If no fault is detected, measure the resistance between terminal #4 in the relay base and ground.

The ohmmeter should read 0 ohms.

If the resistance is incorrect, replace the rear electronic module (REM).

Other information

- To access and replace the rear electronic module (REM), see **RELAY/FUSE BOX CARGO COMPARTMENT/REAR ELECTRONIC MODULE (REM), REPLACING**
- see **CHECKING WIRING AND TERMINALS** .

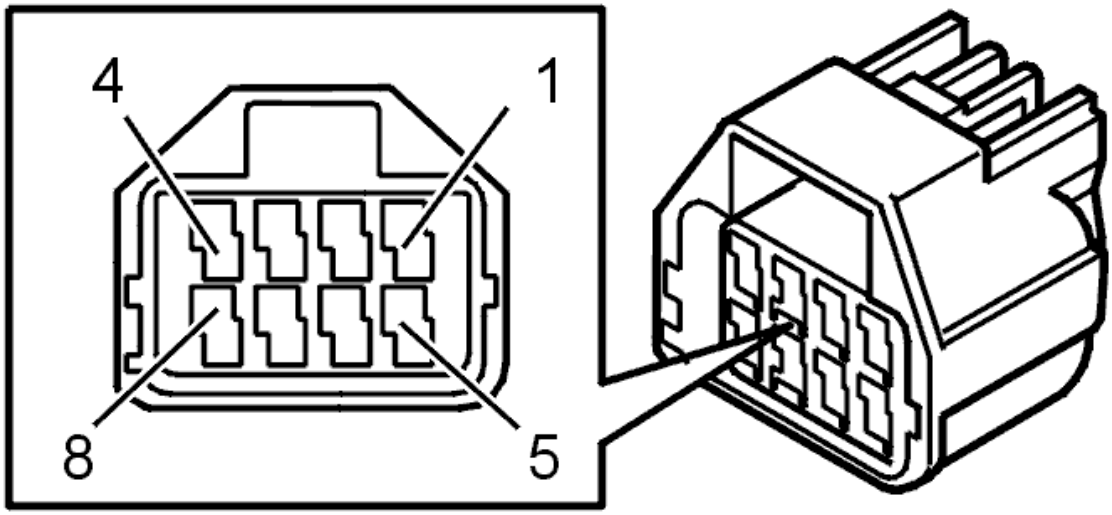

Fig. 53: Identifying Connector Terminals
Courtesy of VOLVO CARS CORPORATION

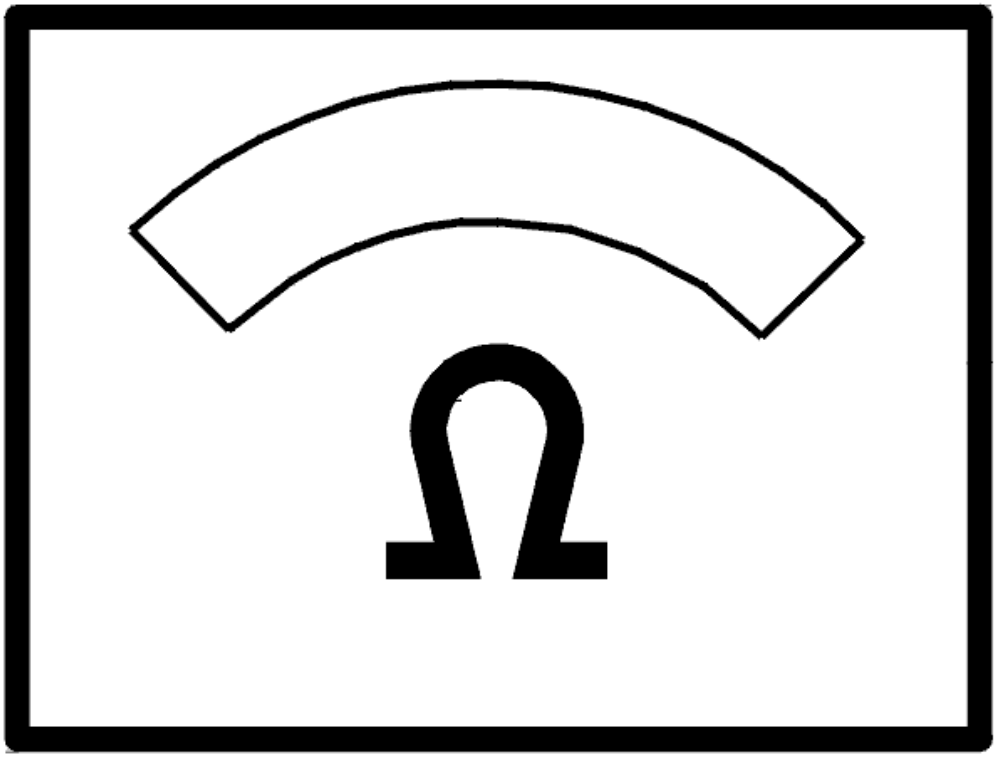

Fig. 54: Identifying Ohmmeter
Courtesy of VOLVO CARS CORPORATION

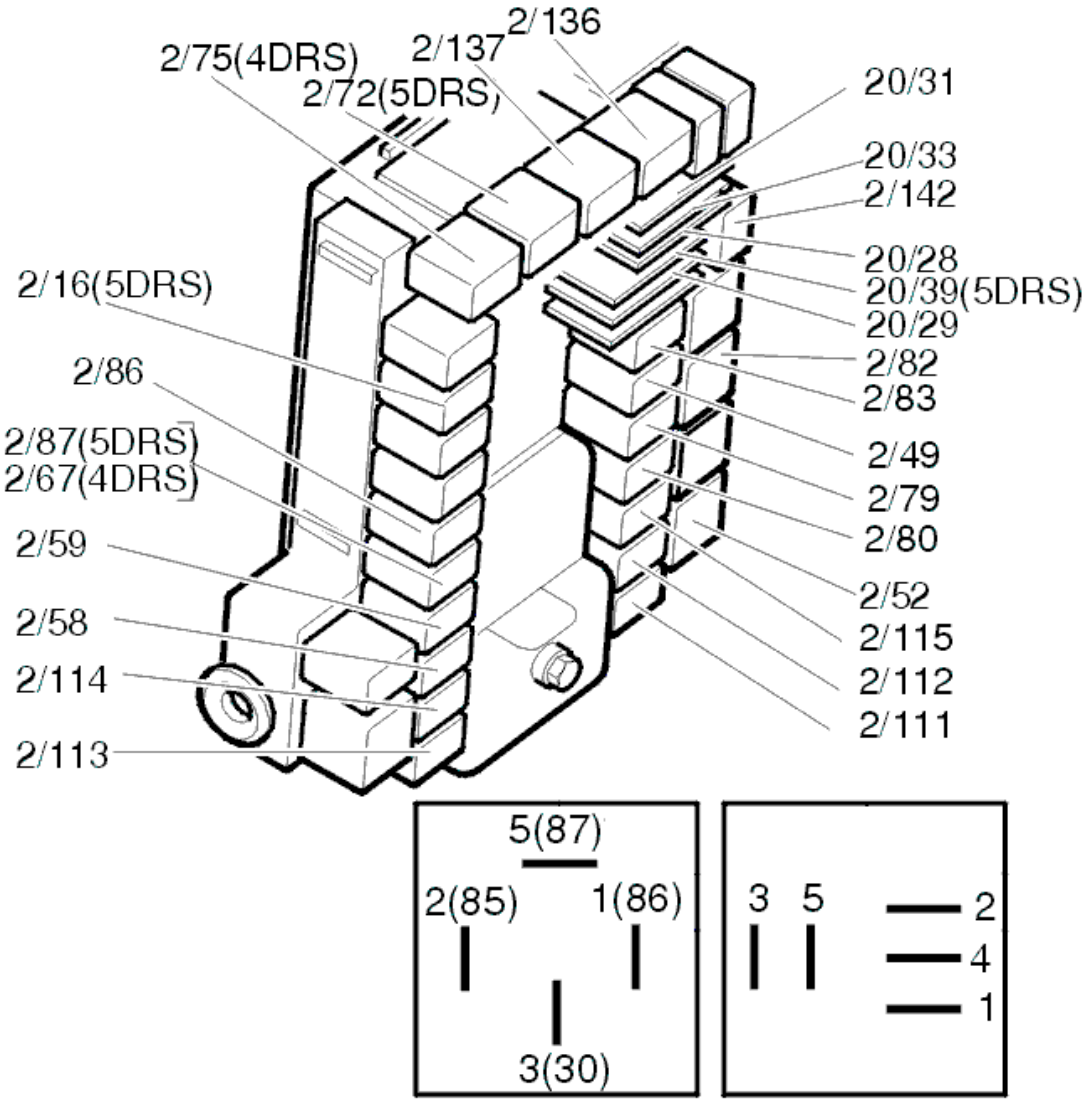

Fig. 55: Identifying Relays
Courtesy of VOLVO CARS CORPORATION

CHECKING THE LOCKING RELAY CIRCUIT

Remove the central locking relay.

Check the cable between terminal #6 the cable and connector and terminal #3 on the relay base. Check for an open-circuit.

If a fault is detected, check in particular the 2 intermediate connectors in the cable harness. Check for contact resistance and oxidation.

Remedy as necessary.

If no fault is detected, measure the resistance between terminal #4 in the relay base and ground.

The ohmmeter should read 0 ohms.

If the resistance is incorrect, replace the rear electronic module (REM).

Other information

- To access and replace the rear electronic module (REM), see **RELAY/FUSE BOX CARGO COMPARTMENT/REAR ELECTRONIC MODULE (REM), REPLACING**
- see **CHECKING WIRING AND TERMINALS** .

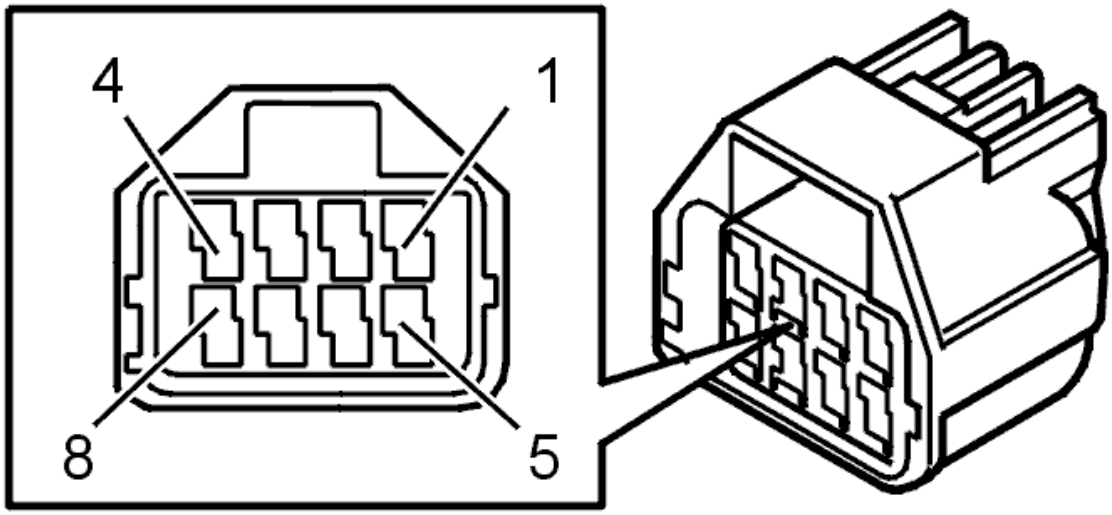

Fig. 56: Identifying Connector Terminals
Courtesy of VOLVO CARS CORPORATION

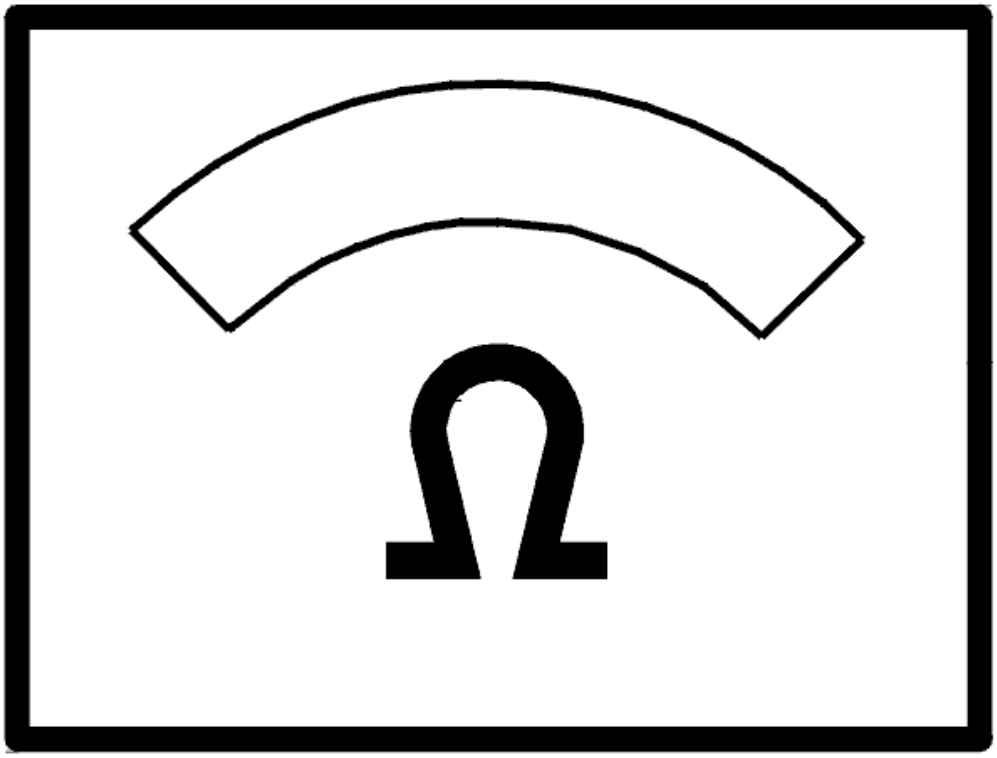

Fig. 57: Identifying Ohmmeter
Courtesy of VOLVO CARS CORPORATION

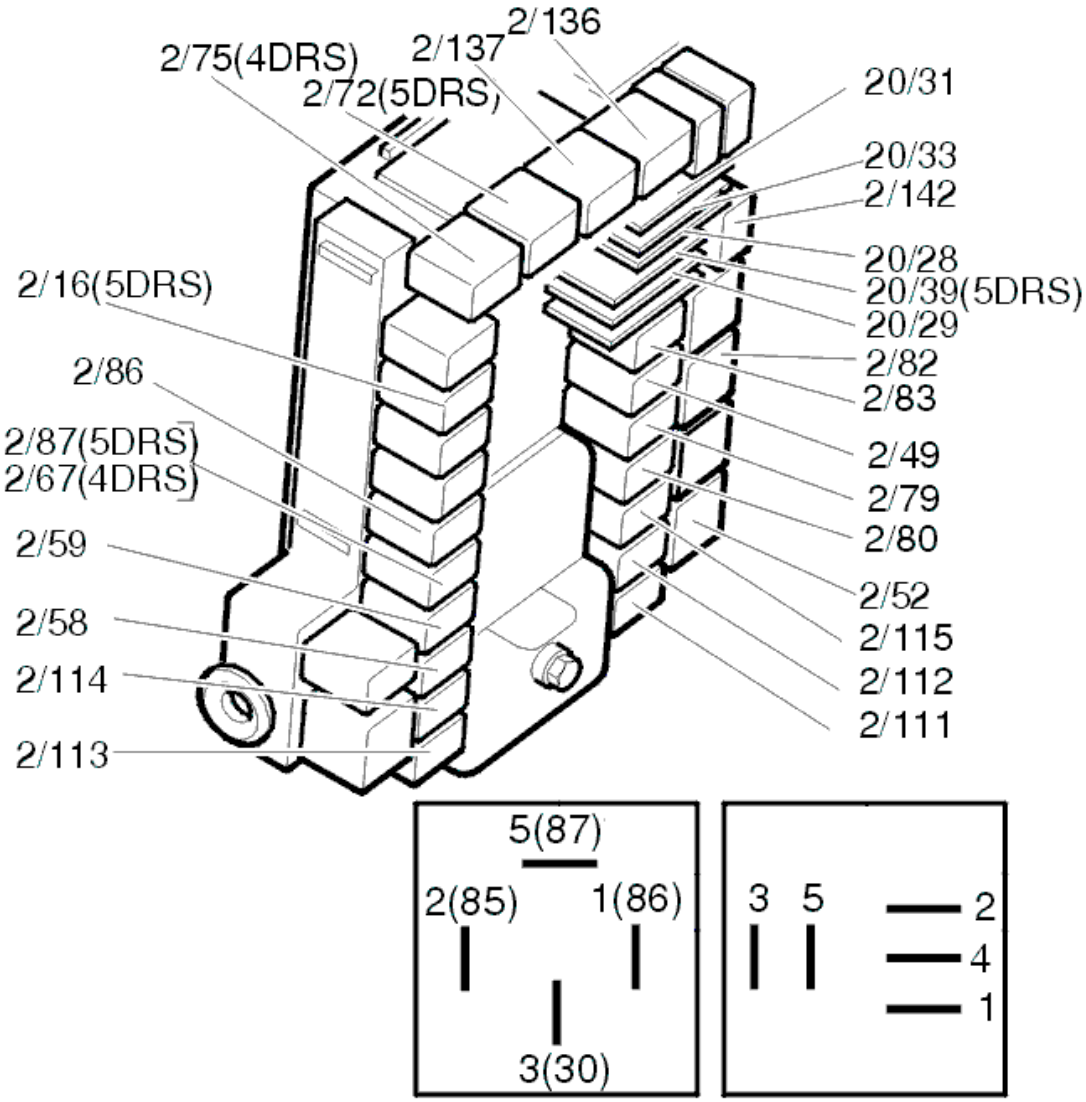

Fig. 58: Identifying Relays
Courtesy of VOLVO CARS CORPORATION

CHECKING THE COMPONENT

Measure the resistance between pins terminals #4 and #6 on the chassis switch lock unit.

The ohmmeter should read 5 ohms.

If the resistance is incorrect, replace the lock unit.

Remedy as necessary.

Other information

- To access the rear electronic module (REM), see **RELAY/FUSE BOX CARGO**

COMPARTMENT/REAR ELECTRONIC MODULE (REM), REPLACING

- To access and replace the lock unit, see **LOCK MECHANISM REAR SIDE DOOR, REPLACING**
- For further information about signals and other values, see **SIGNAL SPECIFICATION** .

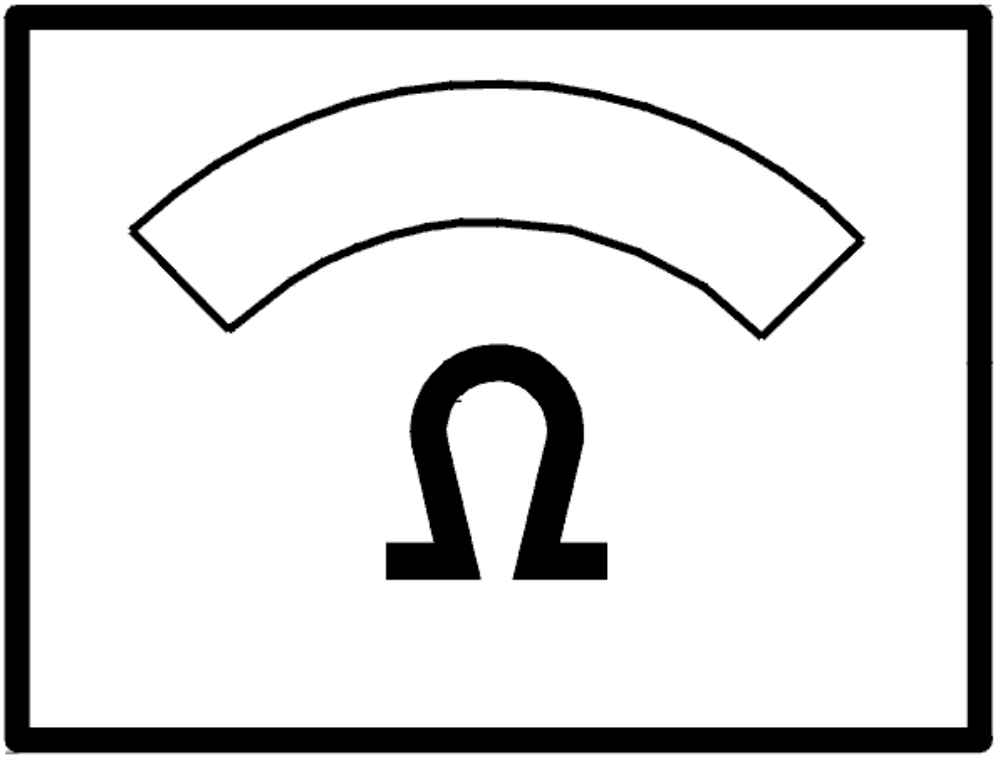

Fig. 59: Identifying Ohmmeter
Courtesy of VOLVO CARS CORPORATION

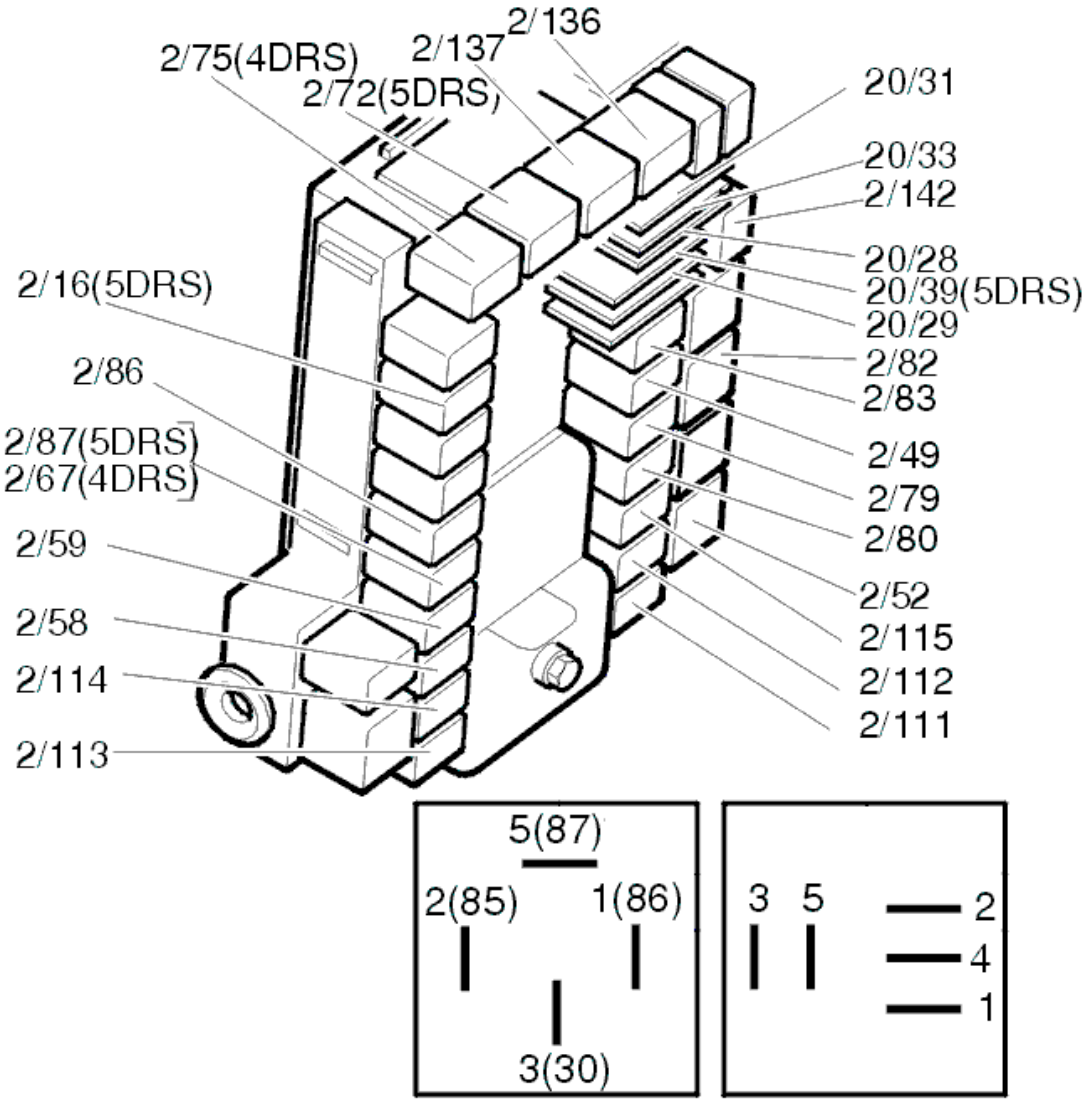

Fig. 60: Identifying Relays
Courtesy of VOLVO CARS CORPORATION

Was a fault detected?

- **YES**

  OKAY: Troubleshooting has been completed.

- **NO**

  Refer to **CHECKING FOR A SHORT-CIRCUIT**

CHECKING FUSES

Remove fuse 11D/8 from the cargo compartment fusebox.

Check that fuse 11D/8 is intact. Check for contact resistance and oxidation.

Other information

- To access the rear electronic module (REM), see **RELAY/FUSE BOX CARGO COMPARTMENT/REAR ELECTRONIC MODULE (REM), REPLACING**
- see **CHECKING WIRING AND TERMINALS** .

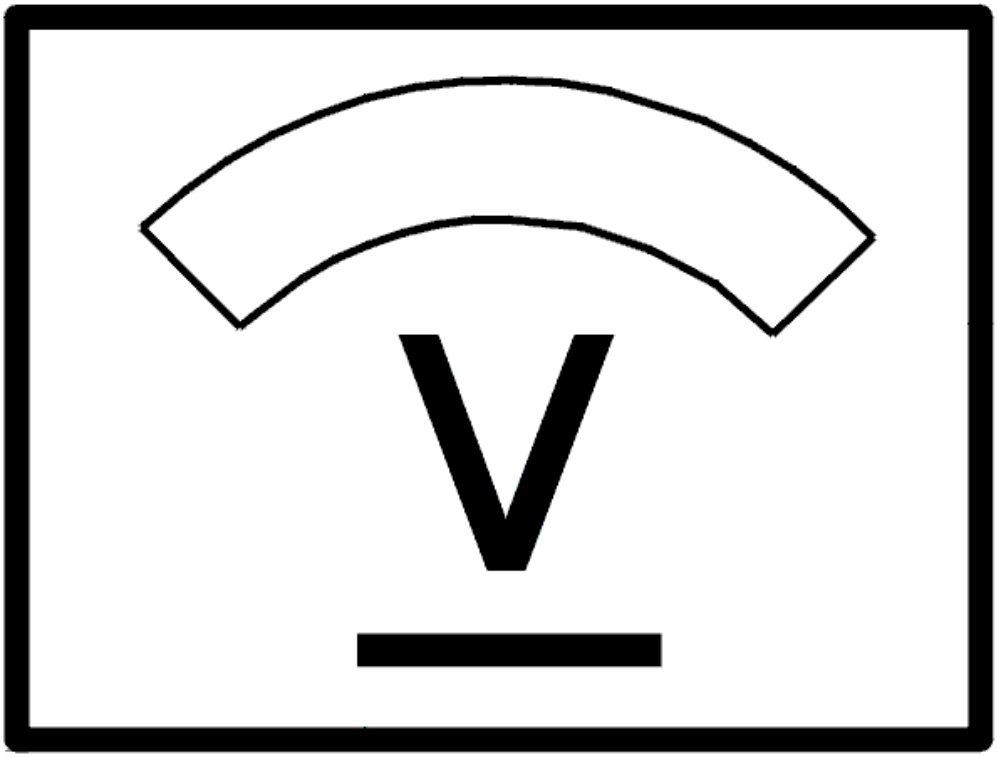

Fig. 61: Identifying Voltage Display
Courtesy of VOLVO CARS CORPORATION

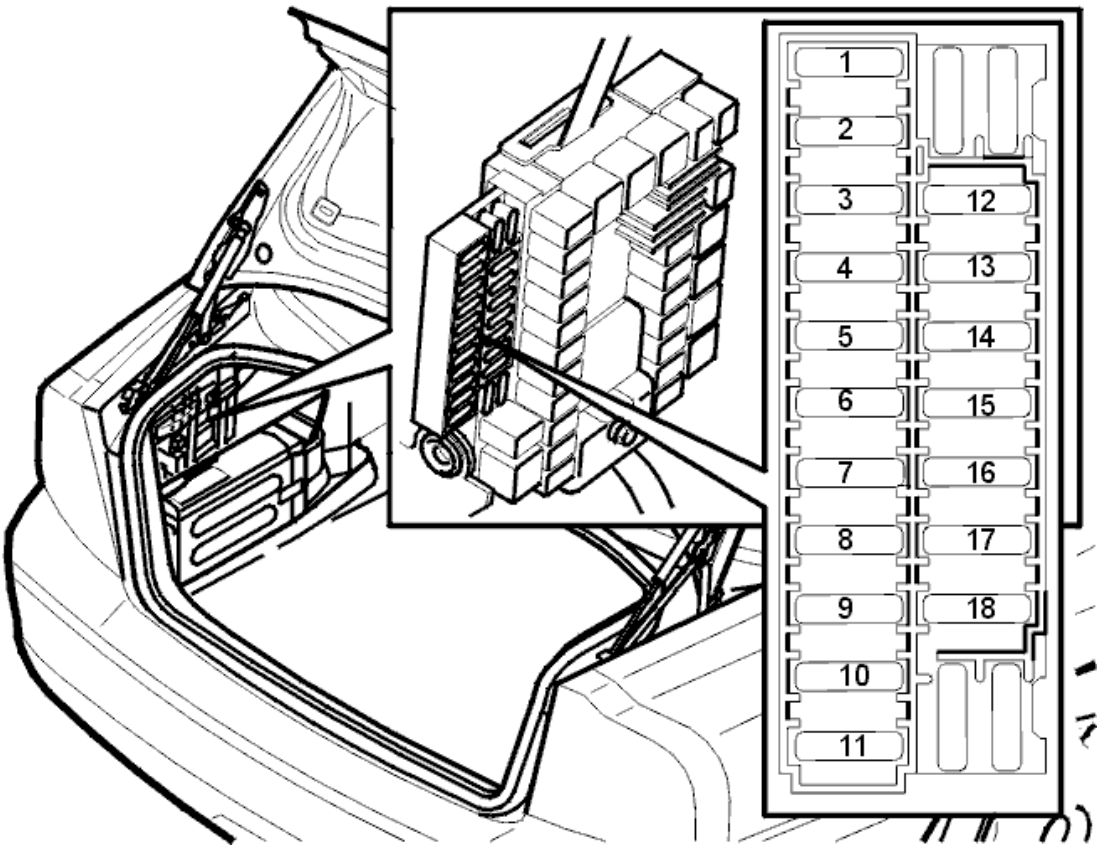

Fig. 62: Fuse Holder (Cargo Compartment)
Courtesy of VOLVO CARS CORPORATION

Is the fuse intact?

- **YES**

  Refer to **CHECKING FOR AN OPEN-CIRCUIT**

- **NO**

  Refer to **CHECKING FOR A SHORT-CIRCUIT**

CHECKING FOR AN OPEN-CIRCUIT

Remove the central locking relay in the rear electronic module (REM) and fault-trace the cable between the fuse holder secondary side (left) and terminal #5 in the relay base. Check for an open-circuit.

Other information

- To access the rear electronic module (REM), see **RELAY/FUSE BOX CARGO COMPARTMENT/REAR ELECTRONIC MODULE (REM), REPLACING**
- see **CHECKING WIRING AND TERMINALS** .

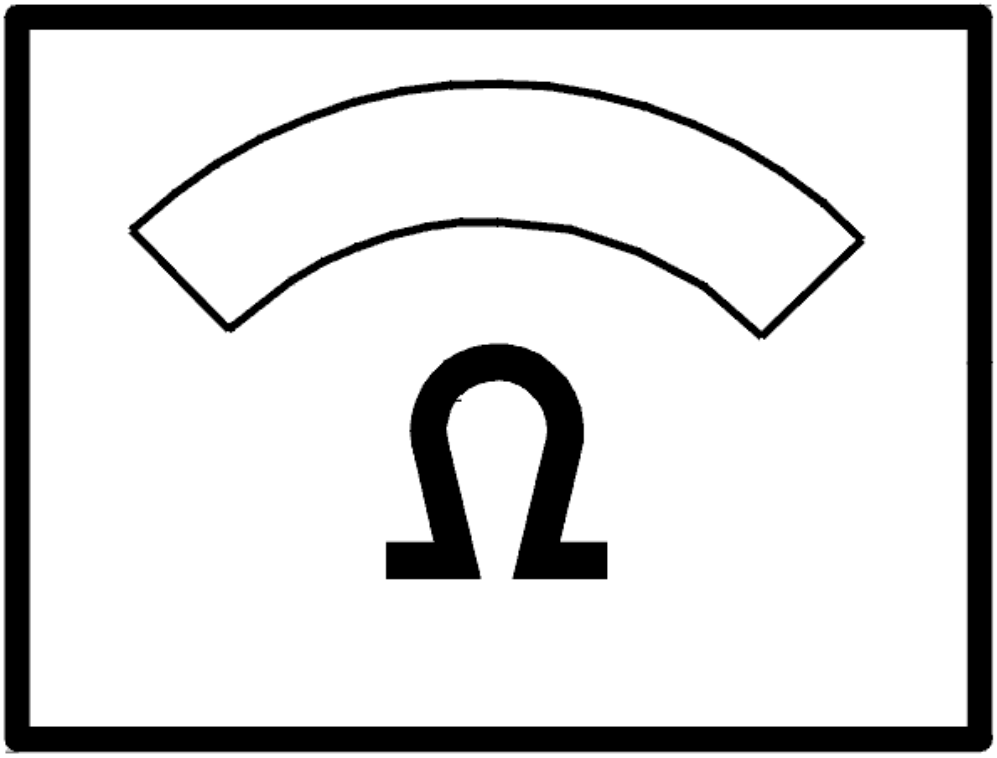

Fig. 63: Identifying Ohmmeter
Courtesy of VOLVO CARS CORPORATION

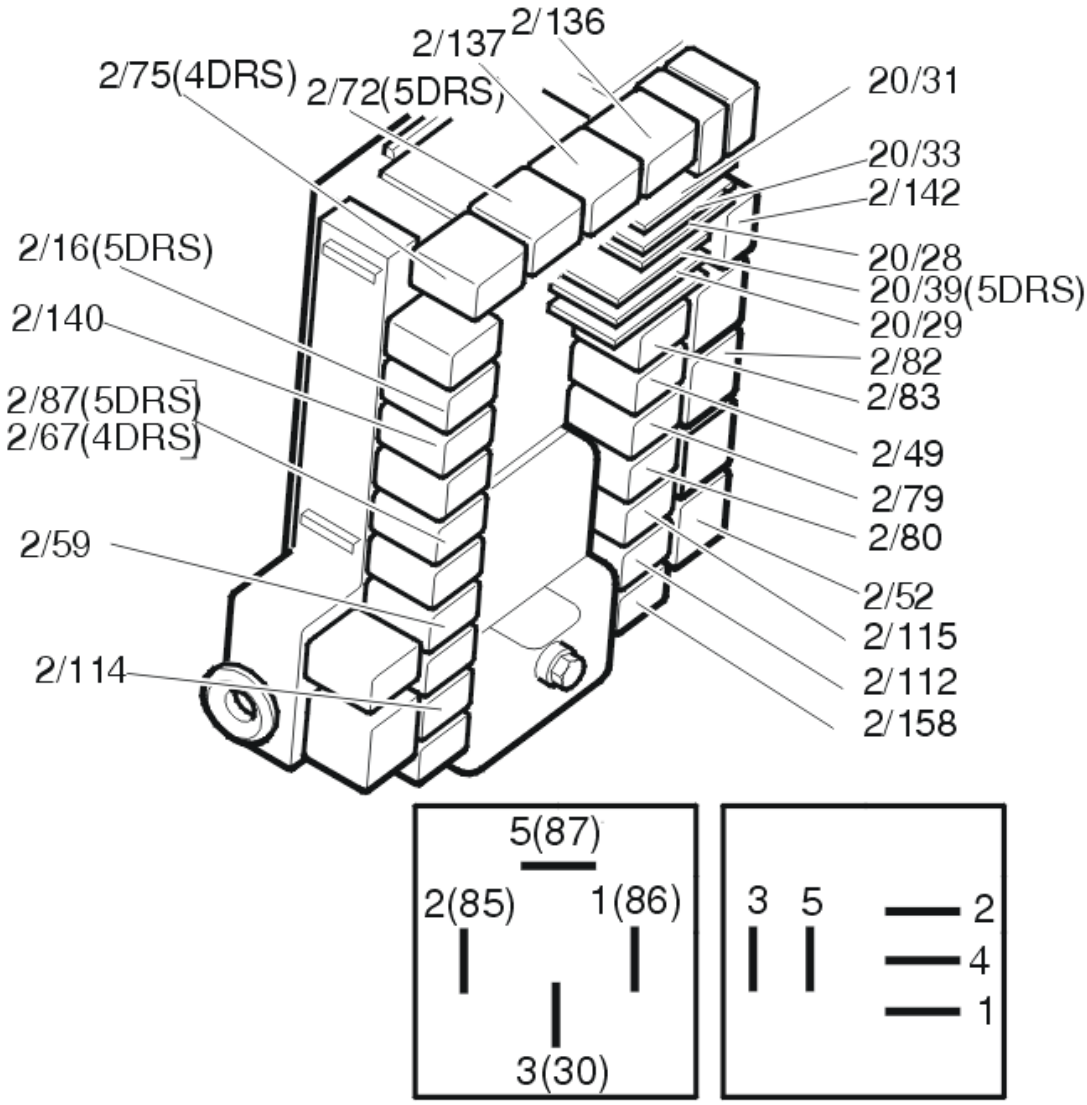

Fig. 64: Identifying Relays
Courtesy of VOLVO CARS CORPORATION

CHECKING FOR A SHORT-CIRCUIT

Measure the resistance between the fuse holder secondary side (left) and ground.

The ohmmeter should read infinite resistance.

If the value is correct, replace the fuse.

Fault-trace all affected relay circuits for a short-circuit to ground if the value is incorrect.

HINT: Replace fuse.

HINT: If the fuse blows immediately the short-circuit is in the relay power cable.

HINT: If the fuse blows when the relevant relay is activated, the short-circuit is in the component power supply cable

HINT: The relay circuits that are affected belong to the central locking relay, unlocking rear left door relay and unlocking rear right door relay.

Other information

- To access the rear electronic module (REM), see **RELAY/FUSE BOX CARGO COMPARTMENT/REAR ELECTRONIC MODULE (REM), REPLACING**
- see **CHECKING WIRING AND TERMINALS** .

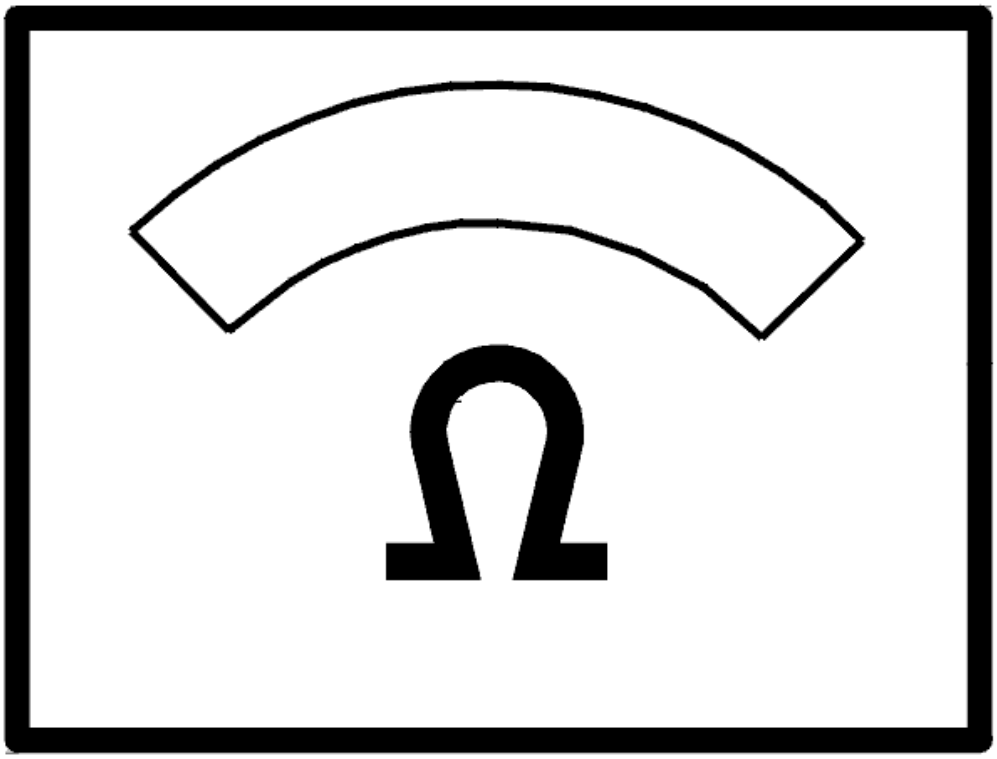

Fig. 65: Identifying Ohmmeter
Courtesy of VOLVO CARS CORPORATION

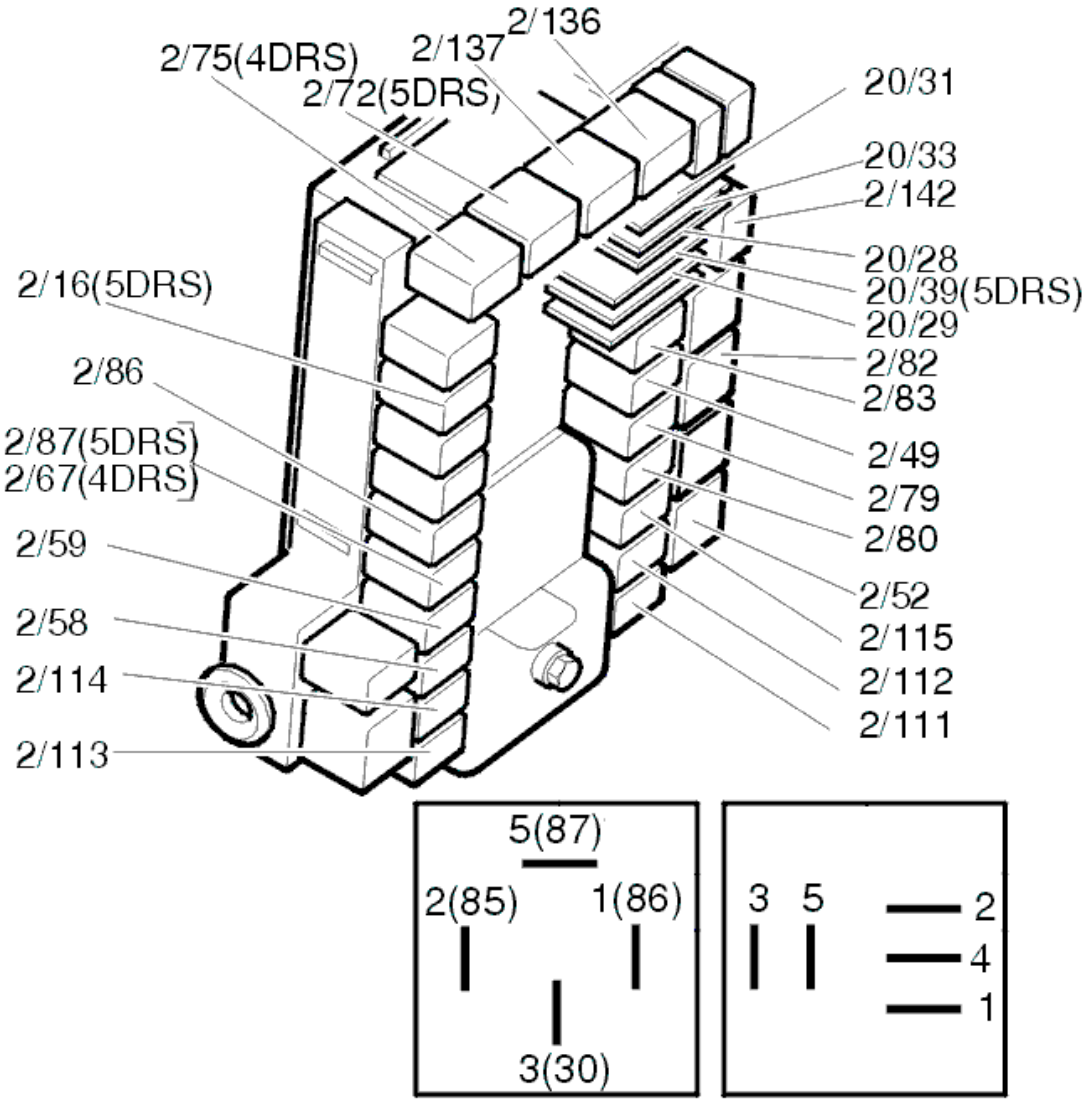

Fig. 66: Identifying Relays
Courtesy of VOLVO CARS CORPORATION

CHECKING THE RIGHT REAR DOOR

CHECK

Is the lock for the left rear door also not functioning?

- **YES**

  Refer to **REPLACING THE COMPONENT**

- **NO**

  Refer to **CIRCUIT TEST**

REPLACING THE COMPONENT

Replace the relays for locking and unlocking in the integrated relay/fusebox in the cargo compartment. Check the relay base switches. Check for contact resistance and oxidation.

Other information

- To access the integrated relay/fusebox in the cargo compartment, see **RELAY/FUSE BOX CARGO COMPARTMENT/REAR ELECTRONIC MODULE (REM), REPLACING**
- see **CHECKING WIRING AND TERMINALS** .

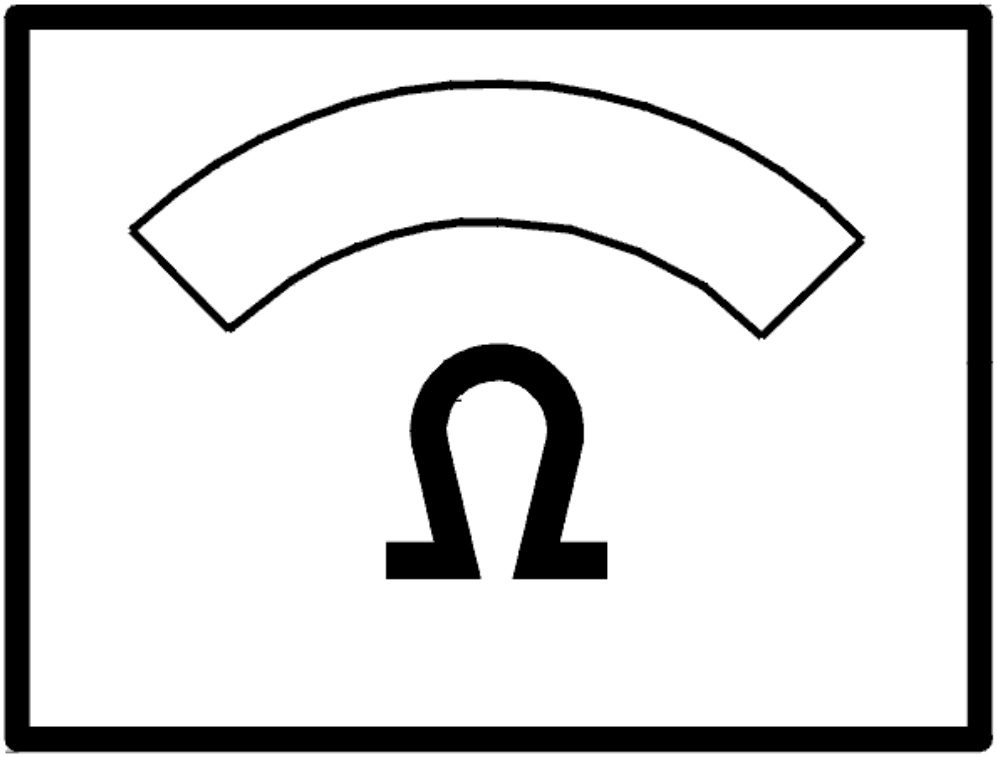

Fig. 67: Identifying Ohmmeter
Courtesy of VOLVO CARS CORPORATION

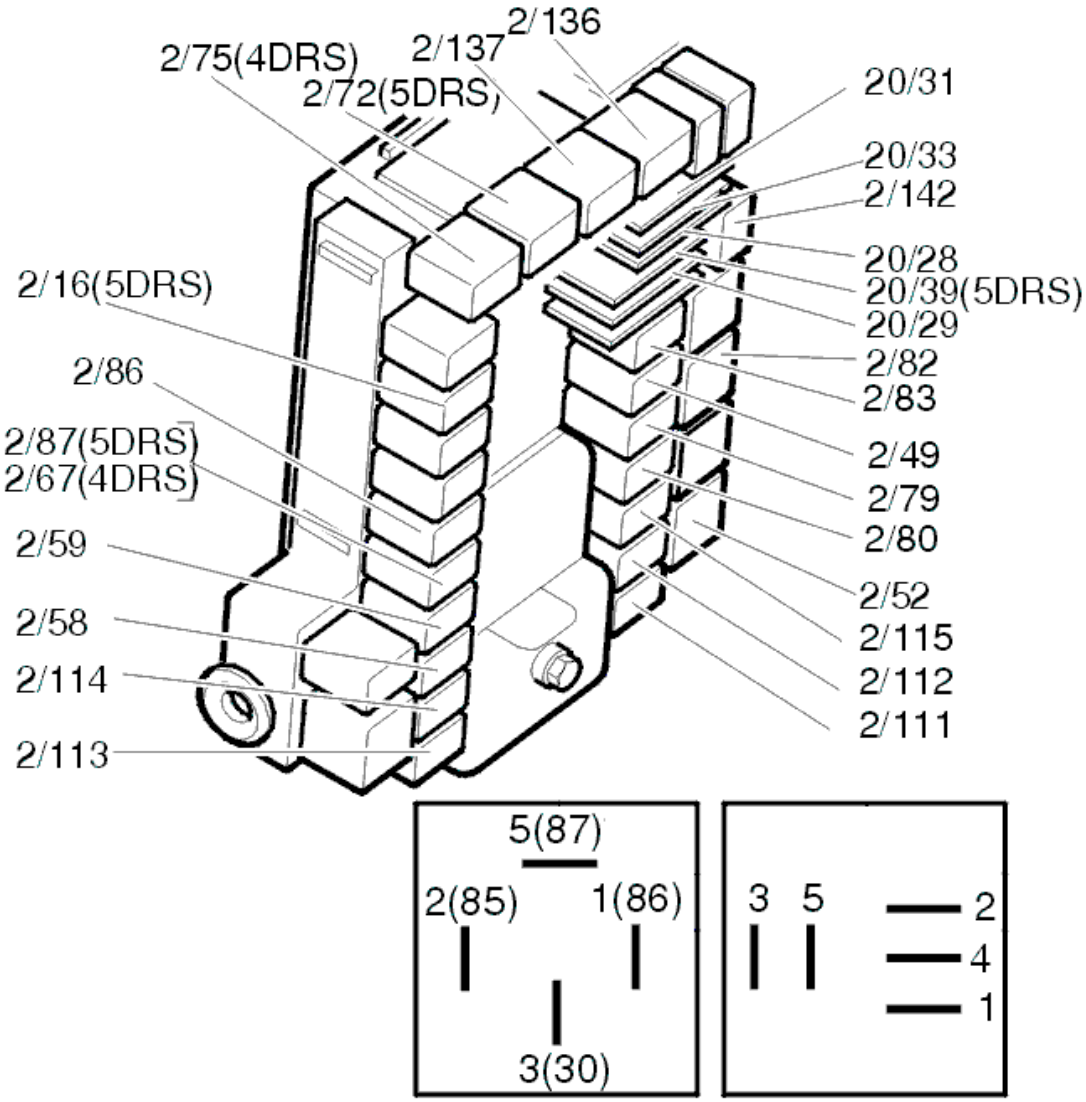

Fig. 68: Identifying Relays
Courtesy of VOLVO CARS CORPORATION

Was a fault detected?

- **YES**

  OKAY: Troubleshooting has been completed.

- **NO**

  Refer to **CHECKING FUSES**

CIRCUIT TEST

The fault indicates an open-circuit in the lock unit circuit.

Disconnect the connector at the lock unit.

Check the connectors for contact resistance and oxidation.

Measure the resistance between terminals terminal #4 and #6 on the cable connector.

Other information

- To access and replace the lock unit, see **LOCK MECHANISM REAR SIDE DOOR, REPLACING**
- see **CHECKING WIRING AND TERMINALS** .

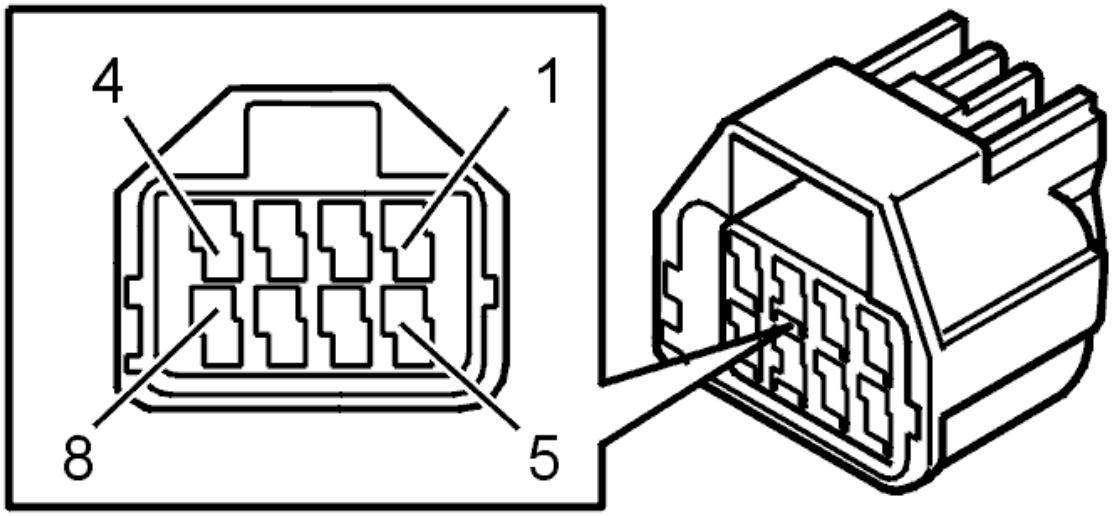

Fig. 69: Identifying Connector Terminals
Courtesy of VOLVO CARS CORPORATION

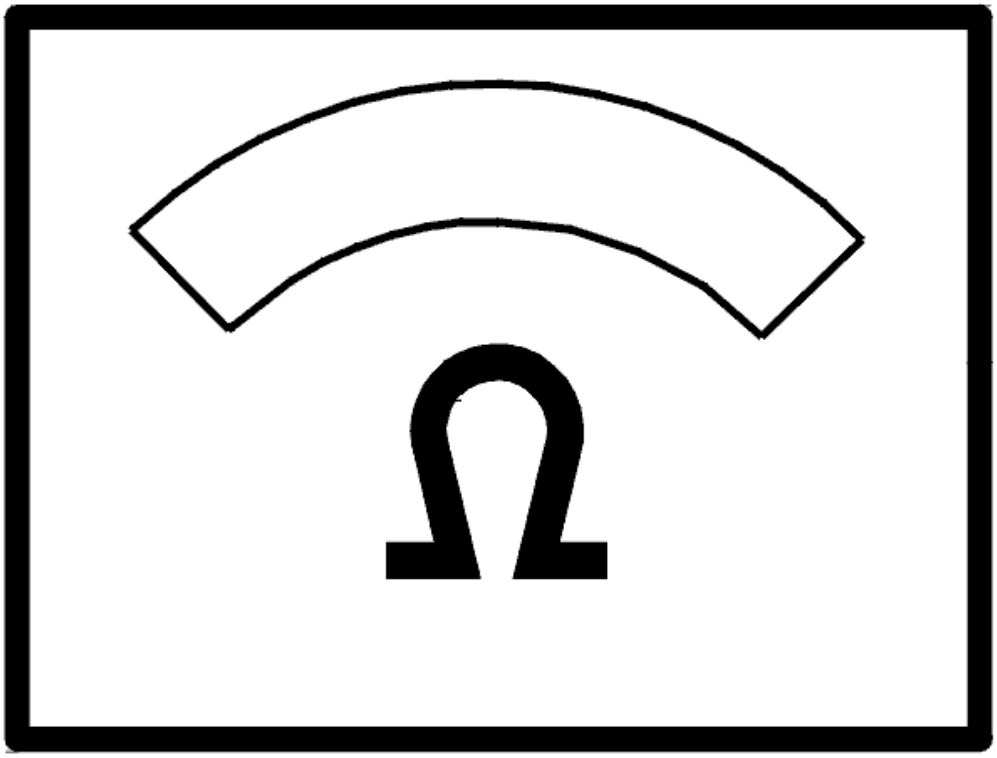

Fig. 70: Identifying Ohmmeter
Courtesy of VOLVO CARS CORPORATION

The ohmmeter should read 0 ohms.

- **OK**

  Refer to **CHECKING THE COMPONENT**

- **NOT OK**

  Refer to **CIRCUIT TEST CONTINUED**

CIRCUIT TEST CONTINUED

Measure the resistance between terminal #4 and ground and between terminal #6 and ground on the cable

connector.

The ohmmeter should read 0 ohms.

1. The ohmmeter displays a fault between terminal #4 and ground. Refer to **CHECKING THE LOCKING RELAY CIRCUIT**
2. The ohmmeter displays a fault between terminal #6 and ground. Refer to **CHECKING THE UNLOCKING RELAY CIRCUIT**

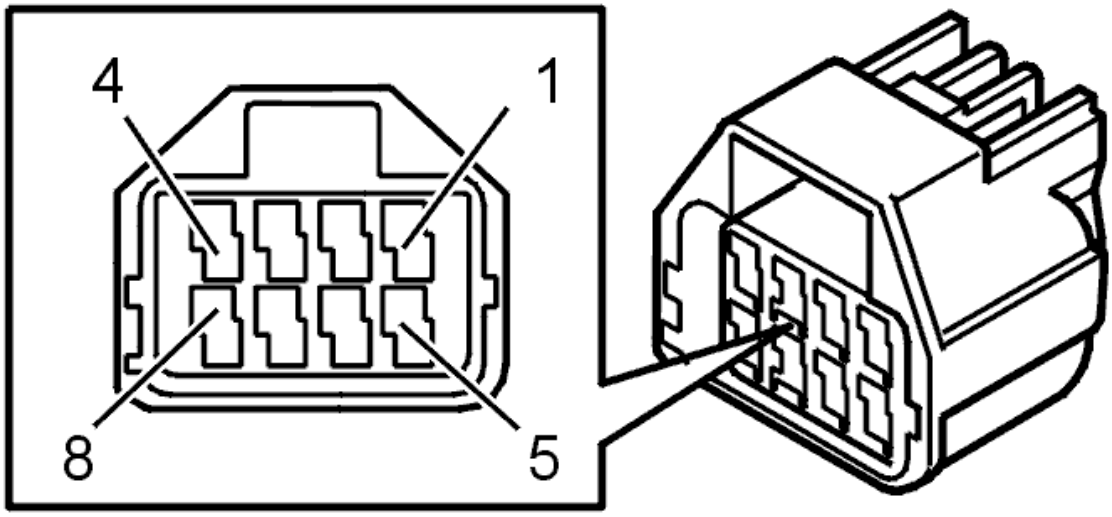

Fig. 71: Identifying Connector Terminals
Courtesy of VOLVO CARS CORPORATION

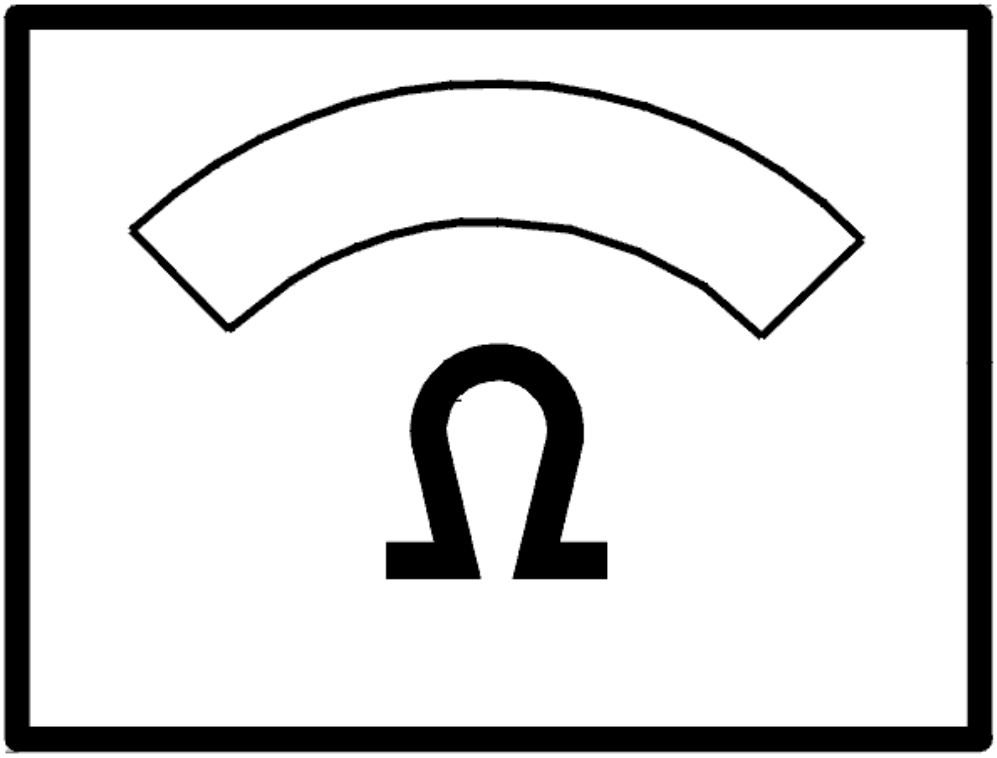

Fig. 72: Identifying Ohmmeter
Courtesy of VOLVO CARS CORPORATION

CHECKING THE UNLOCKING RELAY CIRCUIT

Remove the relay for unlocking the right rear door.

Check the cable between terminal #4 the cable and connector and terminal #3 on the relay base. Check for an open-circuit.

If a fault is detected, check in particular the 2 intermediate connectors in the cable harness. Check for contact resistance and oxidation.

Remedy as necessary.

If no fault is detected, measure the resistance between terminal #4 in the relay base and ground.

The ohmmeter should read 0 ohms.

If the resistance is incorrect, replace the rear electronic module (REM).

Other information

- To access and replace the rear electronic module (REM), see **RELAY/FUSE BOX CARGO COMPARTMENT/REAR ELECTRONIC MODULE (REM), REPLACING**
- see **CHECKING WIRING AND TERMINALS** .

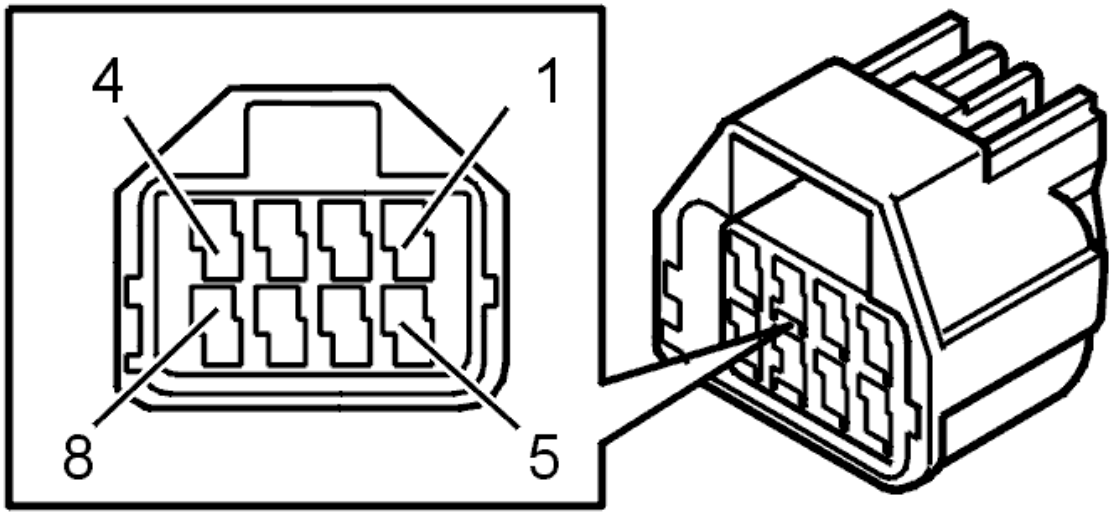

Fig. 73: Identifying Connector Terminals
Courtesy of VOLVO CARS CORPORATION

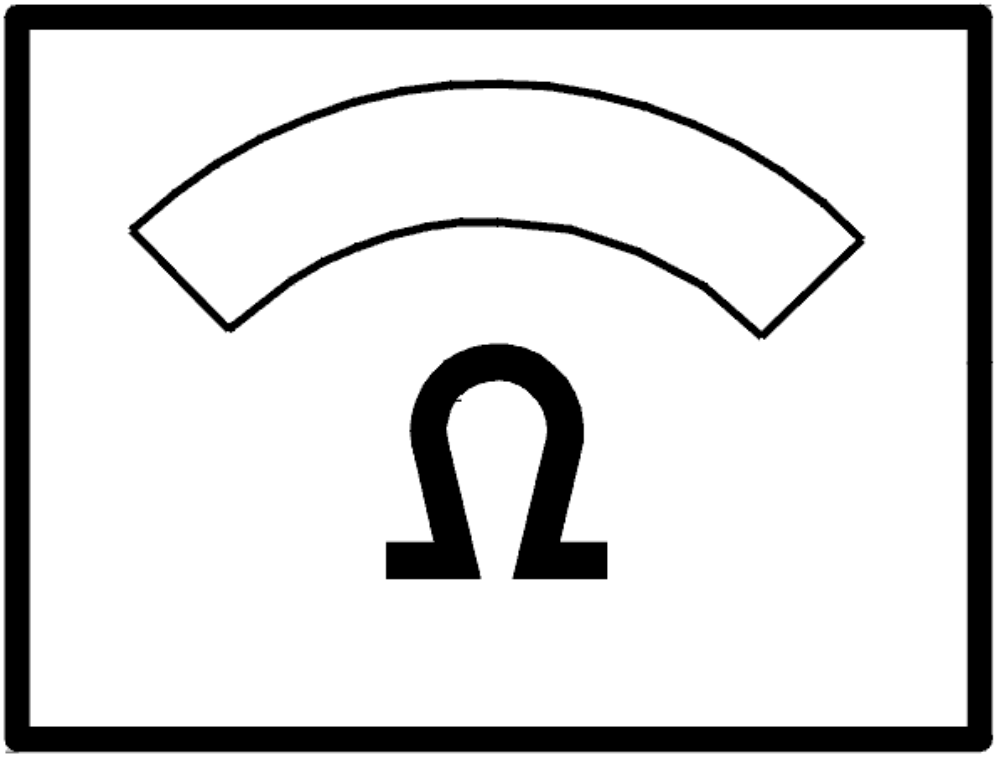

Fig. 74: Identifying Ohmmeter
Courtesy of VOLVO CARS CORPORATION

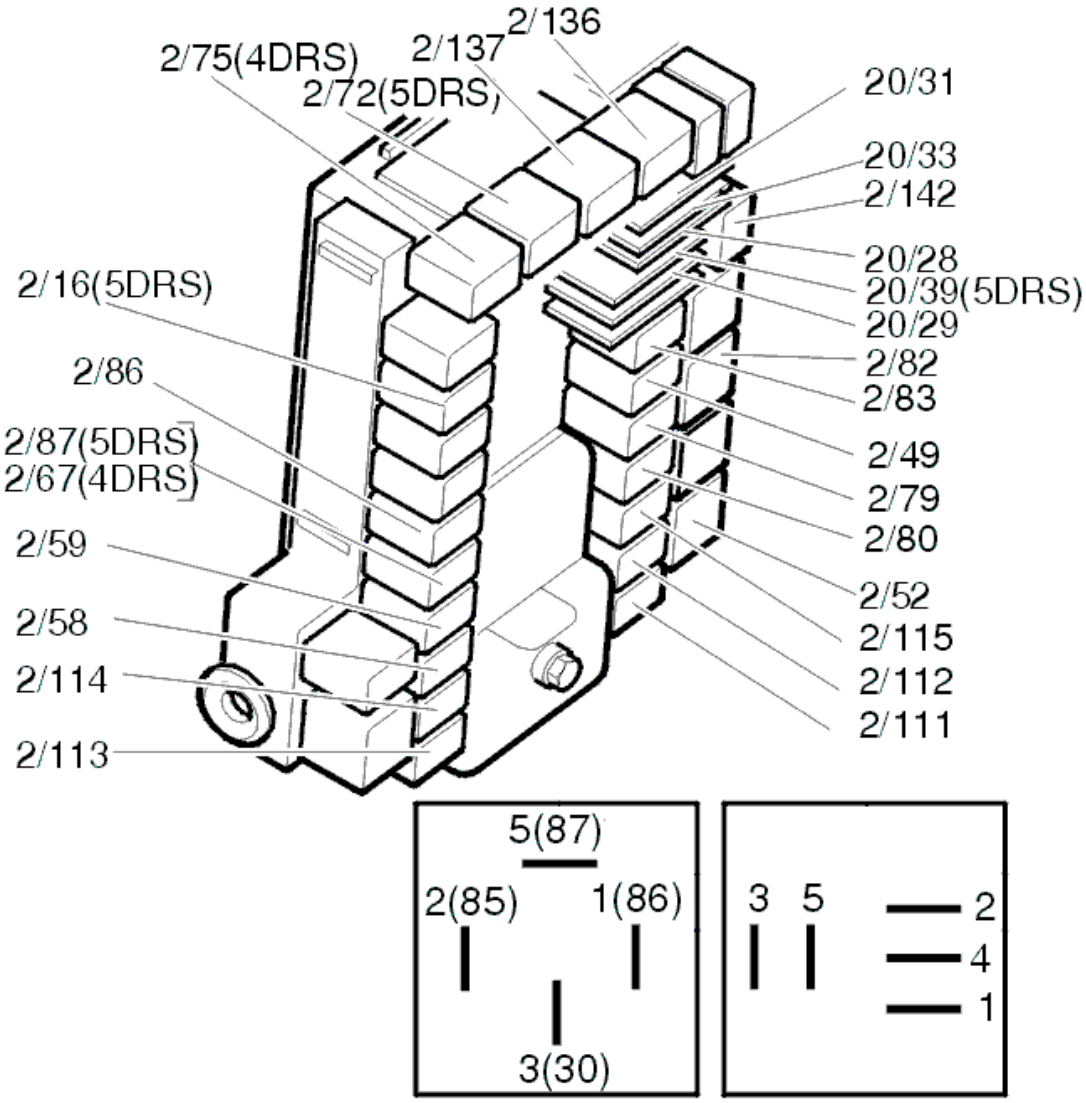

Fig. 75: Identifying Relays
Courtesy of VOLVO CARS CORPORATION

CHECKING THE LOCKING RELAY CIRCUIT

Remove the central locking relay.

Check the cable between terminal #6 the cable and connector and terminal #3 on the relay base. Check for an open-circuit.

If a fault is detected, check in particular the 2 intermediate connectors in the cable harness. Check for contact resistance and oxidation.

Remedy as necessary.

If no fault is detected, measure the resistance between terminal #4 in the relay base and ground.

The ohmmeter should read 0 ohms.

If the resistance is incorrect, replace the rear electronic module (REM).

Other information

- To access and replace the rear electronic module (REM), see **RELAY/FUSE BOX CARGO COMPARTMENT/REAR ELECTRONIC MODULE (REM), REPLACING**
- see **CHECKING WIRING AND TERMINALS** .

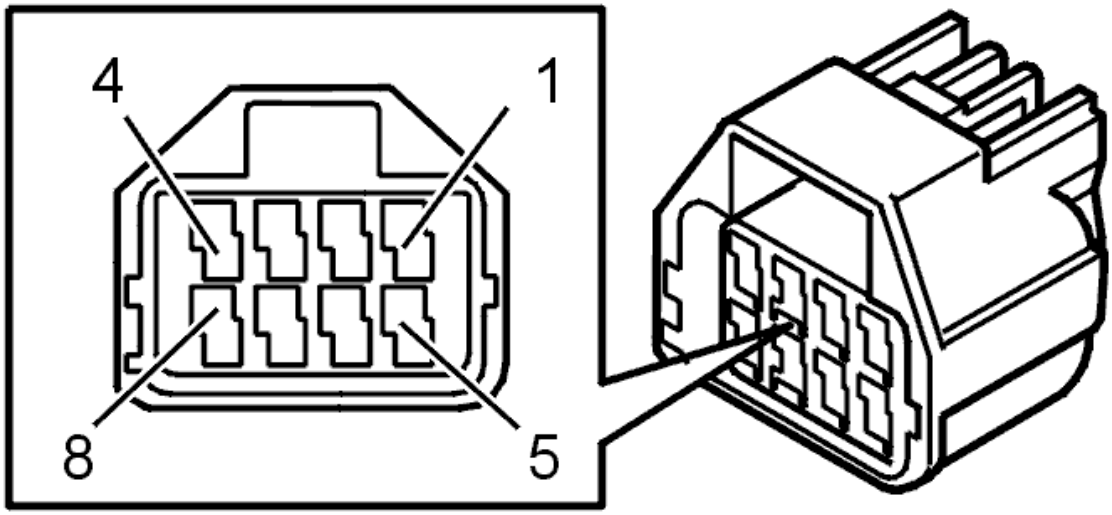

Fig. 76: Identifying Connector Terminals
Courtesy of VOLVO CARS CORPORATION

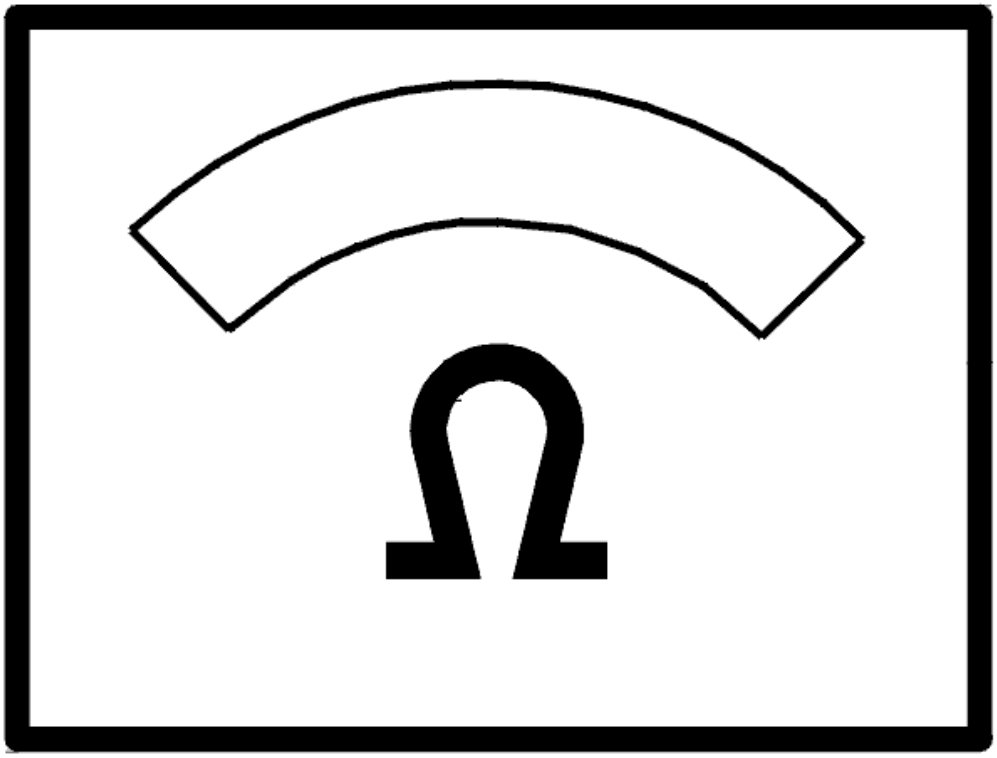

Fig. 77: Identifying Ohmmeter
Courtesy of VOLVO CARS CORPORATION

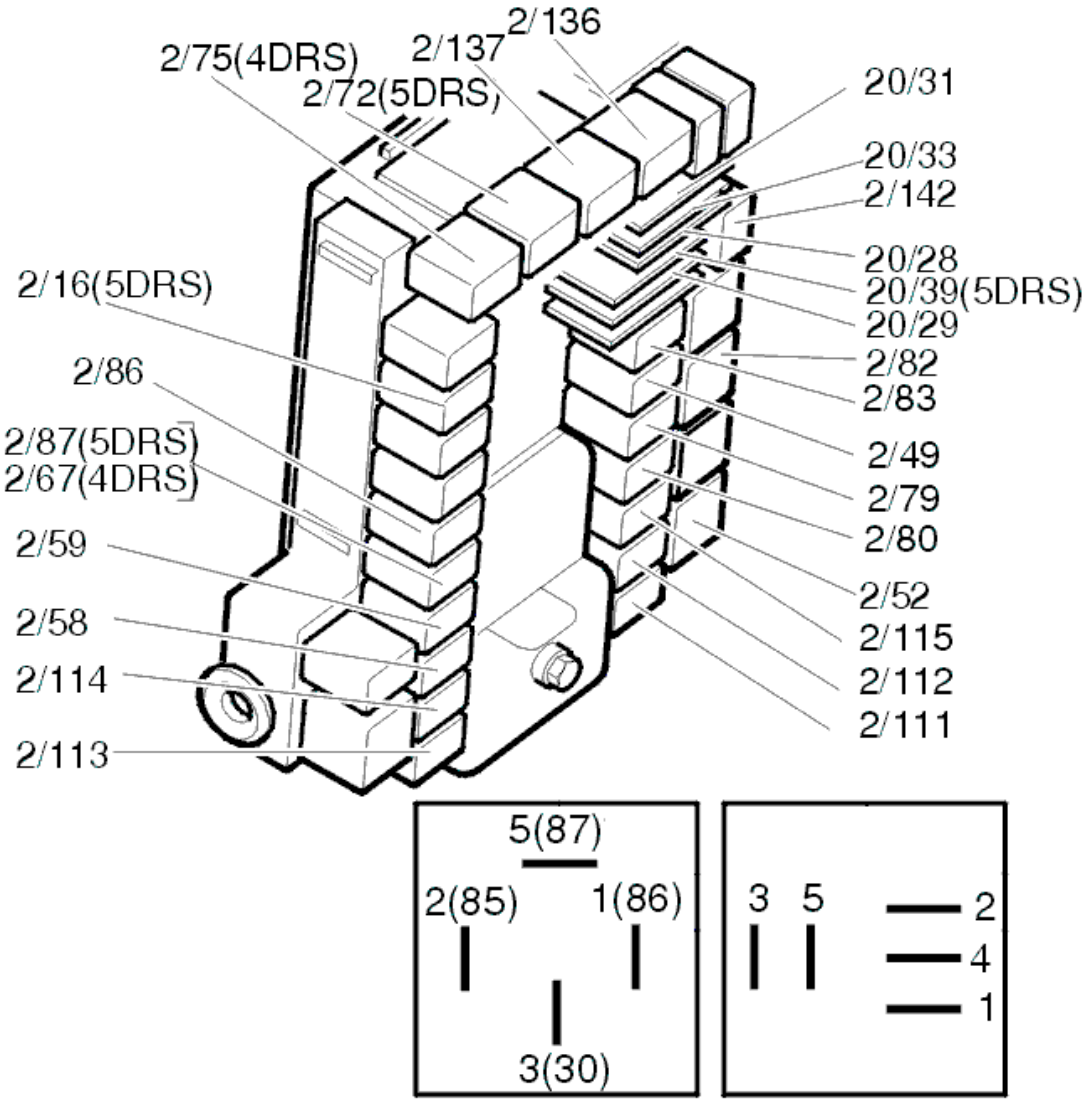

Fig. 78: Identifying Relays
Courtesy of VOLVO CARS CORPORATION

CHECKING THE COMPONENT

Measure the resistance between pins terminals #4 and #6 on the chassis switch lock unit.

The ohmmeter should read 5 ohms.

If the resistance is incorrect, replace the lock unit.

Remedy as necessary.

Other information

- To access the rear electronic module (REM), see **RELAY/FUSE BOX CARGO**

COMPARTMENT/REAR ELECTRONIC MODULE (REM), REPLACING

- To access and replace the lock unit, see **LOCK MECHANISM REAR SIDE DOOR, REPLACING**
- For further information about signals and other values, see **SIGNAL SPECIFICATION** .

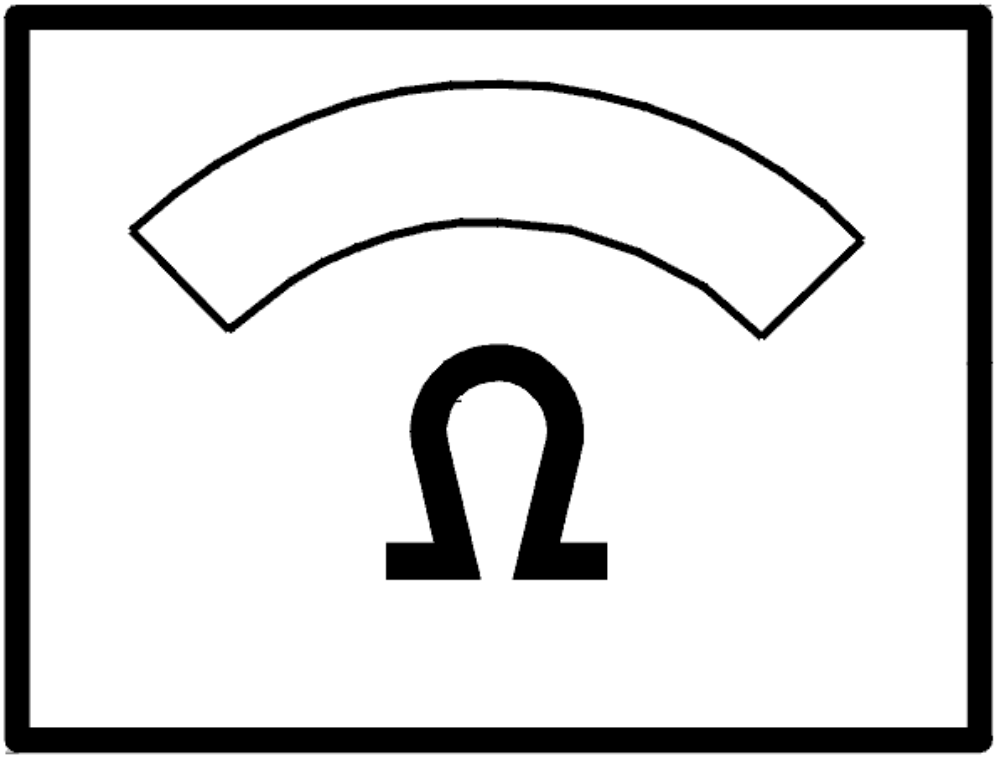

Fig. 79: Identifying Ohmmeter
Courtesy of VOLVO CARS CORPORATION

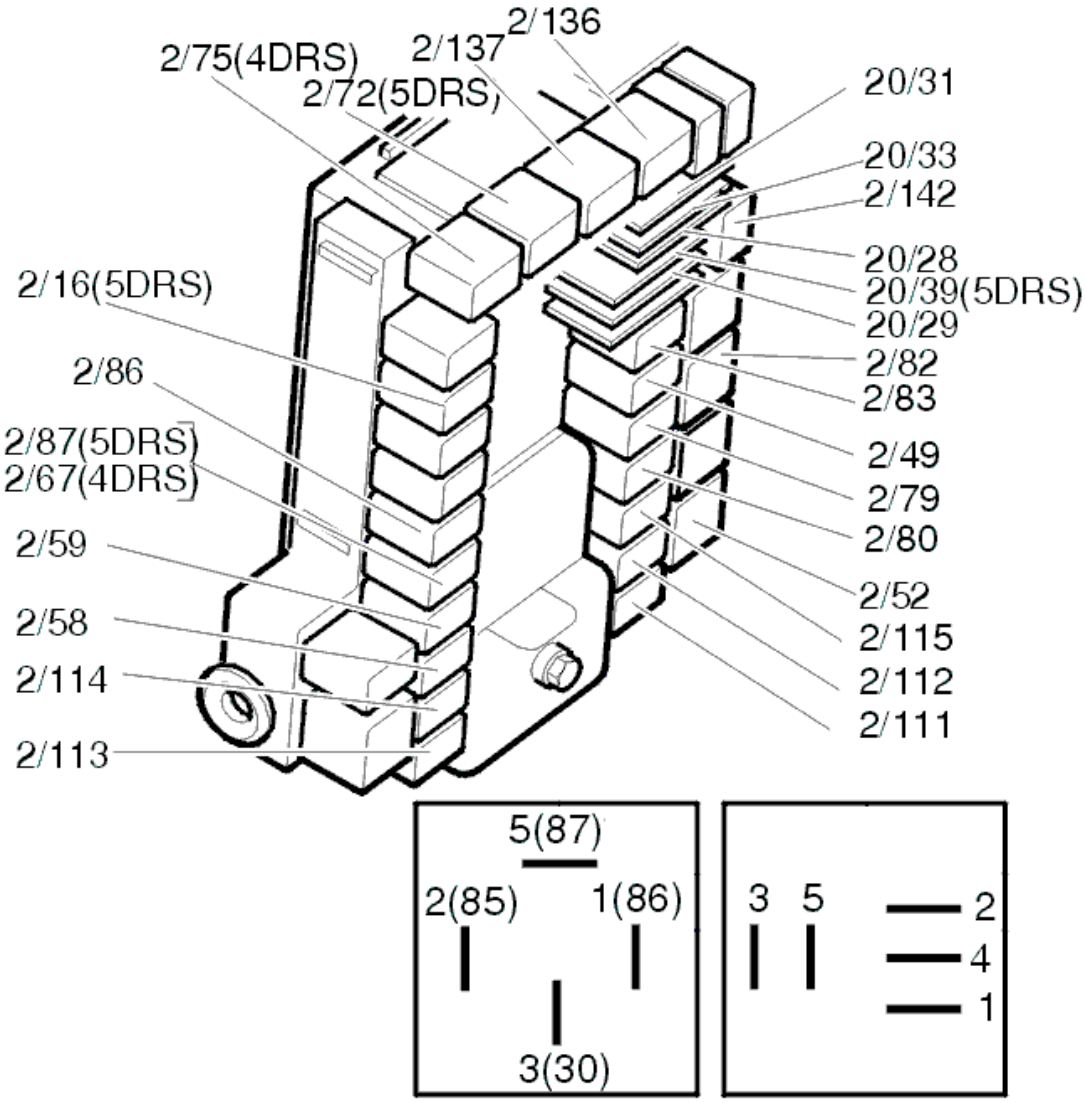

Fig. 80: Identifying Relays
Courtesy of VOLVO CARS CORPORATION

Was a fault detected?

- **YES**

  OKAY: Troubleshooting has been completed.

- **NO**

  Refer to **CHECKING FOR A SHORT-CIRCUIT**

CHECKING FUSES

Remove fuse 11D/8 from the cargo compartment fusebox.

Check that fuse 11D/8 is intact. Check for contact resistance and oxidation.

Other information

- To access the rear electronic module (REM), see **RELAY/FUSE BOX CARGO COMPARTMENT/REAR ELECTRONIC MODULE (REM), REPLACING**
- see **CHECKING WIRING AND TERMINALS** .

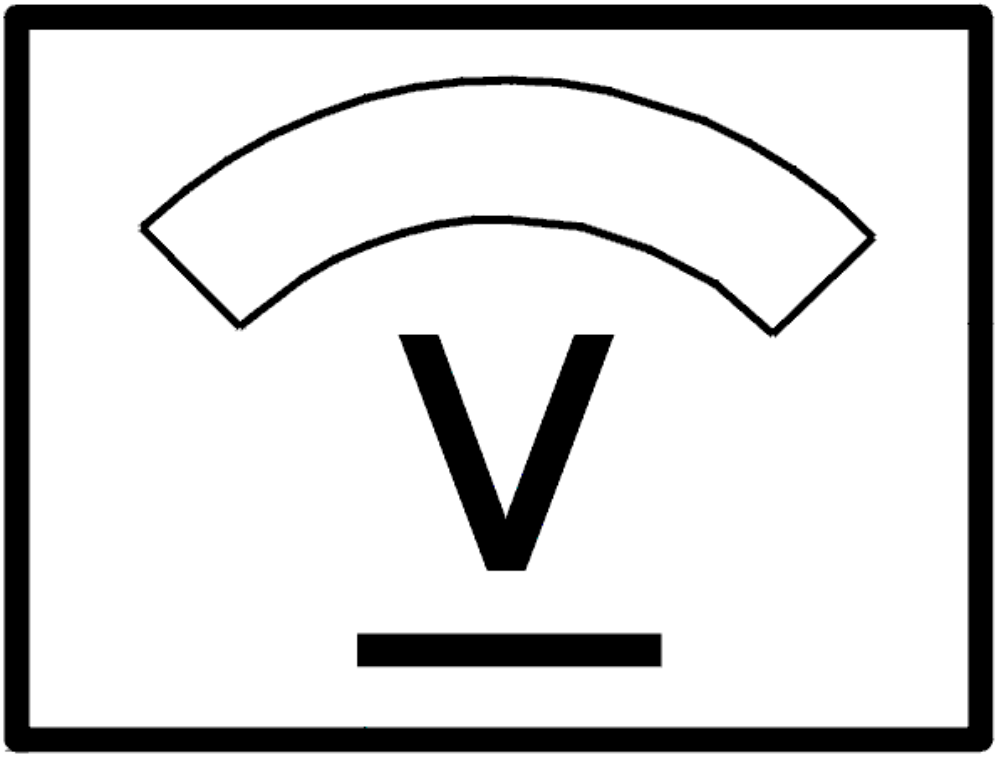

Fig. 81: Identifying Voltage Display
Courtesy of VOLVO CARS CORPORATION

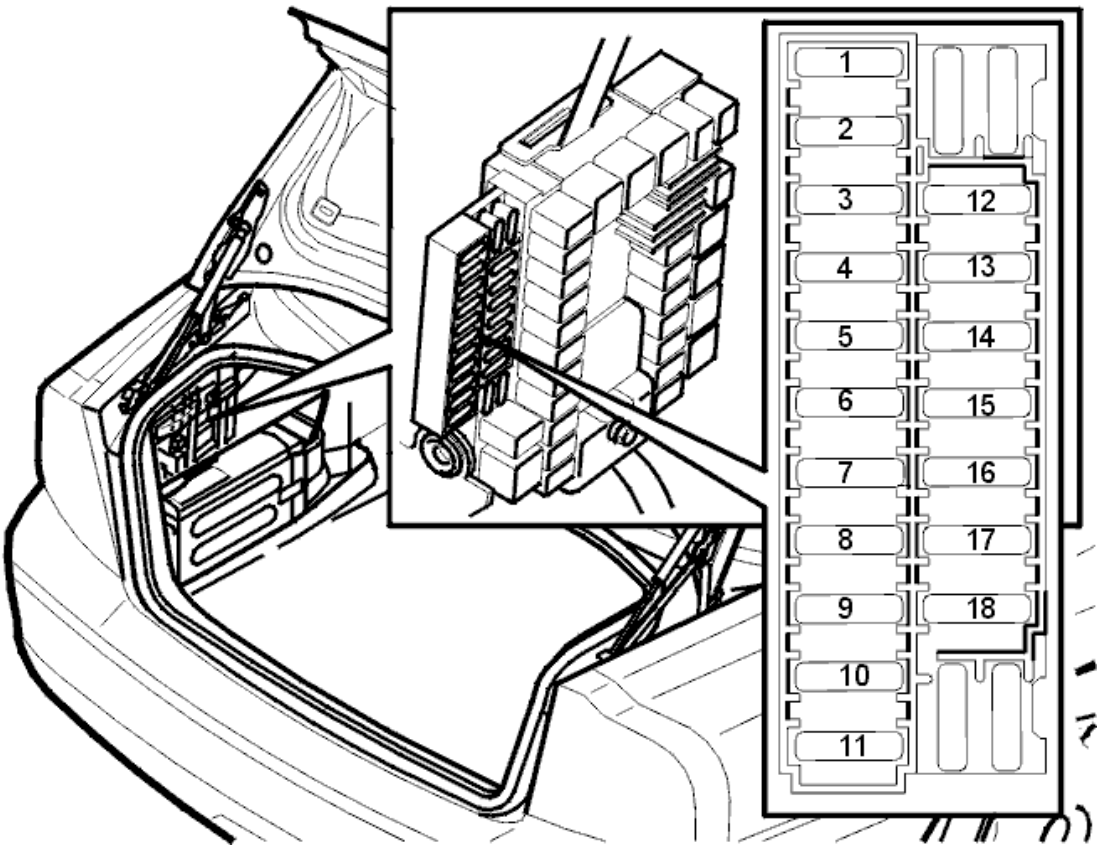

Fig. 82: Fuse Holder (Cargo Compartment)
Courtesy of VOLVO CARS CORPORATION

Is the fuse intact?

- **YES**

  Refer to **CHECKING FOR AN OPEN-CIRCUIT**

- **NO**

  Refer to **CHECKING FOR A SHORT-CIRCUIT**

CHECKING FOR AN OPEN-CIRCUIT

Remove the central locking relay in the rear electronic module (REM) and fault-trace the cable between the fuse holder secondary side (left) and terminal #5 in the relay base. Check for an open-circuit.

Other information

- To access the rear electronic module (REM), see **RELAY/FUSE BOX CARGO COMPARTMENT/REAR ELECTRONIC MODULE (REM), REPLACING**
- see **CHECKING WIRING AND TERMINALS** .

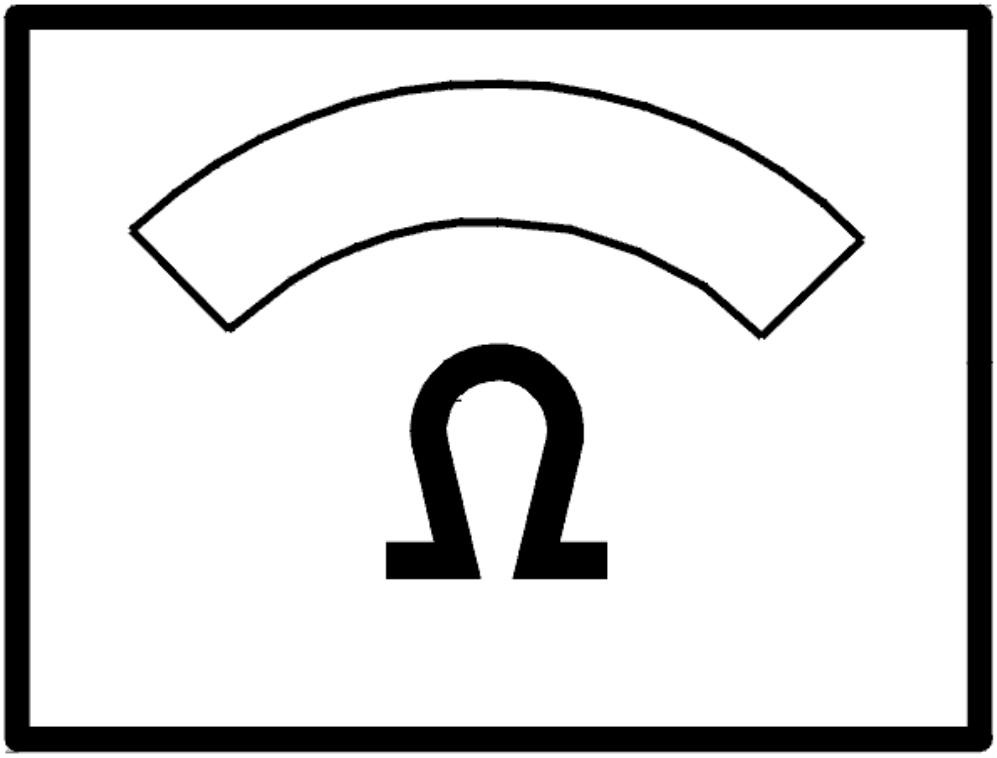

Fig. 83: Identifying Ohmmeter
Courtesy of VOLVO CARS CORPORATION

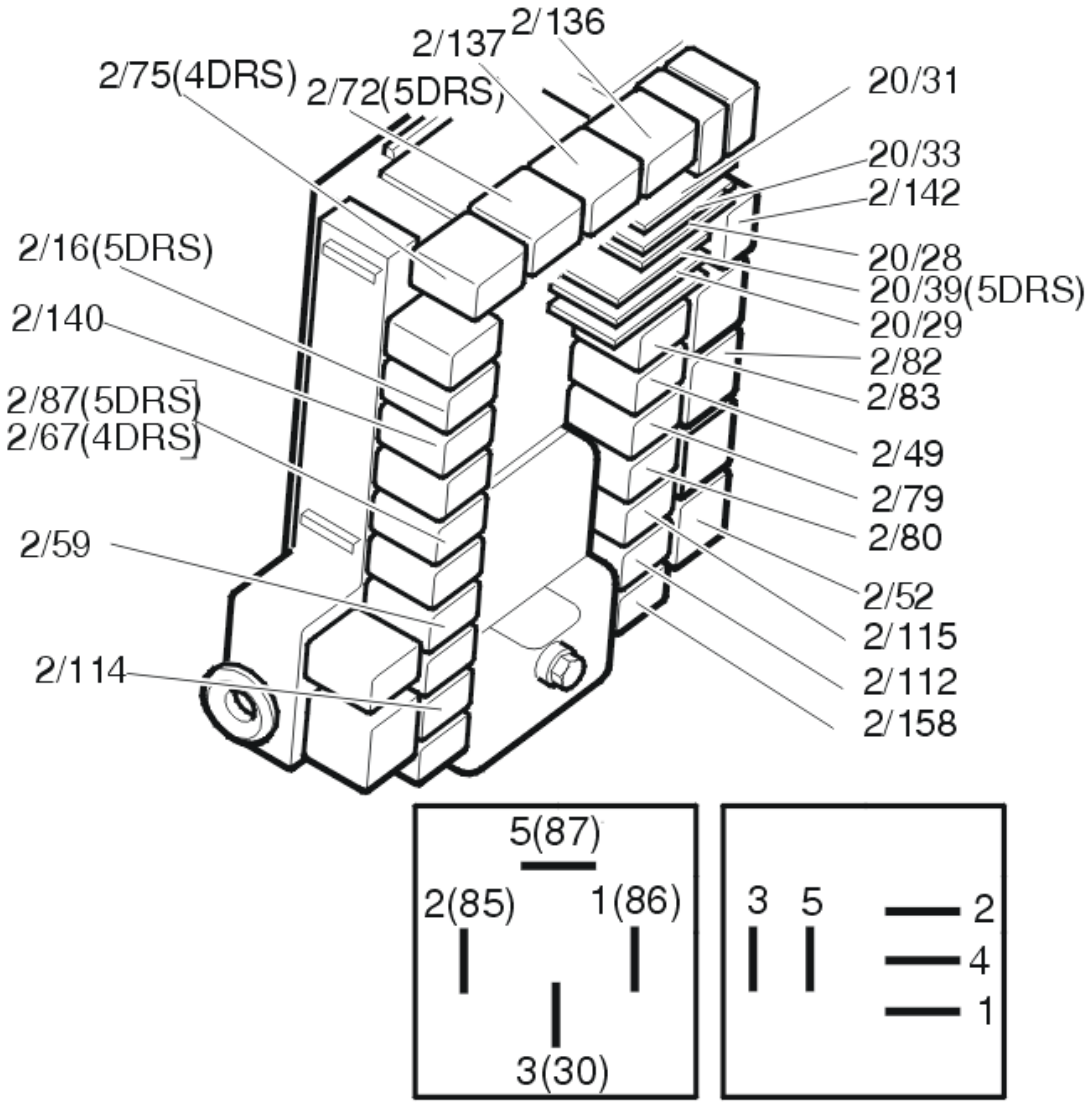

Fig. 84: Identifying Relays
Courtesy of VOLVO CARS CORPORATION

CHECKING FOR A SHORT-CIRCUIT

Measure the resistance between the fuse holder secondary side (left) and ground.

The ohmmeter should read infinite resistance.

If the value is correct, replace the fuse.

Fault-trace all affected relay circuits for a short-circuit to ground if the value is incorrect.

HINT: Replace fuse.

HINT: If the fuse blows immediately the short-circuit is in the relay power cable.

HINT: If the fuse blows when the relevant relay is activated, the short-circuit is in the component power supply cable

HINT: The relay circuits that are affected belong to the central locking relay, unlocking rear left door relay and unlocking rear right door relay.

Other information

- To access the rear electronic module (REM), see **RELAY/FUSE BOX CARGO COMPARTMENT/REAR ELECTRONIC MODULE (REM), REPLACING**
- see **CHECKING WIRING AND TERMINALS** .

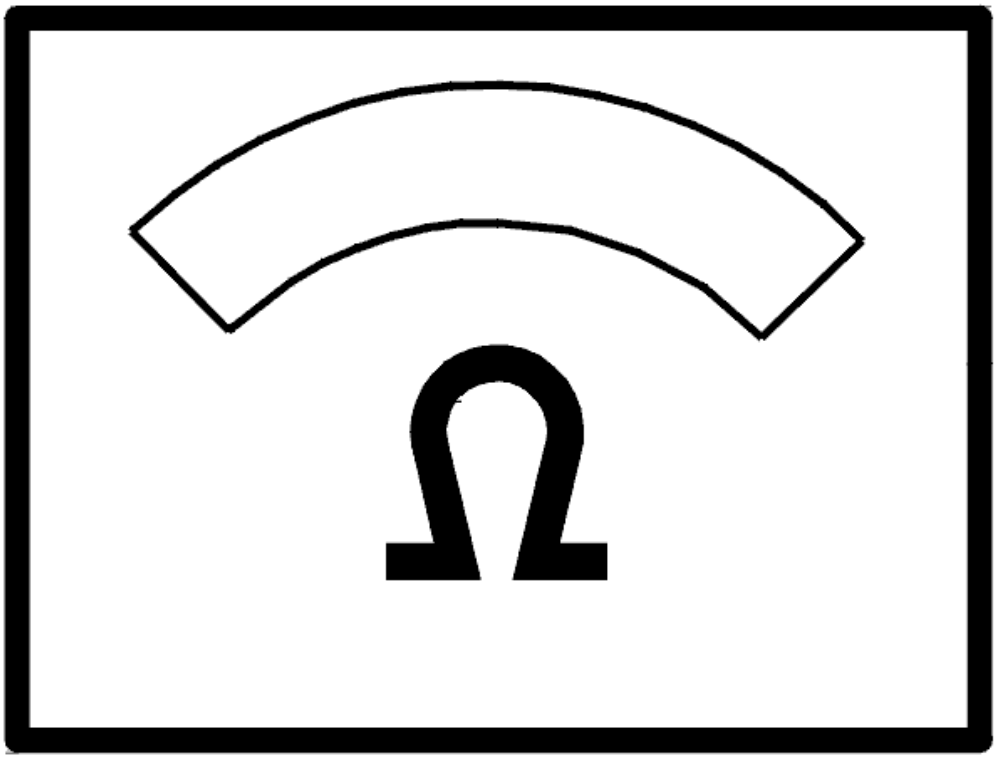

Fig. 85: Identifying Ohmmeter
Courtesy of VOLVO CARS CORPORATION

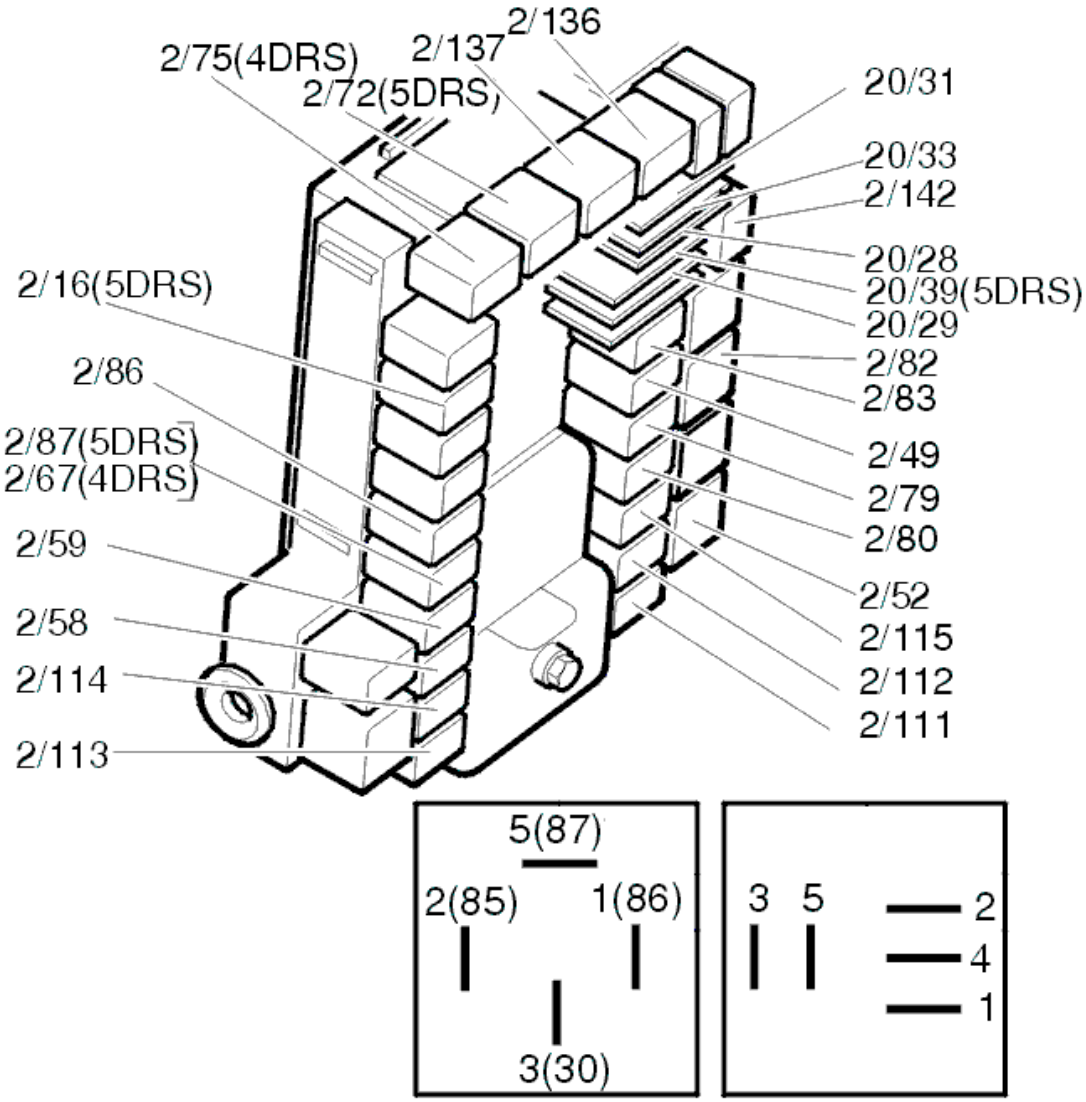

Fig. 86: Identifying Relays
Courtesy of VOLVO CARS CORPORATION

TROUBLE-SHOOTING INFORMATION

Condition

No diagnostic trouble codes are displayed.

Possible Source

Rear doors:

- Faulty relay
- Fault in locking relay circuit

- Fault in unlocking relay circuit
- Faulty lock unit
- Fault in relay supply
- Defective fuse.

Fault symptom[s]

- A door does not lock/open.

CHECKING THE FAN DELAY IN THE INTERIOR COMPARTMENT (2003-04)

CHECKING THE FAN DELAY IN THE INTERIOR COMPARTMENT

PROGRAMMING FAN DELAY RUNNING IN COMPARTMENT

- With a smarttool it is possible to program if fan dealy function is switched on or off.

  The vehicle is delivered from factory with fan delay switched off.

  Read current programming.

  If the current setting is to be changed, select desired value in list and start programming sequence.

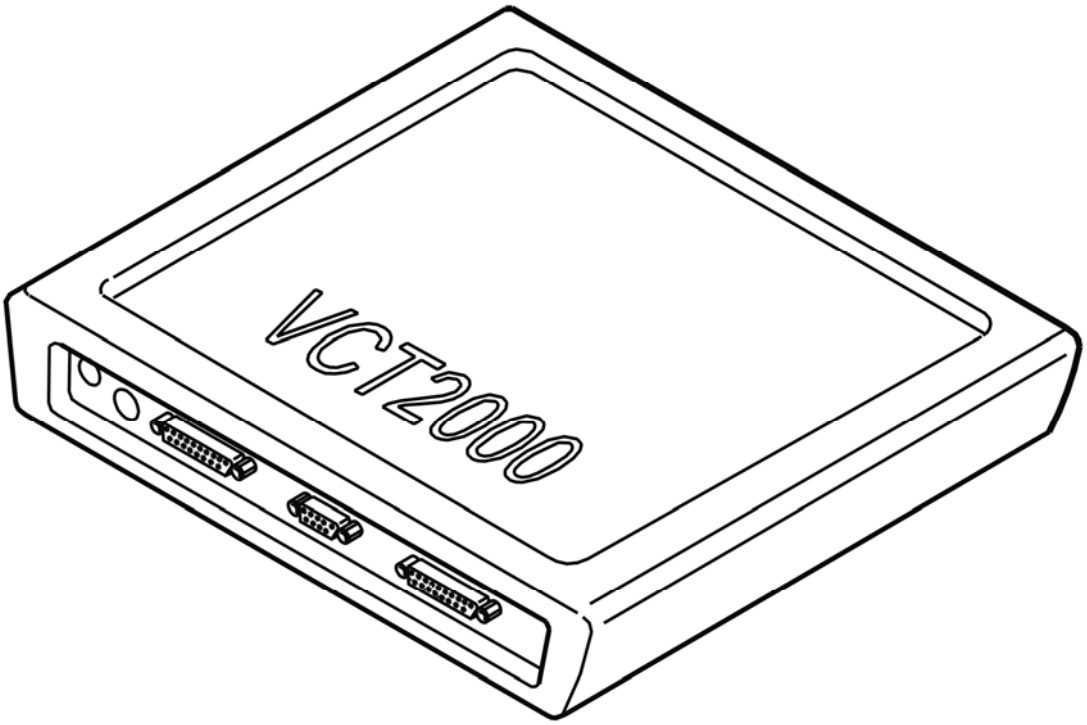

Fig. 87: Identifying VCT2000 Diagnostic Tool Symbol In VIDA
Courtesy of VOLVO CARS CORPORATION

- **Continue**

  Refer to **STORING PROGRAMMED VALUE**

STORING PROGRAMMED VALUE

Press button in smarttool to ensure that programmed information is stored.

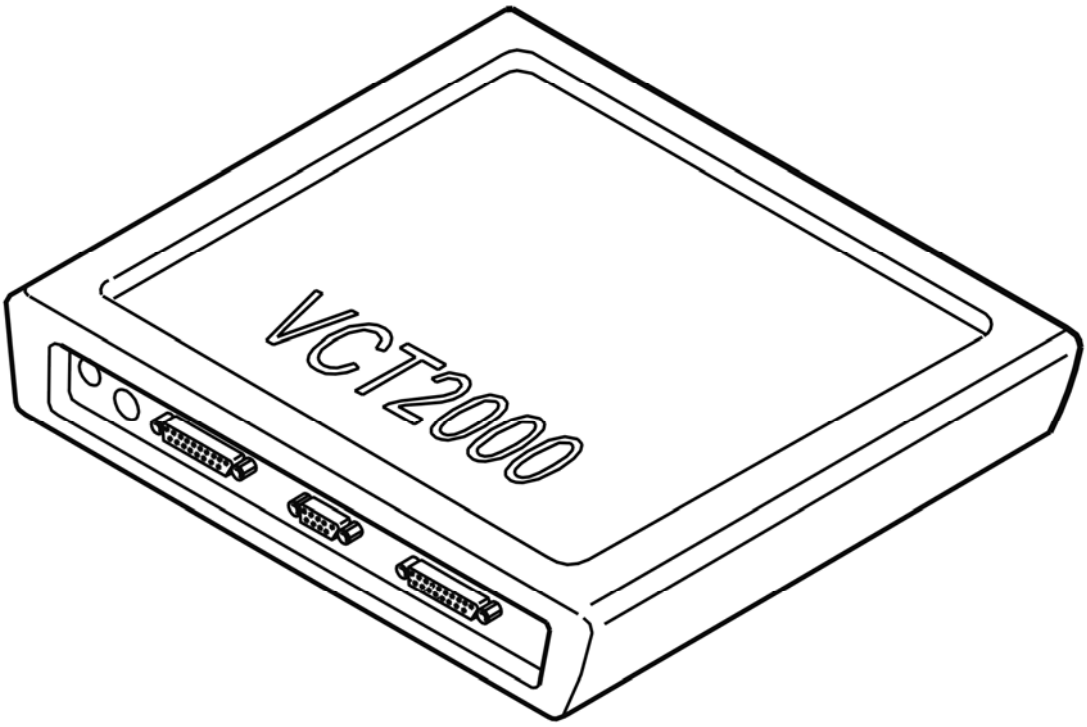

Fig. 88: Identifying VCT2000 Diagnostic Tool Symbol In VIDA
Courtesy of VOLVO CARS CORPORATION

CHECKING THE FLAME SENSOR (B5254T2; B6294T; 2003-04)

CHECKING THE FLAME SENSOR

CHECKING THE OPERATING STATUS

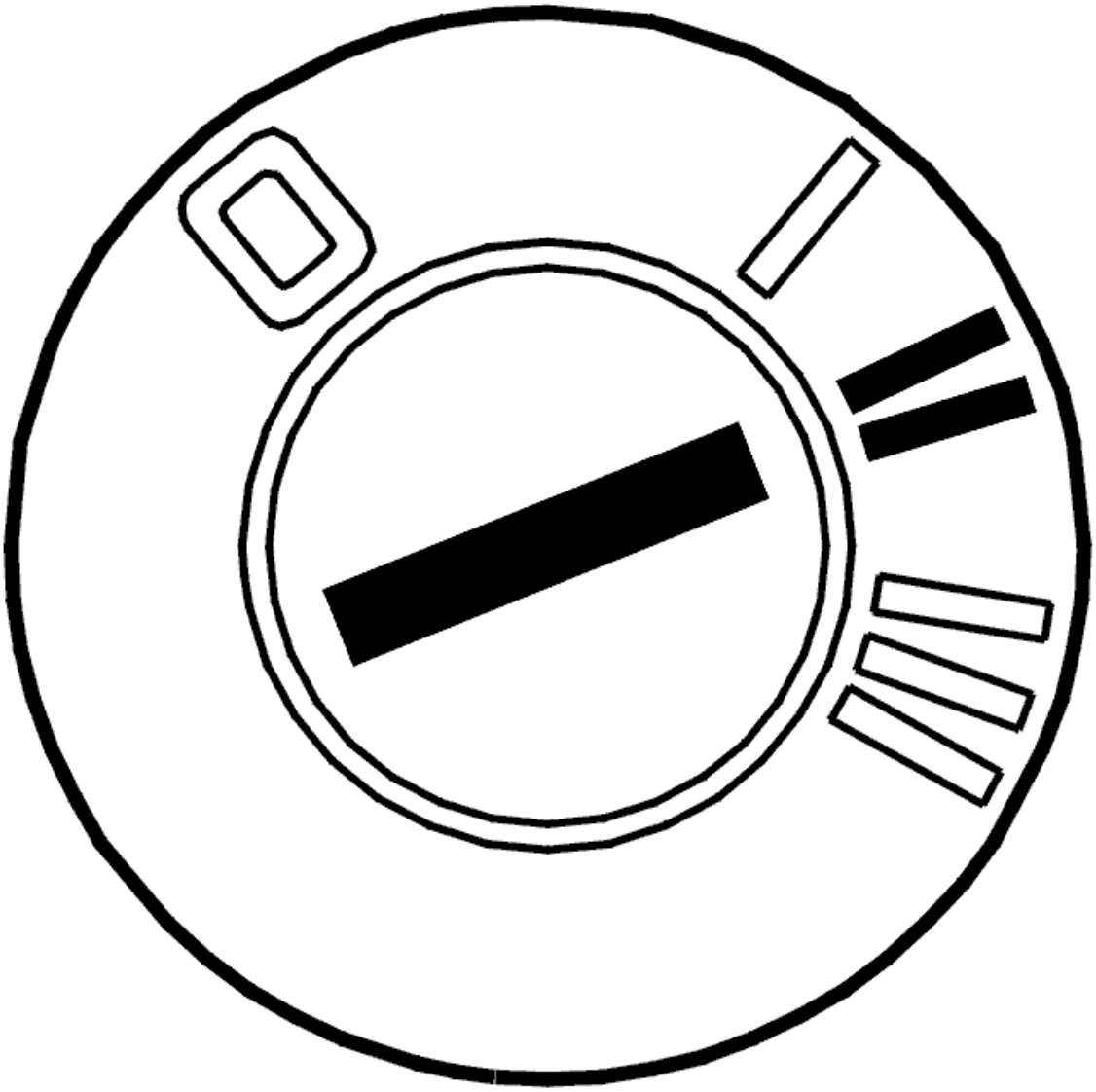

Fig. 89: Identifying Ignition ON
Courtesy of VOLVO CARS CORPORATION

- Ignition on.
- Start the heater.

  Read off the operating status and temperature of the heater.

  HINT: The flame sensor should register the flame. If the temperature increases, even though status 3 is not obtained, the fault may be due to an open-circuit in the cable or the flame sensor may be blocked.

  Check the cable between terminal #8 on the control module and the flame sensor for an open-circuit according to **OPEN-CIRCUIT, PERMANENT FAULTS** .

  - For other values, see **SIGNAL SPECIFICATION** .

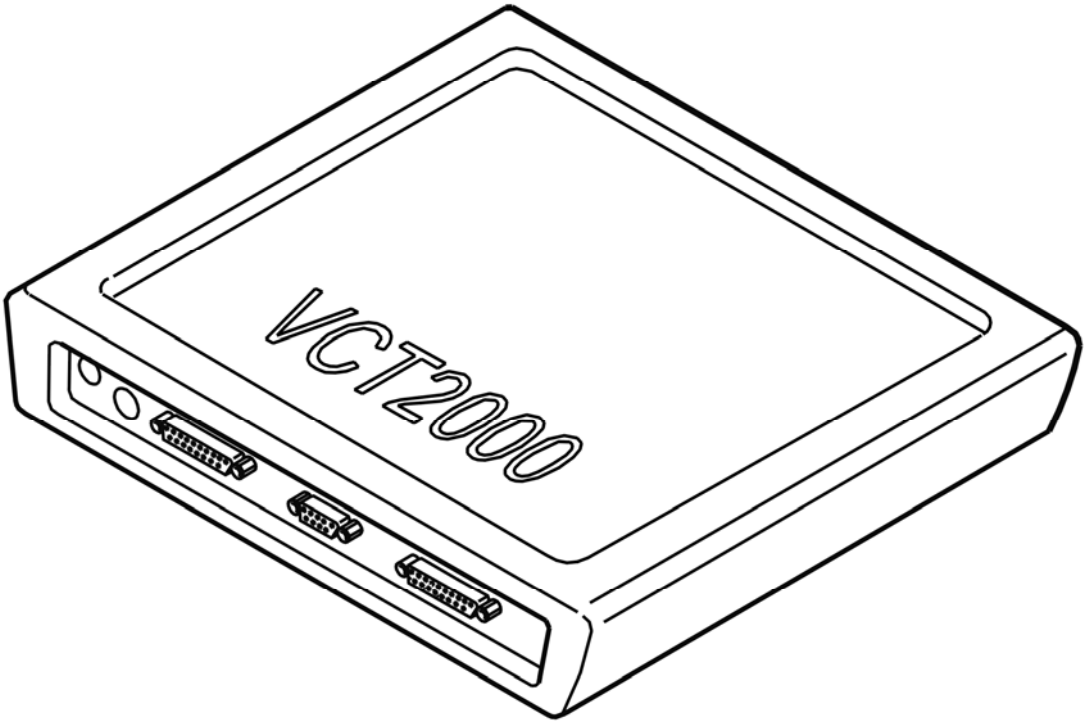

Fig. 90: Identifying VCT2000 Diagnostic Tool Symbol In VIDA
Courtesy of VOLVO CARS CORPORATION

- **Continue**

  Refer to **VERIFICATION**

VERIFICATION

HINT: After carrying out the repair, check that the fault has been remedied.

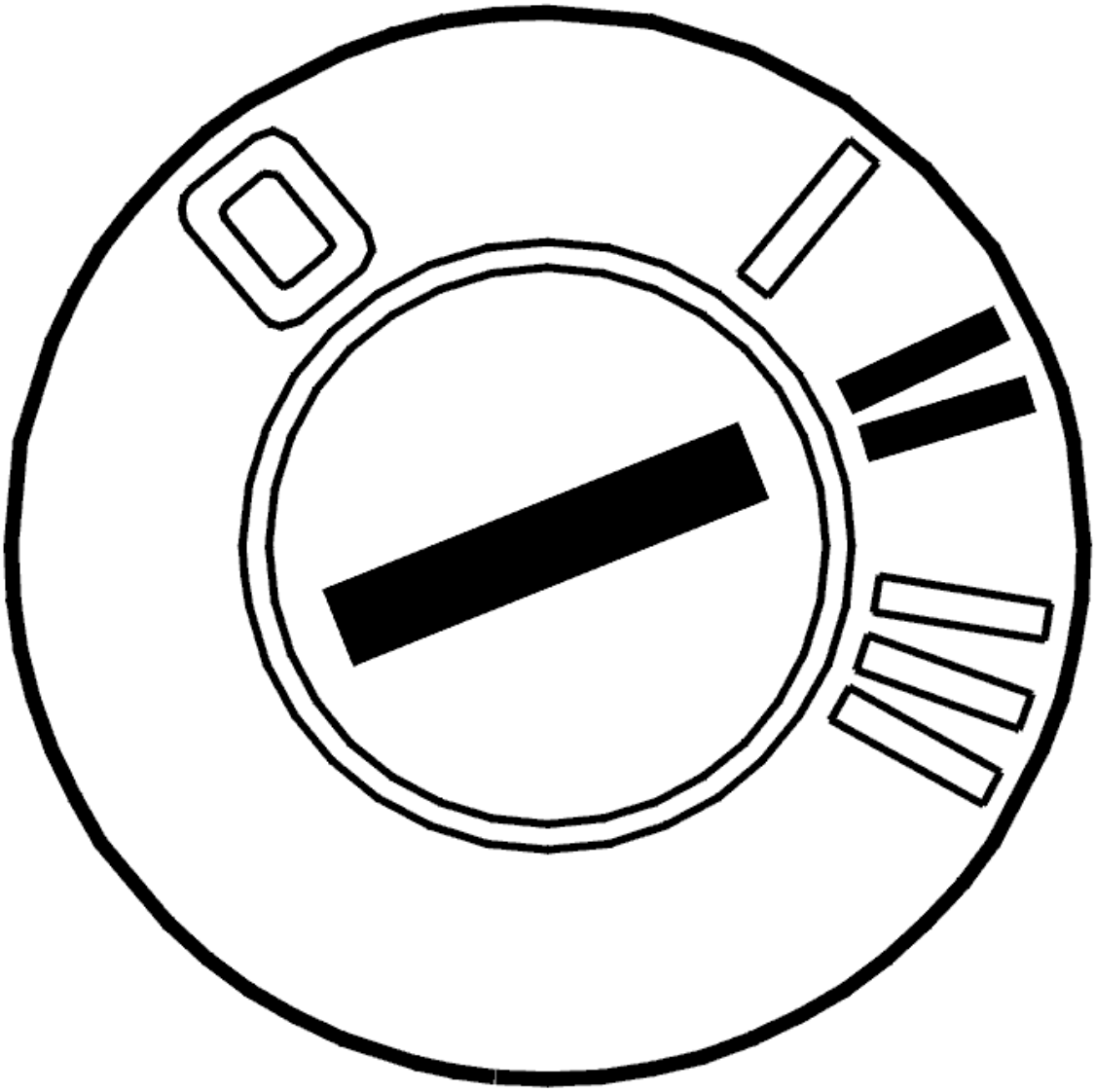

Fig. 91: Identifying Ignition ON
Courtesy of VOLVO CARS CORPORATION

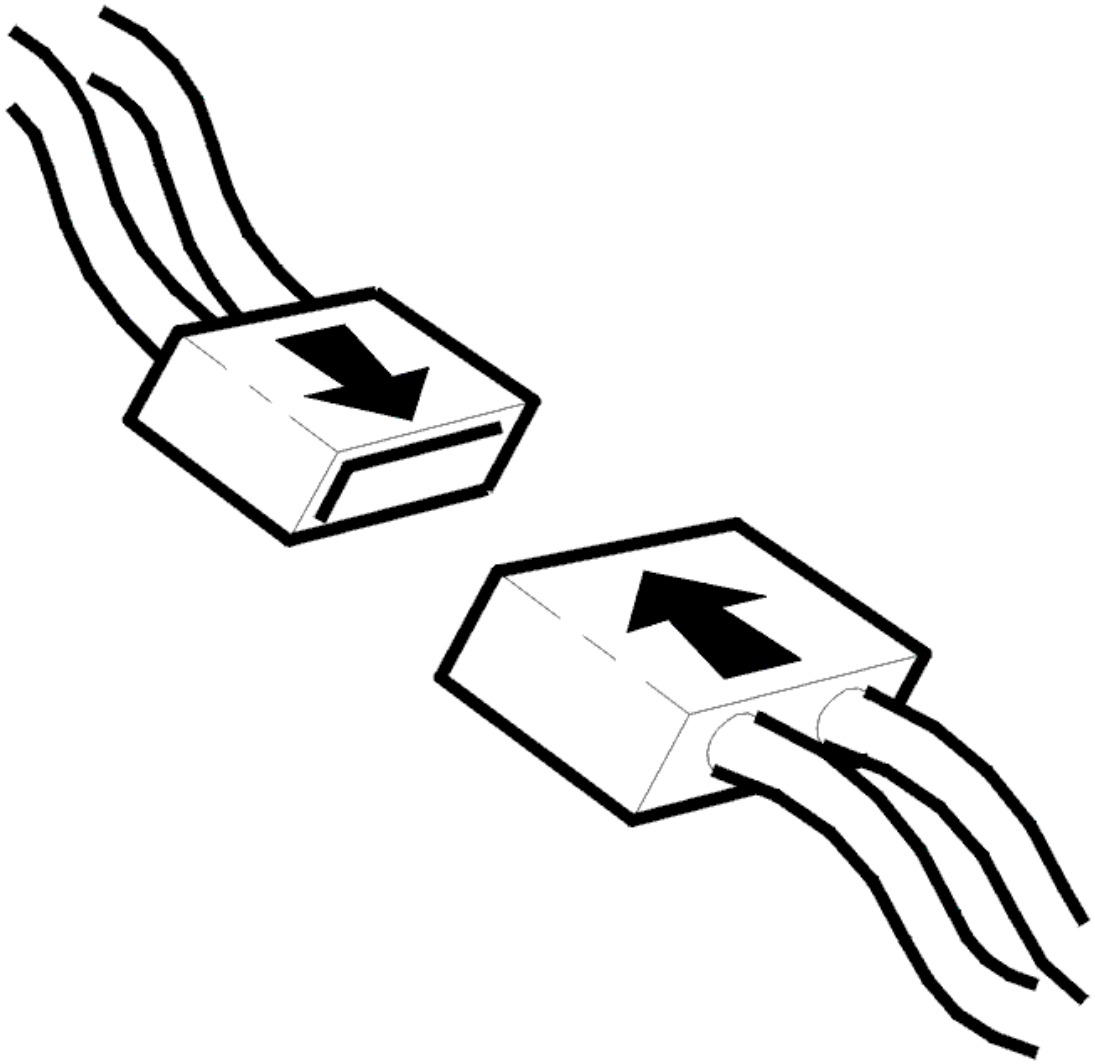

Fig. 92: Connecting Connector
Courtesy of VOLVO CARS CORPORATION

- Ignition off
- Reinstall the connectors, components etc.
- Ignition on.

Erase diagnostic trouble codes (DTCs).

NOTE: **Diagnostic trouble codes (DTCs) must be erased to start the heater. Before erasing diagnostic trouble codes (DTCs) all indicated faults must be corrected.**

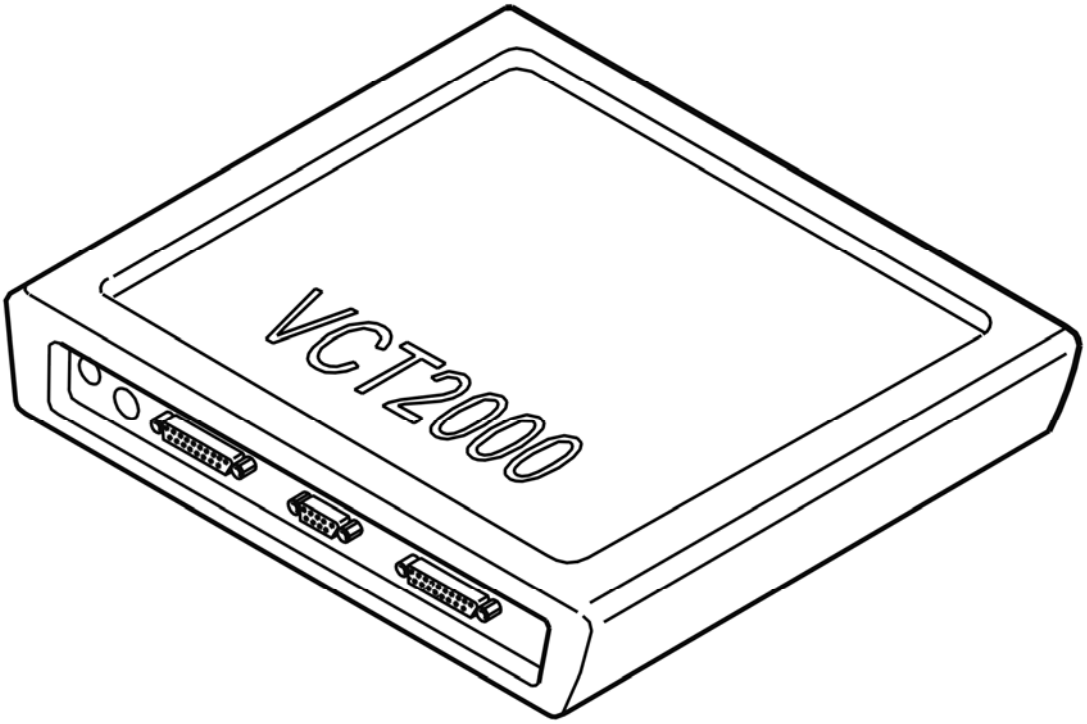

Fig. 93: Identifying VCT2000 Diagnostic Tool Symbol In VIDA
Courtesy of VOLVO CARS CORPORATION

- Refer to **VERIFICATION, CONTINUED**

VERIFICATION, CONTINUED

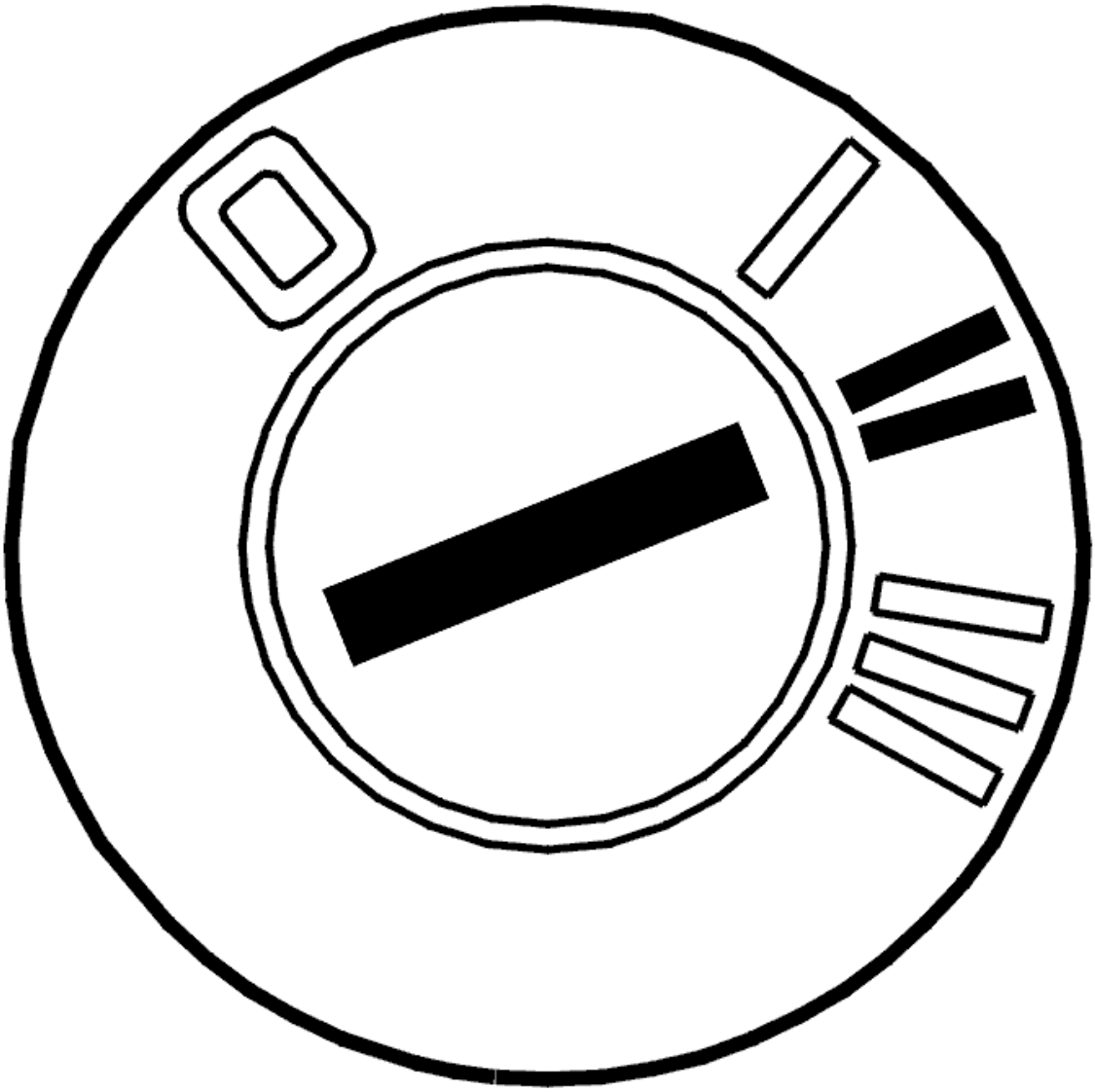

Fig. 94: Identifying Ignition ON
Courtesy of VOLVO CARS CORPORATION

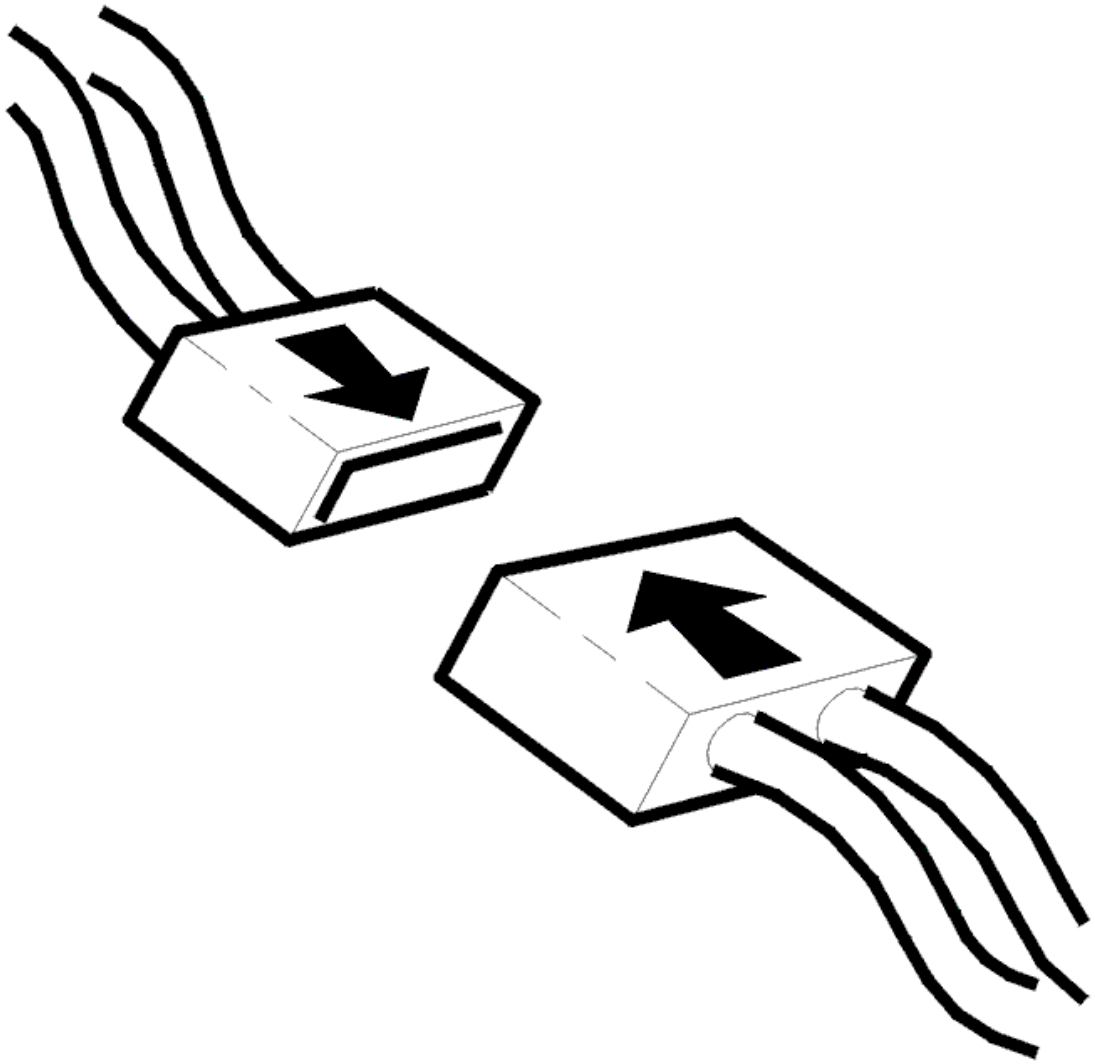

Fig. 95: Connecting Connector
Courtesy of VOLVO CARS CORPORATION

- Ignition off
- Reinstall the connectors, components etc.
- Ignition on.

NOTE: **It is important that only the ignition is on in order for the heater to start.**

- Activate the heater.

  A buzzing sound should be heard from the heater.

  HINT: After repair, the voltage of the flame sensor can be checked. The voltage should be a maximum of 1.0 V.

Check the function of the heater. See **ENGINE COOLANT HEATER, TEST RUNNING** .

Other information:

- For a description of parameters, see **DESCRIPTION OF PARAMETERS**
- For a description of activations, see **ACTIVATING COMPONENTS/FUNCTIONS** .

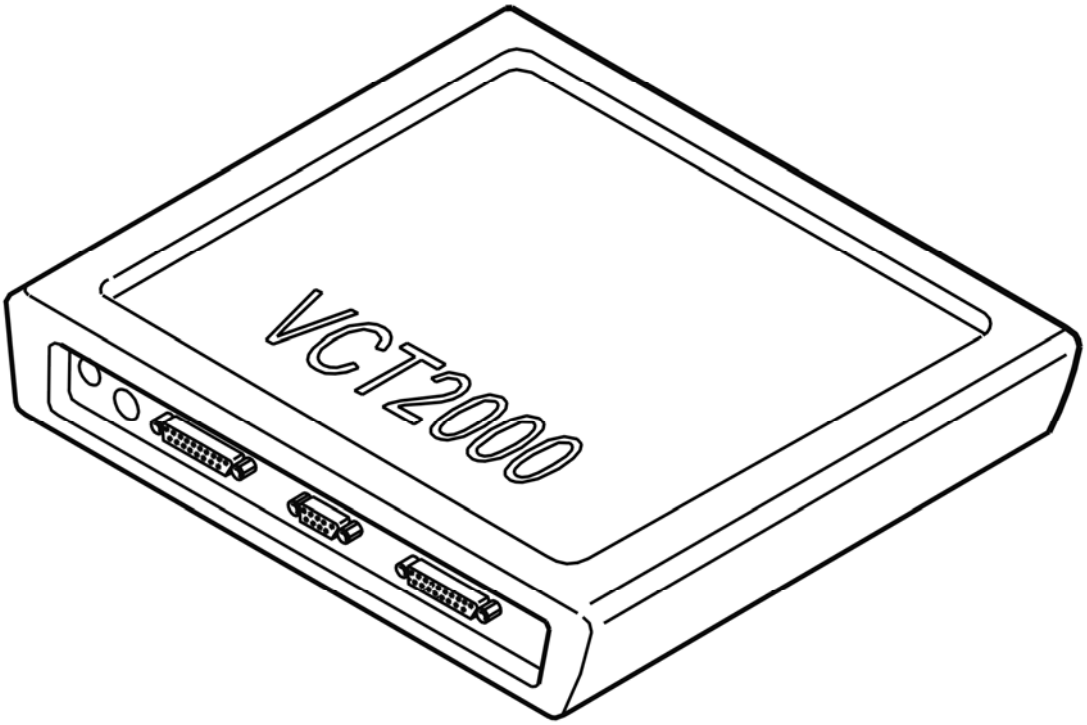

Fig. 96: Identifying VCT2000 Diagnostic Tool Symbol In VIDA
Courtesy of VOLVO CARS CORPORATION

Does the heater operate?

- **YES**

  VERIFIED: Troubleshooting has been completed.

- **NO**

  Refer to **INFORMATION**

INFORMATION

FAULT-TRACING INFORMATION

The fault should have been detected and remedied. As this is not the case fault-tracing has failed.

Exit fault-tracing for this diagnostic trouble code (DTC) or make another attempt.

FAULT-TRACING INFORMATION

Condition

No diagnostic trouble codes (DTCs) are stored.

Substitute Value

None.

Possible Source

- Open-circuit in the cable for the flame sensor (terminal #8).
- The flame sensor is blocked.

Fault symptom[s]

- Poor heating in the passenger compartment.
- The parking heater does not operate.

CHECKING THE FRONT POSITION LAMPS (2003-04)

CHECKING THE FRONT POSITION LAMPS

CHECKING THE WIRING AND THE RELAY

Check the signal cables to the parking lamps. Check for an open-circuit. Check for contact resistance and oxidation.

Check the relay (2/61).

HINT: The voltage over the relay must be 12 V on pins #1 and #3 when the parking lamp is switched on.

Check the cable between terminal #3 and fuse 2, main fuses in the engine compartment (11A/2).

Also check the main fuse.

Check the connector between (54/3R).

Check the cable between the relay #1 (2/61) and passenger compartment fuses for the left respectively right parking lamps. (Fuse 11C/30 for the left side and 11C/31 for the right side).

Check the cable between the passenger compartment fuse and terminal #2 of the lamp housing for the relevant lamp circuit.

For the left parking lamp, check lamp 10/11.

For the right parking lamp, check lamp 10/12.

Check the ground supply between the lamp housing terminal #1 and the ground terminal.

Also check the connector between (54/3L).

Remedy as necessary.

Other information

- To access or replace the headlamp, see **HEADLIGHT/BULB, REPLACING** and **HEADLIGHT/BULB, REPLACING**
- see **CHECKING WIRING AND TERMINALS** .

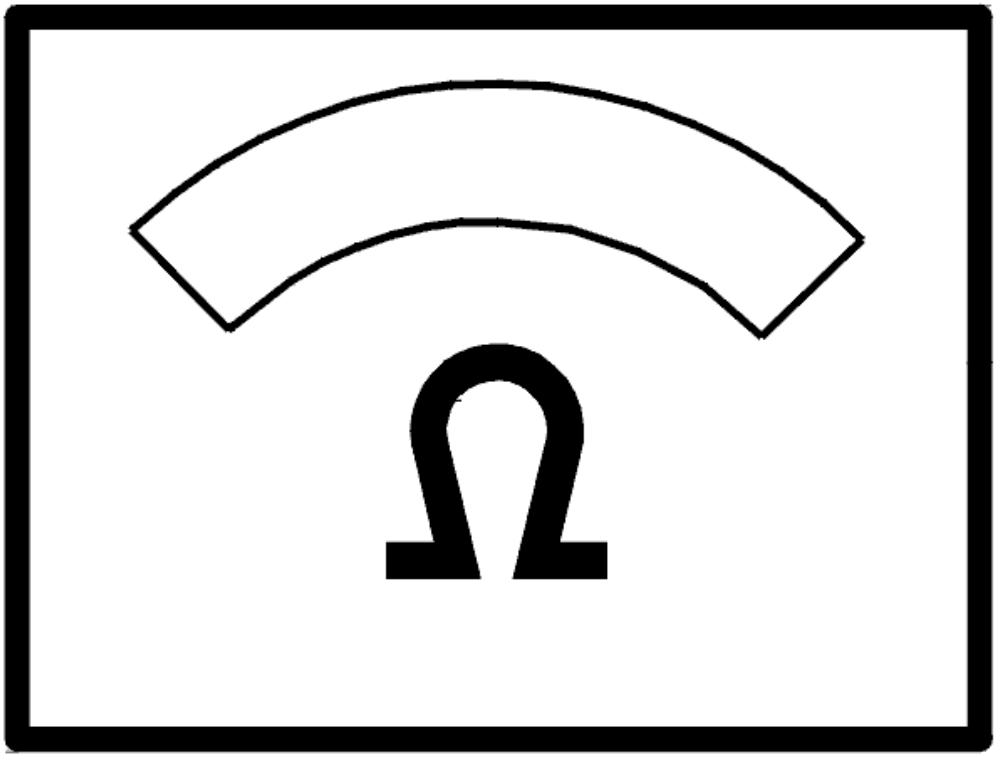

Fig. 97: Identifying Ohmmeter
Courtesy of VOLVO CARS CORPORATION

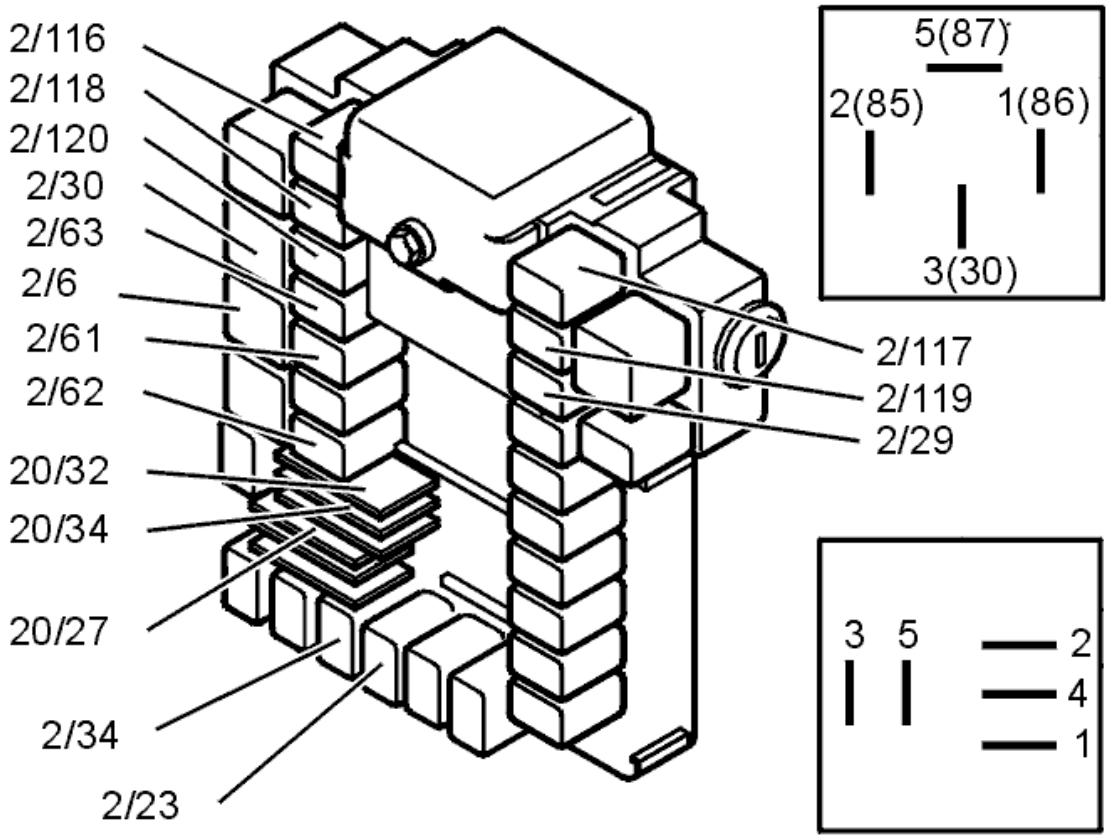

Fig. 98: Identifying Relays
Courtesy of VOLVO CARS CORPORATION

TROUBLE-SHOOTING INFORMATION

Condition

No diagnostic trouble codes are stored.

Substitute Value

None.

Possible Source

- Faulty relay
- Open circuit or short-circuit to ground in the wire.

Fault symptom[s]

- Position lamps are not working.

CHECKING THE FUEL LEVEL SENSOR (2003-04)

CHECKING THE FUEL LEVEL SENSOR

CHECKING WIRING AND CONNECTORS

Check the wiring between:

connector terminal #5 for the fuel level sensors and rear electronic module (REM) terminal #A02 (#A2)

connector terminal #6 for the fuel level sensors and rear electronic module (REM) terminal #A10 (#A10)

connector terminal #7 for the fuel level sensors and rear electronic module (REM) terminal #A8 (#A8)

check for an open-circuit. Check for a short-circuit to supply voltage.

Check the relevant connectors. Check for contact resistance and oxidation.

Remedy as necessary.

Other information:

- For further information about signals and other values, see **SIGNAL SPECIFICATION**
- To connect the breakout box, see **CONNECTING THE BREAKOUT BOX**
- To access the integrated relay/fusebox in the cargo compartment, see **RELAY/FUSE BOX CARGO COMPARTMENT/REAR ELECTRONIC MODULE (REM), REPLACING**
- To access the fuel level sensor connector (left-hand side), see **LEVEL SENSOR, FUEL TANK, RIGHT-HAND/FUEL TANK, REPLACING**
- To access the fuel level sensor connector (right-hand side), see **LEVEL SENSOR, FUEL TANK, RIGHT-HAND/FUEL TANK, REPLACING**
- see **CHECKING WIRING AND TERMINALS** .

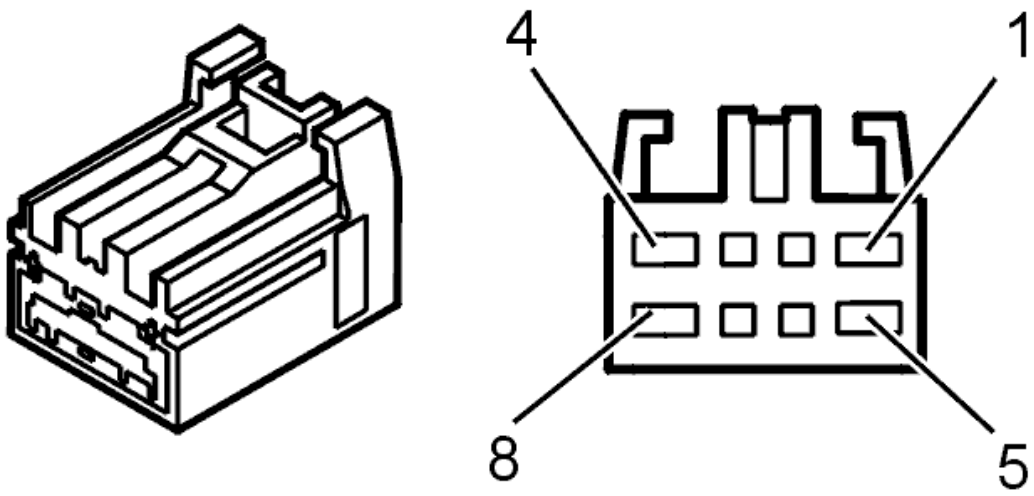

Fig. 99: Fuel Level Sensor Terminals

Courtesy of VOLVO CARS CORPORATION

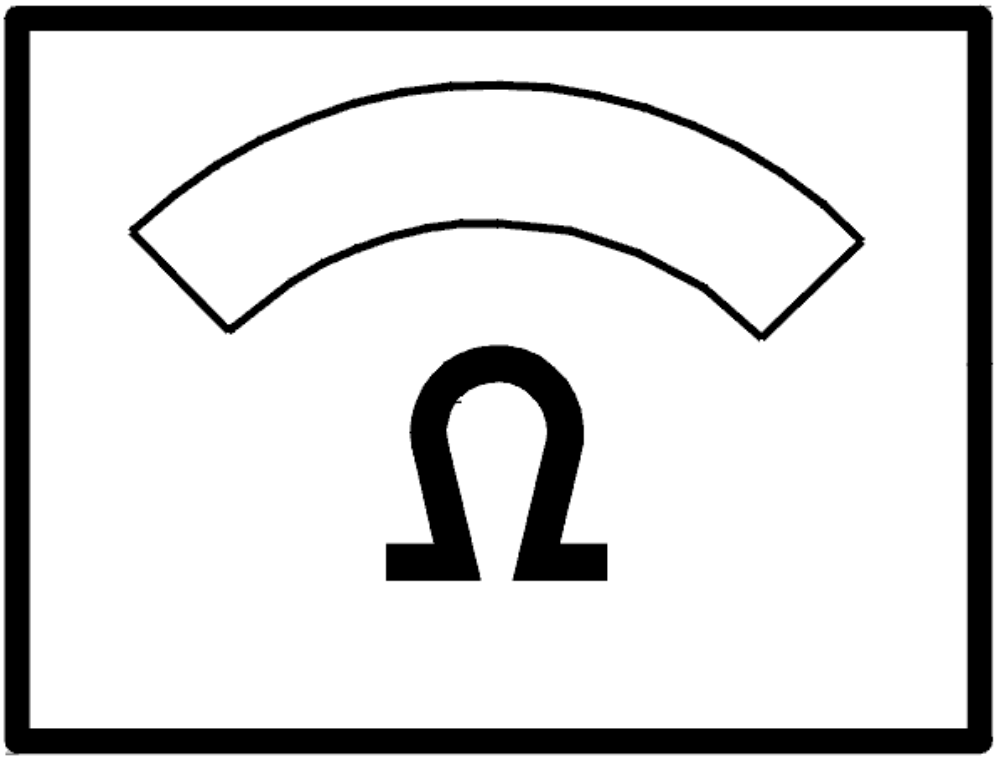

Fig. 100: Identifying Ohmmeter
Courtesy of VOLVO CARS CORPORATION

CHECKING THE RESISTANCE OF THE SENSOR

Check the resistance of both the fuel level sensors. The resistance across each sensor may vary between 12 ohms (full fuel tank) and 383 ohms (empty fuel tank).

HINT: The resistance of the left fuel level sensor can be measured between terminals #5 and #6 on the connector for the fuel level sensors. The resistance of the right fuel level sensor can be measured between terminals #6 and #7 on the connector for the fuel level sensors.

Remedy as necessary.

Other information:

- For further information about signals and other values, see **SIGNAL SPECIFICATION**
- To access the connector/replace the fuel level sensor connector (left-hand side), see **LEVEL SENSOR, FUEL TANK, RIGHT-HAND/FUEL TANK, REPLACING**
- To access the connector/replace the fuel level sensor connector (right-hand side), see **LEVEL SENSOR, FUEL TANK, RIGHT-HAND/FUEL TANK, REPLACING** .

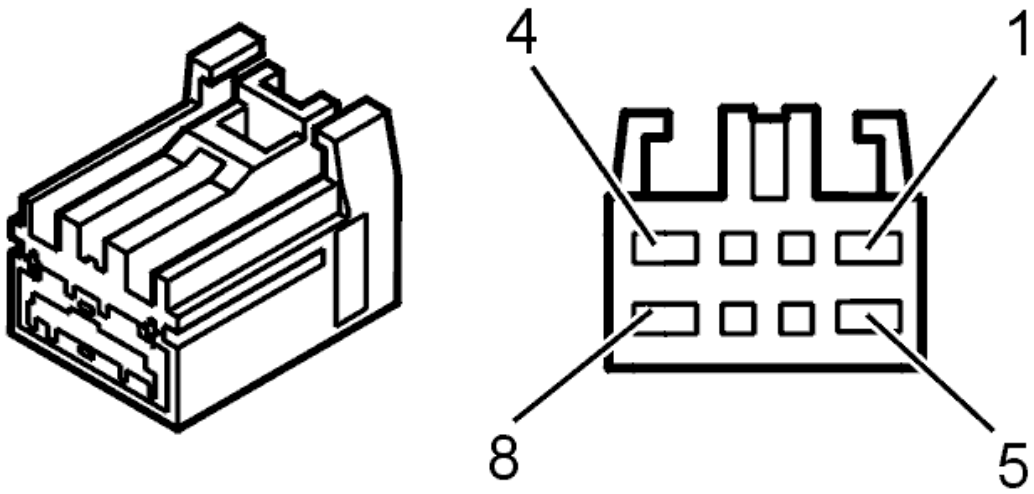

Fig. 101: Fuel Level Sensor Terminals
Courtesy of VOLVO CARS CORPORATION

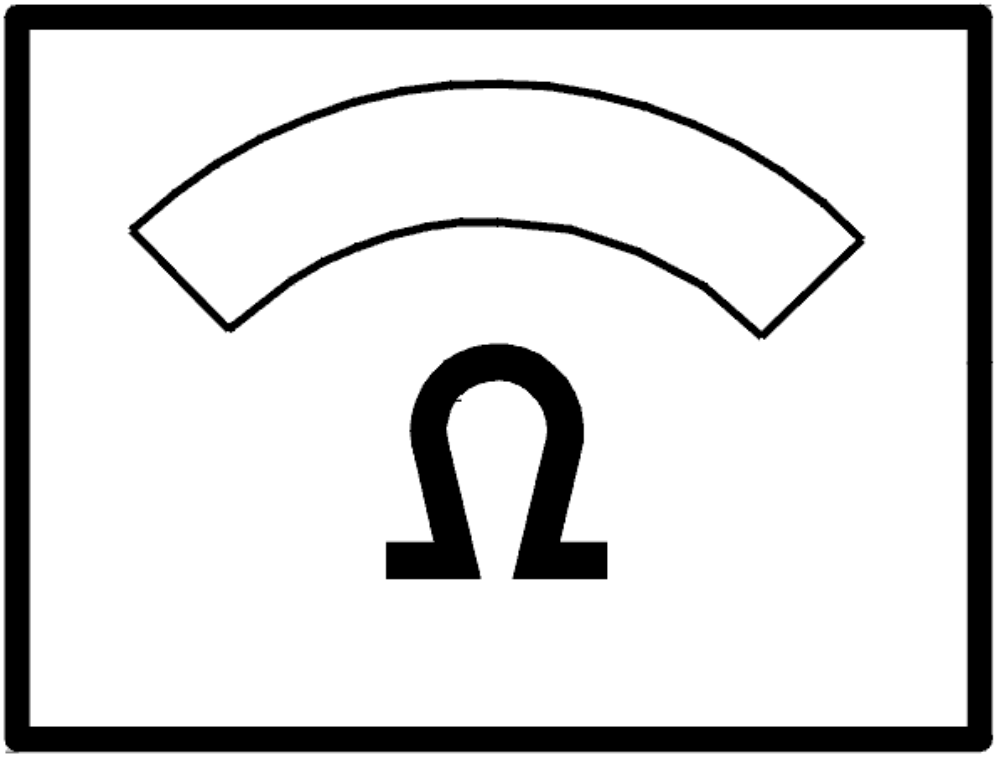

Fig. 102: Identifying Ohmmeter
Courtesy of VOLVO CARS CORPORATION

Was a fault detected?

- **YES**

  OKAY: Troubleshooting has been completed.

- **NO**

  Refer to **CHECKING FLOATS AND WIRING**

CHECKING FLOATS AND WIRING

Check that the floats for the fuel levels sensors have not stuck.

Check the cable inside the fuel tank between the two sensors. Check for a short-circuit to supply voltage. Check for a short-circuit to ground. Check for an open-circuit.

Remedy as necessary.

Other information:

- For further information about signals and other values, see **SIGNAL SPECIFICATION**
- To access or replace the fuel level sensor (left-hand side), see **LEVEL SENSOR, FUEL TANK, RIGHT-HAND/FUEL TANK, REPLACING**
- To access or replace the fuel level sensor (right-hand side), see **LEVEL SENSOR, FUEL TANK, RIGHT-HAND/FUEL TANK, REPLACING**
- see **CHECKING WIRING AND TERMINALS** .

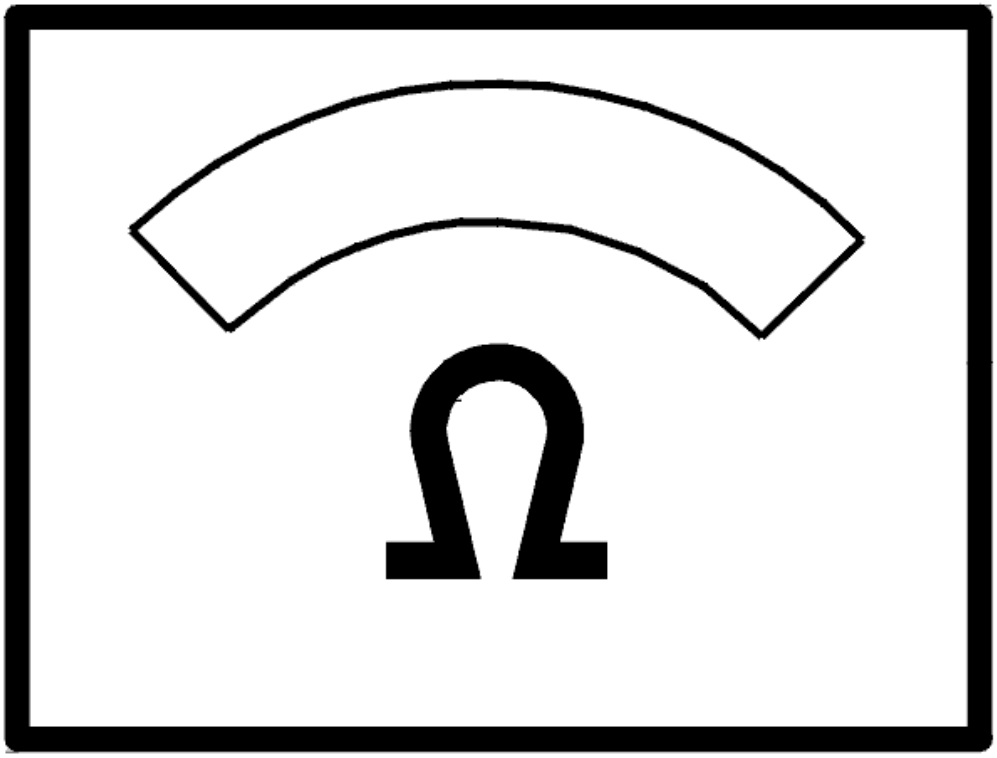

Fig. 103: Identifying Ohmmeter

Courtesy of VOLVO CARS CORPORATION

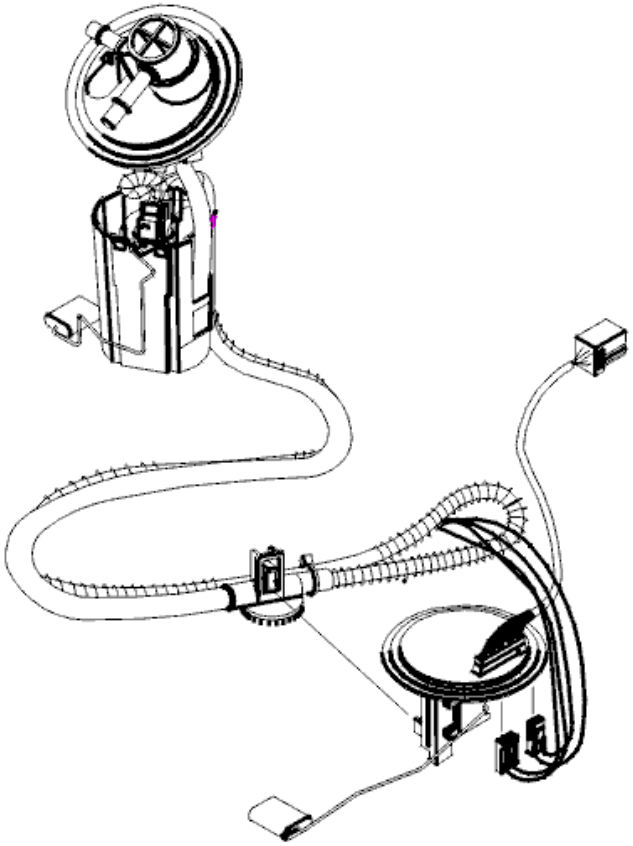

Fig. 104: Identifying Floats, Fuel Level Sensors, And Wiring
Courtesy of VOLVO CARS CORPORATION

TROUBLE-SHOOTING INFORMATION

Condition

No diagnostic trouble codes are displayed.

Possible Source

- Faulty sensor
- Open circuit/short circuit to ground in power supply
- Open circuit in ground wire.

Fault symptom[s]

- Trip computer indicates too soon that fuel tank is empty
- Fuel gauge not working.

CHECKING THE HIGH LEVEL STOP (BRAKE) LAMPS (2003-04)

CHECKING THE HIGH LEVEL STOP (BRAKE) LAMPS

CHECKING THE WIRING AND THE RELAY

If the stop (brake) lamp does not light, check the cable between rear electronic module terminal #4D and high level stop (brake) lamps terminal #1. Check for an open-circuit according to **OPEN-CIRCUIT, PERMANENT FAULTS** . Check for a short-circuit to ground according to **SHORT-CIRCUIT TO GROUND, PERMANENT FAULTS** .

Check the cable between high level stop (brake) lamps terminal #5 and ground. Check for an open-circuit according to **OPEN-CIRCUIT, PERMANENT FAULTS** . Check for a short-circuit to supply voltage according to **SHORT-CIRCUIT TO SUPPLY VOLTAGE. PERMANENT FAULTS** .

If the high level stop (brake) lamps are constantly lit, check the cable between rear electronic module terminal #4D and high level stop (brake) lamps terminal #1 for a short-circuit to supply voltage according to **SHORT-CIRCUIT TO SUPPLY VOLTAGE. PERMANENT FAULTS** .

Other information:

- For information about signals, see **SIGNAL SPECIFICATION** .

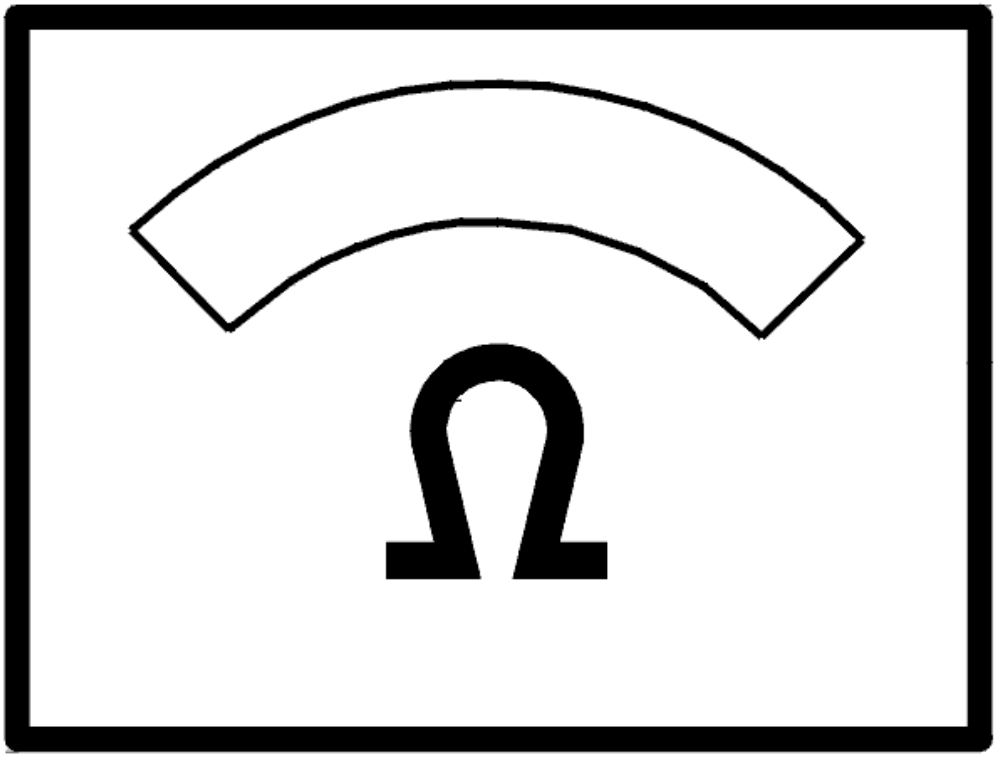

Fig. 105: Identifying Ohmmeter
Courtesy of VOLVO CARS CORPORATION

FAULT-TRACING INFORMATION

Condition

No diagnostic trouble codes (DTCs) are stored.

Possible Source

- Defective high level stop (brake) lamp.
- Open-circuit.
- Short-circuit to ground in the cable.
- Short-circuit to supply voltage in the cable.

Fault symptom[s]

The stop (brake) lamp does not light when the brake pedal is depressed.

The stop (brake) lamp lights constantly.

CHECKING THE HIGH/LOW WIPER SPEED (2003-04)

CHECKING WINDSHIELD WIPERS, HIGH AND LOW SPEED

CHECKING THE WIRING

In the event of a fault at high speed, check the cable between the windshield wiper relay for high and low speed (2/90) terminal #5 and windshield wiper motor (6/1) terminal #2. Check for an open-circuit.

HINT: Check that relay (2/90) is functioning. When high speed is selected there must be 12 V at terminal #5.

In the event of a fault at low speed, check the cable between the windshield wiper relay for high and low speed (2/90) terminal #4 and windshield wiper motor (6/1) terminal #1. Check for an open-circuit.

HINT: Check that relay (2/90) is functioning. When low speed is selected there must be 12 V at terminal #4.

Check the ground supply (6/1) for windshield wiper motor terminal #4 at the ground terminal. Check for an open-circuit.

Check the cable between the relay for windshield wiper low speed and high speed (2/90) terminal #1 and the relay for windshield wiper on/off/interval (2/91) terminal #1. Check for an open-circuit.

HINT: The fault may have been caused by an open-circuit in the supply to the relay. The voltage must be 12 V at (2/90) terminal #1, (2/91) terminal #1 and at (2/91) terminal #5. Check in particular fuse 4 in the integrated relay/fusebox in the engine compartment.

Try replacing the windshield wiper motor according to **MOTOR WINDSHIELD WIPER, REPLACING** .

Remedy as necessary.

Other information:

- see **CHECKING WIRING AND TERMINALS** .

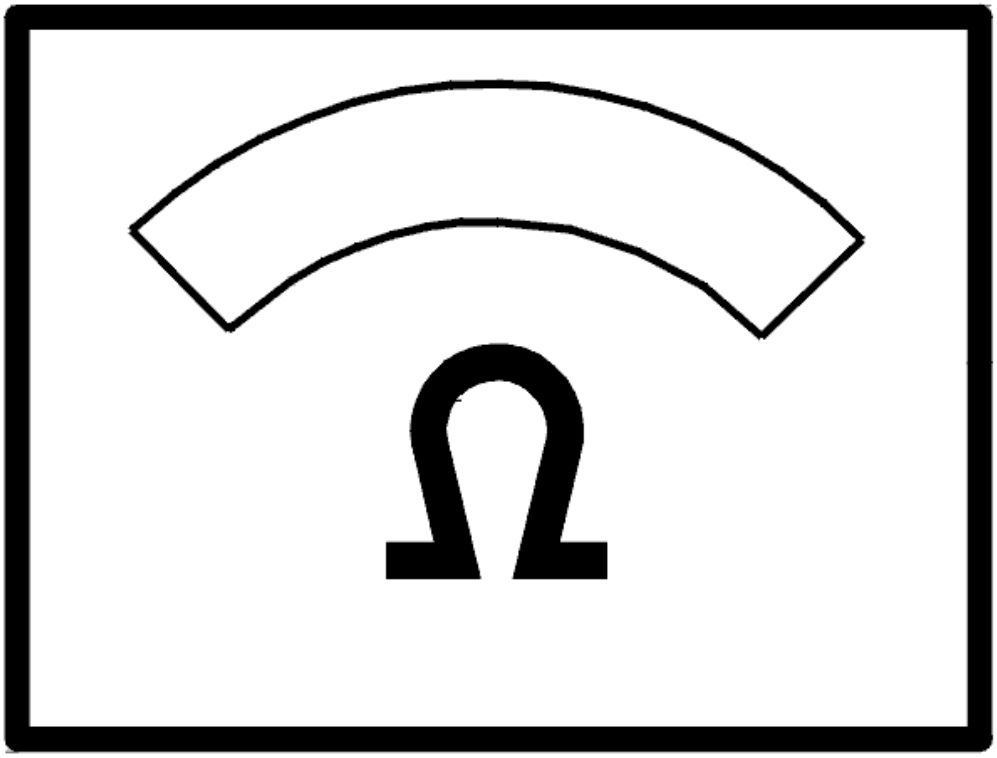

Fig. 106: Identifying Ohmmeter
Courtesy of VOLVO CARS CORPORATION

TROUBLE-SHOOTING INFORMATION

Condition

No diagnostic trouble codes are displayed.

Possible Source

- Faulty relay
- Open circuit in signal wire.

Fault symptom[s]

- Windscreen wiper motor does not work.

CHECKING THE HORN (2003-04)

CHECKING THE HORN

CHECKING THE INPUT SIGNAL

Press the horn. Check that the signal from the horn reaches the control module.

Read off the value.

The value must display ON when the horn is pressed. Otherwise the signal should read OFF.

HINT: The value is constantly OFF in the event of an open-circuit or a short-circuit to supply voltage. The horn value is constantly ON (horn activated) in the event of a short-circuit to ground.

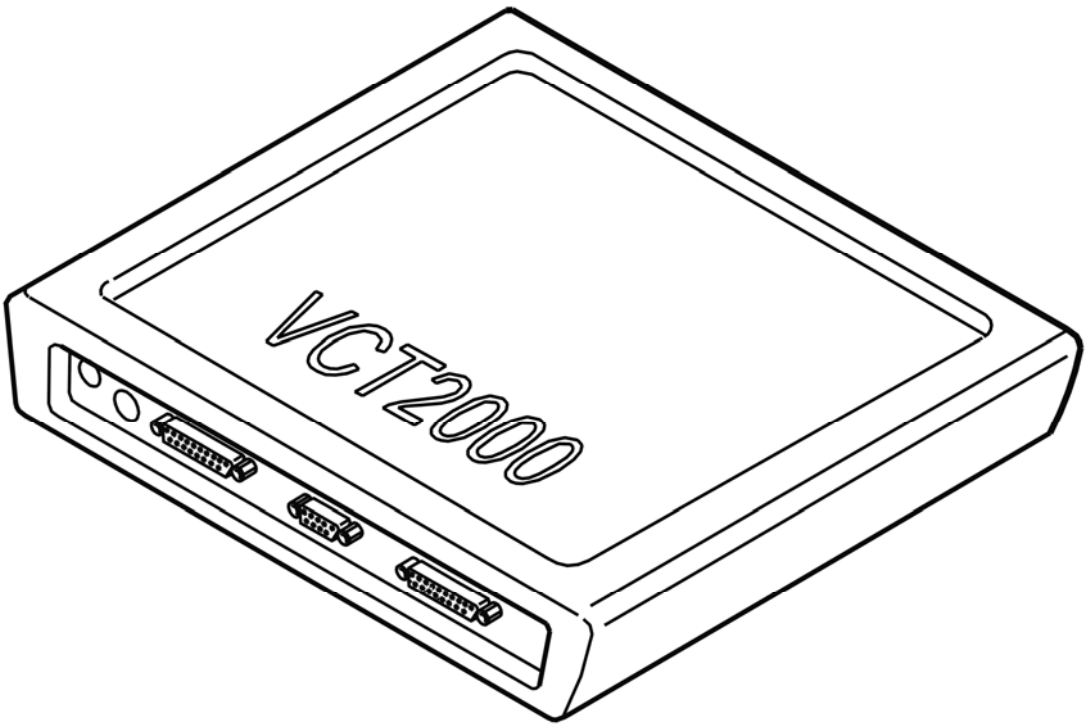

Fig. 107: Identifying VCT2000 Diagnostic Tool Symbol In VIDA
Courtesy of VOLVO CARS CORPORATION

Is the function OK?

- **YES**

Refer to **CHECKING THE OUTPUT SIGNAL**

- **NO**

  Refer to **CHECKING THE CABLE FOR THE INPUT SIGNAL**

CHECKING THE CABLE FOR THE INPUT SIGNAL

Check the cable between central electronic module (CEM) terminal #12D and steering wheel module (SWM) (3/130) terminal #15.

Also check the ground lead for the steering wheel module (SWM) (3/130) terminal #16 for an open-circuit.

If no faults are found, the fault may be in the steering wheel module (SWM).

Remedy as necessary.

Other information

- For further information about signals and other values, see **SIGNAL SPECIFICATION**
- To connect the breakout box to the central electronic module (CEM), see **CONNECTING THE BREAKOUT BOX**
- To connect the breakout box to the steering wheel module (SWM), see **CONNECTING THE BREAKOUT BOX**
- To replace the steering wheel module (SWM), see **STEERING WHEEL MODULE (SWM), REPLACING** .

CHECKING THE OUTPUT SIGNAL

Activate the horn.

HINT: Listen for a click from the relay to determine whether the fault is in the relay circuit or in the wiring for the horn itself.

1. The horn is functioning. Troubleshooting has been completed.
2. The relay clicks. Refer to **CHECKING THE WIRING FOR THE HORN**.
3. The relay does not click. Refer to **CHECKING THE CABLE FOR THE RELAY**.

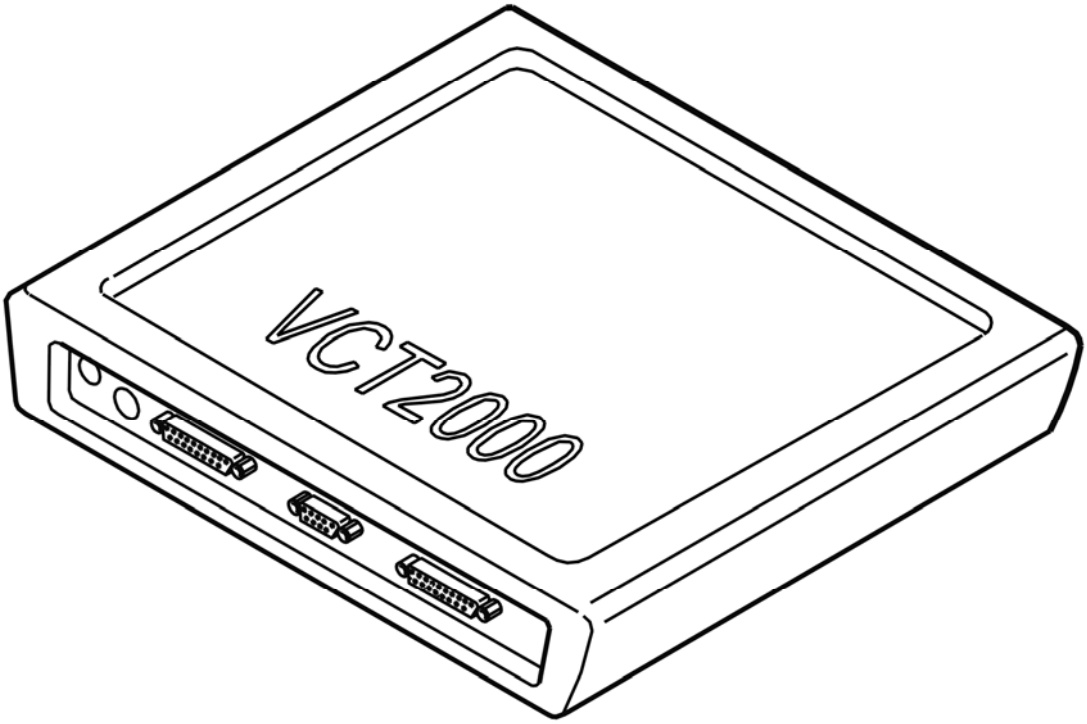

Fig. 108: Identifying VCT2000 Diagnostic Tool Symbol In VIDA
Courtesy of VOLVO CARS CORPORATION

CHECKING THE WIRING FOR THE HORN

Check the relay (2/17).

HINT: The voltage must be 12 V at terminal #3. The signal to the horn is at terminal #5.

Check the cable between relay terminal #5 and horn 1 (16/10) terminal #1 and horn 2 (16/11) terminal #1.

Also check that both the horns are grounded at terminal #2.

Check the connector.

Remedy as necessary.

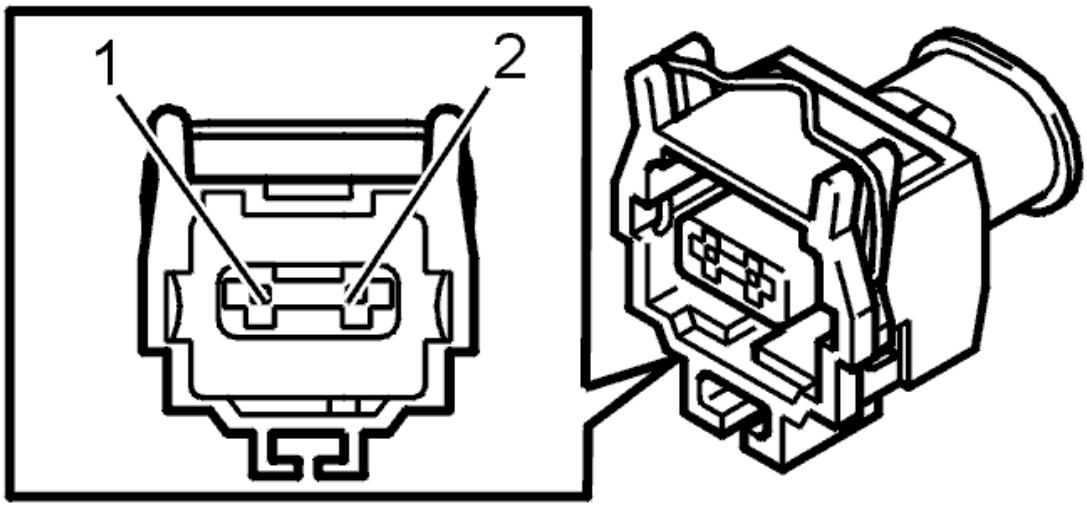

Fig. 109: Brake Pedal Position Sensor Connector Terminal Identification
Courtesy of VOLVO CARS CORPORATION

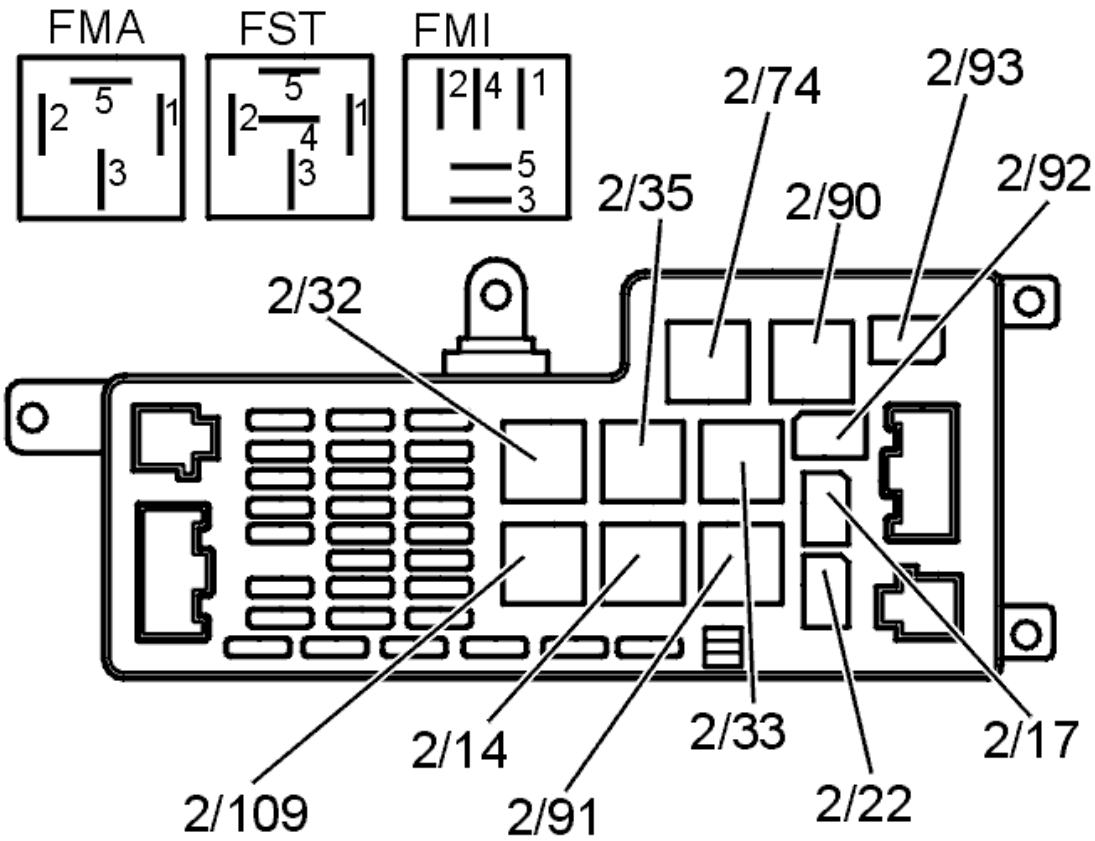

Fig. 110: Identifying Connectors
Courtesy of VOLVO CARS CORPORATION

CHECKING THE CABLE FOR THE RELAY

Check the cable between central electronic module (CEM) terminal #19A and horn relay 2/17 terminal #2.

Check for an open-circuit.

Also check the connector. Check for an open-circuit.

HINT: The fault may have been caused by an open-circuit in the supply to the relay.

HINT: The voltage must be 12 V at both terminals #1 and #2 for relay 2/17.

HINT: In particular, check that fuse 9 in the integrated relay/fusebox in the engine compartment is intact.

Try a new horn relay (2/17).

Remedy as necessary.

Other information

- For further information about signals and other values, see **SIGNAL SPECIFICATION**
- To connect the breakout box, see **CONNECTING THE BREAKOUT BOX**
- see **CHECKING WIRING AND TERMINALS** .

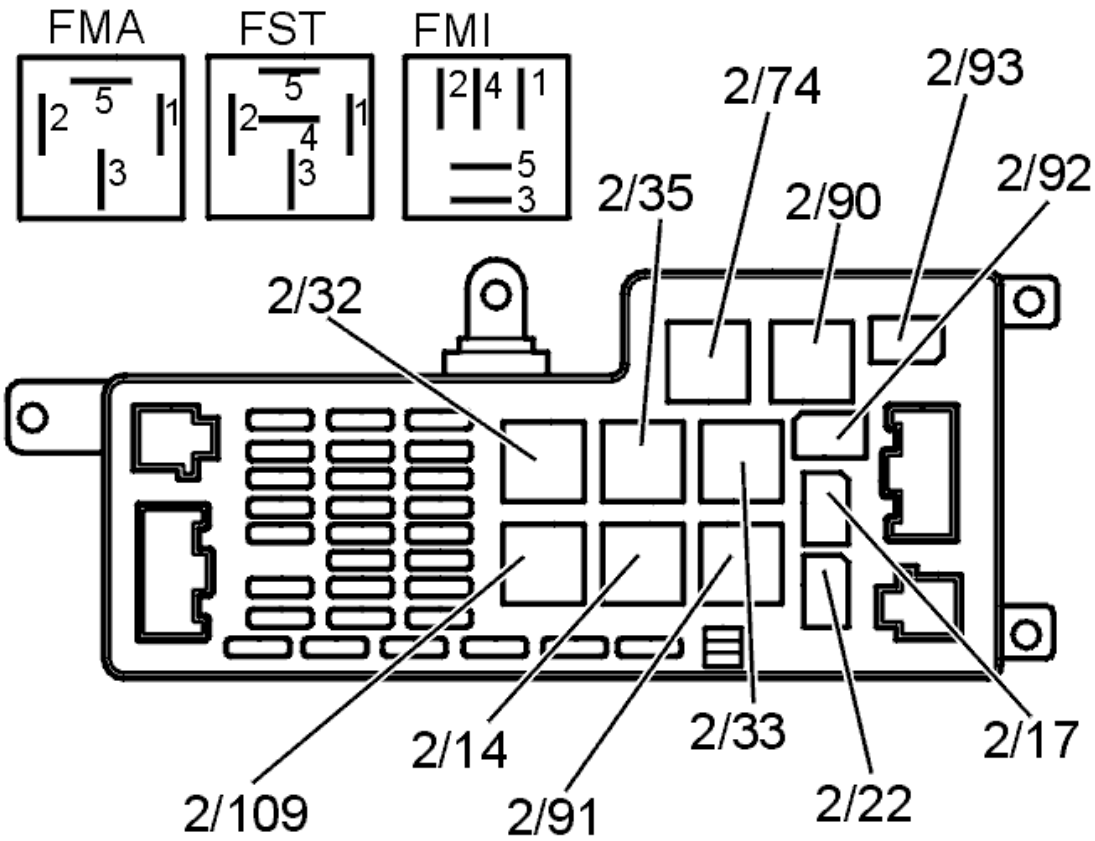

Fig. 111: Identifying Connectors
Courtesy of VOLVO CARS CORPORATION

TROUBLE-SHOOTING INFORMATION

Condition

No diagnostic trouble codes are displayed.

Possible Source

- Short circuit to voltage supply in the signal line
- Short circuit to ground in the signal line
- Open circuit.

Fault symptom[s]

- Horn does not work.

CHECKING THE IGNITION SWITCH KEY SENSOR (2003-04)

CHECK THE KEY SENSOR IN THE IGNITION SWITCH

CHECKING THE KEY SENSOR SIGNAL

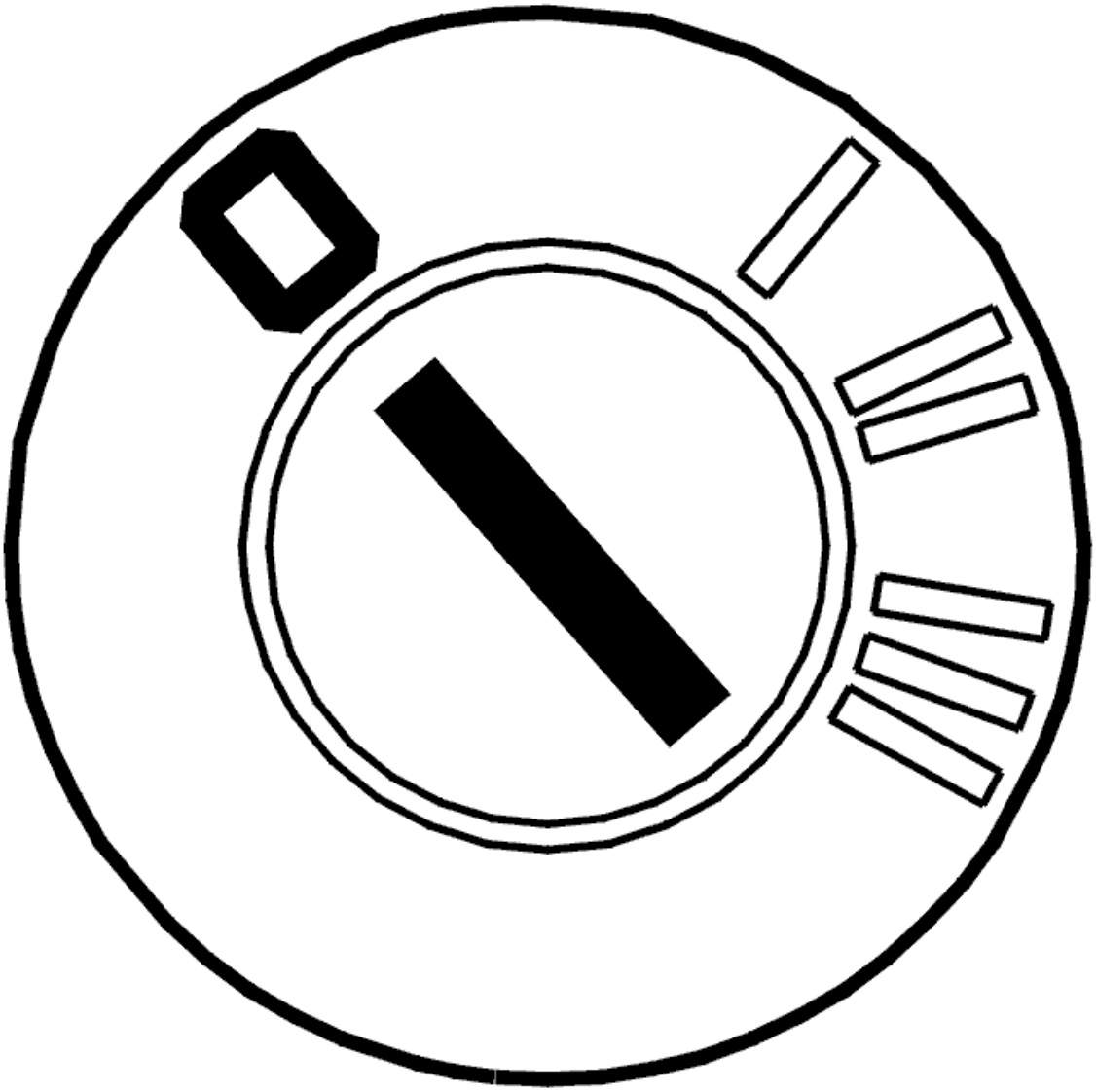

Fig. 112: Identifying Ignition OFF
Courtesy of VOLVO CARS CORPORATION

- Ignition off.

  Check the voltage in the central electronic module (CEM) connector, terminal #B1 (#A21). The voltage must be battery voltage.

  Remove the key from the ignition switch. The voltage must now be approximately 0 V.

  Other information

  - To access or replace the central electronic module (CEM) connector, see **CENTRAL ELECTRONIC MODULE (CEM), REPLACING**
  - To connect the breakout box to the control module, see **CONNECTING THE BREAKOUT BOX**

- For further information about signals and other values, see **SIGNAL SPECIFICATION**

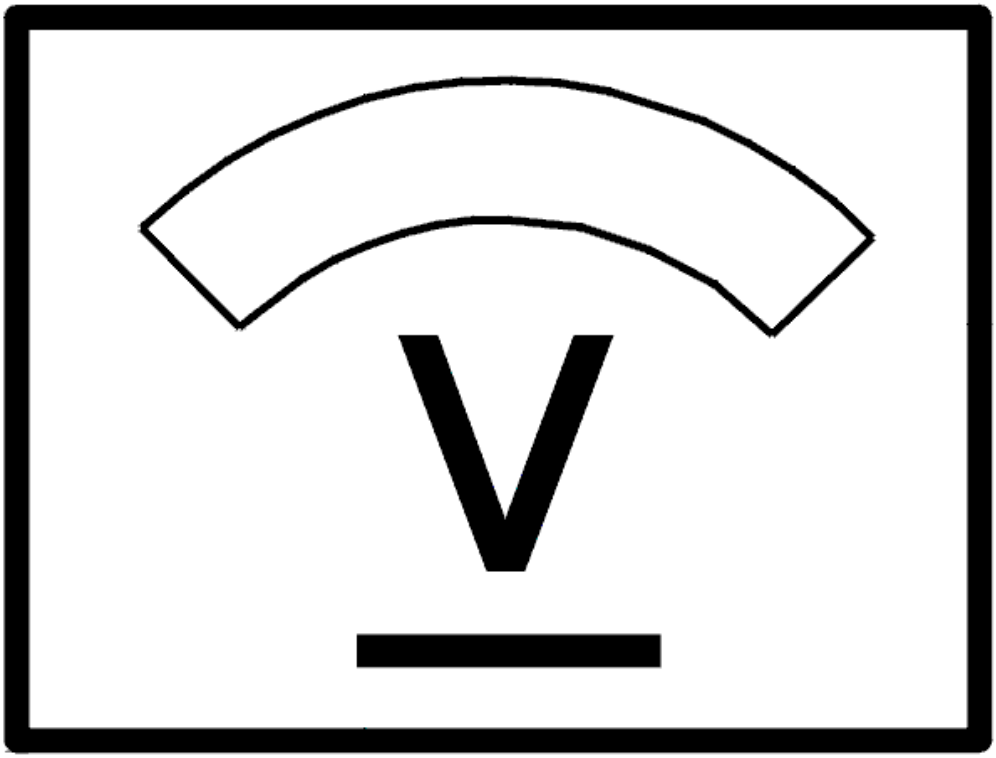

Fig. 113: Identifying Voltage Display
Courtesy of VOLVO CARS CORPORATION

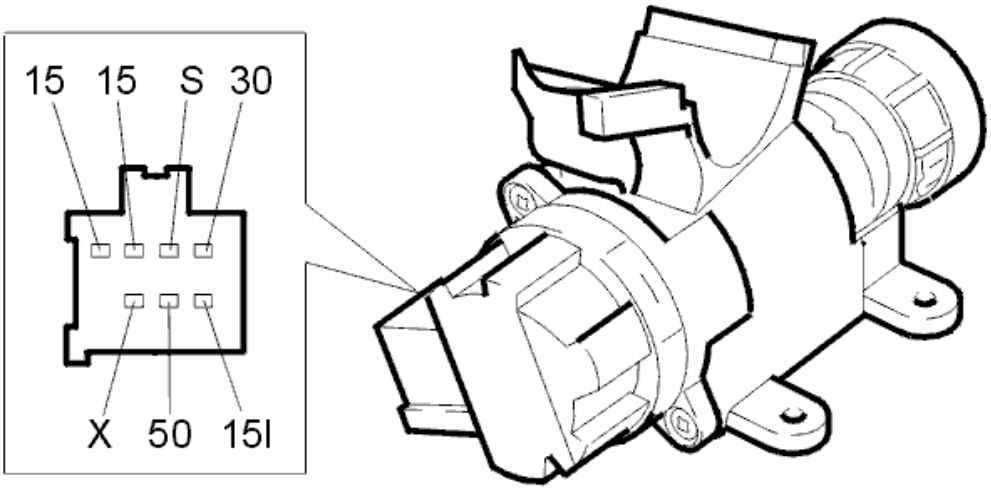

Fig. 114: Identifying Central Electronic Module (CEM) Connector Terminals
Courtesy of VOLVO CARS CORPORATION

Is the voltage OK?

- **YES**

  FAULT NOT FOUND: Troubleshooting has been completed.

- **NO**

  Refer to **CHECKING THE IGNITION SWITCH**

CHECKING THE IGNITION SWITCH

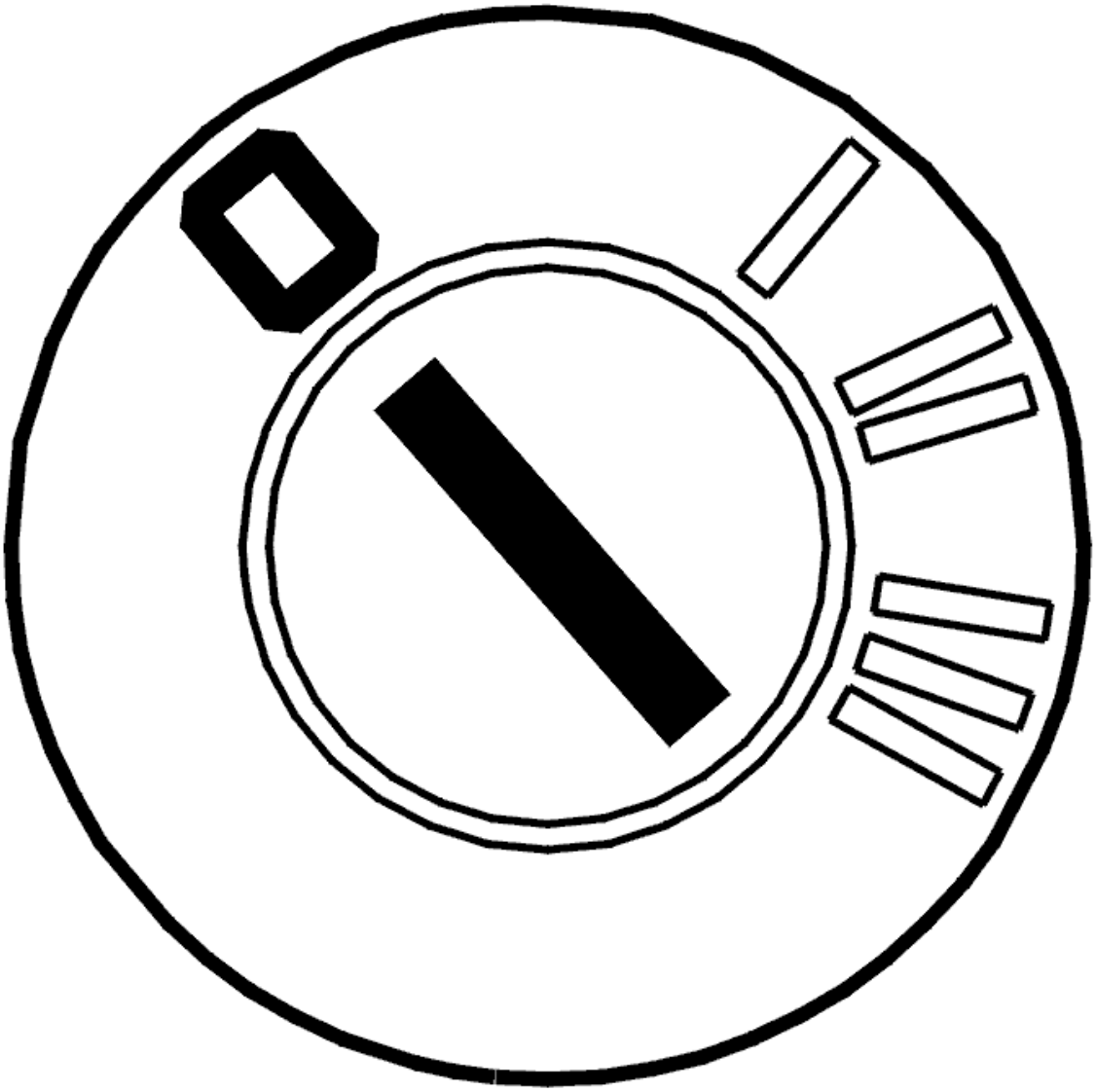

Fig. 115: Identifying Ignition OFF
Courtesy of VOLVO CARS CORPORATION

- Ignition off
- Key out
- Disconnect the connector for the ignition switch.

Check the voltage in the central electronic module (CEM) connector, terminal #B1 (#A21).

Other information

- To access the ignition switch, see **STEERING WHEEL LOCK, REPLACING**

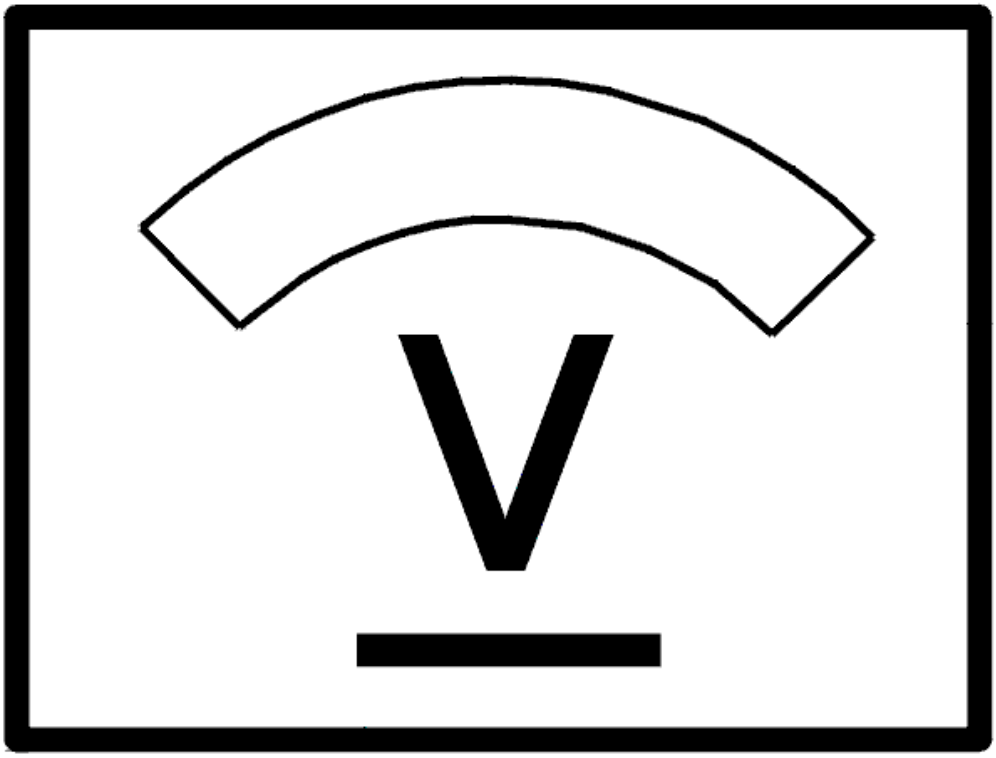

Fig. 116: Identifying Voltage Display
Courtesy of VOLVO CARS CORPORATION

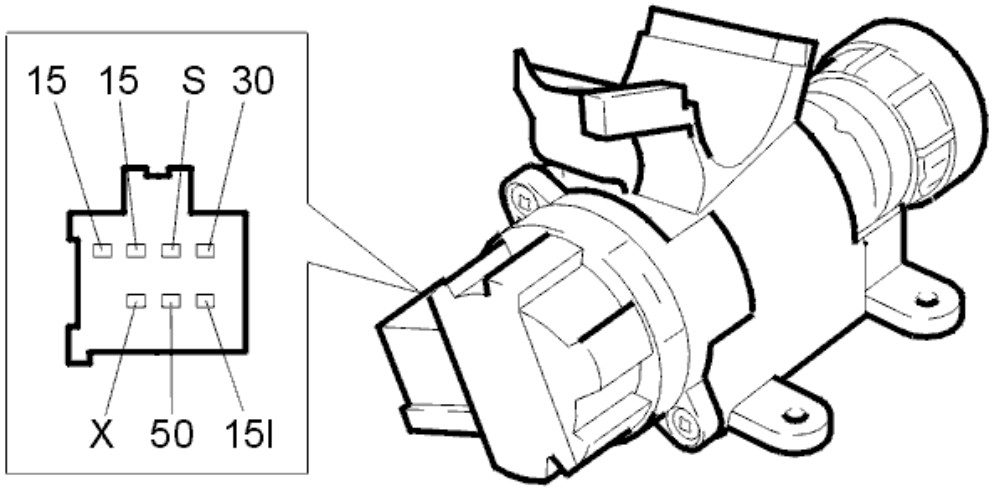

Fig. 117: Identifying Central Electronic Module (CEM) Connector Terminals
Courtesy of VOLVO CARS CORPORATION

Does the voltage drop to approximately 0 V?

- **YES**

  Refer to **REPLACING THE IGNITION SWITCH**

- **NO**

  Refer to **CHECKING THE WIRING**

CHECKING THE WIRING

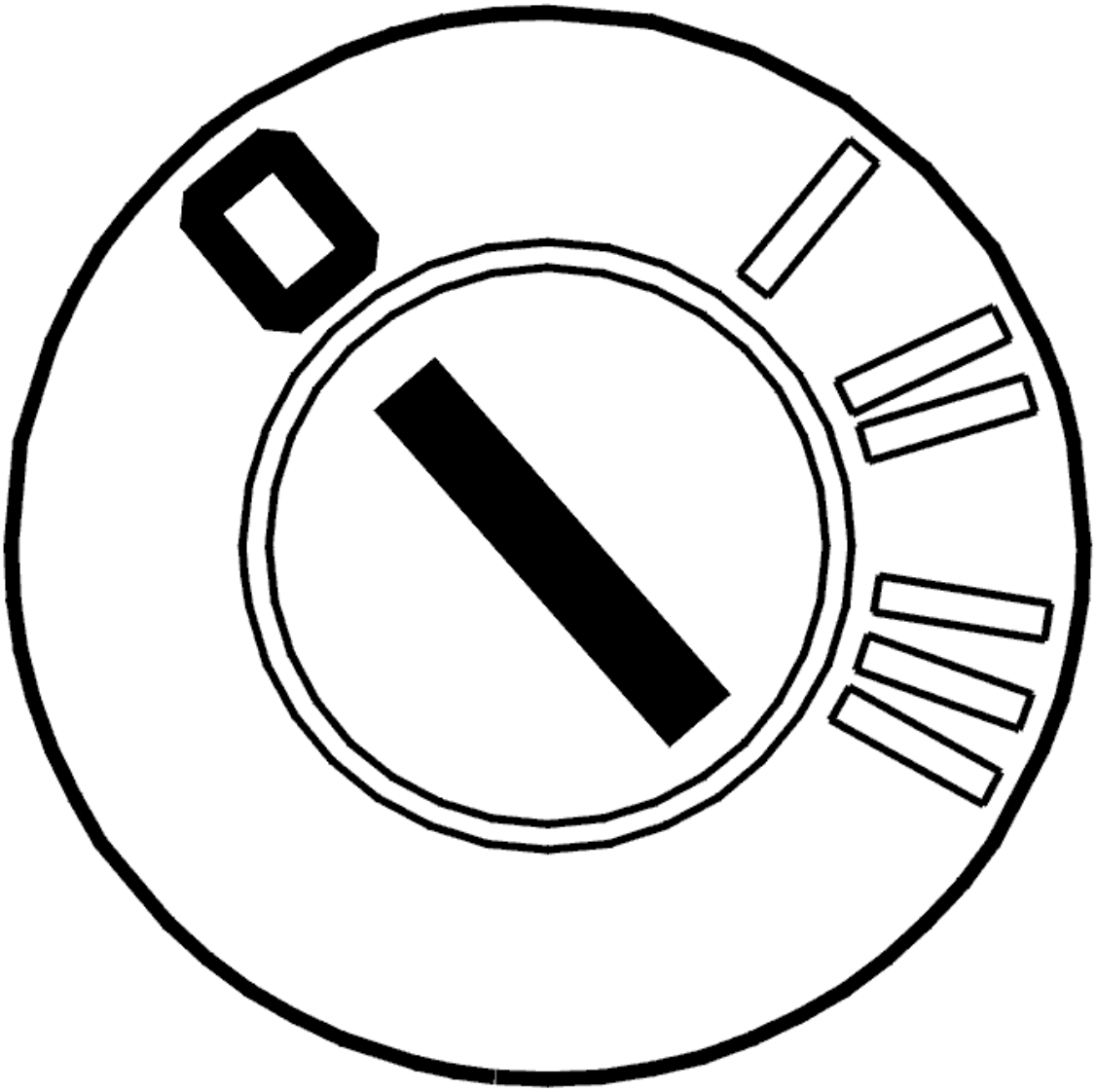

Fig. 118: Identifying Ignition OFF
Courtesy of VOLVO CARS CORPORATION

- Ignition off
- Key out.

Check the cable between central electronic module (CEM) connector terminal #B1 (#A21) and ignition switch connector terminal #3 (#S). Check for a short-circuit to battery voltage.

Other information

- To access the ignition switch, see **STEERING WHEEL LOCK, REPLACING**

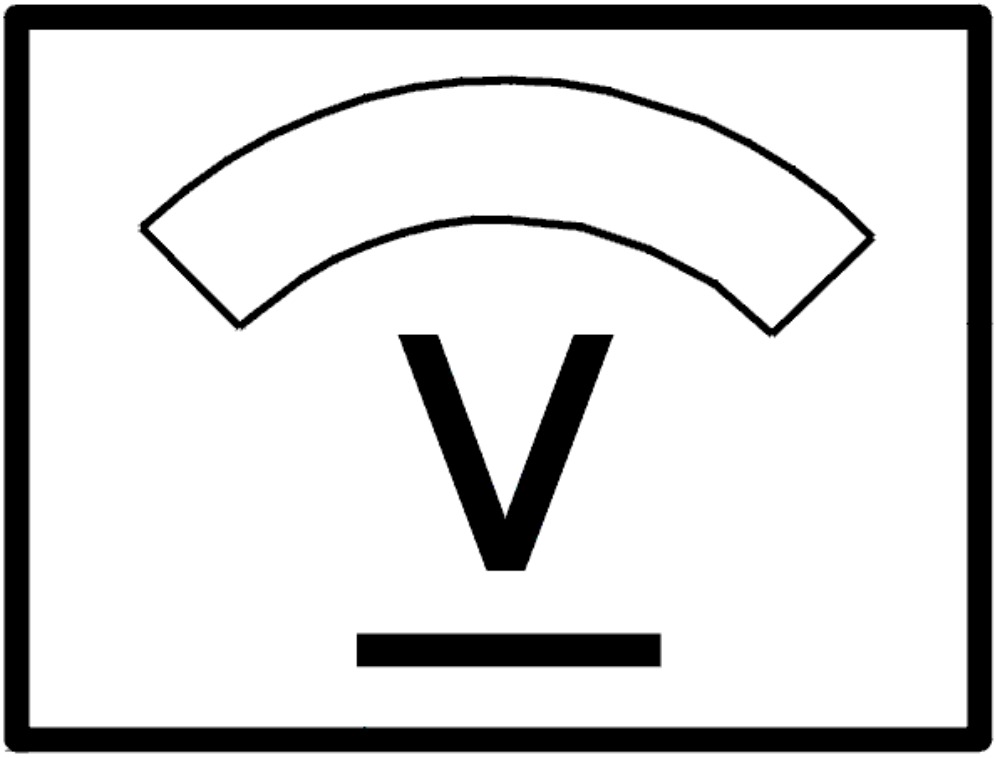

Fig. 119: Identifying Voltage Display
Courtesy of VOLVO CARS CORPORATION

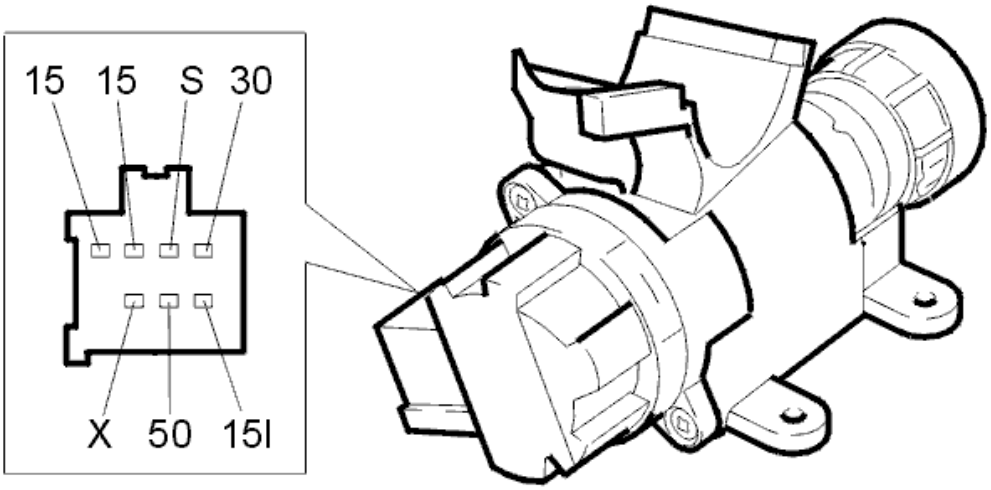

Fig. 120: Identifying Central Electronic Module (CEM) Connector Terminals
Courtesy of VOLVO CARS CORPORATION

Was a fault detected?

- **YES**

  Refer to **VERIFICATION**

- **NO**

  FAULT NOT FOUND: Troubleshooting has been completed.

REPLACING THE IGNITION SWITCH

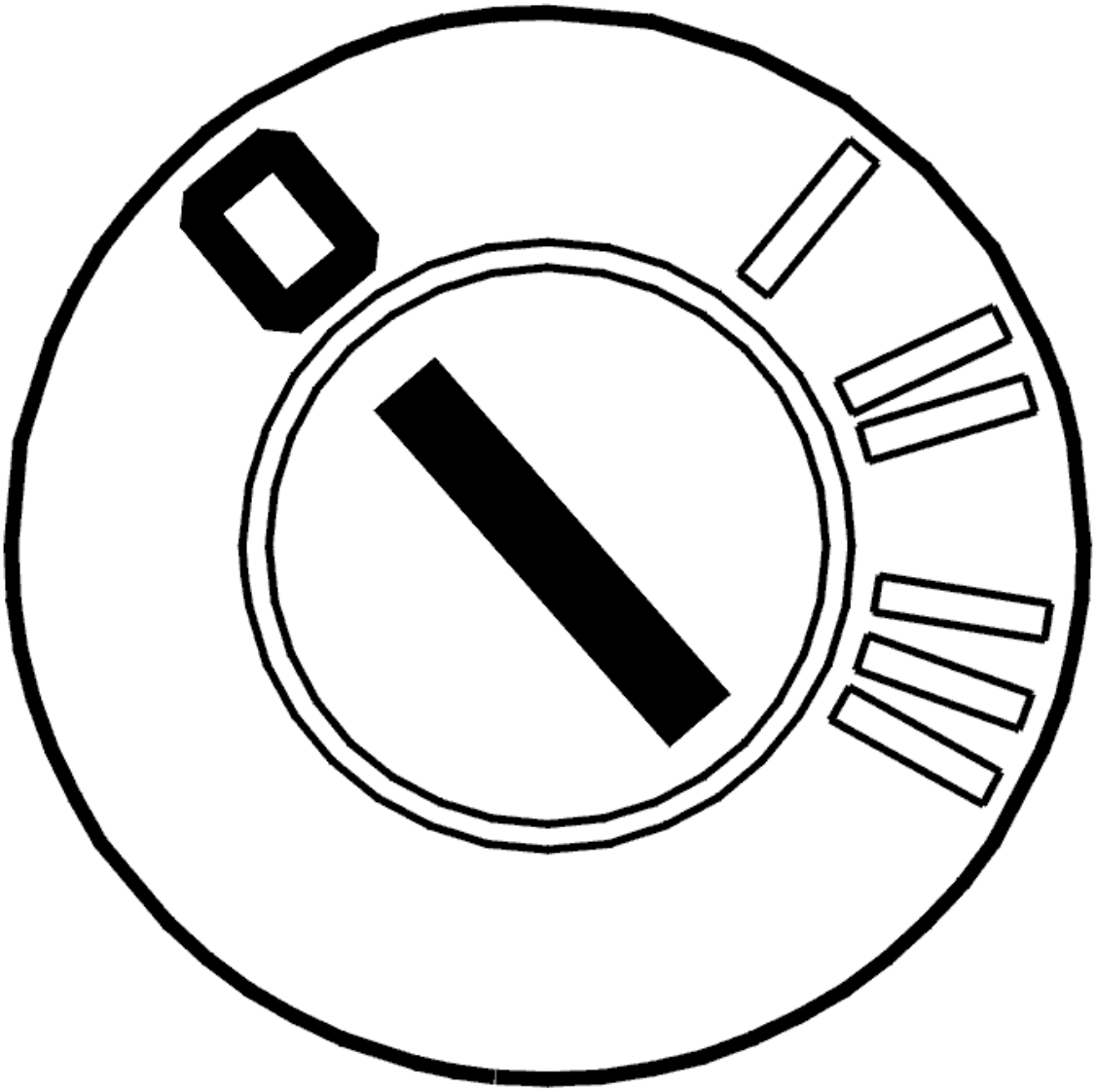

Fig. 121: Identifying Ignition OFF
Courtesy of VOLVO CARS CORPORATION

- Ignition off
- Key out.

Replace the ignition switch. See **STEERING WHEEL LOCK, REPLACING** .

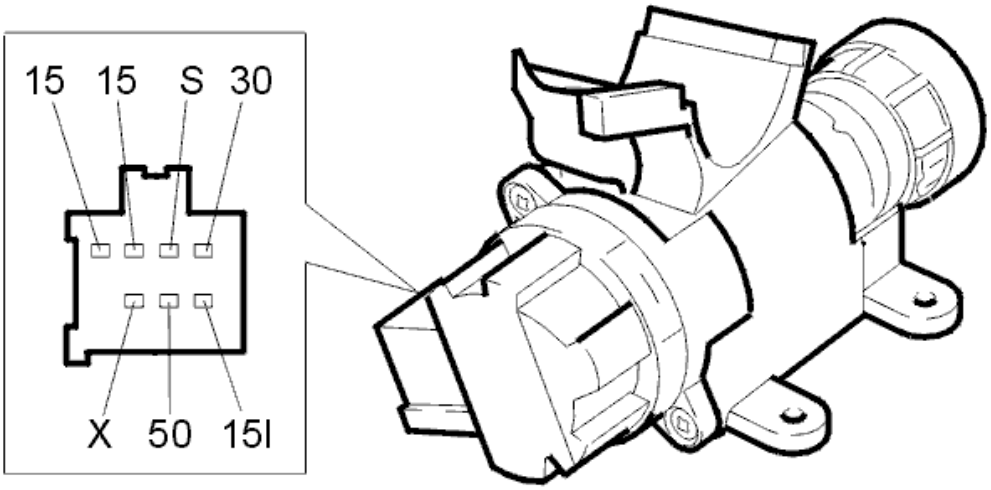

Fig. 122: Identifying Central Electronic Module (CEM) Connector Terminals
Courtesy of VOLVO CARS CORPORATION

- **Continue**

  Refer to **VERIFICATION**

VERIFICATION

HINT: After carrying out the repair, check that the fault has been remedied.

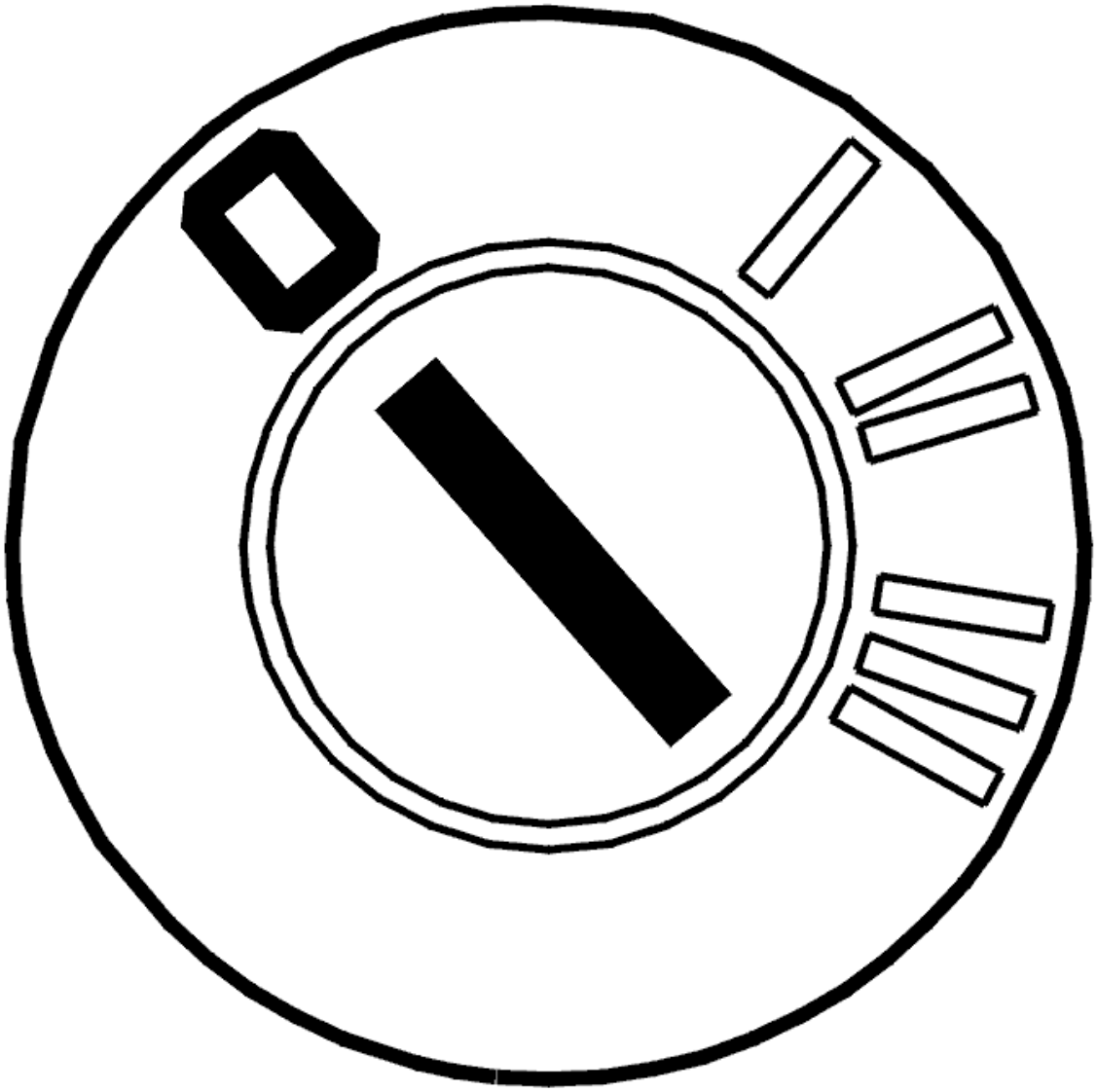

Fig. 123: Identifying Ignition OFF
Courtesy of VOLVO CARS CORPORATION

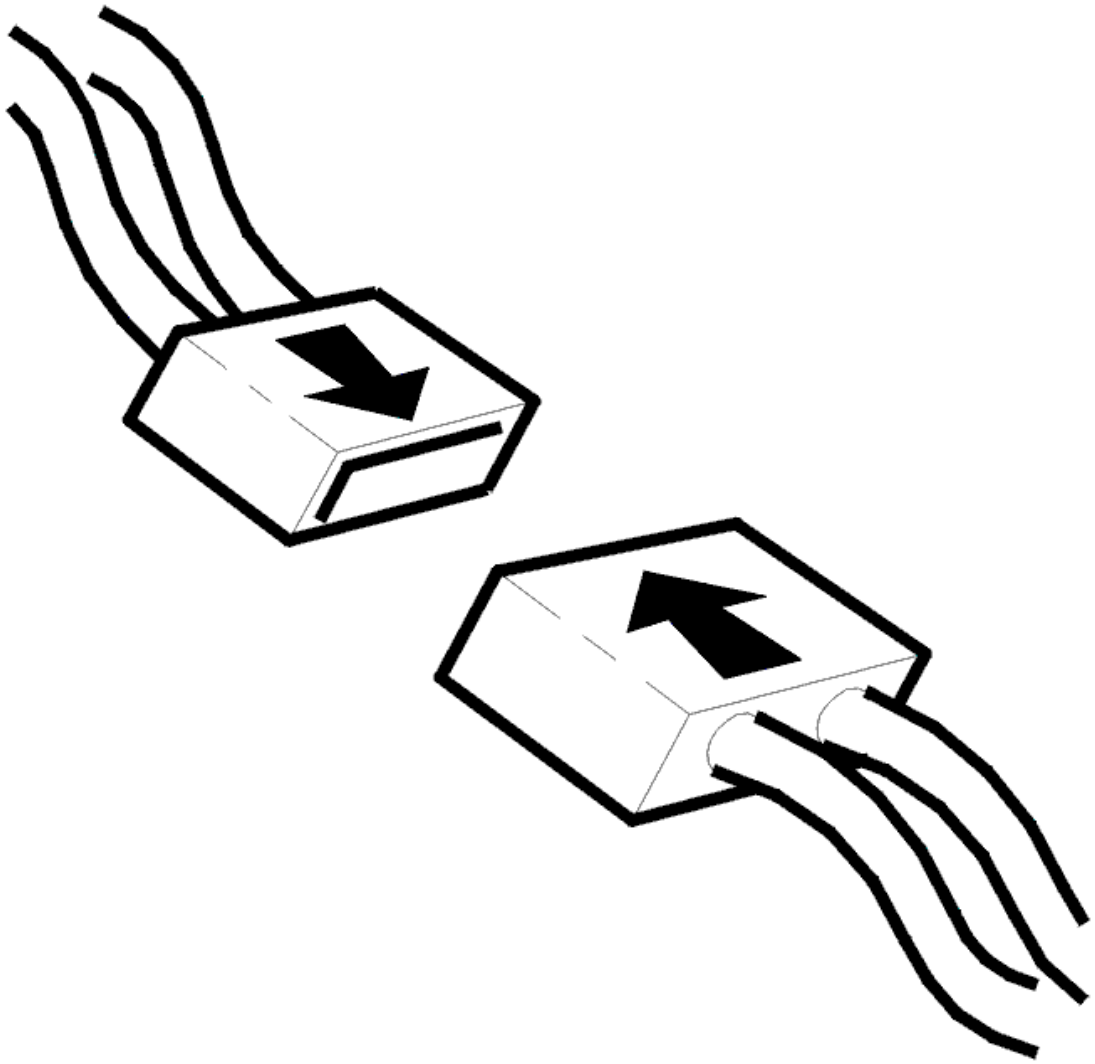

Fig. 124: Connecting Connector
Courtesy of VOLVO CARS CORPORATION

- Ignition off
- Reinstall the connectors, components etc.

  Open the driver's door.

  Check to, see if the key warning signal functions normally and silences when the key is removed from the ignition switch

Was the function OK?

- **YES**

  OKAY: Troubleshooting has been completed.

- **NO**

  Refer to **INFORMATION**

INFORMATION

FAULT-TRACING INFORMATION

The fault should have been detected and remedied. As this is not the case fault-tracing has failed.

Exit fault-tracing for this diagnostic trouble code (DTC) or make another attempt.

FAULT-TRACING INFORMATION

Condition

No DTCs stored.

Possible Source

- The key sensor (pin in the ignition switch) has jammed in the key position.
- Short-circuit to battery voltage in the cable from the key sensor.

Fault symptom[s]

- Cannot be activated/deactivated
- Alarm does not operate
- Central locking does not operate

CHECKING THE INNER REAR-VIEW MIRROR DIMMER (2003-12)

CHECKING THE ANTI-DAZZLE FUNCTION IN THE REAR VIEW MIRROR

CHECKING THE ANTI-DAZZLE FUNCTION

NOTE: If the upper electronic module (UEM) has been replaced software, specially developed for downloading after replacing the control module, must be downloaded to the control module before the anti-dazzle function is changed. See UPPER ELECTRONIC MODULE (UEM)/REARVIEW MIRROR, REPLACING .

The rear view mirror anti-dazzle function can be adjusted:

- If the rear view mirror anti-dazzle function is too powerful or too weak, it can be adjusted.

Specific software for setting the anti-dazzle function must be installed in the car to do this.

TROUBLE-SHOOTING INFORMATION

Condition

No diagnostic trouble codes are displayed.

Electrochromatic mirror.

Substitute Value

?

Possible Source

- Internal fault in control unit.

Fault symptom[s]

- Dimmer does not work.

CHECKING THE INTERIOR LIGHTING (1) (2003-12)

CHECKING THE INTERIOR LIGHTING (1)

CHECKING COMPONENTS AND WIRING

Control module and rear reading lamp module

Check the cable between control module terminal #15 and rear reading lamp module terminal #2. Check for an open-circuit.

Check the cable between control module terminal #14 and rear reading lamp module terminal #6. Check for an open-circuit.

Control module and roof lamp module

Check the cable between the control module terminal #8 and roof lamp module terminal #2A. Check for an open-circuit. Check for a short-circuit to ground.

Control module and right/left vanity mirror lighting

Check the cable between control module terminal #8 and right/left vanity mirror lighting terminal #1. Check for an open-circuit. Check for a short-circuit to ground.

Check the cable between control module #20 and right/left vanity mirror lighting #3. Check for an open-circuit.

Remedy as necessary.

If no fault is found, try replacing the module that is malfunctioning.

This could be:

- Rear reading lamp module
- Roof lamp module
- Right/left vanity mirror lighting.

Other information

- For further information about signals and other values, see **SIGNAL DESCRIPTION, UPPER ELECTRONIC MODULE (UEM)**
- To connect the breakout box, see **CONNECTING THE BREAKOUT BOX**
- To access the vanity mirror lighting, see **BULB VANITY MIRROR, REPLACING**
- To access or replace the roof lamp module, see **INTERIOR LIGHTING, REPLACING**
- To access or replace the rear reading lamp module, see **BULB, READING LAMP, REAR, REPLACING**
- see **CHECKING WIRING AND TERMINALS** .

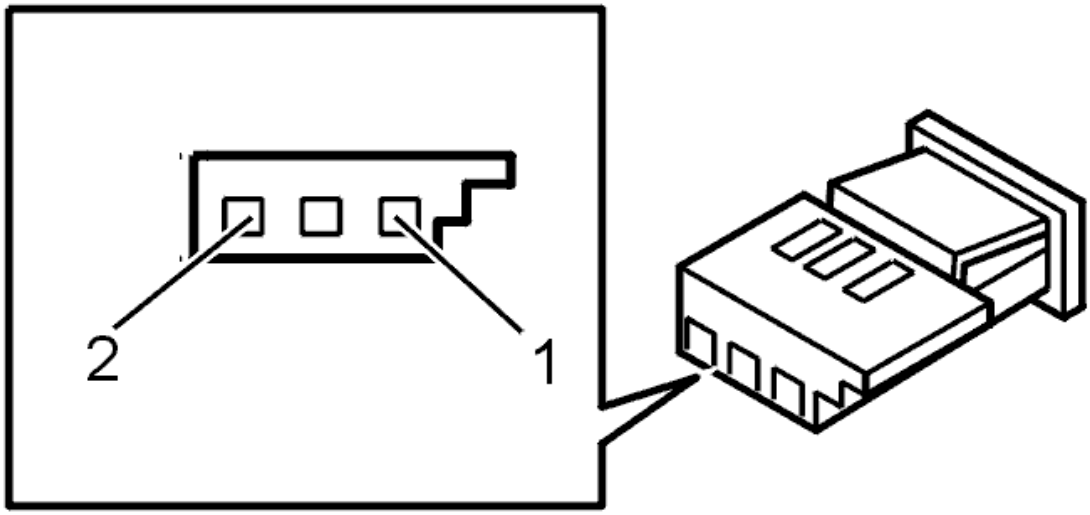

Fig. 125: Identifying Connector Terminals
Courtesy of VOLVO CARS CORPORATION

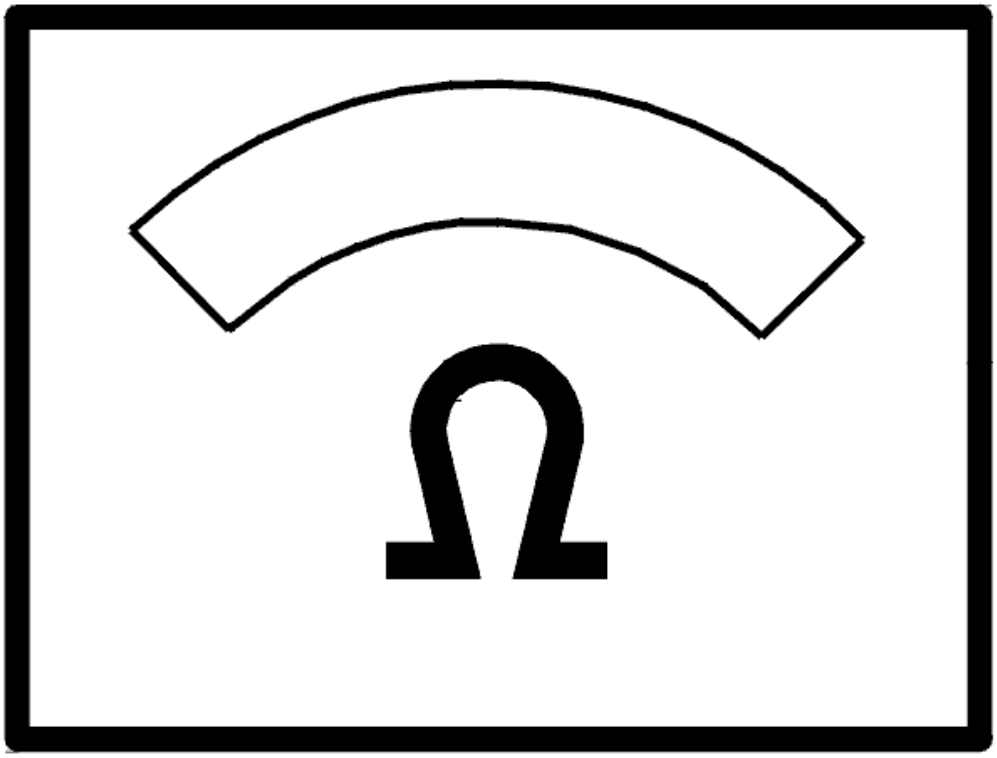

Fig. 126: Identifying Ohmmeter
Courtesy of VOLVO CARS CORPORATION

BULB VANITY MIRROR, REPLACING

- See **BULB VANITY MIRROR, REPLACING** .

TROUBLE-SHOOTING INFORMATION

Condition

No diagnostic trouble codes are displayed.

Substitute Value

Nothing.

Possible Source

- Open circuit or short circuit to ground on the wire.

  Faulty lamp unit.

Fault symptom[s]

- Interior lighting does not work.

CHECKING THE INTERIOR LIGHTING (2) (2003-12)

CHECKING THE INTERIOR LIGHTING

Two times can be programmed for the interior lighting:

1. **Short**

   The period from when the door is unlocked, or the engine stops, to when the interior lighting goes out can be changed if it is too long or too short.

2. **Long**

   The period from when the door is opened, or a lamp is lit with a switch, to when the lamp goes out can be changed if it is too long or too short.

To program a long interior lighting period you must step ("click") through the short interior lighting period programming.

- **Continue**

  Refer to **PROGRAMMING A SHORT INTERIOR LIGHTING PERIOD**

PROGRAMMING A SHORT INTERIOR LIGHTING PERIOD

The general lighting and rear reading lamps light and remain lit for 30 seconds when:

- The door has been unlocked from outside with a key or the remote control.
- The engine has been stopped and the ignition key turned to 0.

The default period is 30 seconds. This can be changed to between 5 and 255 seconds.

Read off the programmed values.

To change the time, mark the desired value in the scrolling list and start programming.

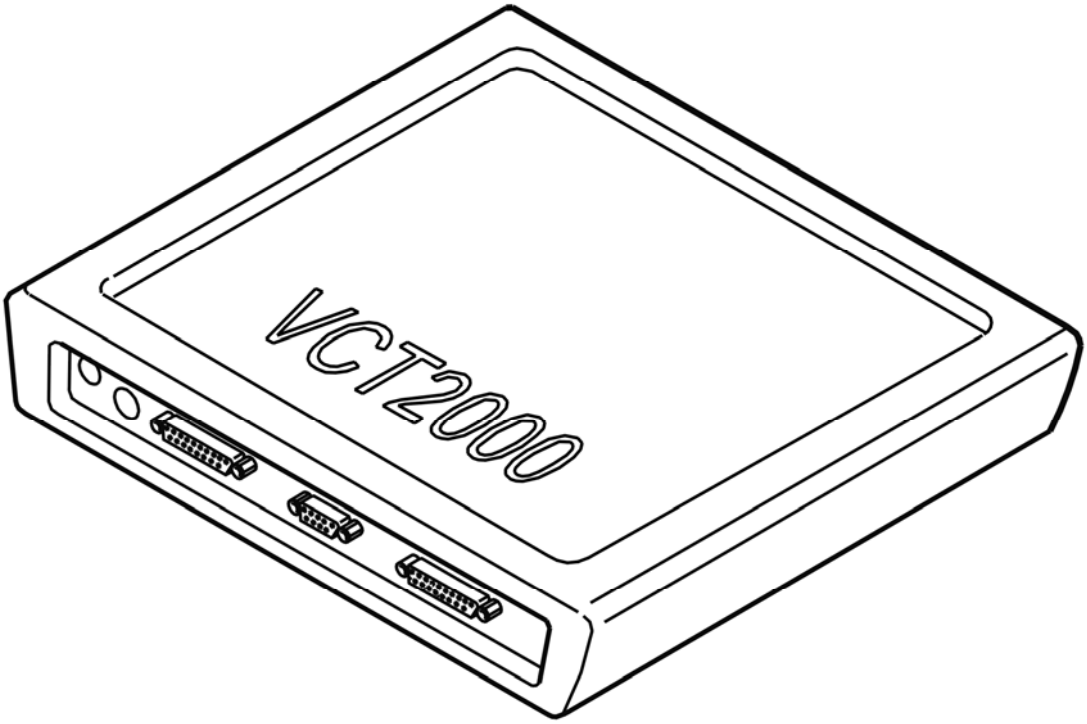

Fig. 127: Identifying VCT2000 Diagnostic Tool Symbol In VIDA
Courtesy of VOLVO CARS CORPORATION

Do you want to program any more parameters?

- **YES**

  Refer to **PROGRAMMING A LONG INTERIOR LIGHTING PERIOD**

- **NO**

  OKAY: Troubleshooting has been completed.

PROGRAMMING A LONG INTERIOR LIGHTING PERIOD

The general lighting and rear reading lamps light and remain lit for 10 minutes when:

- A door is opened after being unlocked.
- The lamp is lit with a switch.

The default period is 10 minutes. This can be changed to between 0 and 255 minutes at 10 minute intervals.

Read off the programmed values.

To change the time, mark the desired value in the scrolling list and start programming.

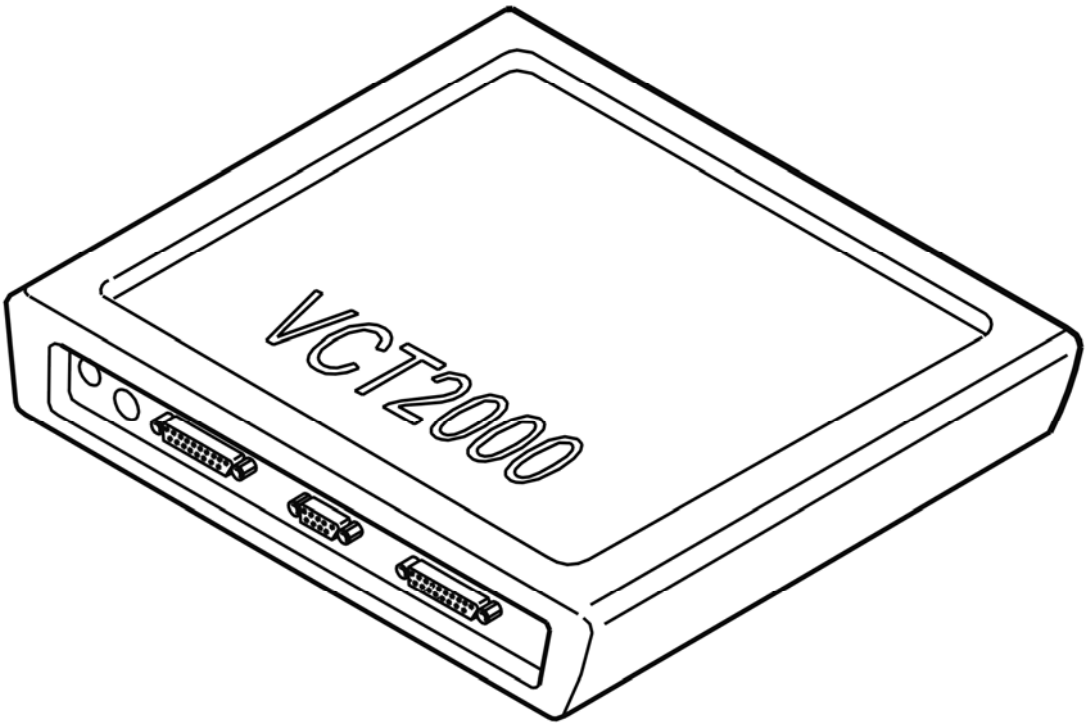

Fig. 128: Identifying VCT2000 Diagnostic Tool Symbol In VIDA
Courtesy of VOLVO CARS CORPORATION

CHECKING THE LIGHT SWITCH (2003-04)

CHECKING LIGHT SWITCH

FAULT IDENTIFICATION

Select the alternative corresponding to the fault.

1. The switch for the front fog lamps does not work. Refer to **CHECKING THE SWITCH FOR THE FRONT FOG LAMPS**.
2. The switch for the fog tail lamps does not work. Refer to **CHECKING THE SWITCH FOR THE FOG TAIL LAMPS**.
3. It is not possible to change between parking lights and low beam. Refer to **CHECKING THE SWITCH FOR THE LOW BEAM AND PARKING LAMPS**

CHECKING THE SWITCH FOR THE FRONT FOG LAMPS

Read off the front fog lamps.

Operate the switch for the front fog lamps.

Other information

- With the front fog lamp on the value should be "on".

  With the front fog lamp switched off the value should be "off".

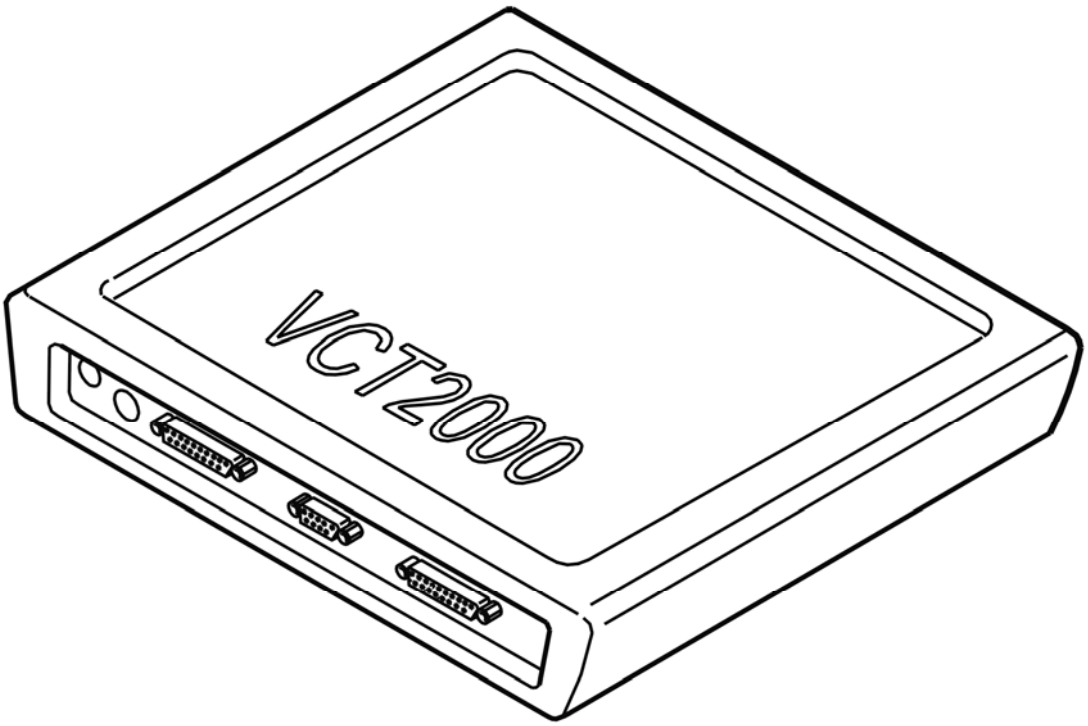

Fig. 129: Identifying VCT2000 Diagnostic Tool Symbol In VIDA
Courtesy of VOLVO CARS CORPORATION

Is the function OK?

- **YES**

  OKAY: Troubleshooting has been completed.

- **NO**

  Refer to **REPLACING COMPONENT**

CHECKING THE SWITCH FOR THE FOG TAIL LAMPS

Read off the fog tail lamps.

Operate the switch for the fog tail lamps.

Other information

- With the fog tail lamps on the value should be "on".

  With the fog tail lamps switched off the value should be "off".

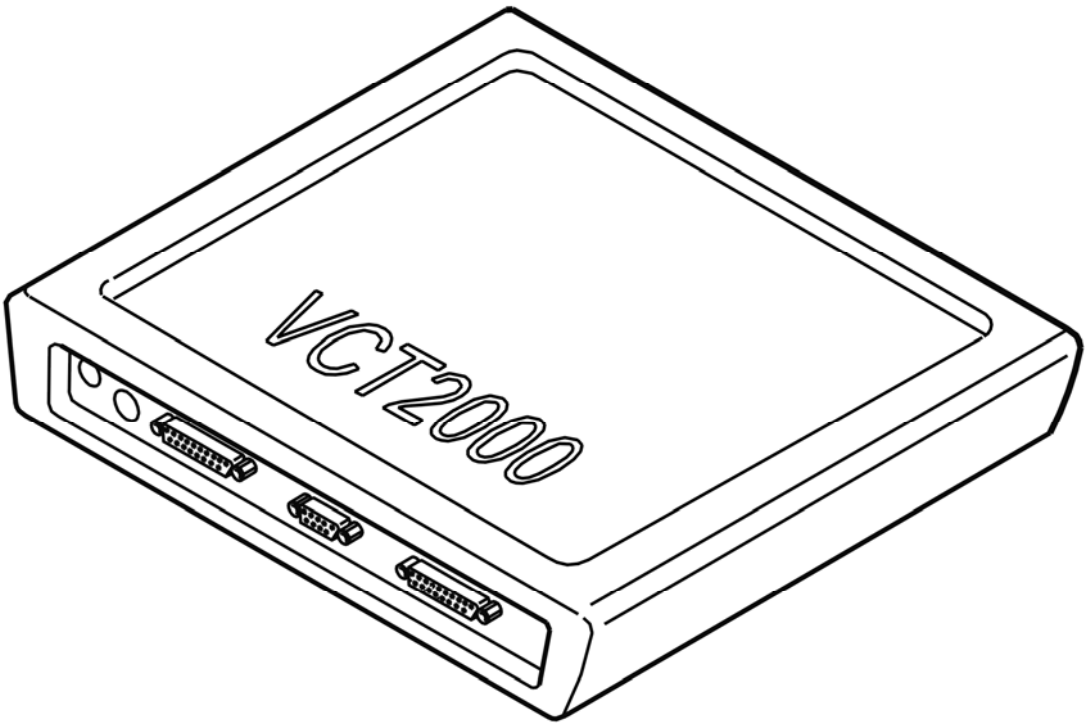

Fig. 130: Identifying VCT2000 Diagnostic Tool Symbol In VIDA
Courtesy of VOLVO CARS CORPORATION

Is the function OK?

- **YES**

  OKAY: Troubleshooting has been completed.

- **NO**

  Refer to **REPLACING COMPONENT**

CHECKING THE SWITCH FOR THE LOW BEAM AND PARKING LAMPS

Read off the switch signal.

Turn the switch to all positions.

The light switch sends the status of switches to the central electronic module (CEM). In event of a non permissible combination on the light switch "Non permissible" is displayed at the read out.

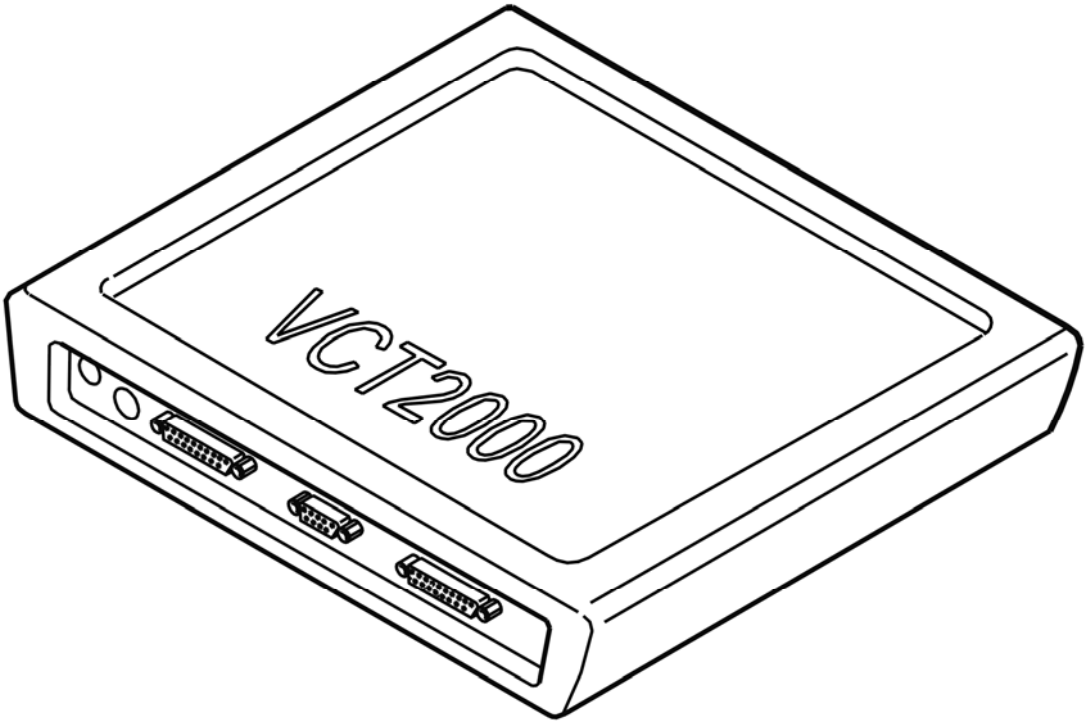

Fig. 131: Identifying VCT2000 Diagnostic Tool Symbol In VIDA
Courtesy of VOLVO CARS CORPORATION

Does the switch function?

- **YES**

  OKAY: Troubleshooting has been completed.

- **NO**

  Refer to **REPLACING COMPONENT**

REPLACING COMPONENT

The diagnostic trouble code (DTC) indicates that the light switch is defective.

Replace the light switch.

Other information

- To replace the light switch, see **SWITCHES LIGHTS, REPLACING** .

TROUBLE-SHOOTING INFORMATION

Condition

No diagnostic trouble codes are stored.

Possible Source

- Faulty light switch.

Fault symptom[s]

Dipped headlamp remains on.

CHECKING THE LOCK FUNCTION OF THE FUEL TANK FILLER COVER (2003-04)

CHECKING THE LOCK FUNCTION OF THE FUEL TANK FILLER COVER

CHECK

Check that the lock is not sticking or jammed. Check that the lock unit is correctly installed.

Check that the locks for the rear doors are not disabled.

1. The fuel tank filler cover plate lock was sticking or had jammed. The lock unit was not correctly installed. Troubleshooting has been completed.
2. The locks for the rear doors are disabled. Refer to **CHECKING FUSES**.
3. No fault detected. Refer to **REPLACING THE COMPONENT**

REPLACING THE COMPONENT

Replace the relays for locking (2/58) and unlocking (2/59) in the integrated relay/fusebox in the cargo compartment. Check the relay base switches. Check for contact resistance and oxidation.

Other information

- To access the integrated relay/fusebox in the cargo compartment, see **RELAY/FUSE BOX CARGO COMPARTMENT/REAR ELECTRONIC MODULE (REM), REPLACING**
- see **CHECKING WIRING AND TERMINALS** .

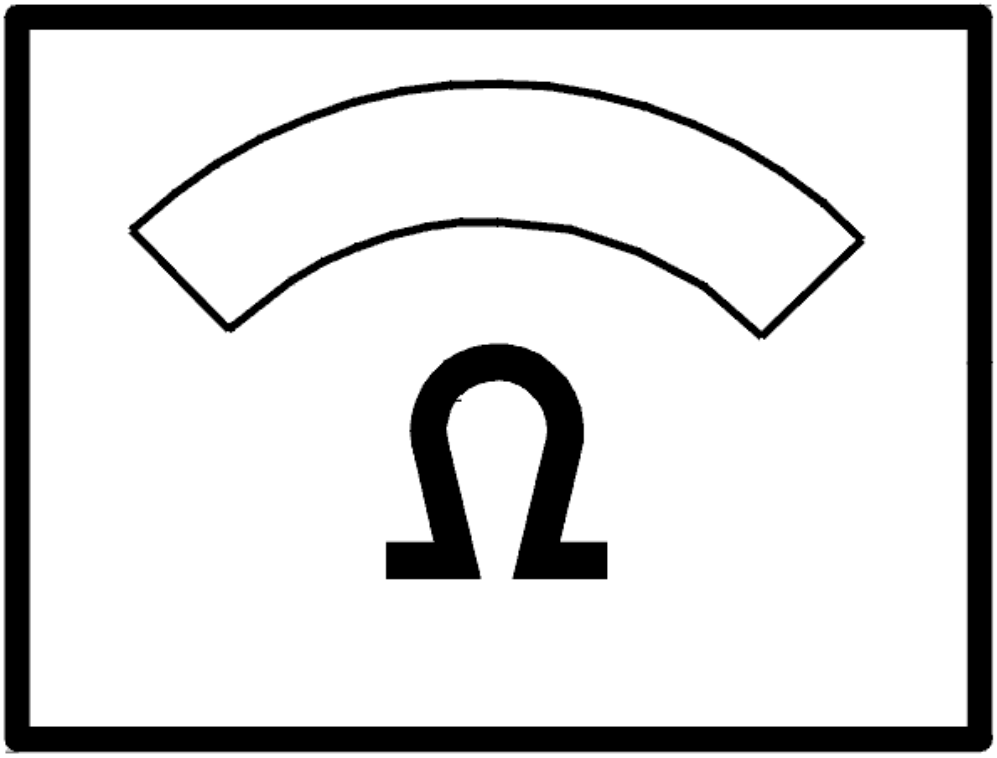

Fig. 132: Identifying Ohmmeter
Courtesy of VOLVO CARS CORPORATION

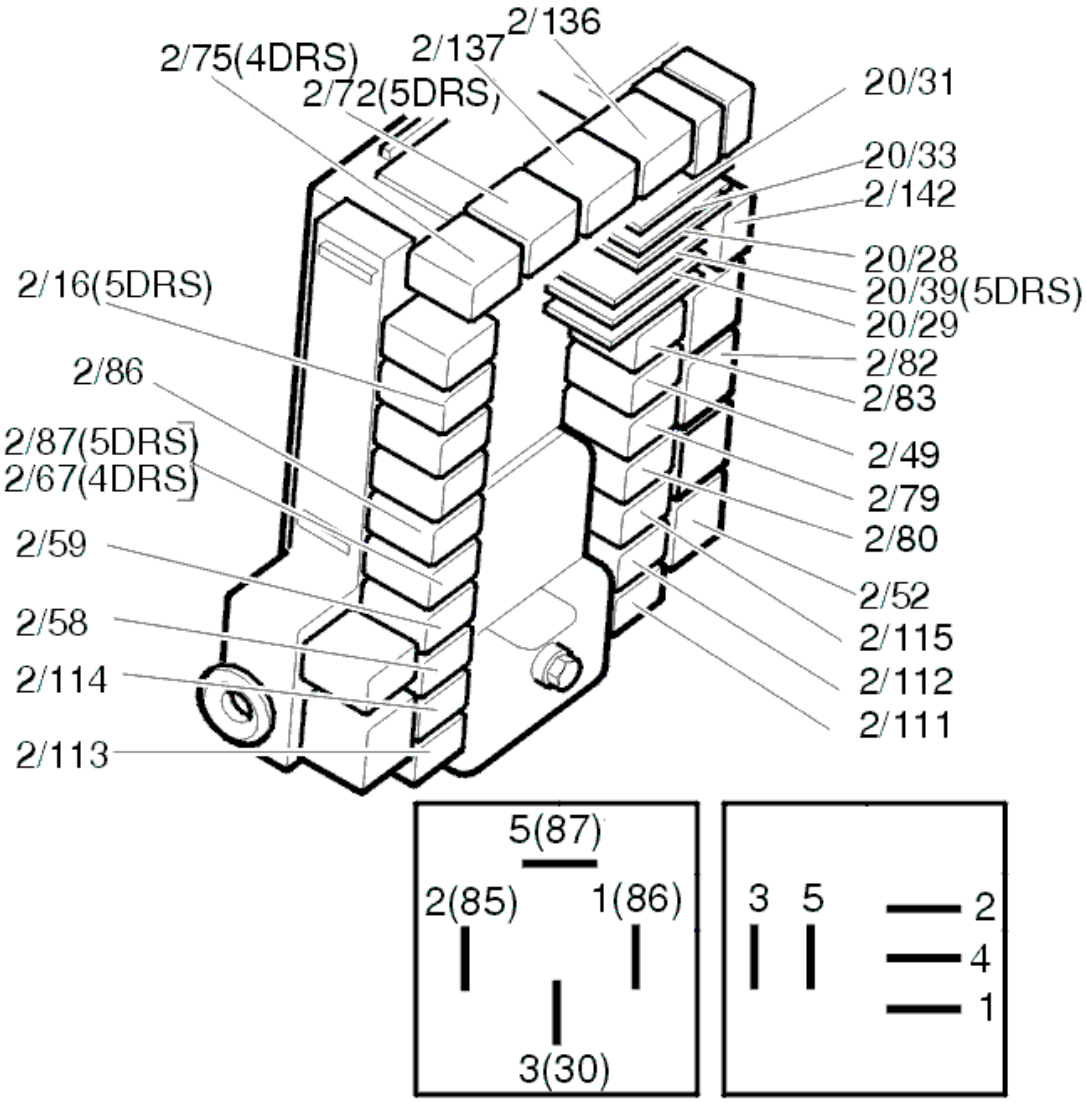

Fig. 133: Identifying Relays
Courtesy of VOLVO CARS CORPORATION

Was a fault detected?

- **YES**

  OKAY: Troubleshooting has been completed.

- **NO**

  Refer to **CIRCUIT TEST**

CIRCUIT TEST

The fault is caused by an open-circuit in one of the relay circuits in the lock unit. To determine in which circuit

the fault is:

Disconnect the connector at the lock unit.

Check the connectors for contact resistance and oxidation.

Measure the resistance between terminals terminal #1 and #2 on the cable connector.

Other information

- To access and replace the lock unit, see **LOCK UNIT FUEL TANK FILLER COVER, REPLACING**
- see **CHECKING WIRING AND TERMINALS** .

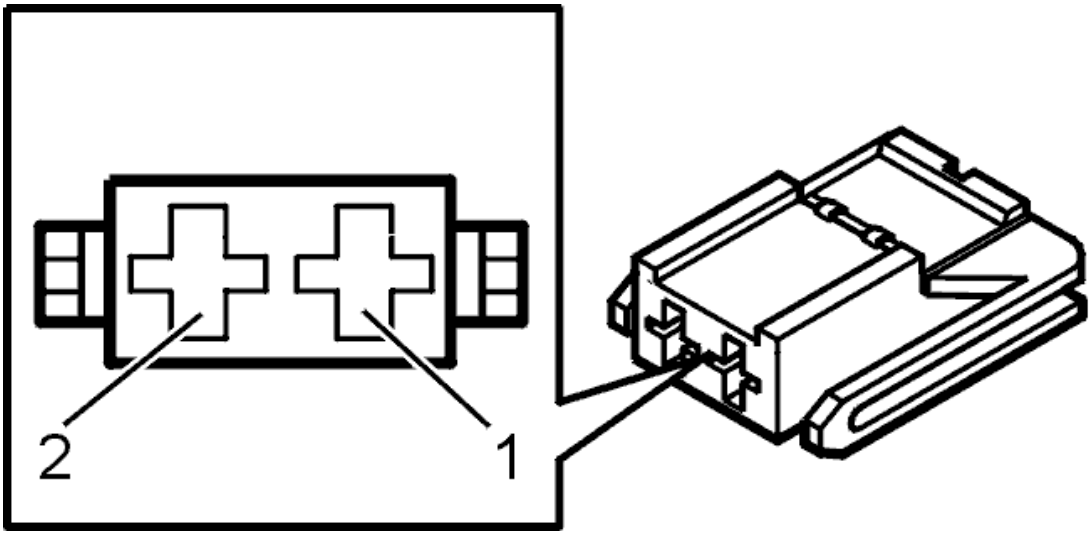

Fig. 134: Identifying Connector Terminals
Courtesy of VOLVO CARS CORPORATION

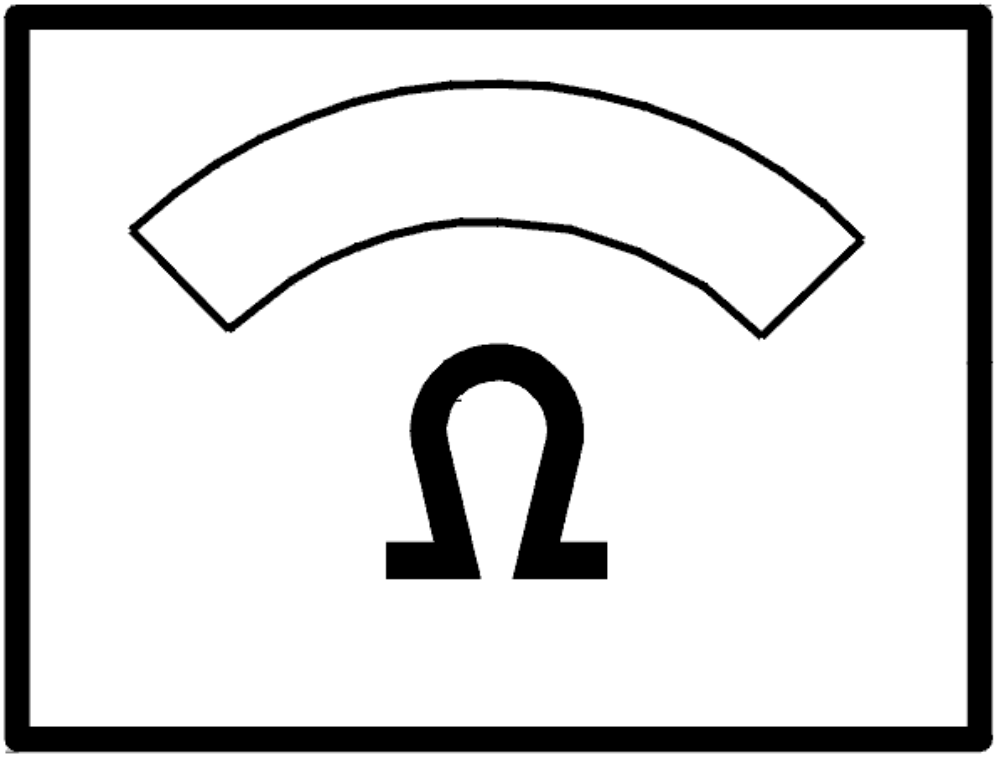

Fig. 135: Identifying Ohmmeter
Courtesy of VOLVO CARS CORPORATION

The ohmmeter should read 0 ohm.

- **OK**

  Refer to **CHECKING THE COMPONENT**

- **NOT OK**

  Refer to **CIRCUIT TEST CONTINUED**

CIRCUIT TEST CONTINUED

Measure the resistance between terminal #1 and ground and between terminal #2 and ground on the cable

connector.

The ohmmeter should read 0 ohm.

1. The ohmmeter displays a fault between terminal #1 and ground. Refer to **CHECKING THE UNLOCKING RELAY CIRCUIT**.
2. The ohmmeter displays a fault between terminal #2 and ground. Refer to **CHECKING THE LOCKING RELAY CIRCUIT**

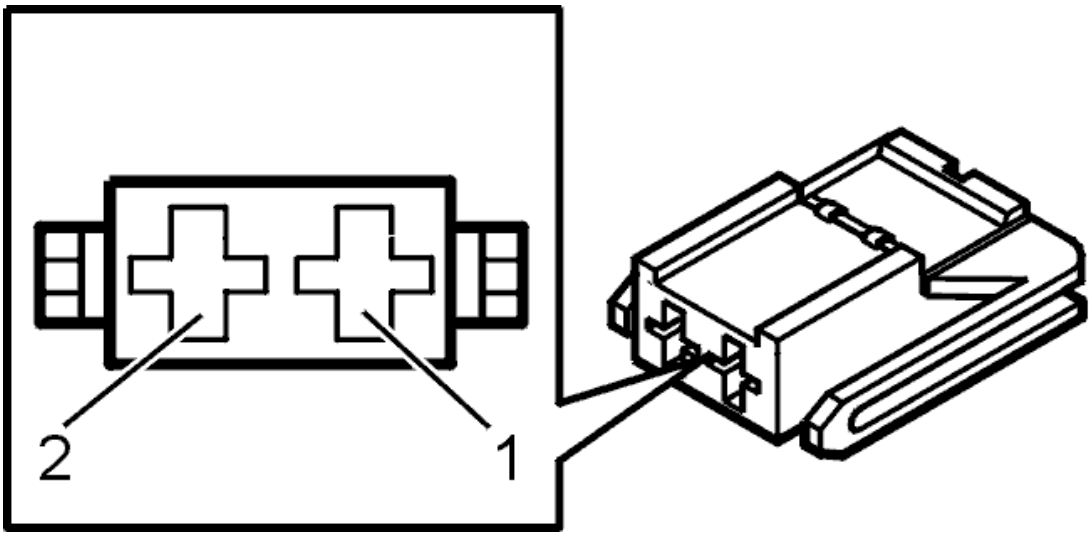

Fig. 136: Identifying Connector Terminals
Courtesy of VOLVO CARS CORPORATION

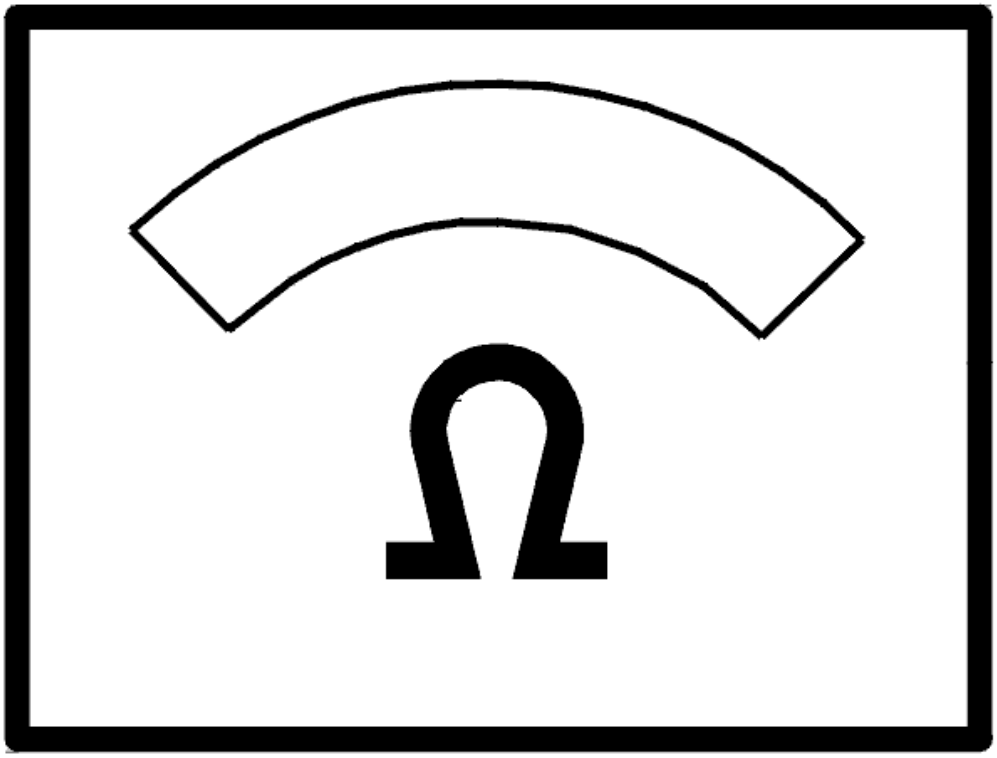

Fig. 137: Identifying Ohmmeter
Courtesy of VOLVO CARS CORPORATION

CHECKING THE LOCKING RELAY CIRCUIT

Remove the locking relay (2/58 (RMI 20)).

Check the cable between terminal #2 the cable and connector and terminal #3 on the relay base. Check for an open-circuit.

Remedy as necessary.

If no fault is detected, measure the resistance between terminal #4 in the relay base and ground.

The ohmmeter should read 0 ohm.

If the resistance is incorrect, replace the rear electronic module (REM).

Other information

- To access and replace the rear electronic module (REM), see **RELAY/FUSE BOX CARGO COMPARTMENT/REAR ELECTRONIC MODULE (REM), REPLACING**
- To access the lock unit, see **ELECTRIC MOTOR, SUN ROOF, REPLACING**
- see **CHECKING WIRING AND TERMINALS** .

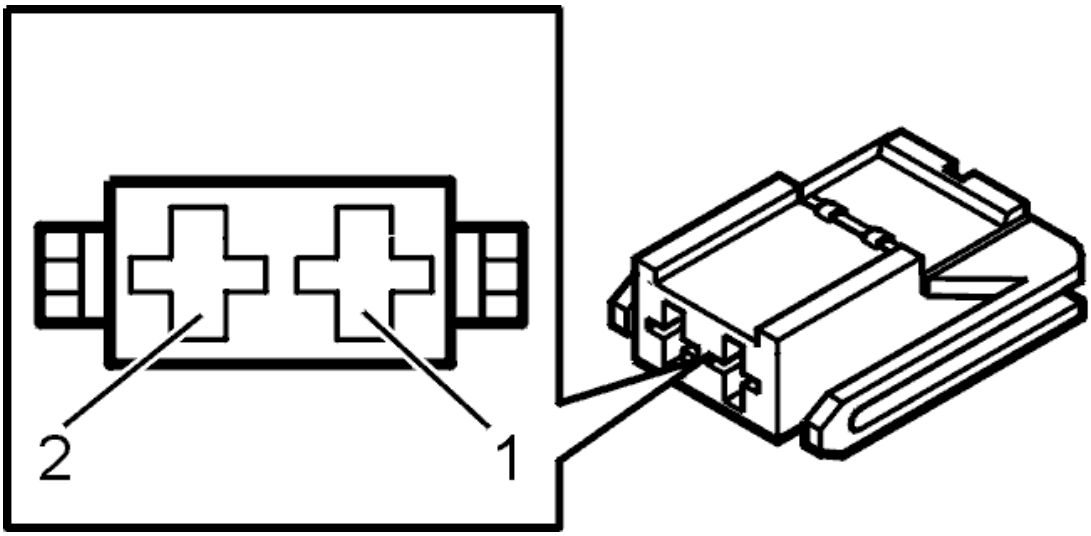

Fig. 138: Identifying Connector Terminals
Courtesy of VOLVO CARS CORPORATION

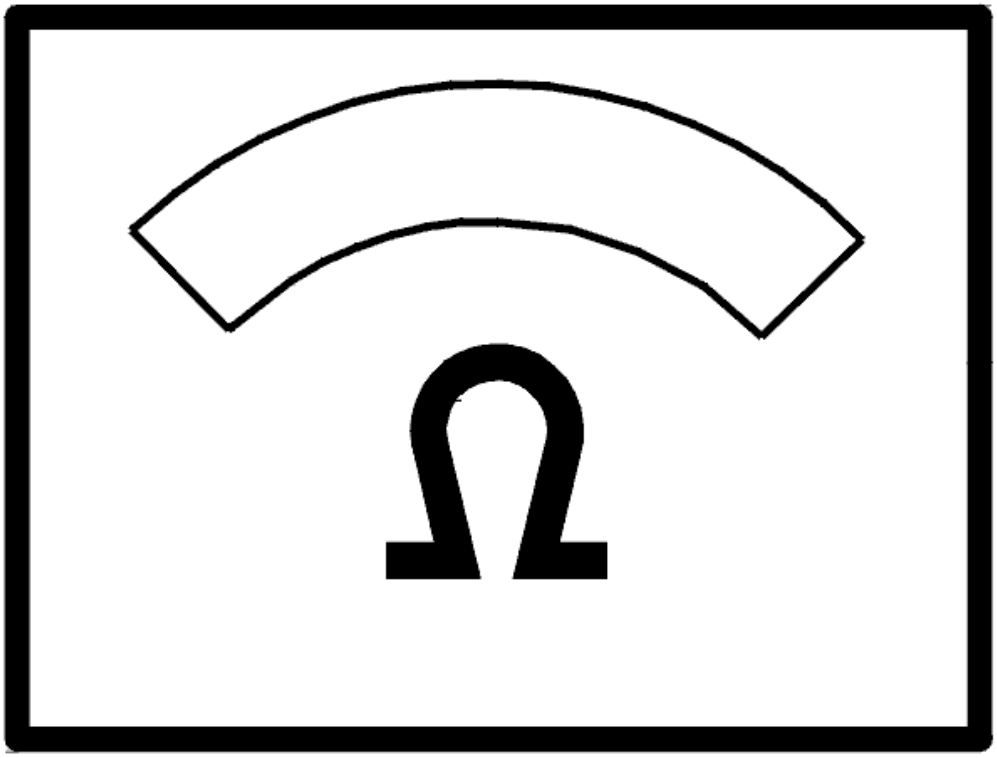

Fig. 139: Identifying Ohmmeter
Courtesy of VOLVO CARS CORPORATION

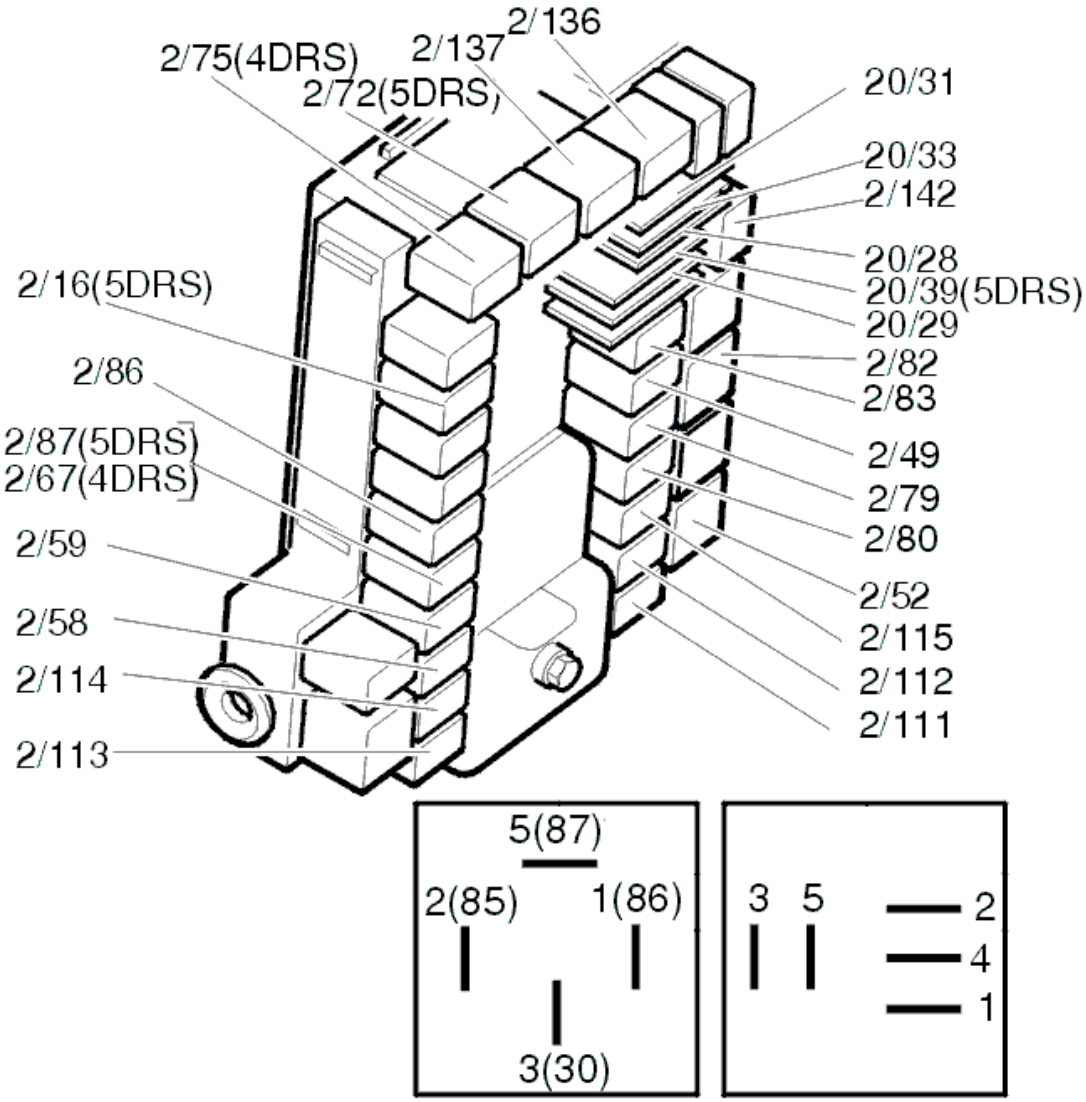

Fig. 140: Identifying Relays
Courtesy of VOLVO CARS CORPORATION

CHECKING THE UNLOCKING RELAY CIRCUIT

Remove the unlocking relay (2/59 (RMI 21)).

Check the cable between terminal #2 the cable and connector and terminal #3 on the relay base. Check for an open-circuit.

Remedy as necessary.

If no fault is detected, measure the resistance between terminal #4 in the relay base and ground.

The ohmmeter should read 0 ohm.

If the resistance is incorrect, replace the rear electronic module (REM).

Other information

- To access and replace the rear electronic module (REM), see **RELAY/FUSE BOX CARGO COMPARTMENT/REAR ELECTRONIC MODULE (REM), REPLACING**
- To access the lock unit, see **ELECTRIC MOTOR, SUN ROOF, REPLACING**
- see **CHECKING WIRING AND TERMINALS** .

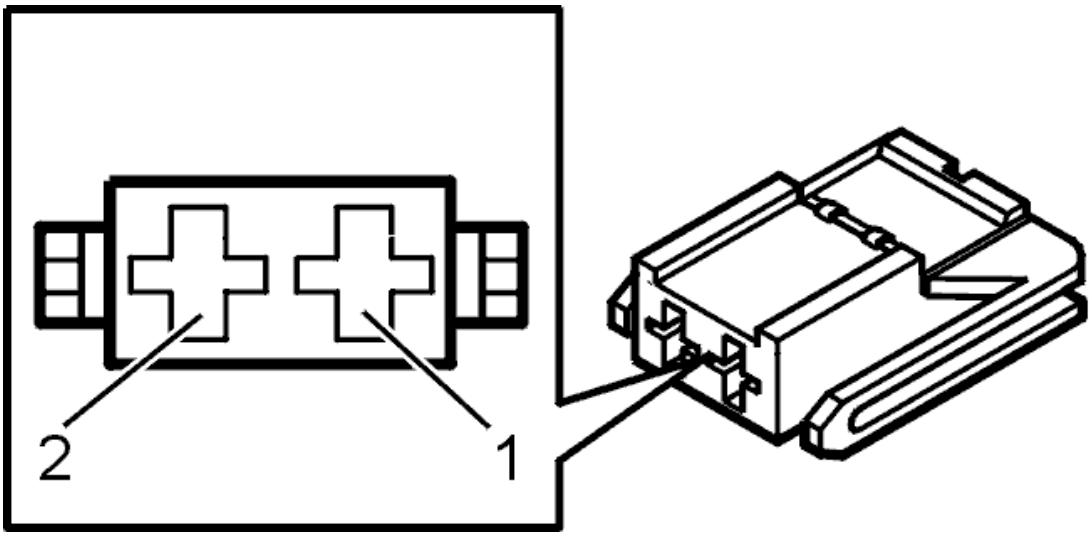

Fig. 141: Identifying Connector Terminals
Courtesy of VOLVO CARS CORPORATION

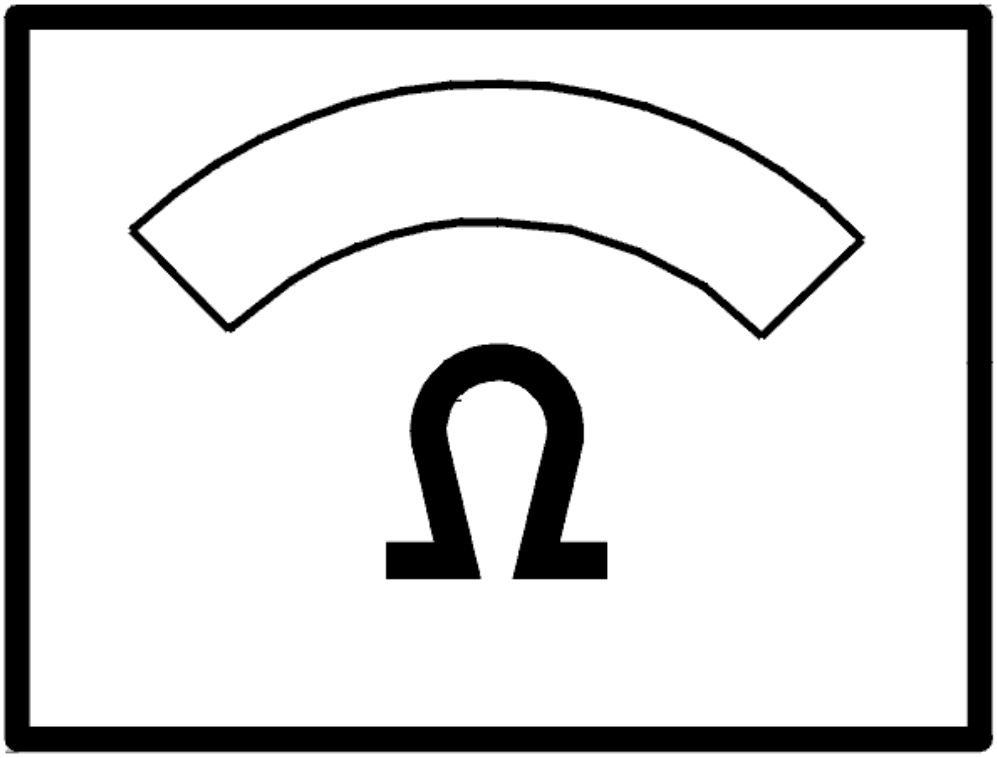

Fig. 142: Identifying Ohmmeter
Courtesy of VOLVO CARS CORPORATION

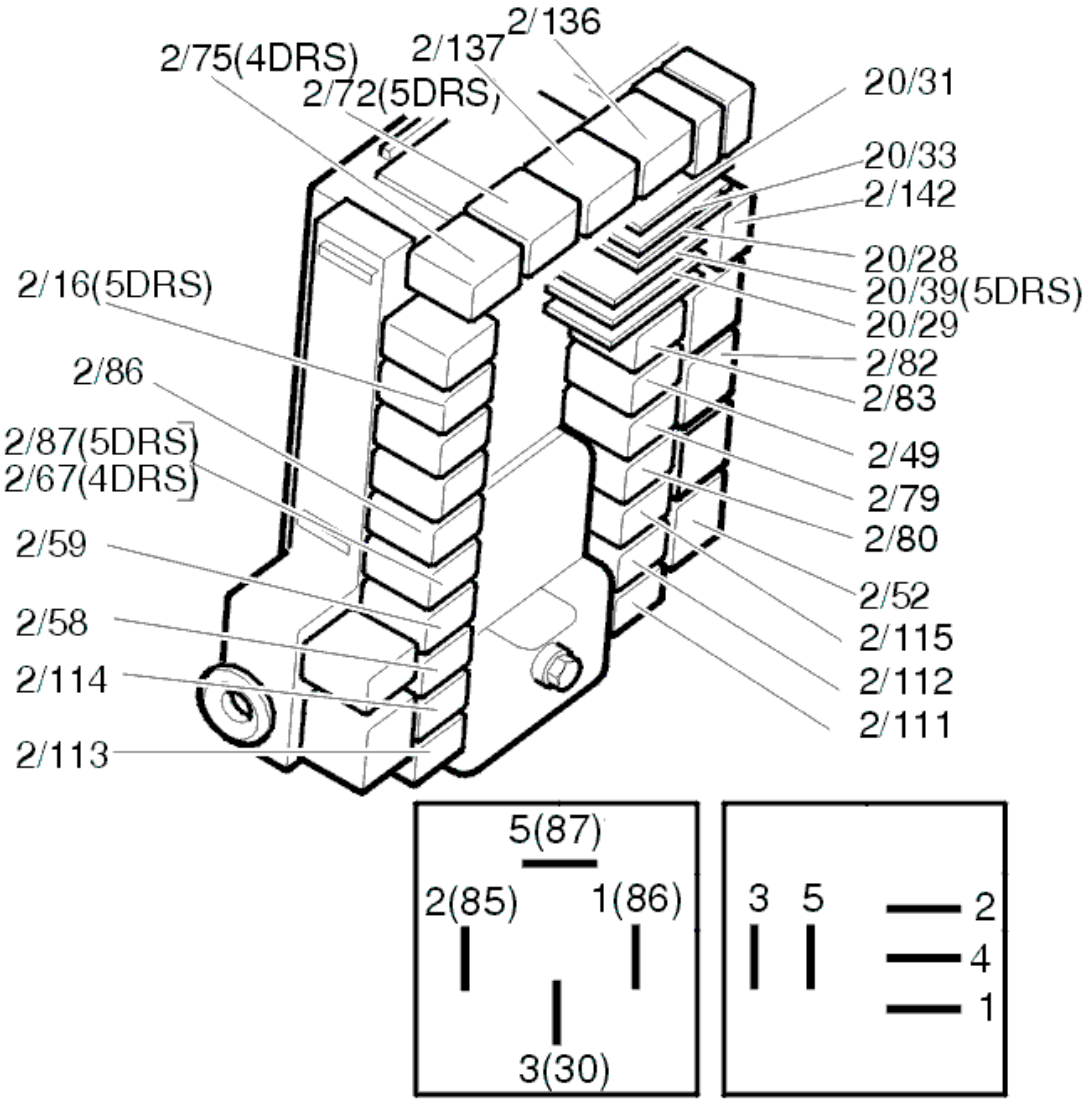

Fig. 143: Identifying Relays
Courtesy of VOLVO CARS CORPORATION

CHECKING THE COMPONENT

Measure the resistance between pins terminals #1 and #2 on the chassis switch lock unit.

The ohmmeter should read 5 ohm.

If the resistance is incorrect, replace the lock unit.

Other information

- To access the rear electronic module (REM), see **RELAY/FUSE BOX CARGO COMPARTMENT/REAR ELECTRONIC MODULE (REM), REPLACING**
- To access and replace the lock unit, see **ELECTRIC MOTOR, SUN ROOF, REPLACING**

- For further information about signals and other values, see **SIGNAL SPECIFICATION** .

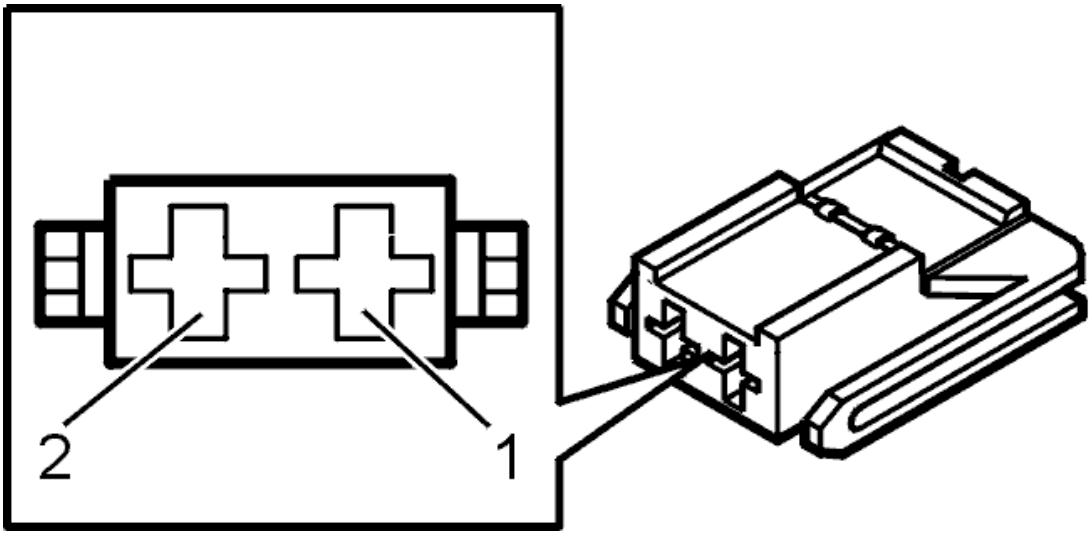

Fig. 144: Identifying Connector Terminals
Courtesy of VOLVO CARS CORPORATION

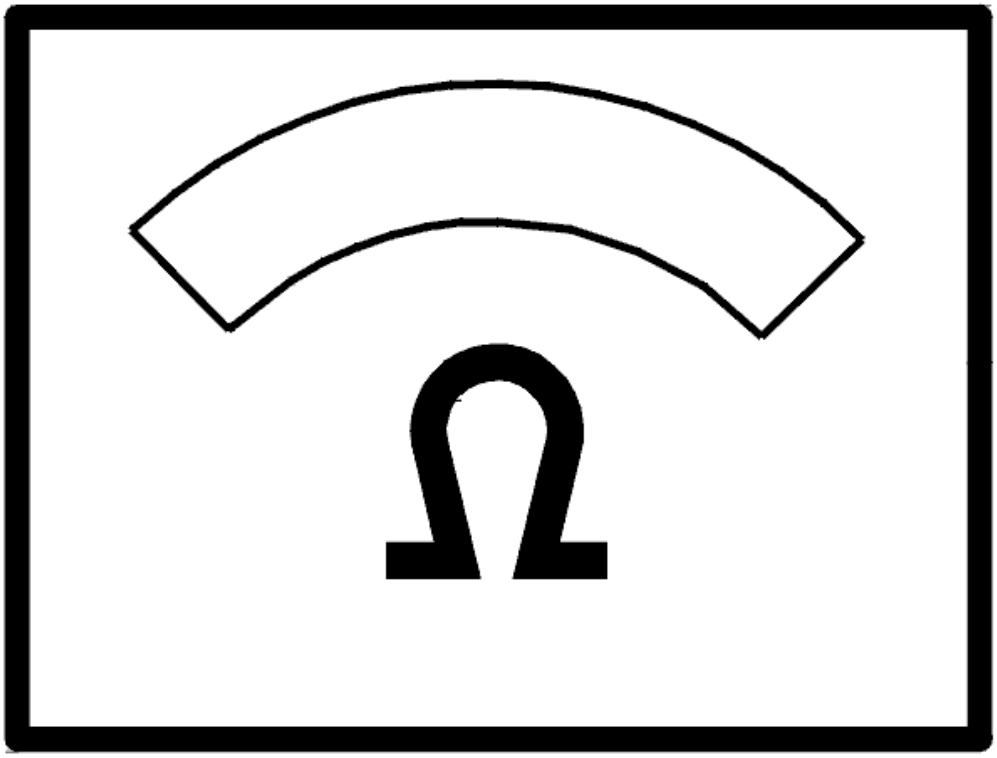

Fig. 145: Identifying Ohmmeter
Courtesy of VOLVO CARS CORPORATION

Was a fault detected?

- **YES**

  OKAY: Troubleshooting has been completed.

- **NO**

  Refer to **CHECKING RELAY POWER SUPPLY**

CHECKING RELAY POWER SUPPLY

Remove the locking relay (2/58 (RMI 20)).

Measure the voltage between terminal #5 in the relay base and ground.

The voltmeter should read battery voltage.

HINT: If the value is OK but the fault remains, connect the connector to the lock module between terminals #3 and #5 in the relay base to force a supply to the locking motor when continuing to take measurements.

Other information

- To access the rear electronic module (REM), see **RELAY/FUSE BOX CARGO COMPARTMENT/REAR ELECTRONIC MODULE (REM), REPLACING** .

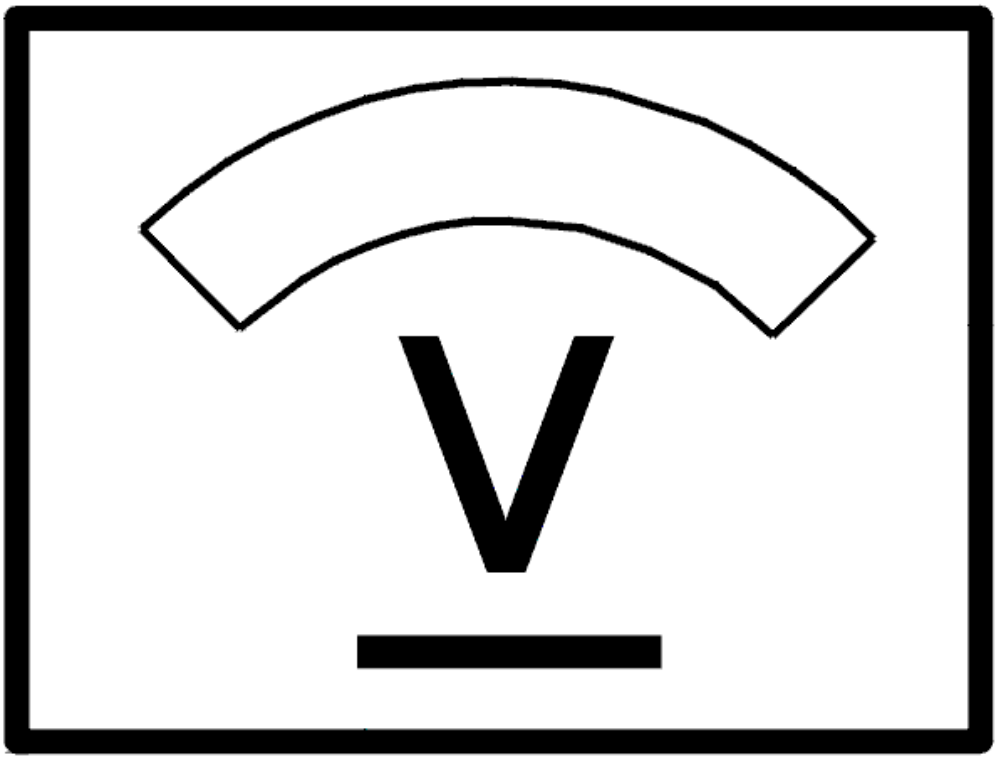

Fig. 146: Identifying Voltage Display
Courtesy of VOLVO CARS CORPORATION

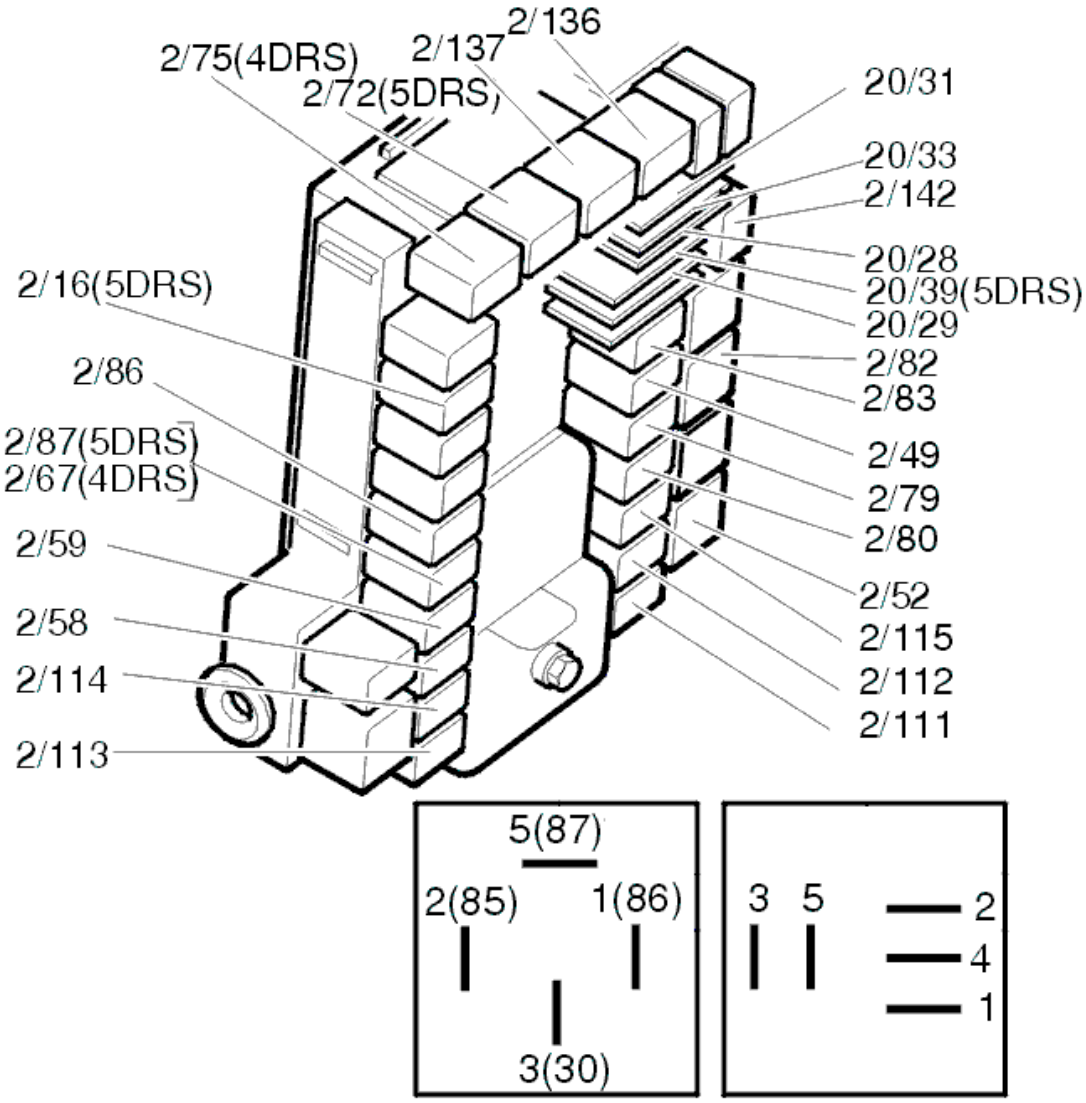

Fig. 147: Identifying Relays
Courtesy of VOLVO CARS CORPORATION

Does the voltmeter read battery voltage?

- **YES**

  OKAY: Troubleshooting has been completed.

- **NO**

  Refer to **CHECKING FUSES**

CHECKING FUSES

Remove fuse 11D/8 from the cargo compartment fusebox.

Check that fuse 11D/8 is intact. Check for contact resistance and oxidation.

Other information

- To access the integrated relay/fusebox in the cargo compartment, see **RELAY/FUSE BOX CARGO COMPARTMENT/REAR ELECTRONIC MODULE (REM), REPLACING**
- see **CHECKING WIRING AND TERMINALS** .

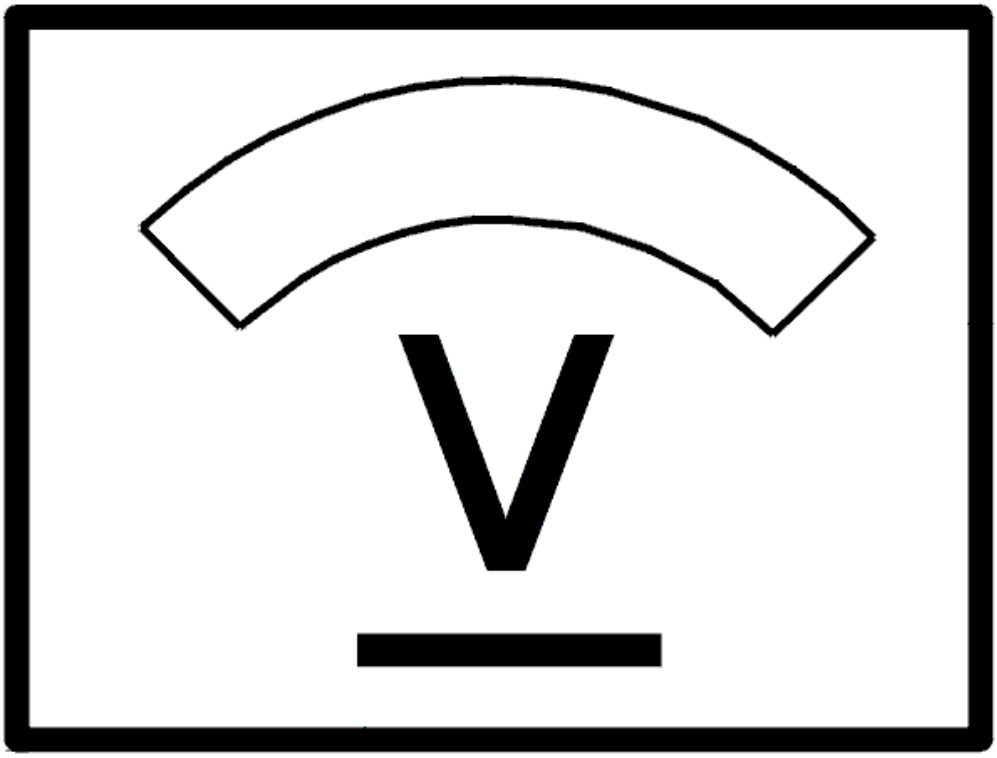

Fig. 148: Identifying Voltage Display
Courtesy of VOLVO CARS CORPORATION

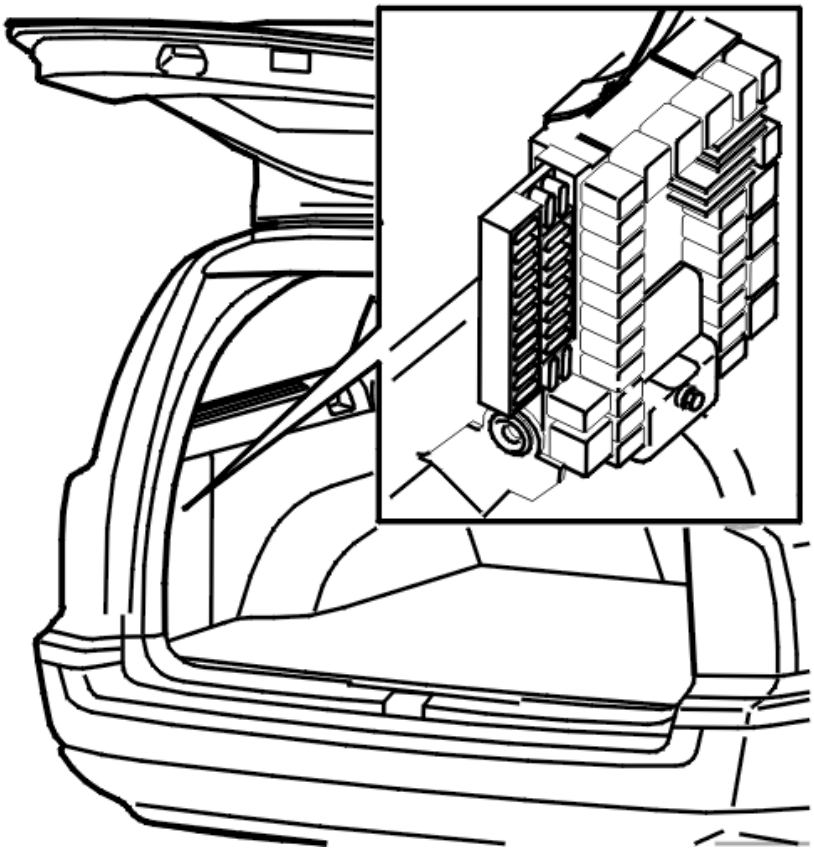

Fig. 149: Locating Integrated Relay/Fusebox In Cargo Compartment
Courtesy of VOLVO CARS CORPORATION

Is the fuse intact?

- **YES**

  Refer to **CHECKING FOR AN OPEN-CIRCUIT**

- **NO**

  Refer to **CHECKING FOR A SHORT-CIRCUIT**

CHECKING FOR AN OPEN-CIRCUIT

Remove relay 2/59 from the integrated relay/fusebox in the cargo compartment. Fault-trace the cable between the secondary side of the fuse holder (left) and terminal #5 in the relay base. Check for an open-circuit.

Other information

- To access the integrated relay/fusebox in the cargo compartment, see **RELAY/FUSE BOX CARGO COMPARTMENT/REAR ELECTRONIC MODULE (REM), REPLACING**
- see **CHECKING WIRING AND TERMINALS** .

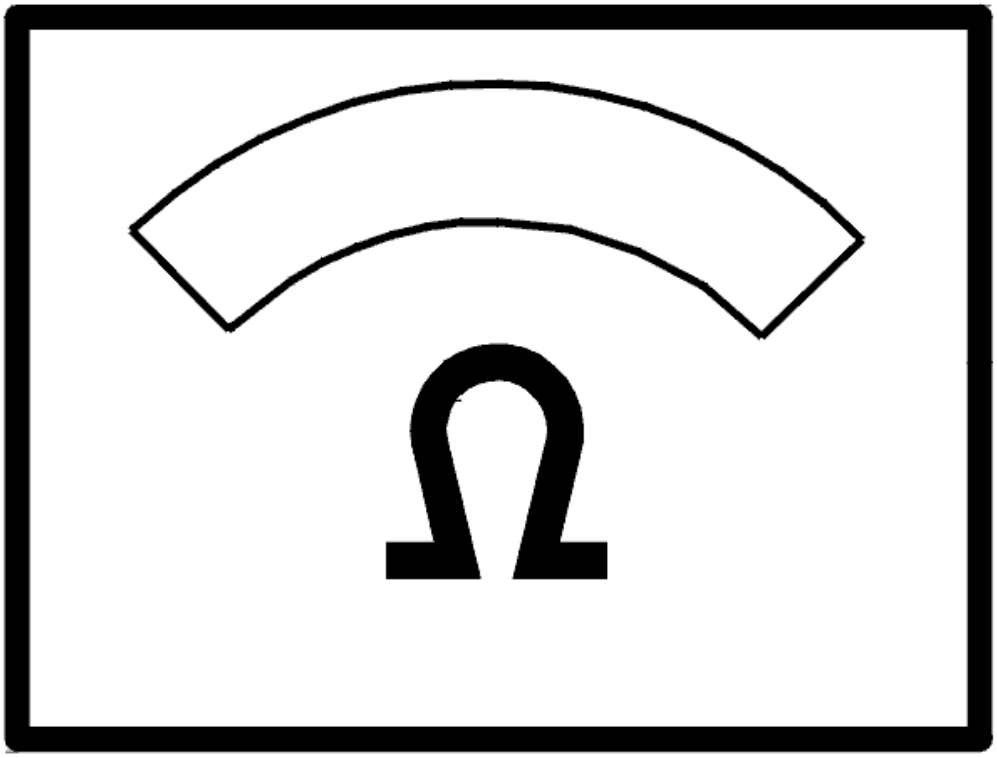

Fig. 150: Identifying Ohmmeter
Courtesy of VOLVO CARS CORPORATION

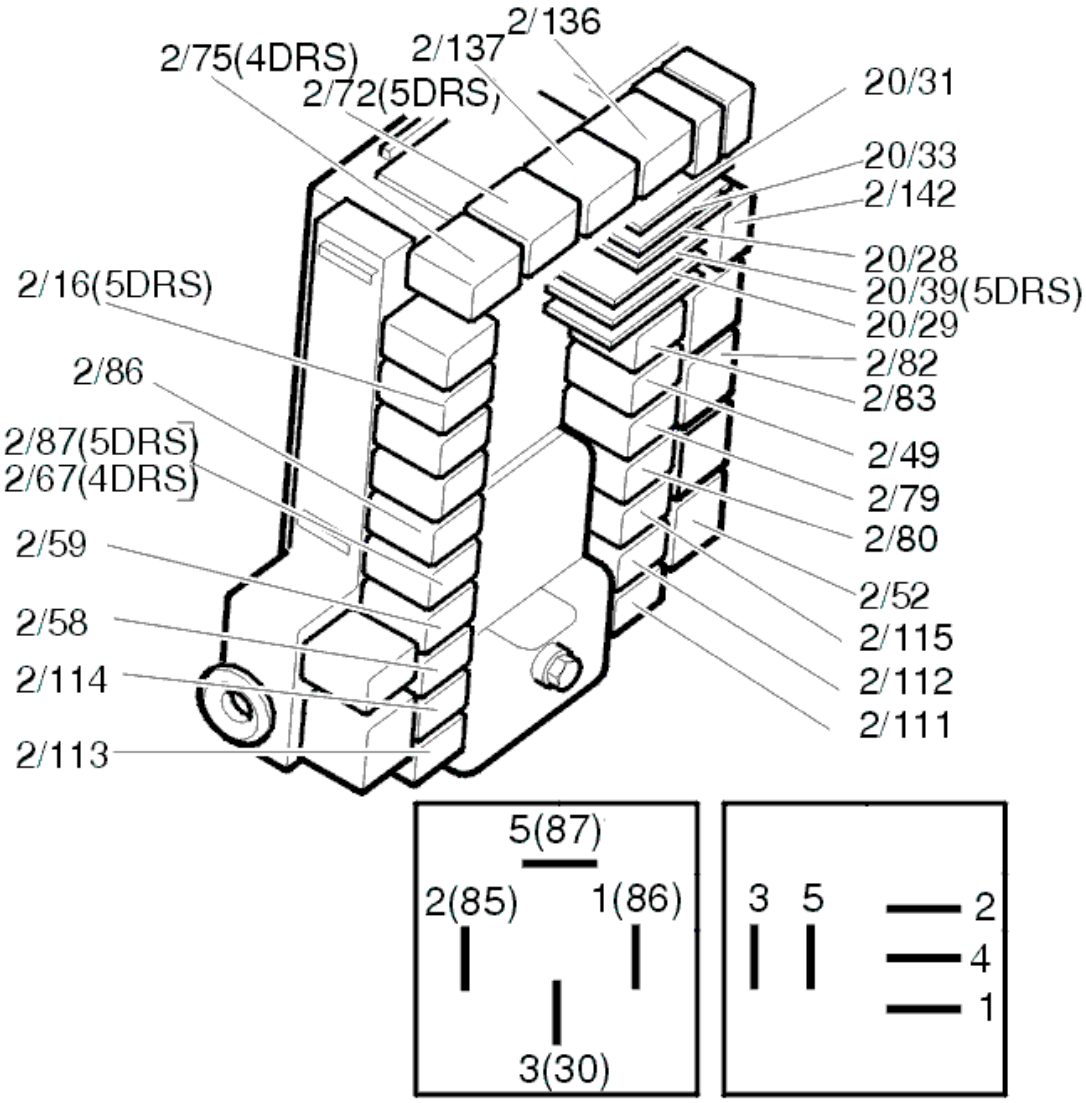

Fig. 151: Identifying Relays
Courtesy of VOLVO CARS CORPORATION

CHECKING FOR A SHORT-CIRCUIT

Measure the resistance between the fuse holder secondary side (left) and ground.

The ohmmeter should read infinite resistance.

If the value is correct, replace the fuse.

NOTE: The fault could be intermittent.

Fault-trace all affected relay circuits for a short-circuit to ground if the value is incorrect.

HINT: Replace fuse.

HINT: If the fuse blows immediately the short-circuit is in the relay power cable.

HINT: If the fuse blows when the relevant relay is activated, the short-circuit is in the component power supply cable

HINT: The relay circuits affected are from relays 2/111, 2/112, 2/113, 2/114, 2/115, 2/56, 2/59 and 2/67.

Other information

- To access the integrated relay/fusebox in the cargo compartment, see **RELAY/FUSE BOX CARGO COMPARTMENT/REAR ELECTRONIC MODULE (REM), REPLACING**
- see **CHECKING WIRING AND TERMINALS** .

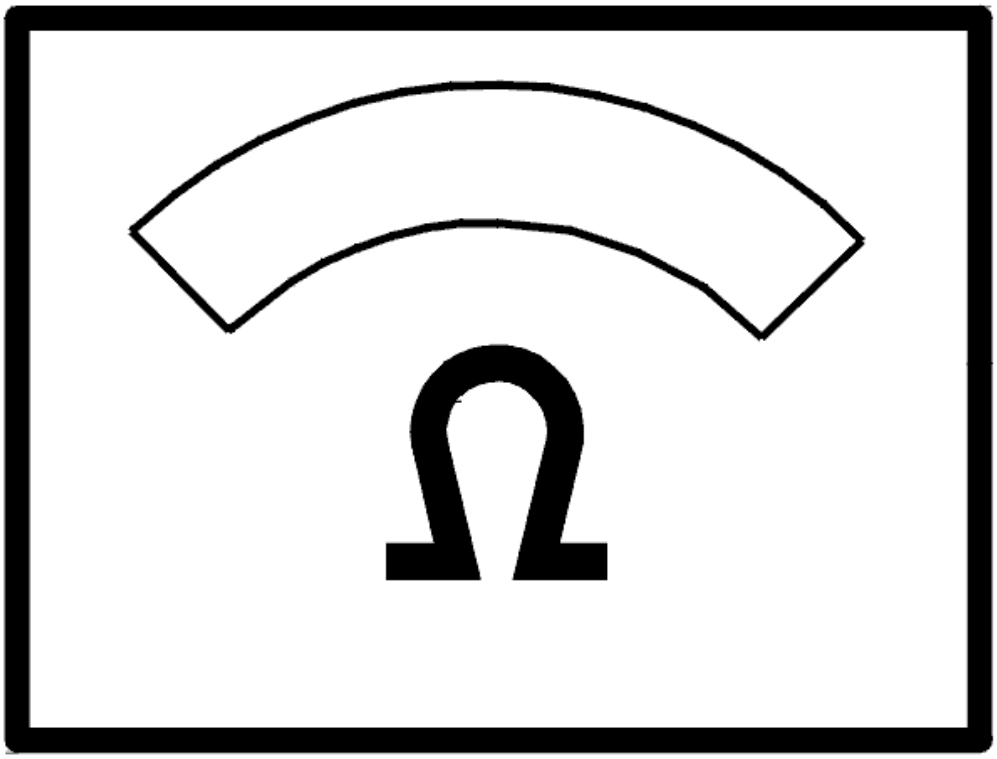

Fig. 152: Identifying Ohmmeter
Courtesy of VOLVO CARS CORPORATION

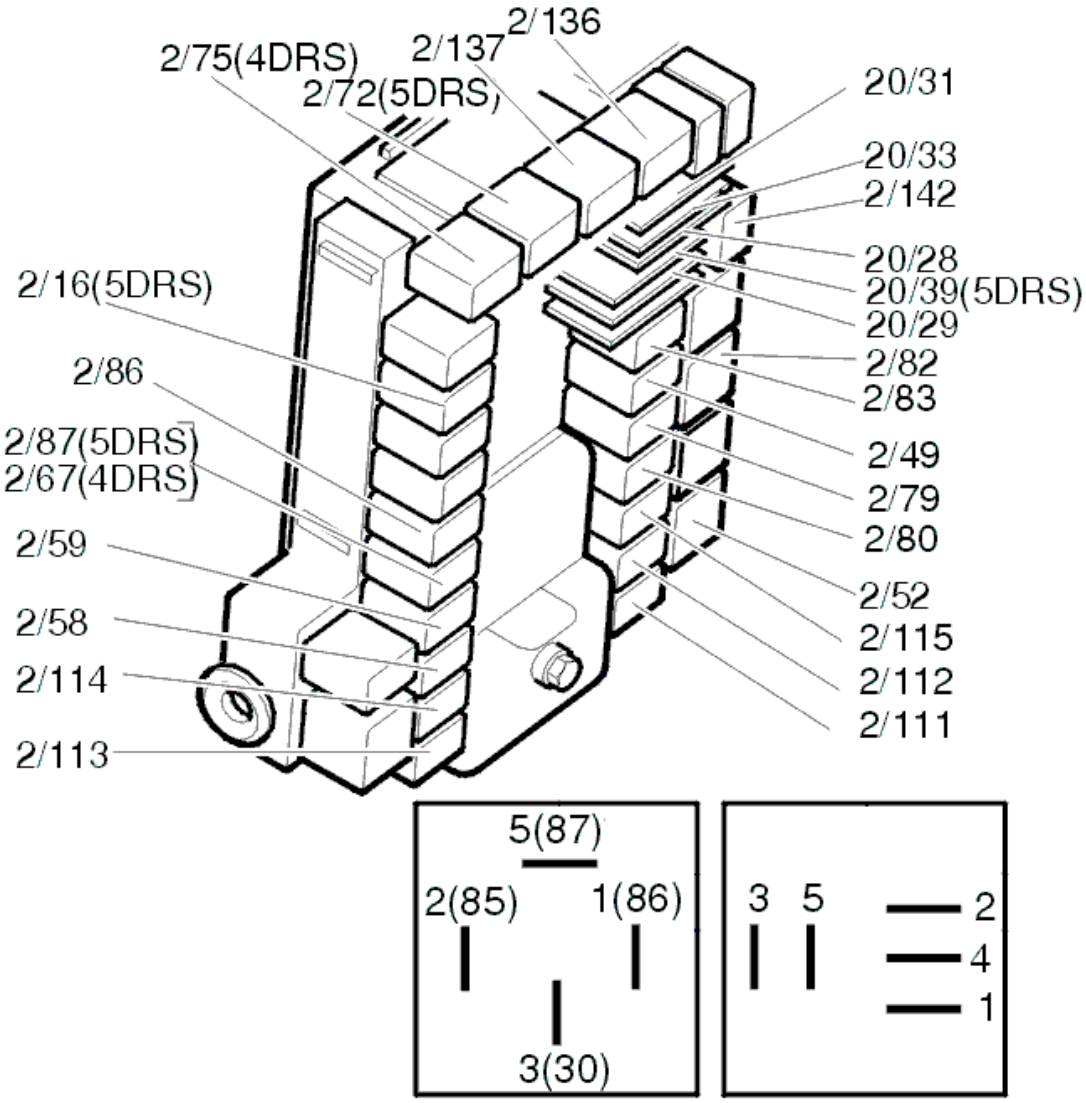

Fig. 153: Identifying Relays
Courtesy of VOLVO CARS CORPORATION

LOCK UNIT FUEL TANK FILLER COVER, REPLACING

- See **LOCK UNIT FUEL TANK FILLER COVER, REPLACING** .

TROUBLE-SHOOTING INFORMATION

Condition

No diagnostic trouble codes are displayed.

Possible Source

Rear doors:

- Faulty relay
- Fault in locking relay circuit
- Fault in unlocking relay circuit
- Faulty lock unit
- Fault in relay supply
- Defective fuse.

Fault symptom[s]

- Tank hatch will not open/lock.

CHECKING THE LOCK FUNCTION OF THE TRUNK LID (2003-04)

CHECKING THE LOCK FUNCTION OF THE TRUNK LID

CHECKING THE LOCK UNIT

Check that the lock is not sticking or jammed. Check that the lock unit is correctly installed.

Check that the lock position sensor functions: Open the trunk lid and close the lock manually with the trunk lid open. This can be carried out by pressing a pen against the striker plate. The cargo compartment lighting should go out when locking is complete.

Then unlock using the trunk lid handle button. The lock motor should automatically and audibly return to the starting point when unlocking is complete.

Remedy as necessary.

1. The trunk lid can be unlocked with the handle button and locked mechanically. Troubleshooting has been completed.
2. The trunk lid can only be unlocked with the remote control. Refer to **BUTTON TEST**.
3. The trunk lid cannot be unlocked with either the remote control or the handle button. Refer to **CHECKING FUSES**.

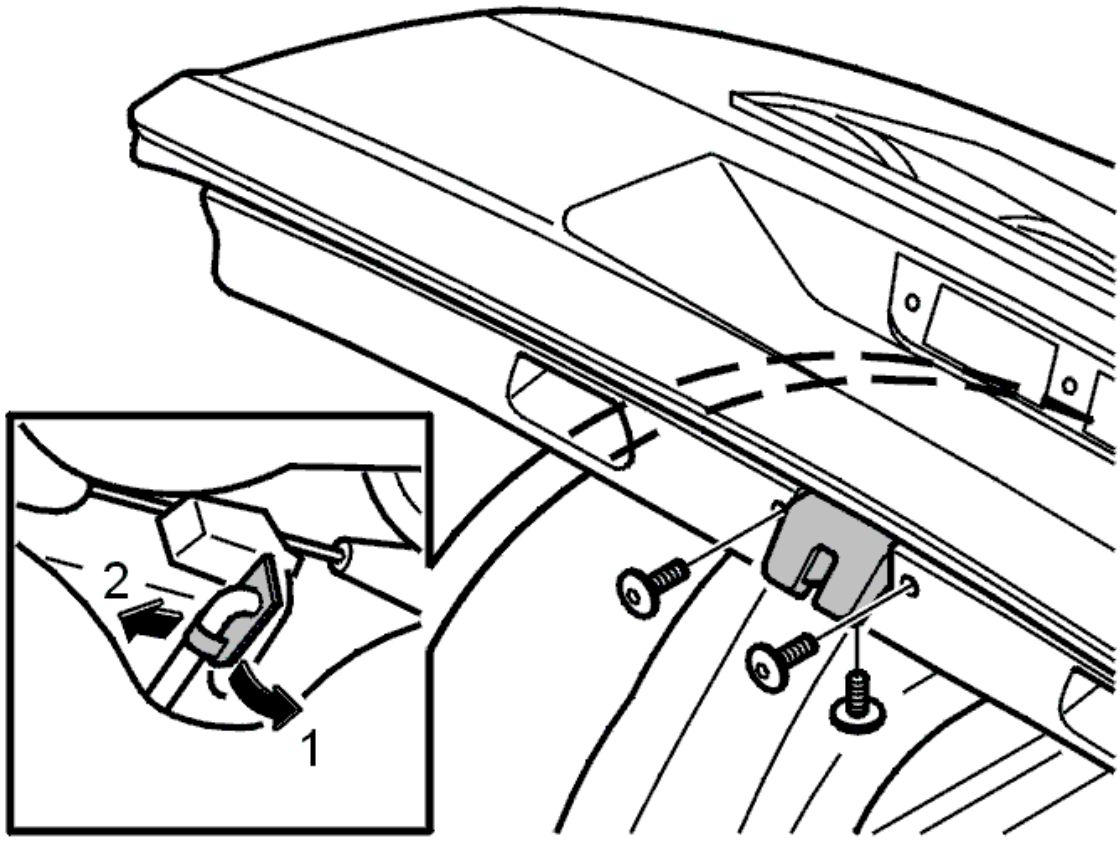

Fig. 154: Identifying Upper/Lower Tailgate Panel, Screws, Disconnecting Connector And Link, And Pulling Out Lock
Courtesy of VOLVO CARS CORPORATION

BUTTON TEST

Press the button in and check if the text displays ON.

Check that the trunk lid opens when the button is pressed in.

Is the function OK?

- **YES**

  OKAY: Troubleshooting has been completed.

- **NOT OK**

  Refer to **CHECKING THE LICENSE PLATE LIGHTING**

CHECKING THE LICENSE PLATE LIGHTING

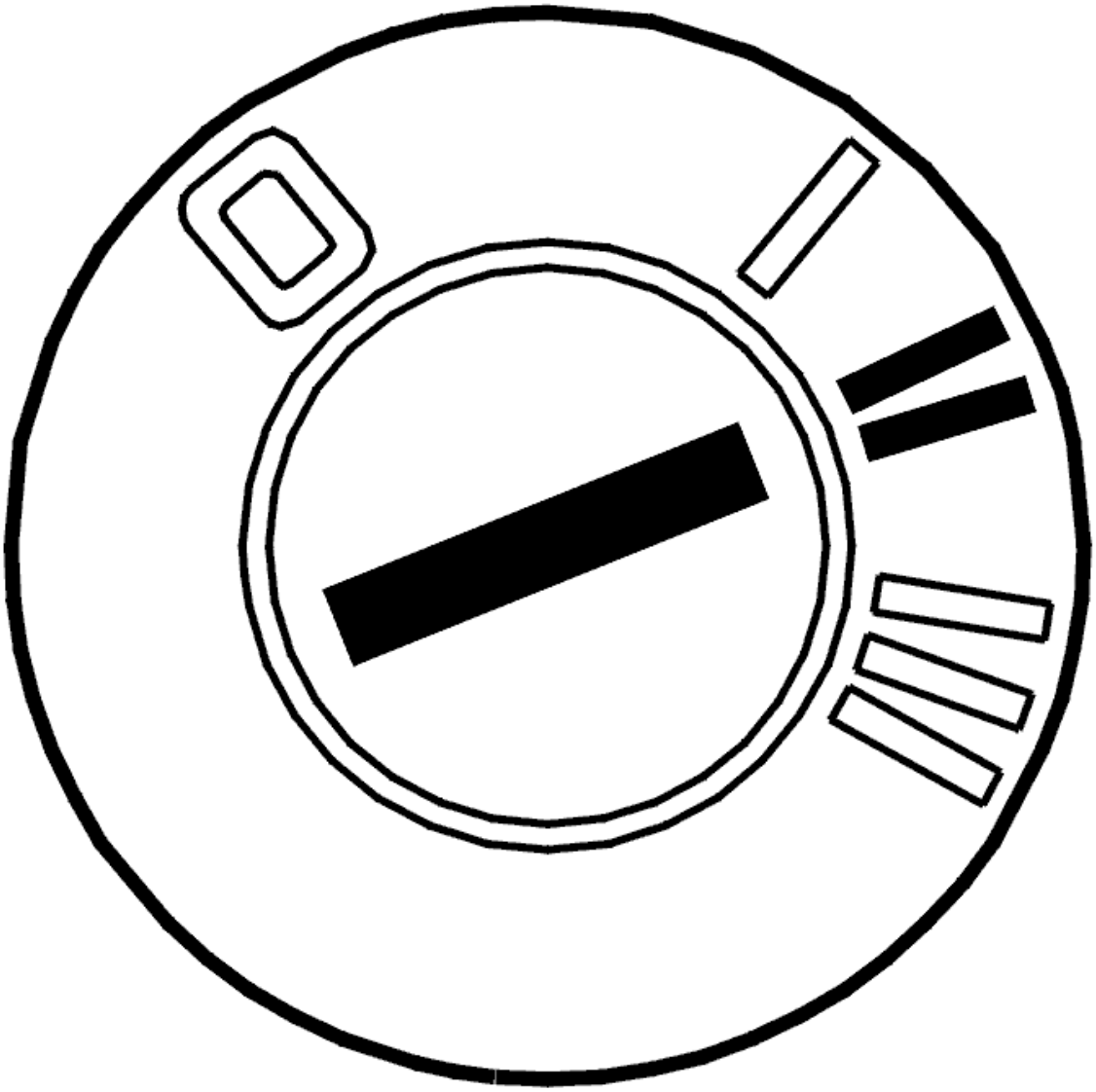

Fig. 155: Identifying Ignition ON
Courtesy of VOLVO CARS CORPORATION

- Ignition on.

Does the license plate lighting function?

- **YES**

  Refer to **CHECKING THE SIGNAL CABLE FOR THE LOCK BUTTON**

- **NOT OK**

  Refer to **CHECKING THE GROUND LEAD FOR THE LOCK BUTTON**

CHECKING THE SIGNAL CABLE FOR THE LOCK BUTTON

Disconnect the connector at the license plate lighting. Check for contact resistance and oxidation.

Check the cable between rear electronic module (REM) connector terminal #D7 and the license plate lighting terminal #1. Check for an open-circuit. In particular check the intermediate connector in the cable harness and the connector in the rear electronic module (REM). Check for oxidation.

Remedy as necessary.

If no fault is detected, ground terminal #1 in the connector for the license plate lighting lamp housing. Then check that the ON is displayed.

If the text ON is not displayed, break the power supply to the rear electronic module (REM).

If the text ON is displayed, replace the lock button.

Other information

- To access and replace the integrated relay/fusebox in the cargo compartment, see **RELAY/FUSE BOX CARGO COMPARTMENT/REAR ELECTRONIC MODULE (REM), REPLACING**
- To connect the breakout box, see **CONNECTING THE BREAKOUT BOX**
- To expose the lamp housing for the license plate lighting, see **BULB, NUMBER PLATE LIGHTING, REPLACING**
- To access and replace the lock button, see **LOCK MECHANISM, TAILGATE, REPLACING**
- see **CHECKING WIRING AND TERMINALS** .

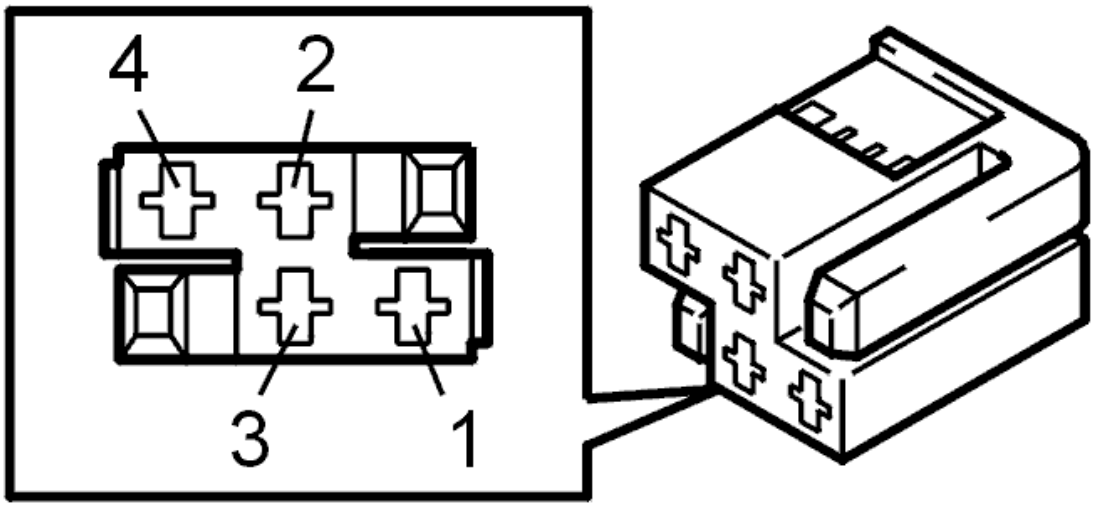

Fig. 156: Identifying Connector Terminals
Courtesy of VOLVO CARS CORPORATION

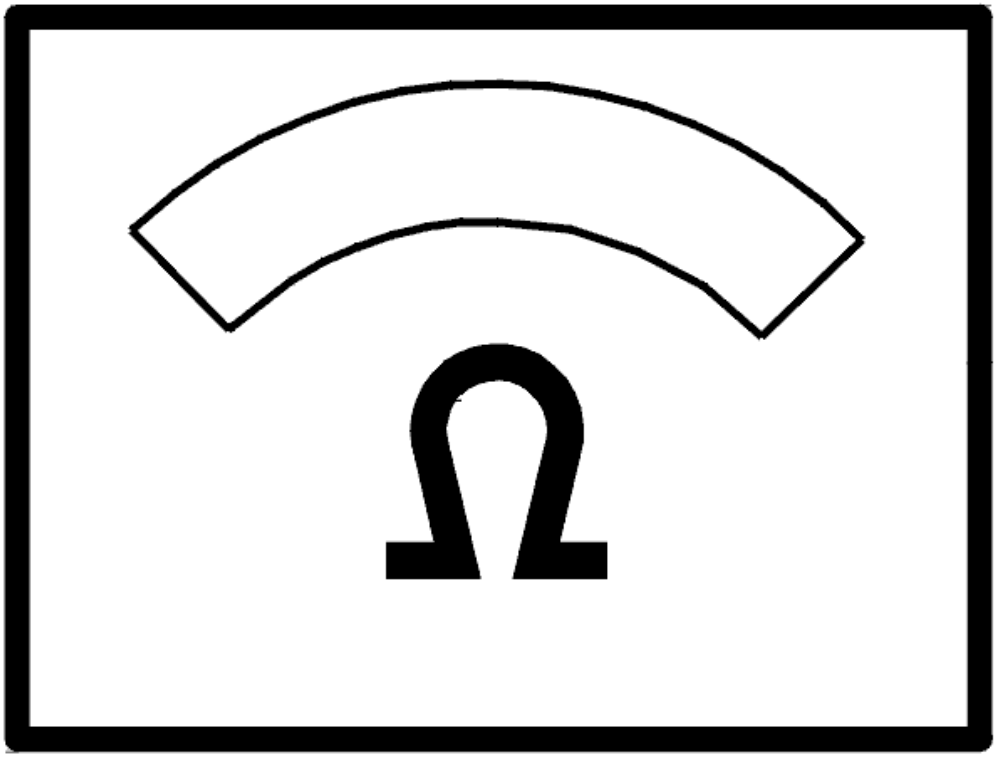

Fig. 157: Identifying Ohmmeter
Courtesy of VOLVO CARS CORPORATION

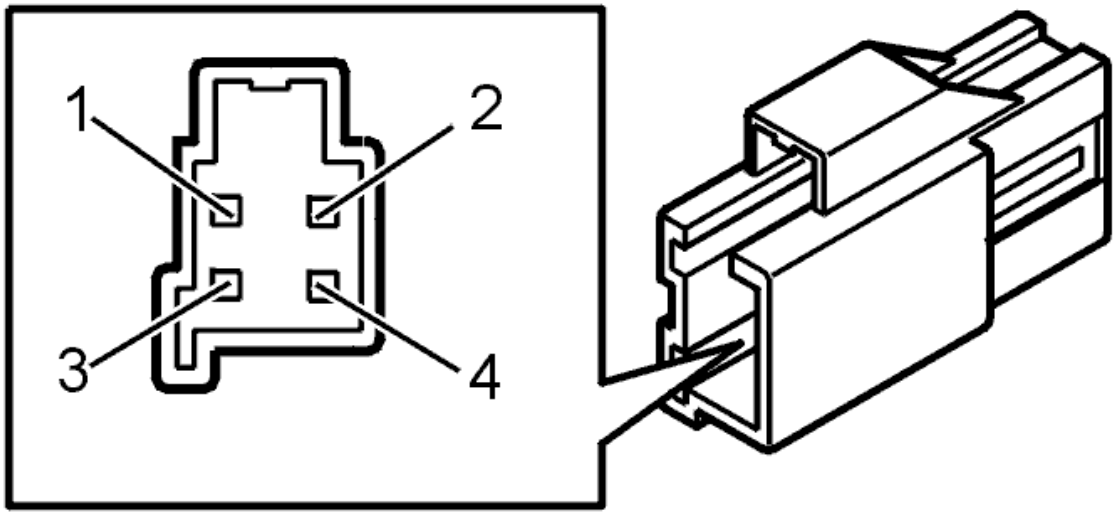

Fig. 158: Identifying Connector Terminals
Courtesy of VOLVO CARS CORPORATION

CHECKING THE GROUND LEAD FOR THE LOCK BUTTON

Check the switch at license plate lighting lamp housing terminal #3 and at lock unit terminal #4. Check the intermediate cable for an open-circuit.

Remedy as necessary.

Other information

- To expose the lamp housing for the license plate lighting, see **BULB, NUMBER PLATE LIGHTING, REPLACING**
- To access and replace the lock button, see **LOCK MECHANISM, TAILGATE, REPLACING**
- see **CHECKING WIRING AND TERMINALS** .

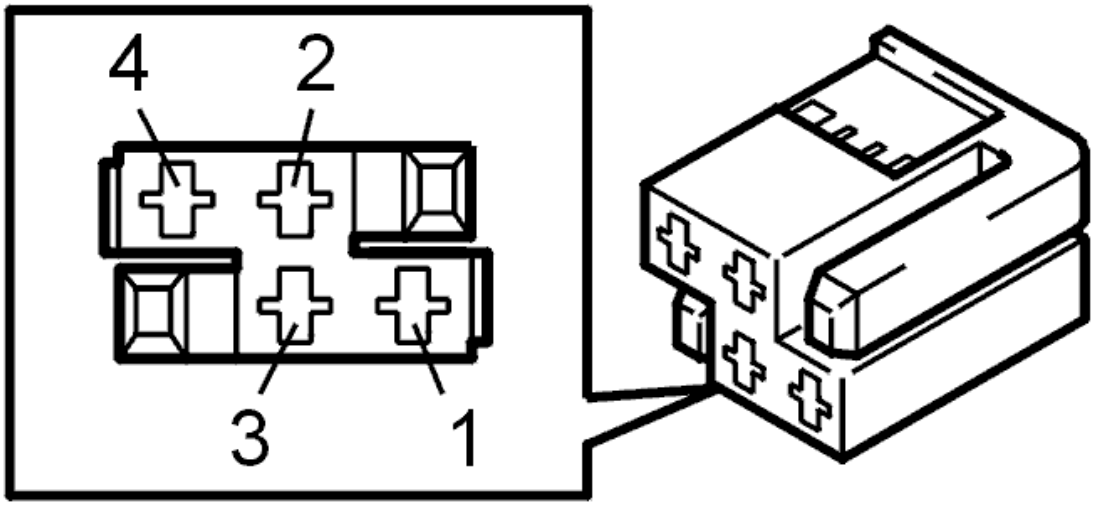

Fig. 159: Identifying Connector Terminals

Courtesy of VOLVO CARS CORPORATION

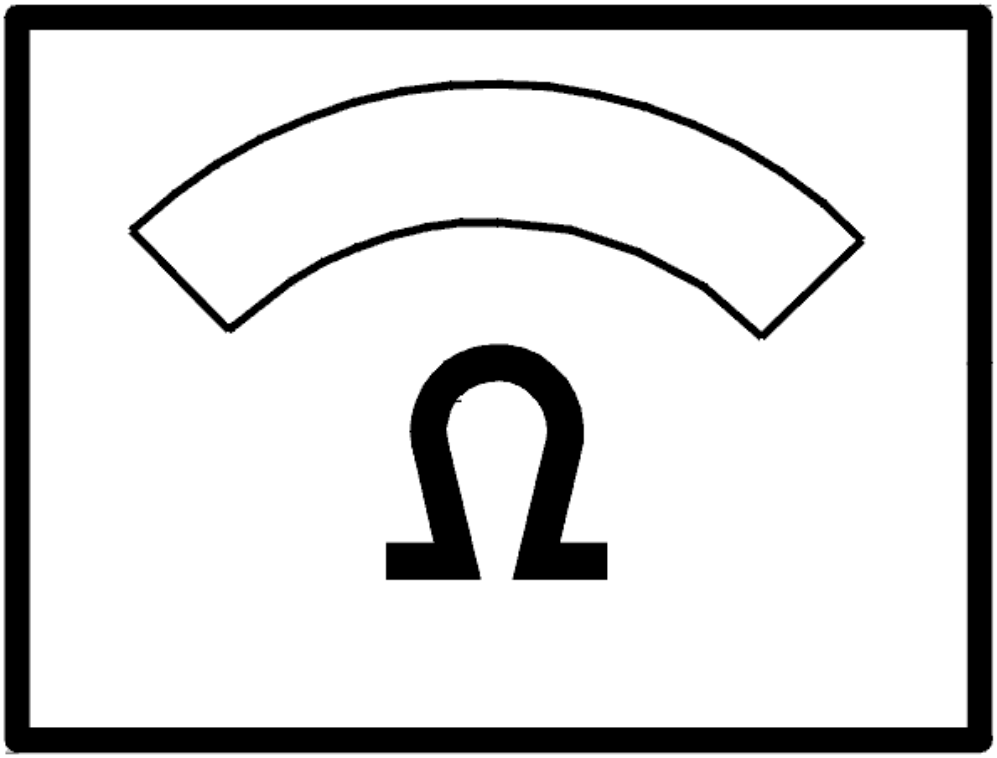

Fig. 160: Identifying Ohmmeter
Courtesy of VOLVO CARS CORPORATION

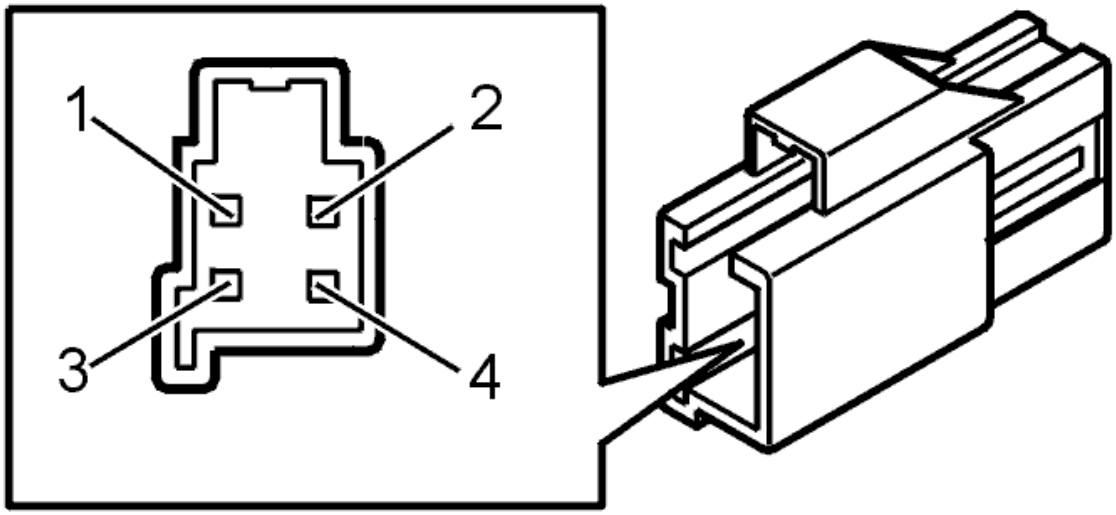

Fig. 161: Identifying Connector Terminals
Courtesy of VOLVO CARS CORPORATION

CHECKING FUSES

Remove fuse 11D/6 from the cargo compartment fusebox.

Check the fuse. Check for contact resistance and oxidation.

Other information

- To access the integrated relay/fusebox in the cargo compartment, see **RELAY/FUSE BOX CARGO COMPARTMENT/REAR ELECTRONIC MODULE (REM), REPLACING**
- see **CHECKING WIRING AND TERMINALS** .

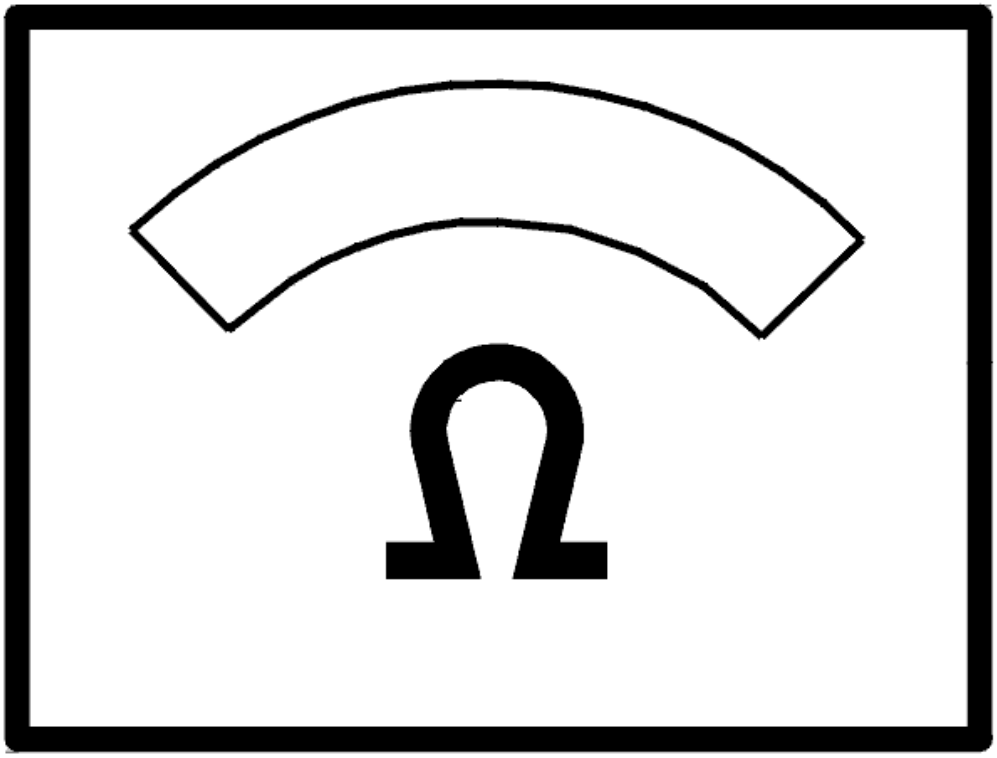

Fig. 162: Identifying Ohmmeter
Courtesy of VOLVO CARS CORPORATION

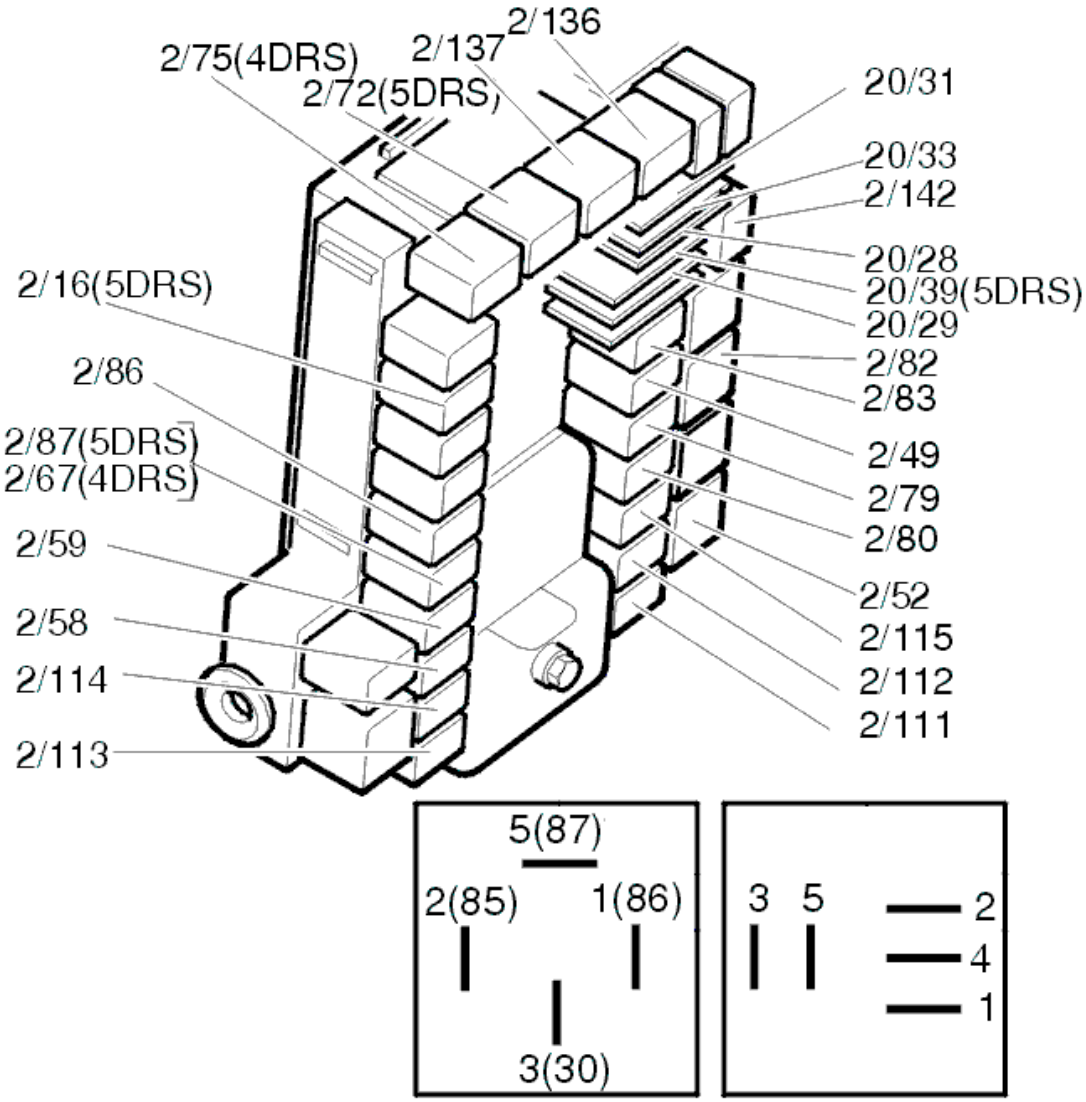

Fig. 163: Identifying Relays
Courtesy of VOLVO CARS CORPORATION

Is the fuse intact?

- **OK**

  Refer to **REPLACING THE RELAY**

- **NOT OK**

  Refer to **CHECKING FOR A SHORT-CIRCUIT**

REPLACING THE RELAY

Replace the relay for unlocking 2/67 (RMI 20) in the integrated relay / fusebox in the cargo compartment.

At the same time, check the relay base switches. Check for contact resistance and oxidation.

Remedy as necessary.

Other information

- To access the integrated relay/fusebox in the cargo compartment, see **RELAY/FUSE BOX CARGO COMPARTMENT/REAR ELECTRONIC MODULE (REM), REPLACING**
- see **CHECKING WIRING AND TERMINALS** .

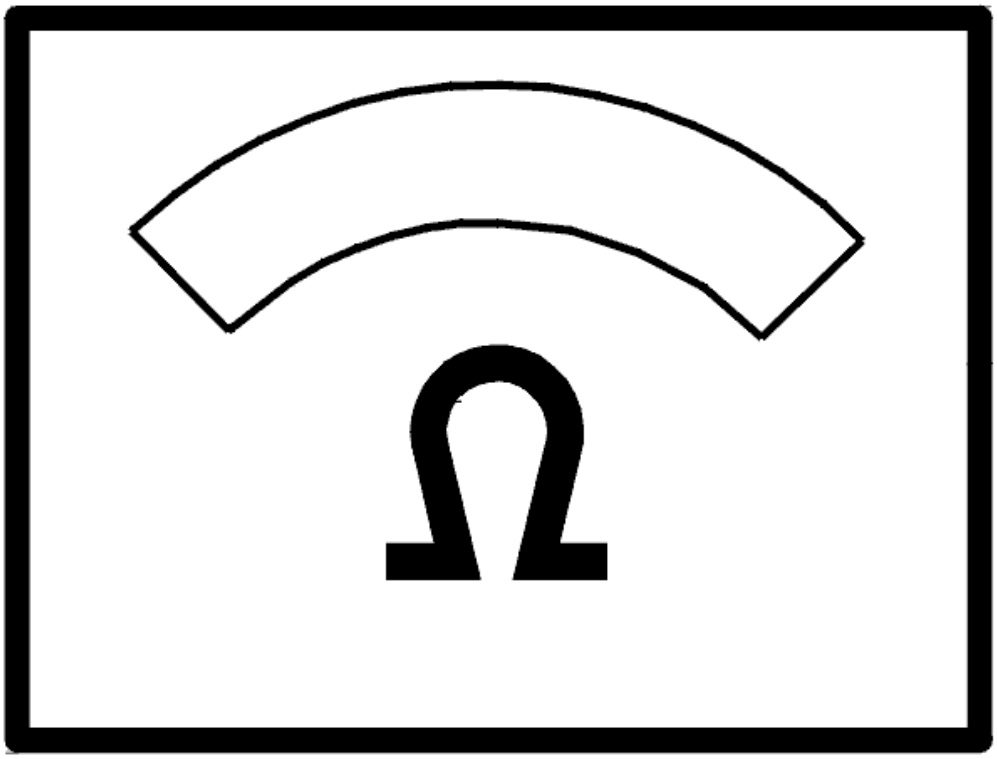

Fig. 164: Identifying Ohmmeter
Courtesy of VOLVO CARS CORPORATION

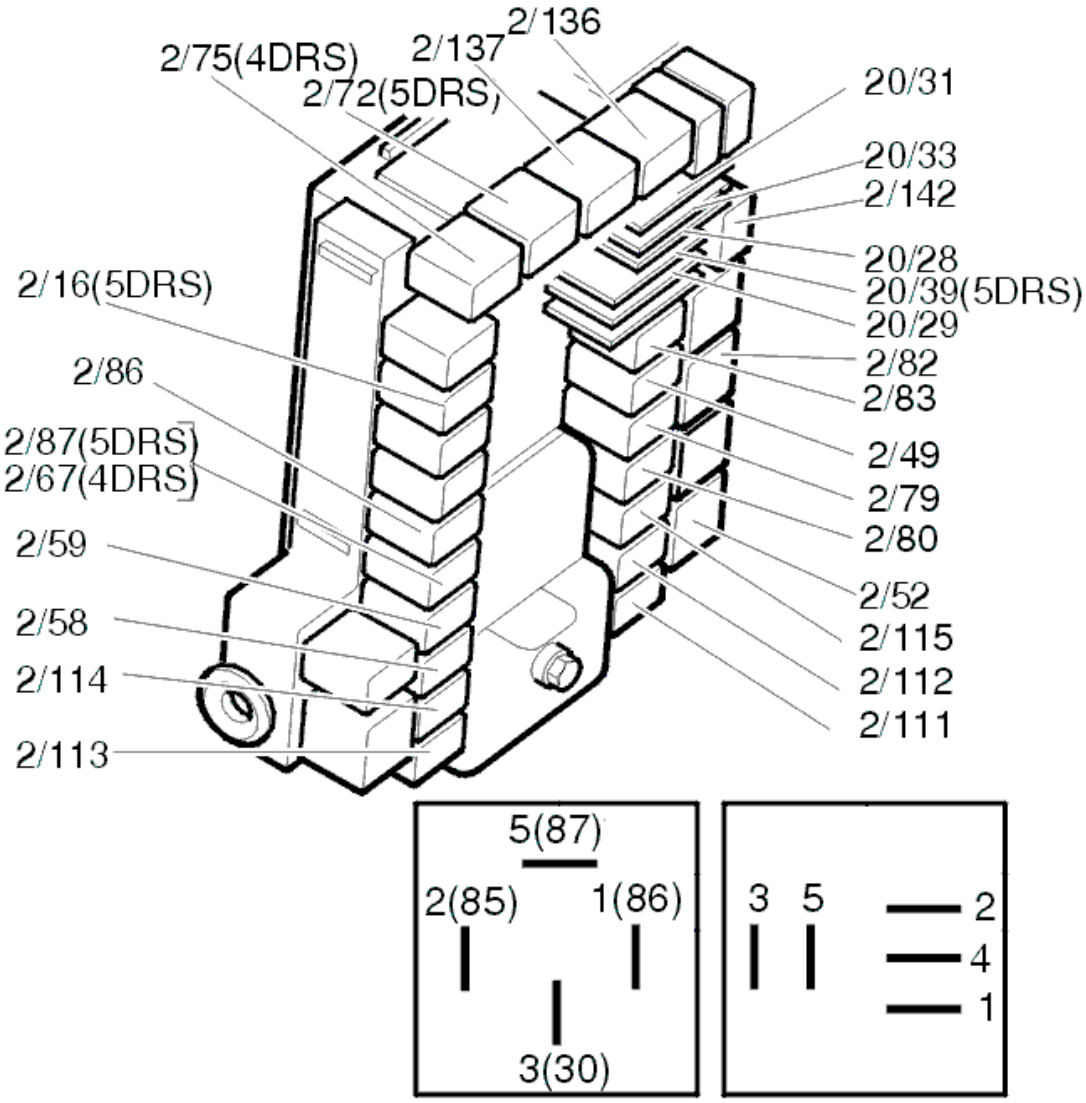

Fig. 165: Identifying Relays
Courtesy of VOLVO CARS CORPORATION

Was a fault detected?

- **YES**

  OKAY: Troubleshooting has been completed.

- **NO**

  Refer to **CIRCUIT TEST**

CIRCUIT TEST

The fault is caused by an open-circuit in one of the relay circuits in the lock unit. To determine in which circuit

the fault is:

Disconnect the connector at the lock unit.

Check the connectors for contact resistance and oxidation.

Measure the resistance between terminals terminal #2 and #4 on the cable connector.

Other information

- To access and replace the lock unit, see **LOCK MECHANISM, TAILGATE, REPLACING**
- see **CHECKING WIRING AND TERMINALS** .

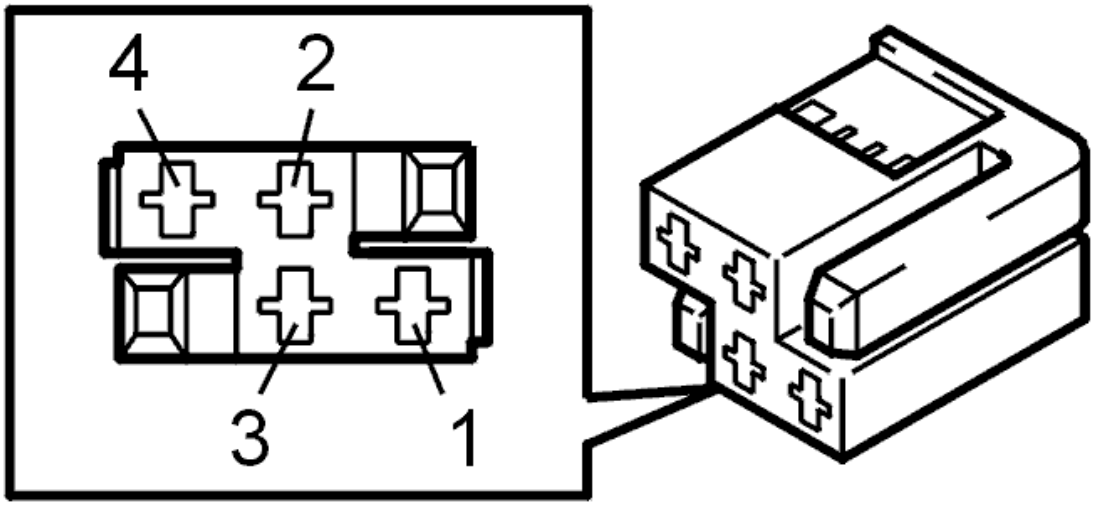

Fig. 166: Identifying Connector Terminals
Courtesy of VOLVO CARS CORPORATION

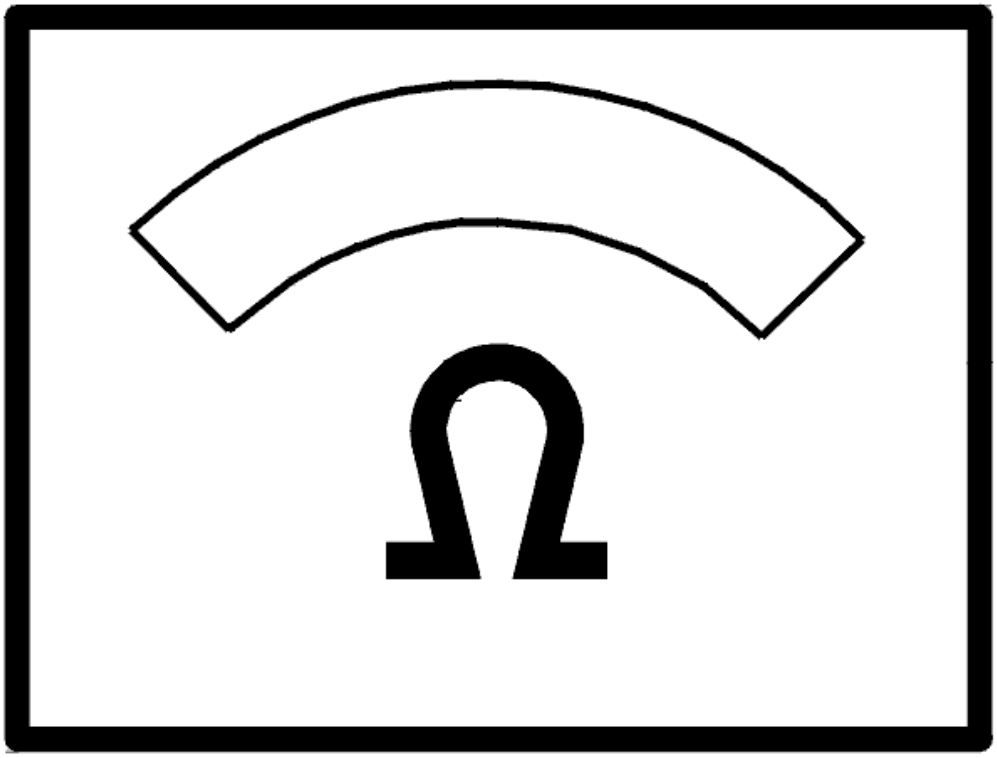

Fig. 167: Identifying Ohmmeter
Courtesy of VOLVO CARS CORPORATION

The ohmmeter should read 0 ohm.

- **OK**

  Refer to **CHECKING GROUND LEAD**

- **NOT OK**

  Refer to **CIRCUIT TEST CONTINUED**

CIRCUIT TEST CONTINUED

Measure the resistance between terminal #2 and ground and between terminal #4 and ground on the cable

connector.

1. The ohmmeter displays an incorrect value between terminal #4 and ground. Refer to **CHECKING GROUND LEAD**.
2. The ohmmeter displays an incorrect value between terminal #2 and ground. Refer to **CHECKING THE POWER SUPPLY**
3. The ohmmeter displays the correct value. Troubleshooting has been completed.

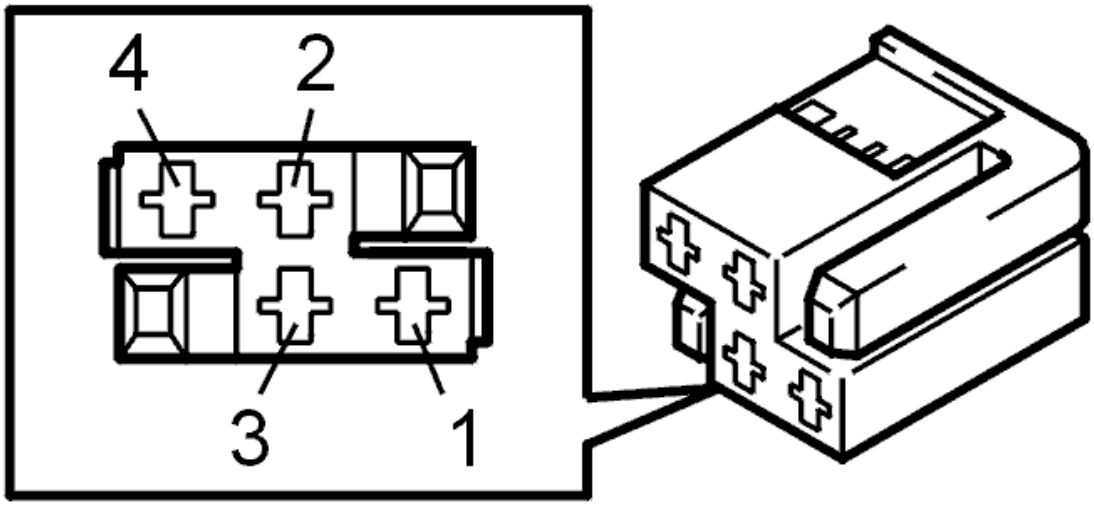

Fig. 168: Identifying Connector Terminals
Courtesy of VOLVO CARS CORPORATION

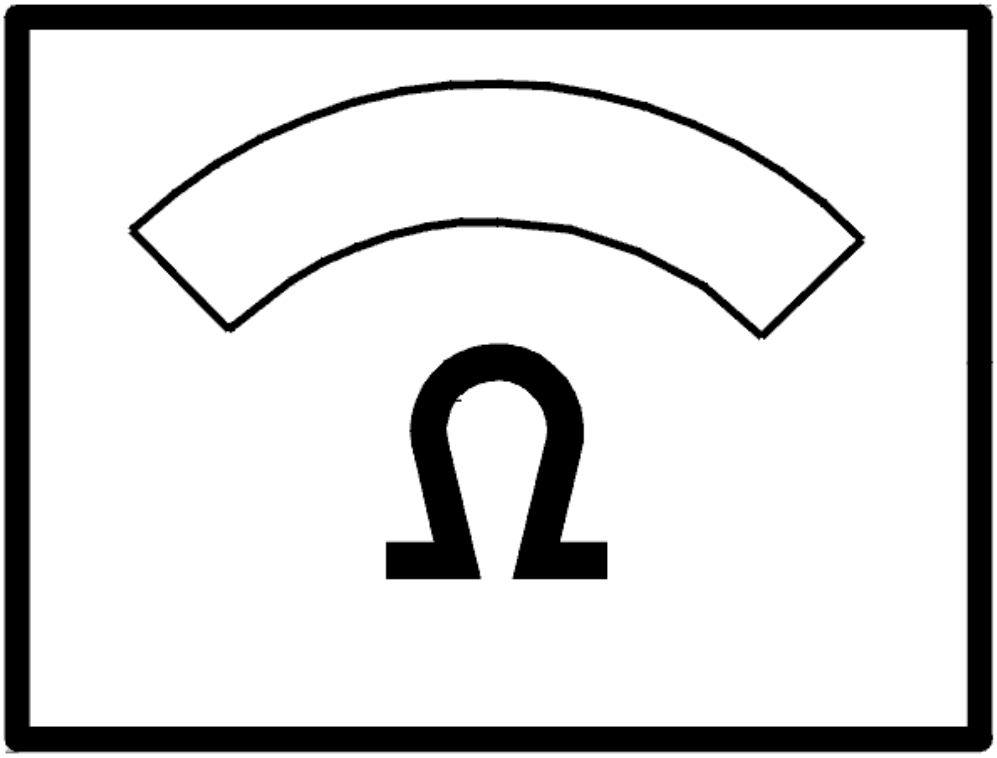

Fig. 169: Identifying Ohmmeter
Courtesy of VOLVO CARS CORPORATION

CHECKING GROUND LEAD

Check the cable between terminal #2 in the cable connector and ground terminal. Check for an open-circuit.

Check in particular the intermediate connector in the cable harness. Check for contact resistance and oxidation.

Remedy as necessary.

Other information

- see **CHECKING WIRING AND TERMINALS** .

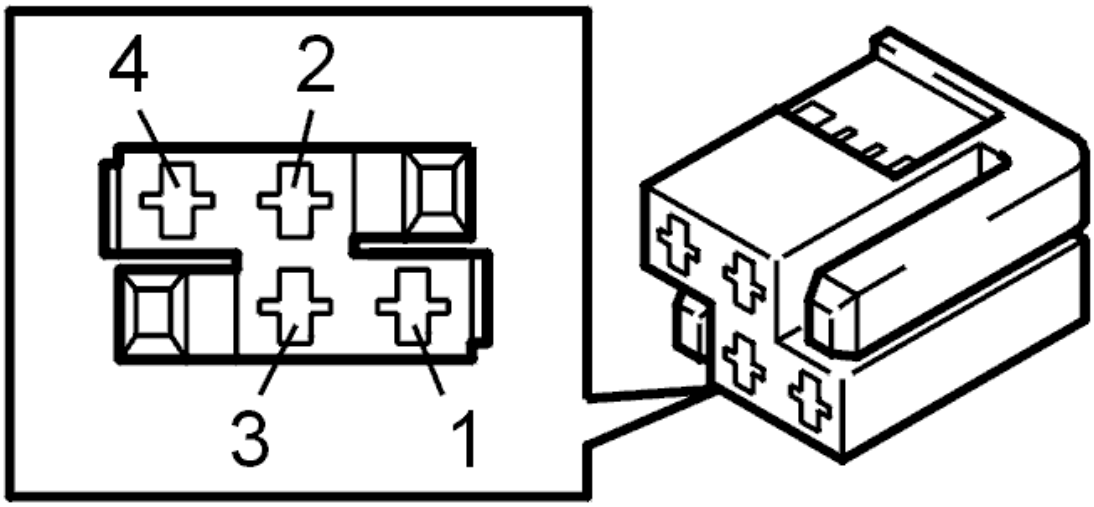

Fig. 170: Identifying Connector Terminals
Courtesy of VOLVO CARS CORPORATION

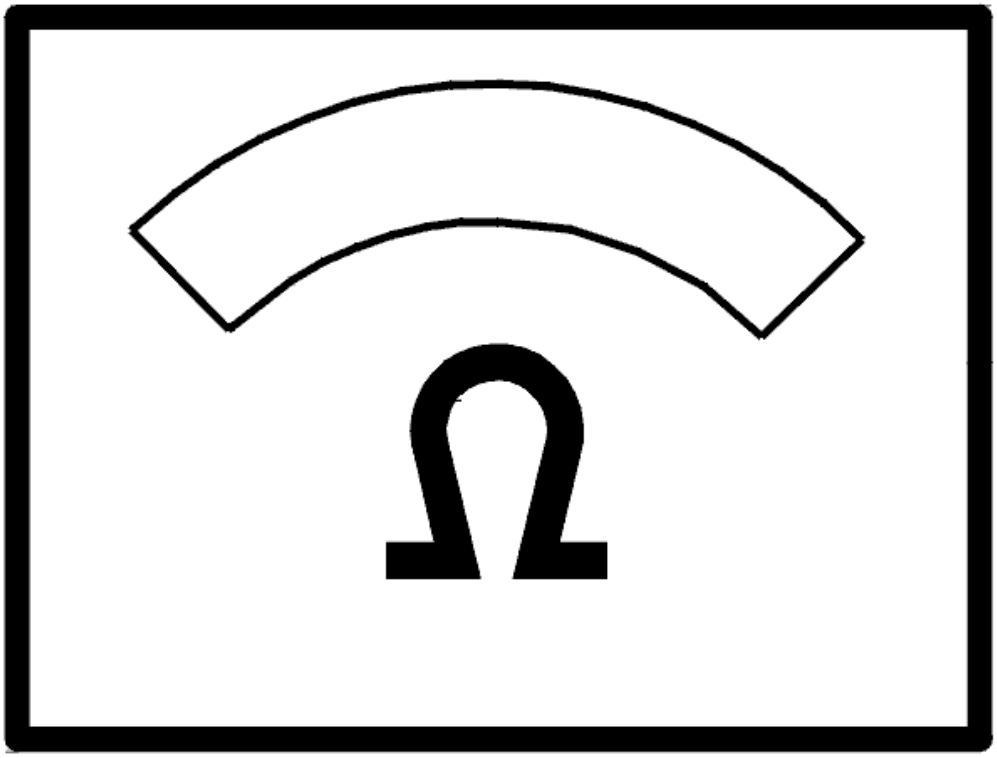

Fig. 171: Identifying Ohmmeter
Courtesy of VOLVO CARS CORPORATION

CHECKING THE POWER SUPPLY

Remove the relay for unlocking 2/67 (RMI 20) from the integrated relay/fusebox in the cargo compartment.

Check the cable between terminal #2 the cable and connector and terminal #3 on the relay base. Check for an open-circuit.

If a fault is detected, check in particular the intermediate connector in the cable harness. Check for contact resistance and oxidation.

If no fault is detected, measure the resistance between terminal #4 in the relay base and ground.

In both cases the ohmmeter should read 0 ohms.

If the value is incorrect, replace the rear electronic module (REM).

Other information

- To access and replace the rear electronic module (REM), see **RELAY/FUSE BOX CARGO COMPARTMENT/REAR ELECTRONIC MODULE (REM), REPLACING** .

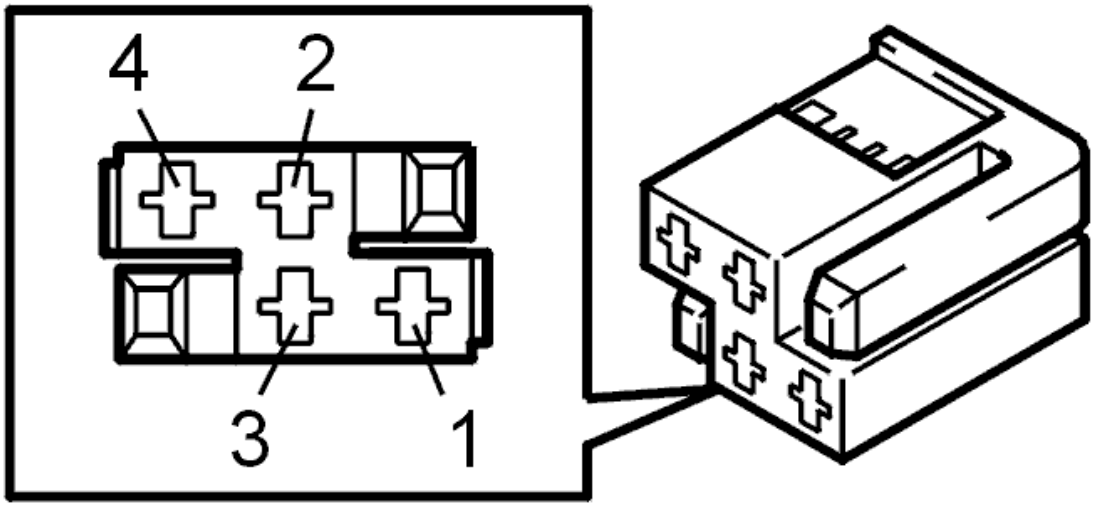

Fig. 172: Identifying Connector Terminals
Courtesy of VOLVO CARS CORPORATION

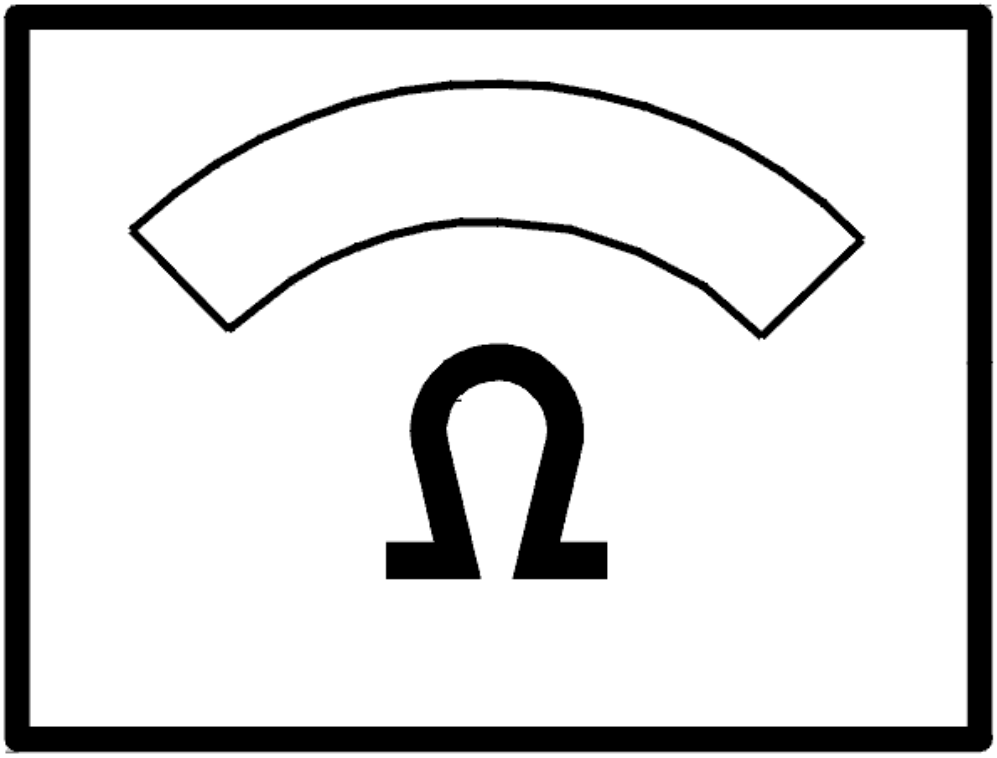

Fig. 173: Identifying Ohmmeter
Courtesy of VOLVO CARS CORPORATION

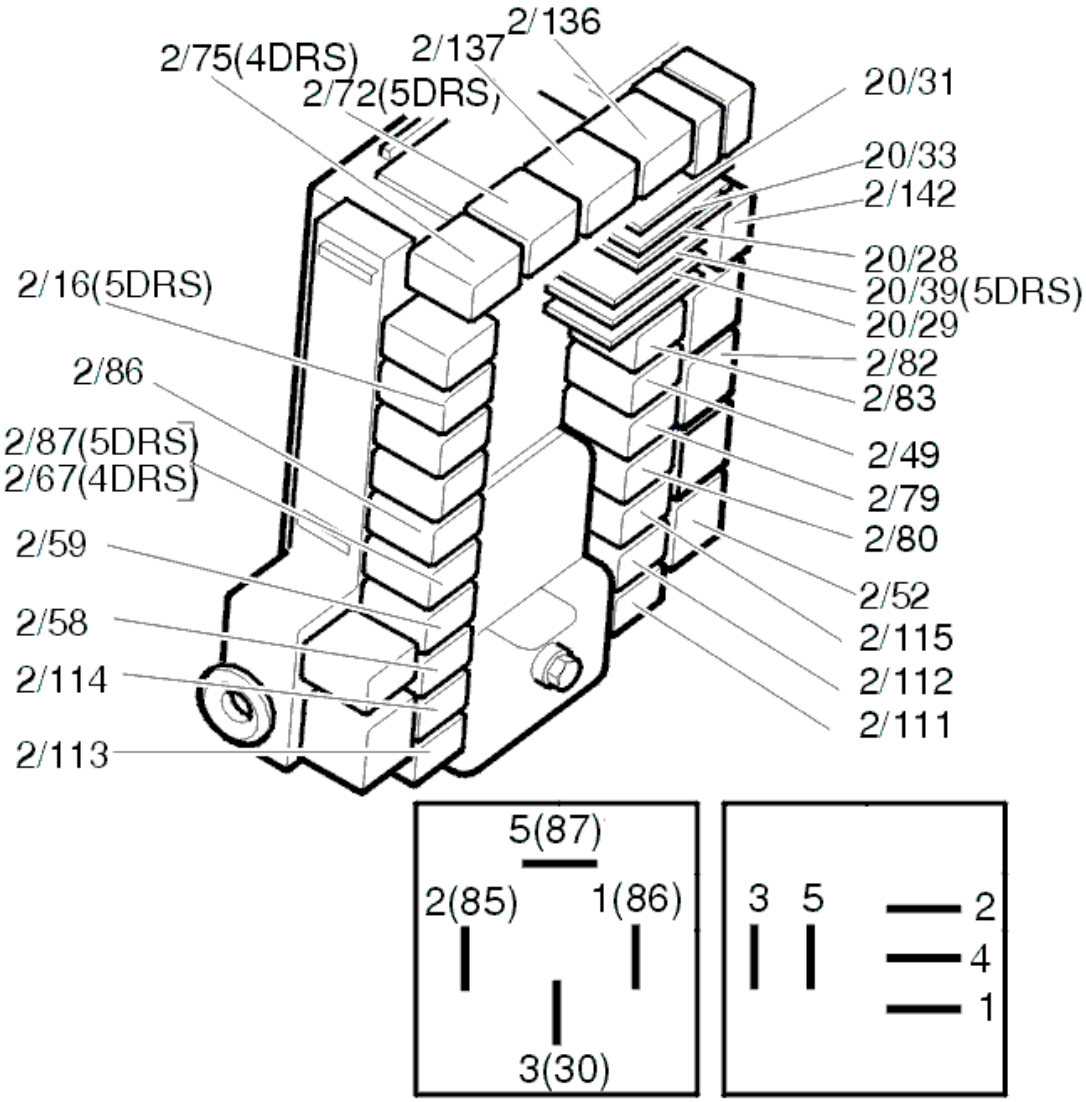

Fig. 174: Identifying Relays
Courtesy of VOLVO CARS CORPORATION

CHECKING THE COMPONENT

Measure the resistance between pins terminals #2 and #4 on the chassis switch lock unit.

The ohmmeter should read approximately 5 ohm.

If the value is incorrect, replace the lock unit.

Other information

- To access and replace the lock unit, see **LOCK MECHANISM, TAILGATE, REPLACING** .

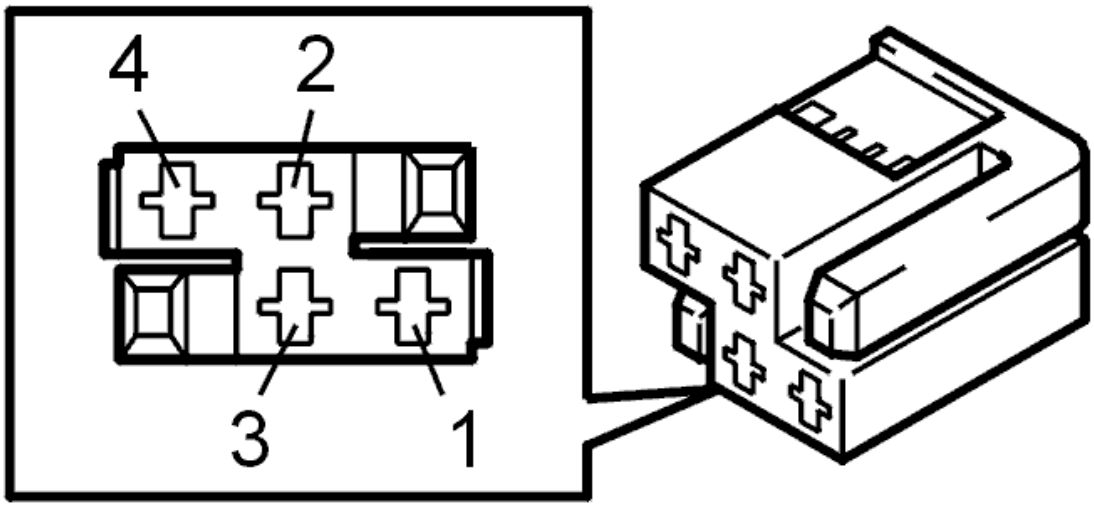

Fig. 175: Identifying Connector Terminals
Courtesy of VOLVO CARS CORPORATION

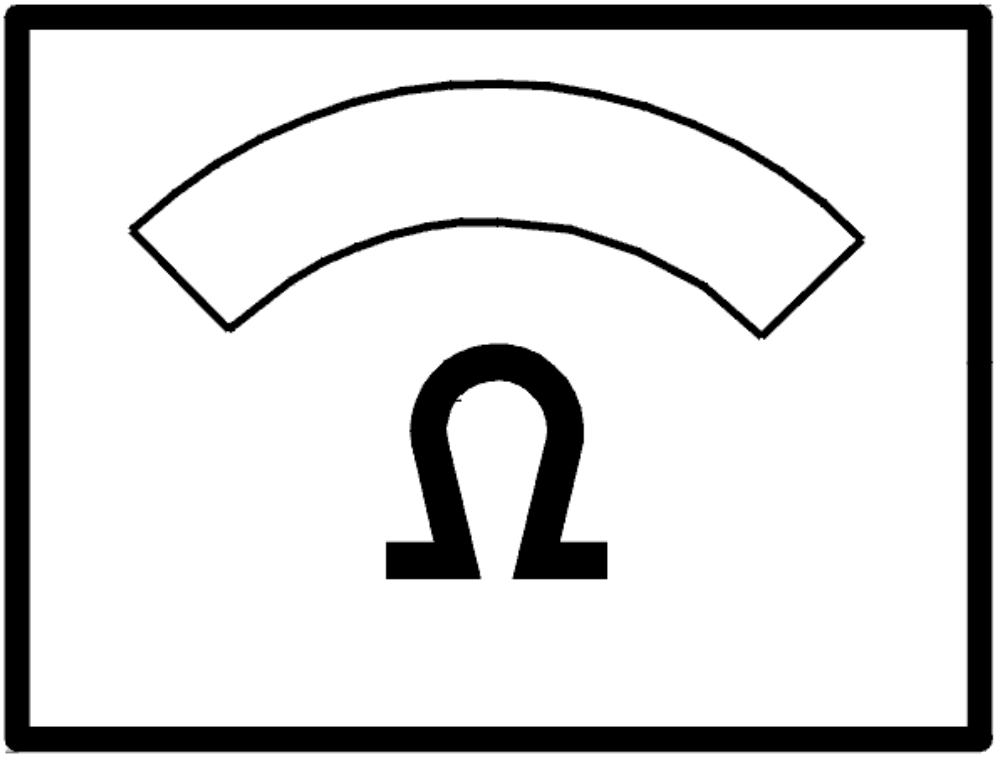

Fig. 176: Identifying Ohmmeter
Courtesy of VOLVO CARS CORPORATION

Was a fault detected?

- **YES**

  OKAY: Troubleshooting has been completed.

- **NO**

  Refer to **CHECKING RELAY POWER SUPPLY**

CHECKING RELAY POWER SUPPLY

Remove the relay for locking 2/67 (RMI 20) from the integrated relay/fusebox in the cargo compartment.

Measure the voltage between terminal #5 in the relay base and ground.

The voltmeter should read battery voltage.

HINT: If the value is OK but the fault remains, connect the connector to the lock module between terminals #3 and #5 in the relay base to force a supply to the locking motor when continuing to take measurements.

Other information

- To access the integrated relay/fusebox in the cargo compartment, see **RELAY/FUSE BOX CARGO COMPARTMENT/REAR ELECTRONIC MODULE (REM), REPLACING** .

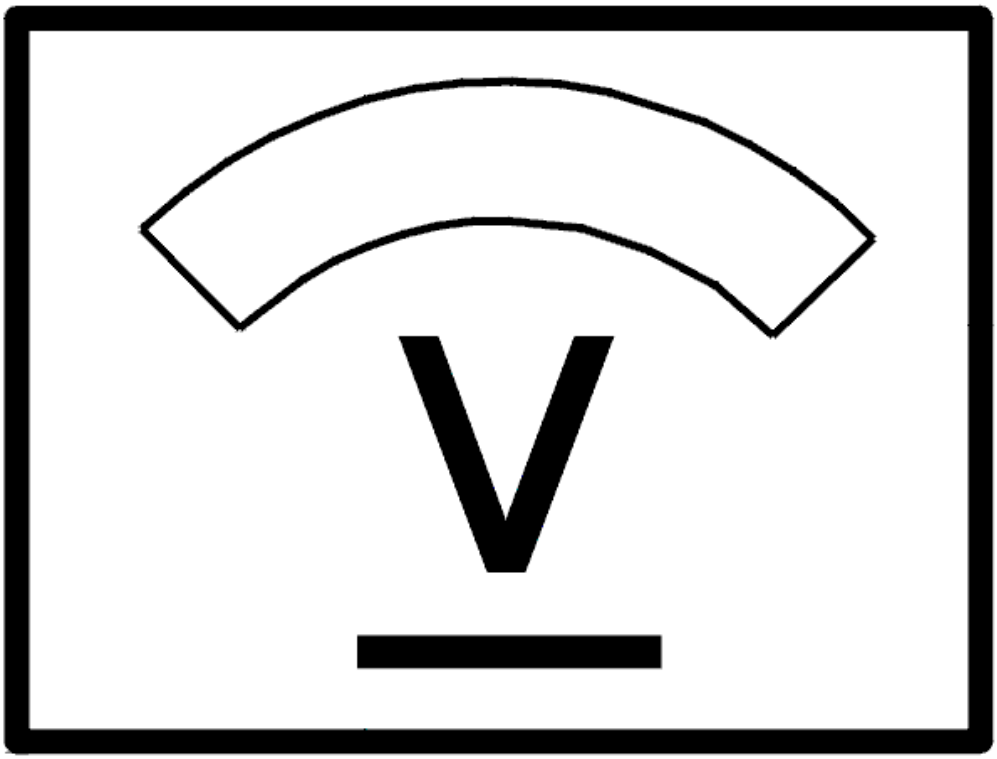

Fig. 177: Identifying Voltage Display
Courtesy of VOLVO CARS CORPORATION

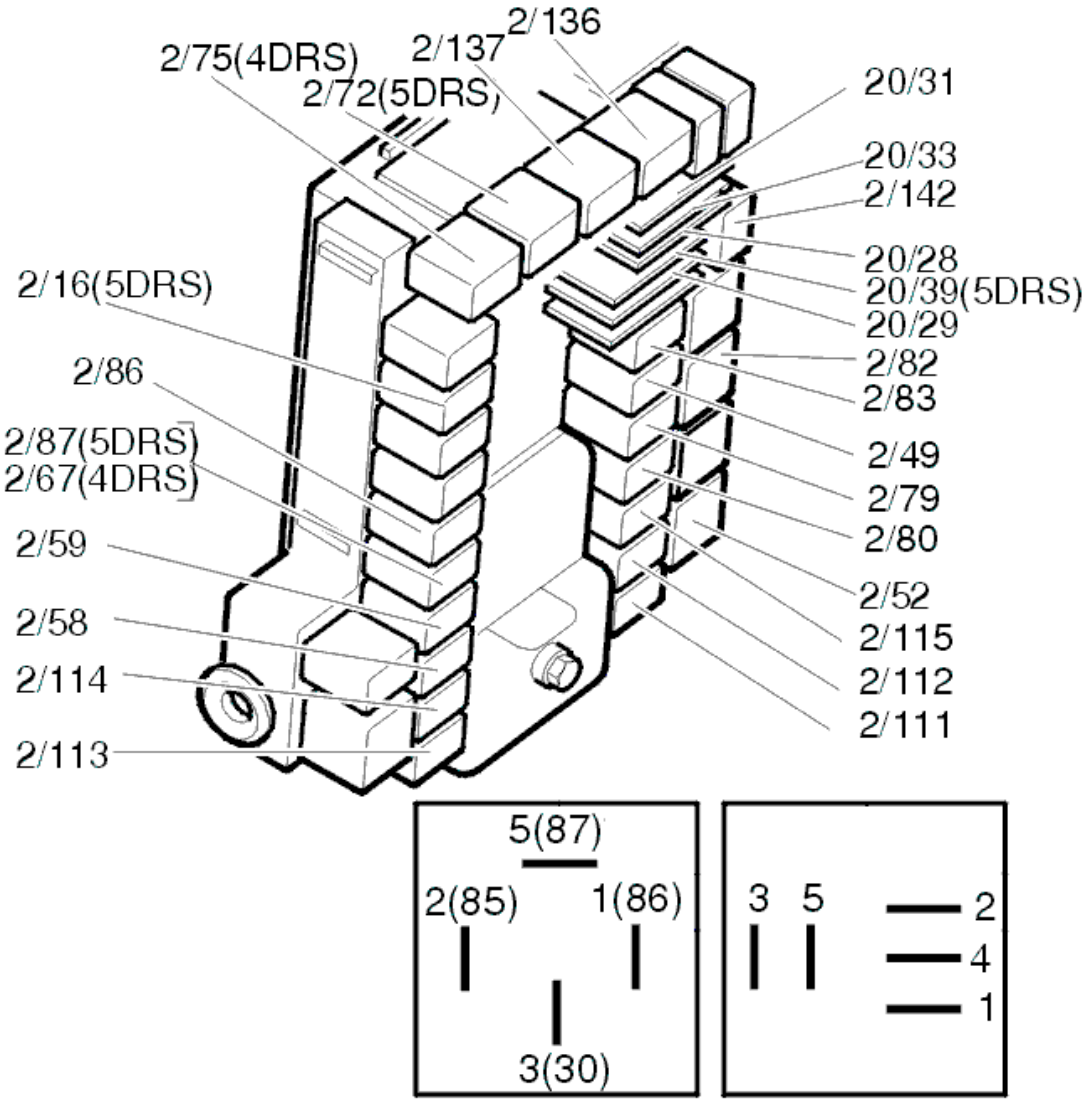

Fig. 178: Identifying Relays
Courtesy of VOLVO CARS CORPORATION

Does the voltmeter read battery voltage?

- **YES**

  OKAY: Troubleshooting has been completed.

- **NO**

  Refer to **CHECKING FOR AN OPEN-CIRCUIT**

CHECKING FOR AN OPEN-CIRCUIT

Check the cable between the fuse holder secondary side (left) and terminal #5 in the relay base. Check for an

open-circuit.

Other information

- To access the rear electronic module (REM), see **RELAY/FUSE BOX CARGO COMPARTMENT/REAR ELECTRONIC MODULE (REM), REPLACING**
- see **CHECKING WIRING AND TERMINALS** .

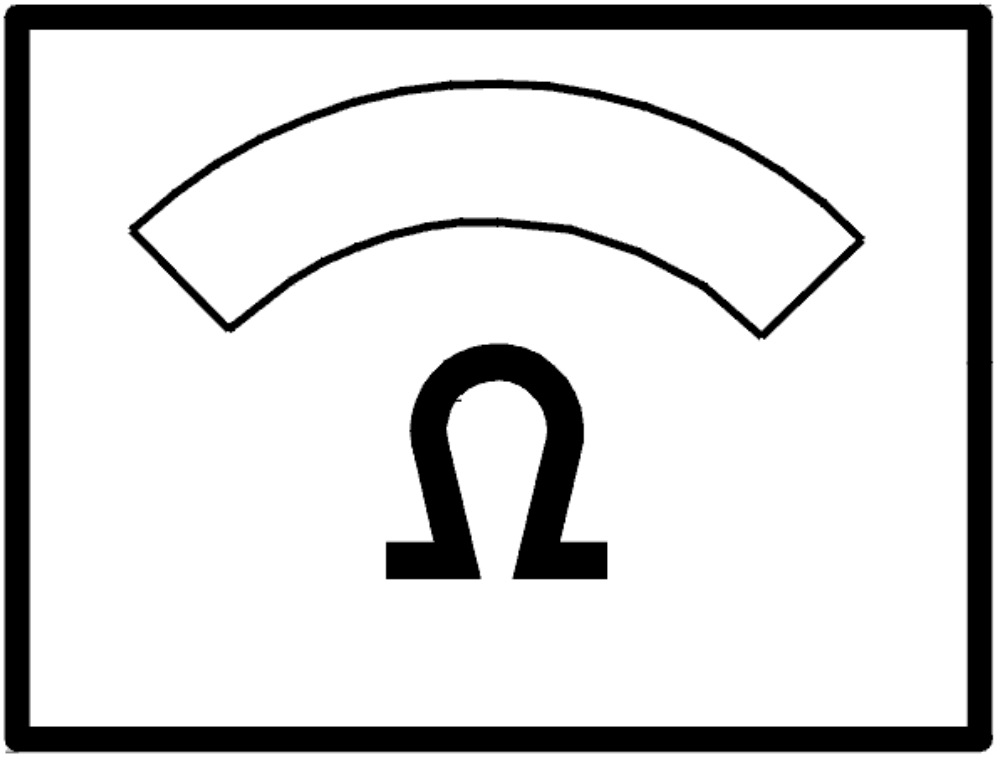

Fig. 179: Identifying Ohmmeter
Courtesy of VOLVO CARS CORPORATION

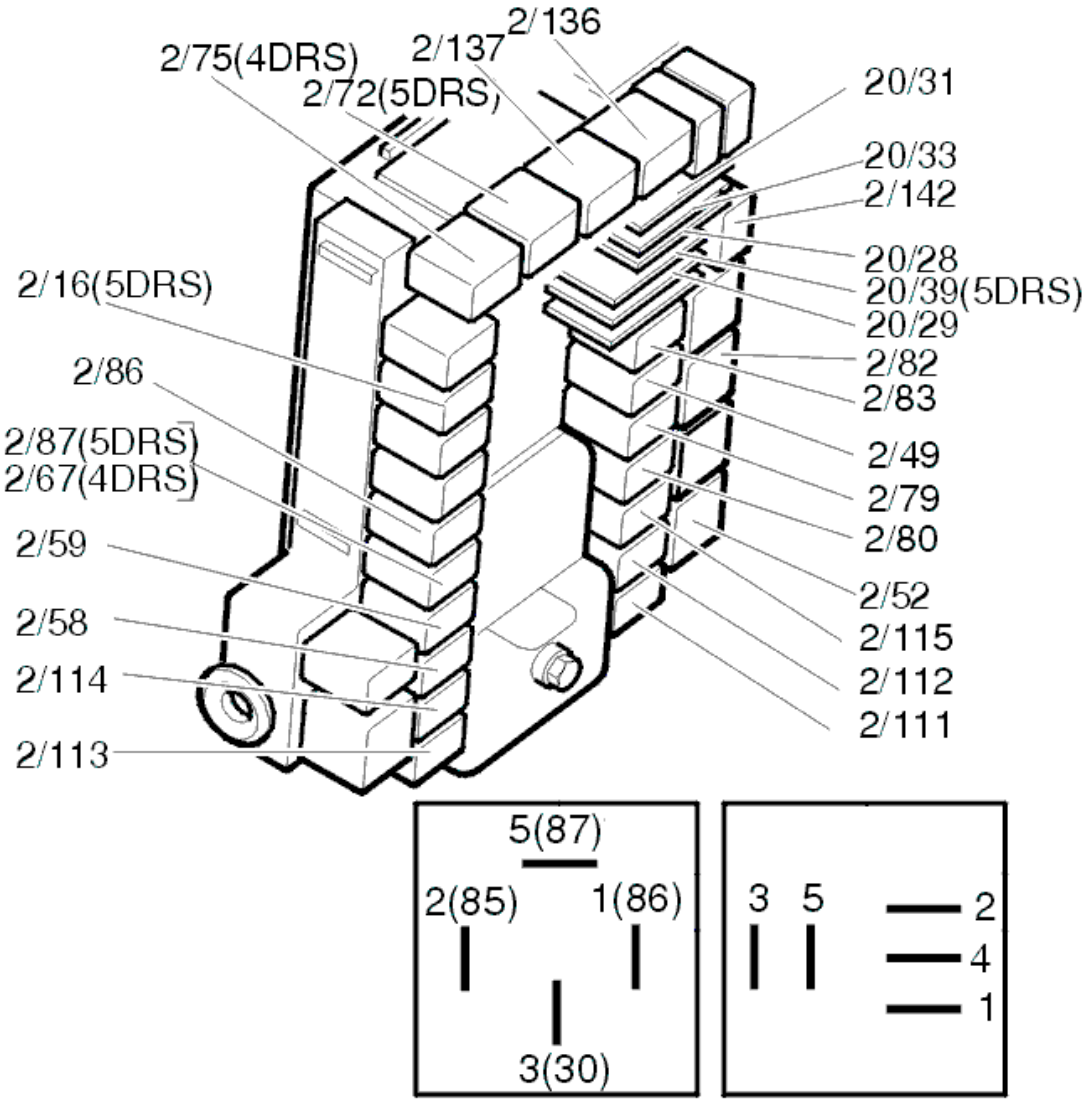

Fig. 180: Identifying Relays
Courtesy of VOLVO CARS CORPORATION

CHECKING FOR A SHORT-CIRCUIT

Measure the resistance between the fuse holder secondary side (left) and ground.

The ohmmeter should read infinite resistance.

If the value is correct, replace the fuse.

NOTE: The fault could be intermittent.

If the value is incorrect, fault-trace all affected relay circuits and component wiring for a short-circuit to ground.

HINT: Replace fuse.

HINT: If the fuse blows immediately the short-circuit is in the relay power cable.

HINT: If the fuse blows when the tailgate is opened the short-circuit is in the power supply cable for the component

HINT: Relay supply cable: fuse 11D/6 terminal #5 relay base 2/67.

HINT: Component supply cable: terminal #4 relay base 2/67 terminal #2 lock unit.

Other information

- To access the rear electronic module (REM), see **RELAY/FUSE BOX CARGO COMPARTMENT/REAR ELECTRONIC MODULE (REM), REPLACING**
- see **CHECKING WIRING AND TERMINALS** .

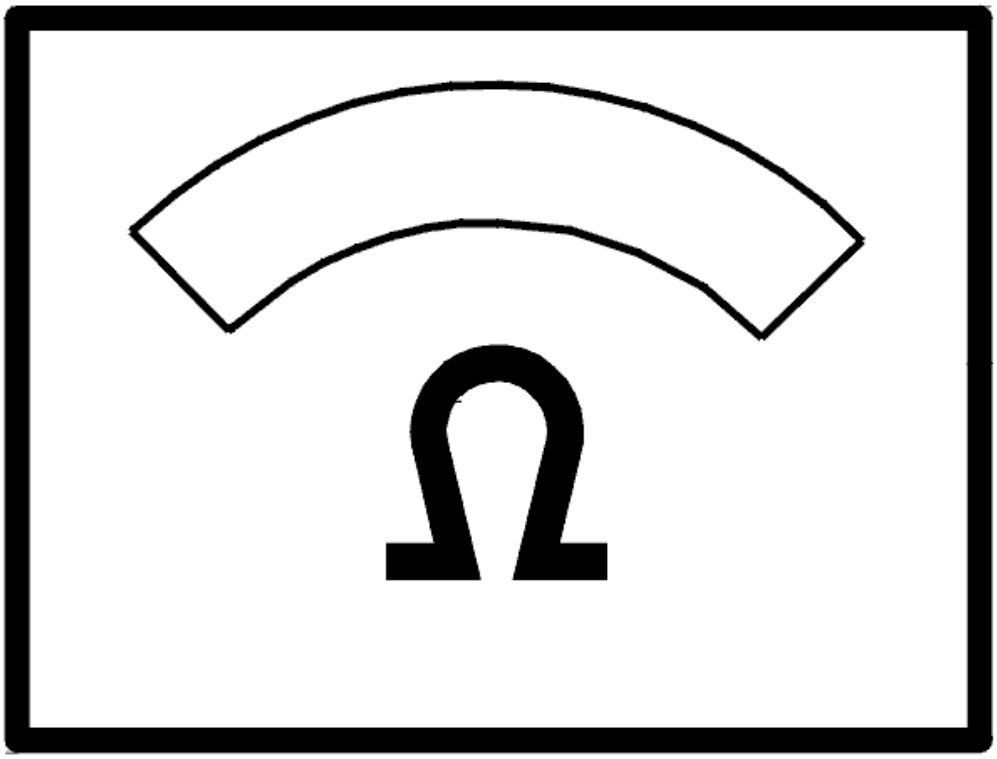

Fig. 181: Identifying Ohmmeter

Courtesy of VOLVO CARS CORPORATION

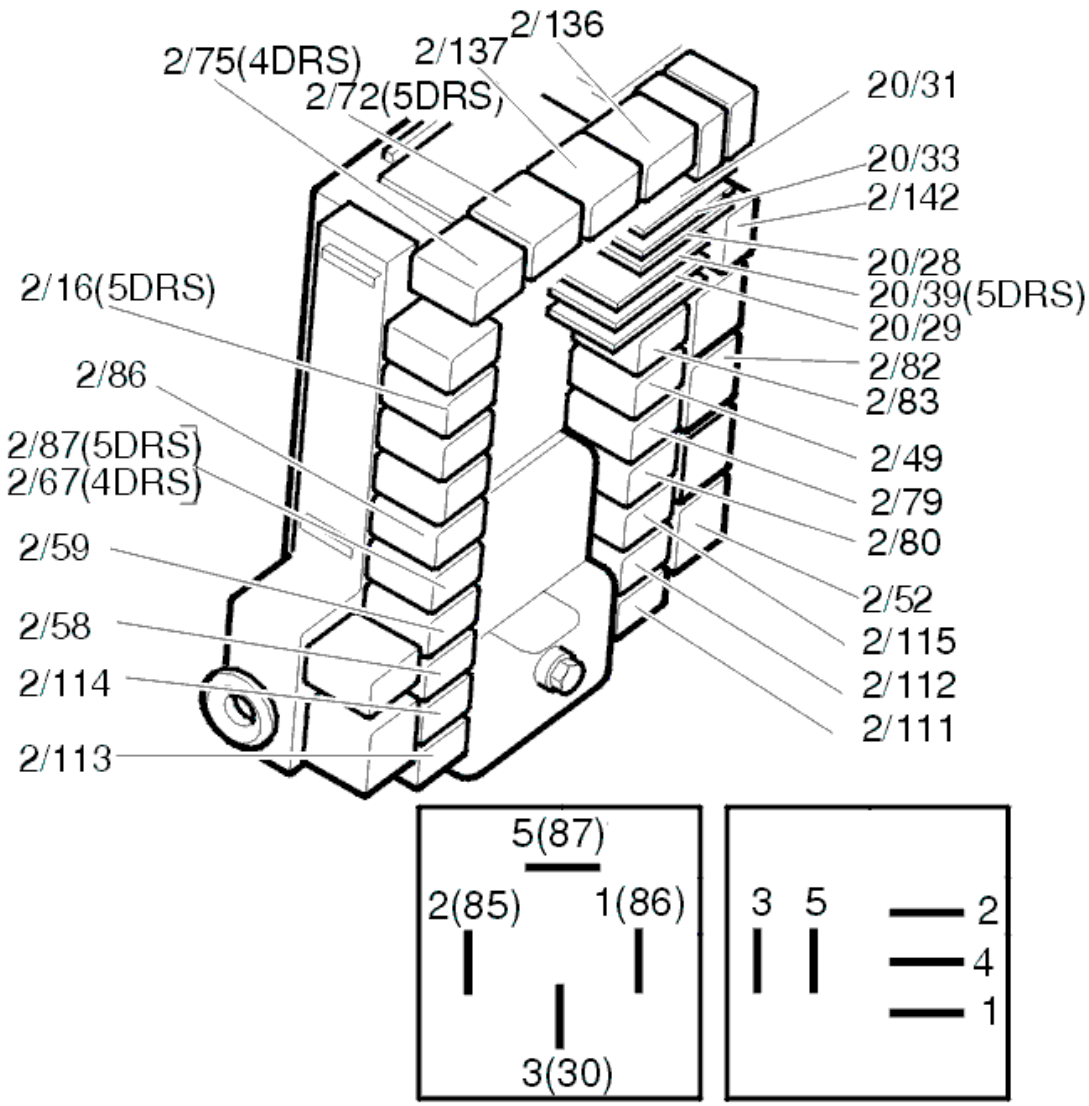

Fig. 182: Identifying Relays
Courtesy of VOLVO CARS CORPORATION

TROUBLE-SHOOTING INFORMATION

Condition

No diagnostic trouble codes are displayed.

Possible Source

Rear doors:

- Faulty relay

- Short circuit to ground/open circuit on lock unit ground/supply wire
- Faulty lock unit
- Fault in relay supply
- Defective fuse
- Defective switch (in boot lid handle)
- Open circuit on switch (in boot lid handle) signal/ground wire
- Fault in control unit
- Defective lock cylinder (mechanical fault).

Fault symptom[s]

- The boot lid will not lock/open.

CHECKING THE POWER SUPPLY (2003-12)

CHECKING THE POWER SUPPLY

SYMPTOM VERIFICATION

HINT: After the repair it is necessary to check that the fault has been rectified.

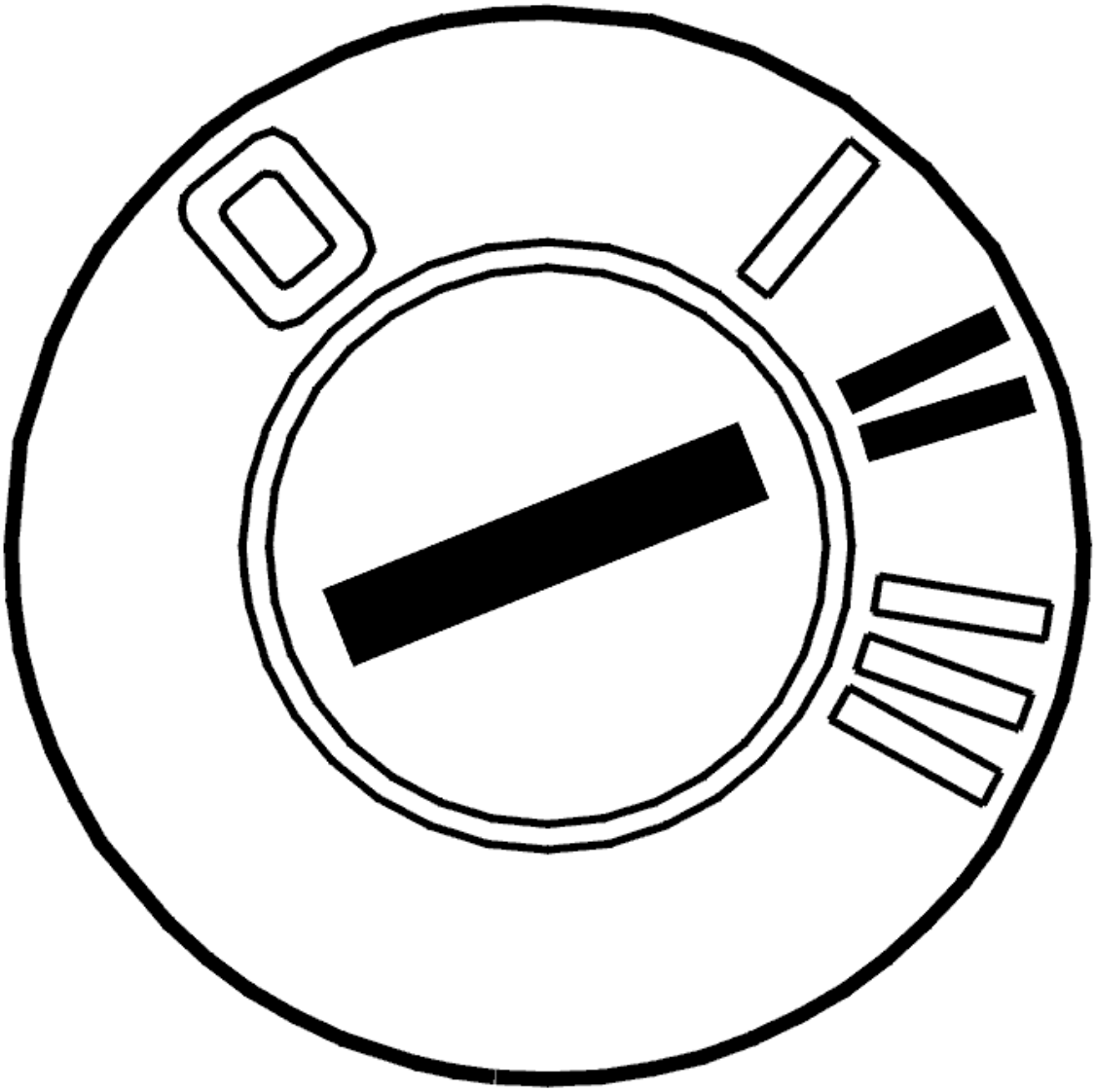

Fig. 183: Identifying Ignition ON
Courtesy of VOLVO CARS CORPORATION

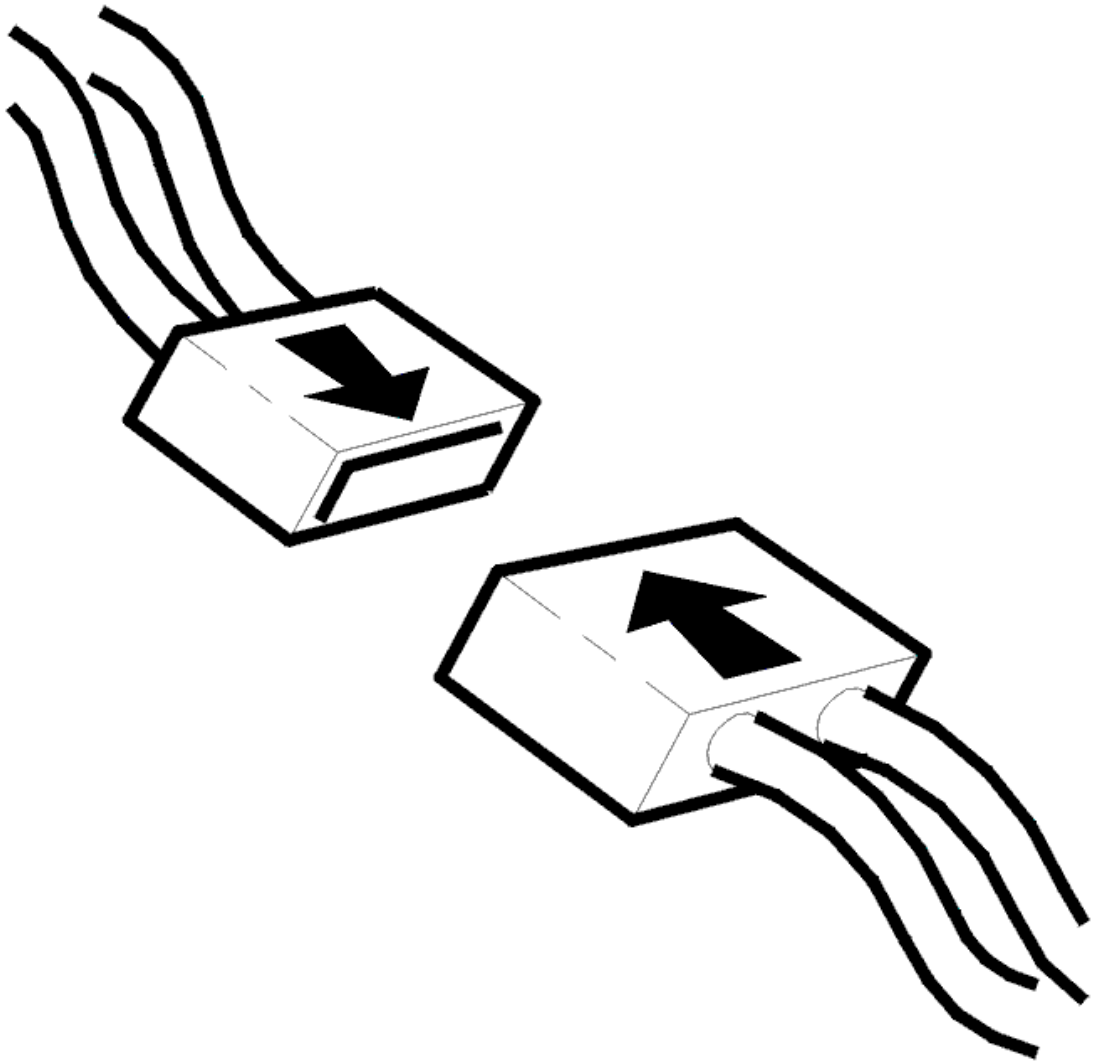

Fig. 184: Connecting Connector
Courtesy of VOLVO CARS CORPORATION

- Ignition off.
- Connect the connectors, install the components, etc.
- Ignition on.

  Move the sunroof to its end position and activate the reading lamps.

Is the function delayed?

- **YES**

  VERIFIED: Troubleshooting has been completed.

- **NO**

  VERIFICATION FAILED: The fault should have been detected and remedied. As this is not the case fault-tracing has failed. Exit fault-tracing for this diagnostic trouble code (DTC) or make another attempt.

CHECKING THE POWER SUPPLY (2003-12)

CHECKING THE POWER SUPPLY

CHECKING THE CONNECTORS

Check connectors 54/13, 54/3L and control unit connector for contact resistance and oxidation as described in, see **CONTACT RESISTANCE AND OXIDATION** .

Do the necessary corrective action.

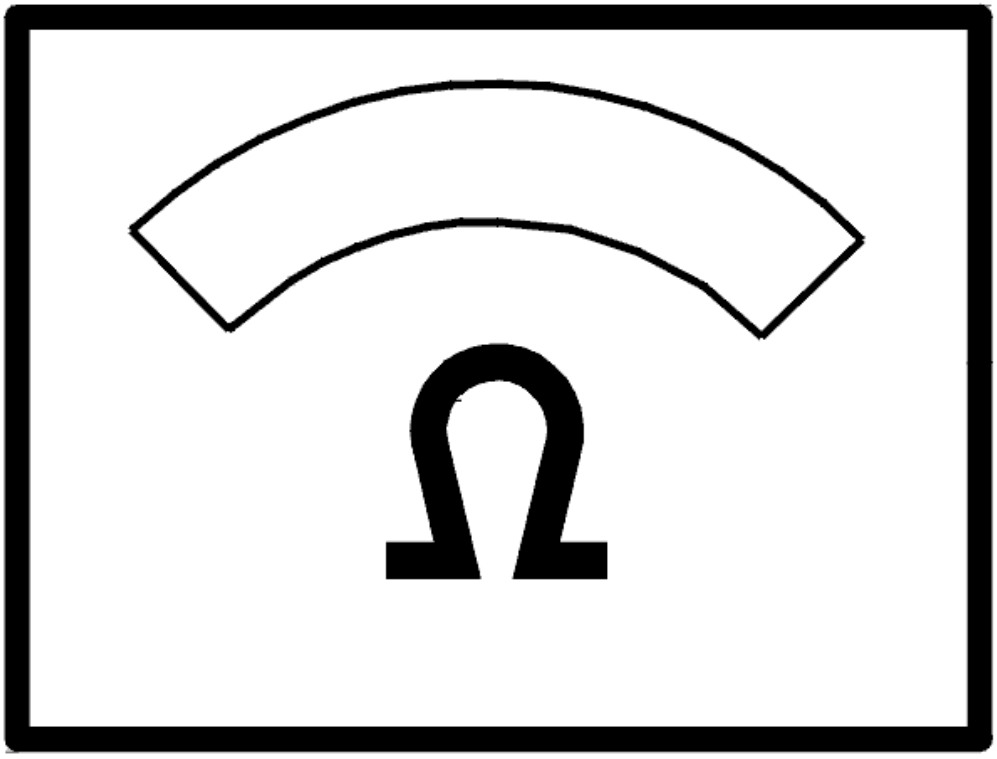

Fig. 185: Identifying Ohmmeter
Courtesy of VOLVO CARS CORPORATION

Is there a fault?

- **YES**

  OKAY: Troubleshooting has been completed.

- **NO**

  Refer to **CHECKING THE WIRES AND COMPONENTS**

CHECKING THE WIRES AND COMPONENTS

Check that fuse 11C/28 in the interior fuse box is correctly installed and is intact.

Check the wire between the battery positive pole and control unit 1 and 11 for an intermittent open circuit as described in, see **OPEN-CIRCUIT, INTERMITTENT FAULTS** , and for an intermittent short circuit to ground as described in **SHORT-CIRCUIT TO GROUND, INTERMITTENT FAULTS** .

Additional information

- For information on signals and additional values, see **SIGNAL DESCRIPTION, UPPER ELECTRONIC MODULE (UEM)**
- To connect the test box, see **CONNECTING THE BREAKOUT BOX** .

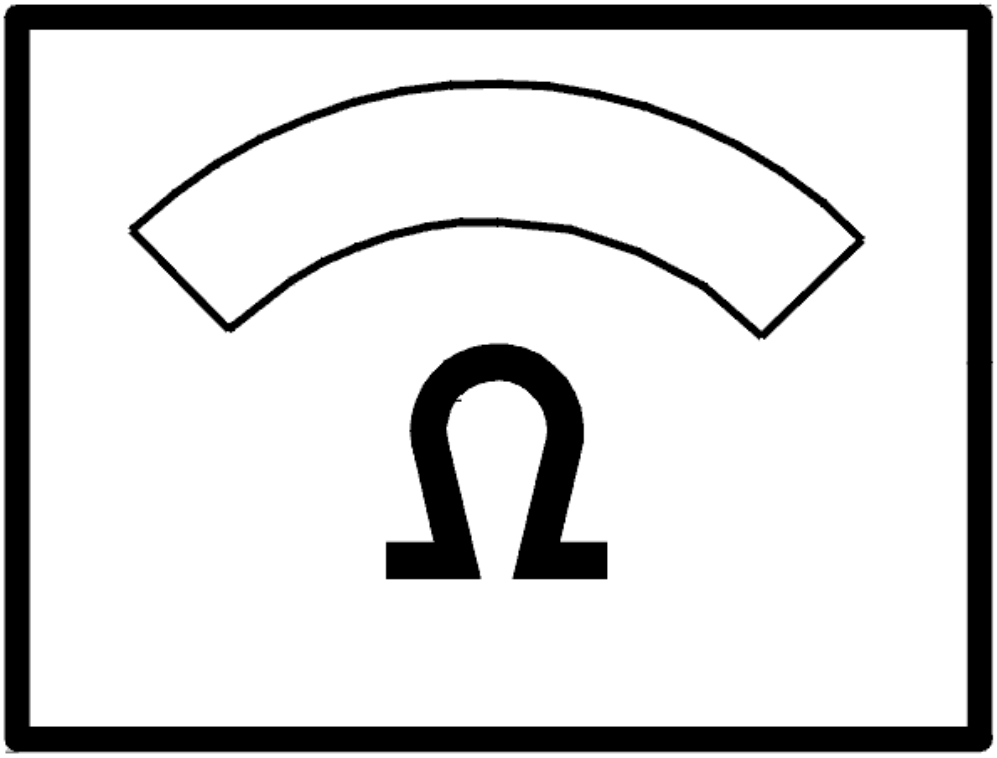

Fig. 186: Identifying Ohmmeter
Courtesy of VOLVO CARS CORPORATION

TROUBLE-SHOOTING INFORMATION

Condition

No diagnostic trouble codes are displayed.

Substitute Value

Nothing.

Possible Source

- Intermittent open circuit or intermittent short circuit to ground on the wire.

Contact resistance or oxidation on the connector.

Fault symptom[s]

- Poor response to command.

CHECKING THE POWER SUPPLY (LSM) (2003-04)

CHECKING THE POWER SUPPLY (LSM)

Check the power supply to the switch, i. e. the wire between the light switch module 1 (3/111) and fuse 23 in the interior compartment fuse box (11C/23), for an open circuit as described in, see **OPEN-CIRCUIT, PERMANENT FAULTS** .

Check fuse 23 in the interior compartment fuse box (11C/23).

Check the ground wire to the light switch module 5 (3/111) at the ground point.

Do the necessary corrective action.

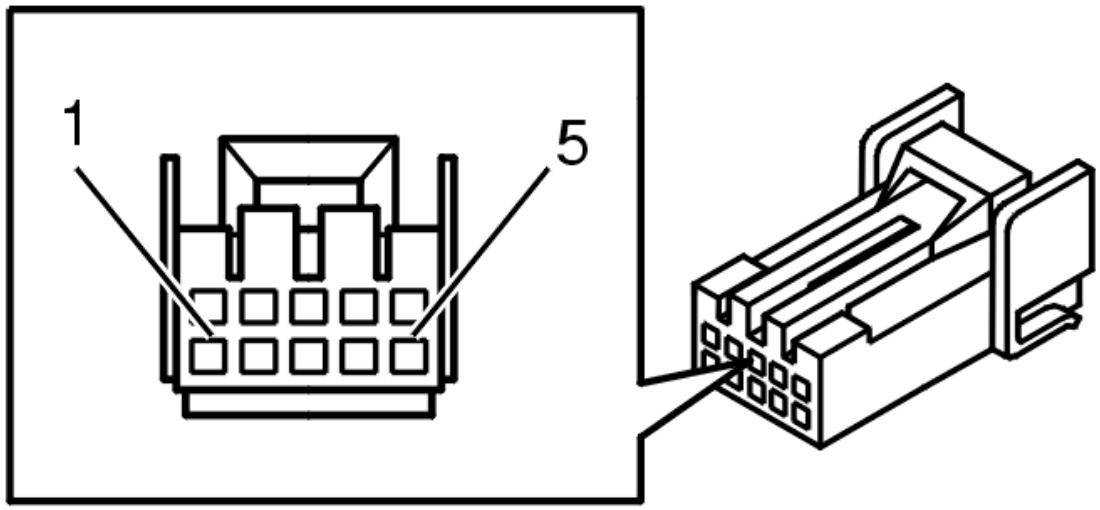

Fig. 187: 10-CD Changer Connector Terminals
Courtesy of VOLVO CARS CORPORATION

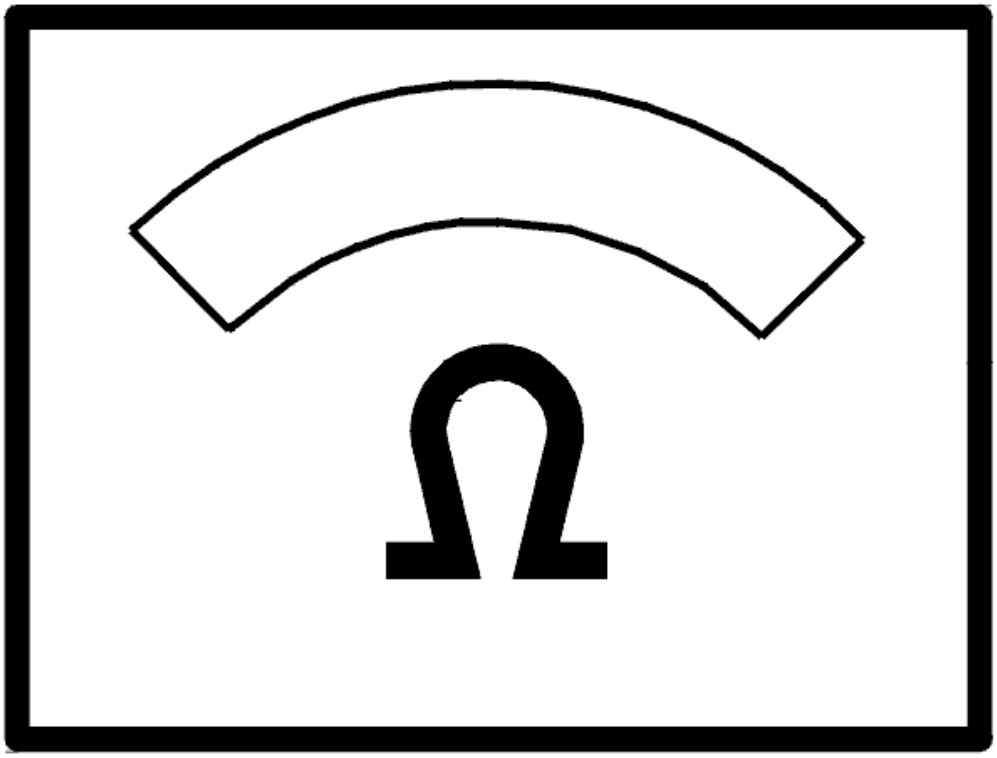

Fig. 188: Identifying Ohmmeter
Courtesy of VOLVO CARS CORPORATION

TROUBLE-SHOOTING INFORMATION

Condition

No diagnostic trouble codes are stored.

Substitute Value

None.

Possible Source

- There is no power supply to the light switch module.

Fault symptom[s]

- Dipped headlamp remains on.

CHECKING THE RAIN SENSOR (2003-12)

CHECKING THE RAIN SENSOR

HINT: If the car has been in programming mode, or if the voltage has been switched off, the car must be locked and then unlocked again. This is to ensure that the rain sensor functions correctly.

Check the cable between terminal #4 on the control module and the park position switch. Check for an open-circuit and a short-circuit.

When the wiper is activated the park position switch should be grounded, 0 V. Otherwise it should be 12 V.

Remedy as necessary.

Other information

- see **CHECKING WIRING AND TERMINALS. PERMANENT FAULT**
- see **CHECKING WIRING AND TERMINALS. INTERMITTENT FAULTS**

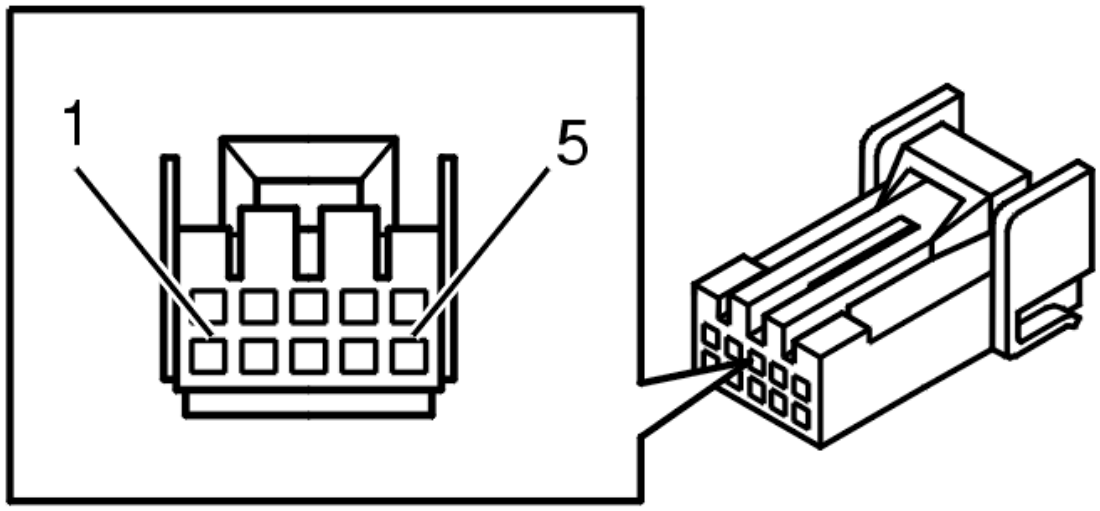

Fig. 189: 10-CD Changer Connector Terminals
Courtesy of VOLVO CARS CORPORATION

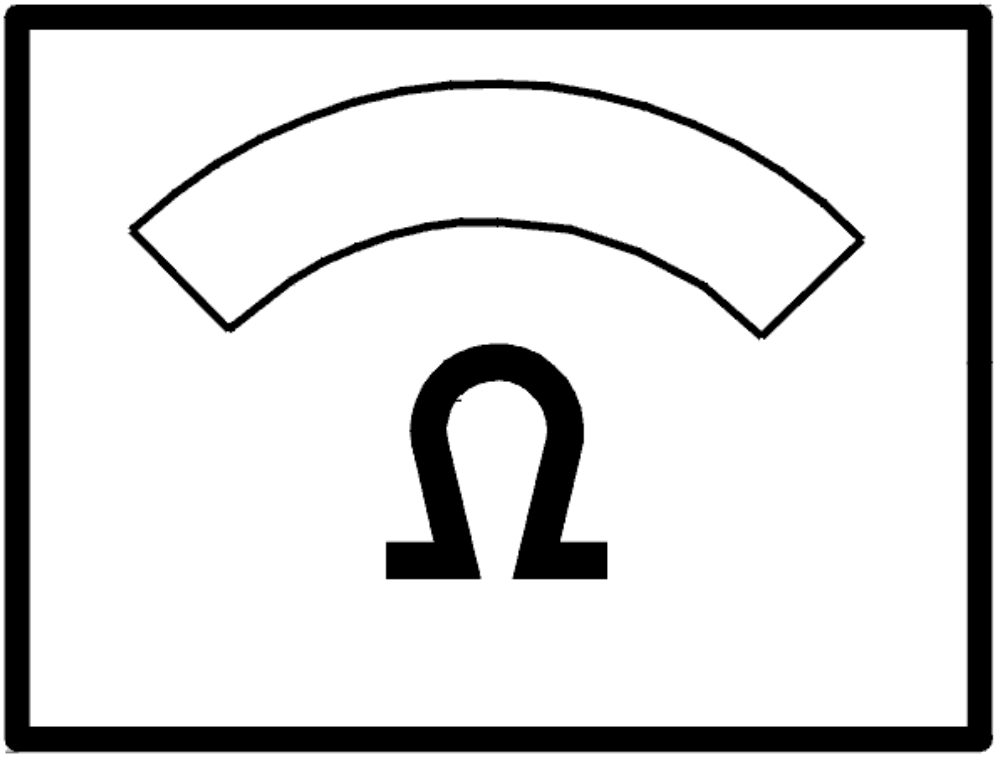

Fig. 190: Identifying Ohmmeter
Courtesy of VOLVO CARS CORPORATION

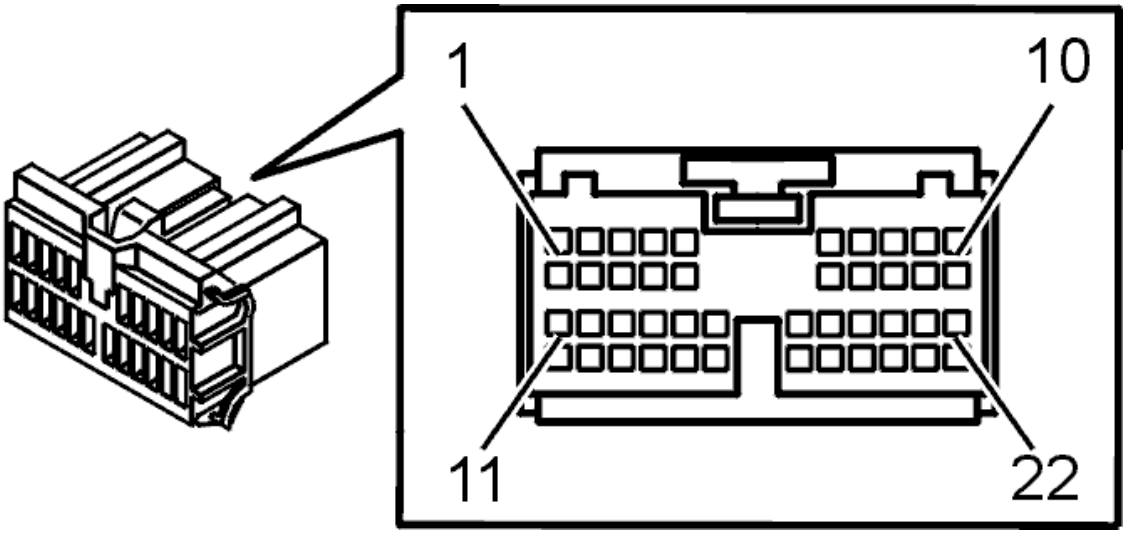

Fig. 191: Identifying Connector (F) Terminals
Courtesy of VOLVO CARS CORPORATION

CHECKING THE REAR FOG LAMP (2003-04)

CHECKING THE REAR FOG LAMP

CHECKING THE RELAY

Check the function of relay 2/49: Activate and deactivate the relay a number of times. The relay is functioning if there is a clicking sound when the relay is activated and deactivated.

Replace with a new relay if the relay does not function.

Other information:

- To access the integrated relay/fusebox in the cargo compartment, see **RELAY/FUSE BOX CARGO COMPARTMENT/REAR ELECTRONIC MODULE (REM), REPLACING** .

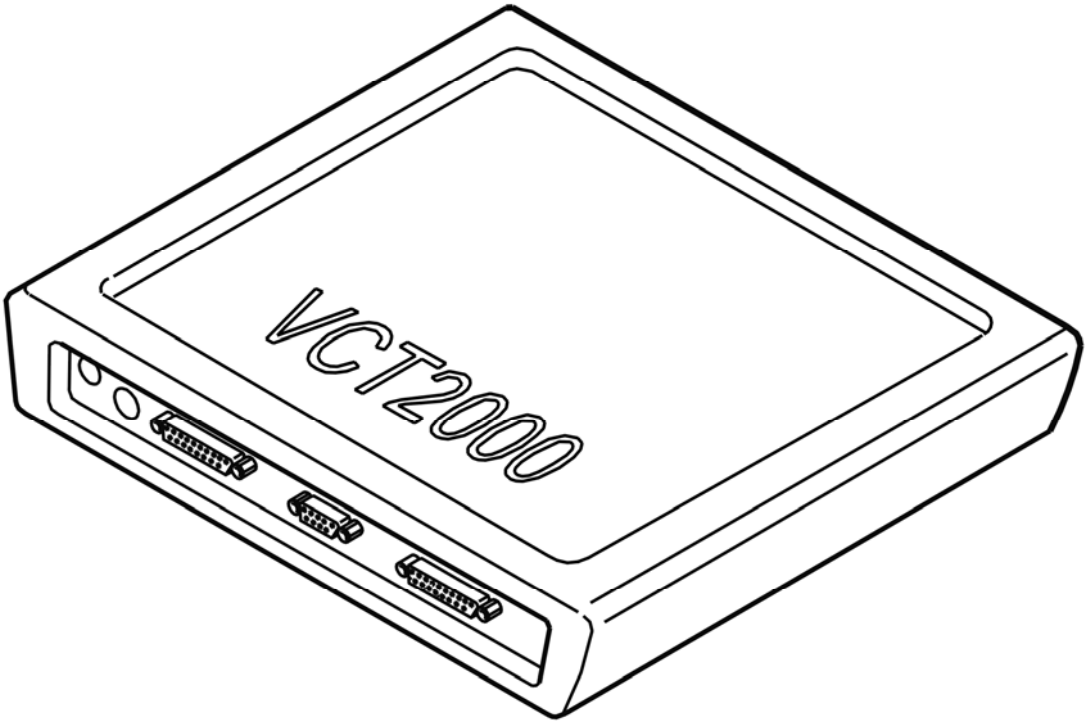

Fig. 192: Identifying VCT2000 Diagnostic Tool Symbol In VIDA
Courtesy of VOLVO CARS CORPORATION

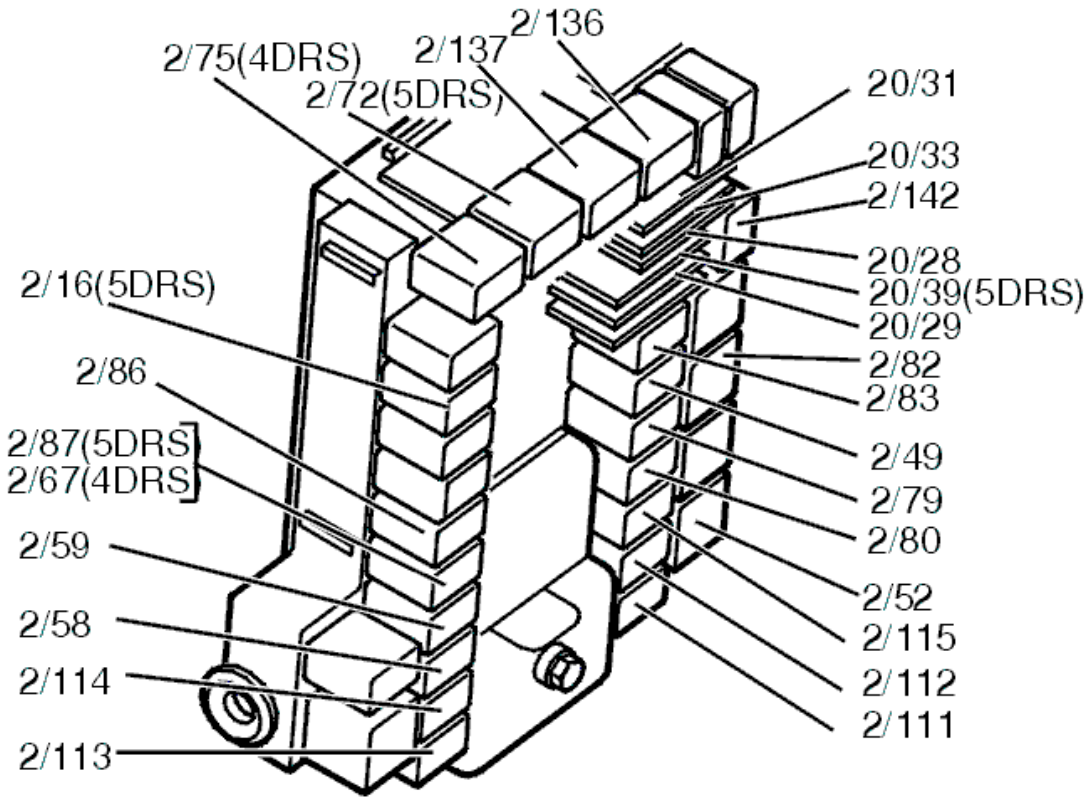

Fig. 193: Identifying Relays
Courtesy of VOLVO CARS CORPORATION

Was a fault detected?

- **YES**

  OKAY: Troubleshooting has been completed.

- **NO**

  Refer to **CHECKING COMPONENTS AND WIRING**

CHECKING COMPONENTS AND WIRING

Check that fuse 11D/2 is intact.

Check that shunt 20/29 is not damaged. The resistance between the terminal pins is 0 ohm to 5 ohms depending on which pin the reading is taken at.

Check the cables between:

fuse 11D/2 terminal #2 and rear electronic module terminal #4E

shunt 20/29 terminal #2 and relay 2/49 terminal #5

relay 2/49 terminal #3 and the left or right lower lamp housing terminal #3

for an open-circuit according to **OPEN-CIRCUIT, PERMANENT FAULTS** and a short-circuit to ground according to **SHORT-CIRCUIT TO GROUND, PERMANENT FAULTS** .

Check the cable between the left or right lower lamp housing terminal #4 and the ground terminal for an open-circuit according to **OPEN-CIRCUIT, PERMANENT FAULTS** .

Check that the bulbs are intact.

Remedy as necessary.

Other information:

- For further information about signals and other values, see **SIGNAL SPECIFICATION**
- To connect the breakout box, see **CONNECTING THE BREAKOUT BOX** .
- To access the integrated relay/fusebox in the cargo compartment, see **RELAY/FUSE BOX CARGO COMPARTMENT/REAR ELECTRONIC MODULE (REM), REPLACING** .
- Shunt 20/29 is marked SH2 on the integrated relay/fusebox in the cargo compartment. Terminal #2 on the shunt can be identified on the reverse of the integrated relay/fusebox.

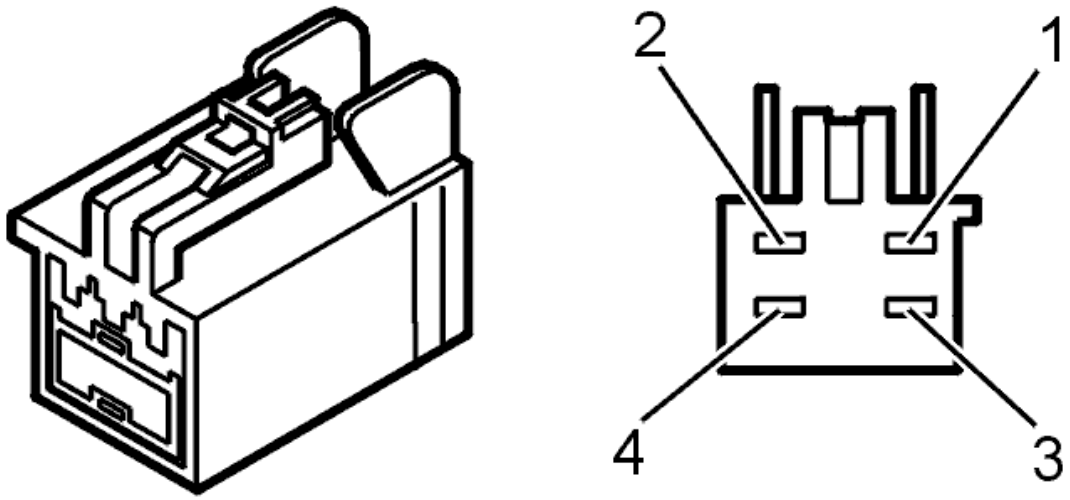

Fig. 194: Identifying Terminals
Courtesy of VOLVO CARS CORPORATION

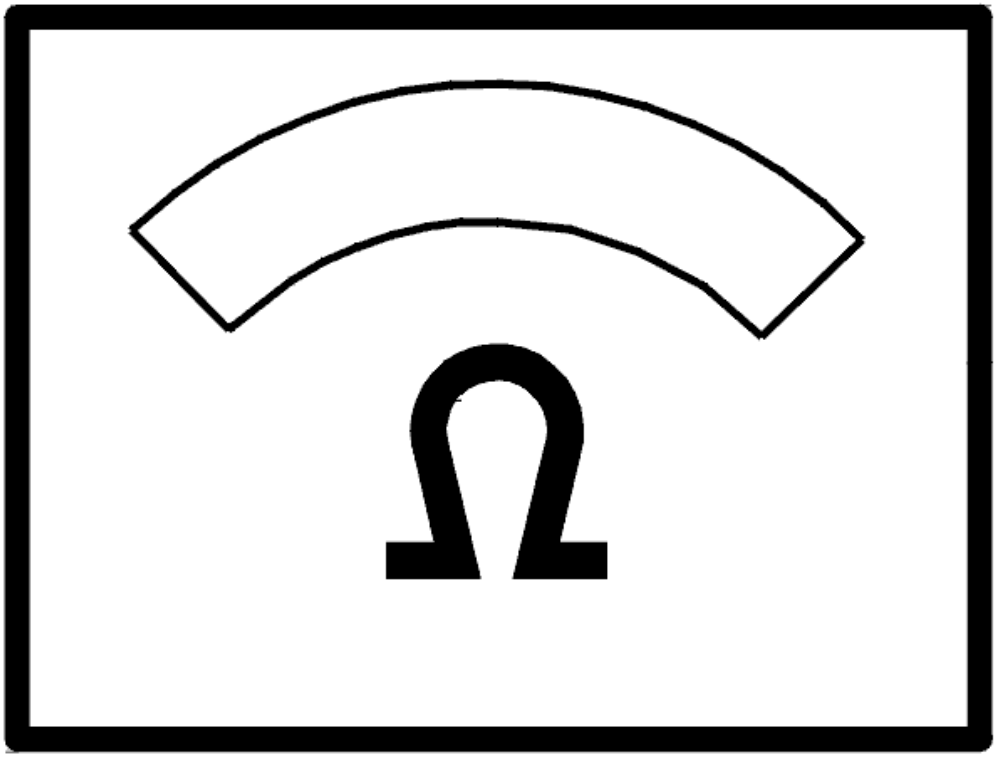

Fig. 195: Identifying Ohmmeter
Courtesy of VOLVO CARS CORPORATION

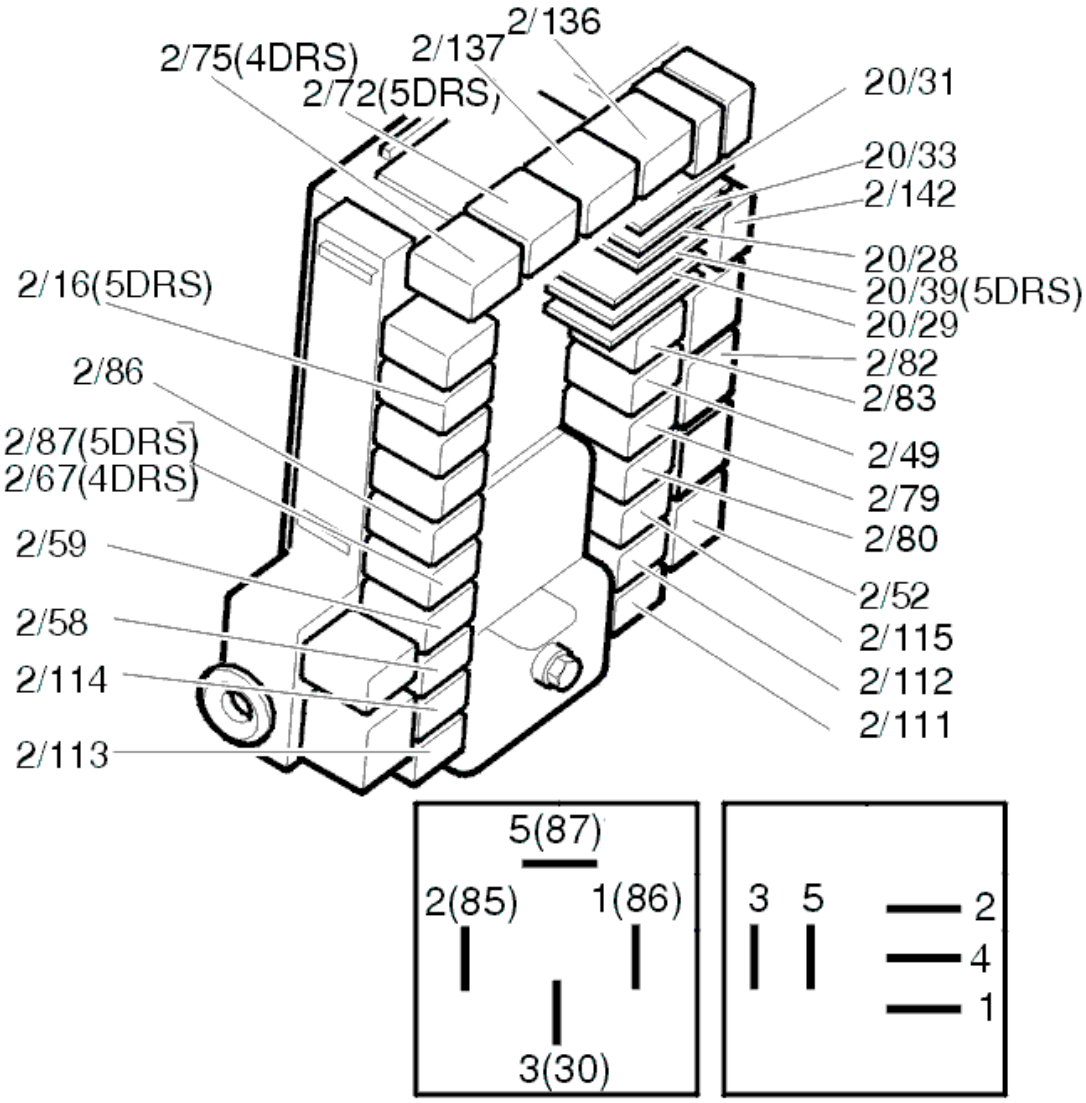

Fig. 196: Identifying Relays
Courtesy of VOLVO CARS CORPORATION

TROUBLE-SHOOTING INFORMATION

Condition

No diagnostic trouble codes are displayed.

Possible Source

- Wire between relay and lamp body short circuited to voltage supply
- Faulty relay
- Defective lamp
- Open circuit/short circuit to ground in power supply

- Open circuit in ground wire.

Fault symptom[s]

- Rear fog lamp does not work.

CHECKING THE REAR FOG LAMP (GERMANY) (2003-04)

CHECKING THE REAR FOG LAMP (GERMANY)

CHECKING THE MARKET

The following fault-tracing only applies to cars intended for the German market.

Is the test applicable?

- **YES**

  Refer to **CHECKING THE RELAY**

- **NO**

  FAULT NOT FOUND: Troubleshooting has been completed.

CHECKING THE RELAY

Check the function of relay 2/83: Activate and deactivate the relay a number of times. The relay is functioning if there is a clicking sound when the relay is activated and deactivated.

Replace with a new relay if the relay does not function.

Other information:

- To access and replace the integrated relay/fusebox in the cargo compartment, see **RELAY/FUSE BOX CARGO COMPARTMENT/REAR ELECTRONIC MODULE (REM), REPLACING** .

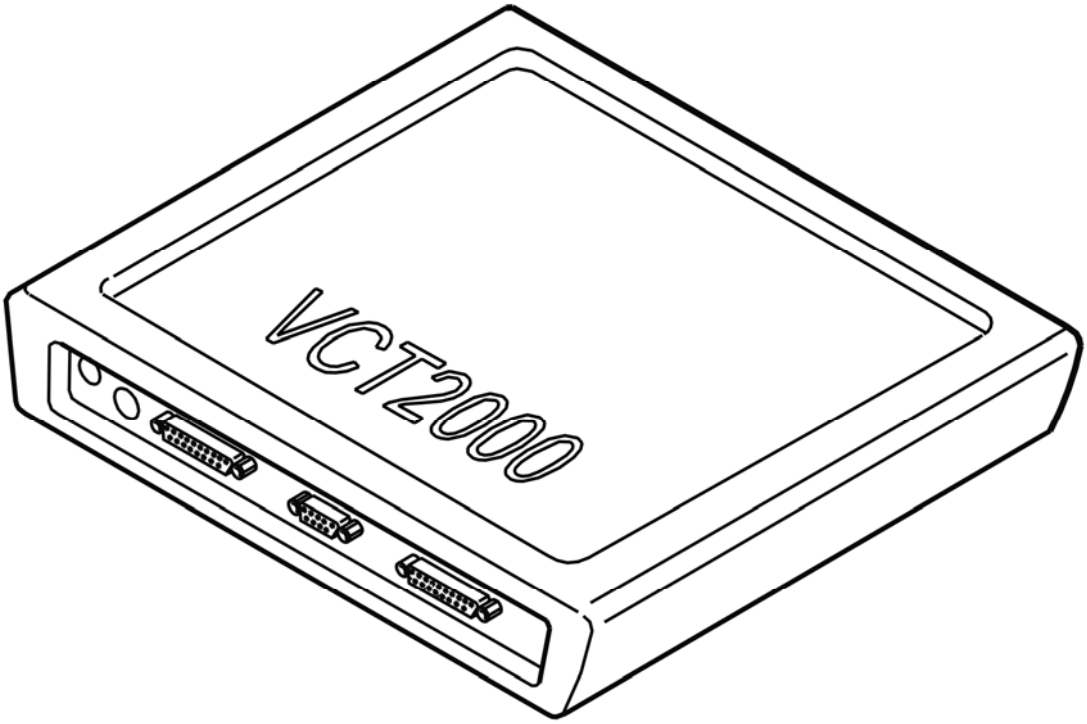

Fig. 197: Identifying VCT2000 Diagnostic Tool Symbol In VIDA
Courtesy of VOLVO CARS CORPORATION

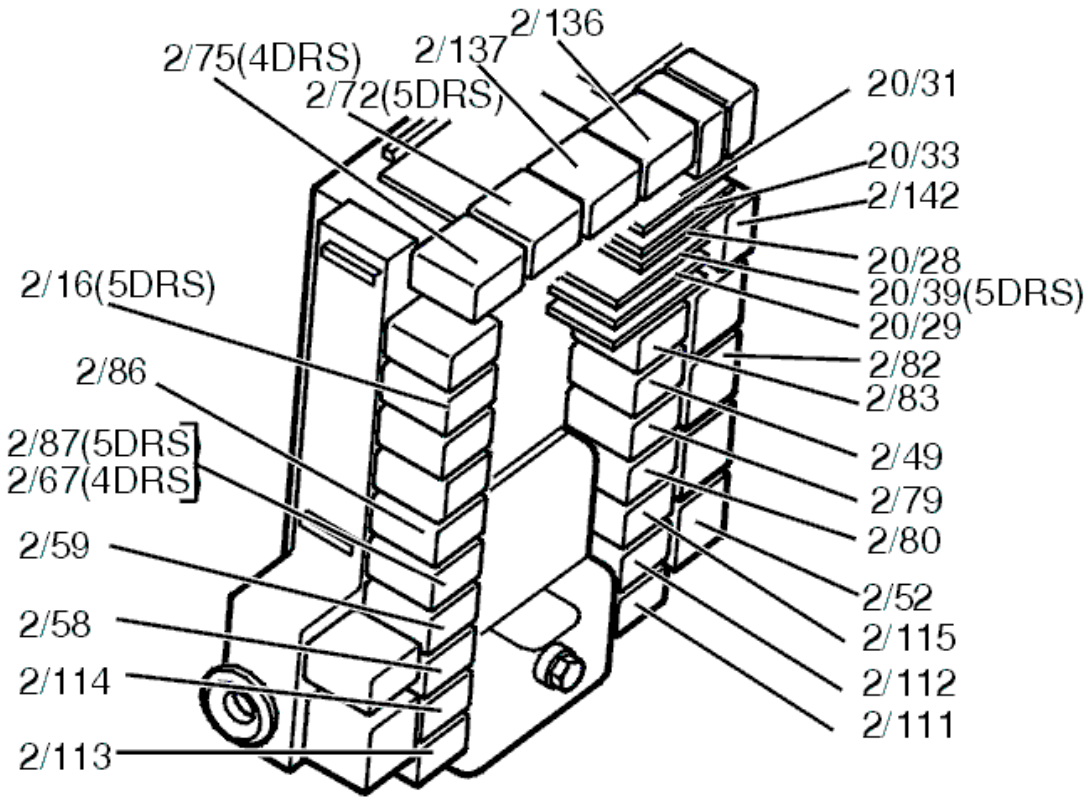

Fig. 198: Identifying Relays
Courtesy of VOLVO CARS CORPORATION

Was a fault detected?

- **YES**

  OKAY: Troubleshooting has been completed.

- **NO**

  Refer to **CHECKING COMPONENTS AND WIRING**

CHECKING COMPONENTS AND WIRING

Check that shunt 20/29 is not damaged. The resistance between the terminal pins is 0 ohm to 5 ohms depending on which pin the reading is taken at.

Check the cable between relay 2/83 terminal #3 and the left and right lower lamp housing connector terminal #3A. Check for an open-circuit according to **OPEN-CIRCUIT, PERMANENT FAULTS** . Check for a short-circuit to ground according to **SHORT-CIRCUIT TO GROUND, PERMANENT FAULTS** .

Check the cable between the left and right upper lamp housing connector terminal #4A and the ground terminal for an open-circuit according to **OPEN-CIRCUIT, PERMANENT FAULTS** .

Check that fuse 11D/2 is intact.

Remedy as necessary.

Other information:

- For further information about signals and other values, see **SIGNAL SPECIFICATION**
- To connect the breakout box, see **CONNECTING THE BREAKOUT BOX** .
- To access the integrated relay/fusebox in the cargo compartment, see **RELAY/FUSE BOX CARGO COMPARTMENT/REAR ELECTRONIC MODULE (REM), REPLACING** .

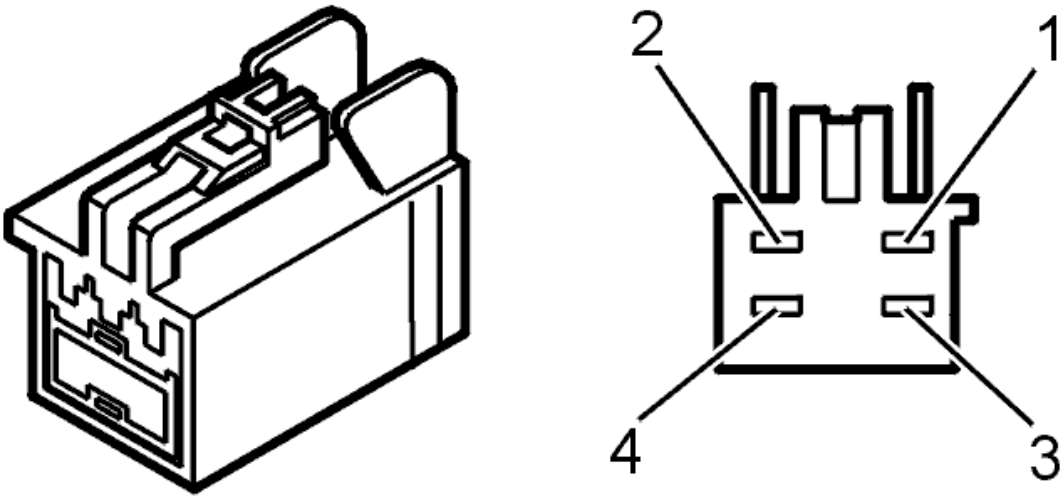

Fig. 199: Identifying Terminals
Courtesy of VOLVO CARS CORPORATION

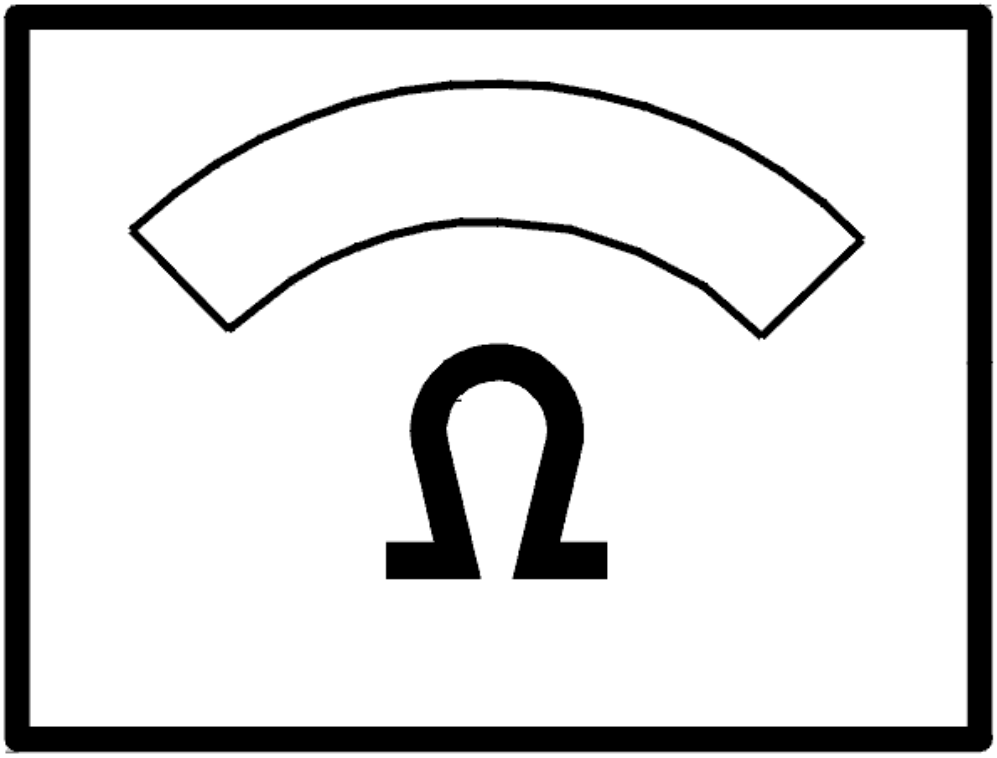

Fig. 200: Identifying Ohmmeter
Courtesy of VOLVO CARS CORPORATION

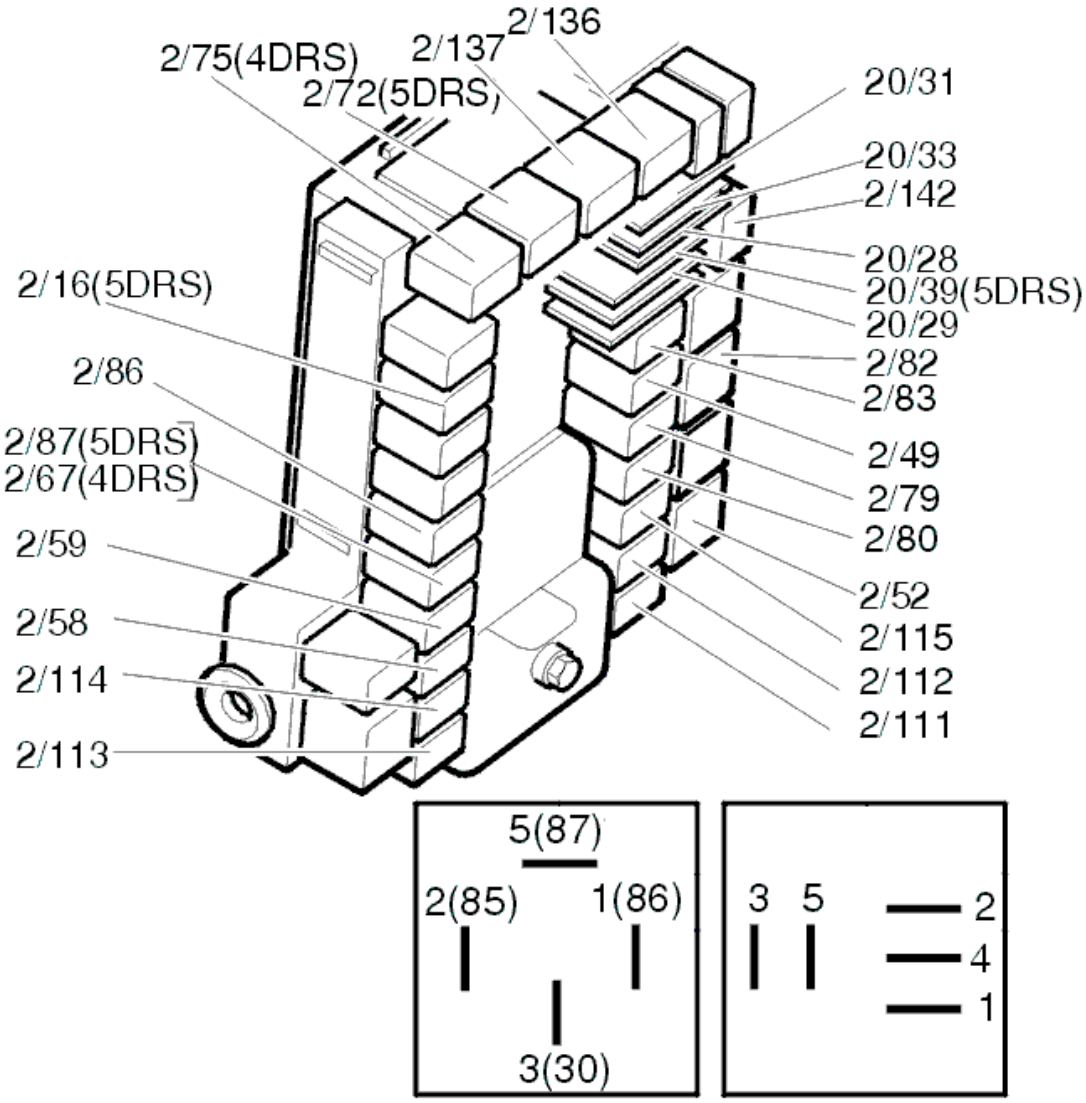

Fig. 201: Identifying Relays
Courtesy of VOLVO CARS CORPORATION

TROUBLE-SHOOTING INFORMATION

see **TROUBLE-SHOOTING INFORMATION**

CHECKING THE REAR FOG LAMP (TRAILERS) (2003-04)

CHECKING THE REAR FOG LAMP (TRAILERS)

CHECKING THE MARKET

The following fault-tracing applies ONLY to cars with trailer connectors.

Is the test applicable?

- **YES**

  Refer to **CHECKING THE RELAY**

- **NO**

  FAULT NOT FOUND: Troubleshooting has been completed.

CHECKING THE RELAY

Check the function of relay 2/83: Activate and deactivate the relay a number of times. The relay is functioning if there is a clicking sound when the relay is activated and deactivated.

Replace with a new relay if the relay does not function.

Other information:

- To access and replace the integrated relay/fusebox in the cargo compartment, see **RELAY/FUSE BOX CARGO COMPARTMENT/REAR ELECTRONIC MODULE (REM), REPLACING** .

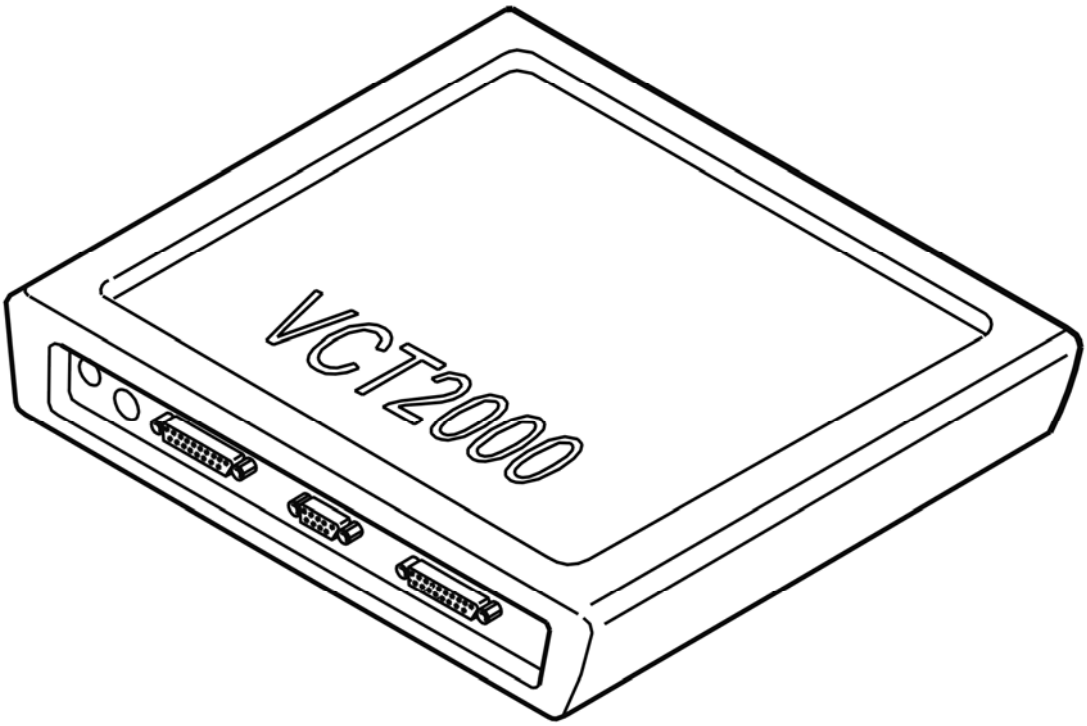

Fig. 202: Identifying VCT2000 Diagnostic Tool Symbol In VIDA
Courtesy of VOLVO CARS CORPORATION

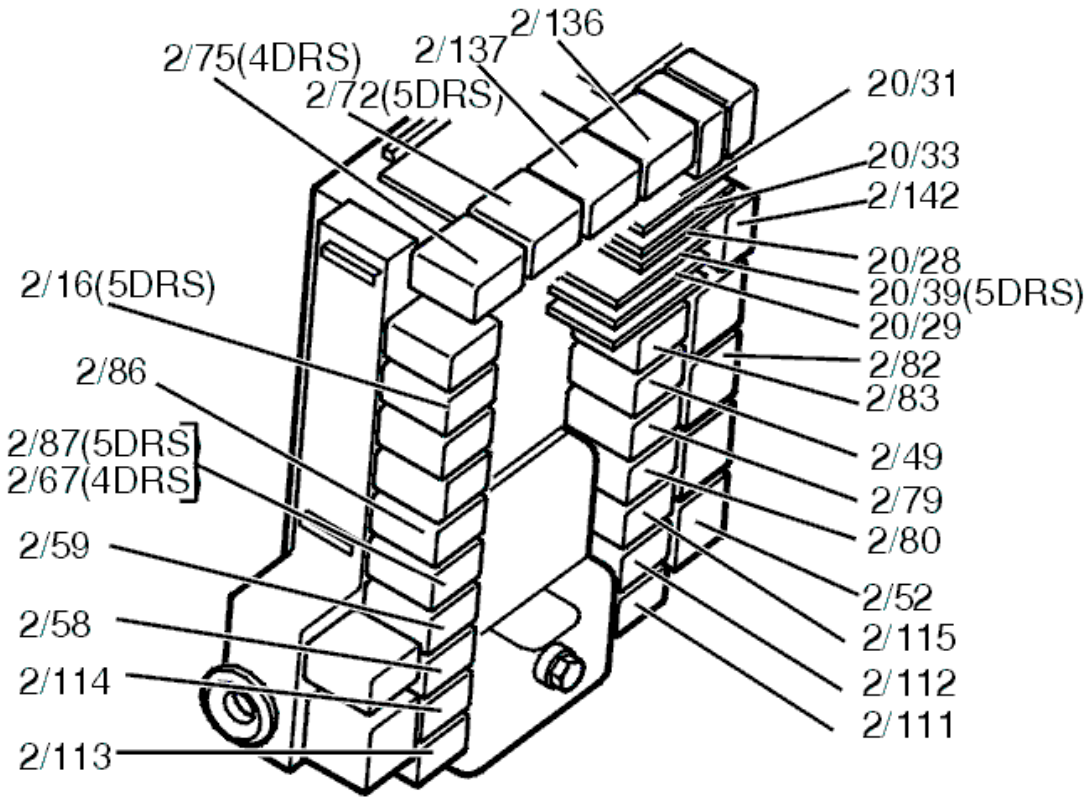

Fig. 203: Identifying Relays
Courtesy of VOLVO CARS CORPORATION

Was a fault detected?

- **YES**

  OKAY: Troubleshooting has been completed.

- **NO**

  Refer to **CHECKING COMPONENTS AND WIRING**

CHECKING COMPONENTS AND WIRING

Check that fuse 11D/2 is intact.

Check the cable between relay 2/83 terminal #3 and the trailer connector. Check for an open-circuit according to **OPEN-CIRCUIT, PERMANENT FAULTS** . Check for a short-circuit to ground according to **SHORT-CIRCUIT TO GROUND, PERMANENT FAULTS** .

Check the cable between the trailer connector and the ground terminal for an open-circuit according to **OPEN-CIRCUIT, PERMANENT FAULTS** .

Remedy as necessary.

Other information:

- For further information about signals and other values, see **SIGNAL SPECIFICATION**
- To connect the breakout box, see **CONNECTING THE BREAKOUT BOX** .
- To access the integrated relay/fusebox in the cargo compartment, see **RELAY/FUSE BOX CARGO COMPARTMENT/REAR ELECTRONIC MODULE (REM), REPLACING** .

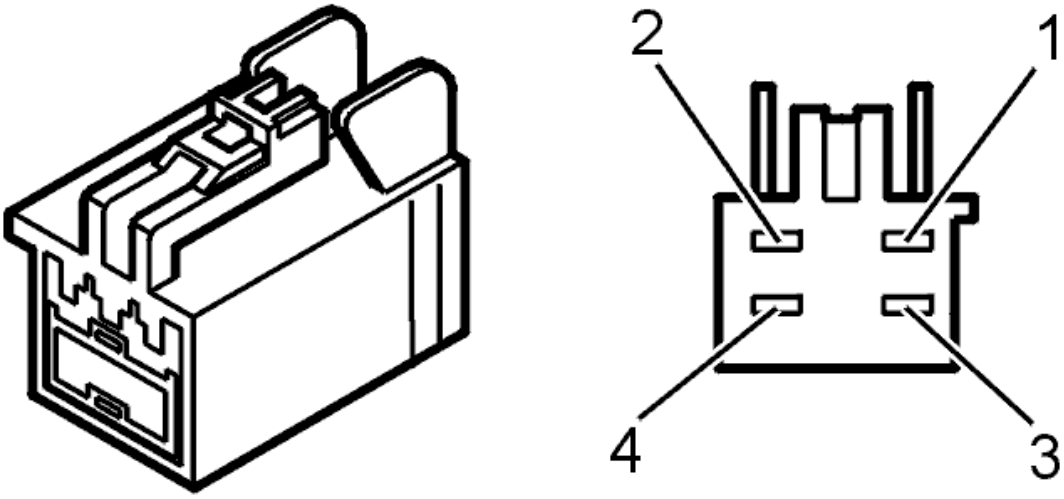

Fig. 204: Identifying Terminals
Courtesy of VOLVO CARS CORPORATION

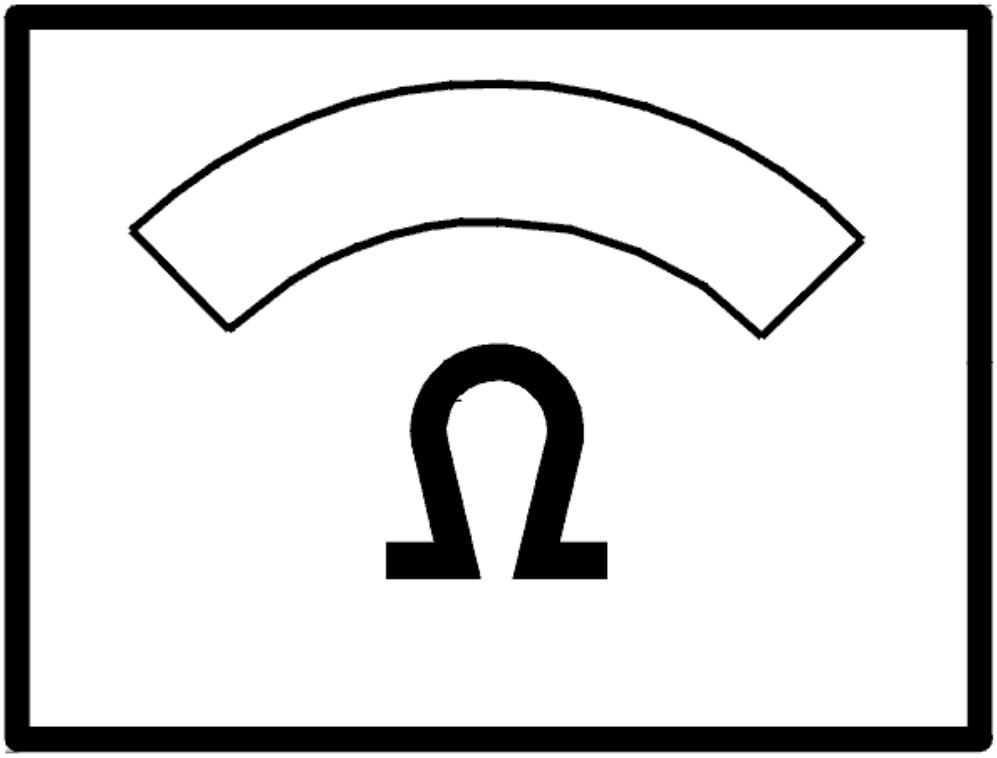

Fig. 205: Identifying Ohmmeter
Courtesy of VOLVO CARS CORPORATION

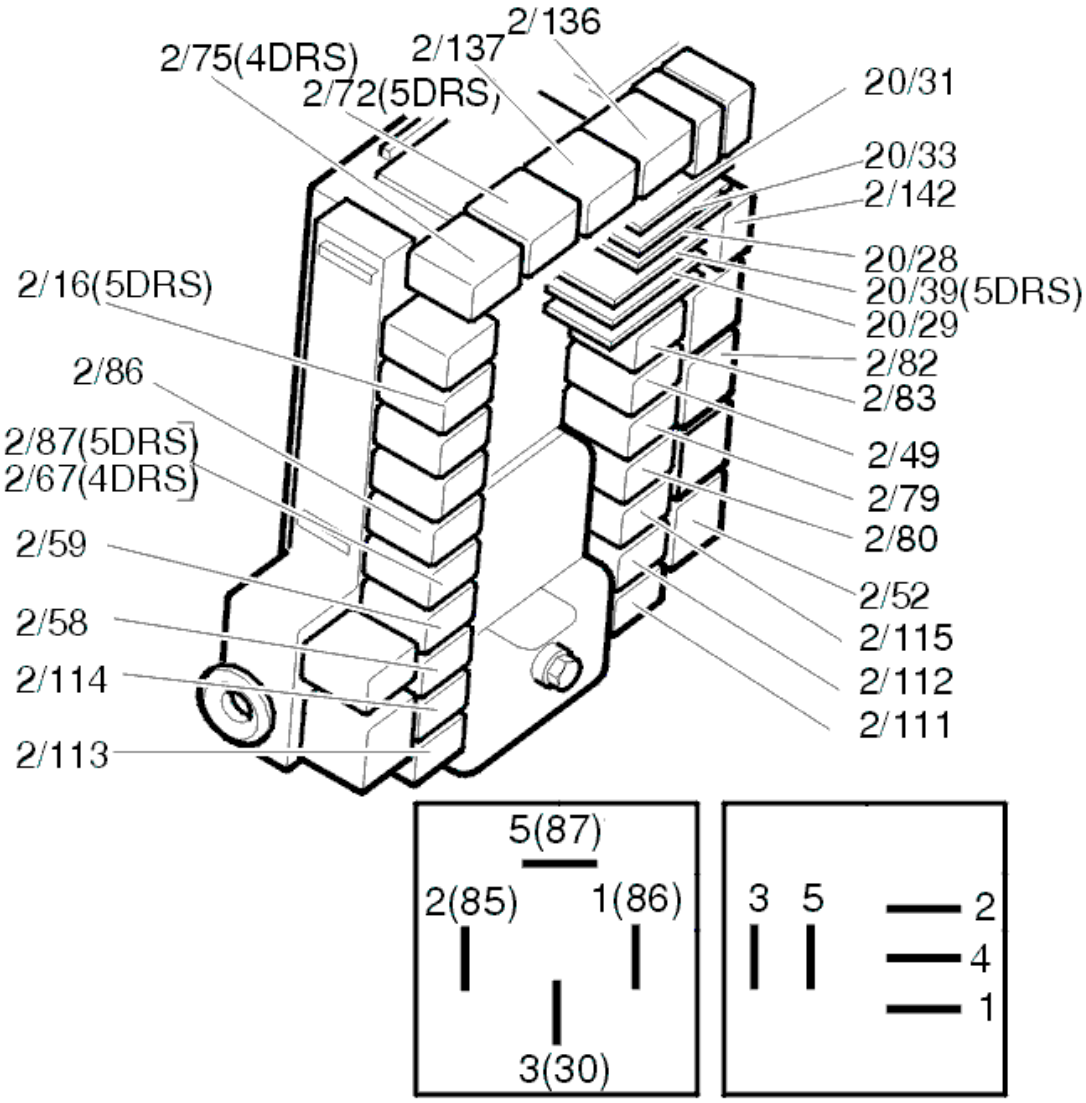

Fig. 206: Identifying Relays
Courtesy of VOLVO CARS CORPORATION

TROUBLE-SHOOTING INFORMATION

see **TROUBLE-SHOOTING INFORMATION**

CHECKING THE REAR PARKING LAMPS (2003-04)

CHECKING THE REAR PARKING LAMPS

CHECKING THE FUSES AND THE CABLES

Check that fuses 11C/30 (group 1) and 11C/31 (group 2) in the passenger compartment are intact.

For group 1, check the cables between:

- fuse 11C/30 and shunt 20/28
- shunt 20/28 and terminal #1 the left and right lower lamp housings (in the cargo compartment).

check for an open-circuit or short-circuit to ground.

For group 2, check the cables between:

- fuse 11C/31 and shunt 20/33
- shunt 20/33 and terminal #2 the left and right lower lamp housings (in the cargo compartment).

check for an open-circuit or short-circuit to ground.

For all groups, check the ground leads between terminal #4 in the left and right lower lamp housings (in the cargo compartment) and the ground terminal. Check for an open-circuit.

Check the control module connector terminal #B1 and the lock unit connector terminal #6. Check for contact resistance and oxidation. Check the intermediate cable. Check for an open-circuit.

Remedy as necessary.

Additional information

- To access the integrated relay/fusebox in the cargo compartment, see **RELAY/FUSE BOX CARGO COMPARTMENT/REAR ELECTRONIC MODULE (REM), REPLACING**
- see **CHECKING WIRING AND TERMINALS** .

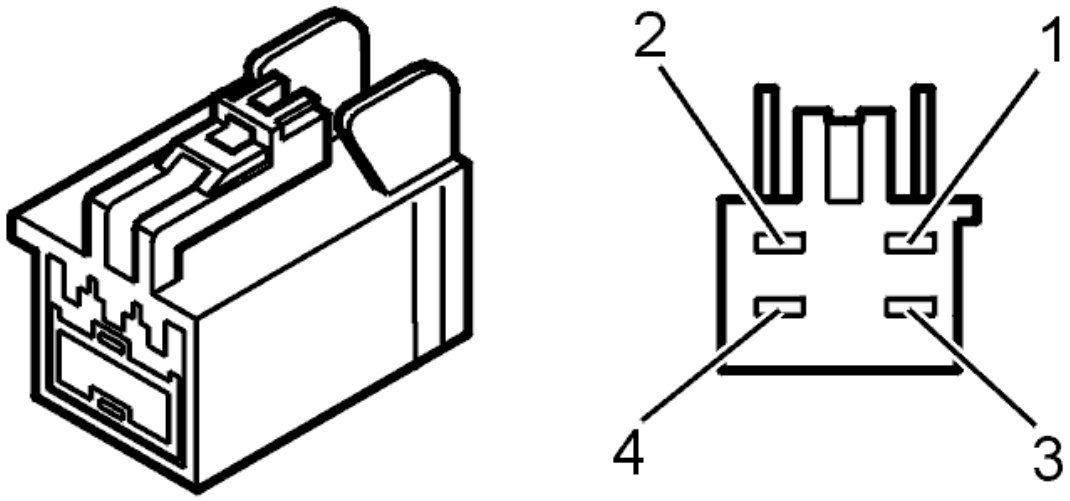

Fig. 207: Identifying Terminals
Courtesy of VOLVO CARS CORPORATION

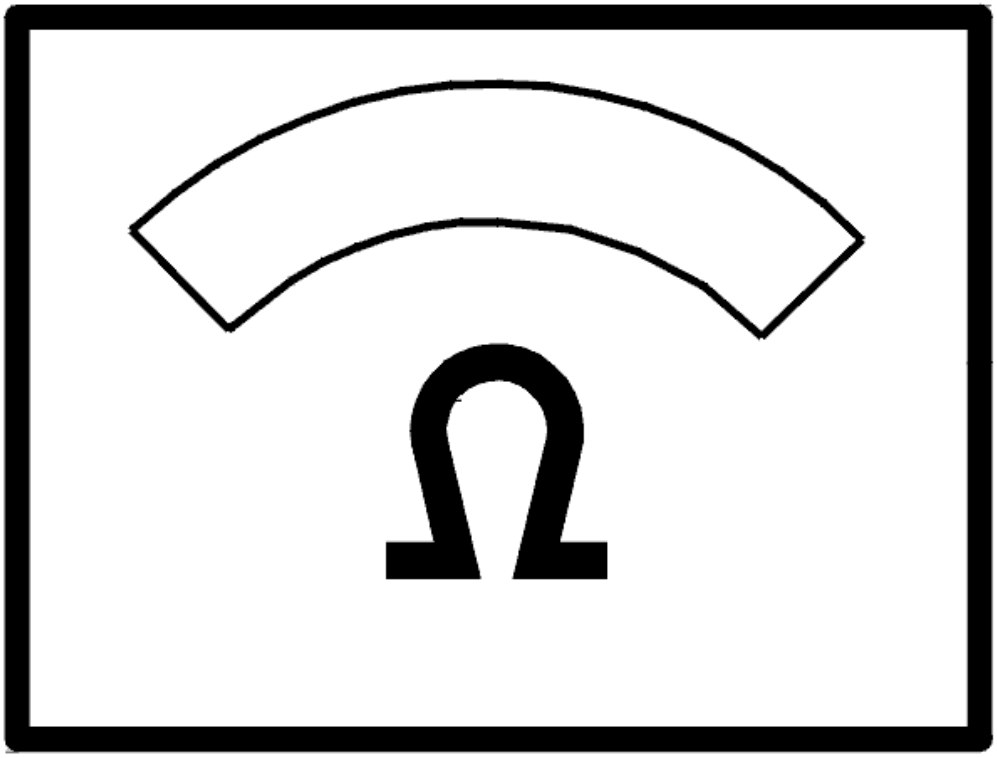

Fig. 208: Identifying Ohmmeter
Courtesy of VOLVO CARS CORPORATION

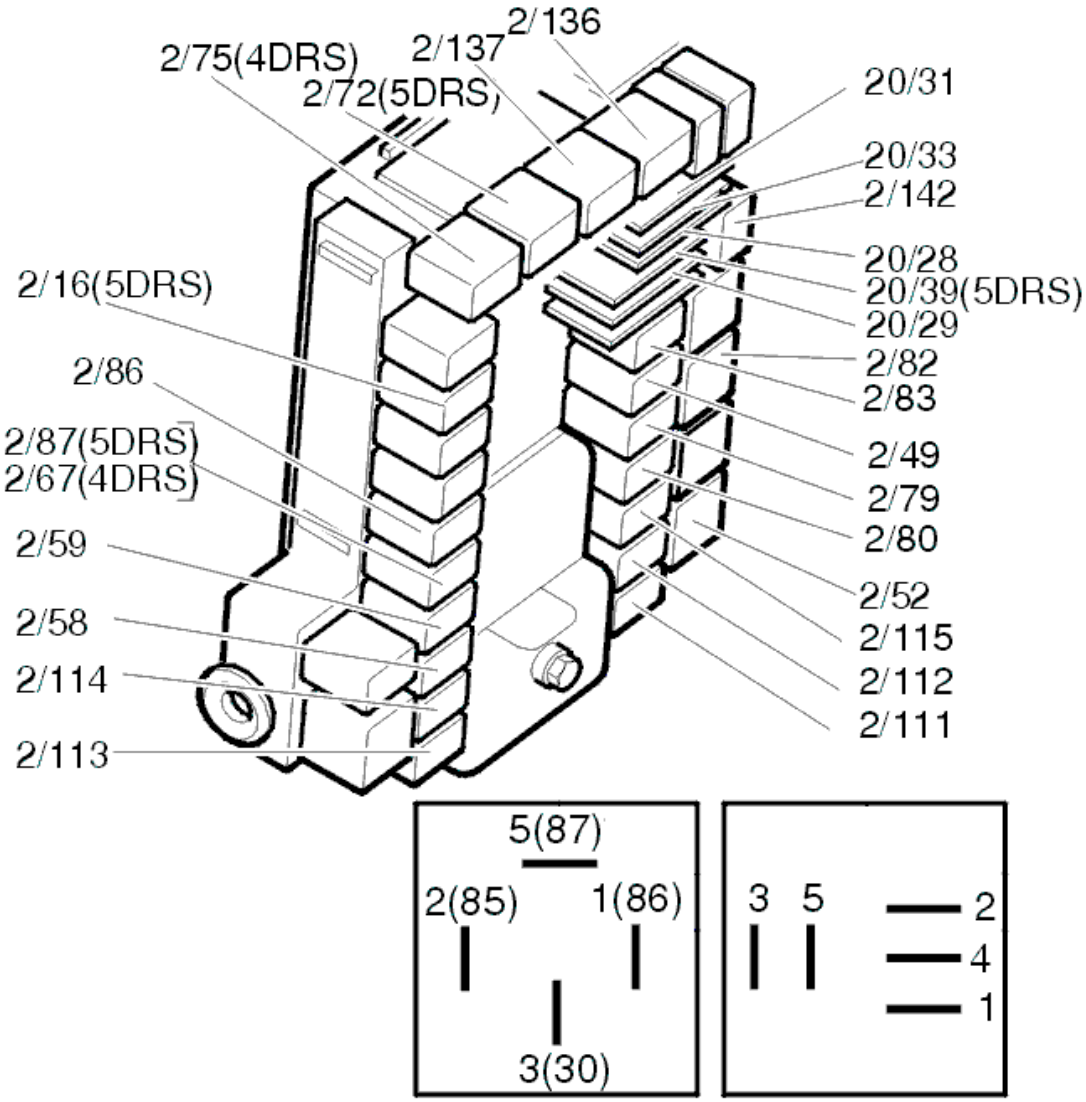

Fig. 209: Identifying Relays
Courtesy of VOLVO CARS CORPORATION

TROUBLE-SHOOTING INFORMATION

Condition

No diagnostic trouble codes are displayed.

Possible Source

- Faulty shunt.
- Open circuit or short circuit to ground in voltage supply.
- Open circuit in grounding.
- Faulty lamps.

CHECKING THE SEAT HEATER (2003-04)

CHECKING SEAT HEATER

CHECKING FUSES

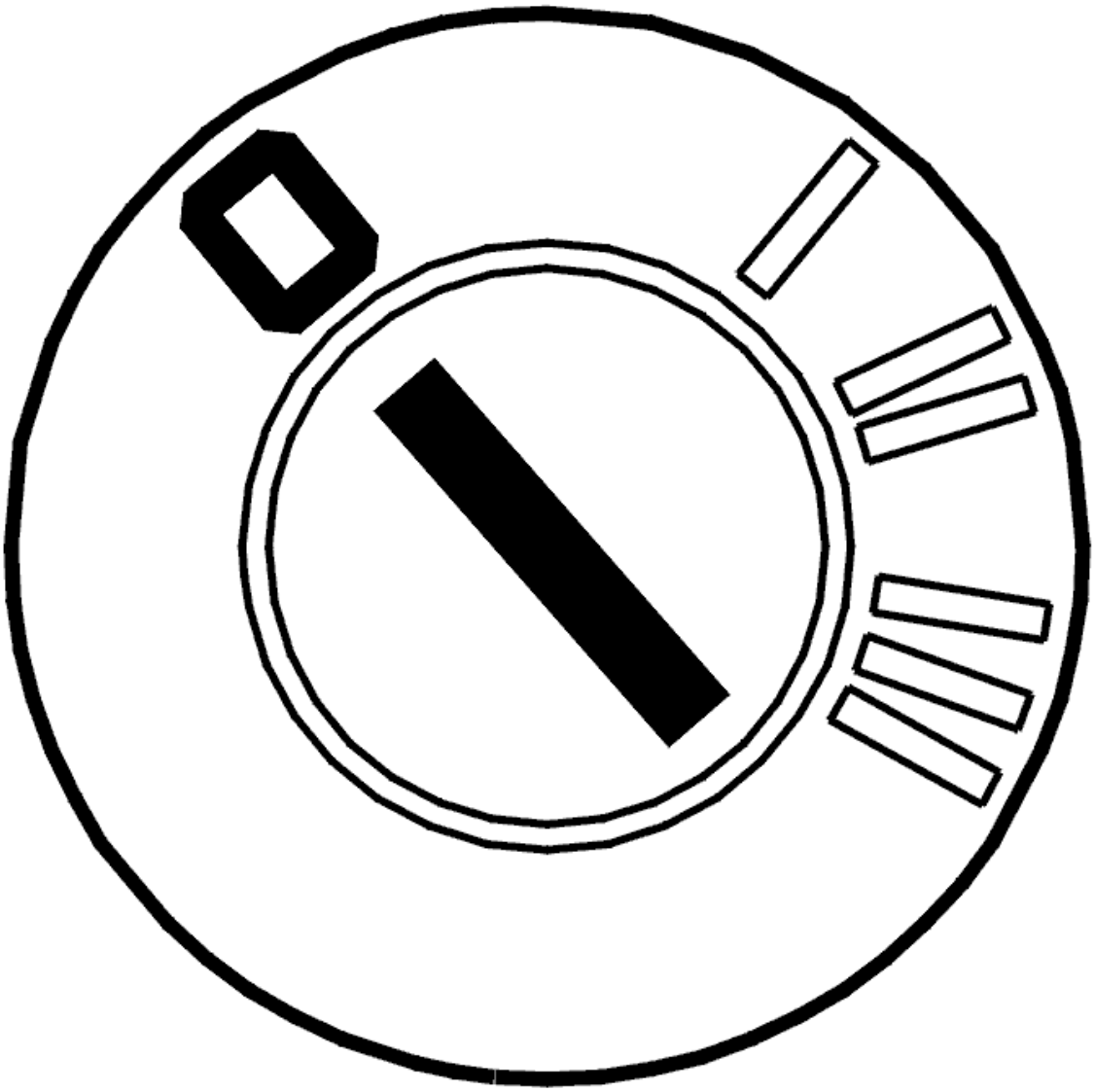

Fig. 210: Identifying Ignition OFF
Courtesy of VOLVO CARS CORPORATION

- Ignition off.

  Check that fuse 11C/8 (25A) is intact.

  Replace the fuse if it is damaged.

Is the fuse intact?

- **YES**

  Refer to **CHECKING THE GROUND LEAD**

- **NO**

  Refer to **CHECKING THE WIRING**

CHECKING THE GROUND LEAD

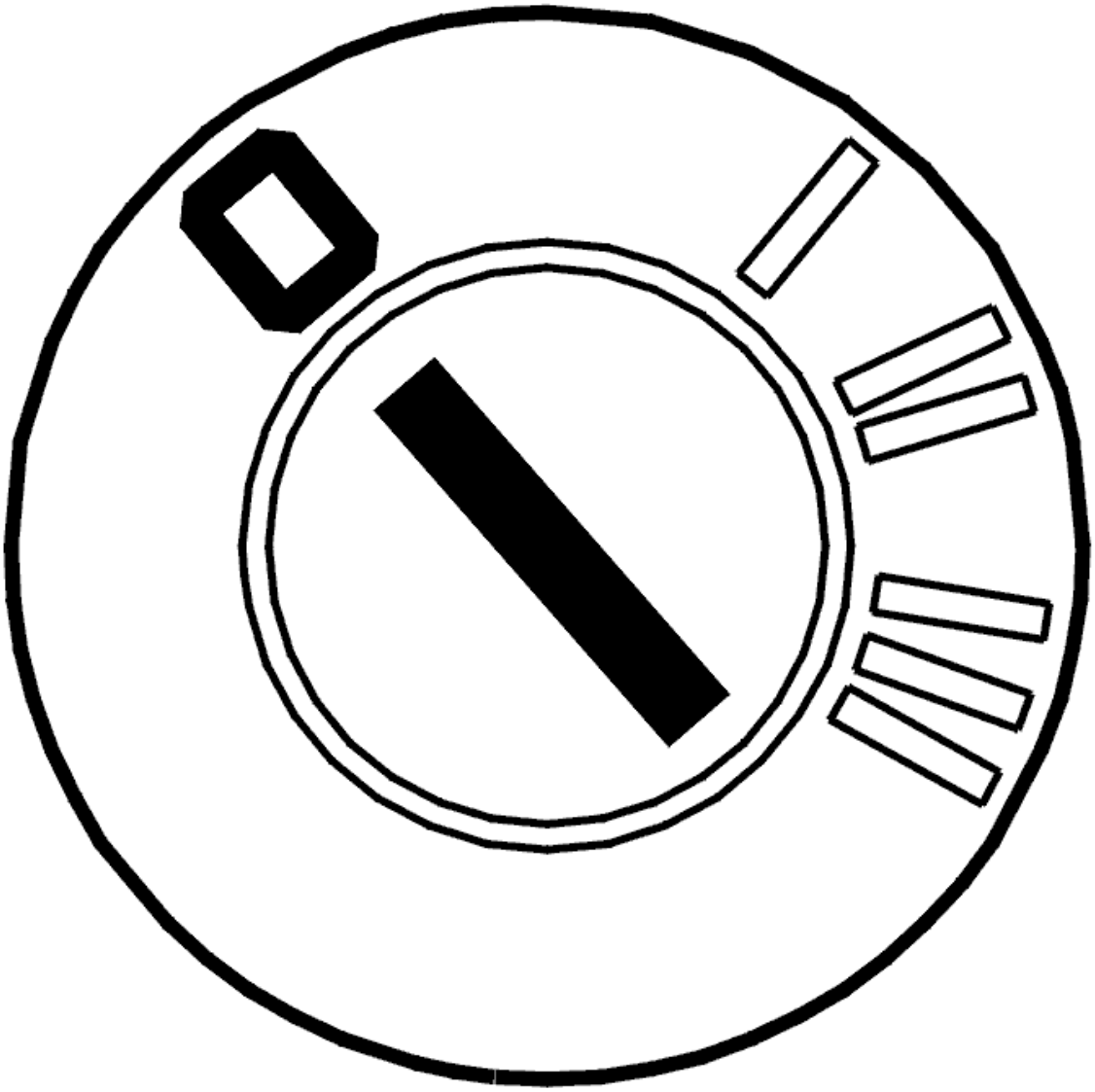

Fig. 211: Identifying Ignition OFF
Courtesy of VOLVO CARS CORPORATION

- Ignition off
- Disconnect connector from the seat heater module.

Check the cable between seat heater (9/12) for left seat and (9/13) for right seat connector terminal #5 and ground terminal 31/66 or 31/67. Check for an open-circuit.

Remedy as necessary.

Other information:

- To connect the breakout box, see **CONNECTING THE BREAKOUT BOX**
- For information about signals, see **SIGNAL SPECIFICATION**
- see **CHECKING WIRING AND TERMINALS** .

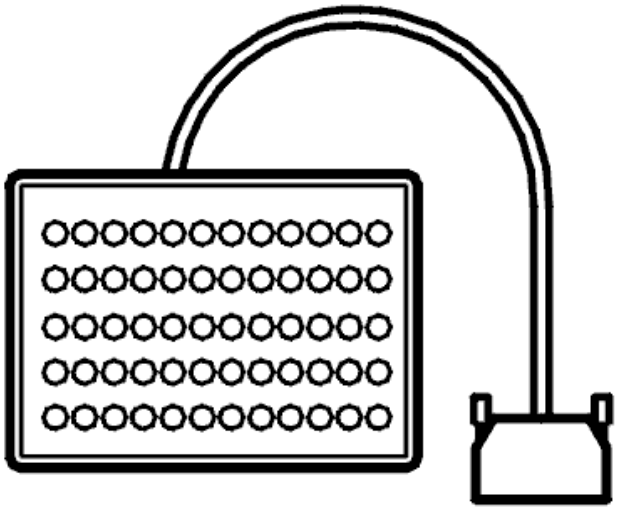

Fig. 212: Breakout Box
Courtesy of VOLVO CARS CORPORATION

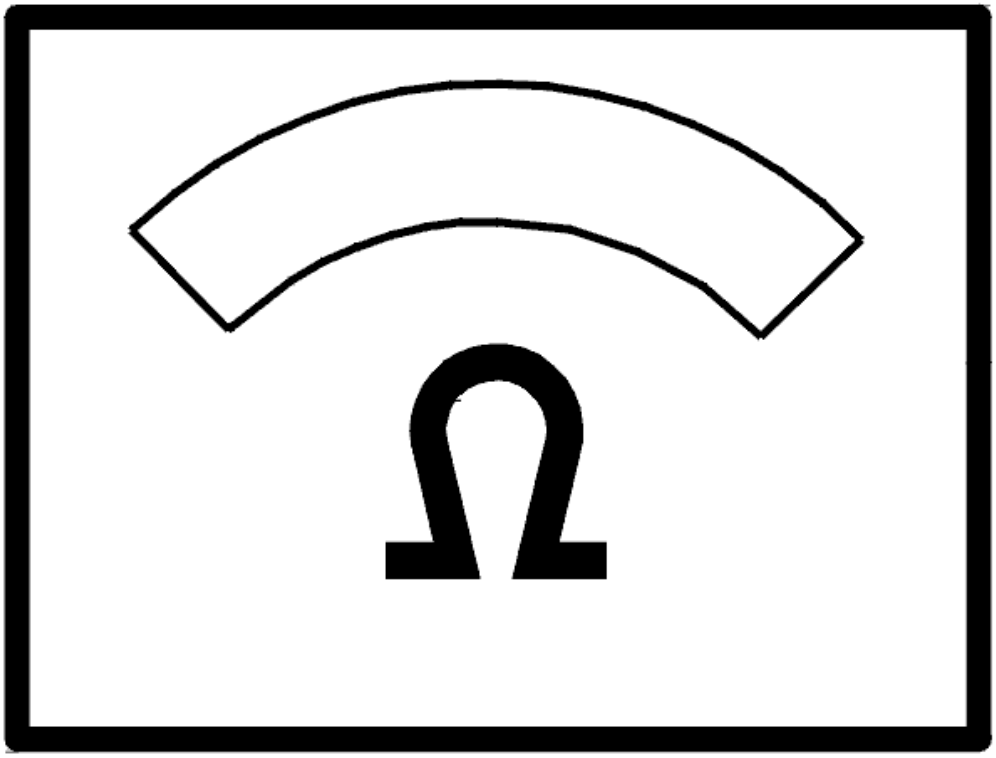

Fig. 213: Identifying Ohmmeter
Courtesy of VOLVO CARS CORPORATION

Is the cable OK?

- **YES**

  Refer to **CHECKING THE POWER SUPPLY**

- **NO**

  OKAY: Troubleshooting has been completed.

CHECKING THE WIRING

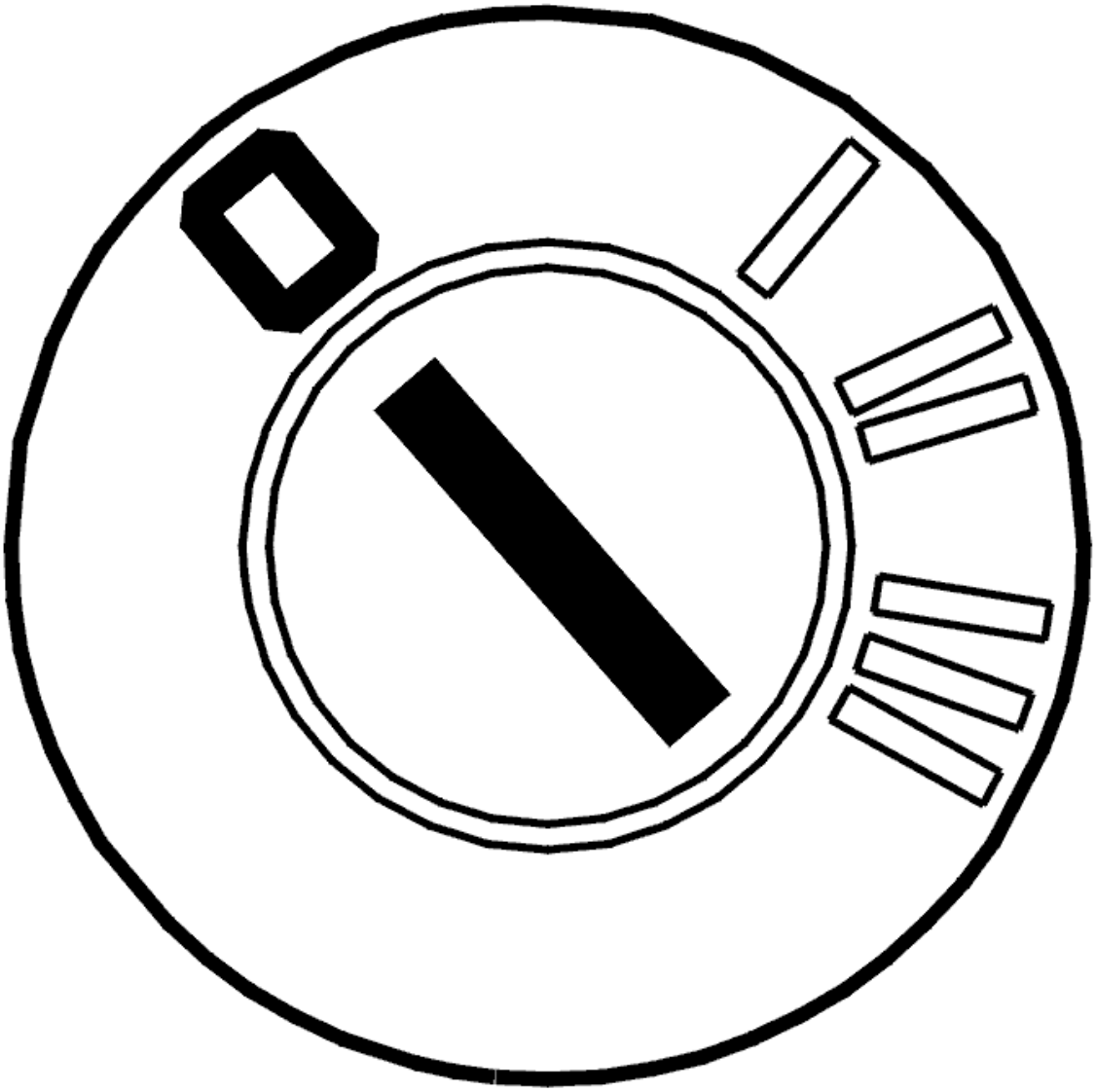

Fig. 214: Identifying Ignition OFF
Courtesy of VOLVO CARS CORPORATION

- Ignition off
- Disconnect connector from the seat heater module.

  Check the cable between fuse 11C/8 terminal #2 (25A) and seat heater (9/12) for left seat and (9/13) for right seat connector terminal #1. Check for a short-circuit to ground.

  Remedy as necessary.

  Other information:

  - To connect the breakout box, see **CONNECTING THE BREAKOUT BOX**
  - For information about signals, see **SIGNAL SPECIFICATION**

- see **CHECKING WIRING AND TERMINALS** .

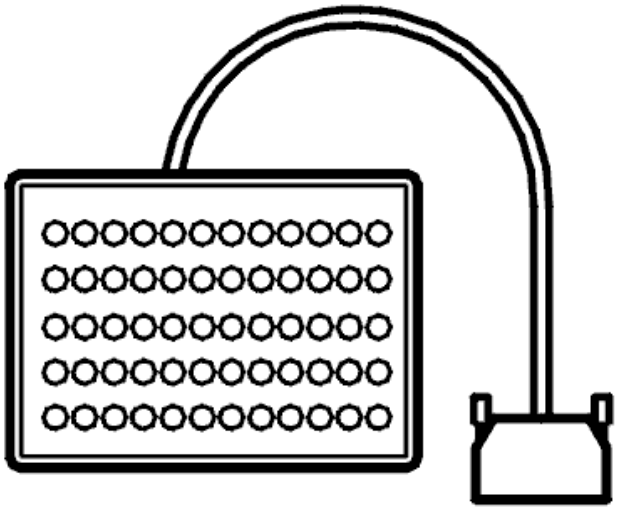

Fig. 215: Breakout Box
Courtesy of VOLVO CARS CORPORATION

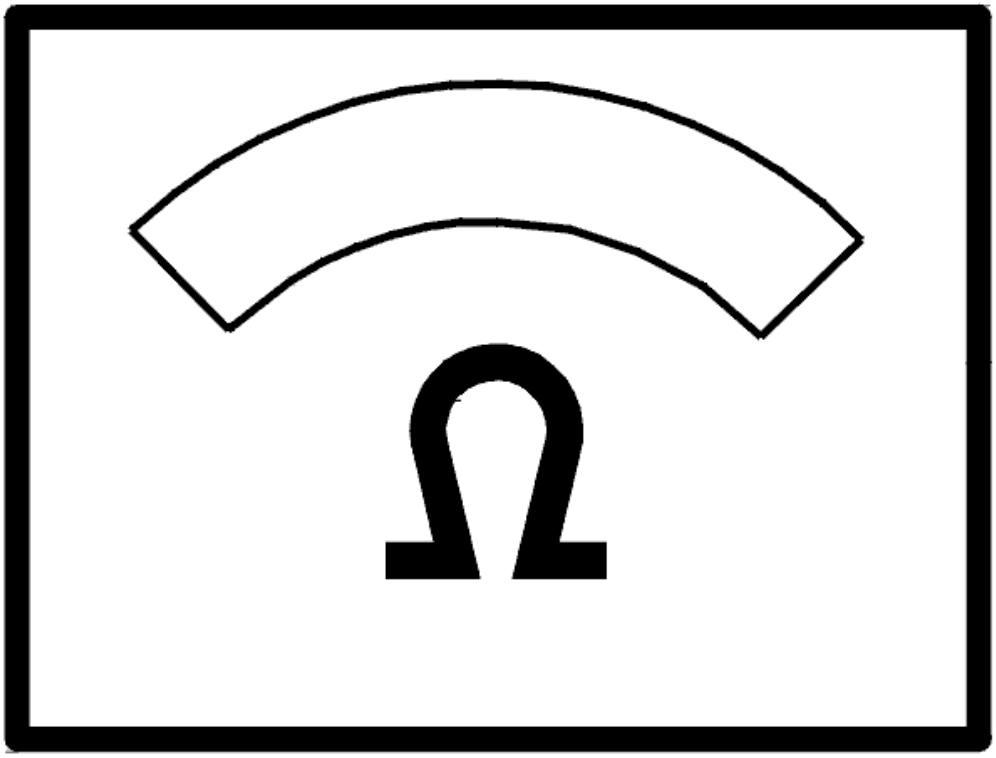

Fig. 216: Identifying Ohmmeter
Courtesy of VOLVO CARS CORPORATION

Is the cable OK?

- **YES**

  Refer to **CHECKING THE CABLE**

- **NO**

  OKAY: Troubleshooting has been completed.

CHECKING THE POWER SUPPLY

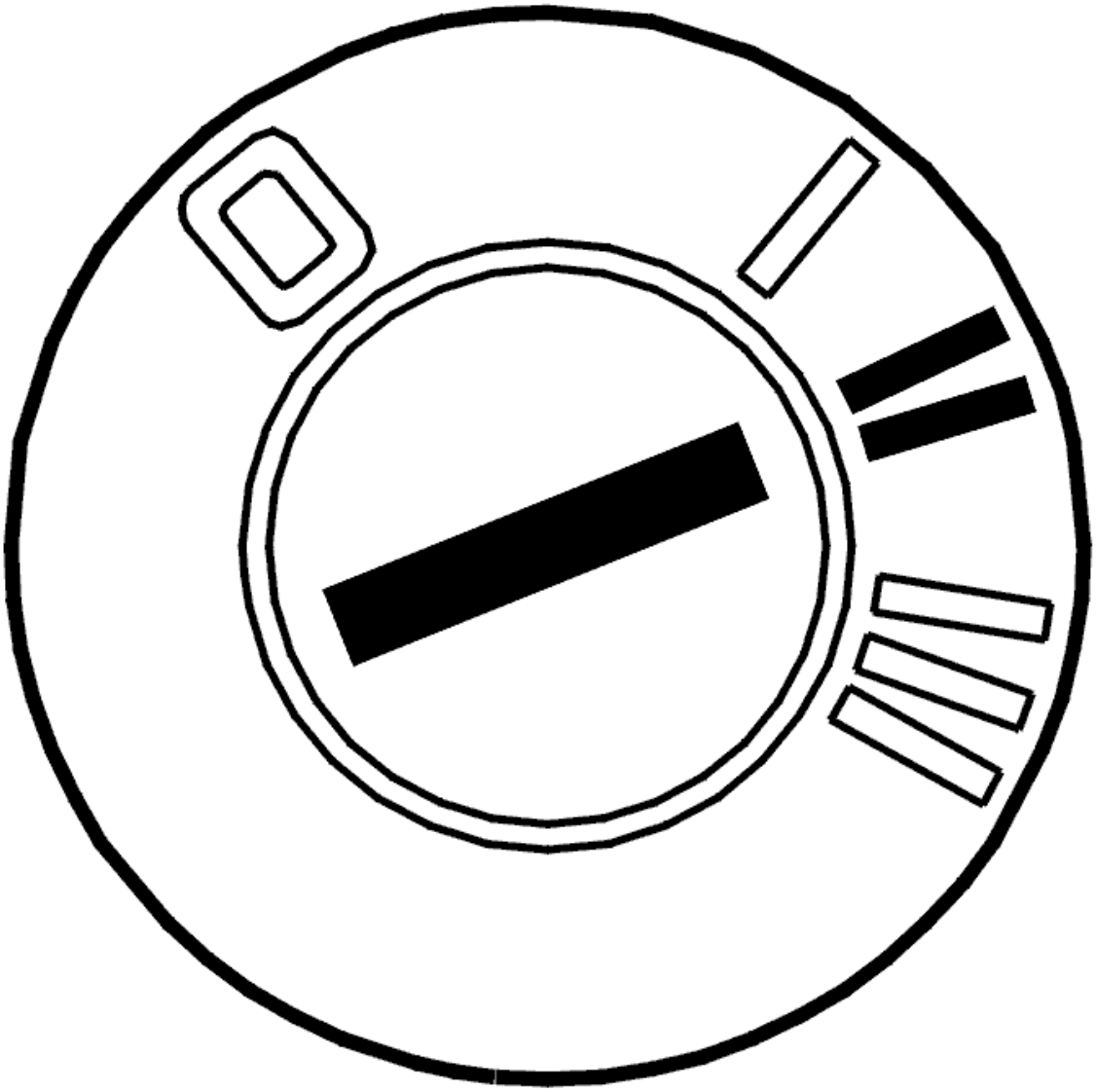

Fig. 217: Identifying Ignition ON
Courtesy of VOLVO CARS CORPORATION

- Ignition off
- Disconnect connector from the seat heater module
- Ignition on.

  Check the voltage between seat heater (9/12) for left seat and (9/13) for right seat connector terminal #1 and ground.

  Other information:

  - To connect the breakout box, see **CONNECTING THE BREAKOUT BOX**
  - For information about signals, see **SIGNAL SPECIFICATION** .

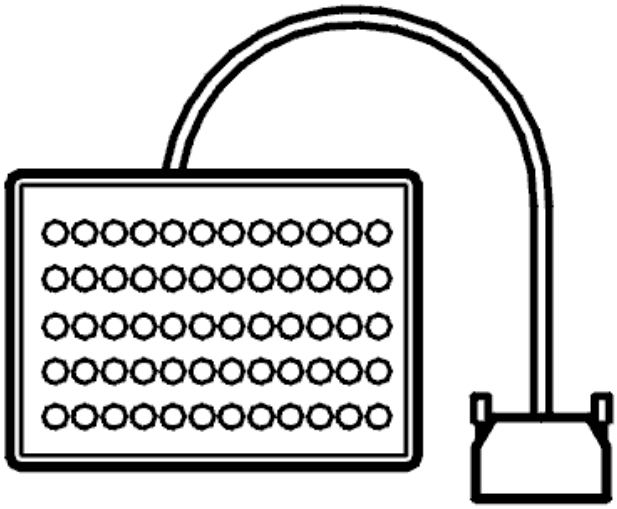

Fig. 218: Breakout Box
Courtesy of VOLVO CARS CORPORATION

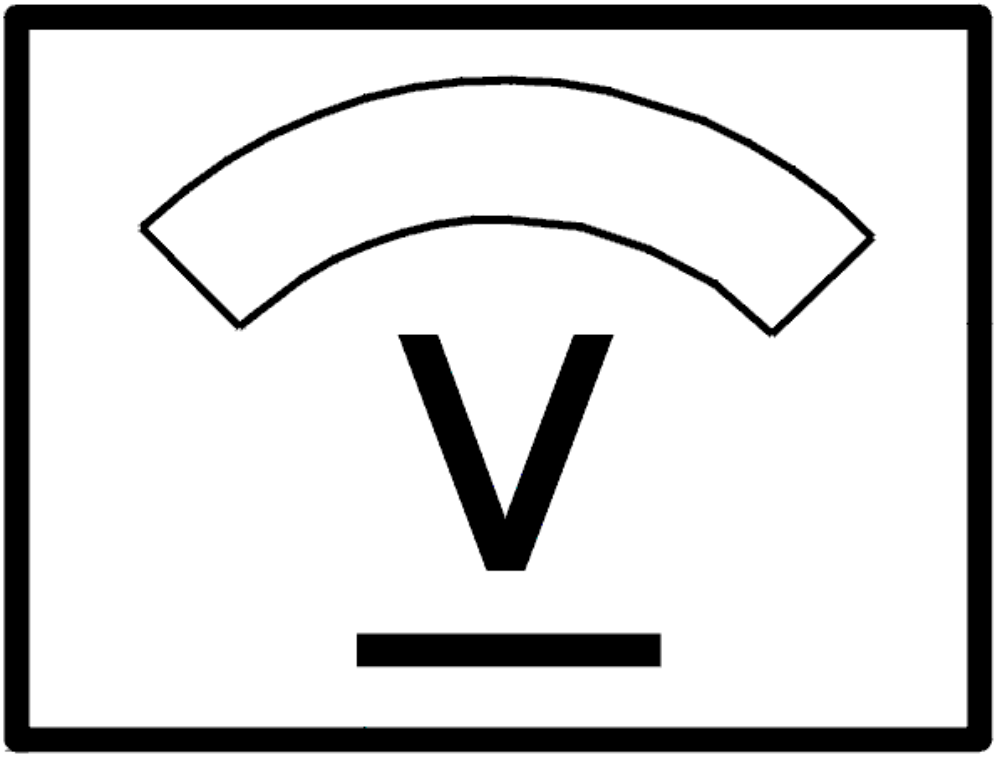

Fig. 219: Identifying Voltage Display
Courtesy of VOLVO CARS CORPORATION

Is the voltage OK?

- **YES**

  Refer to **CHECKING THE WIRING**

- **NO**

  Refer to **REPAIR CABLE**

REPAIR CABLE

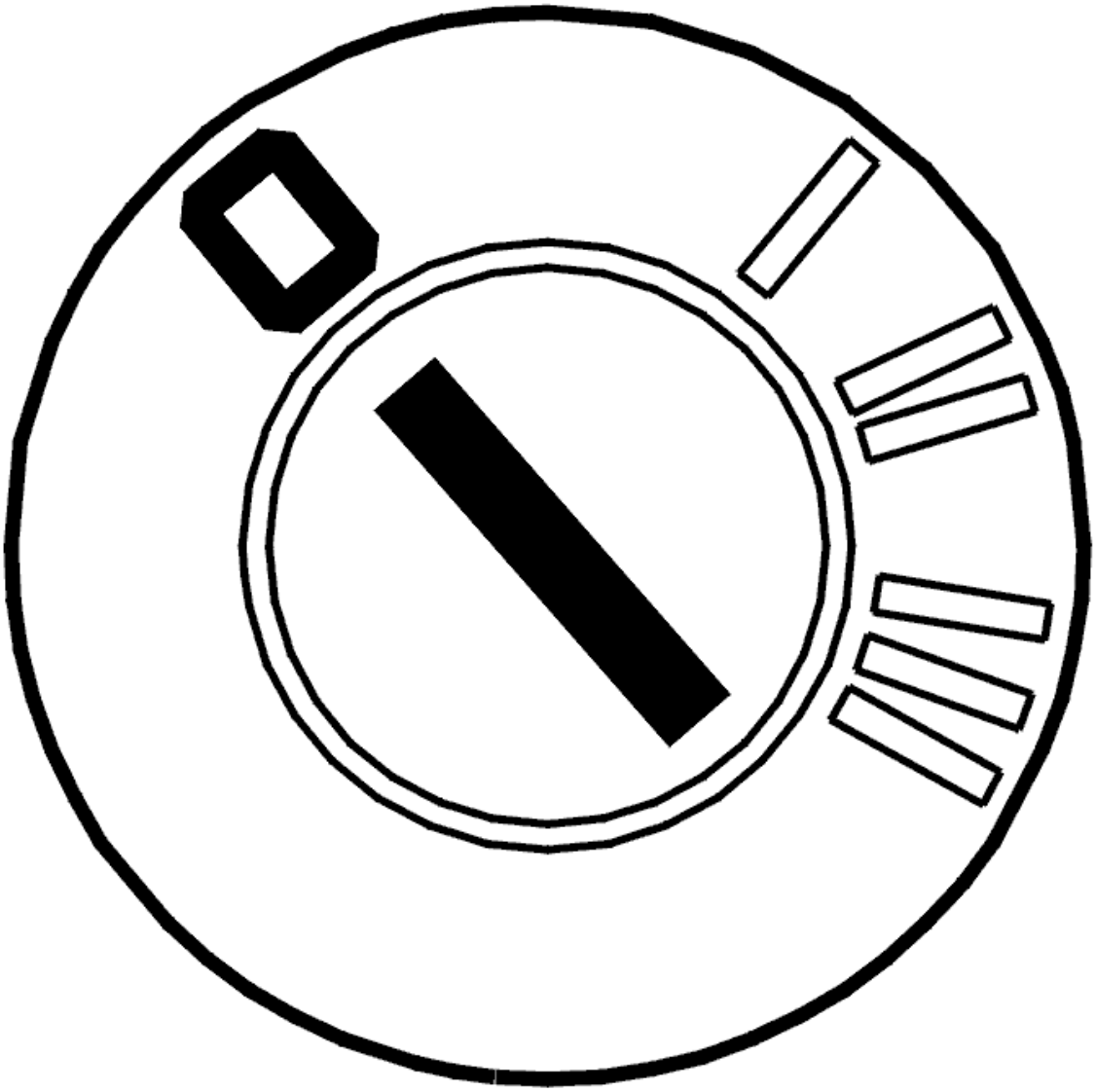

Fig. 220: Identifying Ignition OFF
Courtesy of VOLVO CARS CORPORATION

- Ignition off.

  Repair the cable between fuse 11C/8 terminal #2 (25A) and seat heater (9/12) for left seat and (9/13) for right seat connector terminal #1. Check for a open-circuit.

  Other information:

  - To connect the breakout box, see **CONNECTING THE BREAKOUT BOX**
  - For information about signals, see **SIGNAL SPECIFICATION**
  - see **CHECKING WIRING AND TERMINALS** .

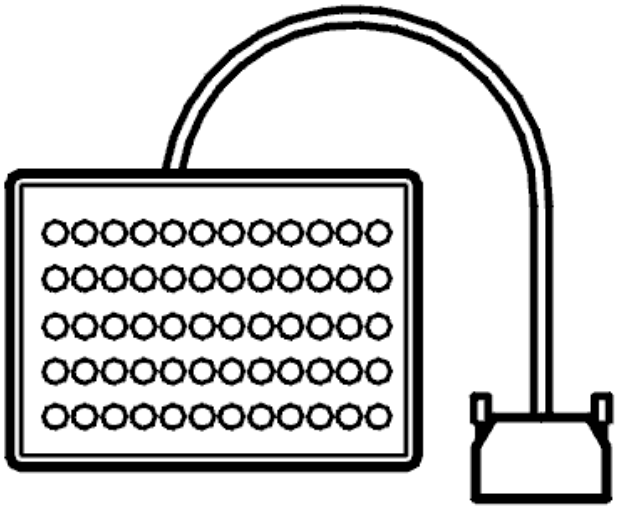

Fig. 221: Breakout Box
Courtesy of VOLVO CARS CORPORATION

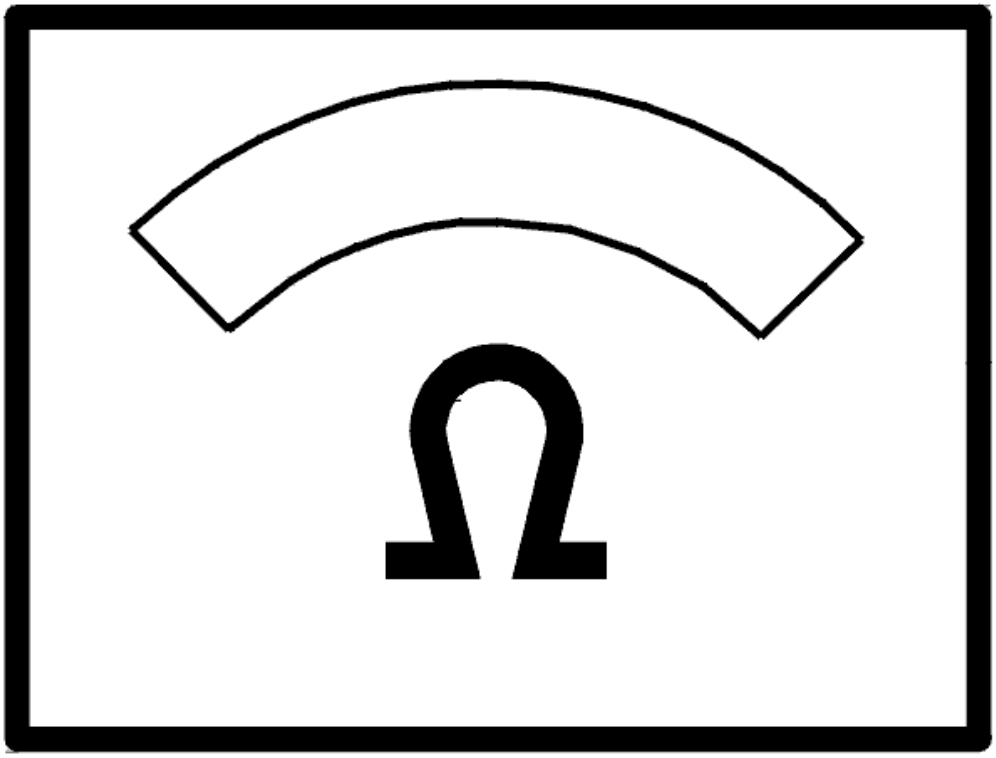

Fig. 222: Identifying Ohmmeter
Courtesy of VOLVO CARS CORPORATION

CHECKING THE CABLE

Check the cable between fuse 11C8 terminal #2 (25A) and seat heater (9/12) for left seat and (9/13) for right seat connector terminal #1. Check for an intermittent short-circuit to ground.

Remedy as necessary.

Replace fuse.

Other information:

- see **CHECKING WIRING AND TERMINALS** .

CHECKING THE WIRING

Check the cable between fuse 11C8 terminal #2 (25A) and seat heater (9/12) for left seat and (9/13) for right seat connector terminal #1. Check for contact resistance and oxidation. Check for an intermittent open-circuit.

Remedy as necessary.

Other information:

- To connect the breakout box, see **CONNECTING THE BREAKOUT BOX**
- For information about signals, see **SIGNAL SPECIFICATION**
- see **CHECKING WIRING AND TERMINALS** .

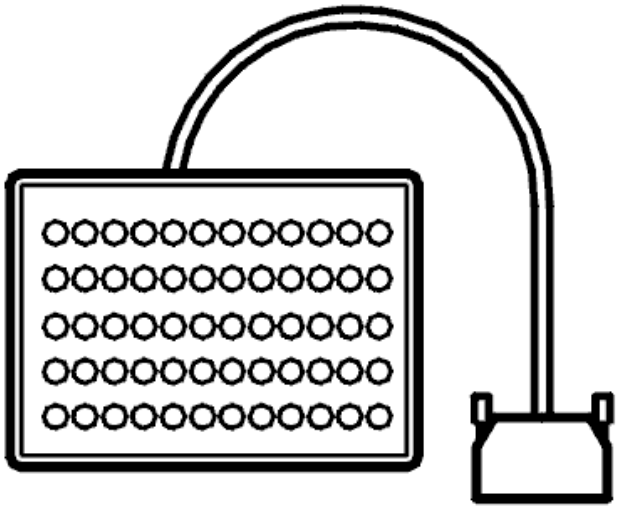

Fig. 223: Breakout Box
Courtesy of VOLVO CARS CORPORATION

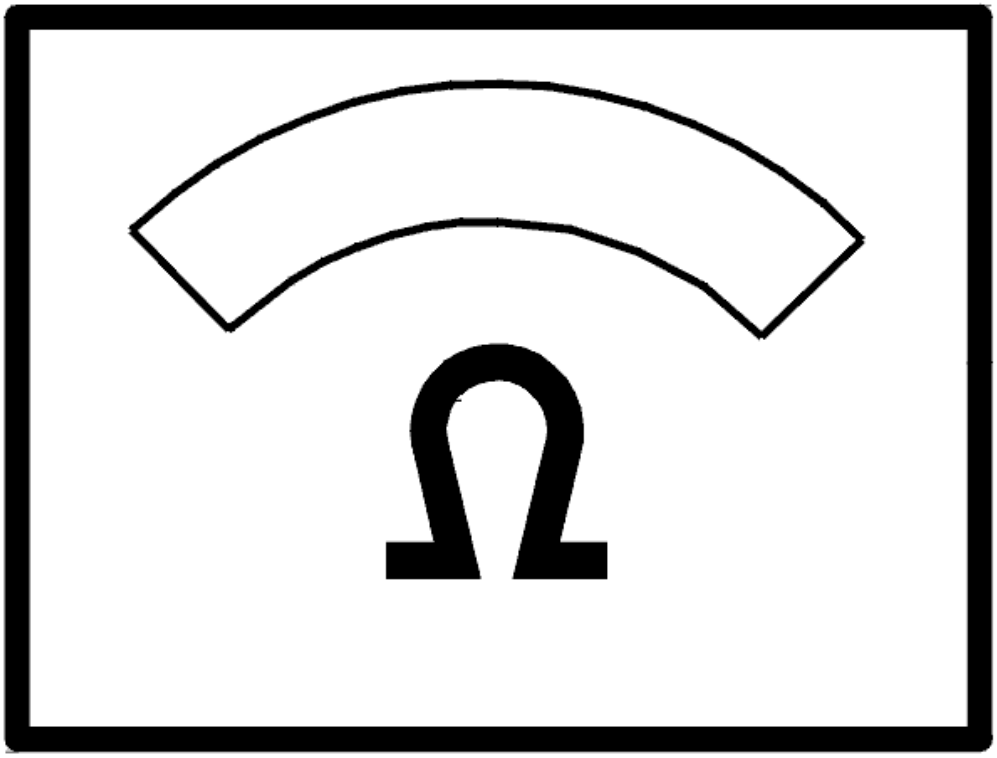

Fig. 224: Identifying Ohmmeter
Courtesy of VOLVO CARS CORPORATION

TROUBLE-SHOOTING INFORMATION

Condition

No diagnostic trouble codes are displayed.

Possible Source

- Defective fuse
- Open circuit or short circuit to ground in power supply or signal wire
- Contact resistance or oxidation.

Fault symptom[s]

- Front seat heating does not work.

CHECKING THE SEAT TEMPERATURE (2003-04)

CHECKING THE SEAT TEMPERATURE

PROGRAMMING THE SEAT TEMPERATURE (CENTRAL ELECTRONIC MODULE)

The heated seat temperature can be adjusted.

This can be carried out for both the left and right seats.

There are two values that can be programmed: low temperature and high temperature.

Programming must be carried out so that the high temperature setting is higher than the low temperature setting.

Do you want to program in Celsius or Fahrenheit?

1. Celsius. Refer to **CELSIUS**
2. Fahrenheit. Refer to **FAHRENHEIT**

CELSIUS

The seat temperature can be set between 0°C and 43°C.

Which seat do you want to reprogram:

1. Left seat. Refer to **CHECKING THE LEFT SEAT**
2. Right seat. Refer to **CHECKING THE RIGHT SEAT**

FAHRENHEIT

The seat temperature can be set between 32°F and 109.4°F.

Which seat do you want to reprogram:

1. Left seat. Refer to **CHECKING THE LEFT SEAT**.
2. Right seat. Refer to **CHECKING THE RIGHT SEAT**

CHECKING THE LEFT SEAT

Read off the programming by clicking on the VCT2000 symbol.

To change the seat temperature, mark the desired value in the scrolling list and start programming.

Programming must be carried out so that the high temperature setting is higher than the low temperature setting.

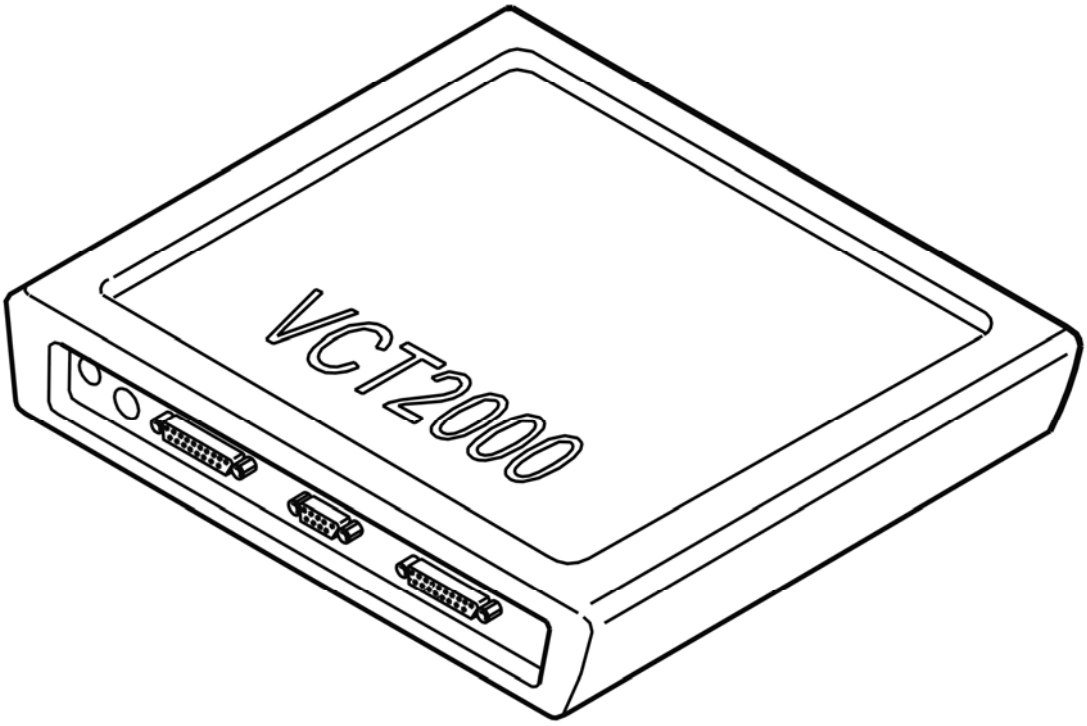

Fig. 225: Identifying VCT2000 Diagnostic Tool Symbol In VIDA
Courtesy of VOLVO CARS CORPORATION

- **Continue**

  Refer to **SAVE THE PROGRAMMED VALUE**

CHECKING THE RIGHT SEAT

Read off the programming by clicking on the VCT2000 symbol.

To change the seat temperature, mark the desired value in the scrolling list and start programming.

Programming must be carried out so that the high temperature setting is higher than the low temperature setting.

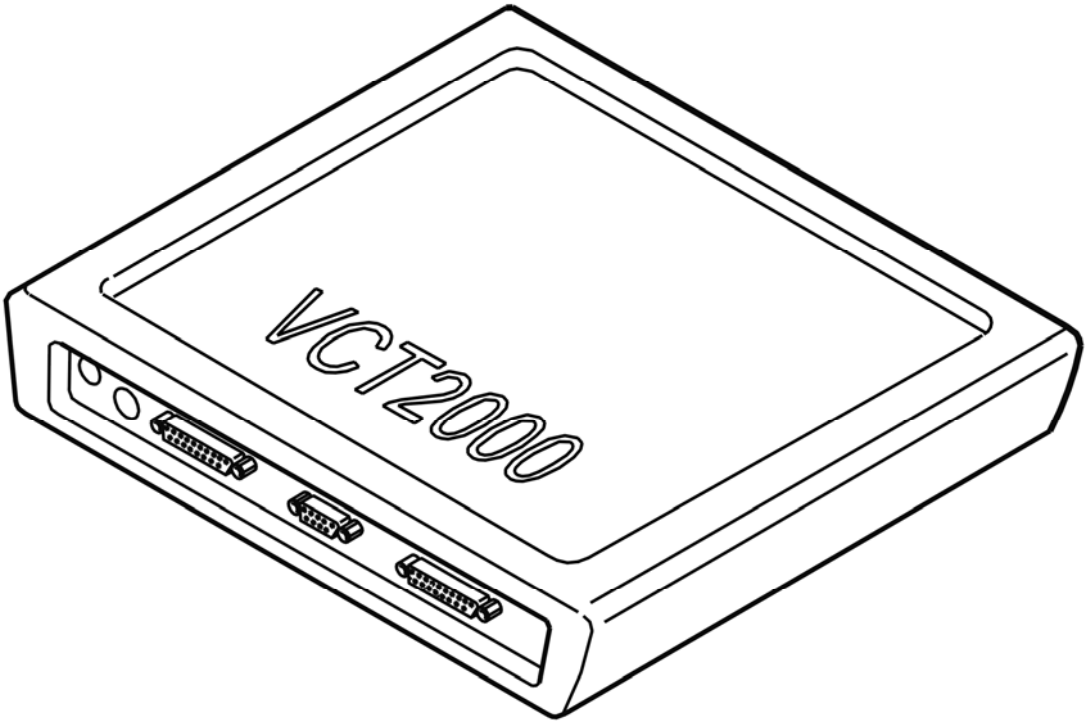

Fig. 226: Identifying VCT2000 Diagnostic Tool Symbol In VIDA
Courtesy of VOLVO CARS CORPORATION

- **Continue**

  Refer to **SAVE THE PROGRAMMED VALUE**

CHECKING THE LEFT SEAT

Read off the programming by clicking on the VCT2000 symbol.

To change the seat temperature, mark the desired value in the scrolling list and start programming.

Programming must be carried out so that the high temperature setting is higher than the low temperature setting.

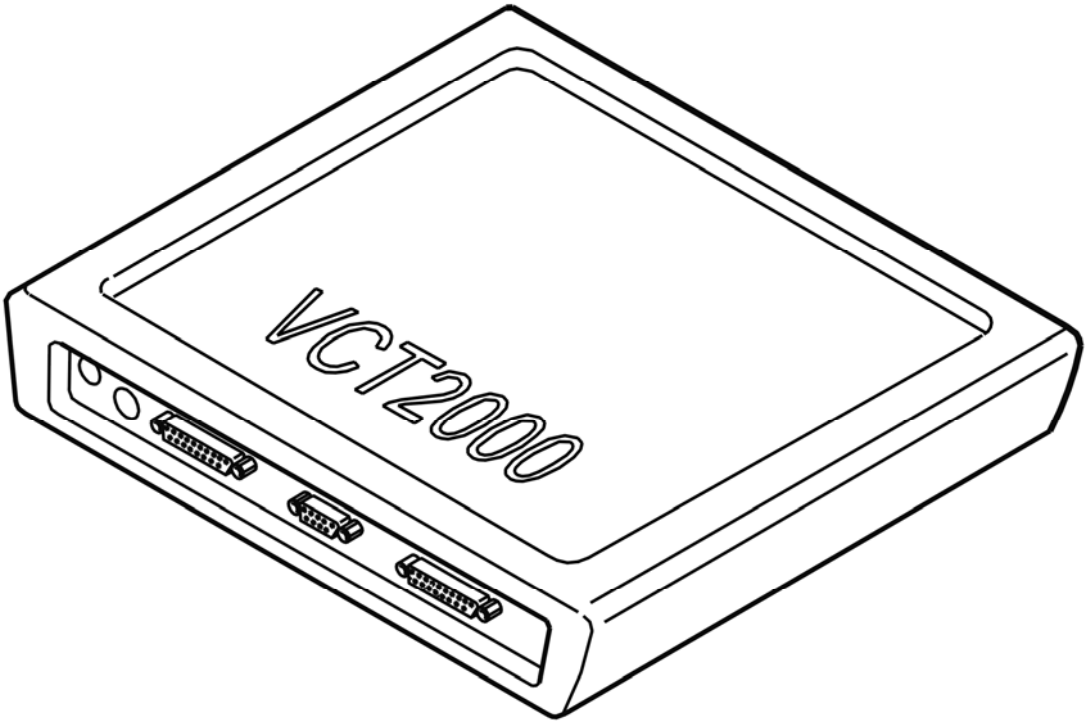

Fig. 227: Identifying VCT2000 Diagnostic Tool Symbol In VIDA
Courtesy of VOLVO CARS CORPORATION

- **Continue**

  Refer to **SAVE THE PROGRAMMED VALUE**

CHECKING THE RIGHT SEAT

Read off the programming by clicking on the VCT2000 symbol.

To change the seat temperature, mark the desired value in the scrolling list and start programming.

Programming must be carried out so that the high temperature setting is higher than the low temperature setting.

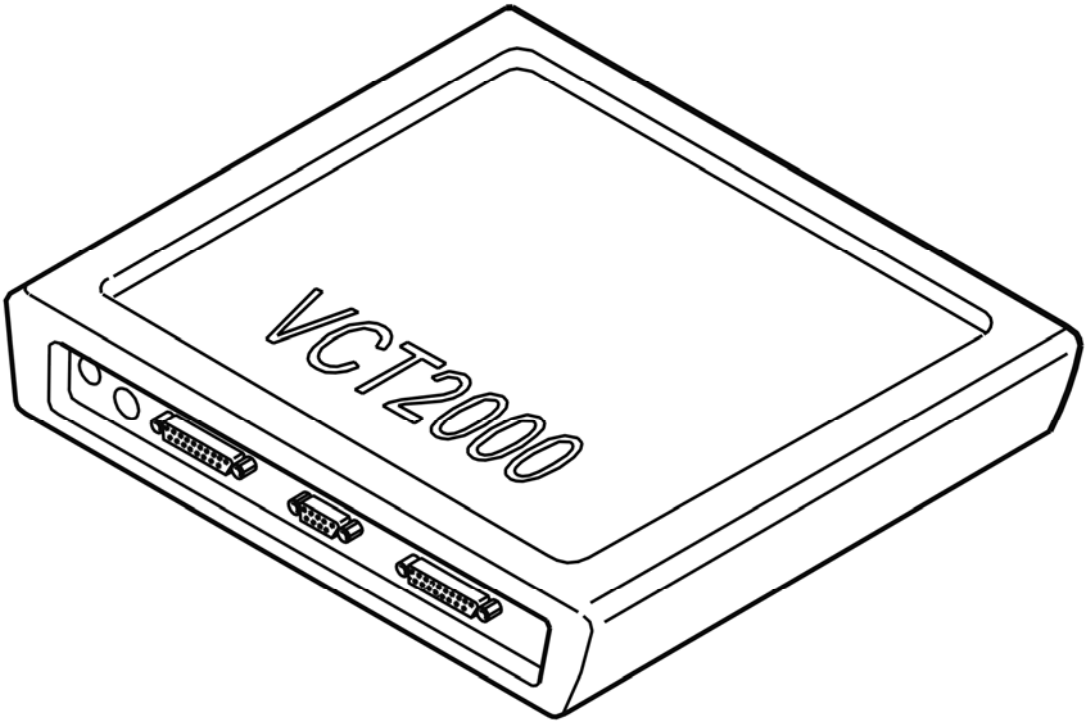

Fig. 228: Identifying VCT2000 Diagnostic Tool Symbol In VIDA
Courtesy of VOLVO CARS CORPORATION

- **Continue**

  Refer to **SAVE THE PROGRAMMED VALUE**

SAVE THE PROGRAMMED VALUE

To ensure that the programmed information is stored, click on the VCT2000 symbol to force the entry.

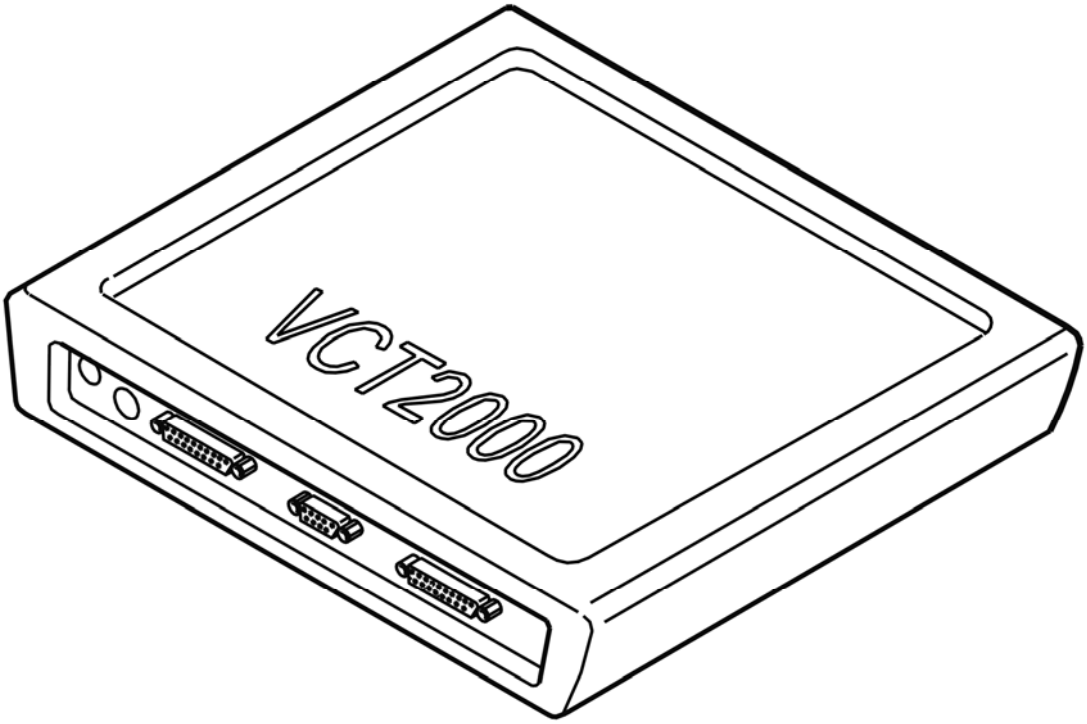

Fig. 229: Identifying VCT2000 Diagnostic Tool Symbol In VIDA
Courtesy of VOLVO CARS CORPORATION

CHECKING THE SHIFT LOCK (2003-04)

CHECKING THE SHIFT LOCK

CHECKING FUSES

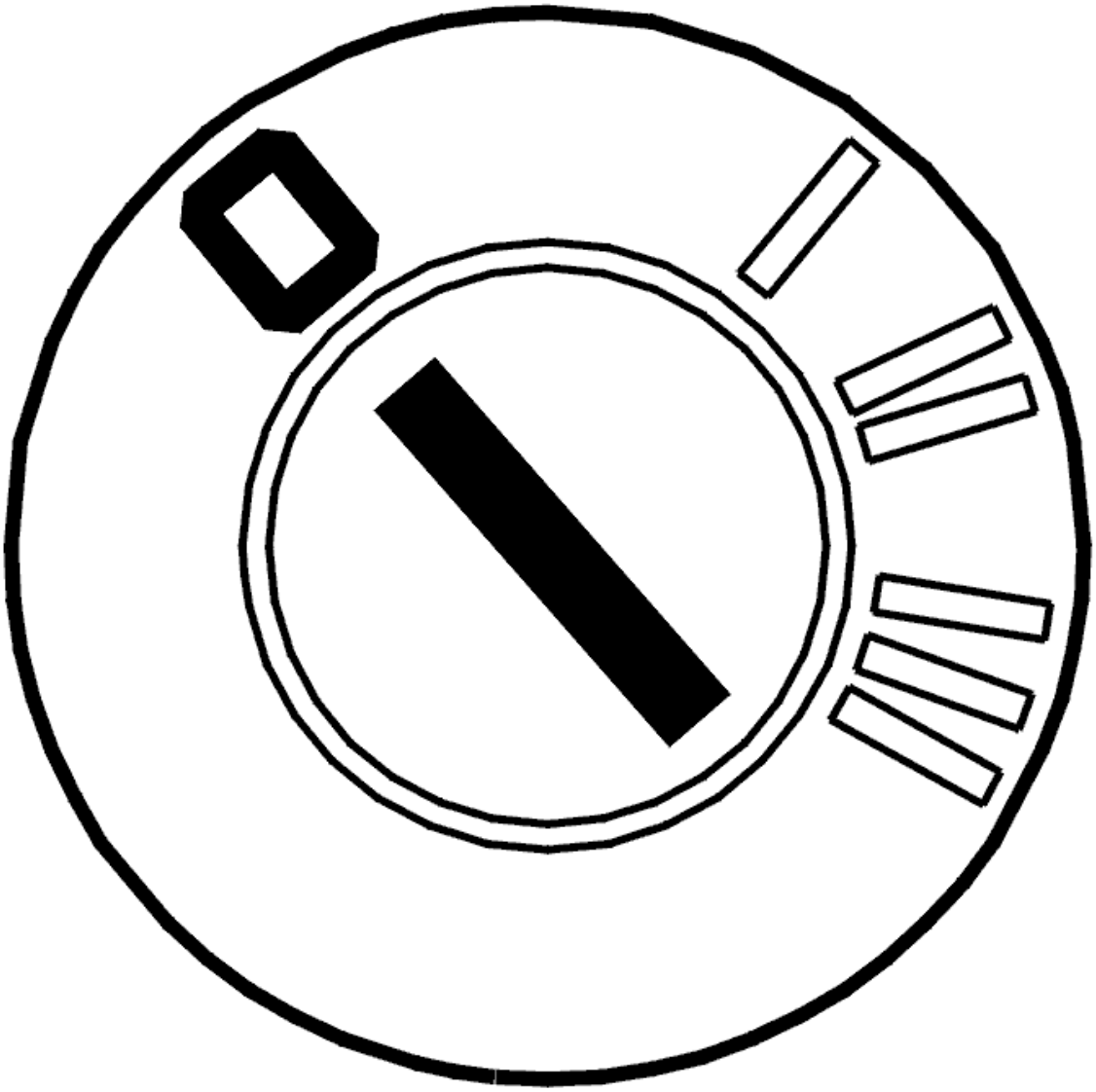

Fig. 230: Identifying Ignition OFF
Courtesy of VOLVO CARS CORPORATION

- Ignition off.

  Check that fuse 11C/24 (10A) is intact.

  Replace the fuse if it is damaged.

Is the fuse intact?

- **YES**

  Refer to **CHECKING THE GROUND LEAD**

- **NO**

Refer to **CHECKING THE CABLE**

CHECKING THE GROUND LEAD

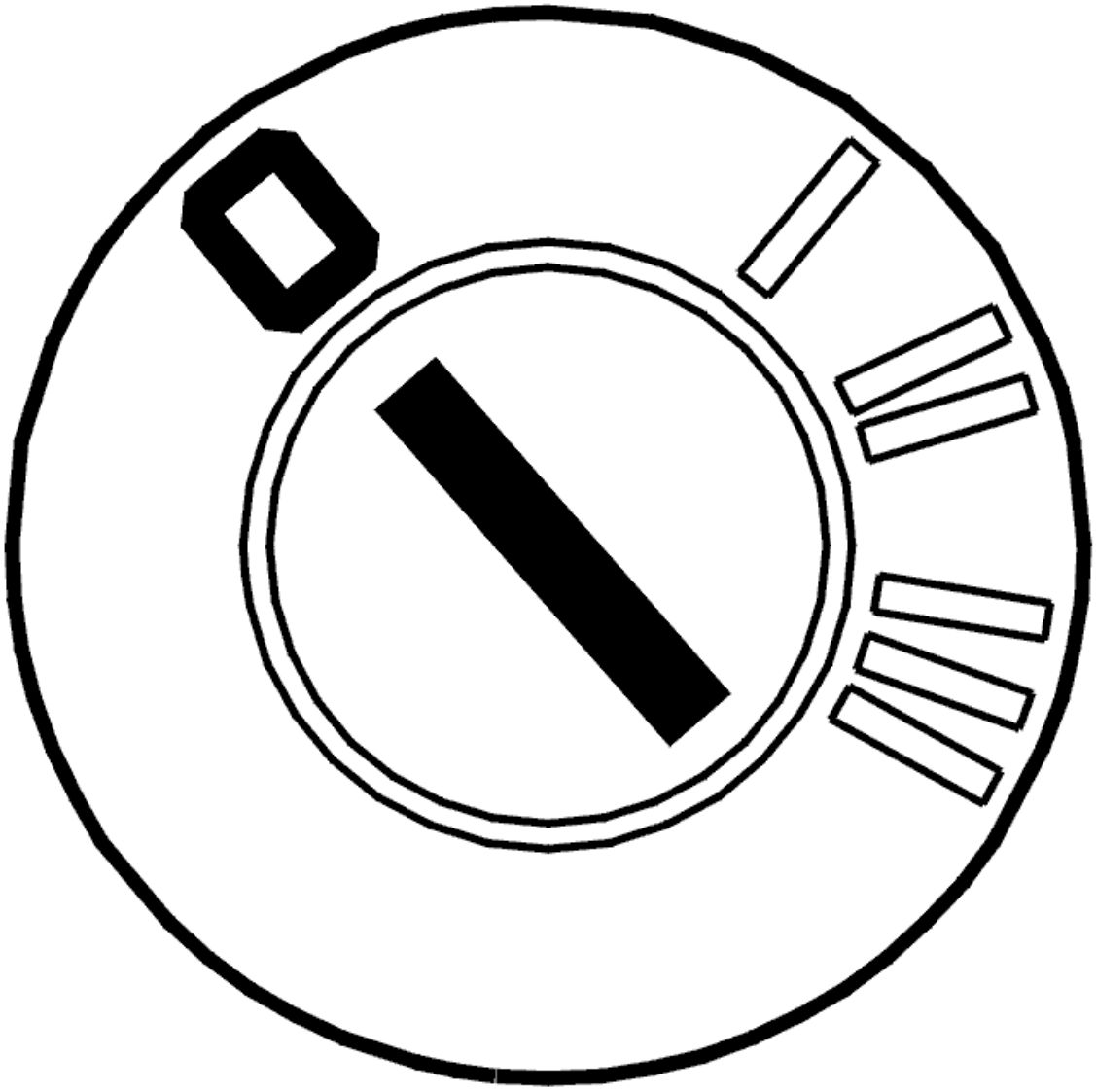

Fig. 231: Identifying Ignition OFF
Courtesy of VOLVO CARS CORPORATION

- Ignition off
- Remove connector from Shift Lock module 3/156.

  Check the cable between Shift Lock connector terminal #6 and ground terminal 31/6. Check for an open-circuit.

  Remedy as necessary.

  Other information:

- To connect the breakout box, see **CONNECTING THE BREAKOUT BOX**
- see **CHECKING WIRING AND TERMINALS** .

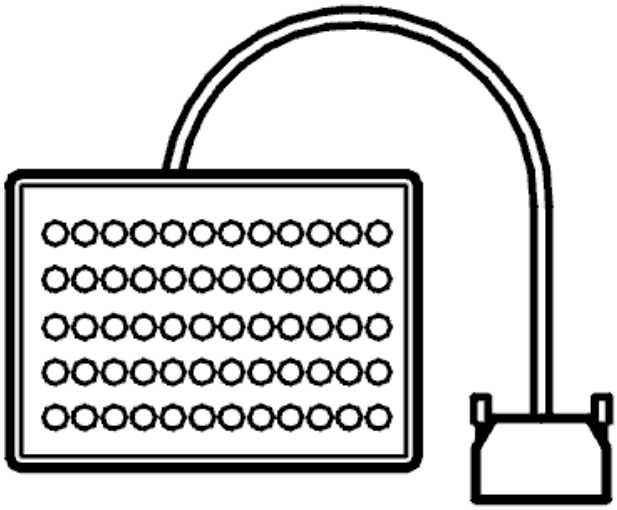

Fig. 232: Breakout Box
Courtesy of VOLVO CARS CORPORATION

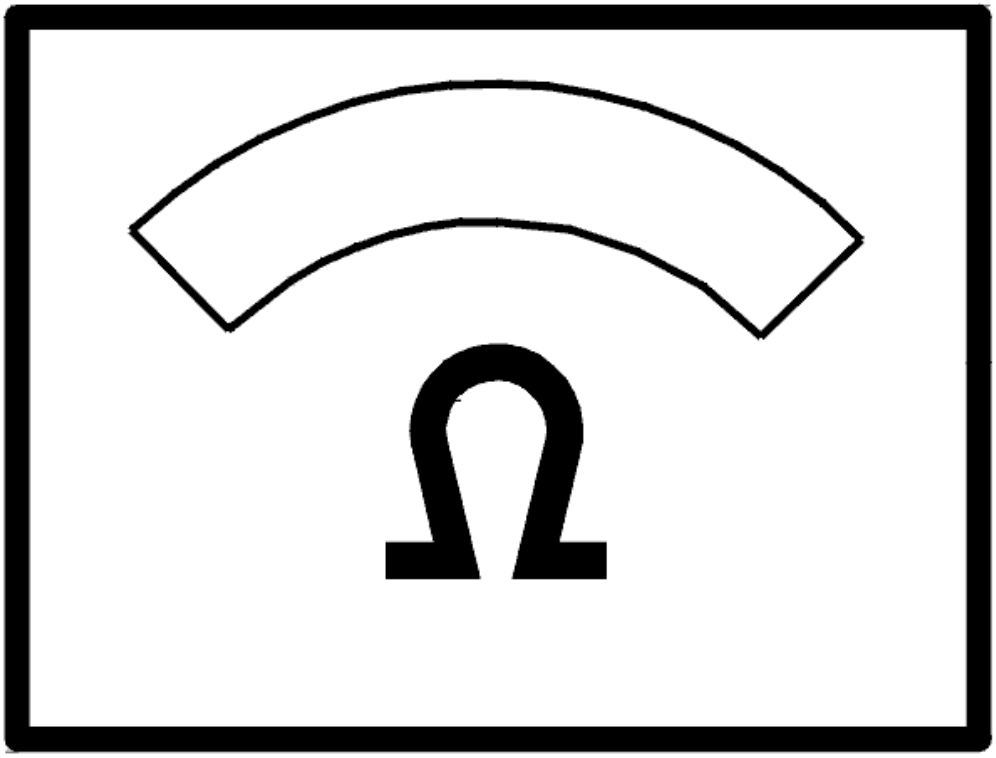

Fig. 233: Identifying Ohmmeter
Courtesy of VOLVO CARS CORPORATION

Is the cable OK?

- **YES**

  Refer to **CHECKING THE POWER SUPPLY**

- **NO**

  OKAY: Troubleshooting has been completed.

CHECKING THE POWER SUPPLY

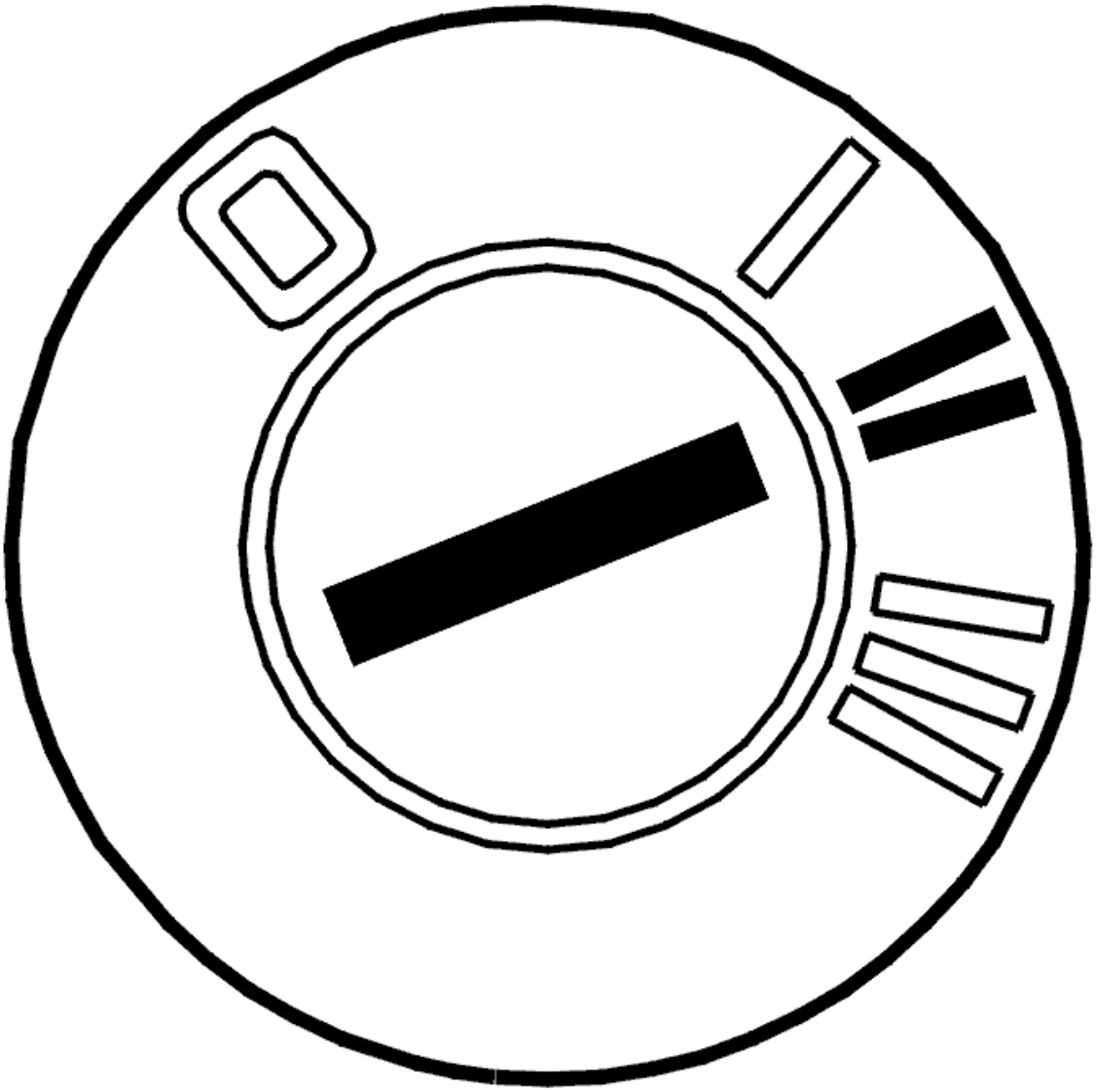

Fig. 234: Identifying Ignition ON
Courtesy of VOLVO CARS CORPORATION

- Ignition off
- Remove relay 2/29 from the central electronic module (CEM) relay holder
- Ignition on.

Check the voltage between relay holder 2/29 terminal #3 and ground.

Other information:

- To connect the breakout box, see **CONNECTING THE BREAKOUT BOX**
- For information about signals, see **SIGNAL SPECIFICATION** .

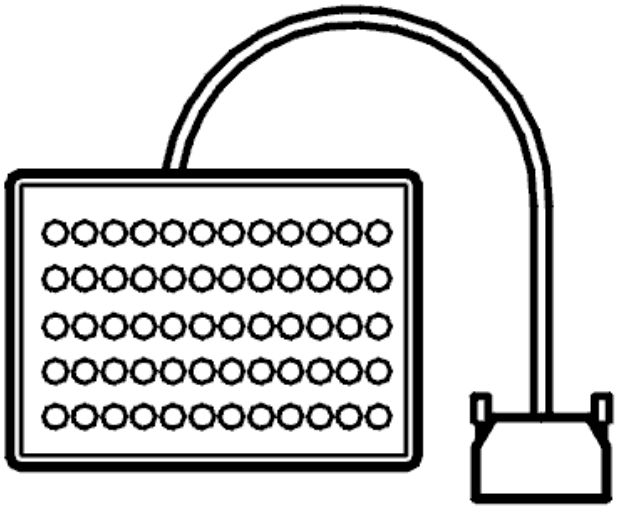

Fig. 235: Breakout Box
Courtesy of VOLVO CARS CORPORATION

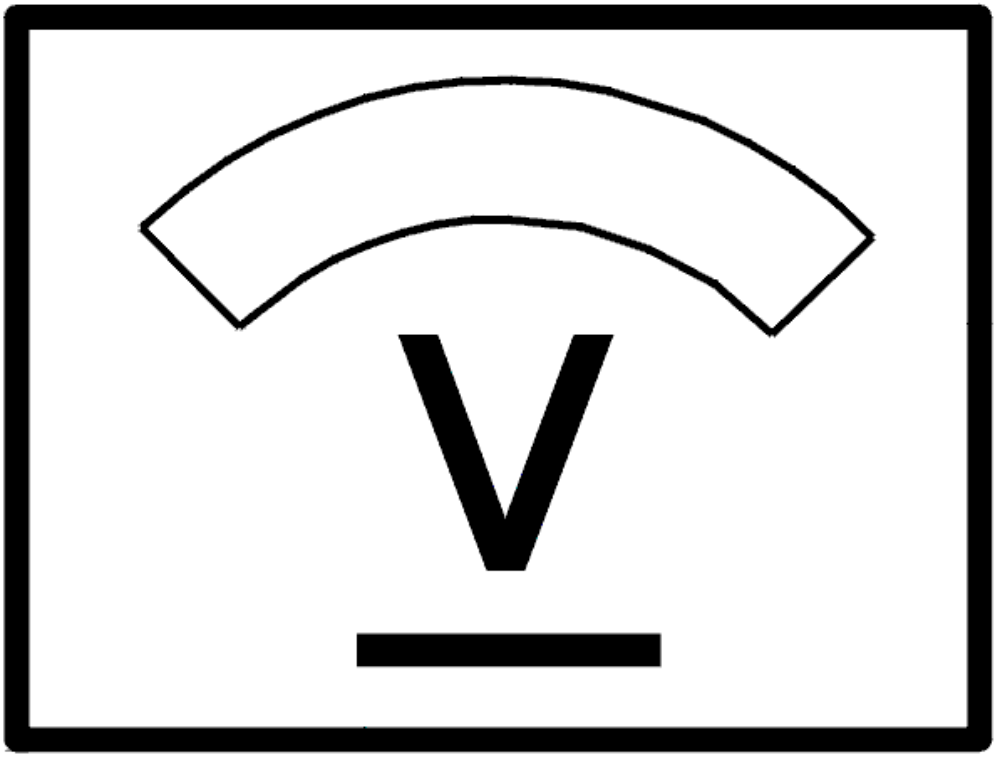

Fig. 236: Identifying Voltage Display
Courtesy of VOLVO CARS CORPORATION

Is the voltage OK?

- **YES**

  Refer to **CHECKING THE RELAY**

- **NO**

  Refer to **REPAIR CABLE**

REPAIR CABLE

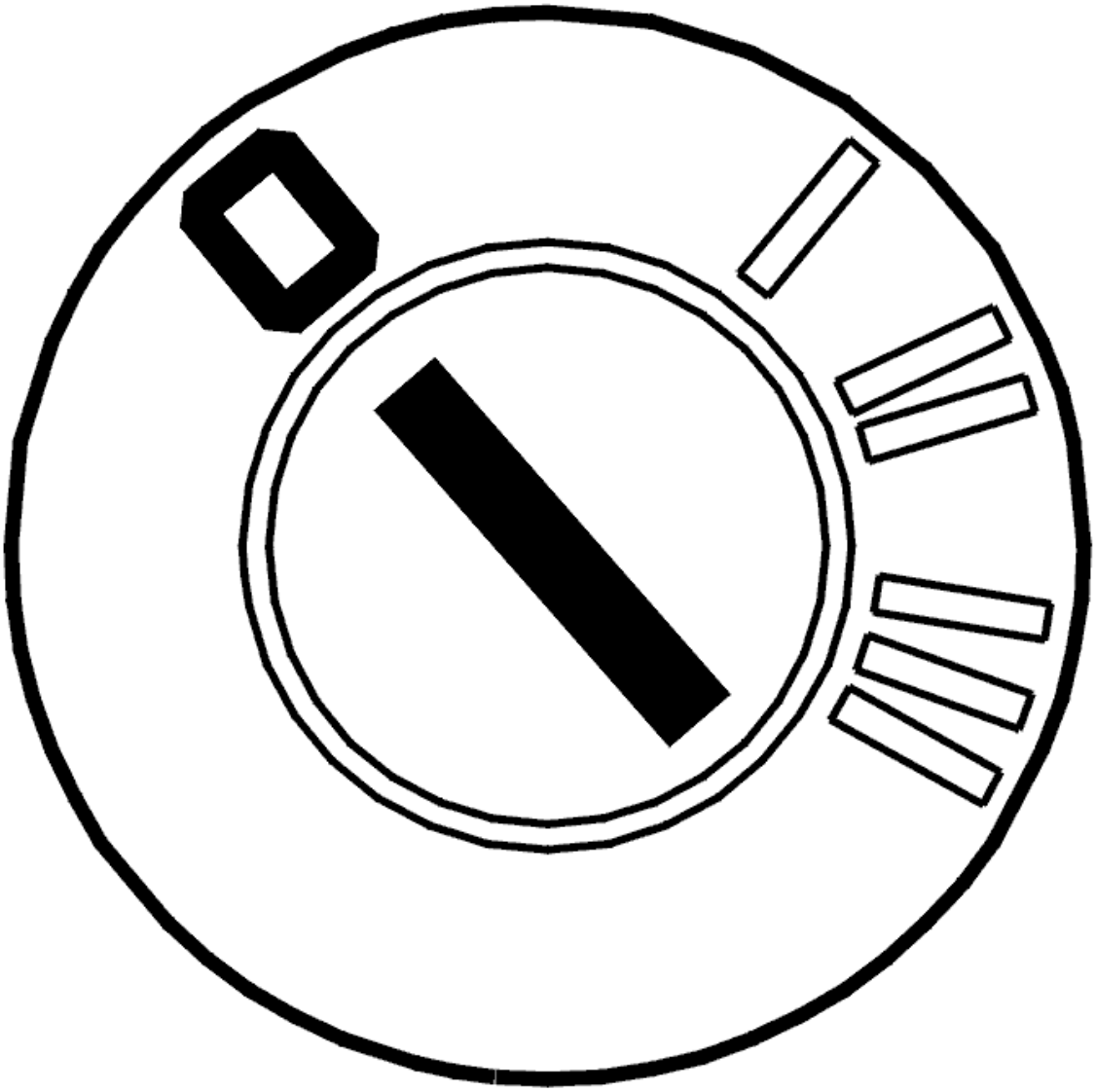

Fig. 237: Identifying Ignition OFF
Courtesy of VOLVO CARS CORPORATION

- Ignition off
- Remove relay 2/29 from the central electronic module (CEM) relay holder.

  Repair the cable between fuse 11C/24 terminal #2 (10A) and relay holder 2/29 terminal #3. Check for an open-circuit.

  Other information:

  - To connect the breakout box, see **CONNECTING THE BREAKOUT BOX**
  - For information about signals, see **SIGNAL SPECIFICATION**
  - see **CHECKING WIRING AND TERMINALS** .

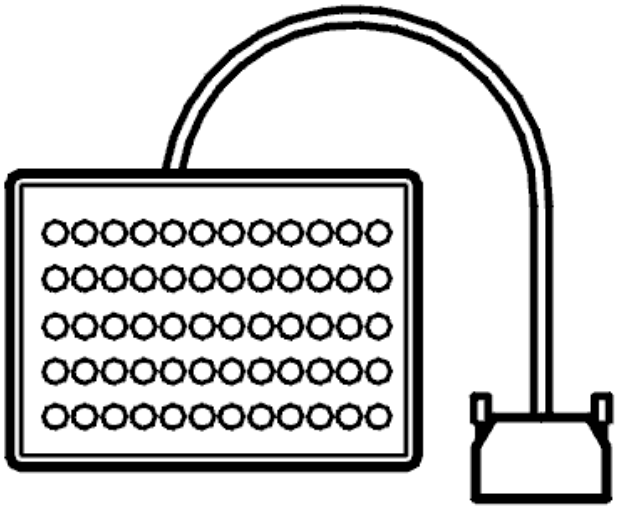

Fig. 238: Breakout Box
Courtesy of VOLVO CARS CORPORATION

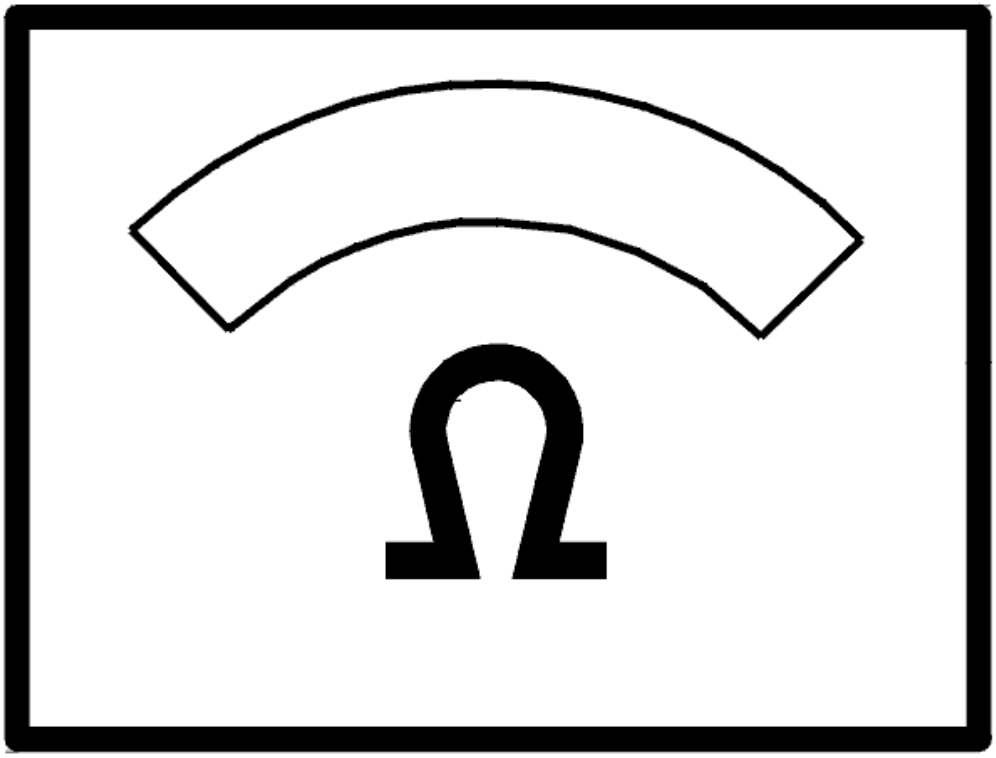

Fig. 239: Identifying Ohmmeter
Courtesy of VOLVO CARS CORPORATION

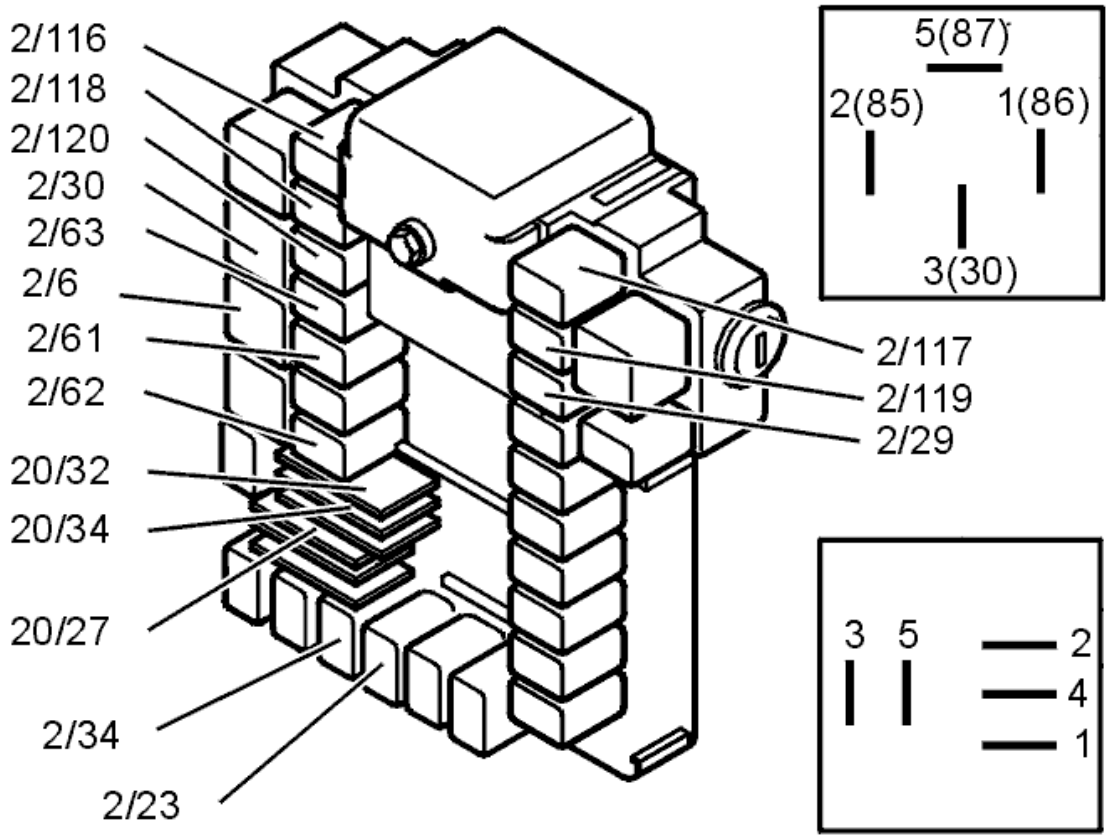

Fig. 240: Identifying Relays
Courtesy of VOLVO CARS CORPORATION

CHECKING THE CABLE

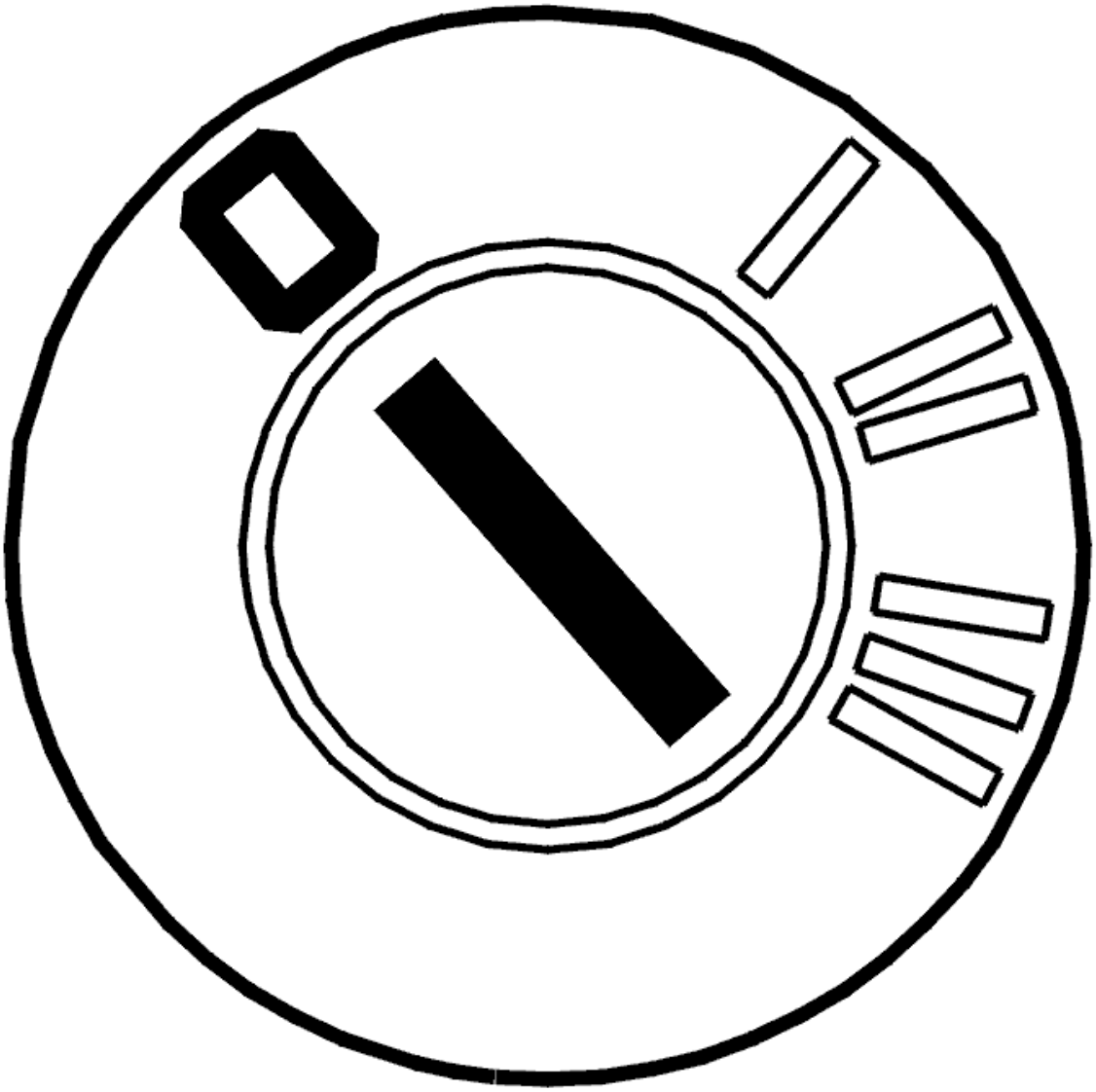

Fig. 241: Identifying Ignition OFF
Courtesy of VOLVO CARS CORPORATION

- Ignition off
- Remove relay 2/29 from the central electronic module (CEM) relay holder.

  Check the cable between fuse 11C/24 terminal #2 (10A) and relay holder 2/29 terminal #3. Check for a short-circuit to ground.

  Remedy as necessary.

  Other information:

  - To connect the breakout box, see **CONNECTING THE BREAKOUT BOX**
  - For information about signals, see **SIGNAL SPECIFICATION**

- see **CHECKING WIRING AND TERMINALS** .

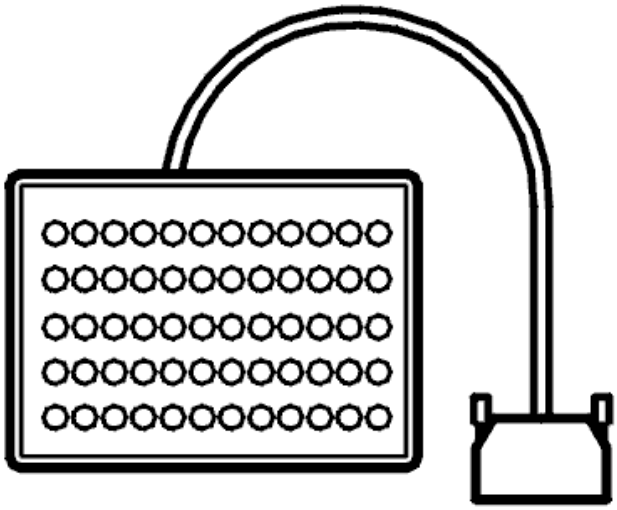

Fig. 242: Breakout Box
Courtesy of VOLVO CARS CORPORATION

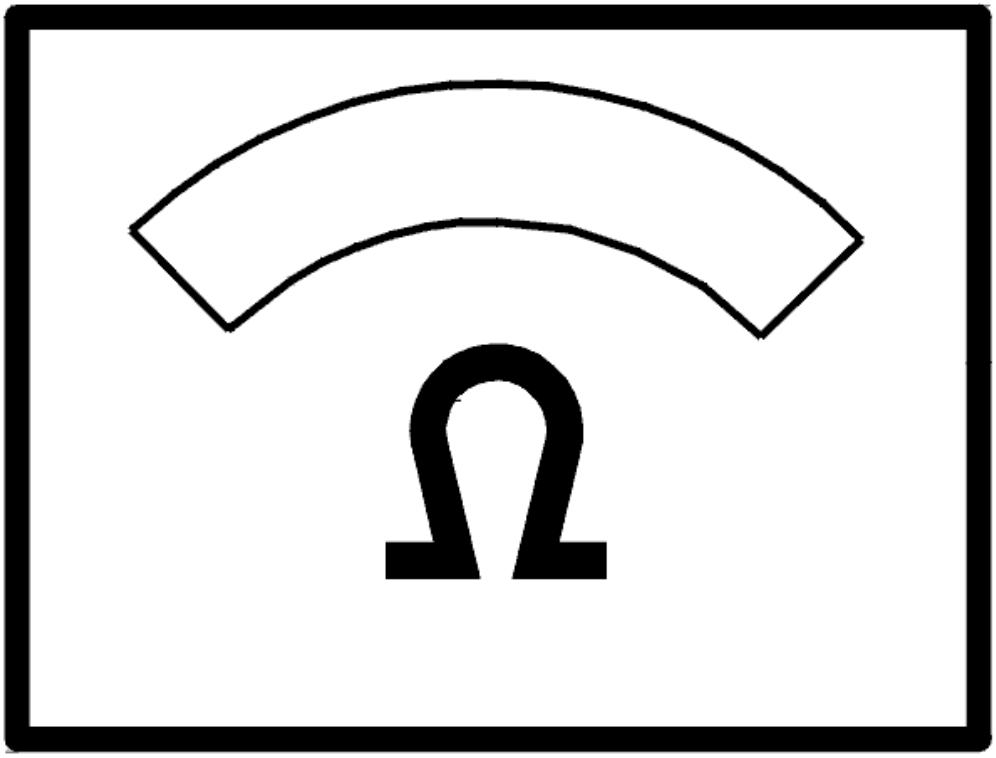

Fig. 243: Identifying Ohmmeter
Courtesy of VOLVO CARS CORPORATION

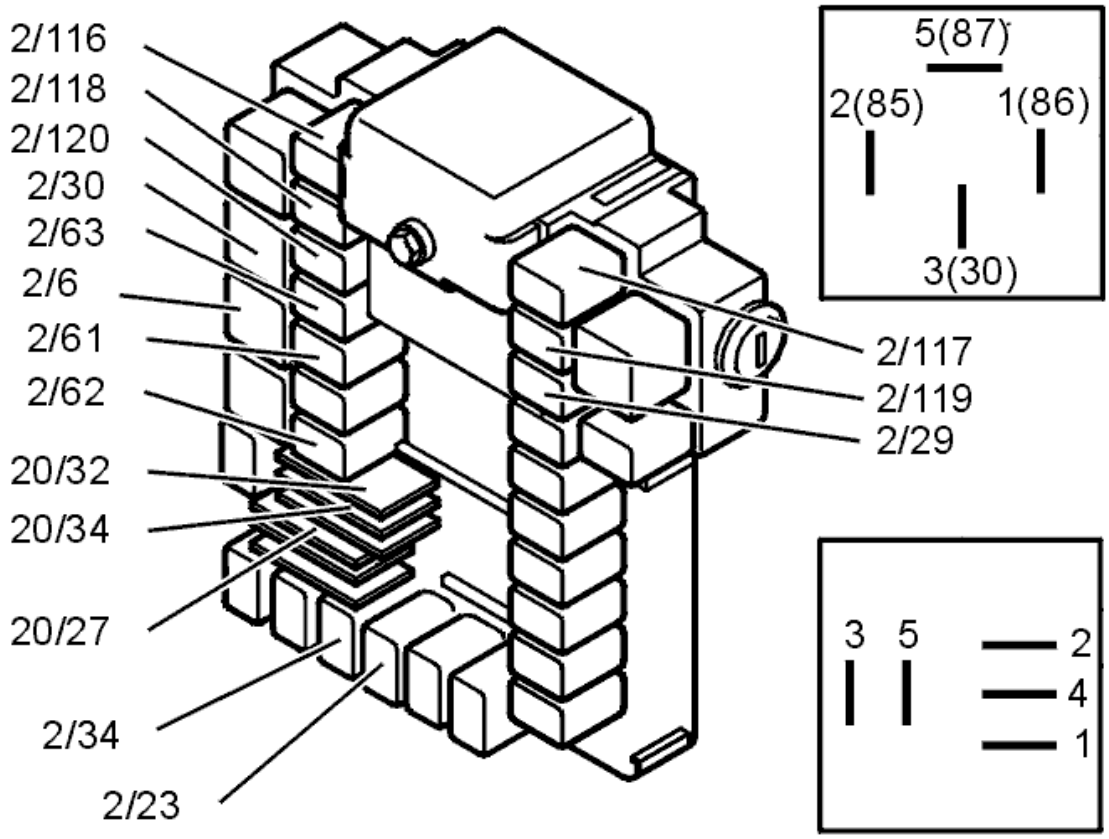

Fig. 244: Identifying Relays
Courtesy of VOLVO CARS CORPORATION

Is the cable correct?

- **YES**

  Refer to **CHECKING THE SIGNAL CABLE**

- **NO**

  OKAY: Troubleshooting has been completed.

CHECKING THE RELAY

Check that relay 2/29 is correctly installed.

Check the relay terminals.

Remedy as necessary.

Is the relay OK?

- **YES**

Refer to **CHECKING THE CABLE**

- **NO**

  OKAY: Troubleshooting has been completed.

CHECKING THE SIGNAL CABLE

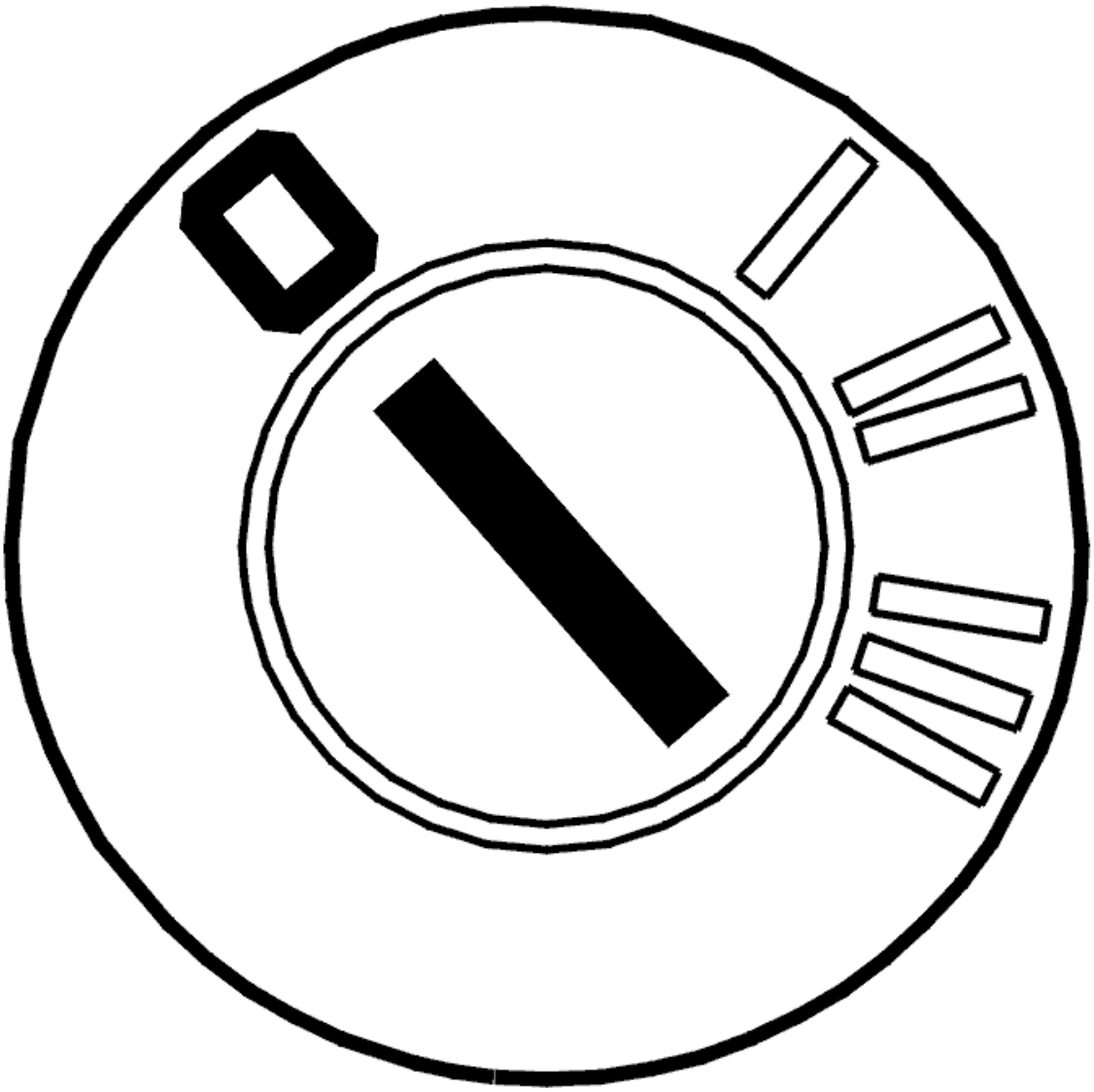

Fig. 245: Identifying Ignition OFF
Courtesy of VOLVO CARS CORPORATION

- Ignition off.

  Check the cable between relay holder 2/29 terminal #1 and Shift Lock connector terminal #1. Check for a short-circuit to ground.

Remedy as necessary.

Other information:

- To connect the breakout box, see **CONNECTING THE BREAKOUT BOX**
- For information about signals, see **SIGNAL SPECIFICATION**
- see **CHECKING WIRING AND TERMINALS** .

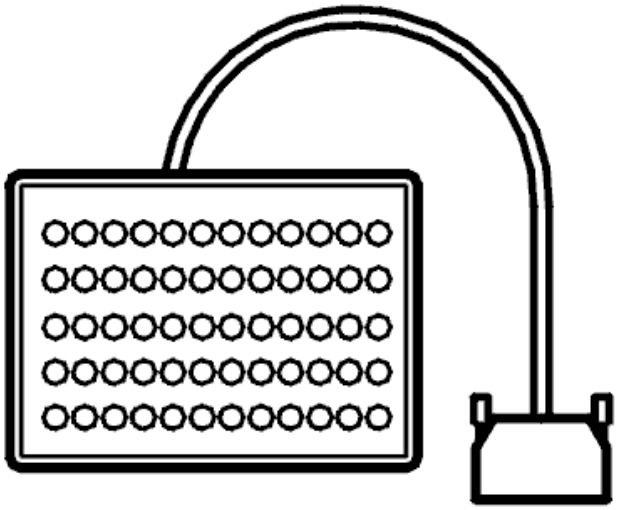

Fig. 246: Breakout Box
Courtesy of VOLVO CARS CORPORATION

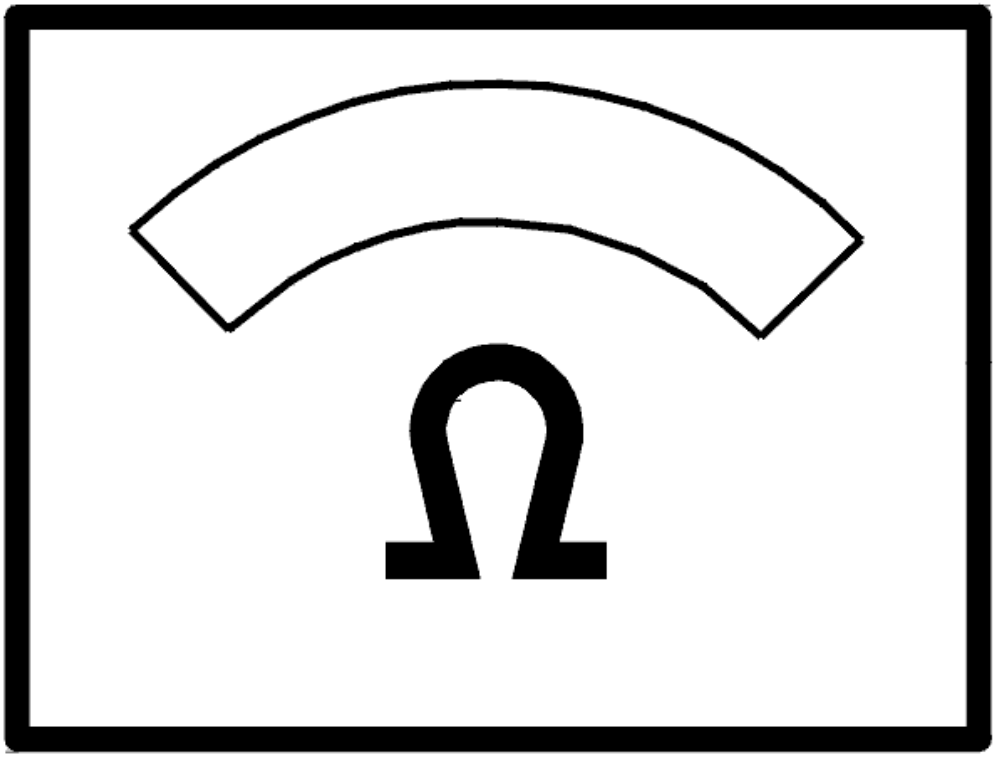

Fig. 247: Identifying Ohmmeter
Courtesy of VOLVO CARS CORPORATION

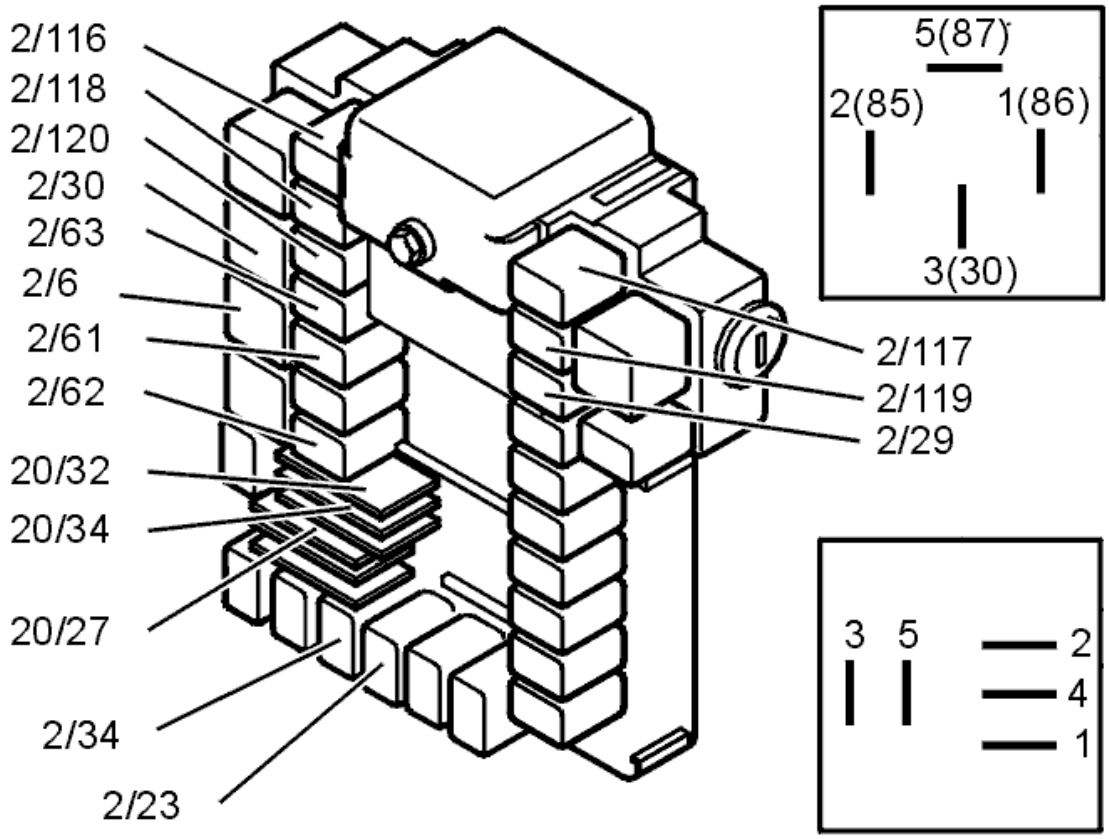

Fig. 248: Identifying Relays
Courtesy of VOLVO CARS CORPORATION

Is the cable correct?

- **YES**

  Refer to **CHECKING THE CABLE**

- **NO**

  OKAY: Troubleshooting has been completed.

CHECKING THE CABLE

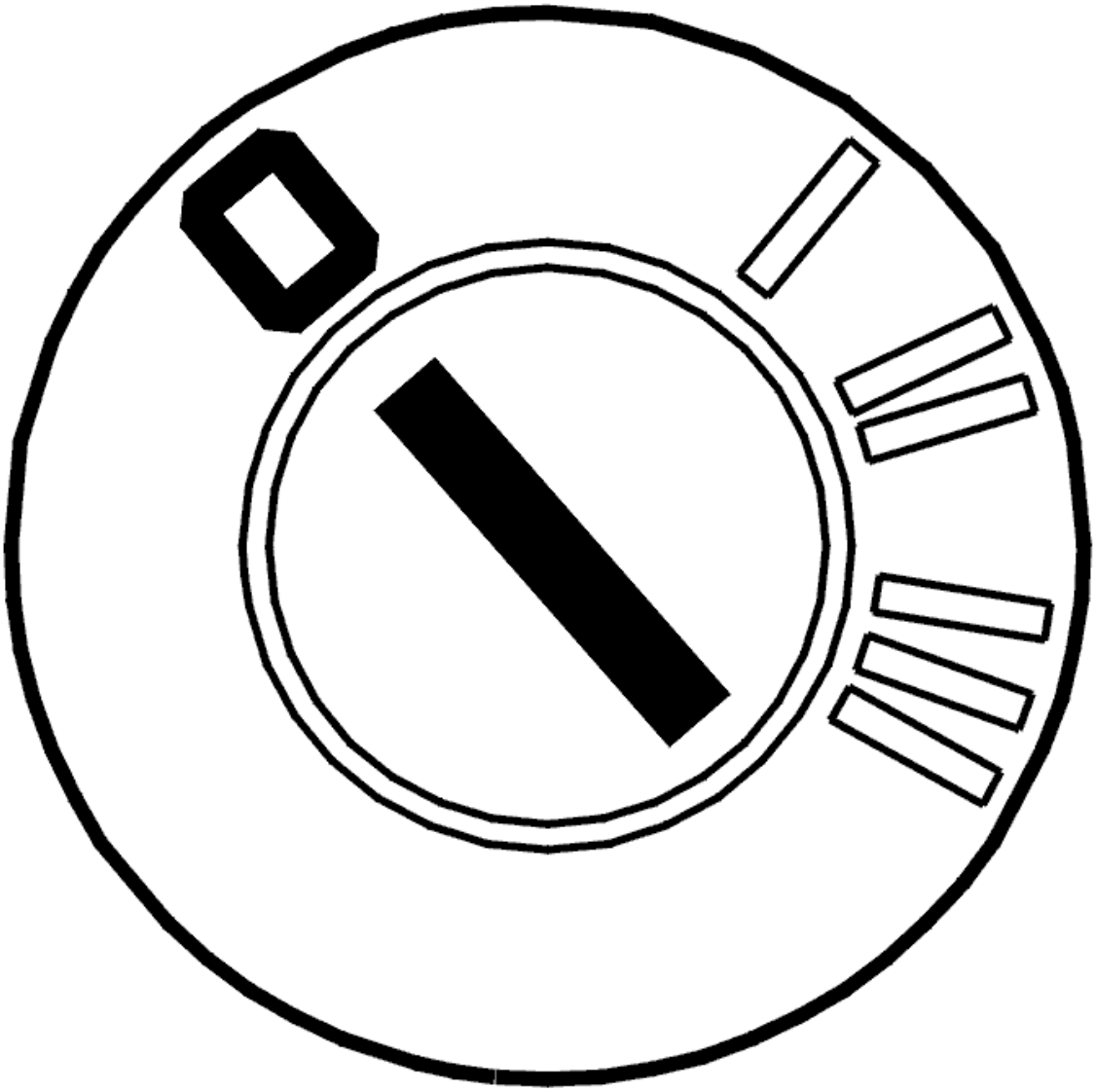

Fig. 249: Identifying Ignition OFF
Courtesy of VOLVO CARS CORPORATION

- Ignition off.

  Check the cable between relay holder 2/29 terminal #1 and Shift Lock connector 3/156 terminal #1. Check for an open-circuit.

  Remedy as necessary.

  Other information:

  - To connect the breakout box, see **CONNECTING THE BREAKOUT BOX**
  - For information about signals, see **SIGNAL SPECIFICATION**
  - see **CHECKING WIRING AND TERMINALS** .

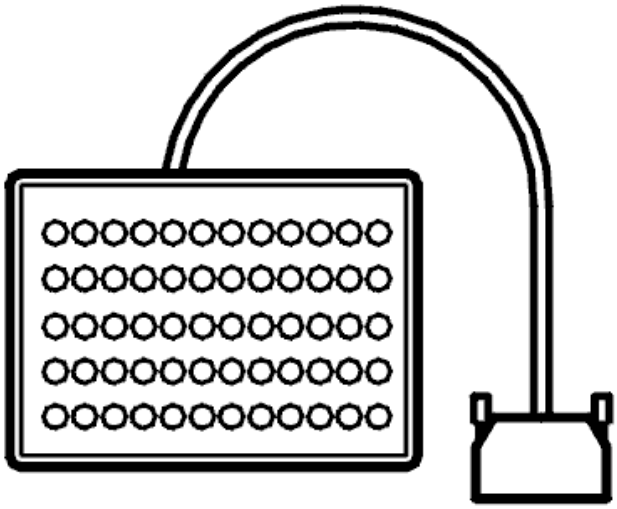

Fig. 250: Breakout Box
Courtesy of VOLVO CARS CORPORATION

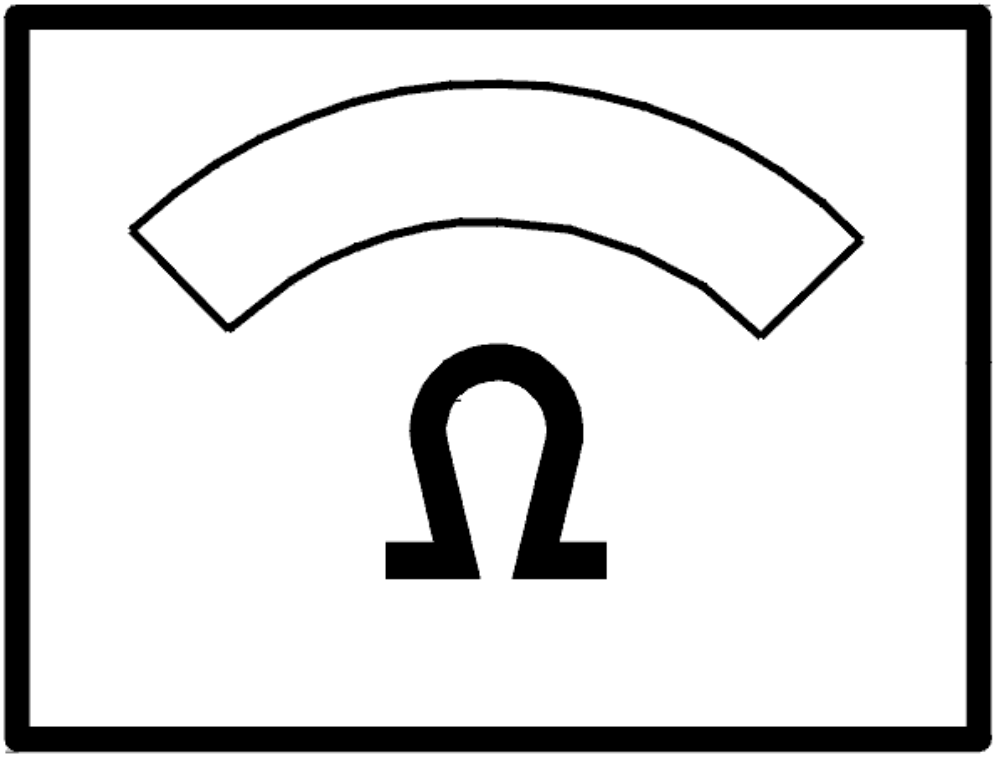

Fig. 251: Identifying Ohmmeter
Courtesy of VOLVO CARS CORPORATION

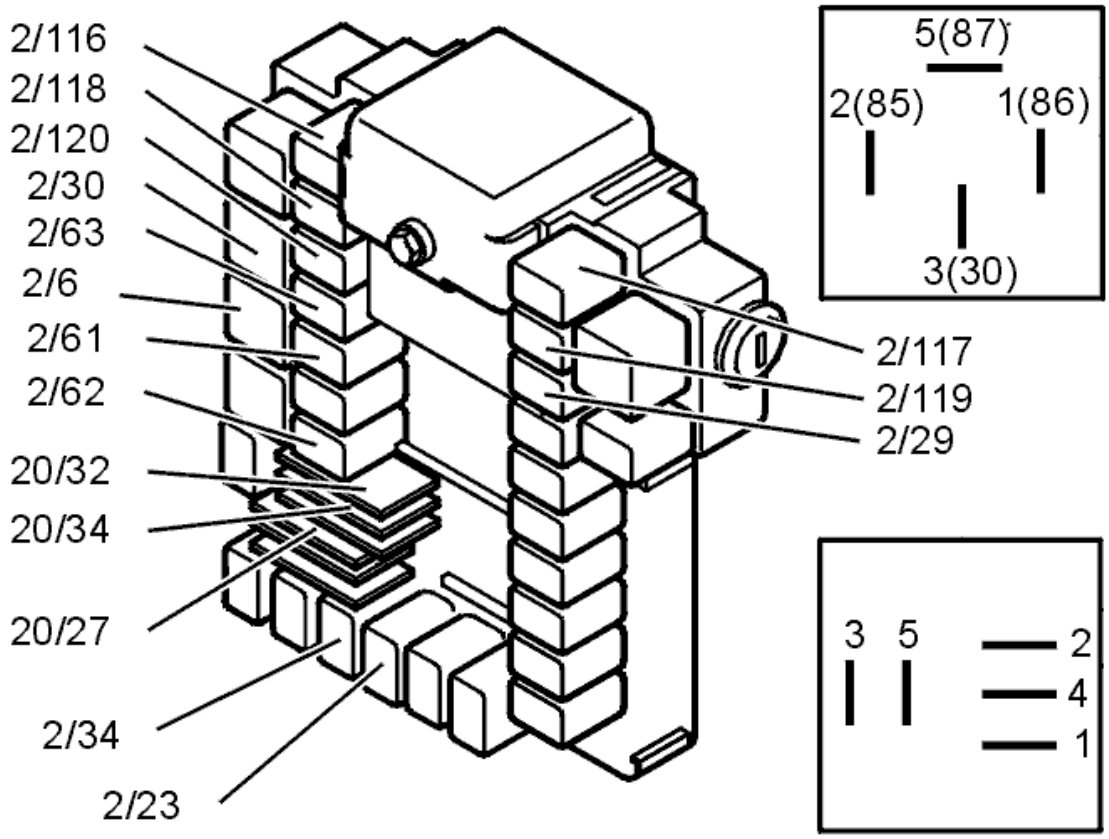

Fig. 252: Identifying Relays
Courtesy of VOLVO CARS CORPORATION

Is the cable correct?

- **YES**

  Refer to **CHECKING THE CABLE**

- **NO**

  OKAY: Troubleshooting has been completed.

CHECKING THE CABLE

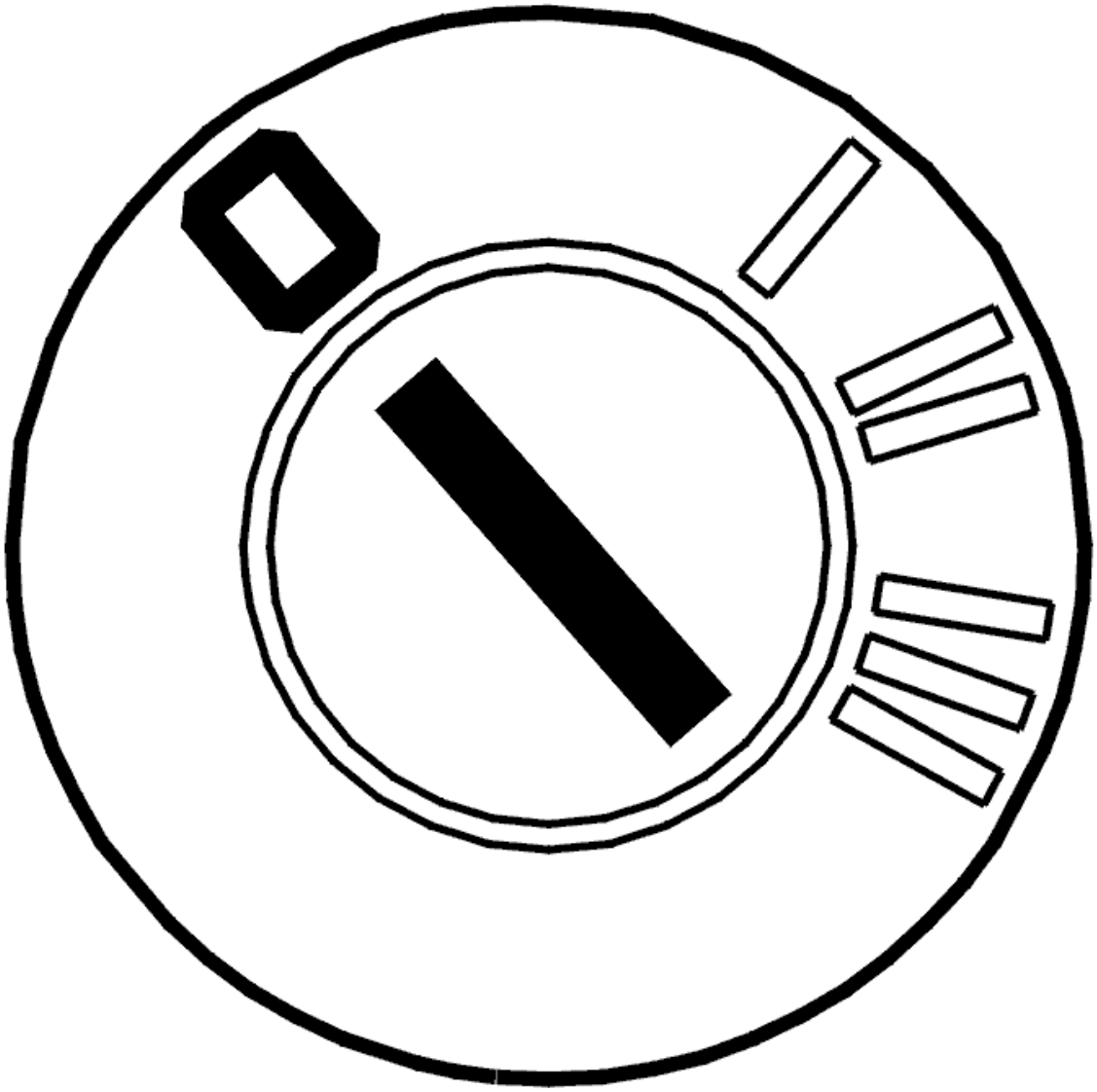

Fig. 253: Identifying Ignition OFF
Courtesy of VOLVO CARS CORPORATION

- Ignition off
- Remove relay 2/29 from the central electronic module (CEM).

  Check the cable between fuse 11C/24 terminal #2 (10A) and relay holder 2/29 terminal #3. Check for an intermittent short-circuit to ground.

  Also check the cable between relay holder 2/29 terminal #1 and Shift Lock connector terminal #1. Check for a short-circuit to ground.

  Remedy as necessary.

  Other information:

- To connect the breakout box, see **CONNECTING THE BREAKOUT BOX**
- For information about signals, see **SIGNAL SPECIFICATION**
- see **CHECKING WIRING AND TERMINALS** .

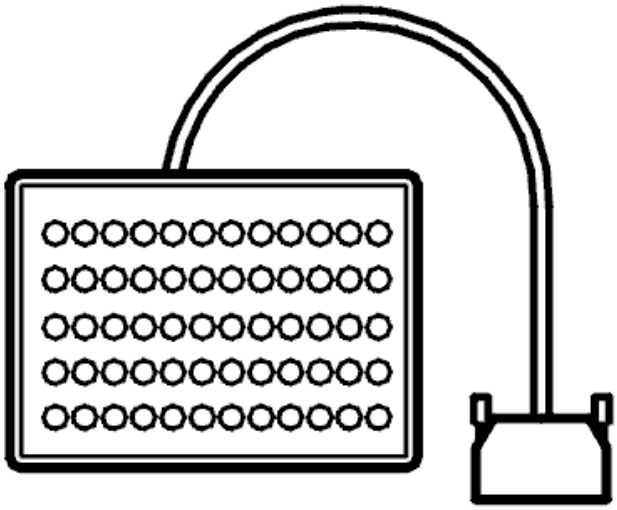

Fig. 254: Breakout Box
Courtesy of VOLVO CARS CORPORATION

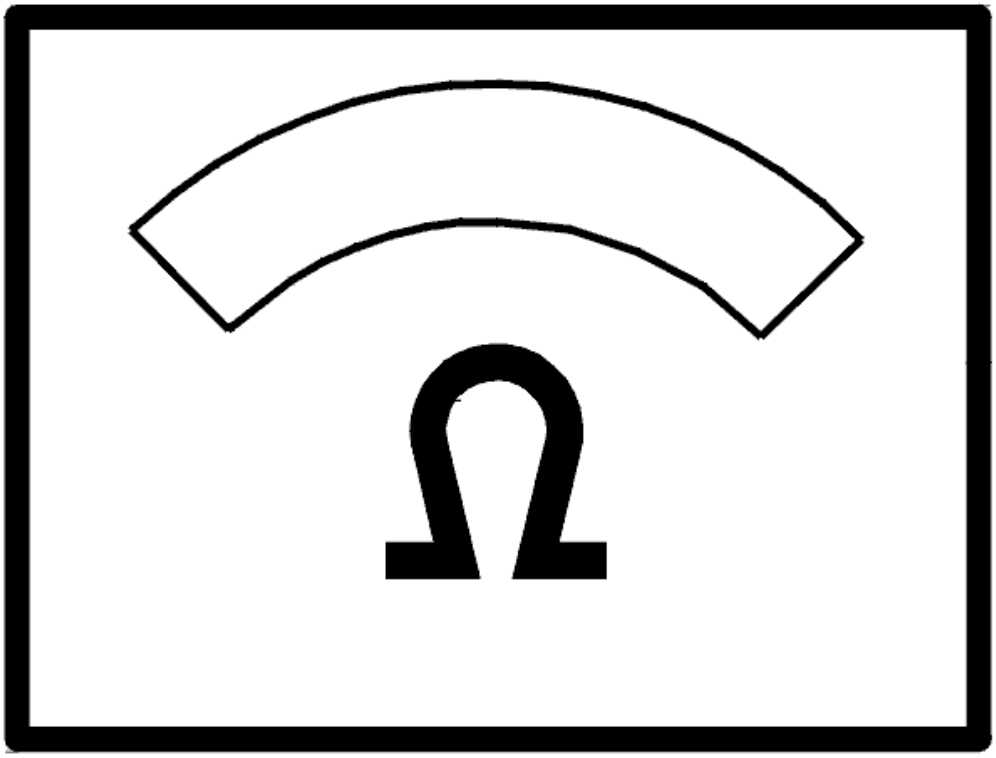

Fig. 255: Identifying Ohmmeter
Courtesy of VOLVO CARS CORPORATION

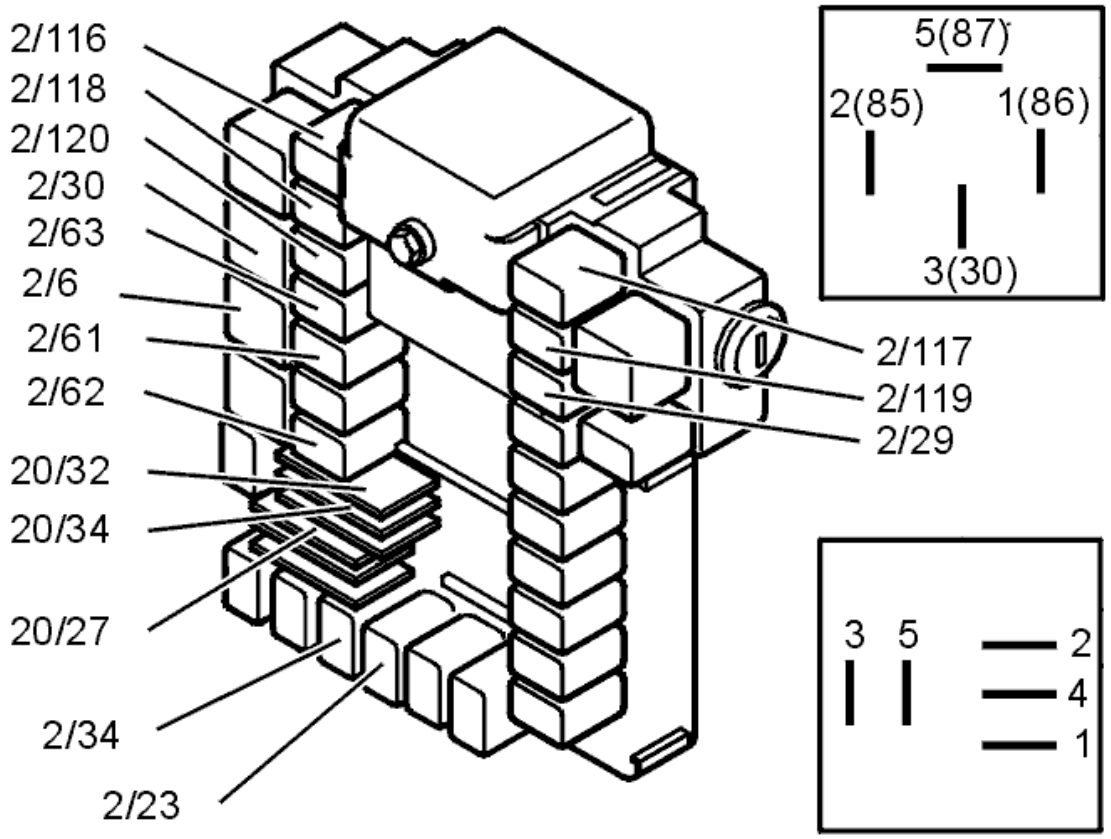

Fig. 256: Identifying Relays
Courtesy of VOLVO CARS CORPORATION

CHECKING THE CABLE

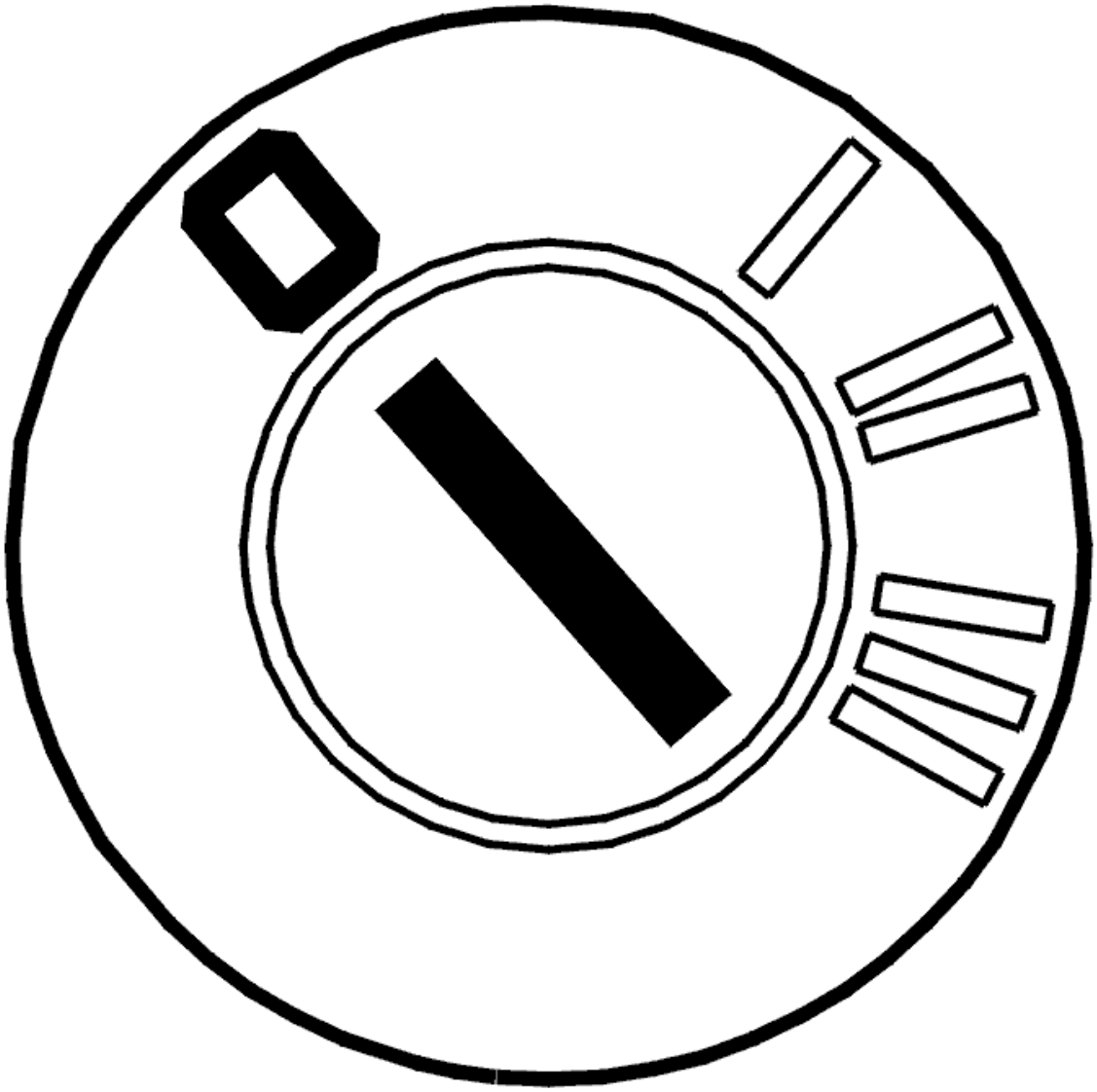

Fig. 257: Identifying Ignition OFF
Courtesy of VOLVO CARS CORPORATION

- Ignition off.

  Check the cable between fuse 11C/24 terminal #2 (10A) and relay holder 2/29 terminal #3. Check for an intermittent open-circuit.

  Also check the cable between relay holder 2/29 terminal #1 and Shift Lock connector terminal #1. Check for an open-circuit.

  Remedy as necessary.

  Other information:

  - To connect the breakout box, see **CONNECTING THE BREAKOUT BOX**

- For information about signals, see **SIGNAL SPECIFICATION**
- see **CHECKING WIRING AND TERMINALS**

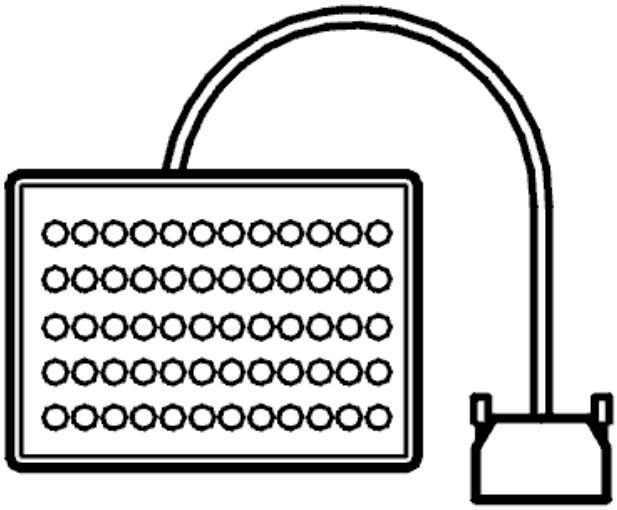

Fig. 258: Breakout Box
Courtesy of VOLVO CARS CORPORATION

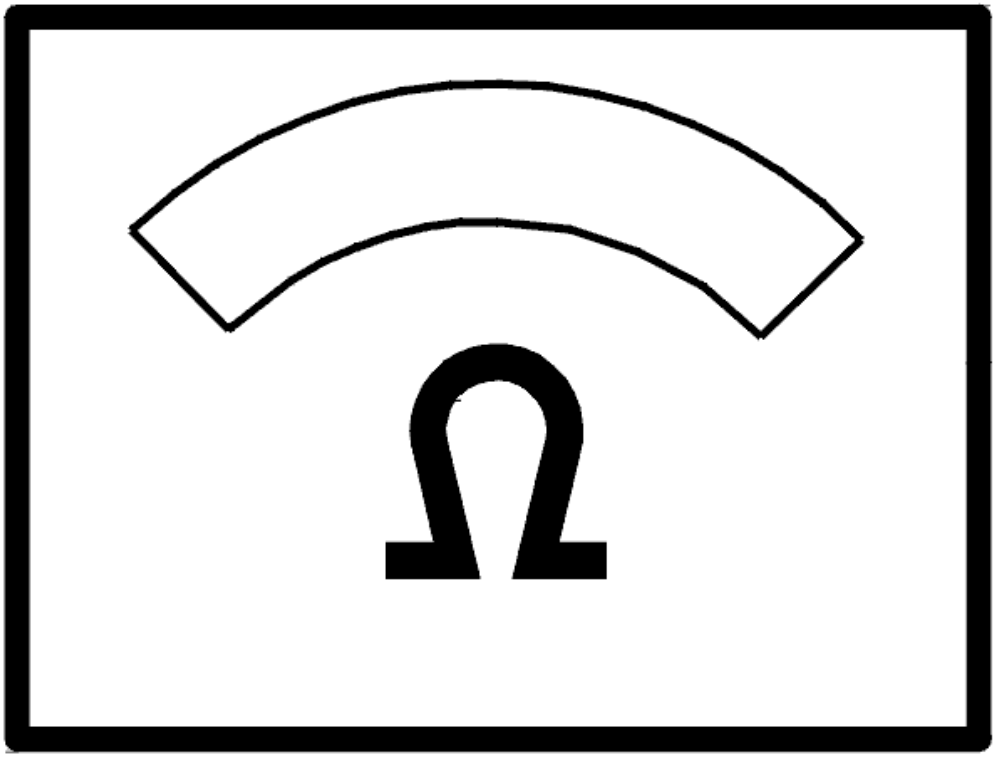

Fig. 259: Identifying Ohmmeter
Courtesy of VOLVO CARS CORPORATION

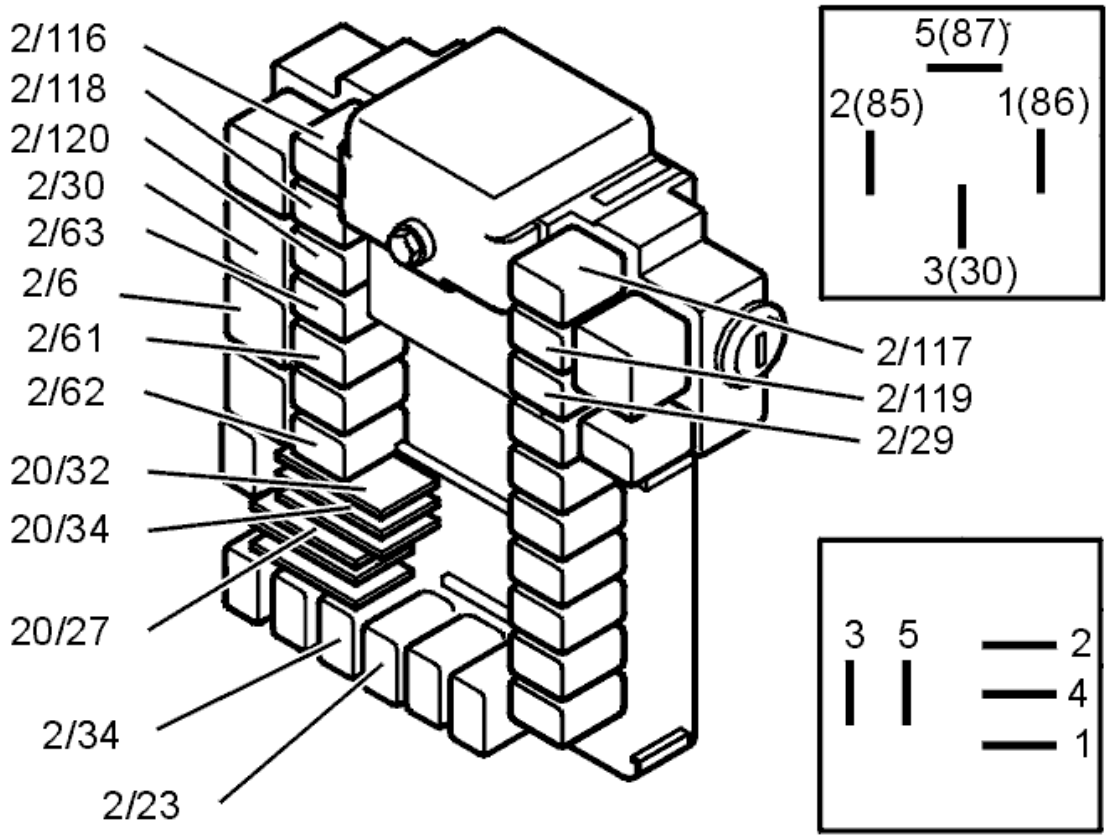

Fig. 260: Identifying Relays
Courtesy of VOLVO CARS CORPORATION

TROUBLE-SHOOTING INFORMATION

Condition

No diagnostic trouble codes are displayed.

Possible Source

- Defective fuse
- Open circuit in signal wire or power supply
- Faulty relay.

Fault symptom[s]

- Engine does not start.

CHECKING THE STARTER MOTOR CIRCUIT (2003-04)

CHECKING THE STARTER MOTOR CIRCUIT

SYMPTOM VERIFICATION

HINT: After the repair it is necessary to check that the fault has been rectified.

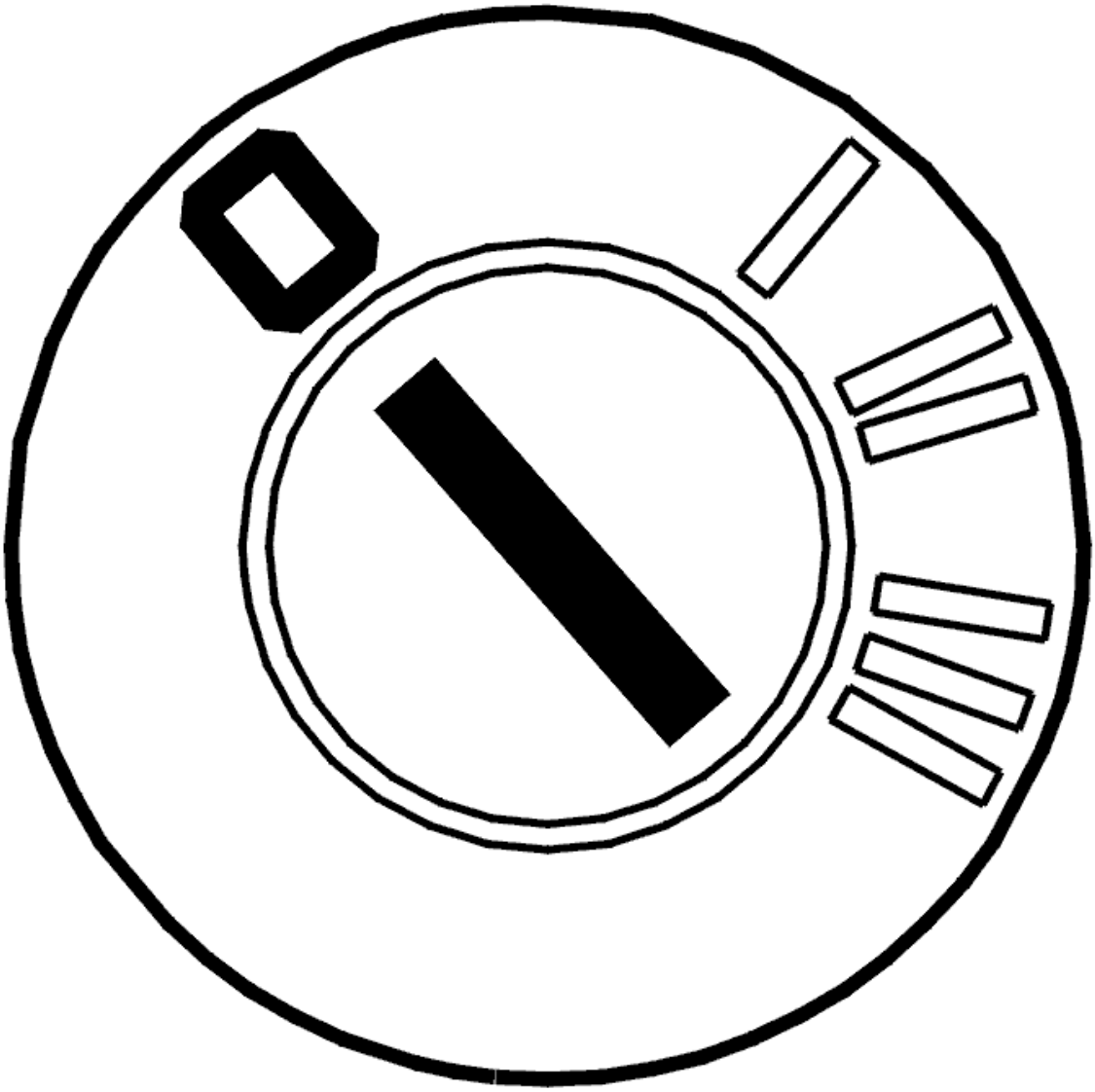

Fig. 261: Identifying Ignition OFF
Courtesy of VOLVO CARS CORPORATION

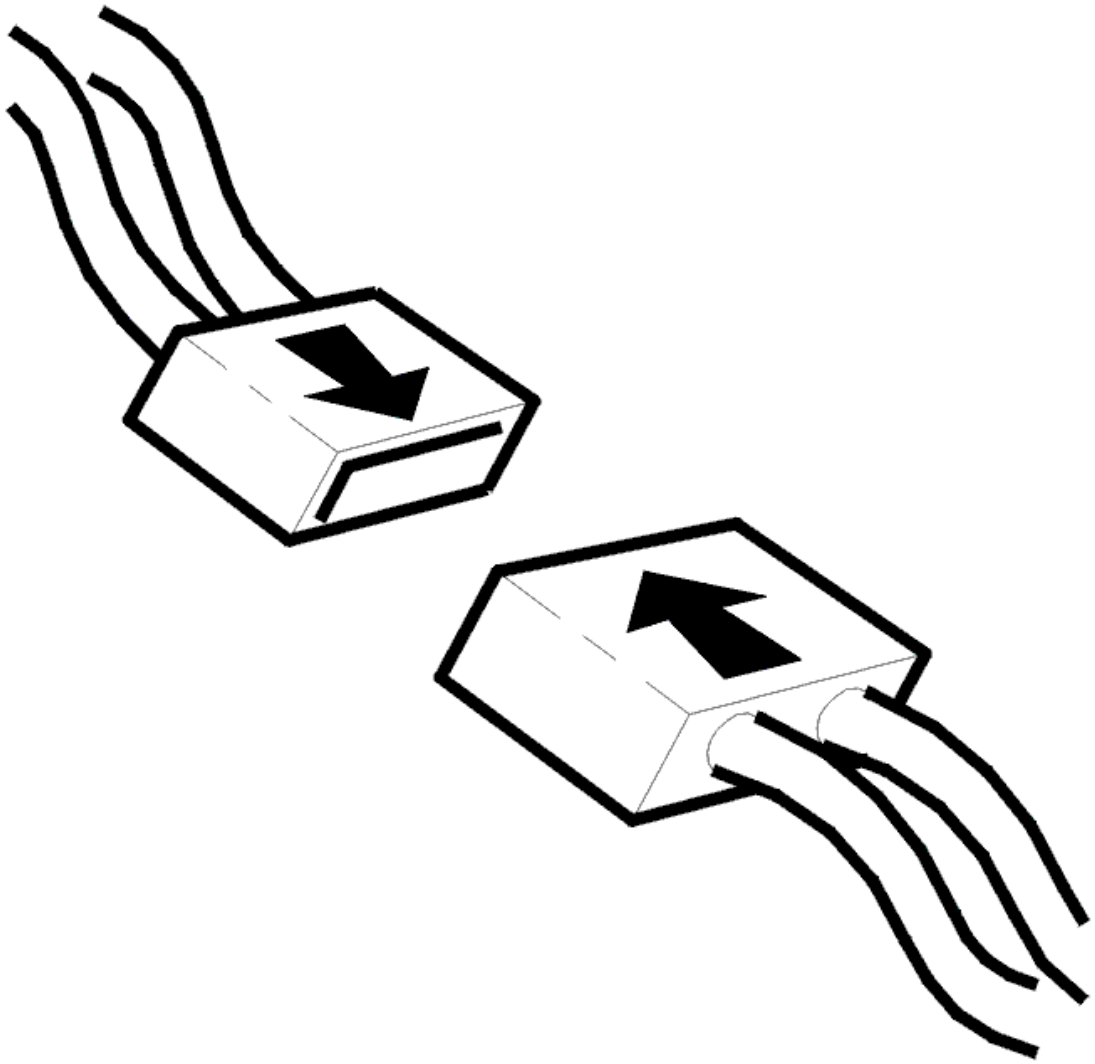

Fig. 262: Connecting Connector
Courtesy of VOLVO CARS CORPORATION

- Ignition off.
- Install connectors, components, etc.

  Start the engine.

Does the starter motor work

- **YES**

  VERIFIED: Troubleshooting has been completed.

- **NO**

VERIFICATION FAILED: The fault should have been detected and remedied. As this is not the case fault-tracing has failed. Exit fault-tracing for this diagnostic trouble code (DTC) or make another attempt.

CHECKING THE SUN ROOF SUNSHADE (2003-12)

CHECKING THE SUN ROOF SUNSHADE

CHECKING THE SUNSHADE

Check that the sunshade rail is clean. Clean the rail as necessary.

Check that the sunshade guide runs in the rail. If necessary, reinsert the guide in the rail.

Replace the sunshade guide as necessary.

Remedy as necessary:

Other information

- For sunshade guide replacement: **SUN VISOR/INNER COVER SUN ROOF, REPLACING**

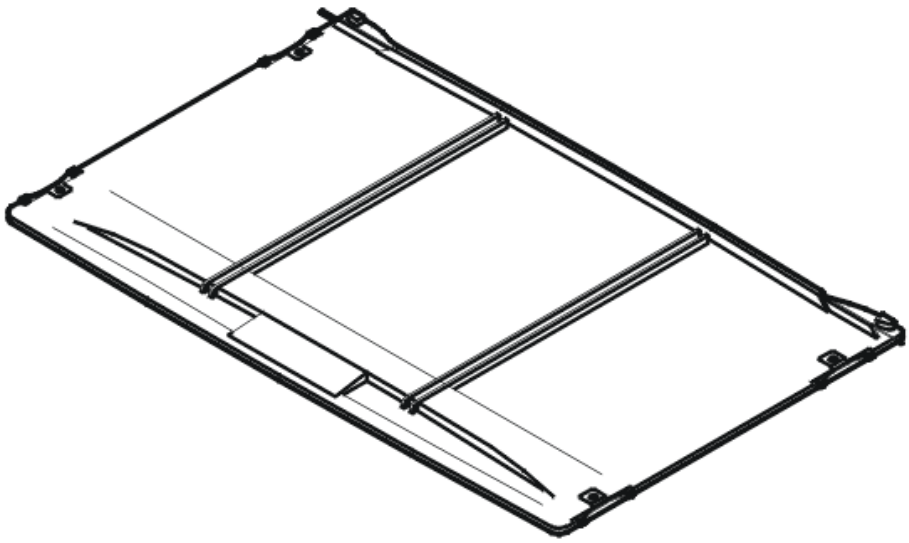

Fig. 263: Identifying Sunshade
Courtesy of VOLVO CARS CORPORATION

- **Continue**

  Refer to **FUNCTIONALITY CHECK**

FUNCTIONALITY CHECK

Check that the sun roof sunshade can be operated.

Is the sunshade function OK?

- **YES**

  OKAY: Troubleshooting has been completed.

- **NO**

  Refer to **INFORMATION**

INFORMATION

FAULT-TRACING INFORMATION

The fault should be diagnosed and remedied. Since this is not the case the fault-tracing process has failed.

Complete the fault-tracing for those fault or try again.

SUN VISOR/INNER COVER SUN ROOF, REPLACING

- See **SUN VISOR/INNER COVER SUN ROOF, REPLACEMENT** .

TROUBLE-SHOOTING INFORMATION

Condition

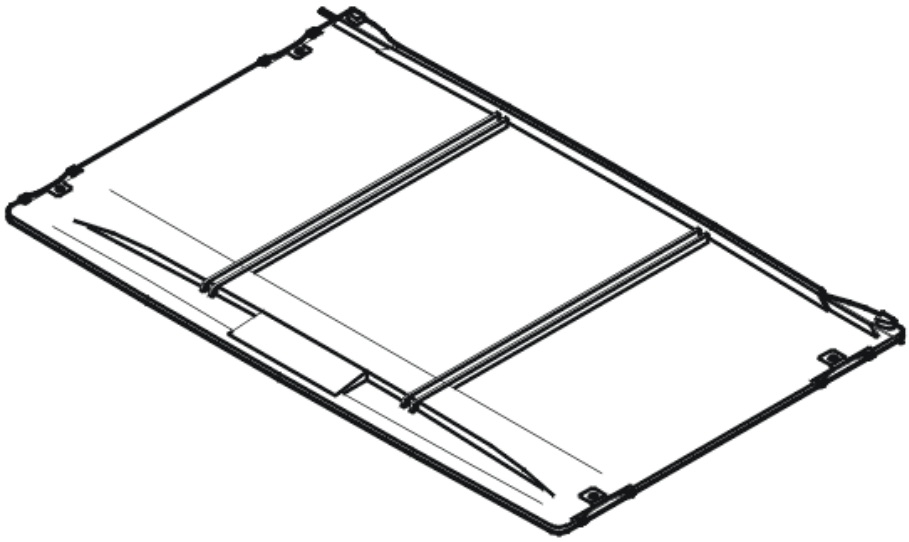

Fig. 264: Identifying Sunshade
Courtesy of VOLVO CARS CORPORATION

No diagnostic trouble codes are displayed.

Substitute Value

None.

Possible Source

- Dirt or coating on the guide rail.
- Faulty guide rail.

Fault symptom[s]

- The sun roof sunshade cannot be operated.

CHECKING THE SUNROOF (2003-12)

CHECKING SUN ROOF

CHECKING THE CONNECTORS

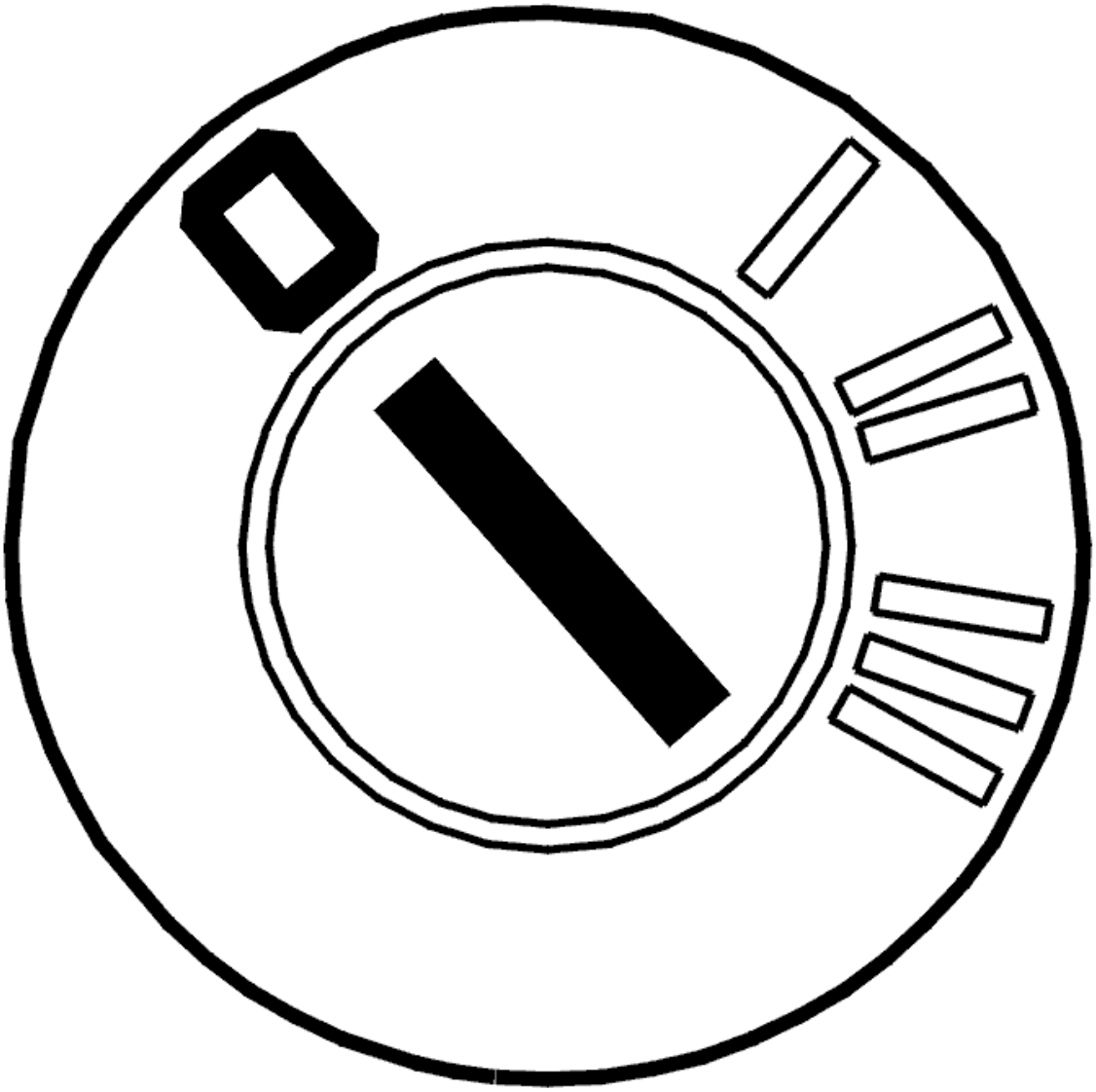

Fig. 265: Identifying Ignition OFF
Courtesy of VOLVO CARS CORPORATION

- Ignition off.

  Check the upper electronic module (UEM), sun roof module (SRM) and wiring connectors (54/3R and 54/13). Check for contact resistance and oxidation. Check for loose connections.

  Check for damage carefully.

  Reinstall the components, reconnect the connectors etc.

  Ignition on.

  Operate the sun roof.

Other information

- To access the upper electronic module (UEM), see **UPPER ELECTRONIC MODULE (UEM)/REARVIEW MIRROR, REPLACING**
- To access the sun roof connector, see **CONTROL MODULE, SUN ROOF, REPLACING**
- see **CHECKING WIRING AND TERMINALS** .

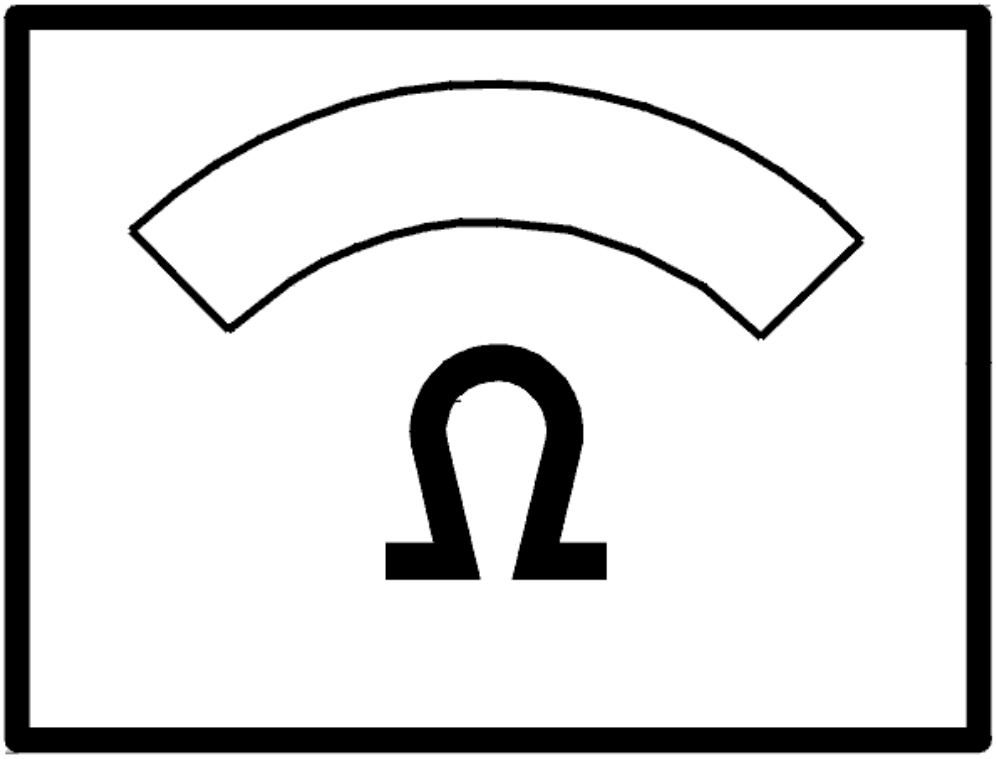

Fig. 266: Identifying Ohmmeter
Courtesy of VOLVO CARS CORPORATION

Do the sun roof controls operate?

- **YES**

  OKAY: Troubleshooting has been completed.

- **NO**

  Refer to **CHECKING COMPONENTS AND WIRING**

CHECKING COMPONENTS AND WIRING

Check that main fuse (11A/2) in the relay/fusebox in the engine compartment is intact.

Check that fuse (11C/34) in the integrated relay/fusebox in the passenger compartment is intact.

Check the cable between sun roof module (SRM) terminal #1 and the battery. Check for a short-circuit to ground. Check for an open-circuit.

Check the cable between sun roof control module terminal #10 and ground: Check the left A-post. Check for a short-circuit to ground. Check for an open-circuit.

The upper electronic module (UEM) and sun roof module (SRM)

Check the cable between upper electronic module (UEM) terminal #8 and sun roof module (SRM) terminal #6. Check for a short-circuit to ground.

Sun roof control module and roof lamp module

Check the cable between the sun roof module (SRM) terminal #2 and the roof lamp module terminal #4B. Check for a short-circuit to supply voltage.

Check the cable between the sun roof module (SRM) terminal #8 and the roof lamp module terminal #3B. Check for a short-circuit to supply voltage.

Check the cable between sun roof module (SRM) terminal #8 and roof lamp module terminal #3B. Check for an open-circuit.

Check the cable between sun roof module (SRM) terminal #2 and roof lamp module terminal #4B. Check for an open-circuit.

Check the cable between sun roof module (SRM) terminal #3 and roof lamp module terminal #2B. Check for an open-circuit.

Check the cable between sun roof module (SRM) terminal #7 and roof lamp module terminal #1B. Check for an open-circuit.

Check the cable between the sun roof module (SRM) terminal #9 and the roof lamp module terminal #9A. Check for an open-circuit. Check for a short-circuit to ground.

Sun roof switch and roof lamp module

Check the wiring between sun roof switch and roof lamp module (RCM). Check for an open-circuit. Check for

a short-circuit to supply voltage.

Remedy as necessary.

Other information

- For further information about signals and other values, see **SIGNAL DESCRIPTION, UPPER ELECTRONIC MODULE (UEM)**
- To connect the breakout box, see **CONNECTING THE BREAKOUT BOX**
- To replace the switch for the sun roof, see **SWITCH SUN ROOF, REPLACING**
- To access the roof lamp module connector, see **INTERIOR LIGHTING, REPLACING**
- To access the sun roof control module, see **CONTROL MODULE, SUN ROOF, REPLACING**
- With the ignition off, the voltage between control module terminal #1 and ground should be battery voltage
- see **CHECKING WIRING AND TERMINALS** .

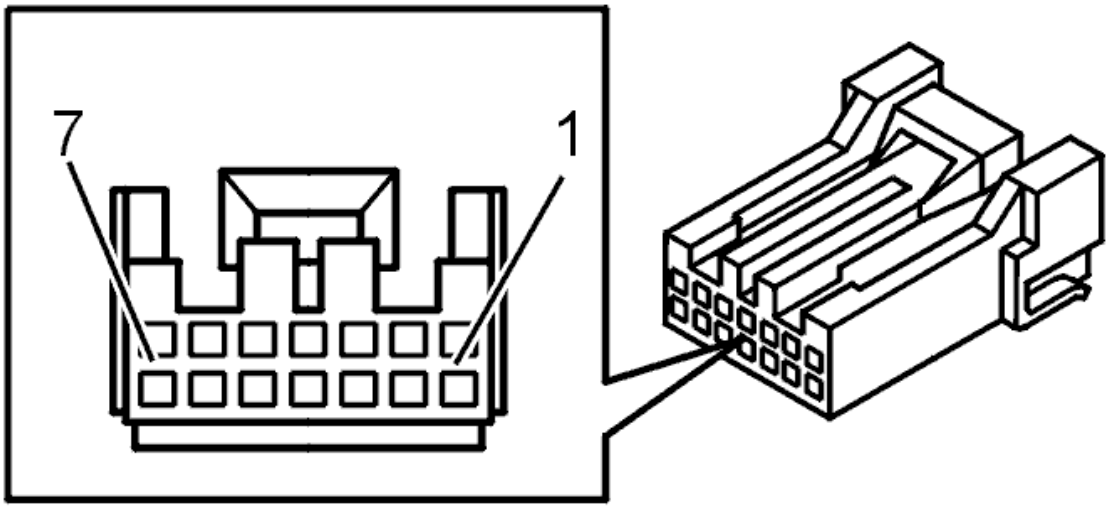

Fig. 267: Identifying Connector Terminals
Courtesy of VOLVO CARS CORPORATION

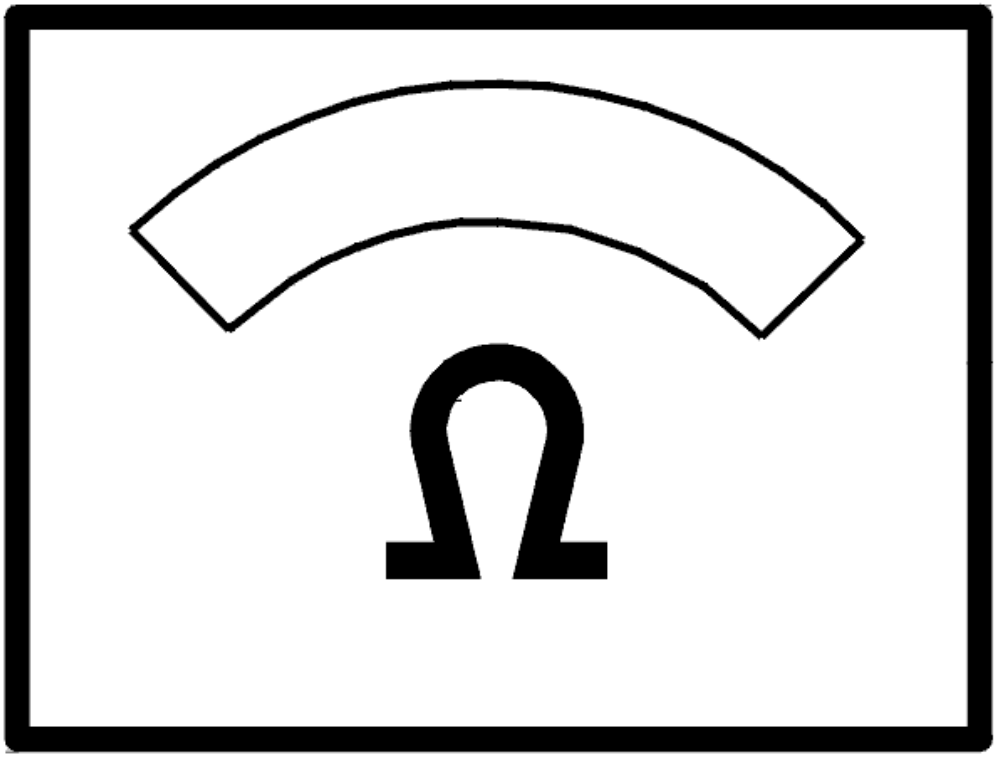

Fig. 268: Identifying Ohmmeter
Courtesy of VOLVO CARS CORPORATION

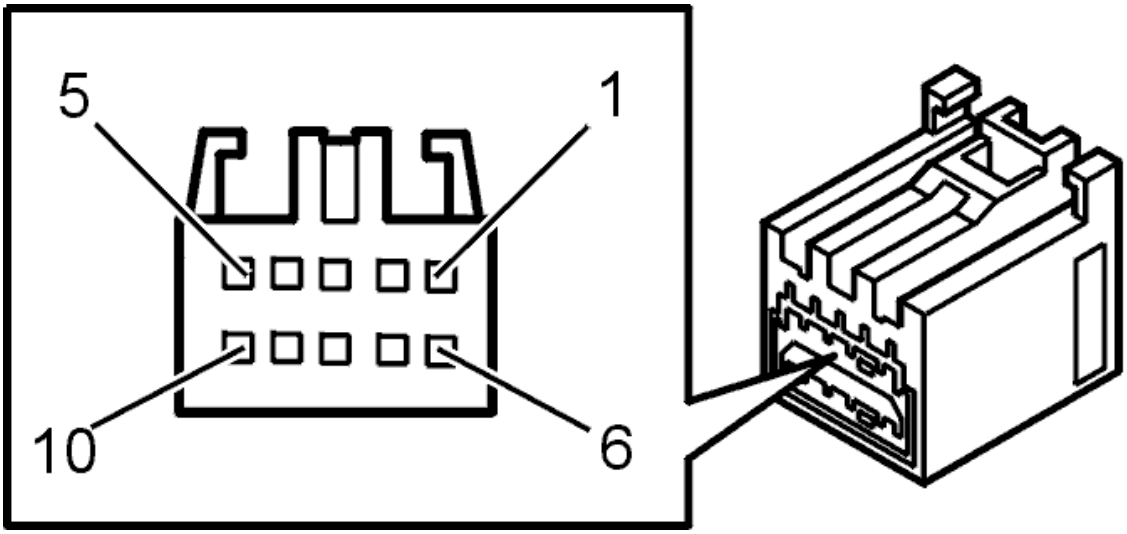

Fig. 269: Identifying Sunroof Module Connector A Terminals
Courtesy of VOLVO CARS CORPORATION

- **Continue**

  Refer to **CHECKING COMPONENTS**

CHECKING COMPONENTS

Visually check for damage to the roof lamp module and its switches.

Remedy as necessary.

If no fault is found replace the sun roof switch.

Other information

- To replace the switch for the sun roof, see **SWITCH SUN ROOF, REPLACING** .

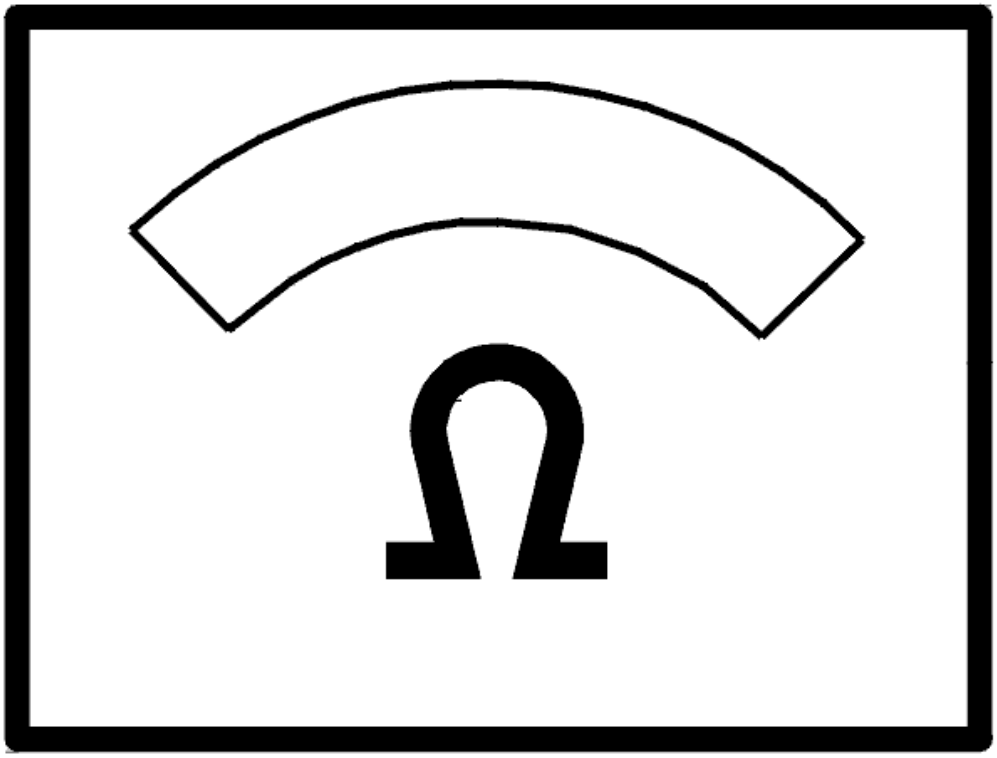

Fig. 270: Identifying Ohmmeter
Courtesy of VOLVO CARS CORPORATION

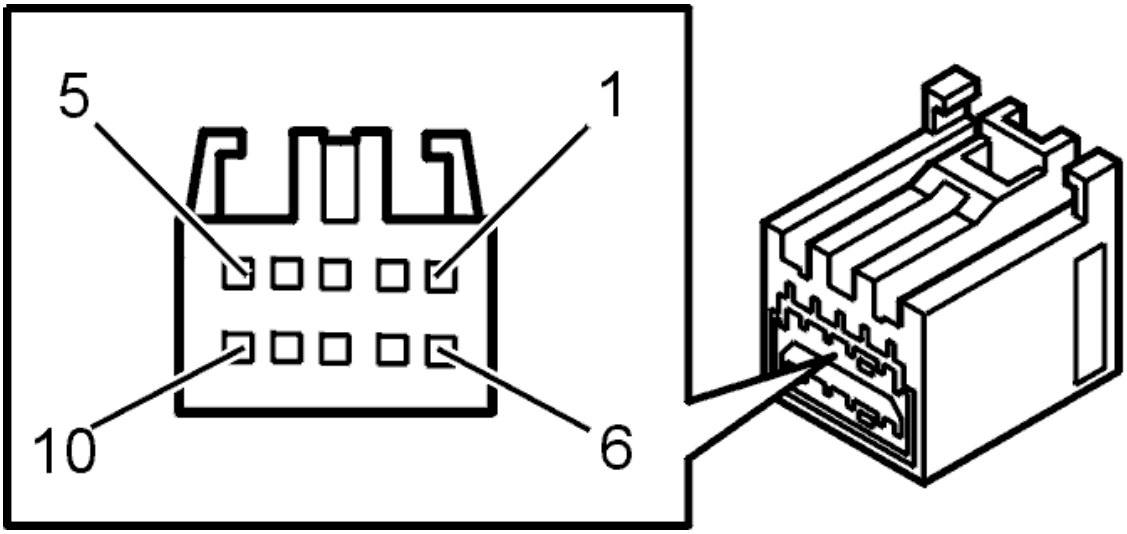

Fig. 271: Identifying Sunroof Module Connector A Terminals
Courtesy of VOLVO CARS CORPORATION

FAULT-TRACING INFORMATION

Condition

No DTCs stored. Sun roof installed.

Substitute Value

None.

Possible Source

- Blown fuse.
- Fault in the power supply to the sun roof control module.
- Fault in the ground terminal for the sun roof control module.
- Fault in the wiring between the upper electronic module and the sun roof control module.
- Fault in the wiring between the sun roof control module and the roof lamp module.
- Fault in the wiring between the sun roof switch and the roof lamp module.

Fault symptom[s]

- The power sun roof does not operate.

CHECKING THE TAILGATE WIPER (2003-04)

CHECKING THE TAILGATE WIPER

CHECKING THE CABLE

- **HINT: The fault could also have been caused by the tailgate wiper sticking.**

  Check fuse 11D/12.

  Check the cable between fuse 11D/12 #2 and rear electronic module relay base 2/16 #3. Check the cable between fuse 11D/12 #2 and rear electronic module relay base 2/72 #3. Check for a short-circuit to supply voltage according to **SHORT-CIRCUIT TO SUPPLY VOLTAGE. PERMANENT FAULTS** . Check for an open-circuit according to **OPEN-CIRCUIT, PERMANENT FAULTS** .

  Check the cable between rear electronic module relay base 2/16 #1 and wiper motor 6/32 #2. Check the cable between rear electronic module relay base 2/72 #1 and wiper motor 6/32 #1. Check for a short-circuit to supply voltage according to **SHORT-CIRCUIT TO SUPPLY VOLTAGE. PERMANENT FAULTS** . Check for an open-circuit according to **OPEN-CIRCUIT, PERMANENT FAULTS** .

  Check the cable between wiper motor 6/32 #3 and ground terminal 31/72. Check for a short-circuit to supply voltage according to **SHORT-CIRCUIT TO SUPPLY VOLTAGE. PERMANENT FAULTS** . Check for an open-circuit according to **OPEN-CIRCUIT, PERMANENT FAULTS** .

  If no other faults are found try a new tailgate wiper motor (6/32).

  Remedy as necessary.

  Other information:

  - To access the integrated relay/fusebox in the cargo compartment, see **RELAY/FUSE BOX CARGO COMPARTMENT/REAR ELECTRONIC MODULE (REM), REPLACING** .
  - For information about signals, see **SIGNAL SPECIFICATION** .

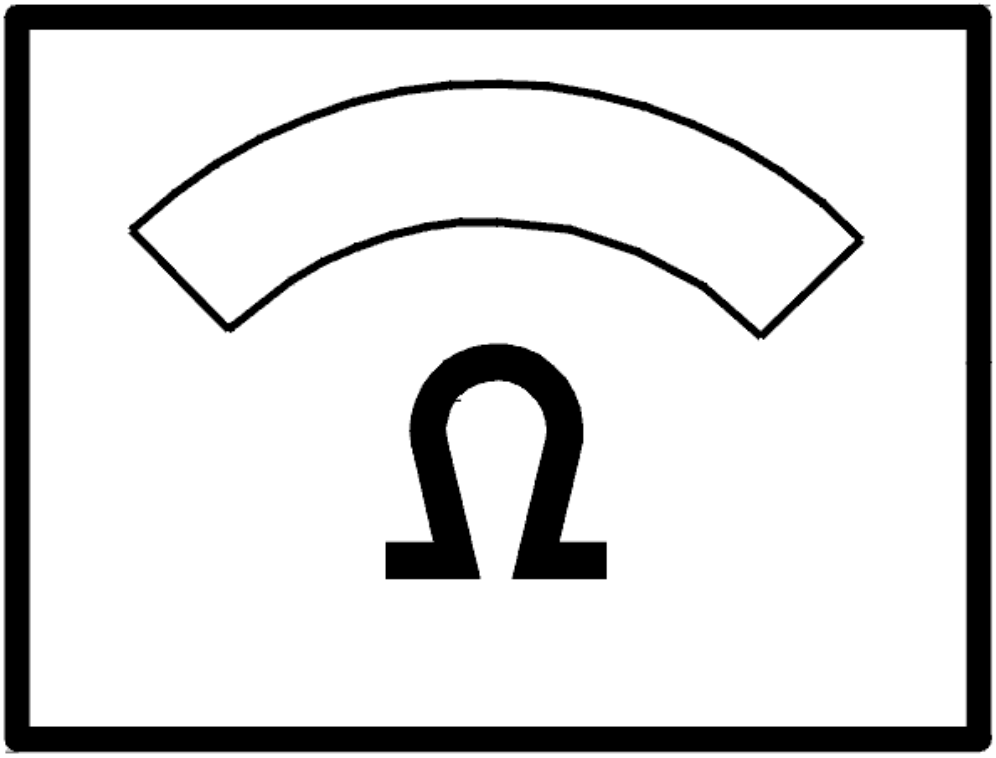

Fig. 272: Identifying Ohmmeter
Courtesy of VOLVO CARS CORPORATION

- **Continue**

  Refer to **VERIFICATION**

VERIFICATION

HINT: After carrying out the repair, check that the fault has been remedied.

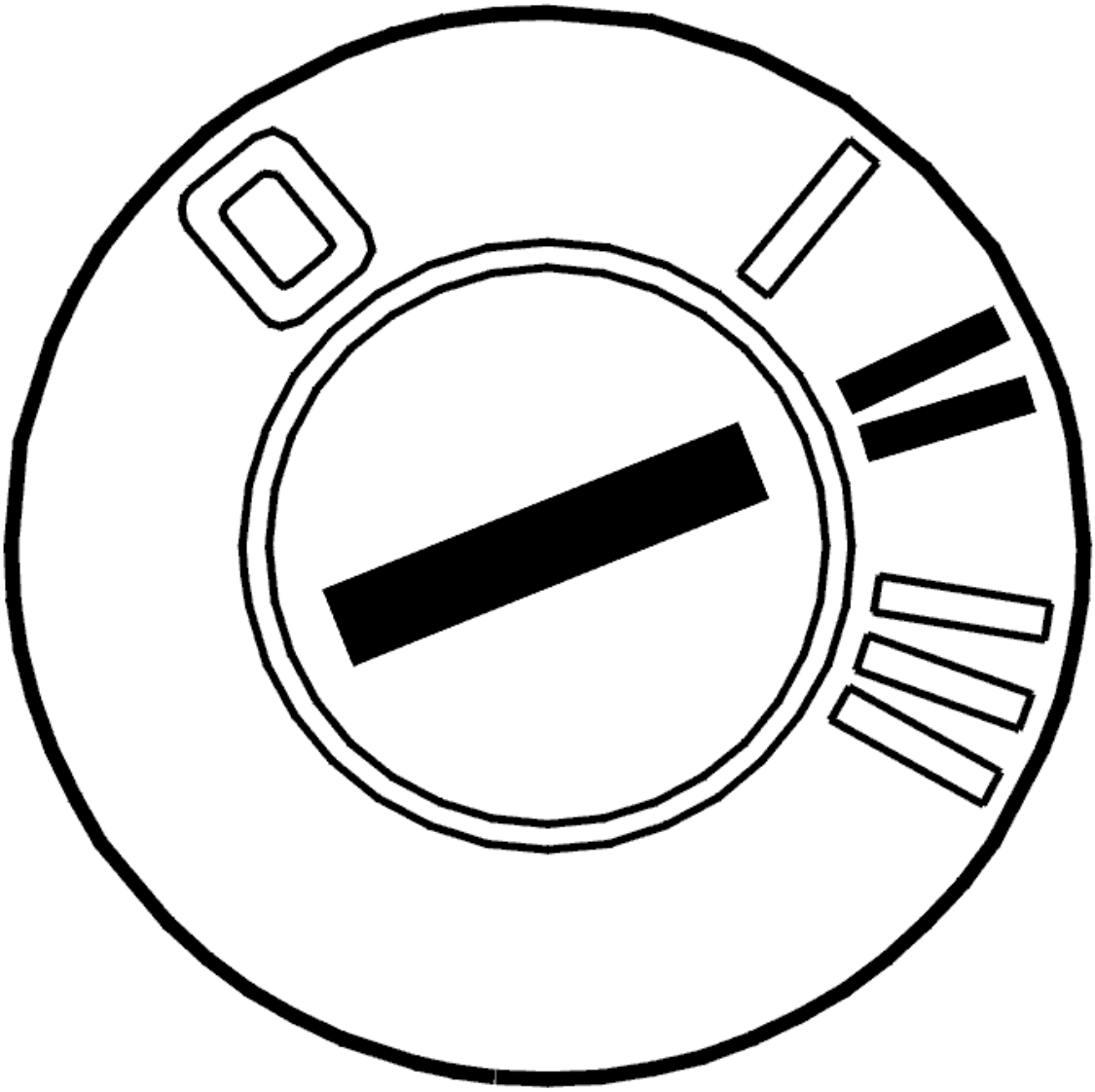

Fig. 273: Identifying Ignition ON
Courtesy of VOLVO CARS CORPORATION

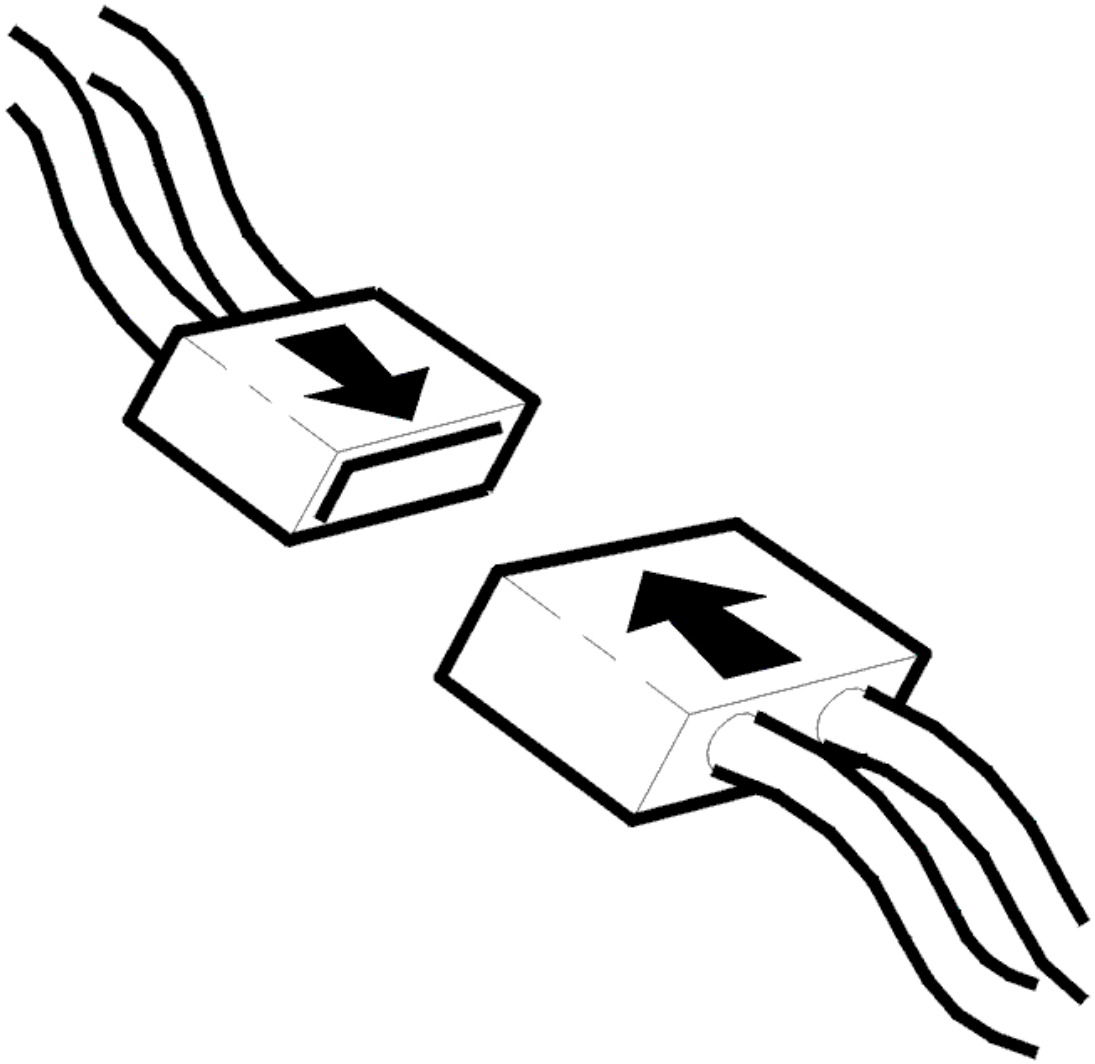

Fig. 274: Connecting Connector
Courtesy of VOLVO CARS CORPORATION

- Reinstall the connectors, components etc.
- Ignition on.

  Activate the tailgate wiper.

  Activate intermittent mode.

Is the function OK?

- **YES**

  VERIFIED: Troubleshooting has been completed.

- **NO**

  Refer to **INFORMATION**

INFORMATION

FAULT-TRACING INFORMATION

The fault should have been detected and remedied. As this is not the case fault-tracing has failed.

Exit fault-tracing for this diagnostic trouble code (DTC) or make another attempt.

TROUBLE-SHOOTING INFORMATION

Condition

No diagnostic trouble codes are displayed.

Possible Source

- Wiper has stuck on windscreen
- Defective windscreen wiper
- Open circuit in wire
- Short circuit to voltage supply on wire.

Fault symptom[s]

- Windscreen wiper motor does not work.

CHECKING THE TANK GAUGE (2005-09)

CHECKING THE TANK GAUGE

see **CHECKING THE TANK GAUGE**

CHECKING THE WARNING LIGHT (2003-04)

CHECKING THE WARNING LIGHT

PROGRAMMING DAYTIME RUNNING LAMPS

Three different daytime running light functions can be programmed:

Low beam in all switch positions except the parking light position (Flex zero)

Position light switch:

OFF: Parking and daytime running lamps or Xenon lamps are activated depending on the signal from the twilight sensor.

Parking lamps: Only parking lamps activated.

On: Parking and Xenon lamps are activated.

The light switch functioning on the basis of: off, parking light and low beam (Flex standard)

Position light switch:

OFF: Daytime running lamps are activated. If the twilight sensor registers insufficient light, all lighting is switched off (Xenon lamps are not activated).

Parking lamps: Only parking lamps activated.

On: Parking and Xenon lamps are activated.

Low beam always on regardless of the position of the light switch (Flex low)

Position light switch:

OFF: Parking and daytime running lamps or Xenon lamps are activated depending on the signal from the twilight sensor.

Parking lamps: Parking and Xenon lamps are activated.

On: Parking and Xenon lamps are activated.

It is essential that the legal requirements of each country are followed.

NOTE: It is not permitted to change this programming in the Canadian market.

Read off the programming by clicking on the VCT2000 symbol.

To change the setting, mark the desired value in the scrolling list and start programming.

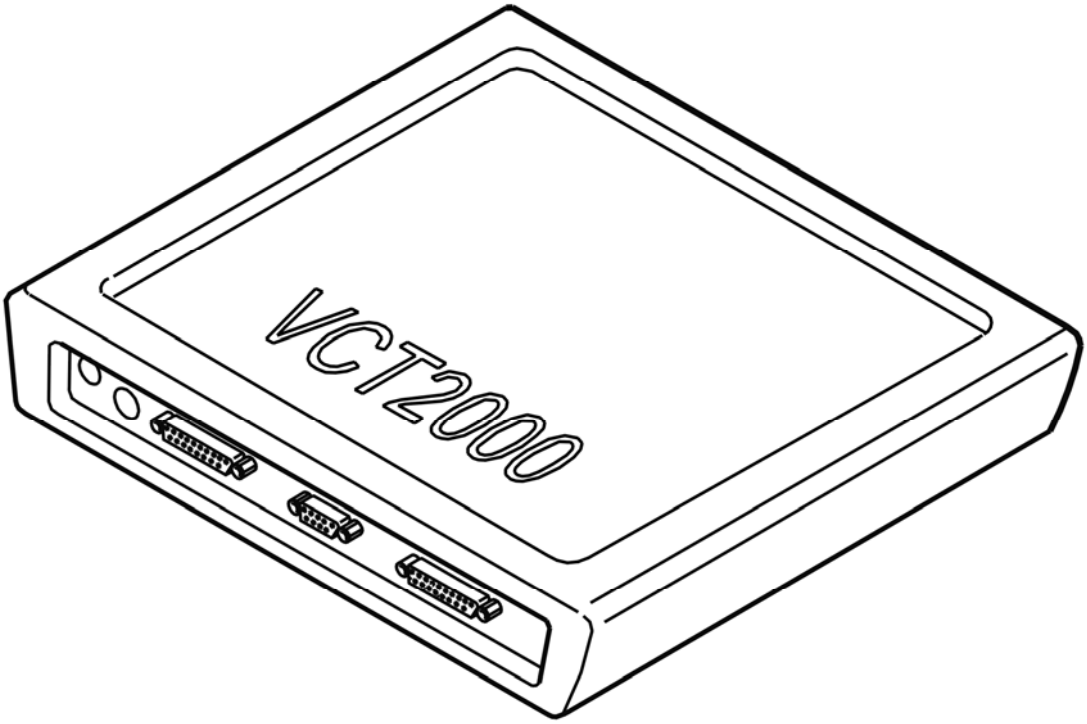

Fig. 275: Identifying VCT2000 Diagnostic Tool Symbol In VIDA
Courtesy of VOLVO CARS CORPORATION

- **Continue**

  Refer to **SAVE THE PROGRAMMED VALUE**

SAVE THE PROGRAMMED VALUE

To ensure that the programmed information is stored, click on the VCT2000 symbol to force the entry.

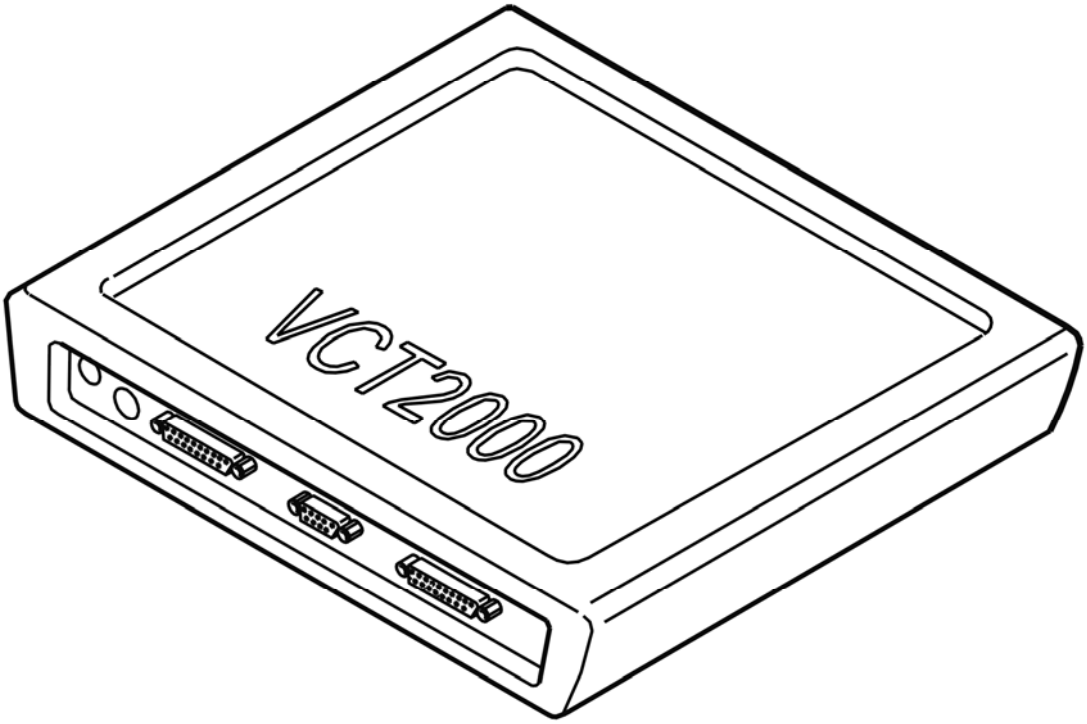

Fig. 276: Identifying VCT2000 Diagnostic Tool Symbol In VIDA
Courtesy of VOLVO CARS CORPORATION

CHECKING THE WIPERS (2003-04)

CHECKING WINDSHIELD WIPER

CHECKING THE CABLE

HINT: The fault could also have been caused by the windshield wipers sticking.

Check the cable between central electronic module (CEM) terminal #16B and motor (6/1) terminal #3. Check for a short-circuit to supply voltage. See **SHORT-CIRCUIT TO SUPPLY VOLTAGE. PERMANENT FAULTS** . Check for an open-circuit. See **OPEN-CIRCUIT, PERMANENT FAULTS** .

Check the connector.

If no other faults are found try a new windshield wiper motor (6/1).

Remedy as necessary.

Other information:

- To connect the breakout box, see **CONNECTING THE BREAKOUT BOX**
- For information about signals, see **SIGNAL SPECIFICATION**
- To replace the wiper motor, see **MOTOR WINDSHIELD WIPER, REPLACING** .

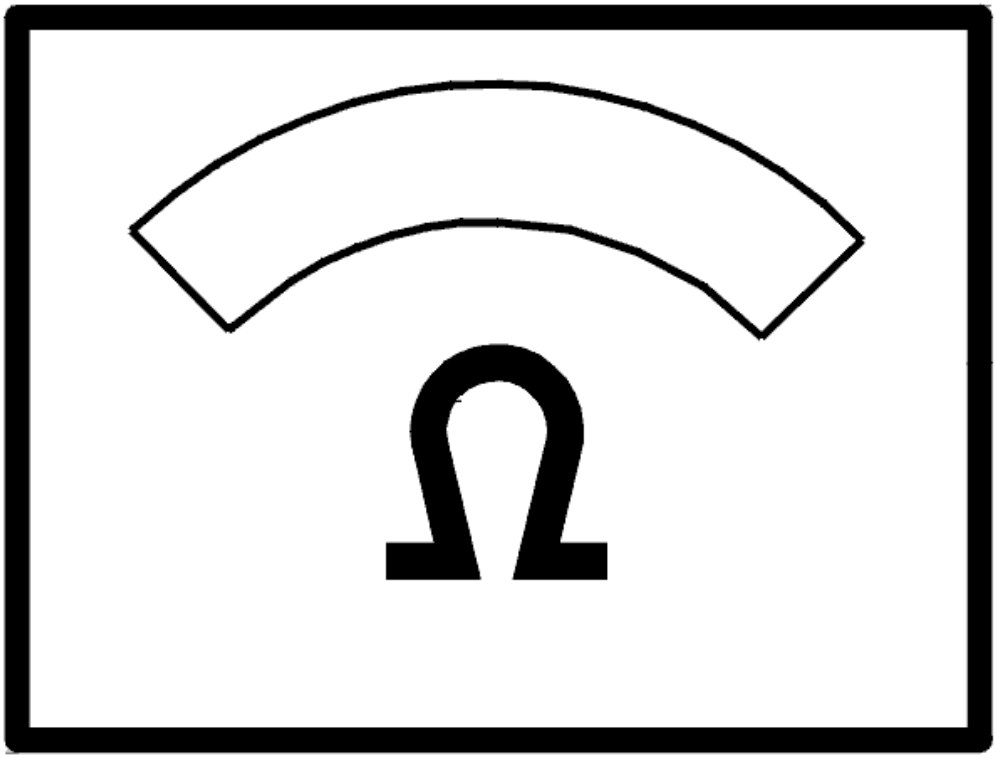

Fig. 277: Identifying Ohmmeter
Courtesy of VOLVO CARS CORPORATION

- **Continue**

  Refer to **VERIFICATION**

VERIFICATION

HINT: After the repair it is necessary to check that the fault has been rectified.

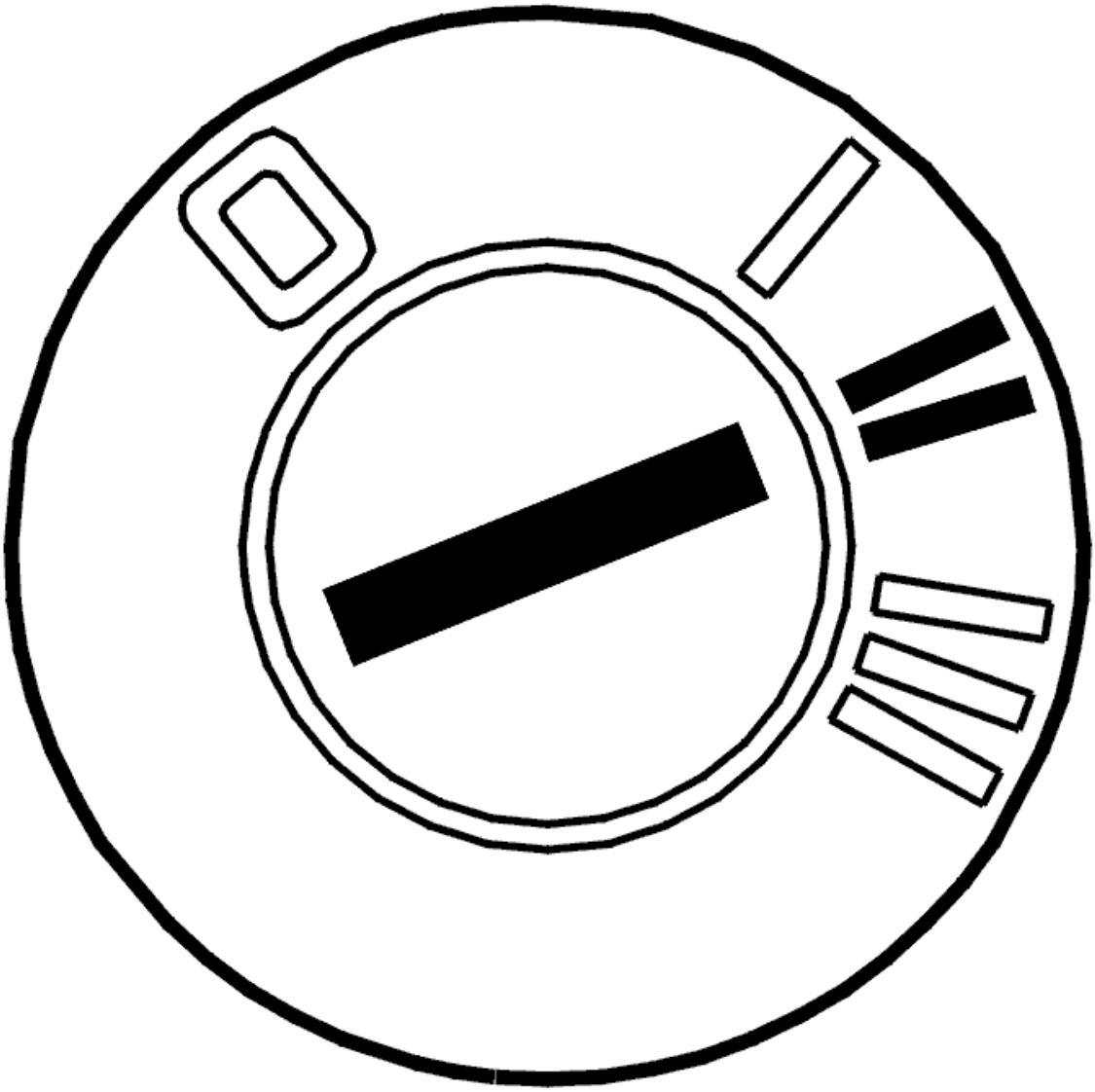

Fig. 278: Identifying Ignition ON
Courtesy of VOLVO CARS CORPORATION

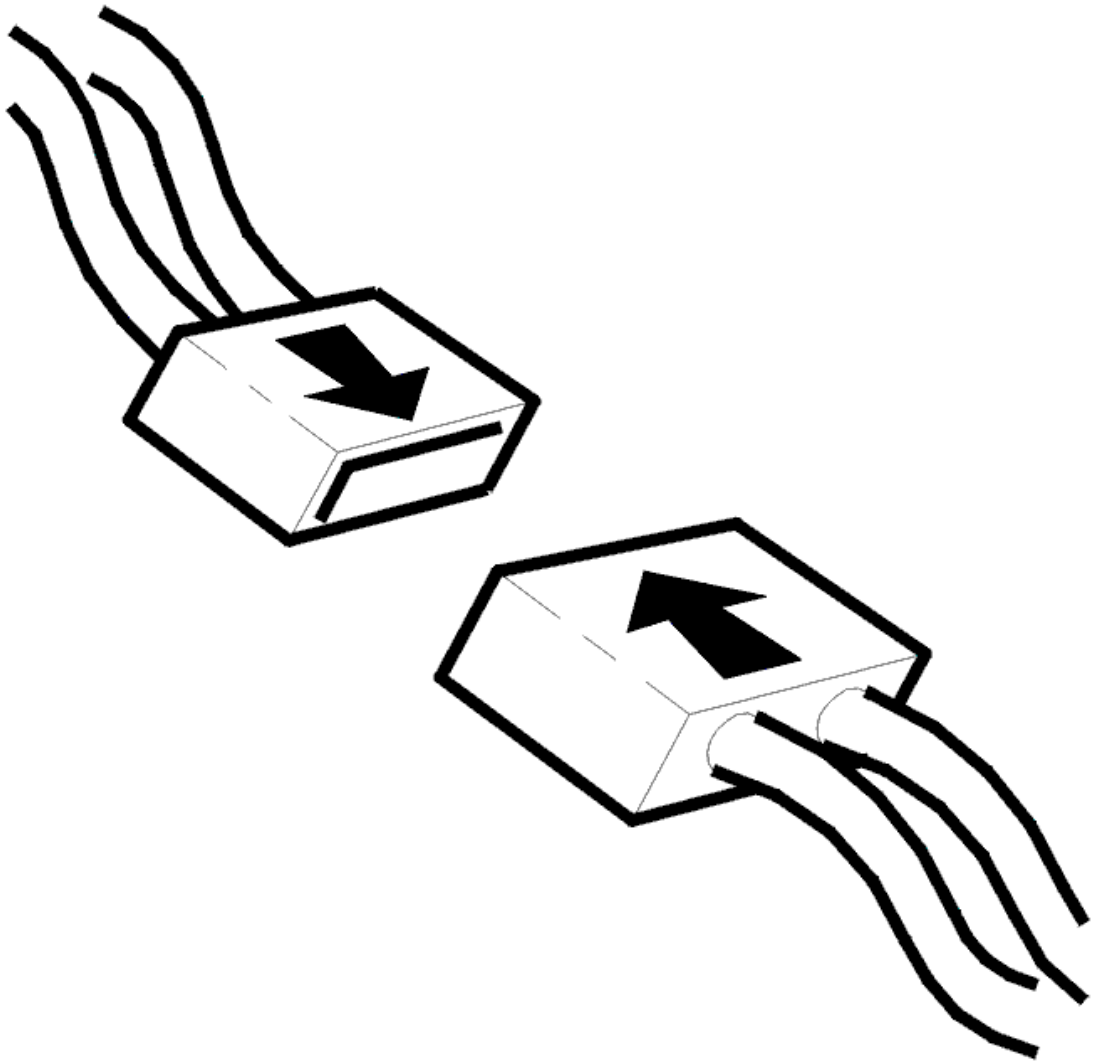

Fig. 279: Connecting Connector
Courtesy of VOLVO CARS CORPORATION

- Connect the connectors, install the components, etc.
- Ignition on.

  Activate windscreen wipers, intermittent position.

  Read the value.

  The value should alternate between the two positions "rest position" and "operating position".

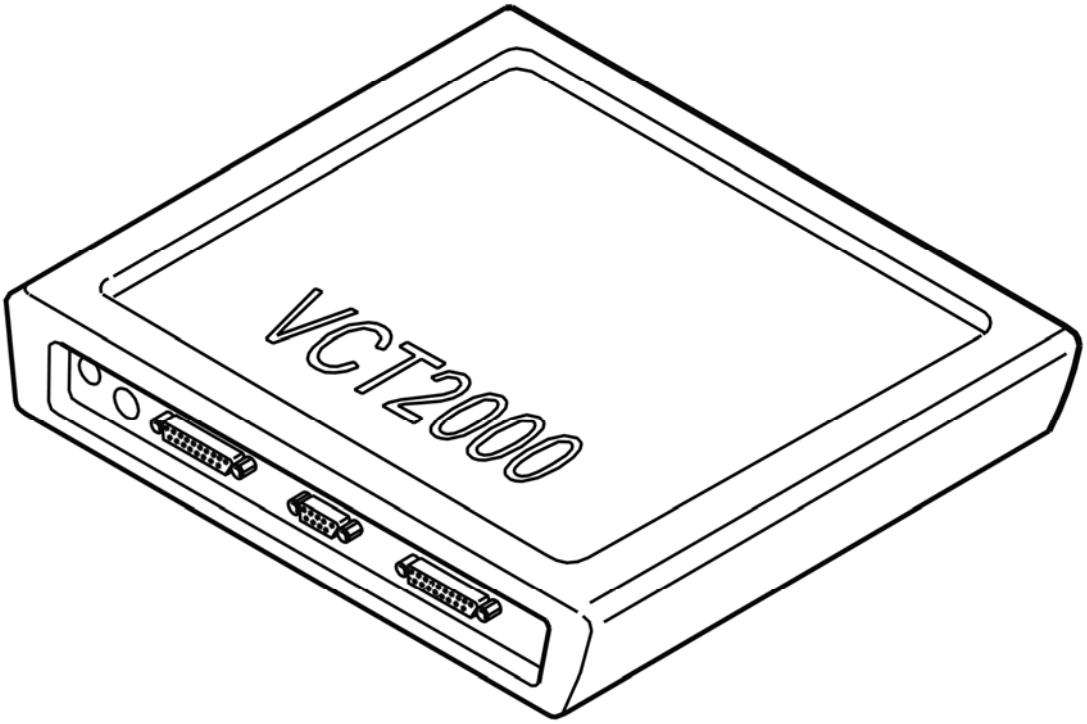

Fig. 280: Identifying VCT2000 Diagnostic Tool Symbol In VIDA
Courtesy of VOLVO CARS CORPORATION

Does it work?

- **YES**

  VERIFIED: Troubleshooting has been completed.

- **NO**

  Refer to **INFORMATION**

INFORMATION

FAULT-TRACING INFORMATION

The fault should have been detected and remedied. As this is not the case fault-tracing has failed.

Exit fault-tracing for this diagnostic trouble code (DTC) or make another attempt.

TROUBLE-SHOOTING INFORMATION

see **TROUBLE-SHOOTING INFORMATION**

CHECKING TIRE PRESSURE SENSORS (2005-12)

QUICK TEST OF THE TIRE PRESSURE SENSOR

CHECKING THE RECEIVER

NOTE: **This method only applies to vehicles with the tire pressure warning system. A diagnostic trouble code (DTC) is stored in the upper electronic module (UEM) in the event of a fault in the tire pressure sensors.**

HINT: Check that no diagnostic trouble code for missing sensor has been stored in the Upper electronic module (UEM) before checking the system - if so, troubleshoot according to this diagnostic trouble code.

The receiver is in the rear view mirror. It receives signals from both the remote control and tire pressure sensors. The remote control can be used to check that the receiver is working.

Check the function of the receiver by pressing the locking and unlocking button on the remote control. The vehicle must lock and unlock.

NOTE: **Fault-trace the symptoms if the remote control and receiver are not working.**

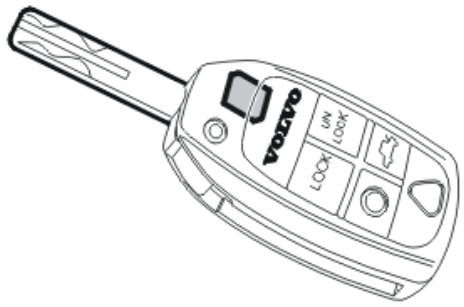

Fig. 281: Identifying Ignition Key
Courtesy of VOLVO CARS CORPORATION

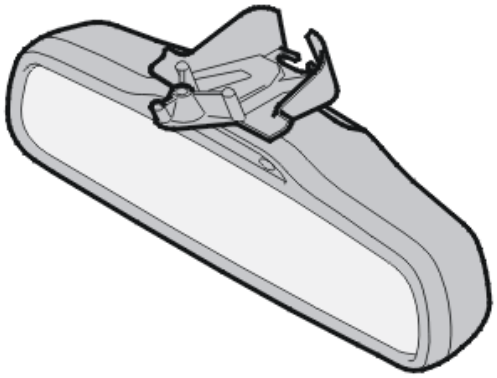

Fig. 282: Identifying Rear View Mirror
Courtesy of VOLVO CARS CORPORATION

Are the remote control and receiver working?

- **YES**

  Refer to **QUICK TEST OF THE TIRE PRESSURE SENSOR**

- **NO**

  OKAY: Troubleshooting has been completed.

QUICK TEST OF THE TIRE PRESSURE SENSOR

HINT: The base of the air valve is aluminum colored if the rims are intended for tire pressure sensors.

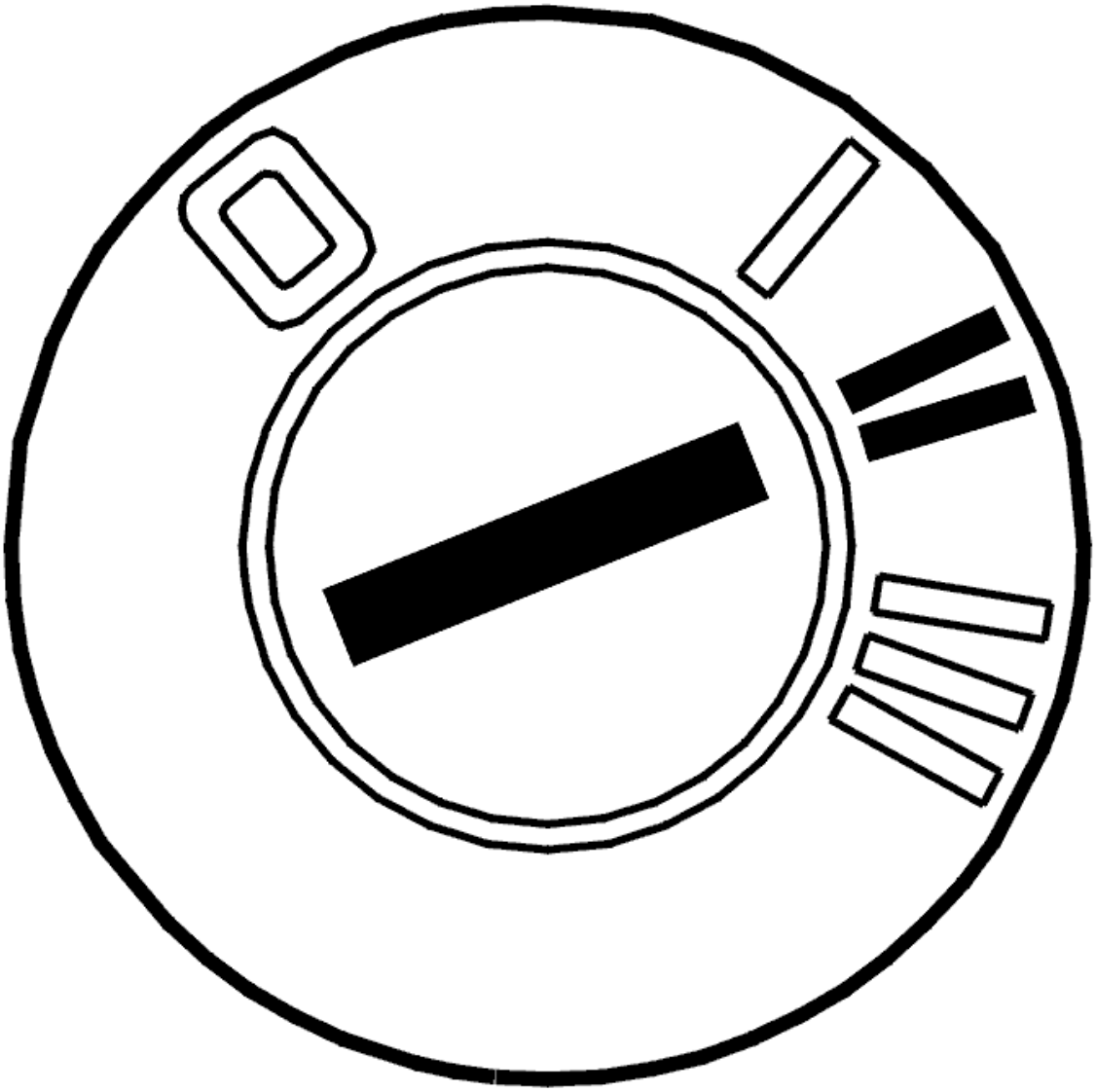

Fig. 283: Identifying Ignition ON
Courtesy of VOLVO CARS CORPORATION

Each tire pressure sensor has its own ID number which is transmitted to and stored in the upper electronic module (UEM). Read off the last stored ID number by clicking on the VCT2000 symbol. The last stored ID number is displayed until a new ID number is received and stored.

Use the following special tools to activate the sensor. Use the following special tools to activate the sensor.

see **9512963**

NOTE: **Ensure that the special tool is positioned under the edge of the rim against the tire where the sensor is installed. The sensor will not be activated if the tool is against the rim. The sensor must then be held in place for approximately 5 seconds for the signals to be correctly received. Use only one special tool at a time in the vicinity of the car.**

NOTE: **Carry out the above in an area away from where other cars are being driven. The receiver can pick up signals from sensors on other cars. An incorrect ID number would then be displayed.**

Repeat this procedure for each wheel. Different ID numbers must be displayed.

HINT: If a sensor does not respond during the test this indicates that the rim does not have a sensor installed, the sensor may be damaged or may be a sensor intended for another make or model.

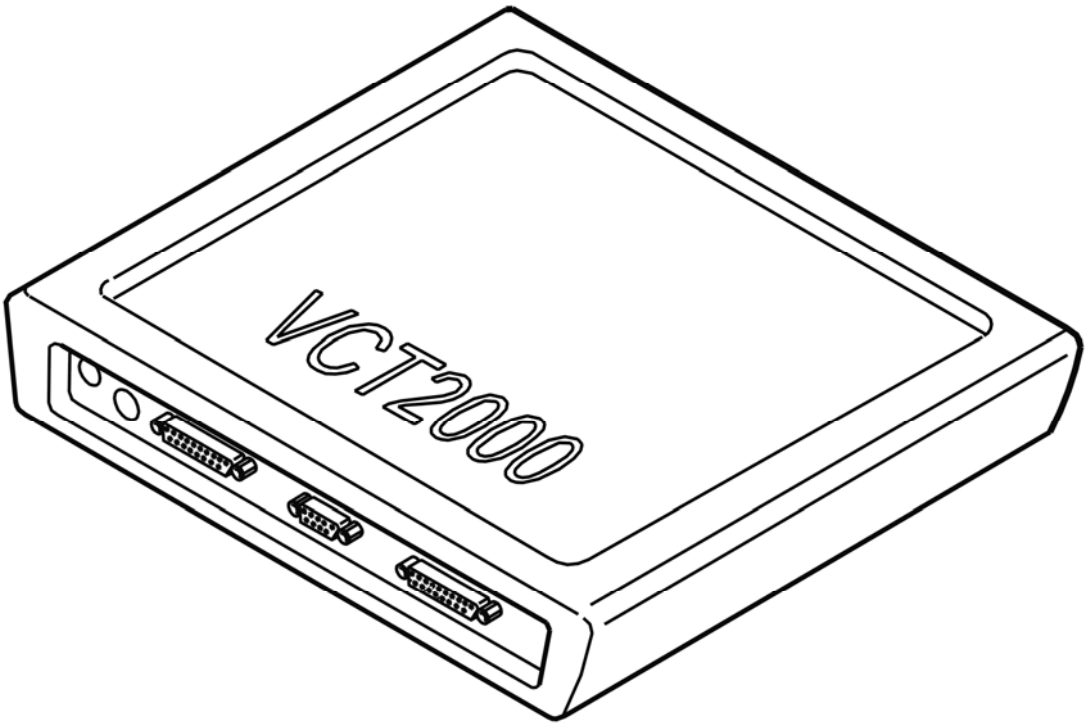

Fig. 284: Identifying VCT2000 Diagnostic Tool Symbol In VIDA
Courtesy of VOLVO CARS CORPORATION

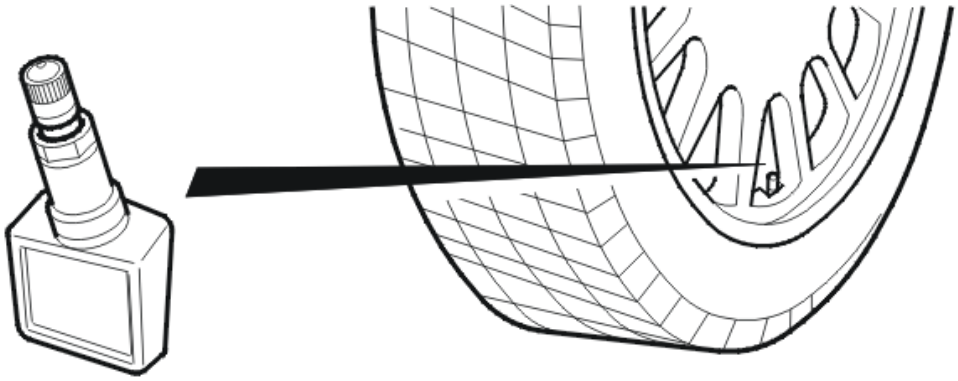

Fig. 285: Identifying Special Tool
Courtesy of VOLVO CARS CORPORATION

- **Continue**

  OKAY: Troubleshooting has been completed.

- Refer to **COMMUNICATION FAULT**

COMMUNICATION FAULT

Communication has been interrupted for one of the following reasons:

- The ignition is switched off
- VCT2000 disconnected from the data link connector (DLC)
- VCT2000 disconnected from the VIDA cart
- Communication problems in VIDA application or in car.
- No voltage in the data link connector (DLC).

Check therefore:

- That the control module power supply and ground terminal are fault-free.
- That the fuse for the data link connector (DLC) is intact.
- that the ignition is on
- that the battery voltage (system voltage) is normal (approximately 12 V).

  If necessary a battery charger can be connected during the test.

  For information about charge currents and the battery, see **BATTERY, CHARGING**

- that VCT2000 is correctly connected to the VIDA cart and the data link connector (DLC)
- that VCT2000 and the wiring is fault-free.

Other information

Try to establish communication again or exit reading off diagnostic trouble codes (DTCs). Depending on the communication fault, select one of the following options.

1. Try again. Refer to **CHECKING THE RECEIVER**.
2. Fault-trace more comprehensively for the communication problem that has occurred. Refer to **CHECKING COMMUNICATION ERRORS**.
3. Exit fault-tracing/Read off from the next system. Troubleshooting has been completed.

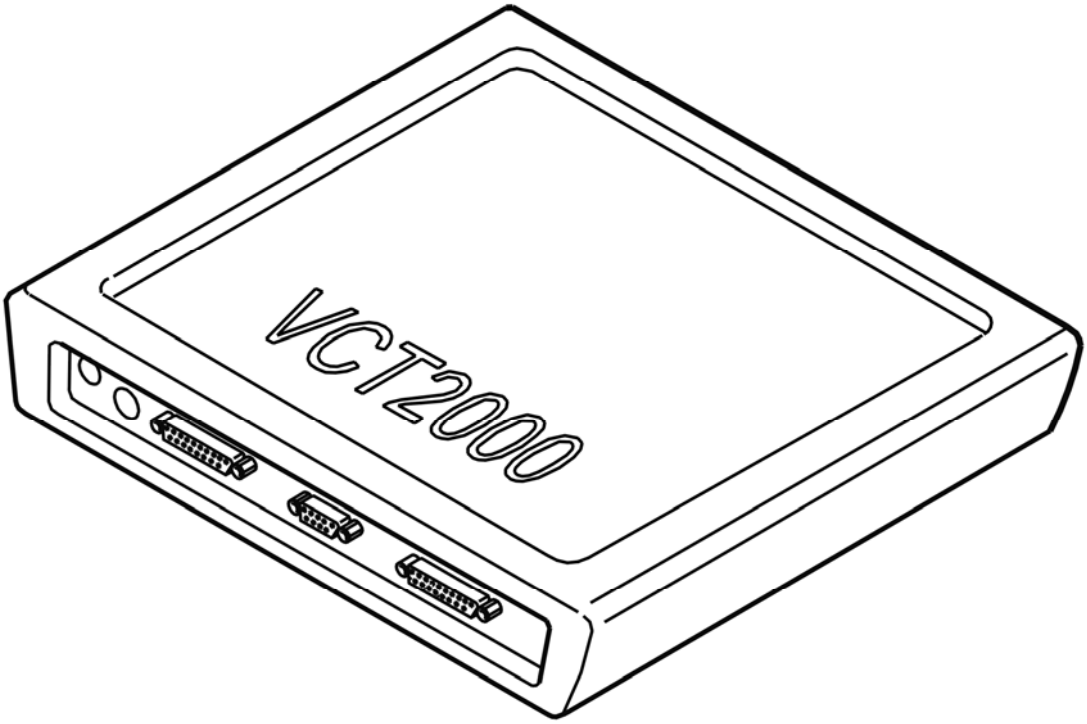

Fig. 286: Identifying VCT2000 Diagnostic Tool Symbol In VIDA
Courtesy of VOLVO CARS CORPORATION

CHECKING COMMUNICATION ERRORS

SELECTING CAR MODEL

Select car model to obtain relevant troubleshooting information.

Select one of the following model alternatives

1. XC90. Refer to **CHECKING COMMUNICATION ERRORS, CAR MODEL XC90**

CHECKING COMMUNICATION ERRORS, CAR MODEL XC90

HINT: Test the communication with another corresponding vehicle to decide if the malfunction is in the vehicle or in VIDA/VCT/cable harness. If the communication works on another vehicle, the malfunction is in the vehicle.

Different speed on the CAN-communication can lead to problems

Volvo's vehicles have different speed of communication on the high-speed part of the CAN-network (HS-CAN), depending on model year.

- Model year -2004 communicates with 250 kbit/s.
- Model year 2005- communicates with 500 kbit/s.

Due to this, it is very important to specify correct vehicle profile before any communication is started with the vehicle's HS-CAN. This is normally done by pressing on "Retrieve VIN" or by manually specifying vehicle parameters under "Vehicle profile".

If the wrong model year has been selected, it may lead to blocking of the CAN-net, diagnostic trouble codes being stored in several control modules or missing response from control modules at continued communication. The following control modules may be affected by this problem:

- Brake control module (BCM)/(ABS)
- Engine control module (ECM)
- Electronic Throttle Module (ETM)
- Suspension Module (SUM)
- Central electronic module (CEM)
- Transmission control module (TCM)
- Steering wheel angle sensor module (SAS)
- Steering Wheel Module (SWM)
- Electrical Power Steering Module (EPS)

If this happens, take the following action:

- Turn off the ignition and remove the ignition key. Insert the key again in position II.
- If the above does not work, remove the battery cable and connect it again after a minute to reset the control modules.
- Select the correct vehicle profile in VIDA and erase the diagnostic trouble codes. Check that the symptoms have disappeared.

Diagnostic outlet

- Check the voltage feed to diagnostic outlet #16. The voltage shall match battery voltage.
- Check the cable for power ground and signal ground to diagnostic outlet #4 and #5.

HINT: When VCT2000 is connected to the diagnostic outlet (is supplied with voltage), the indicator diode shall be activated with a green light. Then the indicator diode flashes quickly when communication takes place with a control module. In case of certain internal malfunctions on VCT2000 the indicator diode is activated with a red light.

Communication cables

- Check the communication cable (k-line) between diagnostic outlet #7 and central electronic module (CEM) #D6 and other connected control modules for open circuit, short-circuit to ground and short-circuit to voltage.

CAUTION: In case of malfunction on this communication cable, communication cannot be established on either the low or high-speed network. First when communication takes place on this cable, the low and high-speed cables between the diagnostic outlet and central electronic module (CEM) are connected to the rest of the network in the vehicle. This is controlled via a relay in the central electronic module (CEM). This relay is only found on vehicles of model year -2004.

- For communication problems with control units on **the high-speed network** , check communication cables between diagnostic outlet #6/#14 and central electronic module (CEM) #B7/#B8 for open circuit, short-circuit to ground and short-circuit to voltage according to references above.
- For communication problems with control units on **the low-speed network** , check communication cables between diagnostic outlet #3/#11 and central electronic module (CEM) #B19/#B20 for open circuit, short-circuit to ground and short-circuit to voltage according to references above.
- Also check the communication cables for the low and high-speed net between the central electronic module (CEM) and the other connected control modules according to troubleshooting above.

Control modules

- Check that the control module's voltage feed and ground connection are trouble-free.

CAUTION: If none of the above checks help, try reading out diagnostic trouble codes in the central electronic module (CEM). Done via VIDA vehicle communication. A prerequisite for being able to communicate with the control modules in the car is that the central electronic module (CEM) is active and can be communicated with. If communication is not possible with the central electronic module (CEM), check the voltage feed and ground for the central electronic module (CEM).

VCT2000 and cable harness

- Connect VCT2000 to the vehicle so that it is supplied with voltage. Test VCT2000 by selecting the system's self-test and VCT Test in the VIDA main menu. If any malfunction is found according to the test, first replace the cable harness then the VCT2000, if the test still indicates a malfunction.
- If no malfunctions were found after troubleshooting according to above, try with a new cable harness and/or new VCT2000.

VIDA

- If no malfunctions were found after troubleshooting according to above, try performing a complete system reset of VIDA (Volvo scan tool).

Other information

- see **CONTENTS**

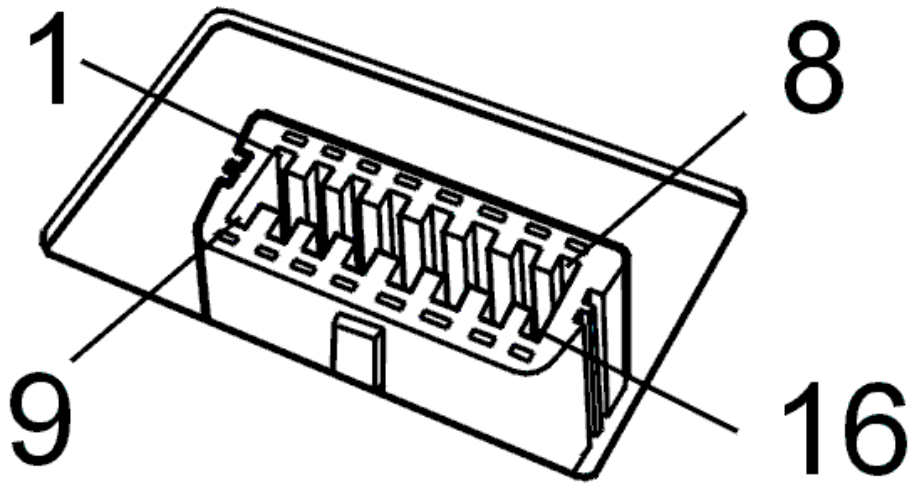

Fig. 287: Identifying Data Link Connector
Courtesy of VOLVO CARS CORPORATION

- **Continue**

  Refer to **FAULT-TRACING INFORMATION**

FAULT-TRACING INFORMATION

FAULT-TRACING INFORMATION

Fault-tracing communication problems is now finished.

Do you want to try establishing communication again?

- **YES**

  Refer to **CHECKING THE RECEIVER**

- **NO**

  Troubleshooting has been completed.

CHECKING UNLOCKING FROM DEADLOCK (2003-04)

CHECKING UNLOCKING FROM DEADLOCK

SELECTING A DOOR

NOTE: **The fault-tracing assumes that unlocking / locking with the central locking system functions normally.**

Which door does it apply to?

1. Front door. Refer to **CHECKING THE FRONT DOOR**.
2. Rear door. Refer to **CHECKING REAR DOORS**.

CHECKING THE FRONT DOOR

Check the control module connector terminal #B1 and the lock unit connector terminal #6. Check for contact resistance and oxidation. Check the intermediate cable. Check for an open-circuit.

Other information

- see **CHECKING WIRING AND TERMINALS** .

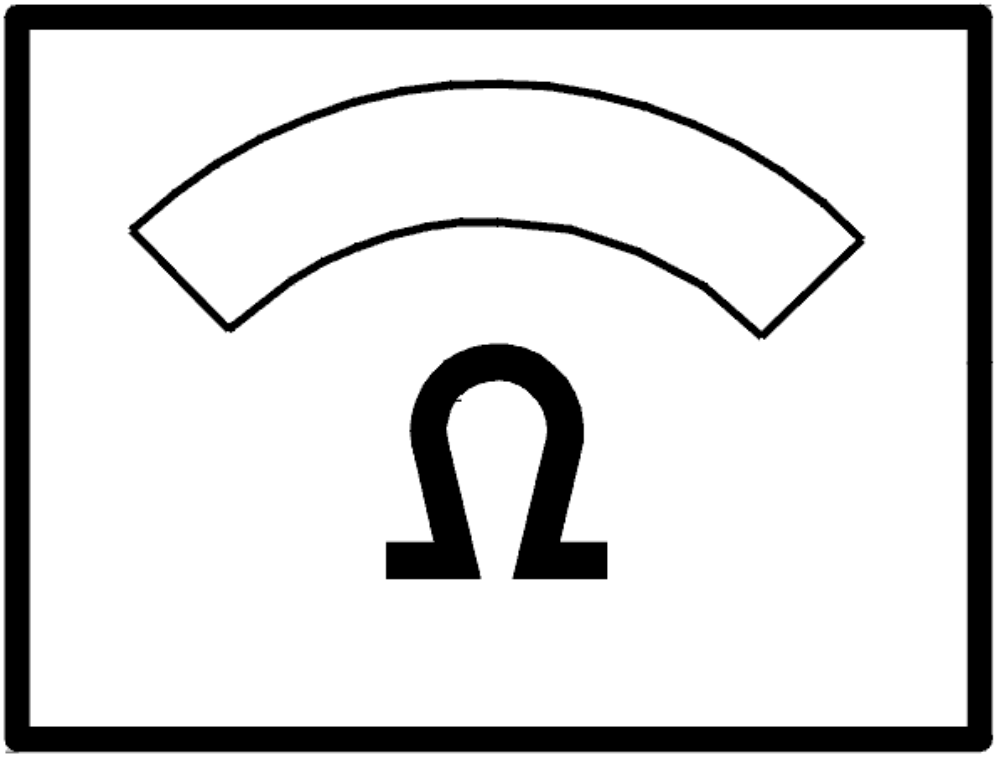

Fig. 288: Identifying Ohmmeter
Courtesy of VOLVO CARS CORPORATION

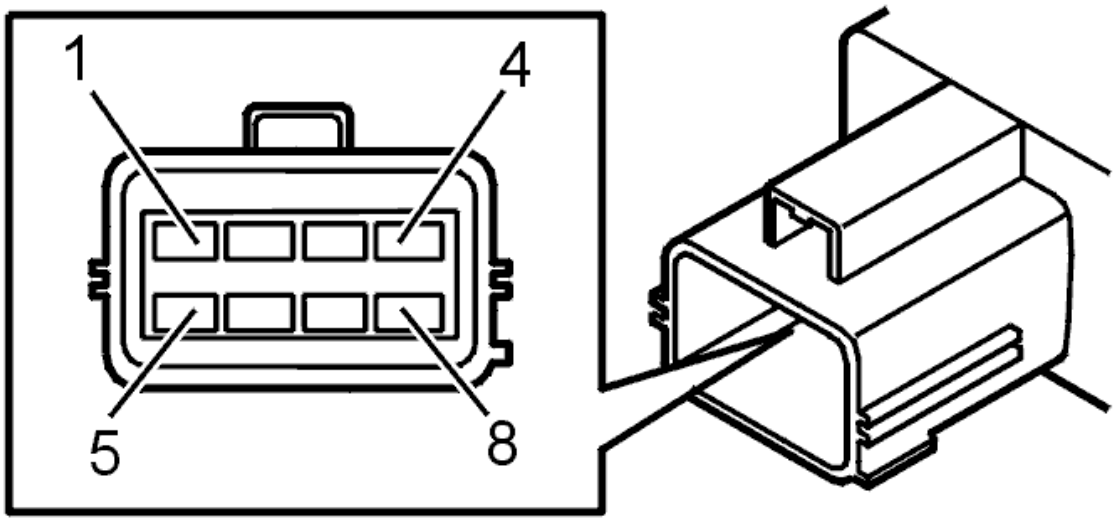

Fig. 289: Identifying Connector Terminals
Courtesy of VOLVO CARS CORPORATION

Was a fault detected?

- **YES**

  OKAY: Troubleshooting has been completed.

- **NO**

  Refer to **CHECKING THE COMPONENT**

CHECKING REAR DOORS

Which door does it apply to?

1. A rear door. Refer to **CIRCUIT TEST**
2. Both the rear doors. Refer to **CIRCUIT TEST**

CIRCUIT TEST

The fault indicates an open-circuit in the cable from (or in) the lock unit. To determine in which circuit the fault is:

Remove the deadlock relay (2/115).

Remove the lock unit connector. Check the connector for contact resistance and oxidation.

Other information

- To expose the integrated relay/fusebox in the cargo compartment, see **RELAY/FUSE BOX CARGO COMPARTMENT/REAR ELECTRONIC MODULE (REM), REPLACING**

- To expose the lock unit, see **LOCK MECHANISM, TAILGATE, REPLACING**
- see **CHECKING WIRING AND TERMINALS** .

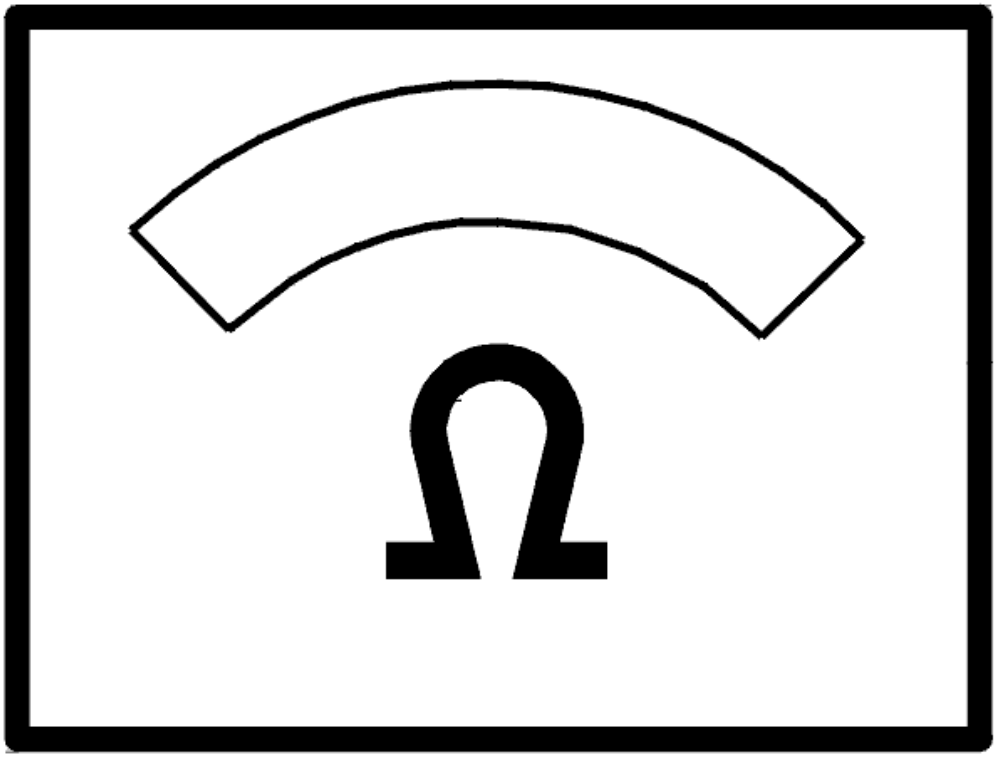

Fig. 290: Identifying Ohmmeter
Courtesy of VOLVO CARS CORPORATION

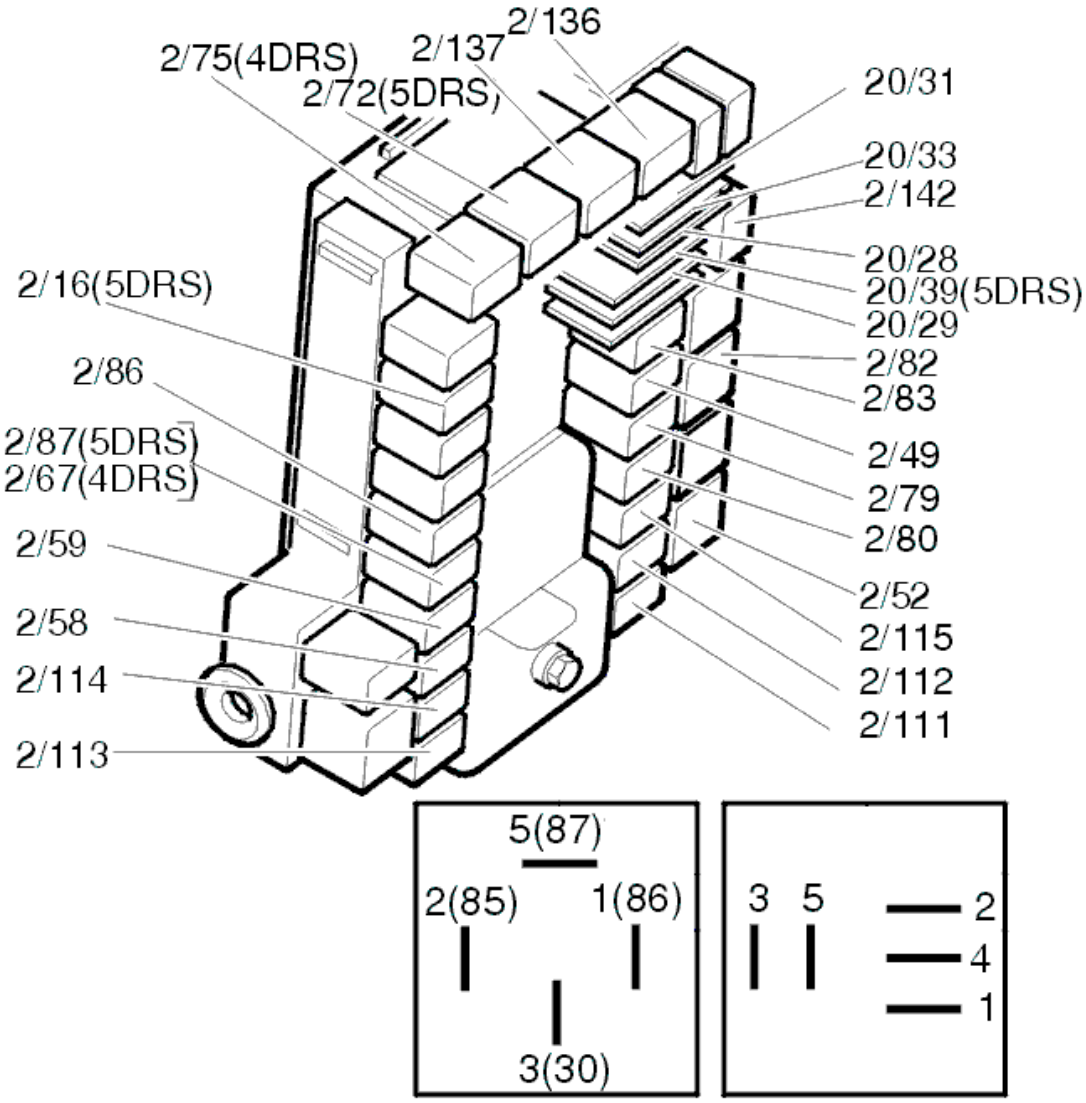

Fig. 291: Identifying Relays
Courtesy of VOLVO CARS CORPORATION

Was a fault detected?

- **YES**

  OKAY: Troubleshooting has been completed.

- **NO**

  Refer to **CIRCUIT TEST (CONT.)**

CIRCUIT TEST (CONT.)

Check the cable between terminal #8 the cable and connector and terminal #3 on the relay base. Check for an

open-circuit. If a fault is detected, check in particular the 2 intermediate connectors in the cable harness. Check for contact resistance and oxidation.

Other information

- To expose the integrated relay/fusebox in the cargo compartment, see **RELAY/FUSE BOX CARGO COMPARTMENT/REAR ELECTRONIC MODULE (REM), REPLACING**
- To expose the lock unit, see **LOCK MECHANISM, TAILGATE, REPLACING**
- see **CHECKING WIRING AND TERMINALS** .

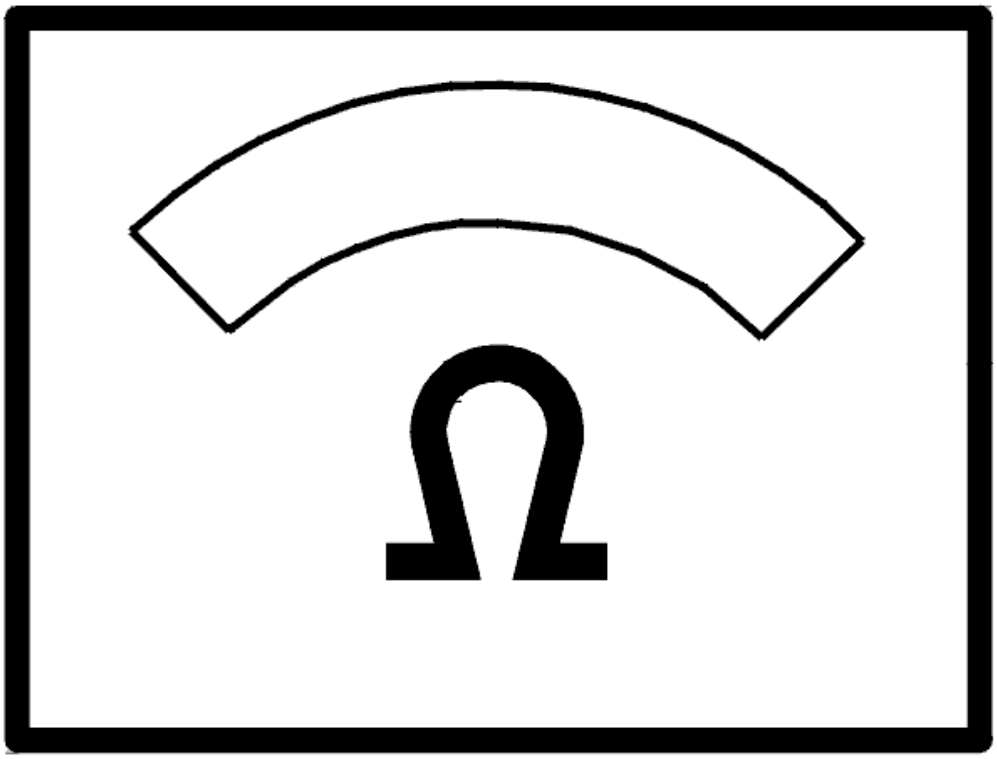

Fig. 292: Identifying Ohmmeter
Courtesy of VOLVO CARS CORPORATION

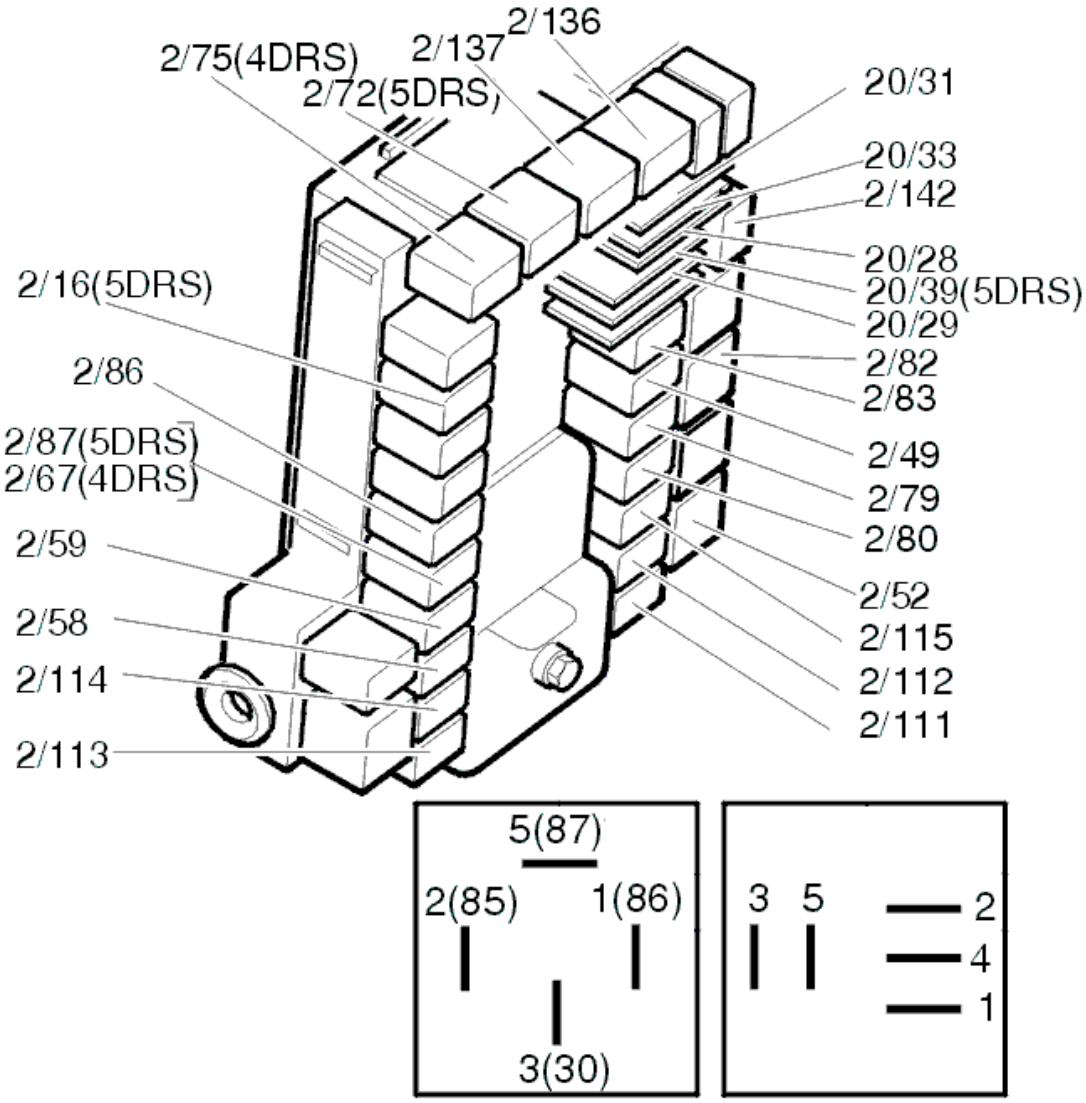

Fig. 293: Identifying Relays
Courtesy of VOLVO CARS CORPORATION

Was a fault detected?

- **YES**

  OKAY: Troubleshooting has been completed.

- **NO**

  Refer to **CHECKING THE COMPONENT**

CIRCUIT TEST

Begin by replacing the relay for deadlocking (2/115) in the integrated relay/fusebox in the cargo compartment.

Check the relay base switches. Check for contact resistance and oxidation.

Other information

- To expose the integrated relay/fusebox in the cargo compartment, see **RELAY/FUSE BOX CARGO COMPARTMENT/REAR ELECTRONIC MODULE (REM), REPLACING** .

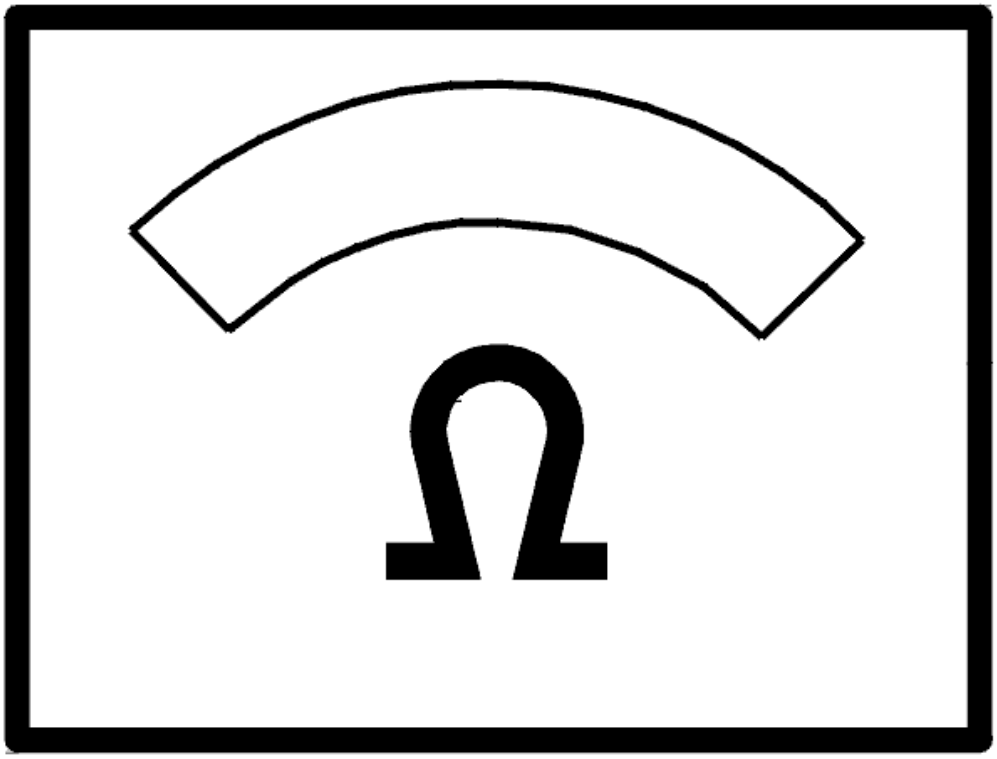

Fig. 294: Identifying Ohmmeter
Courtesy of VOLVO CARS CORPORATION

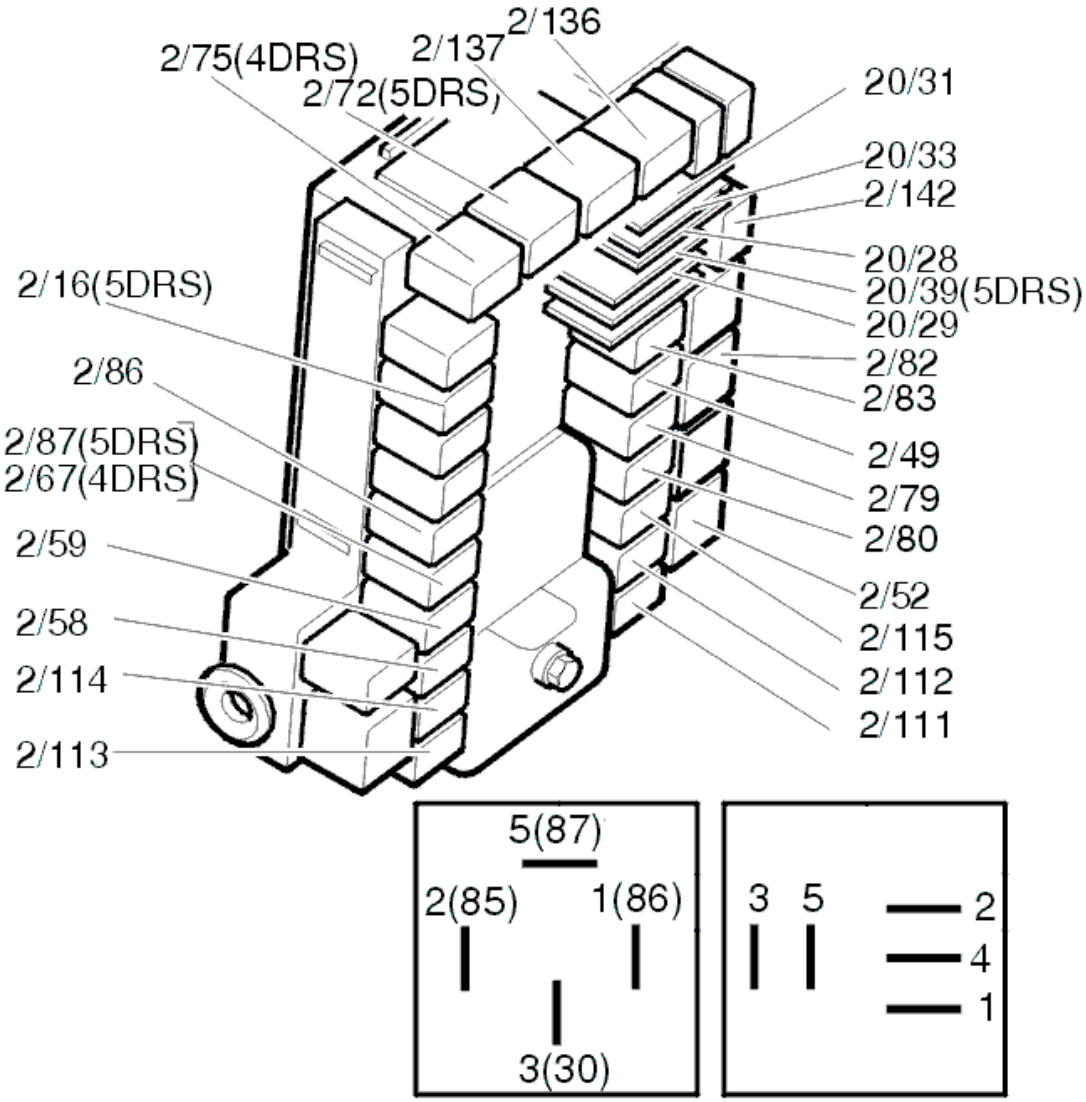

Fig. 295: Identifying Relays
Courtesy of VOLVO CARS CORPORATION

Was a fault detected?

- **YES**

  OKAY: Troubleshooting has been completed.

- **NO**

  Refer to **CIRCUIT TEST (CONT.)**

CIRCUIT TEST (CONT.)

- Remove relay 2/115.

Take resistance readings between terminal #4 of the relay base and ground. The ohmmeter should display a short-circuit.

Other information

- To expose the integrated relay/fusebox in the cargo compartment, see **RELAY/FUSE BOX CARGO COMPARTMENT/REAR ELECTRONIC MODULE (REM), REPLACING** .

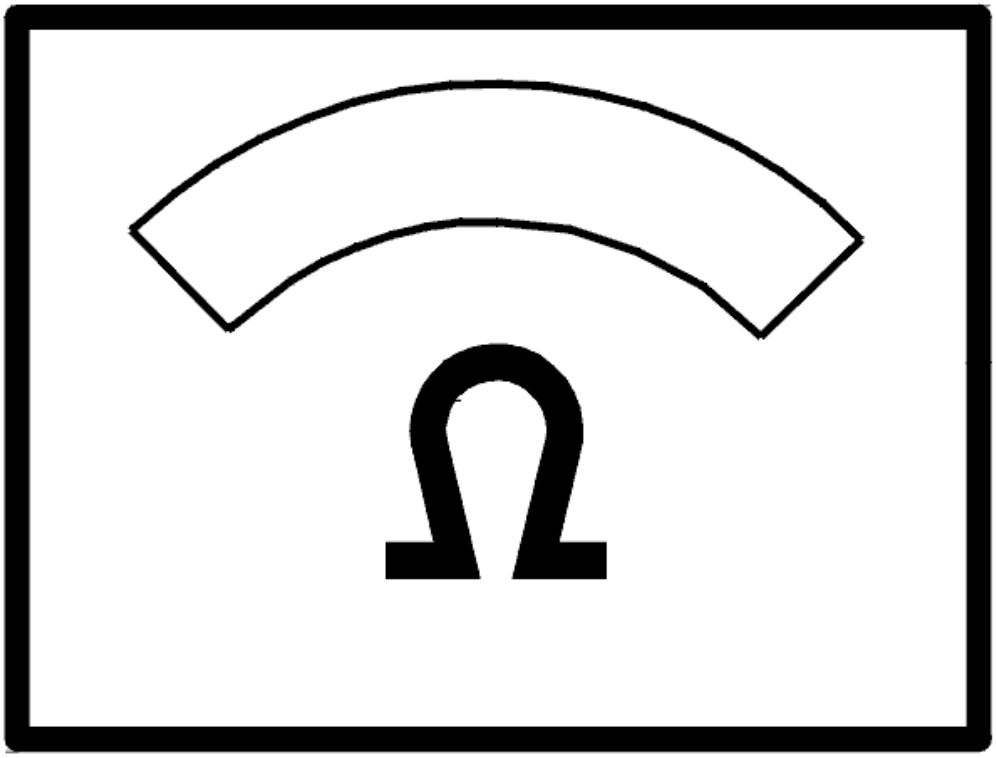

Fig. 296: Identifying Ohmmeter
Courtesy of VOLVO CARS CORPORATION

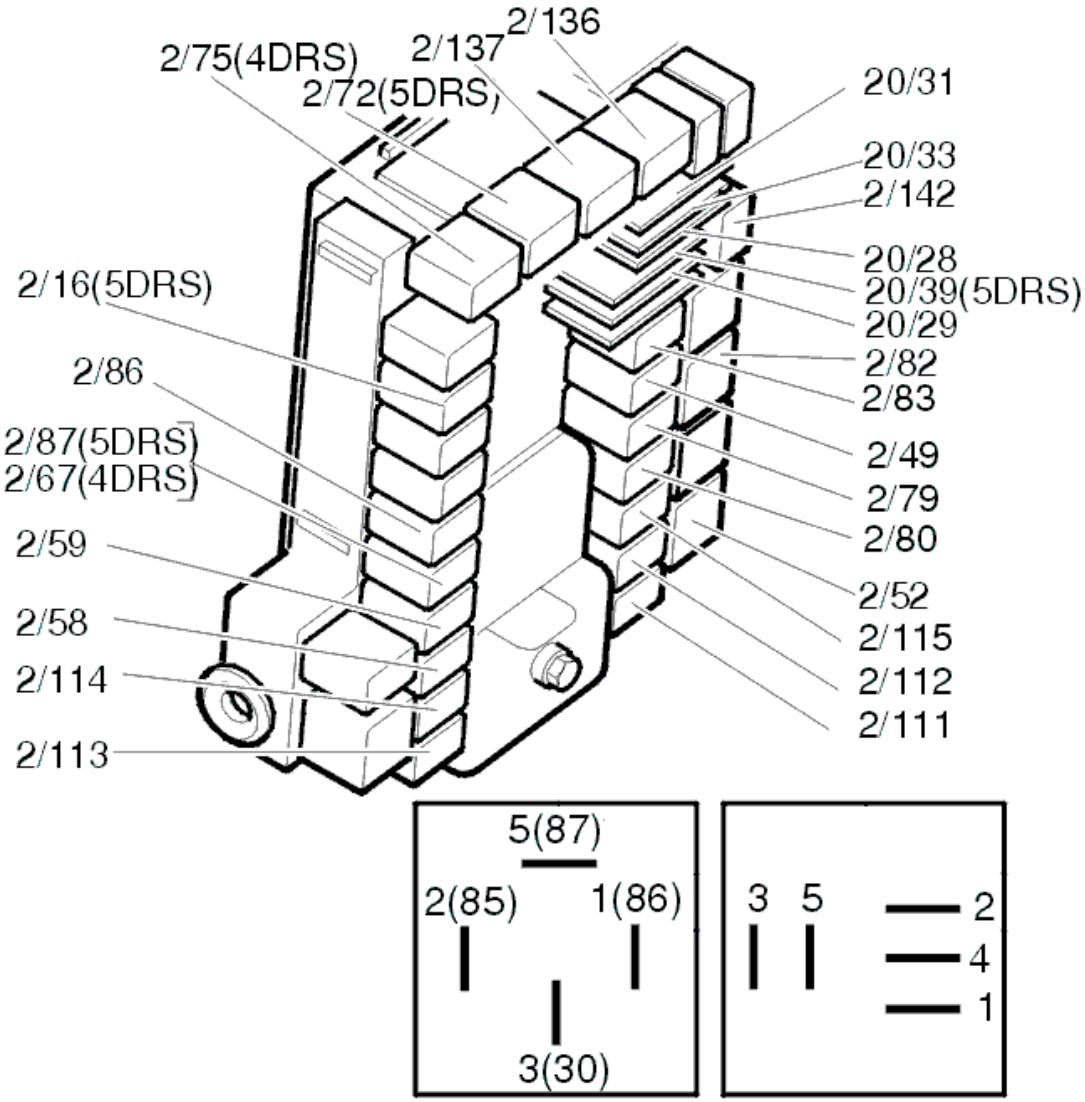

Fig. 297: Identifying Relays
Courtesy of VOLVO CARS CORPORATION

Does the ohmmeter display a short-circuit?

- **YES**

  OKAY: Troubleshooting has been completed.

- **NO**

  Refer to **REPLACING THE COMPONENT**

REPLACING THE COMPONENT

Replace the rear electronic module (REM). See **RELAY/FUSE BOX CARGO COMPARTMENT/REAR**

ELECTRONIC MODULE (REM), REPLACING .

CHECKING THE COMPONENT

Measure the resistance between pins terminals #8 and #6 on the chassis switch lock unit.

The ohmmeter should read approximately 5 ohm.

Other information

- To remove the lock unit, see **LOCK MECHANISM, TAILGATE, REPLACING**
- For information about signals, see **SIGNAL SPECIFICATION** .

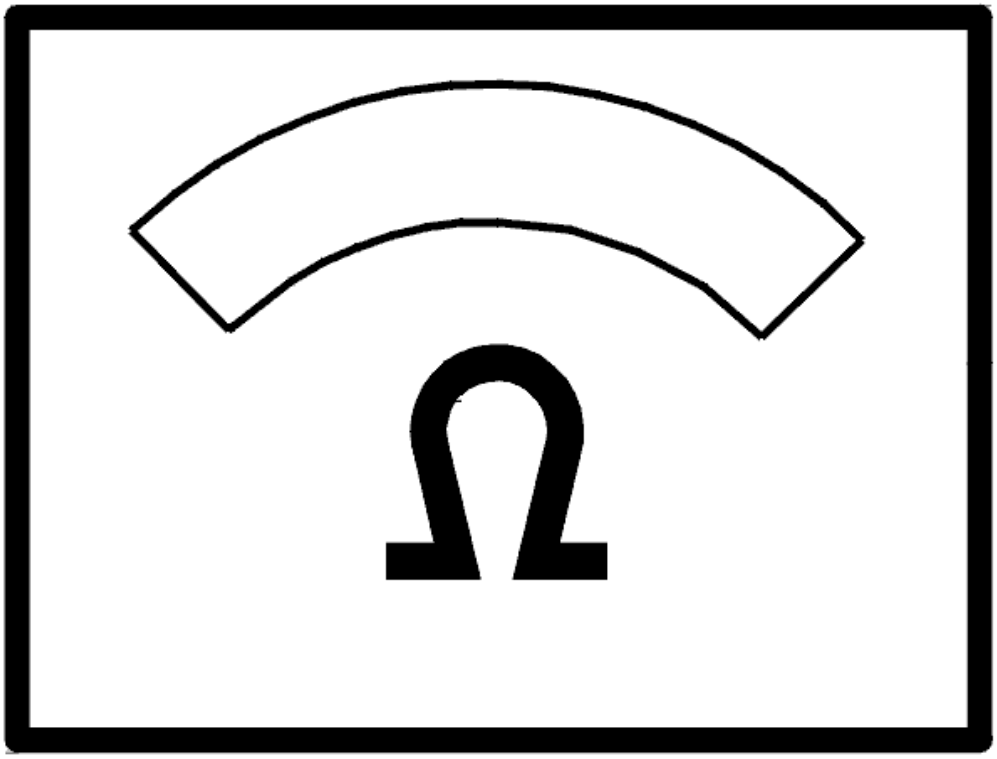

Fig. 298: Identifying Ohmmeter
Courtesy of VOLVO CARS CORPORATION

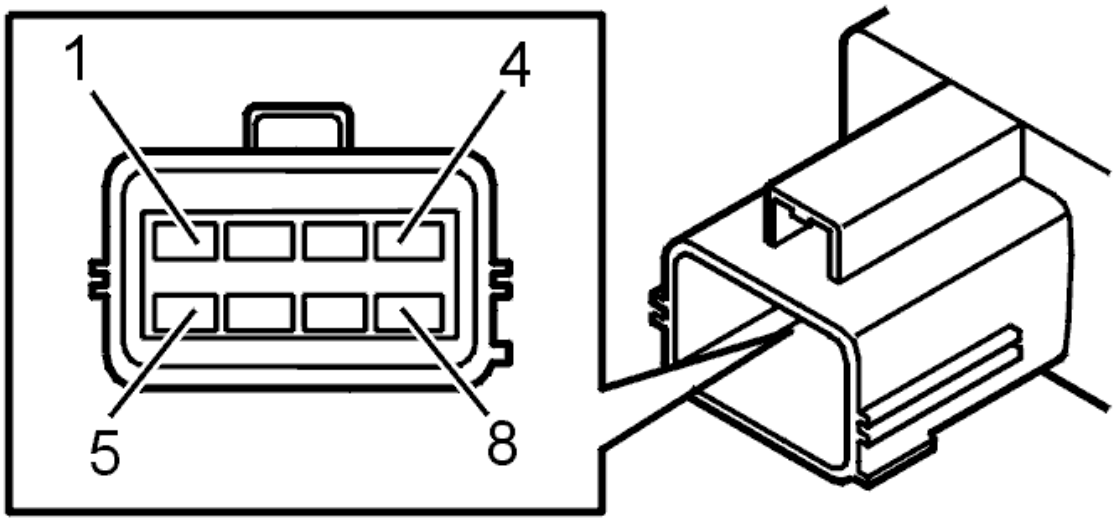

Fig. 299: Identifying Connector Terminals
Courtesy of VOLVO CARS CORPORATION

Is the value correct?

- **YES**

  Refer to **FUNCTION TEST**

- **NO**

  Refer to **REPLACING THE COMPONENT**

FUNCTION TEST

Check that the mechanical/electrical function of the lock unit is OK before the lock unit is reinstalled.

Is the function OK?

- **YES**

  OKAY: Troubleshooting has been completed.

- **NO**

  Refer to **REPLACING THE COMPONENT**

REPLACING THE COMPONENT

Replace the lock unit. See **LOCK MECHANISM, TAILGATE, REPLACING** .

CHECKING THE COMPONENT

Measure the resistance between pins terminals #7 and #6 on the chassis switch lock unit.

The ohmmeter should read approximately 5 ohm.

Other information

- To remove the lock unit, see **LOCK MECHANISM, TAILGATE, REPLACING**
- For information about signals, see **SIGNAL SPECIFICATION** .

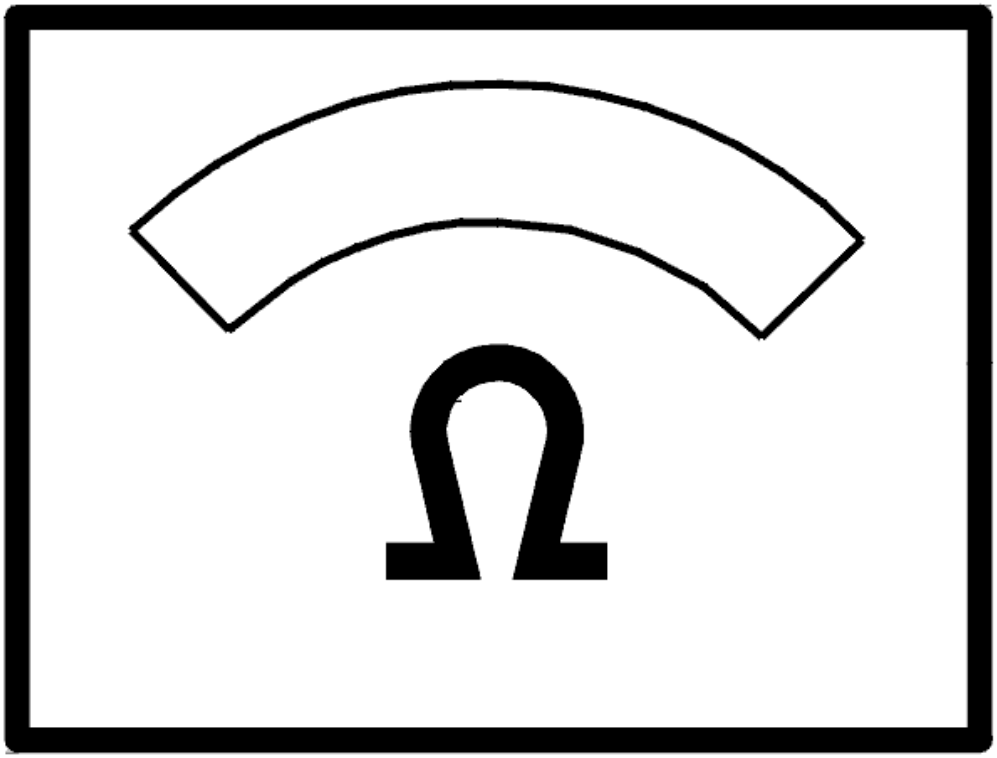

Fig. 300: Identifying Ohmmeter
Courtesy of VOLVO CARS CORPORATION

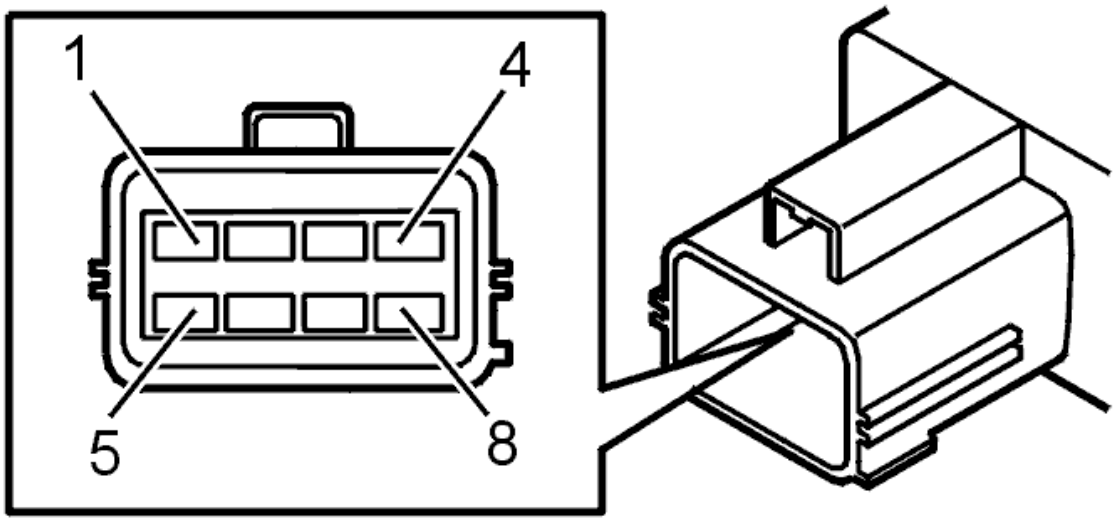

Fig. 301: Identifying Connector Terminals
Courtesy of VOLVO CARS CORPORATION

Is the value correct?

- **YES**

  Refer to **FUNCTION TEST**

- **NO**

  OKAY: Troubleshooting has been completed.

FUNCTION TEST

Check that the mechanical/electrical function of the lock unit is OK before the lock unit is reinstalled.

Is the function OK?

- **YES**

  Refer to **REPLACING THE COMPONENT**

- **NO**

  Refer to **REPLACING THE COMPONENT**

REPLACING THE COMPONENT

Replace the rear electronic module (REM). See **RELAY/FUSE BOX CARGO COMPARTMENT/REAR ELECTRONIC MODULE (REM), REPLACING** .

REPLACING THE COMPONENT

Replace the lock unit. See **LOCK MECHANISM, TAILGATE, REPLACING** .

TROUBLE-SHOOTING INFORMATION

Condition

No diagnostic trouble codes are displayed.

Possible Source

- Faulty lock unit.
- Faulty relay.
- Contact resistance and oxidation in the connectors.
- Fault in wire to lock unit.
- Fault in control unit.

Fault symptom[s]

- Does not open from the deadlock position BLL.

CHECKING WARNING FLASHERS (2003-04)

CHECKING HAZARD WARNING SIGNAL FLASHER

CHECKING THE CABLE AND THE SWITCH

Check the cable between the central electronic module (CEM) terminal #16D and the hazard warning signal flasher switch terminal #3 (3/6). Check for a short-circuit to ground. Check for a short-circuit to supply voltage. Check for an open-circuit.

Check the function of the switch.

When the switch is depressed, the voltage should be 0 V, otherwise 12 V at terminal #3 on the hazard warning signal flasher switch (3/6).

If the switch does not work, replace the switch.

Remedy as necessary.

Other information:

- To replace the switch for the hazard warning signal flasher, see **SWITCH HAZARD WARNING SIGNAL FLASHER, REPLACING**
- see **CHECKING WIRING AND TERMINALS** .

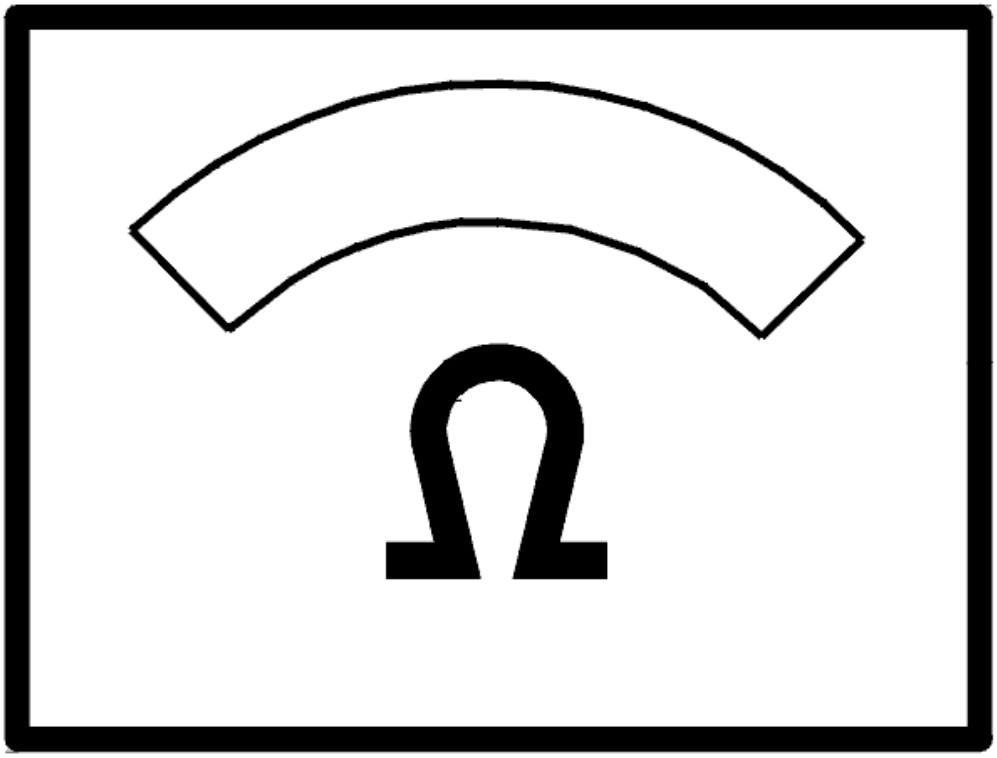

Fig. 302: Identifying Ohmmeter
Courtesy of VOLVO CARS CORPORATION

TROUBLE-SHOOTING INFORMATION

Condition

No diagnostic trouble codes are stored.

Possible Source

- Defective warning flasher switch
- Open circuit in wire
- Short circuit to voltage supply or ground on the wire.

Fault symptom[s]

Warning flasher does not work.

CHECKING WARNING FLASHERS AND GLOVE COMPARTMENT LIGHTING (2003-04)

CHECK HAZARD WARNING SIGNAL FLASHER AND GLOVE COMPARTMENT LIGHTING

CHECKING THE CABLE

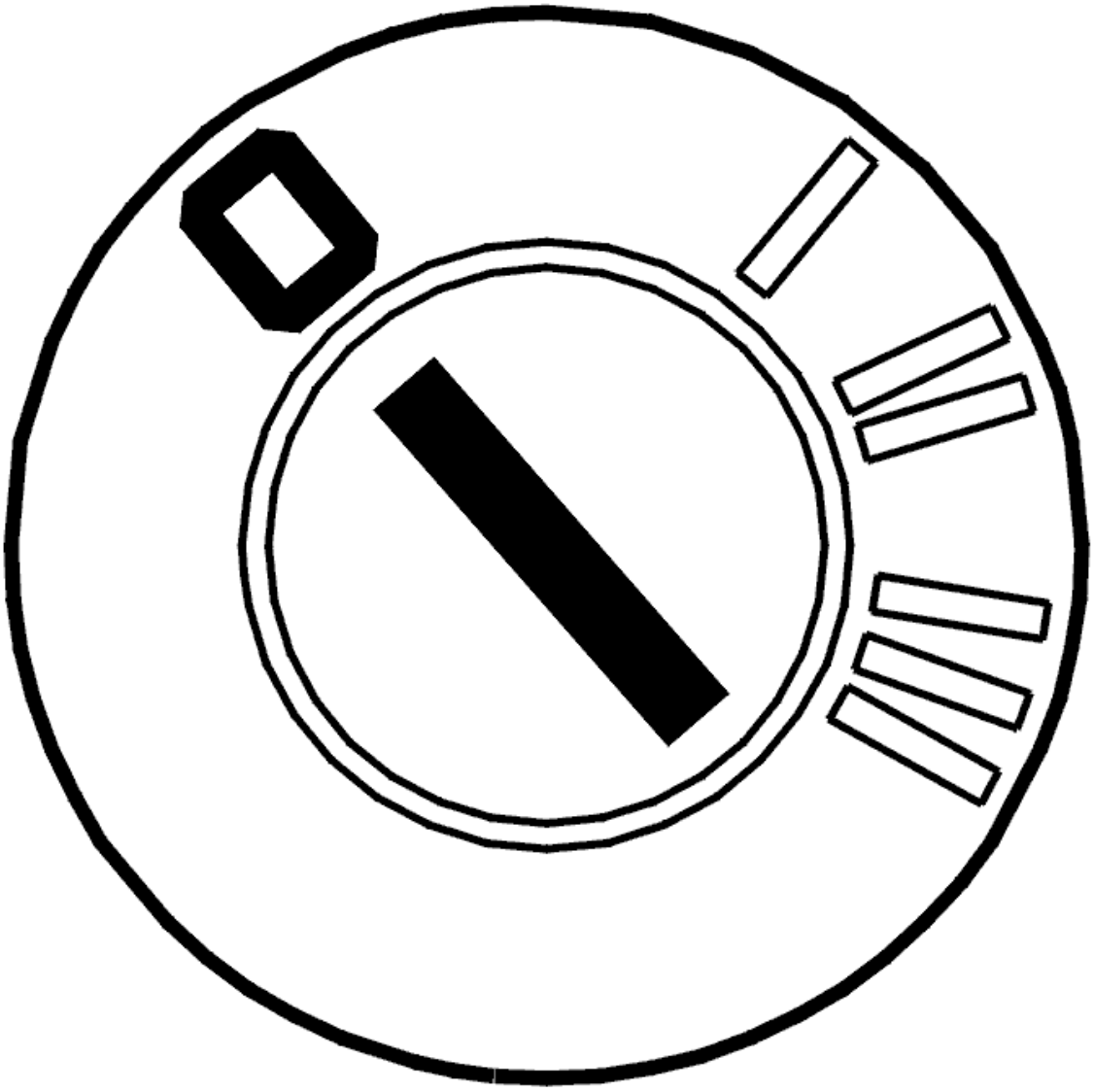

Fig. 303: Identifying Ignition OFF
Courtesy of VOLVO CARS CORPORATION

- Ignition off.

Check the cable between the central electronic module (CEM) terminal #17D and the hazard warning signal flasher switch terminal #1 (3/6). Check for a short-circuit to supply voltage. Check for an open-circuit.

Remedy as necessary.

If no faults were found, replace the switch.

Other information:

- For information about the central electronic module (CEM) connector, see **CENTRAL ELECTRONIC MODULE (CEM), REPLACING**
- To connect the breakout box, see **CONNECTING THE BREAKOUT BOX**
- For information about signals, see **SIGNAL SPECIFICATION**
- To replace the switch for the hazard warning signal flasher, see **SWITCH HAZARD WARNING SIGNAL FLASHER, REPLACING**
- see **CHECKING WIRING AND TERMINALS** .

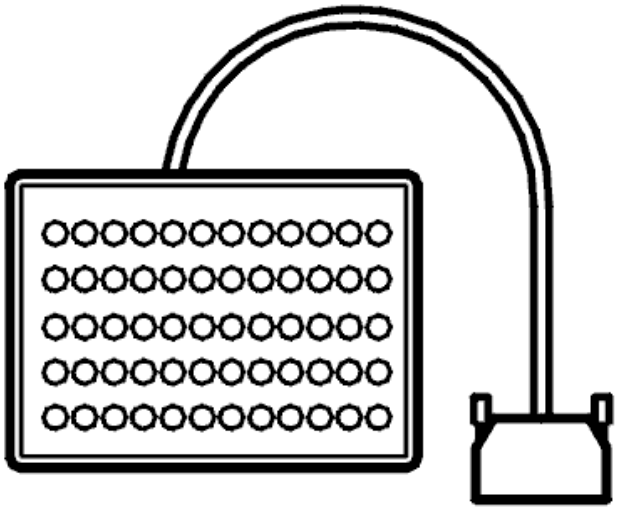

Fig. 304: Breakout Box
Courtesy of VOLVO CARS CORPORATION

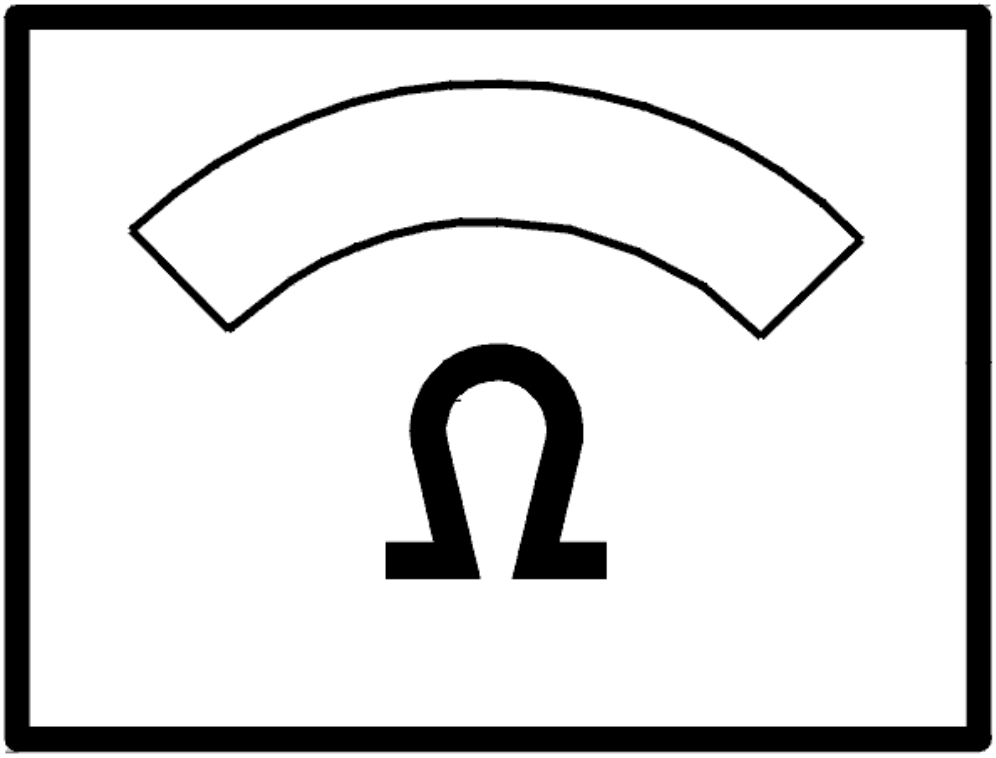

Fig. 305: Identifying Ohmmeter
Courtesy of VOLVO CARS CORPORATION

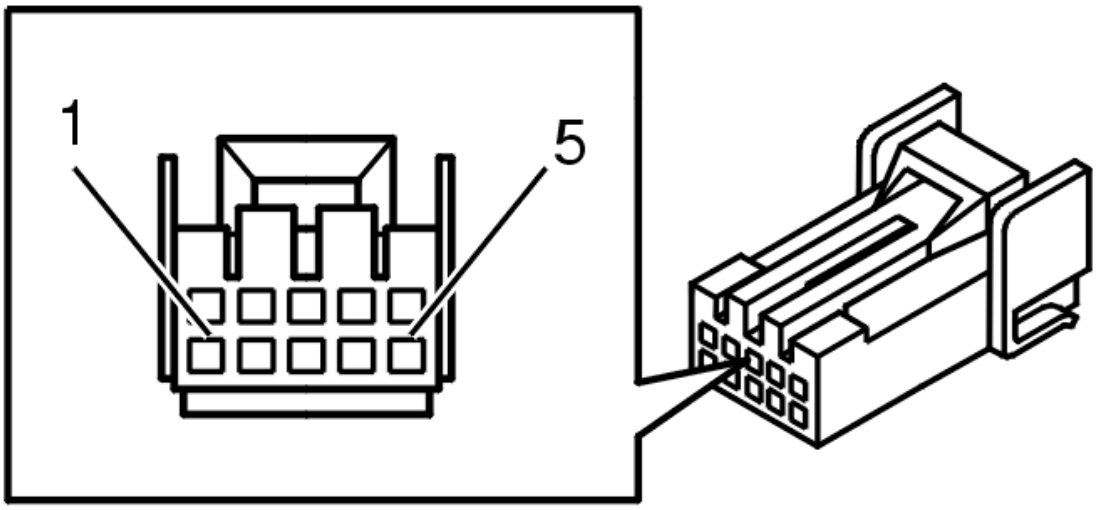

Fig. 306: 10-CD Changer Connector Terminals
Courtesy of VOLVO CARS CORPORATION

TROUBLE-SHOOTING INFORMATION

Condition

No diagnostic trouble codes are stored.

Possible Source

- Warning flasher or glove compartment light is short circuited to voltage supply or has an open circuit.

Fault symptom[s]

Interior lighting does not work.

MISSING INDICATION AT LOCKING OR UNLOCKING (2005-06)

FAULT-TRACING INFORMATION

In certain cases, indication may be missing when locking or unlocking the vehicle with installed alarm system.

The phenomena is rare but may occur if a door is open when the vehicle is locked with the remote control and then the open door is closed approx. one second after locking.

The problem can be solved by downloading new software to Rear electronic module (REM).

If the problem remains after new software has been downloaded, see special mechanical instruction.

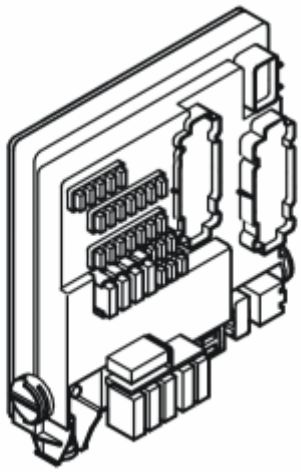

Fig. 307: Identifying Rear Electronic Module (REM)
Courtesy of VOLVO CARS CORPORATION

QUICK TEST OF ALTERNATOR FUNCTION (2005-12)

QUICK TEST OF ALTERNATOR FUNCTION

QUICK TEST INFORMATION

The central electronic module (CEM) has built-in functions for regulating the alternator (alternator control module (ACM)).

To charge the battery optimally, output voltage from the alternator is calculated based on the calculated battery temperature. The central electronic module (CEM) calculates battery temperature from outside temperature, which is obtained from the outside temperature sensor.

Depending on the vehicle's ambient temperature and/or if the vehicle has been without power, the calculated battery temperature (read temperature) may differ slightly from the battery's actual temperature for up to 24 hours afterwards.

In the following tests, battery temperature in the central electronic module (CEM) is changed, thereby changing voltage from the alternator.

The test is divided into two parts - an automatic test and a manual test.

Select one of the alternatives below:

1. Automatic test of alternator function. Refer to **AUTOMATIC TEST OF ALTERNATOR FUNCTION**.
2. Manual test of alternator function. Refer to **MANUAL TEST OF ALTERNATOR FUNCTION**

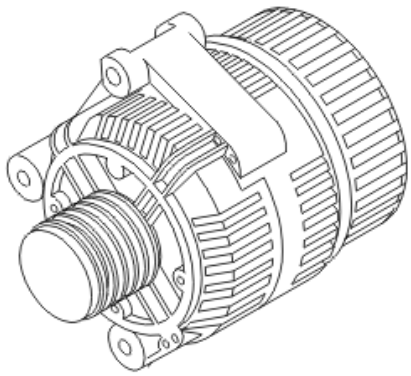

Fig. 308: Freewheel Generator
Courtesy of VOLVO CARS CORPORATION

AUTOMATIC TEST OF ALTERNATOR FUNCTION

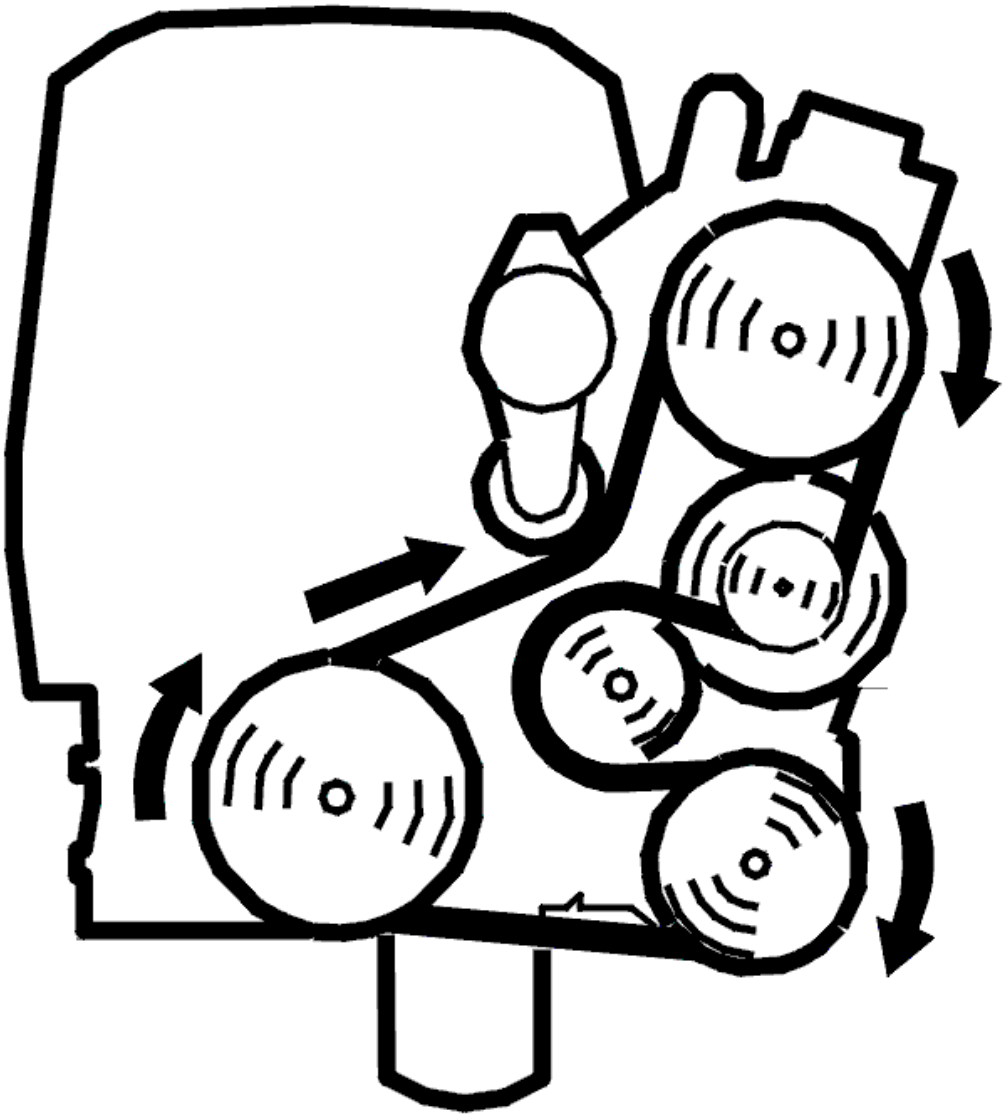

Fig. 309: Belt Routing/Engine Idling - Volvo
Courtesy of VOLVO CARS CORPORATION

- Start the engine and allow it to idle for approx. 1 minute.
- Make sure that no extra electrical consumers are connected. Turn off functions that consume a great deal of power, such as the ventilation fan, heated rear window/door mirrors, heated seats, lighting, radio system, etc.

  Start the automatic test by clicking the Start button.

  Values for battery temperature and voltage are read and displayed continually during the test. A number of tests are performed in which various battery temperatures are used from -30°C to +90°C. Between each battery temperature, there is a delay of approx. 5 seconds before the voltage is read. This allows the alternator to have time to set the right voltage in relation to the set battery temperature.

  The entire test takes approx. 1 minute. A message is displayed when the test is complete. Compare the

values from the readout of battery temperature (T) and voltage (U) with the values in the table.

Battery temperature (T) (°C)	Voltage (U), lower limit (V)	Voltage (U), upper limit (V)
+60°C, +70°C, +80°C, +90°C	12.80 V	13.60 V
+50°C	12.95 V	13.75 V
+40°C	13.27 V	14.07 V
+30°C	13.58 V	14.38 V
+20°C	13.89 V	14.69 V
-30°C, -20°C, -10°C, 0°C, +10°C	14.20 V	15.00 V

If the voltage values generally lie below the lower limit (low voltage), redo the test at an engine speed of 2500 rpm.

If the voltage is within the tolerances this time, alternator function is OK, but the test indicates that the battery is not fully charged. If voltage still deviates, there is a fault in the charging system.

NOTE: **The read-out voltage is read internally from the central electronic module (CEM) and deviates slightly from the actual alternator output voltage due to a drop in voltage in the wiring harness.**

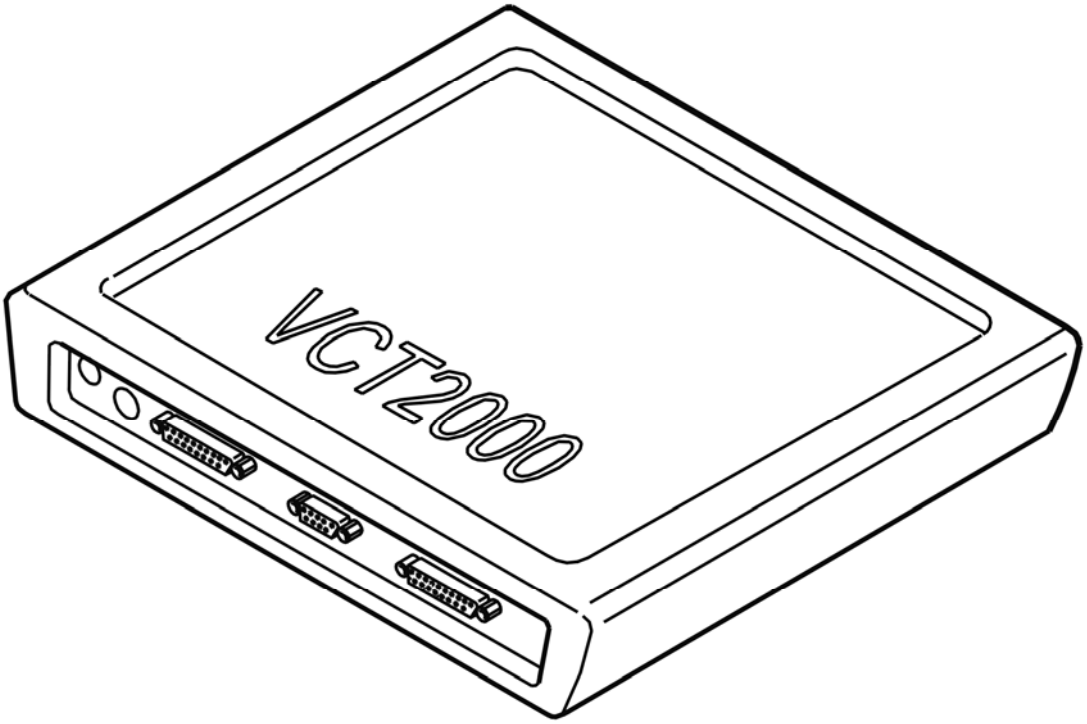

Fig. 310: Identifying VCT2000 Diagnostic Tool Symbol In VIDA
Courtesy of VOLVO CARS CORPORATION

MANUAL TEST OF ALTERNATOR FUNCTION

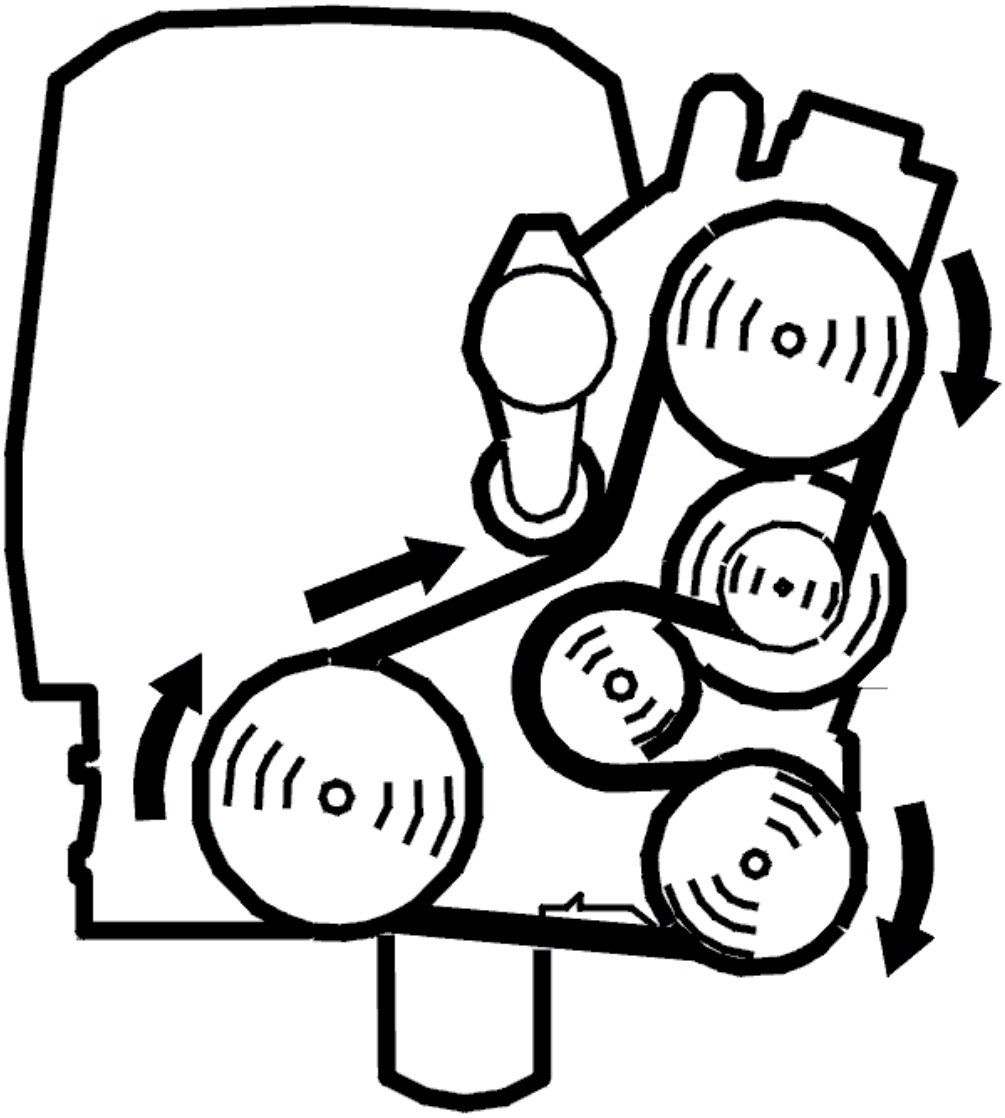

Fig. 311: Belt Routing/Engine Idling - Volvo
Courtesy of VOLVO CARS CORPORATION

- Start the engine and allow it to idle for approx. 1 minute.
- Make sure that no extra electrical consumers are connected. Turn off functions that consume a great deal of power, such as the ventilation fan, heated rear window/door mirrors, heated seats, lighting, radio system, etc.

  Values for battery temperature and voltage are read and displayed continually during the test. Select values that are available in the list window. Wait approx. 5 seconds between each battery temperature change to allow the alternator to have time to set the right voltage in relation to the set battery temperature. Then read battery temperature and voltage between each temperature selection.

  Compare the values from the readout of battery temperature and voltage with the values in the table.

Battery temperature (T) (°C)	Voltage (U), lower limit (V)	Voltage (U), upper limit (V)
+60°C, +70°C, +80°C, +90°C	12.80 V	13.60 V
+50°C	12.95 V	13.75 V
+40°C	13.27 V	14.07 V
+30°C	13.58 V	14.38 V
+20°C	13.89 V	14.69 V
-30°C, -20°C, -10°C, 0° C, +10°C	14.20 V	15.00 V

If the voltage values generally lie below the lower limit (low voltage), redo the test at an engine speed of 2500 rpm.

If the voltage is within the tolerances this time, alternator function is OK, but the test indicates that the battery is not fully charged. If voltage still deviates, there is a fault in the charging system.

NOTE: The read-out voltage is read internally from the central electronic module (CEM) and deviates slightly from the actual alternator output voltage due to a drop in voltage in the wiring harness.

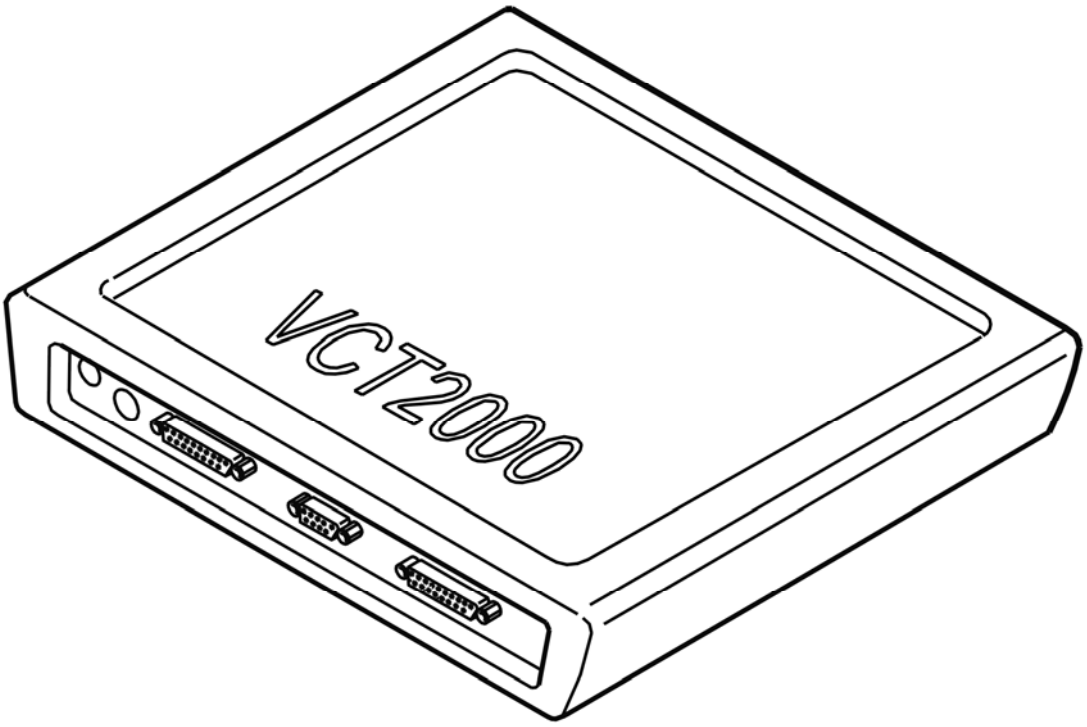

Fig. 312: Identifying VCT2000 Diagnostic Tool Symbol In VIDA

Courtesy of VOLVO CARS CORPORATION

DOOR LOCKS & ANTI-THEFT SYSTEMS

Electrical system

DOOR LOCKS & ANTI-THEFT SYSTEMS

REPLACING THE SWITCH FOR THE LOCK UNIT / CARGO COMPARTMENT LIGHTING

REMOVAL

LOCK UNIT

The switch for the cargo compartment lighting is positioned in the lock unit.

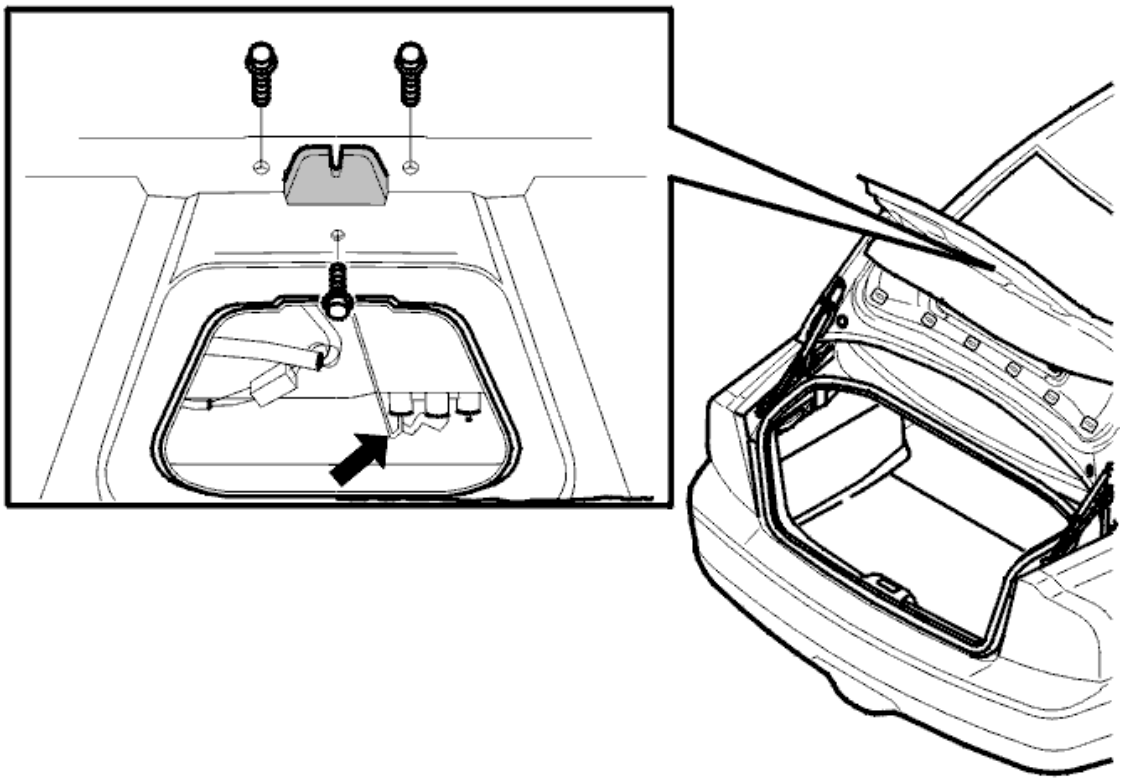

Fig. 1: Identifying Screws & Switch For Lock Unit/Cargo Compartment Lighting
Courtesy of VOLVO CARS CORPORATION

- Remove the upholstery on the tailgate. This is to gain access to the entire lock unit mechanism
- Unhook the lever from the lock cylinder mechanism
- Remove the screws (3 x) from the lock unit. Remove the lock unit
- Disconnect the connector.

INSTALLATION

LOCK UNIT

Install:

1. the connector,
2. the three screws for the lock unit. Tighten the screws to **10 Nm** ,
3. the lever for the lock mechanism,
4. the upholstery.

EXTERIOR LIGHTS

Electrical system

EXTERIOR LIGHTS

REPLACING POSITION SENSORS FOR BI-XENON LAMPS

REMOVING THE POSITION SENSOR

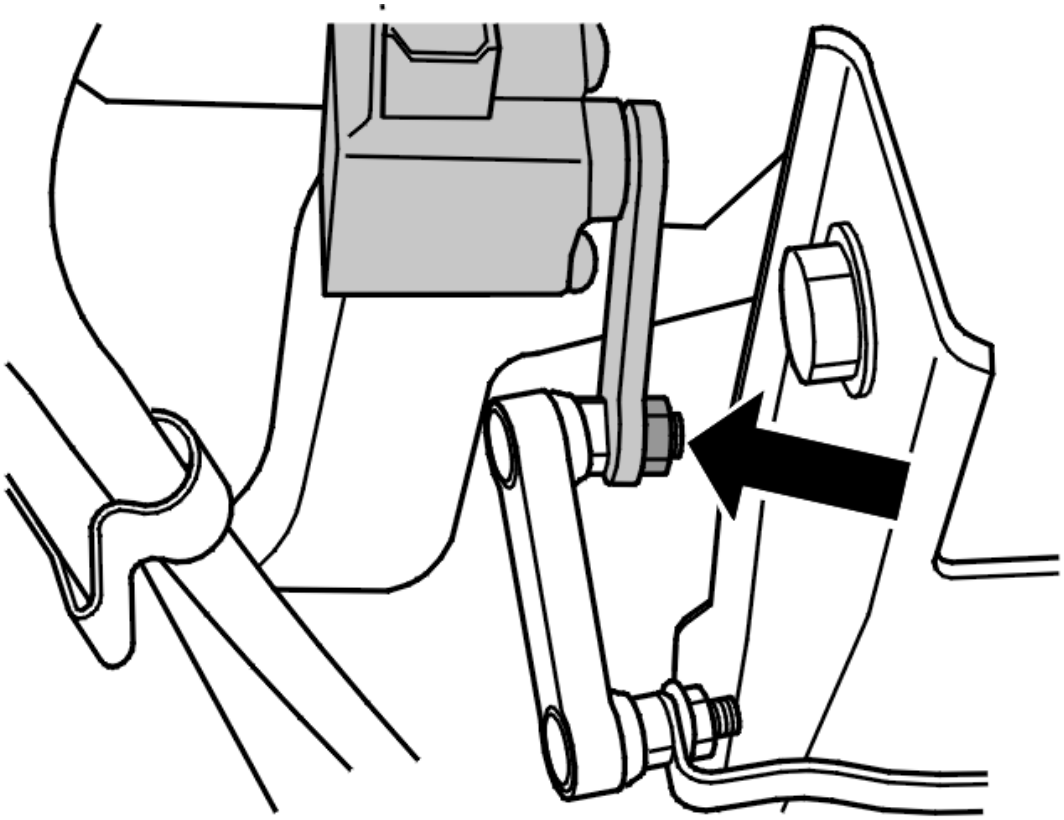

Fig. 1: Identifying Lever Arm And Nut
Courtesy of VOLVO CARS CORPORATION

Raise the car.

Remove:

- the connector
- the nut for the lever arm
- the bracket with the sensor. Press the bracket (it is sprung) and pull it backwards from the rear axle.

Transfer the bracket to the new position sensor.

INSTALLING THE POSITION SENSOR

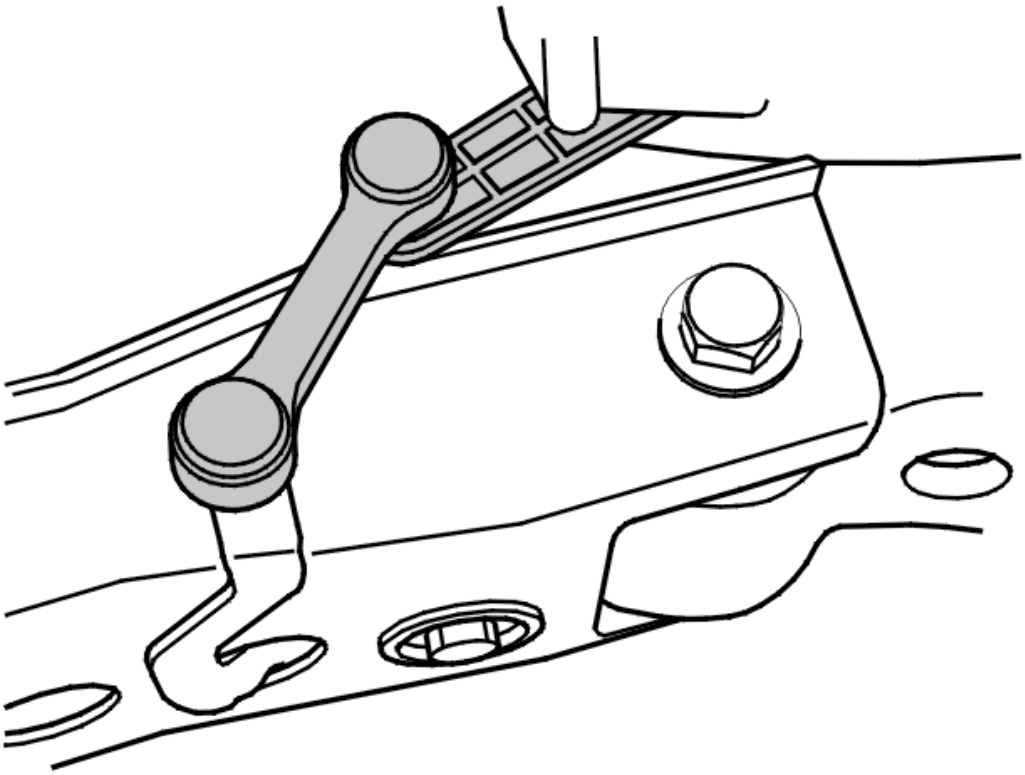

Fig. 2: Identifying Lever Arm And Bracket
Courtesy of VOLVO CARS CORPORATION

Install:

- the bracket with the sensor on the rear axle
- the nut for the lever arm
- the connector.

NOTE: The initial setting for the lever arm should be pointing straight upwards at the rear axle.

Lower the car.

ELECTRICAL

General - Specifications, Mechanical

TIGHTENING TORQUE

GENERAL TIGHTENING TORQUE

NOTE: **Screws coated with a locking fluid or self locking nuts must be replaced with new when reinstalled.**

See the table below to find the tightening torques for components not included in the summary.

Nuts and screws which are not self locking can be reused provided that they are in good condition.

TIGHTENING TORQUE

Applies to screwed joint with strength class 8.8.	
Thread	Tightening torque (Nm)
M5	5
M6	10
M7	17
M8	24
M10	50
M12	80
M14	130

SUMMARY OF TIGHTENING TORQUES FOR SPECIFIC COMPONENTS

NOTE: **Screws coated with locking fluid or sealant must always be replaced with new screws during reinstallation.**

Always use **new screws and nuts** when angle tightening. Any exceptions to this rule will be indicated in the method.

Angle-tightening in tight spaces. See **SCREWED JOINT, TORQUE/ANGLE TIGHTENING** .

Battery connector	2.5 Nm
Generator B+ terminal	15 Nm
Generator, fixed belt pulley	65 Nm
Generator, freewheel pulley	80 Nm
Starter motor	40 Nm
Starter motor B+ terminal	15 Nm
Windshield wiper arm	20 Nm

Rear window wiper arm	14 Nm
Upper screw of tail light, XC90	6 Nm
Lower screw of tail light, XC90	8 Nm
Tail light, other	10 Nm
Screw, speed sensor	10 Nm
Screw, left level sensor	60 Nm
Screw, washer fluid reservoir	17 Nm
Nut, generator cover	16 Nm

ACCESSORIES AND BODY, CAB

Lighting - Cleaning, Inspection and Adjustment

HEADLAMPS, ALIGNING

NOTE: **As the illustrations in this service information are used for different model years and / or models, some variation may occur. However, the essential information in the illustrations is always correct.**

CAUTION: Cars equipped with Bi-Xenon lamps or halogen lamps are adjusted in the same way. Ensure that the position sensor for the Bi-Xenon lamps is correctly calibrated.

PREPARATORY WORK

CAUTION: Always adjust the headlamp beam according to the legal requirements of the market.

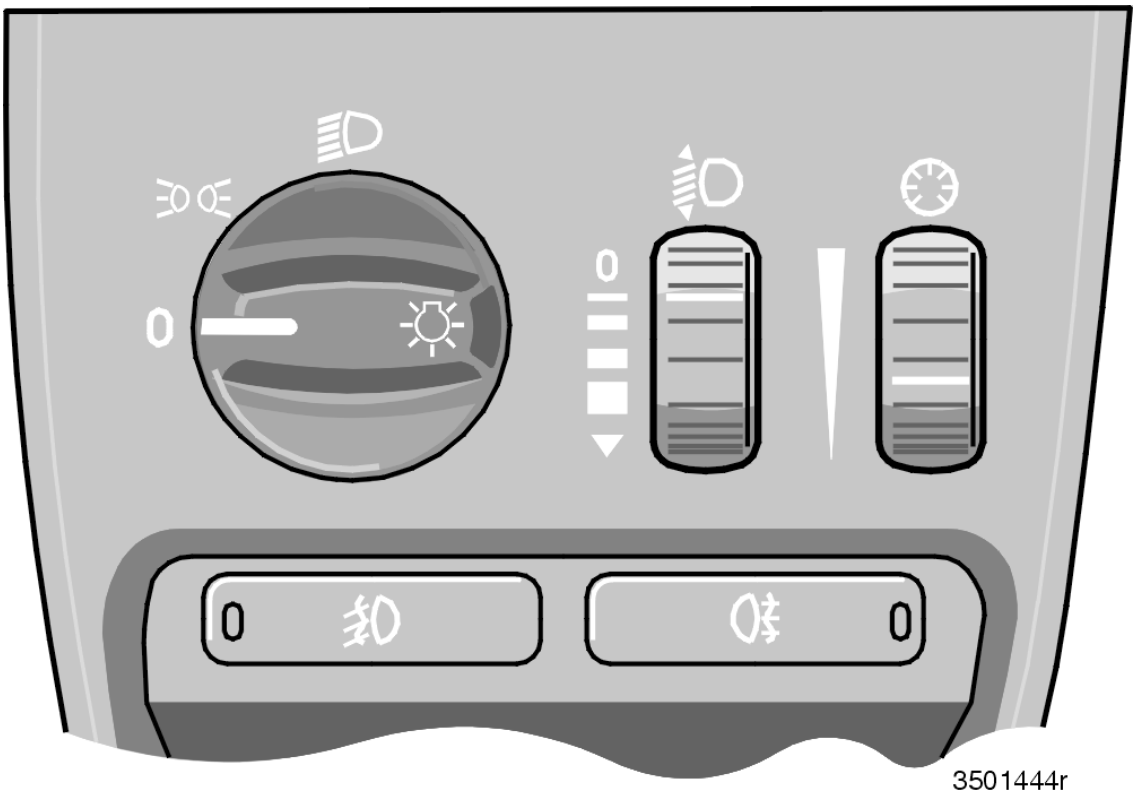

Fig. 1: Identifying Headlamp Switch And Lighting Level Switch
Courtesy of VOLVO CARS CORPORATION

- Ensure that there is sufficient battery voltage.

- Check the button that controls the lighting level. Set the button to the 0 position.
- Ignition and low beam on.

NOTE: Always adjust the beam with low beam switched on.

HEADLAMP ALIGNMENT

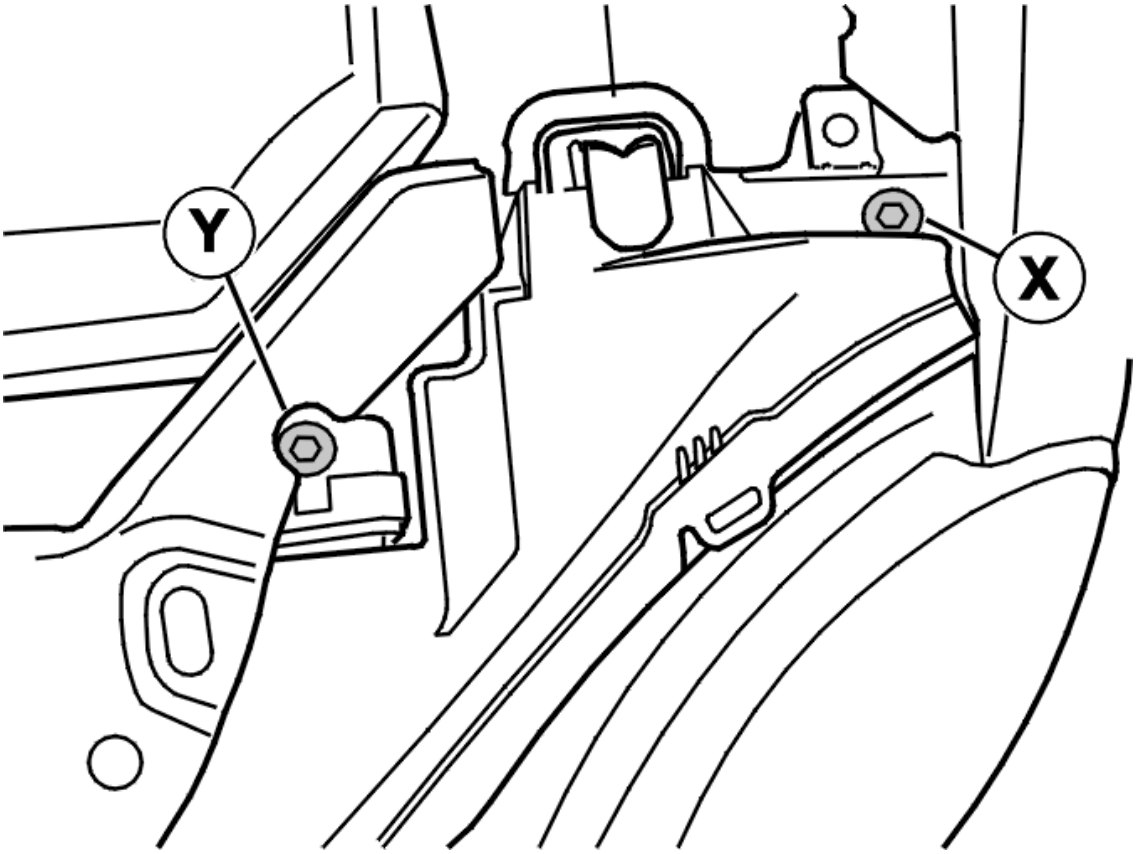

Fig. 2: Identifying Headlamp Alignment Screws
Courtesy of VOLVO CARS CORPORATION

- Adjust the beam vertically (Y) by turning the Allen screw. See the illustration
- Adjust the beam horizontally (X) by turning the Allen screw. See the illustration.

HINT: Use a 6 mm Allen screw.

NOTE: Adjust according to the illustration for the applicable market.

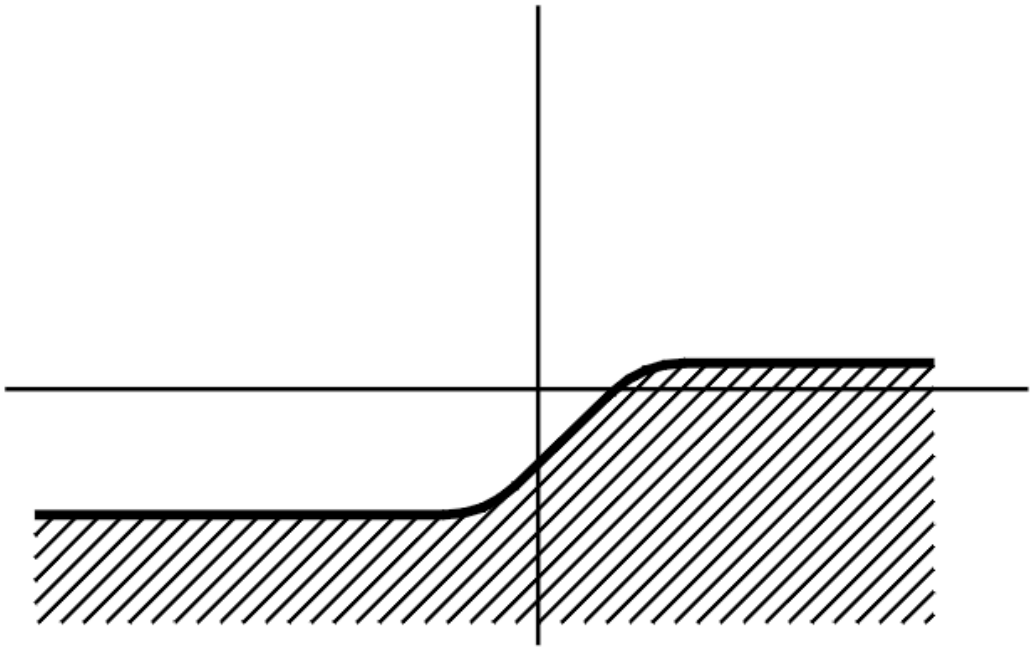

Fig. 3: Adjusting Beam Vertically And Horizontally
Courtesy of VOLVO CARS CORPORATION

USA.

ACCESSORIES AND EQUIPMENT

Lighting - Component Location

COMPONENT LOCATION, LIGHTING, EXTERNAL AND INTERNAL

NOTE: **As the graphics in this service information are used for different model years and/or models, some variation may occur. However, the essential information in the graphics is always correct.**

FRONT LIGHTING

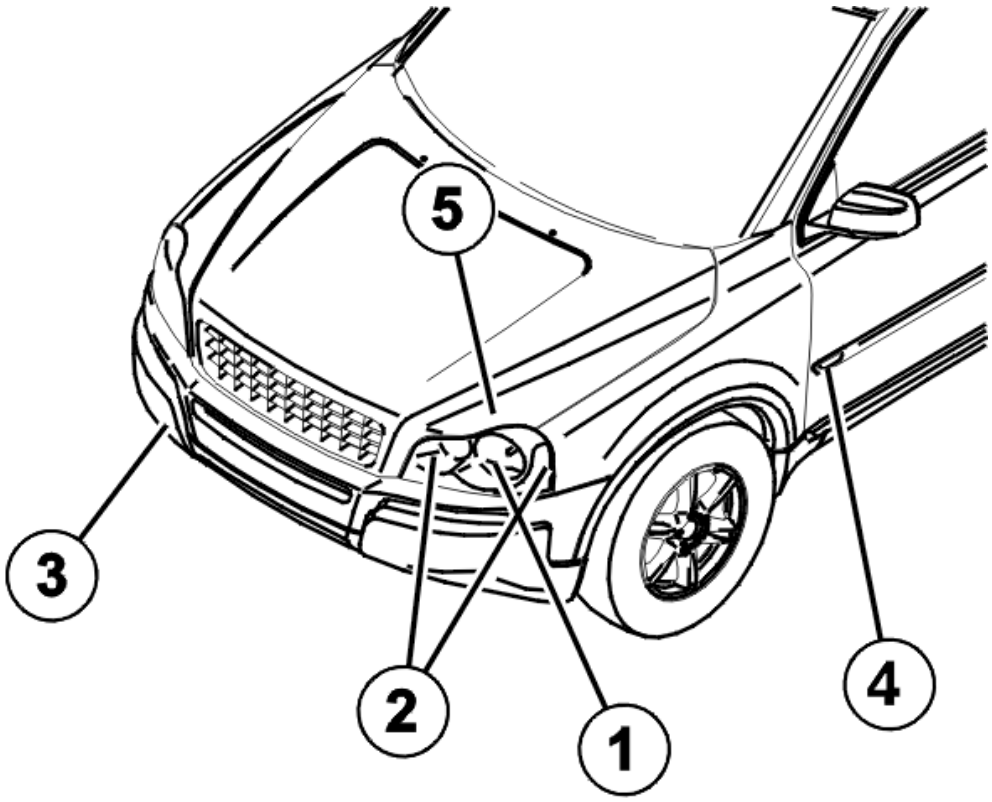

Fig. 1: Locating Exterior Lighting Components -- Front
Courtesy of VOLVO CARS CORPORATION

1. Headlamps
2. Front turn signal lamps
3. Front fog lamps
4. Front side turn signal flashers
5. Motor for headlamp beam height control.

TAIL LAMPS

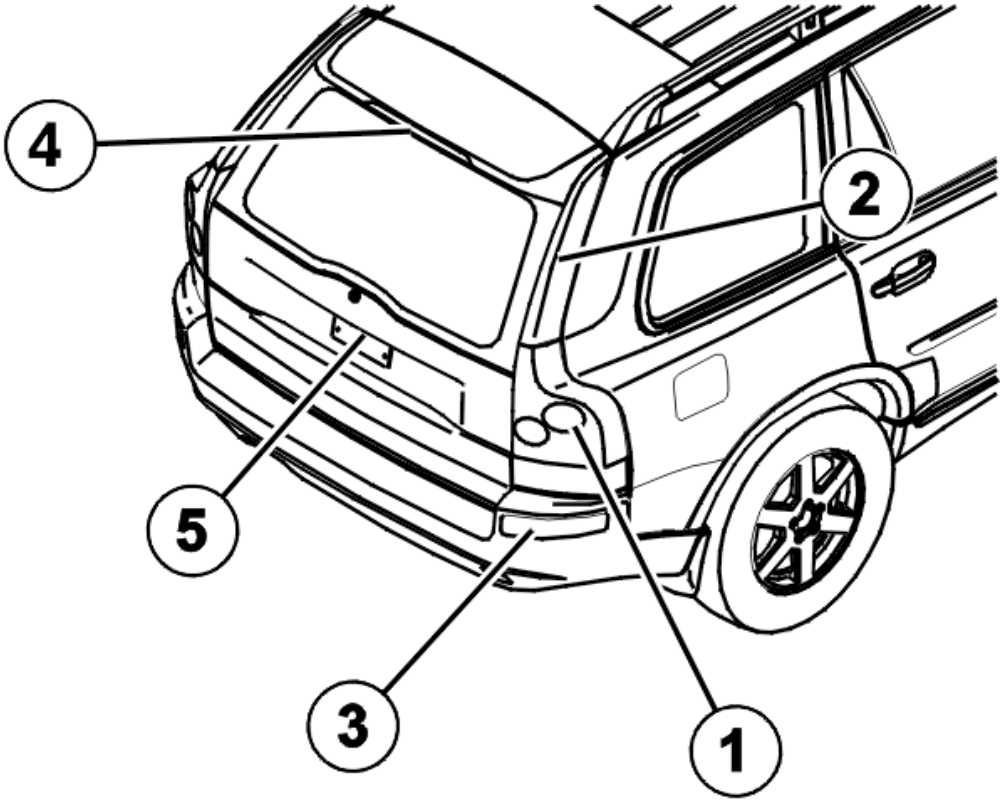

Fig. 2: Locating Exterior Lighting Components -- Rear
Courtesy of VOLVO CARS CORPORATION

1. Lower tail lamp
2. Upper tail lamp
3. Tail lamp bumper
4. High mounted stop lamp
5. License plate lighting.

INTERNAL LIGHTING

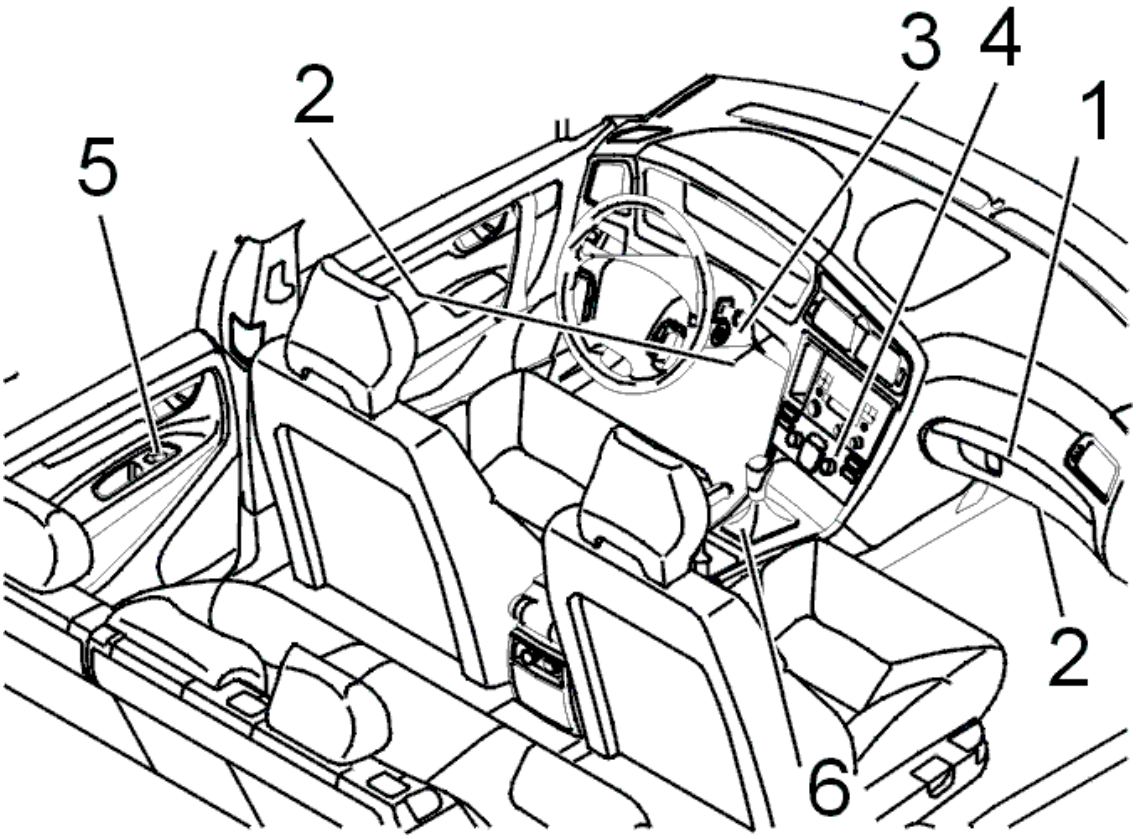

Fig. 3: Locating Interior Lighting Components (1 Of 2)
Courtesy of VOLVO CARS CORPORATION

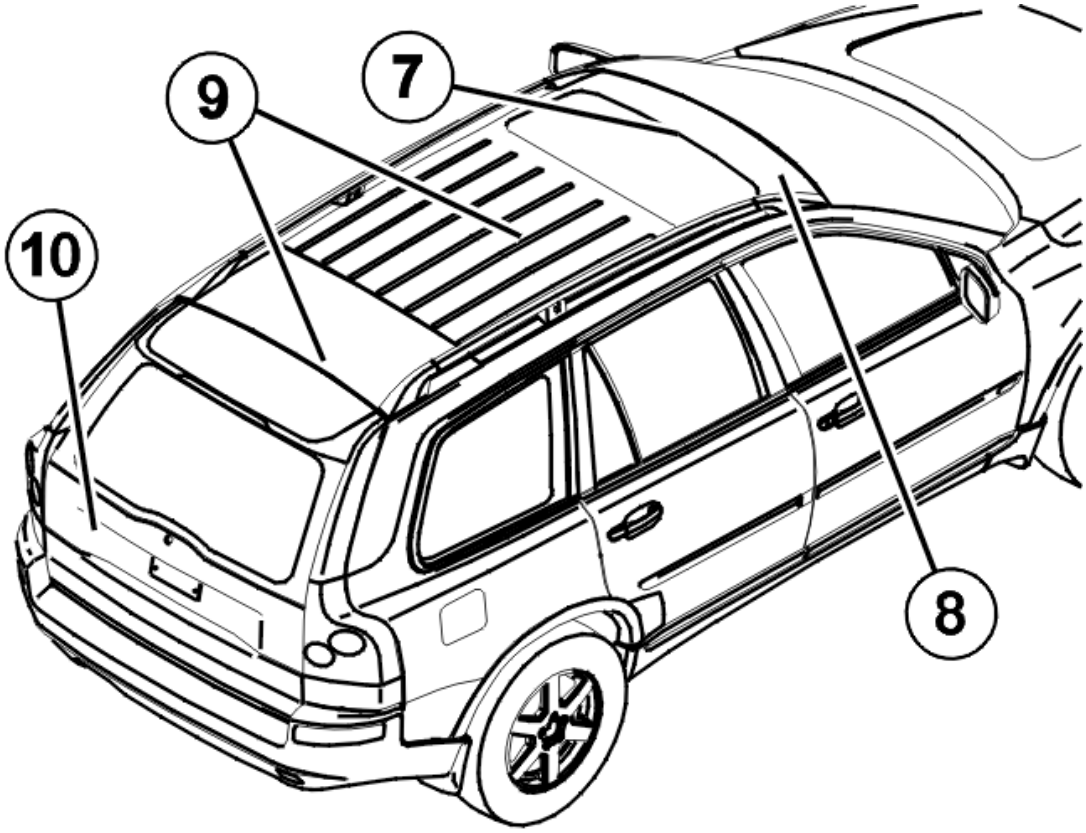

Fig. 4: Locating Interior Lighting Components (2 Of 2)
Courtesy of VOLVO CARS CORPORATION

1. Glove compartment lighting
2. Front courtesy lighting
3. Ignition key lighting
4. Lighting for the ECC control module and dashboard environment panel
5. Door switch
6. Gear selector lighting.
7. Interior lighting and the upper electronic module (UEM).
8. Vanity mirror lighting.
9. Reading lamp, rear.
10. Cargo compartment lighting.

COMPONENT LOCATION, HEADLAMP CONTROL MODULE (HCM)

LOCATION OF COMPONENTS

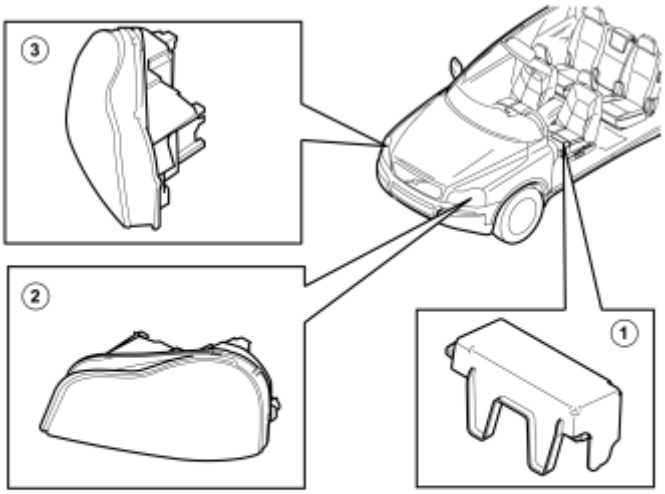

Fig. 5: Locating Headlamp Components
Courtesy of VOLVO CARS CORPORATION

Overview

1. Headlamp Control Module (HCM)
2. Left headlamp control unit (LHCU)
3. Right headlamp control unit (RHCU)

ACCESSORIES AND BODY, CAB

Lighting - Design and Function

GDL BULBS (2003-2004)

DESIGN

see **DESIGN**

FUNCTION

see **FUNCTION**

SYSTEM OVERVIEW

see **SYSTEM OVERVIEW**

GDL BULBS (2005-2011)

DESIGN

see **DESIGN**

FUNCTION

see **FUNCTION**

SYSTEM OVERVIEW

see **SYSTEM OVERVIEW**

LIGHTING (2003-2011)

LIGHTING

see **LIGHTING**

HEADLIGHT CONTROL MODULE (HCM) (2007-2011)

DESIGN

see **DESIGN**

DIAGNOSTIC FUNCTIONS

see **DIAGNOSTIC FUNCTIONS**

DOWNLOADING SOFTWARE AND REPLACING THE CONTROL MODULE

see **DOWNLOADING SOFTWARE AND REPLACING THE CONTROL MODULE**

FUNCTION

see **FUNCTION**

SYSTEM OVERVIEW

see **SYSTEM OVERVIEW**

ACCESSORIES AND BODY, CAB

Lighting - Diagnostic Trouble Codes and Associated Procedures

HCM-0141: CONTROL MODULE. INTERNAL FAULT (B5254T2; 2007)

DIAGNOSTIC TROUBLE CODE (DTC) INFORMATION HCM-0141

Condition

The Headlamp Control Module (HCM) checks internal components and functions.

The diagnostic trouble code (DTC) is stored if the control module detects that:

- Internal components do not work.

The control module's test for the diagnostic trouble code (DTC) starts in the event of:

- Ignition switch position II.

NOTE: The control module can only detect the fault once the test has been started and the diagnostic trouble code (DTC) is stored when the conditions are met.

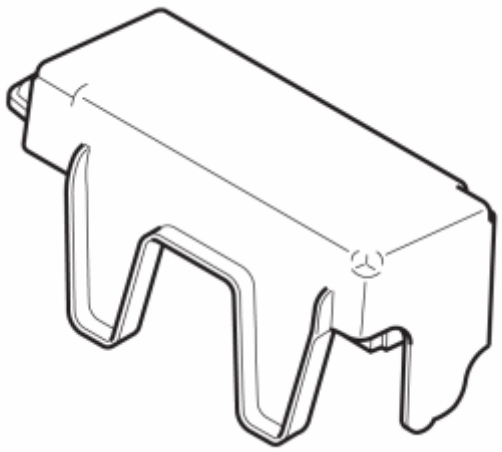

Fig. 1: Identifying Headlight Control Module (HCM)
Courtesy of VOLVO CARS CORPORATION

Substitute Value

- None.

Possible Source

- Damaged Headlamp Control Module (HCM).

Fault symptom[s]

- Active Bi-Xenon light; No Functionality
- Message in information display
- Indicator lamp Active Bi-Xenon light; Flashing

FAULT-TRACING

REPLACING A COMPONENT

The headlamp control module (HCM) has registered an internal fault.

If the fault is intermittent, it has been registered previously but is no longer present. Intermittent faults can be caused by interference upon start of the headlamp control module (HCM) or may be a different type of fault that occurs on different occasions. The fault is evaluated depending on how it occurs. If the problem recurs, replace the headlamp control module (HCM).

In the event of a permanent fault, replace the headlamp control module (HCM).

Remedy as necessary.

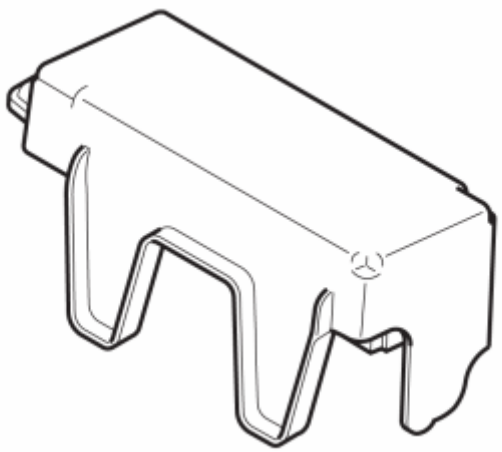

Fig. 2: Identifying Headlight Control Module (HCM)
Courtesy of VOLVO CARS CORPORATION

- **Continue**

  Refer to **INFORMATION**

INFORMATION

FAULT-TRACING INFORMATION

In case of this defect, troubleshooting is not followed by verification.

The information can be displayed again or the fault-tracing for this fault can be interrupted.

HCM-0317: BATTERY VOLTAGE. VOLTAGE TOO HIGH (B5254T2; 2007)

DIAGNOSTIC TROUBLE CODE (DTC) INFORMATION HCM-0317

Condition

The Headlamp Control Module (HCM) checks its own system voltage by comparing the DC voltage to the system voltage in the Central electronic module (CEM). Information about the system voltage in the Central electronic module (CEM) is transmitted via CAN to the Headlamp Control Module (HCM).

The diagnostic trouble code (DTC) is stored if the control module detects that:

- Direct voltage to control module is higher than 16.0 V.

The control module's test for the diagnostic trouble code (DTC) starts in the event of:

- Ignition switch position II.

NOTE: The control module can only detect the fault once the test has been started and the diagnostic trouble code (DTC) is stored when the conditions are met.

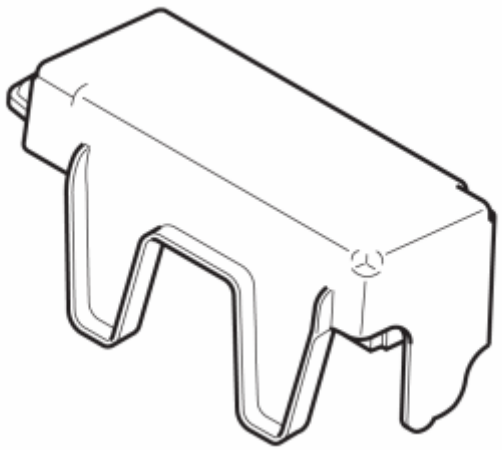

Fig. 3: Identifying Headlight Control Module (HCM)
Courtesy of VOLVO CARS CORPORATION

Substitute Value

- None.

Possible Source

- The charging system is overcharging.
- Damaged generator (GEN).
- Damaged battery.

Fault symptom[s]

- Active Bi-Xenon light; No Functionality
- Message in information display
- Indicator lamp Active Bi-Xenon light; Flashing

FAULT-TRACING

FAULT-TRACING INFORMATION

Use the following information and general checks during fault-tracing.

NOTE: Check that the fuses are intact. For locations, see the instruction manual, cover for fuse box, fuse ratings or similar.

1. Check, if possible, relevant functions in the vehicle using buttons/controls/test drives to determine the status of the fault.

   NOTE: If the vehicle does not show any of the given symptoms in the diagnostic trouble code information (DTC), this may mean that the fault is intermittent or that the control module is not detecting the fault at this moment.

2. Use the diagnostic trouble code's **frozen values** , **status identifiers** and **counter** to determine the operating conditions when the fault was detected, the fault's current status and any degree of intermittence of the fault.
3. Check and fault-trace according to **the fault causes** that are specified in the **diagnostic trouble code (DTC) information** .
4. Use **VIDA Vehicle communication** . Read off the parameters, activate components and functions, carry out quick tests and checking routines for the diagnostic trouble codes to identify the fault.
5. Check relevant components according to **Component specifications** .
6. Check relevant signals using **wiring diagram** , **signal specification** and **breakout box** .

NOTE: More information is available in Design and function .

Remedy as necessary.

Other information

- see **DESCRIPTION OF FROZEN VALUES, HEADLAMP CONTROL MODULE (HCM)**
- see **STATUS IDENTIFIER, DESCRIPTION**
- see **COUNTERS, DESCRIPTION**
- see **DESCRIPTION OF PARAMETERS**
- see **LOCATION OF COMPONENTS**
- see **SIGNAL SPECIFICATION**
- see **CHECKING THE POWER SUPPLY AND GROUND TERMINAL**
- see **CHECKING WIRING AND TERMINALS**

Repair

- see **HEADLAMP CONTROL MODULE (HCM)**

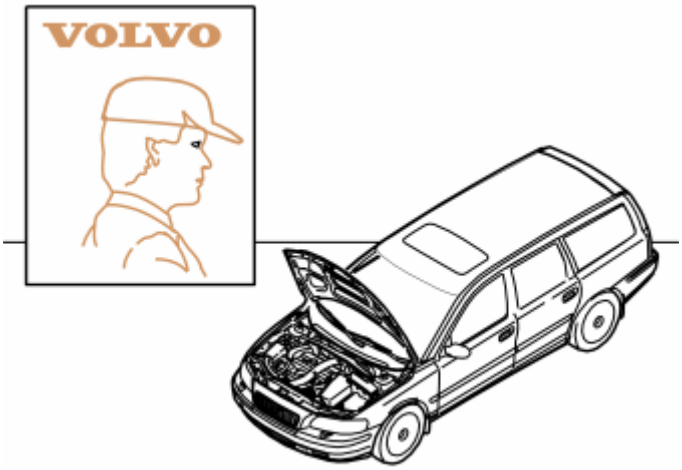

Fig. 4: Identifying VOLVO Certified Service Personnel
Courtesy of VOLVO CARS CORPORATION

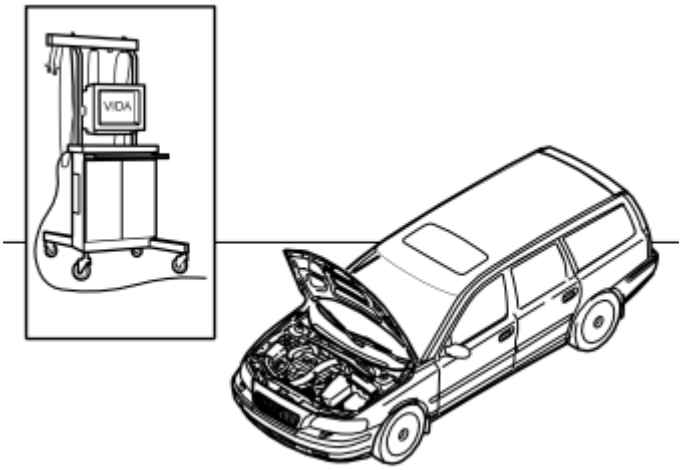

Fig. 5: Identifying VIDA

Courtesy of VOLVO CARS CORPORATION

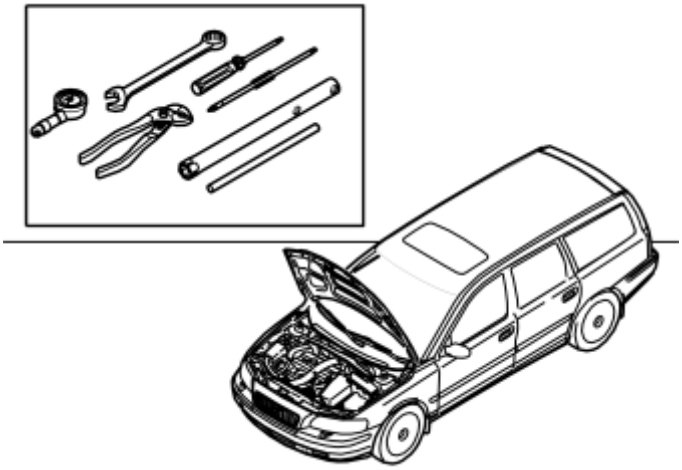

Fig. 6: Identifying Relevant Tools
Courtesy of VOLVO CARS CORPORATION

- **Continue**

  Refer to **INFORMATION**

DESCRIPTION OF FROZEN VALUES, HEADLAMP CONTROL MODULE (HCM)

EXPLANATION

Frozen values are parameter values that are stored when a diagnostic trouble code is generated. Not all parameters can be read out for all diagnostic trouble codes. The parameter values can only be read if they can provide additional information on the prevailing conditions when the code was generated.

TOTAL MILEAGE, VALUE

Measurement range: 0-1,000,000 km

The value indicates the vehicle's total mileage when the Diagnostic Trouble Code (DTC) was generated.

MECU POWER SUPPLY, VALUE

Measurement range: 0 - 63 V

Normal range: 12.0 - 14.5 V

The value indicates the power supply to the central electronic module (CEM) when the diagnostic trouble code was generated.

PASSENGER COMPARTMENT TEMPERATURE, VALUE

Measurement range: -40 till +215 °C

The value indicates the passenger compartment temperature when the diagnostic trouble code was generated.

OUTSIDE TEMPERATURE, VALUE

Measurement range: -40 till +215 °C

The value indicates the outside temperature when the diagnostic trouble code was generated.

POWER SUPPLY MODE, STATUS

The value indicates the status of the power supply mode when the diagnostic trouble code was generated.

Key removed

Key recently removed

Key approved

Ignition off after Accessory position

Accessory position

Accessory position after Ignition on

Ignition on

Running

Start attempt

Signal missing

SPEED, VALUE

Measurement range: 0 to 255 km/h (158 mph).

Indicates speed when the diagnostic trouble code was generated.

STEERING WHEEL ANGLE, VALUE

Measurement range: -780 to +780 °.

Indicates current steering wheel angle.

The normal value when the steering wheel and front wheels point straight ahead is approx. 0°.

INFORMATION

FAULT-TRACING INFORMATION

In case of this defect, troubleshooting is not followed by verification.

The information can be displayed again or the fault-tracing for this fault can be interrupted.

HCM-2281: COMMUNICATION, CENTRAL ELECTRONIC MODULE (CEM). SIGNAL MISSING (B5254T2; 2007)

DIAGNOSTIC TROUBLE CODE (DTC) INFORMATION HCM-2281

Condition

The control module continually supplies necessary information from the Central electronic module (CEM) via CAN communication. The control module checks the communication with the Central electronic module (CEM).

The diagnostic trouble code (DTC) is stored if the control module detects that:

- Communication with the Central electronic module (CEM) is interrupted or missing.

The control module's test for the diagnostic trouble code (DTC) starts in the event of:

- Ignition switch position II.

NOTE: The control module can only detect the fault once the test has been started and the diagnostic trouble code (DTC) is stored when the conditions are met.

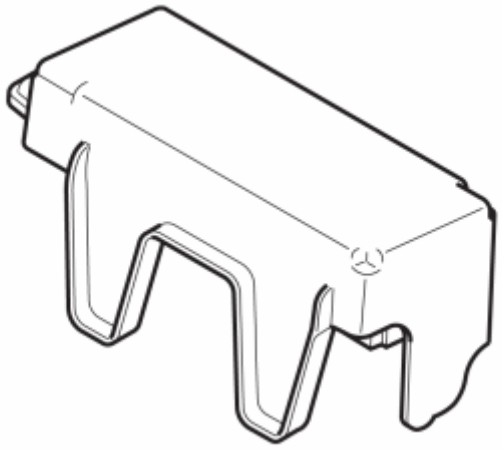

Fig. 7: Identifying Headlight Control Module (HCM)
Courtesy of VOLVO CARS CORPORATION

Substitute Value

- None.

Possible Source

- Fault-trace in transmitting control module.

Fault symptom[s]

- Active Bi-Xenon light; No Functionality
- Message in information display
- Indicator lamp Active Bi-Xenon light; Flashing

FAULT-TRACING

see **FAULT-TRACING**

HCM-2687: COMMUNICATION WITH SAS CONTROL MODULE. SIGNAL MISSING (B5254T2; 2007)

DIAGNOSTIC TROUBLE CODE (DTC) INFORMATION HCM-2687

Condition

The control module is continually supplied with necessary information from the Steering wheel angle sensor module (SAS) via CAN communication. The control module checks the communication with the Steering wheel angle sensor module (SAS).

The diagnostic trouble code (DTC) is stored if the control module detects that:

- No communication with the Steering wheel angle sensor module (SAS).

The control module's test for the diagnostic trouble code (DTC) starts in the event of:

- Ignition switch position II.

NOTE: The control module can only detect the fault once the test has been started and the diagnostic trouble code (DTC) is stored when the conditions are met.

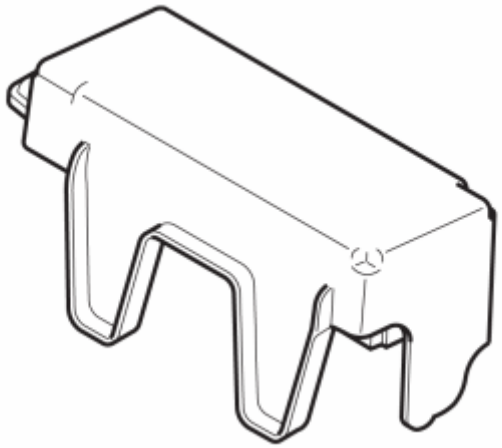

Fig. 8: Identifying Headlight Control Module (HCM)
Courtesy of VOLVO CARS CORPORATION

Substitute Value

- None.

Possible Source

- Fault-trace in transmitting control module.

Fault symptom[s]

- Active Bi-Xenon light; No Functionality
- Message in information display
- Indicator lamp Active Bi-Xenon light; Flashing

FAULT-TRACING

see **FAULT-TRACING**

HCM-2987: COMMUNICATION WITH BCM CONTROL MODULE. SIGNAL MISSING (B5254T2; 2007)

DIAGNOSTIC TROUBLE CODE (DTC) INFORMATION HCM-2987

Condition

The control module is continually supplied with necessary information from the Brake control module (BCM) via CAN communication. The control module checks the communication with the Brake control module (BCM).

The diagnostic trouble code (DTC) is stored if the control module detects that:

- No communication with the Brake control module (BCM).

The control module's test for the diagnostic trouble code (DTC) starts in the event of:

- Ignition switch position II.

NOTE: The control module can only detect the fault once the test has been started and the diagnostic trouble code (DTC) is stored when the conditions are met.

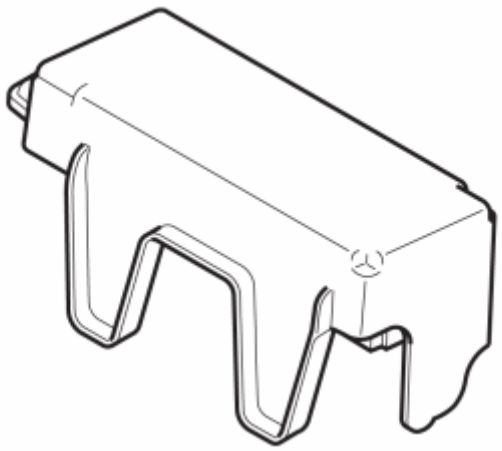

Fig. 9: Identifying Headlight Control Module (HCM)
Courtesy of VOLVO CARS CORPORATION

Substitute Value

- None.

Possible Source

- Fault-trace in transmitting control module.

Fault symptom[s]

- Active Bi-Xenon light; No Functionality
- Message in information display
- Indicator lamp Active Bi-Xenon light; Flashing

FAULT-TRACING

see **FAULT-TRACING**

HCM-4076: LAMP UNIT WRONG MOUNTING POSITION (B5254T2; 2007)

DIAGNOSTIC TROUBLE CODE (DTC) INFORMATION HCM-4076

Condition

The Headlamp Control Module (HCM) checks the location of the Left headlamp control unit (LHCU) and the Right headlamp control unit (RHCU).

The diagnostic trouble code (DTC) is stored if the control module detects that:

- The left headlamp control unit (LHCU) is installed on the right-hand side or vice versa.

The control module's test for the diagnostic trouble code (DTC) starts in the event of:

- Ignition switch position II.

NOTE: The control module can only detect the fault once the test has been started and the diagnostic trouble code (DTC) is stored when the conditions are met.

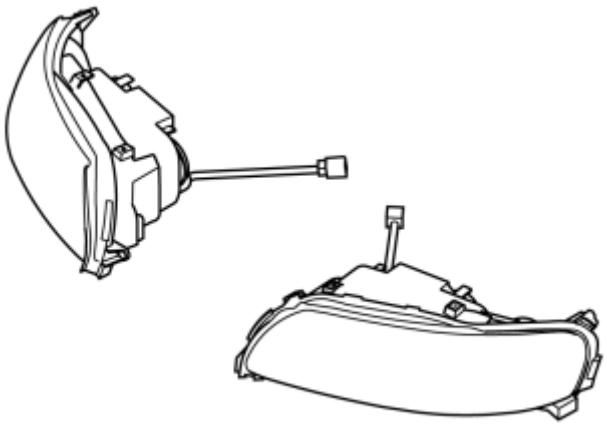

Fig. 10: Identifying Headlamp Units
Courtesy of VOLVO CARS CORPORATION

Substitute Value

- None.

Possible Source

- Cable harness for the Right headlamp control unit (RHCU) is connected to the Left headlamp control unit (LHCU).
- Cable harness for the Left headlamp control unit (LHCU) is connected to the Right headlamp control unit

(RHCU).
- The Right headlamp control unit (RHCU) is programmed with incorrect software.
- The Left headlamp control unit (LHCU) is programmed with incorrect software.

Fault symptom[s]

- Active Bi-Xenon light; No Functionality
- Message in information display
- Indicator lamp Active Bi-Xenon light; Flashing

FAULT-TRACING

see **FAULT-TRACING**

HCM-6401: LEFT HEADLAMP SWIVELLING MOTOR CIRCUIT FAULTY SIGNAL (B5254T2; 2007)

DIAGNOSTIC TROUBLE CODE (DTC) INFORMATION HCM-6401

Condition

The Headlamp Control Module (HCM) communicates with the Left headlamp control unit (LHCU).

The diagnostic trouble code (DTC) is stored if the control module detects that:

- The Left headlamp control unit (LHCU) registers the vertical motor circuit has incorrect voltage or too high temperature.

The control module's test for the diagnostic trouble code (DTC) starts in the event of:

- Ignition switch position II.

NOTE: The control module can only detect the fault once the test has been started and the diagnostic trouble code (DTC) is stored when the conditions are met.

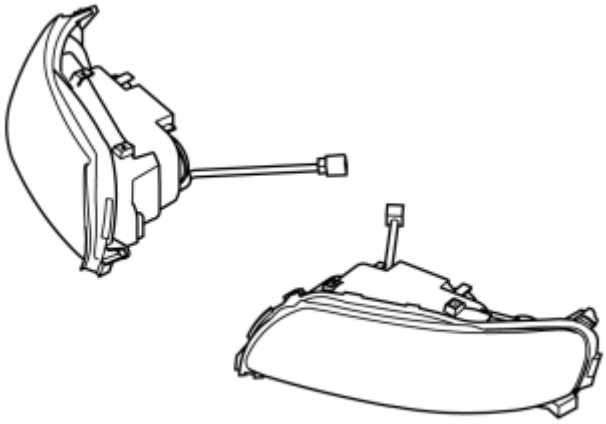

Fig. 11: Identifying Headlamp Units
Courtesy of VOLVO CARS CORPORATION

Substitute Value

- None.

Possible Source

- Faulty power supply.
- Damaged Left headlamp control unit (LHCU).
- Temperature too high.
- Short-circuit to supply voltage in the signal cable.
- The signal cable is short-circuited to ground.
- Open circuit on signal cable.

Fault symptom[s]

- Active Bi-Xenon light; No Functionality
- Message in information display
- Indicator lamp Active Bi-Xenon light; Flashing

FAULT-TRACING

see **FAULT-TRACING**

HCM-6411: LEFT-HAND LAMP MODULE (LHCU) VOLTAGE TOO LOW (B5254T2; 2007)

DIAGNOSTIC TROUBLE CODE (DTC) INFORMATION HCM-6411

Condition

The Headlamp Control Module (HCM) communicates with the Left headlamp control unit (LHCU).

The diagnostic trouble code (DTC) is stored if the control module detects that:

- The Left headlamp control unit (LHCU) registers incorrect system voltage.

The control module's test for the diagnostic trouble code (DTC) starts in the event of:

- Ignition switch position II.

NOTE: The control module can only detect the fault once the test has been started and the diagnostic trouble code (DTC) is stored when the conditions are met.

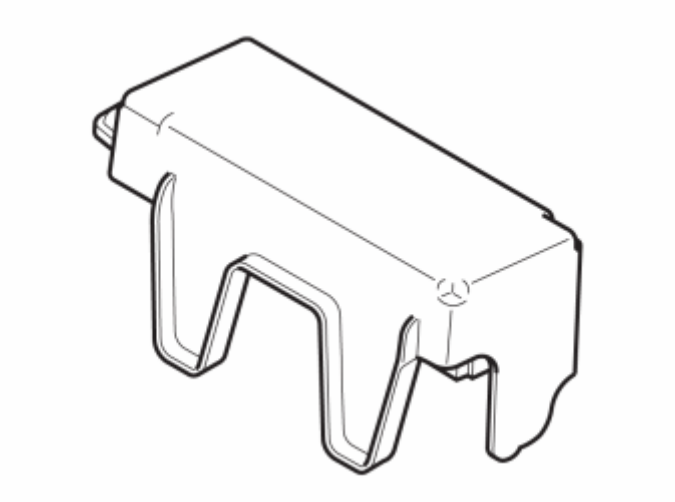

Fig. 12: Identifying Headlight Control Module (HCM)
Courtesy of VOLVO CARS CORPORATION

Substitute Value

- None.

Possible Source

Signal too high:

- The charging system is overcharging.

Signal too low:

- Short-circuit to ground in the power supply cable.
- Open-circuit in the ground lead.

Fault symptom[s]

- Active Bi-Xenon light; No Functionality
- Message in information display
- Indicator lamp Active Bi-Xenon light; Flashing

FAULT-TRACING

see **FAULT-TRACING**

HCM-6477: LEFT HEADLAMP SWIVELLING MOTOR CIRCUIT COMMANDED POSITION NOT REACHABLE (B5254T2; 2007)

DIAGNOSTIC TROUBLE CODE (DTC) INFORMATION HCM-6477

Condition

The Headlamp Control Module (HCM) communicates with the Left headlamp control unit (LHCU).

The diagnostic trouble code (DTC) is stored if the control module detects that:

- The Left headlamp control unit (LHCU) registers that the requested position of the horizontal motor circuit cannot be achieved.

The control module's test for the diagnostic trouble code (DTC) starts in the event of:

- Ignition switch position II.

NOTE: The control module can only detect the fault once the test has been started and the diagnostic trouble code (DTC) is stored when the conditions are met.

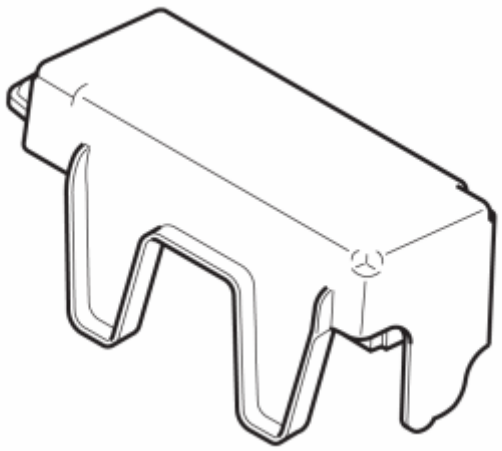

Fig. 13: Identifying Headlight Control Module (HCM)

Courtesy of VOLVO CARS CORPORATION

Substitute Value

- None.

Possible Source

- Blocked engine (the engine does not turn over)
- Damaged horizontal motor.

Fault symptom[s]

- Active Bi-Xenon light; No Functionality
- Message in information display
- Indicator lamp Active Bi-Xenon light; Flashing

FAULT-TRACING

see **FAULT-TRACING**

HCM-6501: RIGHT HEADLAMP SWIVELLING MOTOR CIRCUIT FAULTY SIGNAL (B5254T2; 2007)

DIAGNOSTIC TROUBLE CODE (DTC) INFORMATION HCM-6501

Condition

The Headlamp Control Module (HCM) communicates with the Right headlamp control unit (RHCU).

The diagnostic trouble code (DTC) is stored if the control module detects that:

- The Right headlamp control unit (RHCU) registers an internal fault or too high temperature in the horizontal motor circuit.

The control module's test for the diagnostic trouble code (DTC) starts in the event of:

- Ignition switch position II.

NOTE: The control module can only detect the fault once the test has been started and the diagnostic trouble code (DTC) is stored when the conditions are met.

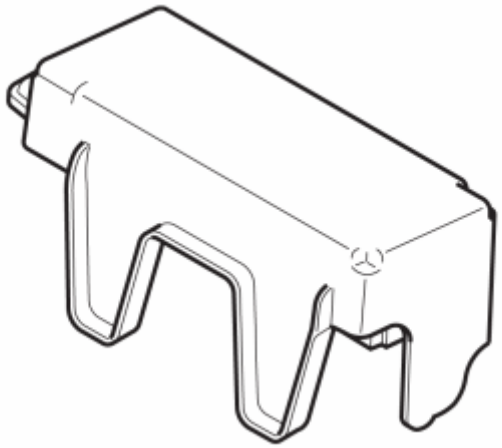

Fig. 14: Identifying Headlight Control Module (HCM)
Courtesy of VOLVO CARS CORPORATION

Substitute Value

- None.

Possible Source

- Damaged Right headlamp control unit (RHCU).
- Temperature too high.
- Short-circuit to supply voltage in the signal cable.
- The signal cable is short-circuited to ground.
- Open circuit on signal cable.

Fault symptom[s]

- Active Bi-Xenon light; No Functionality
- Message in information display
- Indicator lamp Active Bi-Xenon light; Flashing

FAULT-TRACING

see **FAULT-TRACING**

HCM-6511: RIGHT HAND LAMP MODULE (RHCU) VOLTAGE TOO LOW (B5254T2; 2007)

DIAGNOSTIC TROUBLE CODE (DTC) INFORMATION HCM-6511

Condition

The Headlamp Control Module (HCM) communicates with the Left headlamp control unit (LHCU).

The diagnostic trouble code (DTC) is stored if the control module detects that:

- The Left headlamp control unit (LHCU) registers incorrect system voltage.

The control module's test for the diagnostic trouble code (DTC) starts in the event of:

- Ignition switch position II.

NOTE: The control module can only detect the fault once the test has been started and the diagnostic trouble code (DTC) is stored when the conditions are met.

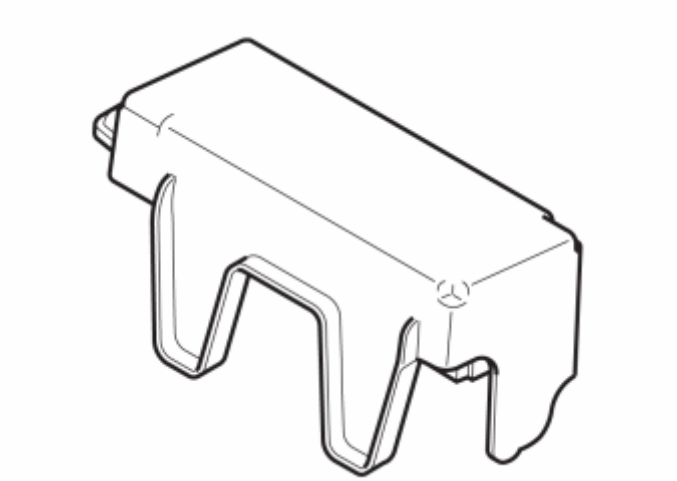

Fig. 15: Identifying Headlight Control Module (HCM)
Courtesy of VOLVO CARS CORPORATION

Substitute Value

- None.

Possible Source

Signal too high:

- The charging system is overcharging.

Signal too low:

- Short-circuit to ground in the power supply cable.
- Open-circuit in the ground lead.

Fault symptom[s]

- Active Bi-Xenon light; No Functionality
- Message in information display
- Indicator lamp Active Bi-Xenon light; Flashing

FAULT-TRACING

see **FAULT-TRACING**

HCM-6577: RIGHT HEADLAMP SWIVELLING MOTOR CIRCUIT COMMANDED POSITION NOT REACHABLE (B5254T2; 2007)

DIAGNOSTIC TROUBLE CODE (DTC) INFORMATION HCM-6577

Condition

The Headlamp Control Module (HCM) communicates with the Right headlamp control unit (RHCU).

The diagnostic trouble code (DTC) is stored if the control module detects that:

- The Right headlamp control unit (RHCU) registers that the requested position of the horizontal motor circuit cannot be achieved.

The control module's test for the diagnostic trouble code (DTC) starts in the event of:

- Ignition switch position II.

NOTE: The control module can only detect the fault once the test has been started and the diagnostic trouble code (DTC) is stored when the conditions are met.

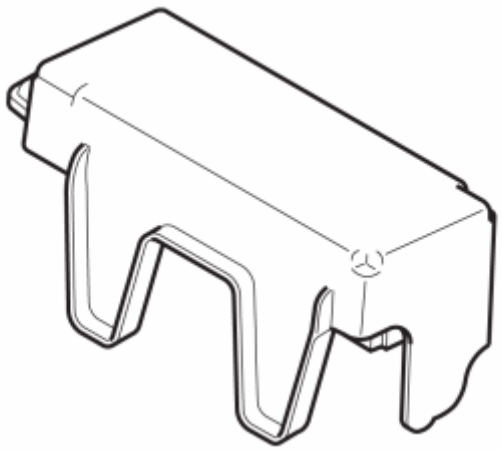

Fig. 16: Identifying Headlight Control Module (HCM)
Courtesy of VOLVO CARS CORPORATION

Substitute Value

- None.

Possible Source

- Blocked engine (the engine does not turn over)
- Damaged horizontal motor.

Fault symptom[s]

- Active Bi-Xenon light; No Functionality
- Message in information display
- Indicator lamp Active Bi-Xenon light; Flashing

FAULT-TRACING

see **FAULT-TRACING**

HCM-B104076: LAMP UNIT. MECHANICAL FAILURES. WRONG MOUNTING POSITION (B6324S; 2007-2010)

DIAGNOSTIC TROUBLE CODE (DTC) INFORMATION HCM-B104076

Condition

The Headlamp Control Module (HCM) checks the location of the Left headlamp control unit (LHCU) and the Right headlamp control unit (RHCU).

The diagnostic trouble code (DTC) is stored if the control module detects that:

- The left headlamp control unit (LHCU) is installed on the right-hand side or vice versa.

The control module's test for the diagnostic trouble code (DTC) starts in the event of:

- Ignition switch position II.

NOTE: **The control module can only detect the fault once the test has been started and the diagnostic trouble code (DTC) is stored when the conditions are met.**

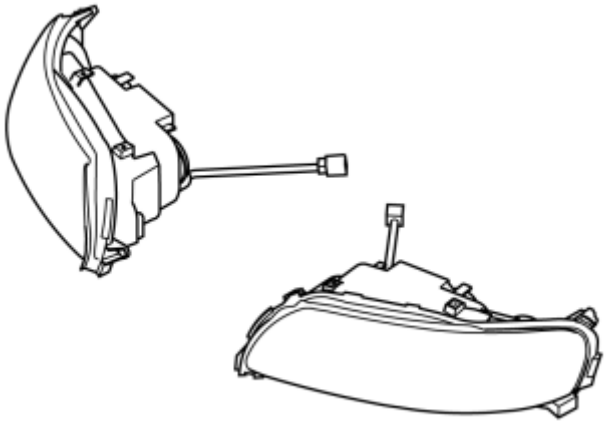

Fig. 17: Identifying Headlamp Units
Courtesy of VOLVO CARS CORPORATION

Substitute Value

- None.

Possible Source

- Cable harness for the Right headlamp control unit (RHCU) is connected to the Left headlamp control unit (LHCU).
- Cable harness for the Left headlamp control unit (LHCU) is connected to the Right headlamp control unit (RHCU).
- The Right headlamp control unit (RHCU) is programmed with incorrect software.
- The Left headlamp control unit (LHCU) is programmed with incorrect software.

Fault symptom[s]

- Active Bi-Xenon light; No Functionality
- Message in information display
- Indicator lamp Active Bi-Xenon light; Flashing

FAULT-TRACING

FAULT-TRACING INFORMATION

Use the following information and general checks during fault-tracing.

NOTE: Check that the fuses are intact. For locations, see the instruction manual, cover for fuse box, fuse ratings or similar.

1. Check, if possible, relevant functions in the vehicle using buttons/controls/test drives to determine the

status of the fault.

NOTE: **If the vehicle does not show any of the given symptoms in the diagnostic trouble code information (DTC), this may mean that the fault is intermittent or that the control module is not detecting the fault at this moment.**

2. Use the diagnostic trouble code's **frozen values** , **status identifiers** and **counter** to determine the operating conditions when the fault was detected, the fault's current status and any degree of intermittence of the fault.
3. Check and fault-trace according to **the fault causes** that are specified in the **diagnostic trouble code (DTC) information** .
4. Use **VIDA Vehicle communication** . Read off the parameters, activate components and functions, carry out quick tests and checking routines for the diagnostic trouble codes to identify the fault.
5. Check relevant components according to **Component specifications** .
6. Check relevant signals using **wiring diagram** , **signal specification** and **breakout box** .

NOTE: **More information is available in Design and function .**

Remedy as necessary.

Other information

- see **DESCRIPTION OF FROZEN VALUES, HEADLAMP CONTROL MODULE (HCM)**
- see **DESCRIPTION OF STATUS IDENTIFIER**
- see **DESCRIPTION OF COUNTER**
- see **DESCRIPTION OF PARAMETERS**
- see **LOCATION OF COMPONENTS**
- see **SIGNAL SPECIFICATION**
- see **CHECKING THE POWER SUPPLY AND GROUND TERMINAL**
- see **CHECKING WIRING AND TERMINALS**

Repair

- see **HEADLAMP CONTROL MODULE (HCM)**

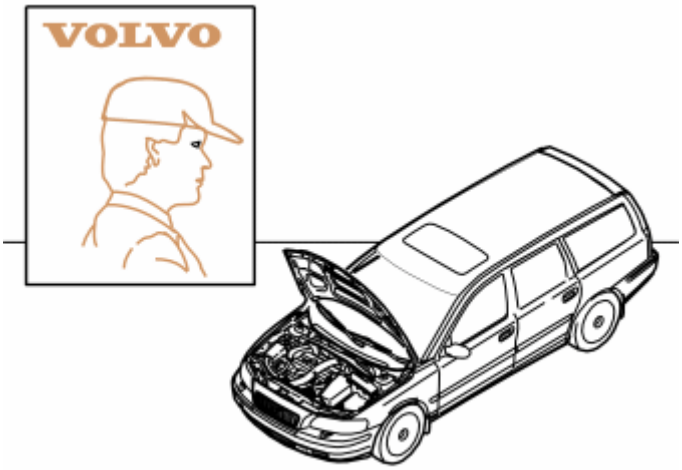

Fig. 18: Identifying VOLVO Certified Service Personnel
Courtesy of VOLVO CARS CORPORATION

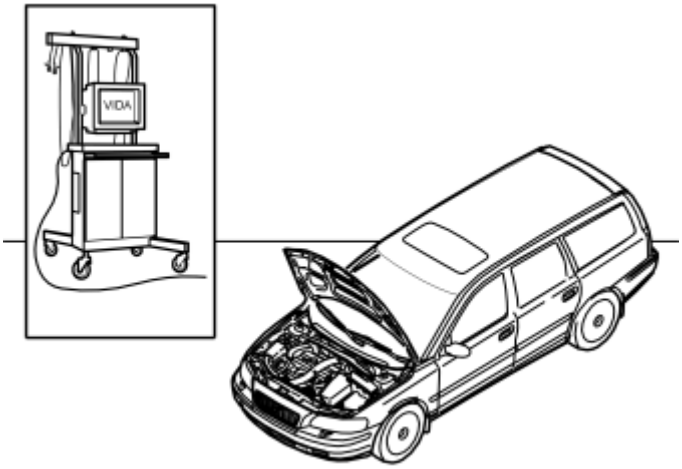

Fig. 19: Identifying VIDA
Courtesy of VOLVO CARS CORPORATION

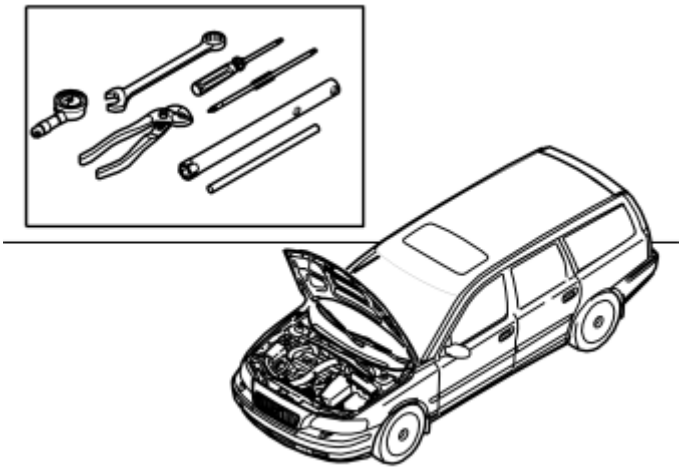

Fig. 20: Identifying Relevant Tools
Courtesy of VOLVO CARS CORPORATION

- **Continue**

  Refer to **INFORMATION**

INFORMATION

FAULT-TRACING INFORMATION

In case of this defect, troubleshooting is not followed by verification.

The information can be displayed again or the fault-tracing for this fault can be interrupted.

HCM-B104076: LAMP UNIT. MECHANICAL FAILURES. WRONG MOUNTING POSITION (B6324S5; 2011)

DIAGNOSTIC TROUBLE CODE (DTC) INFORMATION HCM-B104076

see **DIAGNOSTIC TROUBLE CODE (DTC) INFORMATION HCM-B104076**

FAULT-TRACING

see **FAULT-TRACING**

HCM-B104076: LAMP UNIT. MECHANICAL FAILURES. WRONG MOUNTING POSITION (B8444S; 2007-2011)

DIAGNOSTIC TROUBLE CODE (DTC) INFORMATION HCM-B104076

see **DIAGNOSTIC TROUBLE CODE (DTC) INFORMATION HCM-B104076**

FAULT-TRACING

see **FAULT-TRACING**

HCM-B1D6401 LEFT HEADLAMP SWIVELLING MOTOR CIRCUIT. GENERAL FAILURE INFORMATION. GENERAL ELECTRICAL FAILURE (B6324S; 2007-2010)

DIAGNOSTIC TROUBLE CODE (DTC) INFORMATION HCM-B1D6401

Condition

The Headlamp Control Module (HCM) communicates with the Left headlamp control unit (LHCU).

The diagnostic trouble code (DTC) is stored if the control module detects that:

- The Left headlamp control unit (LHCU) registers the vertical motor circuit has incorrect voltage or too high temperature.

The control module's test for the diagnostic trouble code (DTC) starts in the event of:

- Ignition switch position II.

NOTE: The control module can only detect the fault once the test has been started and the diagnostic trouble code (DTC) is stored when the conditions are met.

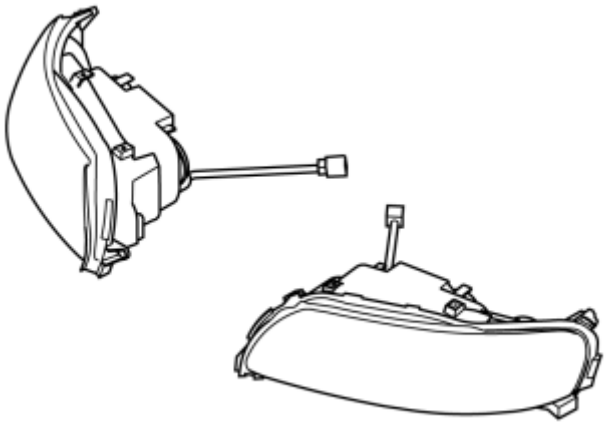

Fig. 21: Identifying Headlamp Units
Courtesy of VOLVO CARS CORPORATION

Substitute Value

- None.

Possible Source

- Faulty power supply.
- Damaged Left headlamp control unit (LHCU).
- Temperature too high.
- Short-circuit to supply voltage in the signal cable.
- The signal cable is short-circuited to ground.
- Open circuit on signal cable.

Fault symptom[s]

- Active Bi-Xenon light; No Functionality
- Message in information display
- Indicator lamp Active Bi-Xenon light; Flashing

FAULT-TRACING

see **FAULT-TRACING**

HCM-B1D6401 LEFT HEADLAMP SWIVELLING MOTOR CIRCUIT. GENERAL FAILURE INFORMATION. GENERAL ELECTRICAL FAILURE (B6324S5; 2011)

DIAGNOSTIC TROUBLE CODE (DTC) INFORMATION HCM-B1D6401

see **DIAGNOSTIC TROUBLE CODE (DTC) INFORMATION HCM-B1D6401**

FAULT-TRACING

see **FAULT-TRACING**

HCM-B1D6401 LEFT HEADLAMP SWIVELLING MOTOR CIRCUIT. GENERAL FAILURE INFORMATION. GENERAL ELECTRICAL FAILURE (B8444S; 2007-2011)

DIAGNOSTIC TROUBLE CODE (DTC) INFORMATION HCM-B1D6401

see **DIAGNOSTIC TROUBLE CODE (DTC) INFORMATION HCM-B1D6401**

FAULT-TRACING

see **FAULT-TRACING**

HCM-B1D6477 LEFT HEADLAMP SWIVELLING MOTOR CIRCUIT.

MECHANICAL FAILURES. COMMANDED POSITION NOT REACHABLE (B6324S; 2007-2010)

DIAGNOSTIC TROUBLE CODE (DTC) INFORMATION HCM-B1D6477

Condition

The Headlamp Control Module (HCM) communicates with the Left headlamp control unit (LHCU).

The diagnostic trouble code (DTC) is stored if the control module detects that:

- The Left headlamp control unit (LHCU) registers that the requested position of the horizontal motor circuit cannot be achieved.

The control module's test for the diagnostic trouble code (DTC) starts in the event of:

- Ignition switch position II.

NOTE: The control module can only detect the fault once the test has been started and the diagnostic trouble code (DTC) is stored when the conditions are met.

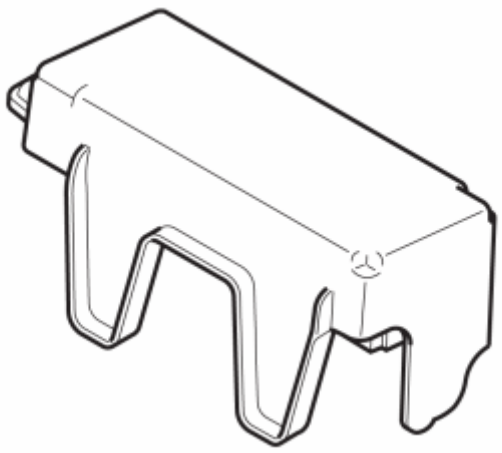

Fig. 22: Identifying Headlight Control Module (HCM)
Courtesy of VOLVO CARS CORPORATION

Substitute Value

- None.

Possible Source

- Blocked engine (the engine does not turn over)
- Damaged horizontal motor.

Fault symptom[s]

- Active Bi-Xenon light; No Functionality
- Message in information display
- Indicator lamp Active Bi-Xenon light; Flashing

FAULT-TRACING

see **FAULT-TRACING**

HCM-B1D6477 LEFT HEADLAMP SWIVELLING MOTOR CIRCUIT. MECHANICAL FAILURES. COMMANDED POSITION NOT REACHABLE (B6324S5; 2011)

DIAGNOSTIC TROUBLE CODE (DTC) INFORMATION HCM-B1D6477

see **DIAGNOSTIC TROUBLE CODE (DTC) INFORMATION HCM-B1D6477**

FAULT-TRACING

see **FAULT-TRACING**

HCM-B1D6477 LEFT HEADLAMP SWIVELLING MOTOR CIRCUIT. MECHANICAL FAILURES. COMMANDED POSITION NOT REACHABLE (B8444S; 2007-2011)

DIAGNOSTIC TROUBLE CODE (DTC) INFORMATION HCM-B1D6477

see **DIAGNOSTIC TROUBLE CODE (DTC) INFORMATION HCM-B1D6477**

FAULT-TRACING

see **FAULT-TRACING**

HCM-B1D6501 RIGHT HEADLAMP SWIVELLING MOTOR CIRCUIT. GENERAL FAILURE INFORMATION. GENERAL ELECTRICAL FAILURE (B6324S; 2007-2010)

DIAGNOSTIC TROUBLE CODE (DTC) INFORMATION HCM-B1D6501

Condition

The Headlamp Control Module (HCM) communicates with the Right headlamp control unit (RHCU).

The diagnostic trouble code (DTC) is stored if the control module detects that:

- The Right headlamp control unit (RHCU) registers an internal fault or too high temperature in the horizontal motor circuit.

The control module's test for the diagnostic trouble code (DTC) starts in the event of:

- Ignition switch position II.

NOTE: The control module can only detect the fault once the test has been started and the diagnostic trouble code (DTC) is stored when the conditions are met.

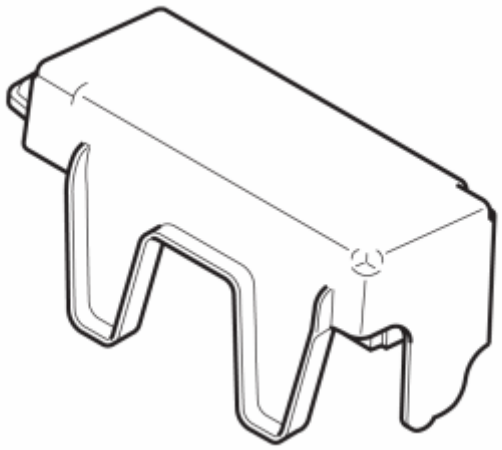

Fig. 23: Identifying Headlight Control Module (HCM)
Courtesy of VOLVO CARS CORPORATION

Substitute Value

- None.

Possible Source

- Damaged Right headlamp control unit (RHCU).
- Temperature too high.
- Short-circuit to supply voltage in the signal cable.
- The signal cable is short-circuited to ground.
- Open circuit on signal cable.

Fault symptom[s]

- Active Bi-Xenon light; No Functionality
- Message in information display

- Indicator lamp Active Bi-Xenon light; Flashing

FAULT-TRACING

see **FAULT-TRACING**

HCM-B1D6501 RIGHT HEADLAMP SWIVELLING MOTOR CIRCUIT. GENERAL FAILURE INFORMATION. GENERAL ELECTRICAL FAILURE (B6324S5; 2011)

DIAGNOSTIC TROUBLE CODE (DTC) INFORMATION HCM-B1D6501

see **DIAGNOSTIC TROUBLE CODE (DTC) INFORMATION HCM-B1D6501**

FAULT-TRACING

see **FAULT-TRACING**

HCM-B1D6501 RIGHT HEADLAMP SWIVELLING MOTOR CIRCUIT. GENERAL FAILURE INFORMATION. GENERAL ELECTRICAL FAILURE (B8444S; 2007-2011)

DIAGNOSTIC TROUBLE CODE (DTC) INFORMATION HCM-B1D6501

see **DIAGNOSTIC TROUBLE CODE (DTC) INFORMATION HCM-B1D6501**

FAULT-TRACING

see **FAULT-TRACING**

HCM-B1D6577 RIGHT HEADLAMP SWIVELLING MOTOR CIRCUIT. MECHANICAL FAILURES. COMMANDED POSITION NOT REACHABLE (B6324S; 2007-2010)

DIAGNOSTIC TROUBLE CODE (DTC) INFORMATION HCM-B1D6577

Condition

The Headlamp Control Module (HCM) communicates with the Right headlamp control unit (RHCU).

The diagnostic trouble code (DTC) is stored if the control module detects that:

- The Right headlamp control unit (RHCU) registers that the requested position of the horizontal motor circuit cannot be achieved.

The control module's test for the diagnostic trouble code (DTC) starts in the event of:

- Ignition switch position II.

NOTE: The control module can only detect the fault once the test has been started and the diagnostic trouble code (DTC) is stored when the conditions are met.

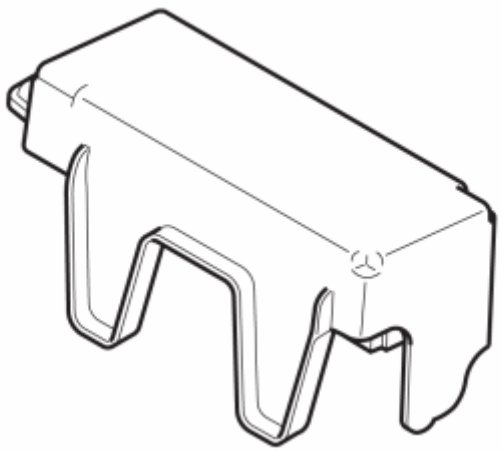

Fig. 24: Identifying Headlight Control Module (HCM)
Courtesy of VOLVO CARS CORPORATION

Substitute Value

- None.

Possible Source

- Blocked engine (the engine does not turn over)
- Damaged horizontal motor.

Fault symptom[s]

- Active Bi-Xenon light; No Functionality
- Message in information display
- Indicator lamp Active Bi-Xenon light; Flashing

FAULT-TRACING

see **FAULT-TRACING**

HCM-B1D6577 RIGHT HEADLAMP SWIVELLING MOTOR CIRCUIT. MECHANICAL FAILURES. COMMANDED POSITION NOT REACHABLE

(B6324S5; 2011)

DIAGNOSTIC TROUBLE CODE (DTC) INFORMATION HCM-B1D6577

see **DIAGNOSTIC TROUBLE CODE (DTC) INFORMATION HCM-B1D6577**

FAULT-TRACING

see **FAULT-TRACING**

HCM-B1D6577 RIGHT HEADLAMP SWIVELLING MOTOR CIRCUIT. MECHANICAL FAILURES. COMMANDED POSITION NOT REACHABLE (B8444S; 2007-2011)

DIAGNOSTIC TROUBLE CODE (DTC) INFORMATION HCM-B1D6577

see **DIAGNOSTIC TROUBLE CODE (DTC) INFORMATION HCM-B1D6577**

FAULT-TRACING

see **FAULT-TRACING**

HCM-B1D6616 LEFT HEADLAMP POWER MODULE. GENERAL ELECTRICAL FAILURES. CIRCUIT VOLTAGE BELOW THRESHOLD (B6324S; 2007-2010)

DIAGNOSTIC TROUBLE CODE (DTC) INFORMATION HCM-1D6616

Condition

The Headlamp Control Module (HCM) communicates with the Left headlamp control unit (LHCU).

The diagnostic trouble code (DTC) is stored if the control module detects that:

- The Left headlamp control unit (LHCU) registers incorrect system voltage.

The control module's test for the diagnostic trouble code (DTC) starts in the event of:

- Ignition switch position II.

NOTE: **The control module can only detect the fault once the test has been started and the diagnostic trouble code (DTC) is stored when the conditions are met.**

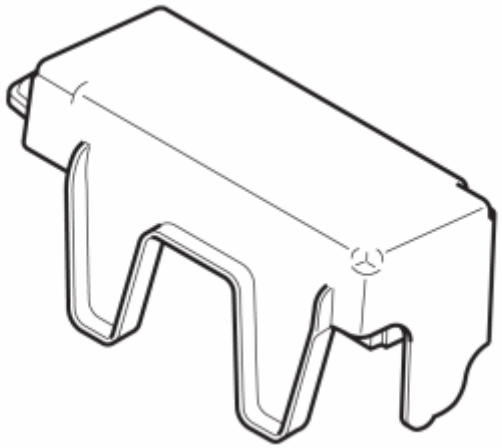

Fig. 25: Identifying Headlight Control Module (HCM)
Courtesy of VOLVO CARS CORPORATION

Substitute Value

- None.

Possible Source

Signal too high:

- The charging system is overcharging.

Signal too low:

- Short-circuit to ground in the power supply cable.
- Open-circuit in the ground lead.

Fault symptom[s]

- Active Bi-Xenon light; No Functionality
- Message in information display
- Indicator lamp Active Bi-Xenon light; Flashing

FAULT-TRACING

see **FAULT-TRACING**

HCM-B1D6616 LEFT HEADLAMP POWER MODULE. GENERAL ELECTRICAL FAILURES. CIRCUIT VOLTAGE BELOW THRESHOLD (B6324S5; 2011)

DIAGNOSTIC TROUBLE CODE (DTC) INFORMATION HCM-1D6616

see **DIAGNOSTIC TROUBLE CODE (DTC) INFORMATION HCM-1D6616**

FAULT-TRACING

see **FAULT-TRACING**

HCM-B1D6616 LEFT HEADLAMP POWER MODULE. GENERAL ELECTRICAL FAILURES. CIRCUIT VOLTAGE BELOW THRESHOLD (B8444S; 2007-2011)

DIAGNOSTIC TROUBLE CODE (DTC) INFORMATION HCM-1D6616

see **DIAGNOSTIC TROUBLE CODE (DTC) INFORMATION HCM-1D6616**

FAULT-TRACING

see **FAULT-TRACING**

HCM-B1D6716 RIGHT HEADLAMP POWER MODULE. GENERAL ELECTRICAL FAILURES. CIRCUIT VOLTAGE BELOW THRESHOLD (B6324S; 2007-2010)

DIAGNOSTIC TROUBLE CODE (DTC) INFORMATION HCM-B1D6716

Condition

The Headlamp Control Module (HCM) communicates with the Left headlamp control unit (LHCU).

The diagnostic trouble code (DTC) is stored if the control module detects that:

- The Left headlamp control unit (LHCU) registers incorrect system voltage.

The control module's test for the diagnostic trouble code (DTC) starts in the event of:

- Ignition switch position II.

NOTE: The control module can only detect the fault once the test has been started and the diagnostic trouble code (DTC) is stored when the conditions are met.

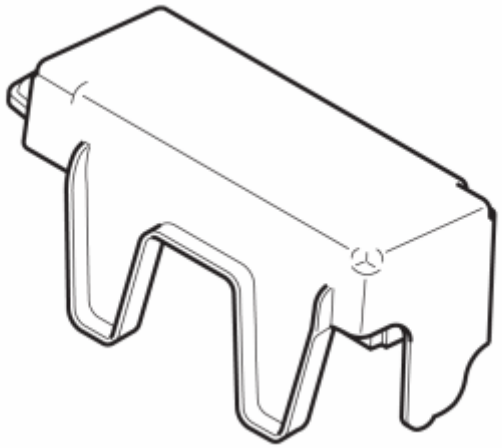

Fig. 26: Identifying Headlight Control Module (HCM)
Courtesy of VOLVO CARS CORPORATION

Substitute Value

- None.

Possible Source

Signal too high:

- The charging system is overcharging.

Signal too low:

- Short-circuit to ground in the power supply cable.
- Open-circuit in the ground lead.

Fault symptom[s]

- Active Bi-Xenon light; No Functionality
- Message in information display
- Indicator lamp Active Bi-Xenon light; Flashing

FAULT-TRACING

see **FAULT-TRACING**

HCM-B1D6716 RIGHT HEADLAMP POWER MODULE. GENERAL ELECTRICAL FAILURES. CIRCUIT VOLTAGE BELOW THRESHOLD (B6324S5; 2011)

DIAGNOSTIC TROUBLE CODE (DTC) INFORMATION HCM-B1D6716

see **DIAGNOSTIC TROUBLE CODE (DTC) INFORMATION HCM-B1D6716**

FAULT-TRACING

see **FAULT-TRACING**

HCM-B1D6716 RIGHT HEADLAMP POWER MODULE. GENERAL ELECTRICAL FAILURES. CIRCUIT VOLTAGE BELOW THRESHOLD (B8444S; 2007-2011)

DIAGNOSTIC TROUBLE CODE (DTC) INFORMATION HCM-B1D6716

see **DIAGNOSTIC TROUBLE CODE (DTC) INFORMATION HCM-B1D6716**

FAULT-TRACING

see **FAULT-TRACING**

HCM-DD00: COMMUNICATION WITH LEFT-HAND LAMP MODULE (LHCU) FAULTY SIGNAL (B5254T2; 2007)

DIAGNOSTIC TROUBLE CODE (DTC) INFORMATION HCM-DD00

Condition

The Headlamp Control Module (HCM) both transmits and receives information via a standardized serial communication method - LIN (Local Interconnect Network). The control module checks the communication with the Left headlamp control unit (LHCU).

The diagnostic trouble code (DTC) is stored if the control module detects that:

- Received message does not correspond with expected message.

The control module's test for the diagnostic trouble code (DTC) starts in the event of:

- Ignition switch position II.

NOTE: **The control module can only detect the fault once the test has been started and the diagnostic trouble code (DTC) is stored when the conditions are met.**

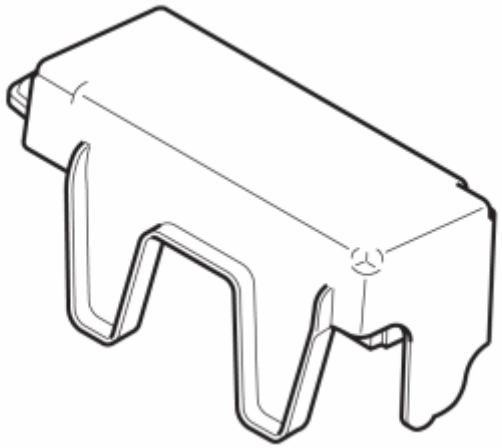

Fig. 27: Identifying Headlight Control Module (HCM)
Courtesy of VOLVO CARS CORPORATION

Substitute Value

- None.

Possible Source

- Communication interference.

Fault symptom[s]

- Active Bi-Xenon light; No Functionality
- Message in information display
- Indicator lamp Active Bi-Xenon light; Flashing

FAULT-TRACING

see **FAULT-TRACING**

HCM-DD01: COMMUNICATION WITH LEFT-HAND LAMP MODULE (LHCU) SIGNAL MISSING (B5254T2; 2007)

DIAGNOSTIC TROUBLE CODE (DTC) INFORMATION HCM-DD01

Condition

The Headlamp Control Module (HCM) both transmits and receives information via a standardized serial communication method - LIN (Local Interconnect Network). The control module checks the communication with the Left headlamp control unit (LHCU).

The diagnostic trouble code (DTC) is stored if the control module detects that:

- No communication with the Left headlamp control unit (LHCU).

The control module's test for the diagnostic trouble code (DTC) starts in the event of:

- Ignition switch position II.

NOTE: The control module can only detect the fault once the test has been started and the diagnostic trouble code (DTC) is stored when the conditions are met.

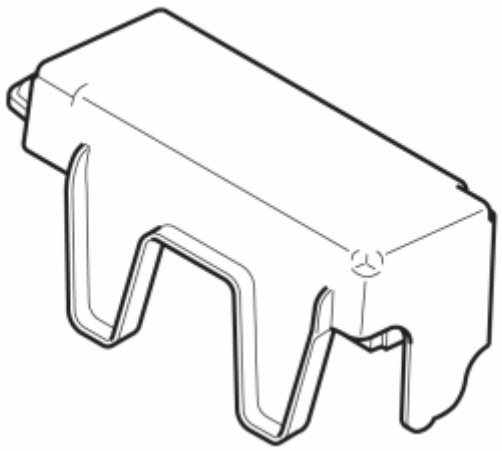

Fig. 28: Identifying Headlight Control Module (HCM)
Courtesy of VOLVO CARS CORPORATION

Substitute Value

- None.

Possible Source

- The signal cable is short-circuited to ground.
- Short-circuit to supply voltage in the signal cable.
- Contact resistance, oxidation or open-circuit in the terminals.

Fault symptom[s]

- Active Bi-Xenon light; No Functionality
- Message in information display
- Indicator lamp Active Bi-Xenon light; Flashing

FAULT-TRACING

see **FAULT-TRACING**

HCM-DD02: COMMUNICATION WITH LEFT-HAND LAMP MODULE (LHCU) FAULTY SIGNAL (B5254T2; 2007)

DIAGNOSTIC TROUBLE CODE (DTC) INFORMATION HCM-DD02

Condition

The Headlamp Control Module (HCM) both transmits and receives information via a standardized serial communication method - LIN (Local Interconnect Network). The control module checks the communication with the Left headlamp control unit (LHCU).

The diagnostic trouble code (DTC) is stored if the control module detects that:

- Received message does not correspond with expected message.

The control module's test for the diagnostic trouble code (DTC) starts in the event of:

- Ignition switch position II.

NOTE: The control module can only detect the fault once the test has been started and the diagnostic trouble code (DTC) is stored when the conditions are met.

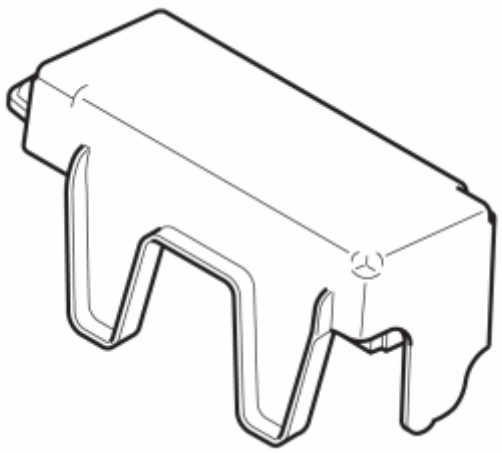

Fig. 29: Identifying Headlight Control Module (HCM)
Courtesy of VOLVO CARS CORPORATION

Substitute Value

- None.

Possible Source

- Communication interference.

Fault symptom[s]

- Active Bi-Xenon light; No Functionality
- Message in information display
- Indicator lamp Active Bi-Xenon light; Flashing

FAULT-TRACING

see **FAULT-TRACING**

HCM-DD10: COMMUNICATION WITH LEFT-HAND LAMP MODULE (LHCU) SIGNAL MISSING (B5254T2; 2007)

DIAGNOSTIC TROUBLE CODE (DTC) INFORMATION HCM-DD10

Condition

The Headlamp Control Module (HCM) both transmits and receives information via a standardized serial communication method - LIN (Local Interconnect Network). The control module checks the communication with the Left headlamp control unit (LHCU).

The diagnostic trouble code (DTC) is stored if the control module detects that:

- No communication with the Left headlamp control unit (LHCU).

The control module's test for the diagnostic trouble code (DTC) starts in the event of:

- Ignition switch position II.

NOTE: The control module can only detect the fault once the test has been started and the diagnostic trouble code (DTC) is stored when the conditions are met.

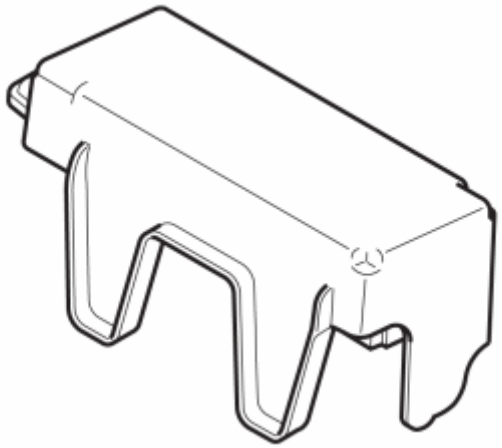

Fig. 30: Identifying Headlight Control Module (HCM)
Courtesy of VOLVO CARS CORPORATION

Substitute Value

- None.

Possible Source

- The signal cable is short-circuited to ground.
- Short-circuit to supply voltage in the signal cable.
- Contact resistance, oxidation or open-circuit in the terminals.

Fault symptom[s]

- Active Bi-Xenon light; No Functionality
- Message in information display
- Indicator lamp Active Bi-Xenon light; Flashing

FAULT-TRACING

see **FAULT-TRACING**

HCM-DD20: COMMUNICATION WITH RIGHT-HAND LAMP MODULE (RHCU) FAULTY SIGNAL (B5254T2; 2007)

DIAGNOSTIC TROUBLE CODE (DTC) INFORMATION HCM-DD20

Condition

The Headlamp Control Module (HCM) both transmits and receives information via a standardized serial

communication method - LIN (Local Interconnect Network). The control module checks the communication with the Right headlamp control unit (RHCU).

The diagnostic trouble code (DTC) is stored if the control module detects that:

- Received message does not correspond with expected message.

The control module's test for the diagnostic trouble code (DTC) starts in the event of:

- Ignition switch position II.

NOTE: The control module can only detect the fault once the test has been started and the diagnostic trouble code (DTC) is stored when the conditions are met.

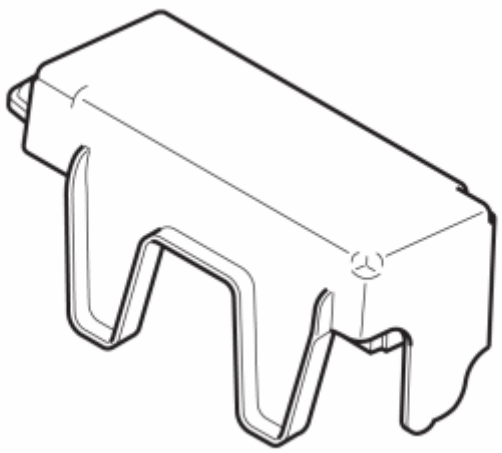

Fig. 31: Identifying Headlight Control Module (HCM)
Courtesy of VOLVO CARS CORPORATION

Substitute Value

- None.

Possible Source

- Communication interference.

Fault symptom[s]

- Active Bi-Xenon light; No Functionality
- Message in information display
- Indicator lamp Active Bi-Xenon light; Flashing

FAULT-TRACING

see **FAULT-TRACING**

HCM-DD21: COMMUNICATION WITH RIGHT-HAND LAMP MODULE (RHCU) SIGNAL MISSING (B5254T2; 2007)

DIAGNOSTIC TROUBLE CODE (DTC) INFORMATION HCM-DD21

Condition

The Headlamp Control Module (HCM) both transmits and receives information via a standardized serial communication method - LIN (Local Interconnect Network). The control module checks the communication with the Right headlamp control unit (RHCU).

The diagnostic trouble code (DTC) is stored if the control module detects that:

- No communication with the Right headlamp control unit (RHCU).

The control module's test for the diagnostic trouble code (DTC) starts in the event of:

- Ignition switch position II.

NOTE: The control module can only detect the fault once the test has been started and the diagnostic trouble code (DTC) is stored when the conditions are met.

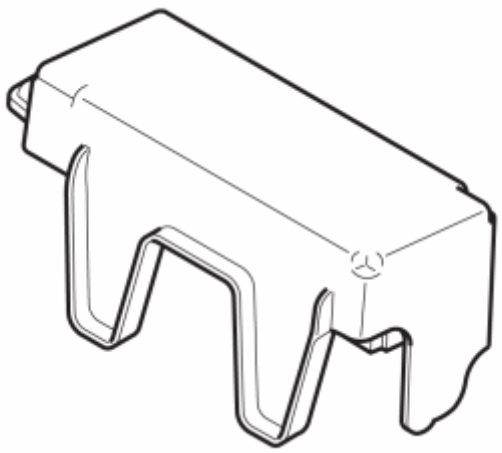

Fig. 32: Identifying Headlight Control Module (HCM)
Courtesy of VOLVO CARS CORPORATION

Substitute Value

- None.

Possible Source

- The signal cable is short-circuited to ground.
- Short-circuit to supply voltage in the signal cable.
- Contact resistance, oxidation or open-circuit in the terminals.

Fault symptom[s]

- Active Bi-Xenon light; No Functionality
- Message in information display
- Indicator lamp Active Bi-Xenon light; Flashing

FAULT-TRACING

see **FAULT-TRACING**

HCM-DD22: COMMUNICATION WITH RIGHT-HAND LAMP MODULE (RHCU) FAULTY SIGNAL (B5254T2; 2007)

DIAGNOSTIC TROUBLE CODE (DTC) INFORMATION HCM-DD22

Condition

The Headlamp Control Module (HCM) both transmits and receives information via a standardized serial communication method - LIN (Local Interconnect Network). The control module checks the communication with the Right headlamp control unit (RHCU).

The diagnostic trouble code (DTC) is stored if the control module detects that:

- Received message does not correspond with expected message.

The control module's test for the diagnostic trouble code (DTC) starts in the event of:

- Ignition switch position II.

NOTE: The control module can only detect the fault once the test has been started and the diagnostic trouble code (DTC) is stored when the conditions are met.

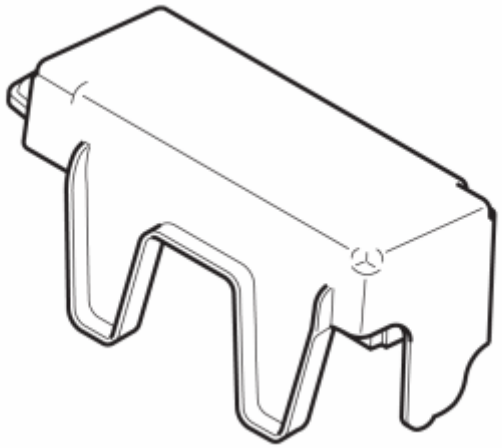

Fig. 33: Identifying Headlight Control Module (HCM)
Courtesy of VOLVO CARS CORPORATION

Substitute Value

- None.

Possible Source

- Communication interference.

Fault symptom[s]

- Active Bi-Xenon light; No Functionality
- Message in information display
- Indicator lamp Active Bi-Xenon light; Flashing

FAULT-TRACING

see **FAULT-TRACING**

HCM-DD30: COMMUNICATION WITH RIGHT-HAND LAMP MODULE (RHCU) SIGNAL MISSING (B5254T2; 2007)

DIAGNOSTIC TROUBLE CODE (DTC) INFORMATION HCM-DD30

Condition

The Headlamp Control Module (HCM) both transmits and receives information via a standardized serial communication method - LIN (Local Interconnect Network). The control module checks the communication with the Right headlamp control unit (RHCU).

The diagnostic trouble code (DTC) is stored if the control module detects that:

- No communication with the Right headlamp control unit (RHCU).

The control module's test for the diagnostic trouble code (DTC) starts in the event of:

- Ignition switch position II.

NOTE: The control module can only detect the fault once the test has been started and the diagnostic trouble code (DTC) is stored when the conditions are met.

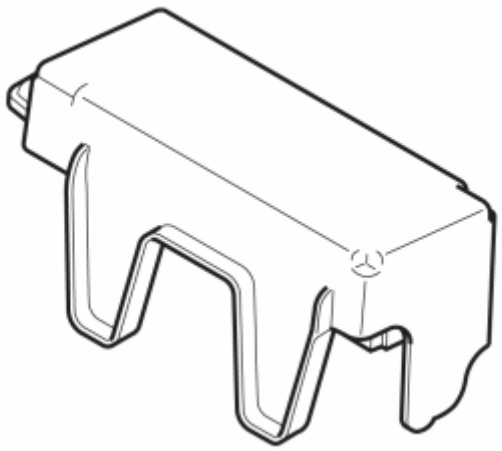

Fig. 34: Identifying Headlight Control Module (HCM)
Courtesy of VOLVO CARS CORPORATION

Substitute Value

- None.

Possible Source

- The signal cable is short-circuited to ground.
- Short-circuit to supply voltage in the signal cable.
- Contact resistance, oxidation or open-circuit in the terminals.

Fault symptom[s]

- Active Bi-Xenon light; No Functionality
- Message in information display
- Indicator lamp Active Bi-Xenon light; Flashing

FAULT-TRACING

see **FAULT-TRACING**

HCM-E000: CONTROL MODULE COMMUNICATION. FAULTY COMMUNICATION (B5254T2; 2007)

DIAGNOSTIC TROUBLE CODE (DTC) INFORMATION HCM-E000

Condition

The control modules transmit and receive information via a standardized serial communication method - CAN (Control Area Network).

The diagnostic trouble code (DTC) is stored if the control module detects that:

- Communication on the CAN network is interrupted by another control module on the CAN network or by the control module's own message causing interference on the CAN network.

The control module's test for the diagnostic trouble code (DTC) starts in the event of:

- Starting the control module's CAN communication.

NOTE: **The control module can only detect the fault once the test has been started and the diagnostic trouble code (DTC) is stored when the conditions are met. In the event of system communication problems, it is not possible to communicate with the control module. Therefore it will only be possible to read off the fault if it is intermittent.**

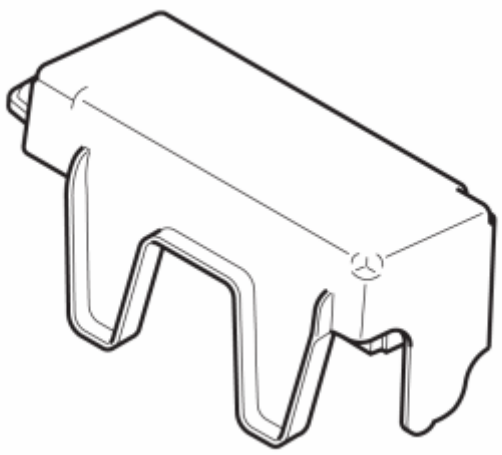

Fig. 35: Identifying Headlight Control Module (HCM)
Courtesy of VOLVO CARS CORPORATION

Substitute Value

- Control module shuts itself off ("bus-off").

HINT: The control module is off until the power supply has been broken. When the power supply is connected the control module will make a new attempt to communicate.

Possible Source

- Short-circuit between the control area network (CAN) wiring.
- Open-circuit in the control area network (CAN) wiring.
- Internal fault in another control module in the same part of the control area network (CAN).
- Internal fault in the control module.

Fault symptom[s]

- Active Bi-Xenon light; No Functionality
- Message in information display
- Indicator lamp Active Bi-Xenon light; Flashing

HCM-E003: CONFIGURATION FAULT. FAULTY CONFIGURATION (B5254T2; 2007)

DIAGNOSTIC TROUBLE CODE (DTC) INFORMATION HCM-E003

Condition

The control modules communicate with each other for exchange of information in a network via a standardized serial communication procedure - CAN (Controller Area Network). The Central electronic module (CEM) regularly transmits messages on the CAN network. These messages contain information about which signal configuration ID applies to the vehicle. The control modules on the CAN network have the same signal configuration ID so that they can communicate with each other.

The control module compares its configuration ID with the signal configuration transmitted on the control area network (CAN) by the central electronic module (CEM).

The diagnostic trouble code (DTC) is stored if the control module detects that:

- The control module's configuration ID differ from the ID that the Central electronic module (CEM) transmits.

The control module's test for the diagnostic trouble code (DTC) starts in the event of:

- Starting the control module's CAN communication.

NOTE: The control module can only detect the fault once the test has been started and the diagnostic trouble code (DTC) is stored when the conditions are met.

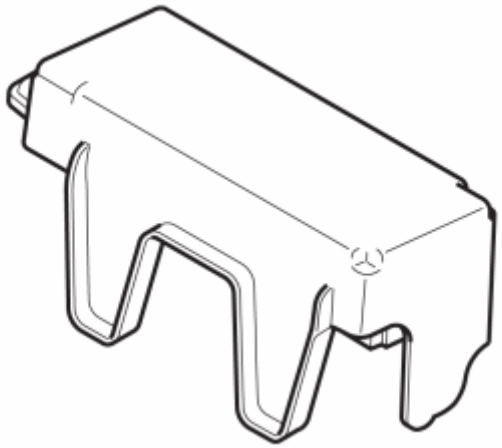

Fig. 36: Identifying Headlight Control Module (HCM)
Courtesy of VOLVO CARS CORPORATION

Substitute Value

- Control module shuts itself off ("bus-off").

NOTE: **When the diagnostic trouble code (DTC) is stored, the control module responds to the diagnostic commands.**

Possible Source

- Incorrect configuration ID (the control module is not intended for this vehicle, for example it is a used control module with different software/hardware).
- Open-circuit in the CAN cables between the control module and the Central Electronic Module (CEM).

Fault symptom[s]

- Active Bi-Xenon light; No Functionality
- Message in information display
- Indicator lamp Active Bi-Xenon light; Flashing

HCM-E010: CONTROL MODULE. VOLTAGE TOO LOW (B5254T2; 2007)

DIAGNOSTIC TROUBLE CODE (DTC) INFORMATION HCM-E010

Condition

The Headlamp Control Module (HCM) checks its own system voltage by comparing the DC voltage to the system voltage in the Central electronic module (CEM). Information about the system voltage in the Central electronic module (CEM) is transmitted via CAN to the Headlamp Control Module (HCM).

The diagnostic trouble code (DTC) is stored if the control module detects that:

- Direct voltage to control module is lower than 9.0 V.

The control module's test for the diagnostic trouble code (DTC) starts in the event of:

- Ignition switch position II.

NOTE: The control module can only detect the fault once the test has been started and the diagnostic trouble code (DTC) is stored when the conditions are met.

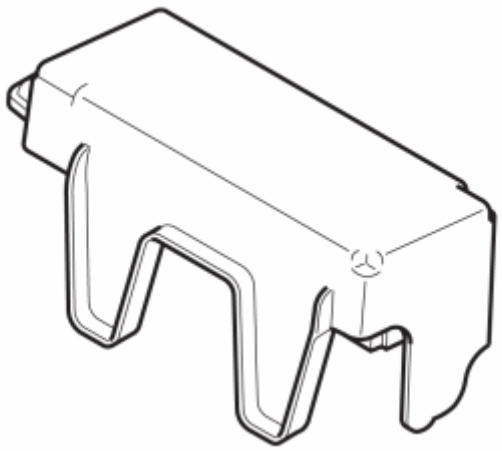

Fig. 37: Identifying Headlight Control Module (HCM)
Courtesy of VOLVO CARS CORPORATION

Substitute Value

- None.

Possible Source

- Contact resistance, oxidation or open-circuit in the terminals.
- Low battery
- Short-circuit to ground in the power supply.
- Damaged fuse.

Fault symptom[s]

- Active Bi-Xenon light; No Functionality
- Message in information display
- Indicator lamp Active Bi-Xenon light; Flashing

FAULT-TRACING

see **FAULT-TRACING**

HCM-P060141: INTERNAL CONTROL MODULE MEMORY CHECK SUM ERROR. SYSTEM INTERNAL FAILURES. GENERAL CHECKSUM FAILURE (B6324S; 2007-2010)

DIAGNOSTIC TROUBLE CODE (DTC) INFORMATION HCM-P060141

Condition

The Headlamp Control Module (HCM) checks internal components and functions.

The diagnostic trouble code (DTC) is stored if the control module detects that:

- Internal components do not work.

The control module's test for the diagnostic trouble code (DTC) starts in the event of:

- Ignition switch position II.

NOTE: The control module can only detect the fault once the test has been started and the diagnostic trouble code (DTC) is stored when the conditions are met.

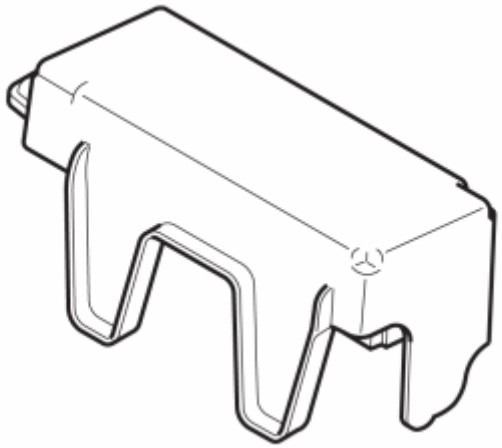

Fig. 38: Identifying Headlight Control Module (HCM)
Courtesy of VOLVO CARS CORPORATION

Substitute Value

- None.

Possible Source

- Damaged Headlamp Control Module (HCM).

Fault symptom[s]

- Active Bi-Xenon light; No Functionality
- Message in information display
- Indicator lamp Active Bi-Xenon light; Flashing

FAULT-TRACING

REPLACING A COMPONENT

The headlamp control module (HCM) has registered an internal fault.

If the fault is intermittent, it has been registered previously but is no longer present. Intermittent faults can be caused by interference upon start of the headlamp control module (HCM) or may be a different type of fault that occurs on different occasions. The fault is evaluated depending on how it occurs. If the problem recurs, replace the headlamp control module (HCM).

In the event of a permanent fault, replace the headlamp control module (HCM).

Remedy as necessary.

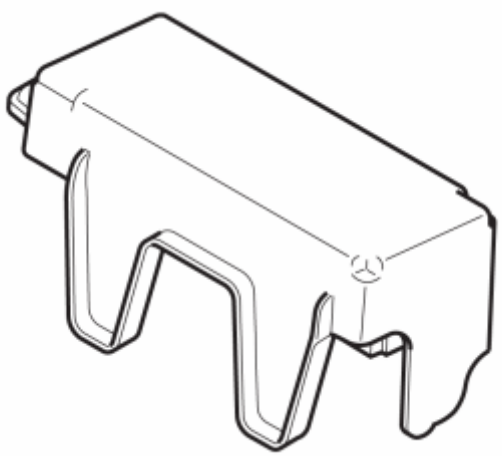

Fig. 39: Identifying Headlight Control Module (HCM)
Courtesy of VOLVO CARS CORPORATION

- **Continue**

  Refer to **INFORMATION**

INFORMATION

FAULT-TRACING INFORMATION

In case of this defect, troubleshooting is not followed by verification.

The information can be displayed again or the fault-tracing for this fault can be interrupted.

HCM-P060141: INTERNAL CONTROL MODULE MEMORY CHECK SUM ERROR. SYSTEM INTERNAL FAILURES. GENERAL CHECKSUM FAILURE (B6324S5; 2011)

DIAGNOSTIC TROUBLE CODE (DTC) INFORMATION HCM-P060141

see **DIAGNOSTIC TROUBLE CODE (DTC) INFORMATION HCM-P060141**

FAULT-TRACING

see **FAULT-TRACING**

HCM-P060141: INTERNAL CONTROL MODULE MEMORY CHECK SUM ERROR. SYSTEM INTERNAL FAILURES. GENERAL CHECKSUM FAILURE (B8444S; 2007-2011)

DIAGNOSTIC TROUBLE CODE (DTC) INFORMATION HCM-P060141

see **DIAGNOSTIC TROUBLE CODE (DTC) INFORMATION HCM-P060141**

FAULT-TRACING

see **FAULT-TRACING**

HCM-U000100: HIGH SPEED CAN COMMUNICATION BUS. GENERAL FAILURE INFORMATION. NO SUB TYPE INFORMATION (B6324S; 2007-2010)

DIAGNOSTIC TROUBLE CODE (DTC) INFORMATION HCM-U000100

Condition

The control modules transmit and receive information via a standardized serial communication method - CAN (Control Area Network).

The diagnostic trouble code (DTC) is stored if the control module detects that:

- Communication on the CAN network is interrupted by another control module on the CAN network or by the control module's own message causing interference on the CAN network.

The control module's test for the diagnostic trouble code (DTC) starts in the event of:

- Starting the control module's CAN communication.

NOTE: The control module can only detect the fault once the test has been started and the diagnostic trouble code (DTC) is stored when the conditions are met. In the event of system communication problems, it is not possible to communicate with the control module. Therefore it will only be possible to read off the fault if it is intermittent.

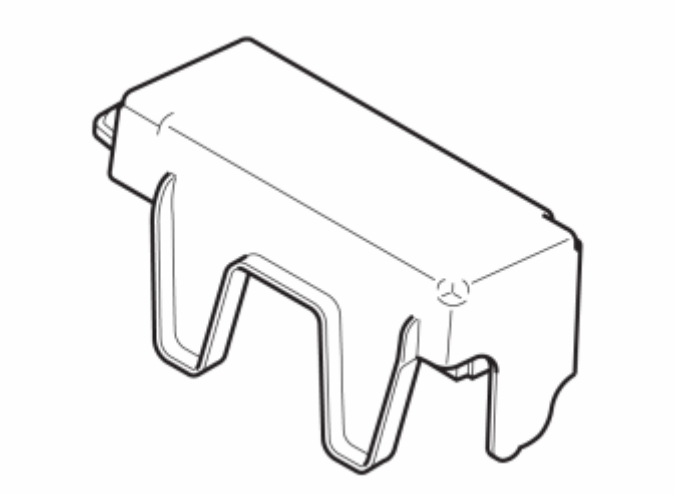

Fig. 40: Identifying Headlight Control Module (HCM)
Courtesy of VOLVO CARS CORPORATION

Substitute Value

- Control module shuts itself off ("bus-off").

HINT: The control module is off until the power supply has been broken. When the power supply is connected the control module will make a new attempt to communicate.

Possible Source

- Short-circuit between the control area network (CAN) wiring.
- Open-circuit in the control area network (CAN) wiring.
- Internal fault in another control module in the same part of the control area network (CAN).
- Internal fault in the control module.

Fault symptom[s]

- Active Bi-Xenon light; No Functionality
- Message in information display

- Indicator lamp Active Bi-Xenon light; Flashing

TROUBLESHOOTING

GENERAL INFORMATION

HINT: For general information about troubleshooting in the Control Area Network (CAN), see the linked document below.

NOTE: When selecting the vehicle profile, the correct vehicle must be identified. Use the "Retrieve VIN" button. Troubleshooting may fail if this is not done.

In order to check the CAN cables, the resistance of the network must be measured. The resistance between the two high-speed CAN cables, with the network connected, must be 60 ohms. The acceptable range of this reading is approx. 55-65 ohms.

If the communication diagnostic trouble code can be read from the control module, the malfunction is probably intermittent.

An intermittent malfunction in the power supply to a control module is indicated by individual diagnostic trouble codes in the Central Electronic Module (CEM) (CEM-1A5X or CEM-1A6X, as appropriate). There is probably no diagnostic trouble code in the control module that the central electronic module (CEM) has generated, since the module cannot generate a diagnostic trouble code when it is not supplied with voltage.

CAUTION: During this troubleshooting use the appropriate wiring diagram as help when measuring.

Other information

- see **GENERAL INFORMATION ABOUT FAULT-TRACING IN THE CAN NETWORK**
- **Continue**

  Refer to **MEASURING CABLES IN CAN-NETWORK (HS-CAN)**

MEASURING CABLES IN CAN-NETWORK (HS-CAN)

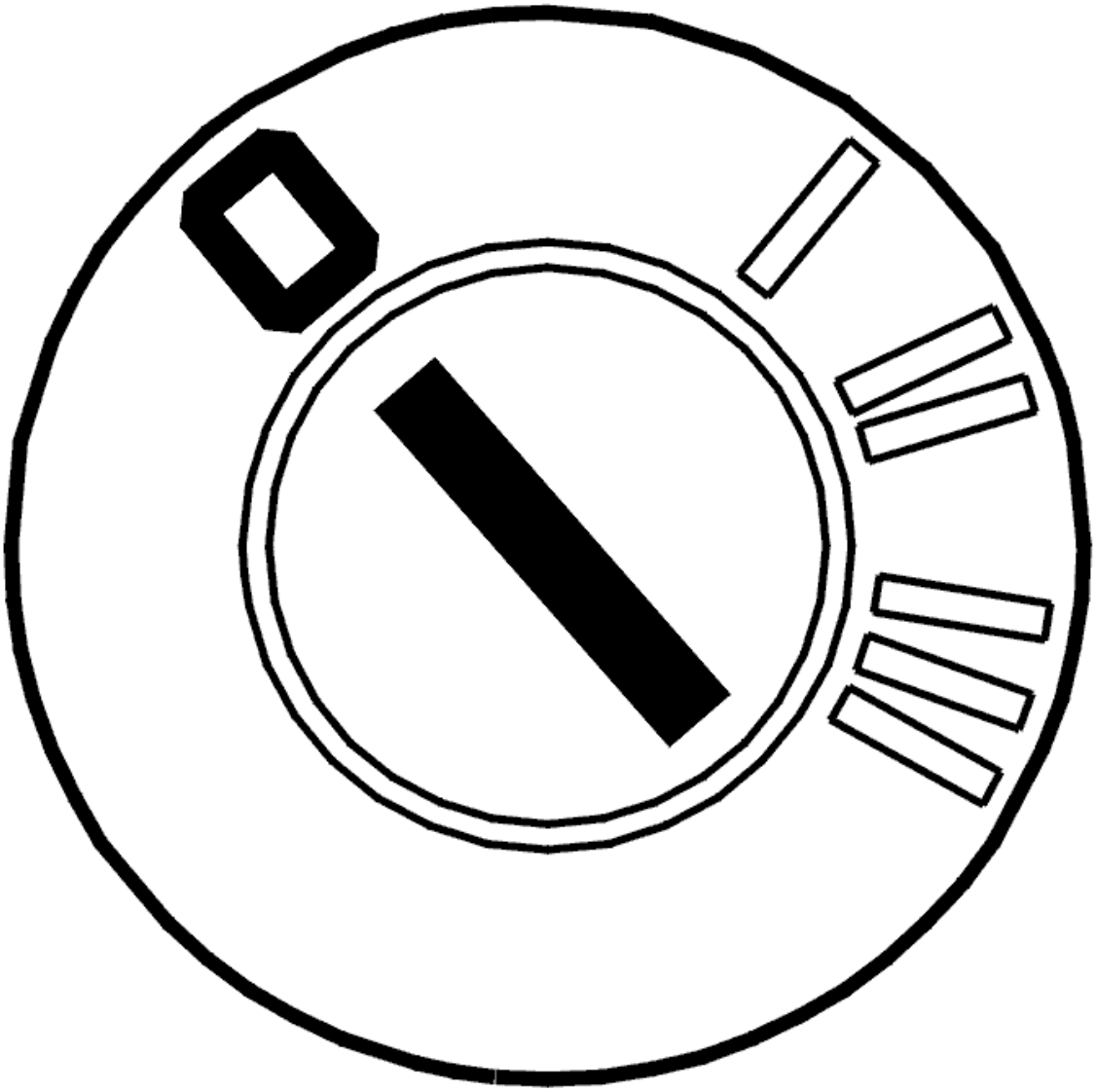

Fig. 41: Identifying Ignition OFF
Courtesy of VOLVO CARS CORPORATION

- Ignition off
- Disconnect the minus terminal on the battery.
- Connect a breakout box to the Engine Control Module (ECM).

NOTE: Also connect the engine control module (ECM) to the adapter cable harness, otherwise the measured values will be incorrect.

HINT: Use the Service Manual, Wiring Diagrams as help when measuring.

Measure the resistance between the connections below. Due to the network design, different measurement values will be obtained. For each measurement, twist the cable harness and wiggle the connections, where accessible, to detect any intermittent short-circuits or open circuits.

NOTE: The following resistance measurements only measure the main paths in the high-speed network, not the junctions that exist for some control modules. An open circuit in one path cannot be detected by this measurement. However, a short-circuit in a branch can be detected.

Measure the resistance between #B58 (#C58) and #B45 (#C45). The resistance shall be approx. 60 ohms. Permitted values approx. 55-65 ohms.

Also measure the resistance between each connection and the voltage as well as ground. The resistance must be infinite or very large (more than 1 Mohms).

HINT: If a malfunction is detected, then try to separate the junction with the measured malfunction at an appropriate point further along the cable. Unplug any connector/control module nearest to the previous measurement point and measure again. In this manner, try to find the malfunction.

Remedy the cables as necessary.

Other information

- see **BATTERY, DISCONNECTING**
- see **CONNECTING THE BREAKOUT BOX**
- see **SIGNAL SPECIFICATION**
- see **CONTENTS**

Was a malfunction detected?

- **YES**

  Refer to **VERIFICATION**

- **NO**

  Refer to **CHECKING THE TRAFFIC LOAD ON THE CAN CABLES**

CHECKING THE TRAFFIC LOAD ON THE CAN CABLES

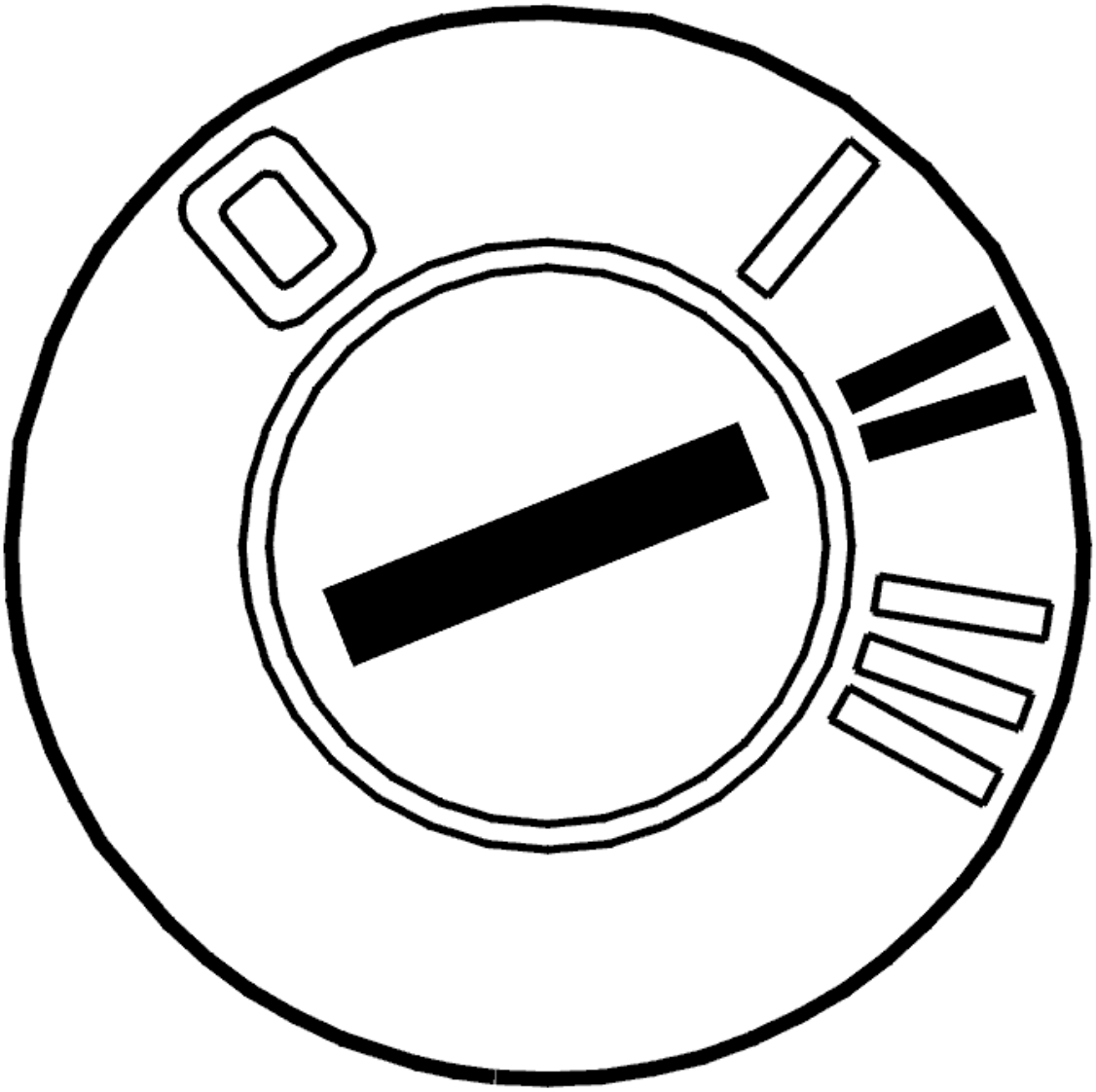

Fig. 42: Identifying Ignition ON
Courtesy of VOLVO CARS CORPORATION

- Connect the battery
- Ignition on

  Malfunctions in the Control Area Network (CAN) may be due to a control module sending incorrect messages that disrupt normal communication. When messages are sent incorrectly, this results in a considerable increase in the amount of traffic on the Control Area Network (CAN). Check the load by measuring the average voltage value on the network cables in relation to ground.

  Check in the following manner:

  - Measure the voltage between #B45 (#C45) (HS-CAN-L) and ground. The voltage shall be approx. 2.3 V.

- Measure the voltage between #B58 (#C58) (HS-CAN-H) and ground. The voltage shall be approx. 2.8 V.

Other information

- see **BATTERY, DISCONNECTING**

Is the value OK?

- **YES**

  Refer to **INFORMATION**

- **NO**

  Refer to **IDENTIFYING A CONTROL MODULE IN THE CAN-NETWORK**

IDENTIFYING A CONTROL MODULE IN THE CAN-NETWORK

If the load on the CAN network is too high, this may be due to a control module sending incorrect messages on the CAN network (known as a disruptive control module). The malfunction may also be due to an intermittent short-circuit to voltage or ground in one of the CAN-cables. This results in the control modules on the CAN-network starting to send incorrect messages. The malfunctions can occur without a diagnostic trouble code (DTC) being stored by the control modules. The voltage can be measured between the CAN-cables in order to check the load on the CAN-network.

NOTE: It is not necessarily the control module(s) that stored the diagnostic trouble code (DTC) that is communicating incorrectly. Incorrect messages can come from any control module in the same section of the CAN-network. However, incorrect communication in one network cannot affect the communication on the other network. In other words, incorrect communication on the LS-CAN cannot disrupt communication on the HS-CAN, and vice versa.

Check the communication/load on the CAN-network by measuring the voltage between #B45 (#C45) and #B58 (#C58). The average value of the voltage shall be approx. 0.5 V (0.4-0.6 V). In case of malfunctioning communication, the voltage is at approx. 0.7 V and above.

To identify which control module is responsible for the incorrect communication, one can disconnect the voltage feed to each control module in turn and re-check the voltage on the CAN-cables. The voltage feed is most easily disconnected by removing the fuse/fuses for the particular control module. Continue until the voltage between the CAN-cables drops to about 0.5 V.

NOTE: When connecting and disconnecting individual control modules, other diagnostic trouble codes (DTCs) may be stored in certain control modules.

HINT: When a suspected control module is identified, connect and disconnect the voltage feed several times to verify that the malfunction appears and disappears. Turn off the ignition between each check.

NOTE: **Do not cut the voltage to the central electronic module (CEM) unless it is the last control module left to check.**

A control module which communicates incorrectly must be replaced. See Repair and installation/Removal, replacement and installation.

NOTE: **Following a malfunction involving control modules that disrupt communication, other control modules may remain in Limp-Home mode (that is, they work but with limited functionality) even after the ignition has been turned off and on a number of times. To remedy this, disconnect and reconnect the battery's minus terminal to restore the control modules to normal function.**

- **Continue**

  Refer to **VERIFICATION**

VERIFICATION

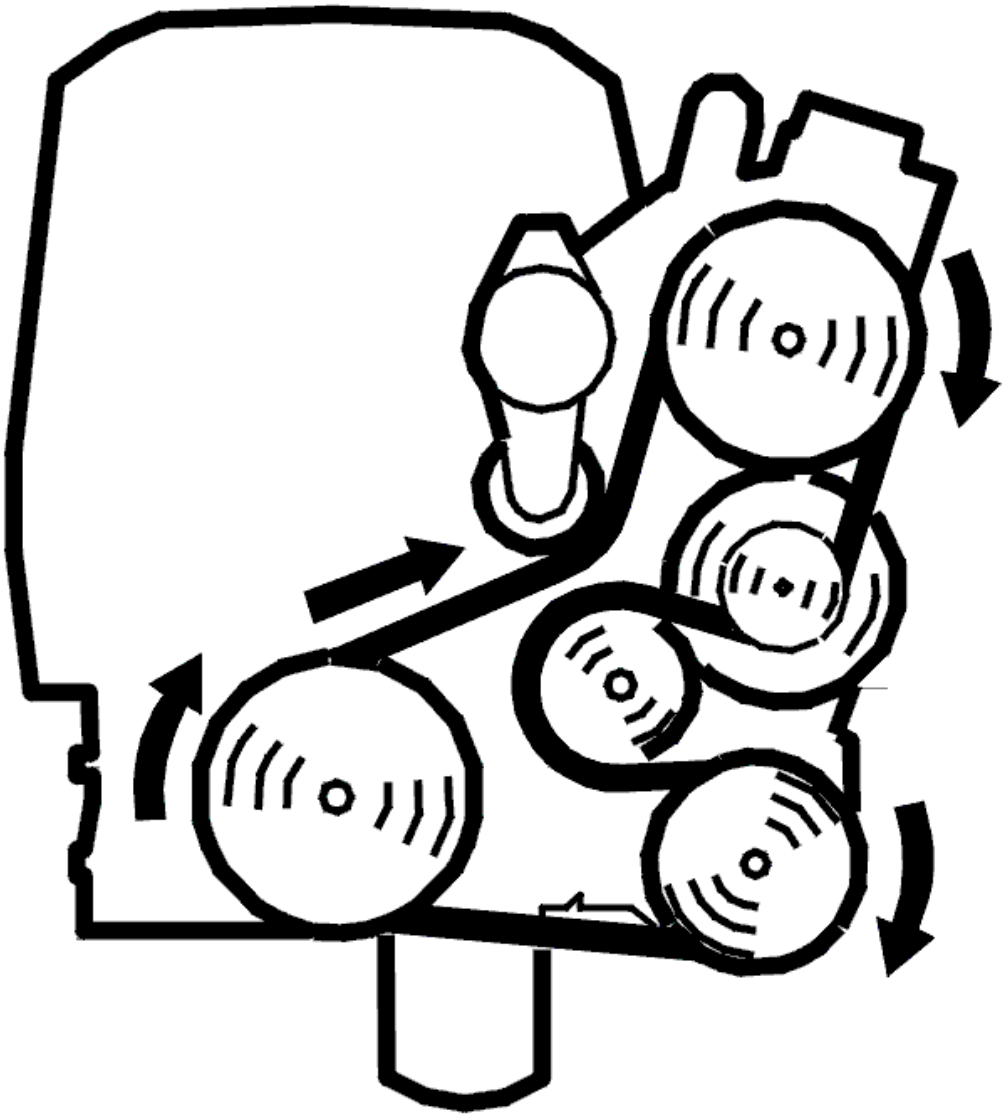

Fig. 43: Belt Routing / Engine Idling - Volvo
Courtesy of VOLVO CARS CORPORATION

- Erase diagnostic trouble codes via Vehicle communication service under function group 0.
- Start the engine and let it run for 10 minutes.
- Read out diagnostic trouble codes via Vehicle communication service under function group 3.

  Check to, see if the communication diagnostic trouble code has been stored again.

Did the trouble code(s) return?

- **YES**

  Refer to **INFORMATION**

- **NO**

  OKAY: Troubleshooting has been completed.

INFORMATION

FAULT-TRACING INFORMATION

Verification shows that the fault is no longer present. The diagnostic trouble code (DTC) was probably caused by an intermittent fault.

Fault-tracing for this diagnostic trouble code (DTC) is not followed by a verification.

You can view the information again or exit fault-tracing for this diagnostic trouble code (DTC).

INFORMATION

FAULT-TRACING INFORMATION

The fault should have been detected and remedied. As this is not the case fault-tracing has failed.

Exit fault-tracing for this diagnostic trouble code (DTC) or make another attempt.

HCM-U000100: HIGH SPEED CAN COMMUNICATION BUS. GENERAL FAILURE INFORMATION. NO SUB TYPE INFORMATION (B6324S5; 2011)

DIAGNOSTIC TROUBLE CODE (DTC) INFORMATION HCM-U000100

see **DIAGNOSTIC TROUBLE CODE (DTC) INFORMATION HCM-U000100**

TROUBLESHOOTING

see **TROUBLESHOOTING**

HCM-U000100: HIGH SPEED CAN COMMUNICATION BUS. GENERAL FAILURE INFORMATION. NO SUB TYPE INFORMATION (B8444S; 2007-2011)

DIAGNOSTIC TROUBLE CODE (DTC) INFORMATION HCM-U000100

see **DIAGNOSTIC TROUBLE CODE (DTC) INFORMATION HCM-U000100**

TROUBLESHOOTING

see **TROUBLESHOOTING**

HCM-U012687: LOST COMMUNICATION WITH STEERING ANGLE SENSOR MODULE. BUS SIGNAL / MESSAGE FAILURES. MISSING MESSAGE (B6324S; 2007-2010)

DIAGNOSTIC TROUBLE CODE (DTC) INFORMATION HCM-U012687

Condition

The control module is continually supplied with necessary information from the Steering wheel angle sensor module (SAS) via CAN communication. The control module checks the communication with the Steering wheel angle sensor module (SAS).

The diagnostic trouble code (DTC) is stored if the control module detects that:

- No communication with the Steering wheel angle sensor module (SAS).

The control module's test for the diagnostic trouble code (DTC) starts in the event of:

- Ignition switch position II.

NOTE: The control module can only detect the fault once the test has been started and the diagnostic trouble code (DTC) is stored when the conditions are met.

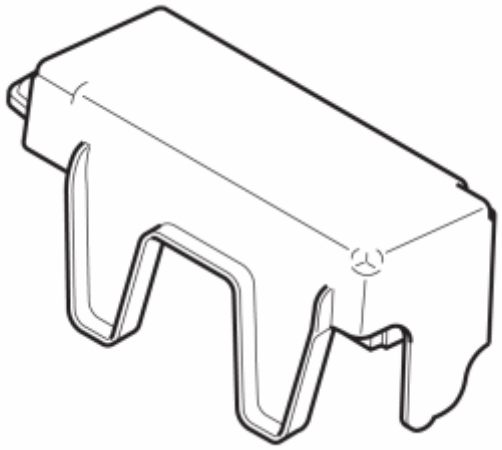

Fig. 44: Identifying Headlight Control Module (HCM)
Courtesy of VOLVO CARS CORPORATION

Substitute Value

- None.

Possible Source

- Fault-trace in transmitting control module.

Fault symptom[s]

- Active Bi-Xenon light; No Functionality
- Message in information display
- Indicator lamp Active Bi-Xenon light; Flashing

FAULT-TRACING

see **FAULT-TRACING**

HCM-U012687: LOST COMMUNICATION WITH STEERING ANGLE SENSOR MODULE. BUS SIGNAL / MESSAGE FAILURES. MISSING MESSAGE (B6324S5; 2011)

DIAGNOSTIC TROUBLE CODE (DTC) INFORMATION HCM-U012687

see **DIAGNOSTIC TROUBLE CODE (DTC) INFORMATION HCM-U012687**

FAULT-TRACING

see **FAULT-TRACING**

HCM-U012687: LOST COMMUNICATION WITH STEERING ANGLE SENSOR MODULE. BUS SIGNAL / MESSAGE FAILURES. MISSING MESSAGE (B8444S; 2007-2011)

DIAGNOSTIC TROUBLE CODE (DTC) INFORMATION HCM-U012687

see **DIAGNOSTIC TROUBLE CODE (DTC) INFORMATION HCM-U012687**

FAULT-TRACING

see **FAULT-TRACING**

HCM-U012987: LOST COMMUNICATION WITH BRAKE CONTROL MODULE. BUS SIGNAL / MESSAGE FAILURES. MISSING MESSAGE (B6324S; 2007-2010)

DIAGNOSTIC TROUBLE CODE (DTC) INFORMATION HCM-U012987

Condition

The control module is continually supplied with necessary information from the Brake control module (BCM) via CAN communication. The control module checks the communication with the Brake control module (BCM).

The diagnostic trouble code (DTC) is stored if the control module detects that:

- No communication with the Brake control module (BCM).

The control module's test for the diagnostic trouble code (DTC) starts in the event of:

- Ignition switch position II.

NOTE: The control module can only detect the fault once the test has been started and the diagnostic trouble code (DTC) is stored when the conditions are met.

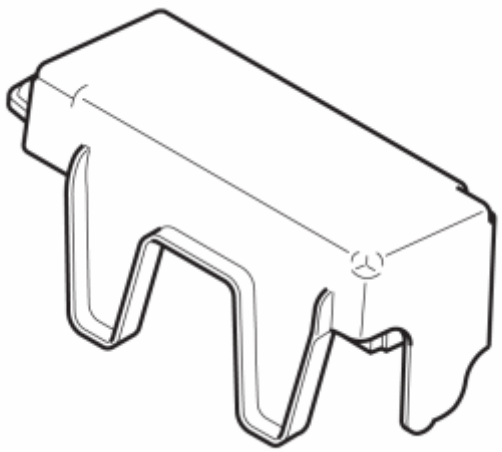

Fig. 45: Identifying Headlight Control Module (HCM)
Courtesy of VOLVO CARS CORPORATION

Substitute Value

- None.

Possible Source

- Fault-trace in transmitting control module.

Fault symptom[s]

- Active Bi-Xenon light; No Functionality
- Message in information display
- Indicator lamp Active Bi-Xenon light; Flashing

FAULT-TRACING

see **FAULT-TRACING**

HCM-U012987: LOST COMMUNICATION WITH BRAKE CONTROL MODULE. BUS SIGNAL / MESSAGE FAILURES. MISSING MESSAGE (B6324S5; 2011)

DIAGNOSTIC TROUBLE CODE (DTC) INFORMATION HCM-U012987

see **DIAGNOSTIC TROUBLE CODE (DTC) INFORMATION HCM-U012987**

FAULT-TRACING

see **FAULT-TRACING**

HCM-U012987: LOST COMMUNICATION WITH BRAKE CONTROL MODULE. BUS SIGNAL / MESSAGE FAILURES. MISSING MESSAGE (B8444S; 2007-2011)

DIAGNOSTIC TROUBLE CODE (DTC) INFORMATION HCM-U012987

see **DIAGNOSTIC TROUBLE CODE (DTC) INFORMATION HCM-U012987**

FAULT-TRACING

see **FAULT-TRACING**

HCM-U030000: INTERNAL CONTROL MODULE SOFTWARE INCOMPATIBILITY. GENERAL FAILURE INFORMATION. NO SUB TYPE INFORMATION (B6324S; 2007-2010)

DIAGNOSTIC TROUBLE CODE (DTC) INFORMATION HCM-U030000

Condition

The control modules communicate with each other for exchange of information in a network via a standardized serial communication procedure - CAN (Controller Area Network). The Central electronic module (CEM) regularly transmits messages on the CAN network. These messages contain information about which signal configuration ID applies to the vehicle. The control modules on the CAN network have the same signal configuration ID so that they can communicate with each other.

The control module compares its configuration ID with the signal configuration transmitted on the control area network (CAN) by the central electronic module (CEM).

The diagnostic trouble code (DTC) is stored if the control module detects that:

- The control module's configuration ID differ from the ID that the Central electronic module (CEM) transmits.

The control module's test for the diagnostic trouble code (DTC) starts in the event of:

- Starting the control module's CAN communication.

NOTE: The control module can only detect the fault once the test has been started and the diagnostic trouble code (DTC) is stored when the conditions are met.

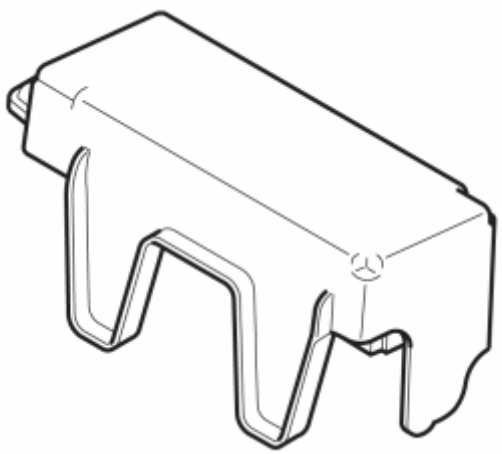

Fig. 46: Identifying Headlight Control Module (HCM)
Courtesy of VOLVO CARS CORPORATION

Substitute Value

- Control module shuts itself off ("bus-off").

NOTE: When the diagnostic trouble code (DTC) is stored, the control module responds to the diagnostic commands.

Possible Source

- Incorrect configuration ID (the control module is not intended for this vehicle, for example it is a used control module with different software/hardware).
- Open-circuit in the CAN cables between the control module and the Central Electronic Module (CEM).

Fault symptom[s]

- Active Bi-Xenon light; No Functionality
- Message in information display
- Indicator lamp Active Bi-Xenon light; Flashing

TROUBLESHOOTING

see **TROUBLESHOOTING**

HCM-U030000: INTERNAL CONTROL MODULE SOFTWARE INCOMPATIBILITY. GENERAL FAILURE INFORMATION. NO SUB TYPE INFORMATION (B6324S5; 2011)

DIAGNOSTIC TROUBLE CODE (DTC) INFORMATION HCM-U030000

see **DIAGNOSTIC TROUBLE CODE (DTC) INFORMATION HCM-U030000**

TROUBLESHOOTING

see **TROUBLESHOOTING**

HCM-U030000: INTERNAL CONTROL MODULE SOFTWARE INCOMPATIBILITY. GENERAL FAILURE INFORMATION. NO SUB TYPE INFORMATION (B8444S; 2007-2011)

DIAGNOSTIC TROUBLE CODE (DTC) INFORMATION HCM-U030000

see **DIAGNOSTIC TROUBLE CODE (DTC) INFORMATION HCM-U030000**

TROUBLESHOOTING

see **TROUBLESHOOTING**

HCM-U042281: INVALID DATA RECEIVED FROM CENTRAL ELECTRONIC MODULE. BUS SIGNAL / MESSAGE FAILURES. INVALID SERIAL DATA RECEIVED (B6324S; 2007-2010)

DIAGNOSTIC TROUBLE CODE (DTC) INFORMATION HCM-U042281

Condition

The control module continually supplies necessary information from the Central electronic module (CEM) via CAN communication. The control module checks the quality of the information from the Central electronic module (CEM).

The diagnostic trouble code (DTC) is stored if the control module detects that:

- Transmitting control module indicates a lower quality level of information than the Headlamp Control Module (HCM) accepts.

The control module's test for the diagnostic trouble code (DTC) starts in the event of:

- Ignition switch position II.

NOTE: The control module can only detect the fault once the test has been started and the diagnostic trouble code (DTC) is stored when the conditions are met.

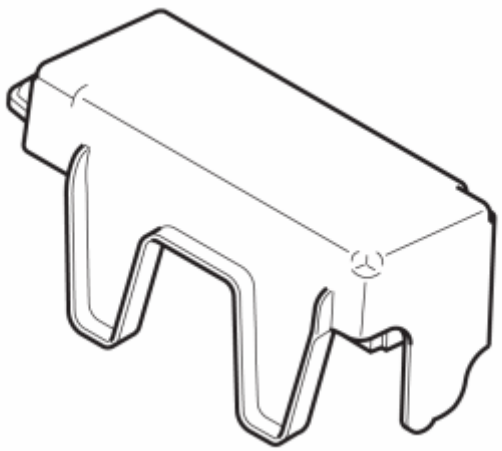

Fig. 47: Identifying Headlight Control Module (HCM)
Courtesy of VOLVO CARS CORPORATION

Substitute Value

- None.

Possible Source

- Fault-trace in transmitting control module.

Fault symptom[s]

- Active Bi-Xenon light; No Functionality
- Message in information display
- Indicator lamp Active Bi-Xenon light; Flashing

FAULT-TRACING

see **FAULT-TRACING**

HCM-U042281: INVALID DATA RECEIVED FROM CENTRAL ELECTRONIC MODULE. BUS SIGNAL / MESSAGE FAILURES. INVALID SERIAL DATA RECEIVED (B6324S5; 2011)

DIAGNOSTIC TROUBLE CODE (DTC) INFORMATION HCM-U042281

see **DIAGNOSTIC TROUBLE CODE (DTC) INFORMATION HCM-U042281**

FAULT-TRACING

see **FAULT-TRACING**

HCM-U042281: INVALID DATA RECEIVED FROM CENTRAL ELECTRONIC MODULE. BUS SIGNAL / MESSAGE FAILURES. INVALID SERIAL DATA RECEIVED (B8444S; 2007-2011)

DIAGNOSTIC TROUBLE CODE (DTC) INFORMATION HCM-U042281

see **DIAGNOSTIC TROUBLE CODE (DTC) INFORMATION HCM-U042281**

FAULT-TRACING

see **FAULT-TRACING**

HCM-U054283: INVALID DATA RECEIVED FROM HEADLAMP CONTROL MODULE "A". BUS SIGNAL / MESSAGE FAILURES. VALUE OF SIGNAL PROTECTION CALCULATION INCORRECT (B6324S; 2007-2010)

DIAGNOSTIC TROUBLE CODE (DTC) INFORMATION HCM-U054283

Condition

The Headlamp Control Module (HCM) both transmits and receives information via a standardized serial communication method - LIN (Local Interconnect Network). The control module checks the communication with the Left headlamp control unit (LHCU).

The diagnostic trouble code (DTC) is stored if the control module detects that:

- Received message does not correspond with expected message.

The control module's test for the diagnostic trouble code (DTC) starts in the event of:

- Ignition switch position II.

NOTE: **The control module can only detect the fault once the test has been started and the diagnostic trouble code (DTC) is stored when the conditions are met.**

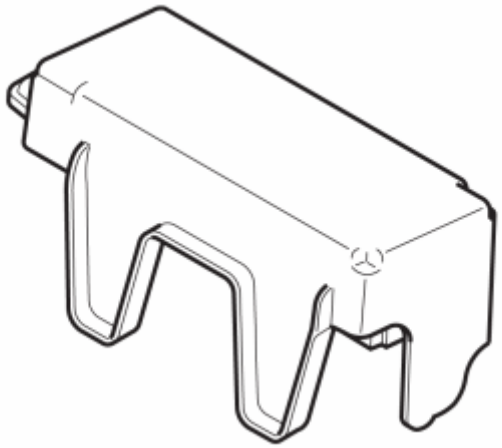

Fig. 48: Identifying Headlight Control Module (HCM)
Courtesy of VOLVO CARS CORPORATION

Substitute Value

- None.

Possible Source

- Communication interference.

Fault symptom[s]

- Active Bi-Xenon light; No Functionality
- Message in information display
- Indicator lamp Active Bi-Xenon light; Flashing

FAULT-TRACING

see **FAULT-TRACING**

HCM-U054283: INVALID DATA RECEIVED FROM HEADLAMP CONTROL MODULE "A". BUS SIGNAL / MESSAGE FAILURES. VALUE OF SIGNAL PROTECTION CALCULATION INCORRECT (B6324S5; 2011)

DIAGNOSTIC TROUBLE CODE (DTC) INFORMATION HCM-U054283

see **DIAGNOSTIC TROUBLE CODE (DTC) INFORMATION HCM-U054283**

FAULT-TRACING

see **FAULT-TRACING**

HCM-U054283: INVALID DATA RECEIVED FROM HEADLAMP CONTROL MODULE "A". BUS SIGNAL / MESSAGE FAILURES. VALUE OF SIGNAL PROTECTION CALCULATION INCORRECT (B8444S; 2007-2011)

DIAGNOSTIC TROUBLE CODE (DTC) INFORMATION HCM-U054283

see **DIAGNOSTIC TROUBLE CODE (DTC) INFORMATION HCM-U054283**

FAULT-TRACING

see **FAULT-TRACING**

HCM-U054286: INVALID DATA RECEIVED FROM HEADLAMP CONTROL MODULE "A". BUS SIGNAL / MESSAGE FAILURES. SIGNAL INVALID (B6324S; 2007-2010)

DIAGNOSTIC TROUBLE CODE (DTC) INFORMATION HCM-U054286

Condition

The Headlamp Control Module (HCM) both transmits and receives information via a standardized serial communication method - LIN (Local Interconnect Network). The control module checks the communication with the Left headlamp control unit (LHCU).

The diagnostic trouble code (DTC) is stored if the control module detects that:

- Received message does not correspond with expected message.

The control module's test for the diagnostic trouble code (DTC) starts in the event of:

- Ignition switch position II.

NOTE: The control module can only detect the fault once the test has been started and the diagnostic trouble code (DTC) is stored when the conditions are met.

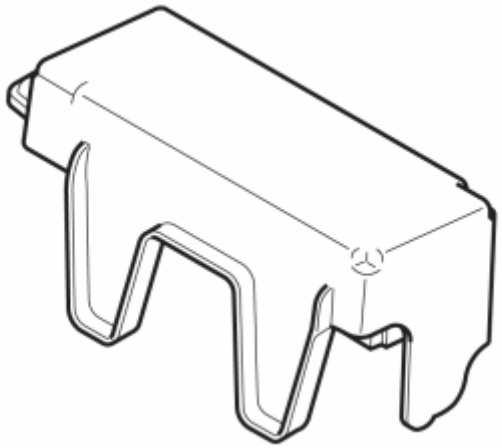

Fig. 49: Identifying Headlight Control Module (HCM)
Courtesy of VOLVO CARS CORPORATION

Substitute Value

- None.

Possible Source

- Communication interference.

Fault symptom[s]

- Active Bi-Xenon light; No Functionality
- Message in information display
- Indicator lamp Active Bi-Xenon light; Flashing

FAULT-TRACING

see **FAULT-TRACING**

HCM-U054286: INVALID DATA RECEIVED FROM HEADLAMP CONTROL MODULE "A". BUS SIGNAL / MESSAGE FAILURES. SIGNAL INVALID (B6324S5; 2011)

DIAGNOSTIC TROUBLE CODE (DTC) INFORMATION HCM-U054286

see **DIAGNOSTIC TROUBLE CODE (DTC) INFORMATION HCM-U054286**

FAULT-TRACING

see **FAULT-TRACING**

HCM-U054286: INVALID DATA RECEIVED FROM HEADLAMP CONTROL MODULE "A". BUS SIGNAL / MESSAGE FAILURES. SIGNAL INVALID (B8444S; 2007-2011)

DIAGNOSTIC TROUBLE CODE (DTC) INFORMATION HCM-U054286

see **DIAGNOSTIC TROUBLE CODE (DTC) INFORMATION HCM-U054286**

FAULT-TRACING

see **FAULT-TRACING**

HCM-U054288: INVALID DATA RECEIVED FROM HEADLAMP CONTROL MODULE "A". BUS SIGNAL / MESSAGE FAILURES. BUS OFF (B6324S; 2007-2010)

DIAGNOSTIC TROUBLE CODE (DTC) INFORMATION HCM-U054288

Condition

The Headlamp Control Module (HCM) both transmits and receives information via a standardized serial communication method - LIN (Local Interconnect Network). The control module checks the communication with the Left headlamp control unit (LHCU).

The diagnostic trouble code (DTC) is stored if the control module detects that:

- No communication with the Left headlamp control unit (LHCU).

The control module's test for the diagnostic trouble code (DTC) starts in the event of:

- Ignition switch position II.

NOTE: The control module can only detect the fault once the test has been started and the diagnostic trouble code (DTC) is stored when the conditions are met.

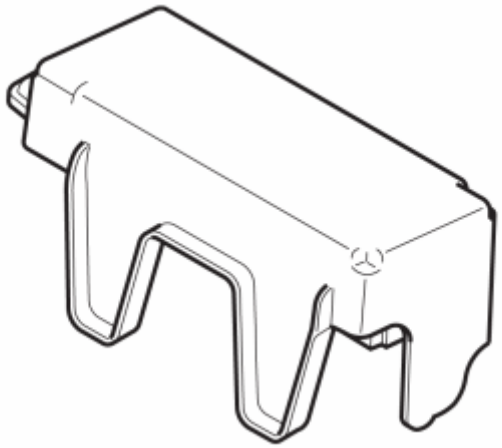

Fig. 50: Identifying Headlight Control Module (HCM)
Courtesy of VOLVO CARS CORPORATION

Substitute Value

- None.

Possible Source

- The signal cable is short-circuited to ground.
- Short-circuit to supply voltage in the signal cable.
- Contact resistance, oxidation or open-circuit in the terminals.

Fault symptom[s]

- Active Bi-Xenon light; No Functionality
- Message in information display
- Indicator lamp Active Bi-Xenon light; Flashing

FAULT-TRACING

see **FAULT-TRACING**

HCM-U054288: INVALID DATA RECEIVED FROM HEADLAMP CONTROL MODULE "A". BUS SIGNAL / MESSAGE FAILURES. BUS OFF (B6324S5; 2011)

DIAGNOSTIC TROUBLE CODE (DTC) INFORMATION HCM-U054288

see **DIAGNOSTIC TROUBLE CODE (DTC) INFORMATION HCM-U054288**

FAULT-TRACING

see **FAULT-TRACING**

HCM-U054288: INVALID DATA RECEIVED FROM HEADLAMP CONTROL MODULE "A". BUS SIGNAL / MESSAGE FAILURES. BUS OFF (B8444S; 2007-2011)

DIAGNOSTIC TROUBLE CODE (DTC) INFORMATION HCM-U054288

see **DIAGNOSTIC TROUBLE CODE (DTC) INFORMATION HCM-U054288**

FAULT-TRACING

see **FAULT-TRACING**

HCM-U054383: INVALID DATA RECEIVED FROM HEADLAMP CONTROL MODULE "B". BUS SIGNAL / MESSAGE FAILURES. VALUE OF SIGNAL PROTECTION CALCULATION INCORRECT (B6324S; 2007-2010)

DIAGNOSTIC TROUBLE CODE (DTC) INFORMATION HCM-U054383

Condition

The Headlamp Control Module (HCM) both transmits and receives information via a standardized serial communication method - LIN (Local Interconnect Network). The control module checks the communication with the Right headlamp control unit (RHCU).

The diagnostic trouble code (DTC) is stored if the control module detects that:

- Received message does not correspond with expected message.

The control module's test for the diagnostic trouble code (DTC) starts in the event of:

- Ignition switch position II.

NOTE: The control module can only detect the fault once the test has been started and the diagnostic trouble code (DTC) is stored when the conditions are met.

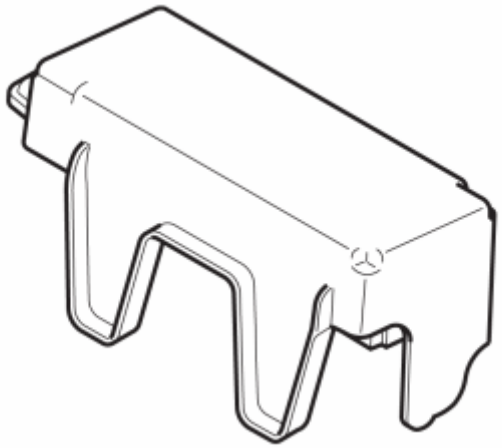

Fig. 51: Identifying Headlight Control Module (HCM)
Courtesy of VOLVO CARS CORPORATION

Substitute Value

- None.

Possible Source

- Communication interference.

Fault symptom[s]

- Active Bi-Xenon light; No Functionality
- Message in information display
- Indicator lamp Active Bi-Xenon light; Flashing

FAULT-TRACING

see **FAULT-TRACING**

HCM-U054383: INVALID DATA RECEIVED FROM HEADLAMP CONTROL MODULE "B". BUS SIGNAL / MESSAGE FAILURES. VALUE OF SIGNAL PROTECTION CALCULATION INCORRECT (B6324S5; 2011)

DIAGNOSTIC TROUBLE CODE (DTC) INFORMATION HCM-U054383

see **DIAGNOSTIC TROUBLE CODE (DTC) INFORMATION HCM-U054383**

FAULT-TRACING

see **FAULT-TRACING**

HCM-U054383: INVALID DATA RECEIVED FROM HEADLAMP CONTROL MODULE "B". BUS SIGNAL / MESSAGE FAILURES. VALUE OF SIGNAL PROTECTION CALCULATION INCORRECT (B8444S; 2007-2011)

DIAGNOSTIC TROUBLE CODE (DTC) INFORMATION HCM-U054383

see **DIAGNOSTIC TROUBLE CODE (DTC) INFORMATION HCM-U054383**

FAULT-TRACING

see **FAULT-TRACING**

HCM-U054386: INVALID DATA RECEIVED FROM HEADLAMP CONTROL MODULE "B". BUS SIGNAL / MESSAGE FAILURES. SIGNAL INVALID (B6324S; 2007-2010)

DIAGNOSTIC TROUBLE CODE (DTC) INFORMATION HCM-U054386

Condition

The Headlamp Control Module (HCM) both transmits and receives information via a standardized serial communication method - LIN (Local Interconnect Network). The control module checks the communication with the Right headlamp control unit (RHCU).

The diagnostic trouble code (DTC) is stored if the control module detects that:

- Received message does not correspond with expected message.

The control module's test for the diagnostic trouble code (DTC) starts in the event of:

- Ignition switch position II.

NOTE: The control module can only detect the fault once the test has been started and the diagnostic trouble code (DTC) is stored when the conditions are met.

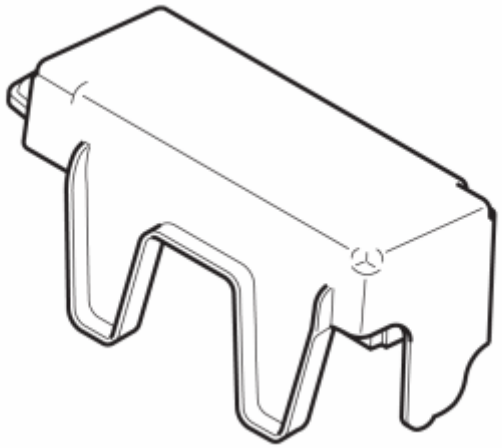

Fig. 52: Identifying Headlight Control Module (HCM)
Courtesy of VOLVO CARS CORPORATION

Substitute Value

- None.

Possible Source

- Communication interference.

Fault symptom[s]

- Active Bi-Xenon light; No Functionality
- Message in information display
- Indicator lamp Active Bi-Xenon light; Flashing

FAULT-TRACING

see **FAULT-TRACING**

HCM-U054386: INVALID DATA RECEIVED FROM HEADLAMP CONTROL MODULE "B". BUS SIGNAL / MESSAGE FAILURES. SIGNAL INVALID (B6324S5; 2011)

DIAGNOSTIC TROUBLE CODE (DTC) INFORMATION HCM-U054386

see **DIAGNOSTIC TROUBLE CODE (DTC) INFORMATION HCM-U054386**

FAULT-TRACING

see **FAULT-TRACING**

HCM-U054386: INVALID DATA RECEIVED FROM HEADLAMP CONTROL MODULE "B". BUS SIGNAL / MESSAGE FAILURES. SIGNAL INVALID (B8444S; 2007-2011)

DIAGNOSTIC TROUBLE CODE (DTC) INFORMATION HCM-U054386

see **DIAGNOSTIC TROUBLE CODE (DTC) INFORMATION HCM-U054386**

FAULT-TRACING

see **FAULT-TRACING**

HCM-U054388: INVALID DATA RECEIVED FROM HEADLAMP CONTROL MODULE "B". BUS SIGNAL / MESSAGE FAILURES. BUS OFF (B6324S; 2007-2010)

DIAGNOSTIC TROUBLE CODE (DTC) INFORMATION HCM-U054388

Condition

The Headlamp Control Module (HCM) both transmits and receives information via a standardized serial communication method - LIN (Local Interconnect Network). The control module checks the communication with the Right headlamp control unit (RHCU).

The diagnostic trouble code (DTC) is stored if the control module detects that:

- No communication with the Right headlamp control unit (RHCU).

The control module's test for the diagnostic trouble code (DTC) starts in the event of:

- Ignition switch position II.

NOTE: The control module can only detect the fault once the test has been started and the diagnostic trouble code (DTC) is stored when the conditions are met.

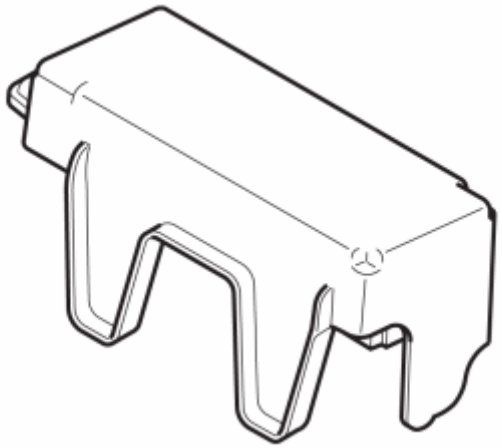

Fig. 53: Identifying Headlight Control Module (HCM)
Courtesy of VOLVO CARS CORPORATION

Substitute Value

- None.

Possible Source

- The signal cable is short-circuited to ground.
- Short-circuit to supply voltage in the signal cable.
- Contact resistance, oxidation or open-circuit in the terminals.

Fault symptom[s]

- Active Bi-Xenon light; No Functionality
- Message in information display
- Indicator lamp Active Bi-Xenon light; Flashing

FAULT-TRACING

see **FAULT-TRACING**

HCM-U054388: INVALID DATA RECEIVED FROM HEADLAMP CONTROL MODULE "B". BUS SIGNAL / MESSAGE FAILURES. BUS OFF (B6324S5; 2011)

DIAGNOSTIC TROUBLE CODE (DTC) INFORMATION HCM-U054388

see **DIAGNOSTIC TROUBLE CODE (DTC) INFORMATION HCM-U054388**

FAULT-TRACING

see **FAULT-TRACING**

HCM-U054388: INVALID DATA RECEIVED FROM HEADLAMP CONTROL MODULE "B". BUS SIGNAL / MESSAGE FAILURES. BUS OFF (B8444S; 2007-2011)

DIAGNOSTIC TROUBLE CODE (DTC) INFORMATION HCM-U054388

see **DIAGNOSTIC TROUBLE CODE (DTC) INFORMATION HCM-U054388**

FAULT-TRACING

see **FAULT-TRACING**

HCM-U1A3887 LOST COMMUNICATION WITH LEFT HEADLAMP MODULE. BUS SIGNAL / MESSAGE FAILURES. MISSING MESSAGE (B6324S; 2007-2010)

DIAGNOSTIC TROUBLE CODE (DTC) INFORMATION HCM-U1A3887

Condition

The Headlamp Control Module (HCM) both transmits and receives information via a standardized serial communication method - LIN (Local Interconnect Network). The control module checks the communication with the Left headlamp control unit (LHCU).

The diagnostic trouble code (DTC) is stored if the control module detects that:

- No communication with the Left headlamp control unit (LHCU).

The control module's test for the diagnostic trouble code (DTC) starts in the event of:

- Ignition switch position II.

NOTE: **The control module can only detect the fault once the test has been started and the diagnostic trouble code (DTC) is stored when the conditions are met.**

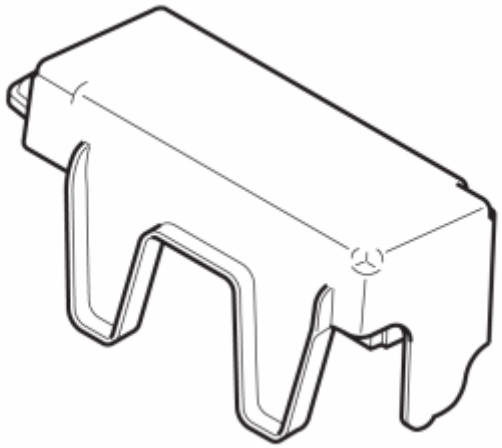

Fig. 54: Identifying Headlight Control Module (HCM)
Courtesy of VOLVO CARS CORPORATION

Substitute Value

- None.

Possible Source

- The signal cable is short-circuited to ground.
- Short-circuit to supply voltage in the signal cable.
- Contact resistance, oxidation or open-circuit in the terminals.

Fault symptom[s]

- Active Bi-Xenon light; No Functionality
- Message in information display
- Indicator lamp Active Bi-Xenon light; Flashing

FAULT-TRACING

see **FAULT-TRACING**

HCM-U1A3887 LOST COMMUNICATION WITH LEFT HEADLAMP MODULE. BUS SIGNAL / MESSAGE FAILURES. MISSING MESSAGE (B6324S5; 2011)

DIAGNOSTIC TROUBLE CODE (DTC) INFORMATION HCM-U1A3887

see **DIAGNOSTIC TROUBLE CODE (DTC) INFORMATION HCM-U1A3887**

FAULT-TRACING

see **FAULT-TRACING**

HCM-U1A3887 LOST COMMUNICATION WITH LEFT HEADLAMP MODULE. BUS SIGNAL / MESSAGE FAILURES. MISSING MESSAGE (B8444S; 2007-2011)

DIAGNOSTIC TROUBLE CODE (DTC) INFORMATION HCM-U1A3887

see **DIAGNOSTIC TROUBLE CODE (DTC) INFORMATION HCM-U1A3887**

FAULT-TRACING

see **FAULT-TRACING**

HCM-U1A3987 LOST COMMUNICATION WITH RIGHT HEADLAMP MODULE. BUS SIGNAL / MESSAGE FAILURES. MISSING MESSAGE (B6324S; 2007-2010)

DIAGNOSTIC TROUBLE CODE (DTC) INFORMATION HCM-U1A3987

Condition

The Headlamp Control Module (HCM) both transmits and receives information via a standardized serial communication method - LIN (Local Interconnect Network). The control module checks the communication with the Right headlamp control unit (RHCU).

The diagnostic trouble code (DTC) is stored if the control module detects that:

- No communication with the Right headlamp control unit (RHCU).

The control module's test for the diagnostic trouble code (DTC) starts in the event of:

- Ignition switch position II.

NOTE: **The control module can only detect the fault once the test has been started and the diagnostic trouble code (DTC) is stored when the conditions are met.**

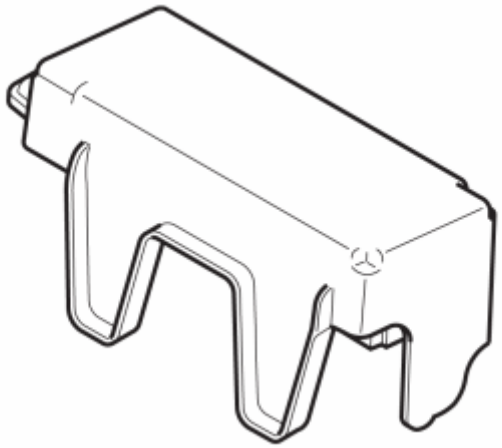

Fig. 55: Identifying Headlight Control Module (HCM)
Courtesy of VOLVO CARS CORPORATION

Substitute Value

- None.

Possible Source

- The signal cable is short-circuited to ground.
- Short-circuit to supply voltage in the signal cable.
- Contact resistance, oxidation or open-circuit in the terminals.

Fault symptom[s]

- Active Bi-Xenon light; No Functionality
- Message in information display
- Indicator lamp Active Bi-Xenon light; Flashing

FAULT-TRACING

see **FAULT-TRACING**

HCM-U1A3987 LOST COMMUNICATION WITH RIGHT HEADLAMP MODULE. BUS SIGNAL / MESSAGE FAILURES. MISSING MESSAGE (B6324S5; 2011)

DIAGNOSTIC TROUBLE CODE (DTC) INFORMATION HCM-U1A3987

see **DIAGNOSTIC TROUBLE CODE (DTC) INFORMATION HCM-U1A3987**

FAULT-TRACING

see **FAULT-TRACING**

HCM-U1A3987 LOST COMMUNICATION WITH RIGHT HEADLAMP MODULE. BUS SIGNAL / MESSAGE FAILURES. MISSING MESSAGE (B8444S; 2007-2011)

DIAGNOSTIC TROUBLE CODE (DTC) INFORMATION HCM-U1A3987

see **DIAGNOSTIC TROUBLE CODE (DTC) INFORMATION HCM-U1A3987**

FAULT-TRACING

see **FAULT-TRACING**

HCM-U300316: BATTERY VOLTAGE. GENERAL ELECTRICAL FAILURES. CIRCUIT VOLTAGE BELOW THRESHOLD (B6324S; 2007-2010)

DIAGNOSTIC TROUBLE CODE (DTC) INFORMATION HCM-U300316

Condition

The Headlamp Control Module (HCM) checks its own system voltage by comparing the DC voltage to the system voltage in the Central electronic module (CEM). Information about the system voltage in the Central electronic module (CEM) is transmitted via CAN to the Headlamp Control Module (HCM).

The diagnostic trouble code (DTC) is stored if the control module detects that:

- Direct voltage to control module is lower than 9.0 V.

The control module's test for the diagnostic trouble code (DTC) starts in the event of:

- Ignition switch position II.

NOTE: The control module can only detect the fault once the test has been started and the diagnostic trouble code (DTC) is stored when the conditions are met.

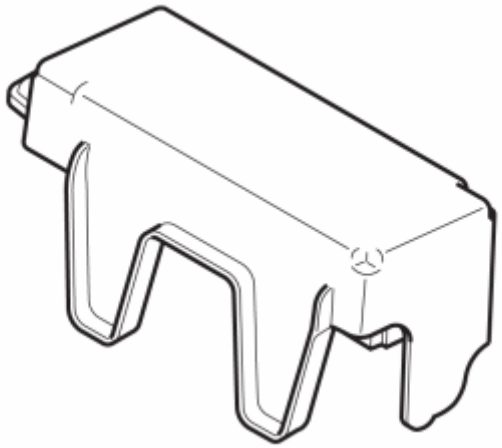

Fig. 56: Identifying Headlight Control Module (HCM)
Courtesy of VOLVO CARS CORPORATION

Substitute Value

- None.

Possible Source

- Contact resistance, oxidation or open-circuit in the terminals.
- Low battery
- Short-circuit to ground in the power supply.
- Damaged fuse.

Fault symptom[s]

- Active Bi-Xenon light; No Functionality
- Message in information display
- Indicator lamp Active Bi-Xenon light; Flashing

FAULT-TRACING

see **FAULT-TRACING**

HCM-U300316: BATTERY VOLTAGE. GENERAL ELECTRICAL FAILURES. CIRCUIT VOLTAGE BELOW THRESHOLD (B6324S5; 2011)

DIAGNOSTIC TROUBLE CODE (DTC) INFORMATION HCM-U300316

see **DIAGNOSTIC TROUBLE CODE (DTC) INFORMATION HCM-U300316**

FAULT-TRACING

see **FAULT-TRACING**

HCM-U300316: BATTERY VOLTAGE. GENERAL ELECTRICAL FAILURES. CIRCUIT VOLTAGE BELOW THRESHOLD (B8444S; 2007-2011)

DIAGNOSTIC TROUBLE CODE (DTC) INFORMATION HCM-U300316

see **DIAGNOSTIC TROUBLE CODE (DTC) INFORMATION HCM-U300316**

FAULT-TRACING

see **FAULT-TRACING**

HCM-U300317: BATTERY VOLTAGE. GENERAL ELECTRICAL FAILURES. CIRCUIT VOLTAGE ABOVE THRESHOLD (B6324S; 2007-2010)

DIAGNOSTIC TROUBLE CODE (DTC) INFORMATION HCM-U300317

Condition

The Headlamp Control Module (HCM) checks its own system voltage by comparing the DC voltage to the system voltage in the Central electronic module (CEM). Information about the system voltage in the Central electronic module (CEM) is transmitted via CAN to the Headlamp Control Module (HCM).

The diagnostic trouble code (DTC) is stored if the control module detects that:

- Direct voltage to control module is higher than 16.0 V.

The control module's test for the diagnostic trouble code (DTC) starts in the event of:

- Ignition switch position II.

NOTE: The control module can only detect the fault once the test has been started and the diagnostic trouble code (DTC) is stored when the conditions are met.

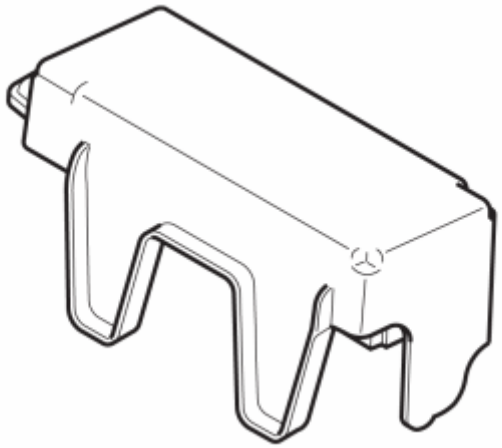

Fig. 57: Identifying Headlight Control Module (HCM)
Courtesy of VOLVO CARS CORPORATION

Substitute Value

- None.

Possible Source

- The charging system is overcharging.
- Damaged generator (GEN).
- Damaged battery.

Fault symptom[s]

- Active Bi-Xenon light; No Functionality
- Message in information display
- Indicator lamp Active Bi-Xenon light; Flashing

FAULT-TRACING

see **FAULT-TRACING**

HCM-U300317: BATTERY VOLTAGE. GENERAL ELECTRICAL FAILURES. CIRCUIT VOLTAGE ABOVE THRESHOLD (B6324S5; 2011)

DIAGNOSTIC TROUBLE CODE (DTC) INFORMATION HCM-U300317

see **DIAGNOSTIC TROUBLE CODE (DTC) INFORMATION HCM-U300317**

FAULT-TRACING

see **FAULT-TRACING**

HCM-U300317: BATTERY VOLTAGE. GENERAL ELECTRICAL FAILURES. CIRCUIT VOLTAGE ABOVE THRESHOLD (B8444S; 2007-2011)

DIAGNOSTIC TROUBLE CODE (DTC) INFORMATION HCM-U300317

see **DIAGNOSTIC TROUBLE CODE (DTC) INFORMATION HCM-U300317**

FAULT-TRACING

see **FAULT-TRACING**

ACCESSORIES AND BODY, CAB

Lighting - General Diagnostics and Tests

CHECK OF VOLTAGE/GROUND CONNECTION, HEADLAMP CONTROL MODULE (HCM)

CHECKING THE POWER SUPPLY AND GROUND TERMINAL

POWER SUPPLY HEADLAMP CONTROL MODULE (HCM)

Headlamp Control Module (HCM) is supplied with voltage via a voltage input on the control module.

When the ignition is on, the power input is powered and the control module is in active mode.

- Power input 1 (#A1) is supplied power via a fuse from the system relay. This power input governs the supply of power to the Headlamp Control Module (HCM). It will not be possible to activate the control module if there is an open-circuit.

Checking the power supply

Check the power supply cable from the system relay to headlamp control module (HCM) terminal #A1 for an open-circuit, loose connections, contact resistance and oxidation. Check the fuse. The voltage must be approximately battery voltage.

Ground terminal Headlamp Control Module (HCM)

Headlamp Control Module (HCM) has a ground input. The ground input from the control module is connected to a ground terminal in the body via a ground lead. See the relevant wiring diagram for further information about the ground terminal.

- Ground input 1 #A6 is power ground and connected to the ground connection in the body.

Checking the ground terminal

Check the ground cable between headlamp control module (HCM) terminal #A6 and ground terminal. Check for an open-circuit, loose connections, contact resistance and oxidation. At ignition on, the voltage-drop between Headlamp Control Module (HCM) ground connection and chassis connection may not be greater than 0.5 V.

Remedy as necessary.

Other information

- see **CHECKING WIRING AND TERMINALS**
- see **SIGNAL SPECIFICATION**

- See the relevant wiring diagram for information about circuits and ground terminals in the bodywork.

ACCESSORIES AND EQUIPMENT

Lighting - Installation Instructions, Accessories

AUXILIARY LIGHTS, INSTALLATION KIT XC90 (2005-10)

AUXILIARY LIGHTS, INSTALLATION KIT

PREPARATIONS

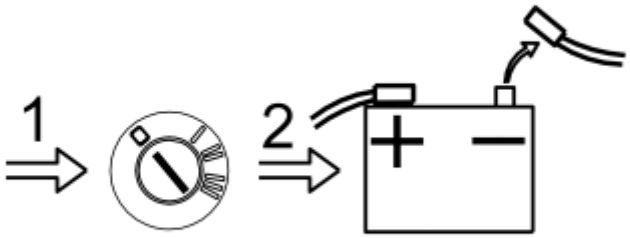

Fig. 1: Disconnect Battery Negative Lead
Courtesy of VOLVO CARS CORPORATION

- Turn the ignition key to position 0.
- Disconnect the battery negative lead.

NOTE: **Wait at least five minutes before disassembling the connectors or removing other electrical equipment.**

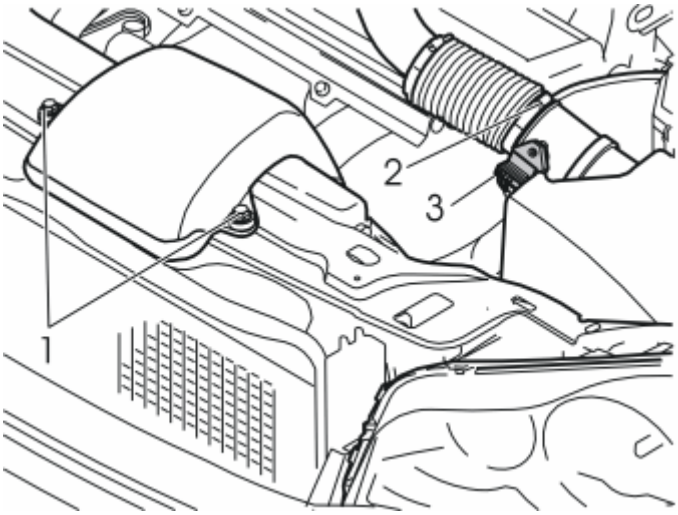

Fig. 2: Identifying ACL Screws, Hose Clamp And Connector
Courtesy of VOLVO CARS CORPORATION

- Remove the two screws (1) from the induction pipe of the air filter.
- Detach the hose clamp (2).
- Remove the connector (3) from the intake manifold to the turbocharger.
- Pull the air cleaner (ACL) from its mounting in the left-hand front member.
- Remove the intake manifold from the air cleaner (ACL) and place it to one side.

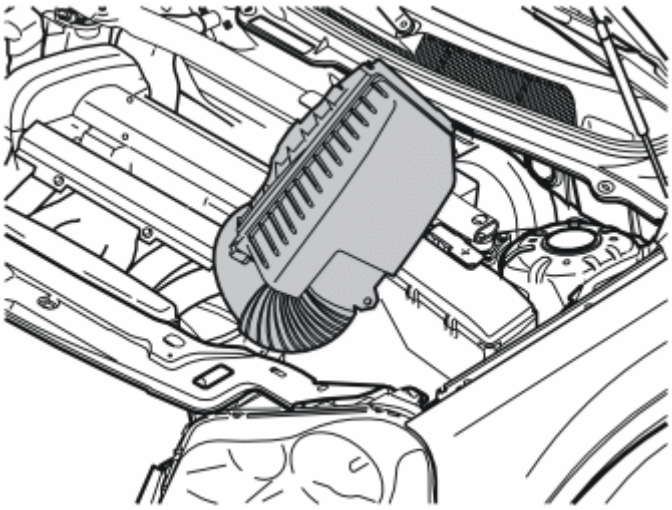

Fig. 3: Identifying ACL And Housing
Courtesy of VOLVO CARS CORPORATION

- Pull up the air cleaner (ACL), rotate it in the short hose and position it as shown. Depending on the design, more hoses or connectors may need detaching around the air cleaner (ACL).

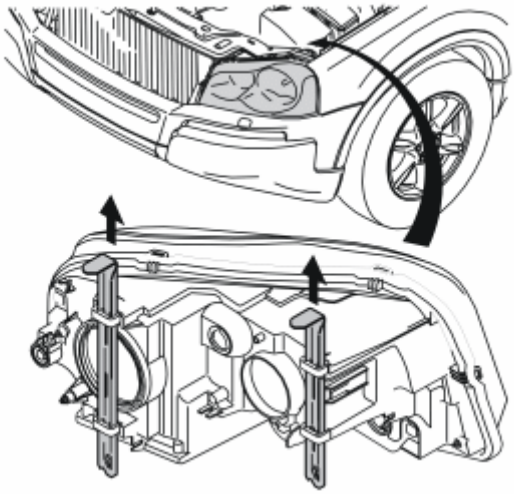

Fig. 4: Detach Left-Hand Headlamp By Pulling Up Two Locking Pins
Courtesy of VOLVO CARS CORPORATION

- Detach the left-hand headlamp by pulling up the two locking pins and then carefully pulling away the headlamp forwards.

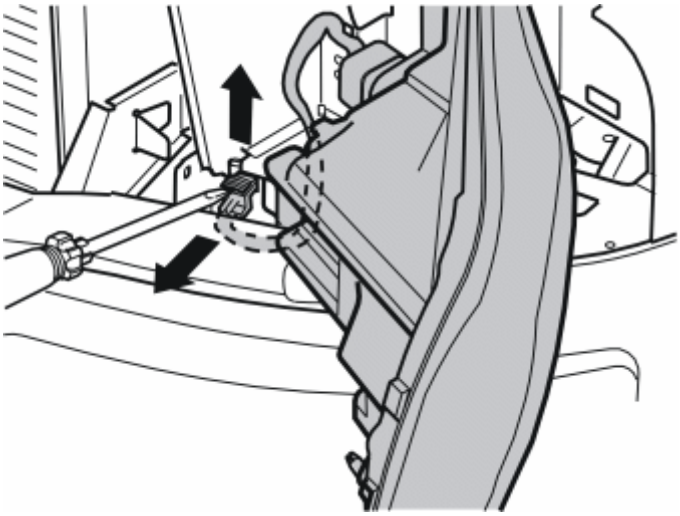

Fig. 5: Carefully Prize Up Catch On Connector For Headlamp With A Screwdriver
Courtesy of VOLVO CARS CORPORATION

- Carefully pry up the catch on the connector for the headlamp using a screwdriver.
- Pull the catch up completely, detach the connector and place the headlamp to one side.

INSTALLING THE CABLE HARNESS

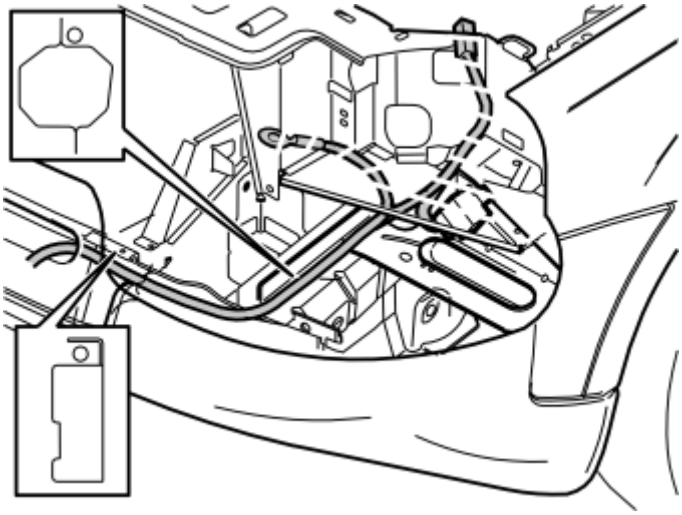

Fig. 6: Identifying Cable Harness Routing
Courtesy of VOLVO CARS CORPORATION

- Take the cable harness from the kit and position it with relay and relay holder where the air cleaner (ACL) was located.
- Now route the ends of the cable harness without cable terminals, along the left-hand side of the panel flange on the left-hand side member.

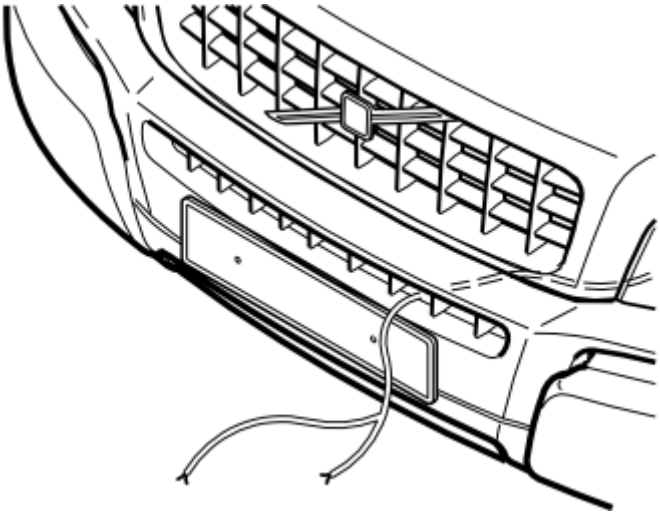

Fig. 7: Identifying Routing Cable Harness Through The Bumper
Courtesy of VOLVO CARS CORPORATION

- Route the cable harness to the right of the top of the bumper rail and out through the third lower space in the air intake above the number plate holder.

INSTALLATION, AUXILIARY LIGHTS BRACKET

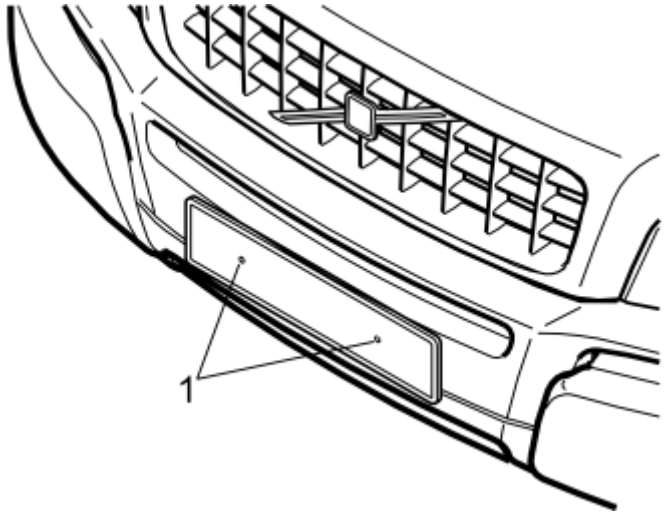

Fig. 8: License Plate And Screws
Courtesy of VOLVO CARS CORPORATION

Remove:

- the number plate.
- the screws (1) to the number plate holder.
- the number plate holder.

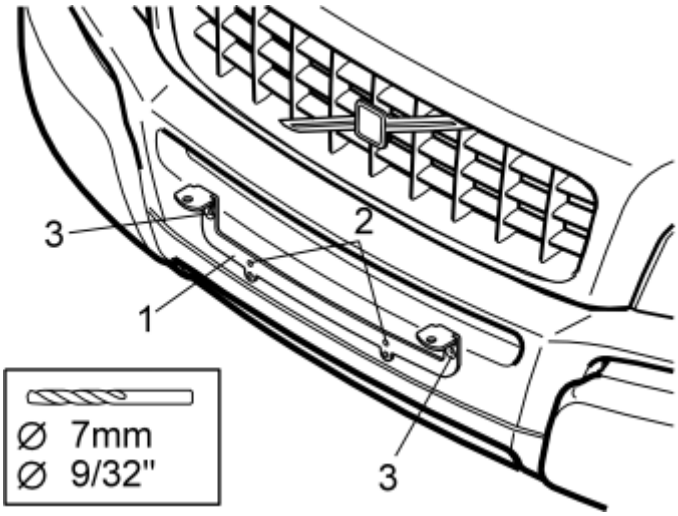

Fig. 9: Auxiliary Lamp Bracket And Mountings
Courtesy of VOLVO CARS CORPORATION

- Take the auxiliary lights bracket (1) from the kit and secure it in the holes for the number plate holder. Use the upper holes (2) in the auxiliary lights bracket.
- Drill with a **7 mm (9/32")** diameter drill bit in the centre of the holes (3), through the bumper cover and the bumper rail that is **39 mm (1 1/2")** inside.

NOTE: Keep the drill horizontal.

- Remove the screws and auxiliary lights bracket.

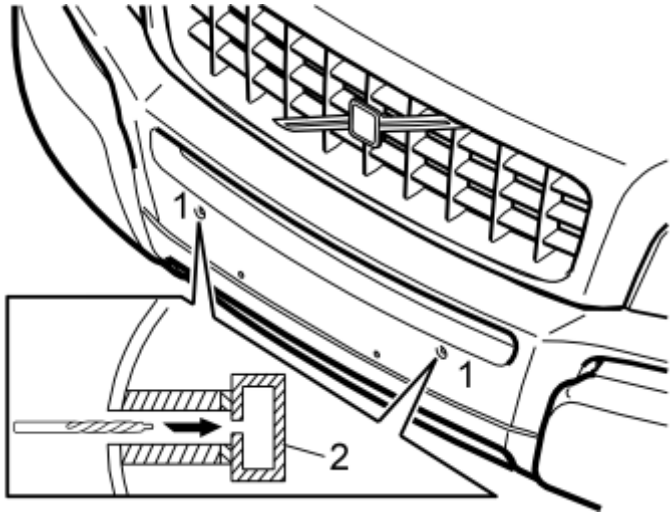

Fig. 10: Identifying Drilling Through Bumper Rail
Courtesy of VOLVO CARS CORPORATION

- Drill the holes (1) with the drill bit (P/N 8633152). Drill through the plastic with the thicker section of the drill bit, and through the bumper rail (2) with the thinner section of the drill bit, which has the dimension **7.3 mm (19/64")** .

NOTE: **It is important that the tip of the drill bit meets the hole that was previously drilled into the bumper rail. The flat surface on the drill bit must drill out all plastic up to the bumper rail.**

NOTE: **Hold the drill horizontally. Use a torch to check that there is no plastic shavings in the holes.**

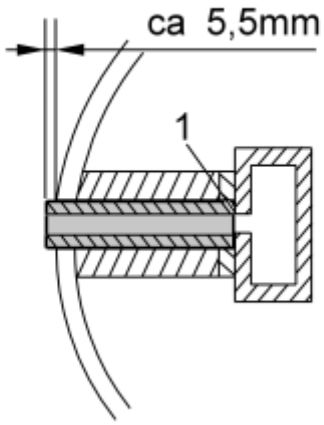

Fig. 11: Identifying Checking For Plastic
Courtesy of VOLVO CARS CORPORATION

- Check that the surface (1), which the socket shall support against, is free from plastic.
- Install two spacer sleeves **L = 44 mm (1 3/4")** into the holes.

NOTE: The spacer sleeves must protrude approx. 5.5 mm (7/32") from the bumper cover.

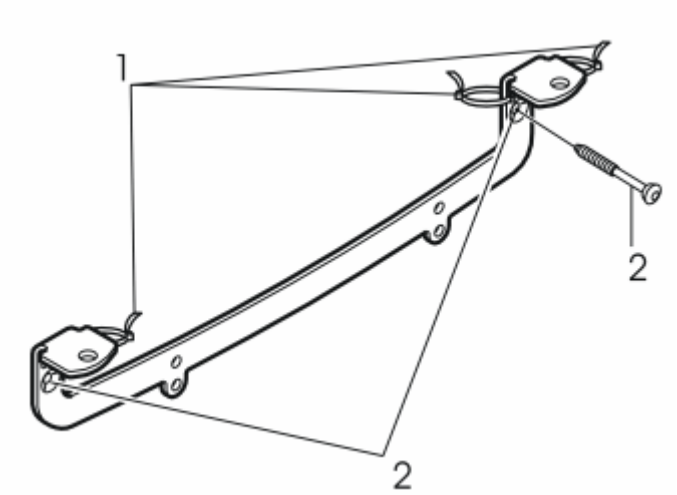

Fig. 12: Identifying Tie Straps In Holes And Bracket Screws
Courtesy of VOLVO CARS CORPORATION

- Affix tie straps (1) in the holes in the auxiliary lights bracket, but do not tighten.
- Install the auxiliary lights bracket on the bumper using the screws (2) from the kit. Tighten loosely. The screws create their own threads in the drilled holes, which means that they may screw in stiffly.

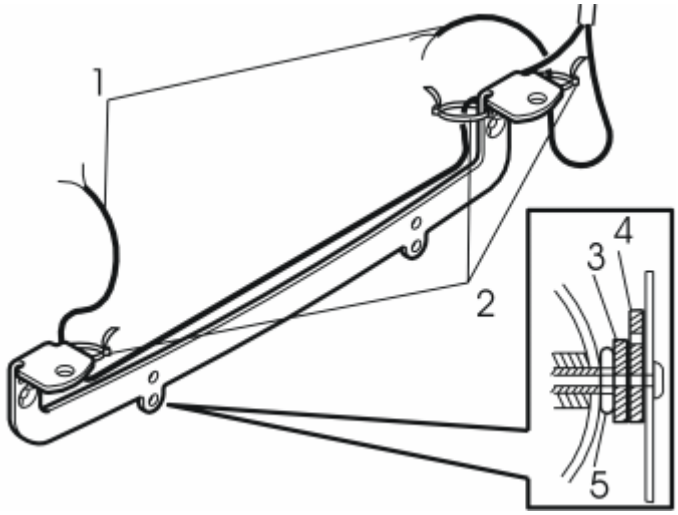

Fig. 13: Guiding Cable Ends In Tie Straps
Courtesy of VOLVO CARS CORPORATION

- Guide in the two cable ends (1) in the three tie straps (2). Route the cables as shown.
- Adapt the length of the cable to the lamps. Press back any excess length of the cable outside of the front

grille back in through the front grille.
- Tighten the tie straps.
- Tighten the two screws for the auxiliary lights bracket.
- Install a spacer washer (3) between the auxiliary lights bracket (4) and the expander nut (5) on both sides.
- Install the number plate and tighten it with the two screws.

INSTALLATION, AUXILIARY LIGHTS

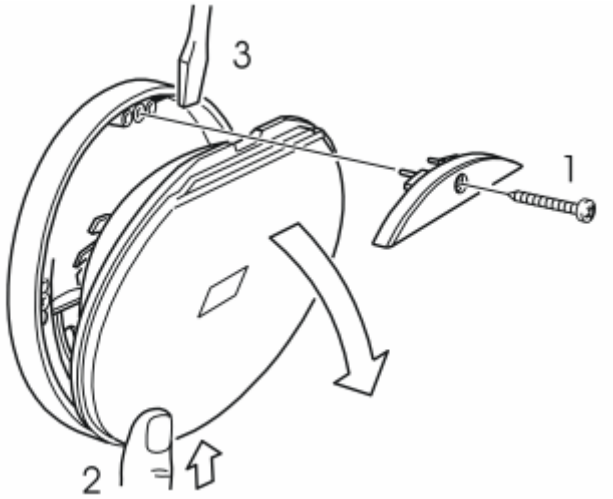

Fig. 14: Identifying Prying Lamp Housing
Courtesy of VOLVO CARS CORPORATION

Use auxiliary lights which are recommended by Volvo dealers.

- Remove the screw (1) and the cover.
- Press lightly on the lens (2).
- Fit a screwdriver (3) between the insert and the lamp housing, and pry carefully.

Fig. 15: Installing Lamp Housing On Auxiliary Mounting
Courtesy of VOLVO CARS CORPORATION

- Install the lamp housing on the auxiliary lights mounting with screw and nut. Tighten manually.

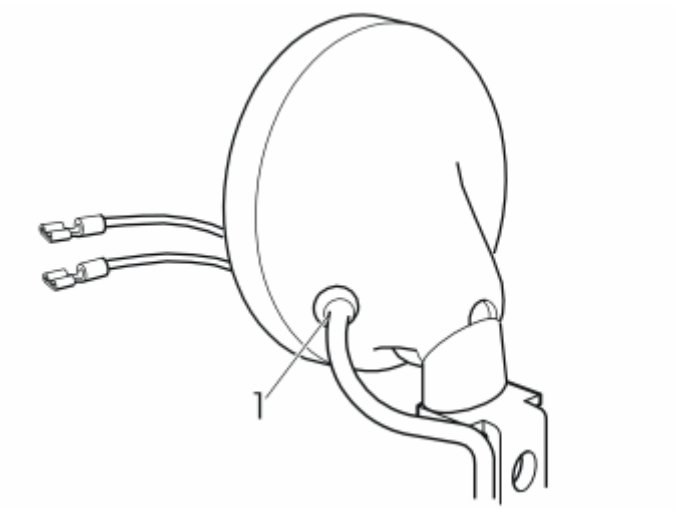

Fig. 16: Routing Cable Harness With Rubber Grommet Into Holes In Lamp Housing
Courtesy of VOLVO CARS CORPORATION

- Route the cable harness with the rubber grommet (1) into the holes in the lamp housing.
- Press the rubber grommet into the hole.
- Install the cable terminals from the kit on the two cable ends.

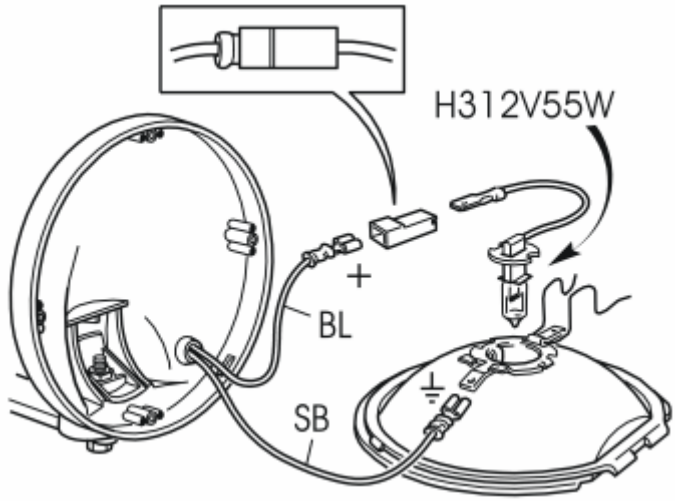

Fig. 17: Connecting Blue Cable To Lamps Cable And Black Cable To Ground
Courtesy of VOLVO CARS CORPORATION

- Connect the blue (BL) cable to the lamp's cable, with a connector socket housing in between.
- Connect the black (SB) cable to ground on the light insert.

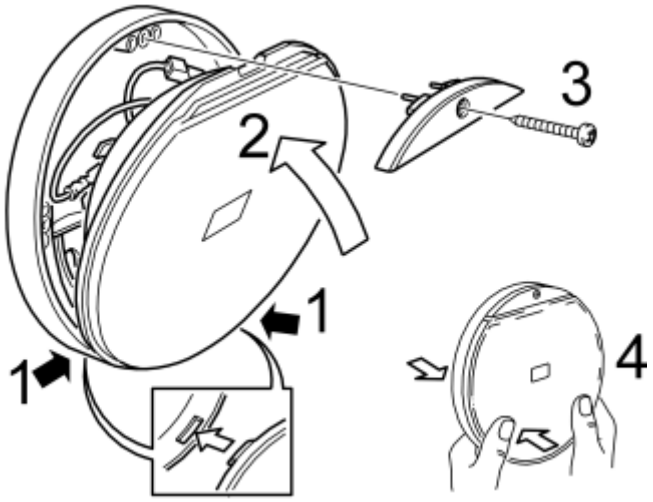

Fig. 18: Assembling Auxiliary Light
Courtesy of VOLVO CARS CORPORATION

- Assemble the auxiliary light, as shown.

INSTALLING THE CABLE HARNESS (CONTD.)

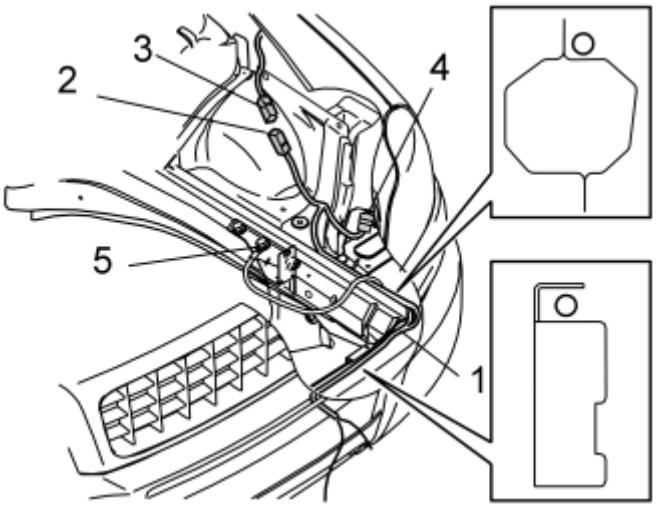

Fig. 19: Identifying Cable Harness Routing
Courtesy of VOLVO CARS CORPORATION

- Take the previously routed cable harness (1) and route it as shown.

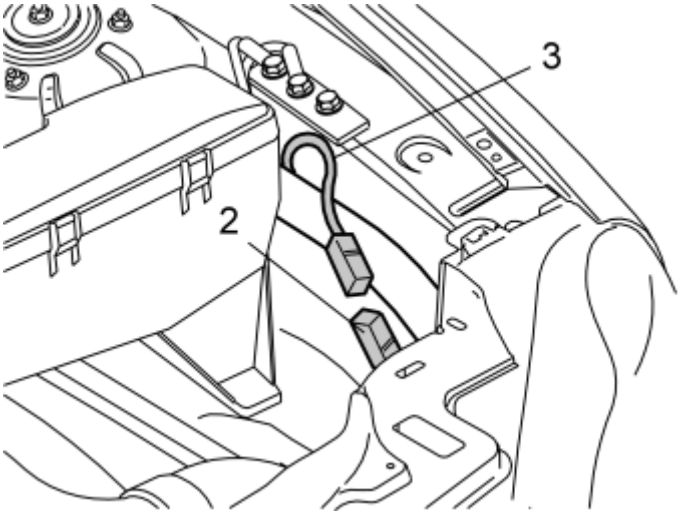

Fig. 20: Identifying Connecting Connectors
Courtesy of VOLVO CARS CORPORATION

- Plug the connector (2) into the pre-routed connector (3).

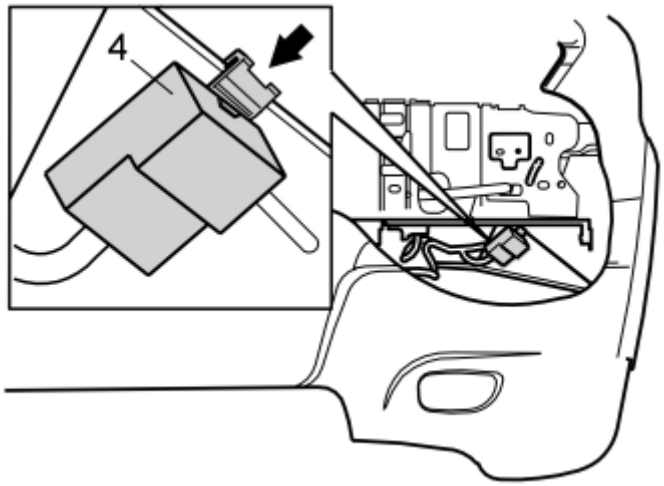

Fig. 21: Identifying Pressing In Relay
Courtesy of VOLVO CARS CORPORATION

- Press in the relay (4) at the vertical panel, under the panel that the main headlamp rests on. Rotate the relay up so that the connector with the cable does not make contact with panel underneath. See also **6** for the location of the relay.

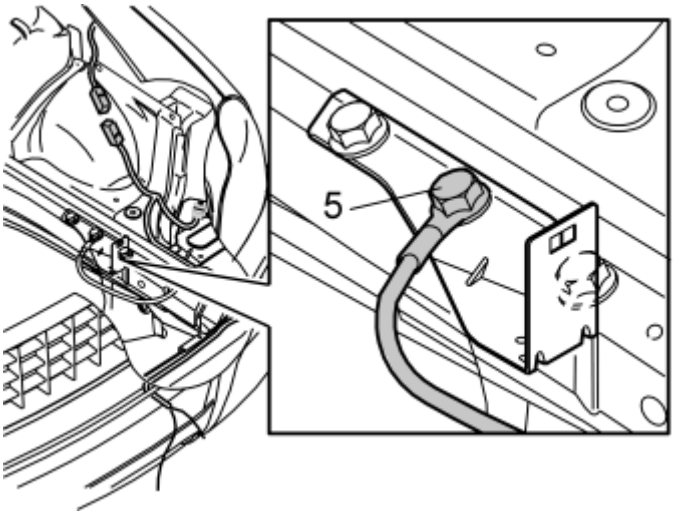

Fig. 22: Identifying Connecting The Ground Lead
Courtesy of VOLVO CARS CORPORATION

- Detach the existing screw (5) in the air cleaner (ACL) bracket and connect the ground cable. Turn the ground cable terminal down and position the cable so that it is not trapped by the air cleaner (ACL) when this is reinstalled. Pull any excess length of the cable through the front grille and clamp it with the existing cables behind the headlamp using tie straps.
- Reinstall the air cleaner (ACL) and the intake manifold.
- Plug in the connector to the headlamp and reinstall the headlamp.

NOTE: The longer of the locking pins must be located on the outside of the headlamp.

CAUTION: Ensure that the cables do not rub and chafe against sharp edges. If the this is the case, rectify this by re-securing the cables. Also check that the cables do not block the air cleaner (ACL) draining hatch.

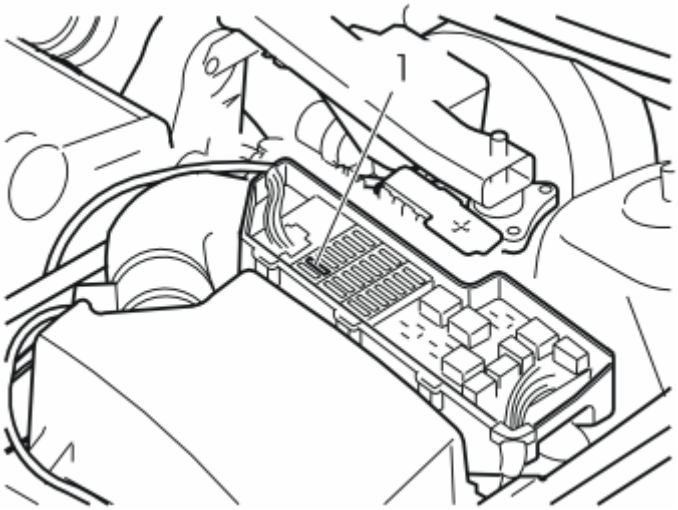

Fig. 23: Fuse Box In Engine Compartment

Courtesy of VOLVO CARS CORPORATION

Applies to cars up to and including model year 2004

- Remove the cover from the fuse box in the engine compartment. Install a 20A fuse in position 2 (1).
- Reinstall the cover.

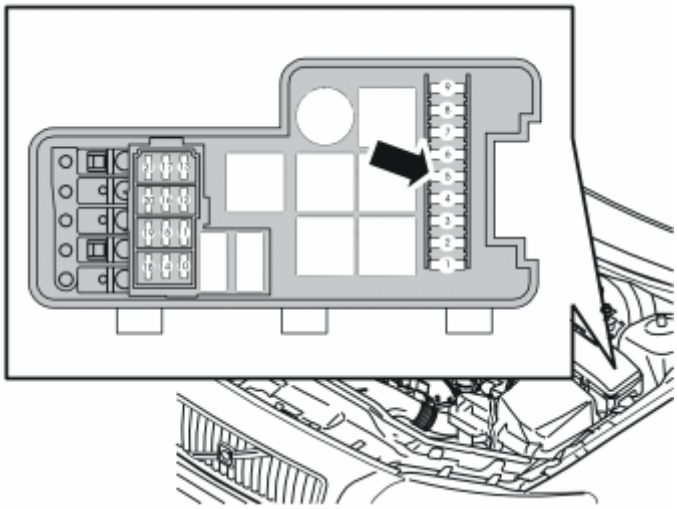

Fig. 24: Identifying Fuse Box Cover
Courtesy of VOLVO CARS CORPORATION

Applies to cars of model year from 2005-

- Remove the cover from the fuse box in the engine compartment. Install a 20A fuse in position 5.
- Reinstall the cover.

INSTALLING THE SWITCH

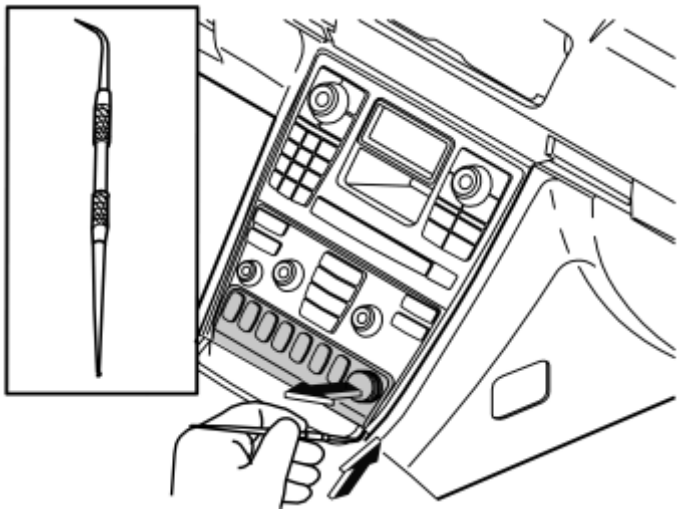

Fig. 25: Identifying Removing The Blind Cover Plug With A Scribe

Courtesy of VOLVO CARS CORPORATION

- Remove the cover plug to the 12 V socket.
- Insert a scriber with an angled tip into the joint on the underside, at one side of the keypad surround.

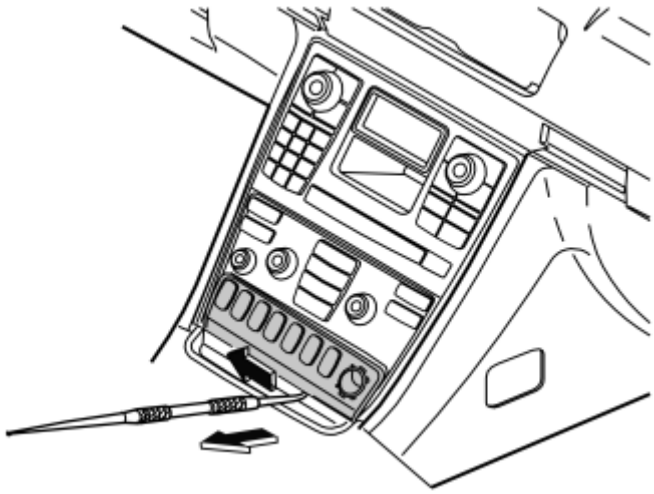

Fig. 26: Pulling Out The Surround Using The Scribe
Courtesy of VOLVO CARS CORPORATION

- Carefully pull out the surround using the scriber, pull along the underside of the surround. It is secured with three mounting lugs in the top and bottom edges.

  NOTE: Do not damage the surround.

- Place the surround to one side.

  HINT: The surround with three button places must be replaced with a surround with seven button places if necessary. This can be purchased separately.

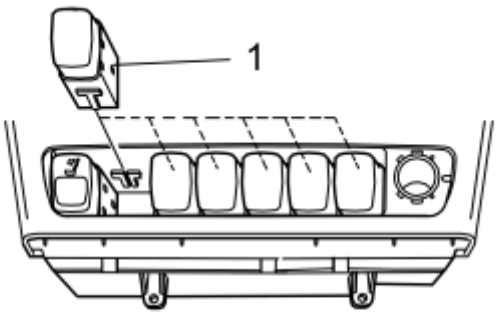

Fig. 27: Identifying Installation Of New Switch
Courtesy of VOLVO CARS CORPORATION

- The switch can be located in any available position. Remove the dummy button and install the new switch (1).
- Reinstall the surround and cover plug to the 12 V socket.

- Align the auxiliary lights for optimum beam pattern.
- Tighten the two screws.
- Install the protective caps on the screw heads.

INSTALLING THE TOP STRUT

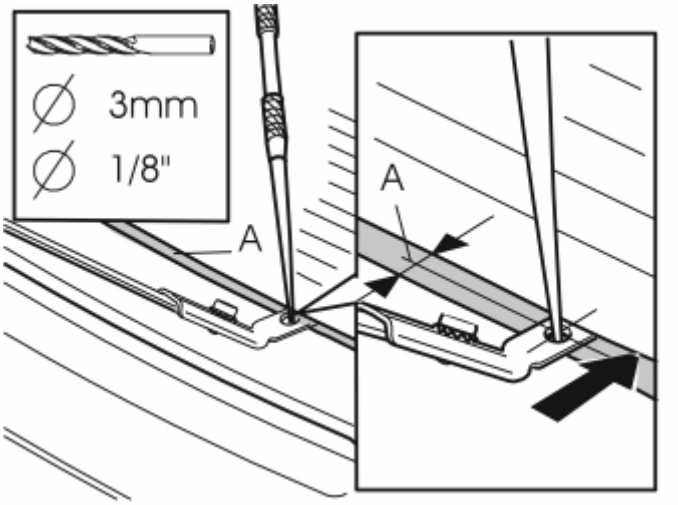

Fig. 28: Locating Mark For Drilling
Courtesy of VOLVO CARS CORPORATION

NOTE: **If the auxiliary lights vibrate and this is distracting then a top strut can be installed.**

- Take the top strut and insert one end in the space between the two bumper sections. Position it in line with the center of the auxiliary light.
- Mark out for drilling the hole through the top strut and in the bumper, in the center of the black edge (A).
- Drill out the hole using a **3 mm (1/8")** diameter drill bit.
- Remove any shavings.

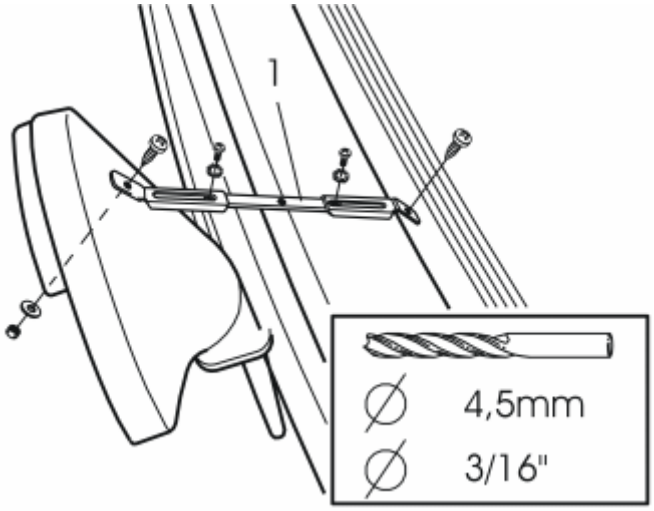

Fig. 29: Identifying Drilling Holes For Stay
Courtesy of VOLVO CARS CORPORATION

- Mark out for drilling the hole through the top strut and in the center top/rear edge of the auxiliary light.
- Drill out the hole using a **4.5 mm (3/16")** diameter drill bit.
- Remove any shavings.
- Take the top strut and locate it between both of the drilled holes for cutting the strut (1).
- Shorten the strut (1) to a suitable length.
- Tighten the top strut to the bumper and auxiliary light with screws, nuts and toothed washers.

NOTE: **The toothed washer must not be fitted on the screw to the bumper, as there is otherwise a risk that the screw may chafe against the bonnet's paintwork.**

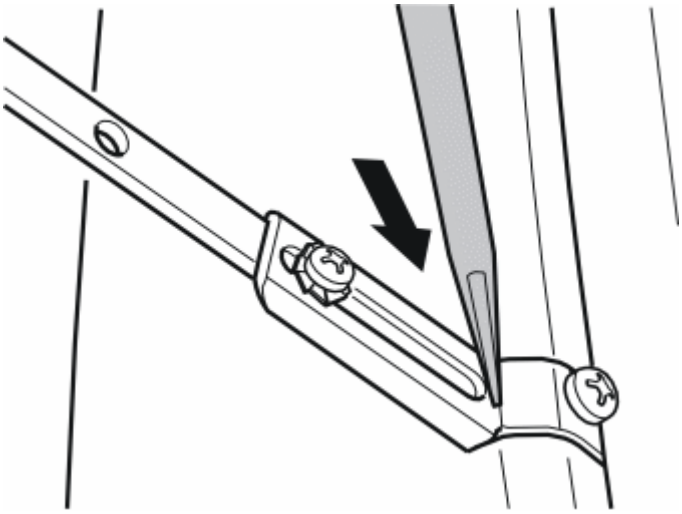

Fig. 30: Identifying Bending Top Stay Down
Courtesy of VOLVO CARS CORPORATION

- Bend the top strut down to the bumper using a screwdriver. This is so that the lower edge of the bonnet does not catch when it is closed.

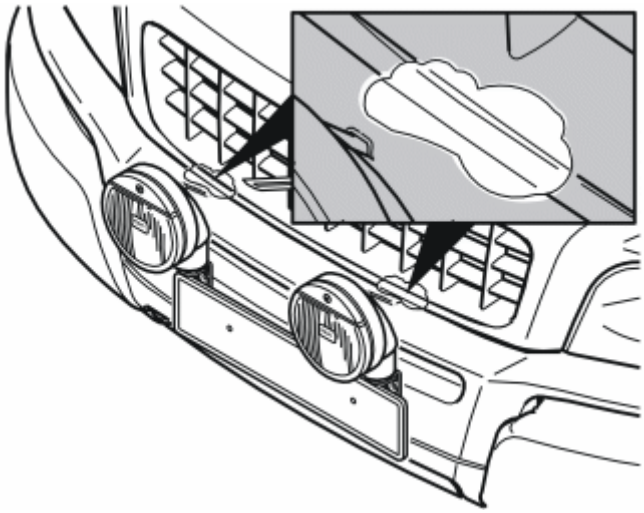

Fig. 31: Identifying Cleaning Painted Surfaces
Courtesy of VOLVO CARS CORPORATION

- Clean the painted surfaces in the front and lower edges of the bonnet opposite where the top struts are mounted in the bumper. Use a mixture of 30% washer fluid and 70% water.
- Wipe dry.

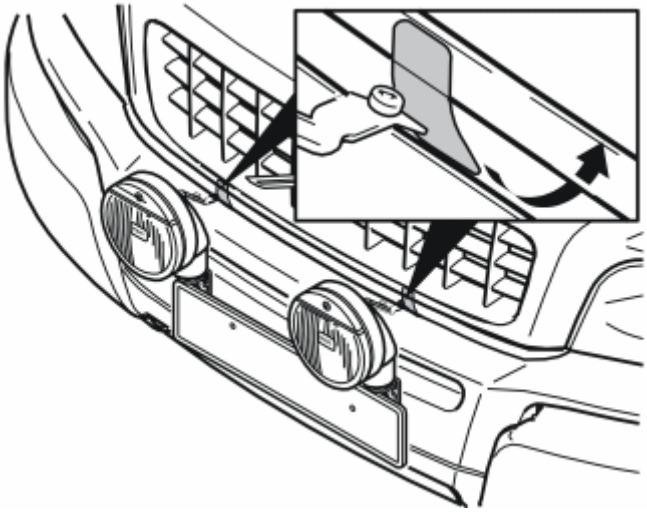

Fig. 32: Pressing Masking Tape Firmly Into Place At Front And Lower Edges Of Bonnet
Courtesy of VOLVO CARS CORPORATION

- Firmly press the protective tape into place in the front and lower edges of the bonnet, opposite where the top struts are mounted in the bumper.

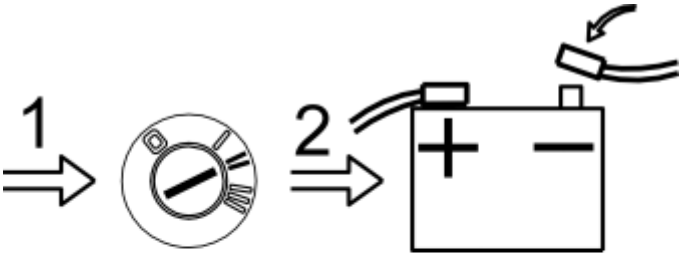

Fig. 33: Connecting Negative Battery Lead
Courtesy of VOLVO CARS CORPORATION

- Turn the ignition key to position II.
- Reconnect the battery negative lead.

AUXILIARY SPOTLAMPS (2003-04)

AUXILIARY SPOTLAMPS

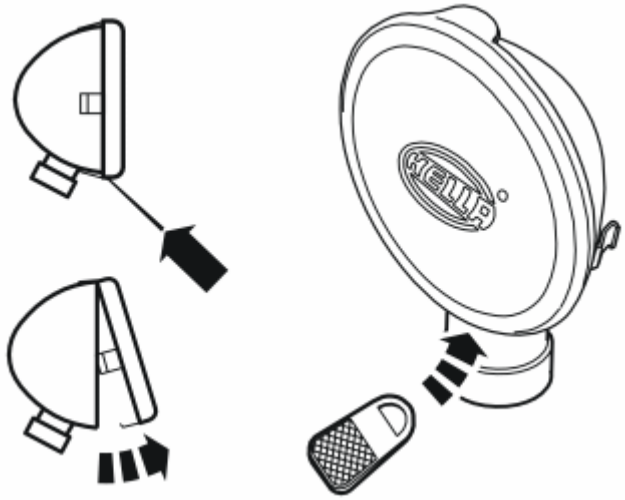

Fig. 34: Identifying Prying Light Insert From Lamp Housing
Courtesy of VOLVO CARS CORPORATION

- Pry the light insert from the lamp housing using the tool supplied.

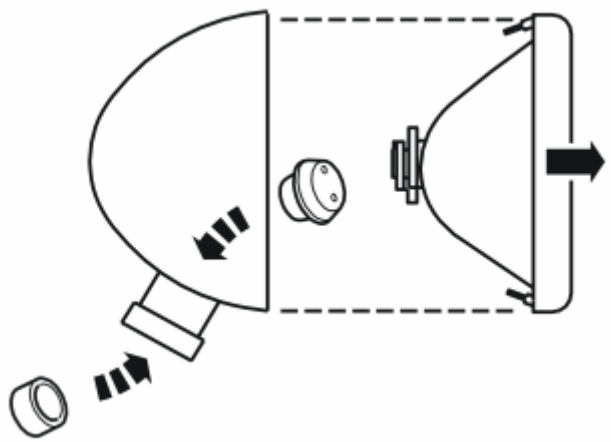

Fig. 35: Identifying Installing Rubber Grommet And Metal Ring On Lamp Housing
Courtesy of VOLVO CARS CORPORATION

- Install the rubber grommet and the metal ring on the lamp housing.

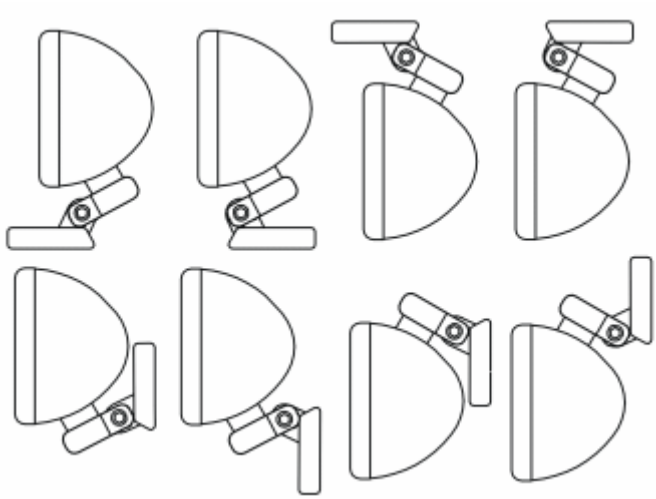

Fig. 36: Identifying Various Spot Lamp Positions
Courtesy of VOLVO CARS CORPORATION

The spot lamp can be installed in several different ways.

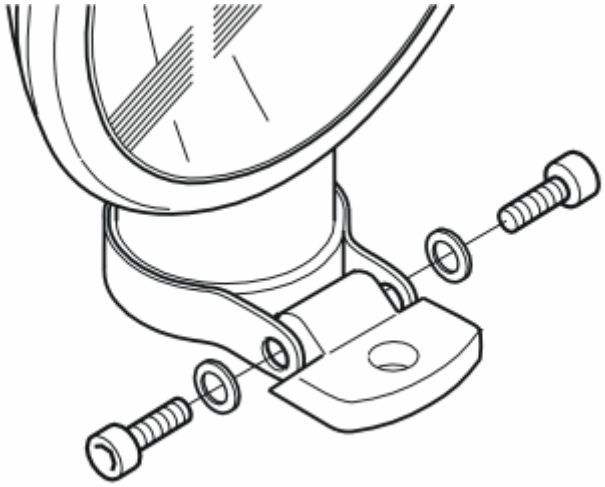

Fig. 37: Identifying Spot Lamp Housing Screws
Courtesy of VOLVO CARS CORPORATION

- Install the mounting in the required way on the lamp housing. Use two screws and two washers.

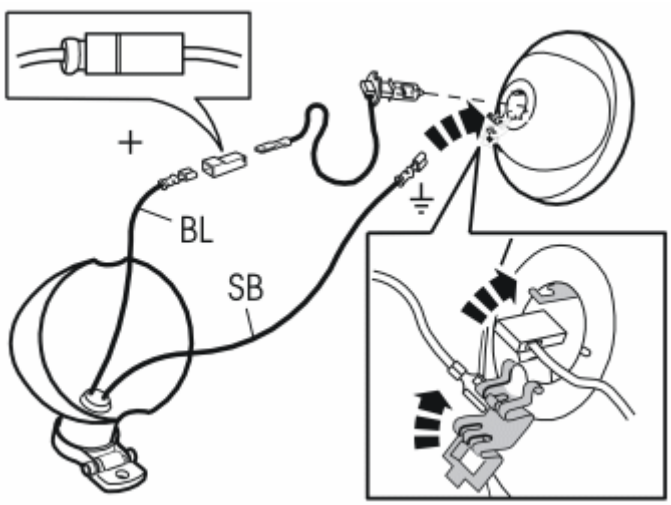

Fig. 38: Connecting Cables Inserted Through Lamp Housing
Courtesy of VOLVO CARS CORPORATION

- Insert the cables through the lamp housing
- Install the flat pin contactors on both the cables
- Supply the blue cable (BL) with a socket housing to prevent short-circuits
- Connect the blue cable (BL) to the cable for the lamp
- Connect the black cable (SB) to ground on the light insert.

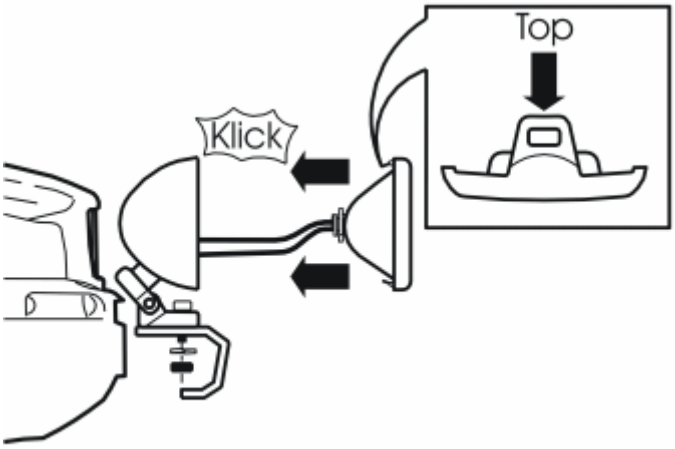

Fig. 39: Assembling Light Insert And Lamp Housing
Courtesy of VOLVO CARS CORPORATION

- Assemble the light insert and the lamp housing. Carefully stretch the cables
- Install the spot lamp on the bracket.

INSTALLATION KIT FOR AUXILIARY LAMPS (2003-08)

INSTALLATION KIT FOR AUXILIARY LAMPS

PREPARATIONS

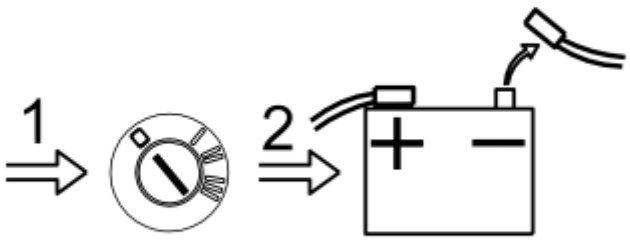

Fig. 40: Disconnect Battery Negative Lead
Courtesy of VOLVO CARS CORPORATION

- Turn the ignition switch to position 0.
- Disconnect the battery negative lead.

NOTE: Wait at least five minutes before disassembling the connectors or removing other electrical equipment.

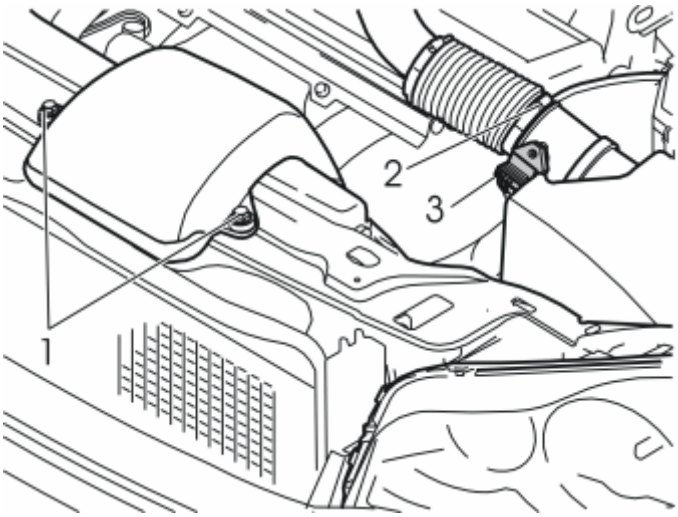

Fig. 41: Identifying ACL Screws, Hose Clamp And Connector
Courtesy of VOLVO CARS CORPORATION

- Remove the two screws (1) from the intake manifold for the air cleaner (ACL)
- Disconnect the hose clamp (2)
- Remove the connector (3) from the intake manifold for the turbocharger (TC)
- Pull off the air cleaner (ACL) from its mounting in the left-hand front member
- Remove the intake manifold from the air cleaner (ACL). Put it to one side.

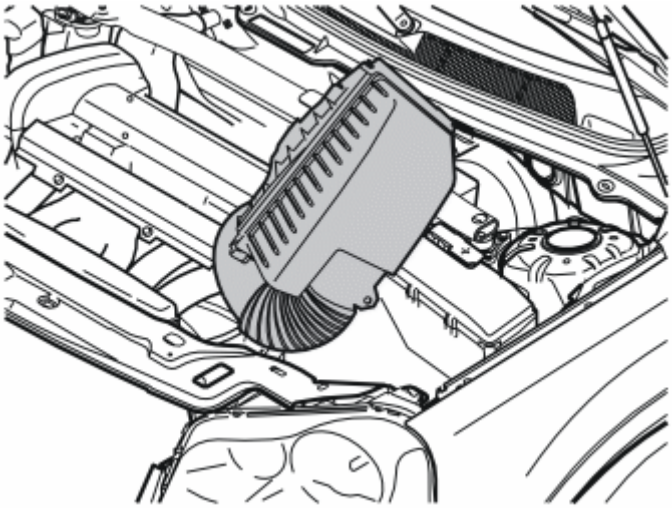

Fig. 42: Identifying ACL And Housing
Courtesy of VOLVO CARS CORPORATION

- Pull up the air cleaner (ACL). Turn the air cleaner (ACL) around in the short hose. Position as shown. Depending on the version more than one hose or connector may need to be detached from around the air cleaner (ACL).

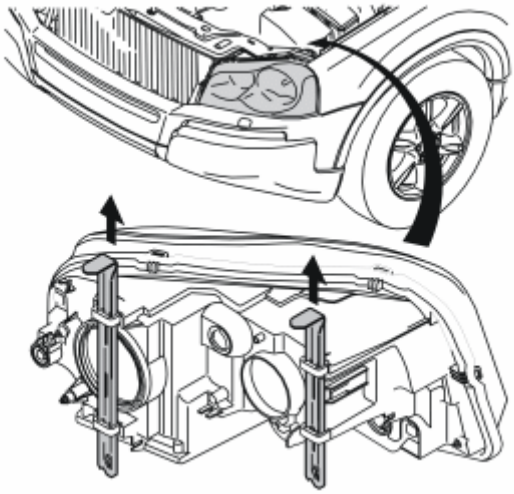

Fig. 43: Detach Left-Hand Headlamp By Pulling Up Two Locking Pins
Courtesy of VOLVO CARS CORPORATION

- Remove the left-hand headlamp by pulling up the two cotter pins and then carefully pulling the headlamp forwards.

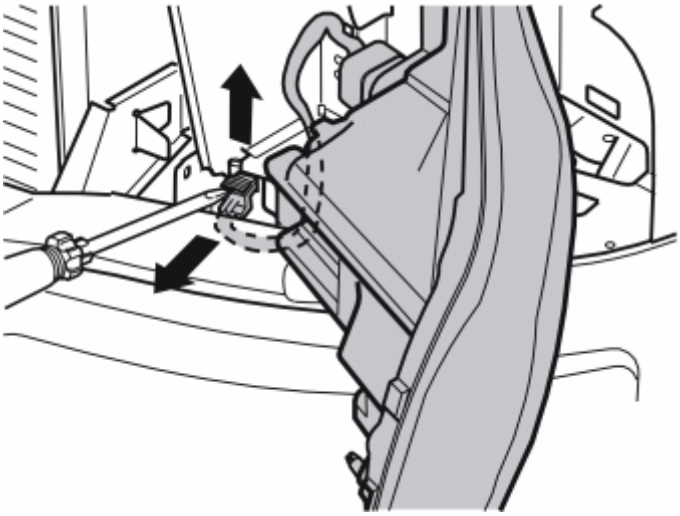

Fig. 44: Carefully Pry Up Catch On Connector For Headlamp With A Screwdriver
Courtesy of VOLVO CARS CORPORATION

- Carefully pry up the catch on the headlamp connector using a screwdriver
- Pull up the lock completely. Disconnect the connector. Place the headlamp to one side.

INSTALLING THE CABLE HARNESS

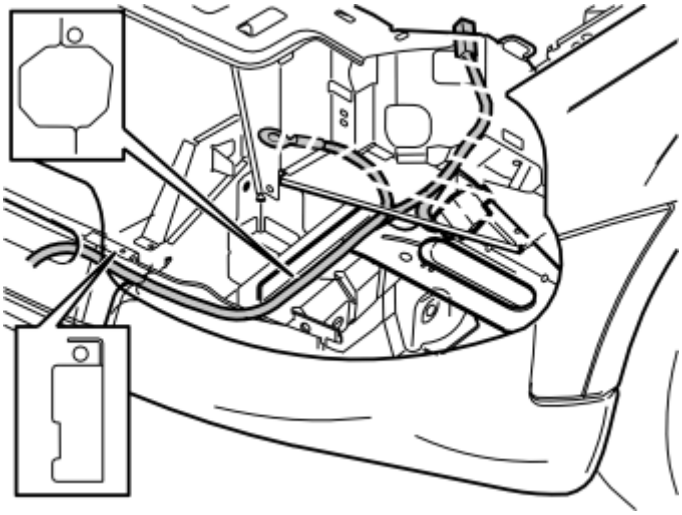

Fig. 45: Identifying Cable Harness Routing
Courtesy of VOLVO CARS CORPORATION

- Take the cable harness from the kit. Position the cable harness with the relay and relay holder where the air cleaner (ACL) was positioned
- Now route the ends of the cable harness without the cable terminals along the left-hand side of the panel edge on the left-hand side member.

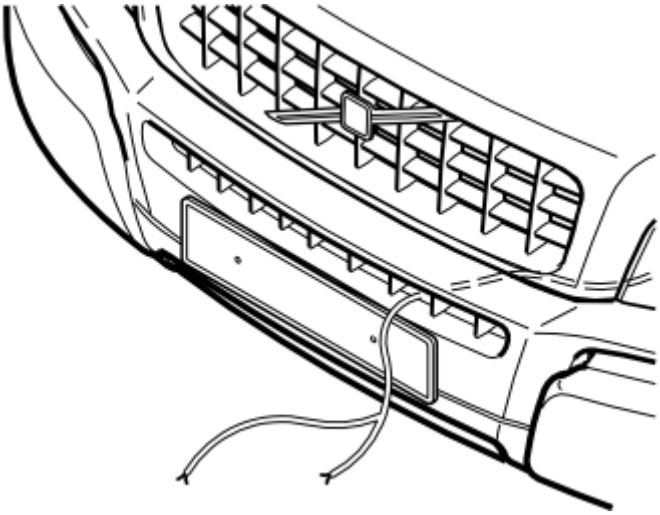

Fig. 46: Identifying Routing Cable Harness Through The Bumper
Courtesy of VOLVO CARS CORPORATION

- Route the cable harness to the right of the upper side of the bumper rail and out through the third lower gap in the air intake above the number plate holder.

INSTALLING THE BRACKET FOR THE AUXILIARY LAMPS

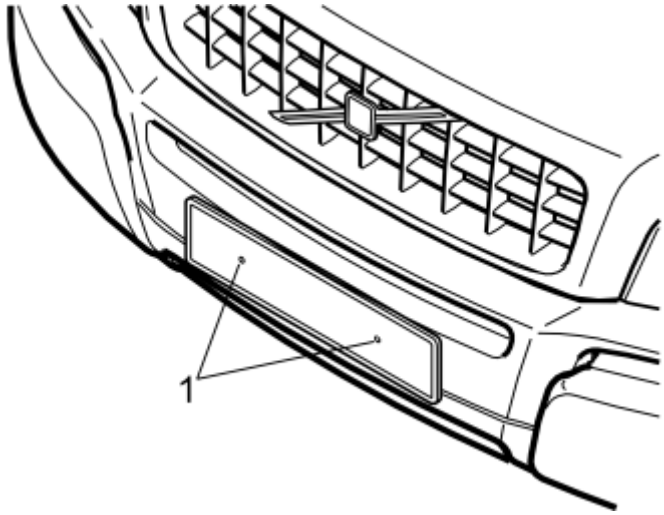

Fig. 47: License Plate And Screws
Courtesy of VOLVO CARS CORPORATION

Remove:

- the number plate
- the screws (1) for the number plate holder
- the number plate holder.

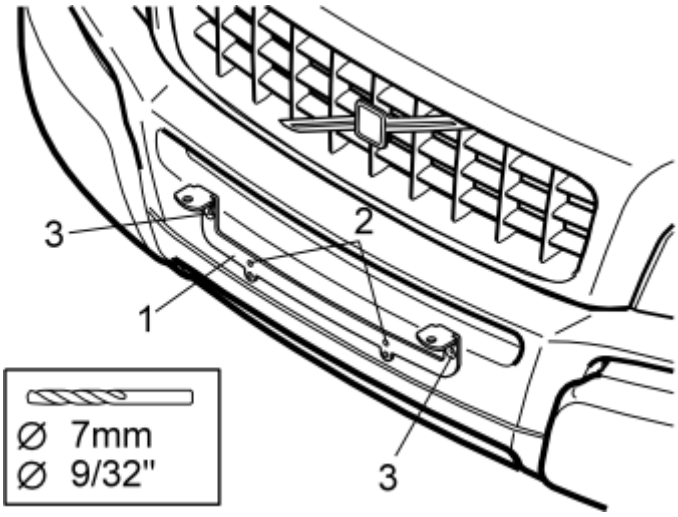

Fig. 48: Auxiliary Lamp Bracket And Mountings
Courtesy of VOLVO CARS CORPORATION

- Secure the auxiliary lamp bracket (1) (from the kit) in the holes for the number plate holder. Use the upper holes (2) in the auxiliary lamp bracket
- Using a **7 mm (9/32")** diameter drill bit, drill the centre of the holes (3). Drill through the bumper cover and the bumper rail which is positioned **39 mm (1 1/2")** inside.

NOTE: Hold the drill horizontally.

- Remove the screws and the auxiliary lamp bracket.

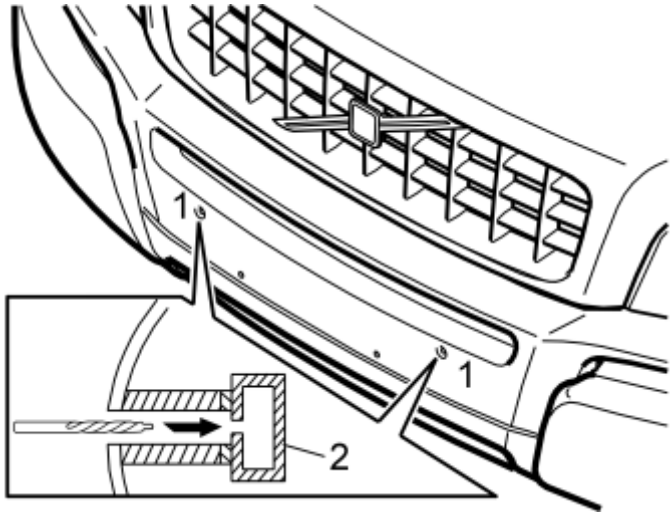

Fig. 49: Identifying Drilling Through Bumper Rail
Courtesy of VOLVO CARS CORPORATION

- Drill the holes (1) using a drill bit (P/N 8633152). Drill through the plastic using the thicker section of the drill bit. Drill through the bumper rail (2) using the smaller section of the drill bit, the dimension of which is **7.3 mm (19/64")** diameter.

NOTE: It is important that the tip of the drill bit meets the hole that was previously drilled into the bumper rail.

The flat surface of the drill bit must drill out all the plastic up to the bumper rail.

NOTE: Hold the drill horizontally. Using a torch, check that there is no plastic shavings in the holes.

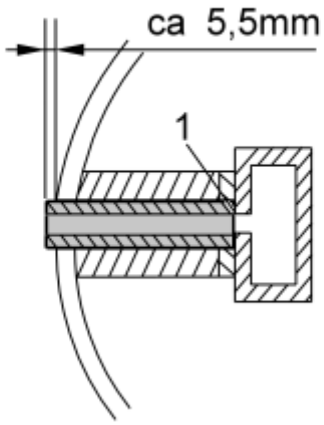

Fig. 50: Identifying Checking for Plastic

Courtesy of VOLVO CARS CORPORATION

- Check that there is no plastic on the area (1) on which the spacers will rest
- Install two spacer sleeves **L = 44 mm (1 3/4")** in the holes.

NOTE: The spacer sleeves must protrude approximately 5.5 mm (7/32") from the bumper cover.

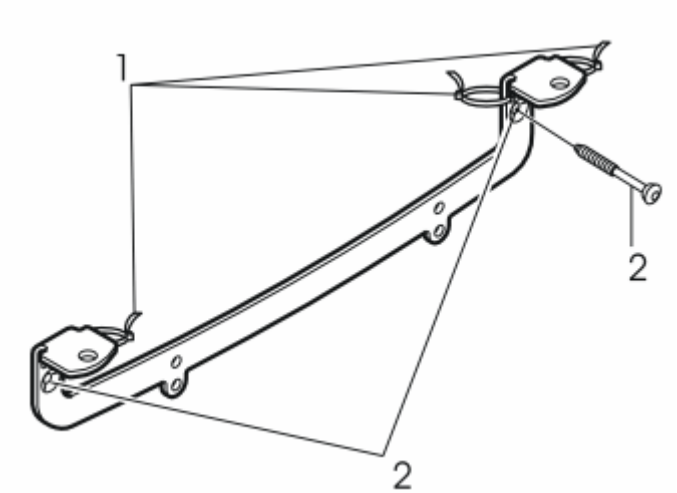

Fig. 51: Identifying Tie Straps In Holes And Bracket Screws
Courtesy of VOLVO CARS CORPORATION

- Secure the tie straps (1) in the holes in the auxiliary lamp bracket. Do not tighten
- Install the auxiliary lamp bracket on the bumper using the screws (2) from the kit. Finger tighten. The screws are self-tapping so it may be hard to screw them in.

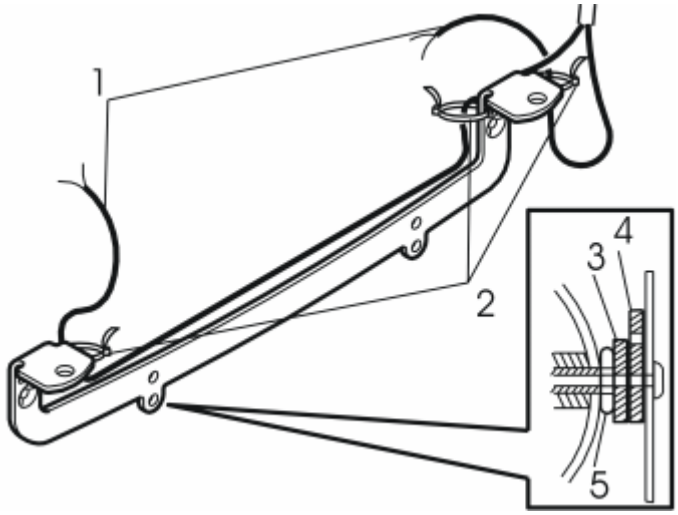

Fig. 52: Guiding Cable Ends In Tie Straps
Courtesy of VOLVO CARS CORPORATION

- Insert the two cable ends (1) in the three tie straps (2). Route the wiring as shown.
- Adjust the cable lengths for the lamps. Press any excess cable outside the grille back into the grille
- Tighten the tie straps
- Tighten the two screws for the auxiliary lamp bracket
- Install a spacer washer (3) between the auxiliary lamp bracket (4) and the expander nut (5) on both sides
- Install the number plate. Tighten the number plate with the two screws.

INSTALLING THE AUXILIARY LAMPS

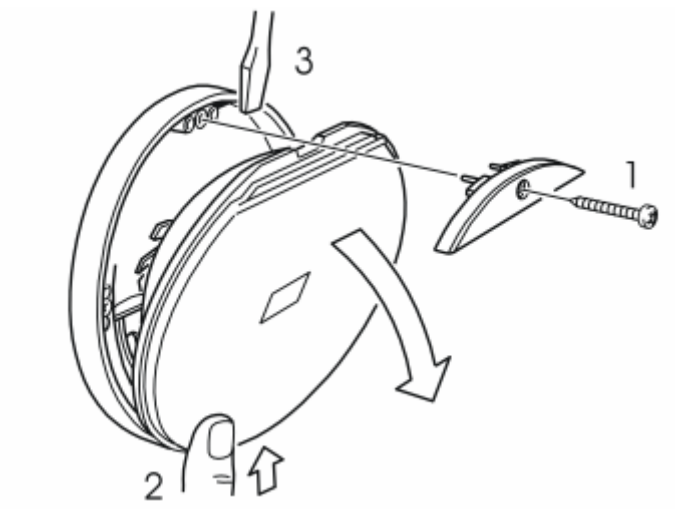

Fig. 53: Identifying Prying Lamp Housing
Courtesy of VOLVO CARS CORPORATION

Use auxiliary lamps recommended by your Volvo dealer.

- Remove the screw (1) and cover
- Press lightly on the lens (2)
- Position a screwdriver (3) between the insert and lamp housing and pry gently.

Fig. 54: Installing Lamp Housing On Auxiliary Mounting
Courtesy of VOLVO CARS CORPORATION

- Install the lamp housing on the auxiliary lamp mounting. Use a screw and nut. Finger tighten.

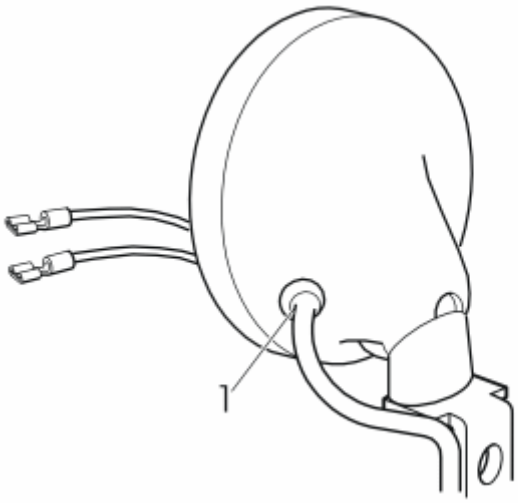

Fig. 55: Routing Cable Harness With Rubber Grommet Into Holes In Lamp Housing
Courtesy of VOLVO CARS CORPORATION

- Route the cable harness with the rubber grommet (1) into the holes in the lamp housing
- Press the rubber grommet into place in the hole
- Install the cable terminals from the kit on the two cable ends.

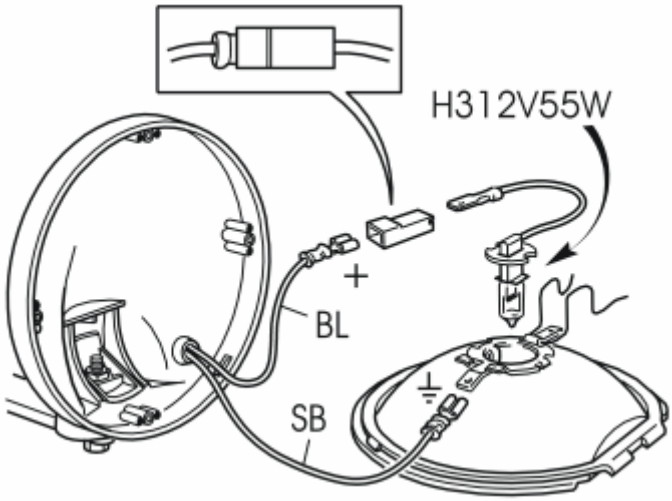

Fig. 56: Connecting Blue Cable To Lamps Cable And Black Cable To Ground
Courtesy of VOLVO CARS CORPORATION

- Connect the blue (BL) cable to the lamp cable via a socket housing
- Connect the black (SB) cable to ground on the lamp insert.

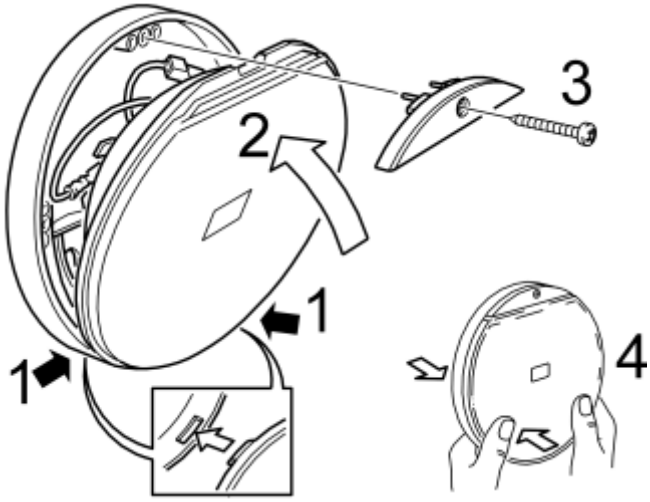

Fig. 57: Assembling Auxiliary Light
Courtesy of VOLVO CARS CORPORATION

- Assemble the auxiliary lamp as shown.

INSTALLING THE CABLE HARNESS (CONTINUED)

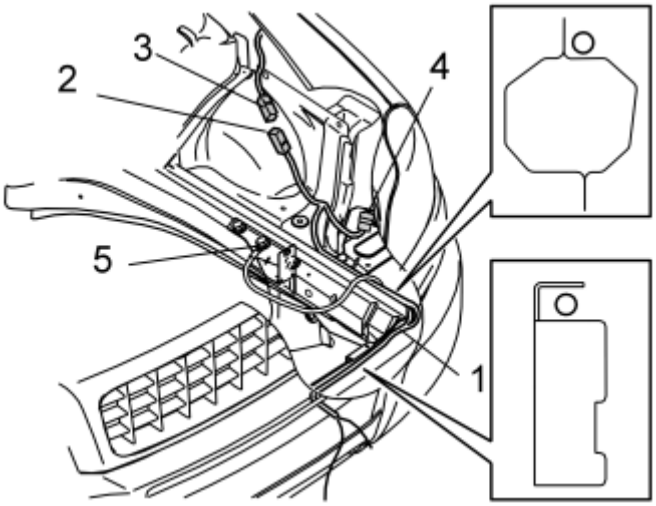

Fig. 58: Identifying Cable Harness Routing
Courtesy of VOLVO CARS CORPORATION

- Route the previously routed cable harness (1) as shown.

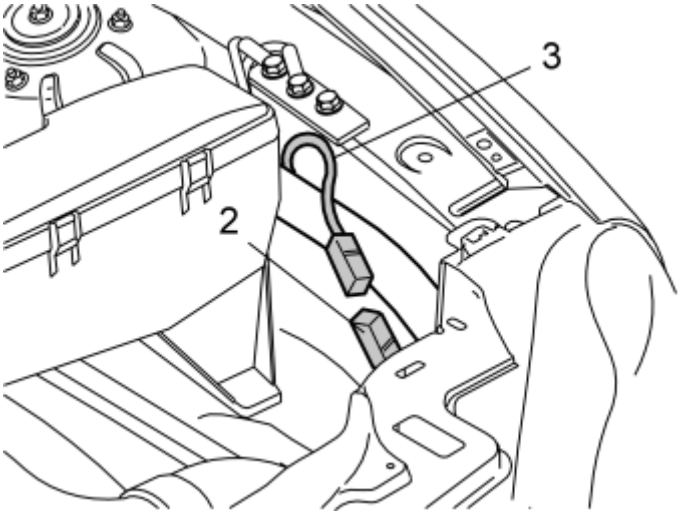

Fig. 59: Identifying Connecting Connectors
Courtesy of VOLVO CARS CORPORATION

- Connect the connector (2) to the pre-routed connector (3).

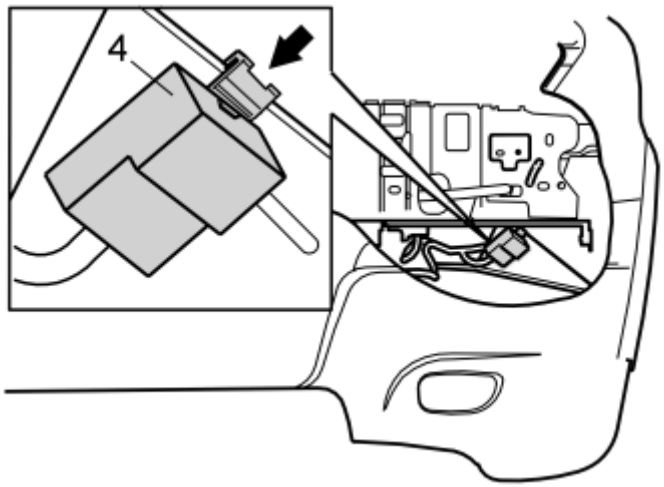

Fig. 60: Identifying Pressing In Relay
Courtesy of VOLVO CARS CORPORATION

- Press the relay (4) into place at the vertical panel, under the panel on which the headlamp rests. Twist up the relay so that the connector with the cable does not catch the panel underneath. Also, see **INSTALLING THE CABLE HARNESS** for the location of the relay.

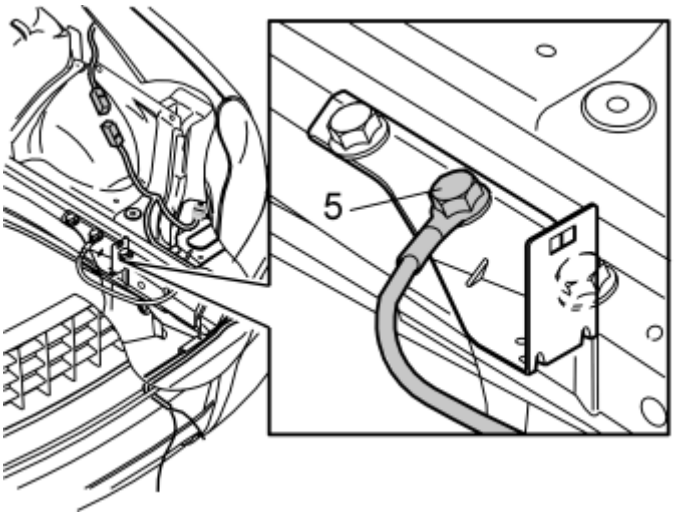

Fig. 61: Identifying Connecting The Ground Lead
Courtesy of VOLVO CARS CORPORATION

- Remove the existing screw (5) in the air cleaner bracket. Connect the ground lead. Twist the ground lead cable terminal downwards. Position the cable so that it does not catch the air cleaner (ACL) when it is reinstalled. Route any excess cable through the front grille. Secure the cable at existing wiring behind the headlamp using tie straps
- Reinstall the air cleaner (ACL) and intake manifold
- Connect the connector to the headlamp and reinstall it.

NOTE: The longer of the cotter pins must be positioned on the outside of the

headlamp.

CAUTION: Ensure that the wiring does not rub against sharp edges. If it does, secure the wiring better. Also check that the wiring does not block the drainage hatch for the air cleaner (ACL).

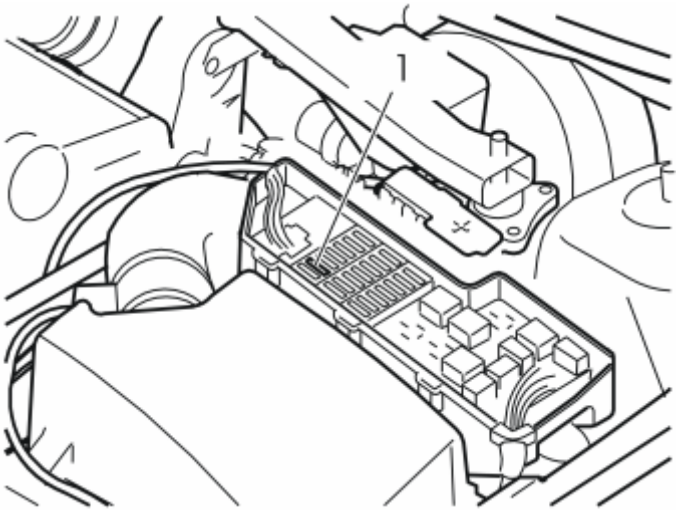

Fig. 62: Fuse Box In Engine Compartment
Courtesy of VOLVO CARS CORPORATION

- Remove the cover from the fuse holder in the engine compartment. Install a 20A fuse in position 2 (1)
- Reinstall the cover.

INSTALLING THE SWITCH

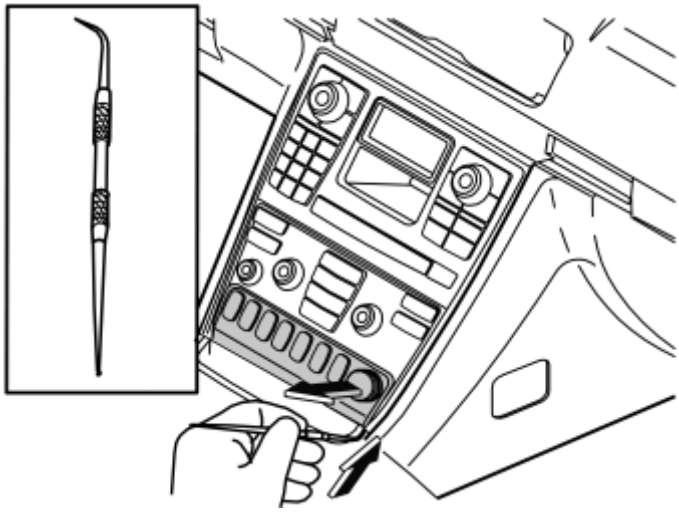

Fig. 63: Identifying Removing The Blind Cover Plug With A Scribe
Courtesy of VOLVO CARS CORPORATION

- Remove the blind cover plug from the 12 V socket

- Take a scriber with an angled point. Insert the angled end of the scriber in the joint underneath, on one side of the surround for the switch unit.

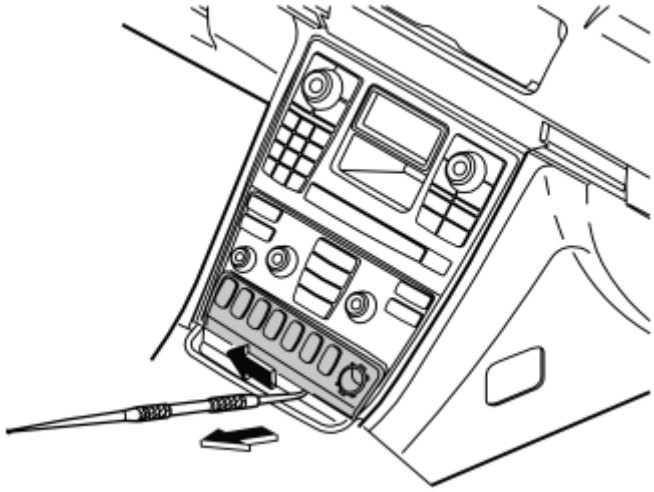

Fig. 64: Pulling Out The Surround Using The Scribe
Courtesy of VOLVO CARS CORPORATION

- Carefully pull out the surround using the scriber. Pull along the underneath of the surround. It is securely positioned with three mounting lugs at the top and lower edges.

NOTE: Do not damage the surround.

- Place the surround to one side.

HINT: The surround with three button spaces can be replaced with a surround with seven button spaces if necessary. This can be purchased separately.

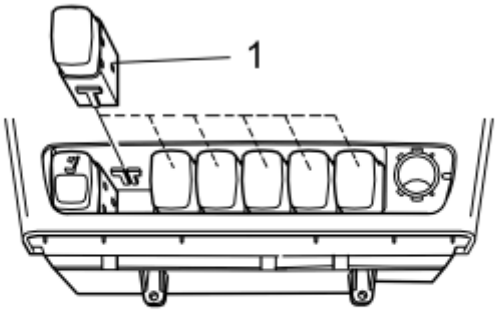

Fig. 65: Identifying Installation Of New Switch
Courtesy of VOLVO CARS CORPORATION

- The switch can be installed in any location. Remove the switch blank. Install the new switch (1)
- Reinstall the surround and the blind cover plug for the 12 V socket.

- Set the auxiliary lamps for optimal light distribution
- Tighten the two screws.
- Install protective caps on the screw heads.

INSTALLING TOP STAYS

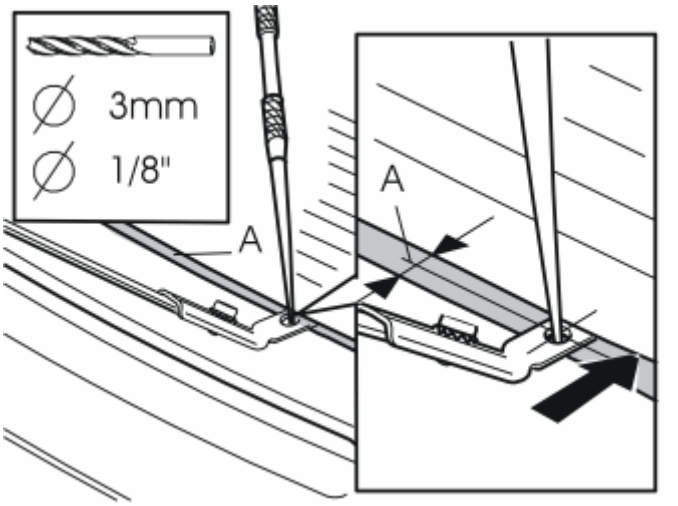

Fig. 66: Locating Mark For Drilling
Courtesy of VOLVO CARS CORPORATION

NOTE: **If the lamps vibrate excessively, a top stay can be installed according to points 23-27.**

- Take the top stay and slide one end in the gap between the two bumper sections. Position in line with the centre of the auxiliary lamp
- Make a mark for drilling a hole through the top stay and in the bumper, in the center of the black edge (A)
- Drill out the hole. Use a **3 mm (1/8")** diameter drill bit
- Remove any shavings.

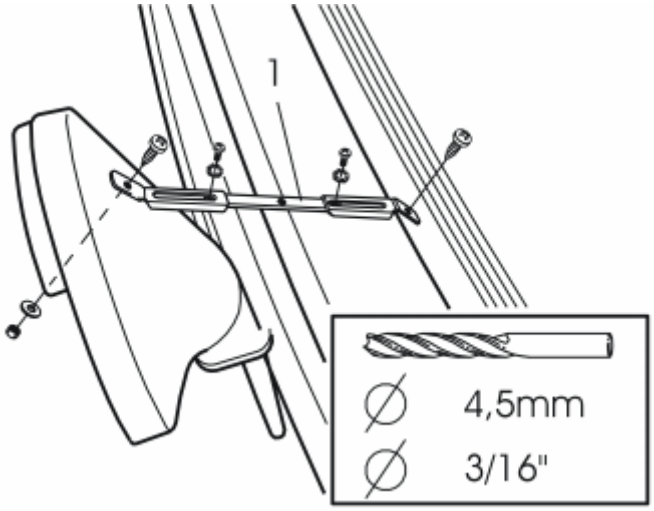

Fig. 67: Identifying Drilling Holes For Stay
Courtesy of VOLVO CARS CORPORATION

- Make a mark for drilling out the hole through the top stay and in the center of the top edge/rear edge of the auxiliary lamp
- Drill the hole. Use a **4.5 mm (3/16")** diameter drill bit
- Remove any shavings
- Position the top stay between both drilled holes so that the stay (1) can be cut to the correct length
- Shorten the stay (1) to a suitable length
- Tighten the top stay to the bumper and auxiliary lamps using screws, nuts and toothed plate connectors.

NOTE: **Do not install a toothed plate connector on the screw for the bumper. There is a risk that the screw would rub against the paint on the bonnet.**

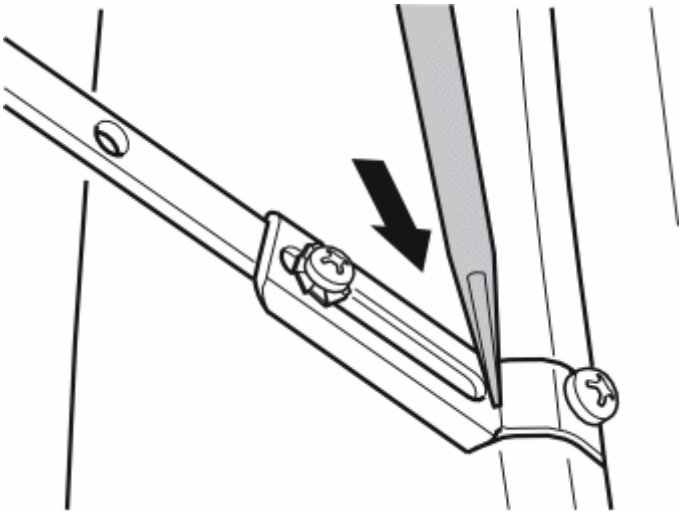

Fig. 68: Identifying Bending Top Stay Down
Courtesy of VOLVO CARS CORPORATION

- Bend the top stay down to the bumper using a screwdriver. This is to prevent the lower edge of the bonnet catching when closing.

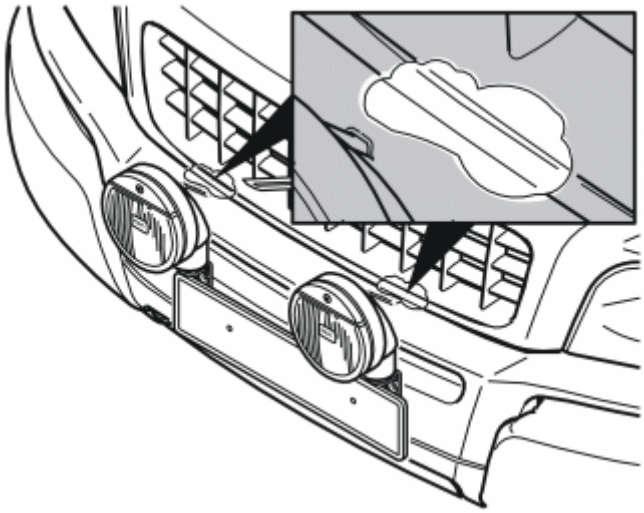

Fig. 69: Identifying Cleaning Painted Surfaces
Courtesy of VOLVO CARS CORPORATION

- Clean the painted surfaces at the front and lower edges of the bonnet, opposite the points where the top stays are secured in the bumper. Use a mixture of 30% windscreen washer fluid and 70% water
- Wipe dry.

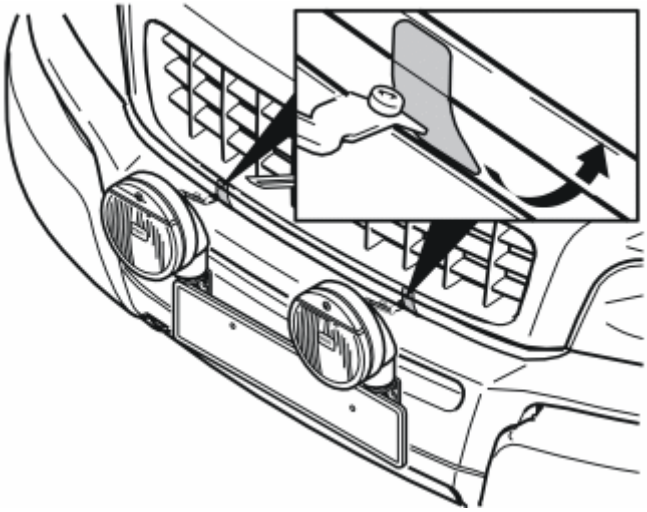

Fig. 70: Pressing Masking Tape Firmly Into Place At Front And Lower Edges Of Bonnet
Courtesy of VOLVO CARS CORPORATION

- Press the masking tape firmly into place at the front and lower edges of the bonnet, opposite the points where the top stays are mounted in the bumper.

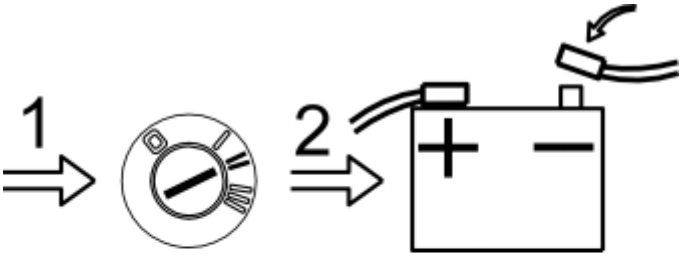

Fig. 71: Connecting Negative Battery Lead
Courtesy of VOLVO CARS CORPORATION

- Turn the ignition key to position II
- Reconnect the battery negative lead.

MOUNTING KIT FOR THE FRONT READING LAMP, FRONT SEAT (2003-08)

MOUNTING KIT FOR THE FRONT READING LAMP, FRONT SEAT

NOTE: The reading lamp is not included in the kit. The reading lamp must be purchased separately.

PREPARATIONS

Applies to all models

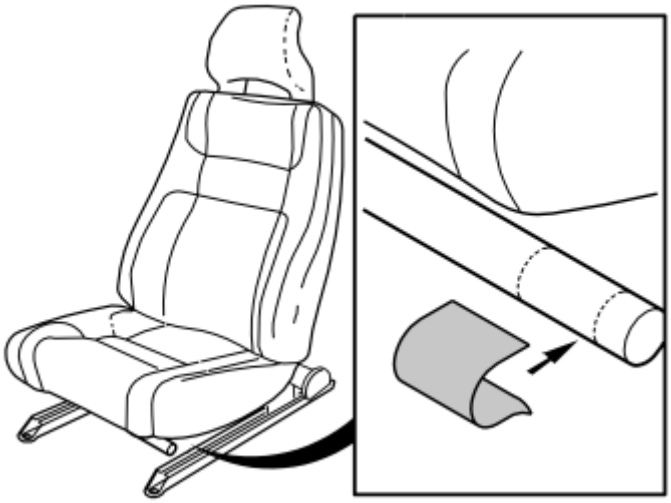

Fig. 72: Applying Tape Around Seat Frame

Courtesy of VOLVO CARS CORPORATION

- Wipe the seat frame clean on the marked surface at the centre console as shown
- Remove the backing from the piece of tape. Apply the tape around the seat frame so that the tape joins at the reverse of the seat frame.

INSTALLING THE LAMP MOUNTING

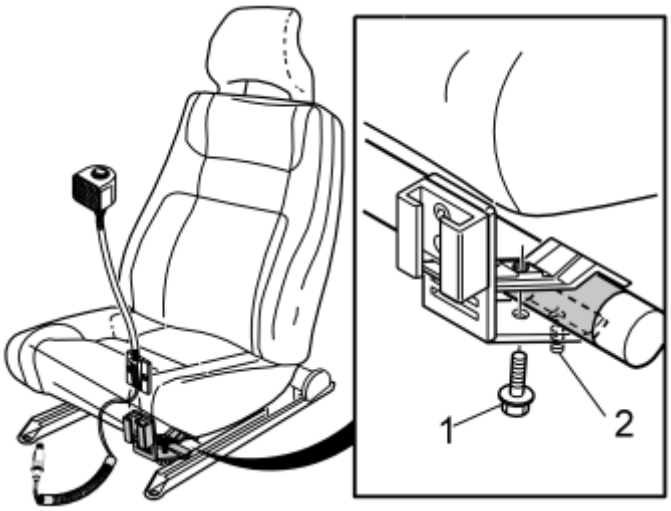

Fig. 73: Installing Lamp Mounting
Courtesy of VOLVO CARS CORPORATION

- Install the lamp mounting on the piece of tape around the seat frame as close to the centre console as possible. Tighten the mounting using the screw (1)
- Adjust the lamp mounting to the desired position. Tighten using the screw (2)
- Install the reading lamp in the mounting. Connect the cable to the cigarette lighter socket.

DISASSEMBLING THE READING LAMP WHEN REPLACING THE BULB

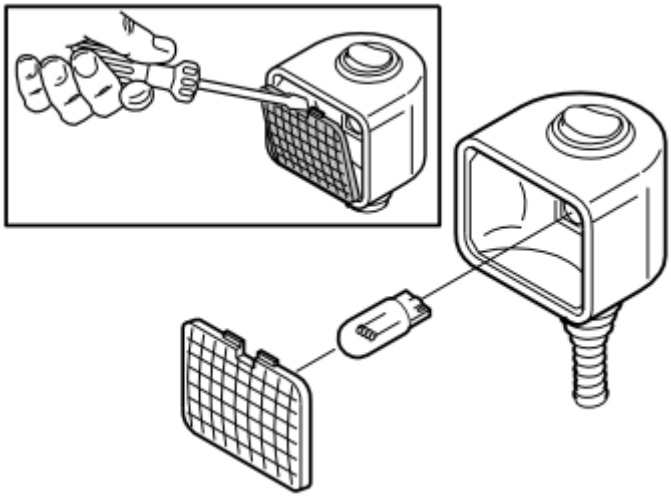

Fig. 74: Identifying Removing Lamp Glass
Courtesy of VOLVO CARS CORPORATION

- Remove the lamp glass. First carefully pry off the top edge of the lamp using a small screwdriver.

AUXILIARY LIGHTS, INSTALLATION KIT (2007-12)

INSTALLATION KIT, AUXILIARY LIGHTS

PREPARATIONS

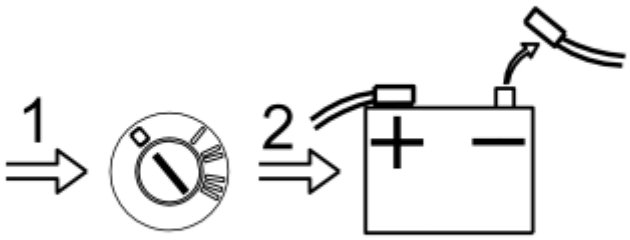

Fig. 75: Disconnect Battery Negative Lead
Courtesy of VOLVO CARS CORPORATION

- Turn the ignition key to position 0.
- Disconnect the battery negative lead.

NOTE: **Wait at least five minutes before disassembling the connectors or removing other electrical equipment.**

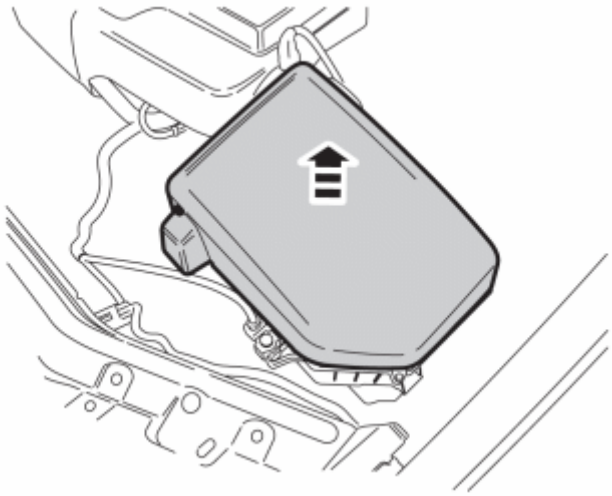

Fig. 76: Identifying Air Filter Cover
Courtesy of VOLVO CARS CORPORATION

- Remove the cover from the air filter.

Fig. 77: Identifying Catches On Control Module Connectors
Courtesy of VOLVO CARS CORPORATION

- Press in the catches on the control module connectors, twist up the lock arms and pull out the connectors.

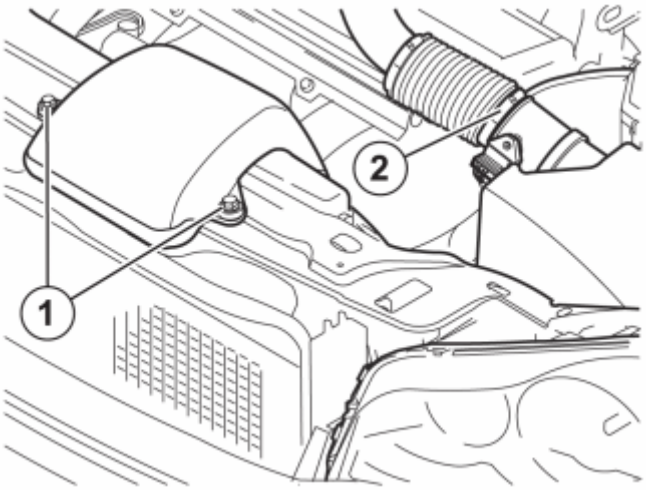

Fig. 78: Identifying Screws And Hose Clamp
Courtesy of VOLVO CARS CORPORATION

- Remove the two screws (1) from the induction pipe of the air filter.
- Detach the hose clamp (2).
- Remove the intake manifold from the air cleaner (ACL) and place it to one side.

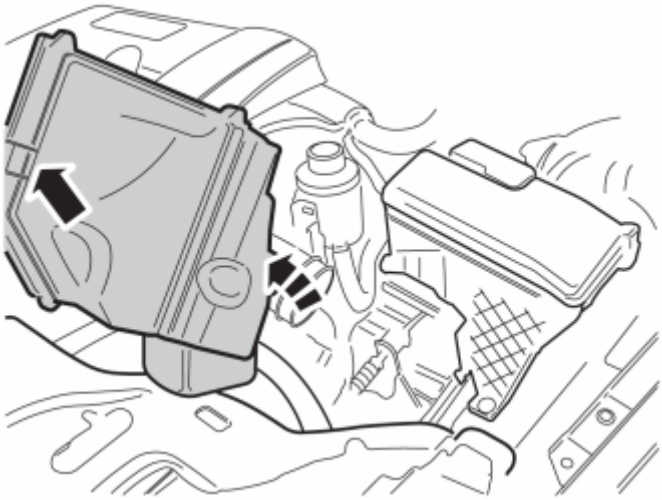

Fig. 79: Identifying Air Filter
Courtesy of VOLVO CARS CORPORATION

- Lift up the air filter, which sits with a clip on the left side. Position the air filter in the engine compartment so that the grounding point underneath is accessible.

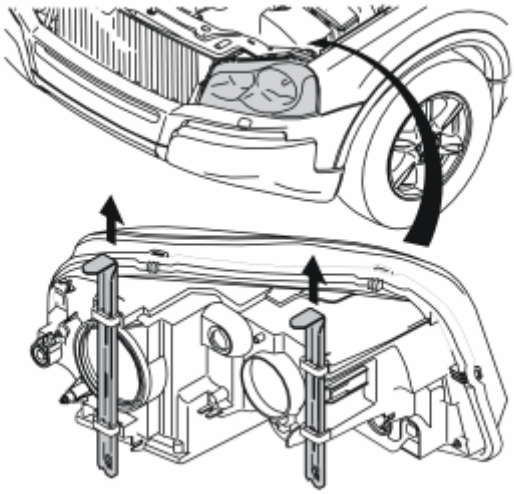

Fig. 80: Detach Left-Hand Headlamp By Pulling Up Two Locking Pins
Courtesy of VOLVO CARS CORPORATION

- Detach the left-hand headlamp by pulling up the two locking pins and then carefully pulling away the headlamp forwards.

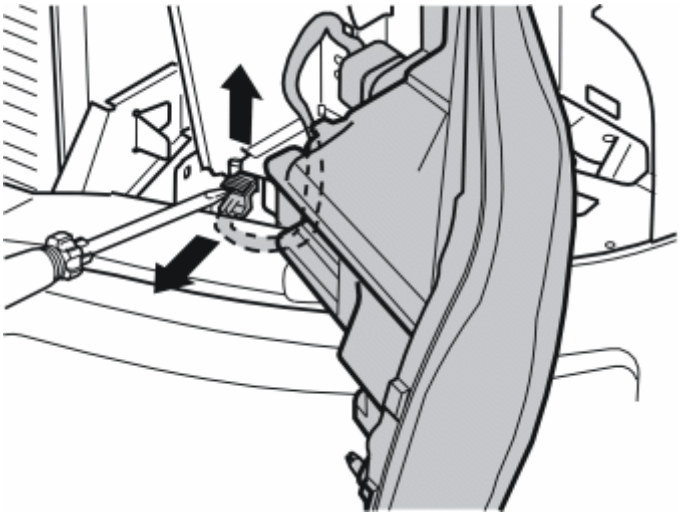

Fig. 81: Carefully Pry Up Catch On Connector For Headlamp With A Screwdriver
Courtesy of VOLVO CARS CORPORATION

- Carefully pry up the catch on the connector for the headlamp using a screwdriver.
- Pull the catch up completely, detach the connector and place the headlamp to one side.

INSTALLING THE AUXILIARY LIGHTS BRACKET

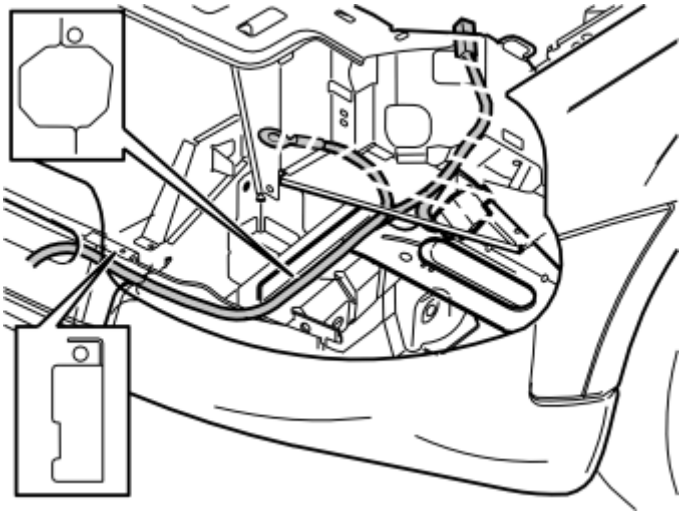

Fig. 82: Identifying Cable Harness Routing
Courtesy of VOLVO CARS CORPORATION

- Take the cable harness from the kit and position it with relay and relay holder where the air cleaner (ACL) was located.
- Route the cable ends without calbe terminal along the left side of the plate flange on the left side member.

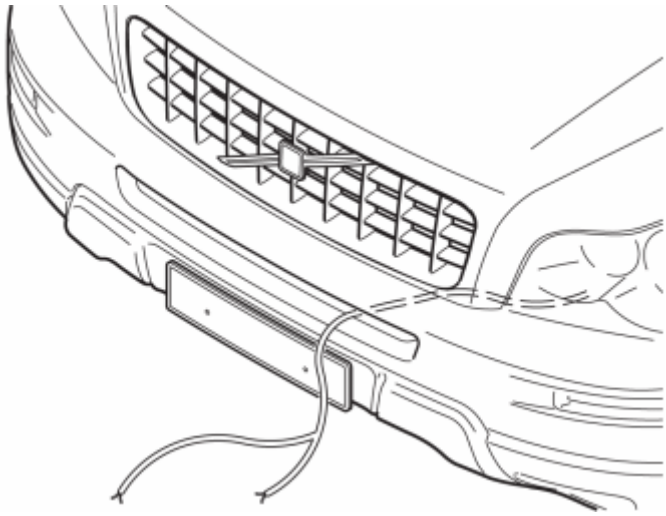

Fig. 83: Routing Cable Harness To Right Of Top Of Bumper Rail And Out Through Third Lower Space In Air Intake
Courtesy of VOLVO CARS CORPORATION

- Route the cable harness to the right of the top of the bumper rail and out through the third lower space in the air intake above the number plate holder.

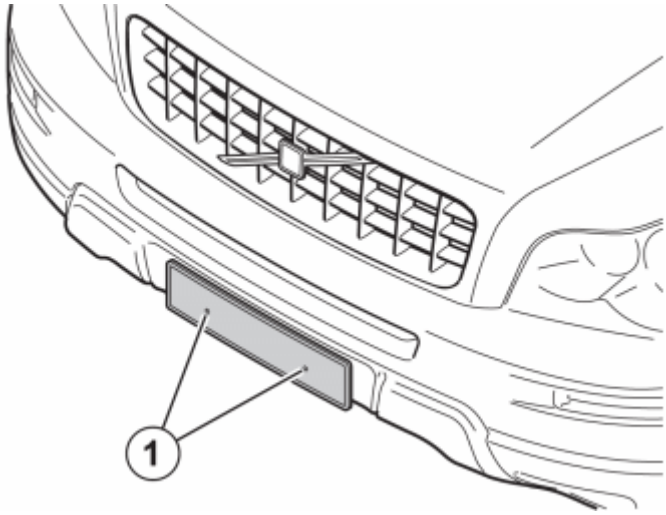

Fig. 84: Identifying Number Plate Holder Screws
Courtesy of VOLVO CARS CORPORATION

Remove:

- the number plate
- the screws (1) to the number plate holder.
- the number plate holder.

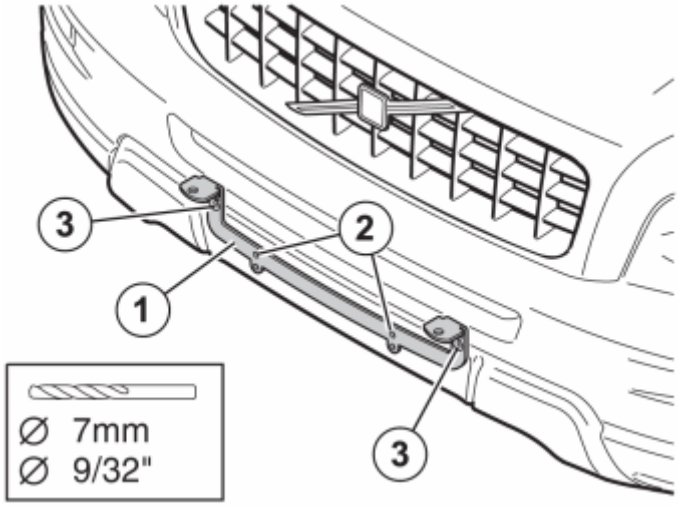

Fig. 85: Identifying Auxiliary Lights Bracket And Upper Hole
Courtesy of VOLVO CARS CORPORATION

- Take the auxiliary lights bracket (1) from the kit and secure it in the holes for the number plate holder. Use the upper holes (2) in the auxiliary lights bracket.
- Drill with a **7 mm (9/32")** diameter drill bit in the centre of the holes (3), through the bumper cover and the bumper rail that is **39 mm (1 1/2")** inside.

NOTE: Keep the drill horizontal.

- Remove the screws and auxiliary lights bracket.

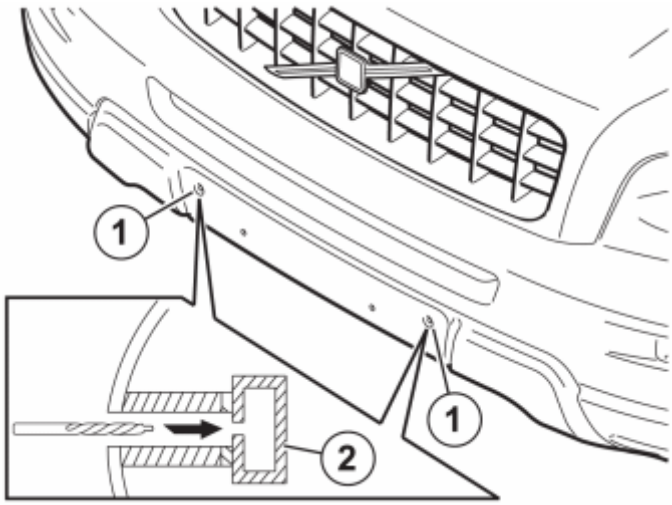

Fig. 86: Drilling Holes With Drill Bit
Courtesy of VOLVO CARS CORPORATION

- Drill the holes (1) with a drill bit (part no. 8633152), through the plastic with the thicker section of the drill bit, and through the bumper rail (2) with the thinner section of the drill bit, which has the dimension **7.3 mm (19/64")** .

NOTE: **It is important that the tip of the drill bit meets the hole that was previously drilled into the bumper rail. The flat surface on the drill bit must drill out all plastic up to the bumper rail.**

NOTE: **Hold the drill horizontally. Use a torch to check that there is no plastic shavings in the holes.**

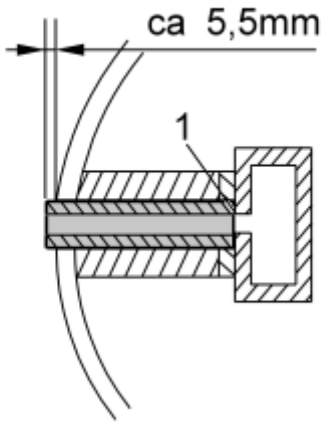

Fig. 87: Identifying Checking for Plastic
Courtesy of VOLVO CARS CORPORATION

- Check that the surface (1), which the socket shall support against, is free from plastic.
- Install two spacer sleeves **L= 50 mm (2")** into the holes.

NOTE: The spacer sleeves must protrude approx. 5.5 mm (7/32") from the bumper cover.

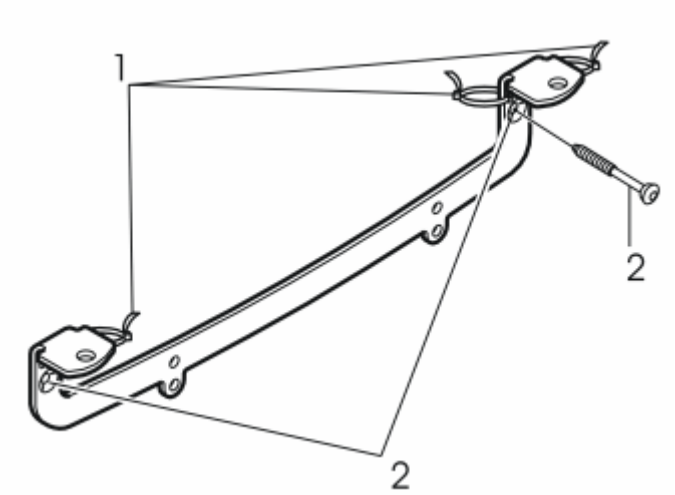

Fig. 88: Identifying Tie Straps In Holes And Bracket Screws
Courtesy of VOLVO CARS CORPORATION

- Affix tie straps (1) in the holes in the auxiliary lights bracket, but do not tighten.
- Install the auxiliary lights bracket on the bumper using the screws (2) from the kit. Tighten loosely. The screws create their own threads in the drilled holes, which means that they may screw in stiffly.

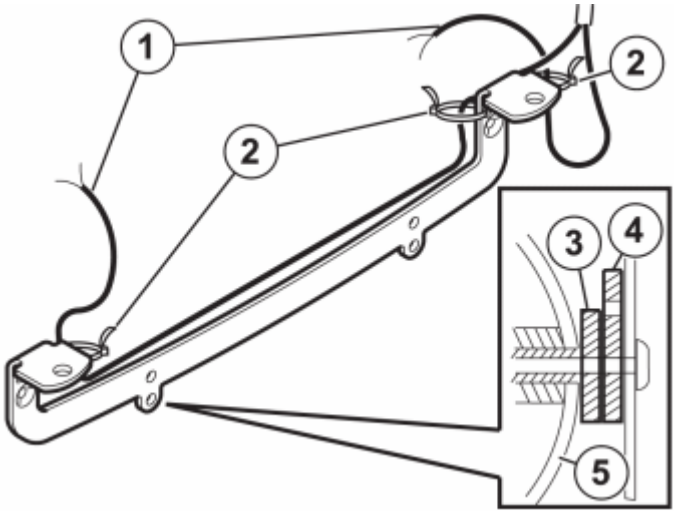

Fig. 89: Identifying Cable Ends, Tie Straps, Spacer Washer, Auxiliary Lights Bracket And Bumper Shell
Courtesy of VOLVO CARS CORPORATION

- Guide in the two cable ends (1) in the three tie straps (2). Route the cables as shown.
- Adapt the length of the cable to the lamps. Press back any excess length of the cable outside of the front

grille in through the front grille.

- Tighten the tie straps.
- Tighten the two screws for the auxiliary lights bracket.
- Install a spacer washer (3) between the auxiliary lights bracket (4) and the bumper shell (5) on both sides.
- Reinstall the number plate holder and fasten it with the two screws.
- Reinstall the number plate.

INSTALLING AUXILIARY LIGHTS

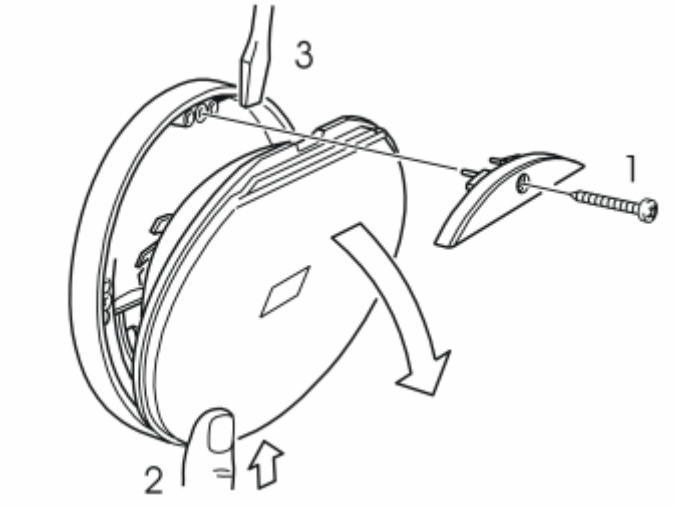

Fig. 90: Identifying Prying Lamp Housing
Courtesy of VOLVO CARS CORPORATION

NOTE: Use auxiliary lights which are recommended by Volvo dealers.

- Remove the screw (1) and the cover.
- Press lightly on the lens (2).
- Fit a screwdriver (3) between the insert and the lamp housing, and pry carefully.

Fig. 91: Installing Lamp Housing On Auxiliary Mounting
Courtesy of VOLVO CARS CORPORATION

- Install the lamp housing on the auxiliary lights mounting with screw and nut. Tighten manually.

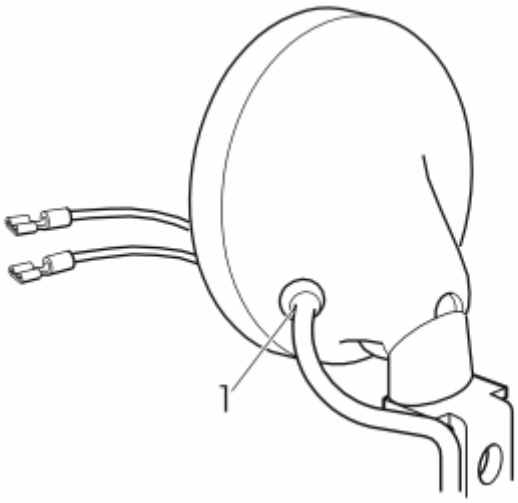

Fig. 92: Routing Cable Harness With Rubber Grommet Into Holes In Lamp Housing
Courtesy of VOLVO CARS CORPORATION

- Route the cable harness with rubber grommet (1) through the holes in the lamp housing.
- Press the rubber grommet into the hole.
- Install the cable terminals from the kit on the two cable ends.

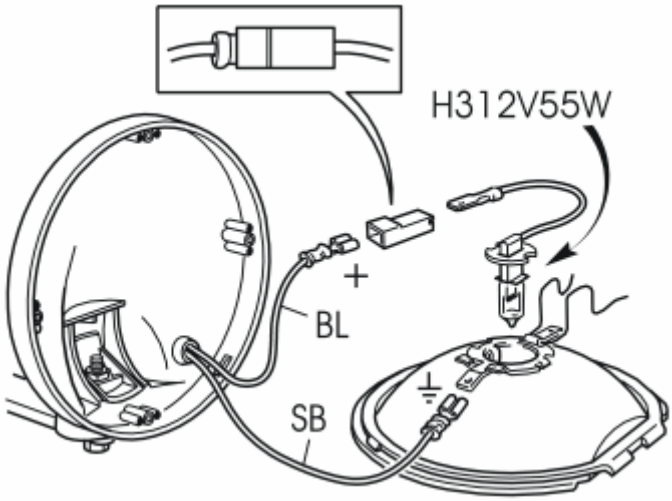

Fig. 93: Connecting Blue Cable To Lamps Cable And Black Cable To Ground
Courtesy of VOLVO CARS CORPORATION

- Connect the blue (BL) cable to the lamp's cable, with a connector socket housing in between.
- Connect the black (SB) cable to ground on the light insert.

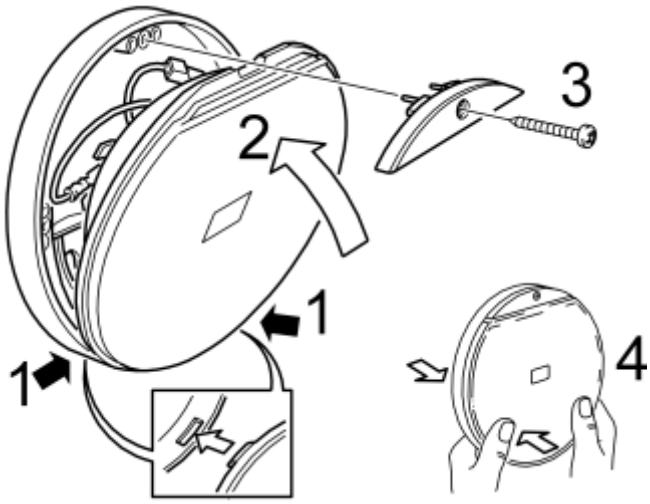

Fig. 94: Assembling Auxiliary Light
Courtesy of VOLVO CARS CORPORATION

- Assemble the auxiliary light, as shown.

CABLE ROUTING AND CONNECTION

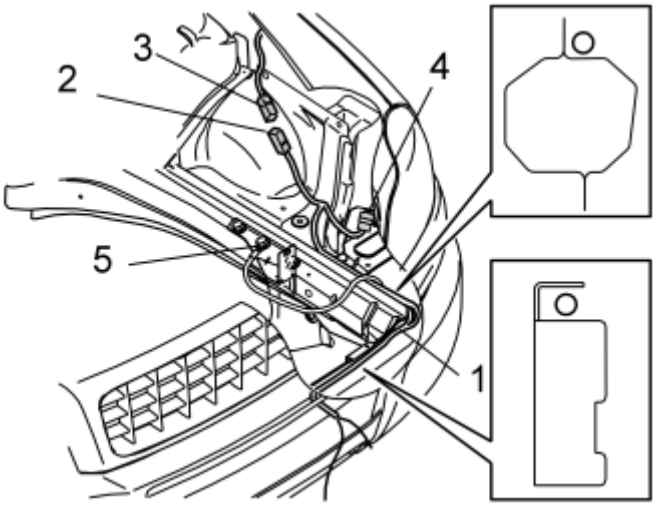

Fig. 95: Identifying Cable Harness Routing
Courtesy of VOLVO CARS CORPORATION

- Take the previously routed cable harness (1) and route it as shown.

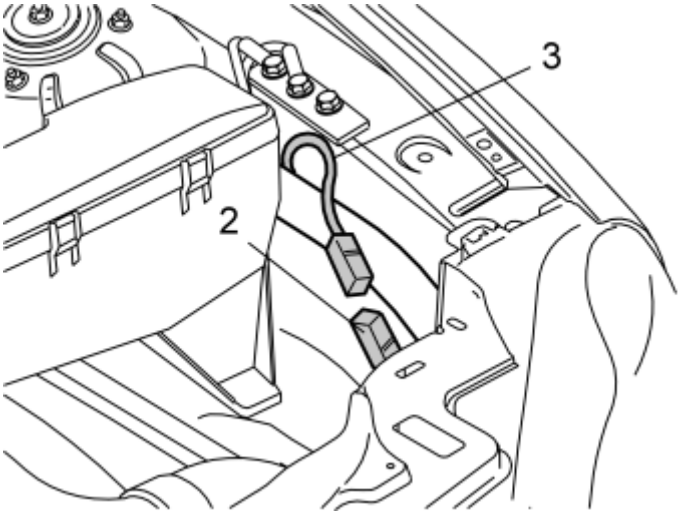

Fig. 96: Identifying Connecting Connectors
Courtesy of VOLVO CARS CORPORATION

- Plug the connector (2) into the pre-routed connector (3).

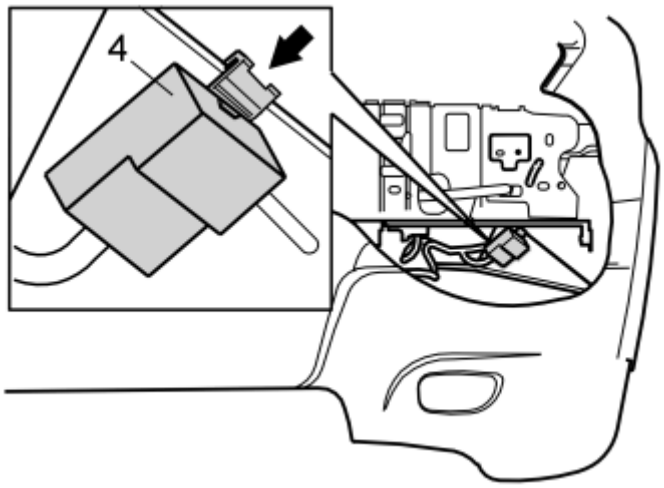

Fig. 97: Identifying Pressing In Relay
Courtesy of VOLVO CARS CORPORATION

- Press in the relay (4) at the vertical panel, under the panel that the main headlamp rests on. Rotate the relay up so that the connector with the cable does not make contact with panel underneath.

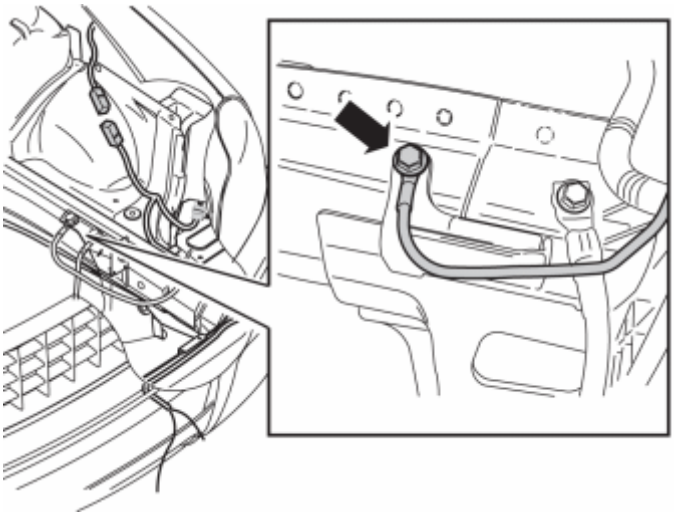

Fig. 98: Identifying Ground Cable
Courtesy of VOLVO CARS CORPORATION

Applies to cars with 5-cylinder and 8-cylinder engines

- Slacken the existing screw in the air filter bracket and connect the ground cable - tightening torque: **24 Nm (18 lbf. ft.)** .

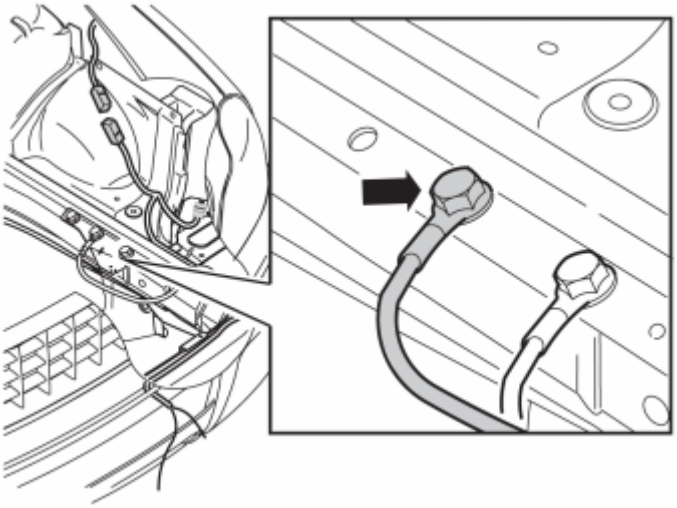

Fig. 99: Identifying Ground Cable Fastened To Center Welding Nut
Courtesy of VOLVO CARS CORPORATION

Applies to cars with 6-cylinder engine

- Remove the ground screw from the kit and fasten the ground cable to the center welding nut - tightening torque: **24 Nm (18 lbf. ft.)** .

Applies to all models

- Twist down the ground cable terminal and position the cable so that it is not pinched by the air filter when it is reinstalled. Route any excess cable through the front grille and clamp at existing cables behind the headlamps with tie straps.
- Reinstall the air filter.
- Connect and reinstall the control module.
- Refit the cover over the air filter.
- Reinstall the intake manifold. Tighten the two screws to **10 Nm (7.5 lbf. ft.)** .
- Plug in the connector to the headlamp and reinstall the headlamp.

NOTE: The longer of the locking pins must be located on the outside of the headlamp.

CAUTION: Ensure that the cables do not rub and chafe against sharp edges. If the this is the case, rectify this by re-securing the cables. Also check that the cables do not block the air cleaner (ACL) draining hatch.

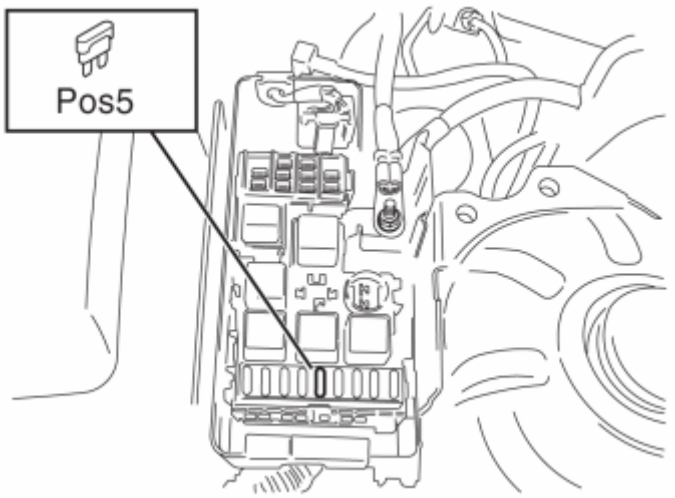

Fig. 100: Identifying 20A Fuse
Courtesy of VOLVO CARS CORPORATION

- Remove the cover from the fuse box in the engine compartment. Install a 20A fuse in position 5.
- Reinstall the cover.

INSTALLING THE SWITCH

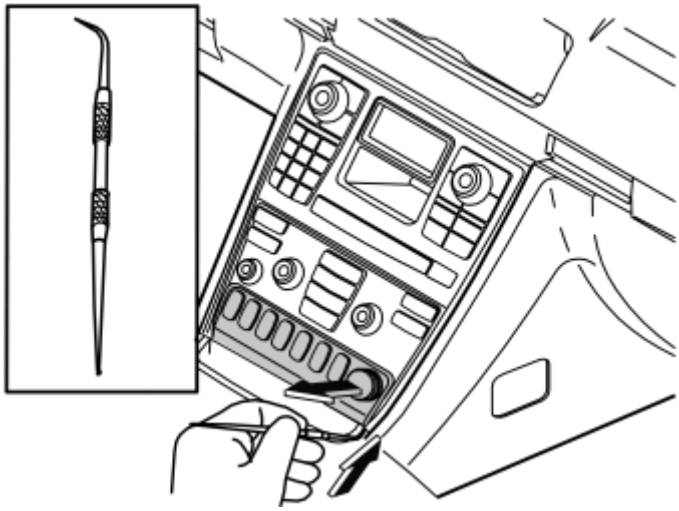

Fig. 101: Identifying Removing The Blind Cover Plug With A Scribe
Courtesy of VOLVO CARS CORPORATION

- Remove the cover plug to the 12 V socket.
- Insert a scriber with an angled tip into the joint on the underside, at one side of the keypad surround.

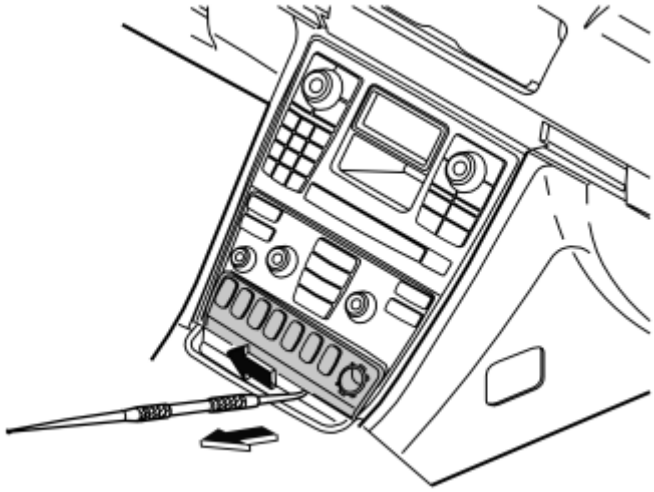

Fig. 102: Pulling Out The Surround Using The Scribe
Courtesy of VOLVO CARS CORPORATION

- Carefully pull out the surround using the scriber, pull along the underside of the surround. It is secured with three mounting lugs in the top and bottom edges.

NOTE: Do not damage the surround.

- Place the surround to one side.

HINT: The surround with three button places must be replaced with a surround with seven button places if necessary. This can be purchased separately.

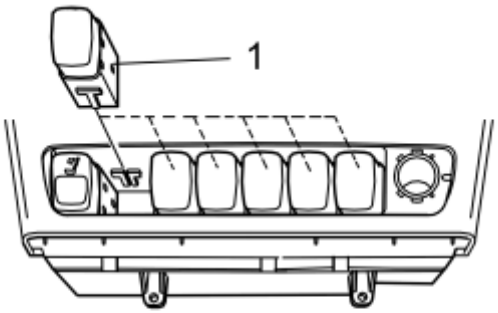

Fig. 103: Identifying Installation Of New Switch
Courtesy of VOLVO CARS CORPORATION

- The switch can be located in any available position. Remove the dummy button and install the new switch (1).

- Reinstall the surround and cover plug to the 12 V socket.

FINISHING WORK

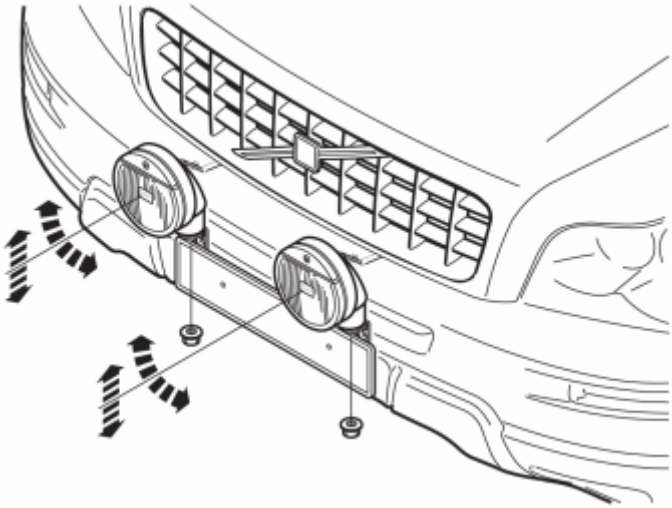

Fig. 104: Identifying Auxiliary Lights, Screws And Protective Caps
Courtesy of VOLVO CARS CORPORATION

- Turn the ignition key to position II.
- Reconnect the battery negative lead
- Align the auxiliary lights for optimum beam pattern.
- Tighten the two screws.
- Install the protective caps on the screw heads.

INSTALLING THE TOP STRUTS

NOTE: If the auxiliary lights vibrate and this is distracting then a top strut can be installed.

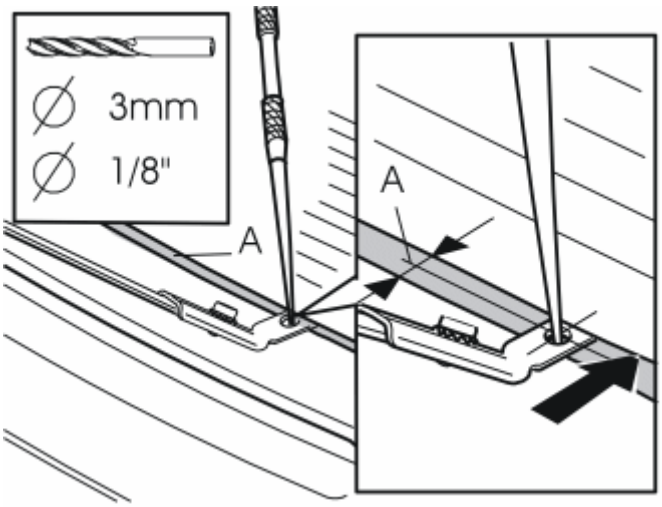

Fig. 105: Locating Mark For Drilling
Courtesy of VOLVO CARS CORPORATION

- Take the top strut and insert one end in the space between the two bumper sections. Position it in line with the centre of the auxiliary light.
- Mark out for drilling the hole through the top strut and in the bumper, in the center of the black edge (A).
- Drill out the hole using a **3 mm (1/8")** diameter drill bit.
- Remove any shavings.

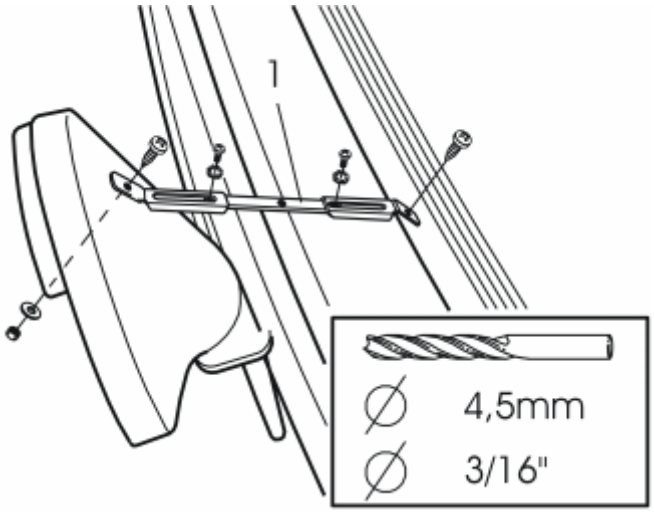

Fig. 106: Identifying Drilling Holes For Stay
Courtesy of VOLVO CARS CORPORATION

- Mark out for drilling the hole through the top strut and in the centre top/rear edge of the auxiliary light.
- Drill out the hole using a **4.5 mm (3/16")** diameter drill bit.
- Remove any shavings.
- Take the top strut and locate it between both of the drilled holes for cutting the strut (1).
- Shorten the strut (1) to a suitable length.
- Tighten the top strut to the bumper and auxiliary light with screws, nuts and toothed washers.

NOTE: **The toothed washer must not be fitted on the screw to the bumper, as there is otherwise a risk that the screw may chafe against the bonnet's paintwork.**

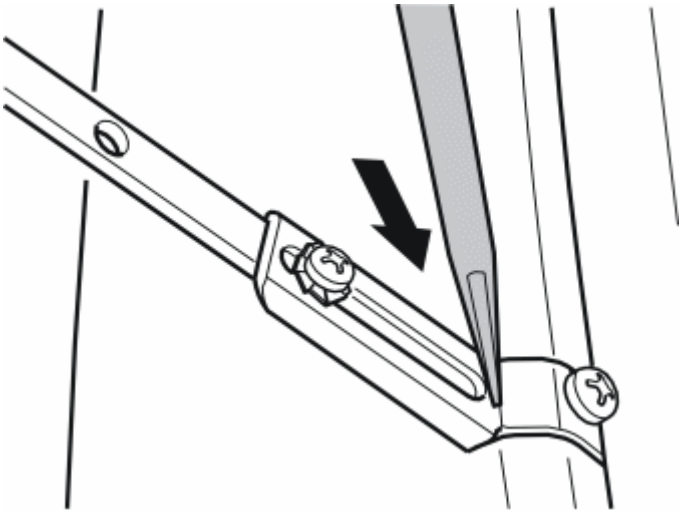

Fig. 107: Identifying Bending Top Stay Down
Courtesy of VOLVO CARS CORPORATION

- Bend the top strut down to the bumper using a screwdriver. This is so that the lower edge of the bonnet does not catch when it is closed.

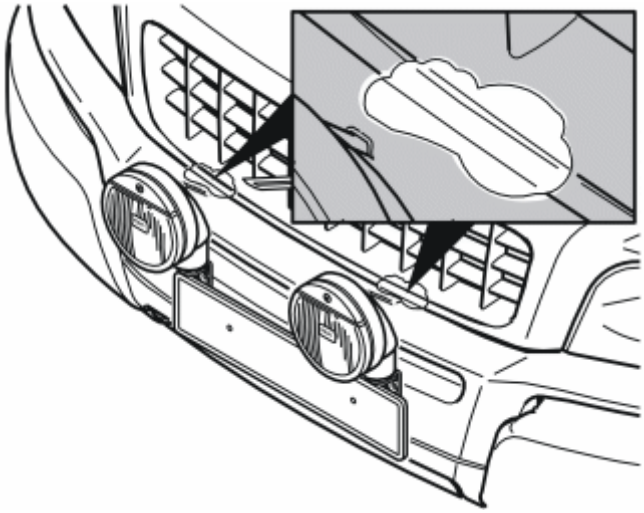

Fig. 108: Identifying Cleaning Painted Surfaces
Courtesy of VOLVO CARS CORPORATION

- Clean the painted surfaces in the front and lower edges of the bonnet opposite where the top struts are mounted in the bumper. Use a mixture of 30% washer fluid and 70% water.
- Wipe dry.

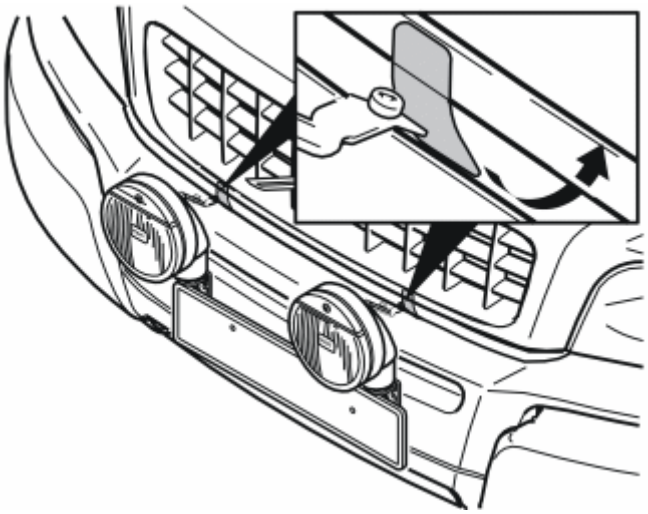

Fig. 109: Pressing Masking Tape Firmly Into Place At Front And Lower Edges Of Bonnet
Courtesy of VOLVO CARS CORPORATION

- Firmly press the protective tape into place in the front and lower edges of the bonnet, opposite where the top struts are mounted in the bumper.

ACCESSORIES AND BODY, CAB

Lighting - Removal, Replacement And Installation

BULBS (2003-2004)

BULB BI-XENON, REPLACING

REMOVAL

NOTE: **As the illustrations in this service information are used for different model years and / or models, some variation may occur. However, the essential information in the illustrations is always correct.**

SAFETY PRECAUTIONS

WARNING: **Always disconnect the headlamp connector and remove the headlamp from the car before carrying out work on bi-xenon headlamps. There is high voltage and a risk of explosion. Allow the lamp to cool. Use protective goggles and gloves when replacing the lamp.**

The glass body of the Bi-Xenon-lamp is filled with different gases and metal vapors which are under pressure. Never touch the glass body of the lamp. Only touch the lamp at the socket. Remove any finger prints from the glass using a clean cloth and alcohol. The lamp must only be used in enclosed headlamps. The replaced Bi-Xenon lamp must be treated as hazardous waste and must be sent for recycling.

LOCATION OF COMPONENTS

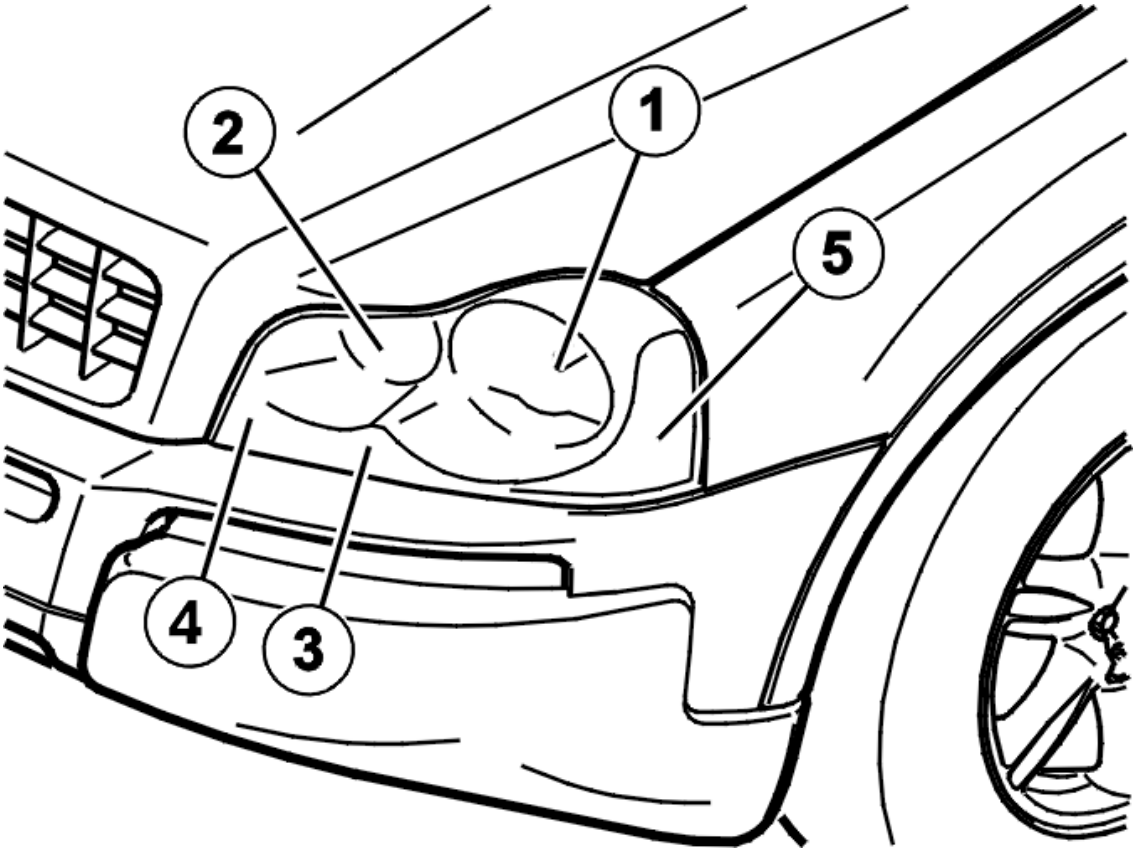

Fig. 1: Identifying Headlamp Bulbs
Courtesy of VOLVO CARS CORPORATION

1. Bi-xenon bulb
2. Halogen high beam
3. Parking lamps
4. Turn signal lamps
5. Side marker lamps.

PREPARATORY WORK

WARNING: Disconnect the headlamp connector. Work with the headlamp removed from the car.

WARNING: Handle the lamp with extreme care. The lamp is gas pressured and can explode.

Remove the headlamp. See **HEADLIGHT/BULB, REPLACINGHEADLIGHT/BULB, REPLACING**.

REMOVING BULBS

WARNING: Wear protective goggles and protective gloves.

- Remove the cover
- Remove the spring clamp above the bulb
- Remove the bulb holder by pressing and twisting it. Carefully pull the bulb straight out from the lamp housing
- Detach the Bi-Xenon bulb by pressing and twisting it.

INSTALLATION

INSTALLING BULB

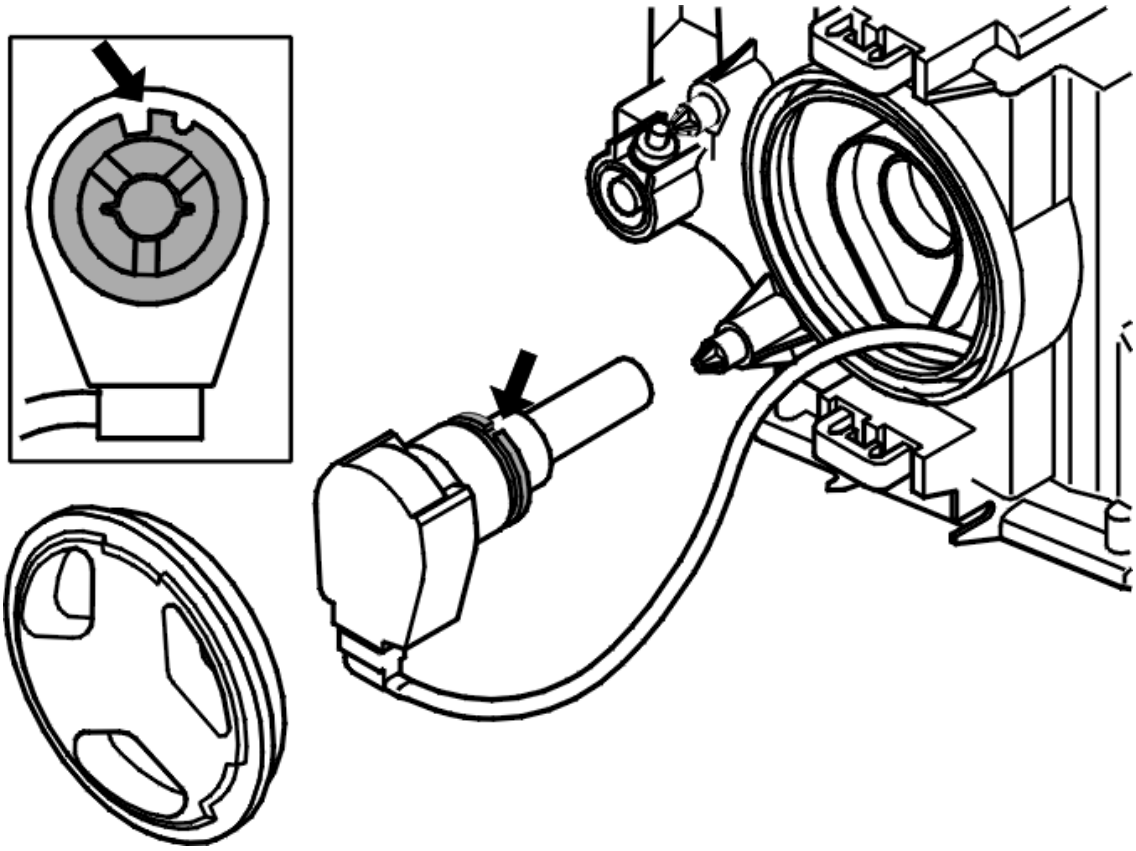

Fig. 2: Identifying Lamp Installed
Courtesy of VOLVO CARS CORPORATION

WARNING: Wear protective goggles and protective gloves.

Install:

- The Bi-Xenon bulb in the bulb holder as illustrated

- the bulb holder carefully in the lamp housing. The connector must be downwards
- the spring clamp over the bulb
- the cover.

FINISHING WORK

Install the headlamp. See **HEADLIGHT/BULB, REPLACING**.

Test the function.

BULB DASHBOARD ENVIRONMENT PANEL, REPLACING

NOTE: **As the illustrations in this service information are used for different model years and / or models, some variation may occur. However, the essential information in the illustrations is always correct.**

NOTE: **The bulbs for the switches in the lower row on the dashboard environment panel cannot be replaced. The entire switch assembly must be replaced. See SWITCHES CLIMATE CONTROL UNIT, REPLACING .**

PREPARATORY WORK

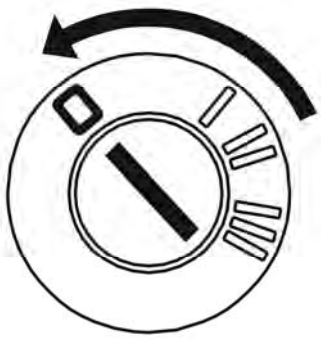

Fig. 3: Identifying Ignition In OFF Position
Courtesy of VOLVO CARS CORPORATION

Ignition off.

Remove the dashboard environment panel. See **CLIMATE CONTROL MODULE (CCM), REPLACING** .

REMOVING BULBS

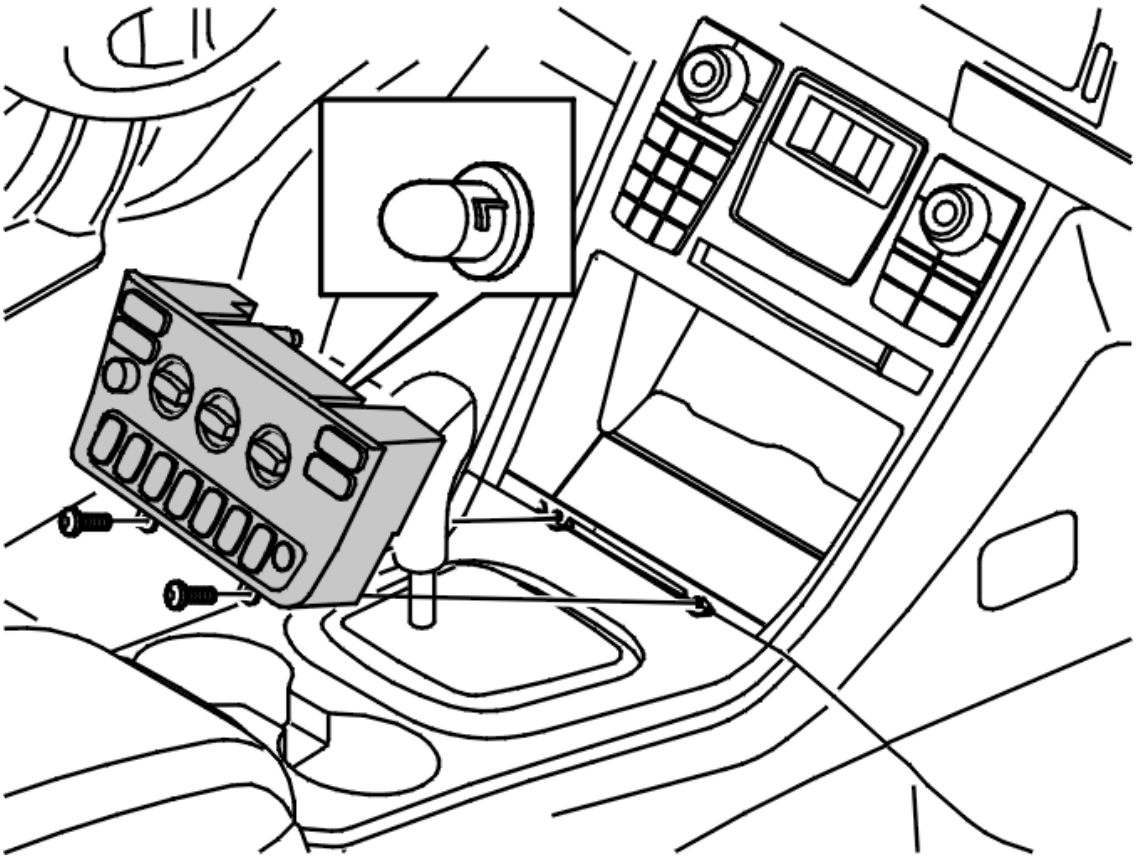

Fig. 4: Locating Dashboard Environment Panel Bulb
Courtesy of VOLVO CARS CORPORATION

Remove the bulb and holder by turning the holder clockwise.

INSTALLING

Install the bulb and holder.

FINISHING WORK

Install the dashboard environment panel. See **CLIMATE CONTROL MODULE (CCM), REPLACING** .

Test the function.

BULB INTERIOR LIGHTING, REPLACING

REMOVAL AND INSTALLATION

REMOVING BULBS

NOTE: **As the illustrations in this service information are used for different model years and / or models, some variation may occur. However, the essential information in the illustrations is always correct.**

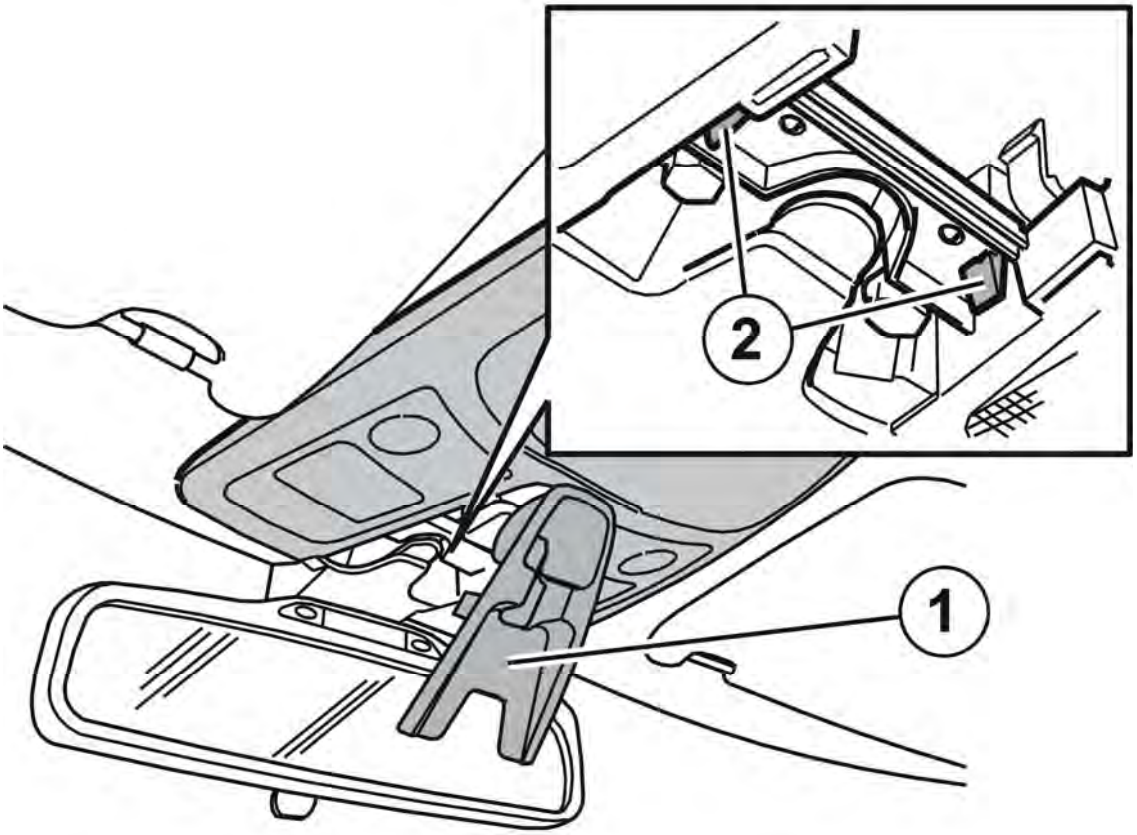

Fig. 5: Bulb Interior Lighting Lens & Cover
Courtesy of VOLVO CARS CORPORATION

- Fold down the cover (1)
- Press the catches outwards. Remove the lens (2)
- Remove the bulb. Use a weatherstrip tool or similar.

INSTALLING BULB

- Install the bulb
- Press the lens into place
- Press the cover into place.

BULB TAIL LAMP/STOP LAMP/BACK-UP LAMP/FOG LAMP, REPLACING

LOCATION

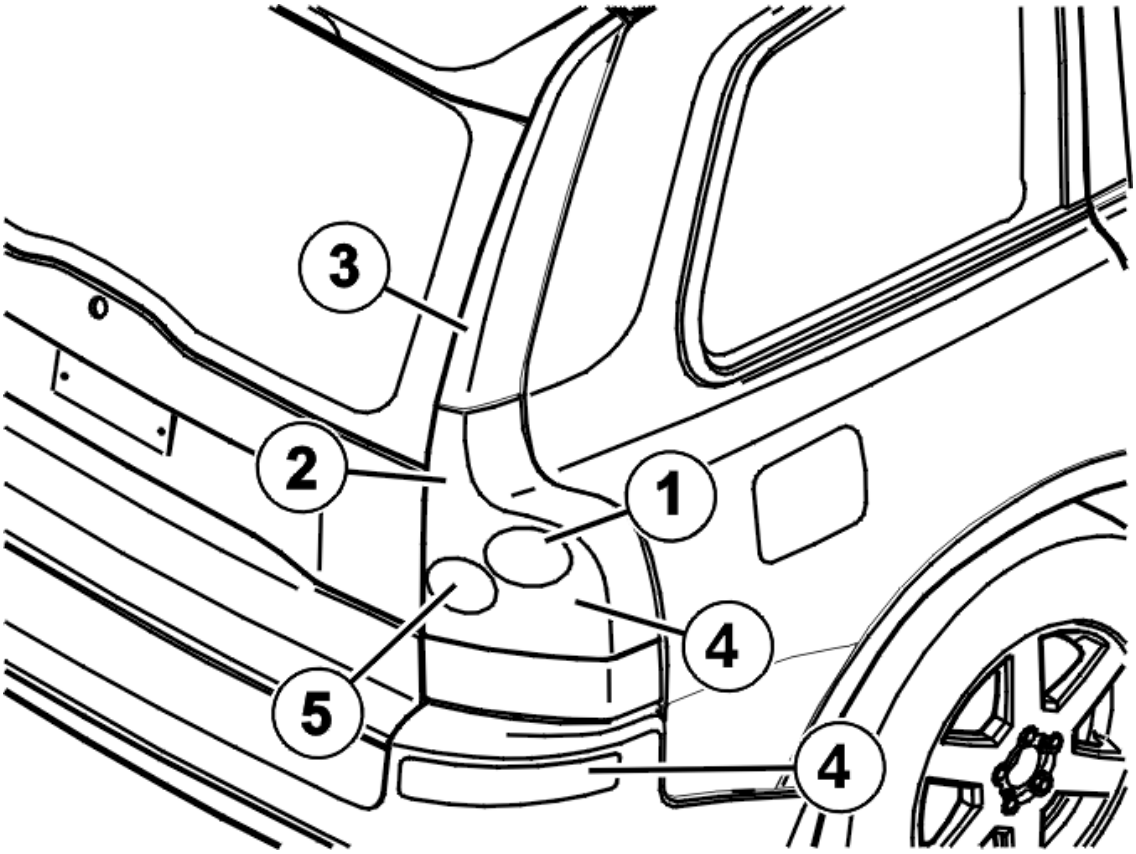

Fig. 6: Identifying Tail Lamp/Stop Lamp/Back-Up Lamp Bulbs
Courtesy of VOLVO CARS CORPORATION

1. Turn signal lamps
2. Stop (brake) lamps
3. The upper tail lamp
4. Tail lamps
5. Back-up (reversing) lamps.

NOTE: **In the left tail lamp, there is only a fog tail lamp bulb (5/21W) in one of the tail lamps.**

REMOVAL

PREPARATIONS

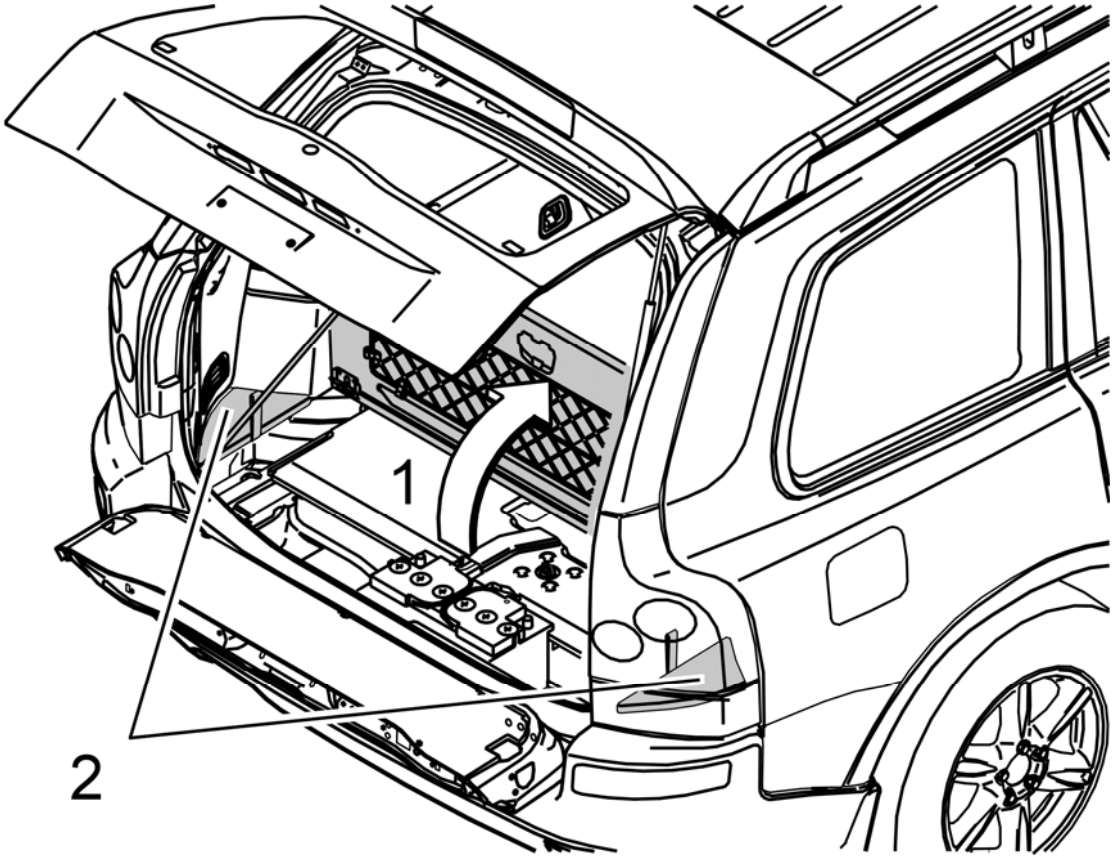

Fig. 7: View Of Cargo Compartment
Courtesy of VOLVO CARS CORPORATION

- Ignition off
- Fold up the floor hatch in the cargo compartment
- Unhook the floor cargo strap
- Push the floor storage compartment and hatch to one side
- Remove the corner section of the floor.

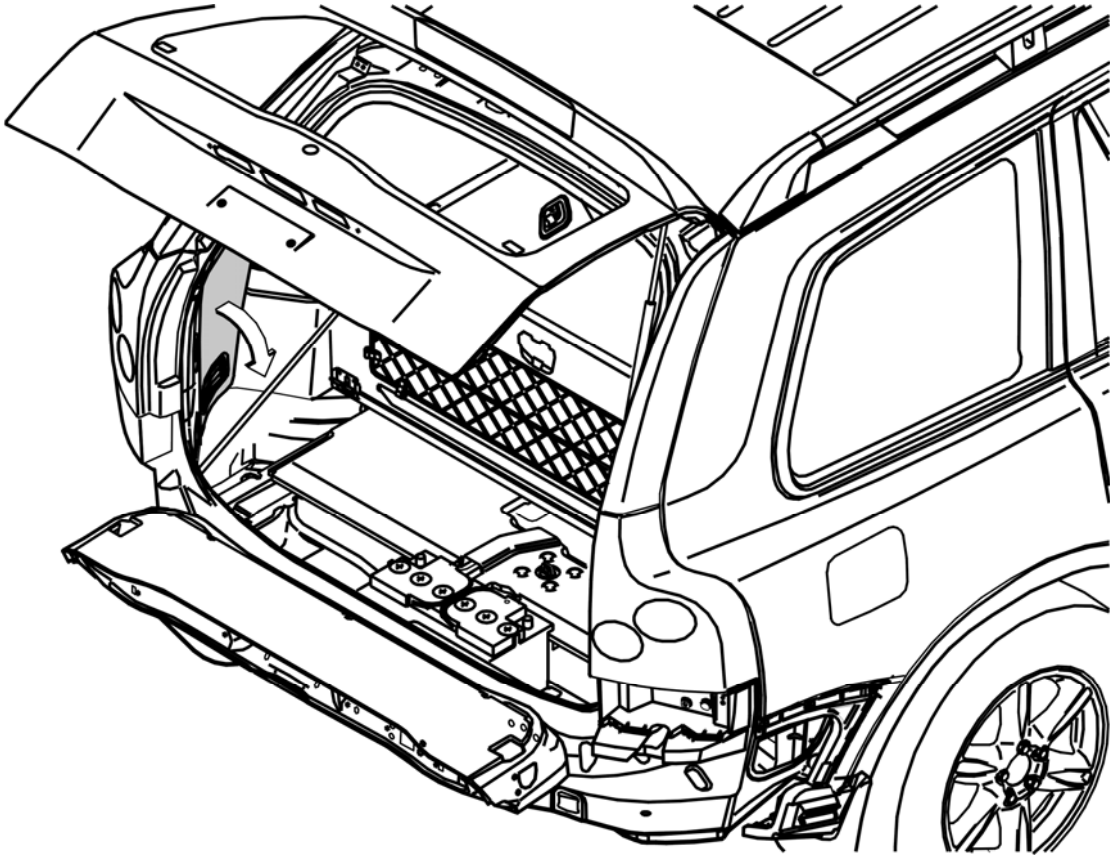

Fig. 8: View Of Rear Side Panel Hatch
Courtesy of VOLVO CARS CORPORATION

Remove the hatch on the rear side panel.

REMOVING THE LOWER TAIL LAMP

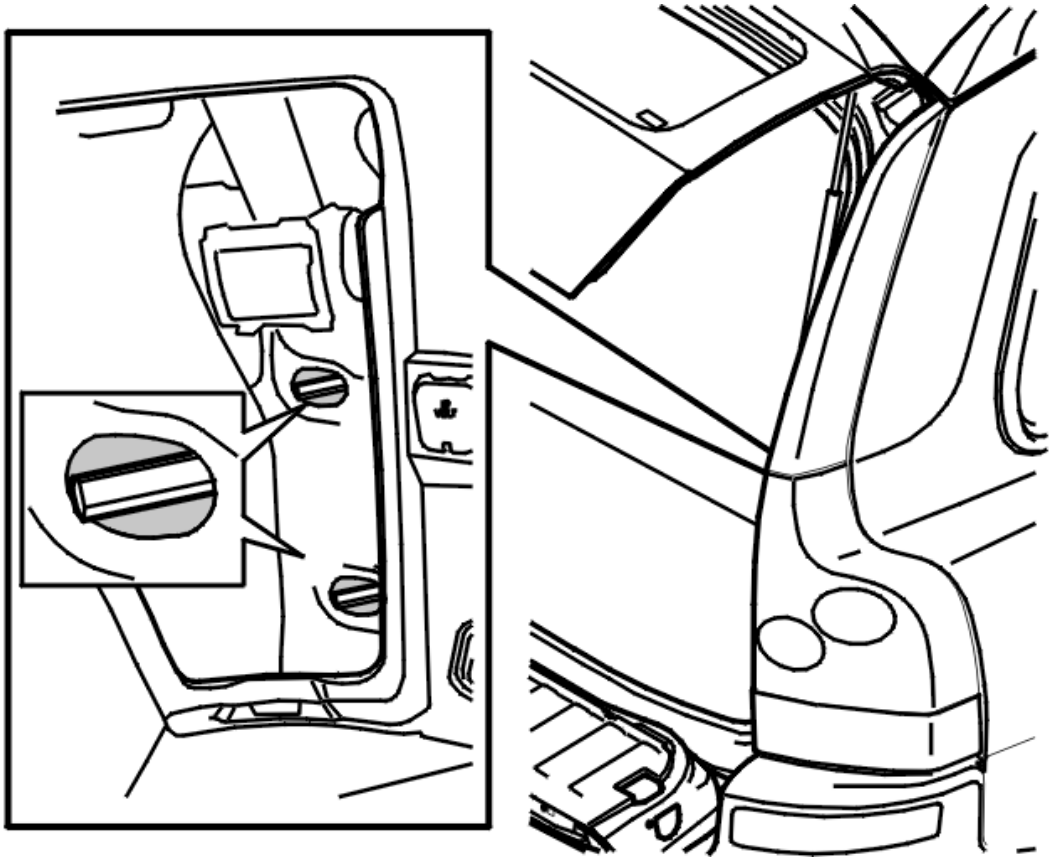

Fig. 9: Identifying Lower Tail Lamp Nuts
Courtesy of VOLVO CARS CORPORATION

Remove:

- 2 nuts.

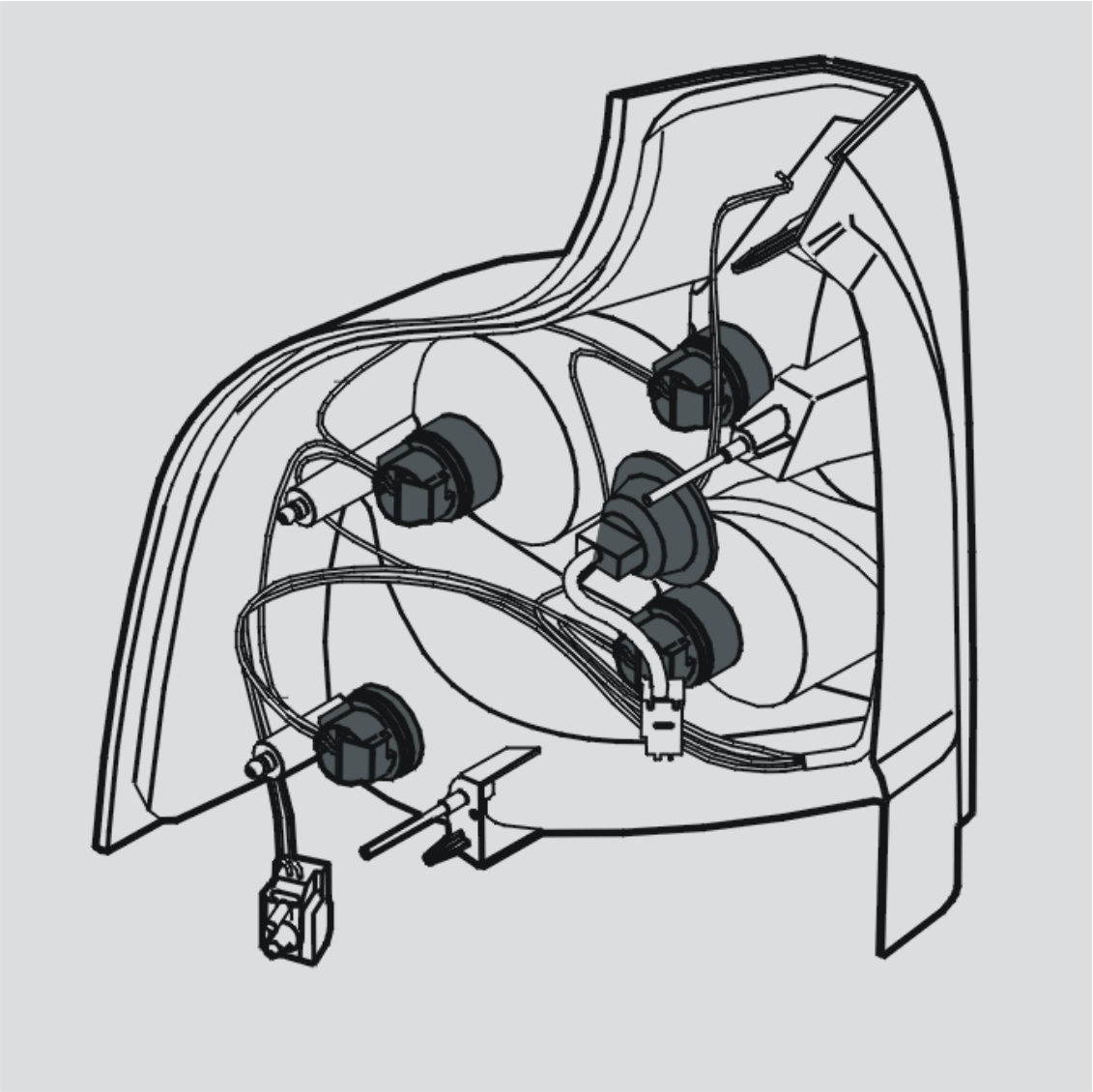

Fig. 10: View Of Tail Lamp Assembly
Courtesy of VOLVO CARS CORPORATION

Remove:

- the tail lamp by pulling it straight back
- the bulb holder by twisting it and pulling it outwards
- the bulb.

REMOVING THE UPPER TAIL LAMP

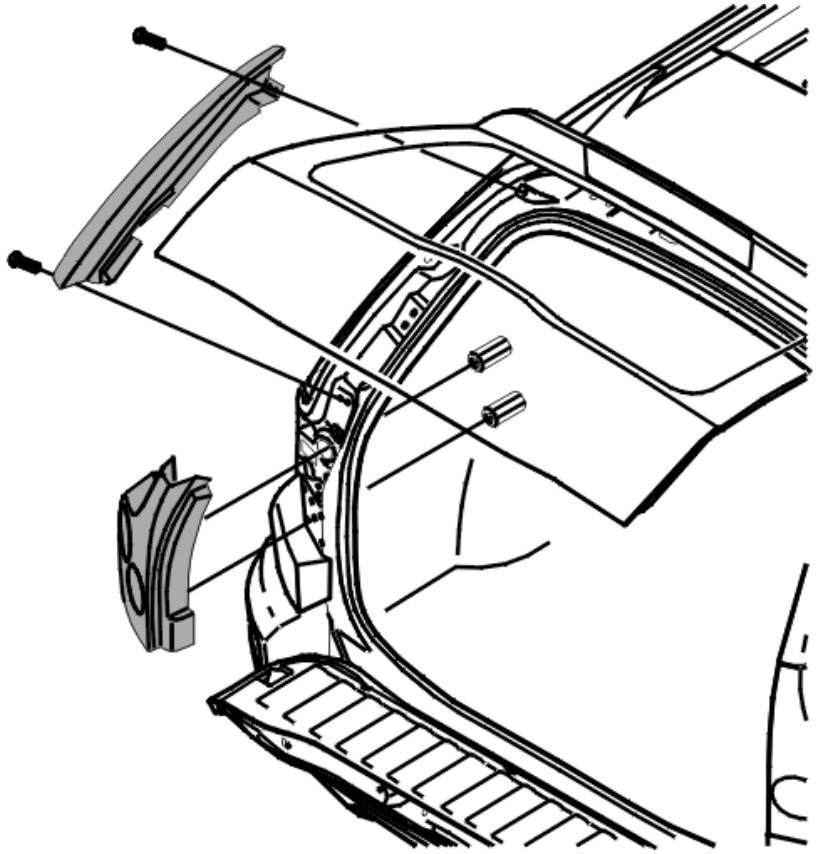

Fig. 11: Removing The Upper Tail Lamp
Courtesy of VOLVO CARS CORPORATION

Remove the lower tail lamp. See **REMOVING THE LOWER TAIL LAMP**.

- Slacken off the 2 screws
- Remove the tail lamp.

INSTALLATION

INSTALLING THE UPPER TAIL LAMP

Align the tail lamp.

Install the 2 screws.

NOTE: **For tightening torques, see SUMMARY OF TIGHTENING TORQUES FOR SPECIFIC COMPONENTS .**

INSTALLING THE LOWER TAIL LAMP

Install:

- the bulb

- the bulb holder. Press the tail lamp into place
- the 2 nuts. Tighten.

FINISHING WORK

Test the function.

Install:

- the hatch in the rear side panel
- the corner section in the floor
- the floor hatch in the cargo compartment.

BULB VANITY MIRROR, REPLACING

REMOVAL AND INSTALLATION

REMOVING THE MIRROR

NOTE: **As the illustrations in this service information are used for different model years and / or models, some variation may occur. However, the essential information in the illustrations is always correct.**

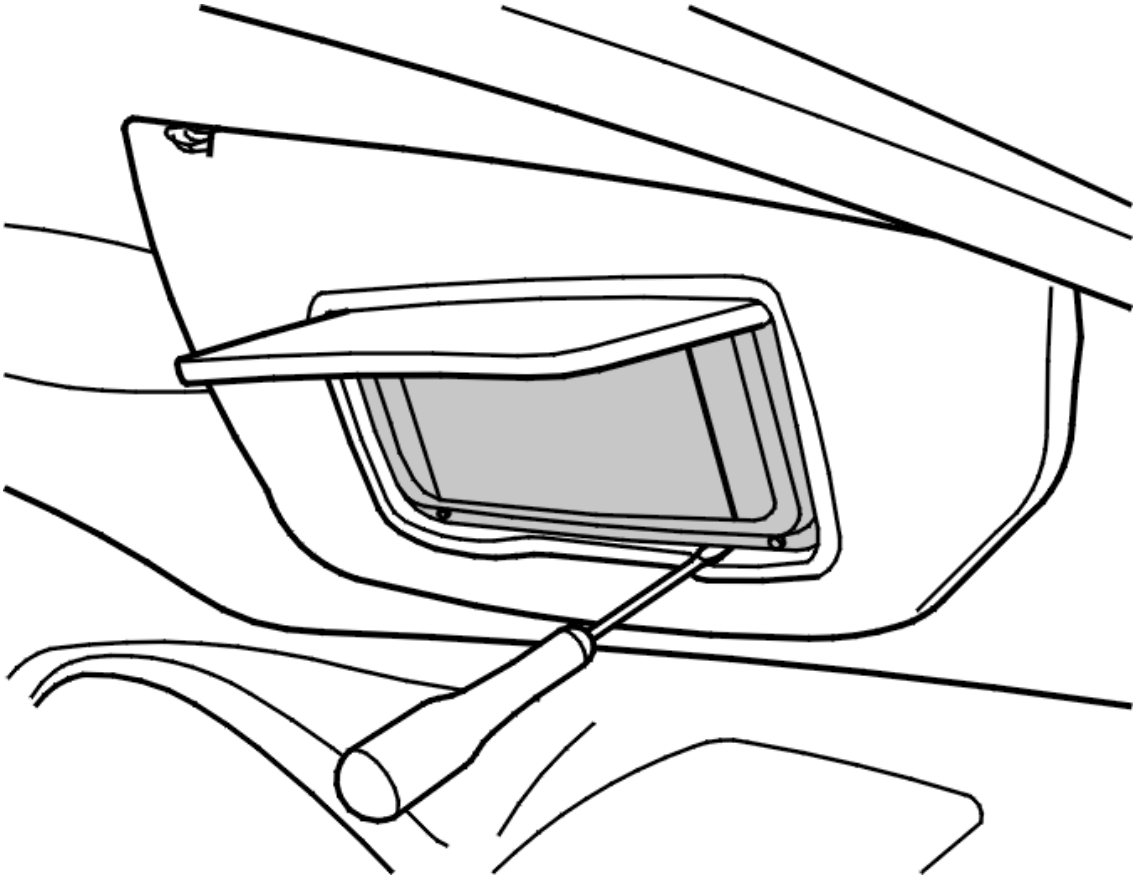

Fig. 12: View Of Removing Mirror And Cover
Courtesy of VOLVO CARS CORPORATION

Remove the mirror and cover using a small screwdriver.

Remove the bulb.

INSTALLING THE MIRROR

Install the bulb.

Press the mirror and cover into place.

Test the function.

BULB, GROUND LIGHTING, DOOR MIRROR, REPLACING

REMOVAL

LAMP AND BULB ASSEMBLY

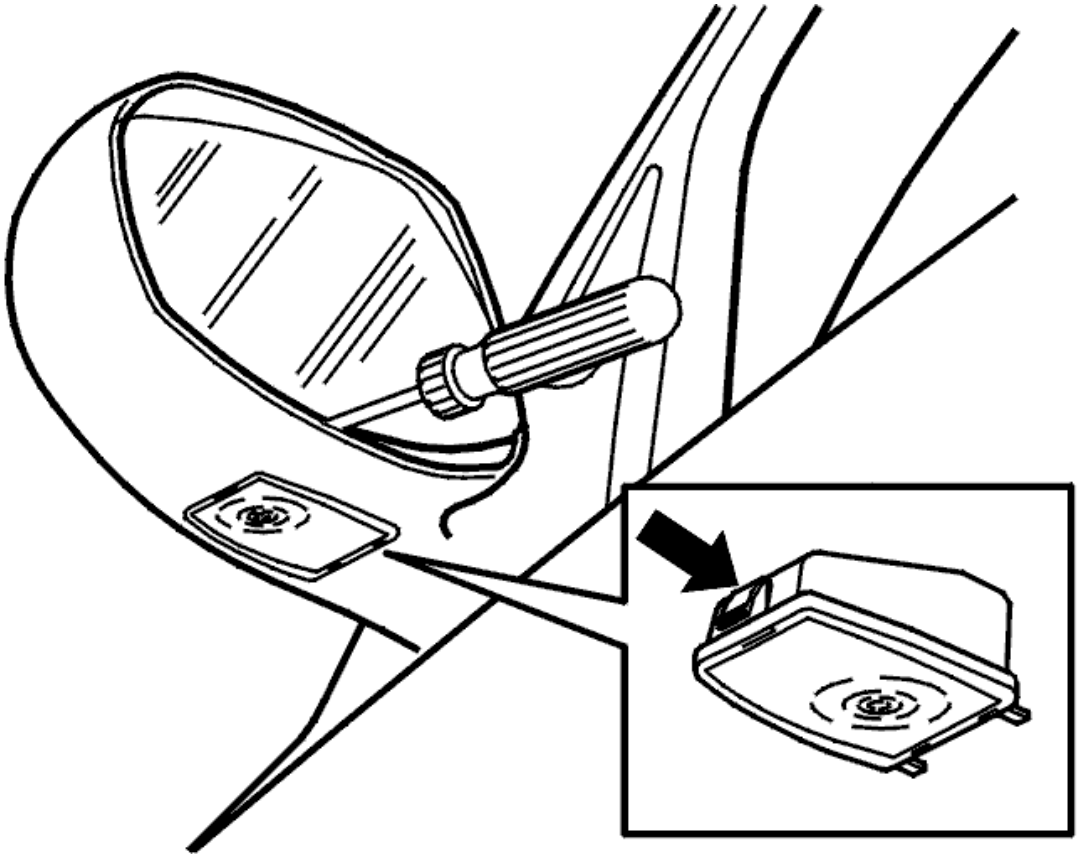

Fig. 13: Locating Door Mirror Ground Lighting Bulb
Courtesy of VOLVO CARS CORPORATION

- Angle the mirror glass upwards / outwards
- Insert a screwdriver in the opening and press in the catch to release the lighting
- Twist the bulb holder free. Disconnect the bulb.

INSTALLATION

LAMP AND BULB ASSEMBLY

- Install the bulb
- Insert the bulb holder and press into place.

BULB, IGNITION SWITCH, REPLACING

REMOVAL

THE HOLDER FOR THE LIGHTING AND THE ANTENNA UNIT FOR THE IMMOBILIZER

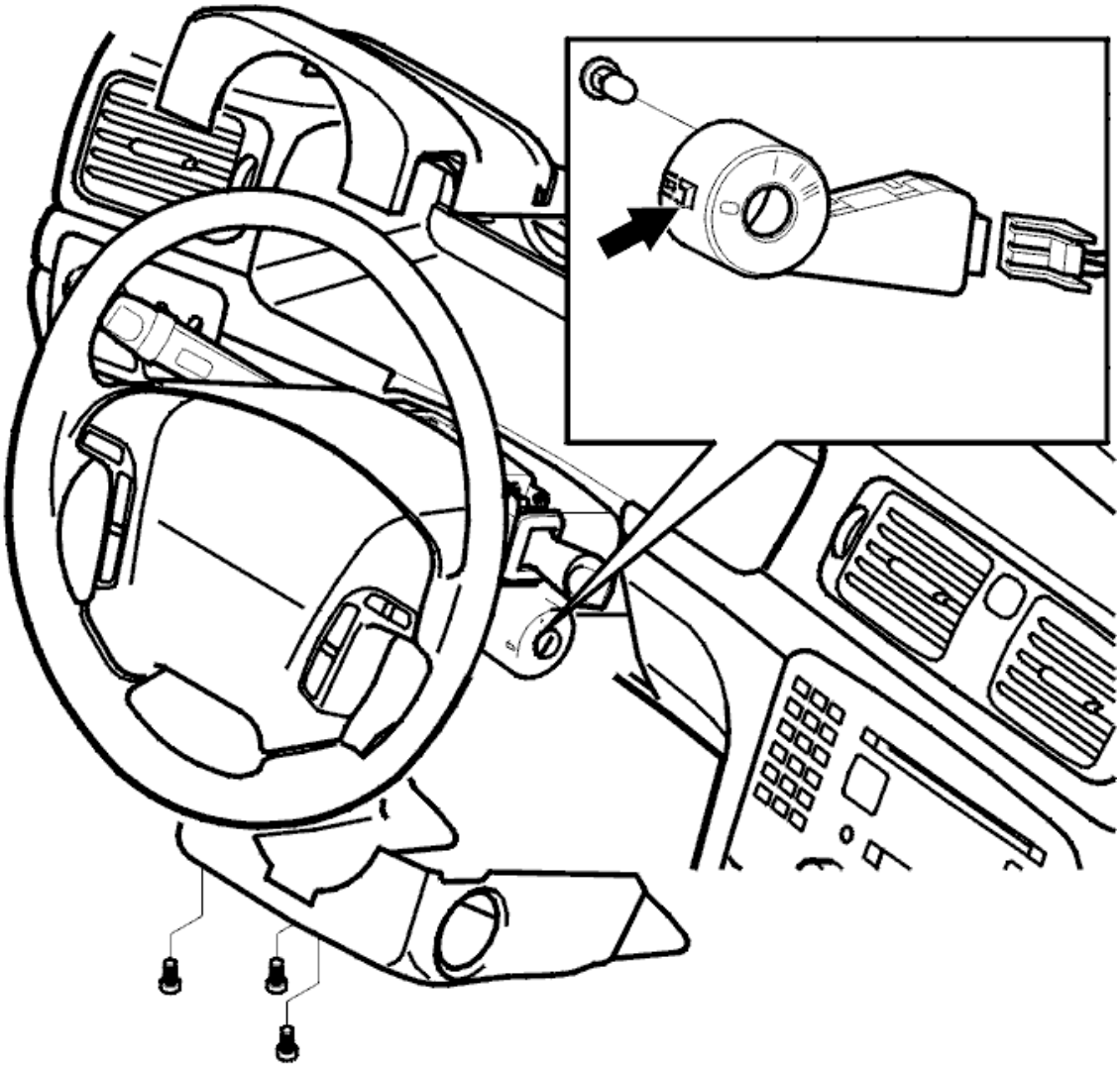

Fig. 14: Identifying Ignition Switch Bulb
Courtesy of VOLVO CARS CORPORATION

- Ignition off
- Reset the lighting switch
- Remove the steering column covers
- Remove the mounting. Remove the holder
- Disconnect the connector
- Remove the antenna unit.

BULB

- Remove the holder
- Remove the bulb holder and the bulb.

INSTALLATION

THE HOLDER FOR THE LIGHTING AND THE ANTENNA UNIT FOR THE IMMOBILIZER

In reverse order.

Check the function.

BULB, NUMBER PLATE LIGHTING, REPLACING

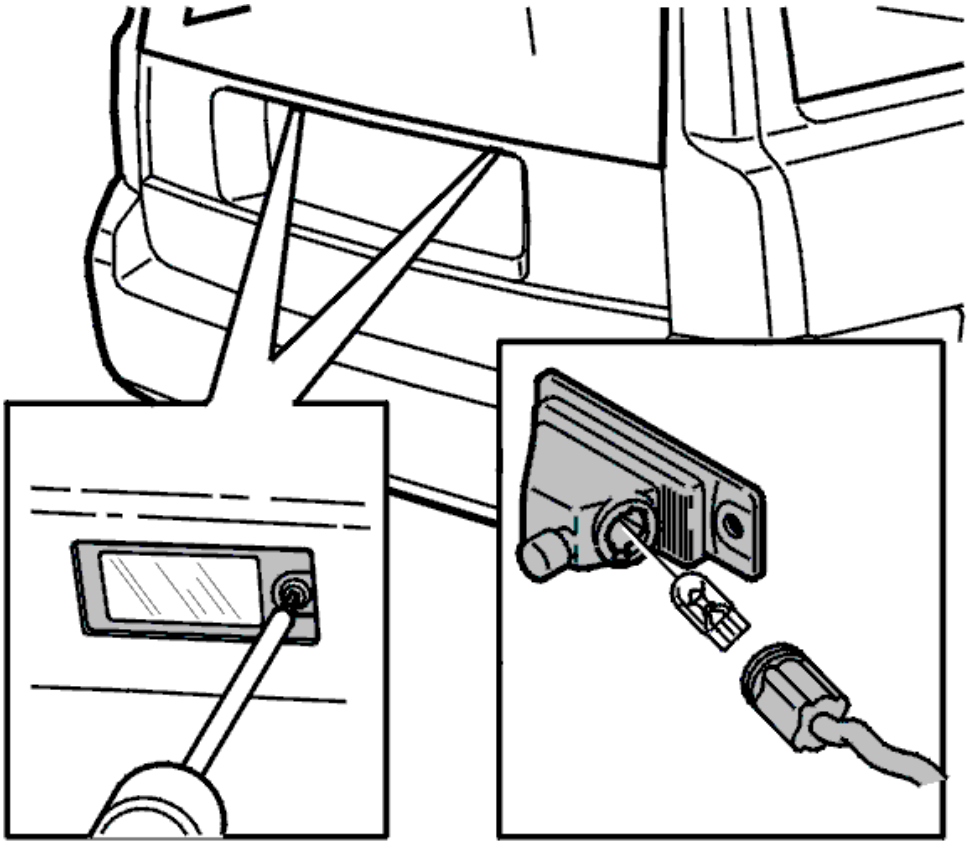

Fig. 15: Replacing License Plate Lighting Bulb
Courtesy of VOLVO CARS CORPORATION

BULB, READING LAMP, REAR, REPLACING

REMOVAL

READING LAMP AND BULB

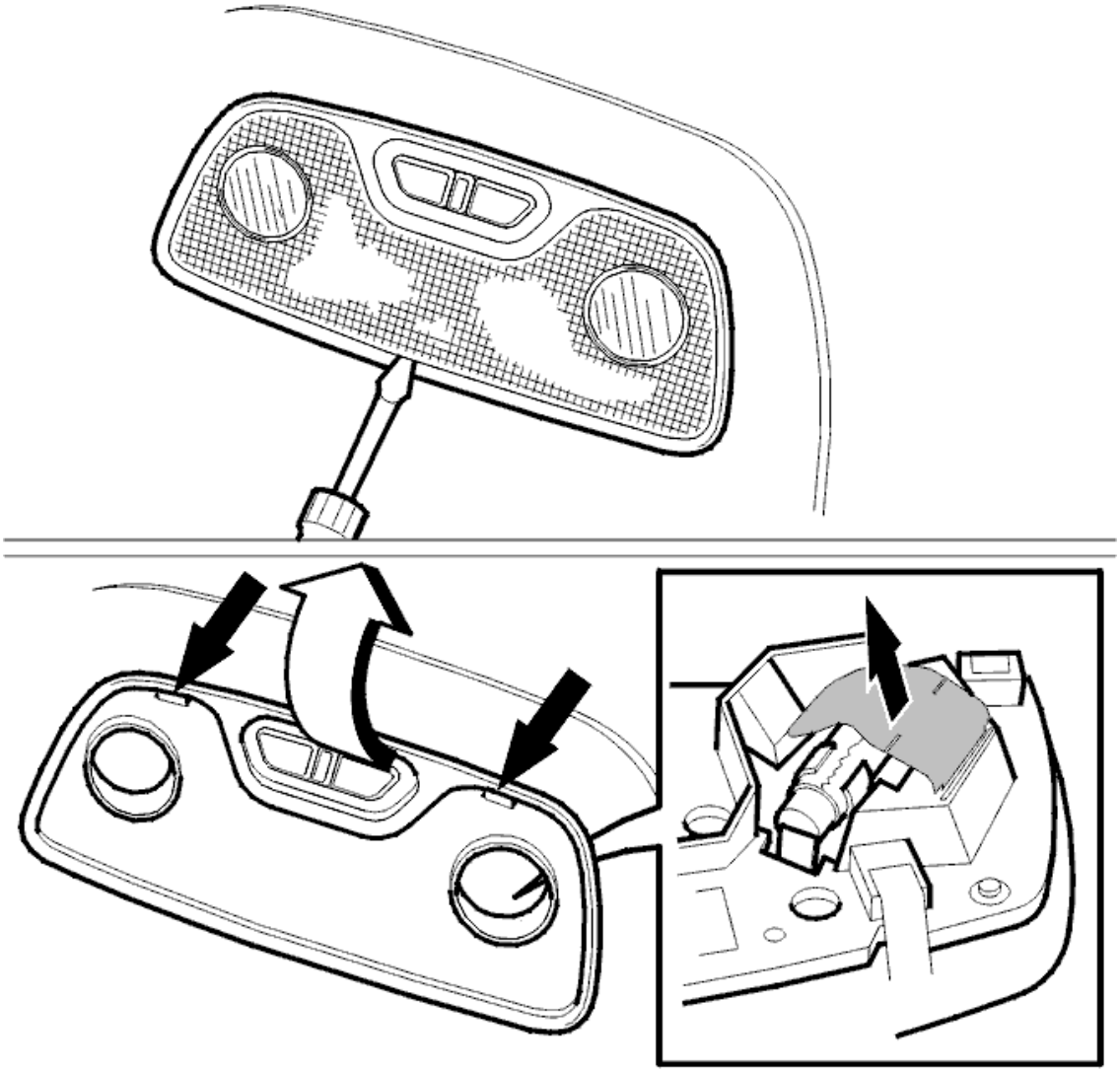

Fig. 16: Removing Reading Lamp And Bulb
Courtesy of VOLVO CARS CORPORATION

- Carefully remove the lens using a small screwdriver
- Release the front edge of the lamp by pressing the catches backward and inward
- Disconnect the connector
- Remove the reflector
- Remove the bulb.

INSTALLATION

READING LAMP AND BULB

In reverse order.

HEADLIGHT/BULB, REPLACING

REMOVAL

NOTE: **As the illustrations in this service information are used for different model years and / or models, some variation may occur. However, the essential information in the illustrations is always correct.**

PREPARATORY WORK

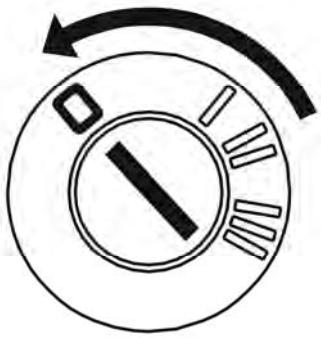

Fig. 17: Identifying Ignition In OFF Position
Courtesy of VOLVO CARS CORPORATION

Ignition off.

Switch off the lighting switch.

CAUTION: The plastic lens on the headlight scratches easily. Do not place the headlight on a hard surface with the lens downwards.

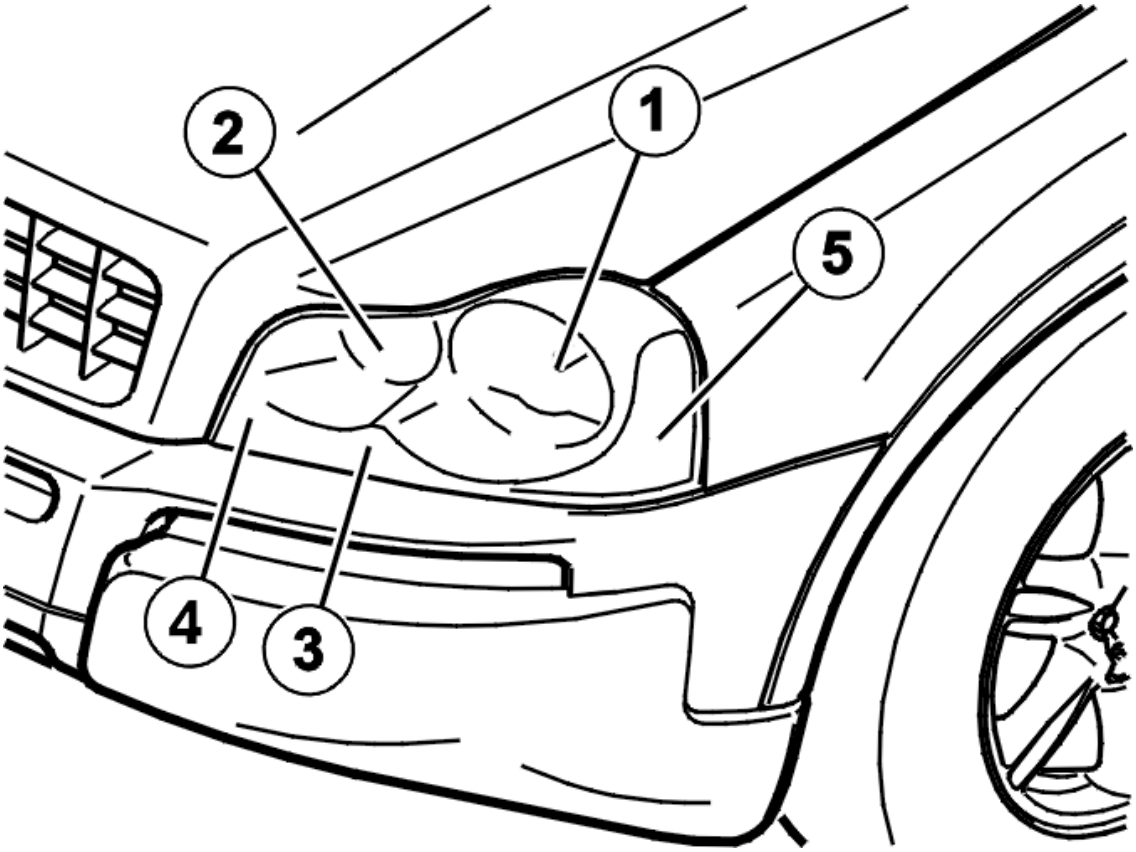

Fig. 18: Identifying Headlamp Bulbs
Courtesy of VOLVO CARS CORPORATION

1. Low beam
2. High beam
3. Parking lights
4. Direction indicators.
5. Side marker lights.

REMOVING HEADLIGHT

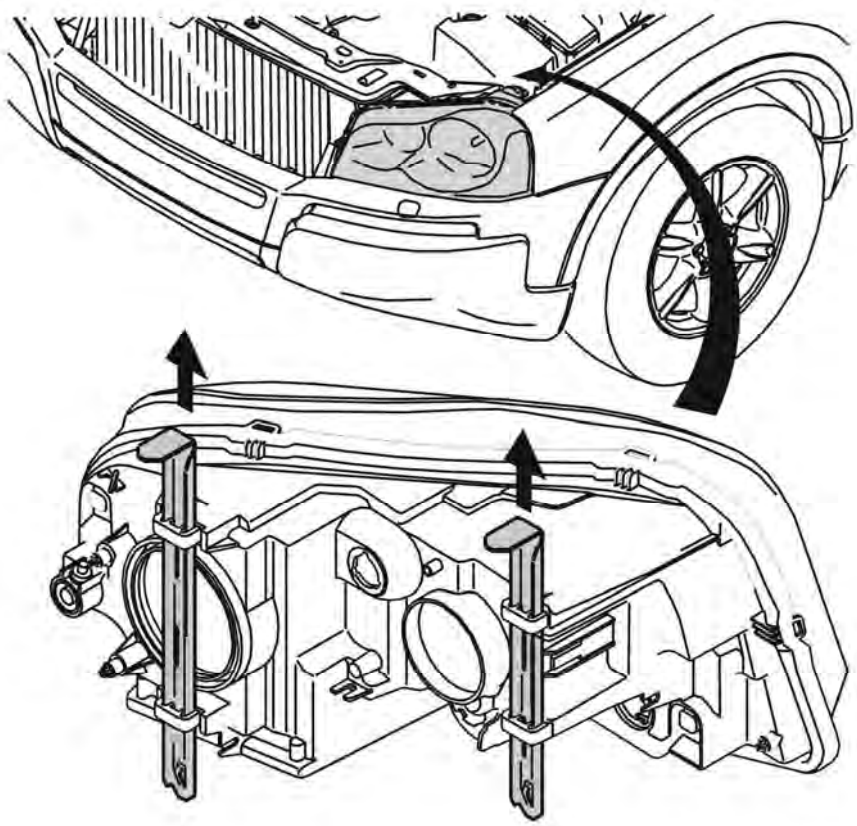

Fig. 19: Pulling Locking Plate Straight Up
Courtesy of VOLVO CARS CORPORATION

CAUTION: For vehicles with Bi-Xenon lamps, see BULB BI-XENON, REPLACING.

Pull the locking plate straight up.

Disconnect the connector.

BULBS REMOVING / INSTALLING

REMOVING BULBS HIGH/LOW BEAM

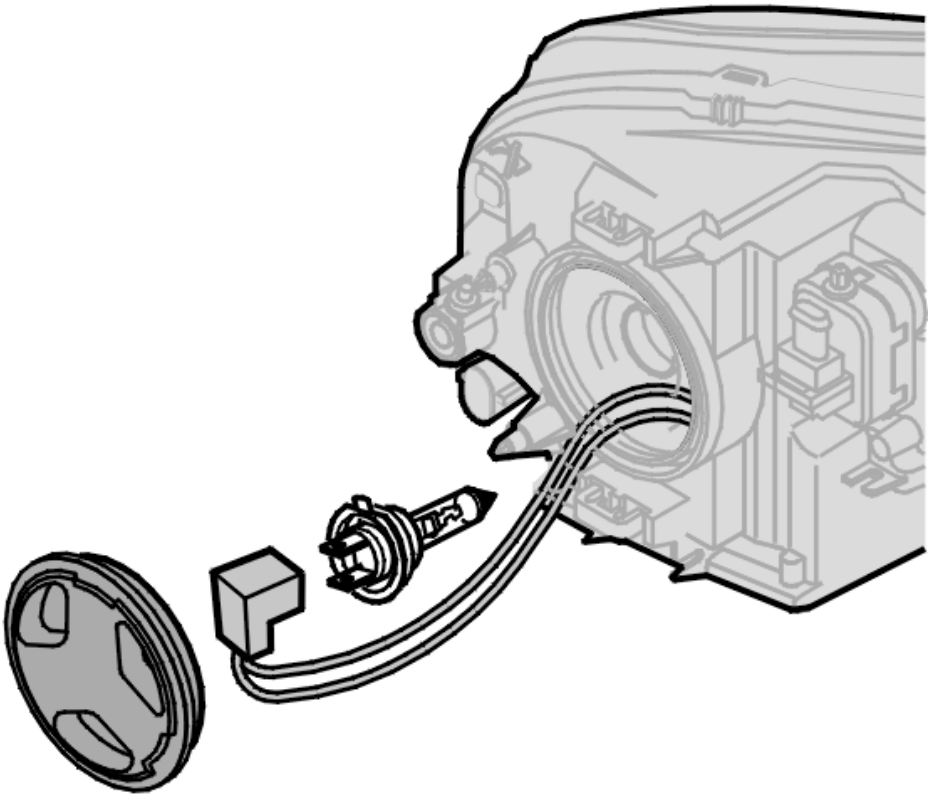

Fig. 20: Removing Of Bulb Cover
Courtesy of VOLVO CARS CORPORATION

Remove the cover.

Release the spring catch.

Remove the bulb.

INSTALLING BULBS HIGH/LOW BEAM

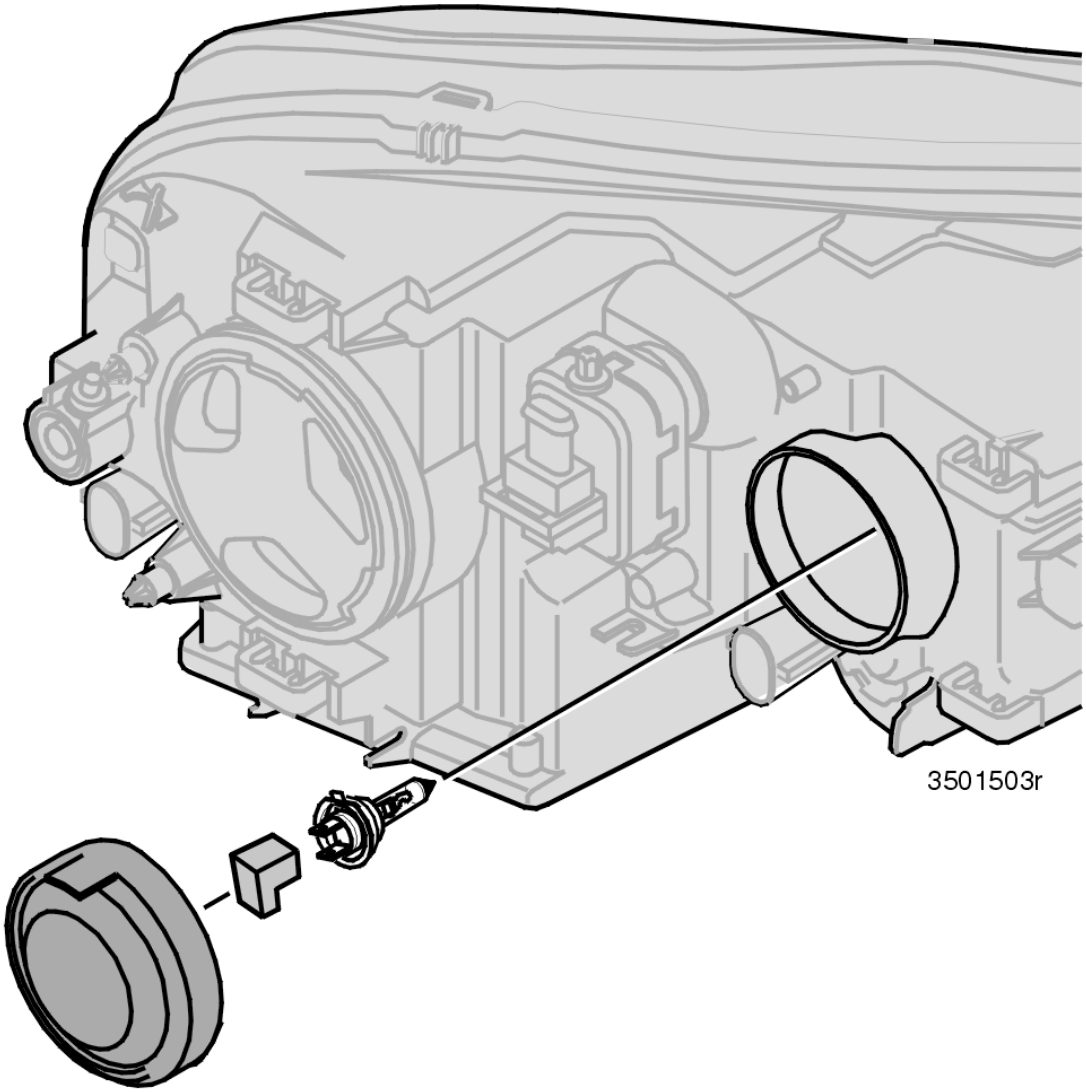

Fig. 21: Installing Of Bulb Cover
Courtesy of VOLVO CARS CORPORATION

Align the brake light.

Lock using the spring.

Install the cover.

REMOVING THE BULB FOR PARKING LIGHTS / SIDE MARKER LIGHTS / DIRECTION INDICATORS

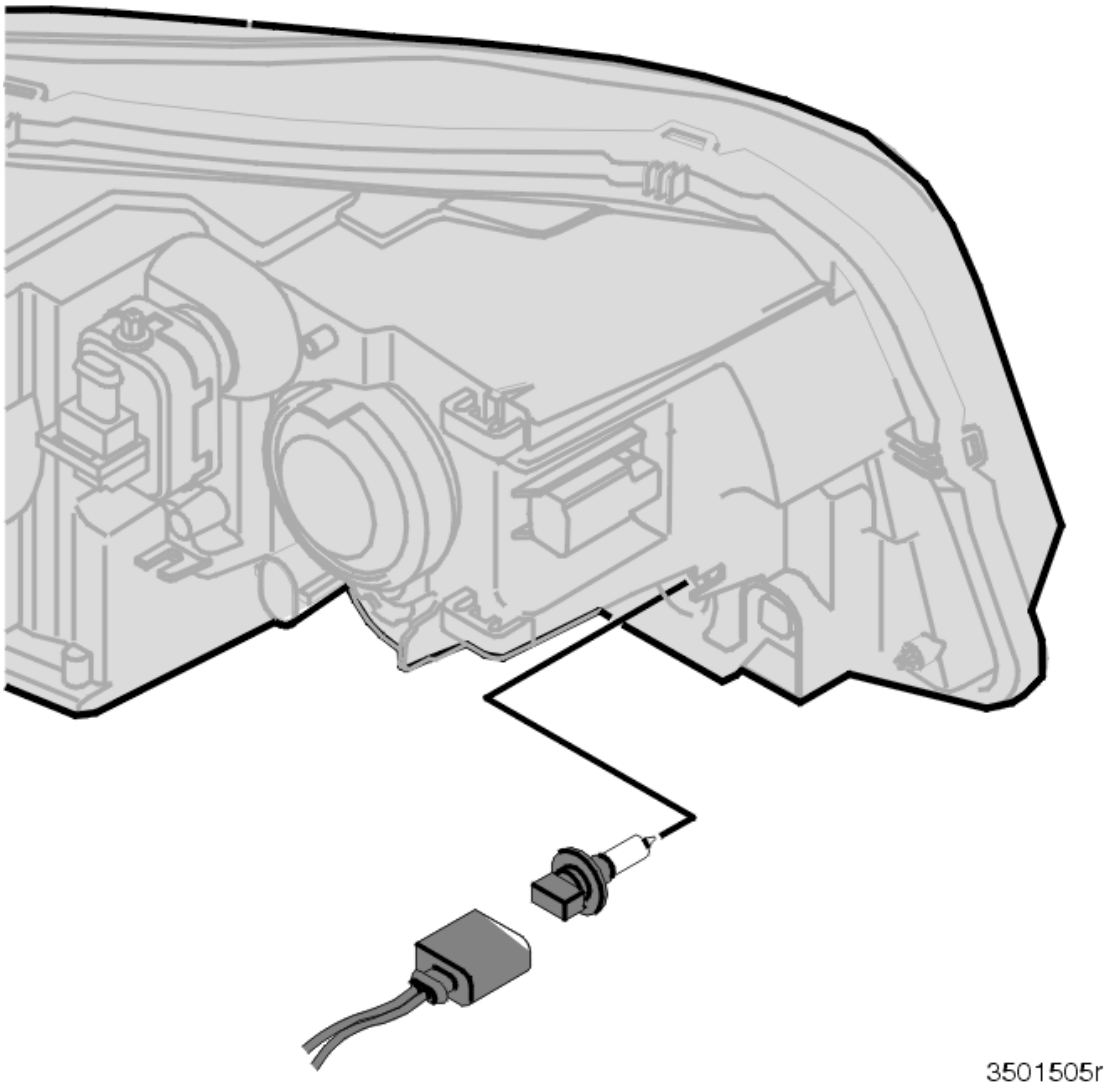

Fig. 22: Removing Parking Lights / Side Marker Lights / Direction Indicators Bulb
Courtesy of VOLVO CARS CORPORATION

Remove the bulb holder by pressing and twisting it.

Remove the bulb.

INSTALLING THE BULB FOR PARKING LIGHTS / SIDE MARKER LIGHTS / DIRECTION INDICATORS

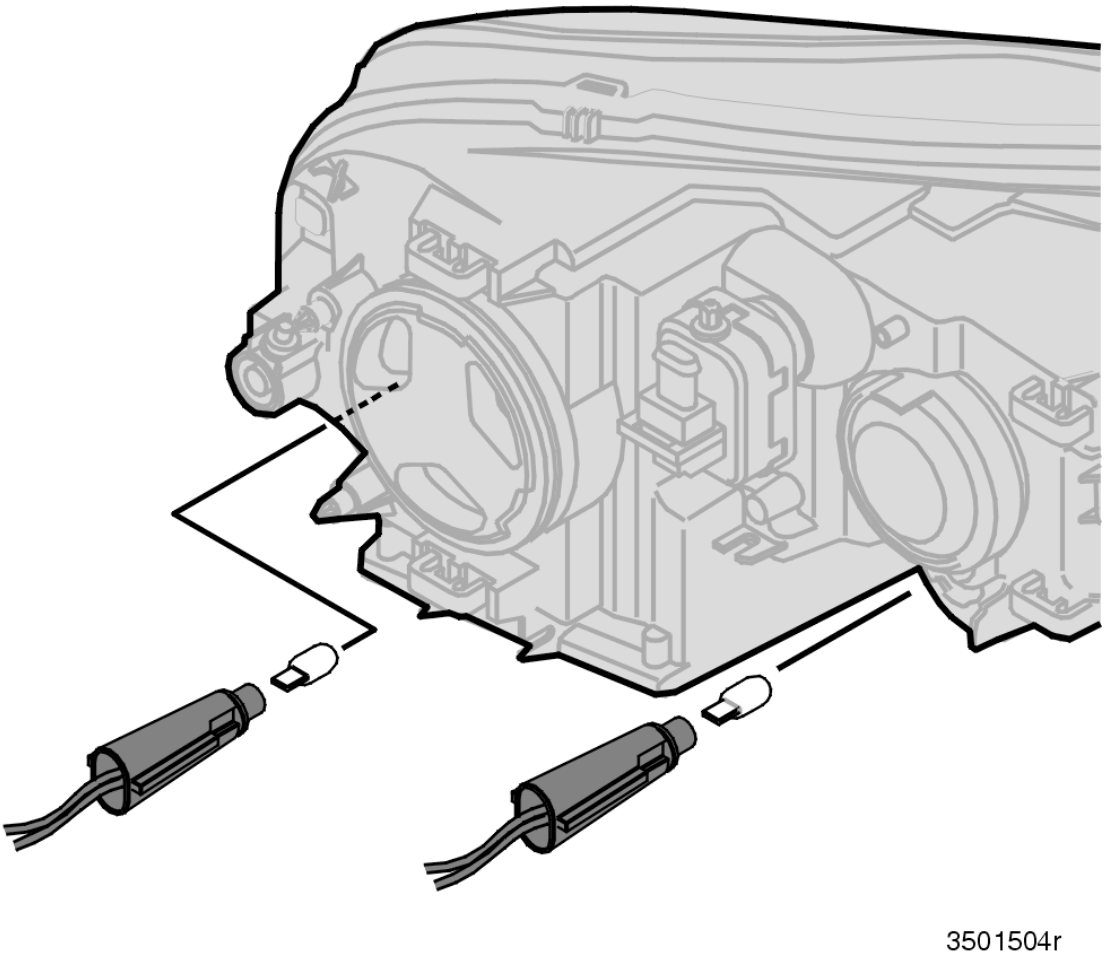

Fig. 23: Installing Parking Lights / Side Marker Lights / Direction Indicators Bulb
Courtesy of VOLVO CARS CORPORATION

Install the bulb.

Install the bulb holder by pressing and twisting it.

INSTALLATION

INSTALLING THE HEADLIGHT

Connect the connector.

Align the headlight.

Install the locking plate.

FINISHING WORK

Test the function.

When replacing headlights or carrying out work which may have affected the headlight alignment, check and align the beam. See **HEADLAMPS, ALIGNING** .

BULBS (2005-2006)

BULB BI-XENON, REPLACING

see **BULB BI-XENON, REPLACING**

BULB DASHBOARD ENVIRONMENT PANEL, REPLACING

see **BULB DASHBOARD ENVIRONMENT PANEL, REPLACING**

BULB INTERIOR LIGHTING, REPLACING

see **BULB INTERIOR LIGHTING, REPLACING**

BULB SUN VISOR MIRROR

see **BULB SUN VISOR MIRROR**

BULB TAIL LAMP/STOP LAMP/BACK-UP LAMP/FOG LAMP, REPLACING

see **BULB TAIL LAMP/STOP LAMP/BACK-UP LAMP/FOG LAMP, REPLACING**

BULB, GROUND LIGHTING, DOOR MIRROR, REPLACING

see **BULB, GROUND LIGHTING, DOOR MIRROR, REPLACING**

BULB, IGNITION SWITCH, REPLACING

see **BULB, IGNITION SWITCH, REPLACING**

BULB, NUMBER PLATE LIGHTING, REPLACING

see **BULB, NUMBER PLATE LIGHTING, REPLACING**

BULB, NUMBER PLATE LIGHTING, REPLACING

see **BULB, NUMBER PLATE LIGHTING, REPLACING**

BULB, READING LAMP, REAR, REPLACING

see **BULB, READING LAMP, REAR, REPLACING**

HEADLIGHT/BULB, REPLACING

see **HEADLIGHT/BULB, REPLACING**

BULBS (2007-2012)

BULB DASHBOARD ENVIRONMENT PANEL, REPLACING

see **BULB DASHBOARD ENVIRONMENT PANEL, REPLACING**

BULB INTERIOR LIGHTING, REPLACING

see **BULB INTERIOR LIGHTING, REPLACING**

BULB SUN VISOR MIRROR

NOTE: Some variation may occur. However, the essential information in the illustrations is always correct.

REMOVAL

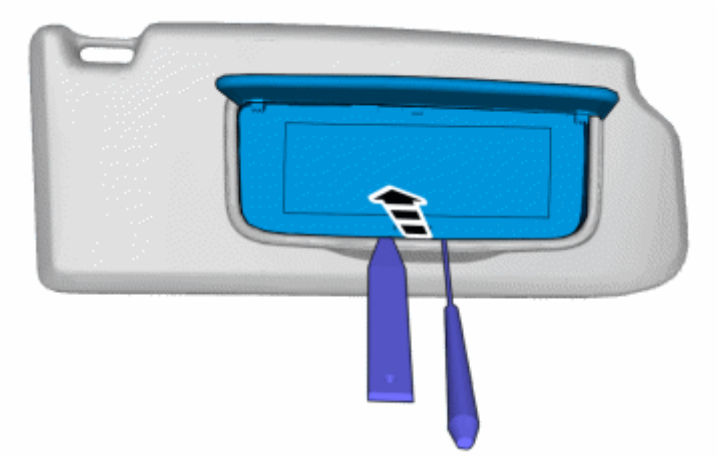

Fig. 24: Removing Sun Visor Mirror (1 Of 3)
Courtesy of VOLVO CARS CORPORATION

CAUTION: Be extra careful when handling this component.

NOTE: Use relative force.

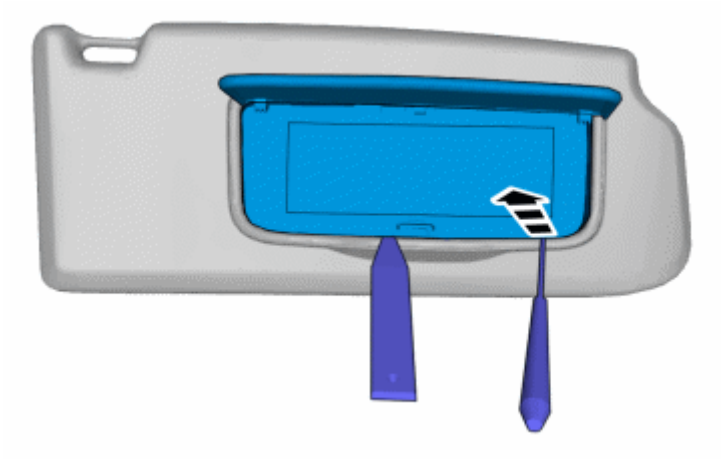

Fig. 25: Removing Sun Visor Mirror (2 Of 3)
Courtesy of VOLVO CARS CORPORATION

CAUTION: Be extra careful when handling this component.

NOTE: Use relative force.

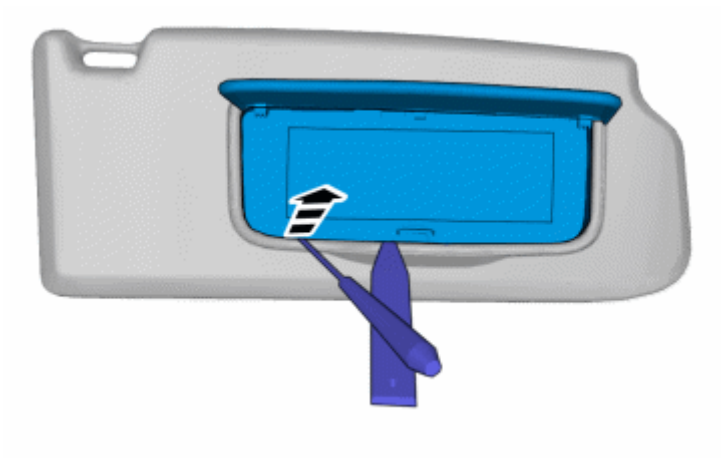

Fig. 26: Removing Sun Visor Mirror (3 Of 3)
Courtesy of VOLVO CARS CORPORATION

CAUTION: Be extra careful when handling this component.

NOTE: Use relative force.

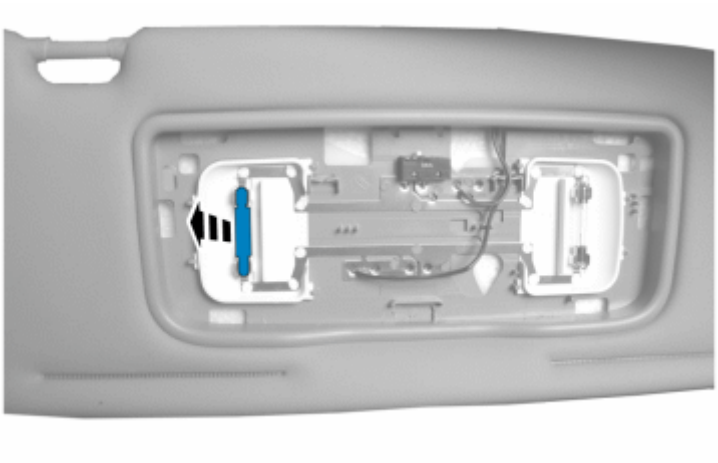

Fig. 27: Removing Sun Visor Mirror Bulb
Courtesy of VOLVO CARS CORPORATION

INSTALLATION

Install in the reverse order.

BULB TAIL LAMP/STOP LAMP/BACK-UP LAMP/FOG LAMP, REPLACING

see **BULB TAIL LAMP/STOP LAMP/BACK-UP LAMP/FOG LAMP, REPLACING**

BULB, DOOR MIRROR, GROUND LIGHTING

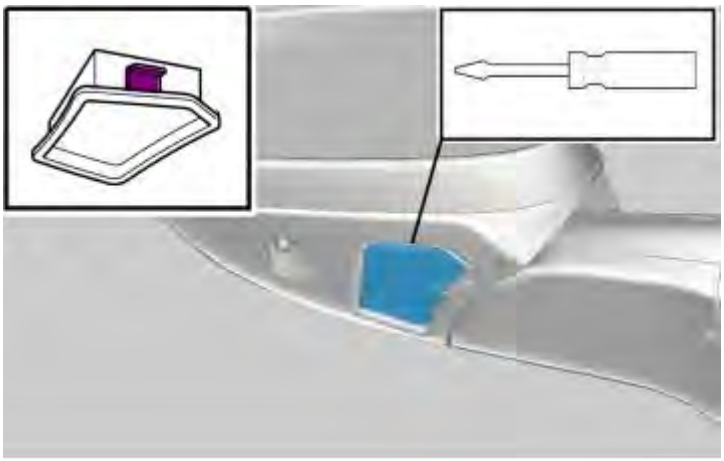

Fig. 28: Identifying Ground Lighting Door Mirror Bulb Removal
Courtesy of VOLVO CARS CORPORATION

BULB, IGNITION SWITCH, REPLACING

see **BULB, IGNITION SWITCH, REPLACING**

BULB, NUMBER PLATE LIGHTING, REPLACING

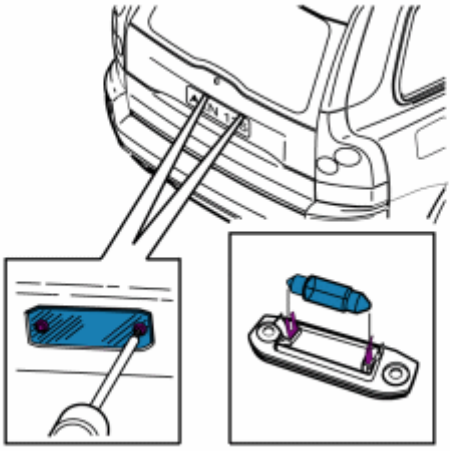

Fig. 29: Identifying Number Plate Lighting Bulb
Courtesy of VOLVO CARS CORPORATION

BULB, READING LAMP, REAR, REPLACING

see **BULB, READING LAMP, REAR, REPLACING**

HEADLIGHT BULB (XENON)

REMOVAL

WARNING: Wear safety goggles and protective gloves.

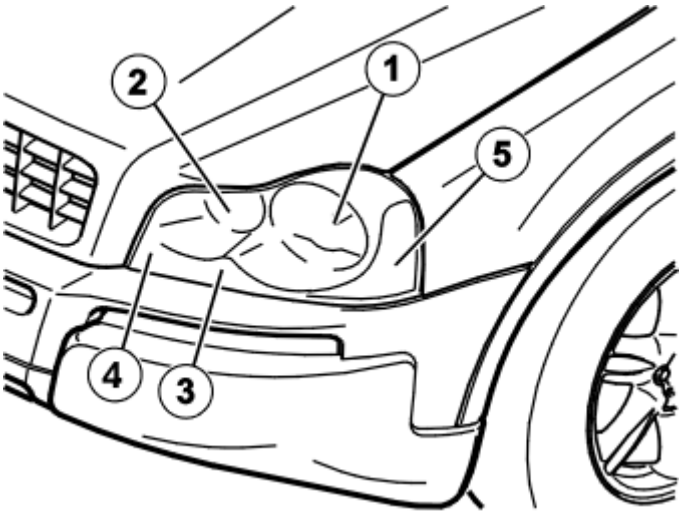

Fig. 30: View Of Xenon Headlight Bulb
Courtesy of VOLVO CARS CORPORATION

1. Bi-Xenon lamp
2. High beam, halogen

3. Parking lights
4. Direction indicators
5. Side marker lights

Remove the headlight. See **HEADLIGHT/BULB, REPLACING**.

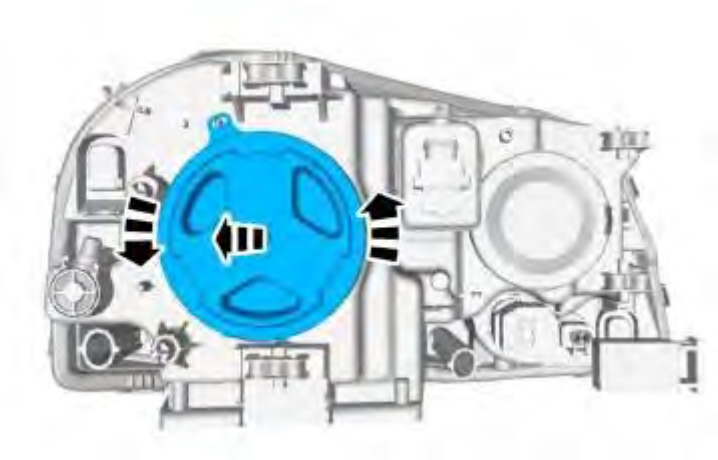

Fig. 31: View Of Remove The Headlight
Courtesy of VOLVO CARS CORPORATION

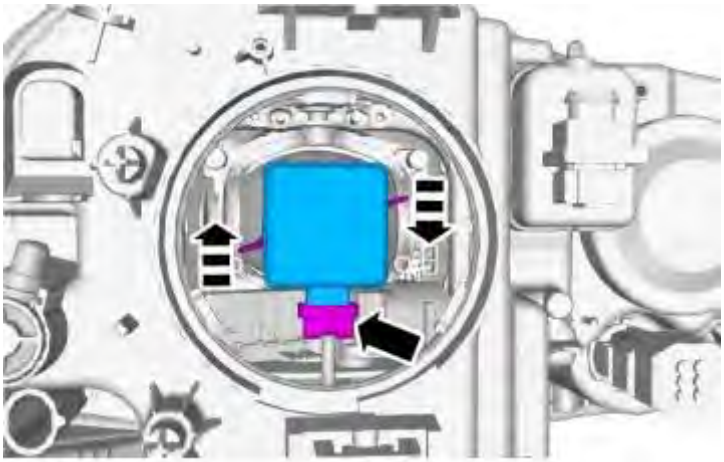

Fig. 32: Identifying Headlight Removal
Courtesy of VOLVO CARS CORPORATION

INSTALL

To install, reverse the removal procedure

HEADLIGHT/BULB, REPLACING

REMOVAL

NOTE: **As the illustrations in this service information are used for different model years and / or models, some variation may occur. However, the essential information in the illustrations is always correct.**

PREPARATORY WORK

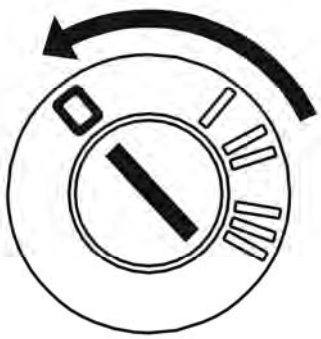

Fig. 33: Identifying Ignition In OFF Position
Courtesy of VOLVO CARS CORPORATION

Ignition off.

Switch off the lighting switch.

CAUTION: The plastic lens on the headlight scratches easily. Do not place the headlight on a hard surface with the lens downwards.

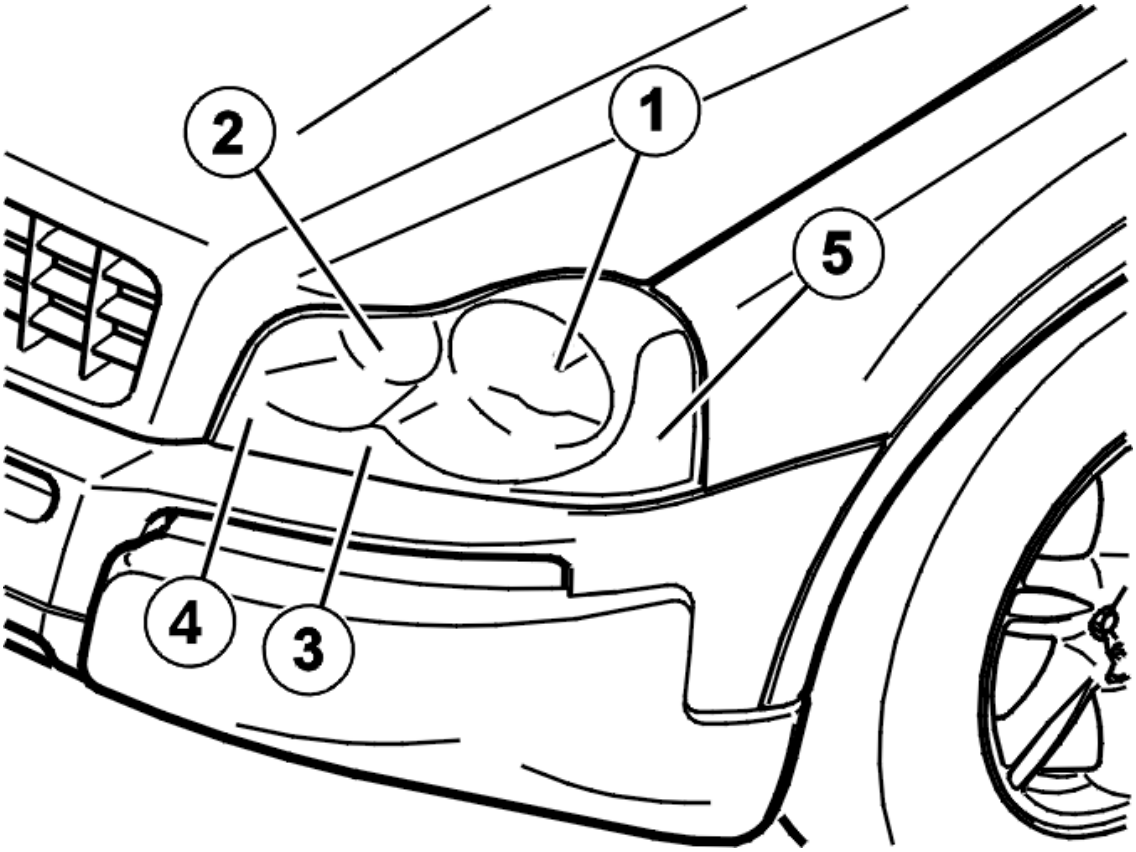

Fig. 34: Identifying Headlamp Bulbs
Courtesy of VOLVO CARS CORPORATION

1. Low beam
2. High beam
3. Parking lights
4. Direction indicators.
5. Side marker lights.

REMOVING HEADLIGHT

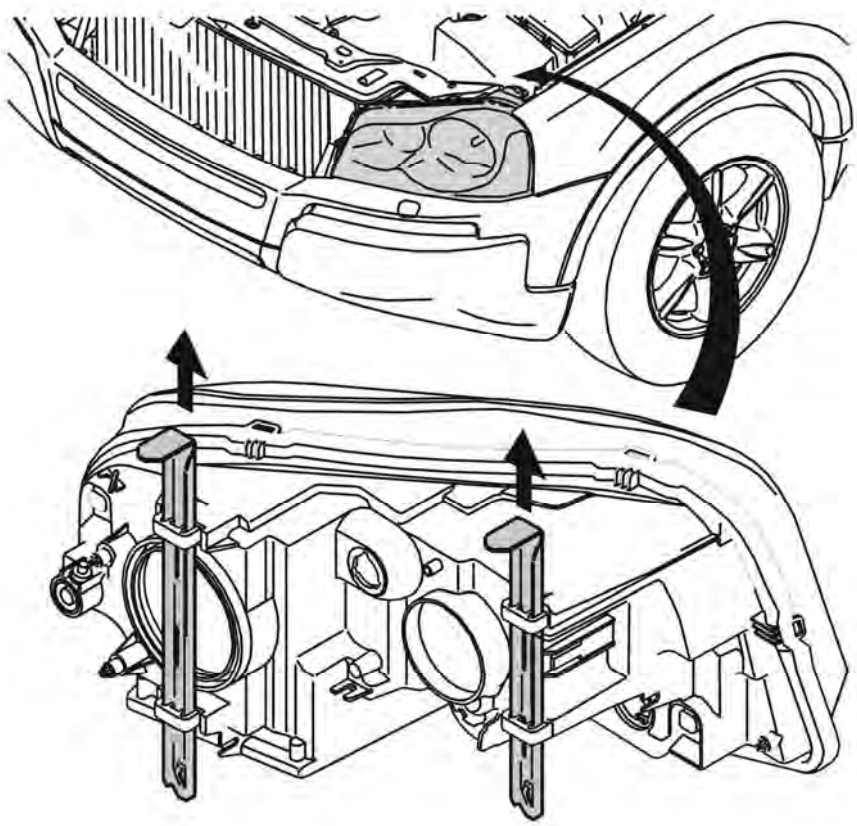

Fig. 35: Pulling Locking Plate Straight Up
Courtesy of VOLVO CARS CORPORATION

CAUTION: For vehicles with Bi-Xenon lamps, see HEADLIGHT BULB (XENON).

Pull the locking plate straight up.

Disconnect the connector.

BULBS REMOVING / INSTALLING

REMOVING BULBS HIGH/LOW BEAM

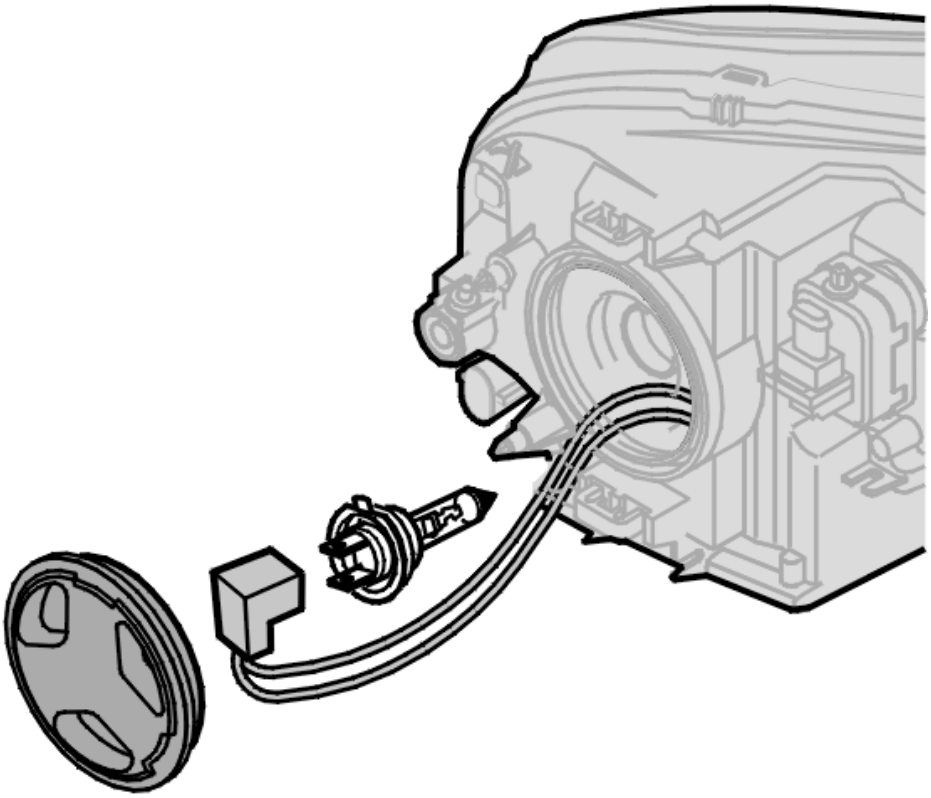

Fig. 36: Removing Of Bulb Cover
Courtesy of VOLVO CARS CORPORATION

Remove the cover.

Release the spring catch.

Remove the bulb.

INSTALLING BULBS HIGH/LOW BEAM

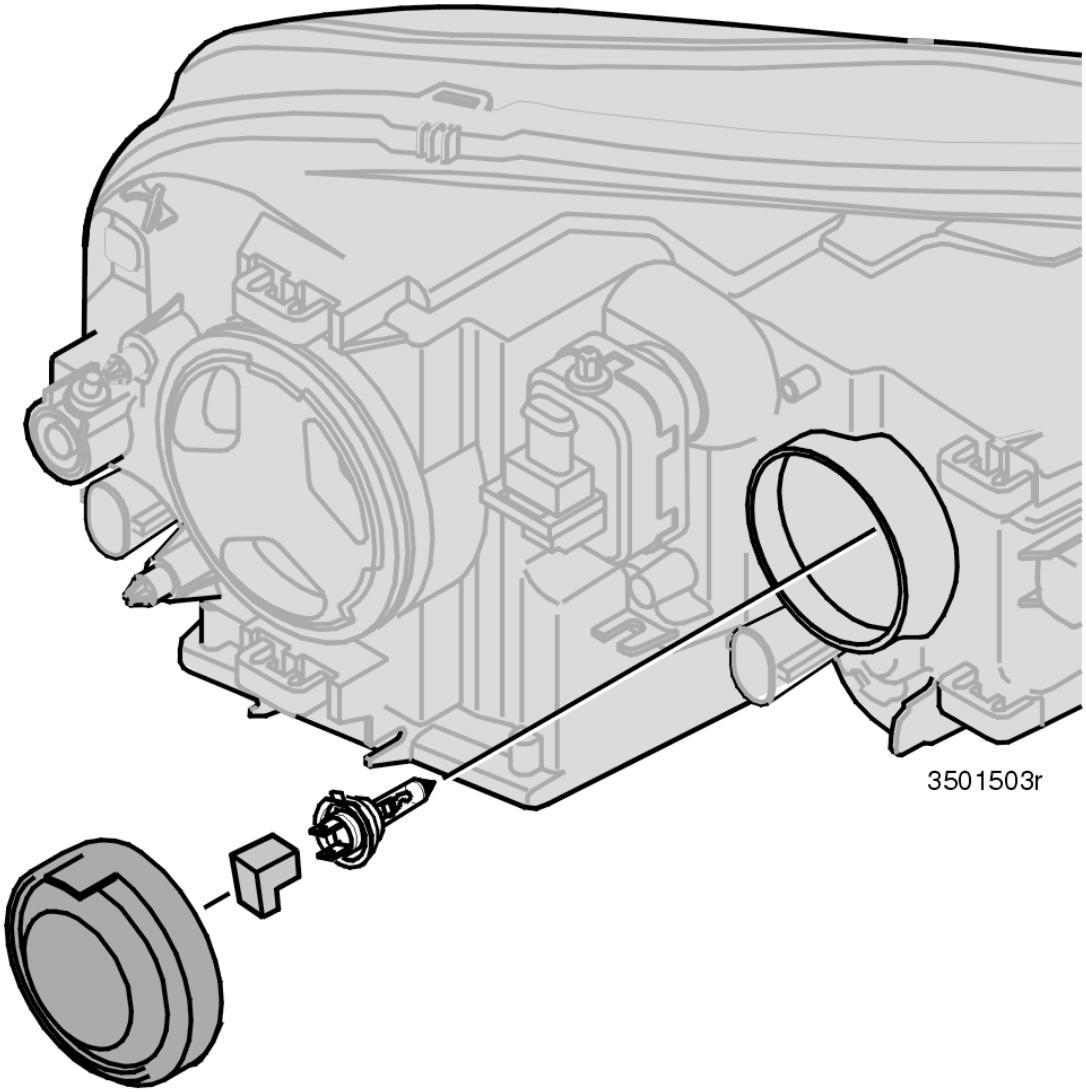

Fig. 37: Installing Of Bulb Cover
Courtesy of VOLVO CARS CORPORATION

Align the brake light.

Lock using the spring.

Install the cover.

REMOVING THE BULB FOR PARKING LIGHTS / SIDE MARKER LIGHTS / DIRECTION INDICATORS

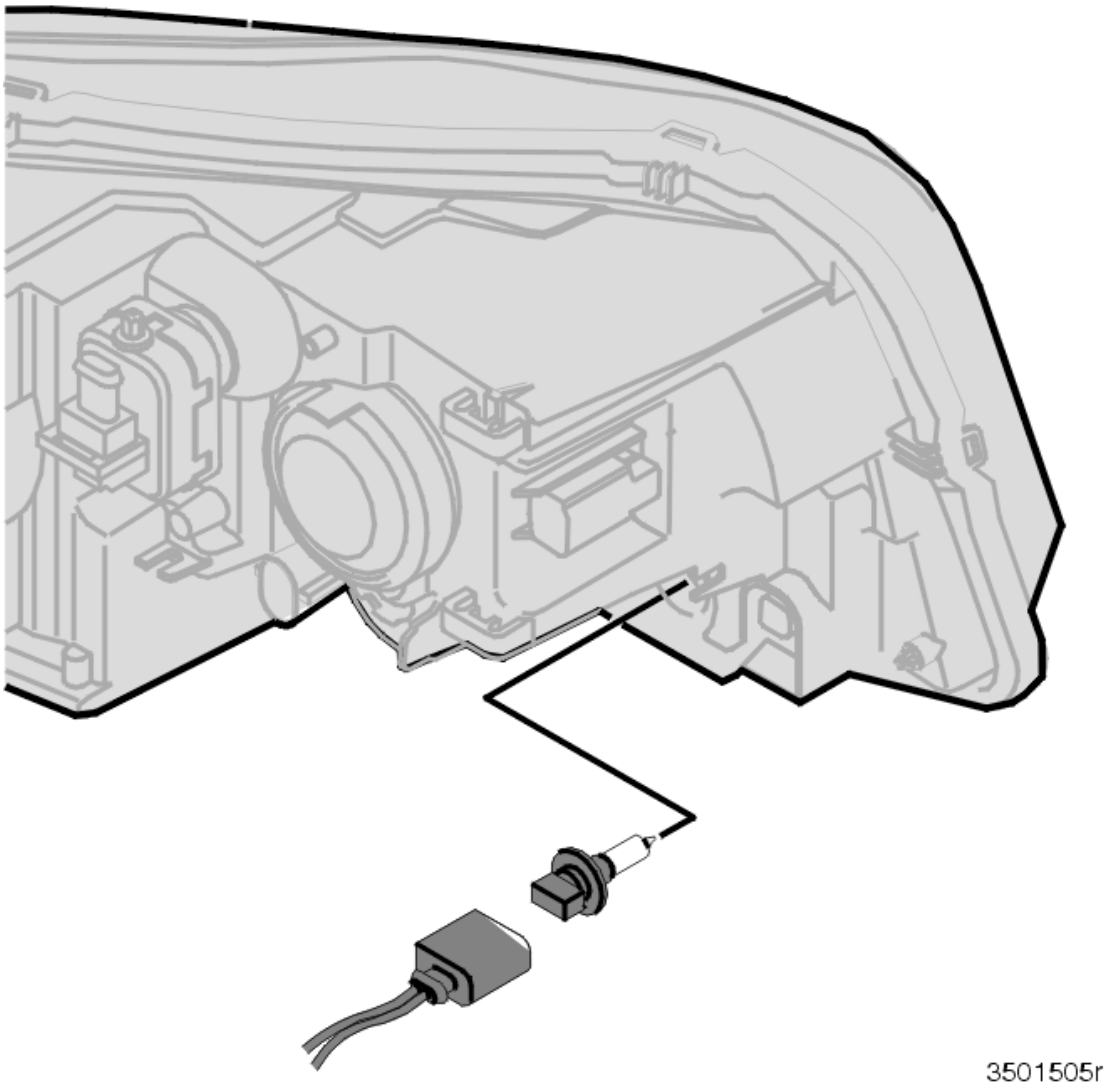

Fig. 38: Removing Parking Lights / Side Marker Lights / Direction Indicators Bulb
Courtesy of VOLVO CARS CORPORATION

Remove the bulb holder by pressing and twisting it.

Remove the bulb.

INSTALLING THE BULB FOR PARKING LIGHTS / SIDE MARKER LIGHTS / DIRECTION INDICATORS

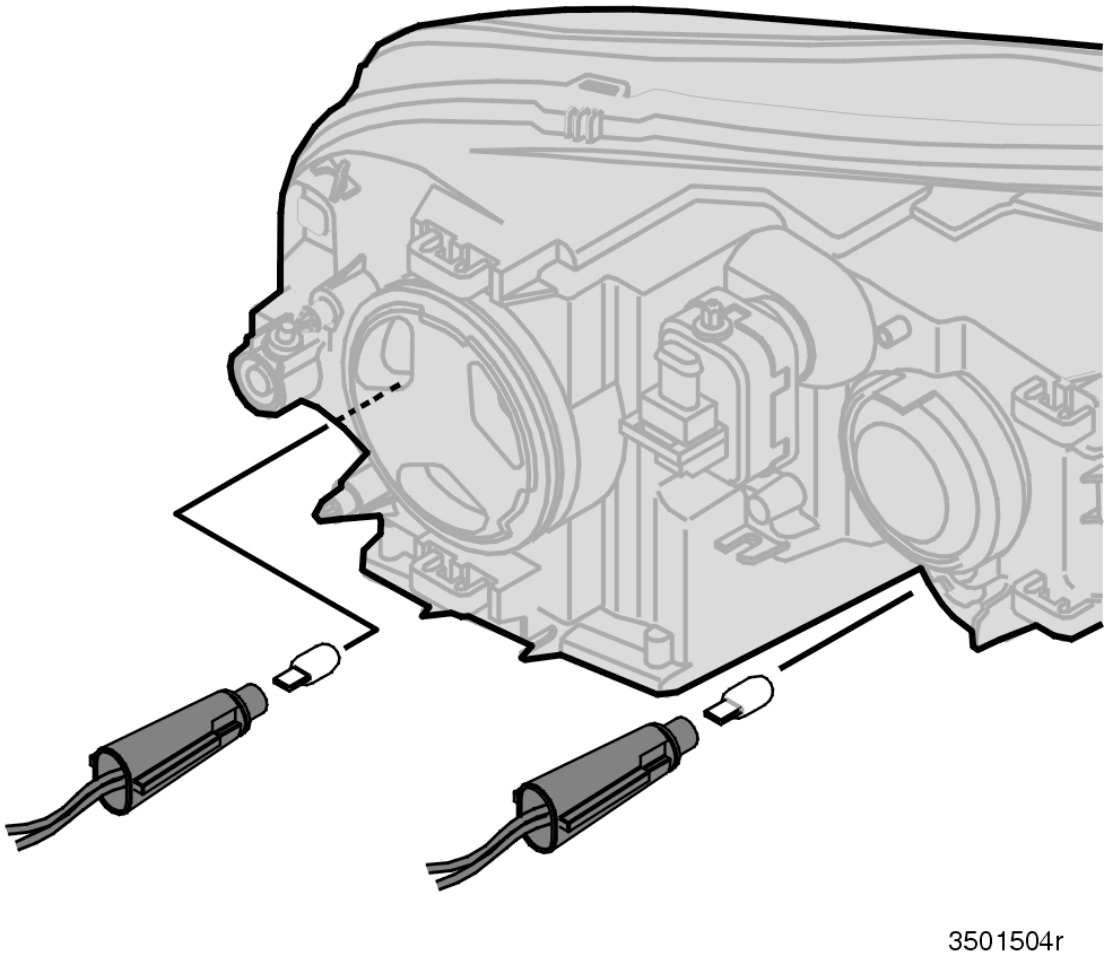

Fig. 39: Installing Parking Lights / Side Marker Lights / Direction Indicators Bulb
Courtesy of VOLVO CARS CORPORATION

Install the bulb.

Install the bulb holder by pressing and twisting it.

INSTALLATION

INSTALLING THE HEADLIGHT

Connect the connector.

Align the headlight.

Install the locking plate.

FINISHING WORK

Test the function.

When replacing headlights or carrying out work which may have affected the headlight alignment, check and align the beam. See **HEADLAMPS, ALIGNING** .

EXTRA LAMPS AND ACCESSORIES

FOG LAMPS FRONT, REPLACING

REMOVAL

NOTE: Some variation may occur. However, the essential information in the illustrations is always correct.

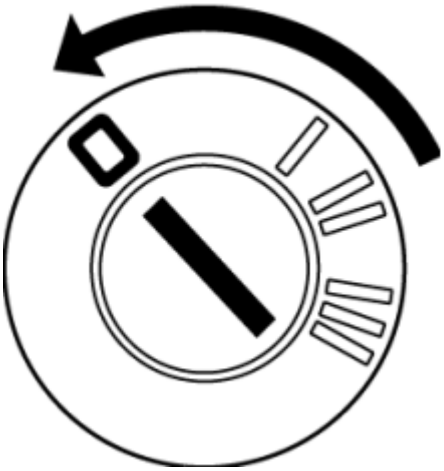

Fig. 40: Identifying Ignition Switch In OFF Position
Courtesy of VOLVO CARS CORPORATION

Fig. 41: Locating Connection Points (1 Of 2)
Courtesy of VOLVO CARS CORPORATION

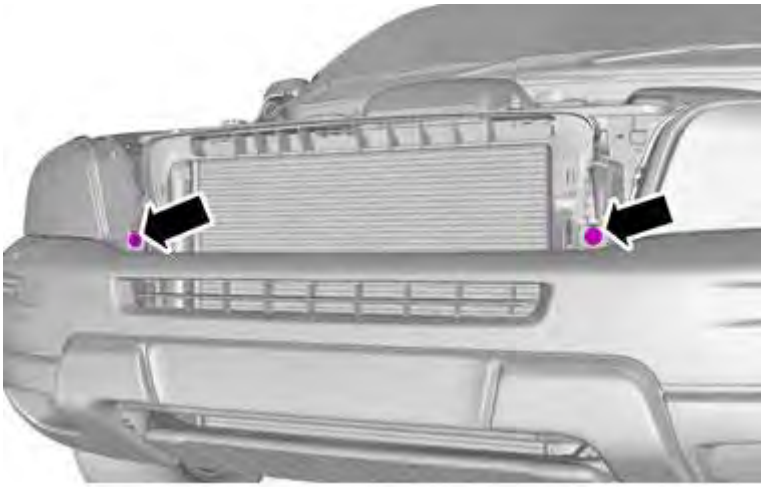

Fig. 42: Locating Connection Points (2 Of 2)
Courtesy of VOLVO CARS CORPORATION

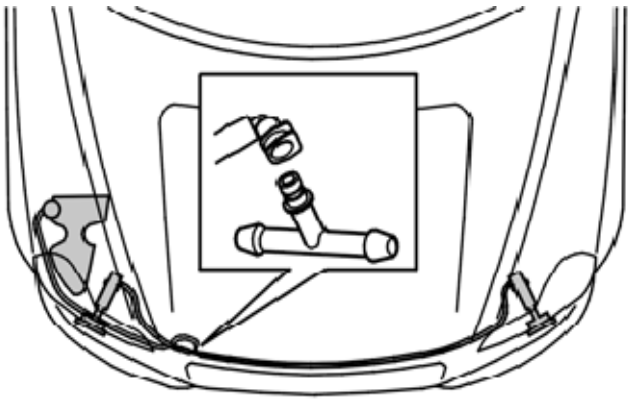

Fig. 43: Identifying Cable And Connector
Courtesy of VOLVO CARS CORPORATION

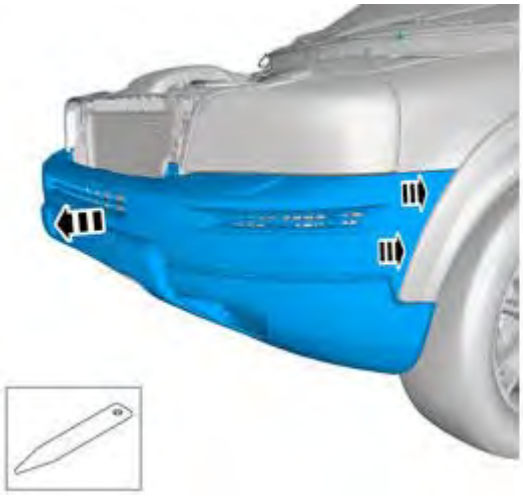

Fig. 44: Removing/Installing Front Fascia
Courtesy of VOLVO CARS CORPORATION

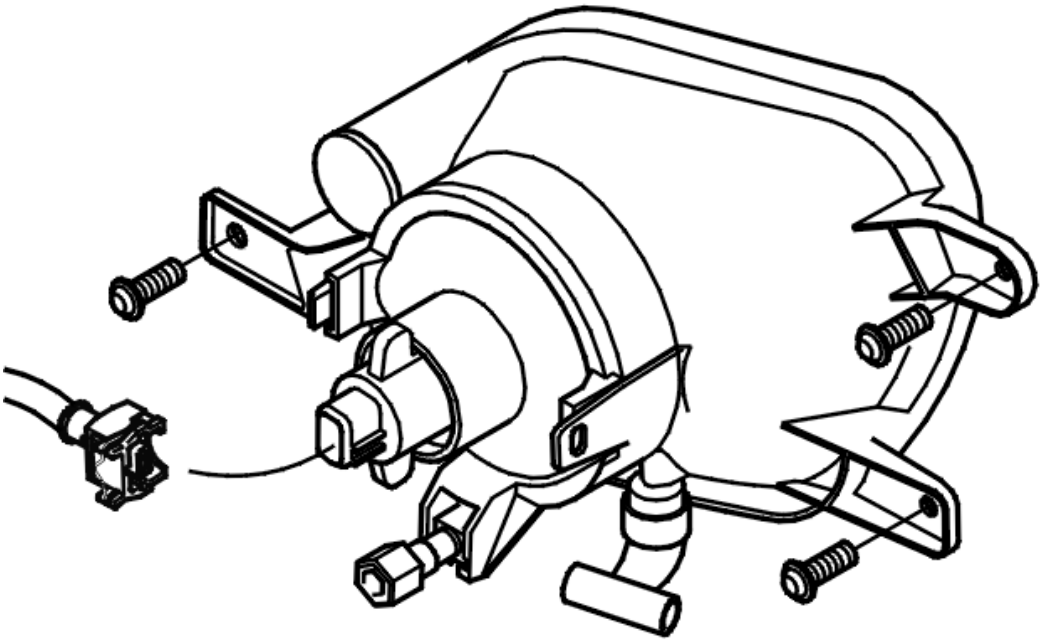

Fig. 45: Identifying Fog Lamp Unit
Courtesy of VOLVO CARS CORPORATION

INSTALLATION

To install, reverse the removal procedure.

LIGHTING, FRONT (2003-2006)

BALLAST BI-XENON LAMPS, REPLACING

REMOVAL

NOTE: **As the illustrations in this service information are used for different model years and / or models, some variation may occur. However, the essential information in the illustrations is always correct.**

SAFETY PRECAUTIONS

CAUTION: Always disconnect the headlamp connector and remove the headlamp

from the car before carrying out work on bi-xenon headlamps. There is high voltage and a risk of explosion.

Allow the lamp to cool. Use protective goggles and gloves when replacing the lamp. The glass body of the Bi-Xenon-lamp is filled with different gases and metal vapors which are under pressure. Never touch the glass body of the lamp. Only touch the lamp at the socket. Remove any finger prints from the glass using a clean cloth and alcohol. The lamp must only be used in enclosed headlamps.

The replaced Bi-Xenon lamp must be treated as hazardous waste and must be sent for recycling.

PREPARATORY WORK

Remove the headlamp. See **HEADLIGHT/BULB, REPLACINGHEADLIGHT/BULB, REPLACING**.

NOTE: **Disconnect the headlamp connector. Work with the headlamp removed from the car.**

REMOVING THE BALLAST

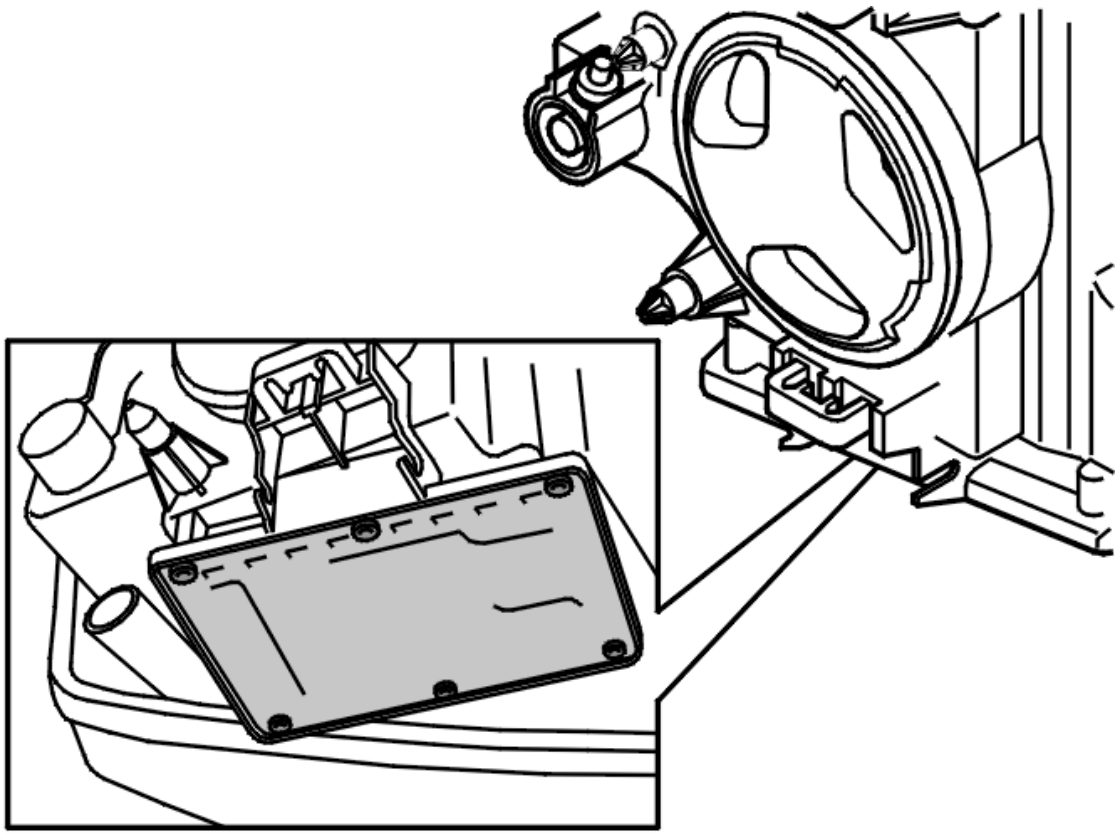

Fig. 46: View Of Ballast

Courtesy of VOLVO CARS CORPORATION

Slacken off the screws. Use Torx 20 with holes.

Disconnect the connectors.

INSTALLATION

INSTALLING THE BALLAST

Reconnect connectors.

Install the screws. Tighten.

FINISHING WORK

Install the headlamp. See **HEADLIGHT/BULB, REPLACINGHEADLIGHT/BULB, REPLACING**.

Test the function. Check high and low beam.

HEADLIGHT/BULB, REPLACING

see **HEADLIGHT/BULB, REPLACING**

MOTOR HEIGHT CONTROL HEADLAMP, REPLACING

see **MOTOR HEIGHT CONTROL HEADLAMP, REPLACING**

LIGHTING, FRONT (2007-2012)

HEADLAMP BALLAST (XENON)

REMOVE

Remove the headlamp. See **HEADLIGHT/BULB, REPLACING**

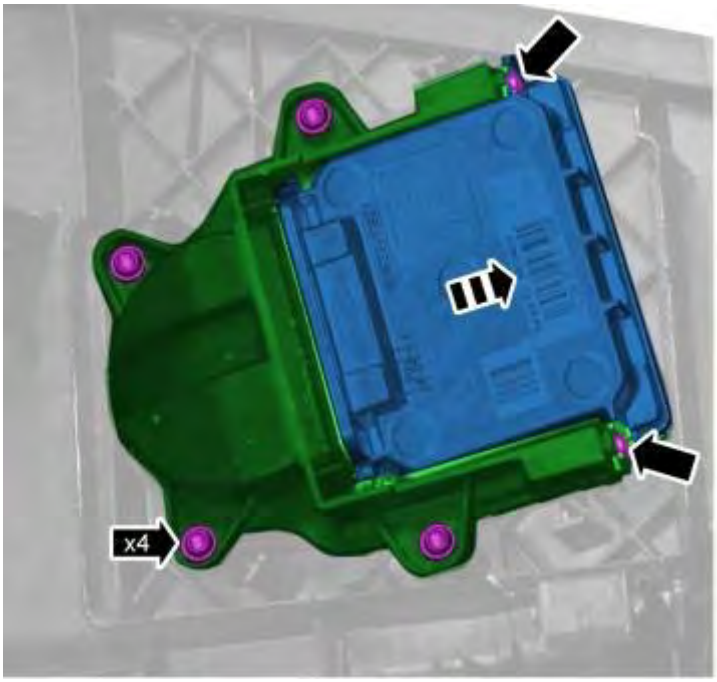

Fig. 47: Identifying Screws
Courtesy of VOLVO CARS CORPORATION

HEADLAMP CONTROL MODULE (HCM)

REMOVE

Remove the left-hand front seat. See **FRONT SEAT, REPLACING** .

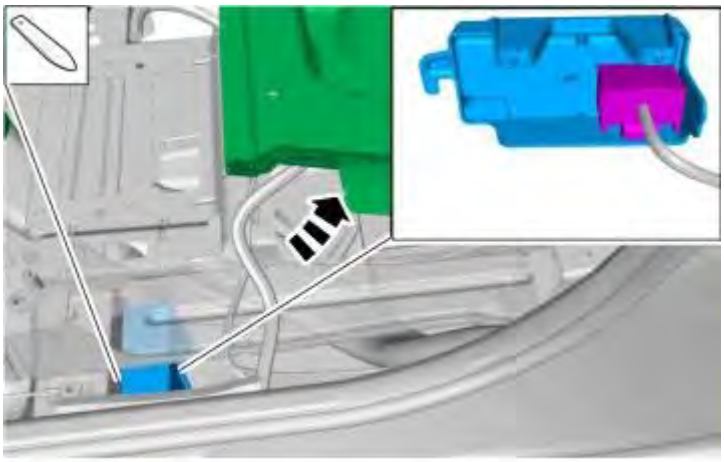

Fig. 48: Identifying Front Seat And Connector
Courtesy of VOLVO CARS CORPORATION

INSTALL

To install, reverse the removal procedure.

HEADLIGHT/BULB, REPLACING

see **HEADLIGHT/BULB, REPLACING**

MOTOR HEIGHT CONTROL HEADLAMP, REPLACING

NOTE: **As the illustrations in this service information are used for different model years and / or models, some variation may occur. However, the essential information in the illustrations is always correct.**

REMOVAL

PREPARATORY WORK

- Remove the headlamp. See **HEADLIGHT/BULB, REPLACINGHEADLIGHT/BULB, REPLACING**.

REMOVING THE MOTOR

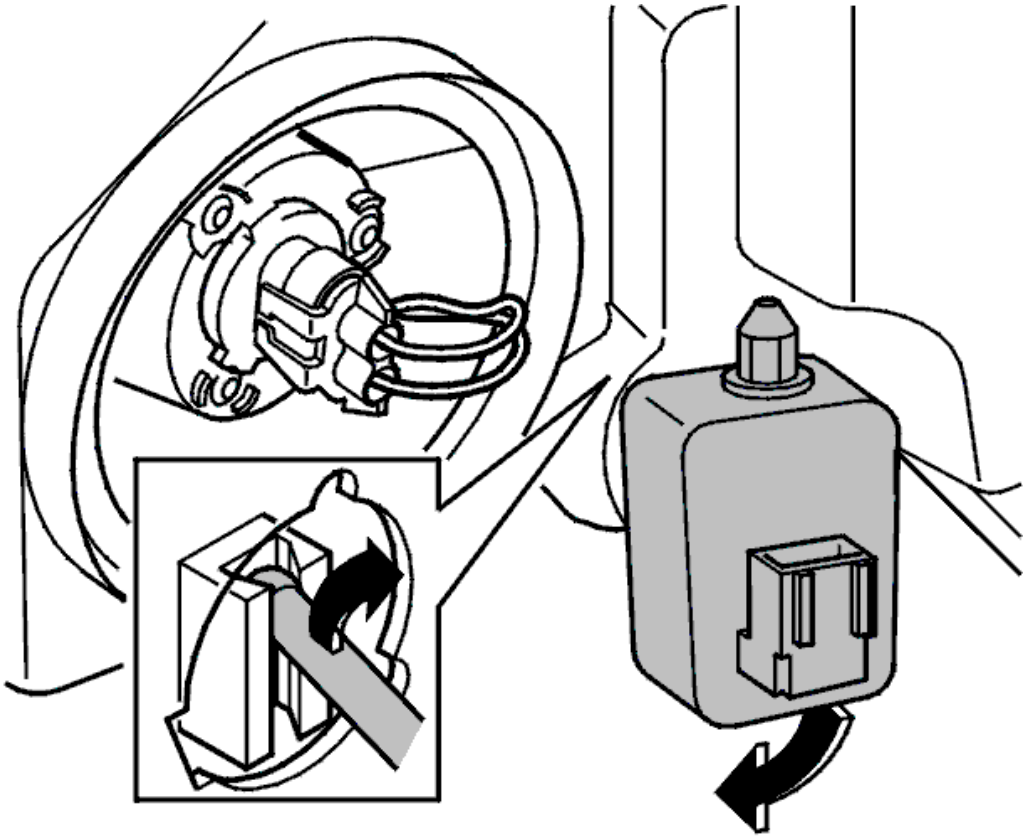

Fig. 49: Pulling Lamp Back Towards Opening And Angling Motor Down While Pulling
Courtesy of VOLVO CARS CORPORATION

- Disconnect the connector
- Remove the motor by turning a 1/4 turn clockwise

- Twist the motor downwards along the shaft so that the ball releases from the channel in the reflector. See the illustration.

INSTALLATION

INSTALLING THE MOTOR

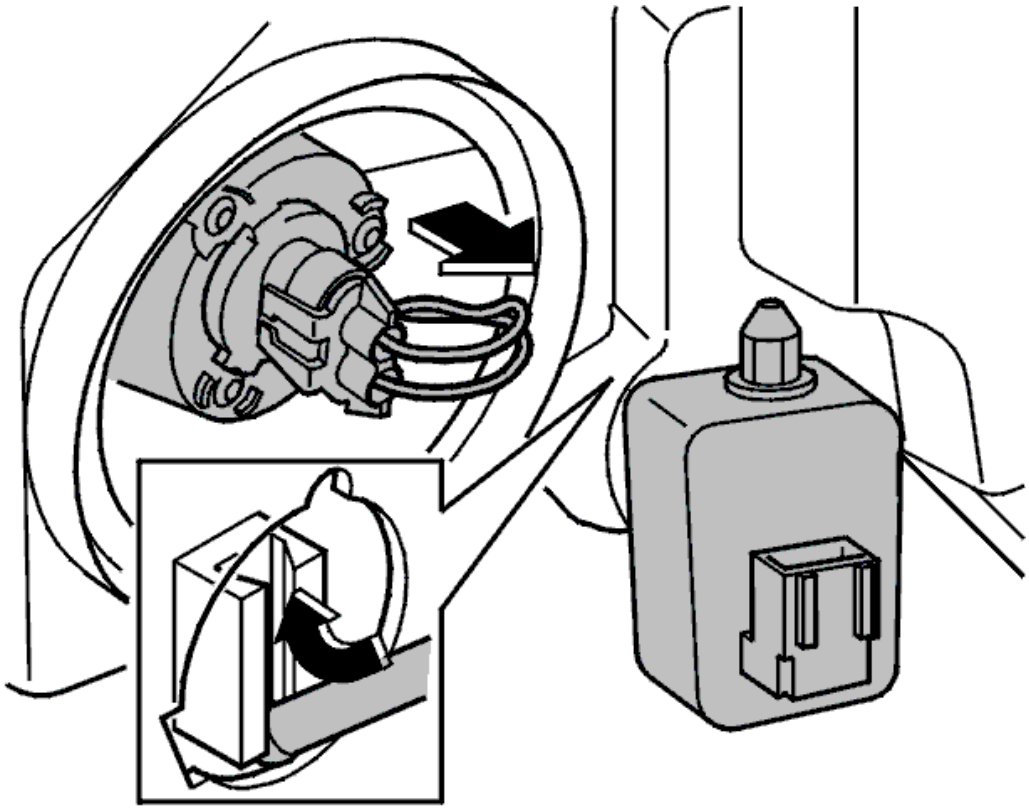

Fig. 50: Pulling Reflector Back Towards Mounting In Headlamp Housing
Courtesy of VOLVO CARS CORPORATION

- Twist the adjusting screw on the motor so that the shaft is extended, in order to facilitate installation
- Remove the cover from one of the bulbs
- Pull the reflector backwards
- Apply grease to the ball and place it in the groove as illustrated
- Twist the motor into place
- Connect the connector
- Install the cover.

FINISHING WORK

- Install the headlamp. See **HEADLIGHT/BULB, REPLACINGHEADLIGHT/BULB, REPLACING**
- Adjust the headlamp alignment. See **HEADLAMPS, ALIGNING** .

LIGHTING, INNER

COURTESY LIGHTING, FRONT, REPLACING

REMOVAL

COURTESY LAMP AND BULB

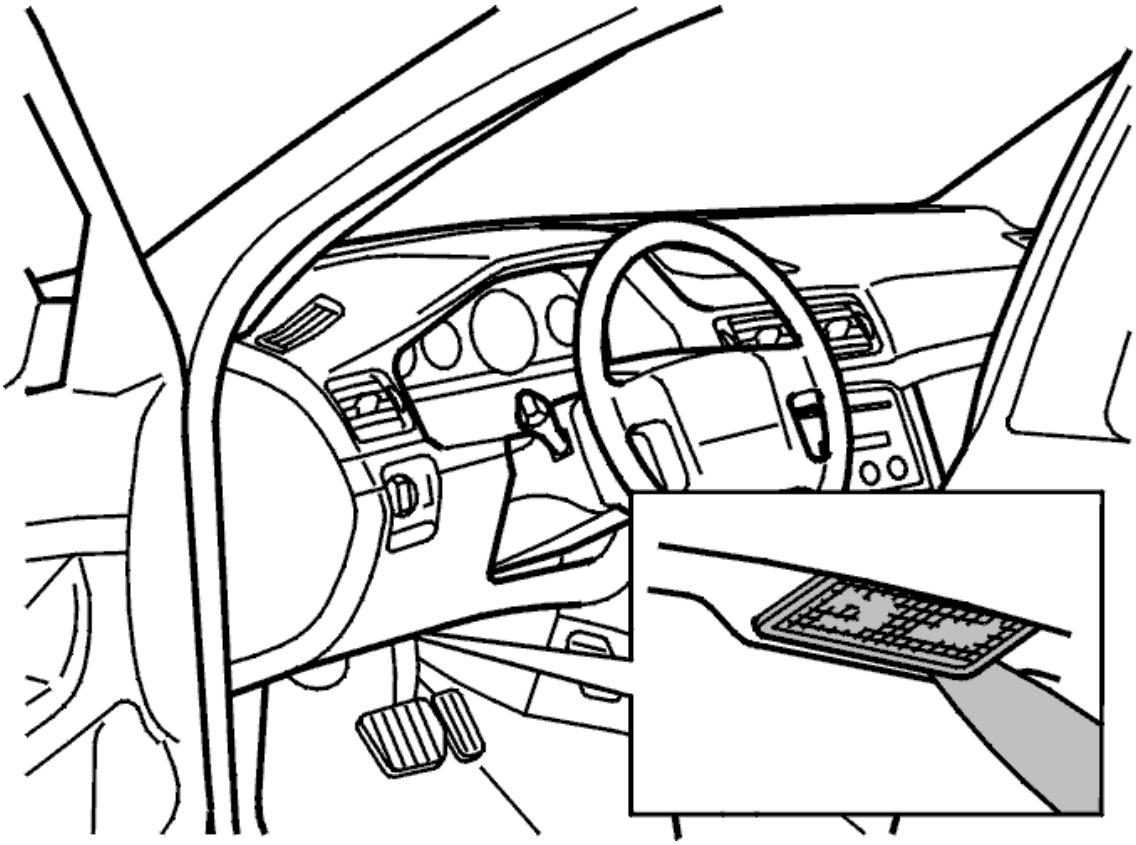

Fig. 51: Locating Front Courtesy Lighting
Courtesy of VOLVO CARS CORPORATION

- Carefully turn the inner edge of the lamp lens until the lamp releases. Use a weatherstrip tool
- Disconnect the connector
- Remove the bulb.

INSTALLATION

COURTESY LAMP AND BULB

In reverse order.

INTERIOR LIGHTING, REPLACING

REMOVAL

PREPARATORY WORK

NOTE: **As the illustrations in this service information are used for different model years and / or models, some variation may occur. However, the essential information in the illustrations is always correct.**

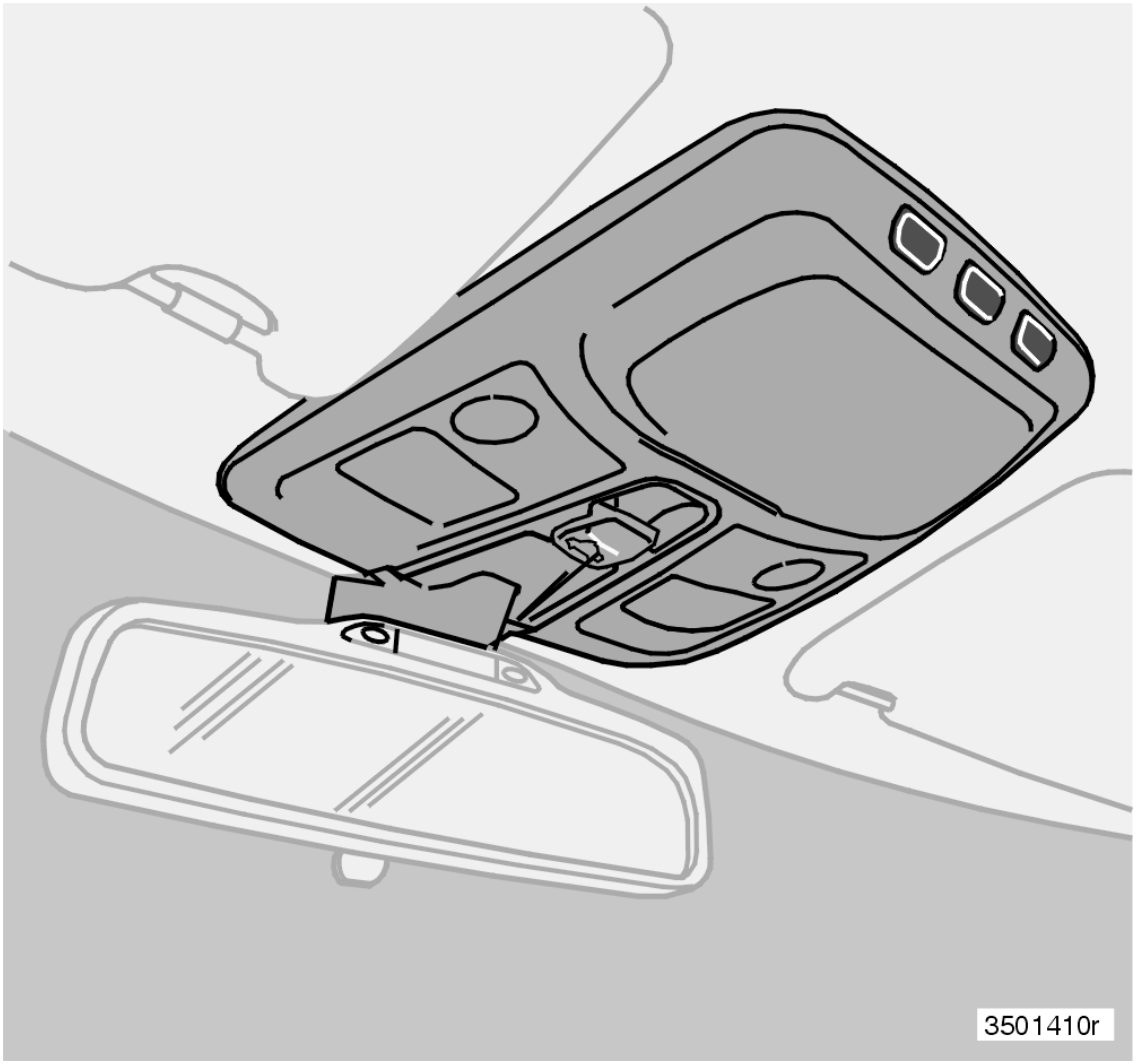

Fig. 52: Identifying Rear View Mirror Console
Courtesy of VOLVO CARS CORPORATION

Remove the lens from the interior lighting. See **BULB INTERIOR LIGHTING, REPLACING**.

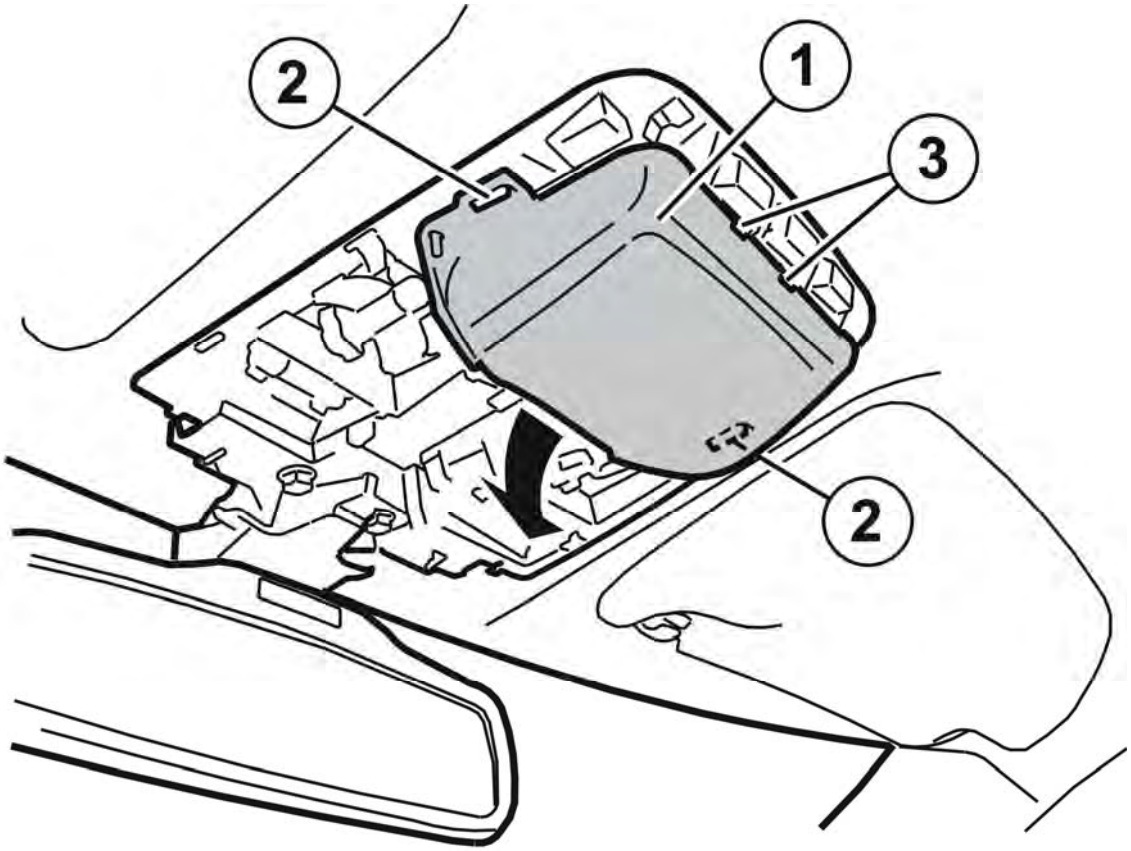

Fig. 53: Identifying Interior Lighting Cover And Clips
Courtesy of VOLVO CARS CORPORATION

Open the clips (2, 3) and remove the cover (1).

REMOVING THE INTERIOR LIGHTING

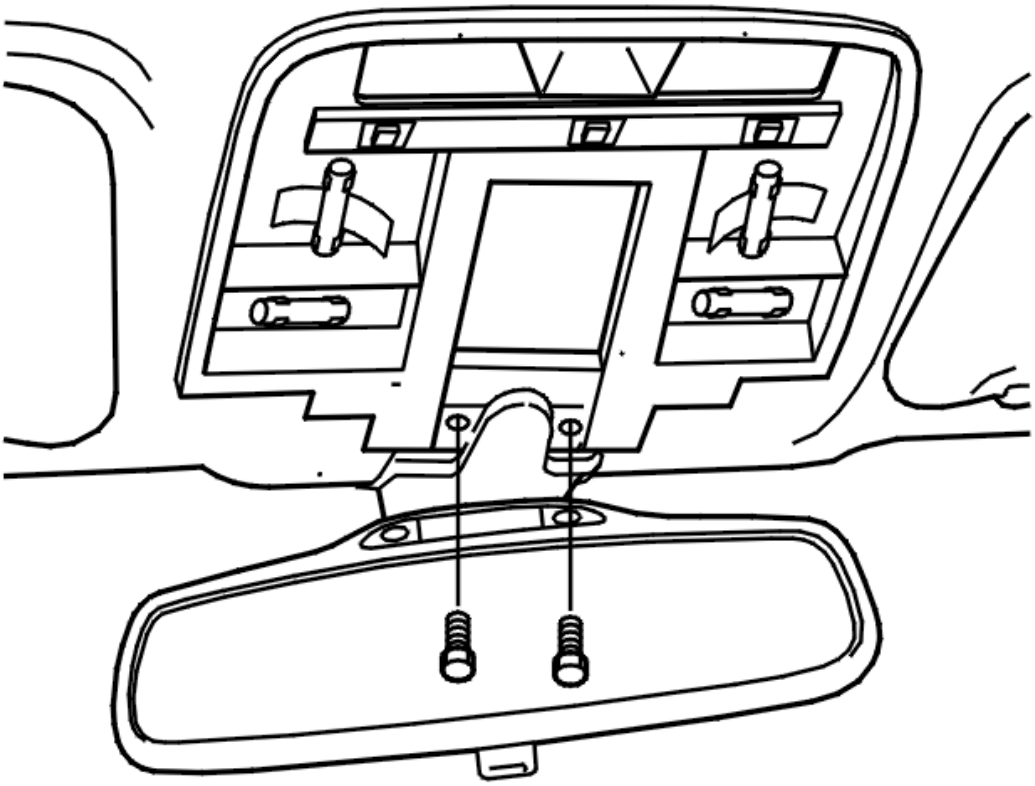

Fig. 54: Identifying Interior Lighting Screws
Courtesy of VOLVO CARS CORPORATION

- Remove the screws from the front edge
- Press in the catches on one side and detach the interior lighting from the headlining
- Disconnect the connector
- Disconnect the ground lead.

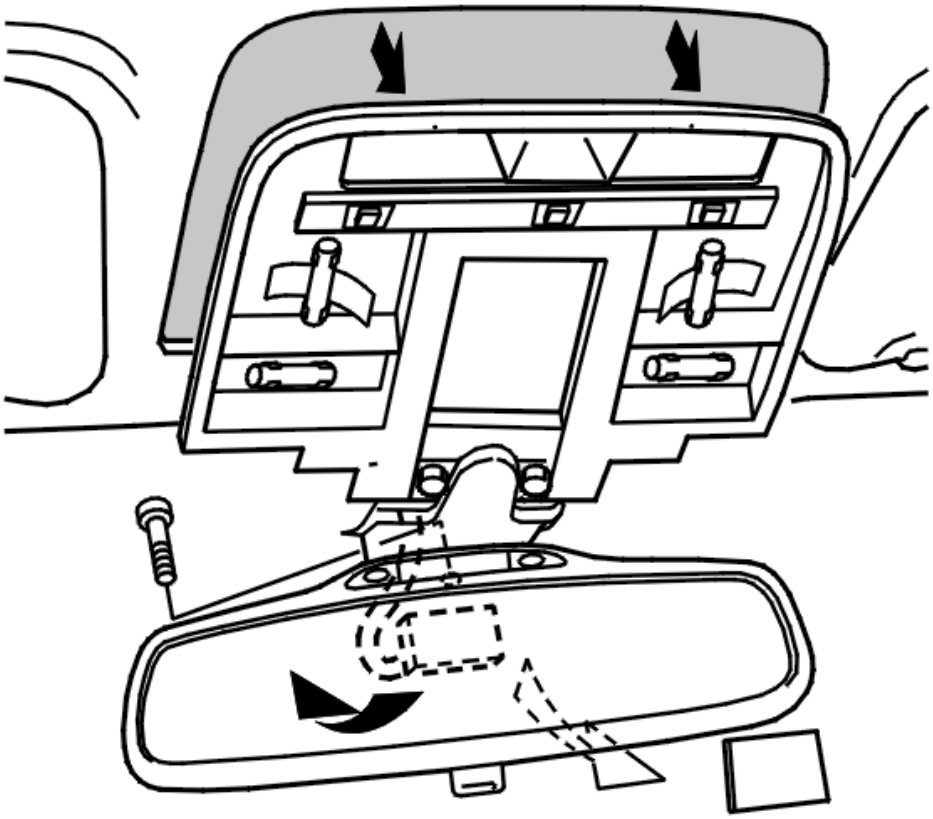

Fig. 55: Removing Interior Lighting
Courtesy of VOLVO CARS CORPORATION

Remove the screw from the rear view mirror.

Remove the interior lighting.

INSTALLATION

NOTE: For tightening torques, see TIGHTENING TORQUE .

INSTALLING THE INTERIOR LIGHTING

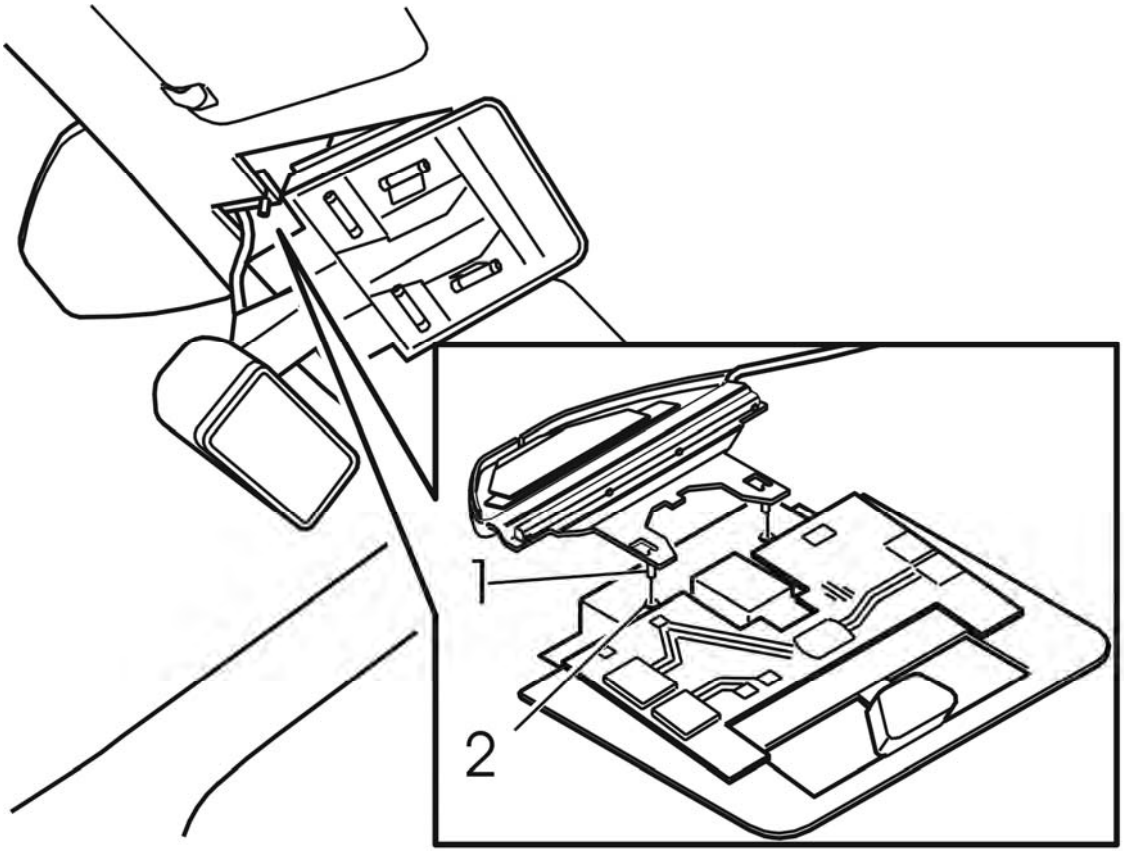

Fig. 56: Aligning Interior Lighting On Gear Selector Module Antenna Locating Pins
Courtesy of VOLVO CARS CORPORATION

Install:

- the screw for the rear view mirror. Tighten

CAUTION: Check that the microphone cable is not trapped (if applicable).

- the ground lead. Connect the connector. Align the interior lighting on the gear selector module (GSM) antenna locating pins (1) and press into place
- the screws. Tighten.

FINISHING WORK

Install the cover.

Install the lens for the interior lighting. See **BULB INTERIOR LIGHTING, REPLACING**.

Test the function.

UPPER ELECTRONIC MODULE (UEM)/REARVIEW MIRROR, REPLACING

REMOVAL

PREPARATORY INFORMATION

NOTE: **The illustrations in this service information are used for different model years and/or models. Some variation may occur. However, the essential information in the illustrations is always correct.**

NOTE: **A rear view mirror with manual function cannot be replaced with automatic anti-dazzle or vice versa. The system will store diagnostic trouble codes (DTCs). The upper electronic module (UEM) is integrated in the rear view mirror.**

NOTE: **Read off data from the control module before replacing the control module. Program this data back into the new control module. Programmed data is read off via VIDA vehicle communication.**

CAUTION: **New software can only be ordered when the control module is installed in the car. VIDA reads off the new control module identity which is required to order the correct software.**

NOTE: **Always check that the control module and control module box connectors do not have bent or damaged terminals or socket / sleeves. This may have been the cause of a fault.**

PREPARATORY WORK

Remove the interior lighting. See **INTERIOR LIGHTING, REPLACING**.

REMOVING THE REAR VIEW MIRROR/CONTROL MODULE

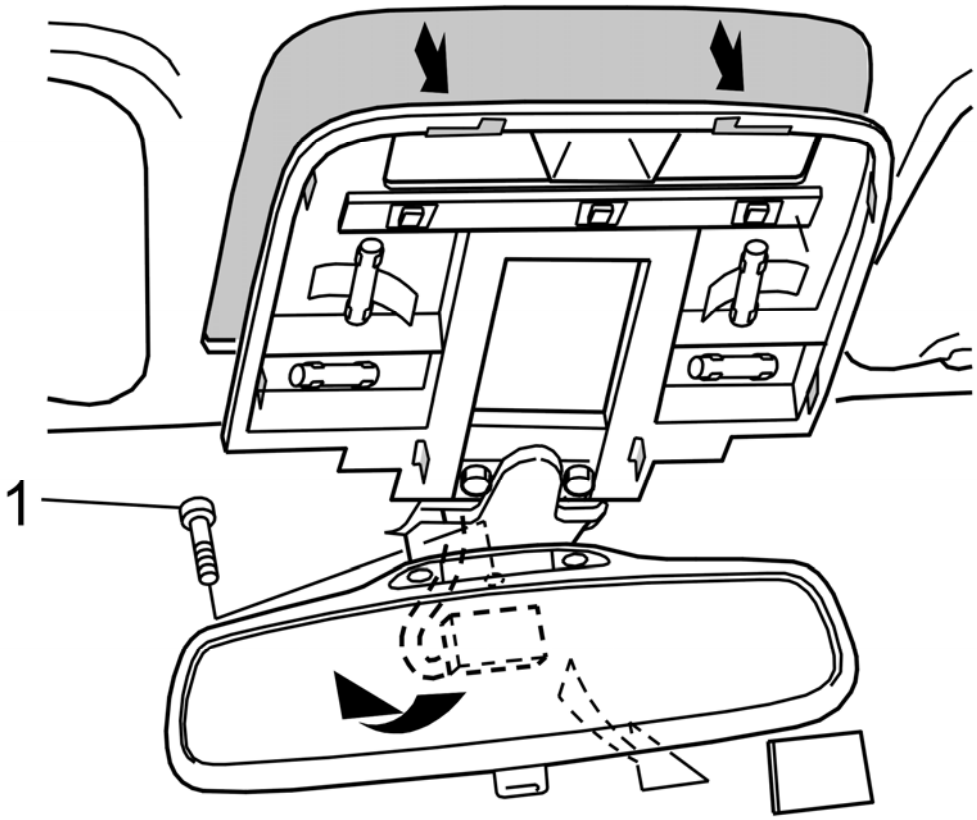

Fig. 57: Identifying Removal Of Rear View Mirror/Control Module
Courtesy of VOLVO CARS CORPORATION

- Remove the cover over the connector for the rear view mirror and control module
- Remove the cable spring using a screwdriver
- For rear view mirrors with manual anti-dazzle: Flip the anti-dazzle button toward the lens.

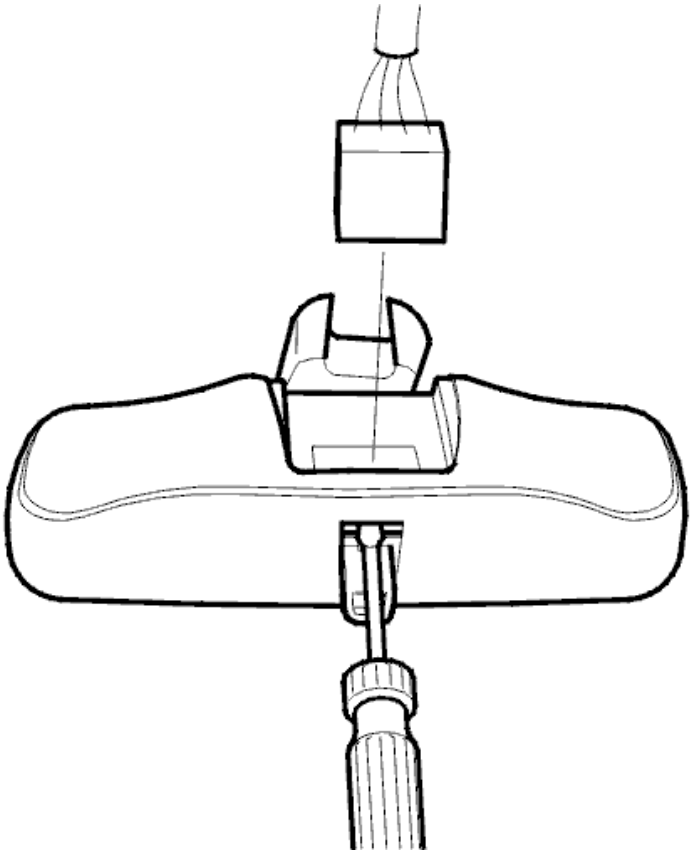

Fig. 58: Identifying Removal Of Rear View Mirror Connector
Courtesy of VOLVO CARS CORPORATION

Disconnect the connector by pressing the catch using a small screwdriver.

INSTALLATION

INSTALLING THE REAR VIEW MIRROR AND CONTROL MODULE

Connect the connector.

- The cable spring
- The connector cover
- The interior lighting. See **INSTALLATION**.

ORDERING SOFTWARE

Order software according to the table below.

S60	8637414
V70 2000-, V70 2001-/XC70	8637414
S80	8637414
XC90	8637414

LIGHTING, REAR

BULB TAIL LAMP/STOP LAMP/BACK-UP LAMP/FOG LAMP, REPLACING

see **BULB TAIL LAMP/STOP LAMP/BACK-UP LAMP/FOG LAMP, REPLACING**

HIGH LEVEL STOP LAMP, REPLACING

REMOVAL AND INSTALLATION

REMOVING THE STOP (BRAKE) LAMP

NOTE: **As the illustrations in this service information are used for different model years and / or models, some variation may occur. However, the essential information in the illustrations is always correct.**

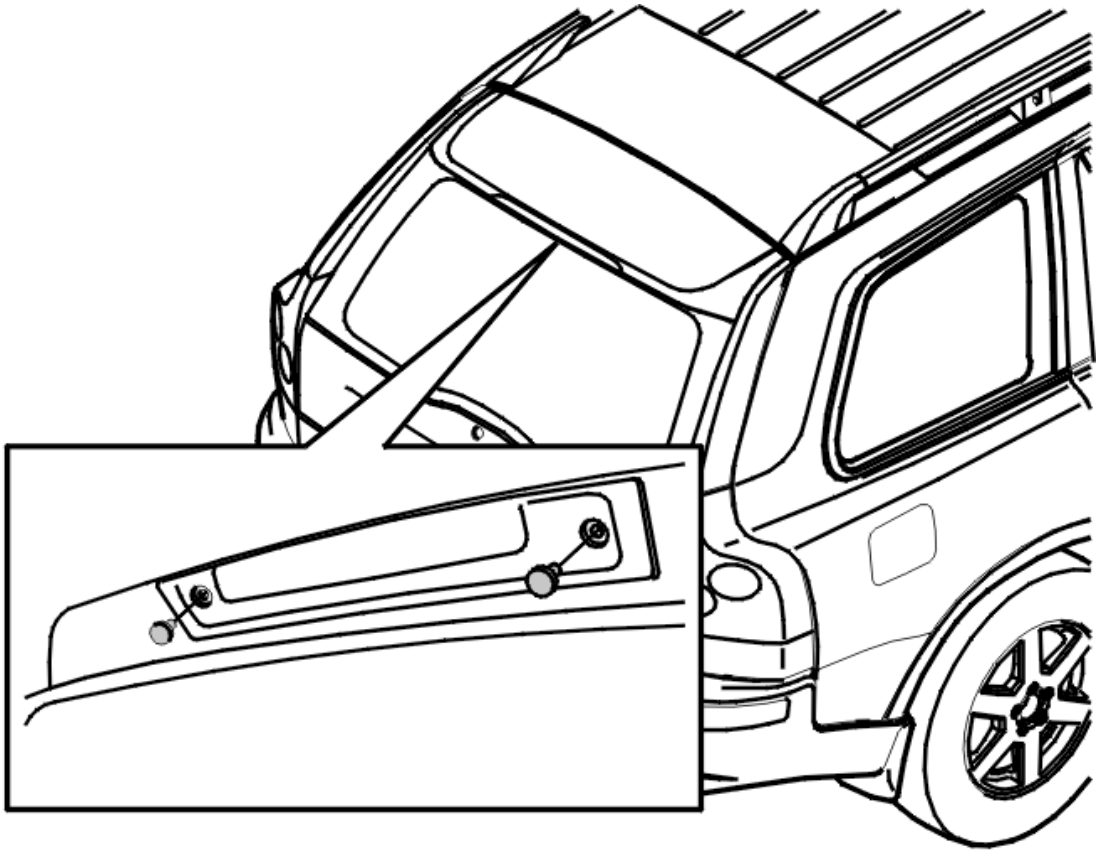

Fig. 59: Identifying High Level Stop Lamp Screws
Courtesy of VOLVO CARS CORPORATION

NOTE: **The stop lamp can only be replaced as a complete unit.**

Remove:

- the blind cover plugs using a small screwdriver
- the screws. Disconnect the connector
- the washer hose
- the stop (brake) lamp
- the washer nozzle.

INSTALLING THE STOP LAMP

Install:

- the washer nozzle
- the washer hose.

Connect the connector.

Align the stop lamp.

Install:

- 2 screws
- blind cover plugs.

Test the function.

TAIL LAMP BUMPER, REPLACING

REMOVAL AND INSTALLATION

PREPARATORY WORK

NOTE: **As the illustrations in this service information are used for different model years and / or models, some variation may occur. However, the essential information in the illustrations is always correct.**

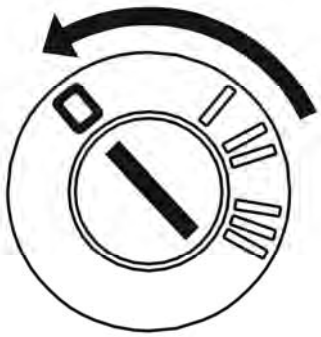

Fig. 60: Identifying Ignition In OFF Position
Courtesy of VOLVO CARS CORPORATION

Ignition off.

Switch off the lighting switch.

REMOVING THE TAIL LAMP

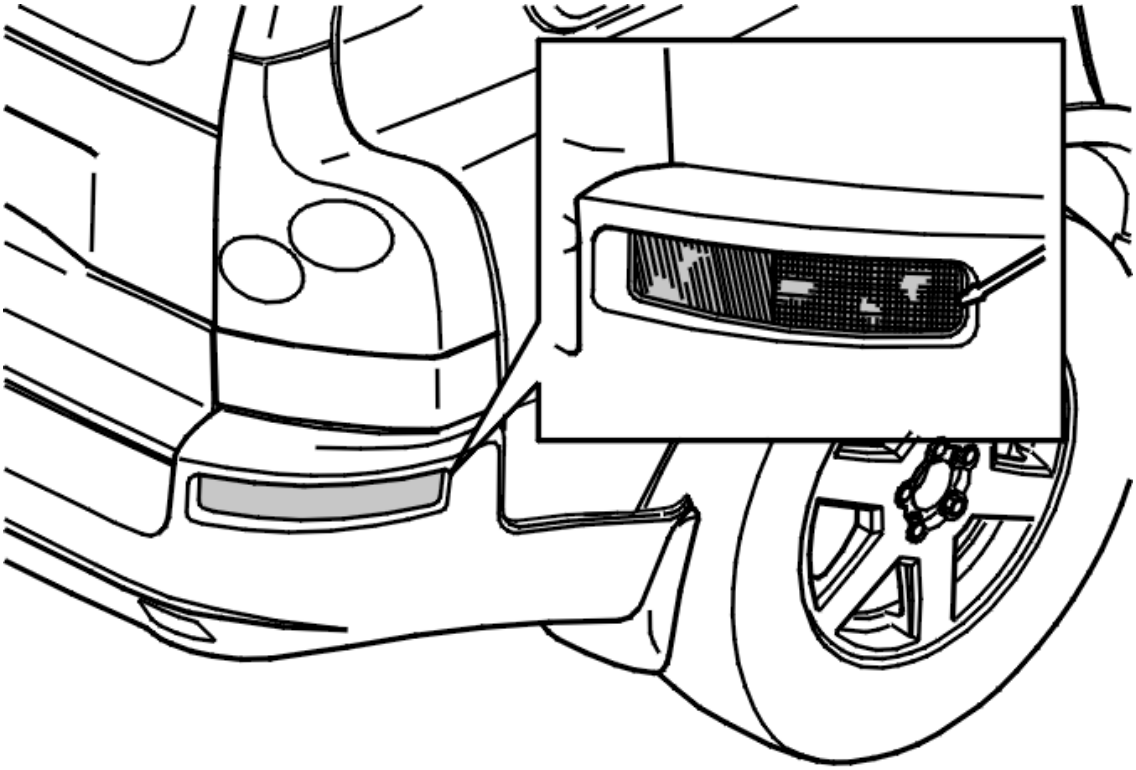

Fig. 61: Identifying Bumper Tail Lamp
Courtesy of VOLVO CARS CORPORATION

Detach the tail lamp at the front edge. Use a weatherstrip tool.

Remove:

- the bulb holder by pressing and twisting it
- the bulb.

INSTALLING THE TAIL LAMP

Install:

- the bulb
- the bulb holder. Press the tail lamp into place.

FINISHING WORK

Reset the lighting switch.

Test the function.

LIGHTING, SIDE (2003-2006)

SIDE TURN SIGNAL FLASHER, REPLACING

REMOVAL

SIDE TURN SIGNAL FLASHERS, ASSEMBLY

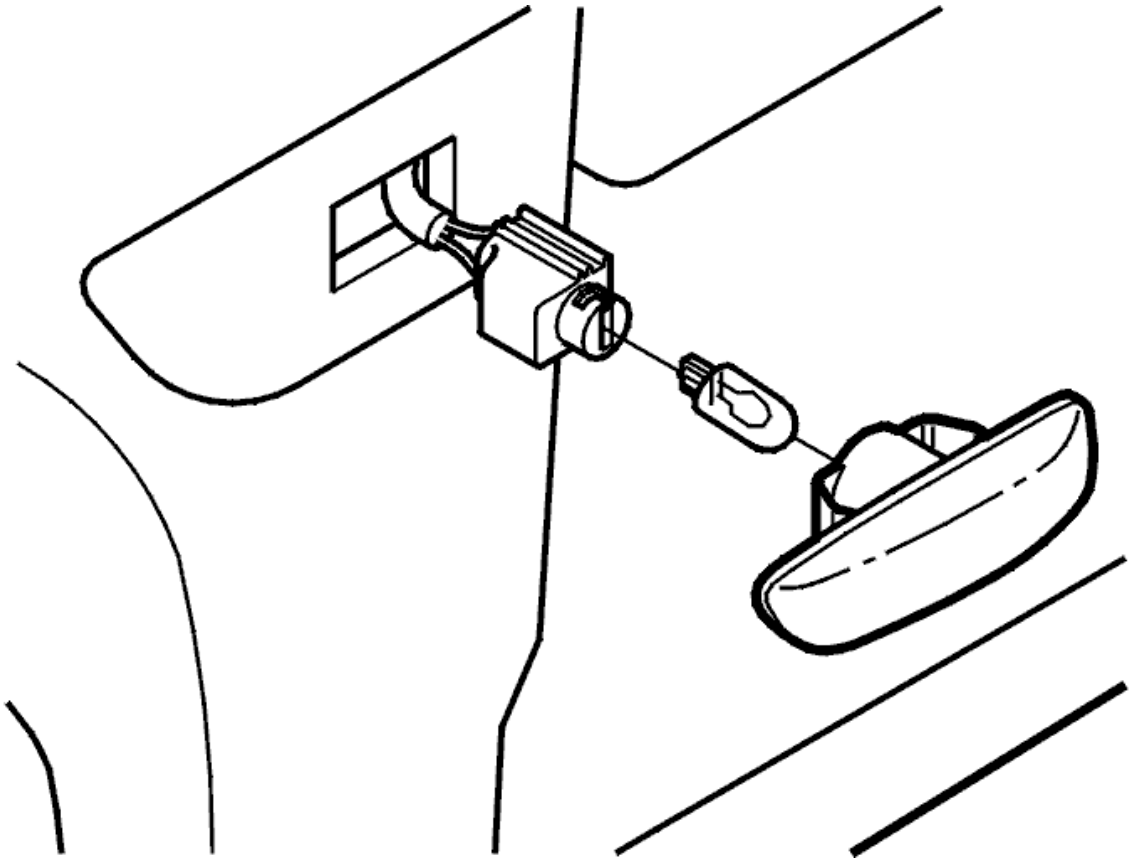

Fig. 62: Identifying Side Turn Signal Flasher
Courtesy of VOLVO CARS CORPORATION

- Press the lamp housing forward and pull out the rear edge at the same time. Release the lamp housing when its rear edge has detached to release its front edge
- Disconnect the connector.

BULB

- Remove the lamp housing
- Twist the bulb holder free from the lamp housing
- Pull the bulb straight out.

INSTALLATION

SIDE TURN SIGNAL FLASHERS, ASSEMBLY AND BULB

- In reverse order.

LIGHTING, SIDE (2007-2012)

SIDE TURN SIGNAL FLASHER

REMOVAL AND INSTALLATION

NOTE: Removal steps in this procedure may contain installation details.

Remove the mirror cover. See **COVER, EXTERNAL MIRROR** .

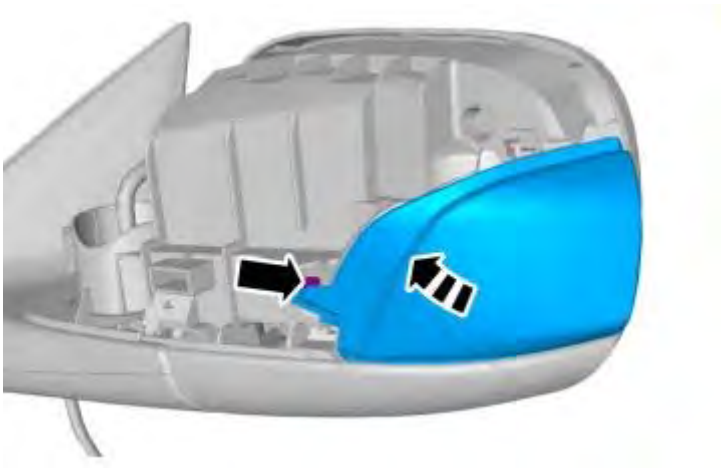

Fig. 63: Removing Side Turn Signal Flasher
Courtesy of VOLVO CARS CORPORATION

CAUTION: Pry carefully to avoid cracking the lamp housing.

INSTALL

To install, reverse the removal procedure

ACCESSORIES AND EQUIPMENT

Lighting - Specifications, Electrical/Electronic

SIGNAL DESCRIPTION, HEADLAMP CONTROL MODULE (HCM)

SIGNAL SPECIFICATION

All the values given below are between the respective terminal in column 1 and terminal #A6 in column 1 (power ground), if this is not the case, it is indicated within brackets.

NOTE: It is important to check ground terminals before taking readings.

U=	DC voltage in volts (V)	U_{AC} =	AC voltage in volts (V)
U_{bat} =	Battery voltage (V)	f =	Frequency in Hertz (Hz)
U_{low} =	Voltage approximately 0 V	t =	Time in seconds
PWM =	Pulse width modulated signal as a %	-	-

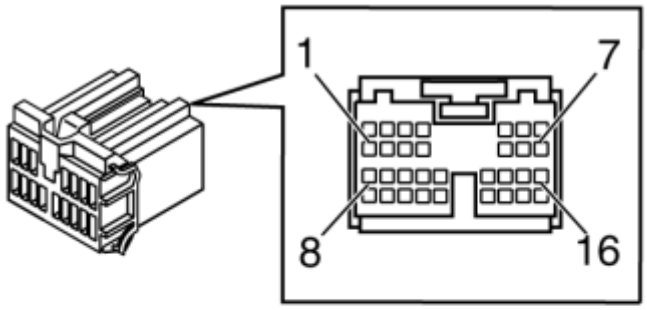

Fig. 1: Identifying Connector & Terminals
Courtesy of VOLVO CARS CORPORATION

SIGNAL TABLE

Control module terminal	Signal type	Ignition off Active/Inactive	Ignition on Active/Inactive	Other

#A1	15-feed	U_{low} /U_{low}	U_{high} /U_{high}	-
#A2	-	-	-	-
#A3	Communication CAN_L high speed network	During communication the voltage is 1.5-2.5 V		-
#A4	Communication CAN_H high speed network	During communication the voltage is 2.0-3.5 V		-
#A5	Left headlamp control unit (LHCU), LIN communication	During communication the voltage is 0 V - U_{bat}		-
#A6	Power ground	U_{low} /U_{low}	U_{low} /U_{low}	-
#A7	Right headlamp control unit (RHCU), LIN communication	During communication the voltage is 0 V - U_{bat}		-
#A8	-	-	-	-
#A9	-	-	-	-
#A10	-	-	-	-
#A11	-	-	-	-
#A12	-	-	-	-
#A13	-	-	-	-
#A14	-	-	-	-
#A15	-	-	-	-
#A16	-	-	-	-

ACCESSORIES AND EQUIPMENT

Lighting - Specifications, Other

VEHICLE COMMUNICATION INFORMATION, HEADLAMP CONTROL MODULE (HCM) (B5254T2; 2007)

DESCRIPTION OF PARAMETERS

PARAMETERS, VALUE

POWER SUPPLY, VALUE

Measurement range 6 - 20 V.

Indicates the power supply to the headlamp control module (HCM).

The normal value when the alternator is charging: 13.0-14.5 V.

STEERING WHEEL ANGLE, VALUE

Measurement range: -780 to +780°.

Indicates current steering wheel angle.

The normal value when the steering wheel and front wheels point straight ahead is approx. 0°.

DESCRIPTION OF READING OFF OF EXTENDED DIAGNOSTIC TROUBLE CODE (DTC) INFORMATION

see **DESCRIPTION OF FROZEN VALUES, HEADLAMP CONTROL MODULE (HCM)**

see **DESCRIPTION OF STATUS IDENTIFIER**

see **DESCRIPTION OF COUNTER**

DESCRIPTION OF FROZEN VALUES, HEADLAMP CONTROL MODULE (HCM)

EXPLANATION

Frozen values are parameter values that are stored when a diagnostic trouble code is generated. Not all parameters can be read out for all diagnostic trouble codes. The parameter values can only be read if they can provide additional information on the prevailing conditions when the code was generated.

TOTAL MILEAGE, VALUE

Measurement range: 0-1,000,000 km

The value indicates the vehicle's total mileage when the Diagnostic Trouble Code (DTC) was generated.

MECU POWER SUPPLY, VALUE

Measurement range: 0 - 63 V

Normal range: 12.0 - 14.5 V

The value indicates the power supply to the central electronic module (CEM) when the diagnostic trouble code was generated.

PASSENGER COMPARTMENT TEMPERATURE, VALUE

Measurement range: -40 till +215 °C

The value indicates the passenger compartment temperature when the diagnostic trouble code was generated.

OUTSIDE TEMPERATURE, VALUE

Measurement range: -40 till +215 °C

The value indicates the outside temperature when the diagnostic trouble code was generated.

POWER SUPPLY MODE, STATUS

The value indicates the status of the power supply mode when the diagnostic trouble code was generated.

Key removed

Key recently removed

Key approved

Ignition off after Accessory position

Accessory position

Accessory position after Ignition on

Ignition on

Running

Start attempt

Signal missing

SPEED, VALUE

Measurement range: 0 to 255 km/h (158 mph).

Indicates speed when the diagnostic trouble code was generated.

STEERING WHEEL ANGLE, VALUE

Measurement range: -780 to +780 °.

Indicates current steering wheel angle.

The normal value when the steering wheel and front wheels point straight ahead is approx. 0°.

VEHICLE COMMUNICATION INFORMATION, HEADLAMP CONTROL MODULE (HCM) (B6324S; 2007-10)

DESCRIPTION OF PARAMETERS

PARAMETERS, VALUE

POWER SUPPLY, VALUE

Measurement range 6 - 20 V.

Indicates the power supply to the headlamp control module (HCM).

The normal value when the alternator is charging: 13.0-14.5 V.

STEERING WHEEL ANGLE, VALUE

Measurement range: -780 to +780°.

Indicates current steering wheel angle.

The normal value when the steering wheel and front wheels point straight ahead is approx. 0°.

DESCRIPTION OF READING OFF OF EXTENDED DIAGNOSTIC TROUBLE CODE (DTC) INFORMATION

CONTENTS

Select type of description.

- see **DESCRIPTION OF FROZEN VALUES, HEADLAMP CONTROL MODULE (HCM)**
- see **DESCRIPTION OF STATUS IDENTIFIER**
- see **DESCRIPTION OF COUNTER**

VEHICLE COMMUNICATION INFORMATION, HEADLAMP CONTROL

MODULE (HCM) (B6324S5; 2011-12)

DESCRIPTION OF PARAMETERS

see **DESCRIPTION OF PARAMETERS**

DESCRIPTION OF READING OFF OF EXTENDED DIAGNOSTIC TROUBLE CODE (DTC) INFORMATION

see **DESCRIPTION OF READING OFF OF EXTENDED DIAGNOSTIC TROUBLE CODE (DTC) INFORMATION**

VEHICLE COMMUNICATION INFORMATION, HEADLAMP CONTROL MODULE (HCM) (B8444S; 2007-11)

DESCRIPTION OF PARAMETERS

see **DESCRIPTION OF PARAMETERS**

DESCRIPTION OF READING OFF OF EXTENDED DIAGNOSTIC TROUBLE CODE (DTC) INFORMATION

see **DESCRIPTION OF READING OFF OF EXTENDED DIAGNOSTIC TROUBLE CODE (DTC) INFORMATION**

ACCESSORIES AND BODY, CAB

Lighting - Symptom Verification

HEADLIGHTS/MOISTURE/MIST ON INSIDE OF LENS (2006-2011)

SYMPTOM AND FUNCTION DESCRIPTION

NOTE: The symptom should always be verified together with the customer.

The following tips may be of help to decide if the symptom is due to a product feature or if continued troubleshooting is needed.

HINT: Mist on the inside of the headlight glass is normal if it has disappeared after 30 minute's driving.

FRONT FOG LIGHTS/DAYTIME RUNNING LIGHTS/MOISTURE/MIST ON INSIDE OF LENS (2006-2011)

SYMPTOM AND FUNCTION DESCRIPTION

NOTE: The symptom should always be verified together with the customer.

The following tips may be of help to decide if the symptom is due to a product feature or if continued troubleshooting is needed.

HINT: If moisture disappears after use, it is OK.

GENERAL INFORMATION

Volvo - 1985-12

OXYGEN SENSOR WARNING LIGHT

NOTE: **To determine the appropriate reset procedure, refer to OXYGEN SENSOR WARNING LIGHT RESET INDEX. Only vehicles listed in this index have an Oxygen Sensor Warning Light reset.**

OXYGEN SENSOR WARNING LIGHT RESET INDEX

Model & Year	Reset Procedure
242, 244 & 245	
1984-85	Oxygen Sensor Warning Light Reset - Procedure 1
740 & 760	
1984-85	Oxygen Sensor Warning Light Reset - Procedure 1
760 GLE	
1986	Oxygen Sensor Warning Light Reset - Procedure 1

OXYGEN SENSOR WARNING LIGHT RESET - PROCEDURE 1

1. Warning light in dash will illuminate every 30,000 miles as a reminder to replace oxygen sensor. After replacing sensor, reset mileage counter.
2. To reset mileage counter on 1980-84 models, locate mileage counter in-line with speedometer cable. Press reset button. See **Fig. 1**. Ensure reminder light is out.

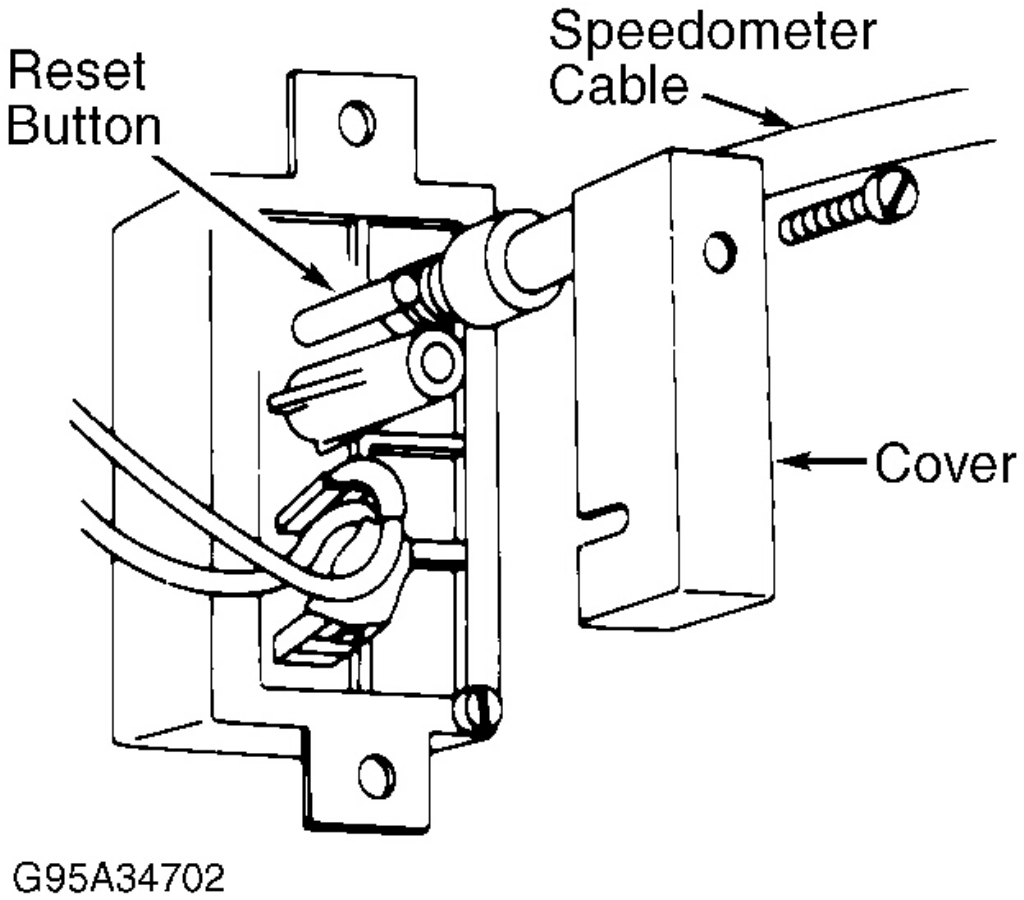

Fig. 1: Resetting Oxygen Sensor Light Mileage Counter (1980-84 Models)
Courtesy of VOLVO CARS OF NORTH AMERICA.

3. To reset counter on 1985 models and 1986 760 GLE models, locate unit under dash (follow wires or small cable from back of speedometer to unit). Remove retaining screw and switch cover. Press reset button. Ensure reminder light is out. Install switch cover.

PUSH BUTTON START/STOP IGNITION SWITCH POSITIONS

Fig. 2: Ignition Slot With Remote Key, Start/Stop Button
Courtesy of VOLVO CARS OF NORTH AMERICA.

NOTE: **The brake pedal must not be depressed when accessing ignition modes I or II .**

CAUTION: Foreign objects in the ignition slot can impair function or damage the lock.

Ignition Mode 0: Insert the remote key in the ignition slot.

Ignition Mode I: Press the remote key into the ignition slot and press **START/STOP ENGINE** .

Ignition Mode II: Press the remote key into the ignition slot and press **START/STOP ENGINE** for approx. 2 seconds.

Ignition Mode III:

- **Engine Start:** Start the engine
- **Stopping The Engine:** Press **START/STOP ENGINE** (If the engine is running and the vehicle is moving, keep the button depressed until the engine stops).

Return To Ignition Mode 0: Press **START/STOP ENGINE** to return from **I** , **II** , or **III** to ignition mode **0** .

SERVICE REMINDER LIGHT

NOTE: **Service reminder light (if equipped) will come on at 5000 or 10,000 mile intervals to indicate oil and filter change is scheduled. After changing oil and filter, reset mileage counter.**

NOTE: **To determine the appropriate reset procedure, refer to SERVICE REMINDER LIGHT RESET INDEX. Only vehicles listed in this index have a Service Reminder Light reset.**

SERVICE REMINDER LIGHT RESET INDEX

Model & Year	Reset Procedure
240	
1988-93	Service Reminder Light Reset - Procedure 1
740	
1987-90	Service Reminder Light Reset - Procedure 2
1991-92	Service Reminder Light Reset - Procedure 3
760	
1985-90	Service Reminder Light Reset - Procedure 2
780	
1987-90	Service Reminder Light Reset - Procedure 2
850	
1993-95	Service Reminder Light Reset - Procedure 4
1993-97 (w/ Yazaki Inst.Cluster)	Service Reminder Light Reset - Procedure 6
1996-97 (w/ VDO Inst.Cluster)	Service Reminder Light Reset - Procedure 5
940	
1991-95	Service Reminder Light Reset - Procedure 3
960	
1992-95	Service Reminder Light Reset - Procedure 3
1996-97	Service Reminder Light Reset - Procedure 7
C30	
2008-12	Service Reminder Light Reset - Procedure 13
C70	
1998	Service Reminder Light Reset - Procedure 8
1999-04	Service Reminder Light Reset - Procedure 9
2006-12	Service Reminder Light Reset - Procedure 13
S40	
2000-04 (Early Production)	Service Reminder Light Reset - Procedure 14
2004 (Late Production)	Service Reminder Light Reset - Procedure 12
2005-11	Service Reminder Light Reset - Procedure 13
S60	
2001	Service Reminder Light Reset - Procedure 10
2002-09	Service Reminder Light Reset - Procedure 10 or Service Reminder Light Reset - Procedure 11
2011-12	Service Reminder Light Reset - Procedure 15
S70	
1998	Service Reminder Light Reset - Procedure 8

1999-00	**Service Reminder Light Reset - Procedure 9**
S80	
1999-06	**Service Reminder Light Reset - Procedure 10** or **Service Reminder Light Reset - Procedure 11**
2007-12	**Service Reminder Light Reset - Procedure 15**
S90	
1997-98	**Service Reminder Light Reset - Procedure 7**
V40	
2000-04	**Service Reminder Light Reset - Procedure 14**
V50	
2005-11	**Service Reminder Light Reset - Procedure 13**
V70 & V70 XC	
1998	**Service Reminder Light Reset - Procedure 8**
1999-00	**Service Reminder Light Reset - Procedure 9**
2001	**Service Reminder Light Reset - Procedure 10**
2002-07	**Service Reminder Light Reset - Procedure 10** or **Service Reminder Light Reset - Procedure 11**
2008-10	**Service Reminder Light Reset - Procedure 15**
V90	
1997-98	**Service Reminder Light Reset - Procedure 7**
XC60	
2010-12	**Service Reminder Light Reset - Procedure 15**
XC70	
2003-07	**Service Reminder Light Reset - Procedure 10**
2008-12	**Service Reminder Light Reset - Procedure 15**
XC90	
2003-04	**Service Reminder Light Reset - Procedure 10**
2005-12	**Service Reminder Light Reset - Procedure 10** or **Service Reminder Light Reset - Procedure 11**

SERVICE REMINDER LIGHT RESET - PROCEDURE 1

To reset counter, locate reset lever behind instrument cluster and push reset lever upward. See **Fig. 3**.

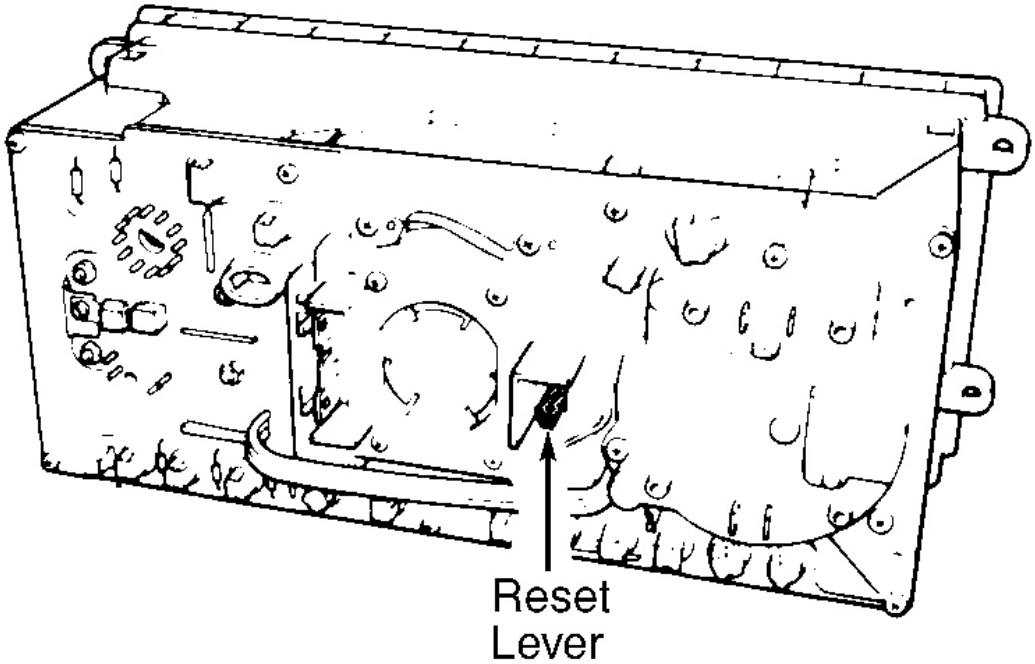

REAR VIEW OF INSTRUMENT PANEL

G90F16613

Fig. 3: Resetting Service Interval Light Mileage Counter (240)
Courtesy of VOLVO CARS OF NORTH AMERICA.

SERVICE REMINDER LIGHT RESET - PROCEDURE 2

To reset counter, locate button behind right center of instrument cluster and press button. See **Fig. 4**.

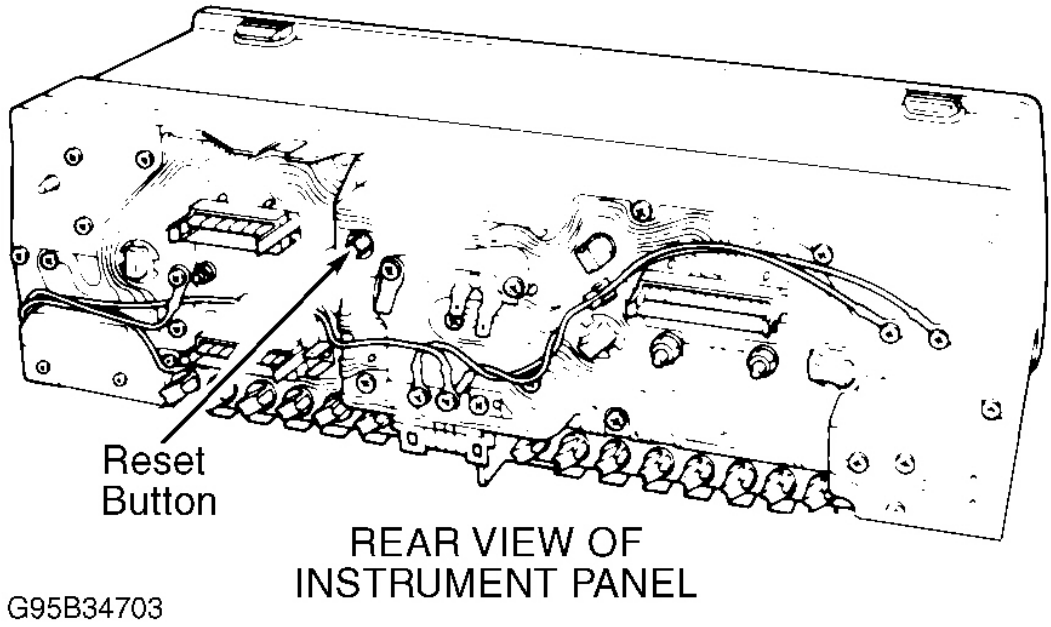

Fig. 4: Resetting Service Interval Light Mileage Counter (740)
Courtesy of VOLVO CARS OF NORTH AMERICA.

SERVICE REMINDER LIGHT RESET - PROCEDURE 3

Remove rubber grommet to left of odometer. Using a small screwdriver, depress reset knob. See **Fig. 5**.

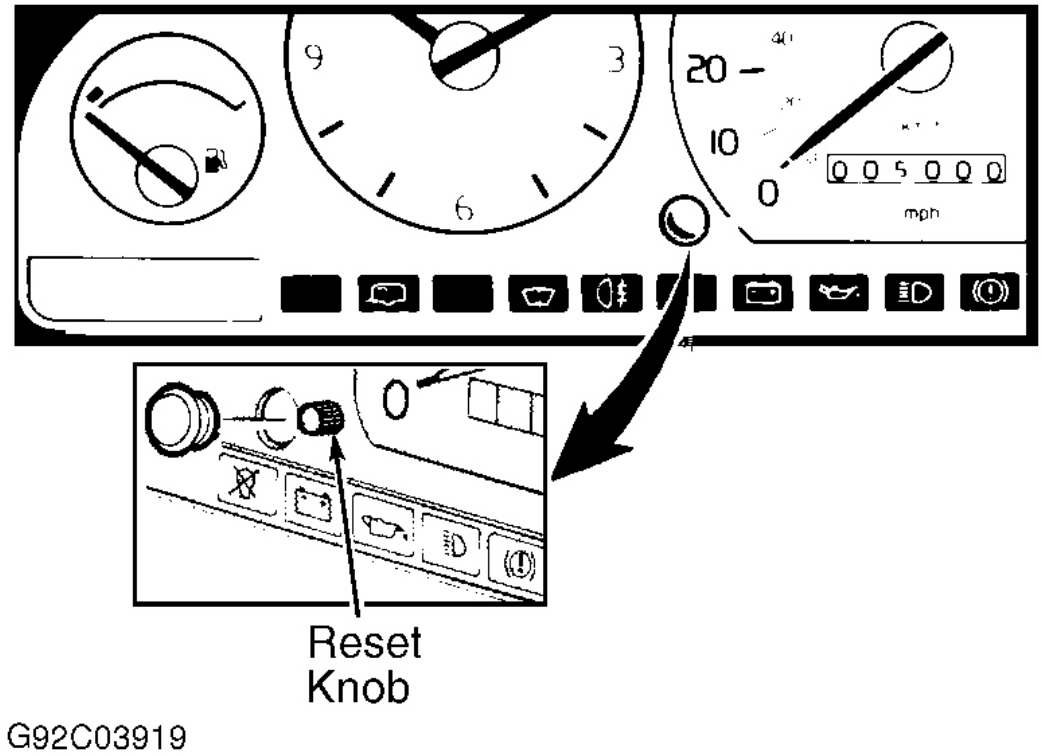

Fig. 5: Resetting Service Interval Light Mileage Counter (1991-92 740 & 1991-95 940 & 960; Also Applies To Some 850 Models)
Courtesy of VOLVO CARS OF NORTH AMERICA.

SERVICE REMINDER LIGHT RESET - PROCEDURE 4

The Service Reminder Indicator (SRI) is triggered at the appropriate interval is reached. On US and Canadian cars, with or without turbocharger, this will be 10,000 miles (15,000 km), 750 operating hours or 12 calendar months.

Once triggered, the SRI comes on each time the engine is started. The light goes out after about 2 minutes. After service is performed and the SRI counter reset, the SRI will not light again until shortly before the next service is due.

1. Identify type of instrument cluster used in vehicle. See **Fig. 6**.

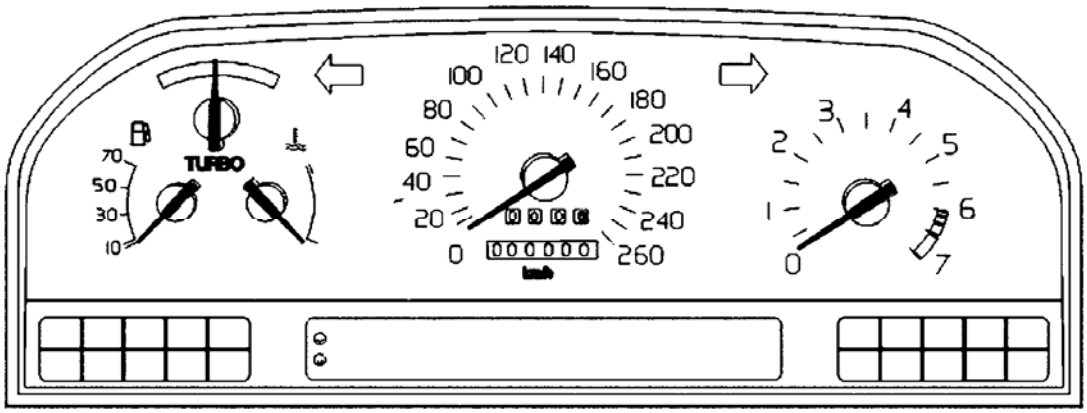

Fig. 6: Identifying VDO Instrument Cluster (1993-97 850)
Courtesy of VOLVO CARS OF NORTH AMERICA.

2. Turn ignition on. Locate on-board diagnostic unit on right side of engine compartment. Connect diagnostic lead to terminal No. 7 on diagnostic unit. See **Fig. 7**.

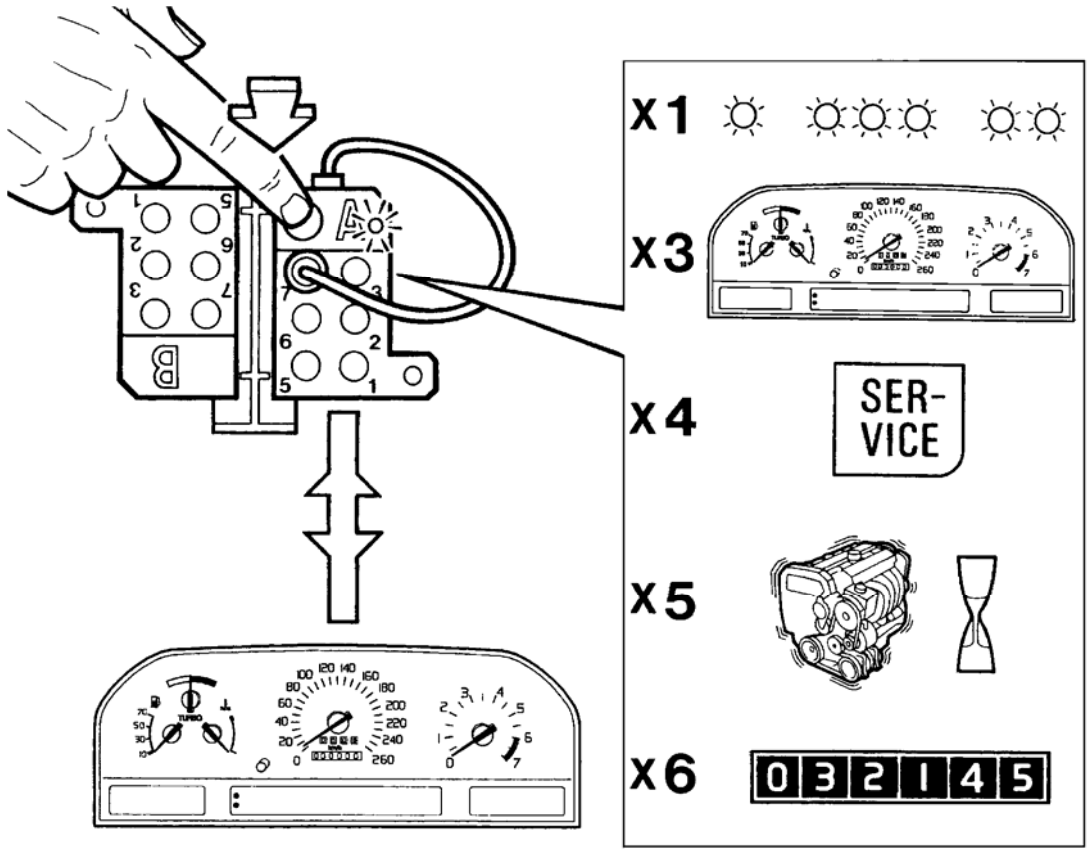

Fig. 7: Locating On-Board Diagnostic Unit (1993-95 850)
Courtesy of VOLVO CARS OF NORTH AMERICA.

3. Depress button 4 times, briefly but firmly. System is now in DTM 4 mode. When LED comes on and stays on, the system is ready for entering codes.
4. Code to be entered is 1-5-1. Enter first digit (1) with LED on. Wait until it comes on and stays on again, then enter the second digit (5). Repeat procedure for the third digit (1).
5. Wait for diagnostic unit confirmation (LED flashing several times in succession). If LED emits a couple of rapid flashes and service reminder light is turned off, reset procedure is complete. If service reminder light remains on, repeat procedure.

SERVICE REMINDER LIGHT RESET - PROCEDURE 5

Vehicles with VDO Instrument Cluster

Identify type of instrument cluster used in vehicle. See **Fig. 6**.

The service reminder indicator is lit for two minutes each time the engine is started until it is reset after the next service. Reset is performed using a Volvo scan tool, or equivalent aftermarket scan tool.

Connect scan tool to Data Link Connector (DLC) in center console, in front of shift lever. See **Fig. 8**. Turn ignition on, with engine off. Follow scan tool menus as follows:

1. Select LANGUAGE, press ENTER
2. Select 800 SERIES, press ENTER
3. Select SERVICE, press ENTER
4. Select RESET SRI, press EXIT

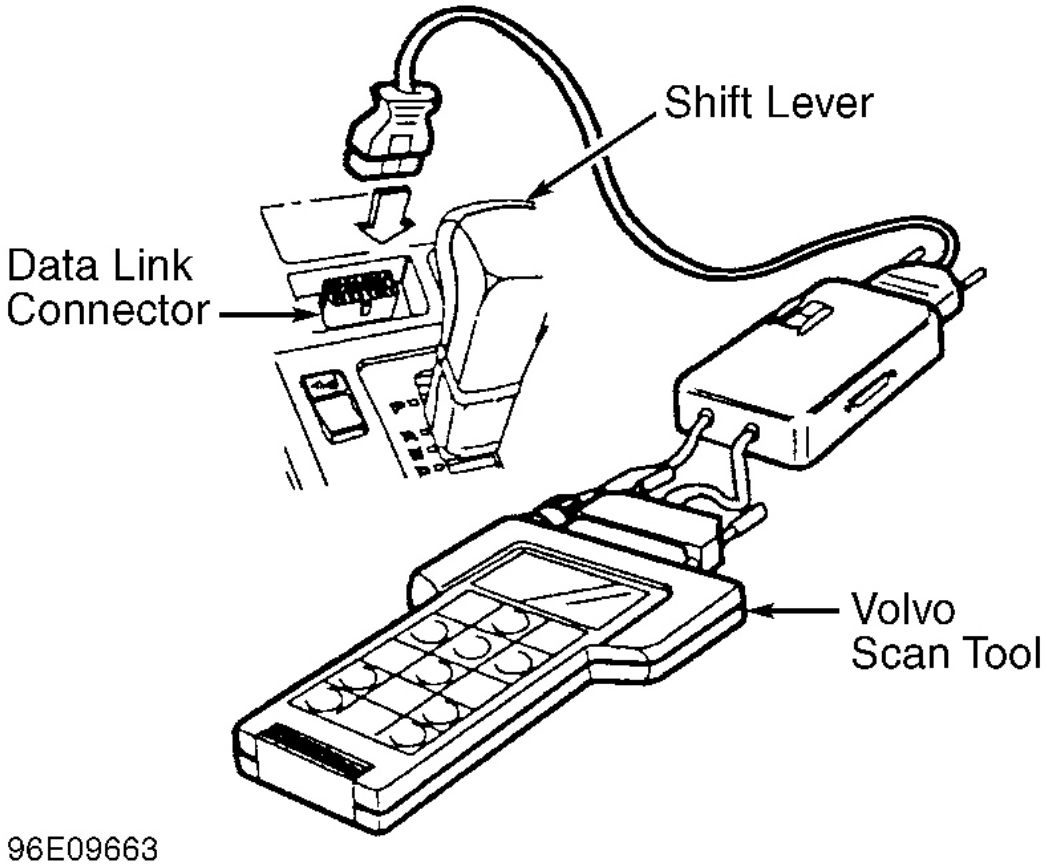

Fig. 8: Locating Data Link Connector (1996-97 850 - VDO)
Courtesy of VOLVO CARS OF NORTH AMERICA.

SERVICE REMINDER LIGHT RESET - PROCEDURE 6

Vehicles with Yazaki Instrument Cluster

The service reminder indicator comes on when 10,000 mile (15,000 km) service interval is reached.

1. Vehicle is equipped with Yazaki instrument cluster. See **Fig. 9**.
2. The service reminder reset knob is located on front of instrument cluster, underneath a rubber grommet. See **Fig. 5**.
3. To reset, remove rubber grommet. Use a small screwdriver to depress the knob.

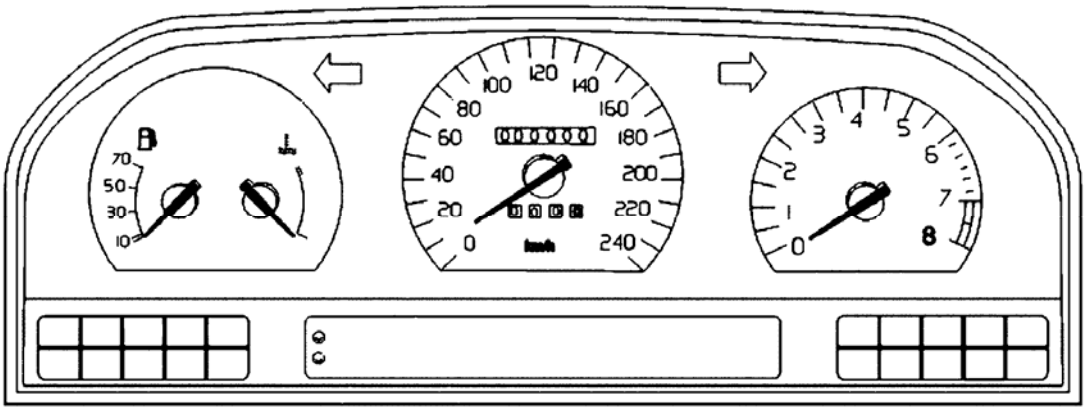

G00283674

Fig. 9: Identifying Yazaki Instrument Cluster (1993-97 850 - Yazaki)
Courtesy of VOLVO CARS OF NORTH AMERICA.

SERVICE REMINDER LIGHT RESET - PROCEDURE 7

The service reminder light will illuminate at 10,000 miles, 750 hours of driving or 12 months, whichever comes first to remind driver that service interval has been exceeded. Service reminder light is reset using Volvo Scan Tool, or equivalent aftermarket scan tool. Follow scan tool manufacturer's instructions. Diagnostic connector is located in center console.

SERVICE REMINDER LIGHT RESET - PROCEDURE 8

NOTE: Depending on application, Service Reminder Indicator (SRI) may be turned off by one of two methods.

Method 1

SRI reset may depend on instrument panel installed in vehicle. See **Procedure 5 (1996-97 850 With VDO Instrument Clusters)** or **Procedure 6 (1993-97 850 With Yazaki Instrument Clusters)**.

Method 2

The service reminder light will illuminate at 10,000 miles, 750 hours of driving or 12 months, whichever comes first to remind driver that service interval has been exceeded. Service reminder light is reset using Volvo Scan Tool, or equivalent aftermarket scan tool. Follow scan tool manufacturer's instructions. Diagnostic connector is located in center console, in front of shift lever.

SERVICE REMINDER LIGHT RESET - PROCEDURE 9

1. Turn ignition off.
2. Press in trip odometer reset button.
3. Switch ignition on, while continuing to press trip odometer reset button.

4. Continue pressing in the reset button for 10 seconds.
5. Release reset button within 4 seconds.

SERVICE REMINDER LIGHT RESET - PROCEDURE 10

Models 2001 & Earlier

The service reminder indicator (SRI) informs the driver that it is time for the car to be serviced. The lamp remains lit for 120 seconds when the ignition is switched on.

NOTE: If the lamp flashes, it may be because one of the service parameters has not been programmed.

1. Turn ignition to position I.
2. Press and hold in the reset button for the trip odometer.
3. Turn ignition to position II, while continuing to press trip odometer reset button.
4. The service reminder indicator (SRI) starts flashing when the reset button for the trip odometer has been pressed for 10 seconds.
5. Release the reset button for the trip odometer within 5 seconds. The instrument gives an audible signal when resetting has succeeded.

NOTE: If the trip meter reset button is not released within 5 seconds the indicator is not reset. However the indicator will stop flashing.

Models 2002 & Later

The service reminder indicator (SRI) informs the driver that it is time for the car to be serviced. The text message is displayed for 120 seconds each time the ignition is switched on.

1. Turn ignition to position I
2. Press and hold in the reset button for the trip odometer
3. Turn the key to position II within 2 seconds, while continuing to press trip odometer reset button.
4. For all vehicles from the 2003 model year a general yellow lamp will light when the reset button must be released.
5. Release the reset button for the trip odometer within 4 seconds. The instrument gives an audible signal when resetting has succeeded

   NOTE: If the reset button for the trip odometer is not released within 4 seconds, the service reminder indicator (SRI) is not reset.

6. If the trip meter is already reset the reset button should be held in for a minimum of 10 seconds and a maximum of 14 seconds.

SERVICE REMINDER LIGHT RESET - PROCEDURE 11

NOTE: **If equipped with a push button start/stop ignition, see PUSH BUTTON START/STOP IGNITION SWITCH POSITIONS for ignition switch positions.**

The SRI lights the first time the ignition is switched on after the service interval has been reached. The SRI will continue to illuminate, and remain illuminated, for 2 minutes every time the ignition is switched on or until it is reset. The SRI can be programmed for distance traveled, time since last service and engine hours since last service. Programming is done using the Volvo factory scan tool.

Starting from the 2002 model year, the need for service is indicated partly by the lamp and partly by a text message, TIME FOR SERVICE or TIME FOR REGULAR SERVICE. The SRI can be reset using the Volvo factory scan tool (or equivalent aftermarket scan tool), or using the following method.

NOTE: **The service indicator message can also be reset using VIDA vehicle communication.**

The service reminder indicator (SRI) informs the driver that it is time for the vehicle to be serviced. The text message is displayed for 120 seconds each time the ignition is switched on.

1. Ignition position I
2. Press and hold in the reset button for the trip odometer.
3. Turn the key to position II within 2 seconds, while continuing to press trip odometer reset button.
4. Hold the reset button for the trip meter pressed in until the original value has been reset and the general yellow lamp comes on.
5. Release the reset button for the trip odometer within 4 seconds. The instrument gives an audible signal when resetting has succeeded.

   NOTE: **The odometer reset button must be released within 4 seconds to reset the service indication message.**

6. If the trip meter is already reset, the reset button should be held in for a minimum of 10 seconds and a maximum of 14 seconds.

SERVICE REMINDER LIGHT RESET - PROCEDURE 12

NOTE: **The S40 information applies to late production 2004 cars. In mid-2004, Volvo introduced a redesigned S40. For early production cars, the 4th character of the VIN is V. For late production cars, the 4th character of the VIN is M. Early production S40 models are equipped with 1.9L 4-cylinder engines. Late production S40 models are equipped with 5-cylinder engines.**

1. Turn ignition to position I.
2. Press and hold the reset button for the trip odometer.
3. Turn key to position II within 2 seconds, while continuing to press trip odometer reset button.
4. Hold the reset button for the trip meter until the original value has been reset.

5. Release the reset button for the trip odometer within 4 seconds. The instrument cluster will give an audible signal when resetting is completed.

NOTE: If the reset button for the trip odometer will not released within 4 seconds, the light is not reset.

6. If the trip meter is already reset, the reset button should be held in for a minimum of 10 seconds and a maximum of 14 seconds.

SERVICE REMINDER LIGHT RESET - PROCEDURE 13

NOTE: If equipped with a push button start/stop ignition, see PUSH BUTTON START/STOP IGNITION SWITCH POSITIONS for ignition switch positions.

NOTE: The lamp can also be reset using VIDA vehicle communication.

The service reminder indicator (SRI) informs the driver that it is time for the vehicle to be serviced. The text message is displayed for 120 seconds each time the ignition is switched on.

1. Turn ignition to position I.
2. Press and hold in the reset button for the trip odometer.
3. Turn the key to position II within 2 seconds, while continuing to press trip odometer reset button.
4. Hold the reset button for the trip odometer pressed in until the original value has been reset.
5. The information lamp lights when the reset button must be released.
6. Release the reset button for the trip odometer within 4 seconds. The instrument gives an audible signal when resetting has succeeded.

NOTE: If the reset button for the trip odometer is not released within 4 seconds, the service reminder indicator (SRI) is not reset.

7. If the trip odometer is already reset, the reset button must be held in for a minimum of 10 seconds and a maximum of 14 seconds.

SERVICE REMINDER LIGHT RESET - PROCEDURE 14

NOTE: The S40 information applies to early production 2004 cars. In mid-2004, Volvo introduced a redesigned S40. For early production cars, the 4th character of the VIN is V. For late production cars, the 4th character of the VIN is M. Early production S40 models are equipped with 1.9L 4-cylinder engines. Late production S40 models are equipped with 5-cylinder engines.

1. Turn ignition off.
2. Press and hold in the reset button for the trip odometer.
3. Turn ignition on, while continuing to press trip odometer reset button.

4. The service reminder indicator (SRI) starts flashing when the reset button for the trip odometer has been pressed for 10 seconds.
5. Release the reset button for the trip odometer within 4 seconds. The instrument gives an audible signal when the reset has succeeded. The SRI indicator lamp goes out.

NOTE: If the reset button for the trip odometer is not released within 4 seconds, the light is not reset. However it will stop flashing.

SERVICE REMINDER LIGHT RESET - PROCEDURE 15

NOTE: The service indicator message can also be reset using VIDA vehicle communication.

1. Turn ignition switch to position I.
2. Press and hold the trip odometer reset button.
3. Turn ignition switch to position II, while continuing to press trip odometer reset button.
4. Wait for 10 seconds.
5. Release the reset button when the information lamp starts to flash.
6. The instrument panel beeps when resetting has been successful.

TIRE PRESSURE MONITOR SYSTEM (TPMS)

NOTE: To determine the appropriate reset procedure, refer to TPMS RESET INDEX. Only vehicles listed in this index have a TPMS reset.

TPMS RESET INDEX

Model & Year	Reset Procedure
C30	
2008-12	TPMS Reset - Procedure 1
C70	
2008-12	TPMS Reset - Procedure 1
S40	
2008-11	TPMS Reset - Procedure 1
S60	
2005-12	TPMS Reset - Procedure 1
S80	
2005-12	TPMS Reset - Procedure 1
V50	
2008-11	TPMS Reset - Procedure 1
V70	
2005-10	TPMS Reset - Procedure 1
XC60	

2010-12	**TPMS Reset - Procedure 1**
XC70	
2005-12	**TPMS Reset - Procedure 1**
XC90	
2005-12	**TPMS Reset - Procedure 1**

TPMS RESET - PROCEDURE 1

CAUTION: When inflating tires with TPMS valves, press the pump's mouthpiece straight onto the valve to help avoid bending or otherwise damaging the valve.

NOTE: This system may not function properly if vehicle is equipped with a temporary spare tire or winter wheel/tire, as this tire does not have a TPM system sensor.

NOTE: Volvo vehicles do not require a formal reset procedure for any of the TPM system functions. Tire pressure sensor IDs are automatically programmed while driving.

Tire Pressure Warning

There are two warning levels that generate different warning messages, one warning for low pressure and a warning for very low pressure. A message is also displayed if a sensor stops transmitting or receives insufficient battery voltage. A warning lamp also lights in the Driver information module (DIM) at the same time as the warning message appears.

The easiest way to reset a warning is to fill the underinflated tire to specification. The warning in the Driver information module (DIM) disappears the next time the ignition is switched on. If air is filled in a tire that has warned of low pressure and the ignition is on during the entire process, the warning will go out as soon as the pressure in the tire exceeds the specified level.

Tire Sensor Learning

If a sensor must be replaced, the system must "learn" the new sensor ID. This can be carried out in 2 different ways:

NOTE: The vehicle must be parked for longer than 15 minutes to learn the new ID.

- Drive the vehicle faster than 40 km/h (25 mph) for longer than 10 minutes. The warning for low pressure remains in the Driver information module (DIM) until the Central electronic module (CEM) has identified the new sensor.
- Programming "by hand". This is carried out using the appropriate Volvo tire sensor activation tool, or Low Frequency (LF) initiator (sensor activation tool).

NOTE: The Volvo tire sensor activation tool on S80 (-06)/S60/V70/XC70/XC90 does

not work with the sensors on S40 (04-)/V50/C30/C70 (06-)

MAINTENANCE

Service And Maintenance - General Information

RAPGARD-F™ PAINTWORK PROTECTION (2003-12)

RAPGARD-F PAINTWORK PROTECTION

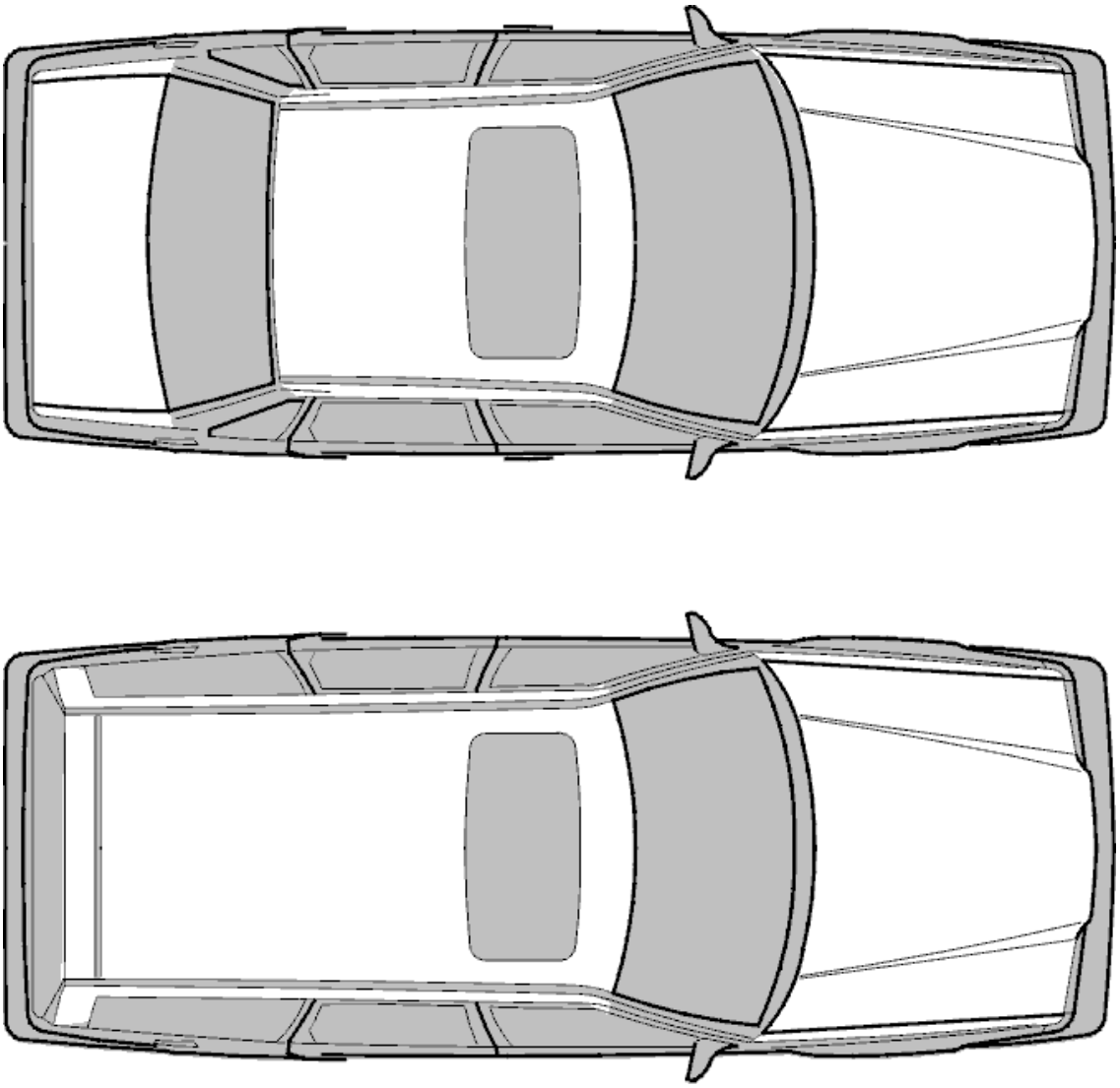

Fig. 1: Hood, Roof And Trunk Protected By RAPGARD
Courtesy of VOLVO CARS CORPORATION

During storage and transport the paintwork on the engine hood, roof and trunk lid of cars is protected by RAPGARD-F, a white plastic film with synthetic rubber adhesive, which is applied to the car in the factory.

RAPGARD-F must be left on the car until approximately **48 hours** prior to delivery to the customer.

The maximum storage time for RAPGARD-F is 6 months from the date of manufacture.

The date of manufacture can be obtained by the dealer using the chassis number register.

If the plastic film becomes detached at any point, the loose section must be removed as soon as possible.

The white areas in the graphic show where RAPGARD-F is applied .

REMOVAL OF RAPGARD-F

TEMPERATURE:

A temperature of **20°C** is ideal for removing RAPGARD-F. The temperatures permitted are as follows:

- Minimum temperature **0°C**
- Maximum temperature **35°C** .

CAUTION: If the body and ambient temperature is higher than 35°C, the car should be parked in the shade and the body cooled with cold water. The adhesive RAPGARD-F may otherwise stick to the paint.

METHOD OF REMOVAL

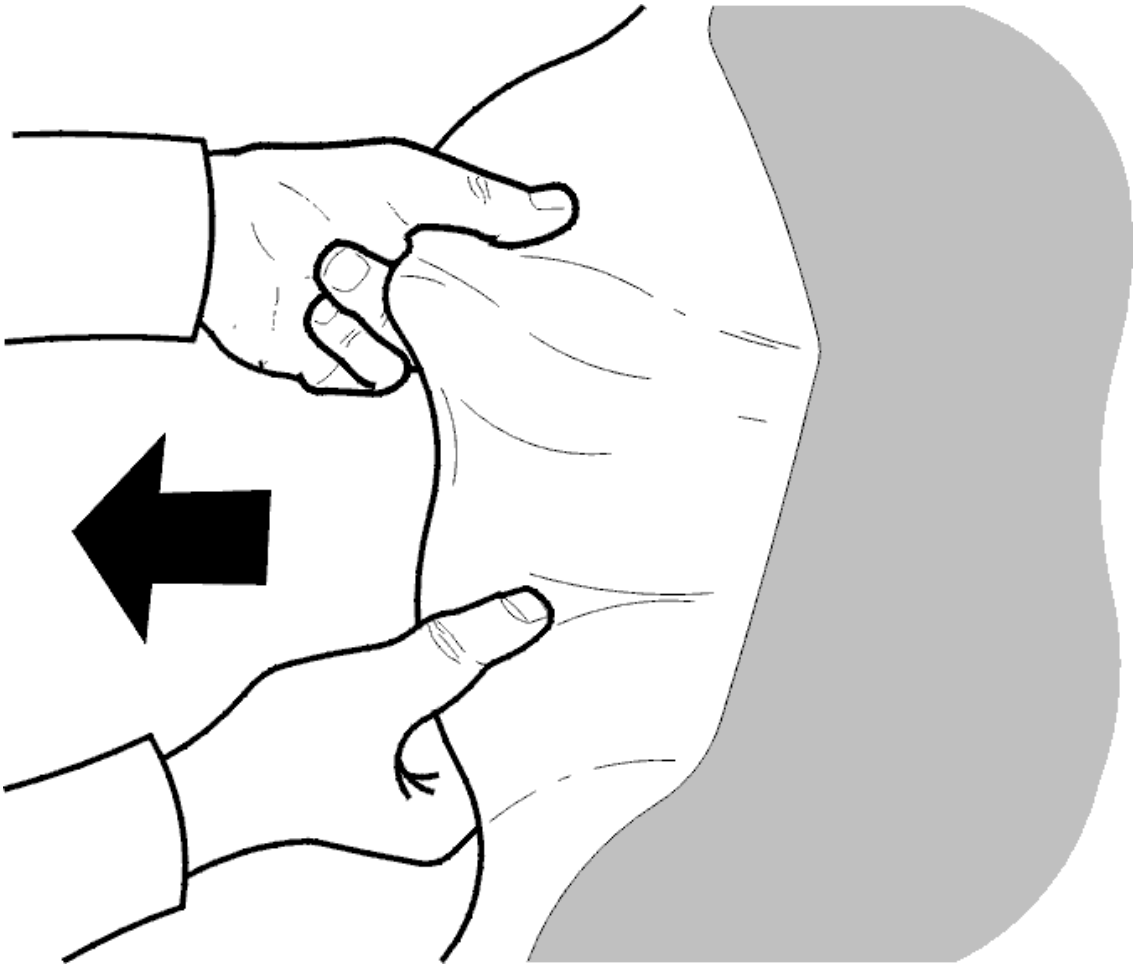

Fig. 2: Identifying RAPGARD Film Pulled Off By Hand
Courtesy of VOLVO CARS CORPORATION

Pull off the RAPGARD film by hand only. No tools may be used.

Begin by loosening the film at the corners.

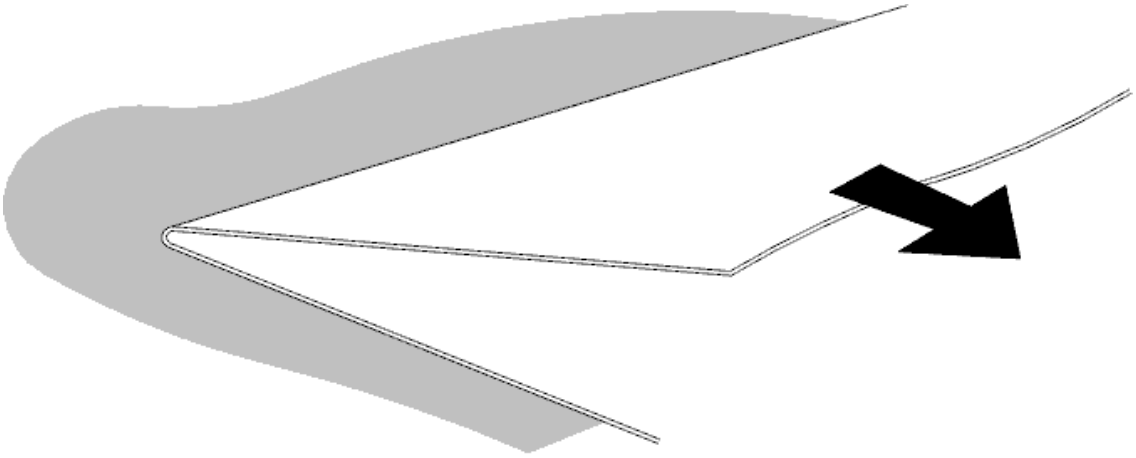

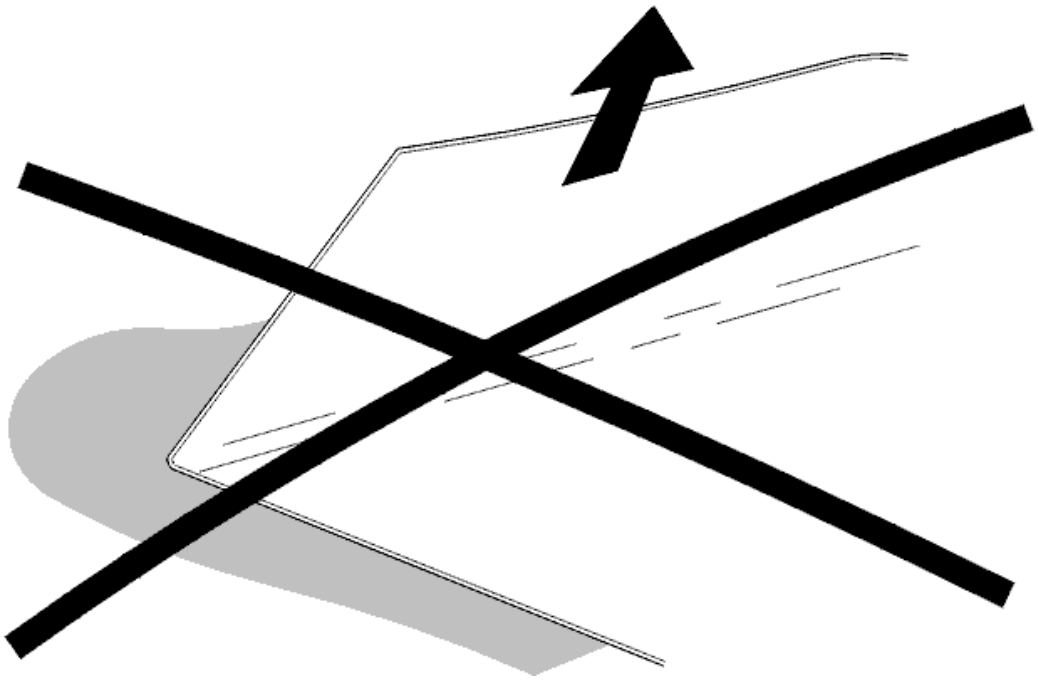

Fig. 3: Identifying RAPGARD Correct And Incorrect Removal
Courtesy of VOLVO CARS CORPORATION

Place the hands as close as possible to the body so that the film is lifted off parallel to the body.

This will minimize the quantity of adhesive remaining on the body.

The method shown in the crossed-out graphic is incorrect.

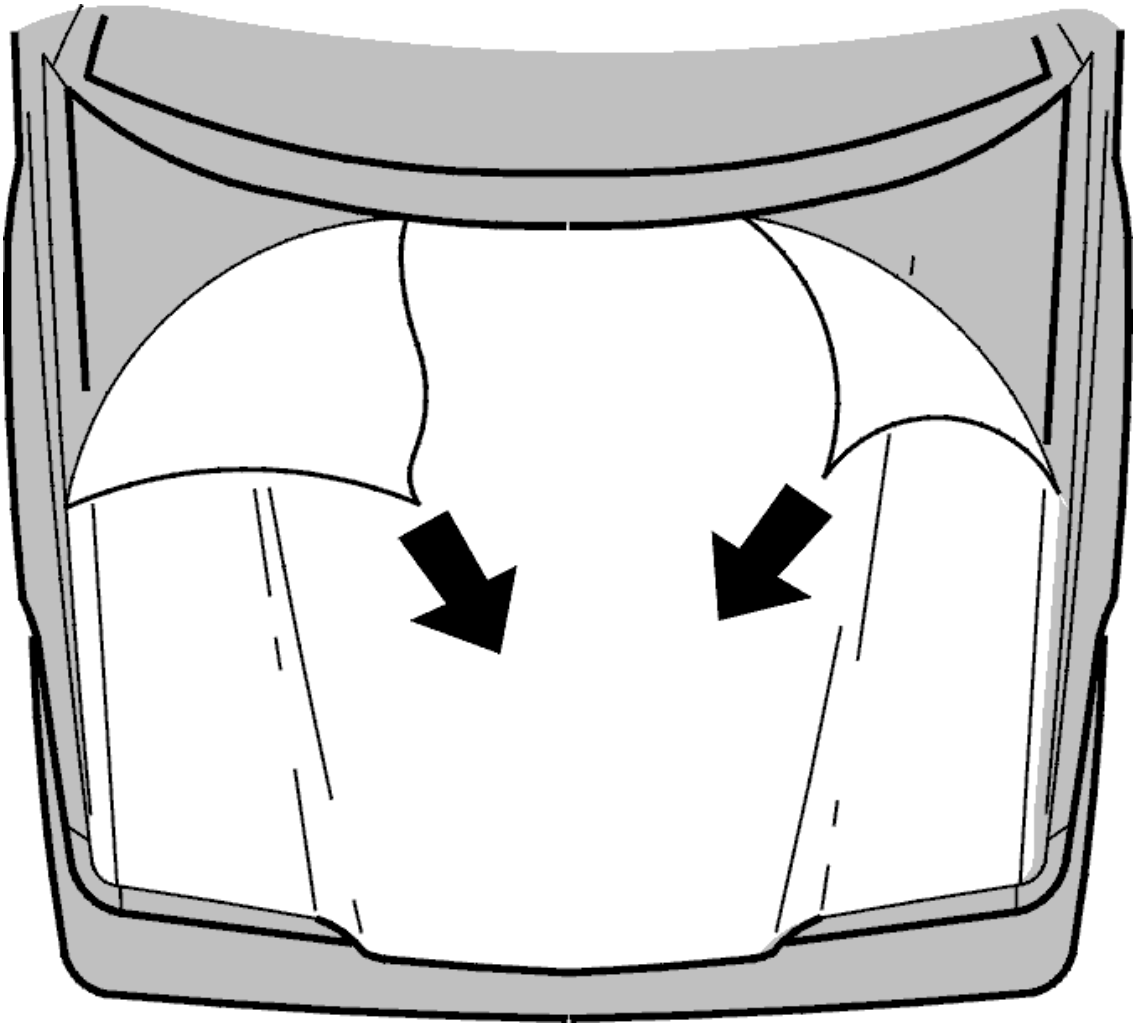

Fig. 4: Identifying RAPGARD Alternately Pulled From Two Corners
Courtesy of VOLVO CARS CORPORATION

On large surfaces, such as the hood and roof, pull alternately from two corners until the film is loose.

PLASTIC RESIDUE

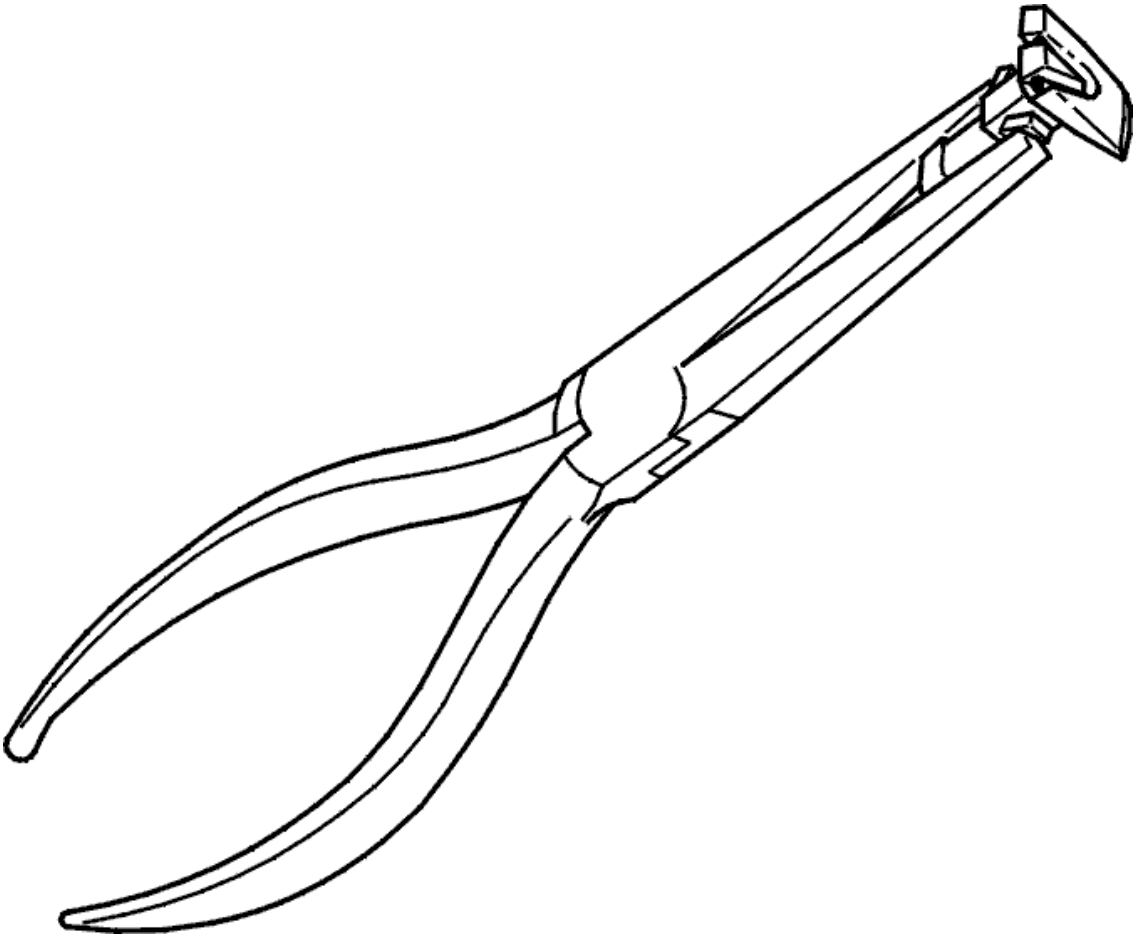

Fig. 5: Identifying Flat-Nosed Pliers
Courtesy of VOLVO CARS CORPORATION

After RAPGARD-F is removed, there may still be plastic residue caught under the washer jets. The jets must be lifted slightly when RAPGARD-F is removed to avoid this.

Use flat-nosed pliers to press in the locking clips on the jet and then lift it in order to remove the RAPGARD-F.

After removing RAPGARD-F, press the washer jet firmly into place on the hood.

ADHESIVE RESIDUE

Wash the car with water when the film has been removed. Dry the car and inspect for adhesive residue on the paintwork.

Any adhesive residue must be removed using auto-cleaner, P/N 1161300 or 1161450.

BUBBLING

Inspect paintwork for bubbling after any adhesive residue has been removed. Bubbling is usually temporary and will disappear within **24 hours** . If there is still bubbling after **48 hours** , heat carefully using a hot-air gun. Hold the air pistol approximately **30 cm** from the paint.

NOTE: The temperature of paintwork must not exceed 100°C

If the bubbling persists, the paintwork must be sanded down and touched up.

MAINTENANCE

Service And Maintenance - Service Programs

MAINTENANCE SERVICE (B5254T2, AW50/51 AWD; B5254T2, AW55-50/51SN; B6324S, TF-80SC; B6324S, TF-80SC AWD; B8444S, TF-80SC AWD; 2007)

SERVICE PROGRAM A

Program point:											
	Km x 1000:	**12**	**24**	**36**	**48**	**60**	**72**	**84**	**96**	**108**	**120**
	Miles x 1000:	**7.5**	**15**	**22.5**	**30**	**37.5**	**45**	**52.5**	**60**	**67.5**	**75**
Parking brake -check and adjust			x		x		x		x		x
Washer and wipers for windshields and headlamps -check the function and for signs of wear		x	x	x	x	x	x	x	x	x	x
Crankcase ventilation - clean	Only applies to B5254T2 Remove the generator (GEN). Clean the pipe screws and hoses.										
Engine -check for leaks	Check for signs of oil, coolant, power steering fluid and brake fluid leaks.		x		x		x		x		x
Program point:											
	Km x 1000:	**12**	**24**	**36**	**48**	**60**	**72**	**84**	**96**	**108**	**120**
	Miles x 1000:	**7.5**	**15**	**22.5**	**30**	**37.5**	**45**	**52.5**	**60**	**67.5**	**75**
Raise the vehicle											

Engine/ Transmission/ Timing gear -check for leaks	In the event of leakage from the transmission, check the oil level.		x		x		x		x		x
Engine oil/ Oil filter - drain the oil. Replace the oil filter		x	x	x	x	x	x	x	x	x	x
Automatic transmission The oil does not normally need changing. The oil must be changed if instructed in the text information display.	**NOTE: For vehicles used as taxis or primarily used for towing, replace the oil according to the service program.**							x			
Wheels and tires (excluding spare wheel) - check for damage, wear, tire pressure		x	x	x	x	x	x	x	x	x	x
Program point:											
	Km x 1000:	**12**	**24**	**36**	**48**	**60**	**72**	**84**	**96**	**108**	**120**
	Miles x 1000:	**7.5**	**15**	**22.5**	**30**	**37.5**	**45**	**52.5**	**60**	**67.5**	**75**
Drive shafts -check the play -check rubber bellows									x	x	x
Brake pads / brake discs -check	see **BRAKE PADS, FRONT, CHECK** see **BRAKE PADS, REAR, CHECK**	x	x	x	x	x	x	x	x	x	x
Brake and fuel lines and											

fuel filter -check for leakage and damage					x				x		
Fuel filter -replace											
Exhaust system -check for leakage, mounting									x	x	x
Program point:											
	Km x 1000:	**12**	**24**	**36**	**48**	**60**	**72**	**84**	**96**	**108**	**120**
	Miles x 1000:	**7.5**	**15**	**22.5**	**30**	**37.5**	**45**	**52.5**	**60**	**67.5**	**75**
Front suspension and steering -check for signs of wear									x	x	x
Rear wheel suspension -check for signs of wear									x	x	x
AWD: Final drive, bevel gear -check for leaks	Only check the oil level if there is leakage.		x		x		x		x		x
AWD: Propeller shaft, pilot bearing, universal joint -check for signs of wear									x	x	x
Lower the vehicle											
Air cleaner (ACL), engine -replace	Clean the air cleaner (ACL) housing.					x					x
Spark plugs -replace	Only applies to B5254T2								x		
	Only applies to										

Spark plugs -replace	B8444S, B6324S										x
Program point:											
	Km x 1000:	**12**	**24**	**36**	**48**	**60**	**72**	**84**	**96**	**108**	**120**
	Miles x 1000:	**7.5**	**15**	**22.5**	**30**	**37.5**	**45**	**52.5**	**60**	**67.5**	**75**
Top up the engine oil		x	x	x	x	x	x	x	x	x	x
Fluid levels - engine compartment -check and adjust brake fluid, clutch fluid, power steering fluid, washer fluid, coolant		x	x	x	x	x	x	x	x	x	x
Engine coolant -check and adjust anti-freeze rating / anti-corrosion agent			x		x		x		x		x
Battery -check poles, electrolyte level, mounting					x		x		x		x
Vehicles with temporary tire sealing kit -check the container with sealer fluid, replace every fourth year, see decal.											
Spare wheel - check for damage, wear,					x				x		

tire pressure											
Auxiliary unit belt, belt tensioner, idler pulley -replace according to the service program or: - replace at a **maximum 10 year** interval	Only applies to B5254T2										
Auxiliary unit belt, belt tensioner, idler pulleys -replace according to the service program or: - replace at a **maximum 10 year** interval	Only applies to B8444S										
Auxiliary belt, belt tensioner, idler pulley, clutch, guide pins -replace according to the service program or: - replace at a **maximum 10 year** interval	Only applies to B6324S										
Rubber connection, generator -replace according to the service program or:	Only applies to B6324S See method for generator.										

- replace at a **maximum 15 year** interval											
Program point:											
	Km x 1000:	**12**	**24**	**36**	**48**	**60**	**72**	**84**	**96**	**108**	**120**
	Miles x 1000:	**7.5**	**15**	**22.5**	**30**	**37.5**	**45**	**52.5**	**60**	**67.5**	**75**
Timing belt belt tensioner, idler pulley -replace according to the service program or: - replace at a **maximum 10 year** interval. Check the decal for the most recent replacement.	Only applies to B5254T2										
Air cleaner (ACL) passenger compartment -replace			x		x		x		x		x
Brake fluid -replace	Recommend that a customer with normal mileage has the fluid replaced every other year.					x					x
	NOTE: **The fluid must be replaced every year if the car is used for mountain driving or is mainly used in humid climates.**										
SRI - set the	see **RESETTING**										

service reminder indicator (SRI) to zero	**THE SERVICE REMINDER INDICATOR (SRI)**	x	x	x	x	x	x	x	x	x	x

SERVICE PROGRAM B

Program point:											
	Km x 1000:	**132**	**144**	**156**	**168**	**180**	**192**	**204**	**216**	**228**	**240**
	Miles x 1000:	**82.5**	**90**	**97.5**	**105**	**112.5**	**120**	**127.5**	**135**	**142.5**	**150**
Parking brake -check and adjust			x		x		x		x		x
Washer and wipers for windshields and headlamps -check the function and for signs of wear		x	x	x	x	x	x	x	x	x	x
Crankcase ventilation - clean	Only applies to B5254T2 Remove the generator (GEN). Clean the pipe screws and hoses.						x				
Engine -check for leaks	Check for signs of oil, coolant, power steering fluid and brake fluid leaks.		x		x		x		x		x
Program point:											
	Km x 1000:	**132**	**144**	**156**	**168**	**180**	**192**	**204**	**216**	**228**	**240**
	Miles x 1000:	**82.5**	**90**	**97.5**	**105**	**112.5**	**120**	**127.5**	**135**	**142.5**	**150**
Raise the vehicle											

Engine/ Transmission/ **Timing gear** -check for leaks	In event of leakage from the transmission, check the oil level.		x		x		x		x		x
Engine oil/ Oil filter - drain the oil. Replace the oil filter		x	x	x	x	x	x	x	x	x	x
Automatic transmission The oil does not normally need changing. The oil must be changed if instructed in the text information display.	**NOTE:** **For vehicles used as taxis or primarily used for towing, replace the oil according to the service program.**				x						
Wheels and tires (excluding spare wheel) - check for damage, wear, tire pressure		x	x	x	x	x	x	x	x	x	x
Program point:											
	Km x 1000:	**132**	**144**	**156**	**168**	**180**	**192**	**204**	**216**	**228**	**240**
	Miles x 1000:	**82.5**	**90**	**97.5**	**105**	**112.5**	**120**	**127.5**	**135**	**142.5**	**150**
Drive shafts -check the play -check rubber bellows		x	x	x	x	x	x	x	x	x	x
Brake pads / brake discs -check	see **BRAKE PADS, FRONT, CHECK** see **BRAKE PADS, REAR, CHECK**	x	x	x	x	x	x	x	x	x	x

Brake and fuel lines and fuel filter -check for leakage and damage			x				x				x
Fuel filter -replace							x				
Exhaust system -check for leakage, mounting		x	x	x	x	x	x	x	x	x	x
Program point:											
	Km x 1000:	**132**	**144**	**156**	**168**	**180**	**192**	**204**	**216**	**228**	**240**
	Miles x 1000:	**82.5**	**90**	**97.5**	**105**	**112.5**	**120**	**127.5**	**135**	**142.5**	**150**
Front suspension and steering -check for signs of wear		x	x	x	x	x	x	x	x	x	x
Rear wheel suspension -check for signs of wear		x	x	x	x	x	x	x	x	x	x
AWD: Final drive, bevel gear -check for leaks	Only check the oil level if there is leakage.		x		x		x		x		x
AWD: Propeller shaft, pilot bearing, universal joint -check for signs of wear		x	x	x	x	x	x	x	x	x	x
Lower the vehicle											
Air cleaner (ACL), engine -replace	Clean the air cleaner (ACL) housing.					x					x
Spark plugs	Only applies										

-replace	to B5254T2						x				
Spark plugs -replace	Only applies to B8444S, B6324S										x
Program point:											
	Km x 1000:	**132**	**144**	**156**	**168**	**180**	**192**	**204**	**216**	**228**	**240**
	Miles x 1000:	**82.5**	**90**	**97.5**	**105**	**112.5**	**120**	**127.5**	**135**	**142.5**	**150**
Top up the engine oil		x	x	x	x	x	x	x	x	x	x
Fluid levels - engine compartment -check and adjust brake fluid, clutch fluid, power steering fluid, washer fluid, coolant		x	x	x	x	x	x	x	x	x	x
Engine coolant -check and adjust anti-freeze rating / anti-corrosion agent			x		x		x		x		x
Battery -check poles, electrolyte level, mounting			x		x		x		x		x
Vehicles with temporary tire sealing kit -check the container with sealer fluid, replace every fourth year, see decal.											
Spare wheel											

- check for damage, wear, tire pressure			x				x				x
Auxiliary unit belt, belt tensioner, idler pulley -replace according to the service program or: - replace at a **maximum 10 year** interval	Only applies to B5254T2						x				
Auxiliary unit belt, belt tensioner, idler pulleys -replace according to the service program or: - replace at a **maximum 10 year** interval	Only applies to B8444S										x
Auxiliary belt, belt tensioner, idler pulley, clutch, guide pins -replace according to the service program or: - replace at a **maximum 10 year** interval	Only applies to B6324S					x					
Rubber connection, generator -replace according to the service	Only applies to B6324S See method										x

program or: - replace at a **maximum 15 year** interval	for generator.										
Program point:											
	Km x 1000:	**132**	**144**	**156**	**168**	**180**	**192**	**204**	**216**	**228**	**240**
	Miles x 1000:	**82.5**	**90**	**97.5**	**105**	**112.5**	**120**	**127.5**	**135**	**142.5**	**150**
Timing belt belt tensioner, idler pulley -replace according to the service program or: - replace at a **maximum 10 year** interval. Check the decal for the most recent replacement.	Only applies to B5254T2						x				
Air cleaner (ACL) passenger compartment -replace			x		x		x		x		x
Brake fluid -replace	Recommend that a customer with normal mileage has the fluid replaced every other year.					x					x
	NOTE: **The fluid must be replaced every year if the car is used for mountain driving or is**										

	mainly used in humid climates.										
SRI - set the service reminder indicator (SRI) to zero	see **RESETTING THE SERVICE REMINDER INDICATOR (SRI)**	x	x	x	x	x	x	x	x	x	x

MAINTENANCE SERVICE (B6324S, TF-80SC; B6324S, TF-80SC AWD; 2010)

SERVICE PROGRAM A

Program point:											
	Km x 1000:	**12**	**24**	**36**	**48**	**60**	**72**	**84**	**96**	**108**	**120**
	Miles x 1000:	**7.5**	**15**	**22.5**	**30**	**37.5**	**45**	**52.5**	**60**	**67.5**	**75**
Parking brake - check and adjust			x		x		x		x		x
Washer and wipers for windshields and headlamps - check the function and for signs of wear		x	x	x	x	x	x	x	x	x	x
Engine - check for leaks	Check for signs of oil, coolant, power steering fluid and brake fluid leaks.		x		x		x		x		x
Program point:											
	Km x 1000:	**12**	**24**	**36**	**48**	**60**	**72**	**84**	**96**	**108**	**120**
	Miles x 1000:	**7.5**	**15**	**22.5**	**30**	**37.5**	**45**	**52.5**	**60**	**67.5**	**75**
Raise the vehicle											
Engine/ Transmission/	In the event of leakage from										

Timing gear - check for leaks	the transmission, check the oil level.		x		x		x		x		x
Engine oil/ Oil filter - drain the oil. Replace the oil filter		x	x	x	x	x	x	x	x	x	x
Automatic transmission The oil does not normally need changing. The oil must be changed if instructed in the text information display.	**NOTE: For vehicles used as taxis or primarily used for towing trailers, change the oil according to the service program.**							x			
Wheels and tires (excluding spare wheel) - check for damage, wear, tire pressure		x	x	x	x	x	x	x	x	x	x
Program point:											
	Km x 1000:	**12**	**24**	**36**	**48**	**60**	**72**	**84**	**96**	**108**	**120**
	Miles x 1000:	**7.5**	**15**	**22.5**	**30**	**37.5**	**45**	**52.5**	**60**	**67.5**	**75**
Drive shafts - check the play - check rubber bellows									x	x	x
Brake pads / brake discs - check	see **BRAKE PADS, FRONT, CHECK** see **BRAKE PADS, REAR, CHECK**	x	x	x	x	x	x	x	x	x	x
Brake and fuel lines and fuel filter					x				x		

- check for leakage and damage											
Fuel filter - replace	**NOTE:** **Change only according to km/miles interval**										
Exhaust system - check for leakage, mounting									x	x	x
Program point:											
	Km x 1000:	**12**	**24**	**36**	**48**	**60**	**72**	**84**	**96**	**108**	**120**
	Miles x 1000:	**7.5**	**15**	**22.5**	**30**	**37.5**	**45**	**52.5**	**60**	**67.5**	**75**
Front wheel suspension, steering system - check for wear according to: Wheel angles check									x	x	x
Rear wheel suspension - check for wear according to: Wheel angles check									x	x	x
AWD: Final drive, bevel gear - check for leaks	Only check the oil level if there is leakage.		x		x		x		x		x
AWD: Propeller shaft, pilot bearing, universal joint - check for signs of wear									x	x	x

Lower the vehicle											
Air cleaner (ACL), engine - replace	Clean the air cleaner (ACL) housing. **Change only according to km/miles interval**					x					x
Spark plugs - replace	**Change only according to km/miles interval**										x
Program point:											
	Km x 1000:	**12**	**24**	**36**	**48**	**60**	**72**	**84**	**96**	**108**	**120**
	Miles x 1000:	**7.5**	**15**	**22.5**	**30**	**37.5**	**45**	**52.5**	**60**	**67.5**	**75**
Top up the engine oil		x	x	x	x	x	x	x	x	x	x
Fluid levels - engine compartment - check and adjust brake fluid, clutch fluid, power steering fluid, washer fluid, coolant		x	x	x	x	x	x	x	x	x	x
Engine coolant - check and adjust anti-freeze rating / anti-corrosion agent			x		x		x		x		x
Vehicles with temporary tire sealing kit - check the container with sealer fluid, replace every											

fourth year, see decal.											
Spare wheel - check for damage, wear, tire pressure					x				x		
Auxiliary unit belt, belt tensioner, idler pulleys - replace according to the service program or: - replace at a **maximum 10 year** interval	Only applies to B8444S										
Auxiliary belt, belt tensioner, idler pulley, clutch, guide pins - replace according to the service program or: - replace at a **maximum 10 year** interval	Only applies to B6324SX										
Rubber connection, generator - replace according to the service program or: - replace at a **maximum 15 year** interval	Only applies to B6324SX See method for generator.										
Program point:											
	Km x 1000:	**12**	**24**	**36**	**48**	**60**	**72**	**84**	**96**	**108**	**120**
	Miles x 1000:	**7.5**	**15**	**22.5**	**30**	**37.5**	**45**	**52.5**	**60**	**67.5**	**75**

Air cleaner (ACL) passenger compartment - replace			x		x		x		x		x
Brake fluid - replace	Recommend that a customer with normal mileage has the fluid replaced every other year.					x					x
	NOTE: **The oil must be changed every year if the car is used for mountain driving or is mainly used in humid climates.**										
SRI - set the service reminder indicator (SRI) to zero	see **RESETTING THE SERVICE REMINDER INDICATOR (SRI)**	x	x	x	x	x	x	x	x	x	x

SERVICE PROGRAM B

Program point:											
	Km x 1000:	**132**	**144**	**156**	**168**	**180**	**192**	**204**	**216**	**228**	**240**
	Miles x 1000:	**82.5**	**90**	**97.5**	**105**	**112.5**	**120**	**127.5**	**135**	**142.5**	**150**
Parking brake - check and adjust			x		x		x		x		x
Washer and wipers for windshields and headlamps - check the		x	x	x	x	x	x	x	x	x	x

function and for signs of wear											
Engine - check for leaks	Check for signs of oil, coolant, power steering fluid and brake fluid leaks.		x		x		x		x		x
Program point:											
	Km x 1000:	**132**	**144**	**156**	**168**	**180**	**192**	**204**	**216**	**228**	**240**
	Miles x 1000:	**82.5**	**90**	**97.5**	**105**	**112.5**	**120**	**127.5**	**135**	**142.5**	**150**
Raise the vehicle											
Engine/ Transmission/ **Timing gear** - check for leaks	In event of leakage from the transmission, check the oil level.		x		x		x		x		x
Engine oil/ oil filter - drain the oil. Replace the oil filter		x	x	x	x	x	x	x	x	x	x
Automatic transmission The oil does not normally need changing. The oil must be changed if instructed in the text information display.	**NOTE:** **For vehicles used as taxis or primarily used for towing trailers, change the oil according to the service program.**				x						
Wheels and tires (excluding spare wheel) - check for damage, wear, tire pressure		x	x	x	x	x	x	x	x	x	x

Program point:											
	Km x 1000:	**132**	**144**	**156**	**168**	**180**	**192**	**204**	**216**	**228**	**240**
	Miles x 1000:	**82.5**	**90**	**97.5**	**105**	**112.5**	**120**	**127.5**	**135**	**142.5**	**150**
Drive shafts - check the play - check rubber bellows		x	x	x	x	x	x	x	x	x	x
Brake pads / brake discs - check	see **BRAKE PADS, FRONT, CHECK** see **BRAKE PADS, REAR, CHECK**	x	x	x	x	x	x	x	x	x	x
Brake and fuel lines and fuel filter - check for leakage and damage			x				x				x
Fuel filter - replace	**NOTE:** **Change only according to km/miles interval**						x				
Exhaust system - check for leakage, mounting		x	x	x	x	x	x	x	x	x	x
Program point:											
	Km x 1000:	**132**	**144**	**156**	**168**	**180**	**192**	**204**	**216**	**228**	**240**
	Miles x 1000:	**82.5**	**90**	**97.5**	**105**	**112.5**	**120**	**127.5**	**135**	**142.5**	**150**
Front suspension and steering - check for wear according to: Wheel angles check		x	x	x	x	x	x	x	x	x	x
Rear wheel											

suspension - check for wear according to: Wheel angles check		x	x	x	x	x	x	x	x	x	x
AWD: Final drive, bevel gear - check for leaks	Only check the oil level if there is leakage.		x		x		x		x		x
AWD: Propeller shaft, pilot bearing, universal joint - check for signs of wear		x	x	x	x	x	x	x	x	x	x
Lower the vehicle											
Air cleaner (ACL), engine - replace	Clean the air cleaner (ACL) housing. **Change only according to km/miles interval**					x					x
Spark plugs - replace	**Change only according to km/miles interval**										x
Program point:											
	Km x 1000:	**132**	**144**	**156**	**168**	**180**	**192**	**204**	**216**	**228**	**240**
	Miles x 1000:	**82.5**	**90**	**97.5**	**105**	**112.5**	**120**	**127.5**	**135**	**142.5**	**150**
Top up the engine oil		x	x	x	x	x	x	x	x	x	x
Fluid levels - engine compartment - check and adjust brake fluid, clutch fluid, power steering		x	x	x	x	x	x	x	x	x	x

fluid, washer fluid, coolant											
Engine coolant - check and adjust anti-freeze rating / anti-corrosion agent			x		x		x		x		x
Vehicles with temporary tire sealing kit - check the container with sealer fluid, replace every fourth year, see decal.											
Spare wheel - check for damage, wear, tire pressure			x				x				x
Auxiliary unit belt, belt tensioner, idler pulleys - replace according to the service program or: - replace at a **maximum 10 year** interval	Only applies to B8444S										x
Auxiliary belt, belt tensioner, idler pulley, clutch, guide pins - replace according to the service program	Only applies to B6324SX										x

or: - replace at a **maximum 10 year** interval											
Rubber connection, generator - replace according to the service program or: - replace at a **maximum 15 year** interval	Only applies to B6324S See method for generator.										x
Program point:											
	Km x 1000:	**132**	**144**	**156**	**168**	**180**	**192**	**204**	**216**	**228**	**240**
	Miles x 1000:	**82.5**	**90**	**97.5**	**105**	**112.5**	**120**	**127.5**	**135**	**142.5**	**150**
Air cleaner (ACL) passenger compartment - replace			x		x		x		x		x
Brake fluid - replace	Recommend that a customer with normal mileage has the fluid replaced every other year.					x					x
	NOTE: **The oil must be changed every year if the car is used for mountain driving or is mainly used in humid climates.**										
SRI - set the service	see **RESETTING THE**										

reminder indicator (SRI) to zero	**SERVICE REMINDER INDICATOR (SRI)**	x	x	x	x	x	x	x	x	x	x	

MAINTENANCE SERVICE (B6324S, TF-80SC; B6324S, TF-80SC AWD; B8444S, TF-80SC AWD; 2008-2009)

SERVICE PROGRAM A

Program point:												
	Km x 1000:	**12**	**24**	**36**	**48**	**60**	**72**	**84**	**96**	**108**	**120**	
	Miles x 1000:	**7.5**	**15**	**22.5**	**30**	**37.5**	**45**	**52.5**	**60**	**67.5**	**75**	
Parking brake -check and adjust			x		x		x		x		x	
Washer and wipers for windshields and headlamps -check the function and for signs of wear		x	x	x	x	x	x	x	x	x	x	
Engine -check for leaks	Check for signs of oil, coolant, power steering fluid and brake fluid leaks.		x		x		x		x		x	
Program point:												
	Km x 1000:	**12**	**24**	**36**	**48**	**60**	**72**	**84**	**96**	**108**	**120**	
	Miles x 1000:	**7.5**	**15**	**22.5**	**30**	**37.5**	**45**	**52.5**	**60**	**67.5**	**75**	
Raise the vehicle												
Engine/ Transmission/ Timing gear -check for leaks	In the event of leakage from the transmission, check the oil level.		x		x		x		x		x	
Engine oil/												

Oil filter - drain the oil. Replace the oil filter		x	x	x	x	x	x	x	x	x	x
Automatic transmission The oil does not normally need changing. The oil must be changed if instructed in the text information display.	**NOTE:** **For vehicles used as taxis or primarily used for towing trailers, change the oil according to the service program.**							x			
Wheels and tires (excluding spare wheel) - check for damage, wear, tire pressure		x	x	x	x	x	x	x	x	x	x
Program point:											
	Km x 1000:	**12**	**24**	**36**	**48**	**60**	**72**	**84**	**96**	**108**	**120**
	Miles x 1000:	**7.5**	**15**	**22.5**	**30**	**37.5**	**45**	**52.5**	**60**	**67.5**	**75**
Drive shafts -check the play -check rubber bellows									x	x	x
Brake pads / brake discs -check	see **BRAKE PADS, FRONT, CHECK** see **BRAKE PADS, REAR, CHECK**	x	x	x	x	x	x	x	x	x	x
Brake and fuel lines and fuel filter -check for leakage and damage					x				x		
Fuel filter -replace											
Exhaust											

system -check for leakage, mounting									x	x	x
Program point:											
	Km x 1000:	**12**	**24**	**36**	**48**	**60**	**72**	**84**	**96**	**108**	**120**
	Miles x 1000:	**7.5**	**15**	**22.5**	**30**	**37.5**	**45**	**52.5**	**60**	**67.5**	**75**
Front wheel suspension, steering system - check for wear according to: Wheel angles check									x	x	x
Rear wheel suspension - check for wear according to: Wheel angles check									x	x	x
AWD: Final drive, bevel gear -check for leaks	Only check the oil level if there is leakage.		x		x		x		x		x
AWD: Propeller shaft, pilot bearing, universal joint -check for signs of wear									x	x	x
Lower the vehicle											
Air cleaner (ACL), engine -replace	Clean the air cleaner (ACL) housing.					x					x
Spark plugs -replace											x
Program											

point:											
	Km x 1000:	**12**	**24**	**36**	**48**	**60**	**72**	**84**	**96**	**108**	**120**
	Miles x 1000:	**7.5**	**15**	**22.5**	**30**	**37.5**	**45**	**52.5**	**60**	**67.5**	**75**
Top up the engine oil		x	x	x	x	x	x	x	x	x	x
Fluid levels - engine compartment -check and adjust brake fluid, clutch fluid, power steering fluid, washer fluid, coolant		x	x	x	x	x	x	x	x	x	x
Engine coolant -check and adjust anti-freeze rating / anti-corrosion agent			x		x		x		x		x
Battery -check poles, electrolyte level, mounting					x		x		x		x
Vehicles with temporary tire sealing kit -check the container with sealer fluid, replace every fourth year, see decal.											
Spare wheel - check for damage, wear, tire pressure					x				x		
Auxiliary unit belt, belt											

tensioner, idler pulleys -replace according to the service program or: - replace at a **maximum 10 year** interval	Only applies to B8444S										
Auxiliary belt, belt tensioner, idler pulley, clutch, guide pins -replace according to the service program or: - replace at a **maximum 10 year** interval	Only applies to B6324S										
Rubber connection, generator -replace according to the service program or: - replace at a **maximum 15 year** interval	Only applies to B6324S See method for generator.										
Program point:											
	Km x 1000:	**12**	**24**	**36**	**48**	**60**	**72**	**84**	**96**	**108**	**120**
	Miles x 1000:	**7.5**	**15**	**22.5**	**30**	**37.5**	**45**	**52.5**	**60**	**67.5**	**75**
Air cleaner (ACL) passenger compartment -replace			x		x		x		x		x
Brake fluid -replace	Recommend that a customer with normal										

	mileage has the fluid replaced every other year.					x					x
	NOTE: **The oil must be changed every year if the car is used for mountain driving or is mainly used in humid climates.**										
SRI - set the service reminder indicator (SRI) to zero	see **RESETTING THE SERVICE REMINDER INDICATOR (SRI)**	x	x	x	x	x	x	x	x	x	x

SERVICE PROGRAM B

Program point:											
	Km x 1000:	**132**	**144**	**156**	**168**	**180**	**192**	**204**	**216**	**228**	**240**
	Miles x 1000:	**82.5**	**90**	**97.5**	**105**	**112.5**	**120**	**127.5**	**135**	**142.5**	**150**
Parking brake -check and adjust			x		x		x		x		x
Washer and wipers for windshields and headlamps -check the function and for signs of wear		x	x	x	x	x	x	x	x	x	x
Engine -check for leaks	Check for signs of oil, coolant, power steering fluid		x		x		x		x		x

	and brake fluid leaks.										
Program point:											
	Km x 1000:	**132**	**144**	**156**	**168**	**180**	**192**	**204**	**216**	**228**	**240**
	Miles x 1000:	**82.5**	**90**	**97.5**	**105**	**112.5**	**120**	**127.5**	**135**	**142.5**	**150**
Raise the vehicle											
Engine/ Transmission/ Timing gear -check for leaks	In event of leakage from the transmission, check the oil level.		x		x		x		x		x
Engine oil/ oil filter - drain the oil. Replace the oil filter		x	x	x	x	x	x	x	x	x	x
Automatic transmission The oil does not normally need changing. The oil must be changed if instructed in the text information display.	**NOTE: For vehicles used as taxis or primarily used for towing trailers, change the oil according to the service program.**				x						
Wheels and tires (excluding spare wheel) - check for damage, wear, tire pressure		x	x	x	x	x	x	x	x	x	x
Program point:											
	Km x 1000:	**132**	**144**	**156**	**168**	**180**	**192**	**204**	**216**	**228**	**240**
	Miles x 1000:	**82.5**	**90**	**97.5**	**105**	**112.5**	**120**	**127.5**	**135**	**142.5**	**150**
Drive shafts -check the play -check rubber		x	x	x	x	x	x	x	x	x	x

bellows											
Brake pads / brake discs -check	see **BRAKE PADS, FRONT, CHECK** see **BRAKE PADS, REAR, CHECK**	x	x	x	x	x	x	x	x	x	x
Brake and fuel lines and fuel filter -check for leakage and damage			x				x				x
Fuel filter -replace							x				
Exhaust system -check for leakage, mounting		x	x	x	x	x	x	x	x	x	x
Program point:											
	Km x 1000:	**132**	**144**	**156**	**168**	**180**	**192**	**204**	**216**	**228**	**240**
	Miles x 1000:	**82.5**	**90**	**97.5**	**105**	**112.5**	**120**	**127.5**	**135**	**142.5**	**150**
Front suspension and steering - check for wear according to: Wheel angles check		x	x	x	x	x	x	x	x	x	x
Rear wheel suspension - check for wear according to: Wheel angles check		x	x	x	x	x	x	x	x	x	x
AWD: Final drive, bevel gear -check for leaks	Only check the oil level if there is leakage.		x		x		x		x		x

AWD: Propeller shaft, pilot bearing, universal joint -check for signs of wear		x	x	x	x	x	x	x	x	x	x
Lower the vehicle											
Air cleaner (ACL), engine -replace	Clean the air cleaner (ACL) housing.					x					x
Spark plugs -replace	**Change only according to km/miles interval**										x
Program point:											
	Km x 1000:	**132**	**144**	**156**	**168**	**180**	**192**	**204**	**216**	**228**	**240**
	Miles x 1000:	**82.5**	**90**	**97.5**	**105**	**112.5**	**120**	**127.5**	**135**	**142.5**	**150**
Top up the engine oil		x	x	x	x	x	x	x	x	x	x
Fluid levels - engine compartment -check and adjust brake fluid, clutch fluid, power steering fluid, washer fluid, coolant		x	x	x	x	x	x	x	x	x	x
Engine coolant -check and adjust anti-freeze rating / anti-corrosion agent			x		x		x		x		x
Battery -check poles,			x		x		x		x		x

electrolyte level, mounting											
Vehicles with temporary tire sealing kit -check the container with sealer fluid, replace every fourth year, see decal.											
Spare wheel - check for damage, wear, tire pressure			x				x				x
Auxiliary unit belt, belt tensioner, idler pulleys -replace according to the service program or: - replace at a **maximum 10 year** interval	Only applies to B8444S										x
Auxiliary belt, belt tensioner, idler pulley, clutch, guide pins -replace according to the service program or: - replace at a **maximum 10 year** interval	Only applies to B6324S										x
Rubber connection, generator -replace	Only applies										

according to the service program or: - replace at a **maximum 15 year** interval	to B6324S See method for generator.										x
Program point:											
	Km x 1000:	**132**	**144**	**156**	**168**	**180**	**192**	**204**	**216**	**228**	**240**
	Miles x 1000:	**82.5**	**90**	**97.5**	**105**	**112.5**	**120**	**127.5**	**135**	**142.5**	**150**
Air cleaner (ACL) passenger compartment -replace			x		x		x		x		x
Brake fluid -replace	Recommend that a customer with normal mileage has the fluid replaced every other year.					x					x
	NOTE: **The oil must be changed every year if the car is used for mountain driving or is mainly used in humid climates.**										
SRI - set the service reminder indicator (SRI) to zero	see **RESETTING THE SERVICE REMINDER INDICATOR (SRI)**	x	x	x	x	x	x	x	x	x	x

MAINTENANCE SERVICE (B6324S5, TF-80SC; B6324S5, TF-80SC AWD; 2011-2012)

SERVICE PROGRAM A

see **SERVICE PROGRAM A**

SERVICE PROGRAM B

see **SERVICE PROGRAM B**

MAINTENANCE SERVICE (B8444S, TF-80SC AWD; 2010-2011)

SERVICE PROGRAM A

see **SERVICE PROGRAM A**

SERVICE PROGRAM B

see **SERVICE PROGRAM B**

PRE DELIVERY SERVICE CHECKLIST 2010 (2010)

PRE DELIVERY SERVICE CHECKLIST 2010

New items	
Group:	**New or changed items:**
2. Product	Item in row 1 **CHANGED:** Connect battery charger (4A for a 40Ah battery - 8 A for a 80Ah battery)
2. Product	Item in row 3 **REMOVED:** Install spare fuses, compare fuses with label on fuse-box lid
2. Product	Item in row 5 **CHANGED:** Attach the instruction for leather upholstery on the passenger seat's jacket holder with the Volvo logo visible.
	Item in row 10

2. Product	**REMOVED:** No damage/dirt caused by installing accessories
2. Product	Item in row 11 **REMOVED:** Remove wiper blade transport protection from the wiper blade, if fitted.
3. Under Bonneet Operations	Item in row 1 **REMOVED:** Check functions of latch, hinges and strut
4. Functional Checks	Item in row 1 **ADDED:** Check DIM concerning WARNING INFO
4. Functional Checks	Item in row 4 **REMOVED:** Set radio code
4. Functional Checks	Item in row 6 **CHANGED:** - Optional Volvo on Call function should be installed and adjusted according to VIDA: "Activating the Volvo on Call"
4. Functional Checks	Item in row 9 **REMOVED:** Check function of ashtrays and cupholders
4. Functional Checks	Item in row 10 **REMOVED:** Check cargo belt restraint system
4. Functional Checks	Item in row 12 **REMOVED:** Check fold forwards rear head restraints
4. Functional Checks	Item in row 13 **REMOVED:** Check function of all interior lights
	Item in row 14

4. Functional Checks	**REMOVED:** Check function of all front and rear external lights
4. Functional Checks	Item in row 15 **REMOVED:** Check front and rear fog lights (single light on driver's side)
4. Functional Checks	Item in row 16 **REMOVED:** Check steering column adjustment
4. Functional Checks	Item in row 17 **REMOVED:** Automatic gearbox: Check gear lever function and key lock function. Starter Motor function only in P and N
4. Functional Checks	Item in row 20 **CHANGED:** Check function of wipers
4. Functional Checks	Item in row 21 **REMOVED:** Check headlamp washers/wipers/wiper blades for damage
4. Functional Checks	Item in row 23 **REMOVED:** Check function of internal and external mirrors (including heating elements)
4. Functional Checks	Item in row 24 **REMOVED:** Check auto dim function and electric fold mirrors
4. Functional Checks	Item in row 25 **REMOVED:** Check function of sunroof, including auto open
4. Functional Checks	Item in row 27 **REMOVED:** Check

	rear seat release mechanism
4. Functional Checks	Item in row 28 **REMOVED:** XC90 only: Check operation of 3rd row seats
4. Functional Checks	Item in row 38 **ADDED:** Check Keyless car operation
5. On Lift Operations	Item in row 6 **REMOVED:** Inspect Front and Rear Suspension
5. On Lift Operations	Item in row 8 **REMOVED:** Check oil level in manual gearbox
5. On Lift Operations	Item in row 11 **REMOVED:** Check security and routing of brake lines/hoses
5. On Lift Operations	Item in row 13 **REMOVED:** XC90 only: Test spare wheel wind-down mechanism
5. On Lift Operations	Item in row 14 **REMOVED:** Back off and retorque wheel bolts to specified torque figures
5. On Lift Operations	Item in row 15 **CHANGED:** Set tire pressure to the correct value (see label)
6. DURING DRIVING - CHECK	Item in row 10 **CHANGED:** Check for noises and interference on all bands and CD player
	Item in row 14 **REMOVED:** Check phone and program

6. DURING DRIVING - CHECK	preferred numbers into phone including steering wheel functions
6. DURING DRIVING - CHECK	Item in row 15 **REMOVED:** Check RTI/TV including steering wheel functions
8. Valet Checking Interior and Exterior	Item in row 6 - 11 **REMOVED:** Check Fit/Alignment of Body Panels: -Doors, -Boot, -Bonnet, -Wings, -Sunroof
8. Valet Checking Interior and Exterior	Item in row 12- 15 **REMOVED:** Check all Moldings and Trims for: -Alignment, -Tightness, -Damage
8. Valet Checking Interior and Exterior	Item in row 22 **ADDED:** Check if internal leakage inside car after car wash
8. Valet Checking Interior and Exterior	Item in row 22 **ADDED:** Remove plastic transport protection inside car

1. BEFORE STARTING THE PDS

Change from Transport Mode to Normal Mode, use VIDA Only for XC90 6 cyl: In Transport mode maximum speed is 30 km/h.			
Review Transporter Delivery Checklist			
Ensure suitable vehicle protection is fitted			
Check QW90 for any outstanding QBs			
Check battery, fill in voltage and code in comments box (Voltage below 12.5V is not OK) (Take measurements directly on battery using a 3100/3200/3300 battery tester)			

2. PRODUCT

Connect battery charger (4A for a 40Ah battery - 8 A for a 80Ah battery)			
Vehicles older than 3 months after factory complete, do a PDS upgrade CAN and MOST. XC90, 30745955, 30745956			
Read out fault codes and take away root cause/reset according to instruction			
All accessories/enclosed details (in e. g. glove compartment, cargo compartment) installed and functioning correctly. Attach the instruction for leather upholstery on the passenger seat's jacket holder with the Volvo logo visible.			
Reset service reminder, VIDA: 3 - Maintenance, Service Programs, 38 - Instrumentation, Resetting the SRI to zero			
Check SRI parameters and ensure that the applicable Service Program for the specific Market, Variant and model year is correctly programmed in the combi-instrument.			

3. UNDER BONNET OPERATIONS

Check engine oil level			
Check coolant level			
Check brake fluid level			
Add windscreen washer fluid to strength			
Check power steering fluid level			
Visually check for oil, water and fuel leaks			

4. FUNCTIONAL CHECKS

Indicator and warning lights: Check if all lights illuminate and turn off, while engine is started. Check DIM concerning WARNING INFO Special attention to STC/DSTC light			
Structure week -200945: S80 Executive (07-). Install a 15 A fuse in position no. 6 in FD6, rear electrical fuse box (blue cover) placed in the luggage compartment.			
Structure week 200946-: S80 Executive (07-). Install a 15 A fuse in Central Junction Box (CJB) F18 beside the CEM below the dashboard.			
S80 Executive (07-): with option code 998351 (refrigerator). The crystal glass and bottle opener is placed behind left panel in luggage compartment.			
Set time clock			
- Optional Volvo on Call function should be installed and adjusted according to VIDA: "Activating the Volvo on Call"			
Check function of RTI, including control functions on steering wheel			
Check function of infotainment			
Check horn at all corners of horn pad			
Check function of all front and rear external lights			
Check mid-console functions			
Check function of washer jets (front and rear windscreen)			
Check function of wipers			
Check functions of power windows, all switches, auto up and down functions and cut off on rear			
Check all seat adjustment functions (motor seat including memory)			
Check all seatbelts for correct operation			

Check boot and fuel lid opening switches if applicable			
Check back door child safety lock operation			
Check central locking and alarm			
- Check central lock function of doors and tailgate/boot			
- Check central lock function with both remote control devices			
- Check the function of alarm by opening the engine bonnet (car with open window)			
- Check the reset function of the alarm by closing opening door with key			
- Check all keys in all locks			
- Check Keyless car operation			
- Open and close all doors, check for cracking, noisy doorstops, smooth operation of hinges and handle			

5. ON LIFT OPERATIONS

Inspect for visual oil, water and fuel leaks			
Check condition and security of:			
- Exhaust			
- Heat Shield			
- Catalytic Converter			
- Check for gearbox leaks. Remove plastic engine/gearbox cover where appropriate			
- Check for underbody damage			

Check air/water and fuel connections for security and routing			
C30, S40 (04-), V50, C70 (06-) only: Check clearance, 4-5 mm, between brake dust shield and front brake disc			
Set tire pressure to the correct value (see label)			
Where appropriate, ensure locking wheel nuts are fitted, place locking wheel nut registration form from package intoNew Car Preparation Process folder			
Remove the brake disc protection only if car is not going to stock (if equipped)			
Remove spring extenders (if equipped)			
Check tires and rims for damage and correct tire size			
Check lower part of car for damage. Special attention to be given to bumpers, spoilers and lower side of doors			

6. TEST-DRIVE TO BE AT LEAST FIVE MILES (8.5 KM) OVER VARIED DRIVING CONDITIONS

BEFORE STARTING THE ENGINE			
Ignition and steering lock function			
Automatic gearbox: starter motor only functions in position P and N, reversing lamp in position R			
WHEN STARTING - CHECK			
- Brake pedal travel			
- Starter motor function			
- Engine starts normally			
- Idle speed			
WHEN MOVING OFF - CHECK			

- Parking brake operation, efficiency and lever travel				
- Clutch snatch/slip				
- Acceleration is normal, no pinking, unusual noise				
WHEN MOVING OFF - CHECK, CONT. - Gearbox function, select all gears				
- Steering: play, abnormal stiffness or noise				
- Pulling to one side/unstable feeling				
- Steering wheel correctly aligned				
DURING DRIVING - CHECK				
- All heating/air conditioning functions and two- or three-stage heated seats, operate all fittings				
- Trip computer function				
- Speedometer function				
- Tachometer function				
- Information center function (all settings)				
- Fuel gauge functions and temperature gauge				
- Cruise control operation				
Check audio system:				
- Check function of controls: balance, tone fader, tuning, band selector				
- Check for noises and interference on all bands and CD player				

- Check autostore and set radio channels for FM, AM, DAB (option) (contact Sales for preferred stations)				
- Check Dolby Surround Pro Logic				
- Reset the compass function according to VIDA: "Reset Compass Function"				
WHEN BRAKING				
Bed in parking brake pads/shoes				
AFTER TEST-DRIVE				
Check and adjust alignment of headlamps and auxiliary lamps				

7. ENDING PDS

Check battery, fill in voltage and code in comments box. (Voltage below 12.5 V is not OK). (Take measurements directly on battery using a 3100/3200/3300 battery tester)			
Read out Diagnostic trouble codes (DTC). Remedy any permanent DTC/reset according to VIDA instruction. **NOTE:** **Do not automatically update to newer software unless the Diagnostic instruction requires it.**			

8. VALET - CHECKING INTERIOR AND EXTERIOR

Remove rapguard			
Wash the car			
Check for marks on bumpers			
Inspect the surface finish for any dents, scratches, defects or paint damage			
- Special attention to paint chips on door edges			

Inspect items for cleanliness and damage			
- Special attention to seats			
Check carpets especially in rear cargo area			
Clean windows inside and outside, check for scratches			
Fit immobiliser/alarm/radio stickers			
Wipe steering wheel, gear lever and handbrake clean			
Check if internal leakage inside car after car wash			
Remove plastic transport protection inside car			
Appropriate manuals and/or booklets are in place			
Place the Quick Guide on the passenger seat			

PRE DELIVERY SERVICE CHECKLIST 2011 (2011)

PRE DELIVERY SERVICE CHECKLIST 2011

New items	
Group:	**New or changed items:**
2. Product	Items in row5 **ADDED:** Final assembly of ATSVR (After Theft for Stolen Vehicle Recovery)
	Items in row 1 and 2 **CHANGED:** Install the 15A fuse in

4. Functional Checks	different positions depending on the structure week.

1. BEFORE STARTING THE PDS

Change from Transport Mode to Normal Mode, use VIDA (Volvo Scan Tool) Only for XC90 6 cyl, 8-cyl: In Transport mode maximum speed is 30 km/h.			
Review Transporter Delivery Checklist			
Ensure suitable vehicle protection is fitted			
Check QW90 for any outstanding QBs			
Check battery, fill in voltage and code in comments box (Voltage below 12.5V is not OK) (Take measurements directly on battery using a 3100/3200/3300 battery tester)			

2. PRODUCT

Connect battery charger (4A for a 40Ah battery - 8 A for a 80Ah battery)			
Vehicles older than 3 months after factory complete, do a PDS upgrade CAN and MOST. XC90, 30745955, 30745956			
Read out fault codes and take away root cause/reset according to instruction			
All accessories/enclosed details (in e. g. glove compartment, cargo compartment) installed and functioning correctly. Attach the instruction for leather upholstery on the passenger seat's jacket holder with the Volvo logo visible.			
Final assembly of ATSVR (After Theft for Stolen Vehicle Recovery) Only XC90 with option code 858.			
Only C70 (06-): Mount aerial (placed in trunk from factory) to right rear fender			
Reset service reminder, VIDA: 3 - Maintenance, Service Programs, 38 - Instrumentation, Resetting the SRI to zero			
Check SRI parameters and ensure that the applicable Service Program for the specific Market, Variant and model year is correctly programmed in the combi-			

instrument.			

3. UNDER BONNET OPERATIONS

Check engine oil level			
Check coolant level			
Check brake fluid level			
Add windscreen washer fluid to strength			
Check power steering fluid level			
Visually check for oil, water and fuel leaks			

4. FUNCTIONAL CHECKS

Indicator and warning lights: Check if all lights illuminate and turn off, while engine is started. Check DIM concerning WARNING INFO Special attention to STC/DSTC light			
S80 Executive. Install a 5 A fuse for the analogue clock in F1. It is located behind the side panel of the dashboard on the passenger side.			
S80 Executive: with option code 998351 (refrigerator). The crystal glass and bottle opener is placed behind left panel in luggage compartment.			
Set time clock			
- Optional Volvo on Call function should be installed and adjusted according to VIDA: "Activating the Volvo on Call"			
Check function of RTI, including control functions on steering wheel			
Check function of infotainment			
Check horn at all corners of horn pad			
Check function of all front and rear external lights			
Check mid-console functions			
Check function of washer jets (front and rear windscreen)			
Check function of wipers			
Check functions of power windows, all switches, auto up and down functions and cut off on rear			
Check all seat adjustment functions (motor seat including memory)			
Check all seatbelts for correct operation			
Check boot and fuel lid opening switches if applicable			
Check back door child safety lock operation			
Check central locking and alarm			

- Check central lock function of doors and tailgate/boot			
- Check central lock function with both remote control devices			
- Check the function of alarm in the following way: With all doors, trunk and hood closed, lock the car with the remote key (Lock button). Leave the car locked for at least 30 seconds. Unlock the car and switch to ignition mode 2 (Ignition on). No messages regarding the alarm should be displayed on the information displays.			
- Check all keys in all locks			
- Check Keyless car operation			
- Open and close all doors, check for cracking, noisy doorstops, smooth operation of hinges and handle			

5. ON LIFT OPERATIONS

Inspect for visual oil, water and fuel leaks			
Check condition and security of:			
- Exhaust			
- Heat Shield			
- Catalytic Converter			
- Check for gearbox leaks. Remove plastic engine/gearbox cover where appropriate			
- Check for underbody damage			
Check air/water and fuel connections for security and routing			
Set tire pressure to the correct value (see label)			
Where appropriate, ensure locking wheel nuts are fitted, place locking wheel nut registration form from package into New Car Preparation Process folder			
Remove the brake disc protection only if car is not going to stock (if equipped)			
Remove spring extenders (if equipped)			
Check tires and rims for damage and correct tire size			
Check lower part of car for damage. Special attention to be given to bumpers, spoilers and lower side of doors			

6. TEST-DRIVE TO BE AT LEAST FIVE MILES (8.5 KM) OVER VARIED DRIVING CONDITIONS

BEFORE STARTING THE ENGINE				
Ignition and steering lock function				
Automatic gearbox: starter motor only functions in position P and N, reversing lamp in position R				
WHEN STARTING - CHECK				
- Brake pedal travel				
- Starter motor function				
- Engine starts normally				
- Idle speed				
WHEN MOVING OFF - CHECK				
- Parking brake operation, efficiency and lever travel				
- Clutch snatch/slip				
- Acceleration is normal, no pinking, unusual noise				
WHEN MOVING OFF - CHECK, CONT. - Gearbox function, select all gears				
- Steering: play, abnormal stiffness or noise				
- Pulling to one side/unstable feeling				
- Steering wheel correctly aligned				
DURING DRIVING - CHECK				
- All heating/air conditioning functions and two- or three-stage heated seats, operate all fittings				
- Trip computer function				
- Speedometer function				
- Tachometer function				
- Information center function (all settings)				
- Fuel gauge functions and temperature gauge				
- Cruise control operation				
Check audio system:				
- Check function of controls: balance, tone fader, tuning, band selector				
- Check for noises and interference on all bands and CD player				
- Check autostore and set radio channels for FM, AM, DAB (option)				

(contact Sales for preferred stations)			
- Check Dolby Surround Pro Logic			
- Reset the compass function according to VIDA: "Reset Compass Function"			
WHEN BRAKING			
Bed in parking brake pads/shoes			
AFTER TEST-DRIVE			
Check and adjust alignment of headlamps and auxiliary lamps			

7. ENDING PDS

Fill in actual PDS finish date here:			
Check battery, fill in voltage and code in comments box. (Voltage below 12.5 V is not OK). (Take measurements directly on battery using a 3100/3200/3300battery tester)			
Read out Diagnostic trouble codes (DTC). Remedy any permanent DTC/reset according to VIDA instruction. **NOTE:** **Do not automatically update to newer software unless the Diagnostic instruction requires it.**			

8. VALET - CHECKING INTERIOR AND EXTERIOR

Remove rapguard - see TIE, TJ - 29			
Wash the car			
Check for marks on bumpers			
Inspect the surface finish for any dents, scratches, defects or paint damage			
- Special attention to paint chips on door edges			
Inspect items for cleanliness and damage			
- Special attention to seats			
Check carpets especially in rear cargo area			
Clean windows inside and outside, check for scratches			
Fit immobiliser/alarm/radio stickers			
Wipe steering wheel, gear lever and handbrake clean			
Check if internal leakage inside car after car wash			
Remove plastic transport protection inside car			
Appropriate manuals and/or booklets are in place			
Place the Quick Guide on the passenger seat			

PRE DELIVERY SERVICE CHECKLIST 2012 (2012)

PRE DELIVERY SERVICE CHECKLIST 2012

Model:	Chassis Number:	Mileage before PDS:	Mileage after PDS:

New items	
Group:	**New or changed items:**
4. Functional Checks	Items in row 21 and 22 **CHANGED:** New instructions for checking the alarm.

1. BEFORE STARTING THE PDS

Change from Transport Mode to Normal Mode, use VIDA			
Only for C30 D5204TX, C70 D5204TX, S40 D5204TX, V50 D5204TX, S60, S80, S80L, V60, V70, XC60, XC70 and XC90 6 cyl: In Transport mode maximum speed is 30 km/h.			
Review Transporter Delivery Checklist			
Ensure suitable vehicle protection is fitted			
Check QW90 for any outstanding QBs			
Check battery, fill in voltage and code in comments box (Voltage below 12.5V is not OK) (Take measurements directly on battery using a 3100/3200/3300 battery tester)			

2. PRODUCT

Connect battery charger (4A for a 40Ah battery - 8 A for a 80Ah battery)			
Vehicles older than 3 months after factory complete, do a PDS upgrade CAN and MOST. XC90, 30745955, 30745956			
Read out fault codes and take away root cause/reset according to instruction			
All accessories/enclosed details (in e. g. glove compartment, cargo compartment) installed and functioning correctly. Attach the instruction for leather upholstery on the			

passenger seat's jacket holder with the Volvo logo visible.			
Final assembly of ATSVR (After Theft for Stolen Vehicle Recovery) Only XC90 with option code 858.			
Reset service reminder, VIDA (Volvo Scan Tool): 3 - Maintenance, Service Programs, 38 - Instrumentation, Resetting the SRI to zero			
Check SRI parameters and ensure that the applicable Service Program for the specific Market, Variant and model year is correctly programmed in the combi-instrument.			

3. UNDER BONNET OPERATIONS

Check engine oil level			
Check coolant level			
Check brake fluid level			
Add windscreen washer fluid to strength			
Check power steering fluid level			
Visually check for oil, water and fuel leaks			

4. FUNCTIONAL CHECKS

Functional Checks			
Indicator and warning lights: Check if all lights illuminate and turn off, while engine is started. Check DIM concerning WARNING INFO Special attention to STC/DSTC light			
S80 Executive: with option code 998351 (refrigerator). The crystal glass and bottle opener is placed behind left panel in luggage compartment.			
Set time clock			
- Optional Volvo on Call function should be installed and adjusted according to VIDA: "Activating the Volvo on Call"			
Check function of RTI, including control functions on steering wheel			
Check function of infotainment			
Check horn at all corners of horn pad			
Check function of all front and rear external lights			
Check mid-console functions			
Check function of washer jets (front and rear windscreen)			

Check function of wipers			
Check functions of power windows, all switches, auto up and down functions and cut off on rear			
Check all seat adjustment functions (motor seat including memory)			
Check all seatbelts for correct operation			
Check boot and fuel lid opening switches if applicable			
Check back door child safety lock operation			
Check central locking and alarm			
- Check central lock function of doors and tailgate/boot			
- Check central lock function with both remote control devices			
- Check the function of alarm in the following way: With all doors, trunk and hood closed, lock the car with the remote key (Lock button). Leave the car locked for at least 30 seconds. Unlock the car and switch to ignition mode 2 (Ignition on). No messages regarding the alarm should be displayed on the information displays.			
- Check all keys in all locks			
- Check Keyless car operation			
- Open and close all doors, check for cracking, noisy doorstops, smooth operation of hinges and handle			

5. ON LIFT OPERATIONS

Inspect for visual oil, water and fuel leaks			
Check condition and security of:			
- Exhaust			
- Heat Shield			
- Catalytic Converter			
- Check for gearbox leaks. Remove plastic engine/gearbox cover where appropriate			
- Check for underbody damage			
Check air/water and fuel connections for security and routing			
Set tire pressure to the correct value (see label)			
Where appropriate, ensure locking wheel nuts are fitted, place locking wheel nut registration form from package			

into New Car Preparation Process folder			
Remove the brake disc protection only if car is not going to stock (if equipped)			
Remove spring extenders (if equipped)			
Check tires and rims for damage and correct tire size			
Check lower part of car for damage. Special attention to be given to bumpers, spoilers and lower side of doors			

6. TEST-DRIVE TO BE AT LEAST FIVE MILES (8.5 KM) OVER VARIED DRIVING CONDITIONS

BEFORE STARTING THE ENGINE				
Ignition and steering lock function				
Automatic gearbox: starter motor only functions in position P and N, reversing lamp in position R				
WHEN STARTING - CHECK				
- Brake pedal travel				
- Starter motor function				
- Engine starts normally				
- Idle speed				
WHEN MOVING OFF - CHECK				
- Parking brake operation, efficiency and lever travel				
- Clutch snatch/slip				
- Acceleration is normal, no pinking, unusual noise				
WHEN MOVING OFF - CHECK, CONT. - Gearbox function, select all gears				
- Steering: play, abnormal stiffness or noise				
- Pulling to one side/unstable feeling				
- Steering wheel correctly aligned				
DURING DRIVING - CHECK				
- All heating/air conditioning functions and two- or three-stage heated seats, operate all fittings				
- Trip computer function				
- Speedometer function				
- Tachometer function				
- Information center function (all settings)				
- Fuel gauge functions and				

temperature gauge				
- Cruise control operation				
Check audio system:				
- Check function of controls: balance, tone fader, tuning, band selector				
- Check for noises and interference on all bands and CD player				
- Check autostore and set radio channels for FM, AM, DAB (option) (contact Sales for preferred stations)				
- Check Dolby Surround Pro Logic				
- Reset the compass function according to VIDA (Volvo Scan Tool): "Reset Compass Function"				
WHEN BRAKING				
Bed in parking brake pads/shoes				
AFTER TEST-DRIVE				
Check and adjust alignment of headlamps and auxiliary lamps				

7. ENDING PDS

Fill in actual PDS finish date here:			
Check battery, fill in voltage and code in comments box. (Voltage below 12.5 V is not OK). (Take measurements directly on battery using a 3100/3200/3300battery tester)			
Read out Diagnostic trouble codes (DTC). Remedy any permanent DTC/reset according to VIDA (Volvo Scan Tool) instruction. **NOTE:** **Do not automatically update to newer software unless the Diagnostic instruction requires it.**			

8. VALET - CHECKING INTERIOR AND EXTERIOR

Remove rapguard - see TIE, TJ - 29			
Wash the car			
Check for marks on bumpers			
Inspect the surface finish for any dents, scratches, defects or paint damage			
- Special attention to paint chips on door edges			
Inspect items for cleanliness and damage			
- Special attention to seats			

Check carpets especially in rear cargo area			
Clean windows inside and outside, check for scratches			
Fit immobiliser/alarm/radio stickers			
Wipe steering wheel, gear lever and handbrake clean			
Check if internal leakage inside car after car wash			
Remove plastic transport protection inside car			
Appropriate manuals and/or booklets are in place			
Place the Quick Guide on the passenger seat			

RESTRAINTS

Body and interior

RESTRAINTS

CALIBRATING THE OCCUPANT WEIGHT SENSOR (OWS)

CALIBRATING THE COMPONENT

NOTE: **Calibration can only be performed if the vehicle is equipped with an occupant weight sensor (OWS).**

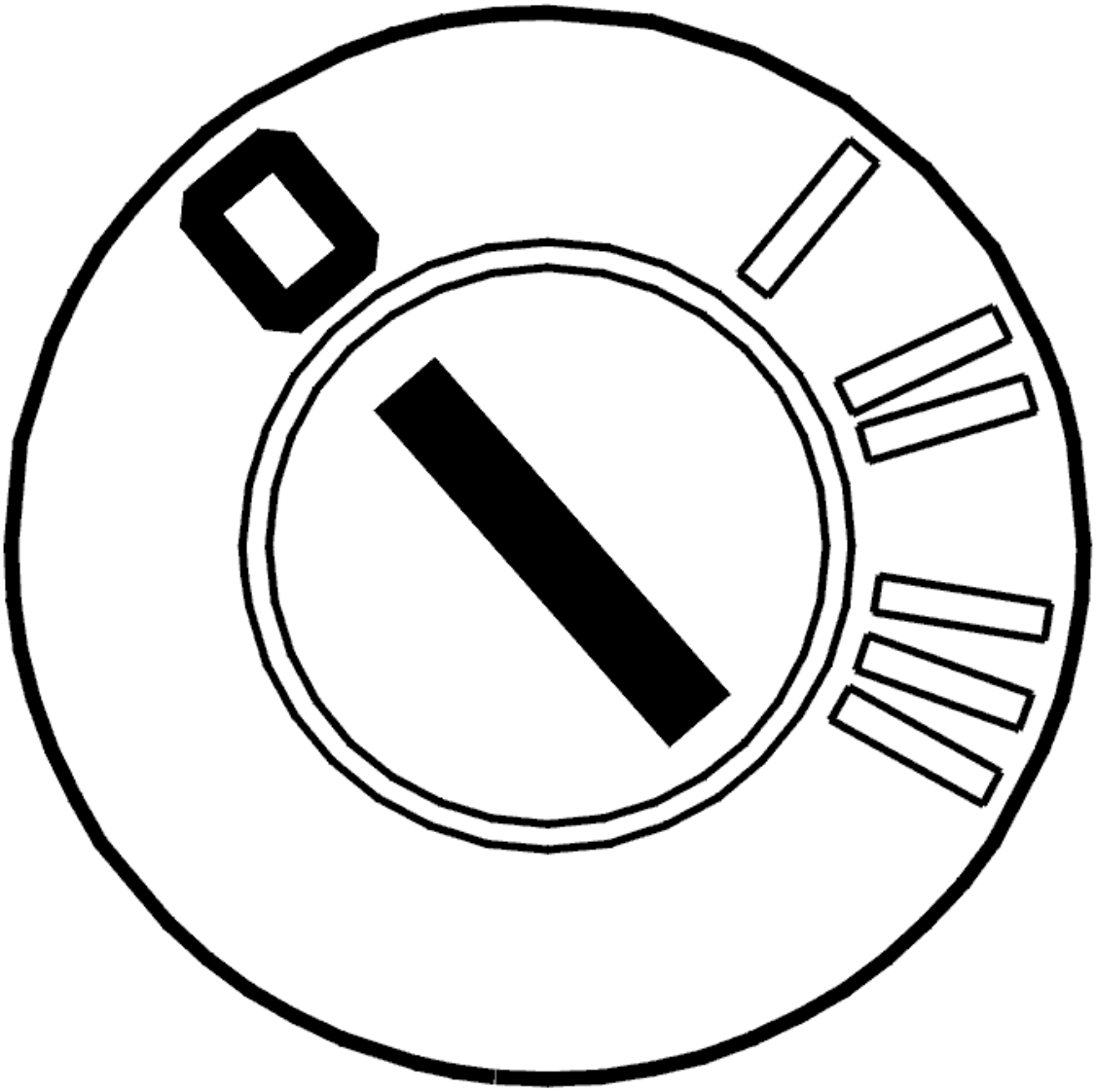

Fig. 1: Identifying Ignition OFF
Courtesy of VOLVO CARS CORPORATION

- Switch off the ignition. Wait 10 seconds
- Ensure that the passenger seat is completely empty
- Switch on the ignition. Wait 10 seconds.

CAUTION: The passenger seat must be completely empty during calibration. If the passenger seat is not completely empty, the calibration will be incorrect, which will result in incorrect function of the SRS system.

Activate calibration of the occupant weight sensor (OWS) using the VCT2000 (or appropriate scan tool).

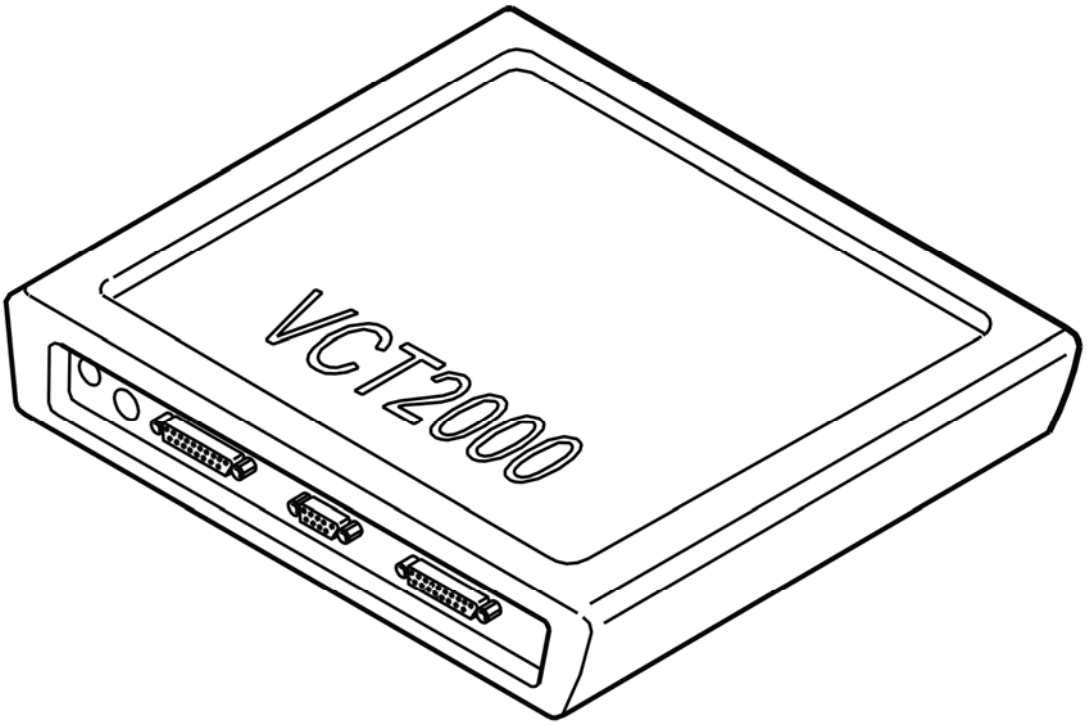

Fig. 2: Identifying VCT2000 Diagnostic Tool Symbol In VIDA
Courtesy of VOLVO CARS CORPORATION

RESTRAINTS

Power transmission

RESTRAINTS

IGNITER CABLE CONNECTOR

NOTE: **The illustrations in this service information are used for different model years and/or models. Some variation may occur. However, the essential information in the illustrations is always correct.**

CONNECTOR, IGNITER CABLE, DISASSEMBLING

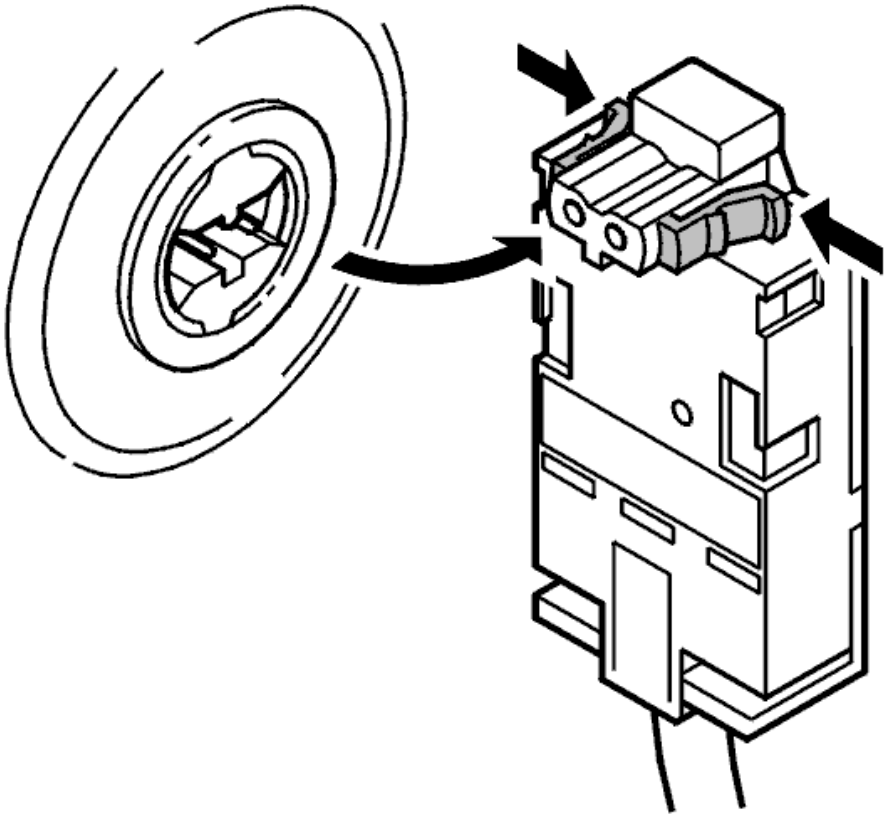

Fig. 1: Identifying Igniter Wire Connector (1 Of 2)
Courtesy of VOLVO CARS CORPORATION

When disassembling the connector it is extremely important that the catch on the connector is released first. The connector must be pulled straight off in relation to the mounting to prevent damage.

CAUTION: Do not use a tool of any type when disassembling due to the increased risk of damage to the connector.

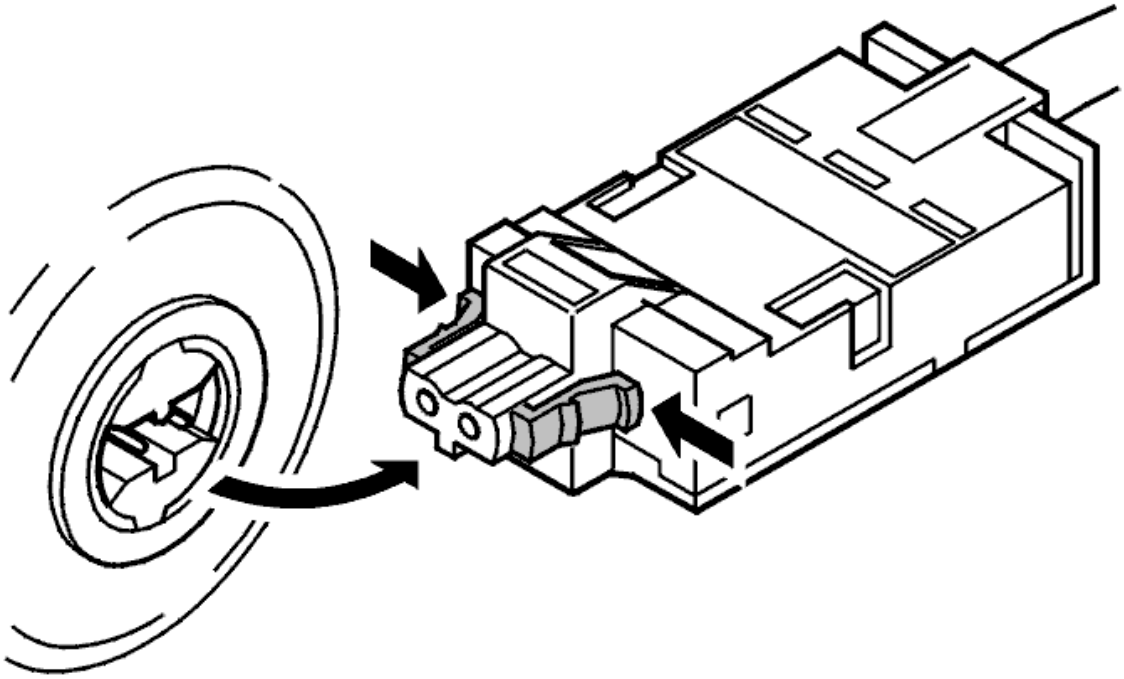

Fig. 2: Identifying Igniter Wire Connector (2 Of 2)
Courtesy of VOLVO CARS CORPORATION

The connector is securely fastened due to the accurate shape so that the connection is durable.

WARNING: **Any damage to the connector can result in the SRS system being disabled.**

ACCESSORIES AND EQUIPMENT

Interior Equipment - General Information

RESTRAINT SYSTEM SAFETY

DECALS FOR SAFETY EQUIPMENT (2003-06)

NOTE: **The graphics in this service information are used for different model years and/or models. Some variation may occur. However, the essential information in the graphics is always correct.**

DECALS FOR SAFETY EQUIPMENT

NOTE: **The appearance of the decals may vary depending on the market and the model year.**

Decals for the safety equipment in the car are in the following positions:

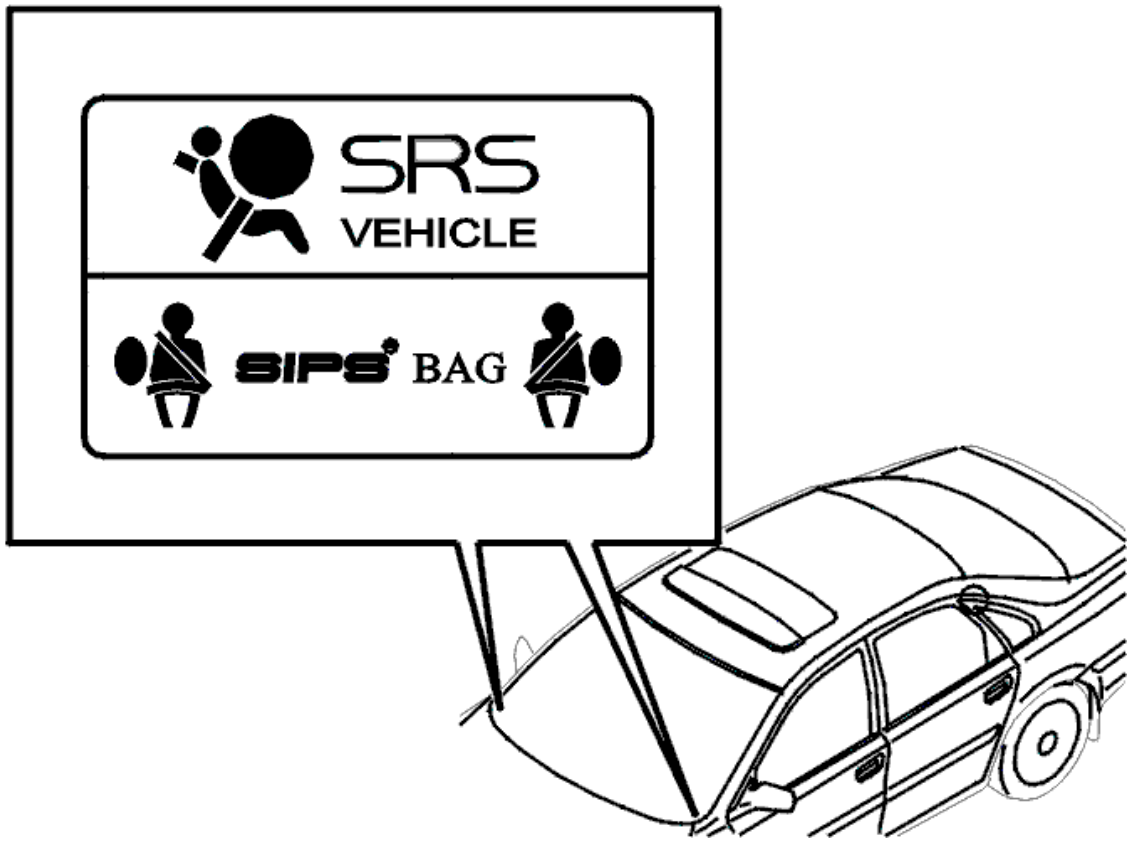

Fig. 1: Decal: Windscreen
Courtesy of VOLVO CARS CORPORATION

Windscreen

This decal indicates that the car is equipped with SRS. The SRS decal is combined with a decal for the SIPS module.

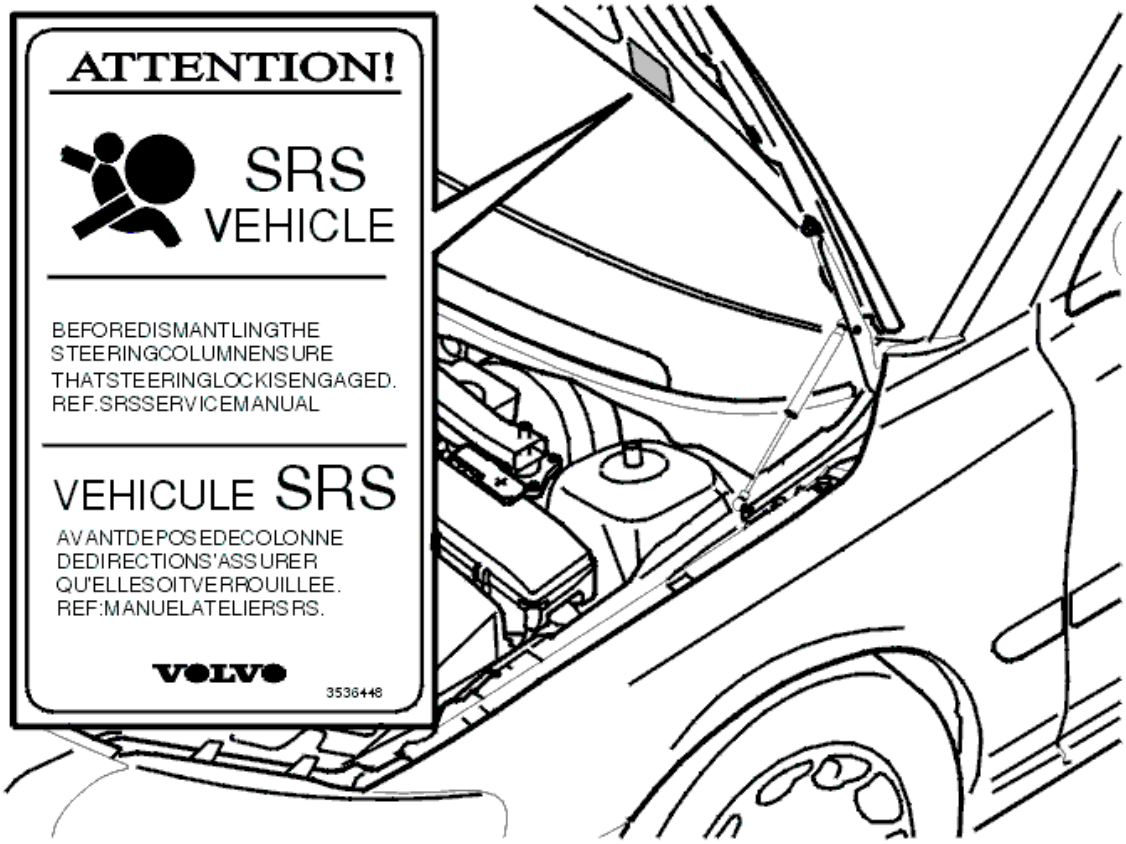

Fig. 2: Decal: Left-Hand Side Of The Engine Compartment
Courtesy of VOLVO CARS CORPORATION

Left-hand side of the engine compartment

Never remove the steering column or steering gear without first locking the contact reel and removing the steering wheel.

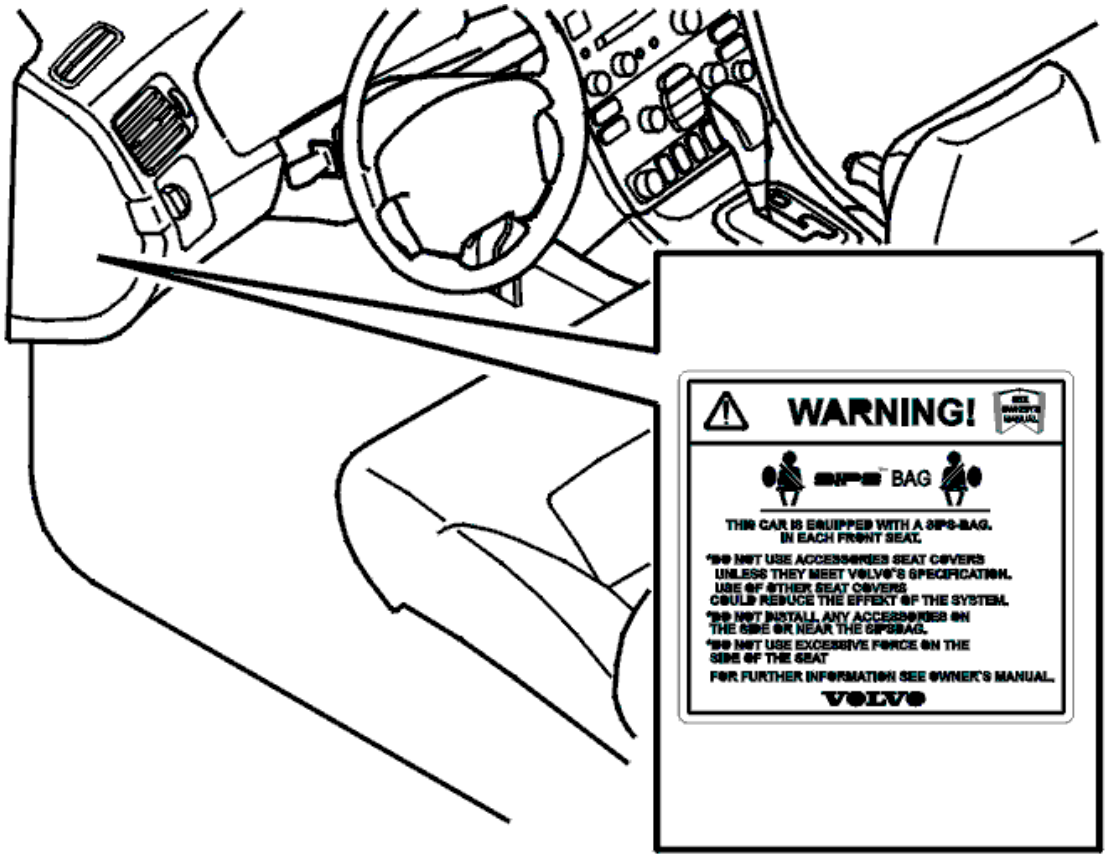

Fig. 3: Decal: End Of The Dashboard (Driver's Side)
Courtesy of VOLVO CARS CORPORATION

End of the dashboard (driver's side)

The decal warns against using seat covers that do not meet Volvo specifications for the front seats.

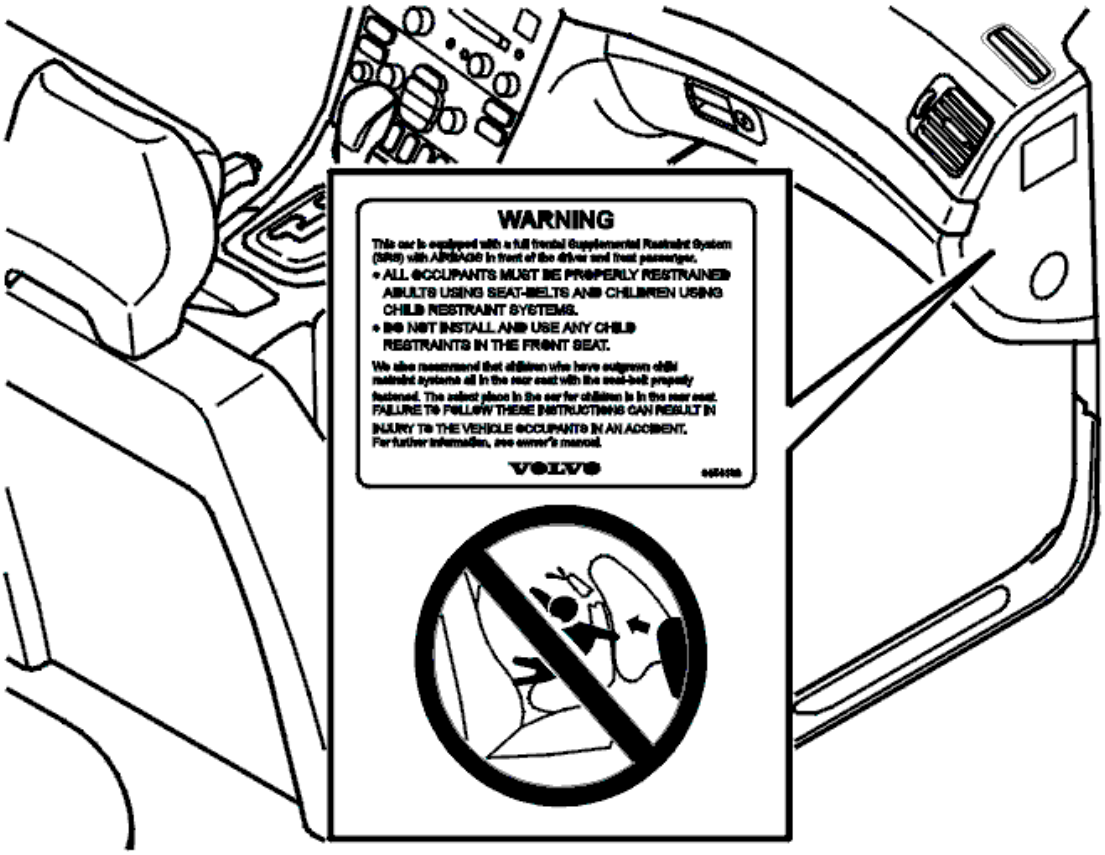

Fig. 4: Decal: End Of The Dashboard (Passenger Side)
Courtesy of VOLVO CARS CORPORATION

End of the dashboard (passenger side)

This decal warns against putting a child seat on the front passenger seat.

WARNING: **Never position a child seat on the front seat if the car has a passenger airbag module.**

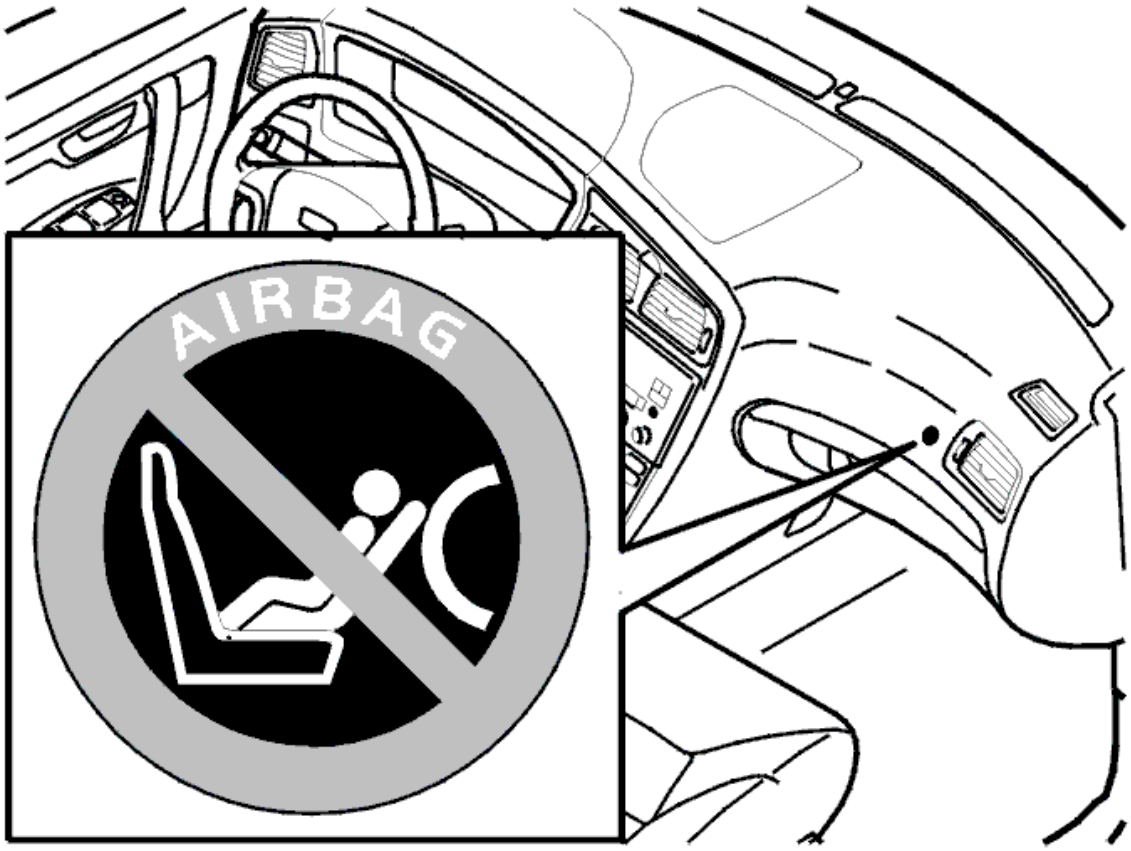

Fig. 5: Decal: Dashboard By The Passenger Airbag Module
Courtesy of VOLVO CARS CORPORATION

Dashboard by the passenger airbag module

Fig. 6: Decal: Sun Visor (Closed Sun Visor)
Courtesy of VOLVO CARS CORPORATION

Sun visor, closed

This decal warns against putting a child seat on the front passenger seat.

WARNING: **Never position a child seat on the front seat if the car has a passenger airbag module.**

Fig. 7: Decal: Sun Visor (Opened Sun Visor)
Courtesy of VOLVO CARS CORPORATION

Sun visor, opened

POSITIONING SAFETY LABELS (2008-12)

NOTE: The labels may vary in appearance.

WINDSHIELD

Fig. 8: Identifying Windshield Label
Courtesy of VOLVO CARS CORPORATION

This label indicates that the vehicle is equipped with SRS. The SRS label is combined with a label for the seat airbag.

DASHBOARD END DRIVER'S SIDE

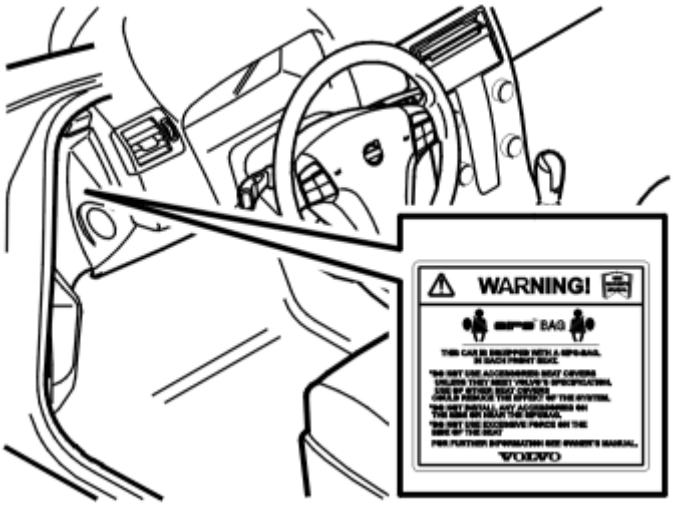

Fig. 9: Identifying Decal (Dashboard End Driver's Side)
Courtesy of VOLVO CARS CORPORATION

The decal warns against using seat covers that do not meet Volvo specifications for the front seats.

DASHBOARD END PASSENGER SIDE

Fig. 10: Identifying Decal (Dashboard End Passenger Side)
Courtesy of VOLVO CARS CORPORATION

This decal warns against putting a child seat on the front passenger seat.

WARNING: **Never install any type of child seat in the passenger seat if the vehicle is equipped with an active airbag.**

DASHBOARD AT FRONT PASSENGER AIRBAG

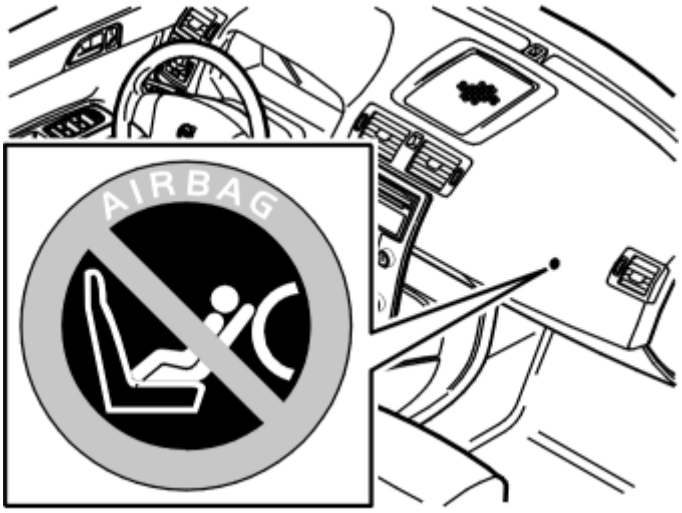

Fig. 11: Identifying Decal (Front Passenger Airbag)
Courtesy of VOLVO CARS CORPORATION

SUN VISOR, CLOSED

Fig. 12: Identifying Decal (Sun Visor)
Courtesy of VOLVO CARS CORPORATION

This decal warns against putting a child seat on the front passenger seat.

WARNING: **Never install any type of child seat in the passenger seat if the vehicle is equipped with an active airbag.**

SUN VISOR, FOLDED DOWN

Fig. 13: Decal: Sun Visor (Opened Sun Visor)
Courtesy of VOLVO CARS CORPORATION

SUPPLEMENTARY RESTRAINT SYSTEM (SRS) SAFETY

WARNING: **The components in the SRS and SIPS systems must be treated very carefully during repair. This is to help prevent:**

1. **Personal injury when carrying out repairs**
2. **Damage to or malfunction of the SRS/SIPS systems.**

Work on the SRS/SIPS system or components related to the SRS/SIPS system must be carried out by an authorized Volvo workshop.

NOTE: **See the relevant section for further information about safety and repair of the SRS system.**

The car has pyrotechnical airbags and seat belt tensioners

The car has the letters SRS stamped into the center of the steering wheel and on the dashboard above the glove compartment. This shows that the car is equipped with driver and passenger side airbags.

There are side airbags in both the front seats. There is a SIPS bag decal on the windscreen and seat compartments to indicate that side airbags are installed.

The letters IC are stamped onto the CD panel. This indicates that an inflatable curtain is installed. The car is equipped with an inflatable curtain as standard but can be delivered with it deactivated.

The car has pyrotechnical airbags and seat belt tensioners.

All SRS components are activated by signals from various electrical sensors.

Cable harness

Take care not to trap, fray, pierce or damage SRS wiring in any way:

- the soundproofing panel
- the glove compartment
- the dashboard
- steering shaft covers
- the ignition switch
- sill trim panels
- all posts
- the roof
- the parcel shelf.

SRS control module

The SRS control module is located between the handbrake and the gear selector lever in the center console.

Never install car accessories on or beside the control module.

Sensors

The collision sensors for the SRS/SIPS system (5) are located in the B-posts, C/D-posts and in the SRS control module. These control all the components in the SRS/SIPS system (4 airbags, 2 inflatable curtains, 5 seat belt tensioners).

Never install car accessories on or beside the sensors.

Signal communication

The sensor modules for the pyrotechnical components are located in the bodywork.

They can be triggered by a blow to, or pressure on, the bodywork. If the acceleration on the sensor is sufficiently high the sensor(s) will transmit a signal to the control module. The control module transmits an activation signal if the signal from the sensors has been sufficiently high or long-lasting.

Work on the SRS steering wheel module

When carrying out repairs to the steering wheel, steering column or steering gear always follow the repair procedures in the appropriate SRS Service Information.

Read the relevant sections. The contact reel in the steering shaft is damaged if the steering wheel is turned more than three turns in one direction.

Test output

Data link connector (DLC) in passenger compartment.

SERVICE LIFE PYROTECHNIC COMPONENTS

GENERAL INFORMATION

NOTE: **The function of the pyrotechnic SRS-components is unaffected by time, unless diagnostic trouble codes (DTC) are indicated by the vehicles' electronic system.**

RESTRAINTS

Body and interior

RESTRAINTS

LOCATION OF COMPONENTS

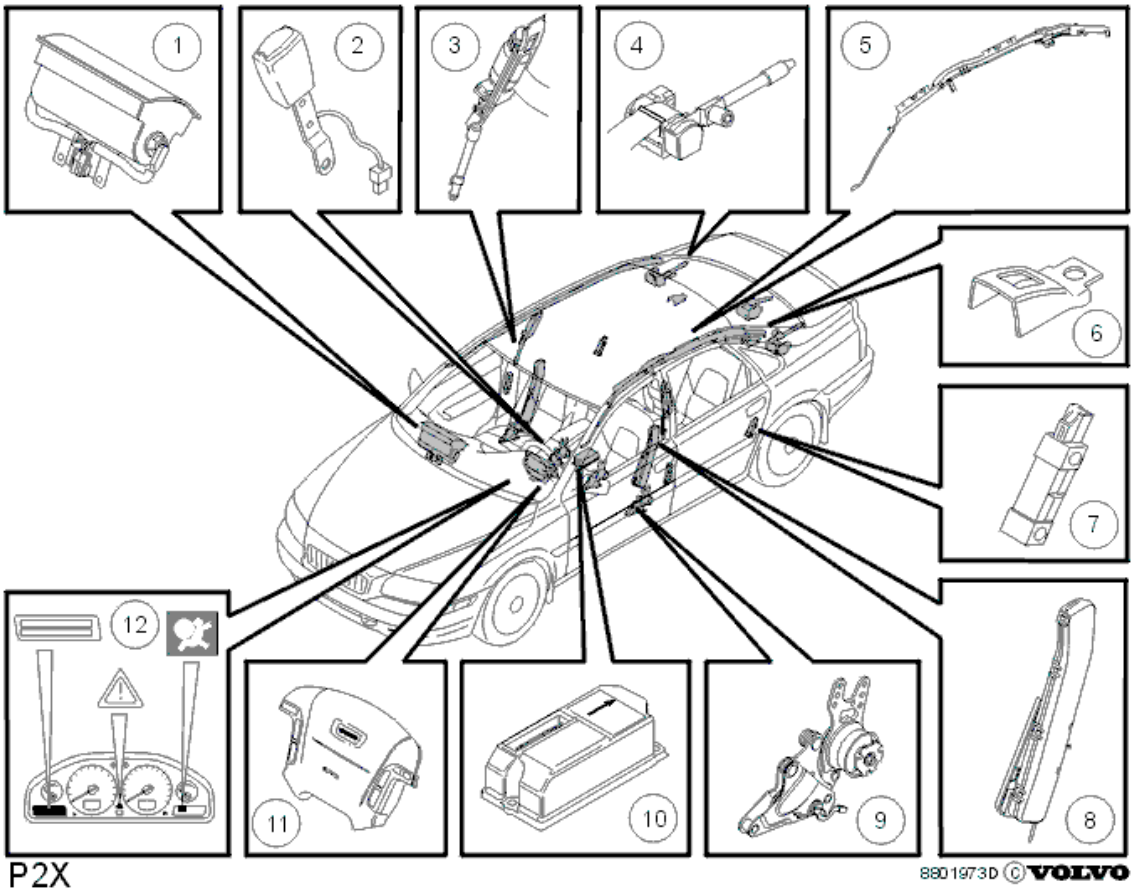

Fig. 1: Locating Safety Equipment
Courtesy of VOLVO CARS CORPORATION

1. Passenger airbag
2. Seat belt buckle
3. Seat belt with seat belt tensioner, front seat
4. Seat belt with seat belt tensioner, rear seat
5. Collision curtains
6. Lock for child seats (certain models only)
7. Sensor in the B and C-posts
8. Side impact protection (SIPS) bag
9. WHIPS (WHIplash Protection System)

10. SRS control module
11. Driver's airbag
12. Combined instrument panel

STORING THE ID NUMBER FOR THE OCCUPANT WEIGHT SENSOR (OWS)

STORING THE ID NUMBER

NOTE: The ID number can only be stored if the vehicle is equipped with an occupant weight sensor (OWS).

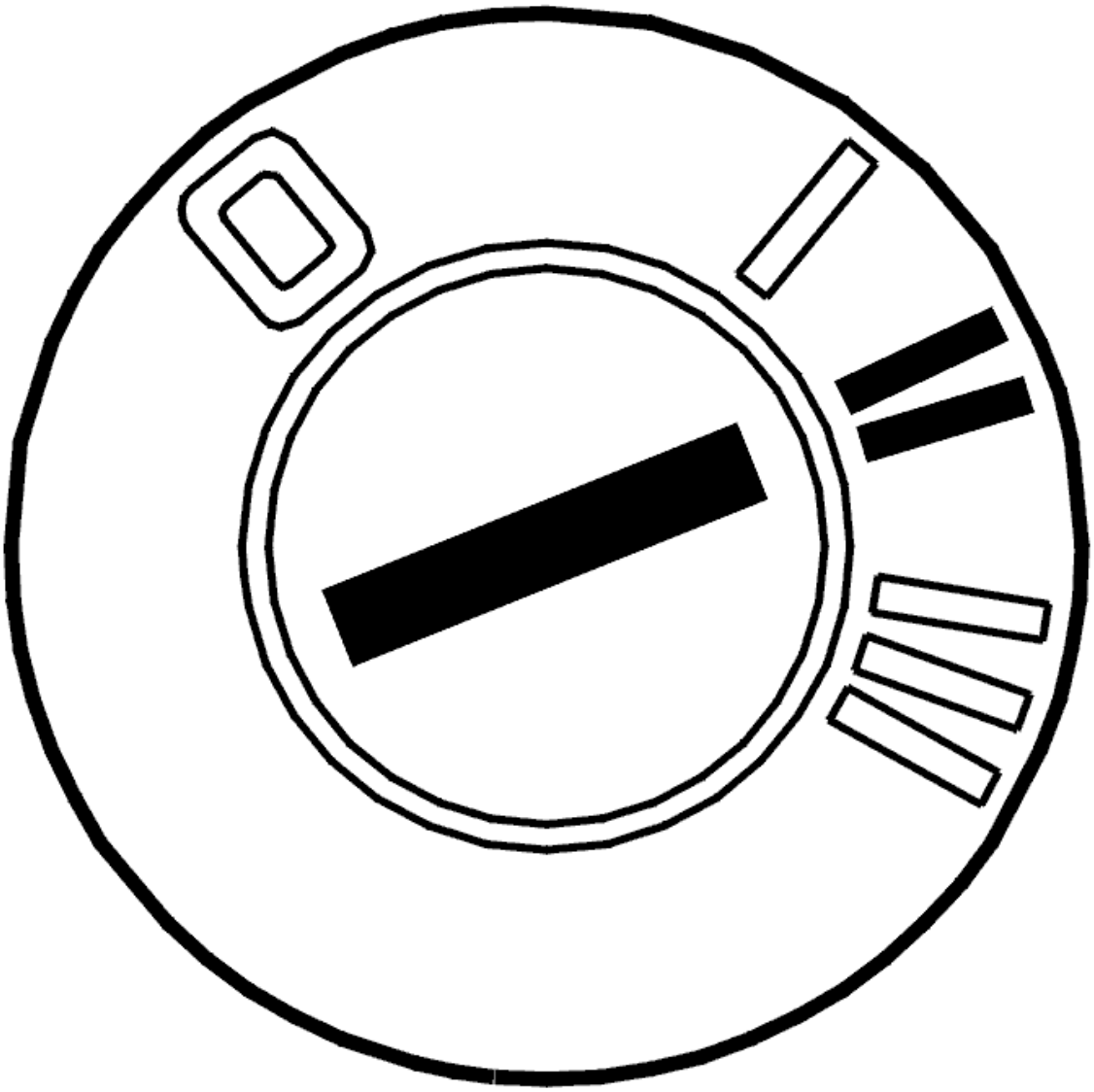

Fig. 2: Identifying Ignition ON
Courtesy of VOLVO CARS CORPORATION

- Switch on the ignition. Wait 10 seconds.

Store the ID number of the occupant weight sensor (OWS) by clicking on the VCT2000 symbol.

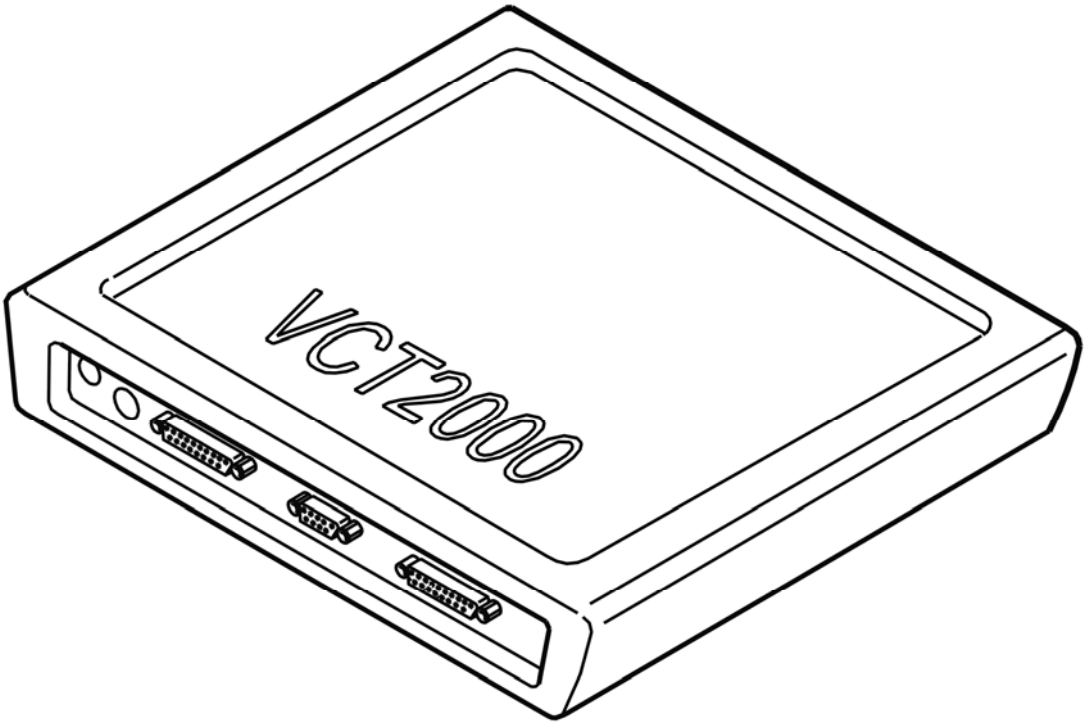

Fig. 3: Identifying VCT2000 Diagnostic Tool Symbol In VIDA
Courtesy of VOLVO CARS CORPORATION

SUPPLEMENTAL RESTRAINT SYSTEM MODULE (SRS), REPLACING

REMOVAL

PREPARATIONS

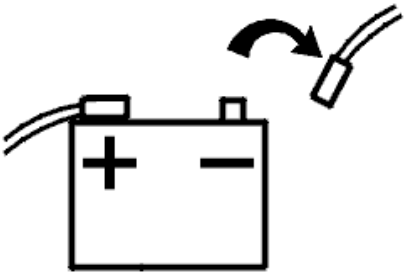

Fig. 4: Disconnecting Battery Lead
Courtesy of VOLVO CARS CORPORATION

Disconnect the battery lead.

See: **BATTERY, DISCONNECTING** .

SRS CONTROL MODULE

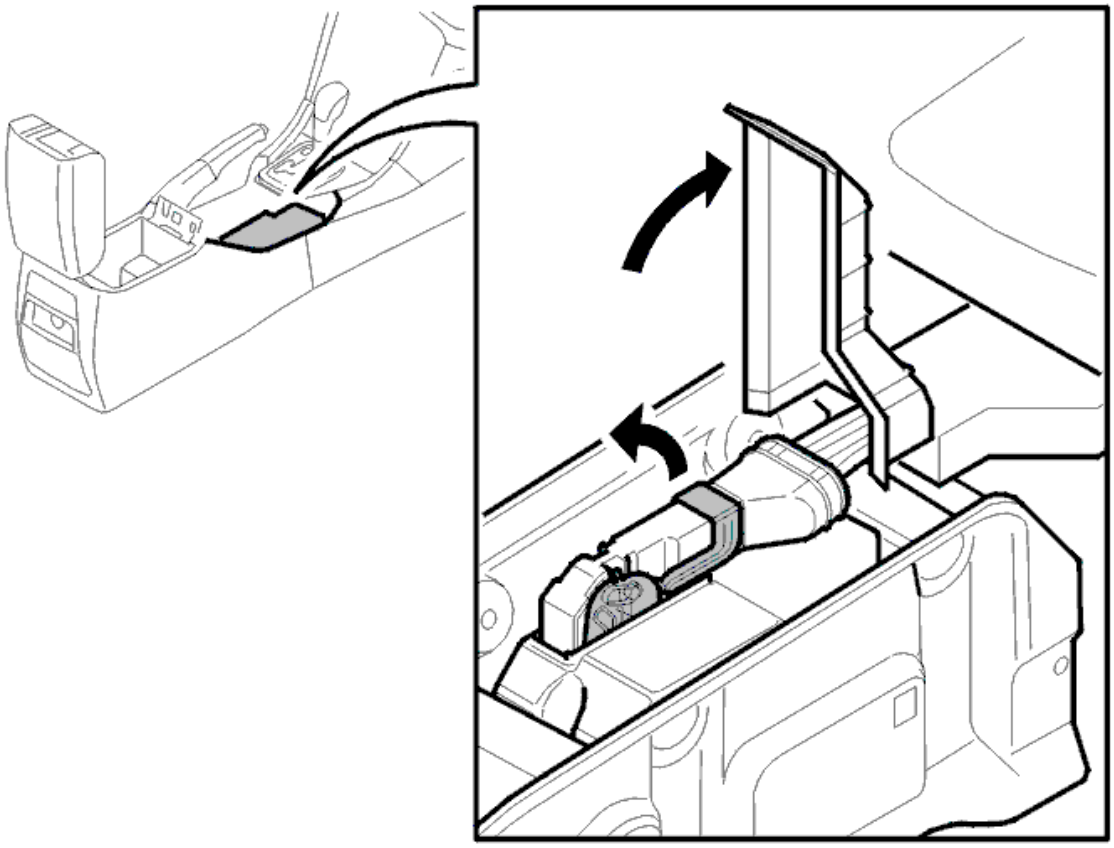

Fig. 5: Identifying Boot & Connector
Courtesy of VOLVO CARS CORPORATION

- Push the boot to one side and disconnect the connector.

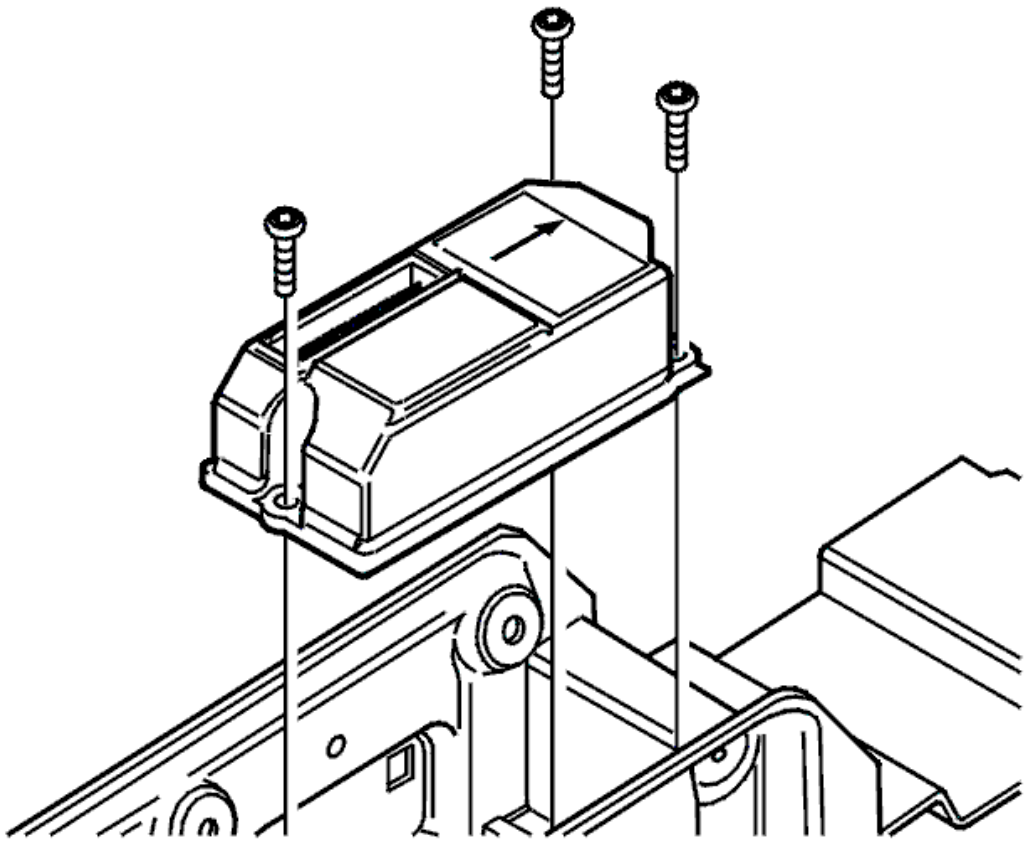

Fig. 6: 3 Control Module Screws
Courtesy of VOLVO CARS CORPORATION

- Remove the 3 control module screws (Torx 30).
- Lift the control module.

INSTALLATION

CAUTION: Take care that nothing comes between the control module and the bodywork. This can cause over-sensitivity or poor SRS system function.

SUPPLEMENTAL RESTRAINT SYSTEM MODULE (SRS)

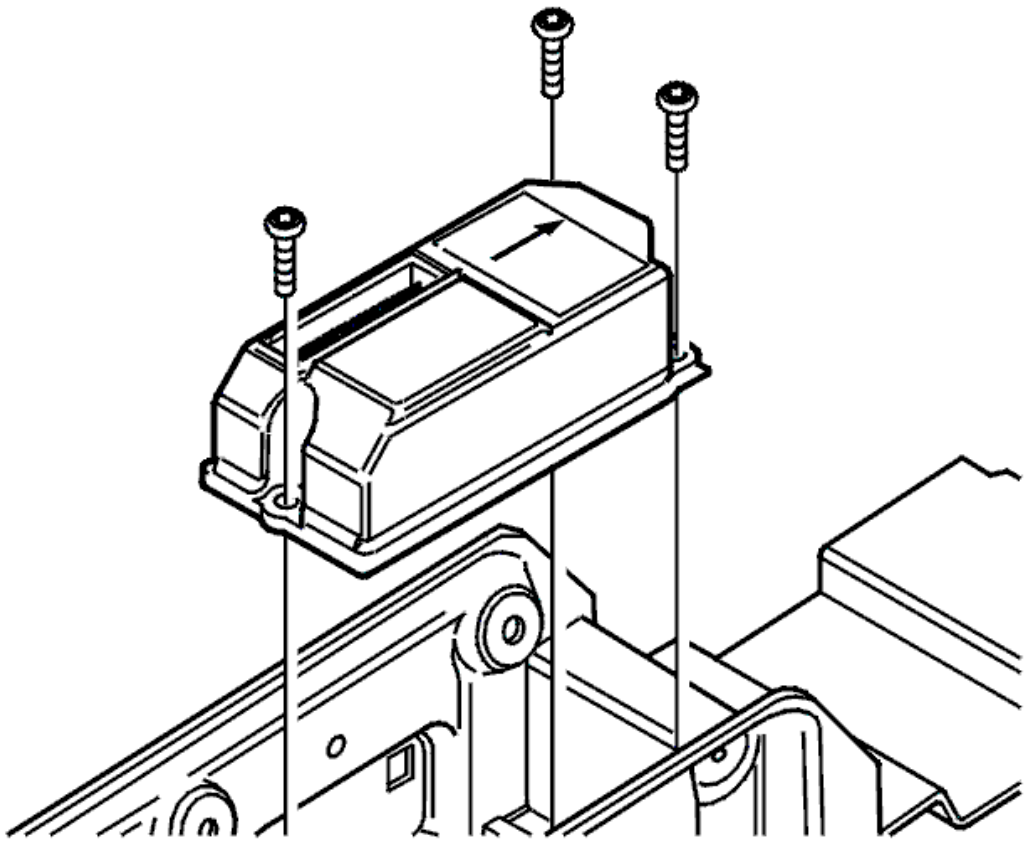

Fig. 7: 3 Control Module Screws
Courtesy of VOLVO CARS CORPORATION

Install 3 screws (Torx 30). Tighten to **10 Nm** .

CAUTION: It is important that the control module is securely mounted onto the bodywork if the sensor module is to operate properly.

Other components are reinstalled in reverse order.

ORDERING SOFTWARE

Order software. See: 9438415

PROGRAMMING CONTROL MODULE

Applies to MY 2005-

After downloading and configuring the control module the control module receives the vehicle configuration data from the central electronic module (CEM). This can take up to 15 seconds and during this time the SRS lamp flashes in the Driver information module (DIM). Downloading and configuration is complete when the SRS lamp stops flashing.

FINAL CHECK

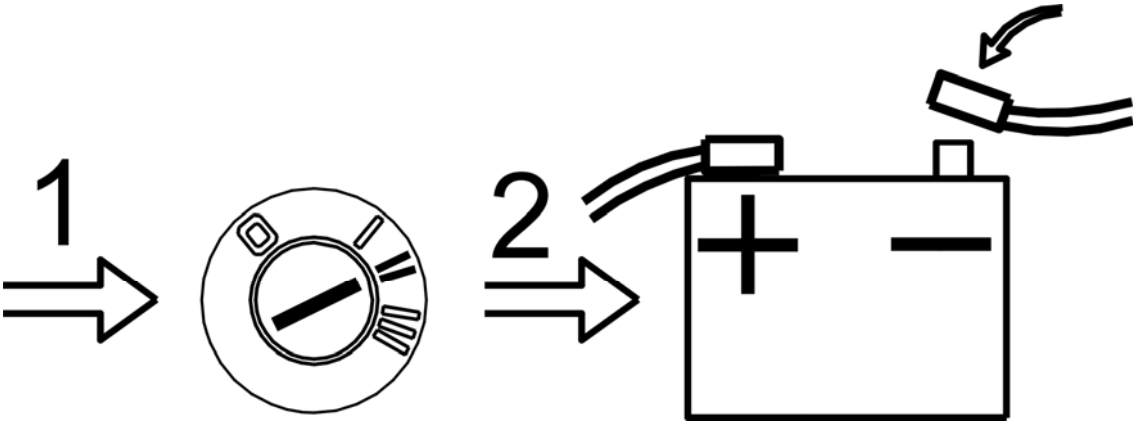

Fig. 8: Connecting Battery Negative Lead
Courtesy of VOLVO CARS CORPORATION

WARNING: **The ignition must not be switched on when the SRS ignition cable connector is being removed or installed.**

When all components have been installed:

- switch ignition to position II
- reconnect the battery negative lead.

NOTE: **Check that the SRS indicator lamp is not defective by turning the key to position II. The SRS indicator lamp should light and go out after approximately seven seconds.**

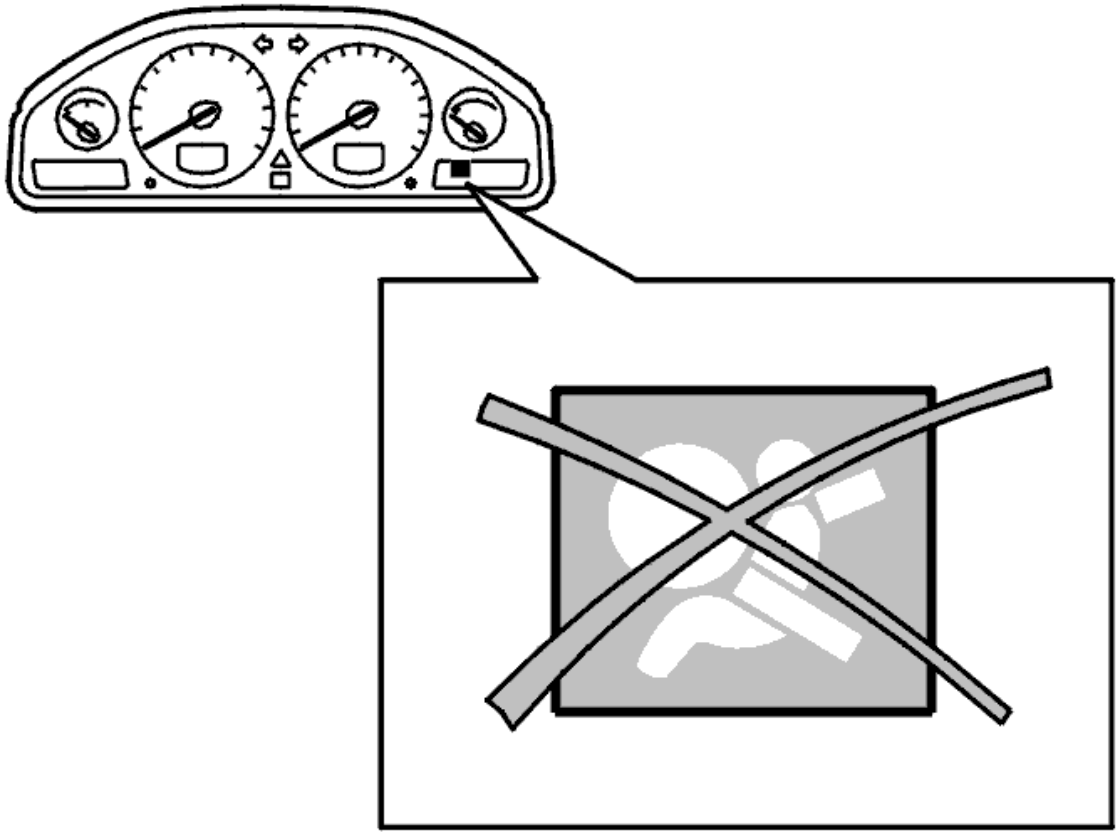

Fig. 9: Identifying SRS Indicator Lamp
Courtesy of VOLVO CARS CORPORATION

- Check that the SRS indicator lamp is not lit constantly. If the lamp is lit constantly use the data link connector (DLC) or VCT2000 to trace the fault.

RESTRAINTS

Brakes

RESTRAINTS

STEERING WHEEL MODULE

PREPARATIONS

NOTE: Disconnect the battery lead.

NOTE: Wait three minutes before starting work.

Ignition on to turn the steering wheel to the correct position.

REMOVING THE STEERING WHEEL MODULE

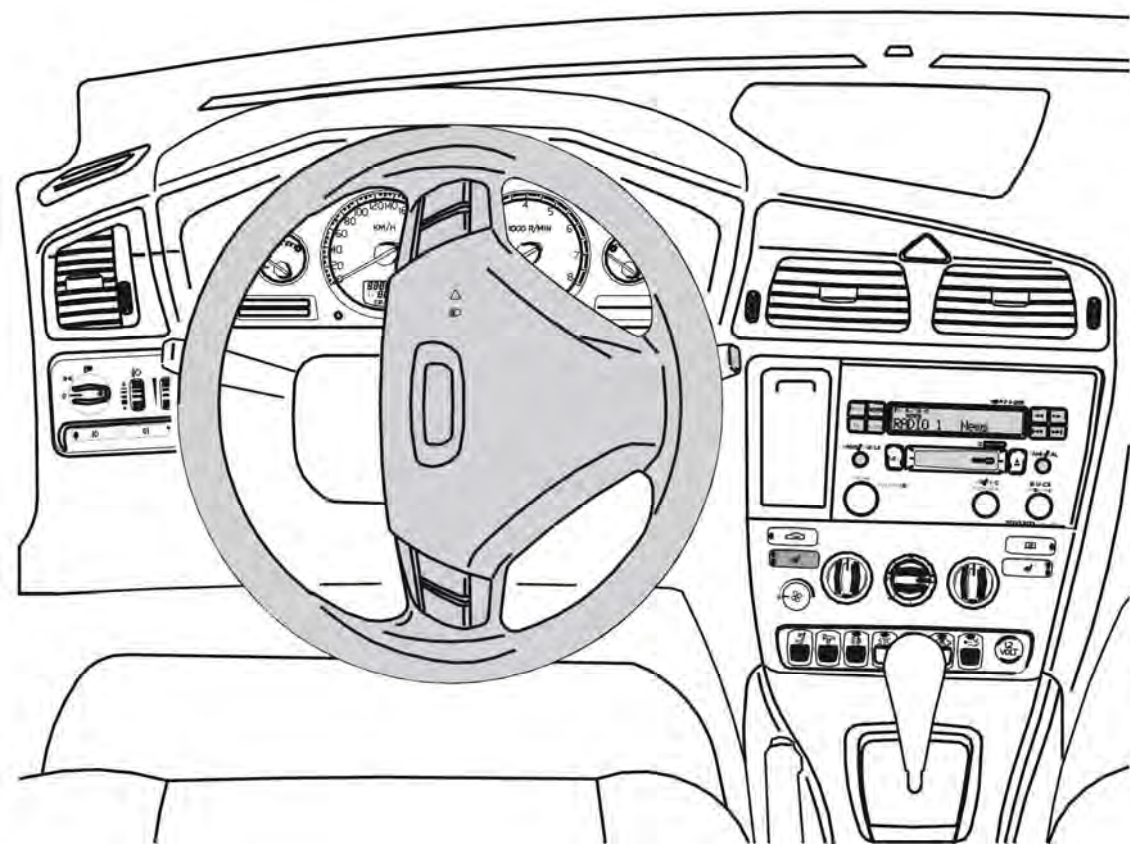

Fig. 1: Identifying Steering Wheel Turned A 1/4 Turn To Access Two Holes On Back
Courtesy of VOLVO CARS CORPORATION

Turn the steering wheel a 1/4 turn so that the two holes on the rear of the steering wheel are accessible.

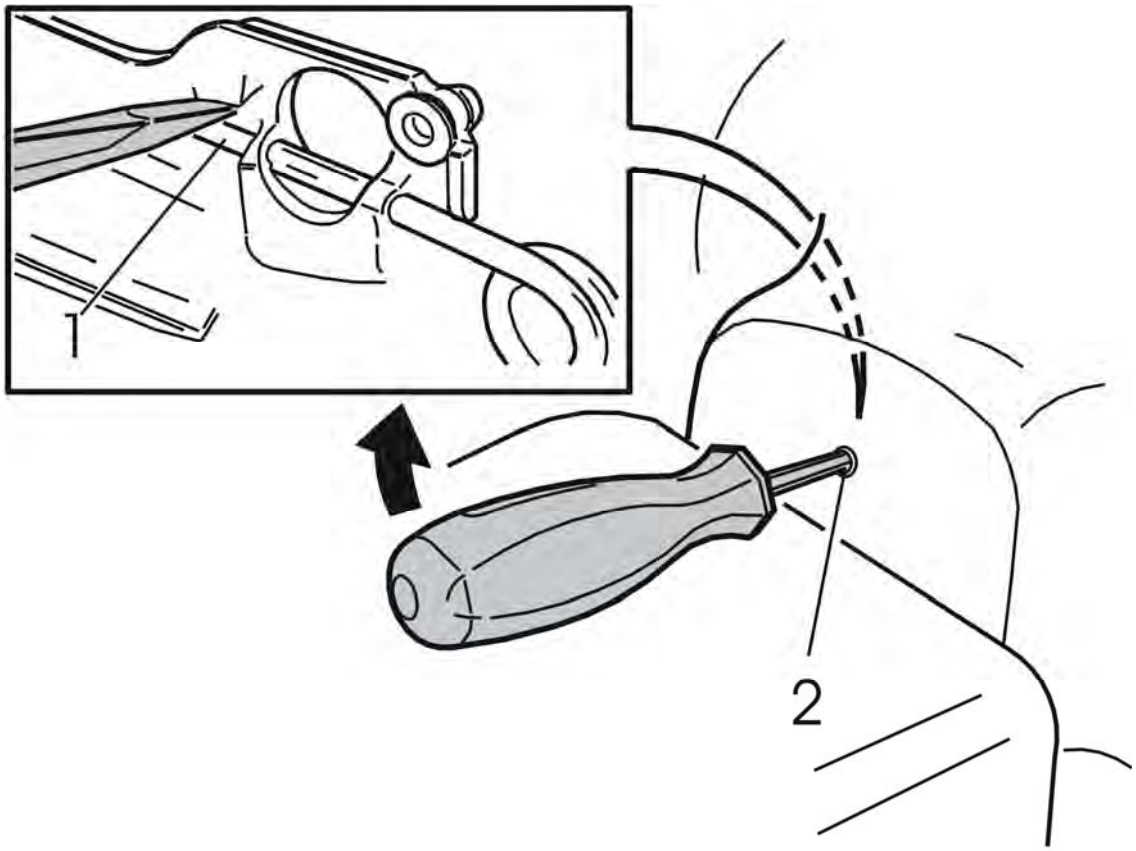

Fig. 2: Identifying Using Screwdriver To Release Catch
Courtesy of VOLVO CARS CORPORATION

Insert a screwdriver in the hole on the rear at right angles to the reverse of the steering wheel.

Put the screwdriver point against the top of the spring clip as shown in the illustration.

Pry the screwdriver up against the upper edge of the hole (2) so that the point of the screwdriver presses down the catch (1) until the catch releases.

Turn the steering wheel a 1/2 turn in the opposite direction. Repeat the process on the other side.

Turn the steering wheel to the neutral position.

Fold out the steering wheel module.

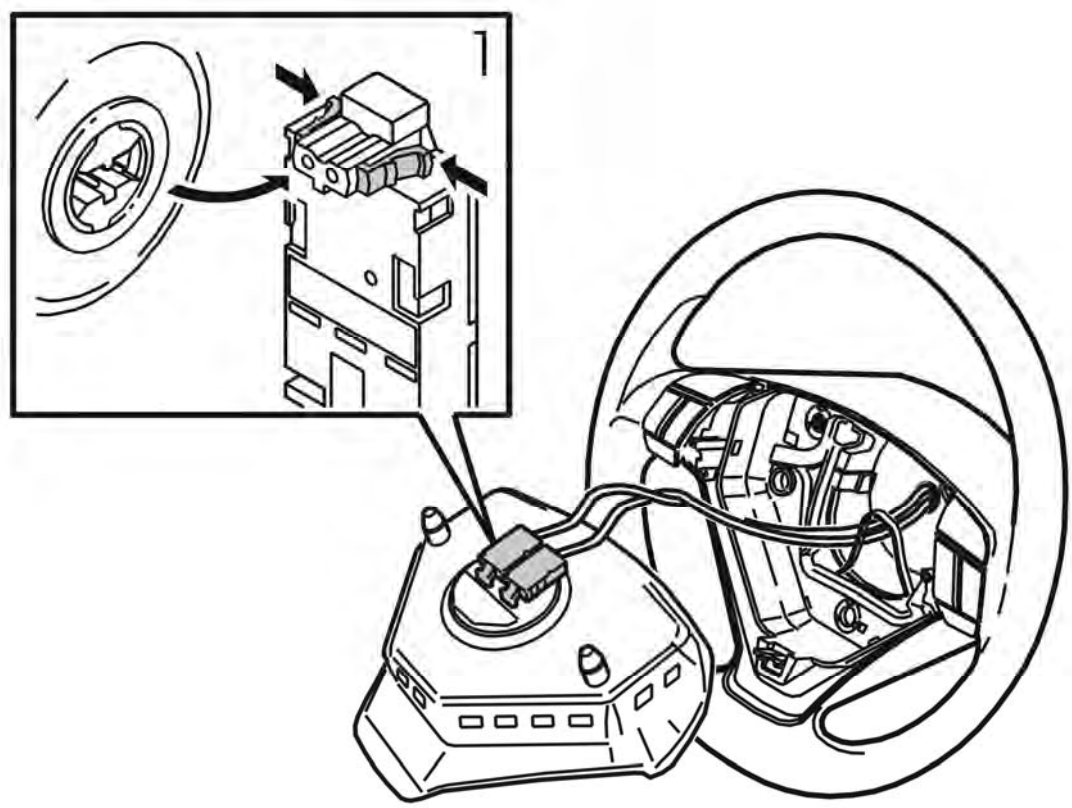

Fig. 3: Connectors For Airbag
Courtesy of VOLVO CARS CORPORATION

Disconnect the two connectors (1) for the ignition cables in the airbag.

Remove the steering wheel module.

INSTALLING THE STEERING WHEEL MODULE

Install:

In reverse order.

NOTE: Ensure that the wiring is not trapped during installation.

To adjust the steering wheel, see **STEERING WHEEL, REPLACING** .

RESTRAINTS

Power transmission

RESTRAINTS

WIRING HARNESS, SUPPLEMENTAL RESTRAINT SYSTEM (SRS)

Special tools:

see **9512620**

see **9512777**

see **9512785**

NOTE: The illustrations in this service information are used for different model years and/or models. Some variation may occur. However, the essential information in the illustrations is always correct.

CAUTION: As the SRS system is a safety system, it is extremely important that these instructions are carefully followed when carrying out repairs in the cable harness.

CAUTION: Ensure that the new pin has the same type of surface treatment as the old.

WARNING: Do not carry out any work on the cable for the SRS system until the connector has been disconnected from the relevant airbag or seat belt tensioner. There is otherwise a risk of static electricity deploying the component.

PREPARATORY WORK

SELECTION OF REPAIR KIT, SRS SYSTEM

Materials: SRS system repair kit for the selected car.

NOTE: Only special tools and materials from the SRS system repair kit for the selected car must be used. Choose a repair location where there is plenty of room to guarantee that work is of the highest quality.

The cables should always be connected color to color. In the cases where the repair terminals have a completely orange cable then this is always fitted to terminal No. 1. In the cases where the repair terminals have a blue and a brown cable, then blue is No. 1 and brown is No. 2.

REMOVING THE BATTERY LEAD AND THE IGNITION CABLE

Disconnect the negative battery cable. See: **BATTERY - DISCONNECTING AND CONNECTING**

Disconnect the relevant ignition cable. See: **IGNITER WIRE CONNECTOR**

ASSEMBLY

CUTTING AND STRIPPING PAIRS OF CABLES

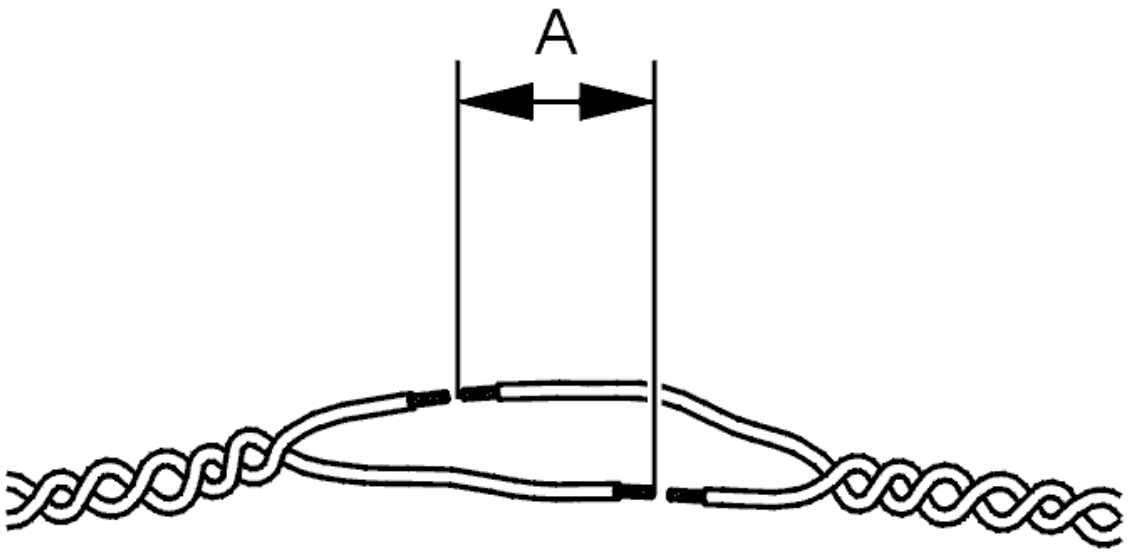

Fig. 1: Cables Cut With Approximately 40 MM Between Splices
Courtesy of VOLVO CARS CORPORATION

Release the cable from the cable harness so that you have plenty of room in which to work.

NOTE: The maximum permitted twinned length after splicing is 100 mm. This is to prevent interference problems.

Cut the cables so that there is approximately 40 mm between the splices (center to center) (A).

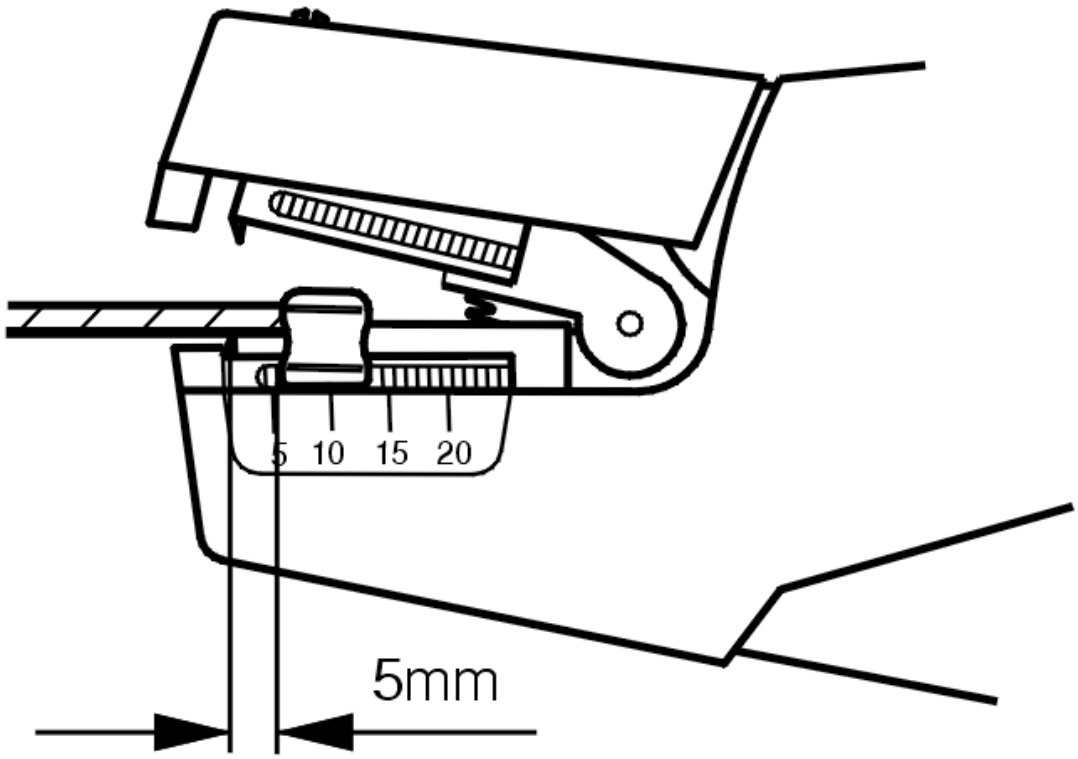

Fig. 2: Identifying Cable Strip Length
Courtesy of VOLVO CARS CORPORATION

Strip off 5.0 mm of the insulation on the 4 cable ends. Use: see **9512620** .

Twin the cable cores on the stripped ends of the cables.

CAUTION: Ensure that all the cores are twinned.

CRIMPING THE SLEEVE

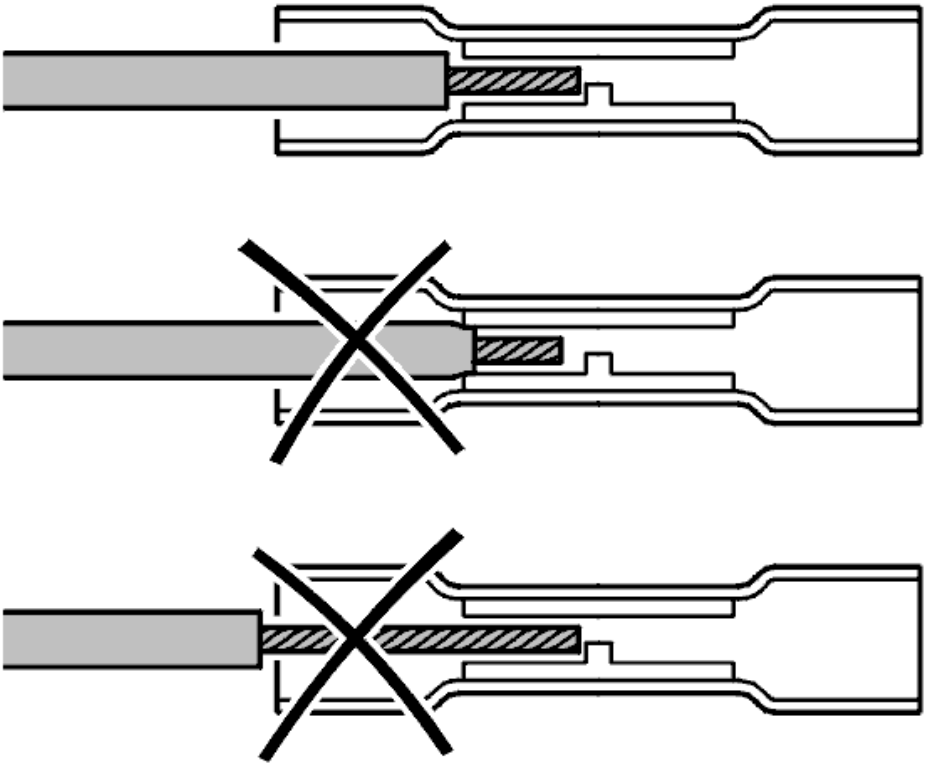

Fig. 3: Crimping Examples
Courtesy of VOLVO CARS CORPORATION

Install a crimp sleeve from the repair kit in the press tool: see **9512785**

Squeeze the crimping tool a little to secure the crimping sleeve in the tool.

Insert the cable as far into the crimp sleeve as it will go.

Ensure that the cable insulation does not get into the crimping area or that stripped cable does not extend outside the sleeve.

Press the pliers' handles as far as they will go to ensure a proper joint. The pliers release automatically.

Check by hand that the crimping sleeve is secure.

Prepare the remaining cable ends in the same way.

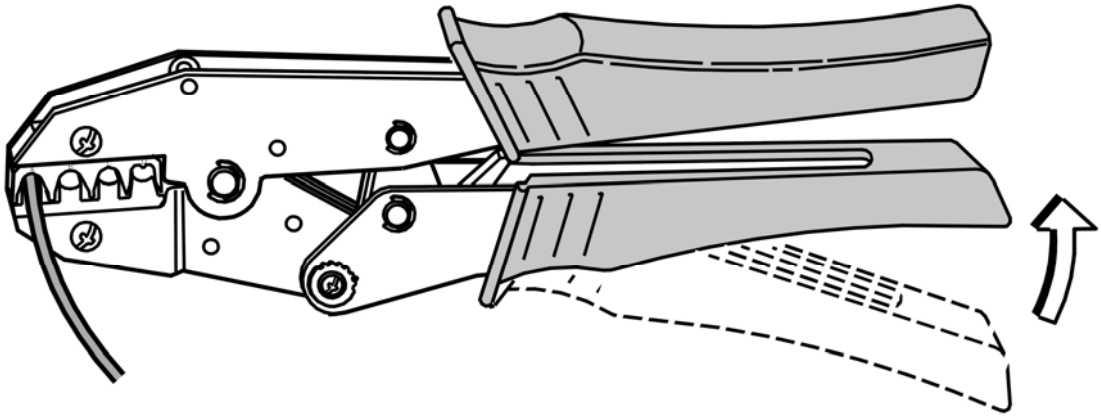

Fig. 4: Crimping Cable Terminal
Courtesy of VOLVO CARS CORPORATION

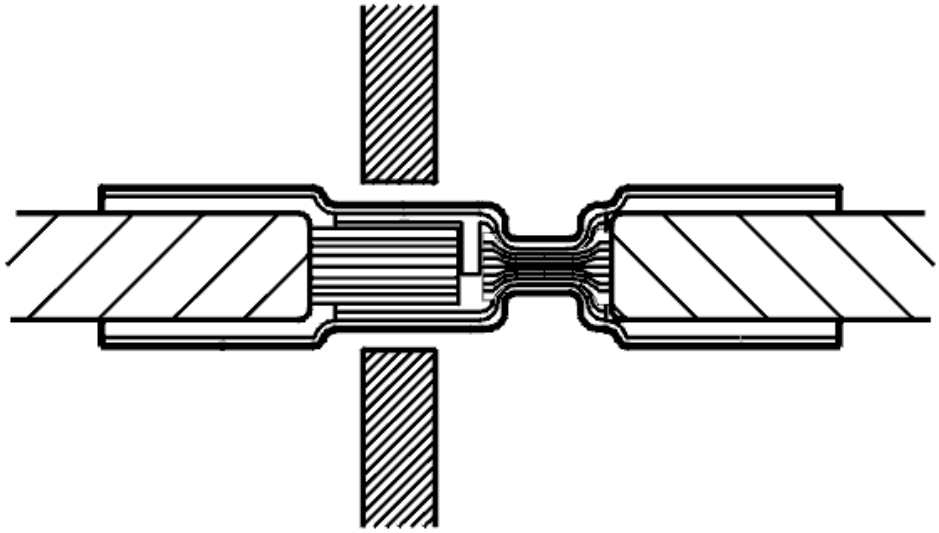

Fig. 5: Crimped Wire
Courtesy of VOLVO CARS CORPORATION

HEATING THE CRIMPING SLEEVE

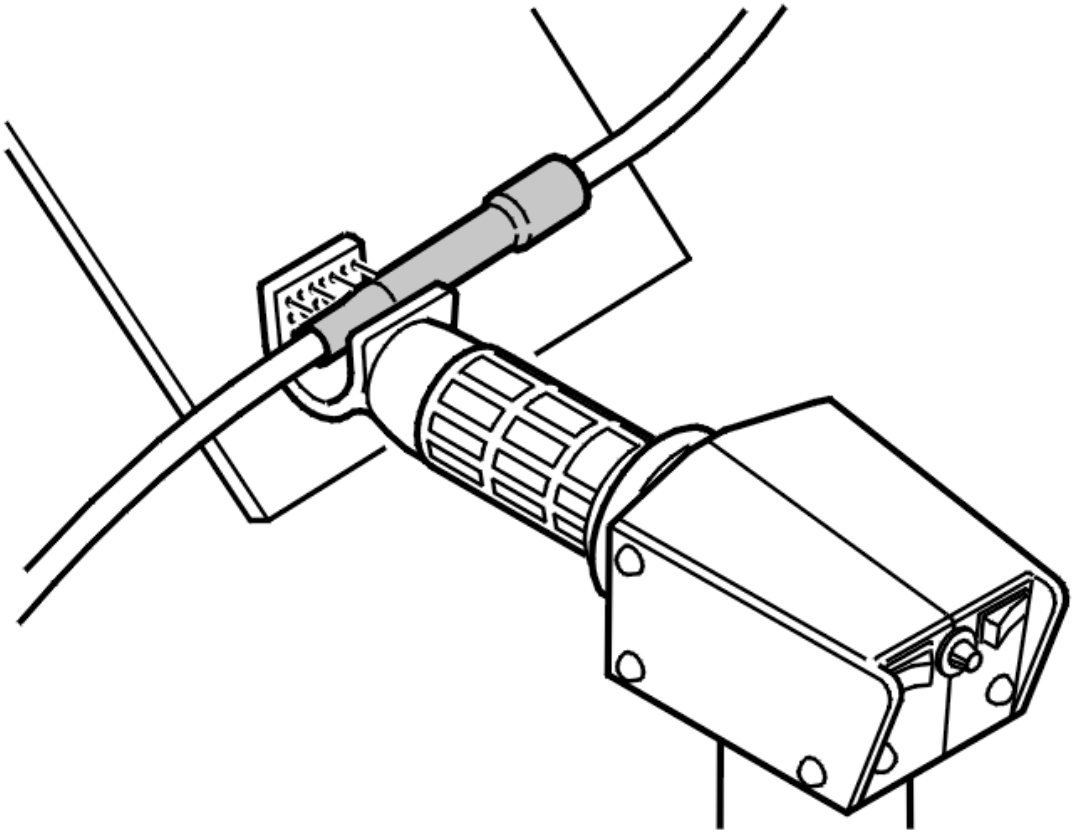

Fig. 6: Heating Heat-Shrink Tubing
Courtesy of VOLVO CARS CORPORATION

Hold a putty knife or other suitable protection behind the heat-shrink tubing to shield the surrounding components from heat.

Heat the sleeve with hot air gun: see **9512777** and a suitable nozzle. It is important that the heat-shrink tubing is shrunk around the cable. It should be possible to, see some adhesive that has squeezed out around the cable.

Fig. 7: Checking Shrinking Results
Courtesy of VOLVO CARS CORPORATION

FINISHING

SECURING THE CABLE FOR THE SRS SYSTEM

Secure the new cable for the SRS system next to the old cable using a tie strap or similar. Reinstall the connectors.

INSTALLING THE BATTERY CABLE

Install the battery negative lead. See **BATTERY - DISCONNECTING AND CONNECTING**

CHECKING AND ADJUSTING THE SRS SYSTEM

Turn the ignition to position 2.

Check the SRS system to ensure that the warning lamp comes on and stays on while the SRS system performs a self-test. The lamp must go out after a few seconds. If not, perform fault-tracing.

If everything is working, reinstall other components.

Test drive the vehicle.

STEERING

Power transmission

STEERING

POWER STEERING PUMP

REMOVAL

NOTE: Removal steps in this procedure may contain installation details.

Remove the following items:

- the auxiliaries belt, see **AUXILIARIES BELT / BELT TENSIONER, REPLACING**
- the intake manifold, see **INDUCTION PIPE**

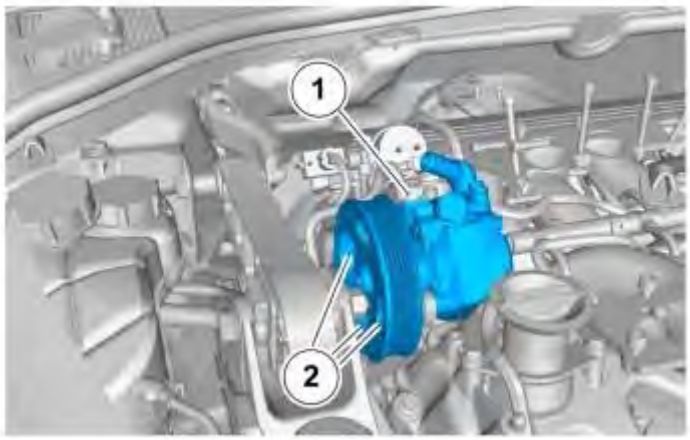

Fig. 1: Identifying Power Steering Pump
Courtesy of VOLVO CARS CORPORATION

WARNING: Be prepared to collect escaping fluid.

Remove the following items:

1. **Torque:** M6

   10 Nm

2. **Torque:** M8

   24 Nm

INSTALLATION

To install, reverse the removal procedure.

Perform power steering system, bleeding air, see **POWER STEERING SYSTEM, BLEEDING**

STEERING

Power transmission

STEERING

POWER STEERING SYSTEM, BLEEDING

Materials	
Designation	**Part number**
Power steering fluid	1161529

BLEEDING

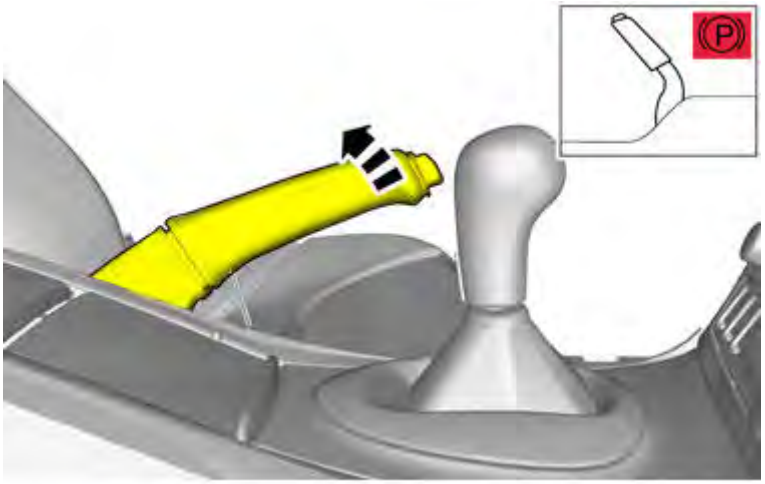

Fig. 1: Applying Parking Brake
Courtesy of VOLVO CARS CORPORATION

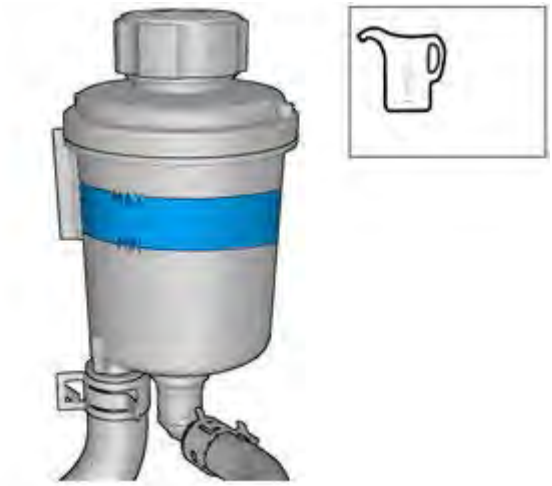

Fig. 2: Identifying Fluid Level Fill Range
Courtesy of VOLVO CARS CORPORATION

WARNING: Avoid skin contact with the specified material.

CAUTION: The fluid level must remain between the MAX and MIN marks.

Use: Power steering fluid, 1161529

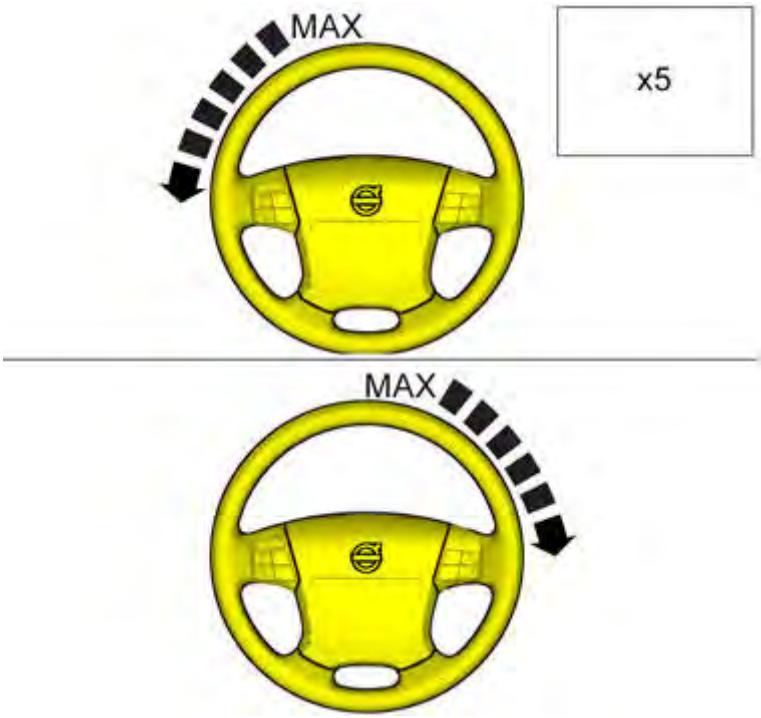

Fig. 3: Identifying Steering Wheel Max Turning Radius
Courtesy of VOLVO CARS CORPORATION

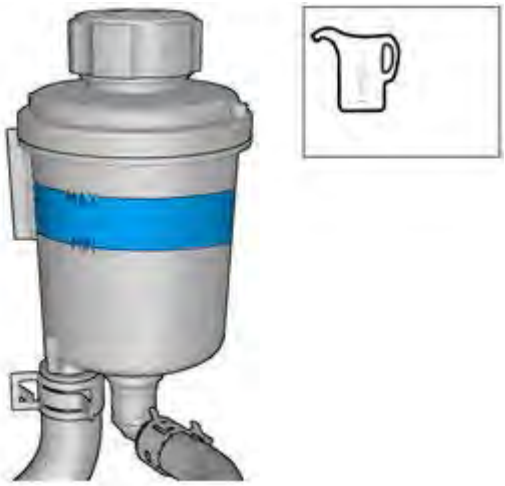

Fig. 4: Identifying Fluid Level Fill Range

Courtesy of VOLVO CARS CORPORATION

WARNING: Avoid skin contact with the specified material.

CAUTION: Make sure that fluid level is to the MAX mark.

Use: Power steering fluid, 1161529

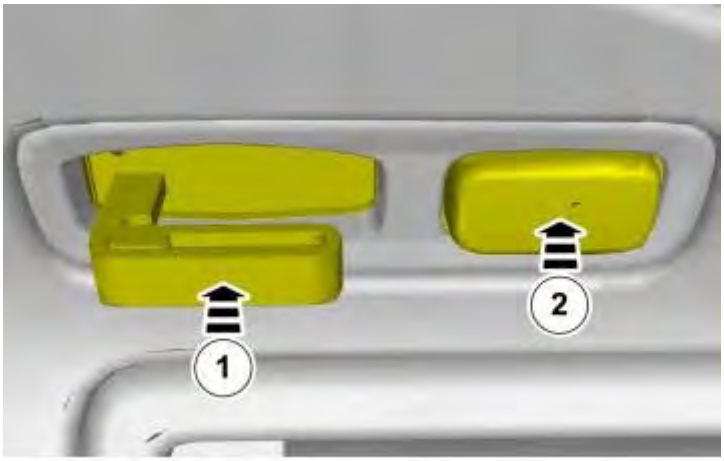

Fig. 5: Starting/Stopping Vehicle Using Remote Key
Courtesy of VOLVO CARS CORPORATION

Fig. 6: Identifying RPM Range
Courtesy of VOLVO CARS CORPORATION

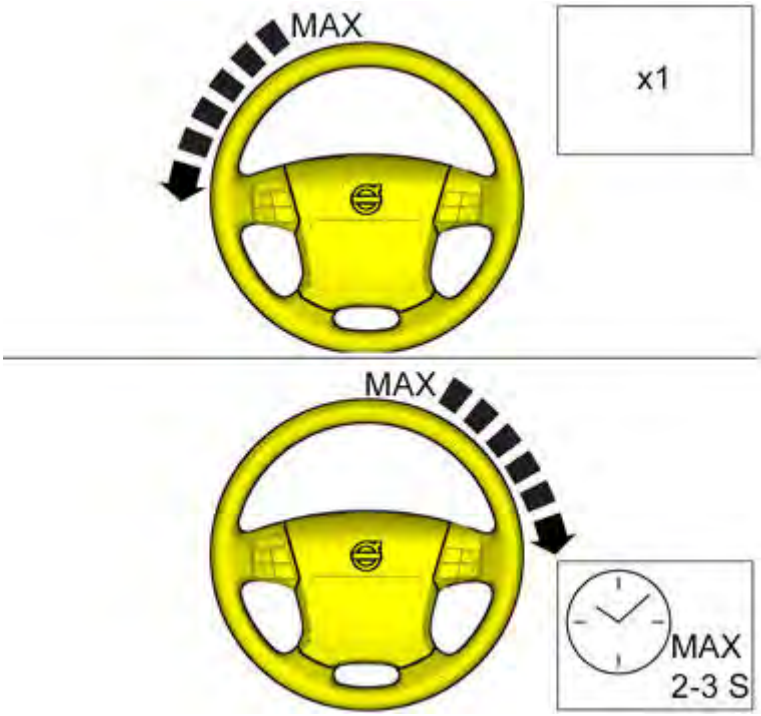

Fig. 7: Identifying Steering Wheel Max Turning Radius
Courtesy of VOLVO CARS CORPORATION

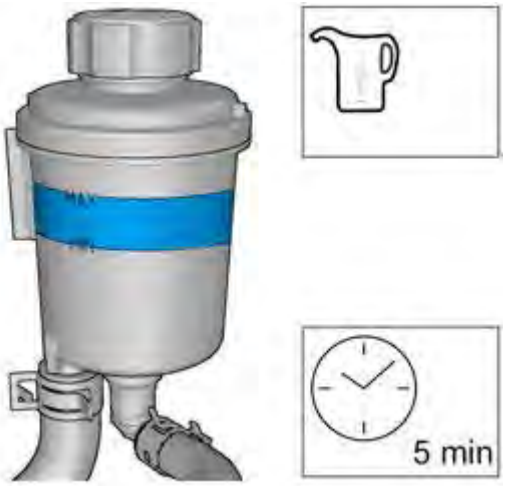

Fig. 8: Identifying Fluid Level Fill Range
Courtesy of VOLVO CARS CORPORATION

WARNING: Avoid skin contact with the specified material.

CAUTION: Make sure that fluid level is to the MAX mark.

Use: Power steering fluid, 1161529

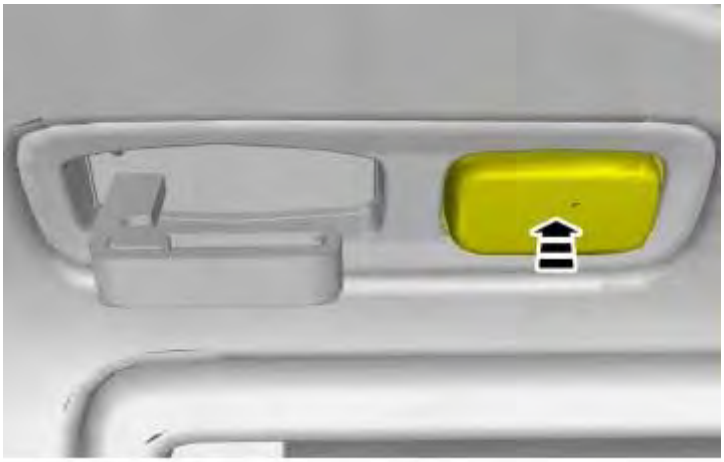

Fig. 9: Starting/Stopping Vehicle Using Remote Key
Courtesy of VOLVO CARS CORPORATION

WARNING: Make sure that the engine is switched off.

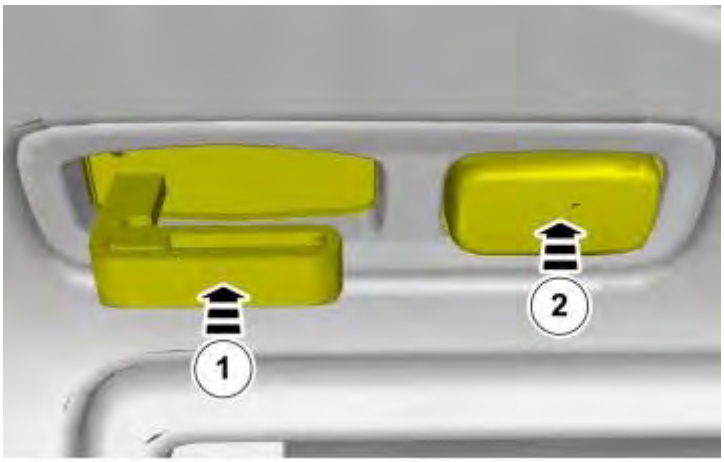

Fig. 10: Starting/Stopping Vehicle Using Remote Key
Courtesy of VOLVO CARS CORPORATION

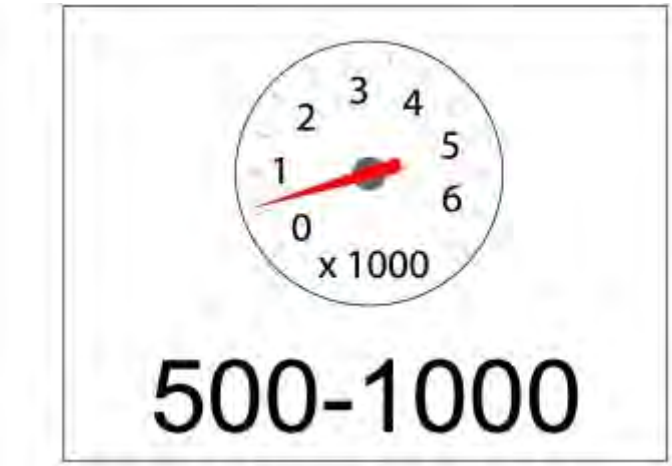

Fig. 11: Identifying RPM Range
Courtesy of VOLVO CARS CORPORATION

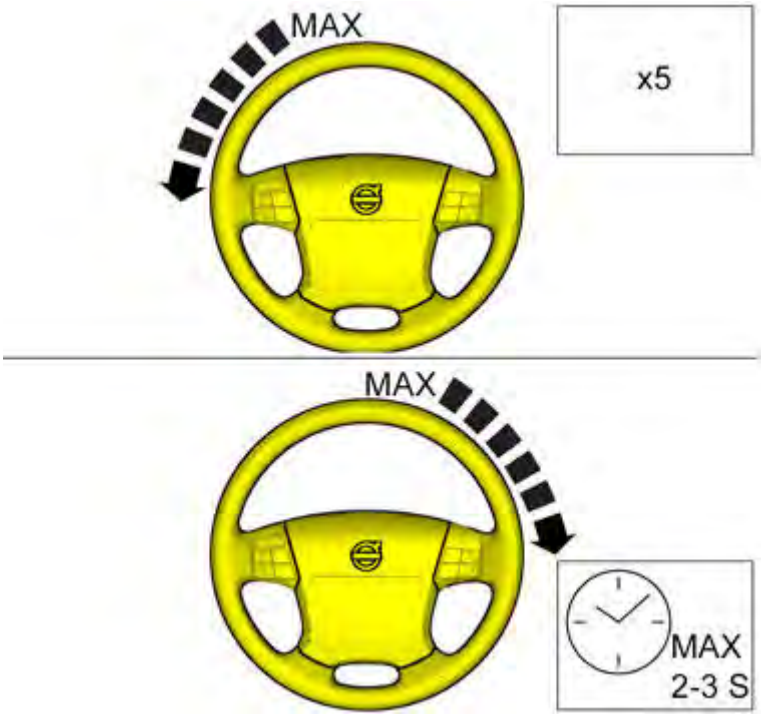

Fig. 12: Identifying Steering Wheel Max Turning Radius
Courtesy of VOLVO CARS CORPORATION

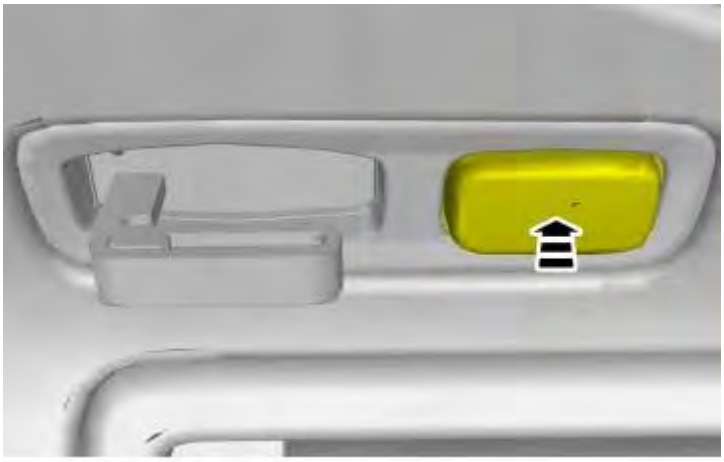

Fig. 13: Starting/Stopping Vehicle Using Remote Key
Courtesy of VOLVO CARS CORPORATION

WARNING: Make sure that the engine is switched off.

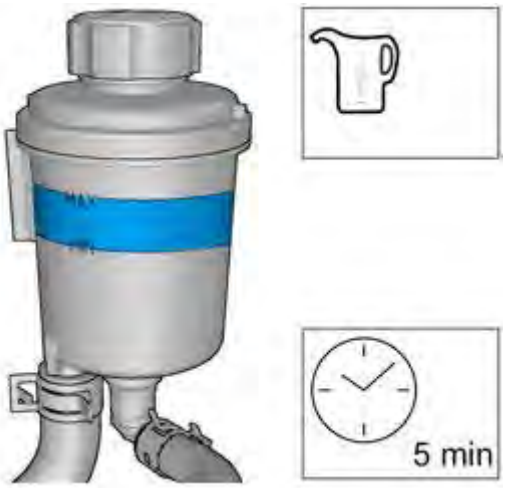

Fig. 14: Identifying Fluid Level Fill Range
Courtesy of VOLVO CARS CORPORATION

WARNING: Avoid skin contact with the specified material.

CAUTION: Make sure that fluid level is to the MAX mark.

Use: Power steering fluid, 1161529

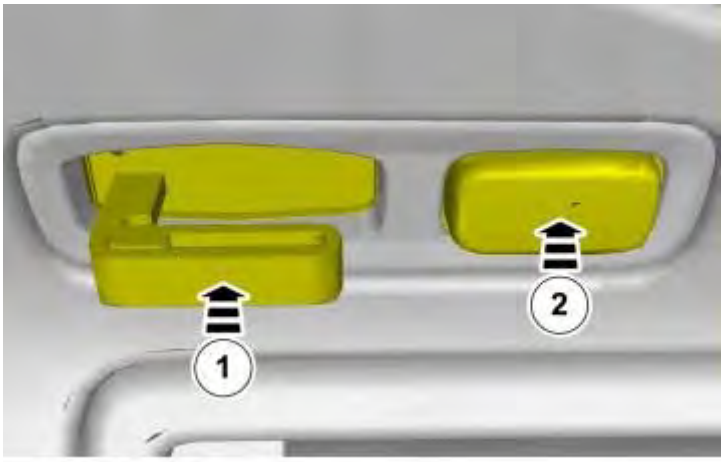

Fig. 15: Starting/Stopping Vehicle Using Remote Key
Courtesy of VOLVO CARS CORPORATION

Fig. 16: Identifying RPM Range
Courtesy of VOLVO CARS CORPORATION

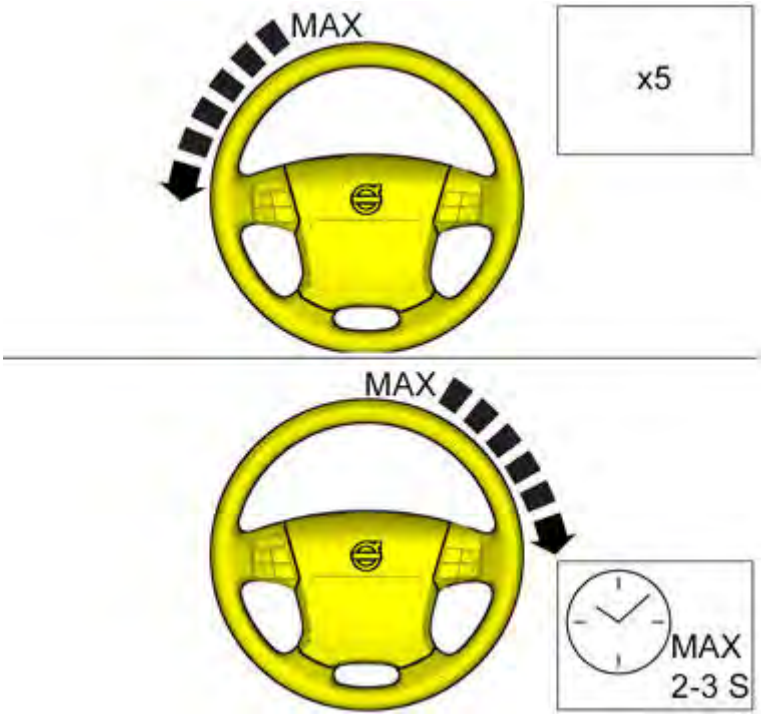

Fig. 17: Identifying Steering Wheel Max Turning Radius
Courtesy of VOLVO CARS CORPORATION

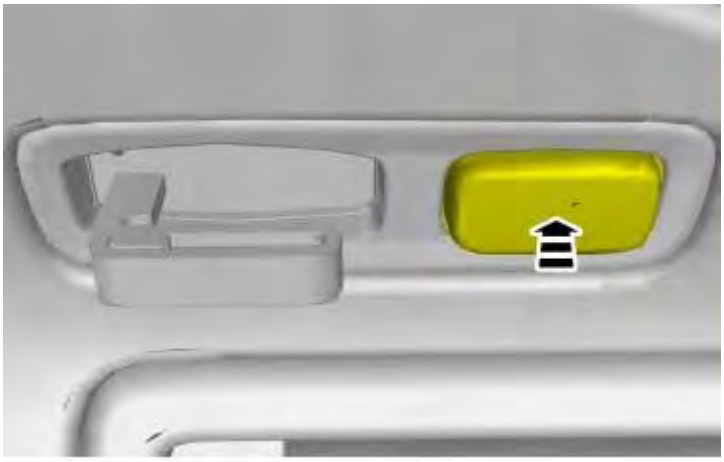

Fig. 18: Starting/Stopping Vehicle Using Remote Key
Courtesy of VOLVO CARS CORPORATION

WARNING: **Make sure that the engine is switched off.**

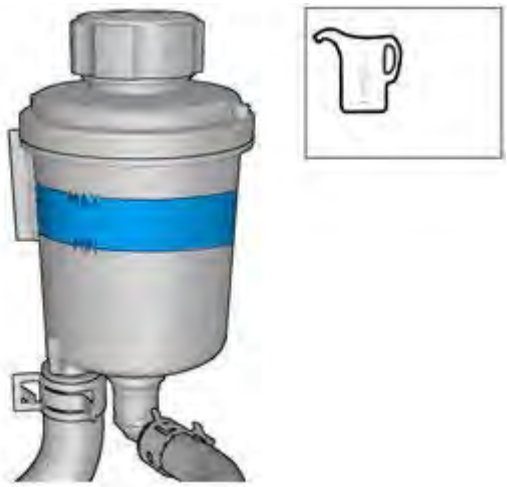

Fig. 19: Identifying Fluid Level Fill Range
Courtesy of VOLVO CARS CORPORATION

WARNING: Avoid skin contact with the specified material.

CAUTION: Make sure that fluid level is to the MAX mark.

Use: Power steering fluid, 1161529

STEERING

Steering - Cleaning, Inspection And Adjustment

STEERING WHEEL (2003-2012)

STEERING WHEEL POSITION, ADJUSTING

NOTE: **As the illustrations in this service information are used for different model years and / or models, some variation may occur. However, the essential information in the illustrations is always correct.**

PREPARATION

Test drive the car and make a note of the steering wheel position.

Remove the battery lead. See **BATTERY, DISCONNECTING** .

Remove the driver's airbag module. See **AIRBAG DRIVER'S SIDE (SRS), REPLACING** .

STEERING WHEEL POSITION, ADJUSTING

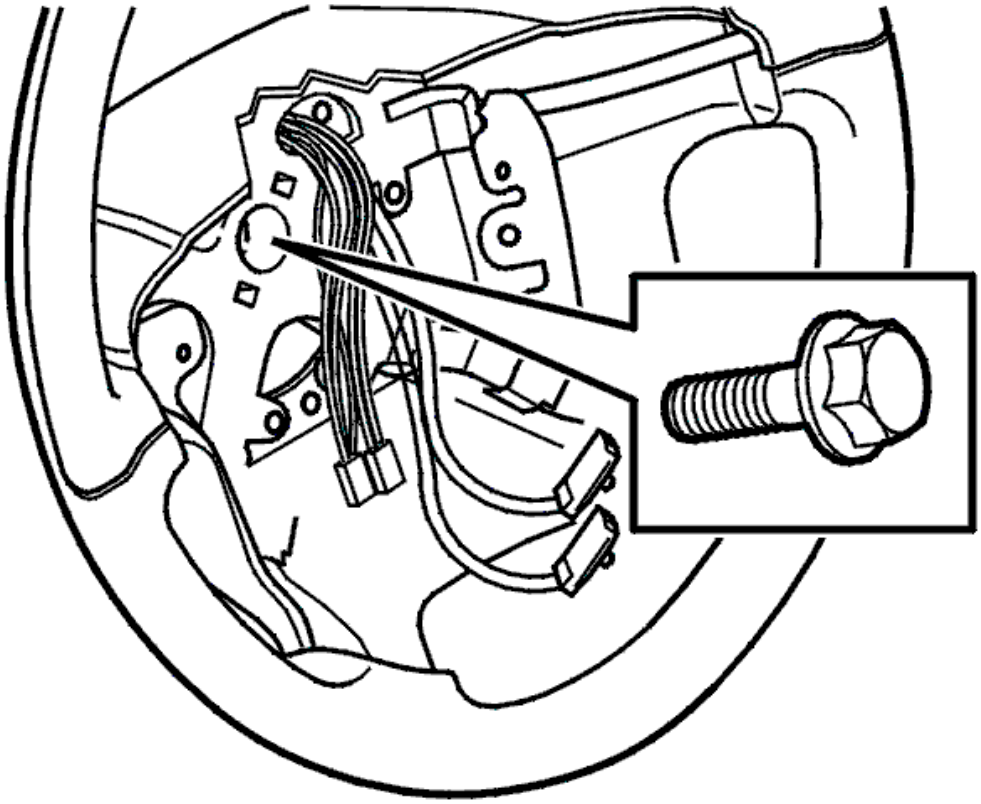

Fig. 1: Identifying Steering Wheel Screw

Courtesy of VOLVO CARS CORPORATION

Remove the steering wheel mounting screw.

Turn the steering wheel to the position noted during the test drive. Remove the steering wheel.

Zero the contact reel. See **CONTACT REEL DRIVER AIRBAG MODULE, RESETTING** .

Set the steering wheel to the "straight ahead" position.

NOTE: **Do not turn the steering wheel when it is on the steering shaft. Since the contact reel is locked, it will be damaged beyond repair if the wheel is turned in this situation.**

Tighten the steering wheel mounting screw. Tighten to **35 Nm** .

Remove the locking screw for the contact reel. Secure the locking screw in the "parking hole" in the steering wheel.

FINISHING

Install:

- the driver's airbag module. See **AIRBAG DRIVER'S SIDE (SRS), REPLACING**
- the battery lead.

Test drive and repeat the adjustment if necessary.

SERVO EQUIPMENT (2003-2006)

POWER STEERING BALANCE/PUMP PRESSURE, CHECKING

Special tools:

see **9995055**

see **9995175**

see **9997179**

see **9997180**

see **9995319**

see **9511506**

see **9998081**

NOTE: Since the illustrations in this service information are used for different model years and/or models, some variation may occur. However, the essential information in the illustrations is always correct.

PREPARATORY WORK

REMOVING

NOTE: The vehicle most be lowered when carrying out work.

Remove the airbag, see **AIRBAG DRIVER'S SIDE (SRS), REPLACING** .

INSTALLING THE TEST DEVICE

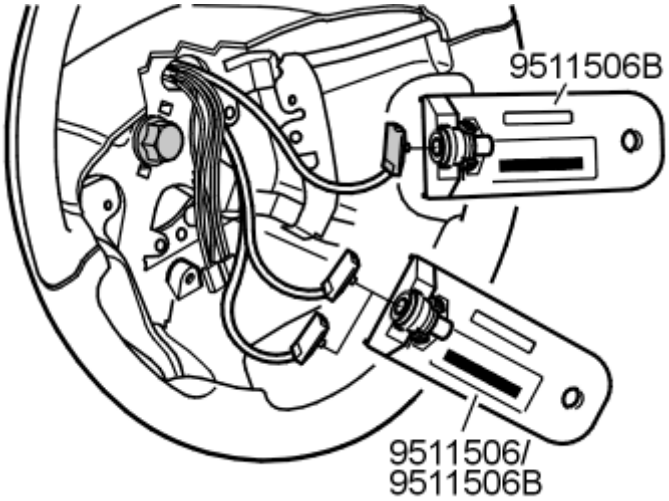

Fig. 2: Identifying Special Tools 9511506
Courtesy of VOLVO CARS CORPORATION

Install the test devices to the connectors for the cables instead of the airbags. The test devices are used so that no diagnostic trouble codes (DTCs) are registered when the engine is started.

On model years 2003 and 2004, see **9511506** alternatively 951 1506 version B are used depending on the version the connectors have.

On model year 2005 or later, see **9511506** and 951 1506 version B is used for the green and violet connector. Use 951 1506 version B for the gray connector that is found on certain vehicles.

Install the battery negative lead, see **BATTERY, DISCONNECTING**

REMOVING THE PRESSURE LINE, APPLIES ONLY TO 5 AND 6 CYLINDER ENGINES

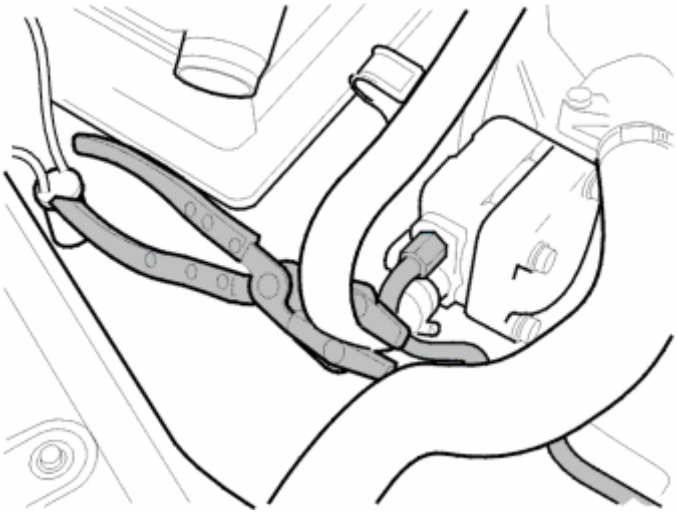

Fig. 3: Identifying Lock Grip Pliers On Oil Pump Return Hose
Courtesy of VOLVO CARS CORPORATION

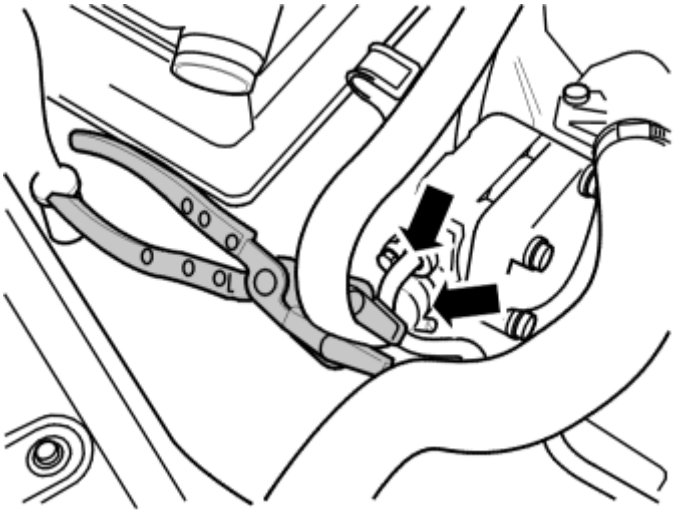

Fig. 4: Identifying Lock Grip / Hose Pliers On Power Steering Pump Return Hose
Courtesy of VOLVO CARS CORPORATION

NOTE: **The illustration displays previous versions, up to and including 2004. From and including 2005 the pressure pipe is secured by a screw and washer.**

WARNING: **Avoid skin contact with the oil.**

Protect the generator (GEN).

Place paper over the generator (GEN) as protection against oil.

Remove the control module coolant pipe.

Install lock grip pliers on the power steering pump return hose.

Remove the pressure line from the power steering pump.

REMOVING THE PRESSURE LINE, APPLIES ONLY TO 8 CYLINDER ENGINES

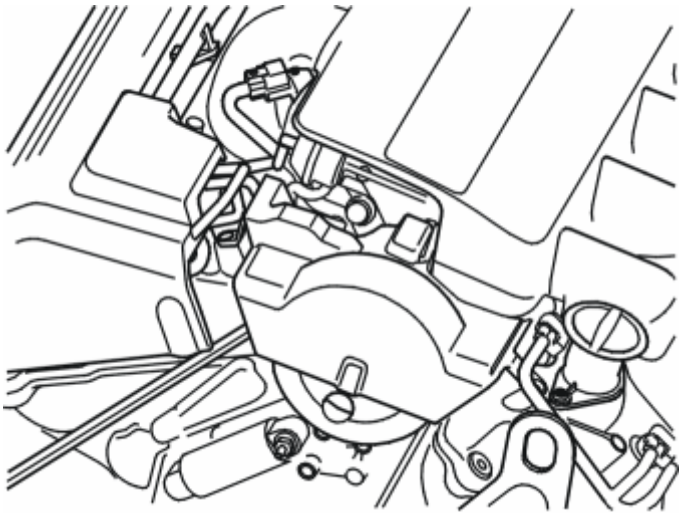

Fig. 5: Identifying Cover Over Engine Front Row Cylinders And Protective Cover Over Power Steering Pump
Courtesy of VOLVO CARS CORPORATION

Remove:

- the cover over the engine's front row of cylinders (bank 1) and slightly detach the cover for the rear row of cylinders (bank 2)
- the protective cover over the power steering pump.

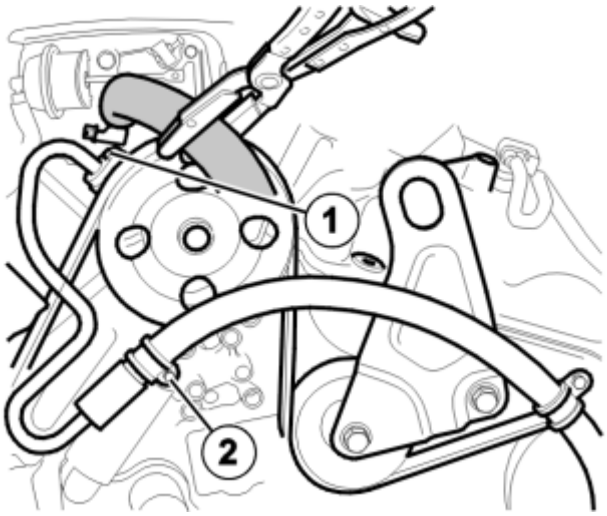

Fig. 6: Identifying Screw And Nut
Courtesy of VOLVO CARS CORPORATION

Install lock grip pliers on the power steering pump return hose.

NOTE: Note the position of the delivery pipe.

Place paper around the pressure line on the power steering pump.

Remove:

- the screw (1)
- the nut (2)
- the pressure line from the power steering pump.

CONNECTING THE MANOMETER, APPLIES TO MODEL YEARS UP TO AND INCLUDING 2004

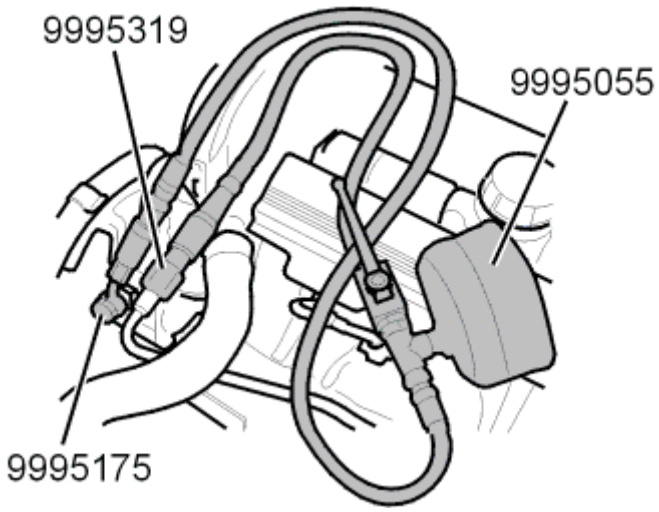

Fig. 7: Identifying Special Tools 9995055, 9995175 And 9995319
Courtesy of VOLVO CARS CORPORATION

Connect see **9995055** version C between the pump and the steering gear pressure hose.

Use: see **9995175** and see **9995319** .

Connect see **9995175** with the pipe screws and the washers from see **9995319** .

NOTE: Connect the hose from the pressure gauge's valve to the steering gear's pressure hose. The valve should be in a position along the hose.

Remove:

- lock grip pliers
- paper over the generator (GEN).

CONNECTING THE MANOMETER, APPLIES TO MODEL YEARS FROM AND INCLUDING 2005

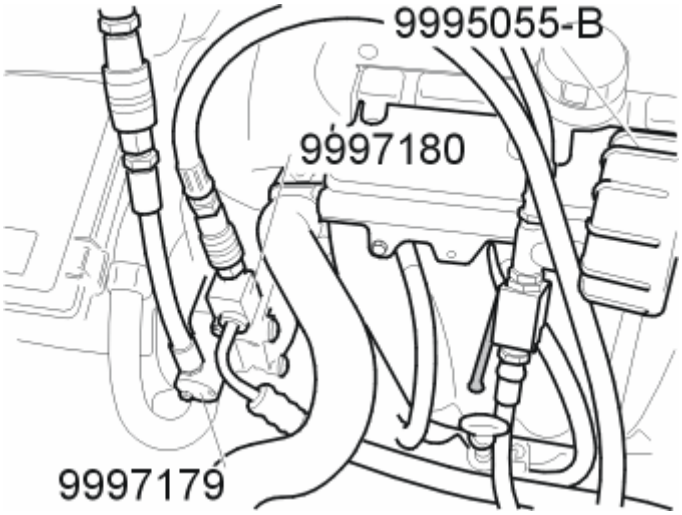

Fig. 8: Connecting Manometer Between Pump And Steering Gear Pressure Hose
Courtesy of VOLVO CARS CORPORATION

Connect see **9995055** version C between the pump and the steering gear pressure hose.

Use: see **9997179** and see **9997180** .

MANOMETER LOCATION

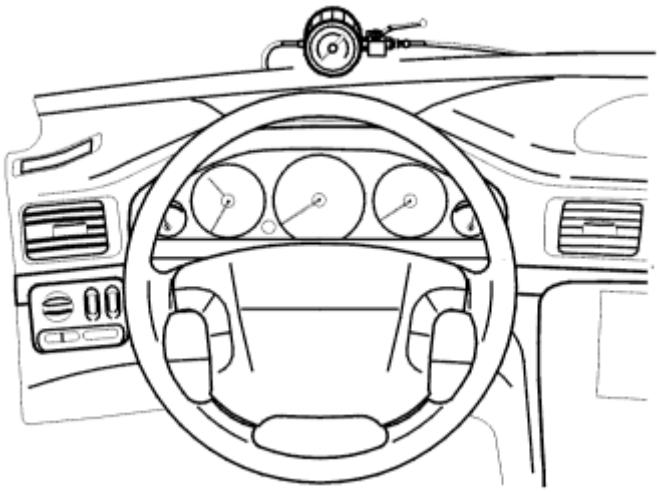

Fig. 9: Identifying Manometer
Courtesy of VOLVO CARS CORPORATION

Position the manometer in the engine compartment so that it can be read off from the driver's seat.

CHECKS

CONDITIONS

For control to be as exact as possible the following conditions must be met:

- The vehicle must be equipped with summer tires on the front wheels, with pressures according to the decal on the fuel tank filler cover.
- That the surface beneath the front wheels resembles a dry asphalt metalled road.

LEAK CHECKING

NOTE: Check for leakage in the connections on the power steering pump or on the steering gear before carrying out the measurements below.

CHECKING THE PUMP CAPACITY

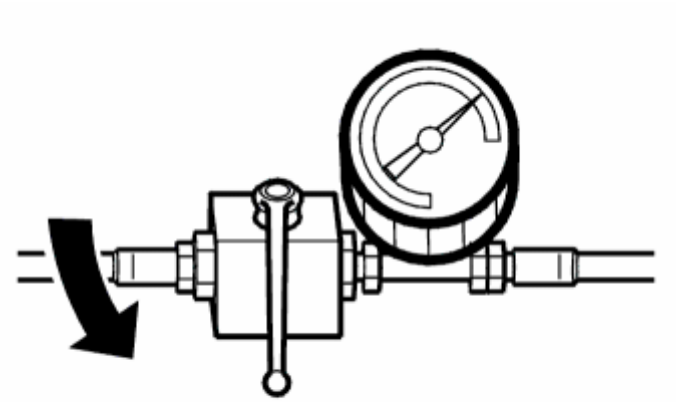

Fig. 10: Checking Pump Capacity With Manometer
Courtesy of VOLVO CARS CORPORATION

Shut the cock for a maximum of 5 seconds. If the pump is fault-free, the manometer pressure should rise to the correct value: **11.0-12.0 MPa** .

The pump must be replaced if the pressure is outside the above values

Switch off the engine.

CHECKING PUMP PRESSURE

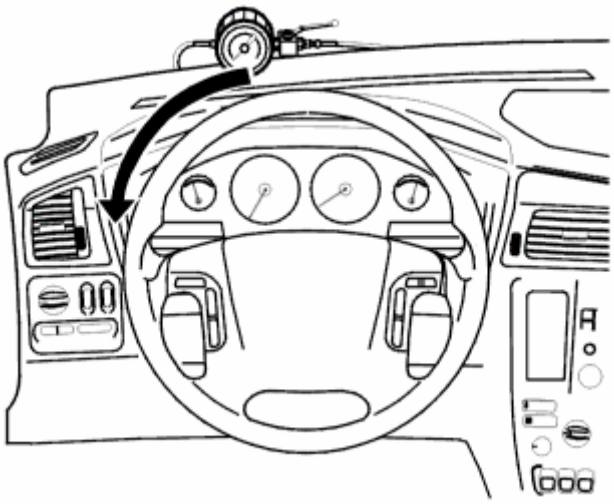

Fig. 11: Checking Pump Pressure Using Manometer
Courtesy of VOLVO CARS CORPORATION

Left limit position:

- Start the engine.
- Turn the steering wheel to the left. Press the steering wheel to the limit position for a maximum of 5 seconds while reading off the manometer.
- Correct pressure: **11.0-12.0 MPa** .

Right limit position:

- Turn the steering wheel to the right limit position and read the manometer according to the previous operation.

If the correct value is not reached there is an internal leak in the steering gear. The steering gear must then be replaced by a new one.

CHECKING THE POWER STEERING BALANCE WHEN TURNING THE STEERING WHEEL

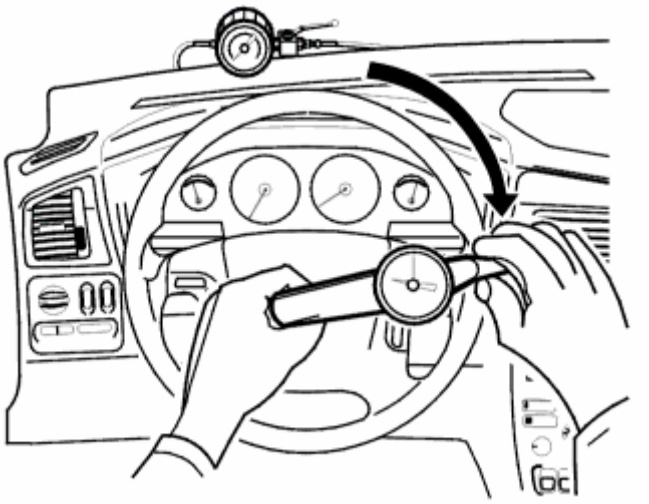

Fig. 12: Checking Power Steering Balance When Turning Steering Wheel Using Manometer
Courtesy of VOLVO CARS CORPORATION

Start the engine.

Turn the steering wheel to the right limit position and release.

Connect torque wrench see **9998081** to the steering shaft screw and turn to the right with the torque wrench at the limit position to pressure level 1 on the manometer. Release the torque on the steering wheel.

Turn again at the limit position to pressure level 2 on the manometer. Read off the torque.

Repeat the procedure turning the steering wheel to the left.

NOTE: Do not hold the steering wheel at the limit position for each pressure level for more than 5 seconds.

Pressure level and torque

Standard steering gear:

Level 1 pressure 4 Mpa torque interval 2.5-5.5 Nm

Level 2 pressure 8 Mpa torque interval 3.0-6.0 Nm

Speed dependent steering gear:

Level 1 pressure 4 Mpa torque interval 1.5-4.5 Nm

Level 2 pressure 8 Mpa torque interval 2.0-5.0 Nm

NOTE: If the torque deviation is greater than 0.7 Nm to reach the same pressure the

steering gear must be replaced. This applies to both with and without speed dependant steering gear.

FINISHING

Disconnect the battery negative lead, see **BATTERY, DISCONNECTING** .

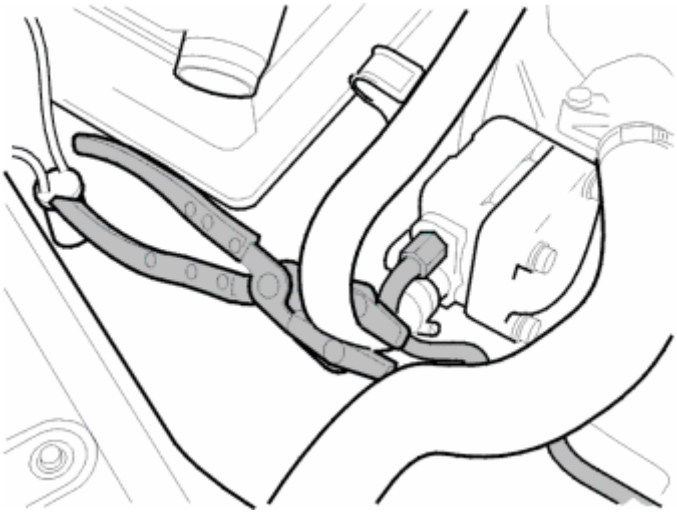

Fig. 13: Identifying Lock Grip Pliers On Oil Pump Return Hose
Courtesy of VOLVO CARS CORPORATION

Remove the test devices see **9511506** and 951 1506 version B. Install the airbag, see **AIRBAG DRIVER'S SIDE (SRS), REPLACING** .

Disconnect the test instrument.

Install lock grip pliers on the oil pump return hose.

NOTE: Place paper over the alternator as protection against any oil spill.

Disconnect the test instrument and the nipples.

Connect the pressure line to the pump. Tighten the nut or screw to the pressure line. Tighten to **25 Nm** . Use new O-ring.

Remove:

- lock grip pliers
- the paper over the generator (GEN).

Only applies to 5 and 6 cylinder engines

Install the coolant hose for the control module.

Applies to all engine variants

Check the oil level in the reservoir. Use Volvo power steering fluid, P/N **1161529-1** to ensure the correct oil quality.

Start the engine. Check for leakage.

Applies to 8 cylinder engines only

Install:

- the cover over the power steering pump 2 x M6. Tighten
- the covers on the engine's row of cylinders, front (bank 1) and rear (bank 2).

SERVO EQUIPMENT (2007-2012)

POWER STEERING BALANCE/PUMP PRESSURE, CHECKING

see **POWER STEERING BALANCE/PUMP PRESSURE, CHECKING**

POWER STEERING SYSTEM, BLEEDING

Materials:	
Designation	**Part number**
Volvo's servo oil	116 1529-1

BLEEDING/FILLING

WARNING: Avoid skin contact with the oil.

NOTE: Use the correct quality.

Fill the reservoir with oil. **Use:** Volvo's servo oil, 116 1529-1

Hang the fluid reservoir from the hood catch using welding rod or similar. Ensure that the hose is stretched.

Turn the steering wheel between both end positions repeatedly 10 times. Fill with fluid if necessary.

Apply the parking brake. Start the engine.

A : Turn the steering wheel slowly to the right. Hold it in the limit position for a maximum of 2 seconds.

B : Turn the steering wheel slowly to the left. Hold it in the limit position for a maximum of 2 seconds.

Switch off the engine, wait 5 minutes and repeat steps **A** and **B** 10 times. Repeat the operation.

Switch off the engine, wait 5 minutes and repeat steps **A** and **B** 10 times.

Reinstall the oil reservoir. Check the oil level.

STEERING

Steering - Component Location

LOCATION OF COMPONENTS, STEERING WHEEL MODULE (SWM) (2003-2004)

LOCATION OF COMPONENTS

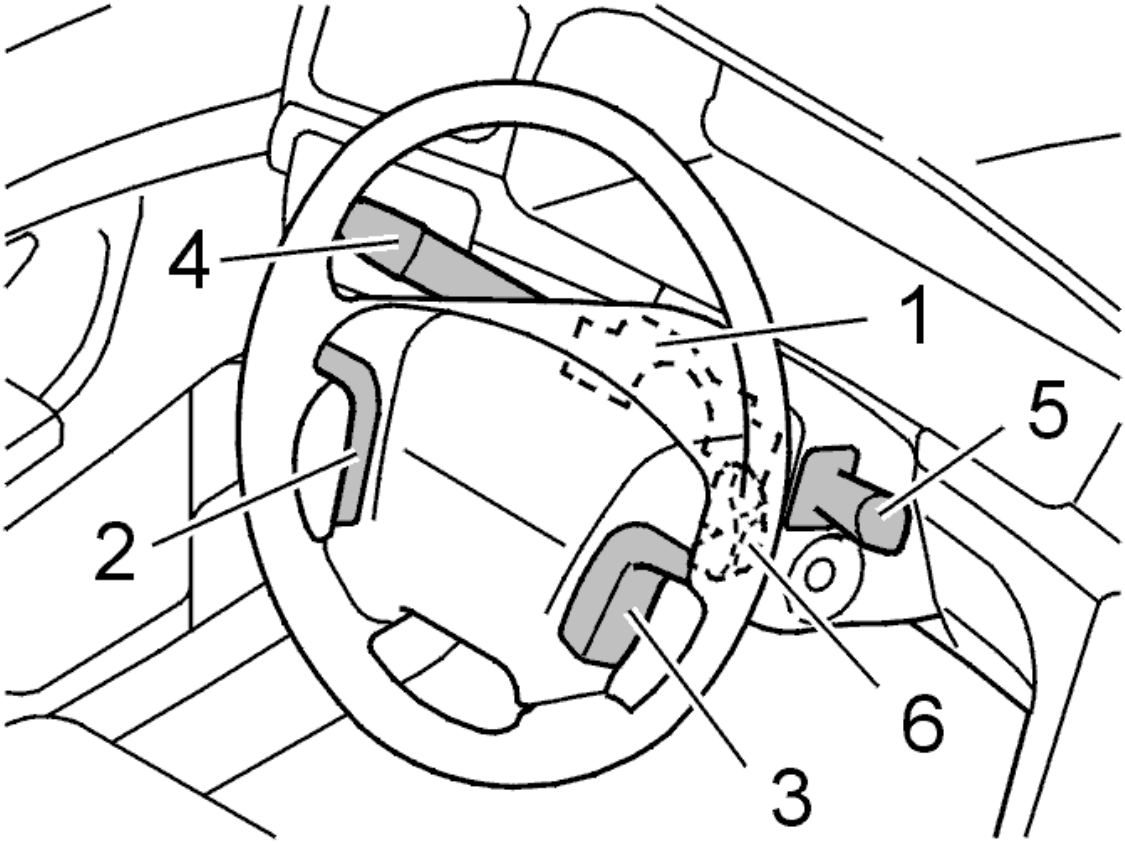

Fig. 1: Identifying Steering Wheel Module Components
Courtesy of VOLVO CARS CORPORATION

- SWM control unit (1)
- Cruise control switch unit (2)
- Radio/telephone switch unit (3)
- Indicator switch (4)
- Wiper switch (5)
- RTI switch unit (6).

COMPONENT LOCATION, STEERING WHEEL ANGLE SENSOR MODULE (SAS) (B5254T2; 2005-2007)

STEERING WHEEL ANGLE SENSOR MODULE (SAS)

LOCATION OF COMPONENTS

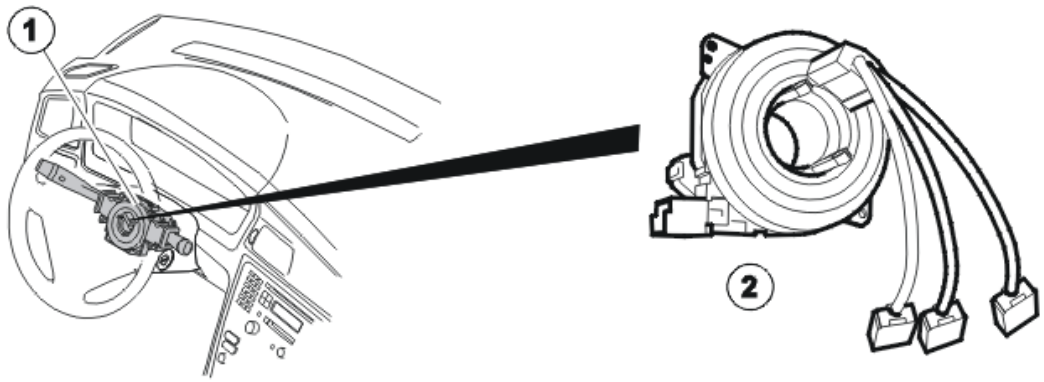

Fig. 2: Identifying Steering Wheel Angle Sensor Module (SAS) & Steering Wheel Module (SWM)
Courtesy of VOLVO CARS CORPORATION

1. Steering wheel angle sensor module (SAS).

   NOTE: Steering wheel angle sensor module (SAS) is integrated in the steering wheel module (SWM).

2. Contact reel / steering wheel angle sensor.

COMPONENT LOCATION, STEERING WHEEL ANGLE SENSOR MODULE (SAS) (B6294T; 2005-2006)

STEERING WHEEL ANGLE SENSOR MODULE (SAS)

see **STEERING WHEEL ANGLE SENSOR MODULE (SAS)**

COMPONENT LOCATION, STEERING WHEEL ANGLE SENSOR MODULE (SAS) (B6324S; 2007-2010)

STEERING WHEEL ANGLE SENSOR MODULE (SAS)

see **STEERING WHEEL ANGLE SENSOR MODULE (SAS)**

COMPONENT LOCATION, STEERING WHEEL ANGLE SENSOR MODULE (SAS) (B6324S5; 2011-2012)

STEERING WHEEL ANGLE SENSOR MODULE (SAS)

see **STEERING WHEEL ANGLE SENSOR MODULE (SAS)**

COMPONENT LOCATION, STEERING WHEEL ANGLE SENSOR MODULE (SAS) (B8444S; 2005-2011)

STEERING WHEEL ANGLE SENSOR MODULE (SAS)

see **STEERING WHEEL ANGLE SENSOR MODULE (SAS)**

STEERING

Steering - Design And Function

STEERING WHEEL MODULE (SWM) (2003-2004)

DESIGN

see **DESIGN**

DIAGNOSTIC FUNCTIONS

see **DIAGNOSTIC FUNCTIONS**

DOWNLOADING SOFTWARE AND REPLACING THE CONTROL MODULE

see **DOWNLOADING SOFTWARE AND REPLACING THE CONTROL MODULE**

FUNCTION

see **FUNCTION**

SYSTEM OVERVIEW

see **SYSTEM OVERVIEW**

CONTROL MODULE FOR THE STEERING WHEEL ANGLE SENSOR (2003-2004)

DESIGN

see **DESIGN**

SAS DIAGNOSTIC FUNCTIONS

see **SAS DIAGNOSTIC FUNCTIONS**

SOFTWARE DOWNLOADING

see **SOFTWARE DOWNLOADING**

SYSTEM OVERVIEW

see **SYSTEM OVERVIEW**

STEERING WHEEL ANGLE SENSOR MODULE (SAS) (2005-2012)

DESIGN

see **DESIGN**

DIAGNOSTIC FUNCTIONS

see **DIAGNOSTIC FUNCTIONS**

FUNCTION

see **FUNCTION**

SOFTWARE DOWNLOADING

see **SOFTWARE DOWNLOADING**

SYSTEM OVERVIEW

see **SYSTEM OVERVIEW**

STEERING

Steering - Diagnostic Trouble Codes and Associated Procedures

SAS-0016: CONTROL MODULE. COMMUNICATION FAULT (B5254T2; 2005-2007)

DIAGNOSTIC TROUBLE CODE (DTC) INFORMATION SAS-0016

Condition

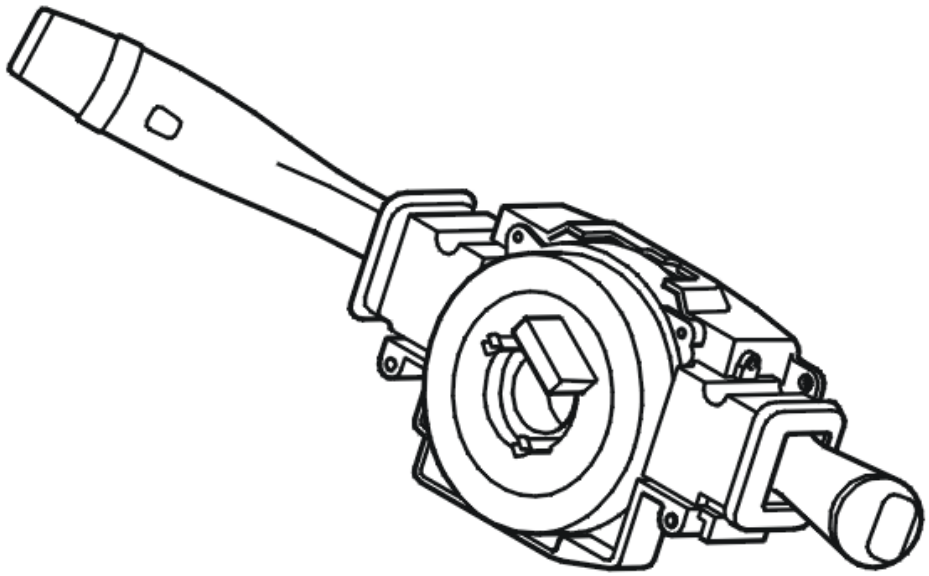

Fig. 1: Identifying Steering Wheel Control Module
Courtesy of VOLVO CARS CORPORATION

The control modules transmit and receive information via a standardized serial communication method, CAN (Control Area Network). Diagnostic trouble codes (DTCs) are stored if the steering wheel angle sensor module (SAS) registers that information from the central electronic module (CEM) is missing.

Steering wheel angle sensor module (SAS) is located inside, and is supplied with power by, the steering wheel module (SWM). Only the steering wheel angle sensor module (SAS) communicates on the controller area network (CAN).

Substitute Value

- The stability function is blocked.

Possible Source

- Incorrect information from the central electronic module (CEM).

Fault symptom[s]

- Anti-spin warning lamp lit.
- General warning lamp lit.
- The stability control system does not function.

COMMUNICATION FAULT

INFORMATION

The steering wheel angle sensor module (SAS) has registered that information about the car configuration from the central electronic module (CEM) is missing.

Exit fault-tracing and fault-trace the central electronic module (CEM) system.

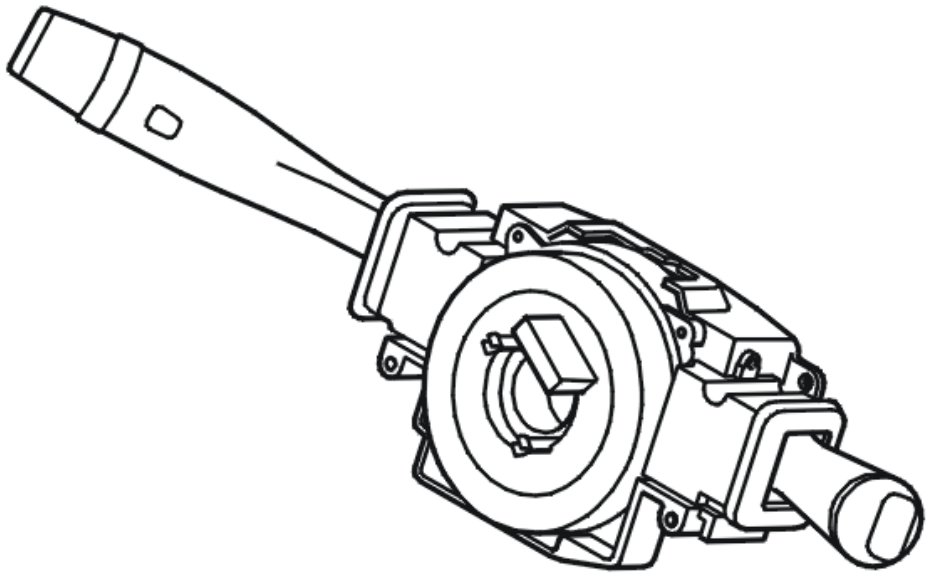

Fig. 2: Identifying Steering Wheel Control Module
Courtesy of VOLVO CARS CORPORATION

SAS-0016: CONTROL MODULE. COMMUNICATION FAULT (B6294T; 2005-2006)

DIAGNOSTIC TROUBLE CODE (DTC) INFORMATION SAS-0016

see **DIAGNOSTIC TROUBLE CODE (DTC) INFORMATION SAS-0016**

COMMUNICATION FAULT

see **COMMUNICATION FAULT**

SAS-0016: STEERING WHEEL POSITION SIGNAL R3. SIGNAL TOO LOW. INTERMITTENT FAULT (2003-2004)

DIAGNOSTIC TROUBLE CODE INFORMATION

see **DIAGNOSTIC TROUBLE CODE INFORMATION**

SIGNAL TOO LOW. INTERMITTENT FAULT

CHECKING THE WIRING AND CONNECTIONS

Check the wires between steering wheel angle sensor (SAS) control unit #13 (#A37) and steering wheel control unit (SWM) #11 (#A11) for an open circuit as described in, see **OPEN-CIRCUIT, INTERMITTENT FAULTS** , and for an intermittent short circuit to ground as described in **SHORT-CIRCUIT TO GROUND, INTERMITTENT FAULTS** .

Additional information:

- To connect the test box to the steering wheel angle sensor control unit, see **CONNECTING THE BREAKOUT BOX TO THE STEERING ANGLE SENSOR** .
- To connect the test box to the steering wheel control unit, see **CONNECTING THE BREAKOUT BOX** .
- For information on signals to the steering wheel angle sensor control unit, see **SIGNAL DESCRIPTION, CONTROL UNIT FOR THE STEERING WHEEL ANGLE SENSOR (SAS)** and **SIGNAL SPECIFICATION** .

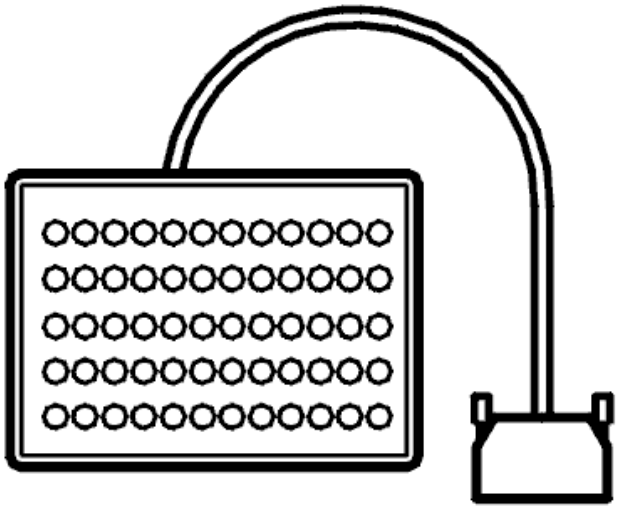

Fig. 3: Breakout Box
Courtesy of VOLVO CARS CORPORATION

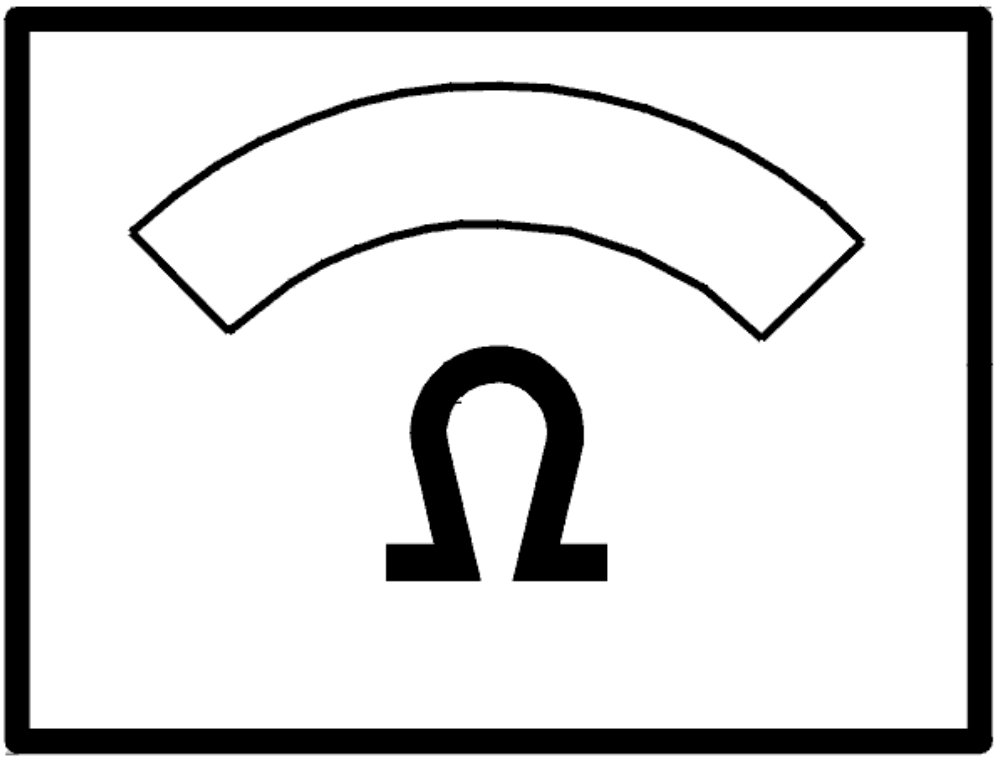

Fig. 4: Identifying Ohm Meter
Courtesy of VOLVO CARS CORPORATION

- **Continue**

  Refer to **INFORMATION**

INFORMATION

FAULT-TRACING INFORMATION

If the fault is intermittent, do not verify fault-tracing if the fault does not recur.

It is possible to view the information again, or leave fault-tracing for this diagnostic trouble code (DTC).

SAS-0016: STEERING WHEEL POSITION SIGNAL R3. SIGNAL TOO LOW.

PERMANENT FAULT (2003-2004)

DIAGNOSTIC TROUBLE CODE INFORMATION

see **DIAGNOSTIC TROUBLE CODE INFORMATION**

SIGNAL TOO LOW. PERMANENT FAULT

CHECKING THE CONNECTORS

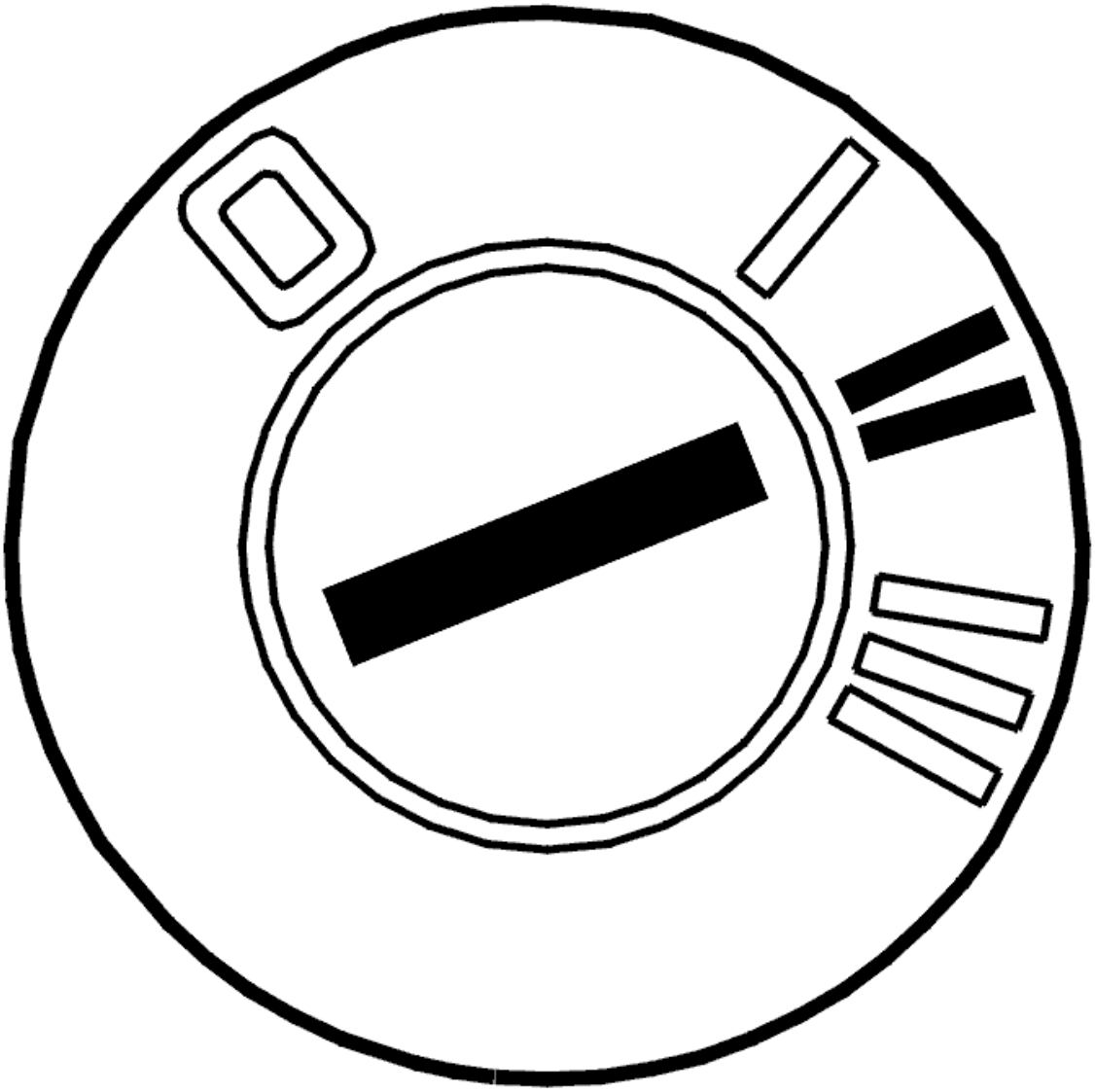

Fig. 5: Identifying Ignition ON
Courtesy of VOLVO CARS CORPORATION

- Ignition on
- Read off the status of steering wheel angle signal R3.

Turn the steering wheel in both directions and check that the value changes between ON and OFF.

Other information:

- To access the connector for the control module for the steering wheel angle sensor, see **STEERING WHEEL MODULE (SWM), REPLACING**
- To access the connector for the steering wheel module (SWM), see **STEERING WHEEL MODULE (SWM), REPLACING**
- For information about signals, see **SIGNAL DESCRIPTION, CONTROL UNIT FOR THE STEERING WHEEL ANGLE SENSOR (SAS)** and **SIGNAL SPECIFICATION** .

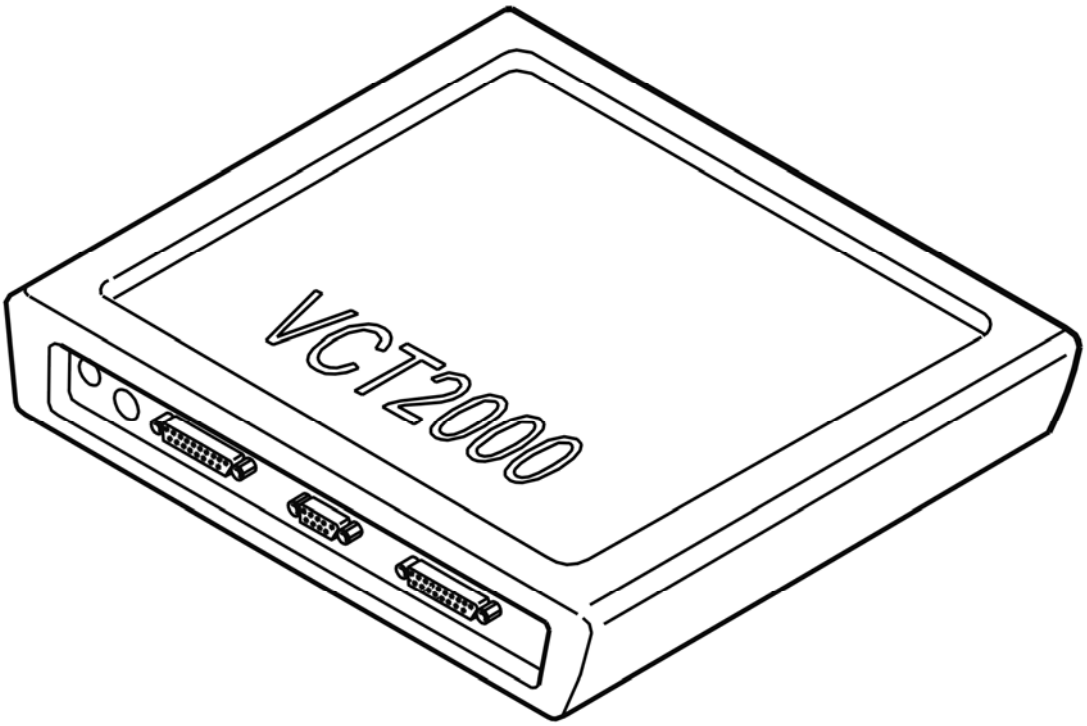

Fig. 6: Identifying VCT2000 Diagnostic Tool Symbol In VIDA
Courtesy of VOLVO CARS CORPORATION

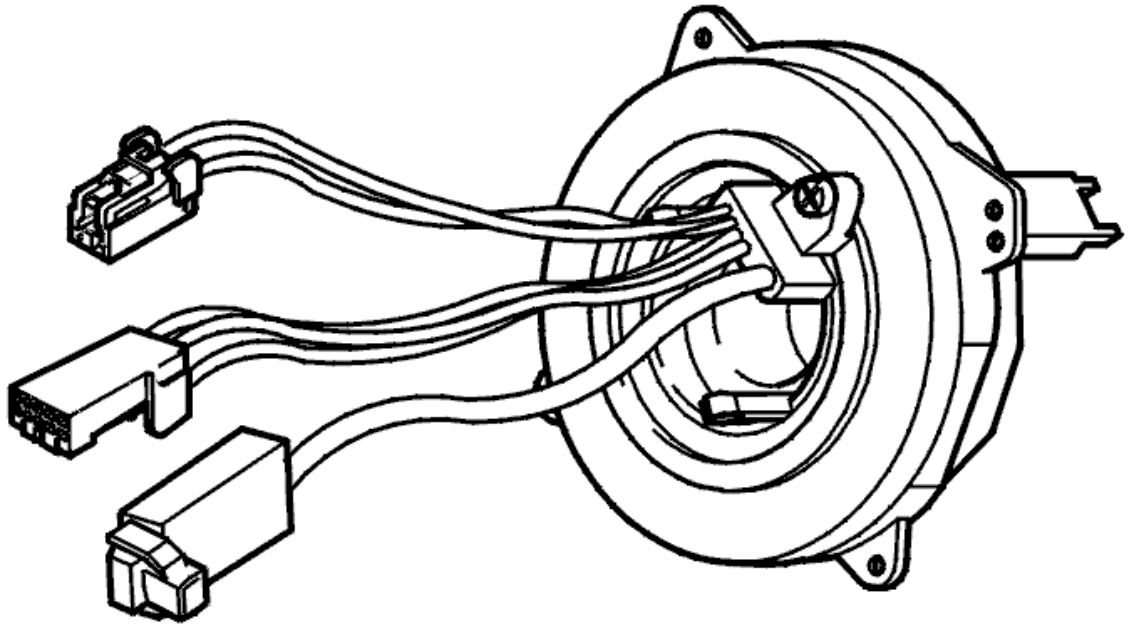

Fig. 7: Identifying Steering Wheel Angle Sensor
Courtesy of VOLVO CARS CORPORATION

Does the value change between OFF and ON?

- **YES**

  OKAY: Troubleshooting has been completed.

- **NO**

  Refer to **CHECKING WIRING AND SENSORS**

CHECKING WIRING AND SENSORS

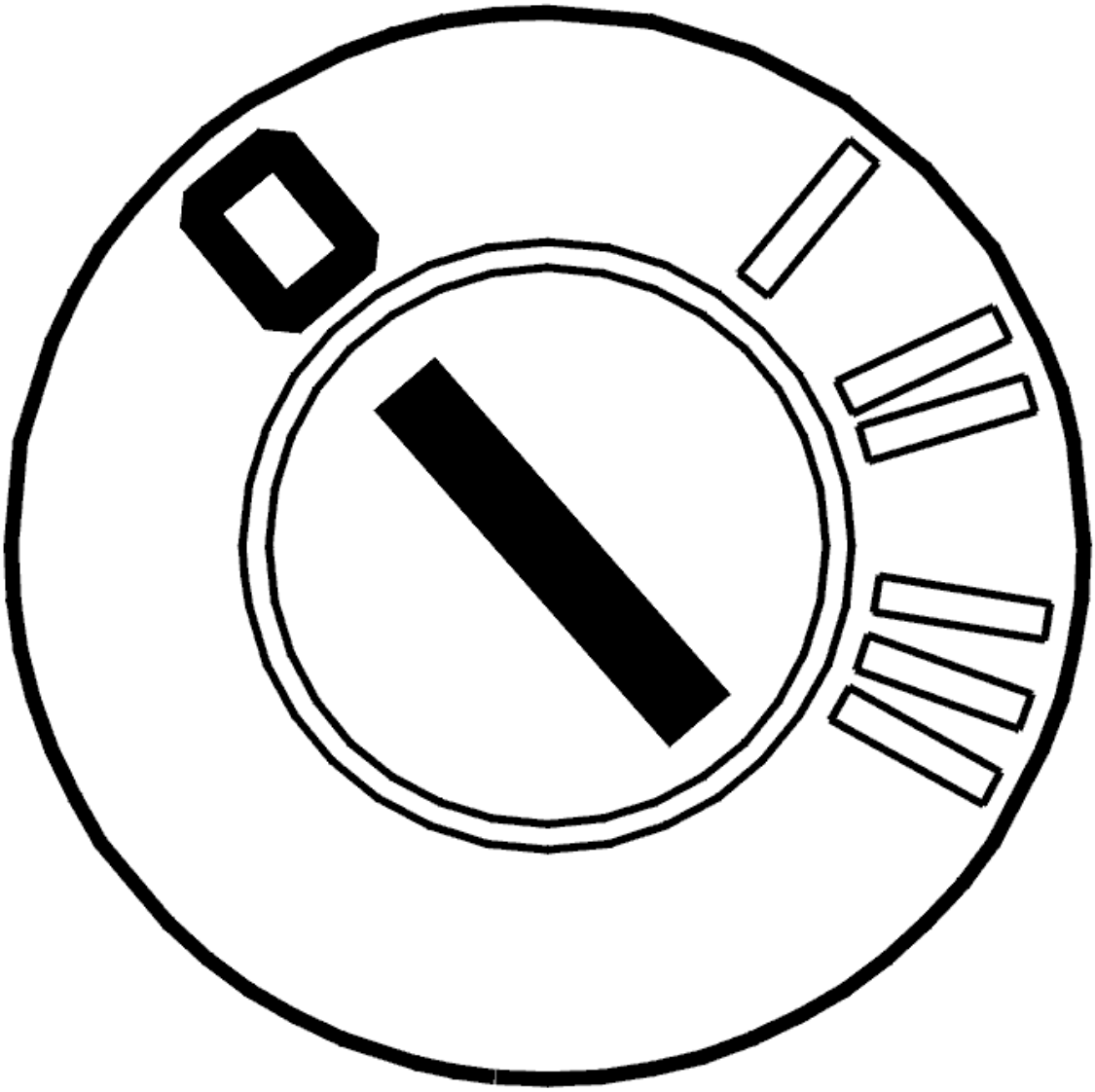

Fig. 8: Identifying Ignition OFF
Courtesy of VOLVO CARS CORPORATION

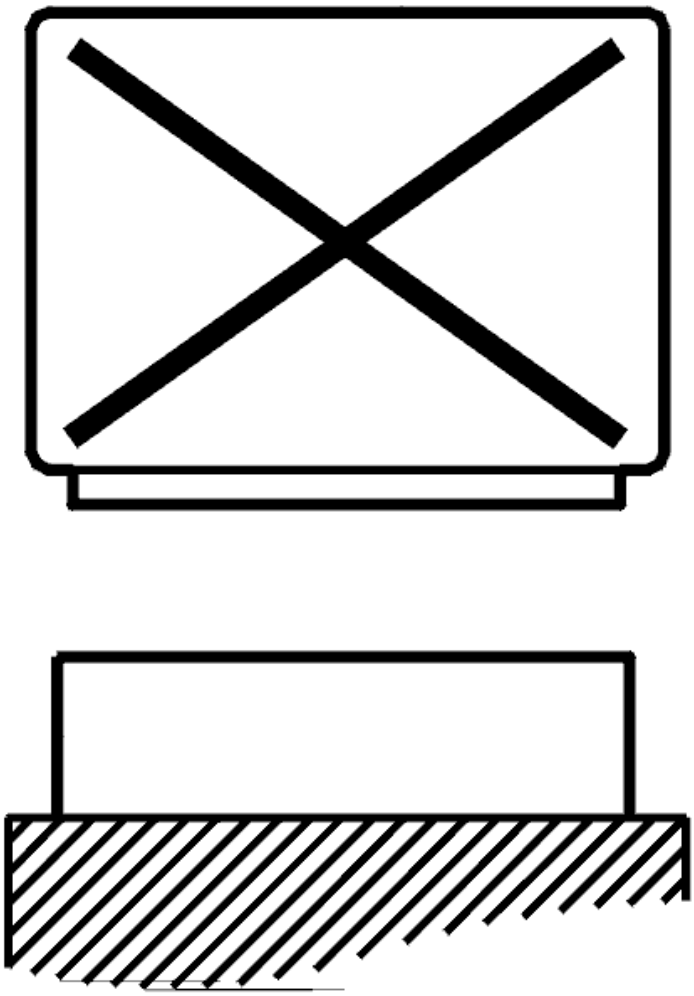

Fig. 9: Disconnecting Control Unit
Courtesy of VOLVO CARS CORPORATION

- Ignition off
- The control module for the steering wheel angle sensor disconnected
- Steering wheel module (SWM) disconnected
- Connect the breakout box to the control module for the steering wheel angle sensor and to the steering wheel module (SWM)

  Check the wiring between the control module for the steering wheel angle sensor terminal #13 (#A37) and steering wheel module (SWM) terminal #11 (#A11). Check for a short-circuit to ground according to **SHORT-CIRCUIT TO GROUND, PERMANENT FAULTS** . Check for an open-circuit according to **OPEN-CIRCUIT, PERMANENT FAULTS** .

  Try replacing the steering wheel angle sensor if no faults are found in the wiring between the control

module for the steering wheel angle sensor and the steering wheel module (SWM).

Other information:

- To connect the breakout box to the control module for the steering wheel angle sensor, see **CONNECTING THE BREAKOUT BOX TO THE STEERING ANGLE SENSOR**
- To connect the breakout box to the steering wheel module (SWM), see **CONNECTING THE BREAKOUT BOX**
- To replace the steering wheel angle sensor, see **CONTACT REEL, REPLACEMENT**
- For information about signals, see **SIGNAL DESCRIPTION, CONTROL UNIT FOR THE STEERING WHEEL ANGLE SENSOR (SAS)** and **SIGNAL SPECIFICATION** .

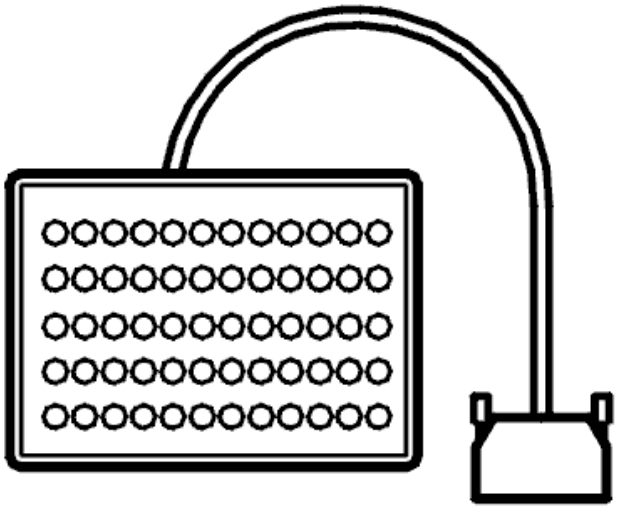

Fig. 10: Breakout Box
Courtesy of VOLVO CARS CORPORATION

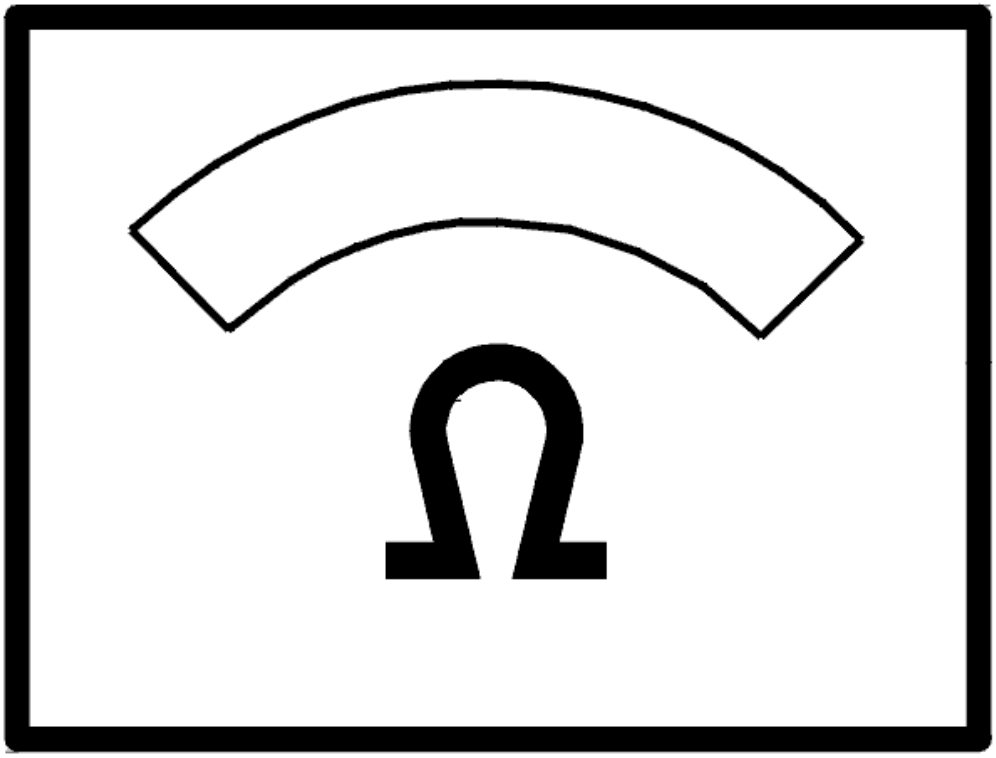

Fig. 11: Identifying Ohm Meter
Courtesy of VOLVO CARS CORPORATION

- **Continue**

  Refer to **VERIFICATION**

VERIFICATION

HINT: After the repair it is necessary to check that the fault has been rectified.

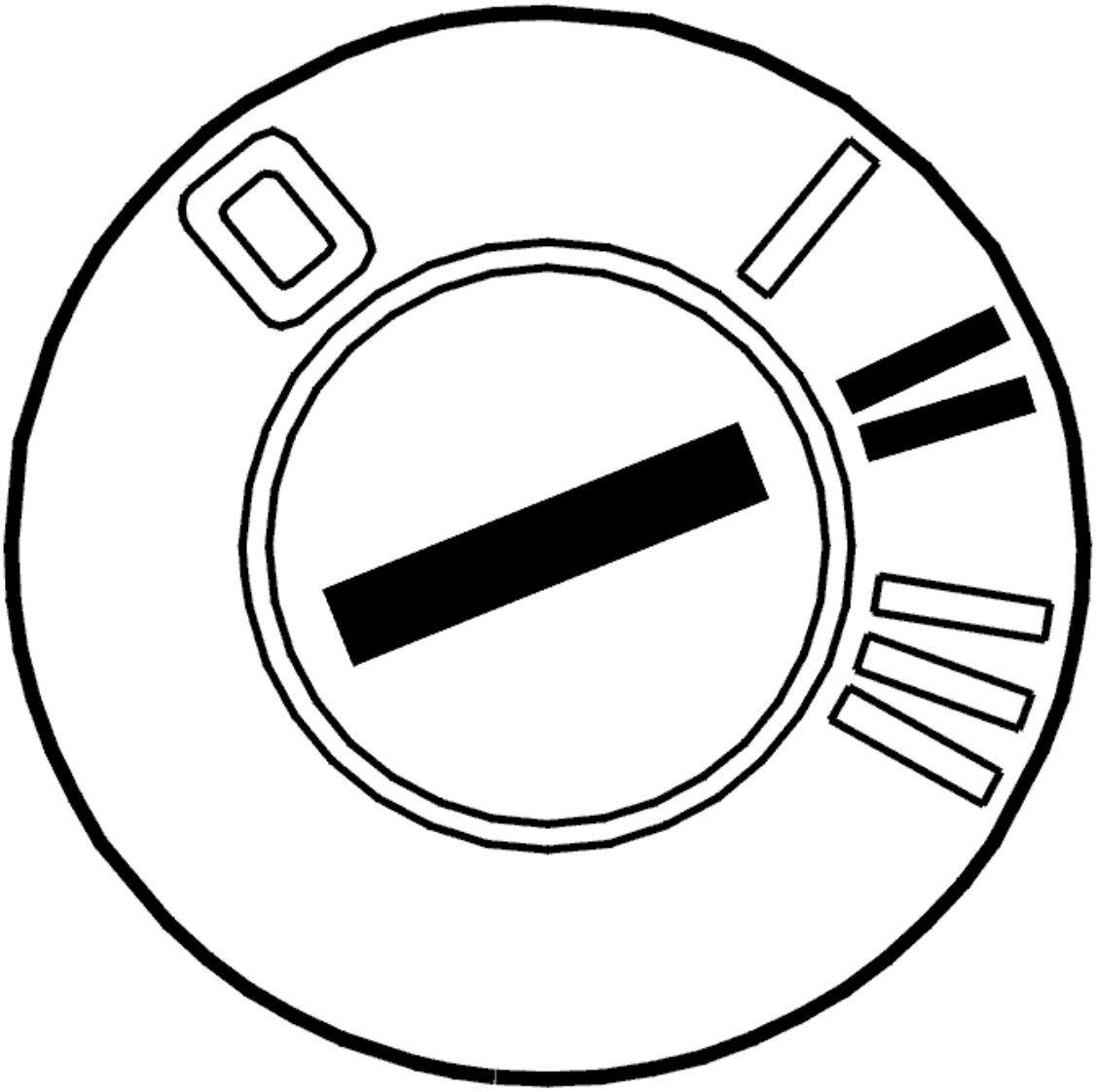

Fig. 12: Identifying Ignition ON
Courtesy of VOLVO CARS CORPORATION

- Ignition off.
- Connect the connectors, install the components, etc.
- Ignition on.
- Read off steering wheel angle signal R3.
- Turn the steering wheel to full lock in both directions.

  The value should change between OFF and ON.

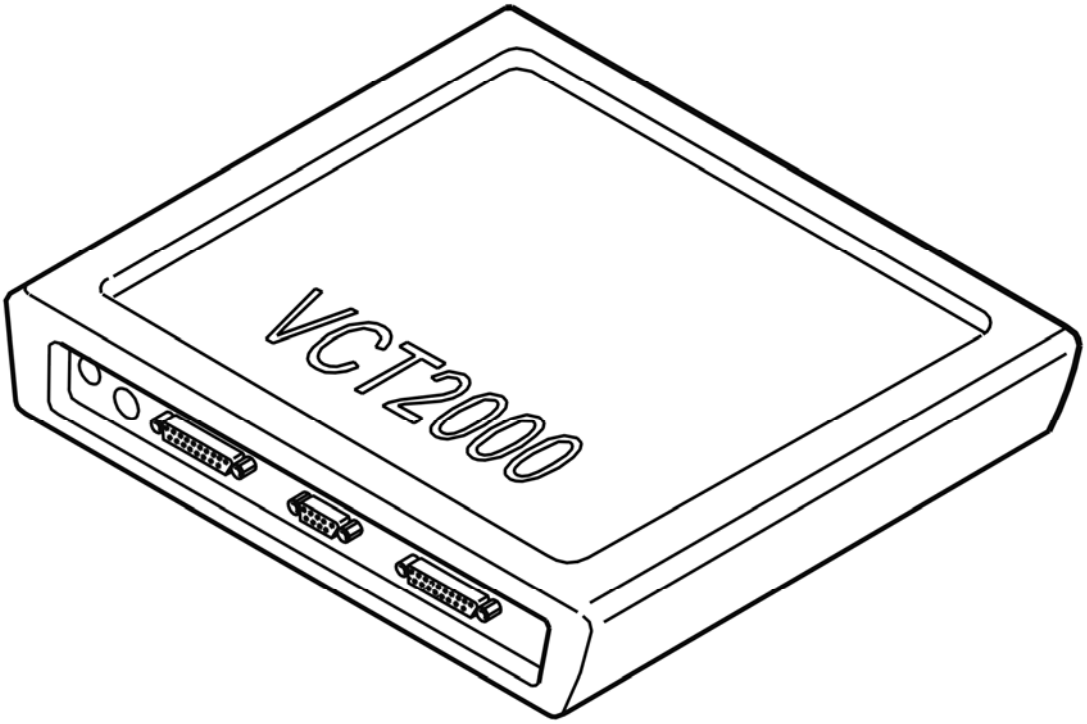

Fig. 13: Identifying VCT2000 Diagnostic Tool Symbol In VIDA
Courtesy of VOLVO CARS CORPORATION

Does the value change?

- **YES**

  VERIFIED: Troubleshooting has been completed.

- **NO**

  Refer to **INFORMATION**

INFORMATION

FAULT-TRACING INFORMATION

The fault should have been detected and remedied. As this is not the case fault-tracing has failed.

Exit fault-tracing for this diagnostic trouble code (DTC) or make another attempt.

SAS-0017: CONTROL MODULE. FAULTY SIGNAL (B5254T2; 2005-2007)

DIAGNOSTIC TROUBLE CODE (DTC) INFORMATION SAS-0017

Condition

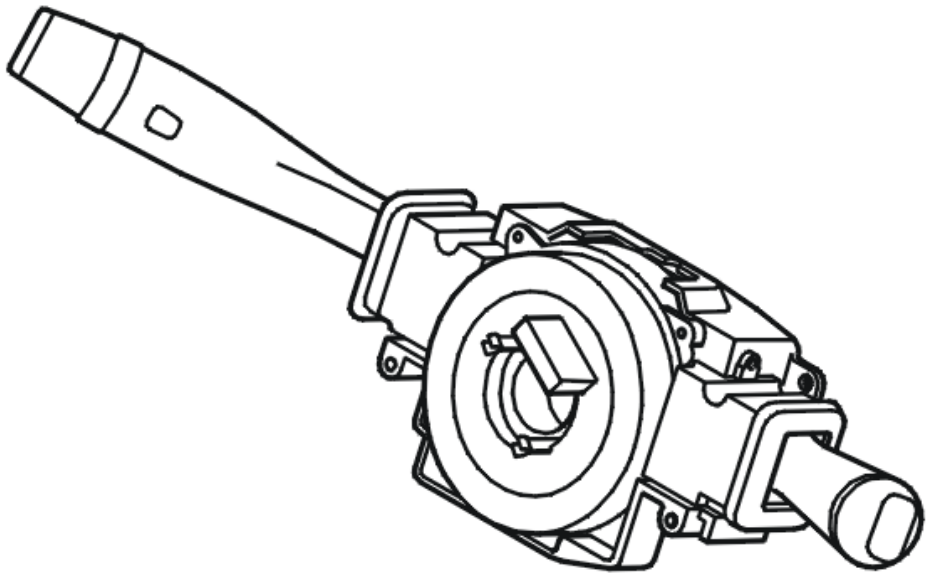

Fig. 14: Identifying Steering Wheel Control Module
Courtesy of VOLVO CARS CORPORATION

The control modules transmit and receive information via a standardized serial communication method, CAN (Control Area Network). Diagnostic trouble code (DTC) is stored if the steering wheel angle sensor module (SAS) registers that information about global values from the central electronic module (CEM) is incorrect.

Steering wheel angle sensor module (SAS) is located inside, and is supplied with power by, the steering wheel module (SWM). Only the steering wheel angle sensor module (SAS) communicates on the controller area network (CAN).

Substitute Value

- The stability function is blocked.

Possible Source

- Incorrect information from the central electronic module (CEM).

Fault symptom[s]

- Anti-spin warning lamp lit.

- General warning lamp lit.
- The stability control system does not function.

FAULTY SIGNAL

INFORMATION

The steering wheel angle sensor module (SAS) has registered that information about the car configuration from the central electronic module (CEM) is missing or incorrect.

Exit fault-tracing and fault-trace the central electronic module (CEM) system.

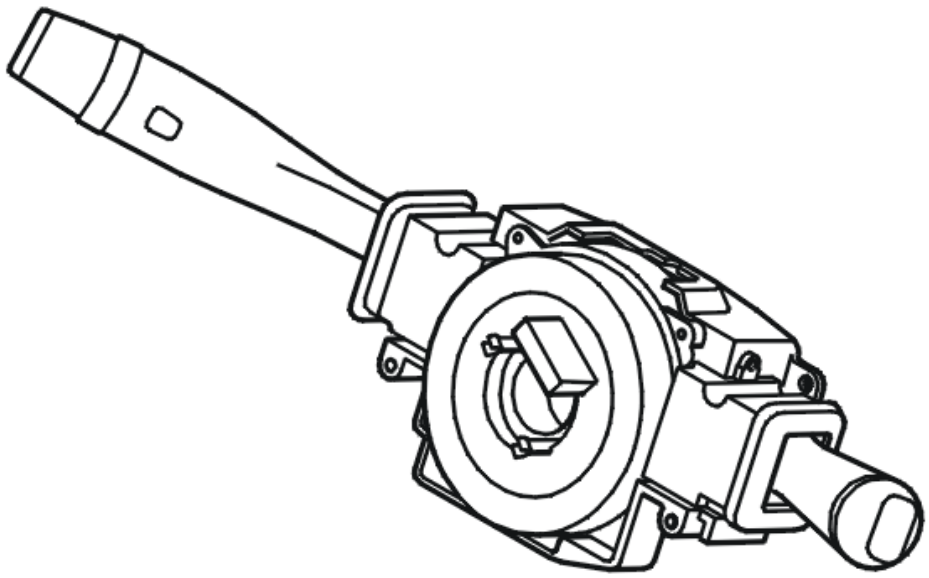

Fig. 15: Identifying Steering Wheel Control Module
Courtesy of VOLVO CARS CORPORATION

SAS-0017: CONTROL MODULE. FAULTY SIGNAL (B6294T; 2005-2006)

DIAGNOSTIC TROUBLE CODE (DTC) INFORMATION SAS-0017

see **DIAGNOSTIC TROUBLE CODE (DTC) INFORMATION SAS-0017**

FAULTY SIGNAL

see **FAULTY SIGNAL**

SAS-0017: STEERING WHEEL POSITION SIGNAL R4. SIGNAL TOO HIGH. INTERMITTENT FAULT (2003-2004)

DIAGNOSTIC TROUBLE CODE INFORMATION

see **DIAGNOSTIC TROUBLE CODE INFORMATION**

SIGNAL TOO HIGH. INTERMITTENT FAULT

CHECKING THE WIRING AND CONNECTIONS

Check the wires between steering wheel angle sensor (SAS) control unit #14 (#A38) and steering wheel control unit (SWM) #18 (#A18) for a short circuit to voltage supply, as described in, see **SHORT-CIRCUIT TO SUPPLY VOLTAGE, INTERMITTENT FAULTS** .

Additional information:

- To connect the test box to the steering wheel angle sensor control unit, see **CONNECTING THE BREAKOUT BOX TO THE STEERING ANGLE SENSOR** .
- To connect the test box to the steering wheel control unit, see **CONNECTING THE BREAKOUT BOX** .
- For information on signals, see **SIGNAL DESCRIPTION, CONTROL UNIT FOR THE STEERING WHEEL ANGLE SENSOR (SAS)** and **SIGNAL SPECIFICATION** .

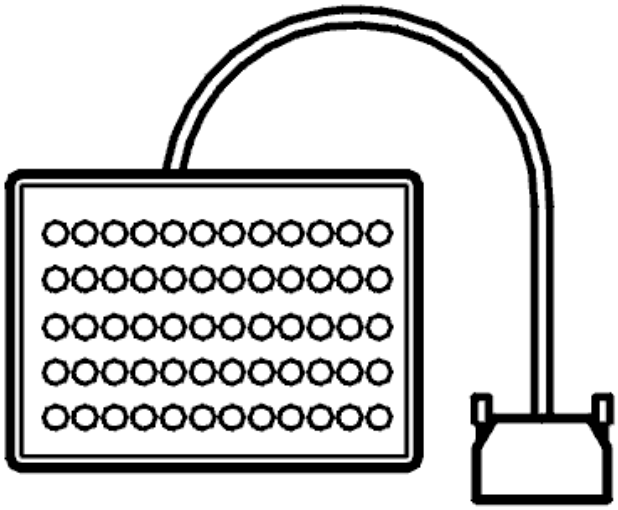

Fig. 16: Breakout Box
Courtesy of VOLVO CARS CORPORATION

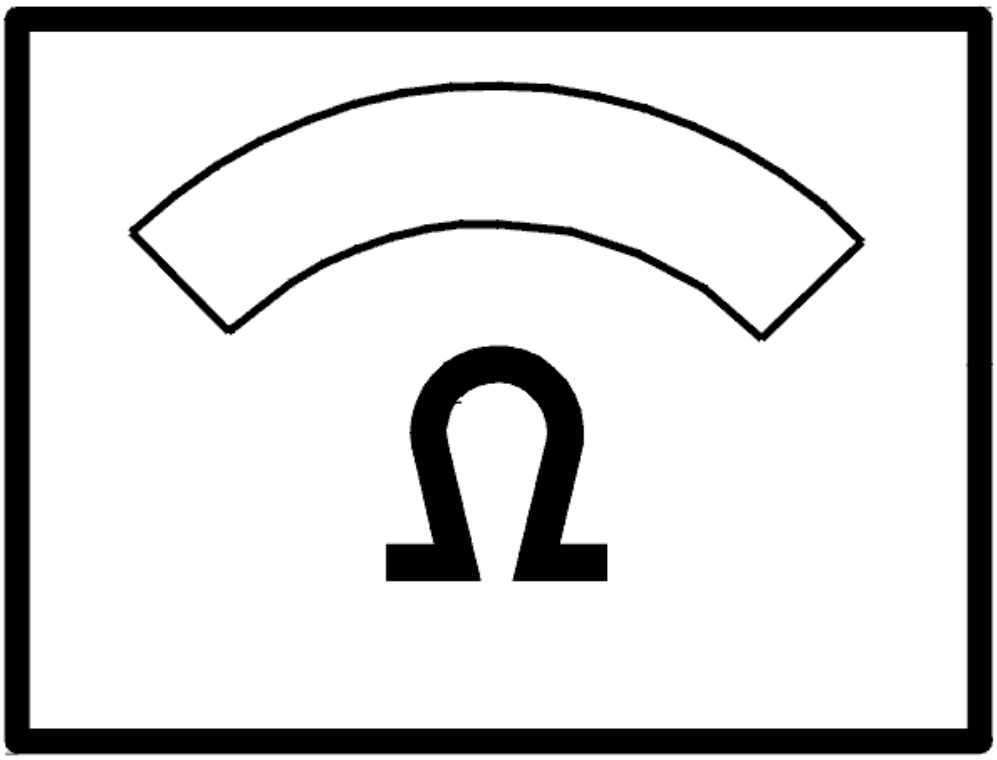

Fig. 17: Identifying Ohm Meter
Courtesy of VOLVO CARS CORPORATION

- **Continue**

  Refer to **INFORMATION**

INFORMATION

FAULT-TRACING INFORMATION

If the fault is intermittent, do not verify fault-tracing if the fault does not recur.

It is possible to view the information again, or leave fault-tracing for this diagnostic trouble code (DTC).

SAS-0017: STEERING WHEEL POSITION SIGNAL R4. SIGNAL TOO HIGH.

PERMANENT FAULT (2003-2004)

DIAGNOSTIC TROUBLE CODE INFORMATION

see **DIAGNOSTIC TROUBLE CODE INFORMATION**

SIGNAL TOO HIGH. PERMANENT FAULT

CHECKING THE CONNECTORS

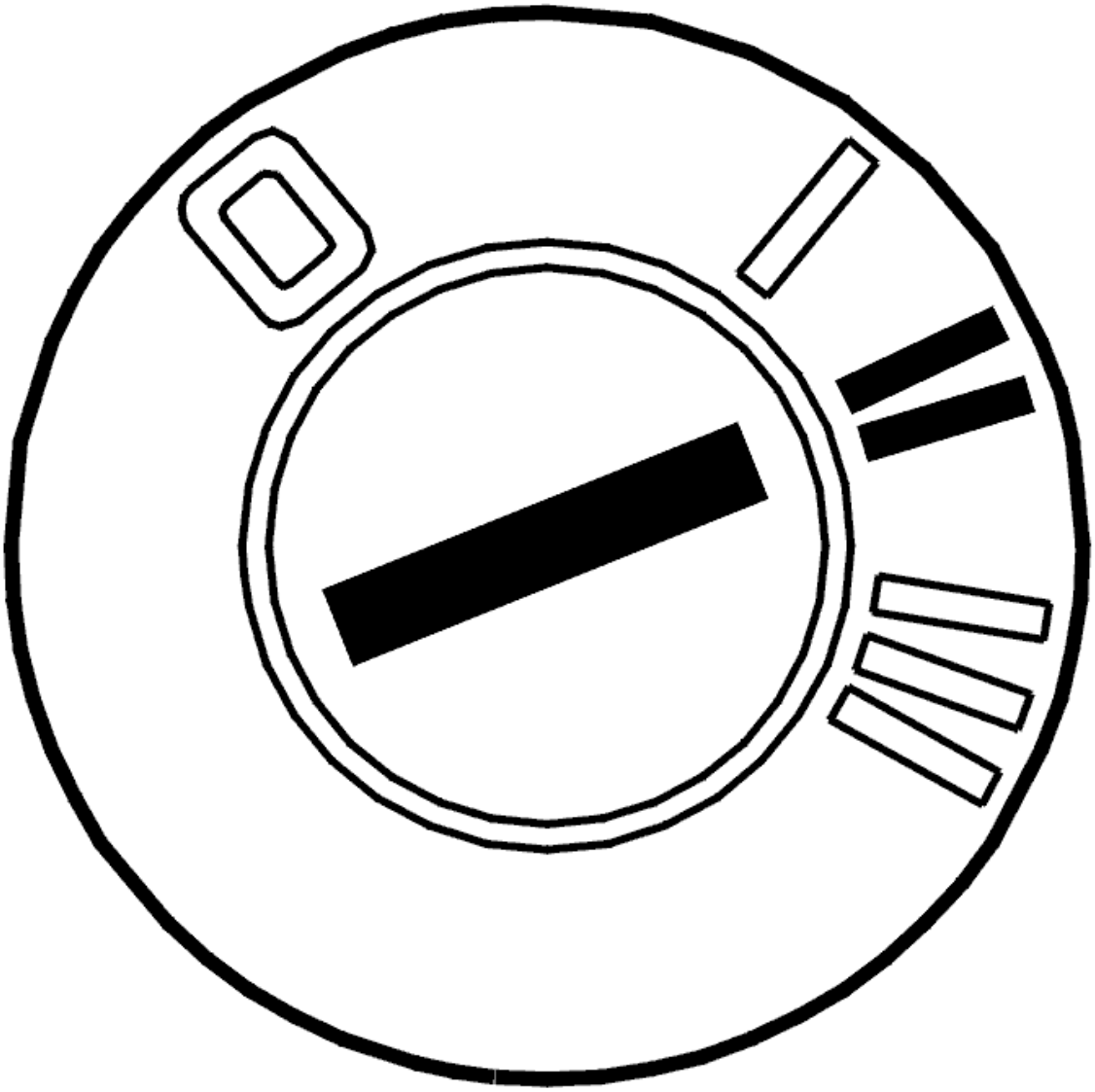

Fig. 18: Identifying Ignition ON
Courtesy of VOLVO CARS CORPORATION

- Ignition off
- Check the ABS control module and steering wheel angle sensor connector. Check for contact resistance

and oxidation. See **CHECKING WIRING AND TERMINALS. PERMANENT FAULT**

- Reinstall the components, reconnect the connectors etc.
- Ignition on
- Read off the status of steering wheel angle signal R4.

Turn the steering wheel in both directions and check that the value changes between ON and OFF.

Other information:

- To connect the breakout box, see **CONNECTING THE BREAKOUT BOX TO THE STEERING ANGLE SENSOR**
- To disconnect the steering wheel angle sensor, see **CONTACT REEL, REPLACEMENT**
- For information about signals, see **SIGNAL DESCRIPTION, CONTROL UNIT FOR THE STEERING WHEEL ANGLE SENSOR (SAS)**.

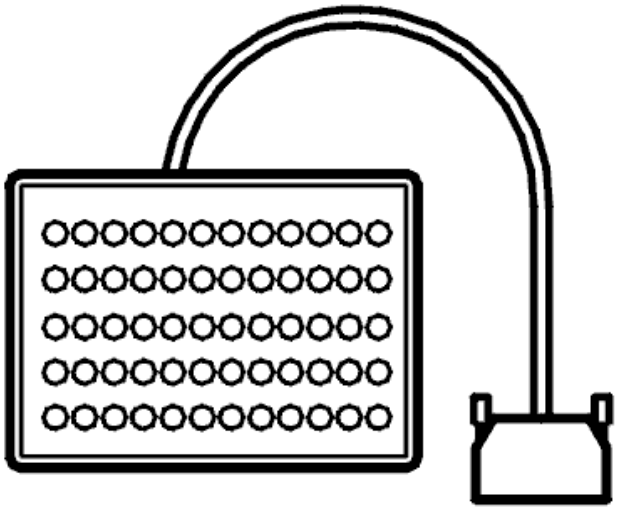

Fig. 19: Breakout Box
Courtesy of VOLVO CARS CORPORATION

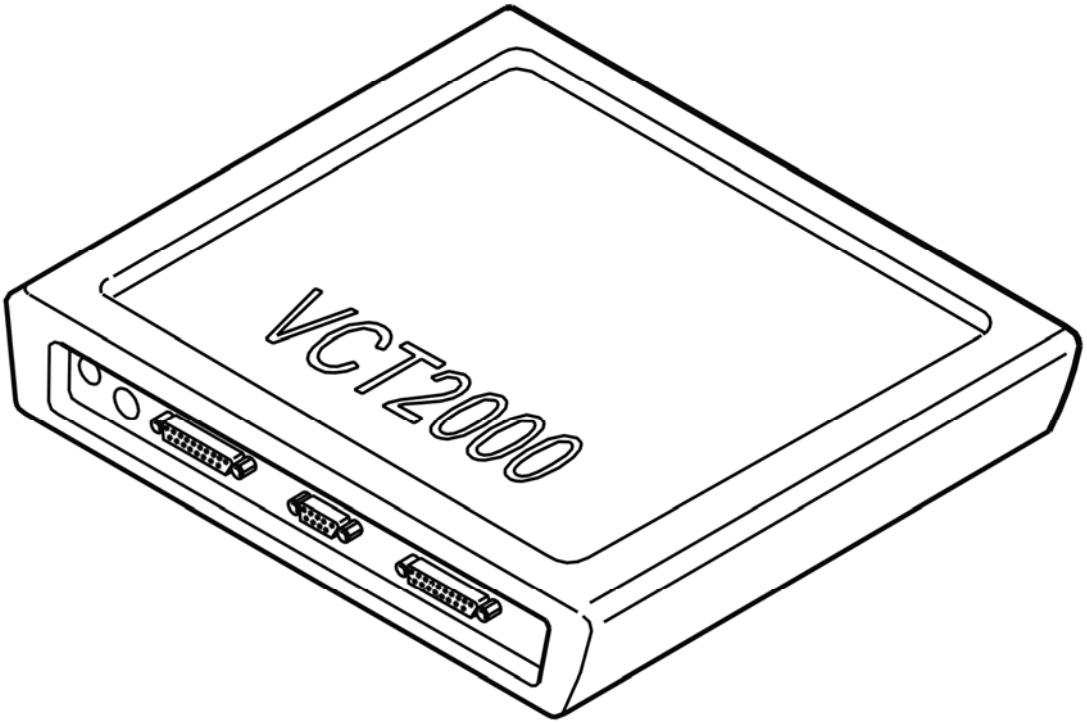

Fig. 20: Identifying VCT2000 Diagnostic Tool Symbol In VIDA
Courtesy of VOLVO CARS CORPORATION

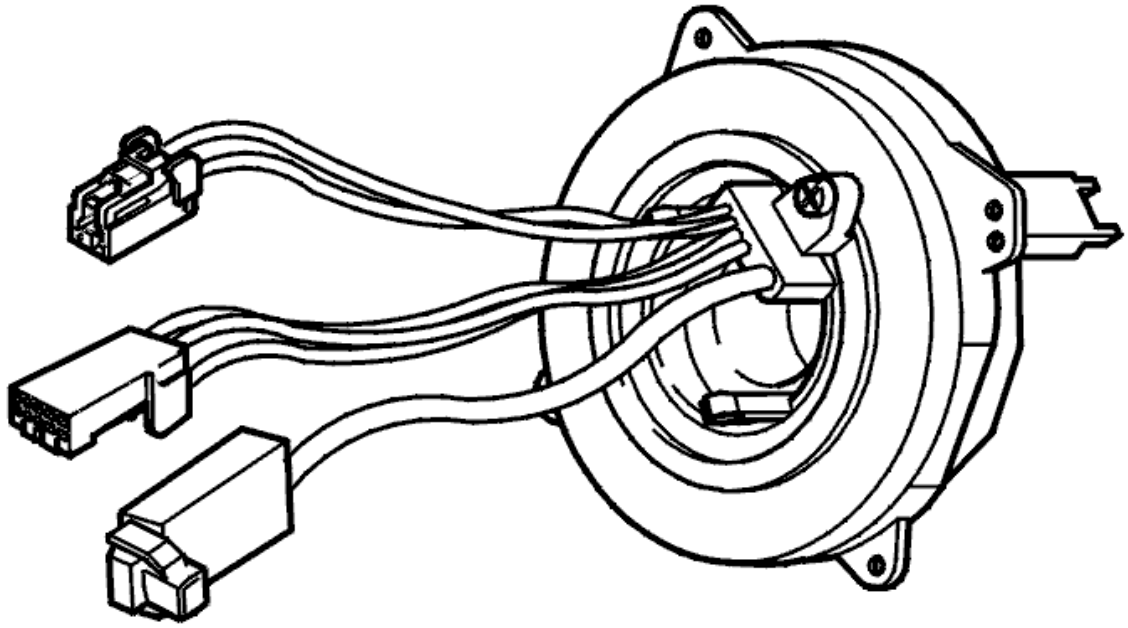

Fig. 21: Identifying Steering Wheel Angle Sensor
Courtesy of VOLVO CARS CORPORATION

Does the value change between OFF and ON?

- **YES**

  OKAY: Troubleshooting has been completed.

- **NO**

  Refer to **CHECKING WIRING AND SENSORS**

CHECKING WIRING AND SENSORS

- Disconnect the cable harness between the steering wheel angle sensor module (SAS) and the steering wheel module (SWM)
- Connect the breakout box.

  Check the wiring between the steering wheel angle sensor module (SAS) terminal #14 (#A38) and steering wheel module (SWM) terminal #18 (#A18). Check for an open-circuit. See **OPEN-CIRCUIT, PERMANENT FAULTS** . Check for a short-circuit to supply voltage. See **SHORT-CIRCUIT TO SUPPLY VOLTAGE. PERMANENT FAULTS** .

HINT: With the ignition on and the breakout box connected to the steering wheel module (SWM), check the supply voltage to the steering wheel angle sensor control module: The voltage should be 12 V.

Try replacing the steering wheel angle sensor if no faults are found in the wiring between the control module for the steering wheel angle sensor and the steering wheel angle sensor.

Other information:

- To connect the breakout box, see **CONNECTING THE BREAKOUT BOX TO THE STEERING ANGLE SENSOR**
- To replace the steering wheel angle sensor, see **CONTACT REEL, REPLACEMENT**
- for information about signals, see **SIGNAL DESCRIPTION, CONTROL UNIT FOR THE STEERING WHEEL ANGLE SENSOR (SAS)**.

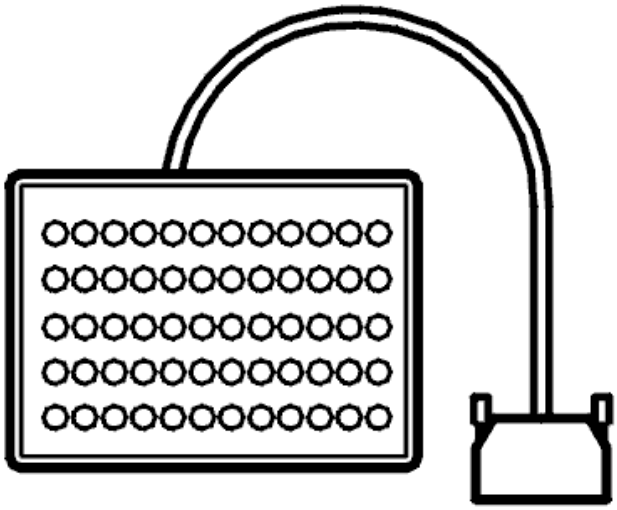

Fig. 22: Breakout Box
Courtesy of VOLVO CARS CORPORATION

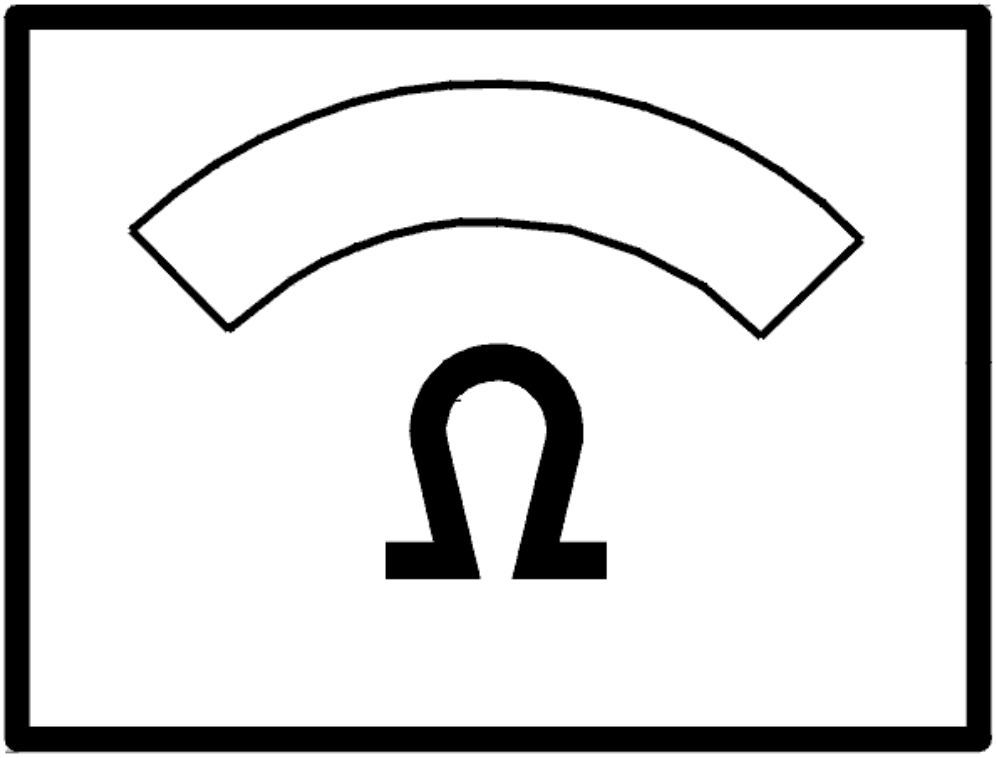

Fig. 23: Identifying Ohm Meter
Courtesy of VOLVO CARS CORPORATION

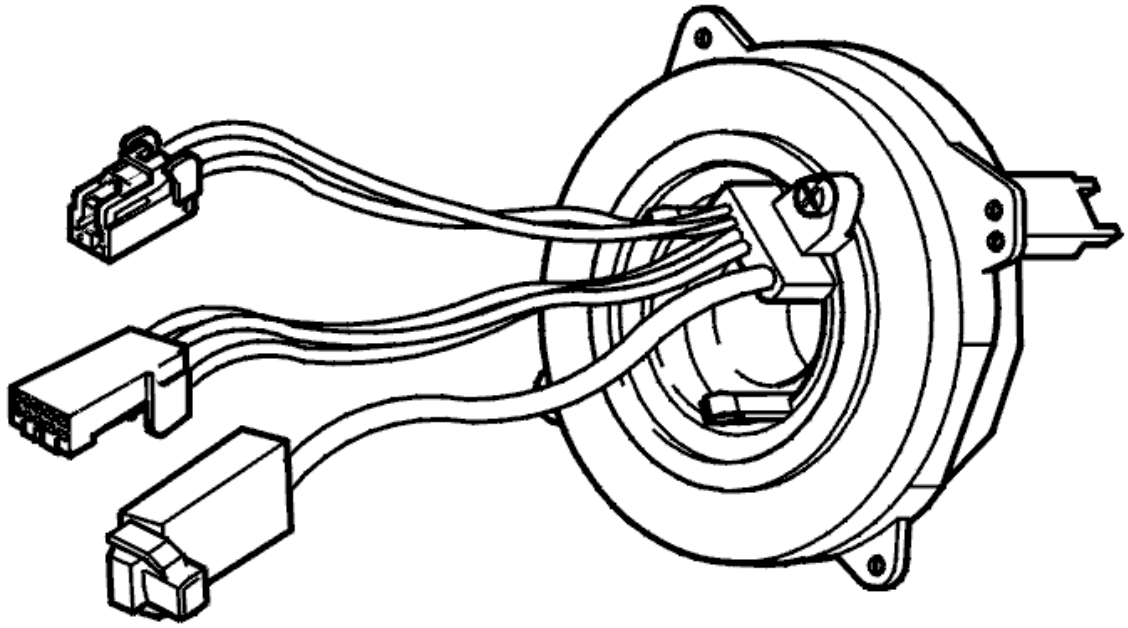

Fig. 24: Identifying Steering Wheel Angle Sensor
Courtesy of VOLVO CARS CORPORATION

Was a fault found in the wiring?

- **YES**

  Refer to **VERIFICATION**

- **NO**

  FAULT NOT FOUND: Troubleshooting has been completed.

VERIFICATION

HINT: After the repair it is necessary to check that the fault has been rectified.

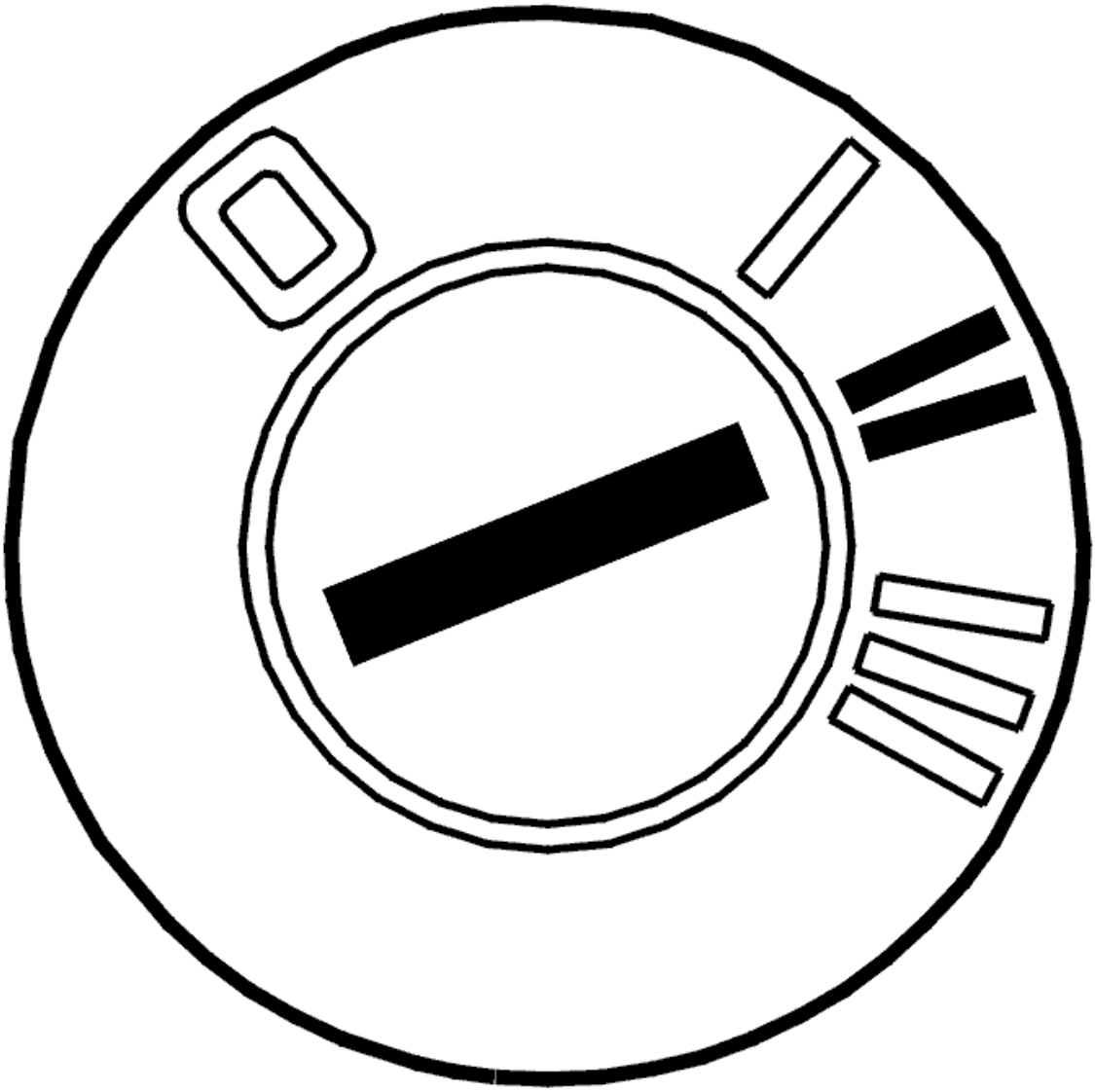

Fig. 25: Identifying Ignition ON
Courtesy of VOLVO CARS CORPORATION

- Ignition off.
- Connect the connectors, install the components, etc.
- Ignition on.
- Read off steering wheel angle signal R4.
- Turn the steering wheel to full lock in both directions.

  The value should change between OFF and ON.

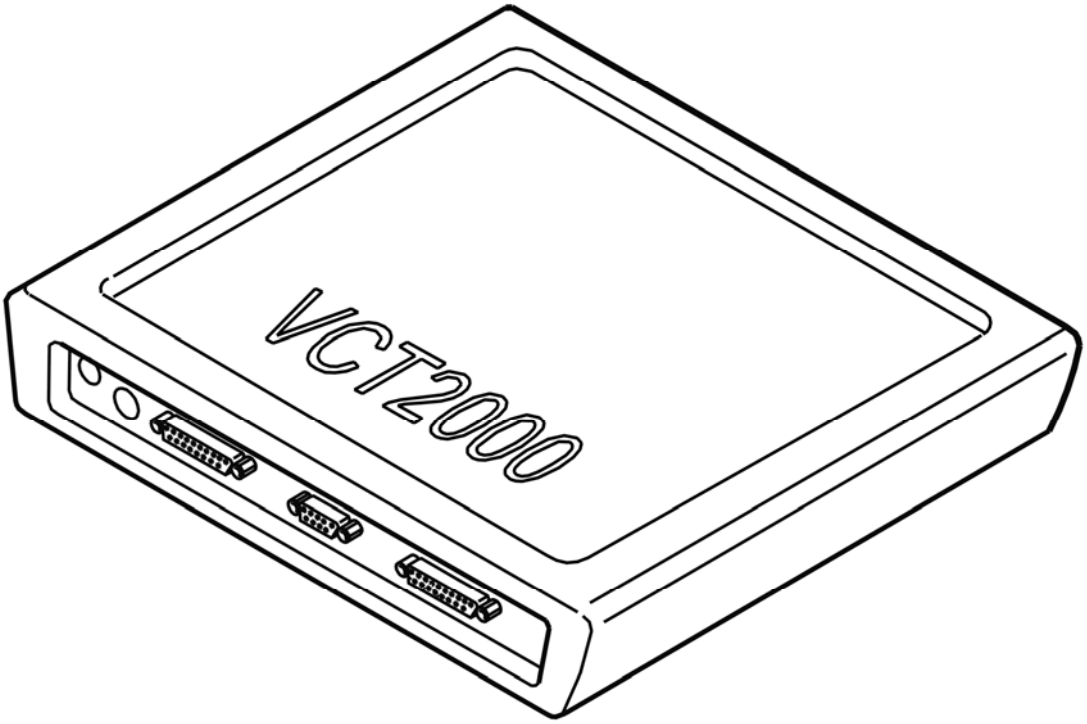

Fig. 26: Identifying VCT2000 Diagnostic Tool Symbol In VIDA
Courtesy of VOLVO CARS CORPORATION

Does the value change?

- **YES**

  VERIFIED: Troubleshooting has been completed.

- **NO**

  Refer to **INFORMATION**

INFORMATION

FAULT-TRACING INFORMATION

The fault should have been detected and remedied. As this is not the case fault-tracing has failed.

Exit fault-tracing for this diagnostic trouble code (DTC) or make another attempt.

SAS-0018: CONTROL MODULE. SIGNAL MISSING (B5254T2; 2005-2007)

DIAGNOSTIC TROUBLE CODE (DTC) INFORMATION SAS-0018

Condition

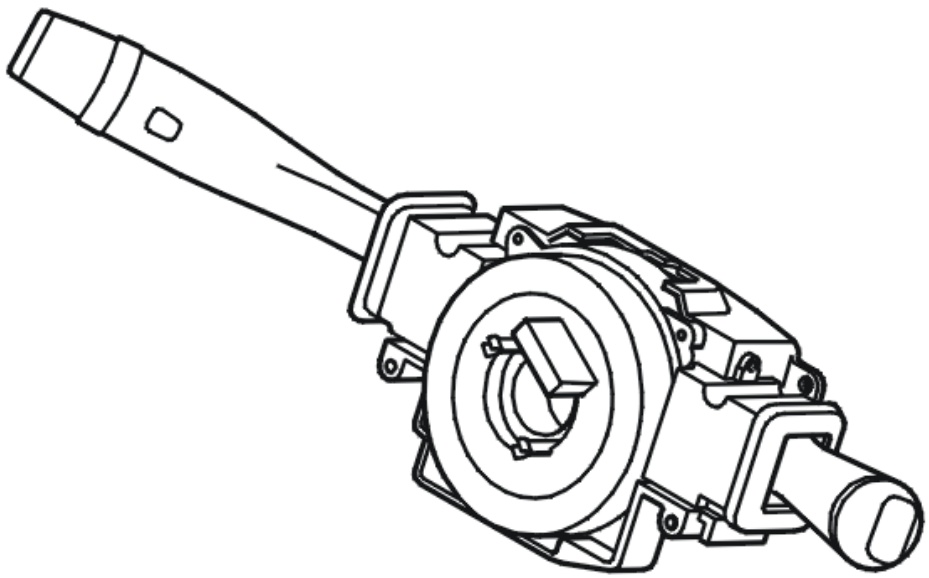

Fig. 27: Identifying Steering Wheel Control Module
Courtesy of VOLVO CARS CORPORATION

The control modules transmit and receive information via a standardized serial communication method, CAN (Control Area Network). Diagnostic trouble code (DTC) is stored if the steering wheel angle sensor module (SAS) registers that information about the ignition key position from the central electronic module (CEM) is missing or incorrect for more than 2.5 seconds.

Steering wheel angle sensor module (SAS) is located inside, and is supplied with power by, the steering wheel module (SWM). Only the steering wheel angle sensor module (SAS) communicates on the controller area network (CAN).

Substitute Value

- The stability function is blocked.

Possible Source

- Information from central electronic module (CEM) is missing or incorrect.

Fault symptom[s]

- Anti-spin warning lamp lit.
- General warning lamp lit.
- The stability control system does not function.

SIGNAL MISSING

INFORMATION

The steering wheel angle sensor module (SAS) has registered that information about the ignition key position from the central electronic module (CEM) is missing or incorrect.

Exit fault-tracing and fault-trace the central electronic module (CEM) system.

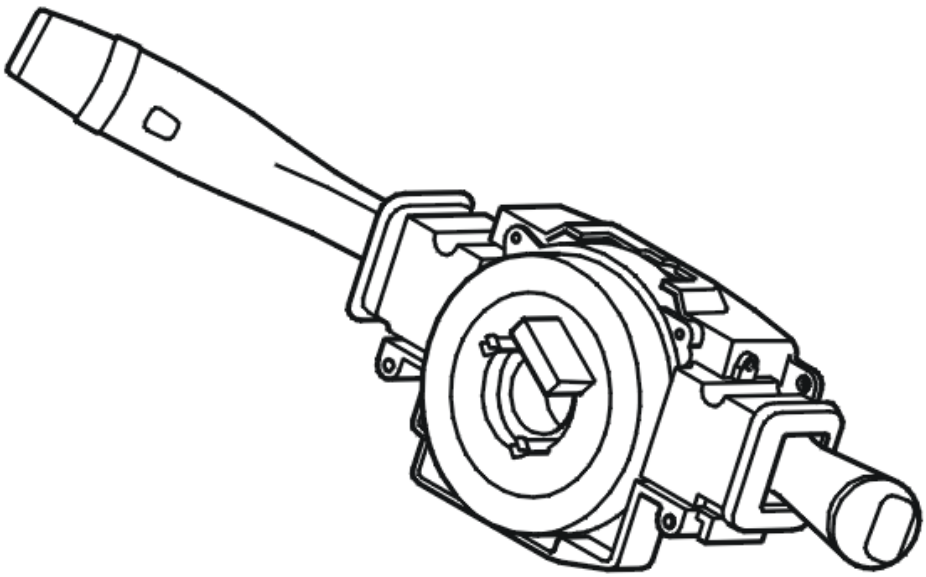

Fig. 28: Identifying Steering Wheel Control Module
Courtesy of VOLVO CARS CORPORATION

SAS-0018: CONTROL MODULE. SIGNAL MISSING (B6294T; 2005-2006)

DIAGNOSTIC TROUBLE CODE (DTC) INFORMATION SAS-0018

see **DIAGNOSTIC TROUBLE CODE (DTC) INFORMATION SAS-0018**

SIGNAL MISSING

see **SIGNAL MISSING**

SAS-0018: STEERING WHEEL POSITION SIGNAL R4. SIGNAL TOO LOW. INTERMITTENT FAULT (2003-2004)

DIAGNOSTIC TROUBLE CODE INFORMATION

see **DIAGNOSTIC TROUBLE CODE INFORMATION**

SIGNAL TOO LOW. INTERMITTENT FAULT

CHECKING THE WIRING AND CONNECTIONS

Check the wires between steering wheel angle sensor (SAS) control unit #14 (#A38) and steering wheel control unit (SWM) #18 (#A18) for an open circuit as described in, see **OPEN-CIRCUIT, INTERMITTENT FAULTS** , and for an intermittent short circuit to ground as described in **SHORT-CIRCUIT TO GROUND, INTERMITTENT FAULTS** .

Additional information:

- To connect the test box to the steering wheel angle sensor control unit, see **CONNECTING THE BREAKOUT BOX TO THE STEERING ANGLE SENSOR** .
- To connect the test box to the steering wheel control unit, see **CONNECTING THE BREAKOUT BOX** .
- For information on signals to the steering wheel angle sensor control unit, see **SIGNAL DESCRIPTION, CONTROL UNIT FOR THE STEERING WHEEL ANGLE SENSOR (SAS)**.
- For information on signals to the steering wheel control unit, see **SIGNAL SPECIFICATION** .

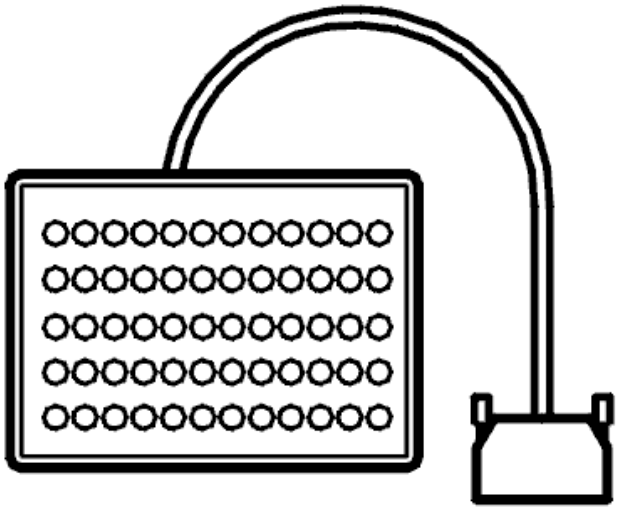

Fig. 29: Breakout Box
Courtesy of VOLVO CARS CORPORATION

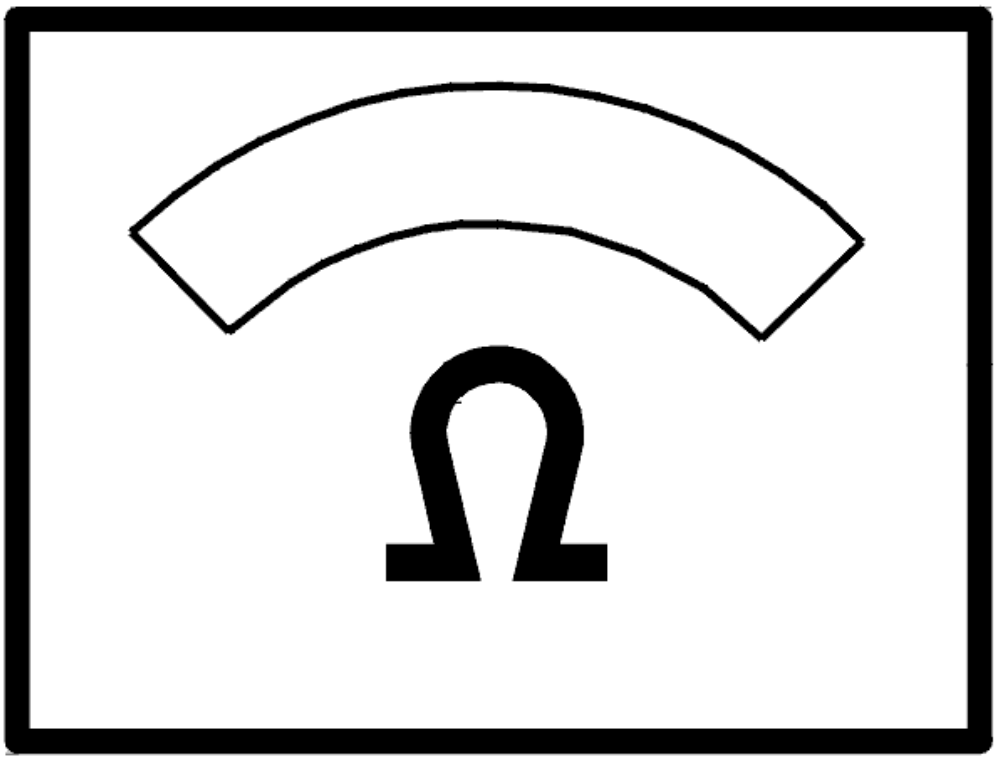

Fig. 30: Identifying Ohm Meter
Courtesy of VOLVO CARS CORPORATION

- **Continue**

  Refer to **INFORMATION**

INFORMATION

FAULT-TRACING INFORMATION

If the fault is intermittent, do not verify fault-tracing if the fault does not recur.

It is possible to view the information again, or leave fault-tracing for this diagnostic trouble code (DTC).

SAS-0018: STEERING WHEEL POSITION SIGNAL R4. SIGNAL TOO LOW.

PERMANENT FAULT (2003-2004)

DIAGNOSTIC TROUBLE CODE INFORMATION

see **DIAGNOSTIC TROUBLE CODE INFORMATION**

SIGNAL TOO LOW. PERMANENT FAULT

CHECKING THE CONNECTORS

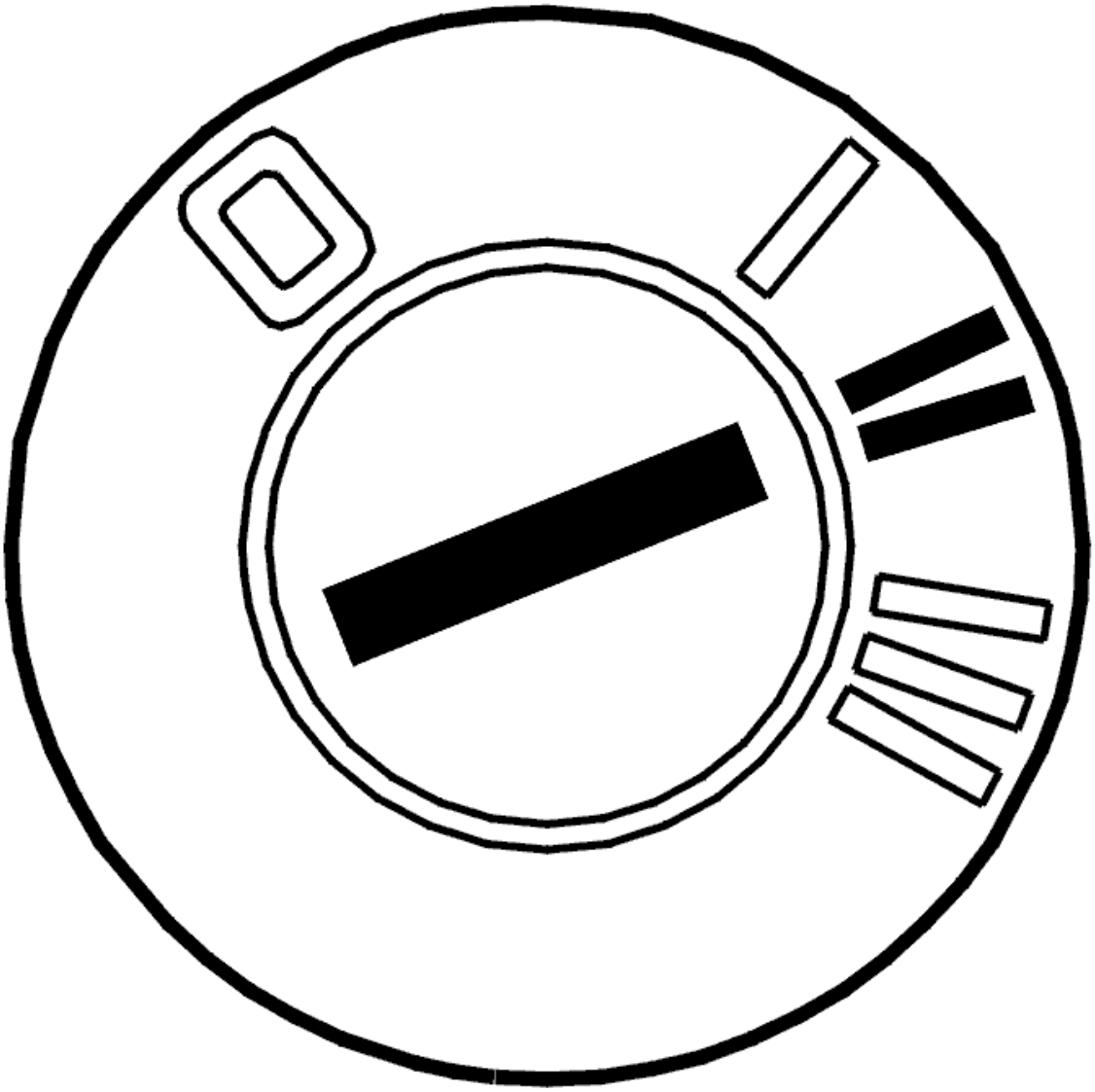

Fig. 31: Identifying Ignition ON
Courtesy of VOLVO CARS CORPORATION

- Ignition on
- Read off the status of steering wheel angle signal R4.

Turn the steering wheel in both directions and check that the value changes between ON and OFF.

Other information:

- To access the connector for the control module for the steering wheel angle sensor, see **STEERING WHEEL MODULE (SWM), REPLACING**
- To access the connector for the steering wheel module (SWM), see **STEERING WHEEL MODULE (SWM), REPLACING**
- For information about signals, see **SIGNAL DESCRIPTION, CONTROL UNIT FOR THE STEERING WHEEL ANGLE SENSOR (SAS)** and **SIGNAL SPECIFICATION** .

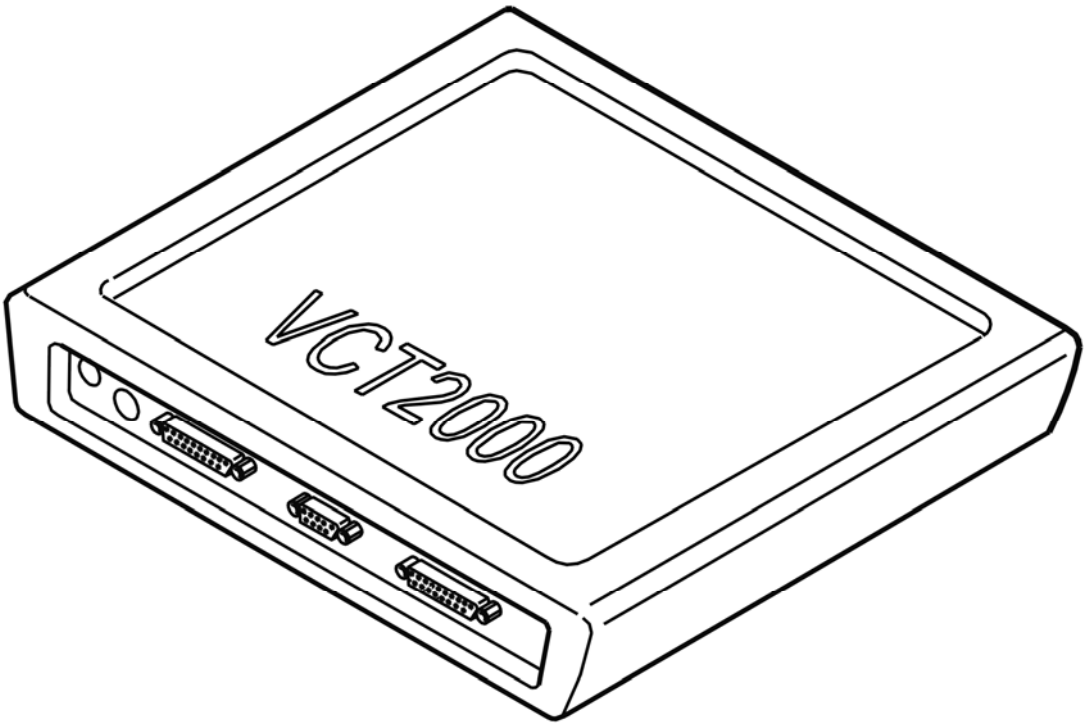

Fig. 32: Identifying VCT2000 Diagnostic Tool Symbol In VIDA
Courtesy of VOLVO CARS CORPORATION

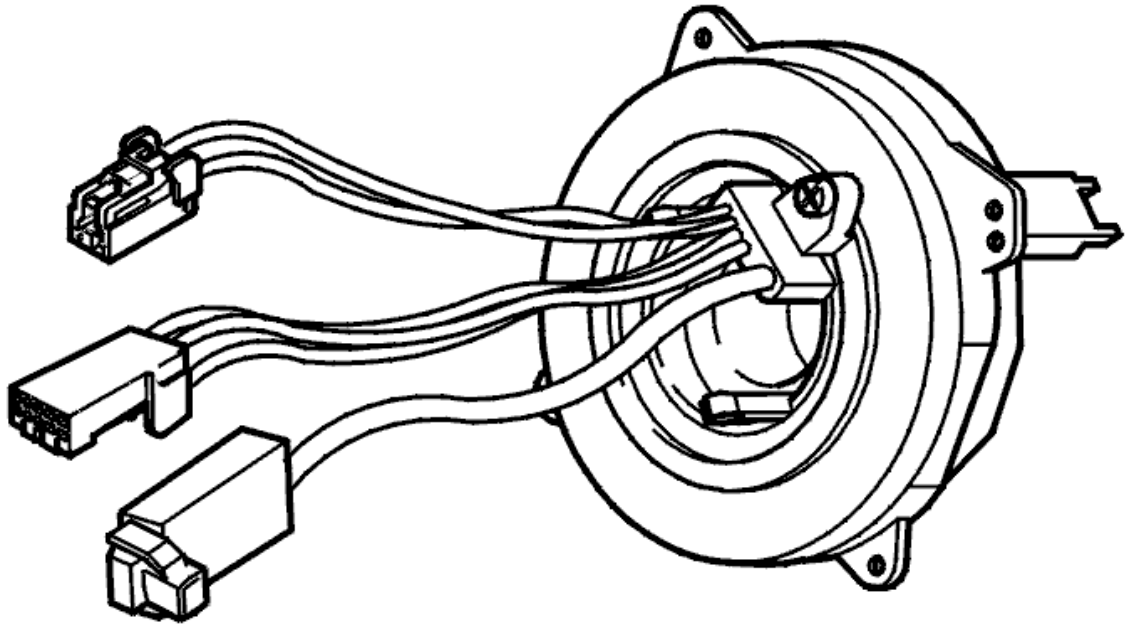

Fig. 33: Identifying Steering Wheel Angle Sensor
Courtesy of VOLVO CARS CORPORATION

Does the value change between OFF and ON?

- **YES**

  OKAY: Troubleshooting has been completed.

- **NO**

  Refer to **CHECKING WIRING AND SENSORS**

CHECKING WIRING AND SENSORS

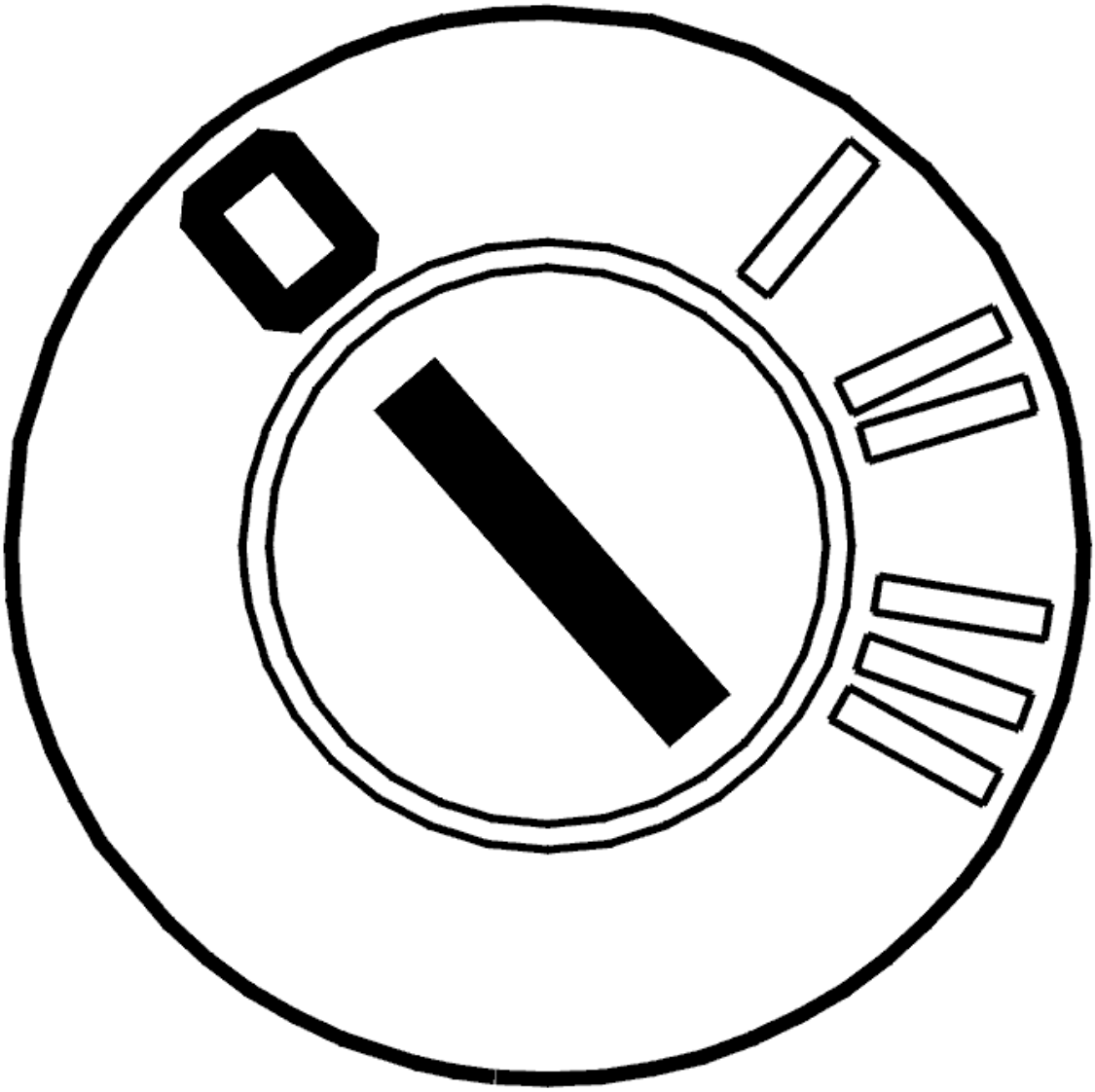

Fig. 34: Identifying Ignition OFF
Courtesy of VOLVO CARS CORPORATION

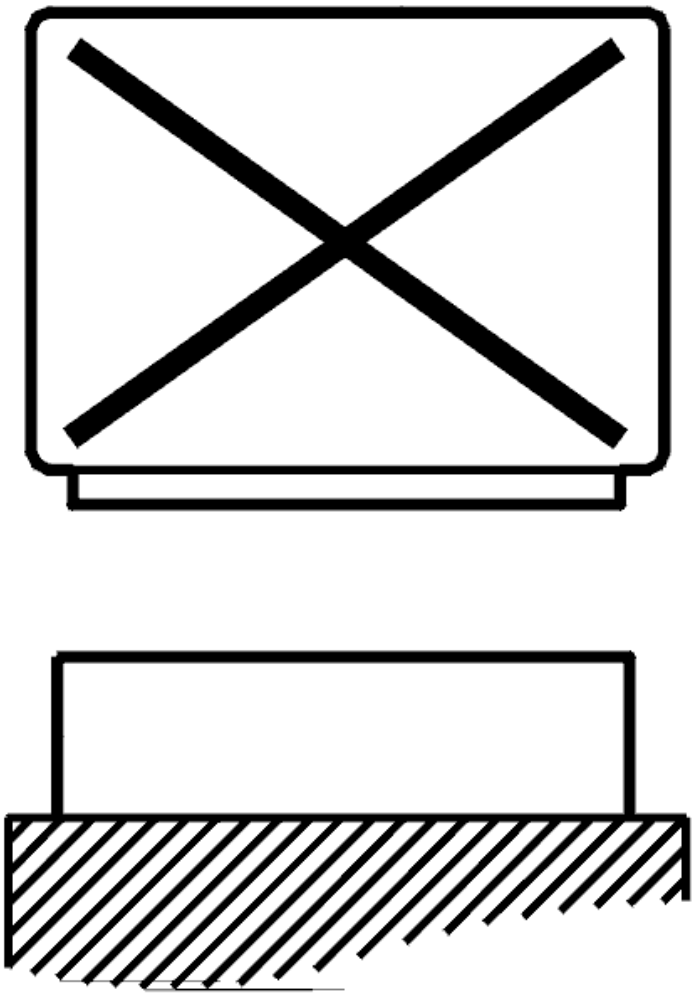

Fig. 35: Disconnecting Control Unit
Courtesy of VOLVO CARS CORPORATION

- Ignition off
- The control module for the steering wheel angle sensor disconnected
- Steering wheel module (SWM) disconnected
- Connect the breakout box to the control module for the steering wheel angle sensor and to the steering wheel module (SWM)

  Check the wiring between the control module for the steering wheel angle sensor terminal #14 (#A38) and steering wheel module (SWM) terminal #18 (#A18). Check for a short-circuit to ground according to **SHORT-CIRCUIT TO GROUND, PERMANENT FAULTS** . Check for an open-circuit according to **OPEN-CIRCUIT, PERMANENT FAULTS** .

  Try replacing the steering wheel angle sensor if no faults are found in the wiring between the control

module for the steering wheel angle sensor and the steering wheel module (SWM).

Other information:

- To connect the breakout box to the control module for the steering wheel angle sensor, see **CONNECTING THE BREAKOUT BOX TO THE STEERING ANGLE SENSOR**
- To connect the breakout box to the steering wheel module (SWM), see **CONNECTING THE BREAKOUT BOX**
- To replace the steering wheel angle sensor, see **CONTACT REEL, REPLACEMENT**
- For information about signals, see **SIGNAL DESCRIPTION, CONTROL UNIT FOR THE STEERING WHEEL ANGLE SENSOR (SAS)** and **SIGNAL SPECIFICATION** .

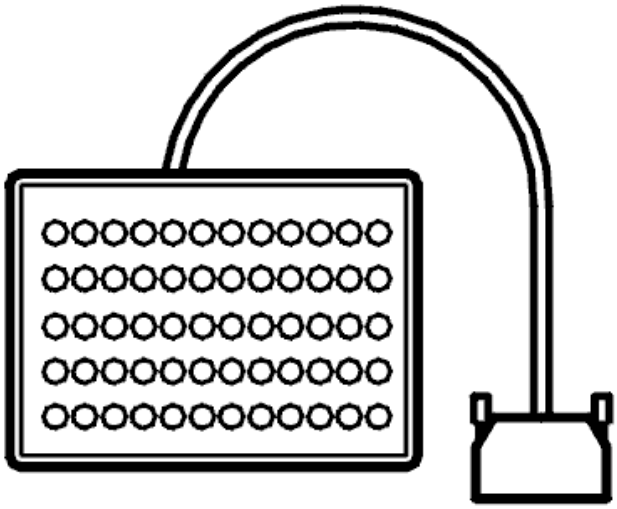

Fig. 36: Breakout Box
Courtesy of VOLVO CARS CORPORATION

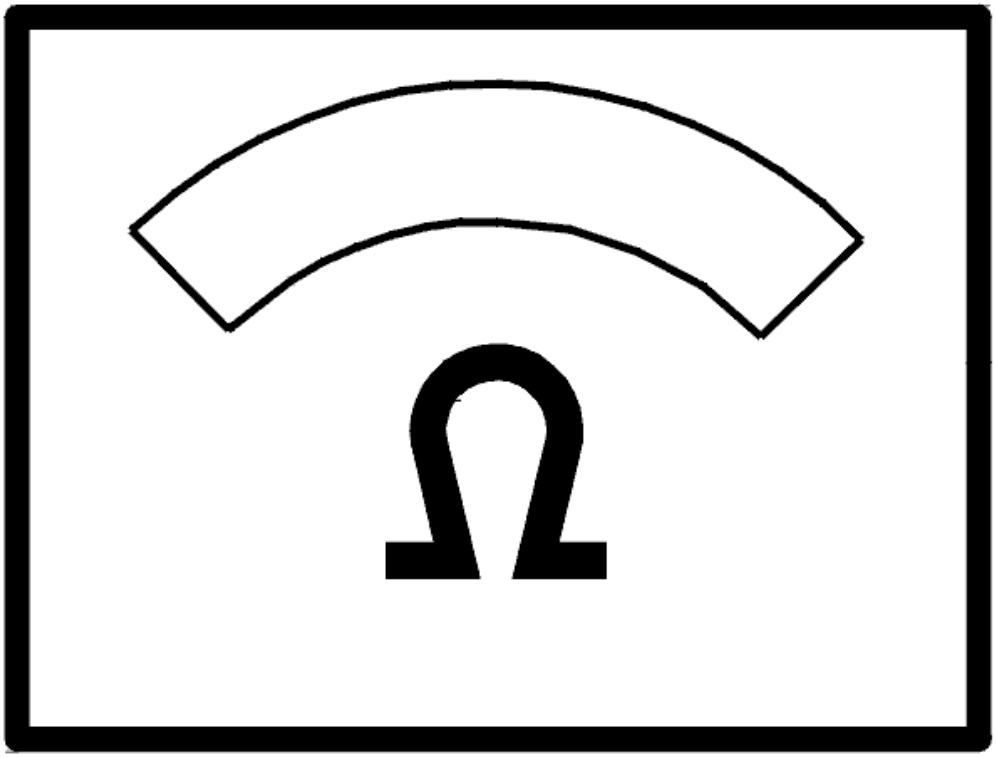

Fig. 37: Identifying Ohm Meter
Courtesy of VOLVO CARS CORPORATION

- **Continue**

  Refer to **VERIFICATION**

VERIFICATION

HINT: After the repair it is necessary to check that the fault has been rectified.

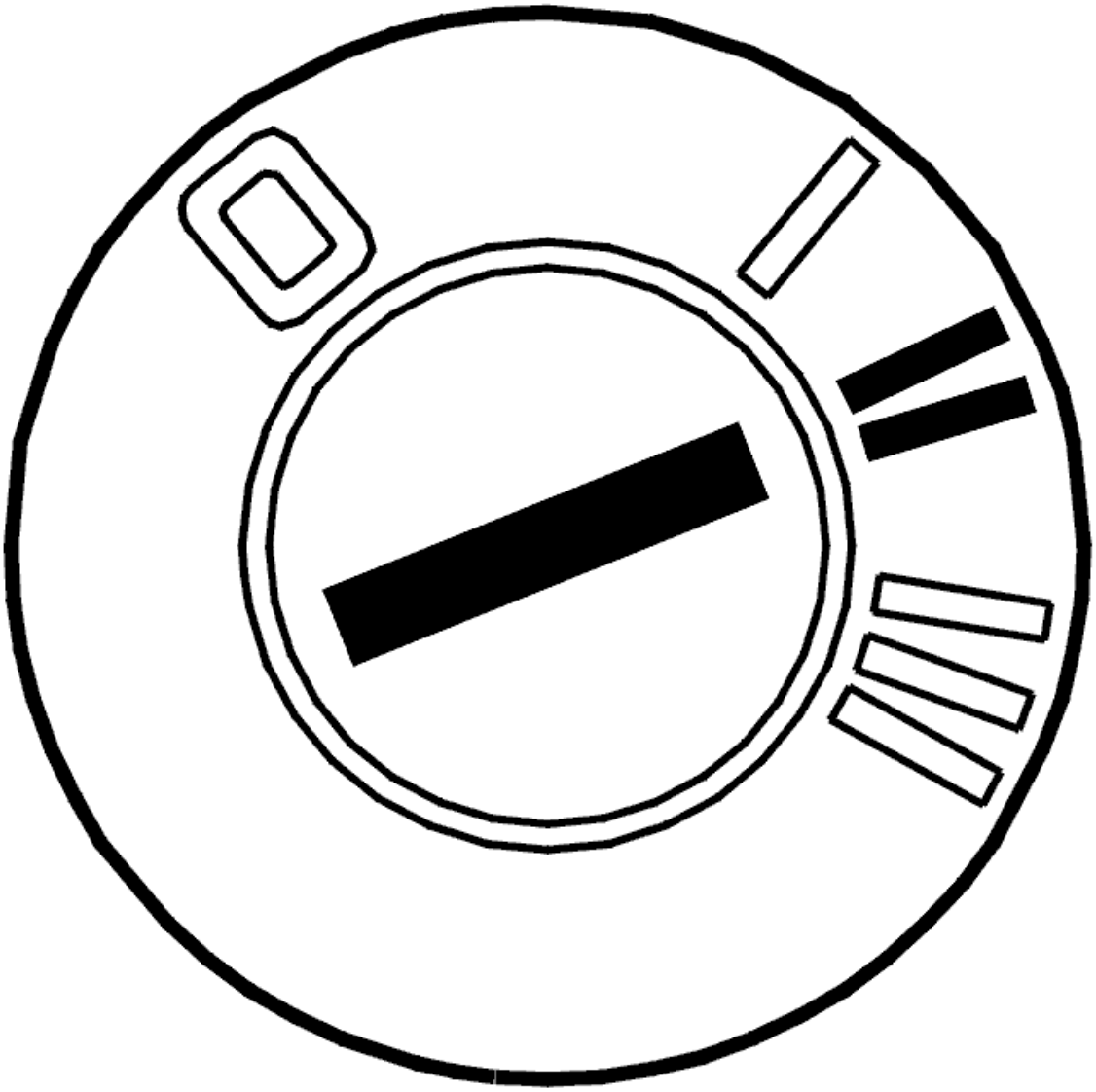

Fig. 38: Identifying Ignition ON
Courtesy of VOLVO CARS CORPORATION

- Ignition off.
- Connect the connectors, install the components, etc.
- Ignition on.
- Read off steering wheel angle signal R4.
- Turn the steering wheel to full lock in both directions.

  The value should change between OFF and ON.

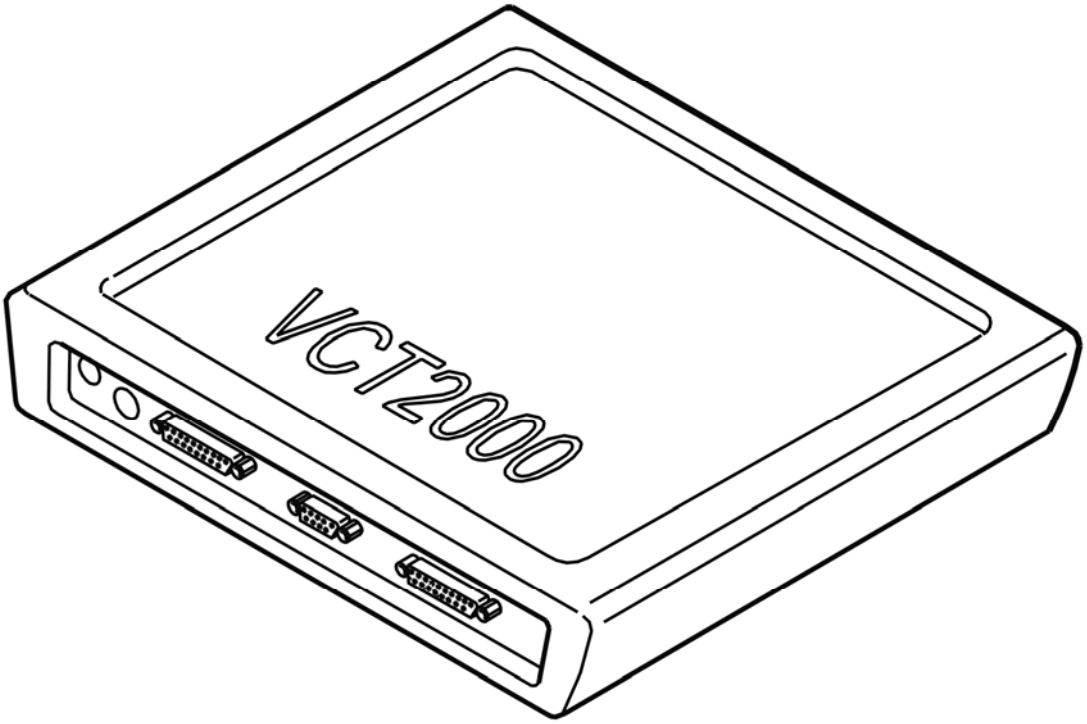

Fig. 39: Identifying VCT2000 Diagnostic Tool Symbol In VIDA
Courtesy of VOLVO CARS CORPORATION

Does the value change?

- **YES**

  VERIFIED: Troubleshooting has been completed.

- **NO**

  Refer to **INFORMATION**

INFORMATION

FAULT-TRACING INFORMATION

The fault should have been detected and remedied. As this is not the case fault-tracing has failed.

Exit fault-tracing for this diagnostic trouble code (DTC) or make another attempt.

SAS-0019: CONTROL MODULE. INTERNAL FAULT (B5254T2; 2005-2007)

DIAGNOSTIC TROUBLE CODE (DTC) INFORMATION SAS-0019

Condition

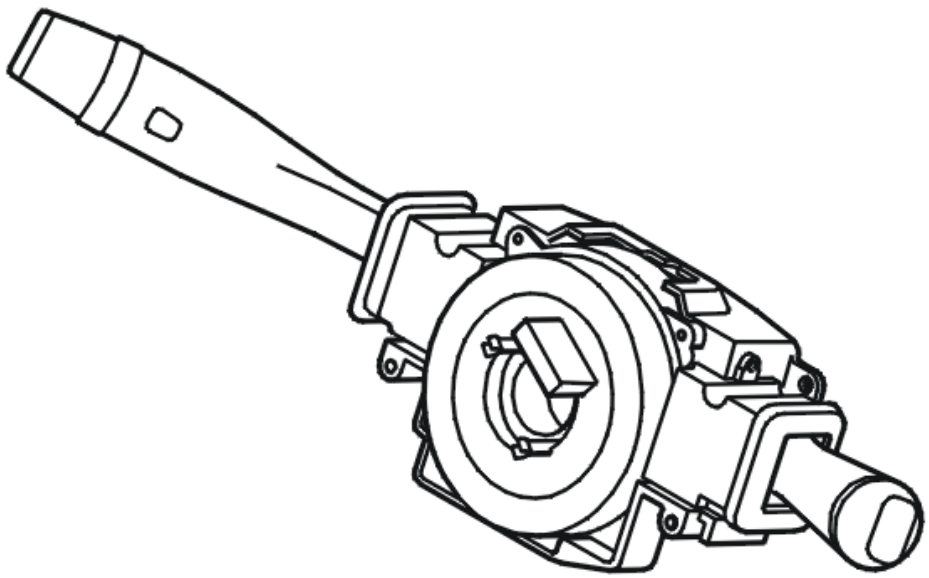

Fig. 40: Identifying Steering Wheel Control Module
Courtesy of VOLVO CARS CORPORATION

The Steering wheel angle sensor module (SAS) is located in the lever module together with the steering wheel module (SWM) and is supplied with power by it.

Steering wheel angle sensor module (SAS) contains two processors which work together. The processors receive information about steering wheel angle, steering direction and steering angle speed from the steering wheel sensor and compare the information with each other. The diagnostic trouble code (DTC) is stored if one processor registers that other processor requests information more often than expected.

Substitute Value

- The stability function is blocked.

Possible Source

- Internal fault.

Fault symptom[s]

- Anti-spin warning lamp lit.

- General warning lamp lit.
- The stability control system does not function.

INTERNAL FAULT

see **INTERNAL FAULT**

SAS-0019: CONTROL MODULE. INTERNAL FAULT (B6294T; 2005-2006)

DIAGNOSTIC TROUBLE CODE (DTC) INFORMATION SAS-0019

see **DIAGNOSTIC TROUBLE CODE (DTC) INFORMATION SAS-0019**

INTERNAL FAULT

see **INTERNAL FAULT**

SAS-0019: CONTROL UNIT. INTERNAL FAULT (2003-2004)

DIAGNOSTIC TROUBLE CODE INFORMATION

Condition

The control units communicate with each other via a standardized serial method of communication - CAN (Controller Area Network) - to exchange information. Control units send and receive information. If the steering wheel angle sensor (SAS) control unit registers an internal fault, diagnostic trouble code SAS-0019 is set.

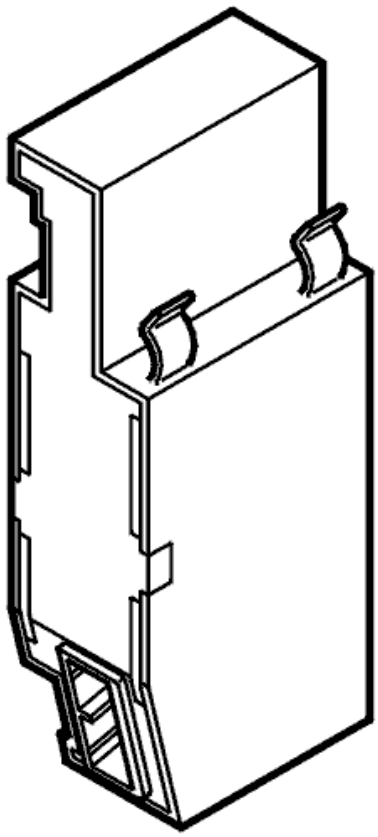

Fig. 41: Control Module For Steering Wheel Angle Sensor
Courtesy of VOLVO CARS CORPORATION

Substitute Value

Stabilizing function disconnected.
Anti-spin function blocked.

Possible Source

- Internal fault in the steering wheel angle sensor control unit.

Fault symptom[s]

- Anti-spin warning lamp is on.
- Stabilizing function not working.
- Anti-spin does not work.

INTERNAL FAULT

REPLACEMENT OF CONTROL UNIT AND PROGRAMMING

Control unit has registered an internal fault.

CAUTION: A new control unit is supplied without software. The new control unit must be programmed before it will work.

For information on programming and replacing the control unit, see **STEERING WHEEL MODULE (SWM), REPLACING** .

SAS-0020: STEERING WHEEL ANGLE SENSOR SIGNAL A/B/IX/IY. SIGNAL FAULTY. INTERMITTENT FAULT (2003-2004)

DIAGNOSTIC TROUBLE CODE INFORMATION

Condition

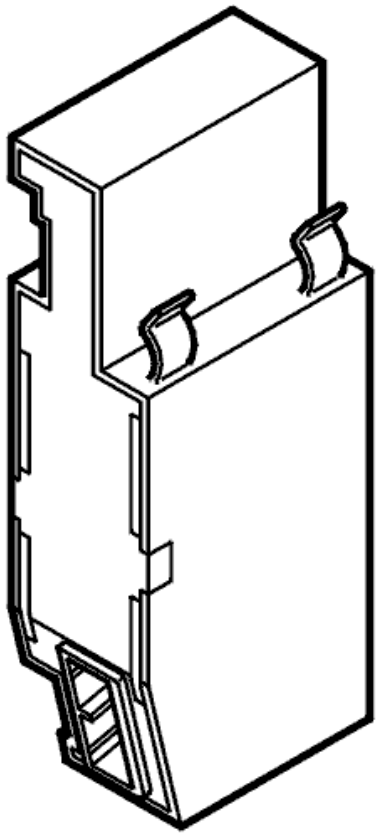

Fig. 42: Control Module For Steering Wheel Angle Sensor
Courtesy of VOLVO CARS CORPORATION

The steering wheel angle sensor has two circuits each with 4 LEDs and 4 receptors which read off their individual code wheel. One circuit measures the steering wheel angle and the other measures steering wheel revolutions. If the steering wheel angle sensor (SAS) control unit registers a faulty steering wheel angle signal from the steering wheel angle sensor, diagnostic trouble code SAS-0020 is set.

Substitute Value

- Stabilizing function disconnected.
- Anti-spin function blocked.

Possible Source

- Internal fault in steering wheel angle sensor.
- Internal fault in the steering wheel angle sensor control unit.

Fault symptom[s]

- Anti-spin warning lamp is on.
- Stabilizing function not working.
- Anti-spin does not work.

FAULTY SIGNAL. INTERMITTENT FAULT

CHECKING WIRING AND TERMINALS

Check the wiring between the control module for the steering wheel angle sensor

terminal #5 (terminal (#A29) and steering wheel module (SWM) terminal #4 (terminal #A4)

terminal #4 (terminal (#A28) and steering wheel module (SWM) terminal #3 (terminal #A3)

terminal #10 (terminal (#A34) and steering wheel module (SWM) terminal #2 (terminal #A2)

#11 (#A35) and steering wheel module (SWM) #17 (#A17)

check for contact resistance and oxidation according to **CONTACT RESISTANCE AND OXIDATION** . Check for an intermittent open-circuit according to **OPEN-CIRCUIT, INTERMITTENT FAULTS** . Check for an intermittent short-circuit to ground according to **SHORT-CIRCUIT TO GROUND, INTERMITTENT FAULTS** . Check for an intermittent short-circuit to supply voltage according to **SHORT-CIRCUIT TO SUPPLY VOLTAGE, INTERMITTENT FAULTS** .

Other information

- To connect the breakout box to the control module for the steering wheel angle sensor, see **CONNECTING THE BREAKOUT BOX TO THE STEERING ANGLE SENSOR**
- To connect the breakout box to the steering wheel module (SWM), see **CONNECTING THE BREAKOUT BOX**
- To replace the steering wheel angle sensor, see **CONTACT REEL, REPLACEMENT**
- For information about signals for the control module for the steering wheel angle sensor, see **SIGNAL DESCRIPTION, CONTROL UNIT FOR THE STEERING WHEEL ANGLE SENSOR (SAS)**
- For information about signals to the steering wheel module (SWM), see **SIGNAL SPECIFICATION** .

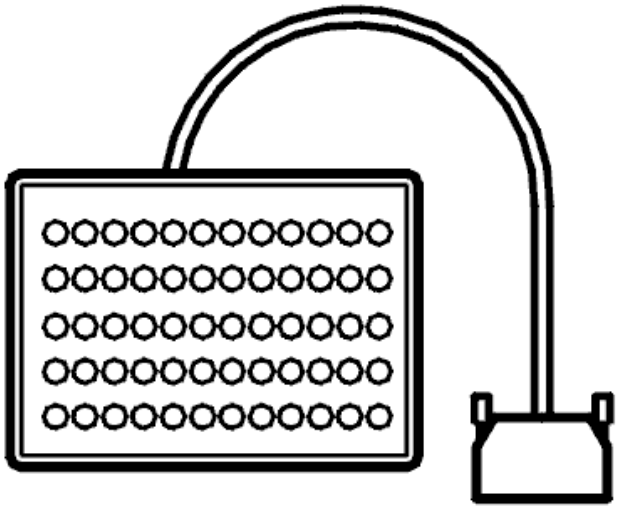

Fig. 43: Breakout Box
Courtesy of VOLVO CARS CORPORATION

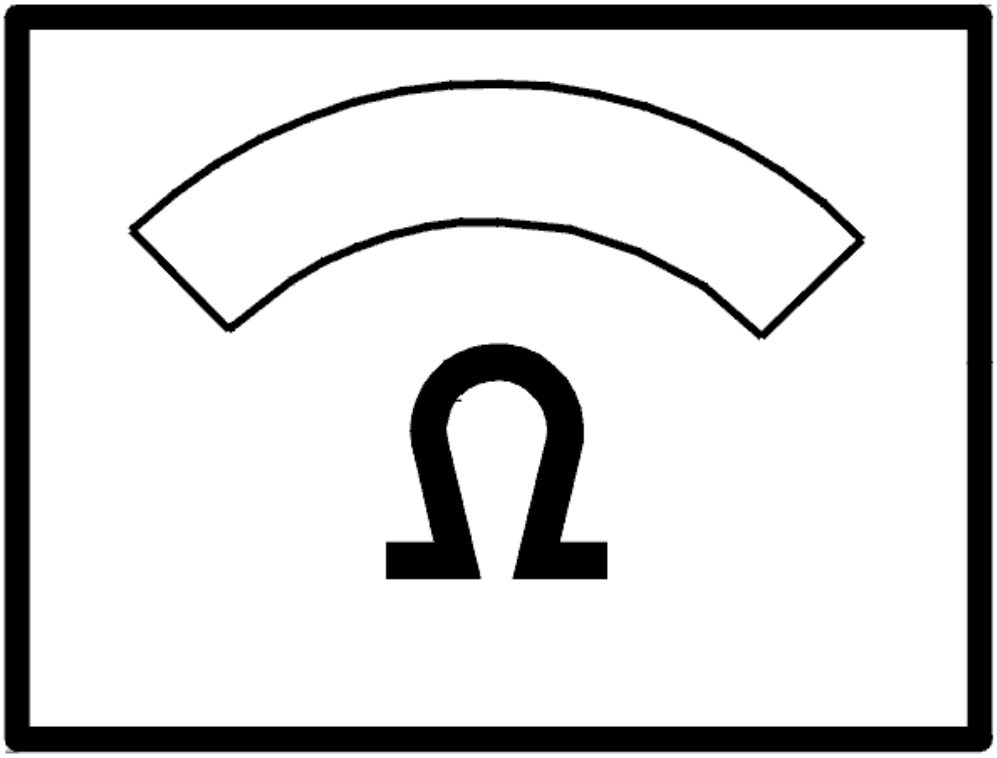

Fig. 44: Identifying Ohm Meter
Courtesy of VOLVO CARS CORPORATION

- **Continue**

  Refer to **INFORMATION**

INFORMATION

FAULT-TRACING INFORMATION

If the fault is intermittent, do not verify fault-tracing if the fault does not recur.

It is possible to view the information again, or leave fault-tracing for this diagnostic trouble code (DTC).

SAS-0020: STEERING WHEEL ANGLE SENSOR SIGNAL A/B/IX/IY. SIGNAL

FAULTY. PERMANENT FAULT (2003-2004)

DIAGNOSTIC TROUBLE CODE INFORMATION

see **DIAGNOSTIC TROUBLE CODE INFORMATION**

FAULTY SIGNAL. PERMANENT FAULT

CHECKING THE SIGNAL

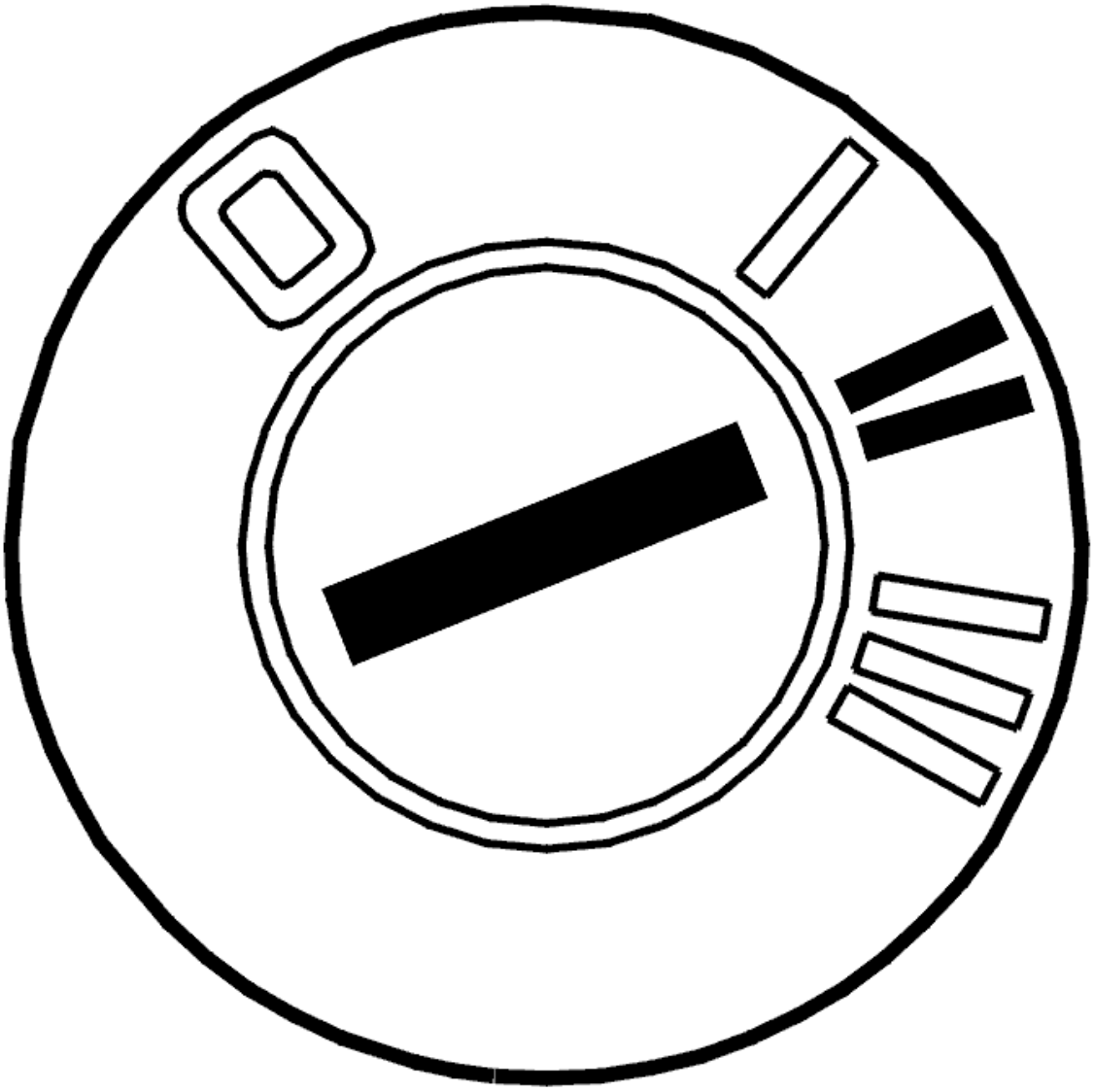

Fig. 45: Identifying Ignition ON
Courtesy of VOLVO CARS CORPORATION

- Ignition off
- Check the control module for the steering wheel angle sensor and the steering wheel module (SWM)

connectors. Check for contact resistance and oxidation according to **CONTACT RESISTANCE AND OXIDATION**

- Ignition on
- Read off the status of steering wheel angle signals A, B, IX and IY
- Carefully turn the steering wheel to the limit positions in both directions and check that the value changes between ON and OFF.

If the value changes between OFF and ON, the cause of the fault was contact resistance or oxidation in the control module or in the steering wheel angle sensor connector.

Other information:

- To disconnect the control module for the steering wheel angle sensor, see **STEERING WHEEL MODULE (SWM), REPLACING**
- To disconnect the steering wheel module (SWM), see **STEERING WHEEL MODULE (SWM), REPLACING**
- For information about signals for the control module for the steering wheel angle sensor, see **SIGNAL DESCRIPTION, CONTROL UNIT FOR THE STEERING WHEEL ANGLE SENSOR (SAS)**
- For information about signals to the steering wheel module (SWM), see **SIGNAL SPECIFICATION** .

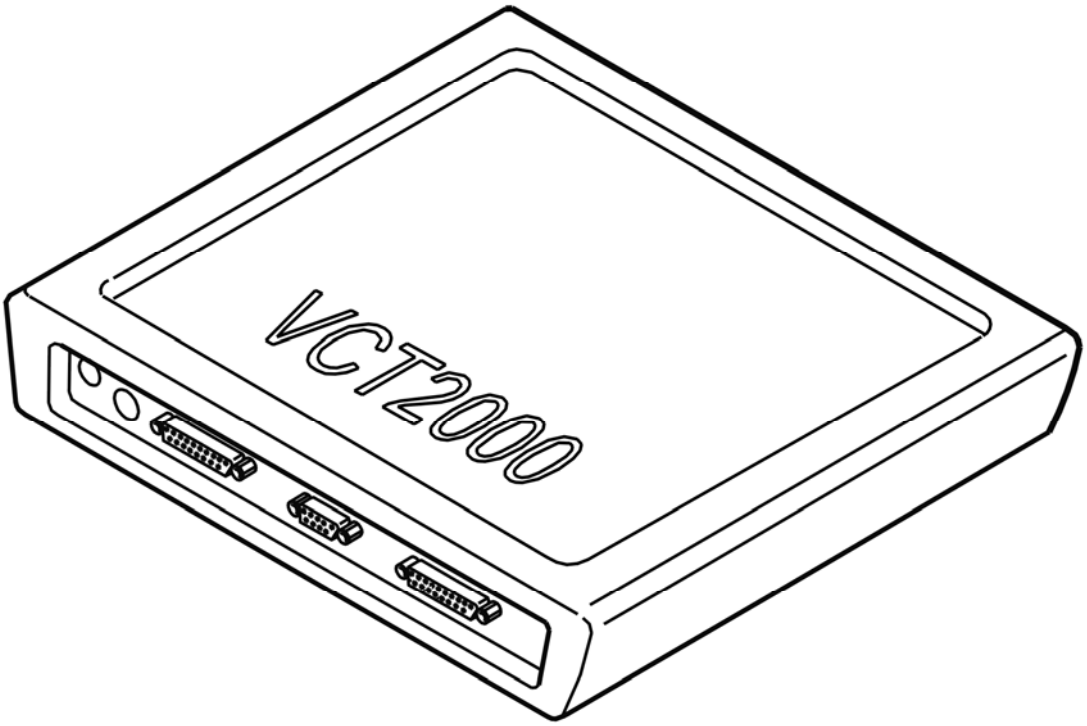

Fig. 46: Identifying VCT2000 Diagnostic Tool Symbol In VIDA
Courtesy of VOLVO CARS CORPORATION

Do the values change between OFF and ON?

- **YES**

  OKAY: Troubleshooting has been completed.

- **NO**

  Refer to **CHECKING WIRING AND SENSORS**

CHECKING WIRING AND SENSORS

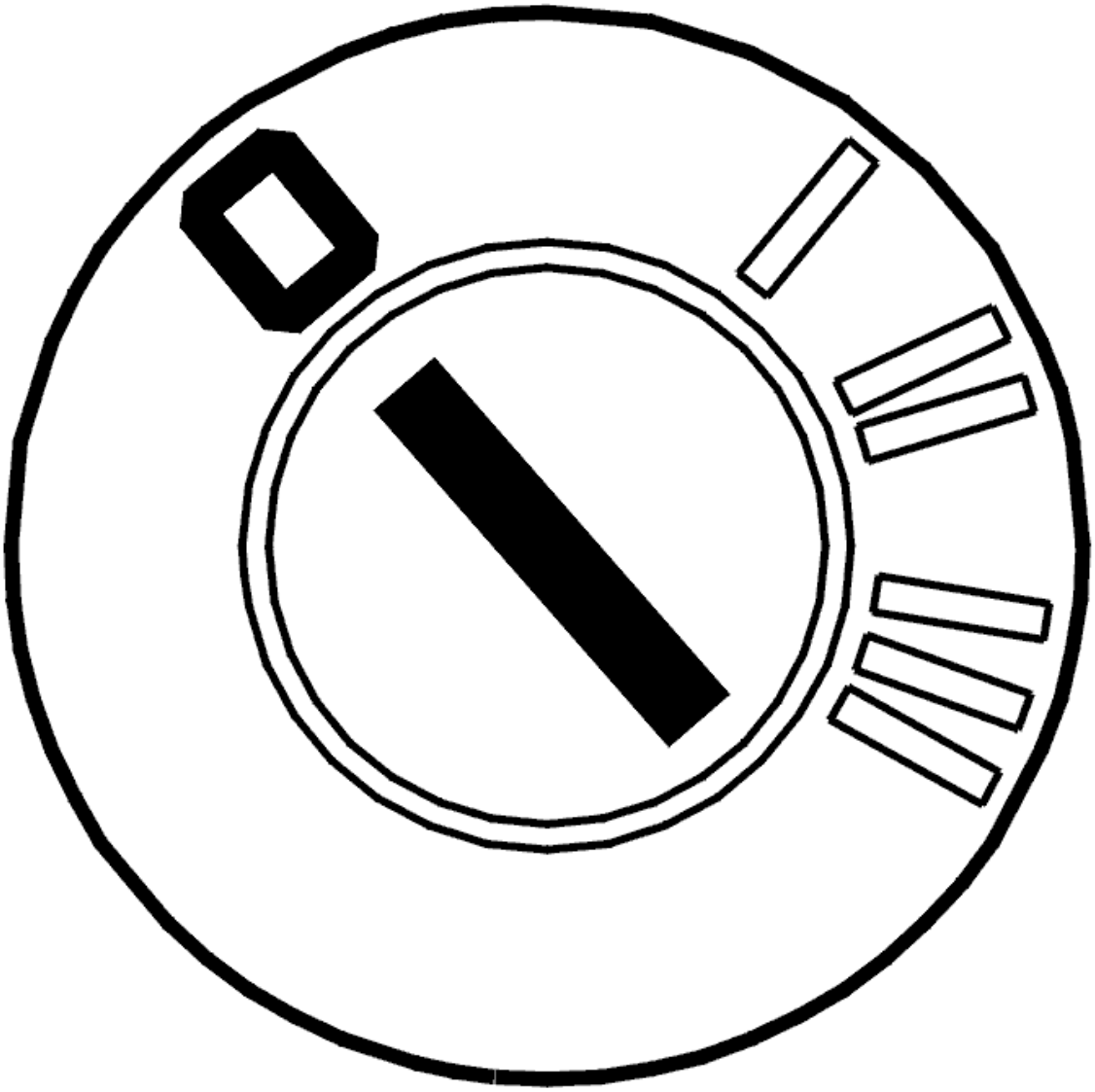

Fig. 47: Identifying Ignition OFF

Courtesy of VOLVO CARS CORPORATION

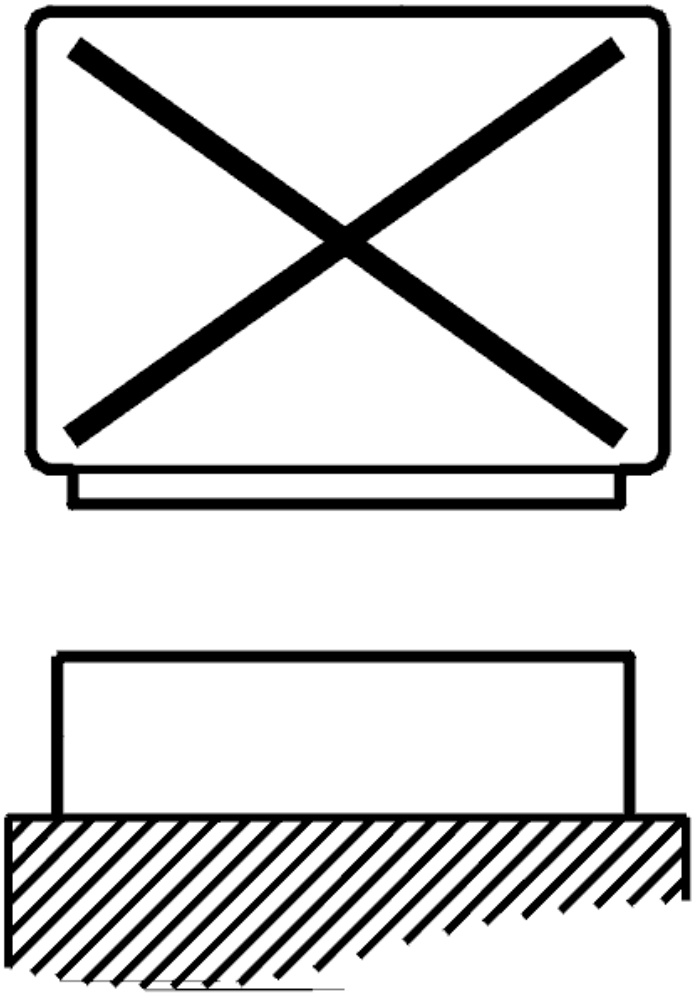

Fig. 48: Disconnecting Control Unit
Courtesy of VOLVO CARS CORPORATION

- Ignition off
- The control module for the steering wheel angle sensor disconnected
- Steering wheel module (SWM) disconnected
- Connect the breakout box to the control module for the steering wheel angle sensor and to the steering wheel module (SWM)

  Check the wiring between the control module for the steering wheel angle sensor

  terminal #3 (terminal (#A27) and steering wheel module (SWM) terminal #5 (terminal #A5)

terminal #4 (terminal (#A28) and steering wheel module (SWM) terminal #3 (terminal #A3)

terminal #10 (terminal (#A34) and steering wheel module (SWM) terminal #2 (terminal #A2)

#11 (#A35) and steering wheel module (SWM) #17 (#A17)

check for a short-circuit to each other. Check for open-circuits according to **OPEN-CIRCUIT, PERMANENT FAULTS** . Check for a short-circuit to ground according to **SHORT-CIRCUIT TO GROUND, PERMANENT FAULTS** . Check for a short-circuit to supply voltage according to **SHORT-CIRCUIT TO SUPPLY VOLTAGE. PERMANENT FAULTS** .

Try replacing the steering wheel angle sensor if no faults are found in the wiring between the control module for the steering wheel angle sensor and the steering wheel module (SWM).

Other information:

- To connect the breakout box to the control module for the steering wheel angle sensor, see **CONNECTING THE BREAKOUT BOX**
- To connect the breakout box to the steering wheel module (SWM), see **CONNECTING THE BREAKOUT BOX**
- To replace the steering wheel angle sensor, see **CONTACT REEL, REPLACEMENT**
- For information about signals for the control module for the steering wheel angle sensor, see **SIGNAL DESCRIPTION, CONTROL UNIT FOR THE STEERING WHEEL ANGLE SENSOR (SAS)**
- For information about signals to the steering wheel module (SWM), see **SIGNAL SPECIFICATION** .

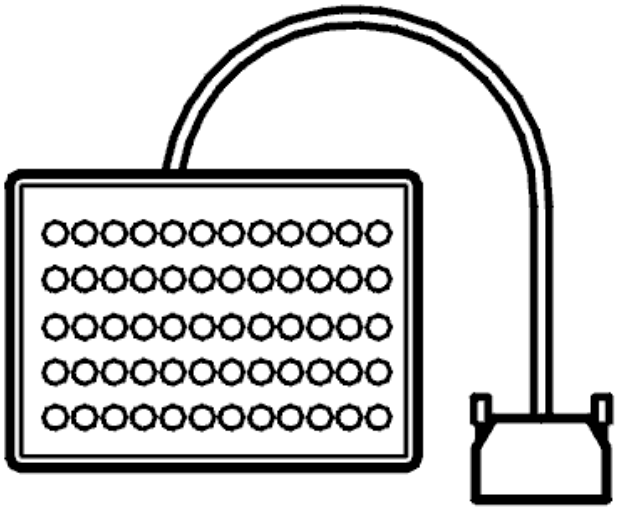

Fig. 49: Breakout Box
Courtesy of VOLVO CARS CORPORATION

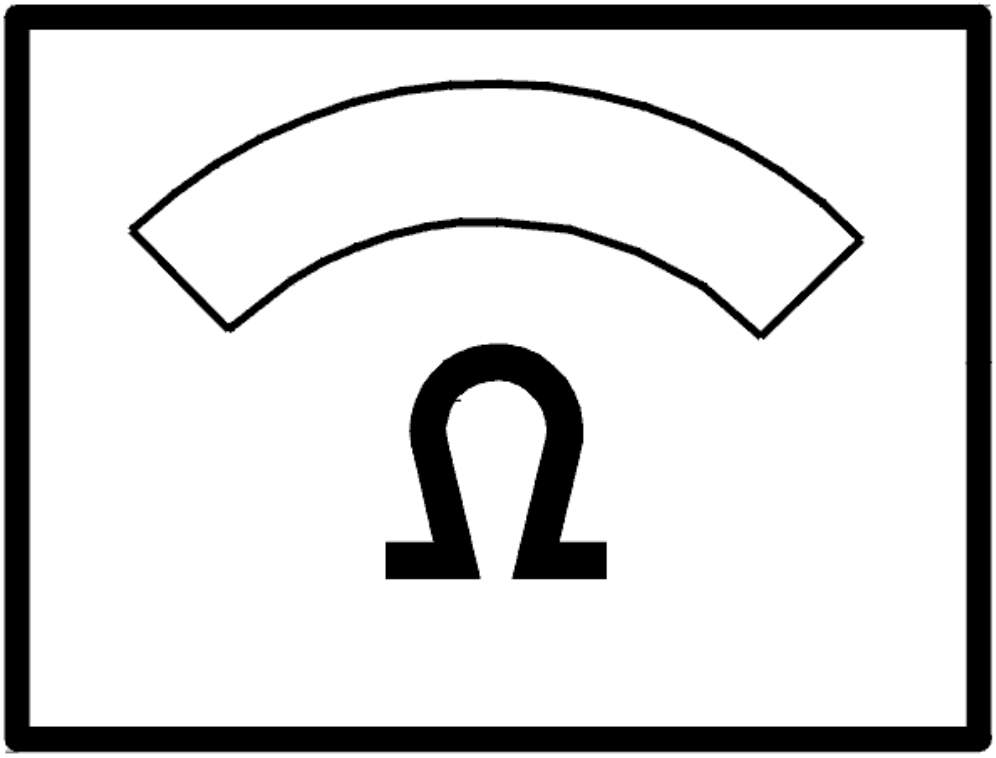

Fig. 50: Identifying Ohm Meter
Courtesy of VOLVO CARS CORPORATION

- **Continue**

  Refer to **VERIFICATION**

VERIFICATION

HINT: After the repair it is necessary to check that the fault has been rectified.

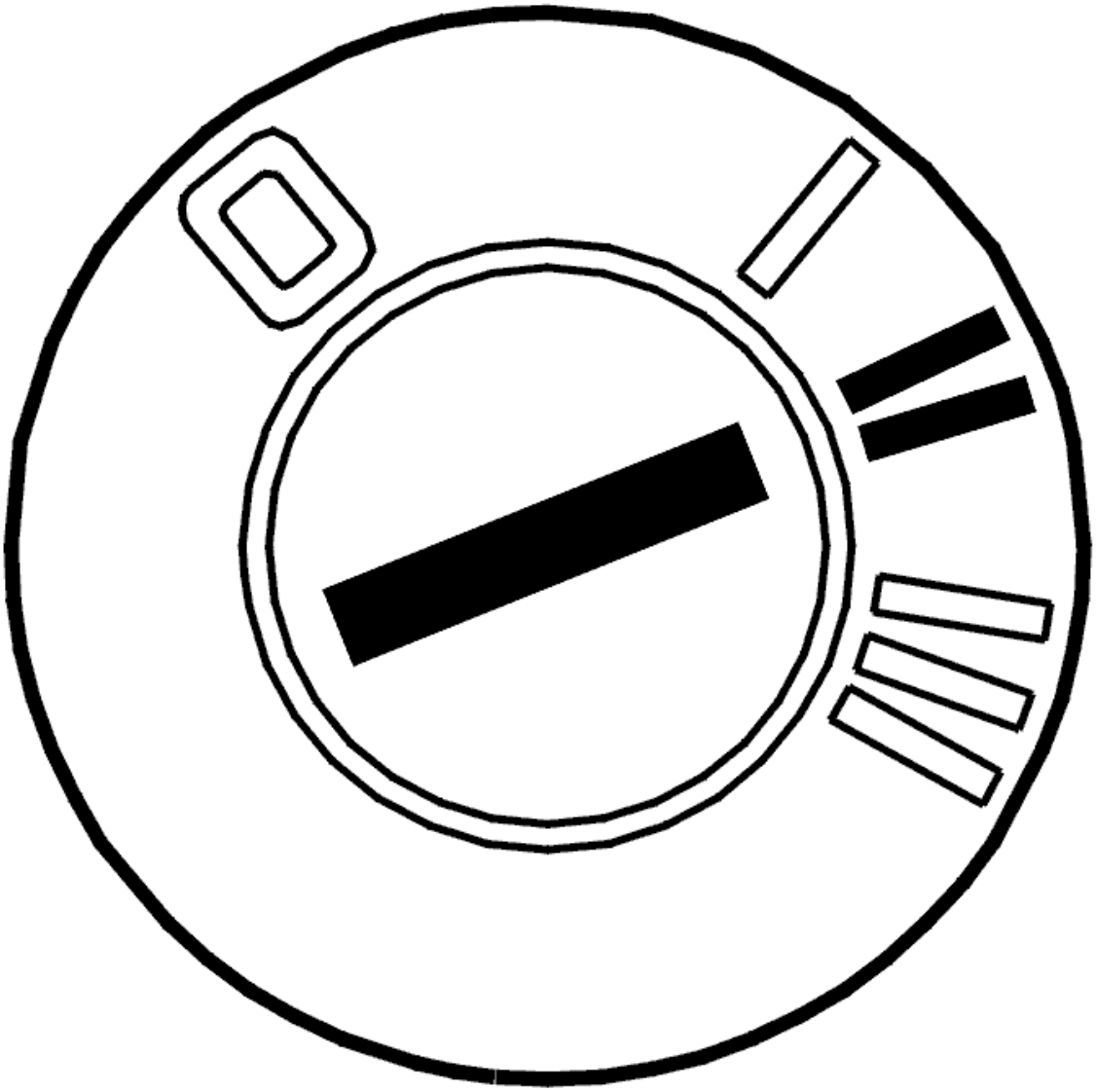

Fig. 51: Identifying Ignition ON
Courtesy of VOLVO CARS CORPORATION

- Ignition off.
- Connect the connectors, install the components, etc.
- Ignition on.
- Turn the steering wheel slowly to full lock in both directions.

  The values should alternate between OFF and ON.

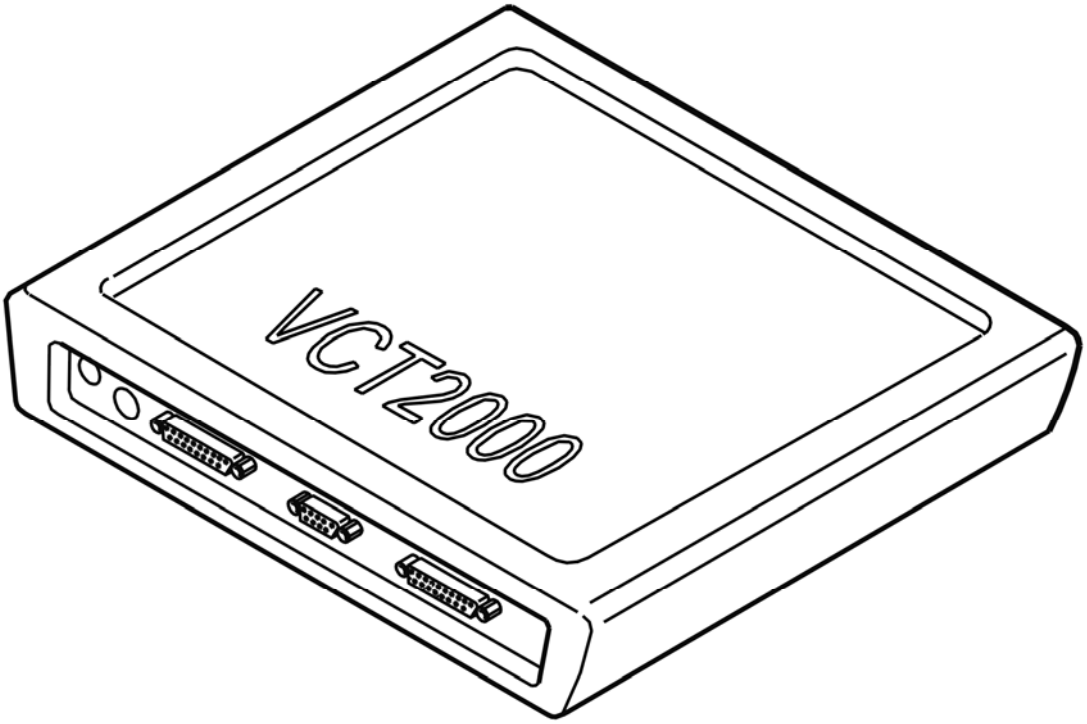

Fig. 52: Identifying VCT2000 Diagnostic Tool Symbol In VIDA
Courtesy of VOLVO CARS CORPORATION

Do the values alternate between OFF and ON?

- **YES**

  VERIFIED: Troubleshooting has been completed.

- **NO**

  Refer to **INFORMATION**

INFORMATION

FAULT-TRACING INFORMATION

The fault should have been detected and remedied. As this is not the case fault-tracing has failed.

Exit fault-tracing for this diagnostic trouble code (DTC) or make another attempt.

SAS-0021: STEERING WHEEL ANGLE SENSOR SIGNAL R1/R2/R3/R4. SIGNAL FAULTY (2003-2004)

DIAGNOSTIC TROUBLE CODE INFORMATION

Condition

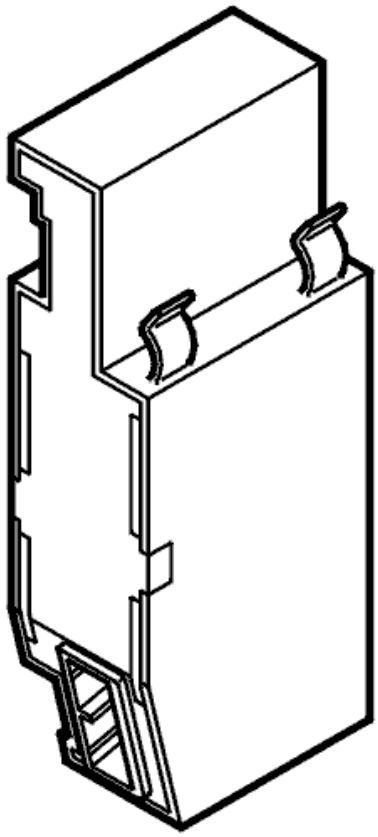

Fig. 53: Control Module For Steering Wheel Angle Sensor
Courtesy of VOLVO CARS CORPORATION

The steering wheel angle sensor has two circuits each with 4 LEDs and 4 receptors which read off their individual code wheel. One circuit measures the steering wheel angle and the other measures steering wheel revolutions. If the steering wheel angle sensor (SAS) control unit registers a faulty steering wheel position signal from the steering wheel angle sensor, diagnostic trouble code SAS-0021 is set.

Substitute Value

- Stabilizing function disconnected.
- Anti-spin function blocked.

Possible Source

- Internal fault in steering wheel angle sensor.
- Internal fault in the steering wheel angle sensor control unit.

Fault symptom[s]

- Anti-spin warning lamp is on.
- Stabilizing function not working.
- Anti-spin does not work.

FAULTY SIGNAL

CHECKING THE SIGNAL

HINT: The control module for the steering wheel angle sensor has been unable to determine whether the fault is active or not. Therefore a test routine will be run.

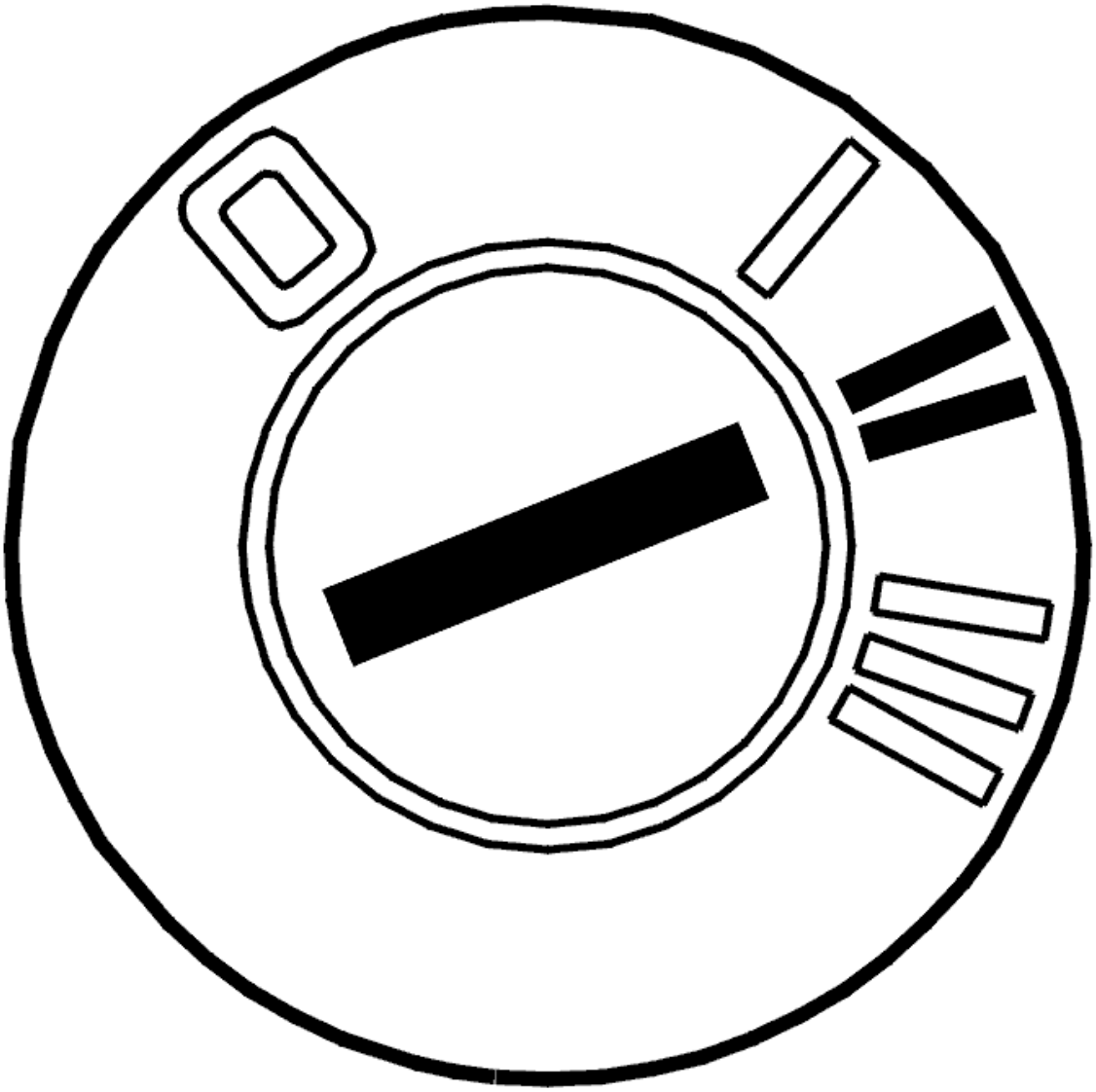

Fig. 54: Identifying Ignition ON
Courtesy of VOLVO CARS CORPORATION

- Ignition on

- Turn the steering wheel to the limit position in both directions twice
- Activate the test routine.
    1. The fault is active. Refer to **SHORT-CIRCUIT BETWEEN THE SIGNAL CABLES** and **CHECKING WIRING AND TERMINALS**

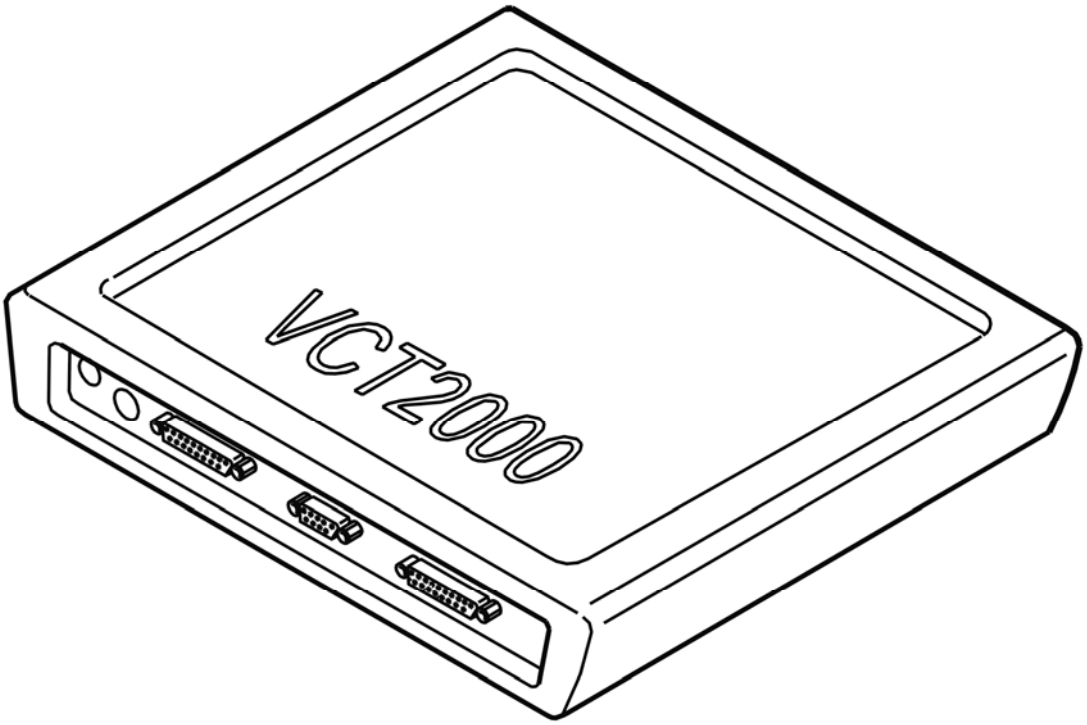

Fig. 55: Identifying VCT2000 Diagnostic Tool Symbol In VIDA
Courtesy of VOLVO CARS CORPORATION

SHORT-CIRCUIT BETWEEN THE SIGNAL CABLES

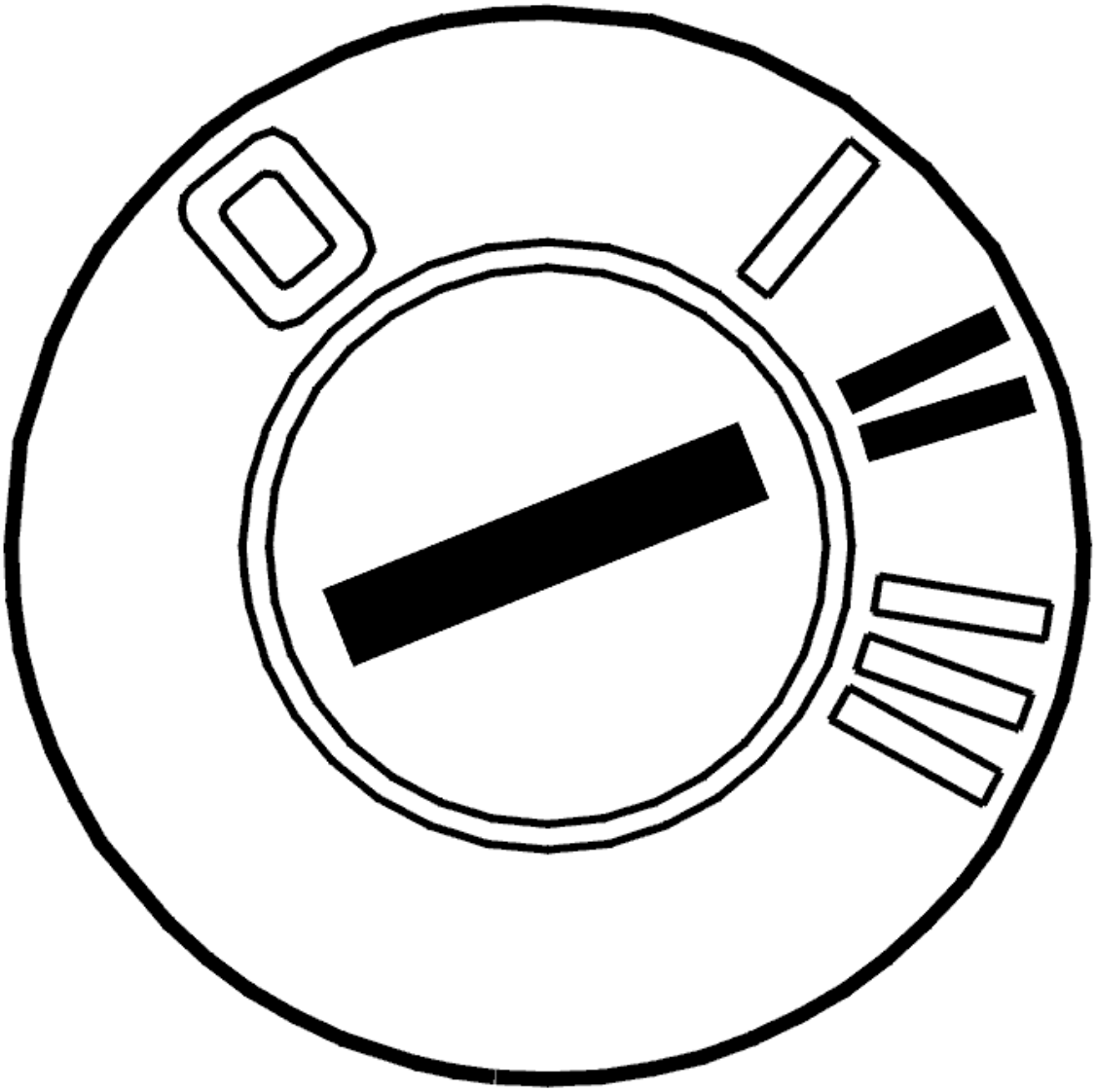

Fig. 56: Identifying Ignition ON
Courtesy of VOLVO CARS CORPORATION

- Ignition off
- Check the connectors for the control module for the steering wheel angle sensor and the steering wheel module (SWM). Check for contact resistance and oxidation according to **CONTACT RESISTANCE AND OXIDATION**
- Ignition on
- Read off the status of steering wheel angle signals R1/R2/R3/R4
- Carefully turn the steering wheel to the limit positions in both directions and check that the value changes between ON and OFF.

  If the value changes between OFF and ON, the cause of the fault was contact resistance or oxidation in the control module or in the steering wheel angle sensor connector.

Other information:

- To disconnect the control module for the steering wheel angle sensor, see **CONNECTING THE BREAKOUT BOX TO THE STEERING ANGLE SENSOR**
- To disconnect the steering wheel module (SWM), see **STEERING WHEEL MODULE (SWM), REPLACING**
- For information about signals for the control module for the steering wheel angle sensor, see **SIGNAL DESCRIPTION, CONTROL UNIT FOR THE STEERING WHEEL ANGLE SENSOR (SAS)**
- For information about signals to the steering wheel module (SWM), see **SIGNAL SPECIFICATION** .

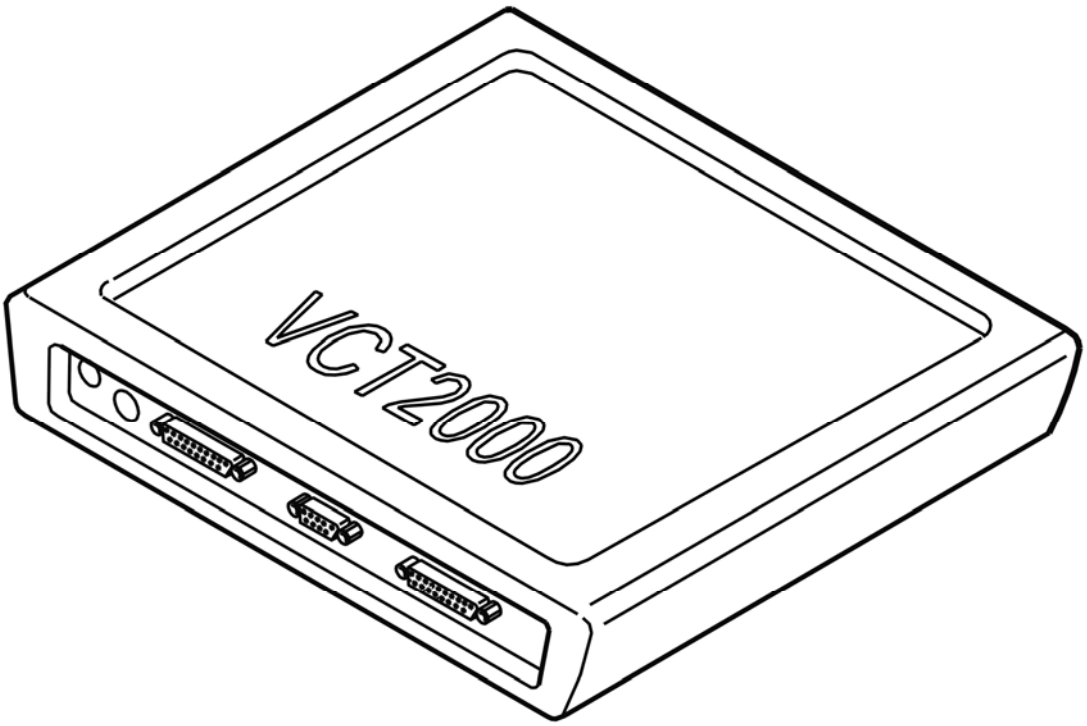

Fig. 57: Identifying VCT2000 Diagnostic Tool Symbol In VIDA
Courtesy of VOLVO CARS CORPORATION

Do the signals change between OFF and ON?

- **YES**

  OKAY: Troubleshooting has been completed.

- **NO**

Refer to **CHECKING WIRING AND SENSORS**

CHECKING WIRING AND SENSORS

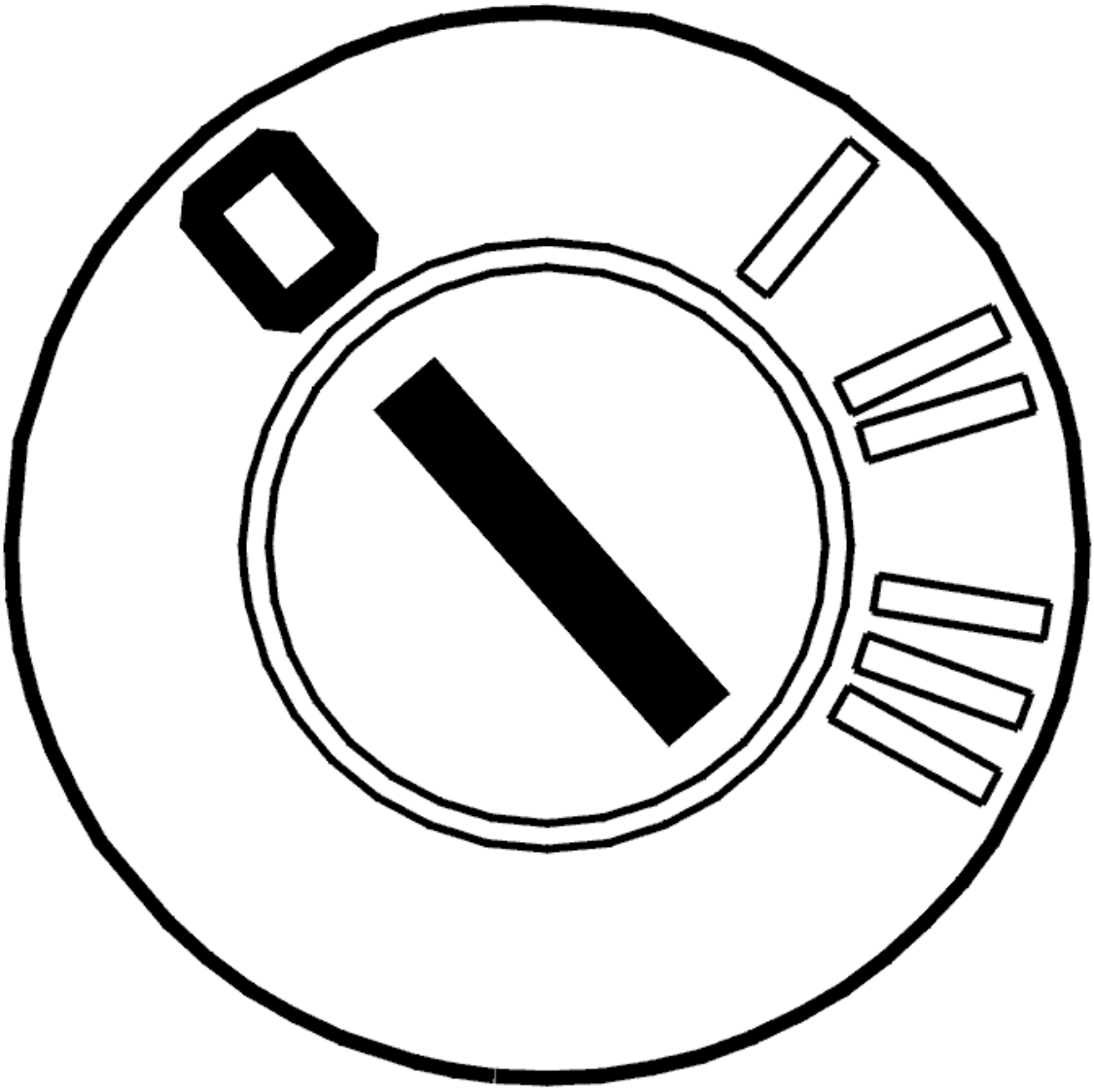

Fig. 58: Identifying Ignition OFF
Courtesy of VOLVO CARS CORPORATION

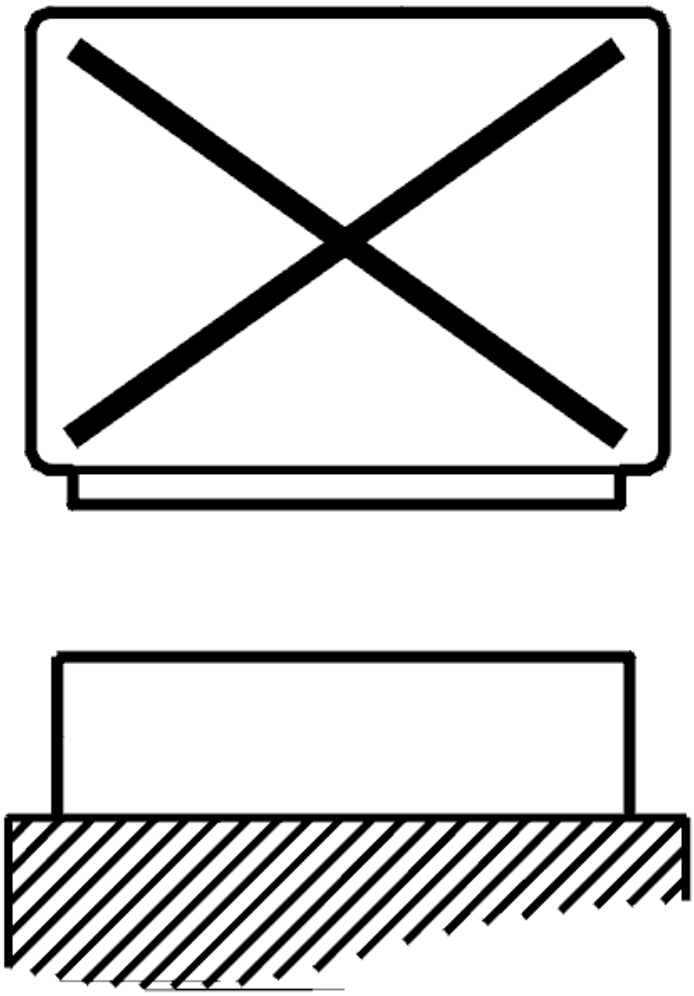

Fig. 59: Disconnecting Control Unit
Courtesy of VOLVO CARS CORPORATION

- Ignition off
- The control module for the steering wheel angle sensor disconnected
- Steering wheel module (SWM) disconnected
- Connect the breakout box to the control module for the steering wheel angle sensor and to the steering wheel module (SWM)

  Check the wiring between the control module for the steering wheel angle sensor

  terminal #5 (terminal (#A29) and steering wheel module (SWM) terminal #4 (terminal #A4)

  terminal #12 (terminal (#A36) and steering wheel module (SWM) terminal #13 (terminal #A3)

terminal #13 (terminal (#A37) and steering wheel module (SWM) terminal #11 (terminal #A11)

terminal #14 (terminal (#A38) and steering wheel module (SWM) terminal #18 (terminal #A18)

check for a short-circuit to each other or an open-circuit according to **OPEN-CIRCUIT, PERMANENT FAULTS** . Check for a short-circuit to ground according to **SHORT-CIRCUIT TO GROUND, PERMANENT FAULTS** . Check for a short-circuit to supply voltage according to **SHORT-CIRCUIT TO SUPPLY VOLTAGE. PERMANENT FAULTS** .

Try replacing the steering wheel angle sensor if no faults are found in the wiring between the control module for the steering wheel angle sensor and the steering wheel module (SWM).

Other information:

- To connect the breakout box to the control module for the steering wheel angle sensor, see **CONNECTING THE BREAKOUT BOX TO THE STEERING ANGLE SENSOR**
- To connect the breakout box to the steering wheel module (SWM), see **CONNECTING THE BREAKOUT BOX**
- To replace the steering wheel angle sensor, see **CONTACT REEL, REPLACEMENT**
- For information about signals for the control module for the steering wheel angle sensor, see **SIGNAL DESCRIPTION, CONTROL UNIT FOR THE STEERING WHEEL ANGLE SENSOR (SAS)**
- For information about signals to the steering wheel module (SWM), see **SIGNAL SPECIFICATION** .

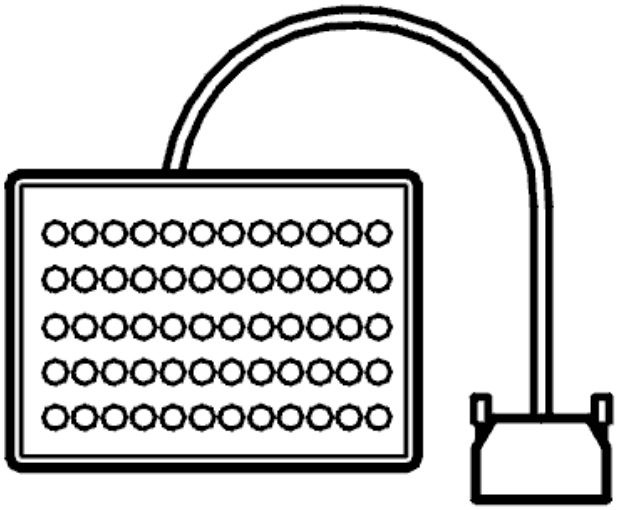

Fig. 60: Breakout Box
Courtesy of VOLVO CARS CORPORATION

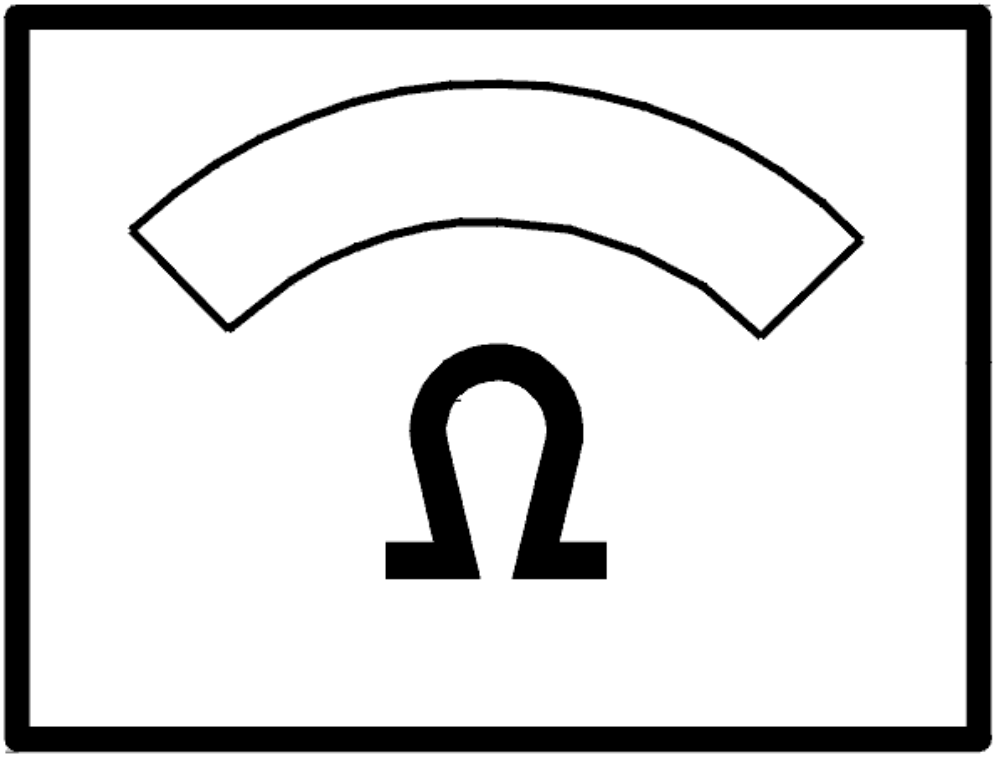

Fig. 61: Identifying Ohm Meter
Courtesy of VOLVO CARS CORPORATION

- **Continue**

  Refer to **VERIFICATION**

CHECKING WIRING AND TERMINALS

Check the wiring between the control module for the steering wheel angle sensor

terminal #5 (terminal (#A29) and steering wheel module (SWM) terminal #4 (terminal #A4)

terminal #12 (terminal (#A36) and steering wheel module (SWM) terminal #13 (terminal #A3)

terminal #13 (terminal (#A37) and steering wheel module (SWM) (terminal #A11)

terminal #14 (terminal (#A38) and steering wheel module (SWM) terminal #18 (terminal #A18)

check for an intermittent short-circuit to each other.

Other information:

- To connect the breakout box to the control module for the steering wheel angle sensor, see **CONNECTING THE BREAKOUT BOX TO THE STEERING ANGLE SENSOR**
- To connect the breakout box to the steering wheel module (SWM), see **CONNECTING THE BREAKOUT BOX**
- To replace the steering wheel angle sensor, see **CONTACT REEL, REPLACEMENT**
- For information about signals for the control module for the steering wheel angle sensor, see **SIGNAL DESCRIPTION, CONTROL UNIT FOR THE STEERING WHEEL ANGLE SENSOR (SAS)**
- For information about signals to the steering wheel module (SWM), see **SIGNAL SPECIFICATION** .

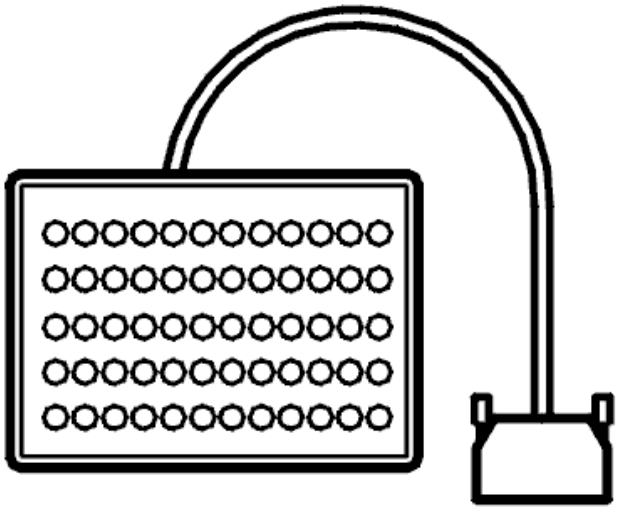

Fig. 62: Breakout Box
Courtesy of VOLVO CARS CORPORATION

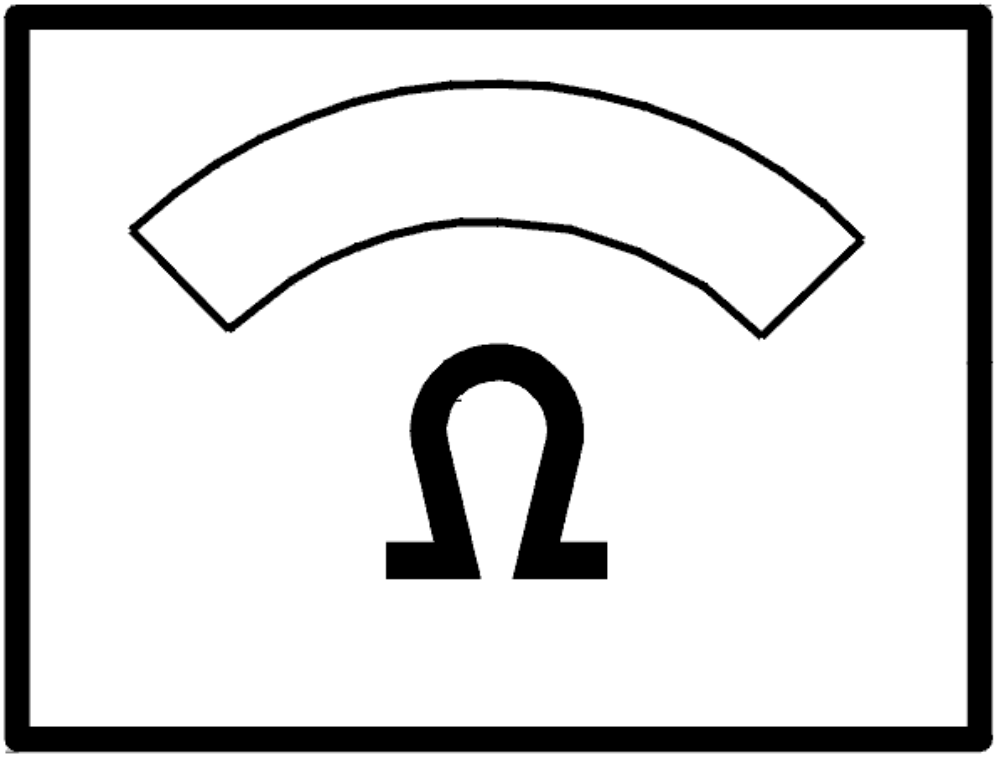

Fig. 63: Identifying Ohm Meter
Courtesy of VOLVO CARS CORPORATION

- **Continue**

  Refer to **INFORMATION**

VERIFICATION

HINT: After the repair it is necessary to check that the fault has been rectified.

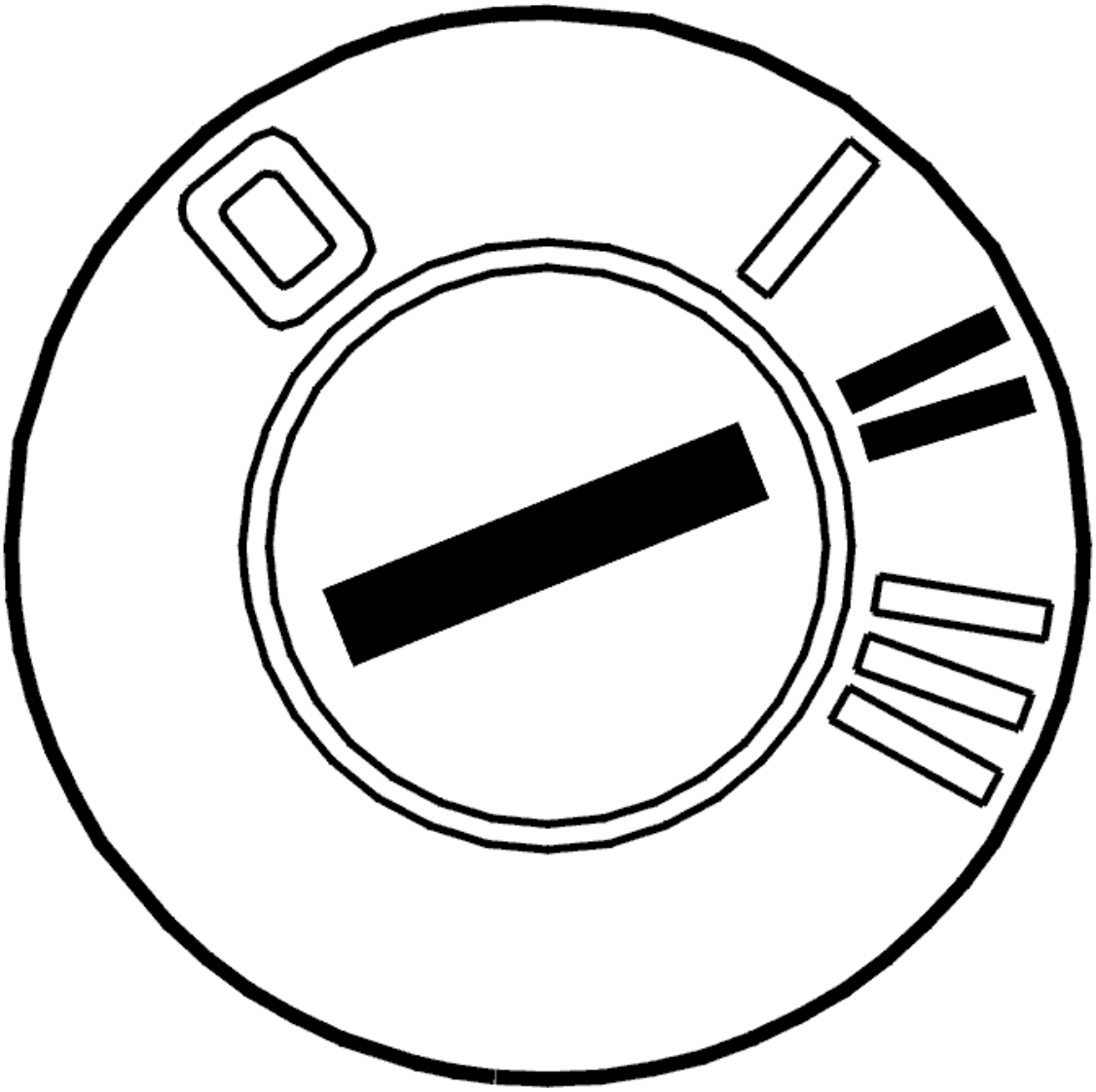

Fig. 64: Identifying Ignition ON
Courtesy of VOLVO CARS CORPORATION

- Ignition off.
- Connect the connectors, install the components, etc.
- Ignition on.
- Read off steering wheel angle signal R1/R2/R3/R4.
- Turn the steering wheel slowly to full lock in both directions.

  The value should change between OFF and ON.

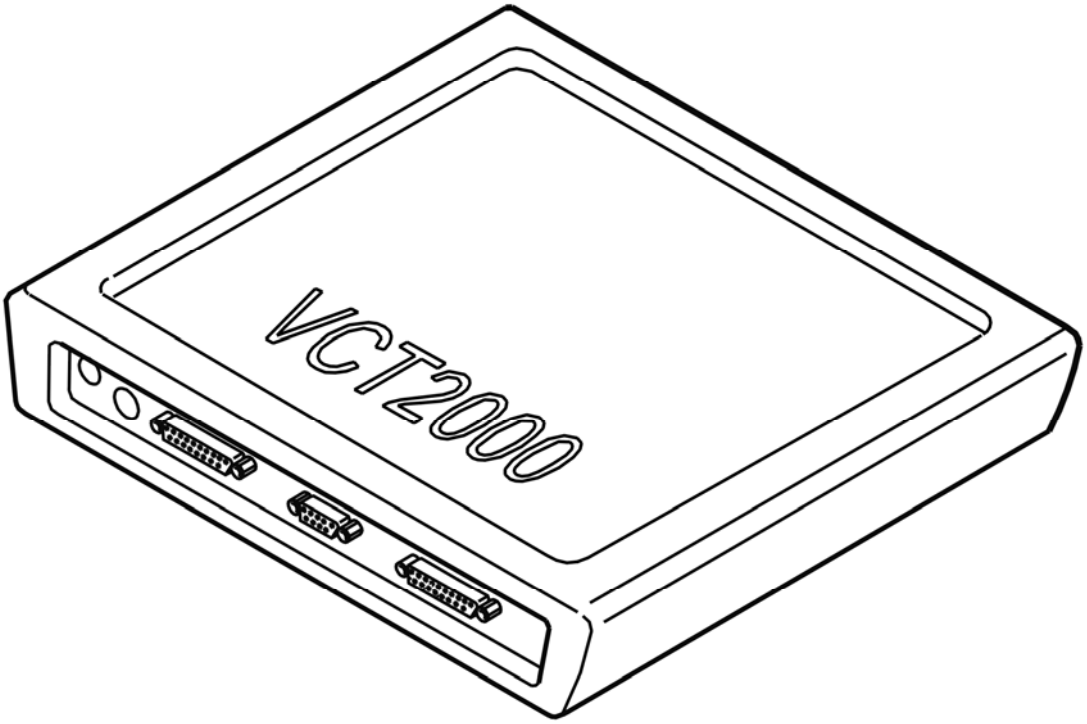

Fig. 65: Identifying VCT2000 Diagnostic Tool Symbol In VIDA
Courtesy of VOLVO CARS CORPORATION

Do the values alternate between OFF and ON?

- **YES**

  VERIFIED: Troubleshooting has been completed.

- **NO**

  Refer to **INFORMATION**

INFORMATION

FAULT-TRACING INFORMATION

The fault should have been detected and remedied. As this is not the case fault-tracing has failed.

Exit fault-tracing for this diagnostic trouble code (DTC) or make another attempt.

INFORMATION

FAULT-TRACING INFORMATION

If the fault is intermittent, do not verify fault-tracing if the fault does not recur.

It is possible to view the information again, or leave fault-tracing for this diagnostic trouble code (DTC).

SAS-0022: STEERING WHEEL ANGLE SENSOR SIGNAL R1/R2/R3/R4. SIGNAL FAULTY. INTERMITTENT FAULT (2003-2004)

DIAGNOSTIC TROUBLE CODE INFORMATION

Condition

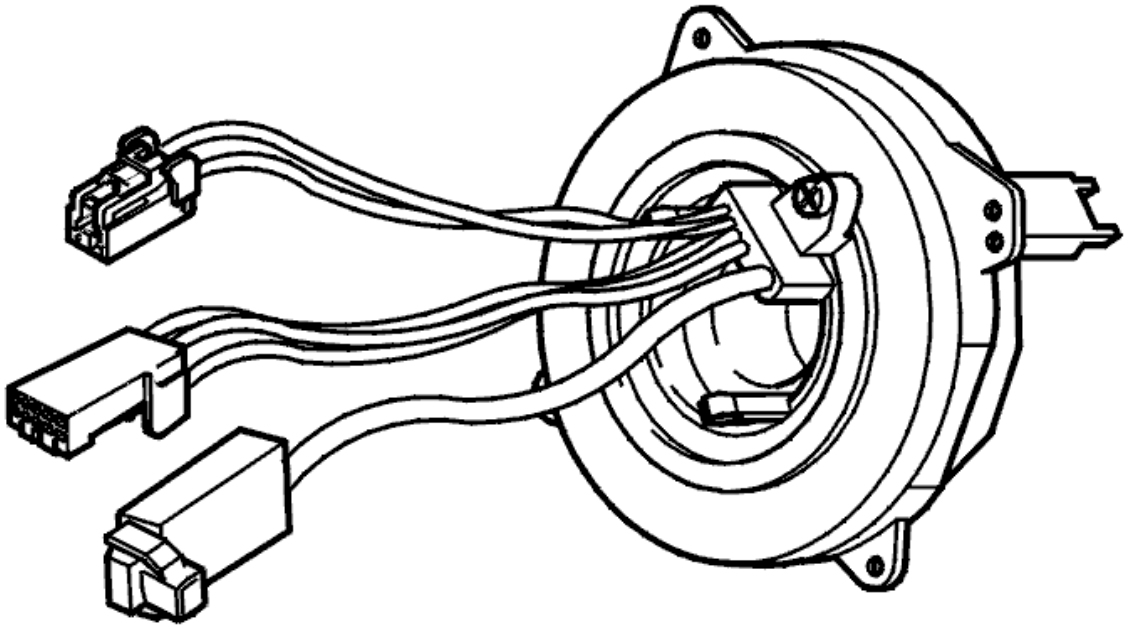

Fig. 66: Identifying Steering Wheel Angle Sensor
Courtesy of VOLVO CARS CORPORATION

The steering wheel angle sensor has two circuits each with 4 LEDs and 4 receptors which read off their individual code wheel. One circuit measures the steering wheel angle and the other measures steering wheel revolutions. If the steering wheel angle sensor (SAS) control unit registers that the wires for the signals R1/R2/R3/R4 between the steering wheel angle sensor control unit and the steering wheel angle sensor have short-circuited to each other, diagnostic trouble code SAS-0022 is set.

Substitute Value

- Stabilizing function disconnected.

- Anti-spin function blocked.

Possible Source

- The signal wires for the signals R1/R2/R3/R4 have short-circuited to each other.
- Internal fault in the steering wheel angle sensor control unit.

Fault symptom[s]

- Anti-spin warning lamp is on.
- Stabilizing function not working.
- Anti-spin does not work.

FAULTY SIGNAL. INTERMITTENT FAULT

CHECKING WIRING AND TERMINALS

Check the wiring between the control module for the steering wheel angle sensor

terminal #5 (terminal (#A29) and steering wheel module (SWM) terminal #4 (terminal #A4)

terminal #12 (terminal (#A36) and steering wheel module (SWM) terminal #13 (terminal #A3)

terminal #13 (terminal (#A37) and steering wheel module (SWM) terminal #11 (terminal #A11)

terminal #14 (terminal (#A38) and steering wheel module (SWM) terminal #18 (terminal #A18)

check for an intermittent short-circuit to each other.

Remedy as necessary.

Other information:

- To connect the breakout box to the control module for the steering wheel angle sensor, see **CONNECTING THE BREAKOUT BOX TO THE STEERING ANGLE SENSOR**
- To connect the breakout box to the steering wheel module (SWM), see **CONNECTING THE BREAKOUT BOX**
- To replace the steering wheel angle sensor, see **CONTACT REEL, REPLACEMENT**
- For information about signals for the control module for the steering wheel angle sensor, see **SIGNAL DESCRIPTION, CONTROL UNIT FOR THE STEERING WHEEL ANGLE SENSOR (SAS)**
- For information about signals to the steering wheel module (SWM), see **SIGNAL SPECIFICATION** .

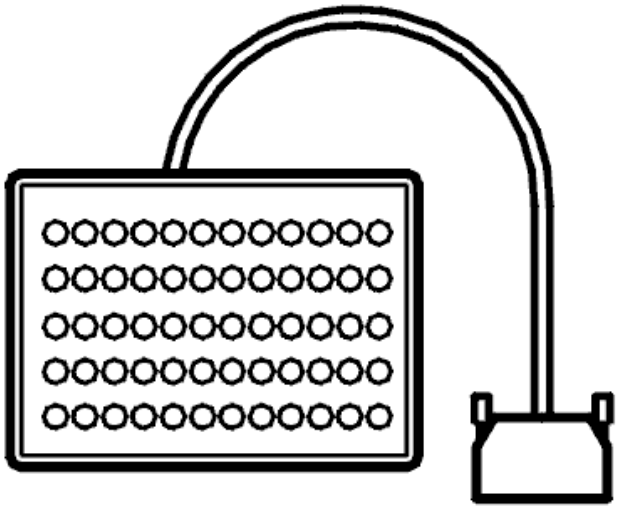

Fig. 67: Breakout Box
Courtesy of VOLVO CARS CORPORATION

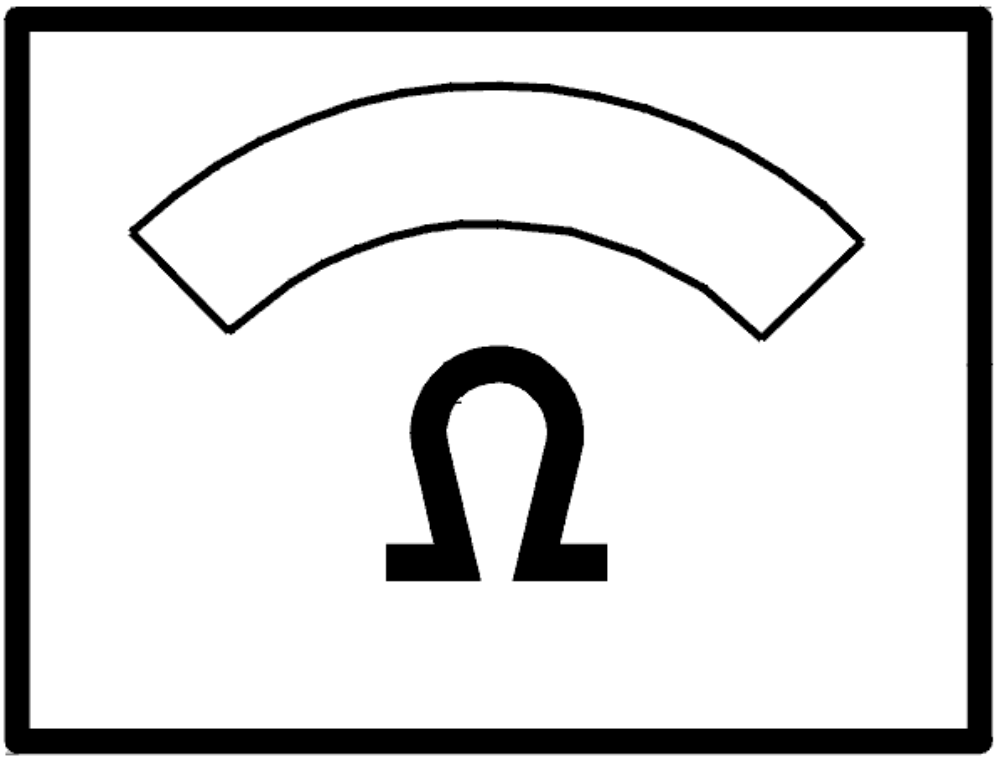

Fig. 68: Identifying Ohm Meter
Courtesy of VOLVO CARS CORPORATION

- **Continue**

  Refer to **INFORMATION**

INFORMATION

FAULT-TRACING INFORMATION

If the fault is intermittent, do not verify fault-tracing if the fault does not recur.

It is possible to view the information again, or leave fault-tracing for this diagnostic trouble code (DTC).

SAS-0022: STEERING WHEEL ANGLE SENSOR SIGNAL R1/R2/R3/R4.

SIGNAL FAULTY. PERMANENT FAULT (2003-2004)

DIAGNOSTIC TROUBLE CODE INFORMATION

see **DIAGNOSTIC TROUBLE CODE INFORMATION**

FAULTY SIGNAL. PERMANENT FAULT

CHECKING WIRING AND SENSORS

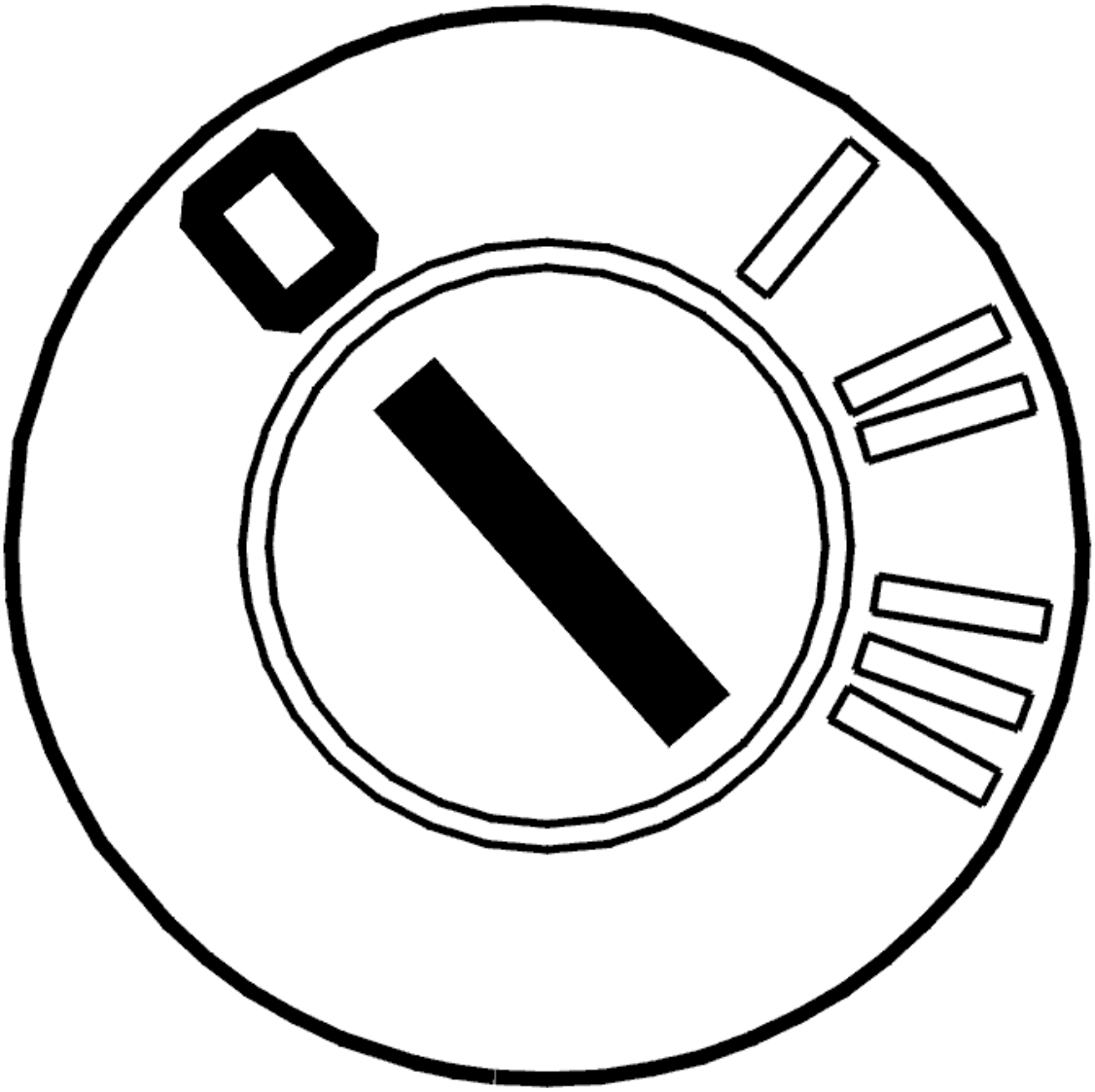

Fig. 69: Identifying Ignition OFF
Courtesy of VOLVO CARS CORPORATION

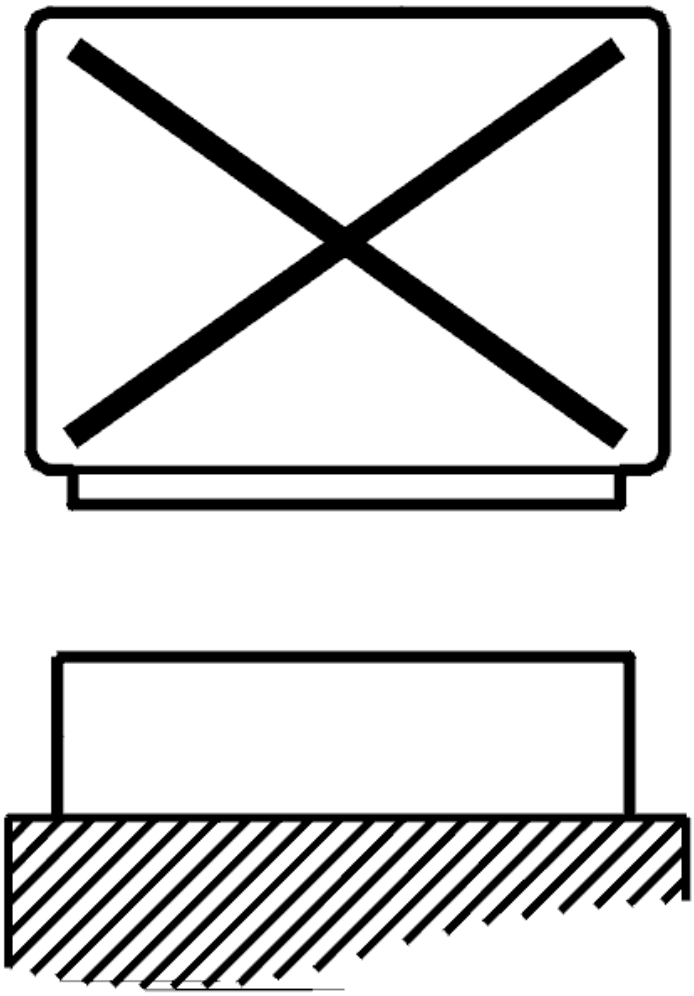

Fig. 70: Disconnecting Control Unit
Courtesy of VOLVO CARS CORPORATION

- Ignition off
- The control module for the steering wheel angle sensor disconnected
- Steering wheel module (SWM) disconnected
- Connect the breakout box to the control module for the steering wheel angle sensor and to the steering wheel module (SWM).

  Check the wiring between the control module for the steering wheel angle sensor

  terminal #5 (terminal (#A29) and steering wheel module (SWM) terminal #4 (terminal #A4)

  terminal #12 (terminal (#A36) and steering wheel module (SWM) terminal #13 (terminal #A13)

terminal #13 (terminal (#A37) and steering wheel module (SWM) terminal #11 (terminal #A11)

terminal #14 (terminal (#A38) and steering wheel module (SWM) terminal #18 (terminal #A18)

check for a short-circuit to each other.

Try replacing the steering wheel angle sensor if no faults are found in the wiring between the control module for the steering wheel angle sensor and the steering wheel module (SWM).

Other information:

- To disconnect the control module for the steering wheel angle sensor, see **STEERING WHEEL MODULE (SWM), REPLACING**
- To connect the breakout box to the steering wheel module (SWM), see **CONNECTING THE BREAKOUT BOX**
- To replace the steering wheel angle sensor, see **CONTACT REEL, REPLACEMENT**
- For information about signals to the control module for the steering wheel angle sensor, see **SIGNAL DESCRIPTION, CONTROL UNIT FOR THE STEERING WHEEL ANGLE SENSOR (SAS)**
- For information about signals to the steering wheel module (SWM), see **SIGNAL SPECIFICATION** .

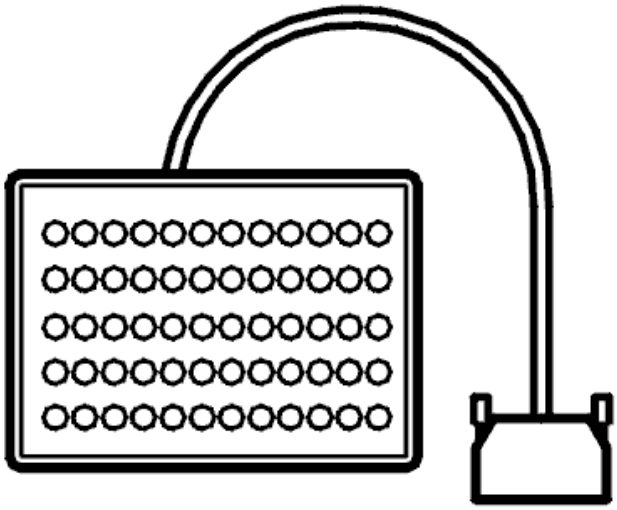

Fig. 71: Breakout Box
Courtesy of VOLVO CARS CORPORATION

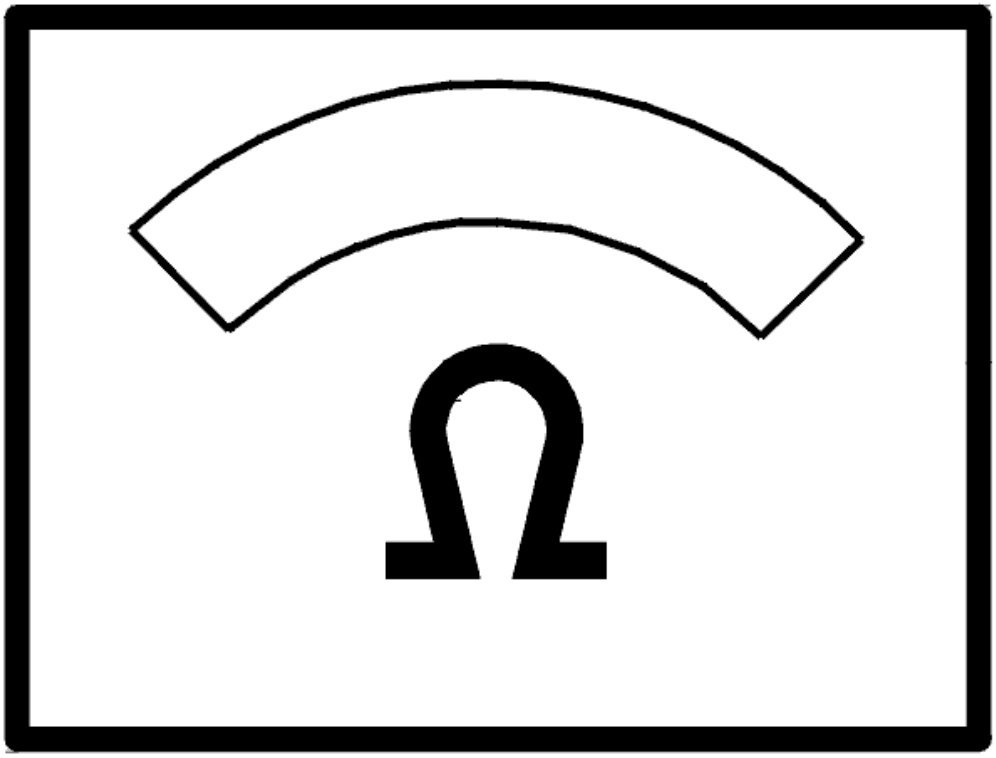

Fig. 72: Identifying Ohm Meter
Courtesy of VOLVO CARS CORPORATION

- **Continue**

  Refer to **VERIFICATION**

VERIFICATION

HINT: After the repair it is necessary to check that the fault has been rectified.

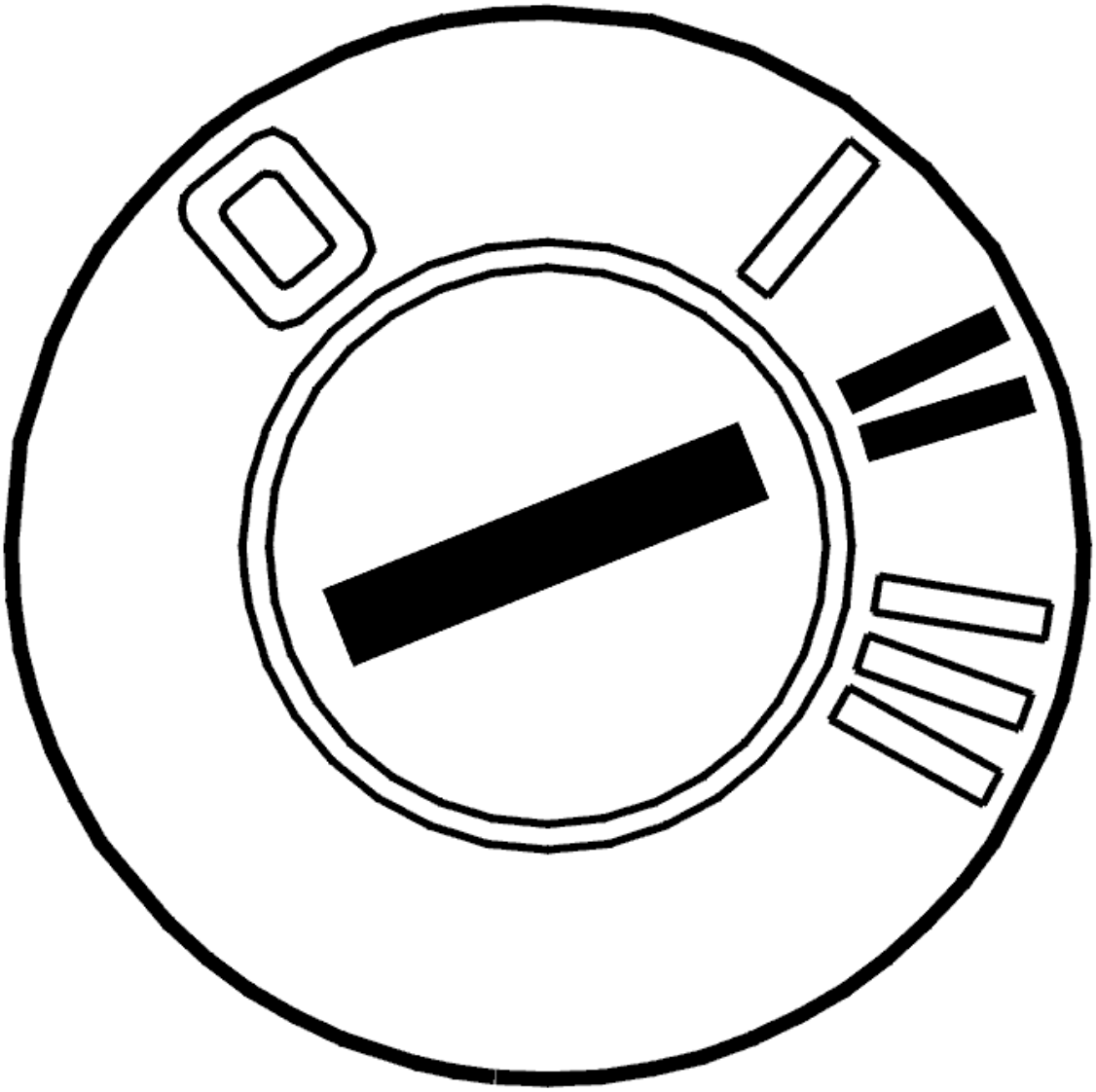

Fig. 73: Identifying Ignition ON
Courtesy of VOLVO CARS CORPORATION

- Ignition off.
- Connect the connectors, install the components, etc.
- Ignition on.
- Read off steering wheel angle signal R1/R2/R3/R4.
- Turn the steering wheel slowly to full lock in both directions.

  The value should change between OFF and ON.

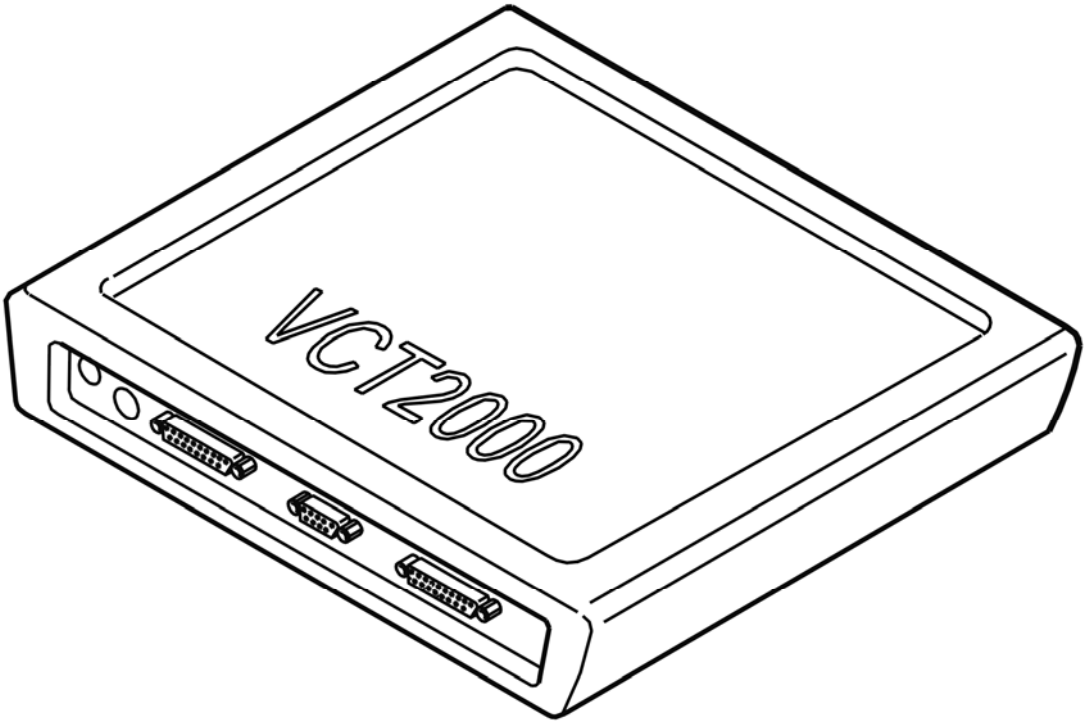

Fig. 74: Identifying VCT2000 Diagnostic Tool Symbol In VIDA
Courtesy of VOLVO CARS CORPORATION

Do the values alternate between OFF and ON?

- **YES**

  VERIFIED: Troubleshooting has been completed.

- **NO**

  Refer to **INFORMATION**

INFORMATION

FAULT-TRACING INFORMATION

The fault should have been detected and remedied. As this is not the case fault-tracing has failed.

Exit fault-tracing for this diagnostic trouble code (DTC) or make another attempt.

SAS-0023: STEERING WHEEL ANGLE SENSOR SIGNAL A/B/IX/IY. SIGNAL FAULTY. INTERMITTENT FAULT (2003-2004)

DIAGNOSTIC TROUBLE CODE INFORMATION

Condition

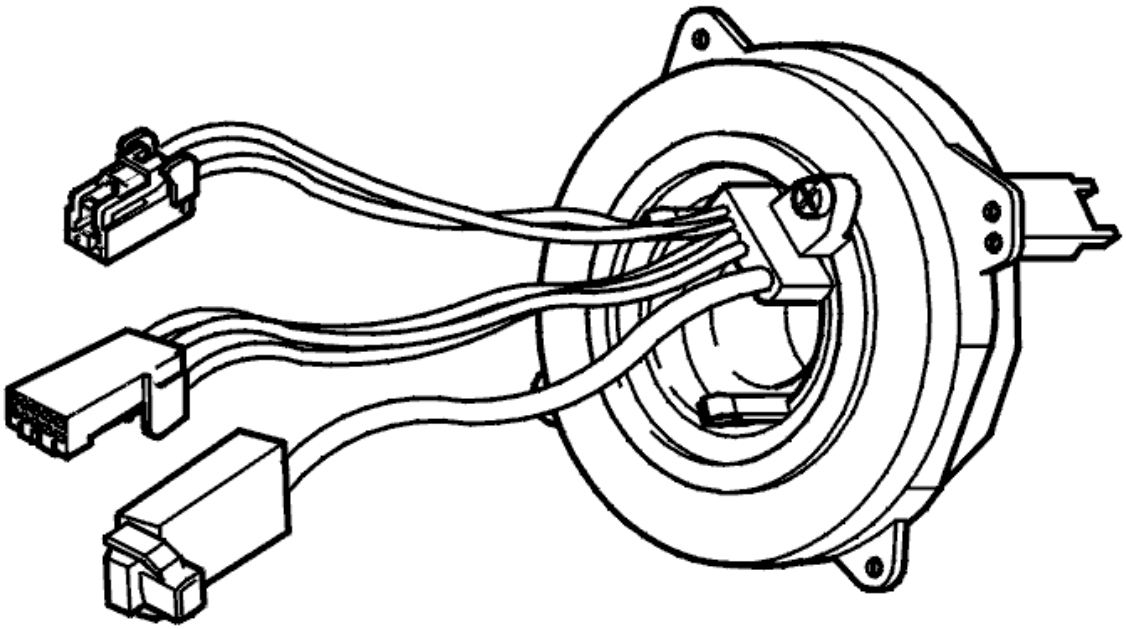

Fig. 75: Identifying Steering Wheel Angle Sensor
Courtesy of VOLVO CARS CORPORATION

The steering wheel angle sensor has two circuits each with 4 LEDs and 4 receptors which read off their individual code wheel. One circuit measures the steering wheel angle and the other measures steering wheel revolutions. If the steering wheel angle sensor (SAS) control unit registers that the wires for the signals A/B/IX/IY between the steering wheel angle sensor (SAS) control unit and the steering wheel angle sensor have short-circuited to each other, diagnostic trouble code SAS-0023 is set.

Substitute Value

- Stabilizing function disconnected.
- Anti-spin function blocked.

Possible Source

- The signal wires for the signals A/B/IX/IY have short-circuited to each other.
- Internal fault in the steering wheel angle sensor control unit.

Fault symptom[s]

- Anti-spin warning lamp is on.
- Stabilizing function not working.
- Anti-spin does not work.

FAULTY SIGNAL. INTERMITTENT FAULT

CHECKING WIRING AND TERMINALS

Check the wiring between the control module for the steering wheel angle sensor

terminal #3 (terminal (#A27) and steering wheel module (SWM) terminal #5 (terminal #A5)

terminal #4 (terminal (#A28) and steering wheel module (SWM) terminal #3 (terminal #A3)

terminal #10 (terminal (#A34) and steering wheel module (SWM) terminal #2 (terminal #A2)

#11 (#A35) and steering wheel module (SWM) #17 (#A17)

check for an intermittent short-circuit to each other.

Remedy as necessary.

Other information:

- To connect the breakout box to the control module for the steering wheel angle sensor, see **STEERING WHEEL MODULE (SWM), REPLACING**
- To connect the breakout box to the steering wheel module (SWM), see **CONNECTING THE BREAKOUT BOX TO THE STEERING ANGLE SENSOR**
- To replace the steering wheel angle sensor, see **CONTACT REEL, REPLACEMENT**
- For information about signals for the control module for the steering wheel angle sensor, see **SIGNAL DESCRIPTION, CONTROL UNIT FOR THE STEERING WHEEL ANGLE SENSOR (SAS)**
- For information about signals to the steering wheel module (SWM), see **SIGNAL SPECIFICATION** .

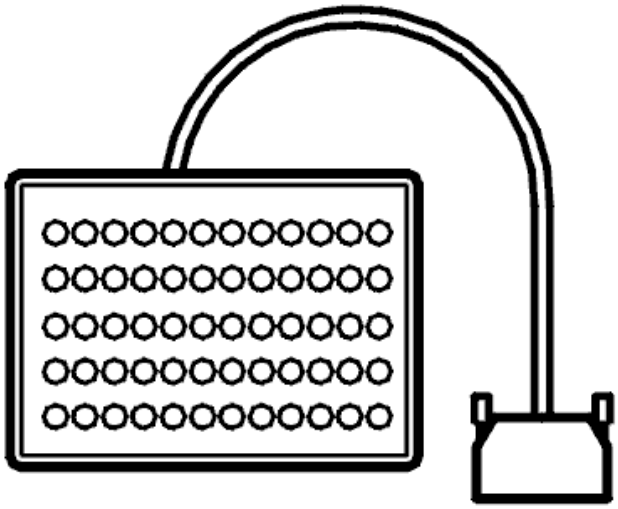

Fig. 76: Breakout Box
Courtesy of VOLVO CARS CORPORATION

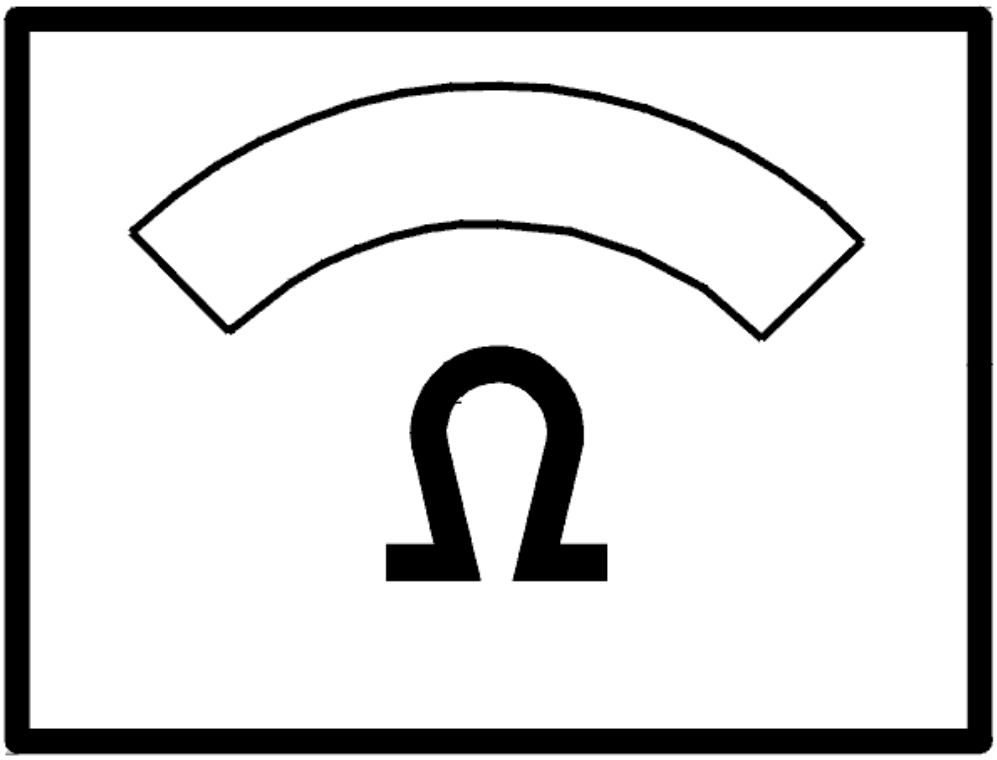

Fig. 77: Identifying Ohm Meter
Courtesy of VOLVO CARS CORPORATION

- **Continue**

  Refer to **INFORMATION**

INFORMATION

FAULT-TRACING INFORMATION

If the fault is intermittent, do not verify fault-tracing if the fault does not recur.

It is possible to view the information again, or leave fault-tracing for this diagnostic trouble code (DTC).

SAS-0023: STEERING WHEEL ANGLE SENSOR SIGNAL A/B/IX/IY. SIGNAL

FAULTY. PERMANENT FAULT (2003-2004)

DIAGNOSTIC TROUBLE CODE INFORMATION

see **DIAGNOSTIC TROUBLE CODE INFORMATION**

FAULTY SIGNAL. PERMANENT FAULT

SHORT-CIRCUIT BETWEEN THE SIGNAL CABLES

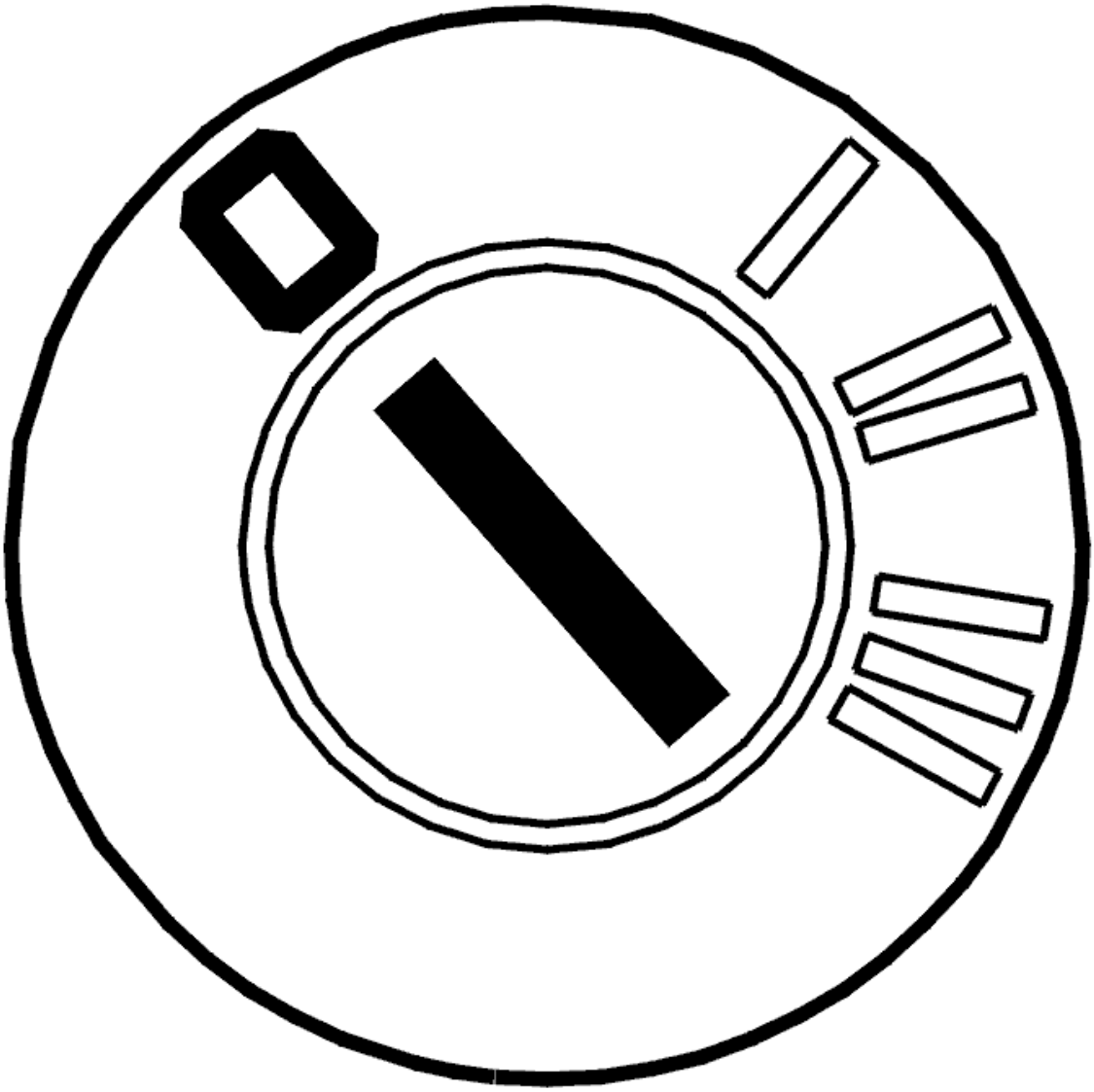

Fig. 78: Identifying Ignition OFF
Courtesy of VOLVO CARS CORPORATION

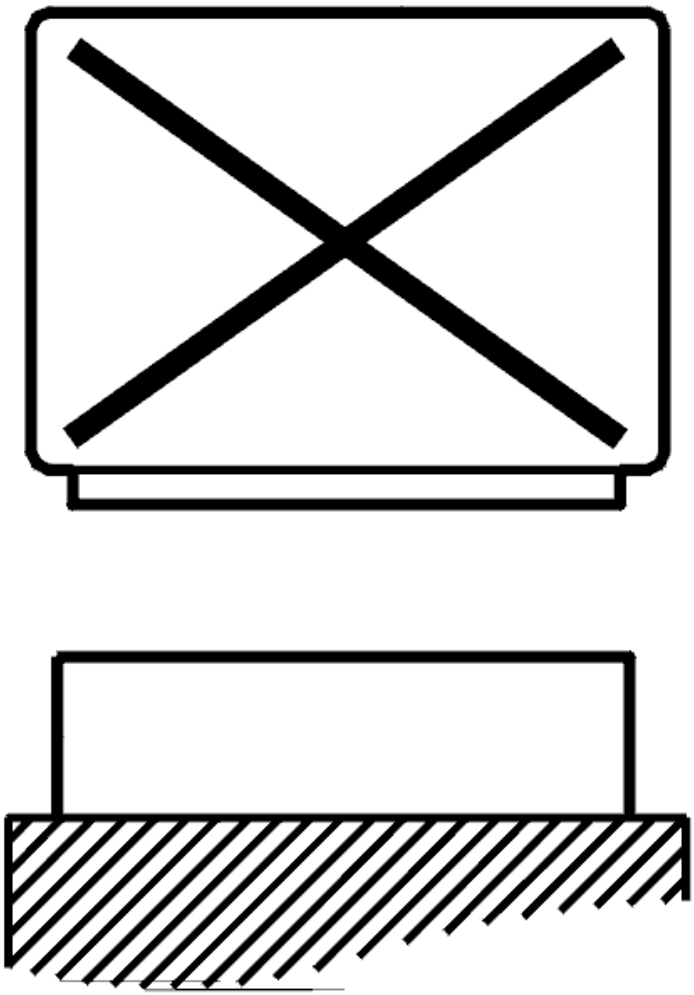

Fig. 79: Disconnecting Control Unit
Courtesy of VOLVO CARS CORPORATION

- Ignition off
- The control module for the steering wheel angle sensor disconnected
- Steering wheel module (SWM) disconnected
- Connect the breakout box to the control module for the steering wheel angle sensor and to the steering wheel module (SWM).

  Check the wiring between the control module for the steering wheel angle sensor

  terminal #3 (terminal (#A27) and steering wheel module (SWM) terminal #5 (terminal #A5)

  terminal #4 (terminal (#A28) and steering wheel module (SWM) terminal #3 (terminal #A3)

terminal #10 (terminal (#A34) and steering wheel module (SWM) terminal #2 (terminal #A2)

#11 (#A35) and steering wheel module (SWM) #17 (#A17)

check for a short-circuit to each other.

Try replacing the steering wheel angle sensor if no faults are found in the wiring between the control module for the steering wheel angle sensor and the steering wheel module (SWM).

Other information:

- To connect the breakout box to the control module for the steering wheel angle sensor, see **CONNECTING THE BREAKOUT BOX TO THE STEERING ANGLE SENSOR**
- To connect the breakout box to the steering wheel module (SWM), see **CONNECTING THE BREAKOUT BOX**
- To replace the steering wheel angle sensor, see **CONTACT REEL, REPLACEMENT**
- For information about signals for the control module for the steering wheel angle sensor, see **SIGNAL DESCRIPTION, CONTROL UNIT FOR THE STEERING WHEEL ANGLE SENSOR (SAS)**
- For information about signals to the steering wheel module (SWM), see **SIGNAL SPECIFICATION** .

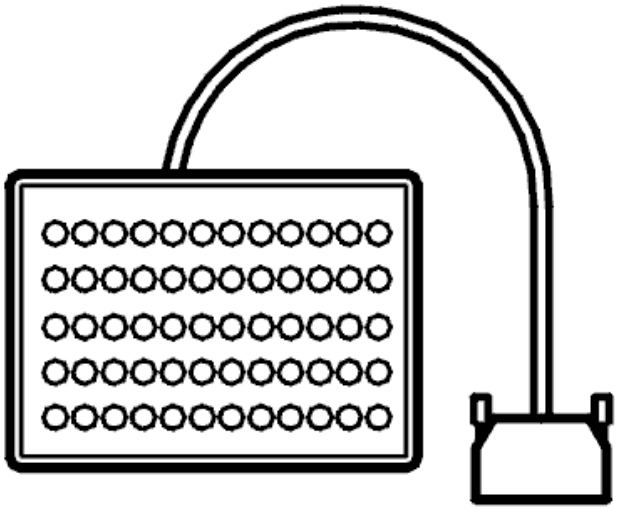

Fig. 80: Breakout Box
Courtesy of VOLVO CARS CORPORATION

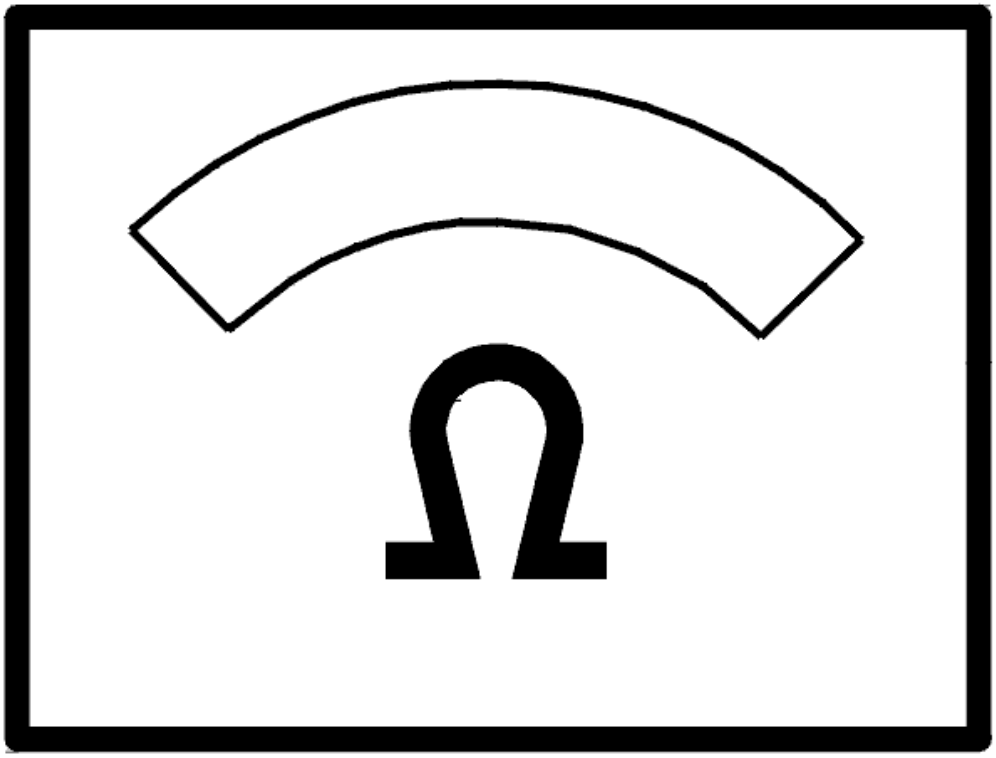

Fig. 81: Identifying Ohm Meter
Courtesy of VOLVO CARS CORPORATION

- **Continue**

  Refer to **VERIFICATION**

VERIFICATION

HINT: After the repair it is necessary to check that the fault has been rectified.

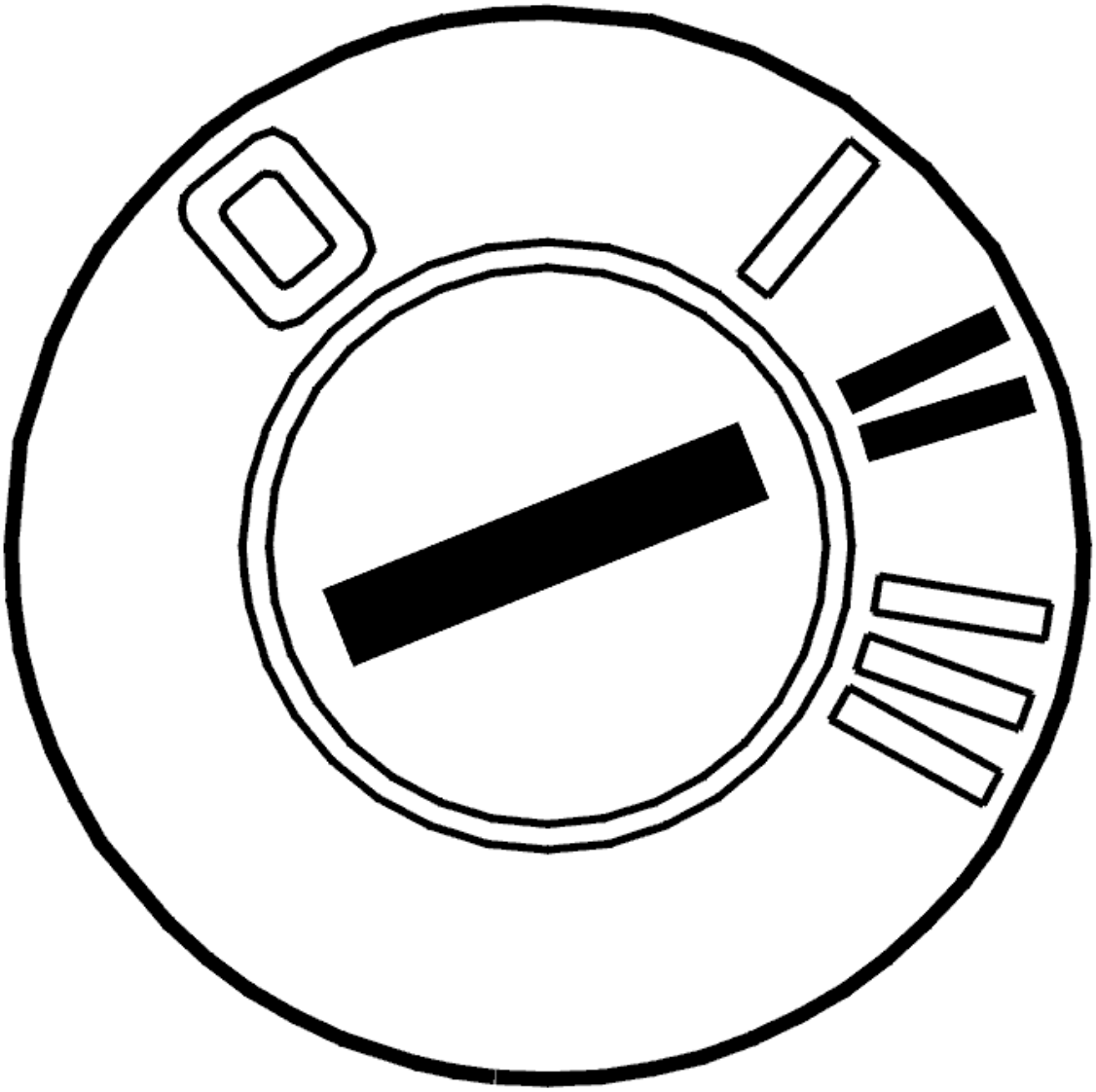

Fig. 82: Identifying Ignition ON
Courtesy of VOLVO CARS CORPORATION

- Ignition off.
- Connect the connectors, install the components, etc.
- Ignition on.
- Turn the steering wheel slowly to full lock in both directions.

  The values should alternate between OFF and ON.

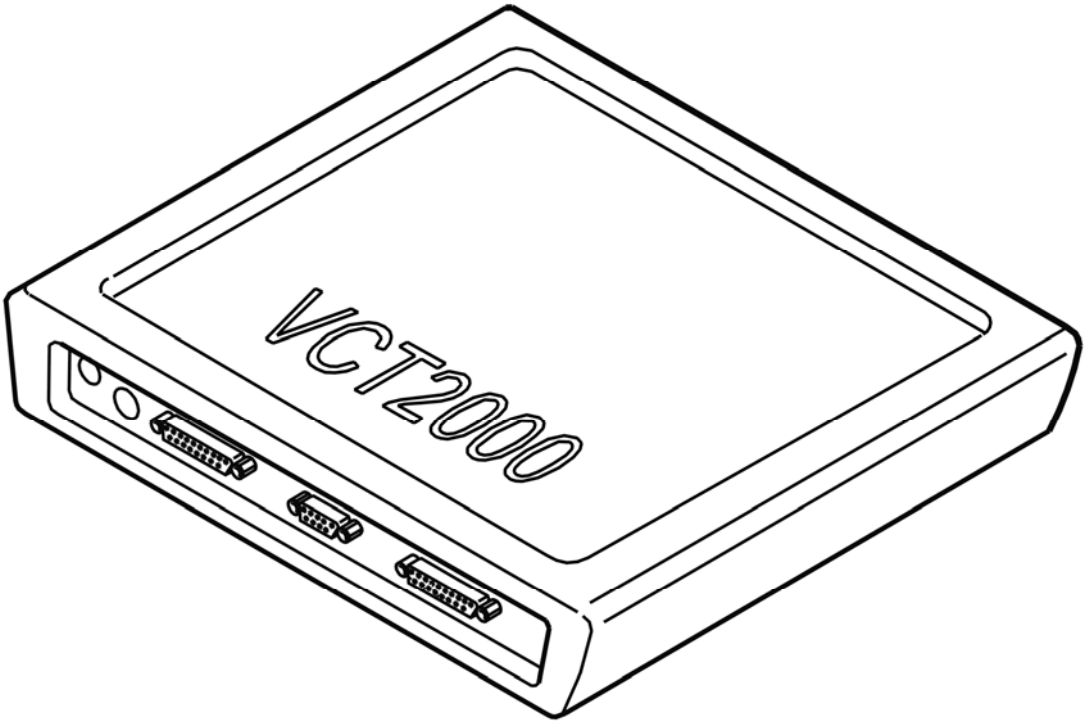

Fig. 83: Identifying VCT2000 Diagnostic Tool Symbol In VIDA
Courtesy of VOLVO CARS CORPORATION

Do the values alternate between OFF and ON?

- **YES**

  VERIFIED: Troubleshooting has been completed.

- **NO**

  Refer to **INFORMATION**

INFORMATION

FAULT-TRACING INFORMATION

The fault should have been detected and remedied. As this is not the case fault-tracing has failed.

Exit fault-tracing for this diagnostic trouble code (DTC) or make another attempt.

SAS-0024: STEERING WHEEL ANGLE SENSOR. NO SIGNAL. INTERMITTENT FAULT (2003-2004)

DIAGNOSTIC TROUBLE CODE INFORMATION

Condition

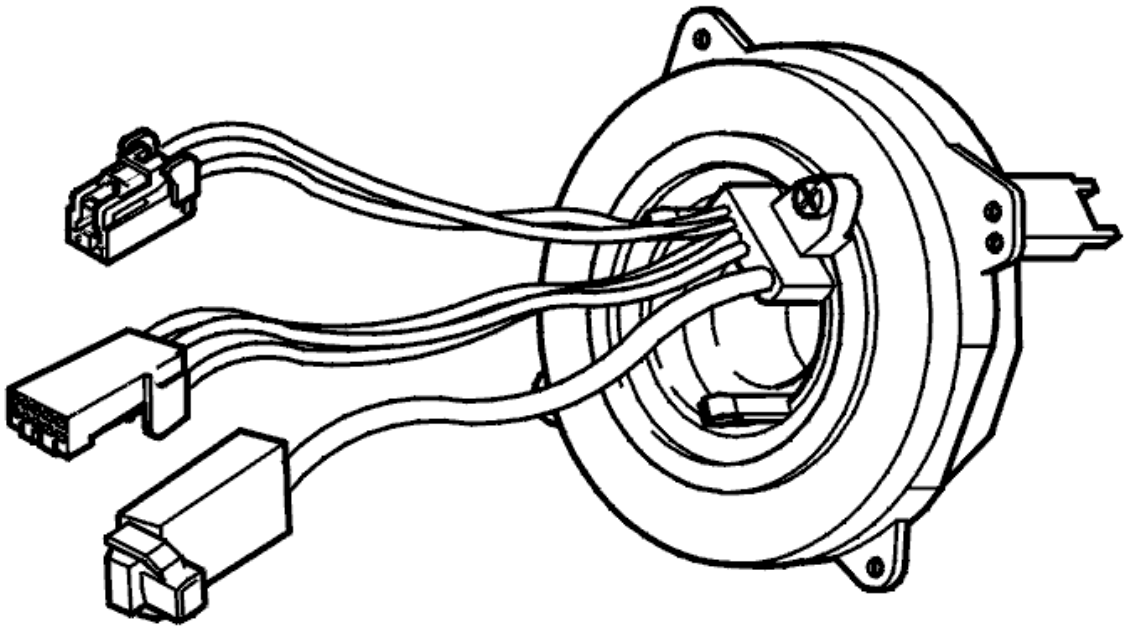

Fig. 84: Identifying Steering Wheel Angle Sensor
Courtesy of VOLVO CARS CORPORATION

If the steering wheel angle sensor (SAS) control unit registers that the signal from the steering wheel angle sensor is missing, diagnostic trouble code SAS-0024 is set.

Substitute Value

- Stabilizing function disconnected.
- Anti-spin function blocked.

Possible Source

- The steering wheel angle sensor connector is not connected.
- Open circuit in the power supply to the steering wheel angle sensor.
- Open circuit in the signal wires.
- Internal fault in the steering wheel angle sensor control unit.

Fault symptom[s]

- Anti-spin warning lamp is on.
- Stabilizing function not working.
- Anti-spin does not work.

SIGNAL DESCRIPTION, CONTROL UNIT FOR THE STEERING WHEEL ANGLE SENSOR (SAS)

The values in the table represent the values between the connections shown in column 1 and #A40 (ground), unless otherwise stated in brackets.

NOTE: It is important that the test box is connected and the ground points checked before testing begins.

U=	DC voltage (V)	Ubat =	battery voltage (V)
I =	amperage (A)	Ulow =	voltage close to 0 V

Test box connection	Control unit connection	Signal type	Ignition on	Other
#A25	#1	15 supply (voltage supply from the ignition lock)	U(Ubat	-
#A26	#2	Voltage supply to steering wheel angle sensor	U(Ubat	15 supply through control unit
#A27	#3	Steering wheel angle signal A	<0.25 V (low) >0.75 V (high) I(1 mA	Steering wheel angle signal The coding wheel in the steering wheel angle sensor is perforated with a special code template. Two circuits, each with 4 LEDs and 4 receptors, read the coding wheel and send a pulsed signal containing information about the position of the steering wheel.
#A28	#4	Steering wheel angle signal B	<0.25 V (low) >0.75 V (high) I(1 mA	Steering wheel angle sensor signal For more information, see steering wheel angle signal A.
#A29	#5	Steering wheel	<0.25 V (low)	Sector identifier

		position signal R1	>0.75 V (high) I(1 mA	For more information, see steering wheel angle signal A.
#A30	#6	Control unit communication wire (CAN H)	U=2-3 V	CAN High speed, Multiplex wire.
#A31	#7	Signal and power ground for steering wheel angle sensor	-	-
#A32	#8	LED circuit 2 signal	-	LED circuit 2 current test
#A33	#9	LED circuit 1 signal	-	LED circuit 1 current test
#A34	#10	Steering wheel angle signal IX	<0.25 V (low) >0.75 V (high) I(1 mA	Steering wheel angle sensor signal For more information, see steering wheel angle signal A.
#A35	#11	Steering wheel angle signal IY	<0.25V (low) >0.75 V (high) I(1 mA	Steering wheel angle sensor signal For more information, see steering wheel angle signal A.
#A36	#12	Steering wheel position R2 signal	<0.25 V (low) >0.75 V (high) I(1 mA	Sector identifier For more information, see signal A.
#A37	#13	Steering wheel position R3 signal	<0.25 V (low) >0.75 V (high) I(1 mA	Sector identifier For more information, see signal A.
#A38	#14	Steering wheel position R4 signal	<0.25 V (low) >0.75 V (high) I(1 mA	Sector identifier For more information, see signal A.
#A39	#15	Control unit communication wire (CAN L)	U=2-3 V	CAN Low speed, Multiplex wire.
#A40	#16	Signal and power ground (measured against the battery negative terminal).	U(Ulow	-

SIGNAL MISSING. INTERMITTENT FAULT

CHECKING WIRING AND TERMINALS

Check the wiring between the control module for the steering wheel angle sensor

terminal #1 (terminal (#A25) and steering wheel module (SWM) terminal #6 (terminal #A6)

terminal #8 (terminal (#A32) and steering wheel module (SWM) terminal #7 (terminal #A7)

terminal #9 (terminal (#A33) and steering wheel module (SWM) terminal #12 (terminal #A12)

check for contact resistance and oxidation. Check for an intermittent open-circuit.

Other information:

- To connect the breakout box to the control module for the steering wheel angle sensor, see **CONNECTING THE BREAKOUT BOX TO THE STEERING ANGLE SENSOR**
- To connect the breakout box to the steering wheel module (SWM), see **CONNECTING THE BREAKOUT BOX**
- To replace the steering wheel angle sensor, see **CONTACT REEL, REPLACEMENT**
- For information about signals to the control module for the steering wheel angle sensor, see **SIGNAL DESCRIPTION, CONTROL UNIT FOR THE STEERING WHEEL ANGLE SENSOR (SAS)**
- For information about signals to the steering wheel module (SWM), see **SIGNAL SPECIFICATION**
- see **CHECKING WIRING AND TERMINALS**

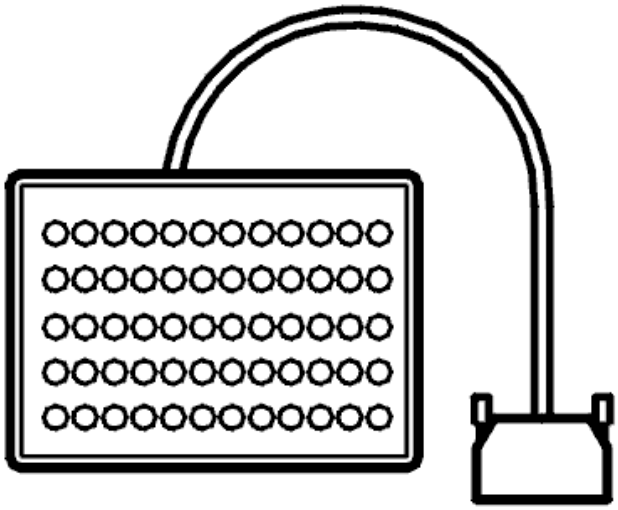

Fig. 85: Breakout Box
Courtesy of VOLVO CARS CORPORATION

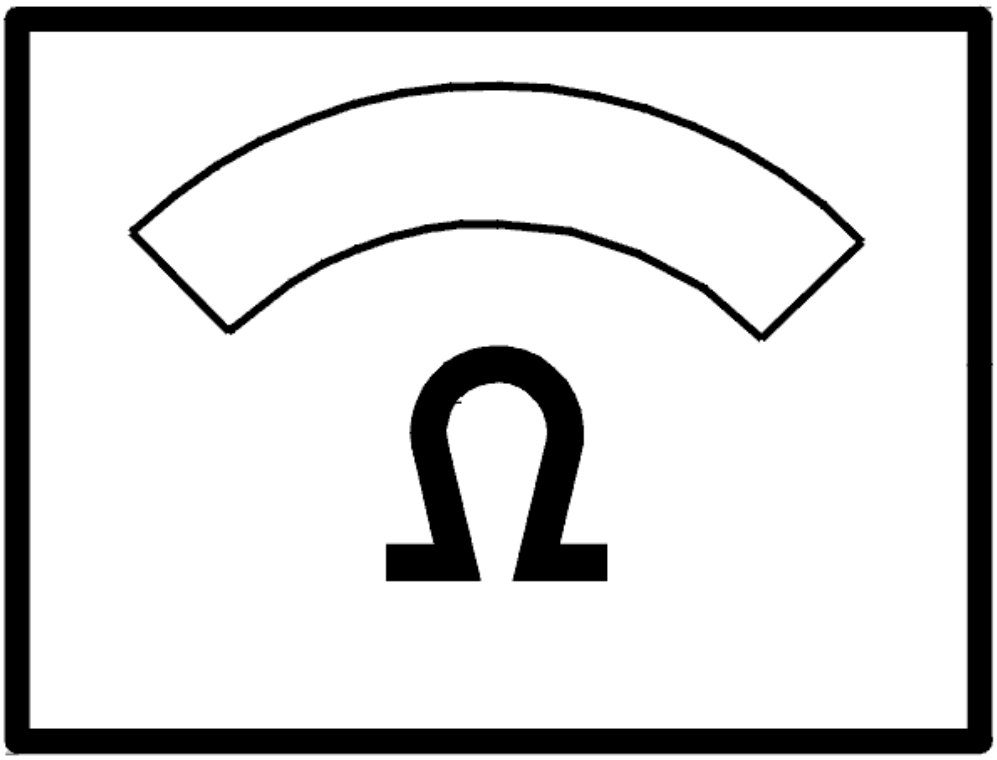

Fig. 86: Identifying Ohm Meter
Courtesy of VOLVO CARS CORPORATION

- **Continue**

  Refer to **INFORMATION**

INFORMATION

FAULT-TRACING INFORMATION

If the fault is intermittent, do not verify fault-tracing if the fault does not recur.

It is possible to view the information again, or leave fault-tracing for this diagnostic trouble code (DTC).

SAS-0024: STEERING WHEEL ANGLE SENSOR. NO SIGNAL. PERMANENT

FAULT (2003-2004)

DIAGNOSTIC TROUBLE CODE INFORMATION

see **DIAGNOSTIC TROUBLE CODE INFORMATION**

SIGNAL MISSING. PERMANENT FAULT

CHECKING THE SIGNAL

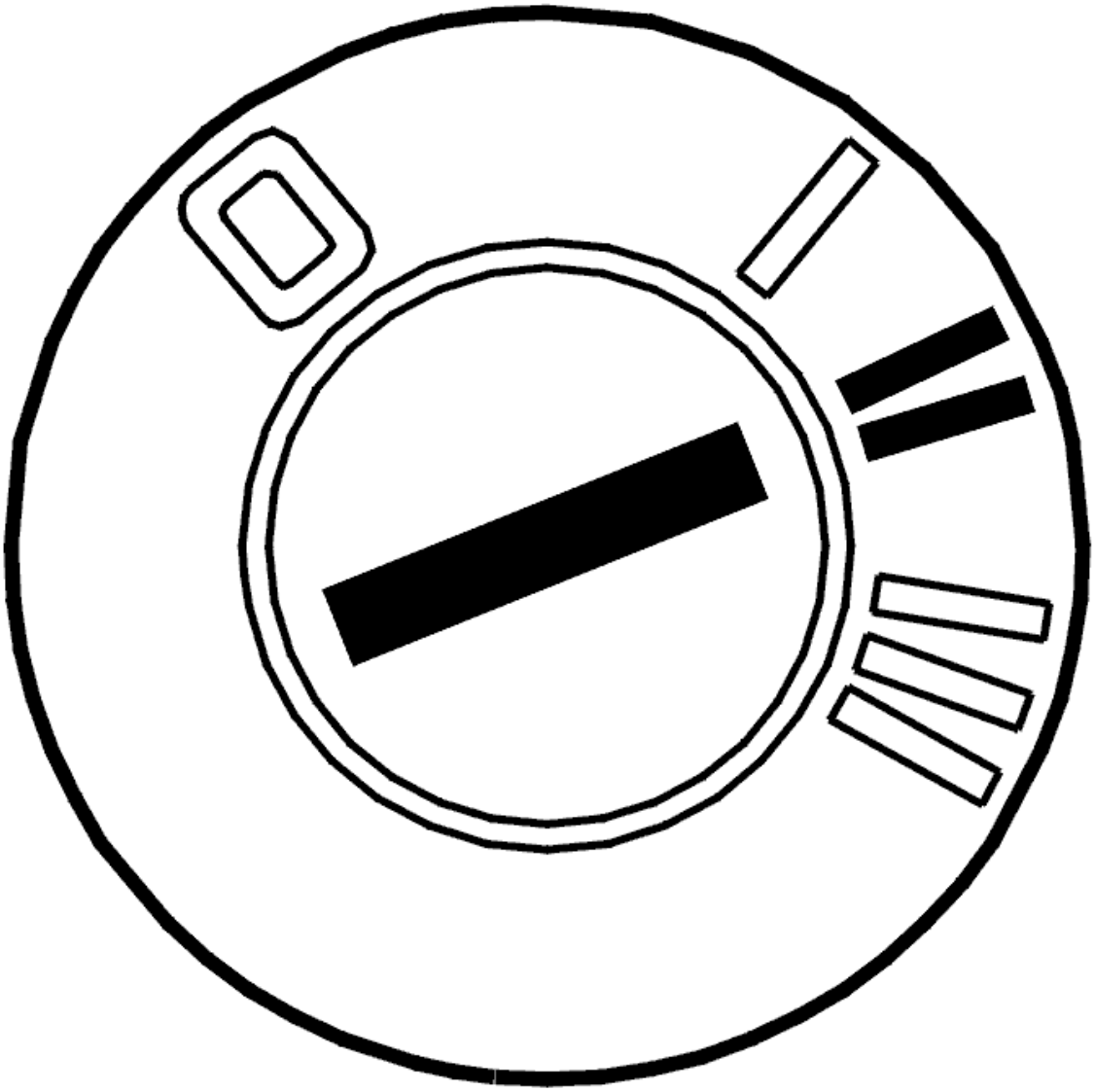

Fig. 87: Identifying Ignition ON
Courtesy of VOLVO CARS CORPORATION

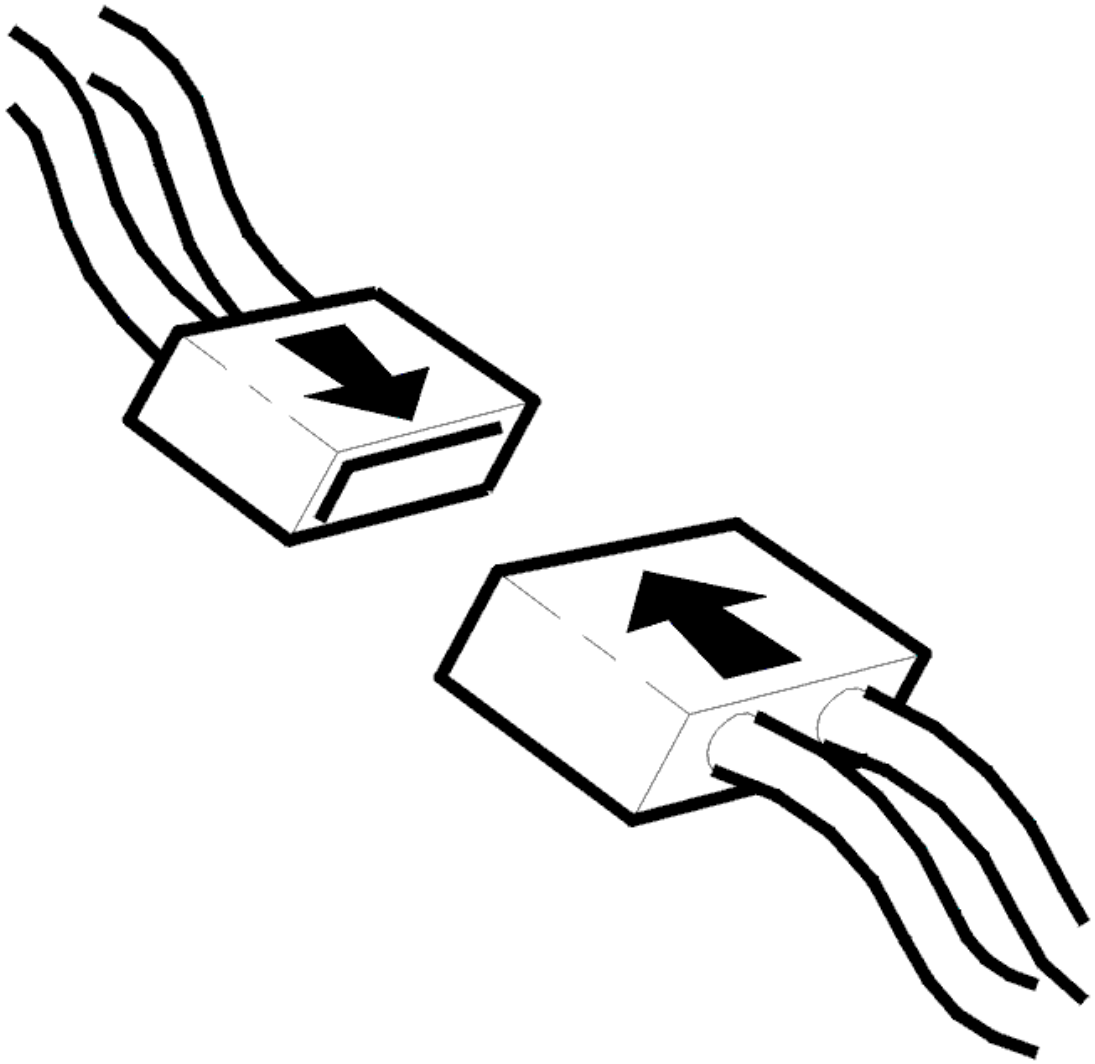

Fig. 88: Connecting Connector
Courtesy of VOLVO CARS CORPORATION

- Ignition off
- Check the control module for the steering wheel angle sensor and the steering wheel module (SWM) connectors. Check for contact resistance and oxidation according to **CONTACT RESISTANCE AND OXIDATION**
- Reinstall the components, reconnect the connectors etc.
- Ignition on
- Turn the steering wheel to the limit position in both directions
- Read off diagnostic trouble codes (DTCs).

  If the status of the diagnostic trouble code (DTC) is intermittent, the problem was probably caused by contact resistance or oxidation in one of the connectors for the control modules.

Other information:

- For information about signals, see **SIGNAL DESCRIPTION, CONTROL UNIT FOR THE STEERING WHEEL ANGLE SENSOR (SAS)**.

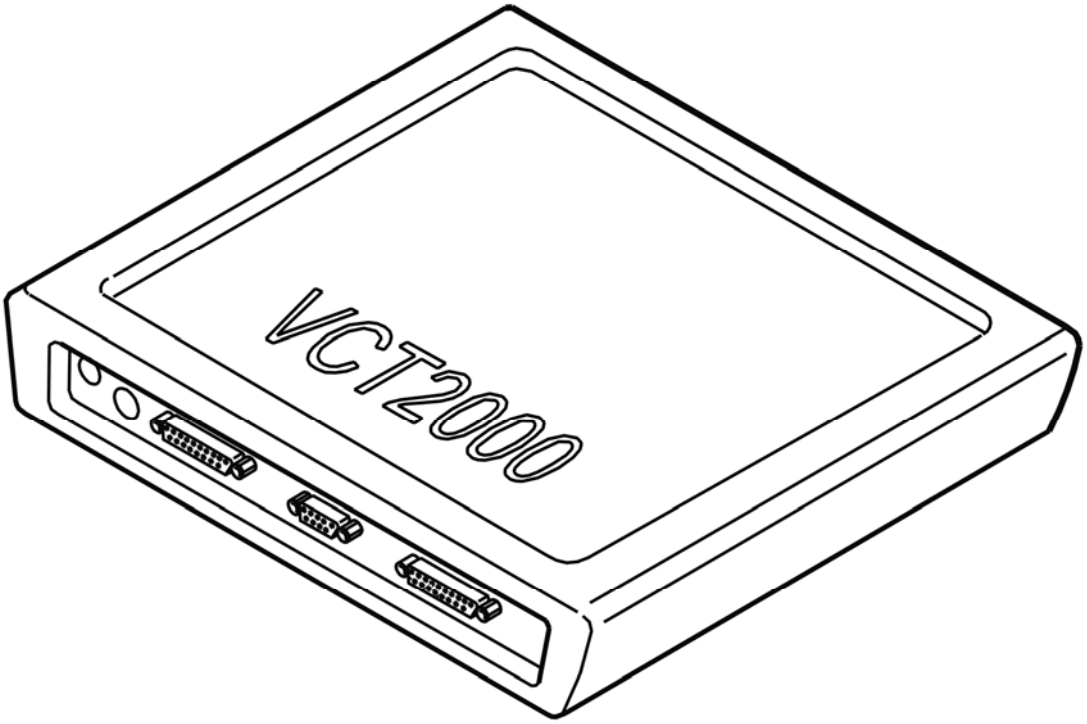

Fig. 89: Identifying VCT2000 Diagnostic Tool Symbol In VIDA
Courtesy of VOLVO CARS CORPORATION

Is the status of the diagnostic trouble code (DTC) intermittent?

- **YES**

  OKAY: Troubleshooting has been completed.

- **NO**

  Refer to **CHECKING WIRING AND SENSORS**

CHECKING WIRING AND SENSORS

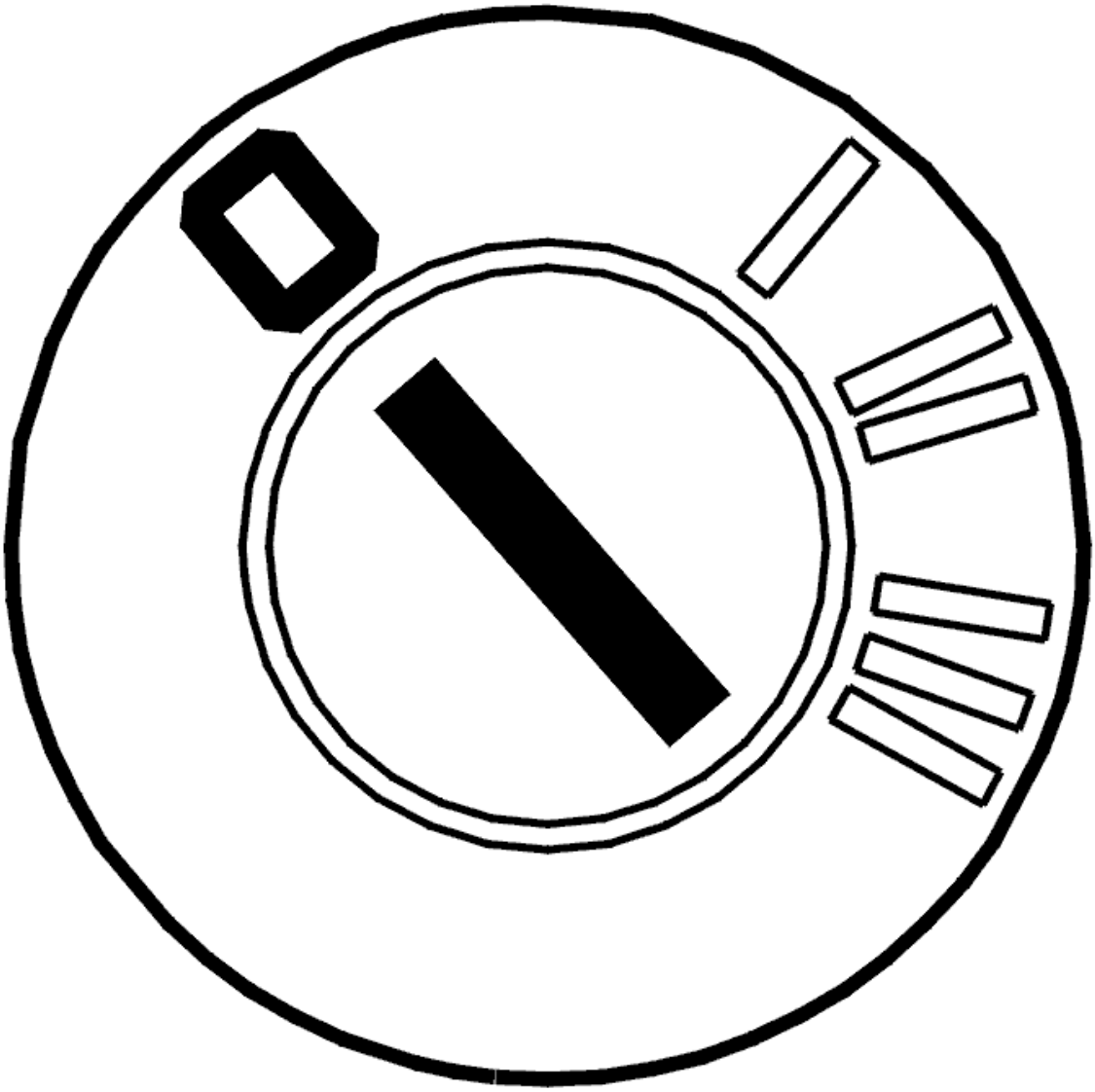

Fig. 90: Identifying Ignition OFF
Courtesy of VOLVO CARS CORPORATION

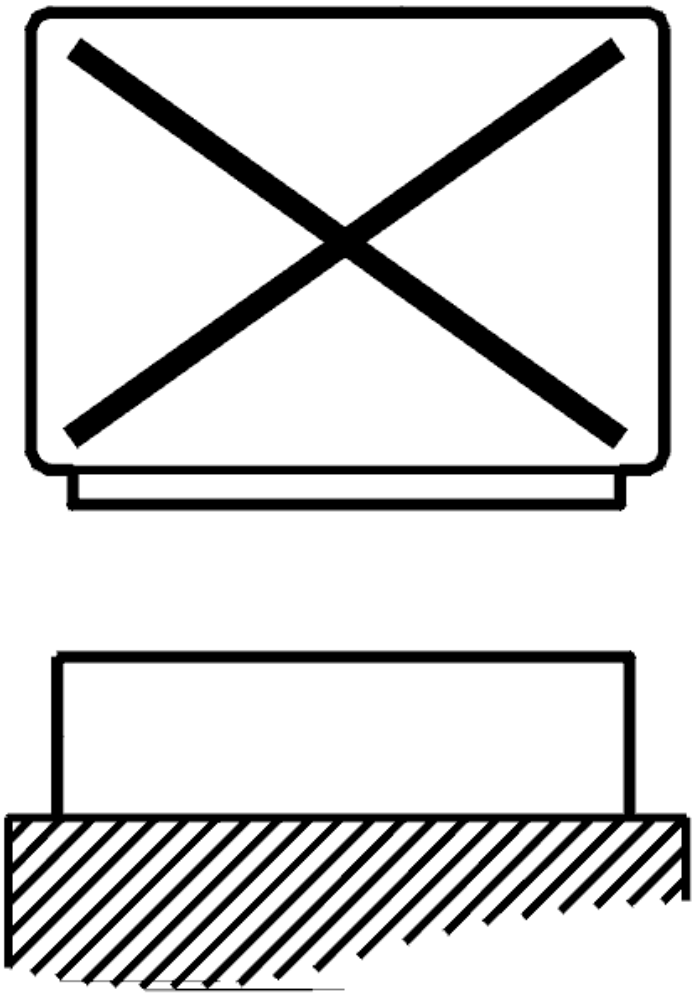

Fig. 91: Disconnecting Control Unit
Courtesy of VOLVO CARS CORPORATION

- Ignition off
- The control module for the steering wheel angle sensor disconnected
- Steering wheel module (SWM) disconnected
- Connect the breakout box to the control module for the steering wheel angle sensor and to the steering wheel module (SWM).

  Check the wiring between the control module for the steering wheel angle sensor

  terminal #1 (terminal (#A25) and steering wheel module (SWM) terminal #6 (terminal #A6)

  terminal #8 (terminal (#A32) and steering wheel module (SWM) terminal #7 (terminal #A7)

terminal #9 (terminal (#A33) and steering wheel module (SWM) terminal #12 (terminal #A12)

for an open-circuit. See **OPEN-CIRCUIT, PERMANENT FAULTS** .

Try replacing the steering wheel angle sensor if no fault is found in the wiring.

Other information:

- To connect the breakout box to the control module for the steering wheel angle sensor, see **CONNECTING THE BREAKOUT BOX TO THE STEERING ANGLE SENSOR**
- To connect the breakout box to the steering wheel module (SWM), see **STEERING WHEEL MODULE (SWM), REPLACING**
- For information about signals for the control module for the steering wheel angle sensor, see **SIGNAL DESCRIPTION, CONTROL UNIT FOR THE STEERING WHEEL ANGLE SENSOR (SAS)**
- For information about signals to the steering wheel module (SWM), see **SIGNAL SPECIFICATION** .

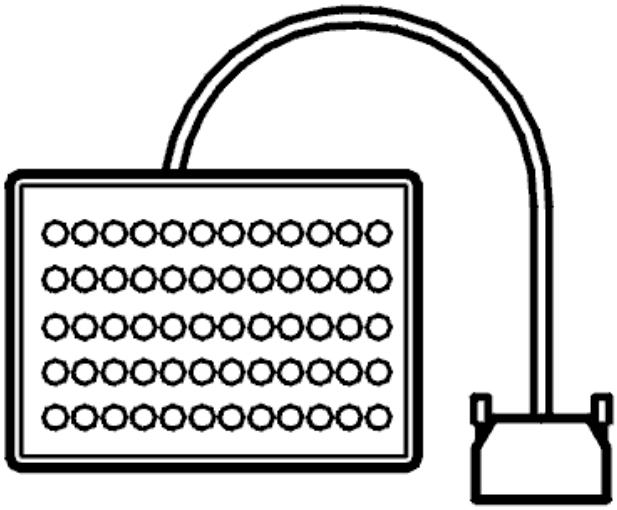

Fig. 92: Breakout Box
Courtesy of VOLVO CARS CORPORATION

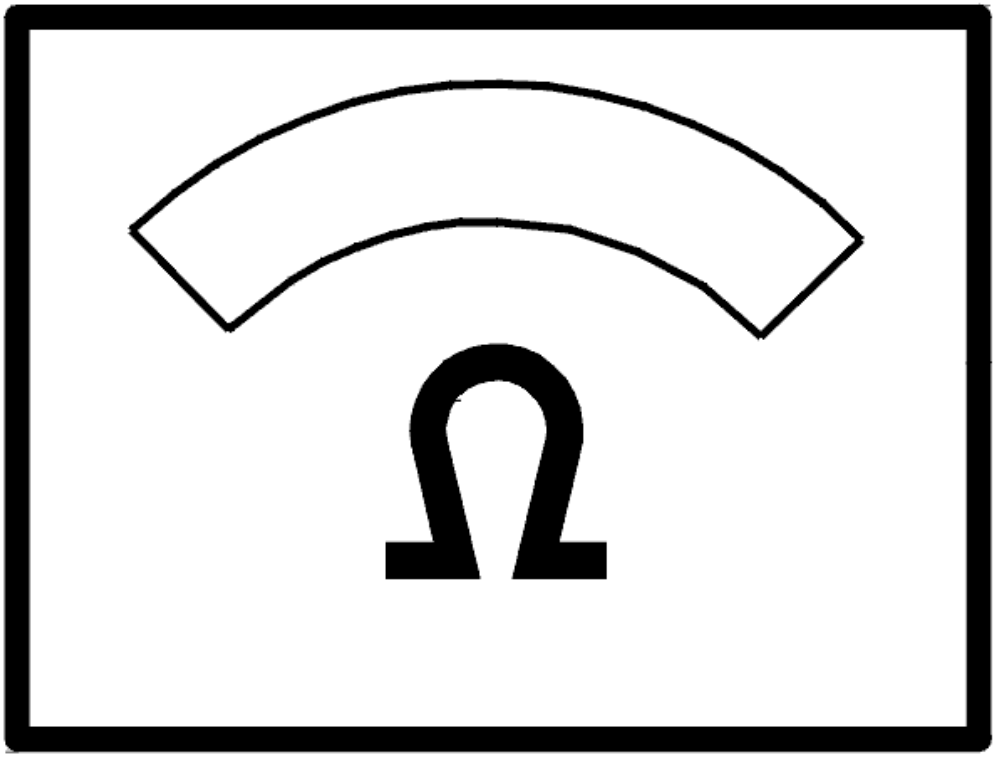

Fig. 93: Identifying Ohm Meter
Courtesy of VOLVO CARS CORPORATION

- **Continue**

  Refer to **VERIFICATION**

VERIFICATION

HINT: After the repair it is necessary to check that the fault has been rectified.

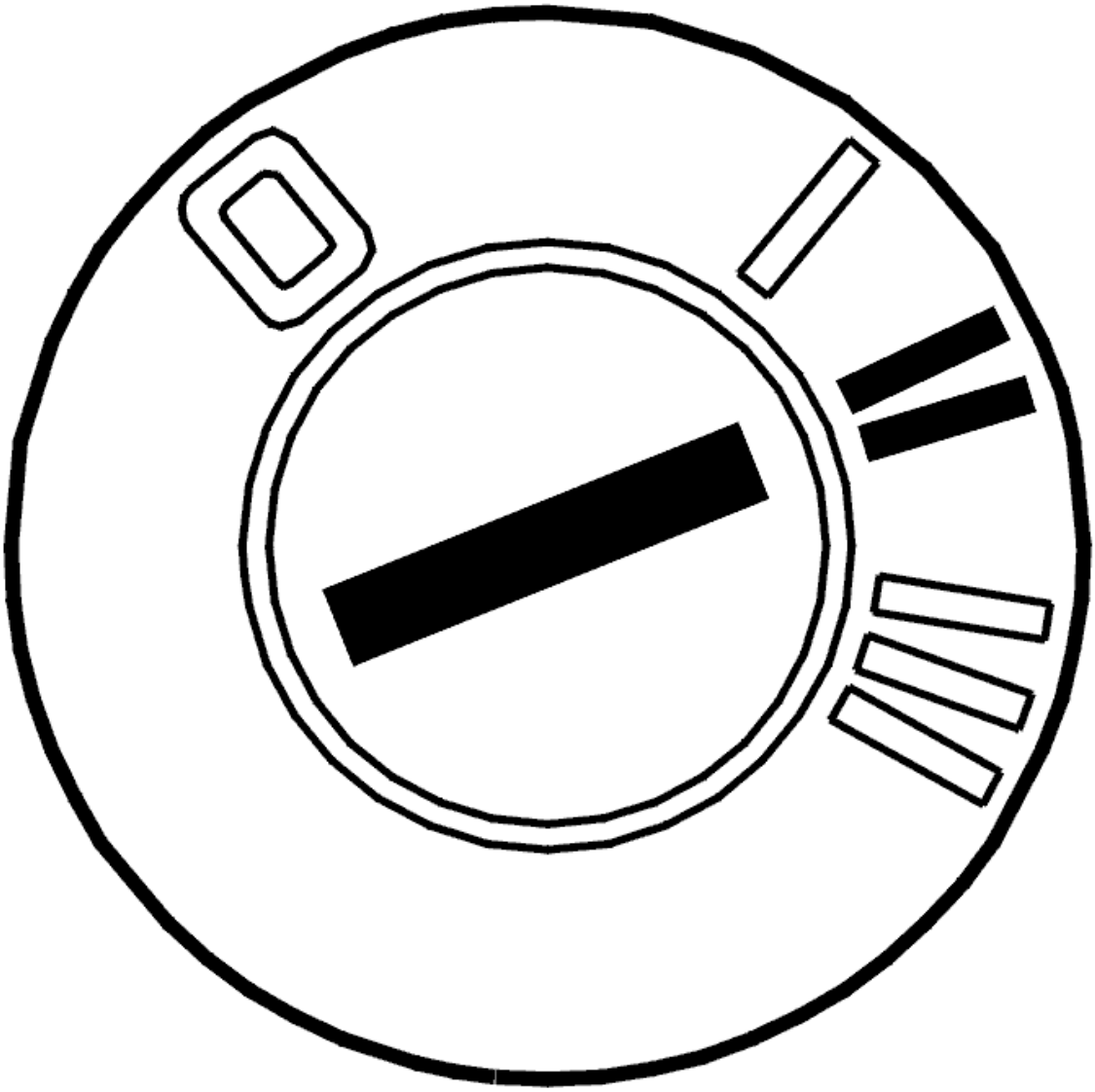

Fig. 94: Identifying Ignition ON
Courtesy of VOLVO CARS CORPORATION

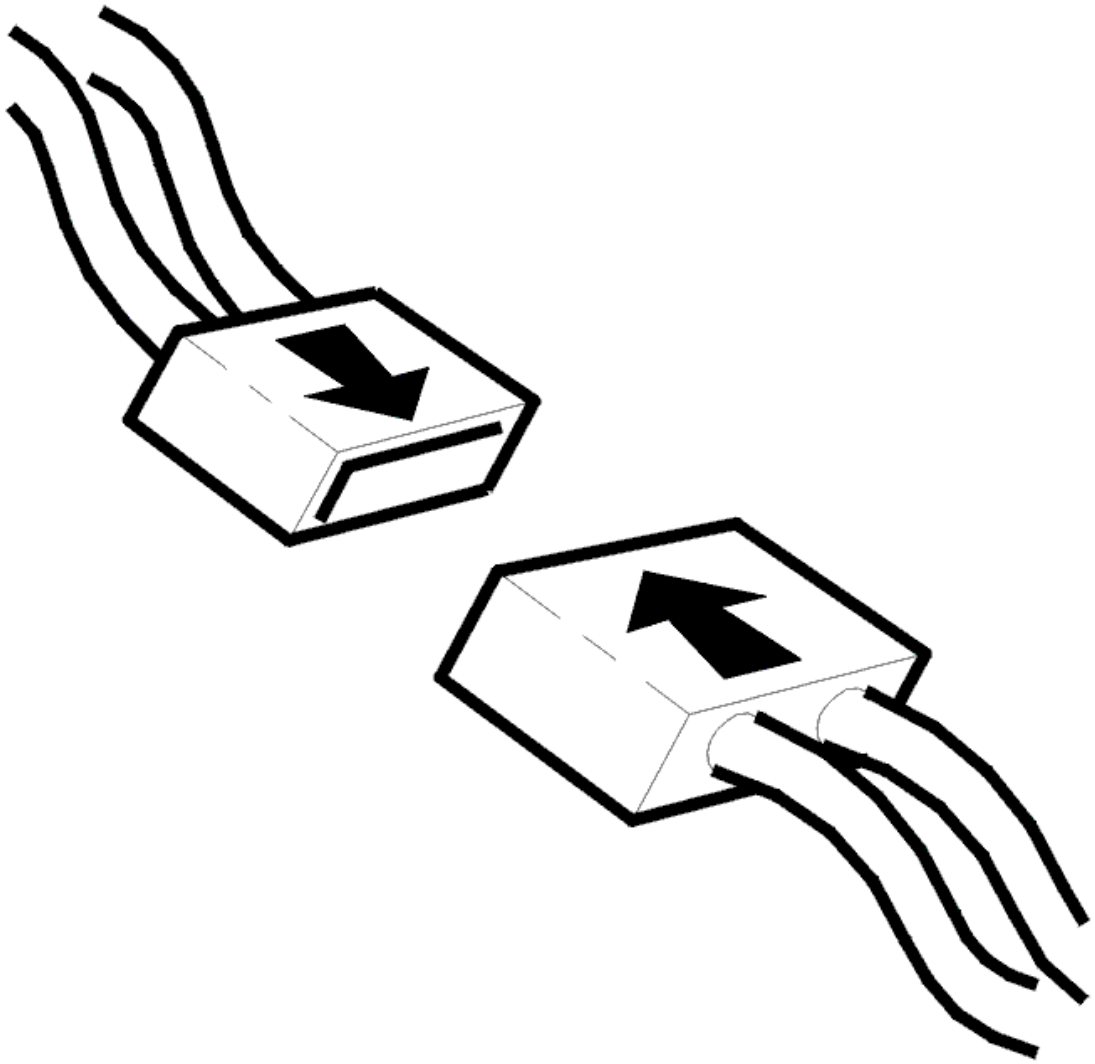

Fig. 95: Connecting Connector
Courtesy of VOLVO CARS CORPORATION

- Ignition off.
- Connect the connectors, install the components, etc.
- Ignition on.
- Turn the steering wheel to full lock in both directions.
- Read the status of the diagnostic trouble code.

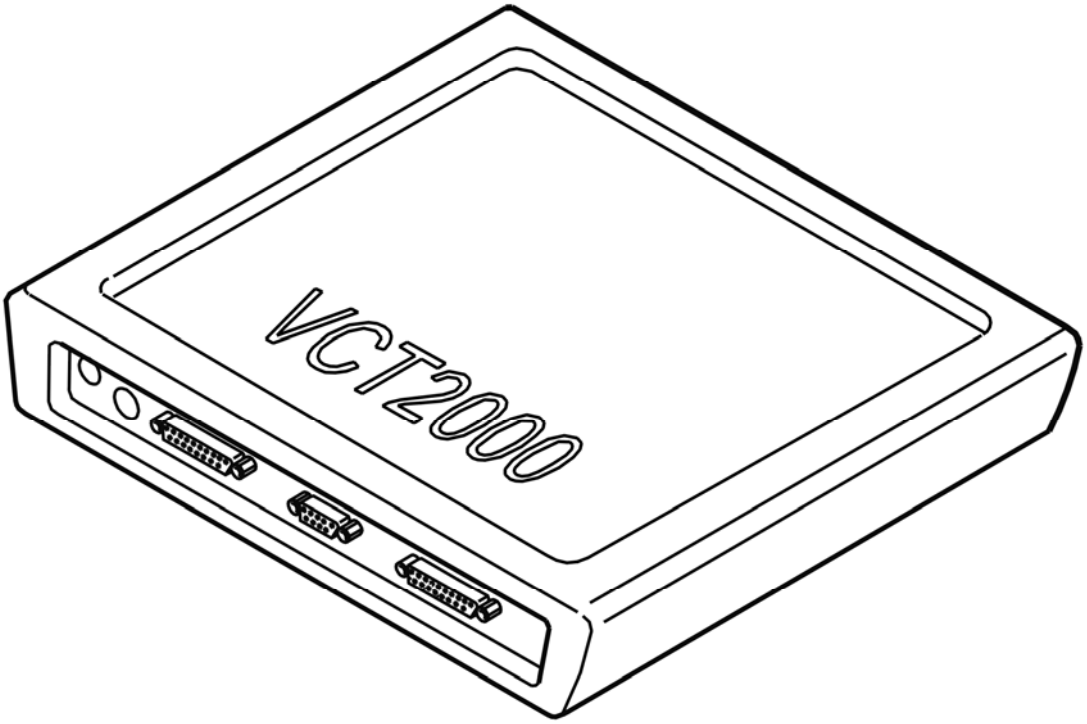

Fig. 96: Identifying VCT2000 Diagnostic Tool Symbol In VIDA
Courtesy of VOLVO CARS CORPORATION

Is the status of the diagnostic trouble code intermittent?

- **YES**

  VERIFIED: Troubleshooting has been completed.

- **NO**

  Refer to **INFORMATION**

INFORMATION

FAULT-TRACING INFORMATION

The fault should have been detected and remedied. As this is not the case fault-tracing has failed.

Exit fault-tracing for this diagnostic trouble code (DTC) or make another attempt.

SAS-0025: LED GROUP 2 CIRCUIT. SIGNAL TOO LOW (2003-2004)

DIAGNOSTIC TROUBLE CODE INFORMATION

see **DIAGNOSTIC TROUBLE CODE INFORMATION**

SIGNAL TOO LOW

CHECKING THE CONNECTORS

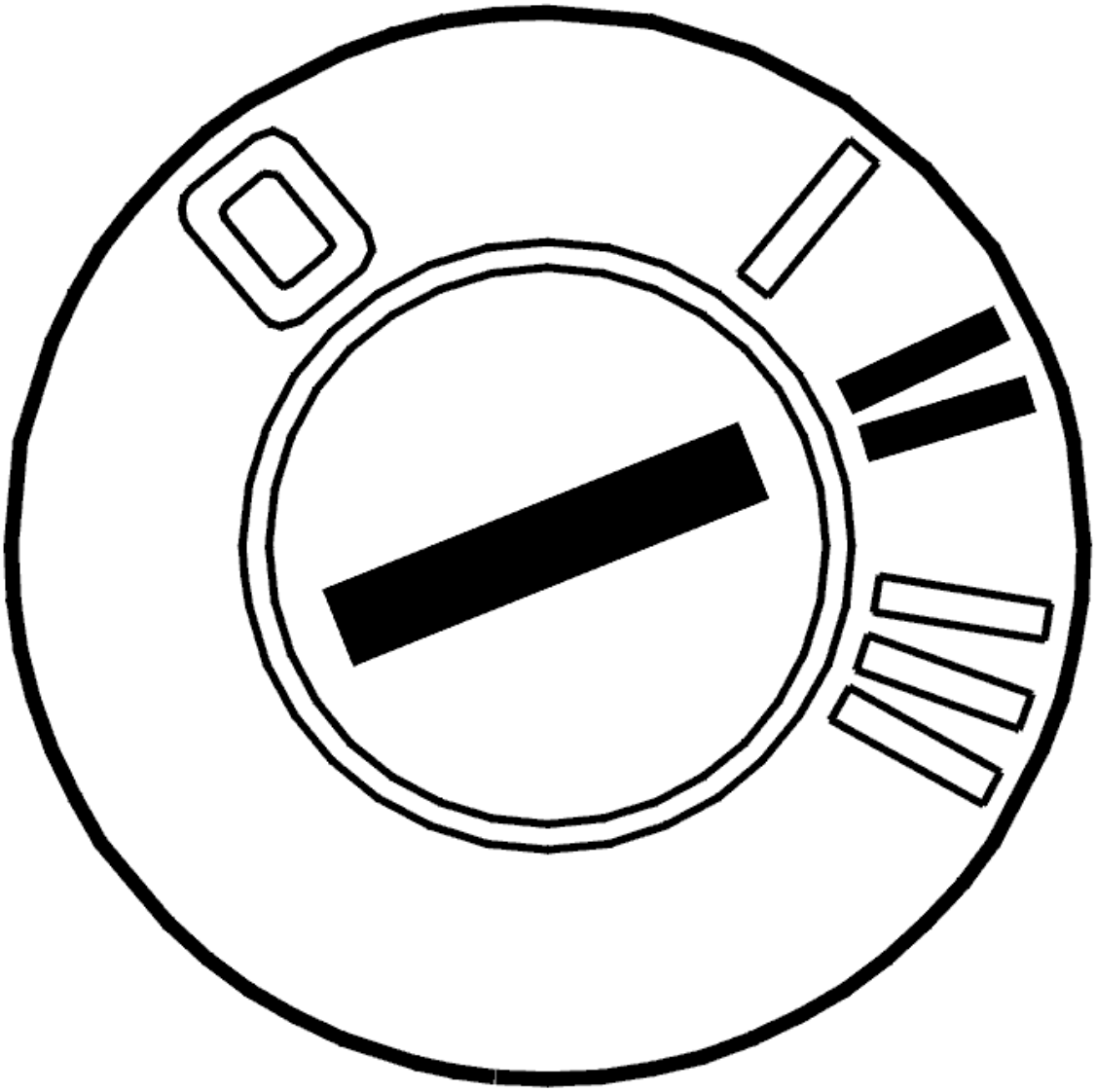

Fig. 97: Identifying Ignition ON
Courtesy of VOLVO CARS CORPORATION

- Ignition off
- Check the control module for the steering wheel angle sensor and the steering wheel module (SWM) connectors. Check for contact resistance and oxidation according to **CONTACT RESISTANCE AND OXIDATION**
- Reinstall the components, reconnect the connectors etc.
- Ignition on

- Read off the current.

  Turn the steering wheel to the limit position in both directions. The current should be between 11 and 30 mA.

  If the current is OK, the cause of the fault was contact resistance or oxidation in the connectors for the control module for the steering wheel angle sensor or in the steering wheel module (SWM).

  Other information:

  - To access the connector for the control module for the steering wheel angle sensor, see **STEERING WHEEL MODULE (SWM), REPLACING**
  - To access the connector for the steering wheel module (SWM), see **STEERING WHEEL MODULE (SWM), REPLACING**
  - To connect the breakout box, see **CONNECTING THE BREAKOUT BOX**
  - To disconnect the steering wheel angle sensor, see **CONTACT REEL, REPLACEMENT**
  - For information about signals, see **SIGNAL DESCRIPTION, CONTROL UNIT FOR THE STEERING WHEEL ANGLE SENSOR (SAS)**.

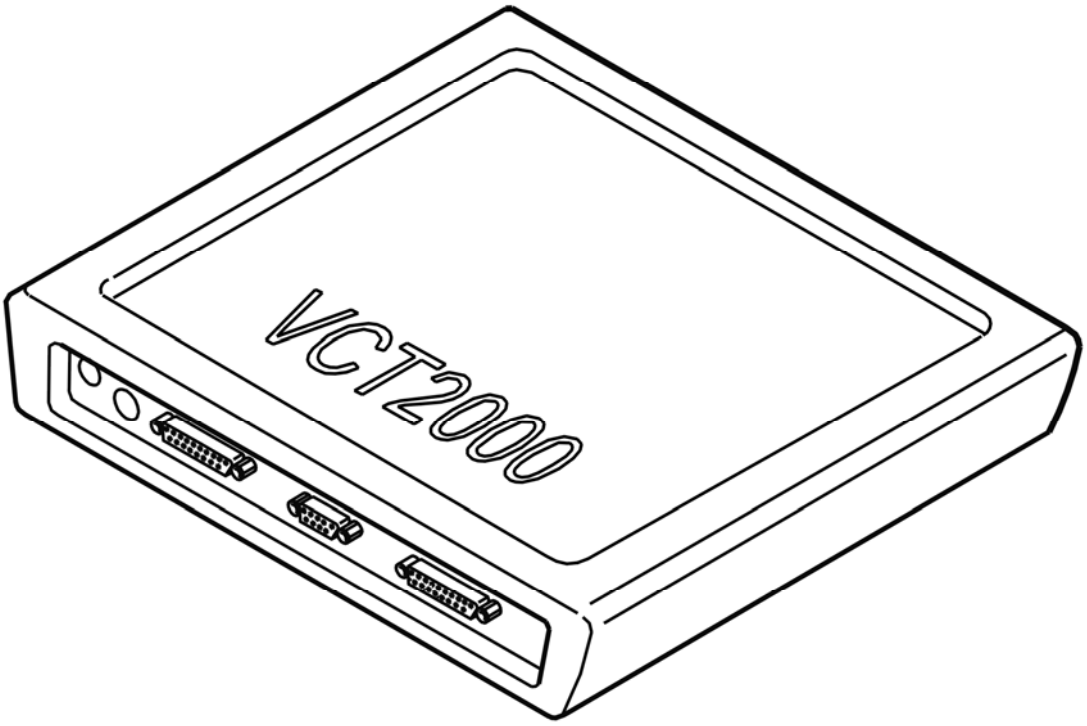

Fig. 98: Identifying VCT2000 Diagnostic Tool Symbol In VIDA
Courtesy of VOLVO CARS CORPORATION

Is the value OK?

- **YES**

  OKAY: Troubleshooting has been completed.

- **NO**

  Refer to **CHECKING WIRING AND SENSORS**

CHECKING WIRING AND SENSORS

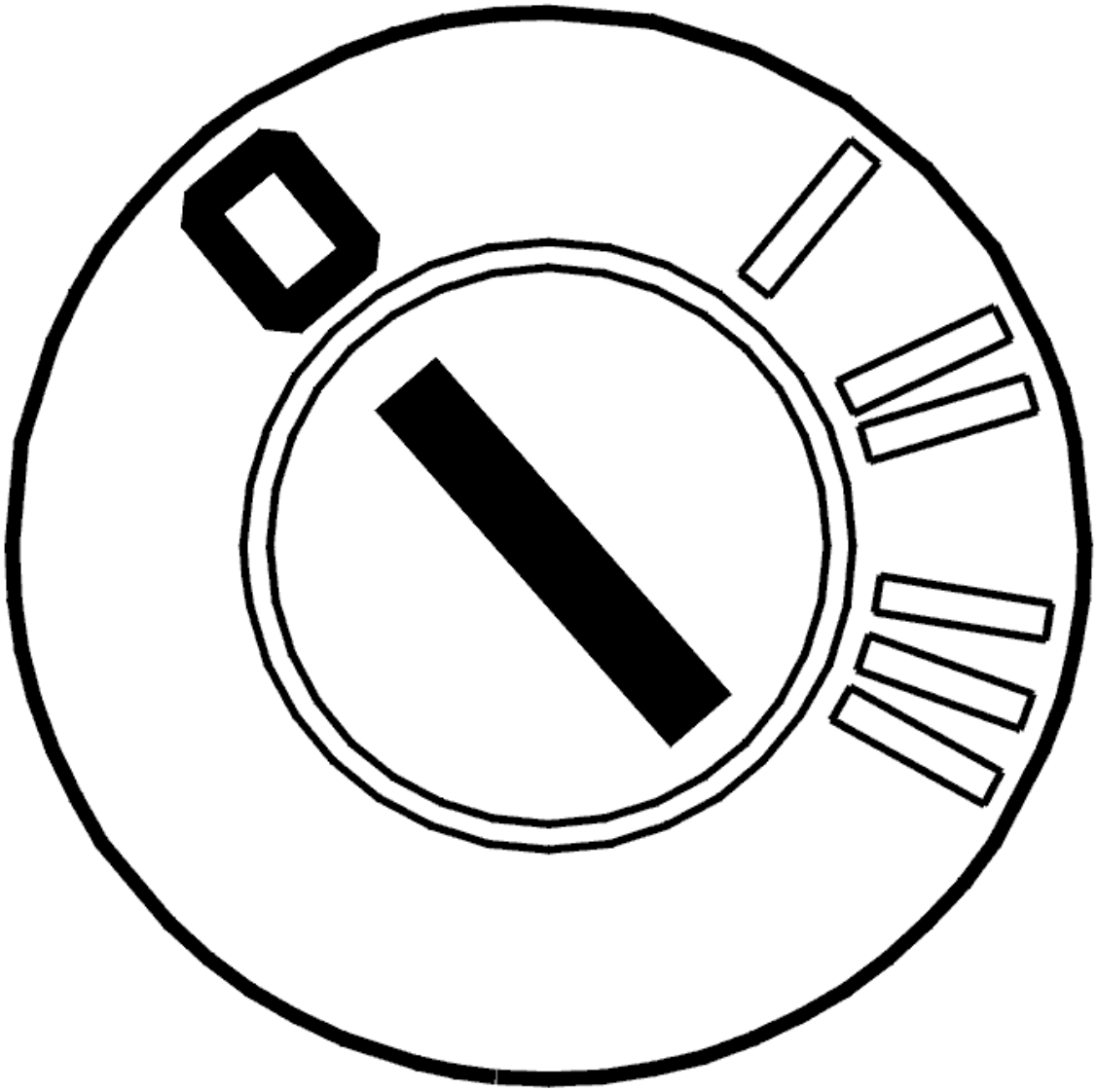

Fig. 99: Identifying Ignition OFF
Courtesy of VOLVO CARS CORPORATION

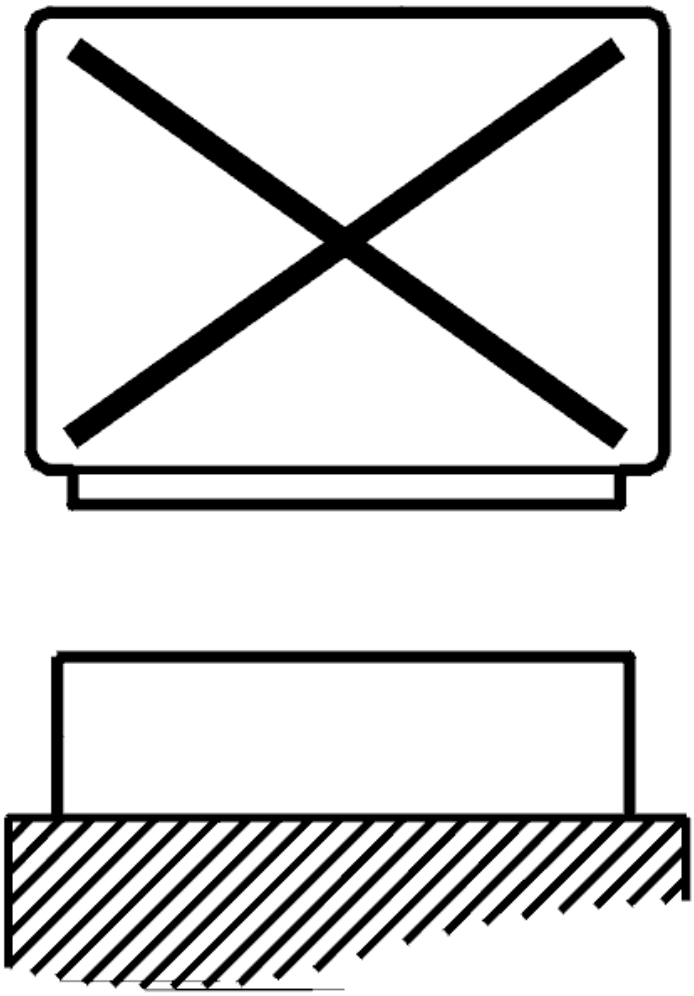

Fig. 100: Disconnecting Control Unit
Courtesy of VOLVO CARS CORPORATION

- Ignition off
- Control module for the steering wheel angle sensor disconnected
- Steering wheel module (SWM) disconnected
- Connect the breakout box to the control module for the steering wheel angle sensor and to the steering wheel module (SWM)

  Check the wiring between the control module for the steering wheel angle sensor terminal #8 (#A32) and steering wheel module (SWM) terminal #7 (#A7). Check for an open-circuit. See **OPEN-CIRCUIT, PERMANENT FAULTS** . Check for a short-circuit to ground. See **SHORT-CIRCUIT TO GROUND, PERMANENT FAULTS** .

  Try replacing the steering wheel angle sensor if no faults are found in the wiring between the control

module and the steering wheel angle sensor.

Other information:

- To access the connector for the control module for the steering wheel angle sensor, see **STEERING WHEEL MODULE (SWM), REPLACING**
- To access the connector for the steering wheel module (SWM), see **STEERING WHEEL MODULE (SWM), REPLACING**
- To connect the breakout box to the control module for the steering wheel angle sensor, see **CONNECTING THE BREAKOUT BOX TO THE STEERING ANGLE SENSOR**
- To replace the steering wheel angle sensor, see **CONTACT REEL, REPLACEMENT**
- For information about signals, see **SIGNAL DESCRIPTION, CONTROL UNIT FOR THE STEERING WHEEL ANGLE SENSOR (SAS)**.

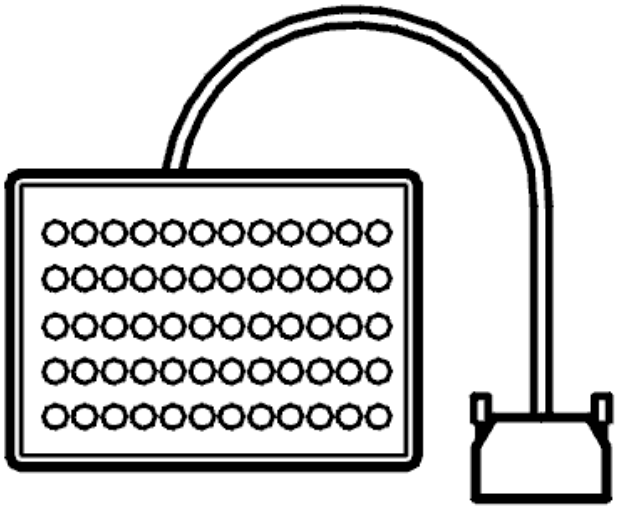

Fig. 101: Breakout Box
Courtesy of VOLVO CARS CORPORATION

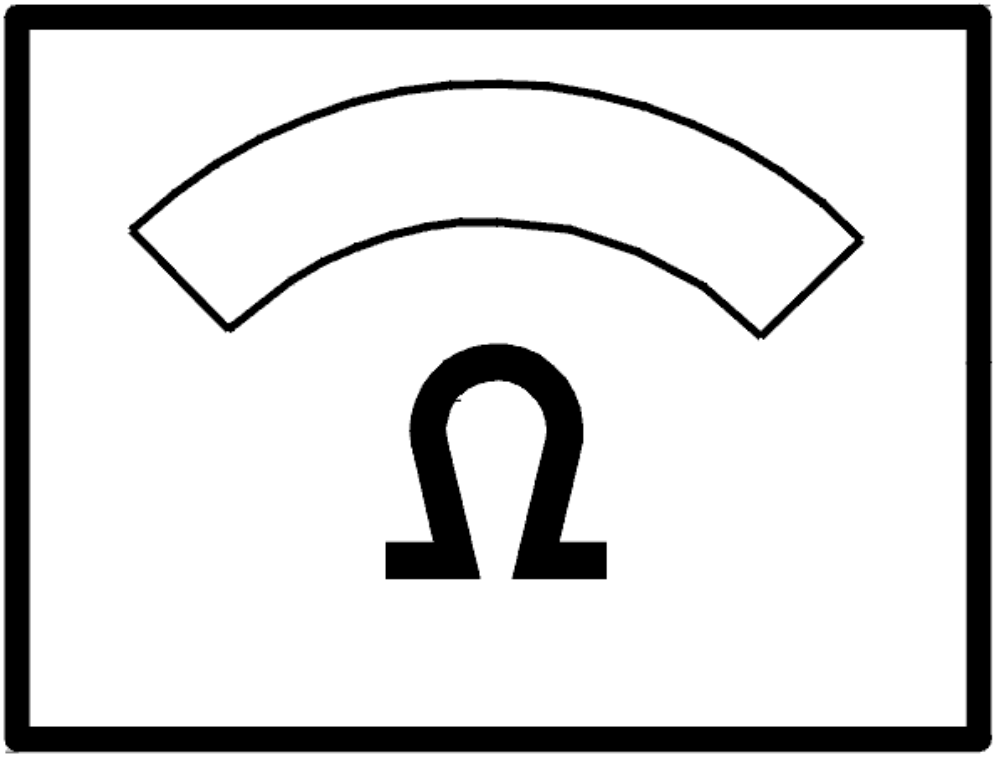

Fig. 102: Identifying Ohm Meter
Courtesy of VOLVO CARS CORPORATION

- **Continue**

  Refer to **VERIFICATION**

VERIFICATION

HINT: After the repair it is necessary to check that the fault has been rectified.

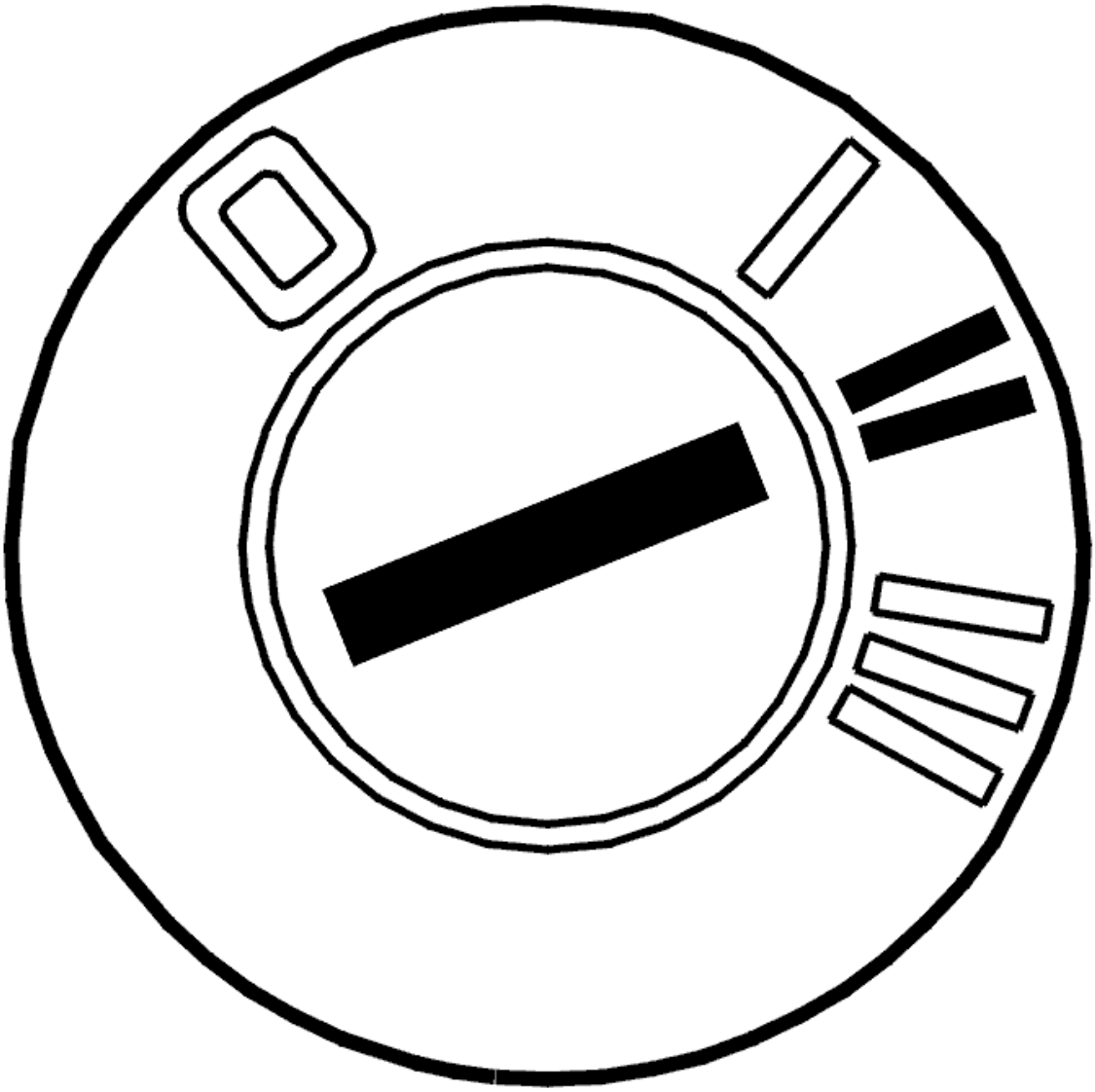

Fig. 103: Identifying Ignition ON
Courtesy of VOLVO CARS CORPORATION

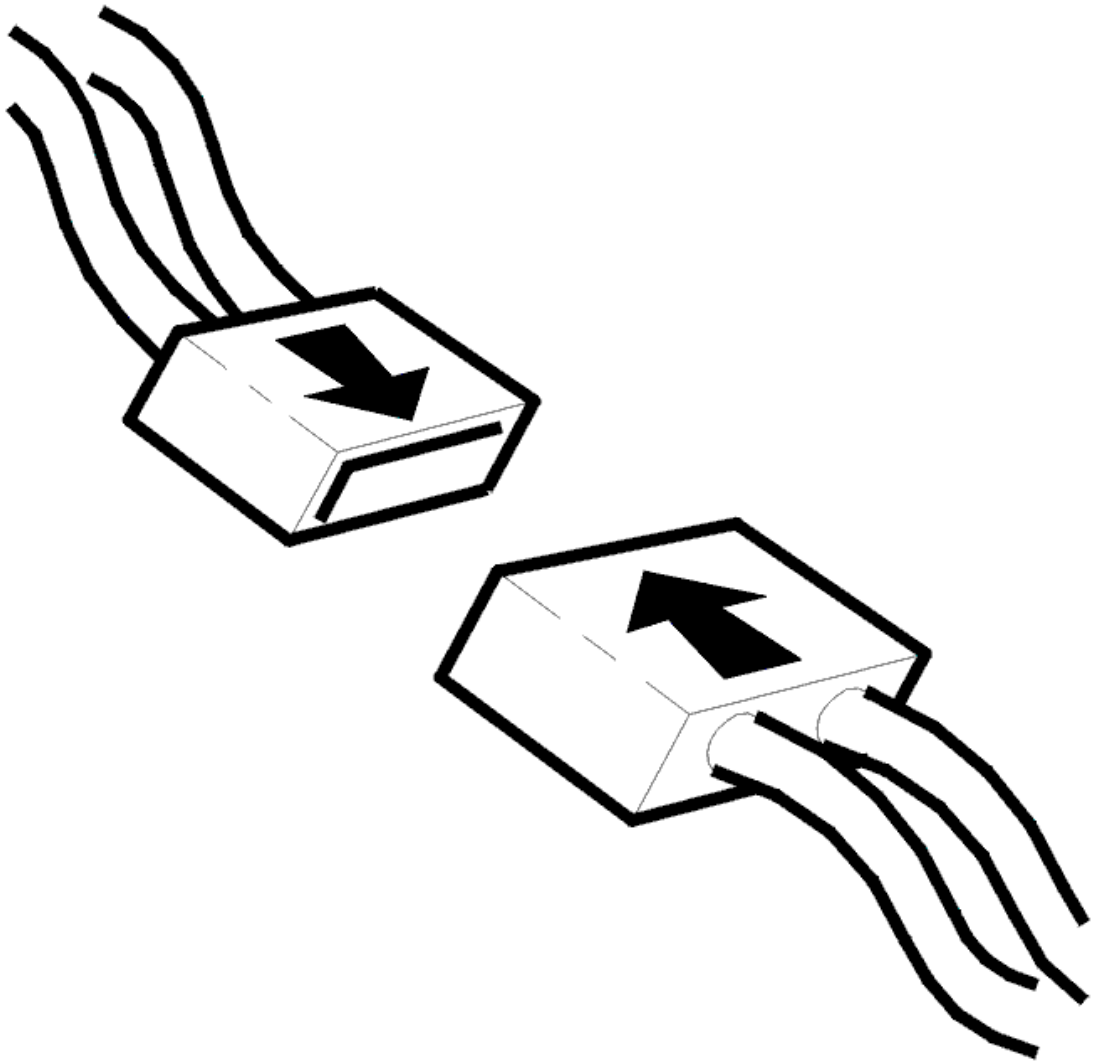

Fig. 104: Connecting Connector
Courtesy of VOLVO CARS CORPORATION

- Ignition off.
- Connect the connectors, install the components, etc.
- Ignition on.
- Read off the current in the circuit.

  Turn the steering wheel to end stop in both directions.

  The current should oscillate between 11 and 30 mA.

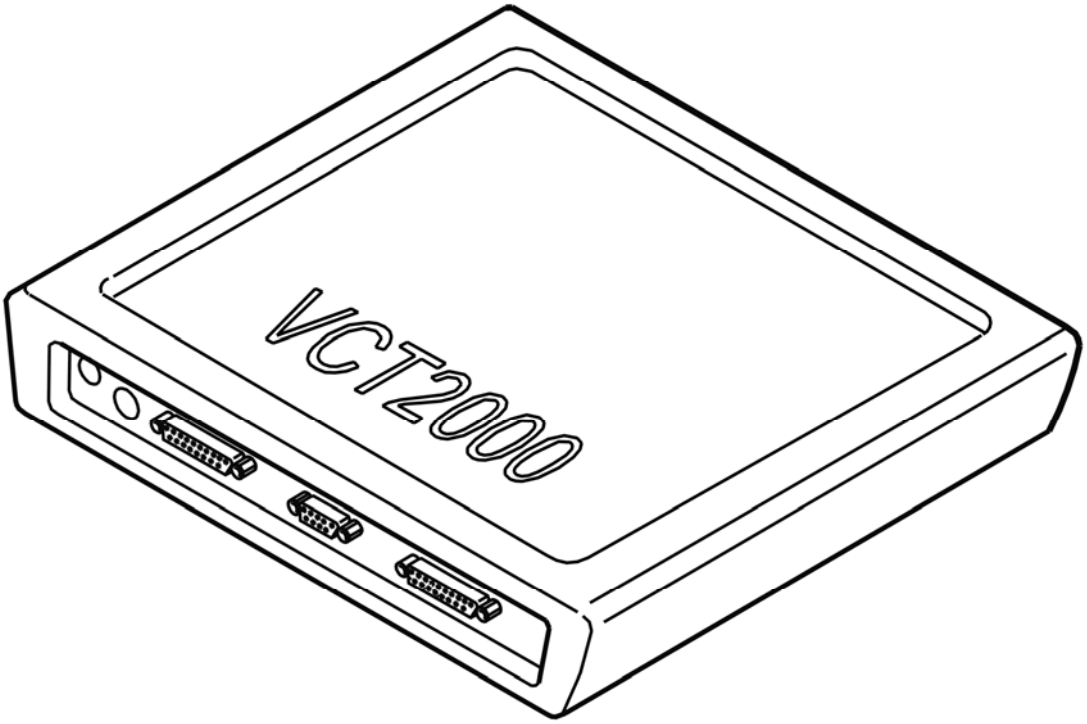

Fig. 105: Identifying VCT2000 Diagnostic Tool Symbol In VIDA
Courtesy of VOLVO CARS CORPORATION

Is the current OK?

- **YES**

  VERIFIED: Troubleshooting has been completed.

- **NO**

  Refer to **INFORMATION**

INFORMATION

FAULT-TRACING INFORMATION

The fault should have been detected and remedied. As this is not the case fault-tracing has failed.

Exit fault-tracing for this diagnostic trouble code (DTC) or make another attempt.

SAS-0026: LED GROUP 2 CIRCUIT. SIGNAL TOO HIGH (2003-2004)

DIAGNOSTIC TROUBLE CODE INFORMATION

see **DIAGNOSTIC TROUBLE CODE INFORMATION**

SIGNAL TOO HIGH

CHECKING THE CONNECTORS

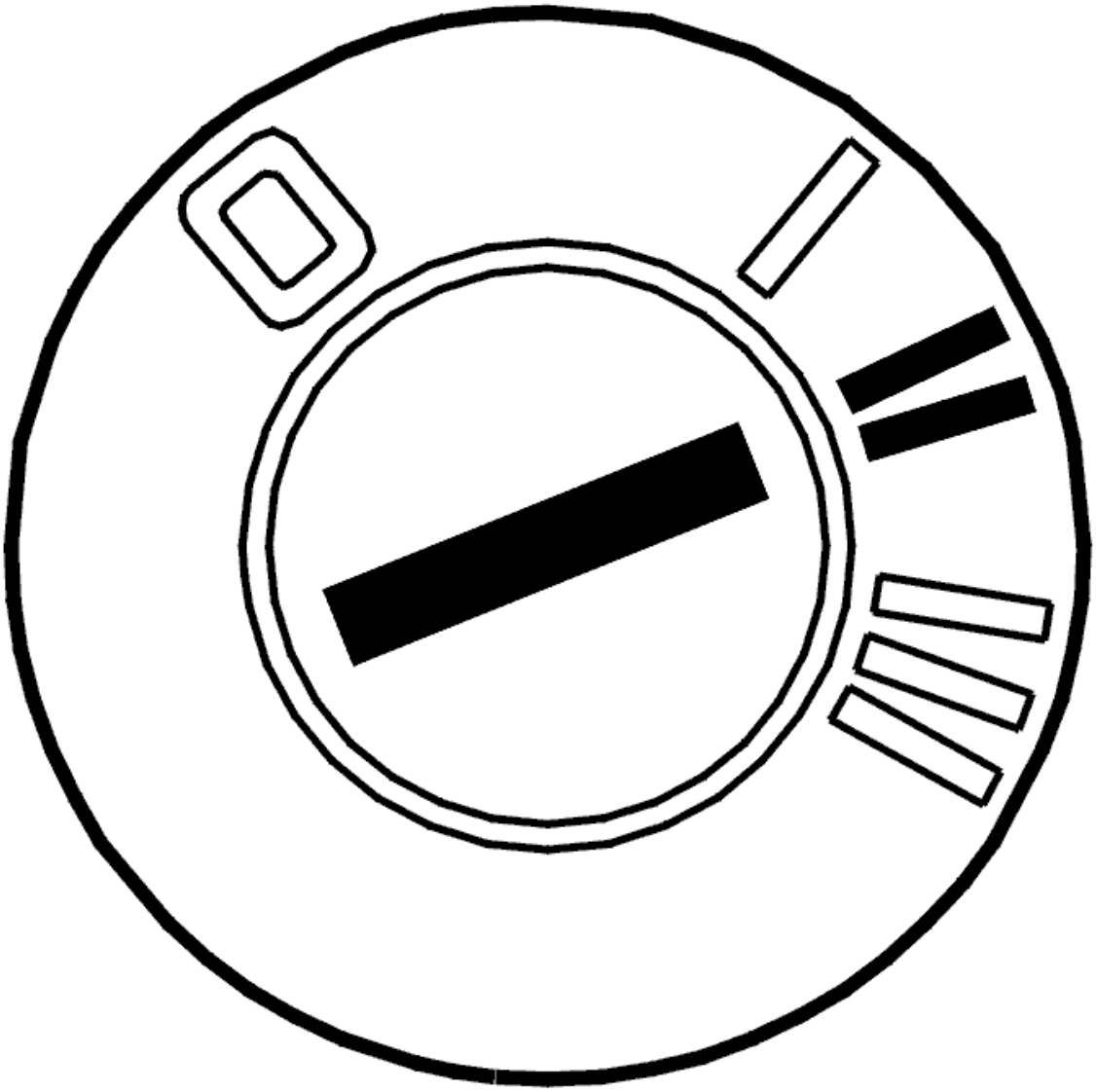

Fig. 106: Identifying Ignition ON
Courtesy of VOLVO CARS CORPORATION

- Ignition off
- Check the control module for the steering wheel angle sensor and the steering wheel module (SWM) connectors. Check for contact resistance and oxidation according to **CONTACT RESISTANCE AND OXIDATION**
- Reinstall the components, reconnect the connectors etc.
- Ignition on

- Read off the current.

  Turn the steering wheel to the limit position in both directions. The current should be between 11 and 30 mA.

  If the current is OK, the problem was caused by contact resistance or oxidation.

  Other information:

  - To access the connector for the control module for the steering wheel angle sensor, see **STEERING WHEEL MODULE (SWM), REPLACING**
  - To access the connector for the steering wheel module (SWM), see **STEERING WHEEL MODULE (SWM), REPLACING**
  - To connect the breakout box, see **CONNECTING THE BREAKOUT BOX**
  - To disconnect the steering wheel angle sensor, see **CONTACT REEL, REPLACEMENT**
  - For information about signals, see **SIGNAL DESCRIPTION, CONTROL UNIT FOR THE STEERING WHEEL ANGLE SENSOR (SAS)**.

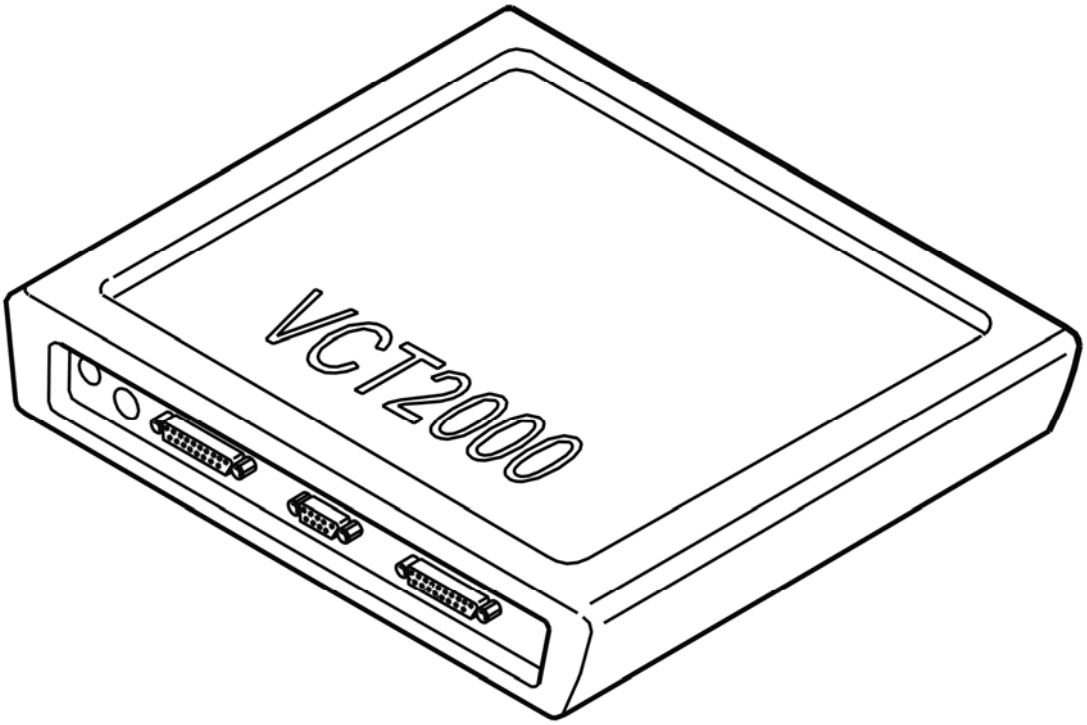

Fig. 107: Identifying VCT2000 Diagnostic Tool Symbol In VIDA
Courtesy of VOLVO CARS CORPORATION

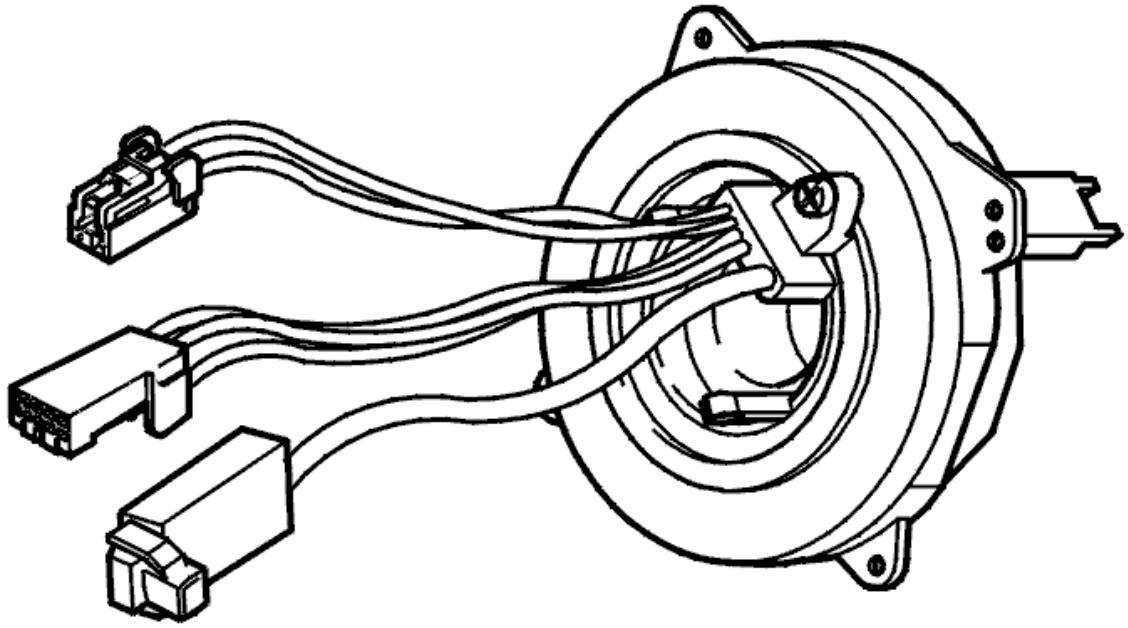

Fig. 108: Identifying Steering Wheel Angle Sensor
Courtesy of VOLVO CARS CORPORATION

Is the value OK?

- **YES**

  OKAY: Troubleshooting has been completed.

- **NO**

  Refer to **CHECKING WIRING AND SENSORS**

CHECKING WIRING AND SENSORS

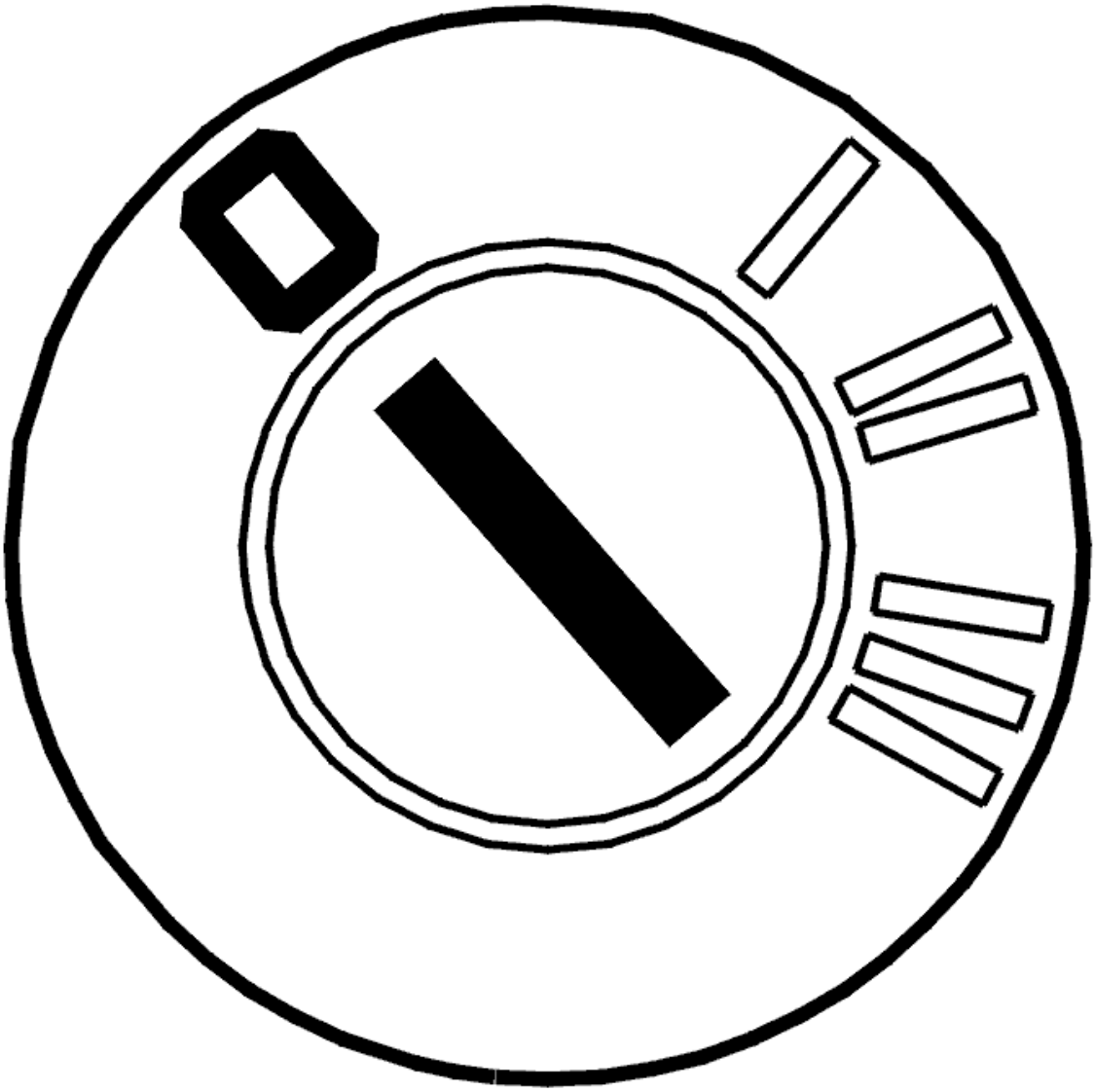

Fig. 109: Identifying Ignition OFF
Courtesy of VOLVO CARS CORPORATION

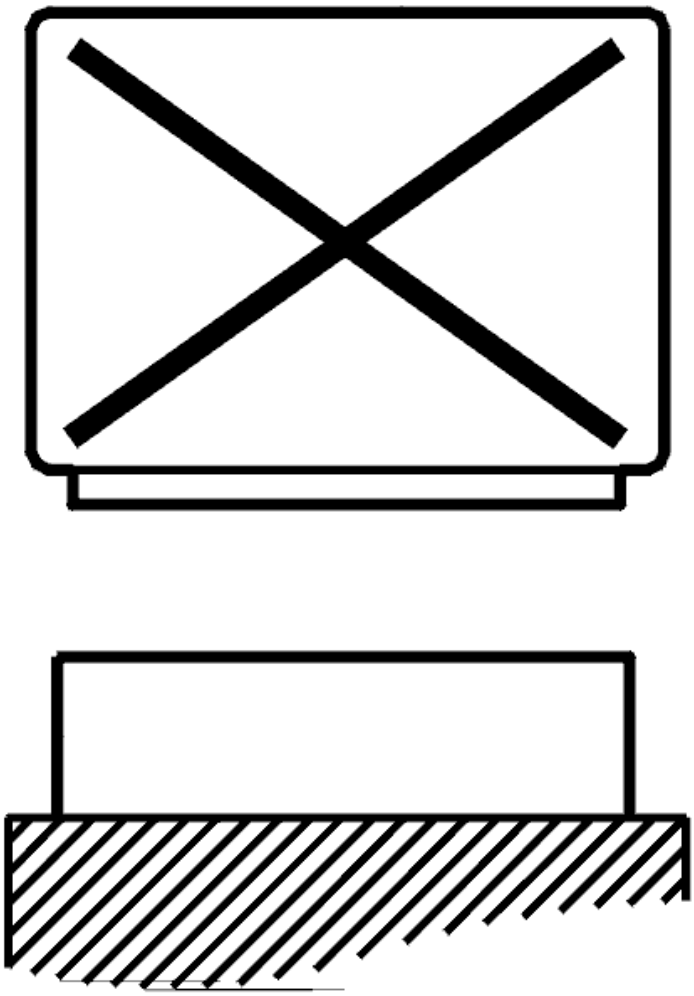

Fig. 110: Disconnecting Control Unit
Courtesy of VOLVO CARS CORPORATION

- Ignition off
- The control module for the steering wheel angle sensor disconnected
- Steering wheel module (SWM) disconnected
- Connect the breakout box to the control module for the steering wheel angle sensor and to the steering wheel module (SWM)

  Check the wiring between the control module for the steering wheel angle sensor terminal #8 (terminal (#A32) and steering wheel module (SWM) terminal #7 (terminal #A7). Check for a short-circuit to supply voltage according to **SHORT-CIRCUIT TO SUPPLY VOLTAGE. PERMANENT FAULTS** .

  Try replacing the steering wheel angle sensor if no faults are found in the wiring between the control module for the steering wheel angle sensor and the steering wheel module (SWM).

Other information:

- To access the connector for the control module for the steering wheel angle sensor, see **STEERING WHEEL MODULE (SWM), REPLACING**
- To access the connector for the steering wheel module (SWM), see **STEERING WHEEL MODULE (SWM), REPLACING**
- To connect the breakout box to the control module for the steering wheel angle sensor, see **CONNECTING THE BREAKOUT BOX TO THE STEERING ANGLE SENSOR**
- To replace the steering wheel angle sensor, see **CONTACT REEL, REPLACEMENT**
- For information about signals, see **SIGNAL DESCRIPTION, CONTROL UNIT FOR THE STEERING WHEEL ANGLE SENSOR (SAS)**.

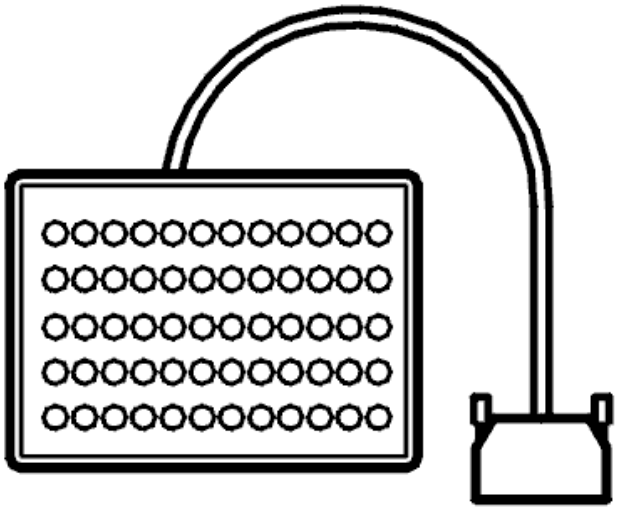

Fig. 111: Breakout Box
Courtesy of VOLVO CARS CORPORATION

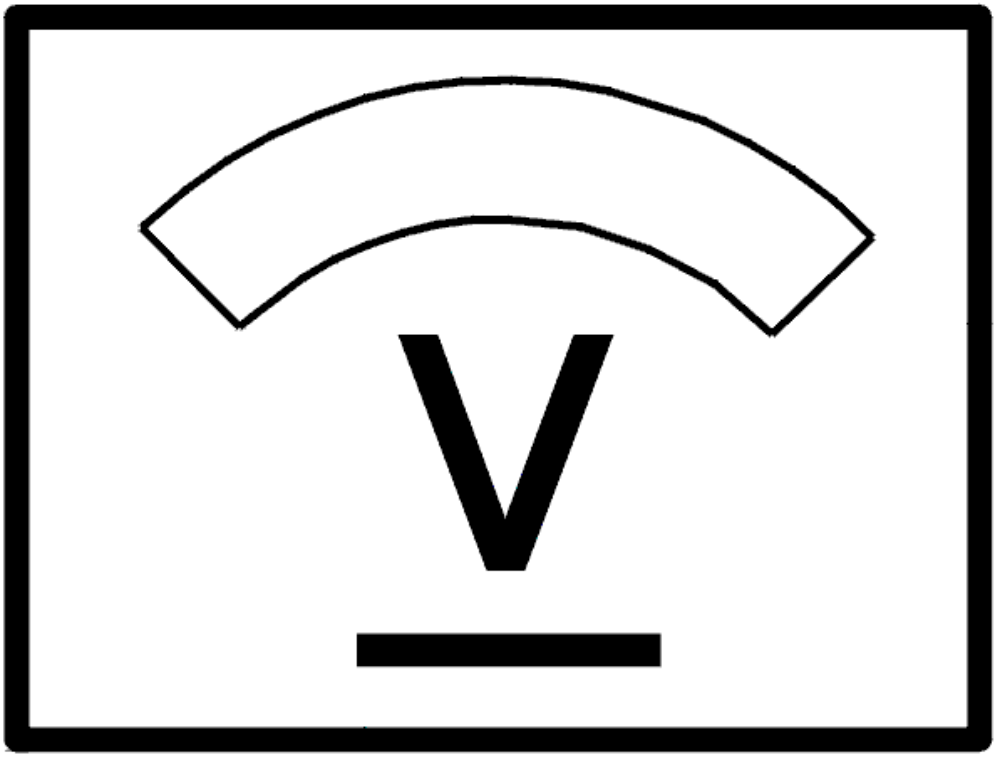

Fig. 112: Identifying Voltage Display
Courtesy of VOLVO CARS CORPORATION

- **Continue**

  Refer to **VERIFICATION**

VERIFICATION

HINT: After the repair it is necessary to check that the fault has been rectified.

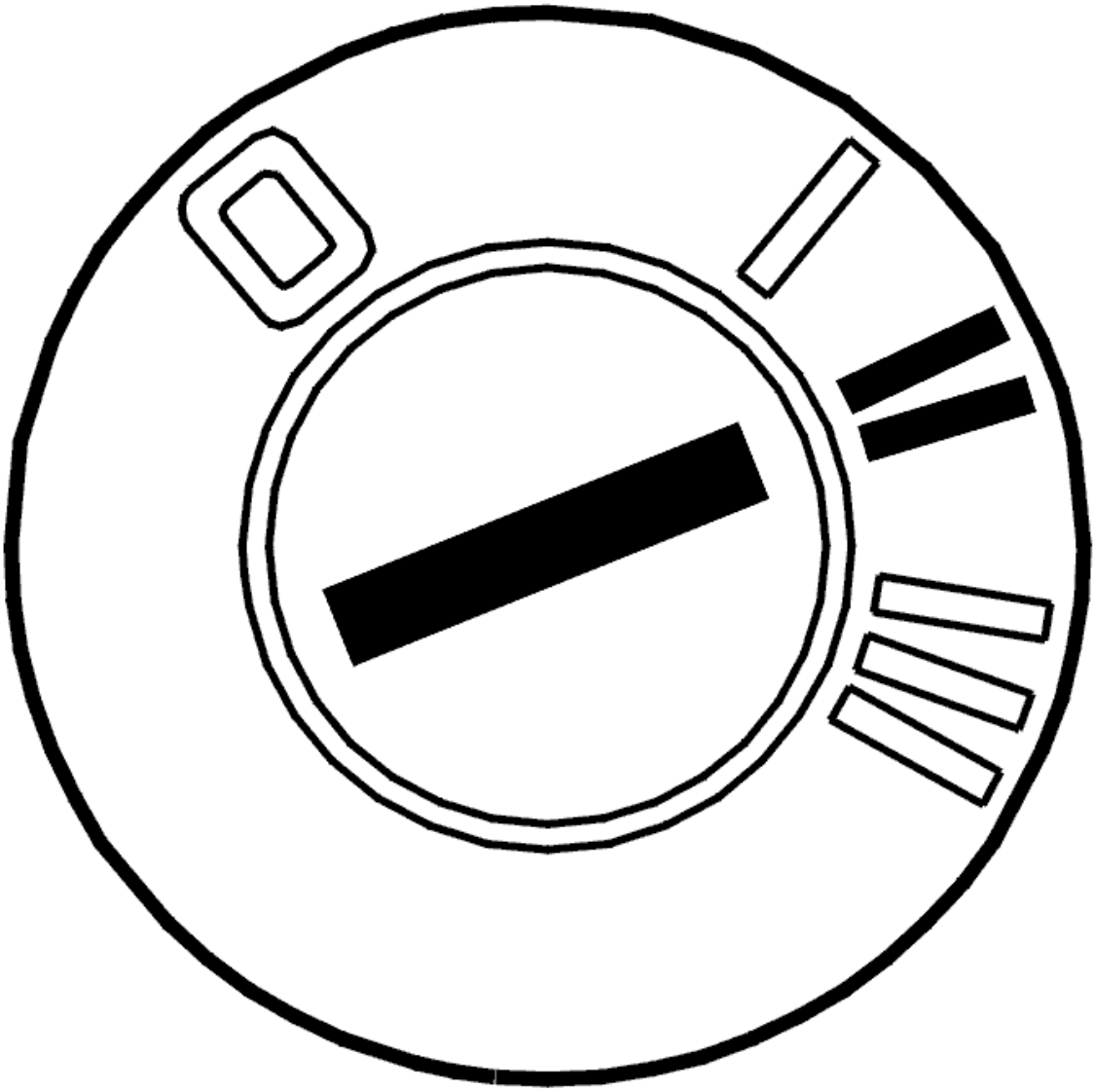

Fig. 113: Identifying Ignition ON
Courtesy of VOLVO CARS CORPORATION

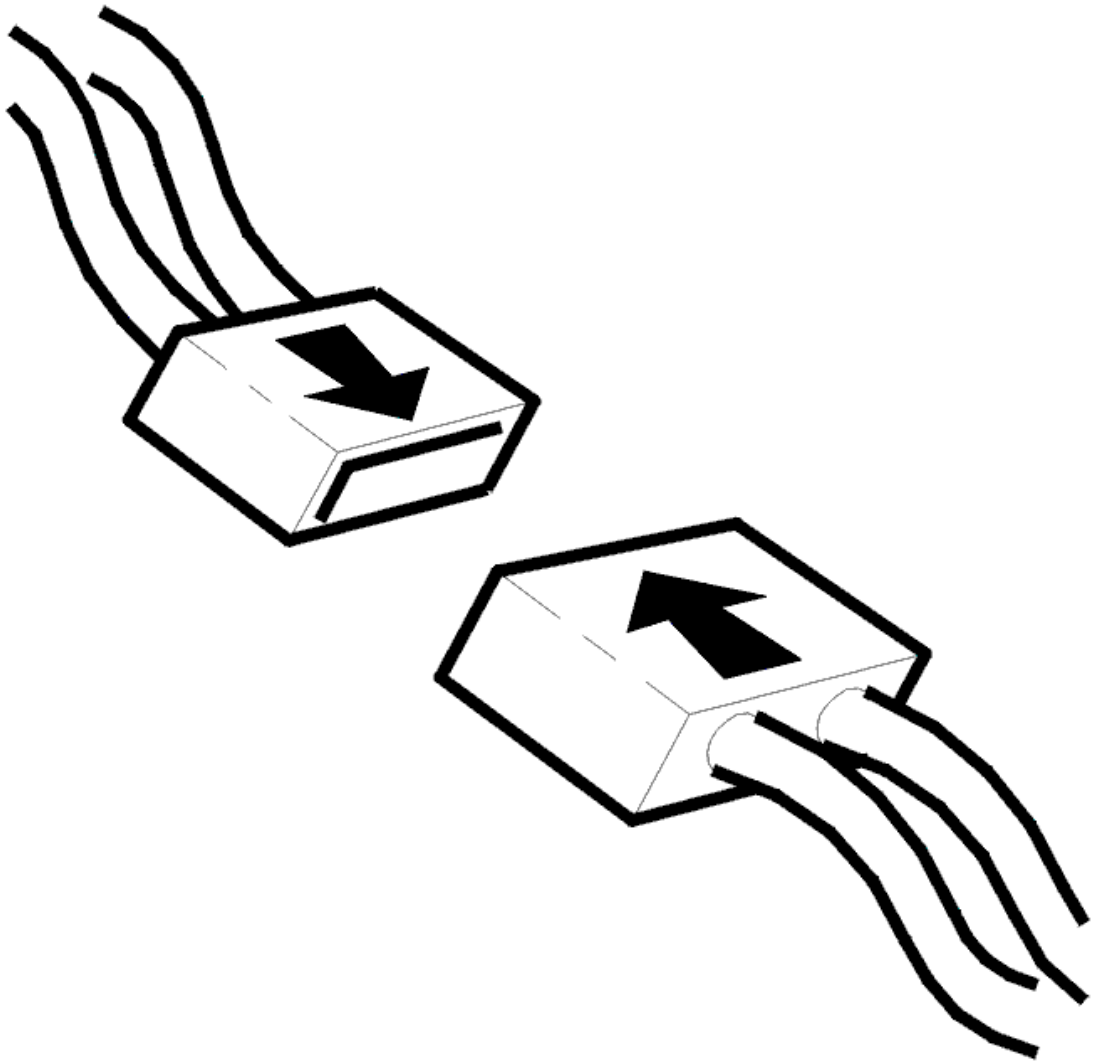

Fig. 114: Connecting Connector
Courtesy of VOLVO CARS CORPORATION

- Ignition off.
- Connect the connectors, install the components, etc.
- Ignition on.
- Read off the current in the circuit.

  Turn the steering wheel to end stop in both directions.

  The current should oscillate between 11 and 30 mA.

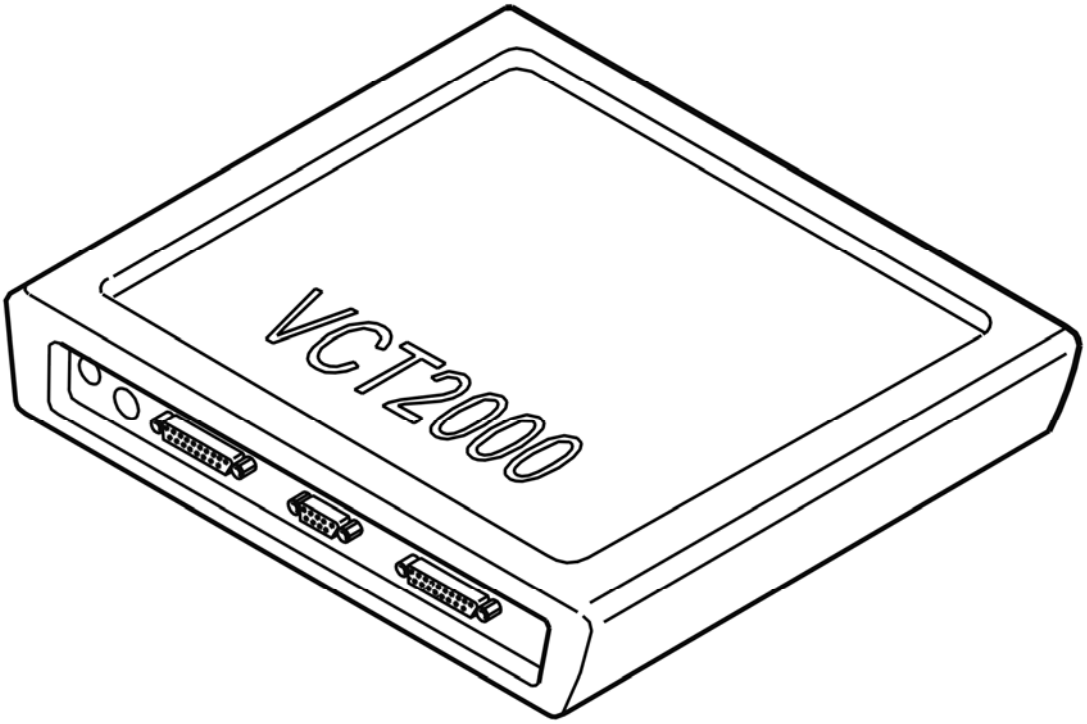

Fig. 115: Identifying VCT2000 Diagnostic Tool Symbol In VIDA
Courtesy of VOLVO CARS CORPORATION

Is the current OK?

- **YES**

  VERIFIED: Troubleshooting has been completed.

- **NO**

  Refer to **INFORMATION**

INFORMATION

FAULT-TRACING INFORMATION

The fault should have been detected and remedied. As this is not the case fault-tracing has failed.

Exit fault-tracing for this diagnostic trouble code (DTC) or make another attempt.

SAS-0041: STEERING WHEEL ANGLE SENSOR. INTERNAL FAULT (2003-2004)

DIAGNOSTIC TROUBLE CODE INFORMATION

Condition

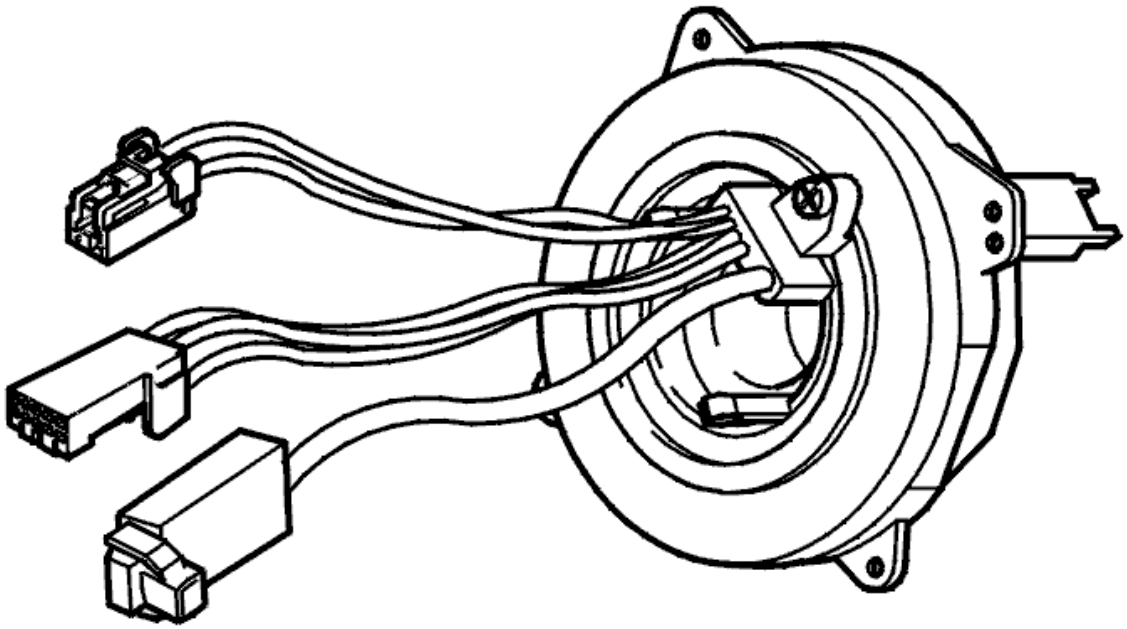

Fig. 116: Identifying Steering Wheel Angle Sensor
Courtesy of VOLVO CARS CORPORATION

If the steering wheel angle sensor (SAS) control unit registers that the steering wheel angle from the steering wheel angle sensor exceeds 700° in any direction, diagnostic trouble code SAS-0041 is set.

Substitute Value

- Stabilizing function disconnected.
- Anti-spin function blocked.

Possible Source

- Steering wheel angle sensor incorrectly adjusted.

Fault symptom[s]

- Anti-spin warning lamp is on.
- Stabilizing function not working.

- Anti-spin does not work.

INTERNAL FAULT

CHECKING THE STEERING WHEEL ANGLE

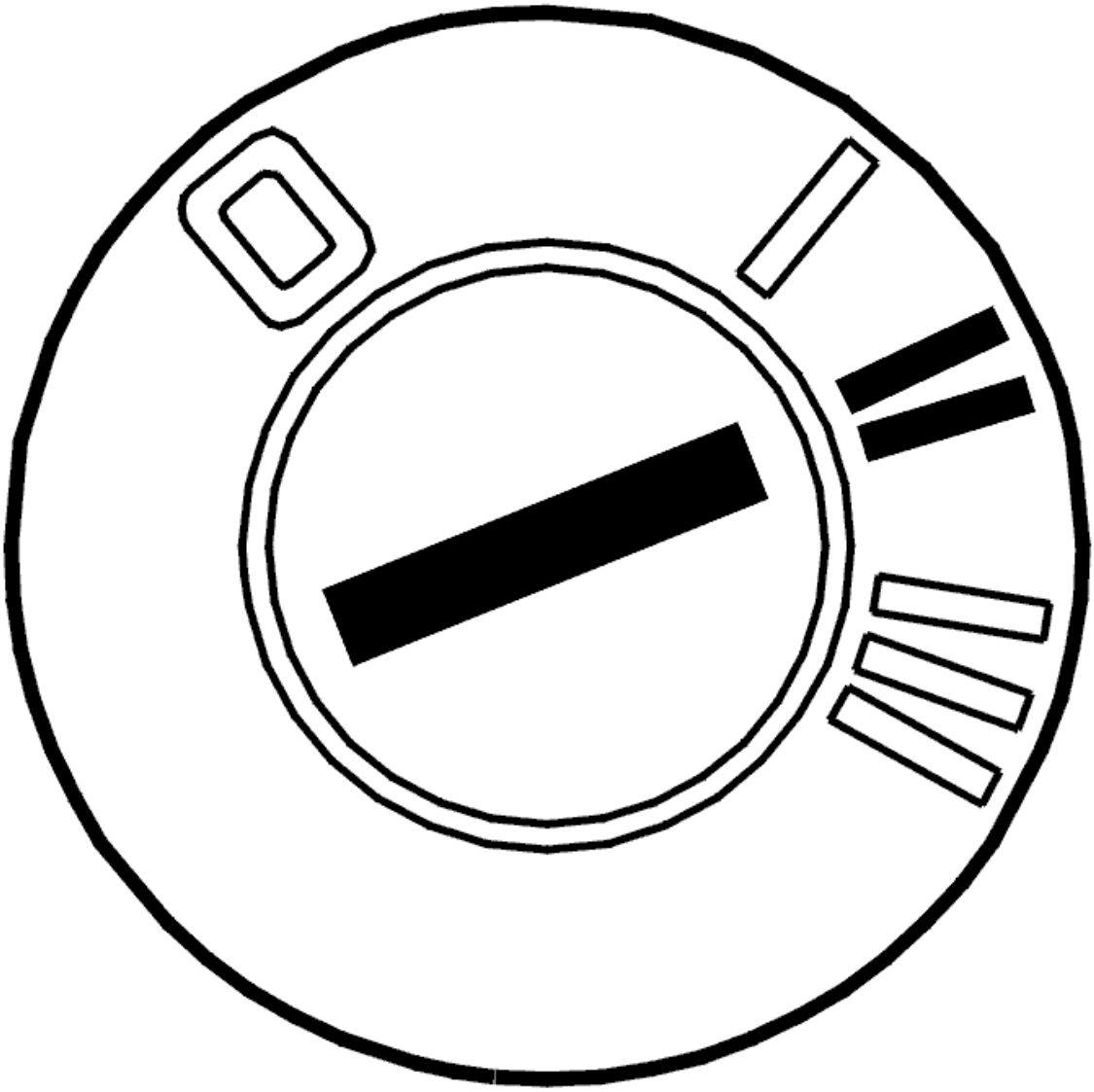

Fig. 117: Identifying Ignition ON
Courtesy of VOLVO CARS CORPORATION

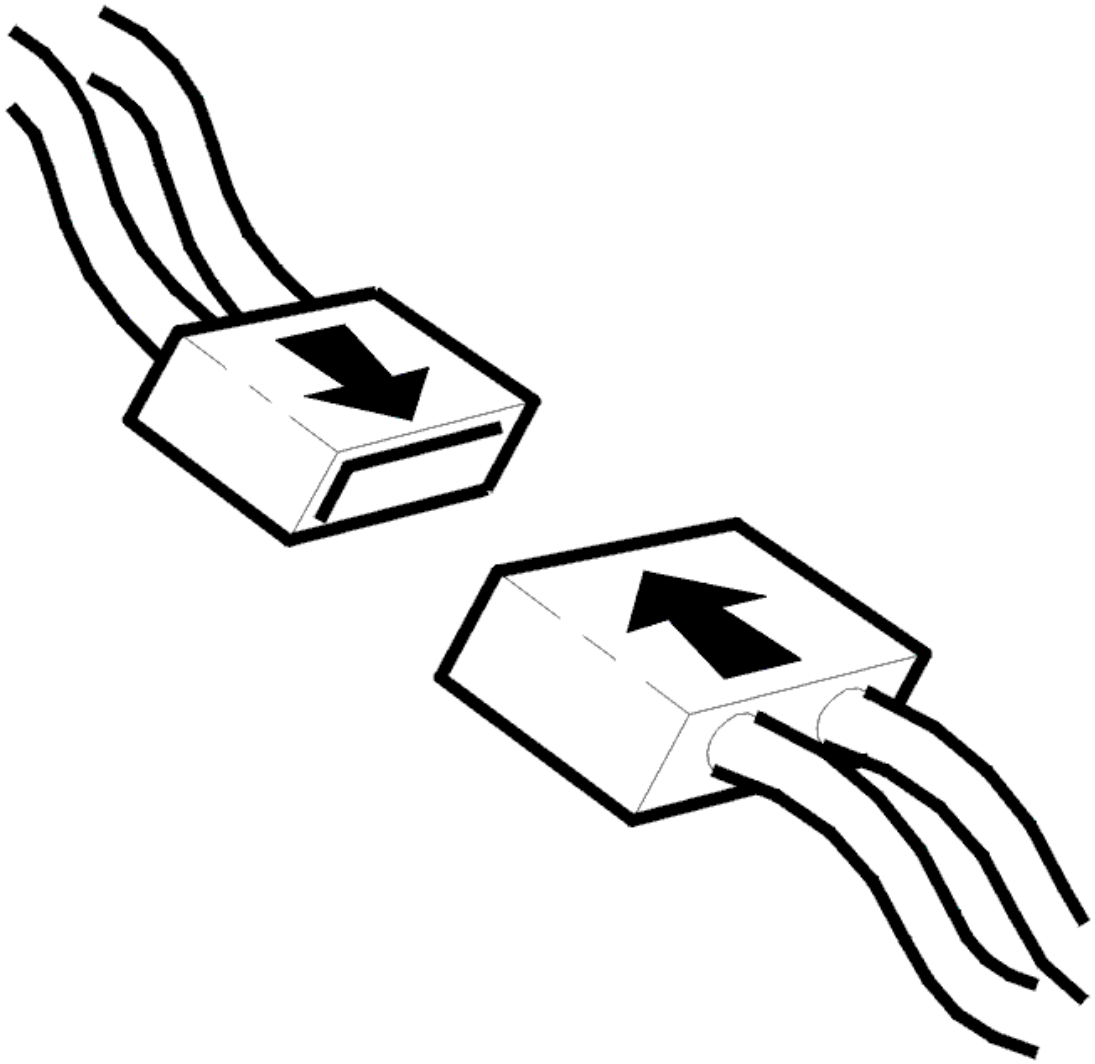

Fig. 118: Connecting Connector
Courtesy of VOLVO CARS CORPORATION

- Ignition off
- Disconnect the connector for the control module for the steering wheel angle sensor
- Disconnect the connector for the steering wheel module (SWM)
- Check the connectors for control module for the steering wheel angle sensor and for the steering wheel angle sensor. Check for contact resistance and oxidation according to **CONTACT RESISTANCE AND OXIDATION**
- Reinstall the components, reconnect the connectors etc.
- Ignition on
- Read off the steering wheel angle.

Turn the steering wheel between both limit positions. Check that the steering wheel angle is updated and

reaches a maximum of +600° or -600°.

Other information:

- To disconnect the connector for the control module for the steering wheel angle sensor, see **CONTACT REEL, REPLACEMENT**
- To disconnect the connector for the steering wheel module (SWM), see **STEERING WHEEL MODULE (SWM), REPLACING** .

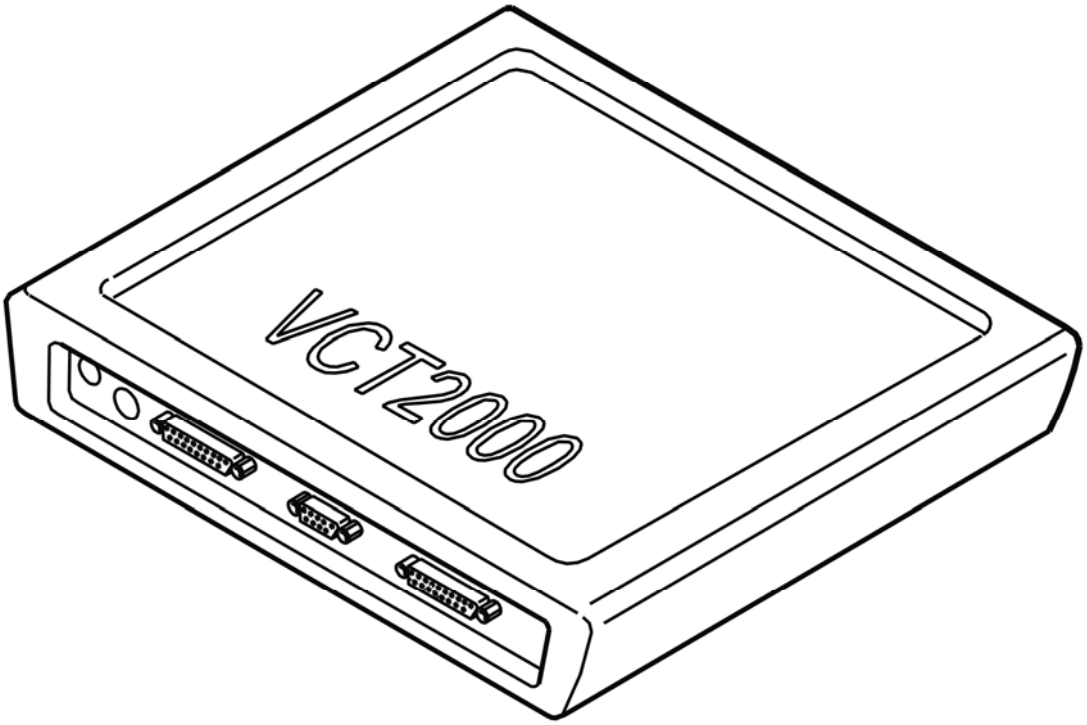

Fig. 119: Identifying VCT2000 Diagnostic Tool Symbol In VIDA
Courtesy of VOLVO CARS CORPORATION

Was the angle in excess of 600° in either direction?

- **YES**

  Refer to **CHECKING THE INSTALLATION**

- **NO**

  OKAY: Troubleshooting has been completed.

CHECKING THE INSTALLATION

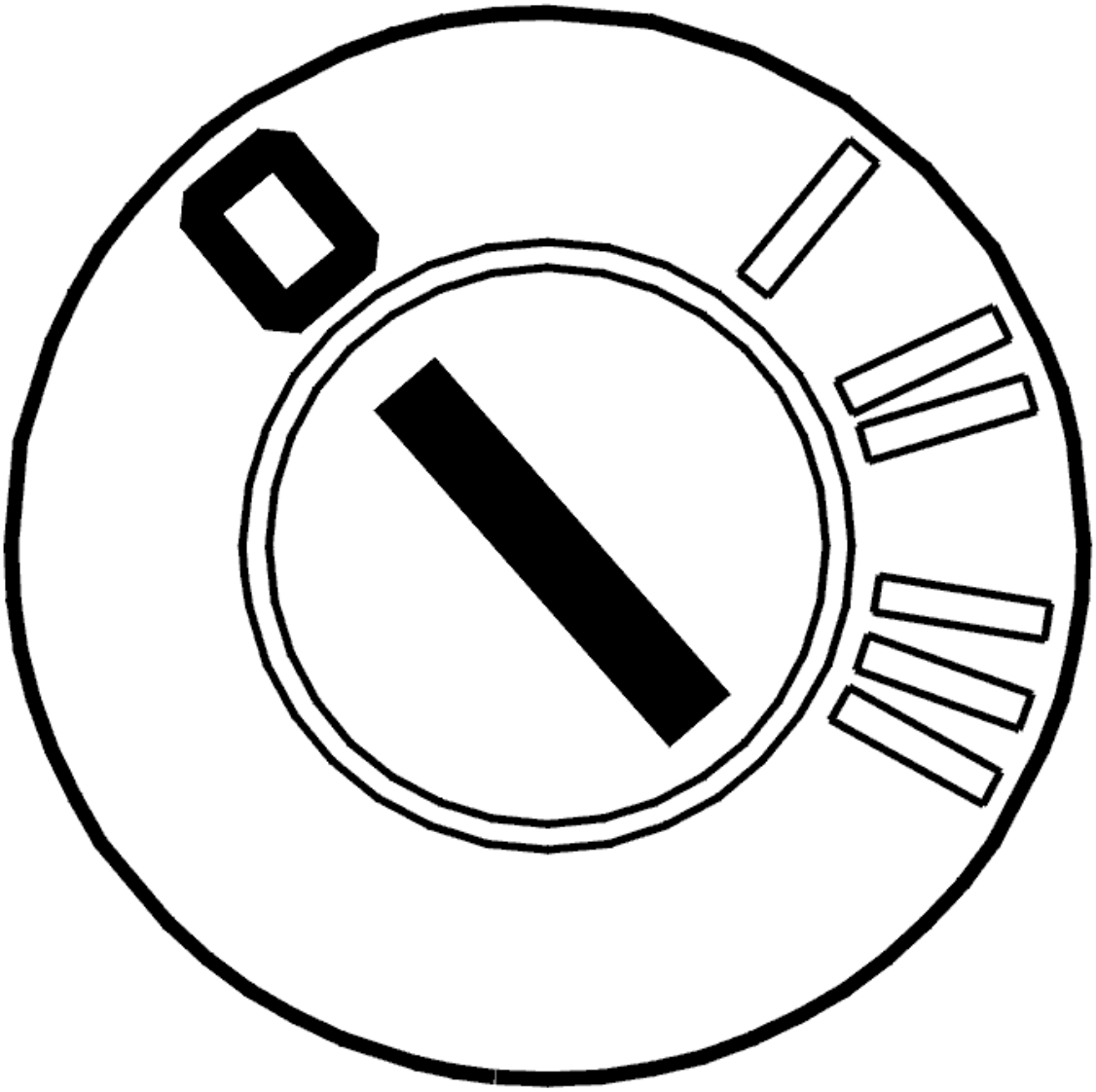

Fig. 120: Identifying Ignition OFF
Courtesy of VOLVO CARS CORPORATION

- Ignition off.

  The diagnostic trouble code (DTC) indicates that the steering wheel module (SWM) or the steering wheel angle sensor is incorrectly installed.

  Check that the steering wheel module (SWM) and the steering wheel angle sensor are correctly installed.

  Other information:

  - To check the steering wheel angle sensor, see **CONTACT REEL, REPLACEMENT**
  - To check the steering wheel module (SWM), see **STEERING WHEEL MODULE (SWM), REPLACING** .

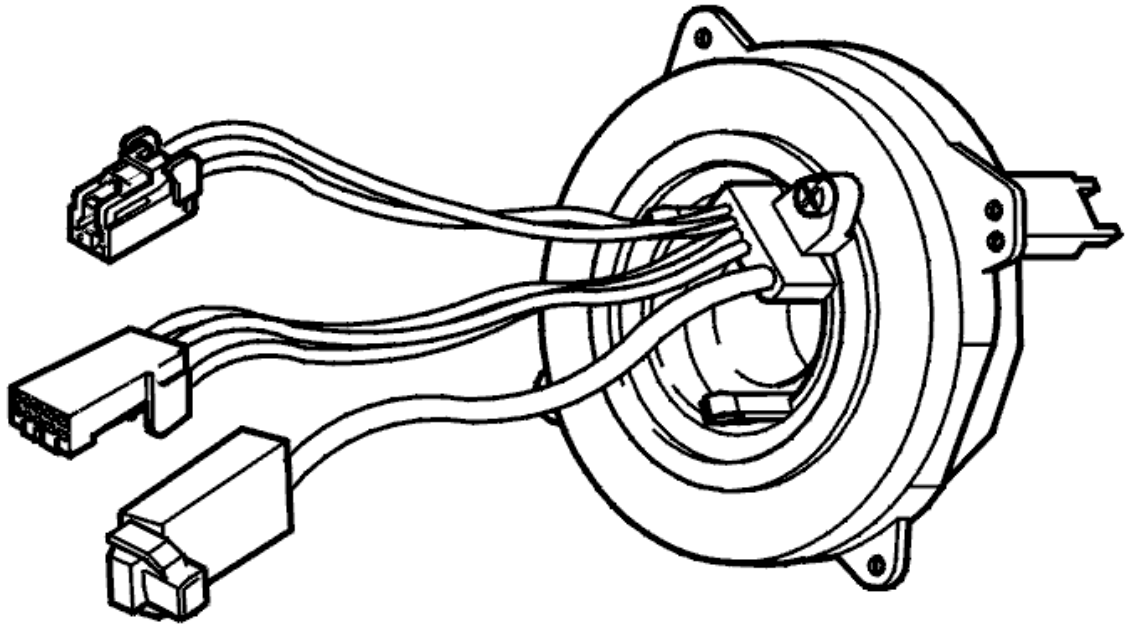

Fig. 121: Identifying Steering Wheel Angle Sensor
Courtesy of VOLVO CARS CORPORATION

- **Continue**

  Refer to **VERIFICATION**

VERIFICATION

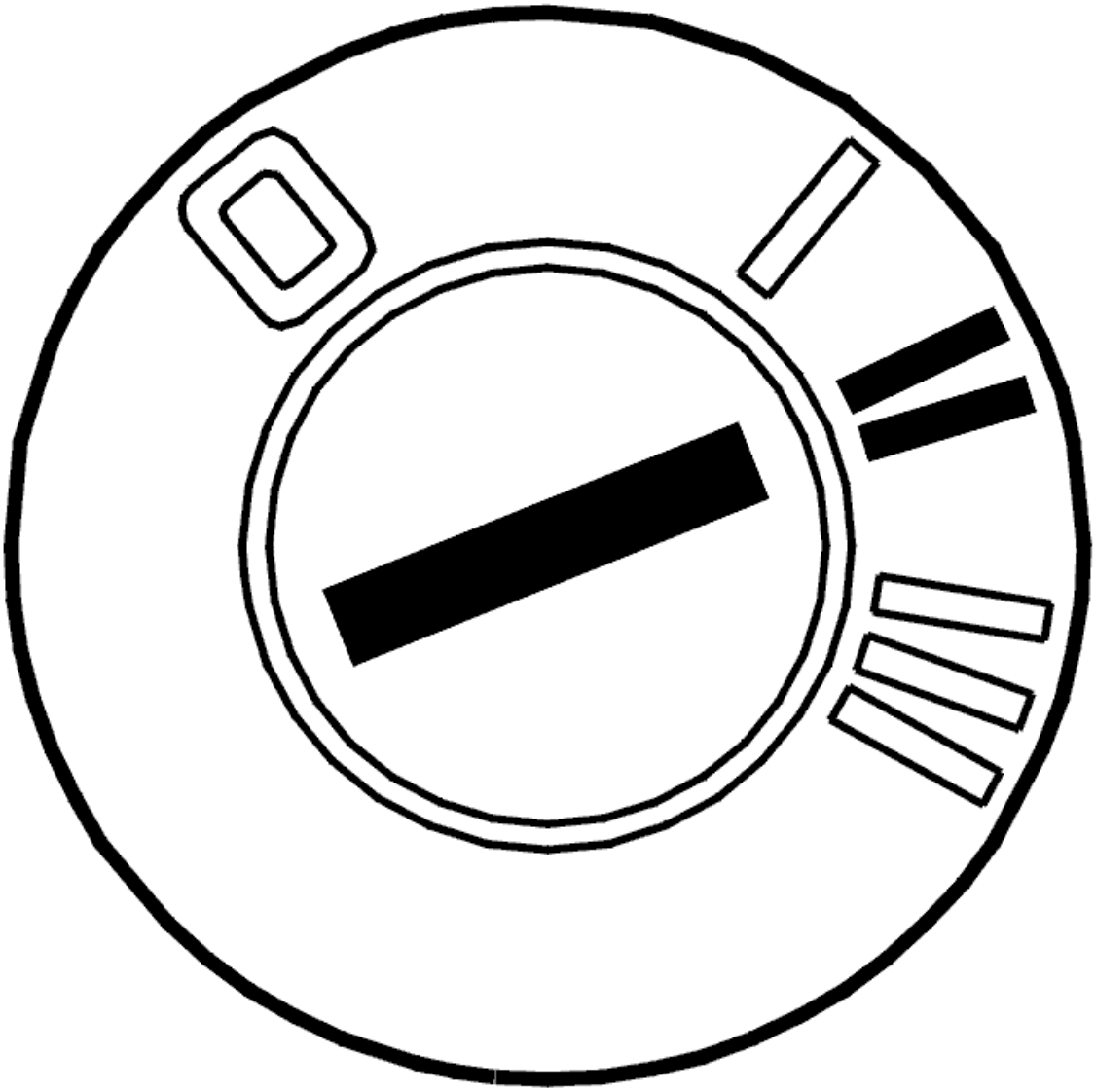

Fig. 122: Identifying Ignition ON
Courtesy of VOLVO CARS CORPORATION

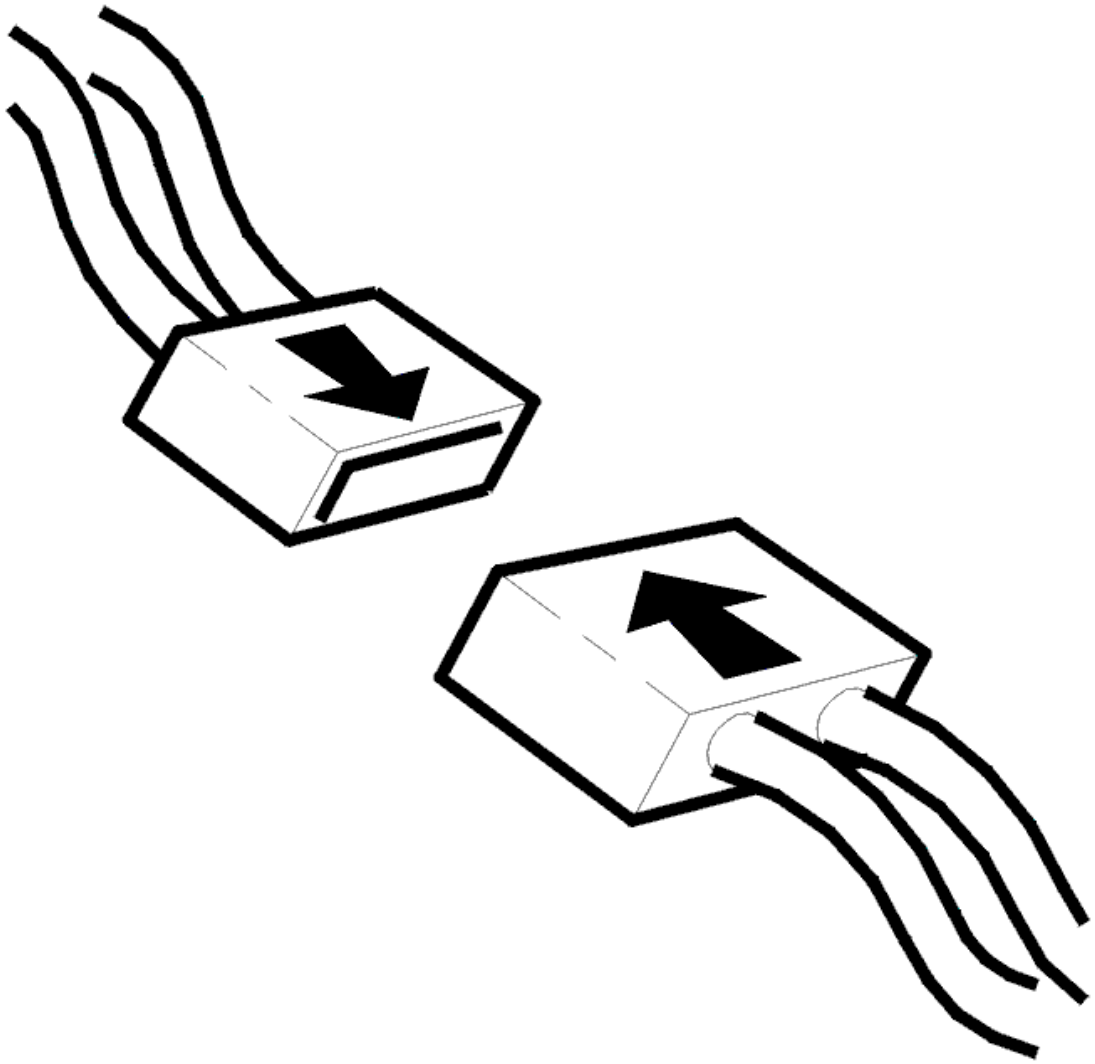

Fig. 123: Connecting Connector
Courtesy of VOLVO CARS CORPORATION

- Ignition off
- Reinstall the components, reconnect the connectors etc.
- Ignition on
- Read off the steering wheel angle.

  Turn the steering wheel between both lock positions. Check that the steering wheel angle is updated and reaches a maximum of +600° or -600°.

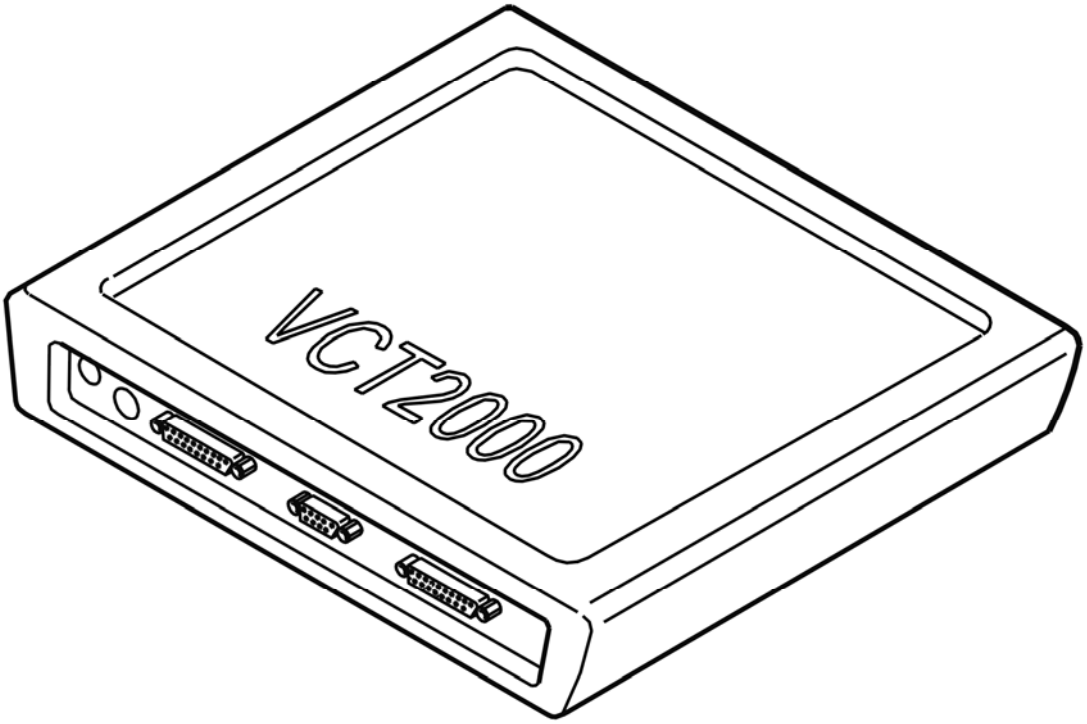

Fig. 124: Identifying VCT2000 Diagnostic Tool Symbol In VIDA
Courtesy of VOLVO CARS CORPORATION

Was the steering wheel angle OK?

- **YES**

  VERIFIED: Troubleshooting has been completed.

- **NO**

  Refer to **INFORMATION**

INFORMATION

FAULT-TRACING INFORMATION

The fault should have been detected and remedied. As this is not the case fault-tracing has failed.

Exit fault-tracing for this diagnostic trouble code (DTC) or make another attempt.

SAS-0042: STEERING WHEEL ANGLE SENSOR. INTERNAL FAULT (2003-2004)

DIAGNOSTIC TROUBLE CODE INFORMATION

Condition

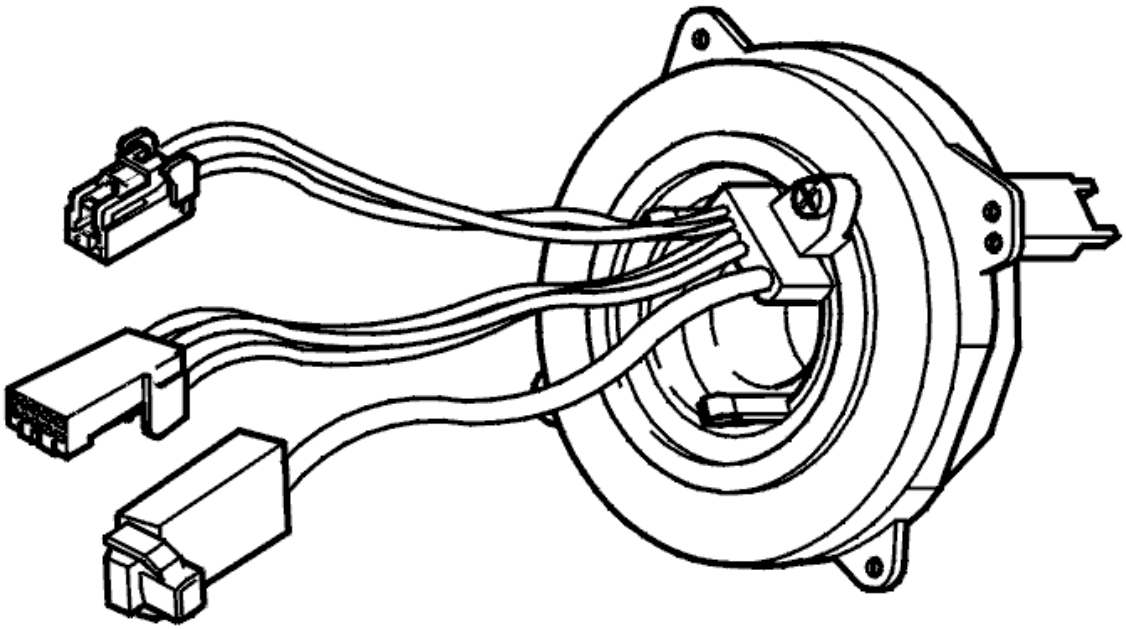

Fig. 125: Identifying Steering Wheel Angle Sensor
Courtesy of VOLVO CARS CORPORATION

If the steering wheel angle sensor (SAS) control unit registers that the steering speed (the speed at which the steering wheel is turned) from the SAS element exceeds 2000°/s, diagnostic trouble code SAS-0042 is set.

Substitute Value

- Stabilizing function disconnected.
- Anti-spin function blocked.

Possible Source

- The front wheels hit a curb or stone.

Fault symptom[s]

- Anti-spin warning lamp is on.
- Stabilizing function not working.

- Anti-spin does not work.

INTERNAL FAULT

INFORMATION

The diagnostic trouble code shows that the steering wheel has turned at a speed of more than 2050°/s. The probable cause of the diagnostic trouble code is that the driver has hit a curb or stone, for example, causing the angle speed of the wheels and steering wheel to change severely.

Check that the fore carriage adjustment has not changed and that the wheels have not been damaged.

SAS-0044: STEERING WHEEL ANGLE SENSOR SIGNAL FAULTY (2003-2004)

DIAGNOSTIC TROUBLE CODE INFORMATION

Condition

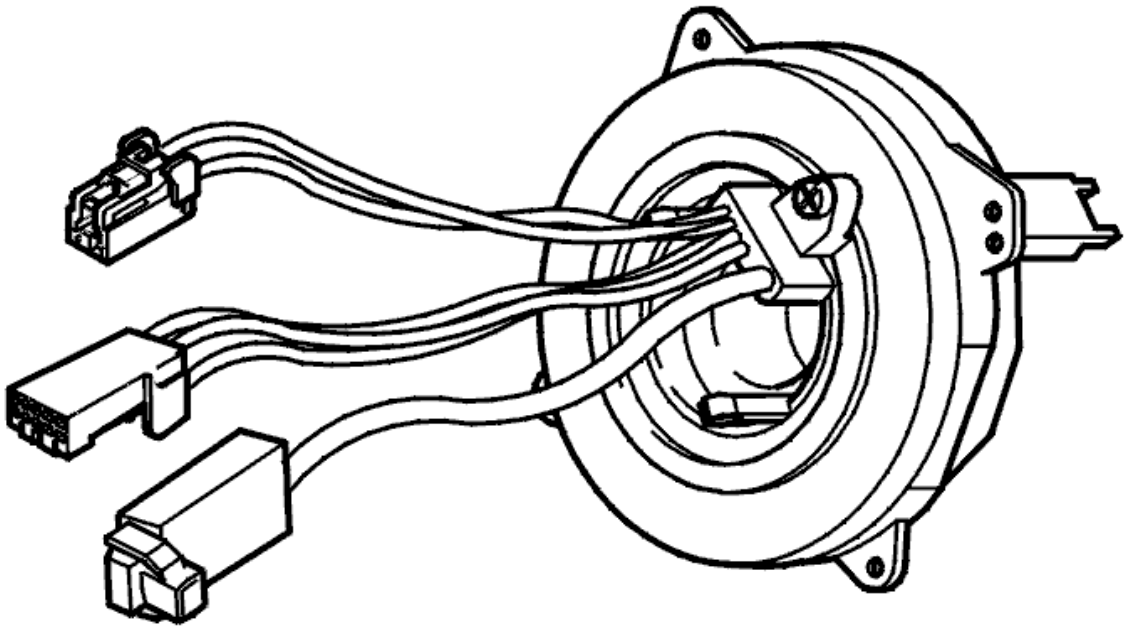

Fig. 126: Identifying Steering Wheel Angle Sensor
Courtesy of VOLVO CARS CORPORATION

If the steering wheel angle sensor (SAS) control unit registers that the voltage in either angle signal A or B is

too low or too high, diagnostic trouble code SAS-0044 will be stored.

Substitute Value

- Stabilizing function disconnected.
- Anti-spin function blocked.

Possible Source

- Internal fault in control unit.

Fault symptom[s]

- Anti-spin warning lamp is on.
- Stabilizing function not working.
- Anti-spin does not work.

FAULTY SIGNAL

CHECKING THE CONNECTORS

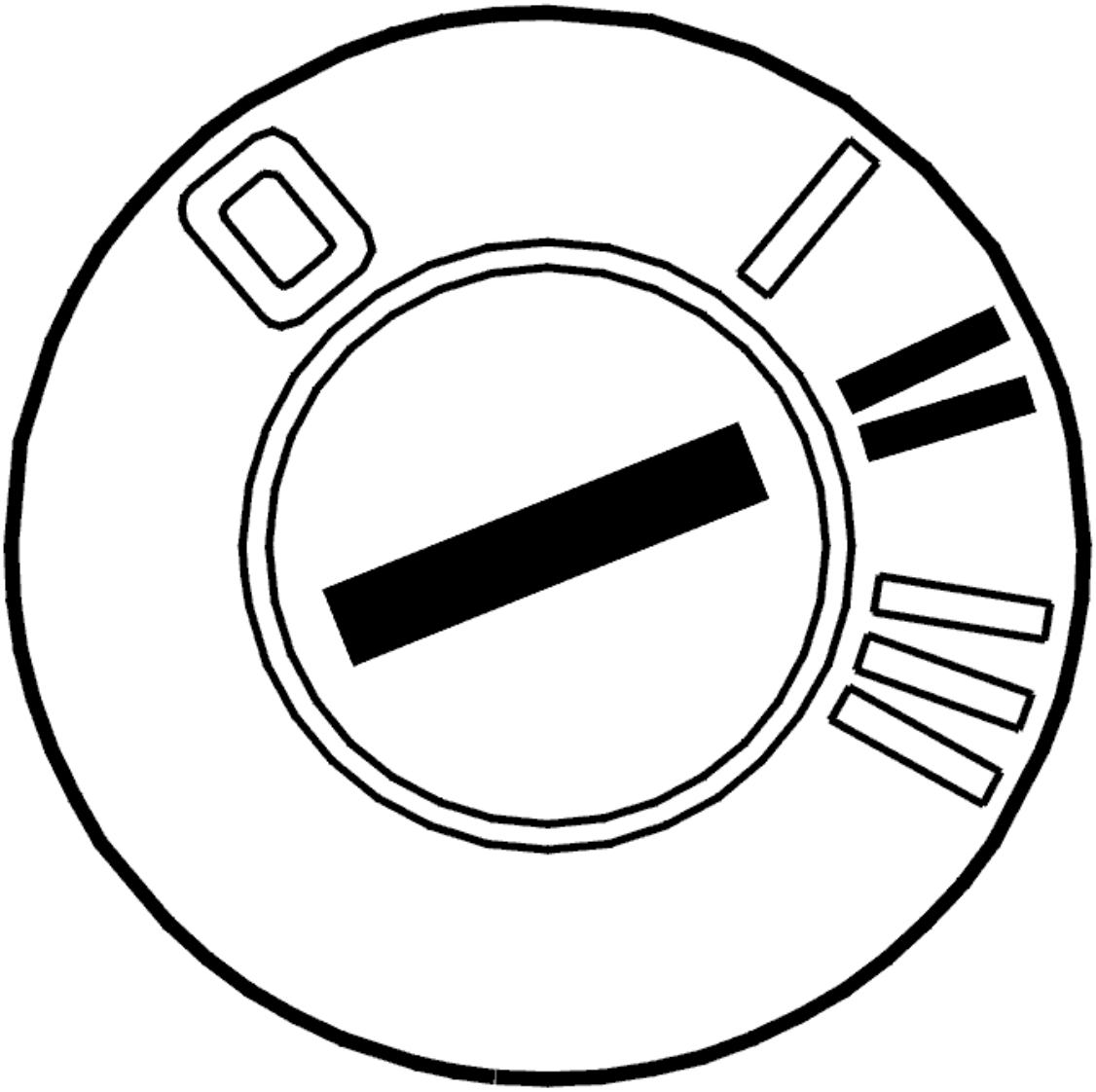

Fig. 127: Identifying Ignition ON
Courtesy of VOLVO CARS CORPORATION

- Ignition off
- Check the connectors for the control module for the steering wheel angle sensor and for the steering wheel module (SWM). Check for contact resistance and oxidation according to **CONTACT RESISTANCE AND OXIDATION**
- Reinstall the components, reconnect the connectors etc.
- Test drive the car. See **TEST DRIVING**
- Ignition on
- Read off diagnostic trouble codes (DTCs).

  If the diagnostic trouble code (DTC) displays an intermittent status, the cause of the fault was probably contact resistance or oxidation in the connector for the control module for the steering wheel angle sensor or in the steering wheel module (SWM)

Other information:

- To disconnect the control module for the steering wheel angle sensor, see **CONTACT REEL, REPLACEMENT**
- To disconnect the steering wheel module (SWM), see **CONTACT REEL, REPLACEMENT**
- For information about signals for the control module for the steering wheel angle sensor, see **SIGNAL DESCRIPTION, CONTROL UNIT FOR THE STEERING WHEEL ANGLE SENSOR (SAS)**
- For information about signals to the steering wheel module (SWM), see **SIGNAL SPECIFICATION** .

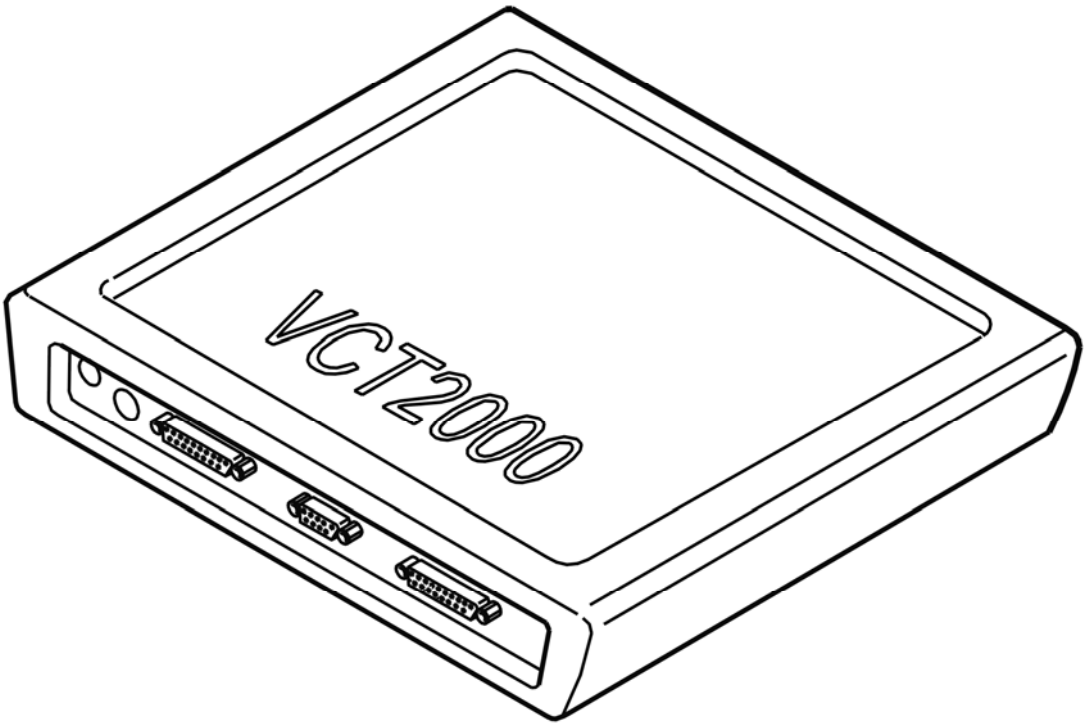

Fig. 128: Identifying VCT2000 Diagnostic Tool Symbol In VIDA
Courtesy of VOLVO CARS CORPORATION

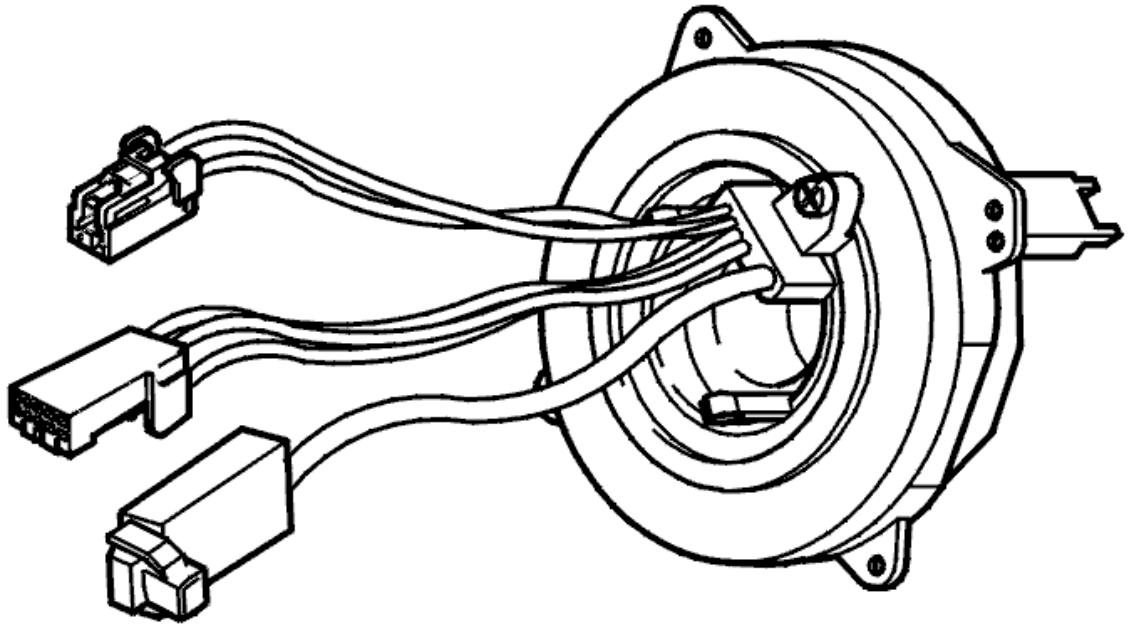

Fig. 129: Identifying Steering Wheel Angle Sensor
Courtesy of VOLVO CARS CORPORATION

Is the status of the diagnostic trouble code (DTC) intermittent?

- **YES**

  OKAY: Troubleshooting has been completed.

- **NO**

  Refer to **CHECKING WIRING AND SENSORS**

CHECKING WIRING AND SENSORS

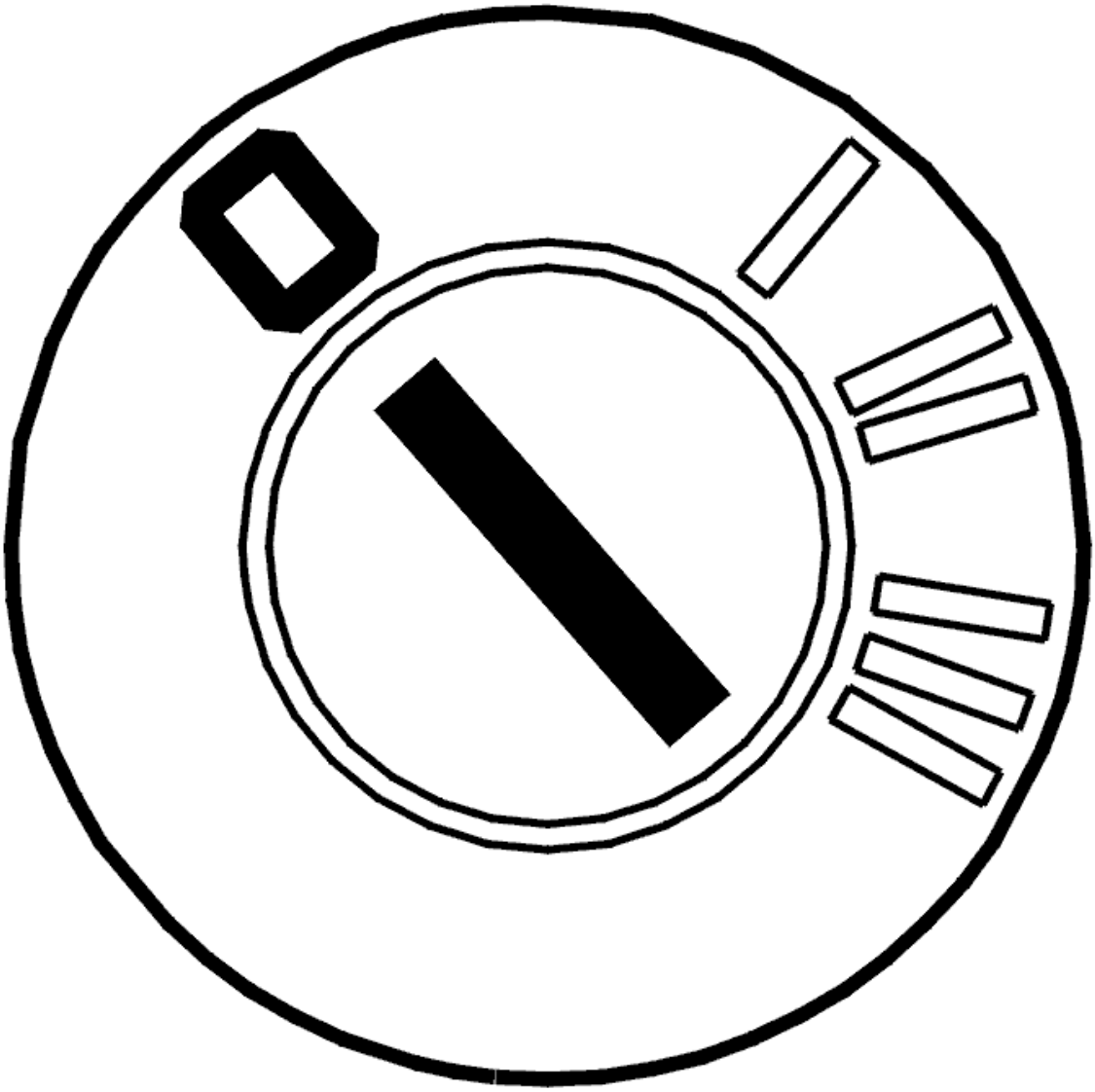

Fig. 130: Identifying Ignition OFF
Courtesy of VOLVO CARS CORPORATION

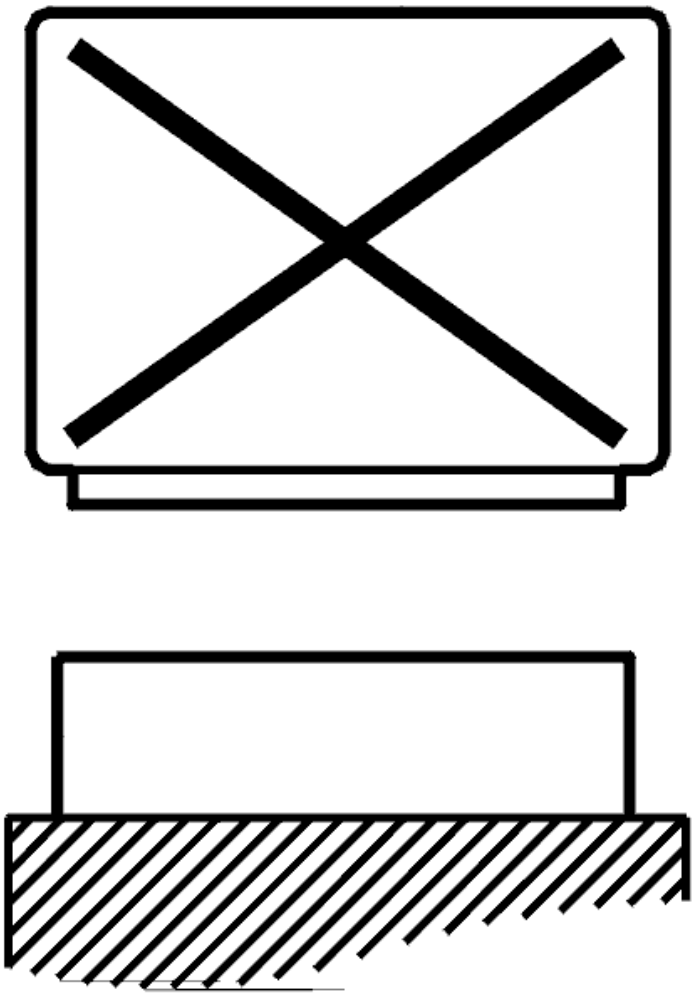

Fig. 131: Disconnecting Control Unit
Courtesy of VOLVO CARS CORPORATION

- Ignition off
- The control module for the steering wheel angle sensor disconnected
- Steering wheel module (SWM) disconnected
- Connect the breakout box to the control module for the steering wheel angle sensor and to the steering wheel module (SWM)

  Check the wiring between the control module for the steering wheel angle sensor

  terminal #3 (terminal (#A27) and steering wheel module (SWM) terminal #5 (terminal #A5)

  terminal #4 (terminal (#A28) and steering wheel module (SWM) terminal #3 (terminal #A3)

check for a short-circuit to ground according to **SHORT-CIRCUIT TO GROUND, PERMANENT FAULTS**

check for a short-circuit to supply voltage according to **SHORT-CIRCUIT TO SUPPLY VOLTAGE. PERMANENT FAULTS** .

Try replacing the steering wheel angle sensor if no fault is found in the wiring.

Other information:

- To connect the breakout box to the control module for the steering wheel angle sensor, see **CONNECTING THE BREAKOUT BOX TO THE STEERING ANGLE SENSOR**
- To connect the breakout box to the steering wheel module (SWM), see **STEERING WHEEL MODULE (SWM), REPLACING**
- To replace the steering wheel angle sensor, see **STEERING WHEEL MODULE (SWM), REPLACING**
- For information about signals for the control module for the steering wheel angle sensor, see **SIGNAL DESCRIPTION, CONTROL UNIT FOR THE STEERING WHEEL ANGLE SENSOR (SAS)**
- For information about signals to the steering wheel module (SWM), see **SIGNAL SPECIFICATION** .

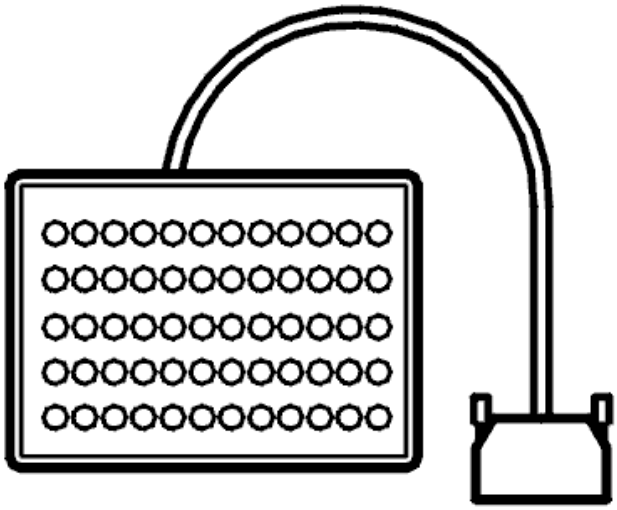

Fig. 132: Breakout Box
Courtesy of VOLVO CARS CORPORATION

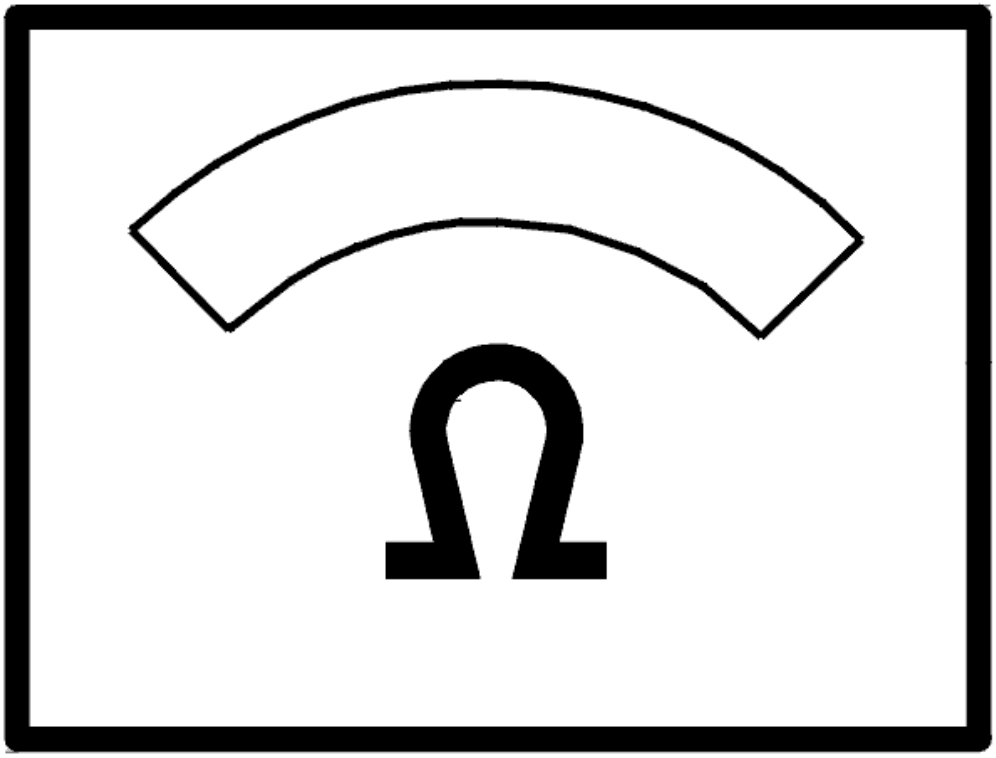

Fig. 133: Identifying Ohm Meter
Courtesy of VOLVO CARS CORPORATION

- **Continue**

  Refer to **VERIFICATION**

VERIFICATION

HINT: After the repair it is necessary to check that the fault has been rectified.

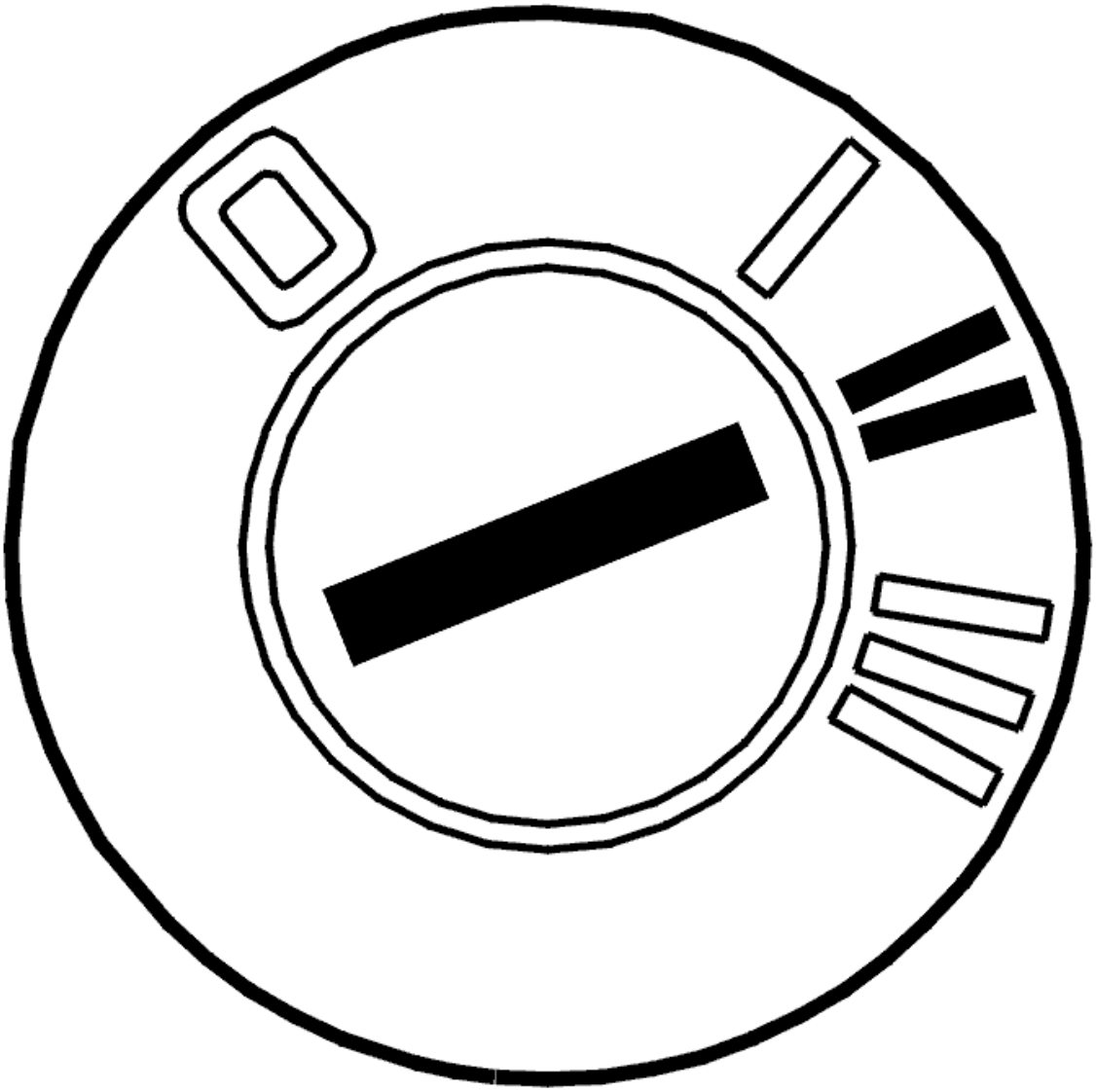

Fig. 134: Identifying Ignition ON
Courtesy of VOLVO CARS CORPORATION

- Ignition off.
- Connect the connectors, install the components, etc.
- Ignition on.
- Read off steering wheel angle signal A.
- Turn the steering wheel to full lock in both directions.

  The value should change between OFF and ON.

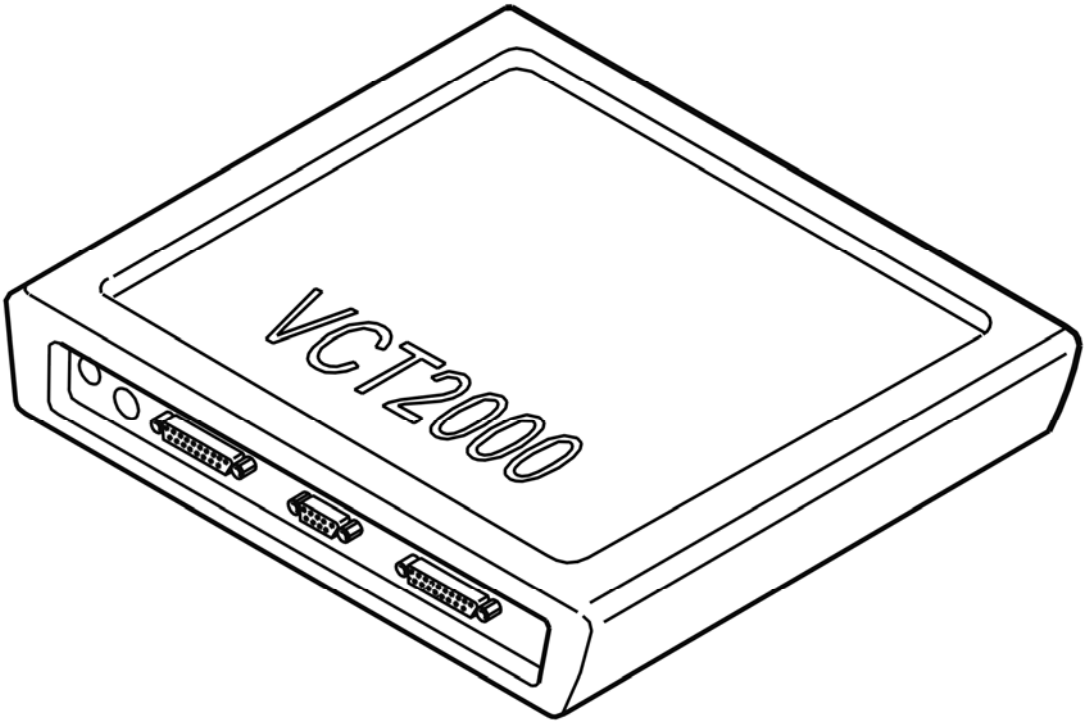

Fig. 135: Identifying VCT2000 Diagnostic Tool Symbol In VIDA
Courtesy of VOLVO CARS CORPORATION

Does the value change?

- **YES**

  VERIFIED: Troubleshooting has been completed.

- **NO**

  Refer to **INFORMATION**

INFORMATION

FAULT-TRACING INFORMATION

The fault should have been detected and remedied. As this is not the case fault-tracing has failed.

Exit fault-tracing for this diagnostic trouble code (DTC) or make another attempt.

TEST DRIVING

WARNING: **Problems with the brakes may make the car difficult to maneuver. Always**

test drive cars under safe, controlled conditions. Follow the appropriate traffic and speed regulations.

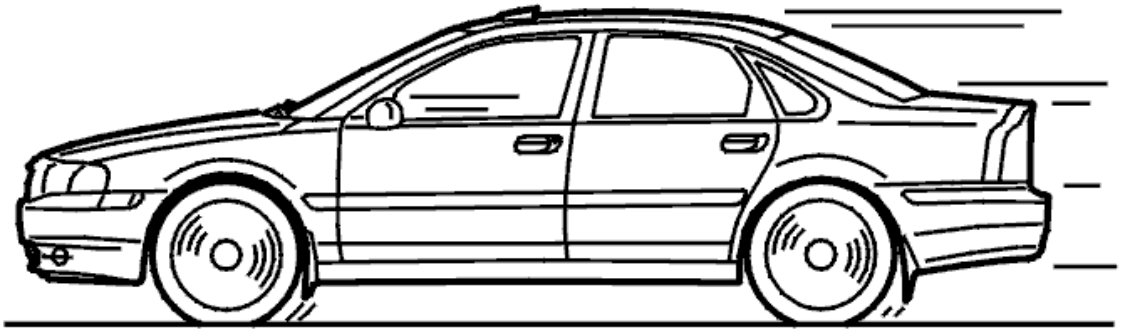

Fig. 136: Identifying Test Drive
Courtesy of VOLVO CARS CORPORATION

To test drive the ABS/STC (stability and traction control) / TRACS (traction control system) functions, see **TEST DRIVE FORM (ABS), DESCRIPTION** .

To test drive the DSTC functions, see **TEST DRIVE FORM (DSTC (DYNAMIC STABILITY AND TRACTION CONTROL) /BRAKE CONTROL MODULE), DESCRIPTION** .

SAS-0045: STEERING WHEEL ANGLE SIGNAL A. NO SIGNAL. INTERMITTENT FAULT (2003-2004)

DIAGNOSTIC TROUBLE CODE INFORMATION

Condition

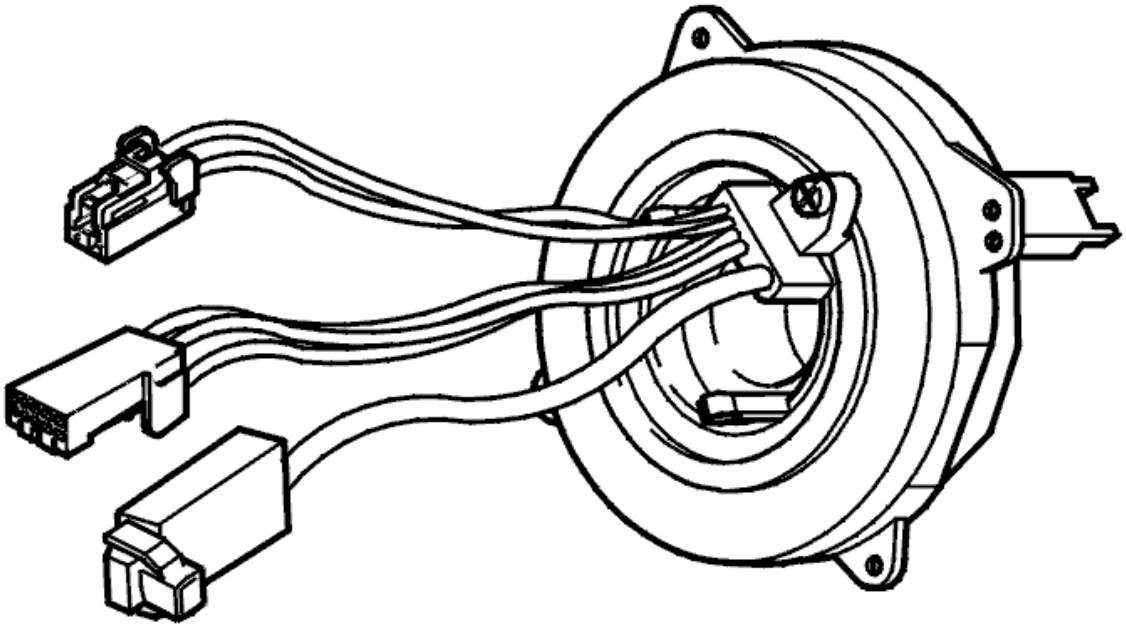

Fig. 137: Identifying Steering Wheel Angle Sensor
Courtesy of VOLVO CARS CORPORATION

The steering wheel angle sensor has two circuits each with 4 LEDs and 4 receptors which read off the position of their individual code wheel. One circuit measures the steering wheel angle and the other measures steering wheel revolutions. If the steering wheel angle sensor (SAS) control unit registers that steering wheel angle signal A is missing, diagnostic trouble code SAS-0045 will be stored.

Substitute Value

- Stabilizing function disconnected.
- Anti-spin function blocked.

Possible Source

- Open circuit in the signal wires.
- Internal fault in control unit.

Fault symptom[s]

- Anti-spin warning lamp is on.
- Stabilizing function not working.
- Anti-spin does not work.

NO SIGNAL. INTERMITTENT FAULT

CHECKING THE WIRING AND CONNECTIONS

Check the wires between steering wheel angle sensor (SAS) control unit #3 (#A27) and steering wheel control unit (SWM) #5 (#A5) for an open circuit, as described in, see **OPEN-CIRCUIT, INTERMITTENT FAULTS** .

Additional information:

- To connect the test box to the steering wheel angle sensor (SAS), see **CONNECTING THE BREAKOUT BOX TO THE STEERING ANGLE SENSOR** .
- To connect the test box to the steering wheel control unit (SWM), see **CONNECTING THE BREAKOUT BOX** .
- For information on signals, see **SIGNAL DESCRIPTION, CONTROL UNIT FOR THE STEERING WHEEL ANGLE SENSOR (SAS)** and **SIGNAL SPECIFICATION** .

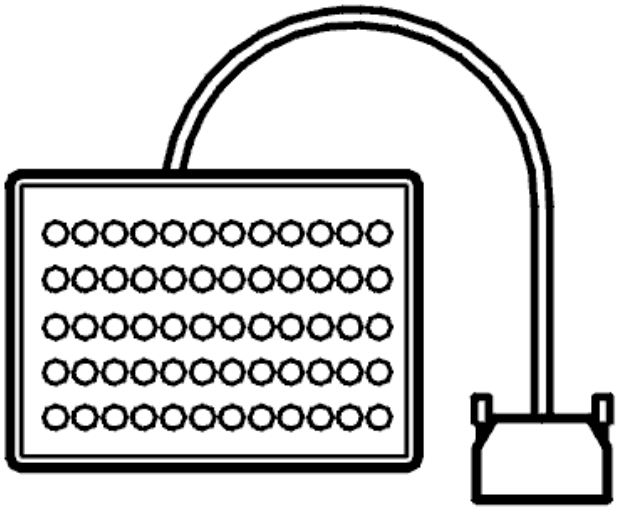

Fig. 138: Breakout Box
Courtesy of VOLVO CARS CORPORATION

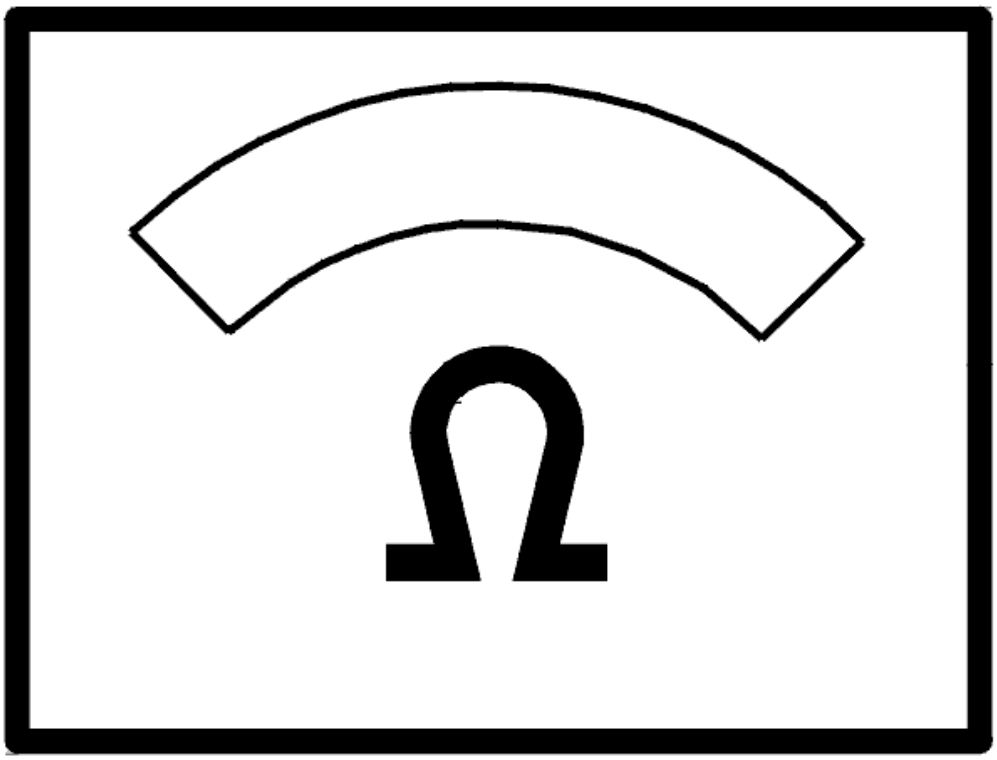

Fig. 139: Identifying Ohm Meter
Courtesy of VOLVO CARS CORPORATION

- **Continue**

  Refer to **INFORMATION**

INFORMATION

FAULT-TRACING INFORMATION

If the fault is intermittent, do not verify fault-tracing if the fault does not recur.

It is possible to view the information again, or leave fault-tracing for this diagnostic trouble code (DTC).

SAS-0045: STEERING WHEEL ANGLE SIGNAL A. NO SIGNAL.

PERMANENT FAULT (2003-2004)

DIAGNOSTIC TROUBLE CODE INFORMATION

see **DIAGNOSTIC TROUBLE CODE INFORMATION**

SIGNAL MISSING. PERMANENT FAULT

CHECKING THE CONNECTORS

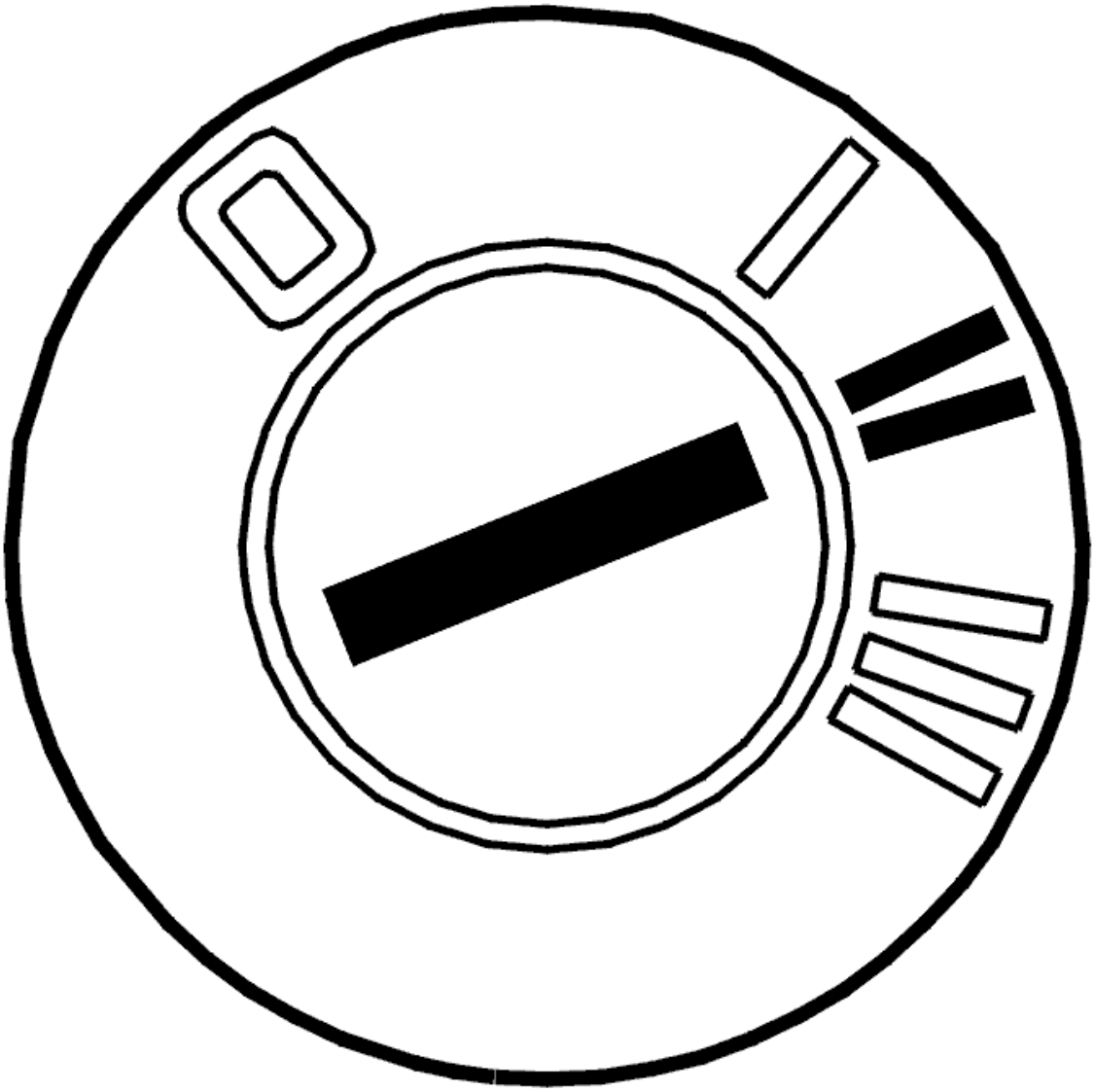

Fig. 140: Identifying Ignition ON
Courtesy of VOLVO CARS CORPORATION

- Ignition off
- Reinstall the components, reconnect the connectors etc.

- Ignition on
- Read off steering wheel angle signal A.

  Turn the steering wheel to the limit positions in both directions and check that the value changes between ON and OFF.

  Other information:

  - To disconnect the control module for the steering wheel angle sensor, see **STEERING WHEEL MODULE (SWM), REPLACING**
  - To disconnect the steering wheel module (SWM), see **STEERING WHEEL MODULE (SWM), REPLACING**
  - For information about signals for the control module for the steering wheel angle sensor, see **SIGNAL DESCRIPTION, CONTROL UNIT FOR THE STEERING WHEEL ANGLE SENSOR (SAS)**
  - For information about signals to the steering wheel module (SWM), see **SIGNAL SPECIFICATION** .

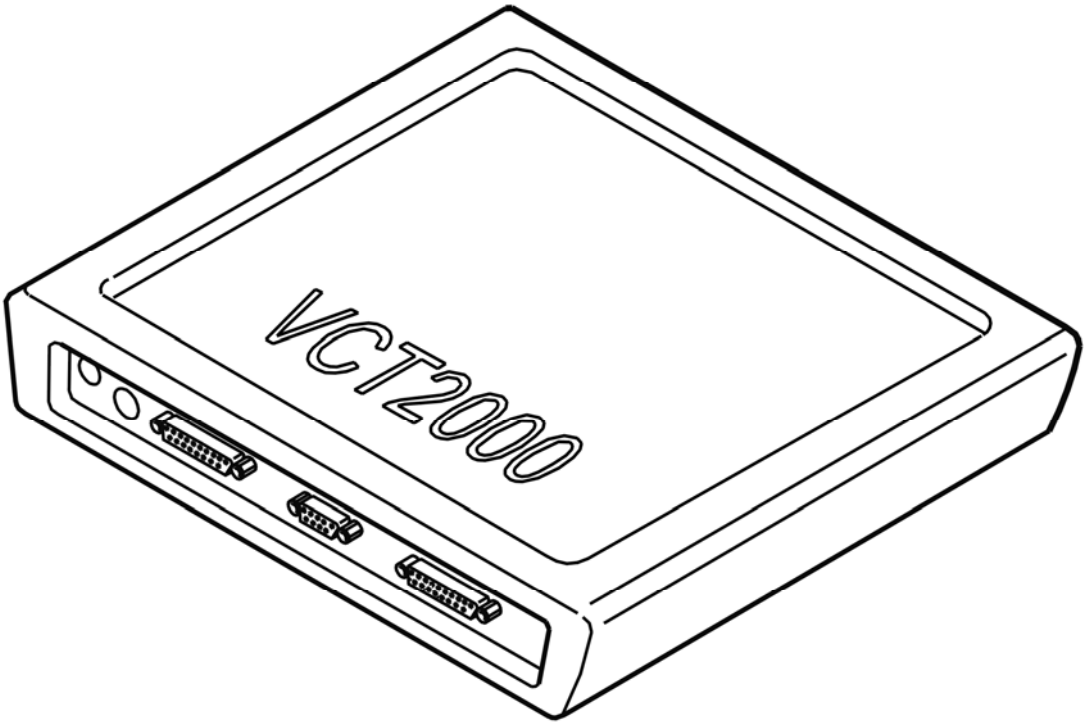

Fig. 141: Identifying VCT2000 Diagnostic Tool Symbol In VIDA
Courtesy of VOLVO CARS CORPORATION

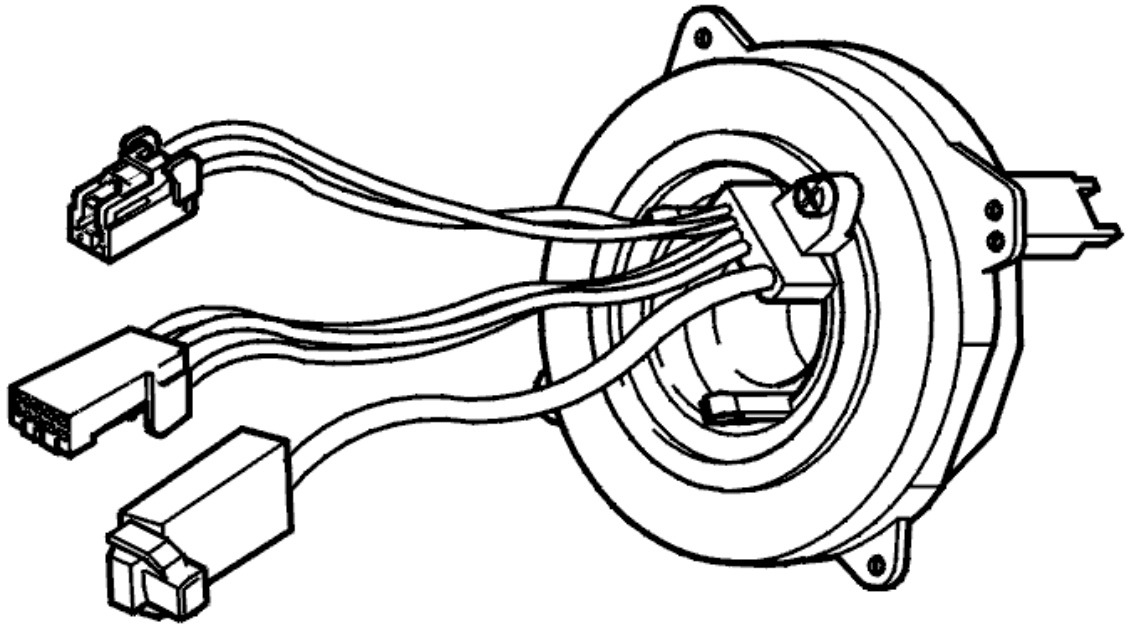

Fig. 142: Identifying Steering Wheel Angle Sensor
Courtesy of VOLVO CARS CORPORATION

Does the value change between OFF and ON?

- **YES**

  Refer to **VERIFICATION**

- **NO**

  Refer to **CHECKING WIRING AND SENSORS**

CHECKING WIRING AND SENSORS

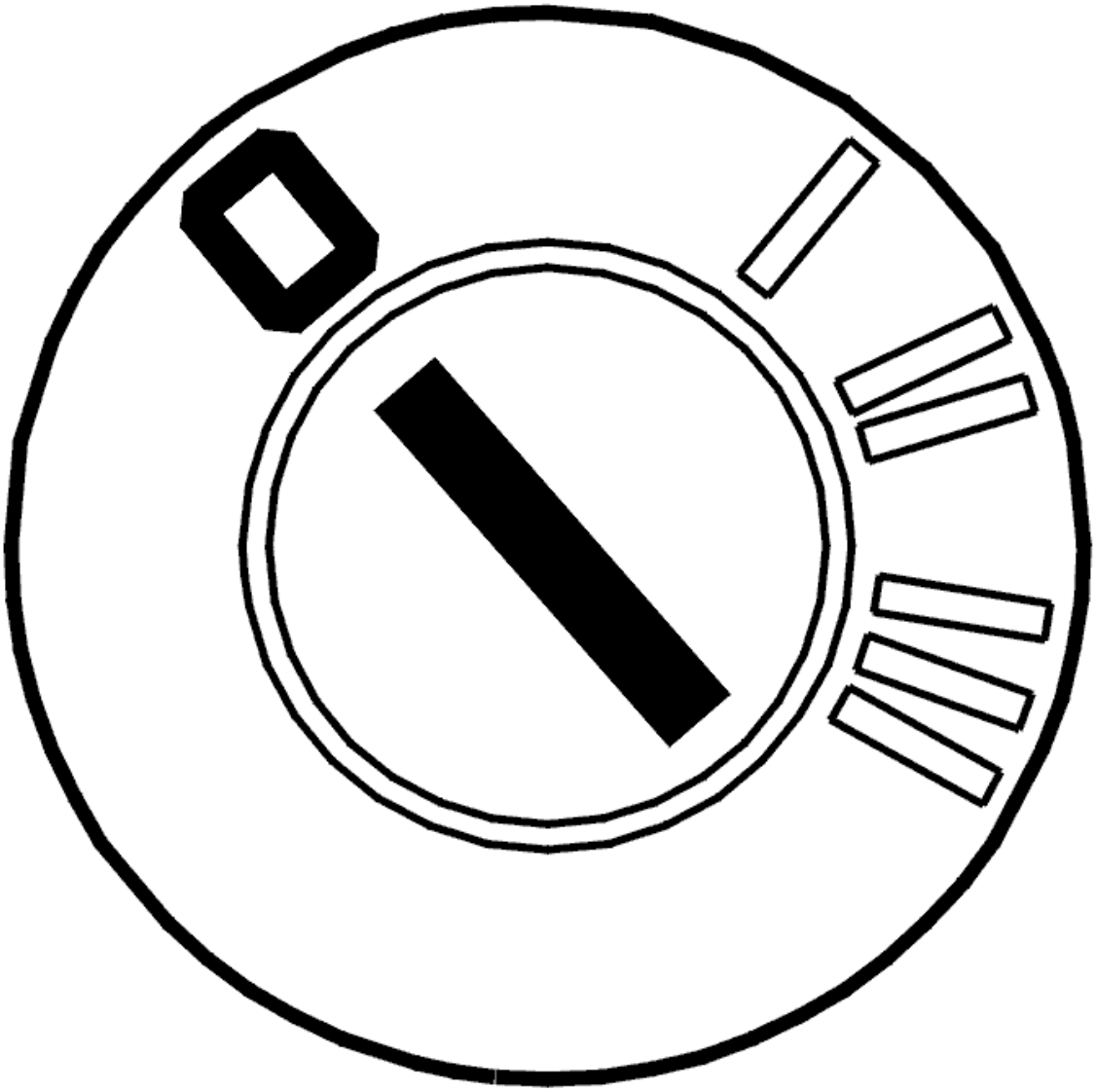

Fig. 143: Identifying Ignition OFF
Courtesy of VOLVO CARS CORPORATION

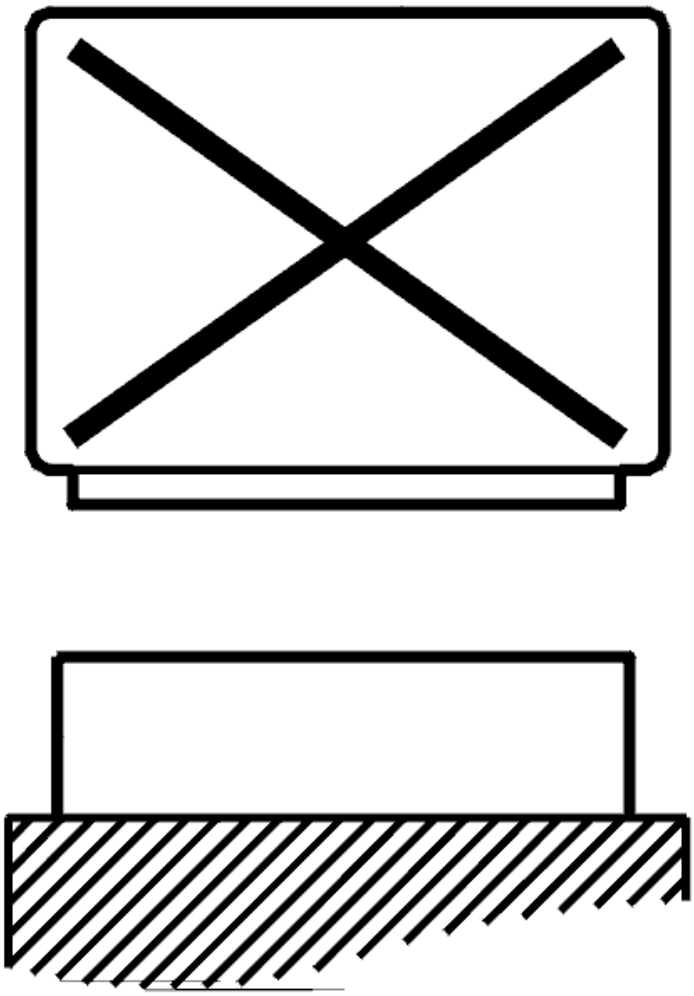

Fig. 144: Disconnecting Control Unit
Courtesy of VOLVO CARS CORPORATION

- Ignition off
- The control module for the steering wheel angle sensor disconnected
- Steering wheel module (SWM) disconnected
- Connect the breakout box to the control module for the steering wheel angle sensor and to the steering wheel module (SWM)

  Check the wiring between the control module for the steering wheel angle sensor terminal #3 (#A27) and steering wheel module (SWM) terminal #5 (#A5). Check for an open-circuit according to **OPEN-CIRCUIT, PERMANENT FAULTS** .

  Try replacing the steering wheel angle sensor if no faults are found in the wiring between the control module for the steering wheel angle sensor and the steering wheel module (SWM).

Other information:

- To connect the breakout box to the control module for the steering wheel angle sensor, see **CONNECTING THE BREAKOUT BOX TO THE STEERING ANGLE SENSOR**
- To connect the breakout box to the steering wheel module (SWM), see **CONNECTING THE BREAKOUT BOX**
- To replace the steering wheel angle sensor, see **CONTACT REEL, REPLACEMENT**
- For information about signals to the control module for the steering wheel angle sensor, see **SIGNAL DESCRIPTION, CONTROL UNIT FOR THE STEERING WHEEL ANGLE SENSOR (SAS)**
- For information about signals to the steering wheel module (SWM), see **SIGNAL SPECIFICATION** .

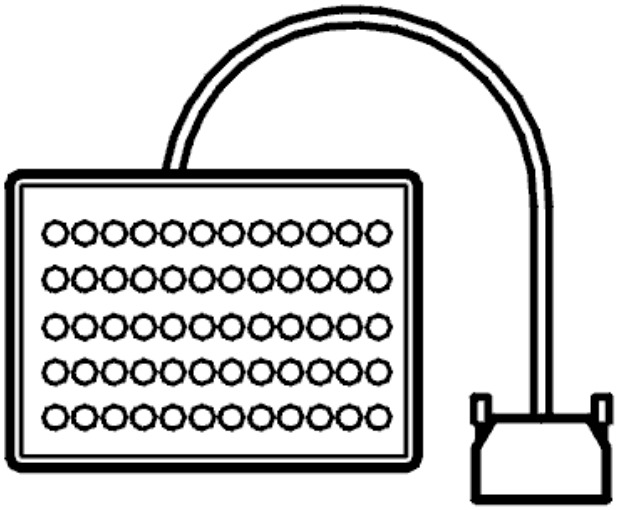

Fig. 145: Breakout Box
Courtesy of VOLVO CARS CORPORATION

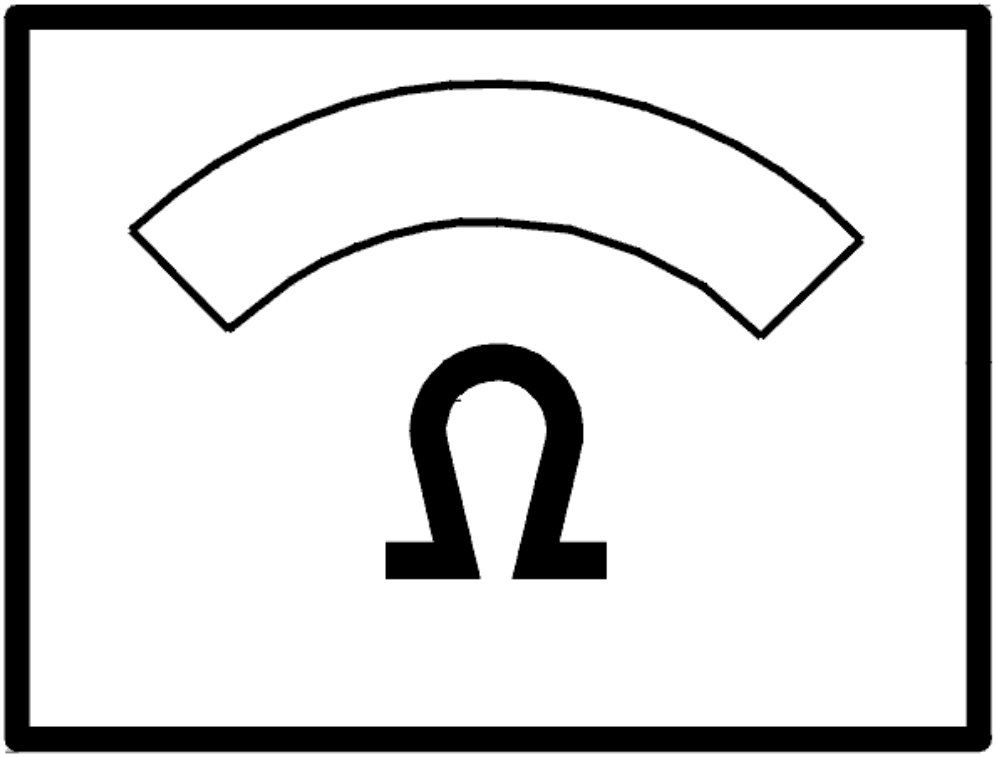

Fig. 146: Identifying Ohm Meter
Courtesy of VOLVO CARS CORPORATION

- **Continue**

  Refer to **VERIFICATION**

VERIFICATION

HINT: After the repair it is necessary to check that the fault has been rectified.

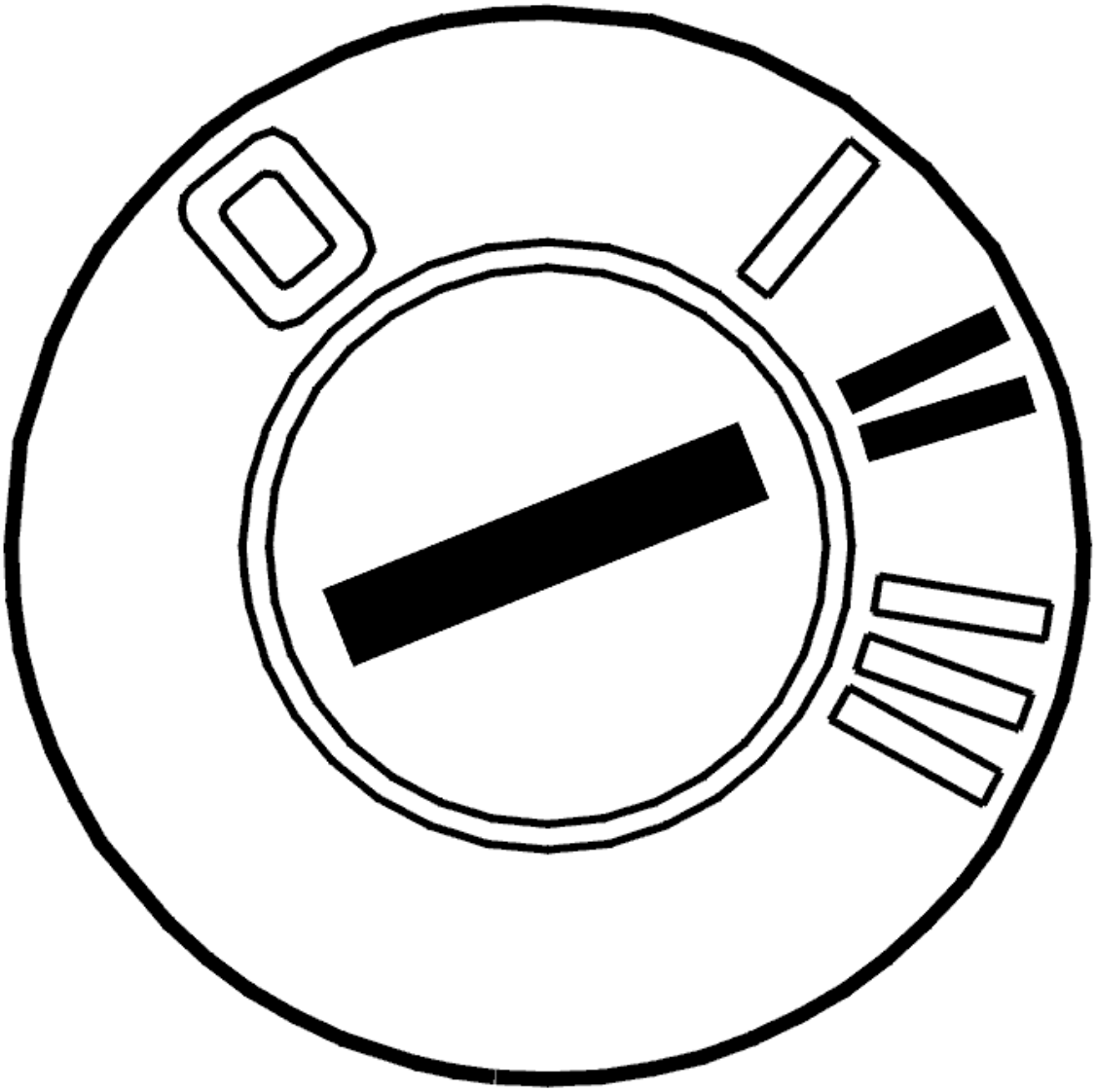

Fig. 147: Identifying Ignition ON
Courtesy of VOLVO CARS CORPORATION

- Ignition off.
- Connect the connectors, install the components, etc.
- Ignition on.
- Read off steering wheel angle signal A.
- Turn the steering wheel to full lock in both directions.

  The value should change between OFF and ON.

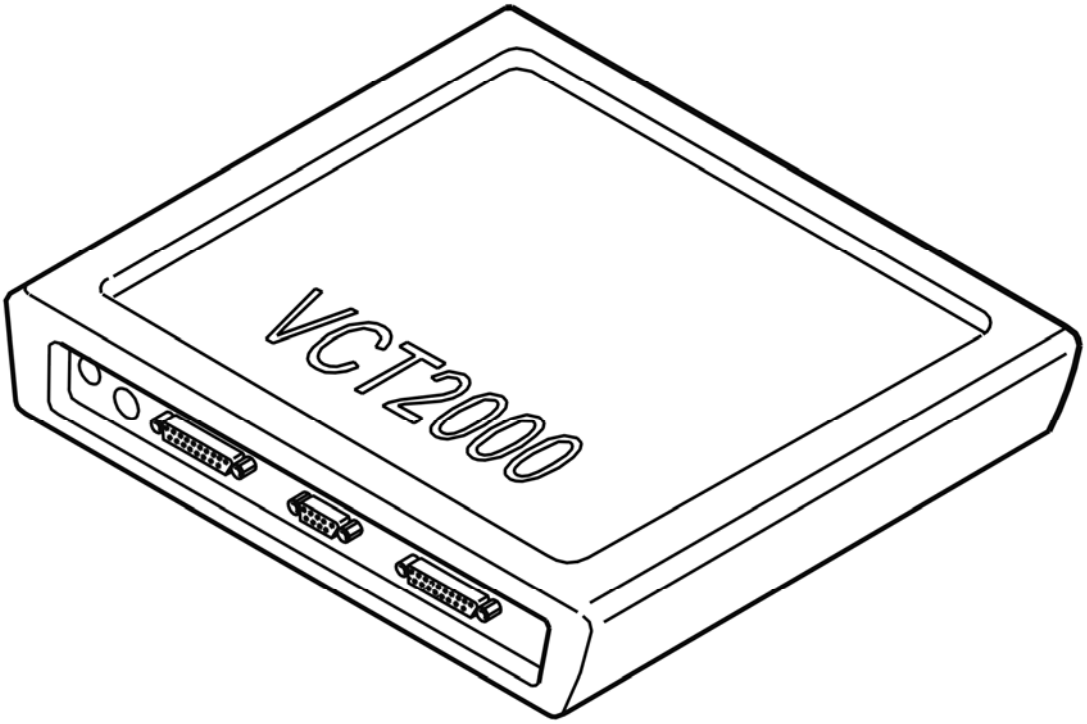

Fig. 148: Identifying VCT2000 Diagnostic Tool Symbol In VIDA
Courtesy of VOLVO CARS CORPORATION

Does the value change?

- **YES**

  VERIFIED: Troubleshooting has been completed.

- **NO**

  Refer to **INFORMATION**

INFORMATION

FAULT-TRACING INFORMATION

The fault should have been detected and remedied. As this is not the case fault-tracing has failed.

Exit fault-tracing for this diagnostic trouble code (DTC) or make another attempt.

SAS-0046: STEERING WHEEL ANGLE SIGNAL B. NO SIGNAL. INTERMITTENT FAULT (2003-2004)

DIAGNOSTIC TROUBLE CODE INFORMATION

Condition

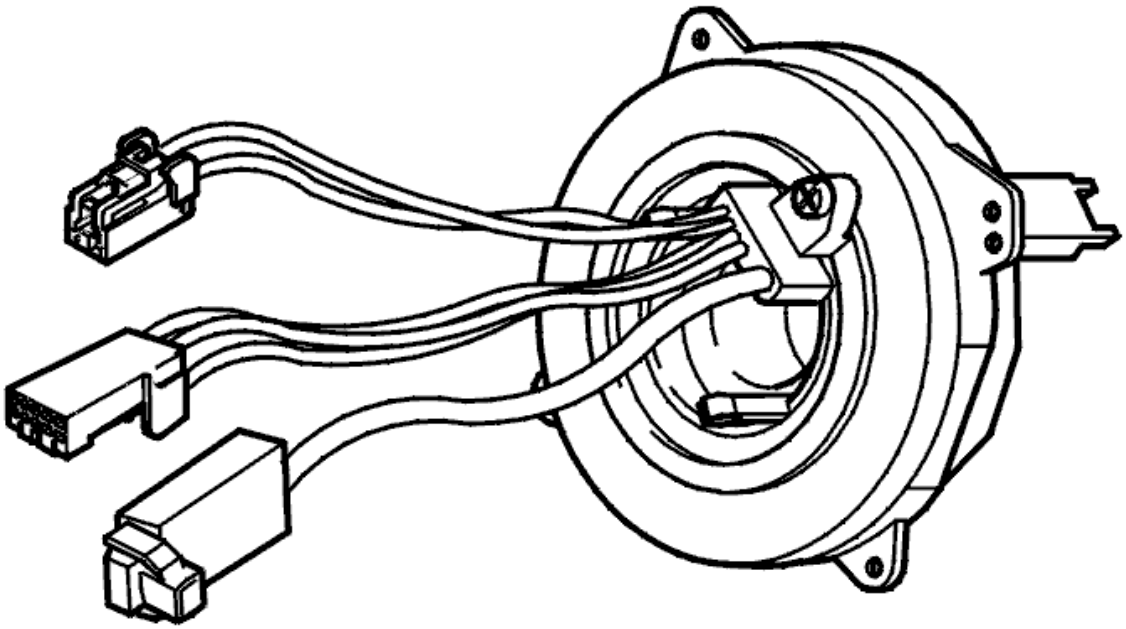

Fig. 149: Identifying Steering Wheel Angle Sensor
Courtesy of VOLVO CARS CORPORATION

The steering wheel angle sensor has two circuits each with 4 LEDs and 4 receptors which read off the position of their individual code wheel. One circuit measures the steering wheel angle and the other measures steering wheel revolutions. If the steering wheel angle sensor (SAS) control unit registers that steering wheel angle signal B is missing, diagnostic trouble code SAS-0046 will be stored.

Substitute Value

- Stabilizing function disconnected.
- Anti-spin function blocked.

Possible Source

- Contact resistance or oxidation in the connector of the steering wheel angle sensor control unit or the steering wheel control unit (SWM).
- Open circuit in the signal wires.
- Internal fault in control unit.

Fault symptom[s]

- Anti-spin warning lamp is on.
- Stabilizing function not working.
- Anti-spin does not work.

NO SIGNAL. INTERMITTENT FAULT

CHECKING THE WIRING AND CONNECTIONS

Check the wires between steering wheel angle sensor (SAS) control unit #4 (#A28) and steering wheel control unit (SWM) #3 (#A3) for an open circuit, as described in, see **OPEN-CIRCUIT, INTERMITTENT FAULTS** .

Additional information:

- To connect the test box to the steering wheel angle sensor (SAS), see **CONNECTING THE BREAKOUT BOX TO THE STEERING ANGLE SENSOR** .
- To connect the test box to the steering wheel control unit (SWM), see **CONNECTING THE BREAKOUT BOX** .
- For information on signals, see **SIGNAL DESCRIPTION, CONTROL UNIT FOR THE STEERING WHEEL ANGLE SENSOR (SAS)**and **SIGNAL SPECIFICATION** .

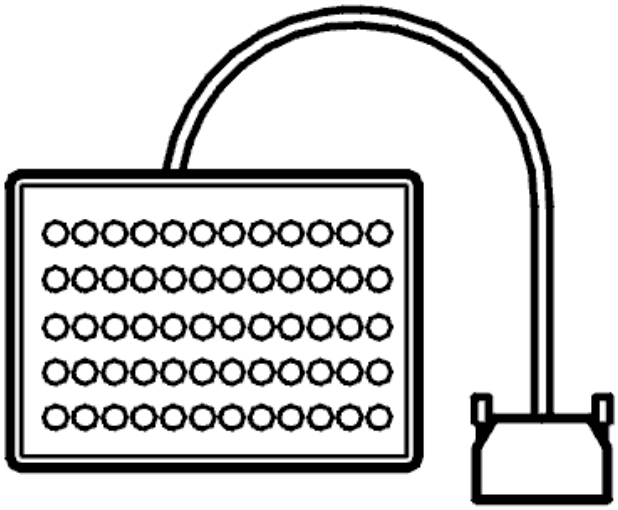

Fig. 150: Breakout Box
Courtesy of VOLVO CARS CORPORATION

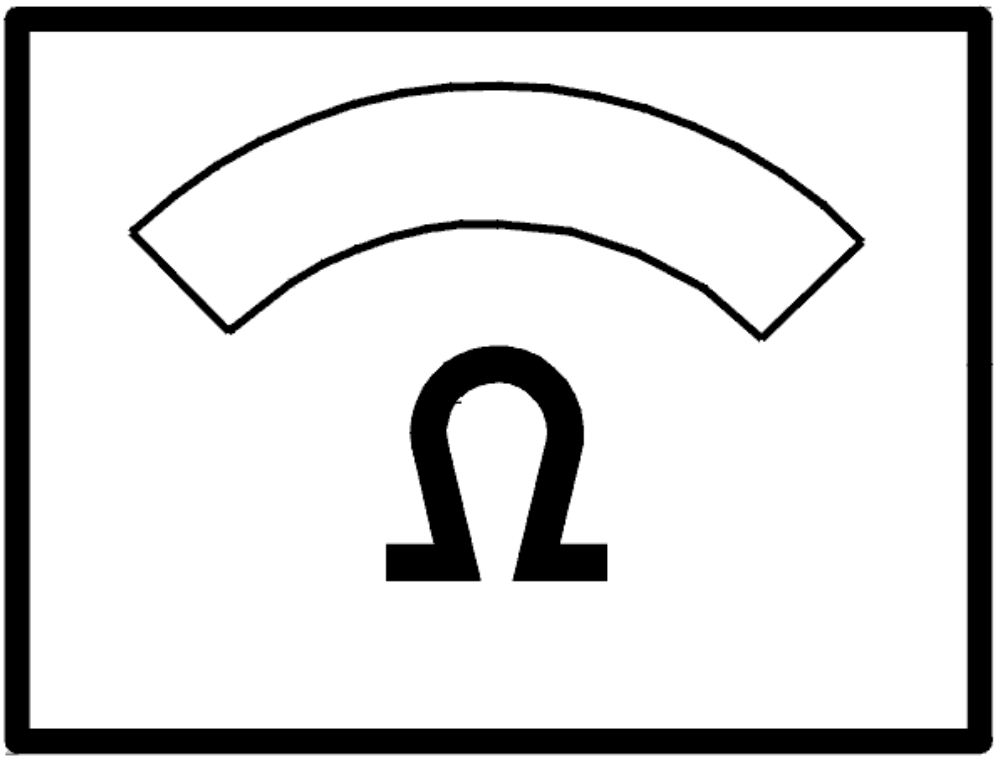

Fig. 151: Identifying Ohm Meter
Courtesy of VOLVO CARS CORPORATION

- **Continue**

  Refer to **INFORMATION**

INFORMATION

FAULT-TRACING INFORMATION

If the fault is intermittent, do not verify fault-tracing if the fault does not recur.

It is possible to view the information again, or leave fault-tracing for this diagnostic trouble code (DTC).

SAS-0046: STEERING WHEEL ANGLE SIGNAL B. NO SIGNAL.

PERMANENT FAULT (2003-2004)

DIAGNOSTIC TROUBLE CODE INFORMATION

see **DIAGNOSTIC TROUBLE CODE INFORMATION**

SIGNAL MISSING. PERMANENT FAULT

CHECKING THE CONNECTORS

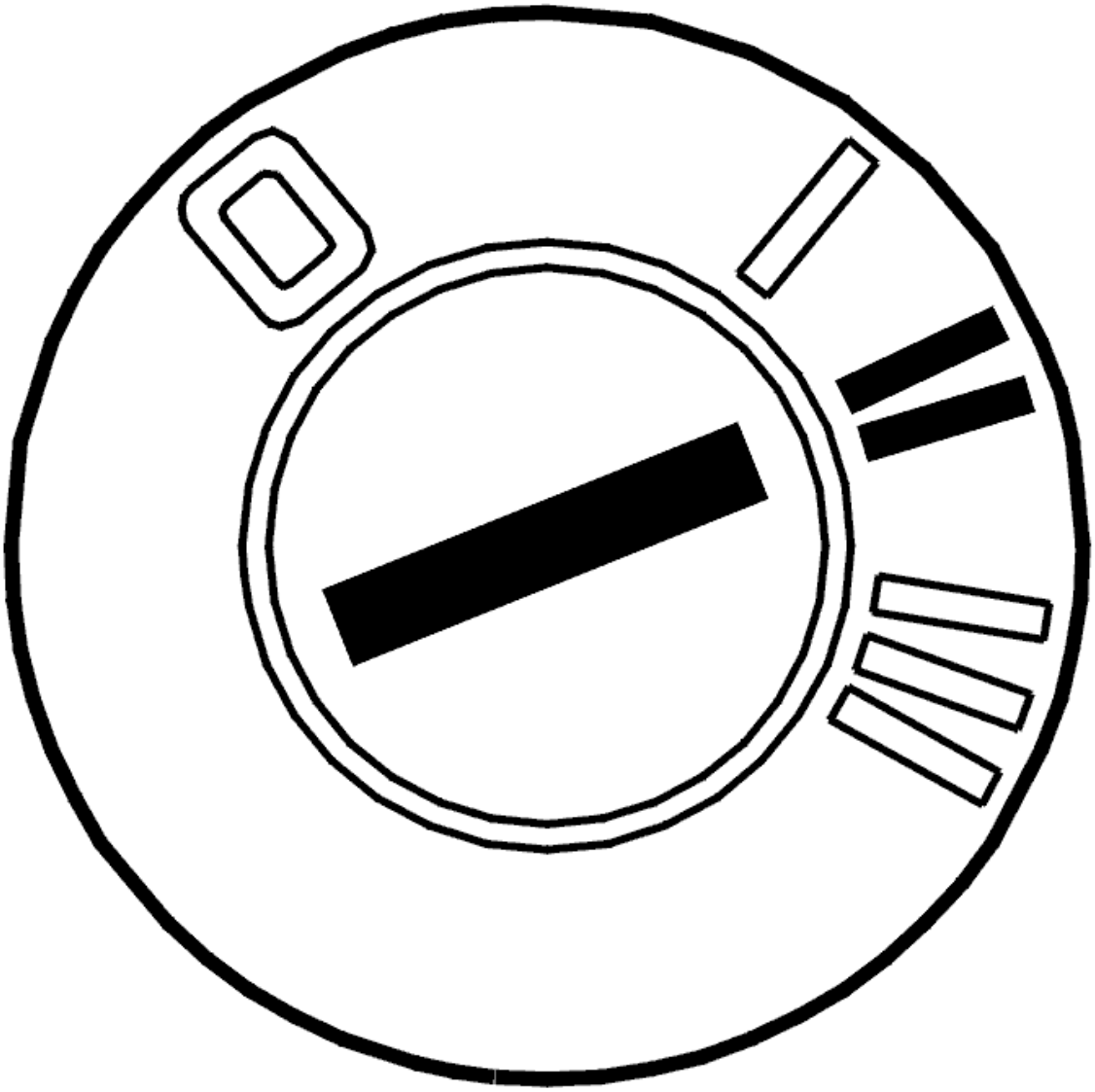

Fig. 152: Identifying Ignition ON
Courtesy of VOLVO CARS CORPORATION

- Ignition off
- Reinstall the components, reconnect the connectors etc.

- Ignition on
- Read off steering wheel angle signal B.

  Turn the steering wheel to the limit positions in both directions and check that the value changes between ON and OFF.

  Other information:

  - To disconnect the control module for the steering wheel angle sensor, see **STEERING WHEEL MODULE (SWM), REPLACING**
  - To disconnect the steering wheel module (SWM), see **STEERING WHEEL MODULE (SWM), REPLACING**
  - For information about signals for the control module for the steering wheel angle sensor, see **SIGNAL DESCRIPTION, CONTROL UNIT FOR THE STEERING WHEEL ANGLE SENSOR (SAS)**
  - For information about signals to the steering wheel module (SWM), see **SIGNAL SPECIFICATION** .

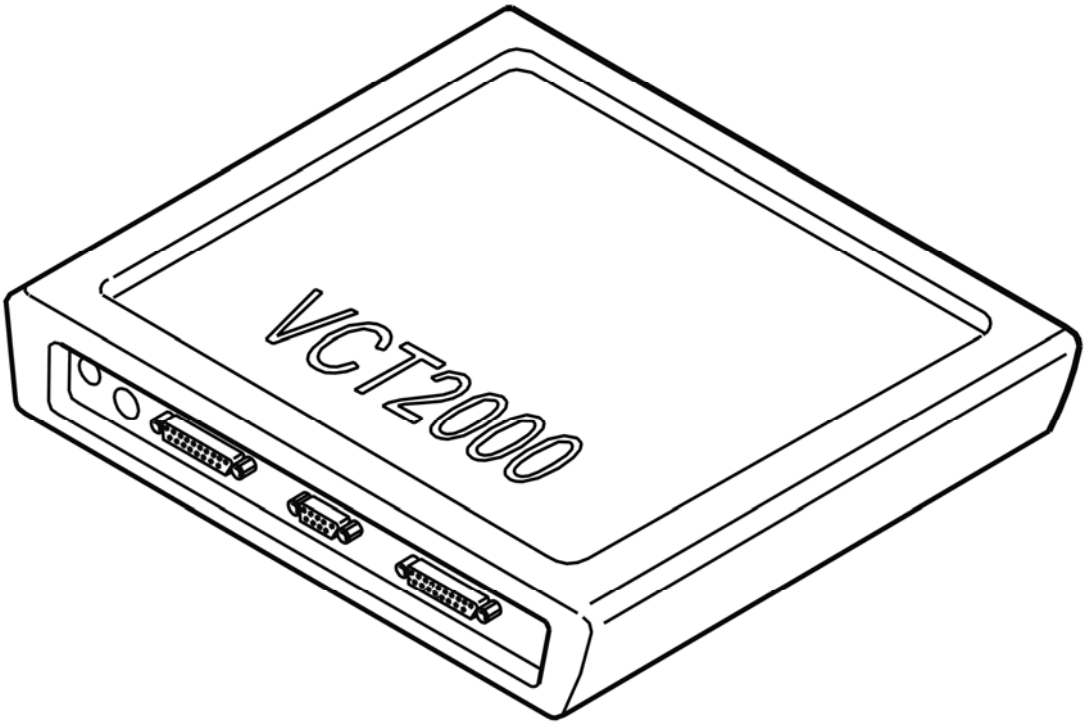

Fig. 153: Identifying VCT2000 Diagnostic Tool Symbol In VIDA
Courtesy of VOLVO CARS CORPORATION

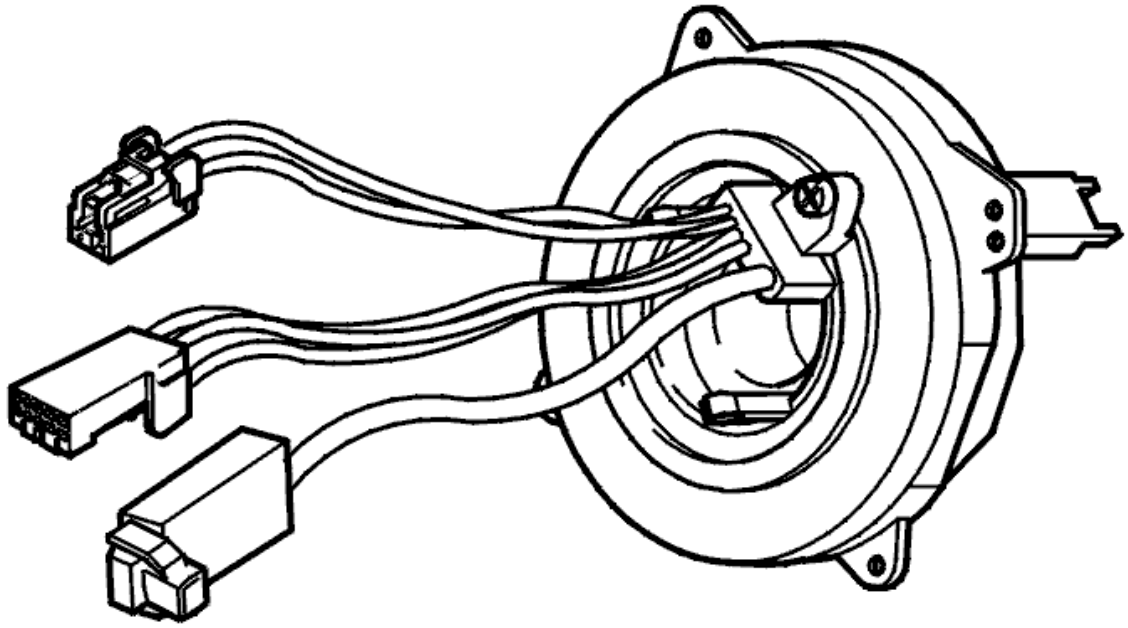

Fig. 154: Identifying Steering Wheel Angle Sensor
Courtesy of VOLVO CARS CORPORATION

Does the value change between OFF and ON?

- **YES**

  Refer to **VERIFICATION**

- **NO**

  Refer to **CHECKING WIRING AND SENSORS**

CHECKING WIRING AND SENSORS

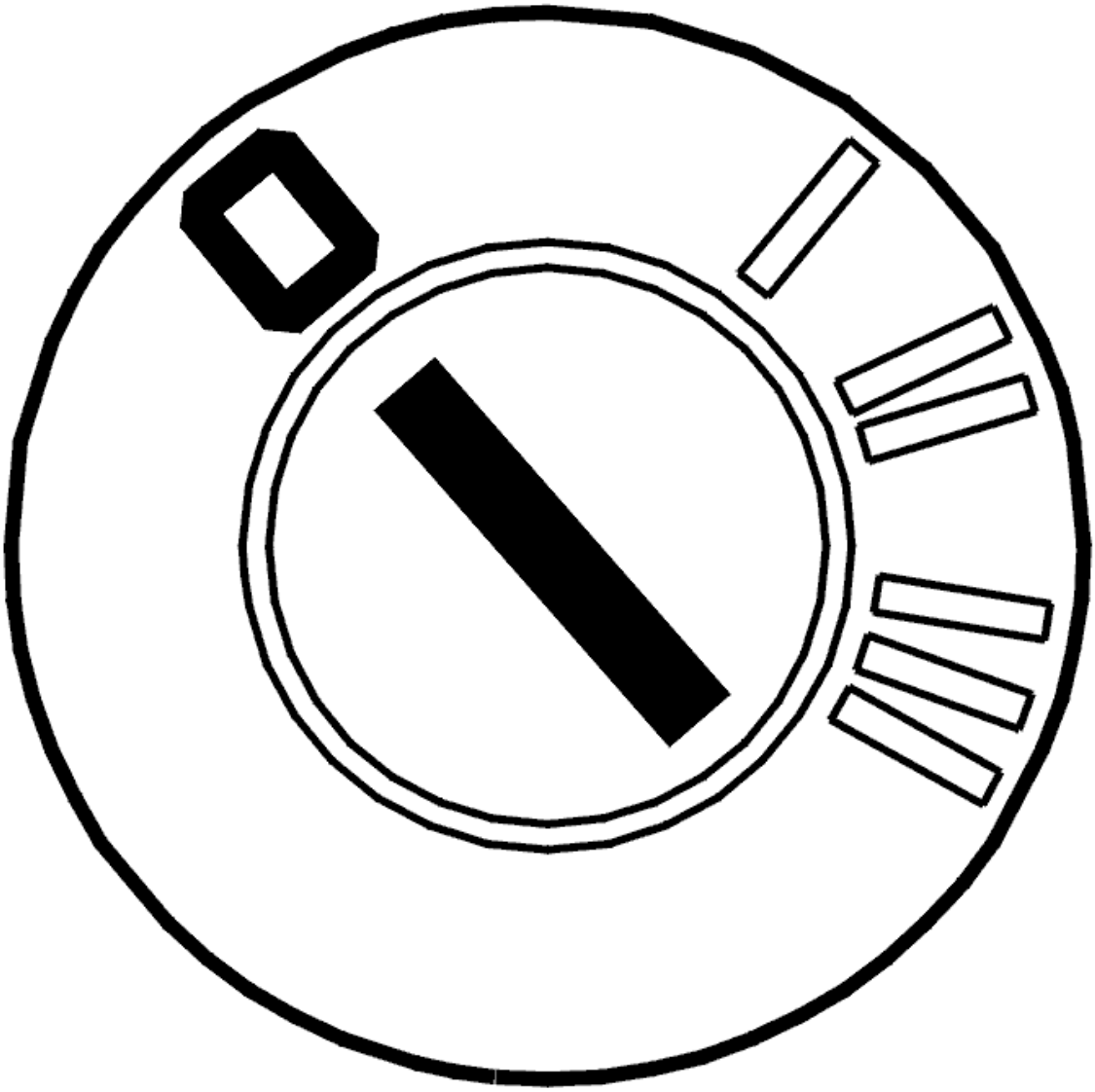

Fig. 155: Identifying Ignition OFF
Courtesy of VOLVO CARS CORPORATION

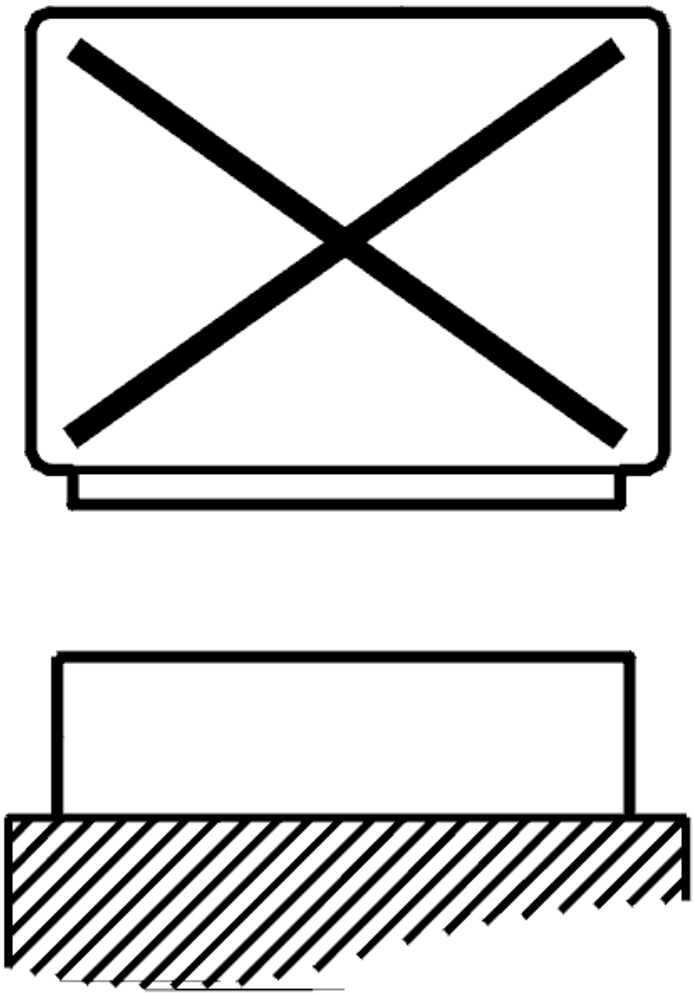

Fig. 156: Disconnecting Control Unit
Courtesy of VOLVO CARS CORPORATION

- Ignition off
- The control module for the steering wheel angle sensor disconnected
- Steering wheel module (SWM) disconnected
- Connect the breakout box to the control module for the steering wheel angle sensor and to the steering wheel module (SWM)

  Check the wiring between the control module for the steering wheel angle sensor terminal #4 (#A28) and steering wheel module (SWM) terminal #3 (#A3). Check for an open-circuit according to **OPEN-CIRCUIT, PERMANENT FAULTS** .

  Try replacing the steering wheel angle sensor if no faults are found in the wiring between the control module for the steering wheel angle sensor and the steering wheel module (SWM).

Other information:

- To connect the breakout box to the control module for the steering wheel angle sensor, see **CONNECTING THE BREAKOUT BOX TO THE STEERING ANGLE SENSOR**
- To connect the breakout box to the steering wheel module (SWM), see **CONNECTING THE BREAKOUT BOX**
- To replace the steering wheel angle sensor, see **CONTACT REEL, REPLACEMENT**
- For information about signals for the control module for the steering wheel angle sensor, see **SIGNAL DESCRIPTION, CONTROL UNIT FOR THE STEERING WHEEL ANGLE SENSOR (SAS)**
- For information about signals to the steering wheel module (SWM), see **SIGNAL SPECIFICATION** .

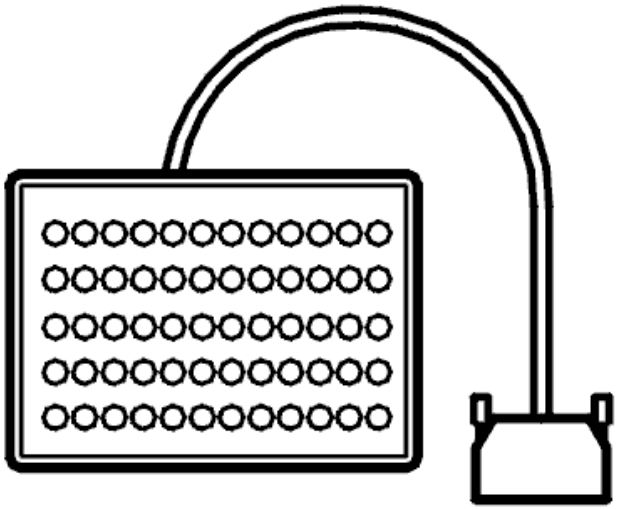

Fig. 157: Breakout Box
Courtesy of VOLVO CARS CORPORATION

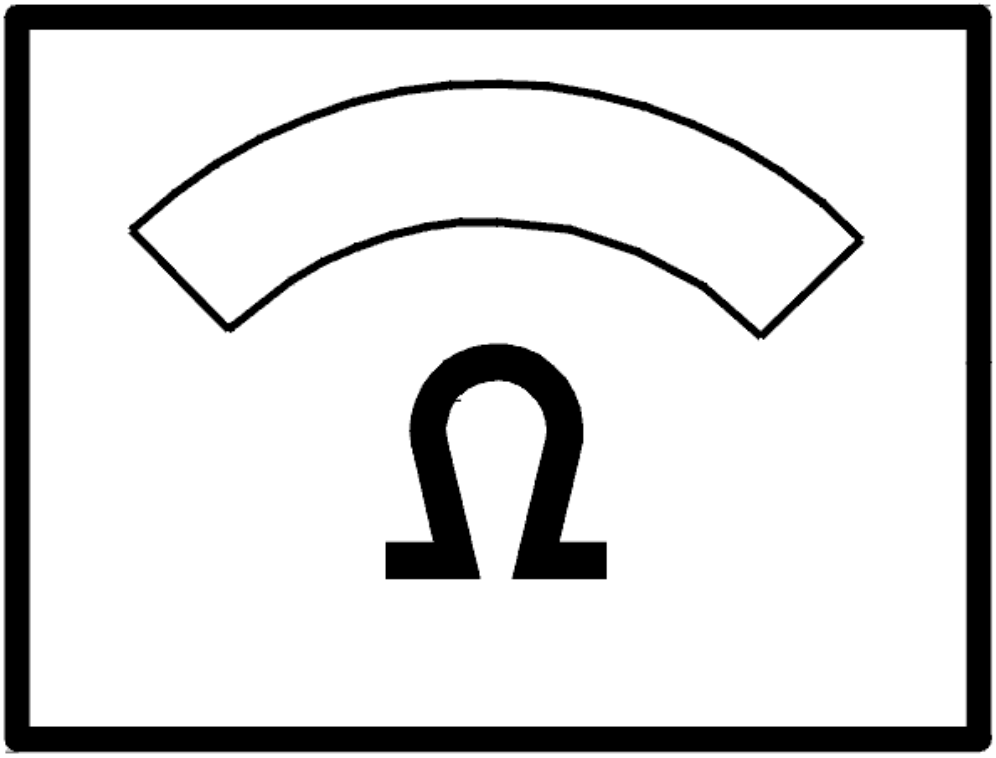

Fig. 158: Identifying Ohm Meter
Courtesy of VOLVO CARS CORPORATION

- **Continue**

  Refer to **VERIFICATION**

VERIFICATION

HINT: After the repair it is necessary to check that the fault has been rectified.

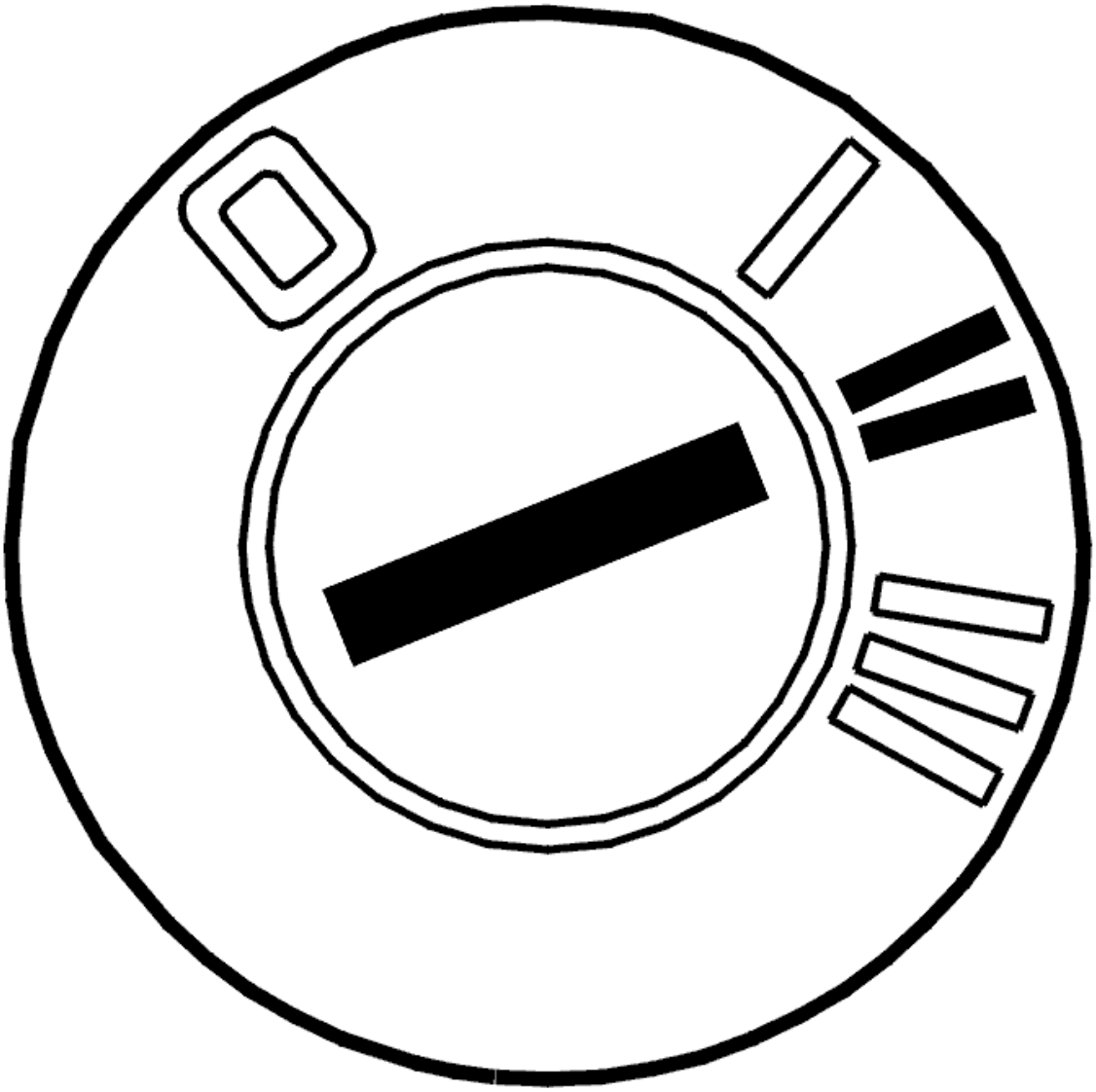

Fig. 159: Identifying Ignition ON
Courtesy of VOLVO CARS CORPORATION

- Ignition off.
- Connect the connectors, install the components, etc.
- Ignition on.
- Read off steering wheel angle signal B.
- Turn the steering wheel to full lock in both directions.

  The value should change between OFF and ON.

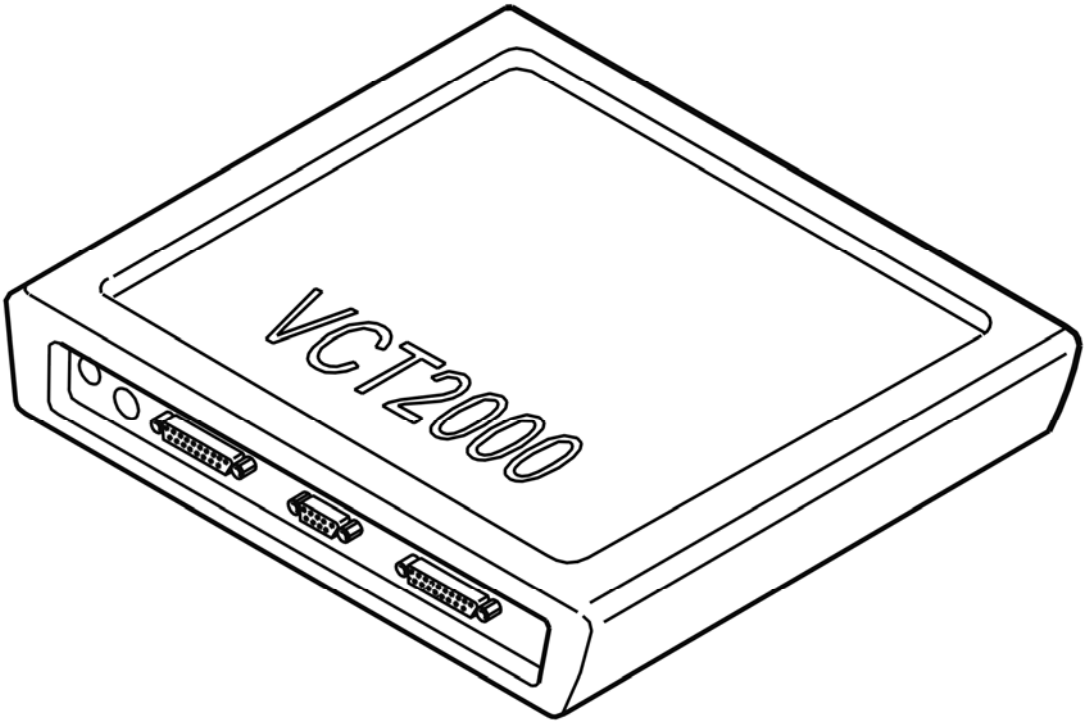

Fig. 160: Identifying VCT2000 Diagnostic Tool Symbol In VIDA
Courtesy of VOLVO CARS CORPORATION

Does the value change?

- **YES**

  VERIFIED: Troubleshooting has been completed.

- **NO**

  Refer to **INFORMATION**

INFORMATION

FAULT-TRACING INFORMATION

The fault should have been detected and remedied. As this is not the case fault-tracing has failed.

Exit fault-tracing for this diagnostic trouble code (DTC) or make another attempt.

SAS-0047: CONTROL UNIT. NO SIGNAL. INTERMITTENT FAULT (2003-2004)

DIAGNOSTIC TROUBLE CODE INFORMATION

Condition

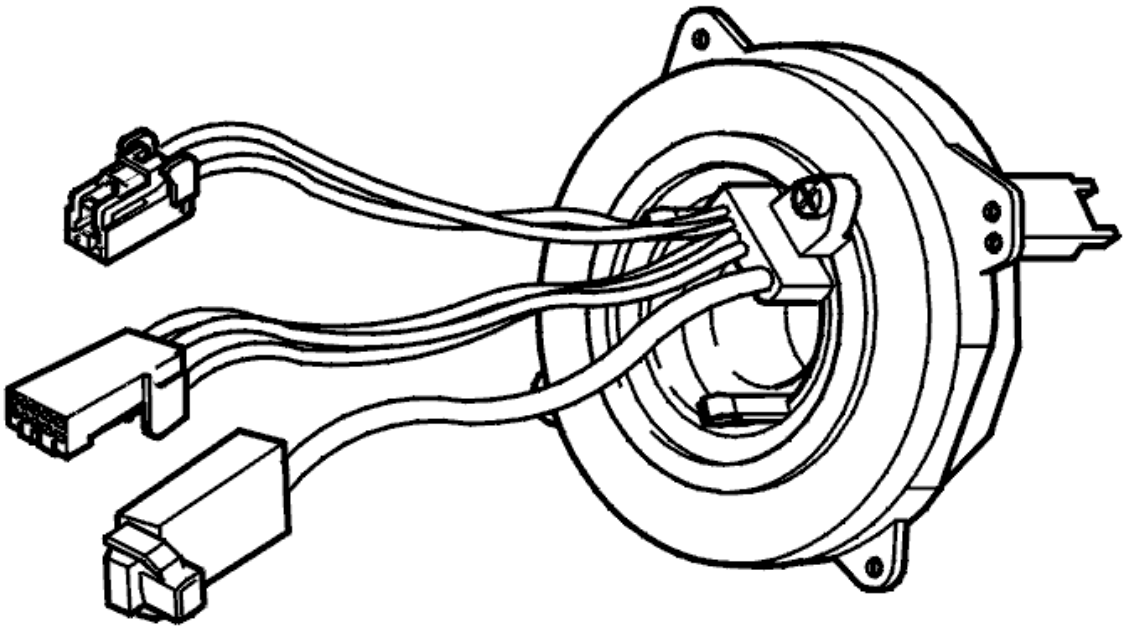

Fig. 161: Identifying Steering Wheel Angle Sensor
Courtesy of VOLVO CARS CORPORATION

If the steering wheel angle sensor (SAS) control unit registers that the ground connection to the control unit is missing, diagnostic trouble code SAS-0047 will be stored.

Substitute Value

- Stabilizing function disconnected.

Possible Source

- Contact resistance or oxidation in the connector of the steering wheel angle sensor control unit or the steering wheel control unit (SWM).
- Open circuit in ground connection.
- Internal fault in control unit.
- Signal wire short circuited to voltage supply.

Fault symptom[s]

- Anti-spin warning lamp is on.
- Stabilizing function not working.

SIGNAL MISSING. INTERMITTENT FAULT

CHECKING WIRING AND TERMINALS

- Disconnect the connectors for the control module for the steering wheel angle sensor and the steering wheel module (SWM)
- Connect the breakout box.

  Check the cable between the control module for the steering wheel angle sensor terminal #7 (#A31) and steering wheel module (SWM) terminal #14 (#A14). Check for an intermittent open-circuit according to **OPEN-CIRCUIT, INTERMITTENT FAULTS** .

  Check the wiring between the control module for the steering wheel angle sensor:

  terminal #9 (terminal (#A33) and steering wheel module (SWM) terminal #12 (terminal #A12)

  terminal #8 (terminal (#A32) and steering wheel module (SWM) terminal #7 (terminal #A7)

  check for an intermittent short-circuit to supply voltage according to **SHORT-CIRCUIT TO SUPPLY VOLTAGE, INTERMITTENT FAULTS** .

  Other information:

  - To connect the breakout box to the control module for the steering wheel angle sensor, see **CONNECTING THE BREAKOUT BOX TO THE STEERING ANGLE SENSOR**
  - To connect the breakout box to the steering wheel module (SWM), see **CONNECTING THE BREAKOUT BOX**
  - To replace the steering wheel angle sensor, see **CONTACT REEL, REPLACEMENT**
  - For information about signals for the control module for the steering wheel angle sensor, see **SIGNAL DESCRIPTION, CONTROL UNIT FOR THE STEERING WHEEL ANGLE SENSOR (SAS)**
  - For information about signals for the steering wheel module (SWM), see **SIGNAL SPECIFICATION** .

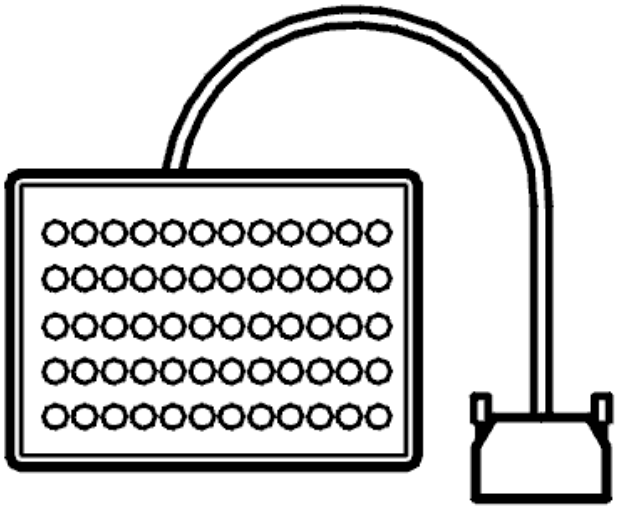

Fig. 162: Breakout Box
Courtesy of VOLVO CARS CORPORATION

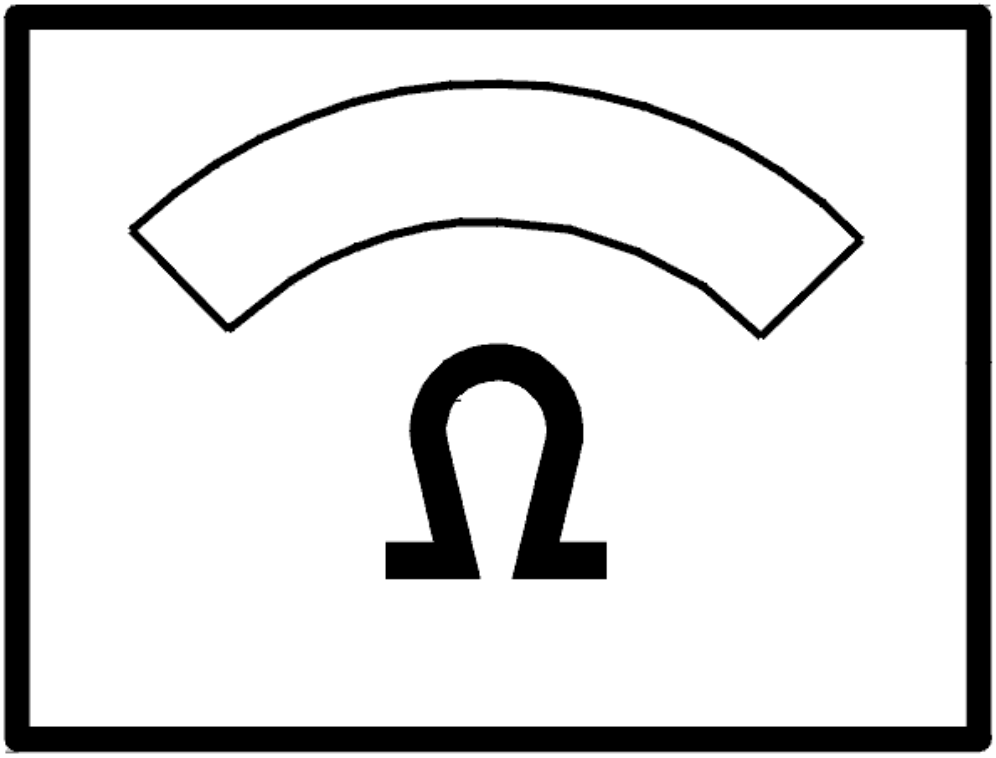

Fig. 163: Identifying Ohm Meter
Courtesy of VOLVO CARS CORPORATION

- **Continue**

  Refer to **INFORMATION**

INFORMATION

FAULT-TRACING INFORMATION

If the fault is intermittent, do not verify fault-tracing if the fault does not recur.

It is possible to view the information again, or leave fault-tracing for this diagnostic trouble code (DTC).

SAS-0047: CONTROL UNIT. NO SIGNAL. PERMANENT FAULT (2003-2004)

DIAGNOSTIC TROUBLE CODE INFORMATION

see **DIAGNOSTIC TROUBLE CODE INFORMATION**

SIGNAL MISSING. PERMANENT FAULT

CHECKING THE CONNECTORS

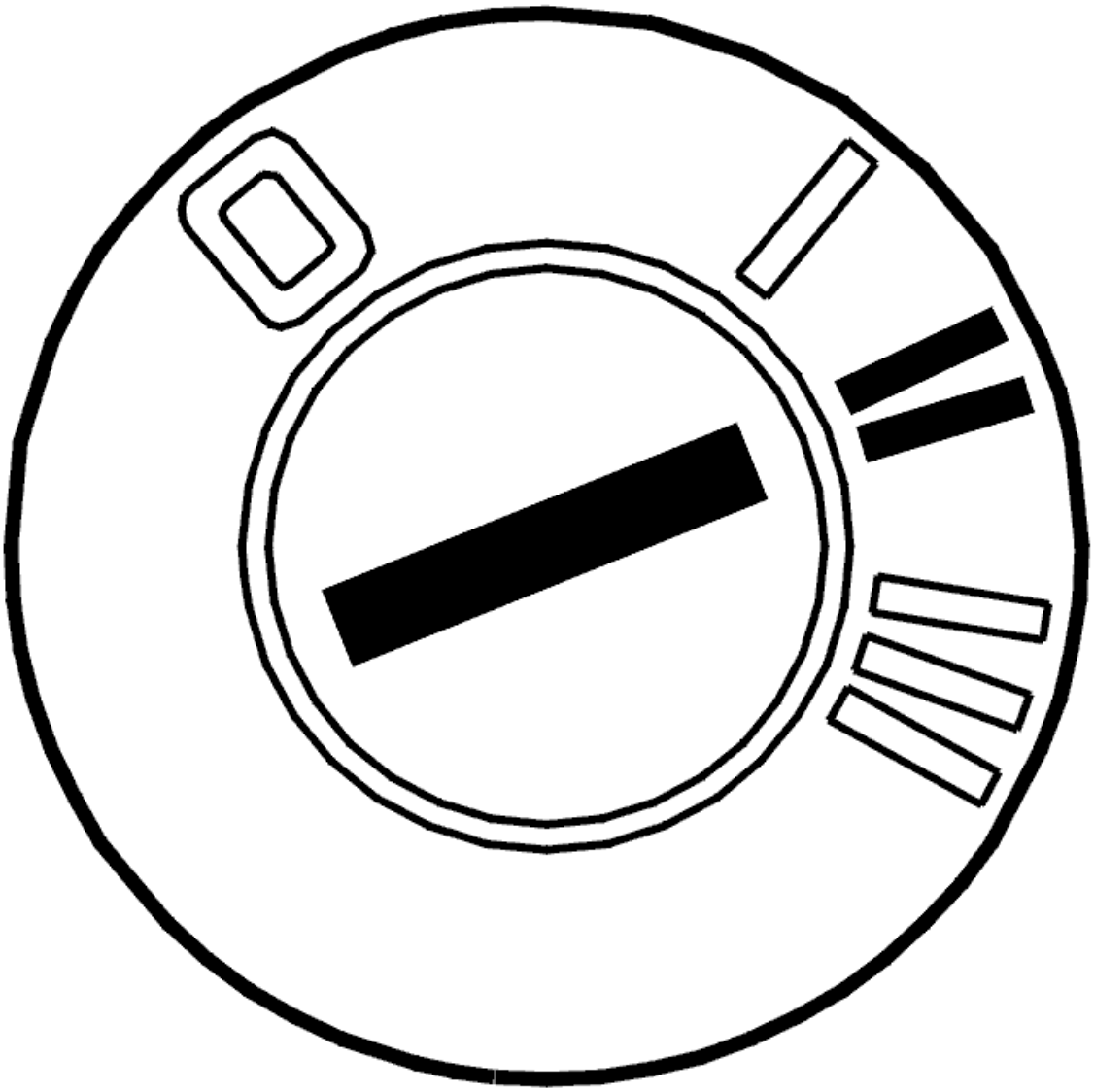

Fig. 164: Identifying Ignition ON
Courtesy of VOLVO CARS CORPORATION

- Ignition off
- Check the control module for the steering wheel angle sensor and the steering wheel module (SWM) connectors. Check for contact resistance and oxidation according to **CONTACT RESISTANCE AND OXIDATION**
- Reinstall the components, reconnect the connectors etc.

- Ignition on
- Read off diagnostic trouble codes (DTCs).

If the diagnostic trouble code (DTC) displays an intermittent status, the cause of the fault was probably contact resistance or oxidation in the connector for the control module for the steering wheel angle sensor or in the steering wheel module (SWM).

Other information:

- To disconnect the control module for the steering wheel angle sensor, see **STEERING WHEEL MODULE (SWM), REPLACING**
- To disconnect the steering wheel module (SWM), see **STEERING WHEEL MODULE (SWM), REPLACING**
- For information about signals for the control module for the steering wheel angle sensor, see **SIGNAL DESCRIPTION, CONTROL UNIT FOR THE STEERING WHEEL ANGLE SENSOR (SAS)**
- For information about signals to the steering wheel module (SWM), see **SIGNAL SPECIFICATION** .

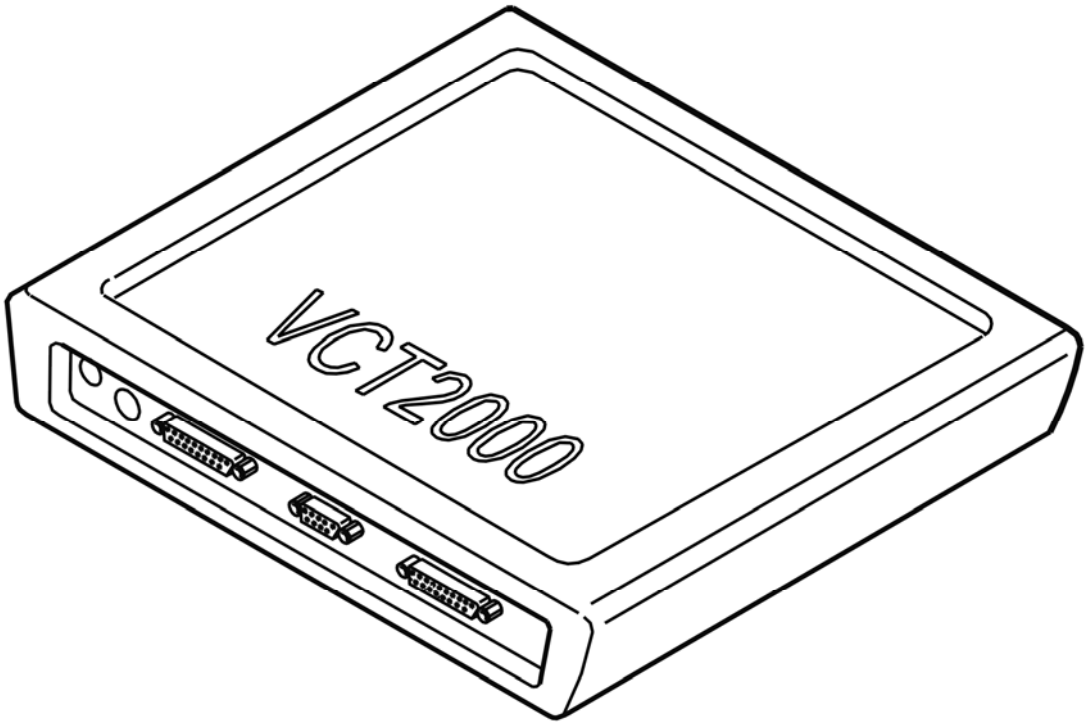

Fig. 165: Identifying VCT2000 Diagnostic Tool Symbol In VIDA
Courtesy of VOLVO CARS CORPORATION

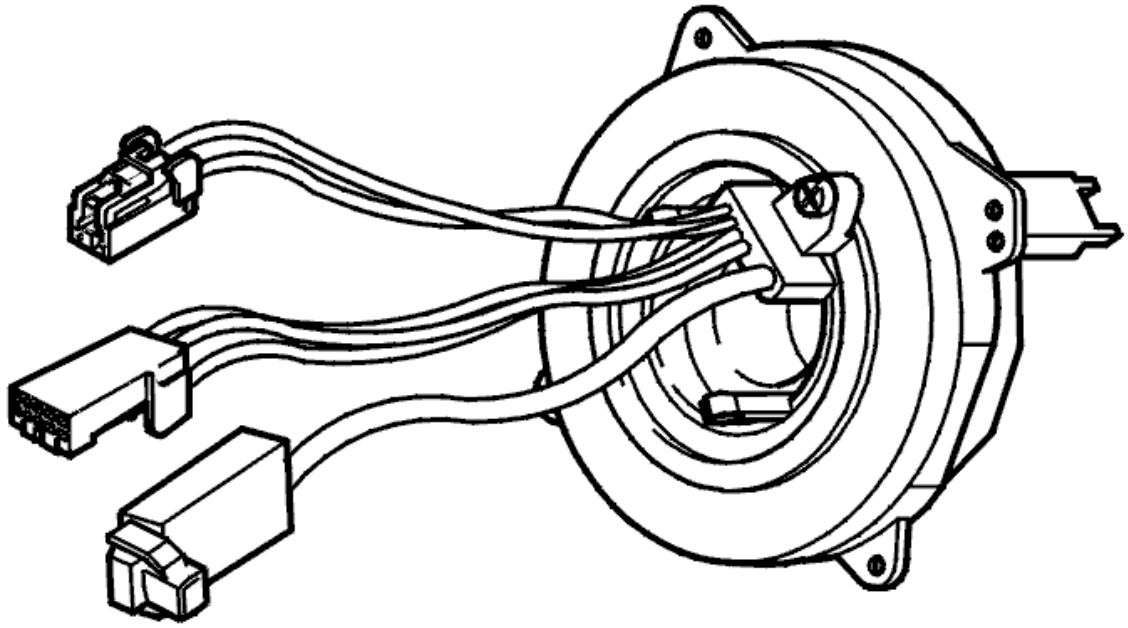

Fig. 166: Identifying Steering Wheel Angle Sensor
Courtesy of VOLVO CARS CORPORATION

Does the diagnostic trouble code (DTC) display an intermittent fault?

- **YES**

  OKAY: Troubleshooting has been completed.

- **NO**

  Refer to **CHECKING WIRING AND SENSORS**

CHECKING WIRING AND SENSORS

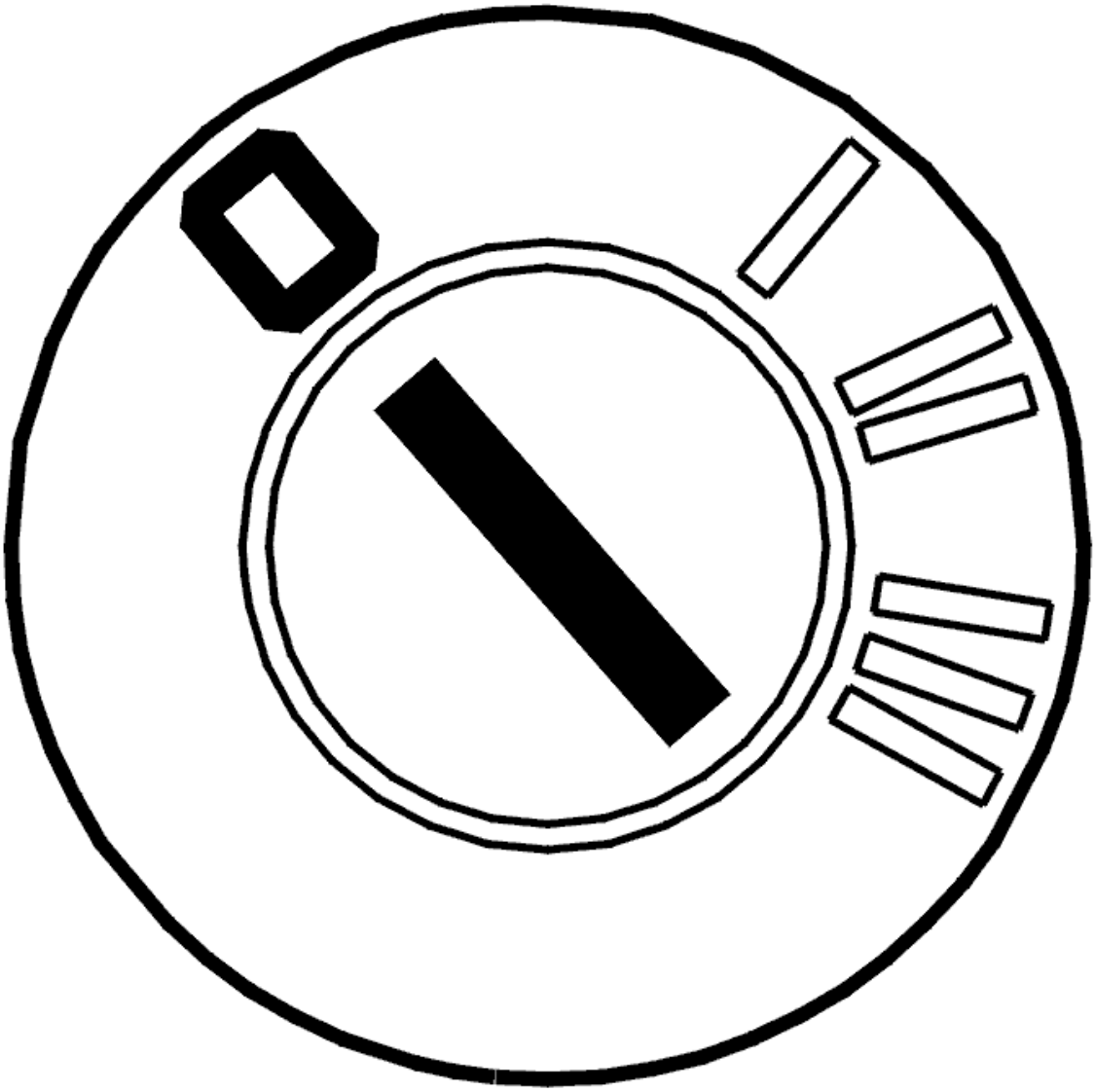

Fig. 167: Identifying Ignition OFF
Courtesy of VOLVO CARS CORPORATION

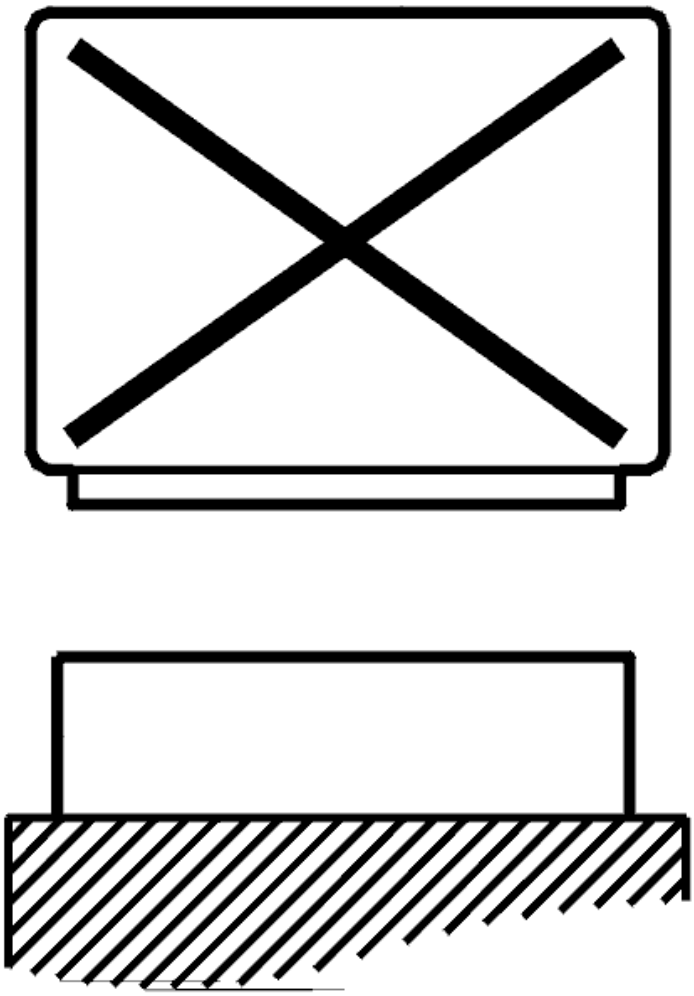

Fig. 168: Disconnecting Control Unit
Courtesy of VOLVO CARS CORPORATION

- Ignition off
- The control module for the steering wheel angle sensor disconnected
- Steering wheel module (SWM) disconnected
- Connect the breakout box to the control module for the steering wheel angle sensor and to the steering wheel module (SWM)

  Check the wiring between the control module for the steering wheel angle sensor terminal #7 (#A31) and steering wheel module (SWM) terminal #14 (#A14). Check for an open-circuit according to **OPEN-CIRCUIT, PERMANENT FAULTS** .

  Check the wiring between the control module for the steering wheel angle sensor

terminal #9 (terminal (#A33) and steering wheel module (SWM) terminal #12 (terminal #A12)

terminal #8 (terminal (#A32) and steering wheel module (SWM) terminal #7 (terminal #A7)

check for a short-circuit to ground according to **SHORT-CIRCUIT TO GROUND, PERMANENT FAULTS** . Check for a short-circuit to supply voltage according to **SHORT-CIRCUIT TO SUPPLY VOLTAGE. PERMANENT FAULTS** .

Try replacing the steering wheel angle sensor if no fault is found in the wiring.

Other information:

- To connect the breakout box to the control module for the steering wheel angle sensor, see **CONNECTING THE BREAKOUT BOX TO THE STEERING ANGLE SENSOR**
- To connect the breakout box to the steering wheel module (SWM), see **CONNECTING THE BREAKOUT BOX**
- To replace the steering wheel angle sensor, see **CONTACT REEL, REPLACEMENT**
- For information about signals for the control module for the steering wheel angle sensor, see **SIGNAL DESCRIPTION, CONTROL UNIT FOR THE STEERING WHEEL ANGLE SENSOR (SAS)**
- For information about signals to the steering wheel module (SWM), see **SIGNAL SPECIFICATION** .

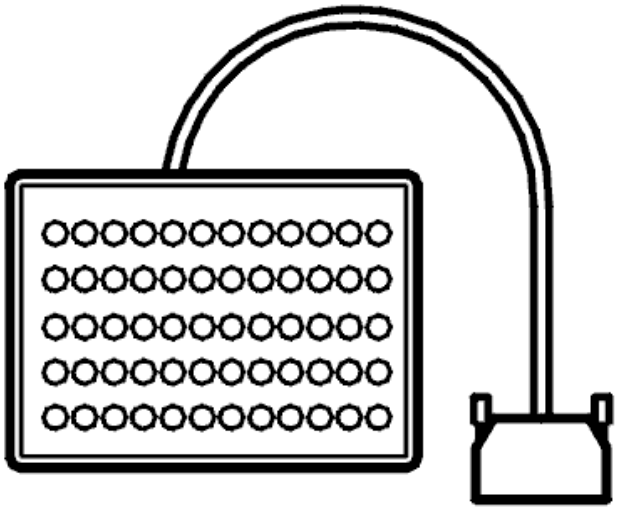

Fig. 169: Breakout Box
Courtesy of VOLVO CARS CORPORATION

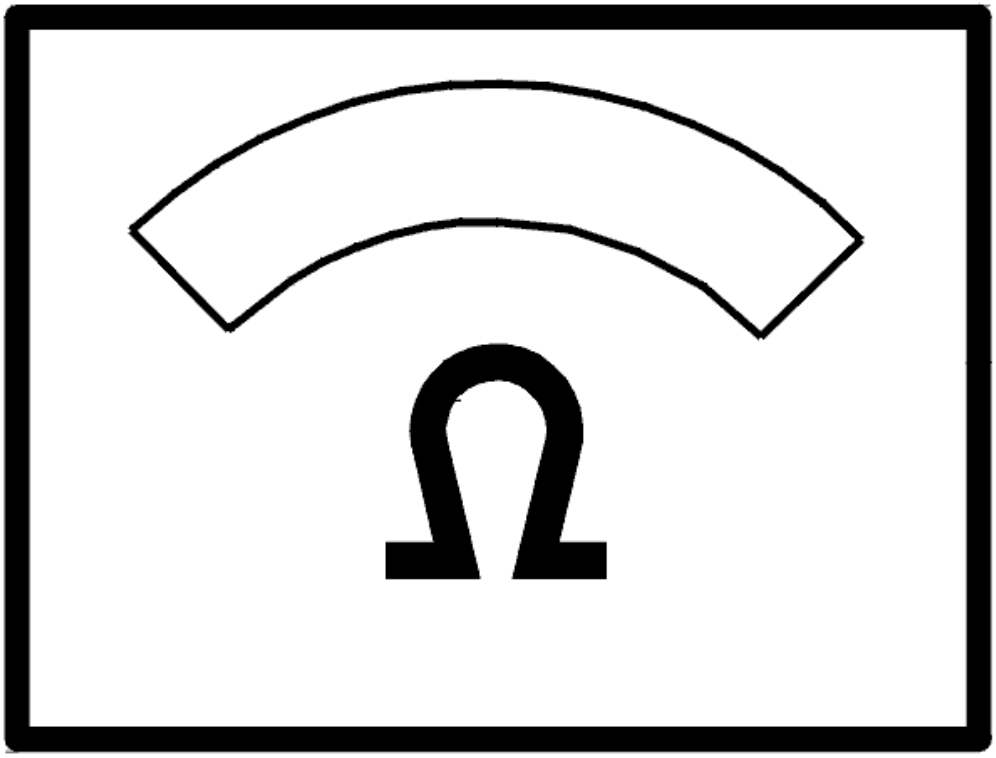

Fig. 170: Identifying Ohm Meter
Courtesy of VOLVO CARS CORPORATION

- **Continue**

  Refer to **VERIFICATION**

VERIFICATION

HINT: After the repair it is necessary to check that the fault has been rectified.

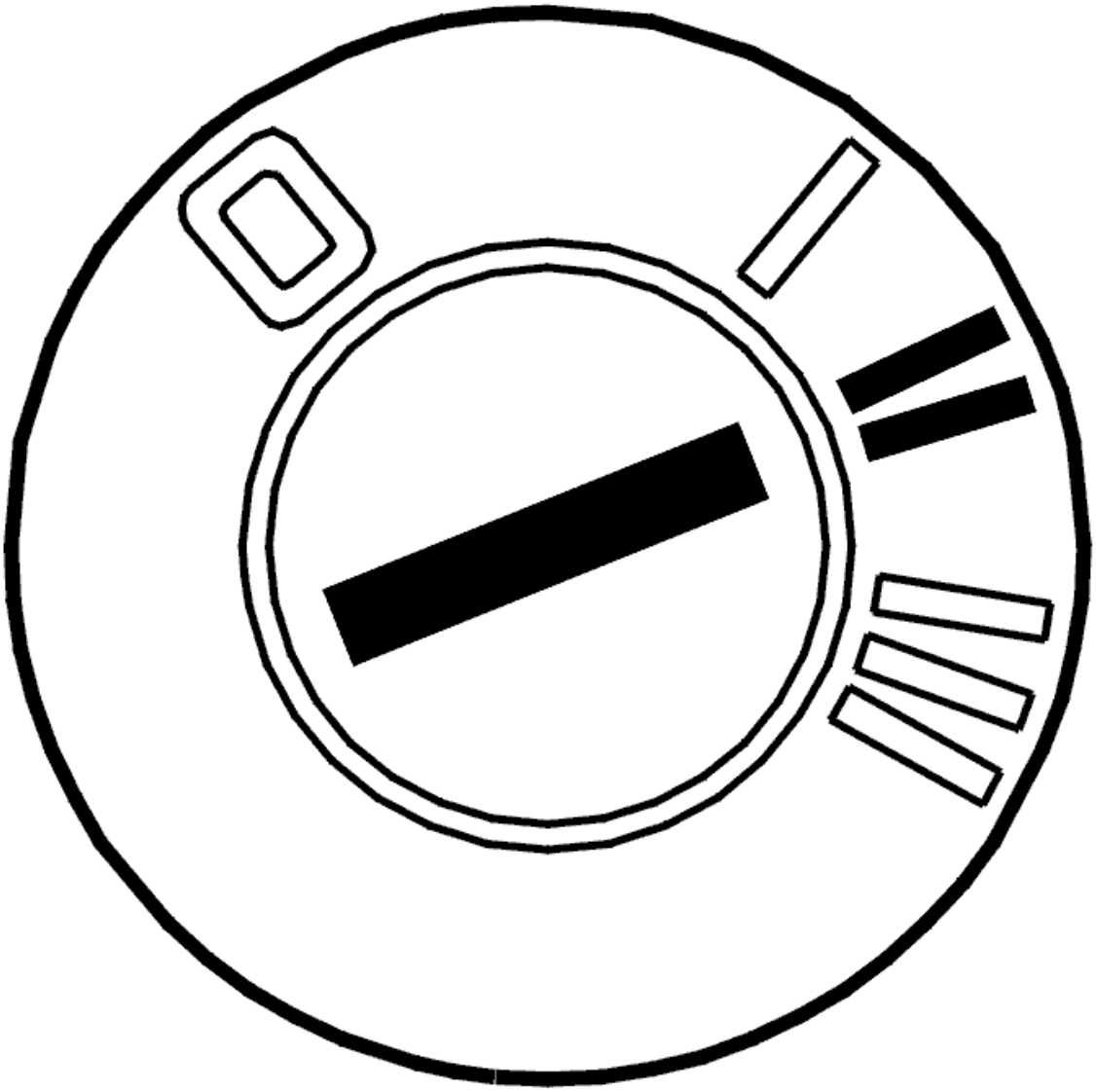

Fig. 171: Identifying Ignition ON
Courtesy of VOLVO CARS CORPORATION

- Ignition off.
- Connect the connectors, install the components, etc.
- Ignition on.
- Read off steering wheel angle signal A.
- Turn the steering wheel to full lock in both directions.

  The value should change between OFF and ON.

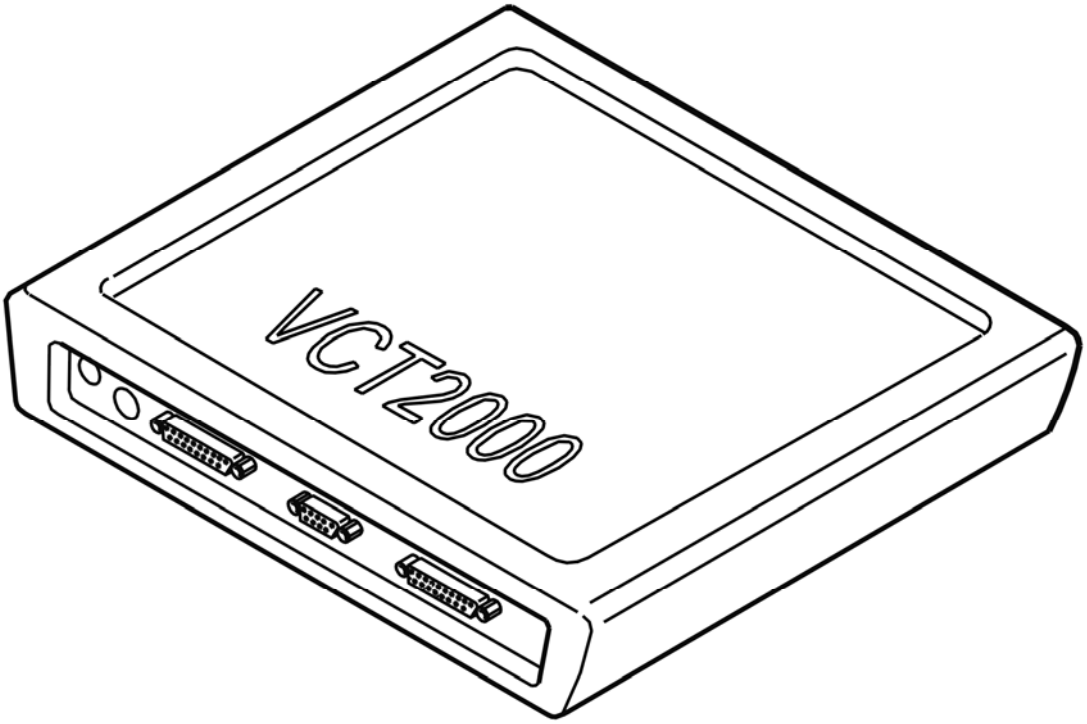

Fig. 172: Identifying VCT2000 Diagnostic Tool Symbol In VIDA
Courtesy of VOLVO CARS CORPORATION

Does the value change?

- **YES**

  VERIFIED: Troubleshooting has been completed.

- **NO**

  Refer to **INFORMATION**

INFORMATION

FAULT-TRACING INFORMATION

The fault should have been detected and remedied. As this is not the case fault-tracing has failed.

Exit fault-tracing for this diagnostic trouble code (DTC) or make another attempt.

SIGNAL DESCRIPTION, CONTROL UNIT FOR THE STEERING WHEEL ANGLE SENSOR (SAS)

The values in the table represent the values between the connections shown in column 1 and #A40 (ground),

unless otherwise stated in brackets.

NOTE: **It is important that the test box is connected and the ground points checked before testing begins.**

U=	DC voltage (V)	Ubat =	battery voltage (V)
I =	amperage (A)	Ulow =	voltage close to 0 V

Test box connection	Control unit connection	Signal type	Ignition on	Other
#A25	#1	15 supply (voltage supply from the ignition lock)	U(Ubat	-
#A26	#2	Voltage supply to steering wheel angle sensor	U(Ubat	15 supply through control unit
#A27	#3	Steering wheel angle signal A	<0.25 V (low) >0.75 V (high) I(1 mA	Steering wheel angle signal The coding wheel in the steering wheel angle sensor is perforated with a special code template. Two circuits, each with 4 LEDs and 4 receptors, read the coding wheel and send a pulsed signal containing information about the position of the steering wheel.
#A28	#4	Steering wheel angle signal B	<0.25 V (low) >0.75 V (high) I(1 mA	Steering wheel angle sensor signal For more information, see steering wheel angle signal A.
#A29	#5	Steering wheel position signal R1	<0.25 V (low) >0.75 V (high) I(1 mA	Sector identifier For more information, see steering wheel angle signal A.
#A30	#6	Control unit communication wire (CAN H)	U=2-3 V	CAN High speed, Multiplex wire.
#A31	#7	Signal and power ground for steering wheel angle sensor	-	-
#A32	#8	LED circuit 2 signal	-	LED circuit 2 current test

#A33	#9	LED circuit 1 signal	-	LED circuit 1 current test
#A34	#10	Steering wheel angle signal IX	<0.25 V (low) >0.75 V (high) I(1 mA	Steering wheel angle sensor signal For more information, see steering wheel angle signal A.
#A35	#11	Steering wheel angle signal IY	<0.25V (low) >0.75 V (high) I(1 mA	Steering wheel angle sensor signal For more information, see steering wheel angle signal A.
#A36	#12	Steering wheel position R2 signal	<0.25 V (low) >0.75 V (high) I(1 mA	Sector identifier For more information, see signal A.
#A37	#13	Steering wheel position R3 signal	<0.25 V (low) >0.75 V (high) I(1 mA	Sector identifier For more information, see signal A.
#A38	#14	Steering wheel position R4 signal	<0.25 V (low) >0.75 V (high) I(1 mA	Sector identifier For more information, see signal A.
#A39	#15	Control unit communication wire (CAN L)	U=2-3 V	CAN Low speed, Multiplex wire.
#A40	#16	Signal and power ground (measured against the battery negative terminal).	U(Ulow	-

SAS-0048: CONTROL UNIT VOLTAGE SUPPLY. SIGNAL TOO HIGH. INTERMITTENT FAULT (2003-2004)

DIAGNOSTIC TROUBLE CODE INFORMATION

Condition

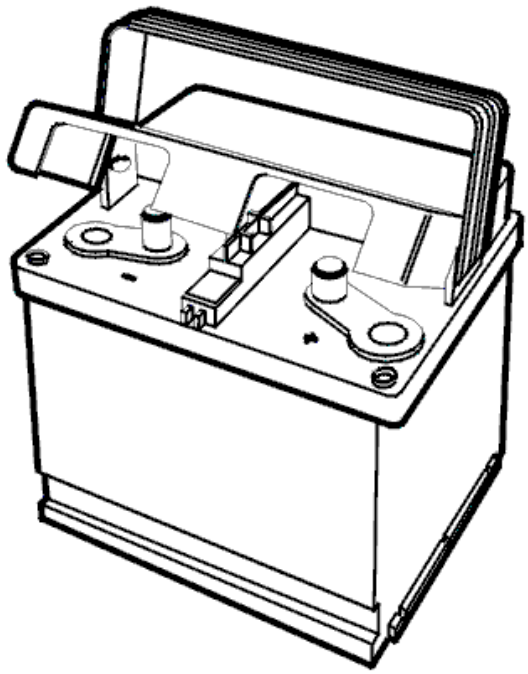

Fig. 173: Identifying Battery
Courtesy of VOLVO CARS CORPORATION

If the steering wheel angle sensor (SAS) control unit registers that battery voltage exceeds approximately 16 V, diagnostic trouble code SAS-0048 will be stored.

Substitute Value

- Nothing.

Possible Source

- A battery charger/starter unit with excessive voltage is connected.
- The charging system overloads.

Fault symptom[s]

- Anti-spin warning lamp is on.

SIGNAL TOO HIGH. INTERMITTENT FAULT

FAULT-TRACING INFORMATION

INFORMATION

There is no fault-tracing for this diagnostic fault code (DTC).

For further information on this diagnostic trouble code, see Diagnostic trouble code (DTC) information.

SAS-0048: CONTROL UNIT VOLTAGE SUPPLY. SIGNAL TOO HIGH. PERMANENT FAULT (2003-2004)

DIAGNOSTIC TROUBLE CODE INFORMATION

see **DIAGNOSTIC TROUBLE CODE INFORMATION**

SIGNAL TOO HIGH. PERMANENT FAULT

CHECKING THE CONNECTED BATTERY CHARGER AND STARTER UNIT

NOTE: **When a battery charger or a starter unit has been connected to the battery it is important to check that the proper voltage has been set. Charging with too high a voltage may cause a diagnostic trouble code to be stored.**

Check that the battery charger/starter unit is connected and that the correct voltage is set.

Check the charging system for too high a charging voltage.

Do the necessary corrective action.

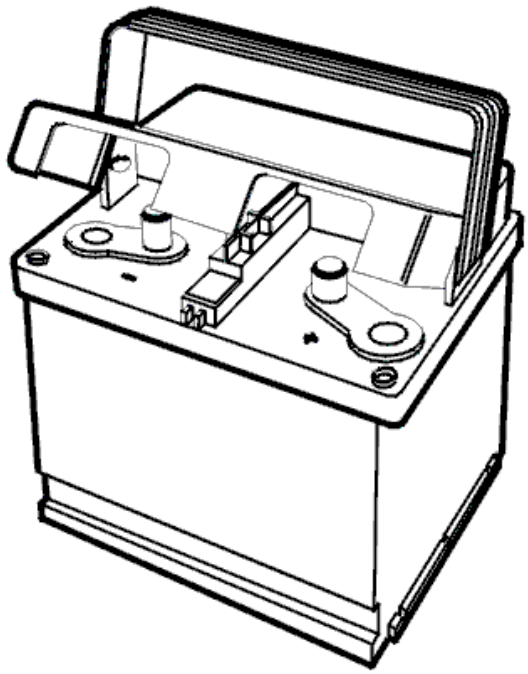

Fig. 174: Identifying Battery
Courtesy of VOLVO CARS CORPORATION

- **Continue**

  Refer to **VERIFICATION**

INFORMATION

FAULT-TRACING INFORMATION

The fault should have been detected and remedied. As this is not the case fault-tracing has failed.

Exit fault-tracing for this diagnostic trouble code (DTC) or make another attempt.

VERIFICATION

HINT: After carrying out the repair, check that the fault has been remedied.

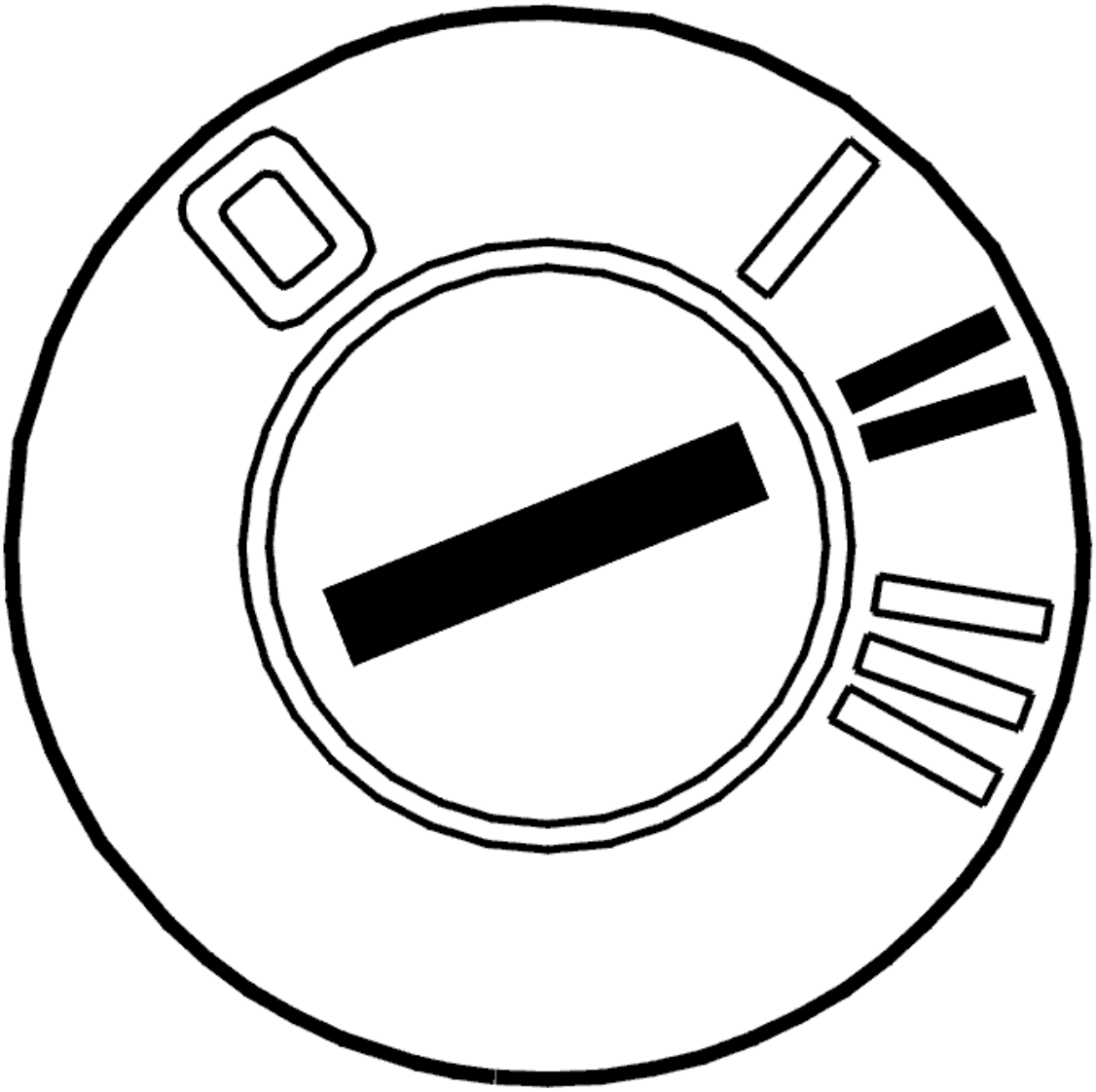

Fig. 175: Identifying Ignition ON
Courtesy of VOLVO CARS CORPORATION

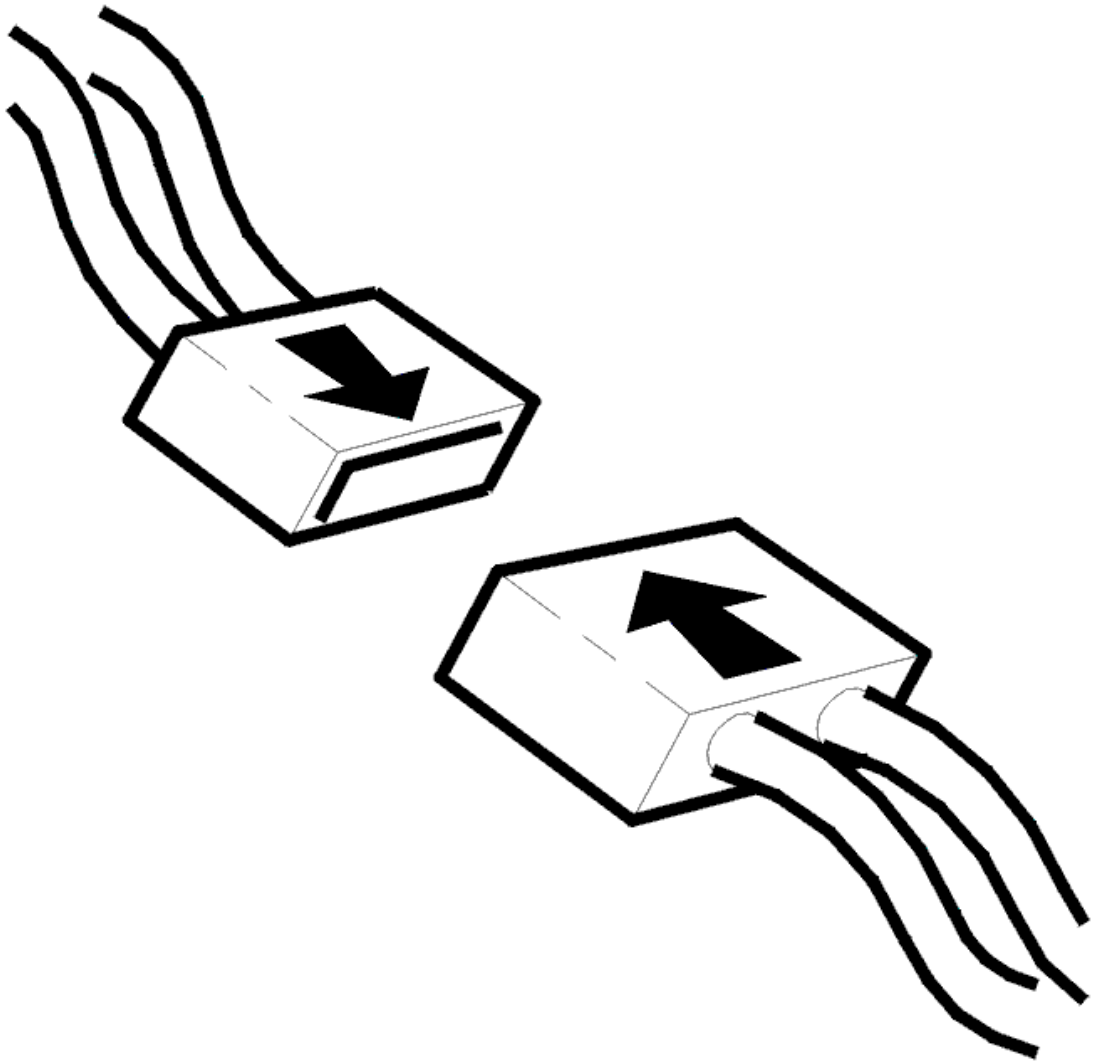

Fig. 176: Connecting Connector
Courtesy of VOLVO CARS CORPORATION

- Ignition off
- Reinstall the components, reconnect the connectors etc.
- Test drive the car according to **TEST DRIVING**
- Ignition on.

  Read off the status of the diagnostic trouble code (DTC).

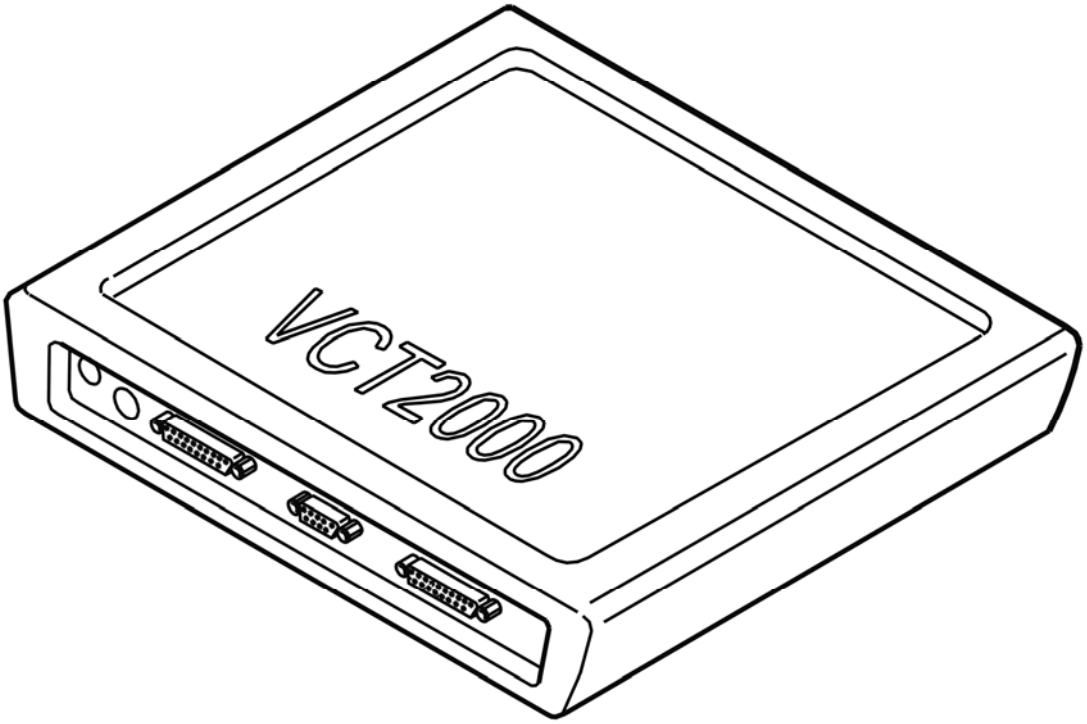

Fig. 177: Identifying VCT2000 Diagnostic Tool Symbol In VIDA
Courtesy of VOLVO CARS CORPORATION

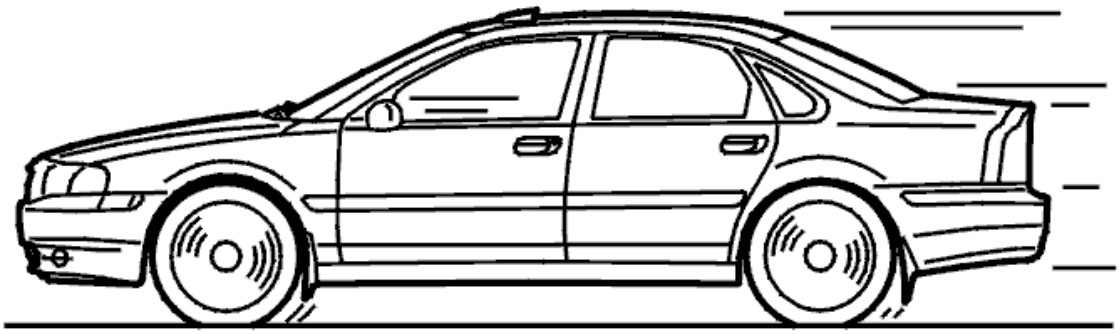

Fig. 178: Identifying Test Drive
Courtesy of VOLVO CARS CORPORATION

Is the status intermittent?

- **YES**

  VERIFIED: Troubleshooting has been completed.

- **NO**

  Refer to **INFORMATION**

SAS-0049: CONTROL UNIT VOLTAGE SUPPLY. SIGNAL FAULTY (2003-2004)

DIAGNOSTIC TROUBLE CODE INFORMATION

Condition

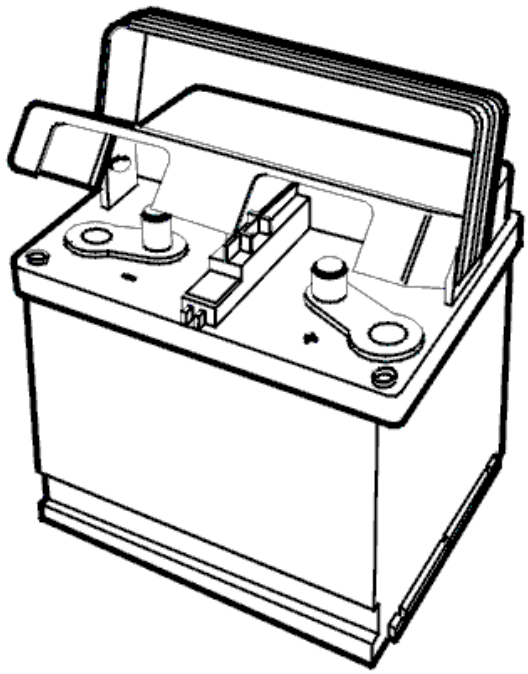

Fig. 179: Identifying Battery
Courtesy of VOLVO CARS CORPORATION

If the steering wheel angle sensor (SAS) control unit registers that the voltage between the central electronic control unit (CEM) and the steering wheel angle sensor control unit differs by +/- 2 V, diagnostic trouble code SAS-0049 will be stored.

Substitute Value

- Nothing.

Possible Source

- Contact resistance or oxidation in the connector of the steering angle sensor control unit or steering wheel control unit.
- Internal fault in control unit.

Fault symptom[s]

- Anti-spin warning lamp is on.

FAULTY SIGNAL

CHECKING THE VOLTAGE

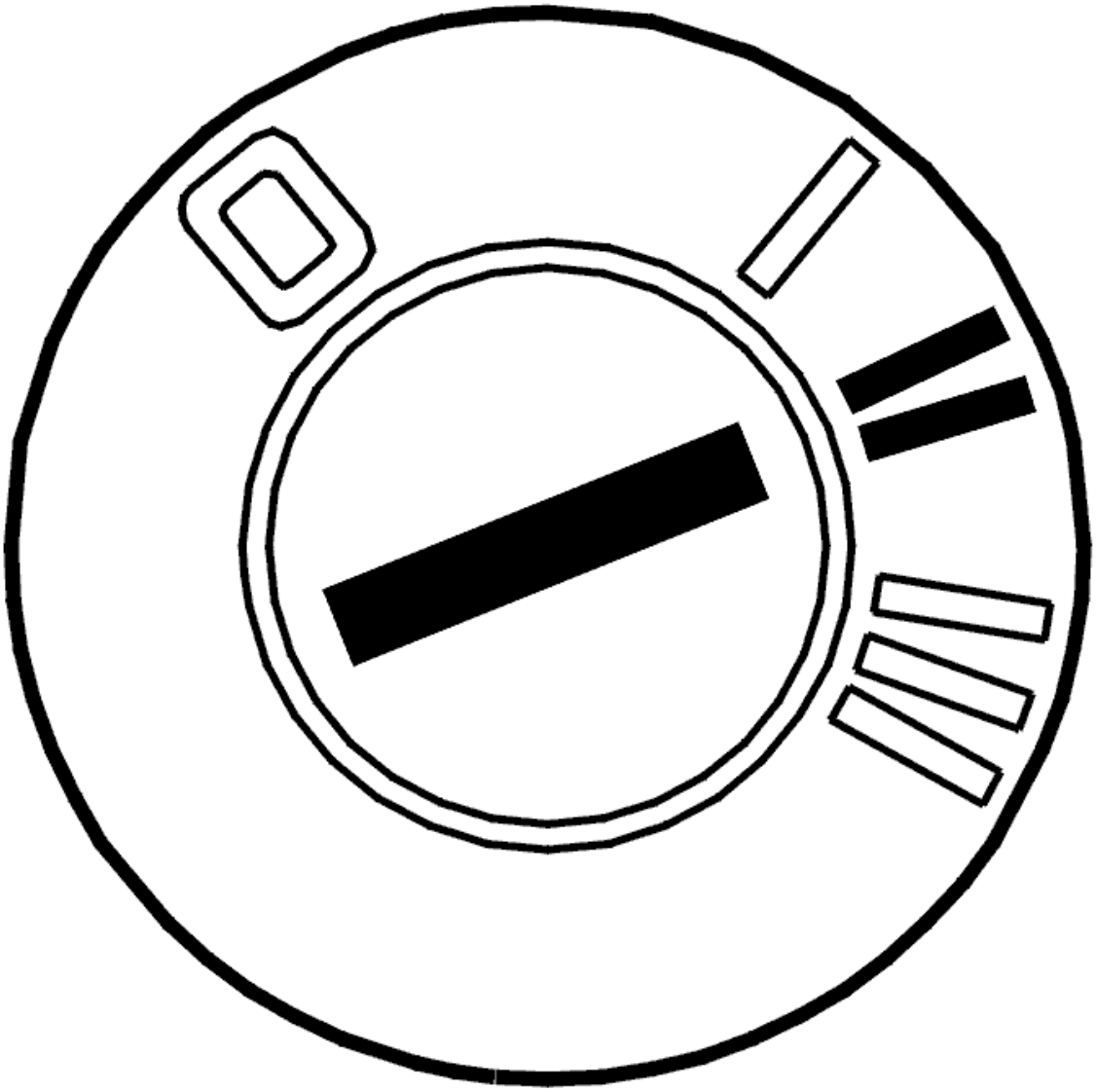

Fig. 180: Identifying Ignition ON
Courtesy of VOLVO CARS CORPORATION

- Ignition off
- Disconnect the connector for the control module for the steering wheel angle sensor
- Disconnect the connector for the steering wheel module (SWM)
- Check the connectors for control module for the steering wheel angle sensor and for the steering wheel angle sensor. Check for contact resistance and oxidation according to **CONTACT RESISTANCE AND OXIDATION**
- Reinstall the components, reconnect the connectors etc.
- Ignition on
- Read off the voltage over the central electronic module (CEM) and the control module for the steering wheel angle sensor.

The voltage must be approximately 12 V for both the central electronic module (CEM) and the control module for the steering wheel angle sensor.

Other information:

- To disconnect the connector for the control module for the steering wheel angle sensor, see **STEERING WHEEL MODULE (SWM), REPLACING**
- To disconnect the connector for the steering wheel module (SWM), see **STEERING WHEEL MODULE (SWM), REPLACING** .

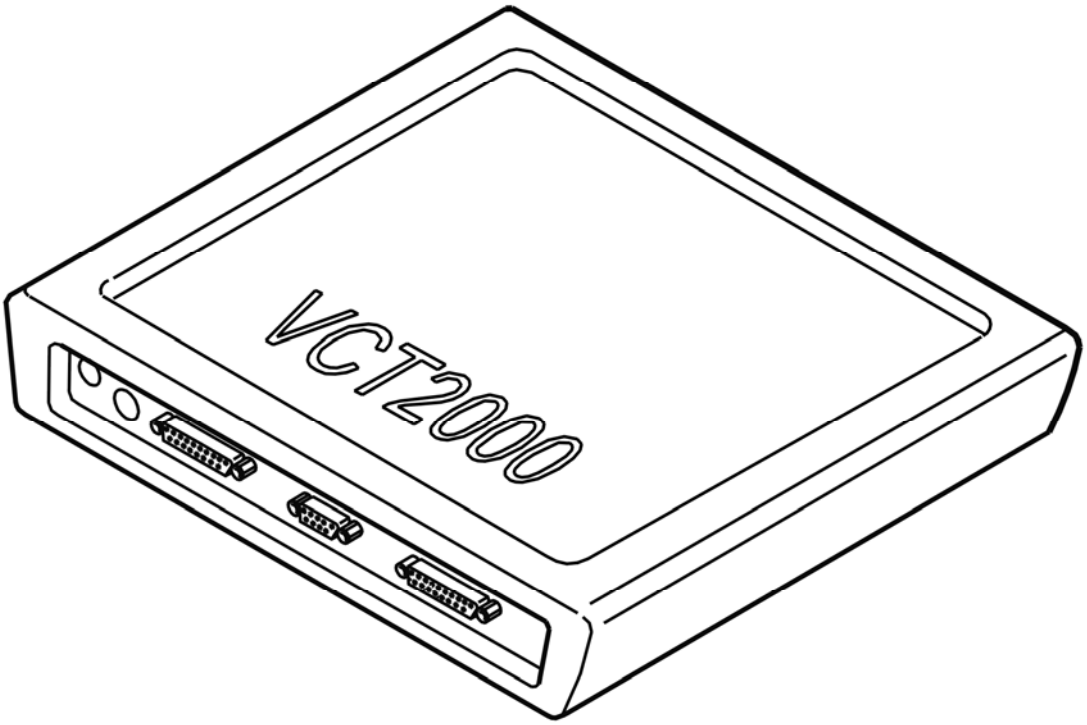

Fig. 181: Identifying VCT2000 Diagnostic Tool Symbol In VIDA
Courtesy of VOLVO CARS CORPORATION

Was the voltage OK?

- **YES**

  OKAY: Troubleshooting has been completed.

- **NO**

  Refer to **CHECKING THE WIRING**

CHECKING THE WIRING

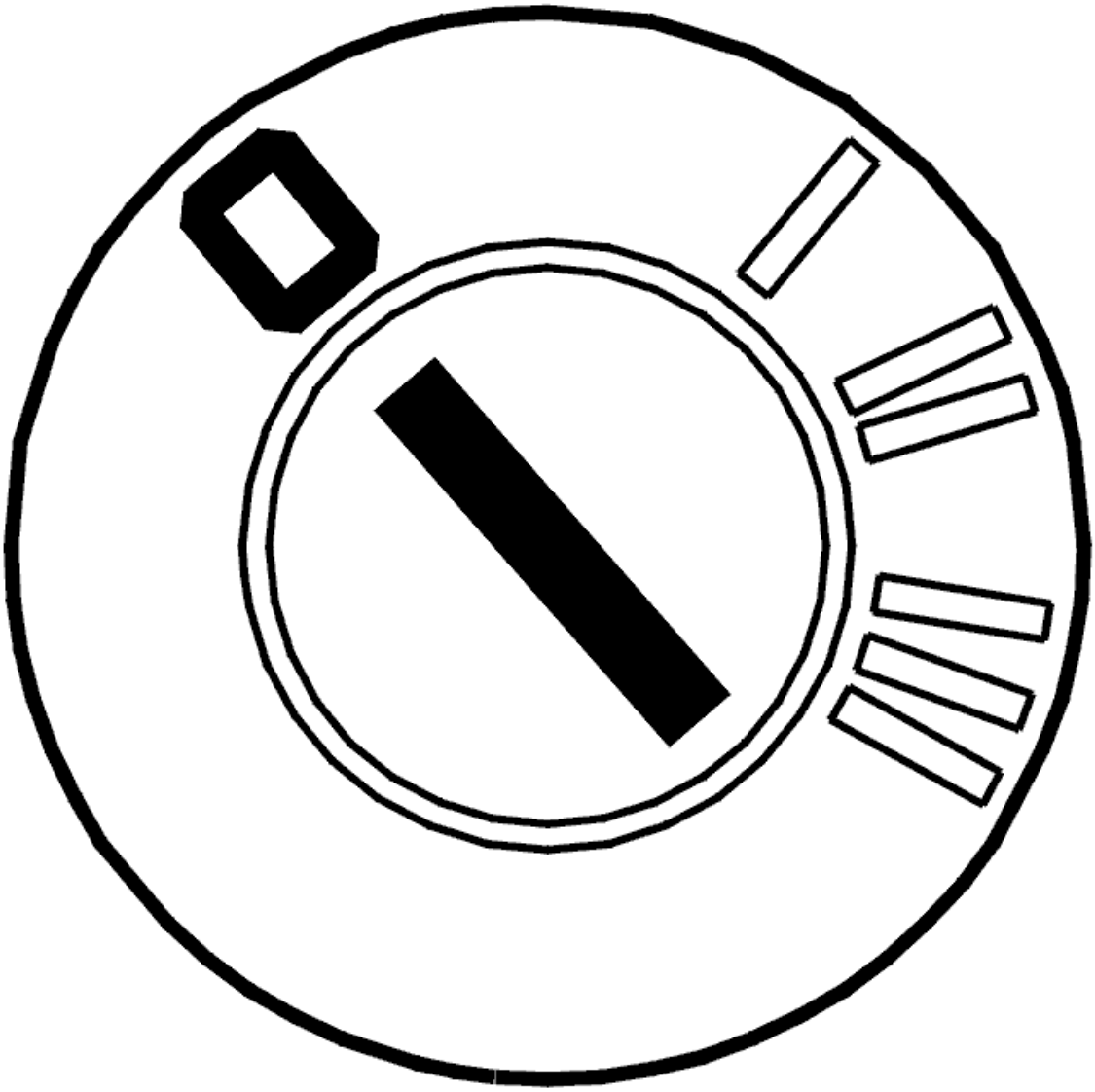

Fig. 182: Identifying Ignition OFF
Courtesy of VOLVO CARS CORPORATION

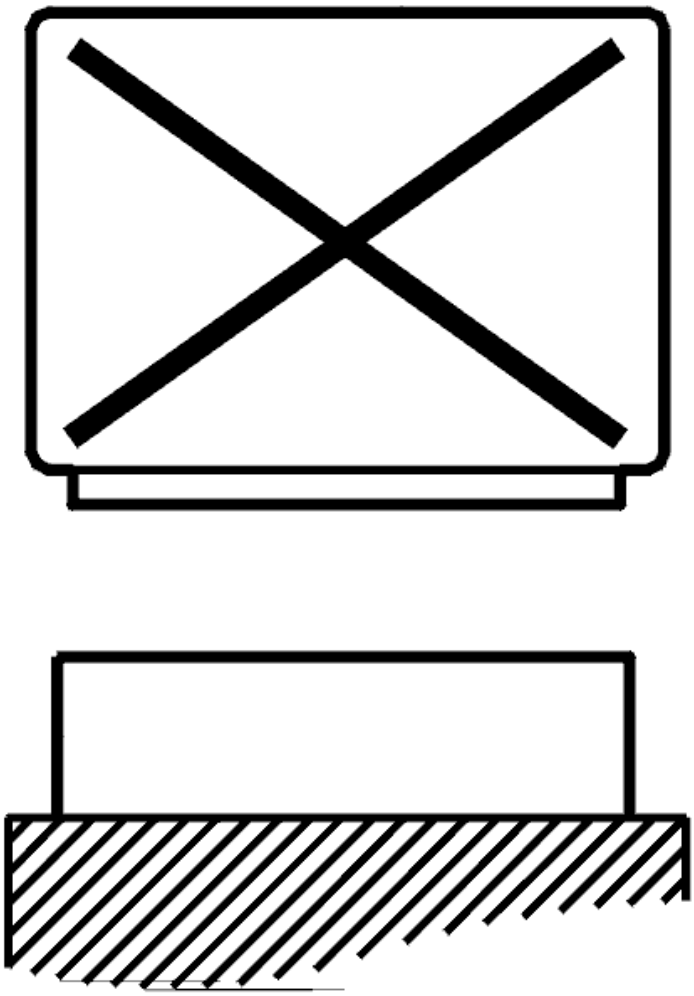

Fig. 183: Disconnecting Control Unit
Courtesy of VOLVO CARS CORPORATION

- Ignition off
- The control module for the steering wheel angle sensor disconnected
- Steering wheel module (SWM) disconnected
- Connect the breakout box to the control module for the steering wheel angle sensor and to the steering wheel module (SWM).

  Check the wiring between the control module for the steering wheel angle sensor terminal #2 (#A26) and steering wheel module (SWM) terminal #6 (#A6). Check for a short-circuit to supply voltage according to **SHORT-CIRCUIT TO SUPPLY VOLTAGE. PERMANENT FAULTS** .

  Try replacing the steering wheel angle sensor if no fault is found in the wiring.

Other information:

- To disconnect the control module for the steering wheel angle sensor, see **STEERING WHEEL MODULE (SWM), REPLACING**
- To connect the breakout box to the steering wheel module (SWM), see **STEERING WHEEL MODULE (SWM), REPLACING**
- To connect the breakout box to the control module for the steering wheel angle sensor, see **CONNECTING THE BREAKOUT BOX TO THE STEERING ANGLE SENSOR**
- To disconnect and replace the steering wheel angle sensor, see **CONTACT REEL, REPLACEMENT** .

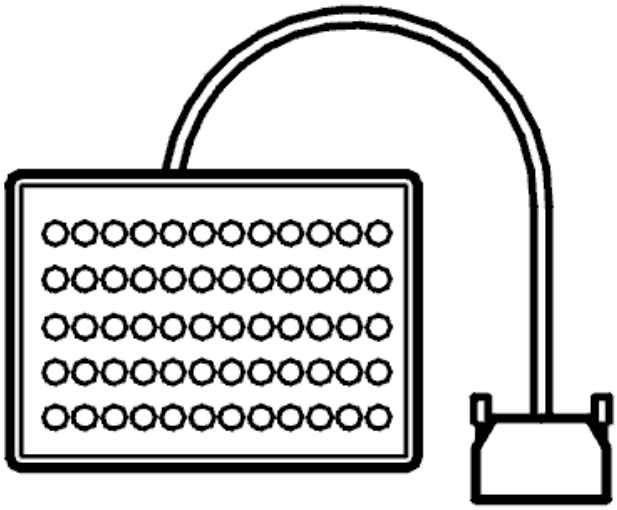

Fig. 184: Breakout Box
Courtesy of VOLVO CARS CORPORATION

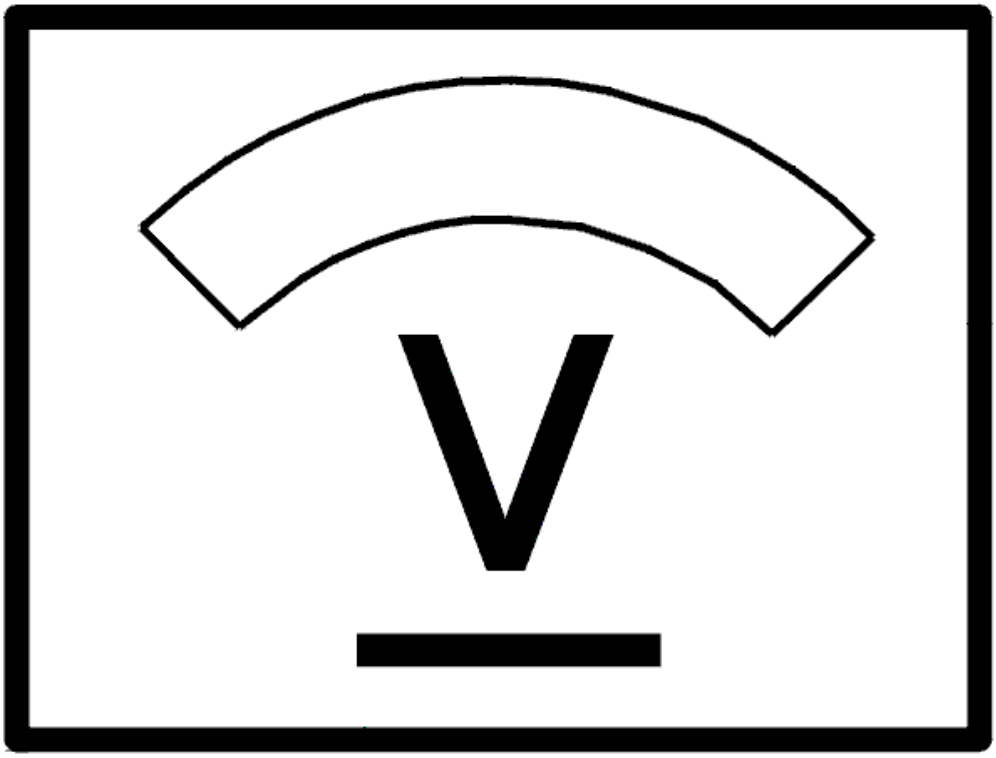

Fig. 185: Identifying Voltage Display
Courtesy of VOLVO CARS CORPORATION

- **Continue**

  Refer to **VERIFICATION**

VERIFICATION

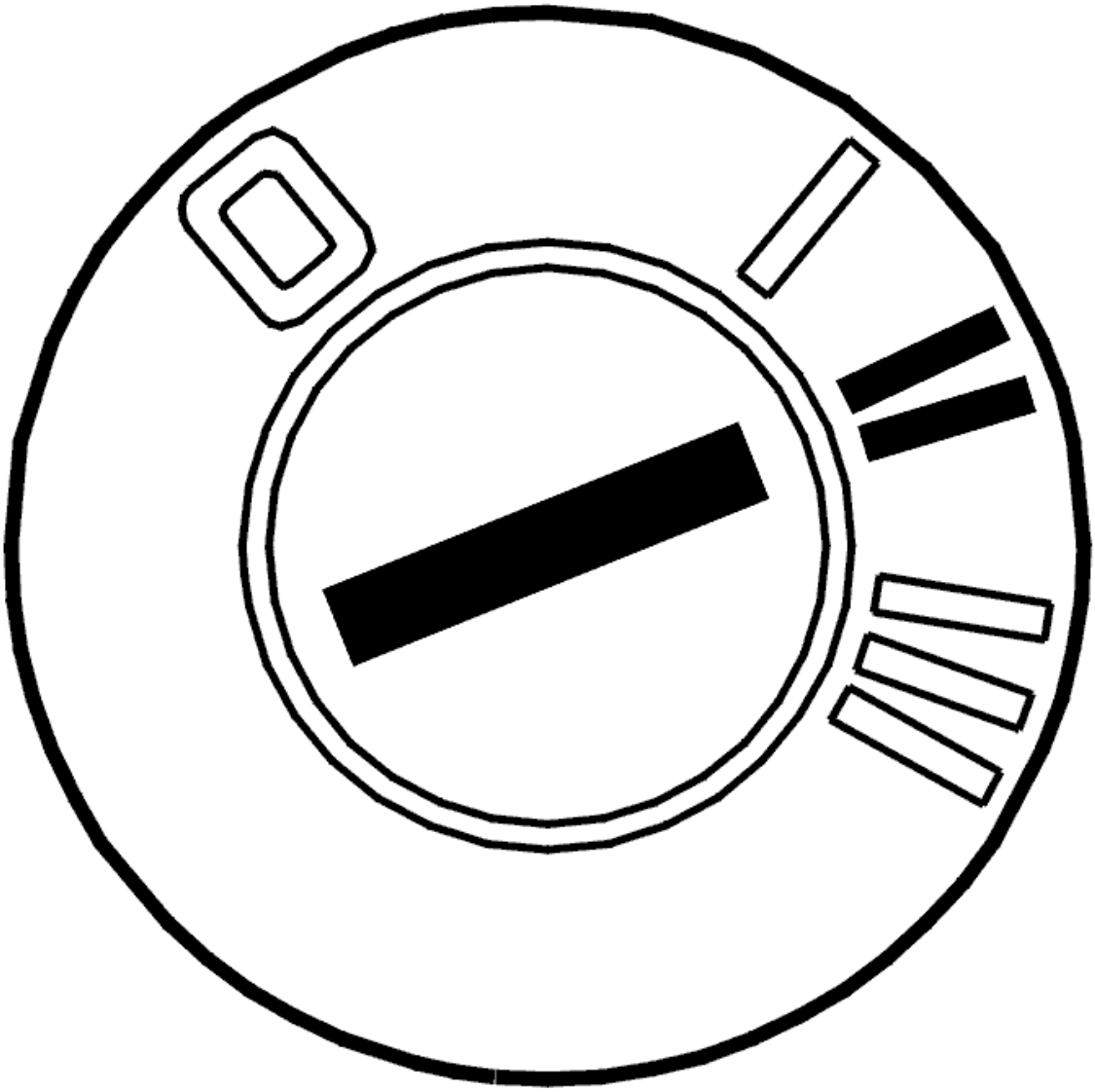

Fig. 186: Identifying Ignition ON
Courtesy of VOLVO CARS CORPORATION

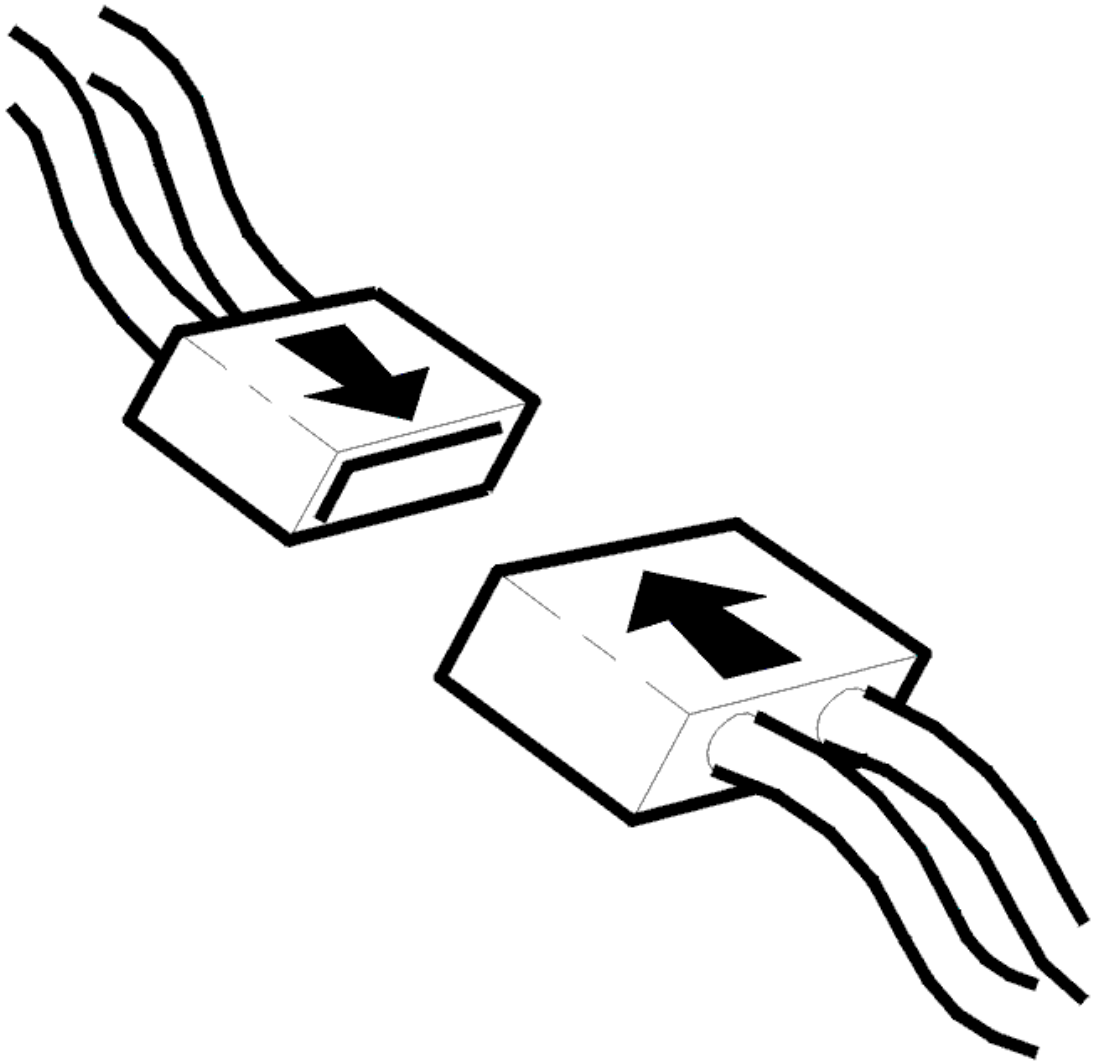

Fig. 187: Connecting Connector
Courtesy of VOLVO CARS CORPORATION

- Ignition off.
- Connect the connectors, install the components, etc.
- Ignition on.
- Read the voltage over the central electronic control unit (CEM) and the steering wheel angle sensor (SAS) control unit.

  Voltage should be approximately 12 V for both the central electronic control unit (CEM) and the steering wheel angle sensor control unit.

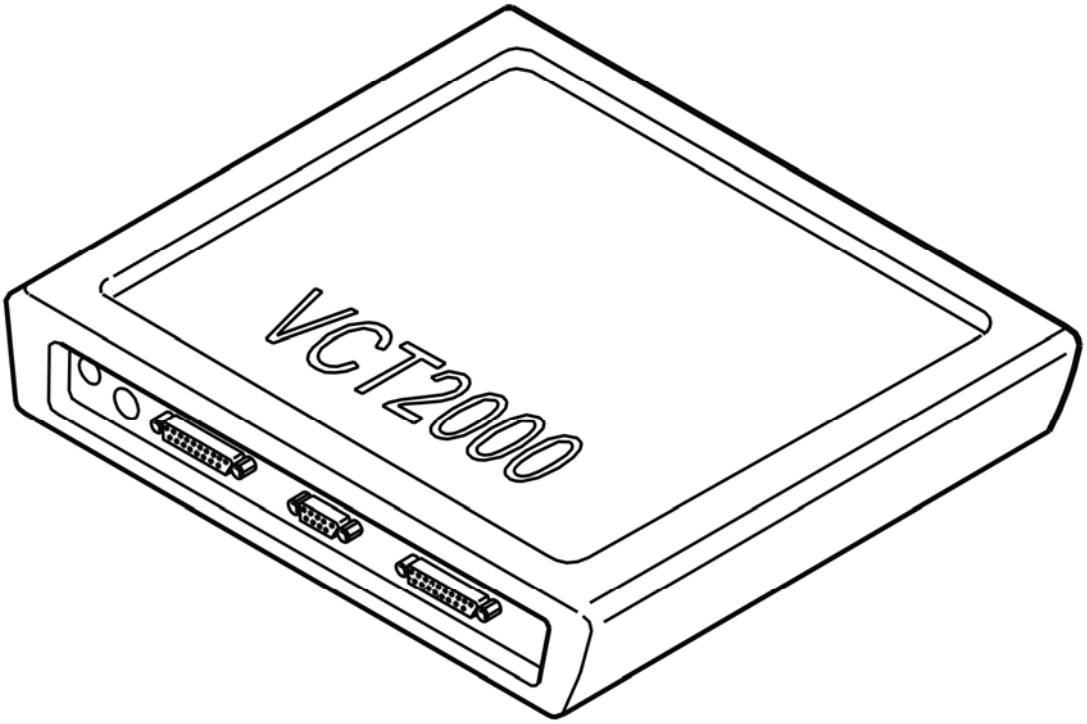

Fig. 188: Identifying VCT2000 Diagnostic Tool Symbol In VIDA
Courtesy of VOLVO CARS CORPORATION

Is voltage OK?

- **YES**

  VERIFIED: Troubleshooting has been completed.

- **NO**

  Refer to **INFORMATION**

INFORMATION

FAULT-TRACING INFORMATION

The fault should have been detected and remedied. As this is not the case fault-tracing has failed.

Exit fault-tracing for this diagnostic trouble code (DTC) or make another attempt.

SAS-004A: CONTROL MODULE INTERNAL FAULT. INTERMITTENT FAULT (2003-2004)

DIAGNOSTIC TROUBLE CODE INFORMATION

Condition

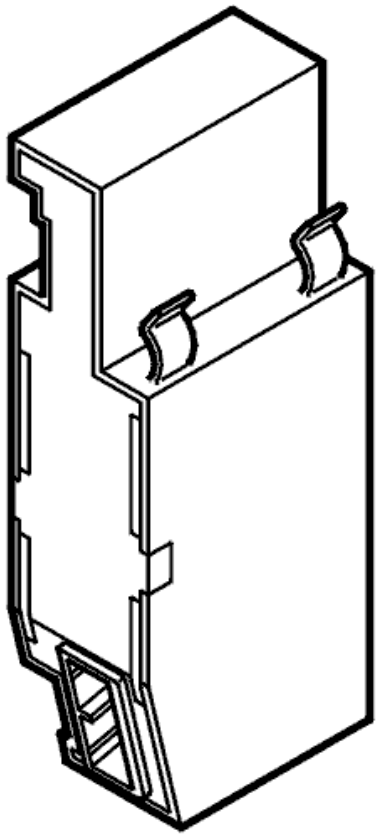

Fig. 189: Control Module For Steering Wheel Angle Sensor
Courtesy of VOLVO CARS CORPORATION

If the steering wheel angle sensor (SAS) control unit registers that information cannot be read from the memory circuit, diagnostic trouble code SAS-004A will be stored.

Substitute Value

- Stabilizing function disconnected.

Possible Source

- Defective control unit.

Fault symptom[s]

- Anti-spin warning lamp is on.
- Stabilizing function not working.

INTERNAL FAULT

INFORMATION

The control module has previously registered a fault. The fault is now no longer present.

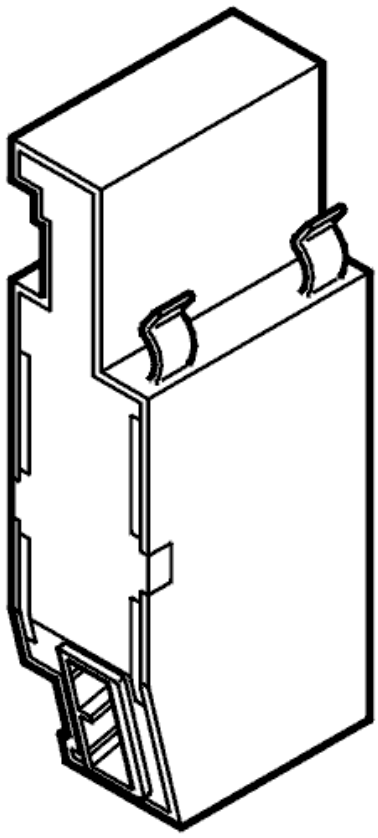

Fig. 190: Control Module For Steering Wheel Angle Sensor
Courtesy of VOLVO CARS CORPORATION

SAS-004A: CONTROL UNIT. INTERNAL FAULT. PERMANENT FAULT (2003-2004)

DIAGNOSTIC TROUBLE CODE INFORMATION

see **DIAGNOSTIC TROUBLE CODE INFORMATION**

INTERNAL FAULT. PERMANENT FAULT

CHECK THE CONTROL MODULE FOR THE STEERING WHEEL ANGLE SENSOR

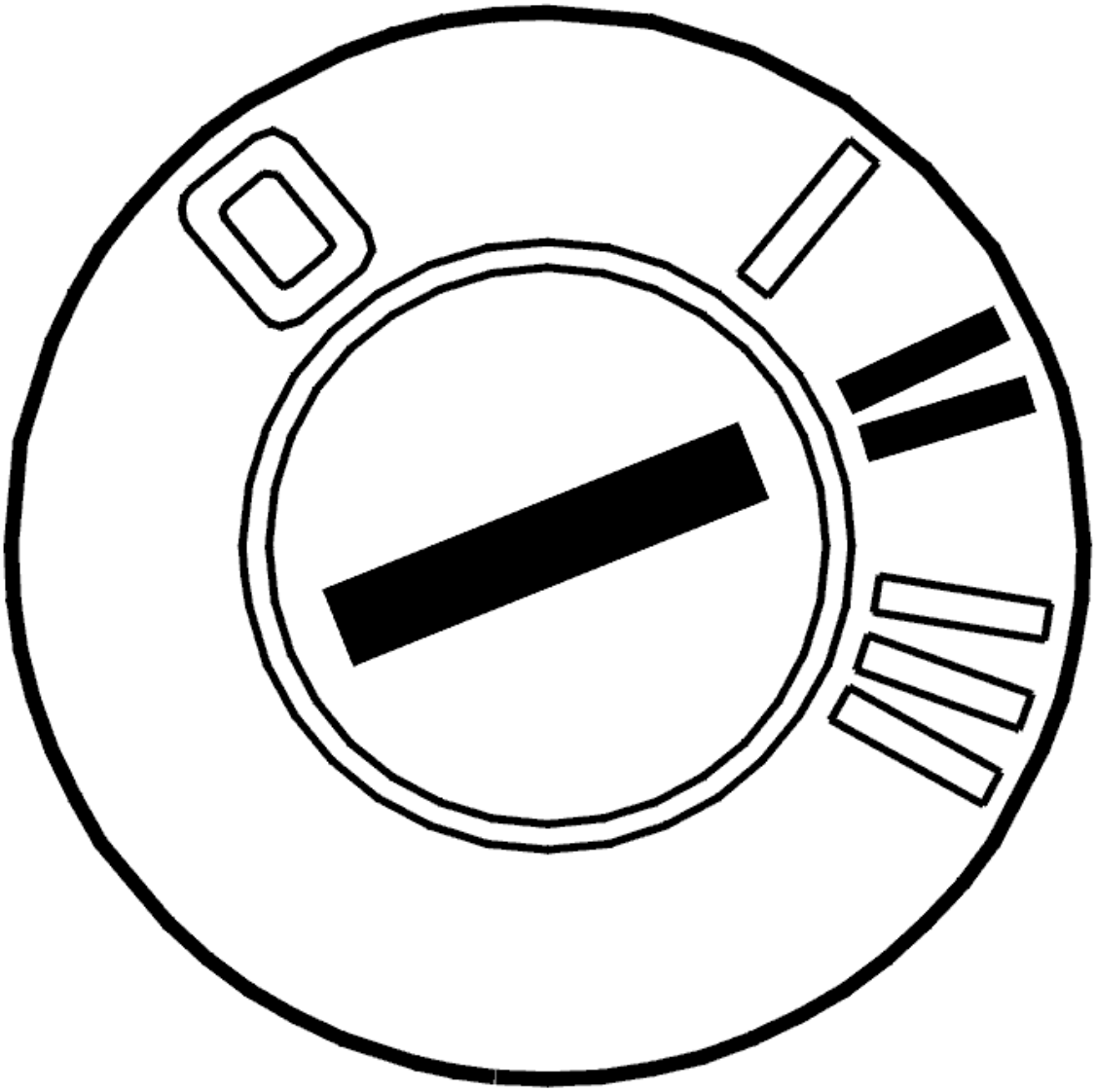

Fig. 191: Identifying Ignition ON
Courtesy of VOLVO CARS CORPORATION

- Ignition off
- Disconnect the connector for the steering wheel module (SWM)
- Wait 150 seconds
- Connect the connector to the steering wheel module (SWM)
- Ignition on
- Read off diagnostic trouble codes (DTCs) for the control module for the steering wheel angle sensor.

  The EEPROM in the control module stores diagnostic trouble codes (DTC), diagnostic trouble code (DTC) counters and frozen values. If the memory circuit is malfunctioning, no information can be read from the control module. Simulate a fault to check the condition of the memory. This stores a diagnostic trouble code (DTC). The memory can then be checked by reading off the diagnostic trouble code (DTC) information.

NOTE: **A diagnostic trouble code (DTC) will be stored in the steering wheel module (SWM) when the module is disconnected. Therefore any diagnostic trouble codes (DTCs) in the system for the steering wheel module (SWM) must be erased.**

Other information:

- To disconnect and connect the connector for the steering wheel module (SWM), see **STEERING WHEEL MODULE (SWM), REPLACING** .

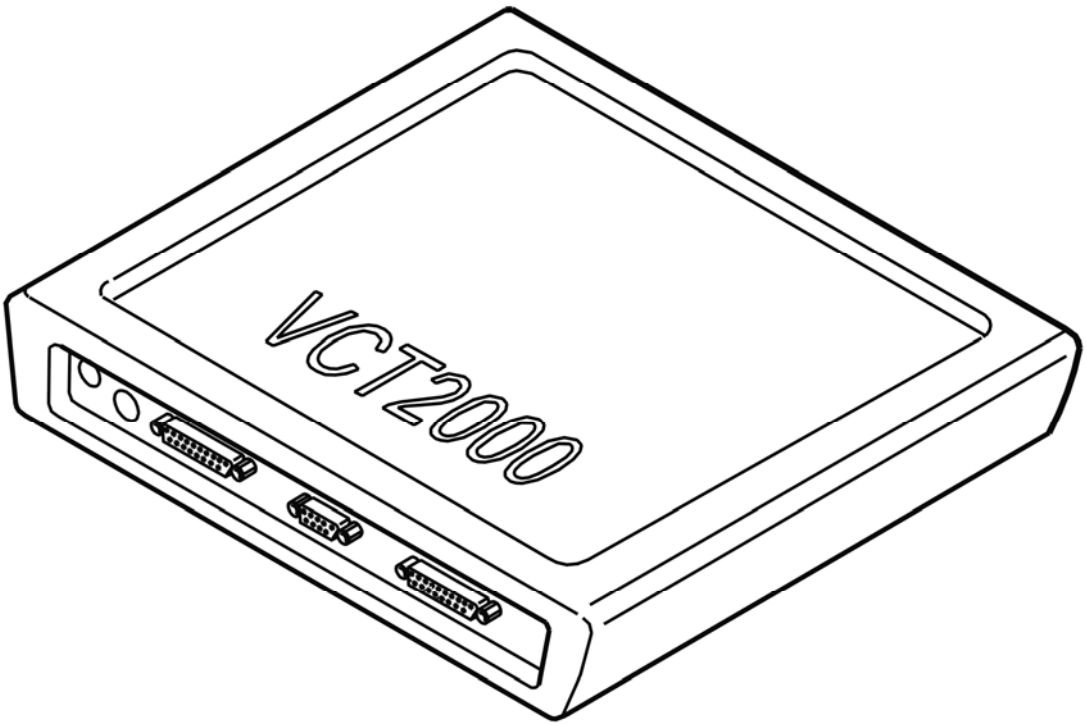

Fig. 192: Identifying VCT2000 Diagnostic Tool Symbol In VIDA
Courtesy of VOLVO CARS CORPORATION

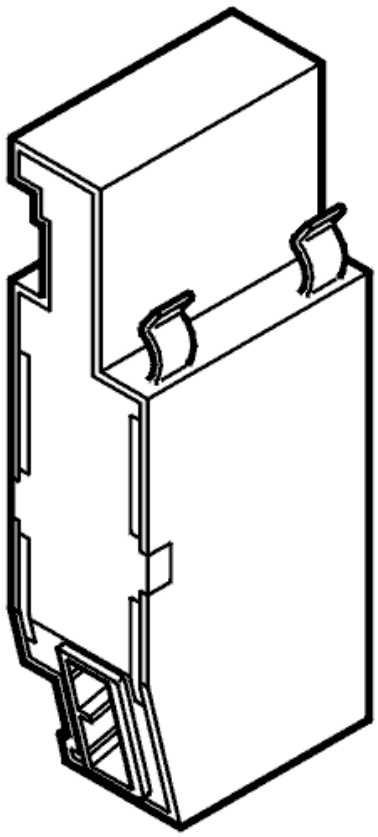

Fig. 193: Control Module For Steering Wheel Angle Sensor
Courtesy of VOLVO CARS CORPORATION

Can the diagnostic trouble codes (DTCs) be read off?

- **YES**

  Refer to **INFORMATION**

- **NO**

  Refer to **REPLACING THE CONTROL MODULE FOR THE STEERING WHEEL ANGLE SENSOR**

REPLACING THE CONTROL MODULE FOR THE STEERING WHEEL ANGLE SENSOR

CAUTION: The control modules are delivered without software. The control module must be programmed in order to function after replacement.

Other information

- For further information about programming and replacing the control module, see **STEERING WHEEL MODULE (SWM), REPLACING** .

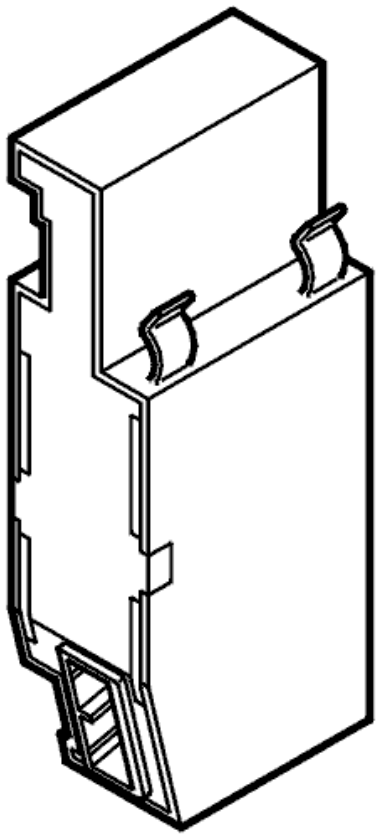

Fig. 194: Control Module For Steering Wheel Angle Sensor
Courtesy of VOLVO CARS CORPORATION

- **Continue**

  Refer to **INFORMATION**

INFORMATION

FAULT-TRACING INFORMATION

In case of this defect, troubleshooting is not followed by verification.

The information can be displayed again or the fault-tracing for this fault can be interrupted.

SAS-004B: STEERING WHEEL ANGLE SENSOR. FAULTY SIGNAL (2003-2004)

DIAGNOSTIC TROUBLE CODE (DTC) INFORMATION

Condition

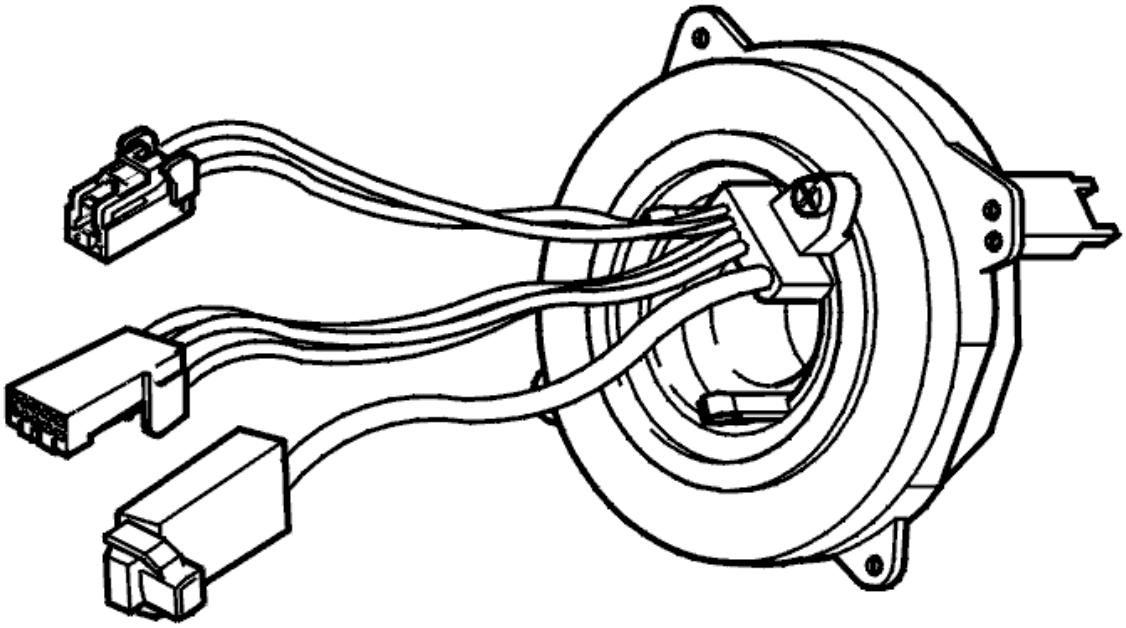

Fig. 195: Identifying Steering Wheel Angle Sensor
Courtesy of VOLVO CARS CORPORATION

Diagnostic trouble code (DTC) SAS-004B is stored if the control module for the steering wheel angle sensor registers that the signal from the steering wheel angle sensor is faulty.

Substitute Value

- None.

Possible Source

- Contact resistance or oxidation in the control module for the steering wheel angle sensor or in the steering wheel module connector.
- Fault in the signal cables between the steering wheel angle sensor and the control module for the steering wheel angle sensor.
- Internal fault in the steering wheel angle sensor.
- Internal fault in the control module.

Fault symptom[s]

- Anti-spin warning lamp lit.
- No stability function.

FAULTY SIGNAL

see **FAULTY SIGNAL**

SAS-C008B64 EXCESSIVE STEERING ANGLE. ALGORITHM FAULT. INAPPROPRIATE SIGNAL (B6324S; 2007-2010)

DIAGNOSTIC TROUBLE CODE (DTC) INFORMATION SAS-C008B64

Condition

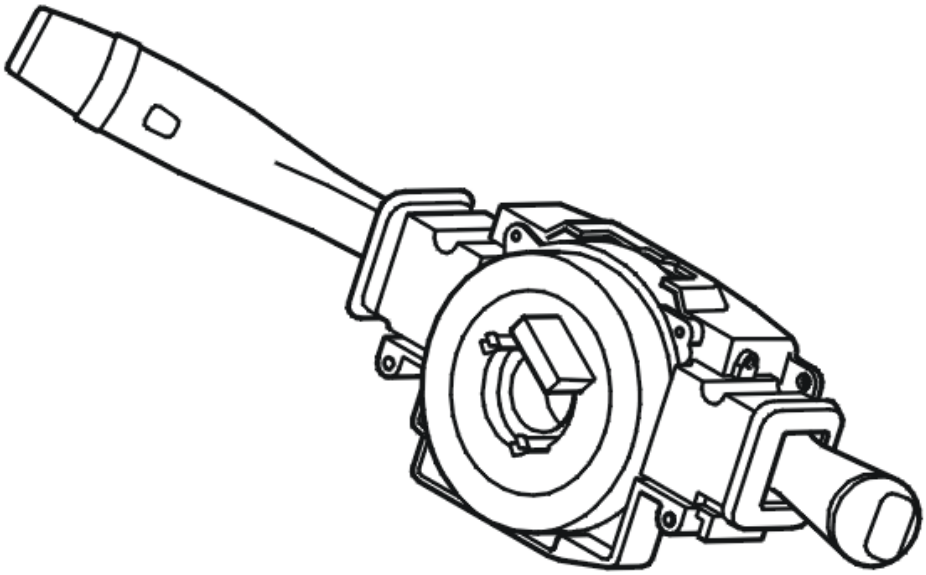

Fig. 196: Identifying Steering Wheel Control Module
Courtesy of VOLVO CARS CORPORATION

The Steering Angle Sensor (SAS) is located in the Steering Wheel Module (SWM) from which it is supplied with power. It is however only the Steering Angle Sensor which communicates on the Control Area Network (CAN).

If the Steering Angle Sensor (SAS) registers that the steering angle exceeds 720°, in either direction, the trouble code is set.

The trouble code may be diagnosed when the ignition is on and the angle sensor is initiated. The sensor is initiated by the steering wheel being turned by more than 4.5° in either direction.

Substitute Value

- The stability function is blocked.

Possible Source

- The Steering Angle Sensor (SAS) is incorrectly fitted.

Fault symptom[s]

- The anti-spin warning lamp is illuminated.
- General warning lamp lit
- The stability function is not working.

FAULT TRACING SAS-C008B64

CHECKING THE FITTING OF THE STEERING ANGLE SENSOR (SAS)

NOTE: **The trouble code indicates that the Steering Angle Sensor (SAS) is incorrectly fitted. It is very important that the switch roller/Steering Angle Sensor (SAS) is correctly fitted. If the unit is fitted with the rotating centre section displaced by one complete revolution, internal components can be damaged when the steering wheel is turned to full lock. If it is possible that the unit is incorrectly assembled, the switch roller must be replaced.**

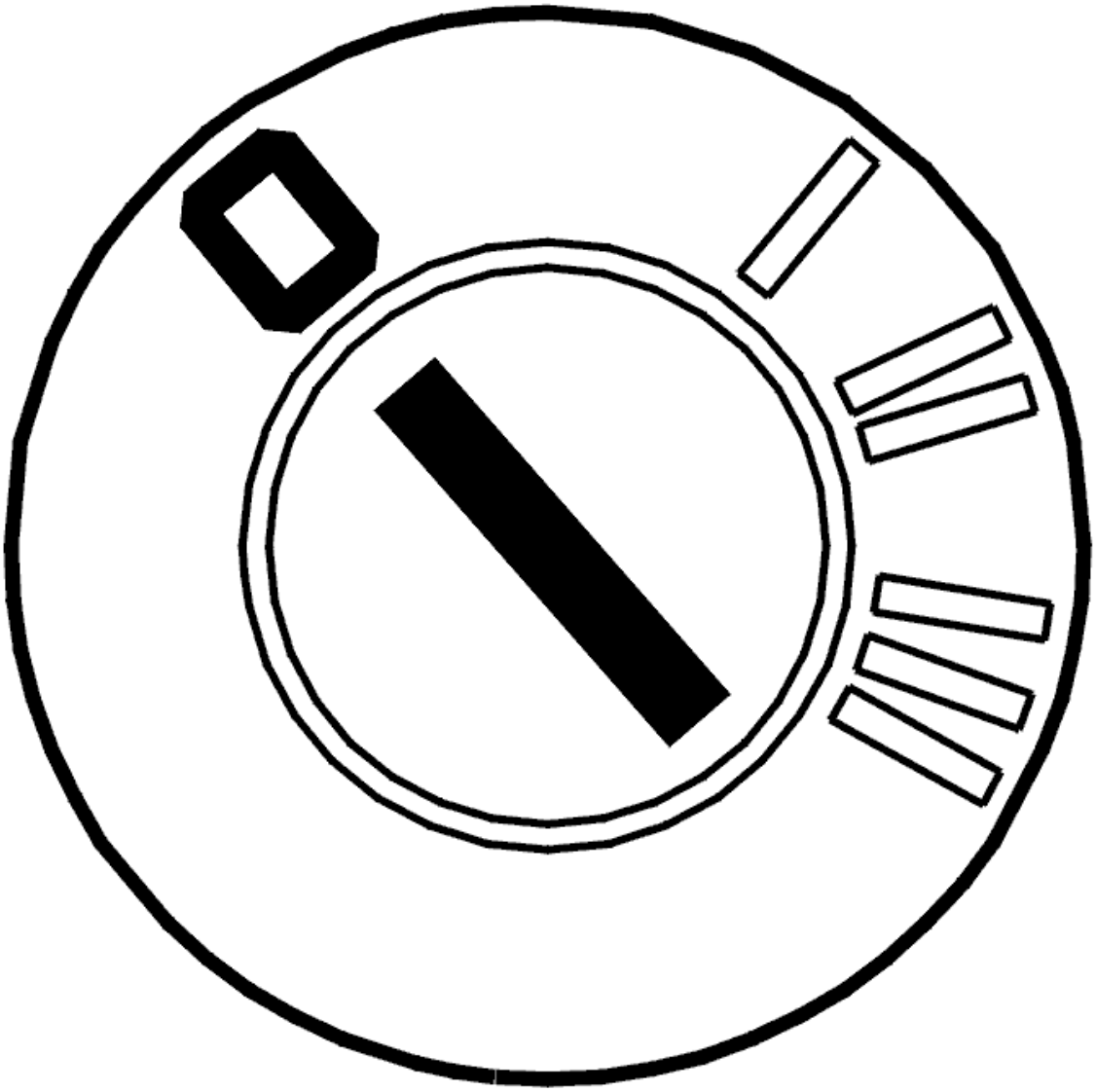

Fig. 197: Identifying Ignition OFF
Courtesy of VOLVO CARS CORPORATION

- Ignition off
- Align the wheels in the straight ahead position.
- Remove the steering wheel.
- Ignition on
- Turn the steering wheel by more than 5° in either direction to initiate the Steering Angle Sensor (SAS).
- Read the value of steering angle by clicking on the VCT2000 (Volvo Scan Tool) symbol.

  Check that the steering angle is 0° when the wheels are in the straight ahead position. If the steering angle is incorrect, position the wheels straight ahead and loosen the steering wheel. Then adjust the contact roller so that the yellow mark can be seen in the contact roller window when the contact roller locking screw is in the correct position.

NOTE: **If the ignition key is turned to position II when the steering wheel is removed, trouble codes for the steering wheel switches are stored in the Central Electronic Module (CEM).**

Other information

- see **CONTACT REEL, REPLACEMENT**

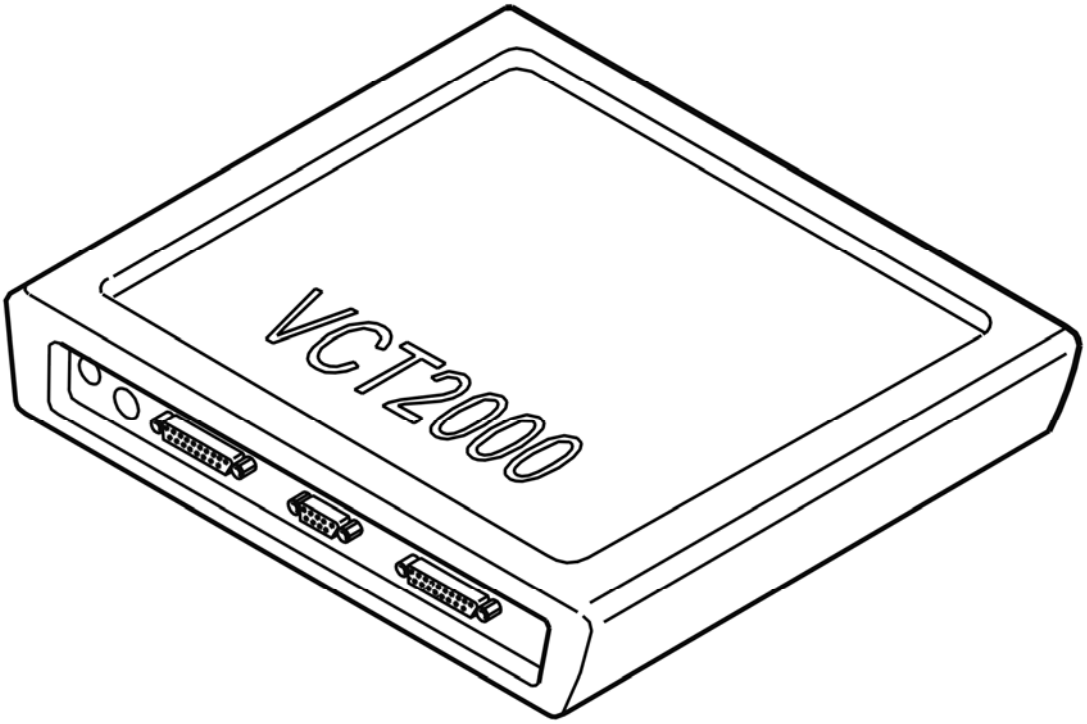

Fig. 198: Identifying VCT2000 Diagnostic Tool Symbol In VIDA
Courtesy of VOLVO CARS CORPORATION

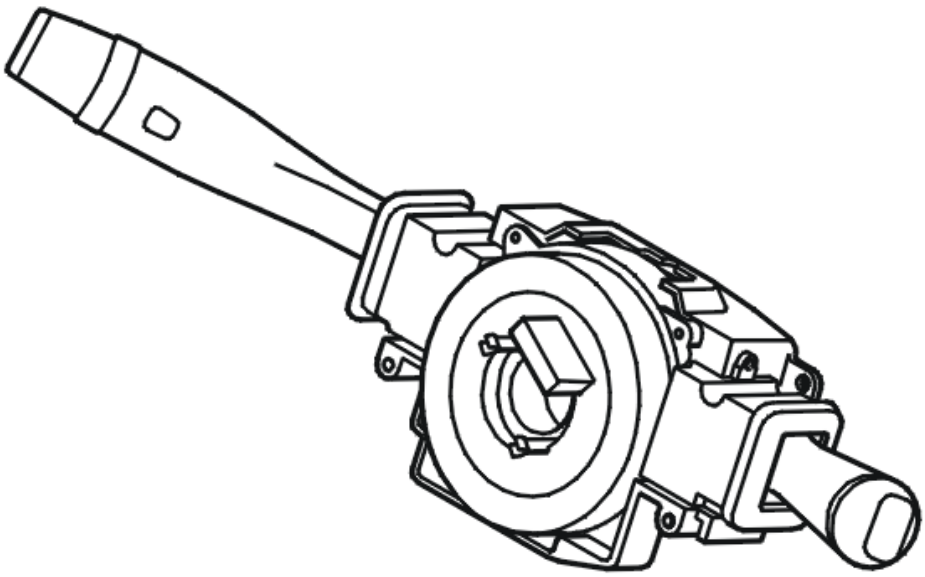

Fig. 199: Identifying Steering Wheel Control Module
Courtesy of VOLVO CARS CORPORATION

- **Continue**

  Refer to **VERIFICATION**

VERIFICATION

HINT: After carrying out the repair, check that the fault has been remedied.

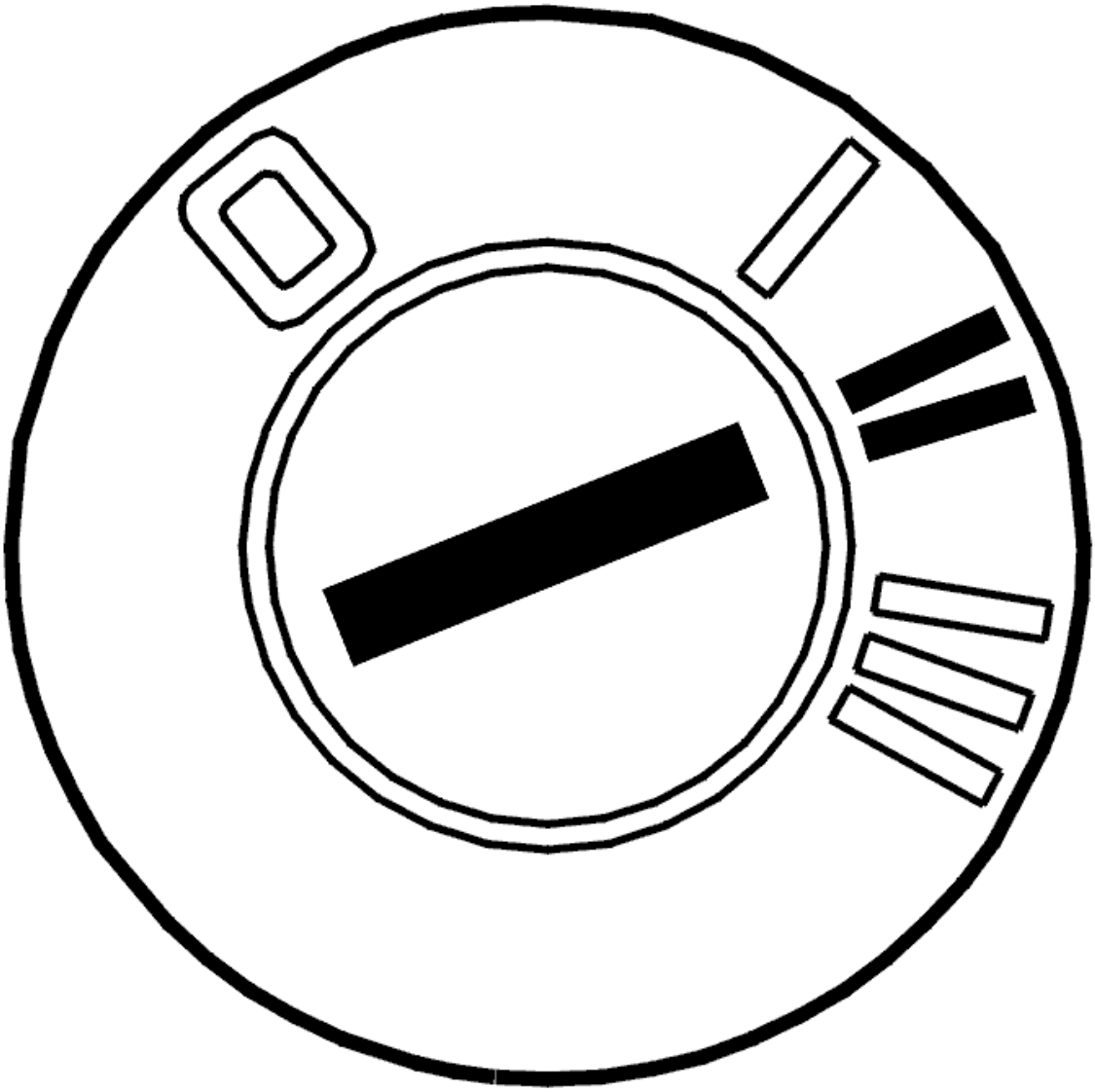

Fig. 200: Identifying Ignition ON
Courtesy of VOLVO CARS CORPORATION

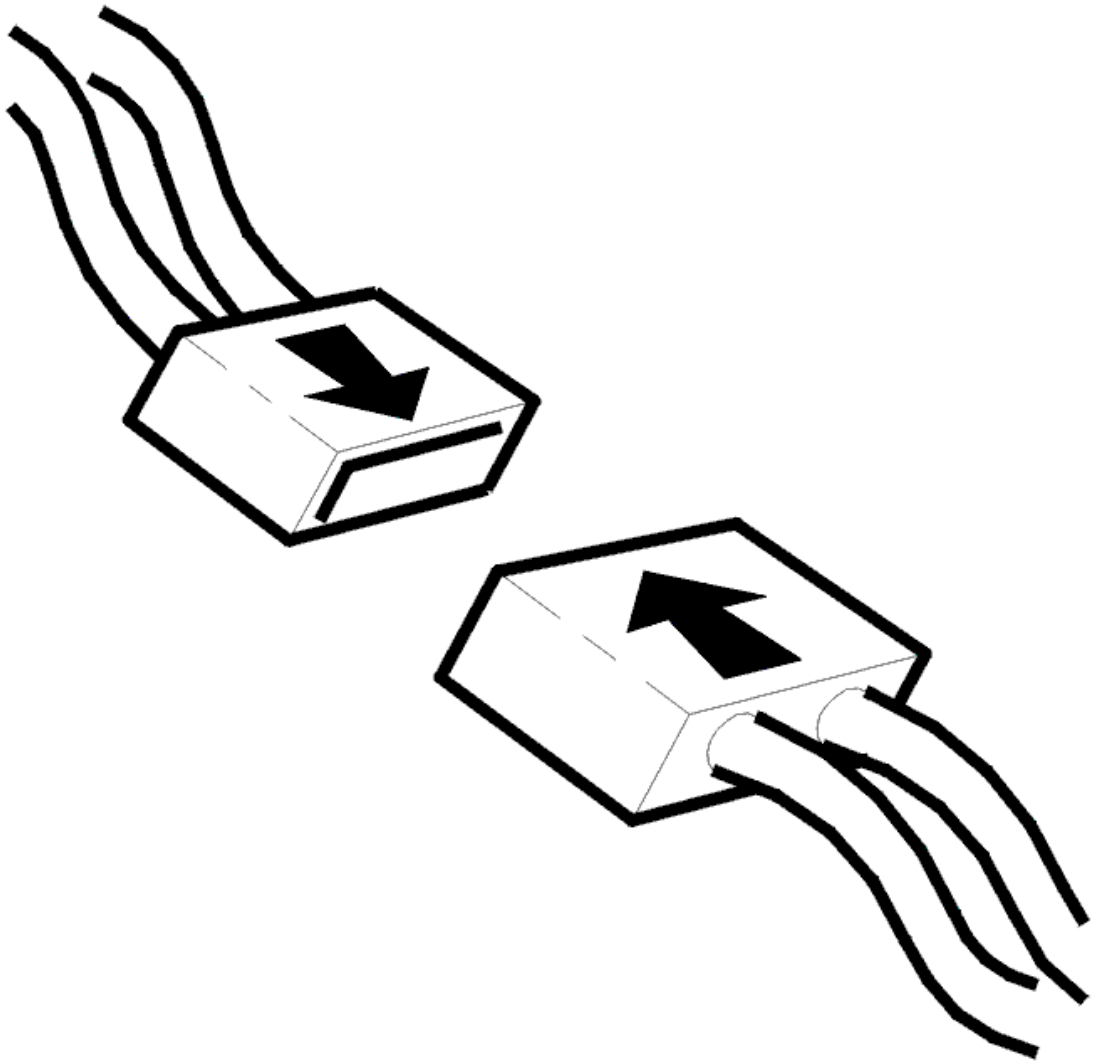

Fig. 201: Connecting Connector
Courtesy of VOLVO CARS CORPORATION

- Ignition off
- Reconnect the connectors, components, etc.
- Ignition on
- Turn the steering wheel by more than 5° in either direction to initiate the Steering Angle Sensor (SAS).
- Read the value of steering angle by clicking on the VCT2000 symbol on VIDA (Volvo scan tool).

  Read the steering angle and check that it is 0° when the wheels are positioned straight ahead.

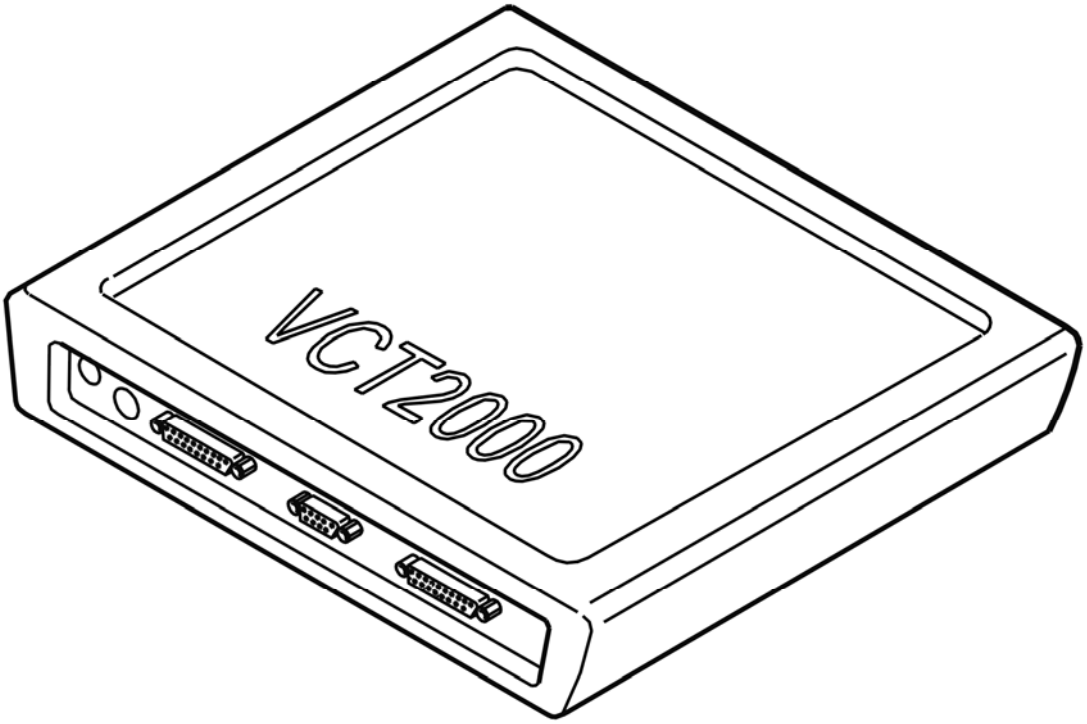

Fig. 202: Identifying VCT2000 Diagnostic Tool Symbol In VIDA
Courtesy of VOLVO CARS CORPORATION

Is the steering angle 0° when the wheels are positioned straight ahead?

- **YES**

  VERIFIED: Troubleshooting has been completed.

- **NO**

  Refer to **INFORMATION**

INFORMATION

FAULT-TRACING INFORMATION

The fault should have been detected and remedied. As this is not the case fault-tracing has failed.

Exit fault-tracing for this diagnostic trouble code (DTC) or make another attempt.

SAS-C008B64 EXCESSIVE STEERING ANGLE. ALGORITHM FAULT. INAPPROPRIATE SIGNAL (B6324S5; 2011-2012)

DIAGNOSTIC TROUBLE CODE (DTC) INFORMATION SAS-C008B64

see **DIAGNOSTIC TROUBLE CODE (DTC) INFORMATION SAS-C008B64**

FAULT TRACING SAS-C008B64

see **FAULT TRACING SAS-C008B64**

SAS-C008B64 EXCESSIVE STEERING ANGLE. ALGORITHM FAULT. INAPPROPRIATE SIGNAL (B8444S; 2005-2011)

DIAGNOSTIC TROUBLE CODE (DTC) INFORMATION SAS-C008B64

see **DIAGNOSTIC TROUBLE CODE (DTC) INFORMATION SAS-C008B64**

FAULT TRACING SAS-C008B64

see **FAULT TRACING SAS-C008B64**

SAS-C008C64 EXCESSIVE RATE OF CHANGE OF STEERING ANGLE. ALGORITHM FAULT. INAPPROPRIATE SIGNAL (B6324S; 2007-2010)

DIAGNOSTIC TROUBLE CODE (DTC) INFORMATION SAS-C008C64

Condition

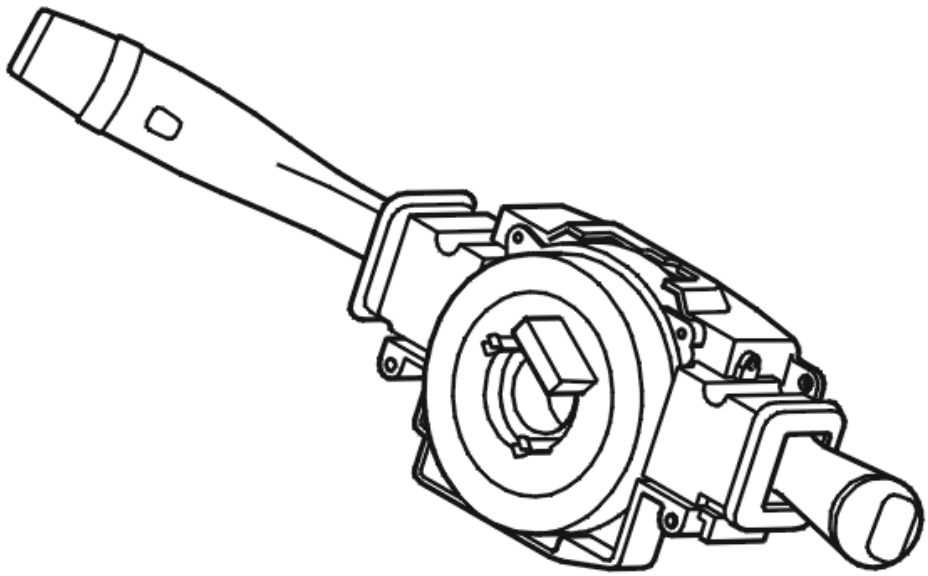

Fig. 203: Identifying Steering Wheel Control Module
Courtesy of VOLVO CARS CORPORATION

The Steering Angle Sensor (SAS) is located in the Steering Wheel Module (SWM) from which it is supplied with power. It is however only the Steering Angle Sensor which communicates on the Control Area Network (CAN).

If the Steering Angle Sensor (SAS) registers that the rate of change of steering angle exceeds 1433 °/second, the trouble code is set.

The trouble code may be diagnosed when the ignition is on and the angle sensor is initiated. The sensor is initiated by the steering wheel being turned by more than 4.5° in either direction.

Substitute Value

- The stability function is blocked.

Possible Source

- The wheel has bumped against something (e. g. a curbstone).
- Internal fault in the control module

Fault symptom[s]

- The anti-spin warning lamp is illuminated.
- General warning lamp lit
- The stability function is not working.

FAULT TRACING SAS-C008C64

INFORMATION

The trouble code indicates that the steering wheel has been turned at a speed exceeding 1433°/second. The likely cause of the trouble code is that the driver has driven into an obstacle such as a curbstone which has caused a rapid movement of the steering wheel.

Check that the front suspension settings have not been affected or the wheels damaged.

Remedy as necessary.

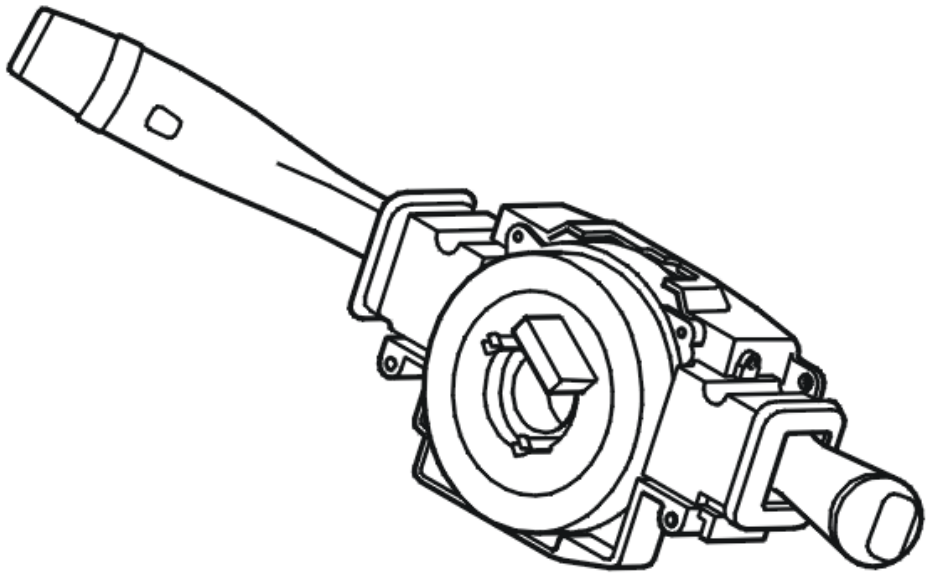

Fig. 204: Identifying Steering Wheel Control Module
Courtesy of VOLVO CARS CORPORATION

SAS-C008C64 EXCESSIVE RATE OF CHANGE OF STEERING ANGLE. ALGORITHM FAULT. INAPPROPRIATE SIGNAL (B6324S5; 2011-2012)

DIAGNOSTIC TROUBLE CODE (DTC) INFORMATION SAS-C008C64

see **DIAGNOSTIC TROUBLE CODE (DTC) INFORMATION SAS-C008C64**

FAULT TRACING SAS-C008C64

see **FAULT TRACING SAS-C008C64**

SAS-C008C64 EXCESSIVE RATE OF CHANGE OF STEERING ANGLE. ALGORITHM FAULT. INAPPROPRIATE SIGNAL (B8444S; 2005-2011)

DIAGNOSTIC TROUBLE CODE (DTC) INFORMATION SAS-C008C64

see **DIAGNOSTIC TROUBLE CODE (DTC) INFORMATION SAS-C008C64**

FAULT TRACING SAS-C008C64

see **FAULT TRACING SAS-C008C64**

SAS-C008D05 STEERING ANGLE SENSOR (SAS) - ECU INTERNAL FAULT. GENERAL INFORMATION. PROGRAMMING FAULT (B6324S; 2007-2010)

DIAGNOSTIC TROUBLE CODE (DTC) INFORMATION SAS-C008D05

Condition

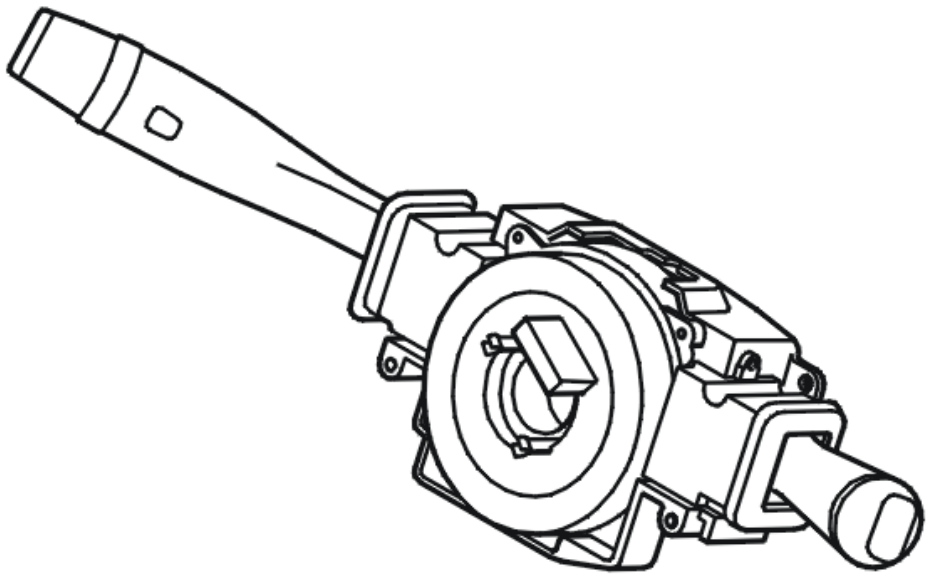

Fig. 205: Identifying Steering Wheel Control Module
Courtesy of VOLVO CARS CORPORATION

The Steering Angle Sensor (SAS) is located in the Steering Wheel Module (SWM) from which it is supplied with power. It is however only the Steering Angle Sensor which communicates on the Control Area Network (CAN).

If the Steering Angle Sensor (SAS) registers an internal fault in the software, the trouble code is set.

The trouble code may be diagnosed when the ignition is on and the angle sensor is initiated. The sensor is initiated by the steering wheel being turned by more than 4.5° in either direction.

Substitute Value

- The stability function is blocked.

Possible Source

- Internal fault in the Steering Angle Sensor (SAS).

Fault symptom[s]

- The anti-spin warning lamp is illuminated.

- General warning lamp lit
- The stability function is not working.

FAULT TRACING

CHECKING THE STATUS

Fig. 206: Identifying Belt Routing
Courtesy of VOLVO CARS CORPORATION

- Ignition off
- Wait approximately 10 seconds.
- Engine running.
- First turn the steering wheel max. to the right, then max. to the left. Then set the steering wheel to the straight-ahead position.
- Read the trouble code counter by clicking the VCT2000 (Volvo Scan Tool) symbol.

  The counters are used to determine the problem's status. For general information about the counters, see:**DESCRIPTION OF COUNTER**

  Counter 1 indicates the number of drive cycles without fault since the fault was last validated.

  If **counter 1** is the same as 0, this means that the fault has been detected in this operating cycle (permanent fault). Replace the Steering wheel module (SWM).

  If **counter 1** is over 0, this indicates that the problem has not been detected in this driving cycle (intermittent problem). The problem has existed earlier but is not active right now. Then check **counter 4** .**Counter 4** indicates number of driving cycles **with problem** since the problem was validated for the first time.

  - If the number of incorrect driving cycles is high, this indicates an intermittent recurring problem. Replace the Steering wheel module (SWM).
  - If the number of incorrect driving cycles is low, this indicates an intermittent temporary problem. No action.

  HINT: Counter 3 indicates number of driving cycles since first time that the problem occurred. If the value for counter 3 is divided by the value for counter 4, the intensity of the problem is obtained. The higher the value, the higher the problem intensity. A high problem intensity indicates that the malfunction recurs often.

NOTE: If the trouble code returns replace the Steering Wheel Module (SWM).

Remedy as necessary.

Other information

- The Steering Angle Sensor (SAS) is integrated in the Steering Wheel Module (SWM). When replacing the control module, see **STEERING WHEEL MODULE (SWM), REPLACING** .

Fig. 207: Identifying VCT2000 Diagnostic Tool Symbol In VIDA
Courtesy of VOLVO CARS CORPORATION

SAS-C008D05 STEERING ANGLE SENSOR (SAS) - ECU INTERNAL FAULT. GENERAL INFORMATION. PROGRAMMING FAULT (B6324S5; 2011-2012)

DIAGNOSTIC TROUBLE CODE (DTC) INFORMATION SAS-C008D05

see **DIAGNOSTIC TROUBLE CODE (DTC) INFORMATION SAS-C008D05**

FAULT TRACING

see **FAULT TRACING**

SAS-C008D05 STEERING ANGLE SENSOR (SAS) - ECU INTERNAL FAULT. GENERAL INFORMATION. PROGRAMMING FAULT (B8444S; 2005-2011)

DIAGNOSTIC TROUBLE CODE (DTC) INFORMATION SAS-C008D05

see **DIAGNOSTIC TROUBLE CODE (DTC) INFORMATION SAS-C008D05**

FAULT TRACING

see **FAULT TRACING**

SAS-C008E44 STEERING ANGLE SENSOR (SAS) - ECU STACK OVERRUN. INTERNAL FAULT. DATA MEMORY FAULT (B6324S; 2007-2010)

DIAGNOSTIC TROUBLE CODE (DTC) INFORMATION SAS-C008E44

Condition

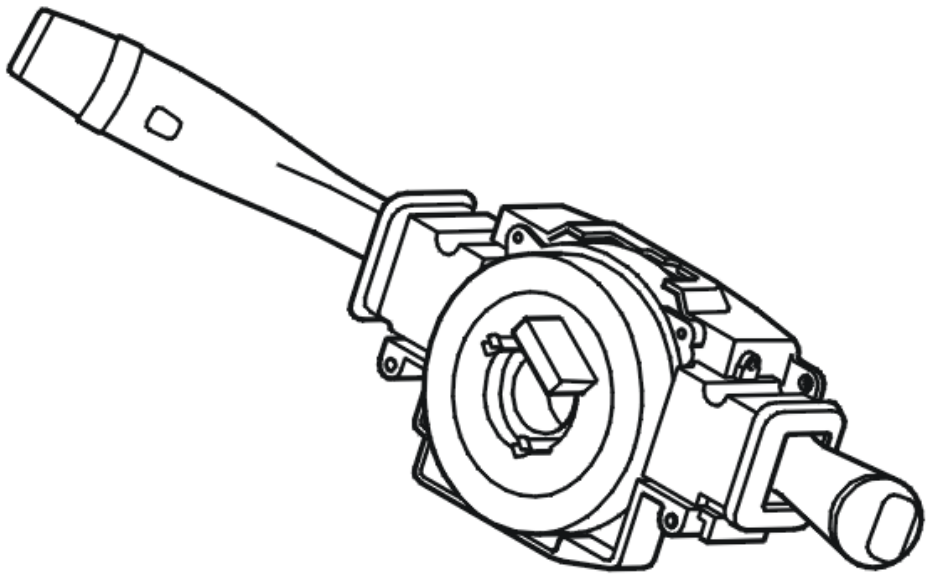

Fig. 208: Identifying Steering Wheel Control Module
Courtesy of VOLVO CARS CORPORATION

The Steering Angle Sensor (SAS) is located in the Steering Wheel Module (SWM) from which it is supplied with power. It is however only the Steering Angle Sensor which communicates on the Control Area Network (CAN).

If the Steering Angle Sensor (SAS) registers an internal fault in the software, the trouble code is set.

The trouble code may be diagnosed when the ignition is on and the angle sensor is initiated. The sensor is initiated by the steering wheel being turned by more than 4.5° in either direction.

Substitute Value

- The stability function is blocked.

Possible Source

- Internal fault in the Steering Angle Sensor (SAS).

Fault symptom[s]

- The anti-spin warning lamp is illuminated.

- General warning lamp lit
- The stability function is not working.

FAULT TRACING

see **FAULT TRACING**

SAS-C008E44 STEERING ANGLE SENSOR (SAS) - ECU STACK OVERRUN. INTERNAL FAULT. DATA MEMORY FAULT (B6324S5; 2011-2012)

DIAGNOSTIC TROUBLE CODE (DTC) INFORMATION SAS-C008E44

see **DIAGNOSTIC TROUBLE CODE (DTC) INFORMATION SAS-C008E44**

FAULT TRACING

see **FAULT TRACING**

SAS-C008E44 STEERING ANGLE SENSOR (SAS) - ECU STACK OVERRUN. INTERNAL FAULT. DATA MEMORY FAULT (B8444S; 2005-2011)

DIAGNOSTIC TROUBLE CODE (DTC) INFORMATION SAS-C008E44

see **DIAGNOSTIC TROUBLE CODE (DTC) INFORMATION SAS-C008E44**

FAULT TRACING

see **FAULT TRACING**

SAS-C008F44 STEERING ANGLE SENSOR (SAS) - DOUBLE CHECK FAULT. INTERNAL FAULT. DATA MEMORY FAULT (B6324S; 2007-2009)

DIAGNOSTIC TROUBLE CODE (DTC) INFORMATION SAS-C008F44

Condition

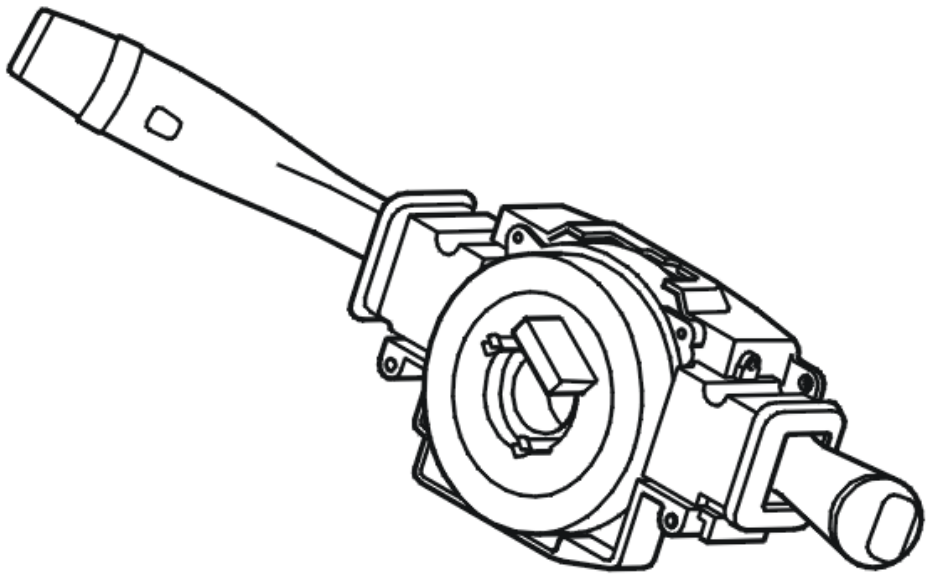

Fig. 209: Identifying Steering Wheel Control Module
Courtesy of VOLVO CARS CORPORATION

The Steering Angle Sensor (SAS) is located in the Steering Wheel Module (SWM) from which it is supplied with power. It is however only the Steering Angle Sensor which communicates on the Control Area Network (CAN).

The Steering wheel angle sensor module (SAS) contains 2 x processors that operate together. The processors receive information about steering wheel angle, steering direction, and steering angle speed from the steering wheel angle sensor (SAS) and then compare the information with each other. The diagnostic trouble code (DTC) is stored if the steering wheel angle sensor module (SAS) registers that the information is incorrect in any way.

The trouble code may be diagnosed when the ignition is on and the angle sensor is initiated. The sensor is initiated by the steering wheel being turned by more than 4.5° in either direction.

Substitute Value

- The stability function is blocked.

Possible Source

- Internal fault in the control module

Fault symptom[s]

- The anti-spin warning lamp is illuminated.
- General warning lamp lit
- The stability function is not working.

FAULT TRACING

STRUCTURE WEEK

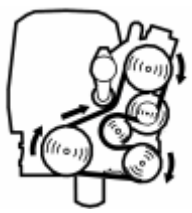

Fig. 210: Identifying Belt Routing
Courtesy of VOLVO CARS CORPORATION

- Update the software in the Steering wheel angle sensor module (SAS) if the vehicle's structure week is earlier than 200934.

  Checking the contact reel

  1. Start the engine with the vehicle's steering wheel in position straight ahead and then turn the steering wheel to full lock, first to the left and then to the right.
  2. Drive the car at over 10 km/h and steer completely to right and left full lock.
  3. Repeat steps 1-2 again, but instead begin with steering to full lock left and then do the same to full lock right.

  NOTE: Note that no anti-skid light turns on and that no message about anti-skid service is required is seen in Driver information module (DIM). If this happens, replace the contact reel.

Was the fault found?

- **YES**

  OKAY: Troubleshooting has been completed.

- **NO**

  Refer to **CHECKING THE STATUS**

CHECKING THE STATUS

Fig. 211: Identifying Belt Routing
Courtesy of VOLVO CARS CORPORATION

- Ignition off
- Wait approximately 10 seconds.
- Engine running.
- Read the trouble code counter by clicking the VCT2000 symbol.

  The counters are used to determine the problem's status. For general information about the counters, see:**DESCRIPTION OF COUNTER** Counters 5, 6 and 7 are not used during this check.

  Counter 1 indicates the number of drive cycles without fault since the fault was last validated.

  If the **counter 1** is 0 it means that the problem is permanent. Replace contact reel/steering wheel angle sensor.

  If **counter 1** is over 0, this indicates that the problem has not been detected in this driving cycle (intermittent problem). The problem has existed earlier but is not active right now. Then check **counter 4** .**Counter 4** indicates number of driving cycles **with problem** since the problem was validated for the first time.

  - If the number of incorrect driving cycles is high, this indicates an intermittent recurring problem. Replace contact reel/steering wheel angle sensor.
  - If the number of incorrect driving cycles is low, this indicates an intermittent temporary problem. No action.

  HINT: Counter 3 indicates number of driving cycles since first time that the problem occurred. If the value for counter 3 is divided by the value for counter 4, the intensity of the problem is obtained. The higher the value, the higher the problem intensity. A high problem intensity indicates that the malfunction recurs often.

  NOTE: If the trouble code returns after replacement of the switch roller/steering angle sensor, replace also the Steering Wheel Module (SWM).

  Remedy as necessary.

  Other information

  - see **CONTACT REEL, REPLACEMENT**
  - The Steering Angle Sensor (SAS) is integrated in the Steering Wheel Module (SWM). When

replacing the control module, see **STEERING WHEEL MODULE (SWM), REPLACING**

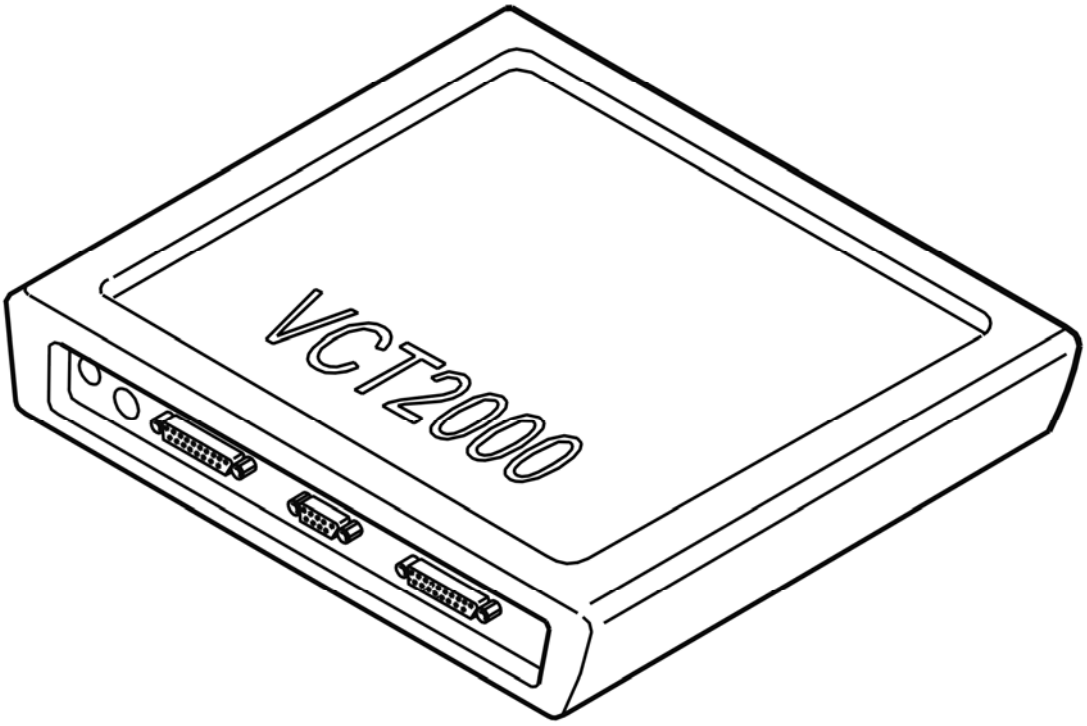

Fig. 212: Identifying VCT2000 Diagnostic Tool Symbol In VIDA
Courtesy of VOLVO CARS CORPORATION

SAS-C008F44 STEERING ANGLE SENSOR (SAS) - DOUBLE CHECK FAULT. INTERNAL FAULT. DATA MEMORY FAULT (B6324S; B8444S; 2010)

DIAGNOSTIC TROUBLE CODE (DTC) INFORMATION SAS-C008F44

see **DIAGNOSTIC TROUBLE CODE (DTC) INFORMATION SAS-C008F44**

FAULT TRACING

READING OFF THE STRUCTURE WEEK

See VIDA/DIAGNOSTICS/DETAILS to see which structure week the vehicle has. VIDA is Volvo scan tool.

The following troubleshooting is adapted to structure week. Updated software for Steering wheel angle sensor module (SAS) was released structure week 201041.

Does the vehicle have the above structure week or later?

- **YES**

  Refer to **CHECKING THE STATUS**

- **NO**

  Refer to **STRUCTURE WEEK**

CHECKING THE STATUS

Fig. 213: Identifying Belt Routing
Courtesy of VOLVO CARS CORPORATION

- Ignition off
- Wait approximately 10 seconds.
- Engine running.
- Read the trouble code counter by clicking the VCT2000 (Volvo Scan Tool) symbol.

  The counters are used to determine the problem's status. For general information about the counters, see:**DESCRIPTION OF COUNTER** Counters 5, 6 and 7 are not used during this check.

  Counter 1 indicates the number of drive cycles without fault since the fault was last validated.

  If the **counter 1** is 0 it means that the problem is permanent. Replace contact reel/steering wheel angle sensor.

  If **counter 1** is over 0, this indicates that the problem has not been detected in this driving cycle (intermittent problem). The problem has existed earlier but is not active right now. Then check **counter 4** .**Counter 4** indicates number of driving cycles **with problem** since the problem was validated for the first time.

  - If the number of incorrect driving cycles is high, this indicates an intermittent recurring problem. Replace contact reel/steering wheel angle sensor.
  - If the number of incorrect driving cycles is low, this indicates an intermittent temporary problem. No action.

  HINT: Counter 3 indicates number of driving cycles since first time that the problem occurred. If the value for counter 3 is divided by the value for counter 4, the intensity of the problem is obtained. The higher the value, the higher the problem intensity. A high problem intensity indicates that the malfunction recurs often.

NOTE: **If the trouble code returns after replacement of the switch roller/steering angle sensor, replace also the Steering Wheel Module (SWM).**

Remedy as necessary.

Other information

- see **CONTACT REEL, REPLACEMENT**
- The Steering Angle Sensor (SAS) is integrated in the Steering Wheel Module (SWM). When replacing the control module, see **STEERING WHEEL MODULE (SWM), REPLACING** .

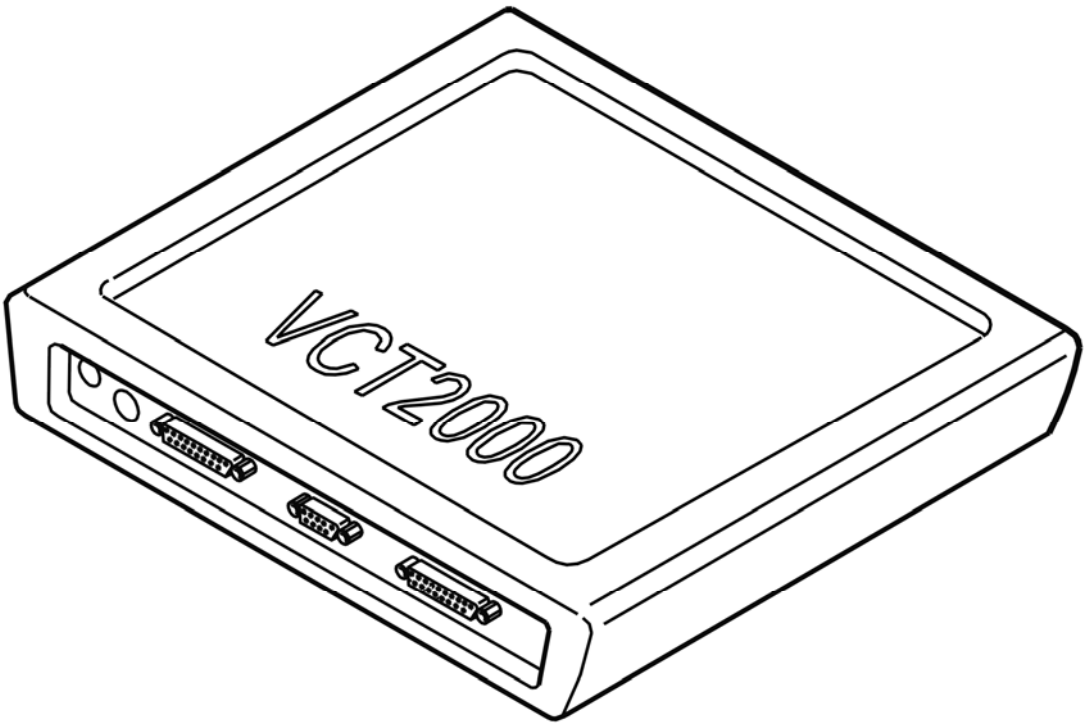

Fig. 214: Identifying VCT2000 Diagnostic Tool Symbol In VIDA
Courtesy of VOLVO CARS CORPORATION

STRUCTURE WEEK

Fig. 215: Identifying Belt Routing

Courtesy of VOLVO CARS CORPORATION

- Update the software in the Steering wheel angle sensor module (SAS) if the vehicle's structure week is earlier than 201041.

  Checking the contact reel

  1. Start the engine with the vehicle's steering wheel in position straight ahead and then turn the steering wheel to full lock, first to the left and then to the right.
  2. Drive the car at over 10 km/h and steer completely to right and left full lock.
  3. Repeat steps 1-2 again, but instead begin with steering to full lock left and then do the same to full lock right.

  NOTE: Note that no anti-skid light turns on and that no message about anti-skid service is required is seen in Driver information module (DIM). If this happens, replace the contact reel.

Was the fault found?

- **YES**

  OKAY: Troubleshooting has been completed.

- **NO**

  Refer to **CHECKING THE STATUS**

SAS-C008F44 STEERING ANGLE SENSOR (SAS) - DOUBLE CHECK FAULT. INTERNAL FAULT. DATA MEMORY FAULT (B6324S5; 2011-2012)

DIAGNOSTIC TROUBLE CODE (DTC) INFORMATION SAS-C008F44

see **DIAGNOSTIC TROUBLE CODE (DTC) INFORMATION SAS-C008F44**

FAULT TRACING

CHECKING THE STATUS

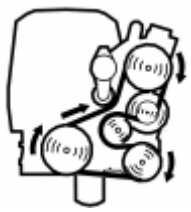

Fig. 216: Identifying Belt Routing
Courtesy of VOLVO CARS CORPORATION

- Ignition off
- Wait approximately 10 seconds.
- Engine running.
- Read the trouble code counter by clicking the VCT2000 (Volvo Scan Tool) symbol.

The counters are used to determine the problem's status. For general information about the counters, see:**DESCRIPTION OF COUNTER** Counters 5, 6 and 7 are not used during this check.

Counter 1 indicates the number of drive cycles without fault since the fault was last validated.

If the **counter 1** is 0 it means that the problem is permanent. Replace contact reel/steering wheel angle sensor.

If **counter 1** is over 0, this indicates that the problem has not been detected in this driving cycle (intermittent problem). The problem has existed earlier but is not active right now. Then check **counter 4** .**Counter 4** indicates number of driving cycles **with problem** since the problem was validated for the first time.

- If the number of incorrect driving cycles is high, this indicates an intermittent recurring problem. Replace contact reel/steering wheel angle sensor.
- If the number of incorrect driving cycles is low, this indicates an intermittent temporary problem. No action.

HINT: Counter 3 indicates number of driving cycles since first time that the problem occurred. If the value for counter 3 is divided by the value for counter 4, the intensity of the problem is obtained. The higher the value, the higher the problem intensity. A high problem intensity indicates that the malfunction recurs often.

NOTE: If the trouble code returns after replacement of the switch roller/steering angle sensor, replace also the Steering Wheel Module (SWM).

Remedy as necessary.

Other information

- see **CONTACT REEL, REPLACEMENT**
- The Steering Angle Sensor (SAS) is integrated in the Steering Wheel Module (SWM). When replacing the control module, see **STEERING WHEEL MODULE (SWM), REPLACING** .

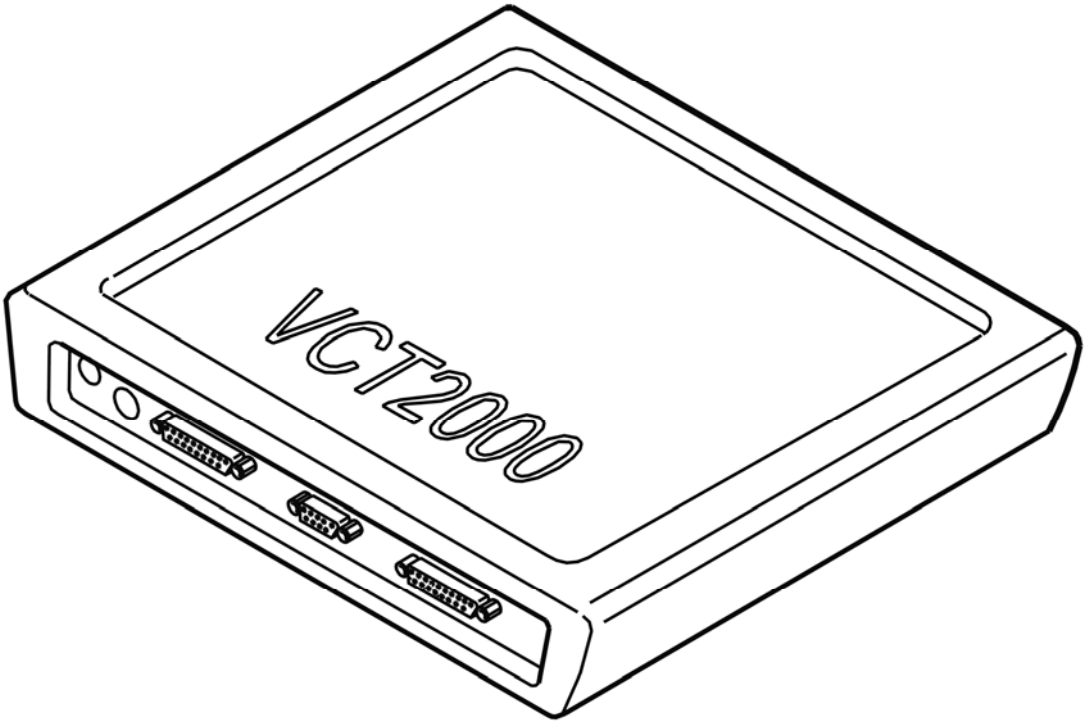

Fig. 217: Identifying VCT2000 Diagnostic Tool Symbol In VIDA
Courtesy of VOLVO CARS CORPORATION

DESCRIPTION OF COUNTER

Counter
There are eight different counters that are stored individually for each diagnostic trouble code (DTC). For an intermittent malfunction, the values of the different counters can be studied to determine how intermittent the malfunction is. All counters do not need to be implemented in one control module, this varies from system to system. The possible counters are described below.

Counter	**Function**
C#1	Counts the number of operating cycles since the malfunction was *last* validated. This information can be used to determine whether the malfunction is active during the current operating cycle or not. The malfunction is present now if the value is zero.
C#2	Counts the number of operating cycles since the malfunction was *last* validated, where test for the diagnostic trouble code was performed without the malfunction being detected and validated. When a test is performed, no malfunction is detected, the counter will count up by 1 for each operating cycle.
C#3	Counts the number of operating cycles since the malfunction was validated *the*

	first time . For each completed operating cycle the counter will count up by 1.
C#4	Counts the number of operating cycles in which the malfunction was validated since it was first validated. Counts the number of times the malfunction has occurred since the first time.
C#5	Counts the number of warm-up cycles since the MIL-light has gone off.
C#6	The counter counts the number of internal detections of the malfunction that have been performed for the diagnostic trouble code. When this counter reaches + 127, the control module considers that the malfunction is active right now. When counter is at value -127 the malfunction is not active. The value is reset to zero at each new operating cycle. If the value increases toward +127 the control module has detected a malfunction and, for each internal test, the value counts up. When the malfunction is not active, the control module counts down to minimum -127. Value can only be changed when the control module has started the test for the diagnostic trouble code. The increments with which the control module counts up or down the value may vary between control modules.
C#7	Shows maximum value for current operating cycle.
C#8	Shows maximum value for current and/or earlier operating cycle.

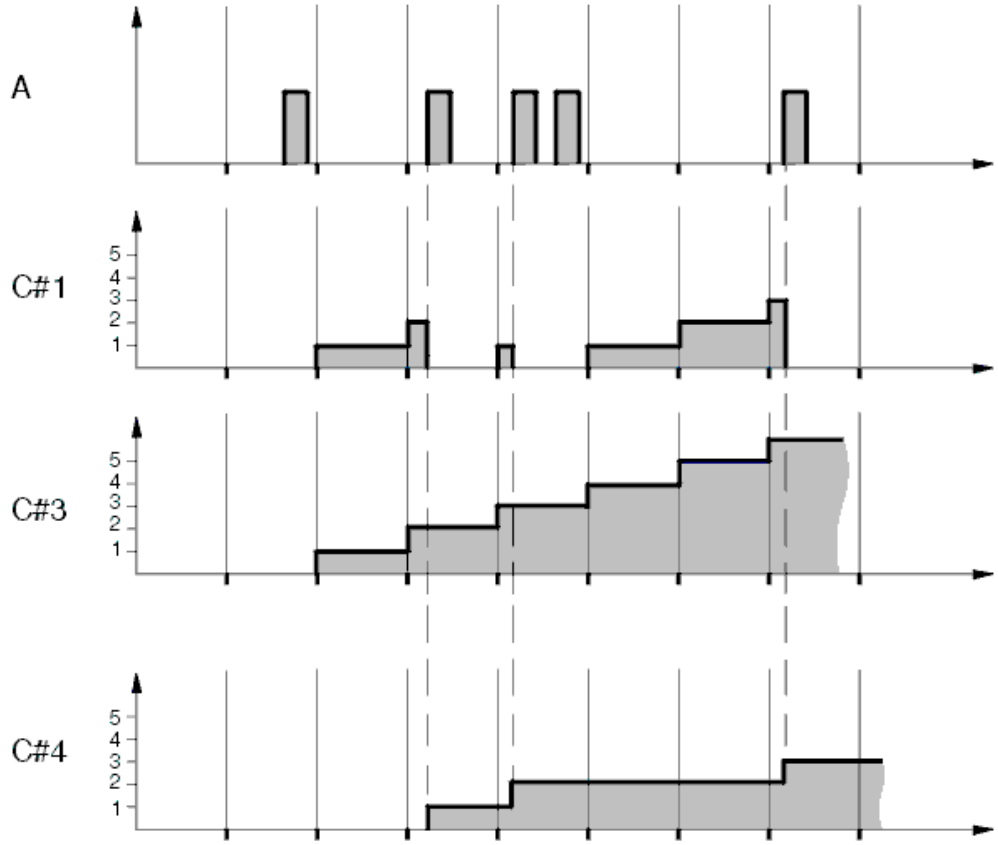

Fig. 218: Diagnostic Trouble Code (DTC) Counter Graph
Courtesy of VOLVO CARS CORPORATION

SAS-C008F44 STEERING ANGLE SENSOR (SAS) - DOUBLE CHECK FAULT. INTERNAL FAULT. DATA MEMORY FAULT (B8444S; 2005-2009)

DIAGNOSTIC TROUBLE CODE (DTC) INFORMATION SAS-C008F44

see **DIAGNOSTIC TROUBLE CODE (DTC) INFORMATION SAS-C008F44**

FAULT TRACING

see **FAULT TRACING**

SAS-C008F44 STEERING ANGLE SENSOR (SAS) - DOUBLE CHECK FAULT. INTERNAL FAULT. DATA MEMORY FAULT (B8444S; 2011)

DIAGNOSTIC TROUBLE CODE (DTC) INFORMATION SAS-C008F44

see **DIAGNOSTIC TROUBLE CODE (DTC) INFORMATION SAS-C008F44**

FAULT TRACING

see **FAULT TRACING**

SAS-C009005: STEERING ANGLE SENSOR (SAS) - RAM CHECK-SUM FAULT. GENERAL INFORMATION. PROGRAMMING FAULT (B6324S; 2007-2010)

DIAGNOSTIC TROUBLE CODE (DTC) INFORMATION SAS-C009005

Condition

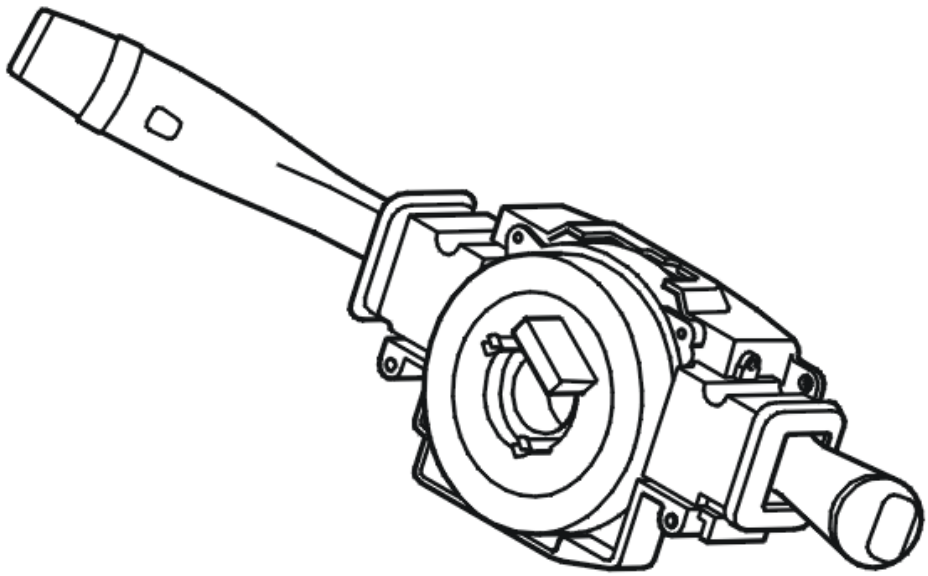

Fig. 219: Identifying Steering Wheel Control Module
Courtesy of VOLVO CARS CORPORATION

The Steering Angle Sensor (SAS) is located in the Steering Wheel Module (SWM) from which it is supplied with power. It is however only the Steering Angle Sensor which communicates on the Control Area Network (CAN).

If the Steering Angle Sensor (SAS) registers an internal fault, the trouble code is set.

The trouble code may be diagnosed when the ignition is on and the angle sensor is initiated. The sensor is initiated by the steering wheel being turned by more than 4.5° in either direction.

Substitute Value

- The stability function is blocked.

Possible Source

- Internal fault in the Steering Angle Sensor (SAS).

Fault symptom[s]

- The anti-spin warning lamp is illuminated.

- General warning lamp lit
- The stability function is not working.

FAULT TRACING

see **FAULT TRACING**

SAS-C009005: STEERING ANGLE SENSOR (SAS) - RAM CHECK-SUM FAULT. GENERAL INFORMATION. PROGRAMMING FAULT (B6324S5; 2011-2012)

DIAGNOSTIC TROUBLE CODE (DTC) INFORMATION SAS-C009005

see **DIAGNOSTIC TROUBLE CODE (DTC) INFORMATION SAS-C009005**

FAULT TRACING

see **FAULT TRACING**

SAS-C009005: STEERING ANGLE SENSOR (SAS) - RAM CHECK-SUM FAULT. GENERAL INFORMATION. PROGRAMMING FAULT (B8444S; 2005-2011)

DIAGNOSTIC TROUBLE CODE (DTC) INFORMATION SAS-C009005

see **DIAGNOSTIC TROUBLE CODE (DTC) INFORMATION SAS-C009005**

FAULT TRACING

see **FAULT TRACING**

SAS-C009102: STEERING ANGLE SENSOR (SAS) - ANALOGUE-DIGITAL CONVERTER LED FAULT. GENERAL FAULT INFORMATION. GENERAL SIGNAL FAULT (B6324S; 2007-2010)

DIAGNOSTIC TROUBLE CODE (DTC) INFORMATION SAS-C009102

Condition

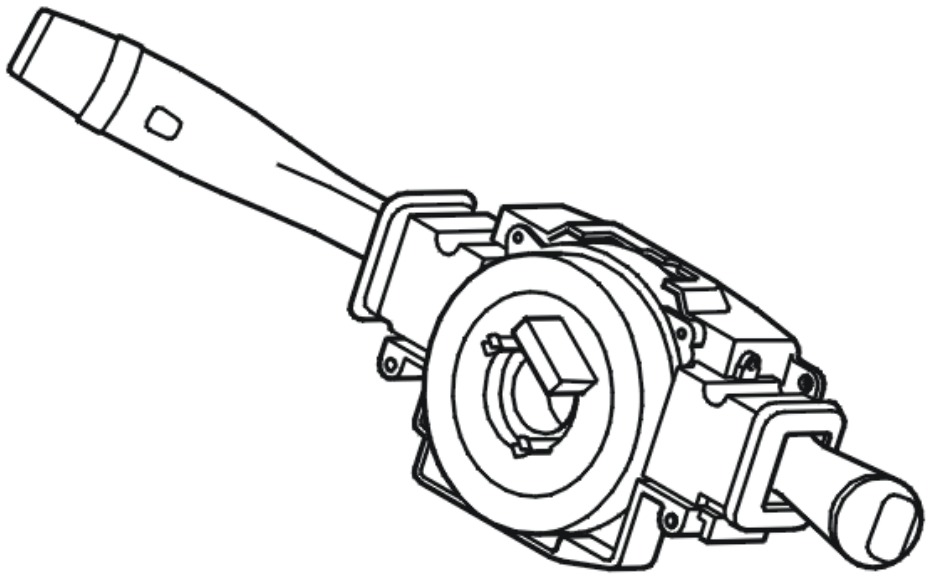

Fig. 220: Identifying Steering Wheel Control Module
Courtesy of VOLVO CARS CORPORATION

The Steering Angle Sensor (SAS) is located in the Steering Wheel Module (SWM) from which it is supplied with power. It is however only the Steering Angle Sensor which communicates on the Control Area Network (CAN).

Fitted into the Steering Angle Sensor (SAS) is a code wheel which follows the steering wheel rotation. Nine optical digital sensors and two analogue photo diodes read the code from the wheel. The code signals which are generated shall form a specific pattern. If the Steering Angle Sensor (SAS) registers that the current through any of the digital or analogue sensors is too high or too low the trouble code is set.

The trouble code may be diagnosed when the ignition is on and the angle sensor is initiated. The sensor is initiated by the steering wheel being turned by more than 4.5° in either direction.

Substitute Value

- The stability function is blocked.

Possible Source

- Internal fault in the Steering Angle Sensor (SAS).

Fault symptom[s]

- The anti-spin warning lamp is illuminated.
- General warning lamp lit
- The stability function is not working.

FAULT TRACING

see **FAULT TRACING**

SAS-C009102: STEERING ANGLE SENSOR (SAS) - ANALOGUE-DIGITAL CONVERTER LED FAULT. GENERAL FAULT INFORMATION. GENERAL SIGNAL FAULT (B6324S5; 2011-2012)

DIAGNOSTIC TROUBLE CODE (DTC) INFORMATION SAS-C009102

see **DIAGNOSTIC TROUBLE CODE (DTC) INFORMATION SAS-C009102**

FAULT TRACING

see **FAULT TRACING**

SAS-C009102: STEERING ANGLE SENSOR (SAS) - ANALOGUE-DIGITAL CONVERTER LED FAULT. GENERAL FAULT INFORMATION. GENERAL SIGNAL FAULT (B8444S; 2005-2011)

DIAGNOSTIC TROUBLE CODE (DTC) INFORMATION SAS-C009102

see **DIAGNOSTIC TROUBLE CODE (DTC) INFORMATION SAS-C009102**

FAULT TRACING

see **FAULT TRACING**

SAS-C009205: STEERING ANGLE SENSOR (SAS) - TASK OVERSTEPPING CAN MCU (MAIN ECU). GENERAL INFORMATION. PROGRAMMING FAULT (B6324S; 2007-2010)

DIAGNOSTIC TROUBLE CODE (DTC) INFORMATION SAS-C009205

Condition

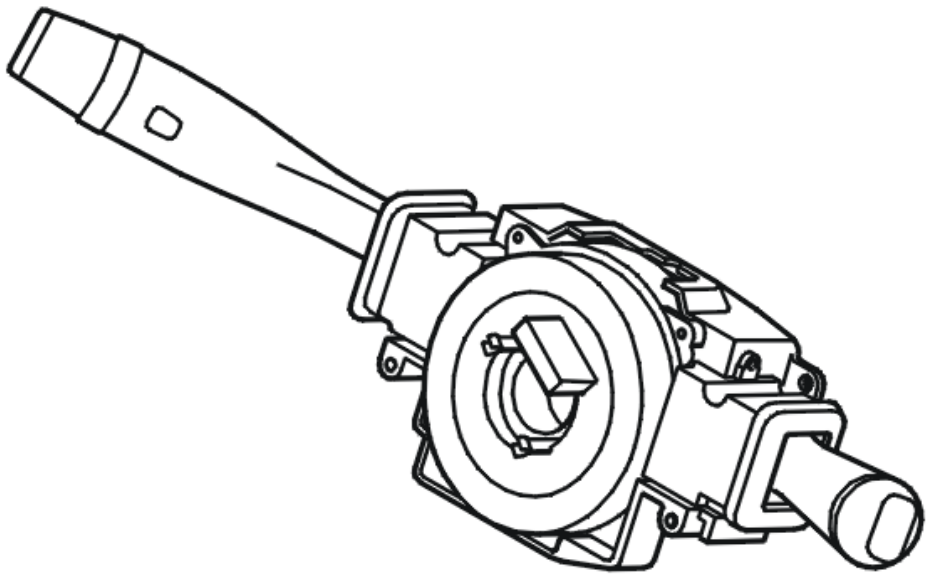

Fig. 221: Identifying Steering Wheel Control Module
Courtesy of VOLVO CARS CORPORATION

The Steering Angle Sensor (SAS) is located in the Steering Wheel Module (SWM) from which it is supplied with power. It is however only the Steering Angle Sensor which communicates on the Control Area Network (CAN).

If the Steering Angle Sensor (SAS) registers an internal fault, the trouble code is set.

The trouble code may be diagnosed when the ignition is on and the angle sensor is initiated. The sensor is initiated by the steering wheel being turned by more than 4.5° in either direction.

Substitute Value

- The stability function is blocked.

Possible Source

- Internal fault in the Steering Angle Sensor (SAS).

Fault symptom[s]

- The anti-spin warning lamp is illuminated.

- General warning lamp lit
- The stability function is not working.

FAULT TRACING

see **FAULT TRACING**

SAS-C009205: STEERING ANGLE SENSOR (SAS) - TASK OVERSTEPPING CAN MCU (MAIN ECU). GENERAL INFORMATION. PROGRAMMING FAULT (B6324S5; 2011-2012)

DIAGNOSTIC TROUBLE CODE (DTC) INFORMATION SAS-C009205

see **DIAGNOSTIC TROUBLE CODE (DTC) INFORMATION SAS-C009205**

FAULT TRACING

see **FAULT TRACING**

SAS-C009205: STEERING ANGLE SENSOR (SAS) - TASK OVERSTEPPING CAN MCU (MAIN ECU). GENERAL INFORMATION. PROGRAMMING FAULT (B8444S; 2005-2011)

DIAGNOSTIC TROUBLE CODE (DTC) INFORMATION SAS-C009205

see **DIAGNOSTIC TROUBLE CODE (DTC) INFORMATION SAS-C009205**

FAULT TRACING

see **FAULT TRACING**

SAS-C009305: STEERING ANGLE SENSOR (SAS) - TASK OVERSTEPPING DOUBLE CONTROL CAN MCU (MAIN ECU). GENERAL INFORMATION. PROGRAMMING FAULT (B6324S; 2007-2010)

DIAGNOSTIC TROUBLE CODE (DTC) INFORMATION SAS-C009305

Condition

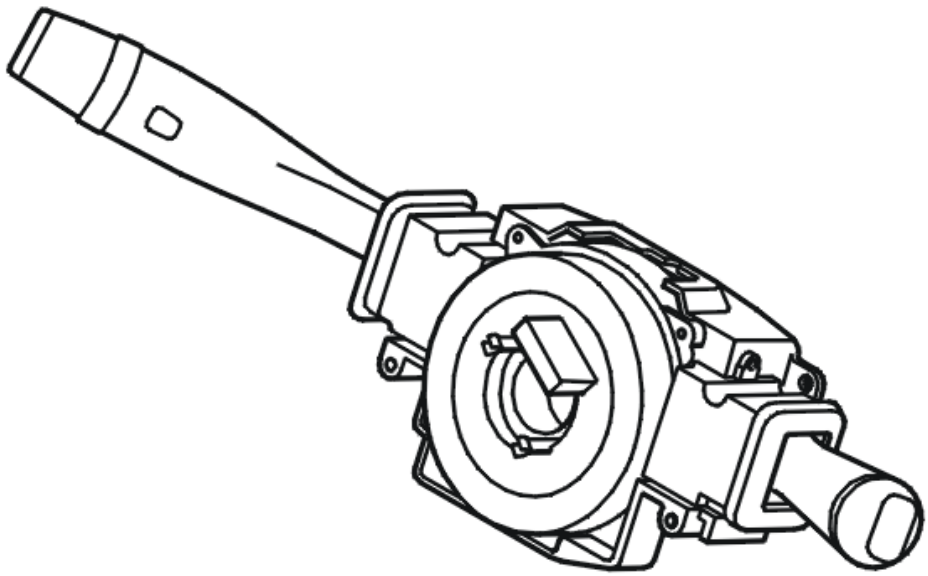

Fig. 222: Identifying Steering Wheel Control Module
Courtesy of VOLVO CARS CORPORATION

The Steering Angle Sensor (SAS) is located in the Steering Wheel Module (SWM) from which it is supplied with power. It is however only the Steering Angle Sensor which communicates on the Control Area Network (CAN).

If the Steering Angle Sensor (SAS) registers an internal fault, the trouble code is set.

The trouble code may be diagnosed when the ignition is on and the angle sensor is initiated. The sensor is initiated by the steering wheel being turned by more than 4.5° in either direction.

Substitute Value

- The stability function is blocked.

Possible Source

- Internal fault in the Steering Angle Sensor (SAS).

Fault symptom[s]

- The anti-spin warning lamp is illuminated.

- General warning lamp lit
- The stability function is not working.

FAULT TRACING

see **FAULT TRACING**

SAS-C009305: STEERING ANGLE SENSOR (SAS) - TASK OVERSTEPPING DOUBLE CONTROL CAN MCU (MAIN ECU). GENERAL INFORMATION. PROGRAMMING FAULT (B6324S5; 2011-2012)

DIAGNOSTIC TROUBLE CODE (DTC) INFORMATION SAS-C009305

see **DIAGNOSTIC TROUBLE CODE (DTC) INFORMATION SAS-C009305**

FAULT TRACING

see **FAULT TRACING**

SAS-C009305: STEERING ANGLE SENSOR (SAS) - TASK OVERSTEPPING DOUBLE CONTROL CAN MCU (MAIN ECU). GENERAL INFORMATION. PROGRAMMING FAULT (B8444S; 2005-2011)

DIAGNOSTIC TROUBLE CODE (DTC) INFORMATION SAS-C009305

see **DIAGNOSTIC TROUBLE CODE (DTC) INFORMATION SAS-C009305**

FAULT TRACING

see **FAULT TRACING**

SAS-C009404: STEERING ANGLE SENSOR (SAS) ANALOGUE-DIGITAL CONVERTER. GENERAL FAULT INFORMATION. INTERNAL FAULT (B6324S; 2007-2009)

DIAGNOSTIC TROUBLE CODE (DTC) INFORMATION SAS-C009404

Condition

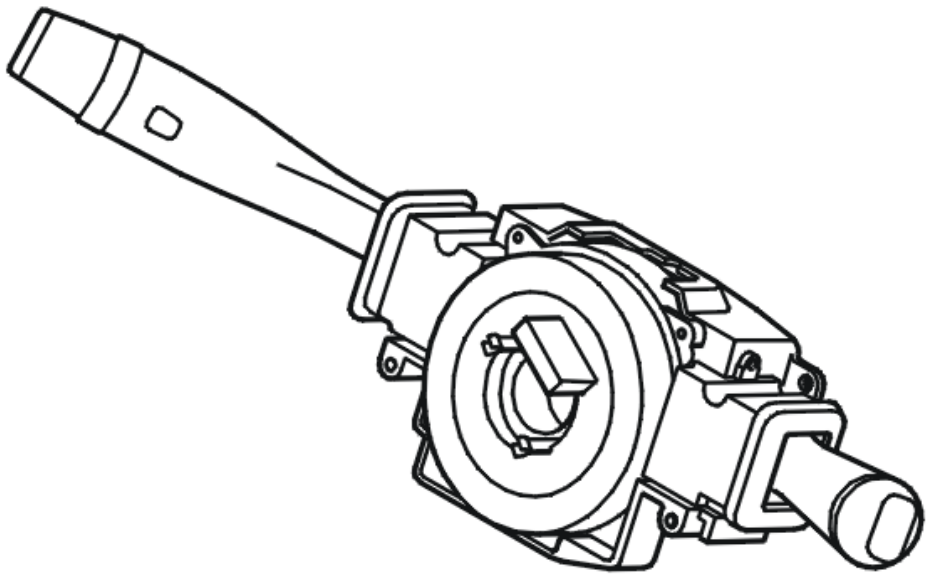

Fig. 223: Identifying Steering Wheel Control Module
Courtesy of VOLVO CARS CORPORATION

The Steering Angle Sensor (SAS) is located in the Steering Wheel Module (SWM) from which it is supplied with power. It is however only the Steering Angle Sensor which communicates on the Control Area Network (CAN).

Fitted into the Steering Angle Sensor (SAS) is a code wheel which follows the steering wheel rotation. Nine optical digital sensors and two analogue photo diodes read the code from the wheel. The code signals which are generated shall form a specific pattern. If the Steering Angle Sensor (SAS) registers that the signal pattern is incorrect the trouble code is set.

The trouble code may be diagnosed when the ignition is on and the angle sensor is initiated. The sensor is initiated by the steering wheel being turned by more than 4.5° in either direction.

Substitute Value

- The stability function is blocked.

Possible Source

- Internal fault in the Steering Angle Sensor (SAS).

Fault symptom[s]

- The anti-spin warning lamp is illuminated.

FAULT TRACING

see **FAULT TRACING**

SAS-C009404: STEERING ANGLE SENSOR (SAS) ANALOGUE-DIGITAL CONVERTER. GENERAL FAULT INFORMATION. INTERNAL FAULT (B6324S; B8444S; 2010)

DIAGNOSTIC TROUBLE CODE (DTC) INFORMATION SAS-C009404

see **DIAGNOSTIC TROUBLE CODE (DTC) INFORMATION SAS-C009404**

FAULT TRACING

see **FAULT TRACING**

SAS-C009404: STEERING ANGLE SENSOR (SAS) ANALOGUE-DIGITAL CONVERTER. GENERAL FAULT INFORMATION. INTERNAL FAULT (B6324S5; 2011-2012)

DIAGNOSTIC TROUBLE CODE (DTC) INFORMATION SAS-C009404

see **DIAGNOSTIC TROUBLE CODE (DTC) INFORMATION SAS-C009404**

FAULT TRACING

see **FAULT TRACING**

SAS-C009404: STEERING ANGLE SENSOR (SAS) ANALOGUE-DIGITAL CONVERTER. GENERAL FAULT INFORMATION. INTERNAL FAULT (B8444S; 2005-2009)

DIAGNOSTIC TROUBLE CODE (DTC) INFORMATION SAS-C009404

see **DIAGNOSTIC TROUBLE CODE (DTC) INFORMATION SAS-C009404**

FAULT TRACING

see **FAULT TRACING**

SAS-C009404: STEERING ANGLE SENSOR (SAS) ANALOGUE-DIGITAL CONVERTER. GENERAL FAULT INFORMATION. INTERNAL FAULT

(B8444S; 2011)

DIAGNOSTIC TROUBLE CODE (DTC) INFORMATION SAS-C009404

see **DIAGNOSTIC TROUBLE CODE (DTC) INFORMATION SAS-C009404**

FAULT TRACING

see **FAULT TRACING**

SAS-C009513: STEERING ANGLE SENSOR (SAS) - NO INTERNAL GROUND OR 12 V CONNECTION. GENERAL ELECTRICAL FAULT. OPEN CIRCUIT (B6324S; 2007-2010)

DIAGNOSTIC TROUBLE CODE (DTC) INFORMATION SAS-C009513

Condition

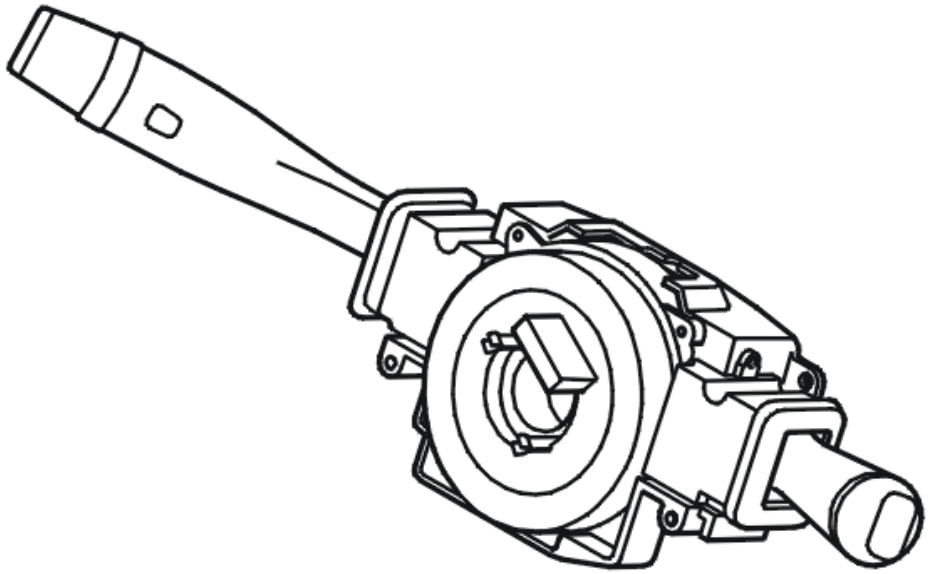

Fig. 224: Identifying Steering Wheel Control Module
Courtesy of VOLVO CARS CORPORATION

The Steering Angle Sensor (SAS) is located in the Steering Wheel Module (SWM) from which it is supplied with power. It is however only the Steering Angle Sensor which communicates on the Control Area Network

(CAN).

If there is no voltage supply (12V) or ground connection to the Steering Angle Sensor (SAS) the trouble code is set.

The trouble code may be diagnosed when the ignition is on and the angle sensor is initiated. The sensor is initiated by the steering wheel being turned by more than 4.5° in either direction.

Substitute Value

- The stability function is blocked.

Possible Source

- Open circuit in the voltage supply circuit for the Steering Angle Sensor (SAS).
- Open circuit in the ground connection for the Steering Angle Sensor (SAS).

Fault symptom[s]

- The anti-spin warning lamp is illuminated.
- General warning lamp lit
- The stability function is not working.

FAULT TRACING

see **FAULT TRACING**

SAS-C009513: STEERING ANGLE SENSOR (SAS) - NO INTERNAL GROUND OR 12 V CONNECTION. GENERAL ELECTRICAL FAULT. OPEN CIRCUIT (B6324S5; 2011-2012)

DIAGNOSTIC TROUBLE CODE (DTC) INFORMATION SAS-C009513

see **DIAGNOSTIC TROUBLE CODE (DTC) INFORMATION SAS-C009513**

FAULT TRACING

see **FAULT TRACING**

SAS-C009513: STEERING ANGLE SENSOR (SAS) - NO INTERNAL GROUND OR 12 V CONNECTION. GENERAL ELECTRICAL FAULT. OPEN CIRCUIT (B8444S; 2005-2011)

DIAGNOSTIC TROUBLE CODE (DTC) INFORMATION SAS-C009513

see **DIAGNOSTIC TROUBLE CODE (DTC) INFORMATION SAS-C009513**

FAULT TRACING

see **FAULT TRACING**

SAS-C009687: THE STEERING ANGLE SENSOR (SAS) LACKS VEHICLE CONFIGURATION DATA. BUS OR MESSAGE FAULT. MISSING MESSAGE (B6324S; 2007-2010)

DIAGNOSTIC TROUBLE CODE (DTC) INFORMATION SAS-C009687

Condition

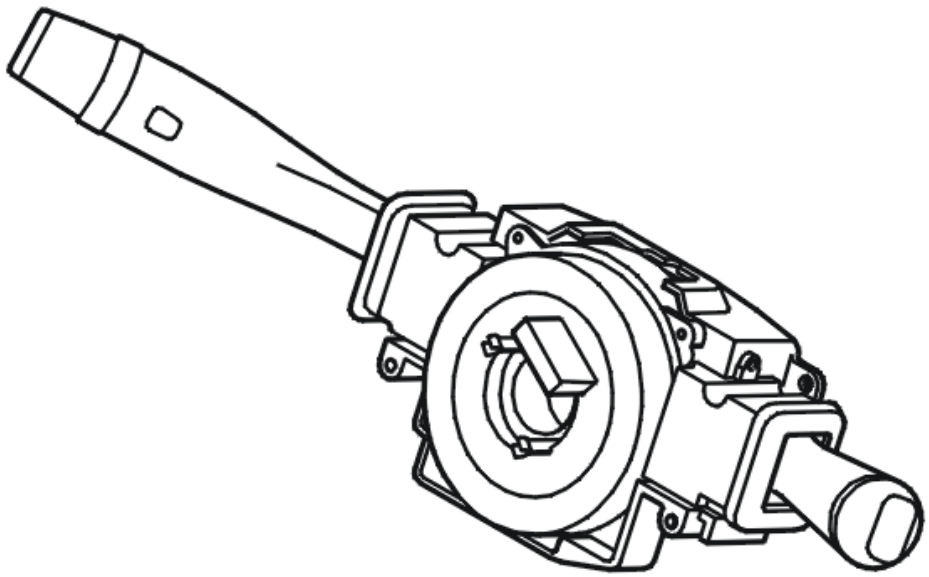

Fig. 225: Identifying Steering Wheel Control Module
Courtesy of VOLVO CARS CORPORATION

The control modules transmit and receive information via a standardized communication network, CAN (Control Area Network). If the Steering Angle Sensor (SAS) registers that information from the Central Electronic Module (CEM) is missing then the trouble code is set.

The Steering Angle Sensor (SAS) is located in the Steering Wheel Module (SWM) from which it is supplied with power. It is however only the Steering Angle Sensor which communicates on the Control Area Network

(CAN).

Substitute Value

- The stability function is blocked.

Possible Source

- Faulty information from the Central Electronic Module (CEM).

Fault symptom[s]

- The anti-spin warning lamp is illuminated.
- General warning lamp lit
- The stability function is not working.

FAULT TRACING SAS-C009687

INFORMATION

The Steering Angle Sensor (SAS) has registered that information from the Central Electronic Module (CEM) about the car configuration is missing.

Finish the fault tracing and proceed with fault tracing on the Central Electronic Module (CEM).

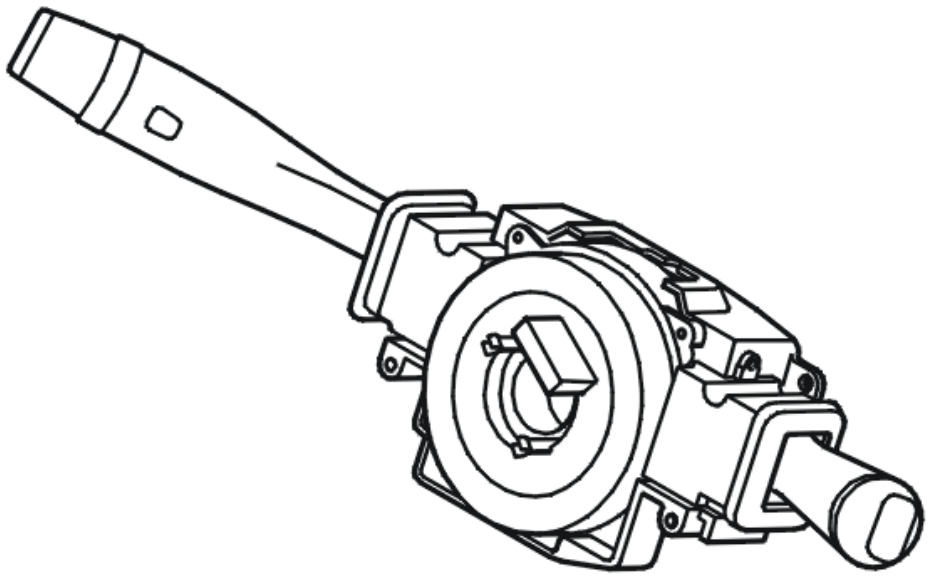

Fig. 226: Identifying Steering Wheel Control Module
Courtesy of VOLVO CARS CORPORATION

SAS-C009687: THE STEERING ANGLE SENSOR (SAS) LACKS VEHICLE CONFIGURATION DATA. BUS OR MESSAGE FAULT. MISSING MESSAGE (B6324S5; 2011-2012)

DIAGNOSTIC TROUBLE CODE (DTC) INFORMATION SAS-C009687

see **DIAGNOSTIC TROUBLE CODE (DTC) INFORMATION SAS-C009687**

FAULT TRACING SAS-C009687

see **FAULT TRACING SAS-C009687**

SAS-C009687: THE STEERING ANGLE SENSOR (SAS) LACKS VEHICLE CONFIGURATION DATA. BUS OR MESSAGE FAULT. MISSING MESSAGE (B8444S; 2005-2011)

DIAGNOSTIC TROUBLE CODE (DTC) INFORMATION SAS-C009687

see **DIAGNOSTIC TROUBLE CODE (DTC) INFORMATION SAS-C009687**

FAULT TRACING SAS-C009687

see **FAULT TRACING SAS-C009687**

SAS-C009781: STEERING ANGLE SENSOR (SAS) INVALID TOTAL PARAMETER VALUE. BUS OR MESSAGE FAULT. FAULTY DATA RECEIVED (B6324S; 2007-2010)

DIAGNOSTIC TROUBLE CODE (DTC) INFORMATION SAS-C009781

Condition

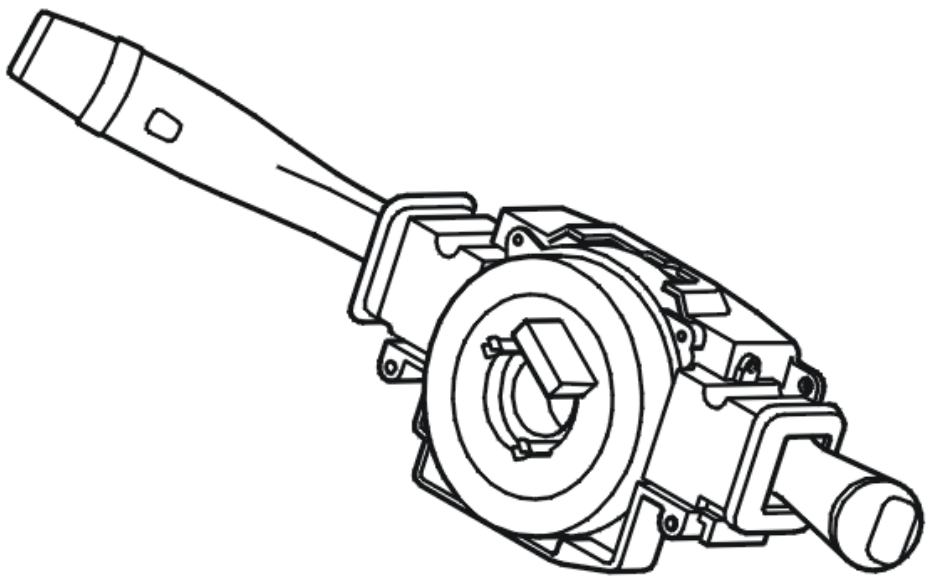

Fig. 227: Identifying Steering Wheel Control Module
Courtesy of VOLVO CARS CORPORATION

The control modules transmit and receive information via a standardized communication network, CAN (Control Area Network). If the Steering Angle Sensor (SAS) registers that information about the global values from the Central Electronic Module (CEM) is faulty, the trouble code is set.

The Steering Angle Sensor (SAS) is located in the Steering Wheel Module (SWM) from which it is supplied with power. It is however only the Steering Angle Sensor which communicates on the Control Area Network (CAN).

Substitute Value

- The stability function is blocked.

Possible Source

- Faulty information from the Central Electronic Module (CEM).

Fault symptom[s]

- The anti-spin warning lamp is illuminated.
- General warning lamp lit
- The stability function is not working.

FAULT TRACING SAS-C009781

INFORMATION

The Steering Angle Sensor (SAS) has registered that information from the Central Electronic Module (CEM) about the car configuration is missing or is faulty.

Finish the fault tracing and proceed with fault tracing on the Central Electronic Module (CEM).

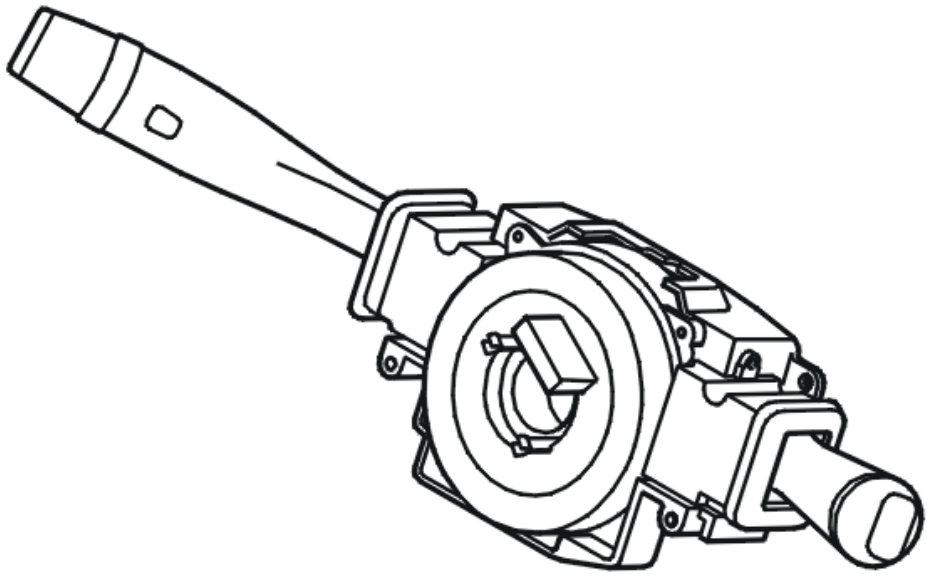

Fig. 228: Identifying Steering Wheel Control Module
Courtesy of VOLVO CARS CORPORATION

SAS-C009781: STEERING ANGLE SENSOR (SAS) INVALID TOTAL PARAMETER VALUE. BUS OR MESSAGE FAULT. FAULTY DATA RECEIVED (B6324S5; 2011-2012)

DIAGNOSTIC TROUBLE CODE (DTC) INFORMATION SAS-C009781

see **DIAGNOSTIC TROUBLE CODE (DTC) INFORMATION SAS-C009781**

FAULT TRACING SAS-C009781

see **FAULT TRACING SAS-C009781**

SAS-C009781: STEERING ANGLE SENSOR (SAS) INVALID TOTAL PARAMETER VALUE. BUS OR MESSAGE FAULT. FAULTY DATA RECEIVED (B8444S; 2005-2011)

DIAGNOSTIC TROUBLE CODE (DTC) INFORMATION SAS-C009781

see **DIAGNOSTIC TROUBLE CODE (DTC) INFORMATION SAS-C009781**

FAULT TRACING SAS-C009781

see **FAULT TRACING SAS-C009781**

SAS-C009887: THE STEERING ANGLE SENSOR (SAS) LACKS AN IGNITION SWITCH SIGNAL. BUS OR MESSAGE FAULT. MISSING MESSAGE (B6324S; 2007-2010)

DIAGNOSTIC TROUBLE CODE (DTC) INFORMATION SAS-C009887

Condition

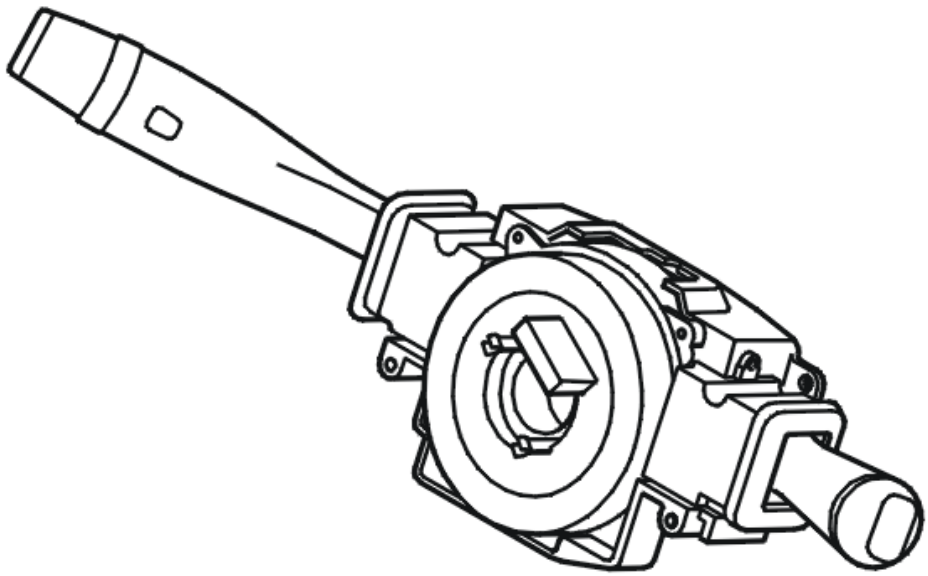

Fig. 229: Identifying Steering Wheel Control Module
Courtesy of VOLVO CARS CORPORATION

The control modules transmit and receive information via a standardized communication network, CAN (Control Area Network). If the Steering Angle Sensor (SAS) registers that information from the Central Electronic Module (CEM) about the ignition switch position is missing or faulty for more than 2.5 seconds, the trouble code is set.

The Steering Angle Sensor (SAS) is located in the Steering Wheel Module (SWM) from which it is supplied with power. It is however only the Steering Angle Sensor which communicates on the Control Area Network (CAN).

Substitute Value

- The stability function is blocked.

Possible Source

- Information from the Central Electronic Module (CEM) is missing or faulty.

Fault symptom[s]

- The anti-spin warning lamp is illuminated.

- General warning lamp lit
- The stability function is not working.

FAULT TRACING SAS-C009887

INFORMATION

The Steering Angle Sensor (SAS) has registered that information from the Central Electronic Module (CEM) about the ignition key position is missing or is faulty.

Finish the fault tracing and proceed with fault tracing on the Central Electronic Module (CEM).

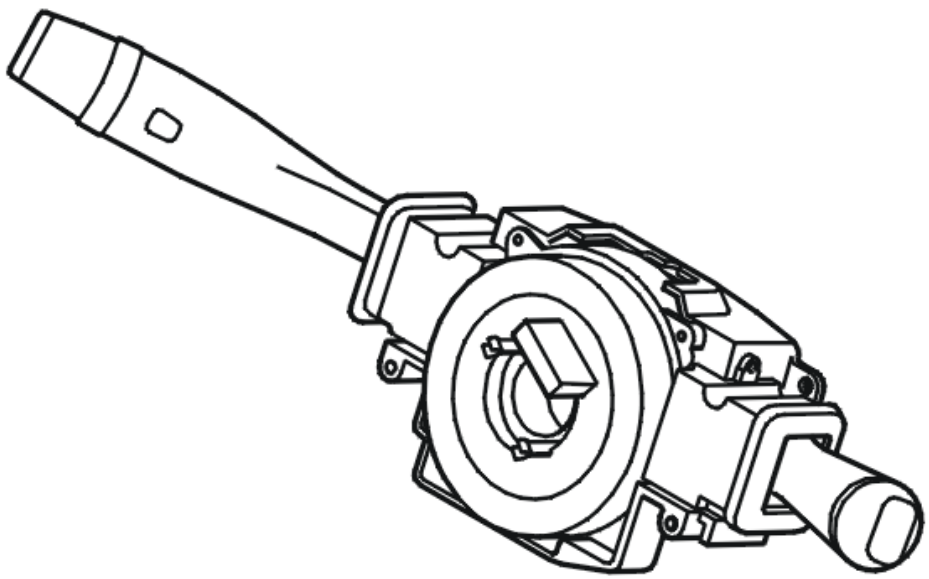

Fig. 230: Identifying Steering Wheel Control Module
Courtesy of VOLVO CARS CORPORATION

SAS-C009887: THE STEERING ANGLE SENSOR (SAS) LACKS AN IGNITION SWITCH SIGNAL. BUS OR MESSAGE FAULT. MISSING MESSAGE (B6324S5; 2011-2012)

DIAGNOSTIC TROUBLE CODE (DTC) INFORMATION SAS-C009887

see **DIAGNOSTIC TROUBLE CODE (DTC) INFORMATION SAS-C009887**

FAULT TRACING SAS-C009887

see **FAULT TRACING SAS-C009887**

SAS-C009887: THE STEERING ANGLE SENSOR (SAS) LACKS AN IGNITION SWITCH SIGNAL. BUS OR MESSAGE FAULT. MISSING MESSAGE (B8444S; 2005-2011)

DIAGNOSTIC TROUBLE CODE (DTC) INFORMATION SAS-C009887

see **DIAGNOSTIC TROUBLE CODE (DTC) INFORMATION SAS-C009887**

FAULT TRACING SAS-C009887

see **FAULT TRACING SAS-C009887**

SAS-C009904: STEERING ANGLE SENSOR (SAS). GENERAL FAULT INFORMATION. INTERNAL FAULT (B6324S; 2007-2010)

DIAGNOSTIC TROUBLE CODE (DTC) INFORMATION SAS-C009904

Condition

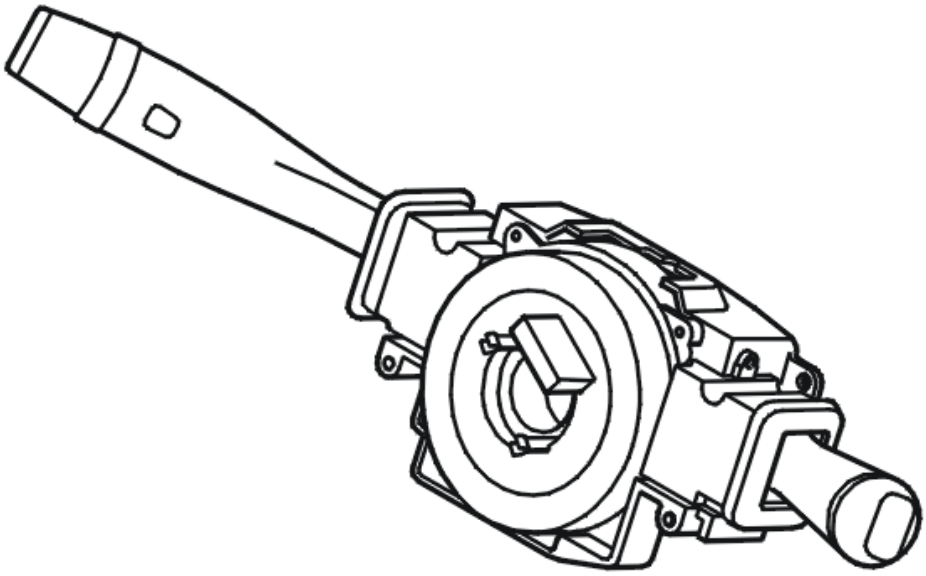

Fig. 231: Identifying Steering Wheel Control Module
Courtesy of VOLVO CARS CORPORATION

The Steering Angle Sensor (SAS) is located in the Steering Wheel Module (SWM) from which it is supplied with power. It is however only the Steering Angle Sensor which communicates on the Control Area Network (CAN).

The Steering Angle Sensor (SAS) incorporates two processors which work together. The processors receive information such as steering angle, steering direction and angle change rate from the angle sensor and then mutually compare this information. If one of the processors registers that the other processor demands information more often than expected, the trouble code is set.

Substitute Value

- The stability function is blocked.

Possible Source

- Internal fault.

Fault symptom[s]

- The anti-spin warning lamp is illuminated.
- General warning lamp lit
- The stability function is not working.

FAULT TRACING

see **FAULT TRACING**

SAS-C009904: STEERING ANGLE SENSOR (SAS). GENERAL FAULT INFORMATION. INTERNAL FAULT (B6324S5; 2011-2012)

DIAGNOSTIC TROUBLE CODE (DTC) INFORMATION SAS-C009904

see **DIAGNOSTIC TROUBLE CODE (DTC) INFORMATION SAS-C009904**

FAULT TRACING

see **FAULT TRACING**

SAS-C009904: STEERING ANGLE SENSOR (SAS). GENERAL FAULT INFORMATION. INTERNAL FAULT (B8444S; 2005-2011)

DIAGNOSTIC TROUBLE CODE (DTC) INFORMATION SAS-C009904

see **DIAGNOSTIC TROUBLE CODE (DTC) INFORMATION SAS-C009904**

FAULT TRACING

see **FAULT TRACING**

SAS-C009D01 STEERING ANGLE SENSOR (SAS) ANALOGUE-DIGITAL CONVERTER FAULT. GENERAL FAULT INFORMATION. GENERAL ELECTRICAL FAULT (B6324S; 2007-2010)

DIAGNOSTIC TROUBLE CODE (DTC) INFORMATION SAS-C009D01

Condition

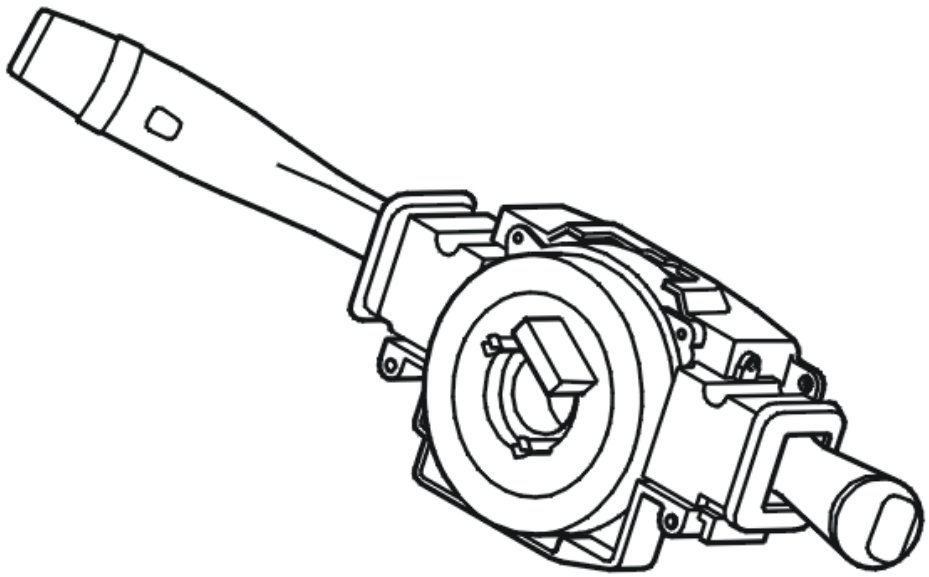

Fig. 232: Identifying Steering Wheel Control Module
Courtesy of VOLVO CARS CORPORATION

The Steering Angle Sensor (SAS) is located in the Steering Wheel Module (SWM) from which it is supplied with power. It is however only the Steering Angle Sensor which communicates on the Control Area Network (CAN).

The Steering Angle Sensor (SAS) compares the voltage with a known value from the Central Electronic Module (CEM).

If the Steering Angle Sensor (SAS) registers that the voltage differs from the known value, the trouble code is set.

The trouble code may be diagnosed when the ignition is on and the angle sensor is initiated. The sensor is initiated by the steering wheel being turned by more than 4.5° in either direction.

Substitute Value

- The stability function is blocked.

Possible Source

- Internal fault in the Steering Angle Sensor (SAS).

Fault symptom[s]

- The anti-spin warning lamp is illuminated.
- General warning lamp lit
- The stability function is not working.

FAULT TRACING SAS-C009D01

CONTROL MODULE REPLACEMENT

The Steering Angle Sensor (SAS) has registered an internal fault. Replace the control module.

Other information

- The Steering Angle Sensor (SAS) is integrated in the Steering Wheel Module (SWM). When replacing the control module, see **STEERING WHEEL MODULE (SWM), REPLACING** .

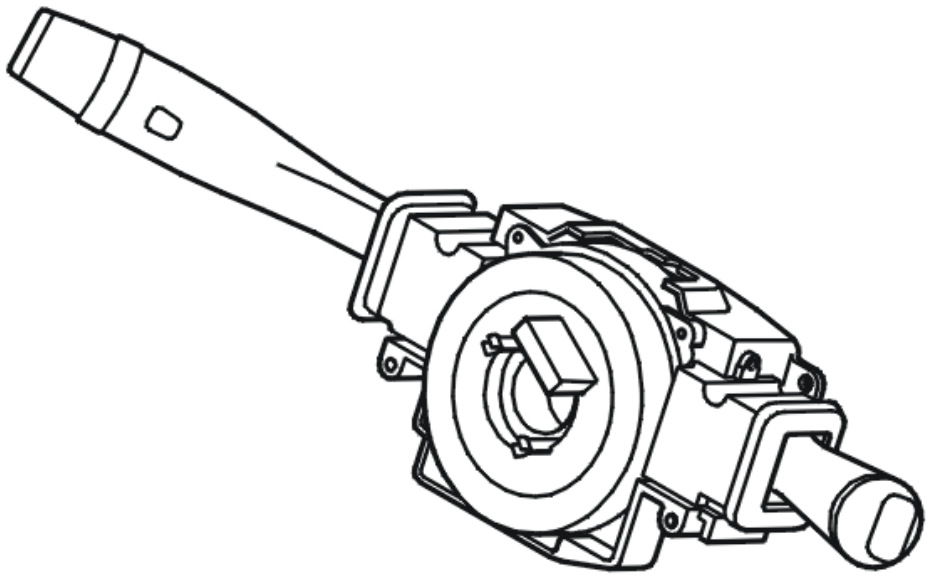

Fig. 233: Identifying Steering Wheel Control Module
Courtesy of VOLVO CARS CORPORATION

SAS-C009D01 STEERING ANGLE SENSOR (SAS) ANALOGUE-DIGITAL CONVERTER FAULT. GENERAL FAULT INFORMATION. GENERAL ELECTRICAL FAULT (B6324S5; 2011-2012)

DIAGNOSTIC TROUBLE CODE (DTC) INFORMATION SAS-C009D01

see **DIAGNOSTIC TROUBLE CODE (DTC) INFORMATION SAS-C009D01**

FAULT TRACING SAS-C009D01

see **FAULT TRACING SAS-C009D01**

SAS-C009D01 STEERING ANGLE SENSOR (SAS) ANALOGUE-DIGITAL CONVERTER FAULT. GENERAL FAULT INFORMATION. GENERAL ELECTRICAL FAULT (B8444S; 2005-2011)

DIAGNOSTIC TROUBLE CODE (DTC) INFORMATION SAS-C009D01

see **DIAGNOSTIC TROUBLE CODE (DTC) INFORMATION SAS-C009D01**

FAULT TRACING SAS-C009D01

see **FAULT TRACING SAS-C009D01**

SAS-C009E64 CPU TO CPU COMMUNICATION FAULT. ALGORITHM FAULT. INAPPROPRIATE SIGNAL (B6324S; 2007-2010)

DIAGNOSTIC TROUBLE CODE (DTC) INFORMATION SAS-C009E64

Condition

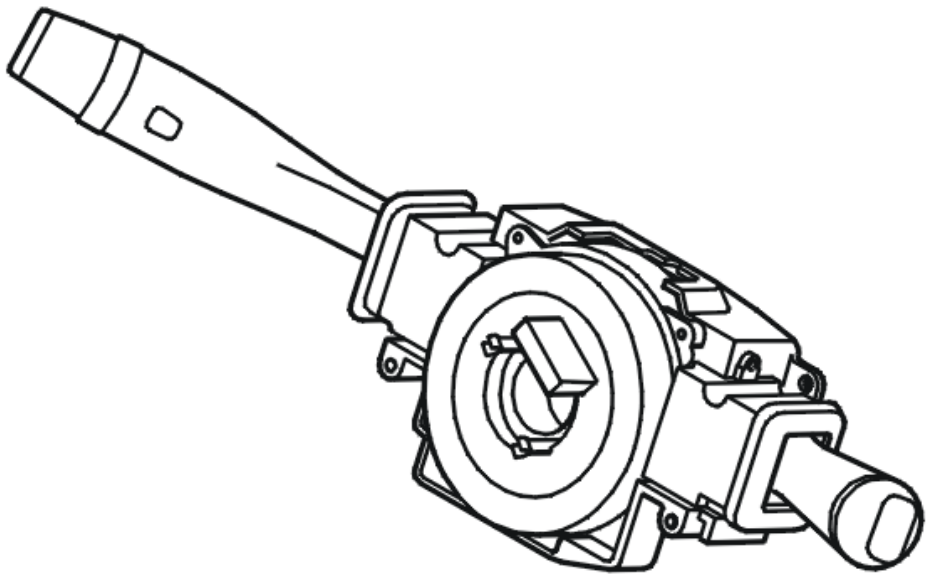

Fig. 234: Identifying Steering Wheel Control Module
Courtesy of VOLVO CARS CORPORATION

The Steering Angle Sensor (SAS) is located in the Steering Wheel Module (SWM) from which it is supplied with power. It is however only the Steering Angle Sensor which communicates on the Control Area Network (CAN).

The Steering Angle Sensor (SAS) incorporates 2 processors which work together. The processors continuously check the communications which are transmitted between them. If the main processor in the Steering Angle Sensor (SAS) registers that the information is in any way incorrect, the trouble code is set.

The trouble code may be diagnosed when the ignition is on and the angle sensor is initiated. The sensor is

initiated by the steering wheel being turned by more than 4.5° in either direction.

Substitute Value

- The stability function is blocked.

Possible Source

- Internal fault in the control module

Fault symptom[s]

- The anti-spin warning lamp is illuminated.
- General warning lamp lit
- The stability function is not working.

FAULT TRACING

see **FAULT TRACING**

SAS-C009E64 CPU TO CPU COMMUNICATION FAULT. ALGORITHM FAULT. INAPPROPRIATE SIGNAL (B6324S5; 2011-2012)

DIAGNOSTIC TROUBLE CODE (DTC) INFORMATION SAS-C009E64

see **DIAGNOSTIC TROUBLE CODE (DTC) INFORMATION SAS-C009E64**

FAULT TRACING

see **FAULT TRACING**

SAS-C009E64 CPU TO CPU COMMUNICATION FAULT. ALGORITHM FAULT. INAPPROPRIATE SIGNAL (B8444S; 2005-2011)

DIAGNOSTIC TROUBLE CODE (DTC) INFORMATION SAS-C009E64

see **DIAGNOSTIC TROUBLE CODE (DTC) INFORMATION SAS-C009E64**

FAULT TRACING

see **FAULT TRACING**

SAS-C009F64 INVALID GREY CODE. ALGORITHM FAULT. INAPPROPRIATE SIGNAL (B6324S; 2007-2010)

DIAGNOSTIC TROUBLE CODE (DTC) INFORMATION SAS-C009F64

Condition

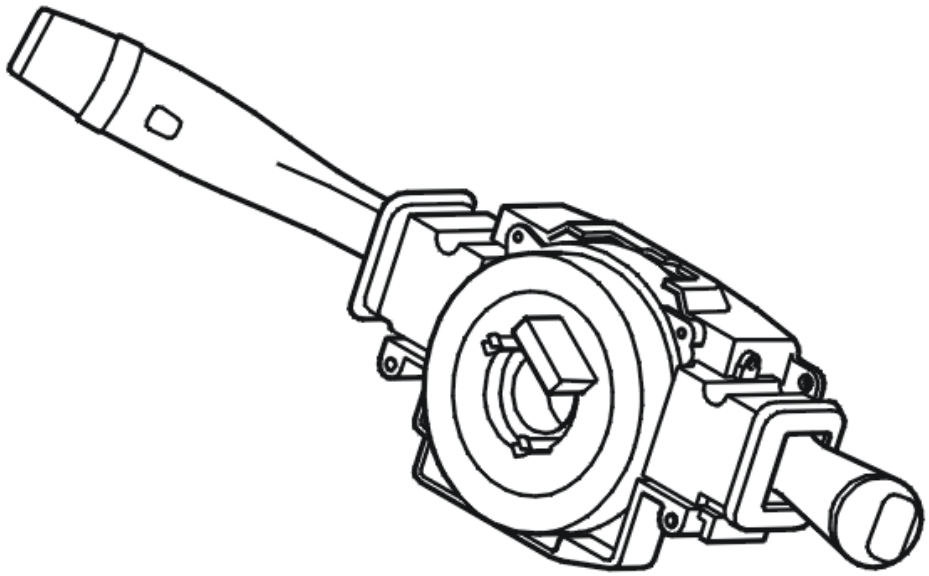

Fig. 235: Identifying Steering Wheel Control Module
Courtesy of VOLVO CARS CORPORATION

The Steering Angle Sensor (SAS) is located in the Steering Wheel Module (SWM) from which it is supplied with power. It is however only the Steering Angle Sensor which communicates on the Control Area Network (CAN).

Fitted into the Steering Angle Sensor (SAS) is a code wheel which follows the steering wheel rotation. Nine optical digital sensors and two analogue photo diodes read the code from the wheel. The code signal which is generated shall form a specific pattern. The Steering Angle Sensor (SAS) checks the signals and if the signal pattern is in any way incorrect the trouble code is set.

The trouble code may be diagnosed when the ignition is on and the angle sensor is initiated. The sensor is initiated by the steering wheel being turned by more than 4.5° in either direction.

Substitute Value

- The stability function is blocked.

Possible Source

- Internal fault in the Steering Angle Sensor (SAS).

Fault symptom[s]

- The anti-spin warning lamp is illuminated.
- General warning lamp lit
- The stability function is not working.

FAULT TRACING

see **FAULT TRACING**

SAS-C009F64 INVALID GREY CODE. ALGORITHM FAULT. INAPPROPRIATE SIGNAL (B6324S5; 2011-2012)

DIAGNOSTIC TROUBLE CODE (DTC) INFORMATION SAS-C009F64

see **DIAGNOSTIC TROUBLE CODE (DTC) INFORMATION SAS-C009F64**

FAULT TRACING

see **FAULT TRACING**

SAS-C009F64 INVALID GREY CODE. ALGORITHM FAULT. INAPPROPRIATE SIGNAL (B8444S; 2005-2011)

DIAGNOSTIC TROUBLE CODE (DTC) INFORMATION SAS-C009F64

see **DIAGNOSTIC TROUBLE CODE (DTC) INFORMATION SAS-C009F64**

FAULT TRACING

see **FAULT TRACING**

SAS-C010029: ANALOGUE SENSOR 1 OUTSIDE LIMIT. GENERAL SIGNAL FAULT. SIGNAL INVALID (B6324S; 2007-2010)

DIAGNOSTIC TROUBLE CODE (DTC) INFORMATION SAS-C010029

Condition

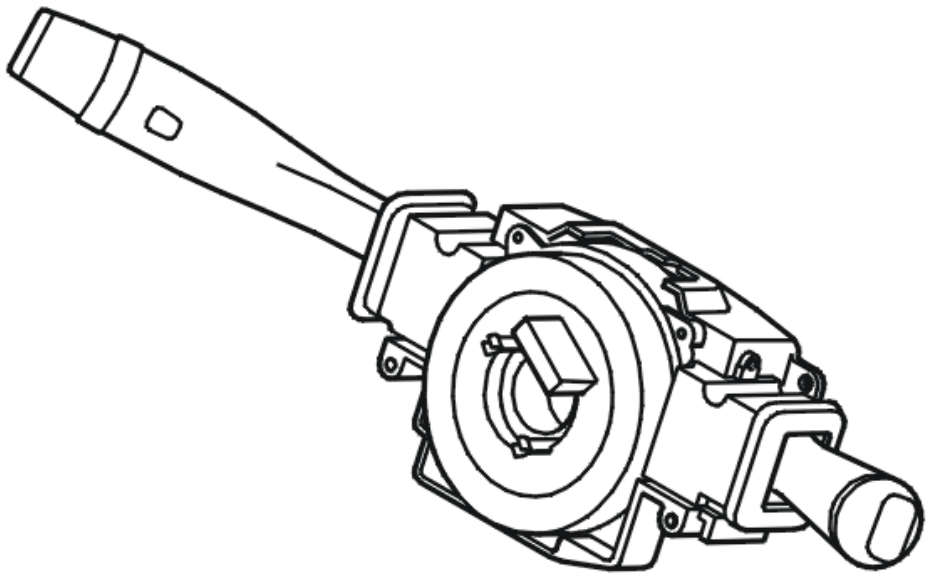

Fig. 236: Identifying Steering Wheel Control Module
Courtesy of VOLVO CARS CORPORATION

The Steering Angle Sensor (SAS) is located in the Steering Wheel Module (SWM) from which it is supplied with power. It is however only the Steering Angle Sensor which communicates on the Control Area Network (CAN).

Fitted into the Steering Angle Sensor (SAS) is a code wheel which follows the steering wheel rotation. Nine optical digital sensors and two analogue photo diodes read the code from the wheel. The code signals which are generated shall form a specific pattern. If the Steering Angle Sensor (SAS) registers that the signal from analogue photo-diode 1 is faulty the trouble code is set.

The trouble code may be diagnosed when the ignition is on and the angle sensor is initiated. The sensor is initiated by the steering wheel being turned by more than 4.5° in either direction.

Substitute Value

- The stability function is blocked.

Possible Source

- Internal fault in the Steering Angle Sensor (SAS).

Fault symptom[s]

- The anti-spin warning lamp is illuminated.

FAULT TRACING

see **FAULT TRACING**

SAS-C010029: ANALOGUE SENSOR 1 OUTSIDE LIMIT. GENERAL SIGNAL FAULT. SIGNAL INVALID (B6324S5; 2011-2012)

DIAGNOSTIC TROUBLE CODE (DTC) INFORMATION SAS-C010029

see **DIAGNOSTIC TROUBLE CODE (DTC) INFORMATION SAS-C010029**

FAULT TRACING

see **FAULT TRACING**

SAS-C010029: ANALOGUE SENSOR 1 OUTSIDE LIMIT. GENERAL SIGNAL FAULT. SIGNAL INVALID (B8444S; 2005-2011)

DIAGNOSTIC TROUBLE CODE (DTC) INFORMATION SAS-C010029

see **DIAGNOSTIC TROUBLE CODE (DTC) INFORMATION SAS-C010029**

FAULT TRACING

see **FAULT TRACING**

SAS-C010129: ANALOGUE SENSOR 2 OUTSIDE LIMIT. GENERAL SIGNAL FAULT. SIGNAL INVALID (B6324S; 2007-2010)

DIAGNOSTIC TROUBLE CODE (DTC) INFORMATION SAS-C010129

Condition

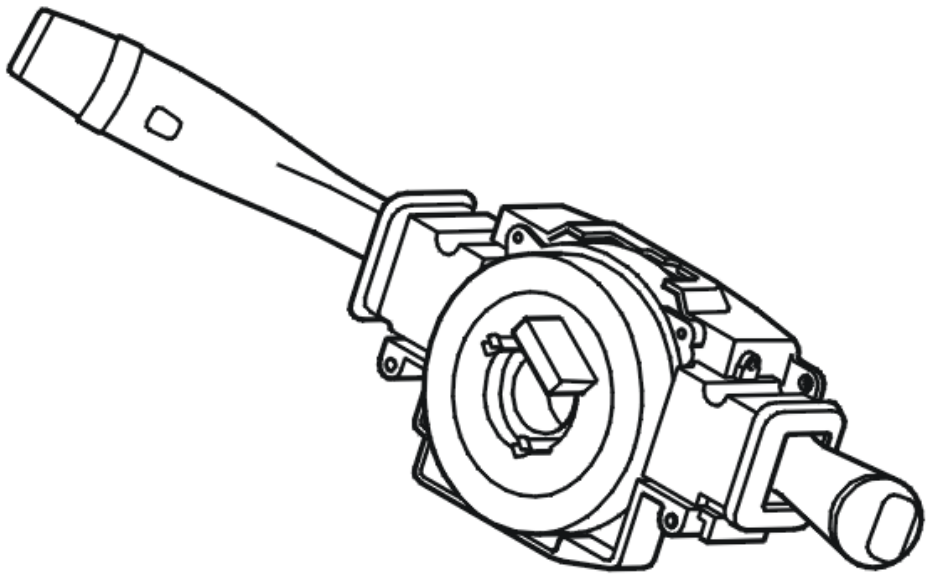

Fig. 237: Identifying Steering Wheel Control Module
Courtesy of VOLVO CARS CORPORATION

The Steering Angle Sensor (SAS) is located in the Steering Wheel Module (SWM) from which it is supplied with power. It is however only the Steering Angle Sensor which communicates on the Control Area Network (CAN).

Fitted into the Steering Angle Sensor (SAS) is a code wheel which follows the steering wheel rotation. Nine optical digital sensors and two analogue photo diodes read the code from the wheel. The code signals which are generated shall form a specific pattern. If the Steering Angle Sensor (SAS) registers that the signal from analogue photo-diode 2 is faulty the trouble code is set.

The trouble code may be diagnosed when the ignition is on and the angle sensor is initiated. The sensor is initiated by the steering wheel being turned by more than 4.5° in either direction.

Substitute Value

- The stability function is blocked.

Possible Source

- Internal fault in the Steering Angle Sensor (SAS).

Fault symptom[s]

- The anti-spin warning lamp is illuminated.
- General warning lamp lit
- The stability function is not working.

FAULT TRACING

see **FAULT TRACING**

SAS-C010129: ANALOGUE SENSOR 2 OUTSIDE LIMIT. GENERAL SIGNAL FAULT. SIGNAL INVALID (B6324S5; 2011-2012)

DIAGNOSTIC TROUBLE CODE (DTC) INFORMATION SAS-C010129

see **DIAGNOSTIC TROUBLE CODE (DTC) INFORMATION SAS-C010129**

FAULT TRACING

see **FAULT TRACING**

SAS-C010129: ANALOGUE SENSOR 2 OUTSIDE LIMIT. GENERAL SIGNAL FAULT. SIGNAL INVALID (B8444S; 2005-2011)

DIAGNOSTIC TROUBLE CODE (DTC) INFORMATION SAS-C010129

see **DIAGNOSTIC TROUBLE CODE (DTC) INFORMATION SAS-C010129**

FAULT TRACING

see **FAULT TRACING**

SAS-C010229: ANALOGUE SENSOR SUM OUTSIDE LIMIT. GENERAL SIGNAL FAULT. SIGNAL INVALID (B6324S; 2007-2010)

DIAGNOSTIC TROUBLE CODE (DTC) INFORMATION SAS-C010229

Condition

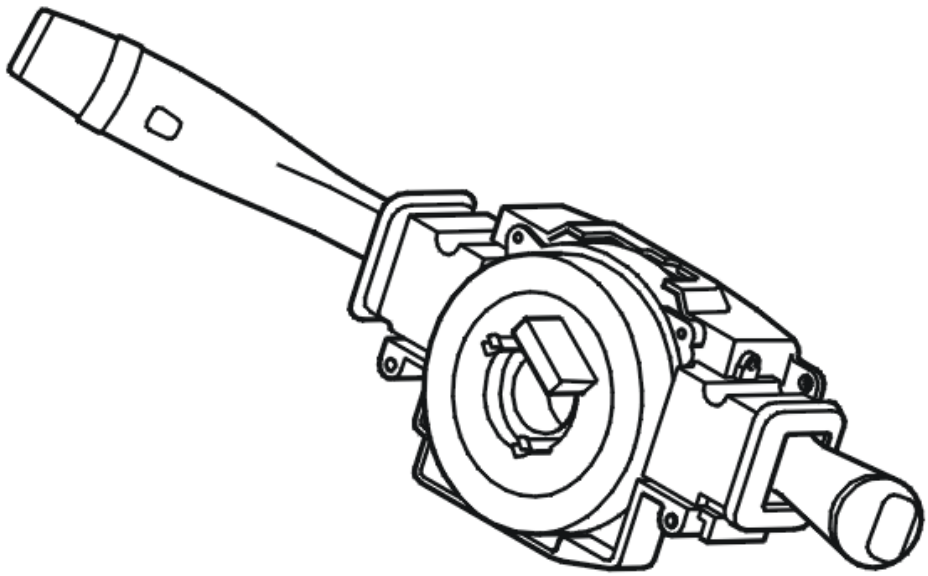

Fig. 238: Identifying Steering Wheel Control Module
Courtesy of VOLVO CARS CORPORATION

The Steering Angle Sensor (SAS) is located in the Steering Wheel Module (SWM) from which it is supplied with power. It is however only the Steering Angle Sensor which communicates on the Control Area Network (CAN).

Fitted into the Steering Angle Sensor (SAS) is a code wheel which follows the steering wheel rotation. Nine optical digital sensors and two analogue photo diodes read the code from the wheel. The code signals which are generated shall form a specific pattern. If the Steering Angle Sensor (SAS) registers that one or both of the signals from analogue photo-diodes 1 and 2 are faulty, the trouble code is set.

The trouble code may be diagnosed when the ignition is on and the angle sensor is initiated. The sensor is initiated by the steering wheel being turned by more than 4.5° in either direction.

Substitute Value

- The stability function is blocked.

Possible Source

- Internal fault in the Steering Angle Sensor (SAS).

Fault symptom[s]

- The anti-spin warning lamp is illuminated.
- General warning lamp lit
- The stability function is not working.

FAULT TRACING

see **FAULT TRACING**

SAS-C010229: ANALOGUE SENSOR SUM OUTSIDE LIMIT. GENERAL SIGNAL FAULT. SIGNAL INVALID (B6324S5; 2011-2012)

DIAGNOSTIC TROUBLE CODE (DTC) INFORMATION SAS-C010229

see **DIAGNOSTIC TROUBLE CODE (DTC) INFORMATION SAS-C010229**

FAULT TRACING

see **FAULT TRACING**

SAS-C010229: ANALOGUE SENSOR SUM OUTSIDE LIMIT. GENERAL SIGNAL FAULT. SIGNAL INVALID (B8444S; 2005-2011)

DIAGNOSTIC TROUBLE CODE (DTC) INFORMATION SAS-C010229

see **DIAGNOSTIC TROUBLE CODE (DTC) INFORMATION SAS-C010229**

FAULT TRACING

see **FAULT TRACING**

SAS-C010349: THE STEERING ANGLE SENSOR (SAS) LACKS INTERNAL VOLTAGE (5 V). INTERNAL FAULT. ELECTRICAL FAULT (B6324S; 2007-2010)

DIAGNOSTIC TROUBLE CODE (DTC) INFORMATION SAS-C010349

Condition

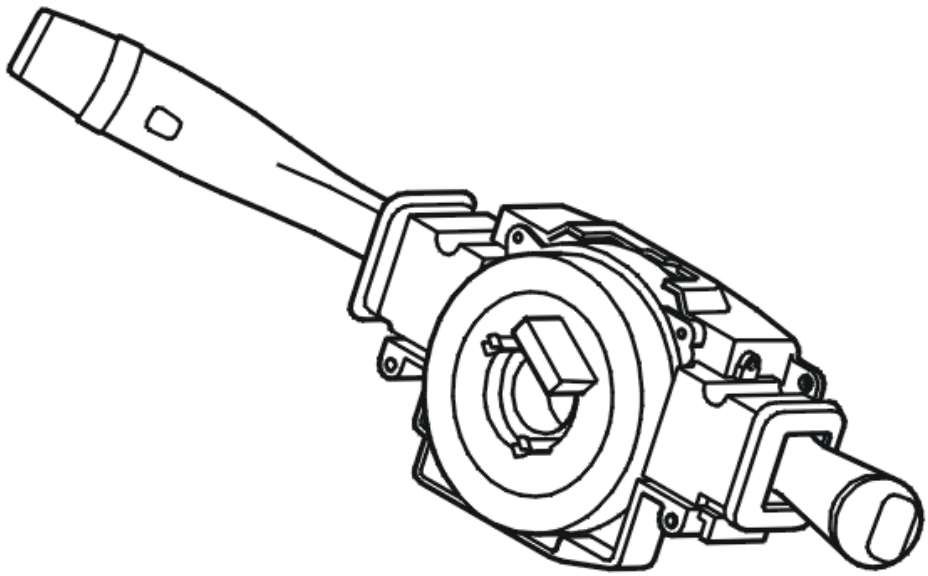

Fig. 239: Identifying Steering Wheel Control Module
Courtesy of VOLVO CARS CORPORATION

The Steering Angle Sensor (SAS) is located in the Steering Wheel Module (SWM) from which it is supplied with power. It is however only the Steering Angle Sensor which communicates on the Control Area Network (CAN).

If the voltage supply (5 V) to the Steering Angle Sensor (SAS) is missing, the trouble code is set.

The trouble code may be diagnosed when the ignition is on and the angle sensor is initiated. The sensor is initiated by the steering wheel being turned by more than 4.5° in either direction.

Substitute Value

- The stability function is blocked.

Possible Source

- Open circuit in the voltage supply circuit for the Steering Angle Sensor (SAS).

Fault symptom[s]

- The anti-spin warning lamp is illuminated.

- General warning lamp lit
- The stability function is not working.

FAULT TRACING

see **FAULT TRACING**

SAS-C010349: THE STEERING ANGLE SENSOR (SAS) LACKS INTERNAL VOLTAGE (5 V). INTERNAL FAULT. ELECTRICAL FAULT (B6324S5; 2011-2012)

DIAGNOSTIC TROUBLE CODE (DTC) INFORMATION SAS-C010349

see **DIAGNOSTIC TROUBLE CODE (DTC) INFORMATION SAS-C010349**

FAULT TRACING

see **FAULT TRACING**

SAS-C010349: THE STEERING ANGLE SENSOR (SAS) LACKS INTERNAL VOLTAGE (5 V). INTERNAL FAULT. ELECTRICAL FAULT (B8444S; 2005-2011)

DIAGNOSTIC TROUBLE CODE (DTC) INFORMATION SAS-C010349

see **DIAGNOSTIC TROUBLE CODE (DTC) INFORMATION SAS-C010349**

FAULT TRACING

see **FAULT TRACING**

SAS-E000: CONTROL MODULE COMMUNICATION. FAULTY COMMUNICATION (2003-2004)

DIAGNOSTIC TROUBLE CODE (DTC) INFORMATION SAS-E000

Condition

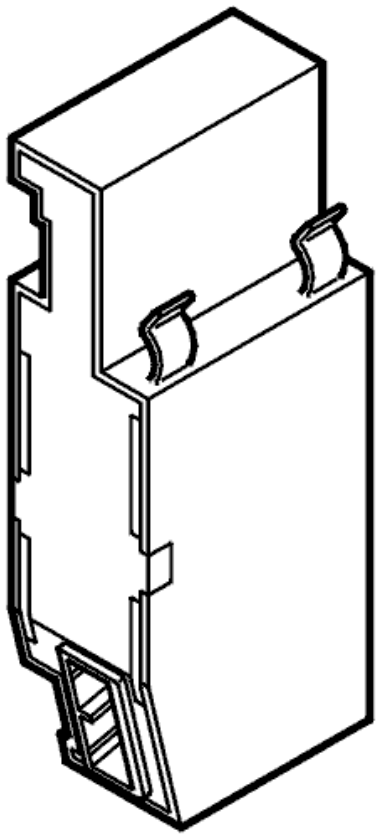

Fig. 240: Control Module For Steering Wheel Angle Sensor
Courtesy of VOLVO CARS CORPORATION

The control modules transmit and receive information via a standardized serial communication method - CAN (Control Area Network). The diagnostic trouble code (DTC) is stored if the control module registers serious interference (CAN communication blocked).

NOTE: **In the event of system communication problems, it is not possible to communicate with the control module. Therefore it will only be possible to read off the fault if it is intermittent.**

Substitute Value

- The control module shuts itself off ("bus-off").

  HINT: The control module will remain shut off until the power supply is broken (15, 30, X). When the power supply is connected the control module will make a new attempt to communicate.

Possible Source

- Short-circuit between the control area network (CAN) wiring
- Open-circuit in the control area network (CAN) wiring
- Internal fault in the control module

- Internal fault in another control module in the same part of the control area network (CAN).

Fault symptom[s]

- The anti-spin warning lamp is lit
- No stability function.

FAULTY COMMUNICATION

see **FAULTY COMMUNICATION**

SAS-E000: CONTROL MODULE COMMUNICATION. FAULTY COMMUNICATION (B5254T2; 2005-2007)

DIAGNOSTIC TROUBLE CODE (DTC) INFORMATION SAS-E000

Condition

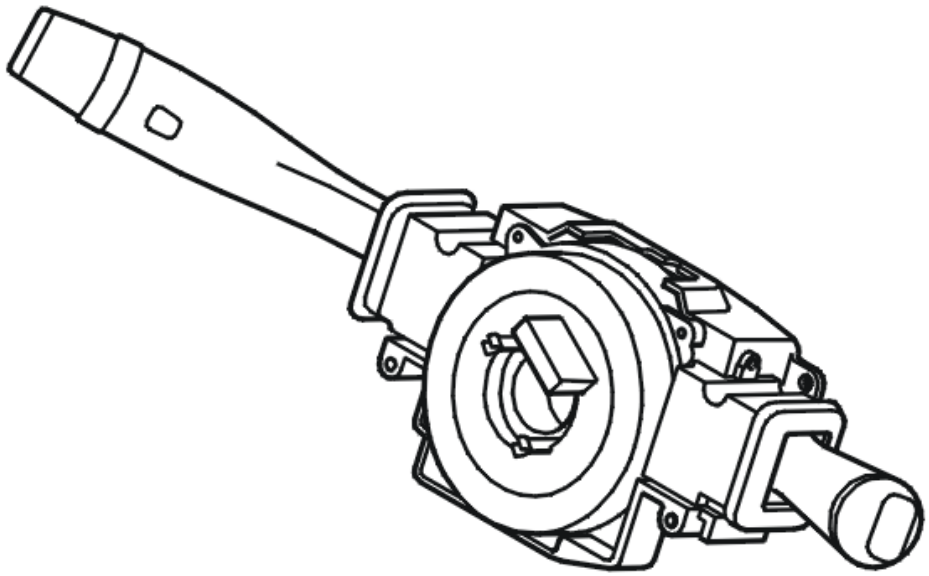

Fig. 241: Identifying Steering Wheel Control Module
Courtesy of VOLVO CARS CORPORATION

The control modules transmit and receive information via a standardized serial communication method, CAN (Control Area Network). The diagnostic trouble code (DTC) is stored if the control module registers serious

interference on the high speed network (CAN communication blocked).

Steering wheel angle sensor module (SAS) is located inside, and is supplied with power by, the steering wheel module (SWM). Only the steering wheel angle sensor module (SAS) communicates on the controller area network (CAN).

NOTE: In the event of system communication problems, it is not possible to communicate with the control module. Therefore it will only be possible to read off the diagnostic trouble code (DTC) if the fault is intermittent.

Substitute Value

- The control module shuts itself off ("bus-off").

Possible Source

- Short-circuit between the control area network (CAN) wiring
- Open-circuit in the control area network (CAN) wiring
- Internal fault in the control module
- Internal fault in another control module in the same part of the control area network (CAN).

Fault symptom[s]

- None.

SAS-E000: CONTROL MODULE COMMUNICATION. FAULTY COMMUNICATION (B6294T; 2005-2006)

DIAGNOSTIC TROUBLE CODE (DTC) INFORMATION SAS-E000

see **DIAGNOSTIC TROUBLE CODE (DTC) INFORMATION SAS-E000**

SAS-E003: CONFIGURATION FAULT (B5254T2; 2005-2007)

DIAGNOSTIC TROUBLE CODE (DTC) INFORMATION SAS-E003

Condition

Steering wheel angle sensor module (SAS) is located inside, and is supplied with power by, the steering wheel module (SWM). Only the steering wheel angle sensor module (SAS) communicates on the controller area network (CAN).

The control module compares its configuration ID with the signal configuration transmitted on the control area network (CAN) by the central electronic module (CEM). If the configuration IDs do not correspond the fault code is stored. The diagnostic trouble code (DTC) is also stored if the communication between the steering

wheel angle sensor module (SAS) and the central electronic module (CEM) is interrupted.

NOTE: **In the event of an open-circuit in both the control area network (CAN) cables, it is not possible to communicate with the control module. Therefore it will only be possible to read off the diagnostic trouble code (DTC) if this type of fault is intermittent. When the diagnostic trouble code (DTC) is stored, the control module responds to the diagnostic commands. However, normal control area network (CAN) communication does not work ("Expulsion mode").**

Substitute Value

- None.

Possible Source

- Incorrect CAN configuration ID (the control module is not intended for this vehicle, for example it is a used control module with different software/hardware)
- Open-circuit in the control area network (CAN) wiring between the control module and the central electrical module (CEM)
- Incorrect version of software.

Fault symptom[s]

- None.

SAS-E003: CONFIGURATION FAULT (B6294T; 2005-2006)

DIAGNOSTIC TROUBLE CODE (DTC) INFORMATION SAS-E003

see **DIAGNOSTIC TROUBLE CODE (DTC) INFORMATION SAS-E003**

SAS-E003: CONFIGURATION FAULT FAULTY CONFIGURATION (2003-2004)

DIAGNOSTIC TROUBLE CODE (DTC) INFORMATION SAS-E003

Condition

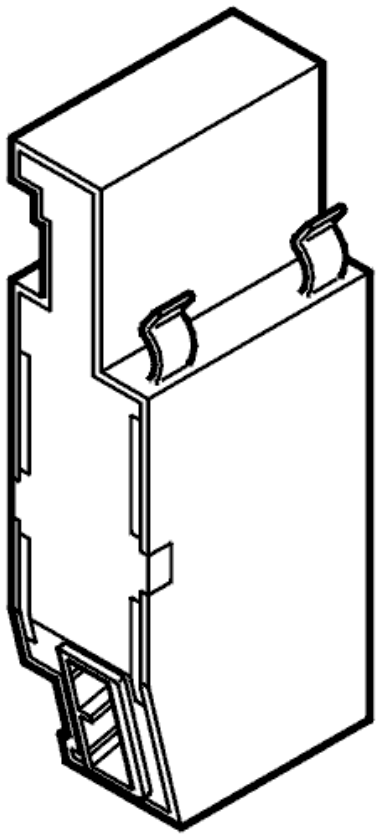

Fig. 242: Control Module For Steering Wheel Angle Sensor
Courtesy of VOLVO CARS CORPORATION

The control module compares its configuration ID with the signal configuration transmitted on the control area network (CAN) by the central electronic module (CEM). If the configuration IDs do not correspond the fault code is stored. The diagnostic trouble code (DTC) is also stored if the communication between the control module and the central electronic module (CEM) is interrupted.

NOTE: **In the event of open-circuit in both the control area network (CAN) cables, it is not possible to communicate with the control module. Therefore it will only be possible to read off the diagnostic trouble code (DTC) if this type of fault is intermittent. When the diagnostic trouble code (DTC) is stored, the control module responds to the diagnostic command, however normal control area network (CAN) communication does not work. ("Expulsion mode")**

Substitute Value

- None.

Possible Source

- Faulty control area network (CAN) configuration ID. (The node is not intended for this car, for example a used control module with different software/hardware.)

- Open-circuit in the control area network (CAN) wiring between the control module and the central electrical module (CEM).

Fault symptom[s]

- The anti-spin warning lamp is lit (up to and including 2002 model year)
- General warning lamp lit (from model year 2003 inclusive)
- No stability function
- Message in the display.

FAULTY CONFIGURATION (2003)

see **FAULTY CONFIGURATION (2003)**

FAULTY CONFIGURATION (2004)

see **FAULTY CONFIGURATION (2004)**

SAS-E010: CONTROL MODULE. VOLTAGE TOO LOW (B5254T2; 2005-2007)

DIAGNOSTIC TROUBLE CODE (DTC) INFORMATION SAS-E010

Condition

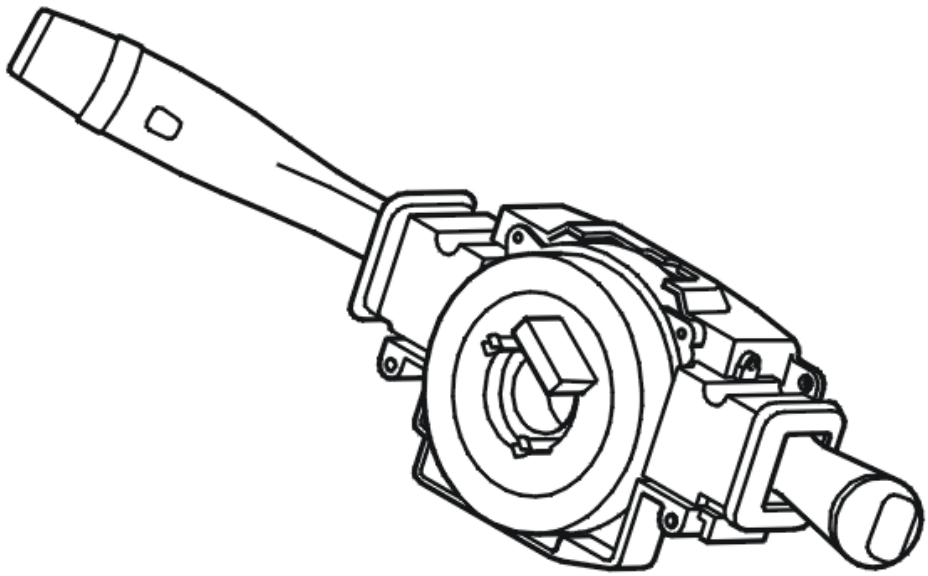

Fig. 243: Identifying Steering Wheel Control Module
Courtesy of VOLVO CARS CORPORATION

The Steering wheel angle sensor module (SAS) is located in the lever module together with the steering wheel module (SWM) and is supplied with power by it.

The steering wheel angle sensor module (SAS) compares the voltage with the central electronic module (CEM).

Diagnostic trouble code (DTC) is stored if the steering wheel angle sensor module (SAS) registers that the voltage when compared to the voltage signal from the central electronic module (CEM) is lower than 2 V for 10 seconds.

The diagnostic trouble code (DTC) can be diagnosed when the ignition is switched on and the steering wheel angle sensor is initiated. Initiation is carried out when the steering wheel is turned more than 4.5° in any direction.

Substitute Value

- The stability function is blocked.

Possible Source

- Contact resistance or oxidation in the connectors of the steering wheel module (SWM)

- Internal fault in the steering wheel angle sensor module (SAS).

Fault symptom[s]

- Anti-spin warning lamp lit.
- General warning lamp lit.
- The stability control system does not function.

VOLTAGE TOO LOW

CHECKING THE POWER SUPPLY

NOTE: Steering wheel angle sensor module (SAS) is located inside, and is supplied with power by, the steering wheel module (SWM).

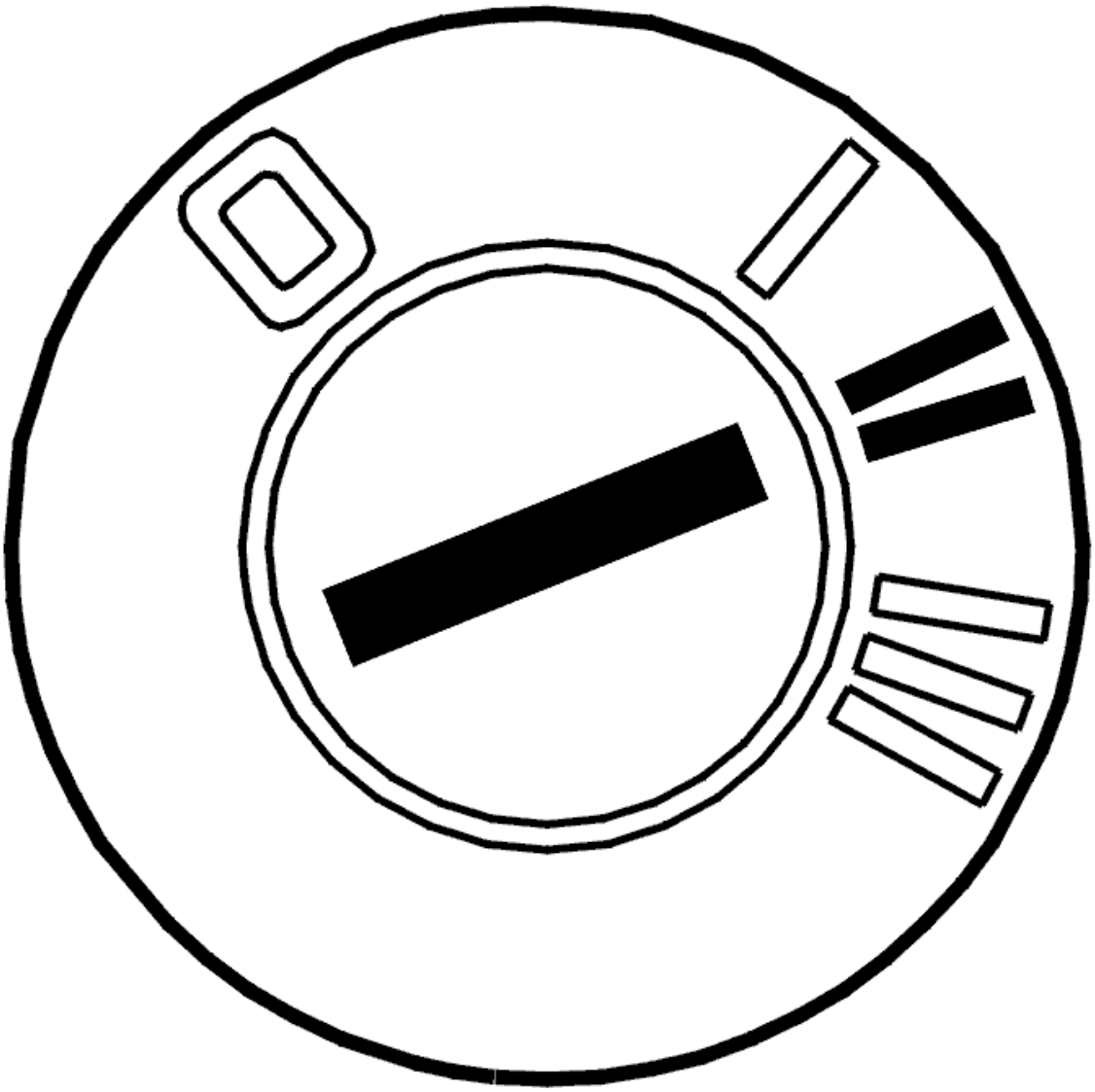

Fig. 244: Identifying Ignition ON
Courtesy of VOLVO CARS CORPORATION

- Ignition on
- Read off the power supply for the steering wheel angle sensor module (SAS) and the central electronic module (CEM).

  The voltage for the steering wheel angle sensor module (SAS) and the central electronic module (CEM) must be approximately the same.

  The fault is permanent if the voltage for the steering wheel angle sensor module (SAS) deviates by more than 2.0 V from the central electronic module (CEM).

  If the voltage is approximately the same, this indicates an intermittent fault, i. e. the fault was present previously but is not active at the moment.

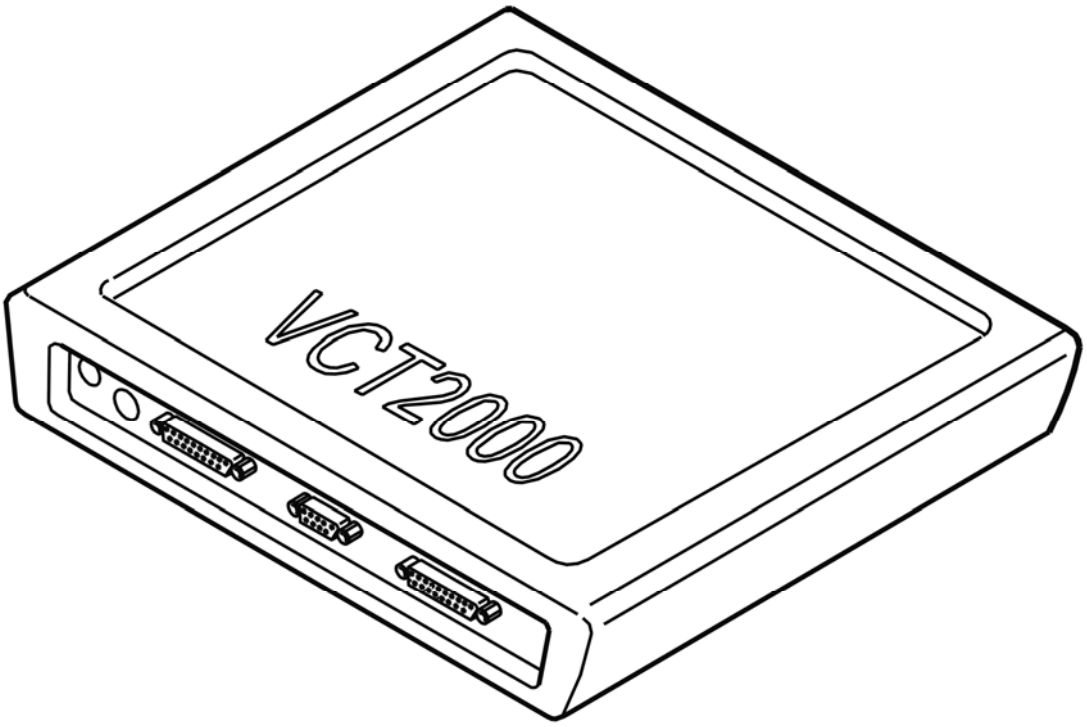

Fig. 245: Identifying VCT2000 Diagnostic Tool Symbol In VIDA
Courtesy of VOLVO CARS CORPORATION

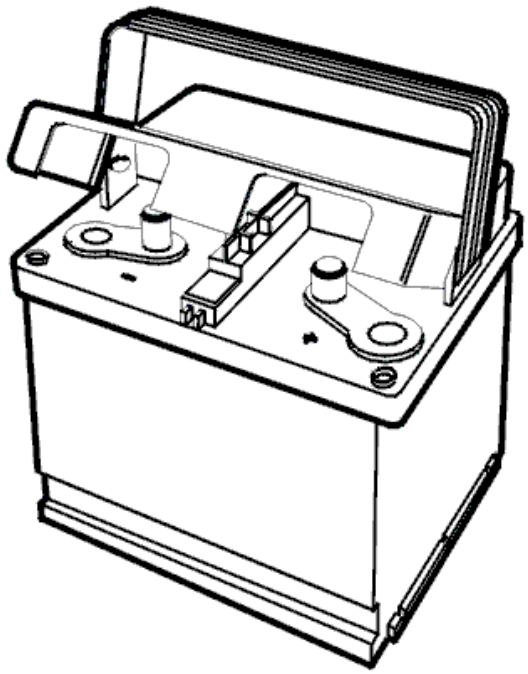

Fig. 246: Identifying Battery
Courtesy of VOLVO CARS CORPORATION

- **Continue**

  Refer to **CHECKING WIRING AND TERMINALS**

CHECKING WIRING AND TERMINALS

Check the connector for the steering wheel module (SWM). Check for contact resistance and oxidation.

Check the power supply cable (15i-supply) between the fuse in the integrated relay/fusebox in the cargo compartment and steering wheel module (SWM) terminal #A8 (#8). Check for contact resistance. Check for oxidation. For information about the circuit, see the relevant appropriate service information.

HINT: With the ignition on the voltmeter should indicate battery voltage.

Check the ground lead between steering wheel module (SWM) terminal #A2 (#2) and the ground terminal. Check for contact resistance. Check for oxidation. For information about the circuit, see the relevant appropriate service information.

Remedy as necessary.

Other information

- see **CONNECTING THE BREAKOUT BOX**
- see **CONTENTS**

- Steering wheel angle sensor module (SAS) is integrated in the steering wheel module (SWM). To replace the control module, see **STEERING WHEEL MODULE (SWM), REPLACING** .

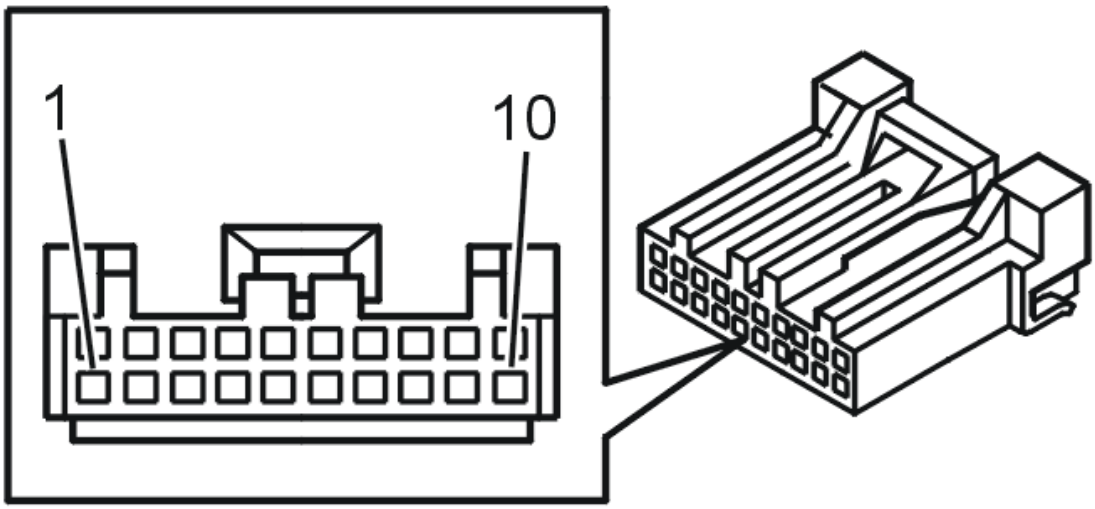

Fig. 247: Identifying Connector A Terminals
Courtesy of VOLVO CARS CORPORATION

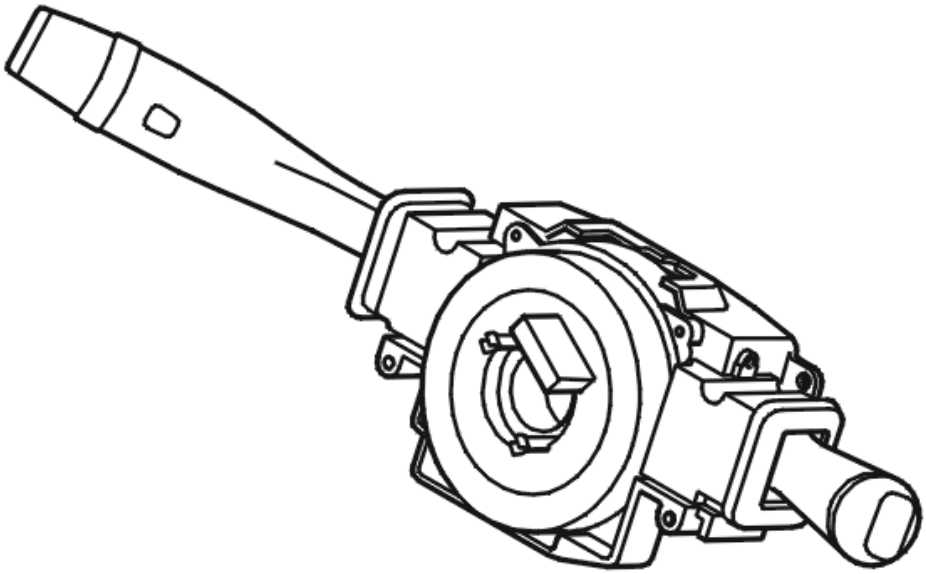

Fig. 248: Identifying Steering Wheel Control Module
Courtesy of VOLVO CARS CORPORATION

- **Continue**

  Refer to **VERIFICATION**

VERIFICATION

HINT: After carrying out the repair, check that the fault has been remedied.

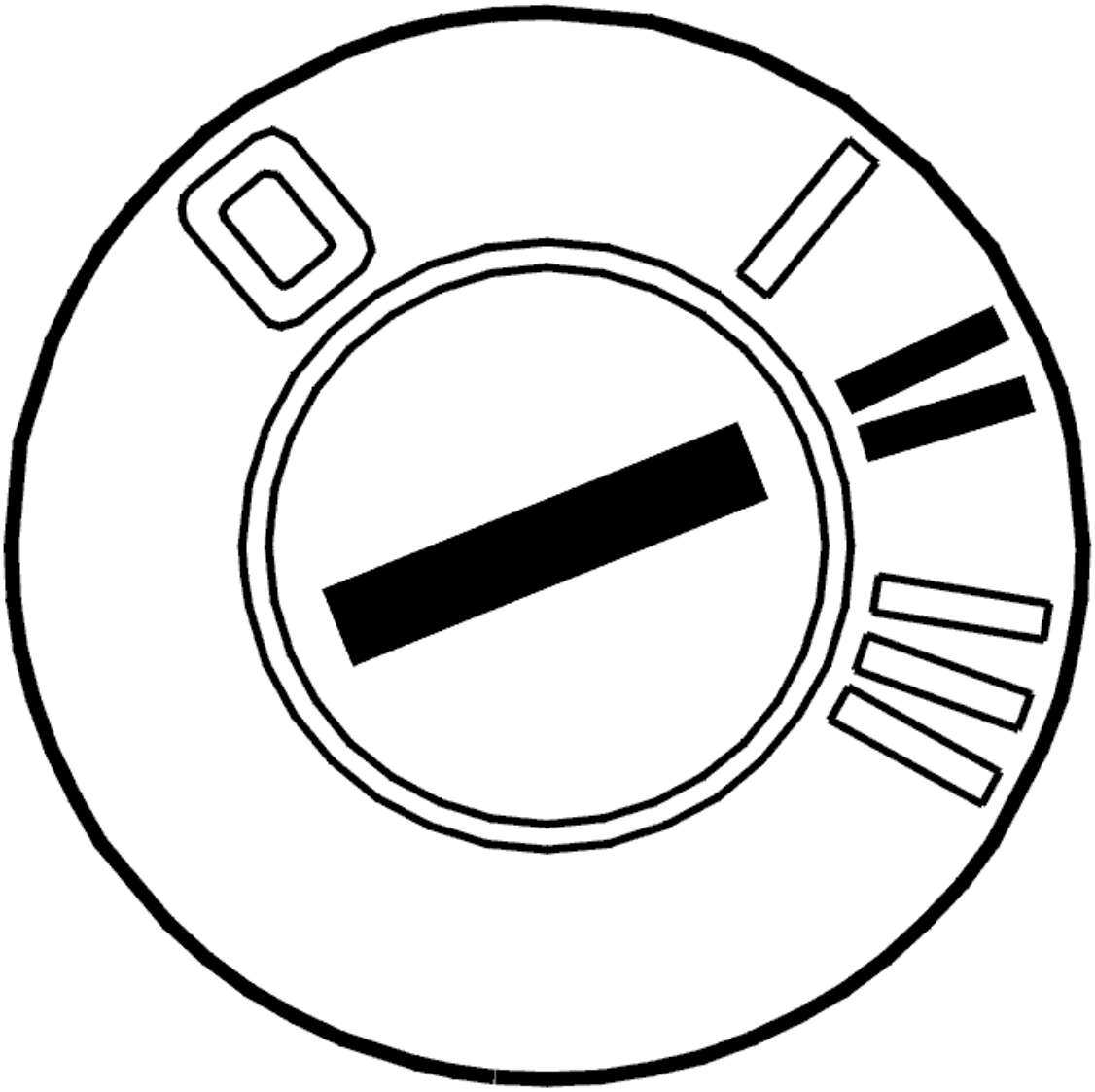

Fig. 249: Identifying Ignition ON
Courtesy of VOLVO CARS CORPORATION

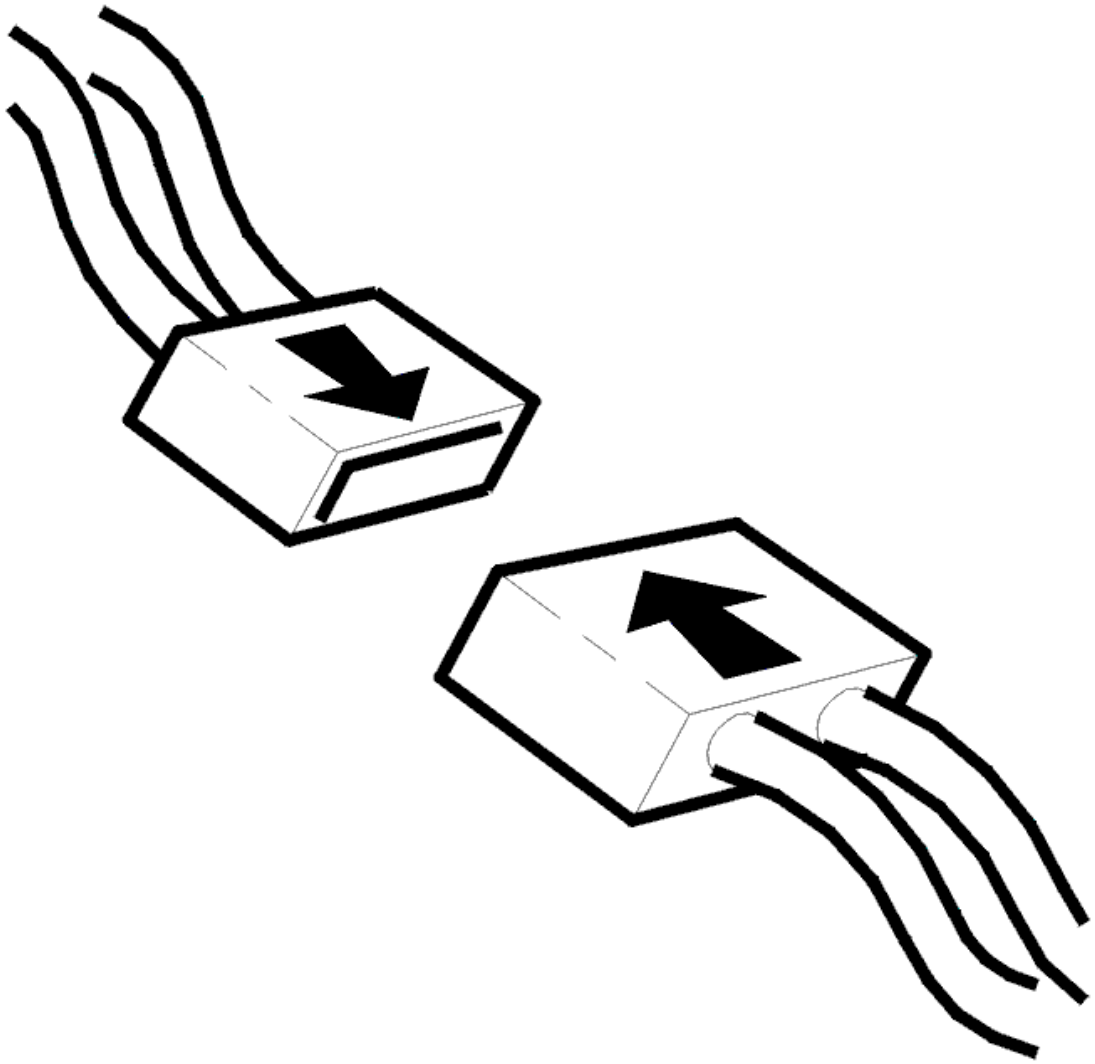

Fig. 250: Connecting Connector
Courtesy of VOLVO CARS CORPORATION

- Ignition off
- Reconnect the connectors, reinstall components etc.
- Ignition on
- Read off the power supply for the steering wheel angle sensor module (SAS) and the central electronic module (CEM).

  Check that the voltage is approximately battery voltage.

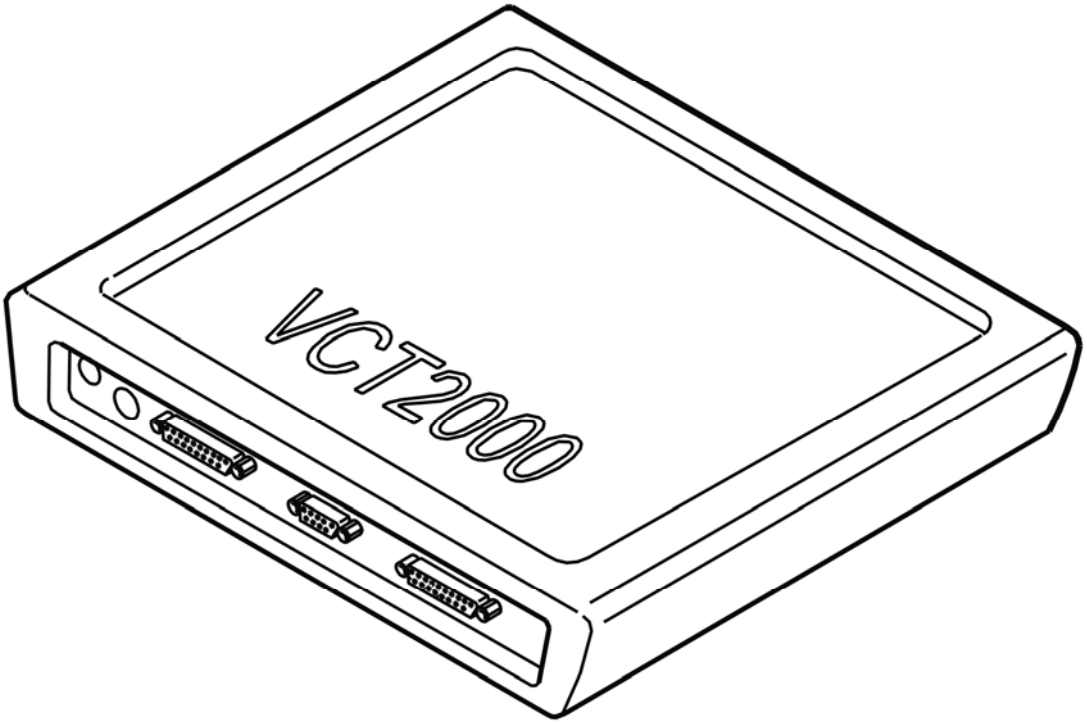

Fig. 251: Identifying VCT2000 Diagnostic Tool Symbol In VIDA
Courtesy of VOLVO CARS CORPORATION

Is the voltage OK?

- **YES**

  VERIFIED: Troubleshooting has been completed.

- **NO**

  Refer to **INFORMATION**

INFORMATION

FAULT-TRACING INFORMATION

The fault should have been detected and remedied. As this is not the case fault-tracing has failed.

Exit fault-tracing for this diagnostic trouble code (DTC) or make another attempt.

SAS-E010: CONTROL MODULE. VOLTAGE TOO LOW (B6294T; 2005-2006)

DIAGNOSTIC TROUBLE CODE (DTC) INFORMATION SAS-E010

see **DIAGNOSTIC TROUBLE CODE (DTC) INFORMATION SAS-E010**

VOLTAGE TOO LOW

see **VOLTAGE TOO LOW**

SAS-U001000: MEDIUM SPEED CAN COMMUNICATION BUS. GENERAL FAULT INFORMATION. NO INFORMATION ABOUT THE TYPE OF FAULT. (B6324S; 2007-2010)

DIAGNOSTIC TROUBLE CODE (DTC) INFORMATION SAS-U001000

Condition

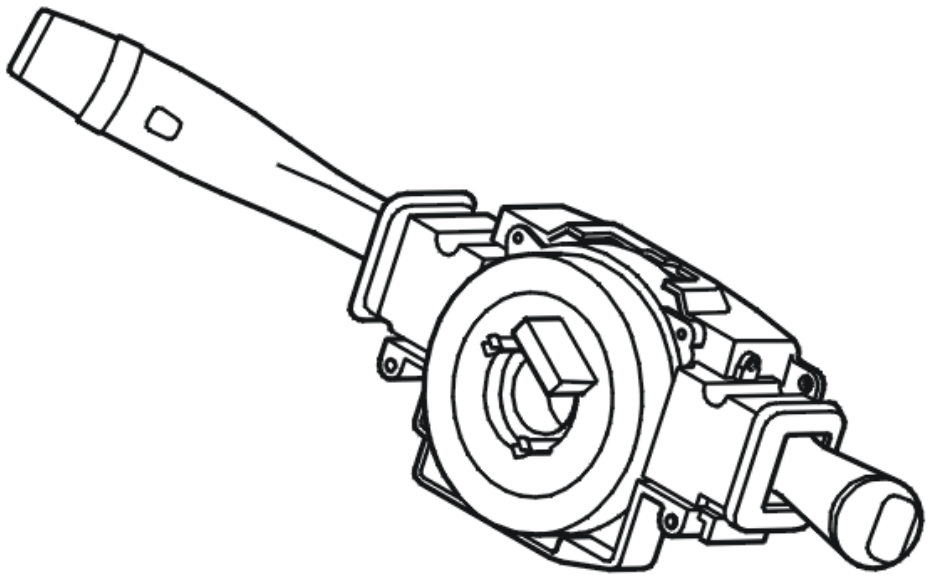

Fig. 252: Identifying Steering Wheel Control Module
Courtesy of VOLVO CARS CORPORATION

The control modules transmit and receive information via a standardized communication network, CAN (Control Area Network). If the Steering Angle Sensor (SAS) registers a serious disturbance on the high speed network (CAN communication blocked) then the trouble code is set.

The Steering Angle Sensor (SAS) is located in the Steering Wheel Module (SWM) from which it is supplied with power. It is however only the Steering Angle Sensor which communicates on the Control Area Network

(CAN).

NOTE: **In the event of system communication problems, it is not possible to communicate with the control module. Therefore it will only be possible to read off the fault if it is intermittent.**

Substitute Value

- The control module switches itself off ("bus-off").

Possible Source

- Short-circuit between the control area network (CAN) wiring.
- Open-circuit in the control area network (CAN) wiring
- Internal fault in the control module
- Internal fault in another control module in the same part of the control area network (CAN).

Fault symptom[s]

- Nothing.

TROUBLESHOOTING

see **TROUBLESHOOTING**

SAS-U001000: MEDIUM SPEED CAN COMMUNICATION BUS. GENERAL FAULT INFORMATION. NO INFORMATION ABOUT THE TYPE OF FAULT. (B6324S5; 2011-2012)

DIAGNOSTIC TROUBLE CODE (DTC) INFORMATION SAS-U001000

see **DIAGNOSTIC TROUBLE CODE (DTC) INFORMATION SAS-U001000**

TROUBLESHOOTING

see **TROUBLESHOOTING**

SAS-U001000: MEDIUM SPEED CAN COMMUNICATION BUS. GENERAL FAULT INFORMATION. NO INFORMATION ABOUT THE TYPE OF FAULT. (B8444S; 2005-2011)

DIAGNOSTIC TROUBLE CODE (DTC) INFORMATION SAS-U001000

see **DIAGNOSTIC TROUBLE CODE (DTC) INFORMATION SAS-U001000**

TROUBLESHOOTING

see **TROUBLESHOOTING**

SAS-U030000: THE INTERNAL SOFTWARE OF THE CONTROL MODULE IS INCOMPATIBLE. GENERAL FAULT INFORMATION. NO INFORMATION ABOUT THE TYPE OF FAULT. (B6324S; 2007-2010)

DIAGNOSTIC TROUBLE CODE (DTC) INFORMATION SAS-U030000

Condition

The Steering Angle Sensor (SAS) is located in the Steering Wheel Module (SWM) from which it is supplied with power. It is however only the Steering Angle Sensor which communicates on the Control Area Network (CAN).

The control module compares its configuration ID with the signal configuration which the Central Electronic Module (CEM) transmits on the Control Area Network (CAN). If the IDs are incompatible then the trouble code is set. The trouble code is also set if the communication between the Steering Angle Sensor (SAS) and the Central Electronic Module (CEM) is interrupted.

NOTE: **In the event of a communication failure in both CAN leads, it is not possible to communicate with the control module. Therefore it will only be possible to read off the fault if it is intermittent. When the trouble code is set, the control module will respond to a diagnostic command but the normal CAN communication does not function (Expulsion mode).**

Substitute Value

- Nothing.

Possible Source

- Incorrect CAN configuration ID (the control module is not intended for this vehicle, e. g. it is a second-hand control module with a different software/hardware).
- Break in the CAN leads between the control module and the Central Electronic Module (CEM).
- Incorrect program version.

Fault symptom[s]

- Nothing.

TROUBLESHOOTING

see **TROUBLESHOOTING**

SAS-U030000: THE INTERNAL SOFTWARE OF THE CONTROL MODULE IS INCOMPATIBLE. GENERAL FAULT INFORMATION. NO INFORMATION ABOUT THE TYPE OF FAULT. (B6324S5; 2011-2012)

DIAGNOSTIC TROUBLE CODE (DTC) INFORMATION SAS-U030000

see **DIAGNOSTIC TROUBLE CODE (DTC) INFORMATION SAS-U030000**

TROUBLESHOOTING

see **TROUBLESHOOTING**

SAS-U030000: THE INTERNAL SOFTWARE OF THE CONTROL MODULE IS INCOMPATIBLE. GENERAL FAULT INFORMATION. NO INFORMATION ABOUT THE TYPE OF FAULT. (B8444S; 2005-2011)

DIAGNOSTIC TROUBLE CODE (DTC) INFORMATION SAS-U030000

see **DIAGNOSTIC TROUBLE CODE (DTC) INFORMATION SAS-U030000**

TROUBLESHOOTING

see **TROUBLESHOOTING**

SAS-U300362: BATTERY VOLTAGE. ALGORITHM FAULT. COMPARISON FAULT (B6324S; 2007-2010)

DIAGNOSTIC TROUBLE CODE (DTC) INFORMATION SAS-U300362

Condition

NOTE: **This trouble code is only relevant for troubleshooting and action in the following cases:**

- The trouble code is active in the present driving cycle and has been active for a longer period of time.
- The customer experiences malfunction that can be attributed to the trouble code.

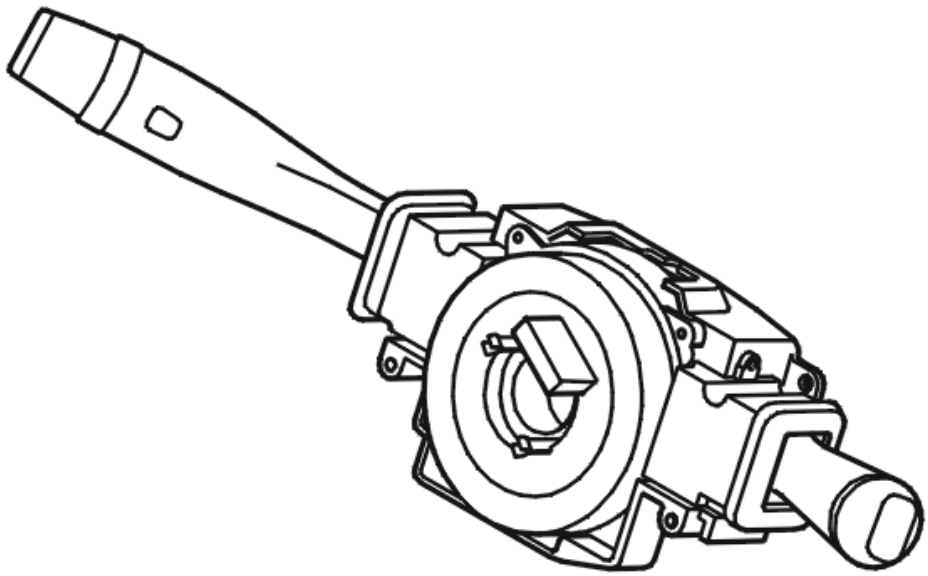

Fig. 253: Identifying Steering Wheel Control Module
Courtesy of VOLVO CARS CORPORATION

The Steering Angle Sensor (SAS) is located in the Steering Wheel Module (SWM) from which it is supplied with power. It is however only the Steering Angle Sensor which communicates on the Control Area Network (CAN).

The Steering Angle Sensor (SAS) compares the voltage with a known value from the Central Electronic Module (CEM).

If the Steering Angle Sensor (SAS) registers that the voltage, in comparison with the voltage signal from the Central Electronic Module (CEM), is more than 2 V lower, for more than 10 seconds, the trouble code is set.

The trouble code may be diagnosed when the ignition is on and the angle sensor is initiated. The sensor is initiated by the steering wheel being turned by more than 4.5° in either direction.

Substitute Value

- The stability function is blocked.

Possible Source

- Connector resistance or oxidation in the connector to the Steering Wheel Module (SWM).

- Internal fault in the Steering Angle Sensor (SAS).

Fault symptom[s]

- The anti-spin warning lamp is illuminated.
- General warning lamp lit
- The stability function is not working.

FAULT TRACING

FAULT-TRACING INFORMATION

NOTE: This trouble code is only relevant for troubleshooting and action in the following cases:

- The trouble code is active in the present driving cycle and has been active for a longer period of time.
- The customer experiences malfunction that can be attributed to the trouble code.

In other cases, the DTC does not indicate a fault and must therefore be ignored and only erased.

Do you want to continue fault-tracing?

- **YES**

  Refer to **CHECKING THE POWER SUPPLY**

- **NO**

  OKAY: Troubleshooting has been completed.

CHECKING THE POWER SUPPLY

NOTE: The Steering Angle Sensor (SAS) is located in the Steering Wheel Module (SWM) from which it is supplied with power.

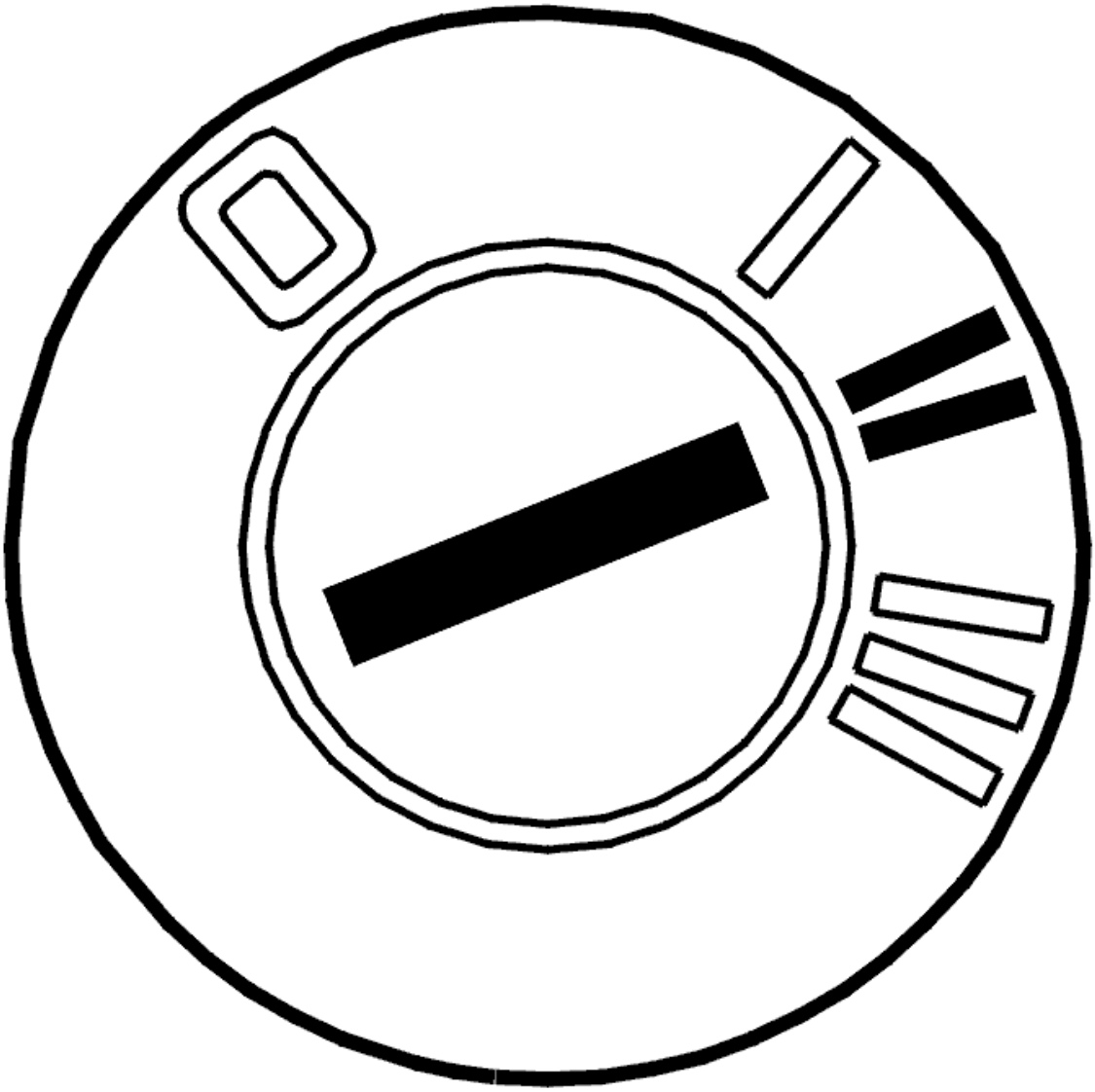

Fig. 254: Identifying Ignition ON
Courtesy of VOLVO CARS CORPORATION

- Ignition on
- Read the supply voltage values for the Steering Angle Sensor (SAS) and the Central Electronic Module (CEM).

  The supply voltage values for the Steering Angle Sensor (SAS) and the Central Electronic Module should be approximately the same.

  If the two voltages differ by more than 2.0 V then this would suggest that the fault is permanent.

  If the voltages are approximately the same then this would suggest that the fault is intermittent, i. e. that the fault has previously been present but is no longer active.

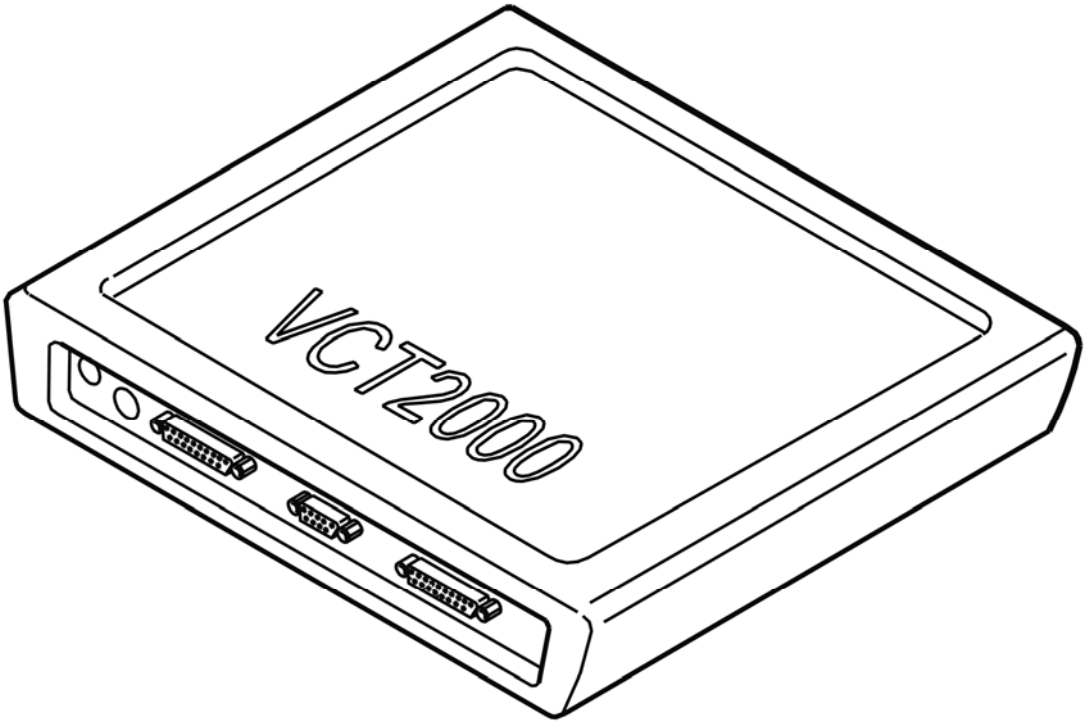

Fig. 255: Identifying VCT2000 Diagnostic Tool Symbol In VIDA
Courtesy of VOLVO CARS CORPORATION

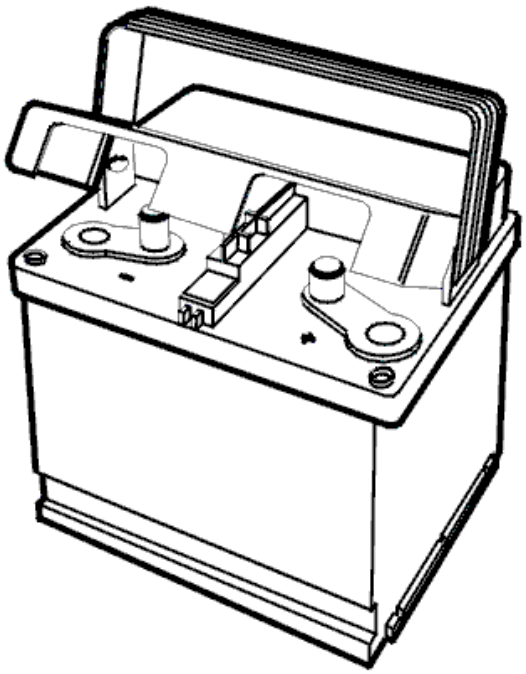

Fig. 256: Identifying Battery

Courtesy of VOLVO CARS CORPORATION

- **Continue**

  Refer to **CHECKING LEADS AND CONNECTORS**

CHECKING LEADS AND CONNECTORS

Check the connector to the Steering Wheel Module (SWM) for connector resistance and oxidation.

Check the power supply lead (15i supply) between the Steering Wheel Module (SWM) #A8 (#8) and the fuse in the luggage compartment relay/fuse centre with respect to contact resistance and oxidation. For information on the cable routing, see the applicable circuit diagram.

HINT: With ignition the voltmeter should display the battery voltage.

Check the ground lead between the ground terminal and the Steering Wheel Module (SWM) #A2 (#2) with respect to resistance and oxidation. For information on the cable routing, see the applicable circuit diagram.

Remedy as necessary.

Other information

- see **CONNECTING THE BREAKOUT BOX**
- see **CONTENTS**
- The Steering Angle Sensor (SAS) is integrated in the Steering Wheel Module (SWM). When replacing the control module, see **STEERING WHEEL MODULE (SWM), REPLACING** .

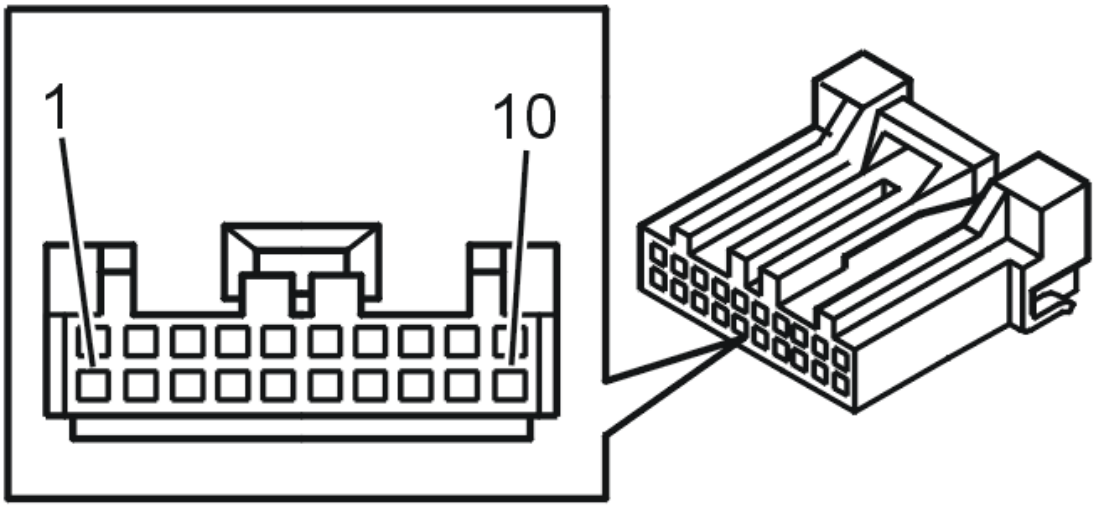

Fig. 257: Identifying Connector A Terminals
Courtesy of VOLVO CARS CORPORATION

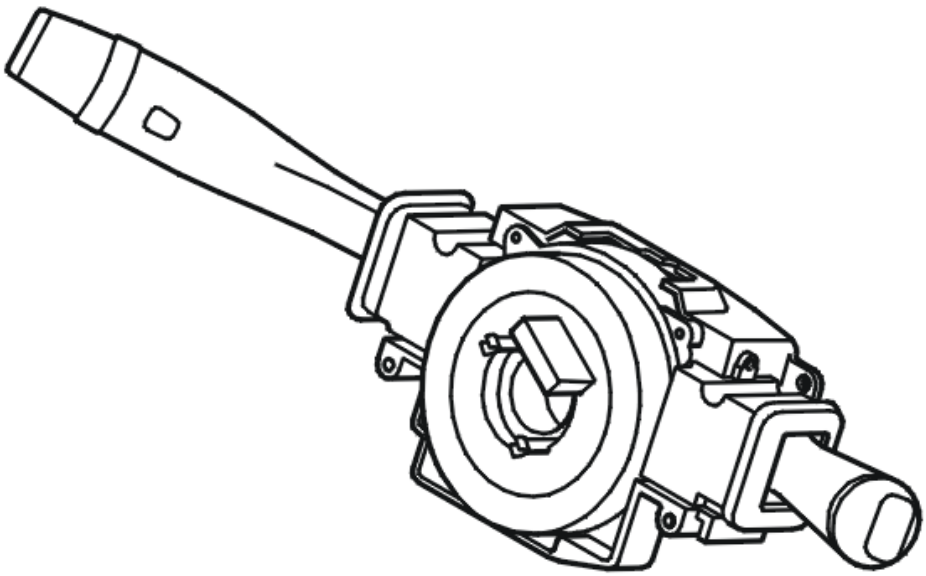

Fig. 258: Identifying Steering Wheel Control Module
Courtesy of VOLVO CARS CORPORATION

- **Continue**

  Refer to **VERIFICATION**

VERIFICATION

HINT: After carrying out the repair, check that the fault has been remedied.

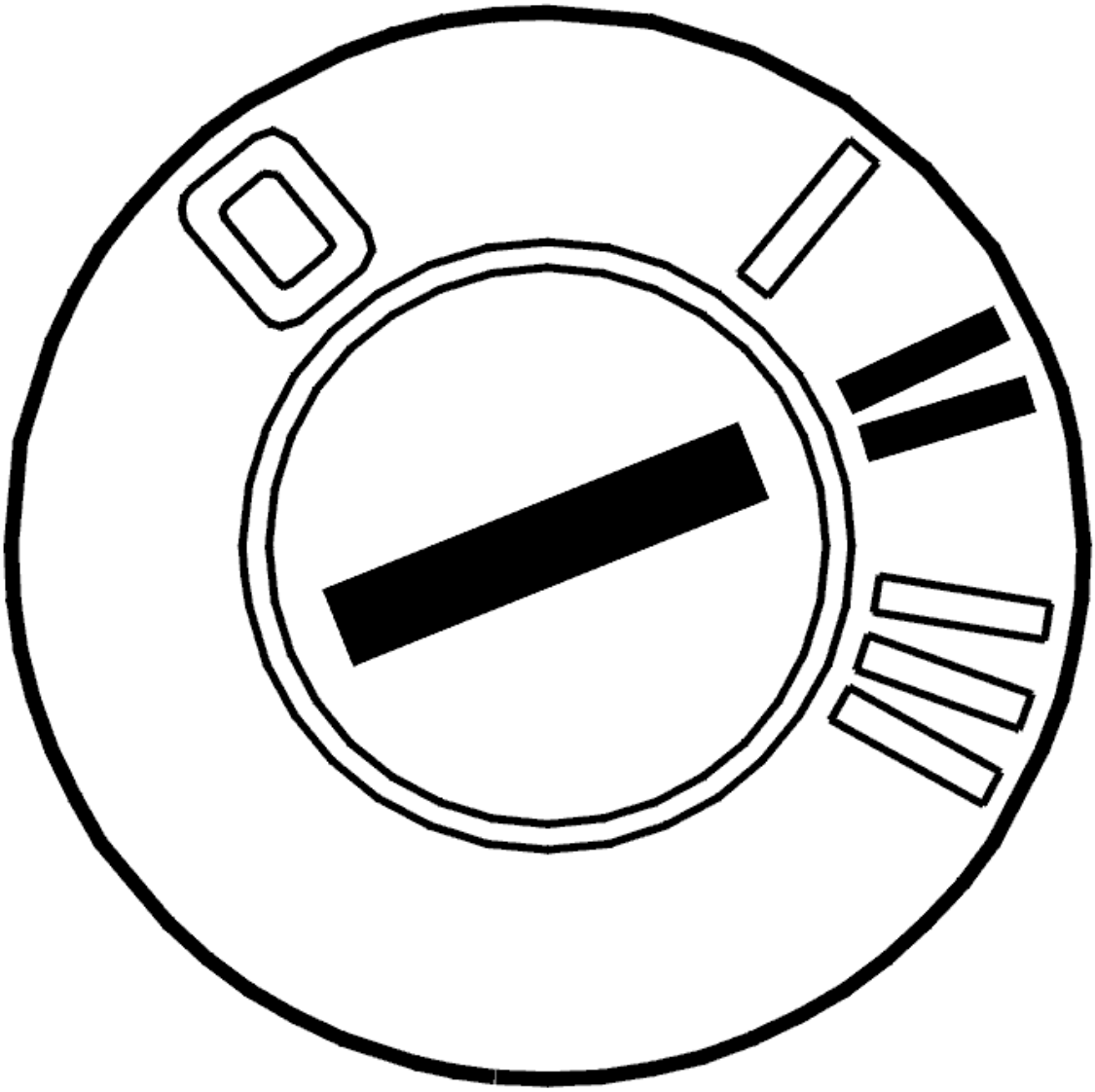

Fig. 259: Identifying Ignition ON
Courtesy of VOLVO CARS CORPORATION

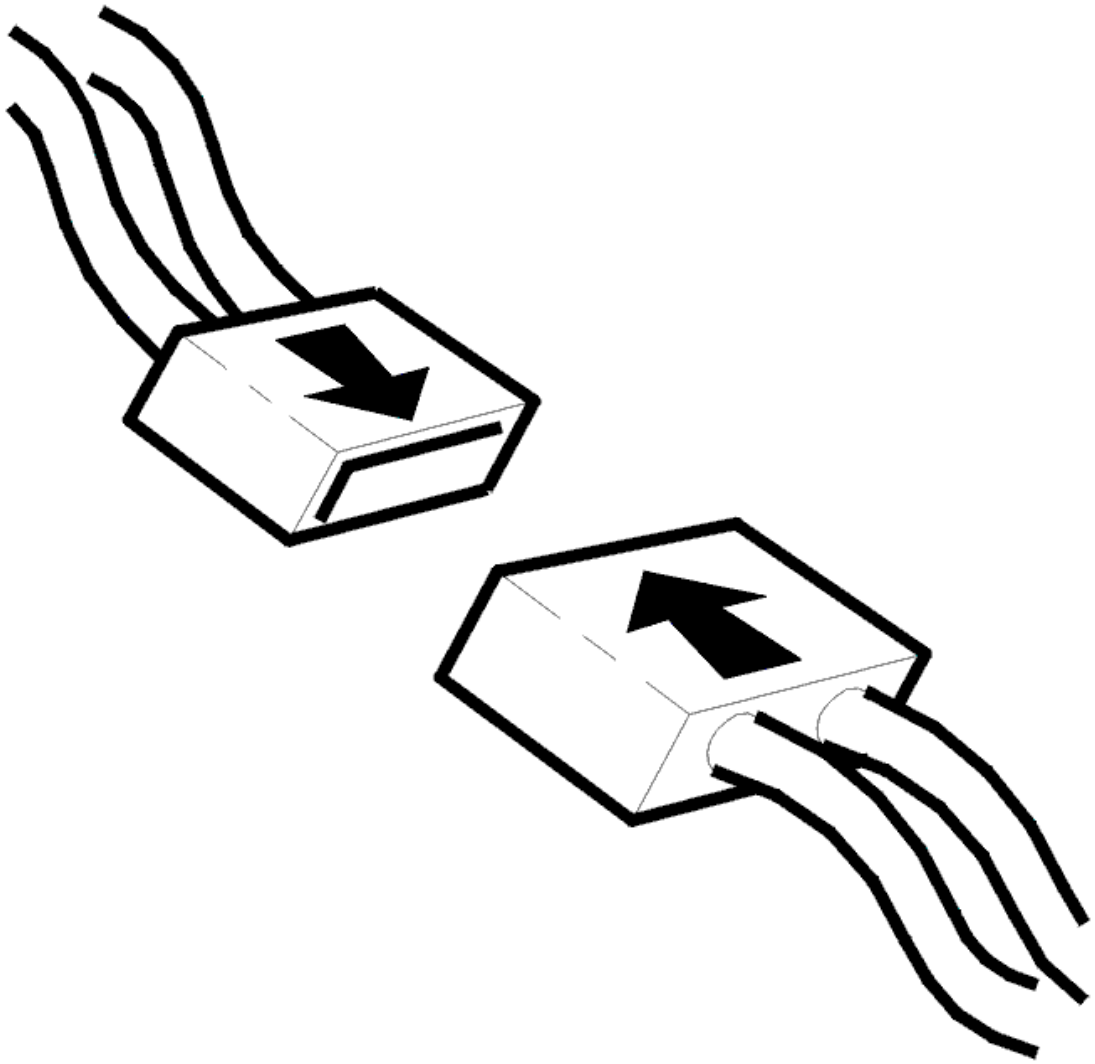

Fig. 260: Connecting Connector
Courtesy of VOLVO CARS CORPORATION

- Ignition off
- Reconnect the connectors, components, etc.
- Ignition on
- Read the supply voltage values for the Steering Angle Sensor (SAS) and the Central Electronic Module (CEM).

  Check that the voltage is approximately the same as the battery voltage.

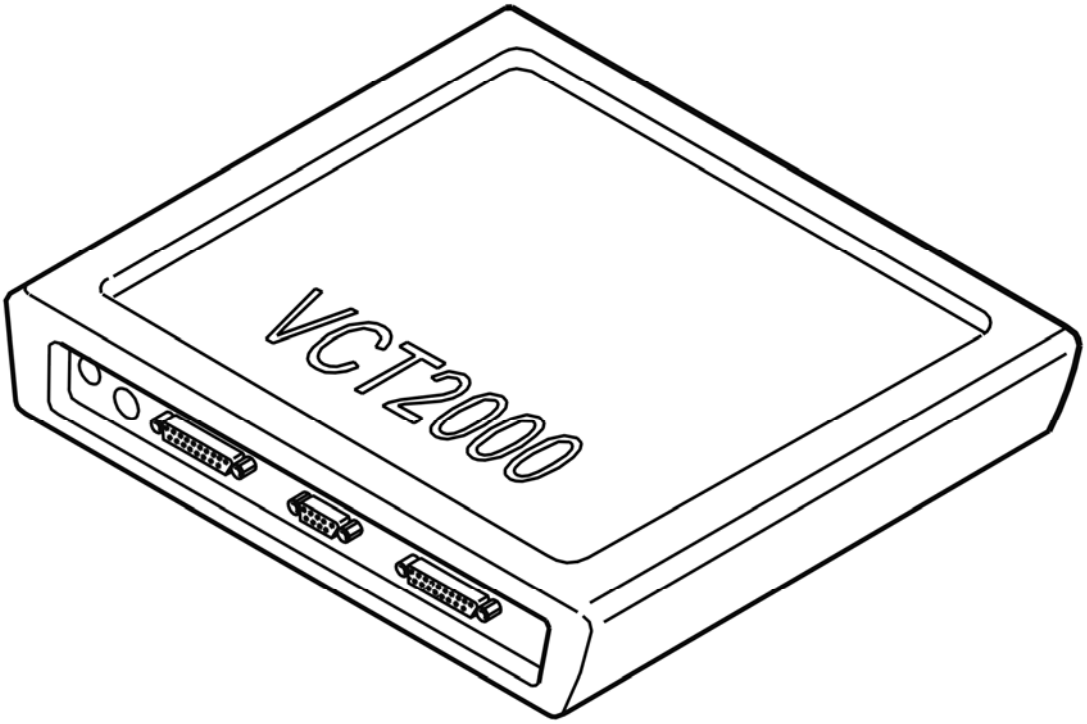

Fig. 261: Identifying VCT2000 Diagnostic Tool Symbol In VIDA
Courtesy of VOLVO CARS CORPORATION

Is the voltage OK?

- **YES**

  VERIFIED: Troubleshooting has been completed.

- **NO**

  Refer to **INFORMATION**

INFORMATION

FAULT-TRACING INFORMATION

The fault should have been detected and remedied. As this is not the case fault-tracing has failed.

Exit fault-tracing for this diagnostic trouble code (DTC) or make another attempt.

SAS-U300362: BATTERY VOLTAGE. ALGORITHM FAULT. COMPARISON FAULT (B6324S5; 2011-2012)

DIAGNOSTIC TROUBLE CODE (DTC) INFORMATION SAS-U300362

see **DIAGNOSTIC TROUBLE CODE (DTC) INFORMATION SAS-U300362**

FAULT TRACING

see **FAULT TRACING**

SAS-U300362: BATTERY VOLTAGE. ALGORITHM FAULT. COMPARISON FAULT (B8444S; 2005-2011)

DIAGNOSTIC TROUBLE CODE (DTC) INFORMATION SAS-U300362

see **DIAGNOSTIC TROUBLE CODE (DTC) INFORMATION SAS-U300362**

FAULT TRACING

see **FAULT TRACING**

SAS-XXXX: UNKNOWN DIAGNOSTIC TROUBLE CODE (DTC) FOR THE CURRENT CONTROL MODULE VERSION (2003-2004)

UNKNOWN DIAGNOSTIC TROUBLE CODE (DTC) FOR THE CURRENT CONTROL MODULE VERSION

READING OFF DIAGNOSTIC TROUBLE CODES (DTCS)

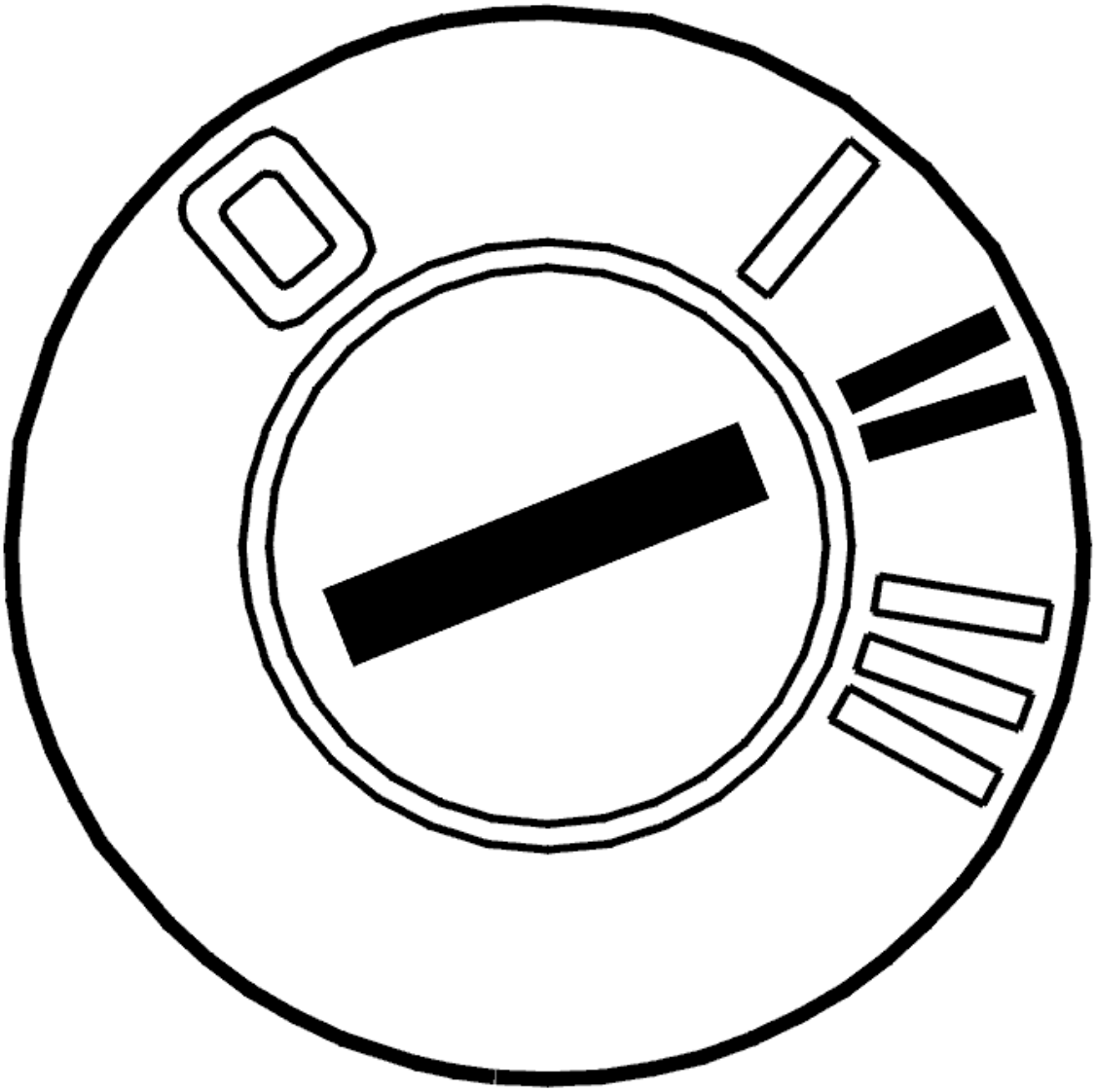

Fig. 262: Identifying Ignition ON
Courtesy of VOLVO CARS CORPORATION

- Ignition on.

  Read off the diagnostic trouble code (DTC) that is stored in the car.

  Make a note of the code. Report the code to VIDA (Volvo Scan Tool) customer support.

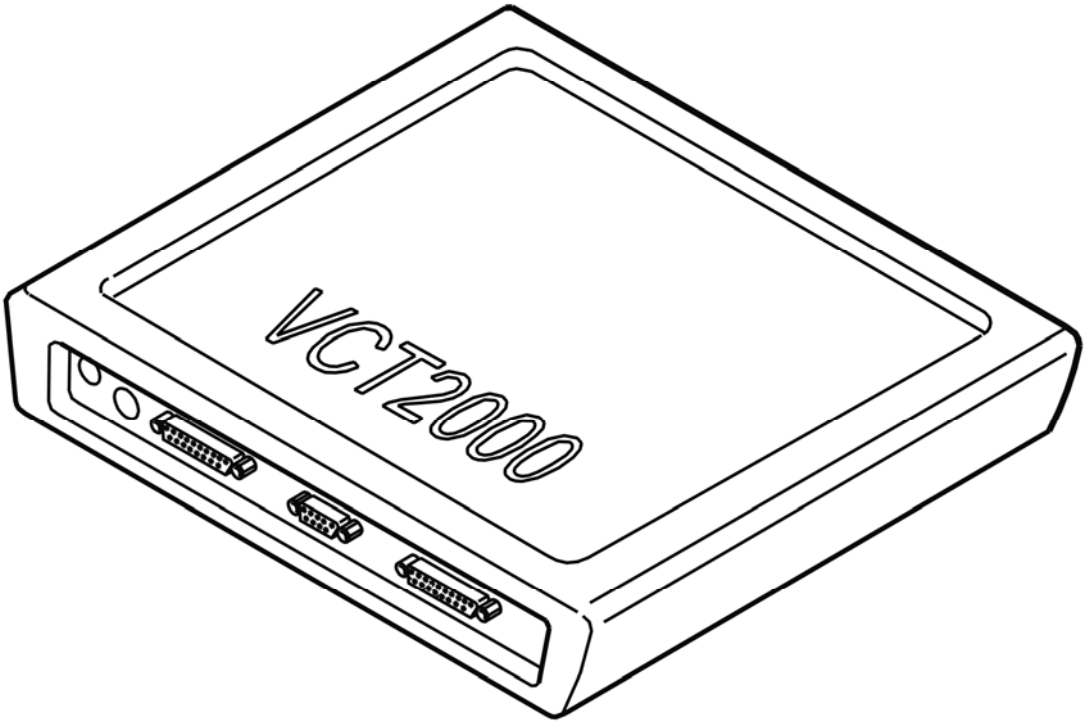

Fig. 263: Identifying VCT2000 Diagnostic Tool Symbol In VIDA
Courtesy of VOLVO CARS CORPORATION

SAS-XXXX: UNKNOWN DIAGNOSTIC TROUBLE CODE (DTC) FOR THE CURRENT CONTROL MODULE VERSION (B5254T2; 2005-2007)

UNKNOWN DIAGNOSTIC TROUBLE CODE (DTC) FOR THE CURRENT CONTROL MODULE VERSION

see **UNKNOWN DIAGNOSTIC TROUBLE CODE (DTC) FOR THE CURRENT CONTROL MODULE VERSION**

SAS-XXXX: UNKNOWN DIAGNOSTIC TROUBLE CODE (DTC) FOR THE CURRENT CONTROL MODULE VERSION (B6294T; 2005-2006)

UNKNOWN DIAGNOSTIC TROUBLE CODE (DTC) FOR THE CURRENT CONTROL MODULE VERSION

see **UNKNOWN DIAGNOSTIC TROUBLE CODE (DTC) FOR THE CURRENT CONTROL MODULE VERSION**

SAS-XXXXXX: UNSPECIFIED DIAGNOSTIC TROUBLE CODE (DTC) FOR

CURRENT CONTROL MODULE VERSION. GENERAL ELECTRICAL FAULT. SHORT CIRCUIT TO GROUND (B6324S; 2007-2010)

UNSPECIFIED DIAGNOSTIC TROUBLE CODE (DTC) FOR CURRENT CONTROL MODULE VERSION

READING OFF DIAGNOSTIC TROUBLE CODES (DTC)

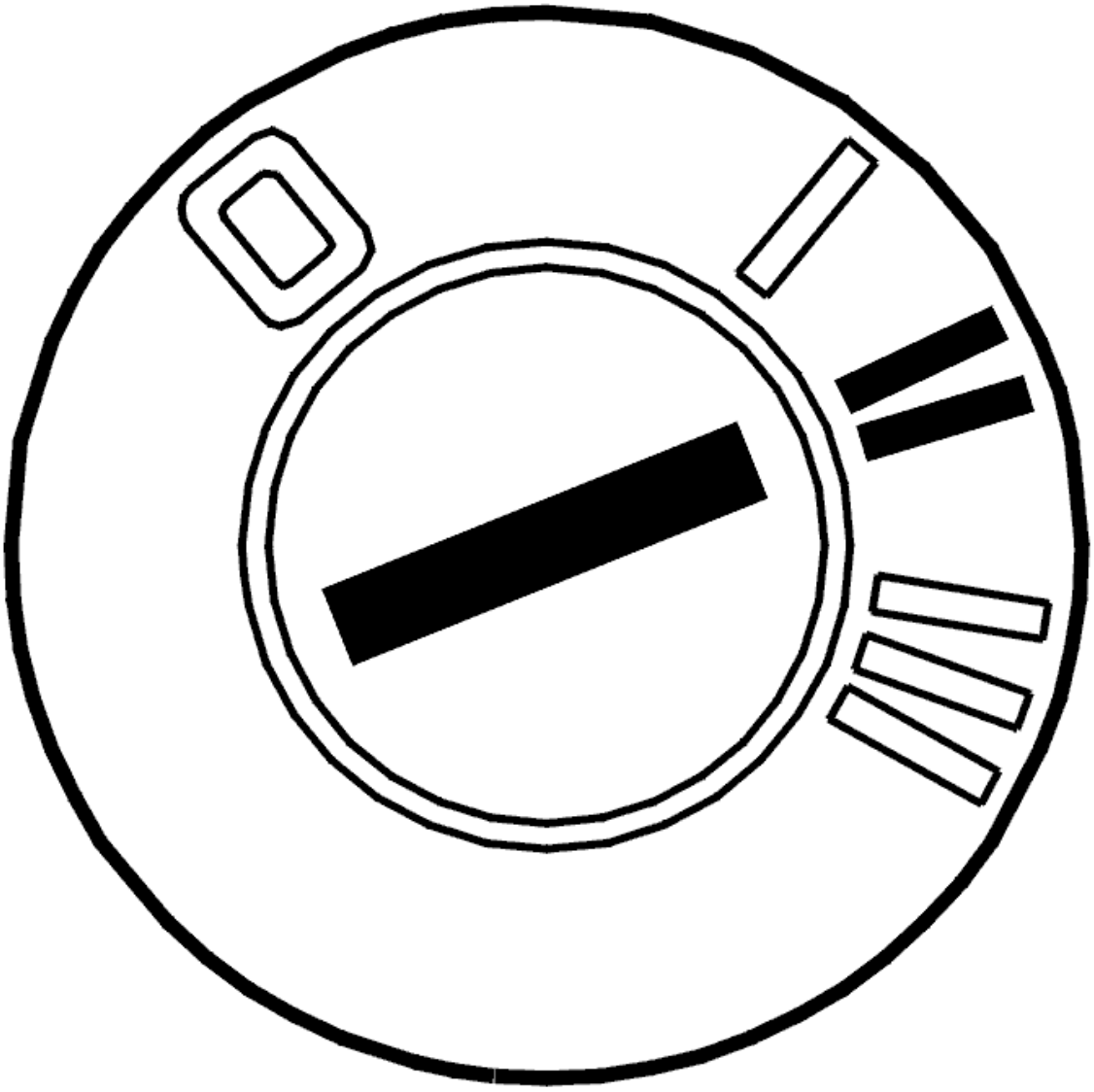

Fig. 264: Identifying Ignition ON
Courtesy of VOLVO CARS CORPORATION

- Ignition on

  Read the trouble code that is stored in the car.

Note and report the number combination to VIDA (Volvo Scan Tool) customer support.

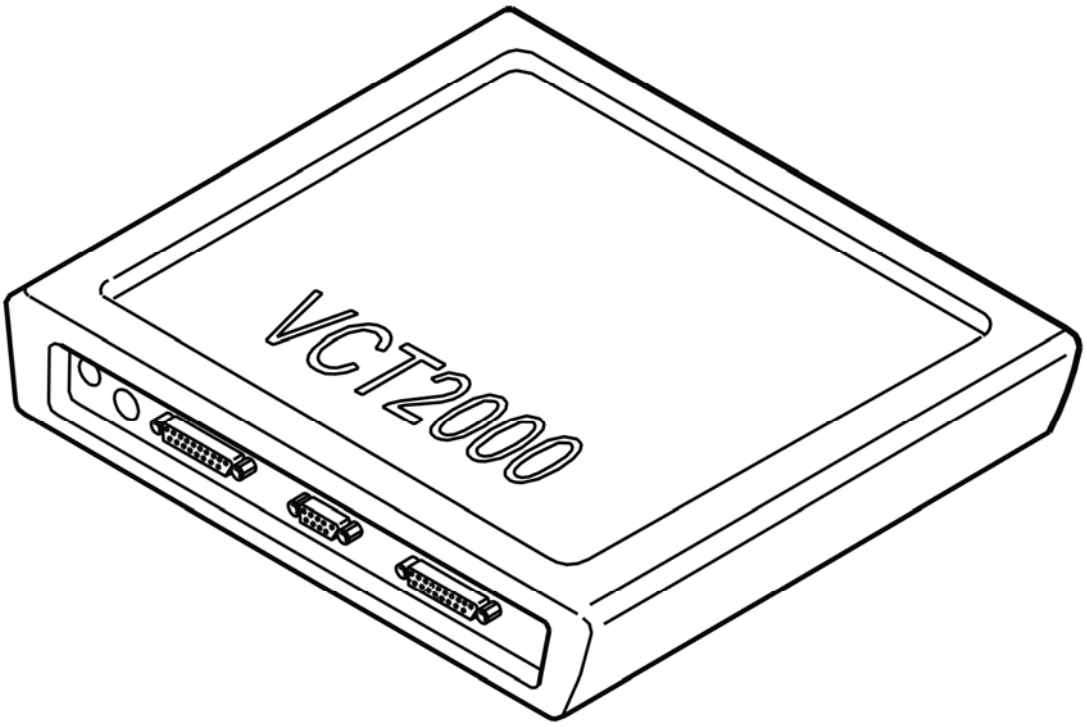

Fig. 265: Identifying VCT2000 Diagnostic Tool Symbol In VIDA
Courtesy of VOLVO CARS CORPORATION

SAS-XXXXXX: UNSPECIFIED DIAGNOSTIC TROUBLE CODE (DTC) FOR CURRENT CONTROL MODULE VERSION. GENERAL ELECTRICAL FAULT. SHORT CIRCUIT TO GROUND (B6324S5; 2011-2012)

UNSPECIFIED DIAGNOSTIC TROUBLE CODE (DTC) FOR CURRENT CONTROL MODULE VERSION

see **UNSPECIFIED DIAGNOSTIC TROUBLE CODE (DTC) FOR CURRENT CONTROL MODULE VERSION**

SAS-XXXXXX: UNSPECIFIED DIAGNOSTIC TROUBLE CODE (DTC) FOR CURRENT CONTROL MODULE VERSION. GENERAL ELECTRICAL FAULT. SHORT CIRCUIT TO GROUND (B8444S; 2005-2011)

UNSPECIFIED DIAGNOSTIC TROUBLE CODE (DTC) FOR CURRENT CONTROL MODULE VERSION

see **UNSPECIFIED DIAGNOSTIC TROUBLE CODE (DTC) FOR CURRENT CONTROL MODULE VERSION**

STEERING

Steering - Diagnostic Trouble Codes And Associated Procedures

SWM-0001: RESET BUTTON. ACTIVATED FOR LONG TIME. INTERMITTENT FAULT (2003-2004)

ACTIVATED FOR A LONG TIME. INTERMITTENT FAULT.

CHECKING THE CONTROL

The diagnostic trouble code (DTC) is stored when the control has been activated for longer than 60 seconds. No further corrective action is required if the diagnostic trouble code (DTC) does not recur.

DIAGNOSTIC TROUBLE CODE INFORMATION

SWM-0001

Condition

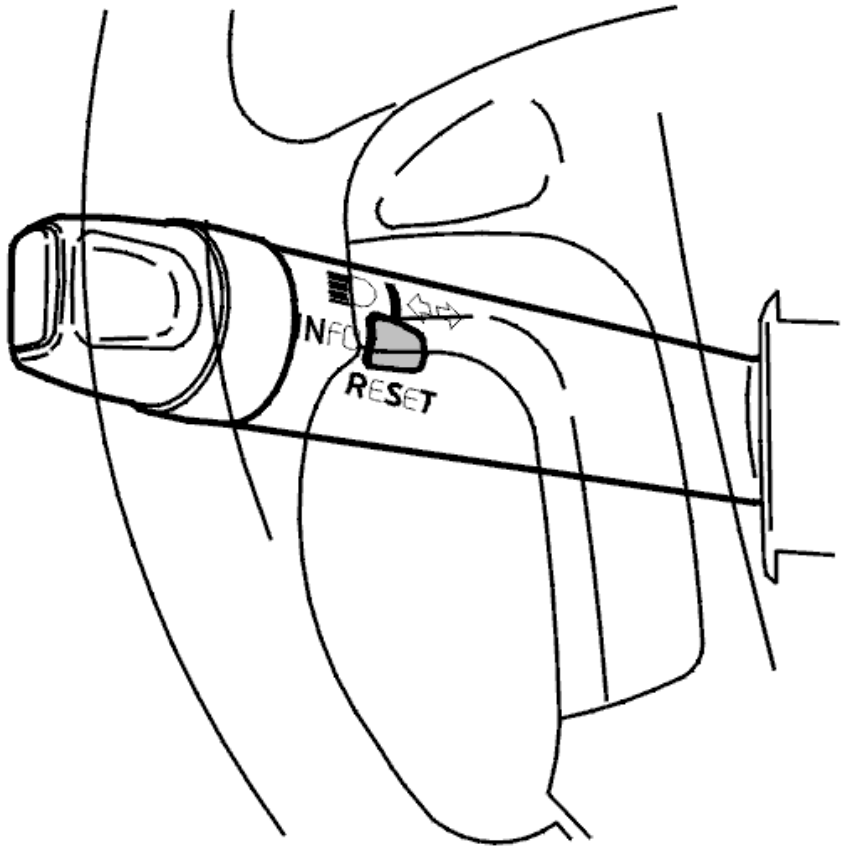

Fig. 1: Identifying Reset Button
Courtesy of VOLVO CARS CORPORATION

If the control unit registers that reset button is activated for more than 60 seconds, diagnostic trouble code SWM-0001 is displayed. When the control unit is in operation, continuous checks of reset button are done.

Substitute Value

Nothing

Possible Source

- Reset button is activated for more than 60 seconds.

Fault symptom[s]

- Parking heater does not work.
- Reset button communication with trip computer does not work.

SWM-0001: RESET BUTTON. ACTIVATED FOR LONG TIME. PERMANENT FAULT (2003-2004)

ACTIVATED TOO LONG. PERMANENT FAULT

CHECKING THE CONTROL

Check that the control does not stick in the activated position.

Replace the turn signal lamp switch.

Remedy as necessary.

Other information:

- To replace the turn signal lamp switch, see **TURN SIGNAL SWITCH, REPLACING**
- **Continue**

  Refer to **VERIFICATION**

VERIFICATION

HINT: After the repair it is necessary to check that the fault has been rectified.

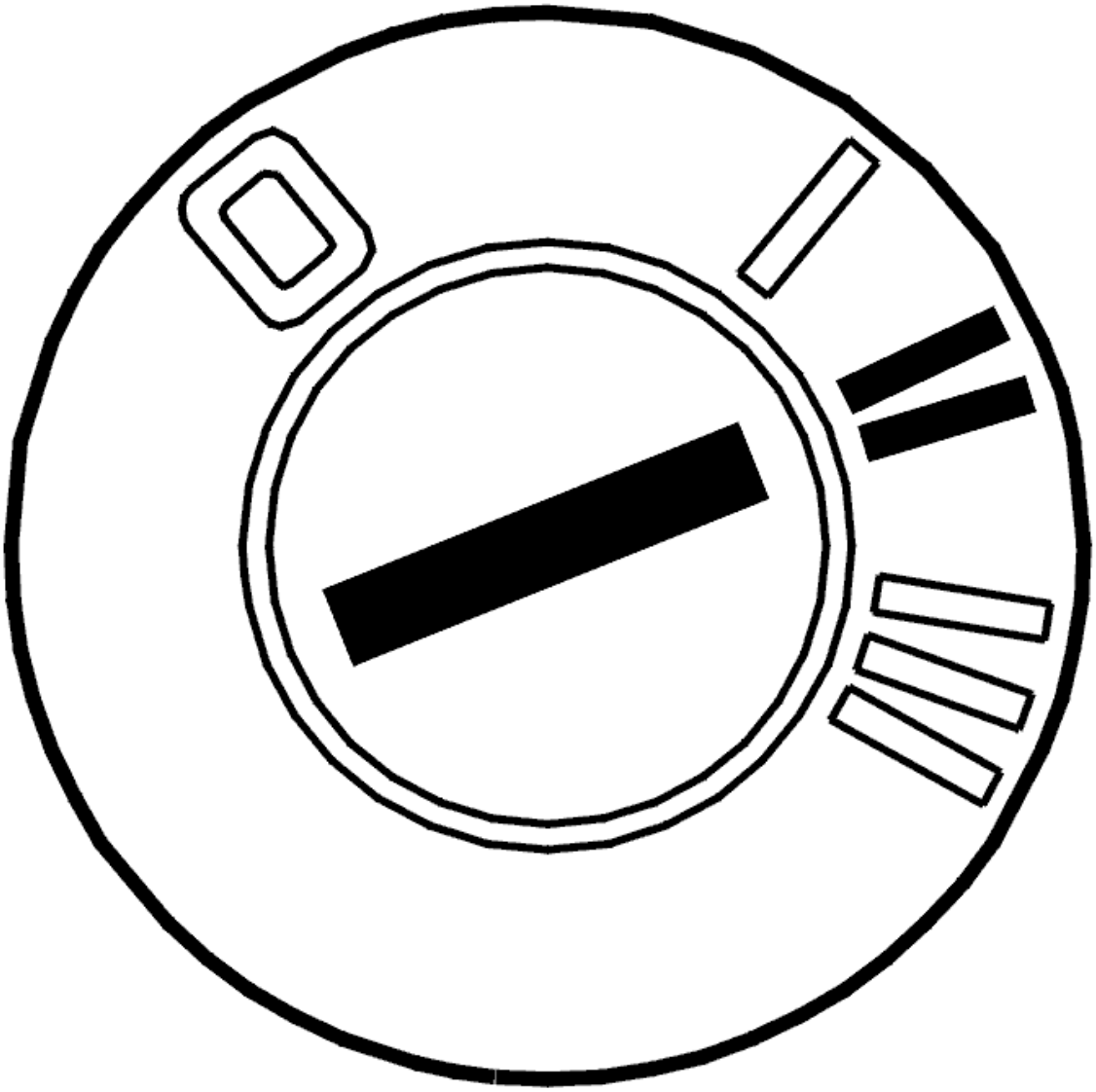

Fig. 2: Identifying Ignition ON
Courtesy of VOLVO CARS CORPORATION

- Ignition off.
- Connect the connectors, install the components, etc.
- Ignition on.

  Check that all indicator switch functions work.

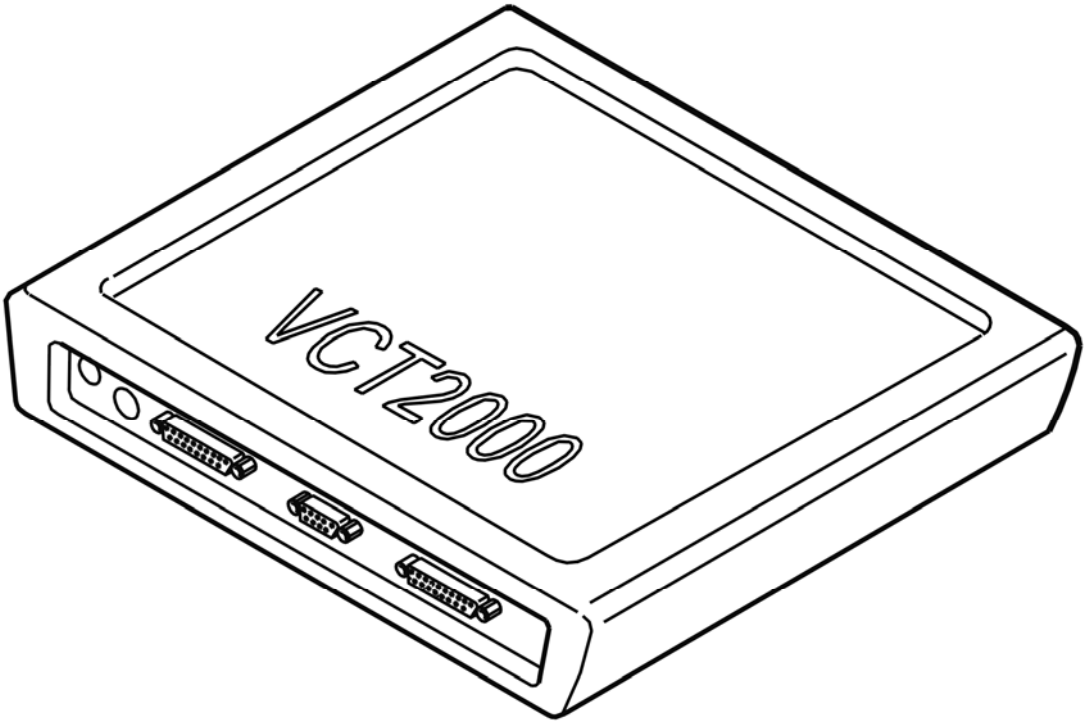

Fig. 3: Identifying VCT2000 Diagnostic Tool Symbol In VIDA
Courtesy of VOLVO CARS CORPORATION

Does switch work?

- **YES**

  VERIFIED: Troubleshooting has been completed.

- **NO**

  Refer to **INFORMATION**

INFORMATION

FAULT-TRACING INFORMATION

The fault should have been detected and remedied. As this is not the case fault-tracing has failed.

Exit fault-tracing for this diagnostic trouble code (DTC) or make another attempt.

DIAGNOSTIC TROUBLE CODE INFORMATION

see **DIAGNOSTIC TROUBLE CODE INFORMATION**

SWM-0002: READ BUTTON. ACTIVATED FOR LONG TIME. INTERMITTENT FAULT (2003-2004)

ACTIVATED FOR A LONG TIME. INTERMITTENT FAULT.

see **ACTIVATED FOR A LONG TIME. INTERMITTENT FAULT.**

DIAGNOSTIC TROUBLE CODE INFORMATION

SWM-0002

Condition

If the control unit registers that read button is activated for more than 60 seconds, diagnostic trouble code SWM-0002 is displayed. When the control unit is in operation, continuous checks of read button are done.

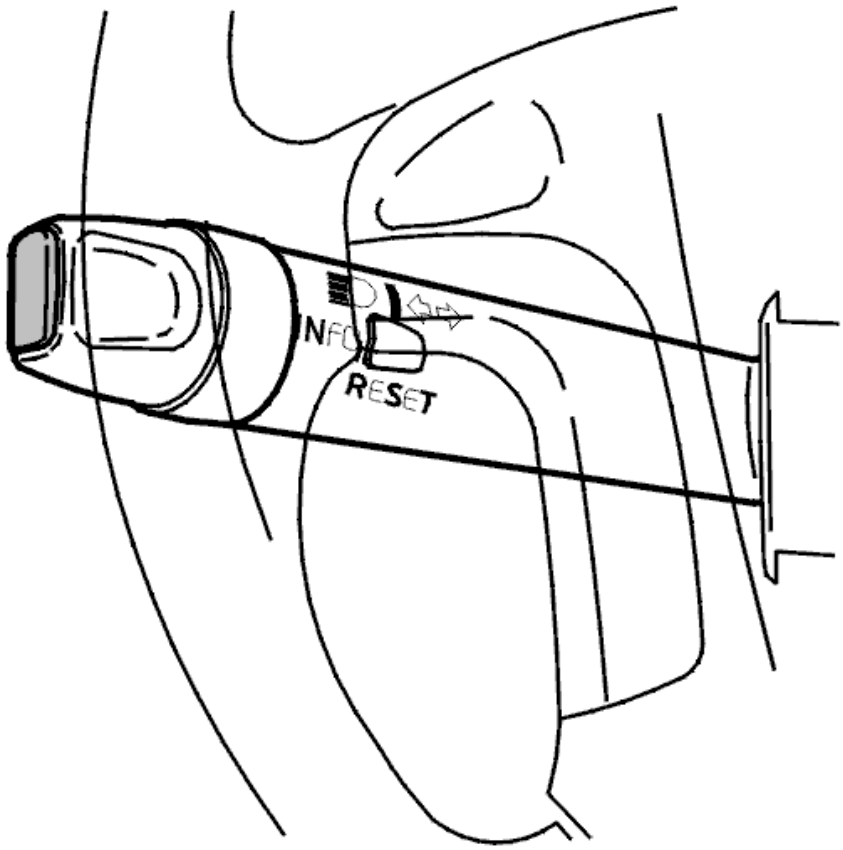

Fig. 4: Identifying Control Stalk
Courtesy of VOLVO CARS CORPORATION

Substitute Value

- Nothing.

Possible Source

- Read button is activated for more than 60 seconds.

Fault symptom[s]

- Warning message on combined instrument warning display cannot be erased
- Message in combined instrument cannot be erased.

SWM-0002: READ BUTTON. ACTIVATED FOR LONG TIME. PERMANENT FAULT (2003-2004)

ACTIVATED TOO LONG. PERMANENT FAULT

see **ACTIVATED TOO LONG. PERMANENT FAULT**

DIAGNOSTIC TROUBLE CODE INFORMATION

see **DIAGNOSTIC TROUBLE CODE INFORMATION**

SWM-0003: HIGH BEAM FLASH ACTIVATED TOO LONG. PERMANENT FAULT (2003-2004)

ACTIVATED TOO LONG. PERMANENT FAULT

see **ACTIVATED TOO LONG. PERMANENT FAULT**

DIAGNOSTIC TROUBLE CODE (DTC) INFORMATION

Condition

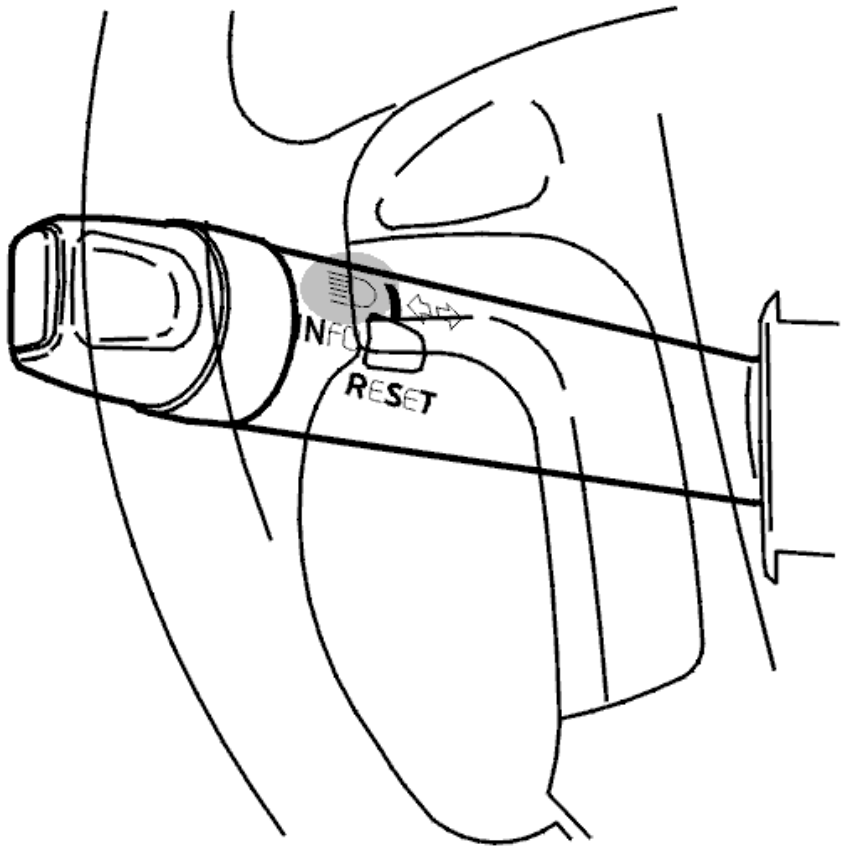

Fig. 5: Identifying Control Stalk
Courtesy of VOLVO CARS CORPORATION

The DTC is stored if the control module registers that the headlamp flash has been activated for more than 60 seconds. While the control module is active it continuously checks the headlamp flash.

Substitute Value

Nothing

Possible Source

- Headlamp flash is activated for more than 60 seconds.

Fault symptom[s]

- High beam lit constantly

SWM-0003: HEADLAMP FLASHER ACTIVATED FOR LONG TIME. INTERMITTENT FAULT (2003-2004)

ACTIVATED FOR A LONG TIME. INTERMITTENT FAULT.

see **ACTIVATED FOR A LONG TIME. INTERMITTENT FAULT.**

DIAGNOSTIC TROUBLE CODE (DTC) INFORMATION

see **DIAGNOSTIC TROUBLE CODE (DTC) INFORMATION**

SWM-0004: INDICATOR LEVER. INCORRECT COMBINATION. INTERMITTENT FAULT (2003-2004)

DIAGNOSTIC TROUBLE CODE INFORMATION

SWM-0004

Condition

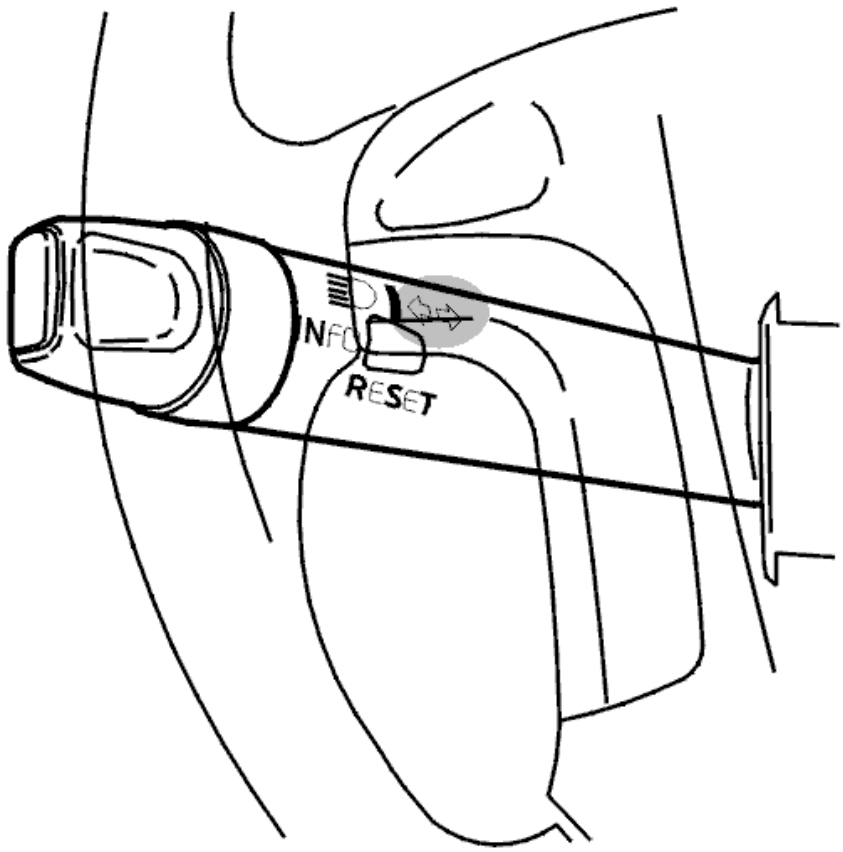

Fig. 6: Identifying Control Stalk
Courtesy of VOLVO CARS CORPORATION

If the control unit registers that left and right switches on indicator lever are activated at the same time, diagnostic trouble code is displayed. Continuous checks are done when the microprocessor is in operation and switches are activated at the same time.

Possible Source

- Left and right switches on indicator lever are activated at the same time.

Fault symptom[s]

- Indicator control does not work.

INCORRECT COMBINATION. INTERMITTENT FAULT

CHECKING INDICATOR SWITCH

The diagnostic trouble code is displayed when the control unit detects an incorrect combination of indicator switch positions. If the diagnostic trouble code is not displayed, no further action is necessary.

SWM-0004: INDICATOR LEVER. INCORRECT COMBINATION. PERMANENT FAULT (2003-2004)

DIAGNOSTIC TROUBLE CODE INFORMATION

see **DIAGNOSTIC TROUBLE CODE INFORMATION**

INVALID COMBINATION. PERMANENT FAULT

CHECKING THE TURN SIGNAL LAMP SWITCH

Replace the turn signal lamp switch because an internal fault has been found.

Other information:

- To replace the turn signal lamp switch, see **TURN SIGNAL SWITCH, REPLACING** .
- **Continue**

  Refer to **VERIFICATION**

VERIFICATION

HINT: After the repair it is necessary to check that the fault has been rectified.

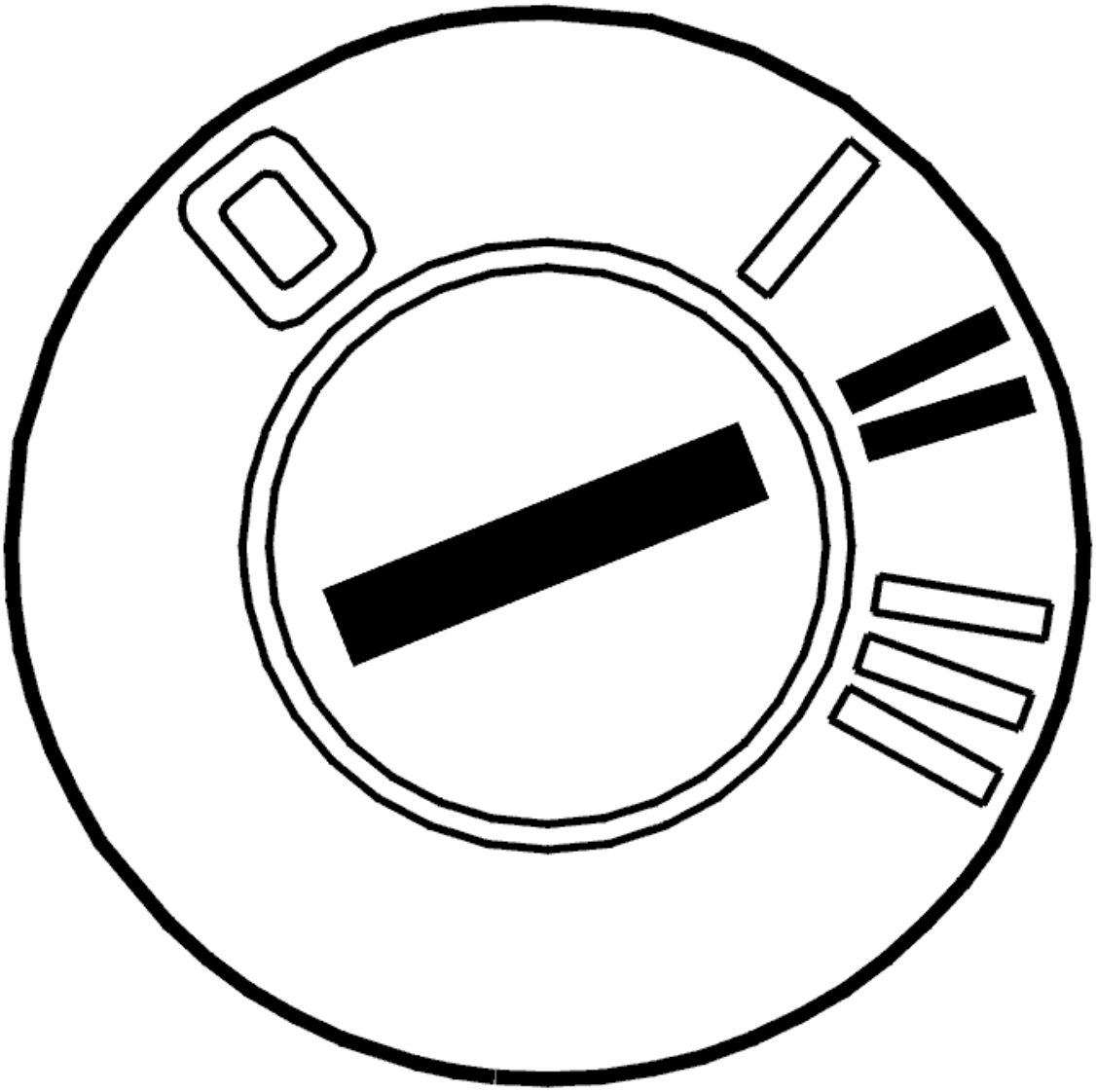

Fig. 7: Identifying Ignition ON
Courtesy of VOLVO CARS CORPORATION

- Ignition off.
- Connect the connectors, install the components, etc.
- Ignition on.

  Check that all indicator switch functions work.

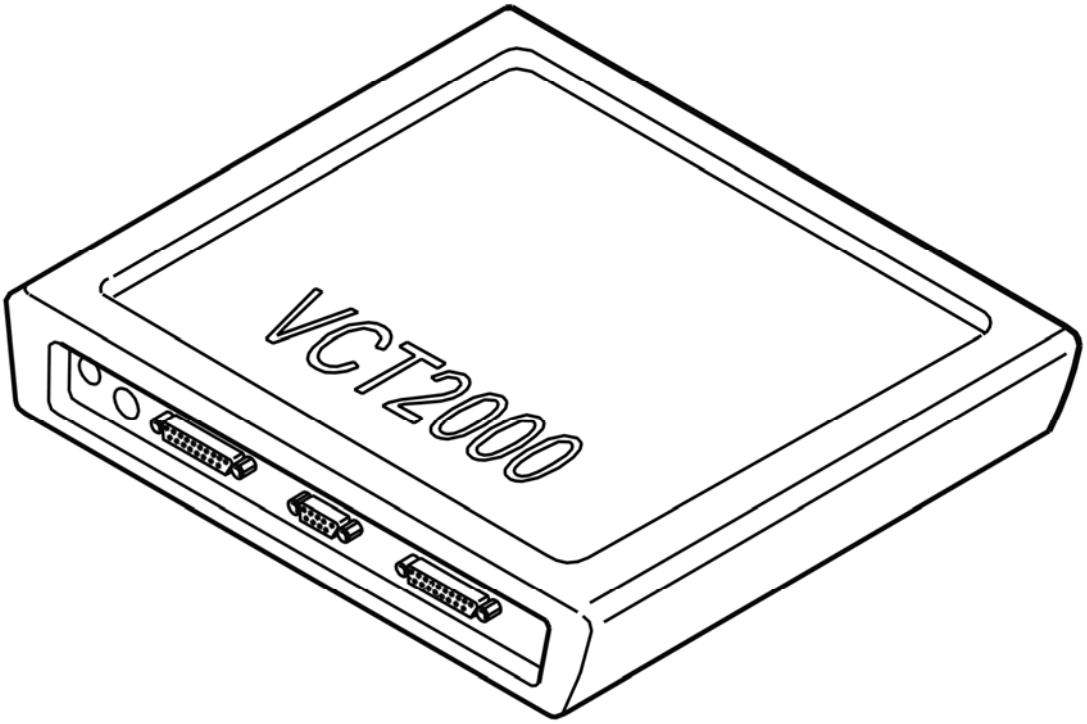

Fig. 8: Identifying VCT2000 Diagnostic Tool Symbol In VIDA
Courtesy of VOLVO CARS CORPORATION

Does switch work?

- **YES**

  VERIFIED: Troubleshooting has been completed.

- **NO**

  Refer to **INFORMATION**

INFORMATION

FAULT-TRACING INFORMATION

The fault should have been detected and remedied. As this is not the case fault-tracing has failed.

Exit fault-tracing for this diagnostic trouble code (DTC) or make another attempt.

SWM-0008: COMMUNICATION WITH STEERING WHEEL BUTTONS. SIGNAL TOO LOW. INTERMITTENT FAULT (2003-2004)

DIAGNOSTIC TROUBLE CODE INFORMATION

SWM-0008

Condition

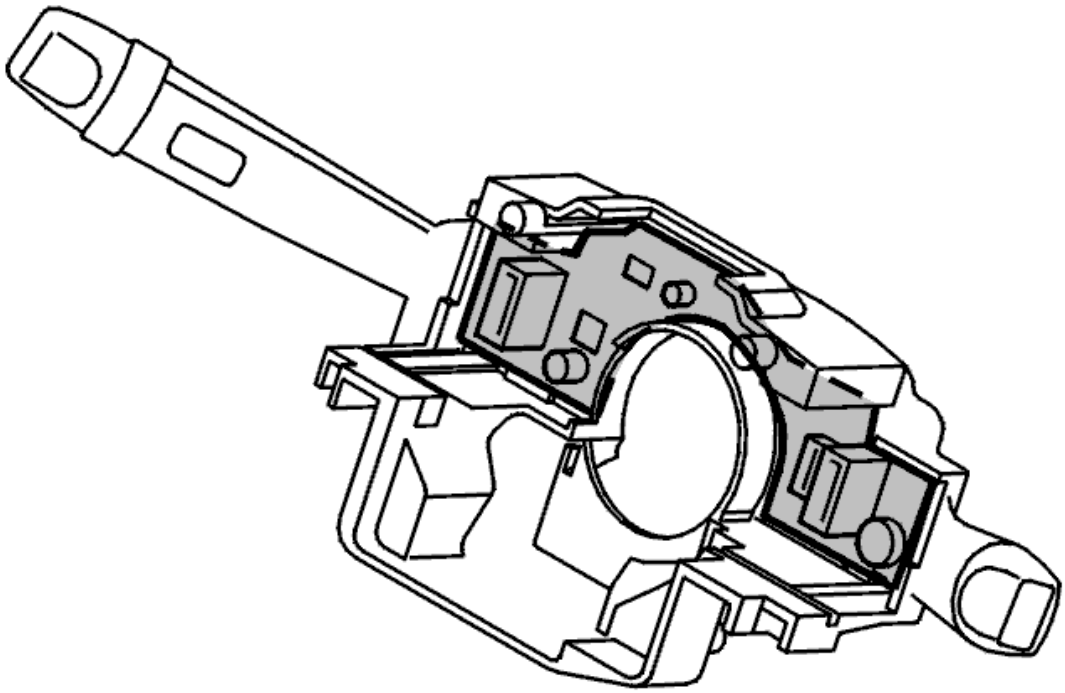

Fig. 9: Identifying Steering Wheel Module
Courtesy of VOLVO CARS CORPORATION

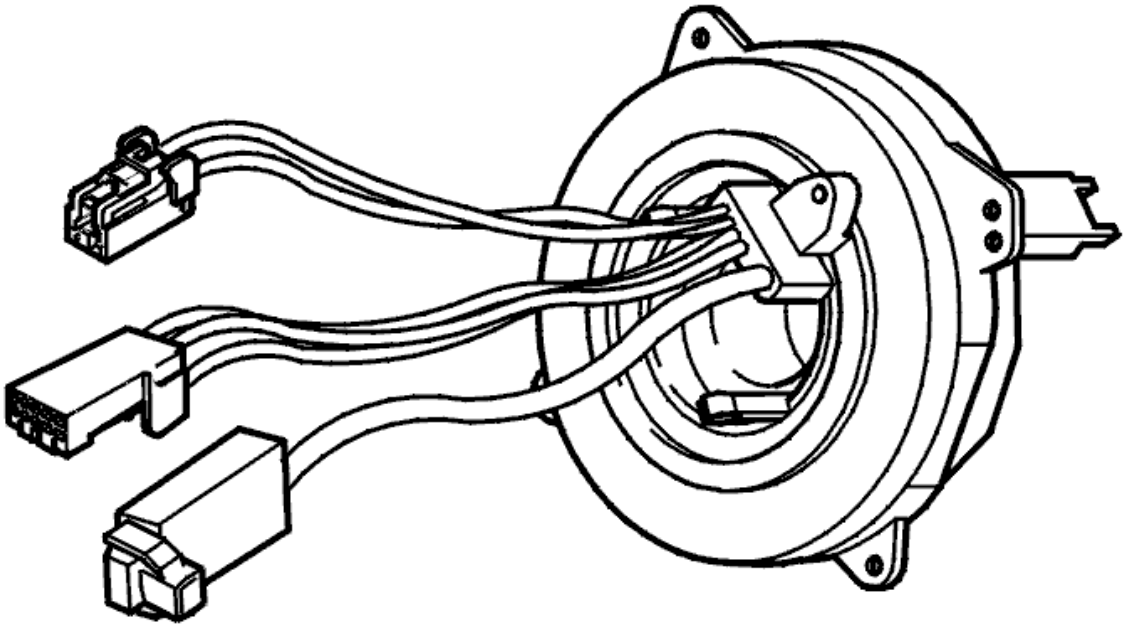

Fig. 10: Identifying Steering Wheel Angle Sensor, Cables & Connectors
Courtesy of VOLVO CARS CORPORATION

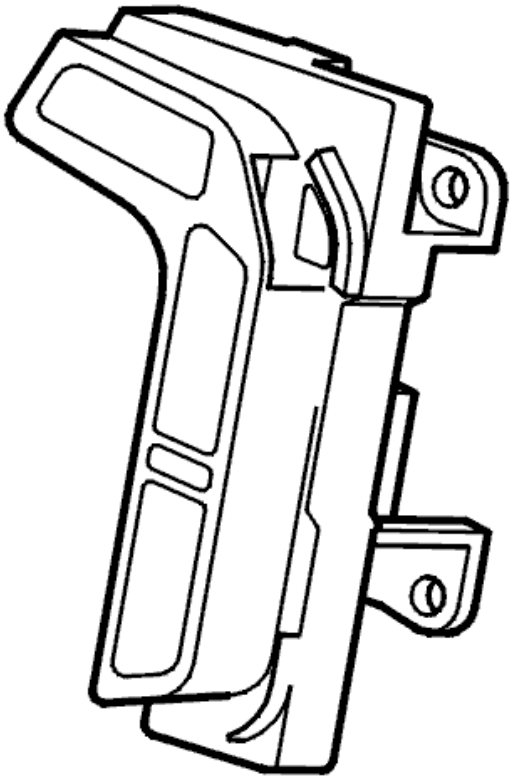

Fig. 11: Identifying Steering Wheel Switches Bracket
Courtesy of VOLVO CARS CORPORATION

If microprocessor/control unit registers that serial interface between SWM and SWS (steering wheel switches) short circuits and signal is low for more than 300ms, diagnostic trouble code SWM-0008 is displayed.

Substitute Value

Cruise-control function does not work when engine is running.

Possible Source

- Serial interface between SWM and SWS (steering wheel switches) short circuited.

Fault symptom[s]

- Cruise control not working at all
- Radio steering wheel buttons do not work
- RTI steering wheel buttons do not work
- Telephone steering wheel buttons do not work.

SIGNAL TOO LOW. INTERMITTENT FAULT

TROUBLE-SHOOTING INFORMATION

The diagnostic trouble code is displayed if there is a fault in internal communication. If the diagnostic trouble code is not displayed, no further action is necessary.

SWM-0008: COMMUNICATION WITH STEERING WHEEL BUTTONS. SIGNAL TOO LOW. PERMANENT FAULT (2003-2004)

DIAGNOSTIC TROUBLE CODE INFORMATION

see **DIAGNOSTIC TROUBLE CODE INFORMATION**

SIGNAL TOO LOW. PERMANENT FAULT

CHECKING THE CONTACT REEL

Check that the upper connector on the switch for the cruise control is correctly connected.

Disconnect the upper switch on the switch for the cruise control. Take voltage readings between terminals #B1 (26) and #B3 (28) (on the cable connector). The fault is probably in the contact reel if the voltage is 0 V. The fault is probably in the switch for the cruise control if the voltage is approximately 12 V.

Remedy as necessary.

Other information:

- To access or replace the cruise control switch, see **KEYPAD STEERING WHEEL, REPLACING**
- To replace the contact reel, see **CONTACT REEL, REPLACEMENT**
- To access or replace the steering wheel module (SWM), see **STEERING WHEEL MODULE (SWM), REPLACING**
- To connect the breakout box, see **CONNECTING THE BREAKOUT BOX** .

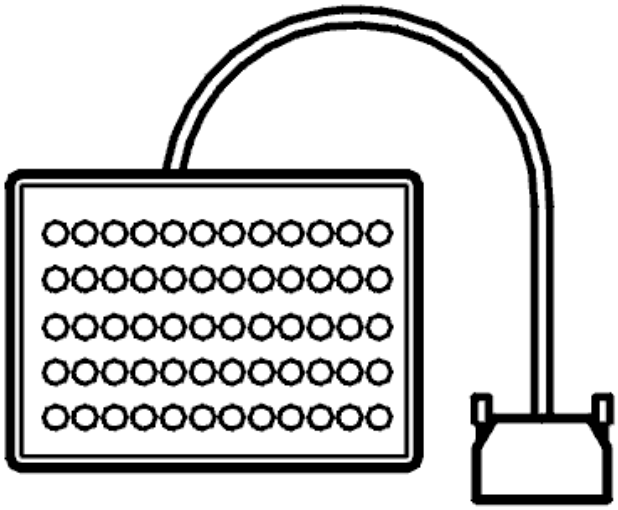

Fig. 12: Breakout Box
Courtesy of VOLVO CARS CORPORATION

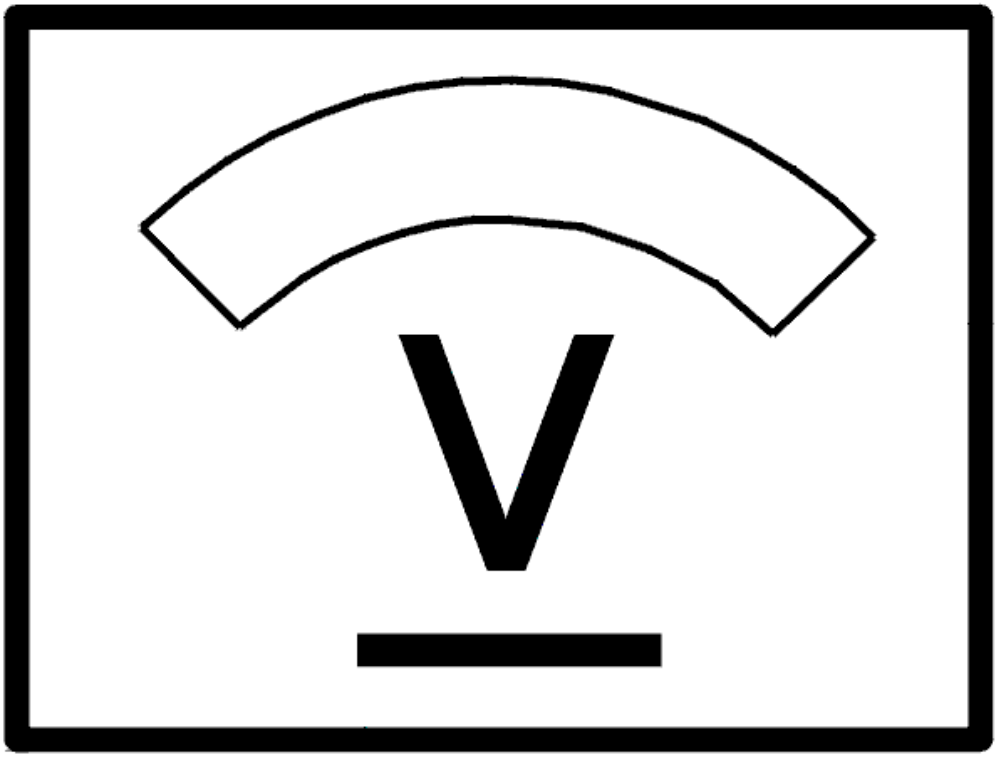

Fig. 13: Identifying Voltage Display
Courtesy of VOLVO CARS CORPORATION

- **Continue**

  Refer to **VERIFICATION**

VERIFICATION

HINT: After the repair it is necessary to check that the fault has been rectified.

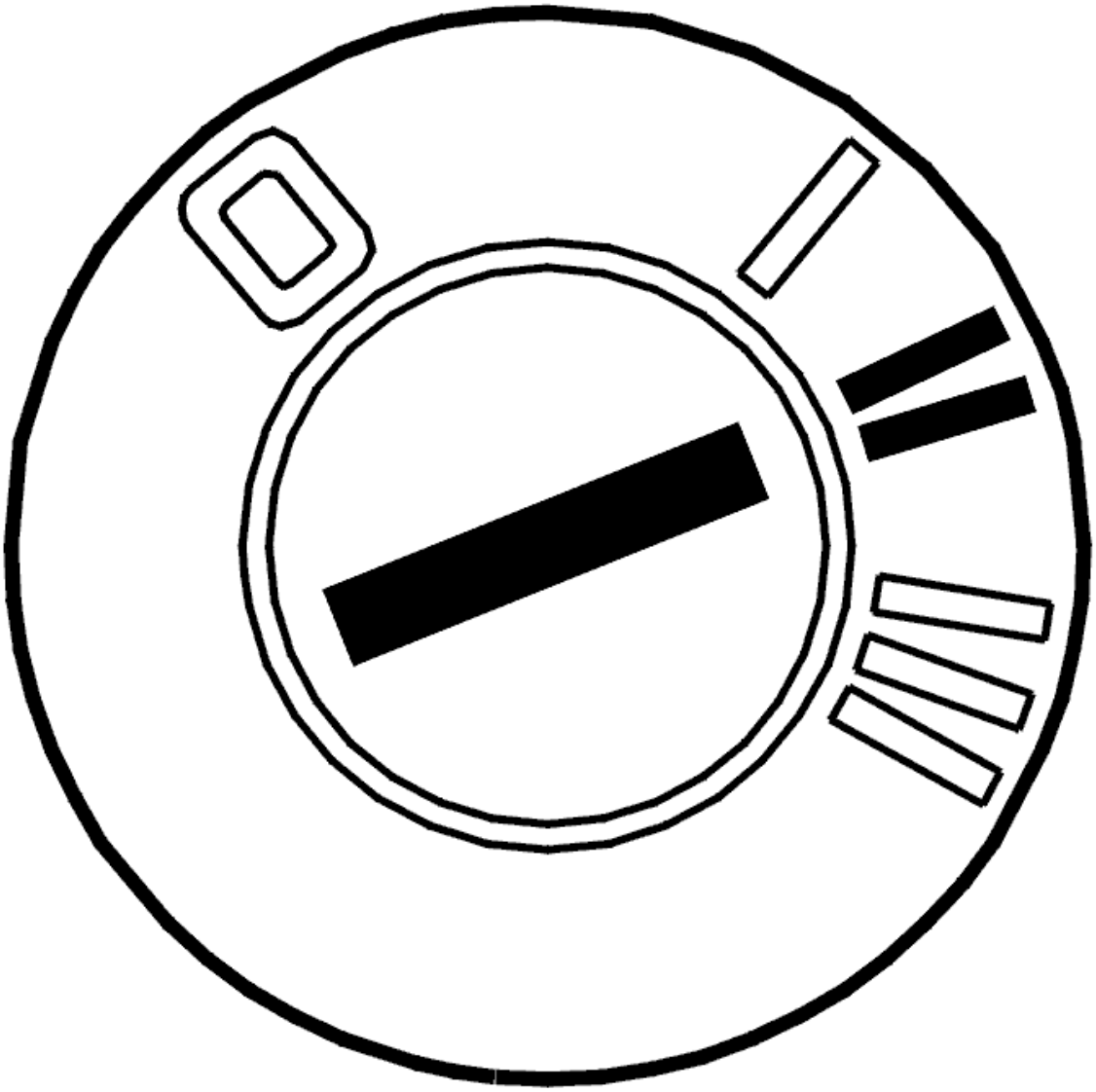

Fig. 14: Identifying Ignition ON
Courtesy of VOLVO CARS CORPORATION

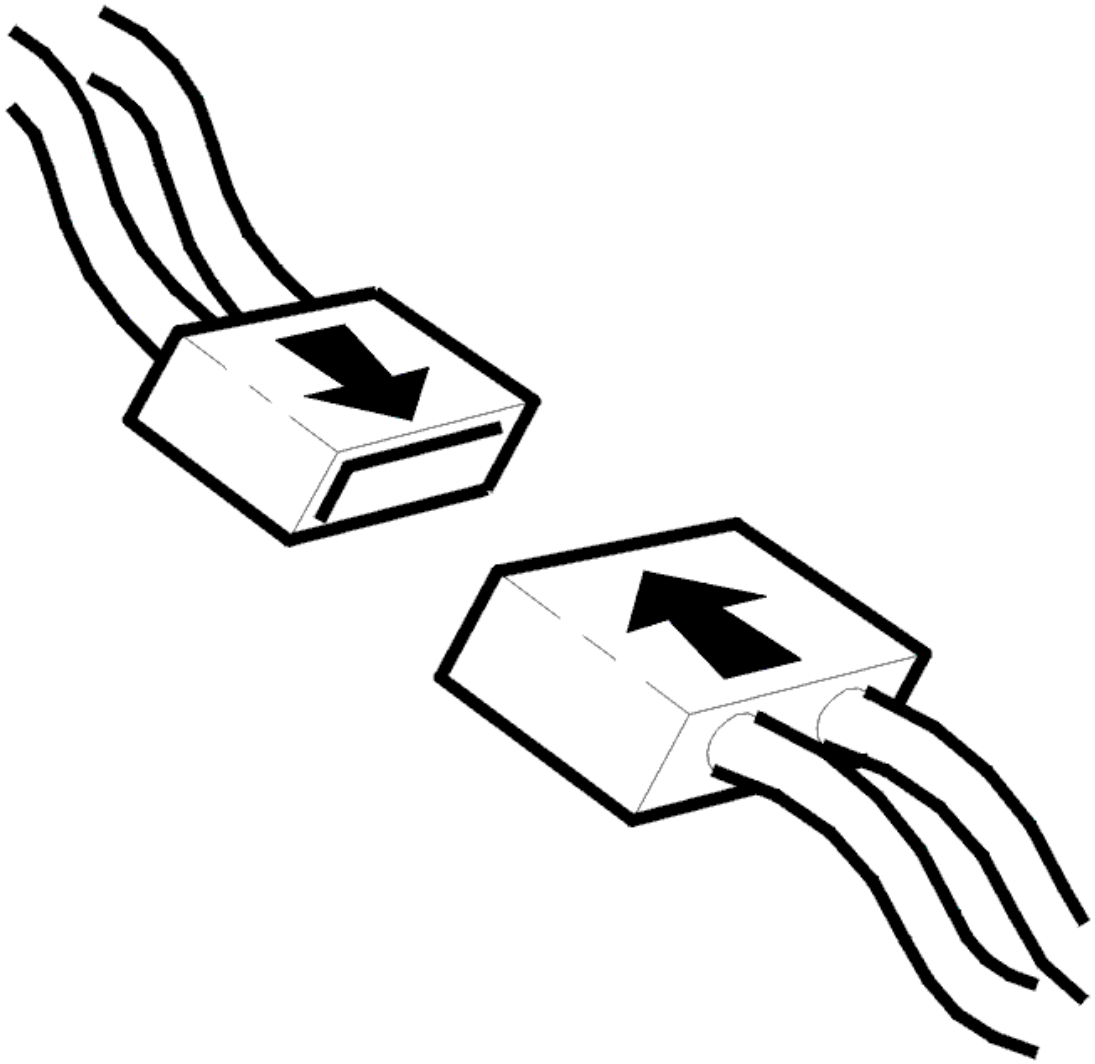

Fig. 15: Connecting Connector
Courtesy of VOLVO CARS CORPORATION

- Ignition off.
- Connect connectors, install components, etc.
- Ignition on.

  Check that the relevant functions of the switch units work.

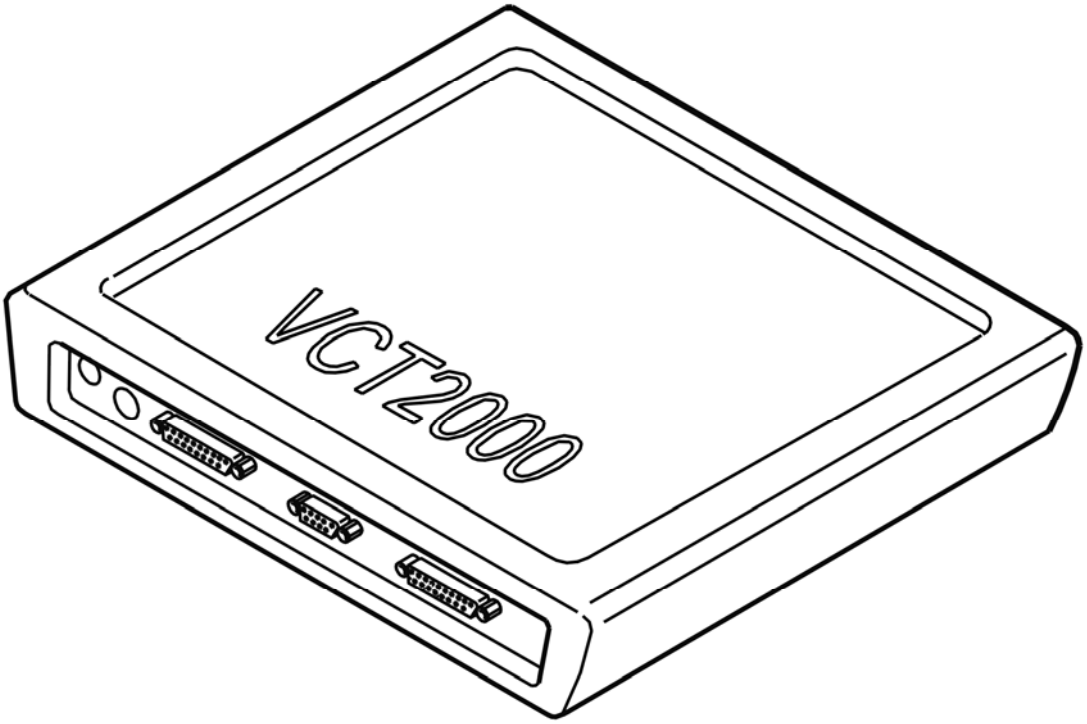

Fig. 16: Identifying VCT2000 Diagnostic Tool Symbol In VIDA
Courtesy of VOLVO CARS CORPORATION

Do buttons work?

- **YES**

  VERIFIED: Troubleshooting has been completed.

- **NO**

  Refer to **INFORMATION**

INFORMATION

FAULT-TRACING INFORMATION

The fault should have been detected and remedied. As this is not the case fault-tracing has failed.

Exit fault-tracing for this diagnostic trouble code (DTC) or make another attempt.

SWM-0009: COMMUNICATION WITH STEERING WHEEL BUTTONS. SIGNAL TOO HIGH. INTERMITTENT FAULT (2003-2004)

DIAGNOSTIC TROUBLE CODE (DTC) INFORMATION

SWM-0009

Condition

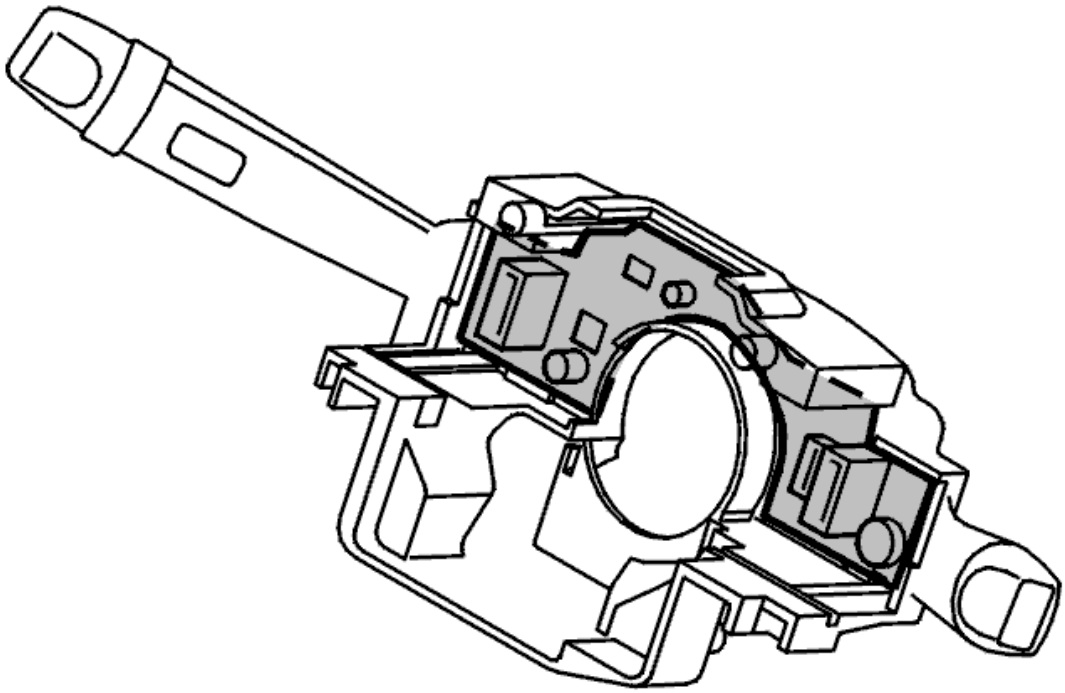

Fig. 17: Identifying Steering Wheel Module
Courtesy of VOLVO CARS CORPORATION

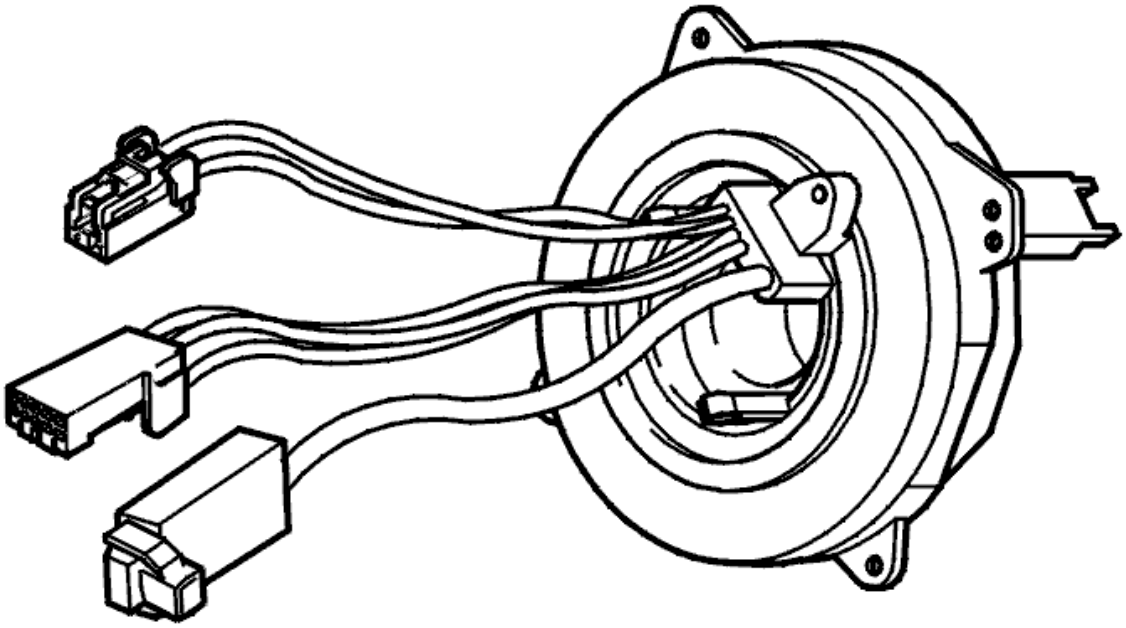

Fig. 18: Identifying Steering Wheel Angle Sensor, Cables & Connectors
Courtesy of VOLVO CARS CORPORATION

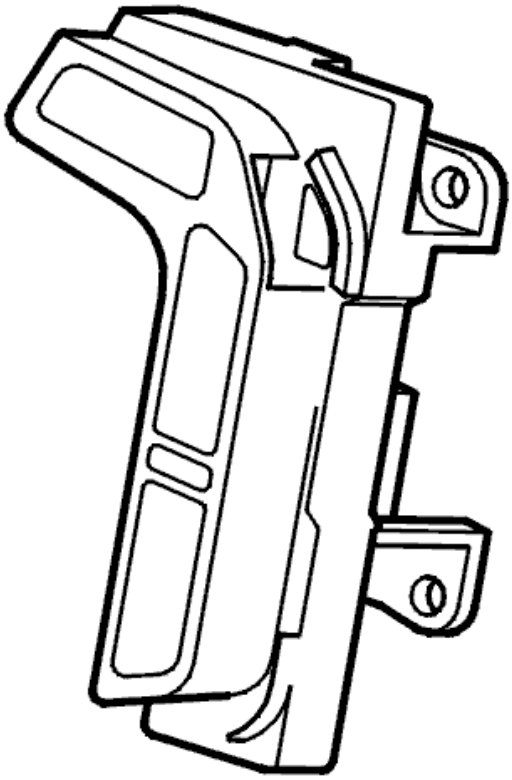

Fig. 19: Identifying Steering Wheel Switches Bracket
Courtesy of VOLVO CARS CORPORATION

Diagnostic trouble code (DTC) SWM-0009 is stored if the micro-processor / control module registers that the serial interface between the steering wheel module and the steering wheel switches is short circuited to 12 V and the signal is high for more than 300 ms.

Substitute Value

The cruise control is deactivated for the rest of the journey.

Possible Source

- The serial interface between the steering wheel module and the steering wheel switches is short circuited to voltage.

Fault symptom[s]

- Cruise control does not function at all.
- The steering wheel radio controls do not function.
- The steering wheel RTI controls do not function.
- The steering wheel carphone controls do not function.

SIGNAL TOO HIGH. INTERMITTENT FAULT

FAULT-TRACING INFORMATION

The diagnostic trouble code (DTC) is stored when there is a fault in the internal communication. No further corrective action is required if the diagnostic trouble code (DTC) does not recur.

SWM-0009: COMMUNICATION WITH STEERING WHEEL BUTTONS. SIGNAL TOO HIGH. PERMANENT FAULT (2003-2004)

DIAGNOSTIC TROUBLE CODE (DTC) INFORMATION

see **DIAGNOSTIC TROUBLE CODE (DTC) INFORMATION**

SIGNAL TOO HIGH. PERMANENT FAULT

CHECKING THE CONTACT REEL

Check that the upper connector on the switch for the cruise control is correctly connected.

Disconnect the upper switch on the switch for the cruise control. Take voltage readings between terminals #B1 (26) and #B3 (28) (on the cable connector). The fault is probably in the contact reel if the voltage is 0 V. The fault is probably in the switch for the cruise control if the voltage is approximately 12 V.

Remedy as necessary.

Other information:

- To access or replace the cruise control switch, see **KEYPAD STEERING WHEEL, REPLACING**
- To replace the contact reel, see **CONTACT REEL, REPLACEMENT**
- To access or replace the steering wheel module (SWM), see **STEERING WHEEL MODULE (SWM), REPLACING**
- To connect the breakout box, see **CONNECTING THE BREAKOUT BOX**

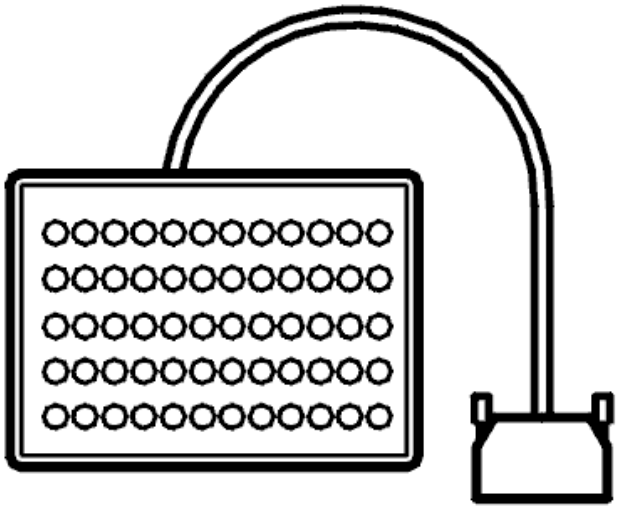

Fig. 20: Breakout Box
Courtesy of VOLVO CARS CORPORATION

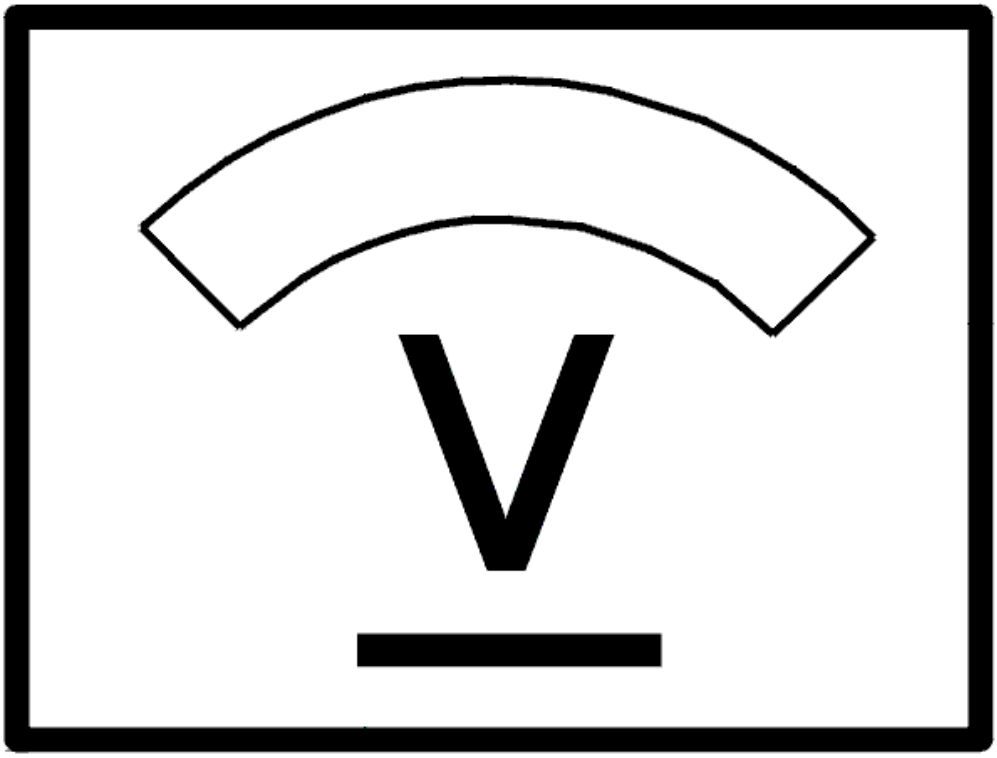

Fig. 21: Identifying Voltage Display
Courtesy of VOLVO CARS CORPORATION

- **Continue**

  Refer to **VERIFICATION**

VERIFICATION

HINT: After the repair it is necessary to check that the fault has been rectified.

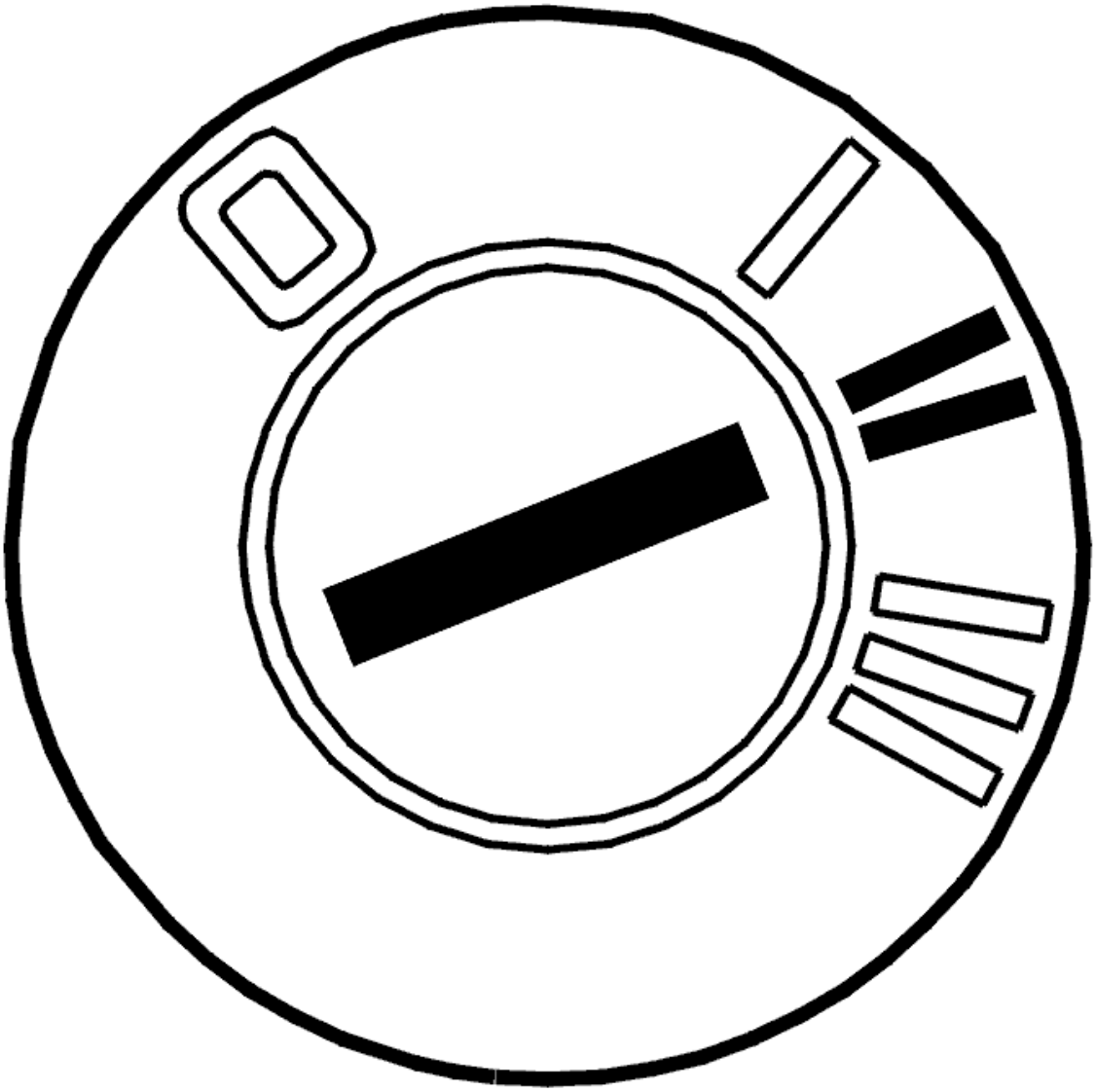

Fig. 22: Identifying Ignition ON
Courtesy of VOLVO CARS CORPORATION

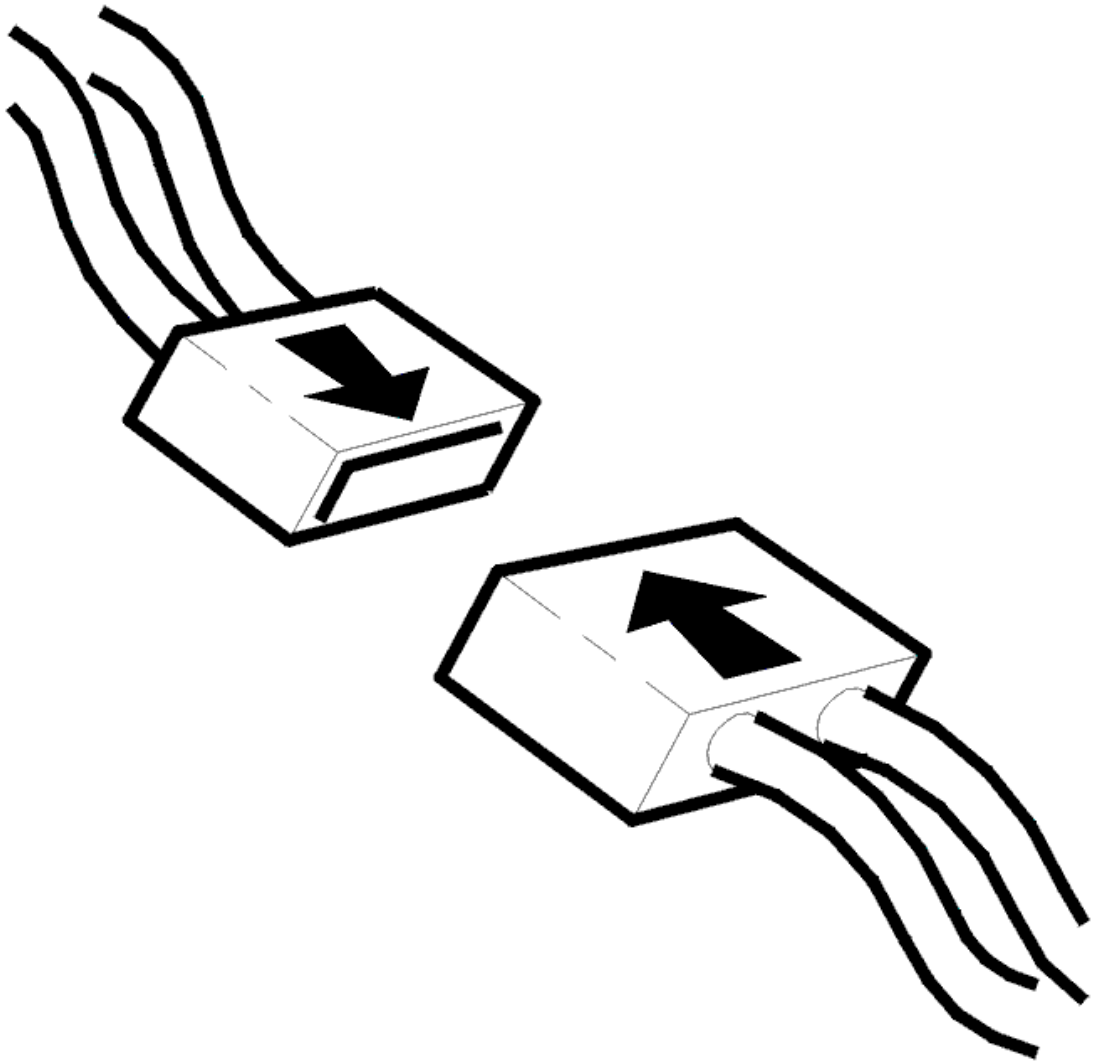

Fig. 23: Connecting Connector
Courtesy of VOLVO CARS CORPORATION

- Ignition off.
- Connect connectors, install components, etc.
- Ignition on.

  Check that the relevant functions of the switch units work.

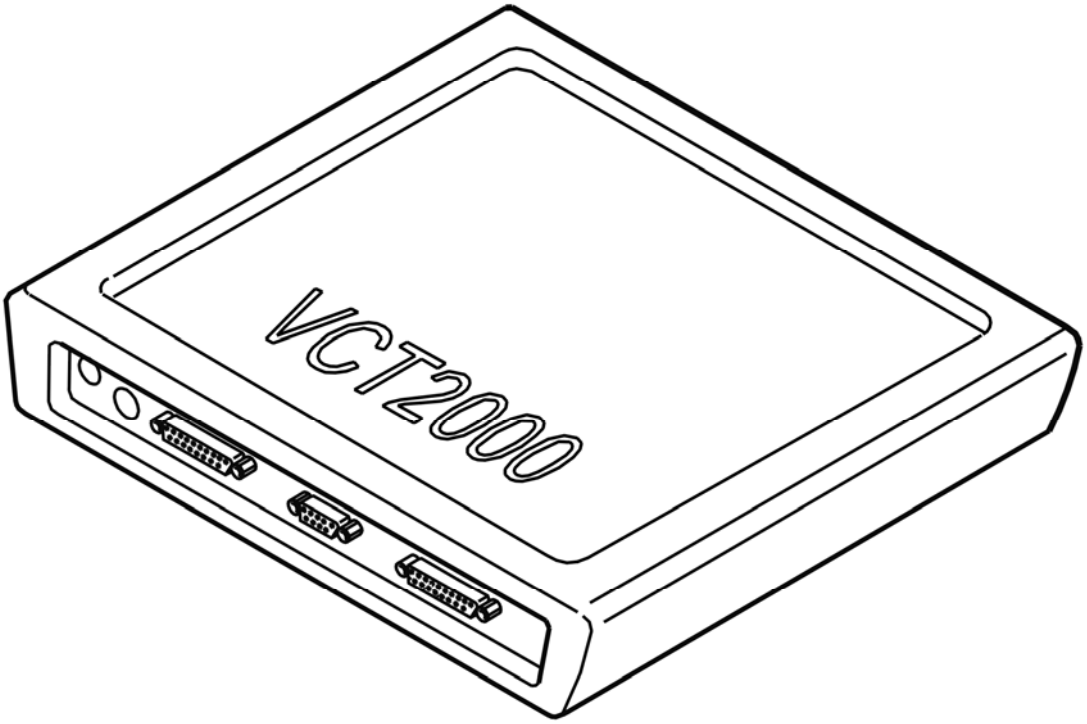

Fig. 24: Identifying VCT2000 Diagnostic Tool Symbol In VIDA
Courtesy of VOLVO CARS CORPORATION

Do buttons work?

- **YES**

  VERIFIED: Troubleshooting has been completed.

- **NO**

  Refer to **INFORMATION**

INFORMATION

FAULT-TRACING INFORMATION

The fault should have been detected and remedied. As this is not the case fault-tracing has failed.

Exit fault-tracing for this diagnostic trouble code (DTC) or make another attempt.

SWM-000A: COMMUNICATION WITH STEERING WHEEL BUTTONS. SIGNAL MISSING. INTERMITTENT FAULT (2003-2004)

DIAGNOSTIC TROUBLE CODE INFORMATION

SWM-000A

Condition

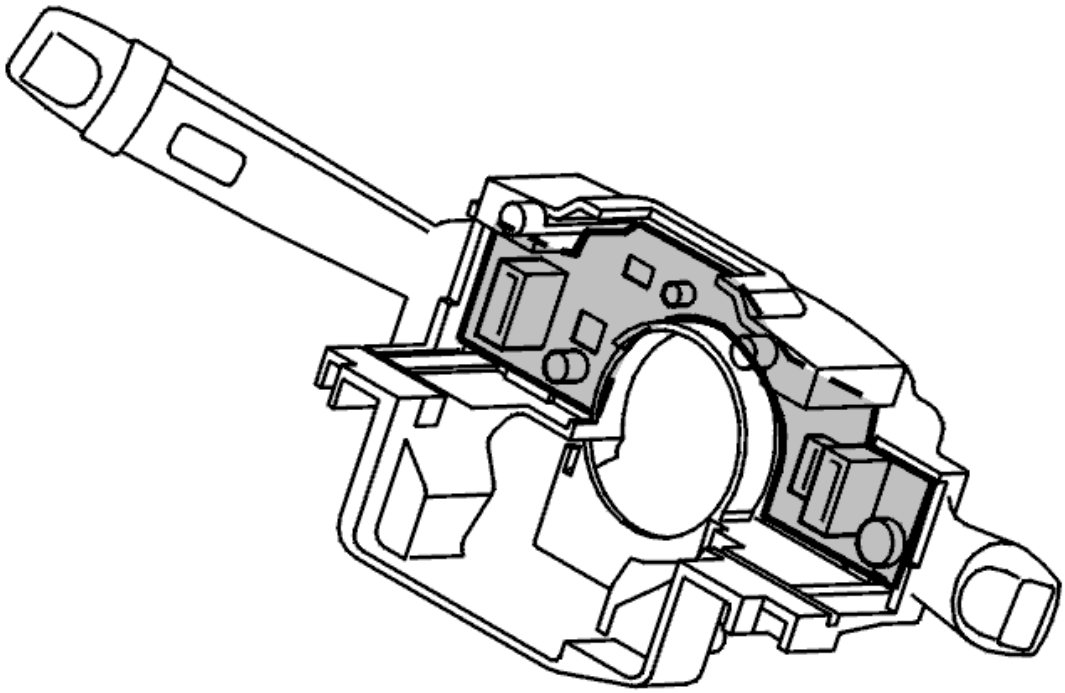

Fig. 25: Identifying Steering Wheel Module
Courtesy of VOLVO CARS CORPORATION

If SWM microprocessor/control unit registers communication faults in serial link between steering wheel module and SWS (steering wheel switches) three times in succession, diagnostic trouble code SWM-000A is displayed.

Substitute Value

Cruise-control function does not work when engine is running.

Possible Source

- Communication fault in serial link between steering wheel module and SWS (steering wheel switches) three times in succession.

Fault symptom[s]

- Cruise control not working at all.

SIGNAL MISSING. INTERMITTENT FAULT

FAULT-TRACING INFORMATION

This diagnostic trouble code (DTC) is stored in the event of communication problems between the control module and the switch or with the radio buttons on the steering wheel.

These problems may be caused by disturbance from the electrical and magnetic fields.

No further corrective action is required if the diagnostic trouble code (DTC) does not recur.

SWM-000A: COMMUNICATION WITH STEERING WHEEL BUTTONS. SIGNAL MISSING. PERMANENT FAULT (2003-2004)

DIAGNOSTIC TROUBLE CODE INFORMATION

see **DIAGNOSTIC TROUBLE CODE INFORMATION**

SIGNAL MISSING. PERMANENT FAULT

CHECKING THE WIRING AND COMPONENT

Check that the connectors between the switch for the cruise control and the contact reel are correctly connected.

Check the wiring between the contact reel and the switch for the cruise control. Check for an open-circuit.

Try a new contact reel.

Remedy as necessary.

Other information:

- To access or replace the cruise control switch, see **KEYPAD STEERING WHEEL, REPLACING**
- To replace the contact reel, see **CONTACT REEL, REPLACEMENT**
- To access or replace the steering wheel module (SWM), see **STEERING WHEEL MODULE (SWM), REPLACING**
- To connect the breakout box, see **CONNECTING THE BREAKOUT BOX**
- For information about signals and connectors, see **SIGNAL SPECIFICATION** .

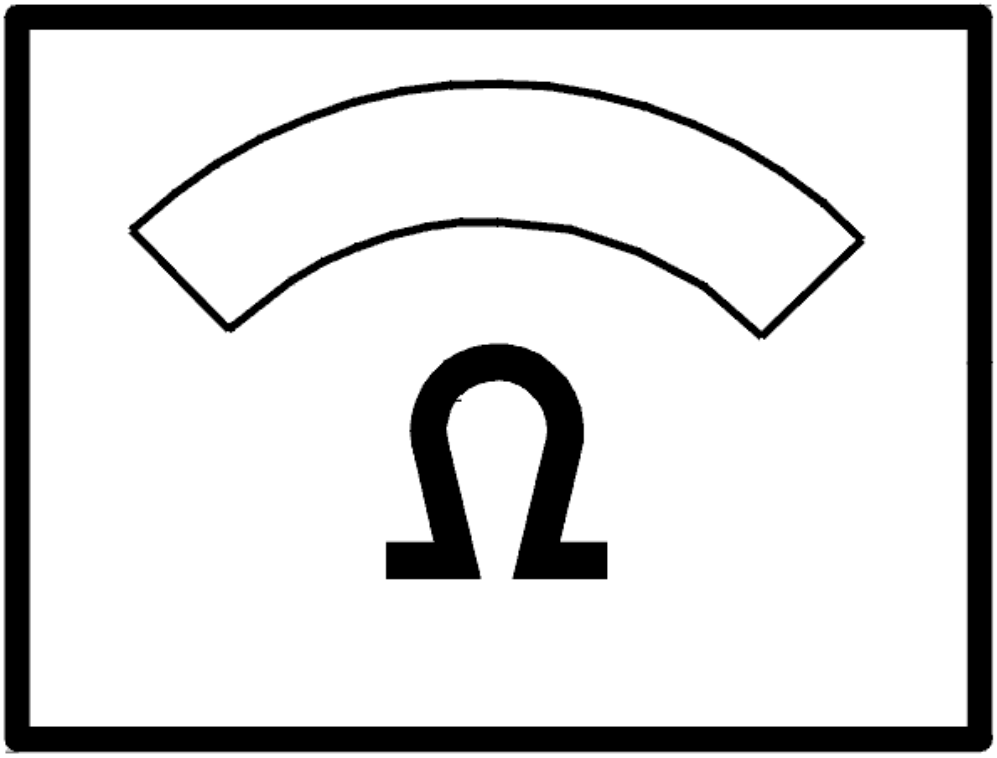

Fig. 26: Identifying Ohm Meter
Courtesy of VOLVO CARS CORPORATION

- **Continue**

  Refer to **VERIFICATION**

VERIFICATION

HINT: After the repair it is necessary to check that the fault has been rectified.

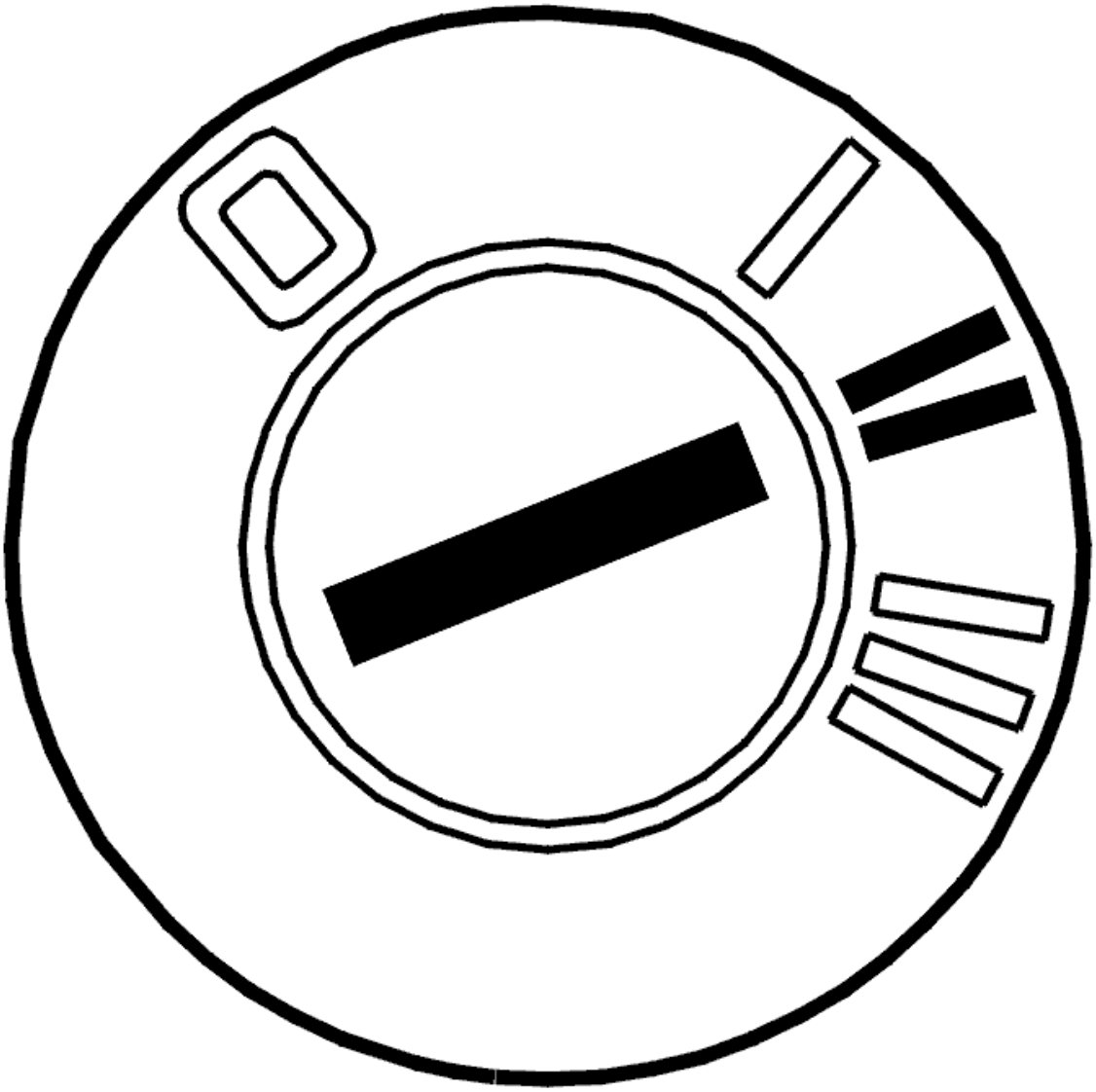

Fig. 27: Identifying Ignition ON
Courtesy of VOLVO CARS CORPORATION

- Ignition off.
- Connect the connectors, install the components, etc.
- Ignition on.

  Check that all buttons on RTI switch unit work.

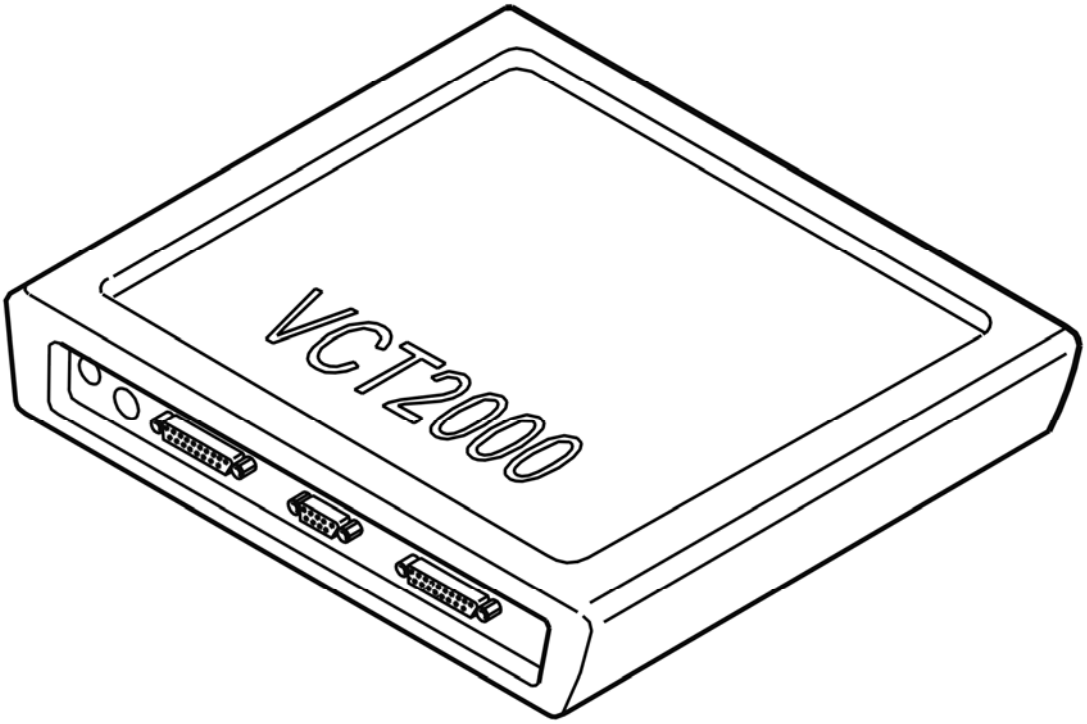

Fig. 28: Identifying VCT2000 Diagnostic Tool Symbol In VIDA
Courtesy of VOLVO CARS CORPORATION

Do the buttons function?

- **YES**

  VERIFIED: Troubleshooting has been completed.

- **NO**

  Refer to **INFORMATION**

INFORMATION

FAULT-TRACING INFORMATION

The fault should have been detected and remedied. As this is not the case fault-tracing has failed.

Exit fault-tracing for this diagnostic trouble code (DTC) or make another attempt.

SWM-000B: WINDSHIELD WIPER LEVER INVALID COMBINATION. INTERMITTENT FAULT (2003-2004)

DIAGNOSTIC TROUBLE CODE INFORMATION

Condition

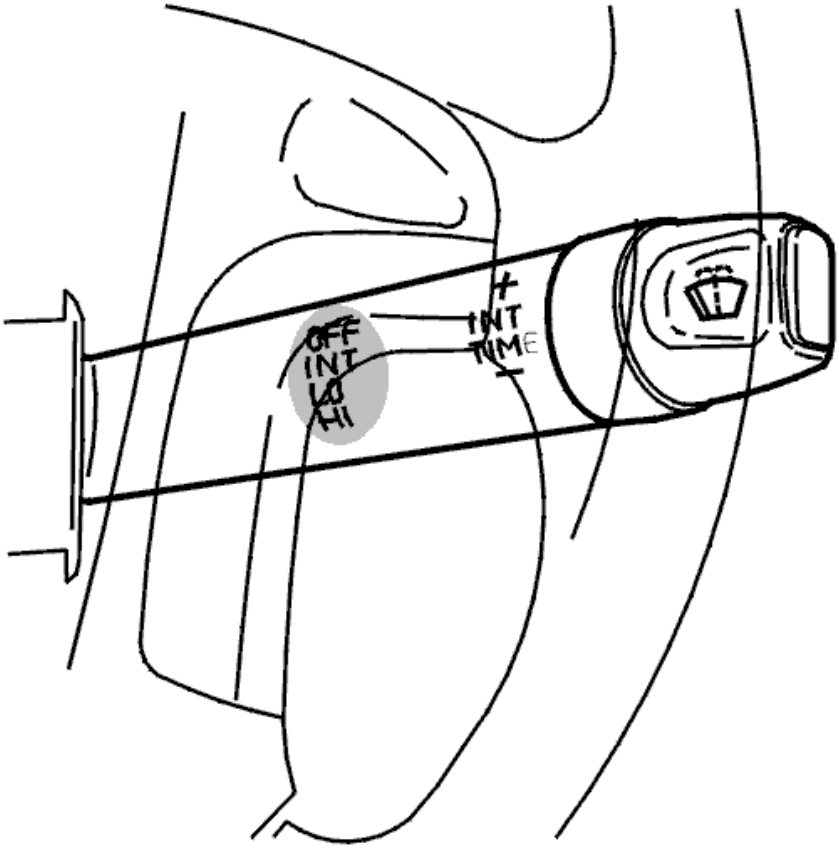

Fig. 29: Identifying Windshield Wiper Lever
Courtesy of VOLVO CARS CORPORATION

- If the control unit registers that switch positions for single wipe and intermittent wipe are activated at the same time for more than 2.5 seconds, diagnostic trouble code SWM-000B is displayed. Continuous checks are done when the control unit is in operation and switches are activated at the same time.

Substitute Value

- If windscreen wipers are activated, wipers operate at lowest speed.

Possible Source

- Switch positions for single wipe and intermittent wipe are activated at the same time for more than 2.5 seconds.

Fault symptom[s]

- Wipers operate at low speed.

INCORRECT COMBINATION. INTERMITTENT FAULT

CHECKING THE WINDSCREEN-WIPER SWITCH

The diagnostic trouble code is displayed when the control unit detects an incorrect combination of windscreen-wiper switch positions. If the diagnostic trouble code is not displayed, no further action is necessary.

SWM-000B: WINDSHIELD WIPER LEVER INVALID COMBINATION. PERMANENT FAULT (2003-2004)

DIAGNOSTIC TROUBLE CODE INFORMATION

see **DIAGNOSTIC TROUBLE CODE INFORMATION**

INVALID COMBINATION. PERMANENT FAULT

REPLACING THE WINDSHIELD WIPER SWITCH

Replace the windshield wiper switch because an internal fault has been found.

Other information:

- To replace the windshield wiper switch, see **WASHER / WIPER SWITCH, REPLACING** .
- **Continue**

  Refer to **VERIFICATION**

VERIFICATION

HINT: After the repair it is necessary to check that the fault has been rectified.

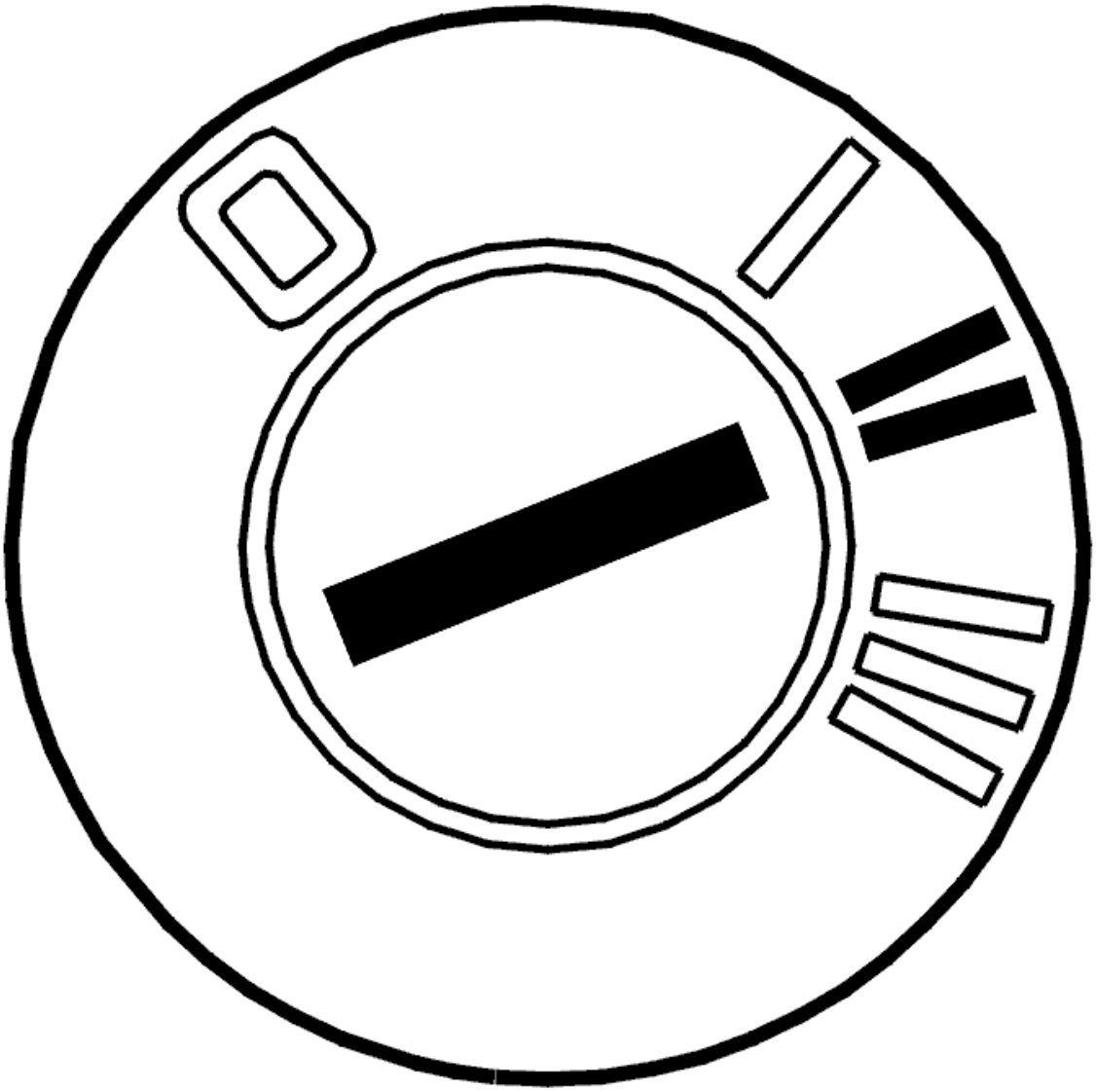

Fig. 30: Identifying Ignition ON
Courtesy of VOLVO CARS CORPORATION

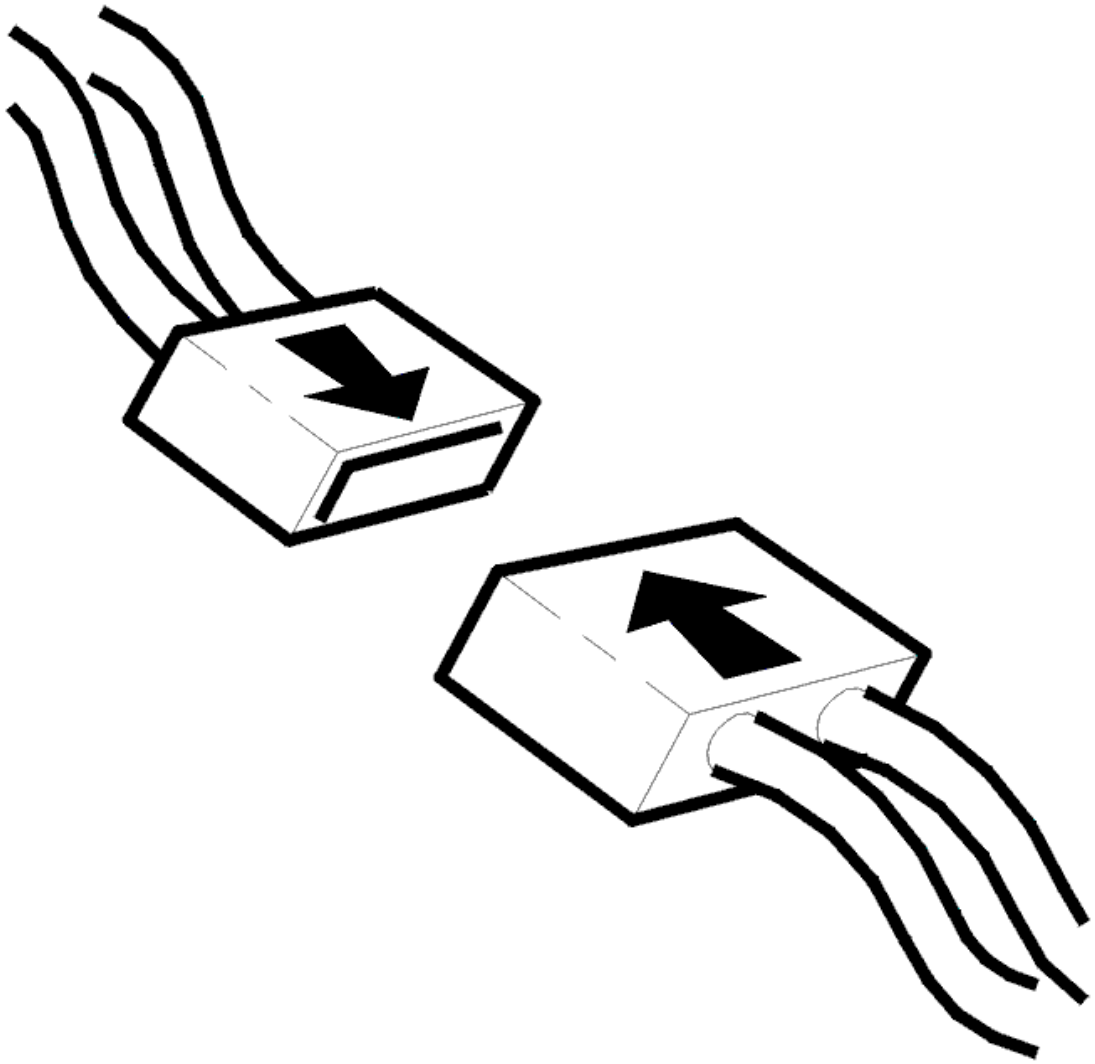

Fig. 31: Connecting Connector
Courtesy of VOLVO CARS CORPORATION

- Ignition off.
- Connect connectors, install components, etc.
- Ignition on.

  Check that all switch functions work.

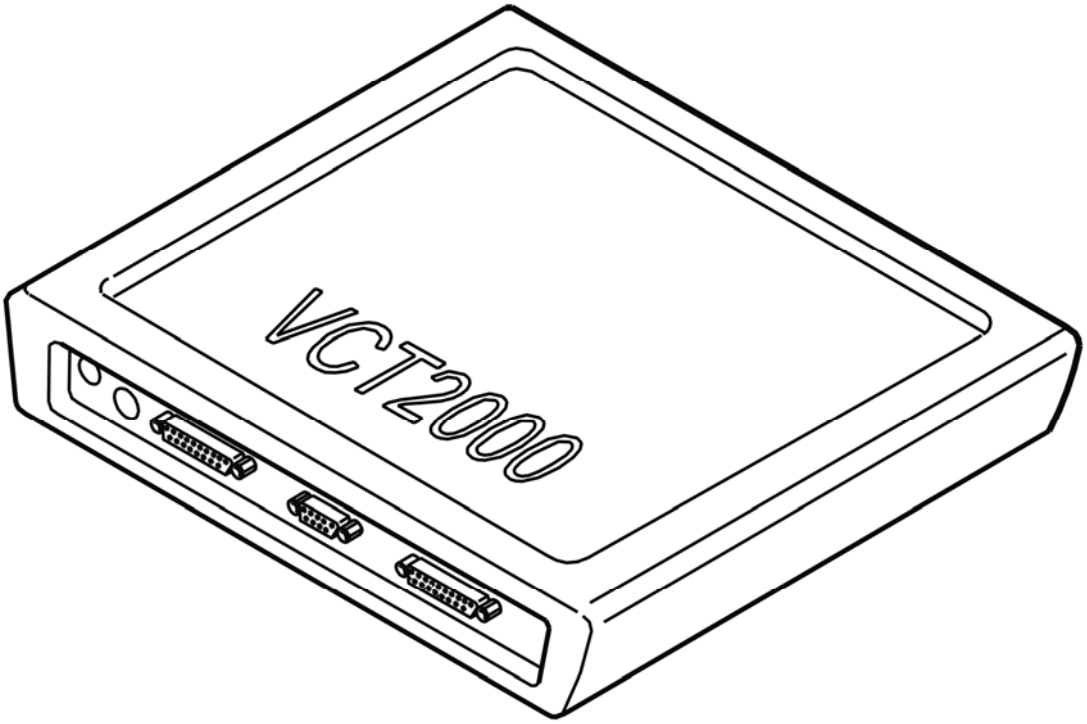

Fig. 32: Identifying VCT2000 Diagnostic Tool Symbol In VIDA
Courtesy of VOLVO CARS CORPORATION

Does switch work?

- **YES**

  VERIFIED: Troubleshooting has been completed.

- **NO**

  Refer to **INFORMATION**

INFORMATION

FAULT-TRACING INFORMATION

The fault should have been detected and remedied. As this is not the case fault-tracing has failed.

Exit fault-tracing for this diagnostic trouble code (DTC) or make another attempt.

SWM-000C: WINDSHIELD WIPER LEVER INVALID COMBINATION. INTERMITTENT FAULT (2003-2004)

DIAGNOSTIC TROUBLE CODE INFORMATION

Condition

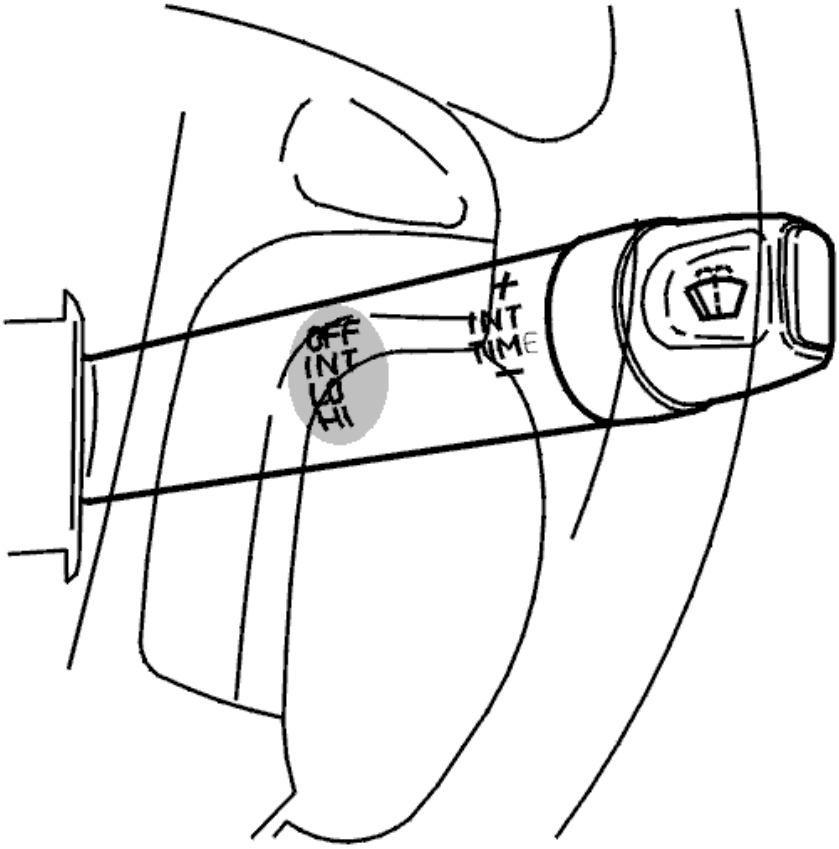

Fig. 33: Identifying Windshield Wiper Lever
Courtesy of VOLVO CARS CORPORATION

If the control unit registers that switch positions for single wipe and low-speed wipe are activated at the same time for more than 2.5 seconds, diagnostic trouble code SWM-000C is displayed. Continuous checks are done when the control unit is in operation and switches are activated at the same time.

Substitute Value

- If windscreen wipers are activated, wipers operate at lowest speed.

Possible Source

- Switch positions for single wipe and low-speed wipe are activated at the same time for more than 2.5 seconds.

Fault symptom[s]

- Wipers operate at low speed.

INCORRECT COMBINATION. INTERMITTENT FAULT

see **INCORRECT COMBINATION. INTERMITTENT FAULT**

SWM-000C: WINDSHIELD WIPER LEVER INVALID COMBINATION. PERMANENT FAULT (2003-2004)

DIAGNOSTIC TROUBLE CODE INFORMATION

see **DIAGNOSTIC TROUBLE CODE INFORMATION**

INVALID COMBINATION. PERMANENT FAULT

see **INVALID COMBINATION. PERMANENT FAULT**

SWM-000D: WINDSHIELD WIPER LEVER INVALID COMBINATION. INTERMITTENT FAULT (2003-2004)

DIAGNOSTIC TROUBLE CODE INFORMATION

Condition

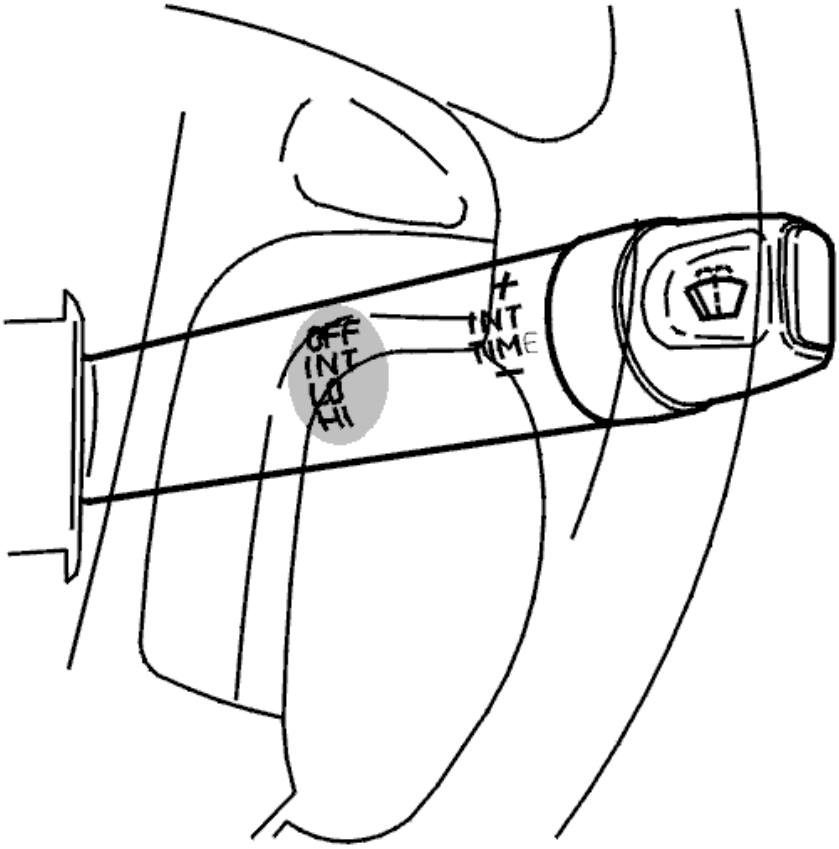

Fig. 34: Identifying Windshield Wiper Lever

Courtesy of VOLVO CARS CORPORATION

If the control unit registers that switch positions for single wipe and high-speed wipe are activated at the same time for more than 2.5 seconds, diagnostic trouble code SWM-000D is displayed. Continuous checks are done when the control unit is in operation and switches are activated at the same time.

Substitute Value

- If windscreen wipers are activated, wipers operate at lowest speed.

Possible Source

- Switch positions for single wipe and high-speed wipe are activated at the same time for more than 2.5 seconds.

Fault symptom[s]

- Wipers operate at low speed.

INCORRECT COMBINATION. INTERMITTENT FAULT

see **INCORRECT COMBINATION. INTERMITTENT FAULT**

SWM-000D: WINDSHIELD WIPER LEVER INVALID COMBINATION. PERMANENT FAULT (2003-2004)

DIAGNOSTIC TROUBLE CODE INFORMATION

see **DIAGNOSTIC TROUBLE CODE INFORMATION**

INVALID COMBINATION. PERMANENT FAULT

see **INVALID COMBINATION. PERMANENT FAULT**

SWM-000E: WINDSHIELD WIPER LEVER. INVALID COMBINATION. INTERMITTENT FAULT (2003-2004)

DIAGNOSTIC TROUBLE CODE (DTC) INFORMATION

Condition

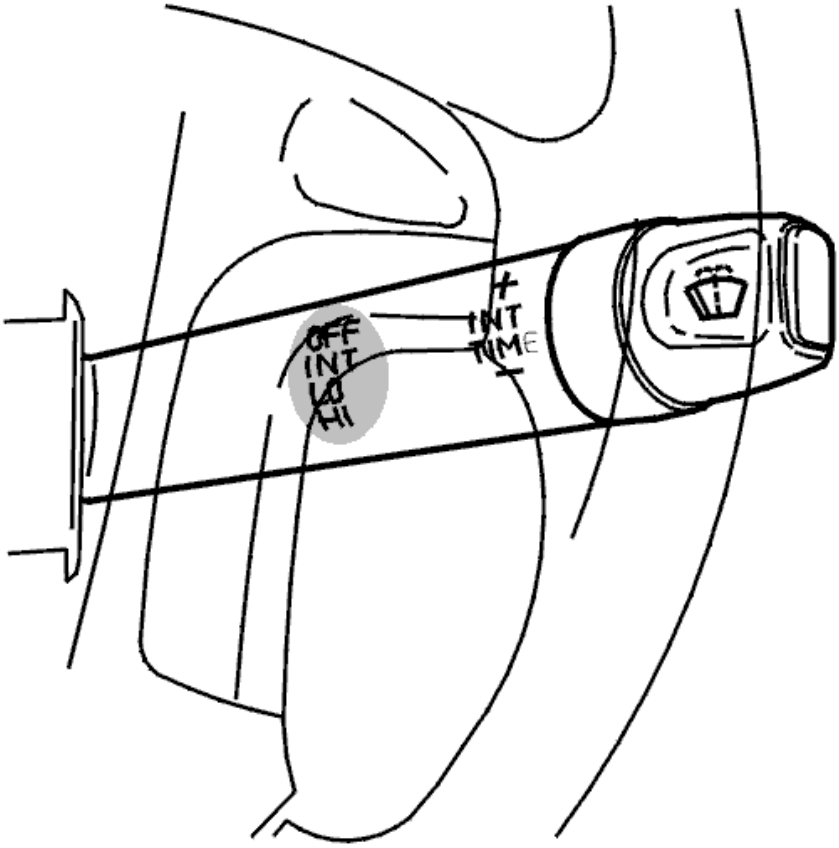

Fig. 35: Identifying Windshield Wiper Lever
Courtesy of VOLVO CARS CORPORATION

Diagnostic trouble code (DTC) SWM-000E is stored if the control module registers that the switch for the washer and the switch for the rear washer are activated for more than 2.5 seconds at the same time. When the control module is active, continuous checks are made to determine whether the switches are activated at the same time.

Substitute Value

- If the windshield wipers are in the active position, the wipers operate at low speed.

Possible Source

- The switches for the front and rear washers are active for more than 2.5 seconds at the same time.

Fault symptom[s]

- The wipers only operate at low speed.

INCORRECT COMBINATION. INTERMITTENT FAULT

see **INCORRECT COMBINATION. INTERMITTENT FAULT**

SWM-000E: WINDSHIELD WIPER LEVER. INVALID COMBINATION. PERMANENT FAULT (2003-2004)

DIAGNOSTIC TROUBLE CODE (DTC) INFORMATION

see **DIAGNOSTIC TROUBLE CODE (DTC) INFORMATION**

INVALID COMBINATION. PERMANENT FAULT

see **INVALID COMBINATION. PERMANENT FAULT**

SWM-0010: RESUME AND CANCEL BUTTONS. INVALID COMBINATION. INTERMITTENT FAULT (2003-2004)

DIAGNOSTIC TROUBLE CODE (DTC) INFORMATION

SWM-0010

Condition

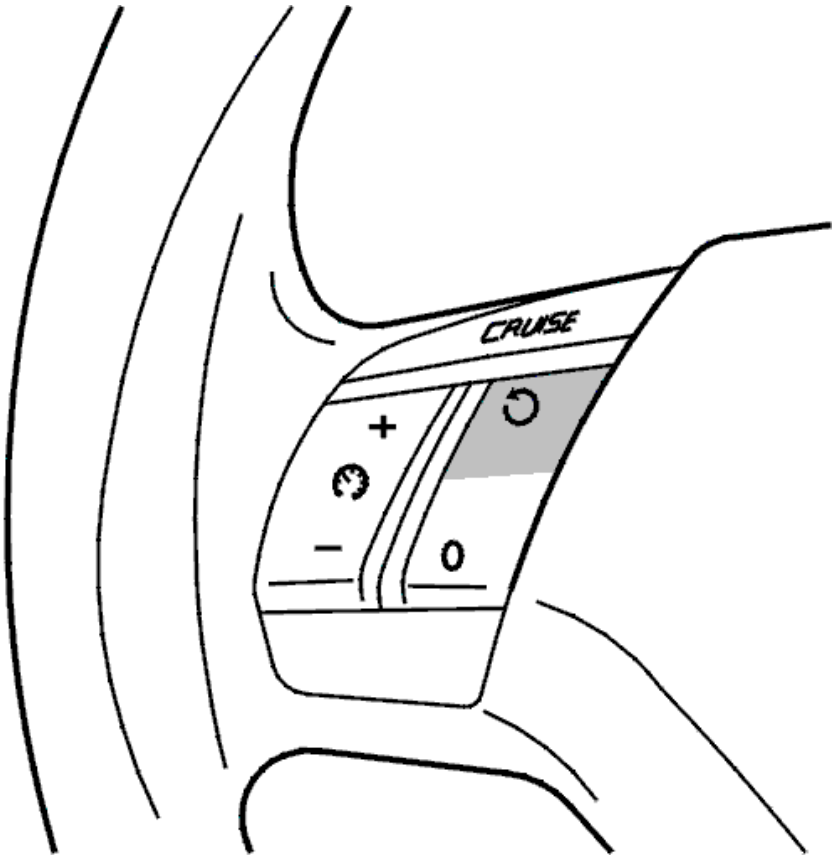

Fig. 36: Identifying Resume Button For Cruise Control
Courtesy of VOLVO CARS CORPORATION

Diagnostic trouble code (DTC) SWM-0010 is stored if the micro processor or steering wheel module registers that the Resume and Cancel buttons on the cruise control function are activated at the same time.

Substitute Value

The cruise control is deactivated for the rest of the journey.

Possible Source

- The Resume and Cancel buttons on the cruise control function were activated at the same time.

Fault symptom[s]

- Cruise control does not function at all.

INCORRECT COMBINATION. INTERMITTENT FAULT

CHECKING THE SWITCH UNIT

The diagnostic trouble code is displayed when the control unit detects an incorrect combination of switch-unit positions. If the diagnostic trouble code is not displayed, no further action is necessary.

SWM-0010: RESUME AND CANCEL BUTTONS. INVALID COMBINATION. PERMANENT FAULT (2003-2004)

DIAGNOSTIC TROUBLE CODE (DTC) INFORMATION

see **DIAGNOSTIC TROUBLE CODE (DTC) INFORMATION**

INVALID COMBINATION. PERMANENT FAULT

REPLACING THE SWITCH

Replace the switch because an internal fault has been found.

Other information:

- To replace the switch, see **KEYPAD STEERING WHEEL, REPLACING** .
- **Continue**

  Refer to **VERIFICATION**

VERIFICATION

HINT: After the repair it is necessary to check that the fault has been rectified.

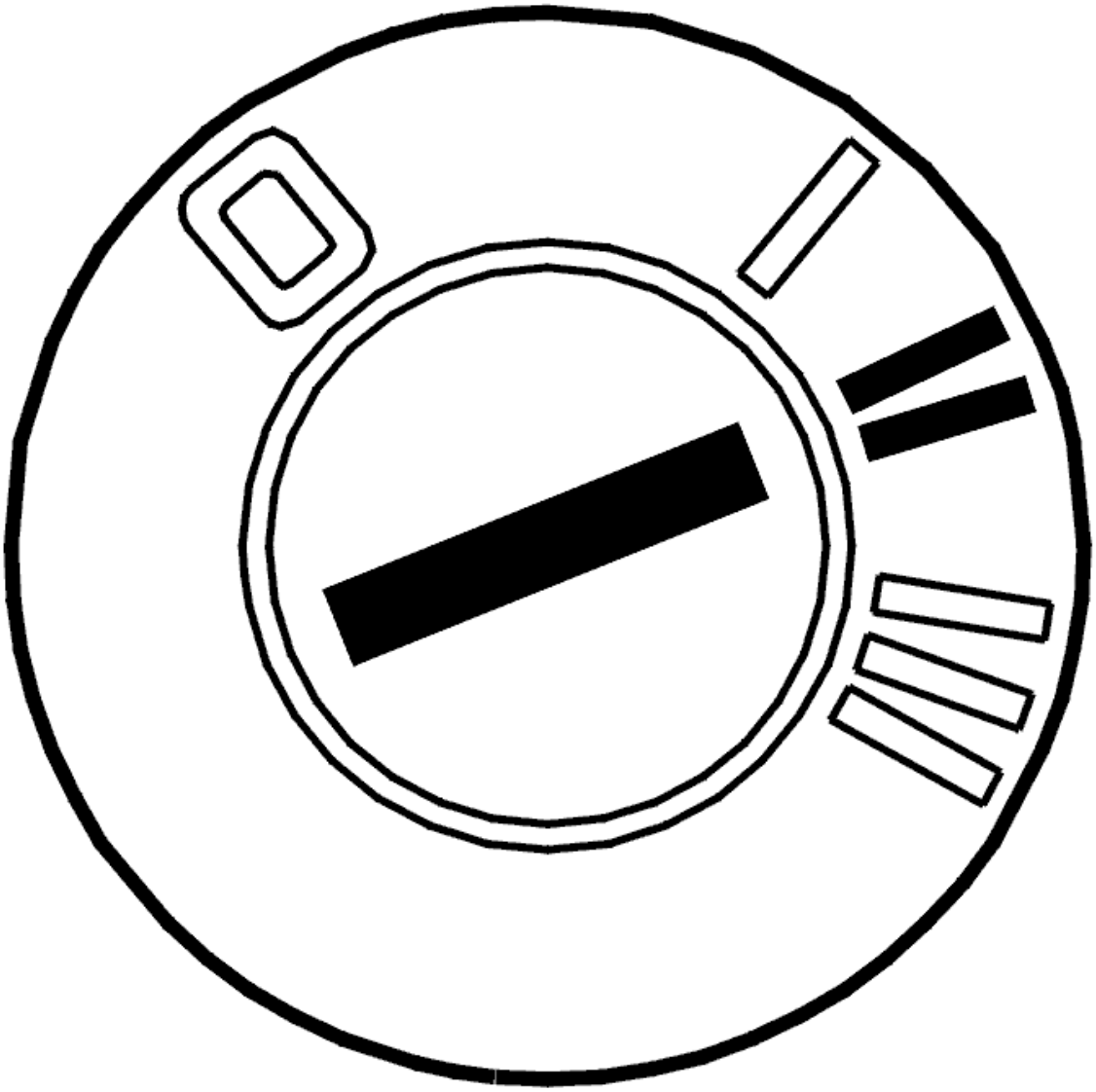

Fig. 37: Identifying Ignition ON
Courtesy of VOLVO CARS CORPORATION

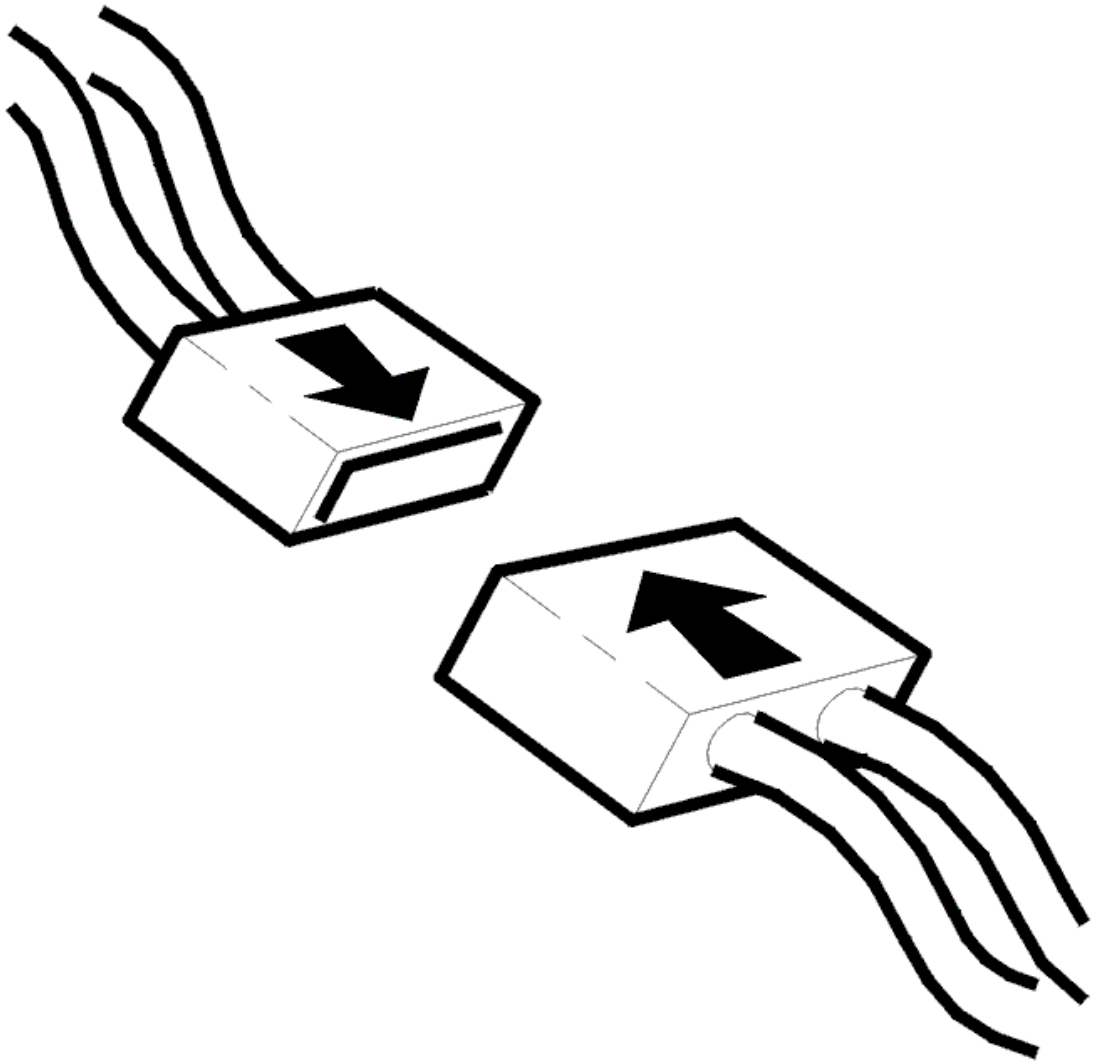

Fig. 38: Connecting Connector
Courtesy of VOLVO CARS CORPORATION

- Ignition off.
- Connect connectors, install components, etc.
- Ignition on.

  Check that the relevant functions of the switch units work.

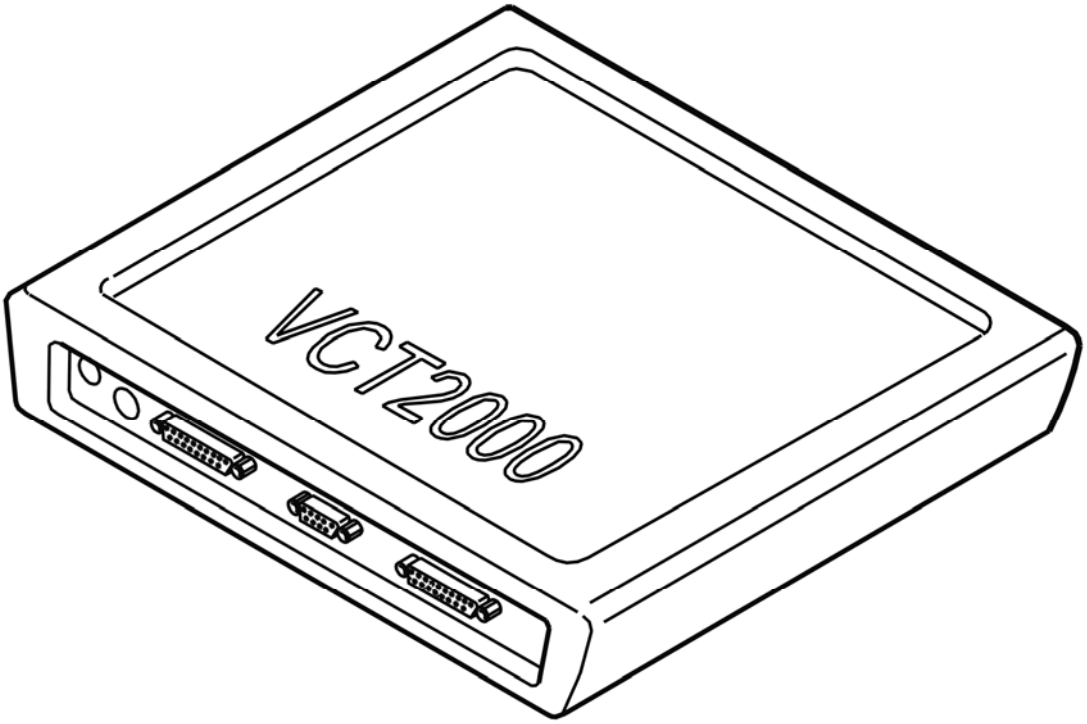

Fig. 39: Identifying VCT2000 Diagnostic Tool Symbol In VIDA
Courtesy of VOLVO CARS CORPORATION

Do buttons work?

- **YES**

  VERIFIED: Troubleshooting has been completed.

- **NO**

  Refer to **INFORMATION**

INFORMATION

FAULT-TRACING INFORMATION

The fault should have been detected and remedied. As this is not the case fault-tracing has failed.

Exit fault-tracing for this diagnostic trouble code (DTC) or make another attempt.

SWM-0011: SET+ AND SET- BUTTONS. INVALID COMBINATION. INTERMITTENT FAULT (2003-2004)

DIAGNOSTIC TROUBLE CODE (DTC) INFORMATION

SWM-0011

Condition

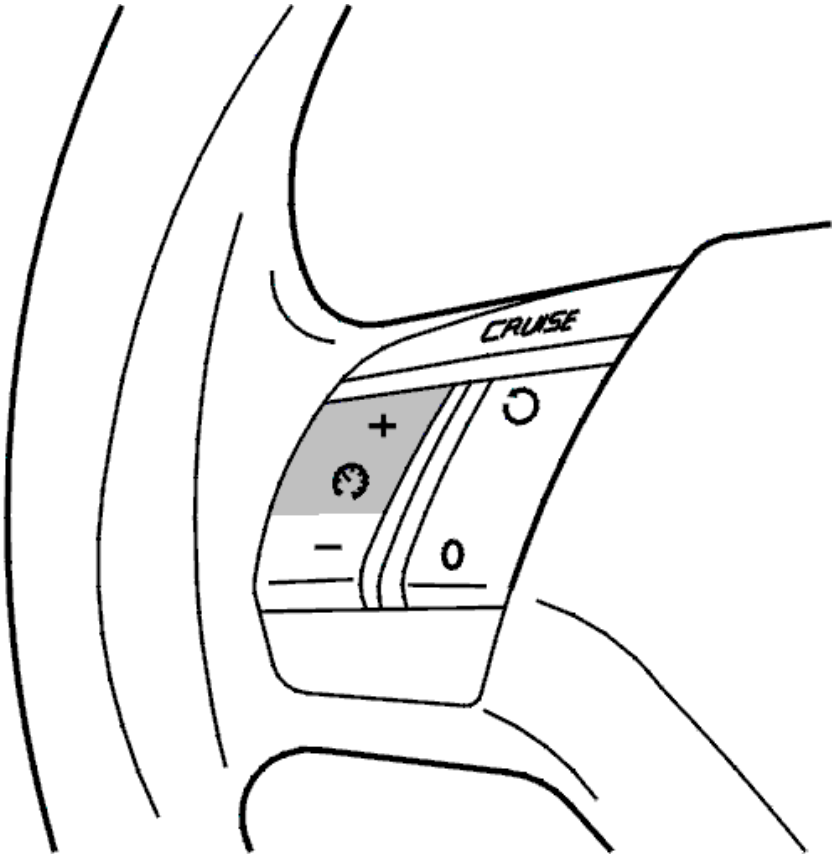

Fig. 40: Identifying Set+ Button For Cruise Control
Courtesy of VOLVO CARS CORPORATION

Diagnostic trouble code (DTC) SWM-0011 is stored if the micro processor or steering wheel module registers that the Set+ and Set- buttons on the cruise control function are activated at the same time.

Substitute Value

The cruise control is deactivated for the rest of the journey.

Possible Source

- The Set- and Set+ buttons on the cruise control function were activated at the same time.

Fault symptom[s]

- Cruise control does not function at all.

INCORRECT COMBINATION. INTERMITTENT FAULT

see **INCORRECT COMBINATION. INTERMITTENT FAULT**

SWM-0011: SET+ AND SET- BUTTONS. INVALID COMBINATION. PERMANENT FAULT (2003-2004)

DIAGNOSTIC TROUBLE CODE (DTC) INFORMATION

see **DIAGNOSTIC TROUBLE CODE (DTC) INFORMATION**

INVALID COMBINATION. PERMANENT FAULT

see **INVALID COMBINATION. PERMANENT FAULT**

SWM-0012: SEARCH+ AND SEARCH- BUTTONS. INVALID COMBINATION. INTERMITTENT FAULT (2003-2004)

DIAGNOSTIC TROUBLE CODE (DTC) INFORMATION

SWM-0012

Condition

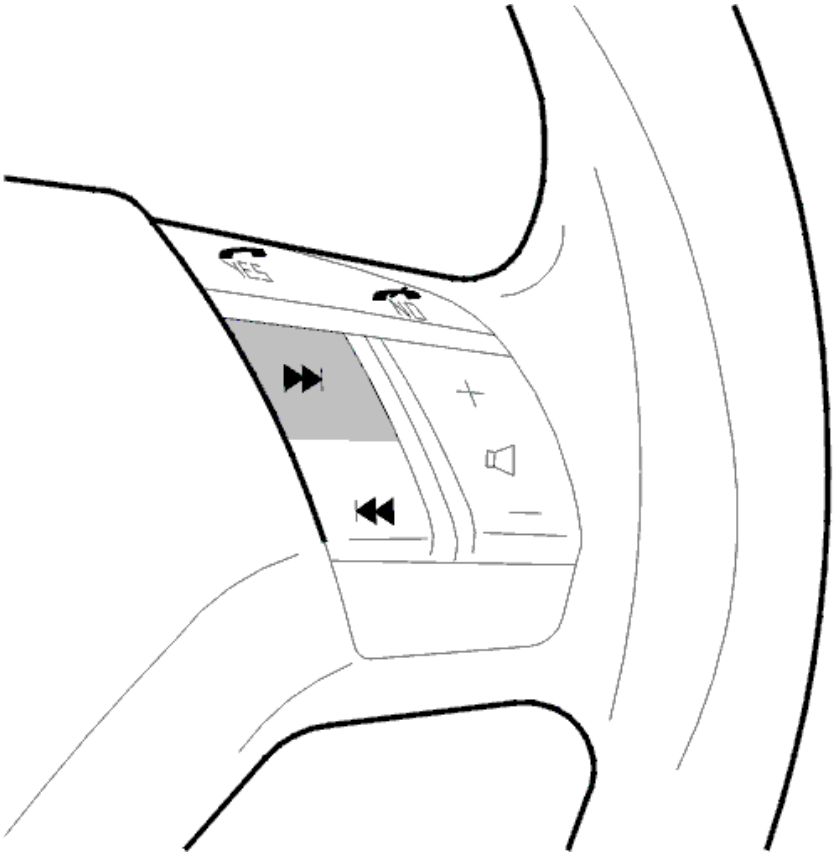

Fig. 41: Identifying Scan- Button
Courtesy of VOLVO CARS CORPORATION

Diagnostic trouble code (DTC) SWM-0012 is stored if the micro processor or steering wheel module registers that the Seek+ and Seek- buttons on the audio / carphone control switch are activated at the same time.

Substitute Value

None.

Possible Source

- The Seek- and Seek+ buttons on the audio / carphone function are activated at the same time.

Fault symptom[s]

- The steering wheel radio controls do not function
- The steering wheel carphone controls do not function.

INCORRECT COMBINATION. INTERMITTENT FAULT

CHECKING THE BUTTONS

The diagnostic trouble code is displayed when the control unit detects an incorrect button combination. If the diagnostic trouble code is not displayed, no further action is necessary.

SWM-0012: SEARCH+ AND SEARCH- BUTTONS. INVALID COMBINATION. PERMANENT FAULT (2003-2004)

DIAGNOSTIC TROUBLE CODE (DTC) INFORMATION

see **DIAGNOSTIC TROUBLE CODE (DTC) INFORMATION**

INVALID COMBINATION. PERMANENT FAULT

CHECKING THE CABLE AND COMPONENT

If the car is equipped with a Road Traffic Information (RTI) system, disconnect the RTI switch from the electrical radio and audio switch.

This is so that the fault can be located.

Read off the status of the buttons in the audio/carphone switch.

If any of the buttons are activated without having been manually activated, the fault is in the RTI switch.

Disconnect the lower switch from the audio and radio switch. This is so that the fault can be located.

Read off the status of the buttons in the audio/carphone switch.

If any of the buttons are activated without having been manually activated, the fault is in the radio and audio switch.

Disconnect the lower switch from the cruise control switch. This is so that the fault can be located.

Read off the status of the buttons in the audio/carphone switch.

If any of the buttons are activated without having been manually activated, the fault is in the cruise control switch, or in the cable between the cruise control switch and the radio and carphone switch.

Remedy as necessary.

Other information:

- To access or replace the RTI switch, see **RTI SWITCH**
- To access or replace the audio and carphone switch, see **KEYPAD STEERING WHEEL, REPLACING**
- To access or replace the cruise control switch, see **KEYPAD STEERING WHEEL, REPLACING** .

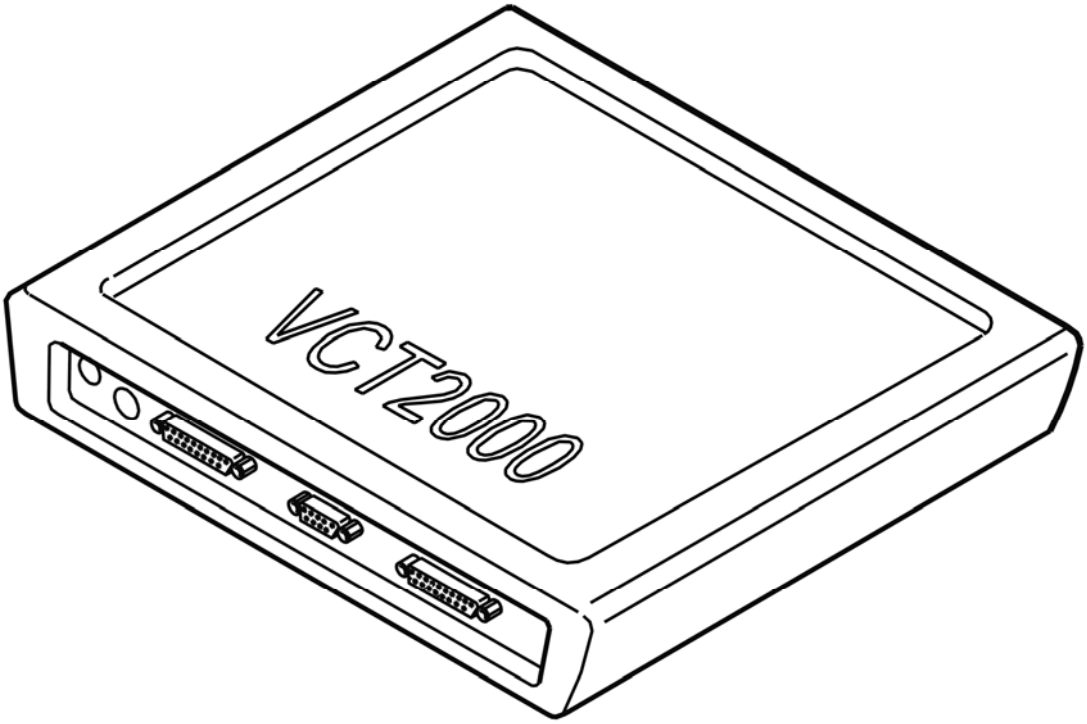

Fig. 42: Identifying VCT2000 Diagnostic Tool Symbol In VIDA
Courtesy of VOLVO CARS CORPORATION

- **Continue**

  Refer to **VERIFICATION**

CHECKING THE CABLE AND COMPONENT

Check the cable between the audio and carphone switch terminals #1, #2, #3 and cruise control switch terminals #1, #2, #3. Check for a short-circuit to supply voltage.

Remedy as necessary.

Other information:

- To access or replace the audio and carphone switch, see **KEYPAD STEERING WHEEL, REPLACING**

  see **CHECKING WIRING AND TERMINALS**

- **Continue**

  Refer to **VERIFICATION**

VERIFICATION

HINT: After the repair it is necessary to check that the fault has been rectified.

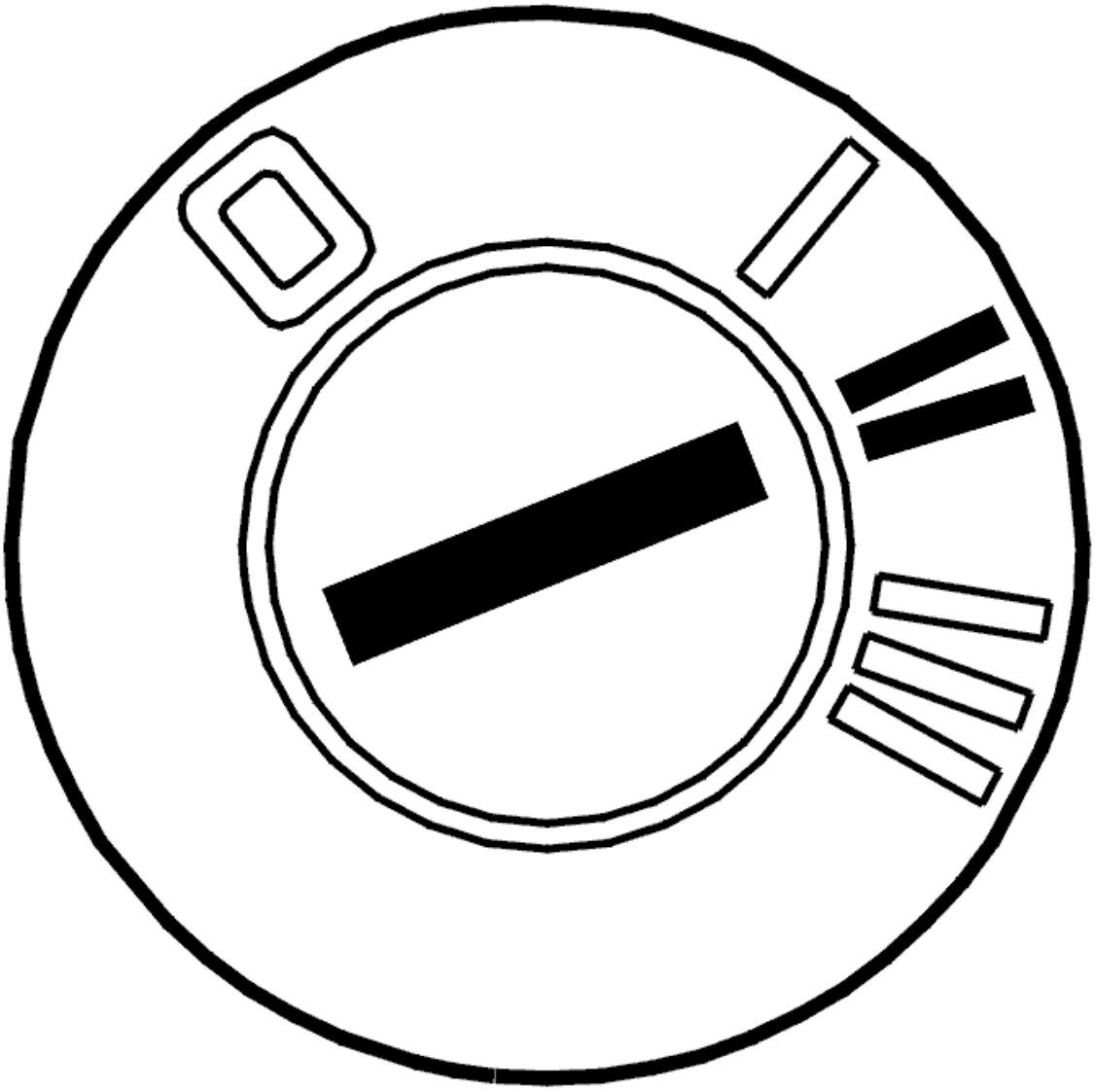

Fig. 43: Identifying Ignition ON
Courtesy of VOLVO CARS CORPORATION

- Ignition off.
- Connect the connectors, install the components, etc.
- Ignition on.

  Check that all buttons on audio/telephone switch unit work.

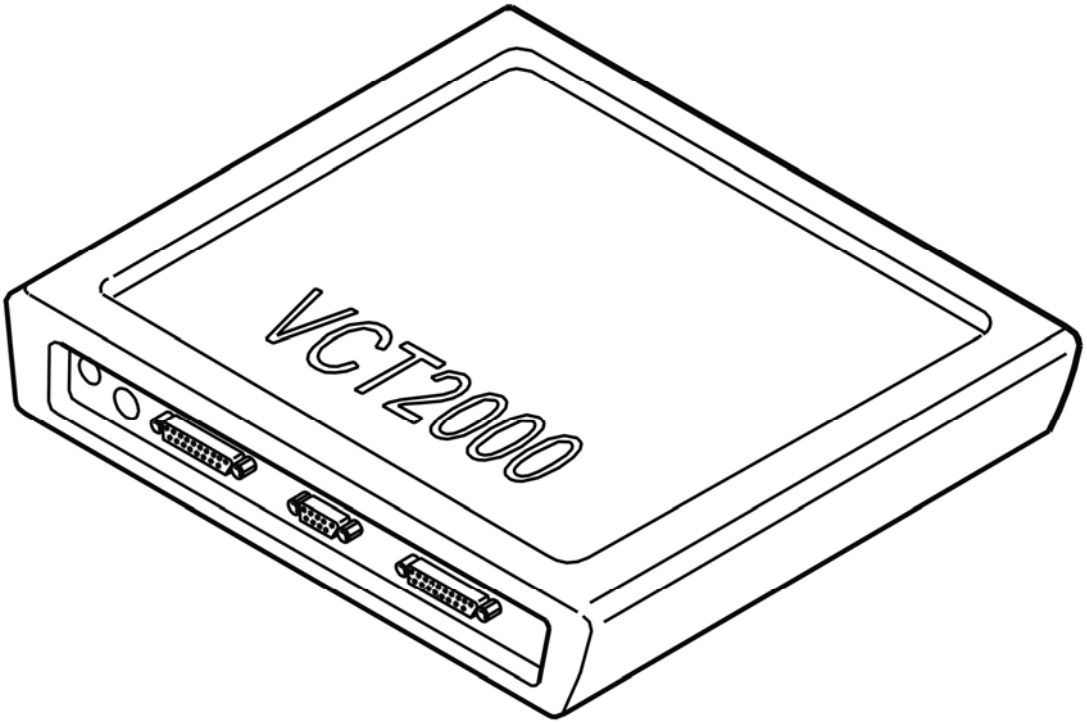

Fig. 44: Identifying VCT2000 Diagnostic Tool Symbol In VIDA
Courtesy of VOLVO CARS CORPORATION

Do buttons work?

- **YES**

  VERIFIED: Troubleshooting has been completed.

- **NO**

  Refer to **INFORMATION**

INFORMATION

FAULT-TRACING INFORMATION

The fault should have been detected and remedied. As this is not the case fault-tracing has failed.

Exit fault-tracing for this diagnostic trouble code (DTC) or make another attempt.

SWM-0013: VOLUME+ AND VOLUME- BUTTONS. INVALID COMBINATION. INTERMITTENT FAULT (2003-2004)

DIAGNOSTIC TROUBLE CODE (DTC) INFORMATION SWM-0013

Condition

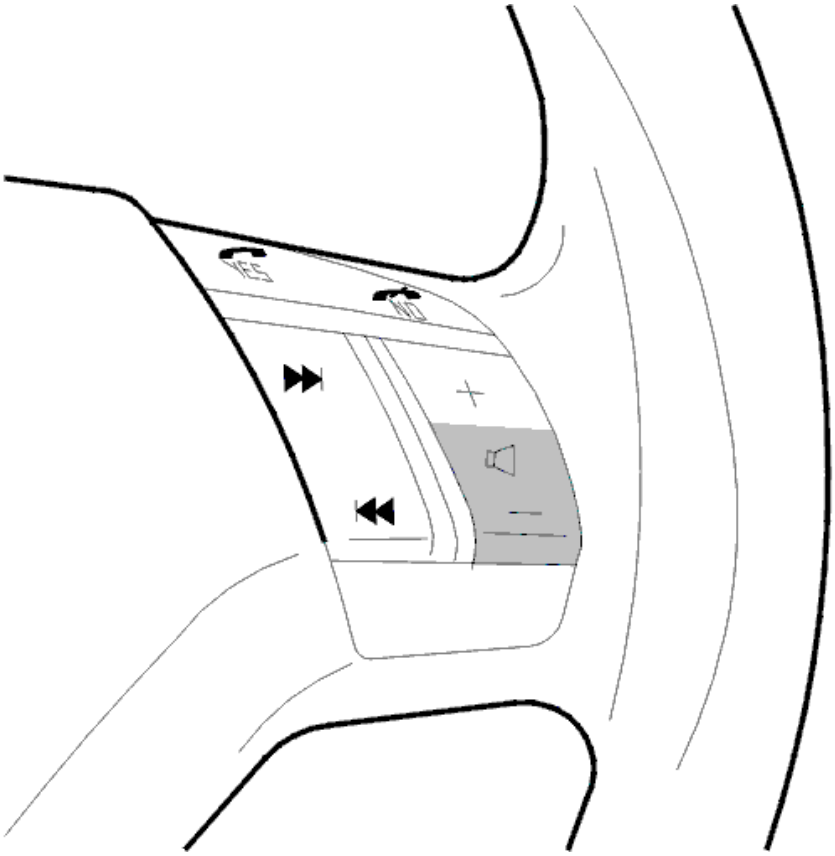

Fig. 45: Identifying Volume- Button
Courtesy of VOLVO CARS CORPORATION

Diagnostic trouble code (DTC) SWM-0013 is stored if the micro processor or steering wheel module (SWM) registers that the Volume+ and Volume- buttons on the audio / carphone control switch are activated at the same time.

Substitute Value

None.

Possible Source

- The Volume+ and Volume- buttons on the audio / carphone control switch are activated at the same time.

Fault symptom[s]

- The steering wheel radio controls do not function
- The steering wheel carphone controls do not function.

INCORRECT COMBINATION. INTERMITTENT FAULT

see **INCORRECT COMBINATION. INTERMITTENT FAULT**

SWM-0013: VOLUME+ AND VOLUME- BUTTONS. INVALID COMBINATION. PERMANENT FAULT (2003-2004)

DIAGNOSTIC TROUBLE CODE (DTC) INFORMATION SWM-0013

see **DIAGNOSTIC TROUBLE CODE (DTC) INFORMATION SWM-0013**

INVALID COMBINATION. PERMANENT FAULT

see **INVALID COMBINATION. PERMANENT FAULT**

SWM-0014: RTI MULTI-BUTTON. INVALID COMBINATION. INTERMITTENT FAULT (2003-2004)

DIAGNOSTIC TROUBLE CODE (DTC) INFORMATION

SWM-0014

Condition

Fig. 46: Identifying RTI Multi-Switch Controller
Courtesy of VOLVO CARS CORPORATION

Diagnostic trouble code (DTC) SWM-0014 is stored if the micro processor or steering wheel module registers that two or more switches on the RTI multi button are activated at the same time.

Substitute Value

None.

Possible Source

- Two or more switches on the RTI multi-switch are activated at the same time.

Fault symptom[s]

- The RTI controls on the steering wheel do not function.

INCORRECT COMBINATION. INTERMITTENT FAULT

CHECKING THE BUTTONS

The diagnostic trouble code is displayed when the control unit detects an incorrect button combination. If the diagnostic trouble code is not displayed, no further action is necessary.

SWM-0014: RTI MULTI-BUTTON. INVALID COMBINATION. PERMANENT FAULT (2003-2004)

DIAGNOSTIC TROUBLE CODE (DTC) INFORMATION

see **DIAGNOSTIC TROUBLE CODE (DTC) INFORMATION**

INVALID COMBINATION. PERMANENT FAULT

CHECKING THE CABLE AND COMPONENT

Disconnect the RTI switch from the audio and radio switch. This is so that the fault can be located.

Read off the status of the buttons in the audio and carphone switch.

If any of the buttons are activated without having been manually activated, the fault is in the RTI switch.

Disconnect the lower switch from the audio and radio switch. This is so that the fault can be located.

Read off the status of the buttons in the audio/carphone switch.

If any of the buttons are activated without having been manually activated, the fault is in the audio and carphone switch.

Disconnect the lower switch from the cruise control switch. This is so that the fault can be located.

Read off the status of the buttons in the audio/carphone switch.

If any of the buttons are activated without having been manually activated the fault is in the cruise control switch or in the cable between the cruise control switch and the radio and carphone switch.

Remedy as necessary.

Other information:

- To access or replace the RTI switch, see **RTI SWITCH**
- To access or replace the audio and carphone switch, see **KEYPAD STEERING WHEEL, REPLACING**
- To access or replace the cruise control switch, see **KEYPAD STEERING WHEEL, REPLACING** .

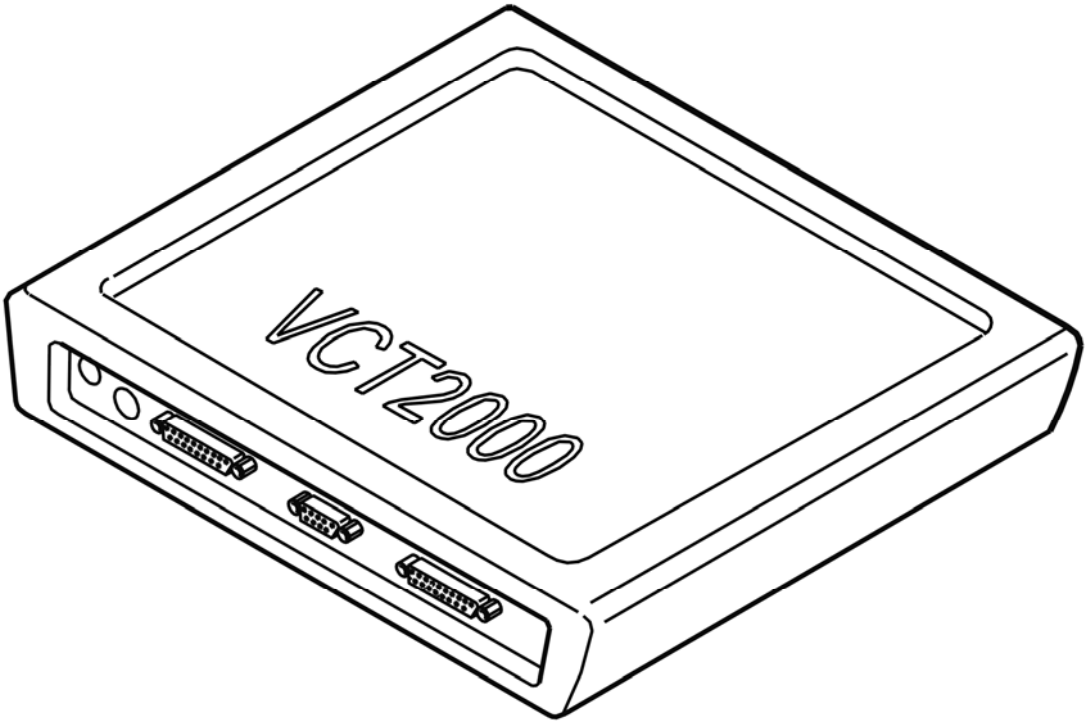

Fig. 47: Identifying VCT2000 Diagnostic Tool Symbol In VIDA
Courtesy of VOLVO CARS CORPORATION

- **Continue**

  Refer to **VERIFICATION**

VERIFICATION

HINT: After the repair it is necessary to check that the fault has been rectified.

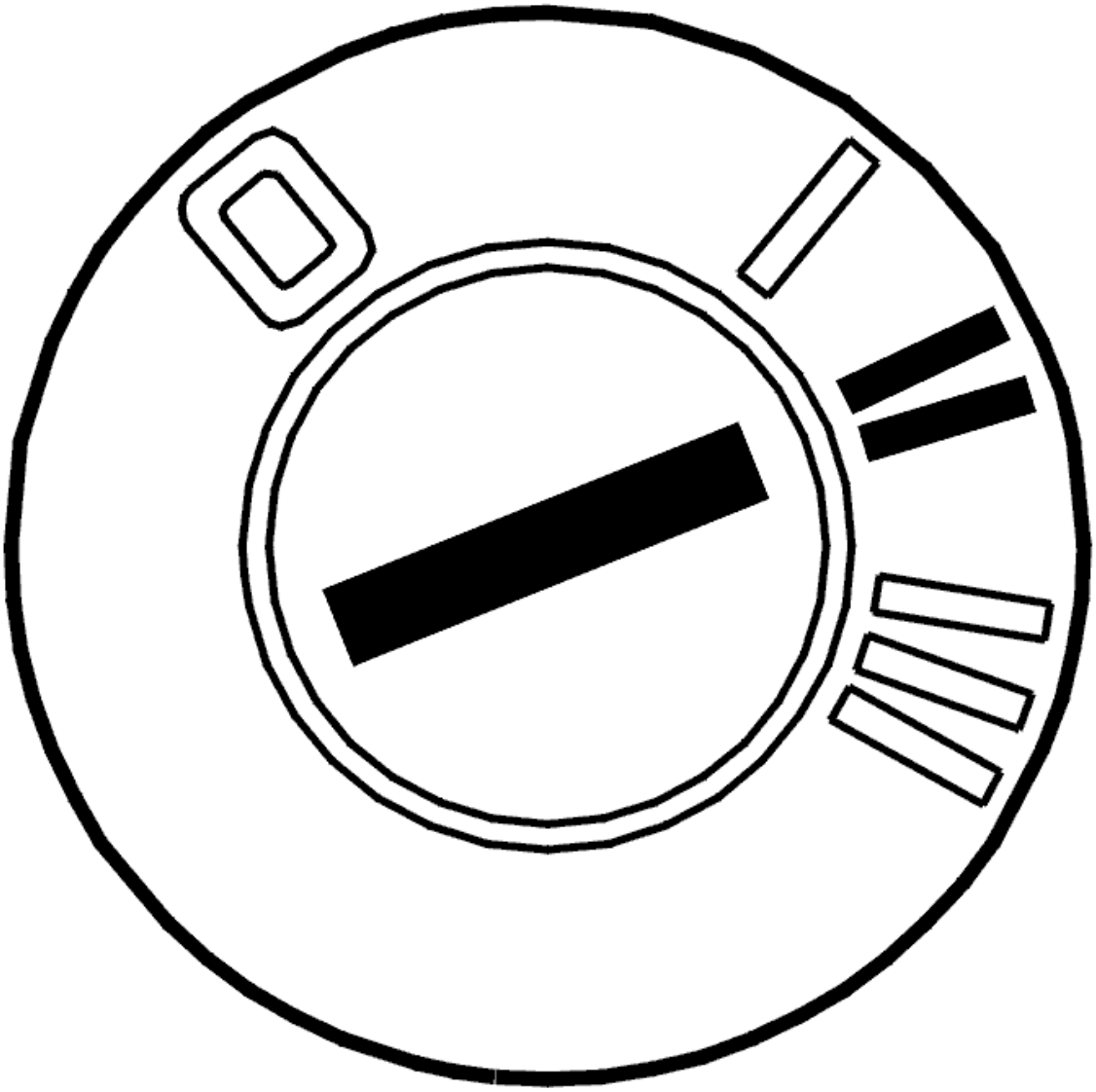

Fig. 48: Identifying Ignition ON
Courtesy of VOLVO CARS CORPORATION

- Ignition off.
- Connect the connectors, install the components, etc.
- Ignition on.

  Check that all buttons on RTI switch unit work.

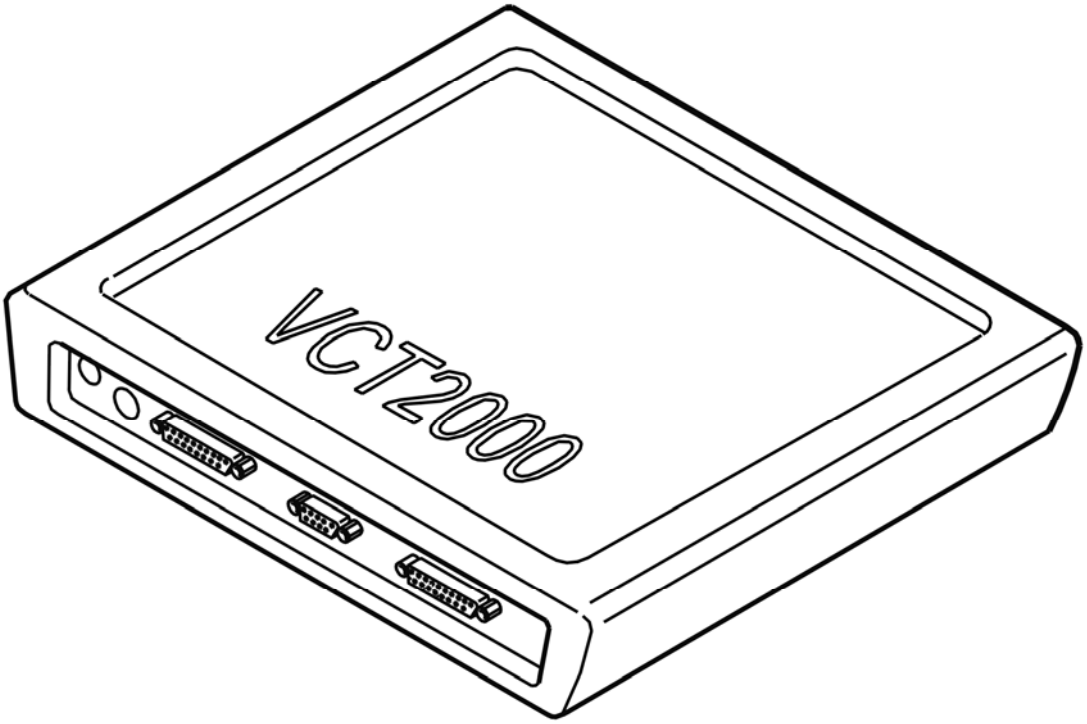

Fig. 49: Identifying VCT2000 Diagnostic Tool Symbol In VIDA
Courtesy of VOLVO CARS CORPORATION

Do the buttons function?

- **YES**

  VERIFIED: Troubleshooting has been completed.

- **NO**

  Refer to **INFORMATION**

INFORMATION

FAULT-TRACING INFORMATION

The fault should have been detected and remedied. As this is not the case fault-tracing has failed.

Exit fault-tracing for this diagnostic trouble code (DTC) or make another attempt.

SWM-0016: CRUISE CONTROL ON/OFF BUTTON. ACTIVATED TOO LONG. INTERMITTENT FAULT (2003-2004)

ACTIVATED FOR LONG TIME. INTERMITTENT FAULT

CHECKING THE SWITCH UNIT

The diagnostic trouble code is displayed when a switch unit has been pressed for more than 5 minutes. If the diagnostic trouble code is not displayed, no further action is necessary.

DIAGNOSTIC TROUBLE CODE (DTC) INFORMATION SWM-0016

Condition

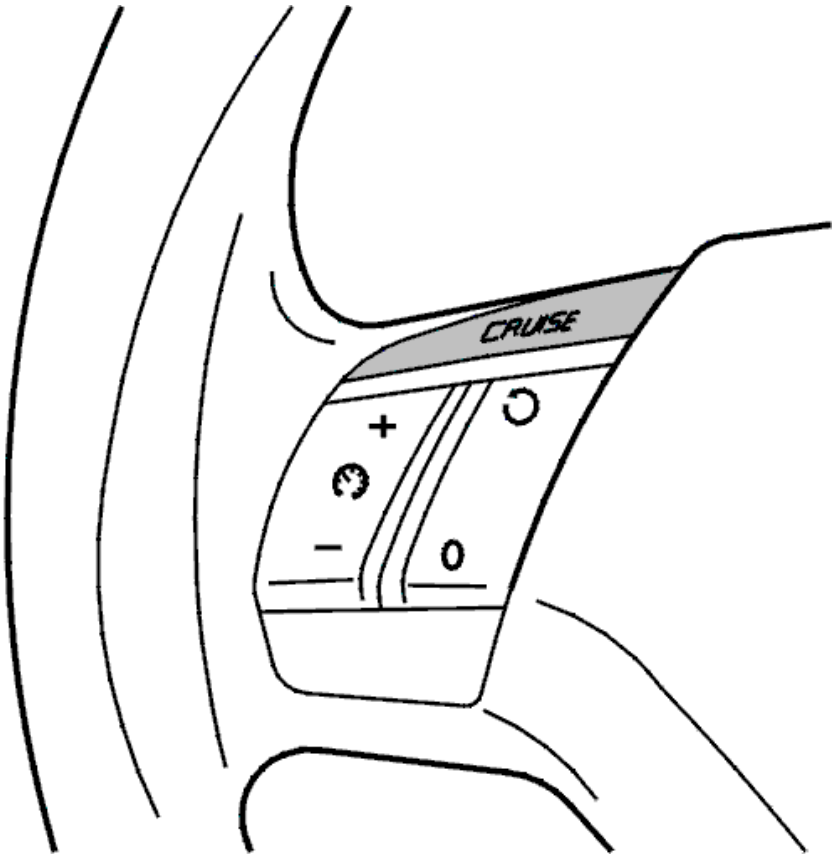

Fig. 50: Identifying ON/OFF Button For Cruise Control
Courtesy of VOLVO CARS CORPORATION

Diagnostic trouble code (DTC) SWM-0016 is stored if the micro processor or steering wheel module (SWM) registers that the CRUISE switch on the cruise control function is activated for more than 1 minute.

Substitute Value

The cruise control is deactivated for the rest of the journey.

Possible Source

- The CRUISE switch on the cruise control function is activated for more than 1 minute.

Fault symptom[s]

- Cruise control does not function at all.

SWM-0016: CRUISE CONTROL ON/OFF BUTTON. ACTIVATED TOO LONG. PERMANENT FAULT (2003-2004)

ACTIVATED TOO LONG. PERMANENT FAULT

CHECKING THE SWITCH

Check that the switch does not stick in the activated position.

Replace the switch control.

Remedy as necessary

Other information:

- To replace the switch control, see **KEYPAD STEERING WHEEL, REPLACING** .
- **Continue**

  Refer to **VERIFICATION**

VERIFICATION

HINT: After the repair it is necessary to check that the fault has been rectified.

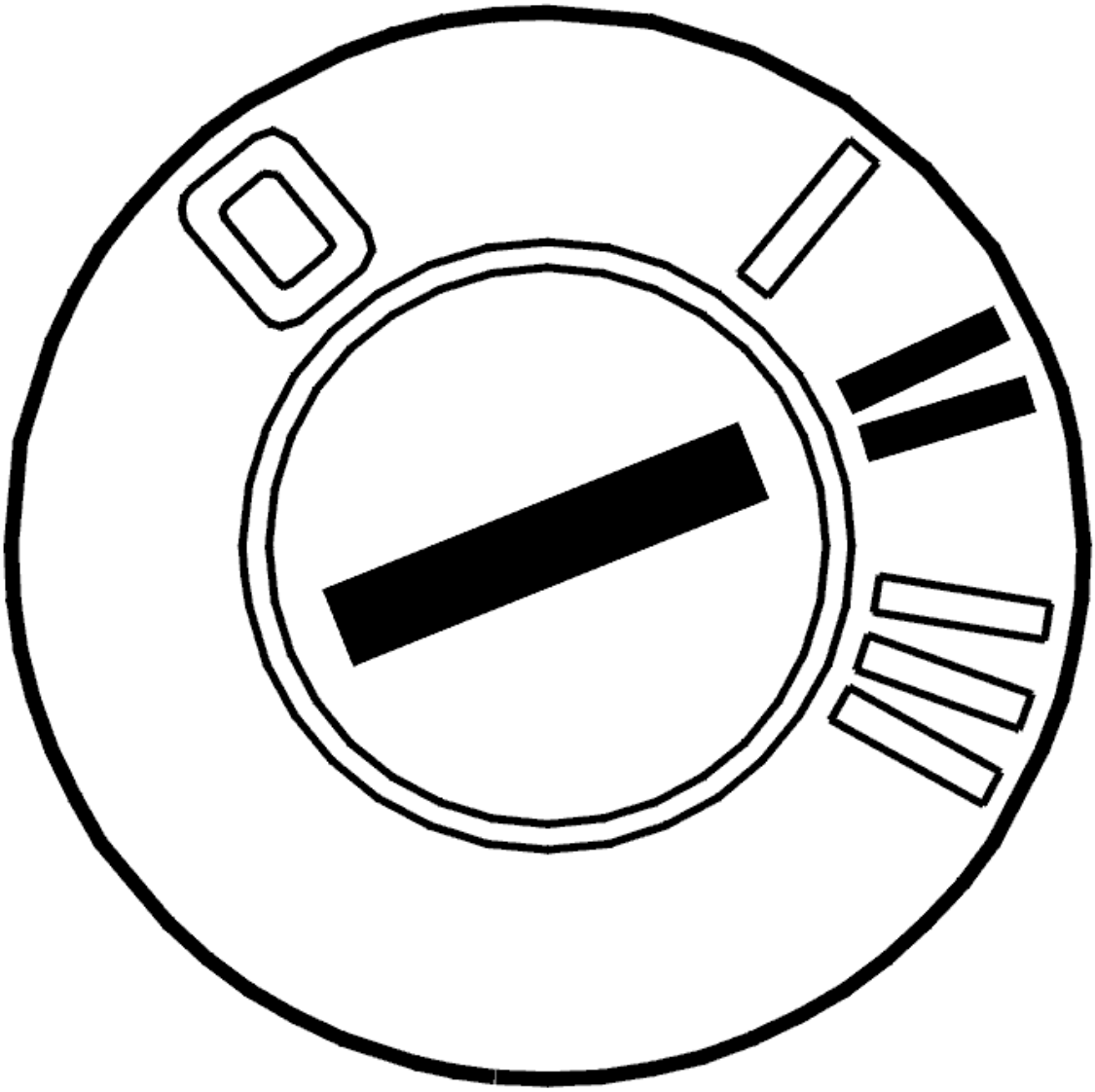

Fig. 51: Identifying Ignition ON
Courtesy of VOLVO CARS CORPORATION

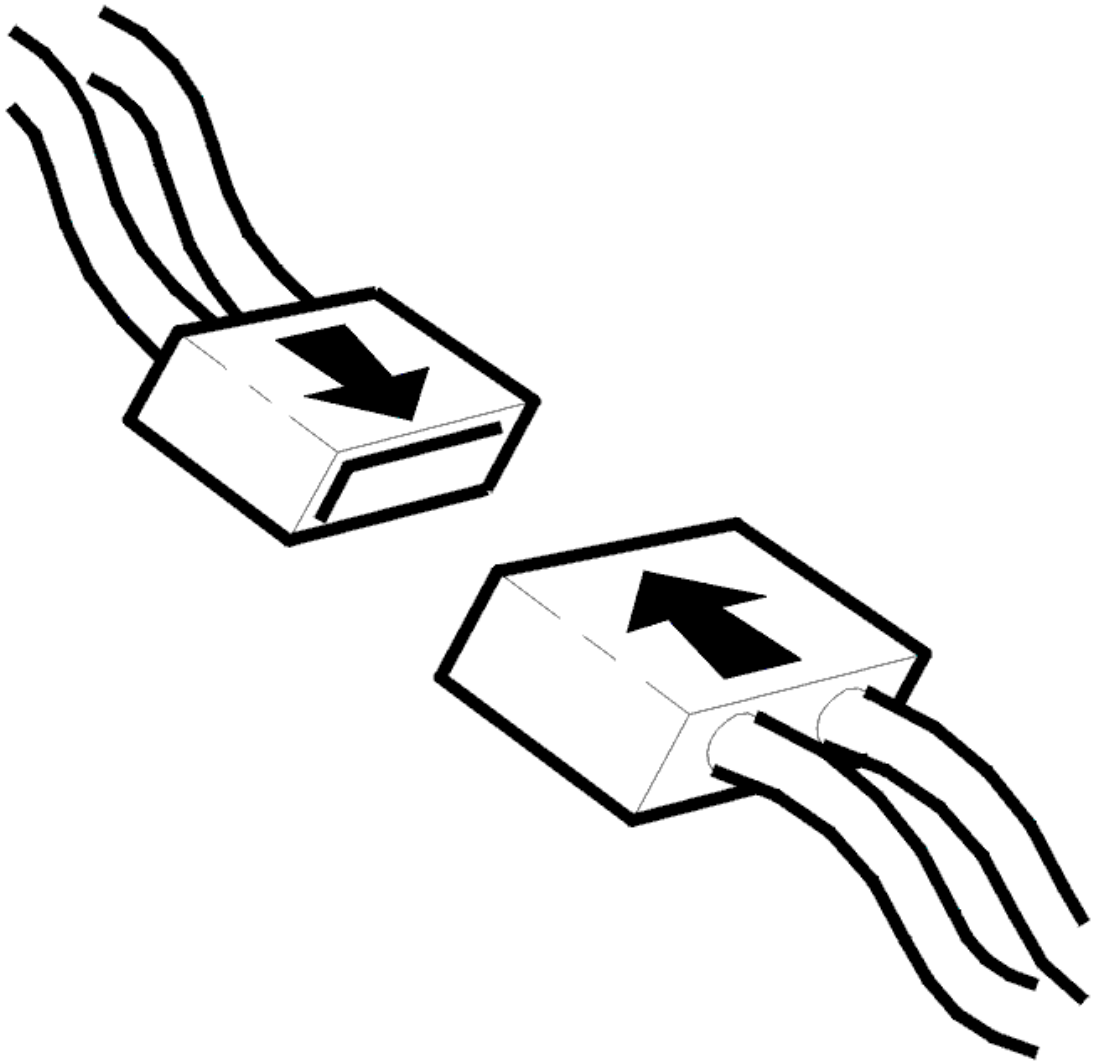

Fig. 52: Connecting Connector
Courtesy of VOLVO CARS CORPORATION

- Ignition off.
- Connect connectors, install components, etc.
- Ignition on.

  Check that the relevant functions of the switch units work.

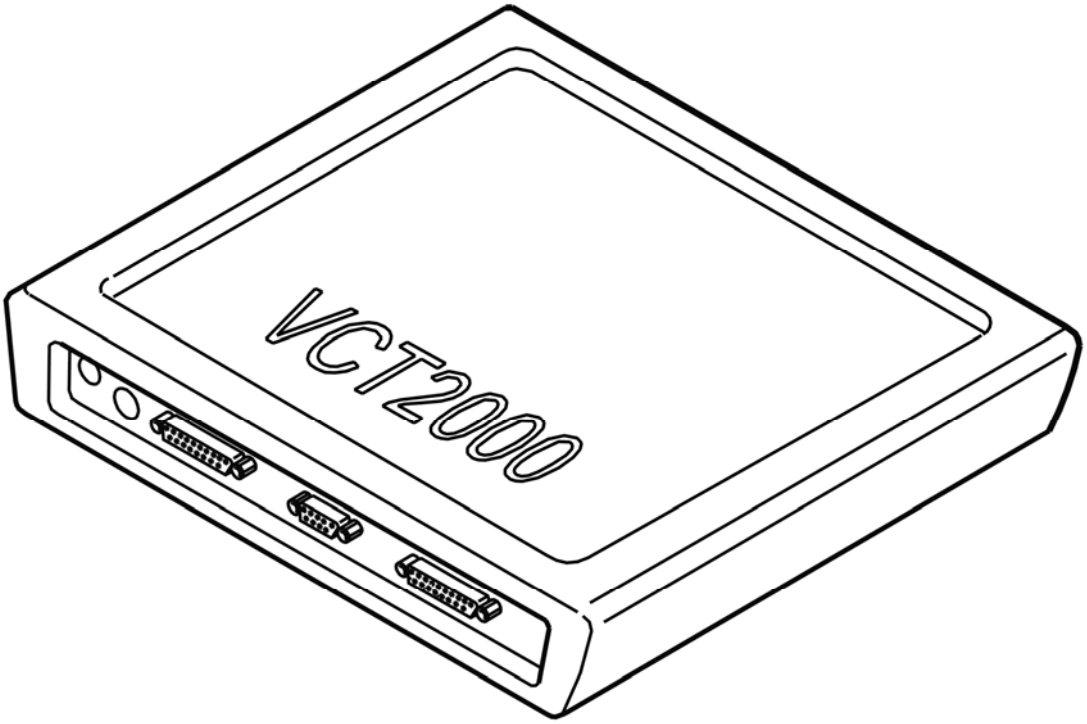

Fig. 53: Identifying VCT2000 Diagnostic Tool Symbol In VIDA
Courtesy of VOLVO CARS CORPORATION

Do buttons work?

- **YES**

  VERIFIED: Troubleshooting has been completed.

- **NO**

  Refer to **INFORMATION**

INFORMATION

FAULT-TRACING INFORMATION

The fault should have been detected and remedied. As this is not the case fault-tracing has failed.

Exit fault-tracing for this diagnostic trouble code (DTC) or make another attempt.

DIAGNOSTIC TROUBLE CODE (DTC) INFORMATION SWM-0016

see **DIAGNOSTIC TROUBLE CODE (DTC) INFORMATION SWM-0016**

SWM-0017: CRUISE CONTROL RESUME BUTTON. ACTIVATED TOO LONG. INTERMITTENT FAULT (2003-2004)

ACTIVATED FOR LONG TIME. INTERMITTENT FAULT

see **ACTIVATED FOR LONG TIME. INTERMITTENT FAULT**

DIAGNOSTIC TROUBLE CODE (DTC) INFORMATION

SWM-0017

Condition

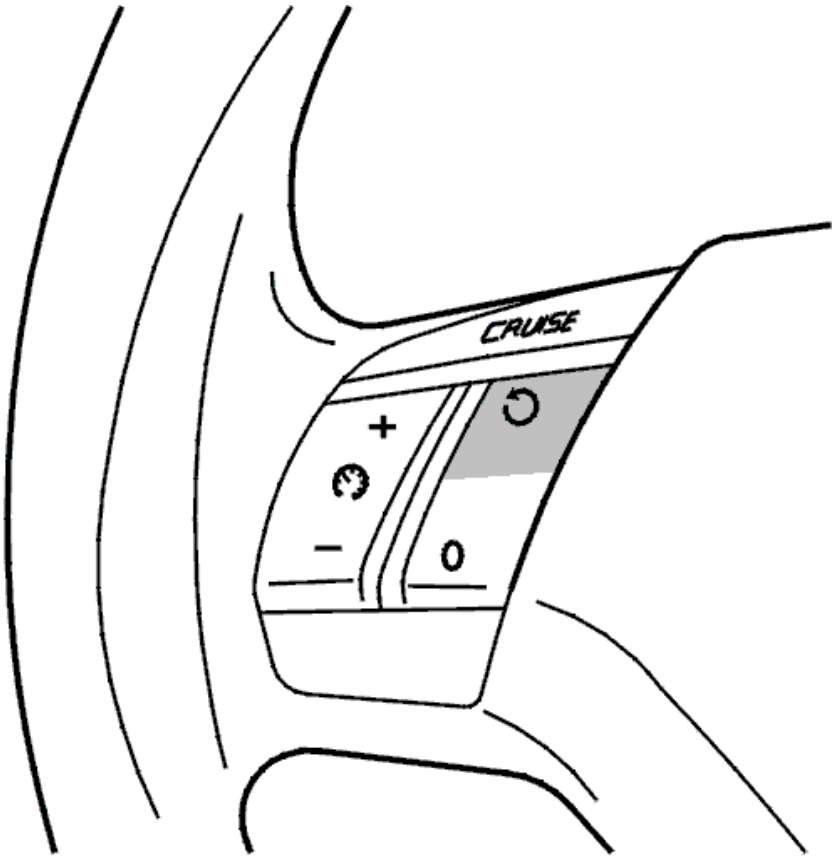

Fig. 54: Identifying Resume Button For Cruise Control
Courtesy of VOLVO CARS CORPORATION

Diagnostic trouble code (DTC) SWM-0017 is stored if the micro processor or steering wheel module registers that the Resume switch on the cruise control function is activated for more than 5 minutes.

Substitute Value

The cruise control is deactivated for the rest of the journey.

Possible Source

- The Resume switch on the cruise control function is activated for more than 5 minutes.

Fault symptom[s]

- Cruise control does not function at all.

SWM-0017: CRUISE CONTROL RESUME BUTTON. ACTIVATED TOO LONG. PERMANENT FAULT (2003-2004)

ACTIVATED TOO LONG. PERMANENT FAULT

see **ACTIVATED TOO LONG. PERMANENT FAULT**

DIAGNOSTIC TROUBLE CODE (DTC) INFORMATION

see **DIAGNOSTIC TROUBLE CODE (DTC) INFORMATION**

SWM-0018: CRUISE CONTROL CANCEL BUTTON. ACTIVATED TOO LONG. INTERMITTENT FAULT (2003-2004)

ACTIVATED FOR LONG TIME. INTERMITTENT FAULT

see **ACTIVATED FOR LONG TIME. INTERMITTENT FAULT**

DIAGNOSTIC TROUBLE CODE (DTC) INFORMATION

SWM-0018

Condition

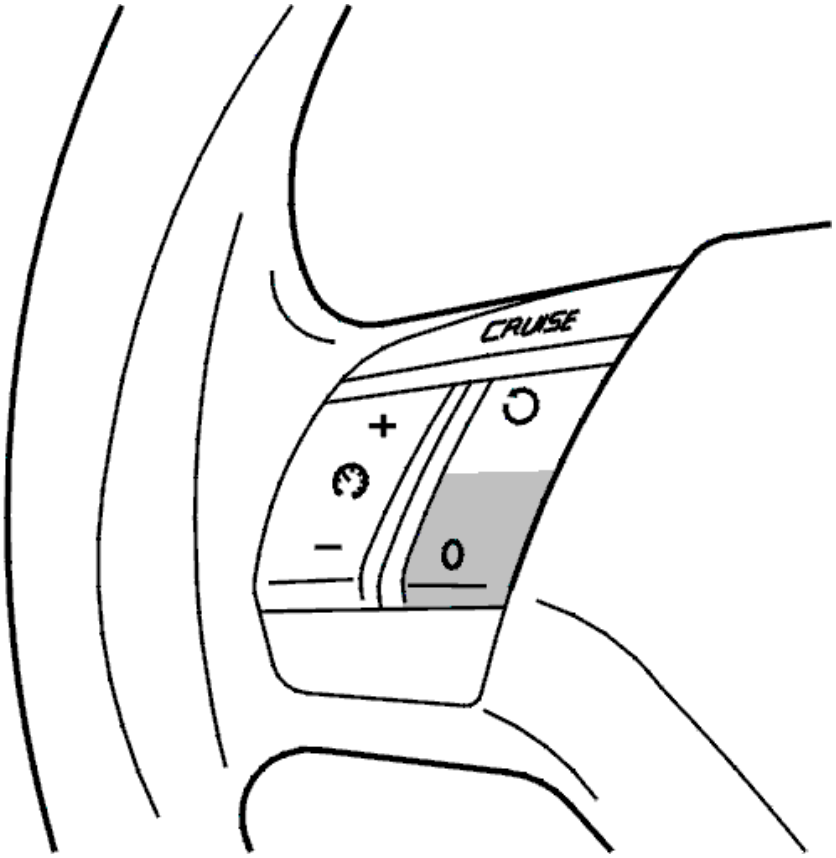

Fig. 55: Identifying Cancel Button For Cruise Control
Courtesy of VOLVO CARS CORPORATION

Diagnostic trouble code (DTC) SWM-0018 is stored if the micro processor or steering wheel module registers that the Cancel switch on the cruise control function is activated for more than 5 minutes.

Substitute Value

The cruise control is deactivated for the rest of the journey.

Possible Source

- The Cancel switch on the cruise control function is activated for more than 5 minutes.

Fault symptom[s]

- Cruise control does not function at all.

SWM-0018: CRUISE CONTROL CANCEL BUTTON. ACTIVATED TOO LONG. PERMANENT FAULT (2003-2004)

ACTIVATED TOO LONG. PERMANENT FAULT

see **ACTIVATED TOO LONG. PERMANENT FAULT**

DIAGNOSTIC TROUBLE CODE (DTC) INFORMATION

see **DIAGNOSTIC TROUBLE CODE (DTC) INFORMATION**

SWM-0019: CRUISE CONTROL SET+ BUTTON. ACTIVATED TOO LONG. INTERMITTENT FAULT (2003-2004)

ACTIVATED FOR LONG TIME. INTERMITTENT FAULT

see **ACTIVATED FOR LONG TIME. INTERMITTENT FAULT**

DIAGNOSTIC TROUBLE CODE (DTC) INFORMATION

SWM-0019

Condition

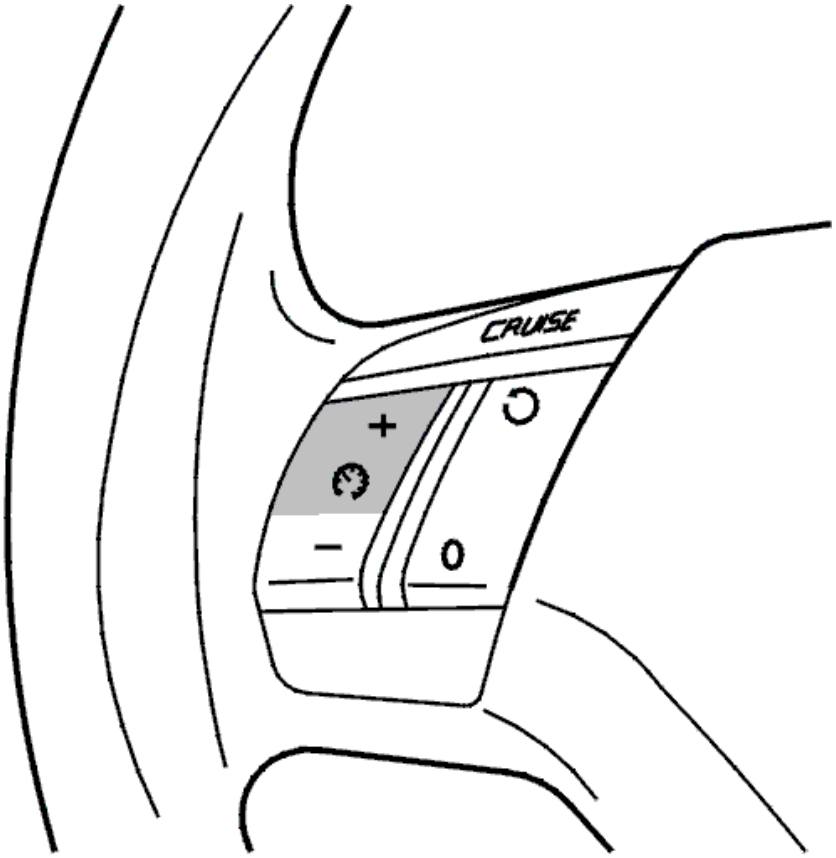

Fig. 56: Identifying Set+ Button For Cruise Control
Courtesy of VOLVO CARS CORPORATION

Diagnostic trouble code (DTC) SWM-0019 is stored if the micro processor or steering wheel module registers

that the Set+ switch on the cruise control function is activated for more than 5 minutes.

Substitute Value

The cruise control is deactivated for the rest of the journey.

Possible Source

- The Set+ switch on the cruise control function is activated for more than 5 minutes.

Fault symptom[s]

- Cruise control does not function at all.

SWM-0019: CRUISE CONTROL SET+ BUTTON. ACTIVATED TOO LONG. PERMANENT FAULT (2003-2004)

ACTIVATED TOO LONG. PERMANENT FAULT

see **ACTIVATED TOO LONG. PERMANENT FAULT**

DIAGNOSTIC TROUBLE CODE (DTC) INFORMATION

see **DIAGNOSTIC TROUBLE CODE (DTC) INFORMATION**

SWM-001A: CRUISE CONTROL SET- BUTTON. ACTIVATED TOO LONG. INTERMITTENT FAULT (2003-2004)

ACTIVATED FOR LONG TIME. INTERMITTENT FAULT

see **ACTIVATED FOR LONG TIME. INTERMITTENT FAULT**

DIAGNOSTIC TROUBLE CODE (DTC) INFORMATION

SWM-001A

Condition

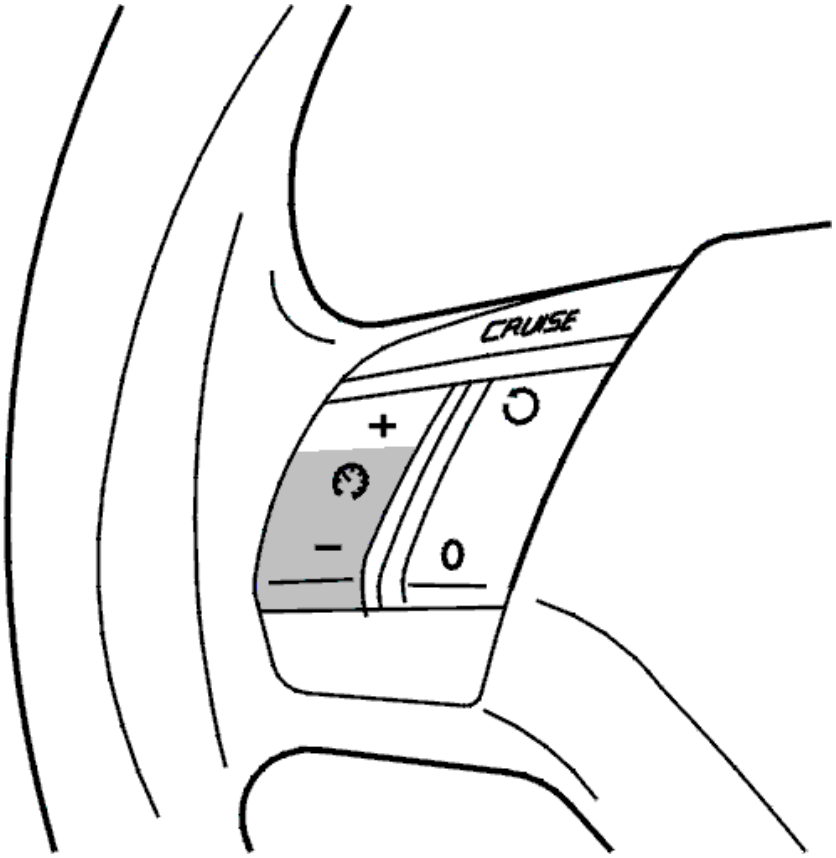

Fig. 57: Identifying Set- Button For Cruise Control
Courtesy of VOLVO CARS CORPORATION

Diagnostic trouble code (DTC) SWM-001A is stored if the micro processor or steering wheel module registers that the Set- switch on the cruise control function is activated for more than 5 minutes.

Substitute Value

The cruise control is deactivated for the rest of the journey.

Possible Source

- The Set- switch on the cruise control function is activated for more than 5 minutes.

Fault symptom[s]

- Cruise control does not function at all.

SWM-001A: CRUISE CONTROL SET- BUTTON. ACTIVATED TOO LONG. PERMANENT FAULT (2003-2004)

ACTIVATED TOO LONG. PERMANENT FAULT

see **ACTIVATED TOO LONG. PERMANENT FAULT**

DIAGNOSTIC TROUBLE CODE (DTC) INFORMATION

see **DIAGNOSTIC TROUBLE CODE (DTC) INFORMATION**

SWM-001B: CARPHONE YES-BUTTON. ACTIVATED TOO LONG. INTERMITTENT FAULT (2003-2004)

ACTIVATED TOO LONG. PERMANENT FAULT

OTHER DIAGNOSTIC TROUBLE CODES (DTCS)

The combination of diagnostic trouble codes (DTCs) can determine where the fault originated.

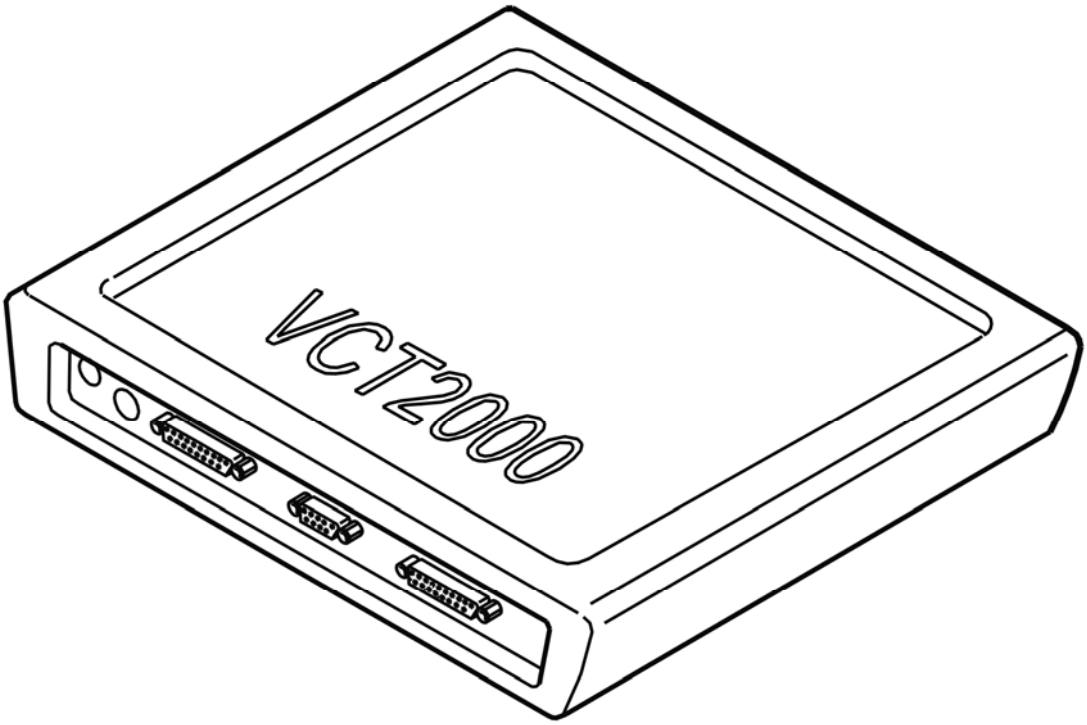

Fig. 58: Identifying VCT2000 Diagnostic Tool Symbol In VIDA
Courtesy of VOLVO CARS CORPORATION

Are two or more of diagnostic trouble codes (DTCs) SWM-001B, SWM-001C, SWM-001D, SWM-001E, SWM-0020, SWM-0021 stored?

- **Yes**

Refer to **CHECKING THE CABLE AND COMPONENT**

- **No**

  Refer to **CHECKING THE BUTTON**

CHECKING THE BUTTON

Ensure that the none of the buttons in the audio and carphone switch are jammed in the depressed position.

Remedy as necessary

Other information:

- To access or replace the audio and carphone switch, see **KEYPAD STEERING WHEEL, REPLACING** .

- **Continue**

  Refer to **VERIFICATION**

CHECKING THE CABLE AND COMPONENT

If the car is equipped with a Road Traffic Information (RTI) system, disconnect the RTI switch from the electrical radio and audio switch. This is so that the fault can be located.

Read off the status of the buttons in the audio and carphone switch.

If any of the buttons are activated without having been depressed, the fault is in the RTI switch.

Disconnect the lower switch from the audio and radio switch. This is so that the fault can be located.

Read off the status of the buttons in the audio and carphone switch.

If any of the buttons are activated without having been manually depressed, the fault is in the audio and carphone switch.

Disconnect the lower switch from the cruise control switch. This is so that the fault can be located.

Read off the status of the buttons in the audio and carphone switch.

If any of the buttons are activated without having been manually activated, the fault is in the cruise control switch, or in the cable between the cruise control switch and the radio and carphone switch.

Remedy as necessary.

Other information:

- To access or replace the RTI switch, see **RTI SWITCH**
- To access or replace the audio and carphone switch, see **KEYPAD STEERING WHEEL, REPLACING**
- To access or replace the cruise control switch, see **KEYPAD STEERING WHEEL, REPLACING** .

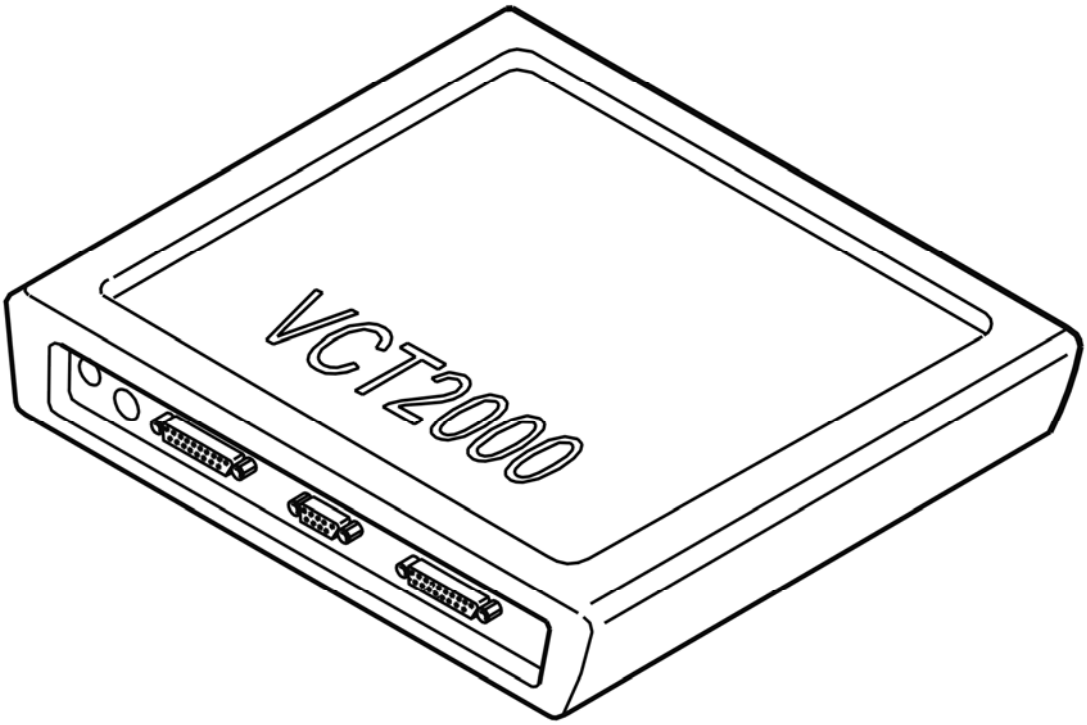

Fig. 59: Identifying VCT2000 Diagnostic Tool Symbol In VIDA
Courtesy of VOLVO CARS CORPORATION

- **Continue**

  Refer to **VERIFICATION**

VERIFICATION

HINT: After the repair it is necessary to check that the fault has been rectified.

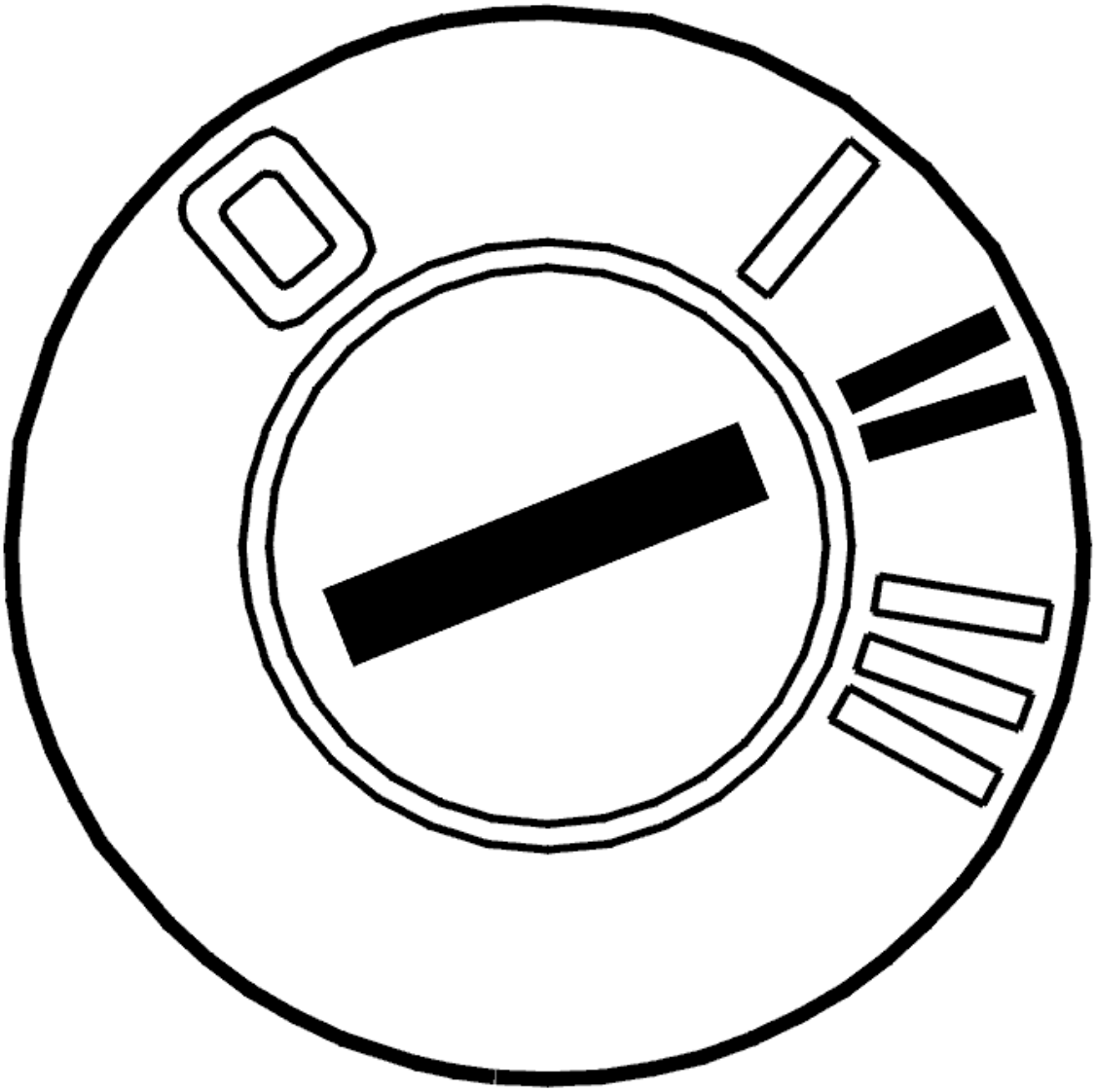

Fig. 60: Identifying Ignition ON
Courtesy of VOLVO CARS CORPORATION

- Ignition off.
- Connect the connectors, install the components, etc.
- Ignition on.

  Check that all buttons on audio/telephone switch unit work.

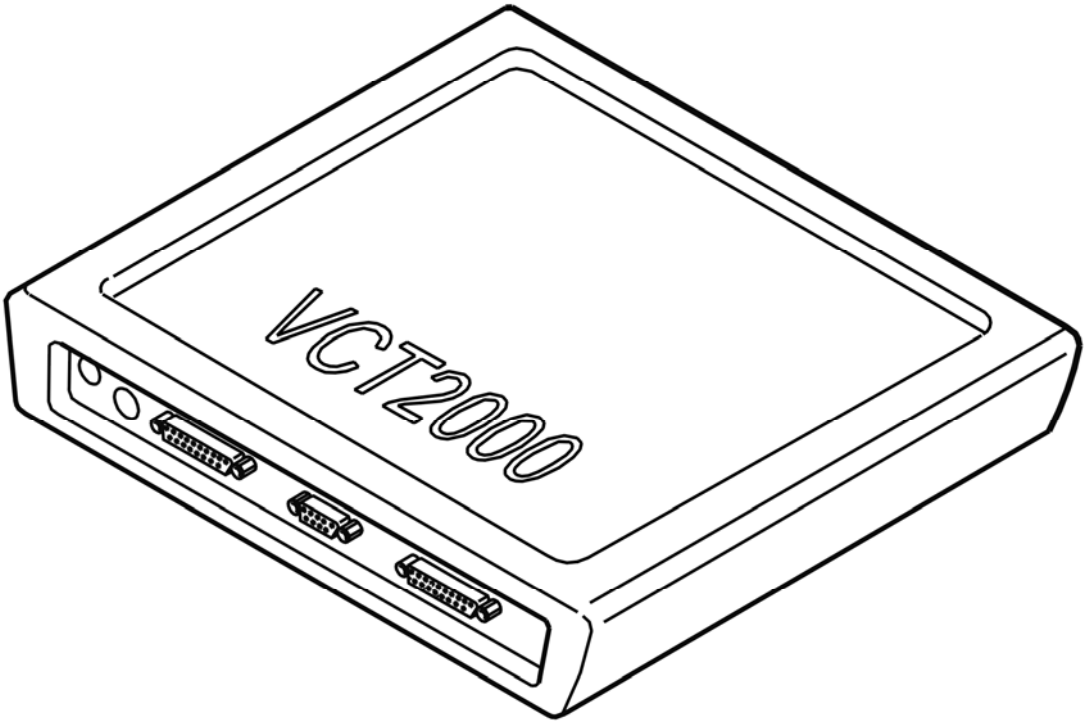

Fig. 61: Identifying VCT2000 Diagnostic Tool Symbol In VIDA
Courtesy of VOLVO CARS CORPORATION

Do buttons work?

- **YES**

  VERIFIED: Troubleshooting has been completed.

- **NO**

  Refer to **INFORMATION**

INFORMATION

FAULT-TRACING INFORMATION

The fault should have been detected and remedied. As this is not the case fault-tracing has failed.

Exit fault-tracing for this diagnostic trouble code (DTC) or make another attempt.

DIAGNOSTIC TROUBLE CODE (DTC) INFORMATION

SWM-001B

Condition

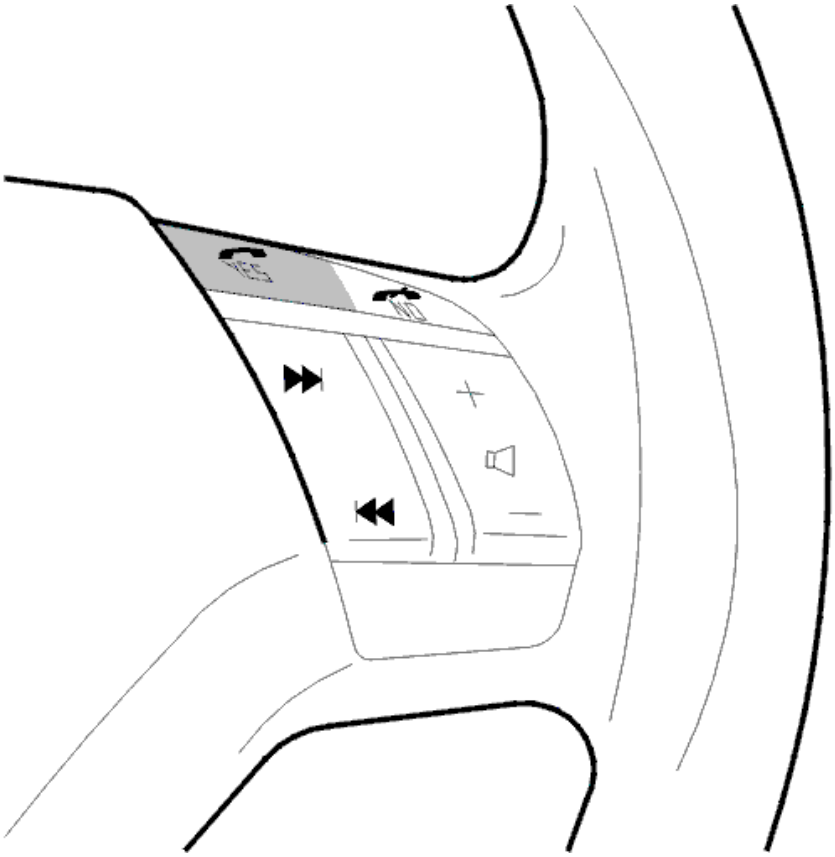

Fig. 62: Identifying YES Button
Courtesy of VOLVO CARS CORPORATION

Diagnostic trouble code (DTC) SWM-001B is stored if the micro processor or steering wheel module registers that the YES switch is activated for more than 5 minutes.

Substitute Value

None.

Possible Source

- The YES switch is activated for more than 5 minutes.

Fault symptom[s]

- The carphone does not function.

SWM-001C: CARPHONE NO BUTTON. ACTIVATED TOO LONG. INTERMITTENT FAULT (2003-2004)

ACTIVATED FOR LONG TIME. INTERMITTENT FAULT

CHECKING THE BUTTONS

The diagnostic trouble code is displayed when a button has been pressed for more than 5 minutes. If the diagnostic trouble code is not displayed, no further action is necessary.

DIAGNOSTIC TROUBLE CODE (DTC) INFORMATION

SWM-001C

Condition

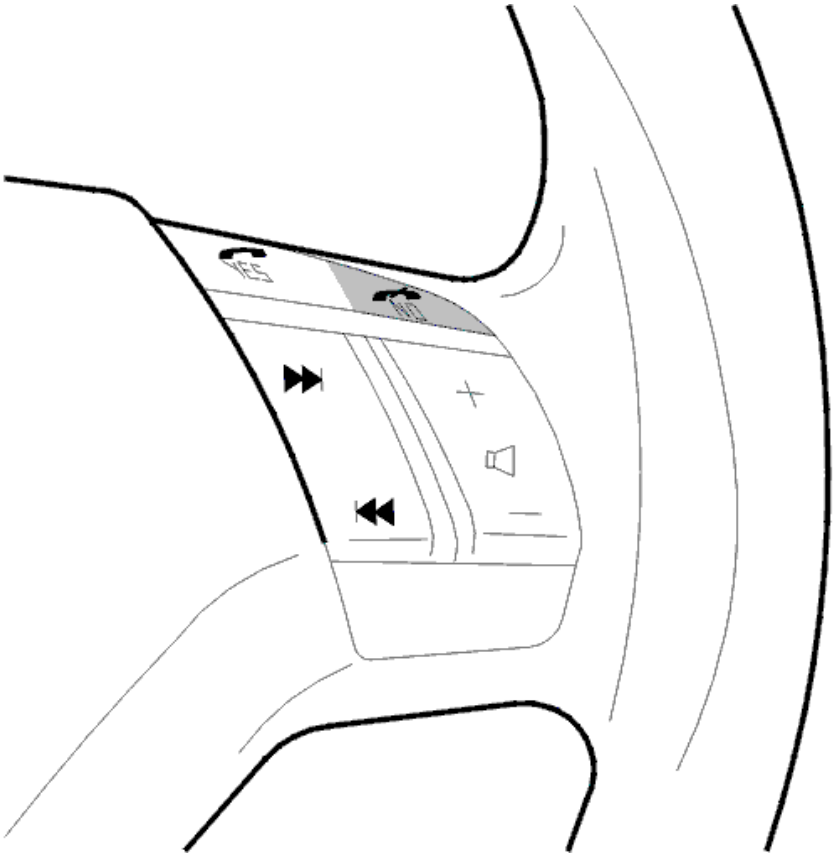

Fig. 63: Identifying NO Button
Courtesy of VOLVO CARS CORPORATION

Diagnostic trouble code (DTC) SWM-001C is stored if the micro processor or steering wheel module registers that the NO switch is activated for more than 5 minutes.

Substitute Value

None.

Possible Source

- The NO switch is activated for more than 5 minutes.

Fault symptom[s]

- The carphone does not function.

SWM-001C: CARPHONE NO BUTTON. ACTIVATED TOO LONG. PERMANENT FAULT (2003-2004)

ACTIVATED TOO LONG. PERMANENT FAULT

see **ACTIVATED TOO LONG. PERMANENT FAULT**

DIAGNOSTIC TROUBLE CODE (DTC) INFORMATION

see **DIAGNOSTIC TROUBLE CODE (DTC) INFORMATION**

SWM-001D: VOLUME+ BUTTON. ACTIVATED TOO LONG. INTERMITTENT FAULT (2003-2004)

ACTIVATED FOR LONG TIME. INTERMITTENT FAULT

see **ACTIVATED FOR LONG TIME. INTERMITTENT FAULT**

DIAGNOSTIC TROUBLE CODE (DTC) INFORMATION

SWM-001D

Condition

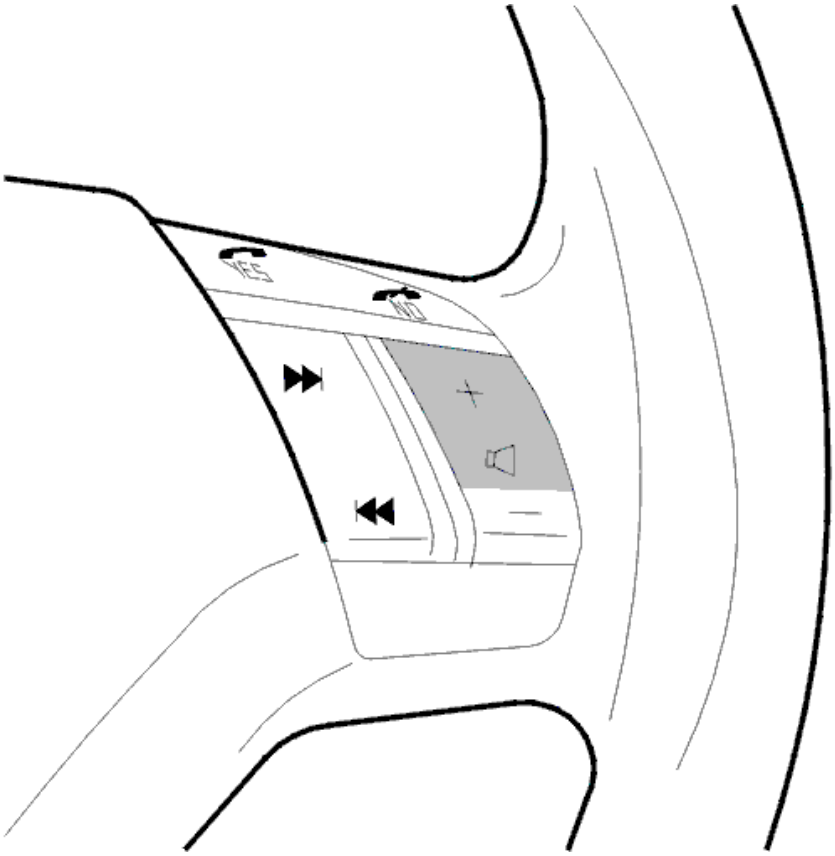

Fig. 64: Identifying Volume+ Switch
Courtesy of VOLVO CARS CORPORATION

Diagnostic trouble code (DTC) SWM-001D is stored if the micro processor or steering wheel module registers that the Volume+ switch is activated for more than 5 minutes.

Substitute Value

None.

Possible Source

- The Volume+ switch is activated for more than 5 minutes.

Fault symptom[s]

- The volume changes without the volume up or volume down buttons being manually activated
- The steering wheel radio controls do not function
- The steering wheel carphone controls do not function.

SWM-001D: VOLUME+ BUTTON. ACTIVATED TOO LONG. PERMANENT FAULT (2003-2004)

ACTIVATED TOO LONG. PERMANENT FAULT

see **ACTIVATED TOO LONG. PERMANENT FAULT**

DIAGNOSTIC TROUBLE CODE (DTC) INFORMATION

see **DIAGNOSTIC TROUBLE CODE (DTC) INFORMATION**

SWM-001E: VOLUME- BUTTON. ACTIVATED TOO LONG. INTERMITTENT FAULT (2003-2004)

ACTIVATED FOR LONG TIME. INTERMITTENT FAULT

see **ACTIVATED FOR LONG TIME. INTERMITTENT FAULT**

DIAGNOSTIC TROUBLE CODE (DTC) INFORMATION

SWM-001E

Condition

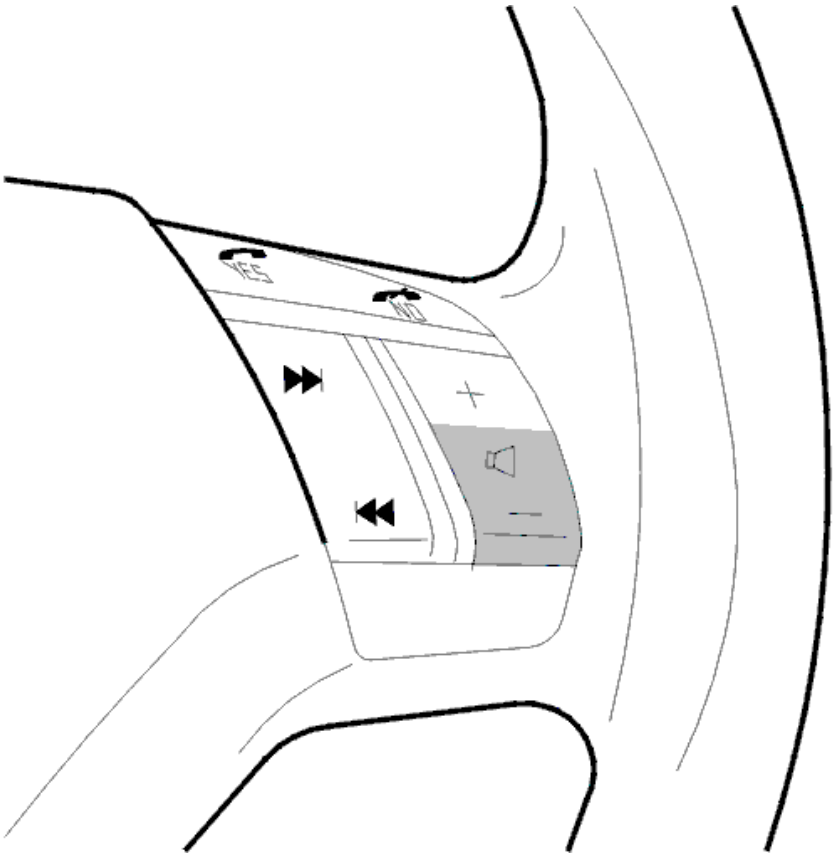

Fig. 65: Identifying Volume- Button
Courtesy of VOLVO CARS CORPORATION

Diagnostic trouble code (DTC) SWM-001E is stored if the micro processor or steering wheel module registers that the Volume- switch is activated for more than 5 minutes.

Substitute Value

None.

Possible Source

- The Volume- switch is activated for more than 5 minutes.

Fault symptom[s]

- The volume changes without the volume up or volume down buttons being manually activated
- The steering wheel radio controls do not function
- The steering wheel carphone controls do not function.

SWM-001E: VOLUME- BUTTON. ACTIVATED TOO LONG. PERMANENT FAULT (2003-2004)

ACTIVATED TOO LONG. PERMANENT FAULT

see **ACTIVATED TOO LONG. PERMANENT FAULT**

DIAGNOSTIC TROUBLE CODE (DTC) INFORMATION

see **DIAGNOSTIC TROUBLE CODE (DTC) INFORMATION**

SWM-0020: SCAN+ BUTTON. ACTIVATED TOO LONG. INTERMITTENT FAULT (2003-2004)

ACTIVATED FOR LONG TIME. INTERMITTENT FAULT

see **ACTIVATED FOR LONG TIME. INTERMITTENT FAULT**

DIAGNOSTIC TROUBLE CODE (DTC) INFORMATION

SWM-0020

Condition

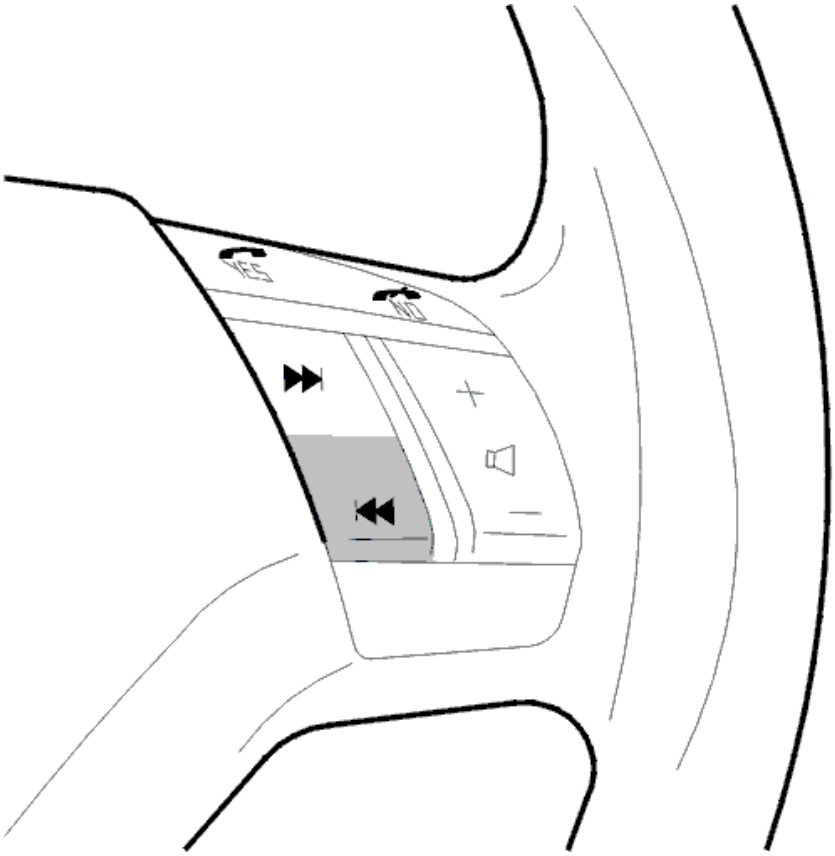

Fig. 66: Identifying Scan+ Button
Courtesy of VOLVO CARS CORPORATION

Diagnostic trouble code (DTC) SWM-0020 is stored if the micro processor or steering wheel module registers that the Scan+ control is activated for more than 5 minutes.

Substitute Value

None.

Possible Source

- The Scan+ control is activated for more than 5 minutes.

Fault symptom[s]

- The station setting changes without the scan+ or scan- buttons being manually activated
- The steering wheel radio controls do not function
- The carphone does not function.

SWM-0020: SCAN+ BUTTON. ACTIVATED TOO LONG. PERMANENT FAULT (2003-2004)

ACTIVATED TOO LONG. PERMANENT FAULT

see **ACTIVATED TOO LONG. PERMANENT FAULT**

DIAGNOSTIC TROUBLE CODE (DTC) INFORMATION

see **DIAGNOSTIC TROUBLE CODE (DTC) INFORMATION**

SWM-0021: SCAN- BUTTON. ACTIVATED TOO LONG. INTERMITTENT FAULT (2003-2004)

ACTIVATED TOO LONG. PERMANENT FAULT

see **ACTIVATED TOO LONG. PERMANENT FAULT**

DIAGNOSTIC TROUBLE CODE (DTC) INFORMATION

SWM-0021

Condition

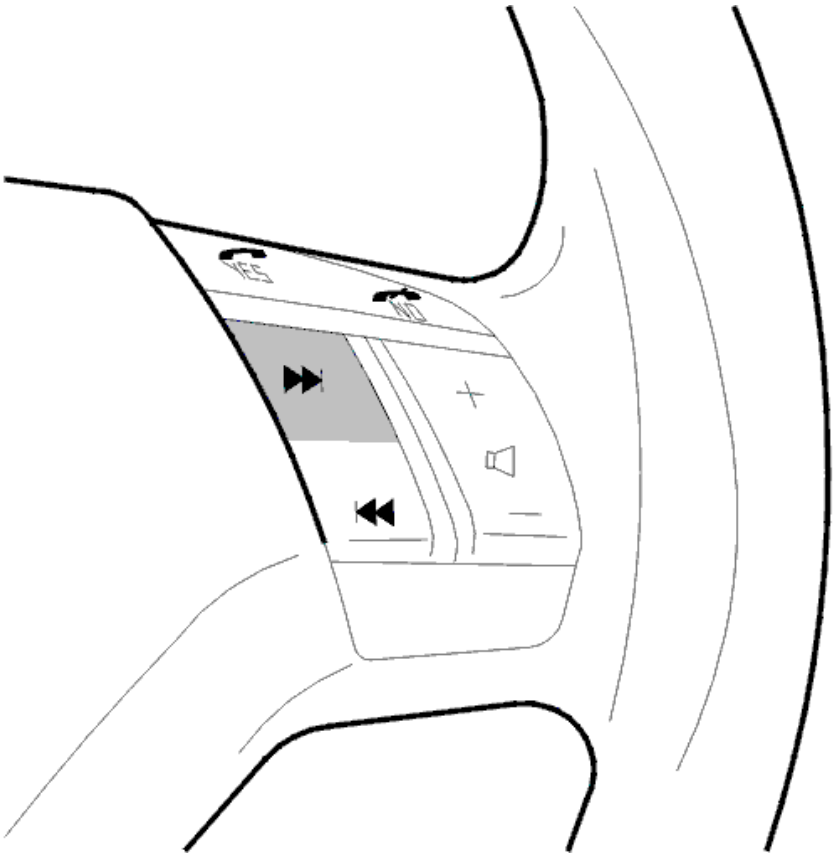

Fig. 67: Identifying Scan- Button
Courtesy of VOLVO CARS CORPORATION

Diagnostic trouble code (DTC) SWM-0021 is stored if the micro processor or steering wheel module registers that the Scan- control is activated for more than 5 minutes.

Substitute Value

None.

Possible Source

- The Scan- control is activated for more than 5 minutes.

Fault symptom[s]

- The station setting changes without the scan+ or scan- buttons being manually activated
- The steering wheel radio controls do not function
- The carphone does not function.

SWM-0022: RTI ENTER BUTTON. ACTIVATED TOO LONG. INTERMITTENT FAULT (2003-2004)

ACTIVATED FOR LONG TIME. INTERMITTENT FAULT

CHECKING THE BUTTONS

The diagnostic trouble code is displayed when a button has been pressed for more than 5 minutes. If the diagnostic trouble code is not displayed, no further action is necessary.

DIAGNOSTIC TROUBLE CODE INFORMATION

SWM-0022

Condition

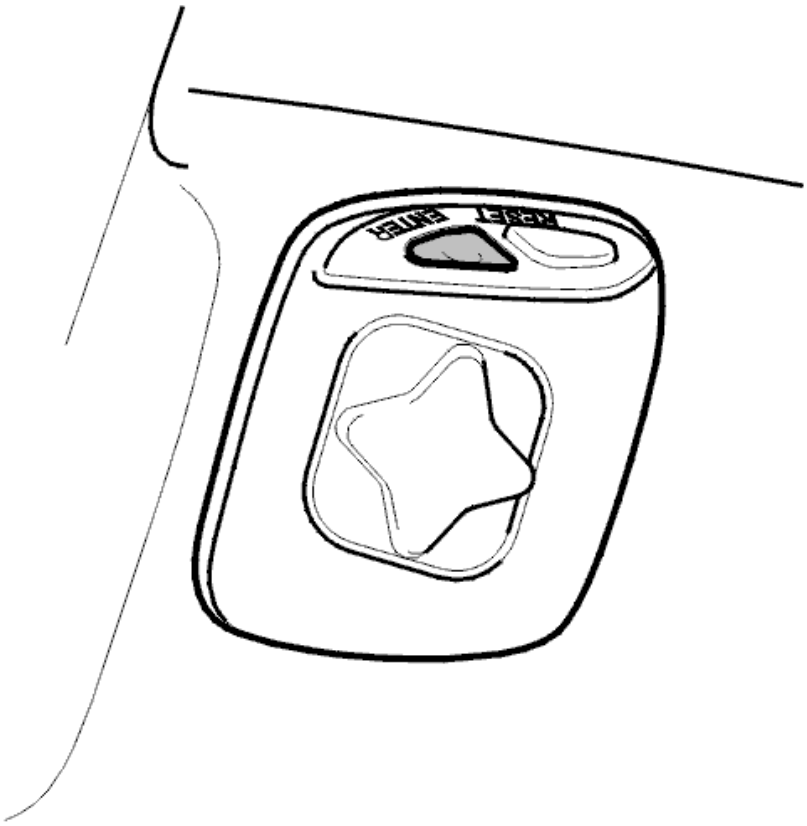

Fig. 68: Identifying Enter Button
Courtesy of VOLVO CARS CORPORATION

If SWM microprocessor/control unit registers that RTI Enter button is activated for more than 5 minutes, diagnostic trouble code SWM-0022 is displayed.

Substitute Value

Nothing.

Possible Source

- RTI Enter button is activated for more than 5 minutes.

Fault symptom[s]

- RTI steering wheel buttons do not work.

SWM-0022: RTI ENTER BUTTON. ACTIVATED TOO LONG. PERMANENT FAULT (2003-2004)

ACTIVATED TOO LONG. PERMANENT FAULT

OTHER DIAGNOSTIC TROUBLE CODES (DTCS)

The combination of diagnostic trouble codes (DTCs) can determine where the fault originated.

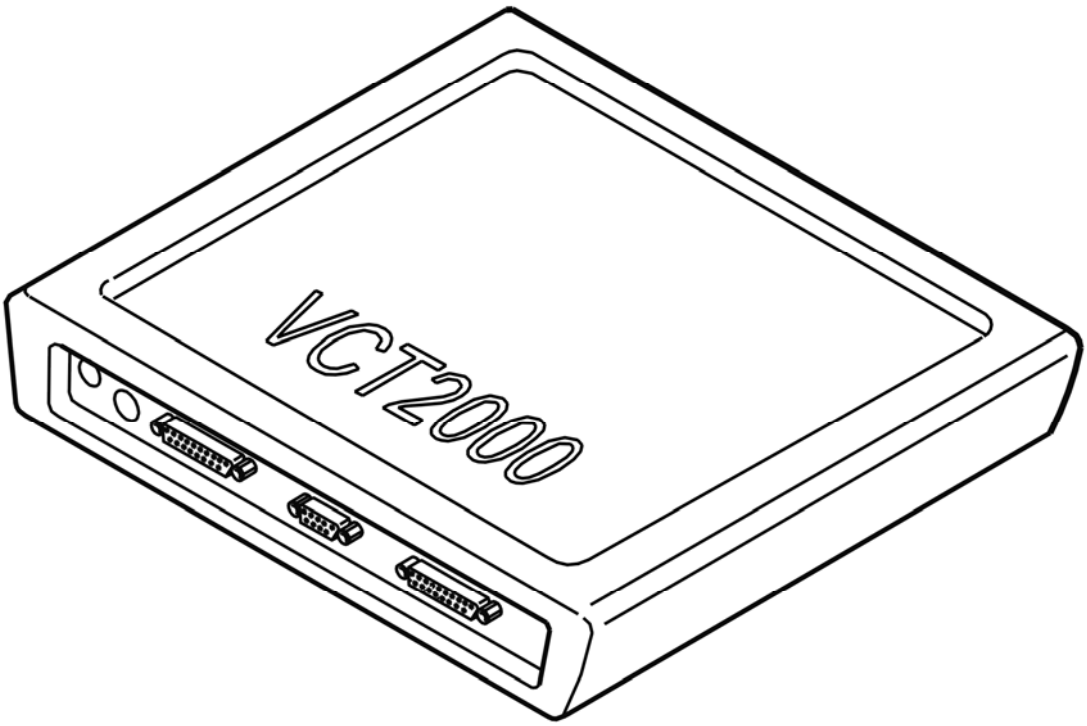

Fig. 69: Identifying VCT2000 Diagnostic Tool Symbol In VIDA
Courtesy of VOLVO CARS CORPORATION

Are two or more of diagnostic trouble codes (DTCs) SWM-0022, SWM-0023, SWM-0024, SWM-0025, SWM-0026 or SWM-0027 stored?

- **Yes**

  Refer to **CHECKING THE CABLE AND COMPONENT**

- **No**

  Refer to **CHECKING THE BUTTON**

CHECKING THE BUTTON

Ensure that the none of the buttons in the RTI switch are jammed in the depressed position.

Remedy as necessary

Other information:

- To access or replace the audio and carphone switch, see **KEYPAD STEERING WHEEL, REPLACING** .
- **Continue**

  Refer to **VERIFICATION**

CHECKING THE CABLE AND COMPONENT

Disconnect the RTI switch from the audio and radio switch. This is so that the fault can be located.

Read off the status of the buttons in the audio/carphone switch.

If any of the buttons are activated without having been manually activated, the fault is in the RTI switch.

Disconnect the lower switch from the audio and radio switch. This is so that the fault can be located.

Read off the status of the buttons in the audio and carphone switch.

If any of the buttons are activated without having been manually activated, the fault is in the audio and carphone switch.

Disconnect the lower switch from the cruise control switch. This is so that the fault can be located.

Read off the status of the buttons in the audio and carphone switch.

If any of the buttons are activated without having been manually activated the fault is in the cruise control switch or in the cable between the cruise control switch and the radio and carphone switch.

Remedy as necessary.

Other information:

- To access or replace the RTI switch, see **RTI SWITCH**
- To access or replace the audio and carphone switch, see **KEYPAD STEERING WHEEL, REPLACING**
- To access or replace the cruise control switch, see **KEYPAD STEERING WHEEL, REPLACING** .

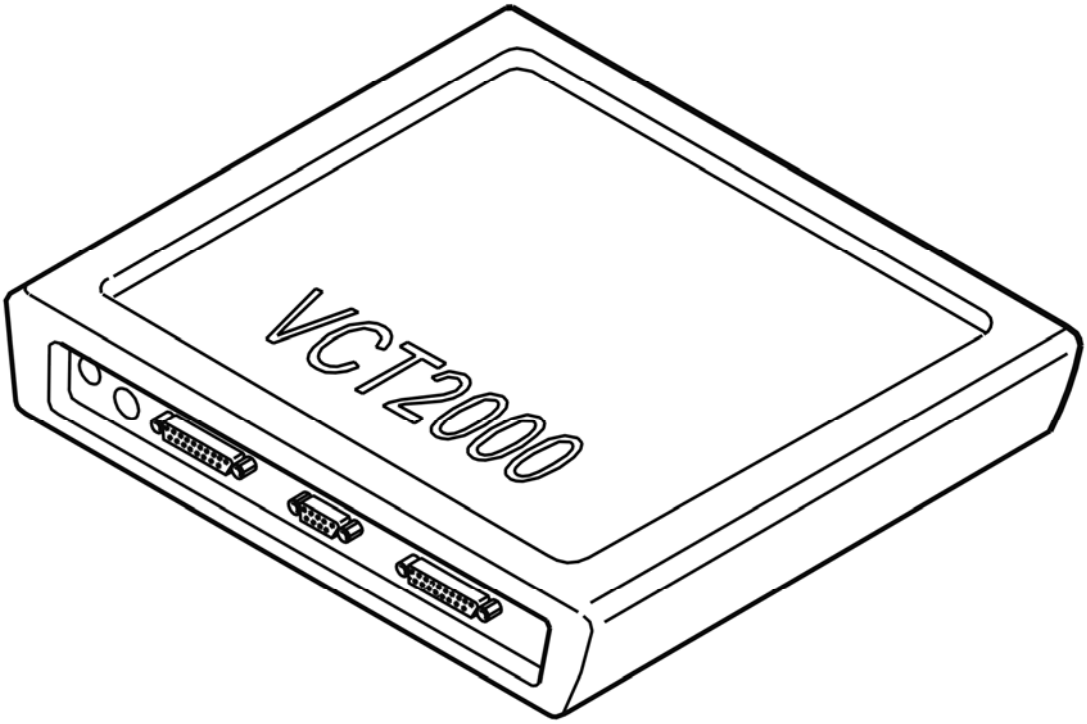

Fig. 70: Identifying VCT2000 Diagnostic Tool Symbol In VIDA
Courtesy of VOLVO CARS CORPORATION

- **Continue**

  Refer to **VERIFICATION**

VERIFICATION

HINT: After the repair it is necessary to check that the fault has been rectified.

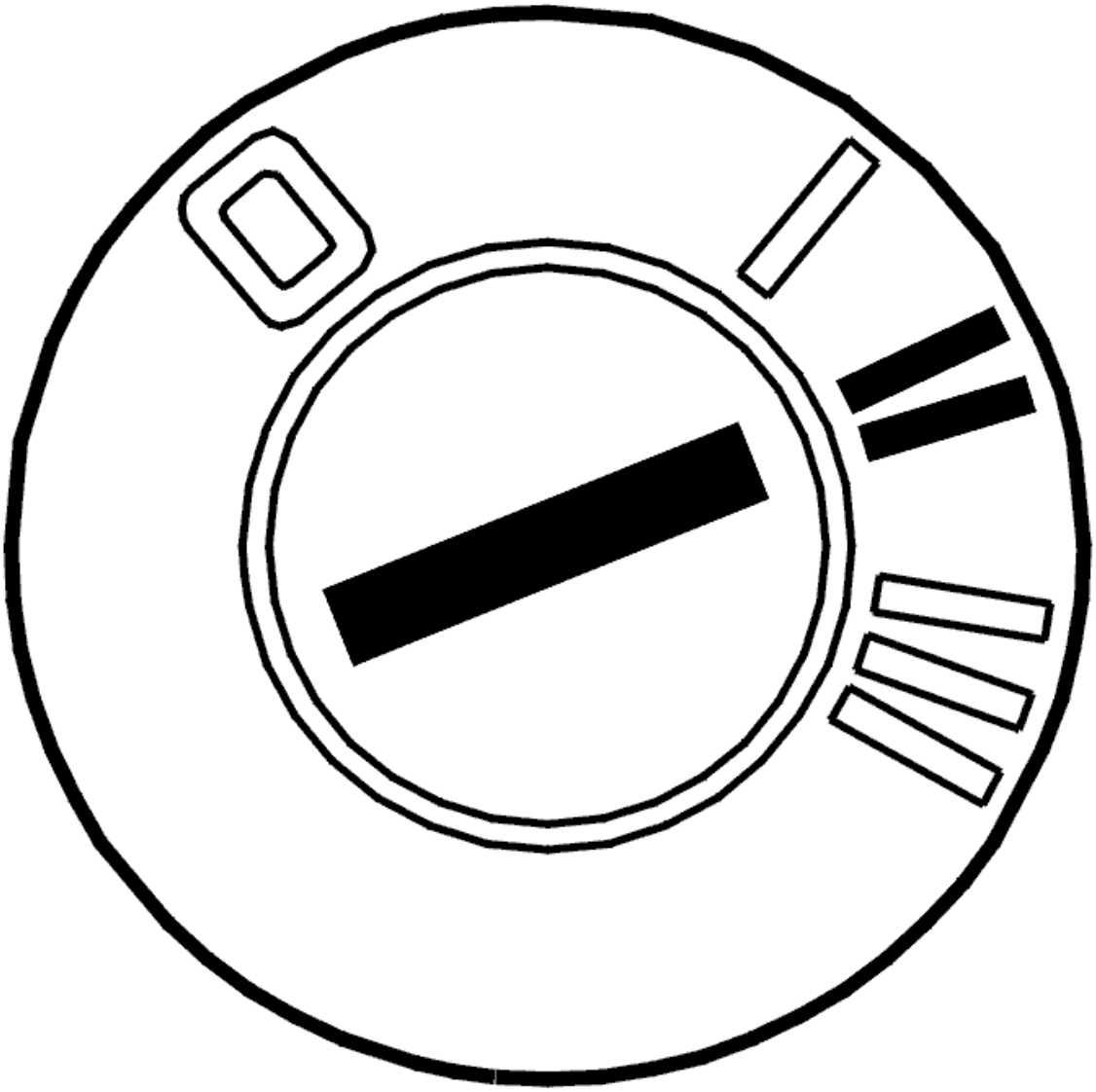

Fig. 71: Identifying Ignition ON
Courtesy of VOLVO CARS CORPORATION

- Ignition off.
- Connect the connectors, install the components, etc.
- Ignition on.

  Check that all buttons on audio/telephone switch unit work.

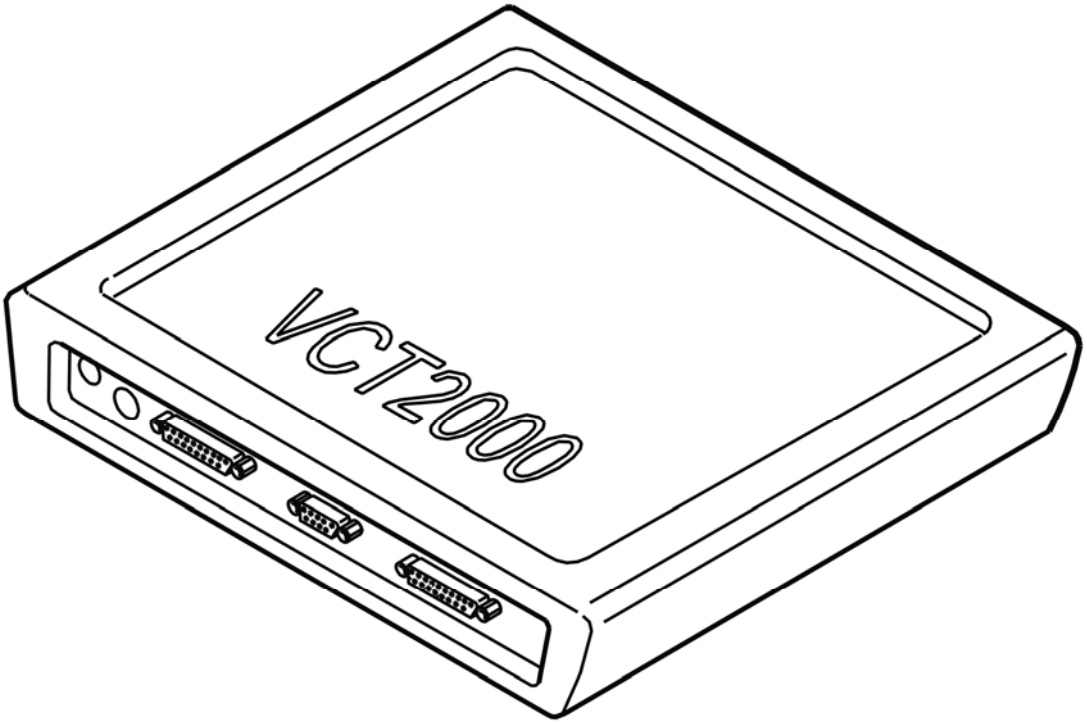

Fig. 72: Identifying VCT2000 Diagnostic Tool Symbol In VIDA
Courtesy of VOLVO CARS CORPORATION

Do buttons work?

- **YES**

  VERIFIED: Troubleshooting has been completed.

- **NO**

  Refer to **INFORMATION**

INFORMATION

FAULT-TRACING INFORMATION

The fault should have been detected and remedied. As this is not the case fault-tracing has failed.

Exit fault-tracing for this diagnostic trouble code (DTC) or make another attempt.

DIAGNOSTIC TROUBLE CODE INFORMATION

see **DIAGNOSTIC TROUBLE CODE INFORMATION**

SWM-0023: RTI RESET BUTTON. ACTIVATED TOO LONG. INTERMITTENT FAULT (2003-2004)

ACTIVATED FOR LONG TIME. INTERMITTENT FAULT

see **ACTIVATED FOR LONG TIME. INTERMITTENT FAULT**

DIAGNOSTIC TROUBLE CODE INFORMATION

SWM-0023

Condition

Fig. 73: Identifying Back Button
Courtesy of VOLVO CARS CORPORATION

If SWM microprocessor/control unit registers that RTI Reset button is activated for more than 5 minutes, diagnostic trouble code SWM-0023 is displayed.

Substitute Value

Nothing.

Possible Source

- RTI Reset button is activated for more than 5 minutes.

Fault symptom[s]

- RTI steering wheel buttons do not work.

SWM-0023: RTI RESET BUTTON. ACTIVATED TOO LONG. PERMANENT FAULT (2003-2004)

ACTIVATED TOO LONG. PERMANENT FAULT

see **ACTIVATED TOO LONG. PERMANENT FAULT**

DIAGNOSTIC TROUBLE CODE INFORMATION

see **DIAGNOSTIC TROUBLE CODE INFORMATION**

SWM-0024: RTI UP BUTTON. ACTIVATED TOO LONG. INTERMITTENT FAULT (2003-2004)

ACTIVATED FOR LONG TIME. INTERMITTENT FAULT

see **ACTIVATED FOR LONG TIME. INTERMITTENT FAULT**

DIAGNOSTIC TROUBLE CODE INFORMATION

SWM-0024

Condition

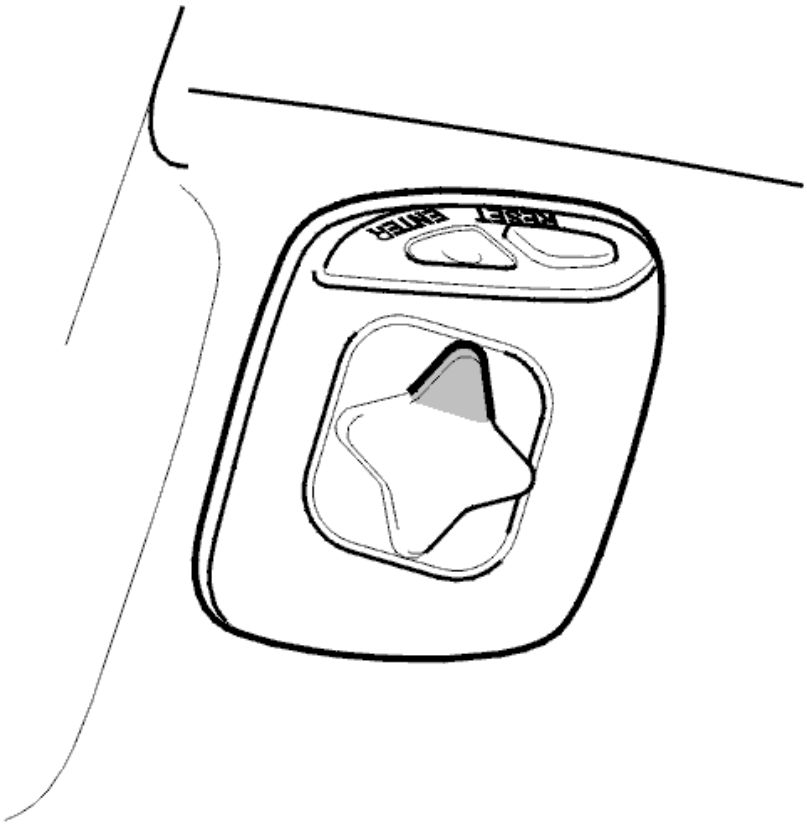

Fig. 74: Identifying RTI Up Button
Courtesy of VOLVO CARS CORPORATION

If SWM microprocessor/control unit registers that RTI Up button is activated for more than 5 minutes, diagnostic trouble code SWM-0024 is displayed.

Substitute Value

Nothing.

Possible Source

- RTI Up button is activated for more than 5 minutes.

Fault symptom[s]

- RTI settings change without RTI buttons being activated manually
- RTI steering wheel buttons do not work.

SWM-0024: RTI UP BUTTON. ACTIVATED TOO LONG. PERMANENT FAULT (2003-2004)

ACTIVATED TOO LONG. PERMANENT FAULT

see **ACTIVATED TOO LONG. PERMANENT FAULT**

DIAGNOSTIC TROUBLE CODE INFORMATION

see **DIAGNOSTIC TROUBLE CODE INFORMATION**

SWM-0025: RTI DOWN BUTTON. ACTIVATED TOO LONG. INTERMITTENT FAULT (2003-2004)

ACTIVATED FOR LONG TIME. INTERMITTENT FAULT

see **ACTIVATED FOR LONG TIME. INTERMITTENT FAULT**

DIAGNOSTIC TROUBLE CODE INFORMATION

SWM-0025

Condition

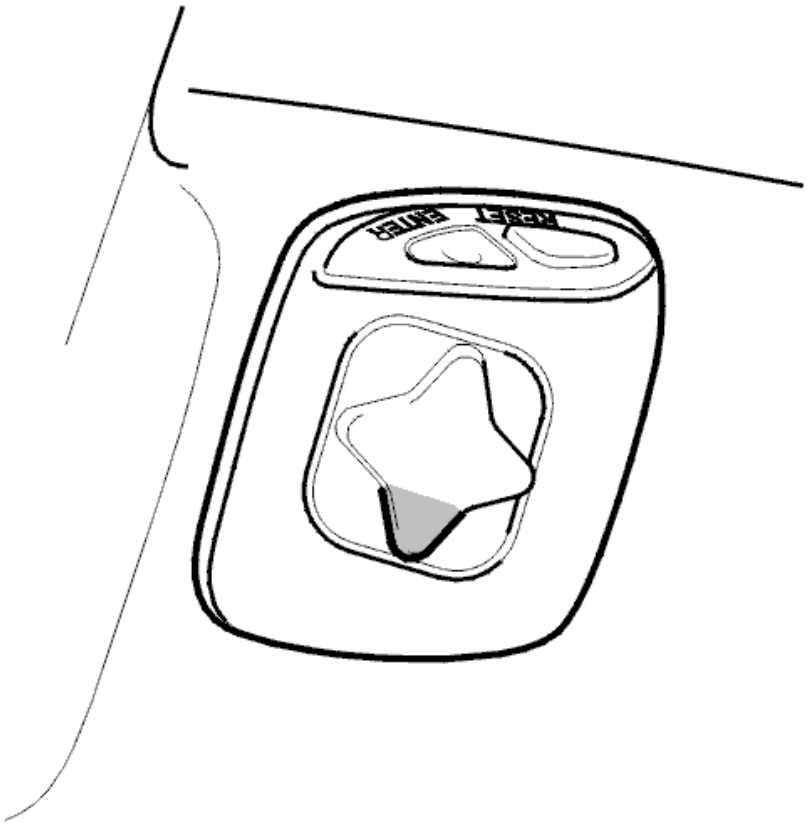

Fig. 75: Identifying Down Button
Courtesy of VOLVO CARS CORPORATION

If SWM microprocessor/control unit registers that RTI Down button is activated for more than 5 minutes,

diagnostic trouble code SWM-0025 is displayed.

Substitute Value

Nothing.

Possible Source

- RTI Down button is activated for more than 5 minutes.

Fault symptom[s]

- RTI settings change without RTI buttons being activated manually
- RTI steering wheel buttons do not work.

SWM-0025: RTI DOWN BUTTON. ACTIVATED TOO LONG. PERMANENT FAULT (2003-2004)

ACTIVATED TOO LONG. PERMANENT FAULT

see **ACTIVATED TOO LONG. PERMANENT FAULT**

DIAGNOSTIC TROUBLE CODE INFORMATION

see **DIAGNOSTIC TROUBLE CODE INFORMATION**

SWM-0026: RTI LEFT BUTTON. ACTIVATED TOO LONG. INTERMITTENT FAULT (2003-2004)

ACTIVATED FOR LONG TIME. INTERMITTENT FAULT

see **ACTIVATED FOR LONG TIME. INTERMITTENT FAULT**

DIAGNOSTIC TROUBLE CODE INFORMATION

SWM-0026

Condition

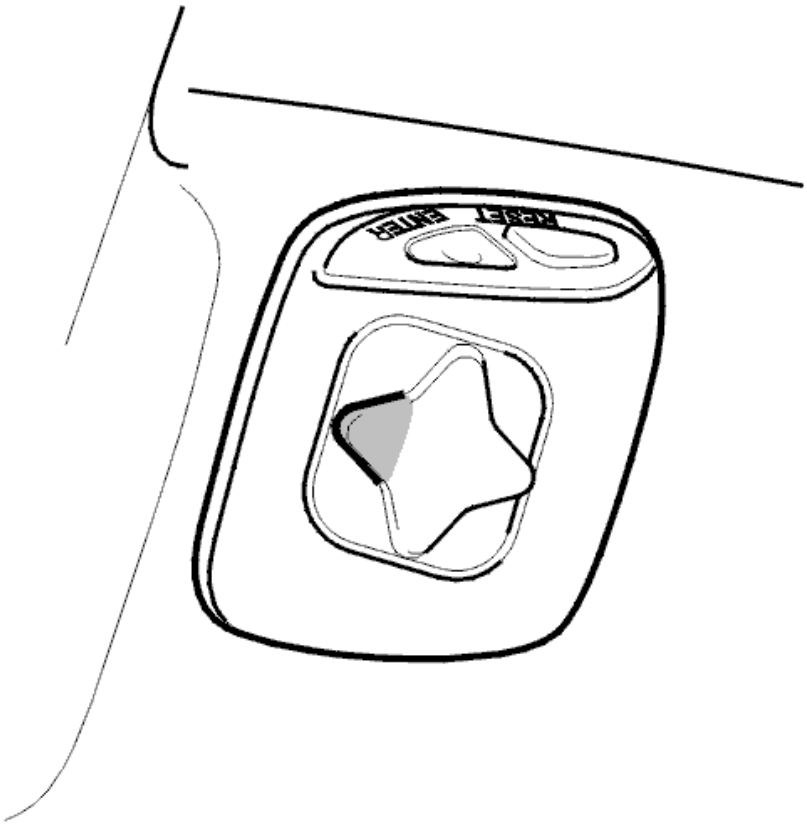

Fig. 76: Identifying Left Button
Courtesy of VOLVO CARS CORPORATION

If SWM microprocessor/control unit registers that RTI Left button is activated for more than 5 minutes, diagnostic trouble code SWM-0026 is displayed.

Substitute Value

Nothing.

Possible Source

- RTI Left button is activated for more than 5 minutes.

Fault symptom[s]

- RTI settings change without RTI buttons being activated manually.
- RTI steering wheel buttons do not work.

SWM-0026: RTI LEFT BUTTON. ACTIVATED TOO LONG. PERMANENT FAULT (2003-2004)

ACTIVATED TOO LONG. PERMANENT FAULT

see **ACTIVATED TOO LONG. PERMANENT FAULT**

DIAGNOSTIC TROUBLE CODE INFORMATION

see **DIAGNOSTIC TROUBLE CODE INFORMATION**

SWM-0027: RTI RIGHT BUTTON. ACTIVATED TOO LONG. INTERMITTENT FAULT (2003-2004)

ACTIVATED FOR LONG TIME. INTERMITTENT FAULT

see **ACTIVATED FOR LONG TIME. INTERMITTENT FAULT**

DIAGNOSTIC TROUBLE CODE INFORMATION

SWM-0027

Condition

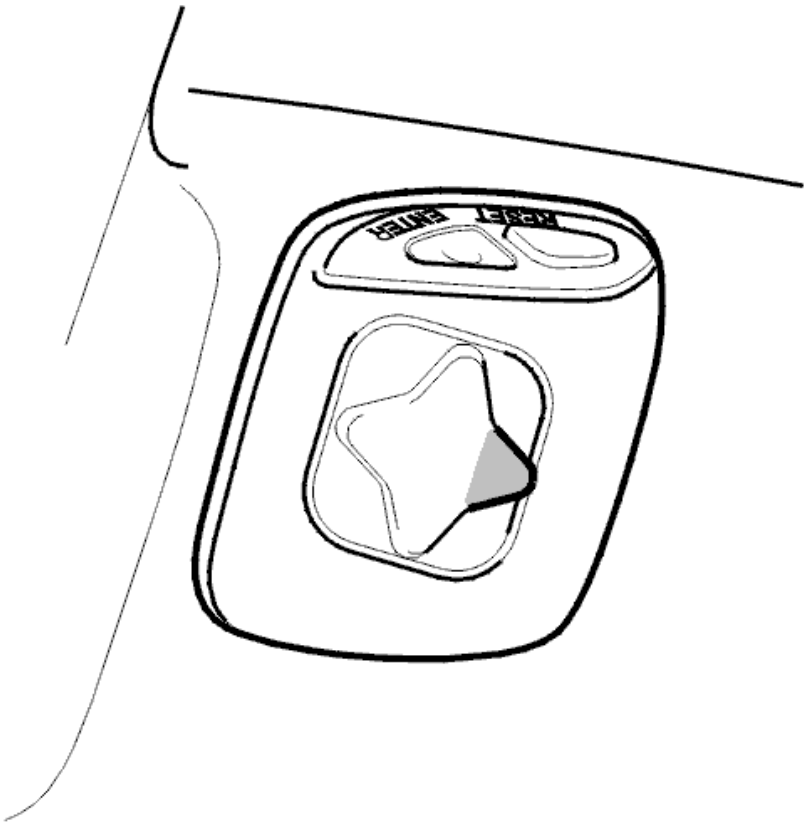

Fig. 77: Identifying RTI Right Button
Courtesy of VOLVO CARS CORPORATION

If SWM microprocessor/control unit registers that RTI Right button is activated for more than 5 minutes,

diagnostic trouble code SWM-0027 is displayed.

Substitute Value

Nothing.

Possible Source

- RTI Right button is activated for more than 5 minutes.

Fault symptom[s]

- RTI settings change without RTI buttons being activated manually.
- RTI steering wheel buttons do not work

SWM-0027: RTI RIGHT BUTTON. ACTIVATED TOO LONG. PERMANENT FAULT (2003-2004)

ACTIVATED TOO LONG. PERMANENT FAULT

see **ACTIVATED TOO LONG. PERMANENT FAULT**

DIAGNOSTIC TROUBLE CODE INFORMATION

see **DIAGNOSTIC TROUBLE CODE INFORMATION**

SWM-0028: SWITCH UNIT. INCORRECT COMBINATION. INTERMITTENT FAULT (2003-2004)

DIAGNOSTIC TROUBLE CODE INFORMATION

Condition

If the microprocessor/control unit SWM registers that several buttons have been activated simultaneously, the diagnostic trouble code is displayed.

Substitute Value

Nothing.

Possible Source

- several buttons have been activated simultaneously.

Fault symptom[s]

- Cruise control not working at all.
- Steering wheel buttons do not work.

INCORRECT COMBINATION. INTERMITTENT FAULT

see **INCORRECT COMBINATION. INTERMITTENT FAULT**

SWM-0028: SWITCH. INVALID COMBINATION. PERMANENT FAULT (2003-2004)

DIAGNOSTIC TROUBLE CODE INFORMATION

see **DIAGNOSTIC TROUBLE CODE INFORMATION**

INVALID COMBINATION. PERMANENT FAULT

see **INVALID COMBINATION. PERMANENT FAULT**

SWM-E001: CONTROL MODULE COMMUNICATION. FAULTY COMMUNICATION (2003-2004)

DIAGNOSTIC TROUBLE CODE (DTC) INFORMATION SWM-E001

Condition

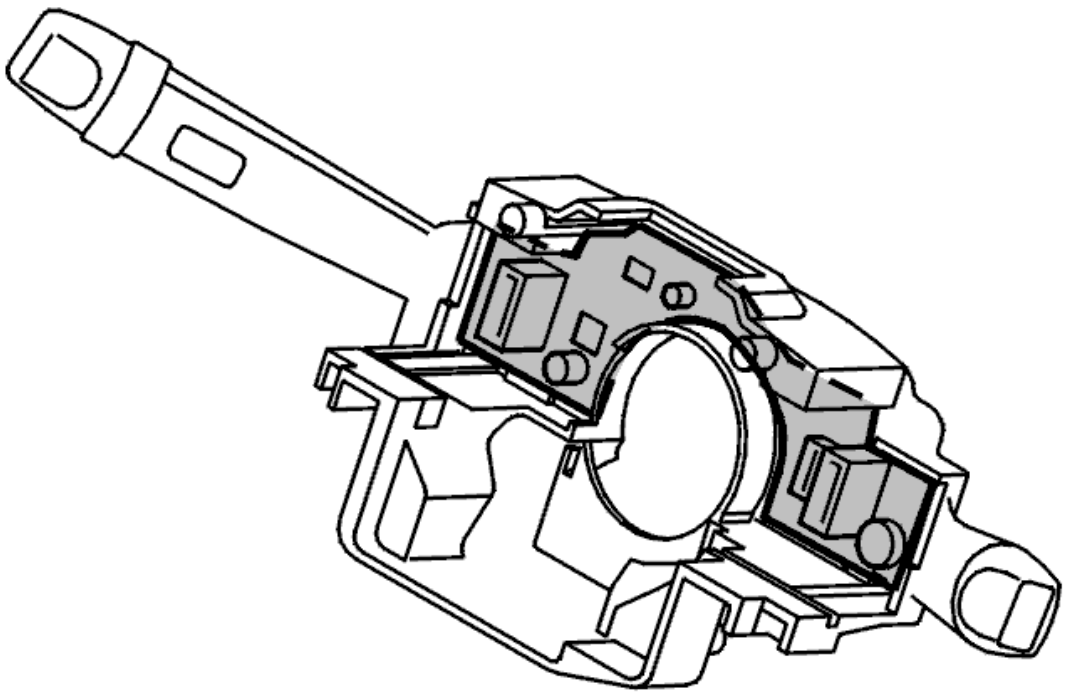

Fig. 78: Identifying Steering Wheel Module
Courtesy of VOLVO CARS CORPORATION

The control modules transmit and receive information via a standardized serial communication method - CAN (Controller Area Network). The diagnostic trouble code (DTC) is stored if the control module registers serious interference (CAN communication blocked).

NOTE: **In the event of system communication problems, it is not possible to communicate with the control module. Therefore it will only be possible to read off the fault if it is intermittent.**

Substitute Value

- The control module shuts itself off ("bus-off").

  HINT: The control module will remain shut off until the power supply is broken (15, 30, X). When the power supply is connected the control module will make a new attempt to communicate.

Possible Source

- Short-circuit between the control area network (CAN) wiring
- Open-circuit in the control area network (CAN) wiring
- Internal fault in the control module

- Internal fault in another control module in the same part of the control area network (CAN).

Fault symptom[s]

- Windshield wipers only operate at lowest speed
- Front windshield washing does not work
- Rear windshield washing does not work
- The turn signal lamp switch does not work
- Cruise control does not work at all
- The turn signal lamps do not work.

FAULTY COMMUNICATION

see **FAULTY COMMUNICATION**

SWM-E003: CONFIGURATION FAULT. FAULTY CONFIGURATION (2003-2004)

DIAGNOSTIC TROUBLE CODE (DTC) INFORMATION SWM-E003

Condition

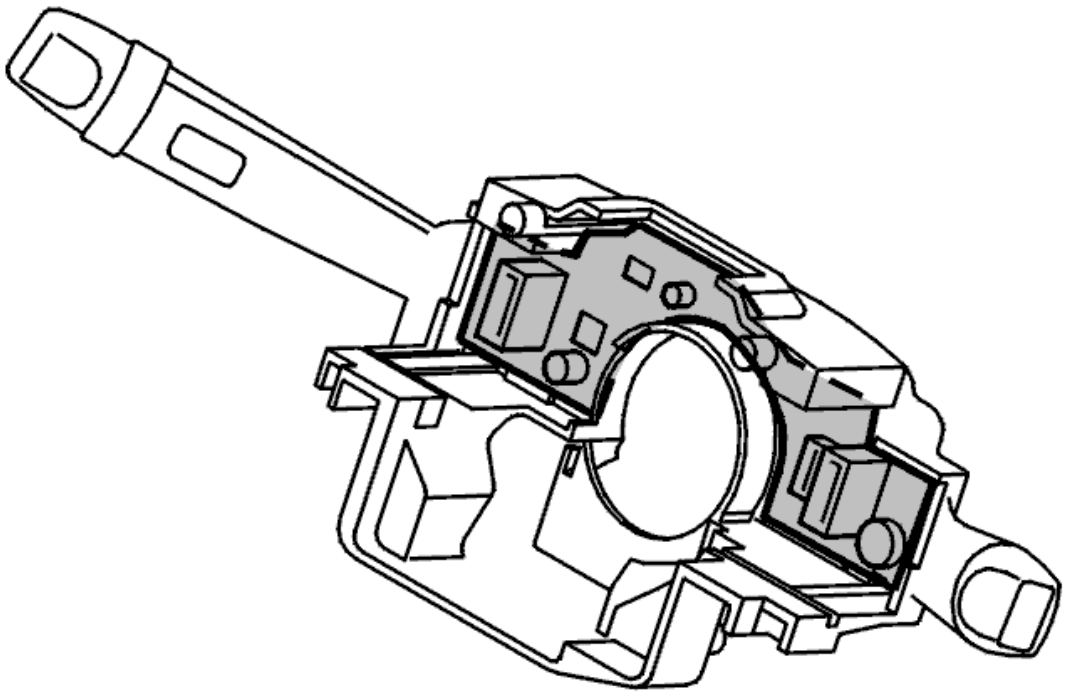

Fig. 79: Identifying Steering Wheel Module
Courtesy of VOLVO CARS CORPORATION

The control module compares its configuration ID with the signal configuration transmitted on the Control area network (CAN) by the central electronic module (CEM). If the configuration IDs do not correspond the fault code is stored. The diagnostic trouble code (DTC) is also stored if the communication between the control module and the central electronic module (CEM) is interrupted.

NOTE: **In the event of open-circuit in both the control area network (CAN) cables, it is not possible to communicate with the control module. Therefore it will only be possible to read off the diagnostic trouble code (DTC) if this type of fault is intermittent. When the diagnostic trouble code (DTC) is stored, the control module responds to the diagnostic command, however normal control area network (CAN) communication does not work. ("Expulsion mode")**

Substitute Value

- None.

Possible Source

- Faulty Control area network (CAN) configuration ID. (The node is not intended for this car, for example a used control module with different software/hardware)
- Open-circuit in the control area network (CAN) wiring between the control module and the central electrical module (CEM).

Fault symptom[s]

- Windshield wipers only operate at lowest speed
- Front windshield washing does not work
- Rear windshield washing does not work
- The turn signal lamp switch does not work
- Cruise control does not work at all
- The turn signal lamps do not work.

FAULTY CONFIGURATION (2003)

see **FAULTY CONFIGURATION (2003)**

FAULTY CONFIGURATION (2004)

see **FAULTY CONFIGURATION (2004)**

SWM-XXXX: UNKNOWN DIAGNOSTIC TROUBLE CODE (DTC) FOR THE CURRENT CONTROL MODULE VERSION (2003-2004)

UNKNOWN DIAGNOSTIC TROUBLE CODE (DTC) FOR THE CURRENT CONTROL MODULE VERSION

READING OFF DIAGNOSTIC TROUBLE CODES (DTCS)

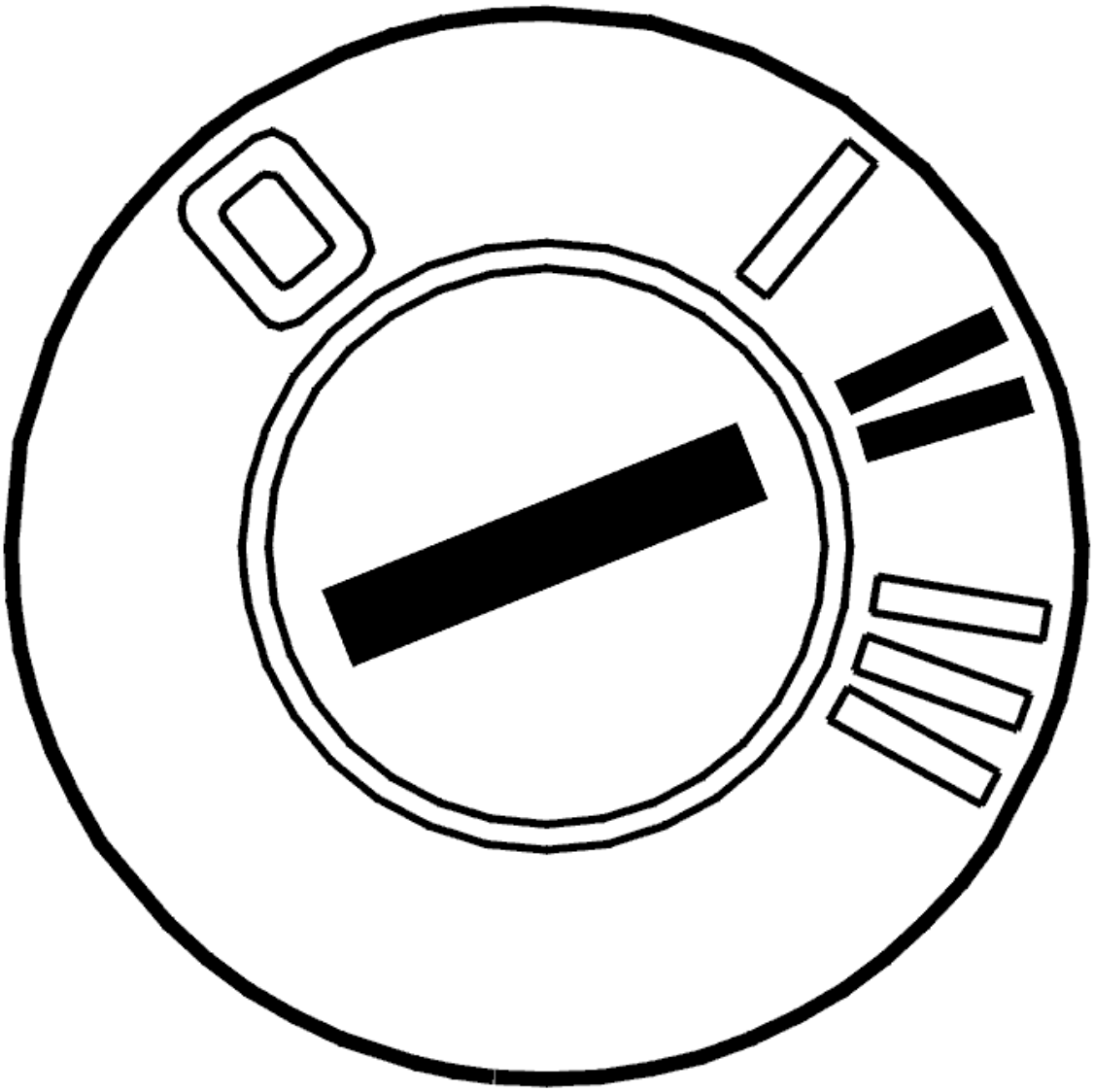

Fig. 80: Identifying Ignition ON
Courtesy of VOLVO CARS CORPORATION

- Ignition on.

  Read off the diagnostic trouble code (DTC) that is stored in the car.

  Make a note of the code. Report the code to VIDA customer support.

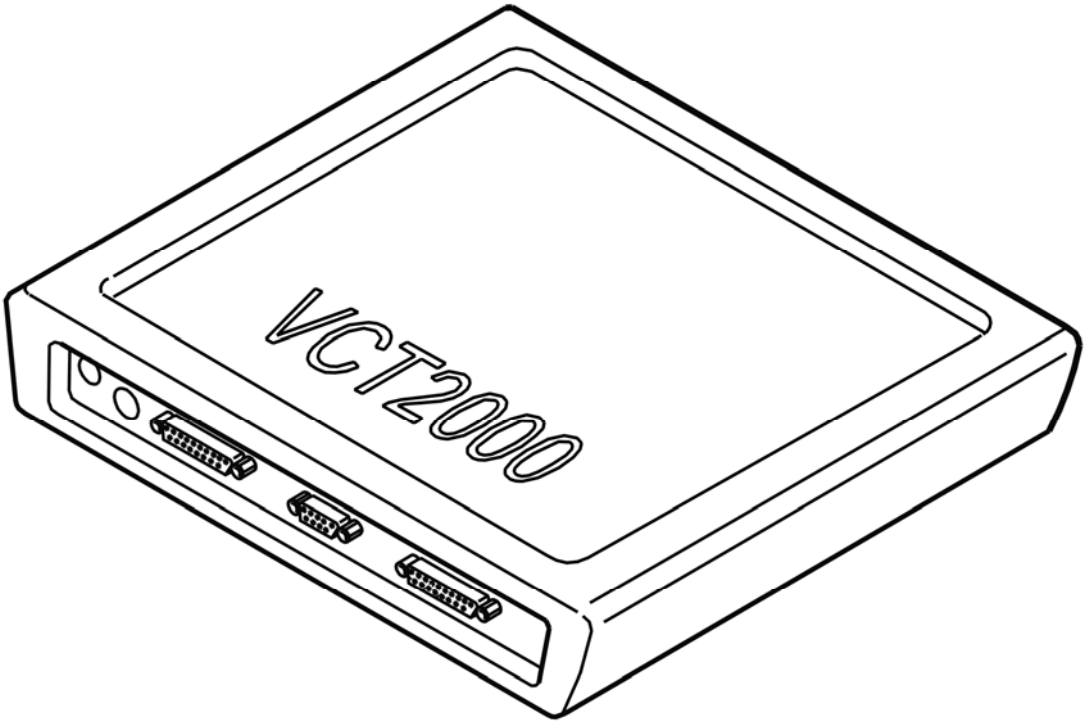

Fig. 81: Identifying VCT2000 Diagnostic Tool Symbol In VIDA
Courtesy of VOLVO CARS CORPORATION

SAS-0000: CONTROL MODULE. VOLTAGE TOO LOW (2003-2004)

DIAGNOSTIC TROUBLE CODE (DTC) INFORMATION

Condition

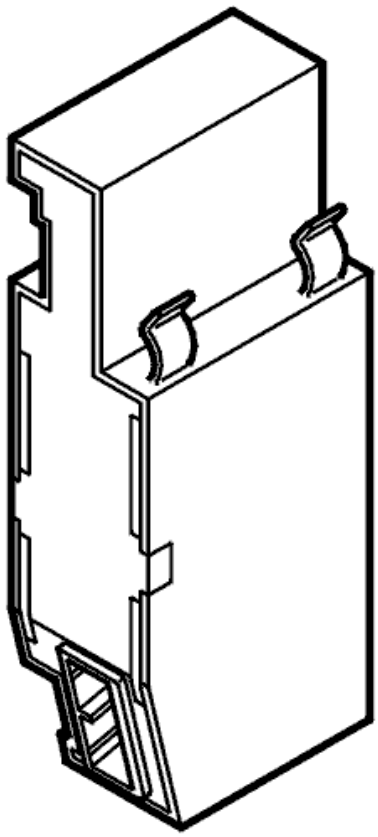

Fig. 82: Control Module For Steering Wheel Angle Sensor
Courtesy of VOLVO CARS CORPORATION

Diagnostic trouble code (DTC) SAS- 0000 is stored if the power supply to the control module for the steering angle sensor (SAS) is too low when the diagnostic trouble codes (DTCs) are entered into the control module EEPROM memory.

Substitute Value

- None.

Possible Source

- Temporary voltage drop in the electrical system.
- Internal fault in the control module.

Fault symptom[s]

- Anti-spin warning lamp lit.

VOLTAGE TOO LOW

FAULT-TRACING INFORMATION

INFORMATION

There is no fault-tracing for this diagnostic fault code (DTC).

For further information on this diagnostic trouble code, see Diagnostic trouble code (DTC) information.

SAS-0001: CONTROL MODULE. FAULTY VOLTAGE (B5254T2; 2005-2007)

DIAGNOSTIC TROUBLE CODE (DTC) INFORMATION SAS-0001

Condition

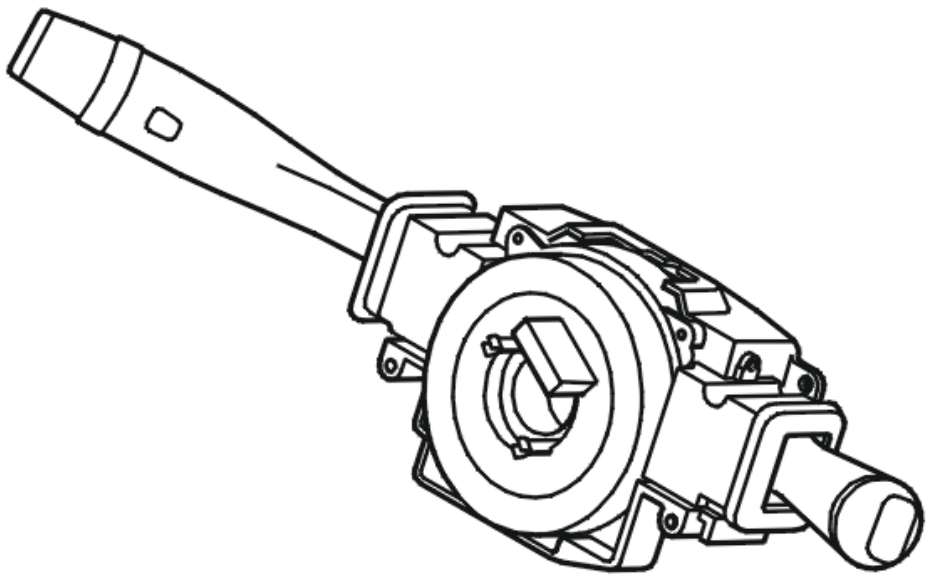

Fig. 83: Identifying Steering Wheel Control Module
Courtesy of VOLVO CARS CORPORATION

Steering wheel angle sensor module (SAS) is located inside, and is supplied with power by, the steering wheel module (SWM). Only the steering wheel angle sensor module (SAS) communicates on the controller area network (CAN).

The steering wheel angle sensor module (SAS) compares the voltage with a known value from the central electronic module (CEM).

The diagnostic trouble code (DTC) is stored if the steering wheel angle sensor module (SAS) registers that the voltage differs from the known value.

The diagnostic trouble code (DTC) can be diagnosed when the ignition is switched on and the steering wheel angle sensor is initiated. Initiation is carried out when the steering wheel is turned more than 4.5° in any direction.

Substitute Value

- The stability function is blocked.

Possible Source

- Internal fault in the steering wheel angle sensor module (SAS).

Fault symptom[s]

- Anti-spin warning lamp lit.
- General warning lamp lit.
- The stability control system does not function.

FAULTY VOLTAGE

REPLACING THE CONTROL MODULE

The steering wheel angle sensor module (SAS) has registered an internal fault. Replace the control module

Other information

- Steering wheel angle sensor module (SAS) is integrated in the steering wheel module (SWM). To replace the control module, see **STEERING WHEEL MODULE (SWM), REPLACING**

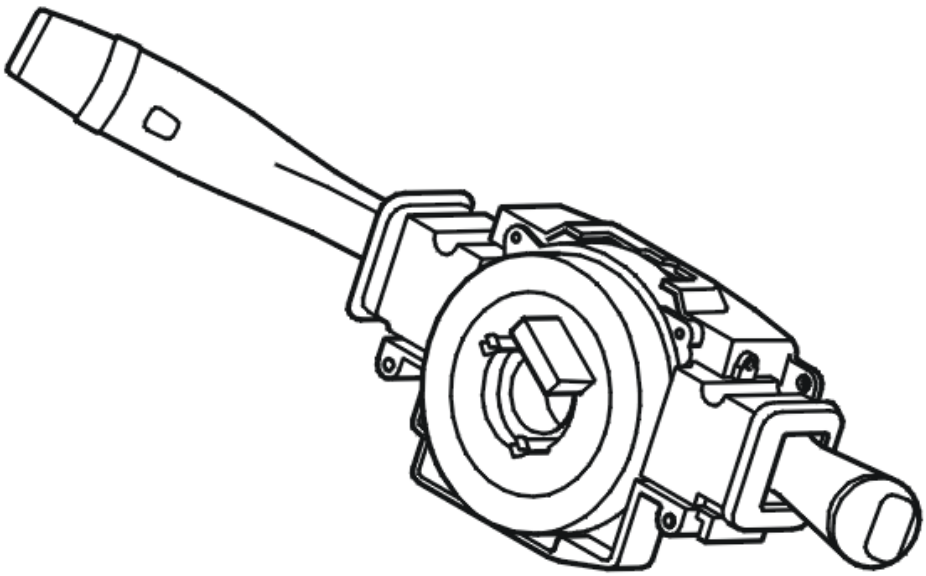

Fig. 84: Identifying Steering Wheel Control Module
Courtesy of VOLVO CARS CORPORATION

SAS-0001: CONTROL MODULE. FAULTY VOLTAGE (B6294T; 2005-2006)

DIAGNOSTIC TROUBLE CODE (DTC) INFORMATION SAS-0001

see **DIAGNOSTIC TROUBLE CODE (DTC) INFORMATION SAS-0001**

FAULTY VOLTAGE

see **FAULTY VOLTAGE**

SAS-0001: LED GROUP 1 CIRCUIT. SIGNAL TOO LOW (2003-2004)

DIAGNOSTIC TROUBLE CODE INFORMATION

Condition

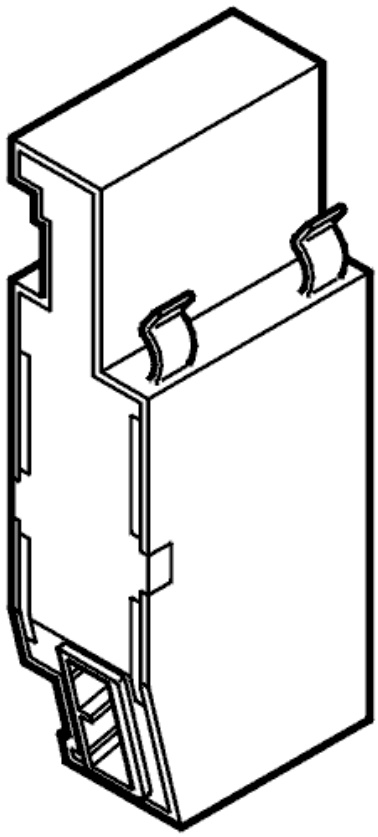

Fig. 85: Control Module For Steering Wheel Angle Sensor
Courtesy of VOLVO CARS CORPORATION

The steering wheel angle sensor has two circuits each with 4 LEDs and 4 receptors which read off their individual code wheel. One circuit measures the steering wheel angle and the other measures steering wheel revolutions. If the control unit registers that the current passing through the LED group circuit is too low, diagnostic trouble code SAS-0001 or SAS-0025 is set, depending on the group.

Substitute Value

- The AYC function is blocked.
- Anti-spin function blocked.

Possible Source

- Contact resistance or oxidation in connections or connectors.
- Short circuit to ground in LED circuit.
- LED 1-4 defective (diagnostic trouble code SAS-0001).
- LED 5-8 defective (diagnostic trouble code SAS-0025).
- Defective control unit.

Fault symptom[s]

- Anti-spin warning lamp is on.
- Stabilizing function not working.
- Anti-spin does not work.

SIGNAL TOO LOW

CHECKING THE CONNECTORS

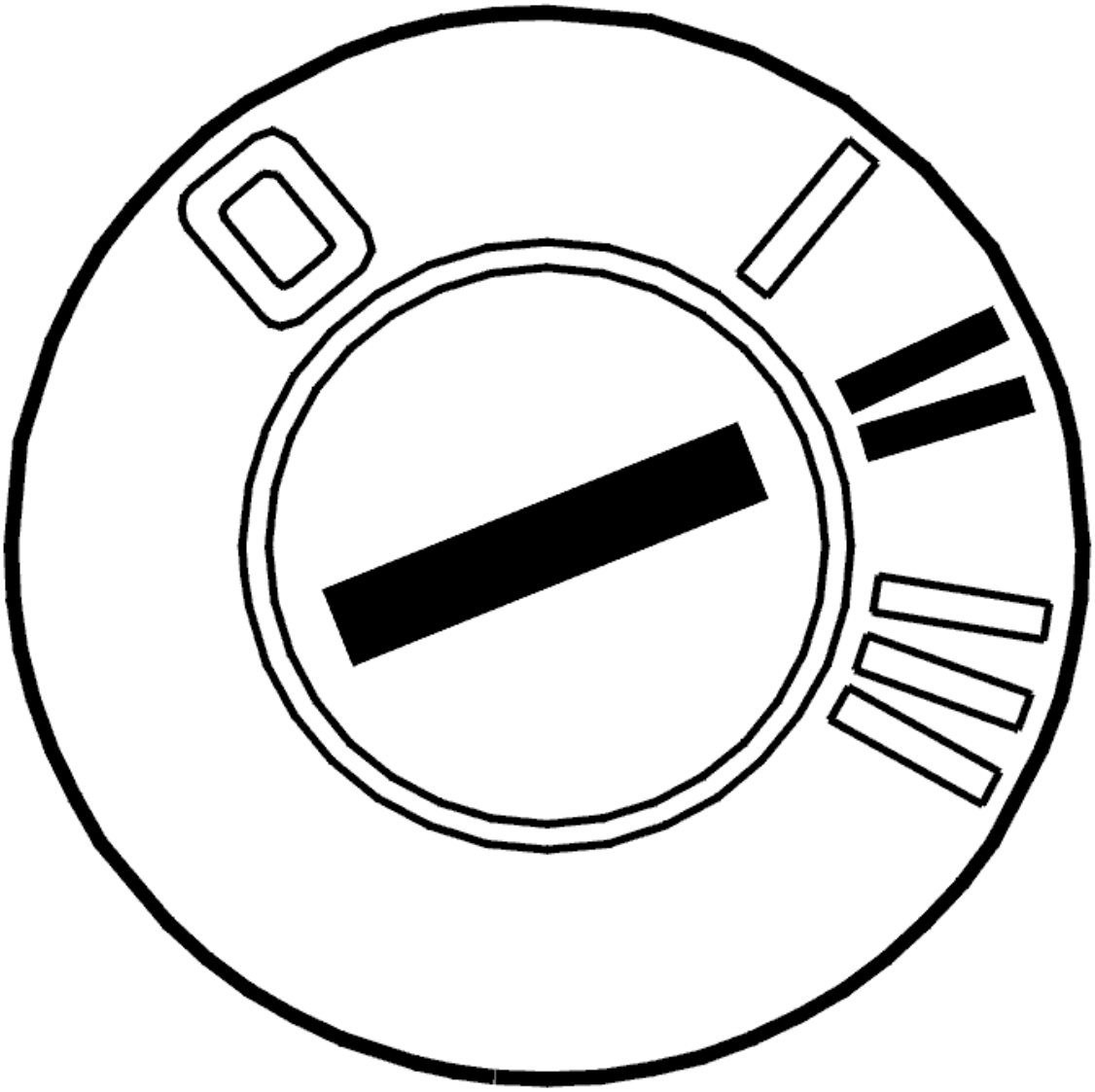

Fig. 86: Identifying Ignition ON
Courtesy of VOLVO CARS CORPORATION

- Ignition off
- Check the control module for the steering wheel angle sensor and the steering wheel module (SWM) connectors. Check for contact resistance and oxidation according to **CONTACT RESISTANCE AND OXIDATION**

- Reinstall the components, reconnect the connectors etc.
- Ignition on
- Read off the current.

Turn the steering wheel to the limit position in both directions. The current should be between 11 and 30 mA.

If the current is OK, the cause of the fault was contact resistance or oxidation in the control module or in the steering wheel module (SWM) connector.

Other information:

- To access the connector for the control module for the steering wheel angle sensor, see **STEERING WHEEL MODULE (SWM), REPLACING**
- To access the connector for the steering wheel module (SWM), see **STEERING WHEEL MODULE (SWM), REPLACING**
- To connect the breakout box to the control module for the steering wheel angle sensor, see **CONNECTING THE BREAKOUT BOX TO THE STEERING ANGLE SENSOR**
- For information about signals, see **SIGNAL DESCRIPTION, CONTROL UNIT FOR THE STEERING WHEEL ANGLE SENSOR (SAS)**

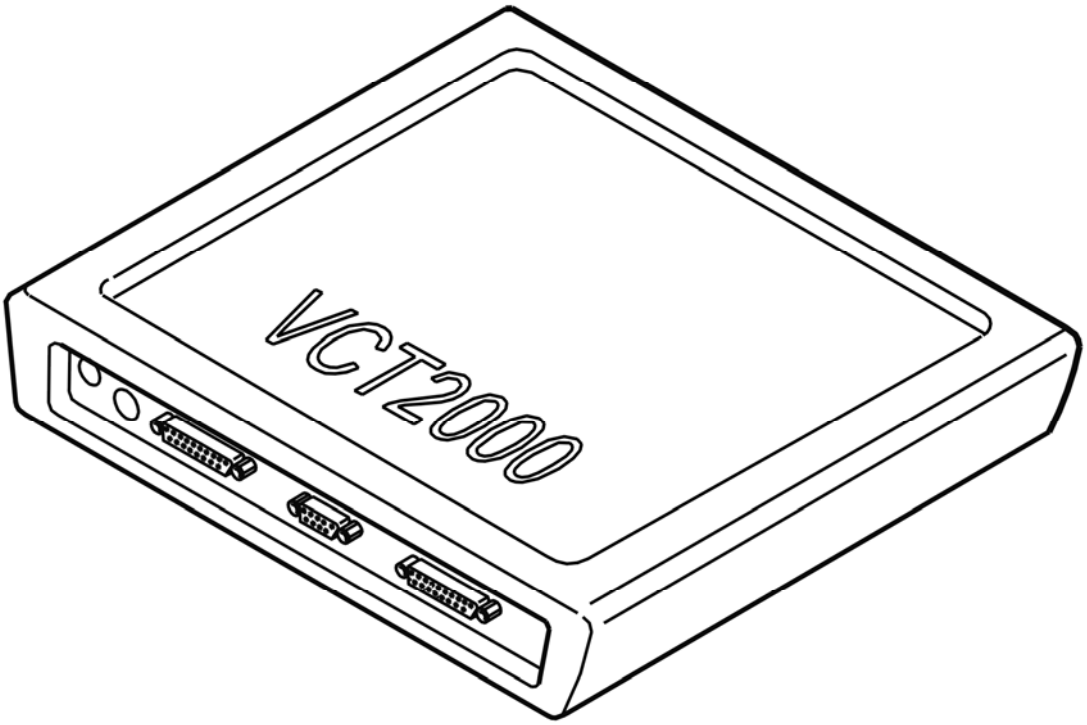

Fig. 87: Identifying VCT2000 Diagnostic Tool Symbol In VIDA

Courtesy of VOLVO CARS CORPORATION

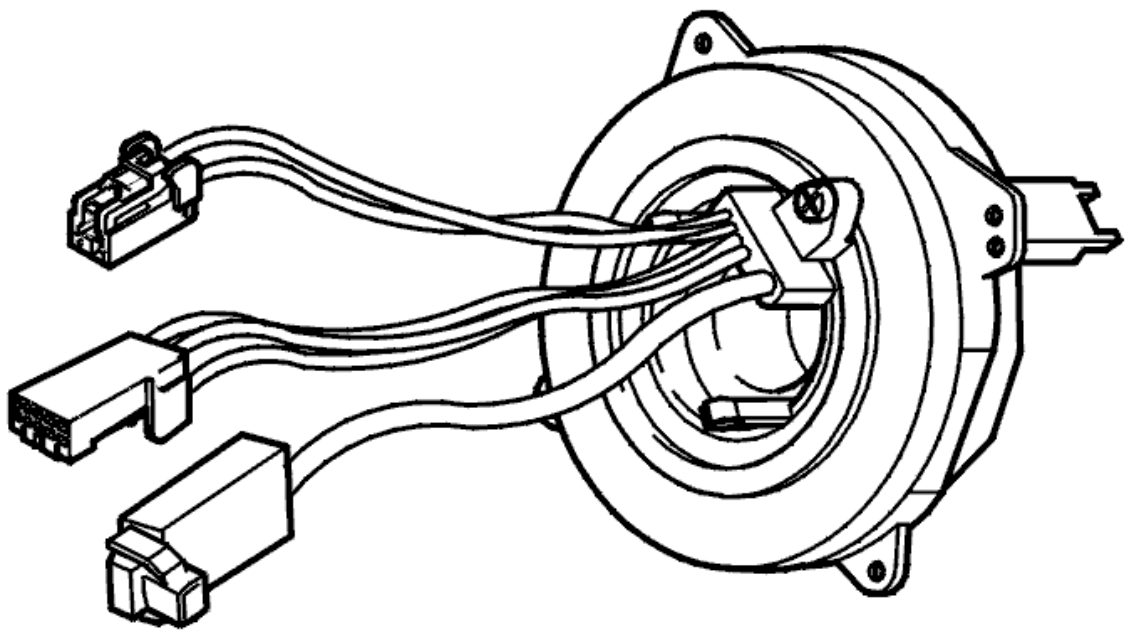

Fig. 88: Identifying Steering Wheel Angle Sensor
Courtesy of VOLVO CARS CORPORATION

Is the value OK?

- **YES**

  OKAY: Troubleshooting has been completed.

- **NO**

  Refer to **CHECKING WIRING AND SENSORS**

CHECKING WIRING AND SENSORS

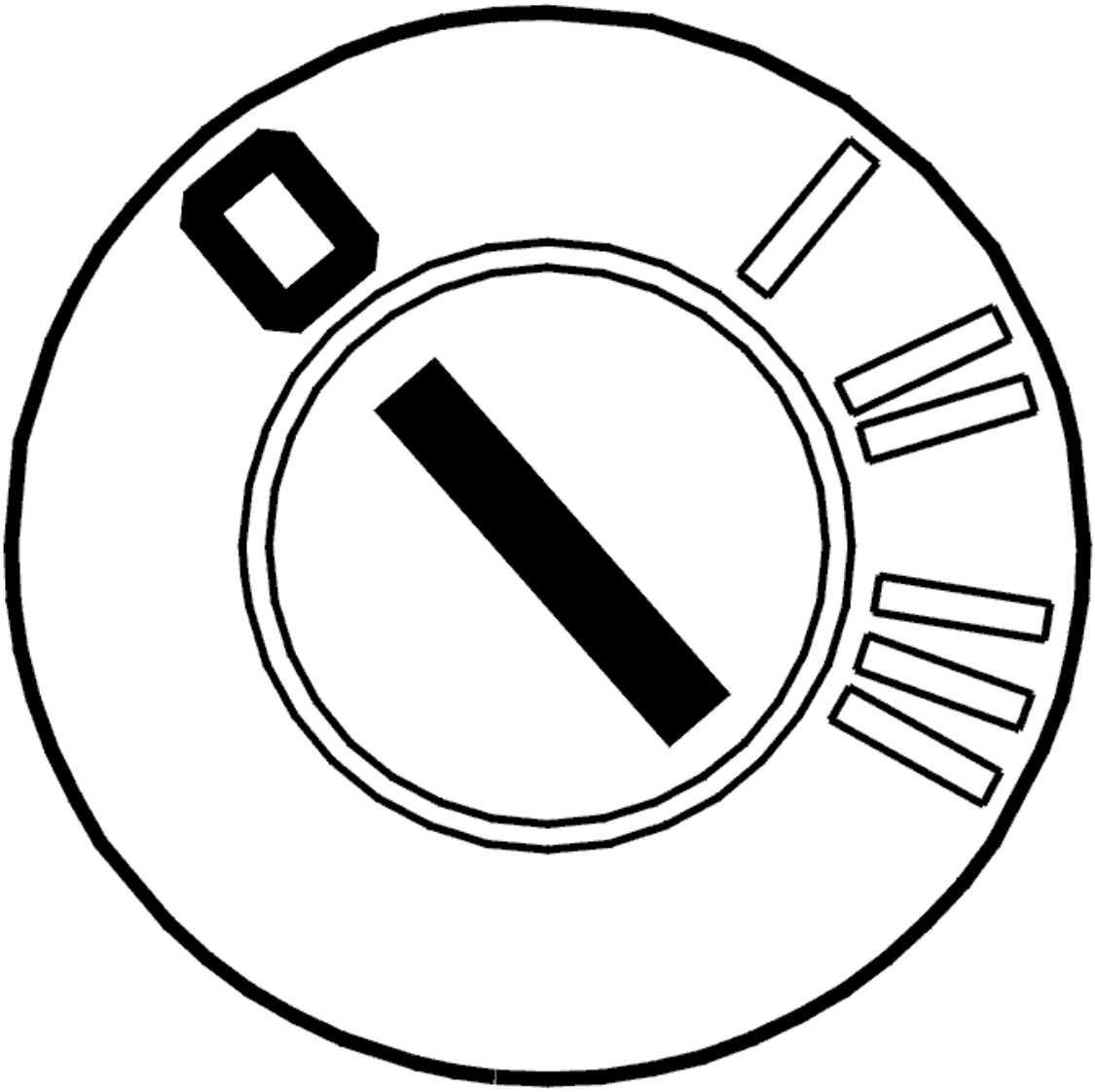

Fig. 89: Identifying Ignition OFF
Courtesy of VOLVO CARS CORPORATION

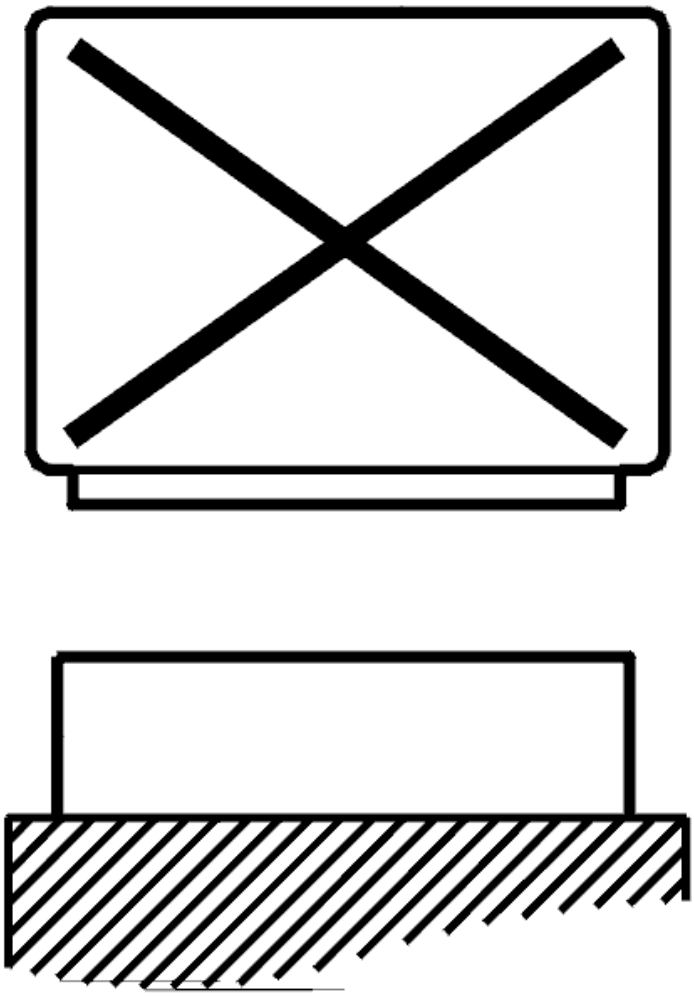

Fig. 90: Disconnecting Control Unit
Courtesy of VOLVO CARS CORPORATION

- Ignition off
- The control module for the steering wheel angle sensor disconnected
- Steering wheel module (SWM) disconnected
- Connect the breakout box to the control module for the steering wheel angle sensor and to the steering wheel module (SWM)

  Check the wiring between the control module for the steering wheel angle sensor terminal #9 (#A33) and steering wheel module (SWM) terminal #12 (#A12). Check for an open-circuit according to **OPEN-CIRCUIT, PERMANENT FAULTS** . Check for a short-circuit to ground according to **SHORT-CIRCUIT TO GROUND, PERMANENT FAULTS** .

  Try replacing the steering wheel angle sensor if no faults are found in the wiring between the control

module for the steering wheel angle sensor and the steering wheel module (SWM).

Other information:

- To access the connector for the steering wheel module (SWM), see **STEERING WHEEL MODULE (SWM), REPLACING**
- To connect the breakout box to the steering wheel module (SWM), see **CONNECTING THE BREAKOUT BOX**
- To replace the steering wheel angle sensor, see **CONTACT REEL, REPLACEMENT**
- For information about signals, see **SIGNAL DESCRIPTION, CONTROL UNIT FOR THE STEERING WHEEL ANGLE SENSOR (SAS)** and **SIGNAL SPECIFICATION** .

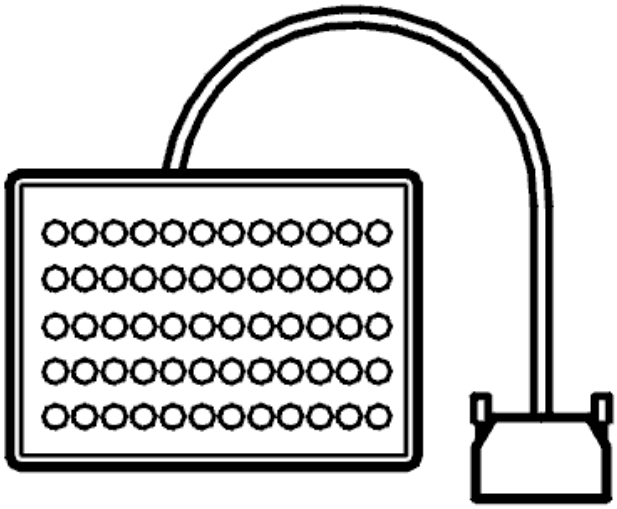

Fig. 91: Breakout Box
Courtesy of VOLVO CARS CORPORATION

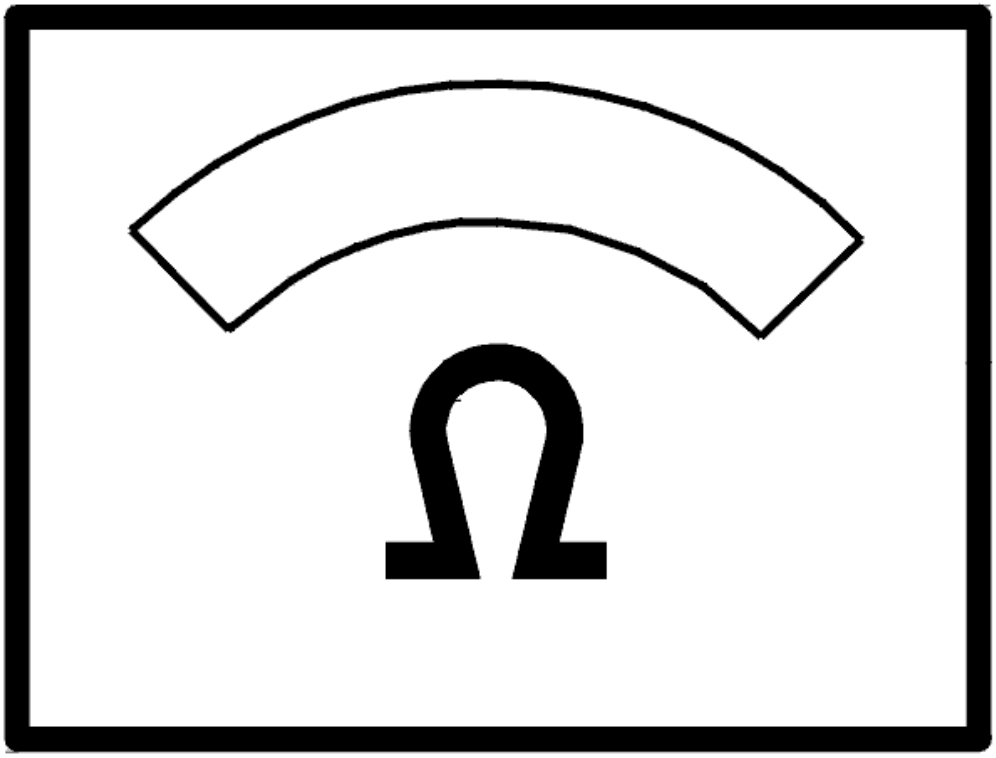

Fig. 92: Identifying Ohm Meter
Courtesy of VOLVO CARS CORPORATION

- **Continue**

  Refer to **VERIFICATION**

VERIFICATION

HINT: After the repair it is necessary to check that the fault has been rectified.

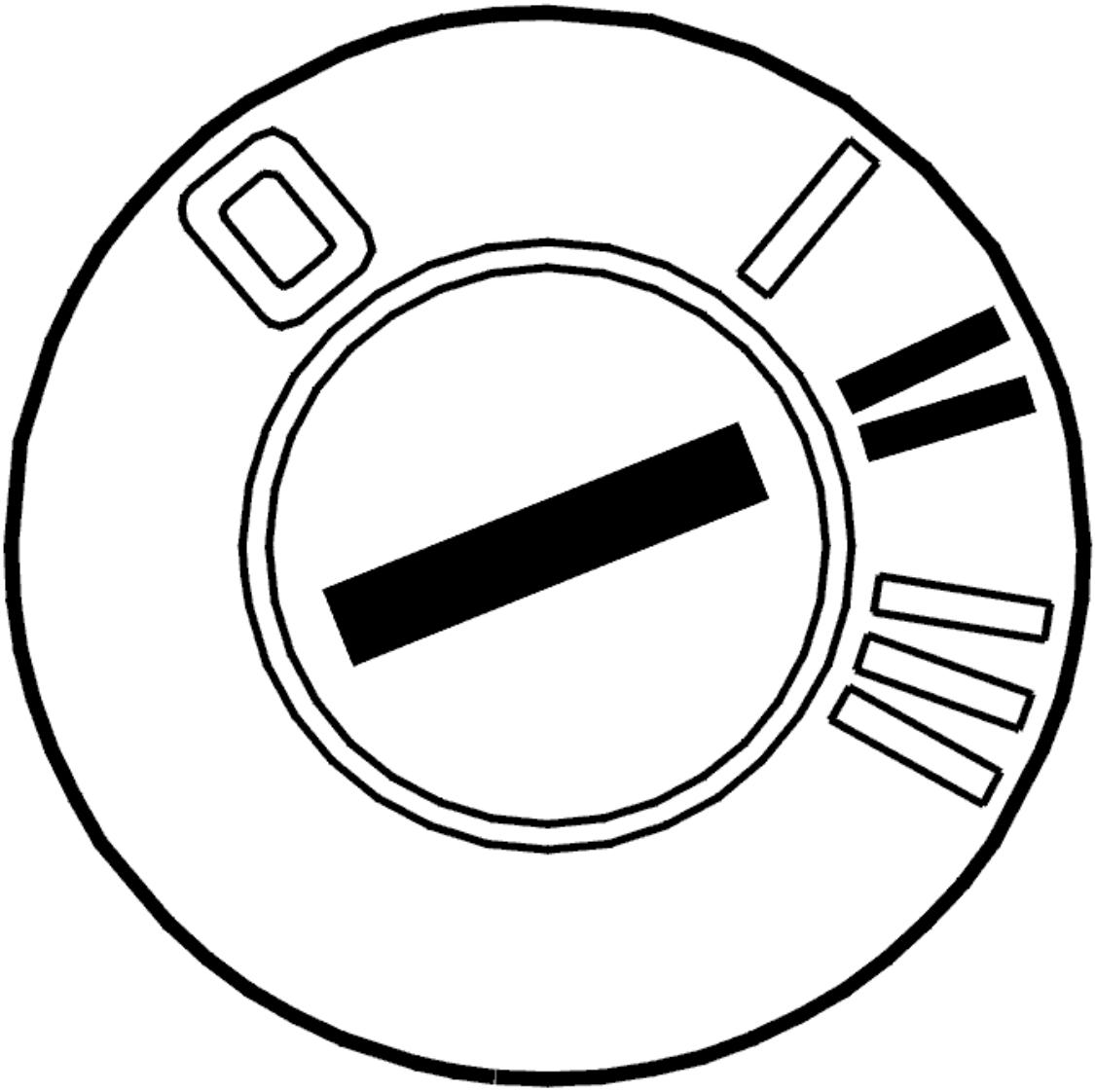

Fig. 93: Identifying Ignition ON
Courtesy of VOLVO CARS CORPORATION

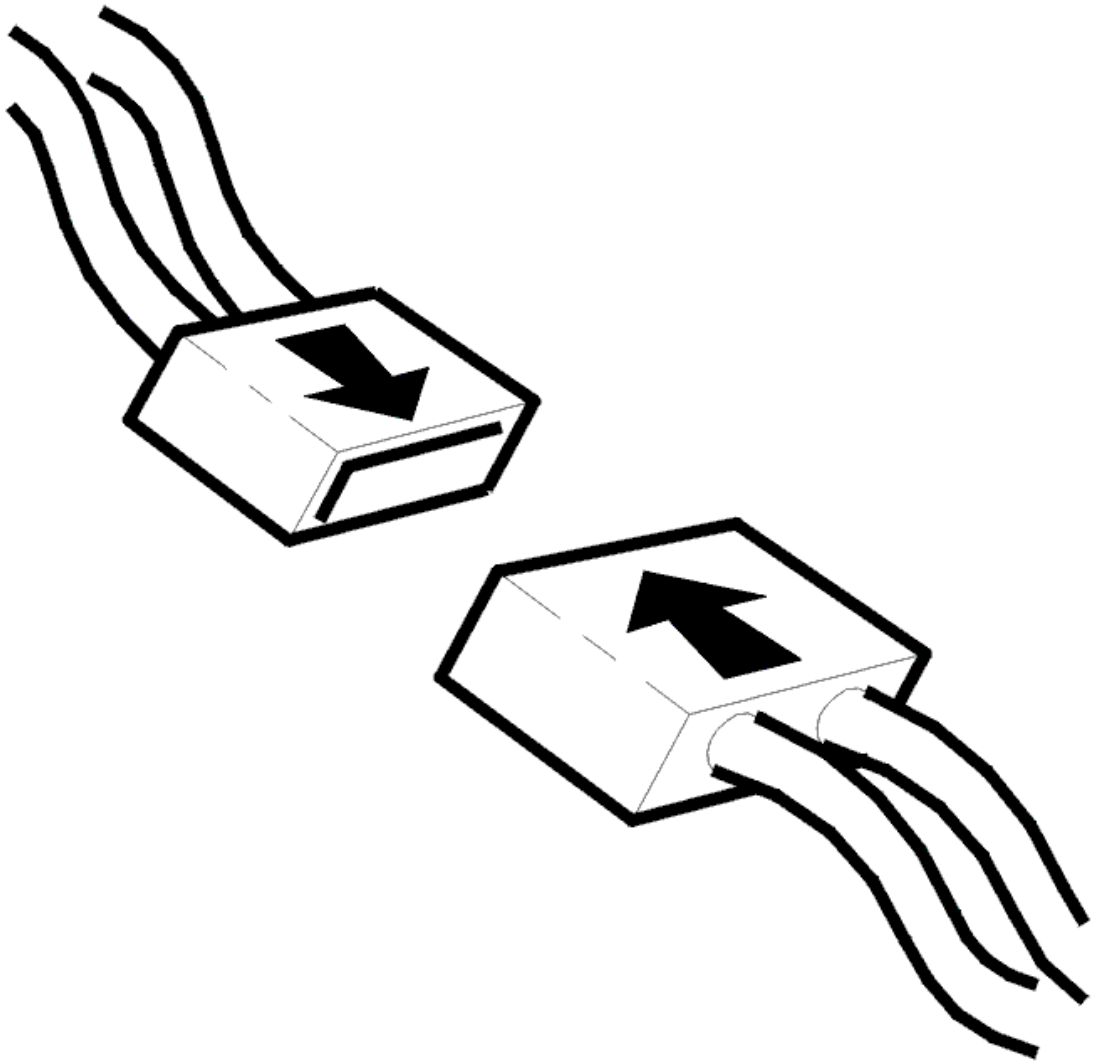

Fig. 94: Connecting Connector
Courtesy of VOLVO CARS CORPORATION

- Ignition off.
- Connect the connectors, install the components, etc.
- Ignition on.
- Read off the current in the circuit.

  Turn the steering wheel to full lock in both directions.

  The current should oscillate between 11 and 30 mA.

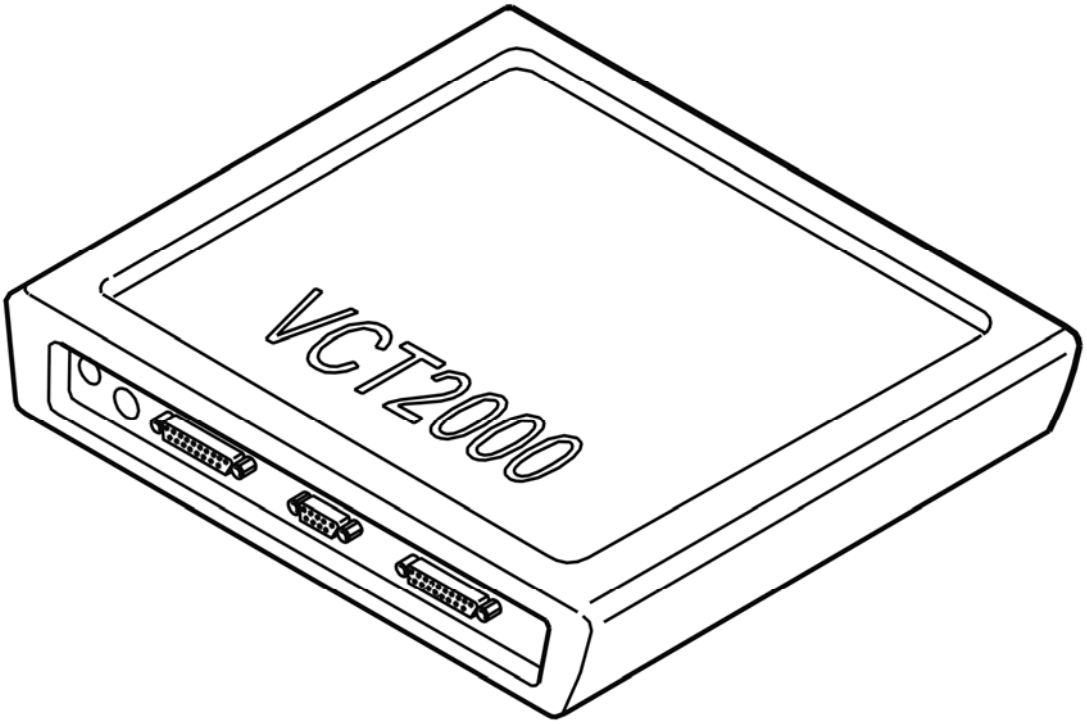

Fig. 95: Identifying VCT2000 Diagnostic Tool Symbol In VIDA
Courtesy of VOLVO CARS CORPORATION

Is the current OK?

- **YES**

  VERIFIED: Troubleshooting has been completed.

- **NO**

  Refer to **INFORMATION**

INFORMATION

FAULT-TRACING INFORMATION

The fault should have been detected and remedied. As this is not the case fault-tracing has failed.

Exit fault-tracing for this diagnostic trouble code (DTC) or make another attempt.

SAS-0002: CONTROL MODULE. INTERNAL FAULT (B5254T2; 2005-2007)

DIAGNOSTIC TROUBLE CODE (DTC) INFORMATION SAS-0002

Condition

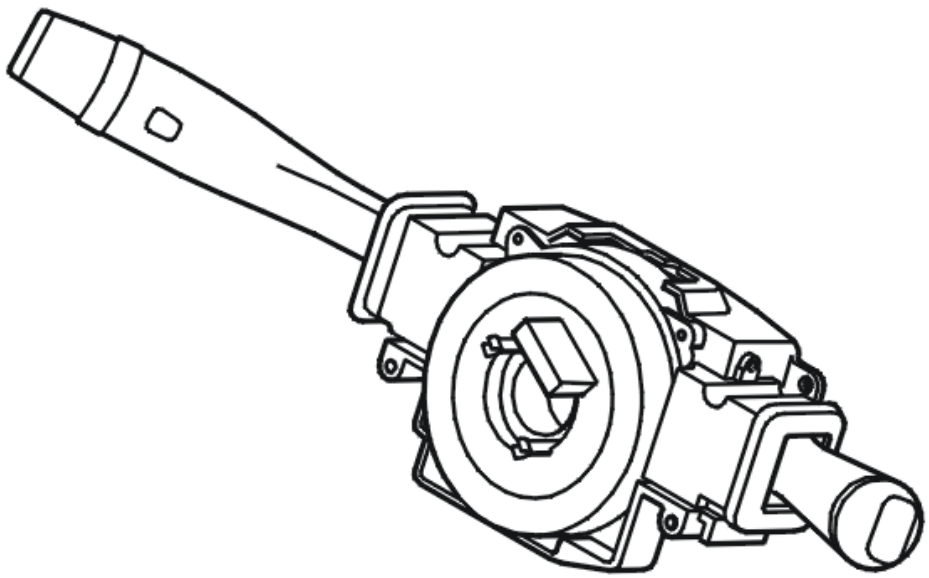

Fig. 96: Identifying Steering Wheel Control Module
Courtesy of VOLVO CARS CORPORATION

Steering wheel angle sensor module (SAS) is located inside, and is supplied with power by, the steering wheel module (SWM). Only the steering wheel angle sensor module (SAS) communicates on the controller area network (CAN).

Steering wheel angle sensor module (SAS) contains two processors which work together. The processors continuously check the communication between them. The diagnostic trouble code (DTC) is stored if the main processor in the steering wheel angle sensor module (SAS) registers that the information is incorrect in any way.

The diagnostic trouble code (DTC) can be diagnosed when the ignition is switched on and the steering wheel angle sensor is initiated. Initiation is carried out when the steering wheel is turned more than 4.5° in any direction.

Substitute Value

- The stability function is blocked.

Possible Source

- Internal fault in the control module.

Fault symptom[s]

- Anti-spin warning lamp lit.
- General warning lamp lit.
- The stability control system does not function.

INTERNAL FAULT

CHECKING THE STATUS

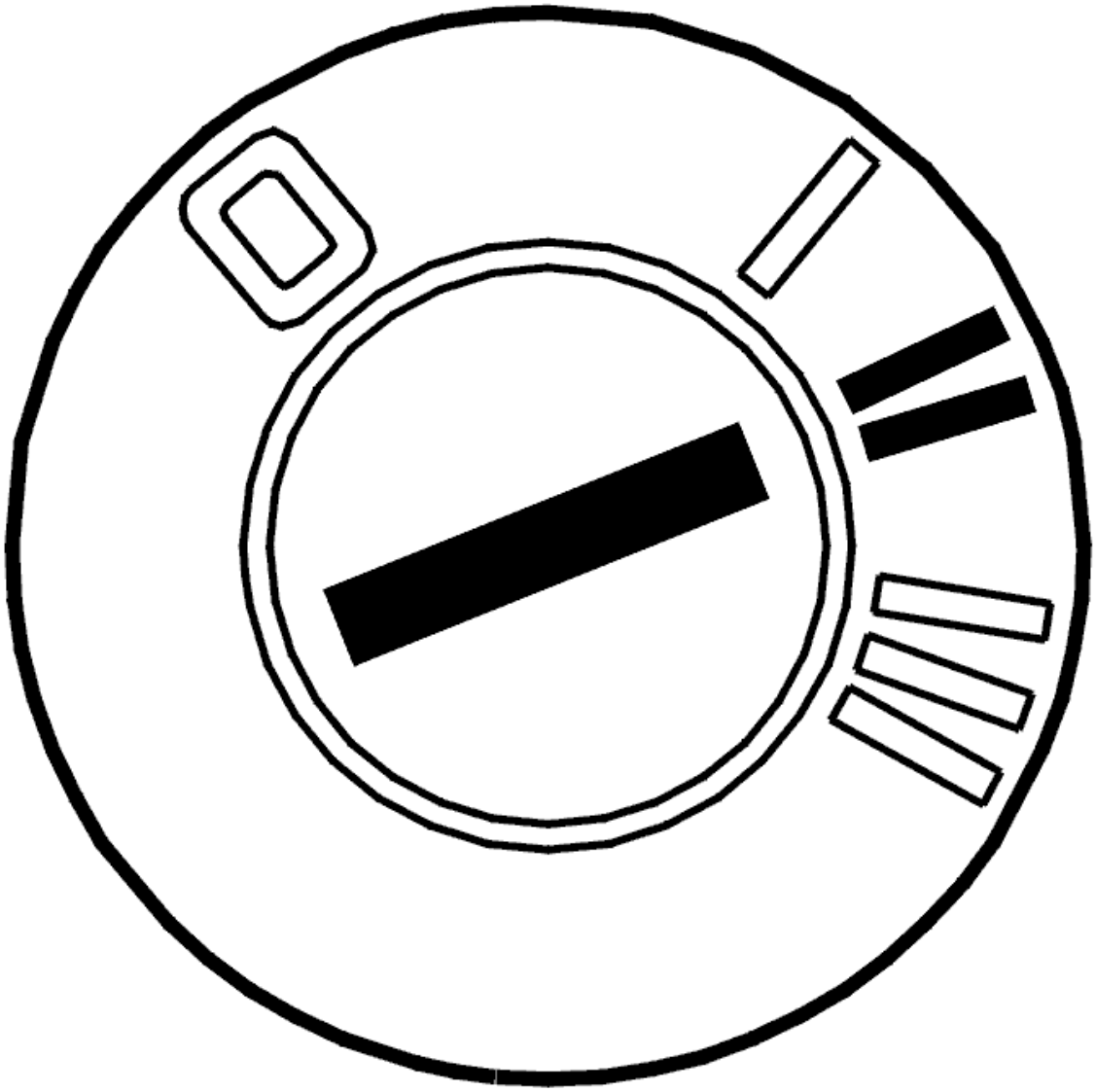

Fig. 97: Identifying Ignition ON
Courtesy of VOLVO CARS CORPORATION

- Ignition off
- Wait approximately 10 seconds
- Engine running.
- First turn the steering wheel max. to the right, then max. to the left. Then set the steering wheel to the straight-ahead position.
- Click on the VCT2000 symbol to read off the diagnostic trouble code (DTC) counter.

The counters are used to determine the problem's status. For general information about the counters, see: **COUNTERS, DESCRIPTION**. Counters 5, 6 and 7 are not used during this check.

Counter 1 counts the number of operating cycles without a fault since the fault was last validated.

If **counter 1** is the same as 0, this means that the fault has been detected in this operating cycle (permanent fault). Replace the Steering wheel module (SWM).

If **counter 1** is over 0, this indicates that the problem has not been detected in this driving cycle (intermittent problem). The problem has existed earlier but is not active right now. The digit indicates number of driving cycles since the diagnostic trouble code was generated. Then check **counter 4** .**Counter 4** indicates number of driving cycles **with problem** since the problem was validated for the first time.

- If the number of incorrect driving cycles is high, this indicates an intermittent recurring problem. Replace the Steering wheel module (SWM).
- If the number of incorrect driving cycles is low, this indicates an intermittent temporary problem. No action.

NOTE: **Counter 3 indicates number of driving cycles since first time that the problem occurred. If the value for counter 3 is divided by the value for counter 4 , the intensity of the problem is obtained. The higher the value, the higher the problem intensity. A high problem intensity indicates that the malfunction recurs often.**

NOTE: **Replace the steering wheel module (SWM) if the fault recurs.**

Remedy as necessary.

Other information

- Steering wheel angle sensor module (SAS) is integrated in the steering wheel module (SWM). To replace the control module, see **STEERING WHEEL MODULE (SWM), REPLACING**

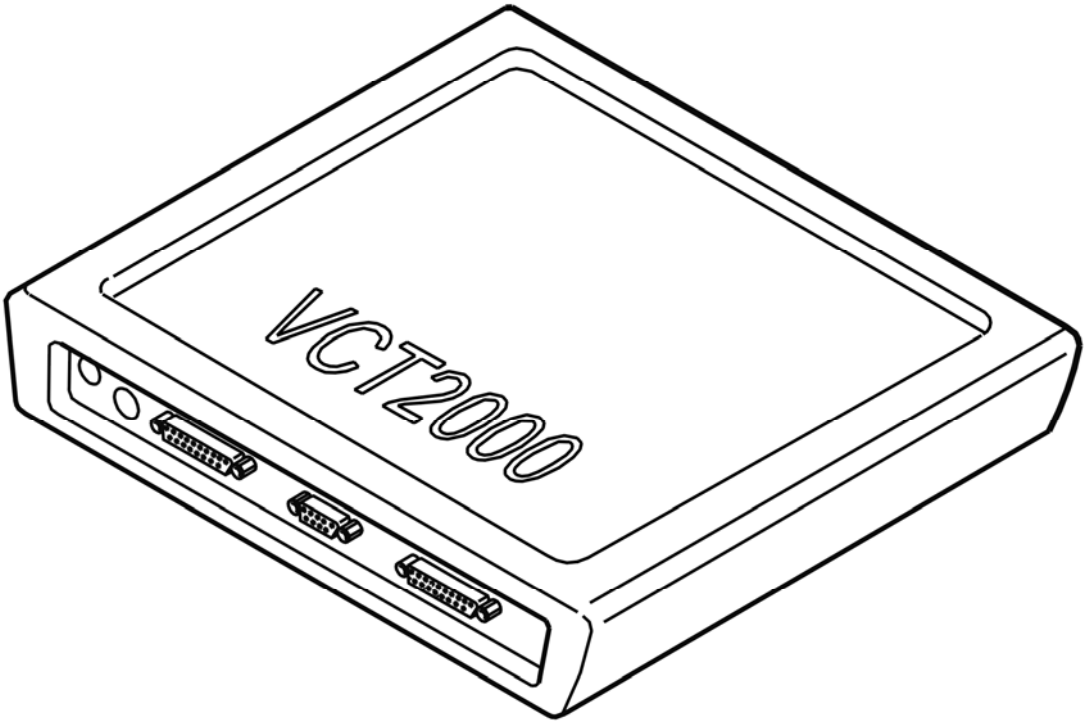

Fig. 98: Identifying VCT2000 Diagnostic Tool Symbol In VIDA
Courtesy of VOLVO CARS CORPORATION

SAS-0002: CONTROL MODULE. INTERNAL FAULT (B6294T; 2005-2006)

DIAGNOSTIC TROUBLE CODE (DTC) INFORMATION SAS-0002

see **DIAGNOSTIC TROUBLE CODE (DTC) INFORMATION SAS-0002**

INTERNAL FAULT

see **INTERNAL FAULT**

SAS-0002: LED GROUP 1 CIRCUIT. SIGNAL TOO HIGH (2003-2004)

DIAGNOSTIC TROUBLE CODE INFORMATION

Condition

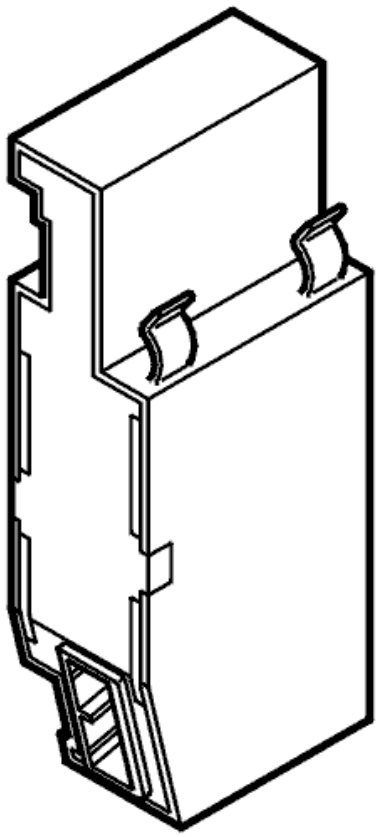

Fig. 99: Control Module For Steering Wheel Angle Sensor
Courtesy of VOLVO CARS CORPORATION

The steering wheel angle sensor has two circuits each with 4 LEDs and 4 receptors which read off their individual code wheel. One circuit measures the steering wheel angle and the other measures steering wheel revolutions. If the control unit registers that the current passing through the LED group circuit is too high, diagnostic trouble code SAS-0002 or SAS-0026 is set, depending on the group.

Substitute Value

- Stabilizing function disconnected.
- Anti-spin function blocked.

Possible Source

- Contact resistance or oxidation in connections or connectors.
- Short circuit to voltage supply in LED circuit.
- LED 1-4 defective (diagnostic trouble code SAS-0002).
- LED 5-8 defective (diagnostic trouble code SAS-0026).
- Defective control unit.

Fault symptom[s]

- Anti-spin warning lamp is on.
- Stabilizing function not working.
- Anti-spin does not work.

SIGNAL TOO HIGH

CHECKING THE CONNECTORS

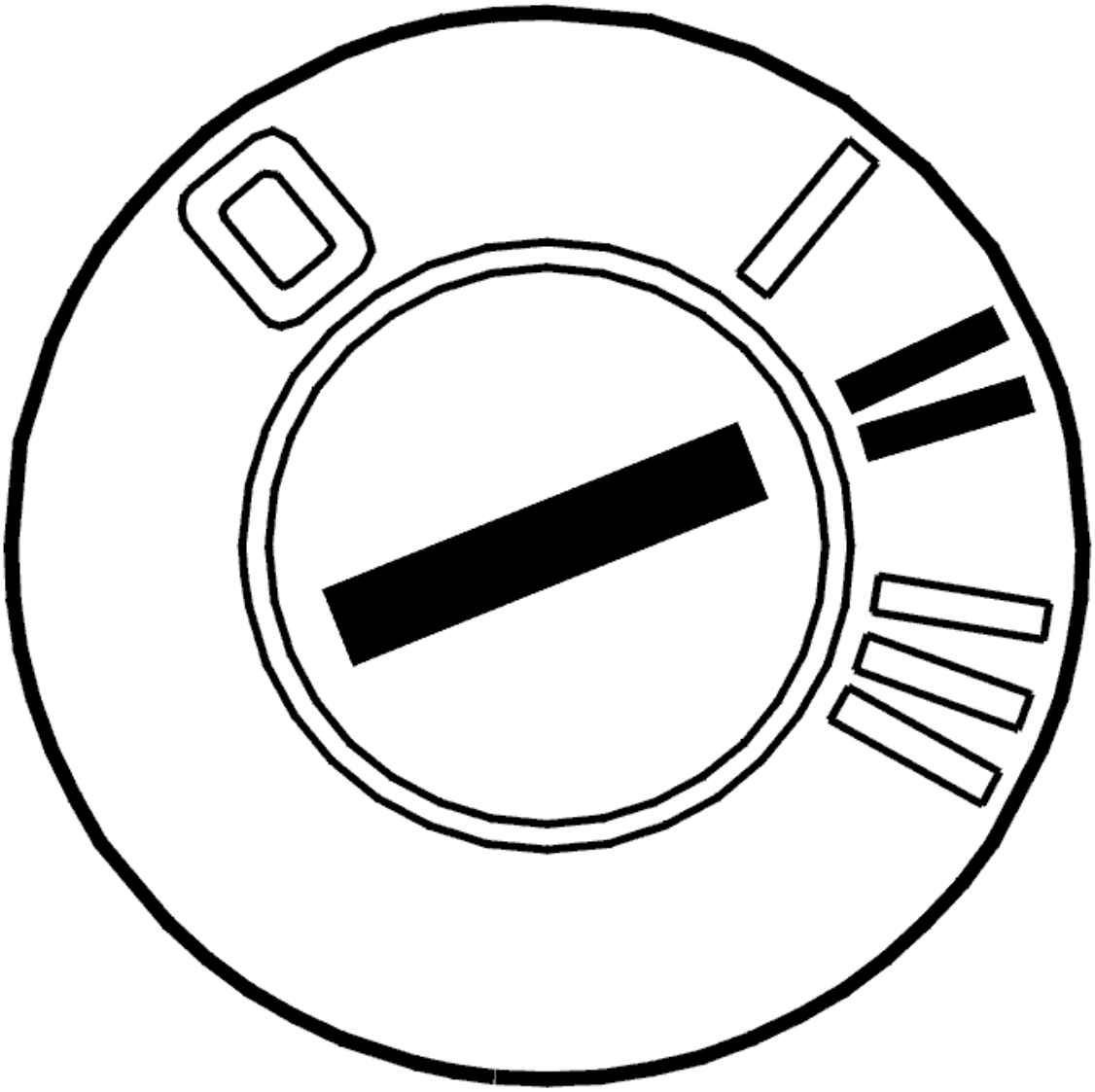

Fig. 100: Identifying Ignition ON
Courtesy of VOLVO CARS CORPORATION

- Ignition on
- Read off the current.

Turn the steering wheel to the limit position in both directions. The current should be between 11 and 30

mA.

Other information:

- To access the connector for the control module for the steering wheel angle sensor, see **STEERING WHEEL MODULE (SWM), REPLACING**
- To access the connector for the steering wheel module (SWM), see **STEERING WHEEL MODULE (SWM), REPLACING**
- For information about signals, see **SIGNAL DESCRIPTION, CONTROL UNIT FOR THE STEERING WHEEL ANGLE SENSOR (SAS)** or **SIGNAL SPECIFICATION** .

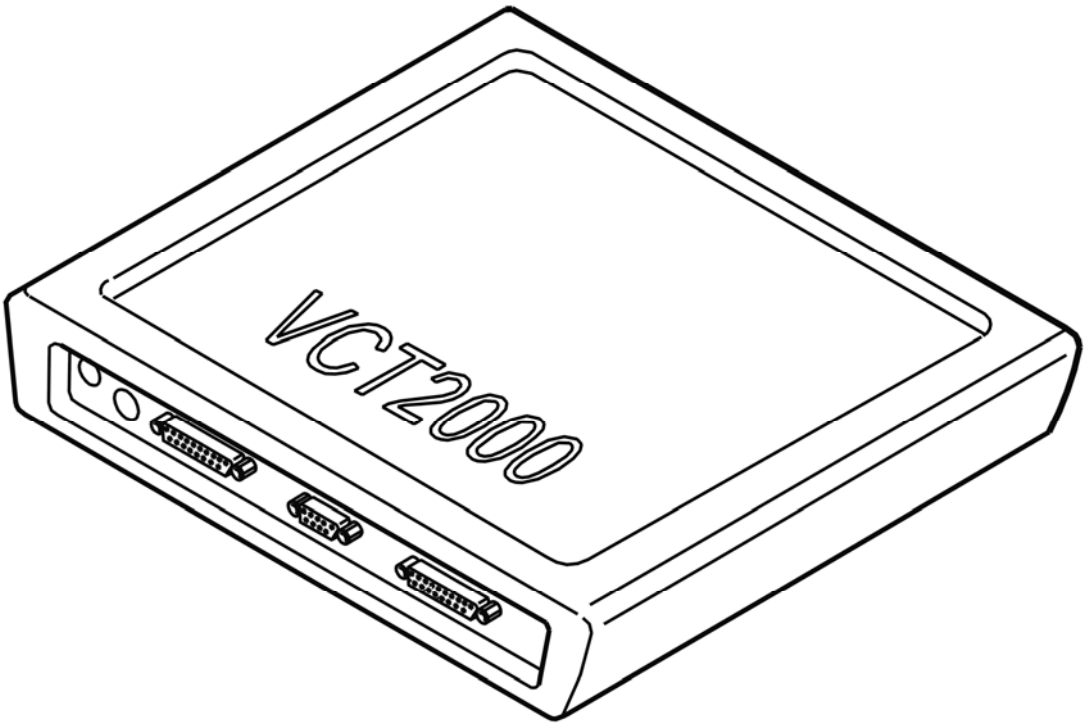

Fig. 101: Identifying VCT2000 Diagnostic Tool Symbol In VIDA
Courtesy of VOLVO CARS CORPORATION

Is the value OK?

- **YES**

  OKAY: Troubleshooting has been completed.

- **NO**

  Refer to **CHECKING WIRING AND SENSORS**

CHECKING WIRING AND SENSORS

- Disconnect the cable harness between the control module for the steering wheel angle sensor and the steering wheel module (SWM).

  Check the wiring between the control module for the steering wheel angle sensor:

  terminal #9 (terminal (#A33) and steering wheel module (SWM) terminal #12 (terminal #A12)

  for a short-circuit to supply voltage according to **SHORT-CIRCUIT TO SUPPLY VOLTAGE. PERMANENT FAULTS** .

  Try replacing the steering wheel angle sensor if no faults are found in the wiring between the control module and the steering wheel angle sensor.

  Other information:

  - To access the connector for the control module for the steering wheel angle sensor, see **STEERING WHEEL MODULE (SWM), REPLACING**
  - To access the connector for the steering wheel module (SWM), see **STEERING WHEEL MODULE (SWM), REPLACING**
  - To connect the breakout box to the control module for the steering wheel angle sensor, see **CONNECTING THE BREAKOUT BOX TO THE STEERING ANGLE SENSOR**
  - To replace the steering wheel angle sensor, see **CONTACT REEL, REPLACEMENT**
  - For information about signals, see **SIGNAL DESCRIPTION, CONTROL UNIT FOR THE STEERING WHEEL ANGLE SENSOR (SAS)** and **SIGNAL SPECIFICATION**
  - To connect the breakout box to the steering wheel module (SWM), see **CONNECTING THE BREAKOUT BOX**

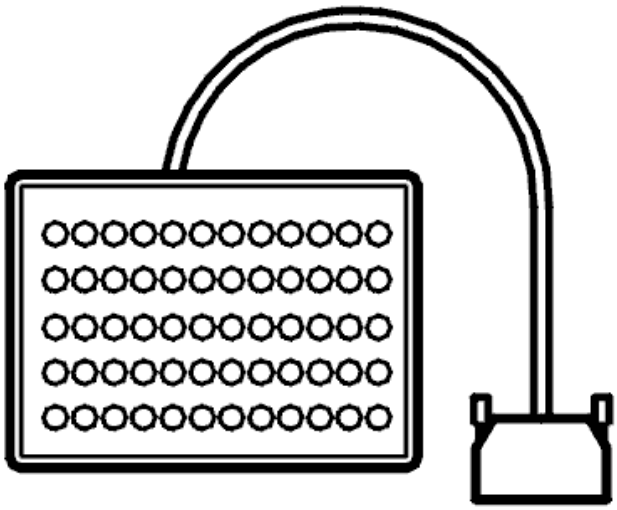

Fig. 102: Breakout Box
Courtesy of VOLVO CARS CORPORATION

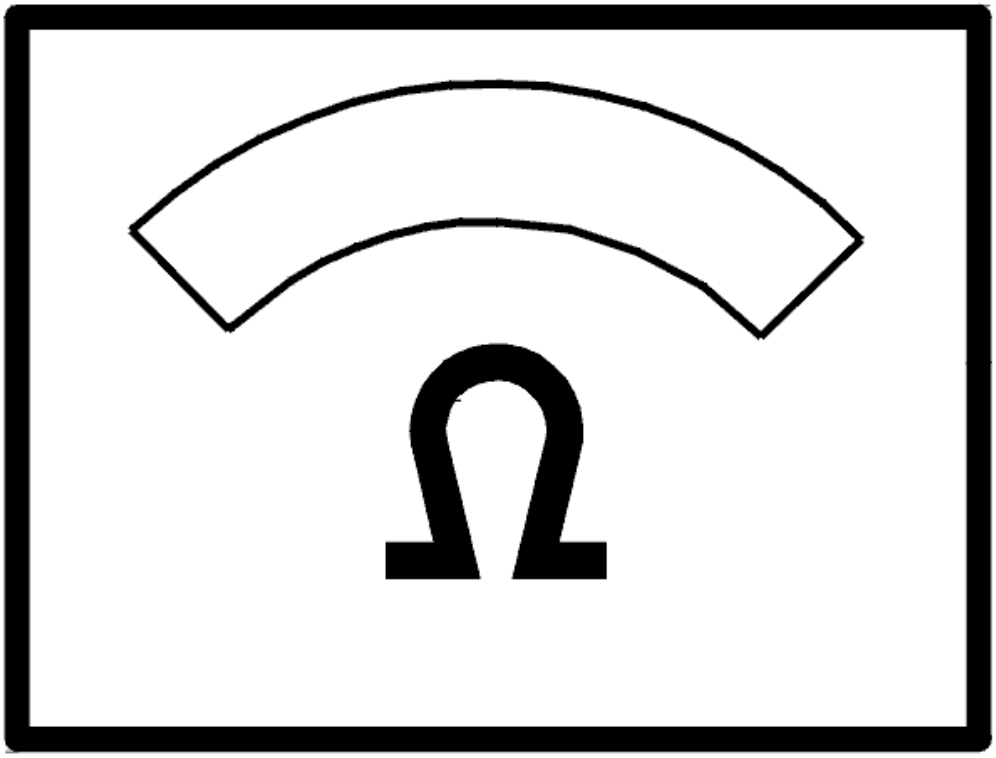

Fig. 103: Identifying Ohm Meter
Courtesy of VOLVO CARS CORPORATION

- **Continue**

  Refer to **VERIFICATION**

VERIFICATION

HINT: After the repair it is necessary to check that the fault has been rectified.

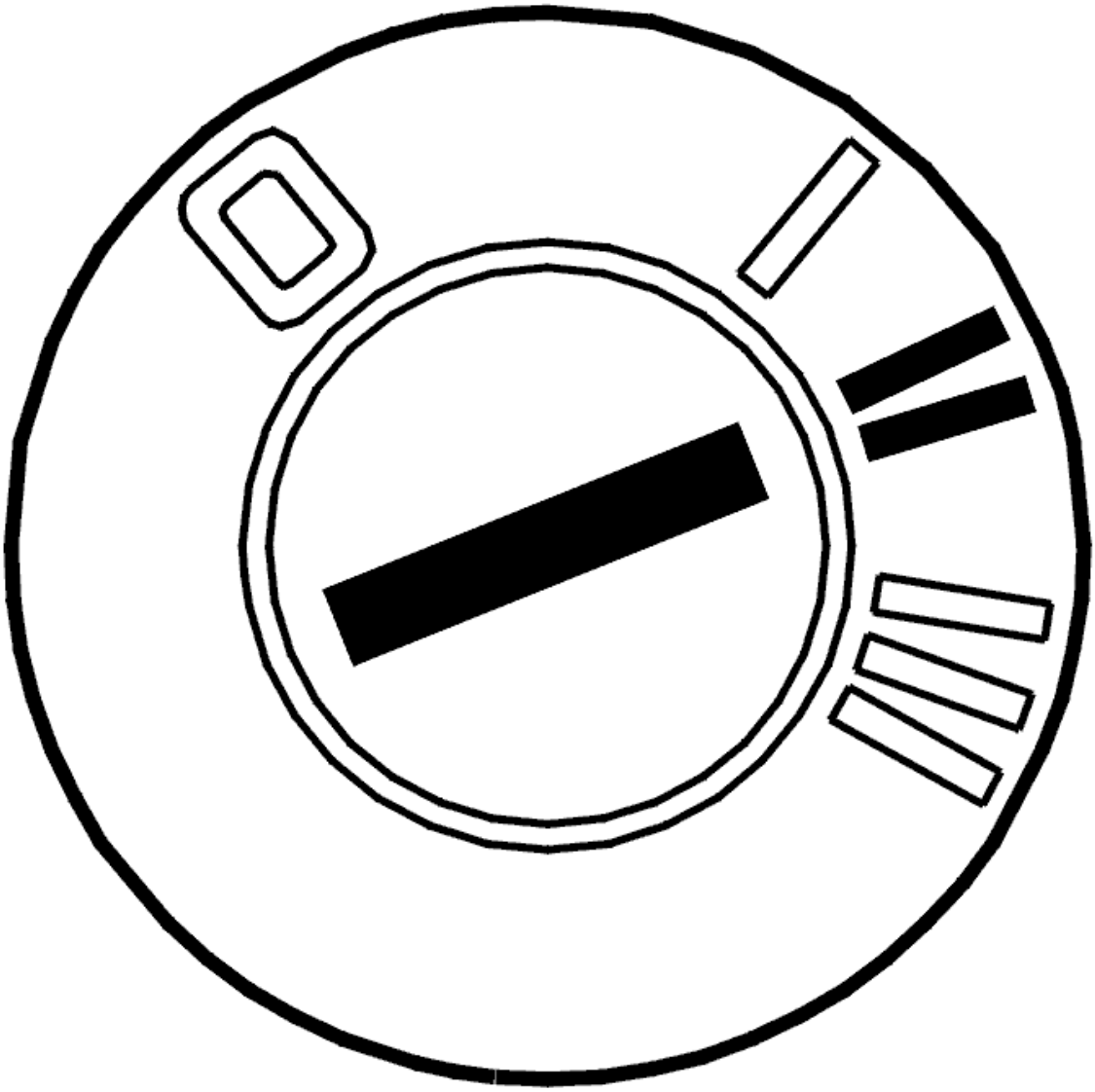

Fig. 104: Identifying Ignition ON
Courtesy of VOLVO CARS CORPORATION

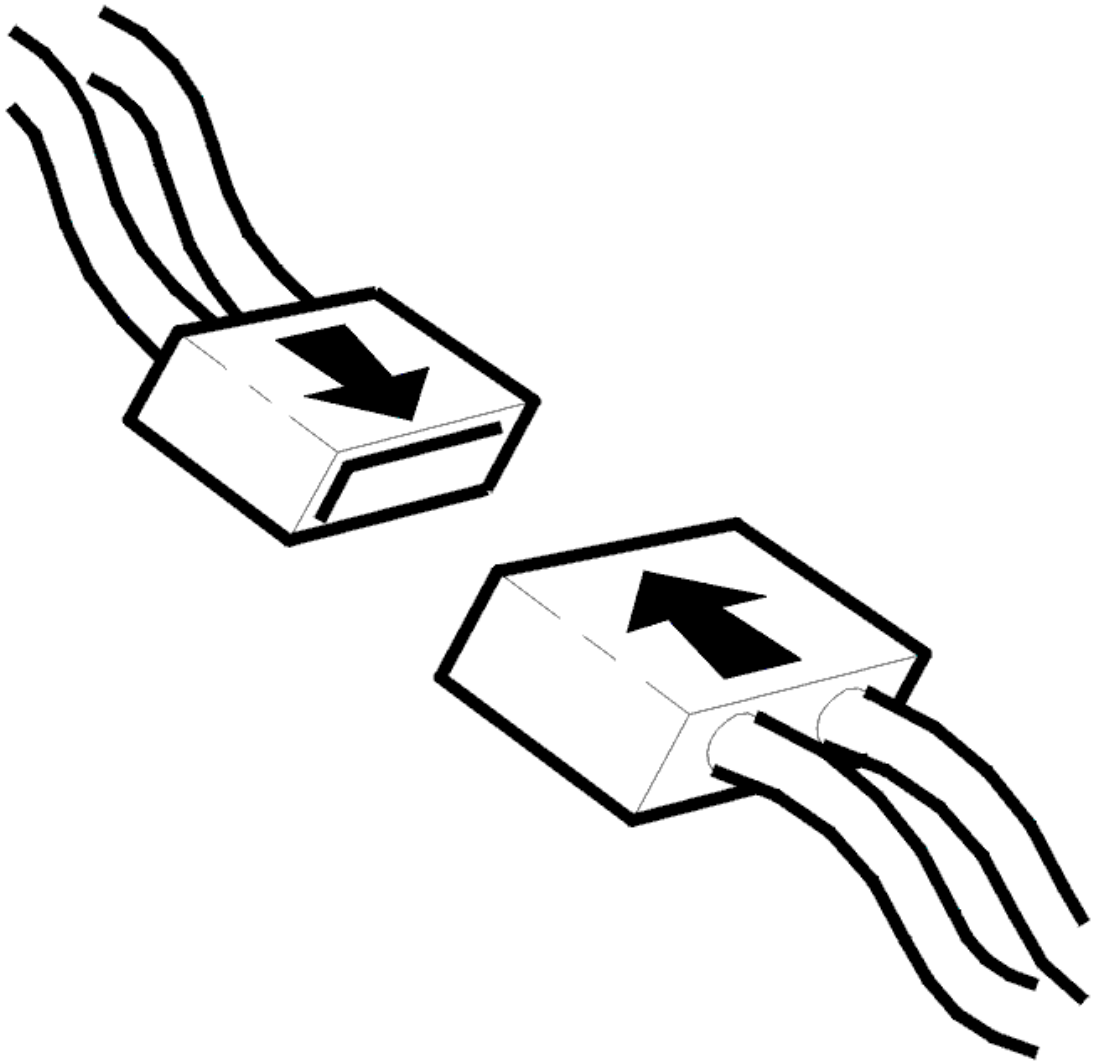

Fig. 105: Connecting Connector
Courtesy of VOLVO CARS CORPORATION

- Ignition off.
- Connect the connectors, install the components, etc.
- Ignition on.
- Read off the current in the circuit.

  Turn the steering wheel to full lock in both directions.

  The current should oscillate between 11 and 30 mA.

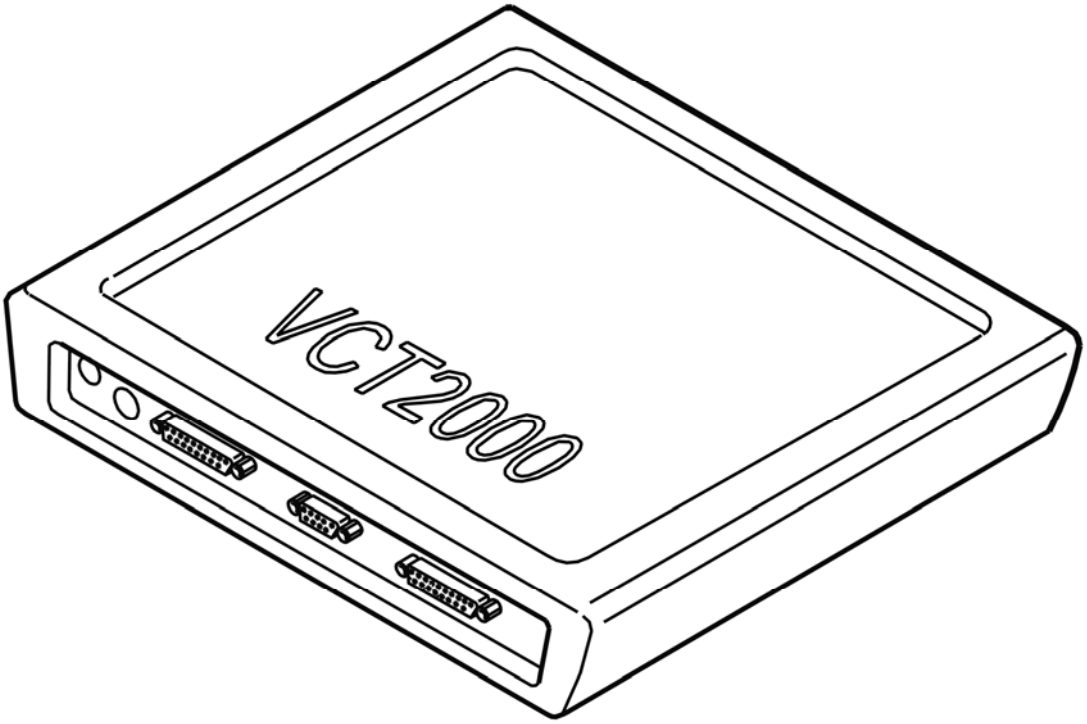

Fig. 106: Identifying VCT2000 Diagnostic Tool Symbol In VIDA
Courtesy of VOLVO CARS CORPORATION

Is the current OK?

- **YES**

  VERIFIED: Troubleshooting has been completed.

- **NO**

  Refer to **INFORMATION**

INFORMATION

FAULT-TRACING INFORMATION

The fault should have been detected and remedied. As this is not the case fault-tracing has failed.

Exit fault-tracing for this diagnostic trouble code (DTC) or make another attempt.

SAS-0003: STEERING WHEEL ANGLE SENSOR. SIGNAL OUTSIDE ITS PERMITTED RANGE (B5254T2; 2005-2007)

DIAGNOSTIC TROUBLE CODE (DTC) INFORMATION SAS-0003

Condition

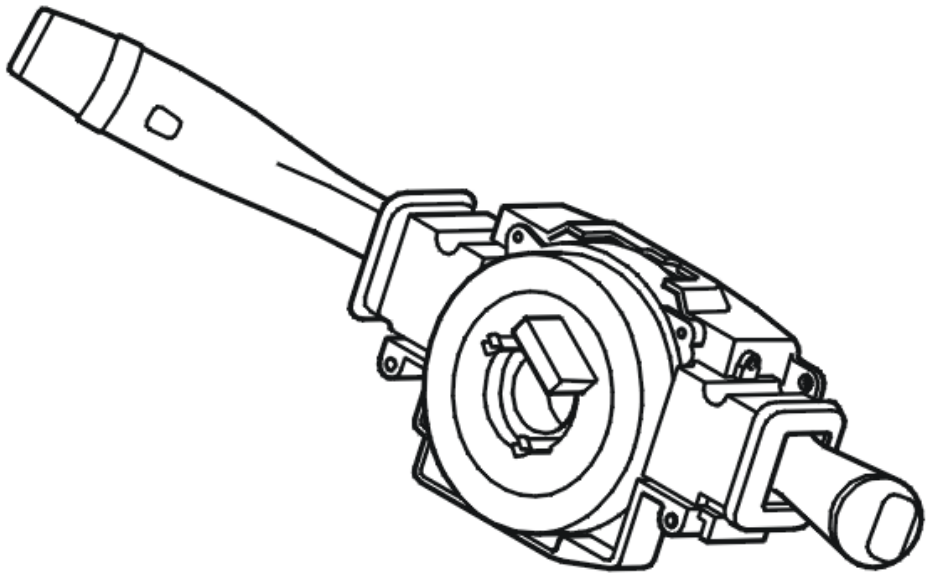

Fig. 107: Identifying Steering Wheel Control Module
Courtesy of VOLVO CARS CORPORATION

Steering wheel angle sensor module (SAS) is located inside, and is supplied with power by, the steering wheel module (SWM). Only the steering wheel angle sensor module (SAS) communicates on the controller area network (CAN).

The diagnostic trouble code (DTC) is stored if the steering wheel angle sensor module (SAS) registers that the steering wheel angle exceeds 720°in any direction.

The diagnostic trouble code (DTC) can be diagnosed when the ignition is switched on and the steering wheel angle sensor is initiated. Initiation is carried out when the steering wheel is turned more than 4.5° in any direction.

Substitute Value

- The stability function is blocked.

Possible Source

- Incorrectly installed steering wheel angle sensor.

Fault symptom[s]

- Anti-spin warning lamp lit.
- General warning lamp lit.
- The stability control system does not function.

SIGNAL OUTSIDE ITS PERMITTED RANGE

CHECKING THE INSTALLATION OF THE STEERING WHEEL ANGLE SENSOR

NOTE: **The diagnostic trouble code (DTC) indicates that the steering wheel angle sensor is incorrectly installed. When installing contact reel/steering wheel angle sensor it is important that the unit is installed correctly. If the unit is installed with the revolving center section one revolution out, internal components may be twisted and broken at full lock. If this is suspected, replace the contact reel.**

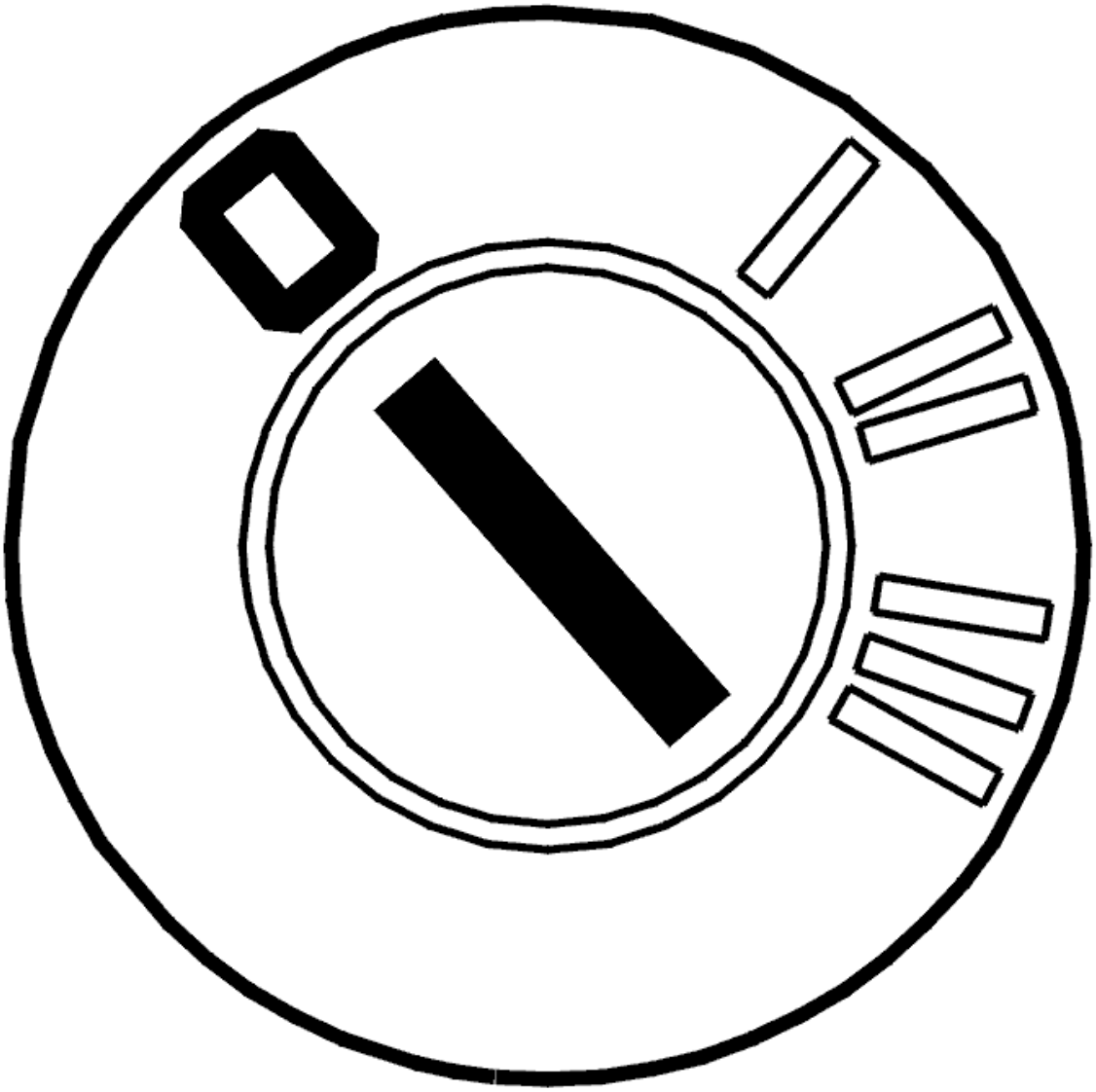

Fig. 108: Identifying Ignition OFF
Courtesy of VOLVO CARS CORPORATION

- Ignition off
- Set the front wheels to the straight ahead position
- Remove the steering wheel
- Ignition on
- Turn the steering wheel more than 5° in any direction to initialize the steering wheel angle sensor module (SAS)
- Click on the VCT2000 symbol to read off the steering wheel angle.

  Check that the steering wheel angle is 0° when the front wheels are pointing straight ahead. Set the wheels to the straight ahead position. Lock the steering wheel lock. Then adjust the contact reel so that the yellow marking can be seen in the window of the contact reel when the locking screw for the contact reel is in the correct position.

NOTE: **The diagnostic trouble code (DTC) for the steering wheel buttons is stored in the central electronic module (CEM) if the ignition key is turned to position II when the steering wheel is removed.**

Other information

- see **CONTACT REEL, REPLACEMENT**

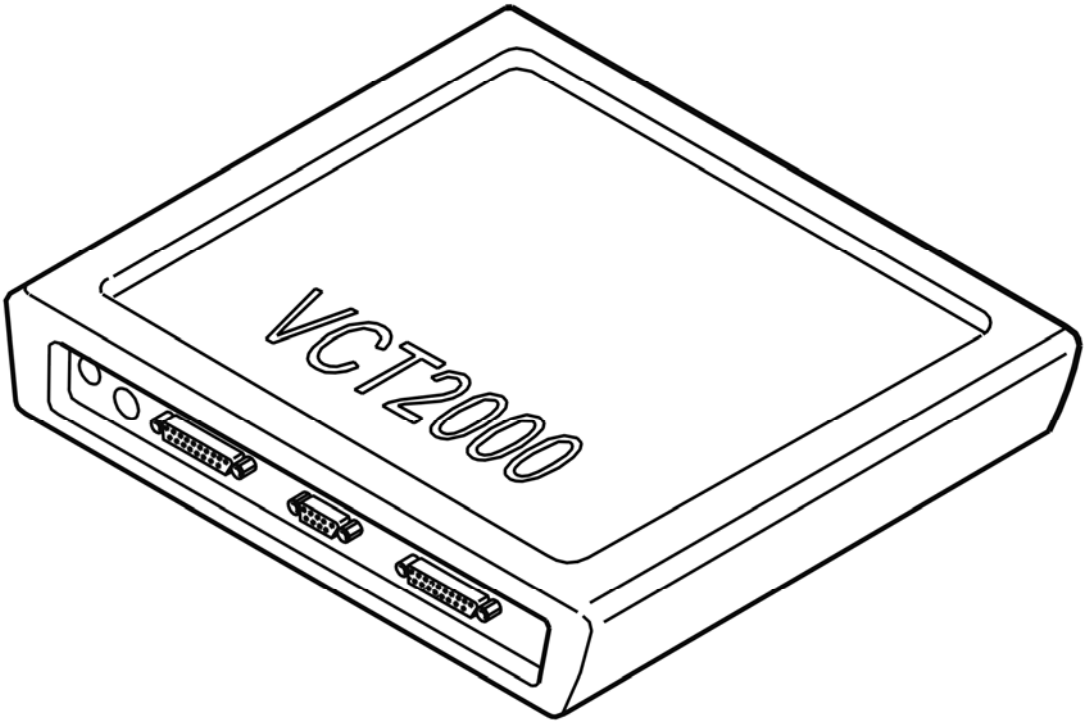

Fig. 109: Identifying VCT2000 Diagnostic Tool Symbol In VIDA
Courtesy of VOLVO CARS CORPORATION

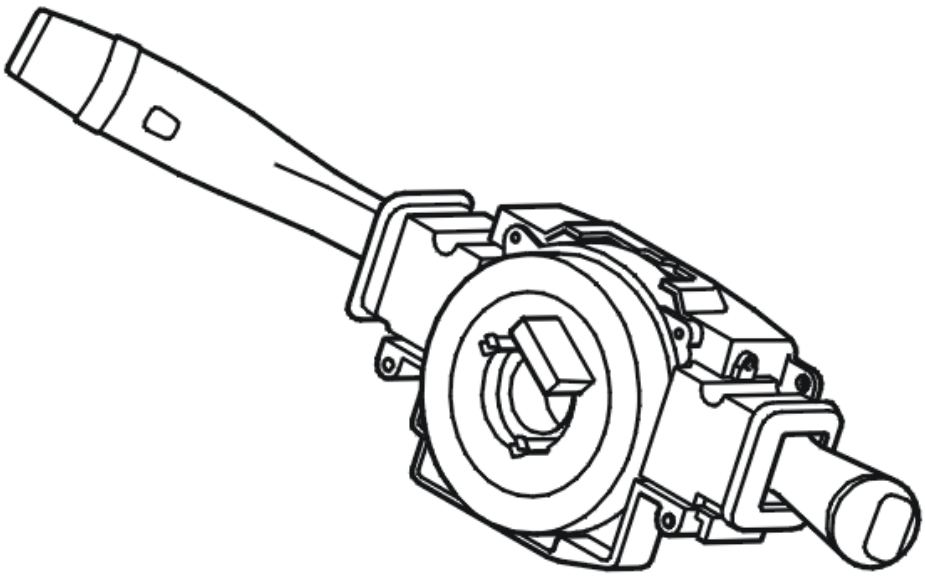

Fig. 110: Identifying Steering Wheel Control Module
Courtesy of VOLVO CARS CORPORATION

- **Continue**

  Refer to **VERIFICATION**

VERIFICATION

HINT: After carrying out the repair, check that the fault has been remedied.

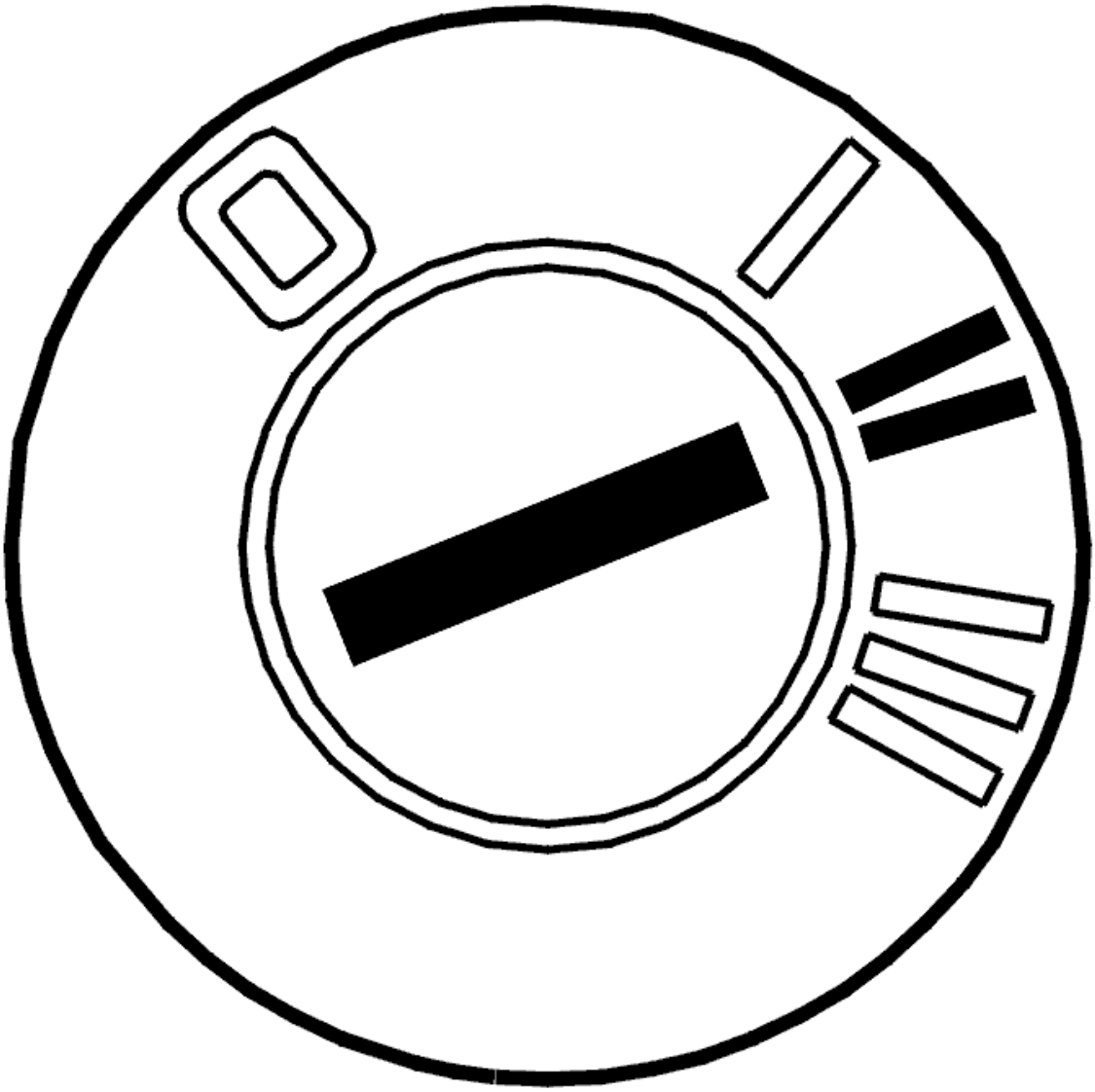

Fig. 111: Identifying Ignition ON
Courtesy of VOLVO CARS CORPORATION

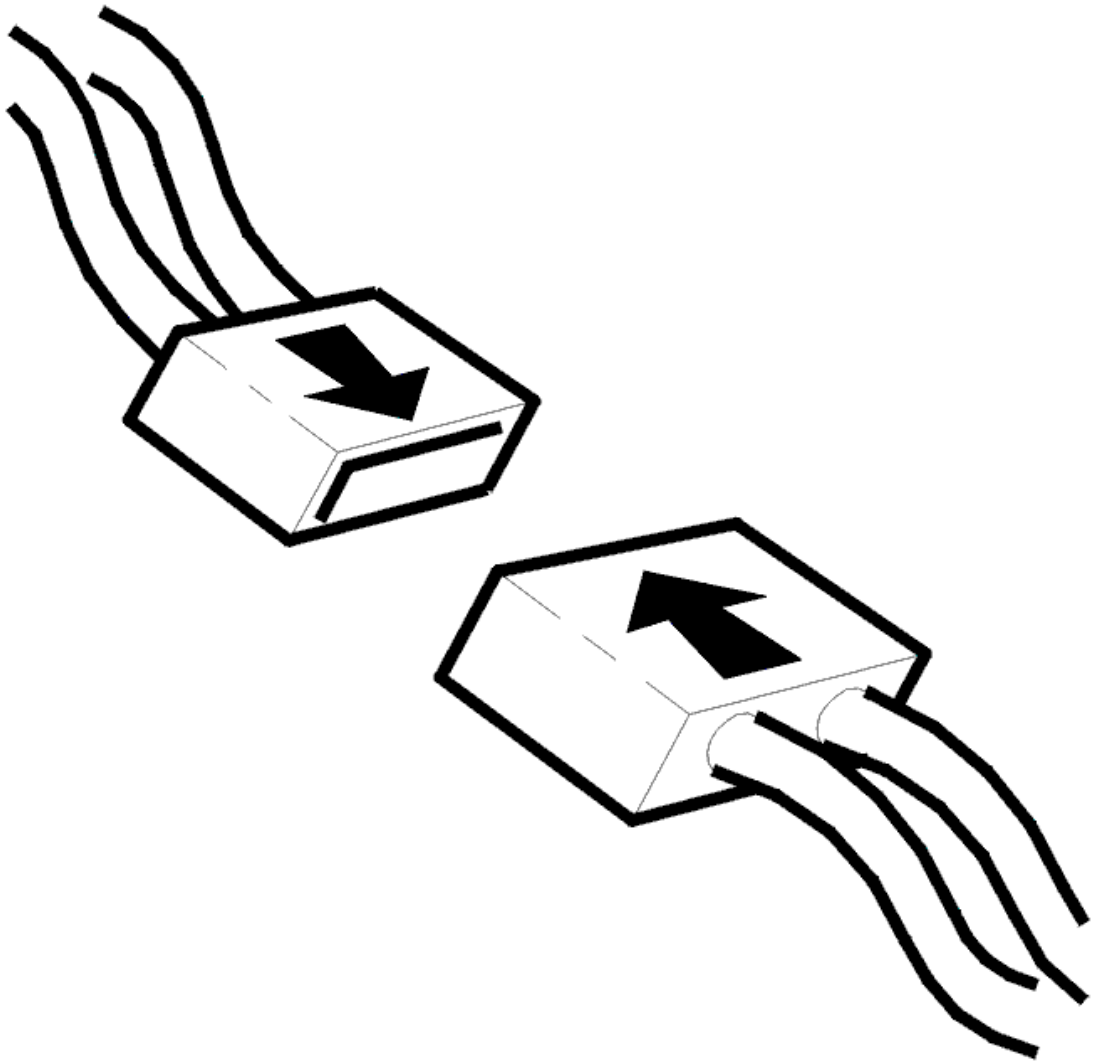

Fig. 112: Connecting Connector
Courtesy of VOLVO CARS CORPORATION

- Ignition off
- Reconnect the connectors, reinstall components etc.
- Ignition on
- Turn the steering wheel more than 5° in any direction to initialize the steering wheel angle sensor module (SAS)
- Click on the VCT2000 symbol to read off the steering wheel angle.

  Read off the steering wheel angle. Check that the steering wheel angle is 0° when the front wheels are pointing straight ahead.

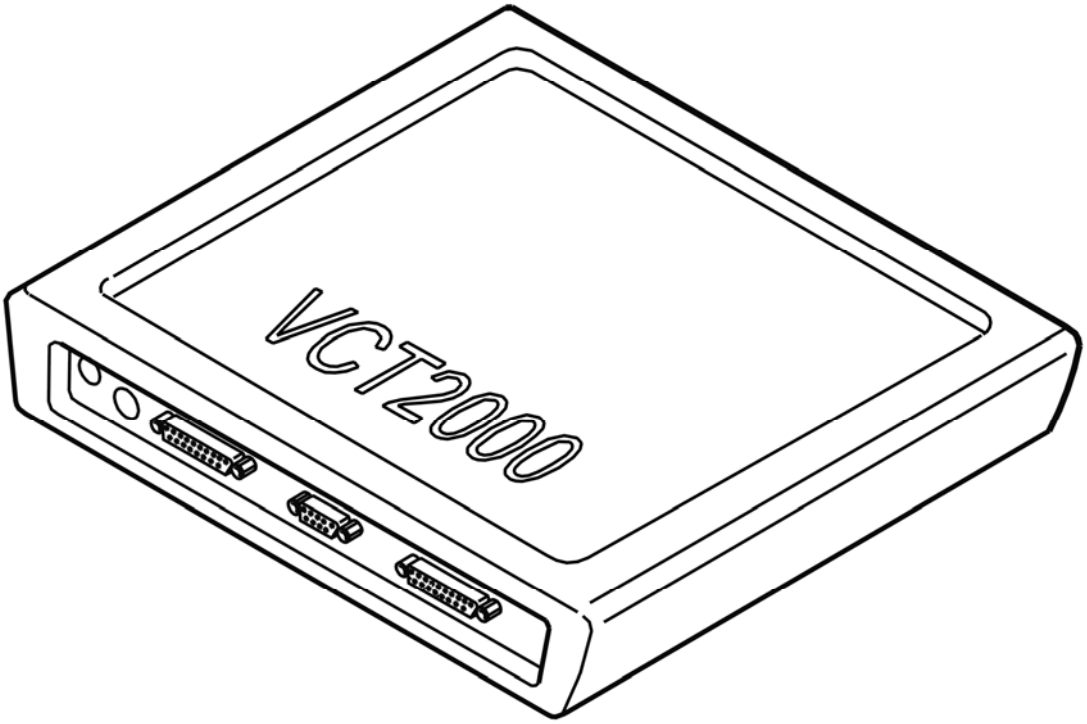

Fig. 113: Identifying VCT2000 Diagnostic Tool Symbol In VIDA
Courtesy of VOLVO CARS CORPORATION

Is the steering wheel angle 0° when the front wheels are pointing straight ahead?

- **YES**

  VERIFIED: Troubleshooting has been completed.

- **NO**

  Refer to **INFORMATION**

INFORMATION

FAULT-TRACING INFORMATION

The fault should have been detected and remedied. As this is not the case fault-tracing has failed.

Exit fault-tracing for this diagnostic trouble code (DTC) or make another attempt.

SAS-0003: STEERING WHEEL ANGLE SENSOR. SIGNAL OUTSIDE ITS PERMITTED RANGE (B6294T; 2005-2006)

DIAGNOSTIC TROUBLE CODE (DTC) INFORMATION SAS-0003

see **DIAGNOSTIC TROUBLE CODE (DTC) INFORMATION SAS-0003**

SIGNAL OUTSIDE ITS PERMITTED RANGE

see **SIGNAL OUTSIDE ITS PERMITTED RANGE**

SAS-0003: STEERING WHEEL ANGLE SIGNAL A. SIGNAL TOO HIGH. INTERMITTENT FAULT (2003-2004)

DIAGNOSTIC TROUBLE CODE INFORMATION

Condition

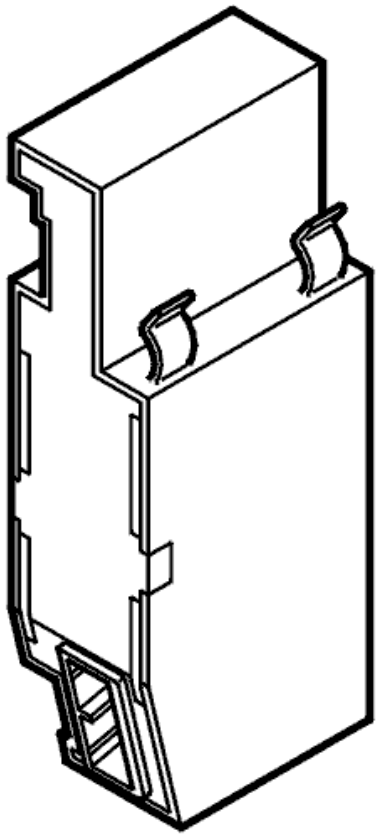

Fig. 114: Control Module For Steering Wheel Angle Sensor
Courtesy of VOLVO CARS CORPORATION

The steering wheel angle sensor has two circuits each with 4 LEDs and 4 receptors which read off their individual track on a perforated code disc. One circuit measures the steering wheel angle and the other measures steering wheel revolutions. If the control unit registers that the signal for any of the steering wheel angle signals A, B, IX, IY, R1, R2, R3 or R4 is too high, diagnostic trouble code SAS-0003, 0005, 0007, 0009, 0011, 0013, 0015 or 0017 is set, depending on the steering wheel angle signal.

Substitute Value

- Stabilizing function disconnected.
- Anti-spin function blocked.

Possible Source

- Contact resistance or oxidation in connections or connectors.
- Short circuit to voltage supply.
- Open circuit.
- Defective control unit.

Fault symptom[s]

- Anti-spin warning lamp is on.
- Stabilizing function not working.
- Anti-spin does not work.

SIGNAL TOO HIGH. INTERMITTENT FAULT

CHECKING THE WIRING AND CONNECTIONS

Check the wires between steering wheel angle sensor (SAS) control unit #3 (#A27) and steering wheel control unit (SWM) #5 (#A5) for a short circuit to voltage supply, as described in, see **SHORT-CIRCUIT TO SUPPLY VOLTAGE, INTERMITTENT FAULTS** .

Additional information:

- To connect the test box to the steering wheel angle sensor control unit, see **CONNECTING THE BREAKOUT BOX TO THE STEERING ANGLE SENSOR** .
- To connect the test box to the steering wheel control unit, see **CONNECTING THE BREAKOUT BOX**
- For information on signals to the steering wheel angle sensor control unit, see **SIGNAL DESCRIPTION, CONTROL UNIT FOR THE STEERING WHEEL ANGLE SENSOR (SAS)**
- For information on signals to the steering wheel control unit, see **SIGNAL SPECIFICATION** .

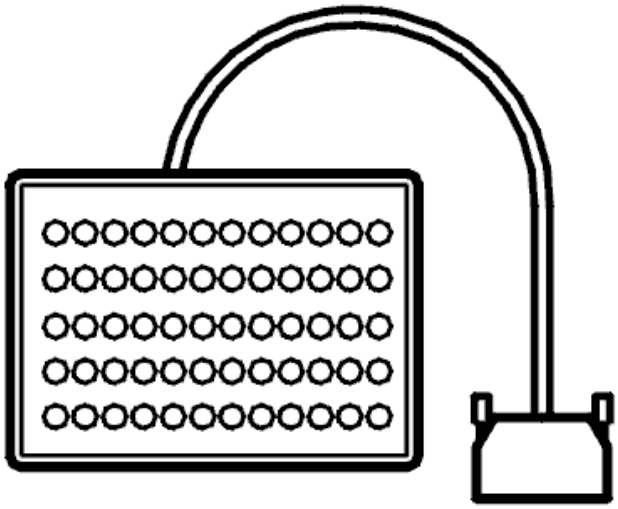

Fig. 115: Breakout Box
Courtesy of VOLVO CARS CORPORATION

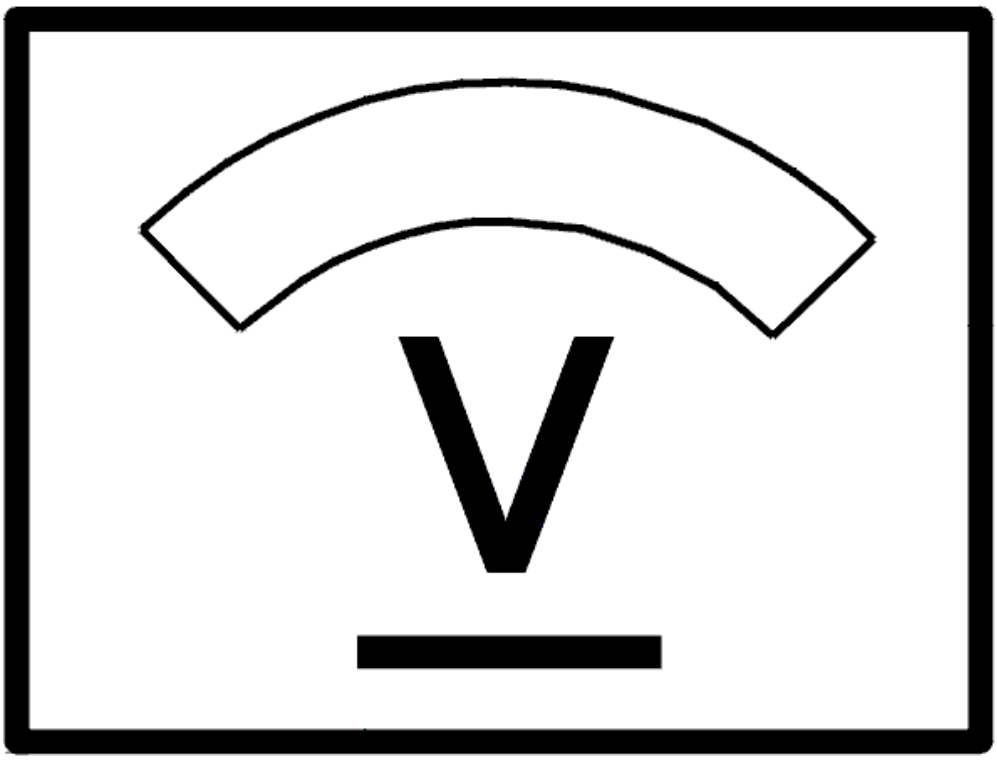

Fig. 116: Identifying Voltage Display
Courtesy of VOLVO CARS CORPORATION

- **Continue**

  Refer to **INFORMATION**

INFORMATION

FAULT-TRACING INFORMATION

If the fault is intermittent, do not verify fault-tracing if the fault does not recur.

It is possible to view the information again, or leave fault-tracing for this diagnostic trouble code (DTC).

SAS-0003: STEERING WHEEL ANGLE SIGNAL A. SIGNAL TOO HIGH.

PERMANENT FAULT (2003-2004)

DIAGNOSTIC TROUBLE CODE INFORMATION

see **DIAGNOSTIC TROUBLE CODE INFORMATION**

SIGNAL TOO HIGH. PERMANENT FAULT

CHECKING THE CONNECTORS

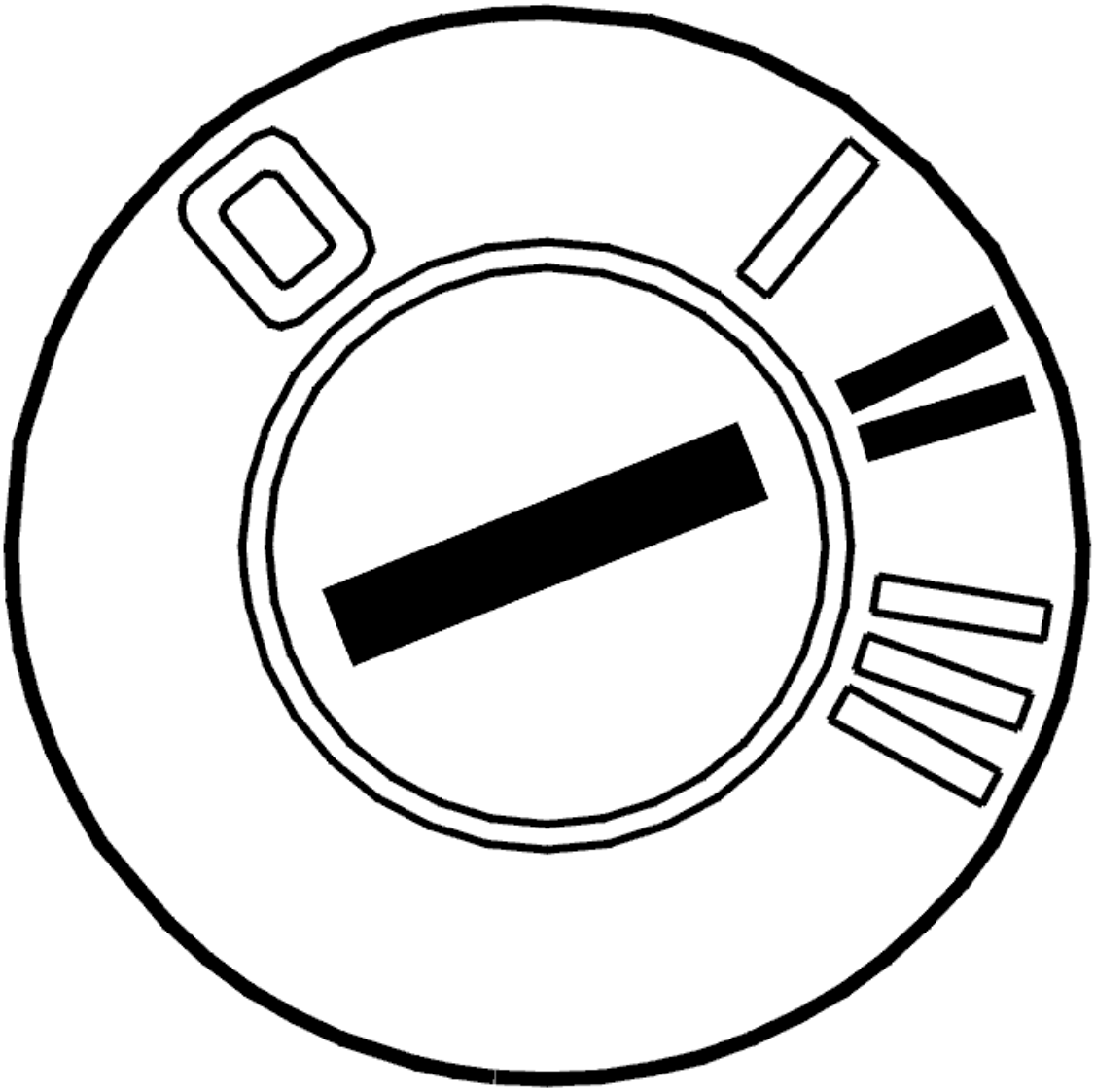

Fig. 117: Identifying Ignition ON
Courtesy of VOLVO CARS CORPORATION

- Ignition off
- Check the connector for control module for the steering wheel angle sensor and the steering wheel angle

sensor connector. Check for contact resistance and oxidation according to **CONTACT RESISTANCE AND OXIDATION**

- Reinstall the components, reconnect the connectors etc.
- Ignition on
- Read off the status of steering wheel angle signal A.

Turn the steering wheel in both directions and check that the value changes between ON and OFF.

If the value changes, the cause of the fault was contact resistance or oxidation in the control module or in the steering wheel angle sensor connector.

Other information:

- To access the connector for the control module for the steering wheel angle sensor, see **STEERING WHEEL MODULE (SWM), REPLACING**
- To access the connector for the steering wheel module (SWM), see **STEERING WHEEL MODULE (SWM), REPLACING**
- For information about signals, see **SIGNAL DESCRIPTION, CONTROL UNIT FOR THE STEERING WHEEL ANGLE SENSOR (SAS)**

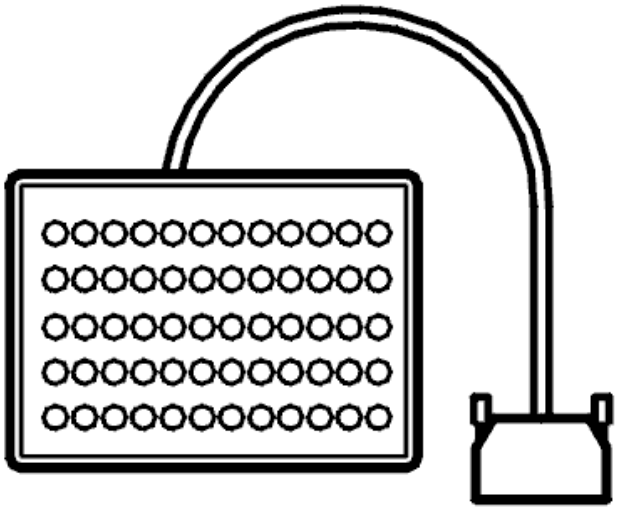

Fig. 118: Breakout Box
Courtesy of VOLVO CARS CORPORATION

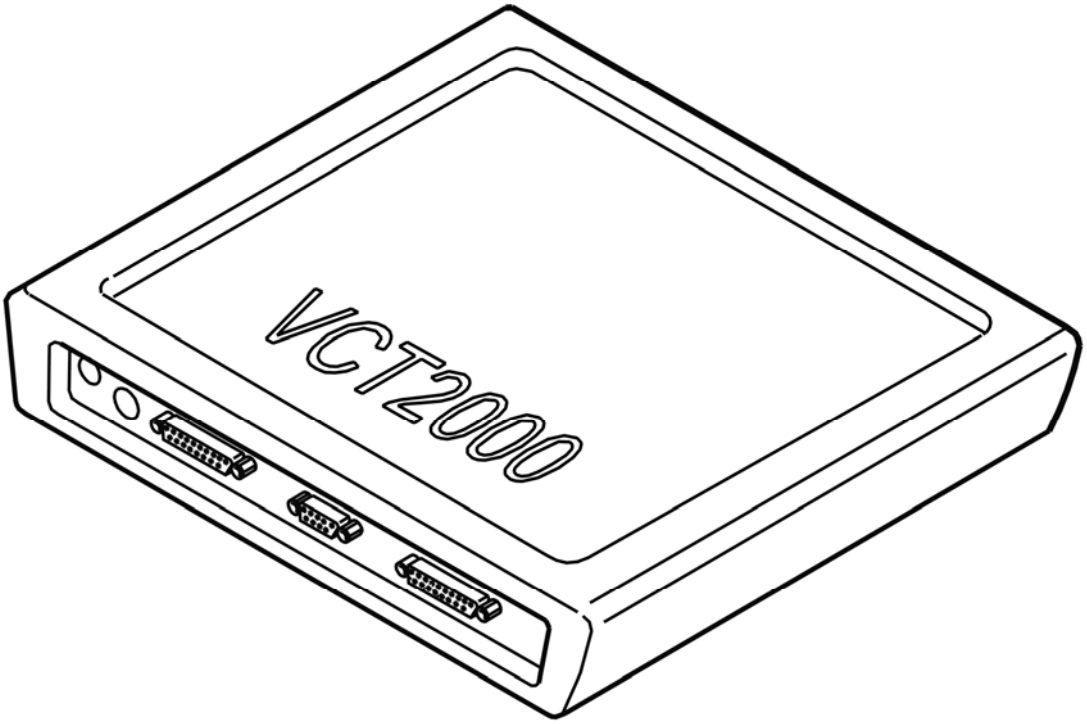

Fig. 119: Identifying VCT2000 Diagnostic Tool Symbol In VIDA
Courtesy of VOLVO CARS CORPORATION

Does the value change between OFF and ON?

- **YES**

  OKAY: Troubleshooting has been completed.

- **NO**

  Refer to **CHECKING WIRING AND SENSORS**

CHECKING WIRING AND SENSORS

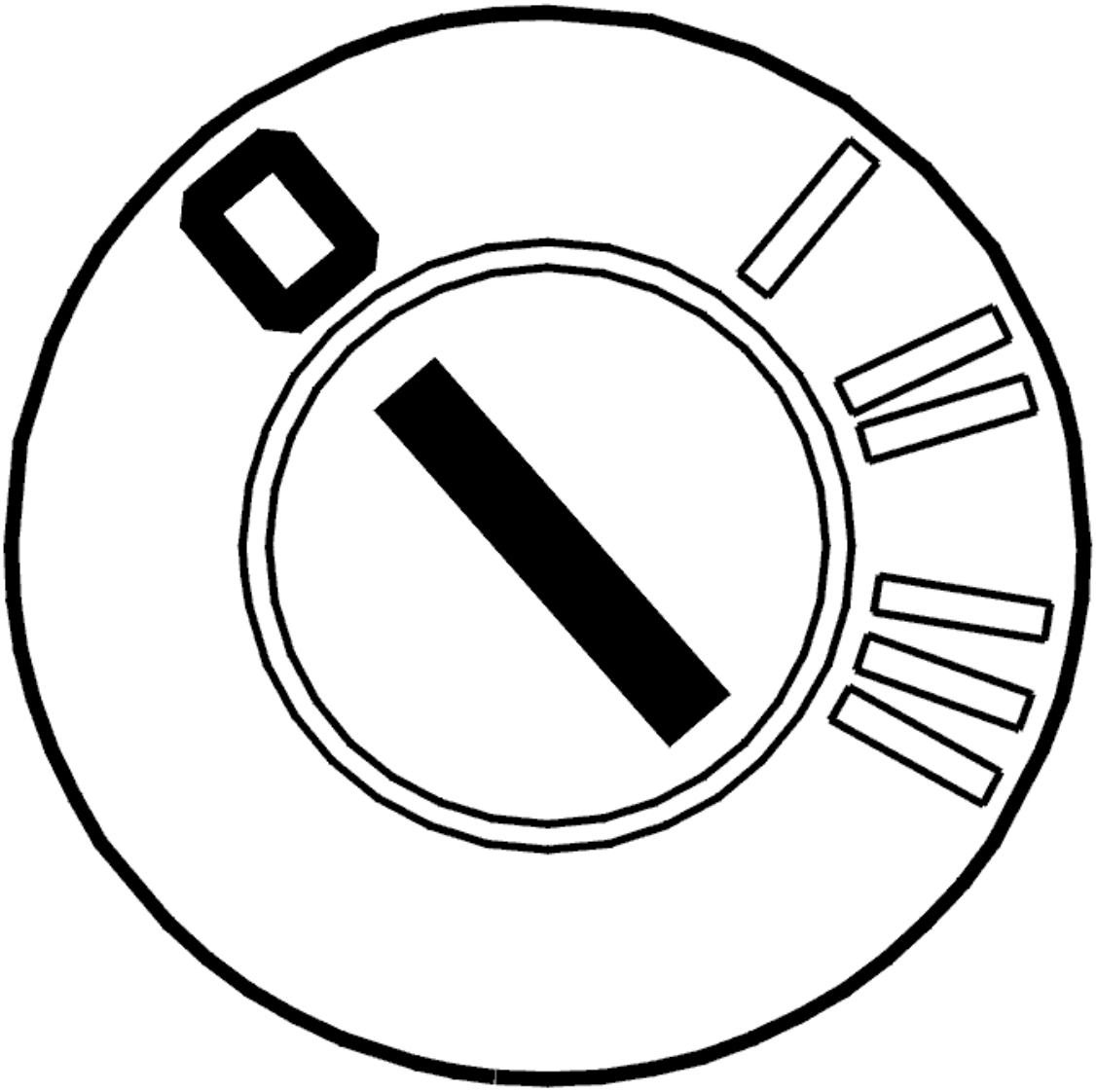

Fig. 120: Identifying Ignition OFF
Courtesy of VOLVO CARS CORPORATION

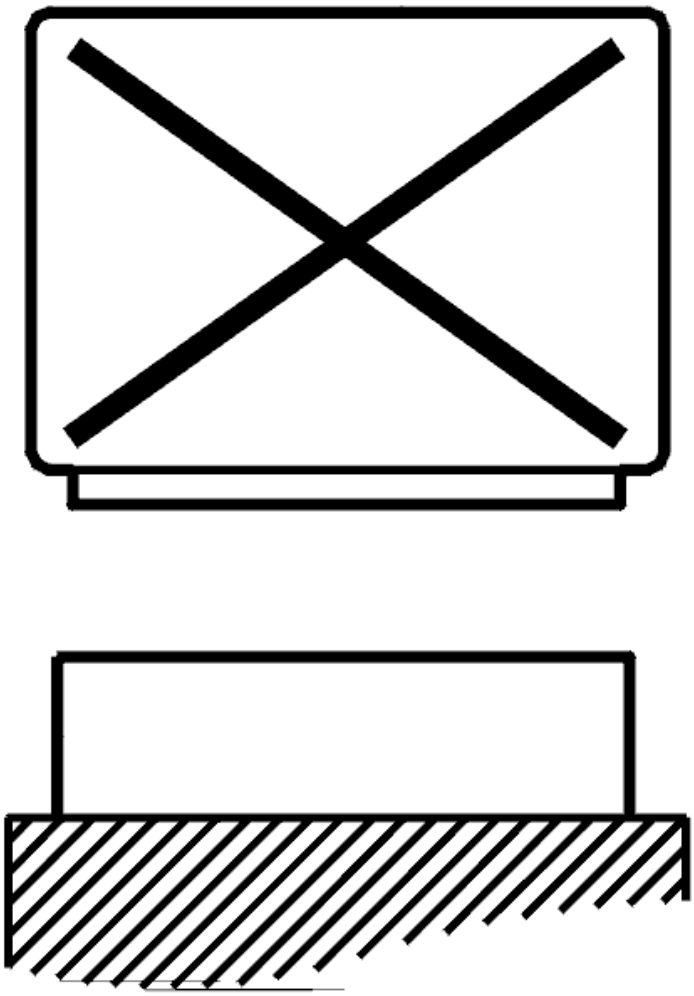

Fig. 121: Disconnecting Control Unit
Courtesy of VOLVO CARS CORPORATION

- Ignition off
- The control module for the steering wheel angle sensor disconnected
- Steering wheel module (SWM) disconnected
- Connect the breakout box to the control module for the steering wheel angle sensor and to the steering wheel module (SWM)

  Check the wiring between the control module for the steering wheel angle sensor terminal #3 (#A27) and steering wheel module (SWM) terminal #5 (#A5). Check for an open-circuit according to **OPEN-CIRCUIT, PERMANENT FAULTS** . Check for a short-circuit to supply voltage according to **SHORT-CIRCUIT TO SUPPLY VOLTAGE. PERMANENT FAULTS** .

  Try replacing the steering wheel angle sensor if no faults are found in the cable between the control

module and the steering wheel angle sensor.

Other information:

- To access the connector for the control module for the steering wheel angle sensor, see **STEERING WHEEL MODULE (SWM), REPLACING**
- To access the connector for the steering wheel module (SWM), see **STEERING WHEEL MODULE (SWM), REPLACING**
- To connect the breakout box to the control module for the steering wheel angle sensor, see **CONNECTING THE BREAKOUT BOX TO THE STEERING ANGLE SENSOR**
- To connect the breakout box to the steering wheel module (SWM), see **CONNECTING THE BREAKOUT BOX**
- For information about signals, see **SIGNAL DESCRIPTION, CONTROL UNIT FOR THE STEERING WHEEL ANGLE SENSOR (SAS)** and **SIGNAL SPECIFICATION**
- To replace the steering wheel angle sensor, see **CONTACT REEL, REPLACEMENT**

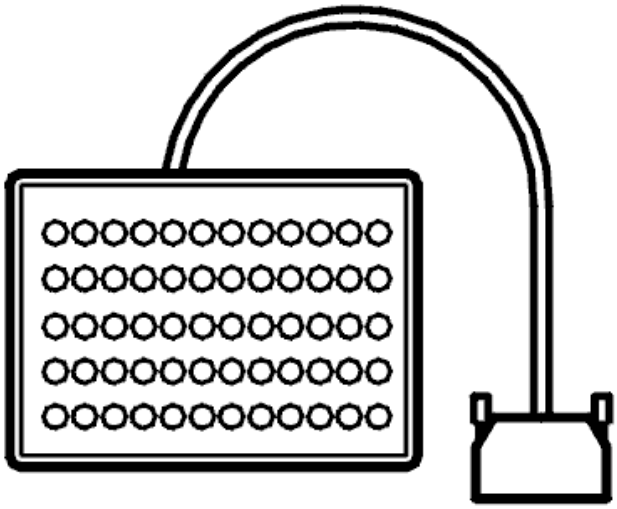

Fig. 122: Breakout Box
Courtesy of VOLVO CARS CORPORATION

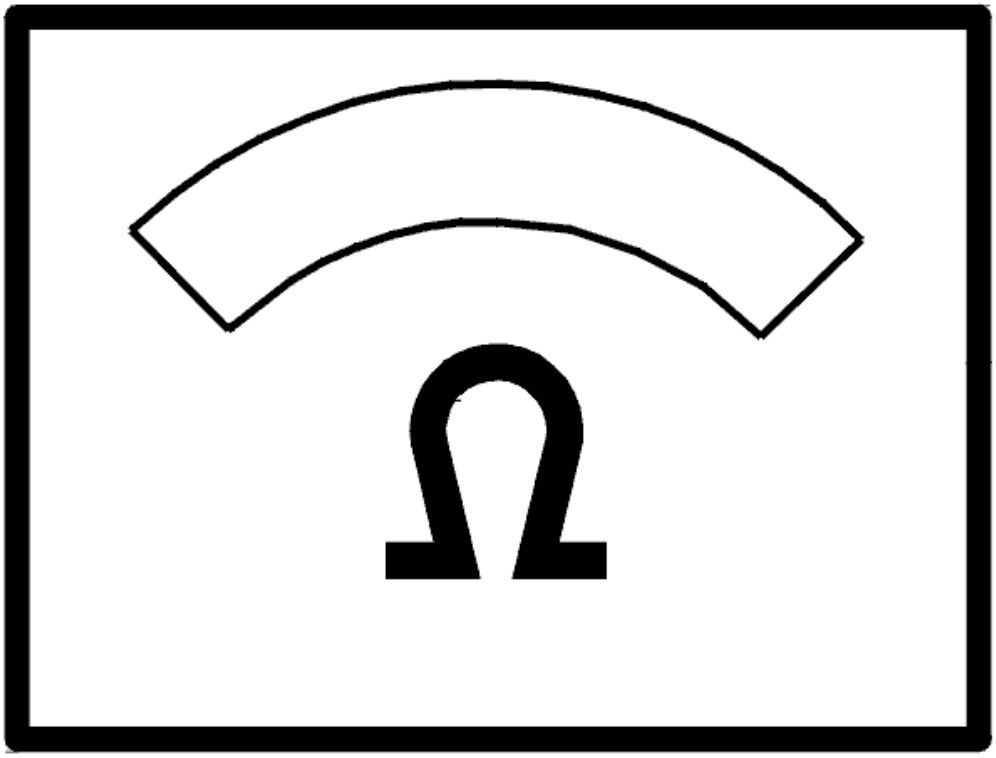

Fig. 123: Identifying Ohm Meter
Courtesy of VOLVO CARS CORPORATION

- **Continue**

  Refer to **VERIFICATION**

VERIFICATION

HINT: After the repair it is necessary to check that the fault has been rectified.

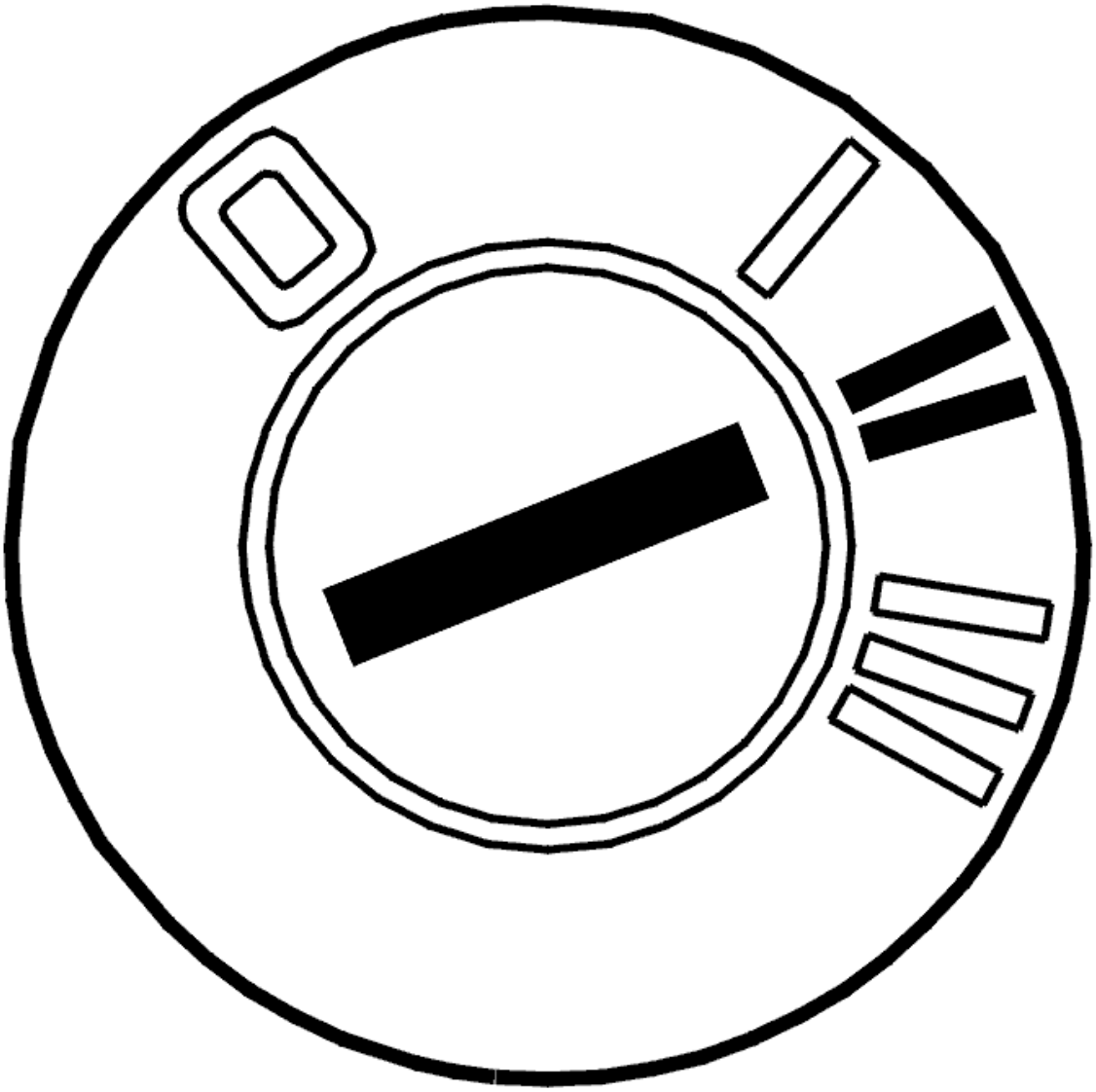

Fig. 124: Identifying Ignition ON
Courtesy of VOLVO CARS CORPORATION

- Ignition off.
- Connect the connectors, install the components, etc.
- Ignition on.
- Read off steering wheel angle signal A.
- Turn the steering wheel to full lock in both directions.

  The value should change between OFF and ON.

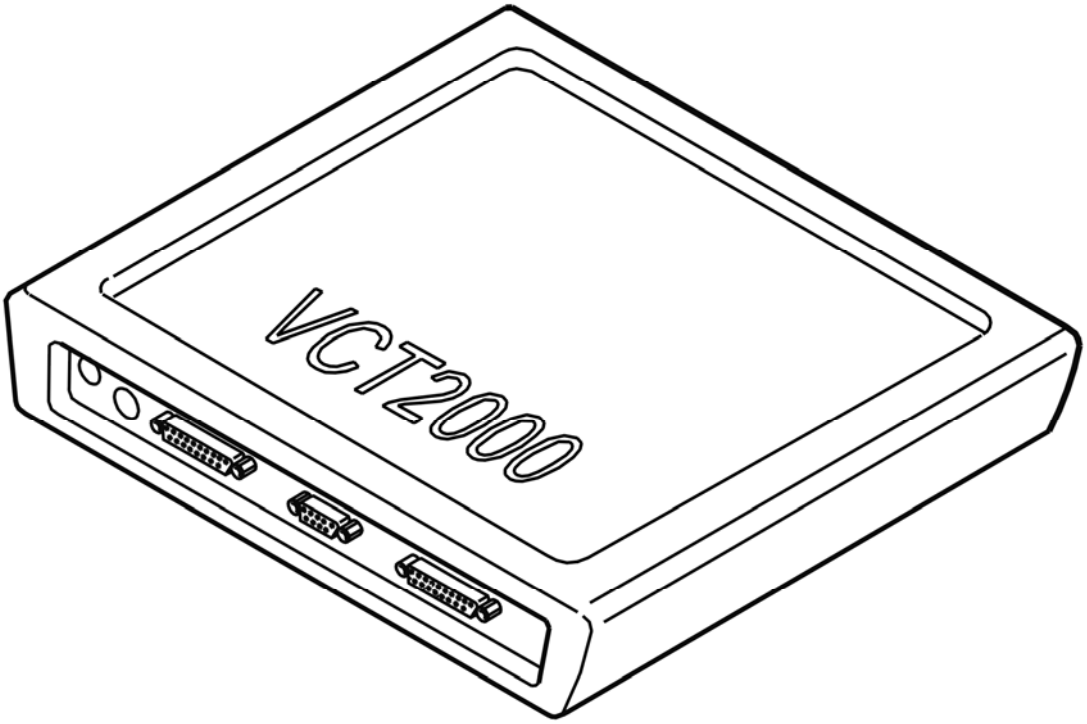

Fig. 125: Identifying VCT2000 Diagnostic Tool Symbol In VIDA
Courtesy of VOLVO CARS CORPORATION

Does the value change?

- **YES**

  VERIFIED: Troubleshooting has been completed.

- **NO**

  Refer to **INFORMATION**

INFORMATION

FAULT-TRACING INFORMATION

The fault should have been detected and remedied. As this is not the case fault-tracing has failed.

Exit fault-tracing for this diagnostic trouble code (DTC) or make another attempt.

SAS-0004: STEERING WHEEL ANGLE SENSOR. SIGNAL OUTSIDE ITS PERMITTED RANGE (B5254T2; 2005-2007)

DIAGNOSTIC TROUBLE CODE (DTC) INFORMATION SAS-0004

Condition

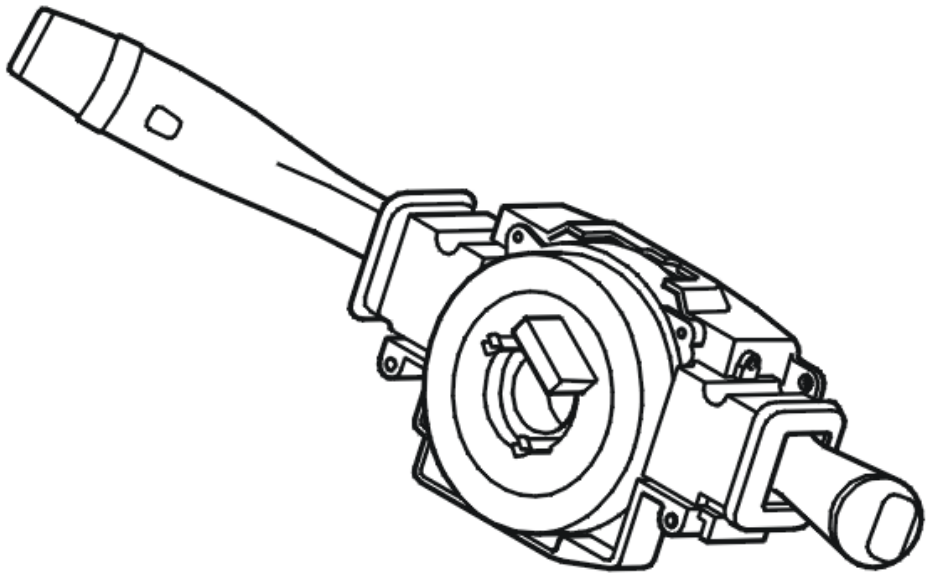

Fig. 126: Identifying Steering Wheel Control Module
Courtesy of VOLVO CARS CORPORATION

Steering wheel angle sensor module (SAS) is located inside, and is supplied with power by, the steering wheel module (SWM). Only the steering wheel angle sensor module (SAS) communicates on the controller area network (CAN).

The diagnostic trouble code (DTC) is stored if the steering wheel angle sensor module (SAS) registers that the steering wheel angle speed exceeds 1433 °/second.

The diagnostic trouble code (DTC) can be diagnosed when the ignition is switched on and the steering wheel angle sensor is initiated. Initiation is carried out when the steering wheel is turned more than 4.5° in any direction.

Substitute Value

- The stability function is blocked.

Possible Source

- The wheel has been pressed against something (the edge of a sidewalk for example)
- Internal fault in the control module.

Fault symptom[s]

- Anti-spin warning lamp lit.
- General warning lamp lit.
- The stability control system does not function.

SIGNAL OUTSIDE ITS PERMITTED RANGE

INFORMATION

The diagnostic trouble code (DTC) indicates that the steering wheel has been turned at a speed in excess of 1400°/s. The probable cause of the diagnostic trouble code (DTC) is that the driver has driven into the edge of a sidewalk or hit a stone, causing the angle speed of the steering wheel and the wheels to change drastically.

Check that front suspension alignment has not changed and that the wheels are not damaged.

Remedy as necessary.

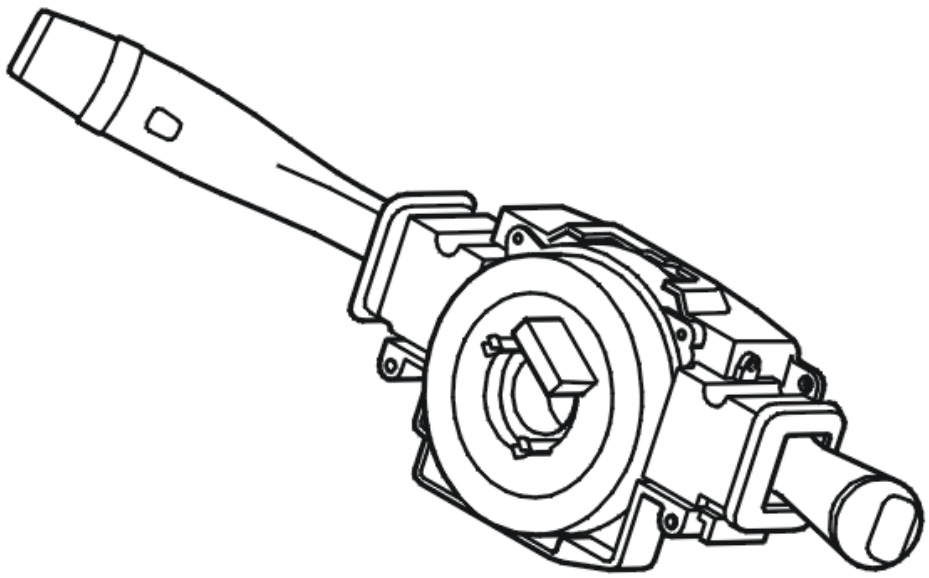

Fig. 127: Identifying Steering Wheel Control Module
Courtesy of VOLVO CARS CORPORATION

SAS-0004: STEERING WHEEL ANGLE SENSOR. SIGNAL OUTSIDE ITS PERMITTED RANGE (B6294T; 2005-2006)

DIAGNOSTIC TROUBLE CODE (DTC) INFORMATION SAS-0004

see **DIAGNOSTIC TROUBLE CODE (DTC) INFORMATION SAS-0004**

SIGNAL OUTSIDE ITS PERMITTED RANGE

see **SIGNAL OUTSIDE ITS PERMITTED RANGE**

SAS-0004: STEERING WHEEL ANGLE SIGNAL A. SIGNAL TOO LOW. INTERMITTENT FAULT (2003-2004)

DIAGNOSTIC TROUBLE CODE INFORMATION

Condition

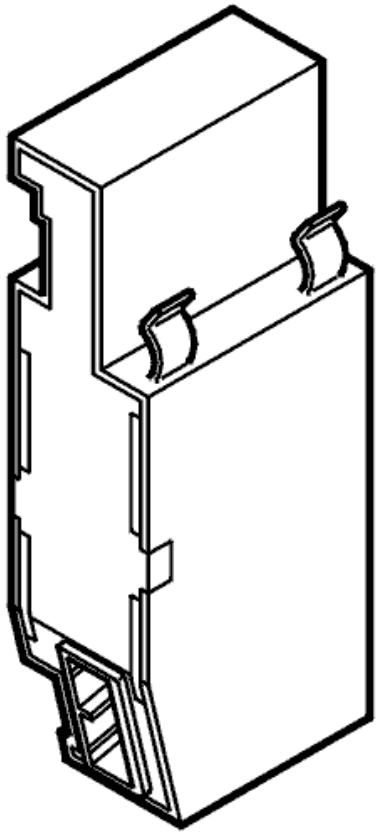

Fig. 128: Control Module For Steering Wheel Angle Sensor
Courtesy of VOLVO CARS CORPORATION

The steering wheel angle sensor has two circuits each with 4 LEDs and 4 receptors which read off their individual track on a perforated code disc. One circuit measures the steering wheel angle and the other measures

steering wheel revolutions. If the control unit registers that the signal for any of the steering wheel angle signals A, B, IX, IY, R1, R2, R3 or R4 is too high, diagnostic trouble code SAS-0004, 0006, 0007, 0008, 0010, 0012, 0014, 0016 or 0018 is set, depending on the steering wheel angle signal.

Substitute Value

- Stabilizing function disconnected.
- Anti-spin function blocked.

Possible Source

- Contact resistance or oxidation in connections or connectors.
- Open circuit.
- Short circuit to ground.
- Defective SAS element.

Fault symptom[s]

- Anti-spin warning lamp is on.
- Stabilizing function not working.
- Anti-spin does not work.

SIGNAL TOO LOW. INTERMITTENT FAULT

CHECKING THE WIRING AND CONNECTIONS

Check the wires between steering wheel angle sensor (SAS) control unit #3 (#A27) and steering wheel control unit (SWM) #5 (#A5) for an open circuit as described in, see **OPEN-CIRCUIT, INTERMITTENT FAULTS** , and for an intermittent short circuit to ground as described in **SHORT-CIRCUIT TO GROUND, INTERMITTENT FAULTS** .

Additional information:

- To connect the test box to the steering wheel angle sensor (SAS), see **CONNECTING THE BREAKOUT BOX TO THE STEERING ANGLE SENSOR** .
- To connect the test box to the steering wheel control unit (SWM), see **CONNECTING THE BREAKOUT BOX**
- For information on signals to the steering wheel angle sensor (SAS) control unit, see **SIGNAL DESCRIPTION, CONTROL UNIT FOR THE STEERING WHEEL ANGLE SENSOR (SAS)**
- For information on signals to the steering wheel control unit (SWM), see **SIGNAL SPECIFICATION** .

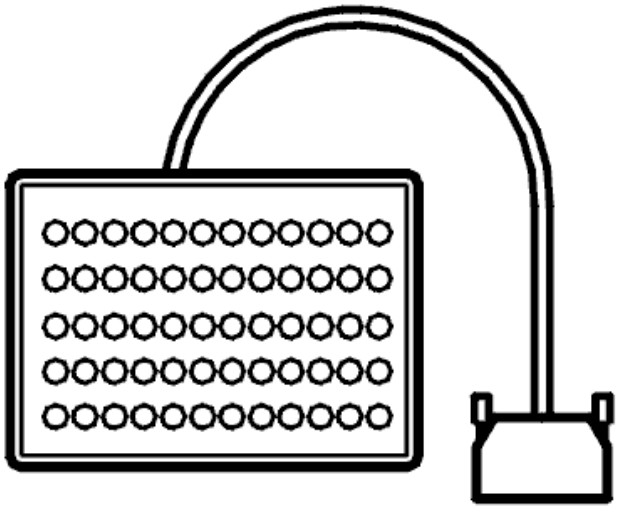

Fig. 129: Breakout Box
Courtesy of VOLVO CARS CORPORATION

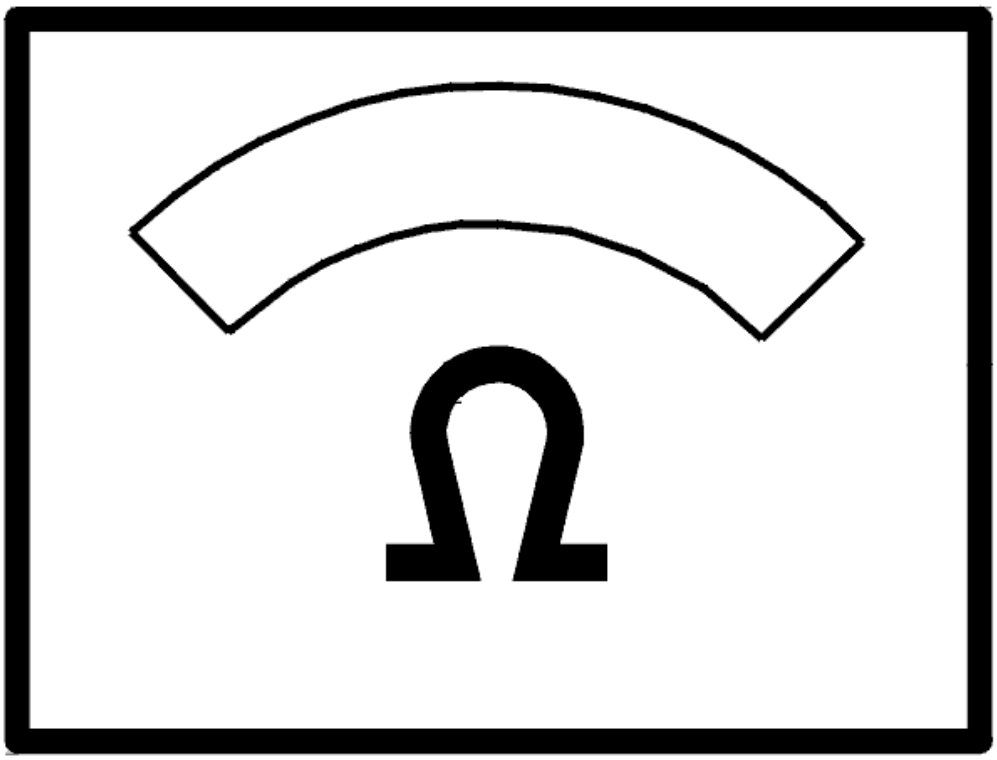

Fig. 130: Identifying Ohm Meter
Courtesy of VOLVO CARS CORPORATION

- **Continue**

  Refer to **INFORMATION**

INFORMATION

FAULT-TRACING INFORMATION

If the fault is intermittent, do not verify fault-tracing if the fault does not recur.

It is possible to view the information again, or leave fault-tracing for this diagnostic trouble code (DTC).

SAS-0004: STEERING WHEEL ANGLE SIGNAL A. SIGNAL TOO LOW.

PERMANENT FAULT (2003-2004)

DIAGNOSTIC TROUBLE CODE INFORMATION

see **DIAGNOSTIC TROUBLE CODE INFORMATION**

SIGNAL TOO LOW. PERMANENT FAULT

CHECKING THE CONNECTORS

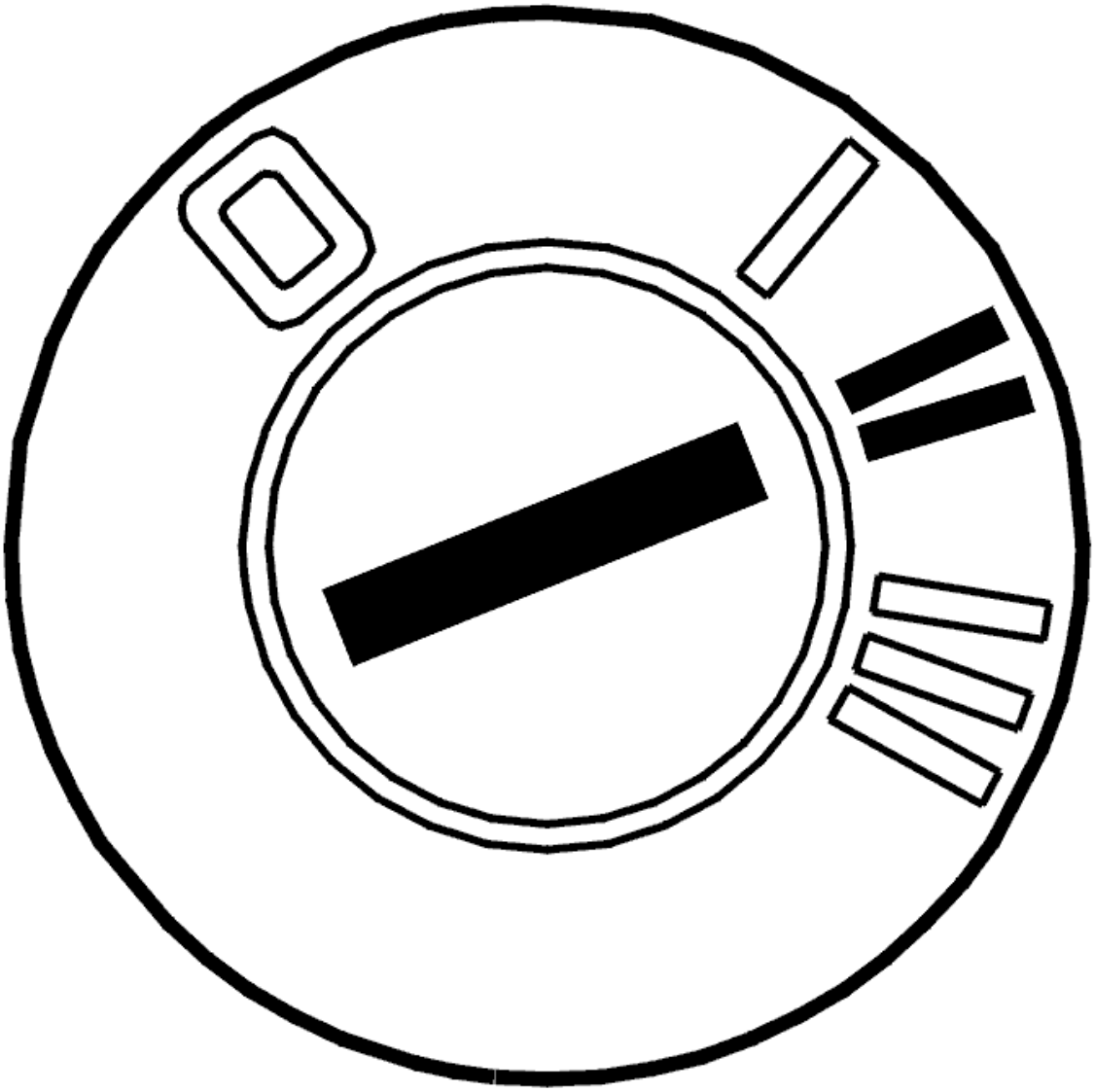

Fig. 131: Identifying Ignition ON
Courtesy of VOLVO CARS CORPORATION

- Ignition on
- Read off the status of steering wheel angle signal A.

Turn the steering wheel in both directions and check that the value changes between ON and OFF.

Other information:

- To access the connector for the control module for the steering wheel angle sensor, see **STEERING WHEEL MODULE (SWM), REPLACING**
- To access the connector for the steering wheel module (SWM), see **STEERING WHEEL MODULE (SWM), REPLACING**
- For information about signals, see **SIGNAL DESCRIPTION, CONTROL UNIT FOR THE STEERING WHEEL ANGLE SENSOR (SAS)** and **SIGNAL SPECIFICATION** .

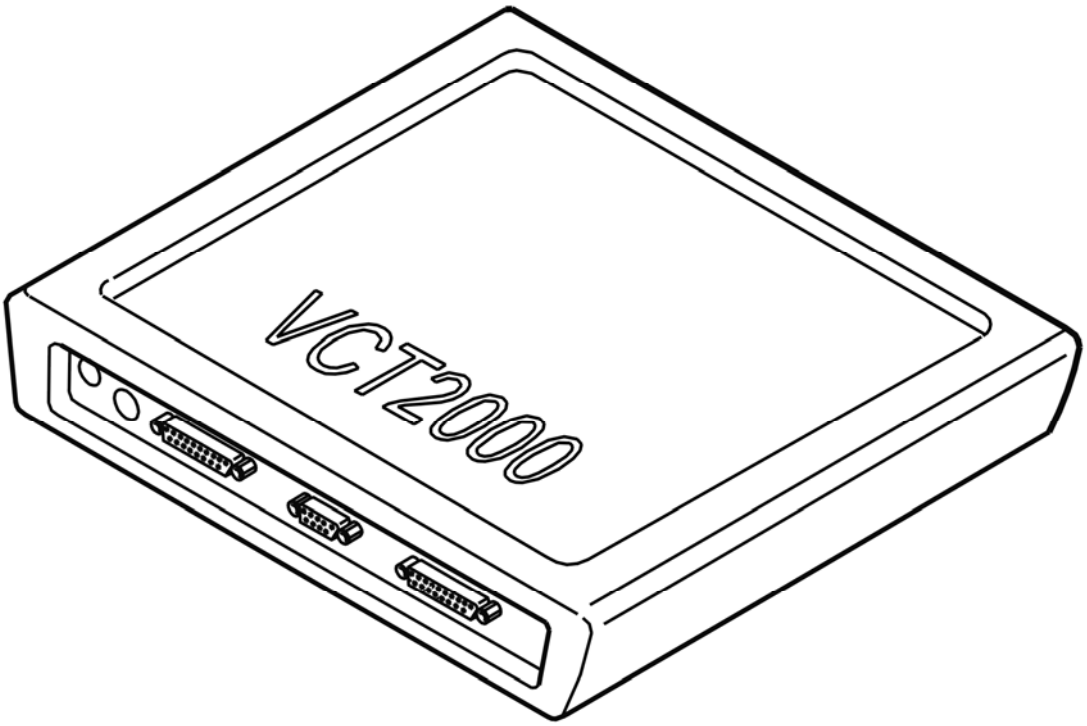

Fig. 132: Identifying VCT2000 Diagnostic Tool Symbol In VIDA
Courtesy of VOLVO CARS CORPORATION

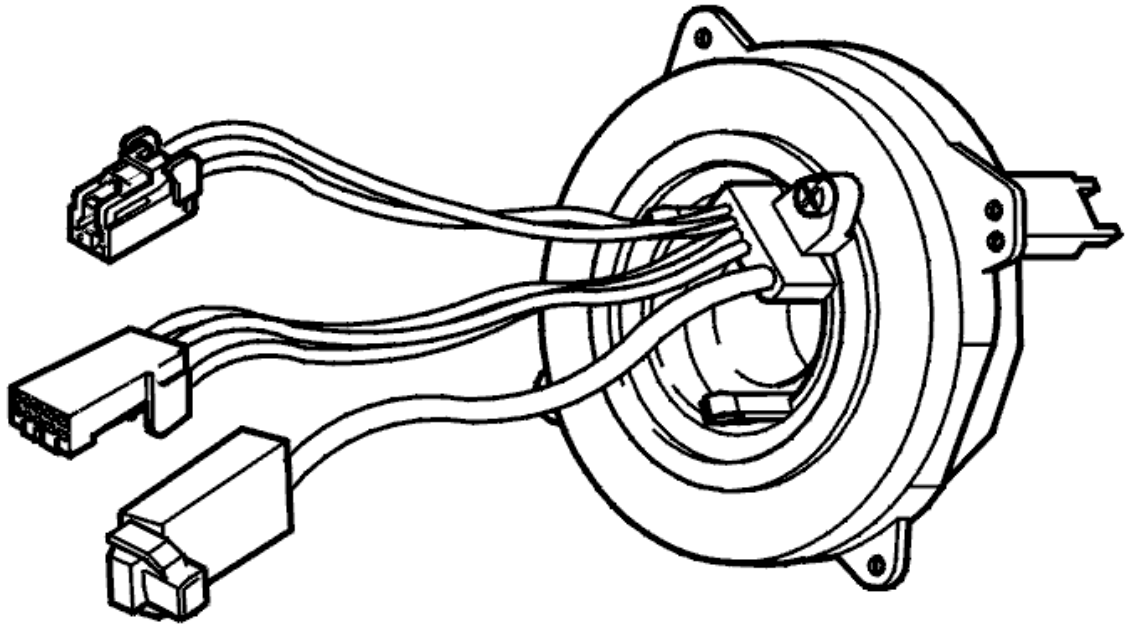

Fig. 133: Identifying Steering Wheel Angle Sensor
Courtesy of VOLVO CARS CORPORATION

Does the value change between OFF and ON?

- **YES**

  OKAY: Troubleshooting has been completed.

- **NO**

  Refer to **CHECKING WIRING AND SENSORS**

CHECKING WIRING AND SENSORS

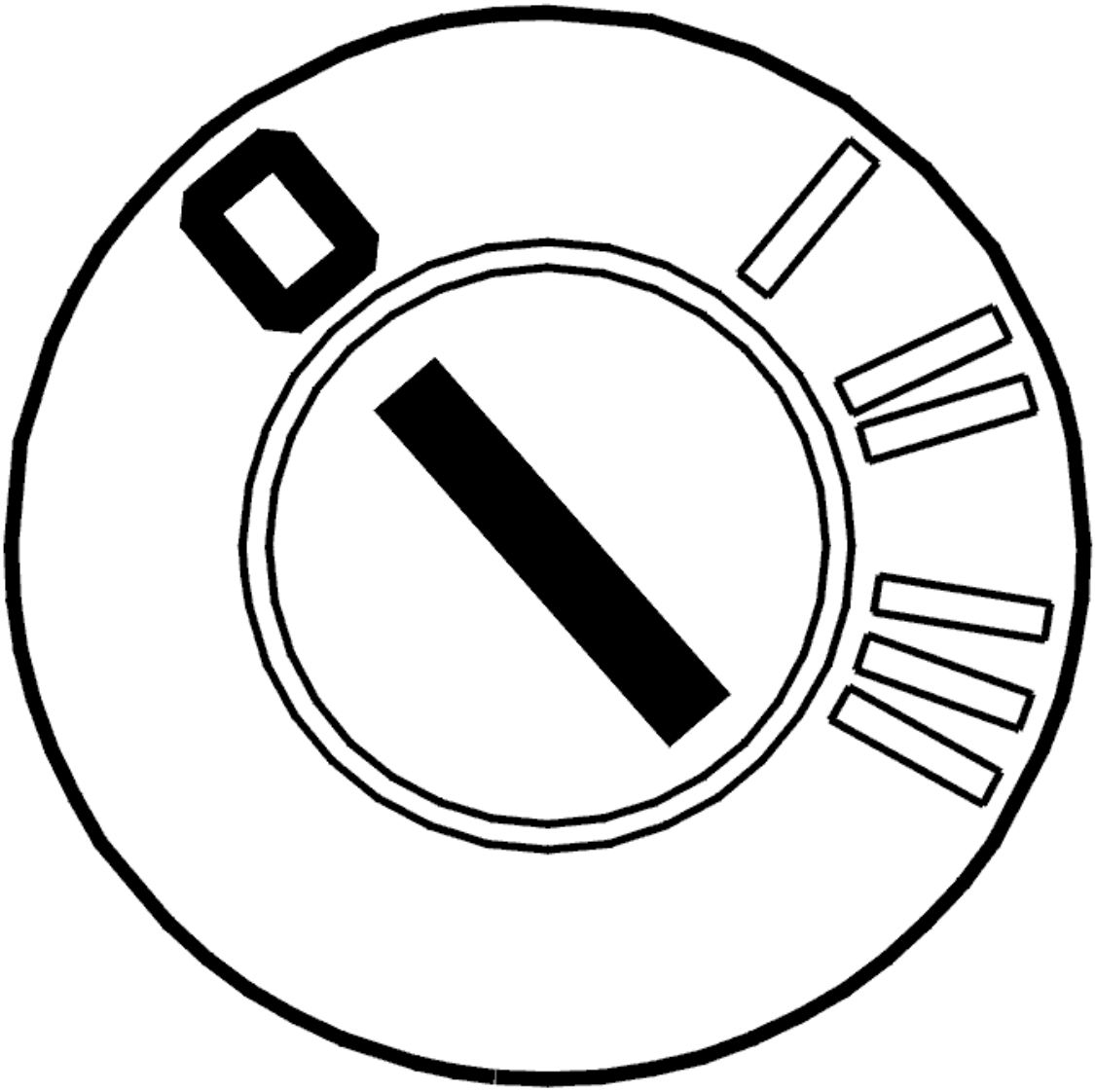

Fig. 134: Identifying Ignition OFF
Courtesy of VOLVO CARS CORPORATION

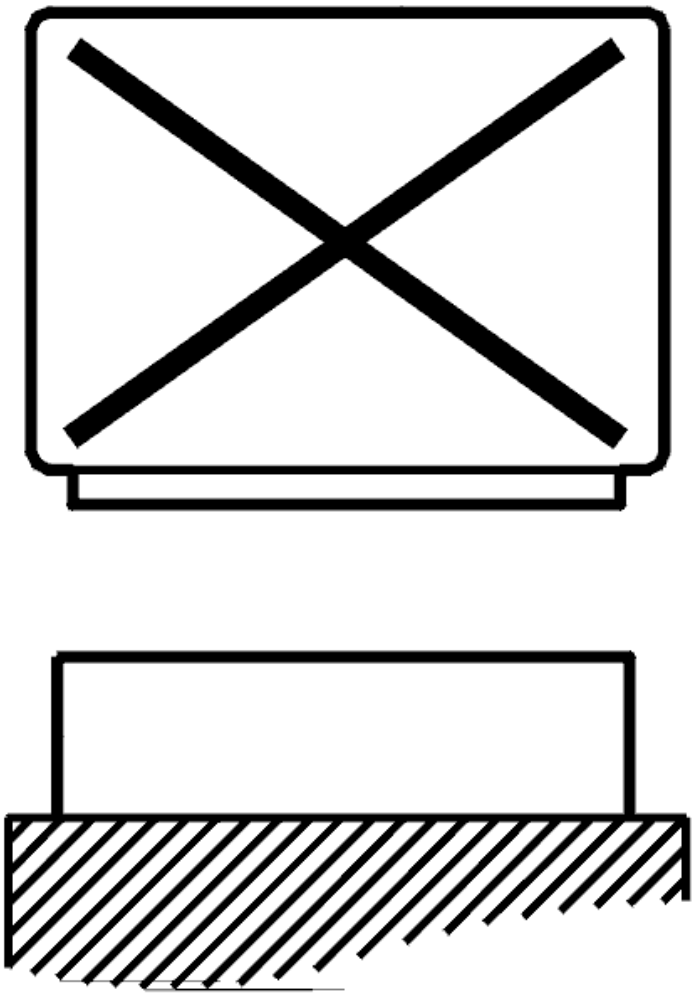

Fig. 135: Disconnecting Control Unit
Courtesy of VOLVO CARS CORPORATION

- Ignition off
- The control module for the steering wheel angle sensor disconnected
- Steering wheel module (SWM) disconnected
- Connect the breakout box to the control module for the steering wheel angle sensor and to the steering wheel module (SWM).

  Check the wiring between the control module for the steering wheel angle sensor terminal #3 (#A27) and steering wheel module (SWM) terminal #5 (#A5). Check for a short-circuit to ground according to **SHORT-CIRCUIT TO GROUND, PERMANENT FAULTS** . Check for an open-circuit according to **OPEN-CIRCUIT, PERMANENT FAULTS** .

  Try replacing the steering wheel angle sensor if no faults are found in the wiring between the control

module for the steering wheel angle sensor and the steering wheel module (SWM).

Other information:

- To connect the breakout box to the control module for the steering wheel angle sensor, see **CONNECTING THE BREAKOUT BOX TO THE STEERING ANGLE SENSOR**
- To connect the breakout box to the steering wheel module (SWM), see **CONNECTING THE BREAKOUT BOX**
- To replace the steering wheel angle sensor, see **CONTACT REEL, REPLACEMENT**
- For information about signals, see **SIGNAL DESCRIPTION, CONTROL UNIT FOR THE STEERING WHEEL ANGLE SENSOR (SAS)** and **SIGNAL SPECIFICATION** .

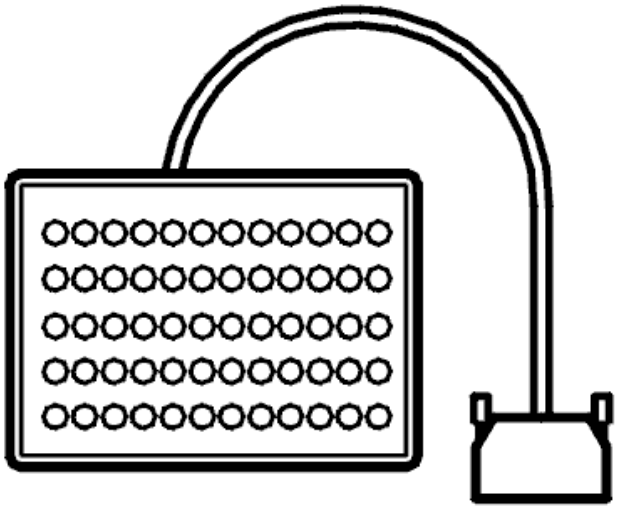

Fig. 136: Breakout Box
Courtesy of VOLVO CARS CORPORATION

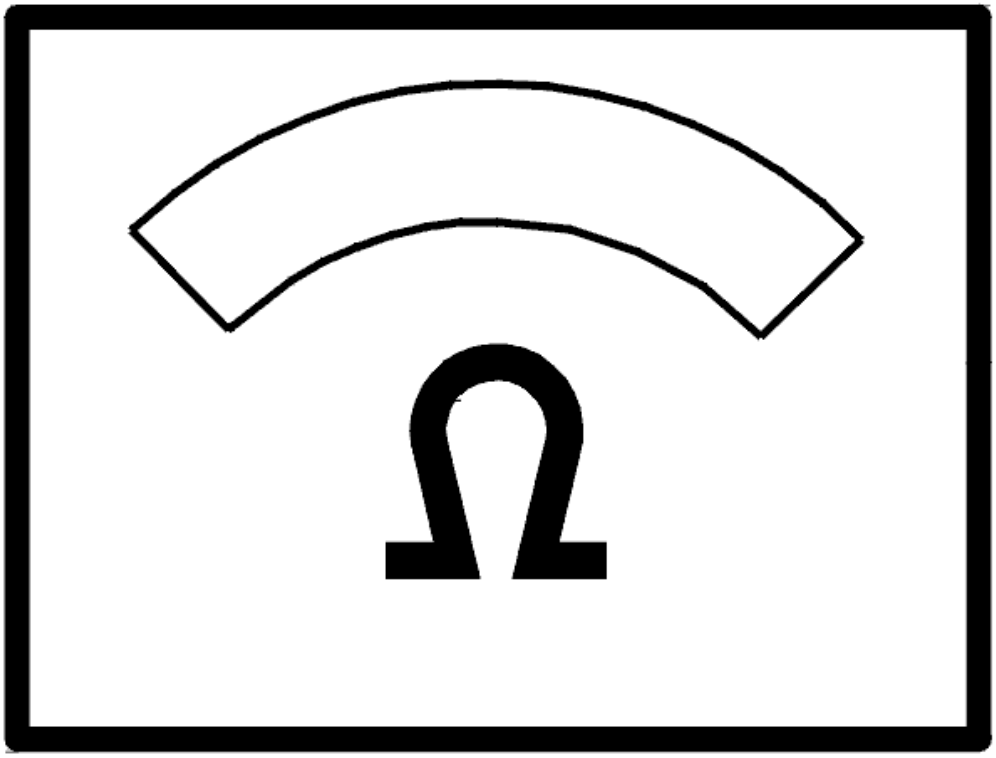

Fig. 137: Identifying Ohm Meter
Courtesy of VOLVO CARS CORPORATION

- **Continue**

  Refer to **VERIFICATION**

VERIFICATION

HINT: After the repair it is necessary to check that the fault has been rectified.

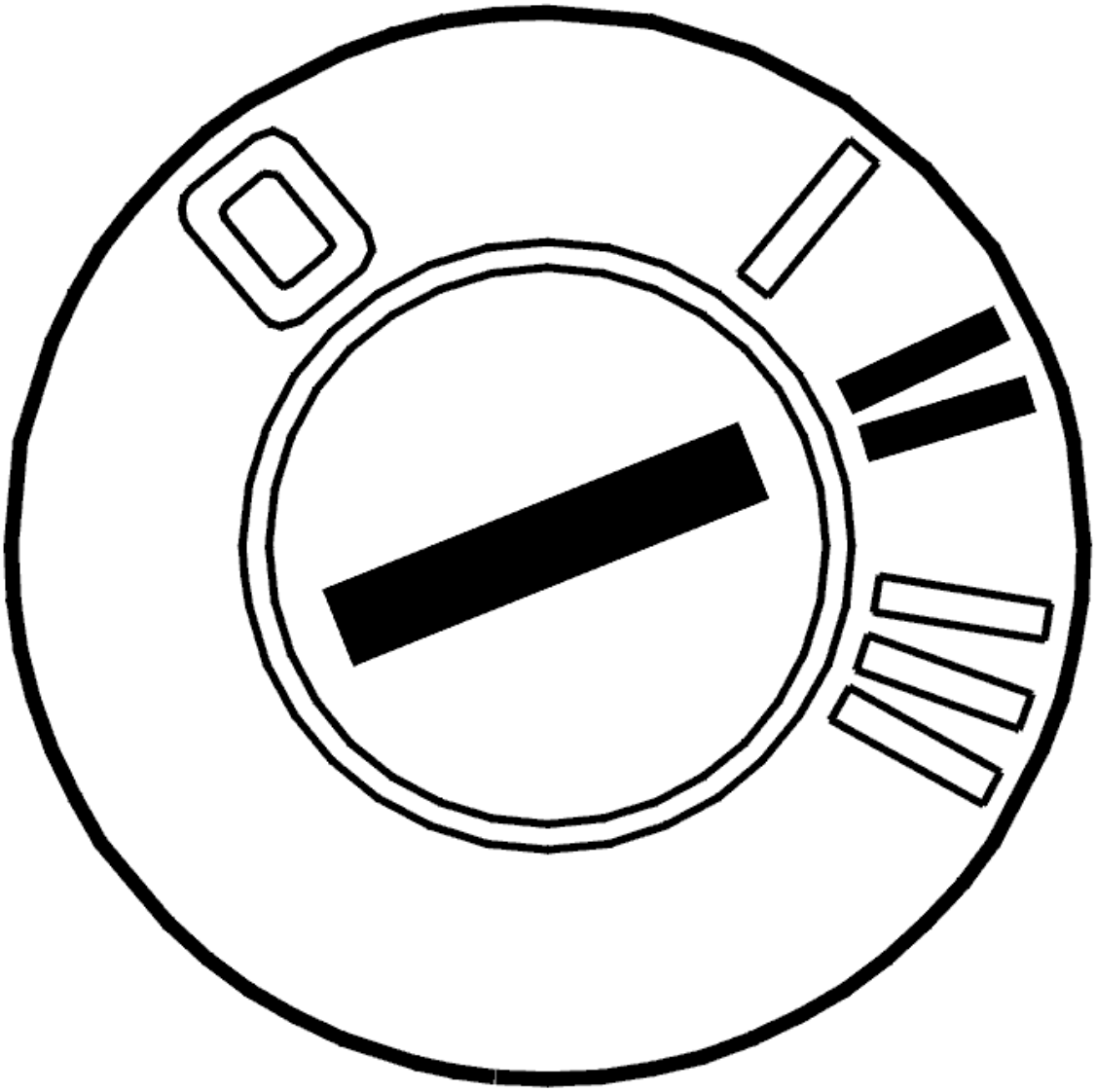

Fig. 138: Identifying Ignition ON
Courtesy of VOLVO CARS CORPORATION

- Ignition off.
- Connect the connectors, install the components, etc.
- Ignition on.
- Read off steering wheel angle signal A.
- Turn the steering wheel to full lock in both directions.

  The value should change between OFF and ON.

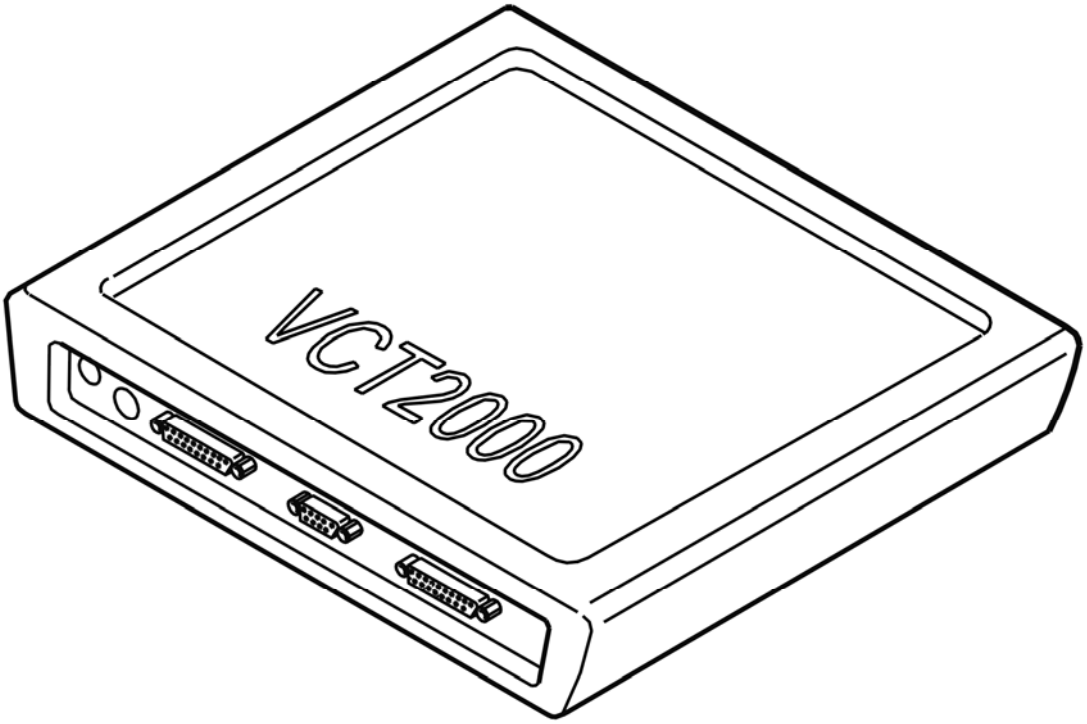

Fig. 139: Identifying VCT2000 Diagnostic Tool Symbol In VIDA
Courtesy of VOLVO CARS CORPORATION

Does the value change?

- **YES**

  VERIFIED: Troubleshooting has been completed.

- **NO**

  Refer to **INFORMATION**

INFORMATION

FAULT-TRACING INFORMATION

The fault should have been detected and remedied. As this is not the case fault-tracing has failed.

Exit fault-tracing for this diagnostic trouble code (DTC) or make another attempt.

SAS-0005: CONTROL MODULE. INTERNAL FAULT (B5254T2; 2005-2007)

DIAGNOSTIC TROUBLE CODE (DTC) INFORMATION

Condition

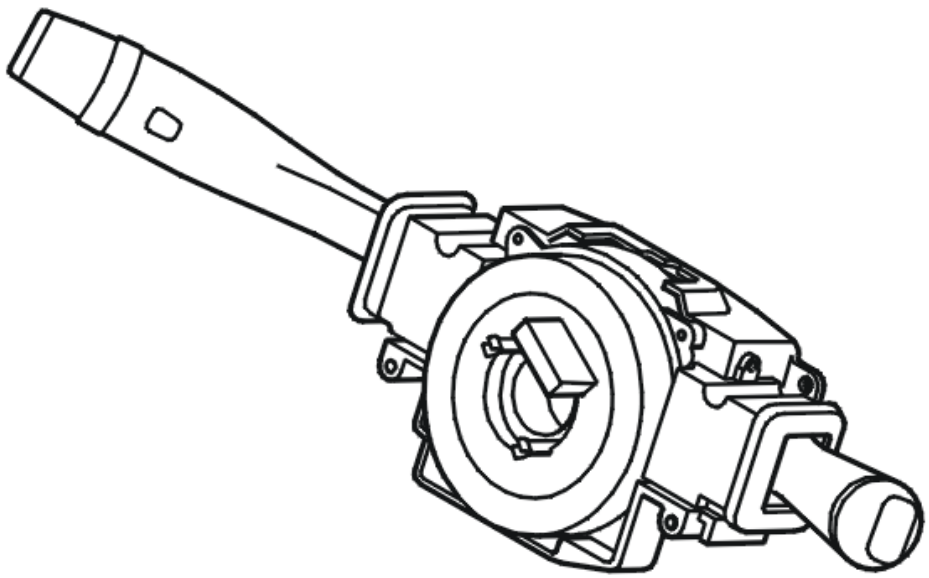

Fig. 140: Identifying Steering Wheel Control Module
Courtesy of VOLVO CARS CORPORATION

The Steering wheel angle sensor module (SAS) is located in the lever module together with the steering wheel module (SWM) and is supplied with power by it.

The steering wheel angle sensor is installed on the underside of the contact reel and together they create a replaceable unit. A code wheel is mounted inside the steering wheel angle sensor which follows the movements of the steering wheel.9 x optical digital sensors and 2 x analog photo diodes read off the code wheel. These signals are compared and must create a specific pattern. The diagnostic trouble code (DTC) is stored if the signal pattern created does not correspond.

Diagnostic trouble code (DTC) SAS-0005 or SAS-0006 is stored (depending on the fault) if the steering wheel angle sensor module (SAS) registers an internal fault in the software.

The diagnostic trouble code (DTC) can be diagnosed when the ignition is switched on and the steering wheel angle sensor is initiated. Initiation is carried out when the steering wheel is turned more than 4.5° in any direction.

Substitute Value

- The stability function is blocked.

Possible Source

- Internal fault in the steering wheel angle sensor module (SAS).

Fault symptom[s]

- Anti-spin warning lamp lit.
- General warning lamp lit.
- The stability control system does not function.

INTERNAL FAULT

see **INTERNAL FAULT**

SAS-0005: CONTROL MODULE. INTERNAL FAULT (B6294T; 2005-2006)

DIAGNOSTIC TROUBLE CODE (DTC) INFORMATION

see **DIAGNOSTIC TROUBLE CODE (DTC) INFORMATION**

INTERNAL FAULT

see **INTERNAL FAULT**

SAS-0005: STEERING WHEEL ANGLE SIGNAL B. SIGNAL TOO HIGH. INTERMITTENT FAULT (2003-2004)

DIAGNOSTIC TROUBLE CODE INFORMATION

see **DIAGNOSTIC TROUBLE CODE INFORMATION**

SIGNAL TOO HIGH. INTERMITTENT FAULT

CHECKING THE WIRING AND CONNECTIONS

Check the wires between steering wheel angle sensor (SAS) control unit #4 (#A28) and steering wheel control unit (SWM) #3 (#A3) for a short circuit to voltage supply, as described in, see **SHORT-CIRCUIT TO SUPPLY VOLTAGE, INTERMITTENT FAULTS** .

Additional information:

- To connect the test box to the steering wheel angle sensor (SAS), see **SIGNAL DESCRIPTION, CONTROL UNIT FOR THE STEERING WHEEL ANGLE SENSOR (SAS)**
- To connect the test box to the steering wheel control unit (SWM), see **CONNECTING THE BREAKOUT BOX**
- For information on signals to the steering wheel angle sensor (SAS) control unit, see **SIGNAL**

DESCRIPTION, CONTROL UNIT FOR THE STEERING WHEEL ANGLE SENSOR (SAS)

- For information on signals to the steering wheel control unit (SWM), see **SIGNAL SPECIFICATION** .

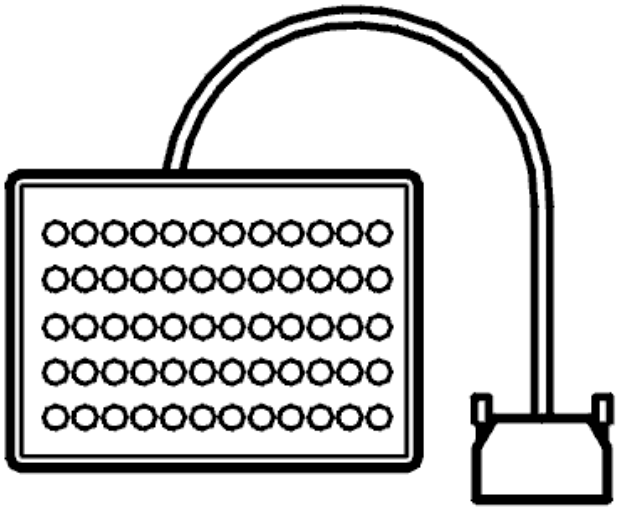

Fig. 141: Breakout Box
Courtesy of VOLVO CARS CORPORATION

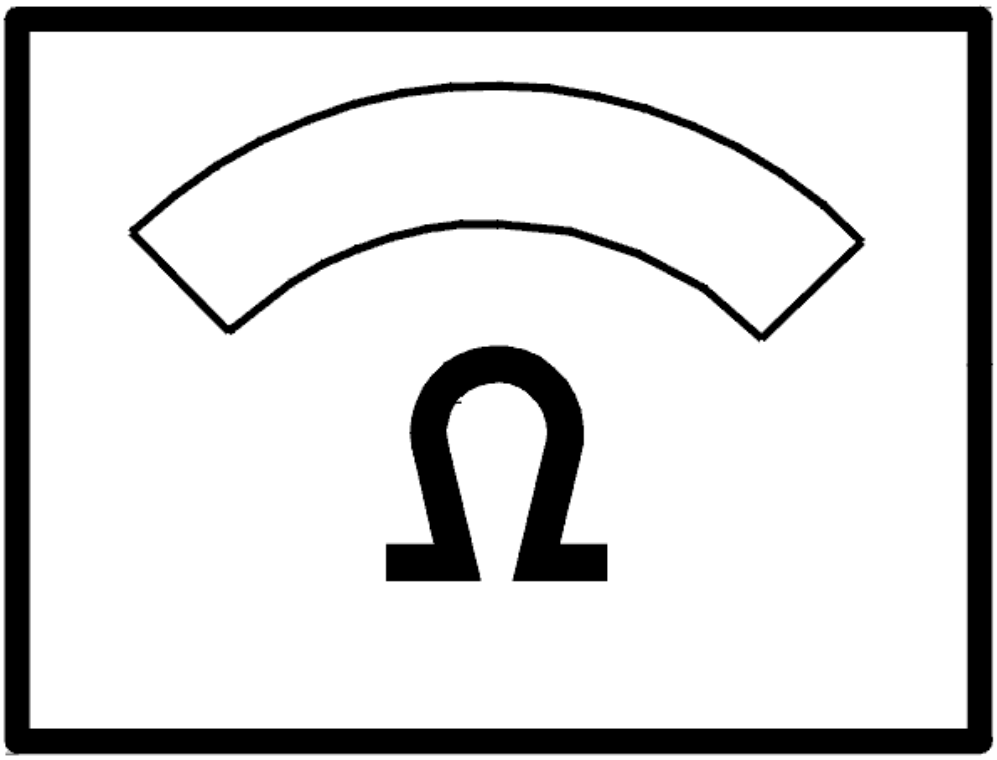

Fig. 142: Identifying Ohm Meter
Courtesy of VOLVO CARS CORPORATION

- **Continue**

  Refer to **INFORMATION**

INFORMATION

FAULT-TRACING INFORMATION

If the fault is intermittent, do not verify fault-tracing if the fault does not recur.

It is possible to view the information again, or leave fault-tracing for this diagnostic trouble code (DTC).

SAS-0005: STEERING WHEEL ANGLE SIGNAL B. SIGNAL TOO HIGH.

PERMANENT FAULT (2003-2004)

DIAGNOSTIC TROUBLE CODE INFORMATION

see **DIAGNOSTIC TROUBLE CODE INFORMATION**

SIGNAL TOO HIGH. PERMANENT FAULT

CHECKING THE CONNECTORS

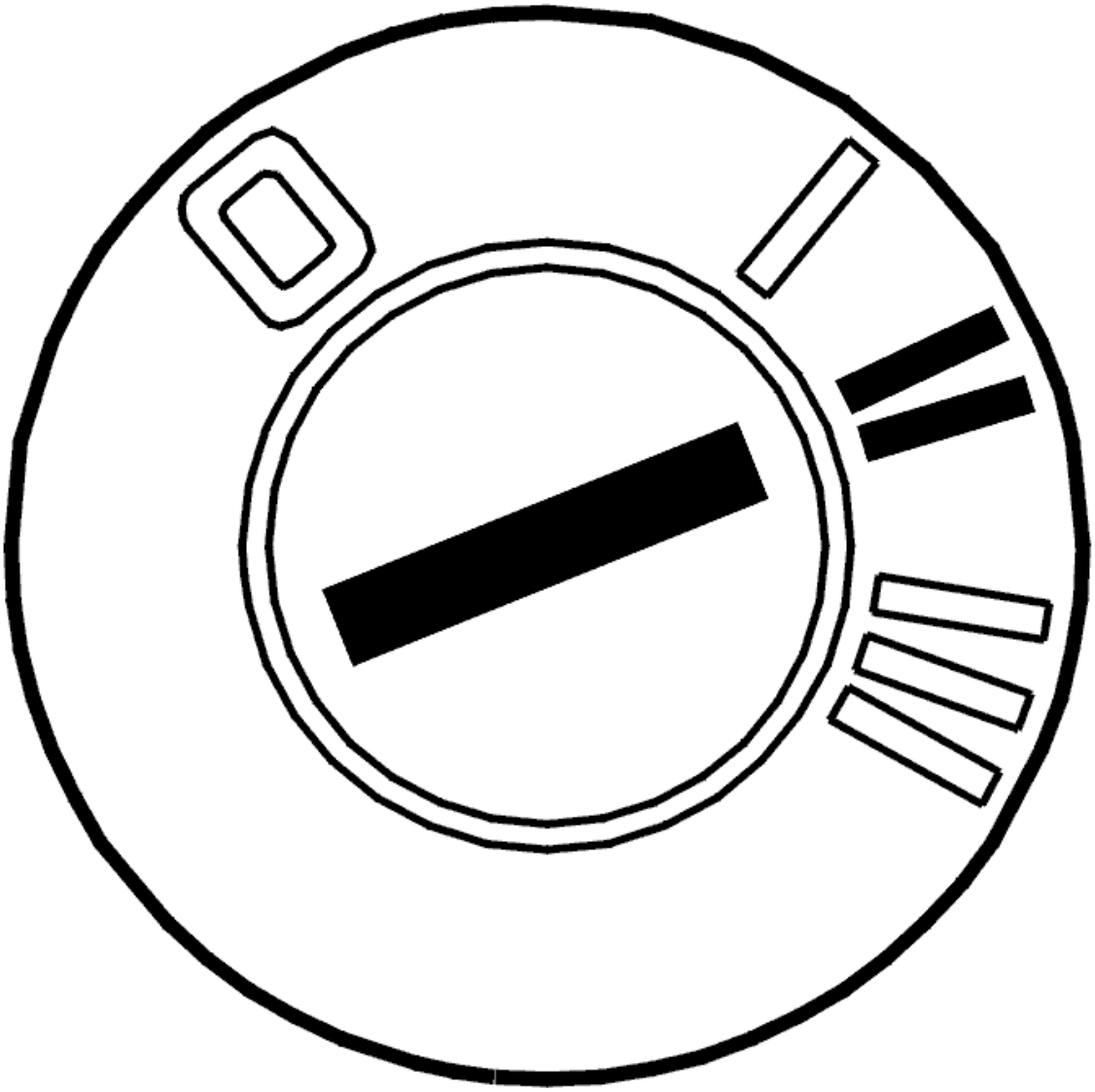

Fig. 143: Identifying Ignition ON
Courtesy of VOLVO CARS CORPORATION

- Ignition off
- Check the control module for the steering wheel angle sensor and the steering wheel module (SWM)

connectors. Check for contact resistance and oxidation according to **CONTACT RESISTANCE AND OXIDATION**

- Reinstall the components, reconnect the connectors etc.
- Ignition on
- Read off the status of steering wheel angle signal B.

Turn the steering wheel in both directions and check that the value changes between ON and OFF.

If the value changes, the cause of the fault was contact resistance or oxidation in the control module or in the steering wheel angle sensor connector.

Other information:

- To access the connector for the control module for the steering wheel module (SWM), see **STEERING WHEEL MODULE (SWM), REPLACING**
- To access the connector for the steering wheel module (SWM), see **STEERING WHEEL MODULE (SWM), REPLACING**
- For information about signals, see **SIGNAL DESCRIPTION, CONTROL UNIT FOR THE STEERING WHEEL ANGLE SENSOR (SAS)** and **SIGNAL SPECIFICATION** .

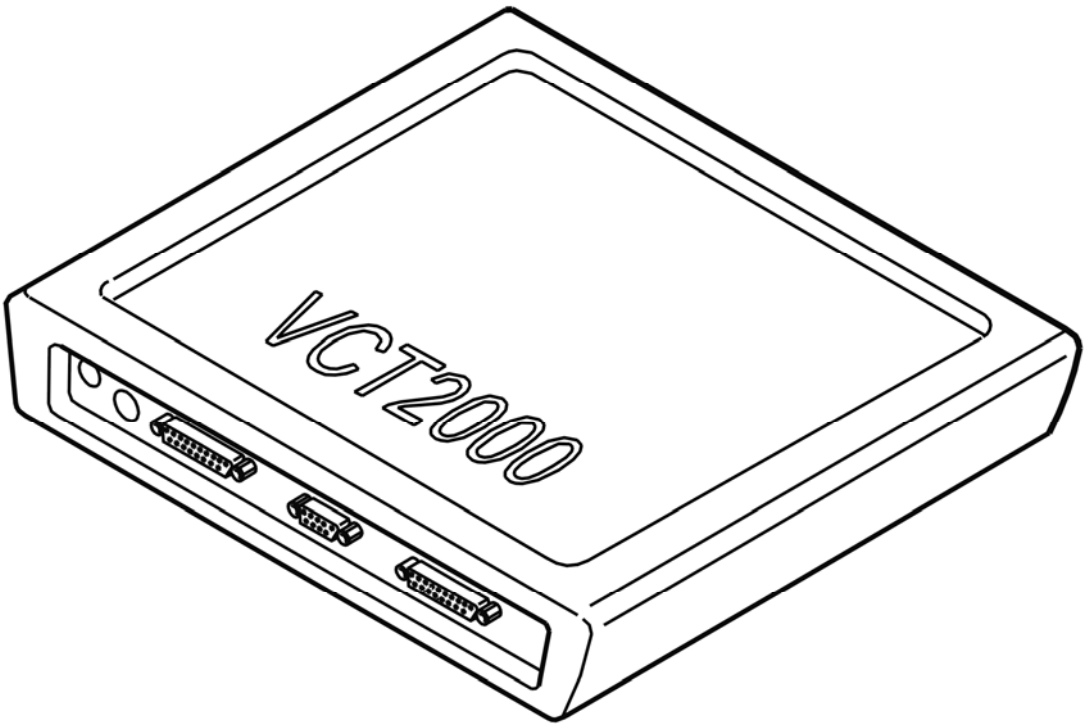

Fig. 144: Identifying VCT2000 Diagnostic Tool Symbol In VIDA
Courtesy of VOLVO CARS CORPORATION

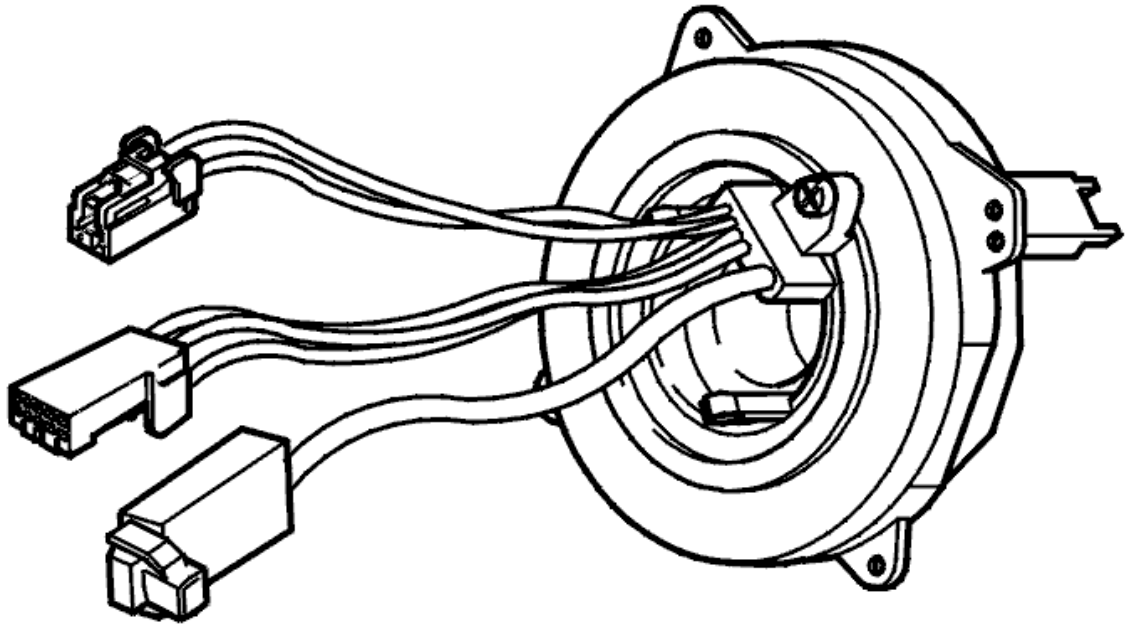

Fig. 145: Identifying Steering Wheel Angle Sensor
Courtesy of VOLVO CARS CORPORATION

Does the value change between OFF and ON?

- **YES**

  OKAY: Troubleshooting has been completed.

- **NO**

  Refer to **CHECKING WIRING AND SENSORS**

CHECKING WIRING AND SENSORS

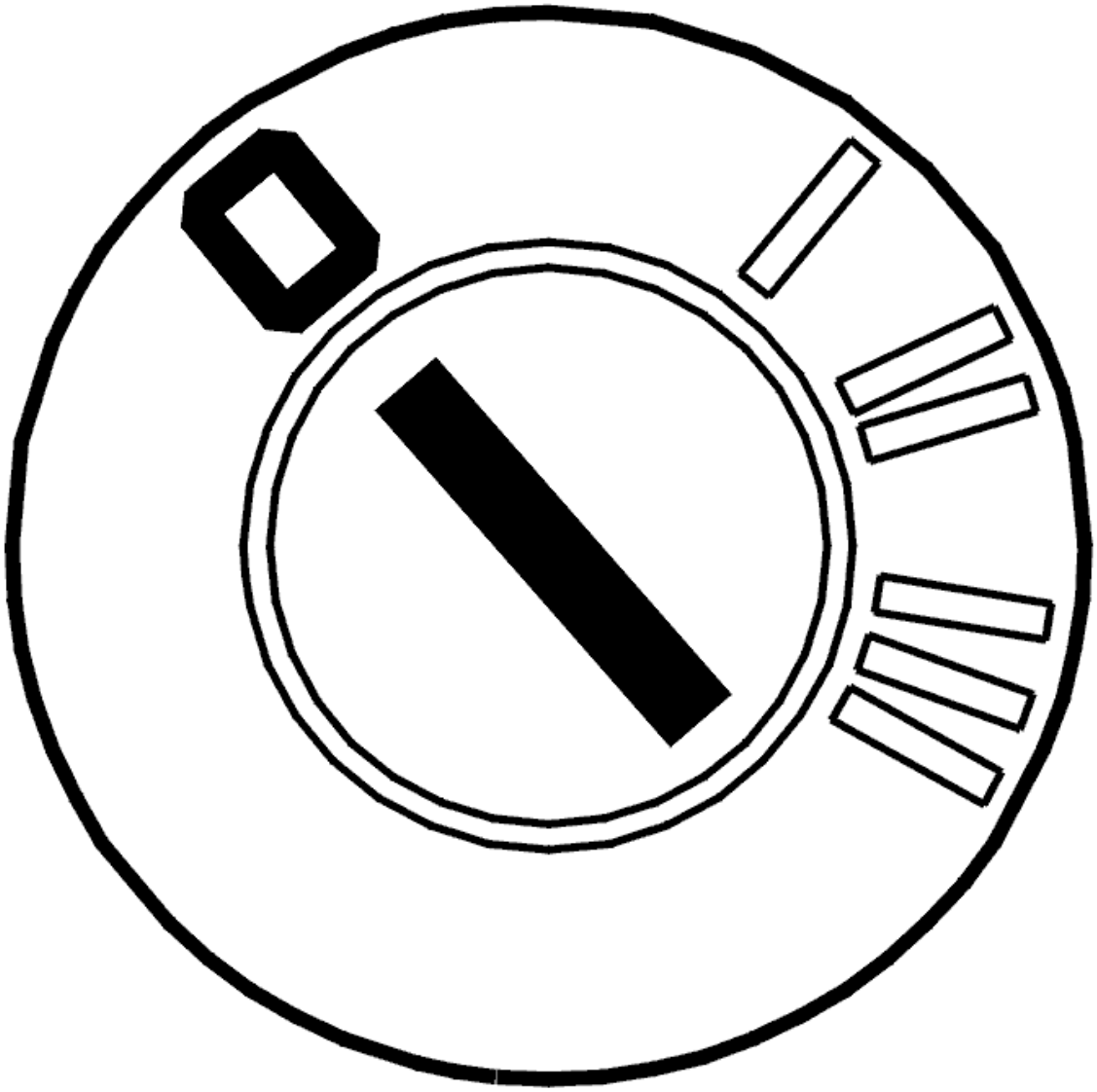

Fig. 146: Identifying Ignition OFF
Courtesy of VOLVO CARS CORPORATION

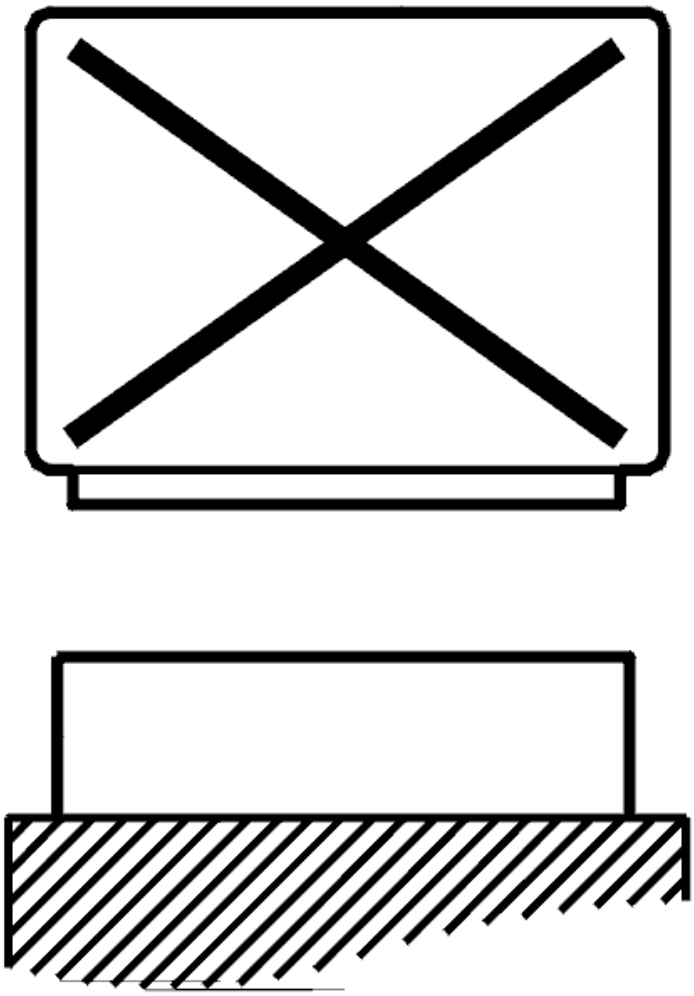

Fig. 147: Disconnecting Control Unit
Courtesy of VOLVO CARS CORPORATION

- Ignition off
- The control module for the steering wheel angle sensor disconnected
- Steering wheel module (SWM) disconnected
- Connect the breakout box to the control module for the steering wheel angle sensor and to the steering wheel module (SWM)

  Check the wiring between the control module for the steering wheel angle sensor terminal #4 (#A28) and steering wheel module (SWM) terminal #3 (#A3). Check for an open-circuit according to **OPEN-CIRCUIT, PERMANENT FAULTS** . Check for a short-circuit to supply voltage according to **SHORT-CIRCUIT TO SUPPLY VOLTAGE. PERMANENT FAULTS** .

  Try replacing the steering wheel angle sensor if no faults are found in the cable between the control

module for the steering wheel angle sensor and the steering wheel module (SWM).

Other information:

- To access the connector for the control module for the steering wheel angle sensor, see **STEERING WHEEL MODULE (SWM), REPLACING**
- To access the connector for the steering wheel module (SWM), see **STEERING WHEEL MODULE (SWM), REPLACING**
- To connect the breakout box to the control module for the steering wheel angle sensor, see **CONNECTING THE BREAKOUT BOX TO THE STEERING ANGLE SENSOR**
- To access the steering wheel module (SWM), see **STEERING WHEEL MODULE (SWM), REPLACING**
- For information about signals, see **SIGNAL DESCRIPTION, CONTROL UNIT FOR THE STEERING WHEEL ANGLE SENSOR (SAS)** and **SIGNAL SPECIFICATION**
- To replace the steering wheel angle sensor, see **CONTACT REEL, REPLACEMENT**

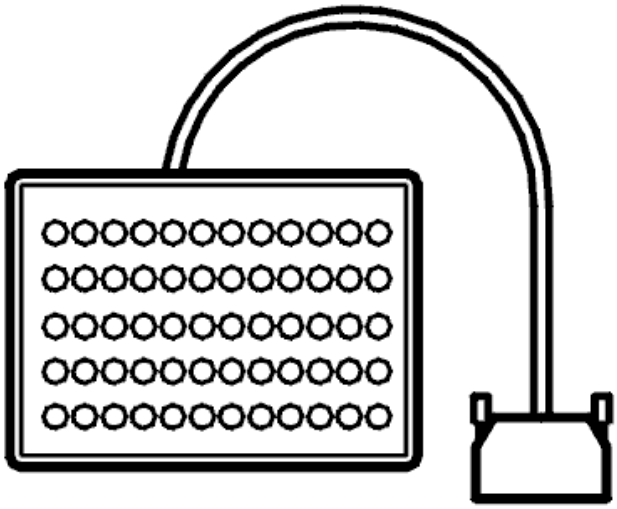

Fig. 148: Breakout Box
Courtesy of VOLVO CARS CORPORATION

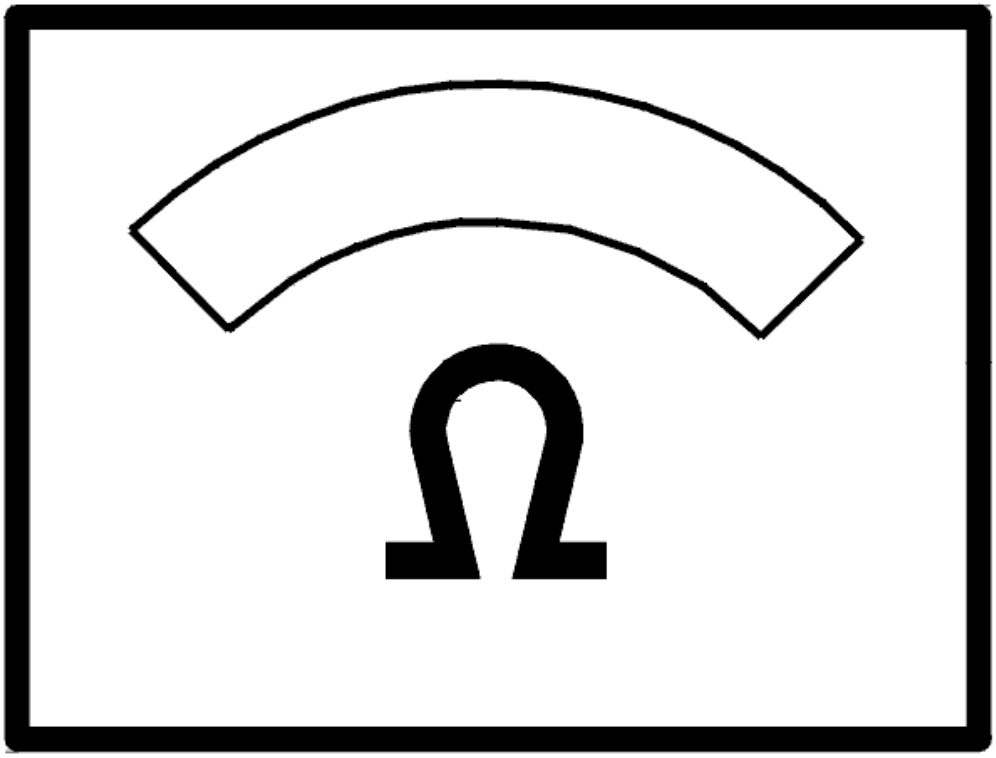

Fig. 149: Identifying Ohm Meter
Courtesy of VOLVO CARS CORPORATION

- **Continue**

  Refer to **VERIFICATION**

VERIFICATION

HINT: After the repair it is necessary to check that the fault has been rectified.

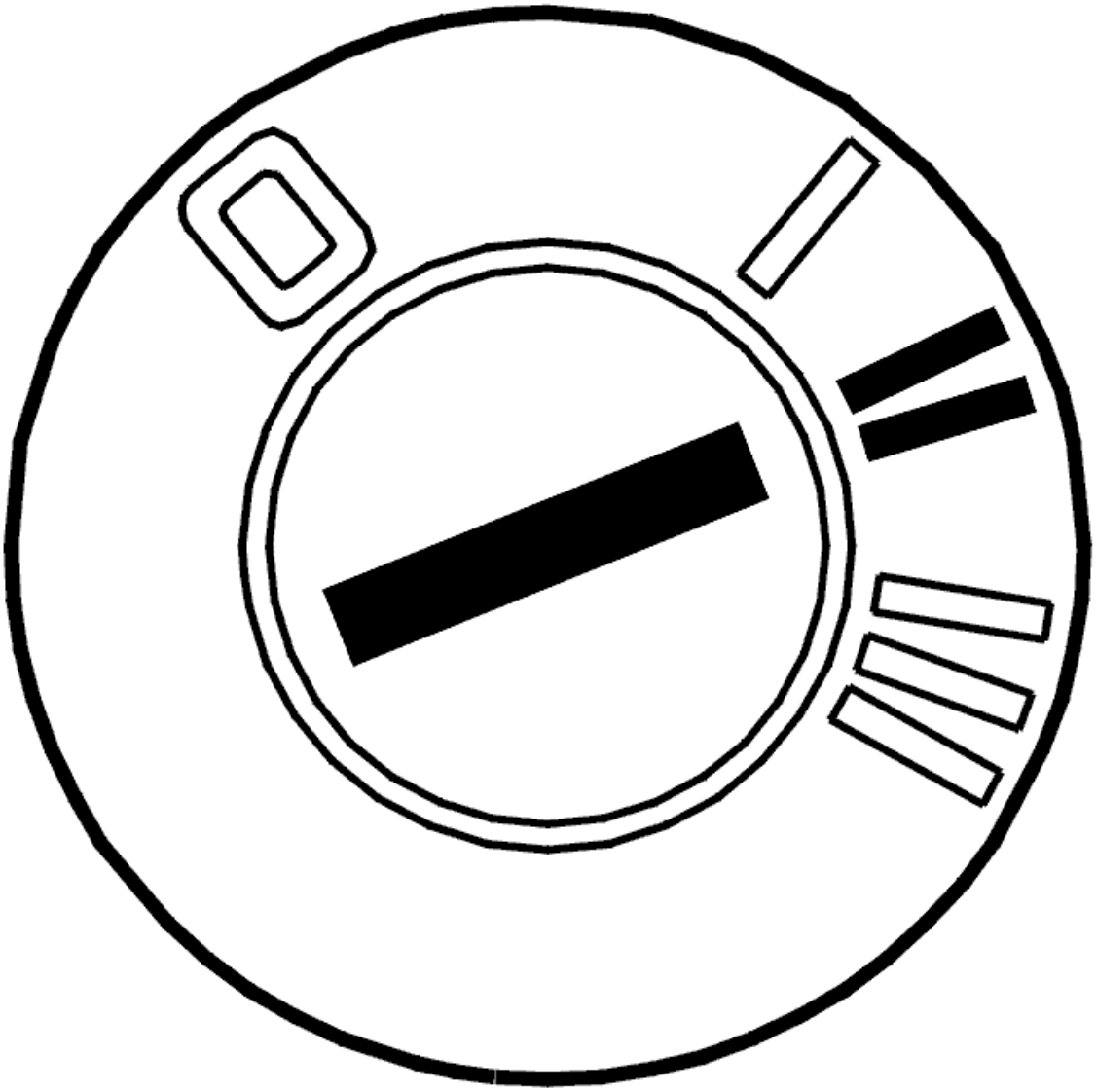

Fig. 150: Identifying Ignition ON
Courtesy of VOLVO CARS CORPORATION

- Ignition off.
- Connect the connectors, install the components, etc.
- Ignition on.
- Read off steering wheel angle signal B.
- Turn the steering wheel to full lock in both directions.

  The value should change between OFF and ON.

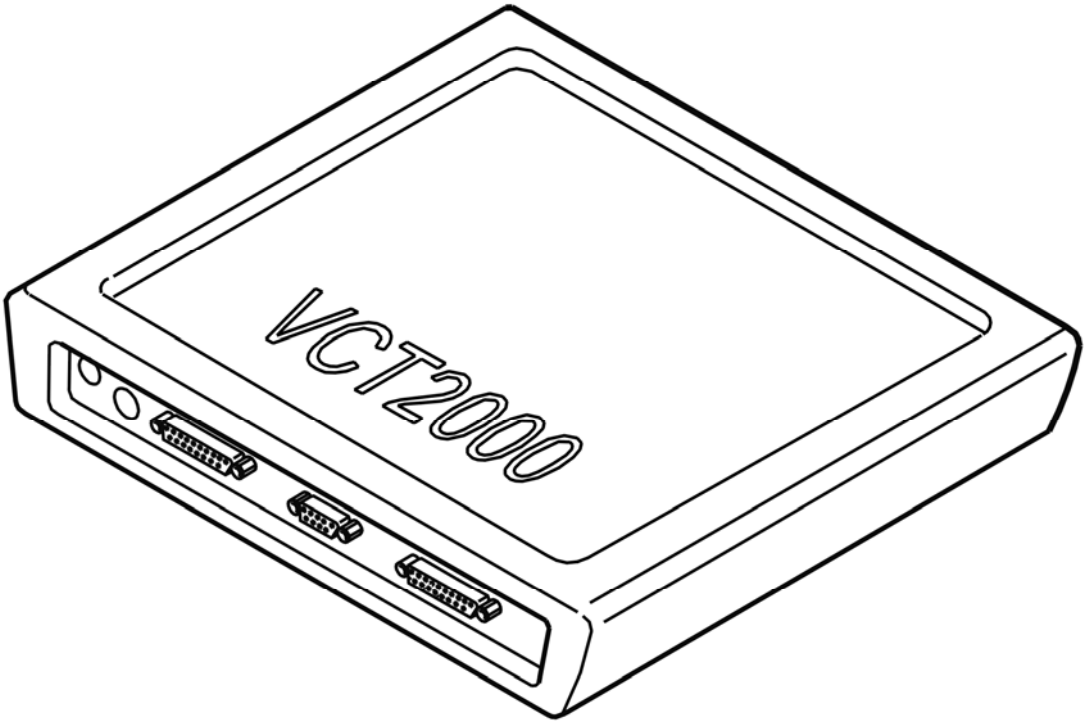

Fig. 151: Identifying VCT2000 Diagnostic Tool Symbol In VIDA
Courtesy of VOLVO CARS CORPORATION

Does the value change?

- **YES**

  VERIFIED: Troubleshooting has been completed.

- **NO**

  Refer to **INFORMATION**

INFORMATION

FAULT-TRACING INFORMATION

The fault should have been detected and remedied. As this is not the case fault-tracing has failed.

Exit fault-tracing for this diagnostic trouble code (DTC) or make another attempt.

SAS-0006: STEERING WHEEL ANGLE SIGNAL B. SIGNAL TOO LOW. INTERMITTENT FAULT (2003-2004)

DIAGNOSTIC TROUBLE CODE INFORMATION

see **DIAGNOSTIC TROUBLE CODE INFORMATION**

SIGNAL TOO LOW. INTERMITTENT FAULT

CHECKING THE WIRING AND CONNECTIONS

Check the wires between steering wheel angle sensor (SAS) control unit #4 (#A28) and steering wheel control unit (SWM) #3 (#A3) for an open circuit as described in, see **OPEN-CIRCUIT, INTERMITTENT FAULTS** , and for an intermittent short circuit to ground as described in **SHORT-CIRCUIT TO GROUND, INTERMITTENT FAULTS** .

Additional information:

- To connect the test box to the steering wheel angle sensor (SAS), see **CONNECTING THE BREAKOUT BOX TO THE STEERING ANGLE SENSOR** .
- To connect the test box to the steering wheel control unit (SWM), see **CONNECTING THE BREAKOUT BOX**
- For information on signals, see **SIGNAL DESCRIPTION, CONTROL UNIT FOR THE STEERING WHEEL ANGLE SENSOR (SAS)** and **SIGNAL SPECIFICATION** .

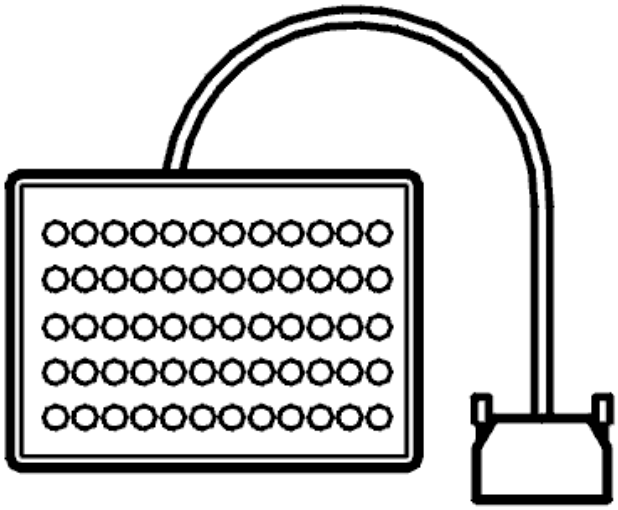

Fig. 152: Breakout Box
Courtesy of VOLVO CARS CORPORATION

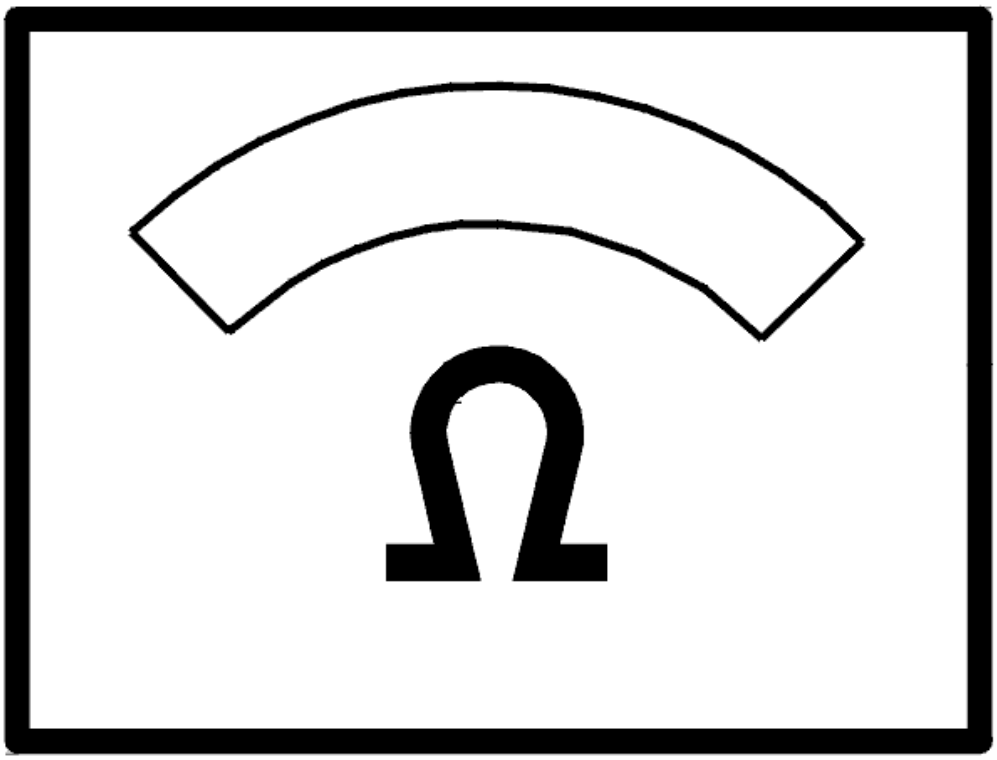

Fig. 153: Identifying Ohm Meter
Courtesy of VOLVO CARS CORPORATION

- **Continue**

  Refer to **INFORMATION**

INFORMATION

FAULT-TRACING INFORMATION

If the fault is intermittent, do not verify fault-tracing if the fault does not recur.

It is possible to view the information again, or leave fault-tracing for this diagnostic trouble code (DTC).

SAS-0006: STEERING WHEEL ANGLE SIGNAL B. SIGNAL TOO LOW.

PERMANENT FAULT (2003-2004)

DIAGNOSTIC TROUBLE CODE INFORMATION

see **DIAGNOSTIC TROUBLE CODE INFORMATION**

SIGNAL TOO LOW. PERMANENT FAULT

CHECKING THE CONNECTORS

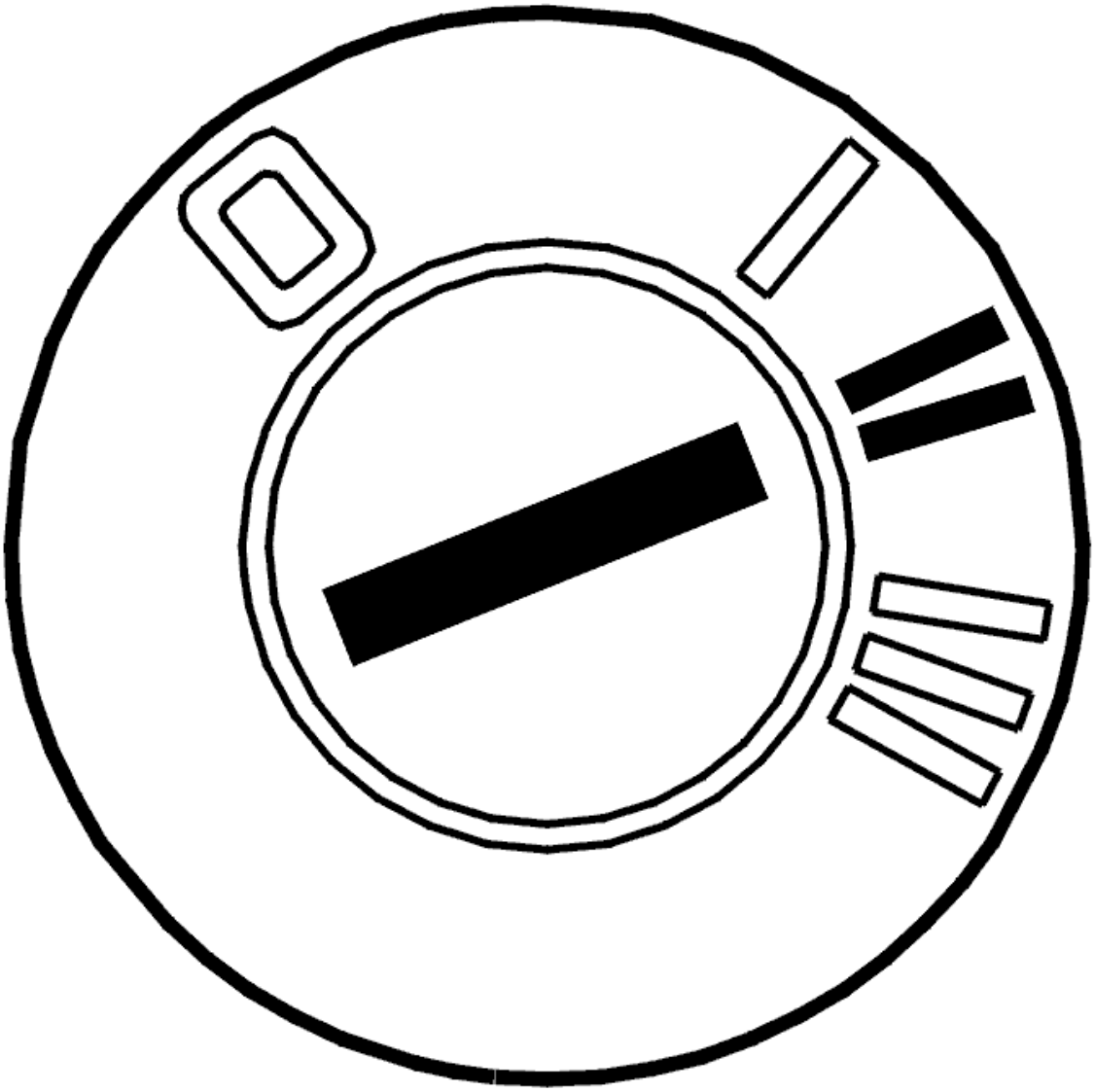

Fig. 154: Identifying Ignition ON
Courtesy of VOLVO CARS CORPORATION

- Ignition on
- Read off the status of steering wheel angle signal B.

Turn the steering wheel in both directions and check that the value changes between ON and OFF.

Other information:

- To access the connector for the control module for the steering wheel angle sensor, see **STEERING WHEEL MODULE (SWM), REPLACING**
- To access the connector for the steering wheel module (SWM), see **STEERING WHEEL MODULE (SWM), REPLACING**
- For information about signals, see **SIGNAL DESCRIPTION, CONTROL UNIT FOR THE STEERING WHEEL ANGLE SENSOR (SAS)**

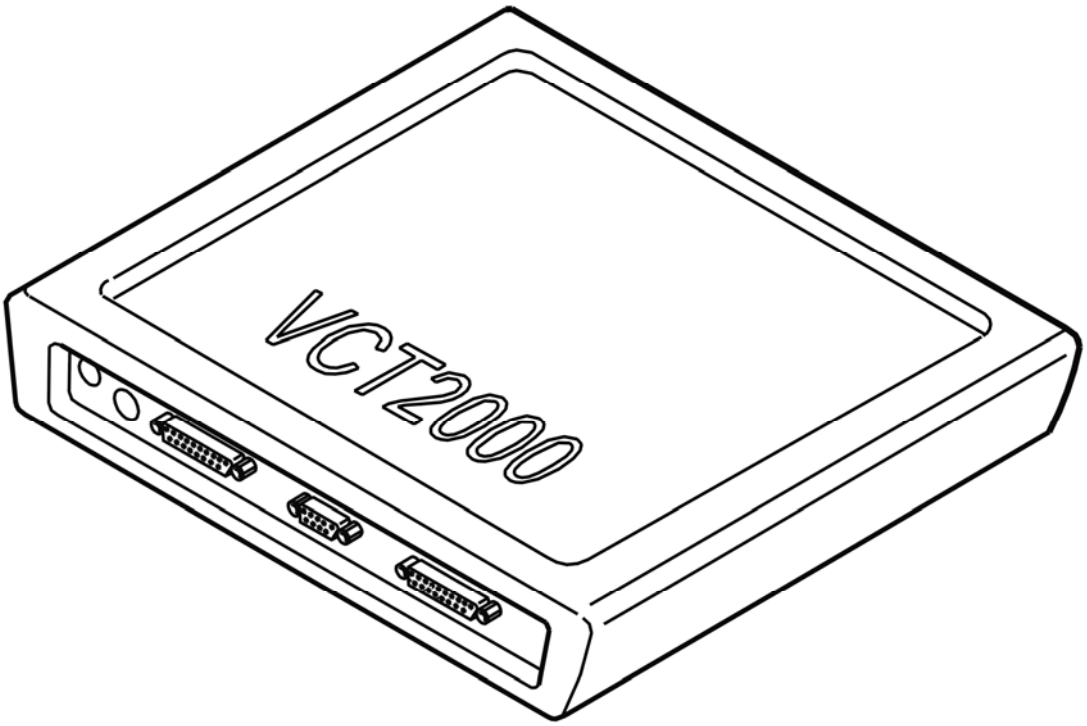

Fig. 155: Identifying VCT2000 Diagnostic Tool Symbol In VIDA
Courtesy of VOLVO CARS CORPORATION

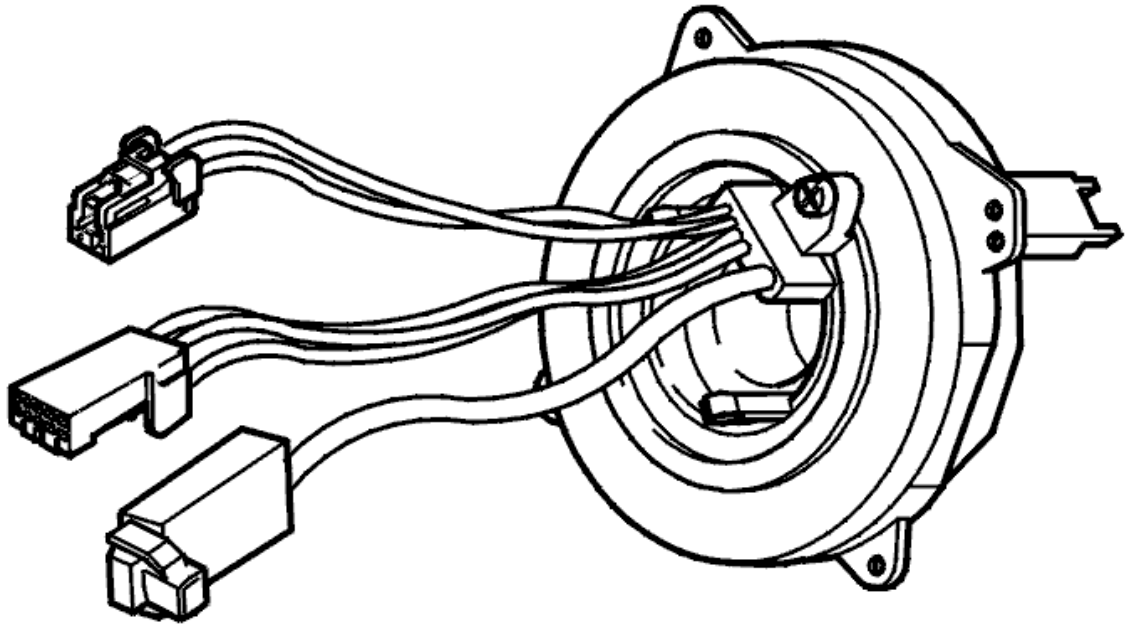

Fig. 156: Identifying Steering Wheel Angle Sensor
Courtesy of VOLVO CARS CORPORATION

Does the value change between OFF and ON?

- **YES**

  OKAY: Troubleshooting has been completed.

- **NO**

  Refer to **CHECKING WIRING AND SENSORS**

CHECKING WIRING AND SENSORS

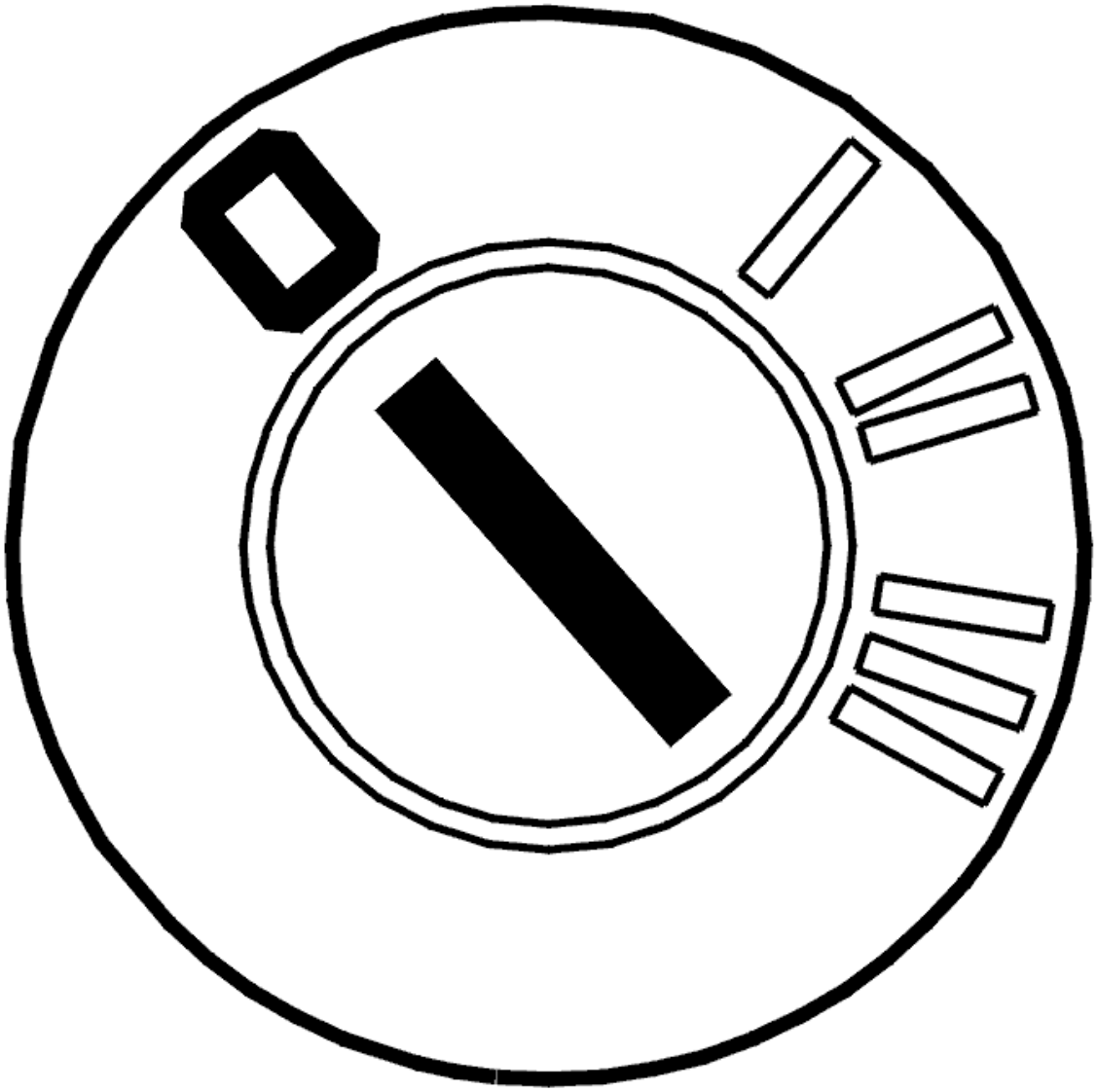

Fig. 157: Identifying Ignition OFF
Courtesy of VOLVO CARS CORPORATION

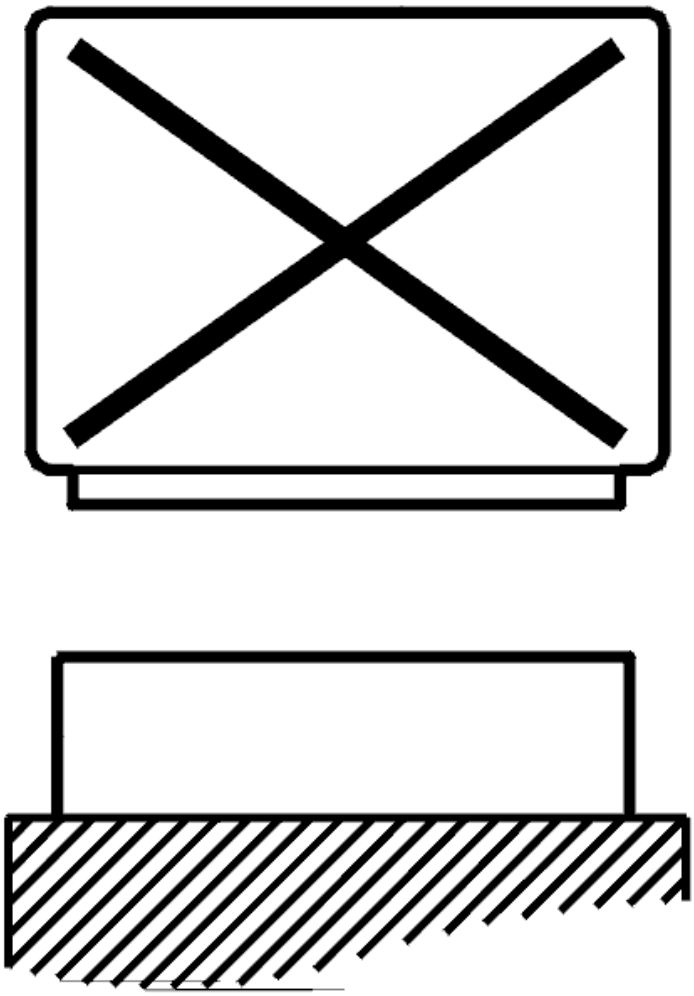

Fig. 158: Disconnecting Control Unit
Courtesy of VOLVO CARS CORPORATION

- Ignition off
- The control module for the steering wheel angle sensor disconnected
- Steering wheel module (SWM) disconnected
- Connect the breakout box to the control module for the steering wheel angle sensor and to the steering wheel module (SWM)

  Check the wiring between the control module for the steering wheel angle sensor terminal #4 (#A28) and steering wheel module (SWM) terminal #3 (#A3). Check for a short-circuit to ground according to **SHORT-CIRCUIT TO GROUND, PERMANENT FAULTS** . Check for an open-circuit according to **OPEN-CIRCUIT, PERMANENT FAULTS** .

  Try replacing the steering wheel angle sensor if no faults are found in the wiring between the control

module for the steering wheel angle sensor and the steering wheel module (SWM).

Other information:

- To connect the breakout box to the control module for the steering wheel angle sensor, see **CONNECTING THE BREAKOUT BOX TO THE STEERING ANGLE SENSOR**
- To connect the breakout box to the steering wheel module (SWM), see **CONNECTING THE BREAKOUT BOX**
- To replace the steering wheel angle sensor, see **CONTACT REEL, REPLACEMENT**
- For information about signals, see **SIGNAL DESCRIPTION, CONTROL UNIT FOR THE STEERING WHEEL ANGLE SENSOR (SAS)** and **SIGNAL SPECIFICATION** .

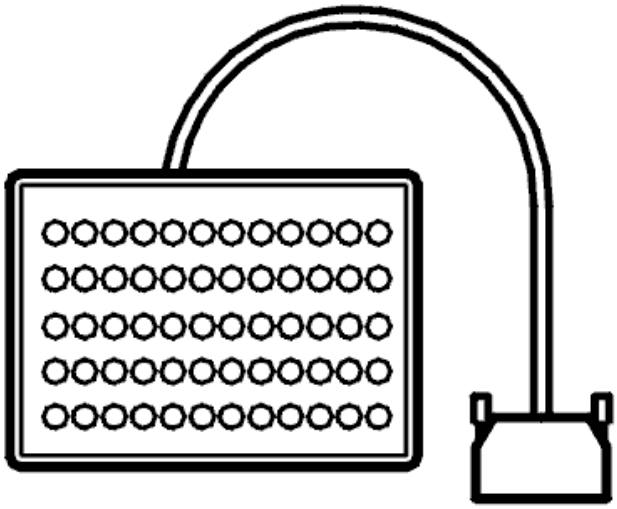

Fig. 159: Breakout Box
Courtesy of VOLVO CARS CORPORATION

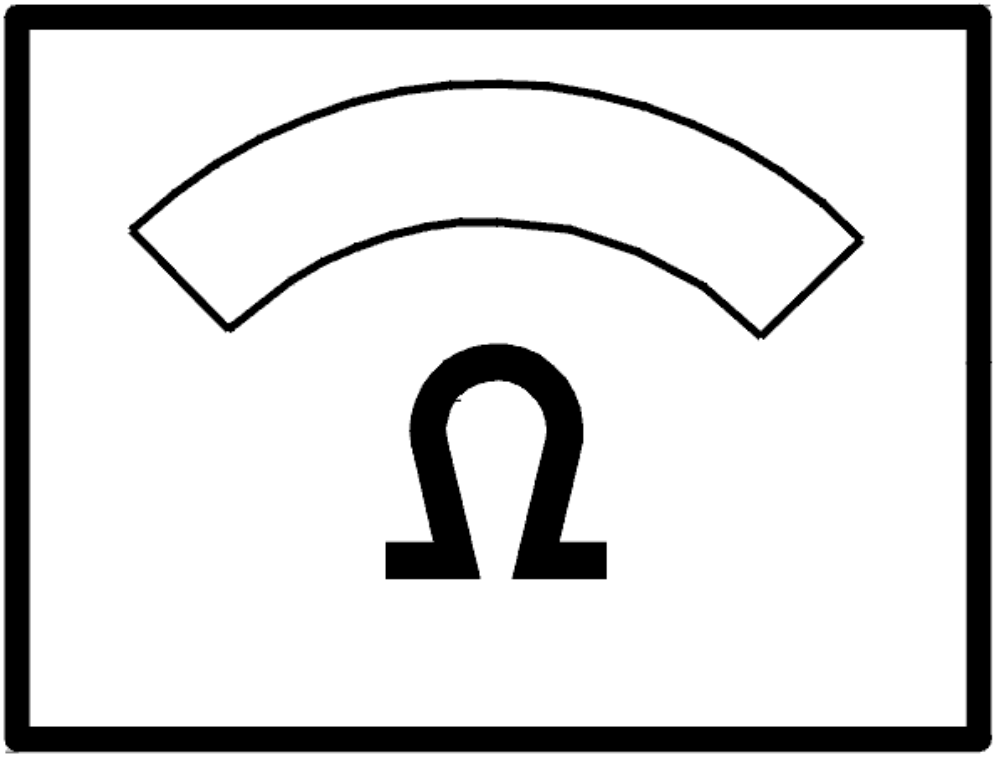

Fig. 160: Identifying Ohm Meter
Courtesy of VOLVO CARS CORPORATION

- **Continue**

  Refer to **VERIFICATION**

VERIFICATION

HINT: After the repair it is necessary to check that the fault has been rectified.

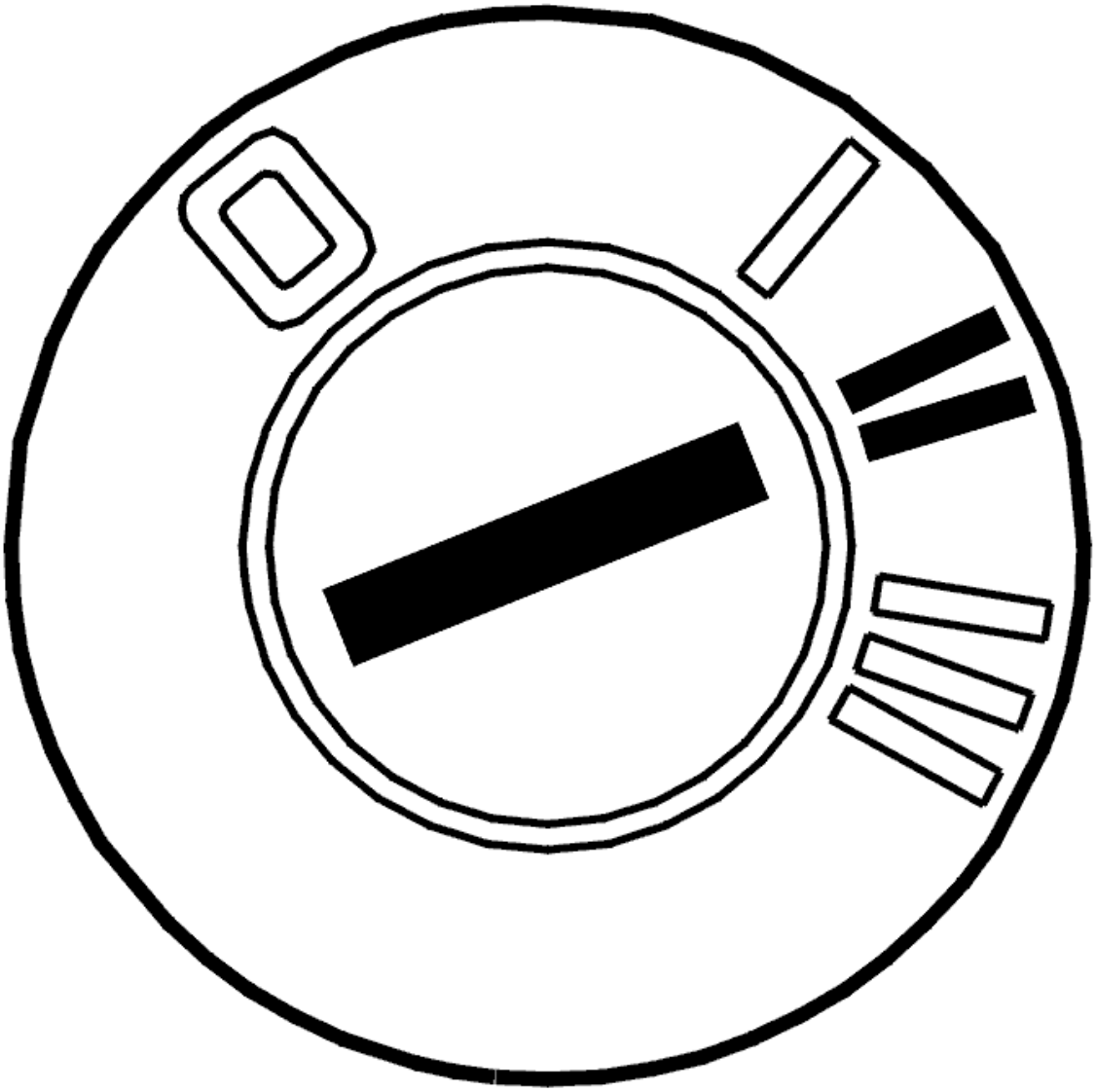

Fig. 161: Identifying Ignition ON
Courtesy of VOLVO CARS CORPORATION

- Ignition off.
- Connect the connectors, install the components, etc.
- Ignition on.
- Read off steering wheel angle signal B.
- Turn the steering wheel to full lock in both directions.

  The value should change between OFF and ON.

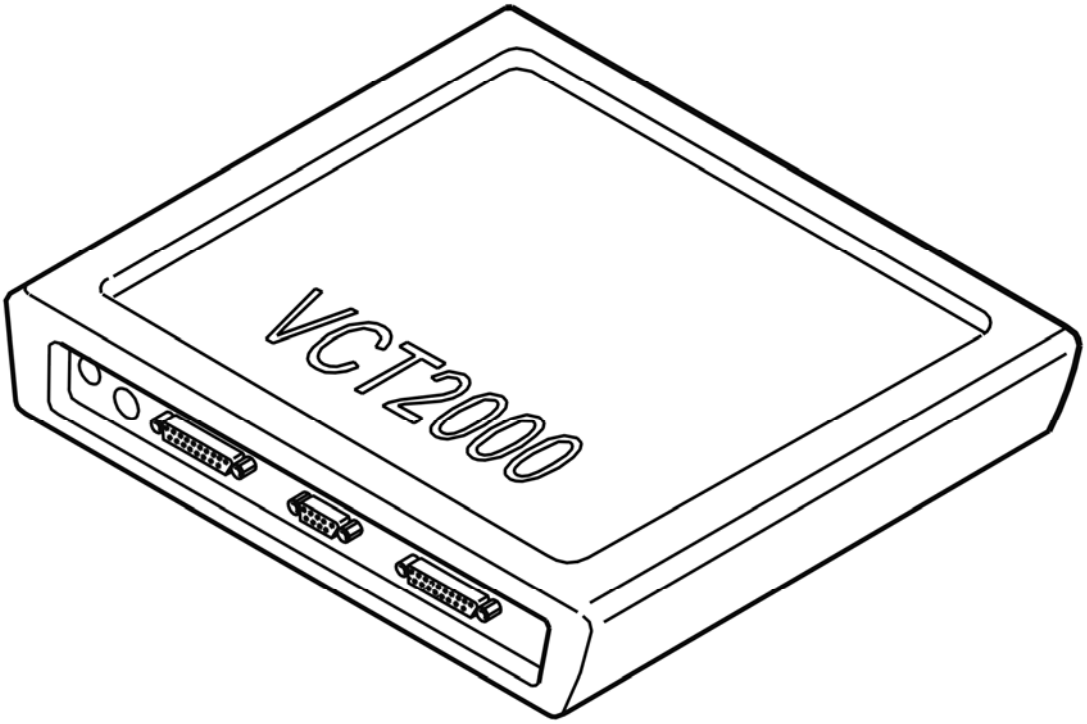

Fig. 162: Identifying VCT2000 Diagnostic Tool Symbol In VIDA
Courtesy of VOLVO CARS CORPORATION

Does the value change?

- **YES**

  VERIFIED: Troubleshooting has been completed.

- **NO**

  Refer to **INFORMATION**

INFORMATION

FAULT-TRACING INFORMATION

The fault should have been detected and remedied. As this is not the case fault-tracing has failed.

Exit fault-tracing for this diagnostic trouble code (DTC) or make another attempt.

SAS-0007: CONTROL MODULE. INTERNAL FAULT (B5254T2; 2005-2007)

DIAGNOSTIC TROUBLE CODE (DTC) INFORMATION SAS-0007

Condition

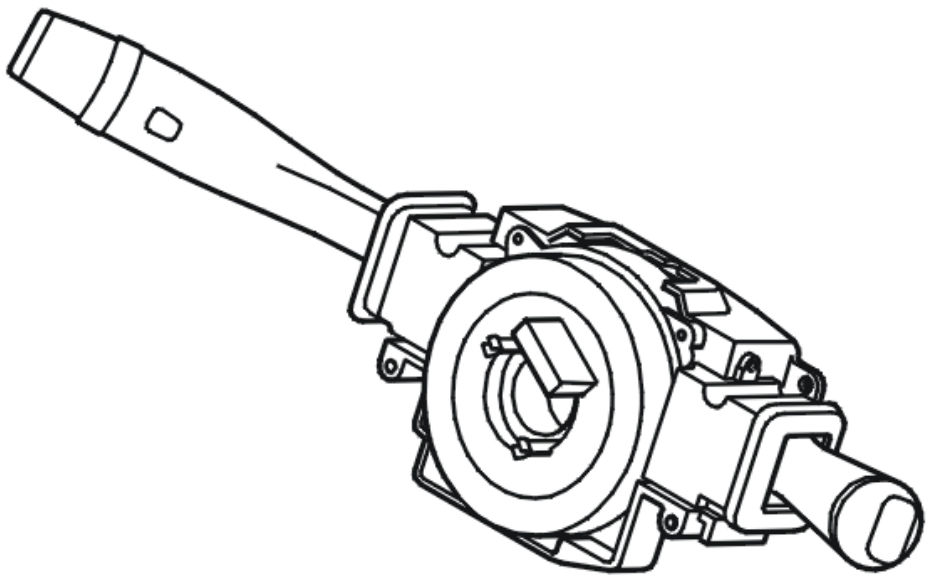

Fig. 163: Identifying Steering Wheel Control Module
Courtesy of VOLVO CARS CORPORATION

Steering wheel angle sensor module (SAS) is located inside, and is supplied with power by, the steering wheel module (SWM). Only the steering wheel angle sensor module (SAS) communicates on the controller area network (CAN).

The Steering wheel angle sensor module (SAS) contains 2 x processors that operate together. The processors receive information about steering wheel angle, steering direction and steering angle speed from the steering wheel angle sensor module (SAS) and compare the information with each other. The diagnostic trouble code (DTC) is stored if the steering wheel angle sensor module (SAS) registers that the information is incorrect in any way.

The diagnostic trouble code (DTC) can be diagnosed when the ignition is switched on and the steering wheel angle sensor is initiated. Initiation is carried out when the steering wheel is turned more than 4.5° in any direction.

Substitute Value

- The stability function is blocked.

Possible Source

- Internal fault in the control module.

Fault symptom[s]

- Anti-spin warning lamp lit.
- General warning lamp lit.
- The stability control system does not function.

INTERNAL FAULT

STRUCTURE WEEK

Fig. 164: Identifying Belt Routing
Courtesy of VOLVO CARS CORPORATION

- Update the software in the Steering wheel angle sensor module (SAS) if the vehicle's structure week is earlier than 201041.

  Checking the contact reel

  1. Start the engine with the vehicle's steering wheel in position straight ahead and then turn the steering wheel to full lock, first to the left and then to the right.
  2. Drive the car at over 10 km/h and steer completely to right and left full lock.
  3. Repeat steps 1-2 again, but instead begin with steering to full lock left and then do the same to full lock right.

  NOTE: Note that no anti-skid light turns on and that no message about anti-skid service is required is seen in Driver information module (DIM). If this happens, replace the contact reel.

Was the fault found?

- **YES**

  OKAY: Troubleshooting has been completed.

- **NO**

  Refer to **CHECKING THE STATUS**

CHECKING THE STATUS

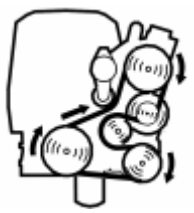

Fig. 165: Identifying Belt Routing
Courtesy of VOLVO CARS CORPORATION

- Ignition off
- Wait approximately 10 seconds
- Engine running.
- First turn the steering wheel max. to the right, then max. to the left.
- Click on the VCT2000 symbol to read off the diagnostic trouble code (DTC) counter.

The counters are used to determine the problem's status. For general information about the counters, see:**COUNTERS, DESCRIPTION**

Counter 1 counts the number of operating cycles without a fault since the fault was last validated.

If **counter 1** is the same as 0, this means that the fault has been detected in this operating cycle (permanent fault). Replace contact reel/steering wheel angle sensor.

If **counter 1** is over 0, this indicates that the problem has not been detected in this driving cycle (intermittent problem). The problem has existed earlier but is not active right now. Then check **counter 4** .**Counter 4** indicates number of driving cycles **with problem** since the problem was validated for the first time.

- If the number of incorrect driving cycles is high, this indicates an intermittent recurring problem. Replace contact reel/steering wheel angle sensor.
- If the number of incorrect driving cycles is low, this indicates an intermittent temporary problem. No action.

HINT: Counter 3 indicates number of driving cycles since first time that the problem occurred. If the value for counter 3 is divided by the value for counter 4, the intensity of the problem is obtained. The higher the value, the higher the problem intensity. A high problem intensity indicates that the malfunction recurs often.

NOTE: Replace the steering wheel module (SWM) if the fault recurs after replacing the contact reel/steering wheel angle sensor.

Remedy as necessary.

Other information

- see **CONTACT REEL, REPLACEMENT**
- Steering wheel angle sensor module (SAS) is integrated in the steering wheel module (SWM). To replace the control module, see **STEERING WHEEL MODULE (SWM), REPLACING**

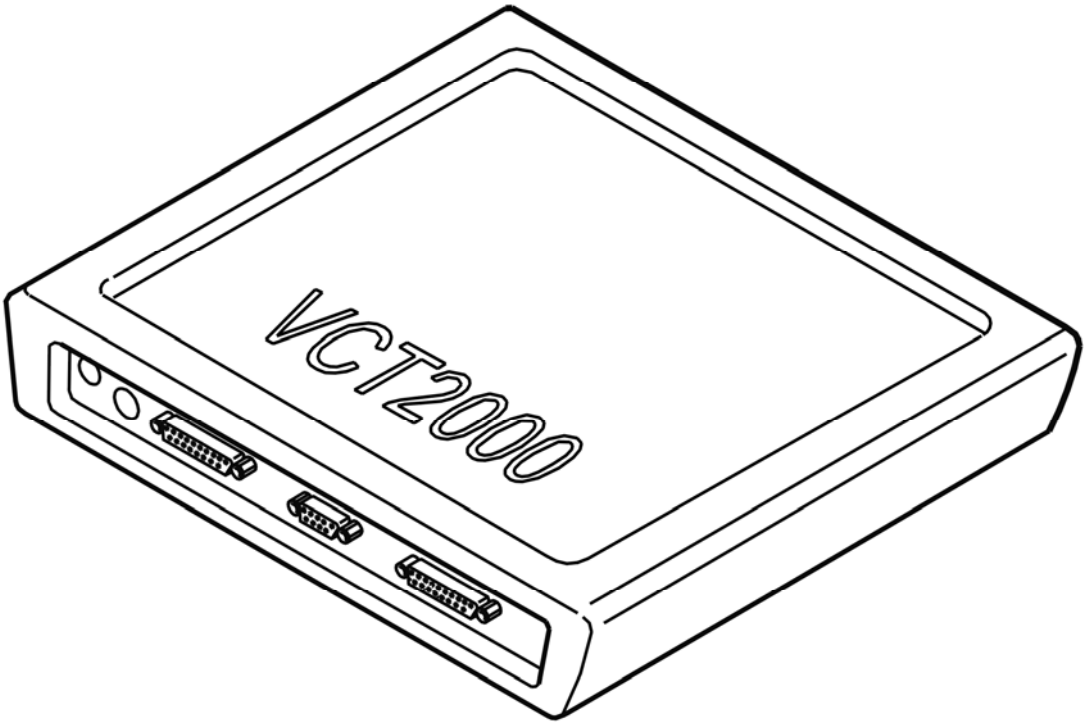

Fig. 166: Identifying VCT2000 Diagnostic Tool Symbol In VIDA
Courtesy of VOLVO CARS CORPORATION

COUNTERS, DESCRIPTION

Counter
A useful fault-tracing tool is the Diagnostic Trouble Code (DTC) counter. The control module stores 6 different counters for each Diagnostic Trouble Code (DTC), which describes the occurrence. The counters can be used to determine when and how often a fault has been detected. Using the counters for the Diagnostic Trouble Code (DTC) it is possible to, see if the fault has only been registered during the current operating cycle or whether it has been detected previously. If a fault is intermittent it is possible to determine how intermittent the fault is by studying the values of the different counters. Example: • Counter 1 = 15 Counts the number of operating cycles since the fault was last validated. • Counter 3 = 69 Counts the number of operating cycles since the fault was first validated. • Counter 4 = 1 Counts how many times the fault has occurred since the first time the fault was first

validated.

- Counter 5 = 91764 The counter adds the time in seconds for which the control module has been operating since the fault was first validated and the diagnostic trouble code (DTC) was stored.
- Counter 6 = 0 The counter adds the time in seconds for which the test, the diagnostic, has run since the fault was first validated and the diagnostic trouble code (DTC) was stored.
- Counter 7 = 0 The counter adds the time in seconds for which the fault has been validated since the fault was first validated and the diagnostic trouble code (DTC) was stored.

In the examples given above, counter 1 gives the number of operating cycles where the diagnostic was run without a fault being detected. Counting takes place from when the fault was last detected. Counter 3 is the total number of operating cycles regardless of whether the diagnostic was run or not. Counter 4 shows the number of operating cycles where the diagnostic detected a fault. Counters 3 and 4 start to count from the first operating cycle after the operating cycle when the fault was first detected.
In the example, counter 4 = 1, which means that the fault was detected twice. One can, see that no fault was detected during the relevant operating cycle. Depending on the number of operating cycles and the customer's driving pattern, it can assist in ruling out this control module from the customer's current problems. The counters can help us understand how intermittent the fault can be. If the counters 1 = 0, 3 = 0 and 4 = 0 it indicates that there have not been any operating cycles since the fault was detected and that the fault was probably generated in the workshop.
For an operating cycle to be recognized certain requirements may be necessary, for example, increasing the engine coolant temperature. In certain cases ignition on, ignition off and ignition on again are counted as an operating cycle.
Counter 5 can be useful if the fault was detected in this operating cycle. The time can be used to determine more exactly when the fault occurred.

NOTE:
Not all counters need be implemented in a control module, this varies from system to system. The possible counters are described below.

Counter	Function
A (see the graph) Counter 1	The graph illustrates the time at which a fault occurs. In the illustration the control module has detected a fault in the second cycle. This fault has then occurred a total of 5 times. The counter can be read off for each diagnostic trouble code (DTC) in the control module in which this is implemented. Operating cycles are marked with vertical lines. An operating cycle usually begins at ignition on and finishes when the ignition is switched off.
C#1 (see the graph) Counter 2	Counts the number of operating cycles since the fault was *last* validated. This information can be used to determine whether the fault is active during the current operating cycle or not. The fault is present now if the value is zero. This counter is also used for most systems to give "Permanent fault" and " Intermittent fault" text messages in VIDA (Volvo

	Scan Tool) when reading off a diagnostic trouble code (DTC).
C#3 (see the graph) Counter 3	Counts the number of operating cycles since the fault was *first* validated. When a fault has been validated, the counter will count up by 1 for each subsequent operating cycle. The same as counter C#1 but monitors the number of cycles since the first fault occurred.
C#4 (see the graph) Counter 4	Counts the number of operating cycles in which the fault was validated since it was first validated. Counts the number of times the fault has occurred since the first time.
C#5 Counter 5	The counter assesses the number of seconds the control module has been operating since the fault was first validated and the diagnostic trouble code (DTC) was stored. The time the control module has been operating is only counted when it is active, not in "sleep mode".
C#6 Counter 6	The counter assesses the number of seconds the test (the diagnosis) has been operating since the fault was first validated and the diagnostic trouble code (DTC) was stored.
C#7 Counter 7	The counter assesses the number of seconds the fault has been valid since it was first validated and the diagnostic trouble code (DTC) was stored.

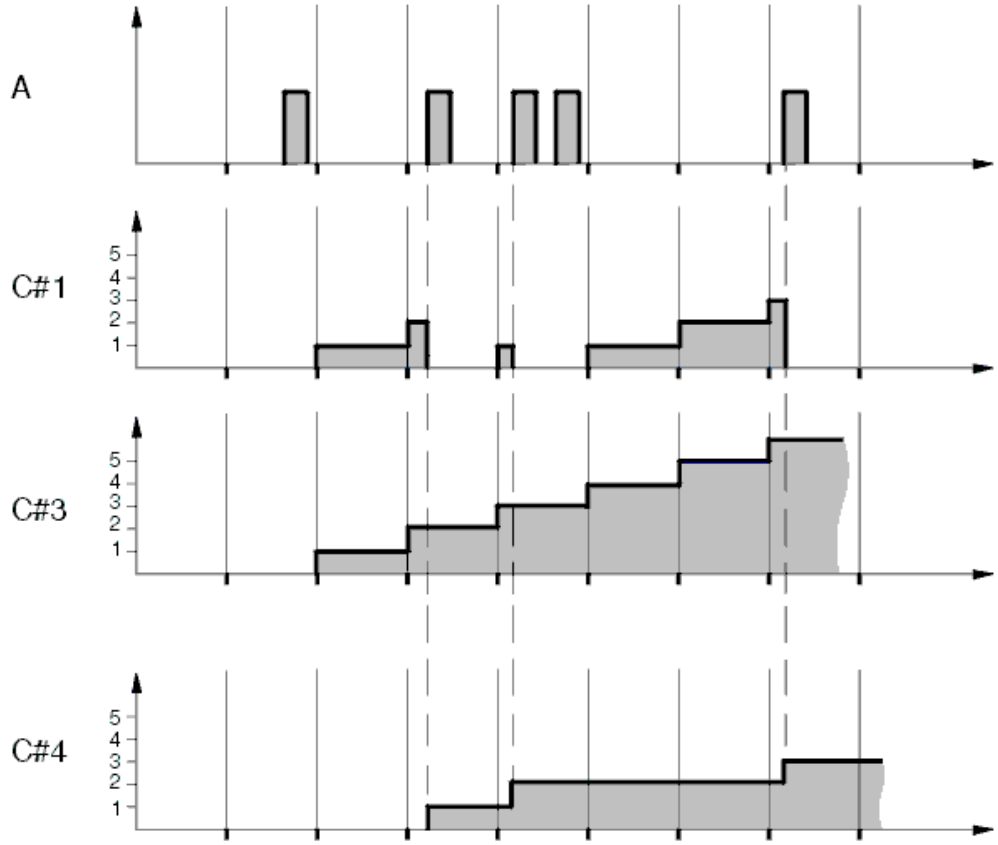

Fig. 167: Diagnostic Trouble Code (DTC) Counter Graph
Courtesy of VOLVO CARS CORPORATION

SAS-0007: CONTROL MODULE. INTERNAL FAULT (B6294T; 2005-2006)

DIAGNOSTIC TROUBLE CODE (DTC) INFORMATION SAS-0007

see **DIAGNOSTIC TROUBLE CODE (DTC) INFORMATION SAS-0007**

INTERNAL FAULT

see **INTERNAL FAULT**

SAS-0007: STEERING WHEEL ANGLE SIGNAL IX. SIGNAL TOO HIGH. INTERMITTENT FAULT (2003-2004)

DIAGNOSTIC TROUBLE CODE INFORMATION

see **DIAGNOSTIC TROUBLE CODE INFORMATION**

SIGNAL TOO HIGH. INTERMITTENT FAULT

CHECKING THE WIRING AND CONNECTIONS

Check the wires between steering wheel angle sensor (SAS) control unit #10 (#A34) and steering wheel control unit (SWM) #2 (#A2) for an open circuit as described in, see **OPEN-CIRCUIT, INTERMITTENT FAULTS** , and for an intermittent short circuit to ground as described in **SHORT-CIRCUIT TO GROUND, INTERMITTENT FAULTS** .

Additional information:

- To connect the test box to the steering wheel angle sensor control unit, see **CONNECTING THE BREAKOUT BOX TO THE STEERING ANGLE SENSOR** .
- To connect the test box to the steering wheel control unit, see **CONNECTING THE BREAKOUT BOX**
- For information on signals to the steering wheel angle sensor control unit, see **SIGNAL DESCRIPTION, CONTROL UNIT FOR THE STEERING WHEEL ANGLE SENSOR (SAS)** .
- For information on signals to the steering wheel control unit, see **SIGNAL SPECIFICATION** .

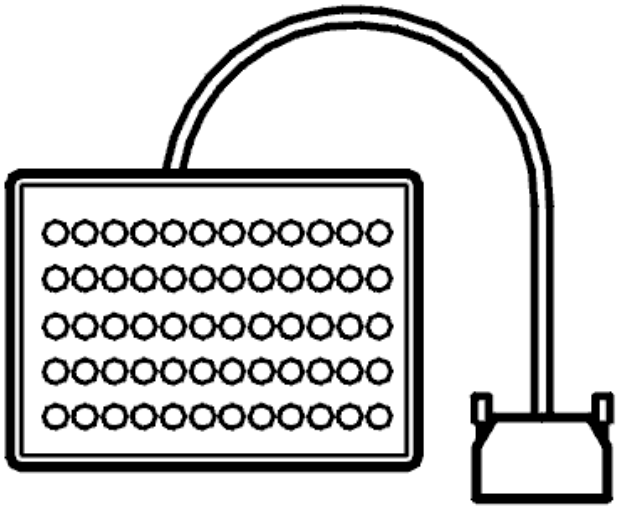

Fig. 168: Breakout Box
Courtesy of VOLVO CARS CORPORATION

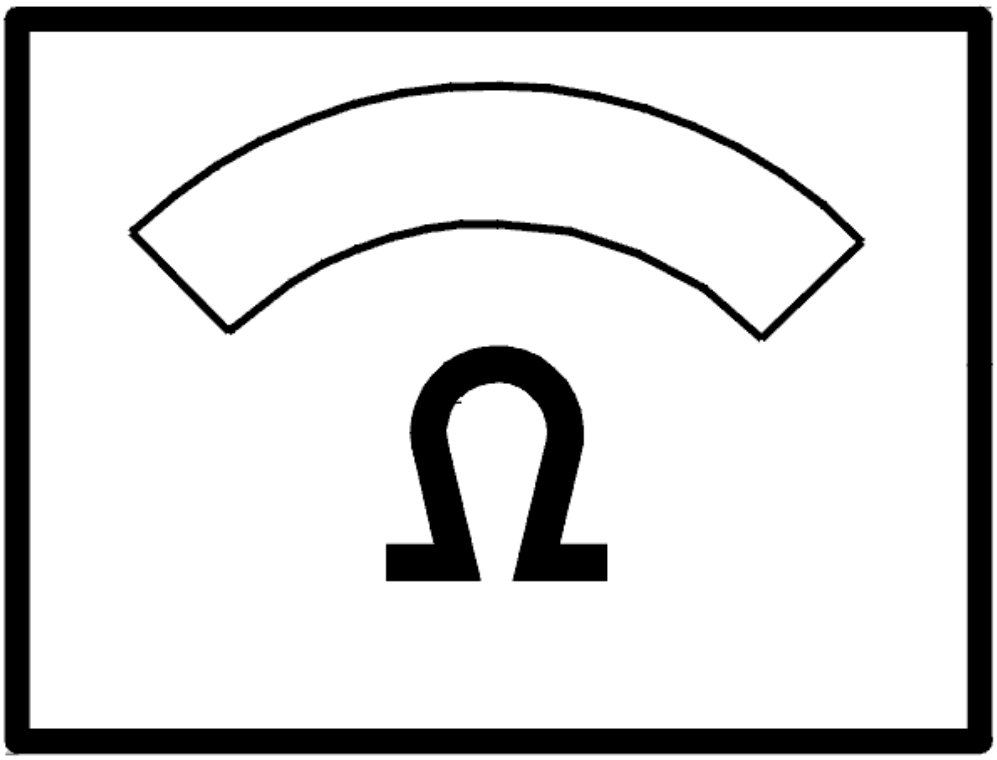

Fig. 169: Identifying Ohm Meter
Courtesy of VOLVO CARS CORPORATION

- **Continue**

  Refer to **INFORMATION**

INFORMATION

FAULT-TRACING INFORMATION

If the fault is intermittent, do not verify fault-tracing if the fault does not recur.

It is possible to view the information again, or leave fault-tracing for this diagnostic trouble code (DTC).

SAS-0007: STEERING WHEEL ANGLE SIGNAL IX. SIGNAL TOO HIGH.

PERMANENT FAULT (2003-2004)

DIAGNOSTIC TROUBLE CODE INFORMATION

see **DIAGNOSTIC TROUBLE CODE INFORMATION**

SIGNAL TOO HIGH. PERMANENT FAULT

CHECKING THE CONNECTORS

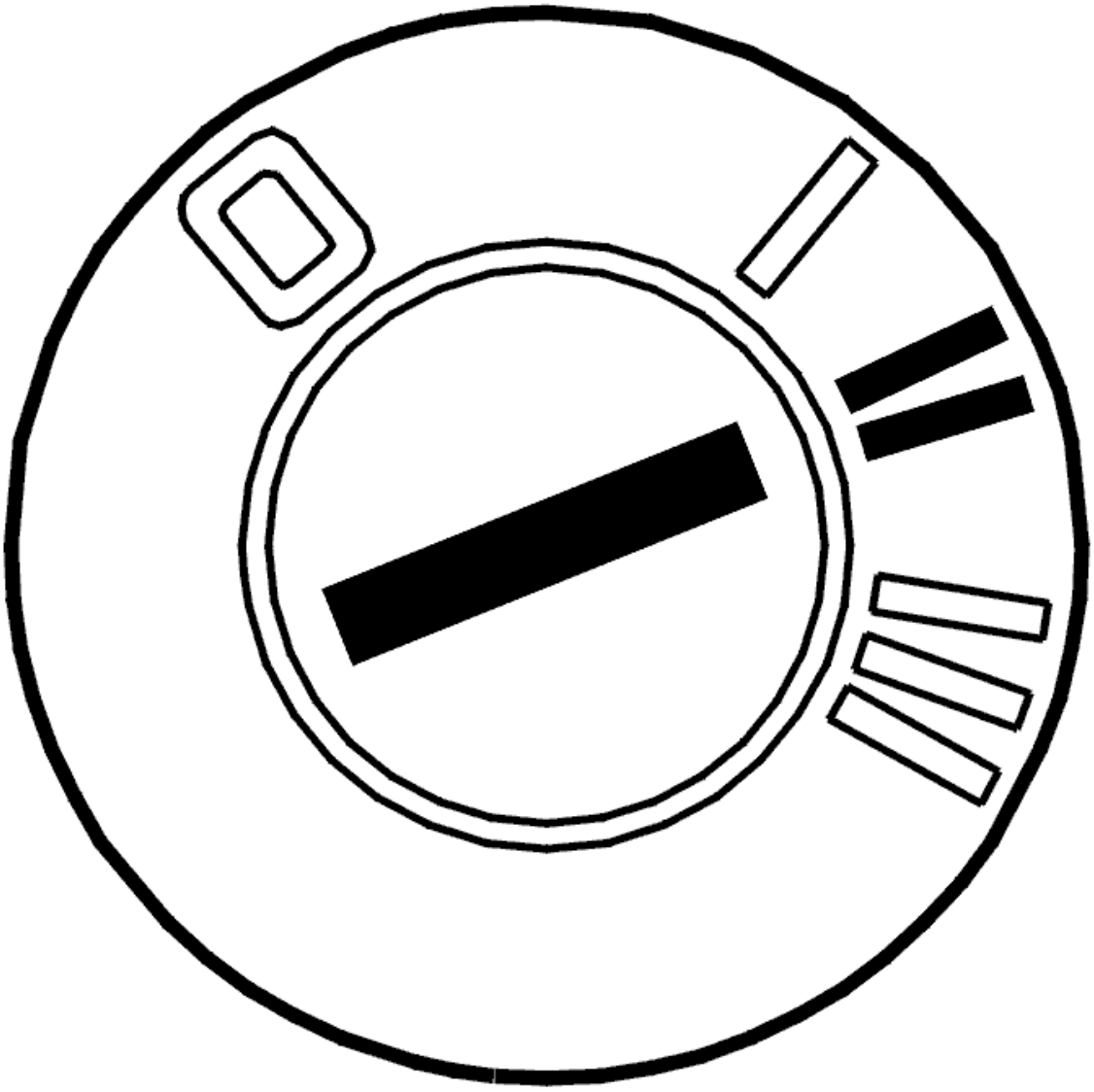

Fig. 170: Identifying Ignition ON
Courtesy of VOLVO CARS CORPORATION

- Ignition off
- Check the control module for the steering wheel angle sensor and the steering wheel module (SWM)

connectors. Check for contact resistance and oxidation according to **CONTACT RESISTANCE AND OXIDATION**

- Reinstall the components, reconnect the connectors etc.
- Ignition on
- Read off the status of steering wheel angle signal IX.

Turn the steering wheel in both directions and check that the value changes between ON and OFF.

If the value changes, the cause of the fault was contact resistance or oxidation in the control module or in the steering wheel angle sensor connector.

Other information:

- To access the connector for the control module for the steering wheel angle sensor, see **STEERING WHEEL MODULE (SWM), REPLACING**
- To access the connector for the steering wheel module (SWM), see **STEERING WHEEL MODULE (SWM), REPLACING**
- For information about signals, see **SIGNAL DESCRIPTION, CONTROL UNIT FOR THE STEERING WHEEL ANGLE SENSOR (SAS)** and **SIGNAL SPECIFICATION** .

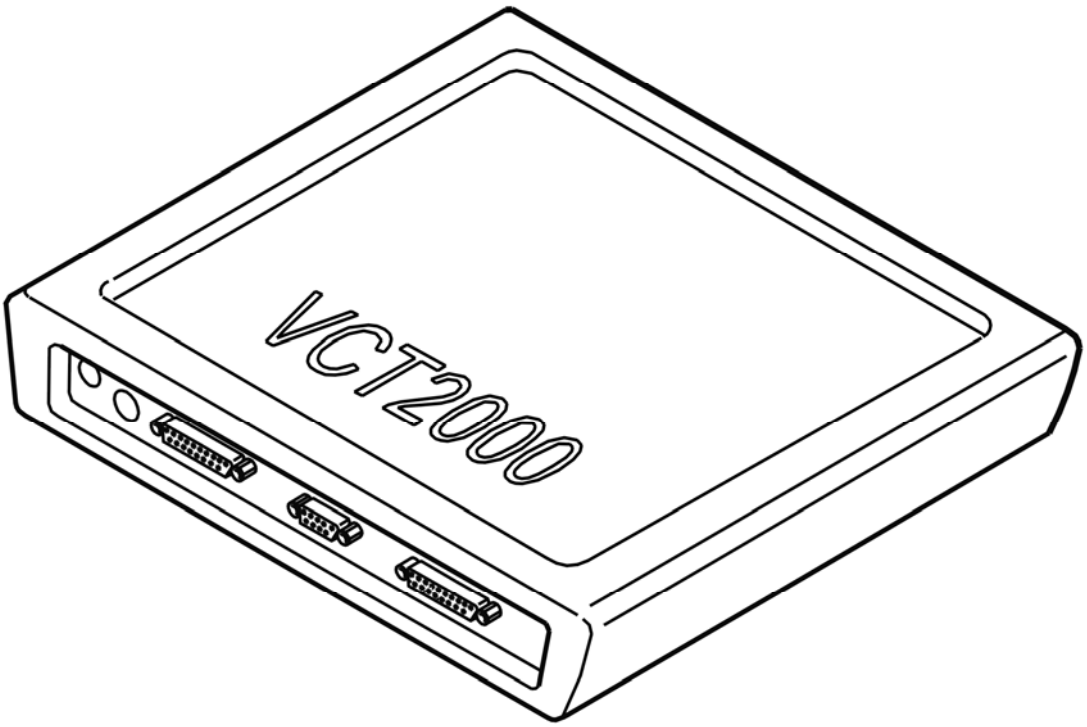

Fig. 171: Identifying VCT2000 Diagnostic Tool Symbol In VIDA
Courtesy of VOLVO CARS CORPORATION

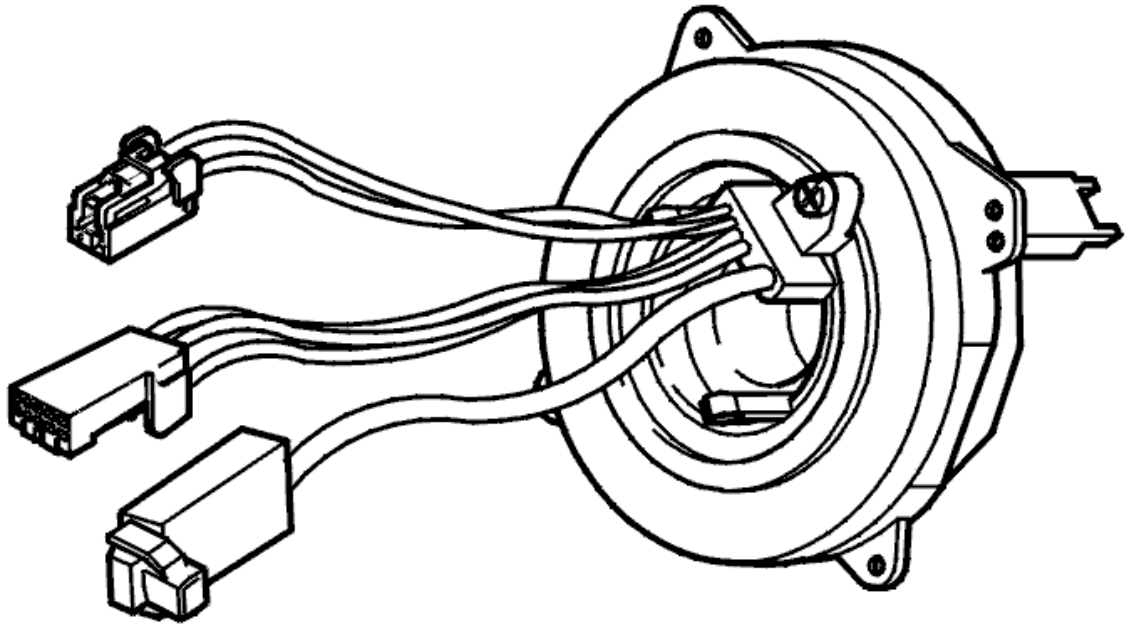

Fig. 172: Identifying Steering Wheel Angle Sensor
Courtesy of VOLVO CARS CORPORATION

Does the value change between OFF and ON?

- **YES**

  OKAY: Troubleshooting has been completed.

- **NO**

  Refer to **CHECKING WIRING AND SENSORS**

CHECKING WIRING AND SENSORS

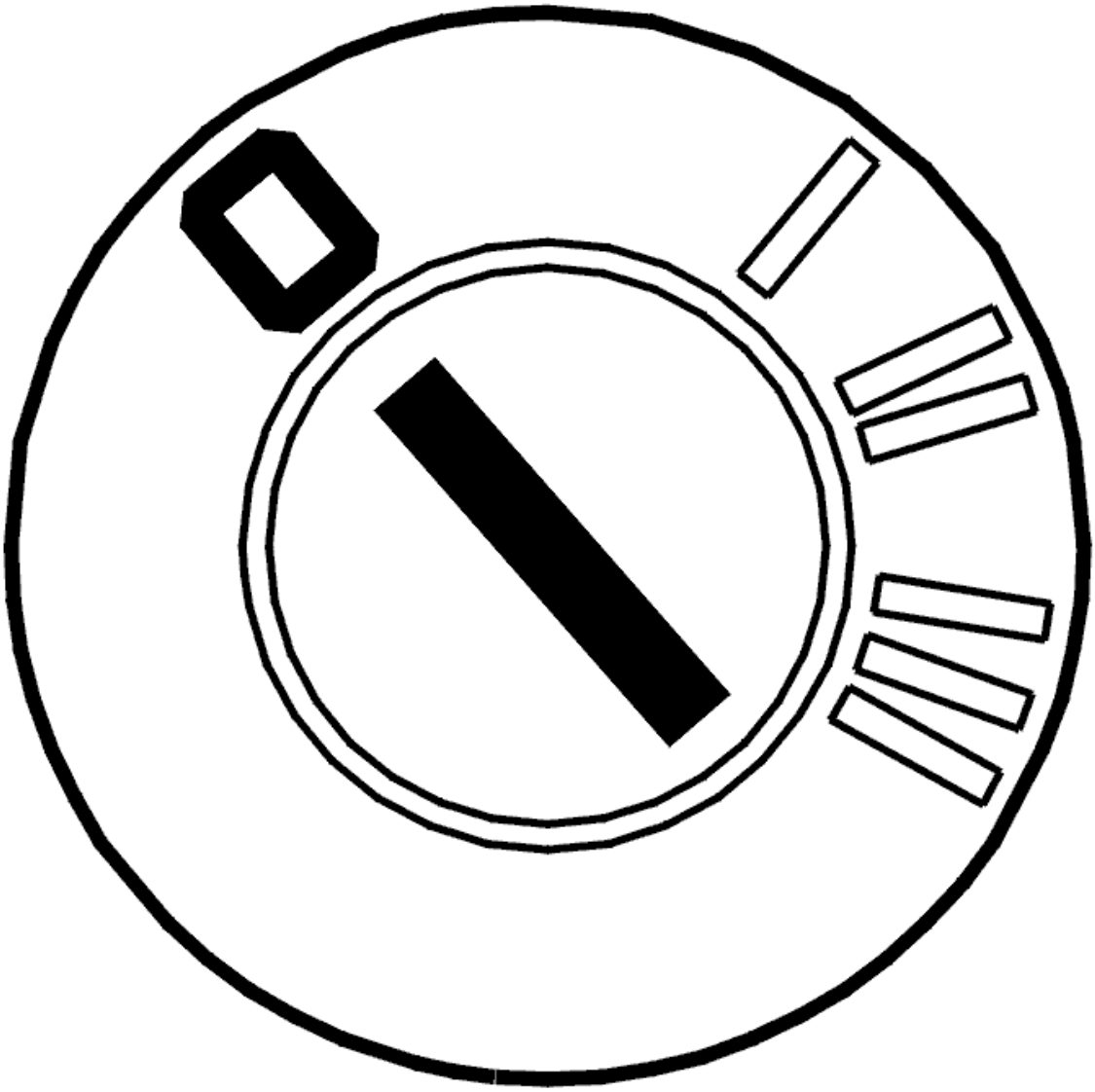

Fig. 173: Identifying Ignition OFF
Courtesy of VOLVO CARS CORPORATION

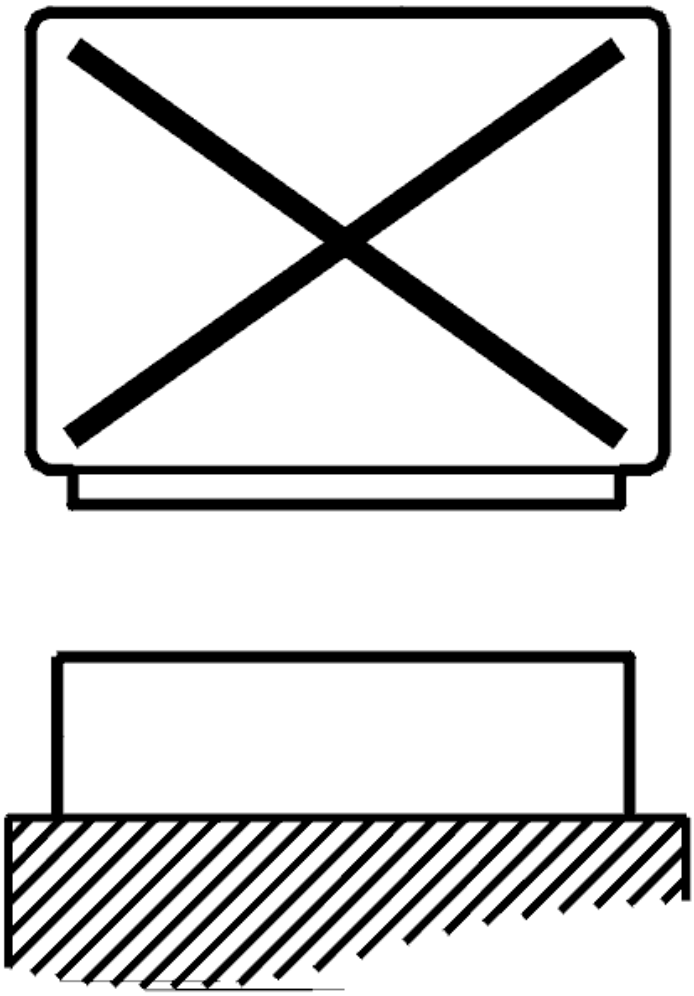

Fig. 174: Disconnecting Control Unit
Courtesy of VOLVO CARS CORPORATION

- Ignition off
- The control module for the steering wheel angle sensor disconnected
- Steering wheel module (SWM) disconnected
- Connect the breakout box to the control module for the steering wheel angle sensor and to the steering wheel module (SWM)

  Check the wiring between the control module for the steering wheel angle sensor terminal #10 (#A34) and steering wheel module (SWM) terminal #2 (#A2). Check for an open-circuit according to **OPEN-CIRCUIT, PERMANENT FAULTS** . Check for a short-circuit to supply voltage according to **SHORT-CIRCUIT TO SUPPLY VOLTAGE. PERMANENT FAULTS** .

  Try replacing the steering wheel angle sensor if no faults are found in the wiring between the control

module for the steering wheel angle sensor and the steering wheel module (SWM).

Other information:

- To access the connector for the control module for the steering wheel angle sensor, see **STEERING WHEEL MODULE (SWM), REPLACING**
- To access the connector for the steering wheel module (SWM), see **STEERING WHEEL MODULE (SWM), REPLACING**
- To connect the breakout box to the control module for the steering wheel angle sensor, see **CONNECTING THE BREAKOUT BOX TO THE STEERING ANGLE SENSOR**
- To connect the breakout box to the steering wheel module (SWM), see **CONNECTING THE BREAKOUT BOX**
- To replace the steering wheel angle sensor, see **CONTACT REEL, REPLACEMENT**
- For information about signals, see **SIGNAL DESCRIPTION, CONTROL UNIT FOR THE STEERING WHEEL ANGLE SENSOR (SAS)** and **SIGNAL SPECIFICATION** .

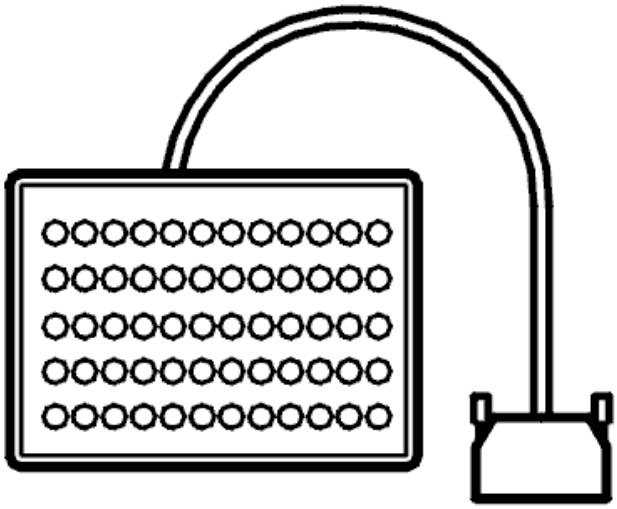

Fig. 175: Breakout Box
Courtesy of VOLVO CARS CORPORATION

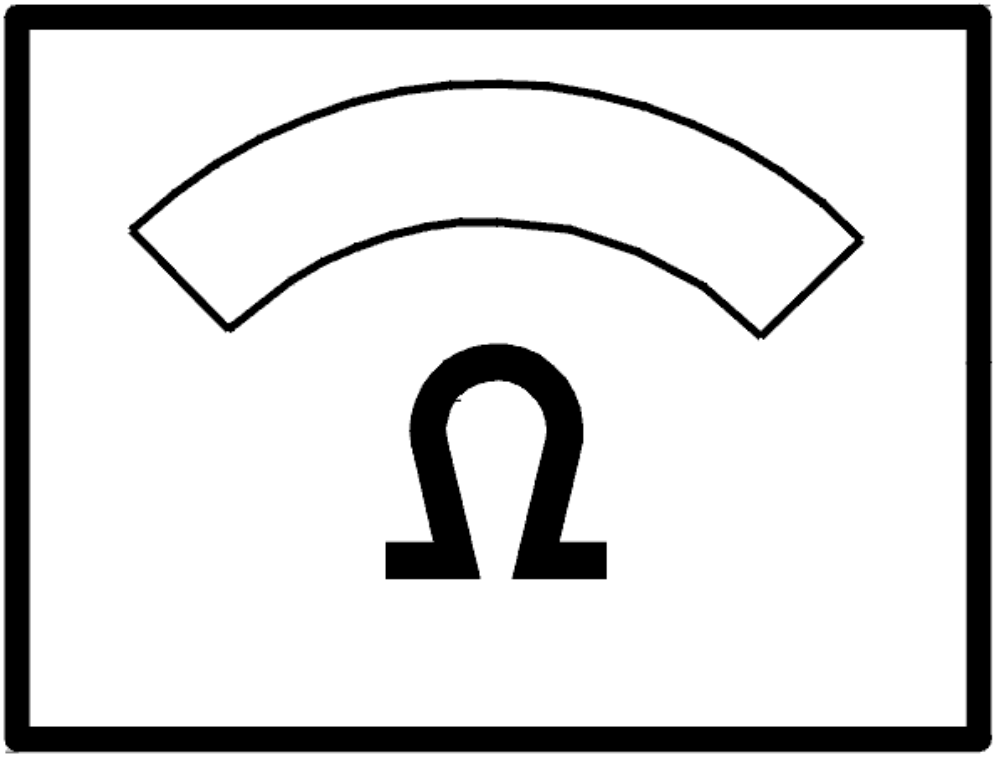

Fig. 176: Identifying Ohm Meter
Courtesy of VOLVO CARS CORPORATION

- **Continue**

  Refer to **VERIFICATION**

VERIFICATION

HINT: After the repair it is necessary to check that the fault has been rectified.

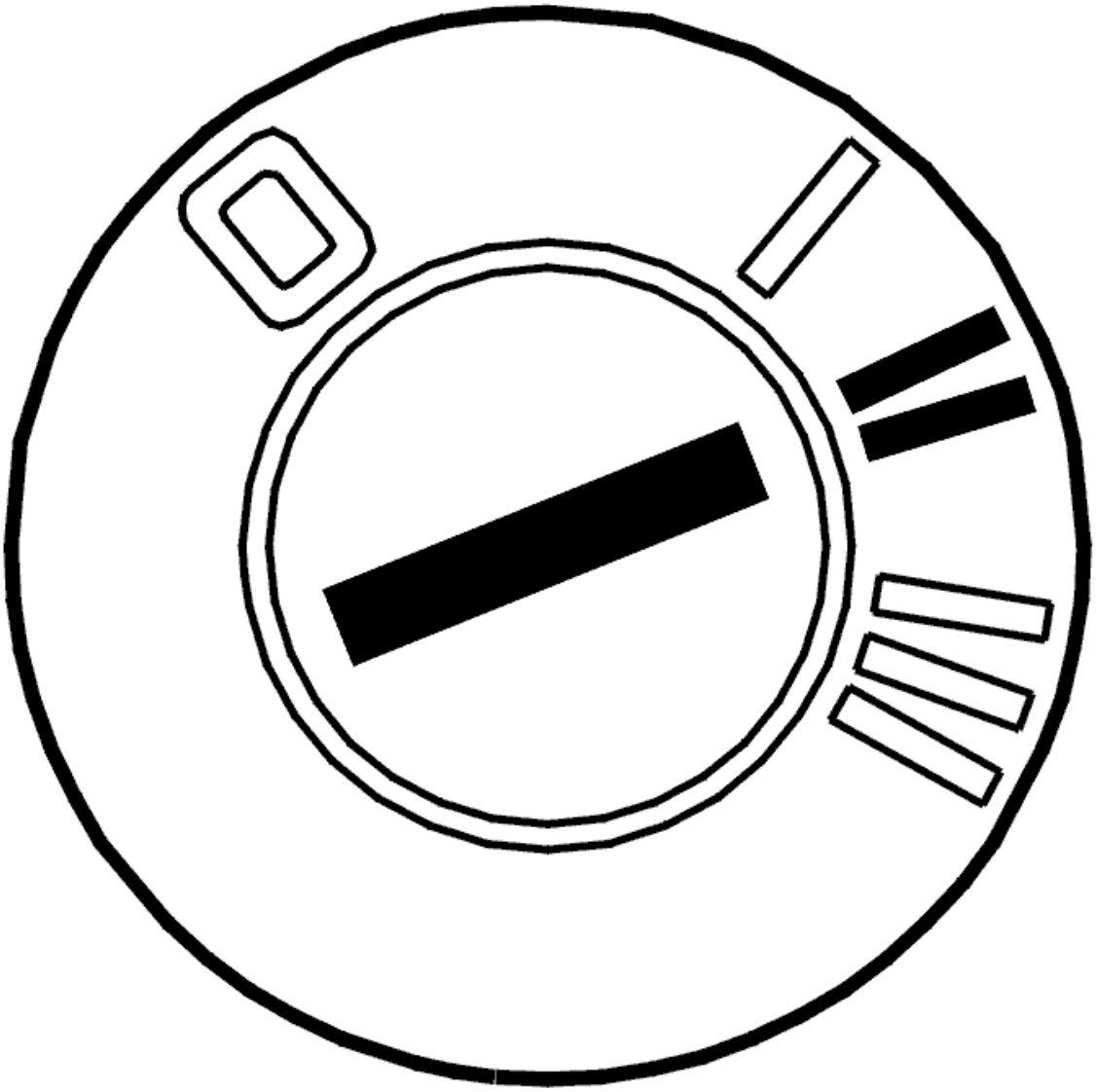

Fig. 177: Identifying Ignition ON
Courtesy of VOLVO CARS CORPORATION

- Ignition off.
- Connect the connectors, install the components, etc.
- Ignition on.
- Read off steering wheel angle signal IX.
- Turn the steering wheel to full lock in both directions.

  The value should change between OFF and ON.

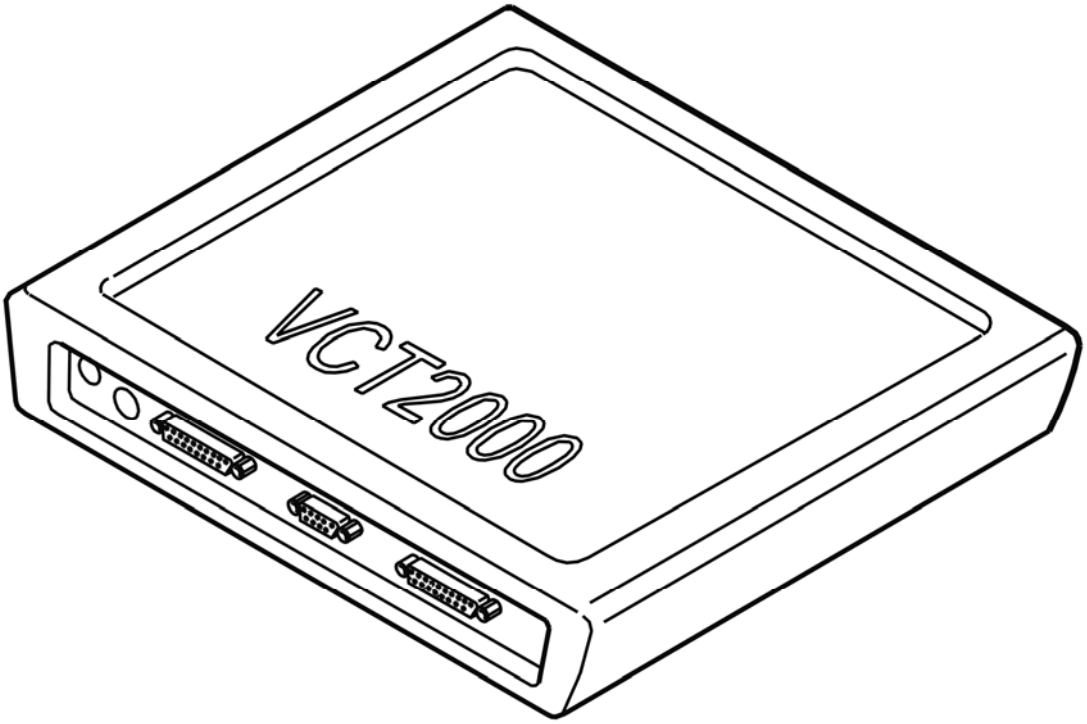

Fig. 178: Identifying VCT2000 Diagnostic Tool Symbol In VIDA
Courtesy of VOLVO CARS CORPORATION

Does the value change?

- **YES**

  VERIFIED: Troubleshooting has been completed.

- **NO**

  Refer to **INFORMATION**

INFORMATION

FAULT-TRACING INFORMATION

The fault should have been detected and remedied. As this is not the case fault-tracing has failed.

Exit fault-tracing for this diagnostic trouble code (DTC) or make another attempt.

SAS-0008: STEERING WHEEL ANGLE SENSOR. INTERNAL FAULT (B5254T2; 2005-2007)

DIAGNOSTIC TROUBLE CODE (DTC) INFORMATION SAS-0008

Condition

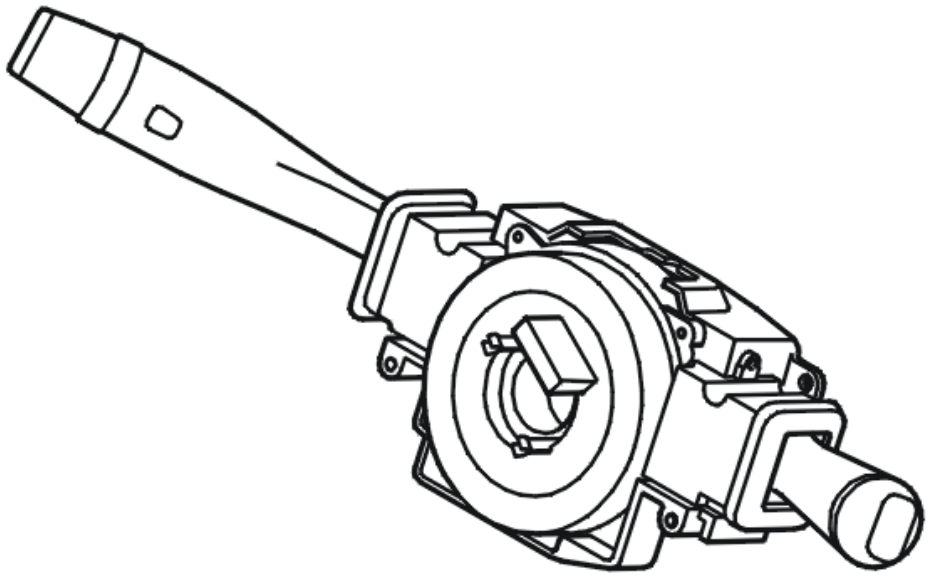

Fig. 179: Identifying Steering Wheel Control Module
Courtesy of VOLVO CARS CORPORATION

The Steering wheel angle sensor module (SAS) is located in the lever module together with the steering wheel module (SWM) and is supplied with power by it.

The steering wheel angle sensor is installed on the underside of the contact reel and together they create a replaceable unit. A code wheel is mounted inside the steering wheel angle sensor which follows the movements of the steering wheel.9 x optical digital sensors and 2 x analog photo diodes read off the code wheel. These signals are compared and must create a specific pattern. The diagnostic trouble code (DTC) is stored if the signal pattern created does not correspond.

The diagnostic trouble code (DTC) can be diagnosed when the ignition is switched on and the steering wheel angle sensor is initiated. Initiation is carried out when the steering wheel is turned more than 4.5° in any direction.

Substitute Value

- The stability function is blocked.

Possible Source

- Internal fault in the steering wheel angle sensor module (SAS).

Fault symptom[s]

- Anti-spin warning lamp lit.
- General warning lamp lit.
- The stability control system does not function.

INTERNAL FAULT

CHECKING THE STATUS

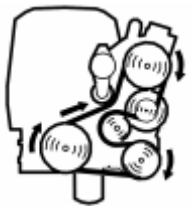

Fig. 180: Identifying Belt Routing
Courtesy of VOLVO CARS CORPORATION

- Ignition off
- Wait approximately 10 seconds
- Engine running.
- First turn the steering wheel max. to the right, then max. to the left.
- Click on the VCT2000 symbol to read off the diagnostic trouble code (DTC) counter.

  The counters are used to determine the problem's status. For general information about the counters, see:**COUNTERS, DESCRIPTION**

  Counter 1 counts the number of operating cycles without a fault since the fault was last validated.

  If **counter 1** is the same as 0, this means that the fault has been detected in this operating cycle (permanent fault). Replace contact reel/steering wheel angle sensor.

  If **counter 1** is over 0, this indicates that the problem has not been detected in this driving cycle (intermittent problem). The problem has existed earlier but is not active right now. Then check **counter 4** .**Counter 4** indicates number of driving cycles **with problem** since the problem was validated for the first time.

  - If the number of incorrect driving cycles is high, this indicates an intermittent recurring problem. Replace contact reel/steering wheel angle sensor.
  - If the number of incorrect driving cycles is low, this indicates an intermittent temporary problem. No action.

HINT: Counter 3 indicates number of driving cycles since first time that the problem occurred. If the value for counter 3 is divided by the value for counter 4, the intensity of the problem is obtained. The higher the value, the higher the problem intensity. A high problem intensity indicates that the malfunction recurs often.

NOTE: Replace the steering wheel module (SWM) if the fault recurs after replacing the contact reel/steering wheel angle sensor.

Remedy as necessary.

Other information

- see **CONTACT REEL, REPLACEMENT**
- Steering wheel angle sensor module (SAS) is integrated in the steering wheel module (SWM). To replace the control module, see **STEERING WHEEL MODULE (SWM), REPLACING**

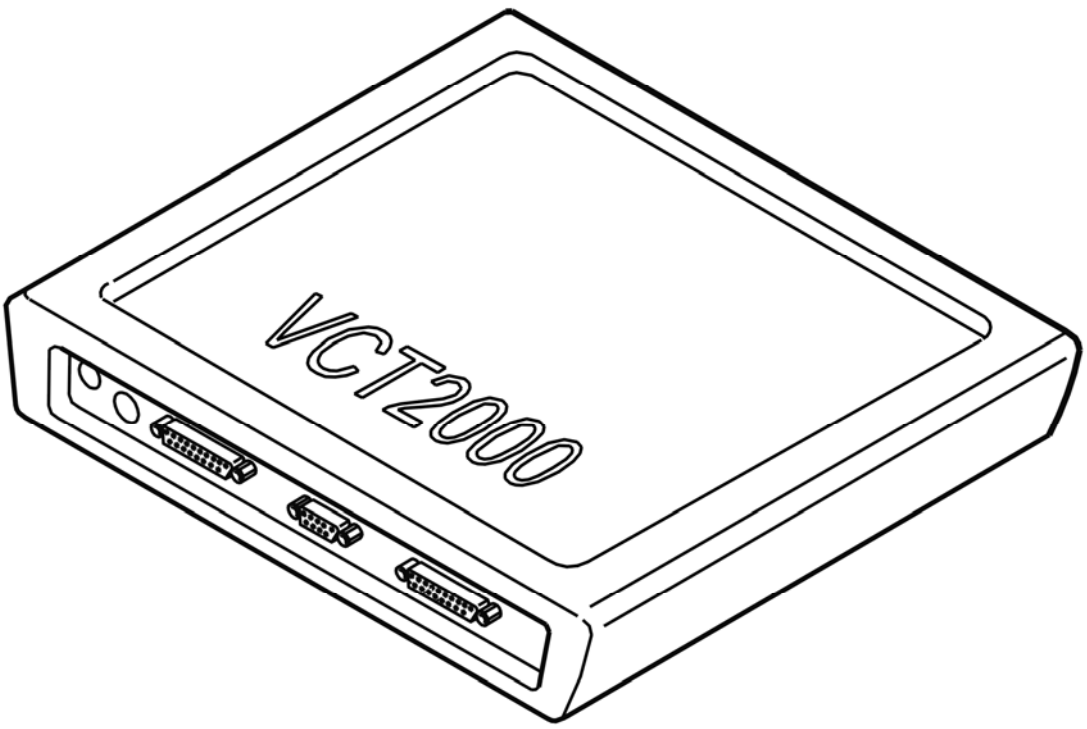

Fig. 181: Identifying VCT2000 Diagnostic Tool Symbol In VIDA
Courtesy of VOLVO CARS CORPORATION

SAS-0008: STEERING WHEEL ANGLE SENSOR. INTERNAL FAULT (B6294T; 2005-2006)

DIAGNOSTIC TROUBLE CODE (DTC) INFORMATION SAS-0008

see **DIAGNOSTIC TROUBLE CODE (DTC) INFORMATION SAS-0008**

INTERNAL FAULT

see **INTERNAL FAULT**

SAS-0008: STEERING WHEEL ANGLE SIGNAL IX. SIGNAL TOO LOW. INTERMITTENT FAULT (2003-2004)

DIAGNOSTIC TROUBLE CODE INFORMATION

see **DIAGNOSTIC TROUBLE CODE INFORMATION**

SIGNAL TOO LOW. INTERMITTENT FAULT

CHECKING THE WIRING AND CONNECTIONS

Check the wires between steering wheel angle sensor (SAS) control unit #10 (#A34) and steering wheel control unit (SWM) #2 (#A2) for an open circuit as described in, see **OPEN-CIRCUIT, INTERMITTENT FAULTS** , and for an intermittent short circuit to ground as described in **SHORT-CIRCUIT TO GROUND, INTERMITTENT FAULTS** .

Additional information:

- To connect the test box to the steering wheel angle sensor control unit, see **CONNECTING THE BREAKOUT BOX TO THE STEERING ANGLE SENSOR** .
- To connect the test box to the steering wheel control unit, see **CONNECTING THE BREAKOUT BOX**
- For information on signals, see **SIGNAL DESCRIPTION, CONTROL UNIT FOR THE STEERING WHEEL ANGLE SENSOR (SAS)** and **SIGNAL SPECIFICATION** .

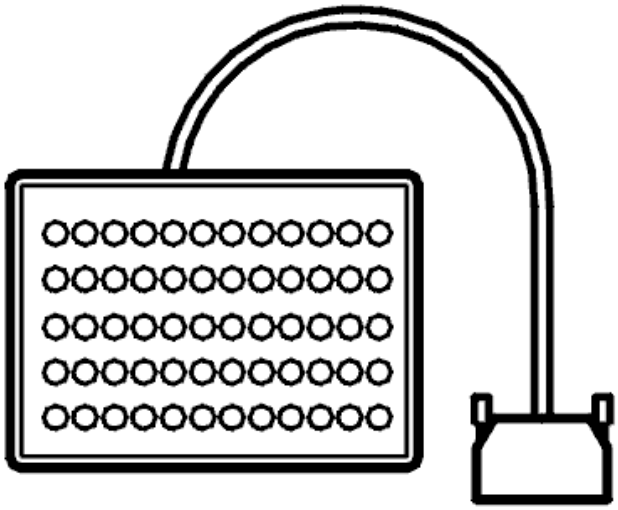

Fig. 182: Breakout Box
Courtesy of VOLVO CARS CORPORATION

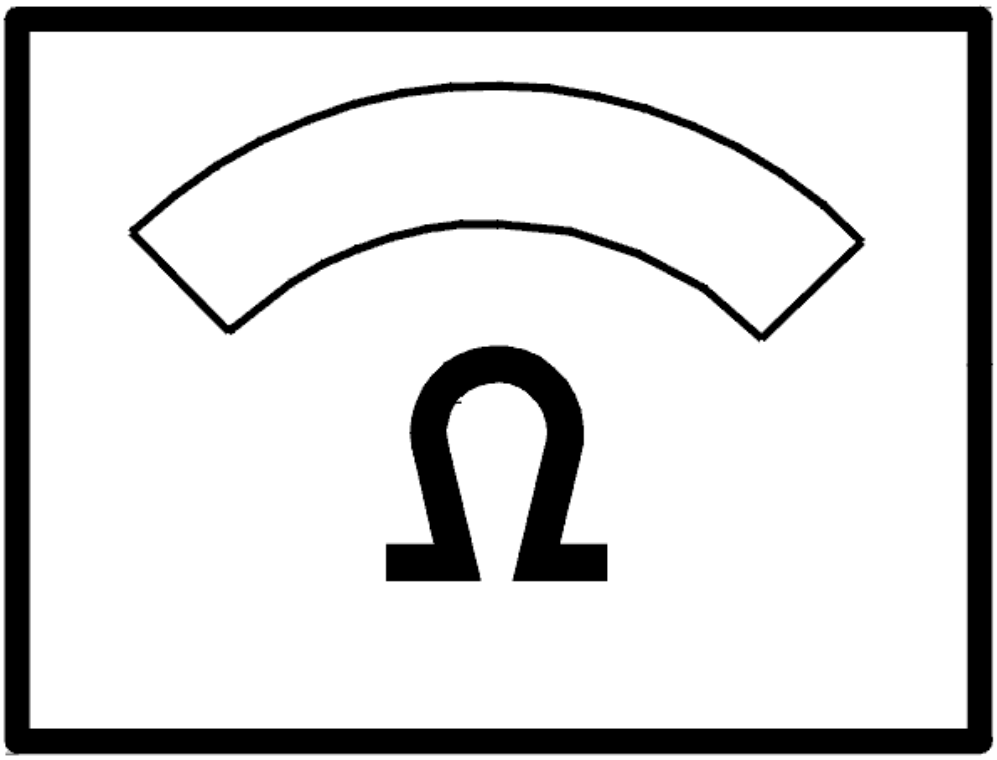

Fig. 183: Identifying Ohm Meter
Courtesy of VOLVO CARS CORPORATION

- **Continue**

  Refer to **INFORMATION**

INFORMATION

FAULT-TRACING INFORMATION

If the fault is intermittent, do not verify fault-tracing if the fault does not recur.

It is possible to view the information again, or leave fault-tracing for this diagnostic trouble code (DTC).

SAS-0008: STEERING WHEEL ANGLE SIGNAL IX. SIGNAL TOO LOW.

PERMANENT FAULT (2003-2004)

DIAGNOSTIC TROUBLE CODE INFORMATION

see **DIAGNOSTIC TROUBLE CODE INFORMATION**

SIGNAL TOO LOW. PERMANENT FAULT

CHECKING THE CONNECTORS

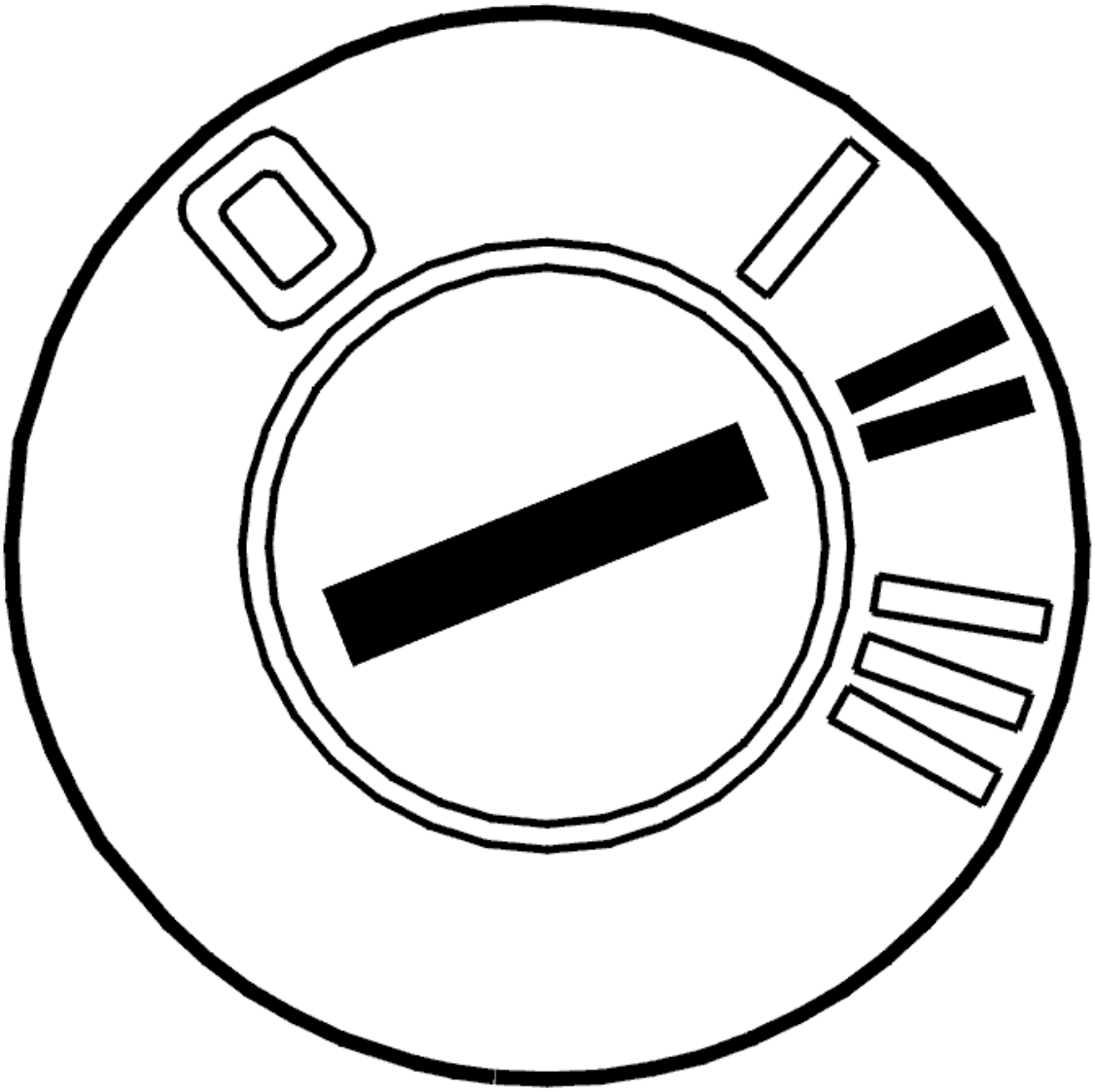

Fig. 184: Identifying Ignition ON
Courtesy of VOLVO CARS CORPORATION

- Ignition on
- Read off the status of steering wheel angle signal IX.

Turn the steering wheel in both directions and check that the value changes between ON and OFF.

Other information:

- To access the connector for the control module for the steering wheel angle sensor, see **STEERING WHEEL MODULE (SWM), REPLACING**
- To access the connector for the steering wheel module (SWM), see **STEERING WHEEL MODULE (SWM), REPLACING**
- For information about signals, see **SIGNAL DESCRIPTION, CONTROL UNIT FOR THE STEERING WHEEL ANGLE SENSOR (SAS)**

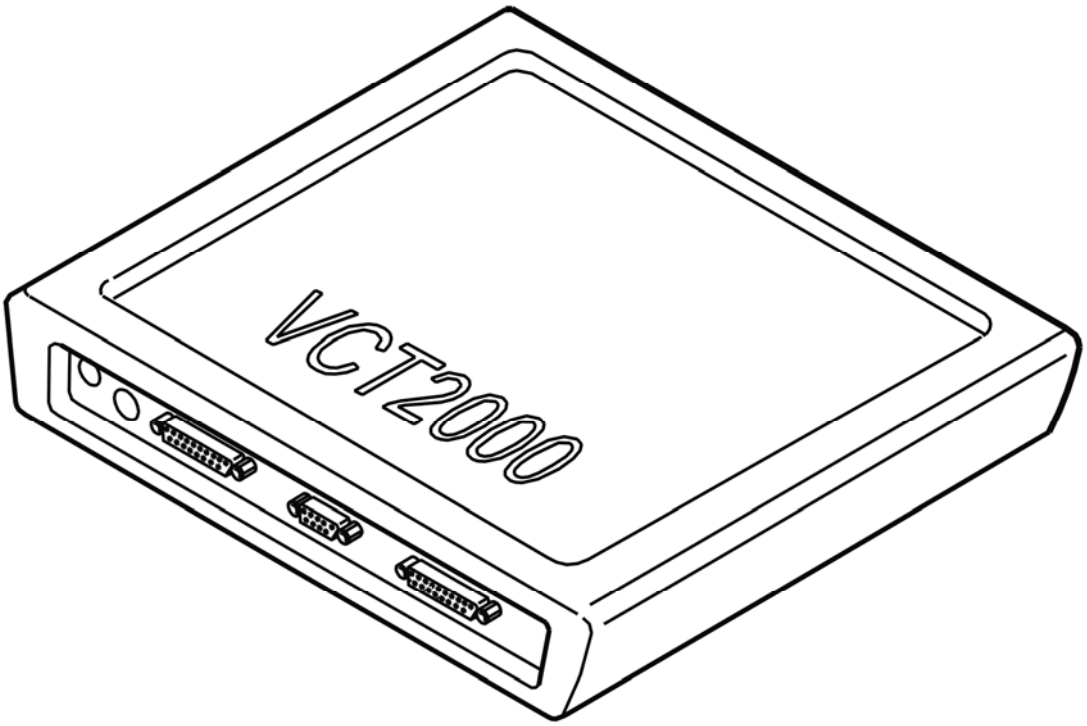

Fig. 185: Identifying VCT2000 Diagnostic Tool Symbol In VIDA
Courtesy of VOLVO CARS CORPORATION

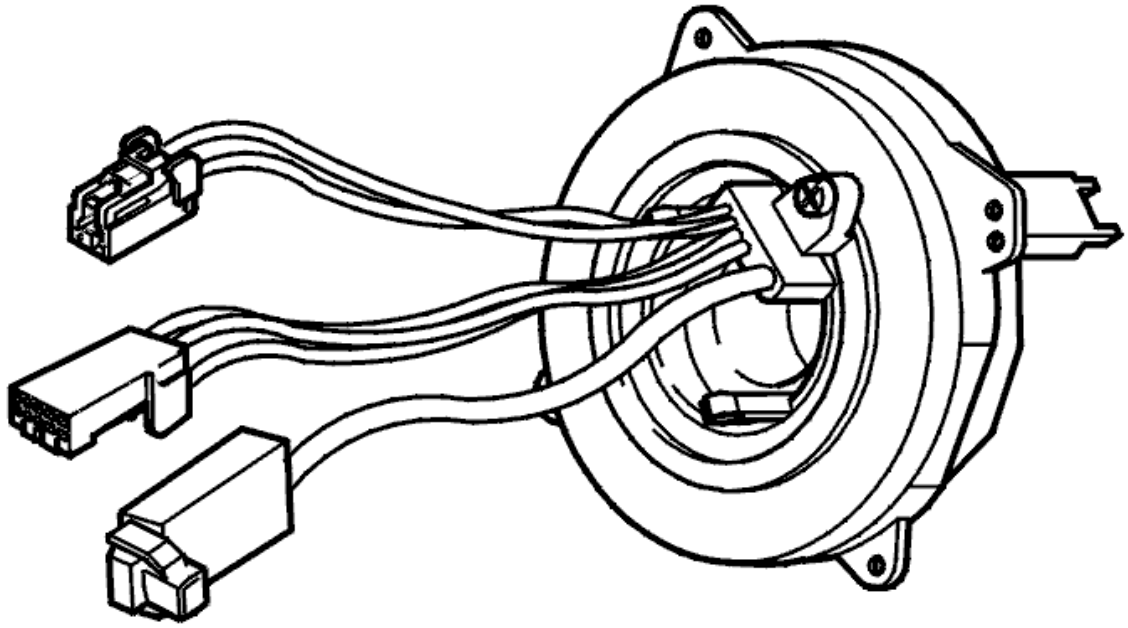

Fig. 186: Identifying Steering Wheel Angle Sensor
Courtesy of VOLVO CARS CORPORATION

Does the value change between OFF and ON?

- **YES**

  OKAY: Troubleshooting has been completed.

- **NO**

  Refer to **CHECKING WIRING AND SENSORS**

CHECKING WIRING AND SENSORS

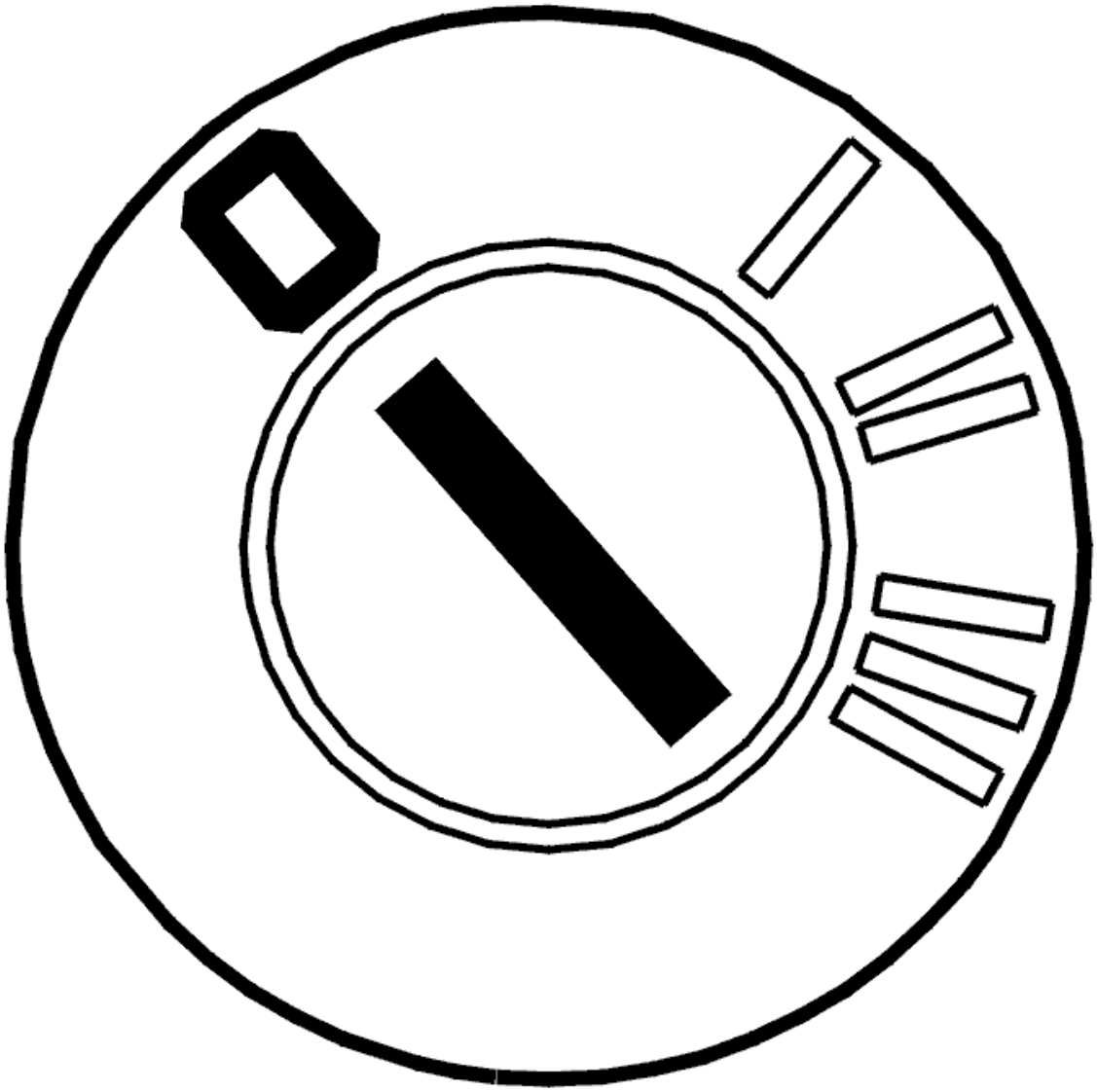

Fig. 187: Identifying Ignition OFF
Courtesy of VOLVO CARS CORPORATION

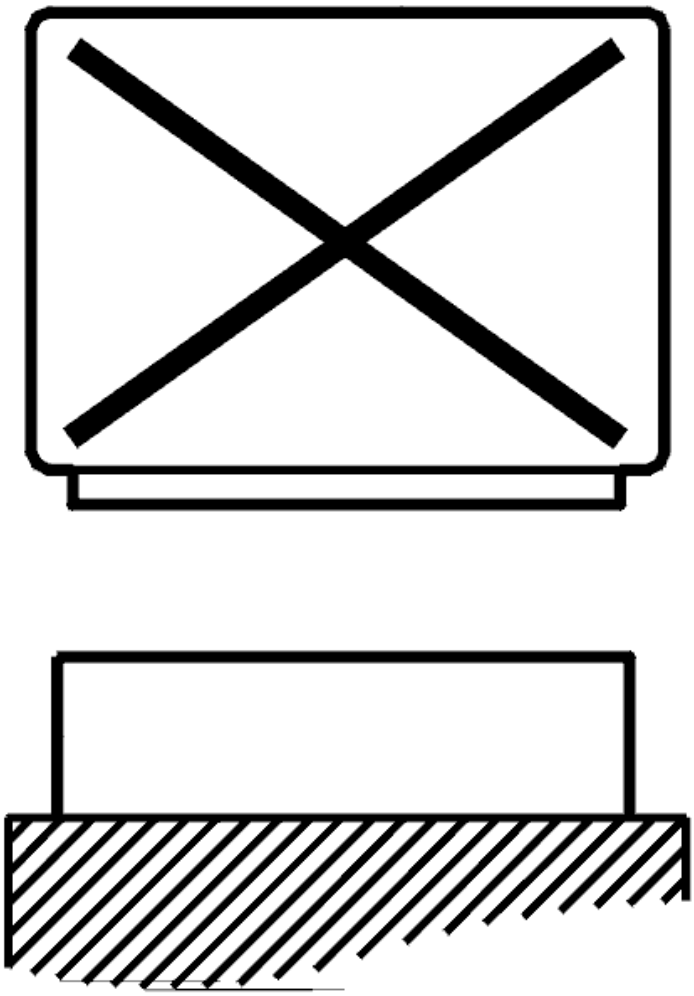

Fig. 188: Disconnecting Control Unit
Courtesy of VOLVO CARS CORPORATION

- Ignition off
- The control module for the steering wheel angle sensor disconnected
- Steering wheel module (SWM) disconnected
- Connect the breakout box to the control module for the steering wheel angle sensor and to the steering wheel module (SWM)

  Check the wiring between the control module for the steering wheel angle sensor terminal #10 (#A34) and steering wheel module (SWM) terminal #2 (#A2). Check for a short-circuit to ground according to **SHORT-CIRCUIT TO GROUND, PERMANENT FAULTS** . Check for an open-circuit according to **OPEN-CIRCUIT, PERMANENT FAULTS** .

  Try replacing the steering wheel angle sensor if no faults are found in the wiring between the control

module for the steering wheel angle sensor and the steering wheel module (SWM).

Other information:

- To connect the breakout box to the control module for the steering wheel angle sensor, see **STEERING WHEEL MODULE (SWM), REPLACING**
- To connect the breakout box to the steering wheel module (SWM), see **CONNECTING THE BREAKOUT BOX**
- To replace the steering wheel angle sensor, see **CONTACT REEL, REPLACEMENT**
- For information about signals, see **SIGNAL DESCRIPTION, CONTROL UNIT FOR THE STEERING WHEEL ANGLE SENSOR (SAS)** and **SIGNAL SPECIFICATION** .

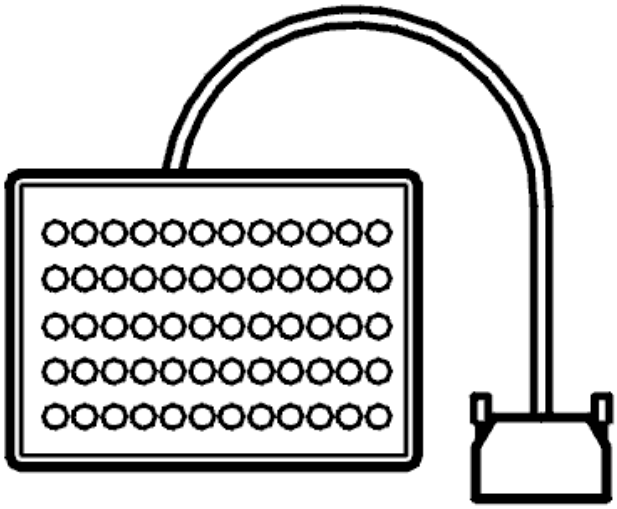

Fig. 189: Breakout Box
Courtesy of VOLVO CARS CORPORATION

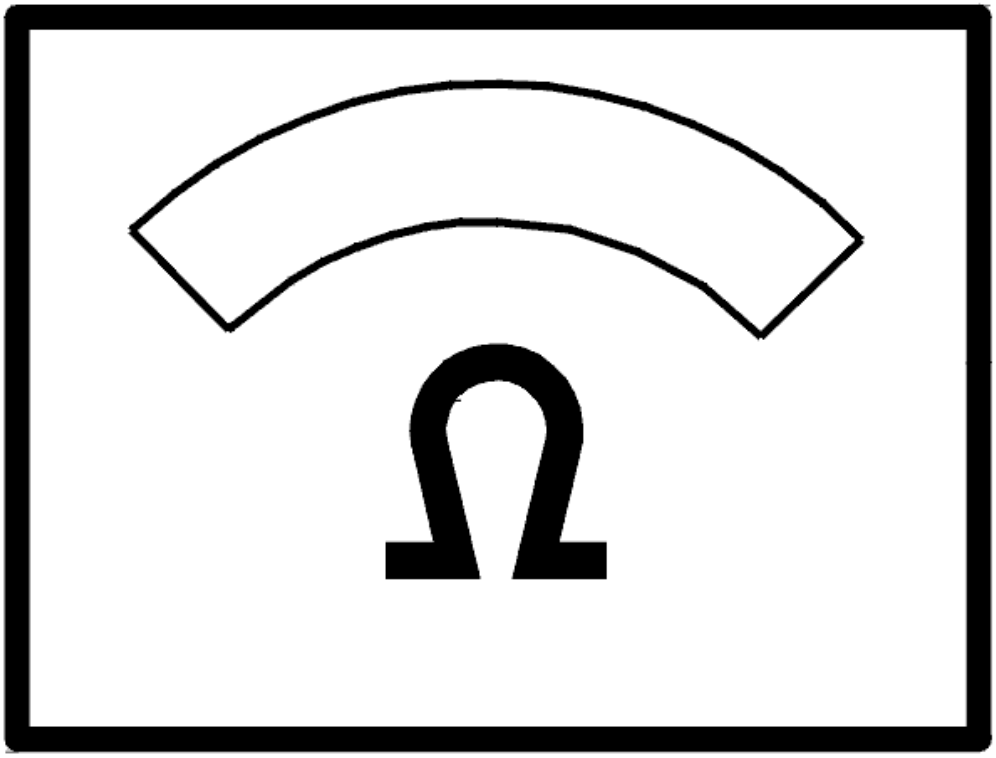

Fig. 190: Identifying Ohm Meter
Courtesy of VOLVO CARS CORPORATION

- **Continue**

  Refer to **VERIFICATION**

VERIFICATION

HINT: After the repair it is necessary to check that the fault has been rectified.

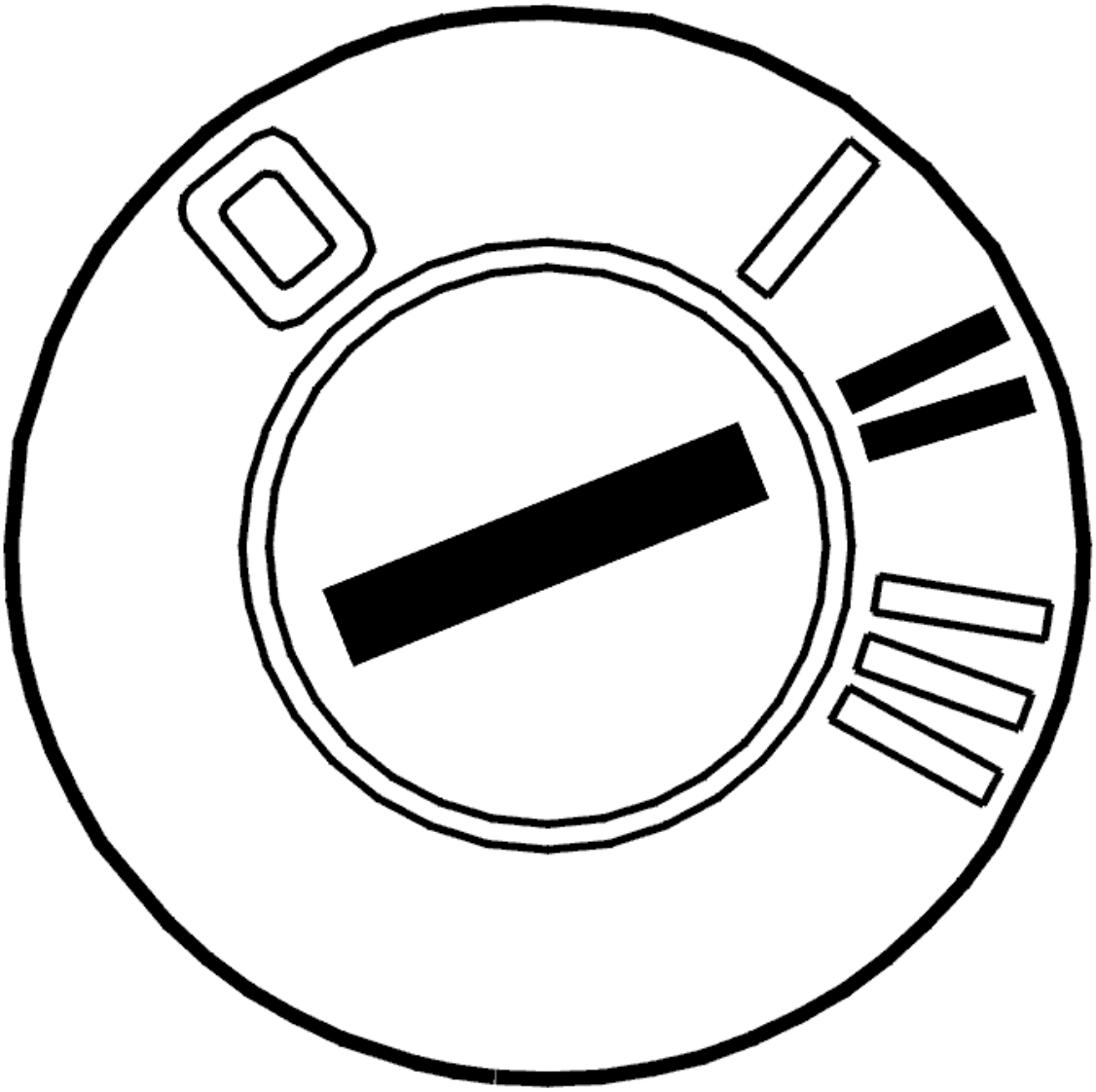

Fig. 191: Identifying Ignition ON
Courtesy of VOLVO CARS CORPORATION

- Ignition off.
- Connect the connectors, install the components, etc.
- Ignition on.
- Read off steering wheel angle signal IX.
- Turn the steering wheel to full lock in both directions.

  The value should change between OFF and ON.

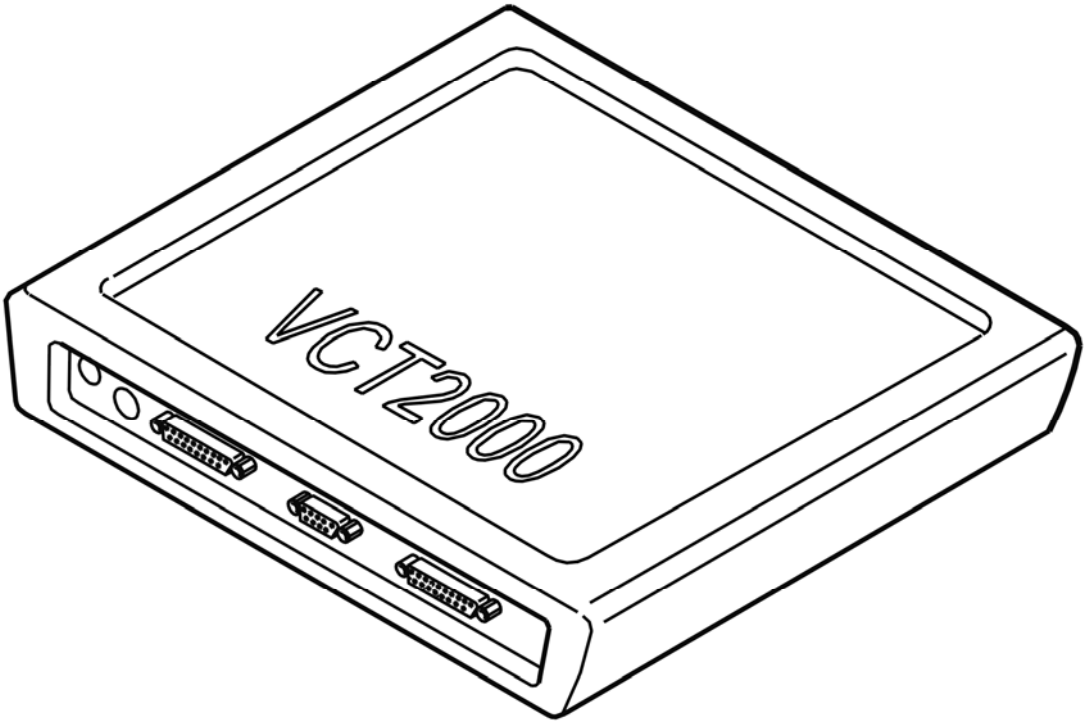

Fig. 192: Identifying VCT2000 Diagnostic Tool Symbol In VIDA
Courtesy of VOLVO CARS CORPORATION

Does the value change?

- **YES**

  VERIFIED: Troubleshooting has been completed.

- **NO**

  Refer to **INFORMATION**

INFORMATION

FAULT-TRACING INFORMATION

The fault should have been detected and remedied. As this is not the case fault-tracing has failed.

Exit fault-tracing for this diagnostic trouble code (DTC) or make another attempt.

SAS-0009: CONTROL MODULE. INTERNAL FAULT (B5254T2; 2005-2007)

DIAGNOSTIC TROUBLE CODE (DTC) INFORMATION SAS-0009

Condition

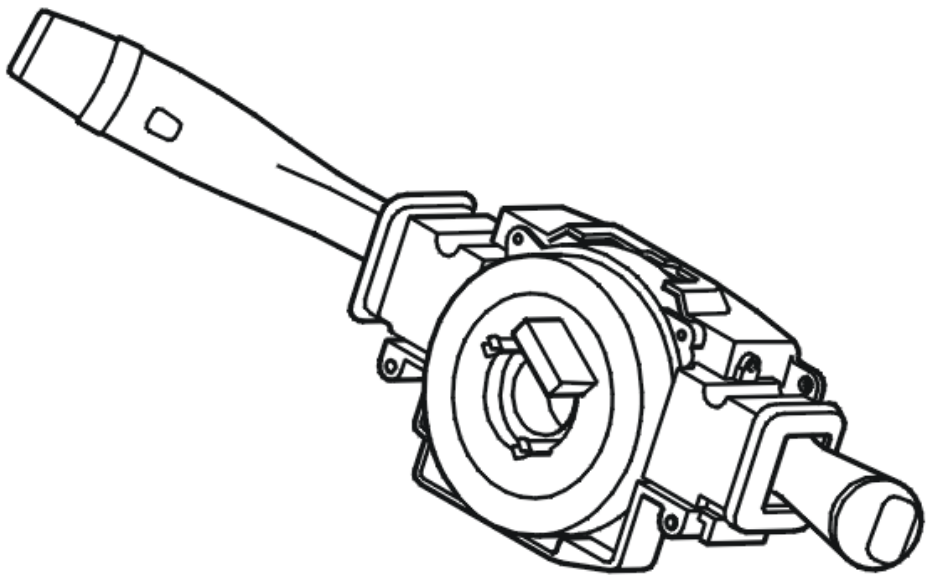

Fig. 193: Identifying Steering Wheel Control Module
Courtesy of VOLVO CARS CORPORATION

The Steering wheel angle sensor module (SAS) is located in the lever module together with the steering wheel module (SWM) and is supplied with power by it.

The diagnostic trouble code (DTC) is stored if the steering wheel angle sensor module (SAS) registers an internal fault.

The diagnostic trouble code (DTC) can be diagnosed when the ignition is switched on and the steering wheel angle sensor is initiated. Initiation is carried out when the steering wheel is turned more than 4.5° in any direction.

Substitute Value

- The stability function is blocked.

Possible Source

- Internal fault in the steering wheel angle sensor module (SAS).

Fault symptom[s]

- Anti-spin warning lamp lit.
- General warning lamp lit.
- The stability control system does not function.

INTERNAL FAULT

see **INTERNAL FAULT**

SAS-0009: CONTROL MODULE. INTERNAL FAULT (B6294T; 2005-2006)

DIAGNOSTIC TROUBLE CODE (DTC) INFORMATION SAS-0009

see **DIAGNOSTIC TROUBLE CODE (DTC) INFORMATION SAS-0009**

INTERNAL FAULT

see **INTERNAL FAULT**

SAS-0009: STEERING WHEEL ANGLE SIGNAL IY. SIGNAL TOO HIGH. INTERMITTENT FAULT (2003-2004)

DIAGNOSTIC TROUBLE CODE INFORMATION

see **DIAGNOSTIC TROUBLE CODE INFORMATION**

SIGNAL TOO HIGH. INTERMITTENT FAULT

CHECKING THE WIRING AND CONNECTIONS

Check the wires between steering wheel angle sensor (SAS) control unit #11 (#A35) and steering wheel control unit (SWM) #17 (#A17) for a short circuit to voltage supply, as described in, see **SHORT-CIRCUIT TO SUPPLY VOLTAGE, INTERMITTENT FAULTS** .

Additional information:

- To connect the test box to the steering wheel angle sensor control unit, see **CONNECTING THE BREAKOUT BOX TO THE STEERING ANGLE SENSOR** .
- To connect the test box to the steering wheel control unit, see **CONNECTING THE BREAKOUT BOX**
- For information on signals, see **SIGNAL DESCRIPTION, CONTROL UNIT FOR THE STEERING WHEEL ANGLE SENSOR (SAS)** and **SIGNAL SPECIFICATION** .

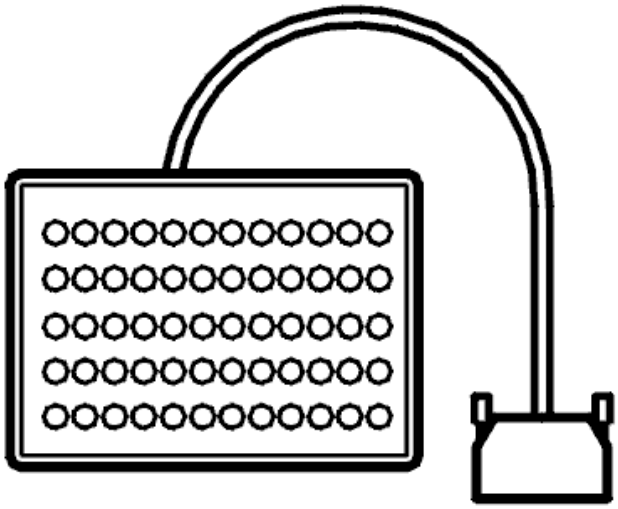

Fig. 194: Breakout Box
Courtesy of VOLVO CARS CORPORATION

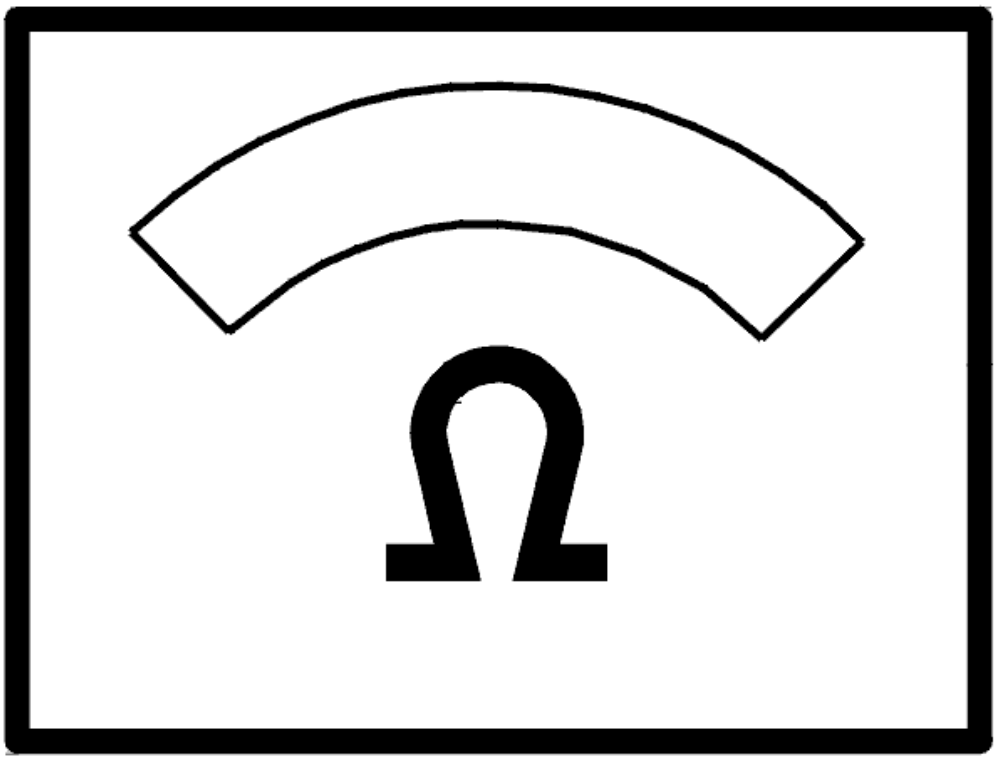

Fig. 195: Identifying Ohm Meter
Courtesy of VOLVO CARS CORPORATION

- **Continue**

  Refer to **INFORMATION**

INFORMATION

FAULT-TRACING INFORMATION

If the fault is intermittent, do not verify fault-tracing if the fault does not recur.

It is possible to view the information again, or leave fault-tracing for this diagnostic trouble code (DTC).

SAS-0009: STEERING WHEEL ANGLE SIGNAL IY. SIGNAL TOO HIGH.

PERMANENT FAULT (2003-2004)

DIAGNOSTIC TROUBLE CODE INFORMATION

see **DIAGNOSTIC TROUBLE CODE INFORMATION**

SIGNAL TOO HIGH. PERMANENT FAULT

CHECKING THE CONNECTORS

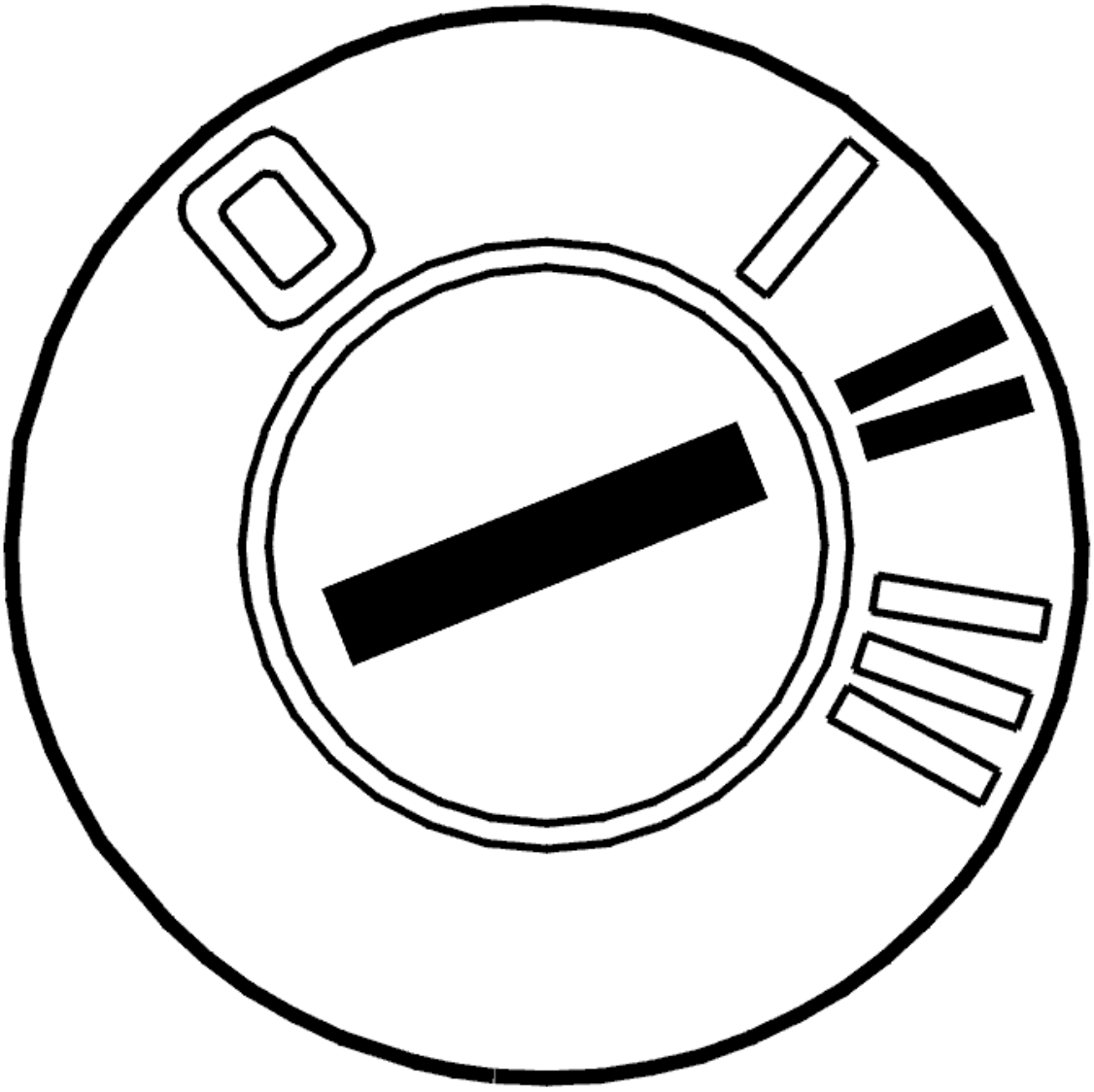

Fig. 196: Identifying Ignition ON
Courtesy of VOLVO CARS CORPORATION

- Ignition off
- Check the control module for the steering wheel angle sensor and the steering wheel module (SWM)

connectors. Check for contact resistance and oxidation according to **CONTACT RESISTANCE AND OXIDATION**

- Reinstall the components, reconnect the connectors etc.
- Ignition on
- Read off the status of steering wheel angle signal IY.

Turn the steering wheel in both directions and check that the value changes between ON and OFF.

If the value changes, the cause of the fault was contact resistance or oxidation in the control module or in the steering wheel angle sensor connector.

Other information:

- To access the connector for the control module for the steering wheel angle sensor, see **STEERING WHEEL MODULE (SWM), REPLACING**
- To access the connector for the steering wheel module (SWM), see **STEERING WHEEL MODULE (SWM), REPLACING**
- For information about signals, see **SIGNAL DESCRIPTION, CONTROL UNIT FOR THE STEERING WHEEL ANGLE SENSOR (SAS)** and **SIGNAL SPECIFICATION** .

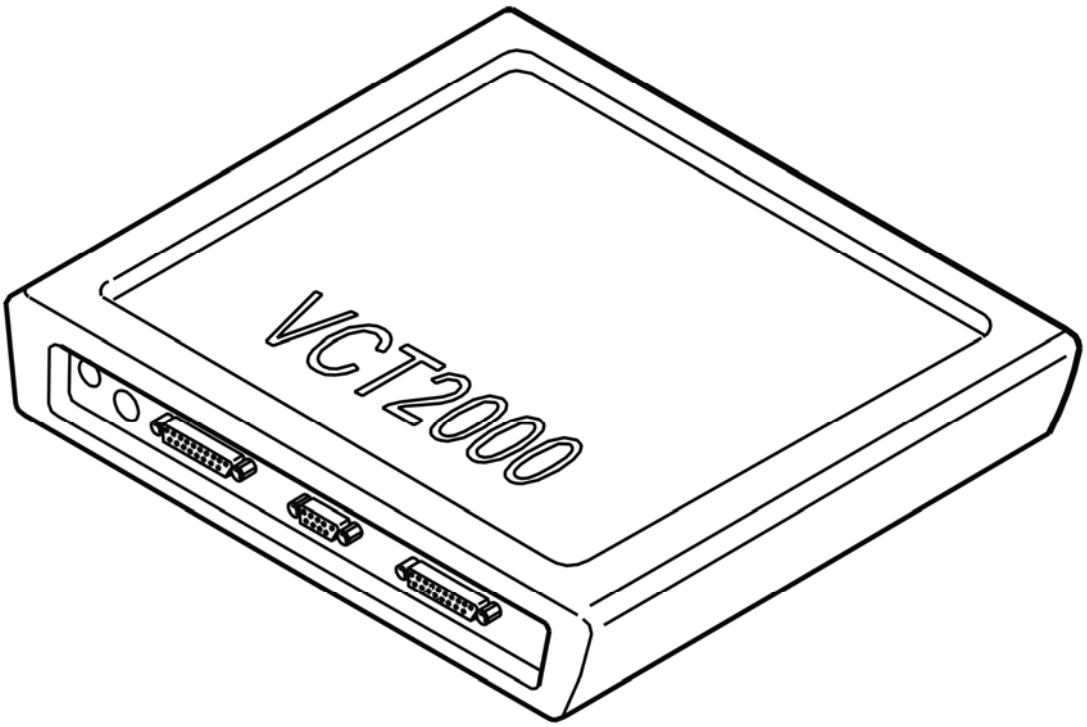

Fig. 197: Identifying VCT2000 Diagnostic Tool Symbol In VIDA
Courtesy of VOLVO CARS CORPORATION

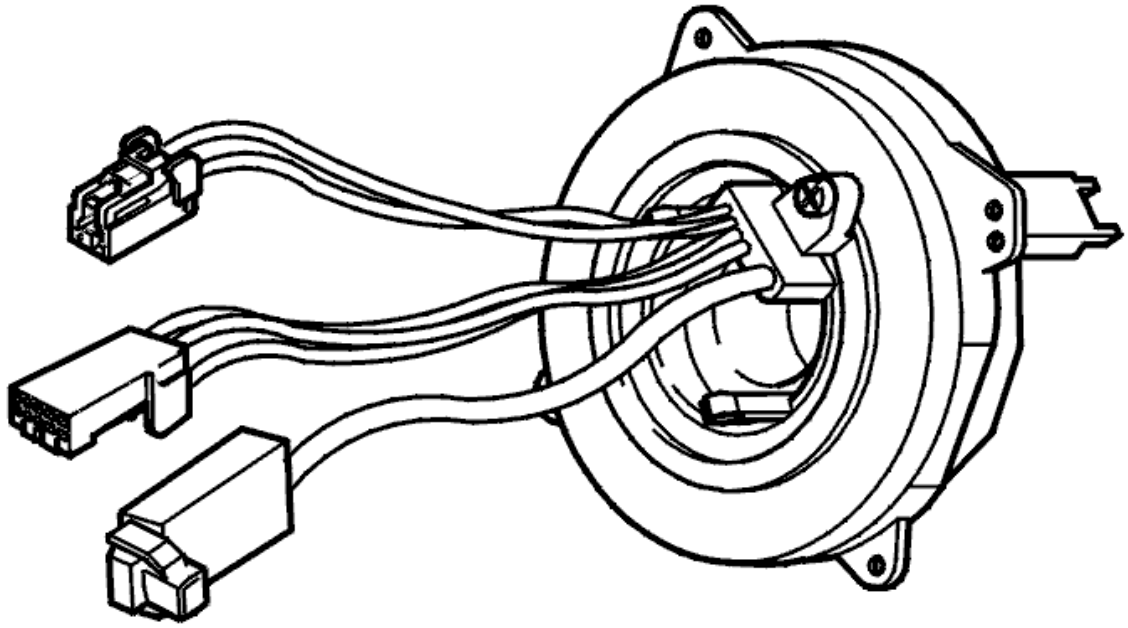

Fig. 198: Identifying Steering Wheel Angle Sensor
Courtesy of VOLVO CARS CORPORATION

Does the value change between OFF and ON?

- **YES**

  OKAY: Troubleshooting has been completed.

- **NO**

  Refer to **CHECKING WIRING AND SENSORS**

CHECKING WIRING AND SENSORS

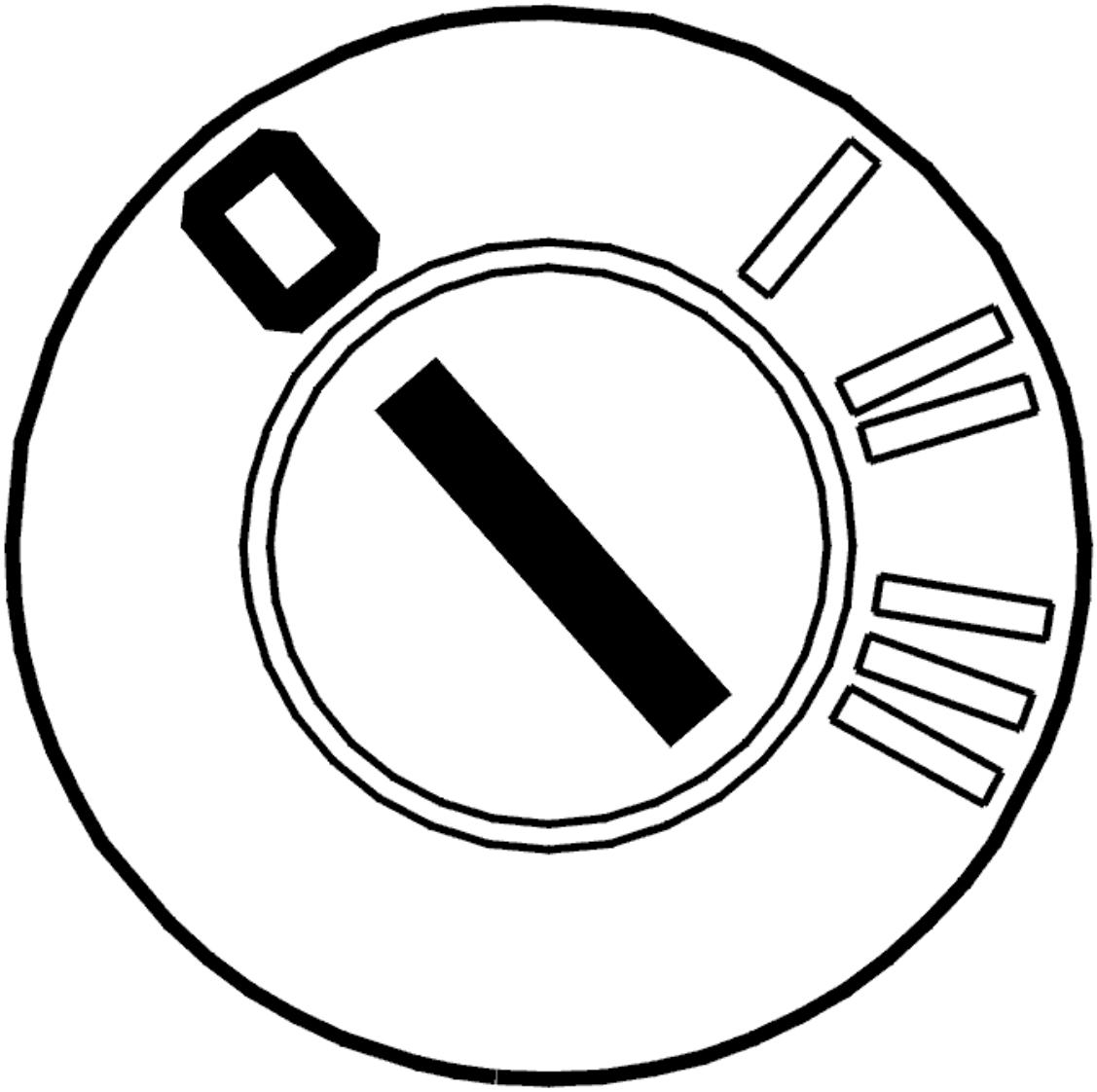

Fig. 199: Identifying Ignition OFF
Courtesy of VOLVO CARS CORPORATION

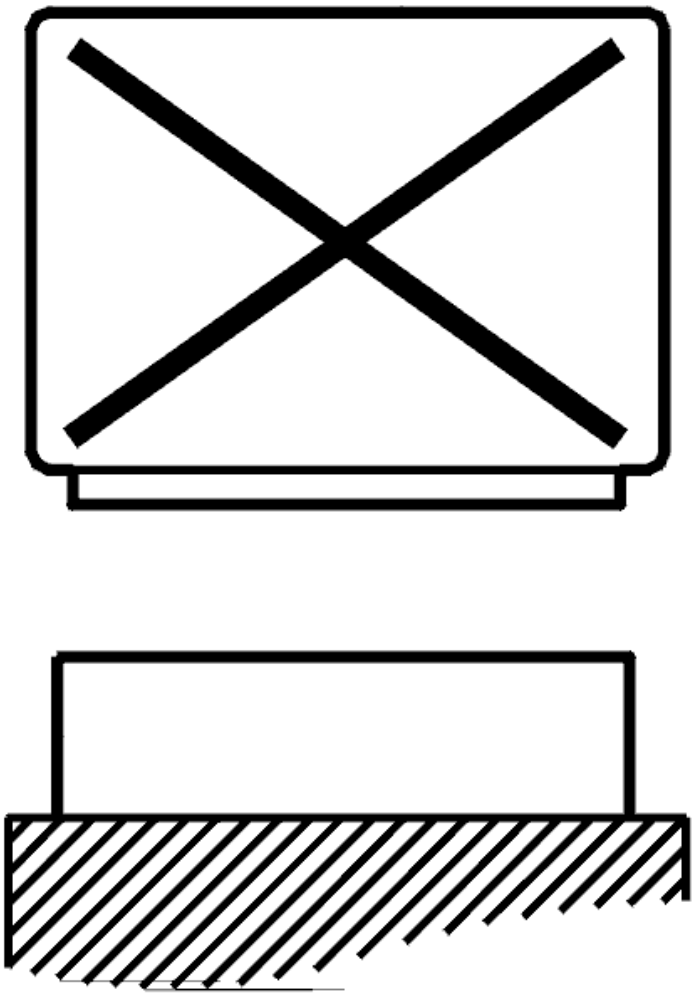

Fig. 200: Disconnecting Control Unit
Courtesy of VOLVO CARS CORPORATION

- Ignition off
- The control module for the steering wheel angle sensor disconnected
- Steering wheel module (SWM) disconnected
- Connect the breakout box to the control module for the steering wheel angle sensor and to the steering wheel module (SWM)

  Check the wiring between the control module for the steering wheel angle sensor terminal #11 (#A35) and steering wheel module (SWM) terminal #17 (#A17). Check for an open-circuit according to **OPEN-CIRCUIT, PERMANENT FAULTS** . Check for a short-circuit to supply voltage according to **SHORT-CIRCUIT TO SUPPLY VOLTAGE. PERMANENT FAULTS** .

  Try replacing the steering wheel angle sensor if no faults are found in the cable between the control

module for the steering wheel angle sensor and the steering wheel module (SWM).

Other information:

- To access the connector for the control module for the steering wheel angle sensor, see **STEERING WHEEL MODULE (SWM), REPLACING**
- To access the connector for the steering wheel module (SWM), see **STEERING WHEEL MODULE (SWM), REPLACING**
- To connect the breakout box to the control module for the steering wheel angle sensor, see **CONNECTING THE BREAKOUT BOX TO THE STEERING ANGLE SENSOR**
- To replace the steering wheel angle sensor, see **CONTACT REEL, REPLACEMENT**
- For information about signals, see **SIGNAL DESCRIPTION, CONTROL UNIT FOR THE STEERING WHEEL ANGLE SENSOR (SAS)** and **SIGNAL SPECIFICATION** .

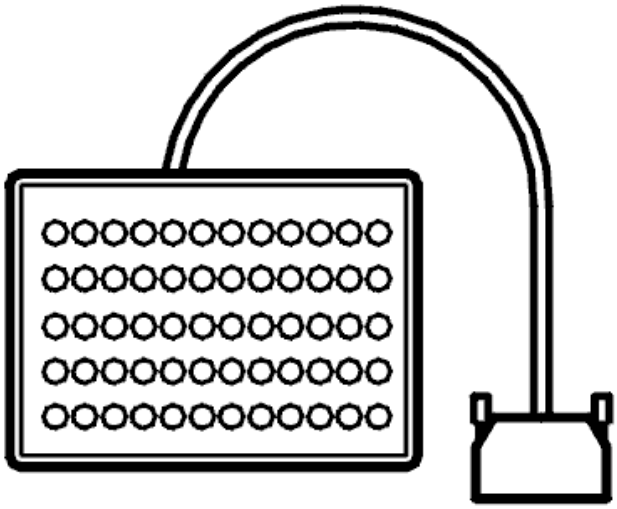

Fig. 201: Breakout Box
Courtesy of VOLVO CARS CORPORATION

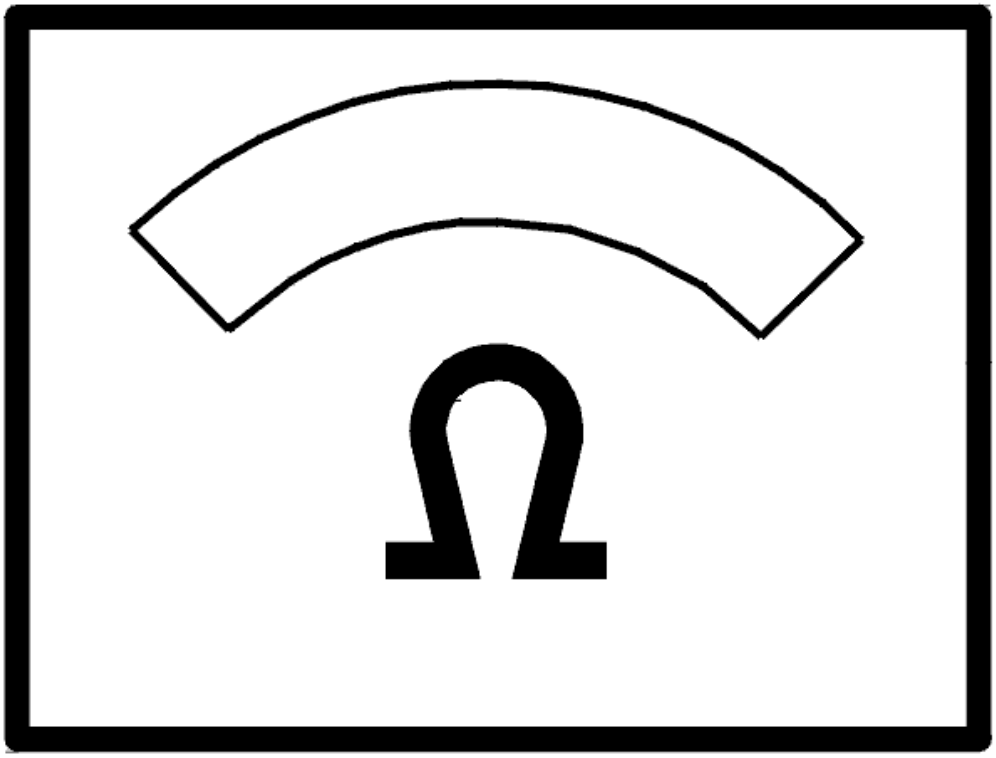

Fig. 202: Identifying Ohm Meter
Courtesy of VOLVO CARS CORPORATION

- **Continue**

  Refer to **VERIFICATION**

VERIFICATION

HINT: After the repair it is necessary to check that the fault has been rectified.

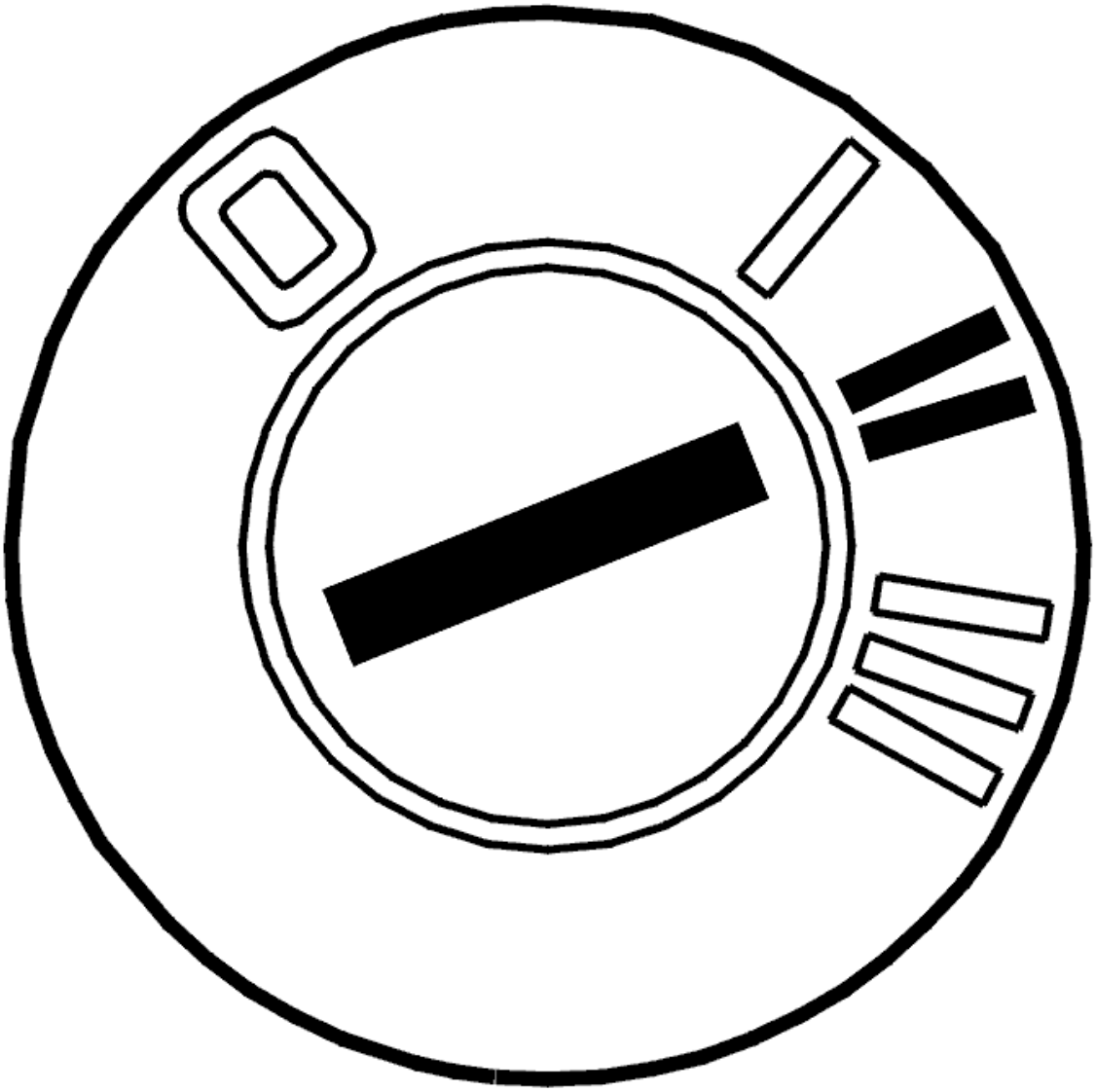

Fig. 203: Identifying Ignition ON
Courtesy of VOLVO CARS CORPORATION

- Ignition off.
- Connect the connectors, install the components, etc.
- Ignition on.
- Read off steering wheel angle signal IY.
- Turn the steering wheel to full lock in both directions.

  The value should change between OFF and ON.

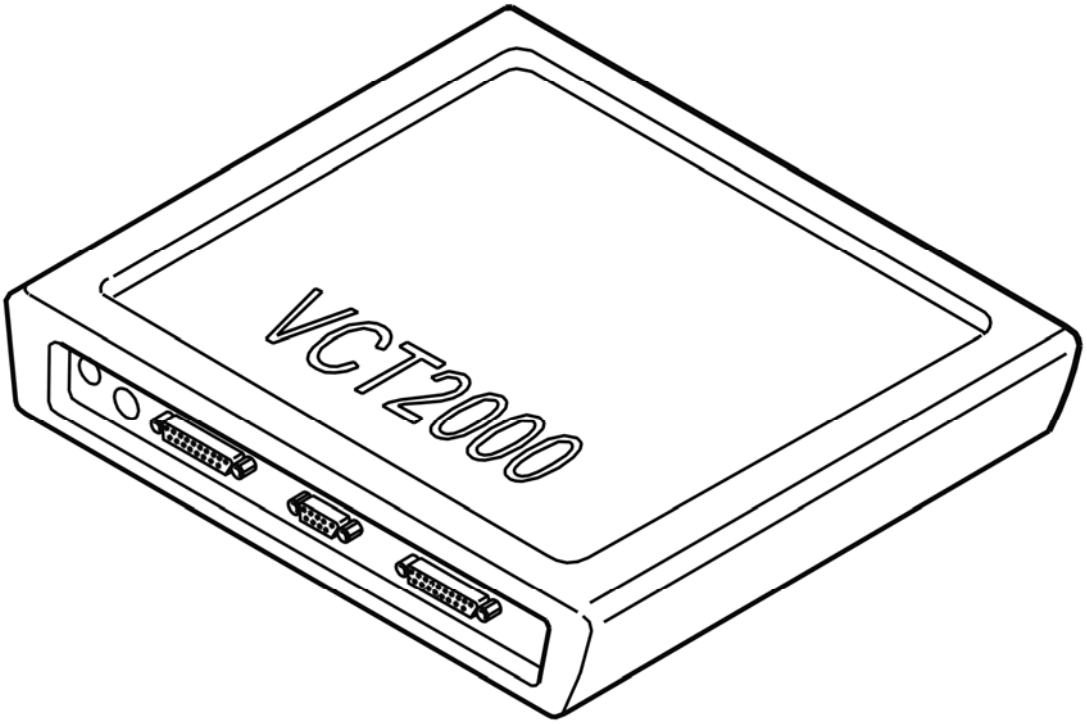

Fig. 204: Identifying VCT2000 Diagnostic Tool Symbol In VIDA
Courtesy of VOLVO CARS CORPORATION

Does the value change?

- **YES**

  VERIFIED: Troubleshooting has been completed.

- **NO**

  Refer to **INFORMATION**

INFORMATION

FAULT-TRACING INFORMATION

The fault should have been detected and remedied. As this is not the case fault-tracing has failed.

Exit fault-tracing for this diagnostic trouble code (DTC) or make another attempt.

SAS-000A: STEERING WHEEL ANGLE SENSOR. INTERNAL FAULT (B5254T2; 2005-2007)

DIAGNOSTIC TROUBLE CODE (DTC) INFORMATION SAS-000A

Condition

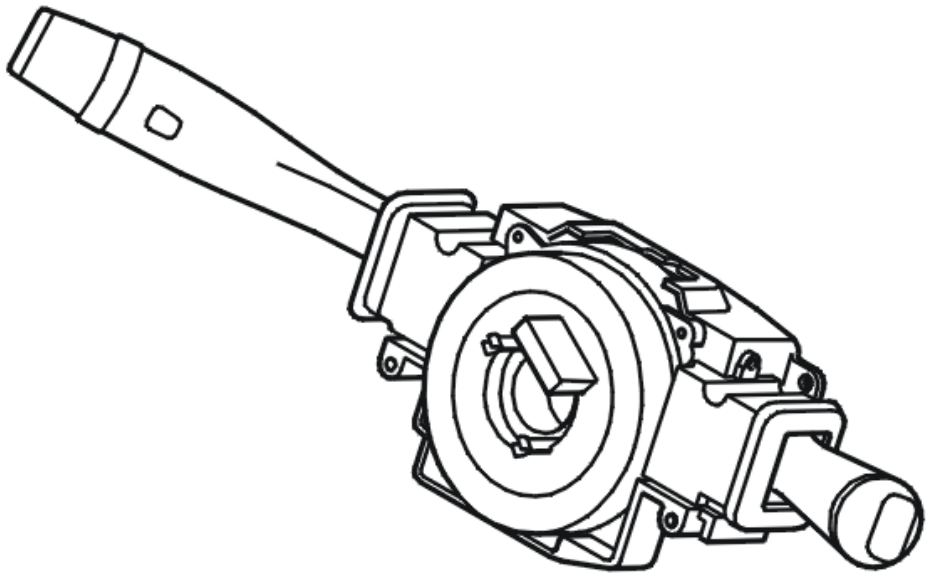

Fig. 205: Identifying Steering Wheel Control Module
Courtesy of VOLVO CARS CORPORATION

The Steering wheel angle sensor module (SAS) is located in the lever module together with the steering wheel module (SWM) and is supplied with power by it.

The steering wheel angle sensor is installed on the underside of the contact reel and together they create a replaceable unit. A code wheel is mounted inside the steering wheel angle sensor which follows the movements of the steering wheel.9 x optical digital sensors and 2 x analog photo diodes read off the code wheel. These signals are compared and must create a specific pattern. The diagnostic trouble code (DTC) is stored if the signal pattern created does not correspond.

The diagnostic trouble code (DTC) can be diagnosed when the ignition is switched on and the steering wheel angle sensor is initiated. Initiation is carried out when the steering wheel is turned more than 4.5° in any direction.

Substitute Value

- The stability function is blocked.

Possible Source

- Internal fault in the steering wheel angle sensor.

Fault symptom[s]

- Anti-spin warning lamp lit.
- General warning lamp lit.
- The stability control system does not function.

INTERNAL FAULT

see **INTERNAL FAULT**

SAS-000A: STEERING WHEEL ANGLE SENSOR. INTERNAL FAULT (B6294T; 2005-2006)

DIAGNOSTIC TROUBLE CODE (DTC) INFORMATION SAS-000A

see **DIAGNOSTIC TROUBLE CODE (DTC) INFORMATION SAS-000A**

INTERNAL FAULT

see **INTERNAL FAULT**

SAS-000B: CONTROL MODULE. INTERNAL FAULT (B5254T2; 2005-2007)

DIAGNOSTIC TROUBLE CODE (DTC) INFORMATION SAS-000B

Condition

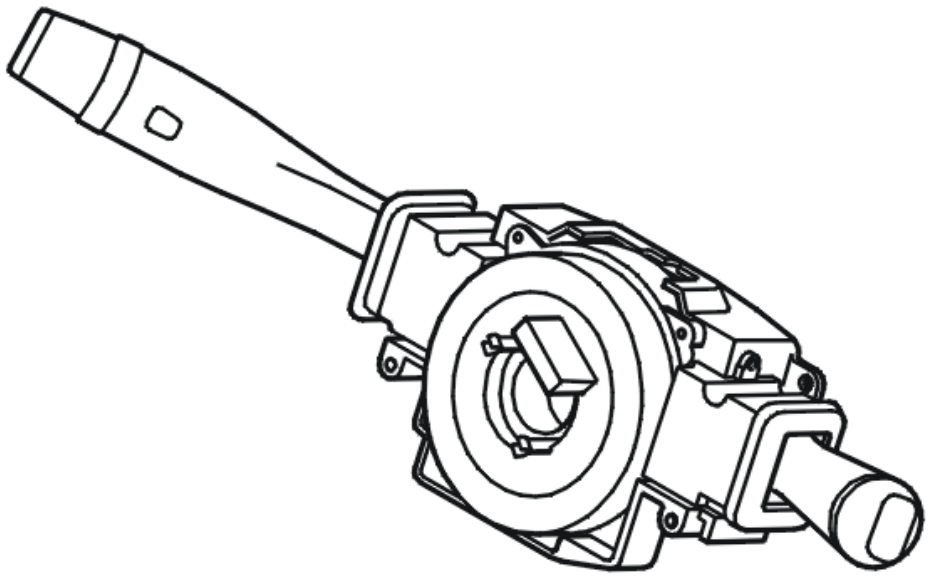

Fig. 206: Identifying Steering Wheel Control Module
Courtesy of VOLVO CARS CORPORATION

The Steering wheel angle sensor module (SAS) is located in the lever module together with the steering wheel module (SWM) and is supplied with power by it.

The diagnostic trouble code (DTC) is stored if the steering wheel angle sensor module (SAS) registers an internal fault.

The diagnostic trouble code (DTC) can be diagnosed when the ignition is switched on and the steering wheel angle sensor is initiated. Initiation is carried out when the steering wheel is turned more than 4.5° in any direction.

Substitute Value

- The stability function is blocked.

Possible Source

- Internal fault in the steering wheel angle sensor module (SAS).

Fault symptom[s]

- Anti-spin warning lamp lit.

- General warning lamp lit.
- The stability control system does not function.

INTERNAL FAULT

see **INTERNAL FAULT**

SAS-000B: CONTROL MODULE. INTERNAL FAULT (B6294T; 2005-2006)

DIAGNOSTIC TROUBLE CODE (DTC) INFORMATION SAS-000B

see **DIAGNOSTIC TROUBLE CODE (DTC) INFORMATION SAS-000B**

INTERNAL FAULT

see **INTERNAL FAULT**

SAS-000C: CONTROL MODULE. INTERNAL FAULT (B5254T2; 2005-2007)

DIAGNOSTIC TROUBLE CODE (DTC) INFORMATION SAS-000C

Condition

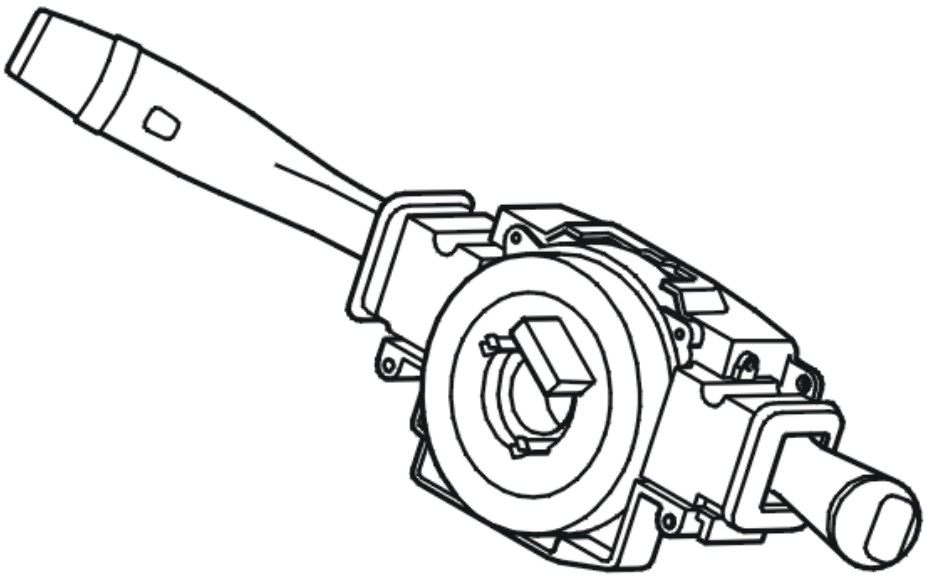

Fig. 207: Identifying Steering Wheel Control Module
Courtesy of VOLVO CARS CORPORATION

The Steering wheel angle sensor module (SAS) is located in the lever module together with the steering wheel module (SWM) and is supplied with power by it.

The diagnostic trouble code (DTC) is stored if the steering wheel angle sensor module (SAS) registers an internal fault.

The diagnostic trouble code (DTC) can be diagnosed when the ignition is switched on and the steering wheel angle sensor is initiated. Initiation is carried out when the steering wheel is turned more than 4.5° in any direction.

Substitute Value

- The stability function is blocked.

Possible Source

- Internal fault in the steering wheel angle sensor module (SAS).

Fault symptom[s]

- Anti-spin warning lamp lit.
- General warning lamp lit.
- The stability control system does not function.

INTERNAL FAULT

see **INTERNAL FAULT**

SAS-000C: CONTROL MODULE. INTERNAL FAULT (B6294T; 2005-2006)

DIAGNOSTIC TROUBLE CODE (DTC) INFORMATION SAS-000C

see **DIAGNOSTIC TROUBLE CODE (DTC) INFORMATION SAS-000C**

INTERNAL FAULT

see **INTERNAL FAULT**

SAS-000E: STEERING WHEEL ANGLE SENSOR. INTERNAL FAULT (B5254T2; 2005-2007)

DIAGNOSTIC TROUBLE CODE (DTC) INFORMATION SAS-000E

Condition

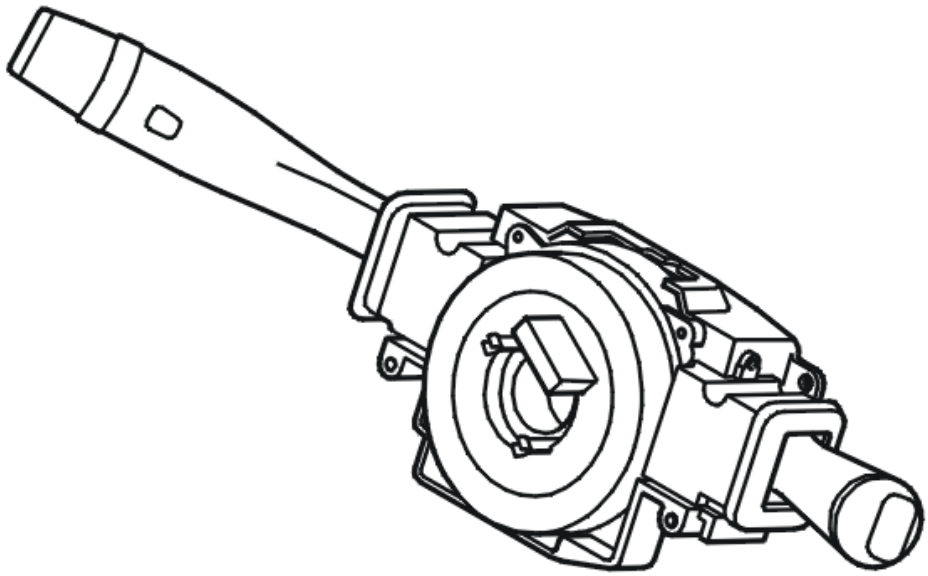

Fig. 208: Identifying Steering Wheel Control Module
Courtesy of VOLVO CARS CORPORATION

The Steering wheel angle sensor module (SAS) is located in the lever module together with the steering wheel module (SWM) and is supplied with power by it.

The steering wheel angle sensor is installed on the underside of the contact reel and together they create a replaceable unit. A code wheel is mounted inside the steering wheel angle sensor which follows the movements of the steering wheel.9 x optical digital sensors and 2 x analog photo diodes read off the code wheel. These signals are compared and must create a specific pattern. The diagnostic trouble code (DTC) is stored if the signal pattern created does not correspond.

The diagnostic trouble code (DTC) can be diagnosed when the ignition is switched on and the steering wheel angle sensor is initiated. Initiation is carried out when the steering wheel is turned more than 4.5° in any direction.

Substitute Value

- The stability function is blocked.

Possible Source

- Internal fault in the steering wheel angle sensor.

Fault symptom[s]

- Anti-spin warning lamp lit.

INTERNAL FAULT

see **INTERNAL FAULT**

SAS-000E: STEERING WHEEL ANGLE SENSOR. INTERNAL FAULT (B6294T; 2005-2006)

DIAGNOSTIC TROUBLE CODE (DTC) INFORMATION SAS-000E

see **DIAGNOSTIC TROUBLE CODE (DTC) INFORMATION SAS-000E**

INTERNAL FAULT

see **INTERNAL FAULT**

SAS-000F: STEERING WHEEL ANGLE SENSOR. INTERNAL FAULT (B5254T2; 2005-2007)

DIAGNOSTIC TROUBLE CODE (DTC) INFORMATION SAS-000F

Condition

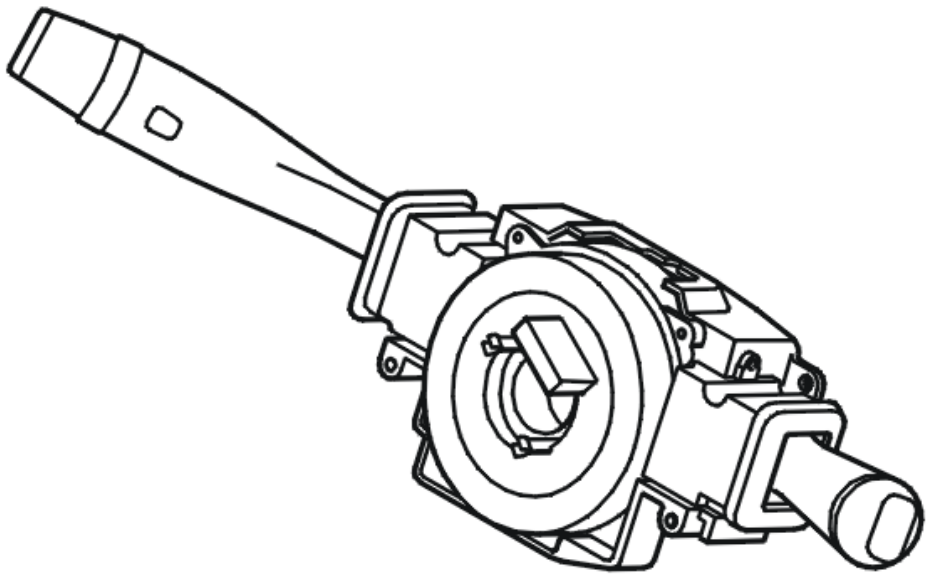

Fig. 209: Identifying Steering Wheel Control Module
Courtesy of VOLVO CARS CORPORATION

The Steering wheel angle sensor module (SAS) is located in the lever module together with the steering wheel module (SWM) and is supplied with power by it.

The steering wheel angle sensor is installed on the underside of the contact reel and together they create a replaceable unit. A code wheel is mounted inside the steering wheel angle sensor which follows the movements of the steering wheel.9 x optical digital sensors and 2 x analog photo diodes read off the code wheel. These signals are compared and must create a specific pattern. The diagnostic trouble code (DTC) is stored if the signal pattern created does not correspond.

The diagnostic trouble code (DTC) can be diagnosed when the ignition is switched on and the steering wheel angle sensor is initiated. Initiation is carried out when the steering wheel is turned more than 4.5° in any direction.

Substitute Value

- The stability function is blocked.

Possible Source

- Internal fault in the steering wheel angle sensor.

Fault symptom[s]

- Anti-spin warning lamp lit.

INTERNAL FAULT

see **INTERNAL FAULT**

SAS-000F: STEERING WHEEL ANGLE SENSOR. INTERNAL FAULT (B6294T; 2005-2006)

DIAGNOSTIC TROUBLE CODE (DTC) INFORMATION SAS-000F

see **DIAGNOSTIC TROUBLE CODE (DTC) INFORMATION SAS-000F**

INTERNAL FAULT

see **INTERNAL FAULT**

SAS-0010: STEERING WHEEL ANGLE SENSOR. INTERNAL FAULT (B5254T2; 2005-2007)

DIAGNOSTIC TROUBLE CODE (DTC) INFORMATION SAS-0010

Condition

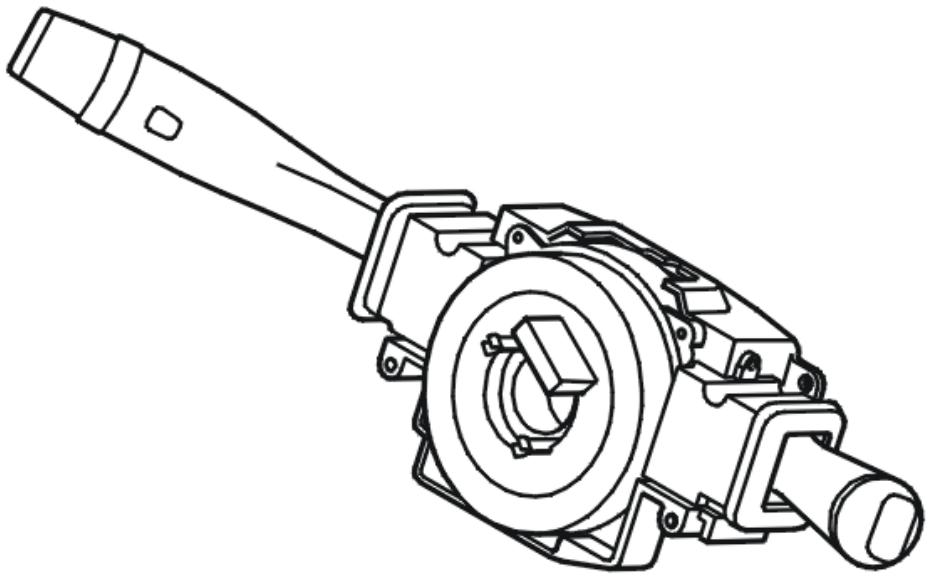

Fig. 210: Identifying Steering Wheel Control Module
Courtesy of VOLVO CARS CORPORATION

The Steering wheel angle sensor module (SAS) is located in the lever module together with the steering wheel module (SWM) and is supplied with power by it.

The steering wheel angle sensor is installed on the underside of the contact reel and together they create a replaceable unit. A code wheel is mounted inside the steering wheel angle sensor which follows the movements of the steering wheel.9 x optical digital sensors and 2 x analog photo diodes read off the code wheel. These signals are compared and must create a specific pattern. The diagnostic trouble code (DTC) is stored if the signal pattern created does not correspond.

The diagnostic trouble code (DTC) can be diagnosed when the ignition is switched on and the steering wheel angle sensor is initiated. Initiation is carried out when the steering wheel is turned more than 4.5° in any direction.

Substitute Value

- The stability function is blocked.

Possible Source

- Internal fault in the steering wheel angle sensor.

Fault symptom[s]

- Anti-spin warning lamp lit.
- General warning lamp lit.
- The stability control system does not function.

INTERNAL FAULT

see **INTERNAL FAULT**

SAS-0010: STEERING WHEEL ANGLE SENSOR. INTERNAL FAULT (B6294T; 2005-2006)

DIAGNOSTIC TROUBLE CODE (DTC) INFORMATION SAS-0010

see **DIAGNOSTIC TROUBLE CODE (DTC) INFORMATION SAS-0010**

INTERNAL FAULT

see **INTERNAL FAULT**

SAS-0010: STEERING WHEEL ANGLE SIGNAL IY. SIGNAL TOO LOW. INTERMITTENT FAULT (2003-2004)

DIAGNOSTIC TROUBLE CODE INFORMATION

see **DIAGNOSTIC TROUBLE CODE INFORMATION**

SIGNAL TOO LOW. INTERMITTENT FAULT

CHECKING THE WIRING AND CONNECTIONS

Check the wires between steering wheel angle sensor (SAS) control unit #11 (#A35) and steering wheel control unit (SWM) #17 (#A17) for an open circuit as described in, see **OPEN-CIRCUIT, INTERMITTENT FAULTS** , and for an intermittent short circuit to ground as described in **SHORT-CIRCUIT TO GROUND, INTERMITTENT FAULTS** .

Additional information:

- To connect the test box to the steering wheel angle sensor control unit, see **CONNECTING THE BREAKOUT BOX TO THE STEERING ANGLE SENSOR** .
- To connect the test box to the steering wheel control unit, see **CONNECTING THE BREAKOUT BOX** .
- For information on signals, see **SIGNAL DESCRIPTION, CONTROL UNIT FOR THE STEERING WHEEL ANGLE SENSOR (SAS)** and **SIGNAL SPECIFICATION** .

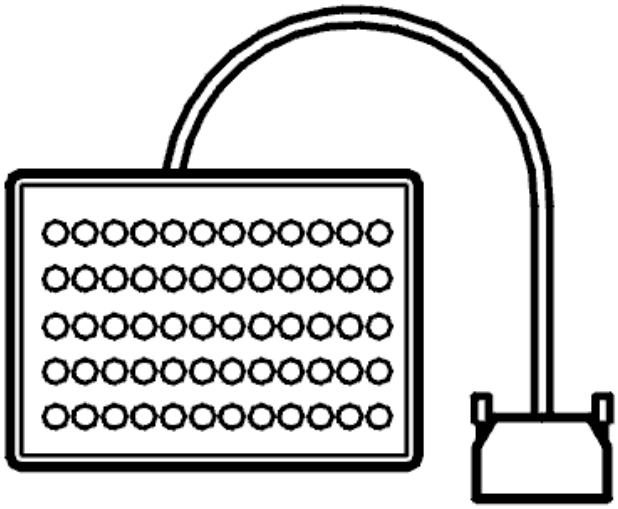

Fig. 211: Breakout Box
Courtesy of VOLVO CARS CORPORATION

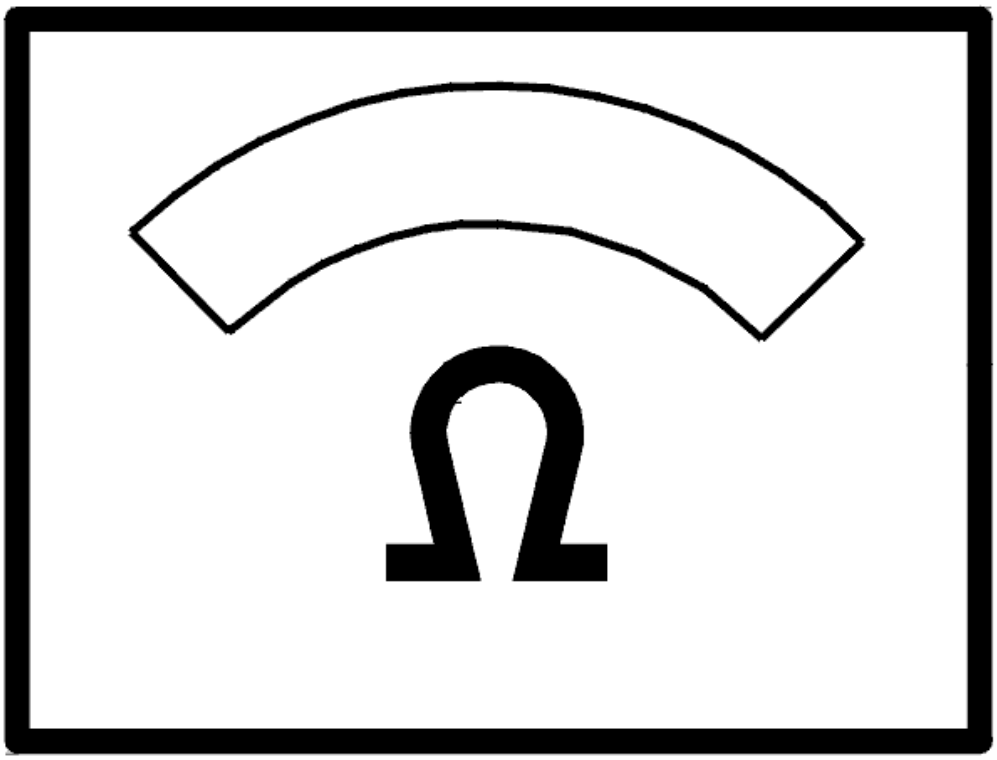

Fig. 212: Identifying Ohm Meter
Courtesy of VOLVO CARS CORPORATION

- **Continue**

  Refer to **INFORMATION**

INFORMATION

FAULT-TRACING INFORMATION

If the fault is intermittent, do not verify fault-tracing if the fault does not recur.

It is possible to view the information again, or leave fault-tracing for this diagnostic trouble code (DTC).

SAS-0010: STEERING WHEEL ANGLE SIGNAL IY. SIGNAL TOO LOW.

PERMANENT FAULT (2003-2004)

DIAGNOSTIC TROUBLE CODE INFORMATION

see **DIAGNOSTIC TROUBLE CODE INFORMATION**

SIGNAL TOO LOW. PERMANENT FAULT

CHECKING THE CONNECTORS

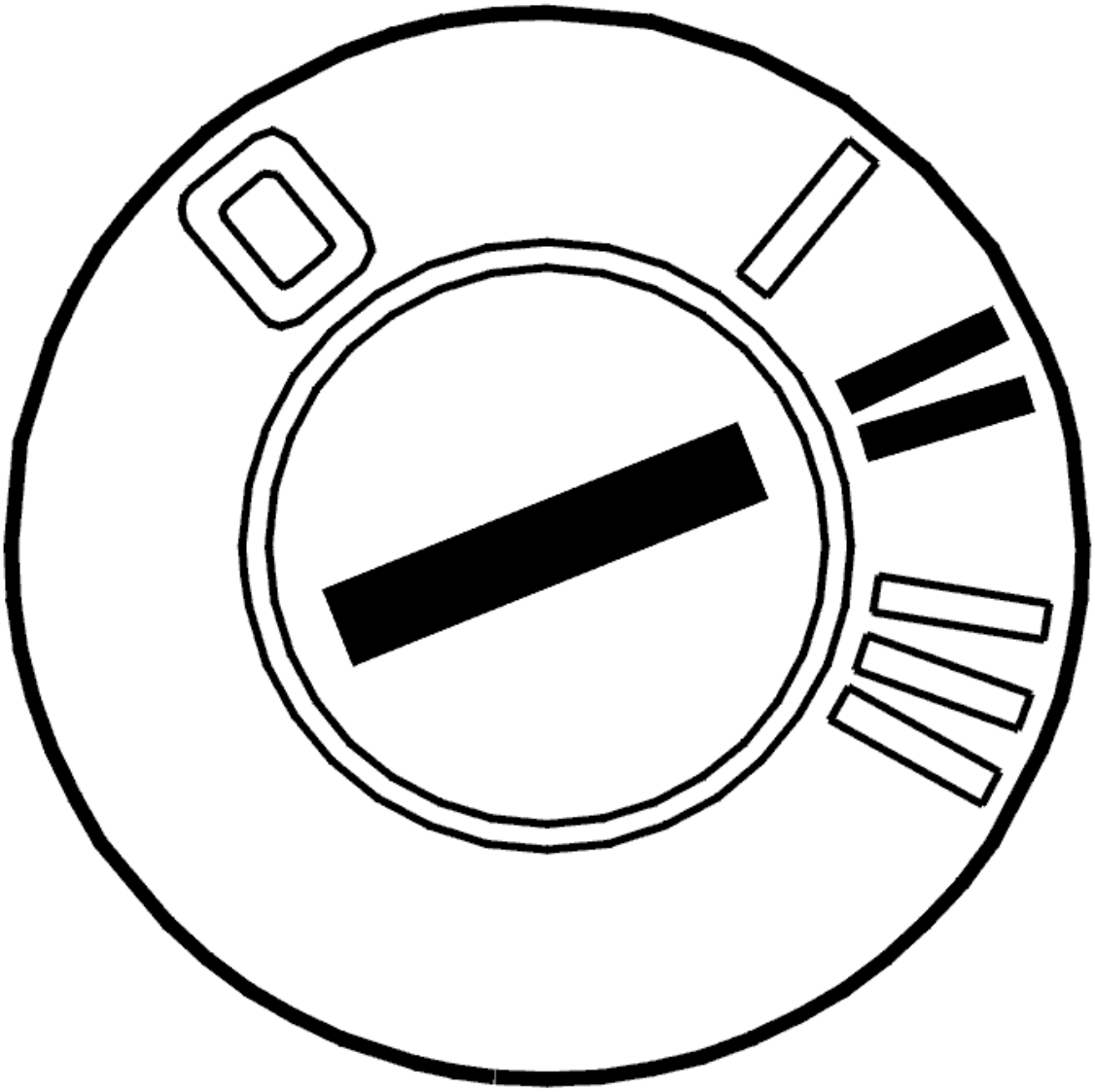

Fig. 213: Identifying Ignition ON
Courtesy of VOLVO CARS CORPORATION

- Ignition on
- Read off the status of steering wheel angle signal IY.

Turn the steering wheel in both directions and check that the value changes between ON and OFF.

Other information:

- To access the connector for the control module for the steering wheel angle sensor, see **STEERING WHEEL MODULE (SWM), REPLACING**
- To access the connector for the steering wheel module (SWM), see **STEERING WHEEL MODULE (SWM), REPLACING**
- For information about signals, see **SIGNAL DESCRIPTION, CONTROL UNIT FOR THE STEERING WHEEL ANGLE SENSOR (SAS)** and **SIGNAL SPECIFICATION** .

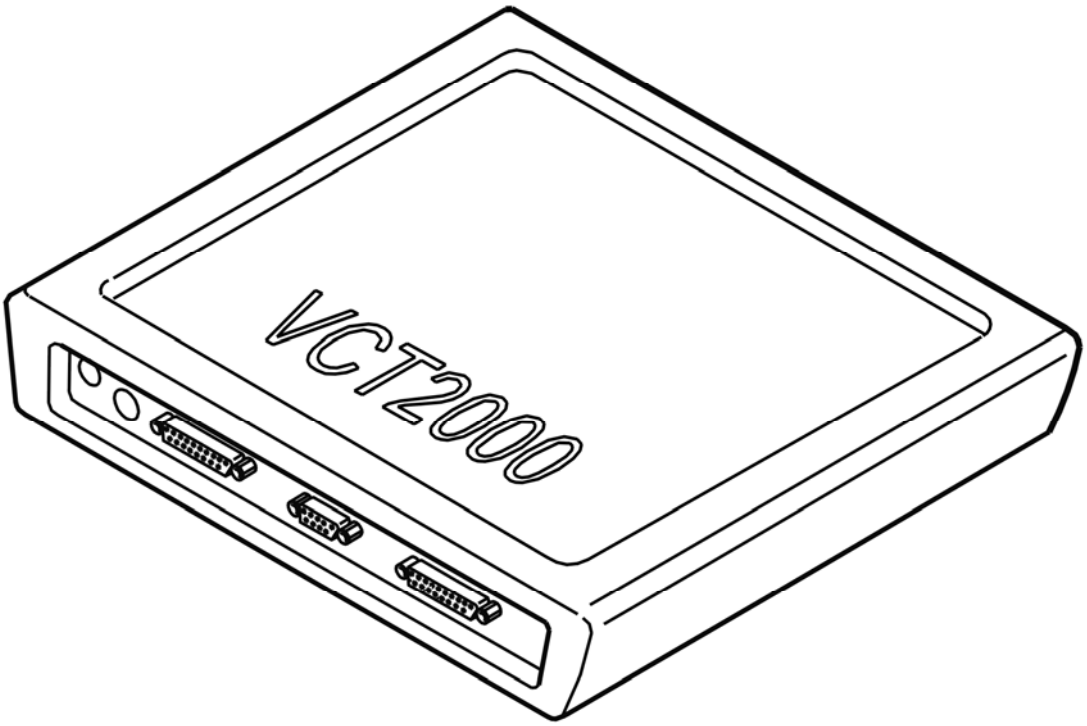

Fig. 214: Identifying VCT2000 Diagnostic Tool Symbol In VIDA
Courtesy of VOLVO CARS CORPORATION

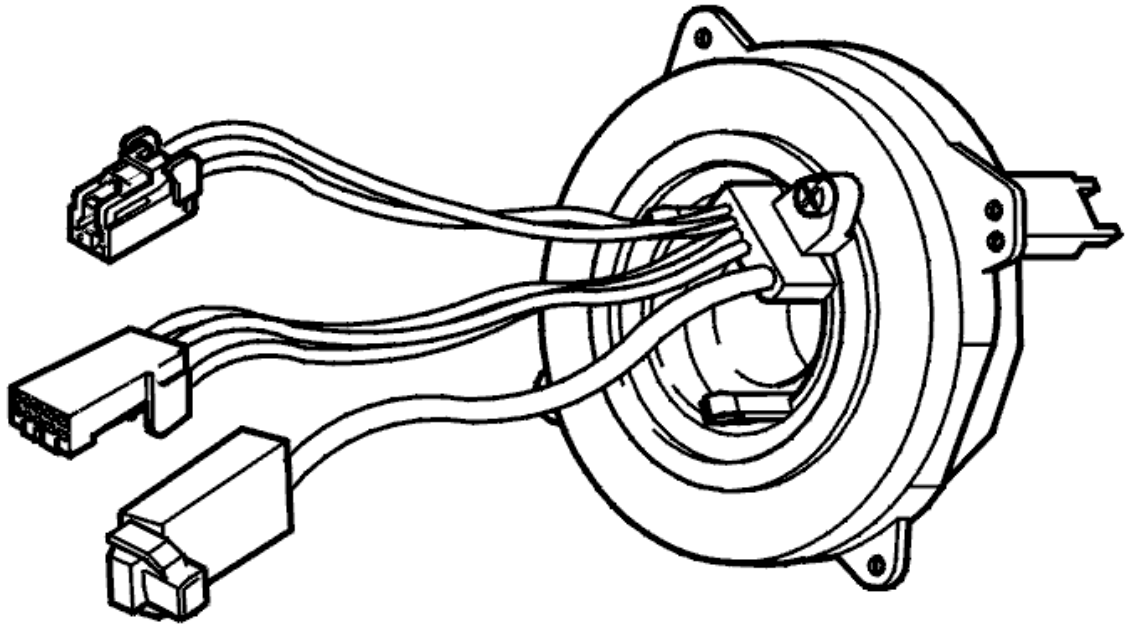

Fig. 215: Identifying Steering Wheel Angle Sensor
Courtesy of VOLVO CARS CORPORATION

Does the value change between OFF and ON?

- **YES**

  OKAY: Troubleshooting has been completed.

- **NO**

  Refer to **CHECKING WIRING AND SENSORS**

CHECKING WIRING AND SENSORS

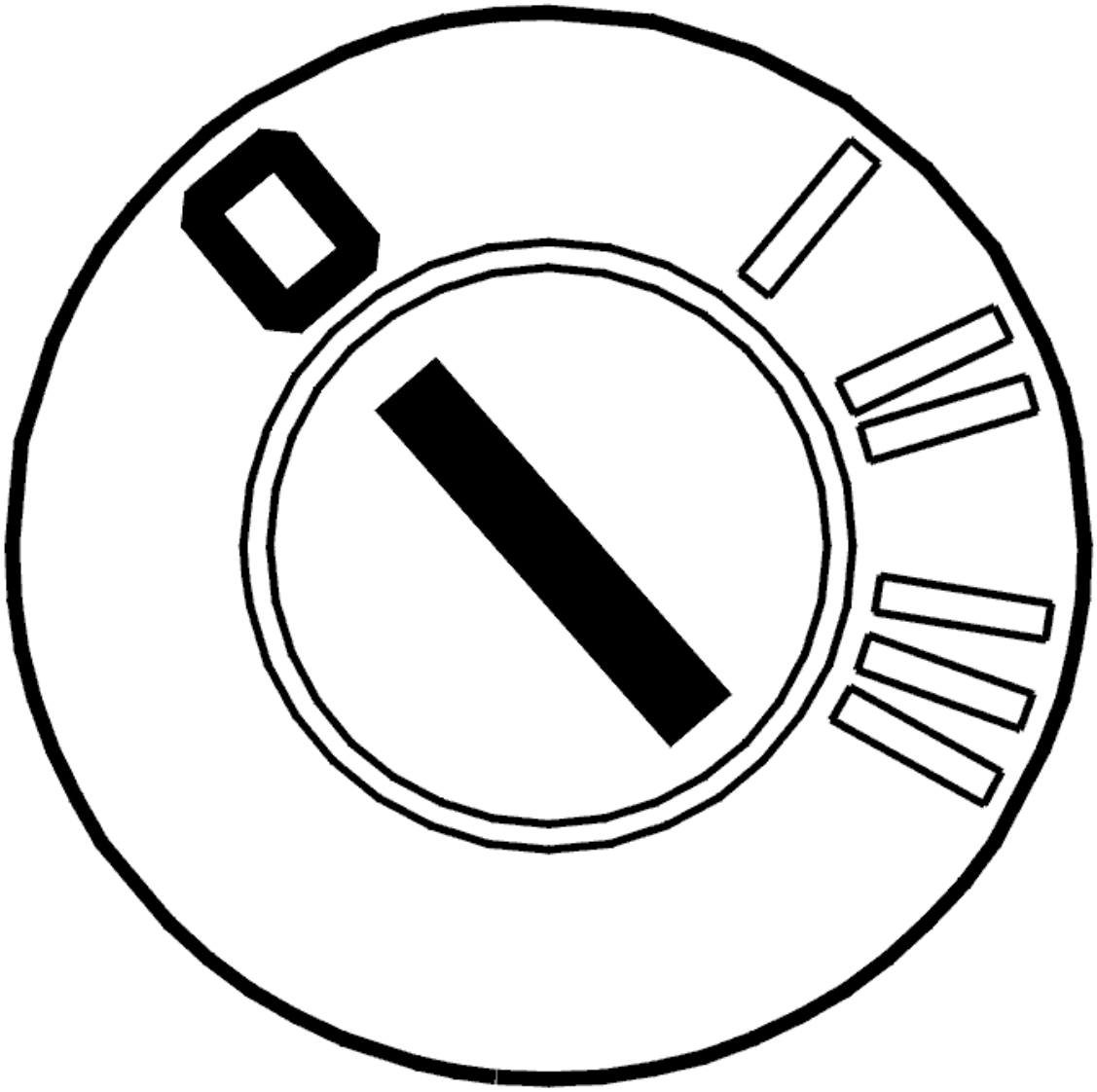

Fig. 216: Identifying Ignition OFF
Courtesy of VOLVO CARS CORPORATION

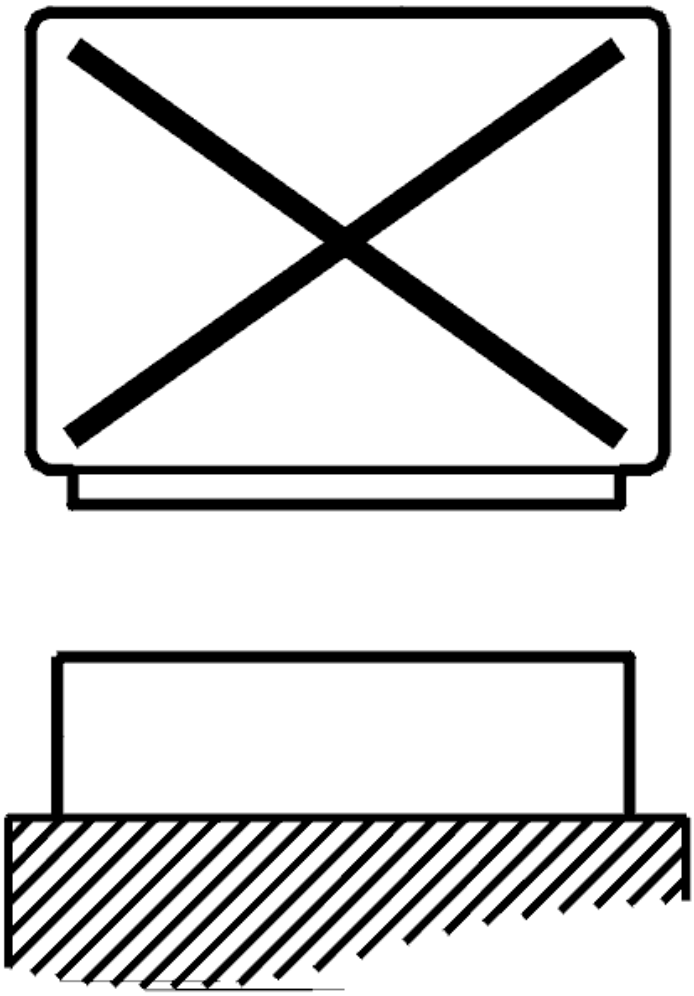

Fig. 217: Disconnecting Control Unit
Courtesy of VOLVO CARS CORPORATION

- Ignition off
- The control module for the steering wheel angle sensor disconnected
- Steering wheel module (SWM) disconnected
- Connect the breakout box to the control module for the steering wheel angle sensor and to the steering wheel module (SWM)

  Check the wiring between the control module for the steering wheel angle sensor terminal #11 (terminal (#A35) and steering wheel module (SWM) terminal #17 (terminal #A17). Check for a short-circuit to ground according to **SHORT-CIRCUIT TO GROUND, PERMANENT FAULTS** . Check for a short-circuit according to **OPEN-CIRCUIT, PERMANENT FAULTS** .

  Try replacing the steering wheel angle sensor if no faults are found in the wiring between the control

module for the steering wheel angle sensor and the steering wheel module (SWM).

Other information:

- To connect the breakout box to the control module for the steering wheel angle sensor, see **CONNECTING THE BREAKOUT BOX TO THE STEERING ANGLE SENSOR**
- To connect the breakout box to the steering wheel module (SWM), see **CONNECTING THE BREAKOUT BOX**
- To replace the steering wheel angle sensor, see **CONTACT REEL, REPLACEMENT**
- For information about signals, see **SIGNAL DESCRIPTION, CONTROL UNIT FOR THE STEERING WHEEL ANGLE SENSOR (SAS)** and **SIGNAL SPECIFICATION** .

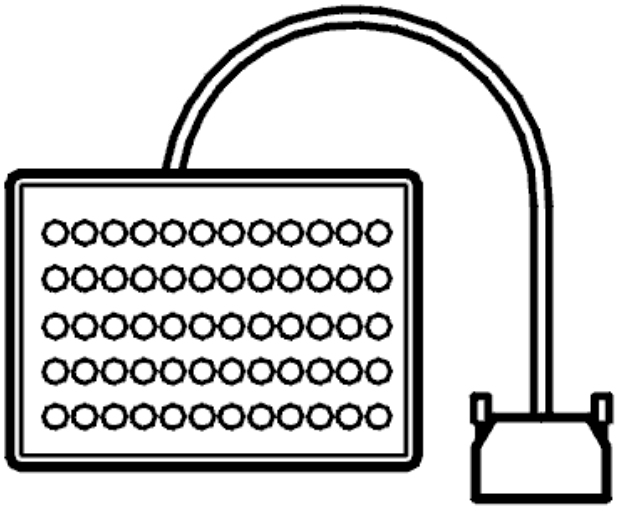

Fig. 218: Breakout Box
Courtesy of VOLVO CARS CORPORATION

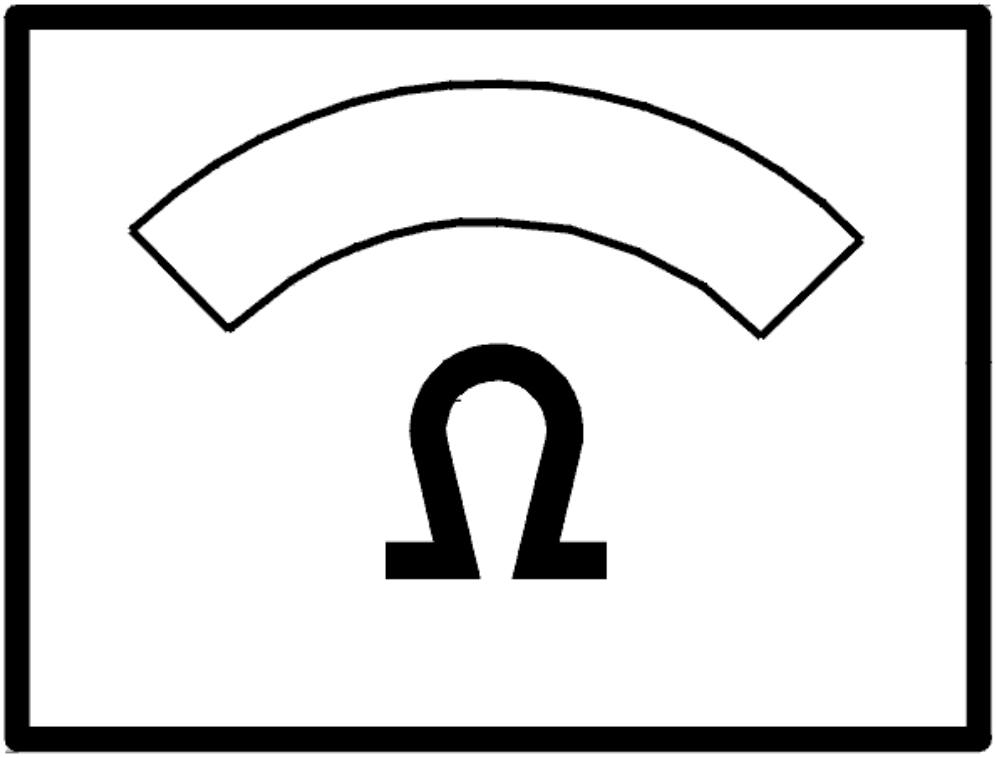

Fig. 219: Identifying Ohm Meter
Courtesy of VOLVO CARS CORPORATION

- **Continue**

  Refer to **VERIFICATION**

VERIFICATION

HINT: After the repair it is necessary to check that the fault has been rectified.

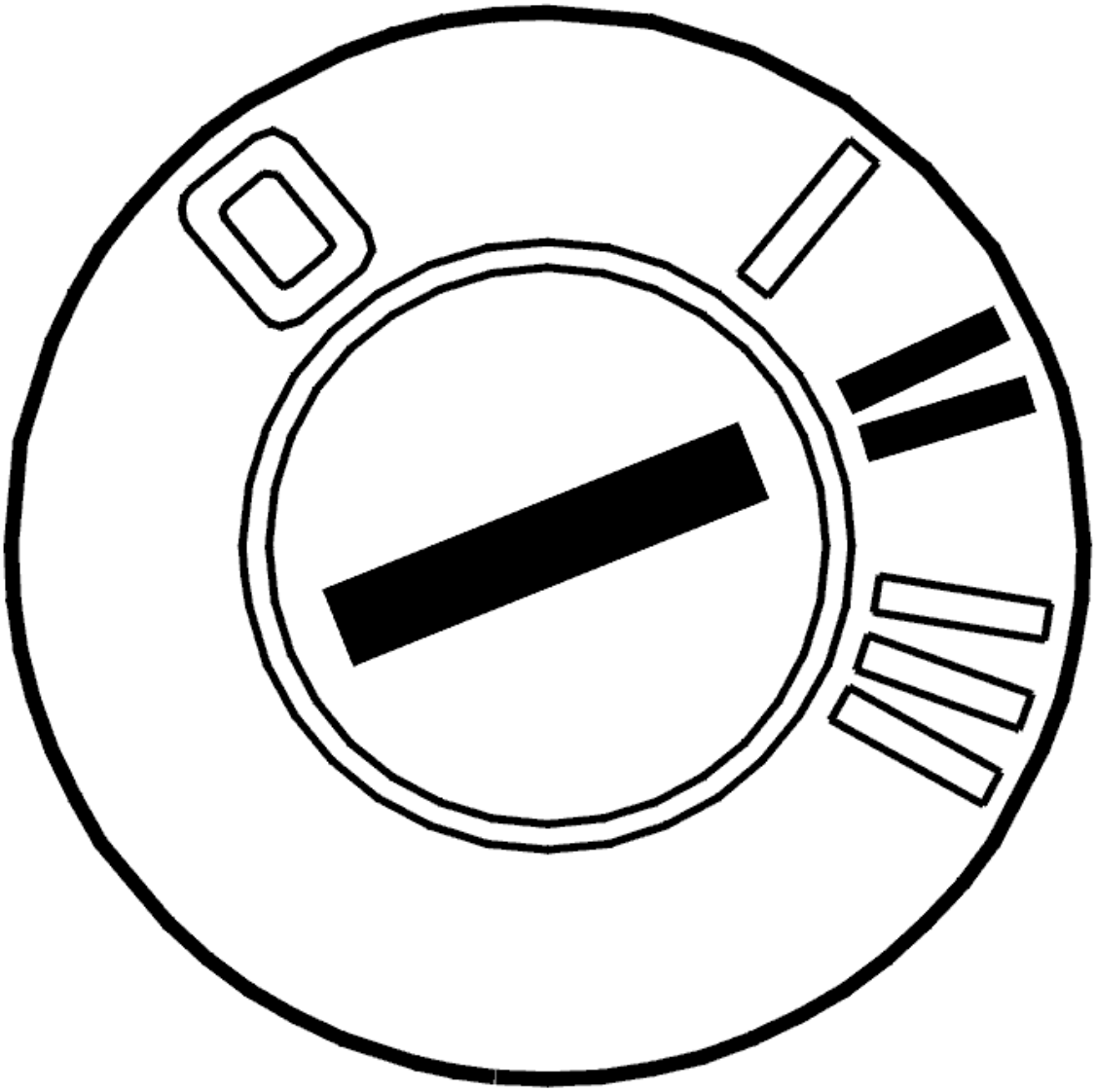

Fig. 220: Identifying Ignition ON
Courtesy of VOLVO CARS CORPORATION

- Ignition off.
- Connect the connectors, install the components, etc.
- Ignition on.
- Read off steering wheel angle signal IY.
- Turn the steering wheel to full lock in both directions.

  The value should change between OFF and ON.

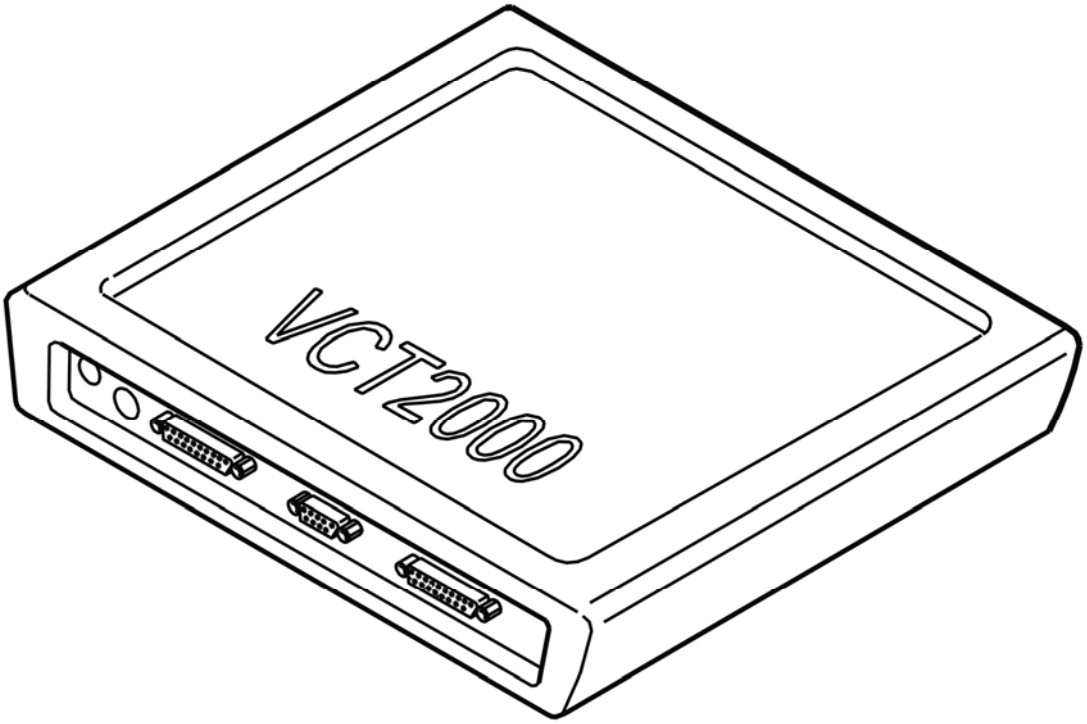

Fig. 221: Identifying VCT2000 Diagnostic Tool Symbol In VIDA
Courtesy of VOLVO CARS CORPORATION

Does the value change?

- **YES**

  VERIFIED: Troubleshooting has been completed.

- **NO**

  Refer to **INFORMATION**

INFORMATION

FAULT-TRACING INFORMATION

The fault should have been detected and remedied. As this is not the case fault-tracing has failed.

Exit fault-tracing for this diagnostic trouble code (DTC) or make another attempt.

SAS-0011: STEERING WHEEL ANGLE SENSOR. INTERNAL FAULT (B5254T2; 2005-2007)

DIAGNOSTIC TROUBLE CODE (DTC) INFORMATION SAS-0011

Condition

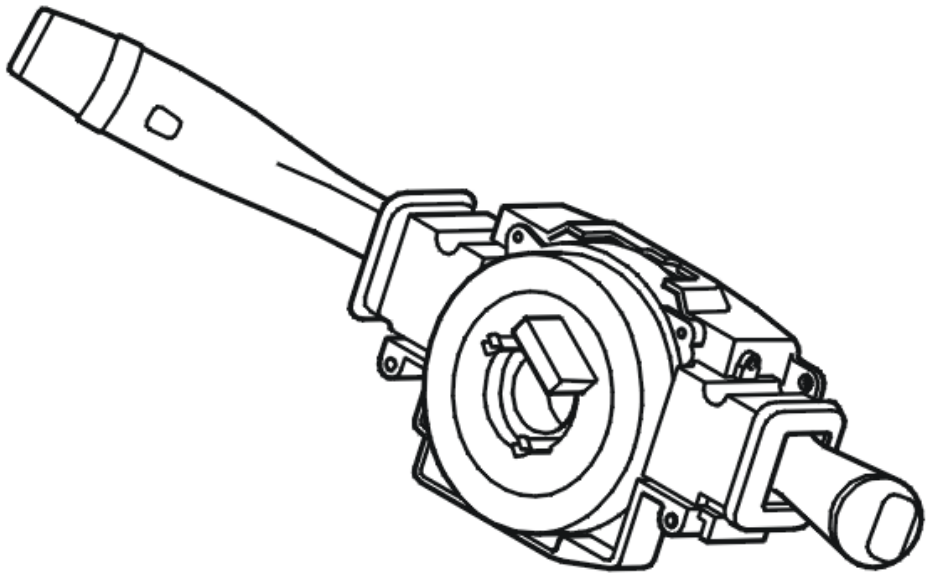

Fig. 222: Identifying Steering Wheel Control Module
Courtesy of VOLVO CARS CORPORATION

The Steering wheel angle sensor module (SAS) is located in the lever module together with the steering wheel module (SWM) and is supplied with power by it.

The steering wheel angle sensor is installed on the underside of the contact reel and together they create a replaceable unit. A code wheel is mounted inside the steering wheel angle sensor which follows the movements of the steering wheel.9 x optical digital sensors and 2 x analog photo diodes read off the code wheel. These signals are compared and must create a specific pattern. The diagnostic trouble code (DTC) is stored if the signal pattern created does not correspond.

The diagnostic trouble code (DTC) can be diagnosed when the ignition is switched on and the steering wheel angle sensor is initiated. Initiation is carried out when the steering wheel is turned more than 4.5° in any direction.

Substitute Value

- The stability function is blocked.

Possible Source

- Internal fault in the steering wheel angle sensor.

Fault symptom[s]

- Anti-spin warning lamp lit.
- General warning lamp lit.
- The stability control system does not function.

INTERNAL FAULT

see **INTERNAL FAULT**

SAS-0011: STEERING WHEEL ANGLE SENSOR. INTERNAL FAULT (B6294T; 2005-2006)

DIAGNOSTIC TROUBLE CODE (DTC) INFORMATION SAS-0011

see **DIAGNOSTIC TROUBLE CODE (DTC) INFORMATION SAS-0011**

INTERNAL FAULT

see **INTERNAL FAULT**

SAS-0011: STEERING WHEEL POSITION SIGNAL R1. SIGNAL TOO HIGH. INTERMITTENT FAULT (2003-2004)

DIAGNOSTIC TROUBLE CODE INFORMATION

see **DIAGNOSTIC TROUBLE CODE INFORMATION**

SIGNAL TOO HIGH. INTERMITTENT FAULT

CHECKING THE WIRING AND CONNECTIONS

Check the wires between steering wheel angle sensor (SAS) control unit #5 (#A29) and steering wheel control unit (SWM) #4 (#A4) for a short circuit to voltage supply, as described in, see **SHORT-CIRCUIT TO SUPPLY VOLTAGE, INTERMITTENT FAULTS** .

Additional information:

- To connect the test box to the steering wheel angle sensor control unit, see **CONNECTING THE BREAKOUT BOX TO THE STEERING ANGLE SENSOR** .
- To connect the test box to the steering wheel control unit, see **CONNECTING THE BREAKOUT BOX** .

- For information on signals, see **SIGNAL DESCRIPTION, CONTROL UNIT FOR THE STEERING WHEEL ANGLE SENSOR (SAS)** and **SIGNAL SPECIFICATION** .

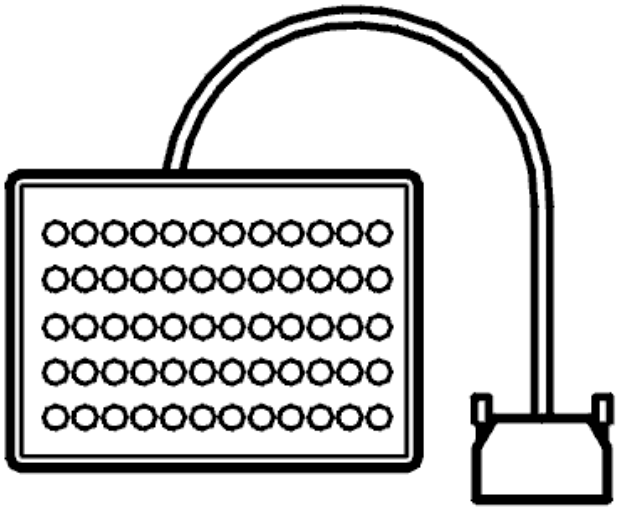

Fig. 223: Breakout Box
Courtesy of VOLVO CARS CORPORATION

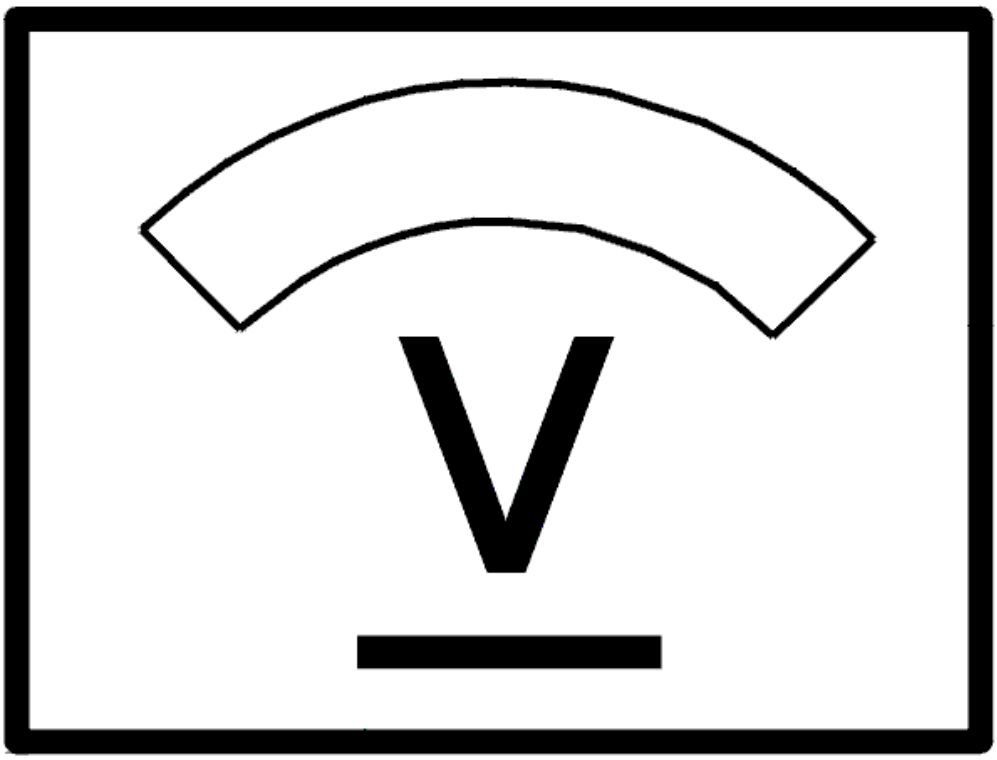

Fig. 224: Identifying Voltage Display
Courtesy of VOLVO CARS CORPORATION

- **Continue**

  Refer to **INFORMATION**

INFORMATION

FAULT-TRACING INFORMATION

If the fault is intermittent, do not verify fault-tracing if the fault does not recur.

It is possible to view the information again, or leave fault-tracing for this diagnostic trouble code (DTC).

SAS-0011: STEERING WHEEL POSITION SIGNAL R1. SIGNAL TOO HIGH.

PERMANENT FAULT (2003-2004)

DIAGNOSTIC TROUBLE CODE INFORMATION

see **DIAGNOSTIC TROUBLE CODE INFORMATION**

SIGNAL TOO HIGH. PERMANENT FAULT

CHECKING THE CONNECTORS

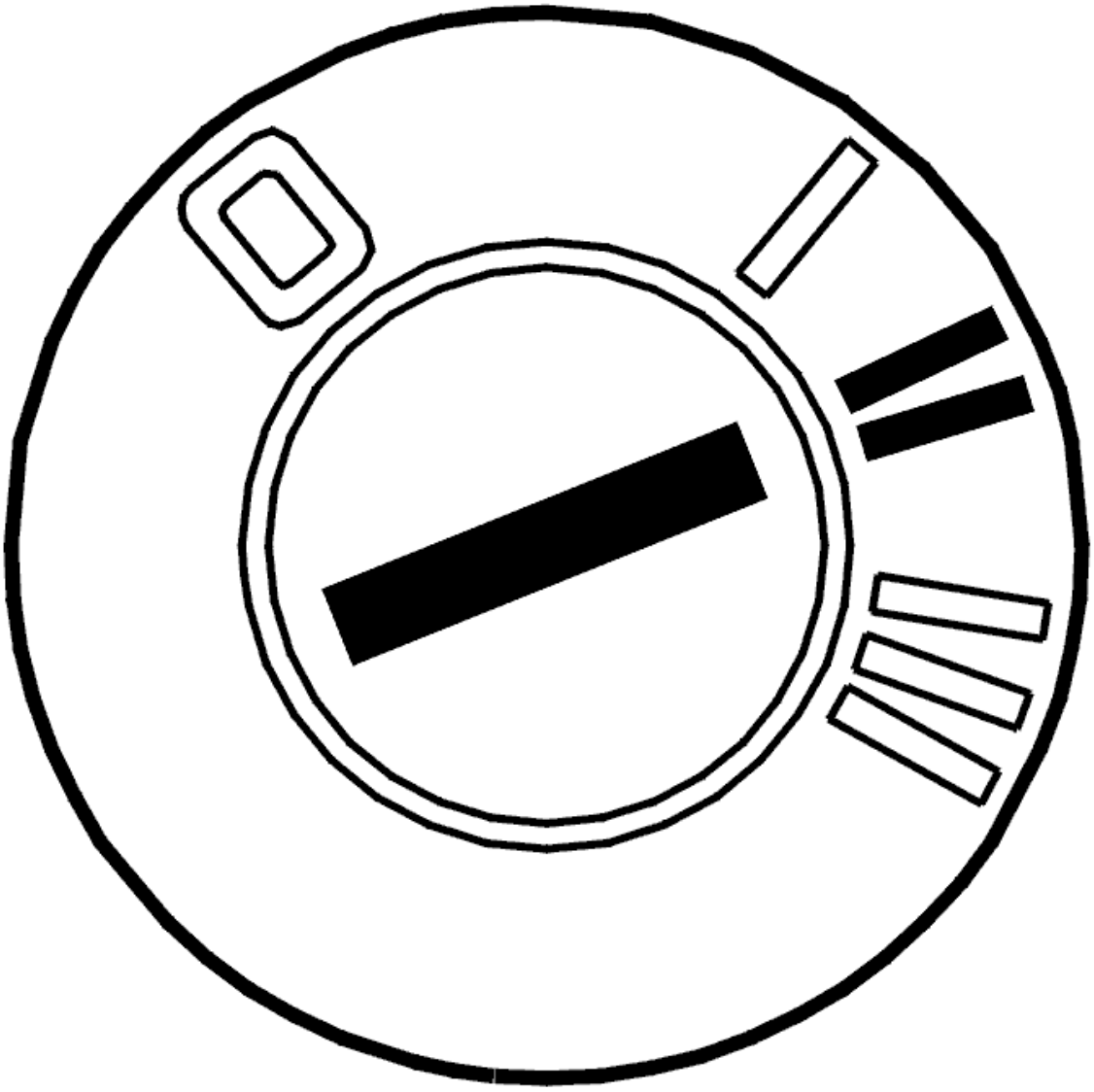

Fig. 225: Identifying Ignition ON
Courtesy of VOLVO CARS CORPORATION

- Ignition off
- Check the control module for the steering wheel angle sensor and the steering wheel module (SWM)

connectors. Check for contact resistance and oxidation according to **CONTACT RESISTANCE AND OXIDATION**

- Reinstall the components, reconnect the connectors etc.
- Ignition on
- Read off the status of steering wheel angle signal R1.

Turn the steering wheel in both directions and check that the value changes between ON and OFF.

If the value changes, the cause of the fault was contact resistance or oxidation in the connectors for the steering wheel module (SWM) or in the control module for the steering wheel angle sensor.

Other information:

- To access the connector for the control module for the steering wheel angle sensor, see **STEERING WHEEL MODULE (SWM), REPLACING**
- To access the connector for the steering wheel module (SWM), see **STEERING WHEEL MODULE (SWM), REPLACING**
- For information about signals, see **SIGNAL DESCRIPTION, CONTROL UNIT FOR THE STEERING WHEEL ANGLE SENSOR (SAS)** and **SIGNAL SPECIFICATION** .

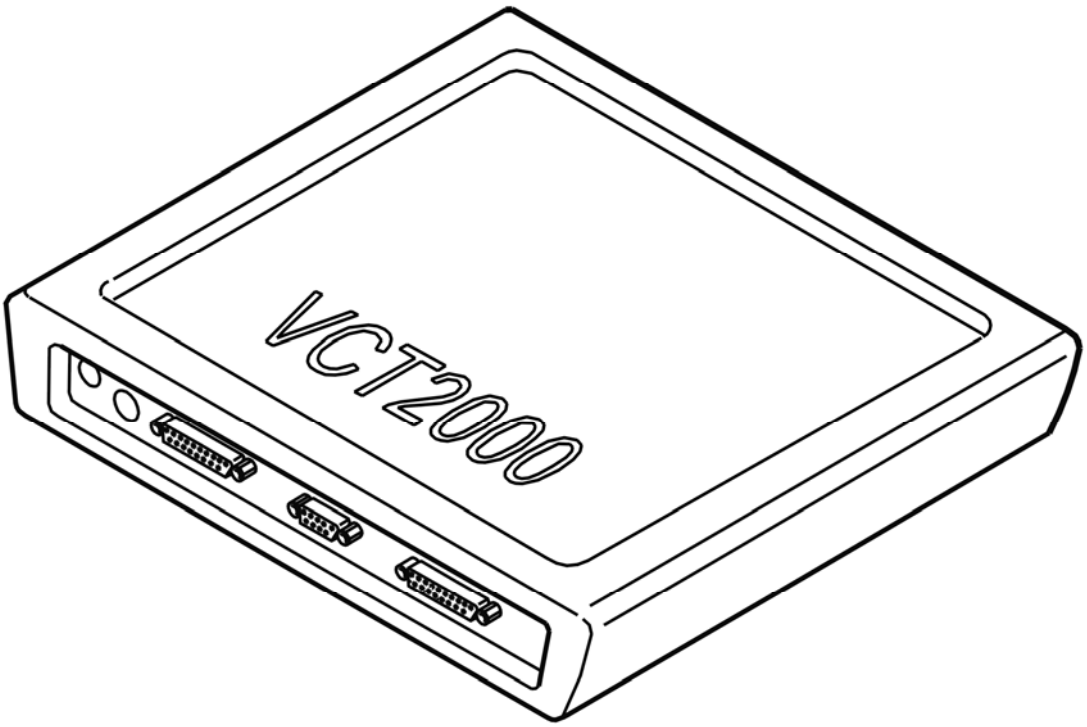

Fig. 226: Identifying VCT2000 Diagnostic Tool Symbol In VIDA
Courtesy of VOLVO CARS CORPORATION

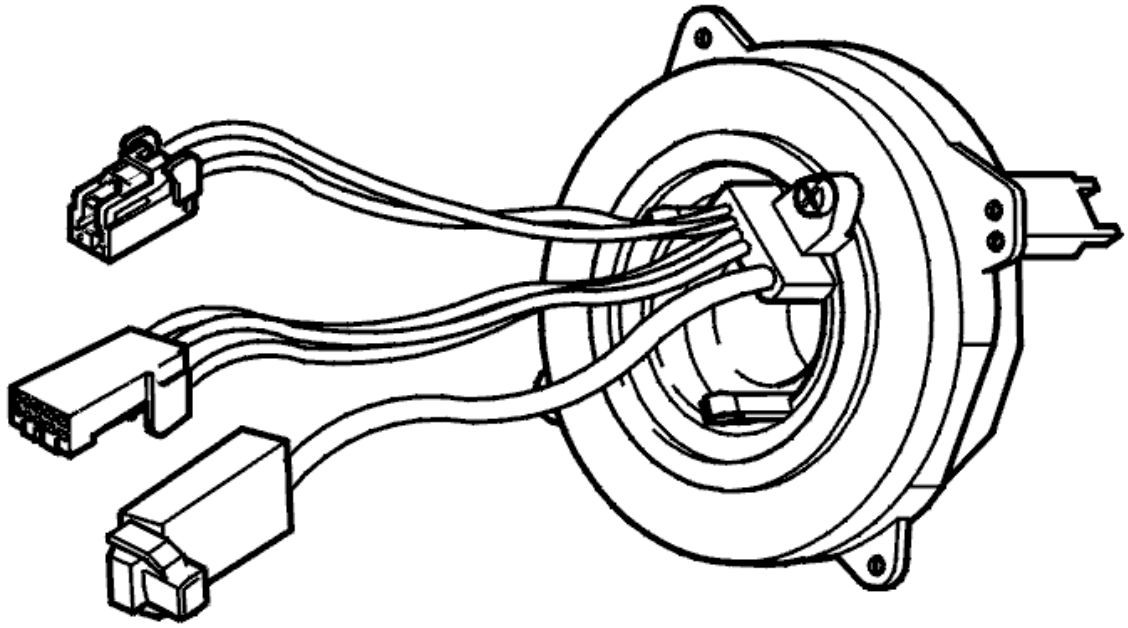

Fig. 227: Identifying Steering Wheel Angle Sensor
Courtesy of VOLVO CARS CORPORATION

Does the value change between OFF and ON?

- **YES**

  OKAY: Troubleshooting has been completed.

- **NO**

  Refer to **CHECKING WIRING AND SENSORS**

CHECKING WIRING AND SENSORS

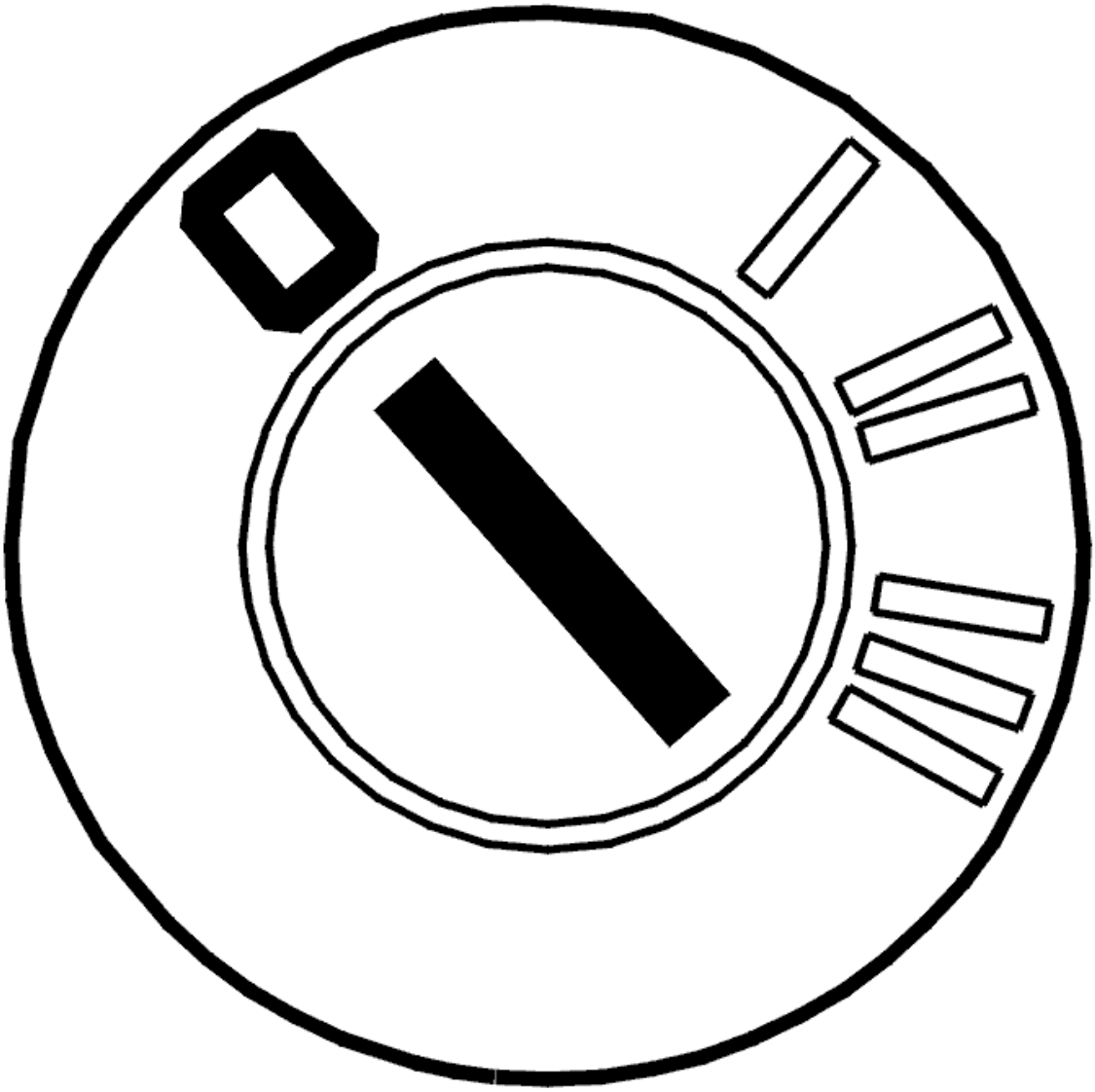

Fig. 228: Identifying Ignition OFF
Courtesy of VOLVO CARS CORPORATION

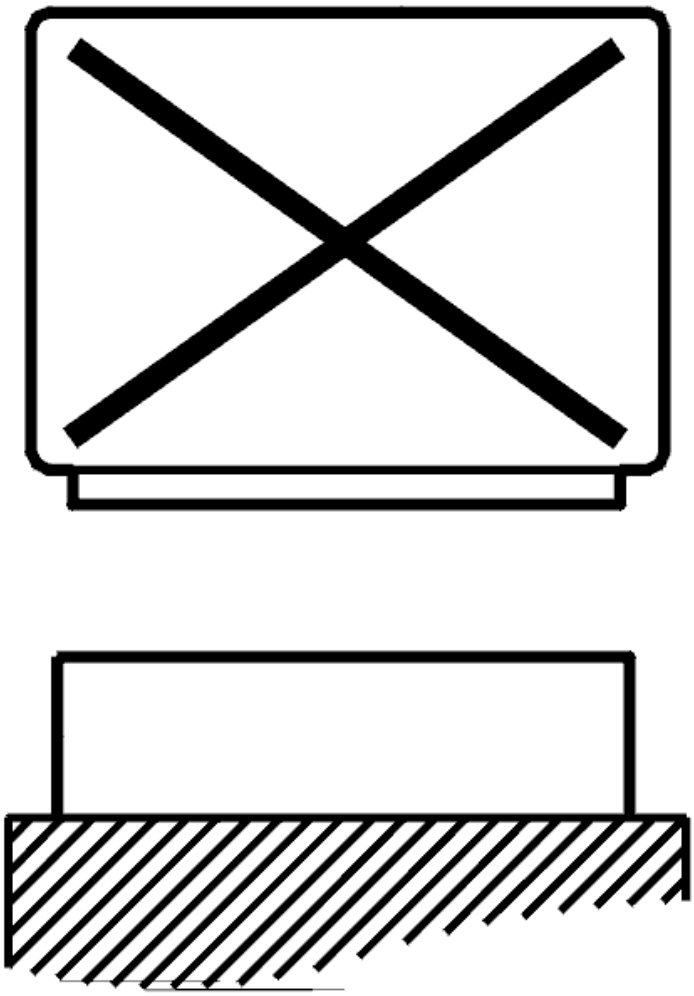

Fig. 229: Disconnecting Control Unit
Courtesy of VOLVO CARS CORPORATION

- Ignition off
- The control module for the steering wheel angle sensor disconnected
- Steering wheel module (SWM) disconnected
- Connect the breakout box to the control module for the steering wheel angle sensor and to the steering wheel module (SWM)

  Check the wiring between the control module for the steering wheel angle sensor terminal #5 (#A29) and steering wheel module (SWM) terminal #4 (#A4). Check for an open-circuit according to **OPEN-CIRCUIT, PERMANENT FAULTS** . Check for a short-circuit to supply voltage according to **SHORT-CIRCUIT TO SUPPLY VOLTAGE. PERMANENT FAULTS** .

  Try replacing the steering wheel angle sensor if no faults are found in the cable between the control

module for the steering wheel angle sensor and the steering wheel module (SWM).

Other information:

- To access the connector for the control module for the steering wheel angle sensor, see **STEERING WHEEL MODULE (SWM), REPLACING**
- To access the connector for the steering wheel module (SWM), see **STEERING WHEEL MODULE (SWM), REPLACING**
- To connect the breakout box to the control module for the steering wheel angle sensor, see **CONNECTING THE BREAKOUT BOX TO THE STEERING ANGLE SENSOR**
- To connect the breakout box to the steering wheel module (SWM), see **CONNECTING THE BREAKOUT BOX**
- To replace the steering wheel angle sensor, see **CONTACT REEL, REPLACEMENT**
- For information about signals, see **SIGNAL DESCRIPTION, CONTROL UNIT FOR THE STEERING WHEEL ANGLE SENSOR (SAS)** and **SIGNAL SPECIFICATION** .

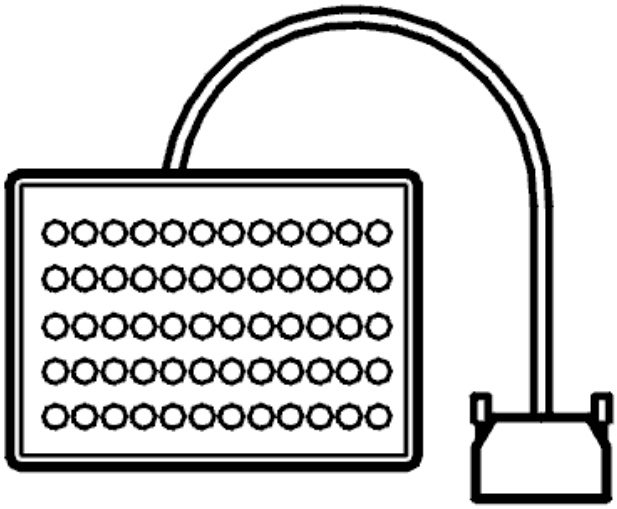

Fig. 230: Breakout Box
Courtesy of VOLVO CARS CORPORATION

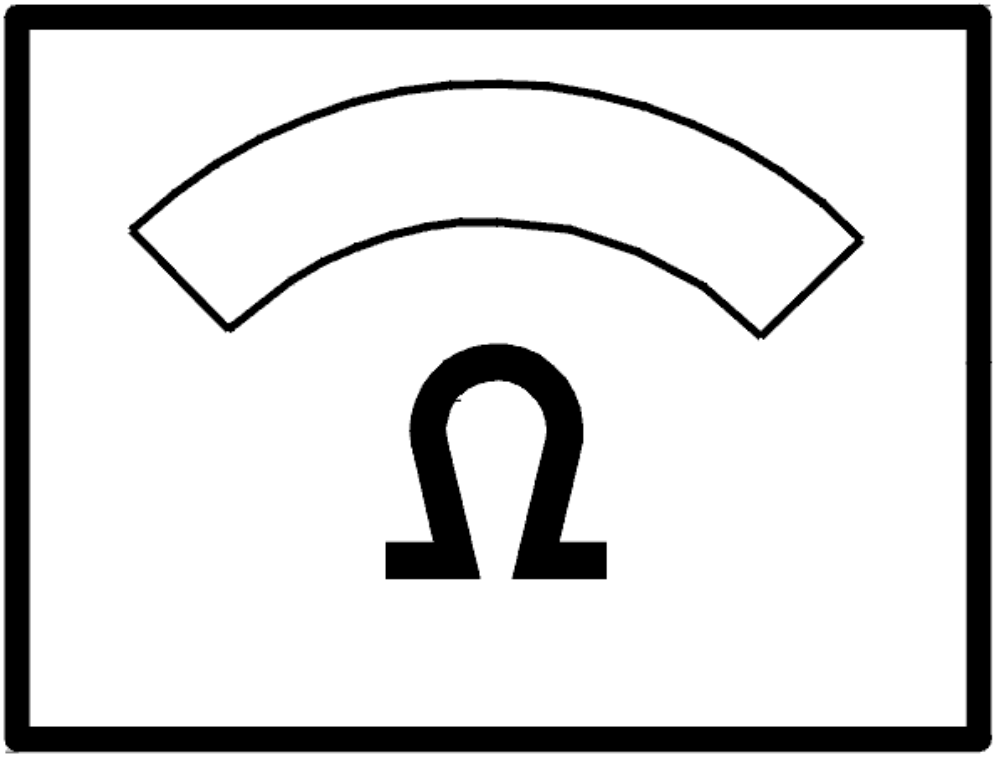

Fig. 231: Identifying Ohm Meter
Courtesy of VOLVO CARS CORPORATION

- **Continue**

  Refer to **VERIFICATION**

VERIFICATION

HINT: After the repair it is necessary to check that the fault has been rectified.

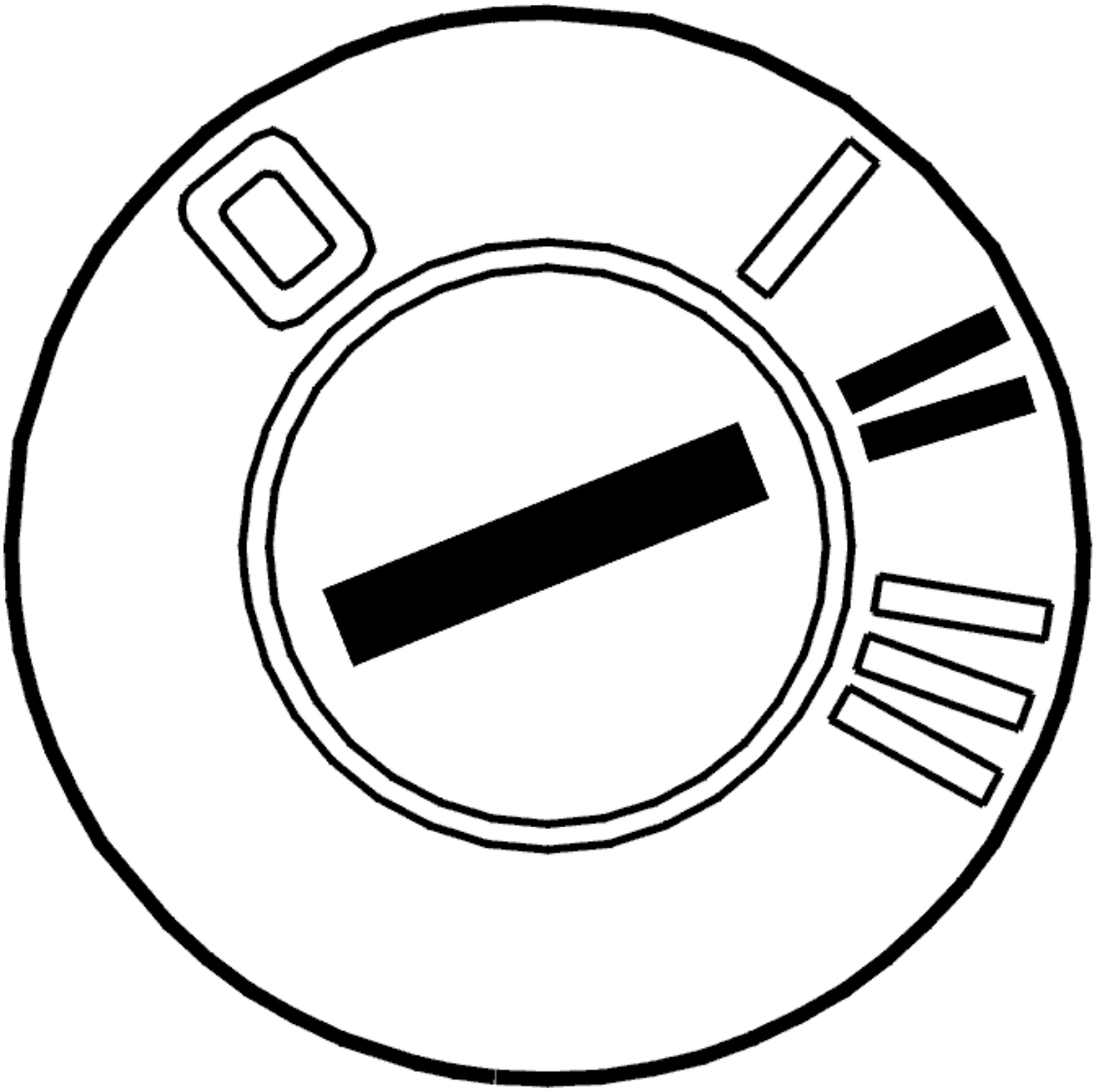

Fig. 232: Identifying Ignition ON
Courtesy of VOLVO CARS CORPORATION

- Ignition off.
- Connect the connectors, install the components, etc.
- Ignition on.
- Read off steering wheel angle signal R1.
- Turn the steering wheel to full lock in both directions.

  The value should change between OFF and ON.

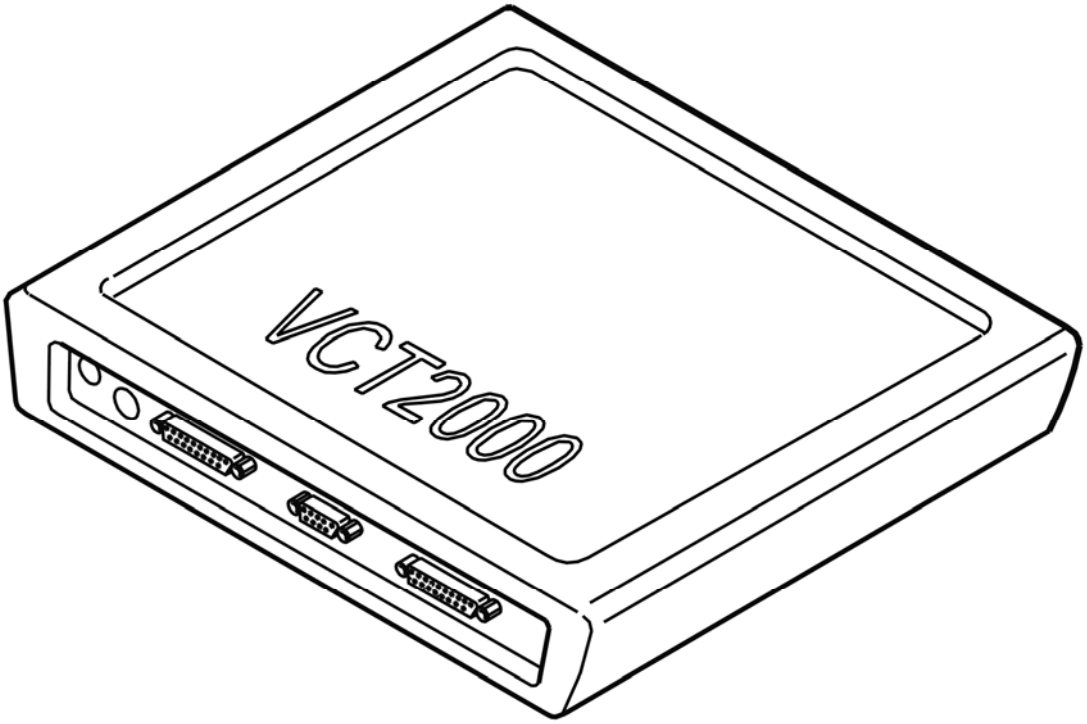

Fig. 233: Identifying VCT2000 Diagnostic Tool Symbol In VIDA
Courtesy of VOLVO CARS CORPORATION

Does the value change?

- **YES**

  VERIFIED: Troubleshooting has been completed.

- **NO**

  Refer to **INFORMATION**

INFORMATION

FAULT-TRACING INFORMATION

The fault should have been detected and remedied. As this is not the case fault-tracing has failed.

Exit fault-tracing for this diagnostic trouble code (DTC) or make another attempt.

SAS-0012: STEERING WHEEL POSITION SIGNAL R1. SIGNAL TOO LOW. INTERMITTENT FAULT (2003-2004)

DIAGNOSTIC TROUBLE CODE INFORMATION

see **DIAGNOSTIC TROUBLE CODE INFORMATION**

SIGNAL TOO LOW. INTERMITTENT FAULT

CHECKING THE WIRING AND CONNECTIONS

Check the wires between steering wheel angle sensor (SAS) control unit #5 (#A29) and steering wheel control unit (SWM) #4 (#A4) for an open circuit as described in, see **OPEN-CIRCUIT, INTERMITTENT FAULTS** , and for an intermittent short circuit to ground as described in **SHORT-CIRCUIT TO GROUND, INTERMITTENT FAULTS** .

Additional information:

- To connect the test box to the steering wheel angle sensor control unit, see **CONNECTING THE BREAKOUT BOX TO THE STEERING ANGLE SENSOR** .
- To connect the test box to the steering wheel control unit, see **CONNECTING THE BREAKOUT BOX**
- For information on signals, see **SIGNAL DESCRIPTION, CONTROL UNIT FOR THE STEERING WHEEL ANGLE SENSOR (SAS)** and **SIGNAL SPECIFICATION** .

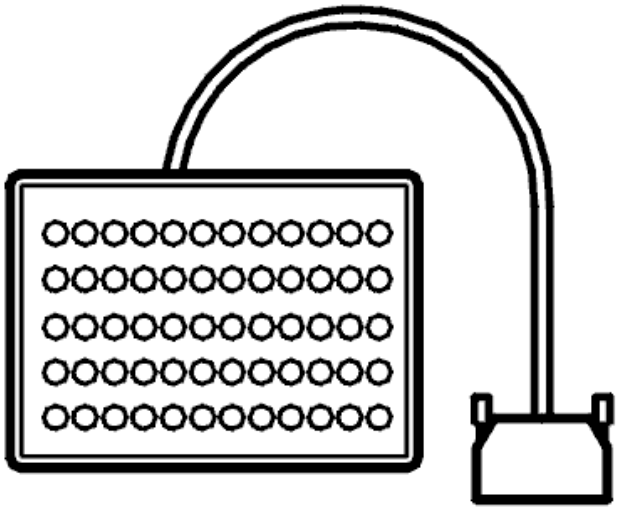

Fig. 234: Breakout Box
Courtesy of VOLVO CARS CORPORATION

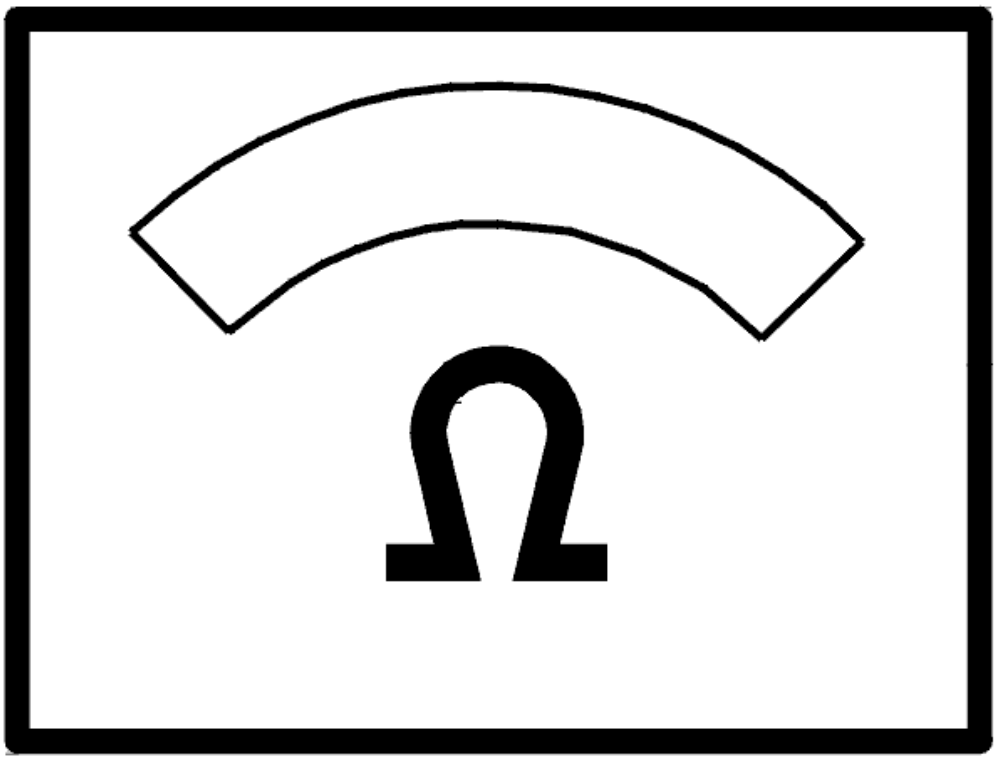

Fig. 235: Identifying Ohm Meter
Courtesy of VOLVO CARS CORPORATION

- **Continue**

  Refer to **INFORMATION**

INFORMATION

FAULT-TRACING INFORMATION

If the fault is intermittent, do not verify fault-tracing if the fault does not recur.

It is possible to view the information again, or leave fault-tracing for this diagnostic trouble code (DTC).

SAS-0012: STEERING WHEEL POSITION SIGNAL R1. SIGNAL TOO LOW.

PERMANENT FAULT (2003-2004)

DIAGNOSTIC TROUBLE CODE INFORMATION

see **DIAGNOSTIC TROUBLE CODE INFORMATION**

SIGNAL TOO LOW. PERMANENT FAULT

CHECKING THE CONNECTORS

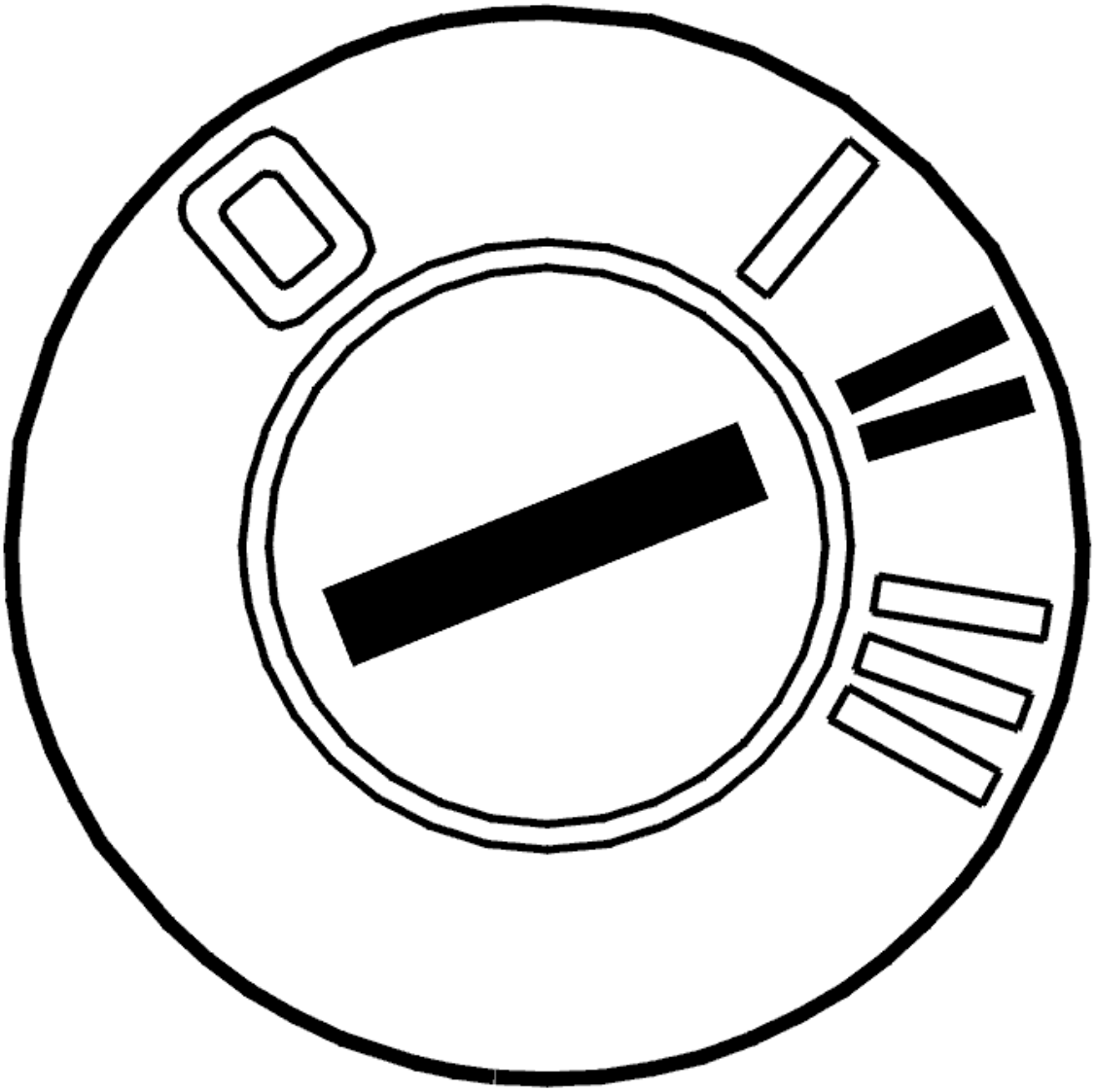

Fig. 236: Identifying Ignition ON
Courtesy of VOLVO CARS CORPORATION

- Ignition on
- Read off the status of steering wheel angle signal R1.

Turn the steering wheel in both directions and check that the value changes between ON and OFF.

Other information:

- To access the connector for the control module for the steering wheel angle sensor, see **STEERING WHEEL MODULE (SWM), REPLACING**
- To access the connector for the steering wheel module (SWM), see **STEERING WHEEL MODULE (SWM), REPLACING**
- For information about signals, see **SIGNAL DESCRIPTION, CONTROL UNIT FOR THE STEERING WHEEL ANGLE SENSOR (SAS)** and **SIGNAL SPECIFICATION** .

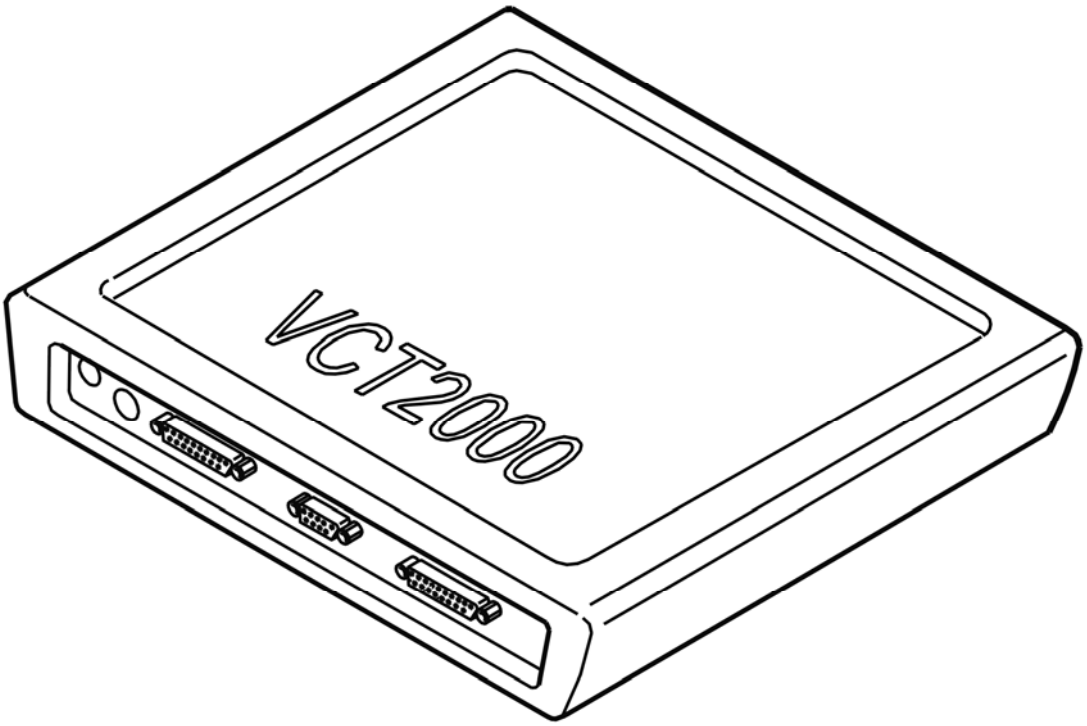

Fig. 237: Identifying VCT2000 Diagnostic Tool Symbol In VIDA
Courtesy of VOLVO CARS CORPORATION

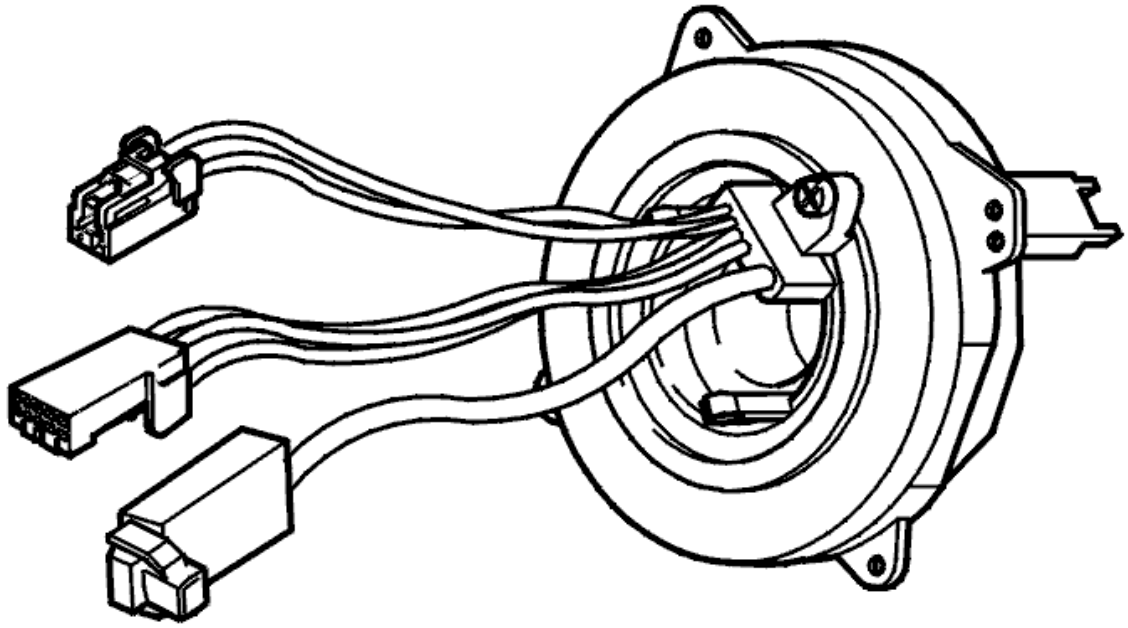

Fig. 238: Identifying Steering Wheel Angle Sensor
Courtesy of VOLVO CARS CORPORATION

Does the value change between OFF and ON?

- **YES**

  OKAY: Troubleshooting has been completed.

- **NO**

  Refer to **CHECKING WIRING AND SENSORS**

CHECKING WIRING AND SENSORS

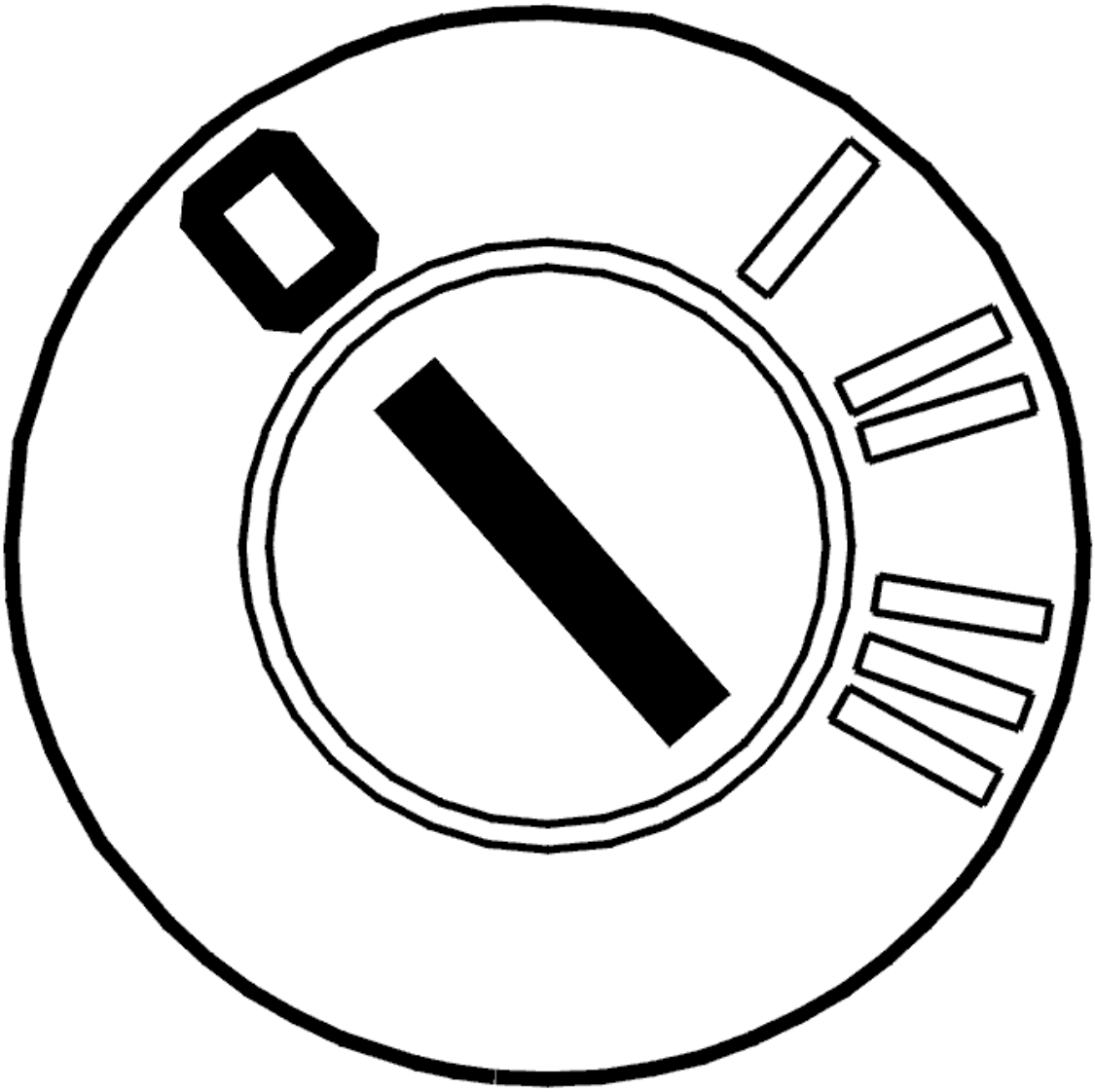

Fig. 239: Identifying Ignition OFF
Courtesy of VOLVO CARS CORPORATION

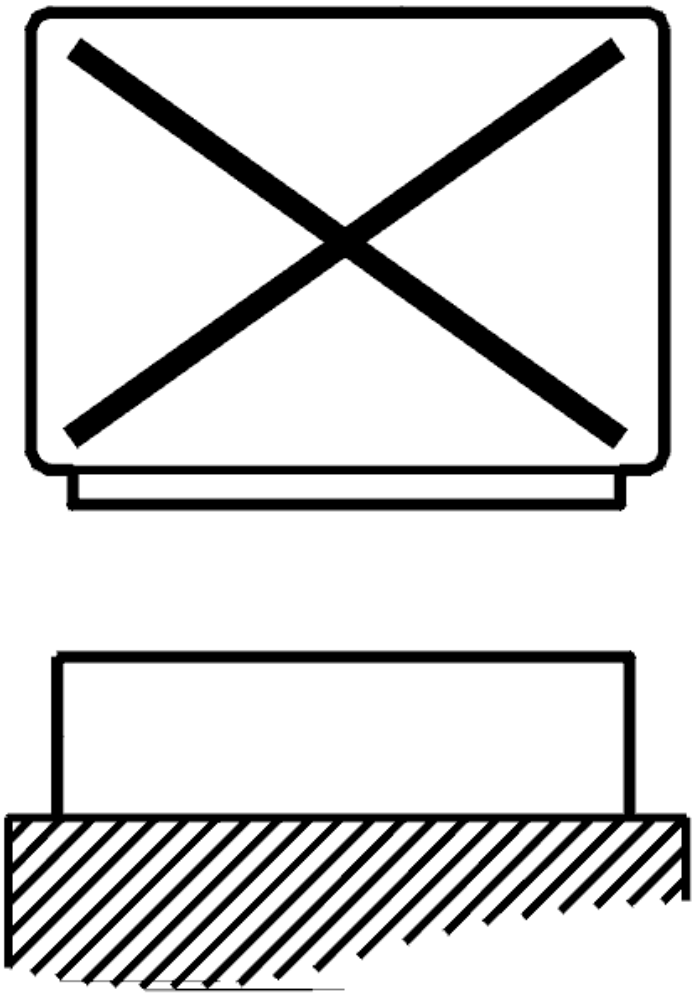

Fig. 240: Disconnecting Control Unit
Courtesy of VOLVO CARS CORPORATION

- Ignition off
- The control module for the steering wheel angle sensor disconnected
- Steering wheel module (SWM) disconnected
- Connect the breakout box to the control module for the steering wheel angle sensor and to the steering wheel module (SWM)

  Check the wiring between the control module for the steering wheel angle sensor terminal #5 (#A29) and steering wheel module (SWM) terminal #4 (#A4). Check for a short-circuit to ground according to **SHORT-CIRCUIT TO GROUND, PERMANENT FAULTS** . Check for an open-circuit according to **OPEN-CIRCUIT, PERMANENT FAULTS** .

  Try replacing the steering wheel angle sensor if no faults are found in the wiring between the control

module for the steering wheel angle sensor and the steering wheel module (SWM).

Other information:

- To connect the breakout box to the control module for the steering wheel angle sensor, see **CONNECTING THE BREAKOUT BOX TO THE STEERING ANGLE SENSOR**
- To connect the breakout box to the steering wheel module (SWM), see **CONNECTING THE BREAKOUT BOX**
- To replace the steering wheel angle sensor, see **CONTACT REEL, REPLACEMENT**
- For information about signals, see **SIGNAL DESCRIPTION, CONTROL UNIT FOR THE STEERING WHEEL ANGLE SENSOR (SAS)** and **SIGNAL SPECIFICATION** .

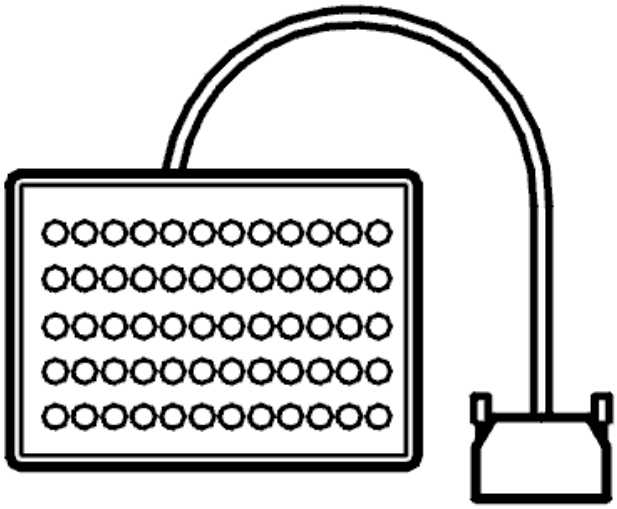

Fig. 241: Breakout Box
Courtesy of VOLVO CARS CORPORATION

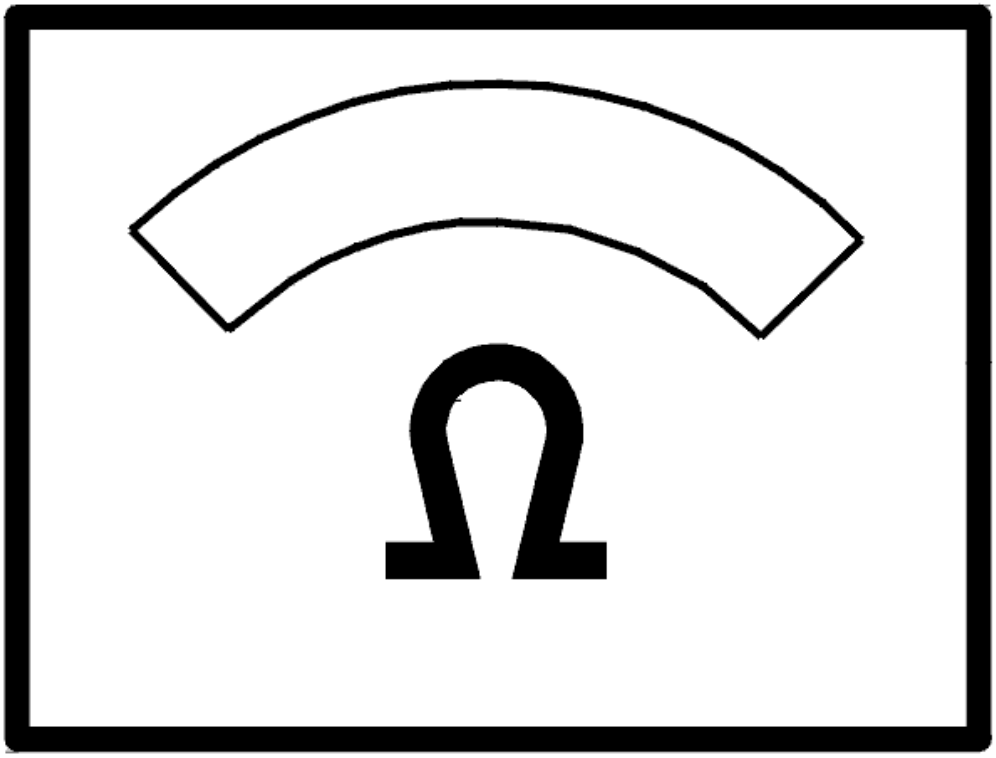

Fig. 242: Identifying Ohm Meter
Courtesy of VOLVO CARS CORPORATION

- **Continue**

  Refer to **VERIFICATION**

VERIFICATION

HINT: After the repair it is necessary to check that the fault has been rectified.

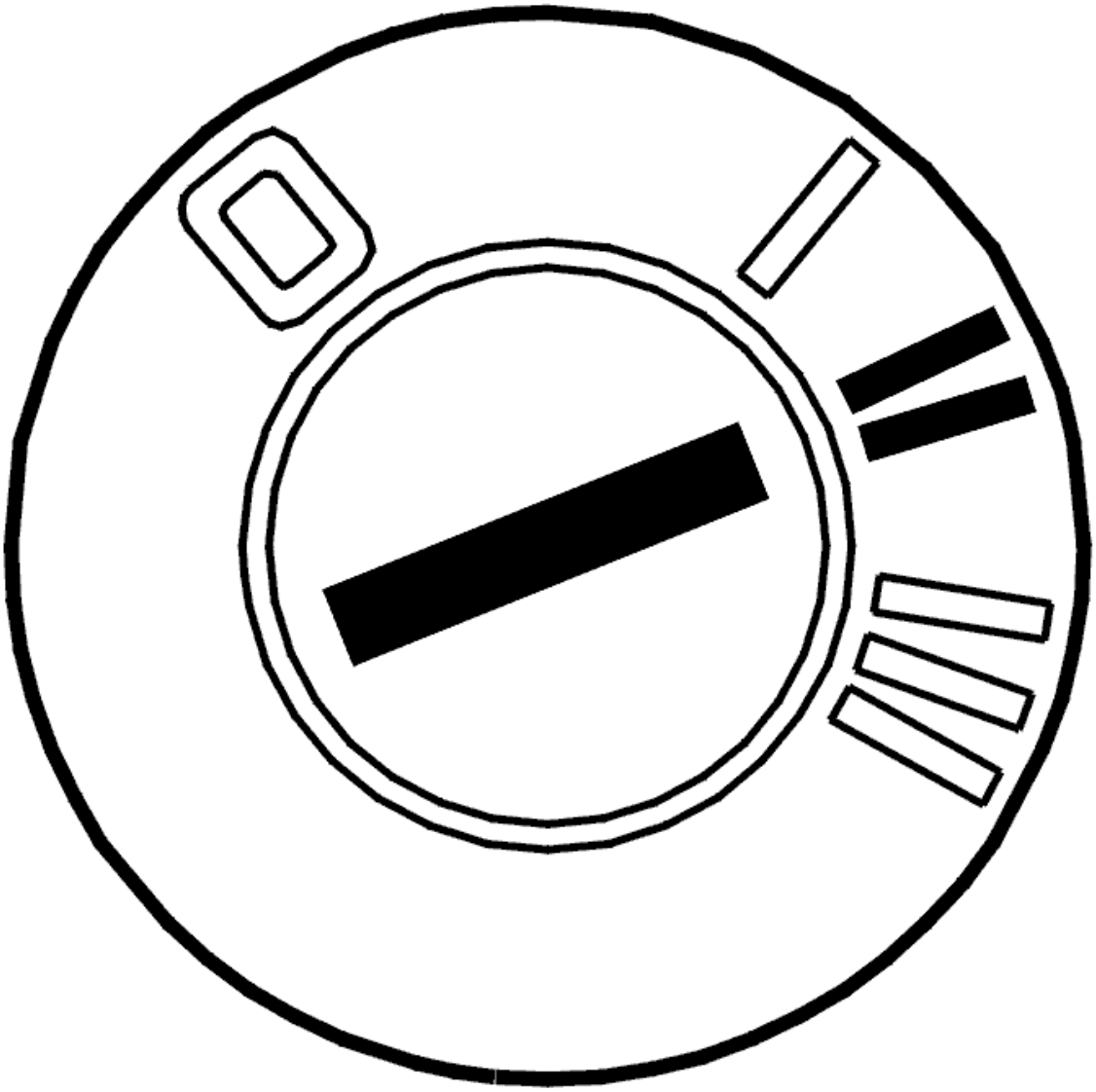

Fig. 243: Identifying Ignition ON
Courtesy of VOLVO CARS CORPORATION

- Ignition off.
- Connect the connectors, install the components, etc.
- Ignition on.
- Read off steering wheel angle signal R1.
- Turn the steering wheel to full lock in both directions.

  The value should change between OFF and ON.

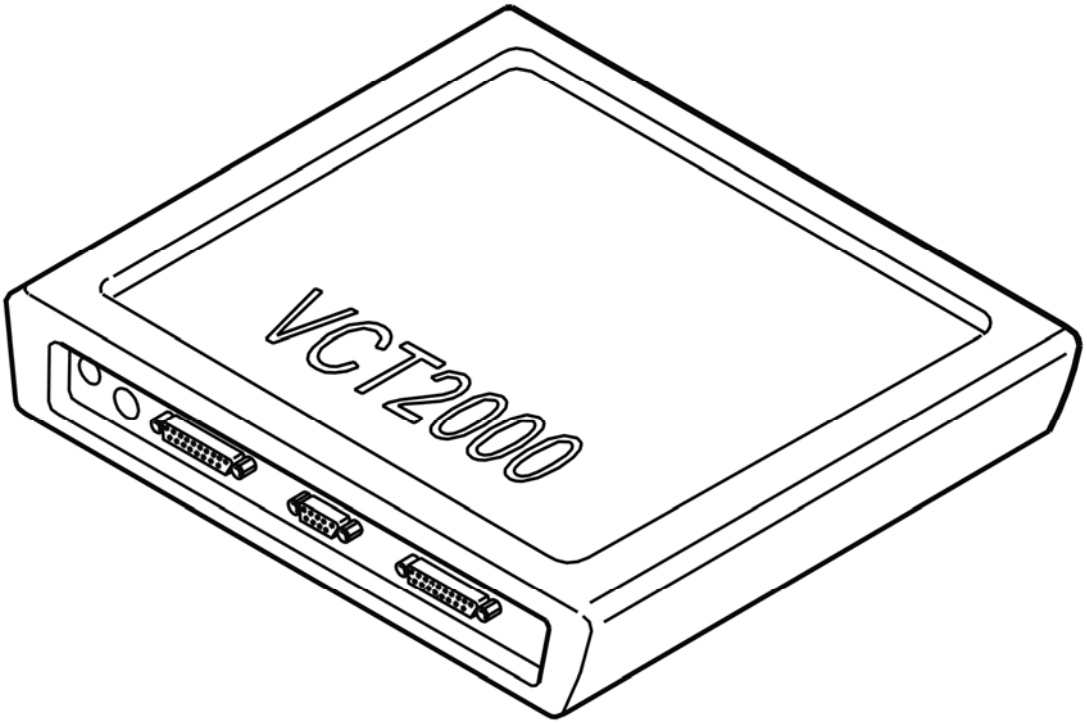

Fig. 244: Identifying VCT2000 Diagnostic Tool Symbol In VIDA
Courtesy of VOLVO CARS CORPORATION

Does the value change?

- **YES**

  VERIFIED: Troubleshooting has been completed.

- **NO**

  Refer to **INFORMATION**

INFORMATION

FAULT-TRACING INFORMATION

The fault should have been detected and remedied. As this is not the case fault-tracing has failed.

Exit fault-tracing for this diagnostic trouble code (DTC) or make another attempt.

SAS-0013: STEERING WHEEL POSITION SIGNAL R2. SIGNAL TOO HIGH. INTERMITTENT FAULT (2003-2004)

DIAGNOSTIC TROUBLE CODE INFORMATION

see **DIAGNOSTIC TROUBLE CODE INFORMATION**

SIGNAL TOO HIGH. INTERMITTENT FAULT

CHECKING THE WIRING AND CONNECTIONS

Check the wires between steering wheel angle sensor (SAS) control unit #12 (#A36) and steering wheel control unit (SWM) #13 (#A13) for a short circuit to voltage supply, as described in, see **SHORT-CIRCUIT TO SUPPLY VOLTAGE, INTERMITTENT FAULTS** .

Additional information:

- To connect the test box to the steering wheel angle sensor control unit, see **CONNECTING THE BREAKOUT BOX TO THE STEERING ANGLE SENSOR** .
- To connect the test box to the steering wheel control unit, see **CONNECTING THE BREAKOUT BOX** .
- For information on signals, see **SIGNAL DESCRIPTION, CONTROL UNIT FOR THE STEERING WHEEL ANGLE SENSOR (SAS)** and **SIGNAL SPECIFICATION** .

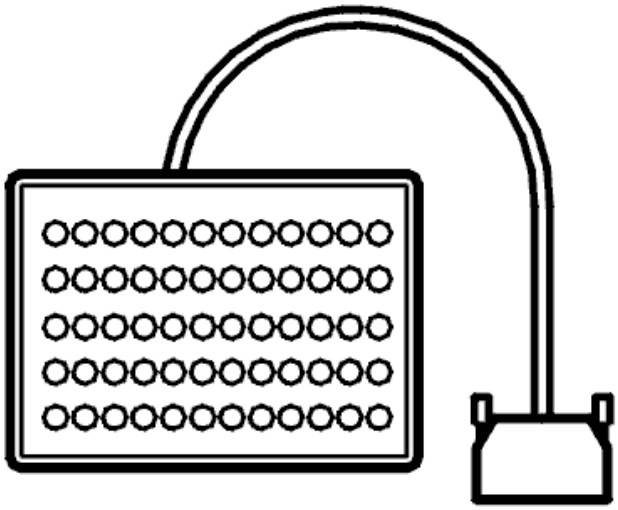

Fig. 245: Breakout Box
Courtesy of VOLVO CARS CORPORATION

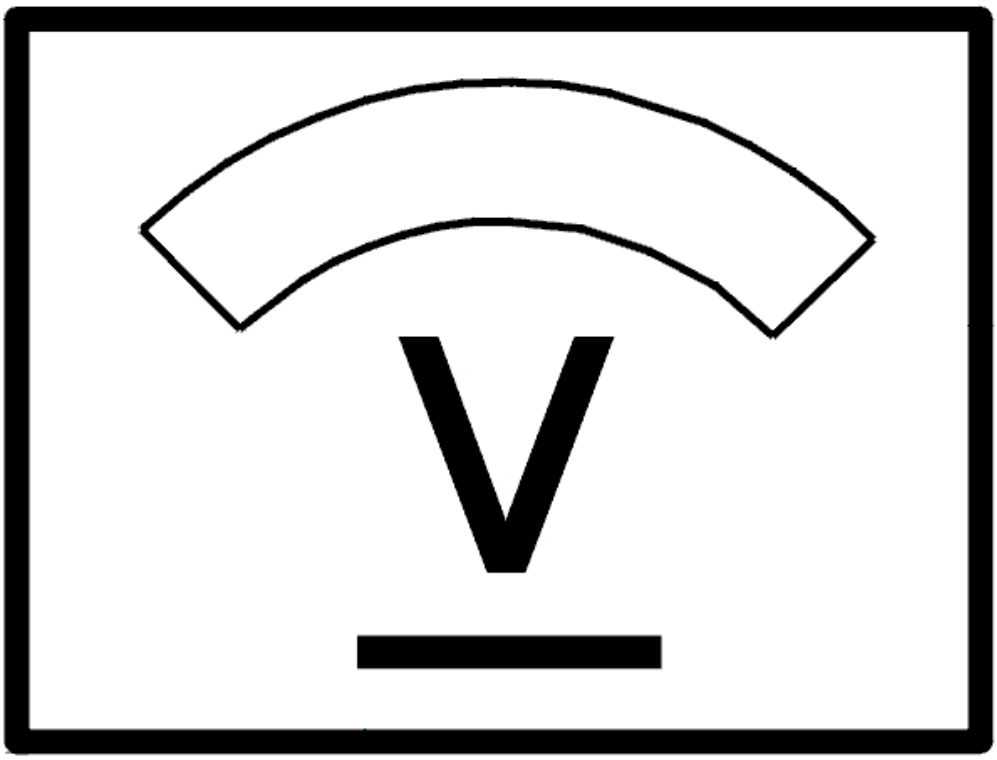

Fig. 246: Identifying Voltage Display
Courtesy of VOLVO CARS CORPORATION

- **Continue**

  Refer to **INFORMATION**

INFORMATION

FAULT-TRACING INFORMATION

If the fault is intermittent, do not verify fault-tracing if the fault does not recur.

It is possible to view the information again, or leave fault-tracing for this diagnostic trouble code (DTC).

SAS-0013: STEERING WHEEL POSITION SIGNAL R2. SIGNAL TOO HIGH.

PERMANENT FAULT (2003-2004)

DIAGNOSTIC TROUBLE CODE INFORMATION

see **DIAGNOSTIC TROUBLE CODE INFORMATION**

SIGNAL TOO HIGH. PERMANENT FAULT

CHECKING THE CONNECTORS

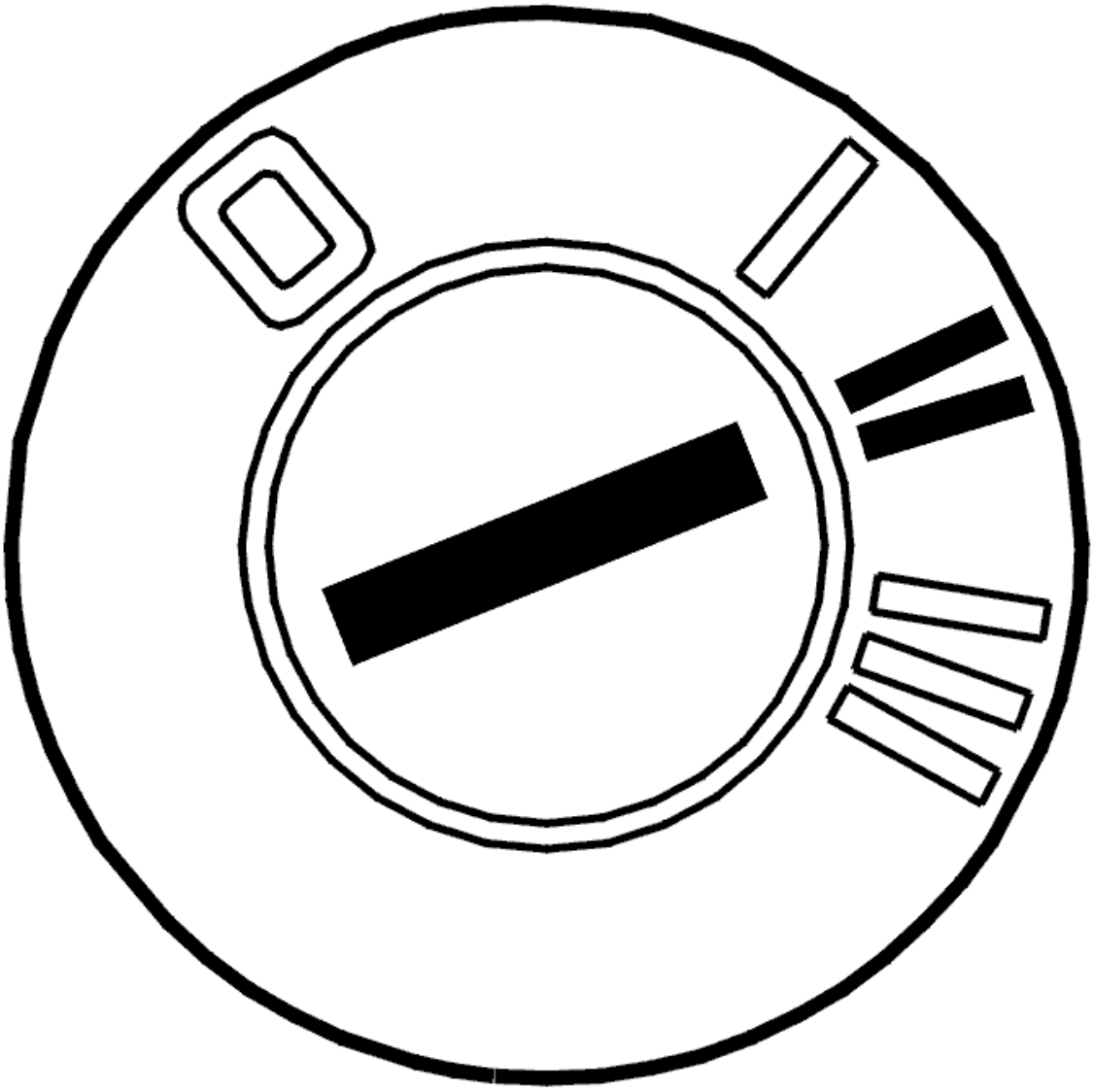

Fig. 247: Identifying Ignition ON
Courtesy of VOLVO CARS CORPORATION

- Ignition off
- Check the control module for the steering wheel angle sensor and the steering wheel module (SWM)

connectors. Check for contact resistance and oxidation according to **CONTACT RESISTANCE AND OXIDATION**

- Reinstall the components, reconnect the connectors etc.
- Ignition on
- Read off the status of steering wheel angle signal R2.

Turn the steering wheel in both directions and check that the value changes between ON and OFF.

If the value changes, the cause of the fault was contact resistance or oxidation in the control module or in the steering wheel angle sensor connector.

Other information:

- To access the connector for the control module for the steering wheel angle sensor, see **STEERING WHEEL MODULE (SWM), REPLACING**
- To access the connector for the steering wheel module (SWM), see **STEERING WHEEL MODULE (SWM), REPLACING**
- For information about signals, see **SIGNAL DESCRIPTION, CONTROL UNIT FOR THE STEERING WHEEL ANGLE SENSOR (SAS)** and **SIGNAL SPECIFICATION** .

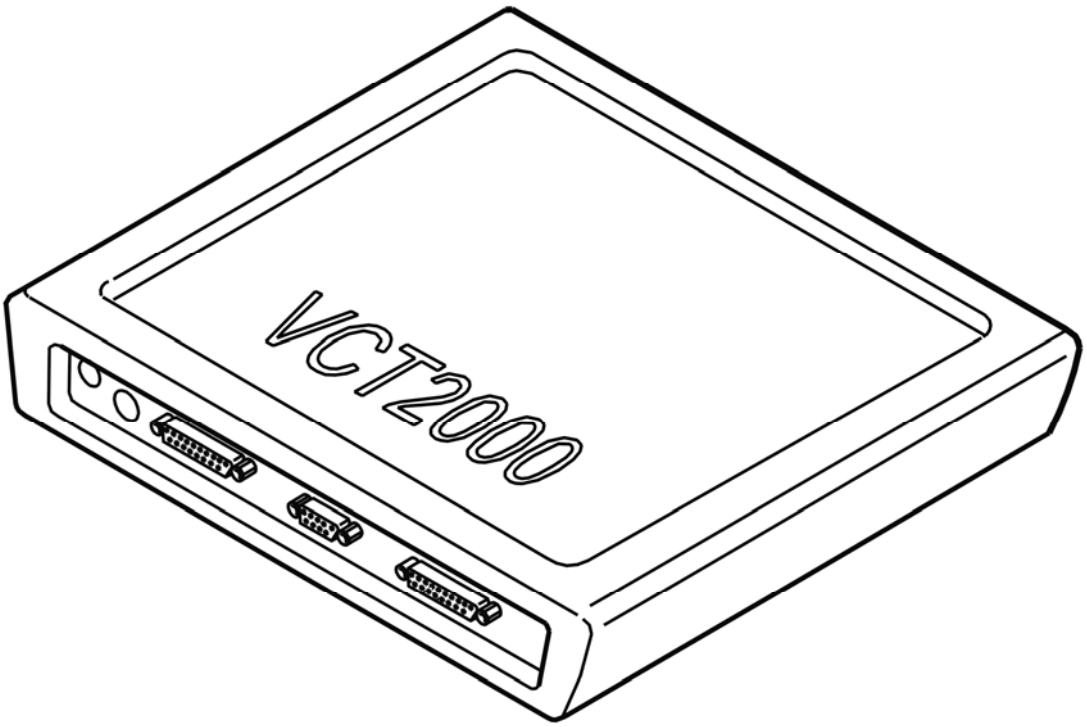

Fig. 248: Identifying VCT2000 Diagnostic Tool Symbol In VIDA
Courtesy of VOLVO CARS CORPORATION

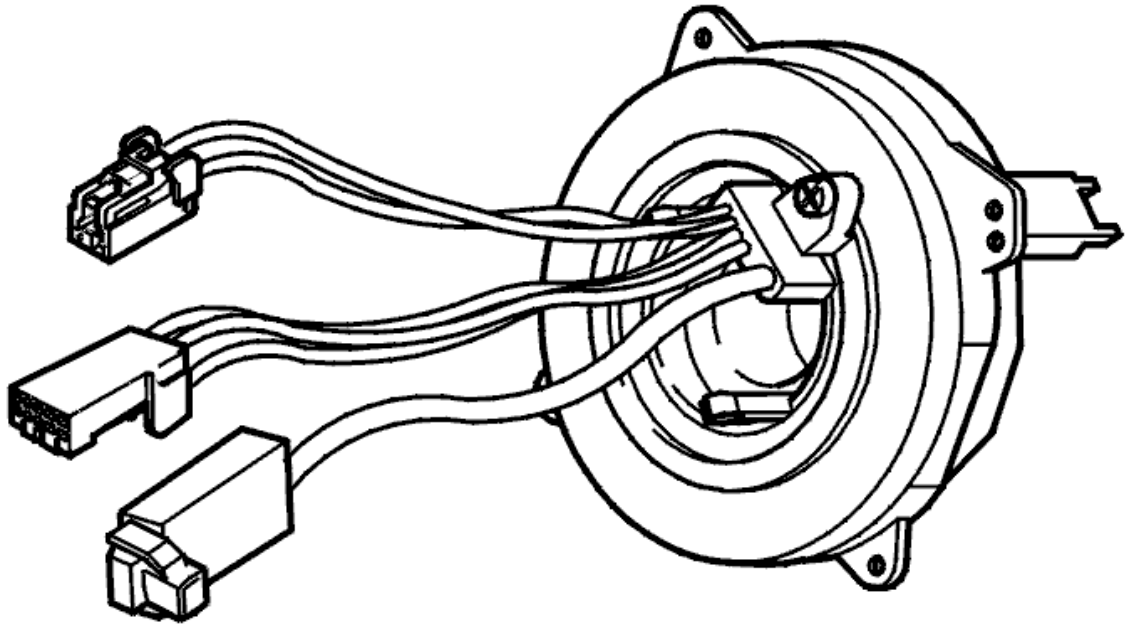

Fig. 249: Identifying Steering Wheel Angle Sensor
Courtesy of VOLVO CARS CORPORATION

Does the value change between OFF and ON?

- **YES**

  OKAY: Troubleshooting has been completed.

- **NO**

  Refer to **CHECKING WIRING AND SENSORS**

CHECKING WIRING AND SENSORS

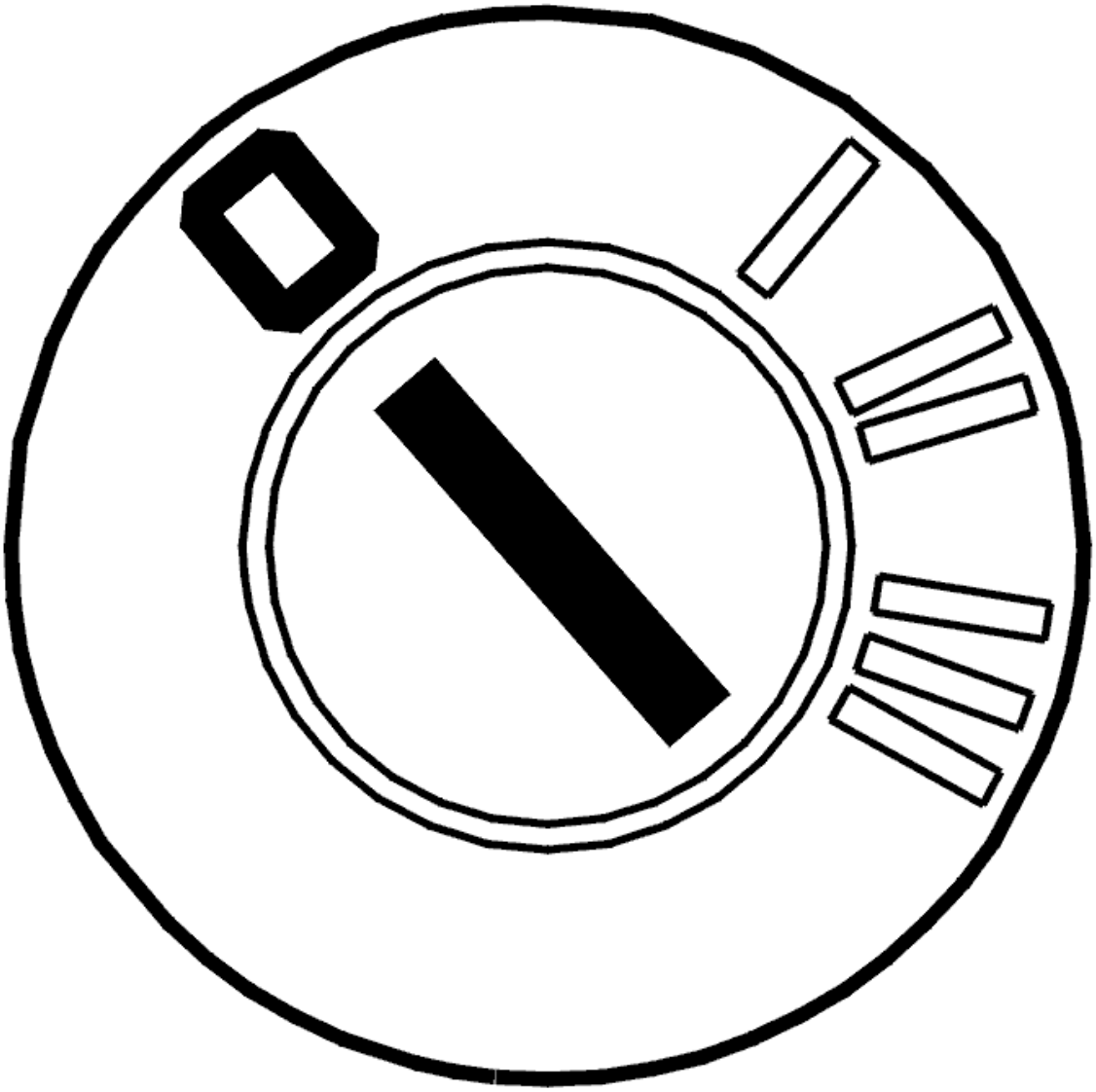

Fig. 250: Identifying Ignition OFF
Courtesy of VOLVO CARS CORPORATION

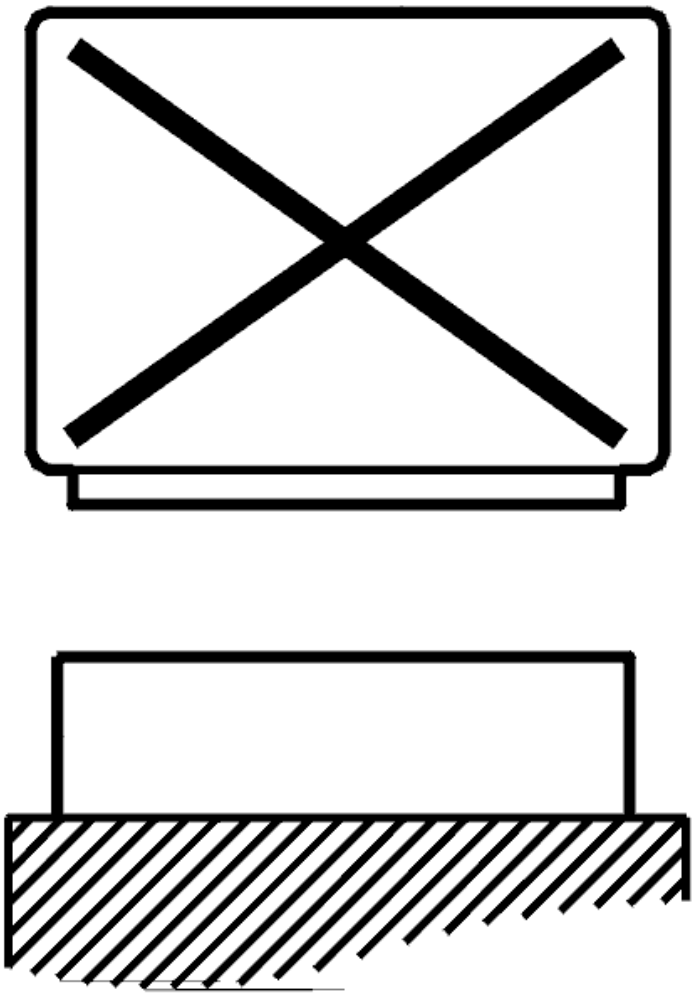

Fig. 251: Disconnecting Control Unit
Courtesy of VOLVO CARS CORPORATION

- Ignition off
- The control module for the steering wheel angle sensor disconnected
- Steering wheel module (SWM) disconnected
- Connect the breakout box to the control module for the steering wheel angle sensor and to the steering wheel module (SWM)

  Check the wiring between the control module for the steering wheel angle sensor terminal #12 (#A36) and steering wheel module (SWM) terminal #13 (#A13). Check for an open-circuit according to **OPEN-CIRCUIT, PERMANENT FAULTS** . Check for a short-circuit to supply voltage according to **SHORT-CIRCUIT TO SUPPLY VOLTAGE. PERMANENT FAULTS** .

  Try replacing the steering wheel angle sensor if no faults are found in the cable between the control

module for the steering wheel angle sensor and the steering wheel module (SWM).

Other information:

- To access the connector for the control module for the steering wheel angle sensor, see **STEERING WHEEL MODULE (SWM), REPLACING**
- To access the connector for the steering wheel module (SWM), see **STEERING WHEEL MODULE (SWM), REPLACING**
- To connect the breakout box to the control module for the steering wheel angle sensor, see **CONNECTING THE BREAKOUT BOX TO THE STEERING ANGLE SENSOR**
- To connect the breakout box to the steering wheel module (SWM), see **CONNECTING THE BREAKOUT BOX**
- To replace the steering wheel angle sensor, see **CONTACT REEL, REPLACEMENT**
- For information about signals, see **SIGNAL DESCRIPTION, CONTROL UNIT FOR THE STEERING WHEEL ANGLE SENSOR (SAS)** and **SIGNAL SPECIFICATION** .

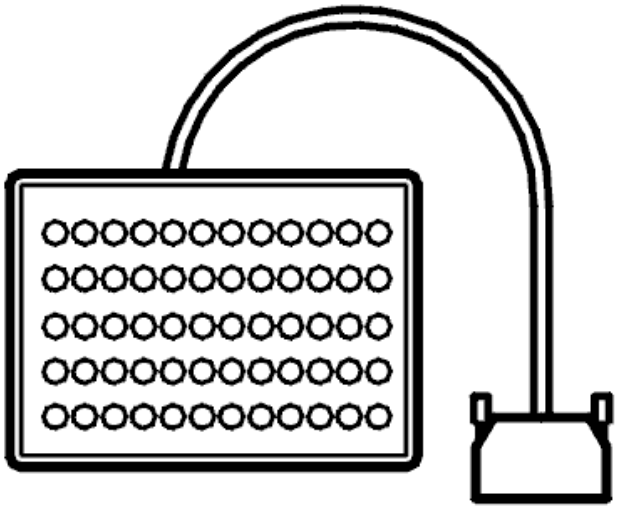

Fig. 252: Breakout Box
Courtesy of VOLVO CARS CORPORATION

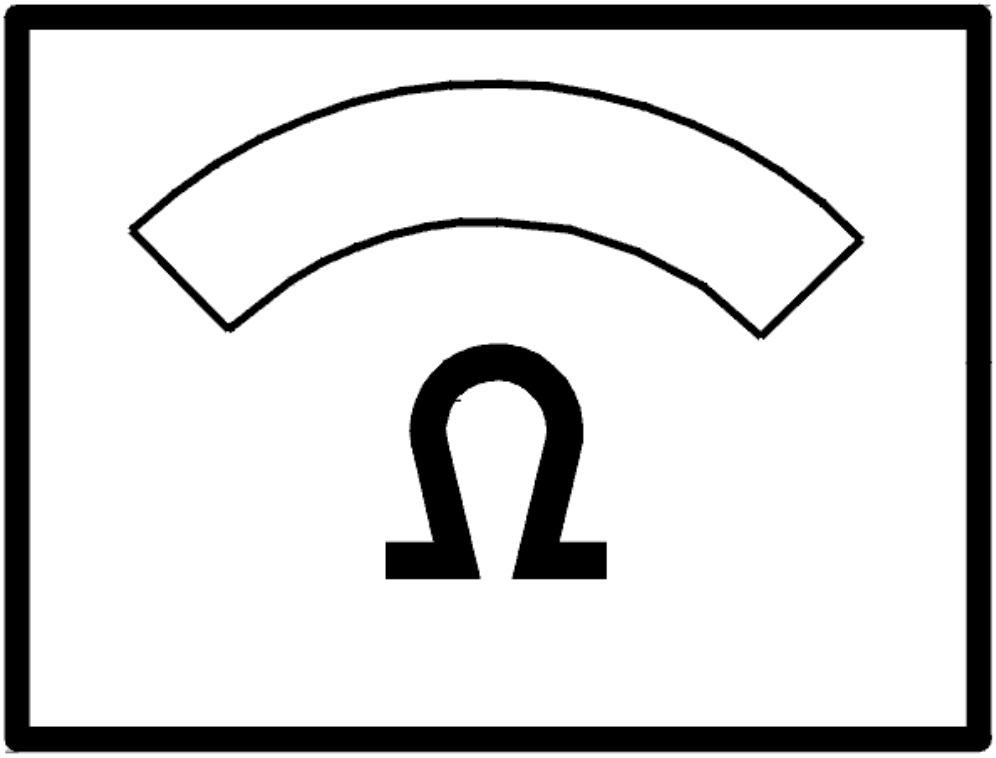

Fig. 253: Identifying Ohm Meter
Courtesy of VOLVO CARS CORPORATION

- **Continue**

  Refer to **VERIFICATION**

VERIFICATION

HINT: After the repair it is necessary to check that the fault has been rectified.

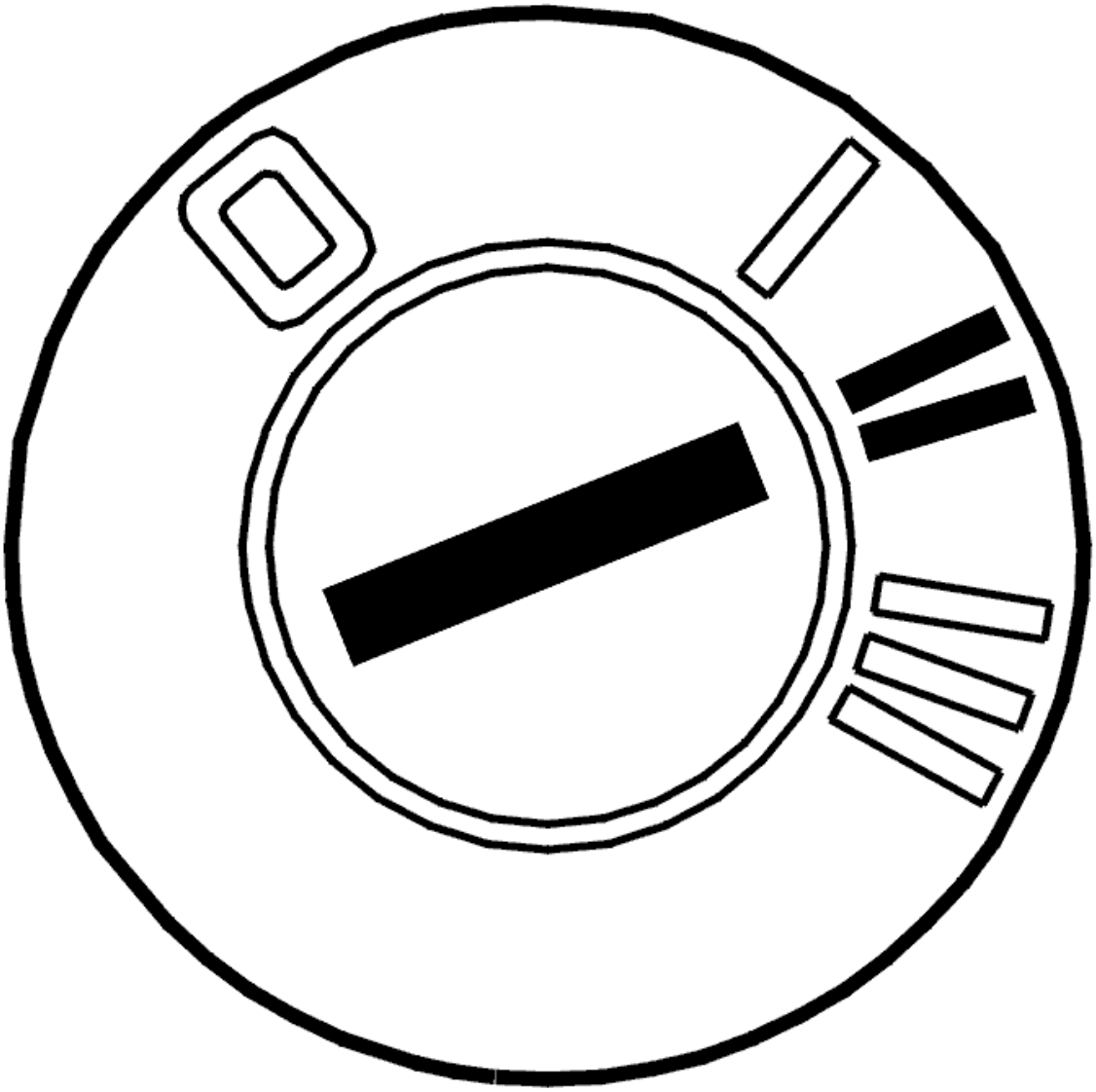

Fig. 254: Identifying Ignition ON
Courtesy of VOLVO CARS CORPORATION

- Ignition off.
- Connect the connectors, install the components, etc.
- Ignition on.
- Read off steering wheel angle signal R2.
- Turn the steering wheel to full lock in both directions.

  The value should change between OFF and ON.

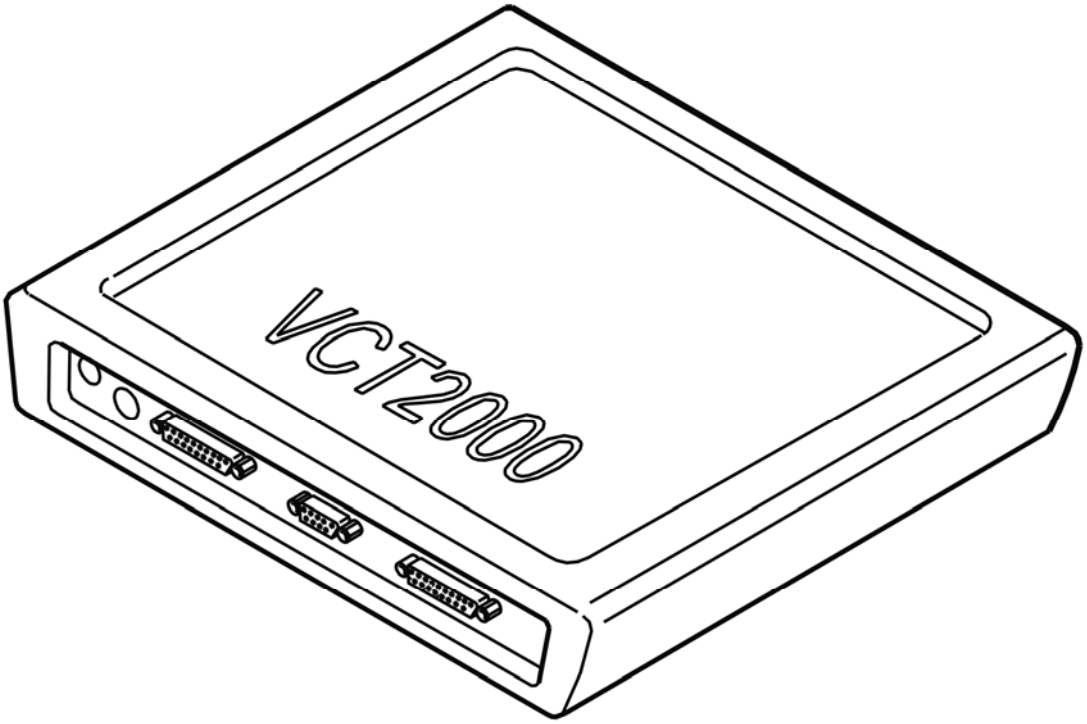

Fig. 255: Identifying VCT2000 Diagnostic Tool Symbol In VIDA
Courtesy of VOLVO CARS CORPORATION

Does the value change?

- **YES**

  VERIFIED: Troubleshooting has been completed.

- **NO**

  Refer to **INFORMATION**

INFORMATION

FAULT-TRACING INFORMATION

The fault should have been detected and remedied. As this is not the case fault-tracing has failed.

Exit fault-tracing for this diagnostic trouble code (DTC) or make another attempt.

SAS-0014: STEERING WHEEL ANGLE SENSOR. INTERNAL FAULT (B5254T2; 2005-2007)

DIAGNOSTIC TROUBLE CODE (DTC) INFORMATION SAS-0014

Condition

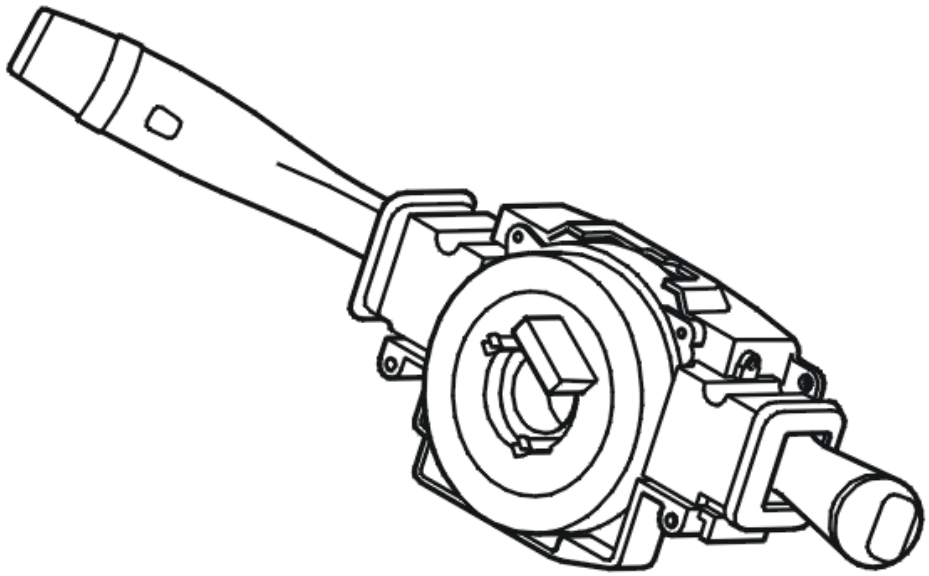

Fig. 256: Identifying Steering Wheel Control Module
Courtesy of VOLVO CARS CORPORATION

The Steering wheel angle sensor module (SAS) is located in the lever module together with the steering wheel module (SWM) and is supplied with power by it.

The diagnostic trouble code (DTC) is stored if there is no voltage supply (12 V) or ground to the steering wheel angle sensor.

The diagnostic trouble code (DTC) can be diagnosed when the ignition is switched on and the steering wheel angle sensor is initiated. Initiation is carried out when the steering wheel is turned more than 4.5° in any direction.

Substitute Value

- The stability function is blocked.

Possible Source

- Open-circuit in the circuit for internal power supply cable to the steering wheel angle sensor

- Open-circuit in the circuit for ground terminal to the steering wheel angle sensor.

Fault symptom[s]

- Anti-spin warning lamp lit.
- General warning lamp lit.
- The stability control system does not function.

INTERNAL FAULT

see **INTERNAL FAULT**

SAS-0014: STEERING WHEEL ANGLE SENSOR. INTERNAL FAULT (B6294T; 2005-2006)

DIAGNOSTIC TROUBLE CODE (DTC) INFORMATION SAS-0014

see **DIAGNOSTIC TROUBLE CODE (DTC) INFORMATION SAS-0014**

INTERNAL FAULT

see **INTERNAL FAULT**

SAS-0014: STEERING WHEEL POSITION SIGNAL R2. SIGNAL TOO LOW. INTERMITTENT FAULT (2003-2004)

DIAGNOSTIC TROUBLE CODE INFORMATION

see **DIAGNOSTIC TROUBLE CODE INFORMATION**

SIGNAL TOO LOW. INTERMITTENT FAULT

CHECKING THE WIRING AND CONNECTIONS

Check the wires between steering wheel angle sensor (SAS) control unit #12 (#A36) and steering wheel control unit (SWM) #13 (#A13) for an open circuit as described in, see **OPEN-CIRCUIT, INTERMITTENT FAULTS** , and for an intermittent short circuit to ground as described in **SHORT-CIRCUIT TO GROUND, INTERMITTENT FAULTS** .

Additional information:

- To connect the test box to the steering wheel angle sensor control unit, see **CONNECTING THE BREAKOUT BOX TO THE STEERING ANGLE SENSOR** .
- To connect the test box to the steering wheel control unit, see **CONNECTING THE BREAKOUT BOX** .

- For information on signals, see **SIGNAL DESCRIPTION, CONTROL UNIT FOR THE STEERING WHEEL ANGLE SENSOR (SAS)** and **SIGNAL SPECIFICATION** .

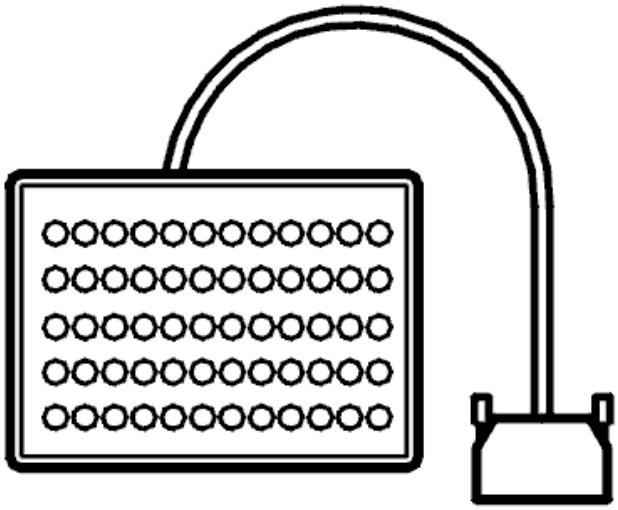

Fig. 257: Breakout Box
Courtesy of VOLVO CARS CORPORATION

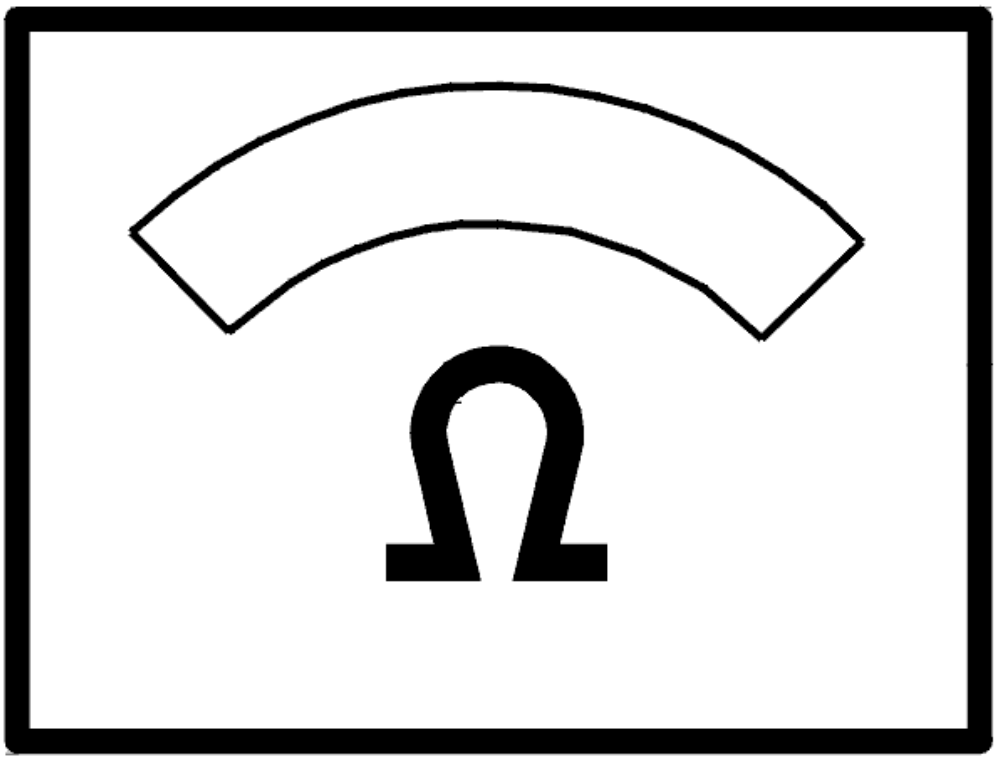

Fig. 258: Identifying Ohm Meter
Courtesy of VOLVO CARS CORPORATION

- **Continue**

  Refer to **INFORMATION**

INFORMATION

FAULT-TRACING INFORMATION

If the fault is intermittent, do not verify fault-tracing if the fault does not recur.

It is possible to view the information again, or leave fault-tracing for this diagnostic trouble code (DTC).

SAS-0014: STEERING WHEEL POSITION SIGNAL R2. SIGNAL TOO LOW.

PERMANENT FAULT (2003-2004)

DIAGNOSTIC TROUBLE CODE INFORMATION

see **DIAGNOSTIC TROUBLE CODE INFORMATION**

SIGNAL TOO LOW. PERMANENT FAULT

CHECKING THE CONNECTORS

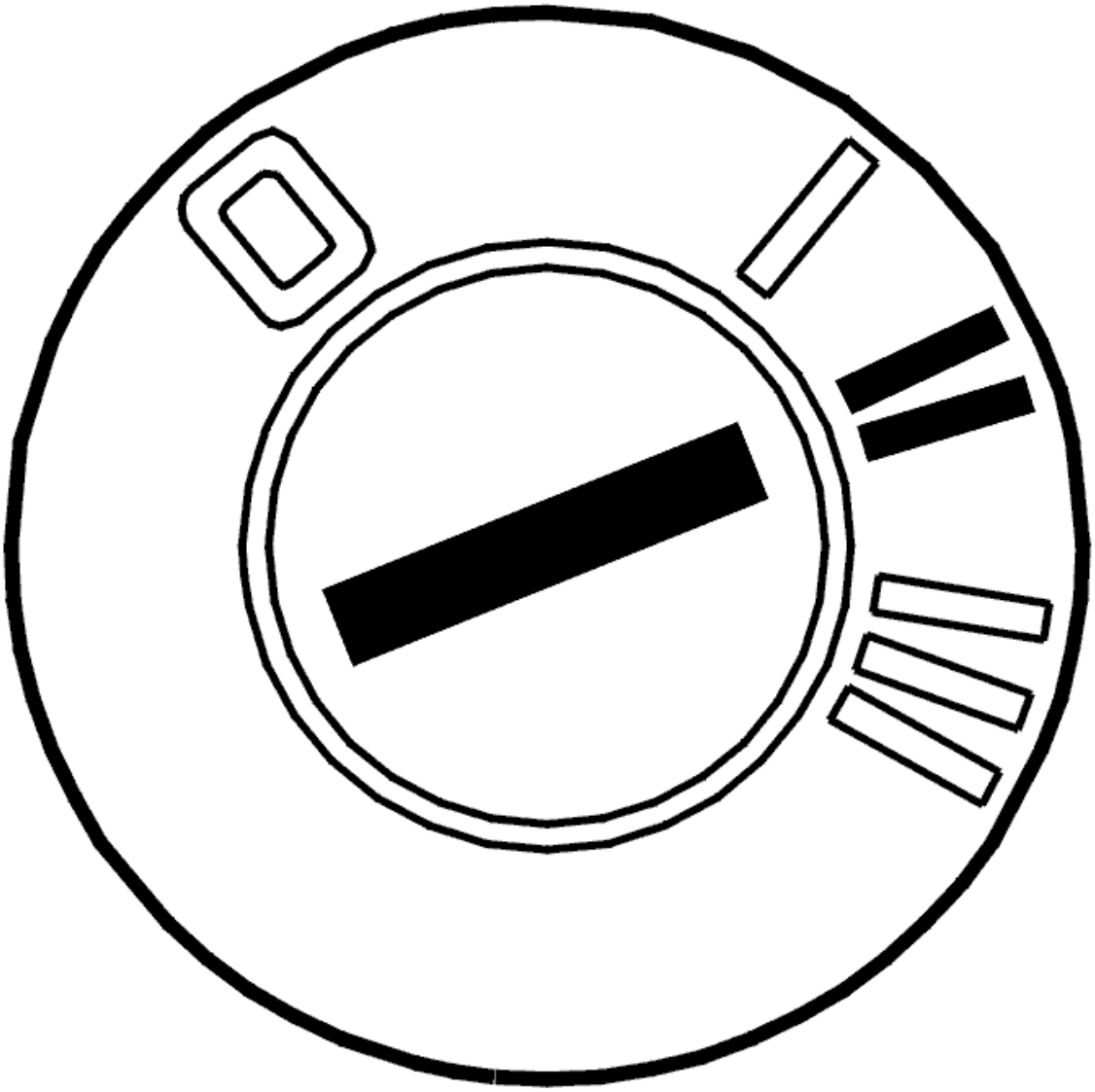

Fig. 259: Identifying Ignition ON
Courtesy of VOLVO CARS CORPORATION

- Ignition on
- Read off the status of steering wheel angle signal R2.

Turn the steering wheel in both directions and check that the value changes between ON and OFF.

Other information:

- To access the connector for the control module for the steering wheel angle sensor, see **STEERING WHEEL MODULE (SWM), REPLACING**
- To access the connector for the steering wheel module (SWM), see **STEERING WHEEL MODULE (SWM), REPLACING**
- For information about signals, see **SIGNAL DESCRIPTION, CONTROL UNIT FOR THE STEERING WHEEL ANGLE SENSOR (SAS)** and **SIGNAL SPECIFICATION** .

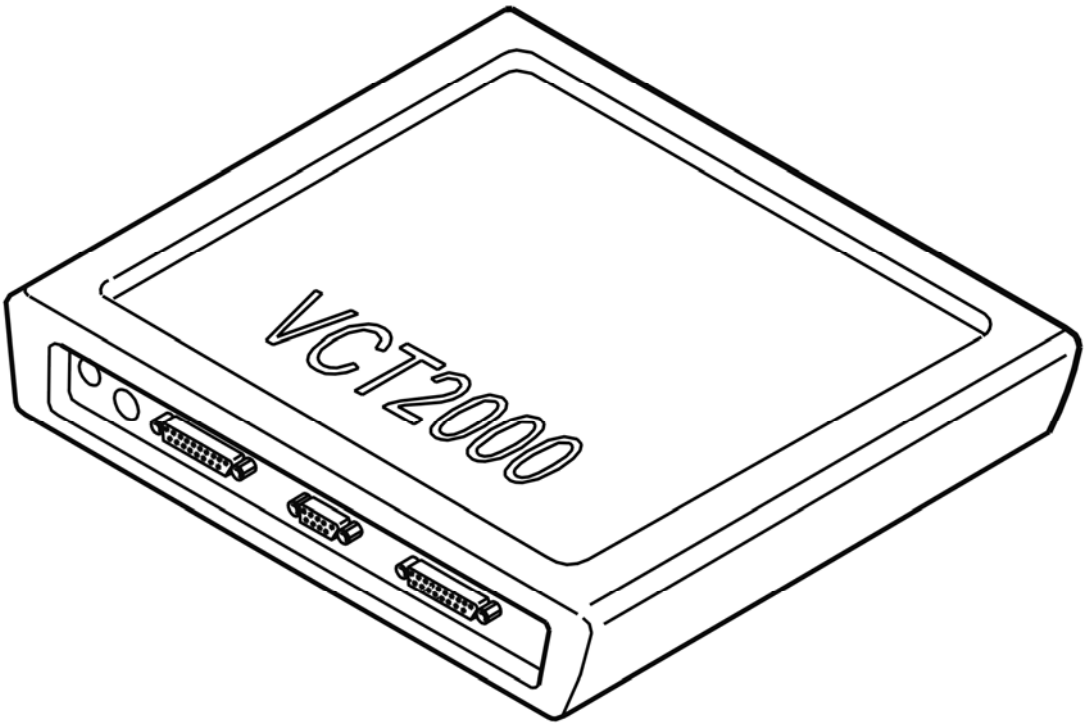

Fig. 260: Identifying VCT2000 Diagnostic Tool Symbol In VIDA
Courtesy of VOLVO CARS CORPORATION

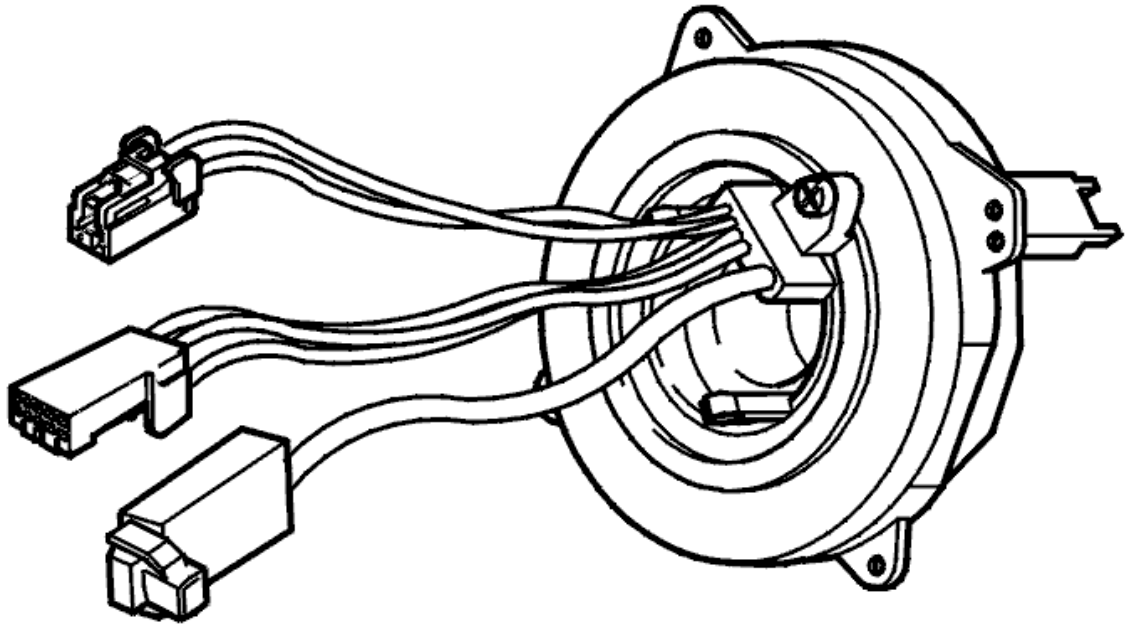

Fig. 261: Identifying Steering Wheel Angle Sensor
Courtesy of VOLVO CARS CORPORATION

Does the value change between OFF and ON?

- **YES**

  OKAY: Troubleshooting has been completed.

- **NO**

  Refer to **CHECKING WIRING AND SENSORS**

CHECKING WIRING AND SENSORS

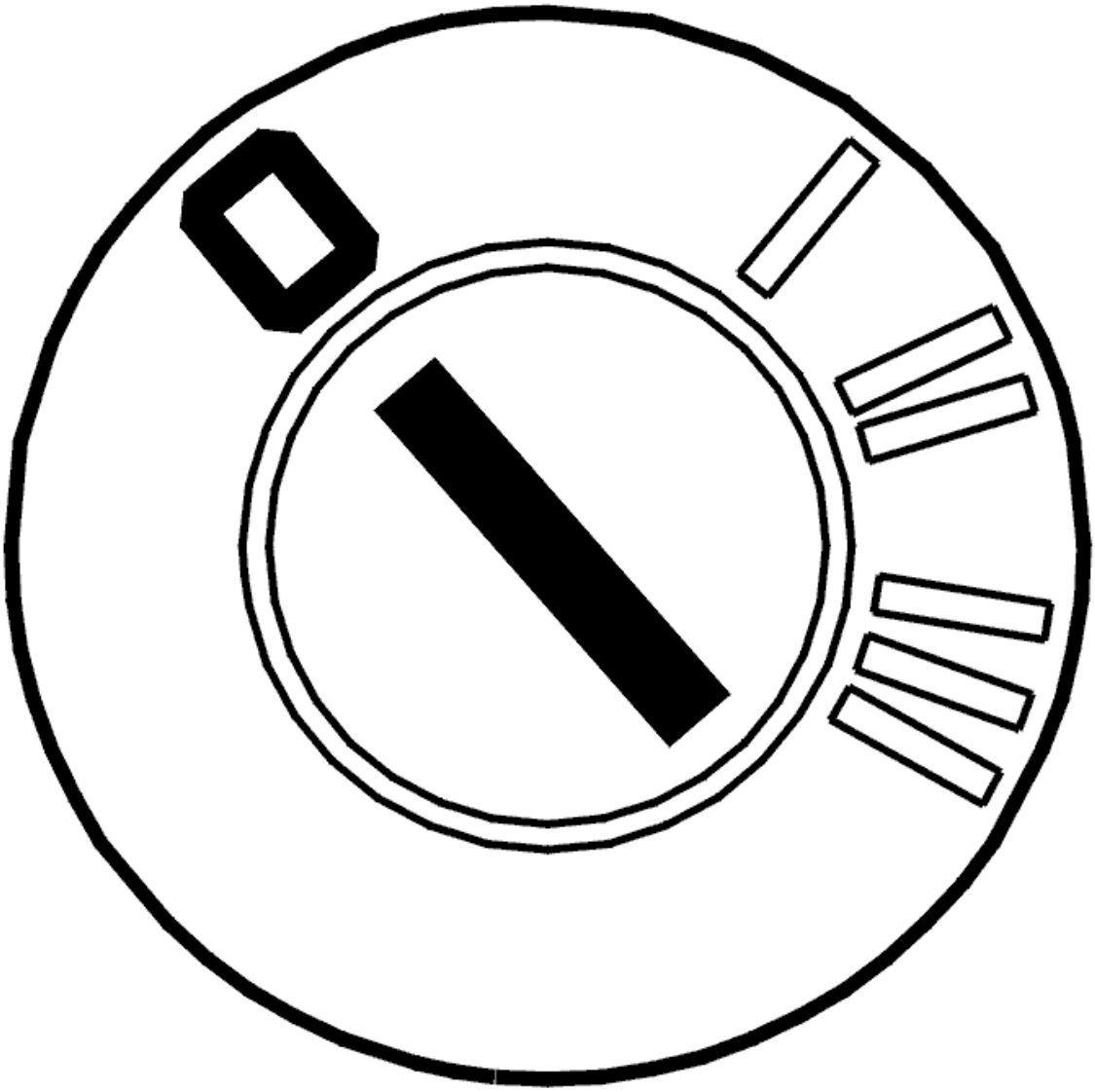

Fig. 262: Identifying Ignition OFF
Courtesy of VOLVO CARS CORPORATION

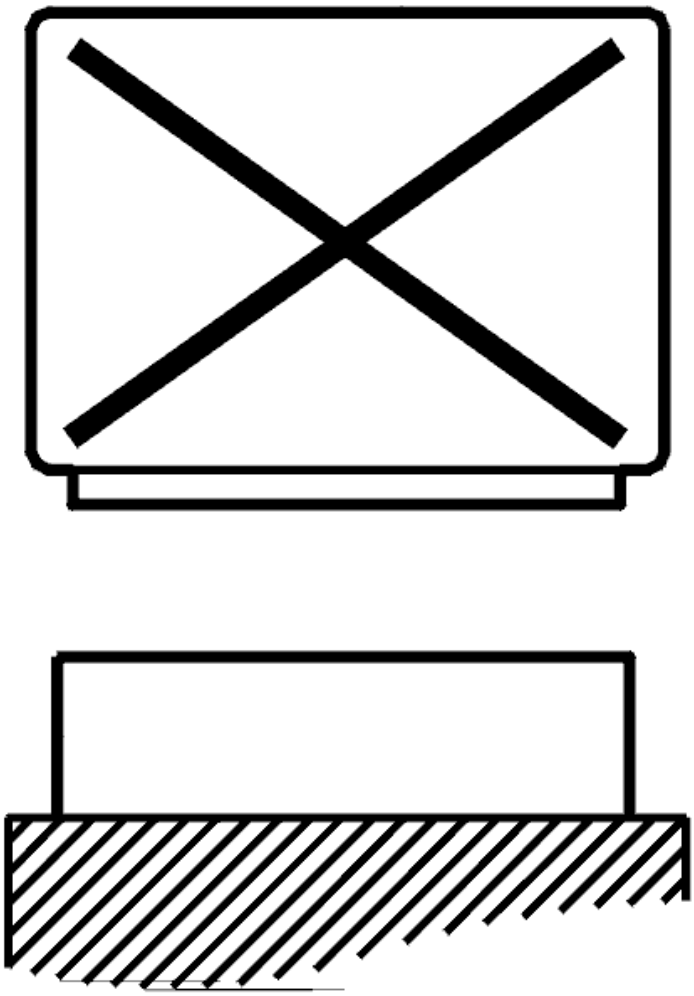

Fig. 263: Disconnecting Control Unit
Courtesy of VOLVO CARS CORPORATION

- Ignition off
- The control module for the steering wheel angle sensor disconnected
- Steering wheel module (SWM) disconnected
- Connect the breakout box to the control module for the steering wheel angle sensor and to the steering wheel module (SWM)

  Check the wiring between the control module for the steering wheel angle sensor terminal #12 (#A36) and steering wheel module (SWM) terminal #13 (#A13). Check for a short-circuit to ground according to **SHORT-CIRCUIT TO GROUND, PERMANENT FAULTS** . Check for an open-circuit according to **OPEN-CIRCUIT, PERMANENT FAULTS** .

  Try replacing the steering wheel angle sensor if no faults are found in the wiring between the control

module for the steering wheel angle sensor and the steering wheel module (SWM).

Other information:

- To connect the breakout box to the control module for the steering wheel angle sensor, see **STEERING WHEEL MODULE (SWM), REPLACING**
- To connect the breakout box to the steering wheel module (SWM), see **CONNECTING THE BREAKOUT BOX**
- To replace the steering wheel angle sensor, see **CONTACT REEL, REPLACEMENT**
- For information about signals, see **SIGNAL DESCRIPTION, CONTROL UNIT FOR THE STEERING WHEEL ANGLE SENSOR (SAS)** and **SIGNAL SPECIFICATION** .

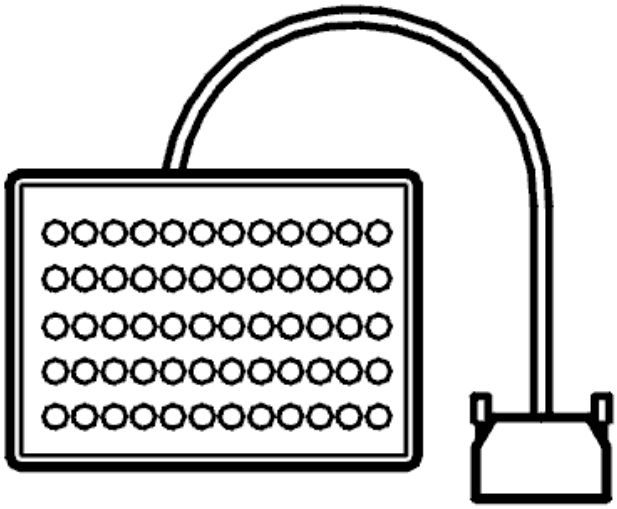

Fig. 264: Breakout Box
Courtesy of VOLVO CARS CORPORATION

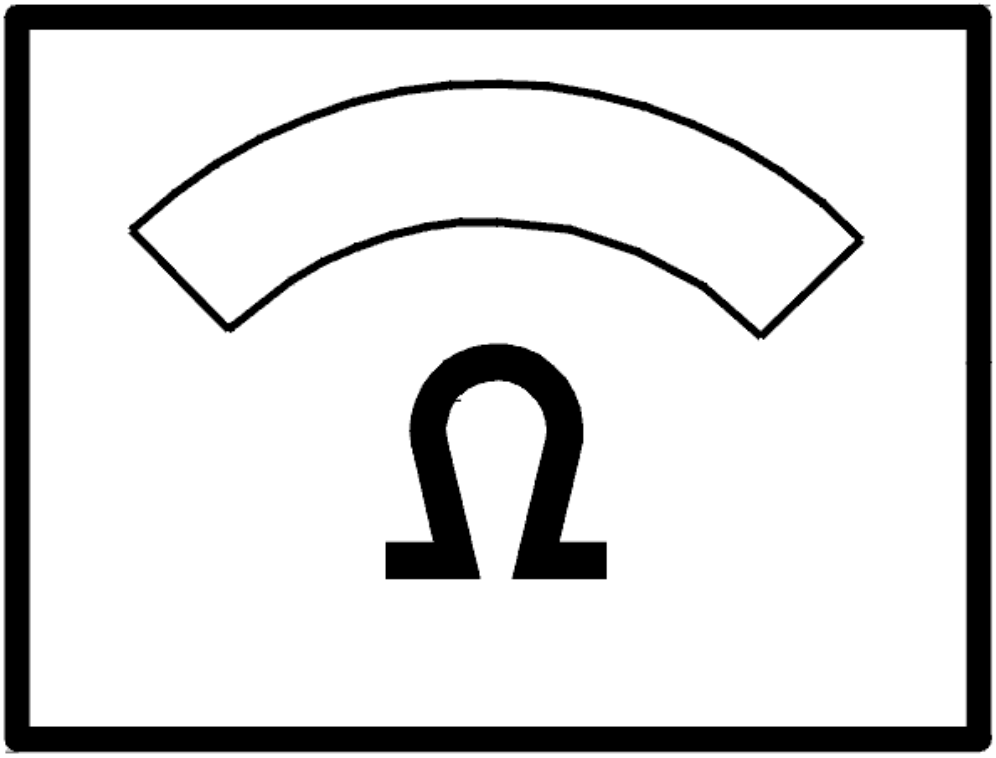

Fig. 265: Identifying Ohm Meter
Courtesy of VOLVO CARS CORPORATION

- **Continue**

  Refer to **VERIFICATION**

VERIFICATION

HINT: After the repair it is necessary to check that the fault has been rectified.

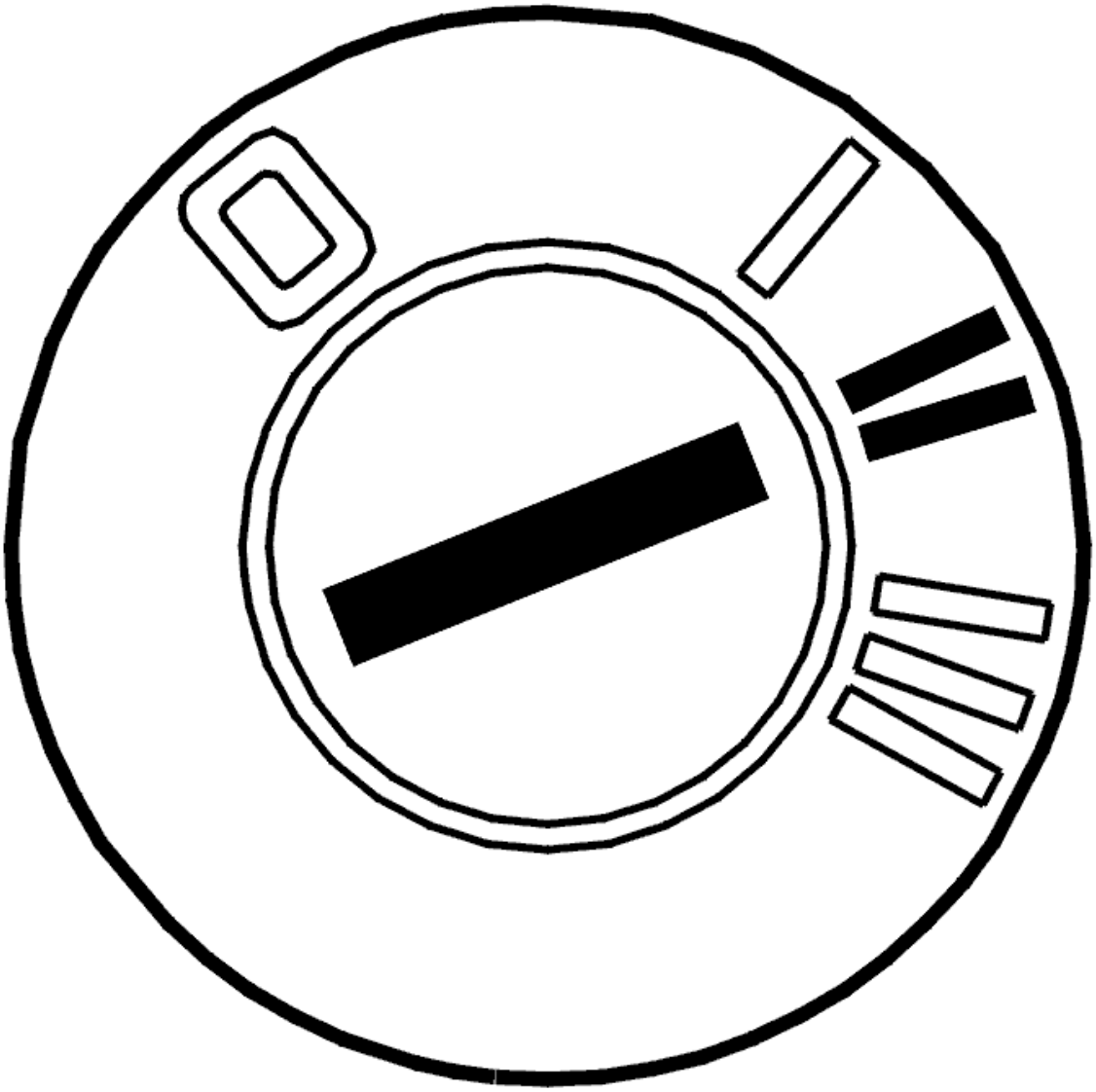

Fig. 266: Identifying Ignition ON
Courtesy of VOLVO CARS CORPORATION

- Ignition off.
- Connect the connectors, install the components, etc.
- Ignition on.
- Read off steering wheel angle signal R2.
- Turn the steering wheel to full lock in both directions.

  The value should change between OFF and ON.

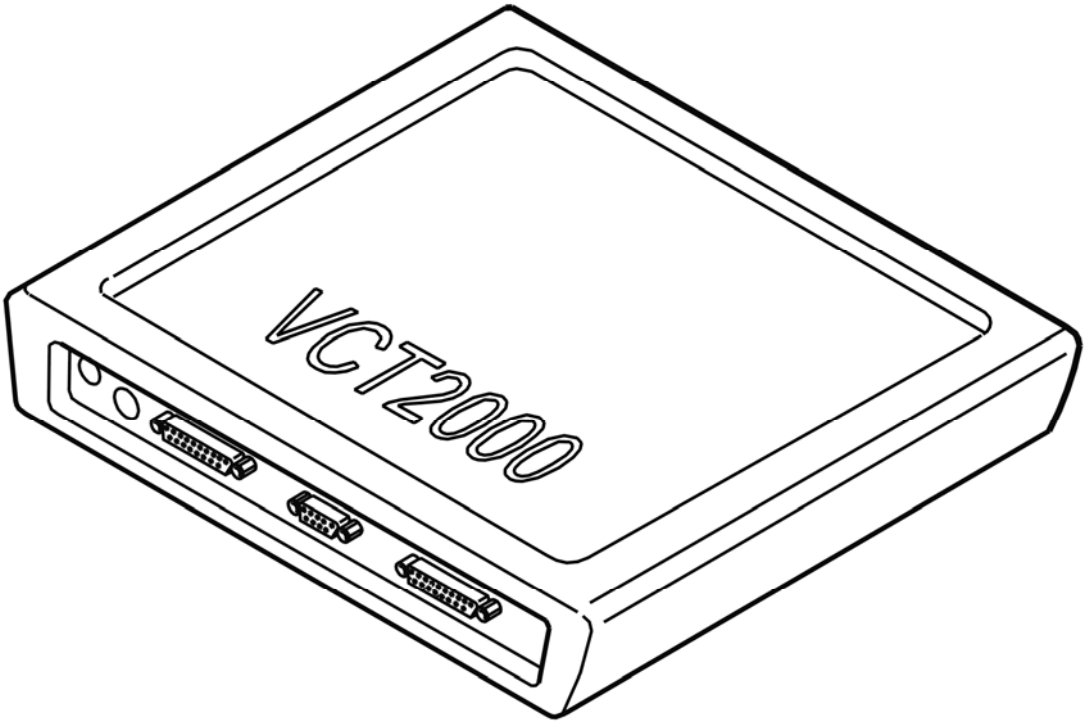

Fig. 267: Identifying VCT2000 Diagnostic Tool Symbol In VIDA
Courtesy of VOLVO CARS CORPORATION

Does the value change?

- **YES**

  VERIFIED: Troubleshooting has been completed.

- **NO**

  Refer to **INFORMATION**

INFORMATION

FAULT-TRACING INFORMATION

The fault should have been detected and remedied. As this is not the case fault-tracing has failed.

Exit fault-tracing for this diagnostic trouble code (DTC) or make another attempt.

SAS-0015: STEERING WHEEL ANGLE SENSOR. INTERNAL FAULT (B5254T2; 2005-2007)

DIAGNOSTIC TROUBLE CODE (DTC) INFORMATION SAS-0015

Condition

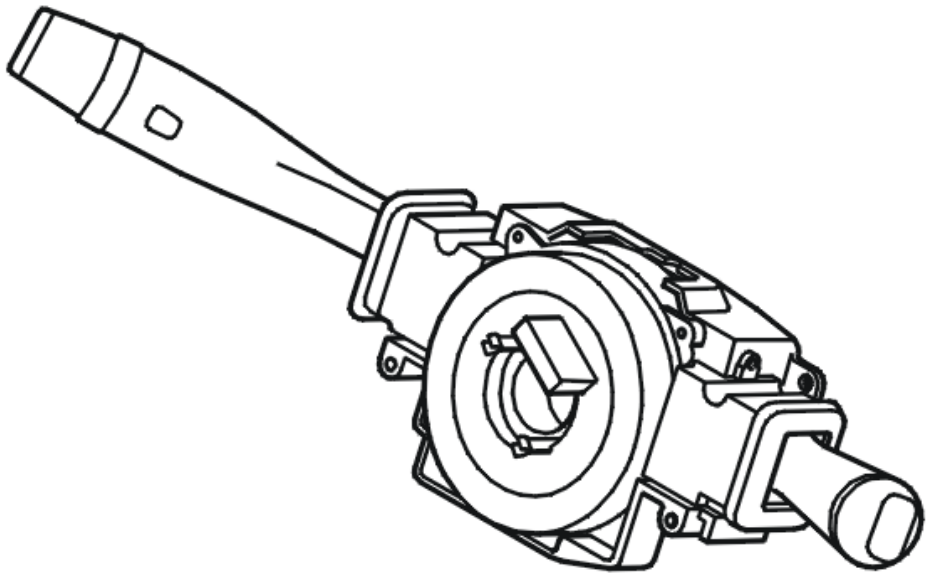

Fig. 268: Identifying Steering Wheel Control Module
Courtesy of VOLVO CARS CORPORATION

The Steering wheel angle sensor module (SAS) is located in the lever module together with the steering wheel module (SWM) and is supplied with power by it.

The diagnostic trouble code (DTC) is stored if the voltage supply (5 V) for the steering wheel angle sensor is missing.

The diagnostic trouble code (DTC) can be diagnosed when the ignition is switched on and the steering wheel angle sensor is initiated. Initiation is carried out when the steering wheel is turned more than 4.5° in any direction.

Substitute Value

- The stability function is blocked.

Possible Source

- Open-circuit in the circuit for internal power supply cable to the steering wheel angle sensor.

Fault symptom[s]

- Anti-spin warning lamp lit.
- General warning lamp lit.
- The stability control system does not function.

INTERNAL FAULT

see **INTERNAL FAULT**

SAS-0015: STEERING WHEEL ANGLE SENSOR. INTERNAL FAULT (B6294T; 2005-2006)

DIAGNOSTIC TROUBLE CODE (DTC) INFORMATION SAS-0015

see **DIAGNOSTIC TROUBLE CODE (DTC) INFORMATION SAS-0015**

INTERNAL FAULT

see **INTERNAL FAULT**

SAS-0015: STEERING WHEEL POSITION SIGNAL R3. SIGNAL TOO HIGH. INTERMITTENT FAULT (2003-2004)

DIAGNOSTIC TROUBLE CODE INFORMATION

see **DIAGNOSTIC TROUBLE CODE INFORMATION**

SIGNAL TOO HIGH. INTERMITTENT FAULT

CHECKING THE WIRING AND CONNECTIONS

Check the wires between steering wheel angle sensor (SAS) control unit #13 (#A37) and steering wheel control unit (SWM) #11 (#A11) for a short circuit to voltage supply, as described in, see **SHORT-CIRCUIT TO SUPPLY VOLTAGE, INTERMITTENT FAULTS** .

Additional information:

- To connect the test box to the steering wheel angle sensor control unit, see **CONNECTING THE BREAKOUT BOX TO THE STEERING ANGLE SENSOR** .
- To connect the test box to the steering wheel control unit, see **CONNECTING THE BREAKOUT BOX** .
- For information on signals, see **SIGNAL DESCRIPTION, CONTROL UNIT FOR THE STEERING WHEEL ANGLE SENSOR (SAS)** and **SIGNAL SPECIFICATION** .

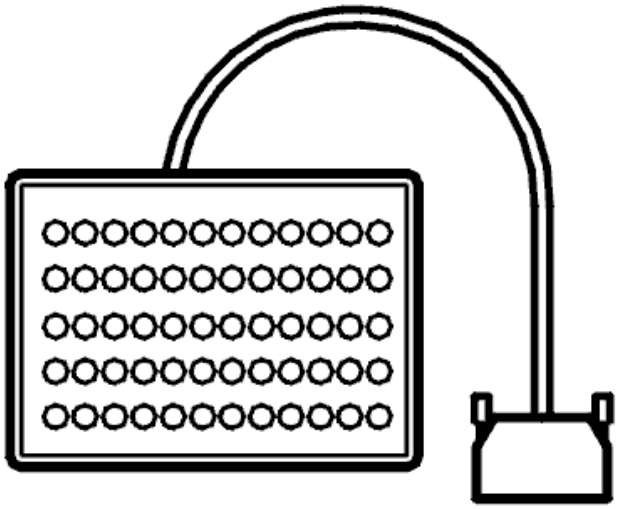

Fig. 269: Breakout Box
Courtesy of VOLVO CARS CORPORATION

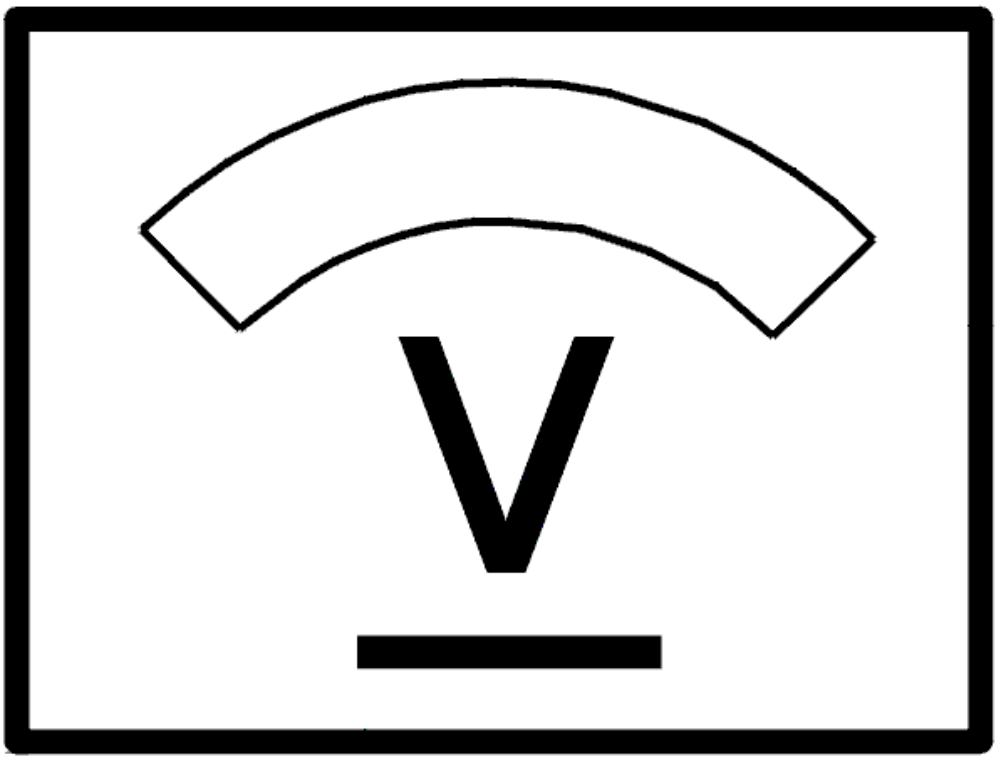

Fig. 270: Identifying Voltage Display
Courtesy of VOLVO CARS CORPORATION

- **Continue**

  Refer to **INFORMATION**

INFORMATION

FAULT-TRACING INFORMATION

If the fault is intermittent, do not verify fault-tracing if the fault does not recur.

It is possible to view the information again, or leave fault-tracing for this diagnostic trouble code (DTC).

SAS-0015: STEERING WHEEL POSITION SIGNAL R3. SIGNAL TOO HIGH.

PERMANENT FAULT (2003-2004)

DIAGNOSTIC TROUBLE CODE INFORMATION

see **DIAGNOSTIC TROUBLE CODE INFORMATION**

SIGNAL TOO HIGH. PERMANENT FAULT

CHECKING THE CONNECTORS

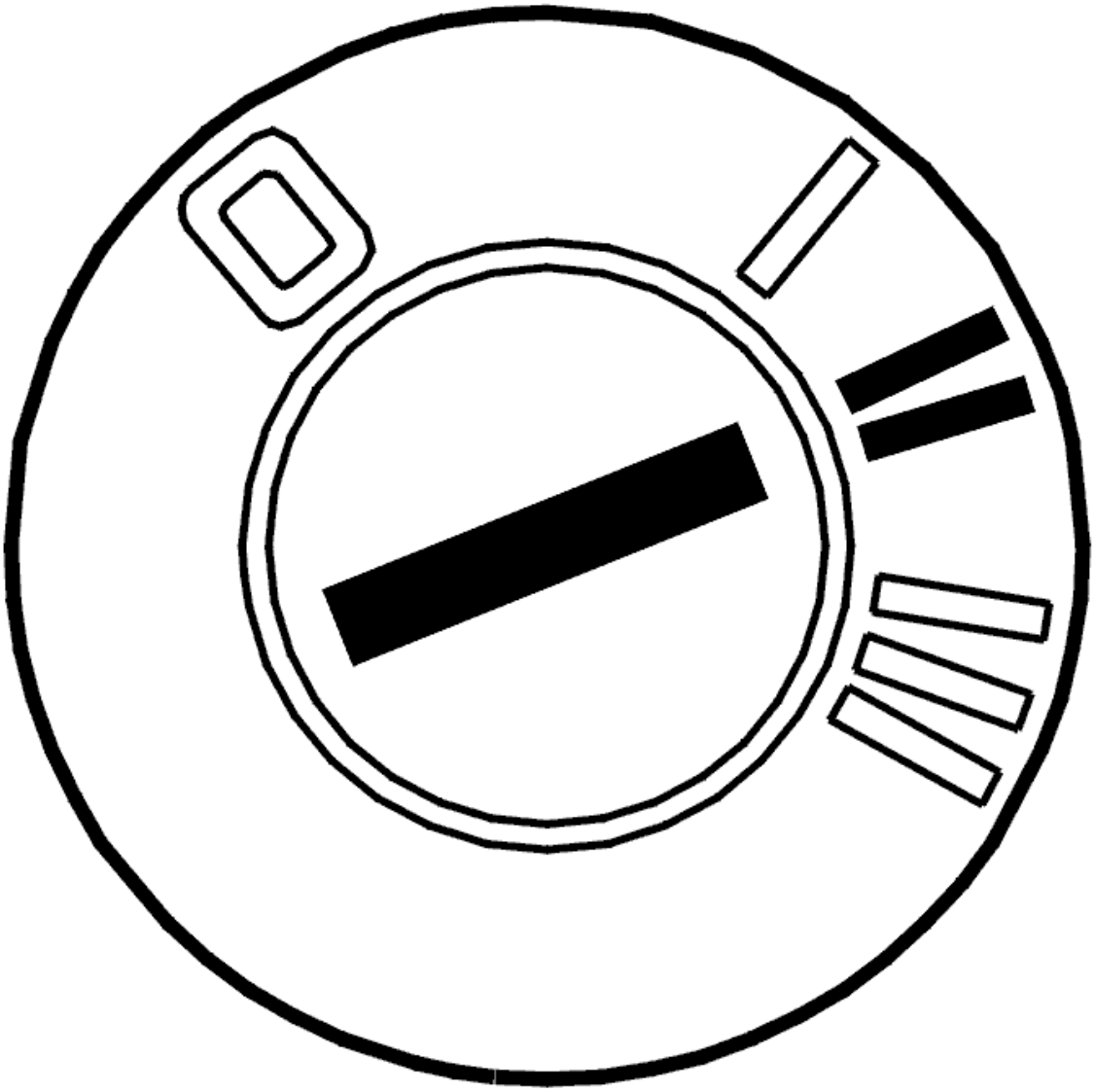

Fig. 271: Identifying Ignition ON
Courtesy of VOLVO CARS CORPORATION

- Ignition off
- Check the control module for the steering wheel angle sensor and the steering wheel module (SWM)

connectors. Check for contact resistance and oxidation according to **CONTACT RESISTANCE AND OXIDATION**

- Reinstall the components, reconnect the connectors etc.
- Ignition on
- Read off the status of steering wheel angle signal R3.

Turn the steering wheel in both directions and check that the value changes between ON and OFF.

If the value changes, the cause of the fault was contact resistance or oxidation in the control module or in the steering wheel angle sensor connector.

Other information:

- To access the connector for the control module for the steering wheel angle sensor, see **STEERING WHEEL MODULE (SWM), REPLACING**
- To access the connector for the steering wheel module (SWM), see **STEERING WHEEL MODULE (SWM), REPLACING**
- For information about signals, see **SIGNAL DESCRIPTION, CONTROL UNIT FOR THE STEERING WHEEL ANGLE SENSOR (SAS)** and **SIGNAL SPECIFICATION** .

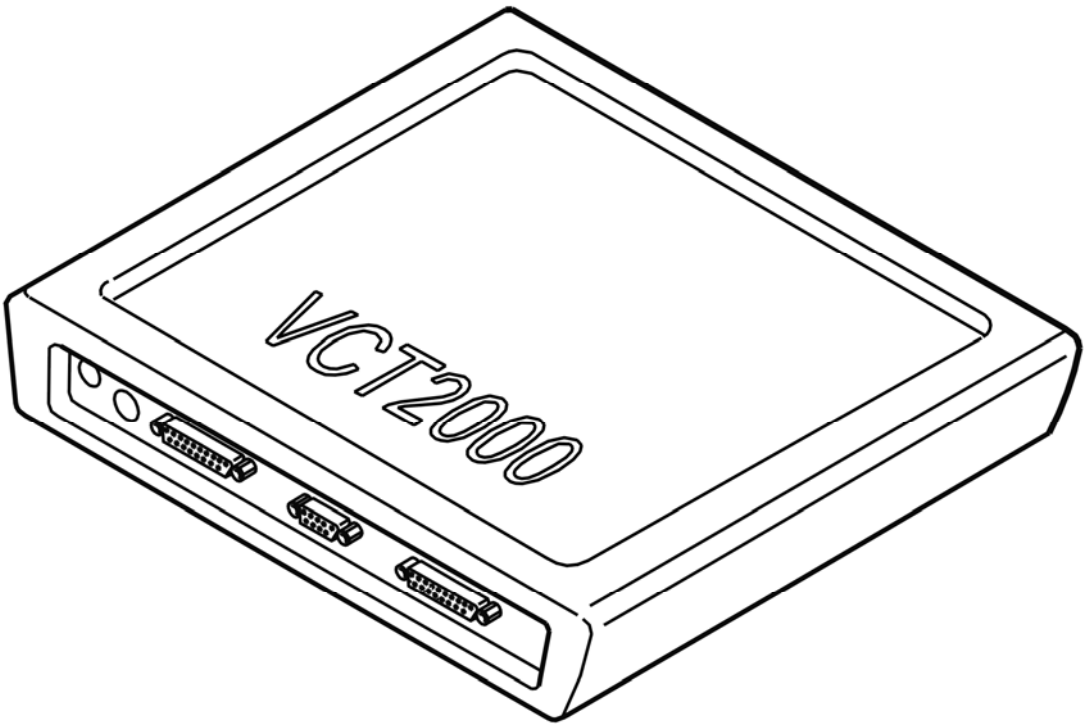

Fig. 272: Identifying VCT2000 Diagnostic Tool Symbol In VIDA
Courtesy of VOLVO CARS CORPORATION

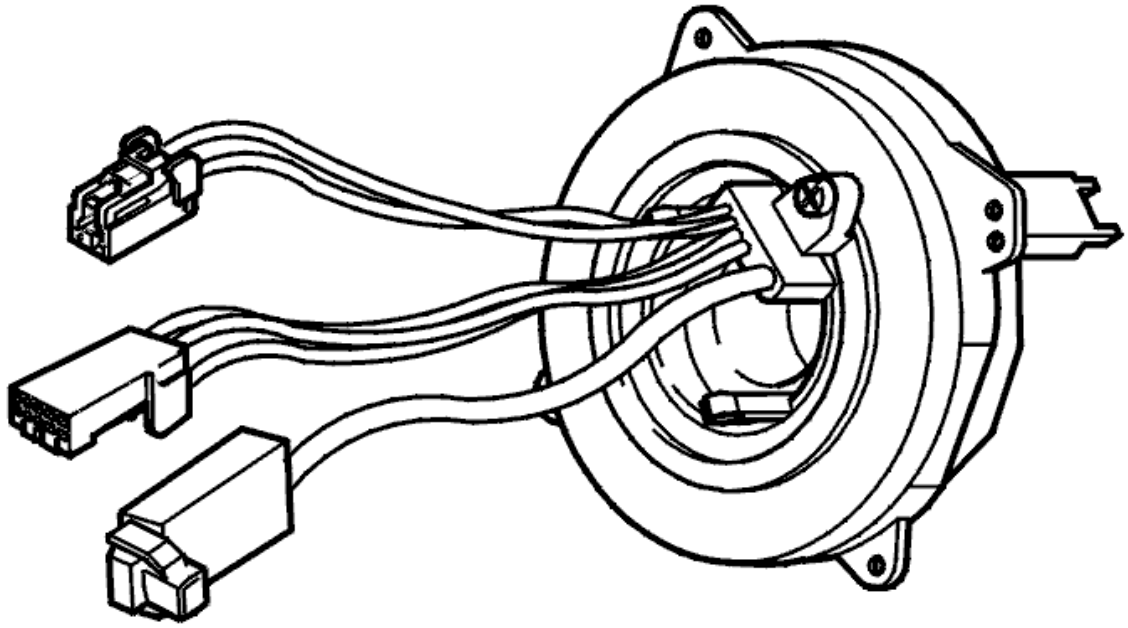

Fig. 273: Identifying Steering Wheel Angle Sensor
Courtesy of VOLVO CARS CORPORATION

Does the value change between OFF and ON?

- **YES**

  OKAY: Troubleshooting has been completed.

- **NO**

  Refer to **CHECKING WIRING AND SENSORS**

CHECKING WIRING AND SENSORS

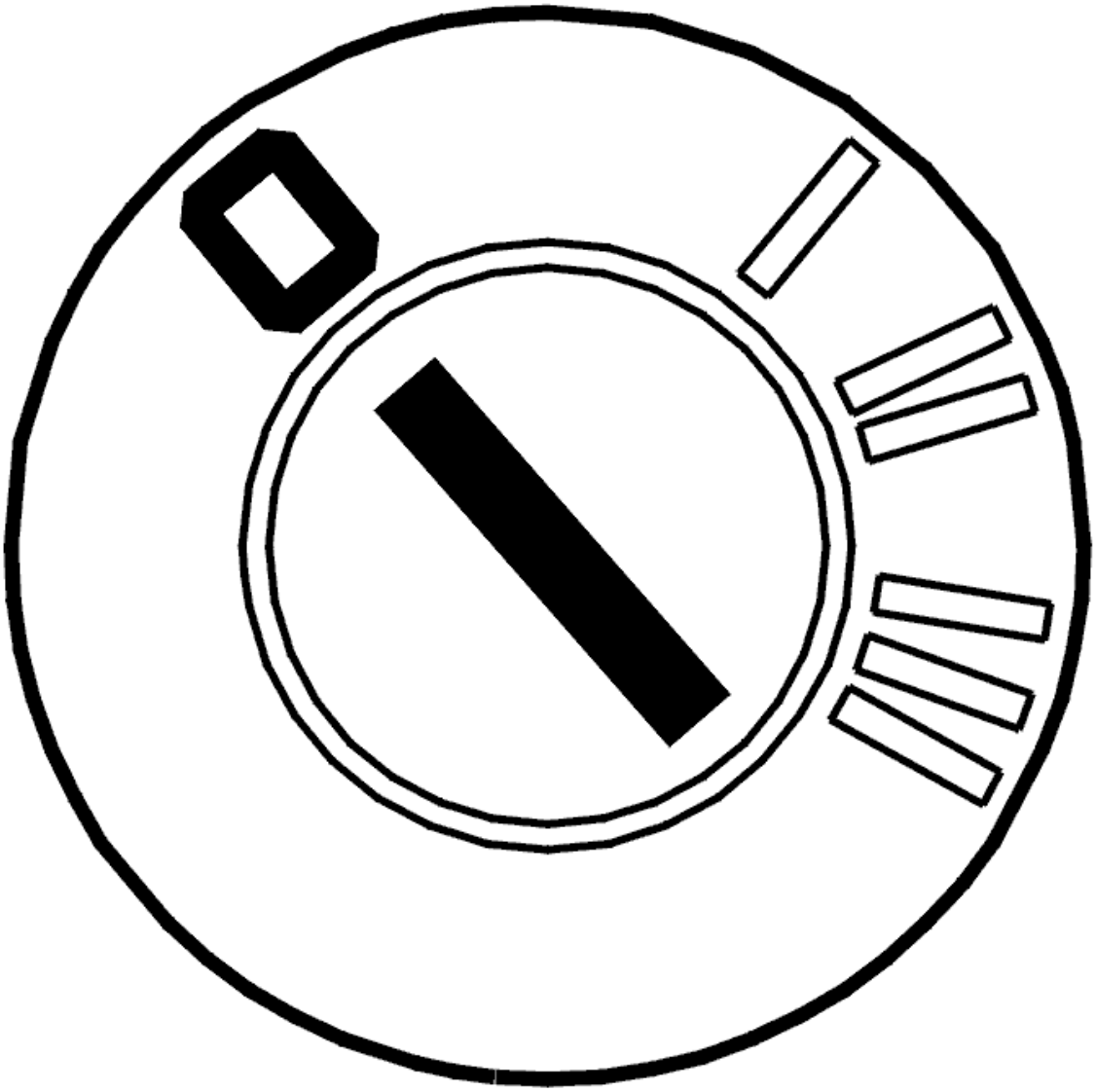

Fig. 274: Identifying Ignition OFF
Courtesy of VOLVO CARS CORPORATION

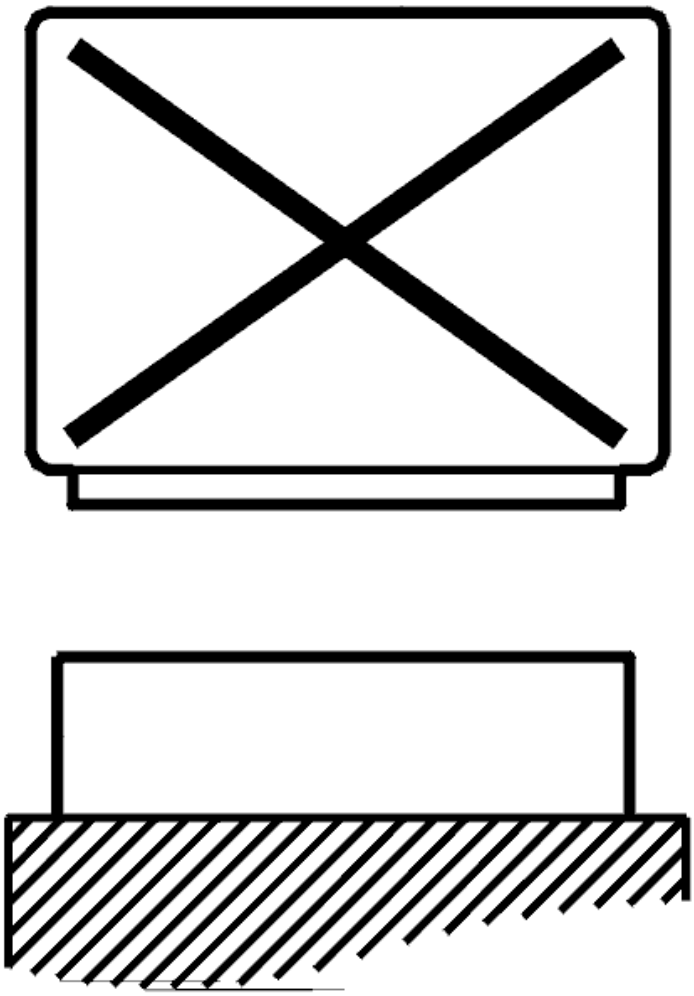

Fig. 275: Disconnecting Control Unit
Courtesy of VOLVO CARS CORPORATION

- Ignition off
- The control module for the steering wheel angle sensor disconnected
- Steering wheel module (SWM) disconnected
- Connect the breakout box to the control module for the steering wheel angle sensor and to the steering wheel module (SWM)

  Check the wiring between the control module for the steering wheel angle sensor terminal #13 (#A37) and steering wheel module (SWM) terminal #11 (#A11). Check for an open-circuit according to **OPEN-CIRCUIT, PERMANENT FAULTS** . Check for a short-circuit to supply voltage according to **SHORT-CIRCUIT TO SUPPLY VOLTAGE. PERMANENT FAULTS** .

  Try replacing the steering wheel angle sensor if no faults are found in the cable between the control

module for the steering wheel angle sensor and the steering wheel module (SWM).

Other information:

- To access the connector for the control module for the steering wheel angle sensor, see **STEERING WHEEL MODULE (SWM), REPLACING**
- To access the connector for the steering wheel module (SWM), see **STEERING WHEEL MODULE (SWM), REPLACING**
- To connect the breakout box to the control module for the steering wheel angle sensor, see **CONNECTING THE BREAKOUT BOX TO THE STEERING ANGLE SENSOR**
- To connect the breakout box to the steering wheel module (SWM), see **CONNECTING THE BREAKOUT BOX**
- To replace the steering wheel angle sensor, see **CONTACT REEL, REPLACEMENT**
- For information about signals, see **SIGNAL DESCRIPTION, CONTROL UNIT FOR THE STEERING WHEEL ANGLE SENSOR (SAS)** and **SIGNAL SPECIFICATION** .

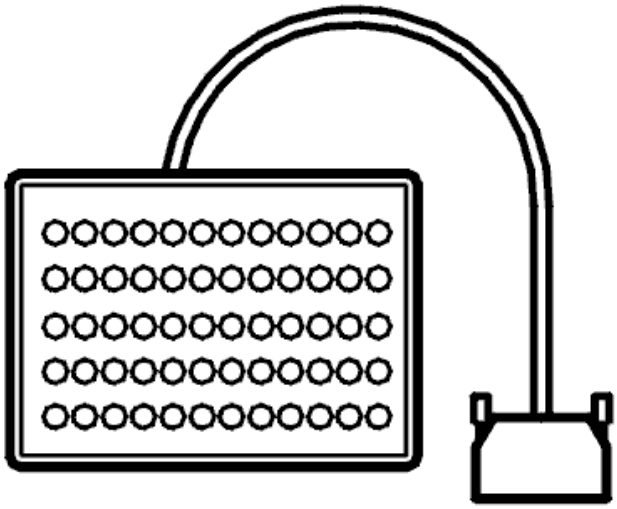

Fig. 276: Breakout Box
Courtesy of VOLVO CARS CORPORATION

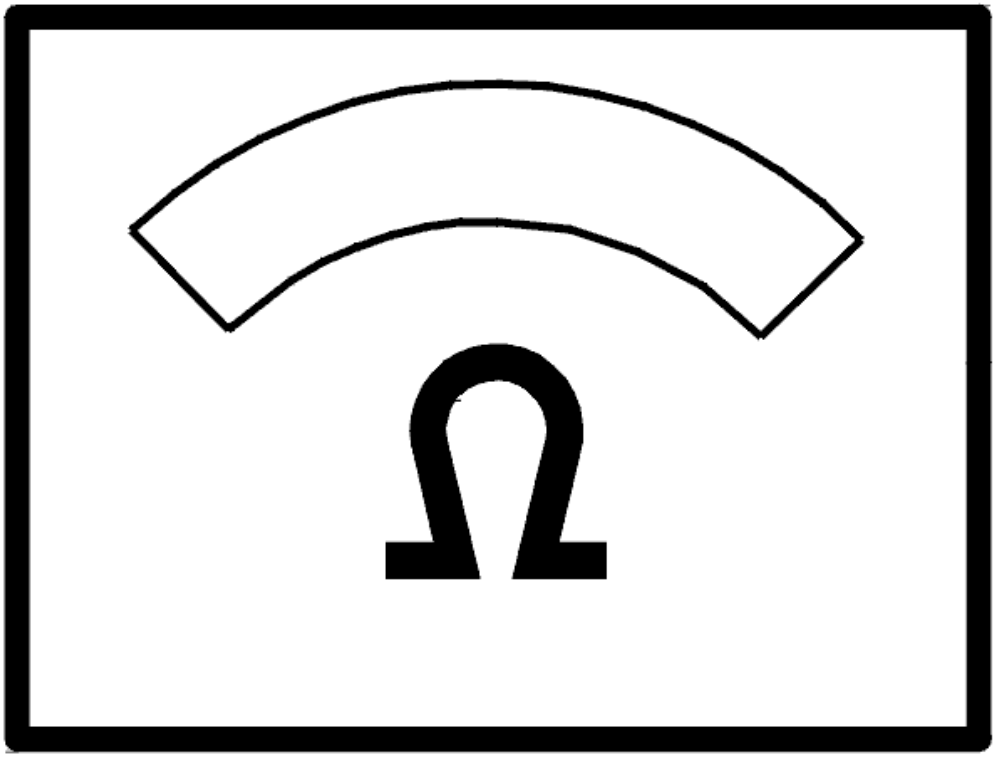

Fig. 277: Identifying Ohm Meter
Courtesy of VOLVO CARS CORPORATION

- **Continue**

  Refer to **VERIFICATION**

VERIFICATION

HINT: After the repair it is necessary to check that the fault has been rectified.

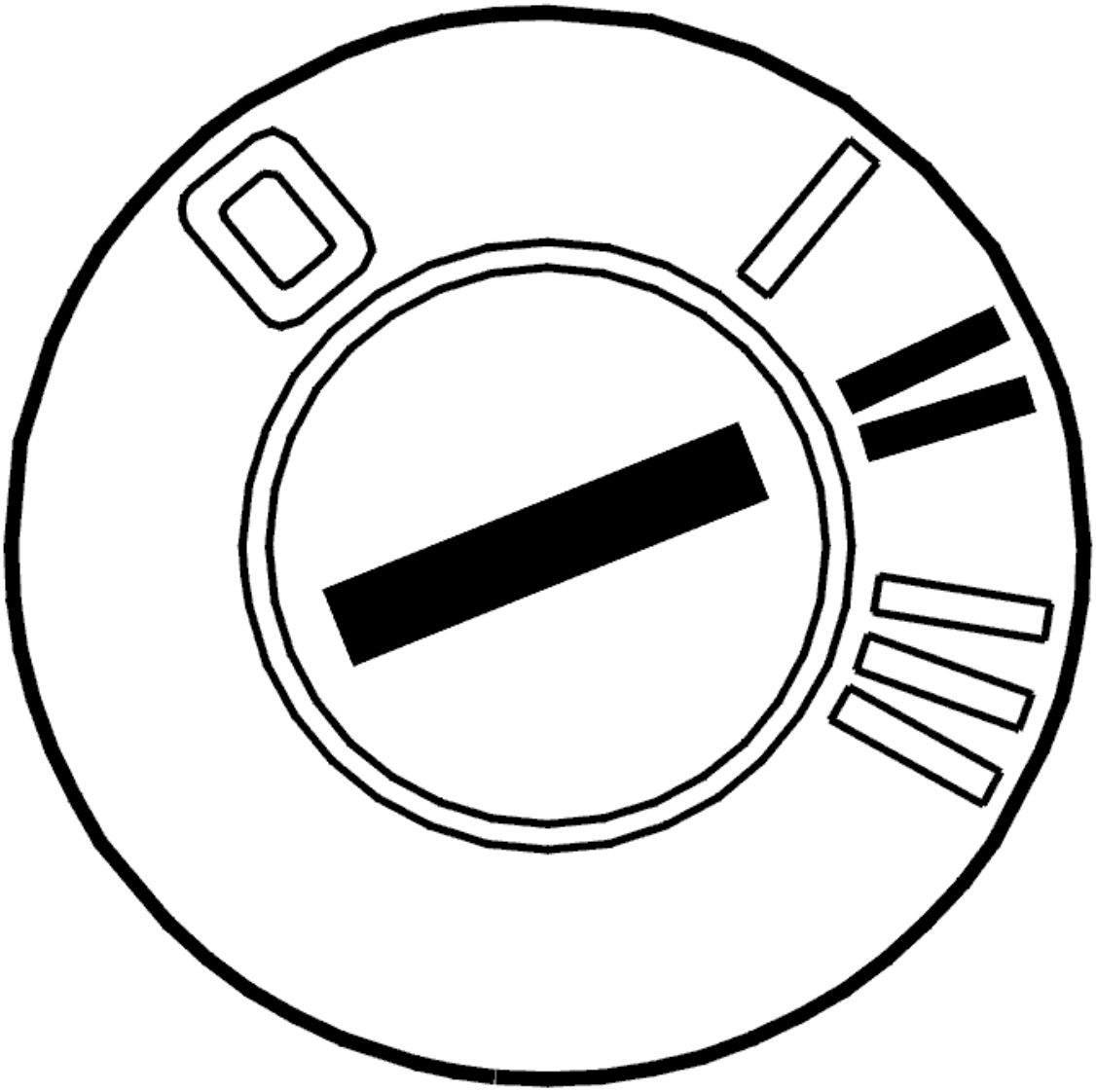

Fig. 278: Identifying Ignition ON
Courtesy of VOLVO CARS CORPORATION

- Ignition off.
- Connect the connectors, install the components, etc.
- Ignition on.
- Read off steering wheel angle signal R3.
- Turn the steering wheel to full lock in both directions.

  The value should change between OFF and ON.

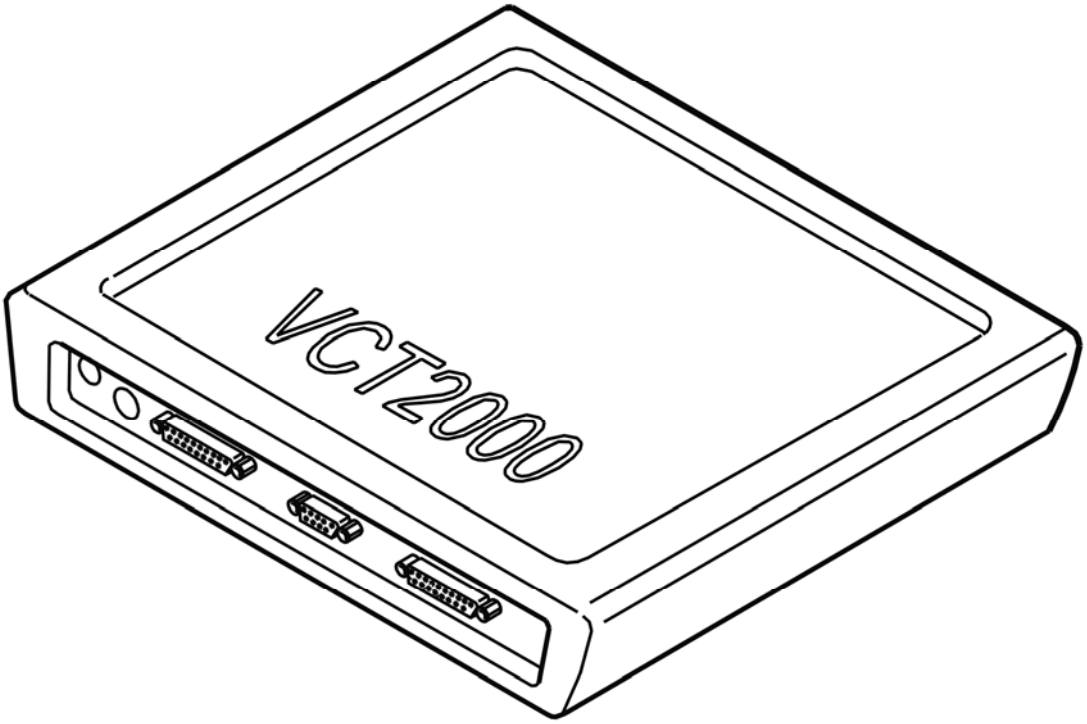

Fig. 279: Identifying VCT2000 Diagnostic Tool Symbol In VIDA
Courtesy of VOLVO CARS CORPORATION

Does the value change?

- **YES**

  VERIFIED: Troubleshooting has been completed.

- **NO**

  Refer to **INFORMATION**

INFORMATION

FAULT-TRACING INFORMATION

The fault should have been detected and remedied. As this is not the case fault-tracing has failed.

Exit fault-tracing for this diagnostic trouble code (DTC) or make another attempt.

STEERING

Steering - General Diagnostics And Tests

CHECKING THE GROUND TERMINAL FOR THE STEERING WHEEL MODULE (SWM) (2003-2004)

CHECKING THE GROUND TERMINAL

CHECKING THE GROUND TERMINAL

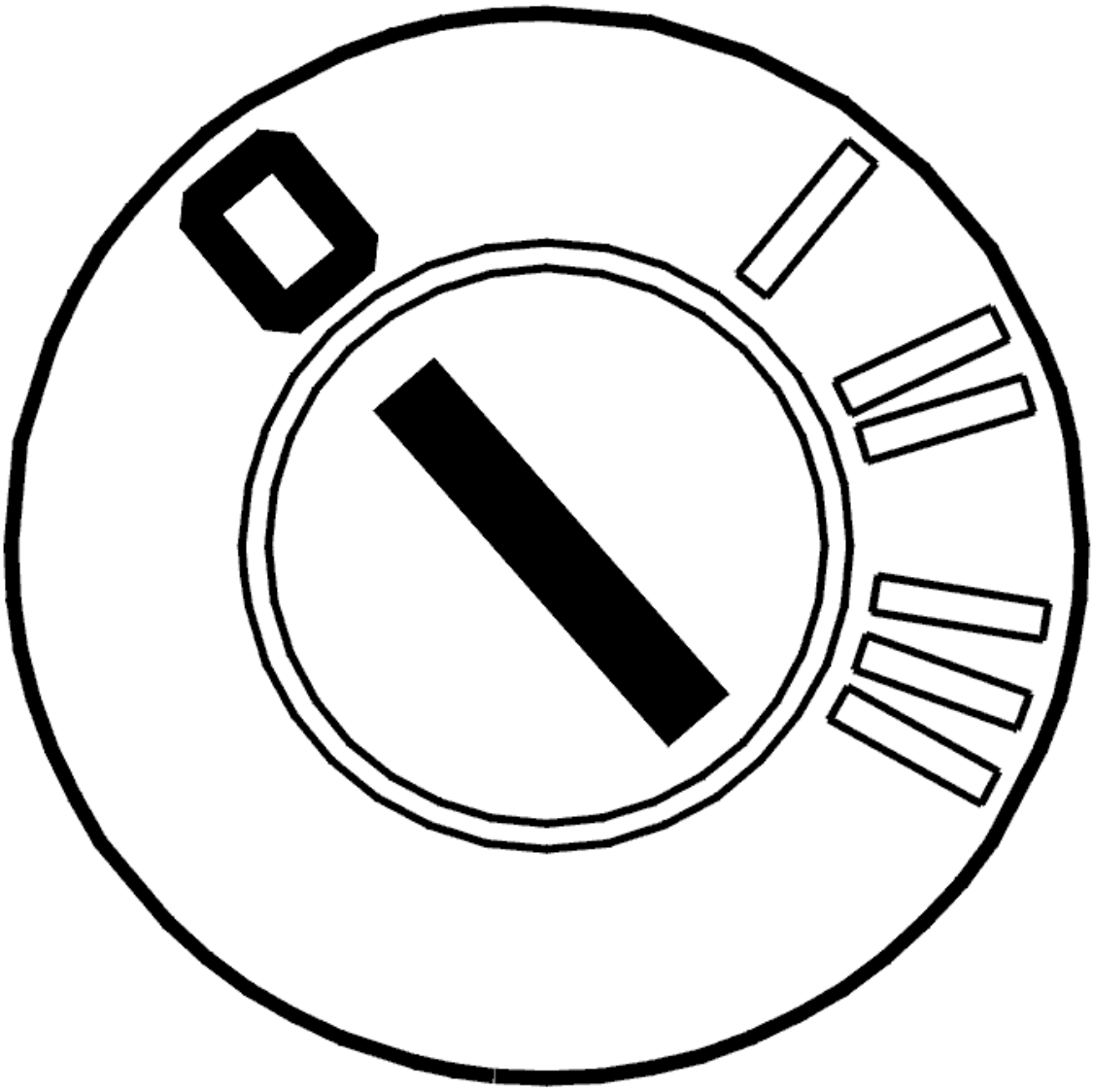

Fig. 1: Identifying Ignition OFF
Courtesy of VOLVO CARS CORPORATION

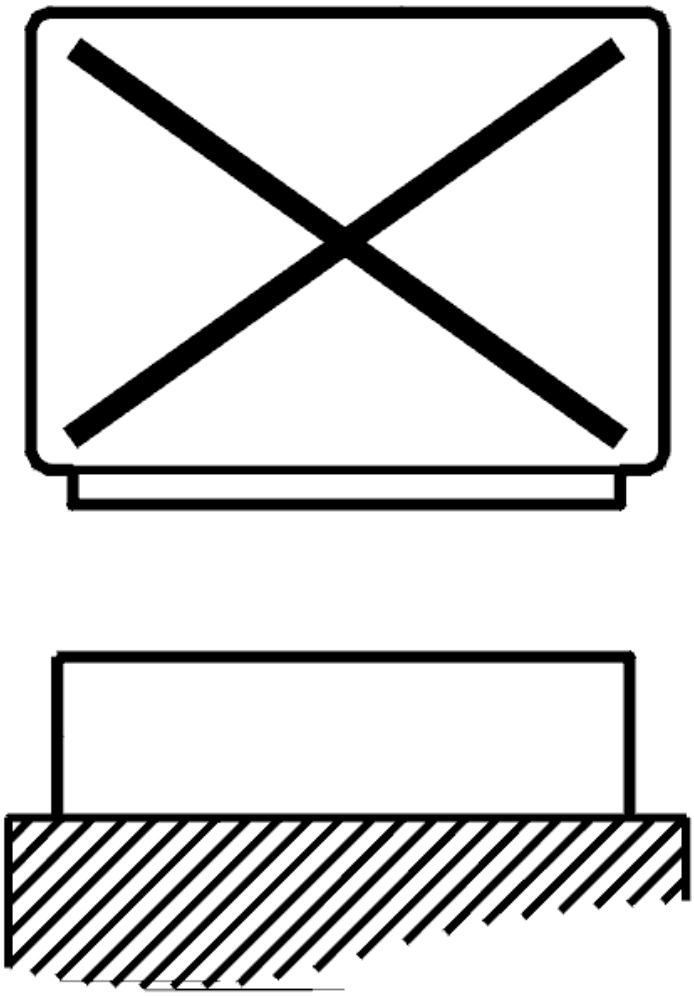

Fig. 2: Disconnecting Control Unit
Courtesy of VOLVO CARS CORPORATION

- Ignition off
- the control module disconnected
- Switch off all equipment that takes power from the battery (courtesy lighting, radio etc).

  Connect an ohmmeter between terminal #16 on the breakout box and the battery negative terminal.

  To connect the breakout box, see **CONNECTING THE BREAKOUT BOX**.

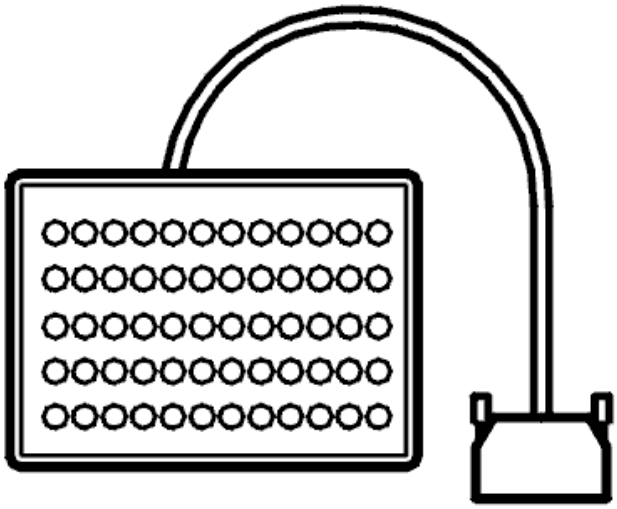

Fig. 3: Breakout Box
Courtesy of VOLVO CARS CORPORATION

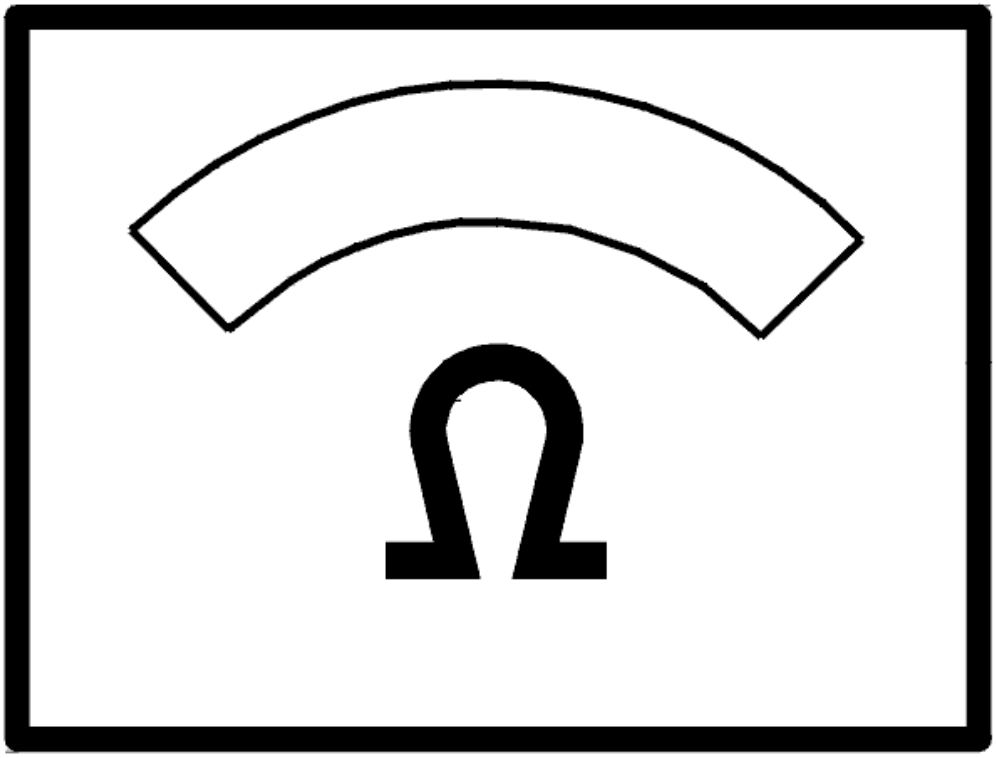

Fig. 4: Identifying Ohm Meter
Courtesy of VOLVO CARS CORPORATION

The ohmmeter should read approximately 0 ohms.

- **OK**

  OKAY: Troubleshooting has been completed.

- **NOT OK**

  Refer to **CHECKING FOR OPEN-CIRCUITS, CONTACT RESISTANCE AND OXIDATION**

CHECKING FOR OPEN-CIRCUITS, CONTACT RESISTANCE AND OXIDATION

For the control module , check ground terminal 31/84 and the wiring connected to it. Check for an open-

circuit. See **OPEN-CIRCUIT, PERMANENT FAULTS**. Check for contact resistance and oxidation. See **CONTACT RESISTANCE AND OXIDATION**.

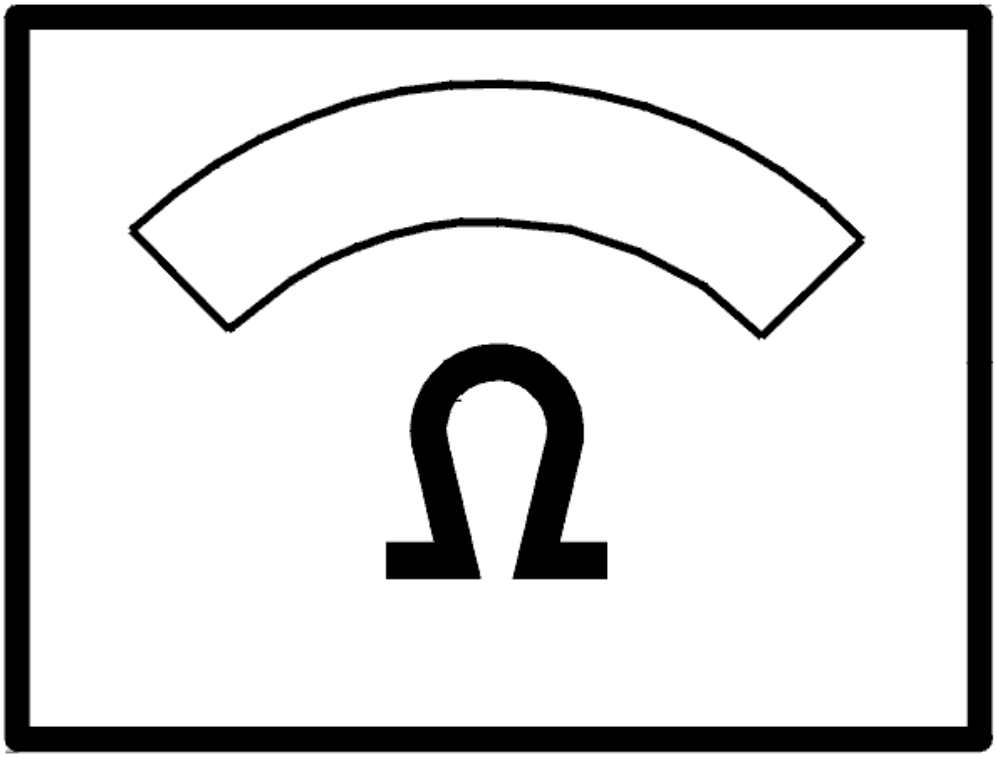

Fig. 5: Identifying Ohm Meter
Courtesy of VOLVO CARS CORPORATION

- **Continue**

  Refer to **VERIFICATION**

VERIFICATION

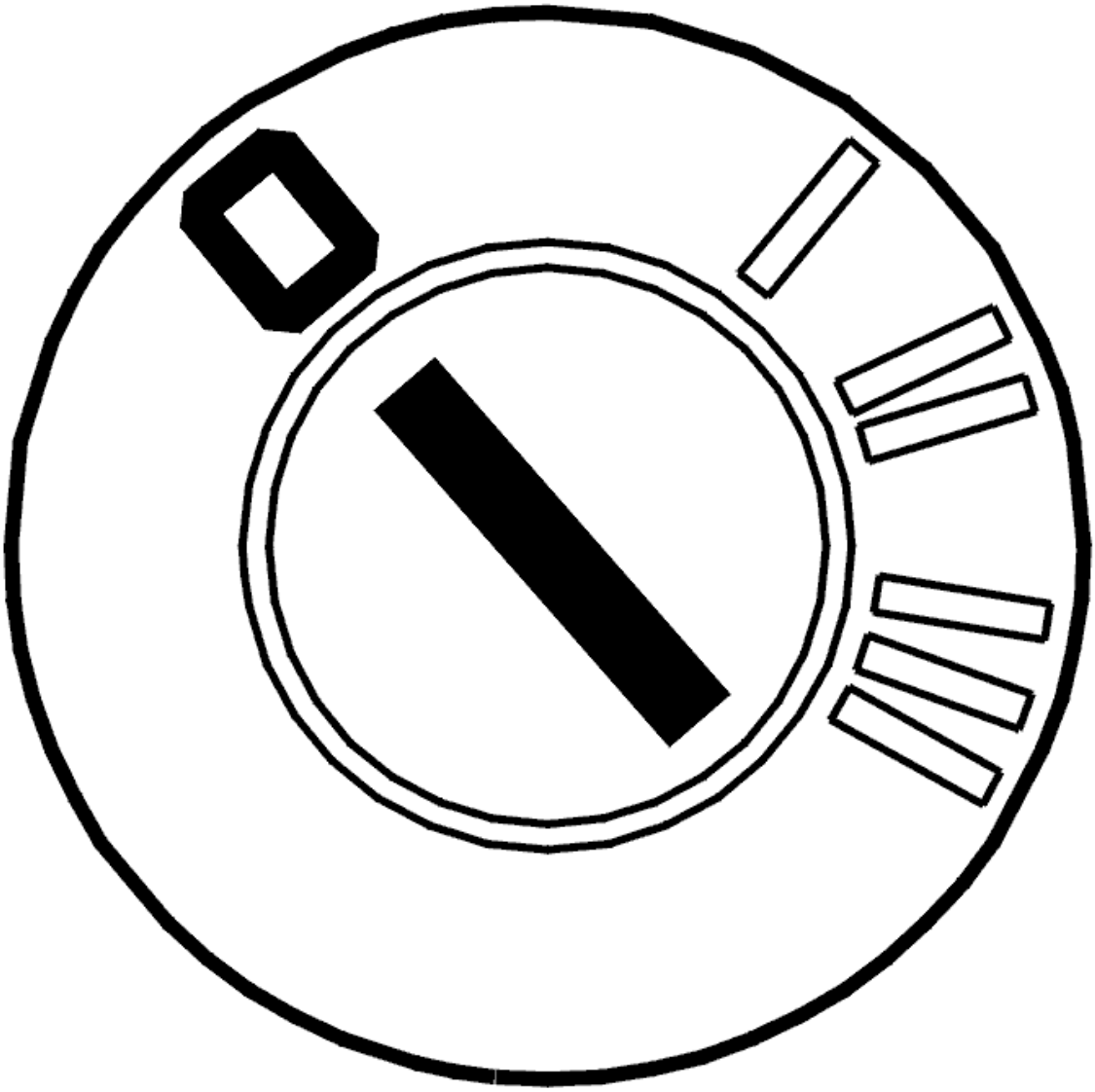

Fig. 6: Identifying Ignition OFF
Courtesy of VOLVO CARS CORPORATION

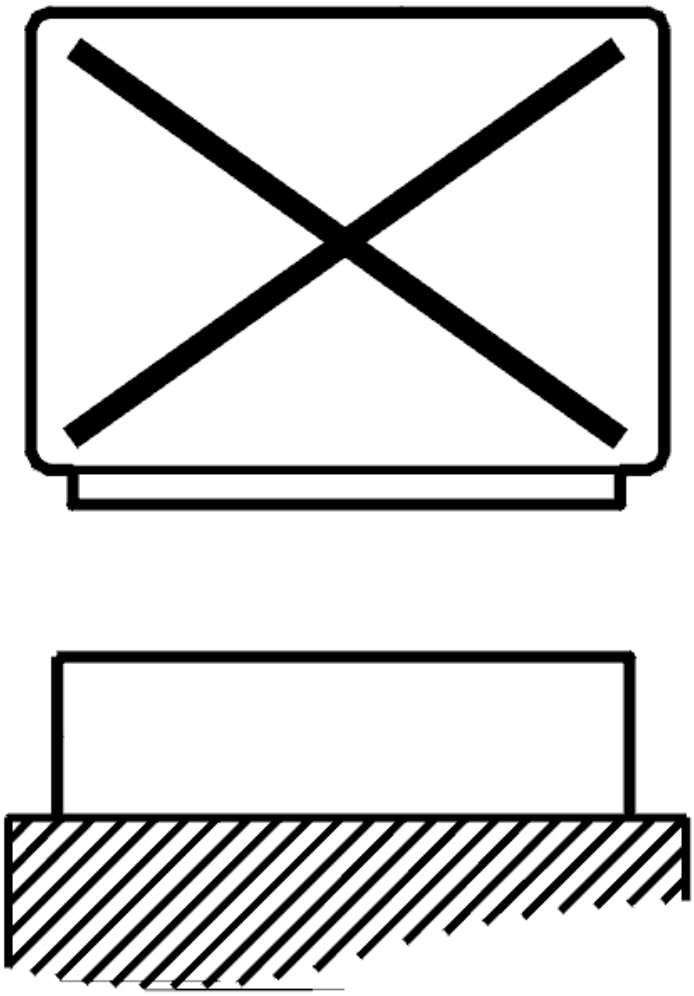

Fig. 7: Disconnecting Control Unit
Courtesy of VOLVO CARS CORPORATION

- Ignition off
- the control module disconnected.
- Switch off all equipment that takes power from the battery (courtesy lighting, radio etc).

  For the control module , connect an ohmmeter between terminal #16 on the breakout box and the battery negative terminal.

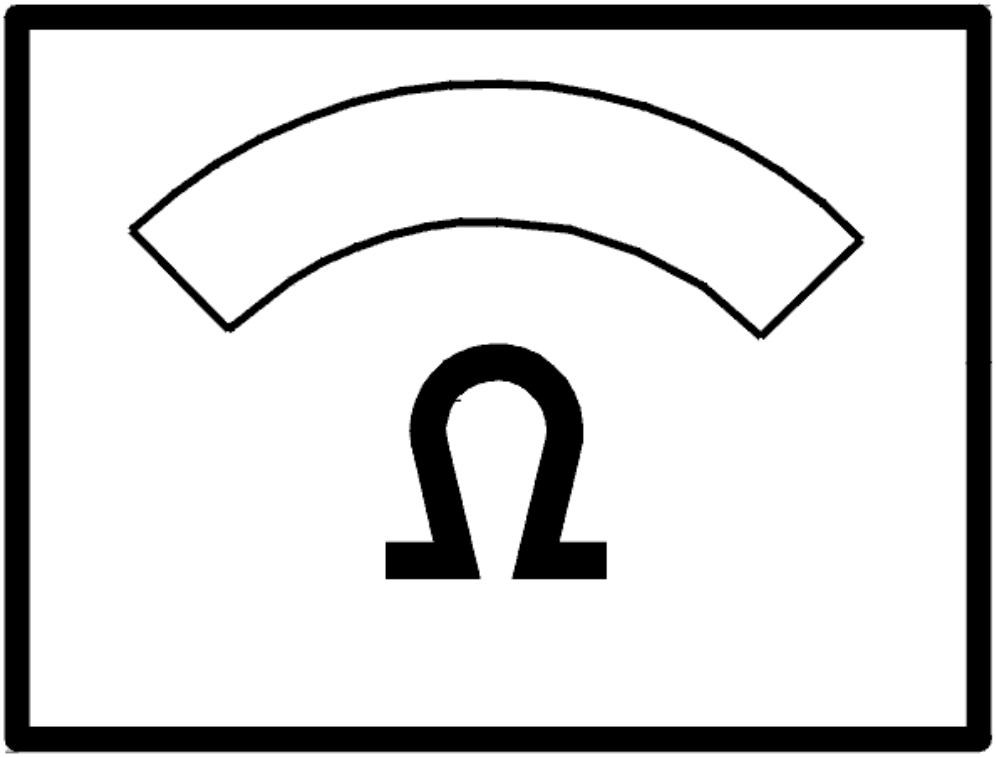

Fig. 8: Identifying Ohm Meter
Courtesy of VOLVO CARS CORPORATION

The ohmmeter should read 0 ohms.

- **YES**

  OKAY: Troubleshooting has been completed.

- **NO**

  Refer to **INFORMATION**

OPEN-CIRCUIT, PERMANENT FAULTS

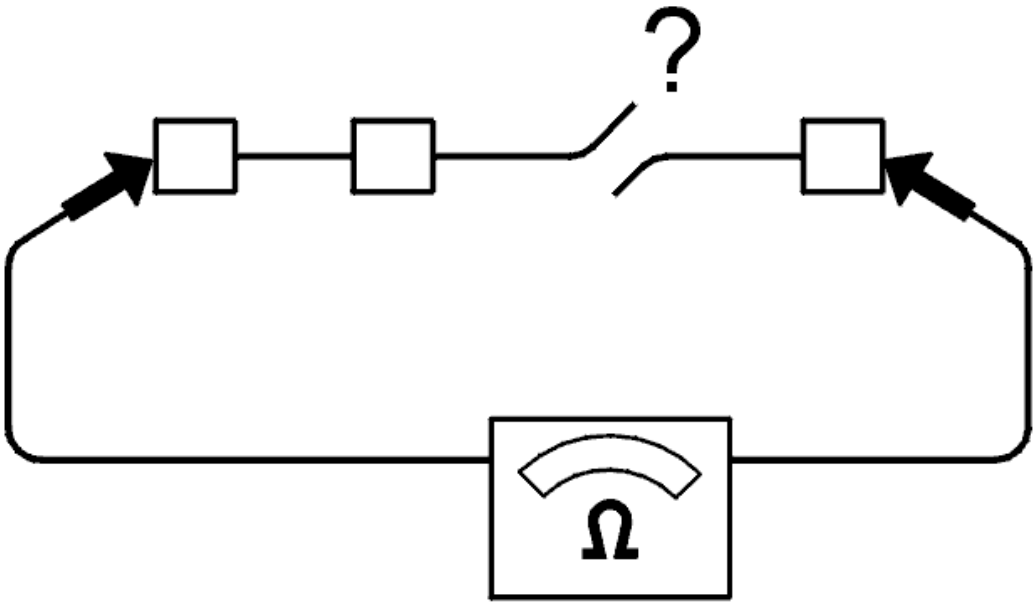

Fig. 9: Checking For Open Circuit
Courtesy of VOLVO CARS CORPORATION

An open-circuit in a cable is indicated by a loss of one or more functions.

Chafed and broken cables or terminals that have come loose are common causes of faults in electrical systems.

Checks:

- Disconnect the connectors at both ends of the cable.

Connect an ohmmeter between the ends of the cable.

The ohmmeter should read approximately 0 ohms if there is no open-circuit in the cable.

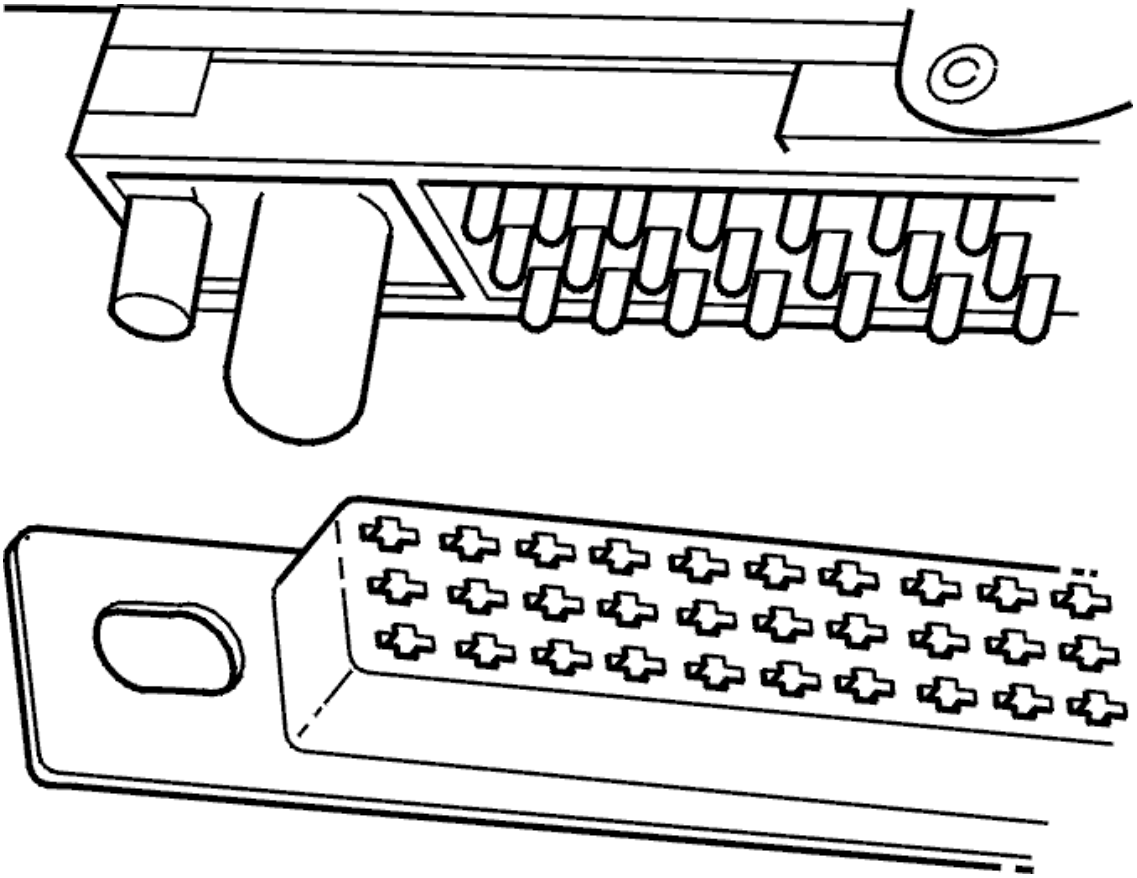

Fig. 10: Identifying Control Module Installation
Courtesy of VOLVO CARS CORPORATION

Always check the control module and control module box connectors to ensure that their pins and sockets are not bent or damaged, as this can cause faults.

Check pins and terminals particularly for this fault. See **CHECK TERMINALS VISUALLY**.

CONTACT RESISTANCE AND OXIDATION

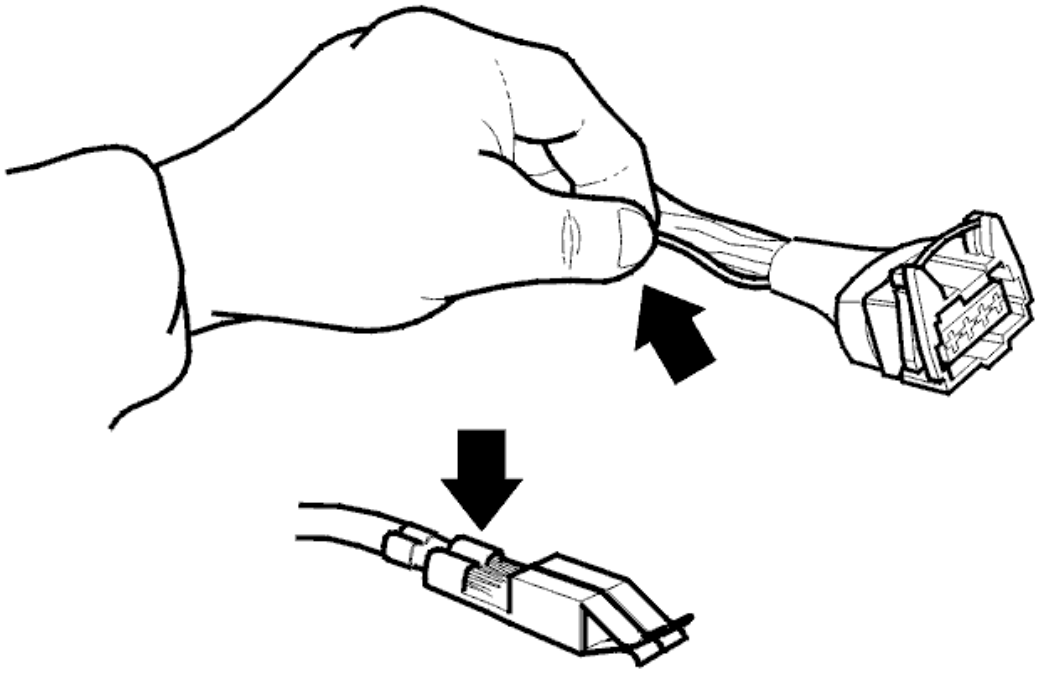

Fig. 11: Identifying Terminal Inspection
Courtesy of VOLVO CARS CORPORATION

In theory, the resistance across contacts, leads and terminals should be 0 ohms. However, there is always some resistance due to terminal oxidation.

If this resistance becomes too great the result will be a malfunction. The magnitude of the resistance before it causes a malfunction depends on the circuit load.

Checks:

- Check the cables visually according to. See **CHECK TERMINALS VISUALLY**

Cleaning female socket terminals and male pin terminals

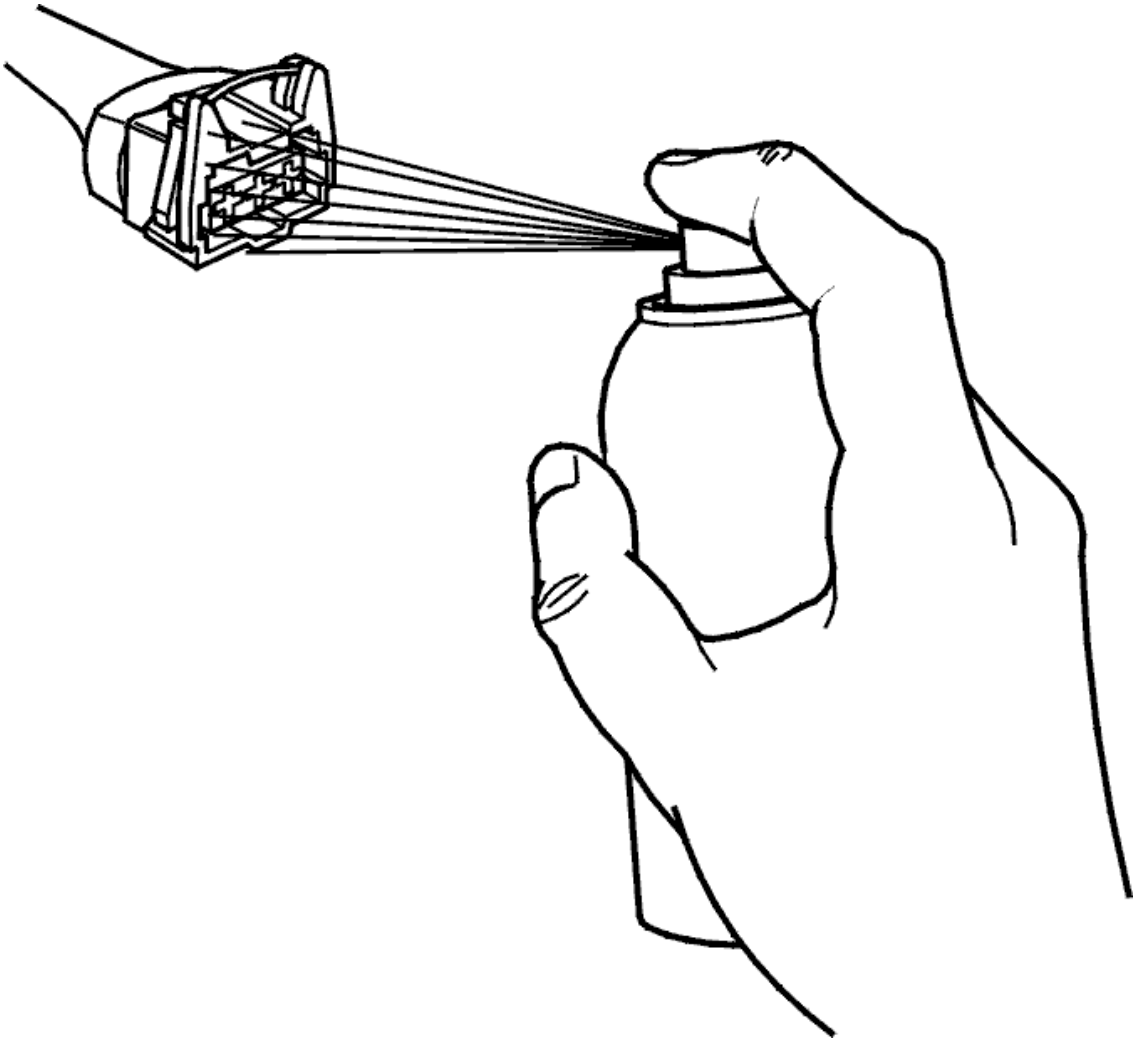

Fig. 12: Apply Rust Solvent Spray Or Grease To Connectors
Courtesy of VOLVO CARS CORPORATION

NOTE: **Do not apply rust solvent spray or grease to the catalyst monitor sensor or instrument cluster connectors.**

- Ignition off
- Disconnect the battery negative terminal
- Use compressed air to clean the disconnected connector
- Apply rust solvent spray 1161422 to the disconnected connectors
- Blow clean using compressed air.

Greasing female terminals

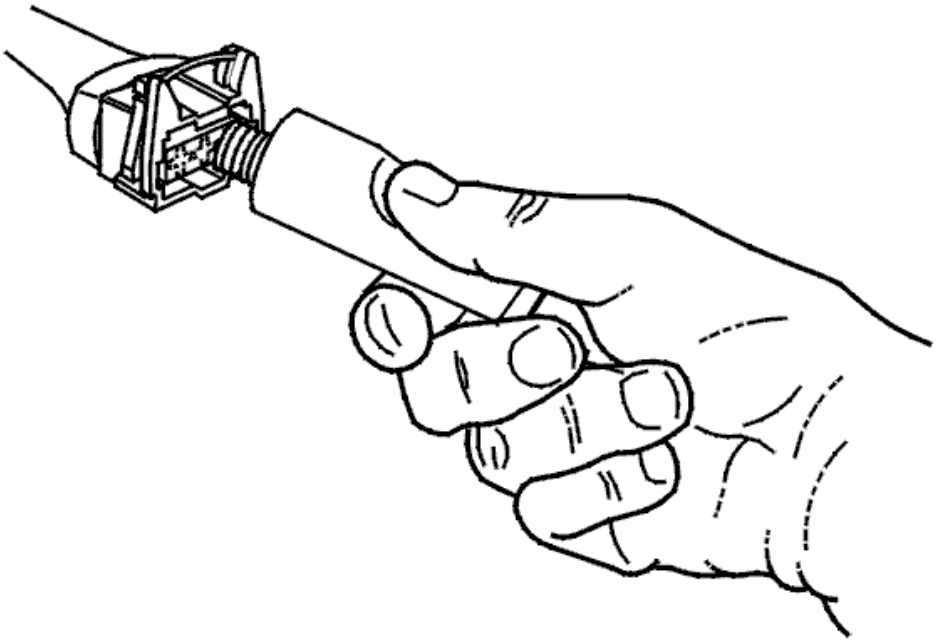

Fig. 13: Identifying Grease Pressed Into Terminals
Courtesy of VOLVO CARS CORPORATION

NOTE: Note Do not fill the protective cover with grease.

- Press grease, P/N 1161417-9, into the female sockets directly from tube
- Check that all the terminal cavities are filled
- Use a loose male pin to ensure that the connection in the sockets is good. The pin should remain in position when pulled gently.

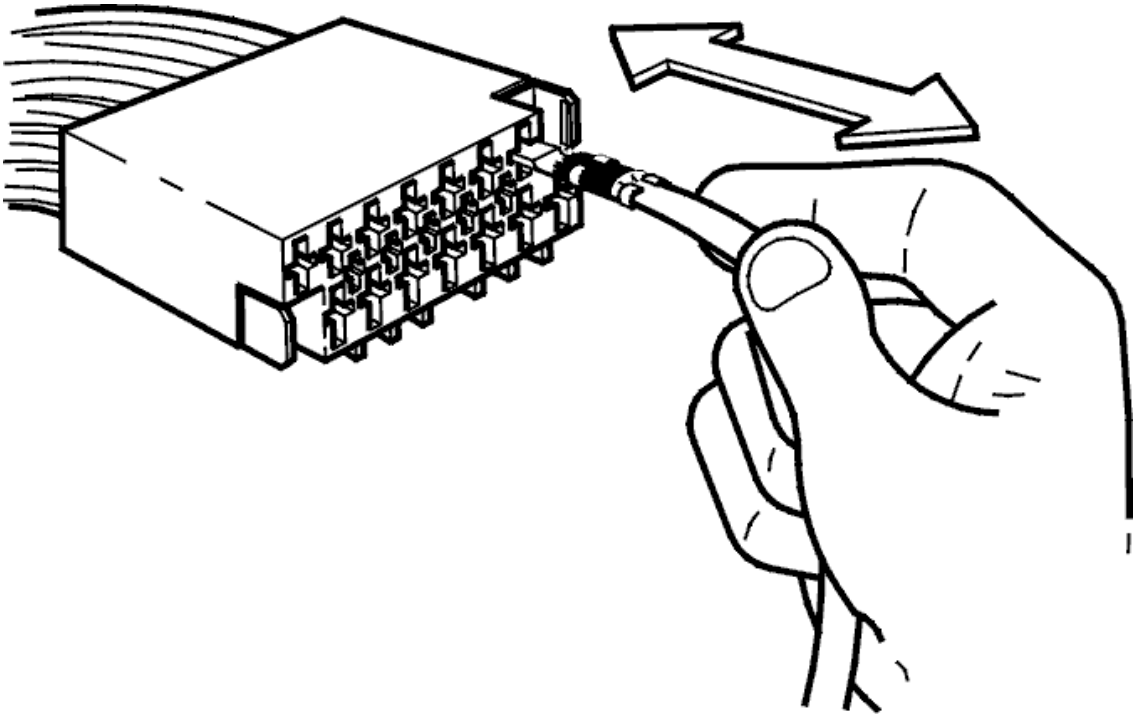

Fig. 14: Checking To Ensure Contact In Sockets Is Good
Courtesy of VOLVO CARS CORPORATION

CHECK TERMINALS VISUALLY

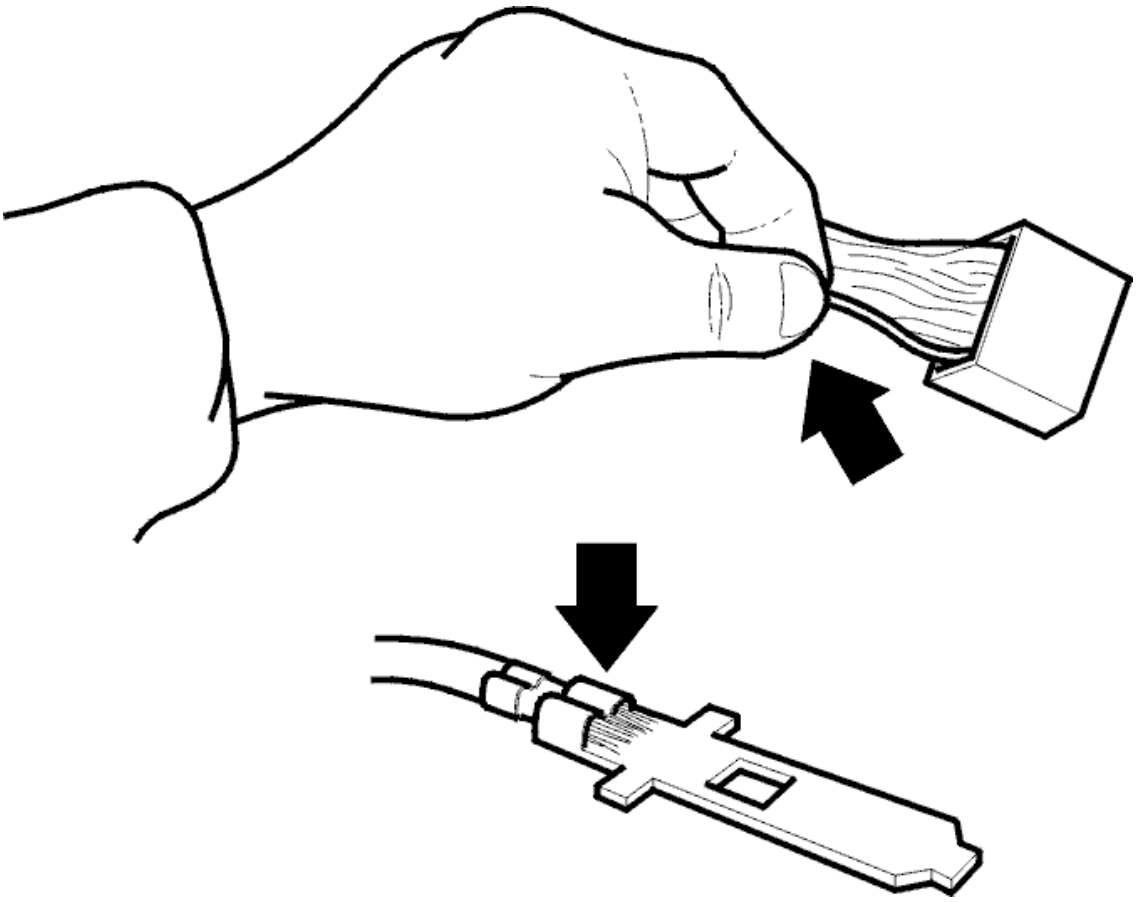

Fig. 15: Checking Contact Resistance & Oxidation
Courtesy of VOLVO CARS CORPORATION

NOTE: **When checking the engine control module (ECM), do not remove the control module from the car before the main relay has interrupted the power supply. This may take up to 4 minutes after the ignition has been switched off and the engine cooling fan (FC) has stopped running.**

Inspect the terminals visually when checking, or taking readings from, opened connectors.

Checks:

- Check for oxidation. This can cause poor connections in the terminals
- Check for damage to pins and terminals. Check that they are properly inserted into the connector. Check that the cable is properly connected to the pin or terminal. Check pins and terminals particularly carefully
- Use a separate male terminal to check the female terminal. Check that they are secure: Pull on the pin.

INFORMATION

FAULT-TRACING INFORMATION

The fault should be diagnosed and remedied. Since this is not the case the fault-tracing process has failed.

Complete the fault-tracing for those fault or try again.

CHECKING THE POWER SUPPLY (2003-2004)

CHECKING THE POWER SUPPLY AND GROUND TERMINALS. INTERMITTENT FAULT

CHECKING THE POWER SUPPLY AND GROUND FOR THE CONTROL MODULE

Check steering wheel module (SWM) connector A. Check for contact resistance and oxidation.

Check fuse 22 in the passenger compartment fusebox for the steering wheel module (SWM).

Note- If the fuse was blown, check the circuit after the fuse. Check for contact resistance and oxidation.

Check the cable for power supply between fuse 22 in the passenger compartment fusebox and the control module terminals #A1 and #A6. Check for an open-circuit.

Check the ground lead between control module #A22 and ground terminal 31/84. Check for an open-circuit.

Check ground terminal 31/84. Check for contact resistance and oxidation.

Remedy as necessary.

Other information:

- To access the steering wheel module (SWM), see **STEERING WHEEL MODULE (SWM), REPLACING**
- For further information about the fuses and relays, see the appropriate service information.
- see **CHECKING WIRING AND TERMINALS** .

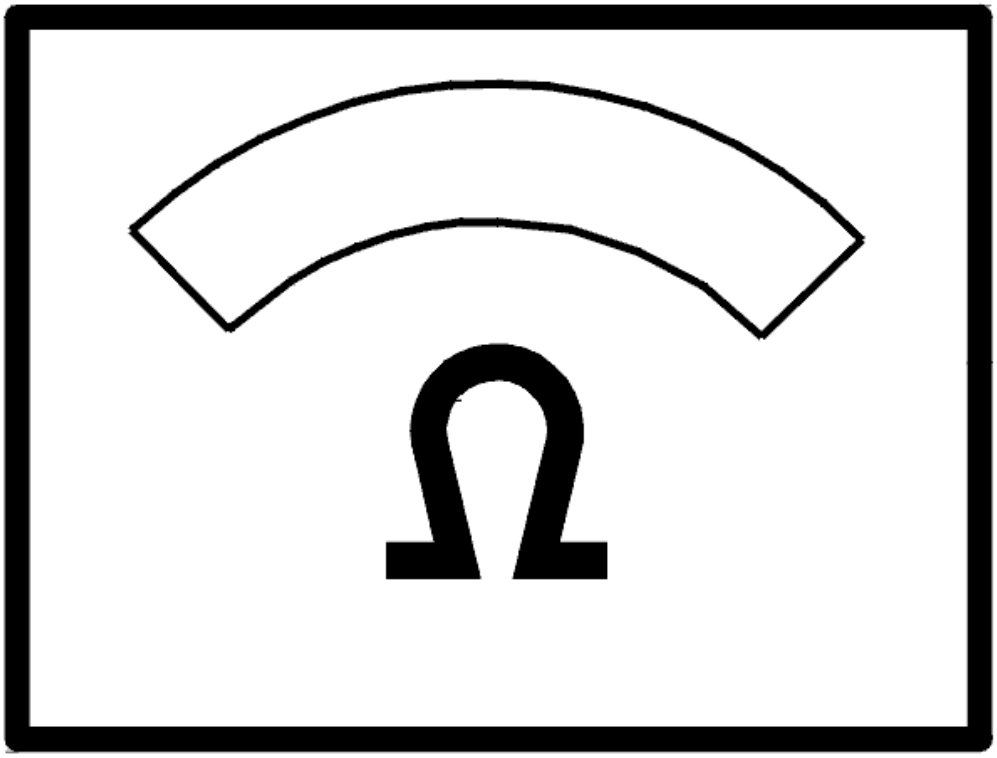

Fig. 16: Identifying Ohm Meter
Courtesy of VOLVO CARS CORPORATION

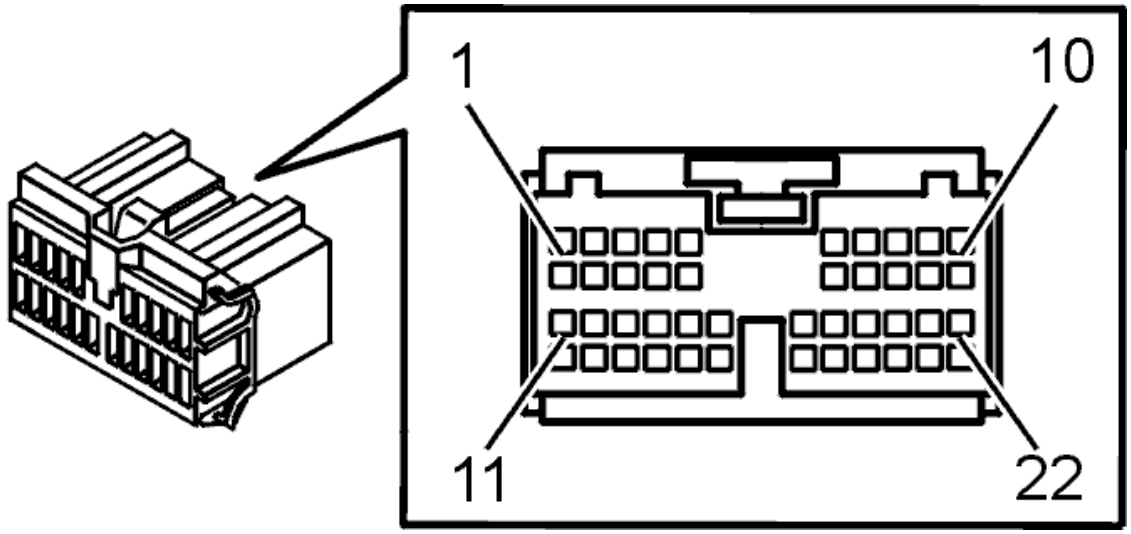

Fig. 17: Identifying Connector (F) Terminals
Courtesy of VOLVO CARS CORPORATION

CHECKING THE POWER SUPPLY AND GROUND TERMINALS. PERMANENT FAULT

CHECKING POWER SUPPLY AND GROUND TERMINALS

Check steering wheel module (SWM) connector A. Check for contact resistance and oxidation.

Check fuse 22 in the passenger compartment fusebox for the steering wheel module (SWM).

Note- If the fuse is blown, check the circuit after the fuse. Check for a short-circuit to ground before replacing the fuse. Then replace the fuse. For further information about the circuit after the fuse, refer to the appropriate service information.

Check the cable for power supply between fuse 22 in the passenger compartment fusebox and the control module terminals #A1 and #A6. Check for an open-circuit.

Check the ground lead between control module #A22 and ground terminal 31/84. Check for an open-circuit. Check ground terminal 31/84. Check for contact resistance and oxidation.

Remedy as necessary.

Other information:

- To access or replace the steering wheel module (SWM), see **STEERING WHEEL MODULE (SWM), REPLACING**
- For further information about the fuses and relays, see the appropriate service information.
- see **CHECKING WIRING AND TERMINALS** .

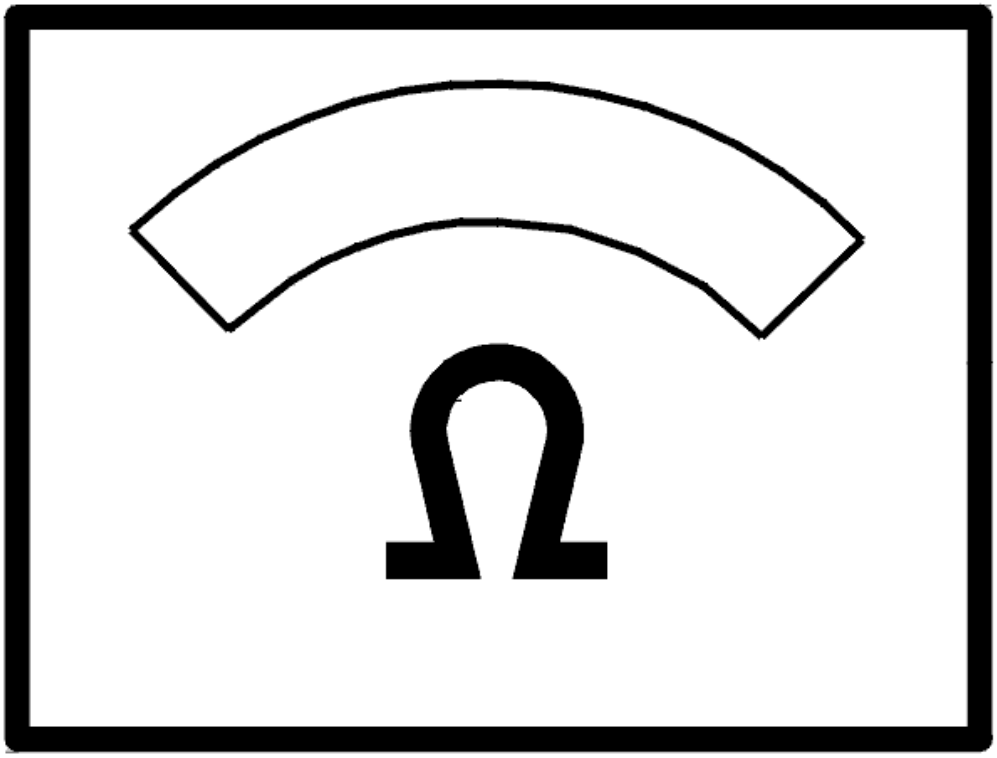

Fig. 18: Identifying Ohm Meter
Courtesy of VOLVO CARS CORPORATION

CONNECTING THE BREAKOUT BOX, STEERING WHEEL MODULE (SWM) (2003-2004)

CONNECTING THE BREAKOUT BOX

Special tools:

see **9511463**

see **9511428**

see **9511508**

CONNECTING THE BREAKOUT BOX

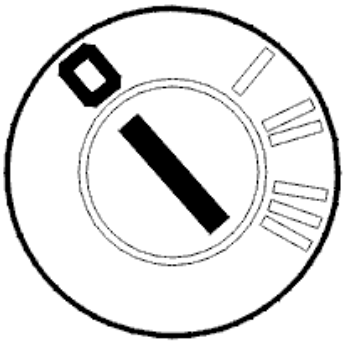

Fig. 19: Identifying Ignition In Off Position
Courtesy of VOLVO CARS CORPORATION

- Ignition off
- Expose the steering wheel module according to **STEERING WHEEL MODULE (SWM), REPLACING** .

Check that the male and female terminals on the unit connectors are undamaged and secure (cannot be pressed in). Check that the cables to the female terminals are secured to the terminal pins.

Connect adapter see **9511463** to the control module connector (wiring side). Connect the breakout box

see **9511428** to the adapter. Steering wheel module terminals #A1-#A22 correspond to #1-#22 on the breakout box. If the contact reel is to be checked, connect adapter see **9511508** to breakout box see **9511428** . Contact reel terminals #B1-#B5 correspond to #26-#30 on the breakout box. The breakout box is designed to facilitate reading off the control module input and output signals when the control module is connected; and the cable and component resistance when the control module is disconnected. The use of a breakout box reduces the risk of accidental short-circuited cables and damage to the connector pins.

For further information about signals and other values, see **SIGNAL SPECIFICATION** .

CHECKING THE VOLTAGE/GROUND, STEERING WHEEL ANGLE SENSOR MODULE (SAS) (2005-2012)

CHECKING THE VOLTAGE / GROUND TERMINAL

CHECKING THE POWER SUPPLY/GROUND TERMINAL

Steering wheel angle sensor module (SAS) is located inside, and is supplied with power by, the steering wheel module (SWM).

Power supply, steering wheel module (SWM)

The steering wheel module (SWM) is powered via a power input on the control module.

Power input terminal #A8 (#8) receives 15i-supply via fuse 11C/9:2 in the passenger compartment relay/fusebox, which is in turn supplied with power by fuse F34 in the cargo compartment relay/fusebox.

Checking the power supply

Check the power supply cable from the battery to steering wheel module (SWM) terminal #A8 (#8). Check for an open-circuit. Check for loose connections. Check for contact resistance. Check for oxidation. Check the fuse. The voltage must be approximately battery voltage.

Ground terminal, steering wheel module (SWM)

The steering wheel module (SWM) has a ground input. The ground input from the control module is a power ground and is connected to ground terminal 31/84 in the car body.

Checking the ground terminal

Check the ground lead between steering wheel module (SWM) terminal #2 (#2) and the ground terminal. Check for an open-circuit. Check for loose connections. Check for contact resistance. Check for oxidation. With the ignition on, the drop in voltage between the ground connection for the steering wheel module (SWM) and the ground terminal must not be greater than 0.5 V.

Remedy as necessary.

Other information

- See the appropriate service information for more about circuit and ground terminals in the bodywork
- see **CONNECTING THE BREAKOUT BOX**
- see **CONTENTS** .

CONNECTING THE BREAKOUT BOX, STEERING WHEEL ANGLE SENSOR MODULE (SAS) (2003-2004)

CONNECTING THE BREAKOUT BOX TO THE STEERING ANGLE SENSOR

Special tools:

see **9511428**

see **9511463**

CONNECTING THE BREAKOUT BOX TO THE CONTROL MODULE FOR THE STEERING WHEEL ANGLE SENSOR

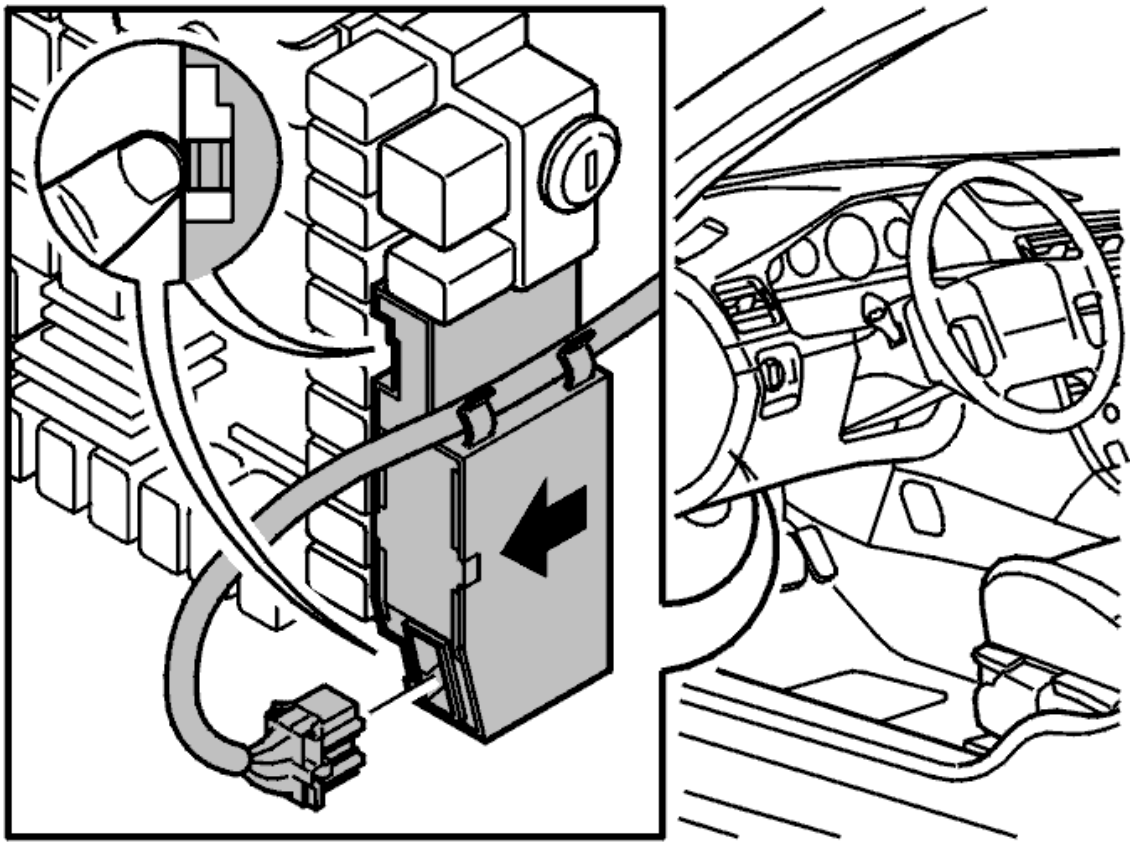

Fig. 20: Identifying Breakout Box Connector & Control Module Cable
Courtesy of VOLVO CARS CORPORATION

- Ignition off
- Expose the control module for the steering wheel angle sensor. For -2004, see **STEERING WHEEL ANGLE SENSOR MODULE (SAS), REPLACING** . For -2005, see **STEERING WHEEL MODULE (SWM), REPLACING** .
- Disconnect the control module for the steering wheel angle sensor by pressing in the lock catch and pull the connector straight outwards
- Check the control module and control module connectors to ensure that the male and female terminals are undamaged and secure (cannot be pressed in). Check that the cables to the female terminals are secured to the terminal pins
- In particular, check the terminal pins relevant to the diagnostic trouble code (DTC) / symptom. See **SIGNAL DESCRIPTION, CONTROL UNIT FOR THE STEERING WHEEL ANGLE SENSOR (SAS)**.
- Connect adapter see **9511463** to the control module connector (wiring side). Connect breakout box see **9511428** to the adapter. Terminals #1 - #16 on the control module for the steering wheel angle sensor correspond to terminals (#A25 - (#A40 on the breakout box
- The breakout box is designed to facilitate reading off the control module input and output signals when the control module is connected; and cable and component resistance when the control module is disconnected. The use of a breakout box reduces the risk of accidental short-circuits and damage to the connector pins.

SIGNAL DESCRIPTION, CONTROL UNIT FOR THE STEERING WHEEL ANGLE SENSOR (SAS)

The values in the table represent the values between the connections shown in column 1 and #A40 (ground), unless otherwise stated in brackets.

NOTE: It is important that the test box is connected and the ground points checked before testing begins.

U=	DC voltage (V)	Ubat =	battery voltage (V)
I =	amperage (A)	Ulow =	voltage close to 0 V

Test box connection	Control unit connection	Signal type	Ignition on	Other
#A25	#1	15 supply (voltage supply from the ignition lock)	U(Ubat	-
#A26	#2	Voltage supply to steering wheel angle sensor	U(Ubat	15 supply through control unit
#A27	#3	Steering wheel angle signal A	<0.25 V (low) >0.75 V (high) I(1 mA	Steering wheel angle signal The coding wheel in the steering wheel angle sensor is perforated with a special code template. Two circuits, each with 4 LEDs and 4 receptors, read the coding wheel and send a pulsed signal containing information about the position of the steering wheel.
#A28	#4	Steering wheel angle signal B	<0.25 V (low) >0.75 V (high) I(1 mA	Steering wheel angle sensor signal For more information, see steering wheel angle signal A.
#A29	#5	Steering wheel position signal R1	<0.25 V (low) >0.75 V (high) I(1 mA	Sector identifier For more information, see steering wheel angle signal A.
#A30	#6	Control unit communication wire (CAN H)	U=2-3 V	CAN High speed, Multiplex wire.
#A31	#7	Signal and power ground for steering wheel angle	-	-

		sensor		
#A32	#8	LED circuit 2 signal	-	LED circuit 2 current test
#A33	#9	LED circuit 1 signal	-	LED circuit 1 current test
#A34	#10	Steering wheel angle signal IX	<0.25 V (low) >0.75 V (high) I(1 mA	Steering wheel angle sensor signal For more information, see steering wheel angle signal A.
#A35	#11	Steering wheel angle signal IY	<0.25V (low) >0.75 V (high) I(1 mA	Steering wheel angle sensor signal For more information, see steering wheel angle signal A.
#A36	#12	Steering wheel position R2 signal	<0.25 V (low) >0.75 V (high) I(1 mA	Sector identifier For more information, see signal A.
#A37	#13	Steering wheel position R3 signal	<0.25 V (low) >0.75 V (high) I(1 mA	Sector identifier For more information, see signal A.
#A38	#14	Steering wheel position R4 signal	<0.25 V (low) >0.75 V (high) I(1 mA	Sector identifier For more information, see signal A.
#A39	#15	Control unit communication wire (CAN L)	U=2-3 V	CAN Low speed, Multiplex wire.
#A40	#16	Signal and power ground (measured against the battery negative terminal).	U(Ulow	-

CONNECTING THE BREAKOUT BOX, STEERING WHEEL ANGLE SENSOR MODULE (SAS) (2005-2012)

CONNECTING THE BREAKOUT BOX

Special tools:

see **9511508**

see **9511428**

CONNECTING THE BREAKOUT BOX

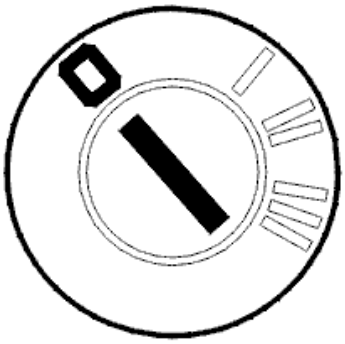

Fig. 21: Identifying Ignition In Off Position
Courtesy of VOLVO CARS CORPORATION

- Ignition off
- Expose the steering wheel module (SWM). See **STEERING WHEEL MODULE (SWM), REPLACING** .

Check that the male and female terminals on the unit connectors are undamaged and secure (cannot be pressed in). Check that the cables to the female terminals are secured to the terminal pins.

Connect adapter see **9511508** to the control module connector (wiring side). Connect the breakout box.

see **9511428** to the adapter. Steering wheel module (SWM) terminals #A1-#A10 correspond to terminals #1-#10 on the breakout box. The breakout box is designed to facilitate reading off the control module input and output signals when the steering wheel module (SWM) is connected, and the cable and component resistance when the control module is disconnected. The use of a breakout box reduces the risk of accidental short-circuited cables and damage to the connector pins.

Disconnect the breakout box in reverse order.

NOTE: Before the control module can be checked and readings taken, the removed fuses must first be installed.

For information about the signals and other values, see **SIGNAL SPECIFICATION** .

For further information about the fuses and ground point, see the appropriate service information.

STEERING

Steering - Installation Instructions, Accessories

STEERING WHEEL, SPORT (2003-2012)

ACCESSORY ELECTRONIC MODULE

see **ACCESSORY ELECTRONIC MODULE**

CARS EQUIPPED WITH SRS/SIPS (AIRBAG)

see **CARS EQUIPPED WITH SRS/SIPS (AIRBAG)**

SPORTS STEERING WHEEL, WOOD/LEATHER

PREPARATIONS

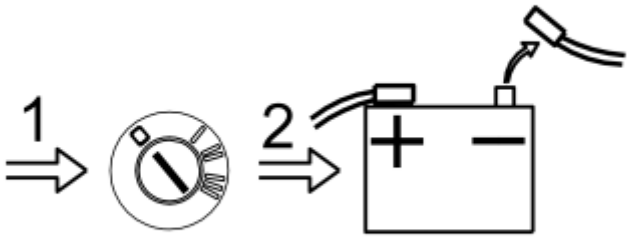

Fig. 1: Disconnect Battery Negative Lead
Courtesy of VOLVO CARS CORPORATION

- Turn the ignition key to position 0. Remove the ignition key from the ignition switch.
- Disconnect the battery negative lead.

NOTE: **Wait at least three minutes before unplugging the connectors or removing other electrical equipment.**

REMOVING THE 3-SPOKE STEERING WHEEL

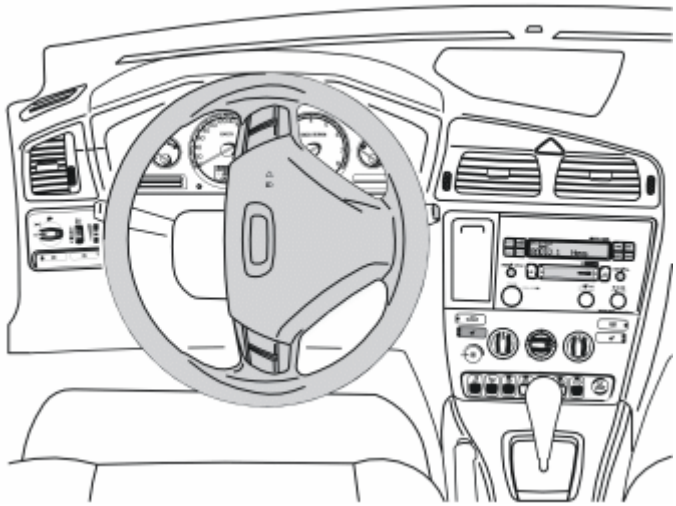

Fig. 2: Identifying Steering Wheel Turned To Access Holes On Back
Courtesy of VOLVO CARS CORPORATION

- Reinsert the ignition key and turn it to position "I" to prevent the steering lock from engaging.
- Turn the steering wheel a quarter turn so that the holes on the reverse of the steering wheel are accessible.

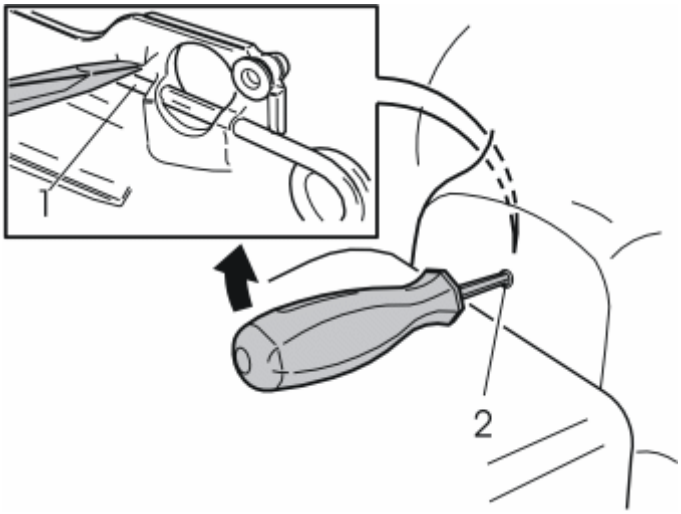

Fig. 3: Identifying Screwdriver Inserted In Back Of Steering Wheel & Locating End Of Locking Spring
Courtesy of VOLVO CARS CORPORATION

- Insert a screwdriver in the hole (2) on the reverse side of the steering wheel at right angles to the rear surface.

  Insert the screwdriver as far as possible to locate the end of the locking spring (1).

- Position the end of the screwdriver on the top of the spring clip as illustrated
- Pry the screwdriver upwards towards the upper edge of the hole (2) so that the end of the screwdriver presses the spring clip down (1) until one side of the steering wheel module springs out and releases from the mounting

- Turn the steering wheel a half turn in the opposite direction. Carry out the same operation on the other side
- Turn the steering wheel to a neutral position.

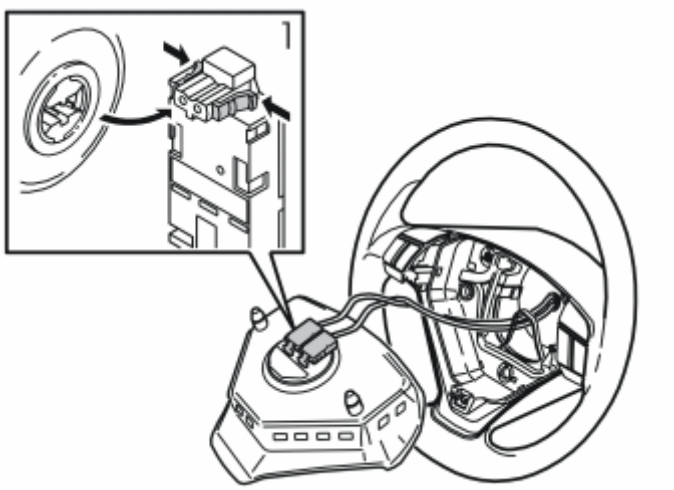

Fig. 4: Identifying Airbag Cable Connectors
Courtesy of VOLVO CARS CORPORATION

- Fold the steering wheel module out
- Remove the two connectors (1) for the ignition cables for the airbag. First press in the catches on the sides. Then pull the connectors straight out.

NOTE: The connectors are tightly secured. However, tools must not be used when removing.

- Place the steering wheel module to one side.

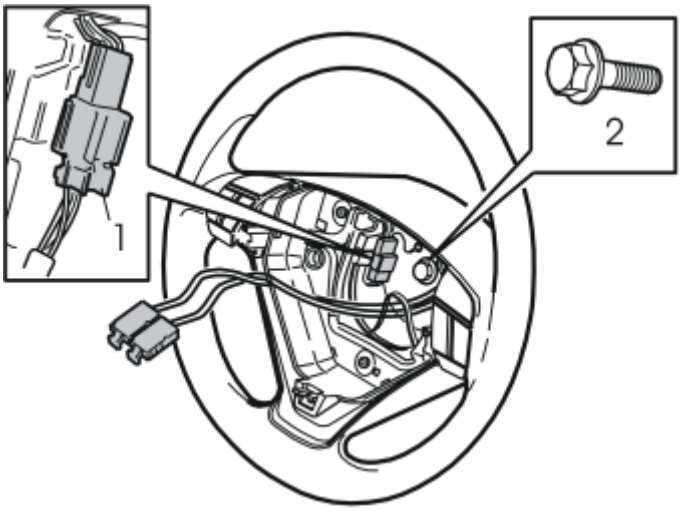

Fig. 5: Identifying Connector And Screw
Courtesy of VOLVO CARS CORPORATION

Remove:

- the connector (1)
- the screw (2) that holds the steering wheel, leave the steering wheel in place.

REMOVING STEERING WHEEL ASSEMBLY

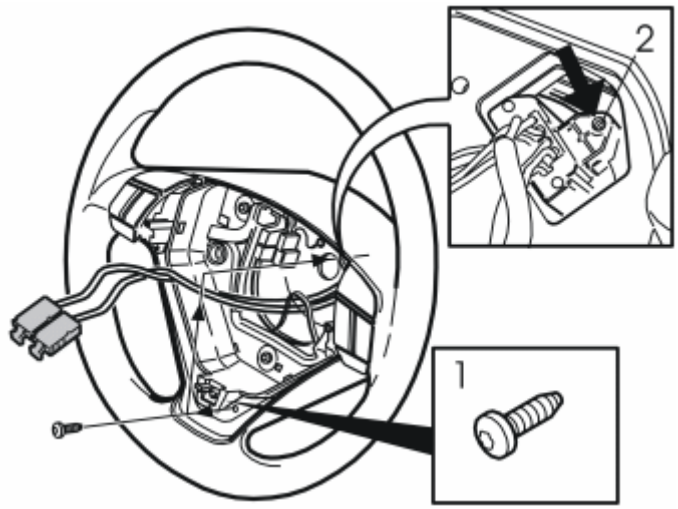

Fig. 6: Identifying Screws
Courtesy of VOLVO CARS CORPORATION

- the screw (1). Install the screw in the contact reel (2).
- the steering wheel. Pull the wiring out through the hole in the steering wheel.

REMOVING HORN RING

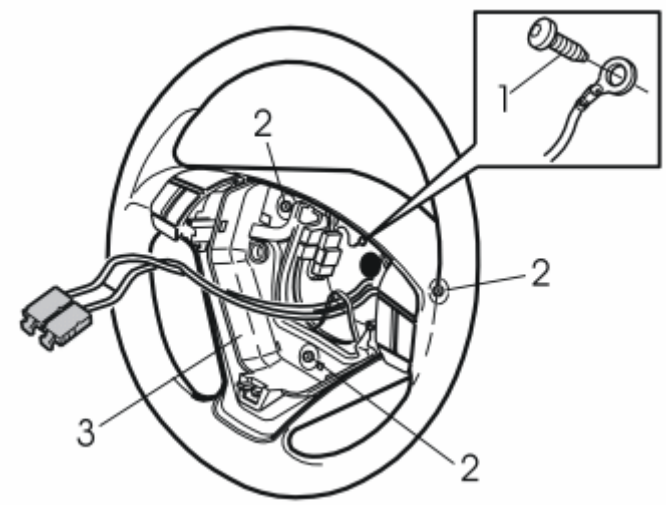

Fig. 7: Identifying Screws & Horn Ring
Courtesy of VOLVO CARS CORPORATION

- Remove the screw (1) and detach the ground lead.

Applies to cars without RTI keypad mounted to the steering wheel

- Remove the three screws (2) and lift out the horn ring (3).
- Place the steering wheel to one side.

Applies to cars with RTI keypad mounted to the steering wheel

- Remove the three screws (2) and detach the horn ring (3).

REMOVING HORN RING

Applies to cars with RTI keypad mounted to the steering wheel

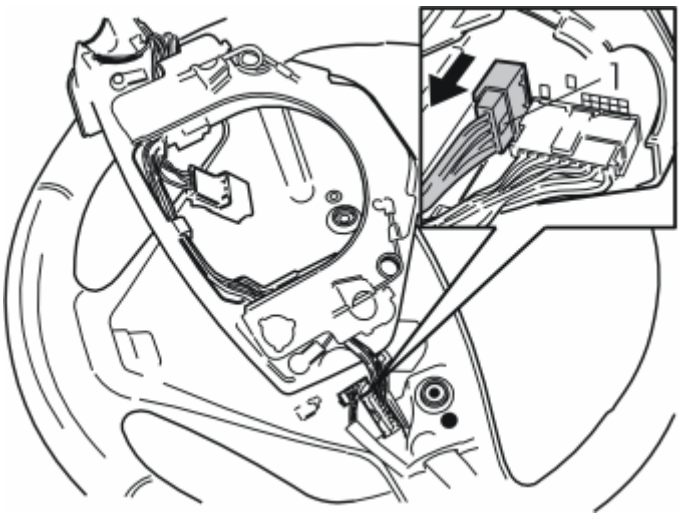

Fig. 8: Identifying Catch & Connector
Courtesy of VOLVO CARS CORPORATION

- Carefully rotate the horn ring upwards and position it as illustrated.
- Remove the connector for the RTI keypad mounted to the steering wheel. Press in the catch (1) and pull out the connector.
- Place the horn ring to one side.

Applies to cars with RTI keypad mounted to the steering wheel

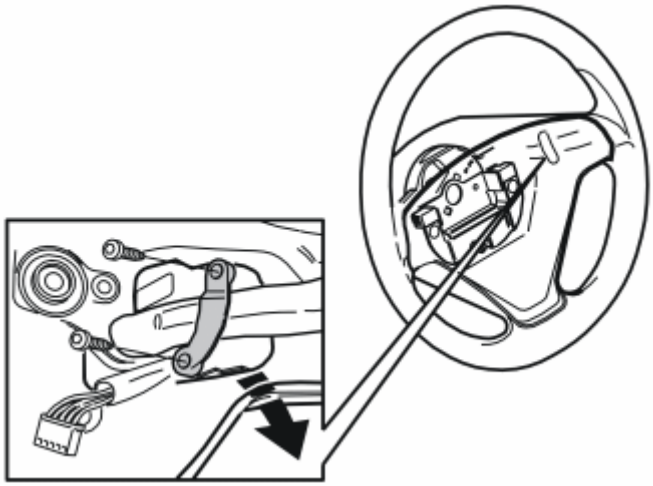

Fig. 9: Identifying Screws, Bracket & Keypad
Courtesy of VOLVO CARS CORPORATION

Remove:

- the two screws in the bracket for the RTI keypad
- the bracket and press the keypad out from the steering column cover.
- Place the steering wheel to one side.

REMOVING STEERING WHEEL ASSEMBLY W/ VIBRATION DAMPER

Applies to cars with vibration damper

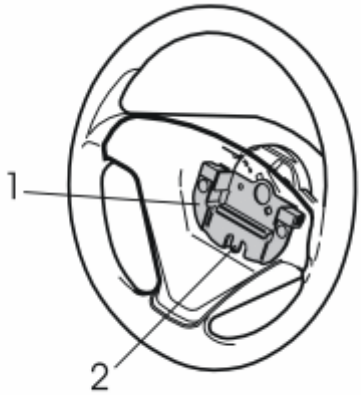

Fig. 10: Identifying Screw & Vibration Damper
Courtesy of VOLVO CARS CORPORATION

- Remove the screw (2) and the vibration damper (1).
- Place the steering wheel to one side.

REMOVING THE 4-SPOKE STEERING WHEEL

REMOVING

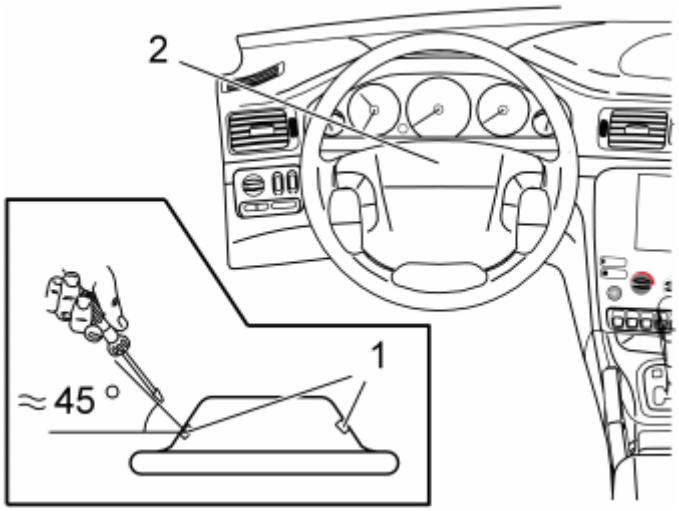

Fig. 11: Detaching Spring-Loaded Screws & Steering Wheel Module
Courtesy of VOLVO CARS CORPORATION

- Reinsert the ignition key and turn it to position "I" to prevent the steering lock from engaging.
- Detach both spring-loaded screws (1) on the reverse side of the steering wheel with a Torx T30 screwdriver.
- Unscrew the screws until they release from the threads and spring back.
- Fold out the steering wheel module (2).

NOTE: Handle the cables with care.

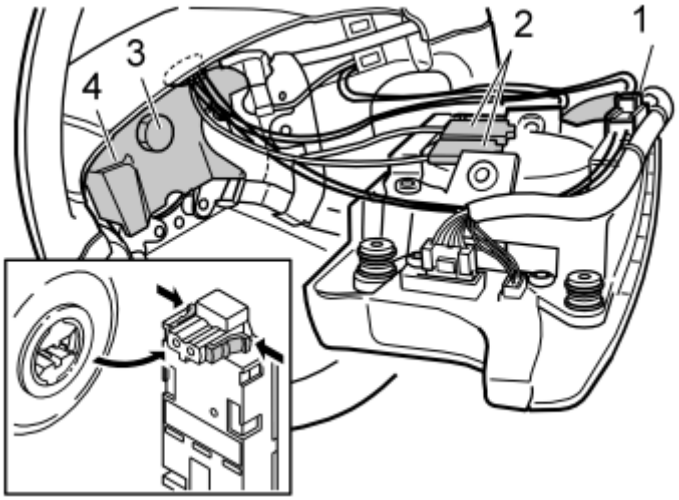

Fig. 12: Identifying Vibration Damper, Bolt, & Connectors
Courtesy of VOLVO CARS CORPORATION

Remove:

- the connector (1) for the horn.
- the SRS connectors (2). Press in the catches on the sides and carefully pull the connectors straight back.

NOTE: Although the connectors are tightly secured, do not use any tools when removing.

- the steering wheel module. Place the steering wheel module safely with the front side facing upwards.
- the bolt (3), but leave the steering wheel in place.
- the vibration damper (4), if applicable.
- the connector for the RTI keypad, if applicable.

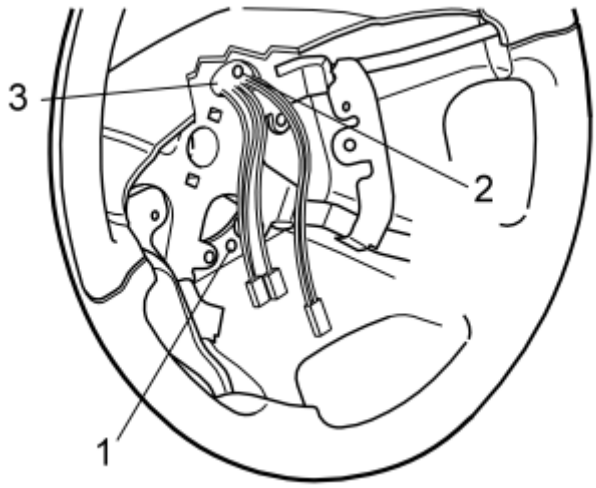

Fig. 13: Identifying Screws & Pulled Wiring
Courtesy of VOLVO CARS CORPORATION

Remove:

- the screw (1). Install the screw in the contact reel (2).
- the steering wheel. Pull the wiring out of the hole (3).

INSTALLING THE NEW STEERING WHEEL

- Install the new steering wheel.

Applies to cars with vibration damper

- Install the vibration damper in the new steering wheel and secure it with the screw, see step, see **REMOVING STEERING WHEEL ASSEMBLY W/ VIBRATION DAMPER**.

NOTE: Make sure the screw is properly tightened and that the vibration damper is

secure. The screw is self-tapping, which can make it difficult to tighten.

Applies to cars with RTI keypad mounted to the steering wheel when installing in a wooden steering wheel

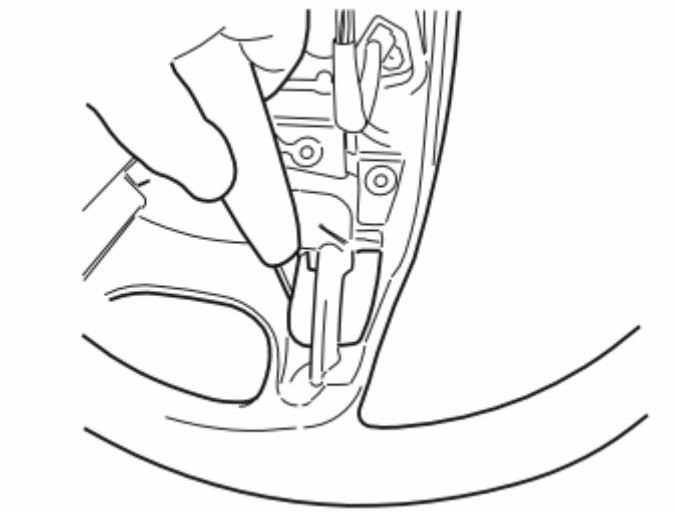

Fig. 14: Cutting Hole For Keypad
Courtesy of VOLVO CARS CORPORATION

Illustration A

- Place the steering wheel in a suitable position and cut along the existing marks with a small knife.

NOTE: When cutting, make sure to hold the knife so that the cuts are perpendicular to the reverse side of the steering wheel. This will reduce the risk of cutting a hole that is too large since the edge around the keypad is only a few millimeters larger than the keypad itself.

Illustration B

Fig. 15: Finishing Keypad Hole
Courtesy of VOLVO CARS CORPORATION

- Cut away some of the material on the reverse side of the steering wheel spoke.
- Test and cut until the keypad fits properly.

Fig. 16: Inserting Keypad Into Hole In Steering Wheel
Courtesy of VOLVO CARS CORPORATION

Applies to cars with RTI keypad mounted to the steering wheel when installing in a wooden steering wheel

- Install the keypad, two screws and clamp. Make sure the cable is positioned on the underside of the steering wheel spoke.
- Insert the keypad into the hole in the steering wheel with the text on the buttons facing out. Press until it connects securely against the steering column cover.

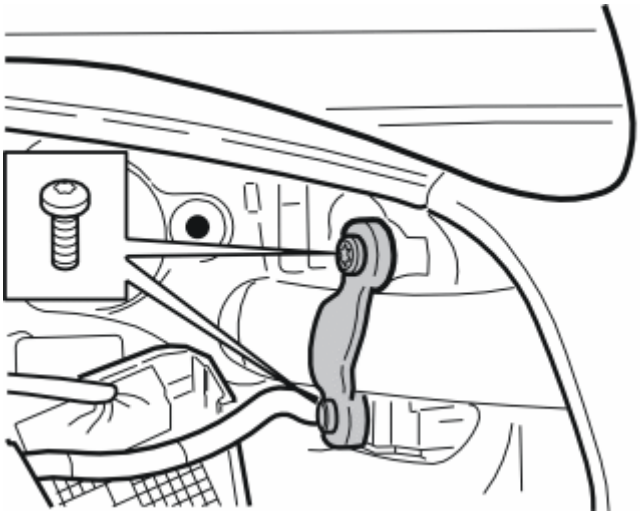

Fig. 17: Identifying Screws & Keypad Clamp
Courtesy of VOLVO CARS CORPORATION

Applies to cars with RTI keypad mounted to the steering wheel when installing in a wooden steering wheel

- Install the screws and attach the keypad with the clamp around the steering wheel spoke.

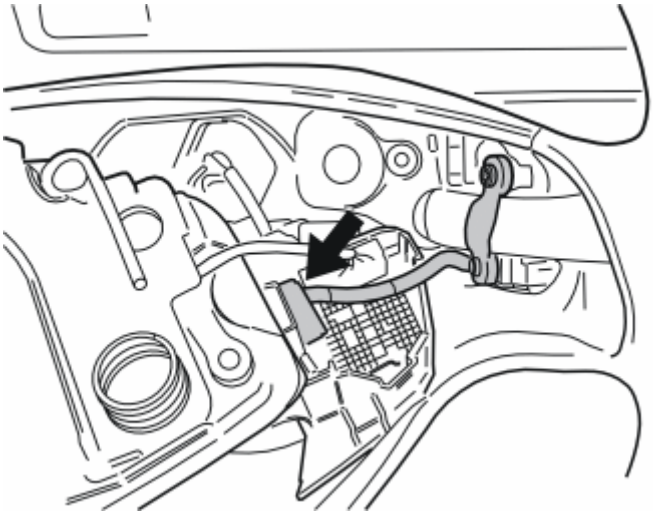

Fig. 18: Identifying Horn Ring Position
Courtesy of VOLVO CARS CORPORATION

Applies to cars with RTI keypad mounted to the steering wheel

- Position the horn ring as illustrated.
- Plug in the keypad connector to the terminal on the reverse side of the keypad located on the right-hand side of the horn ring. The wire from the installed keypad is very short and it can be difficult to install the connector.

- Reinstall the horn ring in the steering wheel, see steps, see **REMOVING HORN RING** - **REMOVING**

HORN RING. Make sure that the three springs on the underside are correctly positioned. Check that the ground lead is not trapped.

- Install the three screws in the horn ring and tighten crosswise them to **8 ± 2 Nm (6 ± 1.5 lbf. ft.)** .

NOTE: The screws are self-tapping.

- Reinstall the ground lead. Tighten.

NOTE: Make sure the screw is properly tightened and that the ground lead is secure. The screw is self-tapping, which can make it difficult to tighten.

- Check the function of the horn by pressing the horn around its entire circumference. A metallic noise should be heard when the three contact points come into contact

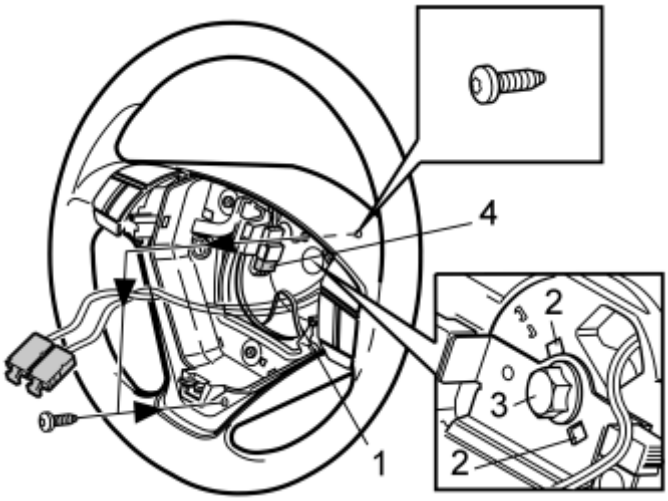

Fig. 19: Identifying Airbag Ignition Cables, Locating Pins, Screw & Connector
Courtesy of VOLVO CARS CORPORATION

- Insert the wiring through the hole in the new steering wheel. Insert the airbag ignition cables through the holder (1).
- Carefully install the new steering wheel by holding it straight and aligning the locating pins (2) on the contact reel.
- Remove the screw from the contact reel and reinstall the screw in the holder. See step, see **REMOVING STEERING WHEEL ASSEMBLY**.
- Install the new screw (3). Tighten to **40 Nm (30 lbf. ft.)** .
- Plug in the connector (4).

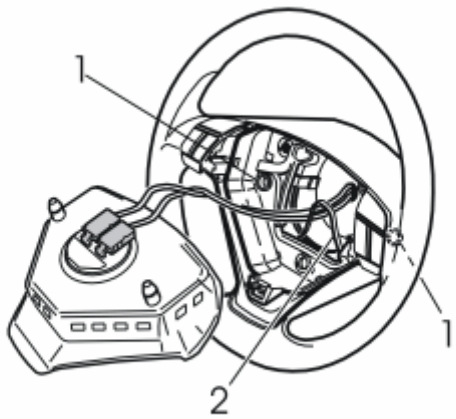

Fig. 20: Checking That Springs Are In Position
Courtesy of VOLVO CARS CORPORATION

- Check that the two springs (1) are in position
- Press the two connectors for the ignition cables for the airbag into the steering wheel module
- Insert the two pins on the reverse of the steering wheel module in the two springs. Ensure that the ignition cables are not trapped
- Press the steering wheel module firmly into its mountings. (Two clearly audible clicks should be heard)

SUPPLEMENTARY WORK

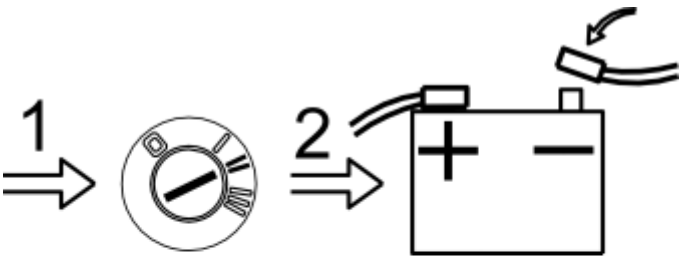

Fig. 21: Connecting Negative Battery Lead
Courtesy of VOLVO CARS CORPORATION

- Turn the ignition key to position II.
- Reconnect the battery negative lead.

SUPPLEMENTAL RESTRAINT SYSTEM MODULE, SRS

see **SUPPLEMENTAL RESTRAINT SYSTEM MODULE, SRS**

STEERING

Steering - Removal, Replacement And Installation

STEERING GEAR (B8444S; 2005-2011)

SOLENOID, STEERING GEAR, REPLACEMENT

NOTE: **The illustrations in this service information are used for different model years and/or models. Some variation may occur. However, the essential information in the illustrations is always correct.**

PREPARATORY WORK

Ignition key in position 0.

NOTE: **Seal connections to inlet and outlet on the steering gear immediately after removing.**

REMOVING

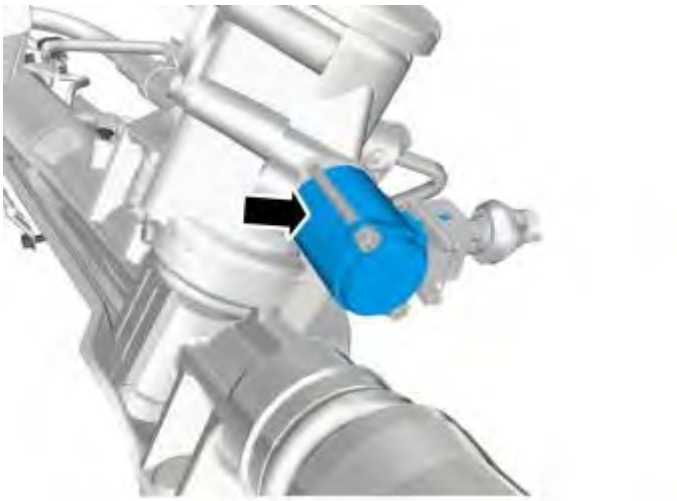

Fig. 1: Identifying Steering Gear Solenoid
Courtesy of VOLVO CARS CORPORATION

Lift up the car and remove the front wheel on the left side.

Remove:

- protective cover under engine (applies to some versions)
- protection over the drive axle for better access (applies to some versions)

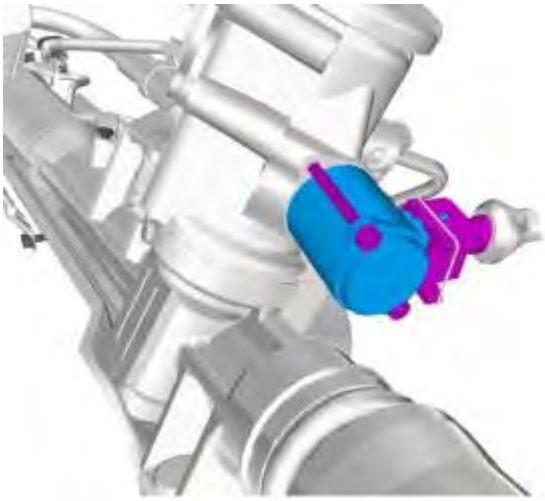

Fig. 2: Identifying Solenoid, Connector & Screws
Courtesy of VOLVO CARS CORPORATION

Place a container under the steering gear to collect the oil.

NOTE: Clean very carefully around the solenoid before removing is started.

Remove:

- the connector
- the screws, 2 pcs., for the solenoid
- the solenoid.

INSTALLING

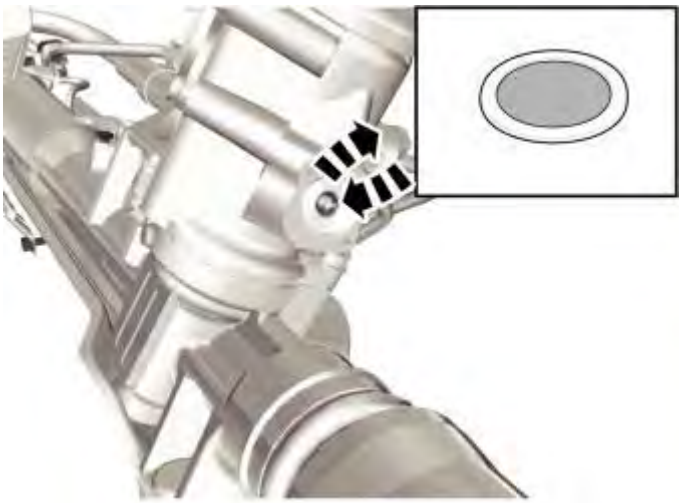

Fig. 3: Identifying Steering Gear Filter
Courtesy of VOLVO CARS CORPORATION

NOTE: Check carefully that there are no impurities.

Change the filter in the steering gear to the new one included in the kit.

Fig. 4: Identifying Solenoid Seals
Courtesy of VOLVO CARS CORPORATION

Lube the solenoid's seals with some oil.

NOTE: Only use Volvo power steering fluid, part number 30741424 (1 liter).

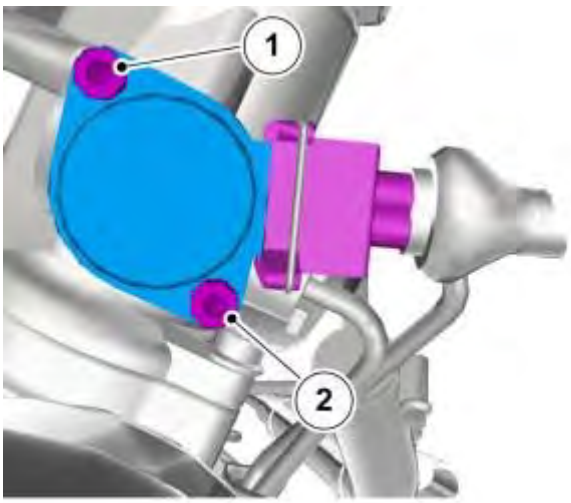

Fig. 5: Identifying Solenoid & Screws
Courtesy of VOLVO CARS CORPORATION

Install the solenoid with the new screws, 2 pcs., included in the kit and tighten alternately to contact.

Tighten in the following order:

Step 1. (1) 0.5 Nm

Step 2. (2) 1.5 Nm

Step 3. (1) 2.9 Nm

Step 4. (2) 2.9 Nm

Plug in the connector for the solenoid.

FINISHING

Install:

- any protective casings
- the wheel. See **INSTALLING WHEELS** .

Check the oil level in the power steering fluid reservoir, top up if necessary.

Bleed the power steering system.

NOTE: Only use Volvo power steering fluid, part number 30741424 (1 liter).

Start the engine and turn the steering wheel slowly back and forth to the end-positions.

Move the vehicle after a few turns of the steering wheel to prevent generating wear marks on the tires.

Check the oil level again.

STEERING GEAR, REPLACEMENT

Special tools:

see **9995460**

see **9995716**

see **9997070**

NOTE: The illustrations in this service information are used for different model years and/or models. Some variation may occur. However, the essential information in the illustrations is always correct.

REMOVAL

PREPARATIONS

Remove:

- the battery lead acc. to: **BATTERY, DISCONNECTING**
- the front wheels on both sides.

DRAINING THE POWER STEERING FLUID RESERVOIR

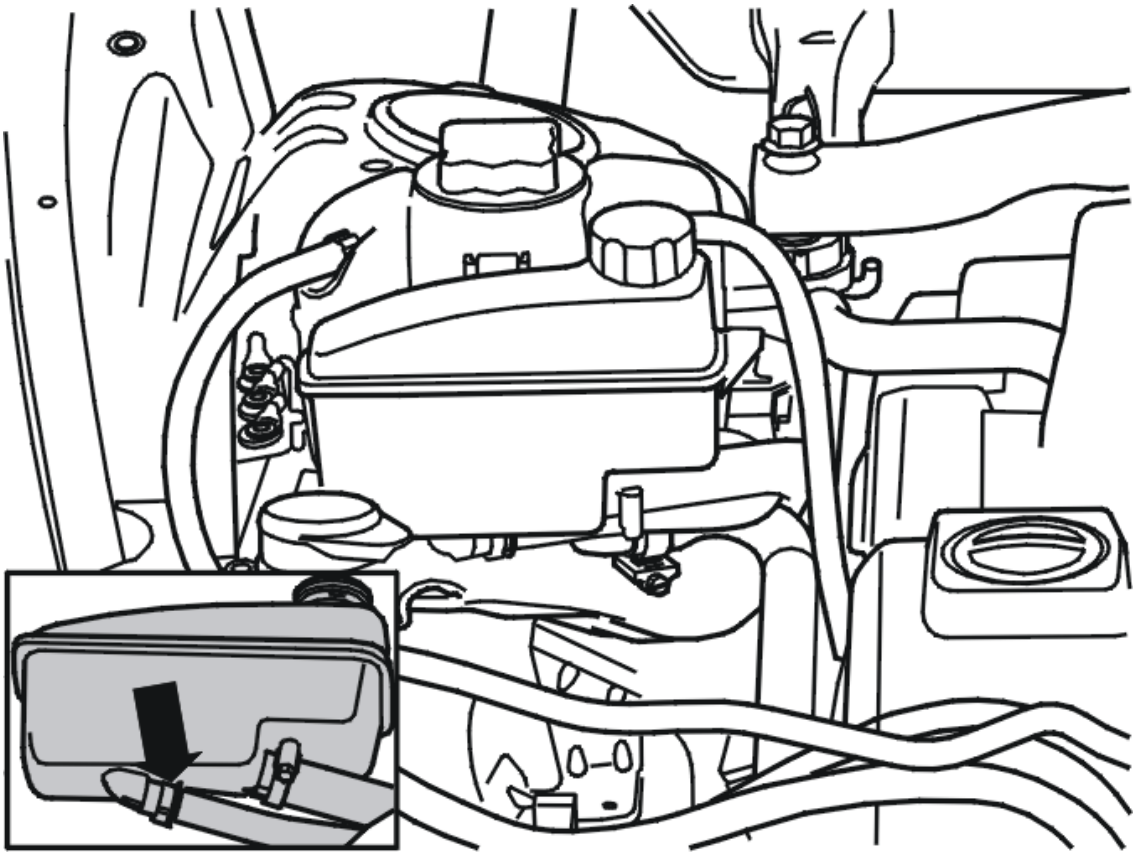

Fig. 6: Draining The Power Steering Fluid Reservoir
Courtesy of VOLVO CARS CORPORATION

WARNING: **Avoid skin contact with the oil.**

Lift up the oil reservoir.

Place paper under the oil reservoir for any oil spillage. Position a container under the oil reservoir.

Remove the hose with the clamp from the oil reservoir.

Drain the oil.

REMOVING THE BOLTS TO THE TORQUE ROD

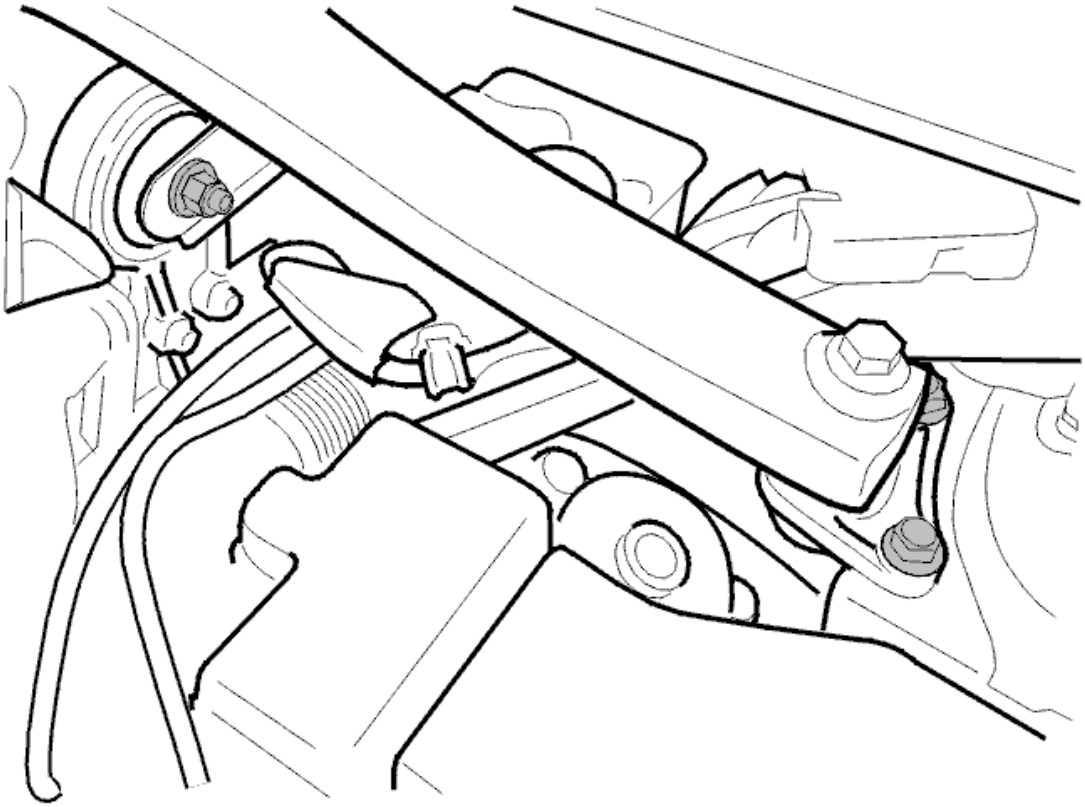

Fig. 7: Engine Stabilizer Brace
Courtesy of VOLVO CARS CORPORATION

Remove the bolts, x2, at the suspension turrets on both sides.

INSTALLING THE LIFTING TOOL

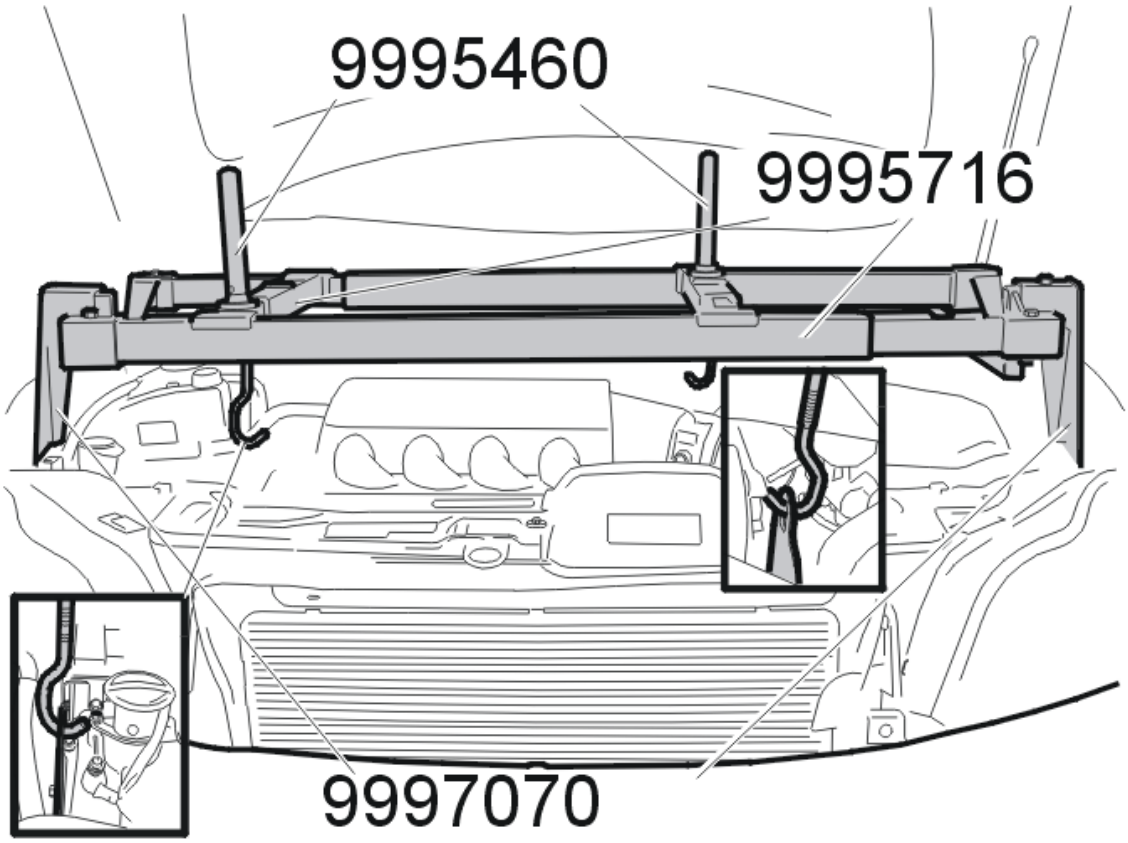

Fig. 8: Installing The Lifting Tool
Courtesy of VOLVO CARS CORPORATION

NOTE: **When raising the engine make sure that the lifting eye does not scratch the torque rod. Tape the torque rod at the lifting eye.**

Remove:

- the oil filler cap
- the upper front engine casing by pulling it straight up.

- Fit: the oil filler cap
- the lifting tool: see **9995716** converted with kit: see **9997070** and the lifting hooks: see **9995460** . Raise the engine slightly so that the engine pads are unloaded.

REMOVING THE WING LINER

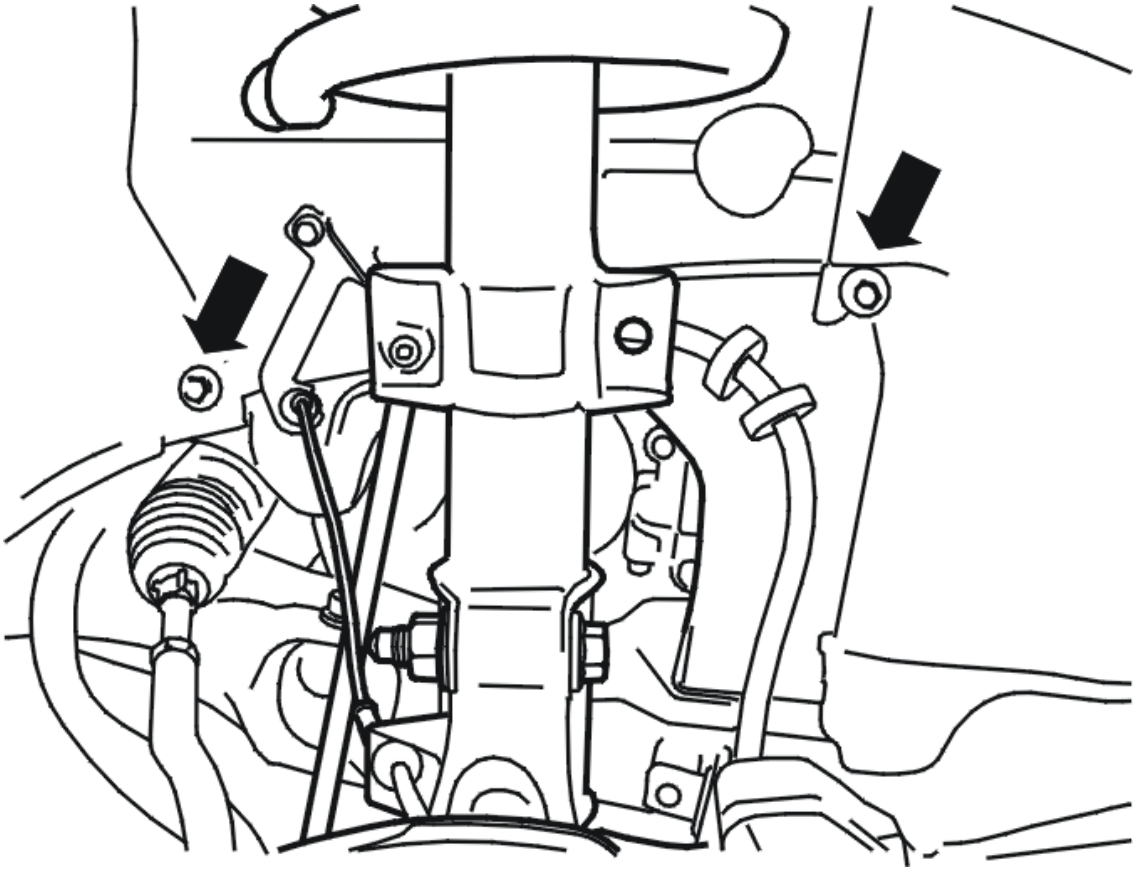

Fig. 9: Removing The Wing Liner
Courtesy of VOLVO CARS CORPORATION

Remove:

- the plastic nuts, x2
- the wing liner.

REMOVING THE BOLTS TO THE ENGINE PAD, RIGHT

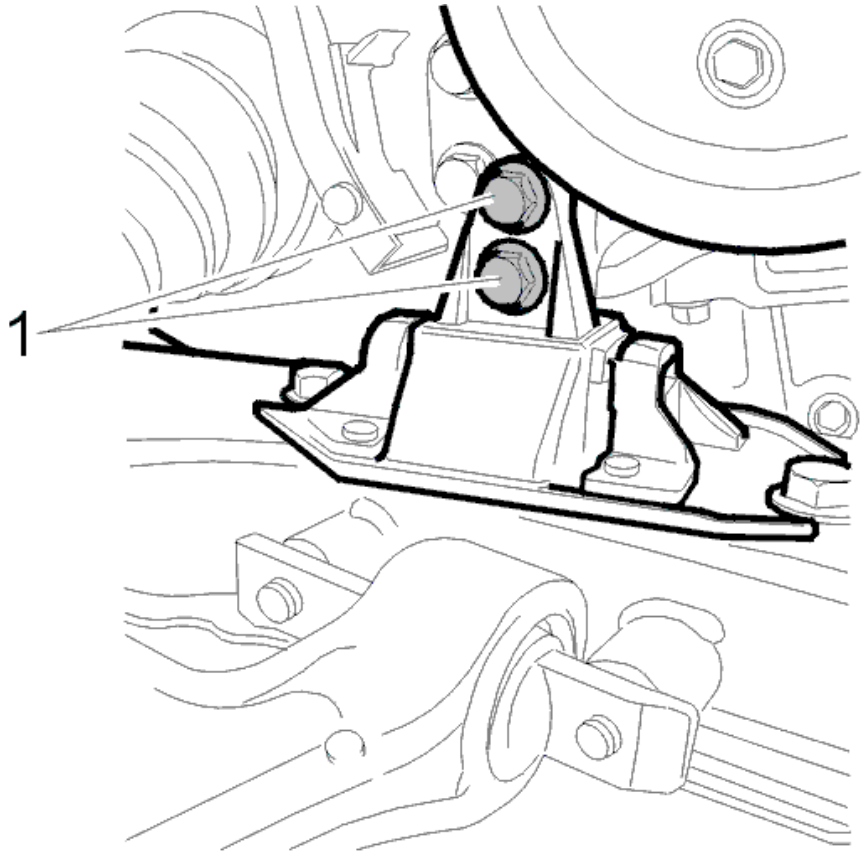

Fig. 10: Identifying Right-Hand Engine Mounting Screws
Courtesy of VOLVO CARS CORPORATION

Remove the bolts (1), x2.

REMOVING THE PROTECTIVE COVER UNDER THE ENGINE

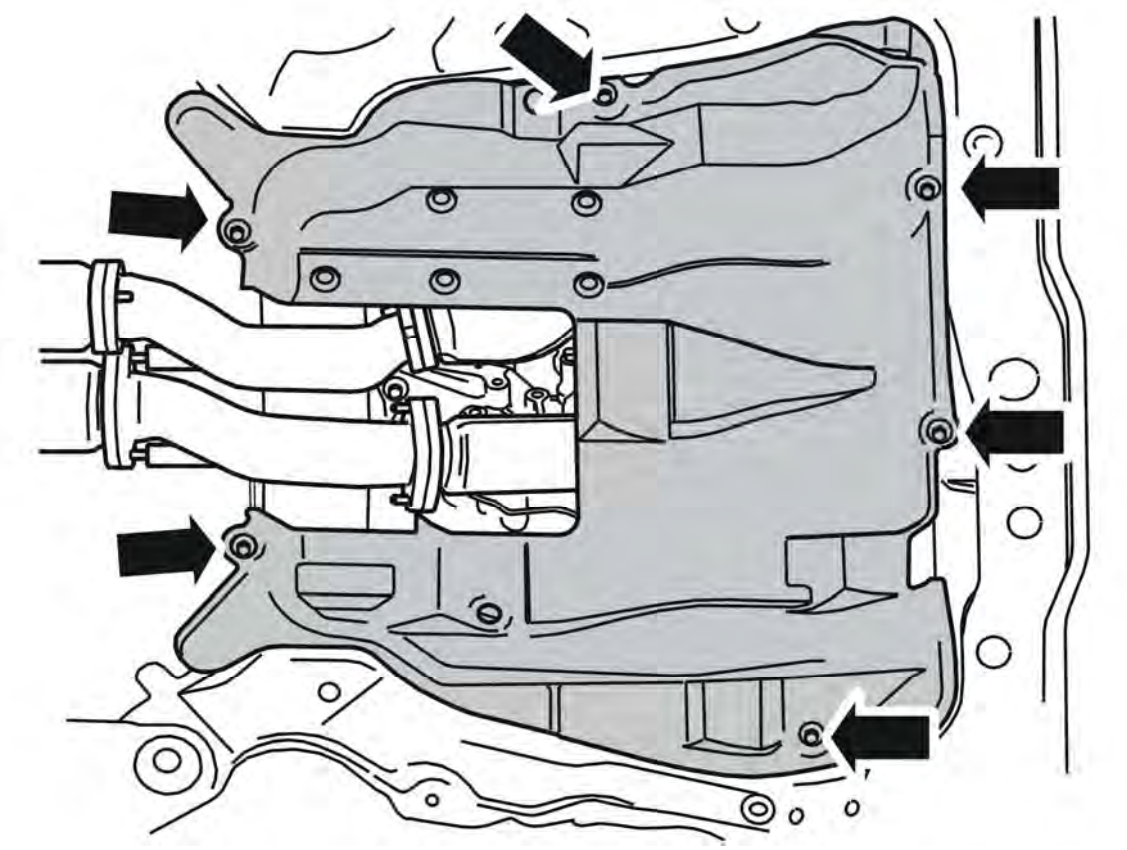

Fig. 11: Removing Splash Guard
Courtesy of VOLVO CARS CORPORATION

Remove:

- the bolts, x6
- the protective cover under the engine.

REMOVING THE EXHAUST PIPES BETWEEN FRONT AND REAR CATALYTIC CONVERTERS

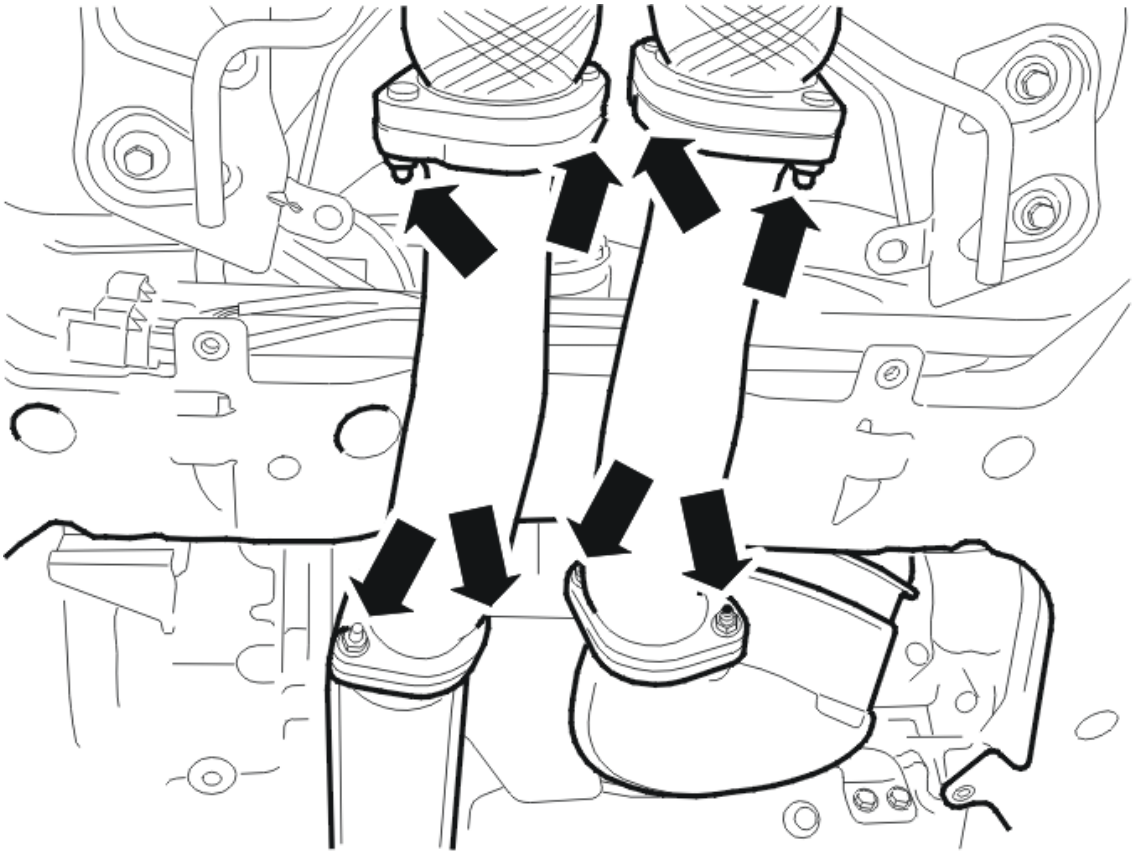

Fig. 12: Removing Exhaust Pipes
Courtesy of VOLVO CARS CORPORATION

Remove:

- both exhaust pipes' nuts
- both exhaust pipes.

REMOVING THE LOWER BOLT TO THE REAR ENGINE PAD

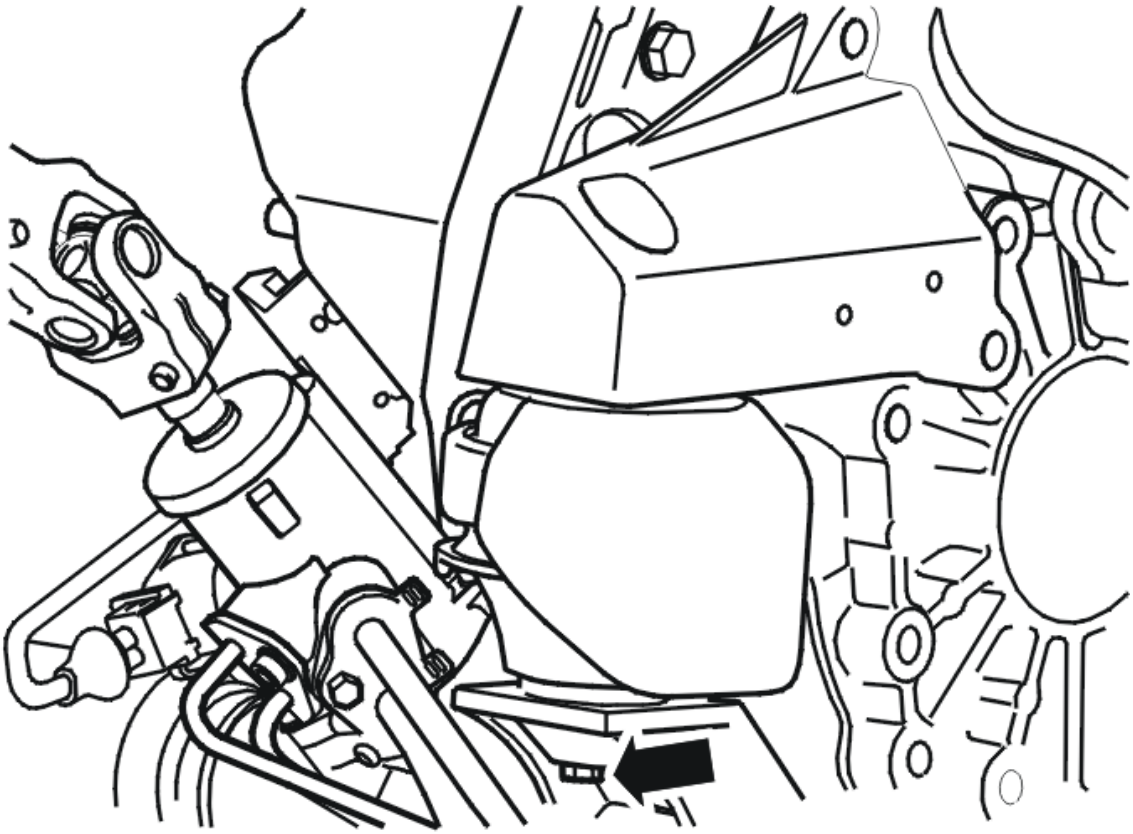

Fig. 13: Removing Engine Pad Bolt
Courtesy of VOLVO CARS CORPORATION

Release the heated oxygen sensor (HO2S) connectors, x2, from the subframe. Fold aside the protective plate under the steering gear to gain access to the engine pad's lower bolt. Remove the engine pad's bolt.

REMOVING THE STEERING SHAFT JOINT, LOWER

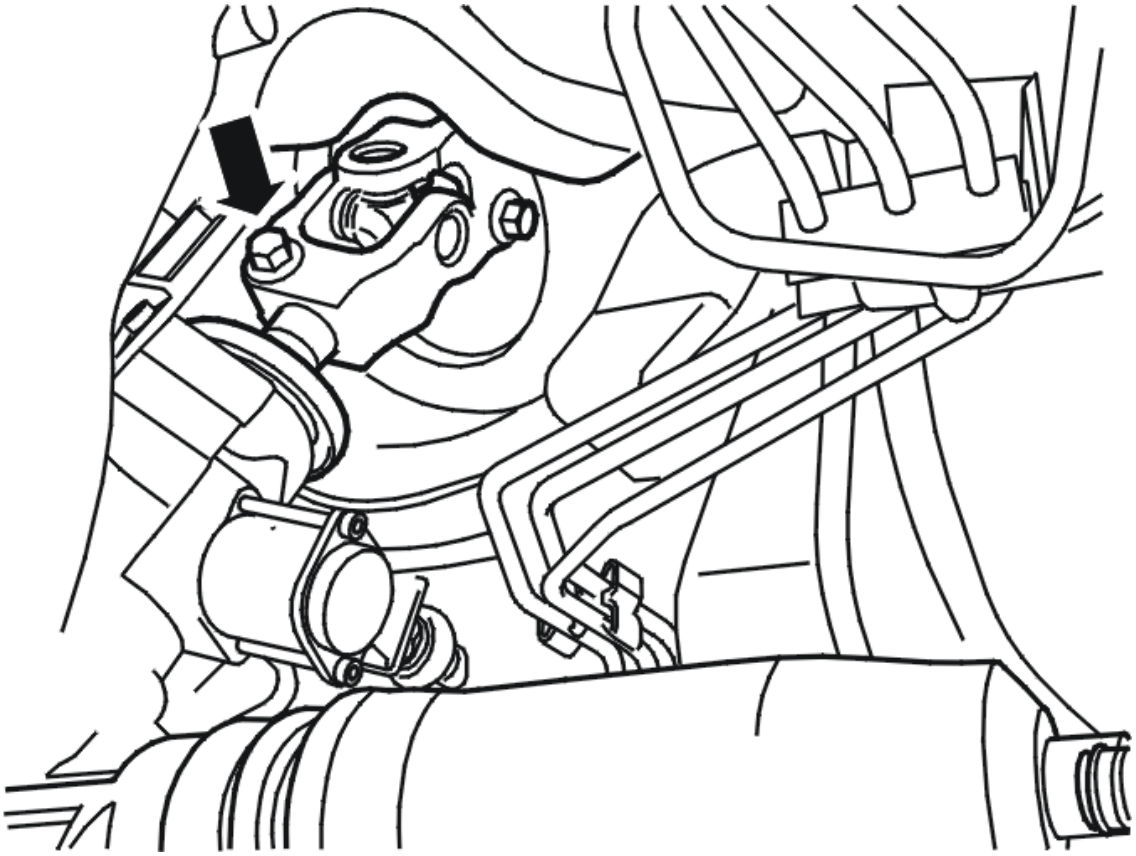

Fig. 14: Removing Steering Shaft Joint
Courtesy of VOLVO CARS CORPORATION

NOTE: **Turn the steering wheel until optimum access to the bolt is achieved. Lock the steering wheel and take out the ignition key, so that the steering wheel lock is activated.**

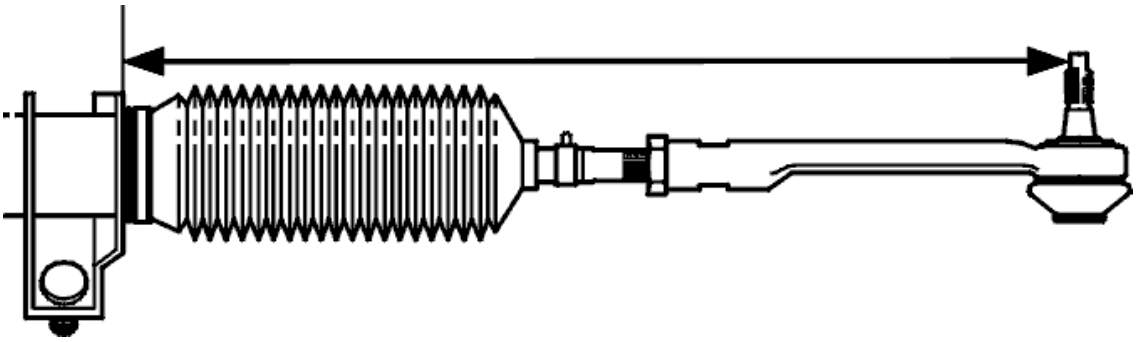

Fig. 15: Identifying Length Of Track Rod In Relation To Steering Gear Housing
Courtesy of VOLVO CARS CORPORATION

NOTE: **On one side, measure the length of the track rod in relation to the steering gear housing. Make a note of the measurement.**

Remove:

- the bolt to the lower steering shaft joint
- the connector to the solenoid.

REMOVING THE TRACK ROD ENDS

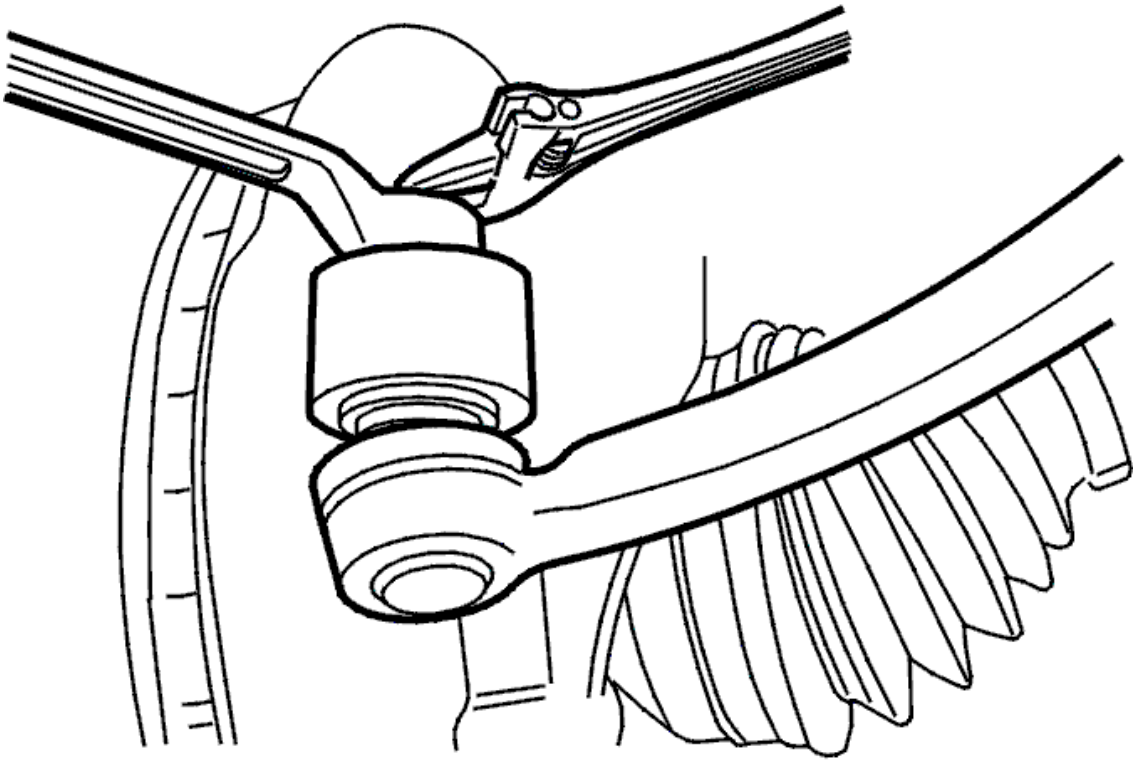

Fig. 16: Removing Track Rod Ends
Courtesy of VOLVO CARS CORPORATION

NOTE: **Make sure that the wheels are in the straight forward position. Lock the steering wheel by removing the ignition key. Do not turn the front wheels so that the position of the steering gear is changed. This could damage the SRS system's contact reel.**

Remove the track rod ends. Counterhold with a wrench so that the gaiter is not damaged.

LOWERING THE SUBFRAME AT THE REAR EDGE

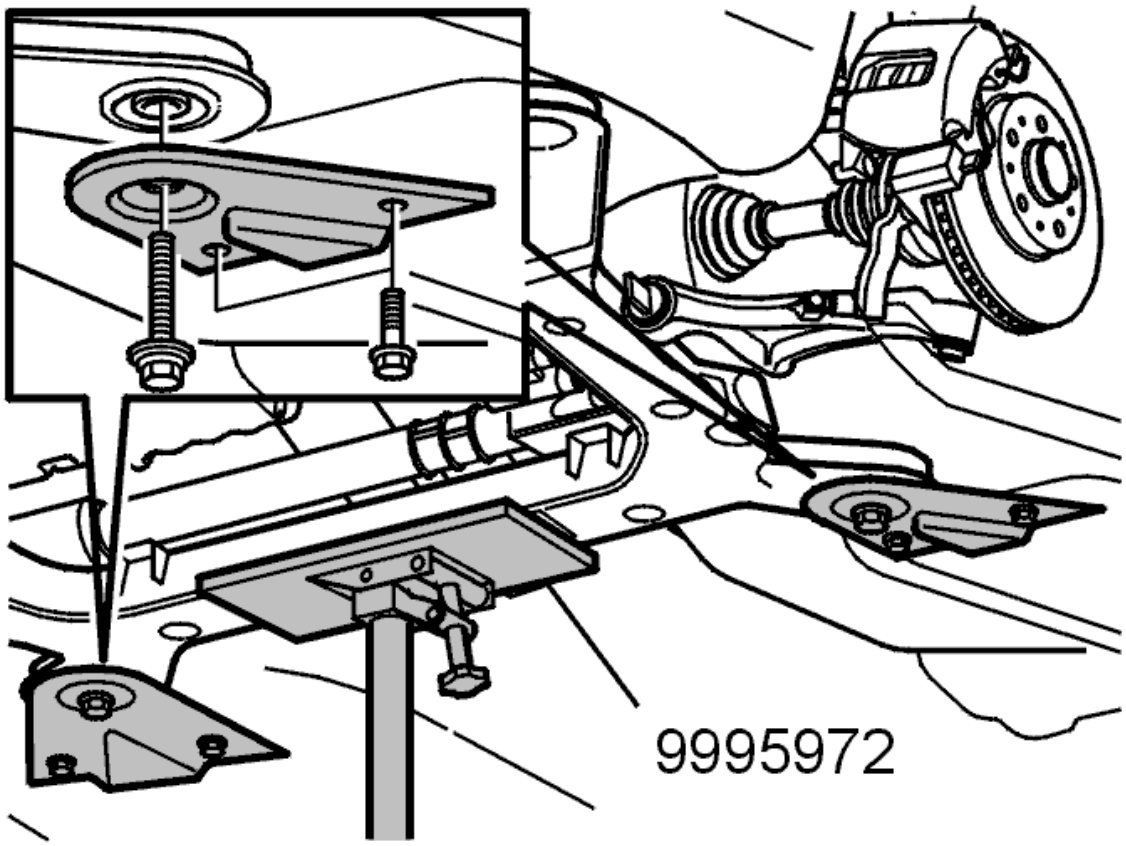

Fig. 17: Identifying Rear Sub-Frame Screws, Brackets & Washers
Courtesy of VOLVO CARS CORPORATION

NOTE: Press the lower steering shaft joint up from the steering gear.

Make sure that no pipes or lines are loaded or trapped when lowering.

Position a mobile jack at the rear end of the subframe.

Remove:

- the bolts to the subframe's brackets at the rear edge
- the bolts to the subframe in the rear edge
- the subframe's brackets.

Release the heated oxygen sensor (HO2S) lines from the anti-roll bar. Lower the subframe carefully.

REMOVING THE PRESSURE PIPE AND RETURN PIPE FROM THE STEERING GEAR

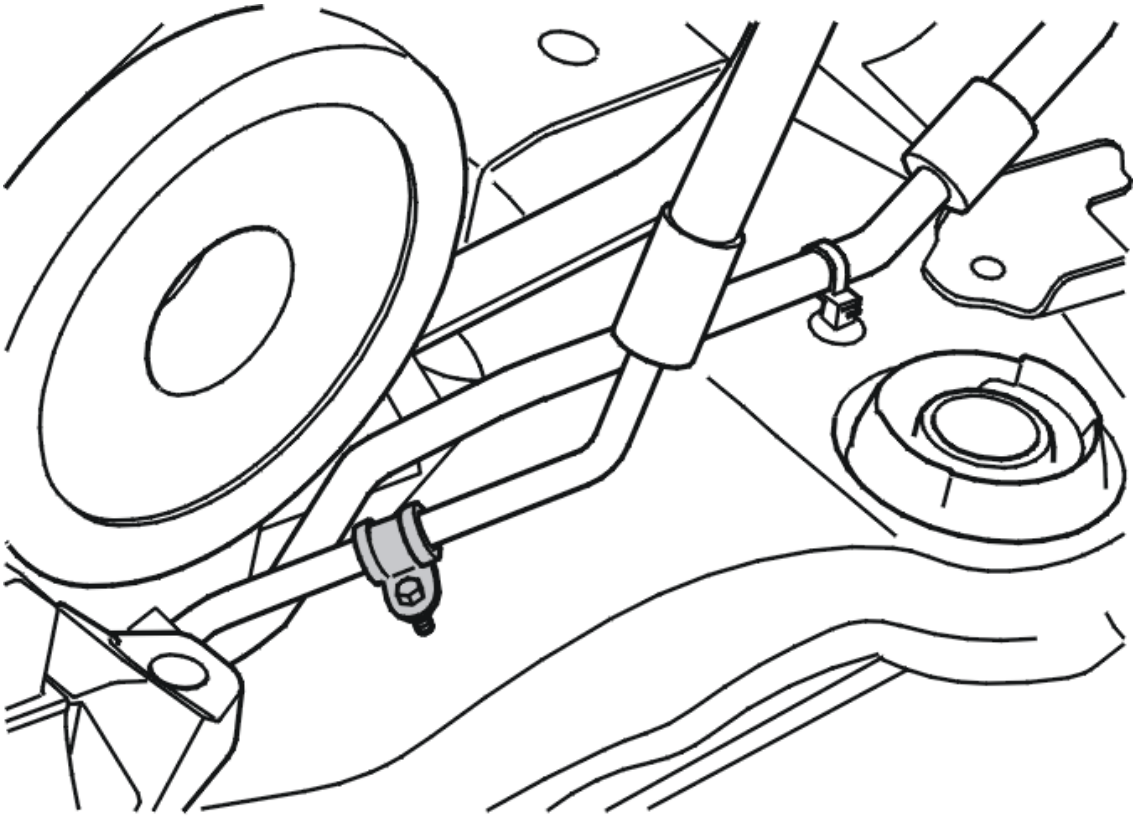

Fig. 18: Removing Steering Gear Pipes (1 of 2)
Courtesy of VOLVO CARS CORPORATION

Remove the bolt to the bracket holding the pipe to the subframe.

Release the pipes from the clips.

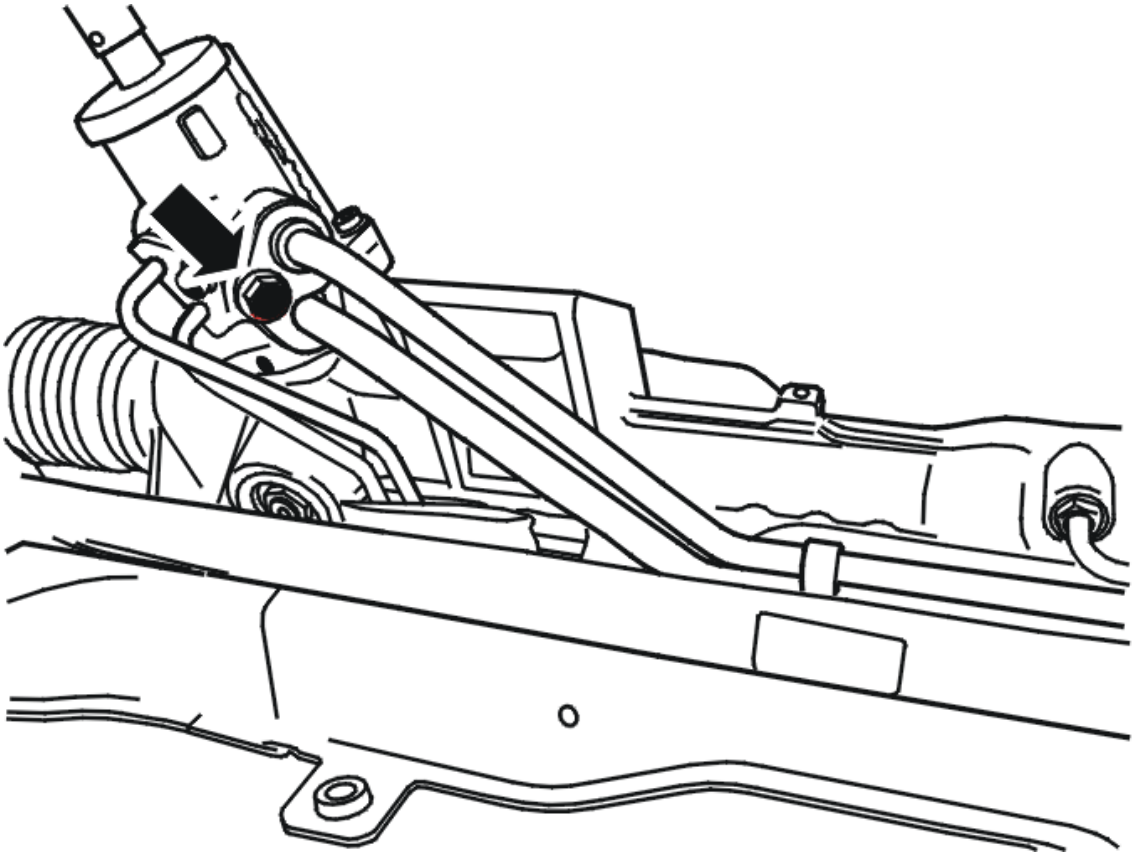

Fig. 19: Removing Steering Gear Pipes (2 of 2)
Courtesy of VOLVO CARS CORPORATION

Place a container under the steering gear.

Remove:

- the pipes' bolt on the valve housing
- the pipes, x2.

REMOVING THE METAL PROTECTIVE COVER

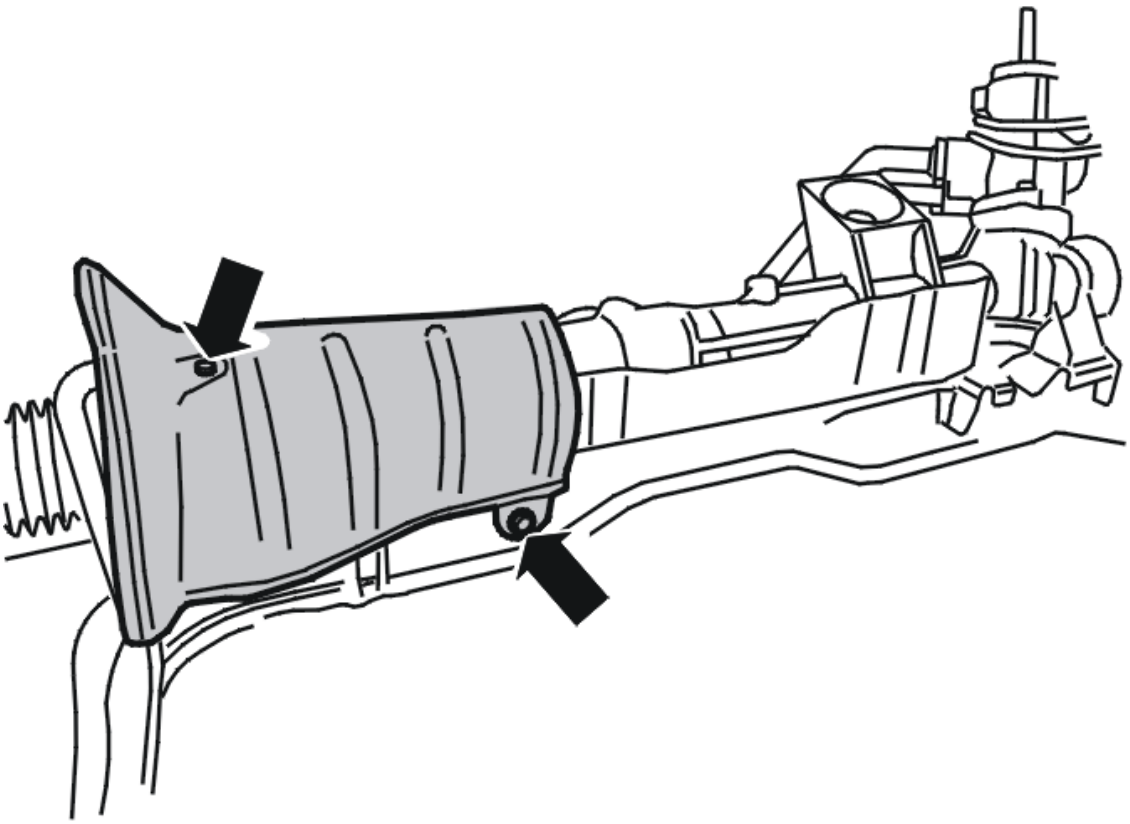

Fig. 20: Removing Protective Plate
Courtesy of VOLVO CARS CORPORATION

Remove:

- the bolt holding the protective plate on the steering gear, x1
- the bolt holding the protective plate to the subframe, x1
- the protective plate.

REMOVING THE STEERING GEAR

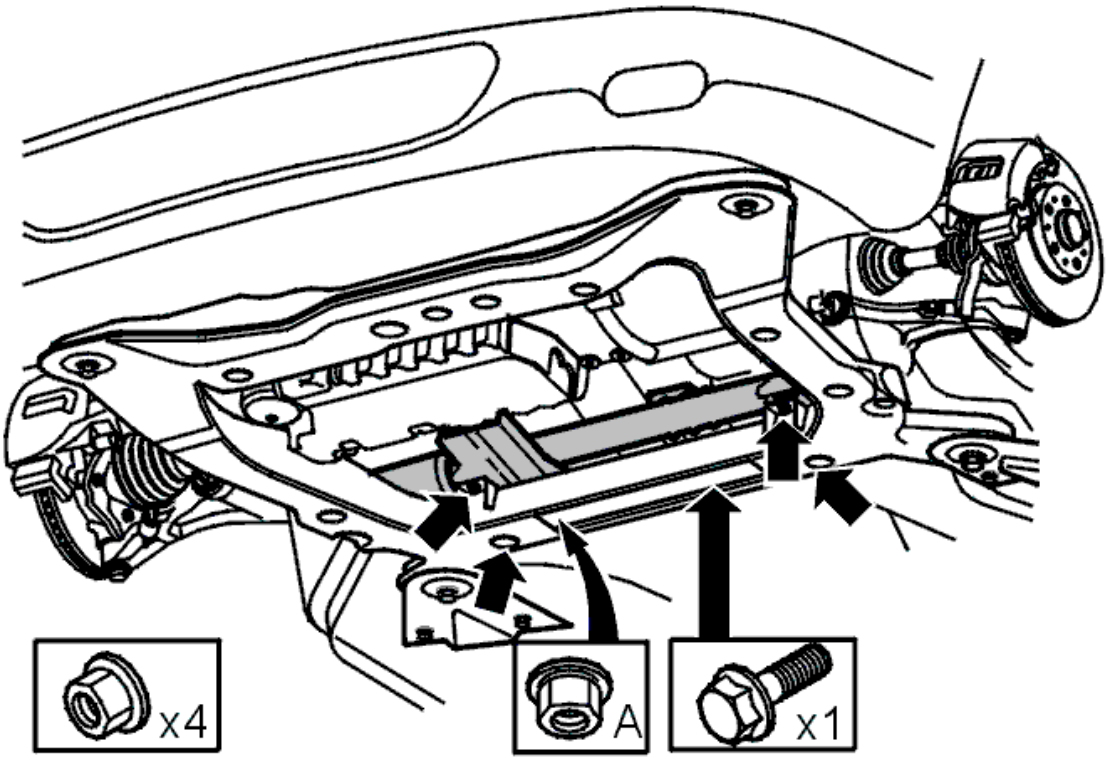

Fig. 21: Identifying Bolt And Nut Holding Steering Gear To Sub-Frame
Courtesy of VOLVO CARS CORPORATION

Remove:

- the nuts (1), x4
- the bolt (2), x1
- the steering gear through the left-hand side of the vehicle.

INSTALLATION

NOTE: For tightening torques, see: TIGHTENING TORQUE .

INSTALLING THE STEERING GEAR

Install:

- the steering gear
- the nuts (1), M10 x4
- the bolt (2), M10 x1.

INSTALLING THE METAL PROTECTIVE COVER

Install:

- the protective plate on the steering gear
- the bolt, M5, holding the protective plate on the steering gear, x1
- the bolt, M6, holding the protective plate to the subframe, x1.

INSTALLING THE OIL PIPES TO THE STEERING GEAR

Install:

- the pipes in the valve housing
- the pipes' bolts on the valve housing in accordance with: **SUMMARY OF TIGHTENING TORQUES FOR SPECIFIC COMPONENTS**
- the bolt, M6, to the oil pipe bracket on the subframe
- the pipe in the clips.

INSTALLING THE SUBFRAME AT THE REAR EDGE

Raise the subframe's rear edge using a mobile jack.

Install the sub-frame's four screws together with the sub-frame's brackets and engine heater, if installed.

Use new screws. Lube the screws with oil.

Tighten acc. to:**SUMMARY OF TIGHTENING TORQUES FOR SPECIFIC COMPONENTS** . First tighten the screws on the sub-frame's left side, then on the right.

Tighten the screws for the brackets M10.

Install the heated oxygen sensor's cables on the anti-roll bar

FITTING THE LOWER BOLT TO THE REAR ENGINE PAD

HINT: Unscrew the upper nut in order to facilitate fitting the lower bolt.

Install:

- the lower bolt to the engine pad, M10, x1
- the heated oxygen sensor (HO2S) connectors on the subframe, x2.

Refit the protective plate under the steering gear.

INSTALLING THE STEERING ARMS TO THE WHEEL SPINDLES

Install the steering arms to the wheels spindles. Use new lock nuts.

Tighten, see: **TIGHTENING TORQUE** . Use see **9512050** .

INSTALLING THE STEERING SHAFT JOINT, LOWER

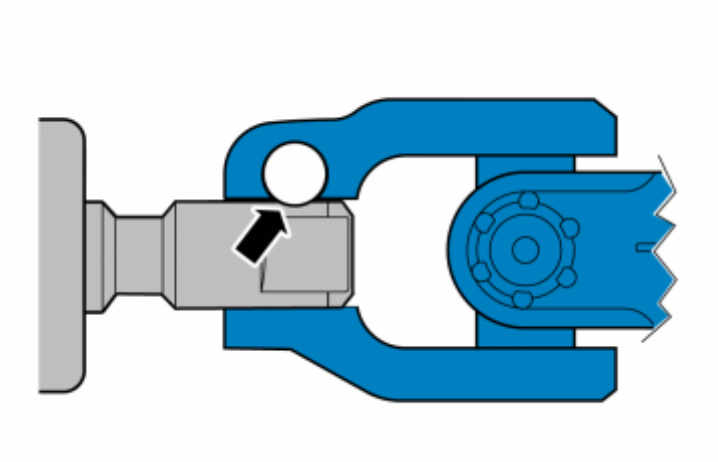

Fig. 22: Locating Steering Shaft Joint On Steering Gear
Courtesy of VOLVO CARS CORPORATION

NOTE: **Always check carefully that the join'ts screw hole is aligned with the slot in the steering gear's shaft.**

Install:

- the lower steering shaft joint
- the bolt, M8
- the connector to the solenoid.

INSTALLING THE EXHAUST PIPES BETWEEN FRONT AND REAR CATALYTIC CONVERTERS

NOTE: **To ensure that there is no exhaust leakage, see: FLANGED JOINT, ASSEMBLING .**

Install:

- both exhaust pipes
- both exhaust pipes' nuts, M8.

INSTALLING THE PROTECTIVE COVER UNDER THE ENGINE

Install:

- the protective cover under the engine
- the bolts, M8, x6.

FITTING THE BOLTS TO THE ENGINE PAD, RIGHT

Fit the bolts, x2. Tighten in accordance with: **SUMMARY OF TIGHTENING TORQUES FOR SPECIFIC COMPONENTS** .

INSTALLING THE WING LINER

Install:

- the wing liner
- the plastic nuts, x2.

REMOVING THE LIFTING TOOL

Remove the lifting tool see **9995716** , kit see **9997070** and lifting hooks see **9995460** .

FITTING THE BOLTS TO THE TORQUE ROD

Fit the bolts, M10 x2, at the suspension turrets on both sides.

FILLING THE POWER STEERING FLUID RESERVOIR

Fit the battery cable.

WARNING: Avoid skin contact with the oil.

Install:

- the hose with the clamp to the oil reservoir
- the oil reservoir.

Fill the power steering fluid reservoir.

NOTE: For the correct oil grade use Volvo power steering fluid, part number: 116 1529-1.

Turn the steering wheel between both end positions several times.

Check and fill with oil as necessary. Apply the parking brake. Start the engine.

A: Turn the steering wheel slowly to the right, keep it at the end position for 2 seconds.

B: Turn the steering wheel slowly to the left, keep it at the end position for 2 seconds. Repeat steps A and B 10 times.

FINISHING

Remove the oil filler cap.

Install:

- the upper front engine casing
- the oil filler cap.

Fit the front wheels on both sides in accordance with: **INSTALLING WHEELS** .

Carry out wheel alignment in accordance with: **WHEEL ALIGNMENT, CHECKING / ADJUSTING** .

STEERING WHEEL, STEERING WHEEL LOCK, STEERING COLUMN, SHAFT (2005-2012)

LEVER STEERING WHEEL ADJUSTMENT, REPLACING

NOTE: **As the illustrations in this service information are used for different model years and / or models, some variation may occur. However, the essential information in the illustrations is always correct.**

PREPARATIONS

Remove:

- the battery lead, see **BATTERY, DISCONNECTING**
- the soundproofing panel. See **SOUNDPROOFING PANEL, REPLACING**
- the steering wheel covers. See **REPLACING THE STEERING COLUMN COVERS** .

REMOVING THE LEVER FOR STEERING WHEEL ADJUSTMENT

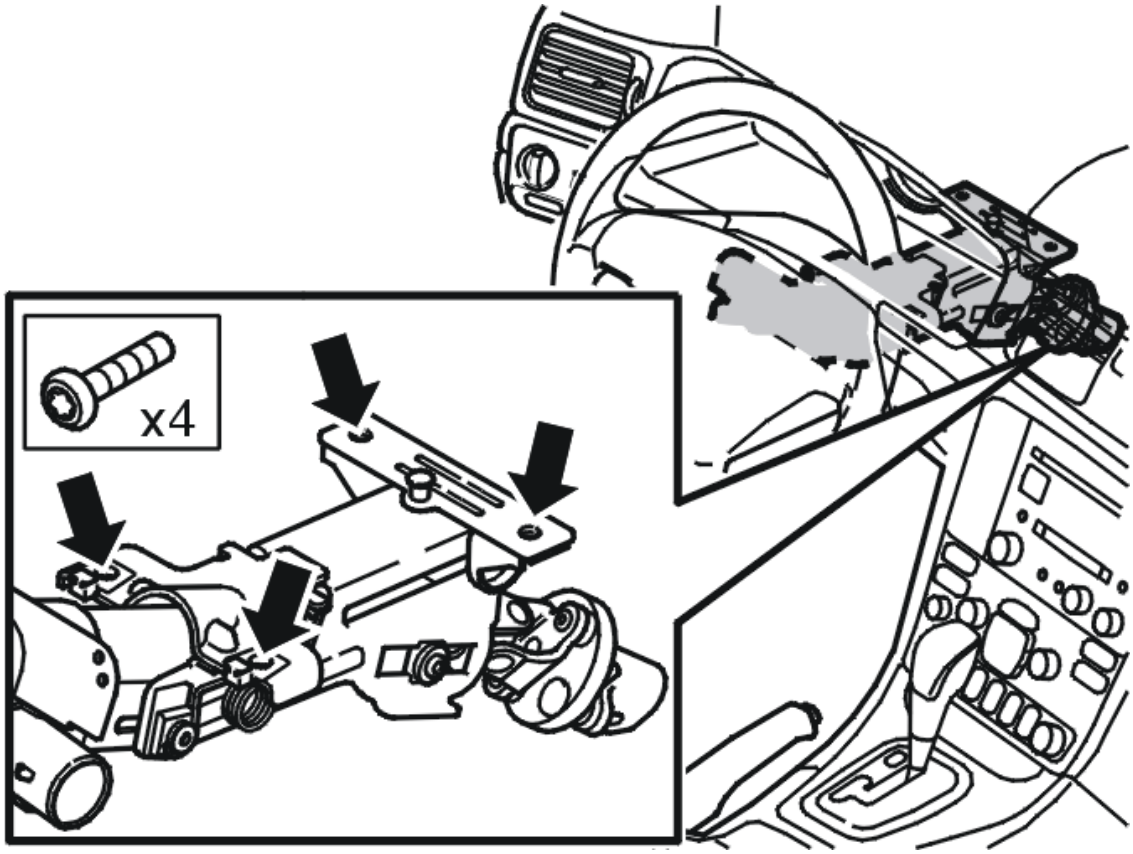

Fig. 23: Identifying Steering Column Screws
Courtesy of VOLVO CARS CORPORATION

- Remove the four screws holding the steering column
- Pull the steering column backwards out from the three guides and press to the right.

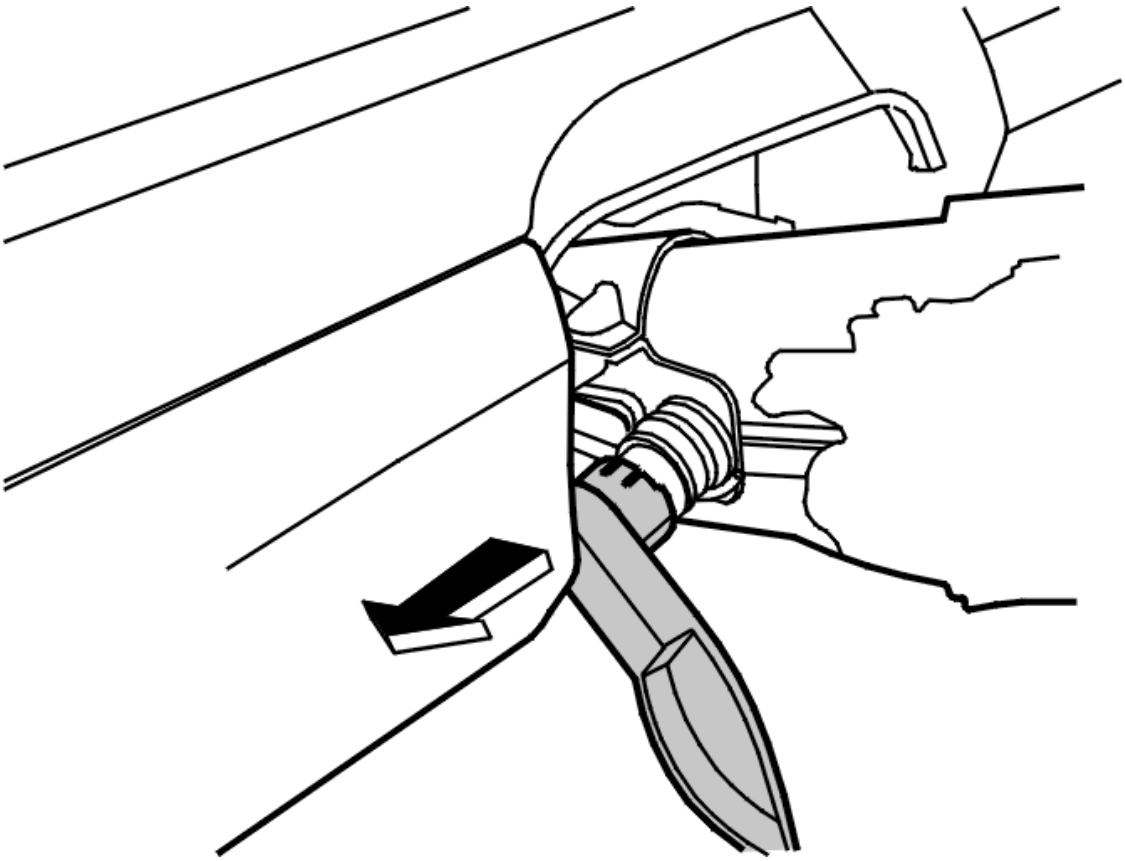

Fig. 24: Identifying Lever Removal
Courtesy of VOLVO CARS CORPORATION

- Remove the lever by pulling it straight out.

INSTALLING THE LEVER FOR STEERING WHEEL ADJUSTMENT

- Install the lever (press to the bottom position)
- Hook the steering column into the three guides.

Remove:

- the screw from the steering column (x4). Tighten to **25 Nm**
- the steering column covers. See **REPLACING THE STEERING COLUMN COVERS**
- the soundproofing panel. See **SOUNDPROOFING PANEL, REPLACING** .

STEERING COLUMN, REPLACING

NOTE: **The illustrations in this service information are used for different model years and/or models. Some variation may occur. However, the essential information in the illustrations is always correct.**

PREPARATORY WORK

REMOVING COMPONENTS

CAUTION: Vehicles equipped with the dynamic stability and traction control (DSTC) system: When working on the steering or wheel alignment, the adaptation of the steering wheel angle must be set to zero using the diagnostic tool. Test drive according to TEST DRIVE FORM (DSTC (DYNAMIC STABILITY AND TRACTION CONTROL) /BRAKE CONTROL MODULE), DESCRIPTION .

Remove:

- the battery negative cable. See: **BATTERY, DISCONNECTING**
- the soundproofing panel. See: **SOUNDPROOFING PANEL, REPLACING** .

REMOVING THE STEERING WHEEL

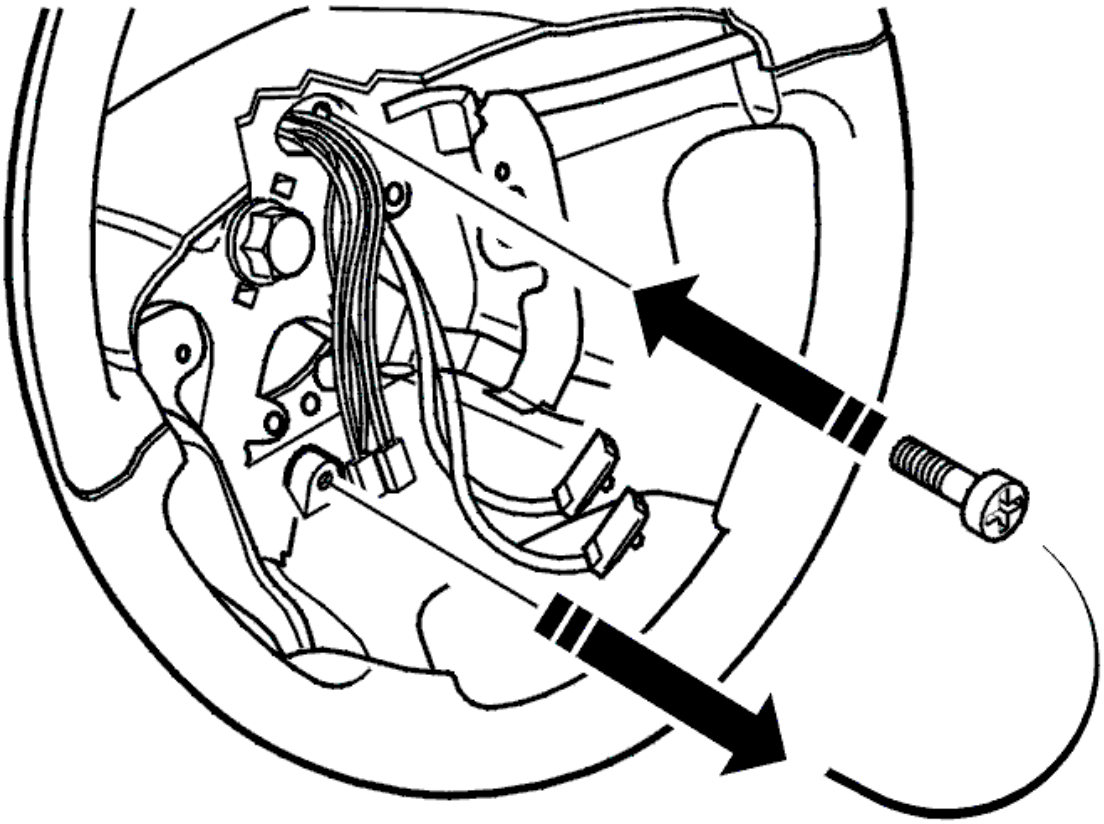

Fig. 25: Identifying Locking Screw Removal
Courtesy of VOLVO CARS CORPORATION

Remove the drivers airbag (SRS). See **AIRBAG DRIVER'S SIDE (SRS), REPLACING** .

Remove the lock screw from its "parking hole" in the steering wheel and install it in the contact reel.

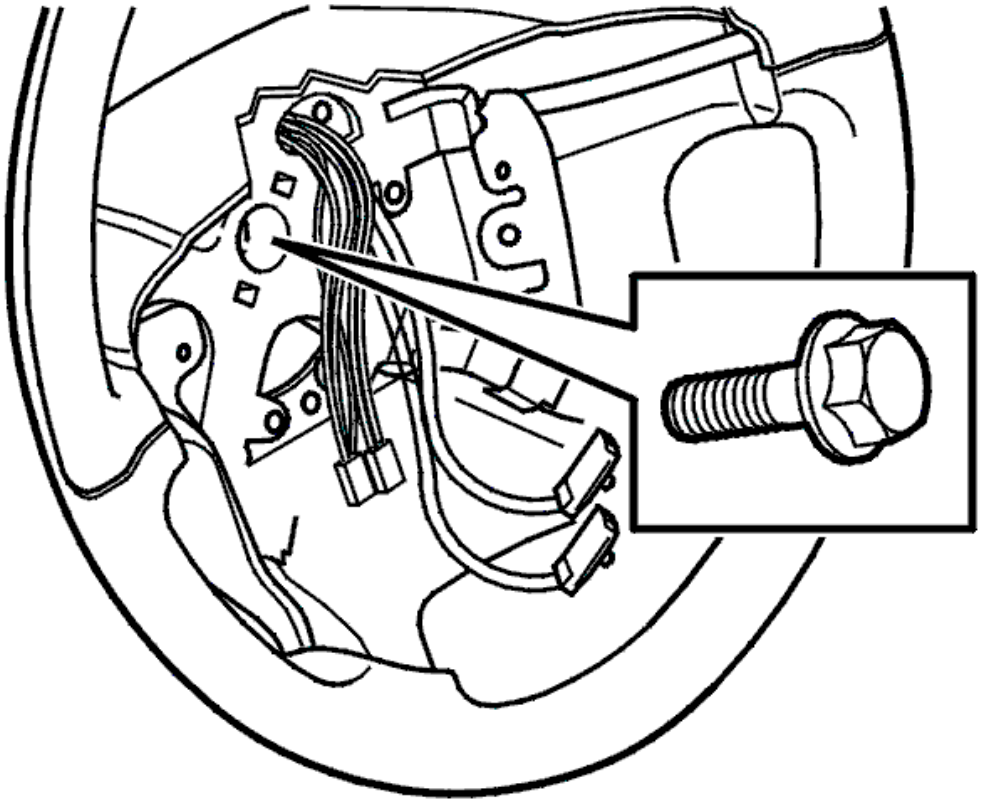

Fig. 26: Identifying Steering Wheel Screw
Courtesy of VOLVO CARS CORPORATION

Remove the steering wheel screw. Ensure that the front wheels and steering wheel are in the straight ahead position. Remove the steering wheel.

NOTE: Ensure that the connectors do not catch on the steering wheel during removal.

REMOVING STEERING COLUMN COVERS

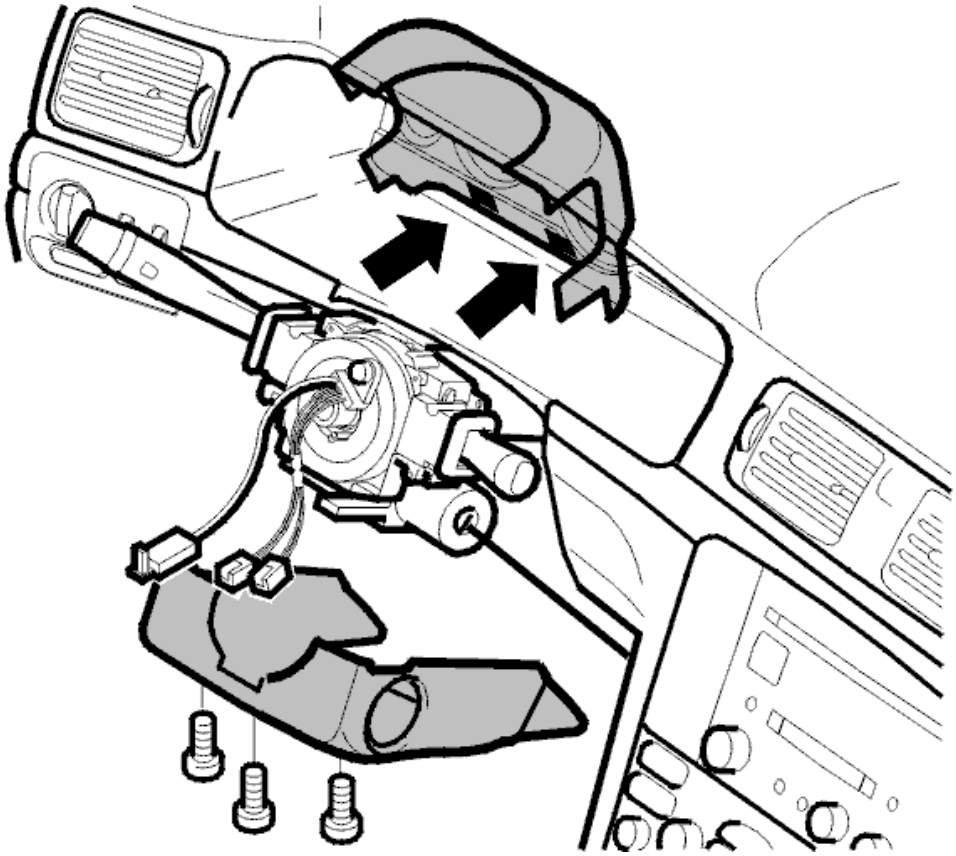

Fig. 27: Identifying Steering Column Covers Removal
Courtesy of VOLVO CARS CORPORATION

Remove the 3 screws.

Pull the steering wheel as far out as possible.

Remove the clip mounting between the covers.

Remove the lower steering column cover.

Remove the seal for the clip mounting at the dashboard.

Remove the upper steering column cover.

REMOVING THE GEAR SELECTOR ASSEMBLY AND STEERING WHEEL MODULE

Remove the gear selector assembly. See:

REMOVING THE STEERING WHEEL LOCK MODULE

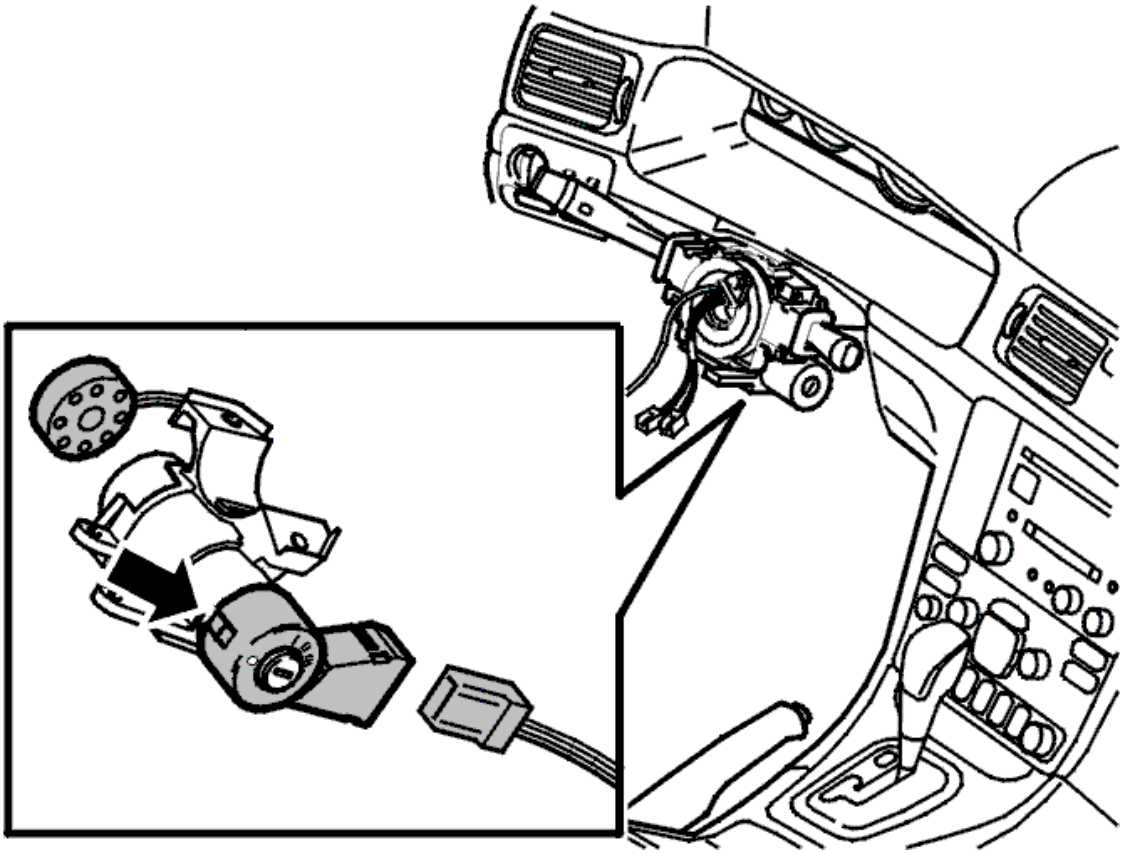

Fig. 28: Identifying Snap Fastener & Steering Wheel Lock Unit
Courtesy of VOLVO CARS CORPORATION

Disconnect the connectors.

Press in the snap fastener and remove the steering wheel lock unit.

REMOVING THE CABLE FOR IGNITION SWITCH INTERLOCK (AUTOMATIC TRANSMISSIONS ONLY)

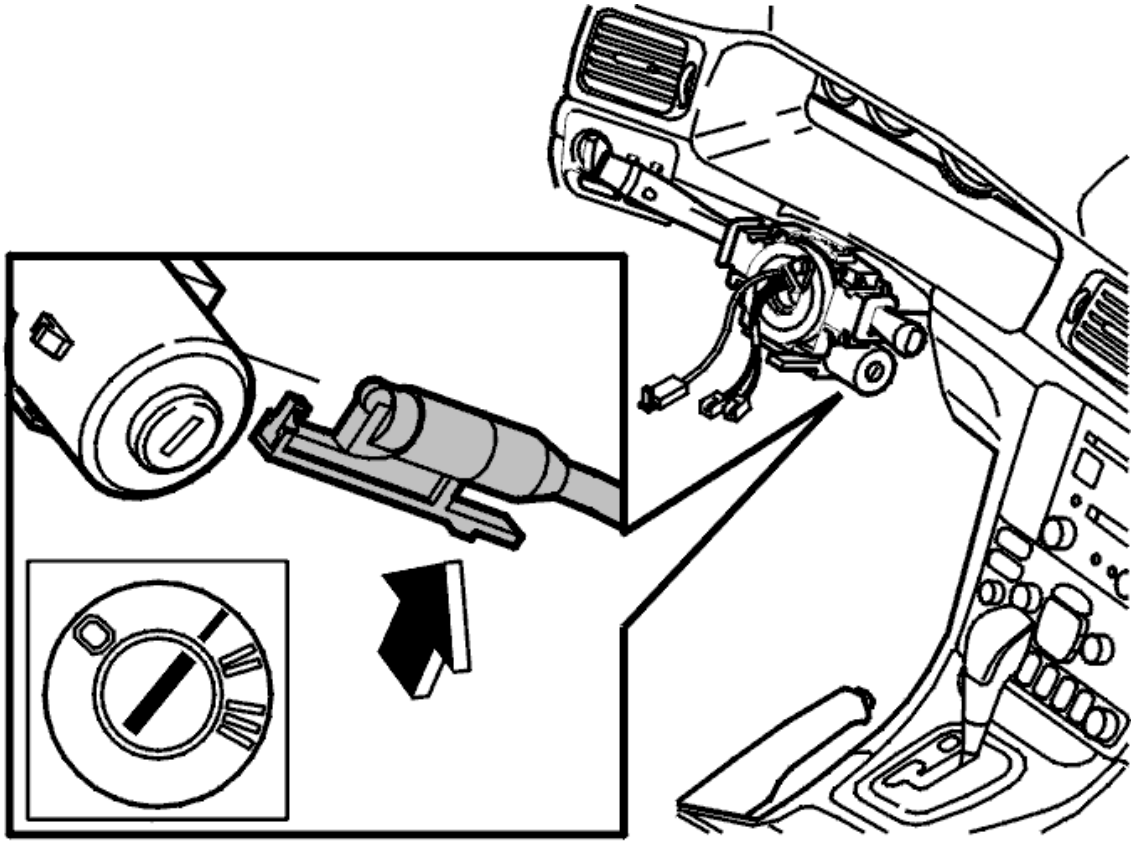

Fig. 29: Identifying Ignition Switch Interlock Cable
Courtesy of VOLVO CARS CORPORATION

Remove the ignition switch interlock cable.

Move the ignition key to position I.

Press up the lock facing and pull out the cable.

REMOVING THE CABLE HARNESS

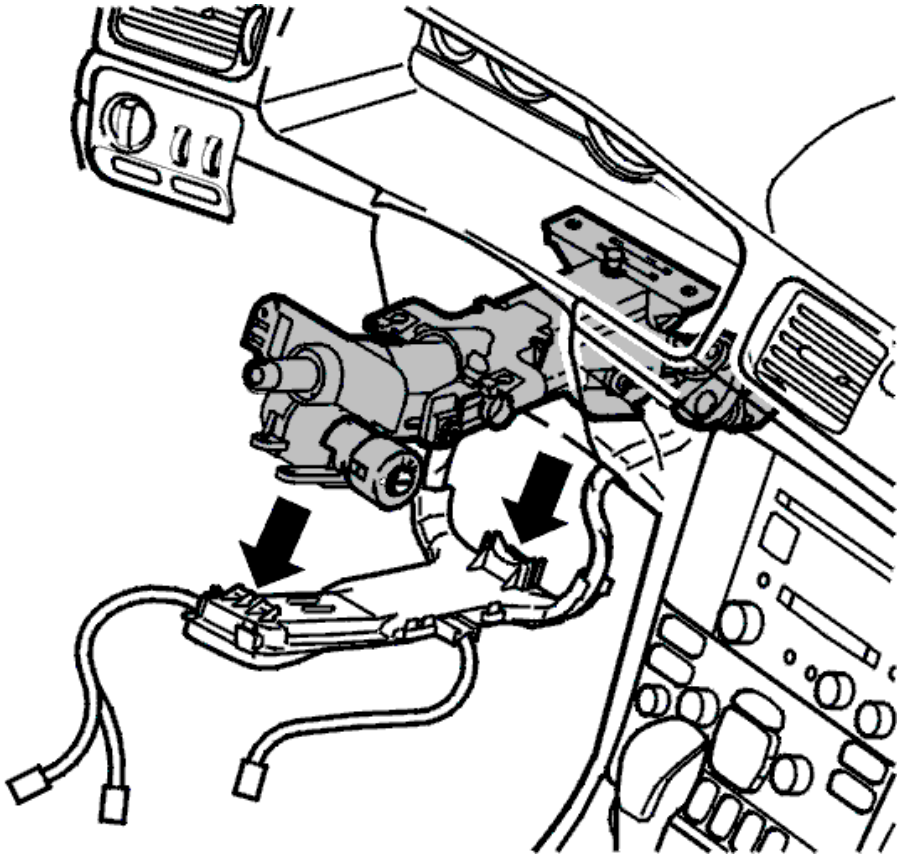

Fig. 30: Cable Sleeve From Steering Column
Courtesy of VOLVO CARS CORPORATION

Remove the cable bracket with the cable harness from the steering column. Route the cable harness and bracket through the hole in the dashboard. Place on the floor.

REMOVING THE LOWER STEERING SHAFT JOINT

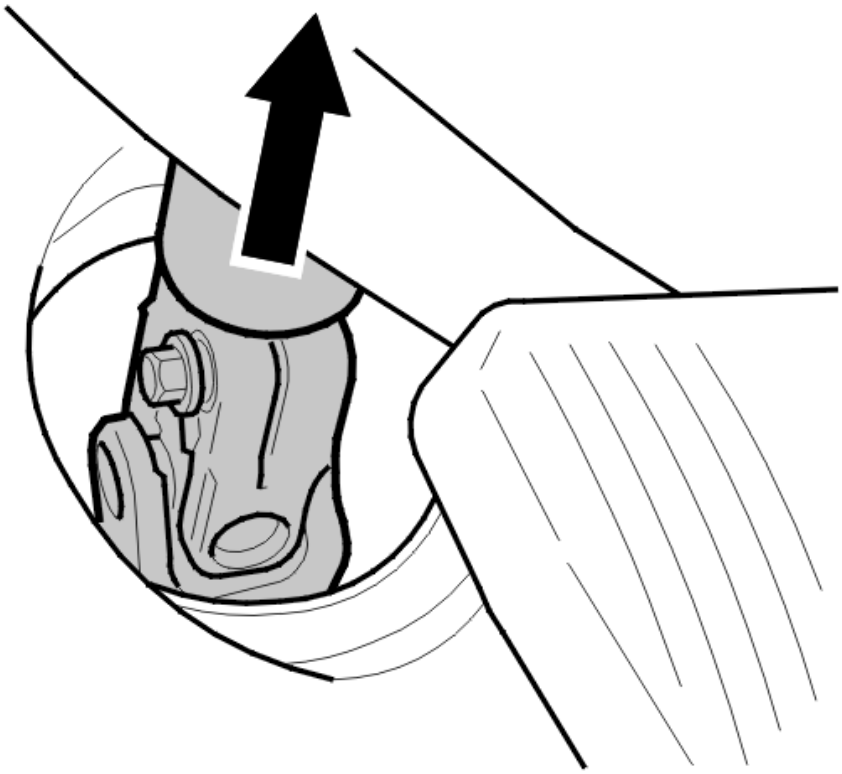

Fig. 31: Identifying Lower Steering Shaft Joint
Courtesy of VOLVO CARS CORPORATION

Fold the floor carpet out of the way.

Bend up the outer section of the steering shaft boot.

Remove the retaining clip around the boot.

Pull the boot up.

Remove:

- the screw securing the mounting for the steering shaft in the joint
- the joint from the steering shaft.

REMOVING STEERING COLUMN

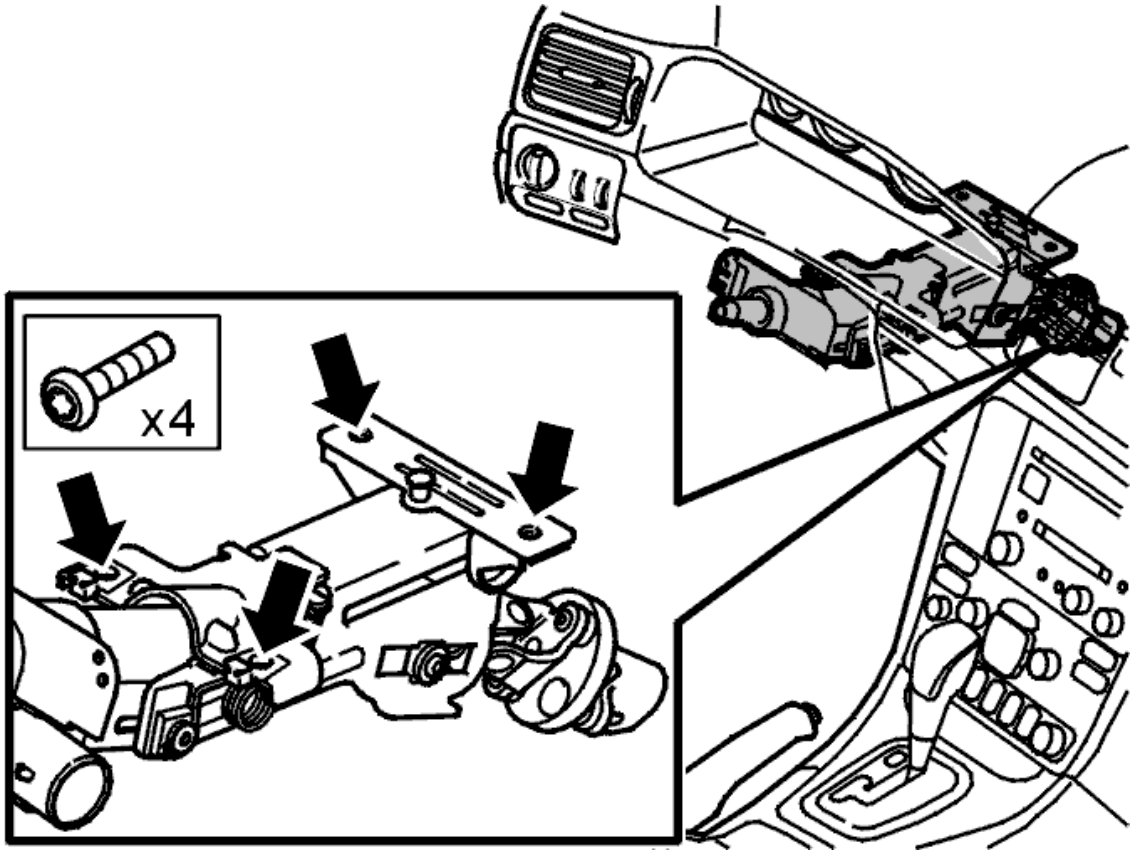

Fig. 32: Identifying Steering Column Screws
Courtesy of VOLVO CARS CORPORATION

Remove the 4 x screws holding the steering column in place.

Pull the steering column backwards from the three guides.

Remove the steering column.

TRANSFERRING COMPONENTS

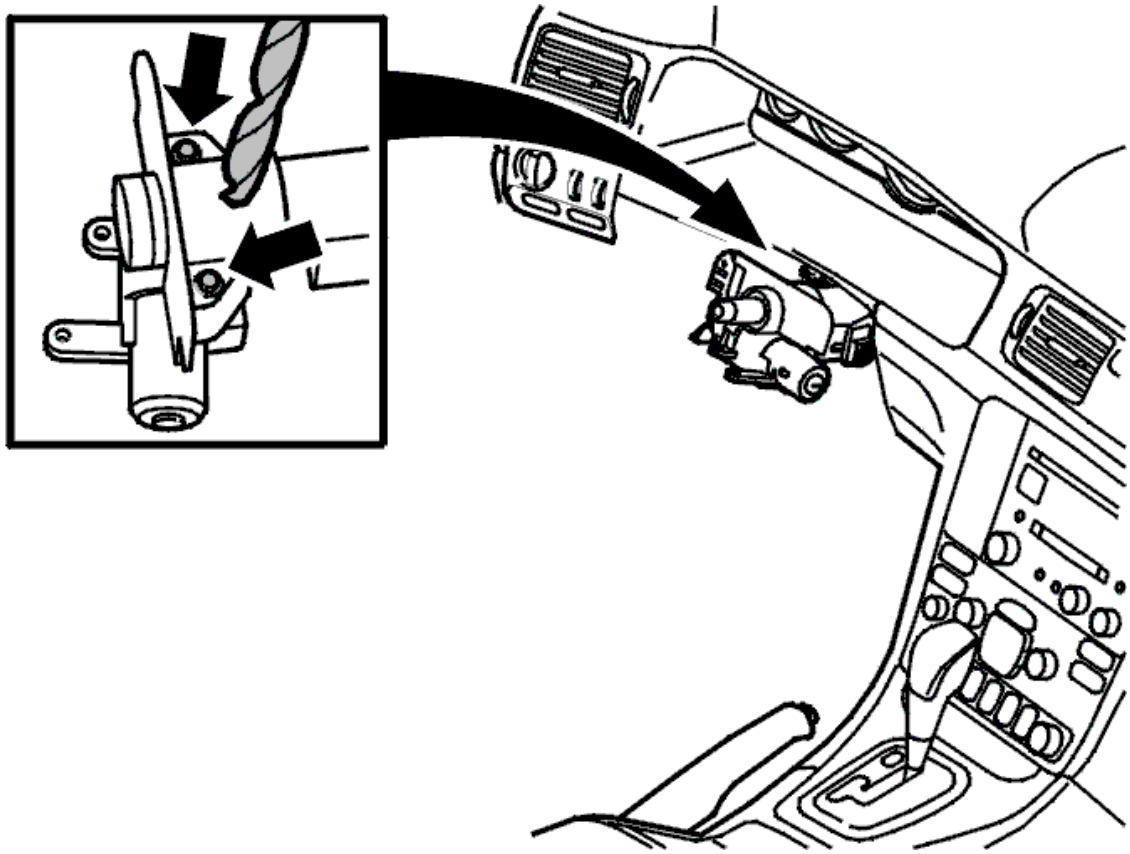

Fig. 33: Drilling Out Security Screws Holding Steering Wheel Lock
Courtesy of VOLVO CARS CORPORATION

Drill out the security screws holding the steering wheel lock.

Transfer the steering wheel lock.

Install the ignition key in the steering wheel lock.

Check that the key is in position I and that the locking lug on the steering wheel lock is down.

Install the steering wheel lock against the cap on the steering column.

Install the new security screws.

Tighten the security screws until the screw heads break off.

INSTALLING

INSTALLING THE STEERING COLUMN

NOTE: Lubricate the steering shaft friction surfaces and the steering column bearing. Use low temperature grease, P/N 1161417-9 (30 grams).

Lubrication is important to avoid noise from the steering column.

NOTE: Check that the rear seat rails are undamaged.

Hook the steering column into the three guides.

Install the screws. Tighten to **25 Nm** . Tighten the rear screw first.

INSTALLING THE LOWER STEERING SHAFT JOINT

Install the steering shaft on the lower steering shaft joint.

Install:

- a new screw. Tighten to **25 Nm** .
- the steering shaft boot and snap ring.

Fold back the carpet.

INSTALLING THE CABLE HARNESS

Pull up the cable harness and bracket. Install on the steering column.

INSTALLING THE CABLE FOR IGNITION SWITCH INTERLOCK (VEHICLES WITH AUTOMATIC TRANSMISSIONS ONLY).

Set the gear selector lever to P position.

Move the ignition key to position I.

Press the cable into the ignition switch and feel to, see that it sits correctly.

Remove the ignition key and check that the gear selector lever is blocked in P position.

INSTALLING THE STEERING WHEEL LOCK MODULE

Remove the ignition key.

Install the steering wheel lock module.

Connect the connector.

INSTALLING THE GEAR SELECTOR ASSEMBLY AND STEERING WHEEL MODULE

Install the gear selector assembly.

INSTALLING STEERING COLUMN COVERS

Install:

- the lower cover for the steering column. Secure the seals for the switches
- the 3 screws.

Press the seal in towards the dashboard in the upper steering column cover.

Press the lower cover into place in the upper cover.

NOTE: Check that the seals for the switches are positioned correctly throughout the operation.

INSTALLING THE STEERING WHEEL

Route the connectors through the hole in the steering wheel one by one.

Install:

- the steering wheel
- the center screw. Tighten. See **SUMMARY OF TIGHTENING TORQUES FOR SPECIFIC COMPONENTS** .

Remove the screw from the contact reel and place it in the "parking hole".

Install the drivers airbag (SRS). See **AIRBAG DRIVER'S SIDE (SRS), REPLACING** .

FINISHING

Ensure that the steering wheel turns easily and that the steering lock functions.

Install the battery lead.

Test drive the vehicle.

Check that the steering wheel is in the correct position.

Adjust the steering wheel position if necessary. See **STEERING WHEEL POSITION, ADJUSTING** .

STEERING SHAFT, LOWER, REPLACING

NOTE: As the illustrations in this service information are used for different model years and / or models, some variation may occur. However, the essential information in the illustrations is always correct.

REMOVAL

REMOVING WHEELS

Remove the wheel on the driver's side.

REMOVING THE SCREW ON THE LOWER STEERING SHAFT

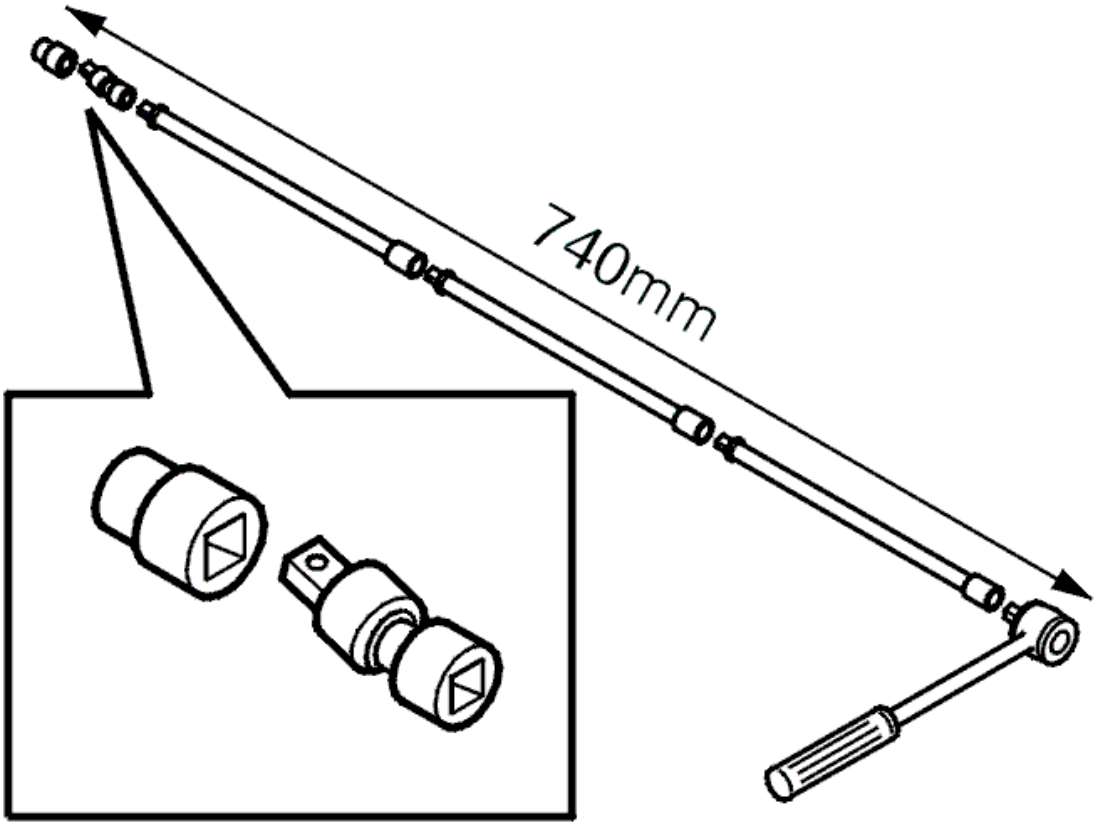

Fig. 34: Identifying Tool Assembly
Courtesy of VOLVO CARS CORPORATION

Remove the screw on the lower steering shaft on the driver's side wheel housing. Use the tool depicted in the illustration.

DISASSEMBLING THE LOWER STEERING SHAFT

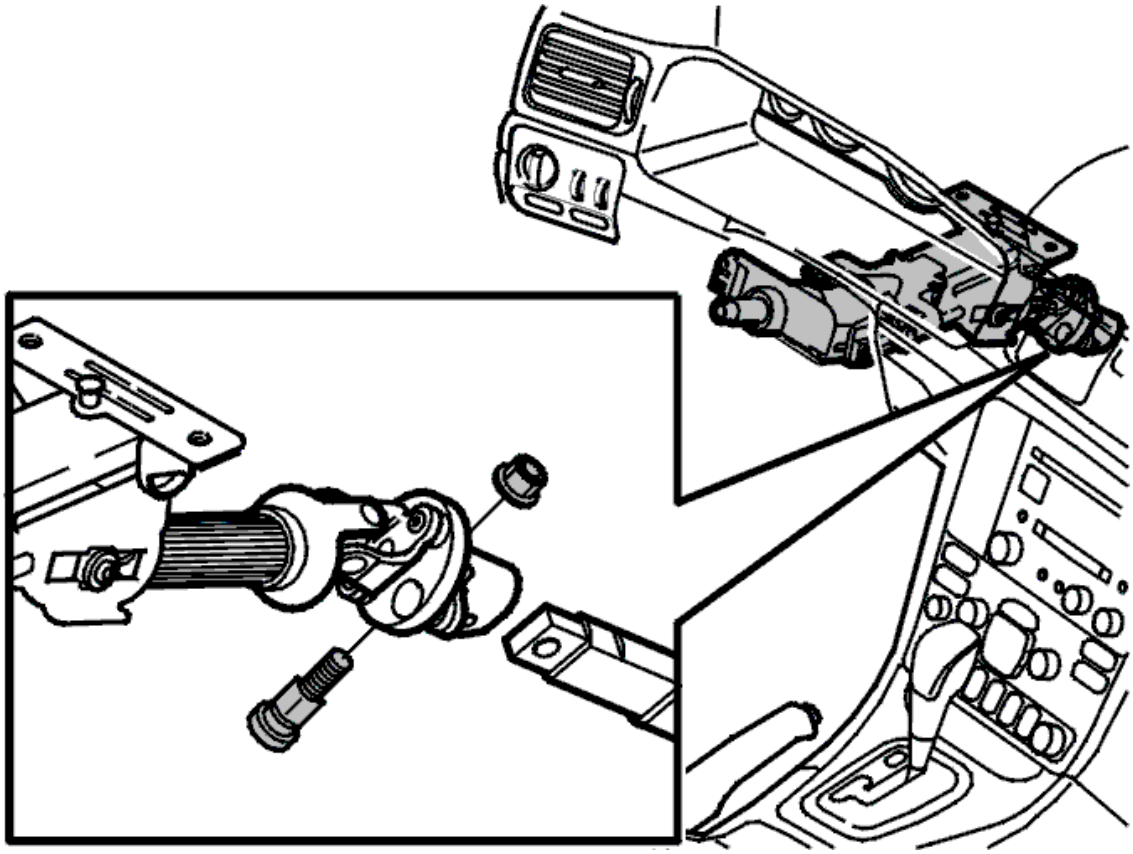

Fig. 35: Identifying Lower Steering Shaft Upper Screw
Courtesy of VOLVO CARS CORPORATION

Set the wheels to straight ahead. Lock the steering wheel lock

Remove the upper screw on the lower steering shaft

Expose the lower steering shaft from the upper steering shaft

Press the upper steering shaft up slightly for better access.

REMOVING THE LOWER STEERING SHAFT

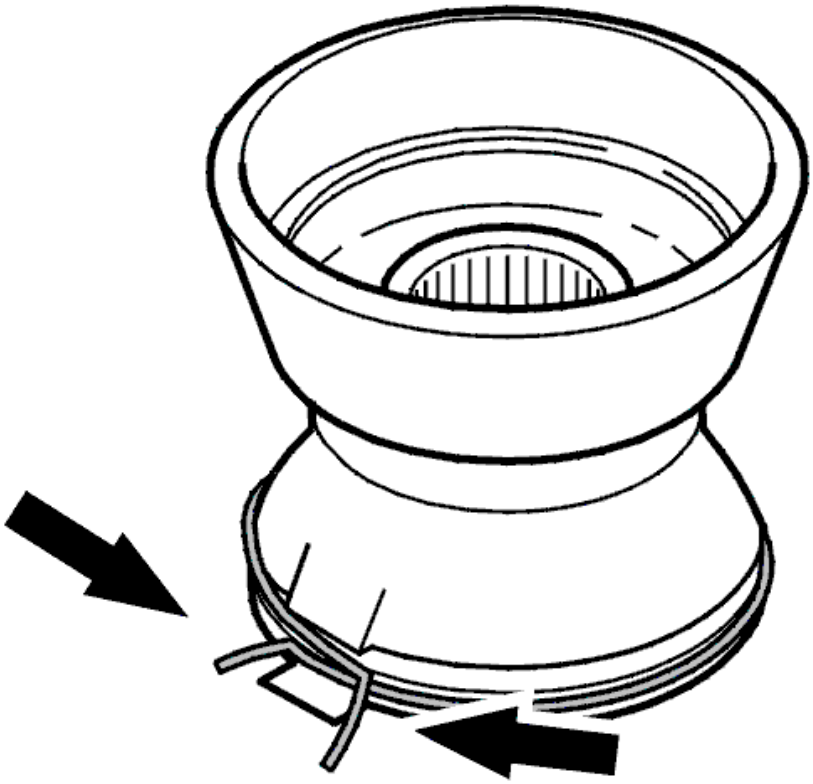

Fig. 36: Bending Up Outer Section Of Steering Shaft Boot
Courtesy of VOLVO CARS CORPORATION

Fold back the floor carpet

Bend up the outer section of the steering shaft boot

Remove:

- the lock ring around the boot
- the boot
- the lower steering shaft.

INSTALLATION

INSTALLING THE LOWER STEERING SHAFT

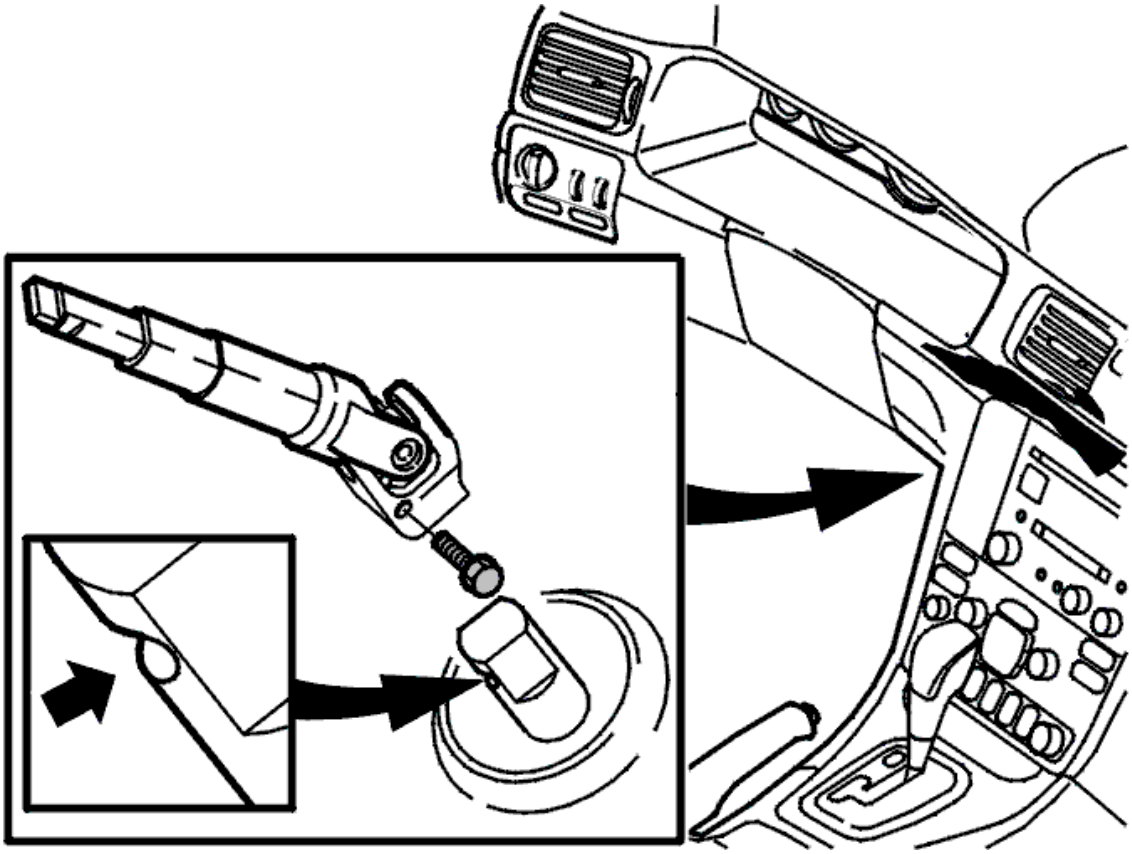

Fig. 37: Identifying Lower Steering Shaft Screw
Courtesy of VOLVO CARS CORPORATION

Clean the steering gear pinion from any rust and lubricate.

Install:

- the lower steering shaft
- the screw of the lower steering shaft from within the vehicle.

NOTE: Ensure that the screw is seated in its groove on the steering gear. Use a new screw. Finger tighten.

INSTALLING THE NEEDLE BEARING

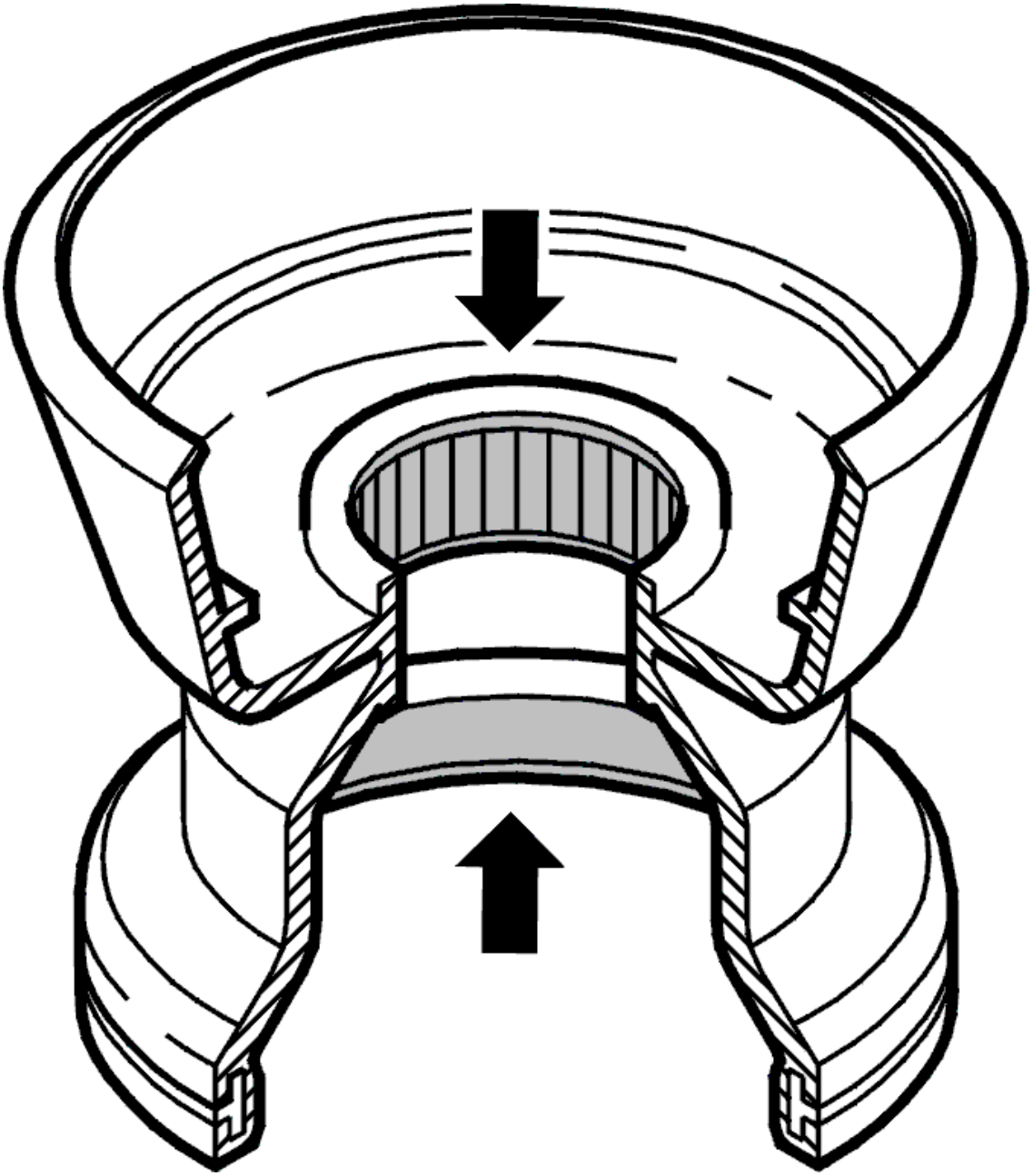

Fig. 38: Identifying Needle Bearing In Boot
Courtesy of VOLVO CARS CORPORATION

Ensure that the needle bearing in the boot is in the groove. Lubricate the needle bearing in the boot with low temperature grease

NOTE: **If necessary, make sure that the plain bearing is properly seated. Lubricate the plain bearing in the boot with low temperature grease, part no. 1161427-8 (6 grams).**

Lubricate the edge on the inside of the inner part of the gaiter with soapy water.

INSTALLING THE SNAP RING

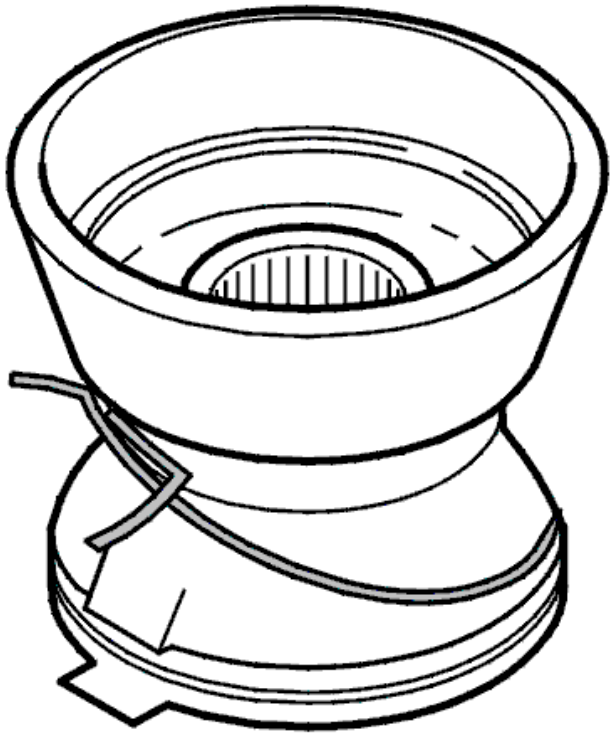

Fig. 39: Identifying Snap Ring On Boot
Courtesy of VOLVO CARS CORPORATION

Install the snap ring on the boot as illustrated.

INSTALLING THE BOOT

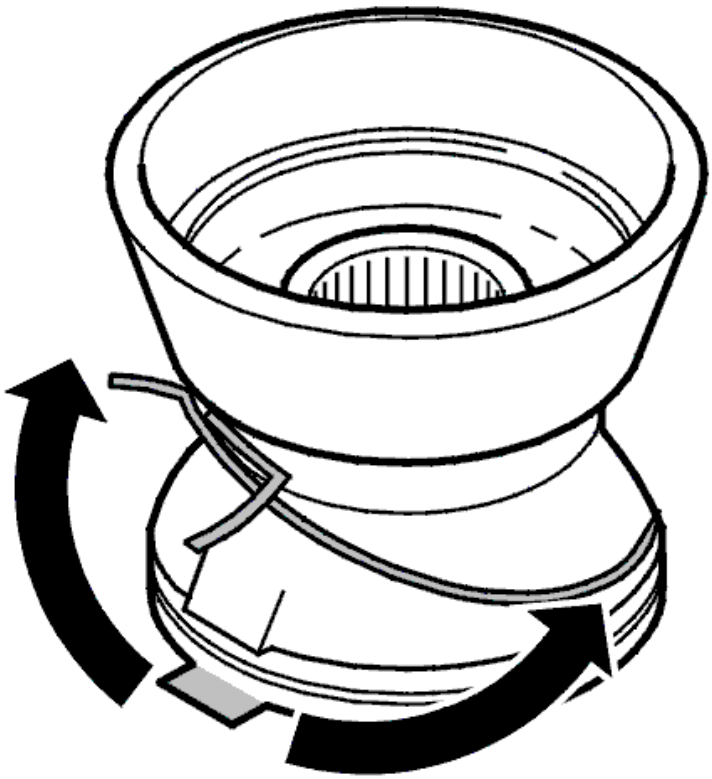

Fig. 40: Identifying Boot Threaded Over Lower Steering Shaft
Courtesy of VOLVO CARS CORPORATION

Thread the boot over the lower steering shaft. Press the boot over the flange of the panel

Start by pressing the boot from the bottom upwards

NOTE: Ensure that the boot seals round the panel flange.

INSTALLING THE SNAP RING

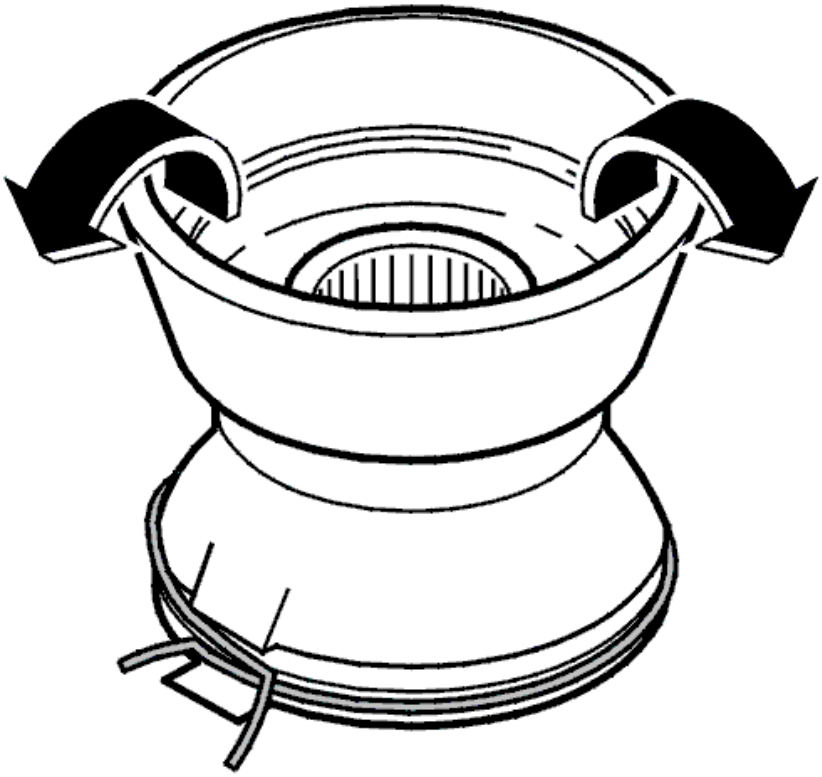

Fig. 41: Identifying Outer Section Of Boot Bent Back
Courtesy of VOLVO CARS CORPORATION

Install the snap ring around the boot. Bend back the outer section of the boot

Fold back the carpet.

ASSEMBLING THE UPPER AND LOWER STEERING SHAFT

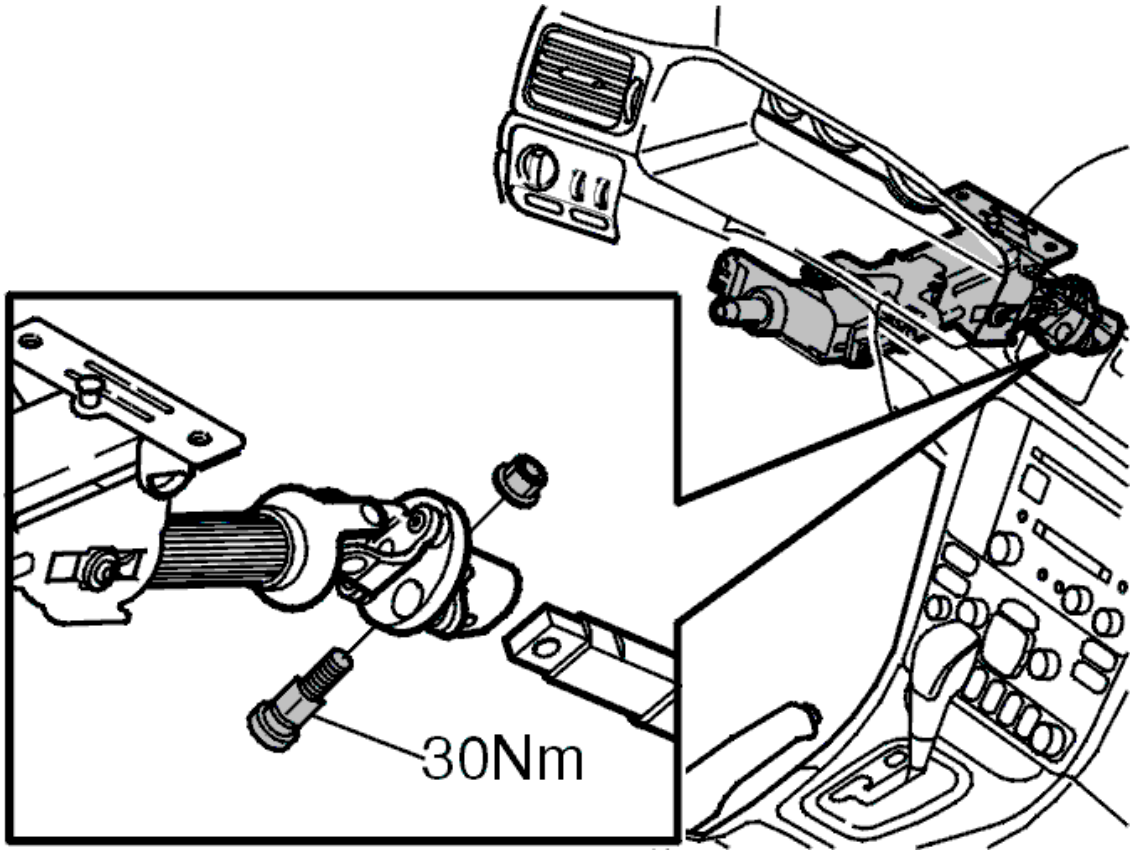

Fig. 42: Identifying Upper & Lower Steering Shaft Assembled
Courtesy of VOLVO CARS CORPORATION

Pull the upper steering shaft down. Assemble the upper steering shaft with the lower steering shaft

Install the screw and nut. Tighten to 30 Nm

NOTE: Use a new screw and nut.

TIGHTENING THE LOWER SCREW ON THE LOWER STEERING SHAFT

Expose the steering wheel lock. Turn the steering wheel so that the screw on the lower steering shaft points straight forward

Tighten the lower screw on the lower steering shaft in the engine compartment. Tighten to 25 Nm.

FITTING THE WHEEL

Remount the wheel, see **INSTALLING WHEELS**

STEERING WHEEL LOCK, REPLACING

NOTE: The illustrations in this service information are used for different model years

and/or models. Some variation may occur. However, the essential information in the illustrations is always correct.

REPLACING

PREPARATION

Pull down the steering wheel adjustment lever and pull up the steering wheel to the uppermost position.

REMOVING THE STEERING COLUMN COVERS

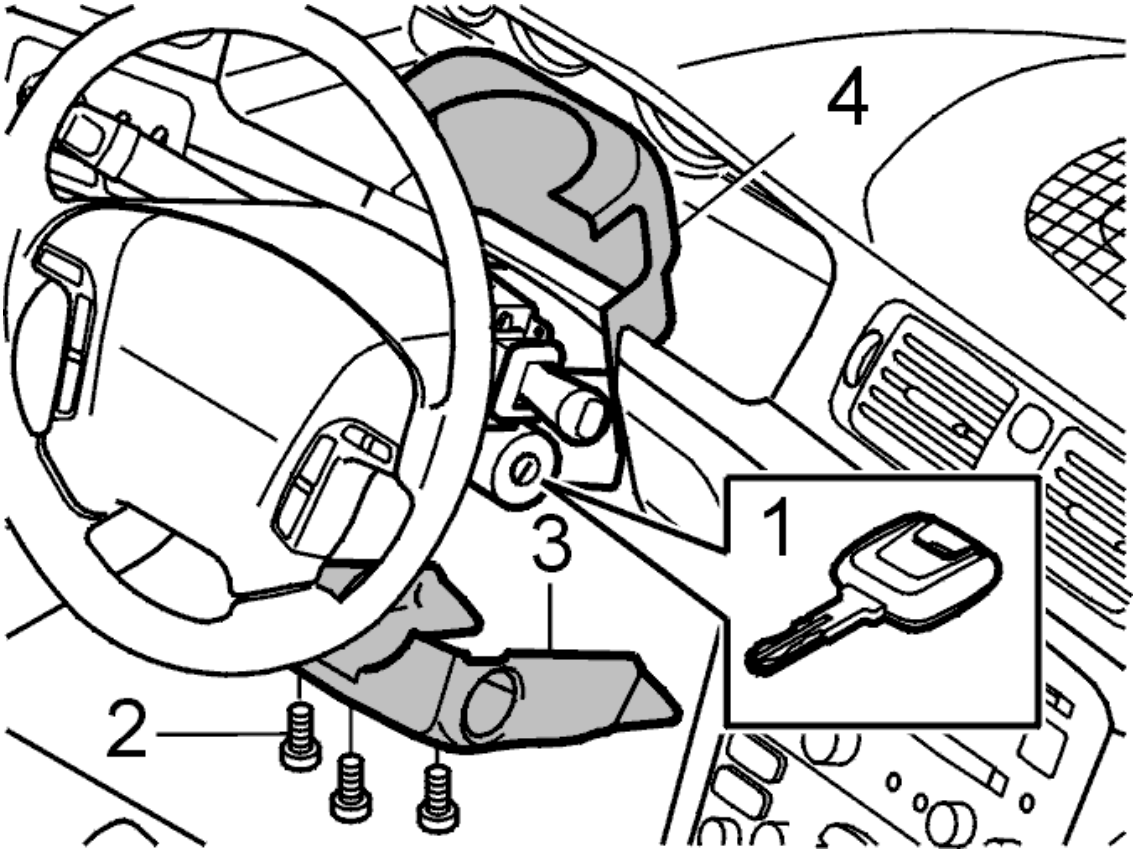

Fig. 43: Steering Column Covers
Courtesy of VOLVO CARS CORPORATION

Remove the ignition key (1).

Remove the three screws (2).

Press in the snap fasteners and remove the lower steering column cover (3).

Pull up the upper steering column cover (4).

REMOVING THE STEERING WHEEL LOCK UNIT

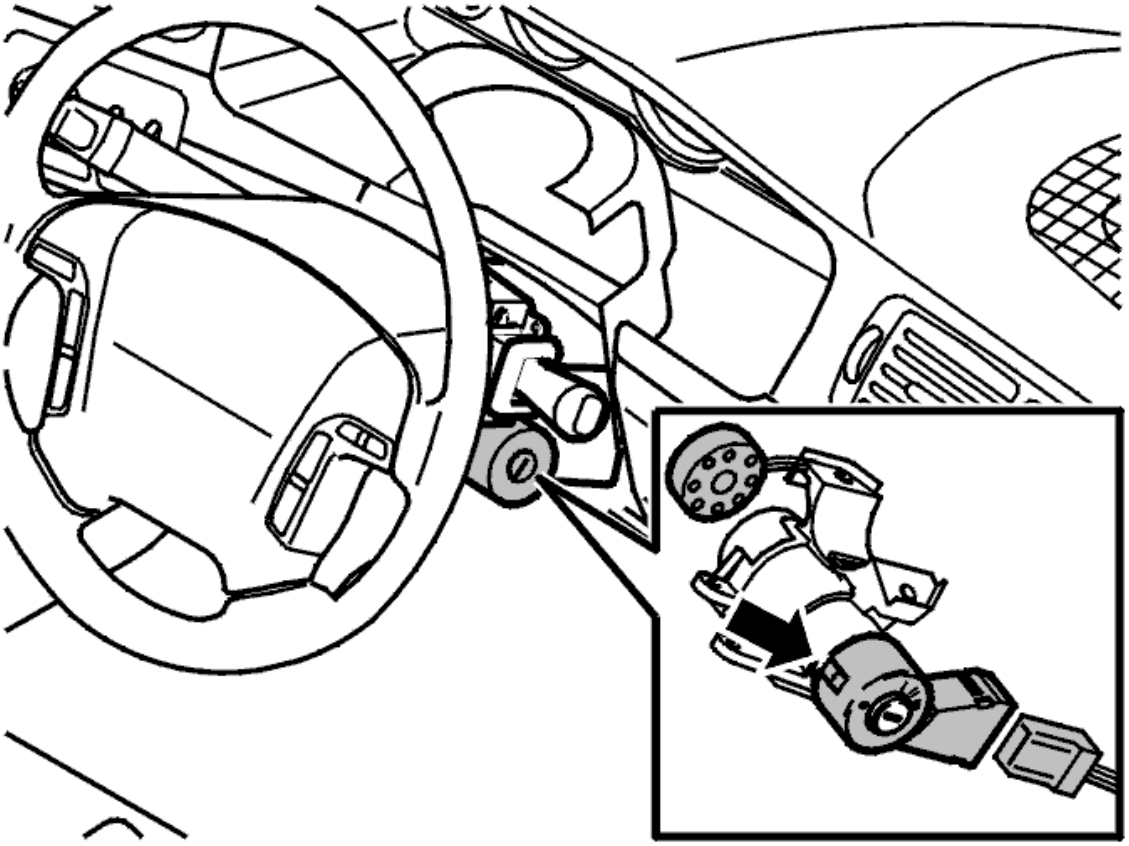

Fig. 44: Identifying Snap Fastener & Steering Wheel Lock Unit
Courtesy of VOLVO CARS CORPORATION

Disconnect the connectors.

Press in the snap fastener and remove the steering wheel lock unit.

REMOVING THE MECHANICAL CABLE FOR THE IGNITION SWITCH INTERLOCK (ONLY APPLIES TO CARS WITH AUTOMATIC TRANSMISSIONS)

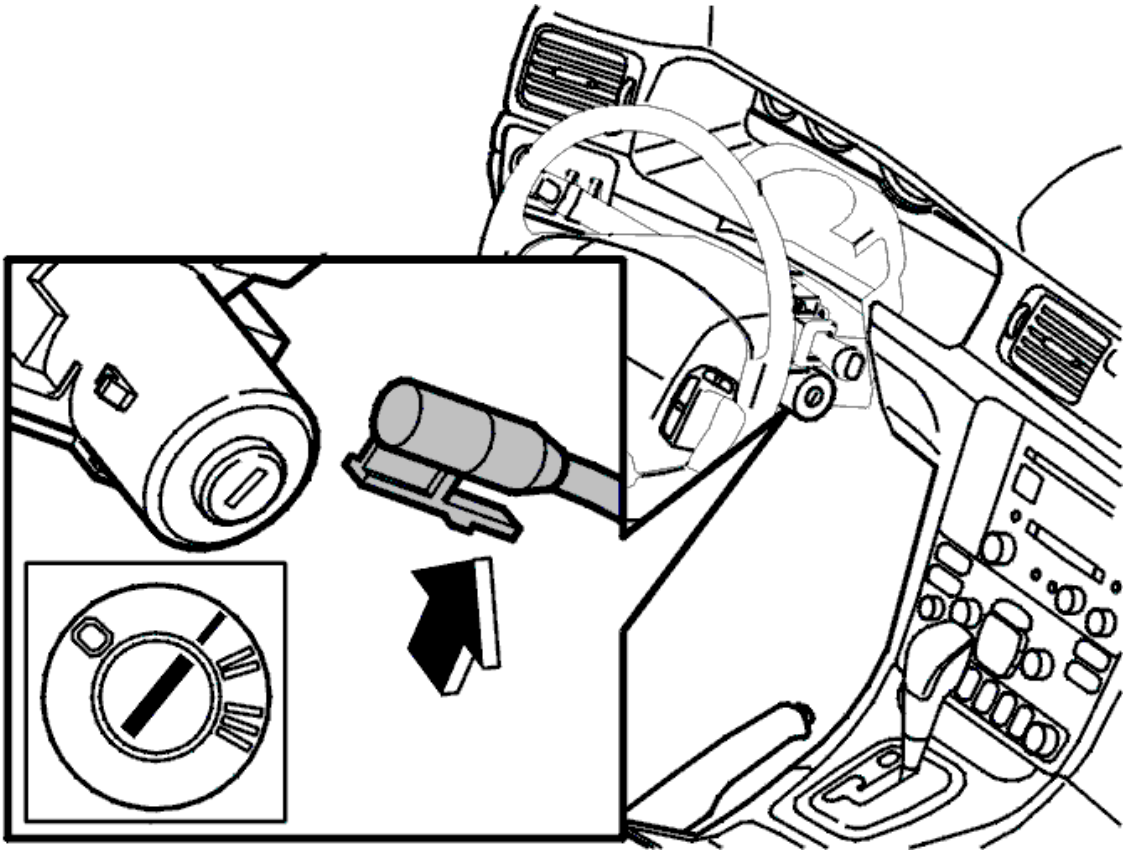

Fig. 45: Identifying Ignition Switch Interlock Cable
Courtesy of VOLVO CARS CORPORATION

Remove the ignition switch interlock cable.

Move the ignition key to position I.

Press up the lock facing and pull out the cable.

REMOVING THE CONNECTORS ON THE STEERING WHEEL MODULE (SWM)

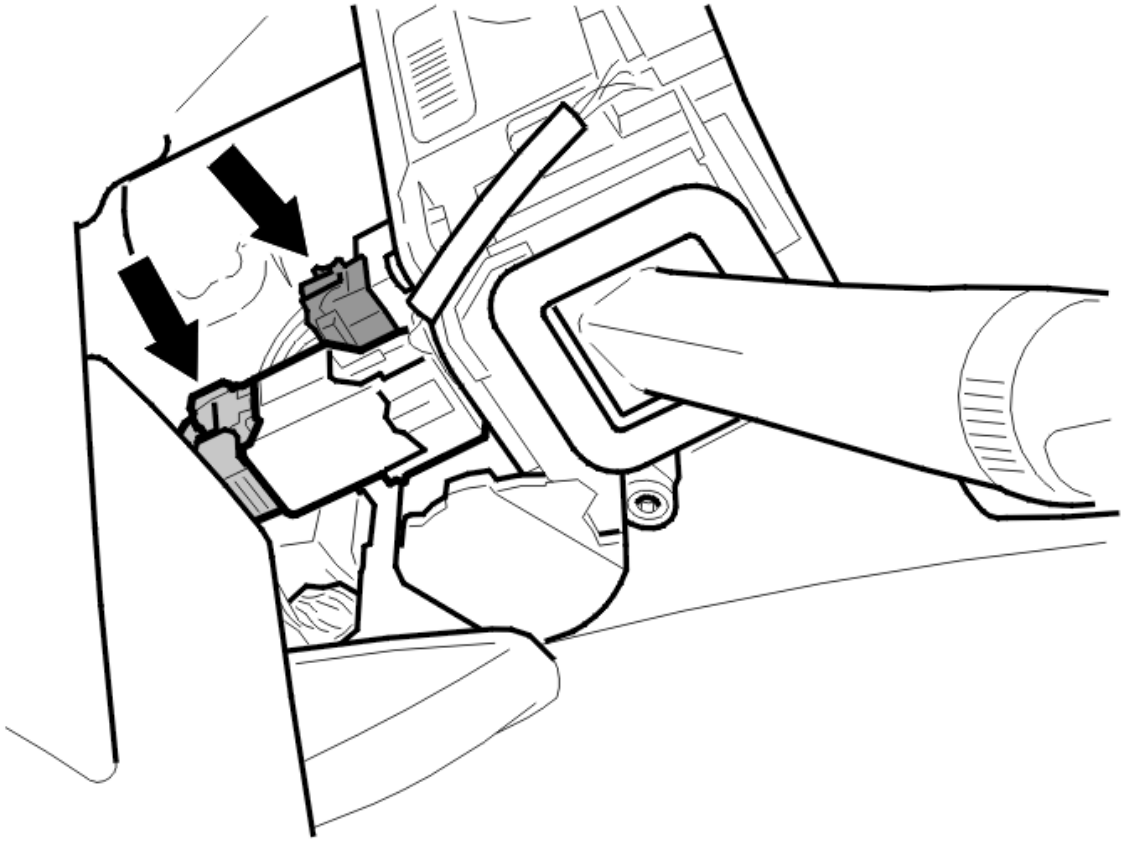

Fig. 46: Identifying Connectors On Gear Selector Assembly
Courtesy of VOLVO CARS CORPORATION

Disconnect the connectors on the gear selector assembly.

REMOVING THE STEERING WHEEL LOCK

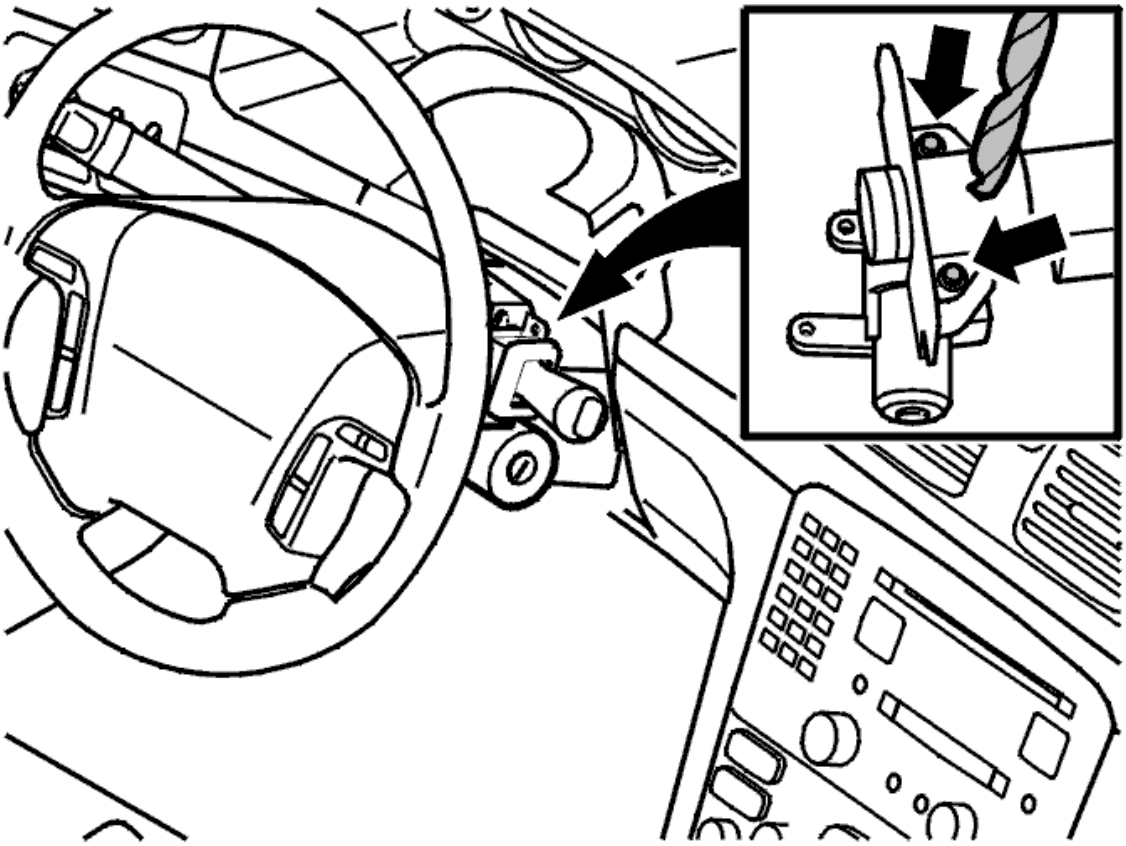

Fig. 47: Drilling Out Security Screws Holding Steering Wheel Lock
Courtesy of VOLVO CARS CORPORATION

Drill out the security screws holding the steering wheel lock.

HINT: Use an angle drill.

Remove the steering wheel lock.

INSTALLING

INSTALLING THE STEERING WHEEL LOCK

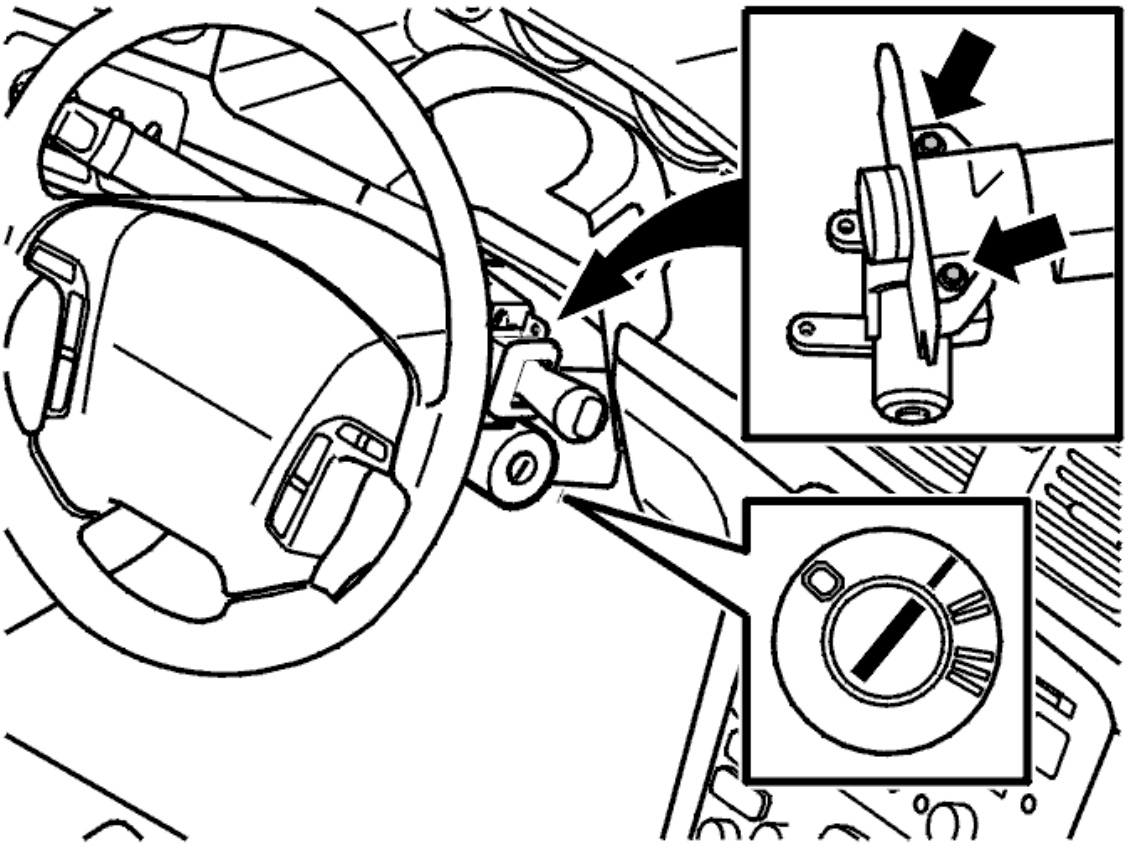

Fig. 48: Identifying Ignition Key Slot & New Steering Wheel Lock
Courtesy of VOLVO CARS CORPORATION

Insert the ignition key in the new steering wheel lock.

Check that the key is in position I and that the locking lug on the steering wheel lock is down.

Install the new steering wheel lock against the cap on the steering column.

Install the new security screws.

Tighten the security screws until the screw heads break off.

INSTALLING THE CONNECTORS ON THE STEERING WHEEL MODULE (SWM)

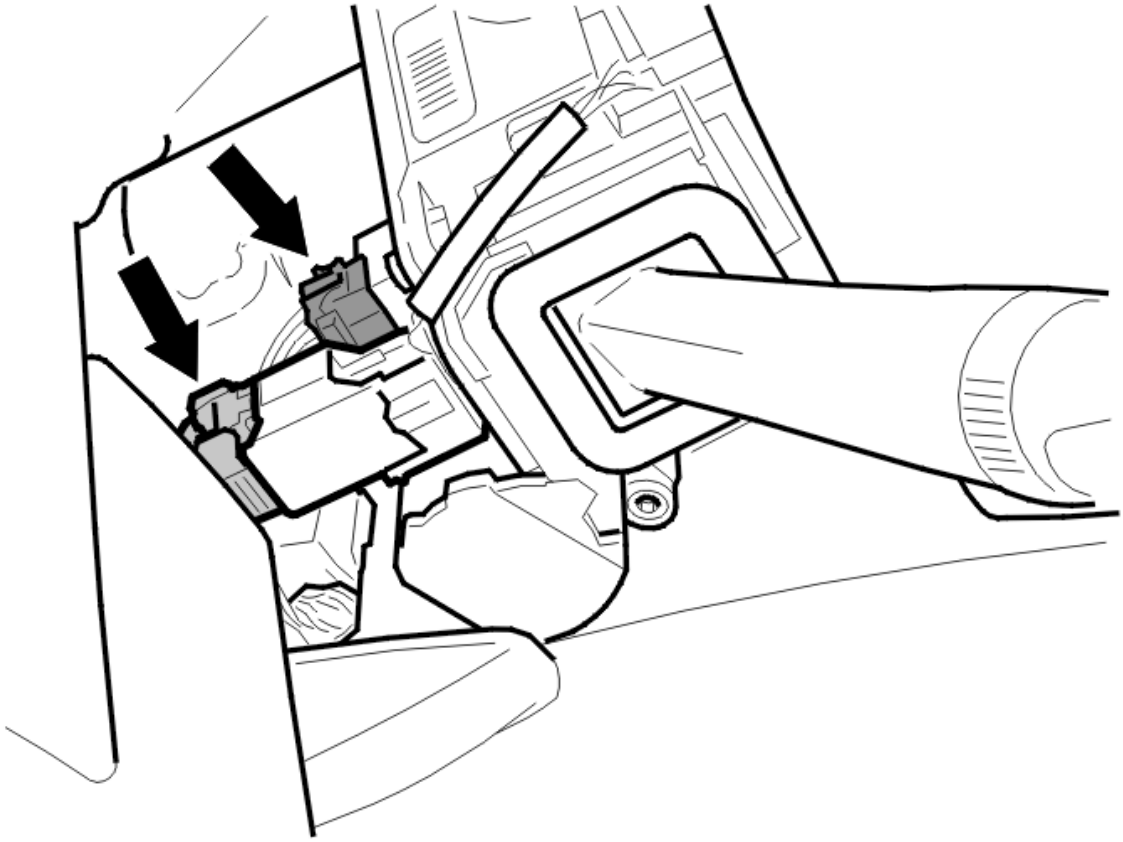

Fig. 49: Identifying Connectors On Gear Selector Assembly
Courtesy of VOLVO CARS CORPORATION

Install the connectors on the gear selector assembly.

INSTALLING THE MECHANICAL CABLE FOR THE IGNITION SWITCH INTERLOCK (ONLY APPLIES TO CARS WITH AUTOMATIC TRANSMISSIONS)

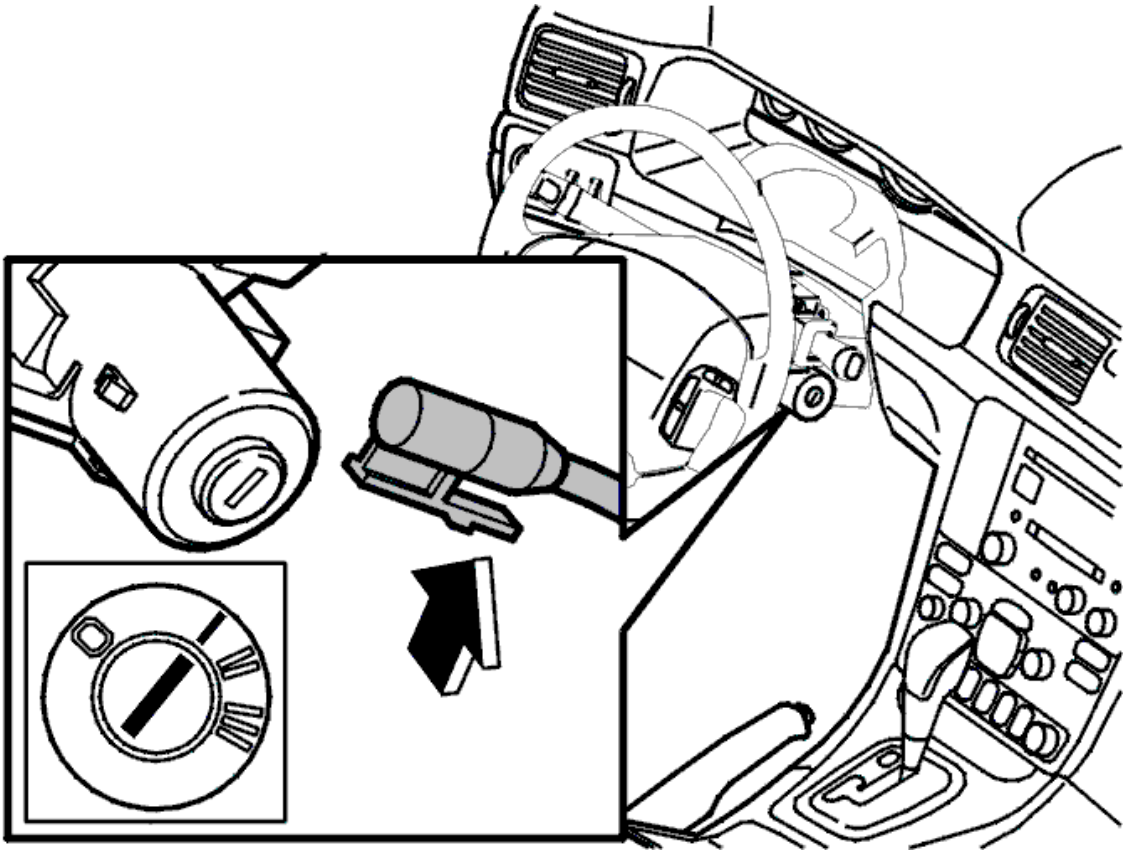

Fig. 50: Identifying Ignition Switch Interlock Cable
Courtesy of VOLVO CARS CORPORATION

Set the gear selector lever to P position.

Move the ignition key to position I.

Press the cable into the ignition switch and feel to, see that it sits correctly.

Remove the ignition key and check that the gear selector lever is blocked in P position.

INSTALLING THE STEERING WHEEL LOCK UNIT

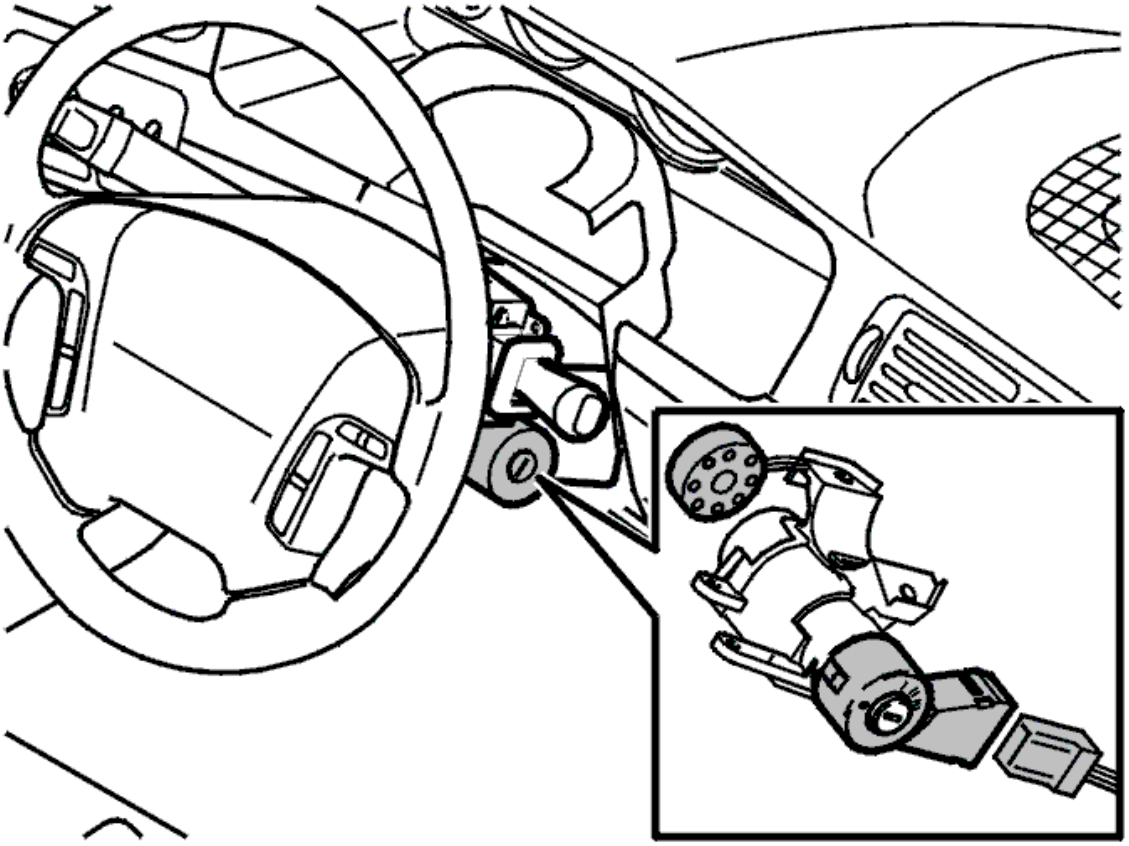

Fig. 51: Identifying Steering Lock Module
Courtesy of VOLVO CARS CORPORATION

Remove the ignition key.

Install:

- the connectors
- the steering lock module.

INSTALLING THE STEERING COLUMN COVERS

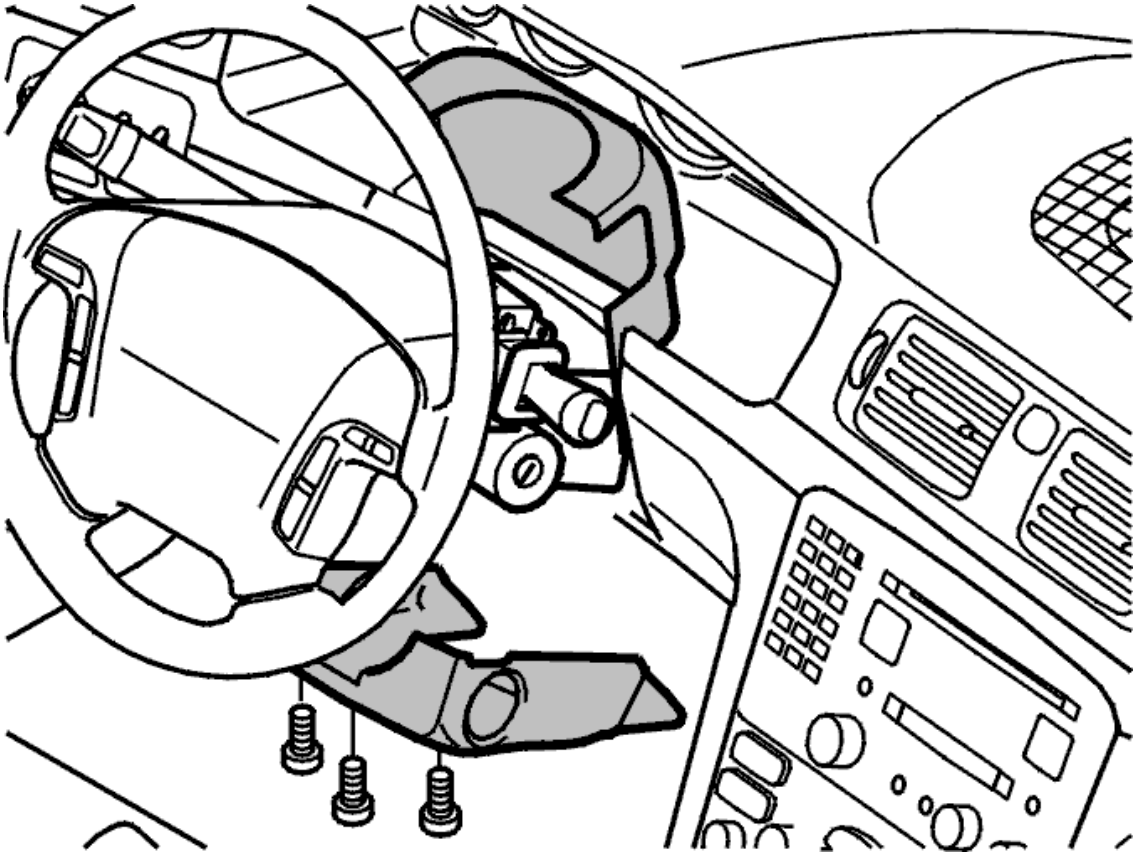

Fig. 52: Identifying Steering Column Covers
Courtesy of VOLVO CARS CORPORATION

Install the lower steering column cover.

NOTE: Ensure that none of the wiring is trapped.

Install the screws for the lower steering column cover.

Fold down the upper steering column cover and press the snap fasteners into place in the lower steering column cover.

NOTE: Ensure that the gaiters around the control levers are correctly positioned against the column covers.

FINISHING

Adjust the steering wheel setting and lock the steering wheel adjustment lever.

Use VIDA vehicle communication to check that no diagnostic trouble codes have been stored during the work.

ORDERING SOFTWARE / KEYS

NOTE: **To install the key, the key and the software must be ordered. To erase the key, only the software needs to be ordered.**

Order a key and/or software. See 9438428 .

NOTE: **Keys can only be programmed or erased when the key and/or software have been delivered.**

The function must be checked if a new key has been added.

FUNCTION TEST

Test start the engine.

STEERING WHEEL MODULE (SWM), REPLACING

REMOVAL

STEERING WHEEL MODULE (SWM)

Remove the steering wheel. See **STEERING WHEEL, REPLACING**. Remove the steering column covers. See **REPLACING THE STEERING COLUMN COVERS**

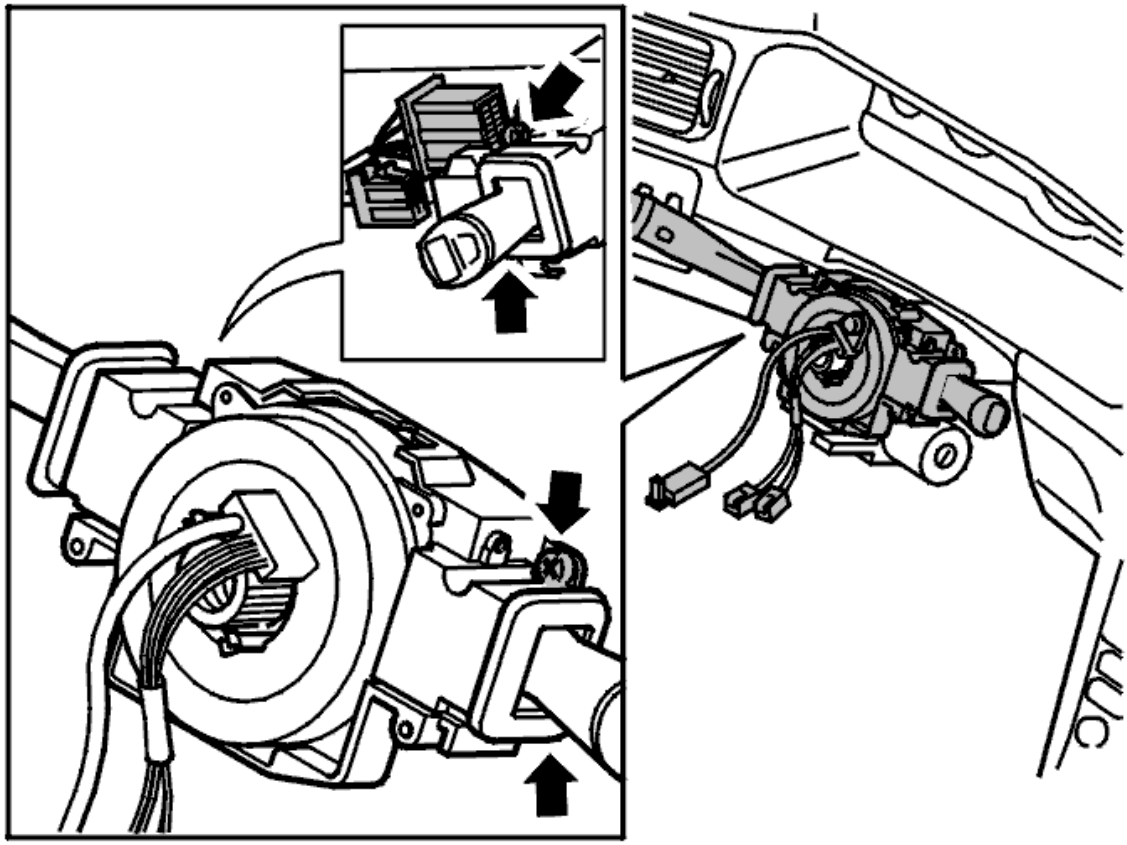

Fig. 53: Gear Selector Assembly And Steering Wheel Module
Courtesy of VOLVO CARS CORPORATION

Remove:

- 2 screws
- the connectors
- the control module with stalks and the contact reel by releasing the catches on the underside
- windscreen wiper and direction indicator stalks. See **WASHER / WIPER SWITCH, REPLACING** and **TURN SIGNAL SWITCH, REPLACING**
- the contact reel. See **CONTACT REEL, REPLACEMENT**

The control module is now exposed.

INSTALLATION

- the contact reel and steering wheel angle sensor. See **CONTACT REEL, REPLACEMENT**
- windscreen wiper and direction indicator stalks. See **WASHER / WIPER SWITCH, REPLACING** and **TURN SIGNAL SWITCH, REPLACING**
- the control module with the levers and contact reel. Check that the hooks engage underneath
- the connectors
- 2 screws. Tighten
- the steering column covers. See **REPLACING THE STEERING COLUMN COVERS**
- the steering wheel. See **STEERING WHEEL, REPLACING**

PROGRAMMING THE CONTROL MODULE

Program the new control module. See the table below:

NOTE: **Software must be downloaded to the Steering wheel module (SWM) for vehicles up to and including model year 2004. Software must only be downloaded to the Steering Angle Sensor Module (SAS) for vehicles from and including model year 2005 if the vehicle is equipped with DSTC. For 2005- vehicles, without DSTC, software does not have to be downloaded.**

-2004	9438286
2005- **NOTE:** **Applies to vehicles equipped with DSTC.**	9438417

STEERING WHEEL, REPLACING

NOTE: **As the illustrations in this service information are used for different model years and / or models, some variation may occur. However, the essential information in the illustrations is always correct.**

REMOVING

REMOVING THE STEERING WHEEL

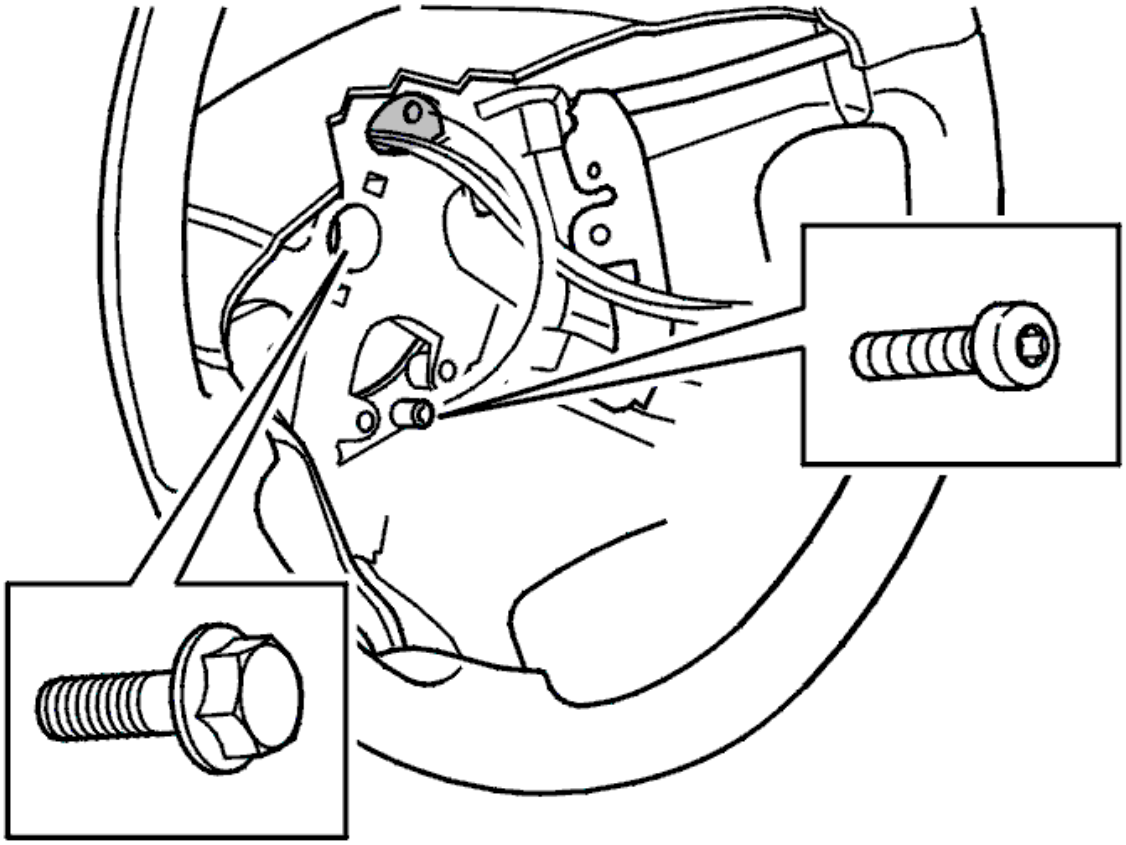

Fig. 54: Bolt From Steering Wheel Column
Courtesy of VOLVO CARS CORPORATION

Remove the driver's airbag module. See **AIRBAG DRIVER'S SIDE (SRS), REPLACING** .

Lock the contact reel in position with the locking screw.

Remove the screw steering wheel - steering column.

Pull the steering wheel straight back.

Pull out the cable harness through the hole in the steering wheel. Remove the steering wheel.

INSTALLING

INSTALLING THE STEERING WHEEL

Pull the cable harness through the hole. Install the steering wheel.

Install the screw for the steering wheel - steering column. Use a new screw.

For tightening torques, see: **TIGHTENING TORQUE** .

Remove the screw for the locking the contact reel.

Install the driver's airbag module. See **AIRBAG DRIVER'S SIDE (SRS), REPLACING** .

STEERING WHEEL, STEERING WHEEL LOCK, STEERING COLUMN, SHAFT (2003-2004)

LEVER STEERING WHEEL ADJUSTMENT, REPLACING

see **LEVER STEERING WHEEL ADJUSTMENT, REPLACING**

STEERING COLUMN, REPLACING

see **STEERING COLUMN, REPLACING**

STEERING SHAFT, LOWER, REPLACING

see **STEERING SHAFT, LOWER, REPLACING**

STEERING WHEEL ANGLE SENSOR MODULE (SAS), REPLACING

REPLACING

NOTE: Removal steps in this procedure may contain installation details.

SOUNDPROOFING PANEL

Remove the driver's side soundproofing panel.

CONTROL MODULE

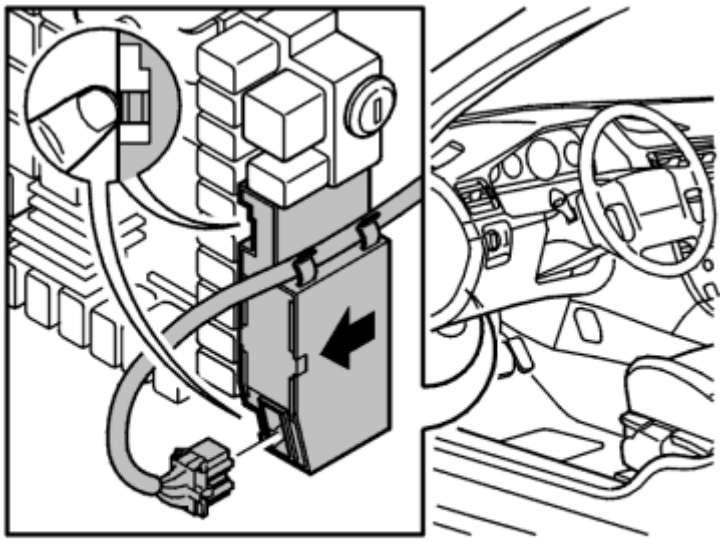

Fig. 55: Identifying Pressing Catches To Pull Back (Remove) Control Module
Courtesy of VOLVO CARS CORPORATION

Remove the control module by pressing the 2 catches using a finger and pulling the control module backwards (see the arrow).

Remove the connector and the cable.

INSTALLING

THE CONTROL MODULE

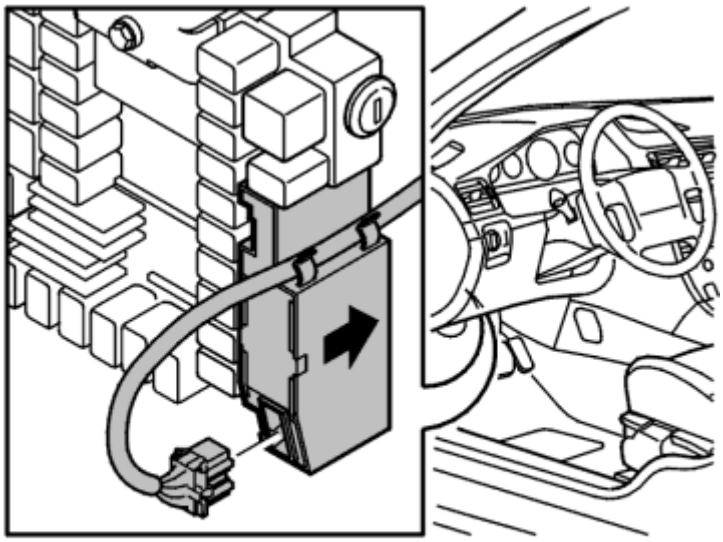

Fig. 56: Identifying Control Module Cable In Holder
Courtesy of VOLVO CARS CORPORATION

Install the cable in the holder for the control module. Press the connector into place.

Reinstall the control module. Press the module into place until there is an audible click.

To install, reverse the removal procedure.

ORDERING SOFTWARE

Order software according to the table below.

S60	9438417
V70/XC70	9438417
S80	9438417
XC90	9438417

STEERING WHEEL LOCK, REPLACING

see **STEERING WHEEL LOCK, REPLACING**

STEERING WHEEL MODULE (SWM), REPLACING

see **STEERING WHEEL MODULE (SWM), REPLACING**

STEERING WHEEL, REPLACING

see **STEERING WHEEL, REPLACING**

STEERING GEAR (2003-2004)

CONTROL MODULE STEERING GEAR, REPLACING

NOTE: **As the illustrations in this service information are used for different model years and / or models, some variation may occur. However, the essential information in the illustrations is always correct.**

PREPARATORY WORK

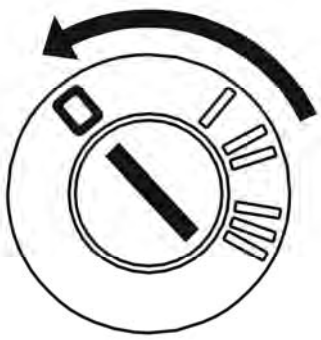

Fig. 57: Identifying Ignition In OFF Position
Courtesy of VOLVO CARS CORPORATION

Ignition off.

Remove the soundproofing panel on the driver's side. See **SOUNDPROOFING PANEL, REPLACING** .

HINT: The control module for the steering gear is on the pedal box bracket. See the illustration.

REMOVAL

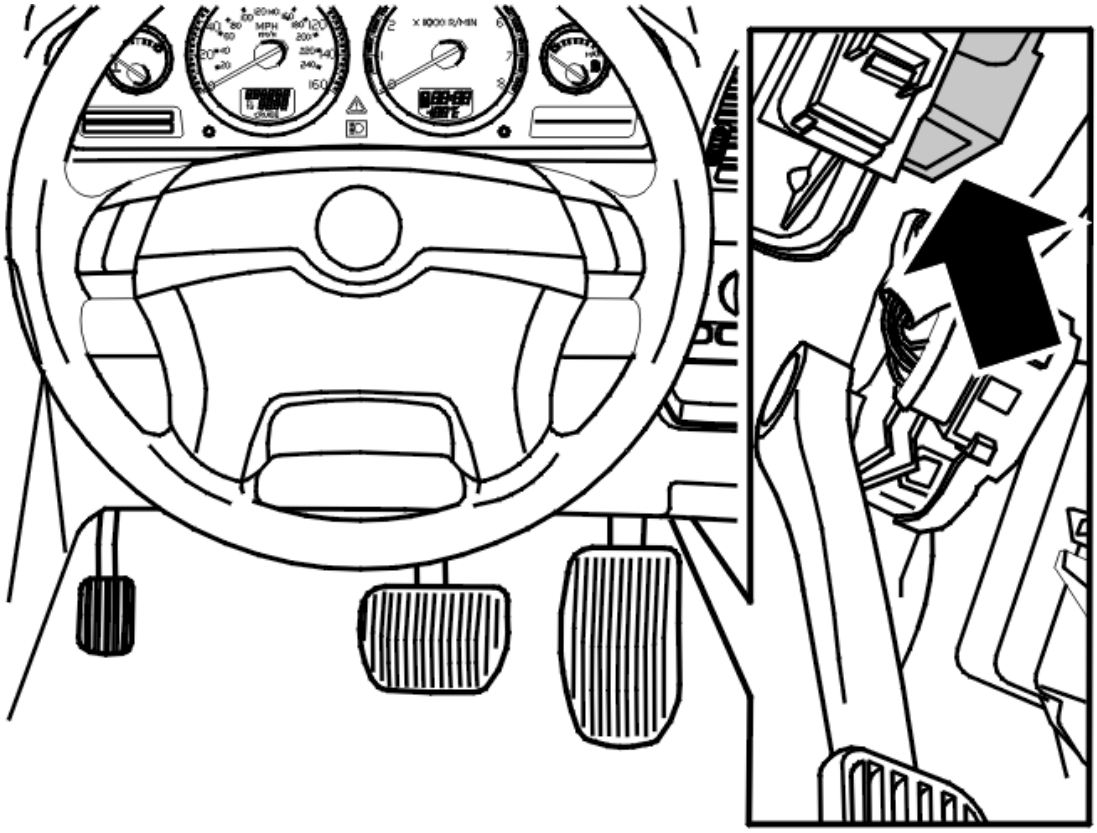

Fig. 58: Steering Gear Control Module Location
Courtesy of VOLVO CARS CORPORATION

Remove the control module for the steering gear.

Disconnect the connector.

INSTALLATION

Connect the connector.

Install the control module for the steering gear.

FINISHING WORK

Install the soundproofing panel. See **SOUNDPROOFING PANEL, REPLACING** .

Test the function.

LIMITERS, REPLACING

see **LIMITERS, REPLACING**

REPLACING THE OUTER STEERING ARM

Special tools:

see **9512050**

REMOVAL AND INSTALLATION

NOTE: For tightening torques, see: TIGHTENING TORQUE .

REMOVING THE STEERING ARM

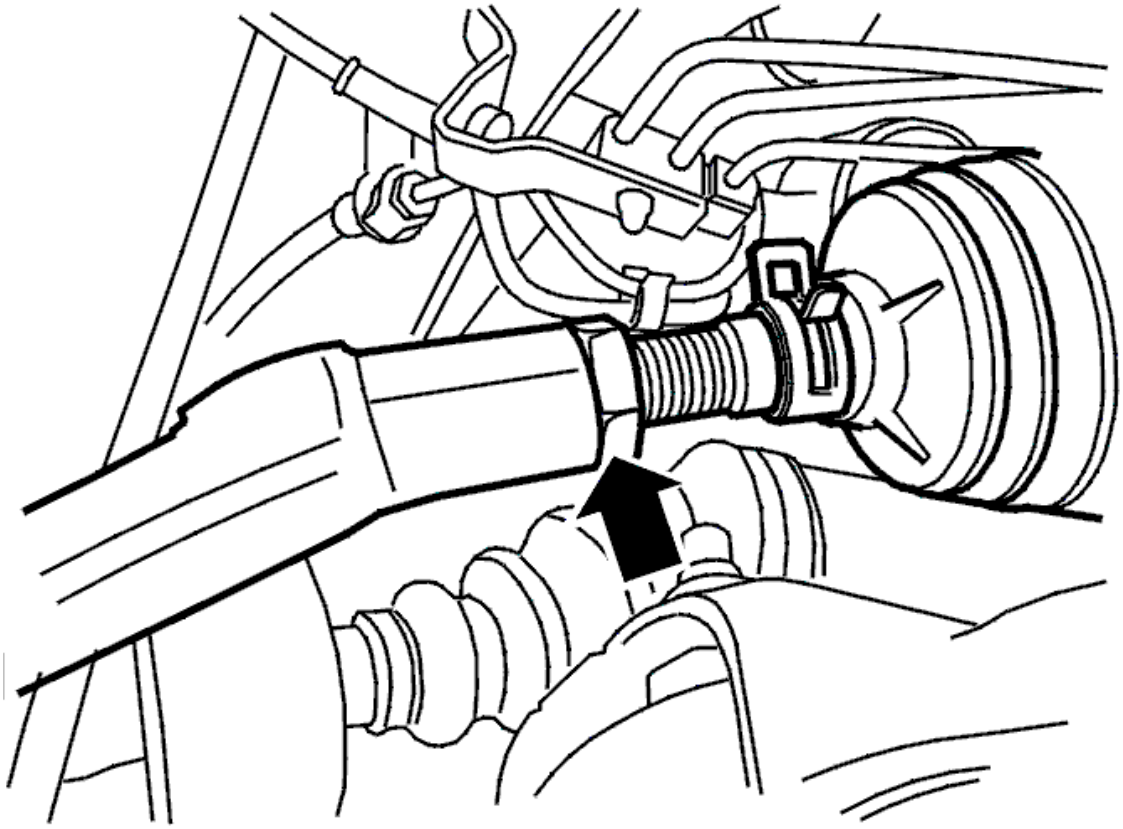

Fig. 59: Identifying Lock Nut
Courtesy of VOLVO CARS CORPORATION

Remove:

- the wheel
- the steering arm from the spindle.

Remove the lock nut. Remove the steering arm.

INSTALLING THE STEERING ARM

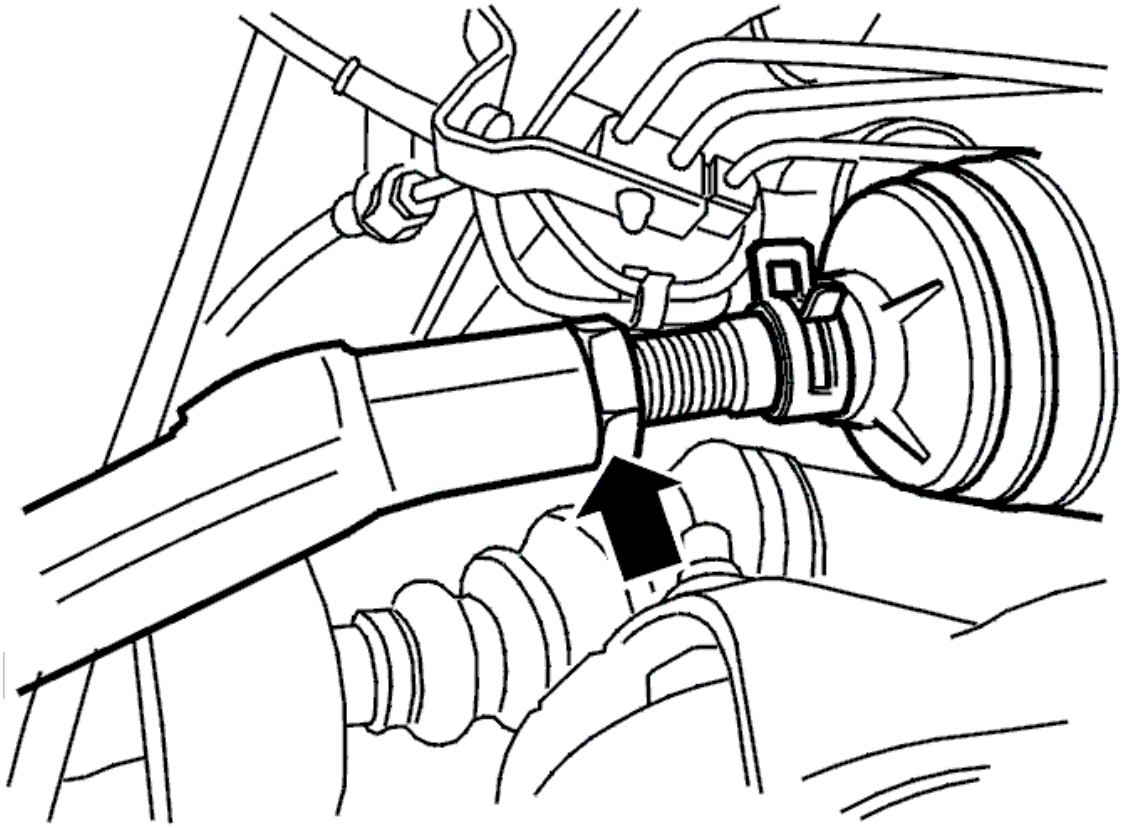

Fig. 60: Identifying Lock Nut
Courtesy of VOLVO CARS CORPORATION

Install:

- the steering arm
- the steering arm on the wheel spindle. Use new lock nut. Use counterhold and tighten. See: **TIGHTENING TORQUE**

  Use: see **9512050**

- the wheel. See: **INSTALLING WHEELS**
- Align the wheels. See: **WHEEL ALIGNMENT, CHECKING / ADJUSTING** .

SOLENOID, STEERING GEAR, REPLACEMENT

NOTE: The illustrations in this service information are used for different model years and/or models. Some variation may occur. However, the essential information in the illustrations is always correct.

PREPARATORY WORK

Ignition key in position 0.

NOTE: **Seal connections to inlet and outlet on the steering gear immediately after removing.**

REMOVING

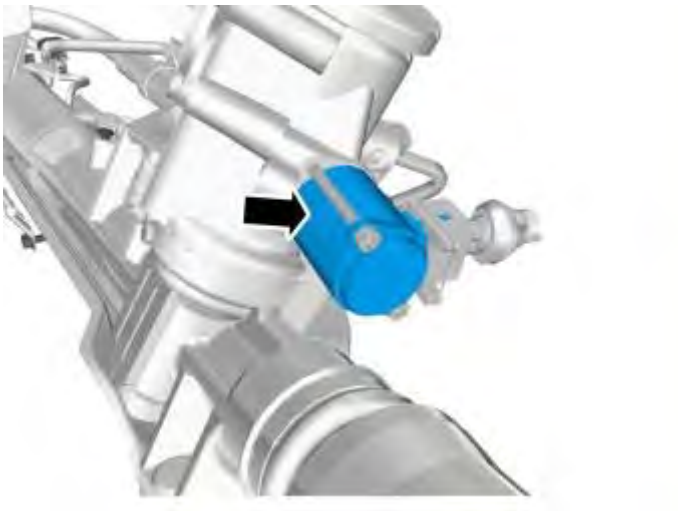

Fig. 61: Identifying Steering Gear Solenoid
Courtesy of VOLVO CARS CORPORATION

Lift up the car and remove the front wheel on the left side.

Remove:

- protective cover under engine (applies to some versions)
- protection over the drive axle for better access (applies to some versions)

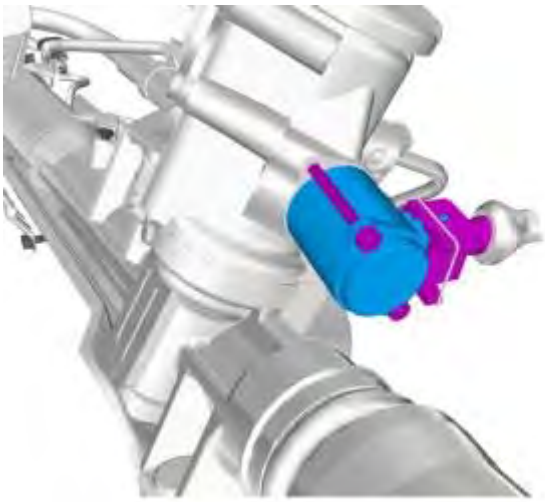

Fig. 62: Identifying Solenoid, Connector & Screws
Courtesy of VOLVO CARS CORPORATION

Place a container under the steering gear to collect the oil.

NOTE: Clean very carefully around the solenoid before removing is started.

Remove:

- the connector
- the screws, 2 pcs., for the solenoid
- the solenoid.

INSTALLING

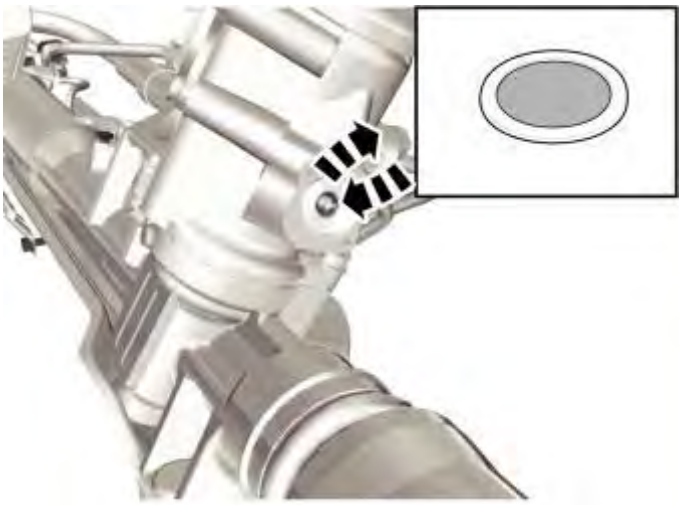

Fig. 63: Identifying Steering Gear Filter
Courtesy of VOLVO CARS CORPORATION

NOTE: Check carefully that there are no impurities.

Change the filter in the steering gear to the new one included in the kit.

Fig. 64: Identifying Solenoid Seals
Courtesy of VOLVO CARS CORPORATION

Lube the solenoid's seals with some oil.

NOTE: Only use Volvo power steering fluid, part number 30741424 (1 liter).

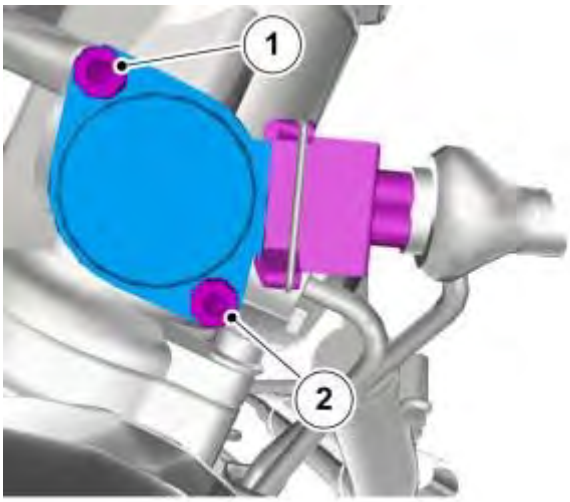

Fig. 65: Identifying Solenoid & Screws
Courtesy of VOLVO CARS CORPORATION

Install the solenoid with the new screws, 2 pcs., included in the kit and tighten alternately to contact.

Tighten in the following order:

Step 1. (1) 0.5 Nm

Step 2. (2) 1.5 Nm

Step 3. (1) 2.9 Nm

Step 4. (2) 2.9 Nm

Plug in the connector for the solenoid.

FINISHING

Install:

- any protective casings
- the wheel. See **INSTALLING WHEELS** .

Check the oil level in the power steering fluid reservoir, top up if necessary.

Bleed the power steering system.

NOTE: Only use Volvo power steering fluid, part number 30741424 (1 liter).

Start the engine and turn the steering wheel slowly back and forth to the end-positions.

Move the vehicle after a few turns of the steering wheel to prevent generating wear marks on the tires.

Check the oil level again.

STEERING ARM INNER, REPLACING

Special tools:

see **9997020**

see **9997083**

NOTE: As the illustrations in this service information are used for different model years and / or models, some variation may occur. However, the essential information in the illustrations is always correct.

PREPARATORY WORK

Remove the wheel.

Clean the boot and the surrounding area thoroughly.

REMOVAL

REMOVING THE OUTER STEERING ARM AND BOOT

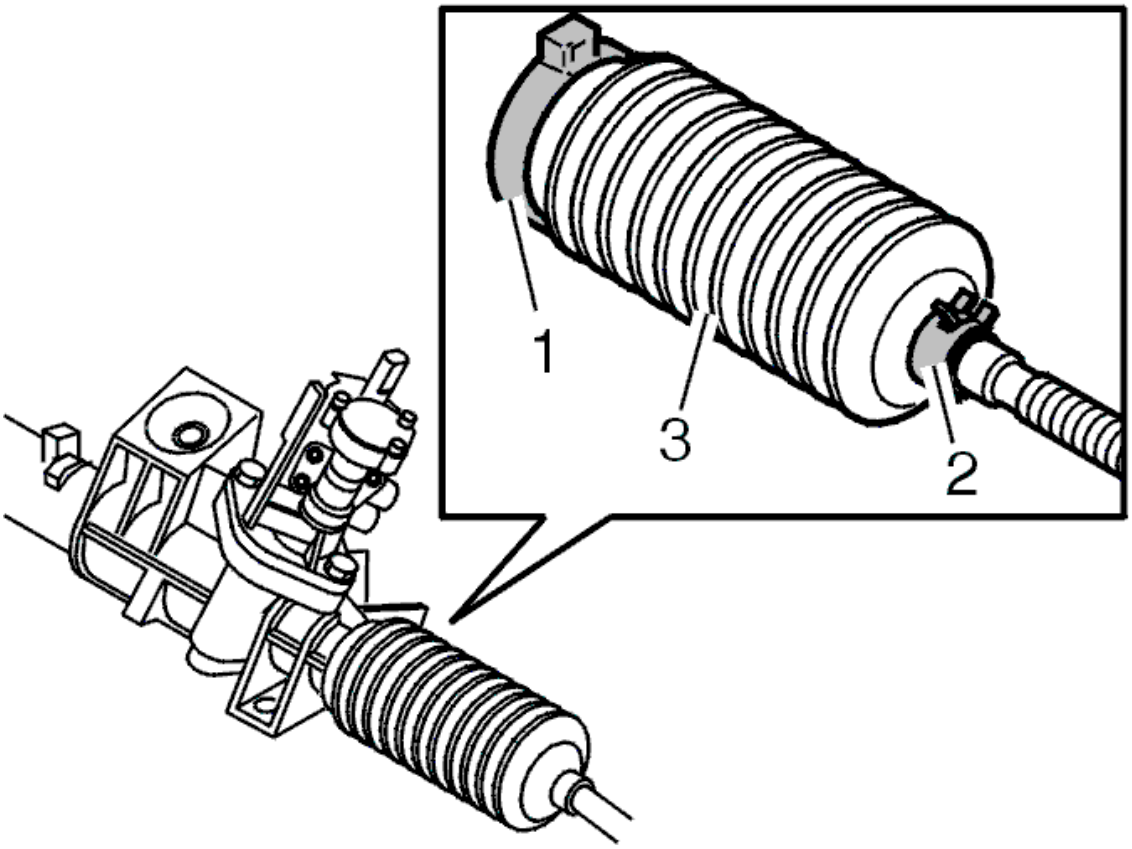

Fig. 66: Identifying Outer Steering Arm & Boot
Courtesy of VOLVO CARS CORPORATION

Remove the steering arm from the wheel spindle.

Slacken off the lock nut.

Remove:

- the steering arm and the lock nut
- the clamps (1) and (2).

Tape the threads on the inner steering arm to protect the boot when removing.

Remove the boot (3).

INSTALLING THE COUNTERHOLD

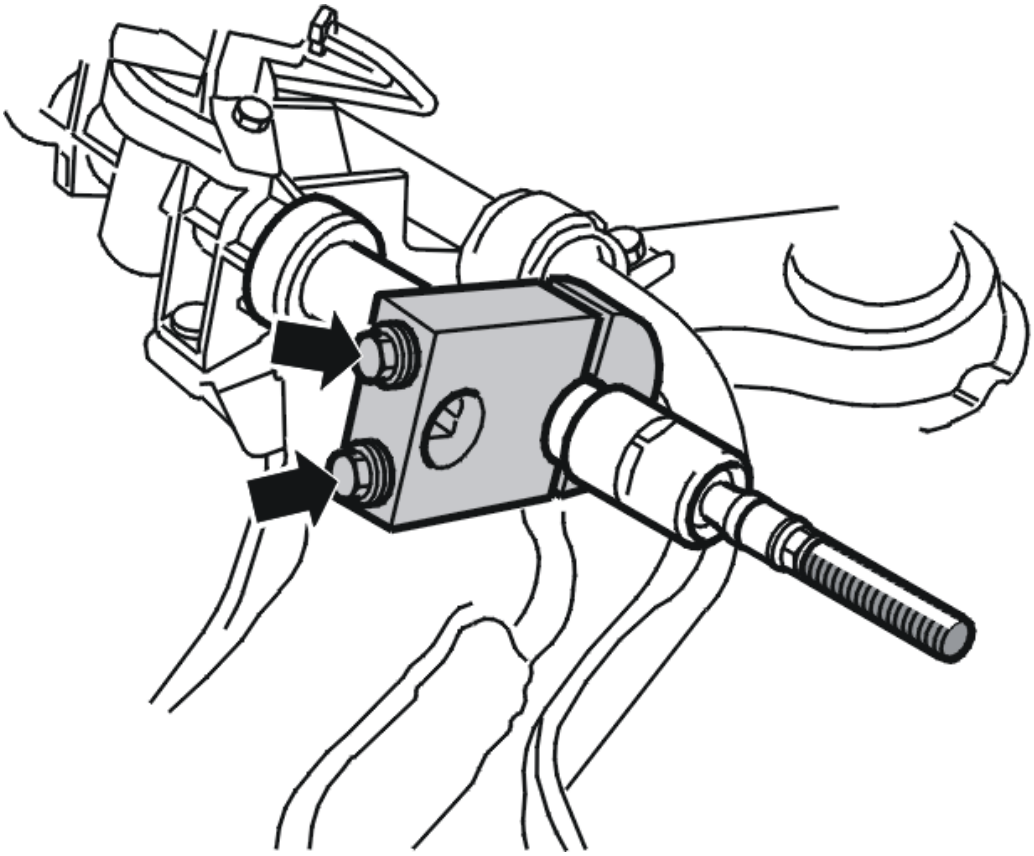

Fig. 67: Counter Hold
Courtesy of VOLVO CARS CORPORATION

NOTE: Cleanliness is very important as the seals in the steering gear are sensitive to scratches on the rack.

Clean the surfaces on the steering rack and the tool **thoroughly** .

Install counterhold 999 7020.

Tighten to **25 Nm** .

Position the counterhold as close to the limiter as possible.

REMOVING THE INNER STEERING ARM

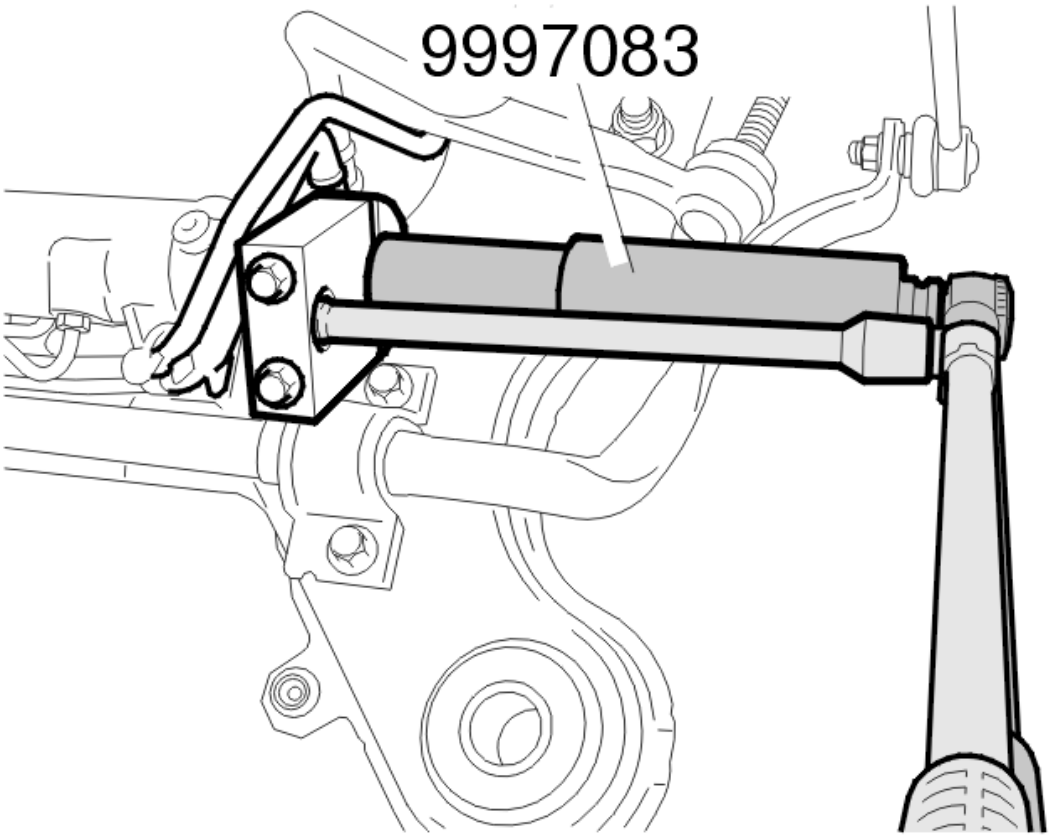

Fig. 68: Identifying Steering Arm Tool (999 7083)
Courtesy of VOLVO CARS CORPORATION

Use tool see **9997083** to remove the steering arm.

Ensure that the connecting rods used are the same length.

Remove the steering arm from the steering gear.

INSTALLATION

INSTALLING THE INNER STEERING ARM

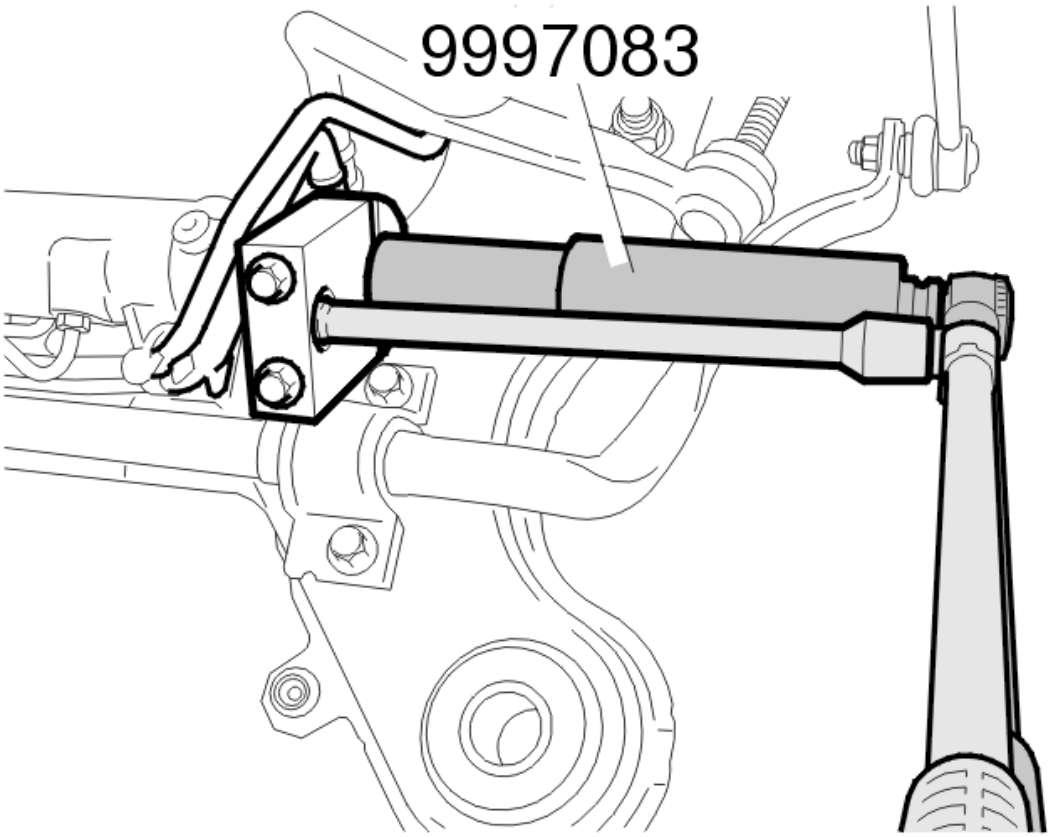

Fig. 69: Identifying Steering Arm Tool (999 7083)
Courtesy of VOLVO CARS CORPORATION

Install the inner tie rod.

Use thread sealant **1161053** .

For tightening torques, see **TIGHTENING TORQUE** .

Remove counterhold see **9997020** and socket see **9997083** .

Clean the steering rack after removing the tool. Check the steering rack for damage.

INSTALLING THE BOOT

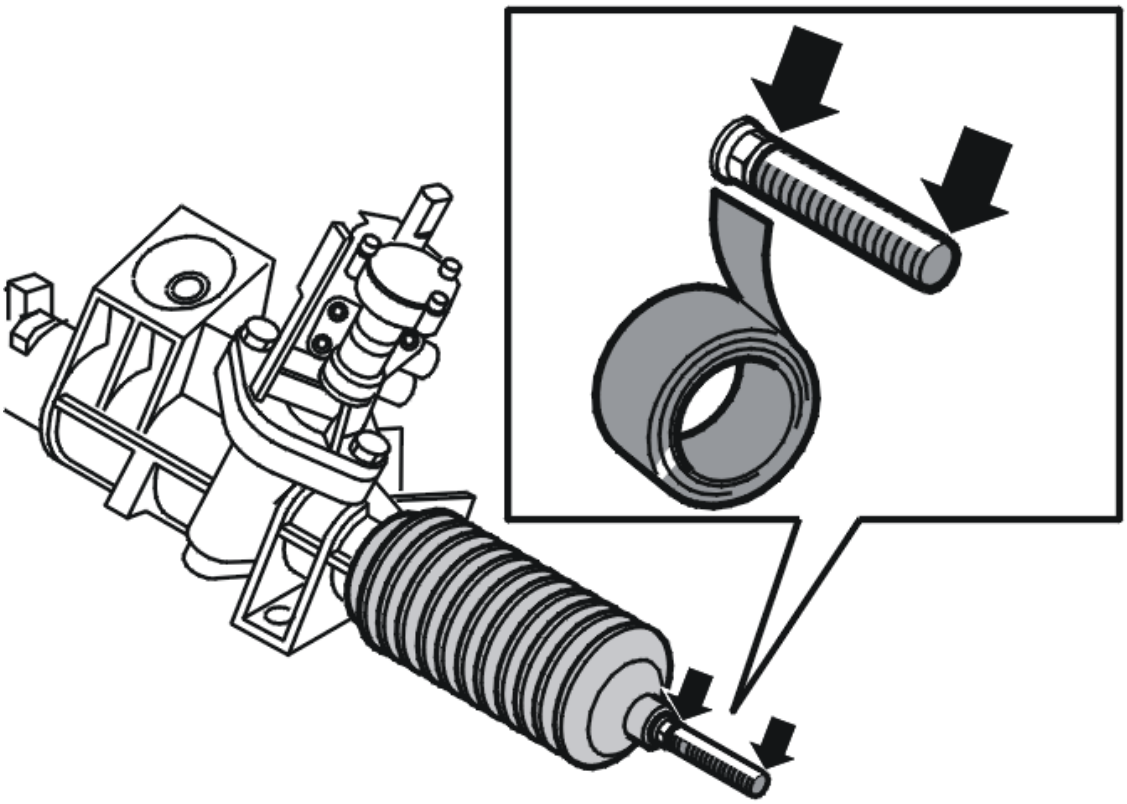

Fig. 70: Ensuring That Tape Is In Place On Threads
Courtesy of VOLVO CARS CORPORATION

Check that the boot is undamaged.

Use a new boot if in any doubt.

Tape the threads on the inner steering arm to protect the boot when installing.

Install the boot using new clamps.

Remove the tape.

INSTALLING THE STEERING ARM

Install:

- the steering arm
- the steering arm on the wheel spindle. Use a counterhold. For tightening torques, see **TIGHTENING TORQUE**
- the wheel. See **INSTALLING WHEELS** .

Align the wheels. See **WHEEL ALIGNMENT, CHECKING / ADJUSTING** .

STEERING GEAR, REPLACING

NOTE: **As the illustrations in this service information are used for different model years and / or models, some variation may occur. However, the essential information in the illustrations is always correct.**

REPLACING

Set the steering wheel to the "straight ahead" position. Remove the key so that the steering wheel lock engages.

Remove the battery lead. See **BATTERY, DISCONNECTING** .

Install the lock grip pliers on the feeder hose and the return hose for the power steering pump.

REMOVING THE SCREW ON THE LOWER STEERING SHAFT

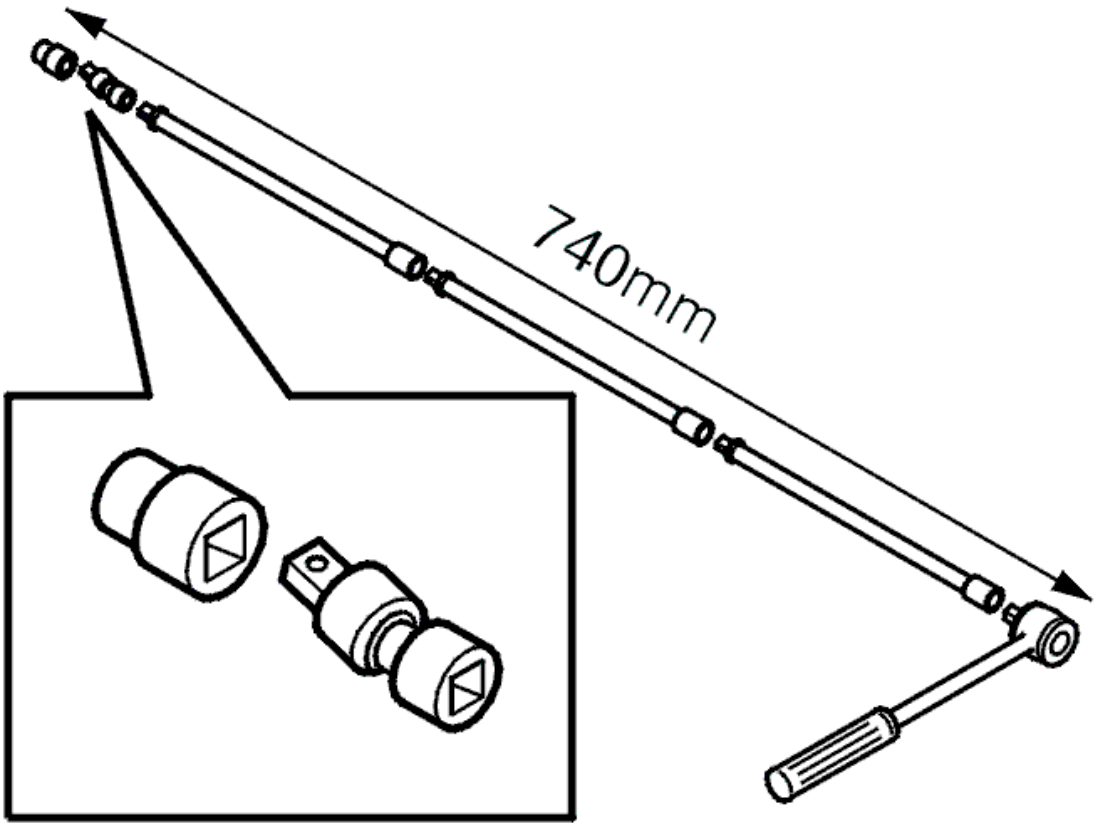

Fig. 71: Identifying Tool Assembly
Courtesy of VOLVO CARS CORPORATION

HINT: If the access to the screw for the steering shaft joint mounting in the steering gear is very limited, set up the tool as illustrated.

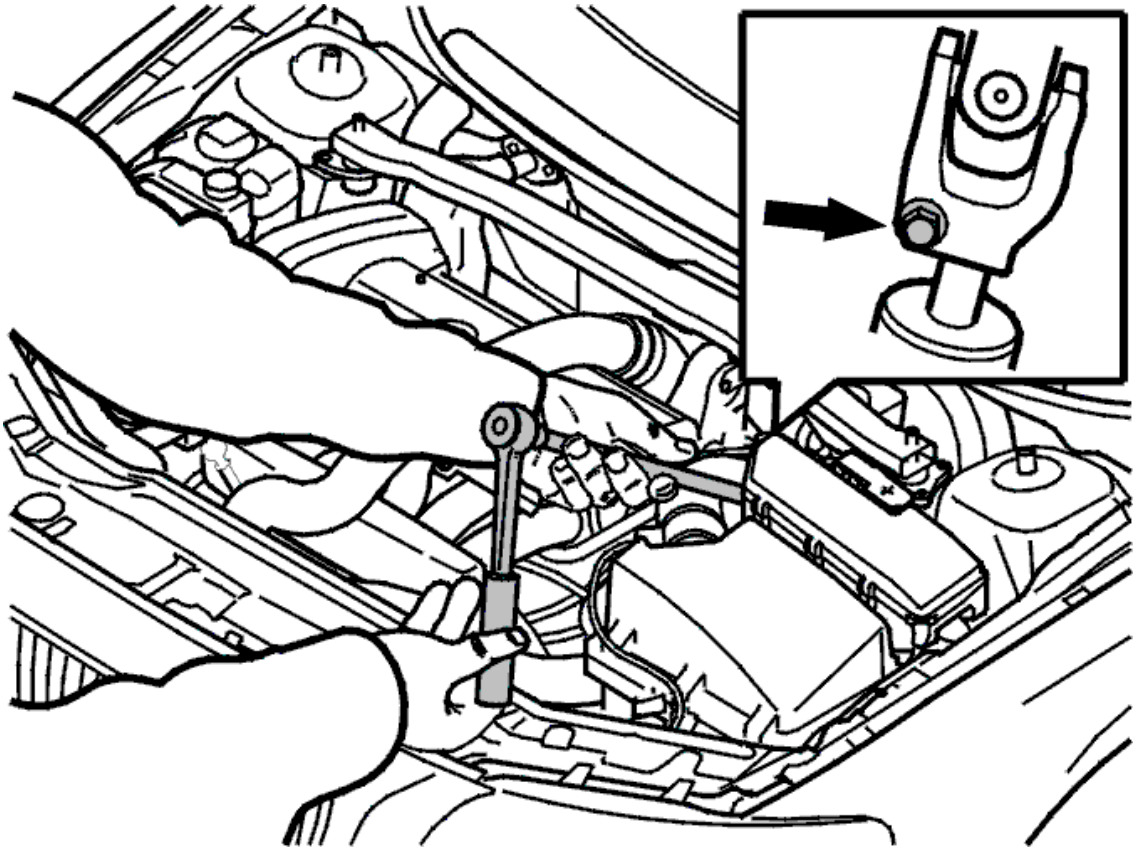

Fig. 72: Steering Shaft Joint Mounting Screw
Courtesy of VOLVO CARS CORPORATION

Remove the screw on the steering shaft joint mounting in the steering gear from the engine compartment.

REMOVING THE SUB-FRAME

Remove the sub-frame. See: **SUB-FRAME FRONT, REPLACING** .

REMOVING THE TRACK ROD ENDS

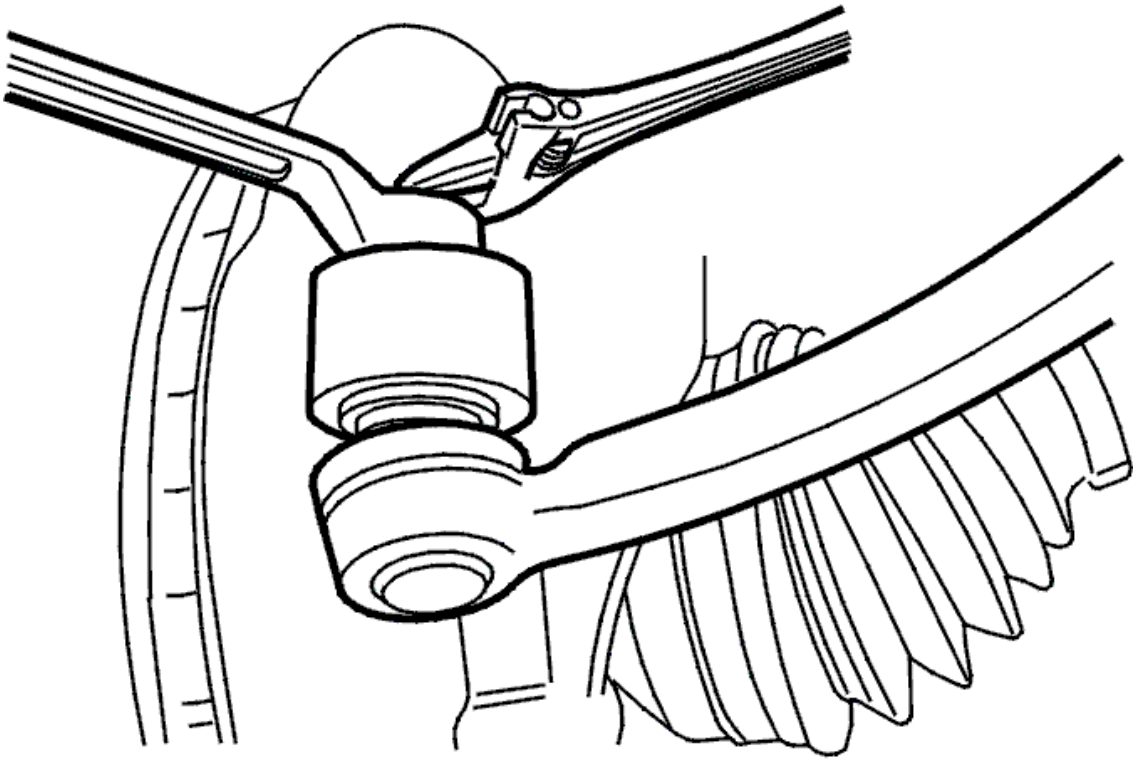

Fig. 73: Removing Track Rod Ends
Courtesy of VOLVO CARS CORPORATION

NOTE: Ensure that the front wheels are pointing straight ahead.

Remove

- the front wheels
- the track rod ends from the steering arms.

Counterhold using a fixed spanner so that the boot is not damaged.

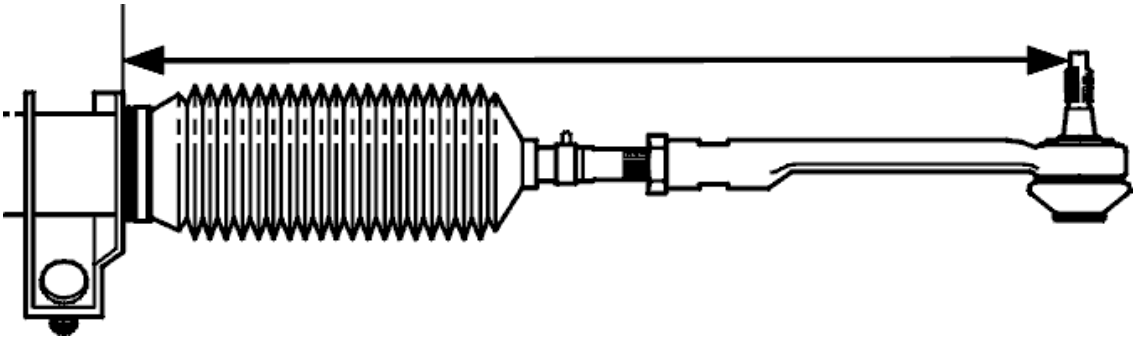

Fig. 74: Identifying Length Of Track Rod In Relation To Steering Gear Housing
Courtesy of VOLVO CARS CORPORATION

NOTE: **On one side, measure the length of the track rod in relation to the steering gear housing. Note the measurement.**

REMOVING THE RETURN LINES AND DELIVERY LINE

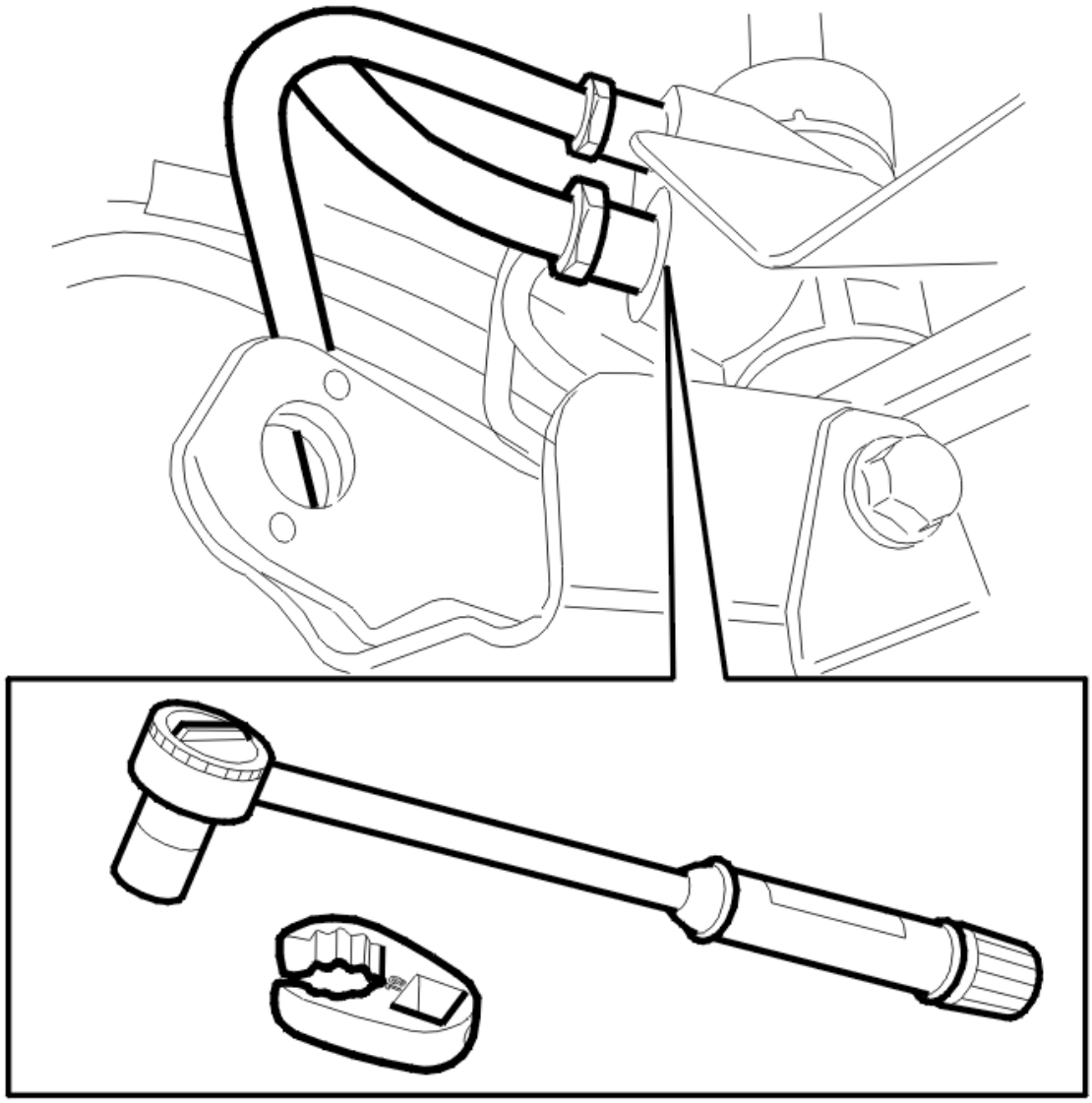

Fig. 75: Identifying Pressure Hose
Courtesy of VOLVO CARS CORPORATION

Place a container under the steering gear.

Remove:

- the return line from the steering gear and drain the fluid
- the delivery line from the steering gear and drain the fluid.

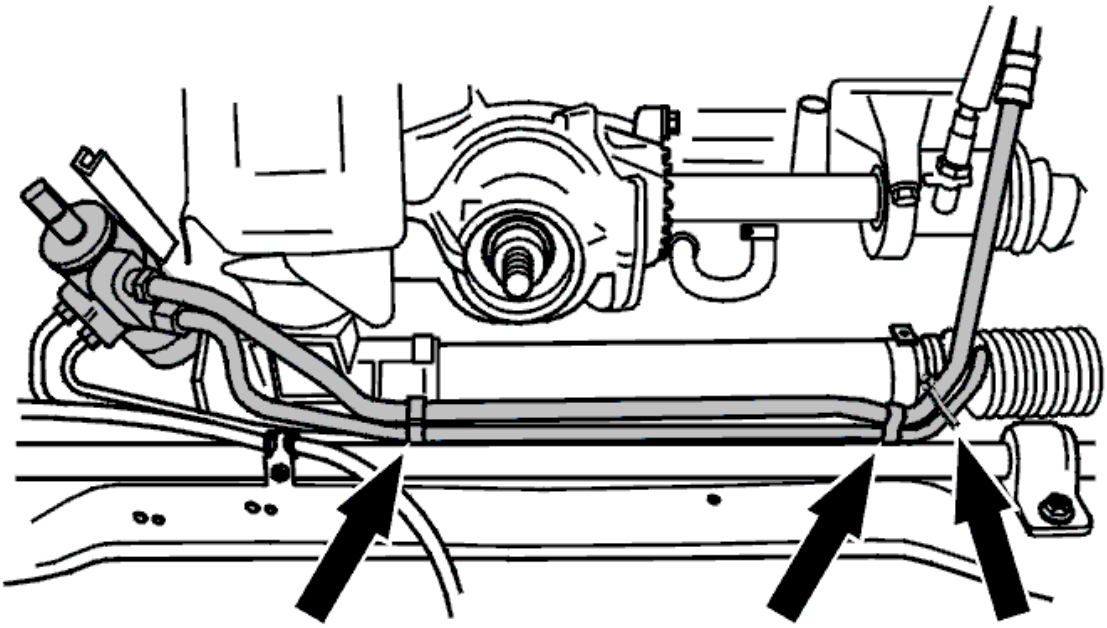

Fig. 76: Identifying Pipe Tie Straps Where Return Hose Meets Pressure Hose
Courtesy of VOLVO CARS CORPORATION

Remove the clips holding the same lines.

NOTE: Note the routing of the lines / hoses.

REMOVING STEERING GEAR

Remove the steering gear.

INSTALLING STEERING GEAR

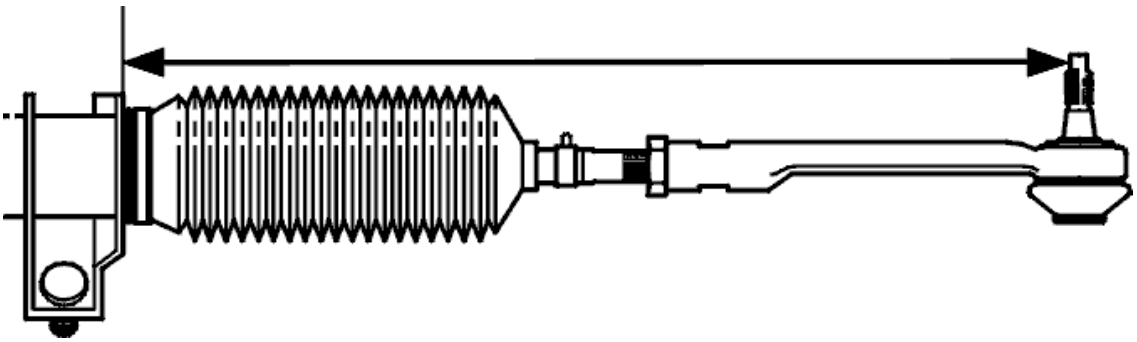

Fig. 77: IDENTIFYING LENGTH OF TRACK ROD IN RELATION TO STEERING GEAR HOUSING

Courtesy of VOLVO CARS CORPORATION

Measure and adjust according to the measurements made earlier between the track rod end and the steering gear housing on the new steering gear.

Install the steering gear.

INSTALLING THE RETURN LINE AND DELIVERY LINE

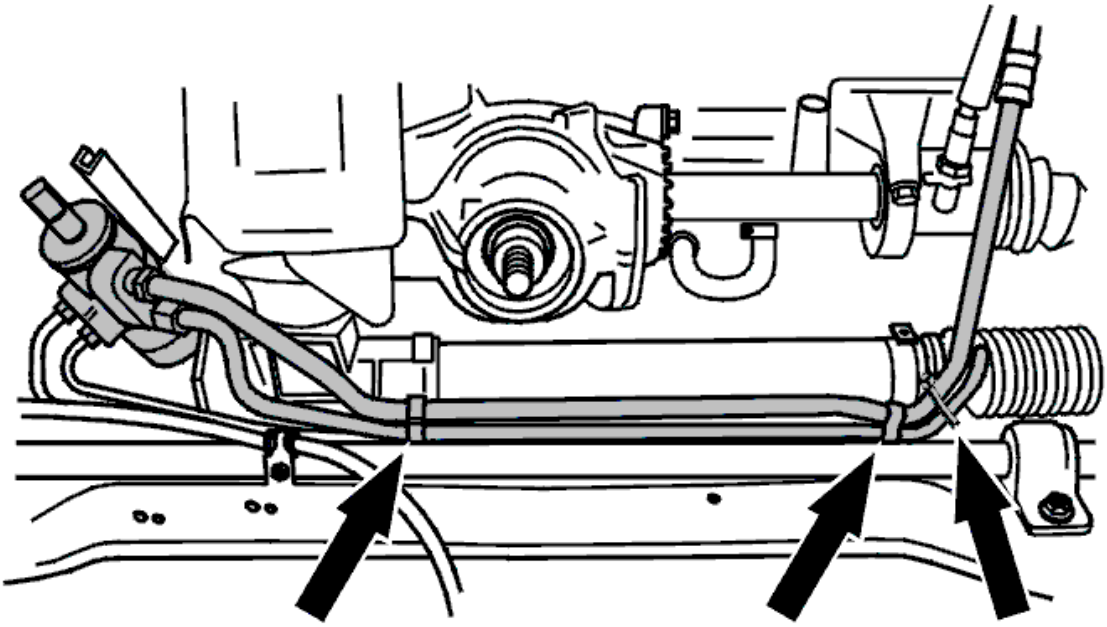

Fig. 78: Identifying Pipe Tie Straps Where Return Hose Meets Pressure Hose
Courtesy of VOLVO CARS CORPORATION

Install the lines according to the noted routing.

Tighten the return line and the delivery line to the steering gear. Tighten to **TIGHTENING TORQUE** .

NOTE: Use a new O-ring on the tube at the steering gear.

Install the clips holding the same lines.

INSTALLING THE STEERING ARMS TO THE WHEEL SPINDLES

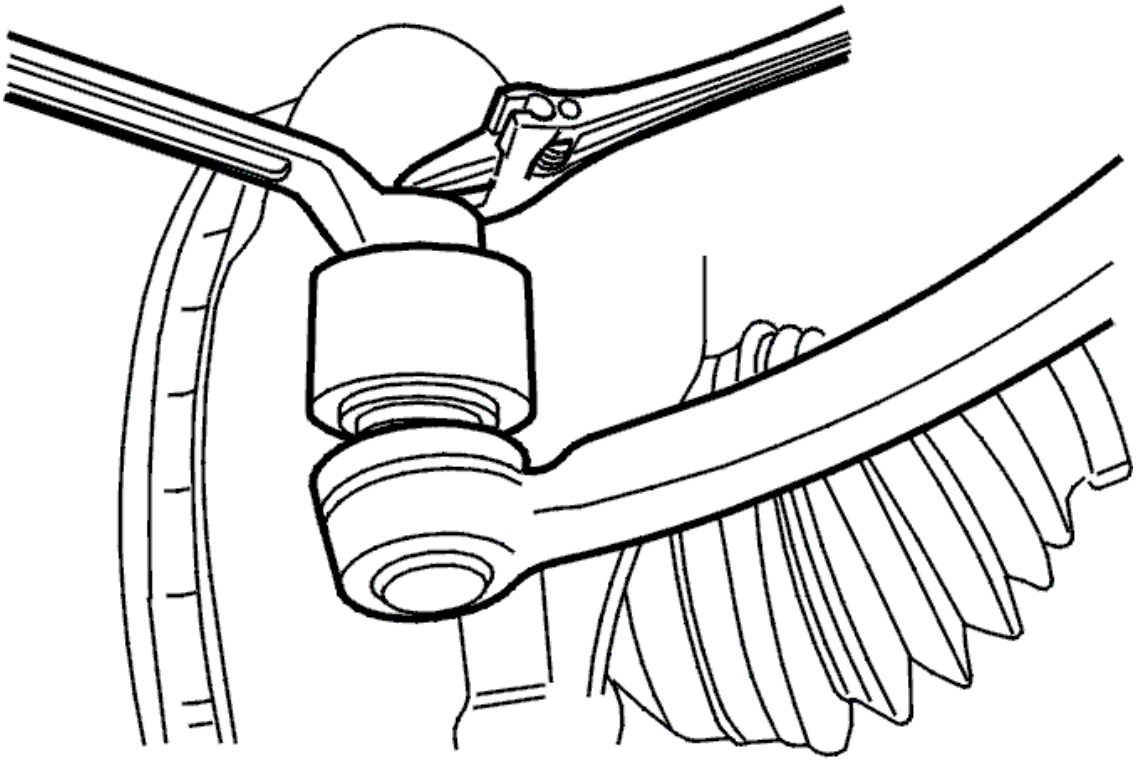

Fig. 79: Installing Steering Arm To Wheel Spindle
Courtesy of VOLVO CARS CORPORATION

Install the steering arms to the wheel spindles. Use new lock nuts.

Tighten, see: **TIGHTENING TORQUE** . Use see **9512050** .

INSTALLING THE SUB-FRAME

Install the sub-frame. See: **SUB-FRAME FRONT, REPLACING** .

INSTALLING THE SCREW ON THE LOWER STEERING SHAFT

NOTE: **Always check carefully that the ball joint's screw hole aligns with the cut-out in the steering gear shaft.**

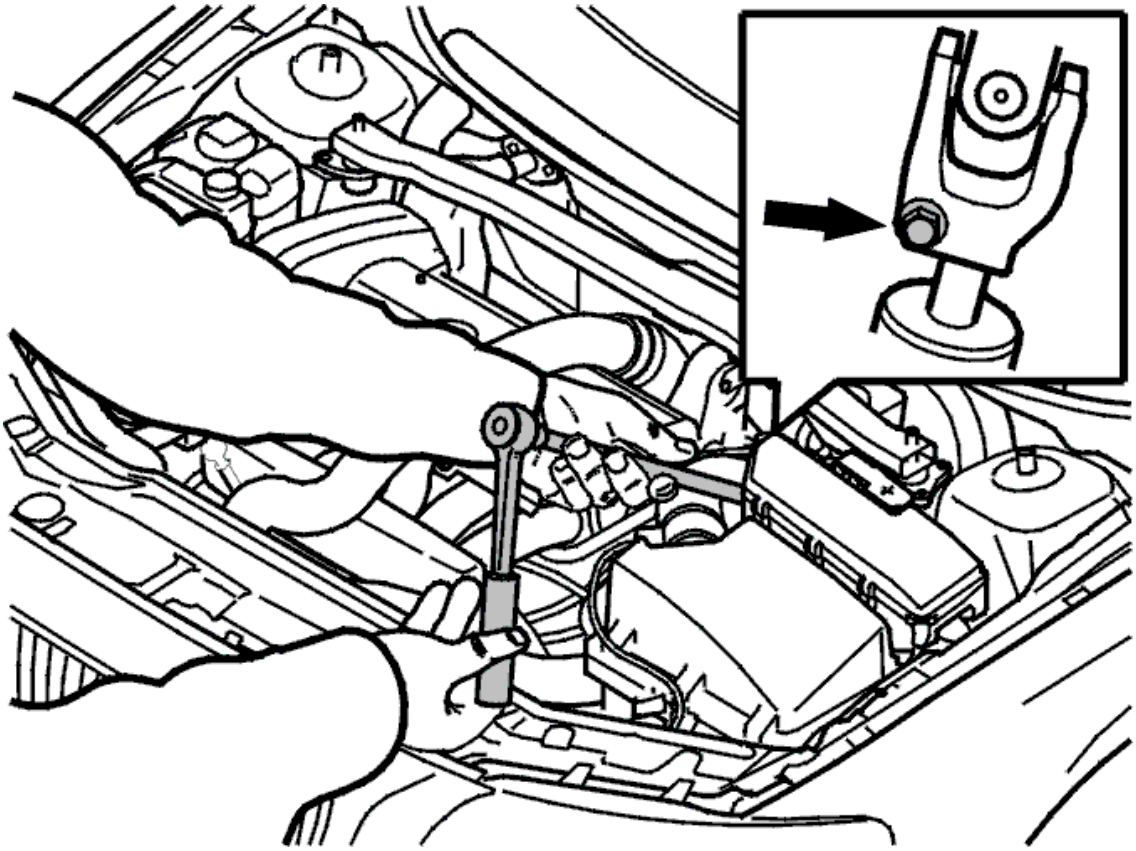

Fig. 80: Installing Steering Shaft Joint Screw
Courtesy of VOLVO CARS CORPORATION

Expose the steering wheel lock. Turn the steering wheel so that the screw in the mounting for the steering shaft joint points straight ahead.

Tighten the lower screw on the steering shaft joint mounting in the steering gear from the engine compartment. Tighten to **TIGHTENING TORQUE** . Use a new screw.

FINISHING

Install:

- the fluid reservoir return hose
- the clips for the cable harness along the hose
- the delivery line on the power steering pump. Tighten. See:**TIGHTENING TORQUE** .

Use a new O-ring on the pipe at the power steering pump.

Install:

- the clamp on the stay between the power steering pump / engine
- the battery lead.

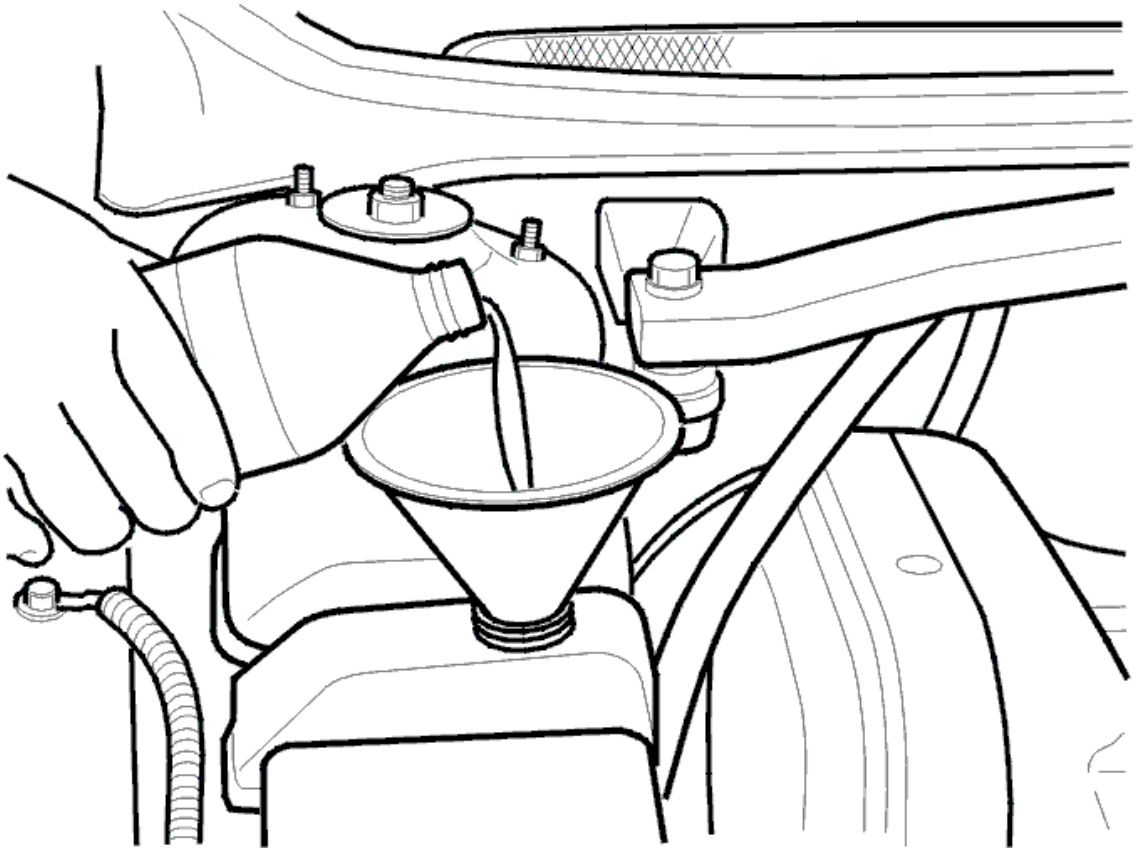

Fig. 81: Filling Servo Reservoir With Oil
Courtesy of VOLVO CARS CORPORATION

Fill the reservoir with oil.

NOTE: Use Volvo power steering fluid, P/N 1161529-1 to ensure the correct oil quality.

Repeatedly turn the steering wheel to full lock. Check and top up oil if required.

Lower the car.

Apply the handbrake. Start the engine.

A: Turn the steering wheel slowly to the right. Hold on full lock for 2 seconds.

B: Turn the steering wheel slowly to the left, hold on full lock for 2 seconds.

Repeat operations A and B approximately 10 times.

STEERING GEAR (B5254T2; 2005-2007)

CONTROL MODULE STEERING GEAR, REPLACING

see **CONTROL MODULE STEERING GEAR, REPLACING**

REPLACING THE OUTER STEERING ARM

see **REPLACING THE OUTER STEERING ARM**

SOLENOID, STEERING GEAR, REPLACEMENT

see **SOLENOID, STEERING GEAR, REPLACEMENT**

STEERING ARM INNER, REPLACING

see **STEERING ARM INNER, REPLACING**

STEERING GEAR, REPLACING

NOTE: **As the illustrations in this service information are used for different model years and / or models, some variation may occur. However, the essential information in the illustrations is always correct.**

REPLACING

Set the steering wheel to the "straight ahead" position. Remove the key so that the steering wheel lock engages.

Remove the battery lead. See **BATTERY, DISCONNECTING** .

Install the lock grip pliers on the feeder hose and the return hose for the power steering pump.

REMOVING THE SCREW ON THE LOWER STEERING SHAFT

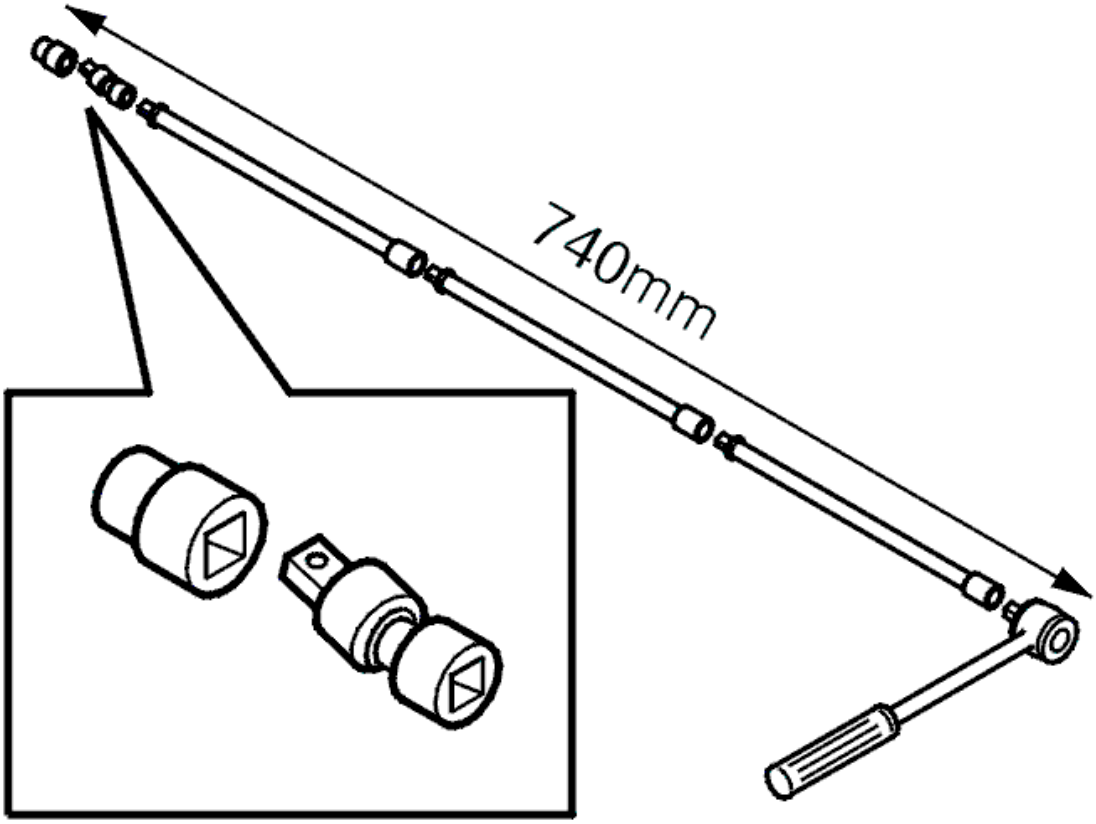

Fig. 82: Identifying Tool Assembly
Courtesy of VOLVO CARS CORPORATION

HINT: If the access to the screw for the steering shaft joint mounting in the steering gear is very limited, set up the tool as illustrated.

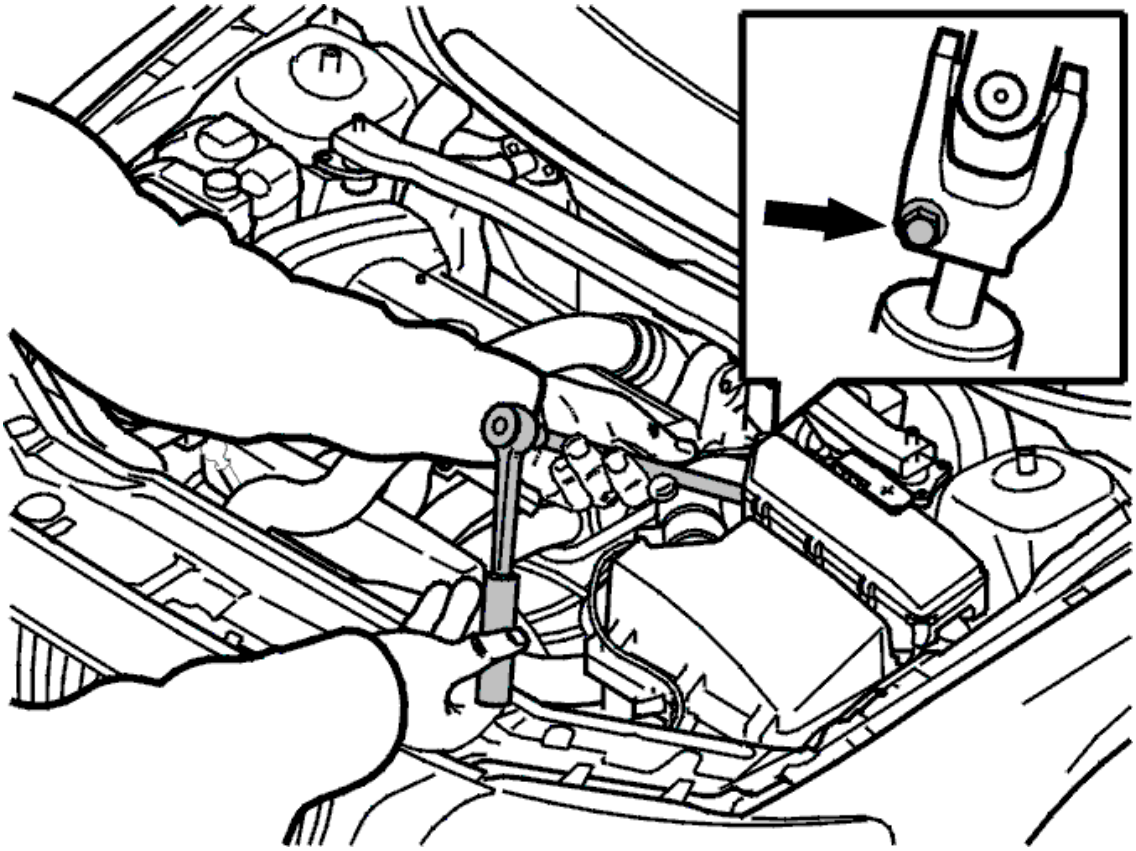

Fig. 83: Steering Shaft Joint Mounting Screw
Courtesy of VOLVO CARS CORPORATION

Remove the screw on the steering shaft joint mounting in the steering gear from the engine compartment.

REMOVING THE SUB-FRAME

Remove the sub-frame. See: **SUB-FRAME FRONT, REPLACING (2007)** or **SUB-FRAME FRONT, REPLACING (2003-2006)** .

REMOVING THE TRACK ROD ENDS

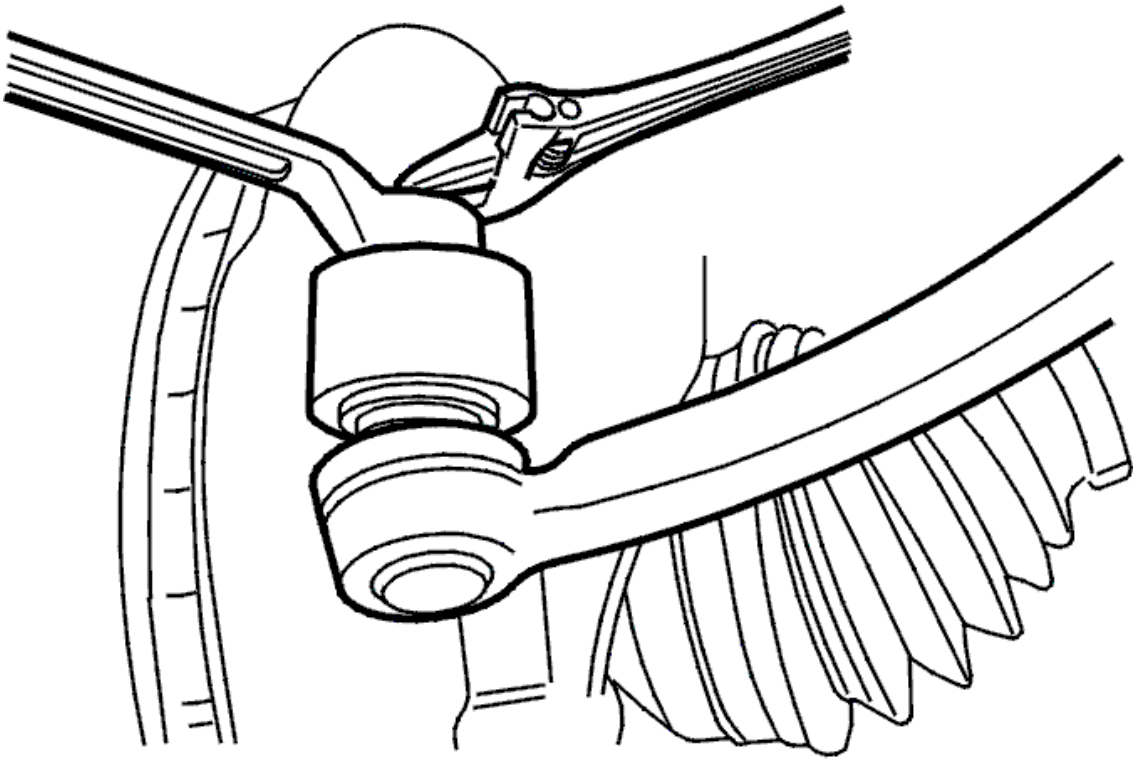

Fig. 84: Removing Track Rod Ends
Courtesy of VOLVO CARS CORPORATION

NOTE: Ensure that the front wheels are pointing straight ahead.

Remove

- the front wheels
- the track rod ends from the steering arms.

Counterhold using a fixed spanner so that the boot is not damaged.

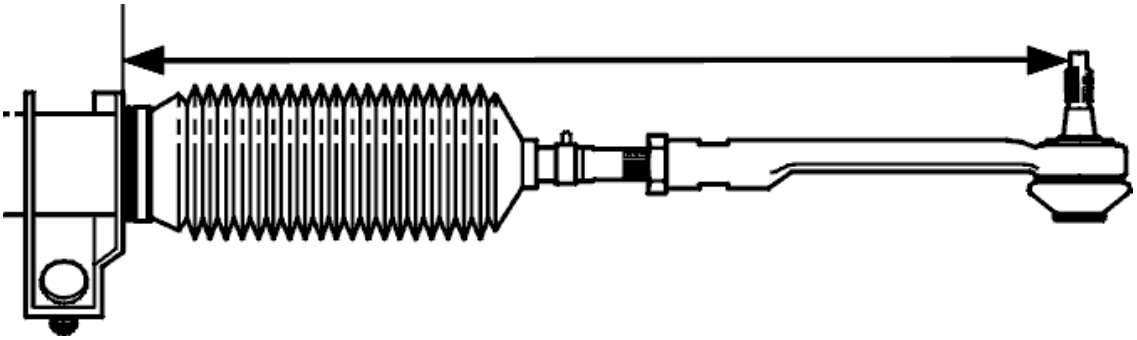

Fig. 85: Identifying Length Of Track Rod In Relation To Steering Gear Housing
Courtesy of VOLVO CARS CORPORATION

NOTE: **On one side, measure the length of the track rod in relation to the steering gear housing. Note the measurement.**

REMOVING THE RETURN LINES AND DELIVERY LINE

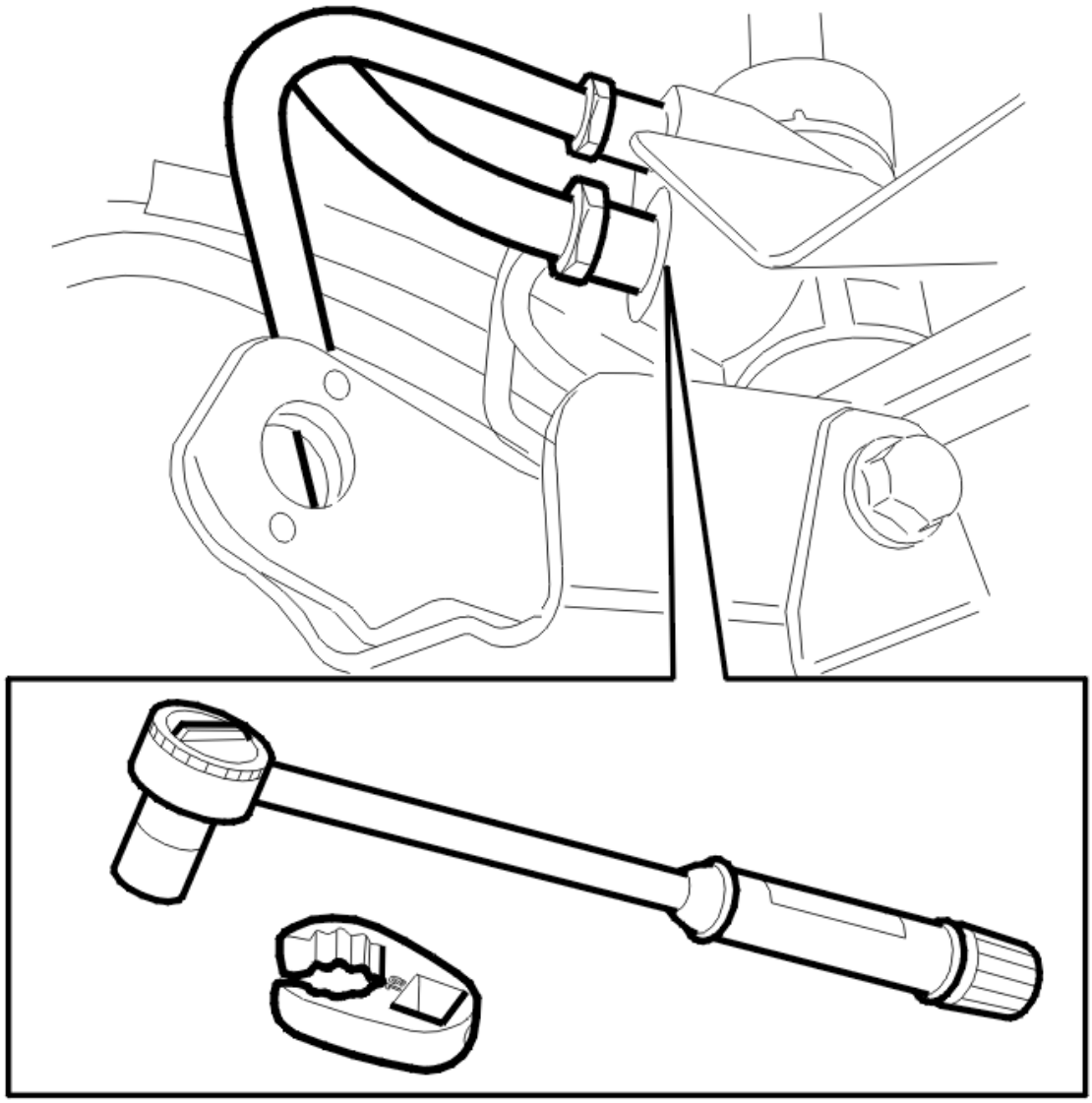

Fig. 86: Identifying Pressure Hose
Courtesy of VOLVO CARS CORPORATION

Place a container under the steering gear.

Remove:

- the return line from the steering gear and drain the fluid
- the delivery line from the steering gear and drain the fluid.

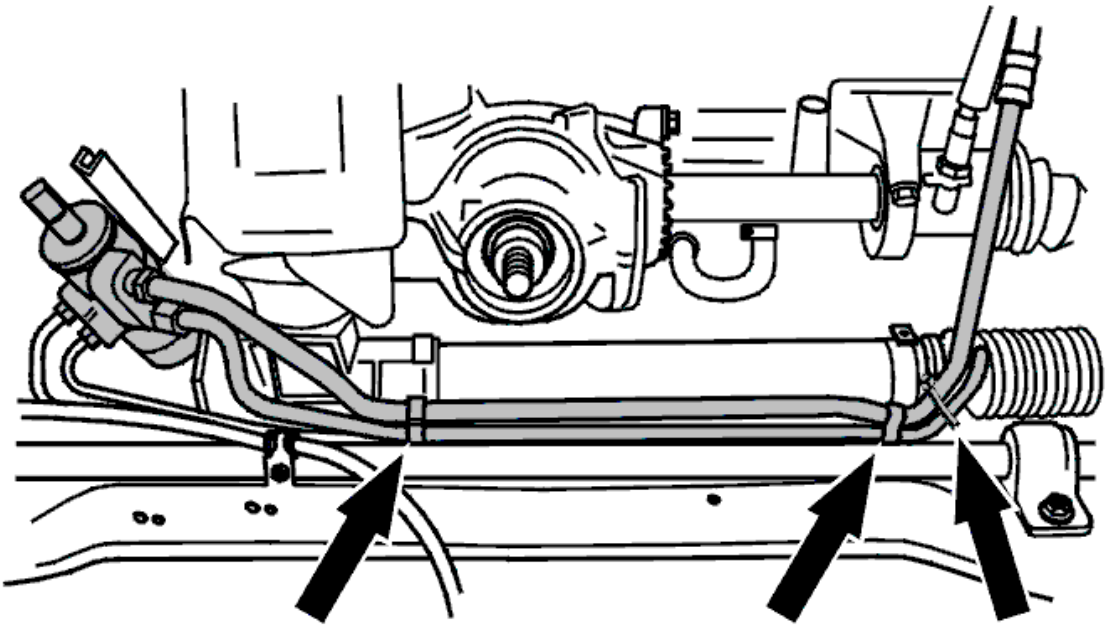

Fig. 87: Identifying Pipe Tie Straps Where Return Hose Meets Pressure Hose
Courtesy of VOLVO CARS CORPORATION

Remove the clips holding the same lines.

NOTE: Note the routing of the lines / hoses.

REMOVING STEERING GEAR

Remove the steering gear.

INSTALLING

INSTALLING STEERING GEAR

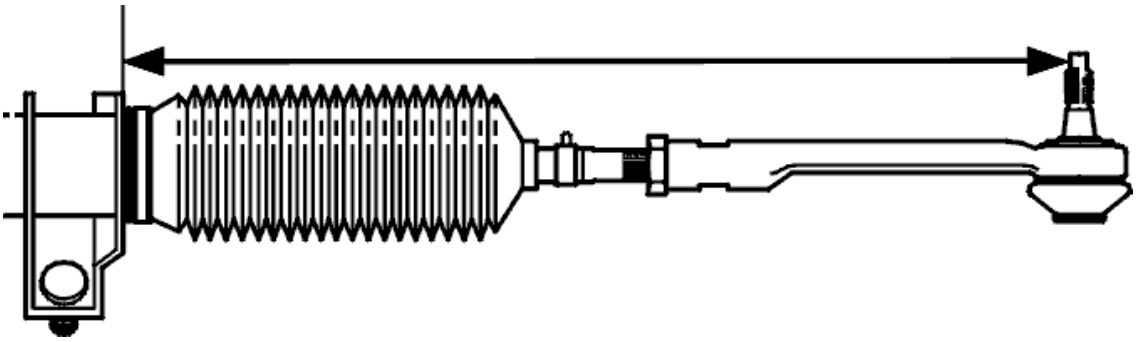

Fig. 88: Identifying Length Of Track Rod In Relation To Steering Gear Housing
Courtesy of VOLVO CARS CORPORATION

Measure and adjust according to the measurements made earlier between the track rod end and the steering gear housing on the new steering gear.

Install the steering gear.

INSTALLING THE RETURN LINE AND DELIVERY LINE

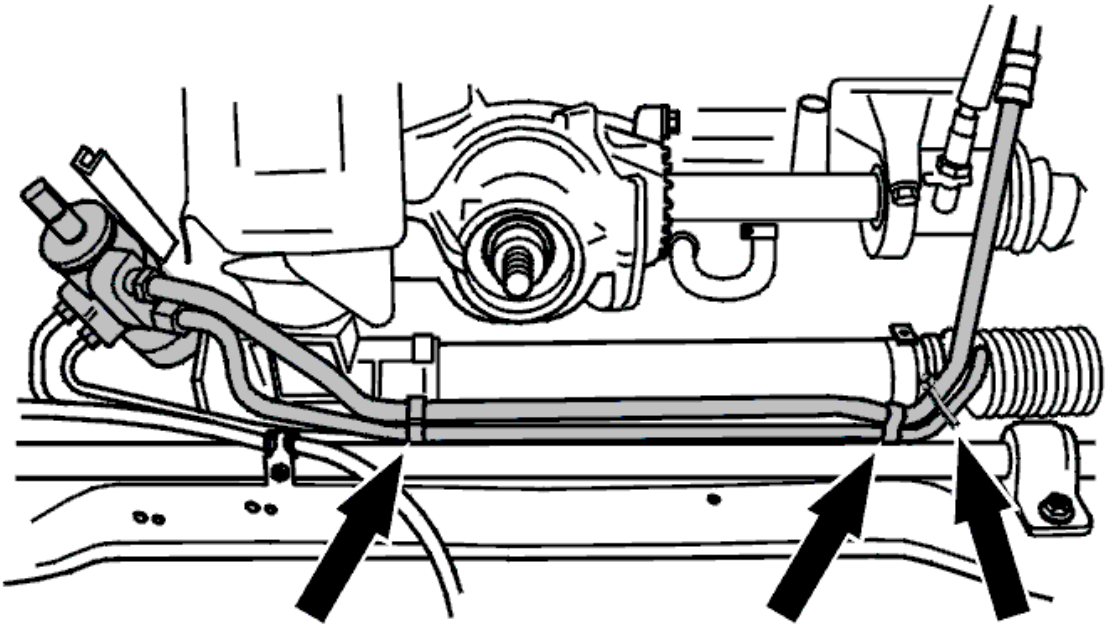

Fig. 89: Identifying Pipe Tie Straps Where Return Hose Meets Pressure Hose
Courtesy of VOLVO CARS CORPORATION

Install the lines according to the noted routing.

Tighten the return line and the delivery line to the steering gear. Tighten to **TIGHTENING TORQUE** .

NOTE: Use a new O-ring on the tube at the steering gear.

Install the clips holding the same lines.

INSTALLING THE STEERING ARMS TO THE WHEEL SPINDLES

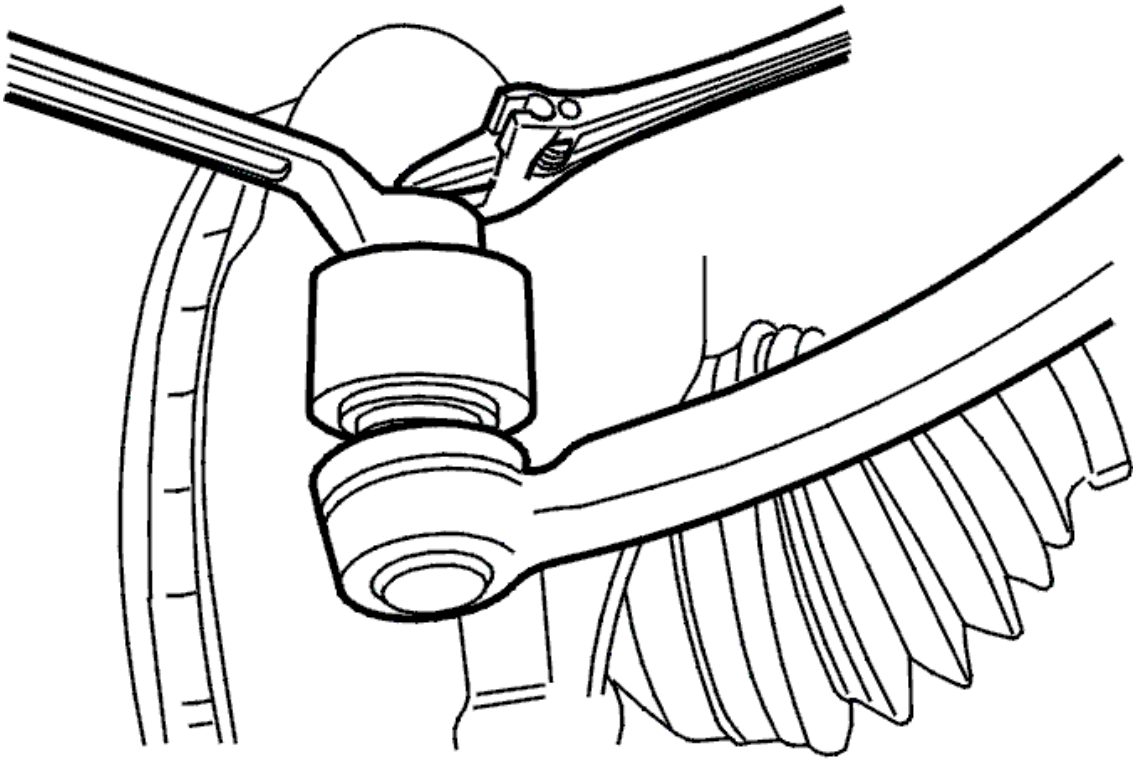

Fig. 90: Installing Steering Arms To Wheel Spindle
Courtesy of VOLVO CARS CORPORATION

Install the steering arms to the wheel spindles. Use new lock nuts.

Tighten, see: **TIGHTENING TORQUE** . Use see **9512050** .

INSTALLING THE SUB-FRAME

Install the sub-frame. See: **SUB-FRAME FRONT, REPLACING (2003-2006)** or **SUB-FRAME FRONT, REPLACING (2007)** .

INSTALLING THE SCREW ON THE LOWER STEERING SHAFT

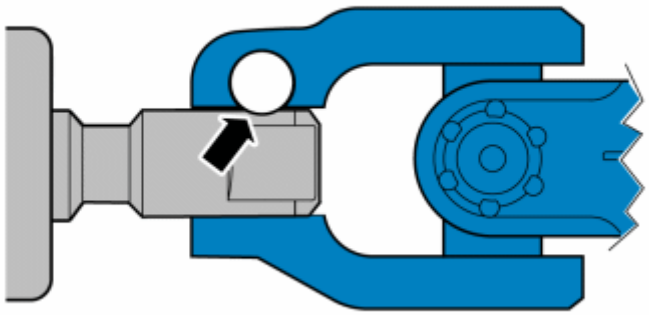

Fig. 91: Locating Steering Shaft Joint On Steering Gear
Courtesy of VOLVO CARS CORPORATION

NOTE: Always check carefully that the ball joint's screw hole aligns with the cut-out in the steering gear shaft.

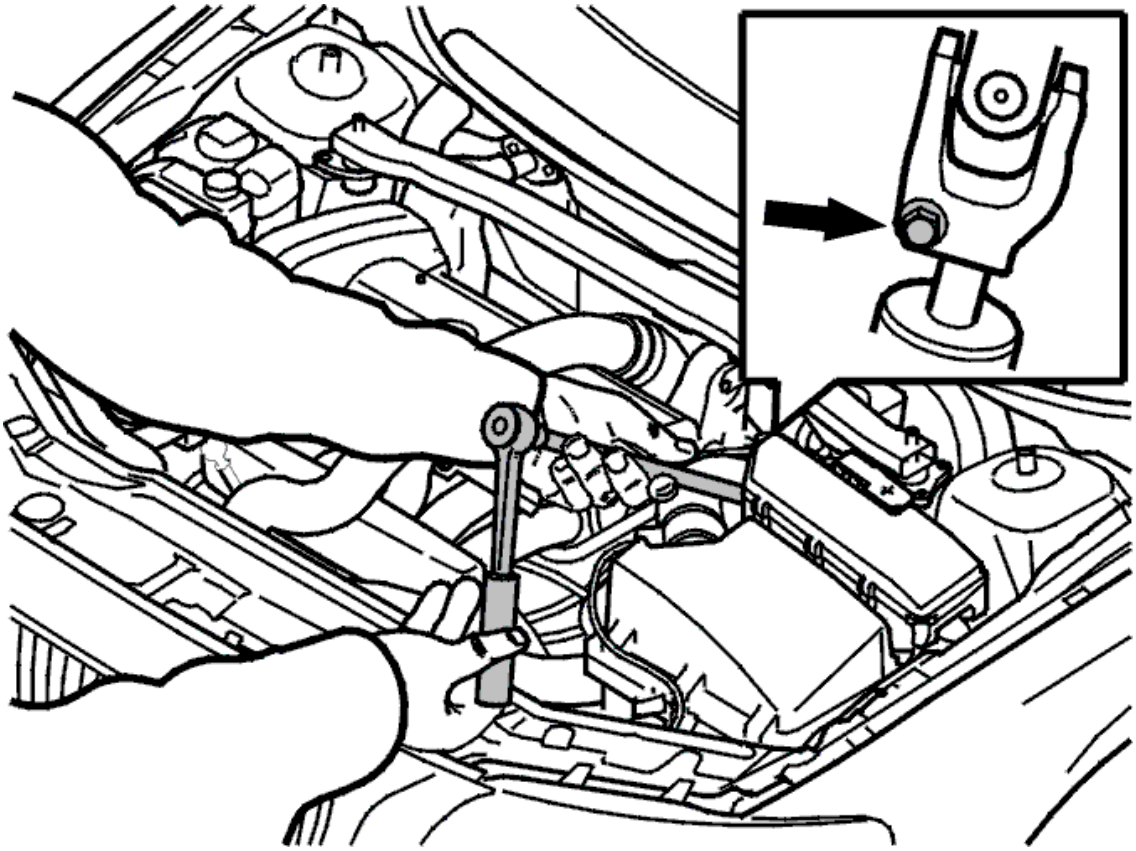

Fig. 92: Installing Steering Shaft Joint Mounting Screw
Courtesy of VOLVO CARS CORPORATION

Expose the steering wheel lock. Turn the steering wheel so that the screw in the mounting for the steering shaft

joint points straight ahead.

Tighten the lower screw on the steering shaft joint mounting in the steering gear from the engine compartment. Tighten to **TIGHTENING TORQUE** . Use a new screw.

FINISHING

Install:

- the fluid reservoir return hose
- the clips for the cable harness along the hose
- the delivery line on the power steering pump. Tighten. See:**TIGHTENING TORQUE** .

Use a new O-ring on the pipe at the power steering pump.

Install:

- the clamp on the stay between the power steering pump / engine
- the battery lead.

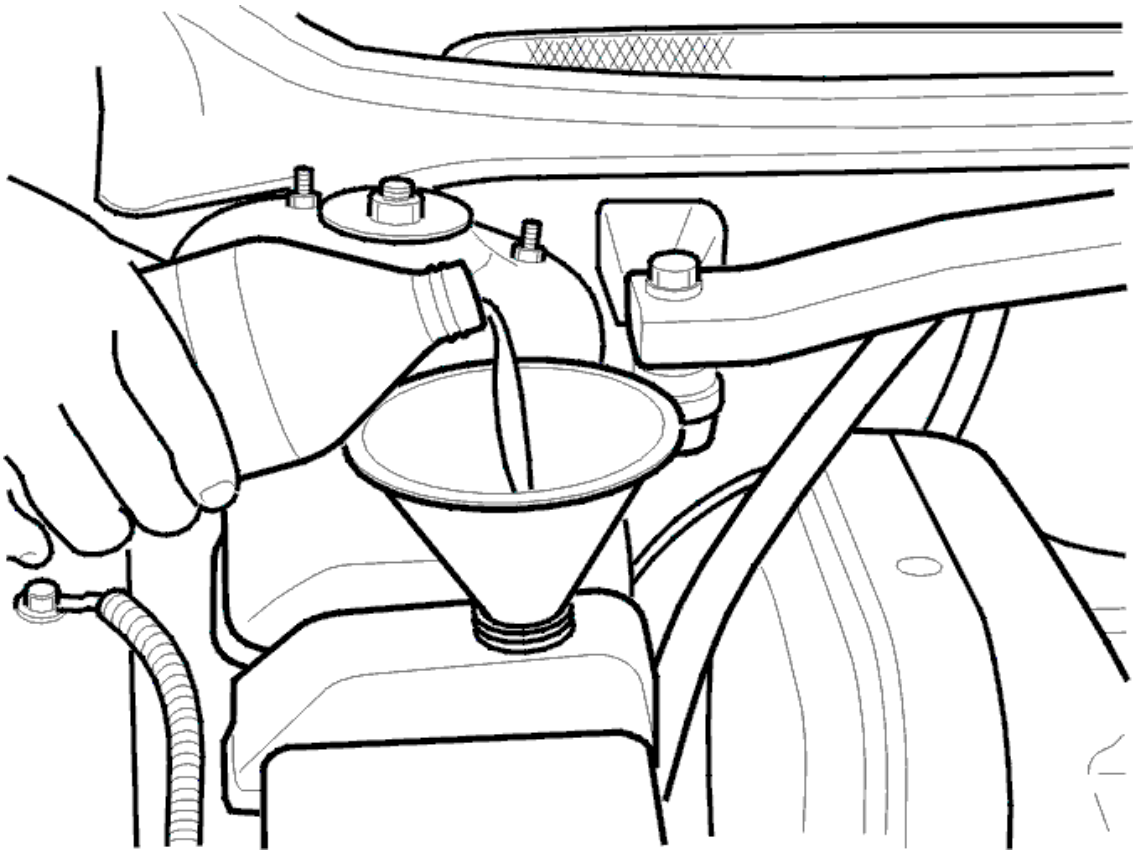

Fig. 93: Filling Servo Reservoir With Oil
Courtesy of VOLVO CARS CORPORATION

Fill the reservoir with oil.

NOTE: Use Volvo power steering fluid, P/N 1161529-1 to ensure the correct oil quality.

Repeatedly turn the steering wheel to full lock. Check and top up oil if required.

Lower the car.

Apply the handbrake. Start the engine.

A: Turn the steering wheel slowly to the right. Hold on full lock for 2 seconds.

B: Turn the steering wheel slowly to the left, hold on full lock for 2 seconds.

Repeat operations A and B approximately 10 times.

STEERING GEAR (B6294T; 2005-2006)

CONTROL MODULE STEERING GEAR, REPLACING

see **CONTROL MODULE STEERING GEAR, REPLACING**

REPLACING THE OUTER STEERING ARM

see **REPLACING THE OUTER STEERING ARM**

SOLENOID, STEERING GEAR, REPLACEMENT

see **SOLENOID, STEERING GEAR, REPLACEMENT**

STEERING ARM INNER, REPLACING

see **STEERING ARM INNER, REPLACING**

STEERING GEAR, REPLACING

see **STEERING GEAR, REPLACING**

STEERING GEAR (B6324S; 2007-2010)

REPLACING THE OUTER STEERING ARM

see **REPLACING THE OUTER STEERING ARM**

SOLENOID, STEERING GEAR, REPLACEMENT

see **SOLENOID, STEERING GEAR, REPLACEMENT**

STEERING ARM INNER, REPLACING

see **STEERING ARM INNER, REPLACING**

STEERING GEAR, REPLACEMENT

see **STEERING GEAR, REPLACEMENT**

STEERING GEAR (B6324S5; 2011-2012)

REPLACING THE OUTER STEERING ARM

see **REPLACING THE OUTER STEERING ARM**

SOLENOID, STEERING GEAR, REPLACEMENT

see **SOLENOID, STEERING GEAR, REPLACEMENT**

STEERING ARM INNER, REPLACING

see **STEERING ARM INNER, REPLACING**

STEERING GEAR, REPLACEMENT

see **STEERING GEAR, REPLACEMENT**

POWER STEERING EQUIPMENT (2003-2004)

FLUID RESERVOIR

REMOVING THE FLUID RESERVOIR

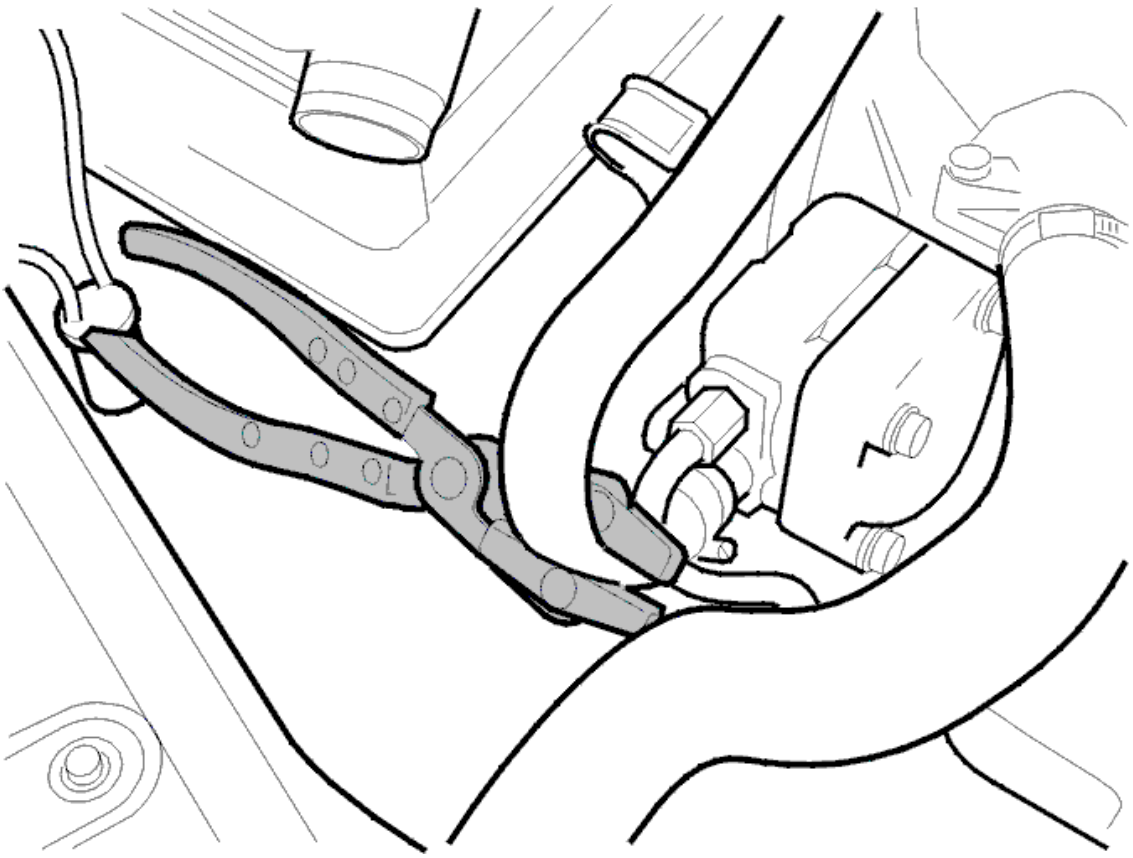

Fig. 94: Identifying Lock Grip Pliers & Feeder Hose
Courtesy of VOLVO CARS CORPORATION

- Install lock grip pliers on the return hose from the fluid reservoir as close to the power steering pump as possible.

WARNING: Avoid skin contact with the oil.

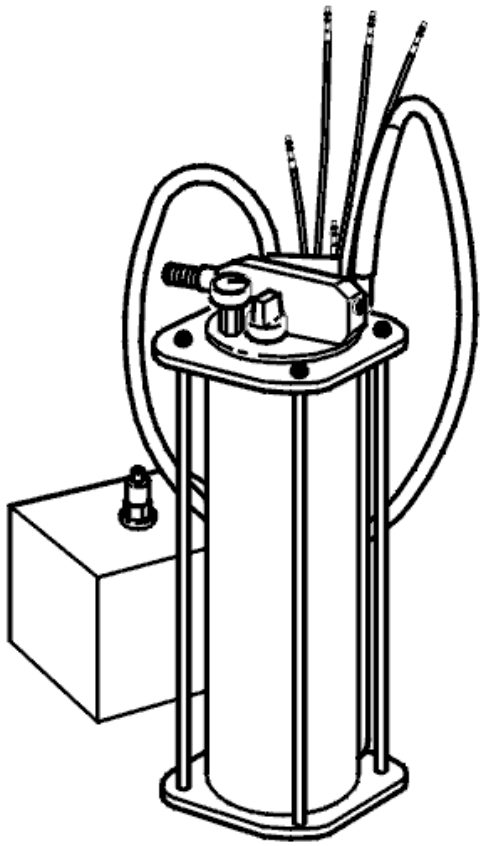

Fig. 95: Identifying Suction Unit
Courtesy of VOLVO CARS CORPORATION

- Extract the oil using the suction unit according to Volvo's Workshop Guide Bulletin 239
- Lift the fluid reservoir from its mounting
- Disconnect both the hoses from the reservoir
- Remove the reservoir.

INSTALLING FLUID RESERVOIR

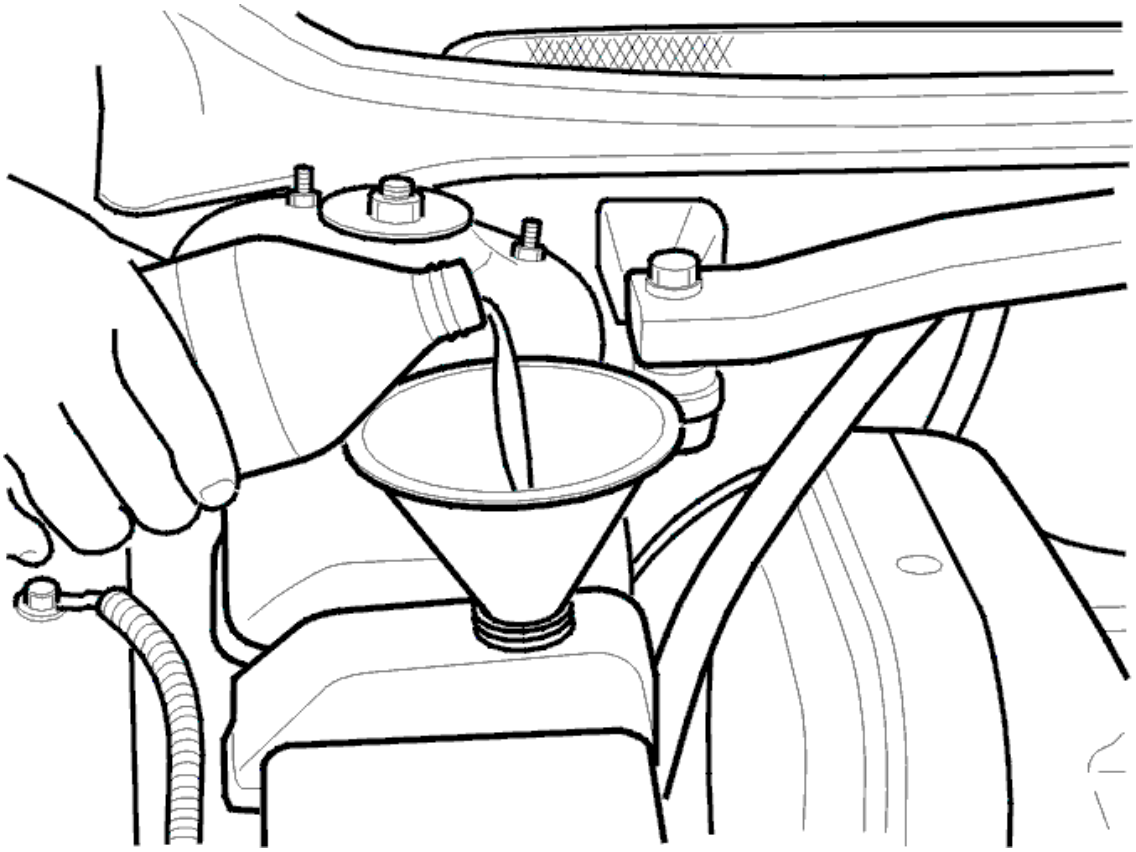

Fig. 96: Filling Servo Reservoir With Oil
Courtesy of VOLVO CARS CORPORATION

- Install the reservoir in reverse order
- Top up with oil. Use Volvo power steering fluid, P/N 1161529-1 to ensure the correct oil quality.

HYDRAULIC PIPES/HOSES STEERING GEAR, REPLACING

NOTE: **As the illustrations in this service information are used for different model years and / or models, some variation may occur. However, the essential information in the illustrations is always correct.**

REMOVAL

PREPARATORY WORK

Remove the battery lead. See **BATTERY, DISCONNECTING** .

Install lock grip pliers on the feeder hose for the power steering pump.

HINT: Place paper or a cloth under the delivery line to absorb any spillage.

Remove the pressure line from the power steering pump.

REMOVING THE SUB-FRAME

Remove the sub-frame. See **SUB-FRAME FRONT, REPLACING (2003-2006)** or **SUB-FRAME FRONT, REPLACING (2007)** and **SUB-FRAME FRONT, REPLACING** .

REMOVING THE RETURN HOSE

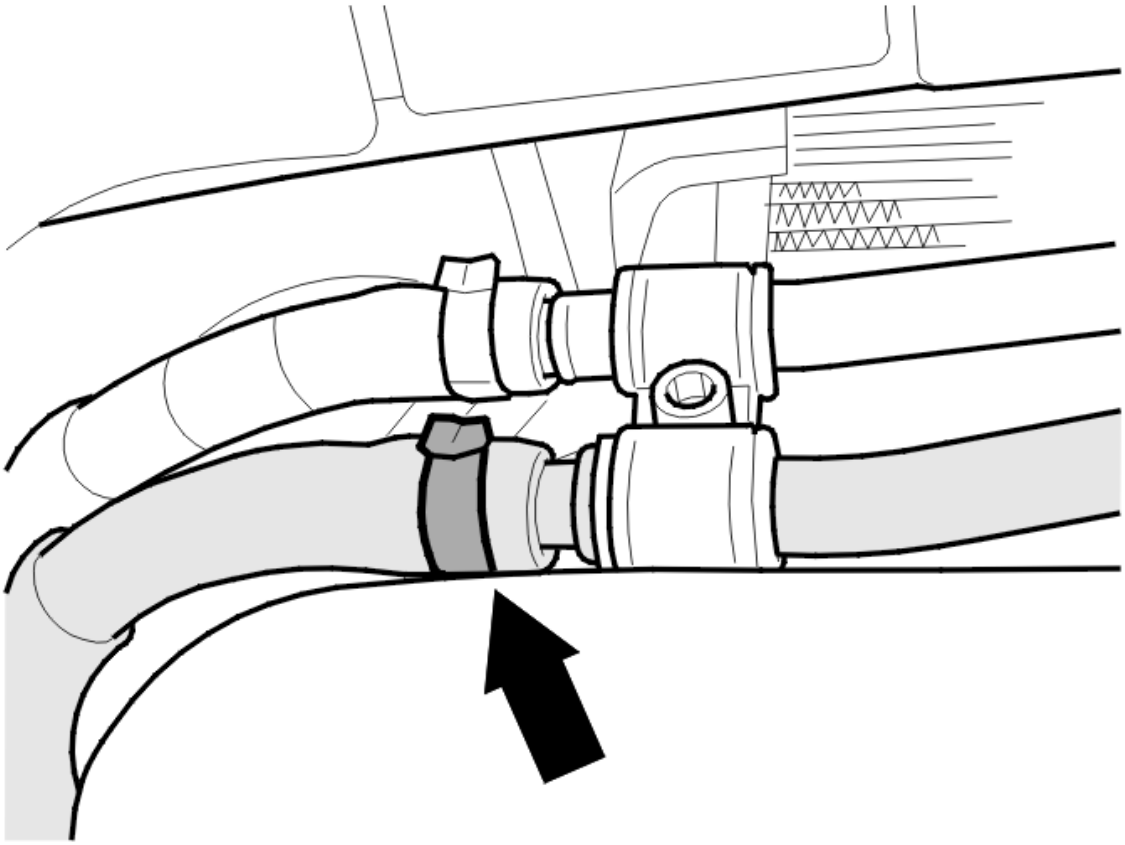

Fig. 97: Removing Return Hose
Courtesy of VOLVO CARS CORPORATION

Remove:

- the clamp for the oil cooler return hose
- the return hose.

REMOVING THE RETURN LINES AND DELIVERY LINE

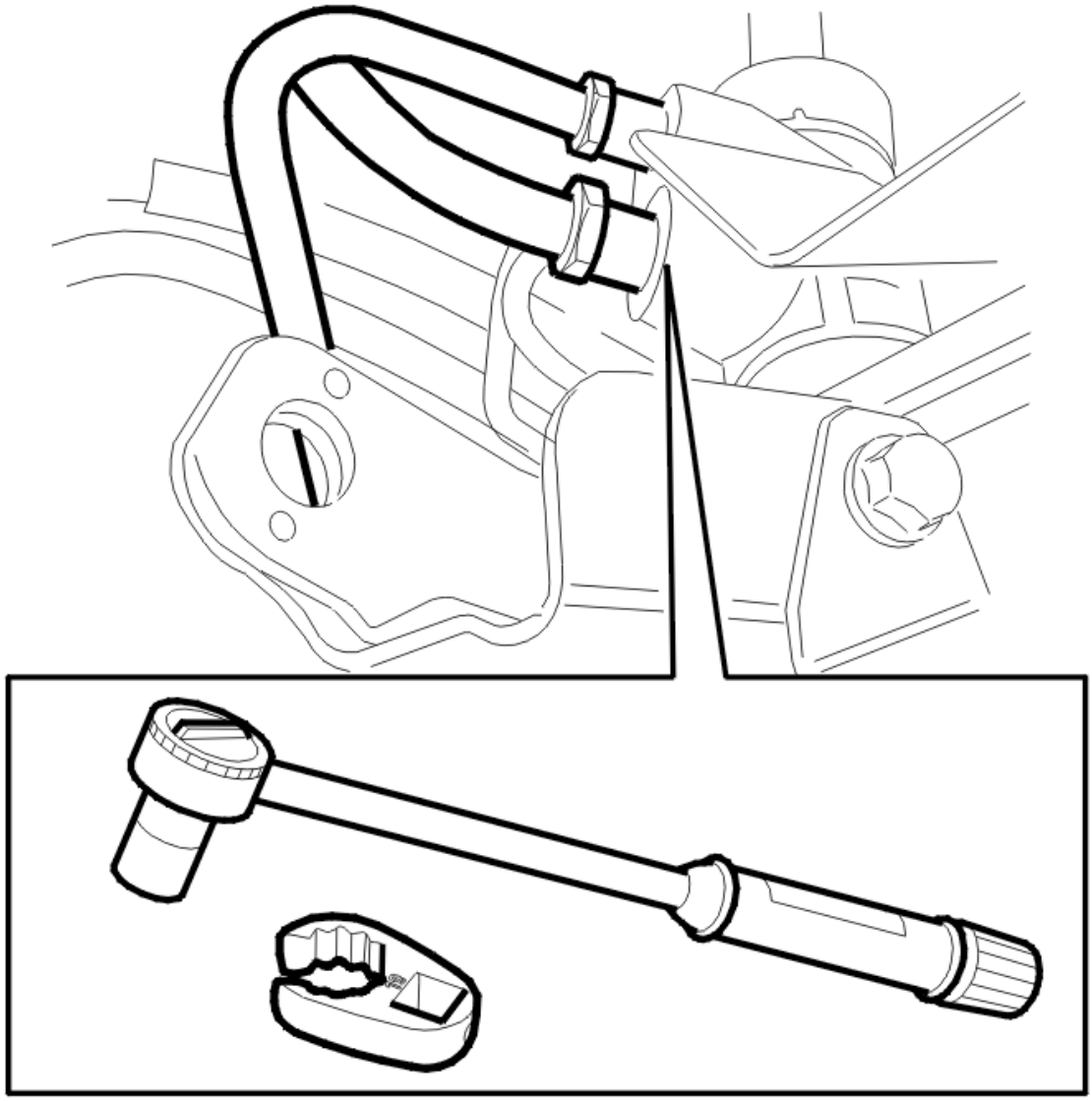

Fig. 98: Identifying Pressure Hose
Courtesy of VOLVO CARS CORPORATION

Place a container under the steering gear.

Remove:

- the return lines from the steering gear and drain the fluid
- the delivery line from the steering gear and drain the fluid.

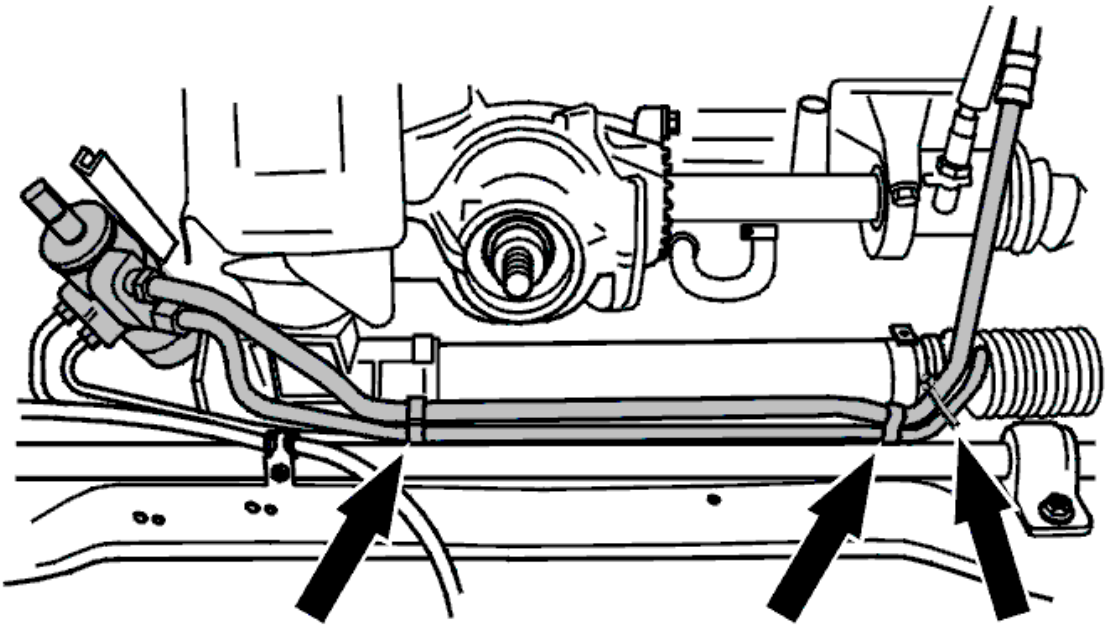

Fig. 99: Identifying Pipe Tie Straps Where Return Hose Meets Pressure Hose
Courtesy of VOLVO CARS CORPORATION

Remove:

- the clips holding the pipes together
- the return line by pressing the pipe to the left and pulling down the end of the hose from the engine compartment
- the delivery line by pulling the hose end down from the engine compartment.

NOTE: Note the routing of the lines / hoses.

INSTALLATION

NOTE: For tightening torques, see TIGHTENING TORQUE .

INSTALLING THE RETURN LINE AND DELIVERY LINE

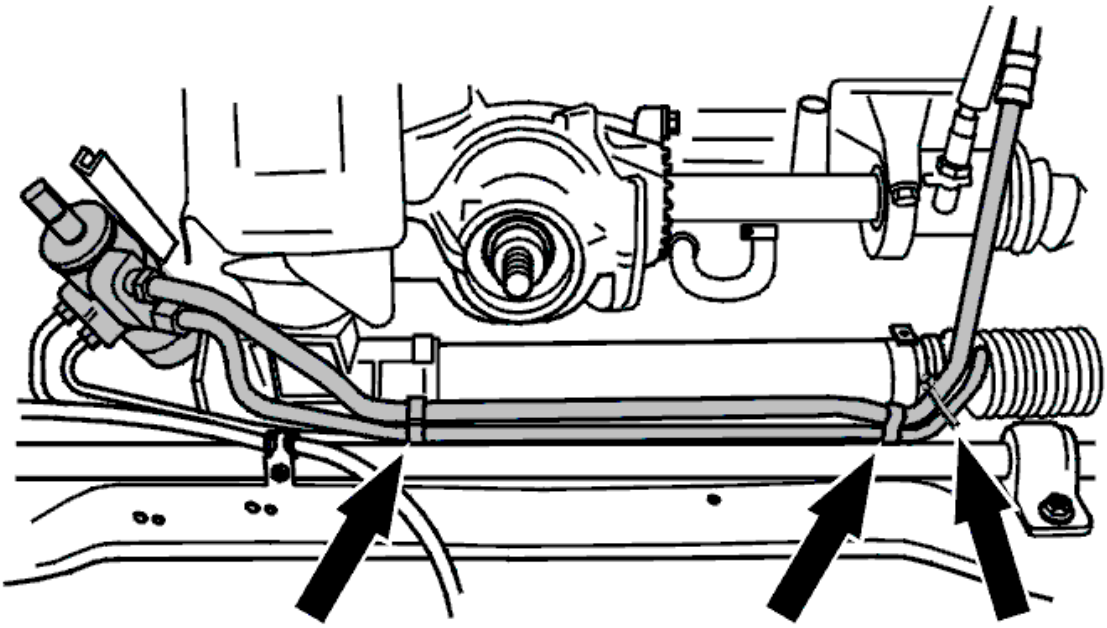

Fig. 100: Identifying Pipe Tie Straps Where Return Hose Meets Pressure Hose
Courtesy of VOLVO CARS CORPORATION

Install the lines according to the noted routing.

Tighten the return line and the delivery line against the steering gear. See **TIGHTENING TORQUE** .

Remove the lock grip pliers from the feeder cable.

NOTE: Use a new O-ring on the pipe at the steering gear.

Install the clips holding the pipes together.

INSTALLING THE SUB-FRAME

Install the sub-frame. See **SUB-FRAME FRONT, REPLACING (2007)** or **SUB-FRAME FRONT, REPLACING (2003-2006)** and **SUB-FRAME FRONT, REPLACING** .

INSTALLING THE RETURN HOSE

Install the return hose on the oil cooler.

NOTE: Use a new clamp.

INSTALLING DELIVERY LINES

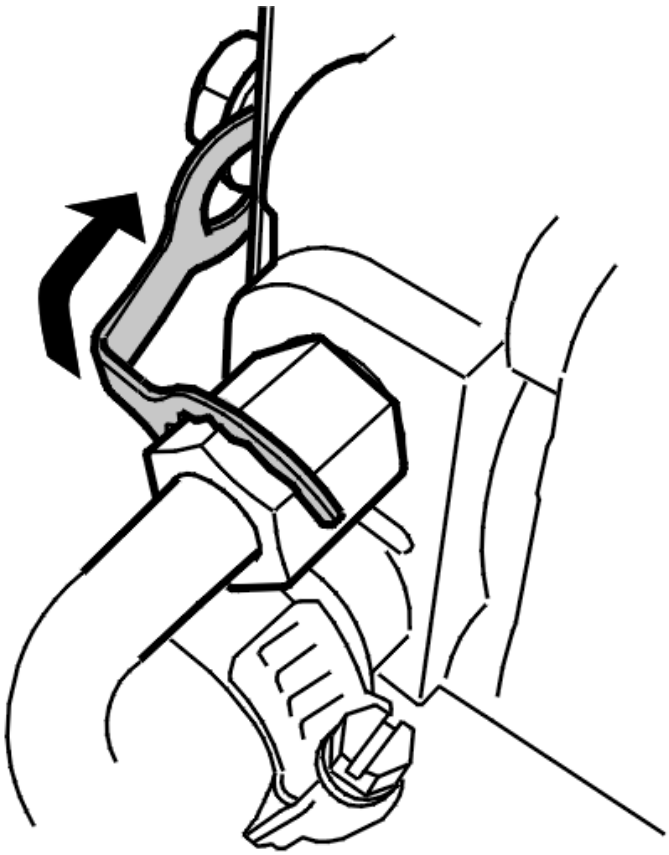

Fig. 101: Installing Delivery Lines
Courtesy of VOLVO CARS CORPORATION

Install:

- the delivery line on the power steering pump. Tighten. See **TIGHTENING TORQUE**
- lock facing, M6.

Remove the lock grip pliers from the feeder hose.

NOTE: Use a new O-ring on the pipe at the power steering pump.

FINISHING

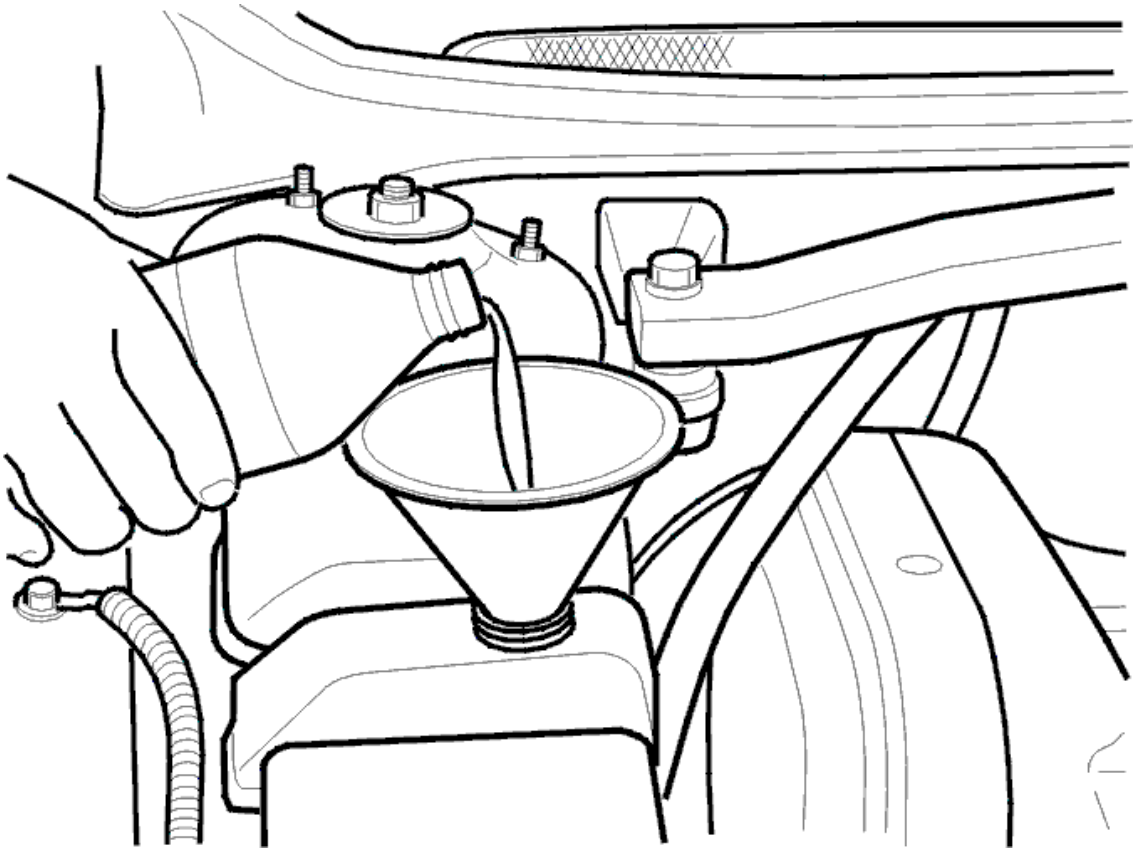

Fig. 102: Filling Servo Reservoir With Oil
Courtesy of VOLVO CARS CORPORATION

Connect the battery lead.

Fill the reservoir with oil.

NOTE: Use Volvo power steering fluid, P/N 116 1529, to ensure the correct oil quality.

Repeatedly turn the steering wheel to full lock. Check and top up oil if required.

Lower the car.

Apply the parking brake. Start the engine.

A: Turn the steering wheel slowly to the right. Hold on full lock for 2 seconds.

B: Turn the steering wheel slowly to the left, hold on full lock for 2 seconds.

Repeat operations A and B approximately 10 times.

INTERNAL PIPE STEERING GEAR

REMOVAL

Remove the steering gear. See **REPLACING THE STEERING GEAR**

NOTE: Seal the servo pump's inlet and outlet connections with plastic plugs immediately after removal

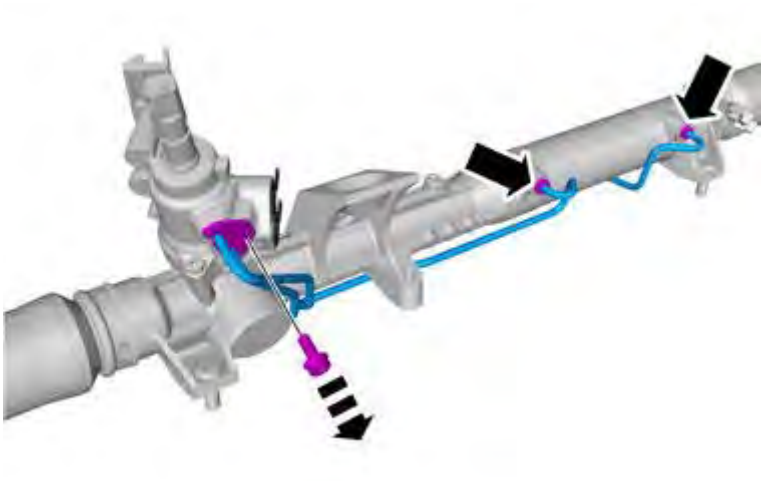

Fig. 103: Identifying Oil Pipes
Courtesy of VOLVO CARS CORPORATION

Remove the protective plate above the pipes.

Clean around the oil pipe connections and blow dry.

Remove the pipes.

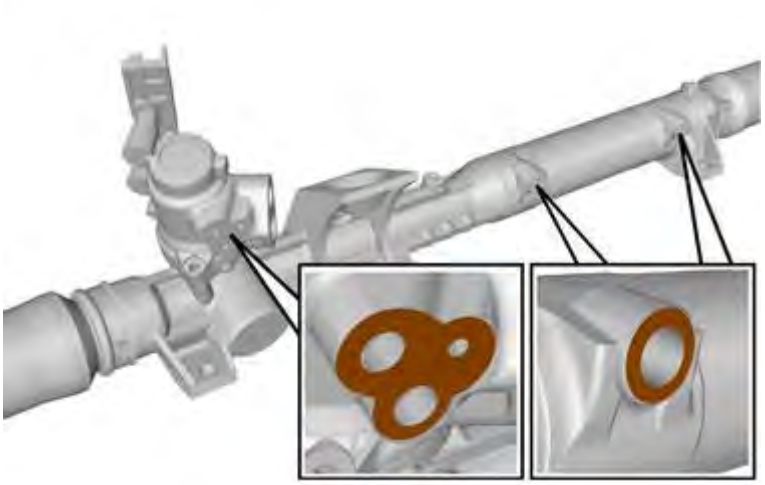

Fig. 104: Identifying Oil Pipe Connections
Courtesy of VOLVO CARS CORPORATION

NOTE: **Ensure that all remnants of the old sealing rings have been removed from the connections on the steering gear.**

INSTALLATION

Fig. 105: Identifying Sealing Rings On Oil Pipes
Courtesy of VOLVO CARS CORPORATION

Install the new sealing rings on the oil pipes. Lubricate the sealing rings. **Use:** Power steering fluid, 30741424

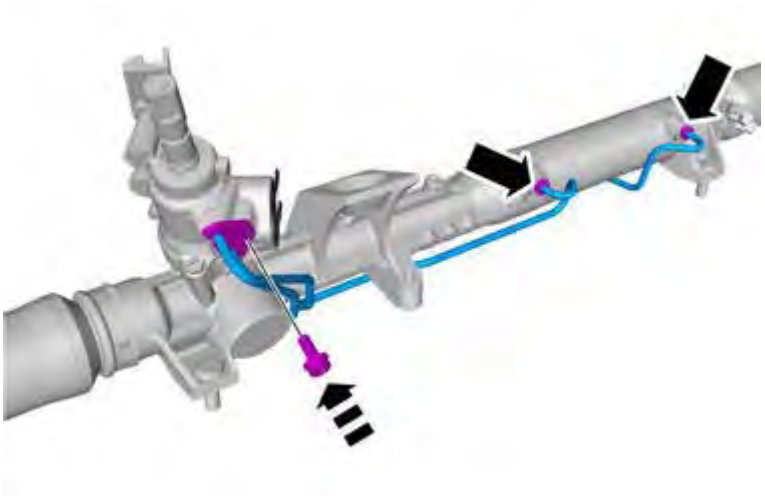

Fig. 106: Identifying Pipes With Sealing Rings
Courtesy of VOLVO CARS CORPORATION

Carefully install the new pipes with the sealing rings on the steering gear.

NOTE: **Use a new screw for the holders for the pipes.**

Tighten all pipe nuts to 7 Nm.

Tighten the screw to the holder. Tighten to 12 Nm.

Install the protective panel over the pipes.

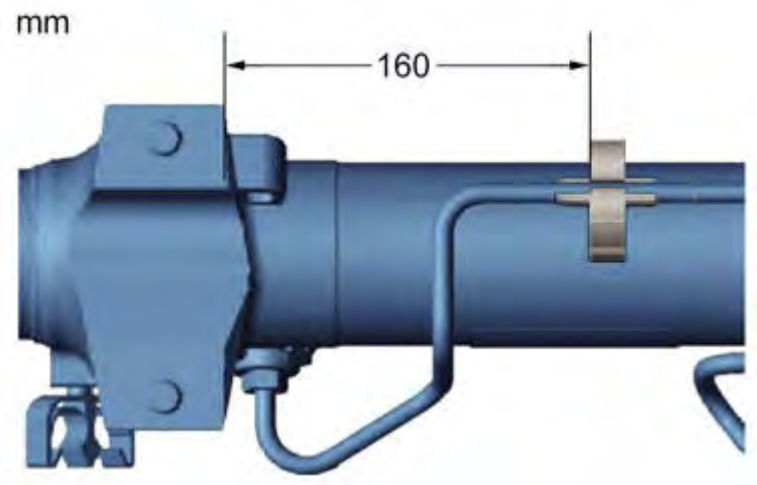

Fig. 107: Identifying Support On Longer Of Oil Pipes
Courtesy of VOLVO CARS CORPORATION

Position a support on the longer of the two oil pipes.

REPLACING THE STEERING GEAR

Special tools:

see **9995259**

see **9995460**

see **9995716**

see **9995972**

see **9997018**

REMOVAL

NOTE: **As the illustrations in this service information are used for different model years and / or models, some variation may occur. However, the essential information in the illustrations is always correct.**

INSTALLING LIFTING TOOLS

Fig. 108: Fixture 999 7018 Installed On Left Hand Side Of Engine At 2 Screws
Courtesy of VOLVO CARS CORPORATION

Ensure that the front wheels are pointing straight ahead

Lock the steering wheel by removing the ignition key

Do not turn the front wheels so that the position of the steering gear changes. This could damage the contact reel for the SRS-system.

Install lifting lug see **9997018** (applies only to 6 cylinder engines).

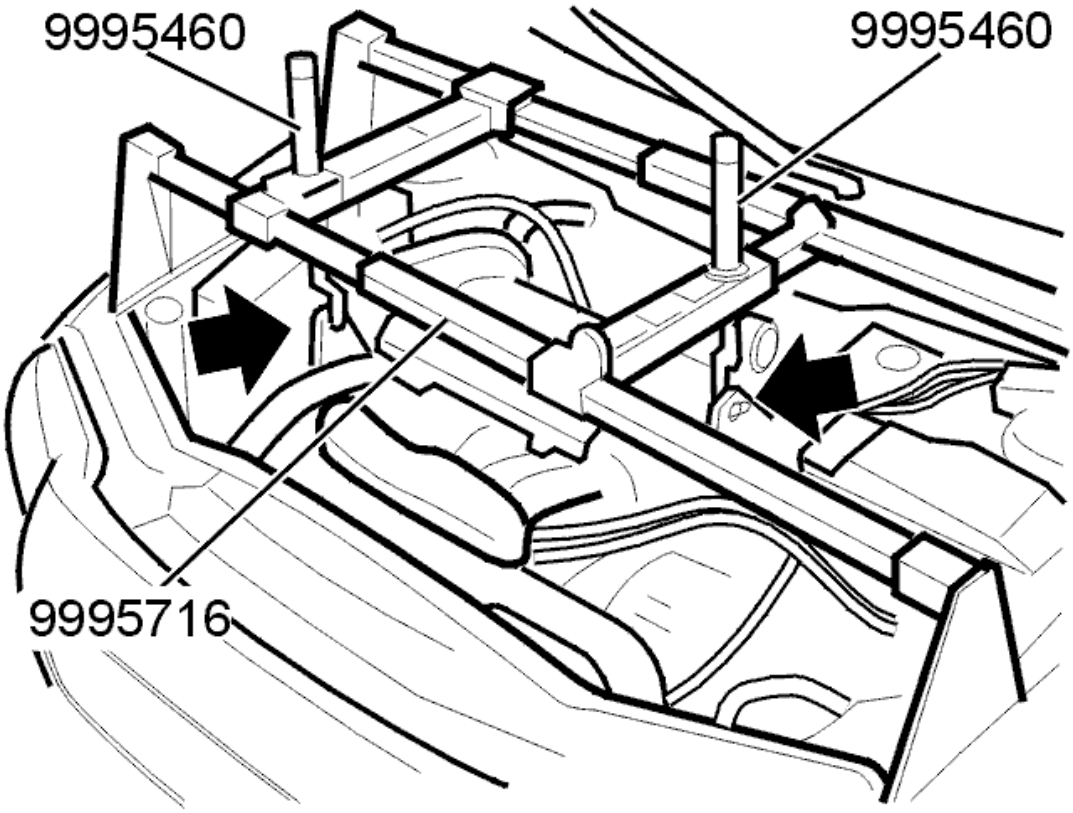

Fig. 109: 999 5716 And Lifting Hooks 999 5460 Installed
Courtesy of VOLVO CARS CORPORATION

Position the lifting device see **9995716** and lifting hooks see **9995460** .

Lift the engine to relieve the load on the engine pads.

DISCONNECTING THE CONNECTOR

Fig. 110: Connector At Brake Servo

Courtesy of VOLVO CARS CORPORATION

NOTE: Only applies to cars with speed related power steering.

Left-hand drive:

Disconnect the connector at the brake servo.

Right-hand drive:

Disconnect the connector at the right suspension turret.

Left and right-hand drive:

Disconnect the connector cable from the clips along the ABS cable.

Push down the connector and cable to the steering gear.

REMOVING TRACK ROD ENDS

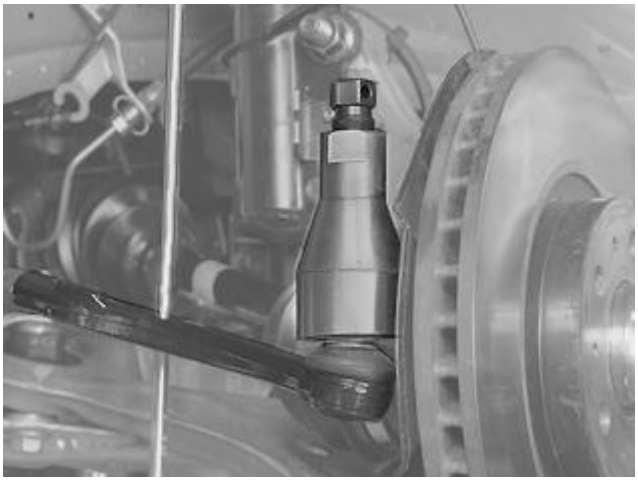

Fig. 111: Identifying Steering Arm Track Rod End
Courtesy of VOLVO CARS CORPORATION

Raise the car.

NOTE: Ensure that the front wheels are pointing straight ahead.

Remove:

- the front wheels
- the track rod ends from the steering arms.

NOTE: If the car has steel wheel spindles, use puller see 9995259 .

MEASURING THE POSITION OF THE TRACK ROD IN THE STEERING GEAR

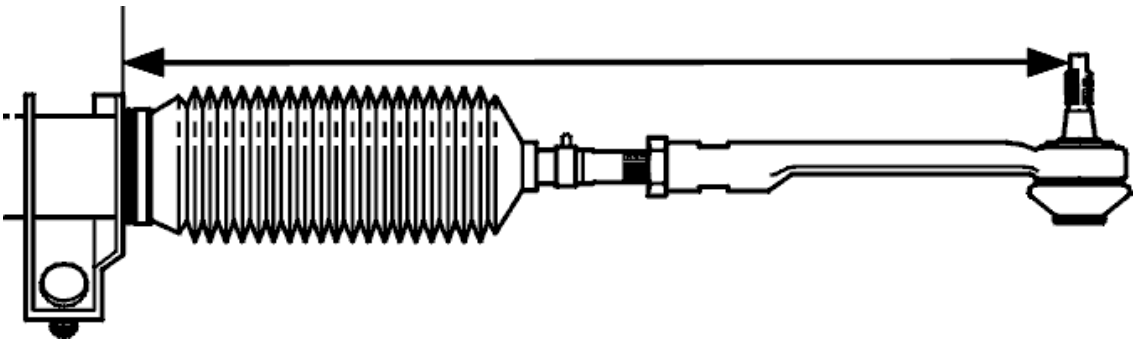

Fig. 112: Identifying Length Of Track Rod In Relation To Steering Gear Housing
Courtesy of VOLVO CARS CORPORATION

On one side, measure the length of the track rod in relation to the steering gear housing. Note the measurement.

REMOVING THE SPLASH GUARD

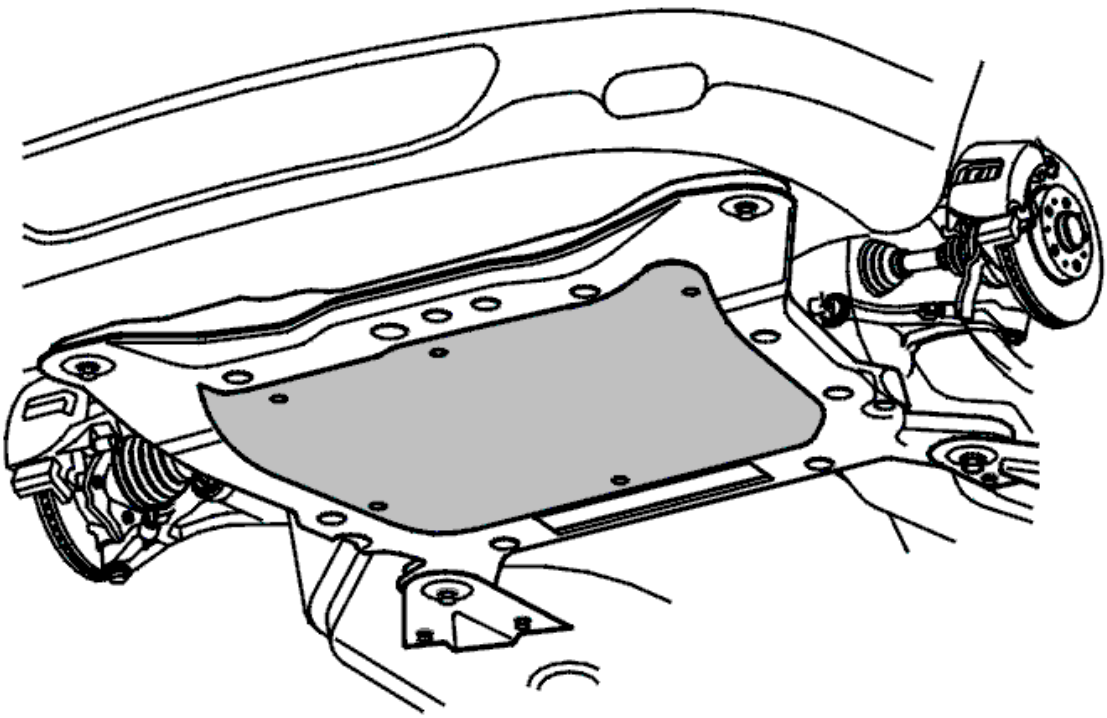

Fig. 113: Identifying Splash Guard Under Engine
Courtesy of VOLVO CARS CORPORATION

Remove the splash guard under the engine.

REMOVING THE BRACKET FOR THE EXHAUST PIPE

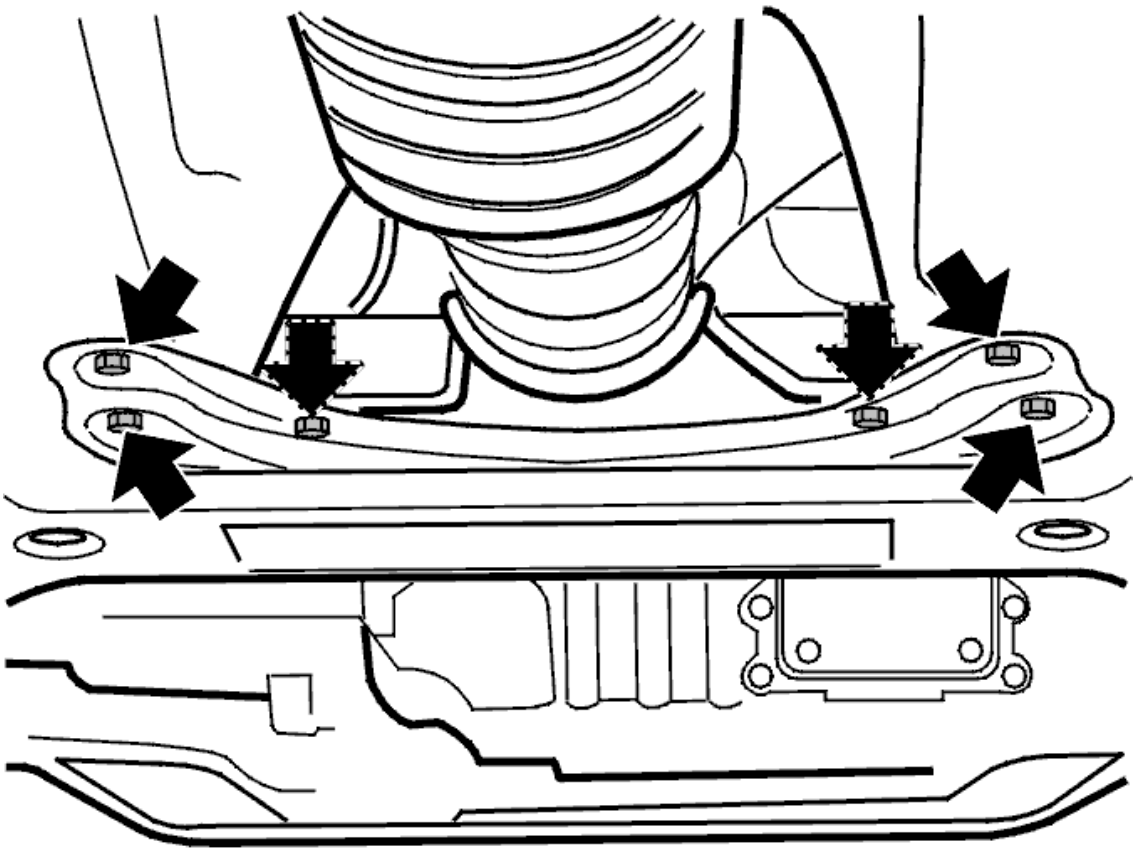

Fig. 114: Exhaust Pipe Bracket Screws
Courtesy of VOLVO CARS CORPORATION

Remove:

- the mounting for the exhaust pipe on the bracket
- the screws holding the exhaust pipe bracket.

Disconnect the brake pipe from the snap fasteners on the bracket.

Remove the bracket.

REMOVING THE COLLISION PROTECTION SYSTEM OVER THE STEERING GEAR

Fig. 115: Collision Protection System Over Steering Gear
Courtesy of VOLVO CARS CORPORATION

Right-hand drive:

- Remove the collision protection system over the steering gear (2 screws)
- Position a container under the steering gear to collect the oil.
- Disconnect the oil pipes from the steering gear.

REMOVING THE NUTS AND SCREW FOR THE STEERING GEAR

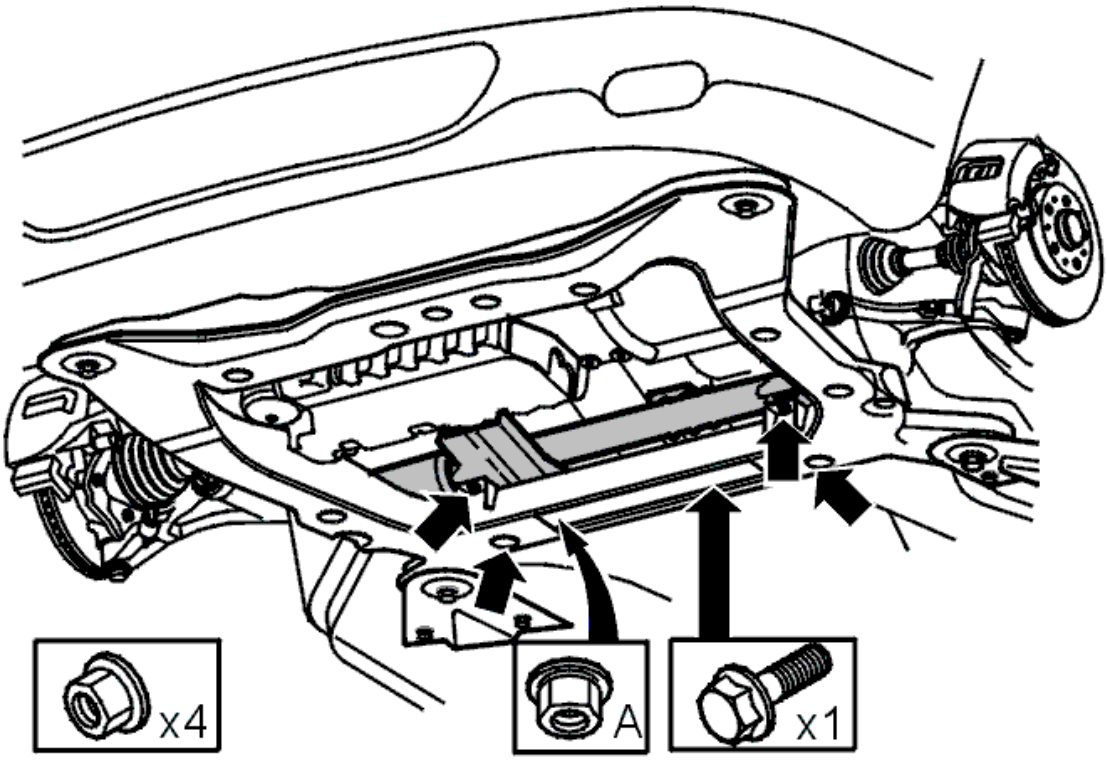

Fig. 116: Identifying Bolt And Nut Holding Steering Gear To Sub-Frame
Courtesy of VOLVO CARS CORPORATION

Remove the four nuts and the screw holding the steering gear to the sub-frame.

Right-hand drive:

Remove the nut (A) holding the lower half of the collision protection.

LOWERING THE SUB-FRAME AT THE REAR EDGE

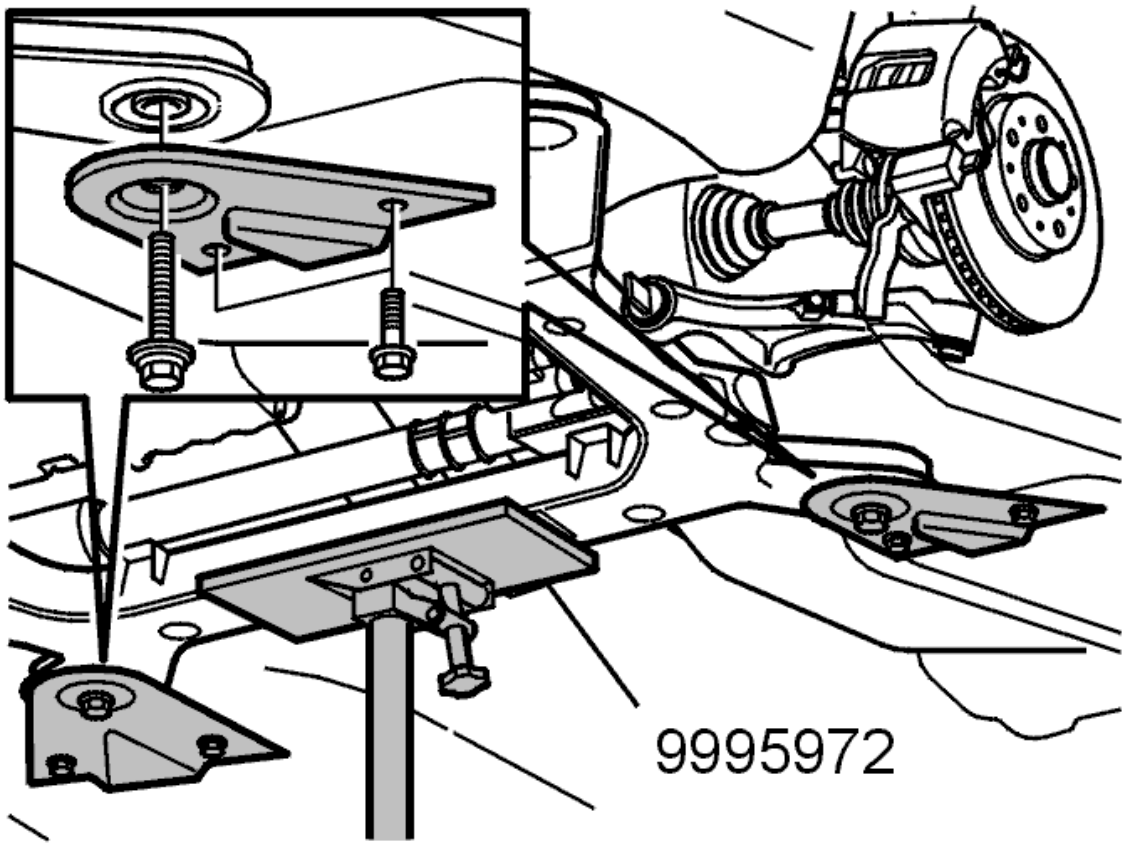

Fig. 117: Identifying Rear Sub-Frame Screws, Brackets & Washers
Courtesy of VOLVO CARS CORPORATION

Place a mobile jack with a universal fixture see **9995972** at the rear of the subframe.

Remove the screws holding the sub-frame brackets to the bodywork on both sides.

Remove the rear sub-frame screws together with the brackets and washers.

Unscrew the front screws in the sub-frame by 10-15 mm.

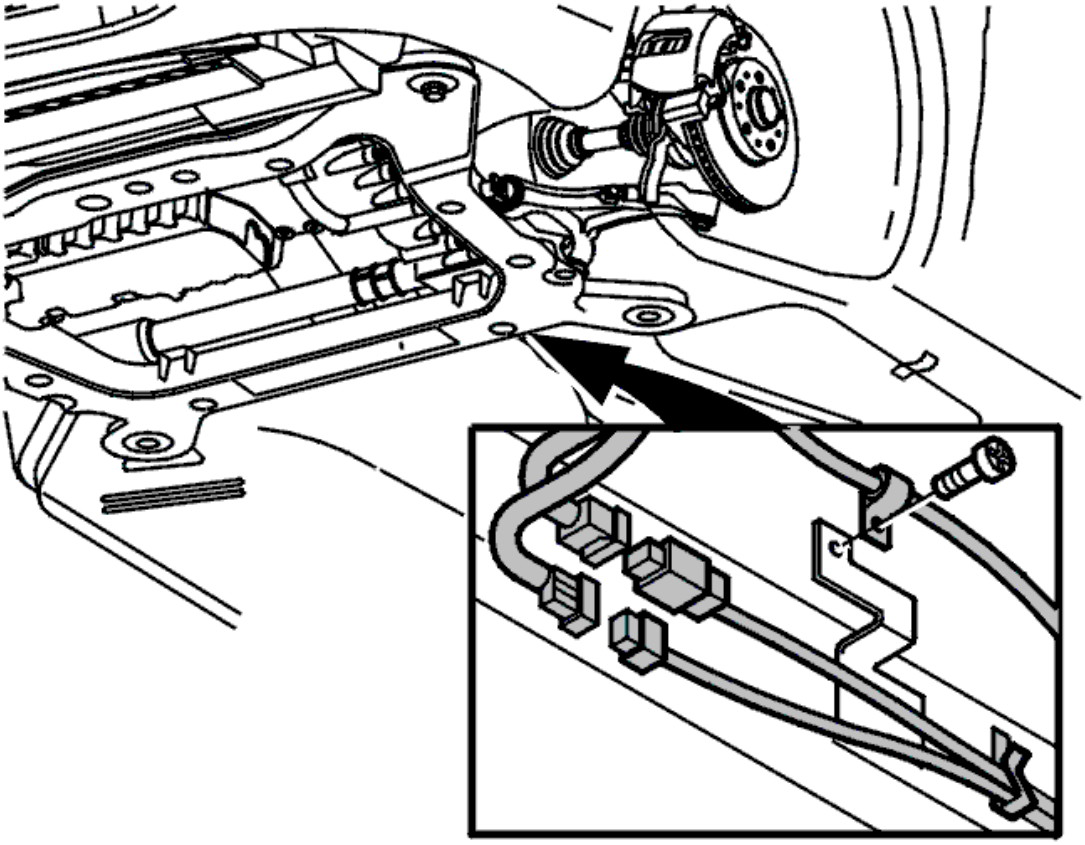

Fig. 118: Bracket For Heated Oxygen Sensor (HO2S) From Mounting
Courtesy of VOLVO CARS CORPORATION

Remove the bracket for the heated oxygen sensor (HO2S) from its mounting (6 cylinder engines only).

Lower the rear edge of the sub-frame approximately 90 mm. Ensure that the steering gear screws are released from the sub-frame.

Remove the mobile jack.

REMOVING STEERING GEAR

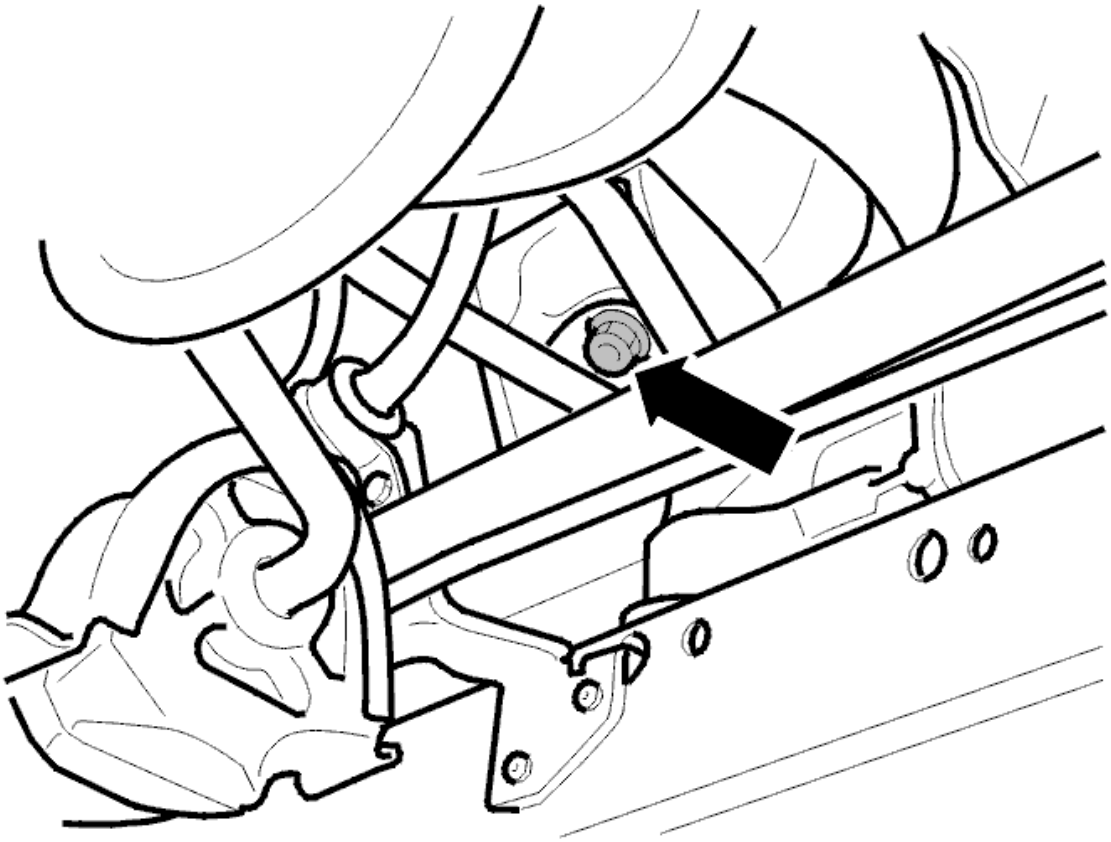

Fig. 119: Identifying Rear Engine Mounting Screw
Courtesy of VOLVO CARS CORPORATION

Remove the rear engine mounting screw.

Position a container under the steering gear to collect the oil.

Remove the oil pipes from the steering gear and holders along the steering gear.

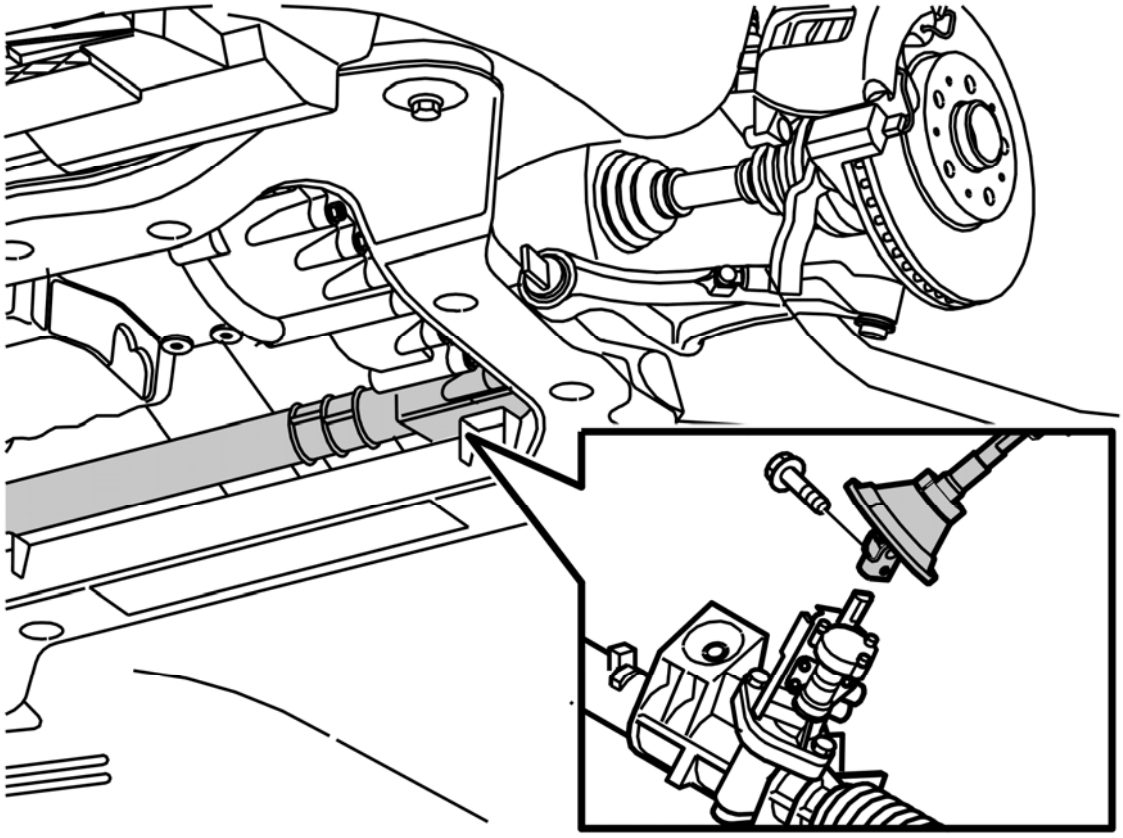

Fig. 120: Identifying Screw For Joint Between Steering Gear And Steering Shaft
Courtesy of VOLVO CARS CORPORATION

Remove the screw for the joint between the steering gear and the steering shaft.

Press up the joint from the steering gear.

Lift the steering gear out to the left (left-hand drive cars only).

Lift the steering gear out to the right (right-hand drive cars only).

INSTALLATION

INSTALLING STEERING GEAR

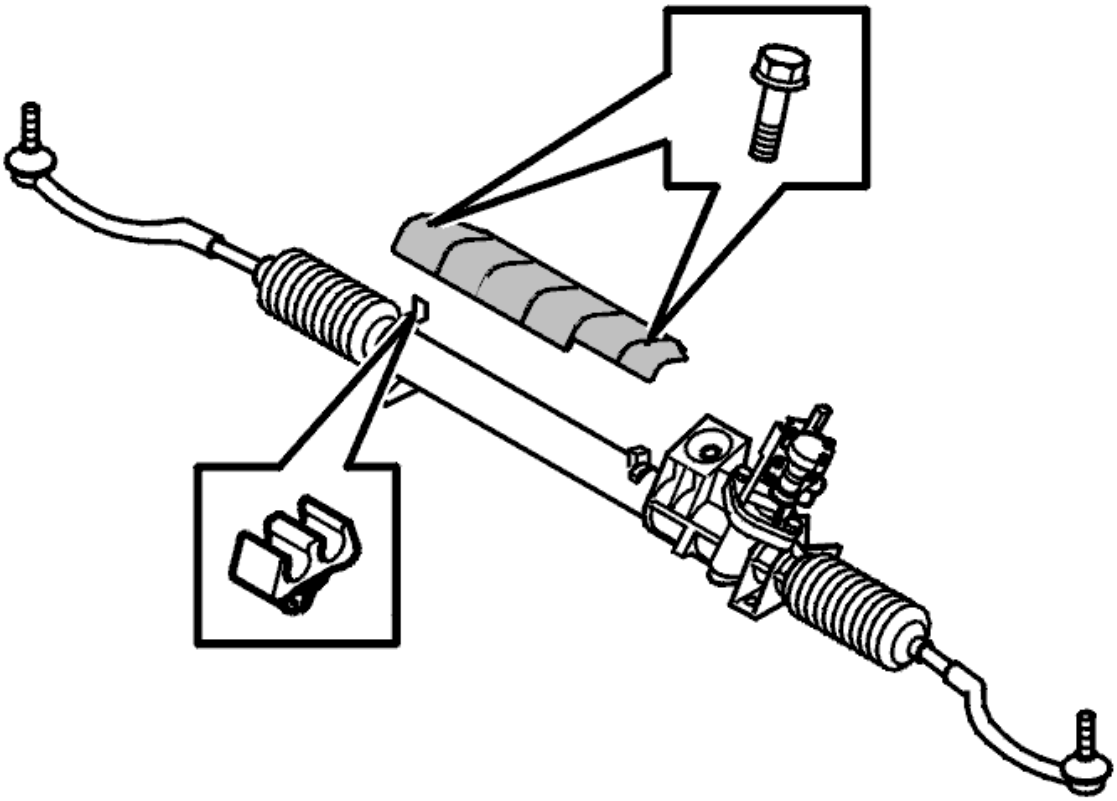

Fig. 121: Heat Shield
Courtesy of VOLVO CARS CORPORATION

Transfer the heat shield.

When replacing steering gear:

Replace the oil pipe holder (only left-hand drive).

CHECKING THE POSITION OF THE TRACK ROD IN THE STEERING GEAR

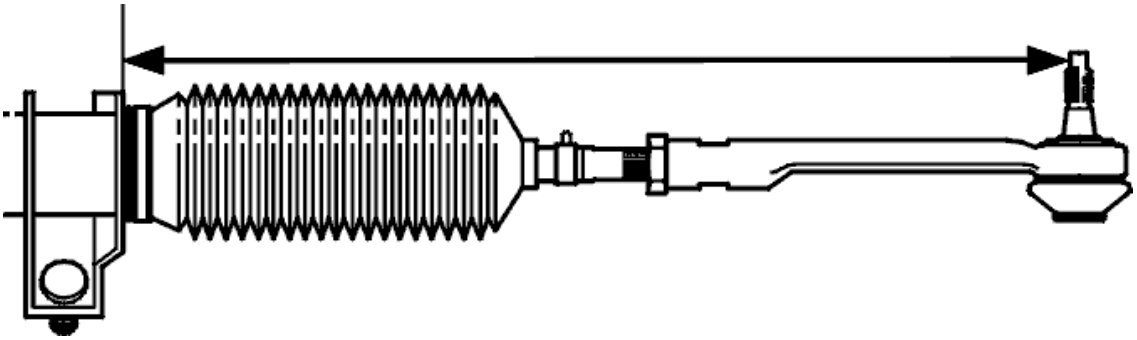

Fig. 122: Identifying Length Of Track Rod In Relation To Steering Gear Housing
Courtesy of VOLVO CARS CORPORATION

Check that track rod is in the same position as when it was removed.

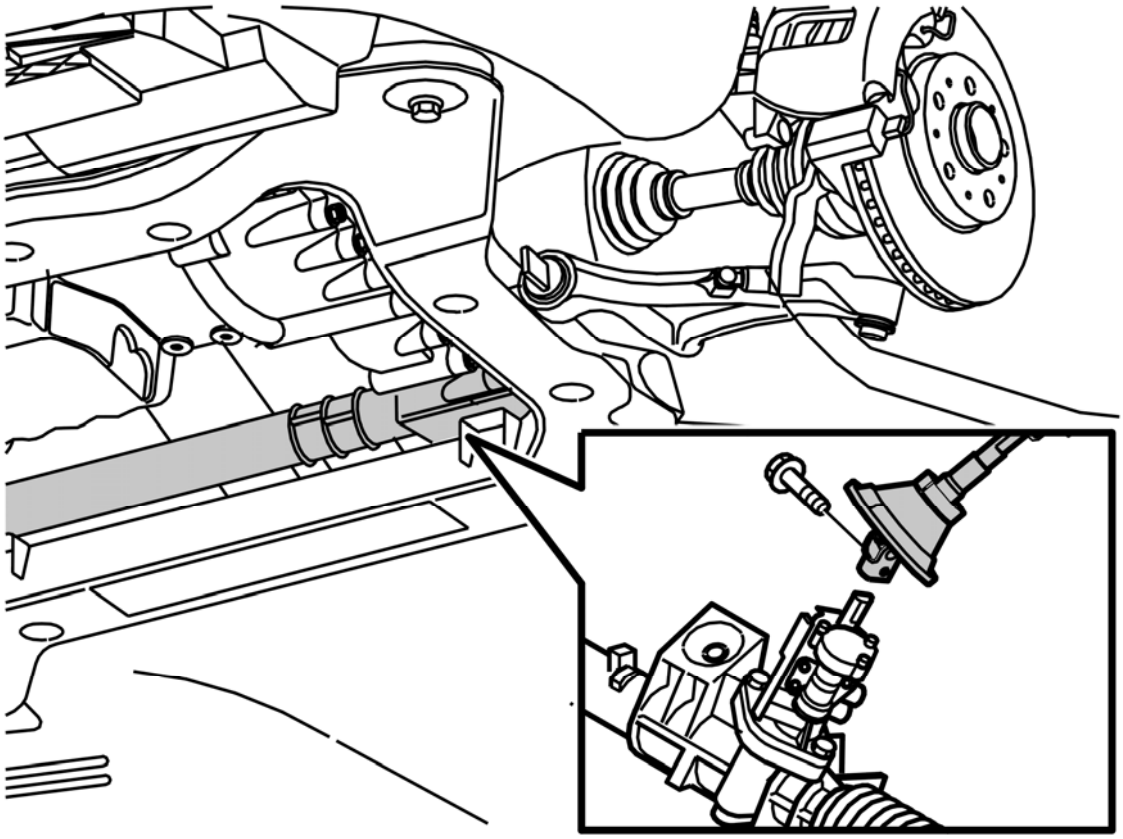

Fig. 123: Identifying Screw For Joint Between Steering Gear And Steering Shaft
Courtesy of VOLVO CARS CORPORATION

Lift in the steering gear in from the left (left-hand drive cars).

Lift in the steering gear in from the right (right-hand drive cars).

Allow the steering gear to rest on the sub-frame.

Install the oil pipes on the steering gear. Use new O-rings. Tighten to **25 Nm** .

Secure the oil pipes in the holders on the power steering (left-hand drive).

Applies to cars with speed related power steering:

Slide the connector to the terminal at the brake servo.

Install the cabling in the clip along the ABS cable.

Applies to all models:

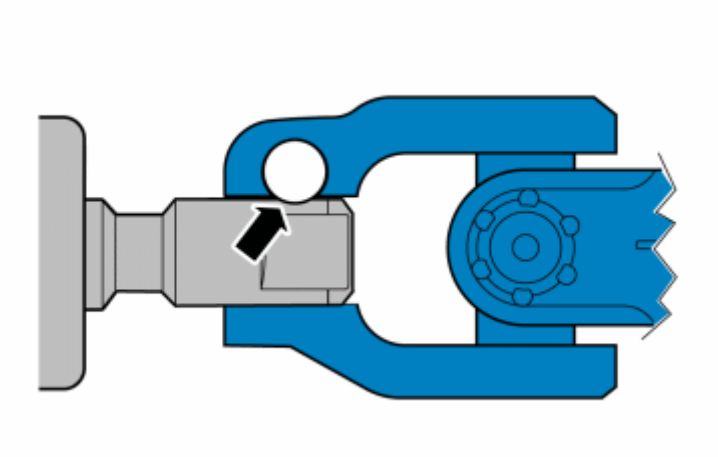

Fig. 124: Locating Steering Shaft Joint On Steering Gear
Courtesy of VOLVO CARS CORPORATION

NOTE: Always check carefully that the ball joint's screw hole aligns with the cut-out in the steering gear shaft.

Align the steering shaft joint.

Lift up the rear edge of the sub-frame slightly using a mobile jack and universal fixture see **9995972** .

Locate the steering shaft joint on the steering gear.

Install a new steering shaft screw. Tighten to **20 Nm** .

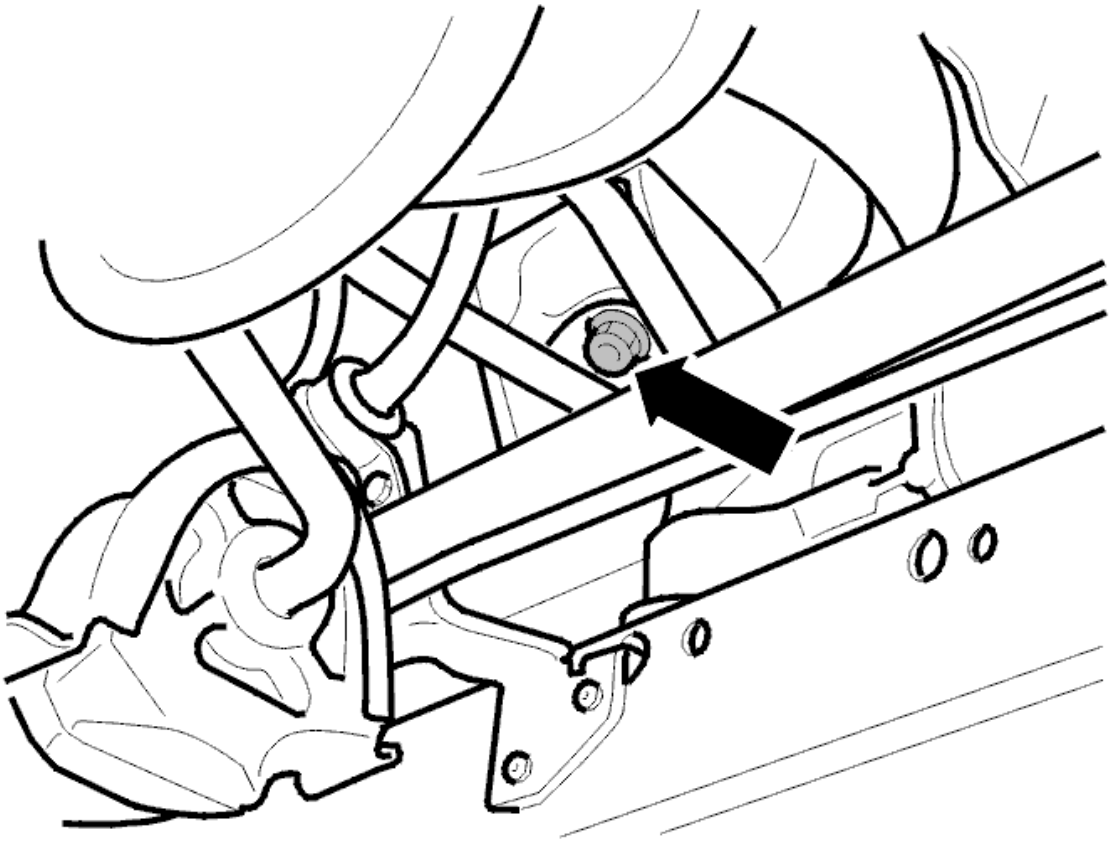

Fig. 125: Identifying Rear Engine Mounting Screw
Courtesy of VOLVO CARS CORPORATION

Install the rear engine mounting screw.

Align the steering gear so that it is positioned straight relative to the sub-frame. Tighten the screw. Tighten to **50 Nm** .

INSTALLING THE SUB-FRAME AT THE REAR EDGE

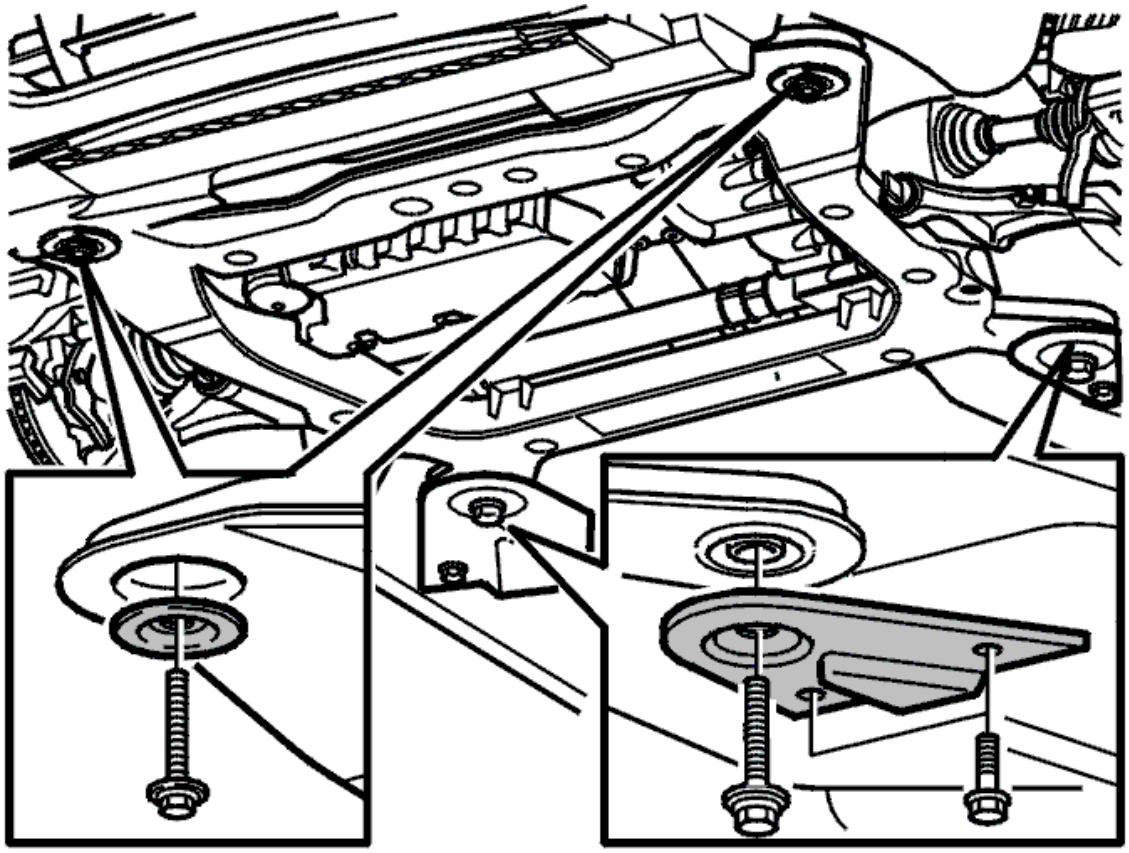

Fig. 126: Identifying Bolts, Washers And Brackets In Sub-Frame
Courtesy of VOLVO CARS CORPORATION

- Lift the sub-frame. At the same time locate the steering gear mounting screws in the frame and, on right-hand drive cars, the collision protection system screw
- Loosely install the sub-frame brackets together with the washers
- Install the rear screws in the sub-frame. Use new screws. Do not tighten yet
- Transfer the mobile jack to the sub-frame front edge
- Replace the front sub-frame screws
- First tighten the screws on the left side of the sub-frame. Tighten to **105 Nm** . Angle tighten 120°.
- Then tighten the right-hand side to the same values as the left side
- Finally tighten the screws for the brackets on both sides. Tighten to **50 Nm** .

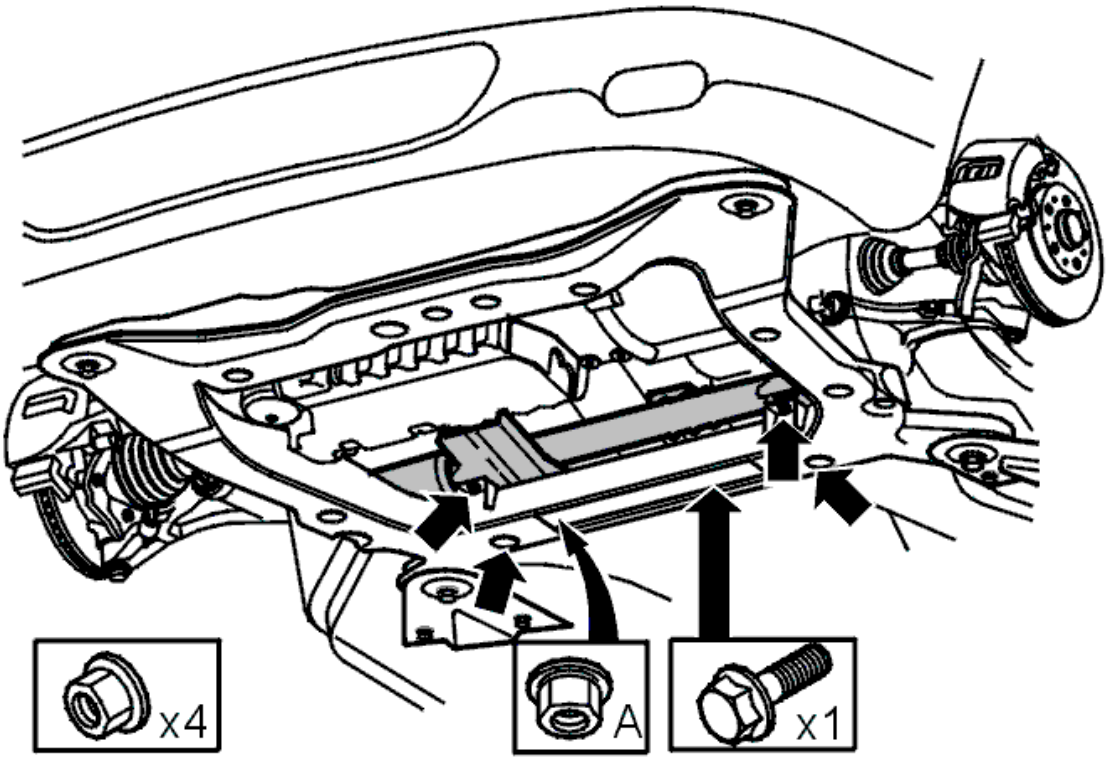

Fig. 127: Identifying Bolt And Nut Holding Steering Gear To Sub-Frame
Courtesy of VOLVO CARS CORPORATION

Install the four nuts and the screw holding the steering gear. Use new nuts and a new screw. Tighten to **50 Nm** .

Right-hand drive:

Install nut (A) holding the lower half of the collision protection system. Tighten to **50 Nm** .

Install the oil pipes. Use new O-rings.

Fig. 128: Collision Protection System Over Steering Gear
Courtesy of VOLVO CARS CORPORATION

Install the collision protection system over the steering gear (2 screws).

Tighten to **80 Nm** .

INSTALLING THE CABLE HARNESS FOR THE HEATED OXYGEN SENSORS (HO2S)

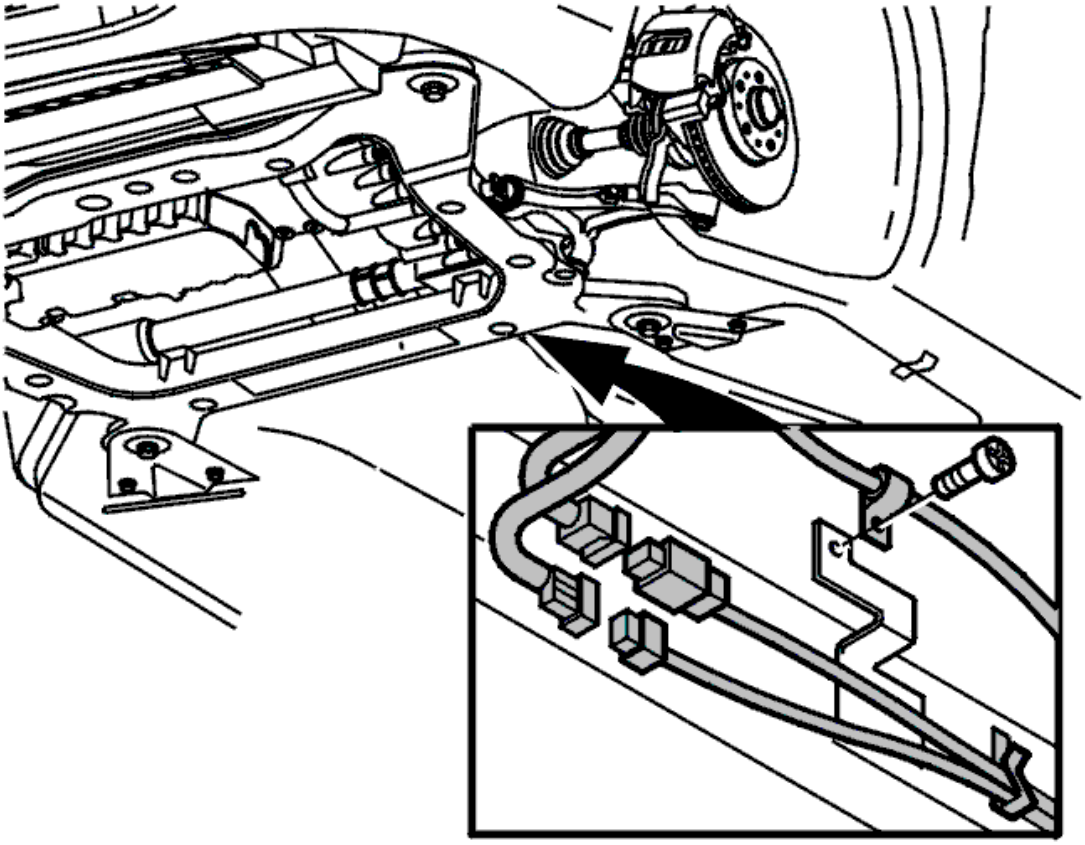

Fig. 129: Bracket For Heated Oxygen Sensor (H02S) In Mounting
Courtesy of VOLVO CARS CORPORATION

Applies only to 6 cylinder engines:

Install the bracket for the heated oxygen sensor (H02S) in its mounting. Connect the connectors.

Install the wiring on the sub-frame. Connect the connectors.

INSTALLING THE BRACKET FOR THE EXHAUST PIPE

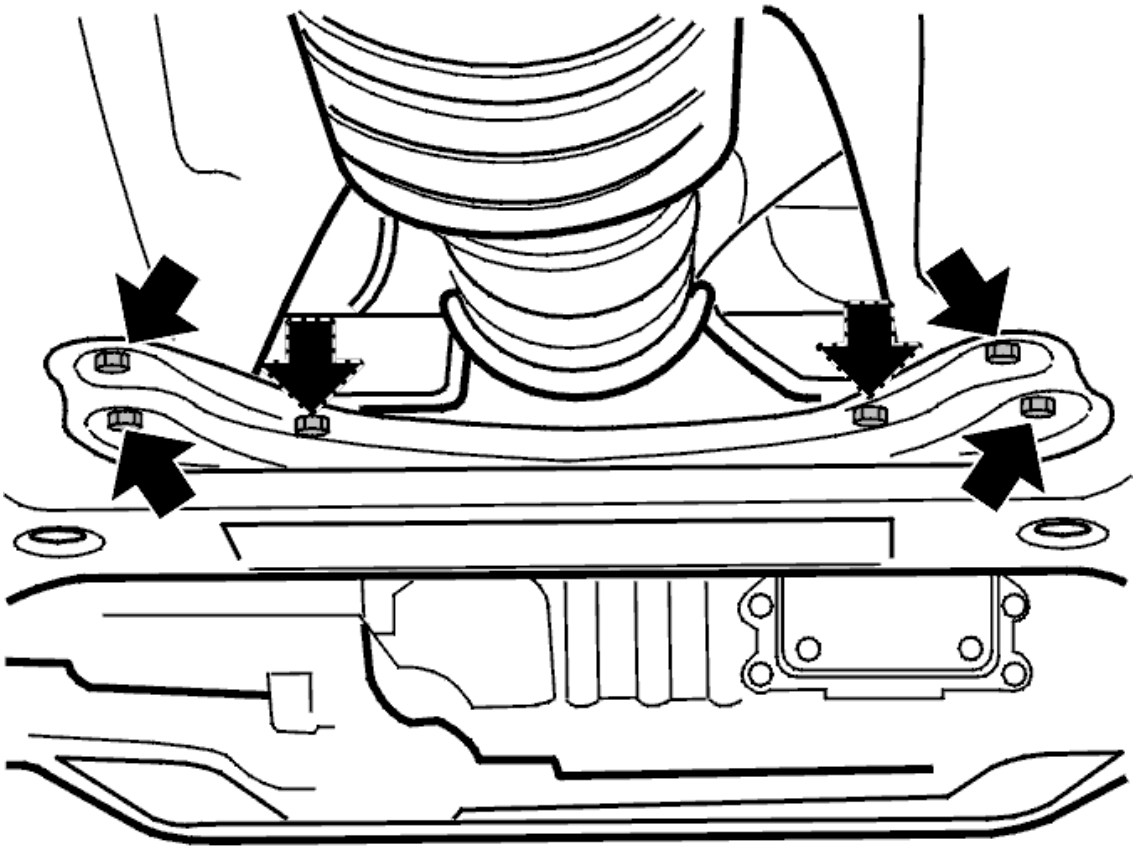

Fig. 130: Exhaust Pipe Bracket Screws
Courtesy of VOLVO CARS CORPORATION

Install:

- the mounting for the exhaust pipe on the bracket. Tighten to **10 Nm**
- the brake pipe on the exhaust pipe bracket
- the exhaust pipe bracket. Tighten the bracket screws. Tighten to **25 Nm** .

INSTALLING THE TRACK ROD ENDS ON THE STEERING ARMS

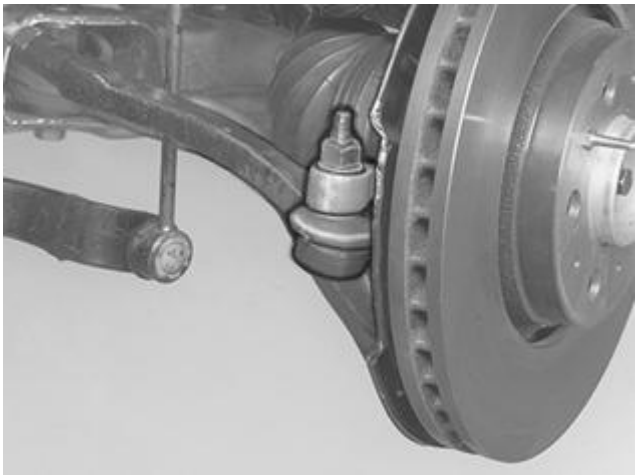

Fig. 131: Identifying Steering Arm Track Rod End
Courtesy of VOLVO CARS CORPORATION

Install the track rod ends on the steering arms. Use new nuts.

Tighten the steering arm on the wheel spindle. See **TIGHTENING TORQUE**

Install:

- the splash guard under the engine
- the wheels. See **INSTALLING WHEELS** .

REMOVING THE LIFTING TOOLS

Fig. 132: Connector At Brake Servo
Courtesy of VOLVO CARS CORPORATION

Lower the car.

Remove the lifting tools.

Applies to cars with speed related power steering:

Connect the connector at the brake servo (left-hand drive cars).

Connect the connector at the right-hand suspension turret (right-hand drive cars).

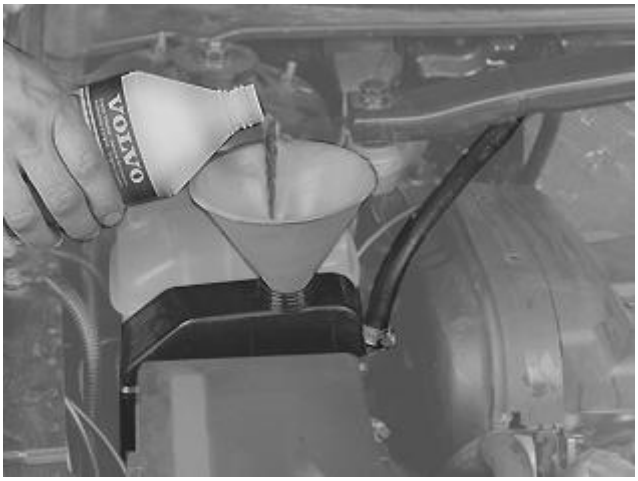

Fig. 133: Identifying Oil Level Topped Up In Servo Reservoir
Courtesy of VOLVO CARS CORPORATION

Top up the oil level in the servo reservoir. Bleed the system.

WARNING: **Avoid skin contact with the oil.**

Repeatedly turn the steering wheel to full lock.

Top up the oil if necessary.

Lower the car.

Apply the handbrake.

Start the engine.

A: Turn the steering wheel slowly to the right. Hold on full lock for 2 seconds.

B: Turn the steering wheel slowly to the left. Hold on full lock for 2 seconds.

Repeat operations A and B approximately 10 times.

FINISHING

Check the toe-in. See **WHEEL ALIGNMENT, CHECKING / ADJUSTING** .

OIL COOLER STEERING GEAR, REPLACING

REMOVAL

REMOVING THE OIL COOLER

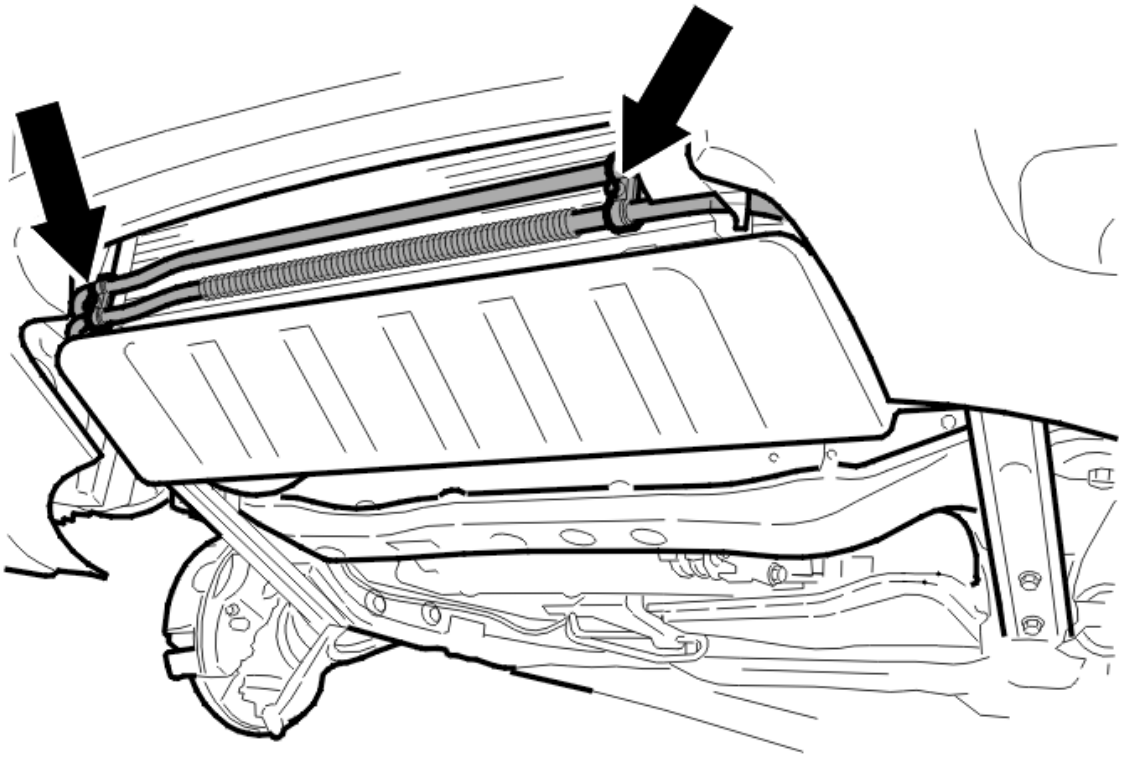

Fig. 134: Removing Oil Cooler
Courtesy of VOLVO CARS CORPORATION

Slacken off the screws for the oil cooler.

Fold the oil cooler down.

NOTE: Place a container under the steering gear.

Remove:

- the clamps
- the hoses
- the oil cooler.

INSTALLATION

NOTE: **For tightening torques, see TIGHTENING TORQUE .**

INSTALLING THE OIL COOLER

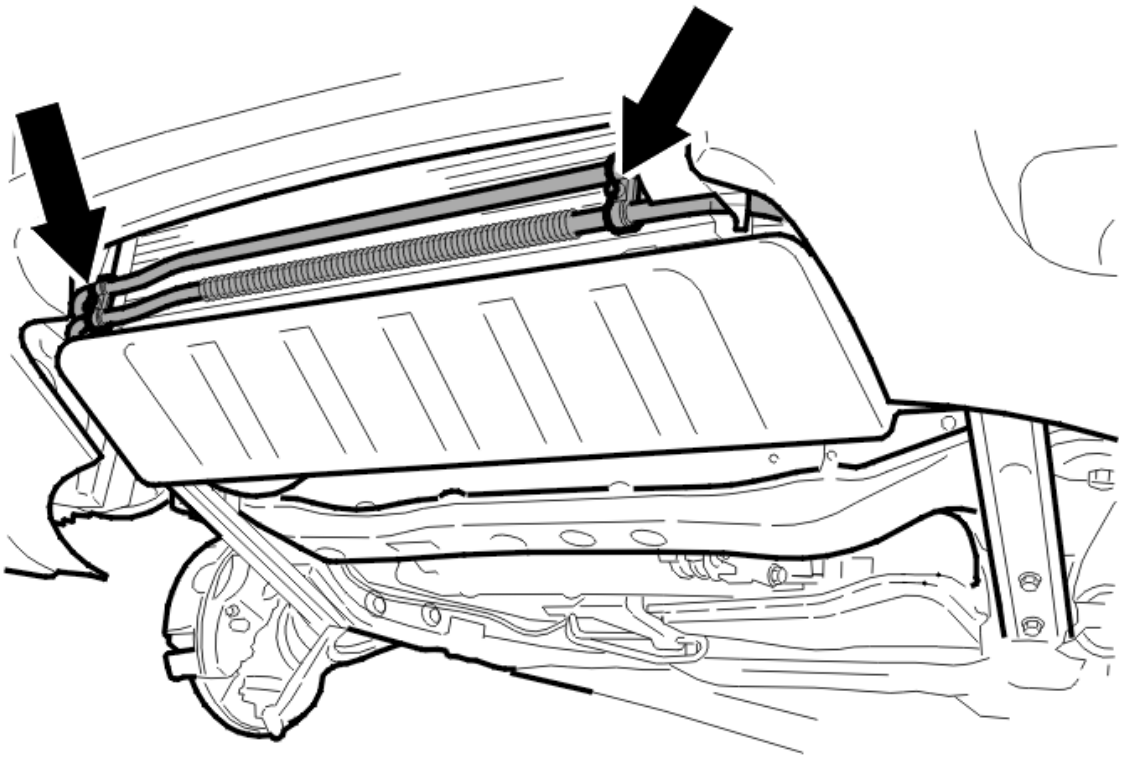

Fig. 135: Installing Oil Cooler
Courtesy of VOLVO CARS CORPORATION

Install:

- the hoses on the oil cooler
- the clamps for the power steering hose
- the screws for the oil cooler.

Tighten the clamps.

POWER STEERING PUMP, REPLACING

REPLACING

NOTE: **As the illustrations in this service information are used for different model years and / or models, some variation may occur. However, the essential information in the illustrations is always correct.**

PREPARATION

WARNING: Used fluid is considerably more dangerous than new fluid. Avoid skin contact with the oil.

Remove

- the oil hose from the mounting on top of the power steering pump
- the auxiliaries belt. See **REPLACING THE ACCESSORY DRIVE BELT / BELT TENSIONER** on 6-cylinder gasoline cars, or **AUXILIARIES BELT / BELT TENSIONER, REPLACING** on 5-cylinder gasoline cars.

NOTE: If there is dirt in the fluid, drain the system and remove the hoses from the steering gear.

REMOVING THE POWER STEERING PUMP

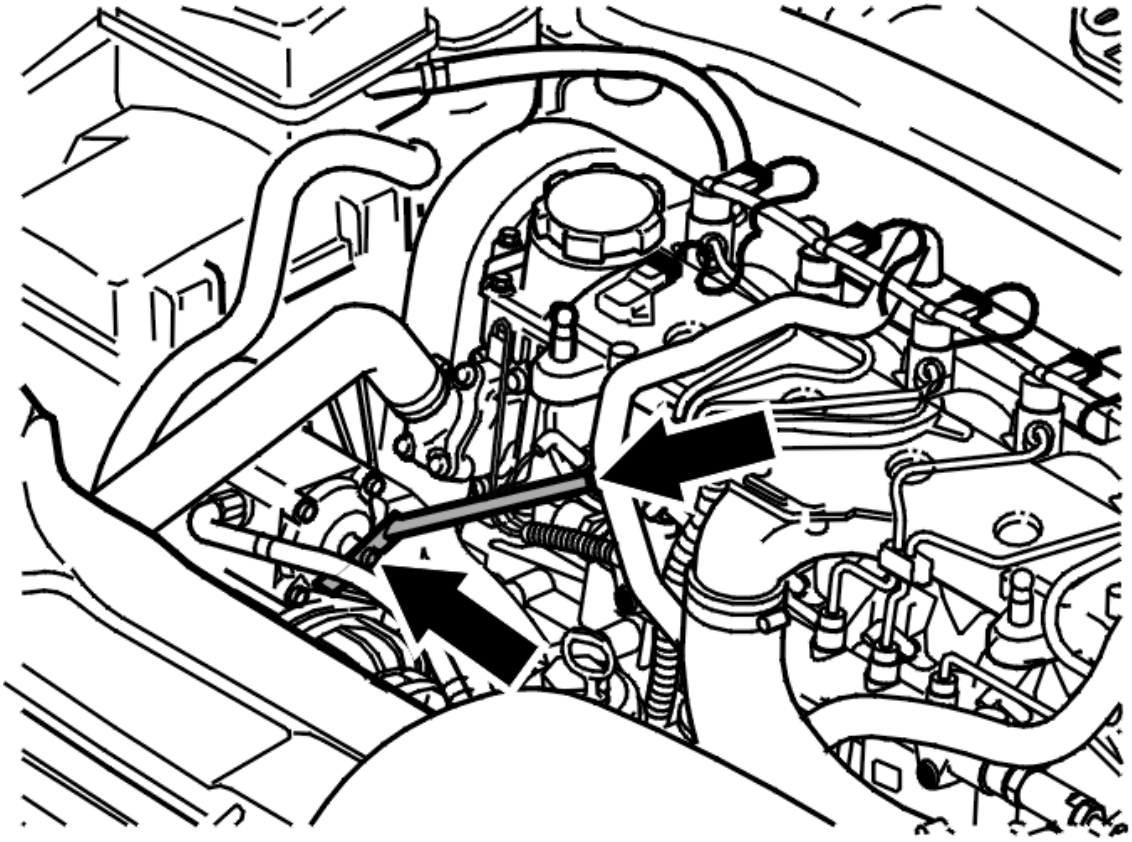

Fig. 136: Removing Power Steering Pump
Courtesy of VOLVO CARS CORPORATION

REMOVING THE FEEDER HOSE AND DELIVERY LINE

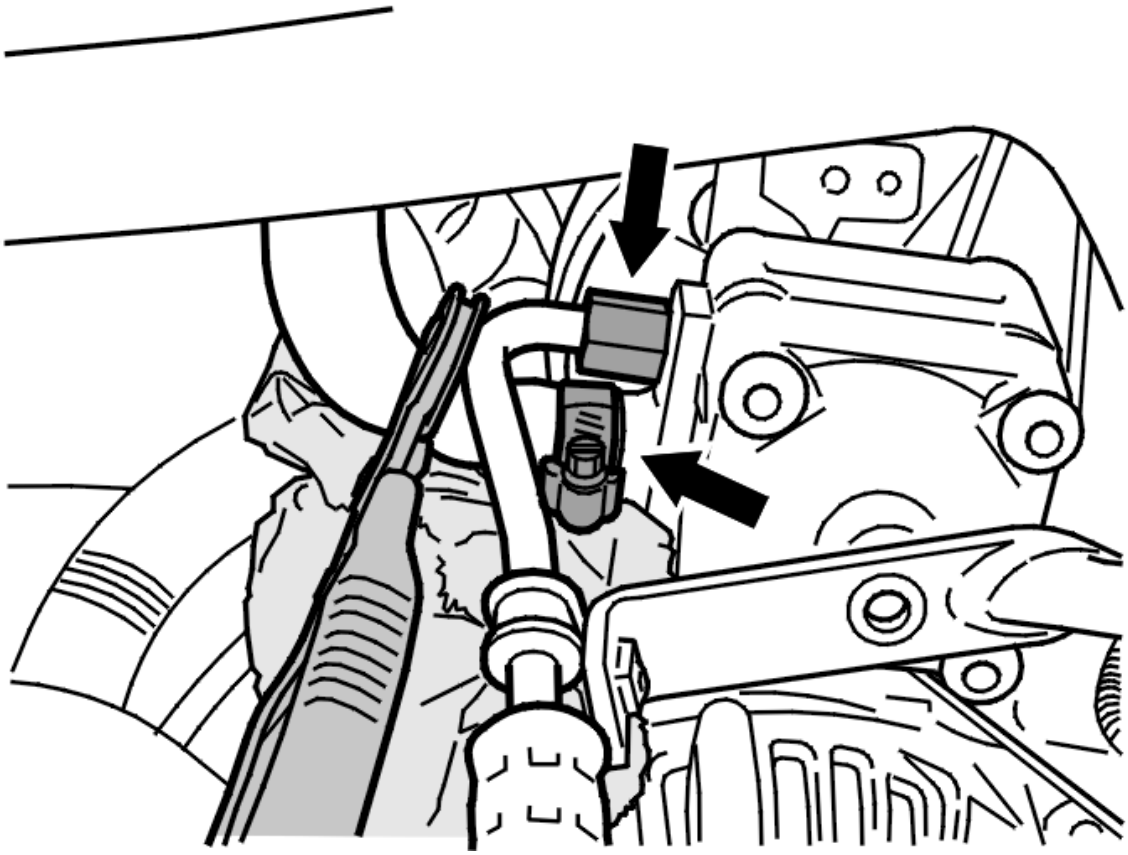

Fig. 137: Removing Feeder Hose And Delivery Line
Courtesy of VOLVO CARS CORPORATION

Install:

- the lock grip pliers on the feeder hose as close to the power steering pump as possible
- the lock grip pliers on the return hose at the fluid reservoir.

NOTE: Place paper over the generator (GEN) as protection against oil.

Remove:

- the screw nipple. Remove the delivery line from the pump
- the hose clamp. Remove the feeder hose from the power steering pump.

WARNING: Avoid skin contact with the oil.

REMOVING THE POWER STEERING PUMP

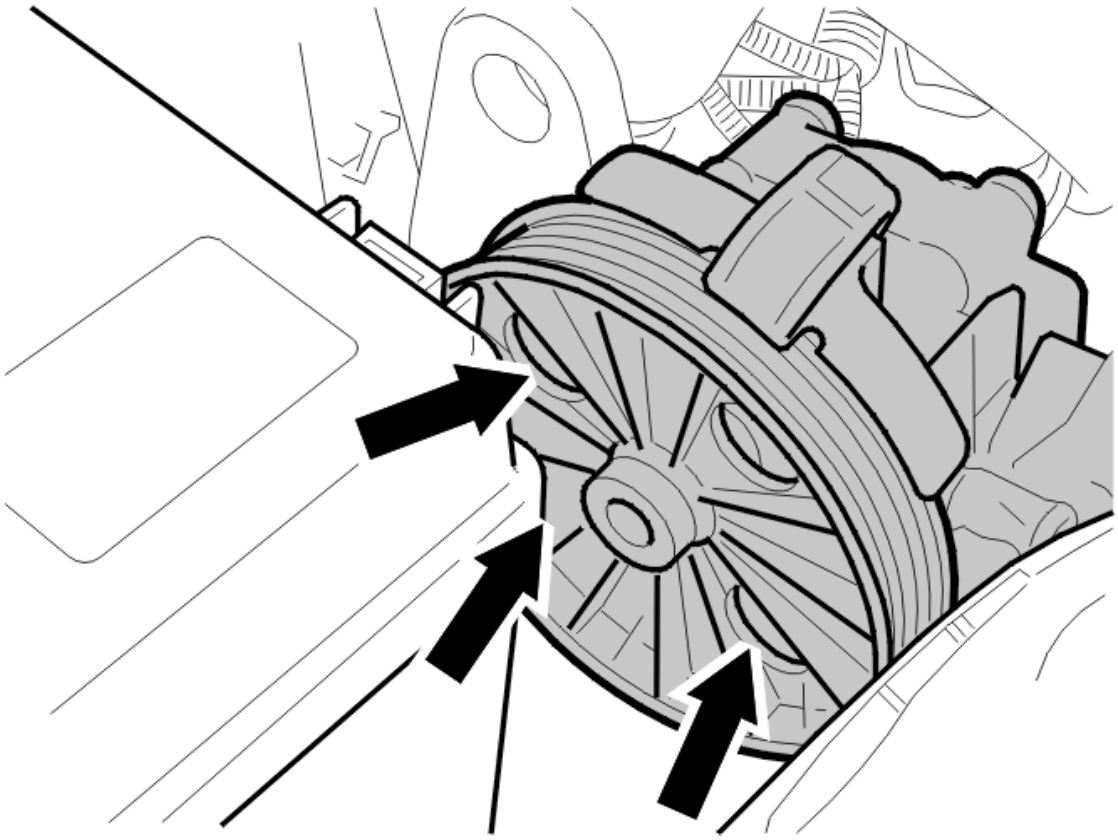

Fig. 138: Removing Power Steering Pump
Courtesy of VOLVO CARS CORPORATION

Remove:

- the 3 screws
- the servo pump.

INSTALLING

Install:

- the servo pump
- the three screws. Tighten to **25 Nm** .

INSTALLING THE POWER STEERING PUMP

- the feeder hose. Tighten the clamp
- the delivery line. Do not tighten yet.

FINISHING

Tighten the delivery line. Tighten to **25 Nm** .

Remove paper and lock grip pliers.

Install the auxiliaries belt. See **REPLACING THE ACCESSORY DRIVE BELT / BELT TENSIONER** on 6-cylinder gasoline cars, or **AUXILIARIES BELT / BELT TENSIONER, REPLACING** on 5-cylinder gasoline cars.

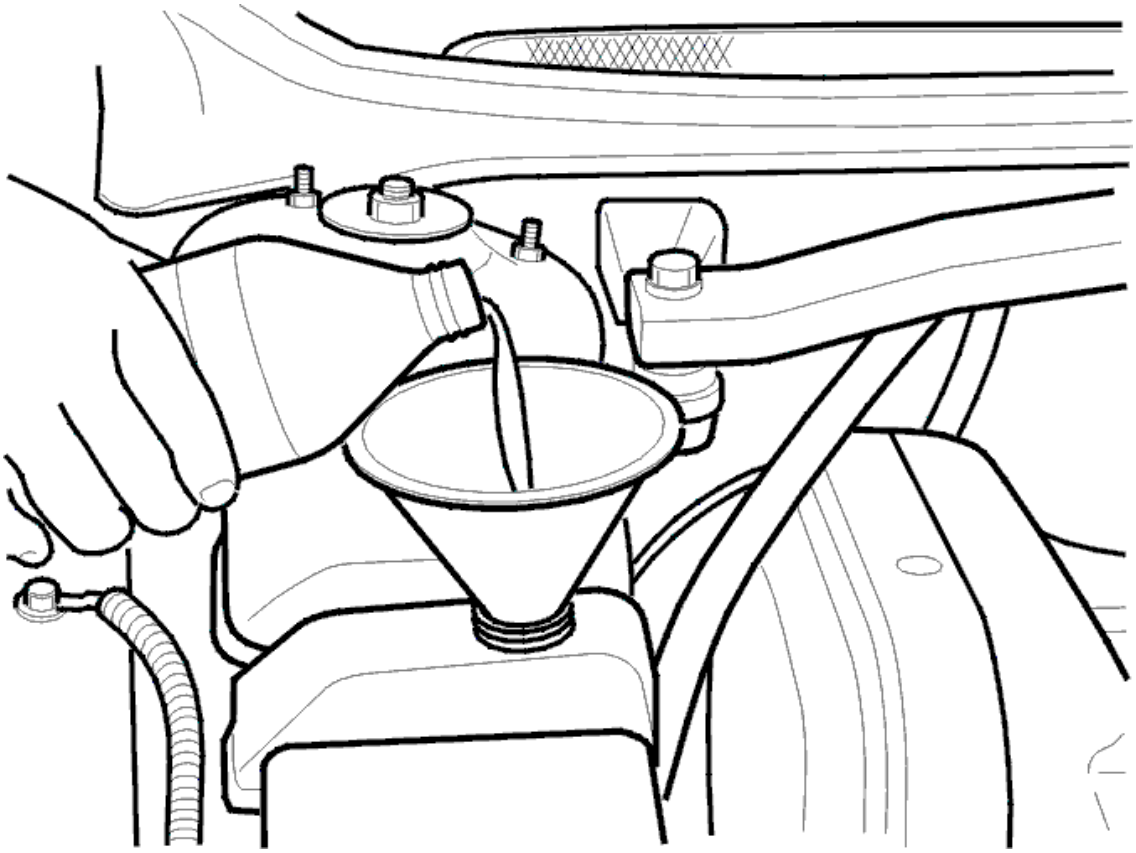

Fig. 139: Filling Servo Reservoir With Oil
Courtesy of VOLVO CARS CORPORATION

Fill the reservoir with oil.

NOTE: Use Volvo power steering fluid, P/N 1161529-1 to ensure the correct oil quality.

Repeatedly turn the steering wheel to full lock. Check and top up oil if required.

Lower the car.

Apply the parking brake. Start the engine.

A: Turn the steering wheel slowly to the right. Hold on full lock for 2 seconds.

B: Turn the steering wheel slowly to the left, hold on full lock for 2 seconds.

Repeat operations A and B approximately 10 times.

AUXILIARIES BELT / BELT TENSIONER, REPLACING

Special tools	
	T9997109 WRENCH **Tool number:** T9997109 **Tool description:** WRENCH **Tool boards:**

NOTE: **Since the illustrations in this service information are used for different model years and / or models, some variation may occur. However, the essential information in the illustrations is always correct.**

REMOVING THE AUXILIARIES BELT

Remove the upper engine cover by pulling it straight up.

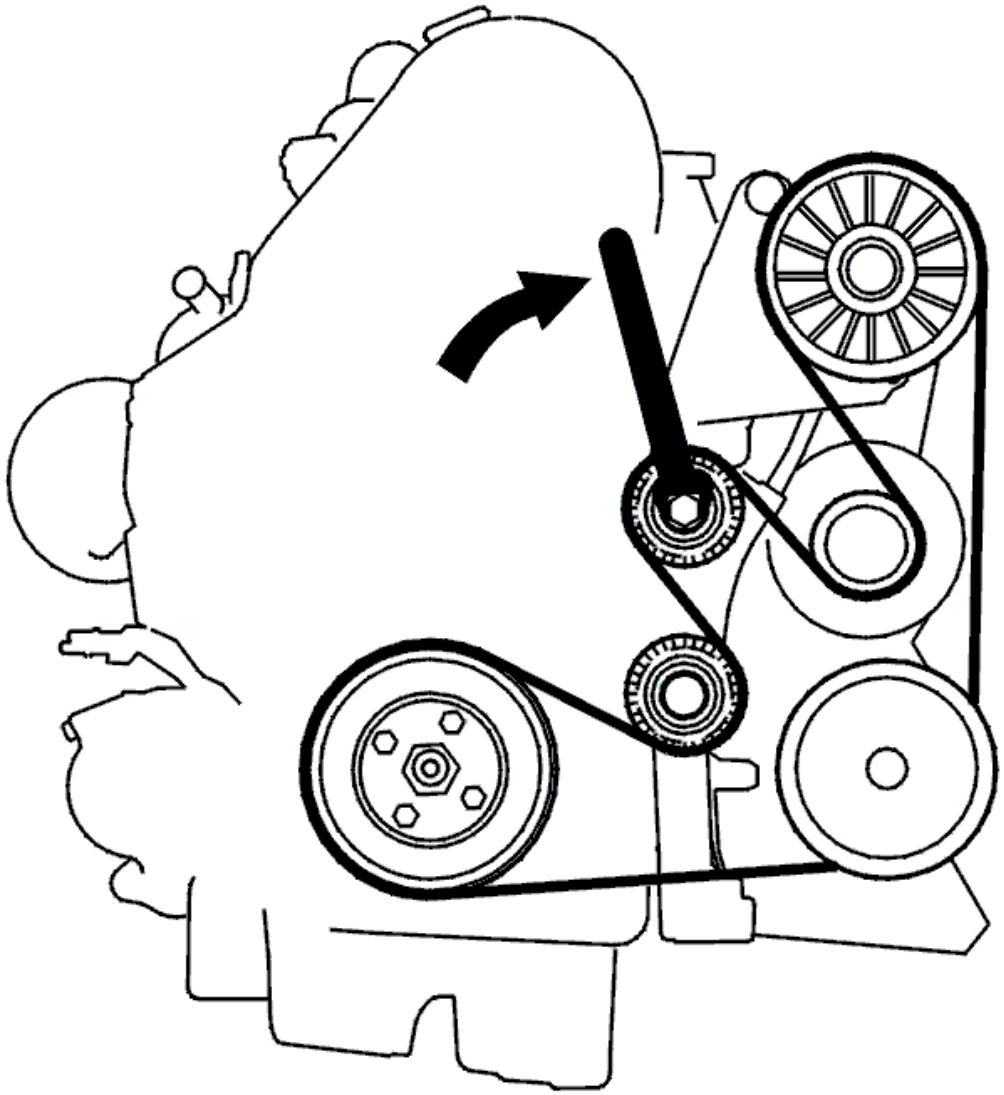

Fig. 140: Identifying Auxiliaries Belt Removal
Courtesy of VOLVO CARS CORPORATION

Remove the plastic cover on the belt tensioner. see **9997109** Turn clockwise as far as possible to relieve the load on the belt.

Remove the belt.

REPLACING THE BELT TENSIONER

Remove:

- the plastic cover on the idler wheel
- the idler wheel

- the two screws for the belt tensioner from the bracket for the auxiliaries equipment
- belt tensioner.

Install a new timing belt tensioner using two screws.

Tighten the screws.

Install the idler wheel and its plastic cover.

INSTALLING THE AUXILIARIES BELT

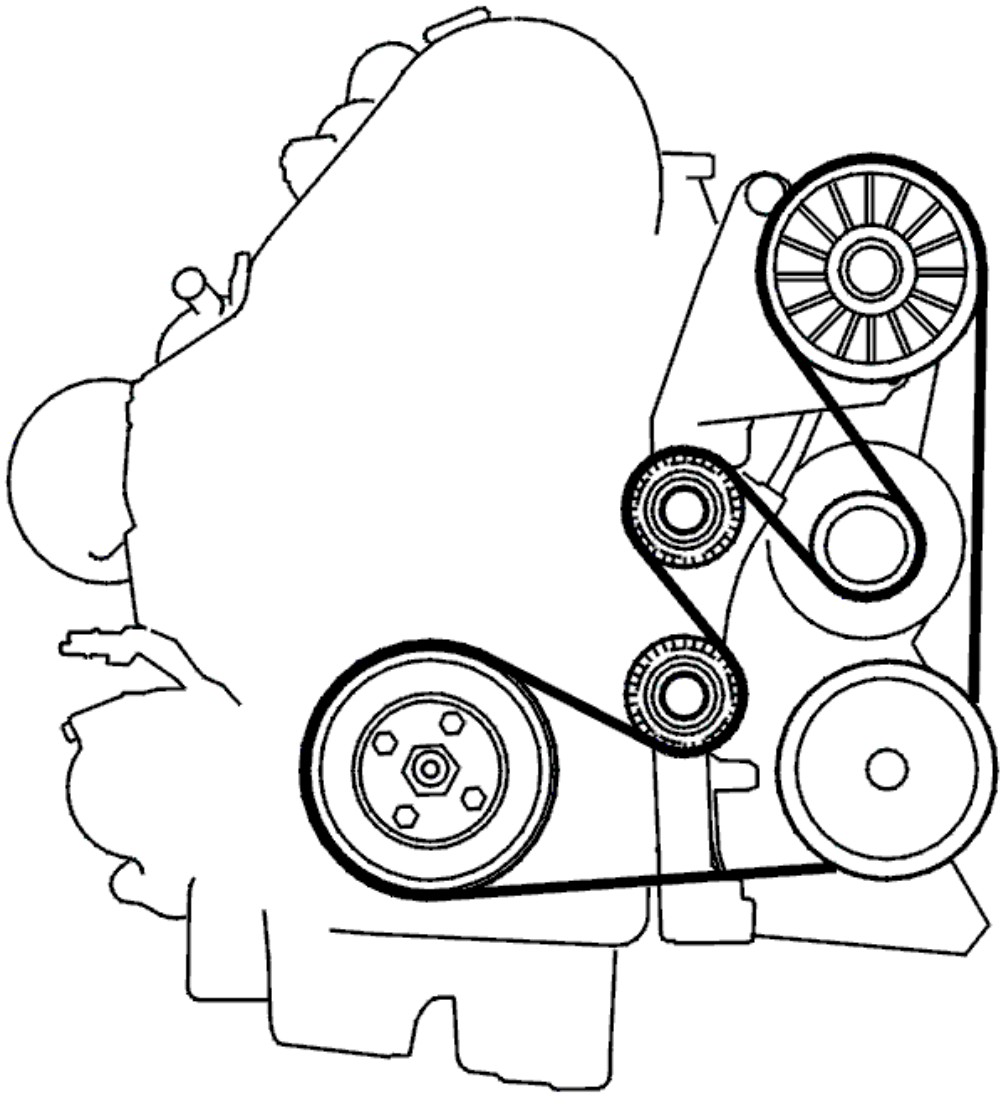

Fig. 141: Identifying Auxiliaries Belt Installation
Courtesy of VOLVO CARS CORPORATION

CAUTION: Ensure that the belt is correctly seated in all its grooves and on the pulley.

Use a spanner and turn the belt tensioner clockwise as far as possible.

Position the belt as illustrated.

Install the plastic cover on the tensioner

CHECKING WORK

Carry out a function test:

Start the engine.

Check the rotation of the belt and the function of the belt tensioner

PULLEY POWER STEERING PUMP, REPLACING

Special tools:

see **9995737**

see **9995738**

see **9995575**

see **9995628**

REMOVING PULLEY

Fig. 142: Removing Pulley Using Puller 999 5737
Courtesy of VOLVO CARS CORPORATION

- Remove the power steering pump. See **POWER STEERING PUMP, REPLACING**
- Secure the power steering pump in a vise
- Remove the pulley. Use puller see **9995737** .

INSTALLING PULLEY, ALTERNATIVE 1

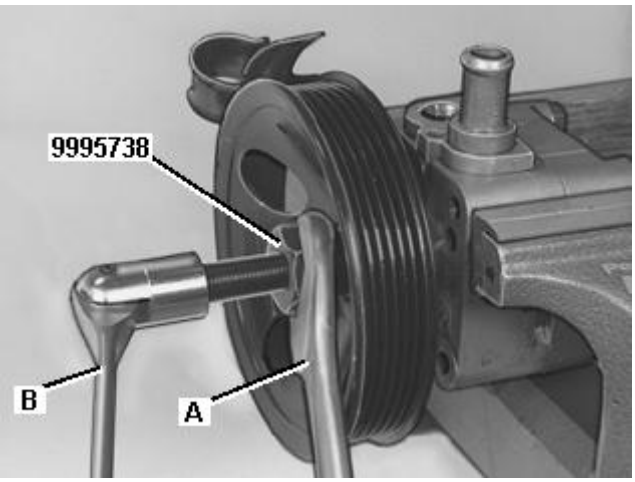

Fig. 143: Installing Pulley
Courtesy of VOLVO CARS CORPORATION

Install the pulley. Lubricate the pump shaft with oil

Use press tool see **9995738** .

- Counterhold using B
- Tighten with A.

INSTALLING PULLEY, ALTERNATIVE 2

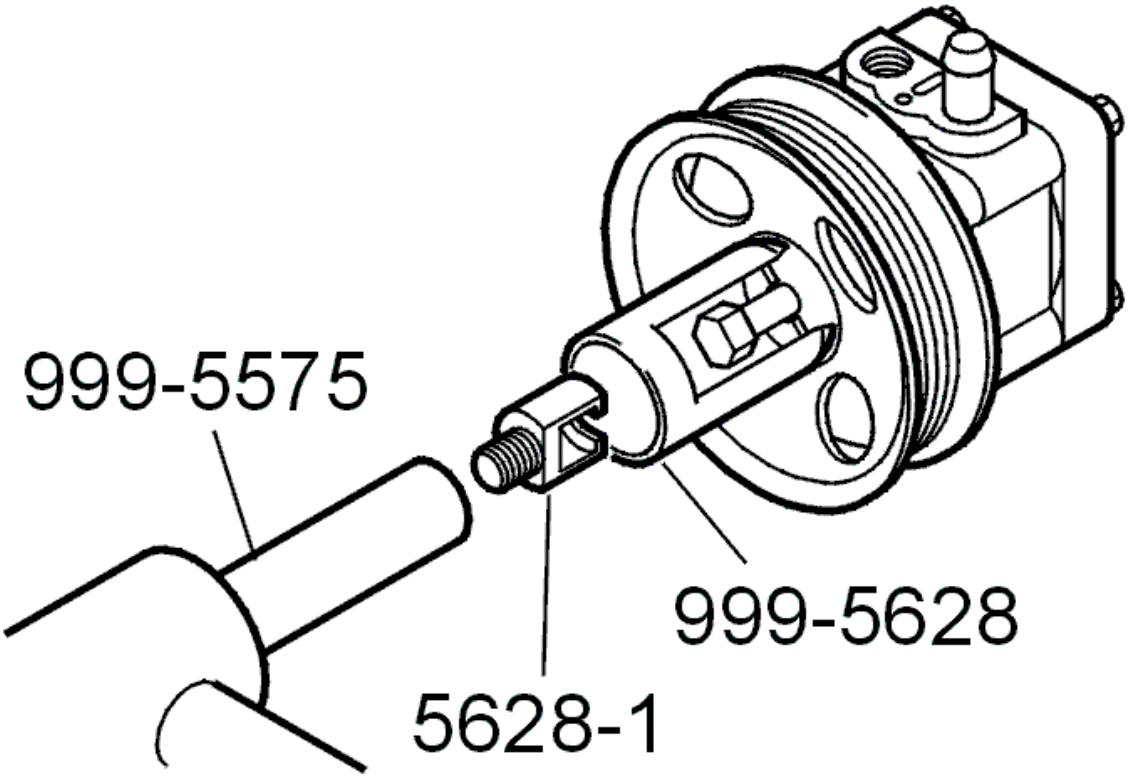

Fig. 144: Installing Pulley Using A Screw With Correct Thread
Courtesy of VOLVO CARS CORPORATION

- Install the screw on the pump shaft.

NOTE: Use a screw with the correct thread (M8x75mm).

- Install special tool see **9995628** on compression tool see **9995575**
- Lubricate the pump shaft and install the pulley
- Install tool 999 5628

  on the pulley

- Hook tool see **9995628** onto the screw for the pump shaft.

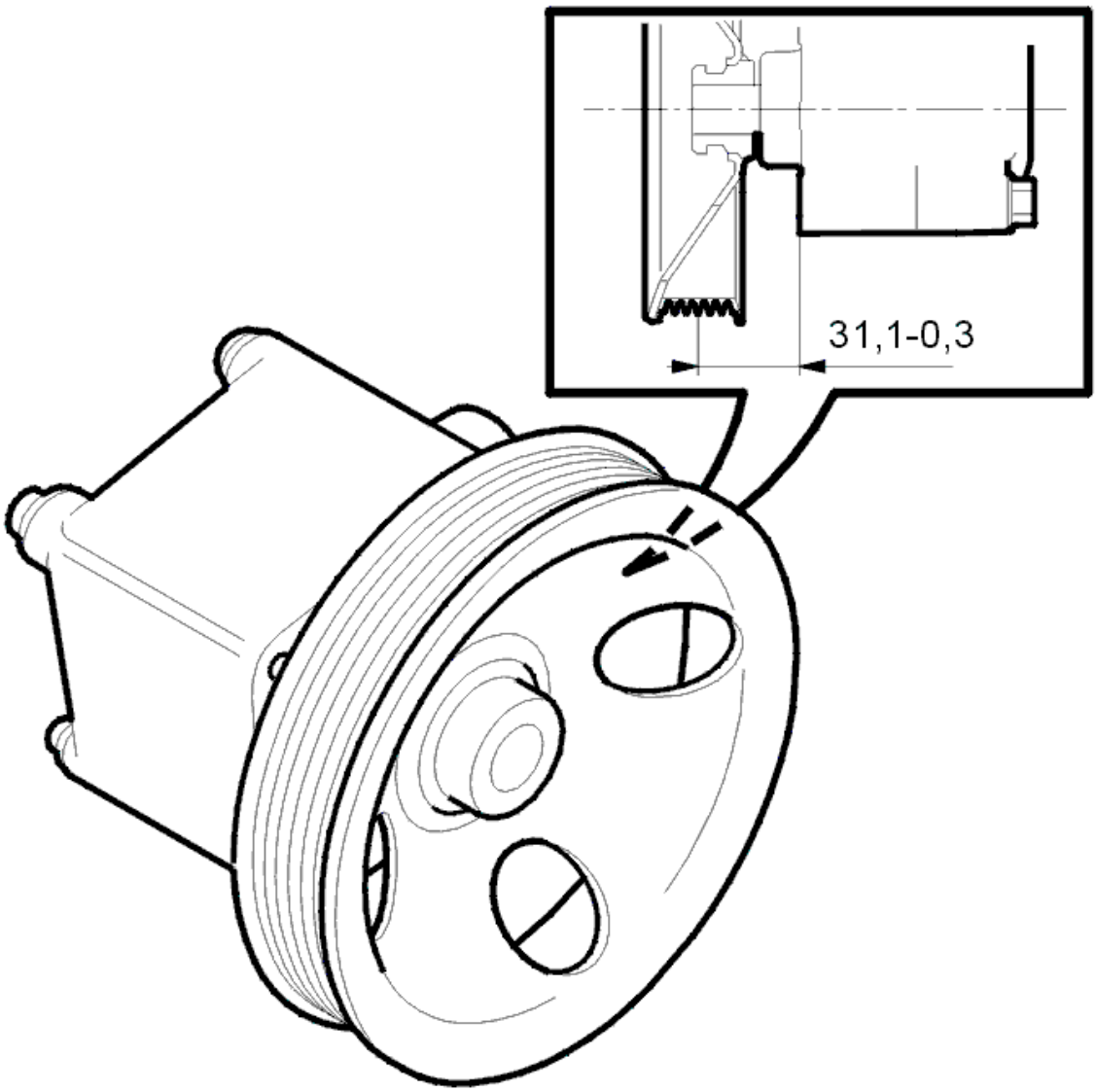

Fig. 145: Pulley Measurements
Courtesy of VOLVO CARS CORPORATION

- Press in the pulley to the listed measurement
- Install the power steering pump. See **POWER STEERING PUMP, REPLACING**.

POWER STEERING EQUIPMENT (B5254T2; 2005-2007)

OIL COOLER STEERING GEAR, REPLACING

see **OIL COOLER STEERING GEAR, REPLACING**

POWER STEERING PUMP, REPLACING

NOTE: The illustrations in this service information are used for different model years

and/or models. Some variation may occur. However, the essential information in the illustrations is always correct.

REMOVAL

WARNING: **Used fluid is considerably more dangerous than new fluid. Avoid skin contact with the oil.**

REMOVING DRIVE BELT

Remove the drive belt. See: **AUXILIARIES BELT / BELT TENSIONER, REPLACING** .

DRAINING OIL

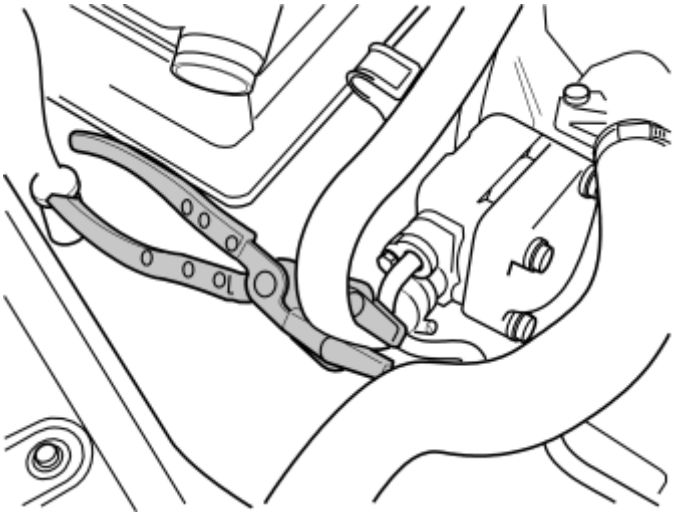

Fig. 146: Identifying Lock Grip / Hose Pliers On Power Steering Pump Feeder Hose
Courtesy of VOLVO CARS CORPORATION

WARNING: **Avoid skin contact with the oil.**

NOTE: **Place paper over the generator (GEN) as protection against oil.**

Install lock grip pliers on the hose from the fluid reservoir as close to the power steering pump as possible.

Extract the oil.

REMOVING THE PRESSURE HOSE

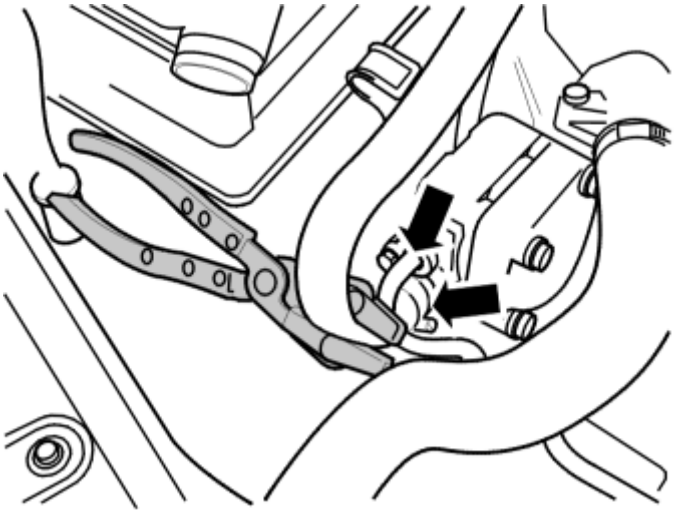

Fig. 147: Identifying Lock Grip / Hose Pliers On Power Steering Pump Return Hose
Courtesy of VOLVO CARS CORPORATION

Remove:

- pressure hose
- feeder hose.

REMOVING THE POWER STEERING PUMP

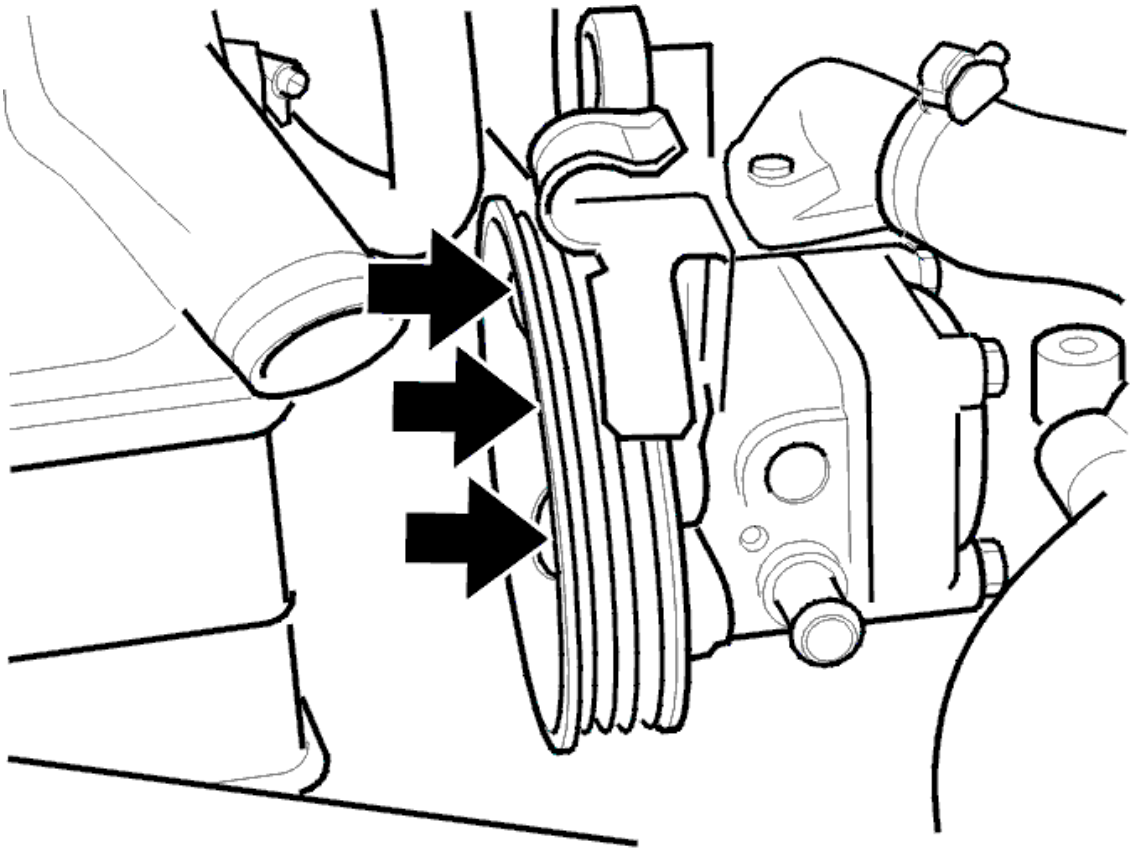

Fig. 148: Locating Power Steering Pump Mounting Screws
Courtesy of VOLVO CARS CORPORATION

Remove the three mounting screws.

INSTALLATION

NOTE: For tightening torques, see: TIGHTENING TORQUE .

INSTALLING THE POWER STEERING PUMP

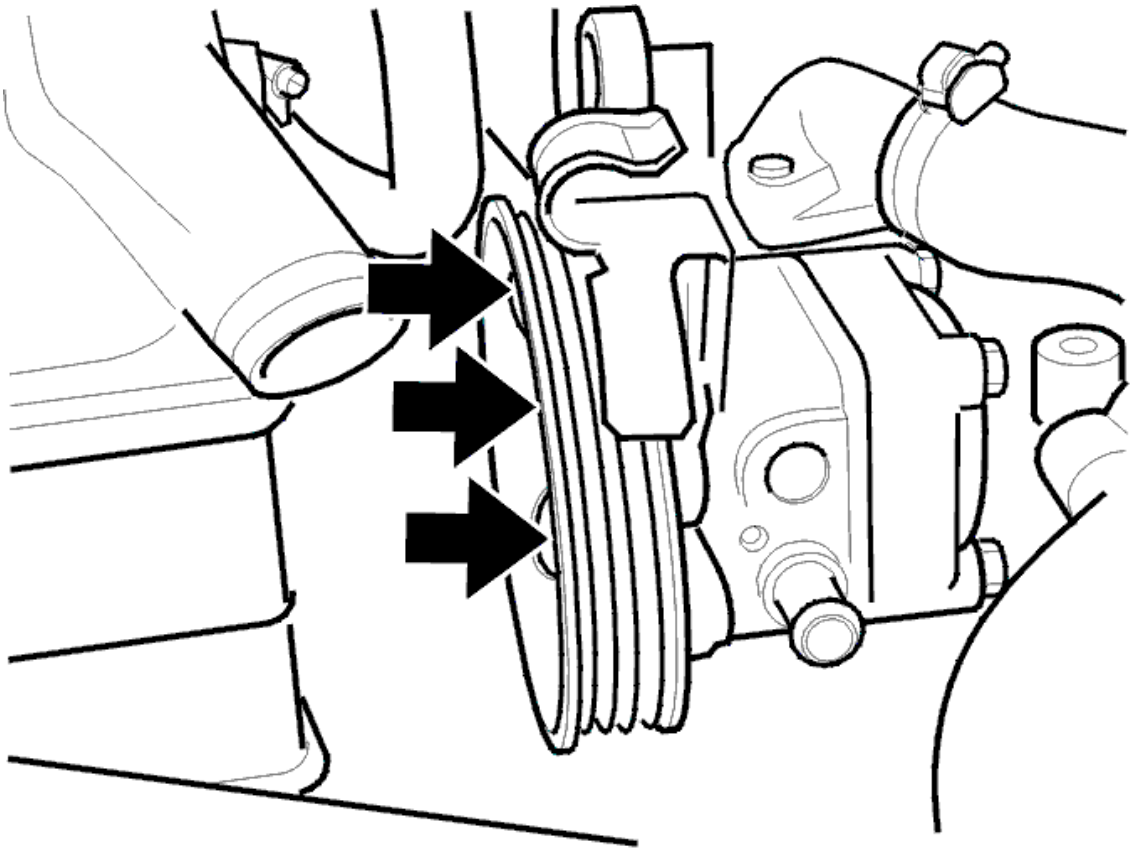

Fig. 149: Locating Power Steering Pump Mounting Screws
Courtesy of VOLVO CARS CORPORATION

Install the three mounting screws (M8).

INSTALLING THE PRESSURE HOSE

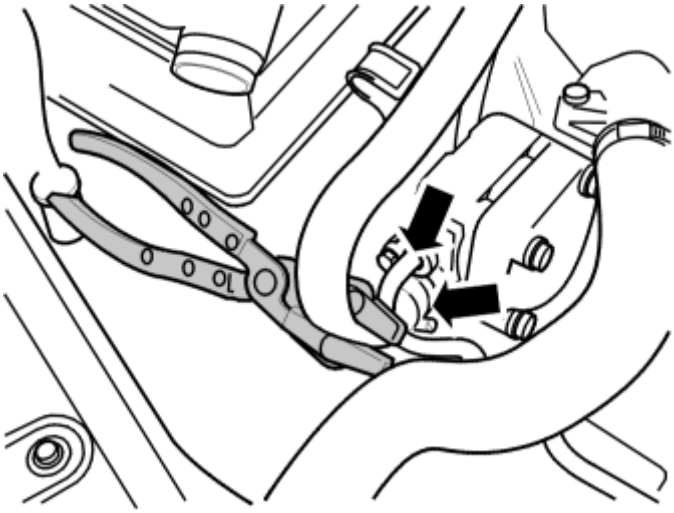

Fig. 150: Identifying Lock Grip / Hose Pliers On Power Steering Pump Return Hose
Courtesy of VOLVO CARS CORPORATION

Install:

- feeder hose
- pressure hose (M6)

NOTE: Use a new O-ring.

INSTALLING DRIVE BELT

Install the drive belt. See: **AUXILIARIES BELT / BELT TENSIONER, REPLACING**

FINISHING

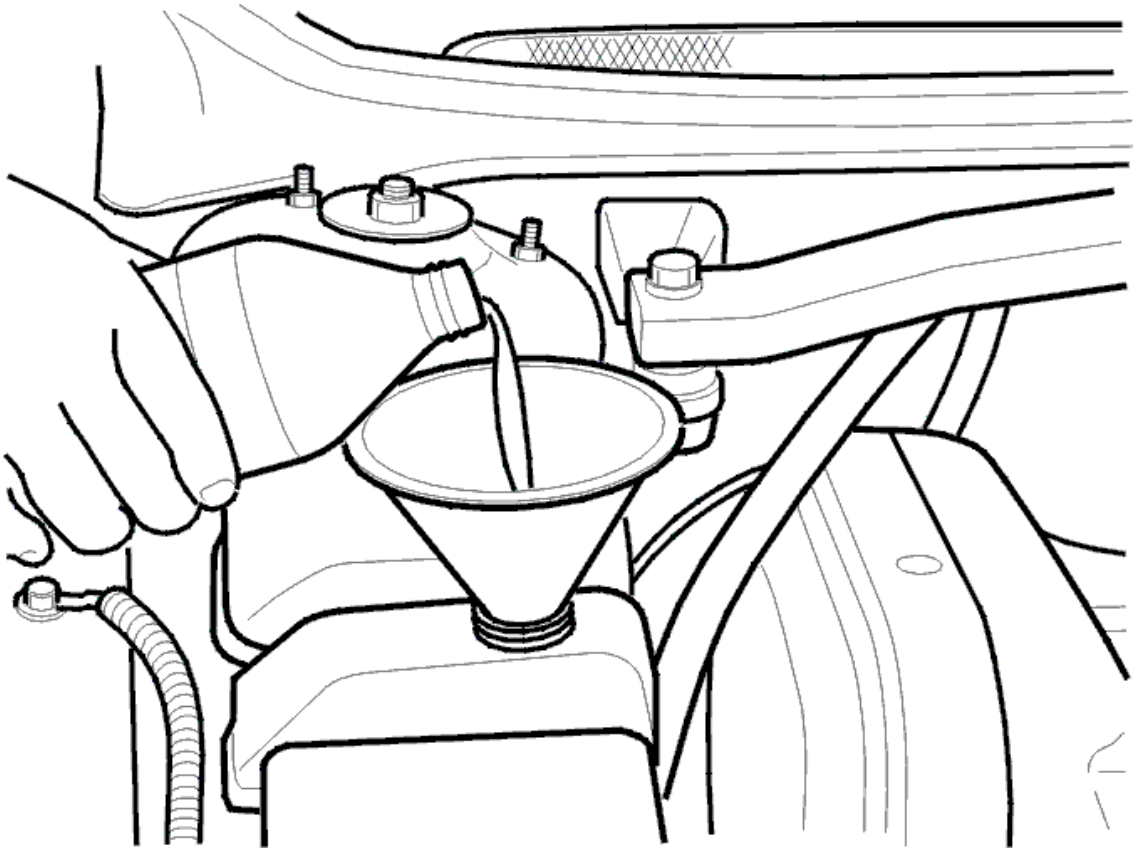

Fig. 151: Filling Servo Reservoir With Oil
Courtesy of VOLVO CARS CORPORATION

WARNING: Avoid skin contact with the oil.

NOTE: Use Volvo power steering fluid, P/N 1161529 to ensure the correct oil quality.

Fill the servo reservoir with oil. Bleed the system

Repeatedly turn the steering wheel to full lock. Top up the oil if necessary

Apply the handbrake. Start the engine

- **A** Turn the steering wheel slowly to the right, keep it at the end position for two seconds.
- **B** Turn the steering wheel slowly to the left, keep it at the end position for two seconds.

Repeat steps A and B ten times.

PRESSURE PIPE/HOSE, STEERING GEAR, REPLACEMENT

NOTE: The illustrations in this service information are used for different model years

and/or models. Some variation may occur. However, the essential information in the illustrations is always correct.

REMOVAL

PREPARATORY WORK

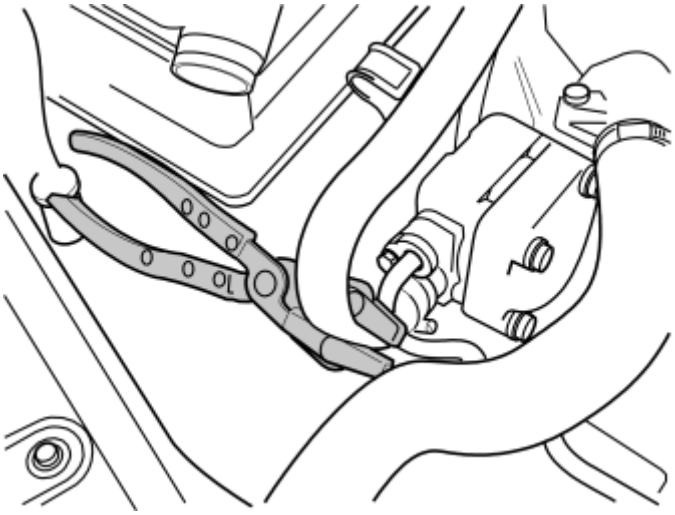

Fig. 152: Identifying Lock Grip / Hose Pliers On Power Steering Pump Feeder Hose
Courtesy of VOLVO CARS CORPORATION

Remove the battery lead. See **BATTERY, DISCONNECTING** .

HINT: Place paper or a rag under the supply pipe to absorb any oil spillage.

Install a hose clip on the feed hose for the power steering pump.

Remove the pressure line from the power steering pump.

REMOVING THE SUB-FRAME

Remove the sub-frame. See: **SUB-FRAME FRONT, REPLACING** .

REMOVING THE DELIVERY LINES

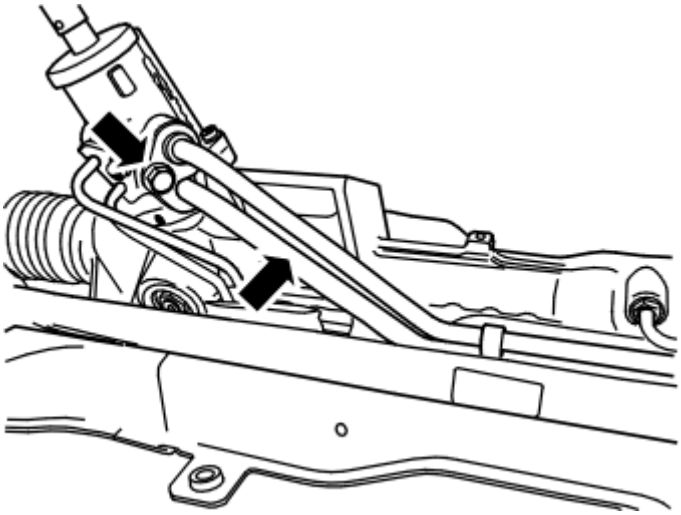

Fig. 153: Identifying Steering Gear Supply Pipe & Nut
Courtesy of VOLVO CARS CORPORATION

Position a container under the steering gear.

Remove:

- the supply pipe from the steering gear. Drain the oil
- release the supply pipe /hose from the clip
- the supply pipe.

NOTE: Note the routing of the supply pipe / hose.

INSTALLATION

NOTE: For tightening torques, see: TIGHTENING TORQUE .

INSTALLING THE SUPPLY PIPE / HOSE

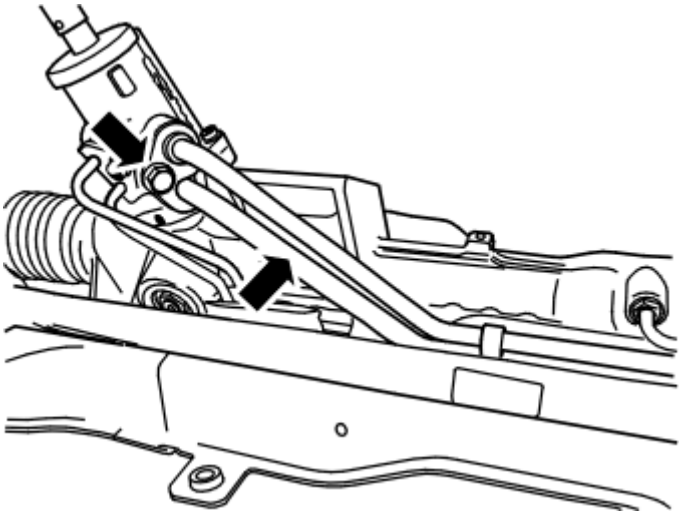

Fig. 154: Identifying Steering Gear Supply Pipe & Nut
Courtesy of VOLVO CARS CORPORATION

Install:

- the supply pipe and return pipe to the steering gear. Tighten
- the supply pipe / hose in the clip for the steering gear.

NOTE: Use a new O-ring.

INSTALLING THE SUB-FRAME

Install the sub-frame. See: **SUB-FRAME FRONT, REPLACING** .

INSTALLING DELIVERY LINES

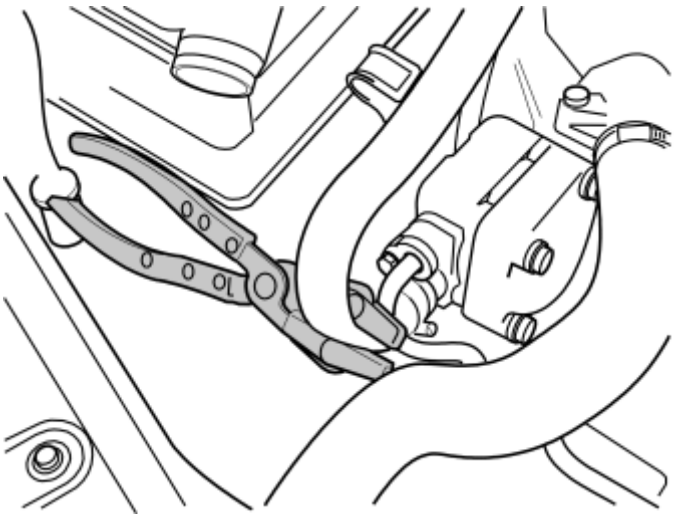

Fig. 155: Identifying Lock Grip / Hose Pliers On Power Steering Pump Feeder Hose
Courtesy of VOLVO CARS CORPORATION

Install the supply pipe on the power steering pump. Tighten to :**TIGHTENING TORQUE**

NOTE: Use a new O-ring.

Remove the hose pliers from the supply line.

FINISHING

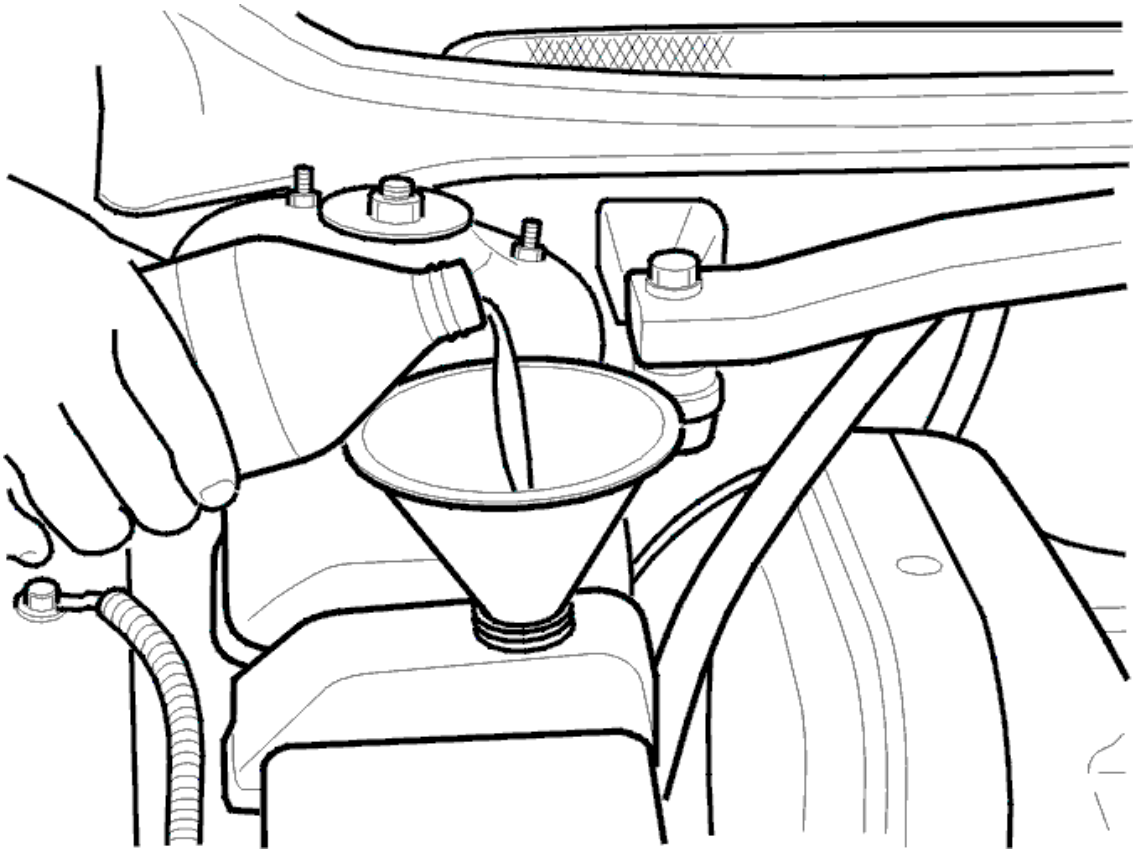

Fig. 156: Filling Servo Reservoir With Oil
Courtesy of VOLVO CARS CORPORATION

Connect the battery lead.

WARNING: Avoid skin contact with the oil.

NOTE: For the correct oil grade use Volvo power steering Fluid P/N 1161529.

Fill the power steering reservoir with oil. Bleed the system.

Turn the steering wheel from lock to lock several times. Top up with oil as necessary.

Lower the vehicle.

Apply the parking brake. Start the engine.

- **A** Turn the steering wheel slowly to the right, keep it at the limit position for two seconds.
- **B** Turn the steering wheel slowly to the left, keep it at the limit position for two seconds.

Repeat steps A and B ten times.

RETURN HOSE, REPLACING

NOTE: The illustrations in this service information are used for different model years and/or models. Some variation may occur. However, the essential information in the illustrations is always correct.

REMOVAL

PREPARATORY WORK

Remove the battery lead. See **BATTERY, DISCONNECTING** .

Install lock grip pliers on the feeder hose for the power steering pump.

REMOVING THE SUB-FRAME

Remove the sub-frame. See: **SUB-FRAME FRONT, REPLACING (2003-2006)** or **SUB-FRAME FRONT, REPLACING (2007)** .

REMOVING THE RETURN HOSE

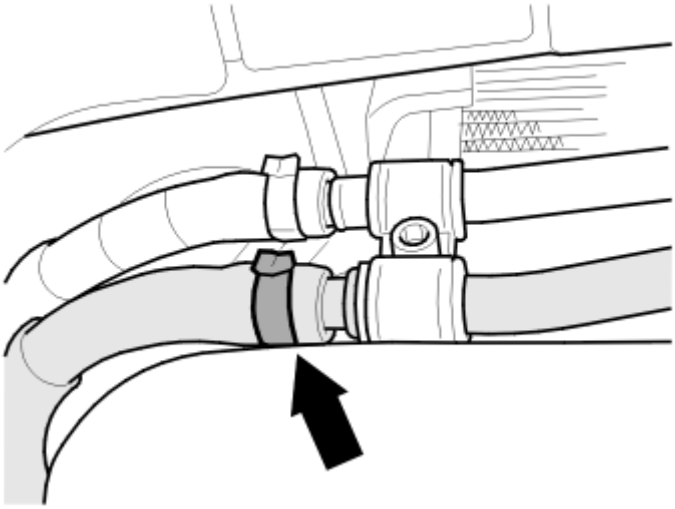

Fig. 157: Identifying Oil Cooler Return Hose Clamp
Courtesy of VOLVO CARS CORPORATION

Remove:

- the clamp for the oil cooler return hose
- the return hose.

REMOVING THE RETURN PIPE

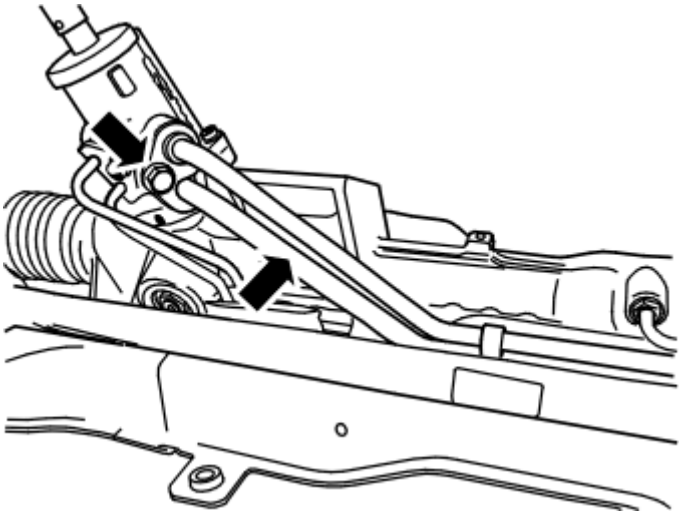

Fig. 158: Identifying Steering Gear Supply Pipe & Nut
Courtesy of VOLVO CARS CORPORATION

Position a container under the steering gear.

Remove:

- the return line from the valve housing, drain the fluid
- disconnect the line from the clips on the steering gear
- the pipe.

INSTALLATION

NOTE: For tightening torques, see: TIGHTENING TORQUE .

INSTALLING THE RETURN HOSE

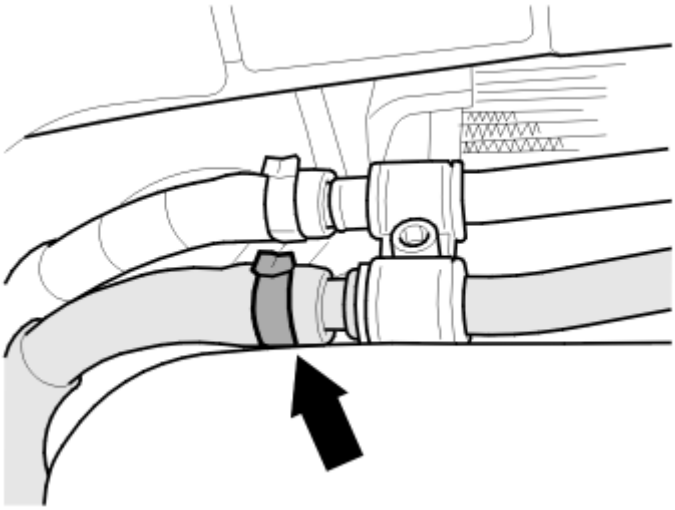

Fig. 159: Identifying Oil Cooler Return Hose Clamp
Courtesy of VOLVO CARS CORPORATION

Install the return hose for the oil cooler, use new clamp.

INSTALLING RETURN PIPE

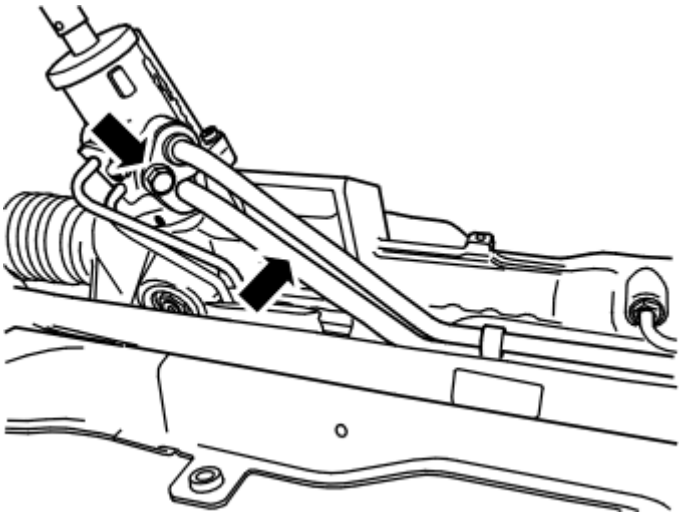

Fig. 160: Identifying Steering Gear Supply Pipe & Nut
Courtesy of VOLVO CARS CORPORATION

Install:

- the pipe in the valve housing
- screw (M8) on the valve housing
- the line in the clips on the steering gear.

NOTE: Use a new O-ring.

INSTALLING THE SUB-FRAME

Install the sub-frame. See: **SUB-FRAME FRONT, REPLACING (2007)** or **SUB-FRAME FRONT, REPLACING (2003-2006)** .

FINISHING

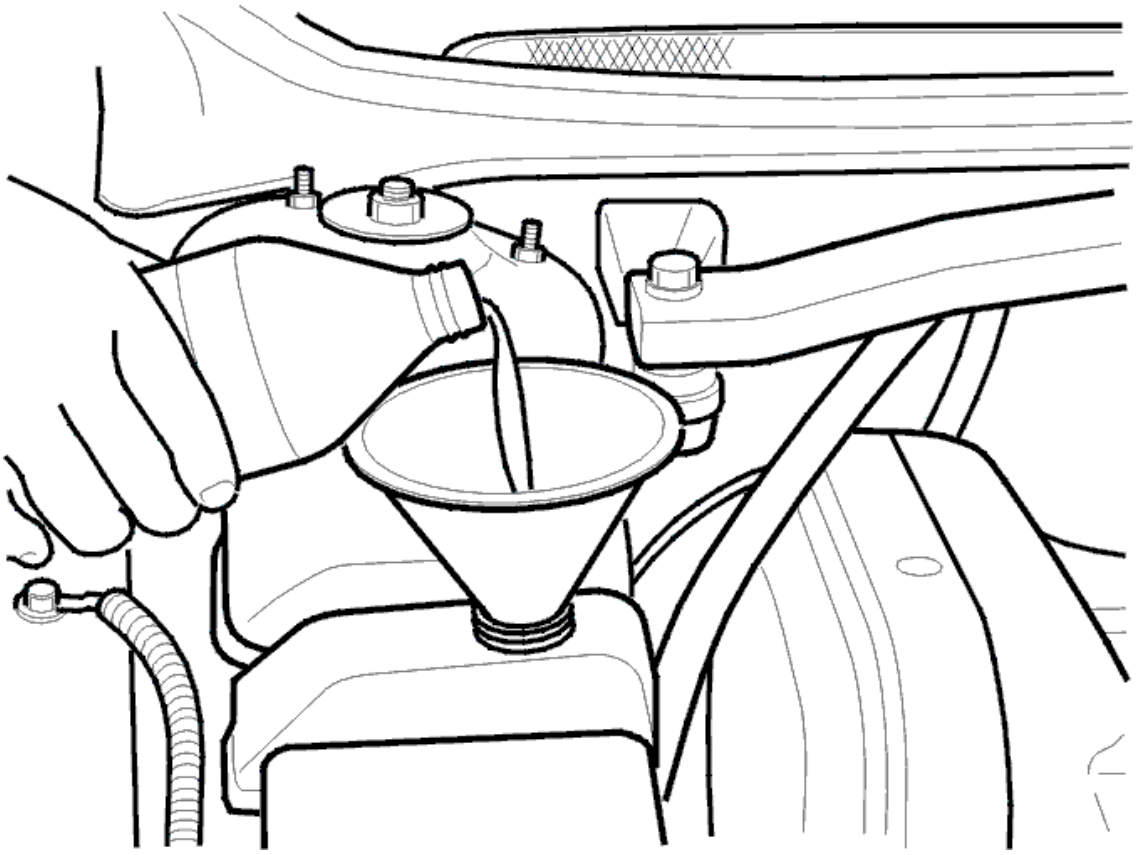

Fig. 161: Filling Servo Reservoir With Oil
Courtesy of VOLVO CARS CORPORATION

Connect the battery lead.

WARNING: Avoid skin contact with the oil.

NOTE: Use Volvo power steering fluid, P/N 1161529 to ensure the correct oil quality.

Fill the servo reservoir with oil. Bleed the system.

Repeatedly turn the steering wheel to full lock. Top up the oil if necessary.

Lower the vehicle.

Apply the parking brake. Start the engine.

- A Turn the steering wheel slowly to the right, keep it at the limit position for two seconds.
- B Turn the steering wheel slowly to the left, keep it at the limit position for two seconds.

Repeat steps A and B ten times.

POWER STEERING EQUIPMENT (B6294T; 2005-2006)

OIL COOLER STEERING GEAR, REPLACING

see **OIL COOLER STEERING GEAR, REPLACING**

POWER STEERING PUMP, REPLACING

NOTE: The illustrations in this service information are used for different model years and/or models. Some variation may occur. However, the essential information in the illustrations is always correct.

REMOVAL

WARNING: Used fluid is considerably more dangerous than new fluid. Avoid skin contact with the oil.

REMOVING DRIVE BELT

Remove the drive belt. See: **REPLACING THE ACCESSORY DRIVE BELT / BELT TENSIONER** .

DRAINING OIL

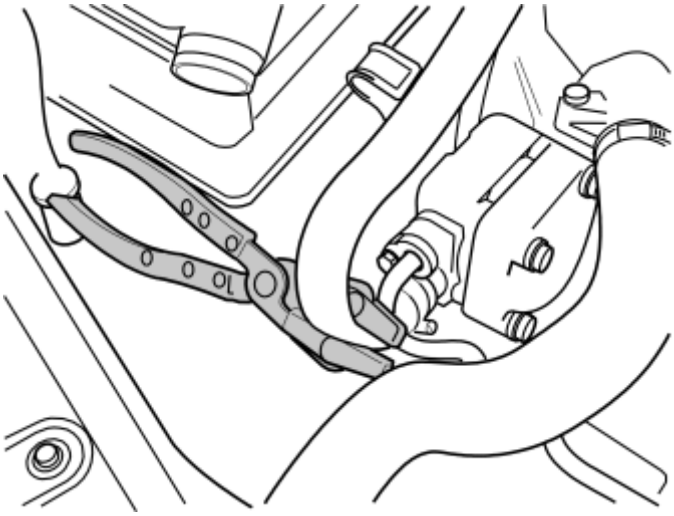

Fig. 162: Identifying Lock Grip / Hose Pliers On Power Steering Pump Feeder Hose
Courtesy of VOLVO CARS CORPORATION

WARNING: Avoid skin contact with the oil.

NOTE: Place paper over the generator (GEN) as protection against oil.

Install lock grip pliers on the hose from the fluid reservoir as close to the power steering pump as possible.

Extract the oil.

REMOVING THE PRESSURE HOSE

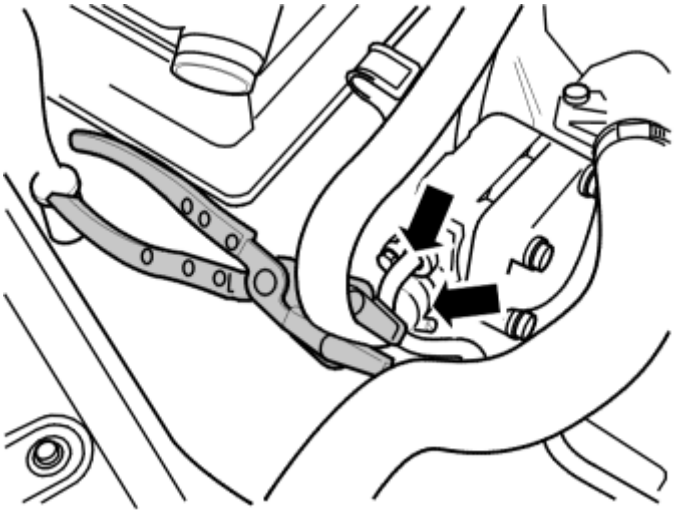

Fig. 163: Identifying Lock Grip / Hose Pliers On Power Steering Pump Return Hose
Courtesy of VOLVO CARS CORPORATION

Remove:

- pressure hose
- feeder hose.

REMOVING THE POWER STEERING PUMP

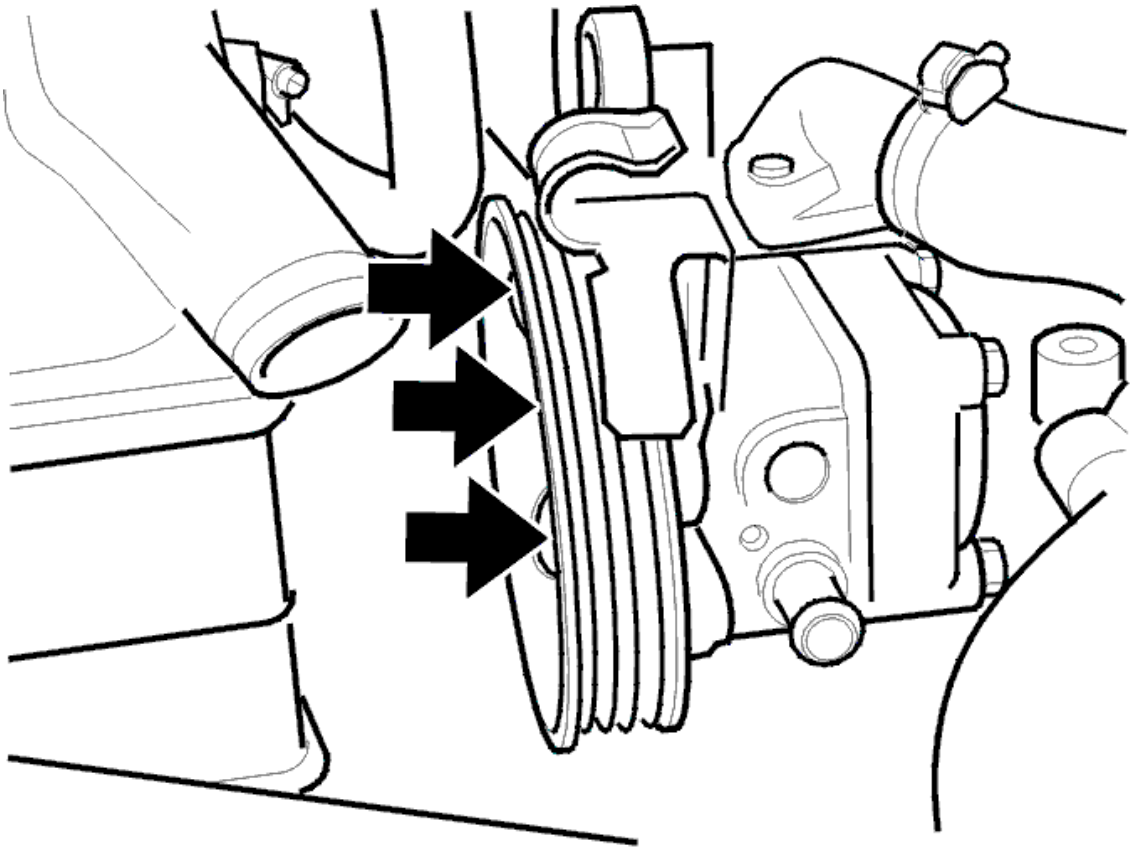

Fig. 164: Locating Power Steering Pump Mounting Screws
Courtesy of VOLVO CARS CORPORATION

Remove the three mounting screws.

INSTALLATION

NOTE: For tightening torques, see: TIGHTENING TORQUE .

INSTALLING THE POWER STEERING PUMP

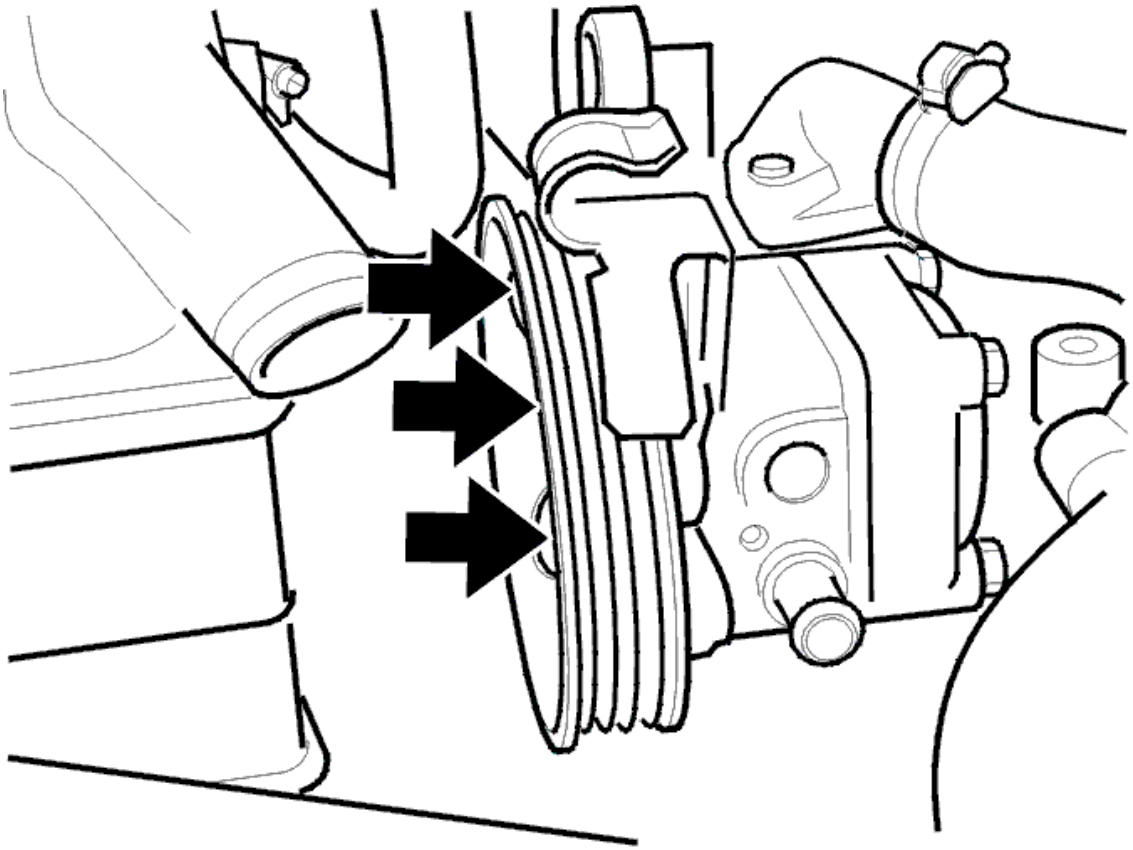

Fig. 165: Locating Power Steering Pump Mounting Screws
Courtesy of VOLVO CARS CORPORATION

Install the three mounting screws (M8).

INSTALLING THE PRESSURE HOSE

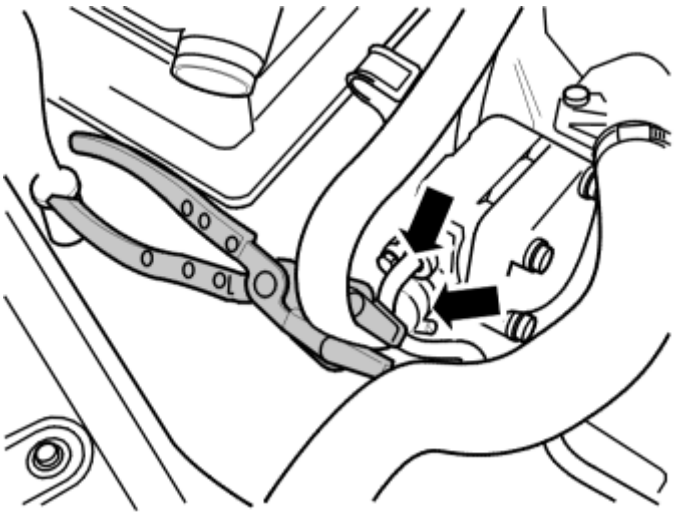

Fig. 166: Identifying Lock Grip / Hose Pliers On Power Steering Pump Return Hose
Courtesy of VOLVO CARS CORPORATION

Install:

- feeder hose
- pressure hose (M6)

NOTE: Use a new O-ring.

INSTALLING DRIVE BELT

Install the drive belt. See: **REPLACING THE ACCESSORY DRIVE BELT / BELT TENSIONER**

FINISHING

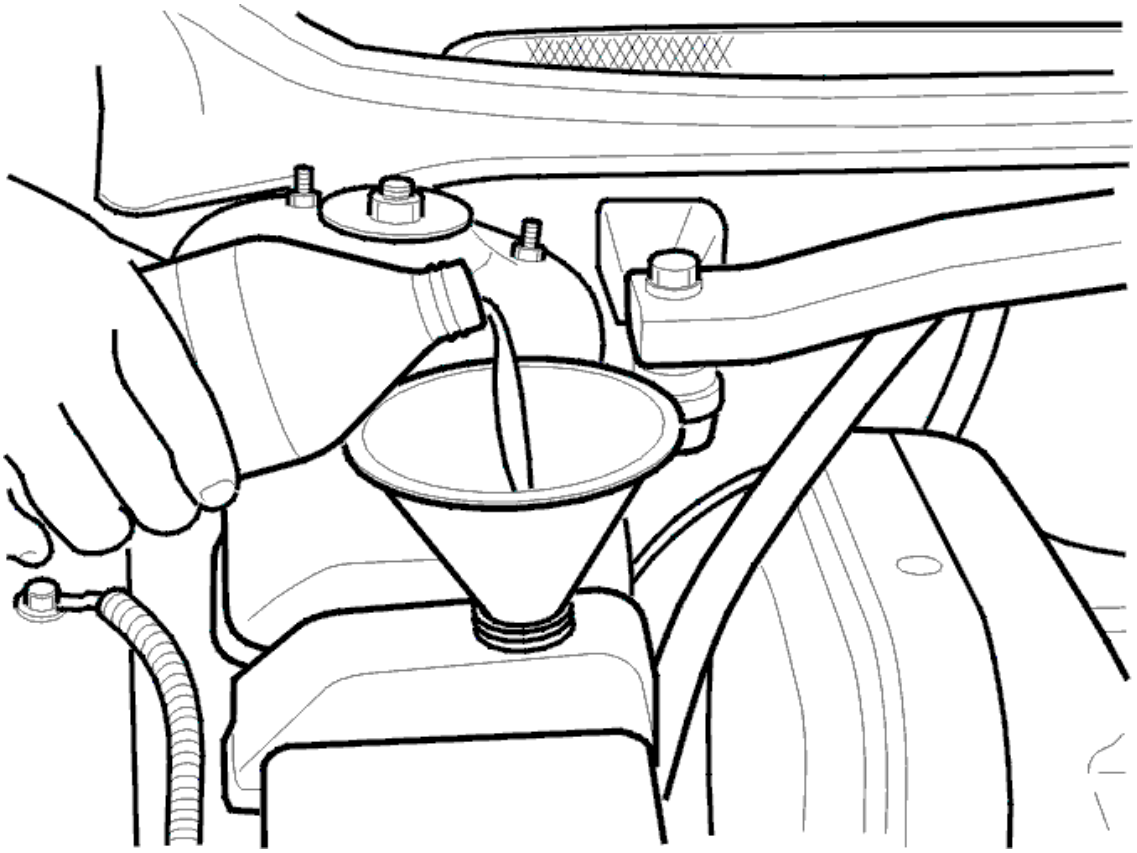

Fig. 167: Filling Servo Reservoir With Oil
Courtesy of VOLVO CARS CORPORATION

WARNING: Avoid skin contact with the oil.

NOTE: Use Volvo power steering fluid, P/N 1161529 to ensure the correct oil quality.

Fill the servo reservoir with oil. Bleed the system

Repeatedly turn the steering wheel to full lock. Top up the oil if necessary

Apply the handbrake. Start the engine

- **A** Turn the steering wheel slowly to the right, keep it at the end position for two seconds.
- **B** Turn the steering wheel slowly to the left, keep it at the end position for two seconds.

Repeat steps A and B ten times.

PRESSURE PIPE/HOSE, STEERING GEAR, REPLACEMENT

NOTE: The illustrations in this service information are used for different model years and/or models. Some variation may occur. However, the essential information in the illustrations is always correct.

REMOVAL

PREPARATORY WORK

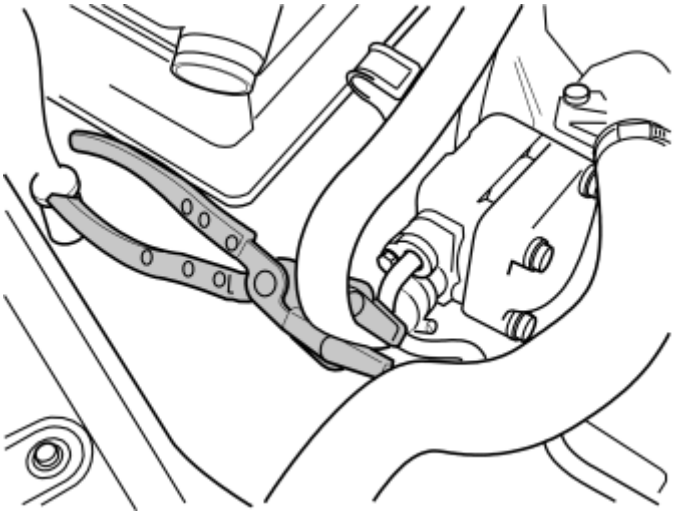

Fig. 168: Identifying Lock Grip / Hose Pliers On Power Steering Pump Feeder Hose
Courtesy of VOLVO CARS CORPORATION

Remove the battery lead. See **BATTERY, DISCONNECTING** .

HINT: Place paper or a rag under the supply pipe to absorb any oil spillage.

Install a hose clip on the feed hose for the power steering pump.

Remove the pressure line from the power steering pump.

REMOVING THE SUB-FRAME

Remove the sub-frame. See: **SUB-FRAME FRONT, REPLACING** .

REMOVING THE DELIVERY LINES

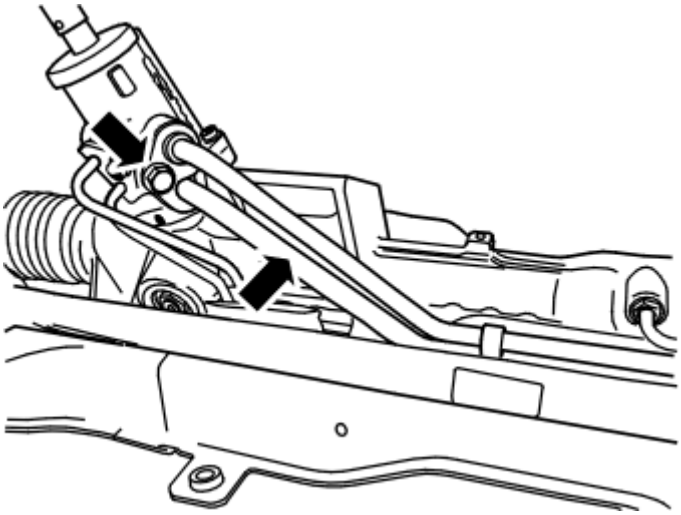

Fig. 169: Identifying Steering Gear Supply Pipe & Nut
Courtesy of VOLVO CARS CORPORATION

Position a container under the steering gear.

Remove:

- the supply pipe from the steering gear. Drain the oil
- release the supply pipe /hose from the clip
- the supply pipe.

NOTE: Note the routing of the supply pipe / hose.

INSTALLATION

NOTE: For tightening torques, see: TIGHTENING TORQUE .

INSTALLING THE SUPPLY PIPE / HOSE

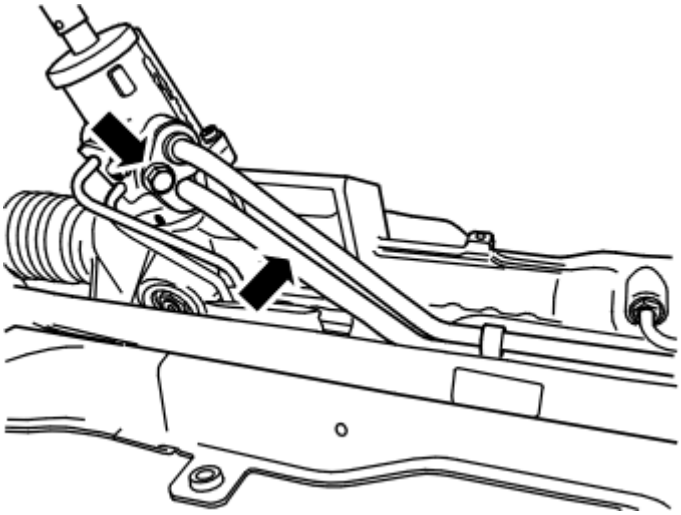

Fig. 170: Identifying Steering Gear Supply Pipe & Nut
Courtesy of VOLVO CARS CORPORATION

Install:

- the supply pipe and return pipe to the steering gear. Tighten
- the supply pipe / hose in the clip for the steering gear.

NOTE: Use a new O-ring.

INSTALLING THE SUB-FRAME

Install the sub-frame. See: **SUB-FRAME FRONT, REPLACING** .

INSTALLING DELIVERY LINES

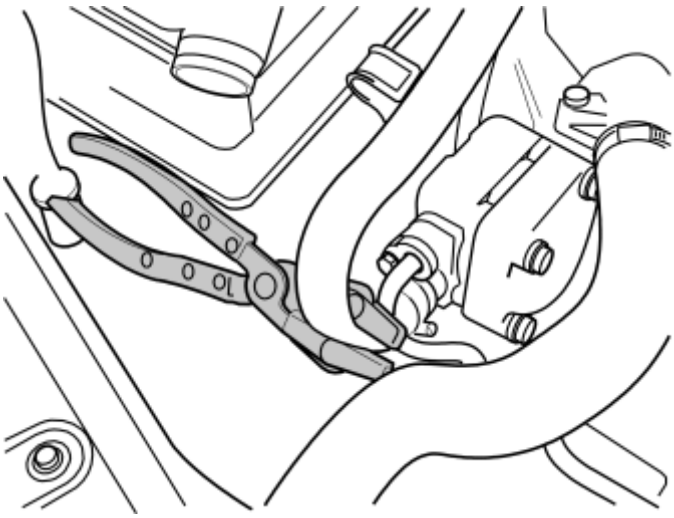

Fig. 171: Identifying Lock Grip / Hose Pliers On Power Steering Pump Feeder Hose
Courtesy of VOLVO CARS CORPORATION

Install the supply pipe on the power steering pump. Tighten: **TIGHTENING TORQUE**

NOTE: Use a new O-ring.

Remove the hose pliers from the supply line.

FINISHING

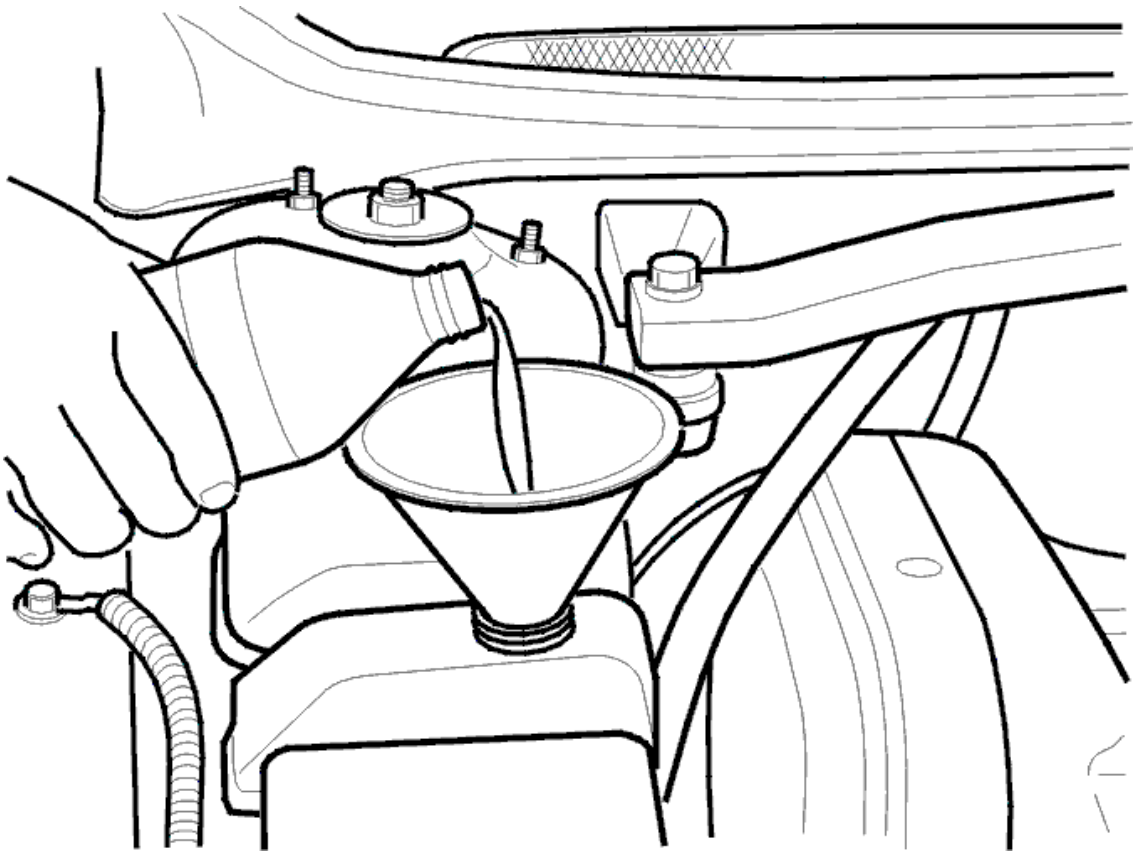

Fig. 172: Filling Servo Reservoir With Oil
Courtesy of VOLVO CARS CORPORATION

Connect the battery lead.

WARNING: Avoid skin contact with the oil.

NOTE: For the correct oil grade use Volvo power steering Fluid P/N 1161529.

Fill the power steering reservoir with oil. Bleed the system.

Turn the steering wheel from lock to lock several times. Top up with oil as necessary.

Lower the vehicle.

Apply the parking brake. Start the engine.

- **A** Turn the steering wheel slowly to the right, keep it at the limit position for two seconds.
- **B** Turn the steering wheel slowly to the left, keep it at the limit position for two seconds.

Repeat steps A and B ten times.

RETURN HOSE, REPLACING

NOTE: The illustrations in this service information are used for different model years and/or models. Some variation may occur. However, the essential information in the illustrations is always correct.

REMOVAL

PREPARATORY WORK

Remove the battery lead. See **BATTERY, DISCONNECTING** .

Install lock grip pliers on the feeder hose for the power steering pump.

REMOVING THE SUB-FRAME

Remove the sub-frame. See: **SUB-FRAME FRONT, REPLACING** .

REMOVING THE RETURN HOSE

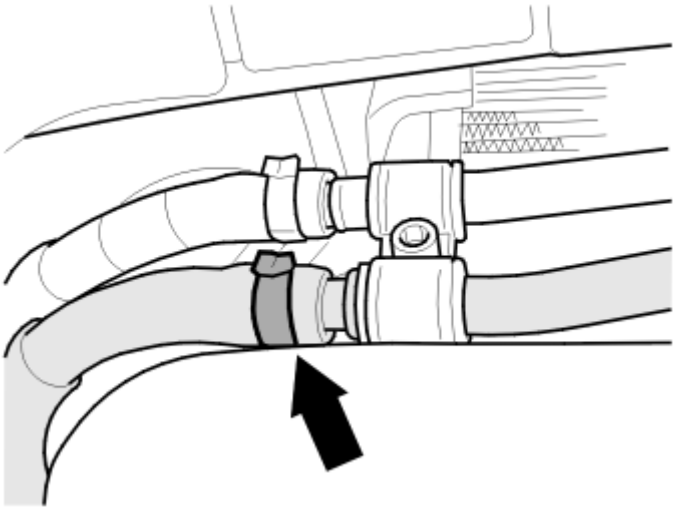

Fig. 173: Identifying Oil Cooler Return Hose Clamp
Courtesy of VOLVO CARS CORPORATION

Remove:

- the clamp for the oil cooler return hose
- the return hose.

REMOVING THE RETURN PIPE

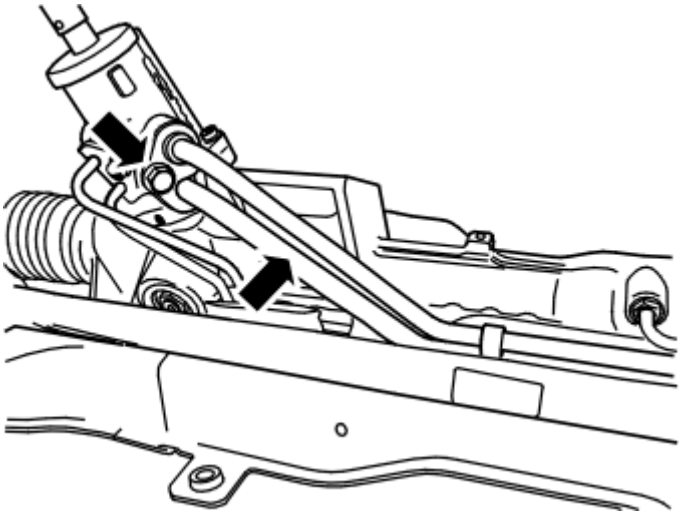

Fig. 174: Identifying Steering Gear Supply Pipe & Nut
Courtesy of VOLVO CARS CORPORATION

Position a container under the steering gear.

Remove:

- the return line from the valve housing, drain the fluid
- disconnect the line from the clips on the steering gear
- the pipe.

INSTALLATION

NOTE: For tightening torques, see: TIGHTENING TORQUE .

INSTALLING THE RETURN HOSE

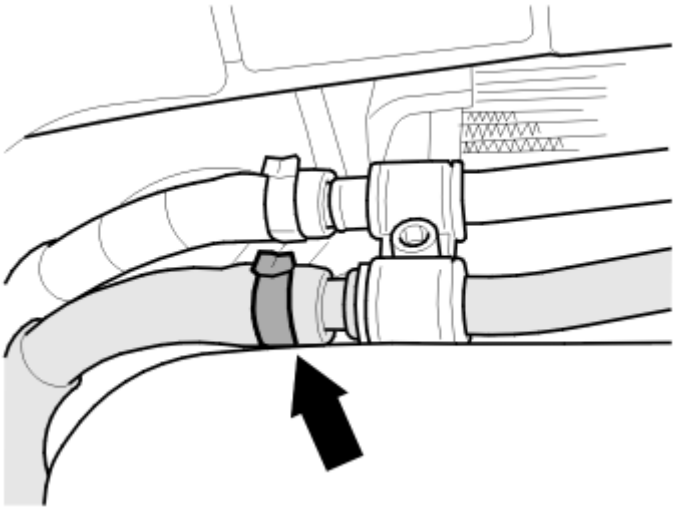

Fig. 175: Identifying Oil Cooler Return Hose Clamp
Courtesy of VOLVO CARS CORPORATION

Install the return hose for the oil cooler, use new clamp.

INSTALLING RETURN PIPE

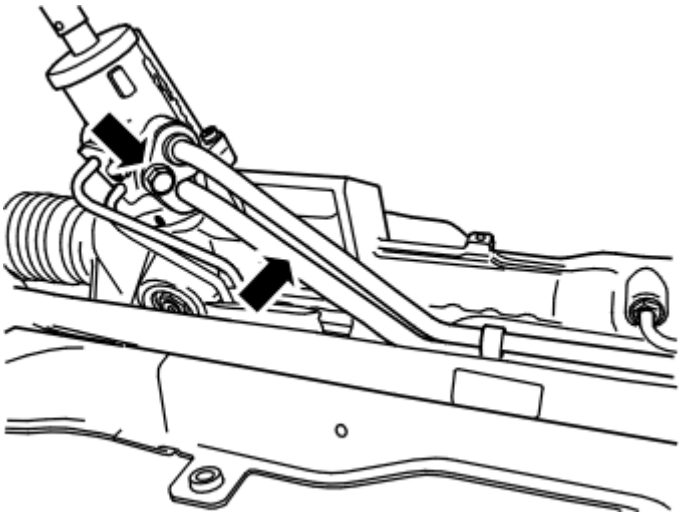

Fig. 176: Identifying Steering Gear Supply Pipe & Nut
Courtesy of VOLVO CARS CORPORATION

Install:

- the pipe in the valve housing
- screw (M8) on the valve housing
- the line in the clips on the steering gear.

NOTE: Use a new O-ring.

INSTALLING THE SUB-FRAME

Install the sub-frame. See: **SUB-FRAME FRONT, REPLACING** .

FINISHING

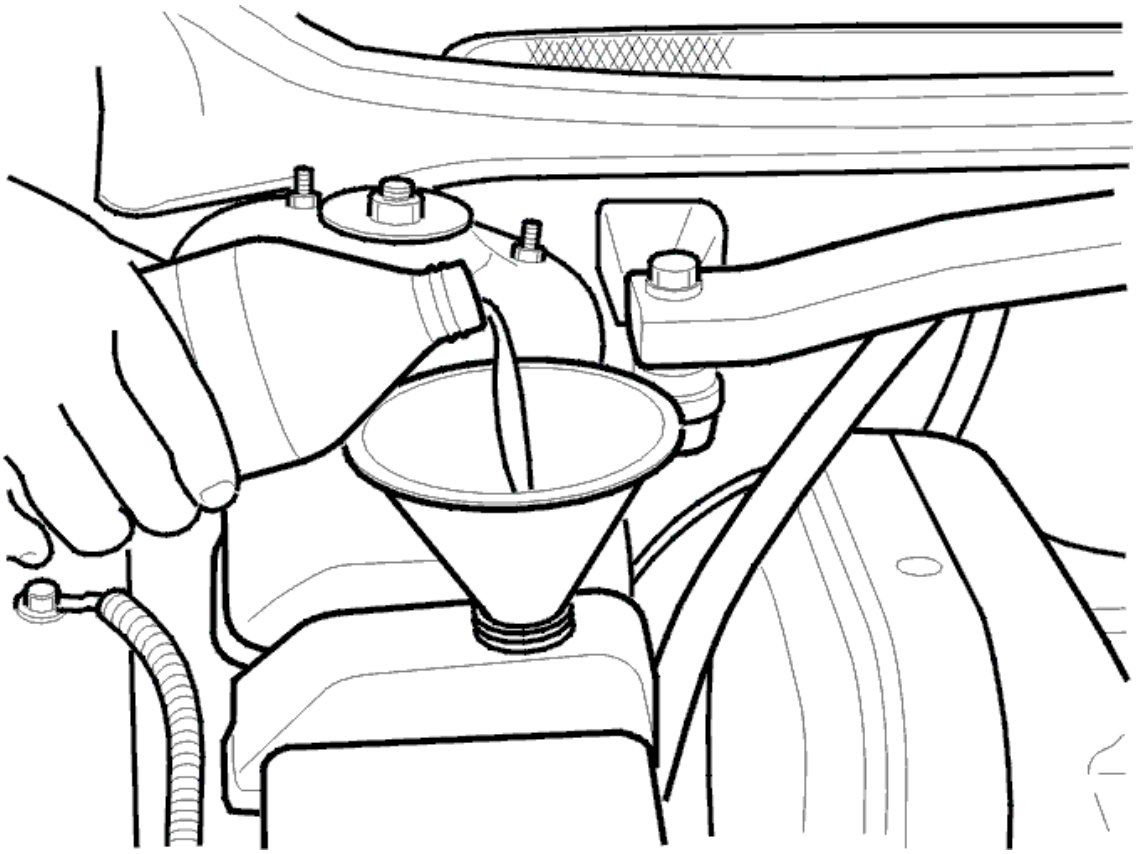

Fig. 177: Filling Servo Reservoir With Oil
Courtesy of VOLVO CARS CORPORATION

Connect the battery lead.

WARNING: Avoid skin contact with the oil.

NOTE: Use Volvo power steering fluid, P/N 1161529 to ensure the correct oil quality.

Fill the servo reservoir with oil. Bleed the system.

Repeatedly turn the steering wheel to full lock. Top up the oil if necessary.

Lower the vehicle.

Apply the parking brake. Start the engine.

- A Turn the steering wheel slowly to the right, keep it at the limit position for two seconds.
- B Turn the steering wheel slowly to the left, keep it at the limit position for two seconds.

Repeat steps A and B ten times.

SERVO EQUIPMENT (2007-2012)

RESERVOIR FLUID POWER STEERING

Special tools	
	T9512859 EVACUATION EQUIPMENT FOR FLUID **Tool number:** T9512859 **Tool description:** EVACUATION EQUIPMENT FOR FLUID **Tool boards:**

Materials:	
Designation	**Part number**
Power steering oil	1161529

REMOVAL

NOTE: Removal steps in this procedure may contain installation details.

Draw up the fluid from the reservoir.

see **9512859**

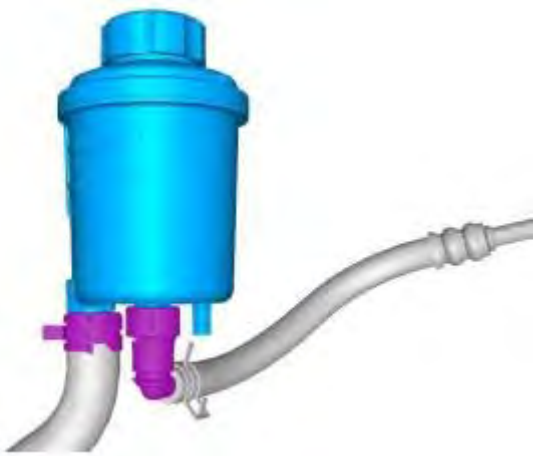

Fig. 178: Power Steering Fluid Reservoir
Courtesy of VOLVO CARS CORPORATION

INSTALLATION

To install, reverse the removal procedure.

Fill the reservoir. **Use:** Power steering oil, 1161529 .

SERVO EQUIPMENT (B6324S; 2007-2010)

OIL COOLER, POWER STEERING

NOTE: **Some variation may occur. However, the essential information in the illustrations is always correct.**

REMOVAL

Remove the air cleaner (ACL) housing

See air filter housing: **AIR CLEANER HOUSING**

Remove casing bumper

See: Casing bumper front, replace. See **CASING BUMPER FRONT, REPLACING**

Fig. 179: Identifying Servo Equipment
Courtesy of VOLVO CARS CORPORATION

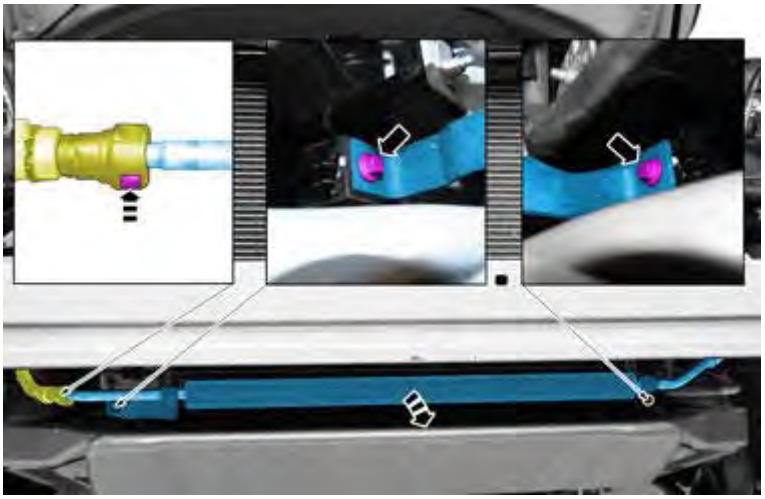

Fig. 180: Removing Oil Cooler Lines
Courtesy of VOLVO CARS CORPORATION

INSTALLATION

Install in the reverse order.

PREPARATION

Perform bleeding

See **POWER STEERING SYSTEM, BLEEDING**

POWER STEERING DELIVERY PIPE

REMOVAL

NOTE: Removal steps in this procedure may contain installation details.

PREPARATION

Drain the power steering fluid from its reservoir. See **RESERVOIR FLUID POWER STEERING**

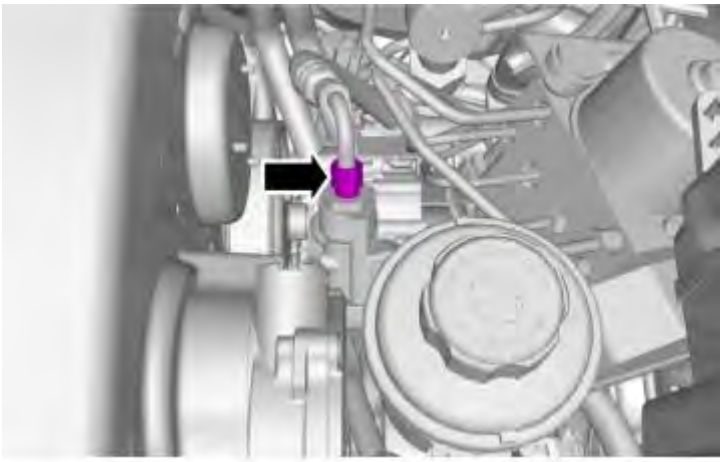

Fig. 181: Power Steering Pump Delivery Pipe
Courtesy of VOLVO CARS CORPORATION

WARNING: **Be prepared to collect escaping fluids.**

Delivery pipe to power steering pump. Tighten. See **SUMMARY OF TIGHTENING TORQUES FOR SPECIFIC COMPONENTS** .

Fig. 182: Locating Engine Undercover And Clips
Courtesy of VOLVO CARS CORPORATION

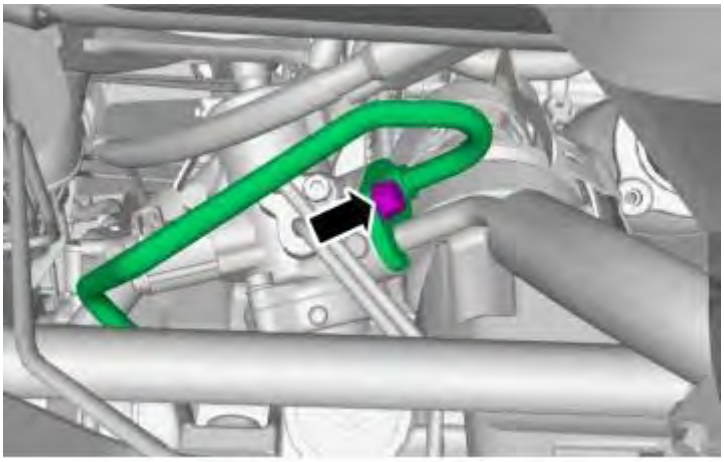

Fig. 183: Delivery Line To Steering Gear
Courtesy of VOLVO CARS CORPORATION

WARNING: Be prepared to collect escaping fluids.

Delivery line to steering gear. Tighten. See **SUMMARY OF TIGHTENING TORQUES FOR SPECIFIC COMPONENTS** .

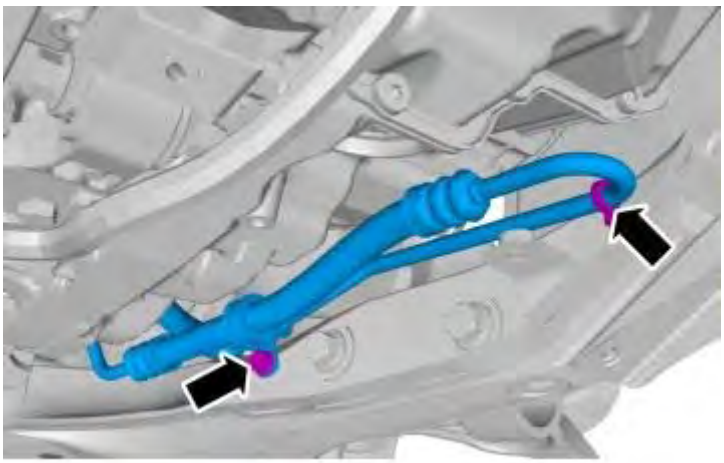

Fig. 184: Removing Line Installation Mountings
Courtesy of VOLVO CARS CORPORATION

M6. Tighten. See **SUMMARY OF TIGHTENING TORQUES FOR SPECIFIC COMPONENTS** .

INSTALLATION

To install, reverse the removal procedure

PREPARATION

Fill and bleed the power steering system. See **POWER STEERING SYSTEM, BLEEDING** .

POWER STEERING PUMP

Special tools	
	T9997077 JIMMY BAR **Tool number:** T9997077 **Tool description:** JIMMY BAR **Tool boards:**

REMOVAL

NOTE: Removal steps in this procedure may contain installation details.

Remove relay and fuse box engine compartment. See **INTEGRATED RELAY / FUSEBOX IN ENGINE COMPARTMENT**

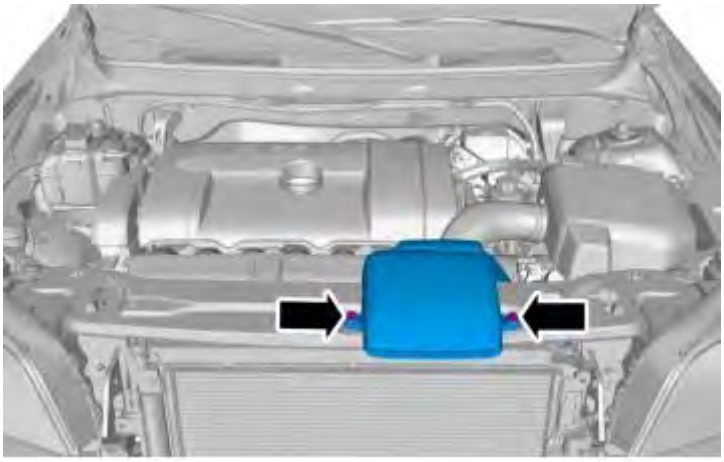

Fig. 185: Front Plate Fresh Air Intake Hose
Courtesy of VOLVO CARS CORPORATION

Fig. 186: Removing Air Filter Assembly Cover
Courtesy of VOLVO CARS CORPORATION

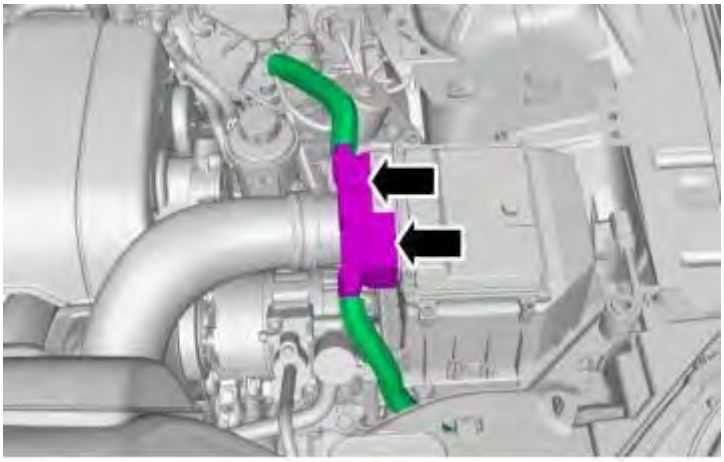

Fig. 187: Air Cleaner Assembly Components
Courtesy of VOLVO CARS CORPORATION

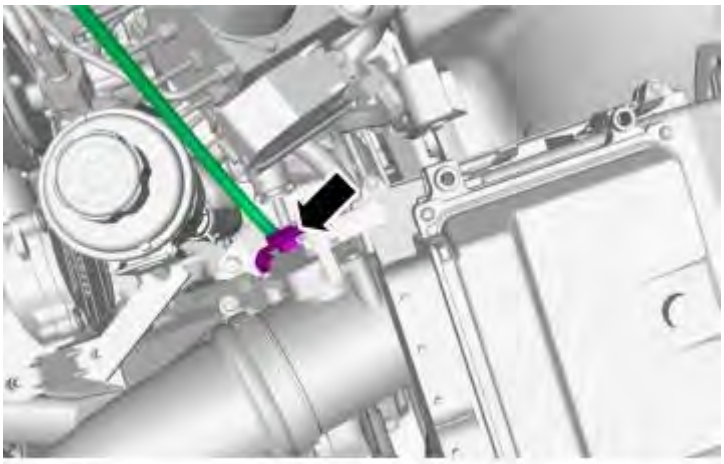

Fig. 188: Removing Line To Air Cleaner Assembly
Courtesy of VOLVO CARS CORPORATION

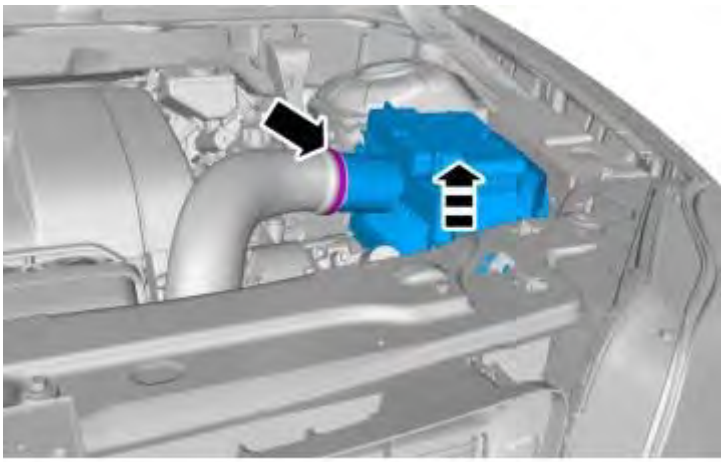

Fig. 189: Removing Air Cleaner Assembly
Courtesy of VOLVO CARS CORPORATION

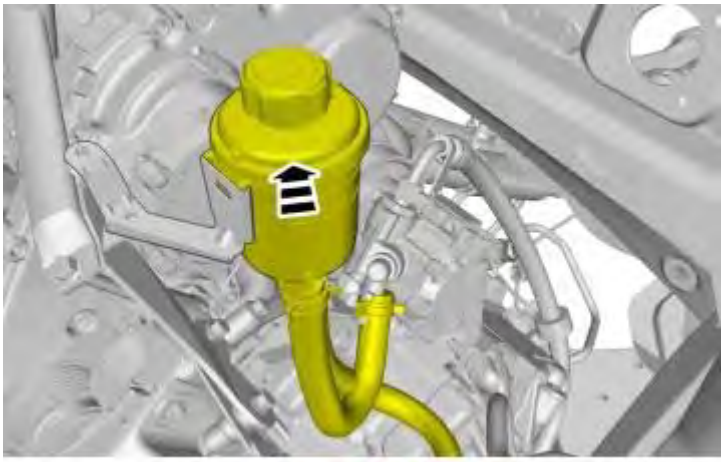

Fig. 190: Removing Reservoir
Courtesy of VOLVO CARS CORPORATION

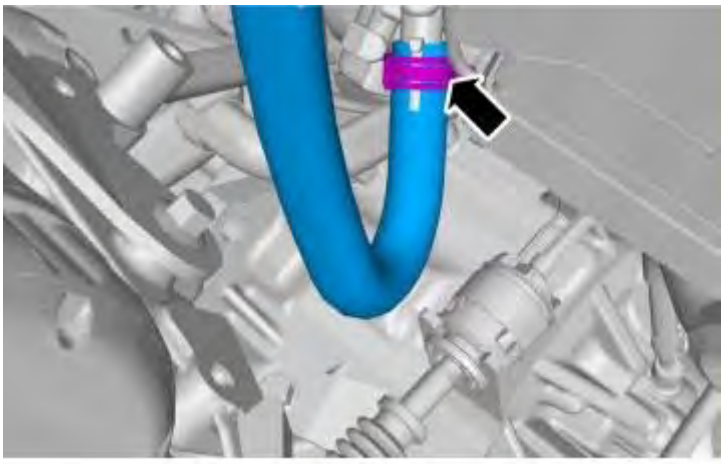

Fig. 191: Removing Connecting Hose
Courtesy of VOLVO CARS CORPORATION

WARNING: **Be prepared to collect escaping fluid.**

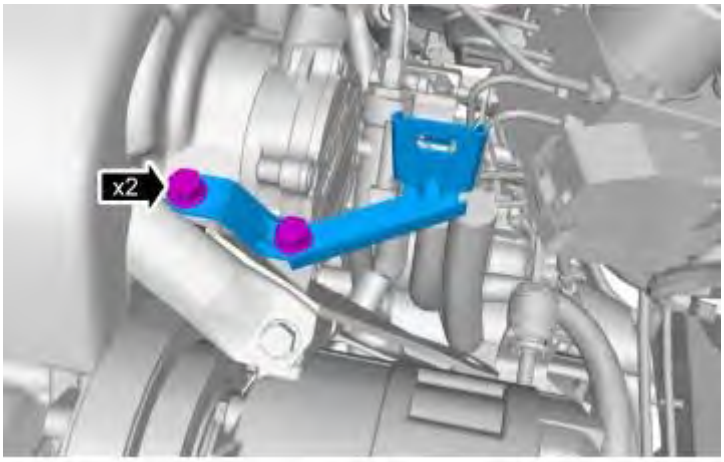

Fig. 192: Removing Reservoir Bracket
Courtesy of VOLVO CARS CORPORATION

Torque: M8

24 Nm

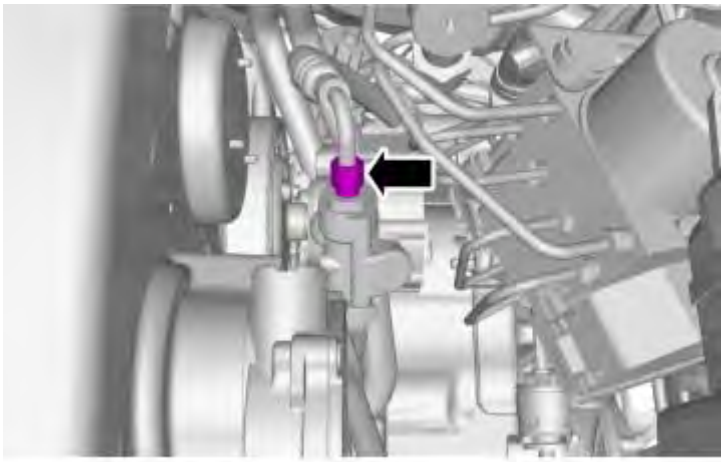

Fig. 193: Power Steering Pump Line
Courtesy of VOLVO CARS CORPORATION

WARNING: **Be prepared to collect escaping fluid.**

Pressure hose in pump (M16) see **SUMMARY OF TIGHTENING TORQUES FOR SPECIFIC COMPONENTS** .

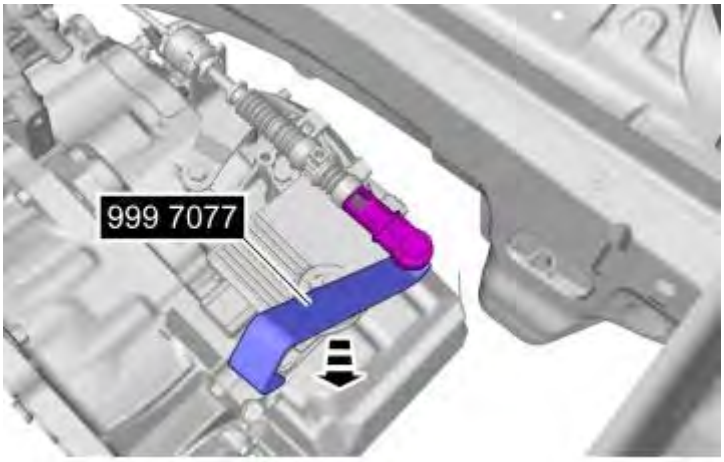

Fig. 194: Identifying Special Service Tool 999 7077
Courtesy of VOLVO CARS CORPORATION

see **9997077**

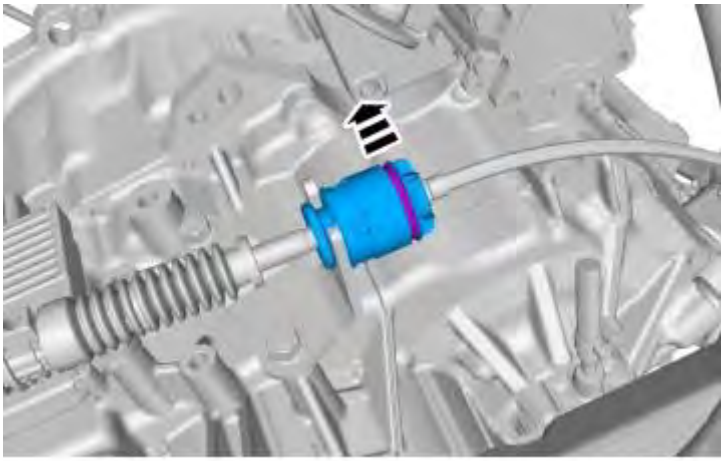

Fig. 195: Removing Transmission Shift Cable
Courtesy of VOLVO CARS CORPORATION

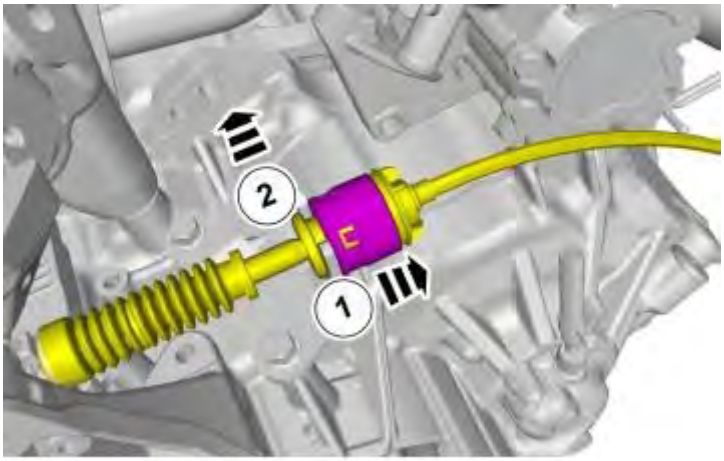

Fig. 196: Removing Transmission Shift Cable
Courtesy of VOLVO CARS CORPORATION

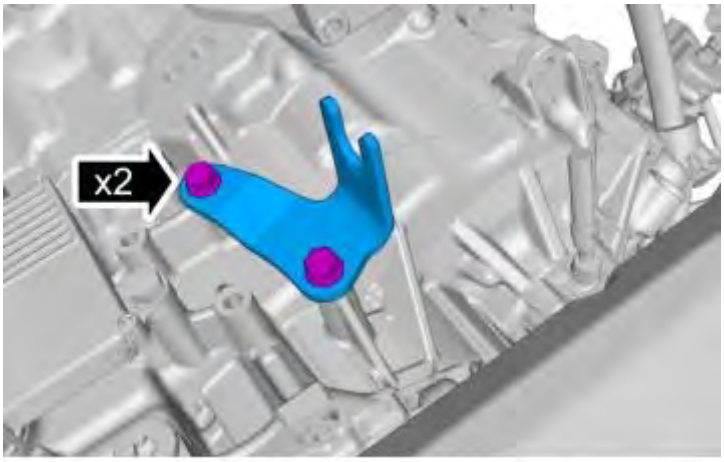

Fig. 197: Removing Transmission Shift Cable Bracket
Courtesy of VOLVO CARS CORPORATION

Torque: M8

24 Nm

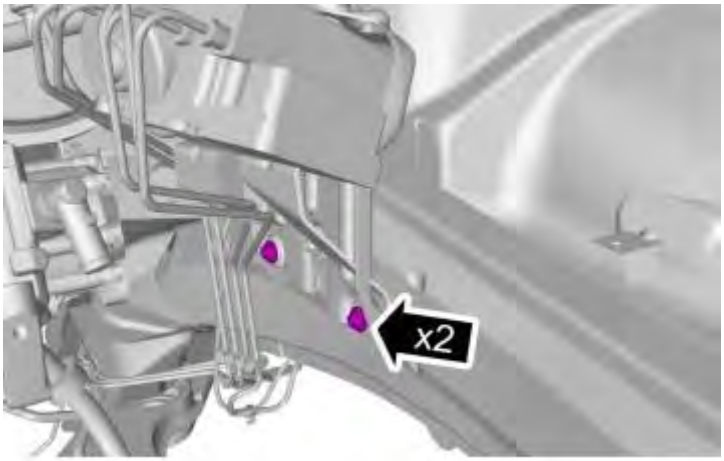

Fig. 198: Component Bracket Bolts
Courtesy of VOLVO CARS CORPORATION

Torque: M6

10 Nm

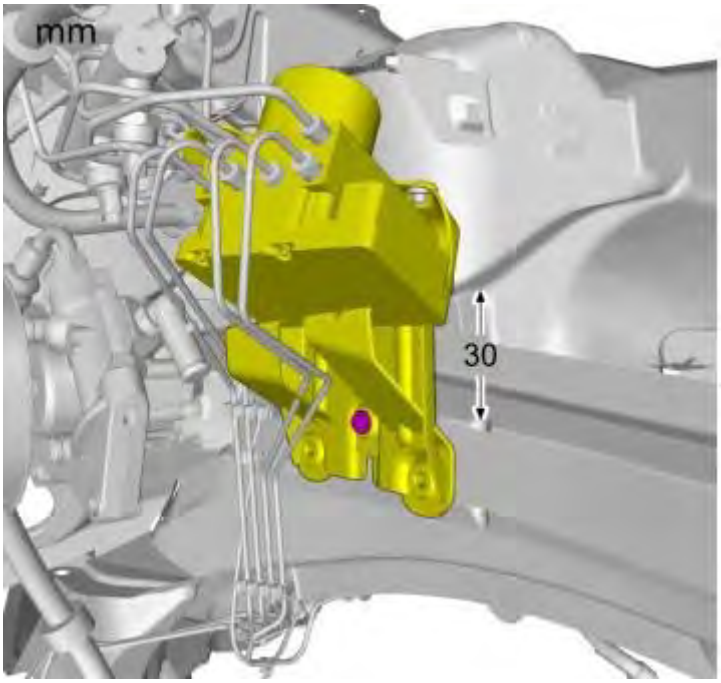

Fig. 199: Removing Component Bracket
Courtesy of VOLVO CARS CORPORATION

NOTE: Do not loosen the bolt more than 4 turns.

Torque: M6

10 Nm

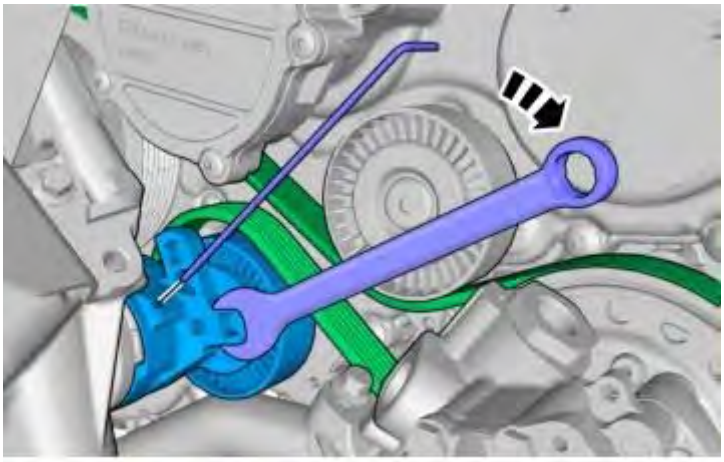

Fig. 200: Using Tensioner To Remove Belt
Courtesy of VOLVO CARS CORPORATION

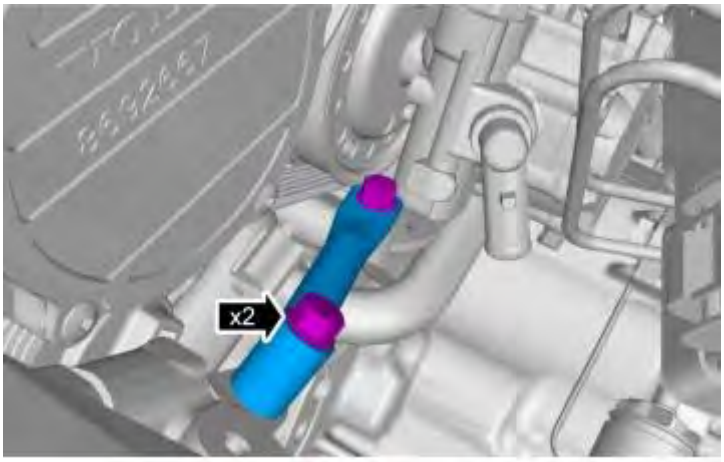

Fig. 201: Removing Bracket
Courtesy of VOLVO CARS CORPORATION

Torque: M8

24 Nm

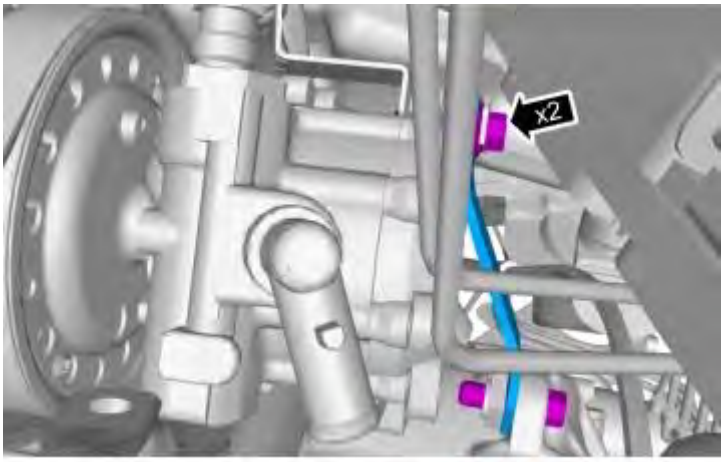

Fig. 202: Removing Bracket
Courtesy of VOLVO CARS CORPORATION

Torque: M8

24 Nm

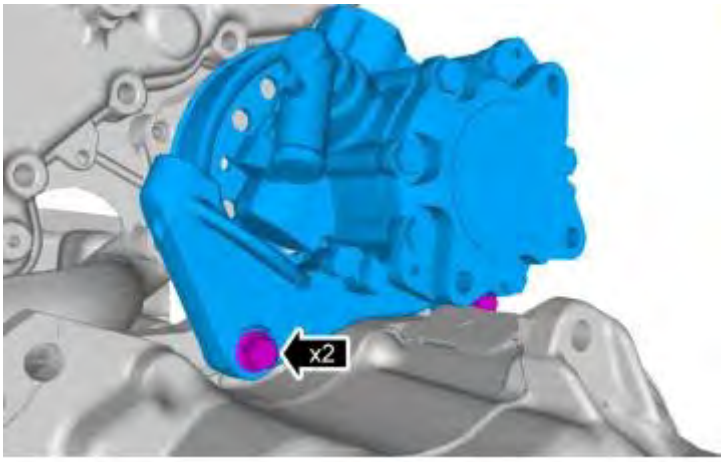

Fig. 203: Removing Power Steering Pump
Courtesy of VOLVO CARS CORPORATION

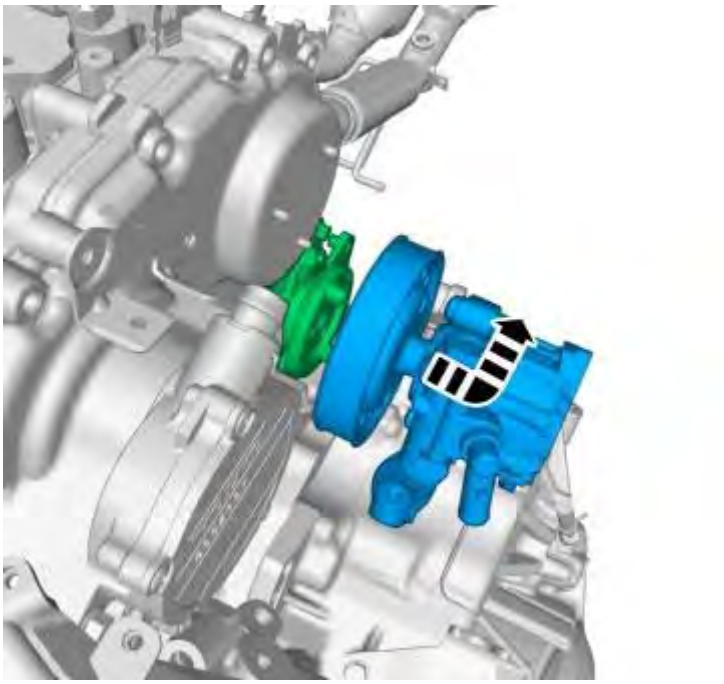

Fig. 204: Removing Power Steering Pump
Courtesy of VOLVO CARS CORPORATION

Fig. 205: Identifying Pulley Retaining Component
Courtesy of VOLVO CARS CORPORATION

NOTE: Make sure that a new component is installed.

INSTALLATION

To install, reverse the removal procedure.

PREPARATION

Perform power steering system bleeding air. See **POWER STEERING SYSTEM, BLEEDING**

RETURN PIPE/HOSE, STEERING GEAR, REPLACEMENT

REMOVAL

Special tools:

see **9995460**

see **9995716**

see **9997070**

NOTE: The illustrations in this service information are used for different model years and/or models. Some variation may occur. However, the essential information in the illustrations is always correct.

REMOVAL

PREPARATIONS

Remove:

- the battery cable, see: **BATTERY, DISCONNECTING**
- the front wheels on both sides.

REMOVING THE RETURN PIPE

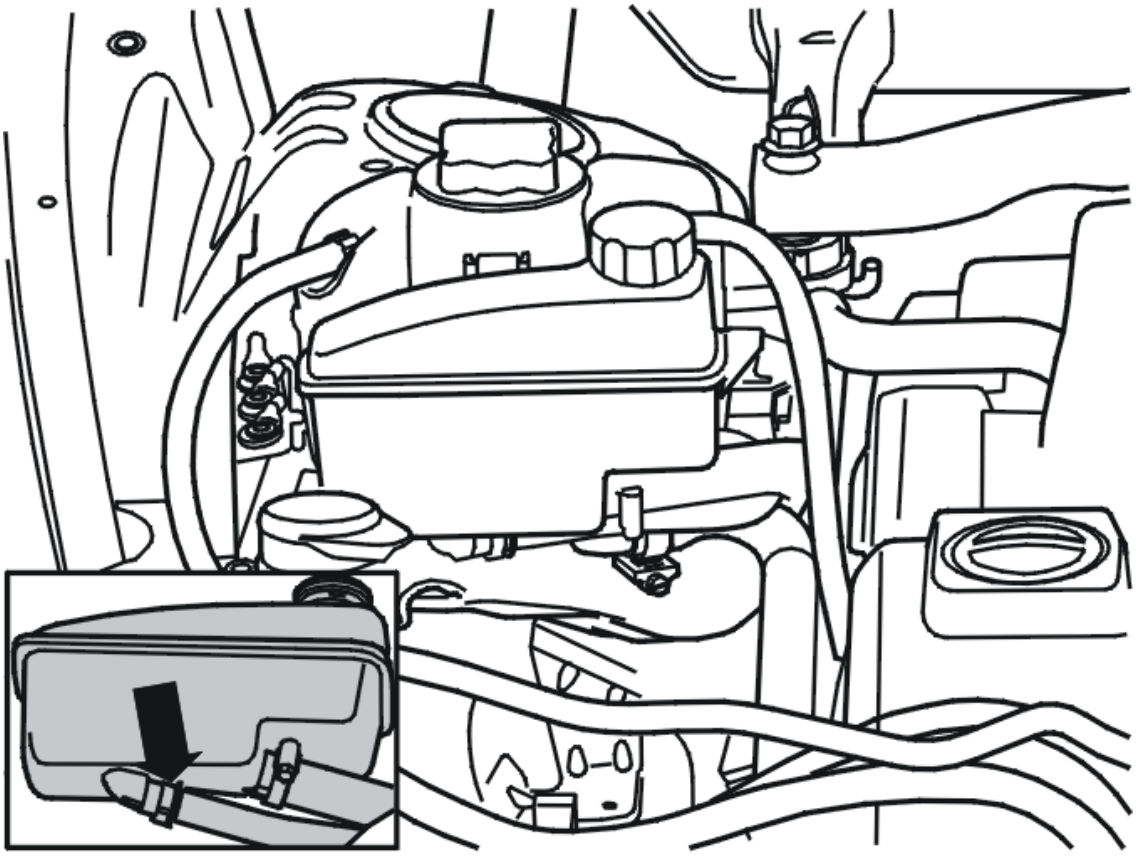

Fig. 206: Removing Return Pipe
Courtesy of VOLVO CARS CORPORATION

WARNING: Avoid skin contact with the oil.

Lift up the oil reservoir. Place paper under the oil reservoir for any oil spillage.

Position a container under the oil reservoir. Remove the hose with the clamp from the oil reservoir. Drain the oil.

NOTE: Make a note of the oil pipe's location

Release the oil hose from the tie strap and the clip on the engine cooling fan (FC).

REMOVING THE BOLTS TO THE TORQUE ROD

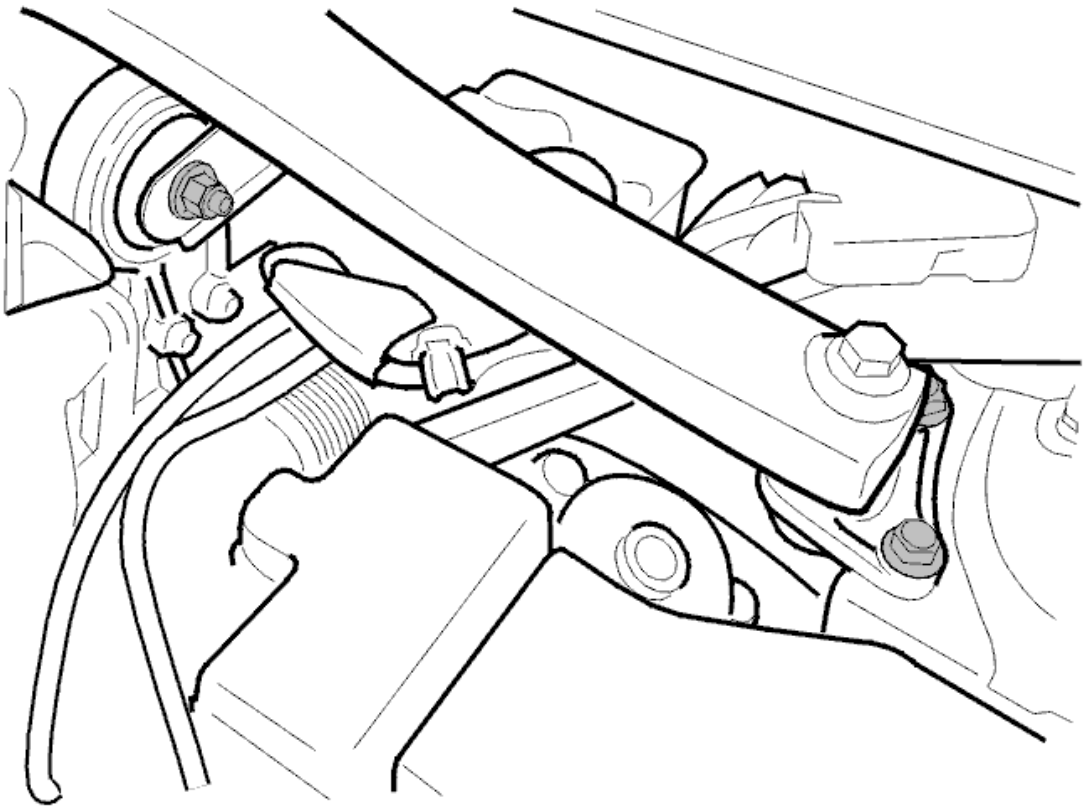

Fig. 207: Engine Stabilizer Brace
Courtesy of VOLVO CARS CORPORATION

Remove the bolts, x2, at the suspension turrets on both sides.

INSTALLING THE LIFTING TOOL

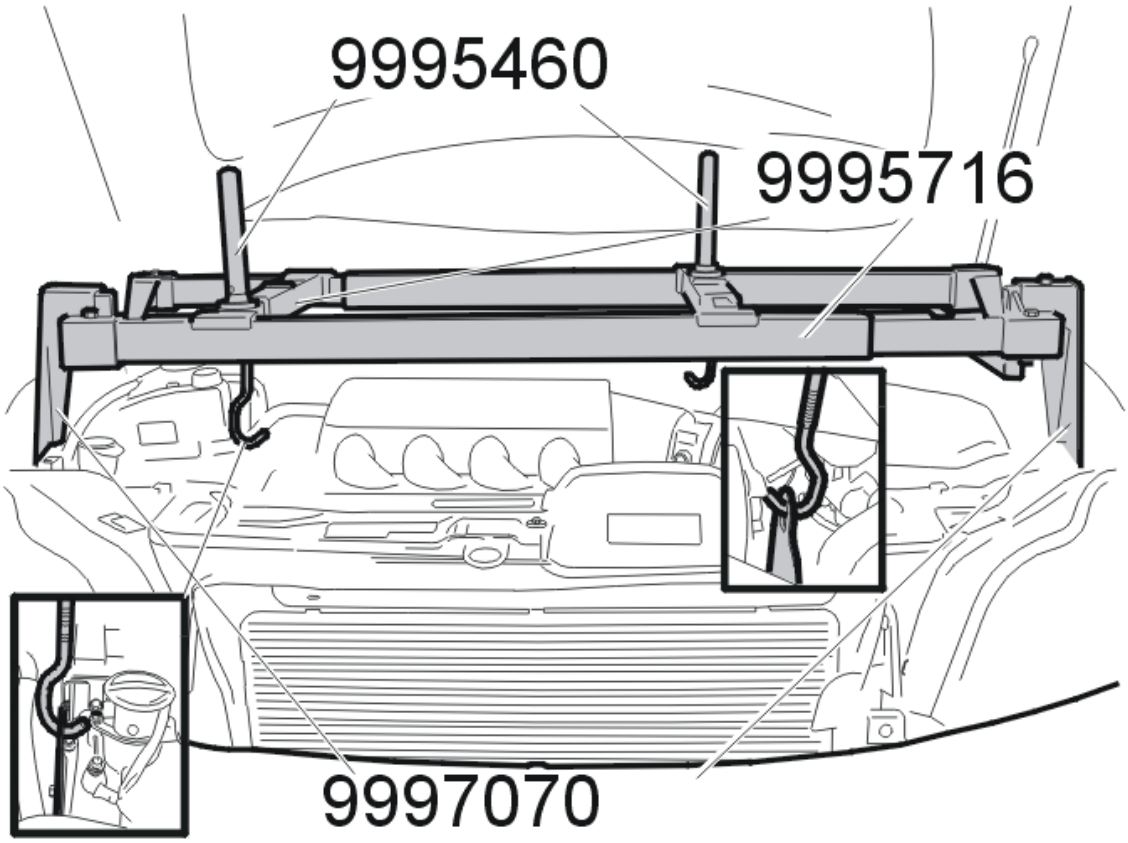

Fig. 208: Installing Lifting Tool
Courtesy of VOLVO CARS CORPORATION

NOTE: **When lifting the engine make sure that the lifting eye does not scratch the torque rod. Tape the torque rod and keep it away from the eye.**

Remove:

- the oil filler cap
- the upper front engine casing by pulling it straight up.

Install:

- the oil filler cap
- the lifting tool: see **9995716** converted with the kit: see **9997070** and lifting hooks: see **9995460** . Lift up the engine slightly so that the engine pads are unloaded.

REMOVING THE WING LINER

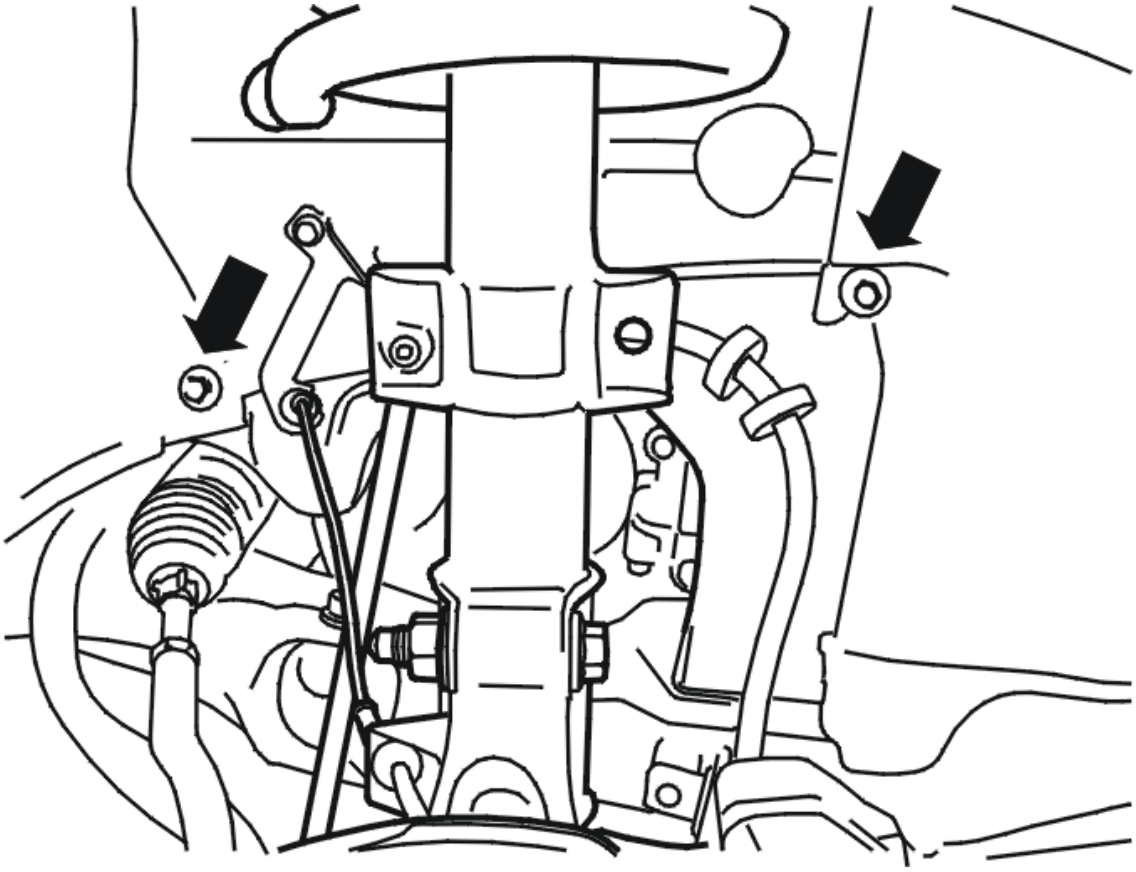

Fig. 209: Removing Wing Liner
Courtesy of VOLVO CARS CORPORATION

Remove:

- the plastic nuts, x2
- the wing liner.

REMOVING THE BOLTS TO THE RIGHT-HAND ENGINE PAD

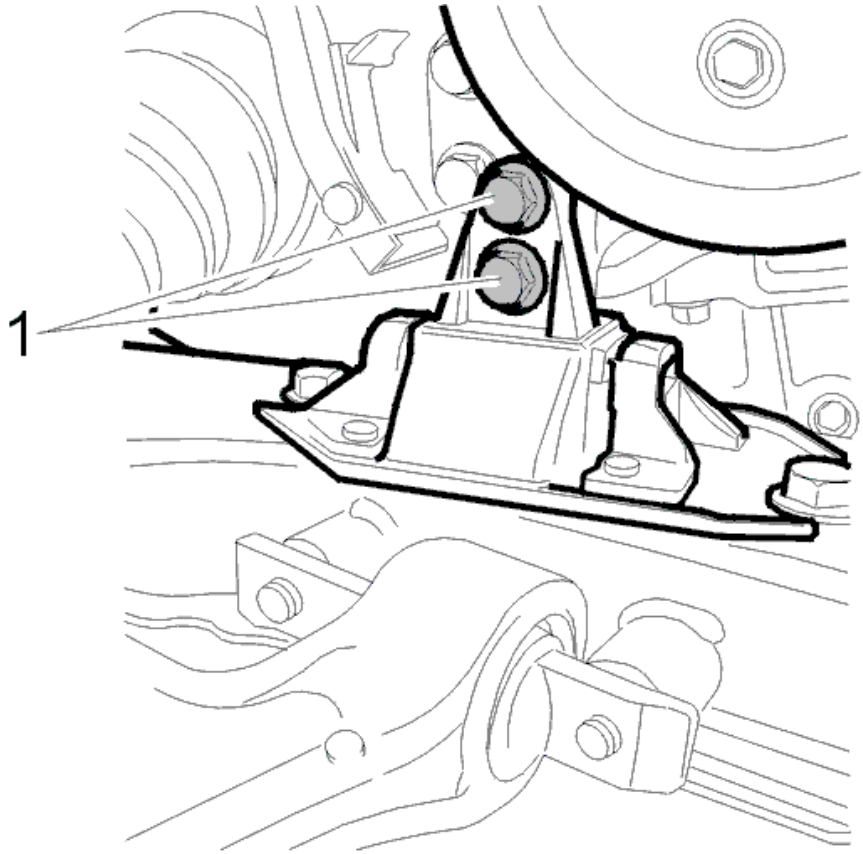

Fig. 210: Identifying Right-Hand Engine Mounting Screws
Courtesy of VOLVO CARS CORPORATION

Remove the bolts (1), x2.

REMOVING THE PROTECTIVE PLATE

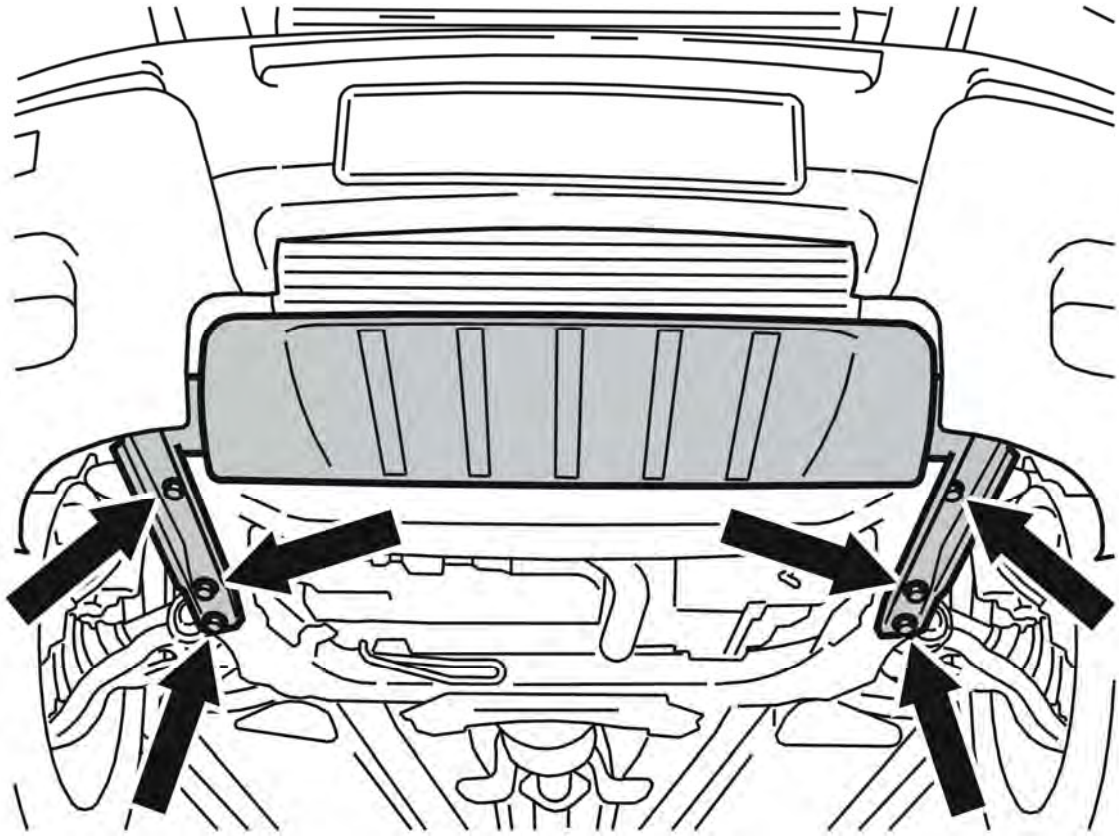

Fig. 211: Splash Guard. Protective Plate And Screws
Courtesy of VOLVO CARS CORPORATION

Remove the 6 screws.

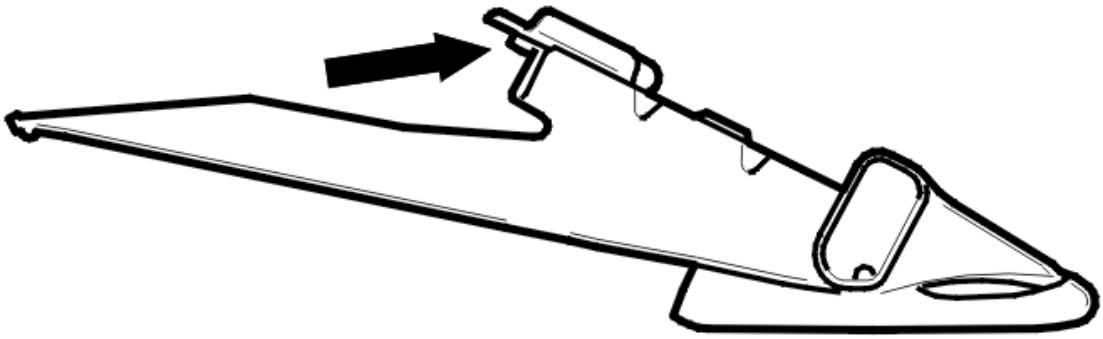

Fig. 212: Identifying Protective Plate
Courtesy of VOLVO CARS CORPORATION

NOTE: There is a guide sleeve on the upper mounting for the plate. This must be lifted slightly so that the panel can be slid forward.

Raise and move the protective plate forward. Remove the protective plate.

REMOVING THE PROTECTIVE COVER UNDER THE ENGINE

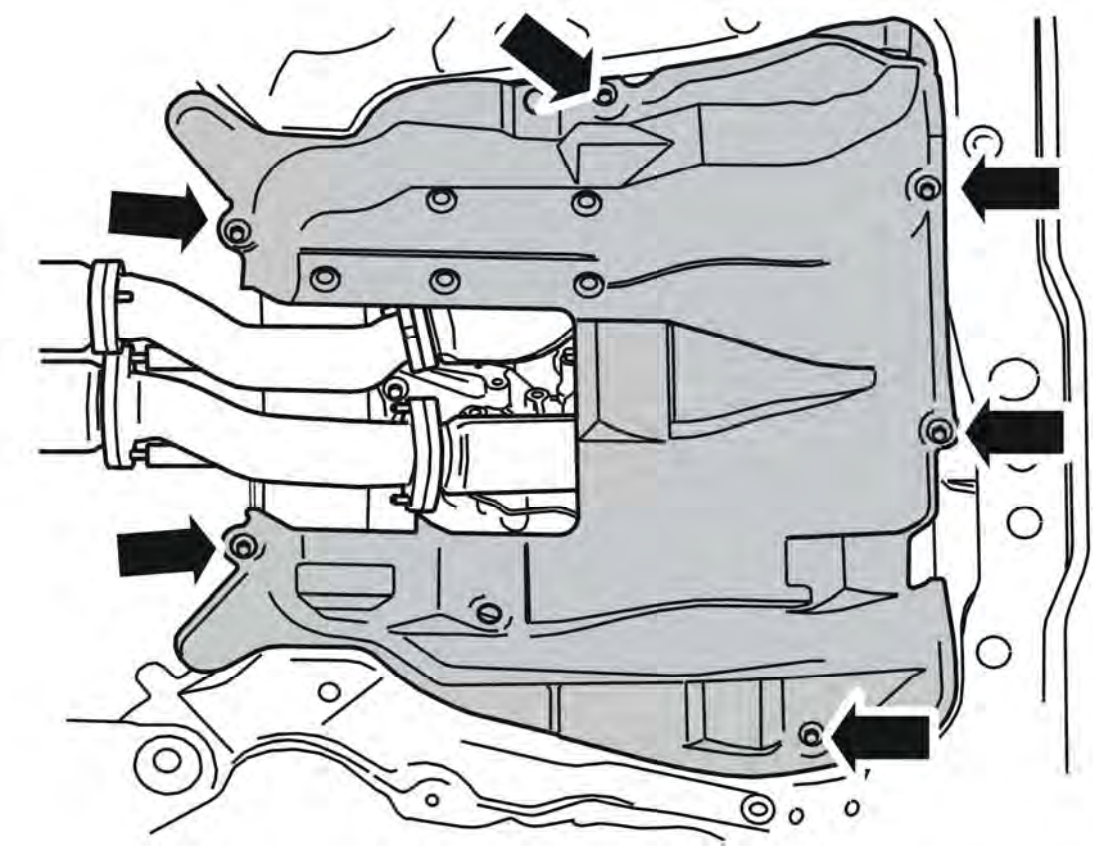

Fig. 213: Removing Plash Guard
Courtesy of VOLVO CARS CORPORATION

Remove:

- the bolts, x6
- the protective cover under the engine.

REMOVING THE GEARBOX BOLTS TO THE LOWER TORQUE ROD

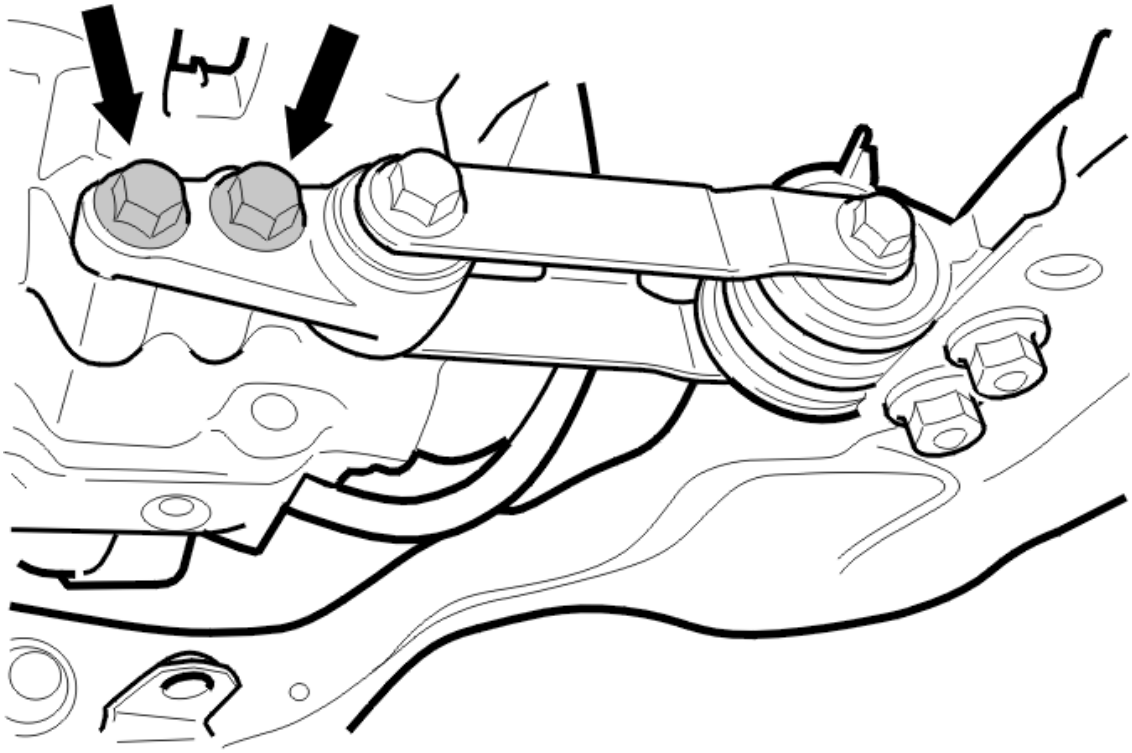

Fig. 214: Identifying Gearbox Bolts
Courtesy of VOLVO CARS CORPORATION

Remove the bolts, x2.

REMOVING THE EXHAUST PIPES BETWEEN FRONT AND REAR CATALYTIC CONVERTERS

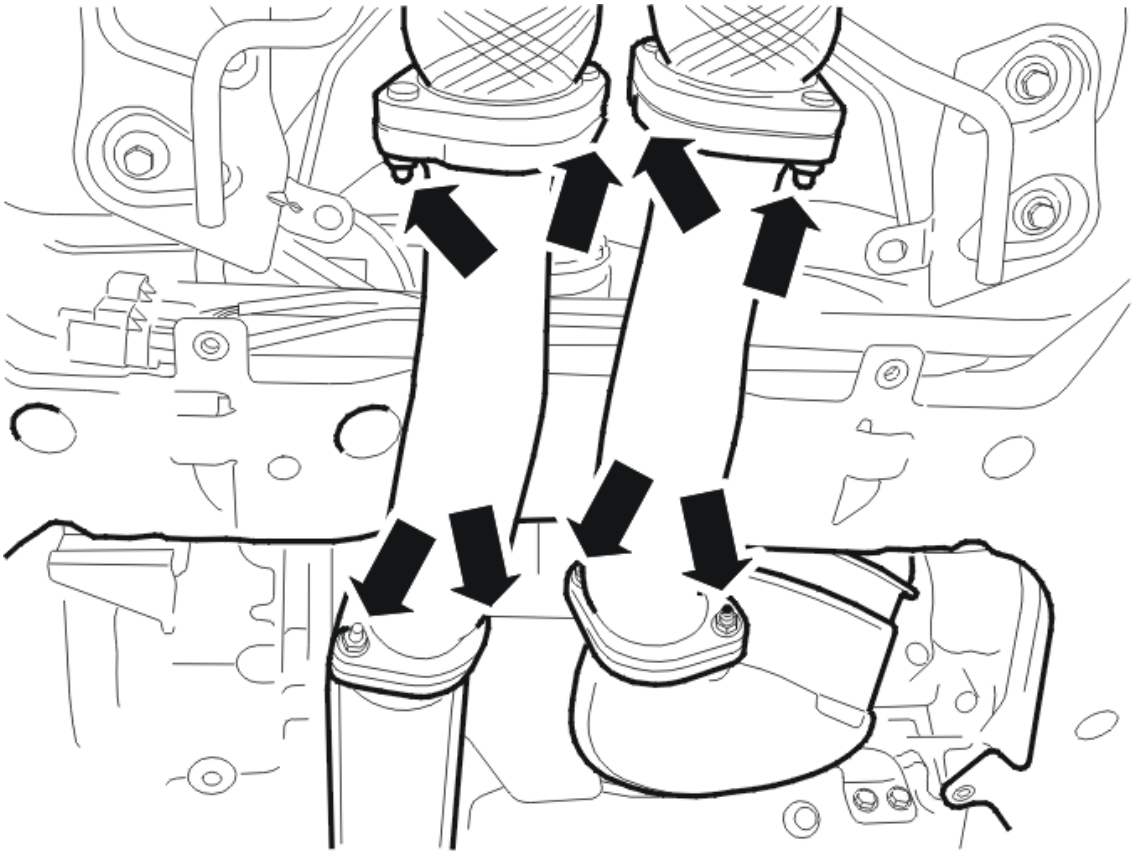

Fig. 215: Removing Exhaust Pipes
Courtesy of VOLVO CARS CORPORATION

Remove:

- both exhaust pipes' nuts
- both exhaust pipes.

REMOVING THE LOWER BOLT TO THE FRONT ENGINE PAD

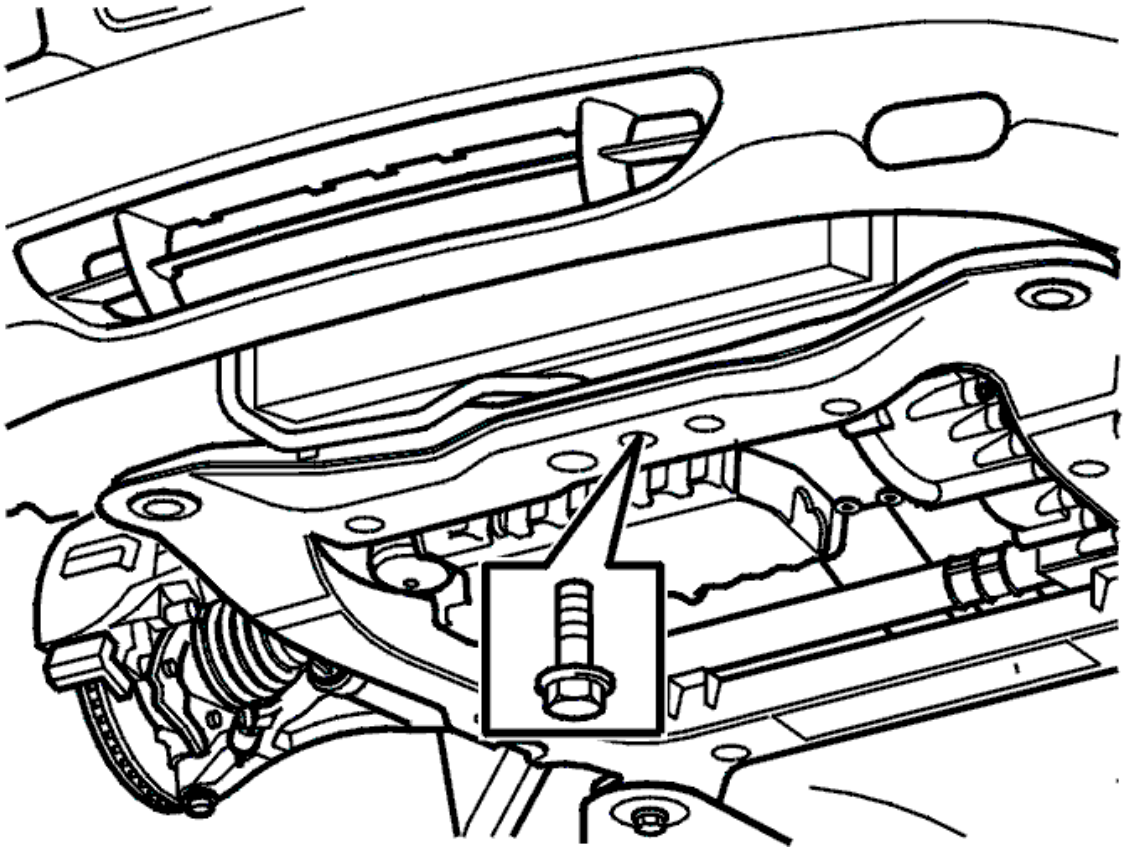

Fig. 216: Front Engine Pad Screw
Courtesy of VOLVO CARS CORPORATION

Remove the lower bolt to the engine pad.

REMOVING THE LOWER BOLT TO THE REAR ENGINE PAD

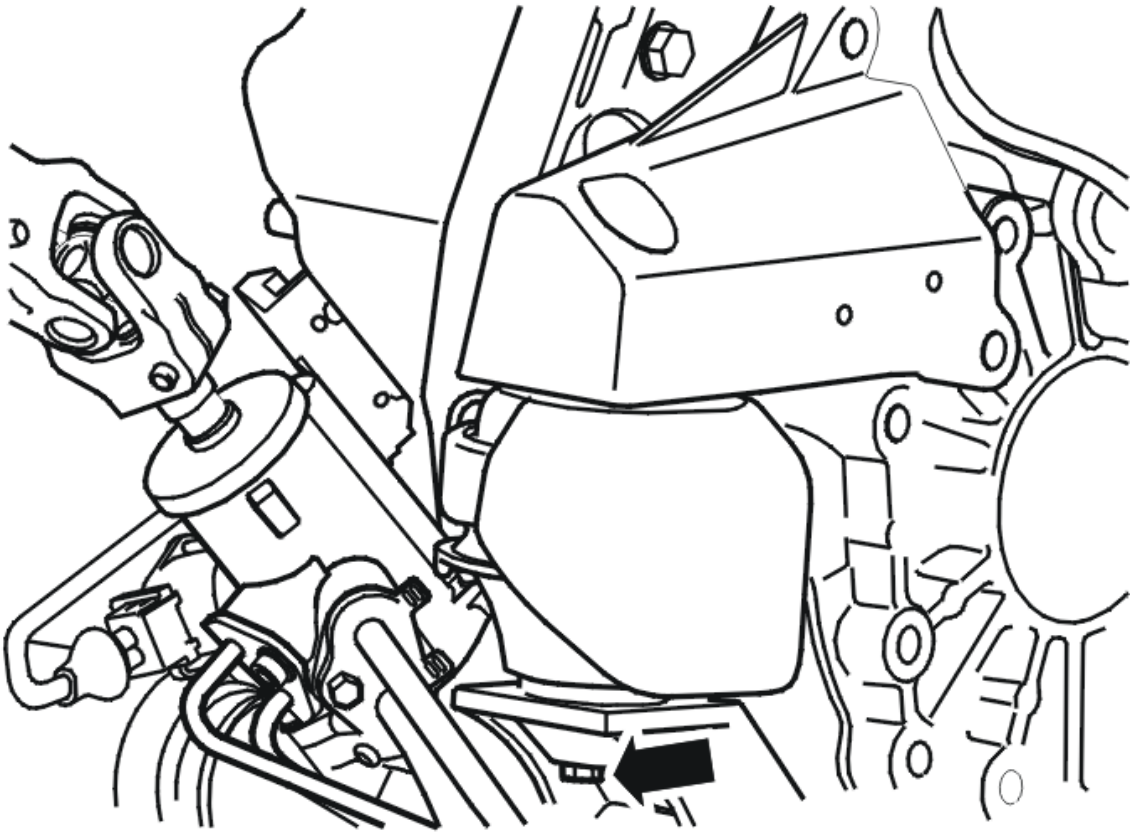

Fig. 217: Removing Engine Pad Bolt
Courtesy of VOLVO CARS CORPORATION

Release the heated oxygen sensor (HO2S) connectors, x2, from the subframe.

Fold aside the protective plate under the steering gear to gain access to the engine pad's lower bolt.

Remove the engine pad's bolt.

REMOVING THE LOWER STEERING SHAFT JOINT

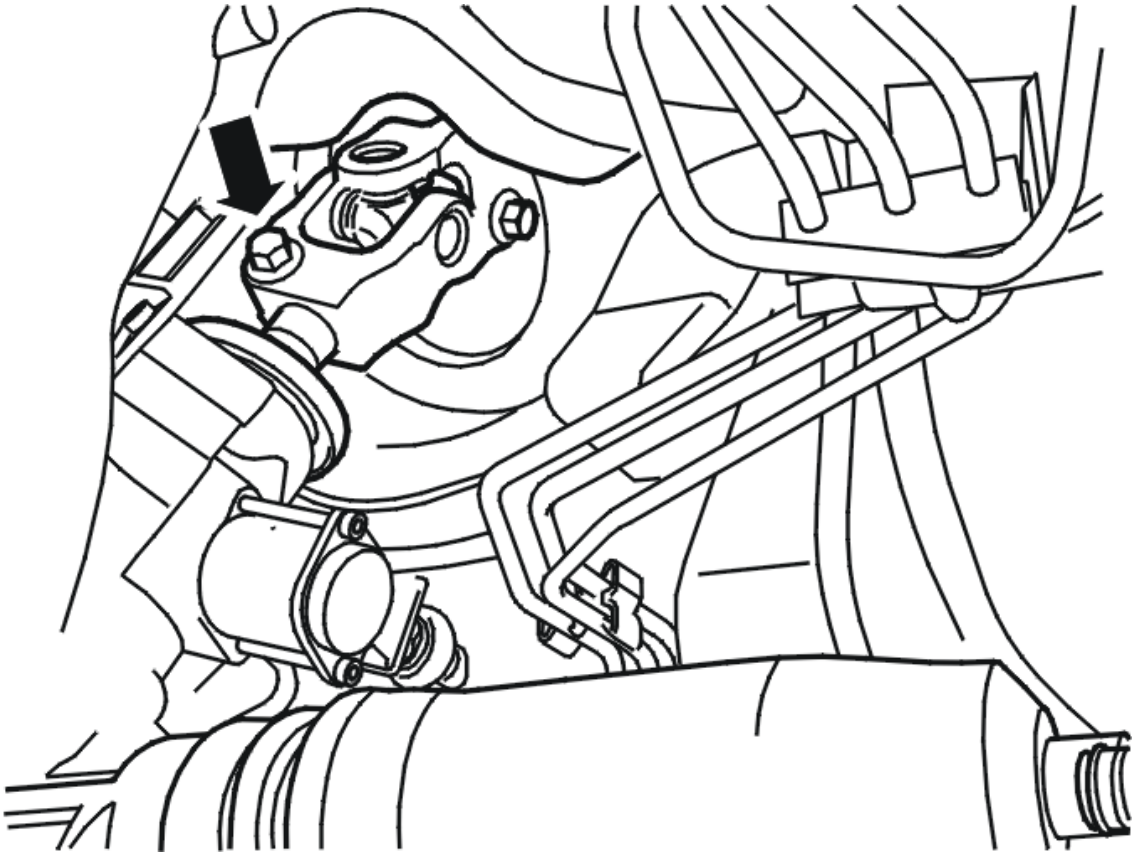

Fig. 218: Steering Shaft Joint Mounting Bolt
Courtesy of VOLVO CARS CORPORATION

NOTE: **Turn the steering wheel until optimum access to the bolt is achieved. Lock the steering wheel and take out the ignition key, so that the steering wheel lock is activated.**

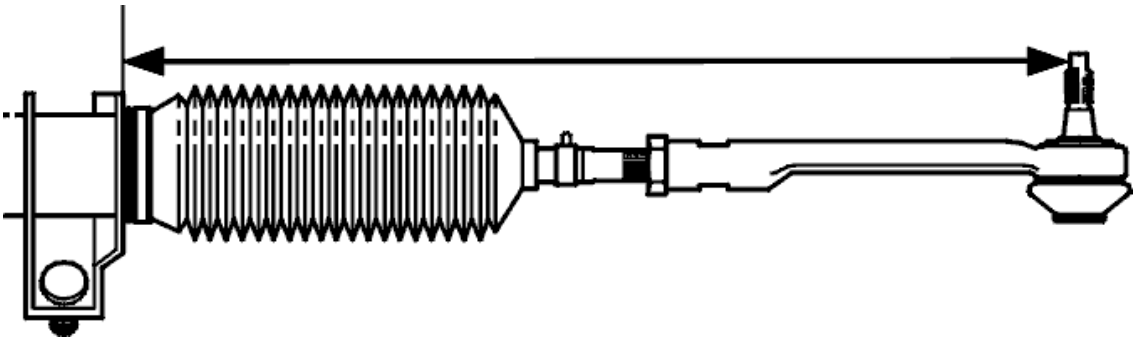

Fig. 219: Identifying Length Of Track Rod In Relation To Steering Gear Housing
Courtesy of VOLVO CARS CORPORATION

NOTE: **On one side, measure the length of the track rod in relation to the steering gear housing. Make a note of the measurement.**

Remove:

- the bolt to the lower steering shaft joint
- the connector to the solenoid.

LOWERING THE SUBFRAME

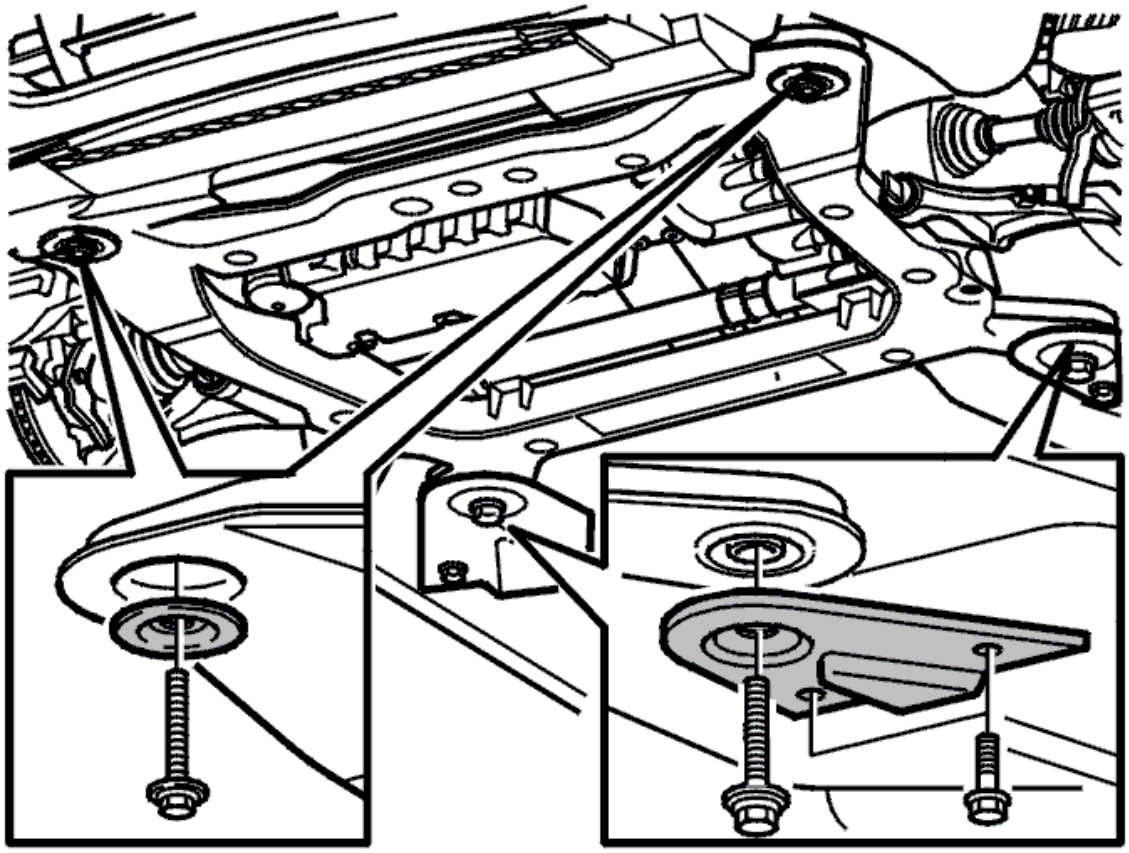

Fig. 220: Identifying Bolts, Washers And Brackets In Sub-Frame
Courtesy of VOLVO CARS CORPORATION

NOTE: Press the joint up from the steering gear. Make sure that no pipes or lines are loaded or trapped when lowering.

Position a lifting table under the subframe.

Remove on both sides:

- the bolts to the subframe's brackets at the rear edge
- the bolts to the subframe in the front and rear edge
- the subframe's brackets.

Release the heated oxygen sensor (HO2S) cables from the anti-roll bar.

Lower the subframe carefully.

REMOVING THE RETURN PIPE, CONTINUED

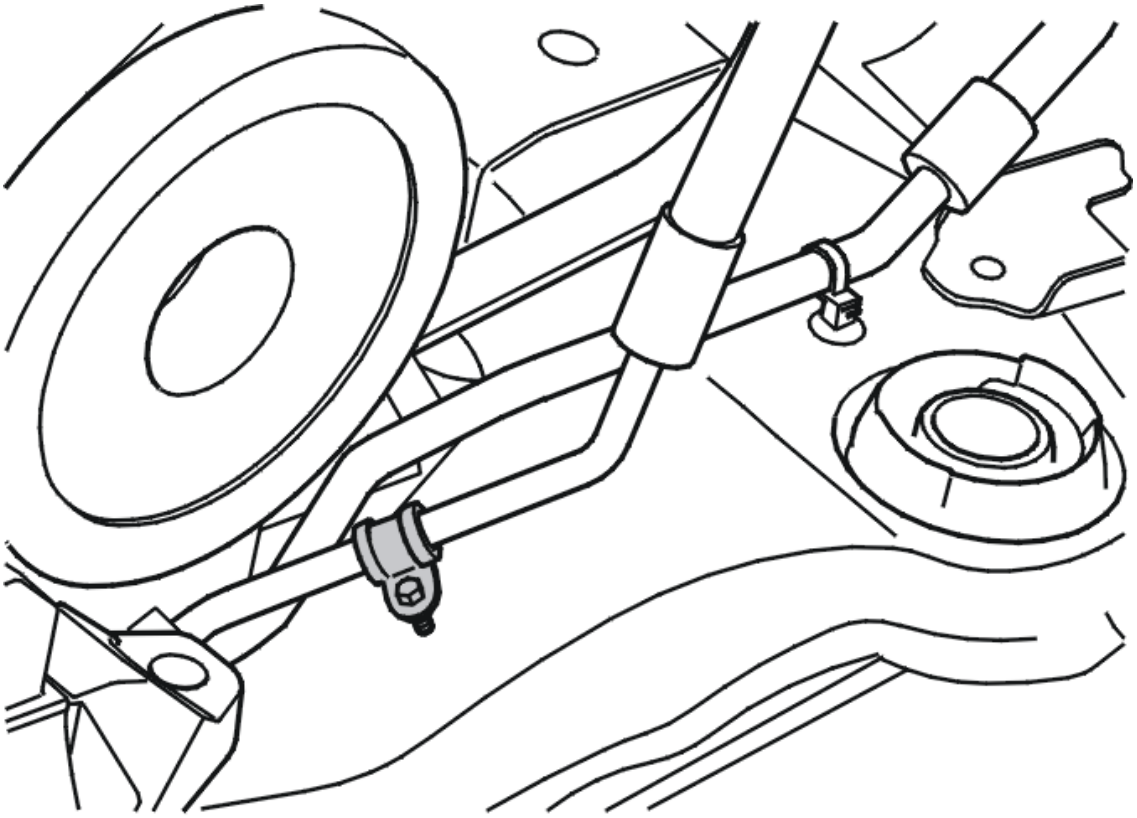

Fig. 221: Removing Return Pipe
Courtesy of VOLVO CARS CORPORATION

Release the pipe from the clips on the subframe.

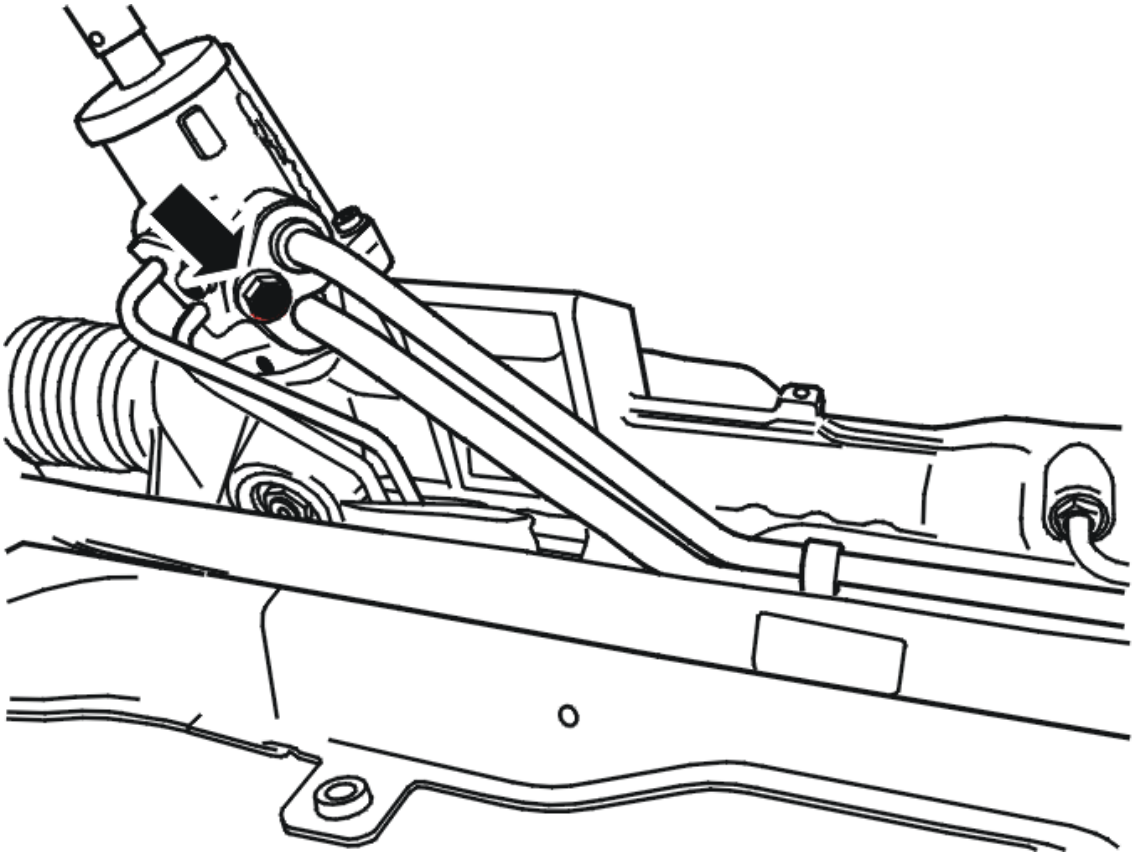

Fig. 222: Removing Steering Gear Pipe
Courtesy of VOLVO CARS CORPORATION

Place a container under the steering gear.

Remove:

- the pipes' bolt on the valve housing
- the pipe.

INSTALLATION

NOTE: For tightening torques, see: TIGHTENING TORQUE .

INSTALLING THE RETURN PIPE

NOTE: Use a new O-ring.

Install:

- the hose with the clamp to the oil reservoir
- the oil reservoir

- the pipe in the clip and the clamp on the engine cooling fan (FC)
- the pipe in the clips on the subframe
- the pipe in the valve housing
- the pipes' bolt, M8, on the valve housing.

INSTALLING THE SUBFRAME

Install the sub-frame. See **INSTALLING THE SUBFRAME**.

FITTING THE LOWER BOLT TO THE REAR ENGINE PAD

HINT: Unscrew the upper nut in order to facilitate fitting the lower bolt.

Install:

- the lower bolt to the engine pad, M10, x1
- the 2 x heated oxygen sensor (HO2S) connectors on the subframe. Reinstall the protective plate under the steering gear.

FITTING THE LOWER BOLT TO THE FRONT ENGINE PAD

Fit the lower bolt to the engine pad, M10, x1.

INSTALLING THE GEARBOX BOLTS TO THE LOWER TORQUE ROD

Fit the bolts, x2, in accordance with: **TIGHTENING TORQUE** .

INSTALLING THE LOWER STEERING SHAFT JOINT

Install:

- the lower steering shaft joint
- the bolt, M8
- the connector to the solenoid.

INSTALLING THE EXHAUST PIPES BETWEEN FRONT AND REAR CATALYTIC CONVERTERS

NOTE: To ensure that there is no exhaust leakage, see: FLANGED JOINT, ASSEMBLING

Install:

- both exhaust pipes
- both exhaust pipes' nuts M8.

INSTALLING THE PROTECTIVE COVER UNDER THE ENGINE

Install:

- the protective cover under the engine
- the bolts, M8, x6.

INSTALLING THE PROTECTIVE PLATE

Move the protective plate up in the bumper cover. Press forward until the mounting brackets enter the subframe. Fit the bolts, M10.

FITTING THE BOLTS TO THE RIGHT-HAND ENGINE PAD

Fit the bolts, x2, in accordance with: **TIGHTENING TORQUE** .

INSTALLING THE WING LINER

Install:

- the wing liner
- the plastic nuts, x2.

REMOVING THE LIFTING TOOL

Remove the lifting tool: see **9995716** , the kit: see **9997070** and lifting hooks: see **9995460** .

FITTING THE BOLTS TO THE TORQUE ROD

Fit the bolts, M10 x2, at the suspension turrets on both sides.

FILLING THE POWER STEERING FLUID RESERVOIR

CAUTION: Avoid skin contact with the oil.

NOTE: For the correct oil grade use Volvo power steering fluid, part number: 116 1529-1.

Fit the battery cable. Fill the power steering fluid reservoir.

Turn the steering wheel between both end positions several times.

Check and fill with oil as necessary.

Apply the parking brake.

Start the engine.

A: Turn the steering wheel slowly to the right, keep it at the end position for 2 seconds.

B: Turn the steering wheel slowly to the left, keep it at the end position for 2 seconds. Repeat steps A and B 10 times.

FINISHING

Remove the oil filler cap.

Install:

- the upper front engine casing
- the oil filler cap
- the front wheels on both sides in accordance with: **INSTALLING WHEELS** .

ADDITIVE AIR SYSTEM

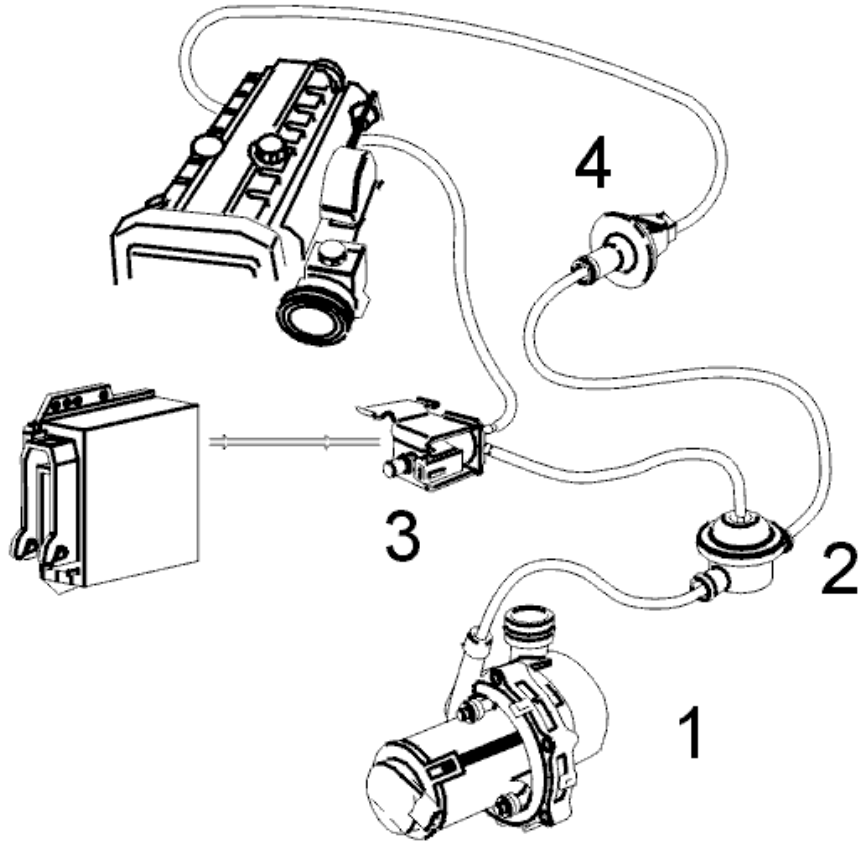

Fig. 223: Additive Air System Component Identification
Courtesy of VOLVO CARS CORPORATION

The purpose of the additive air system is to minimize hydrocarbon and carbon dioxide emissions at cold start by warming up the catalysator as rapidly as possible. By adding air to the exhaust ports during cold-starting, the additive air system initiates post-ignition of unburned hydrocarbons. This allows the injection period to be increased and the ignition to be retarded to give a higher exhaust temperature and, thus, more rapid activation of

the catalysator.

The system consists of:

- An air pump (1) activated by a relay and fitted with a filter. It has its intake directed towards the side in order to avoid ingress of dust or water.
- A shut-off valve (2) which regulates air supply to the exhaust ports.
- A magnetic valve (3) which controls the shut-off valve on the basis of intake manifold vacuum.
- A non-return valve (4) to prevent exhaust gas backflow.

The ECM controls the air-pump relay which, when the system is activated, starts the air pump and opens the magnetic valve. Air is led from the pump via the shut-off valve and non-return valve to the exhaust ports.

The air pump starts about 5-20 seconds after the engine, depending on engine type and temperature during starting. (Pre-B6254FS, it was also necessary for vehicle speed to exceed 3 km/h (2 mph)). The air pump then runs for between 45 and 120 seconds, depending on engine type and temperature during starting.

SERVO EQUIPMENT (B6324S5; 2011-2012)

POWER STEERING DELIVERY PIPE

see **POWER STEERING DELIVERY PIPE**

POWER STEERING PUMP

see **POWER STEERING PUMP**

RETURN PIPE/HOSE, STEERING GEAR, REPLACEMENT

see **RETURN PIPE/HOSE, STEERING GEAR, REPLACEMENT**

SERVO EQUIPMENT (B8444S; 2005-2011)

DELIVERY PIPES/HOSE STEERING GEAR, REPLACING

NOTE: **The illustrations in this service information are used for different model years and/or models. Some variation may occur. However, the essential information in the illustrations is always correct.**

REMOVAL

PREPARATIONS

Remove:

- the battery lead acc. to: **BATTERY, DISCONNECTING**

- the front wheels on both sides.

DRAINING THE POWER STEERING FLUID RESERVOIR

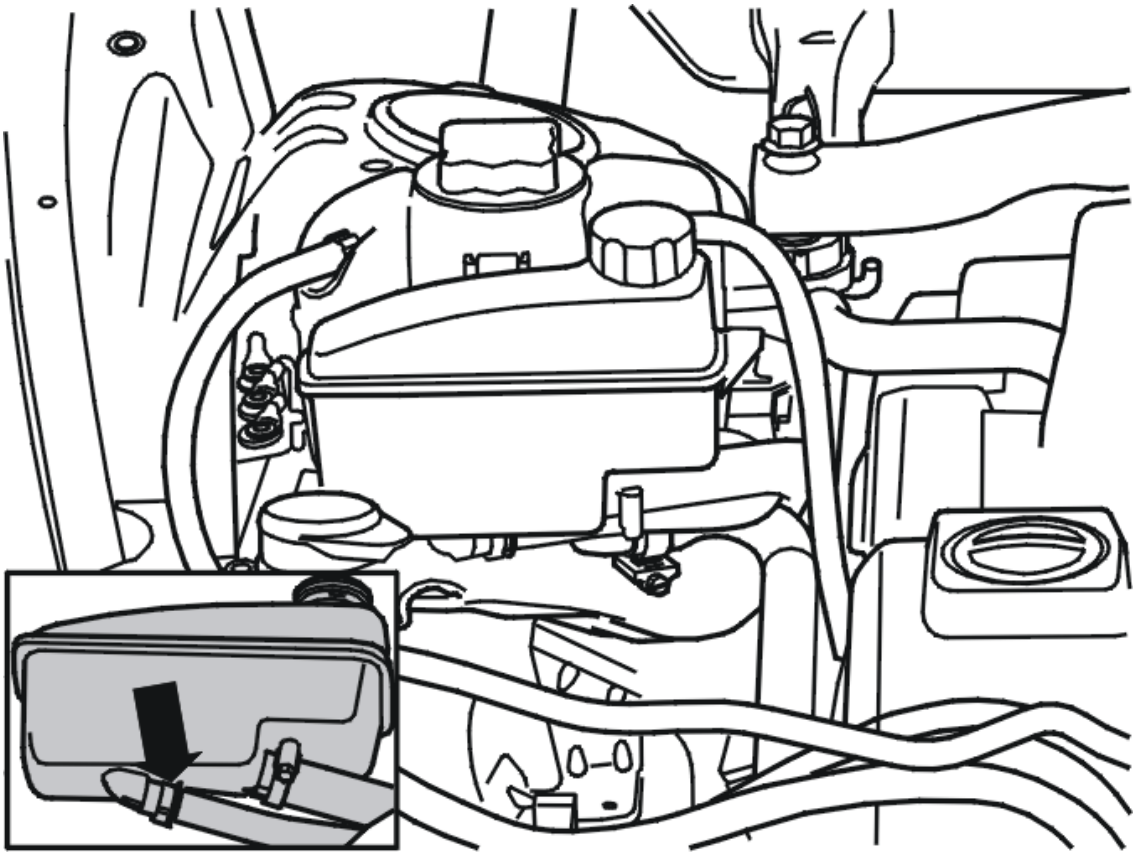

Fig. 224: Draining Power Steering Fluid Reservoir
Courtesy of VOLVO CARS CORPORATION

CAUTION: Avoid skin contact with the oil.

Lift up the oil reservoir. Place paper under the oil reservoir for any oil spillage.

Position a container under the oil reservoir. Remove the hose with the clamp from the oil reservoir. Drain the oil.

REMOVING THE ENGINE CASING

Remove:

- the oil filler cap
- the upper engine casing by pulling it straight up.

Fit the oil filler cap.

REMOVING THE PROTECTIVE COVER OVER THE POWER STEERING PUMP

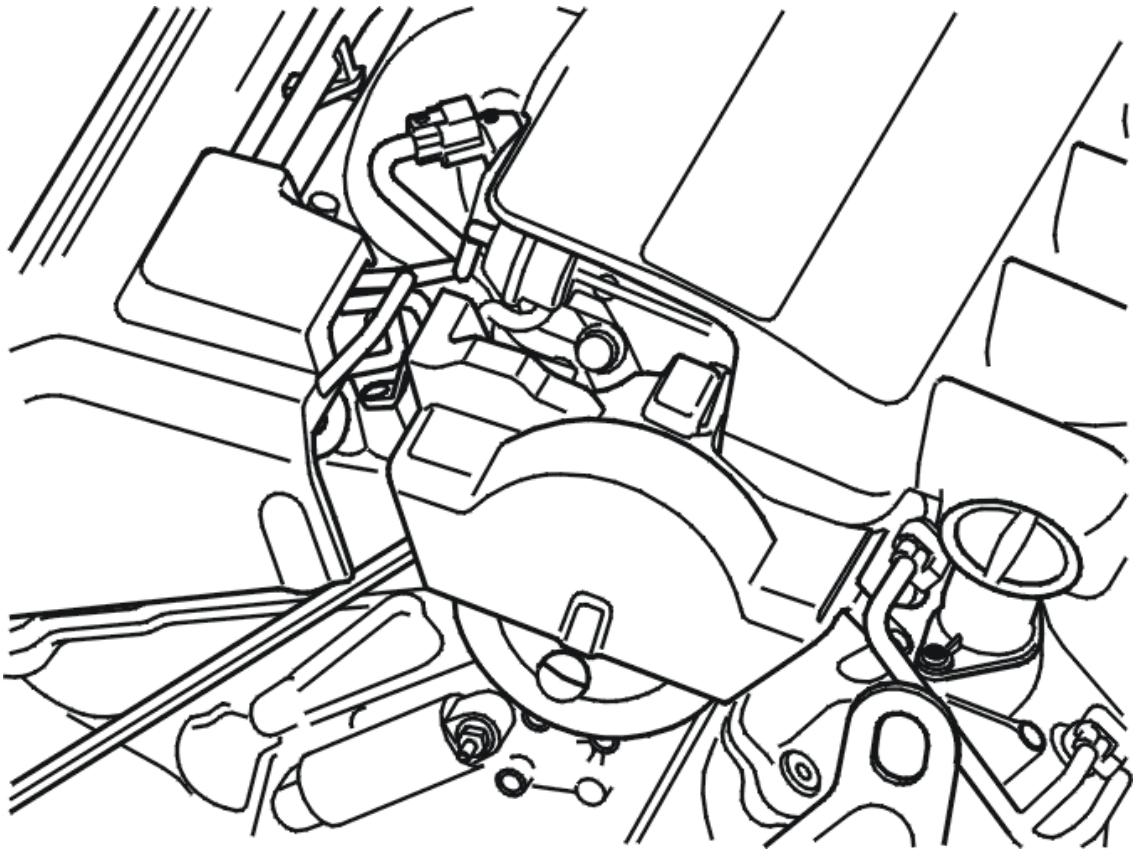

Fig. 225: Power Steering Protective Cover
Courtesy of VOLVO CARS CORPORATION

Lift up the upper rear engine casing on the right-hand side and put it to one side.

Remove:

- the plastic bolt
- the protective cover.

REMOVING THE PRESSURE PIPE

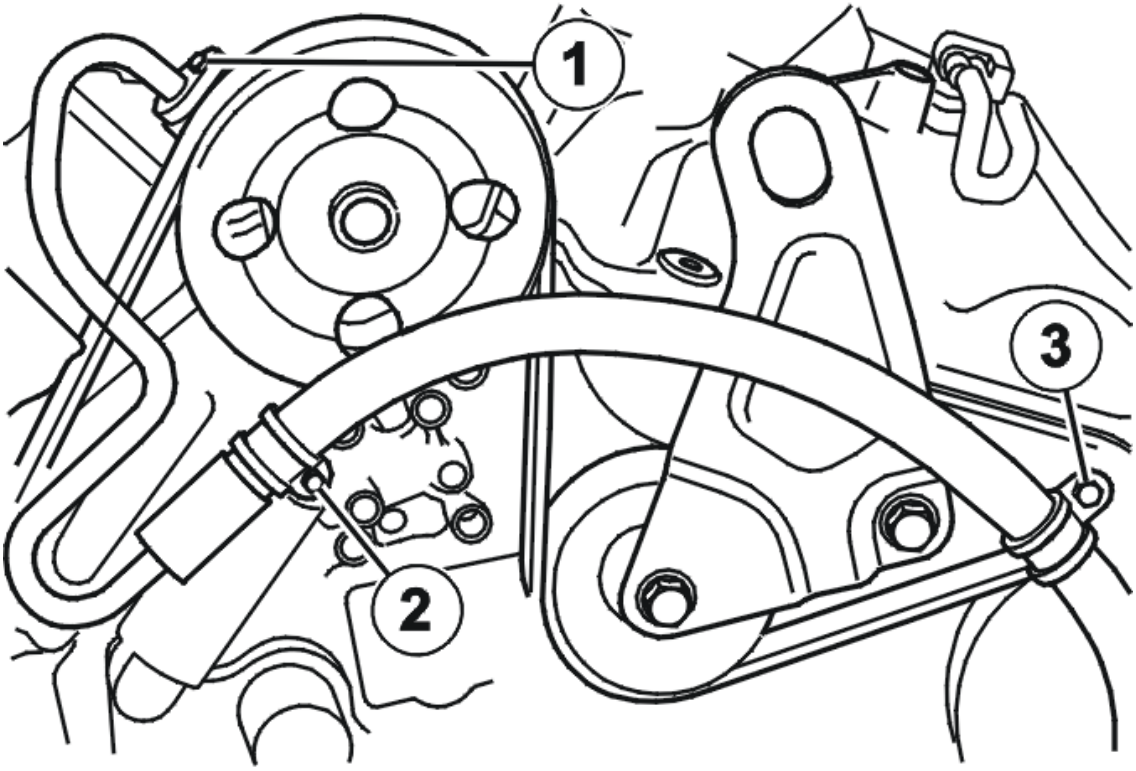

Fig. 226: Removing Pressure Pipe
Courtesy of VOLVO CARS CORPORATION

NOTE: Make a note of the oil pipe's location.

Position paper around the pipe on the power steering pump.

Remove:

- the bolt (1)
- the nut (2)
- the bolt (3)
- the pipe from the power steering pump.

REMOVING THE BOLTS TO THE TORQUE ROD

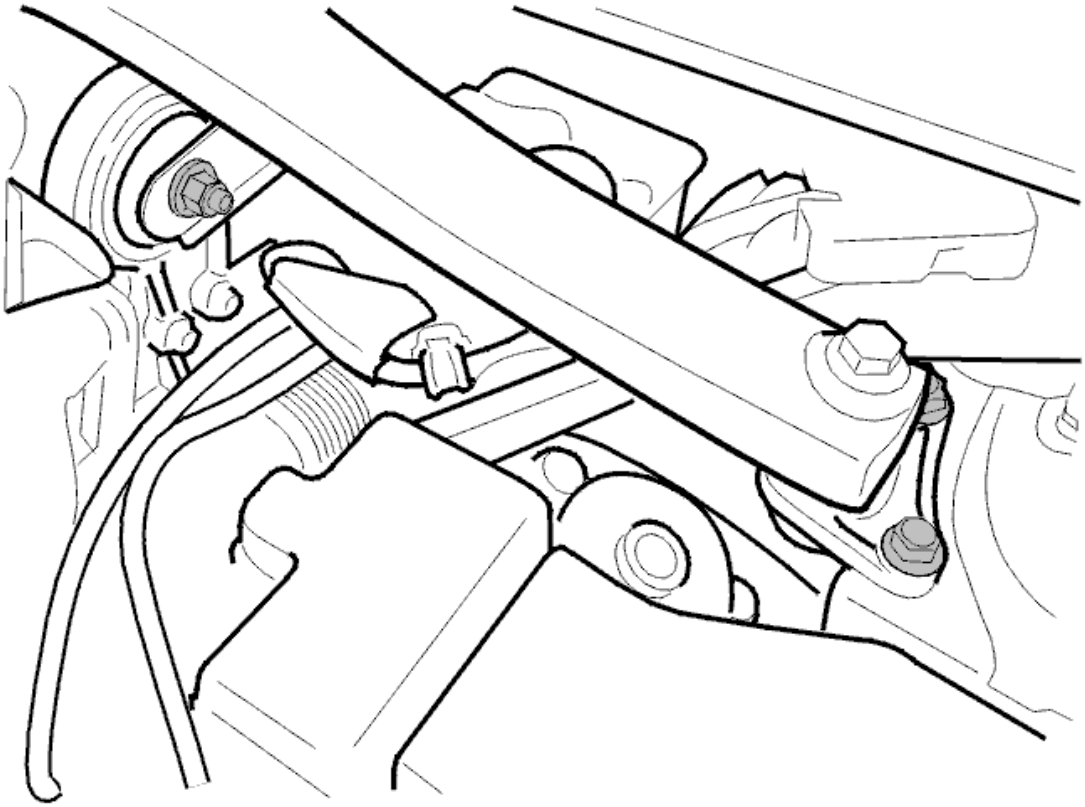

Fig. 227: Engine Stabilizer Brace
Courtesy of VOLVO CARS CORPORATION

Remove the bolts, x2, at the suspension turrets on both sides.

INSTALLING THE LIFTING TOOL

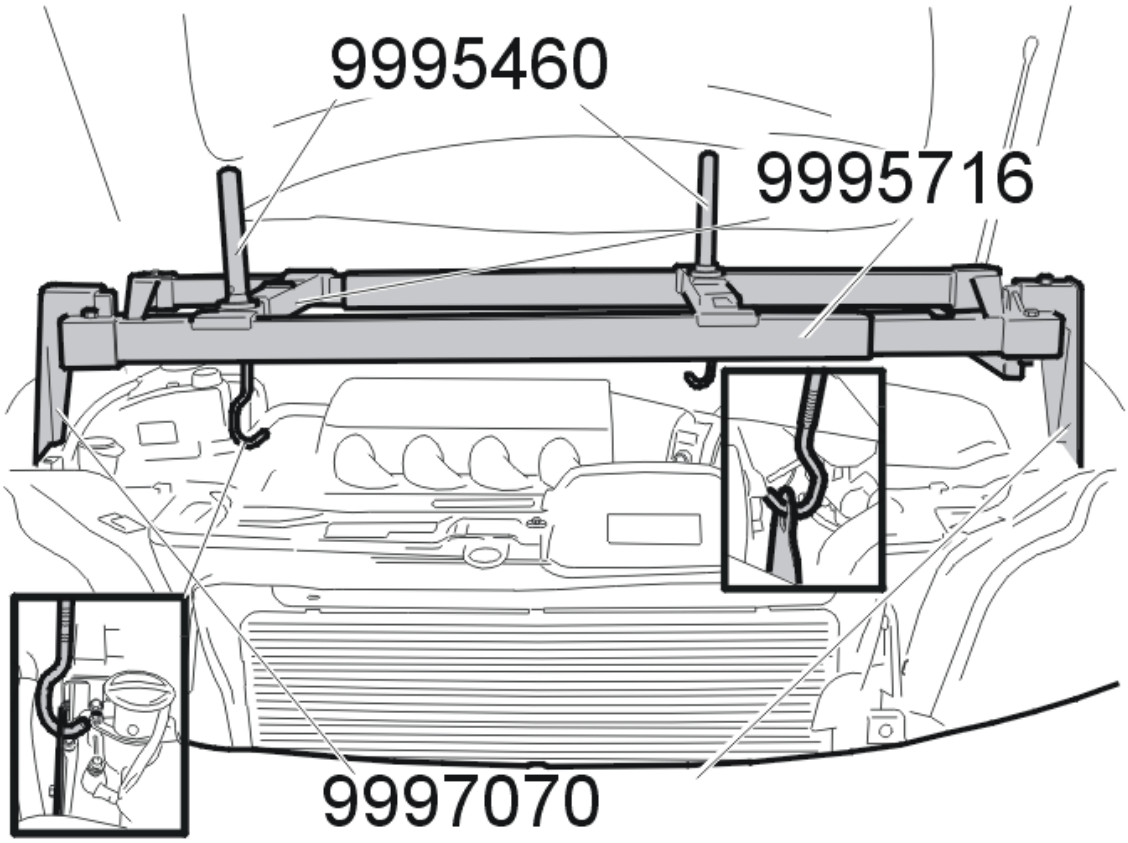

Fig. 228: Installing Lifting Tool
Courtesy of VOLVO CARS CORPORATION

NOTE: When lifting the engine make sure that the lifting eye does not scratch the torque rod. Tape the torque rod and keep it away from the eye.

Install the lifting tool: see **9995716** converted with the kit: see **9997070** and lifting hooks: see **9995460** . Lift up the engine slightly so that the engine pads are unloaded.

REMOVING THE WING LINER

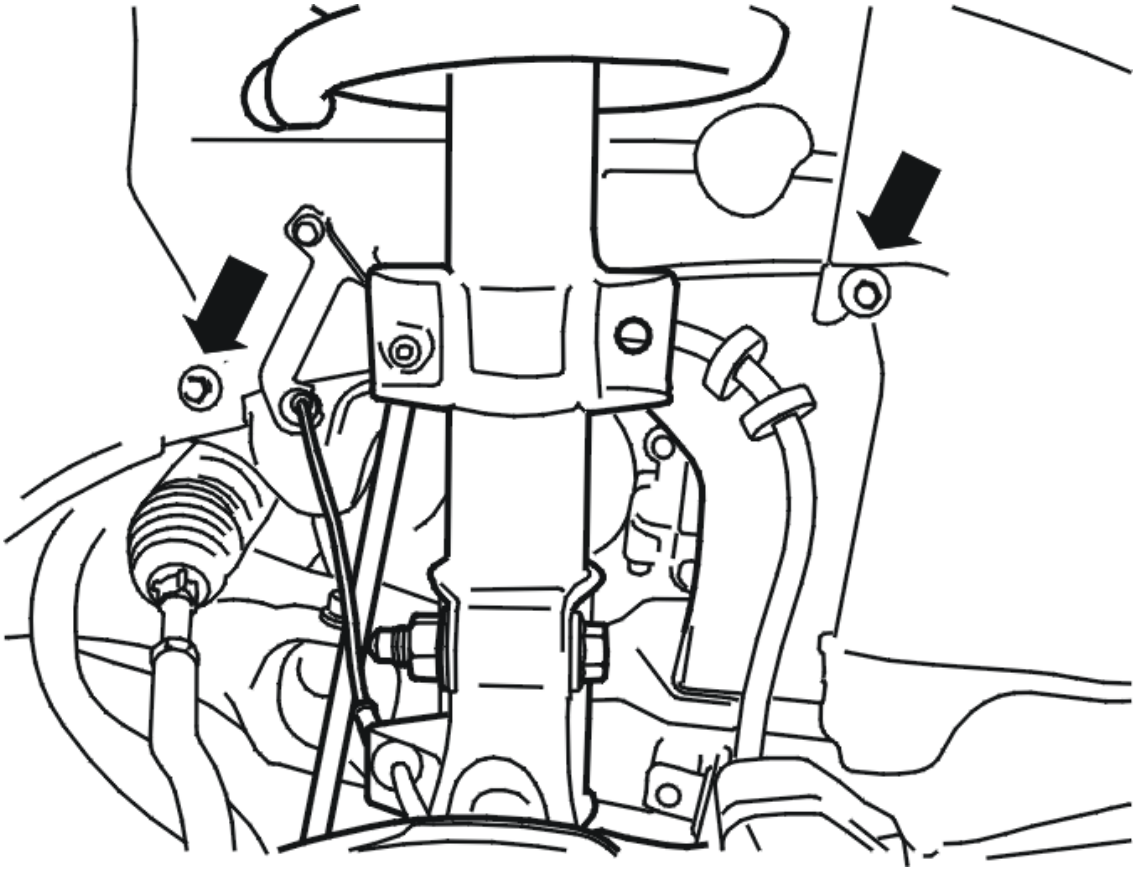

Fig. 229: Removing Wing Liner
Courtesy of VOLVO CARS CORPORATION

Remove:

- the plastic nuts, x2
- the wing liner.

REMOVING THE BOLTS TO THE RIGHT-HAND ENGINE PAD

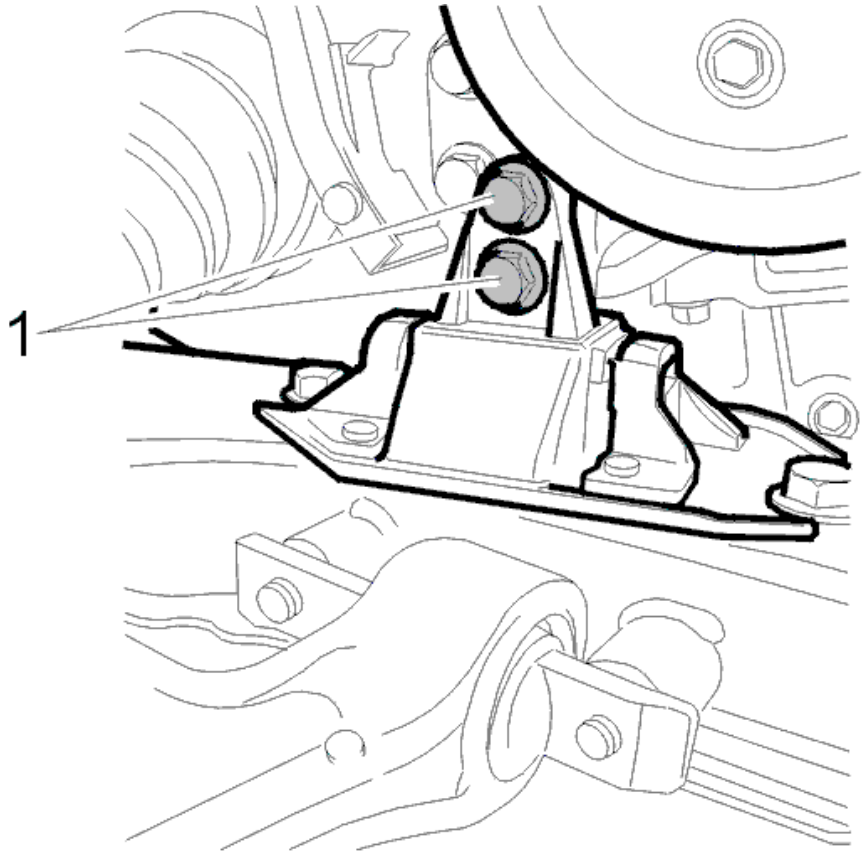

Fig. 230: Identifying Right-Hand Engine Mounting Screws
Courtesy of VOLVO CARS CORPORATION

Remove the bolts (1), x2.

REMOVING THE PROTECTIVE PLATE

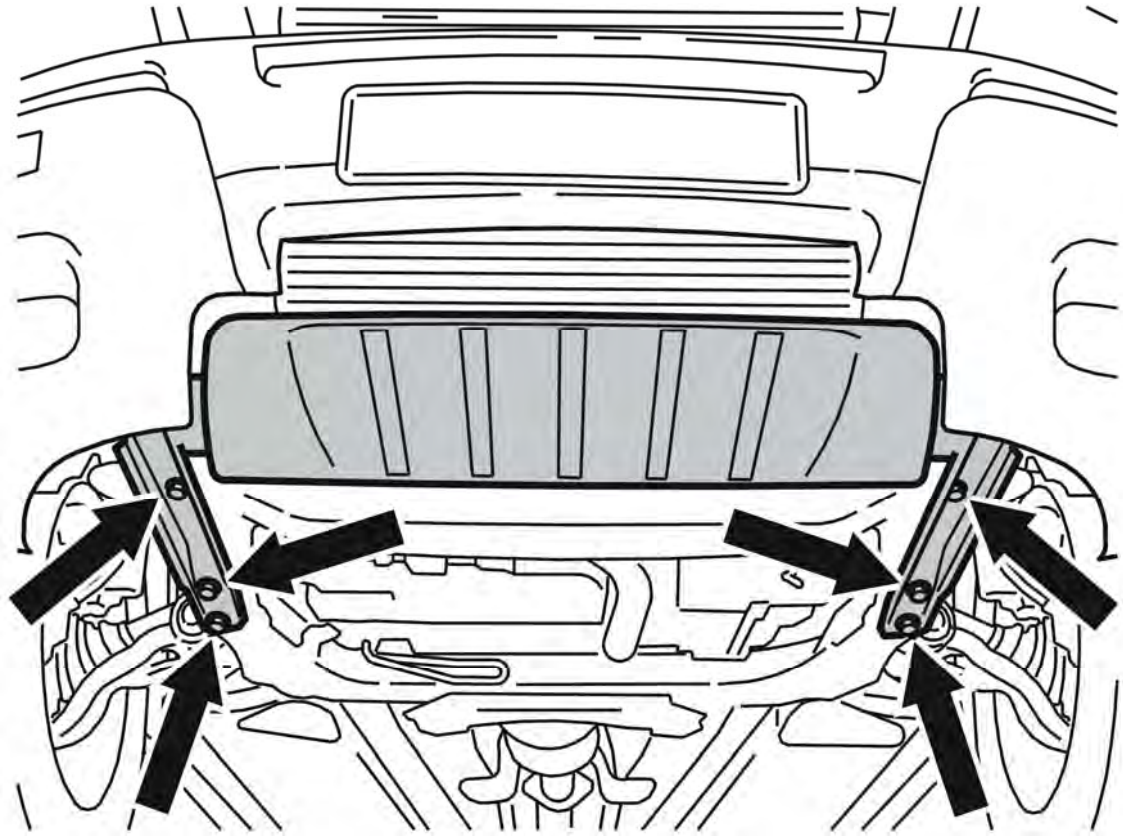

Fig. 231: Splash Guard. Protective Plate And Screws
Courtesy of VOLVO CARS CORPORATION

Remove the bolts, x6.

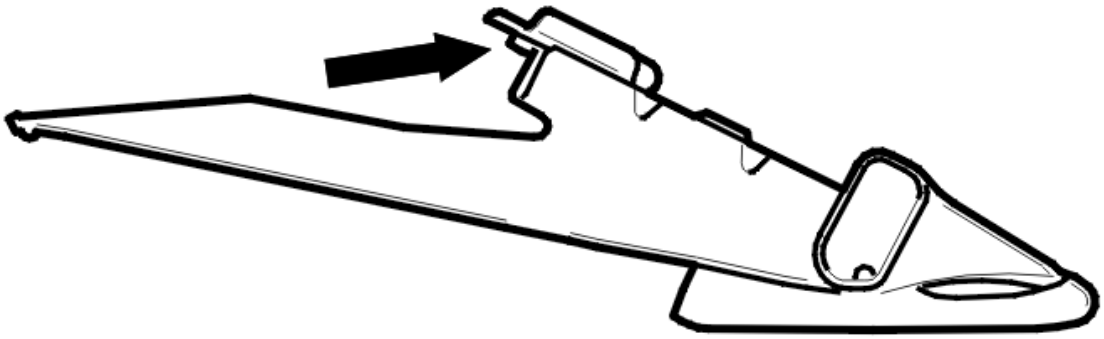

Fig. 232: Identifying Protective Plate
Courtesy of VOLVO CARS CORPORATION

NOTE: The plate's upper mounting has a guide sleeve and therefore it must be lifted slightly so that it can be slid forward.

Raise and move the protective plate forward. Remove the protective plate.

REMOVING THE PROTECTIVE COVER UNDER THE ENGINE

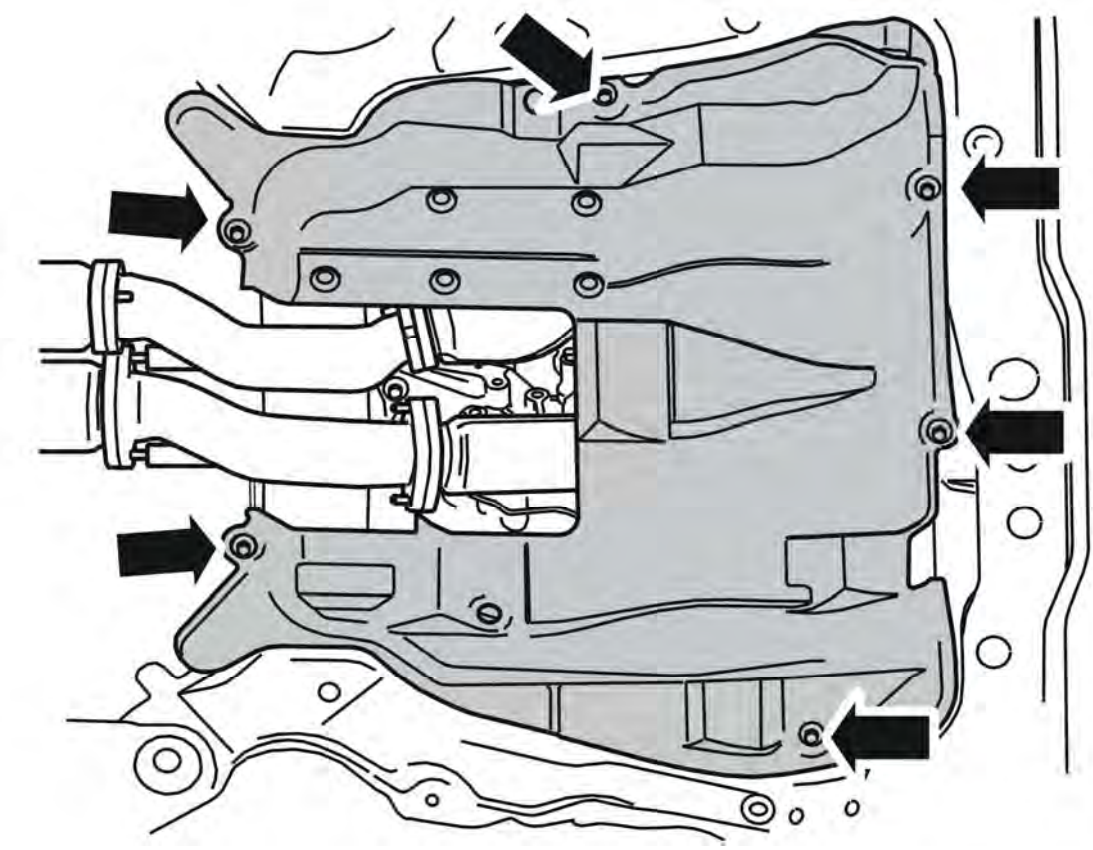

Fig. 233: Removing Splash Guard
Courtesy of VOLVO CARS CORPORATION

Remove:

- the bolts, x6
- the protective cover under the engine.

REMOVING THE GEARBOX BOLTS TO THE LOWER TORQUE ROD

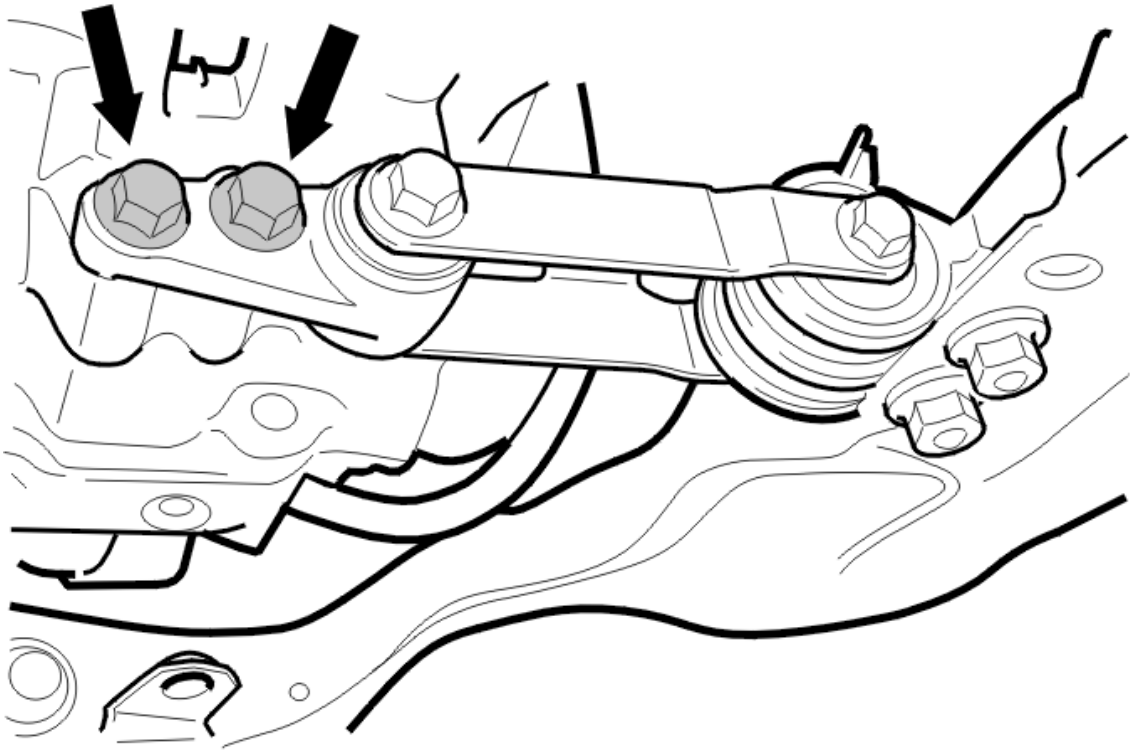

Fig. 234: Identifying Gearbox Bolts
Courtesy of VOLVO CARS CORPORATION

Remove the bolts, x2.

REMOVING THE EXHAUST PIPES BETWEEN FRONT AND REAR CATALYTIC CONVERTERS

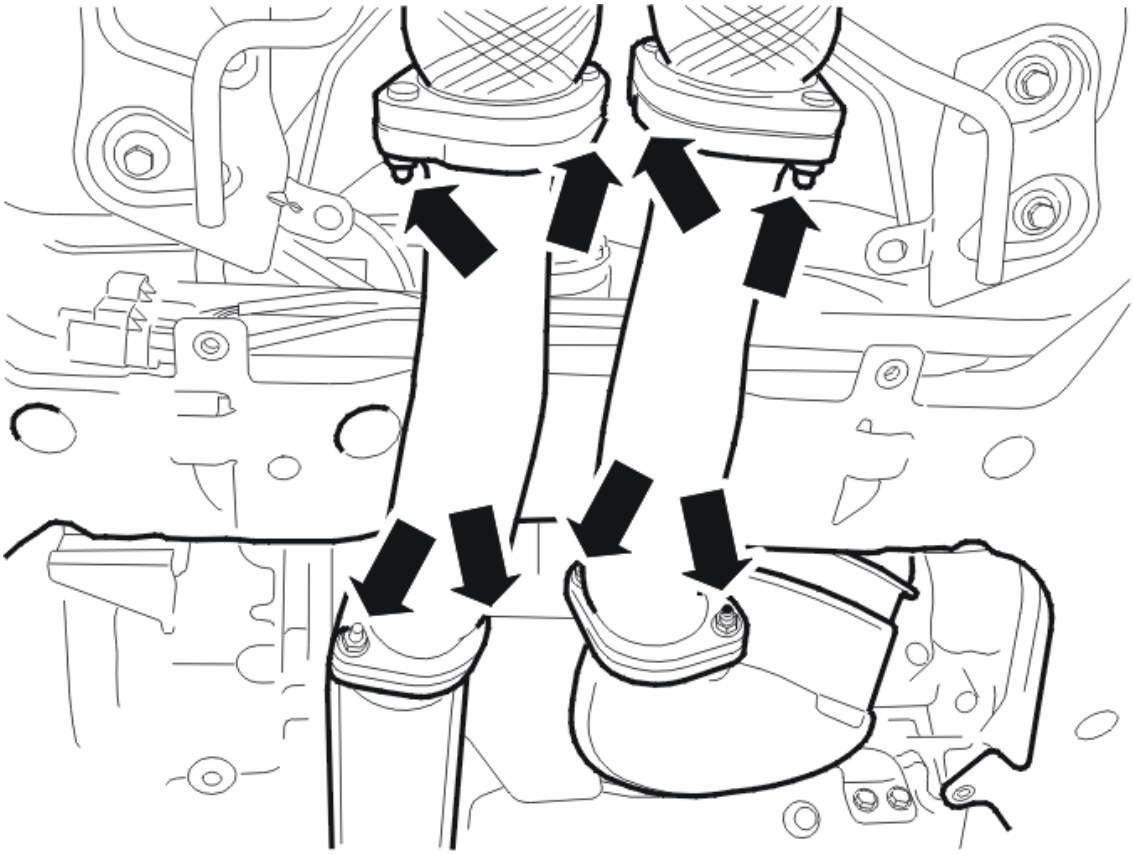

Fig. 235: Removing Exhaust Pipes
Courtesy of VOLVO CARS CORPORATION

Remove:

- both exhaust pipes' nuts
- both exhaust pipes.

REMOVING THE LOWER BOLT TO THE FRONT ENGINE PAD

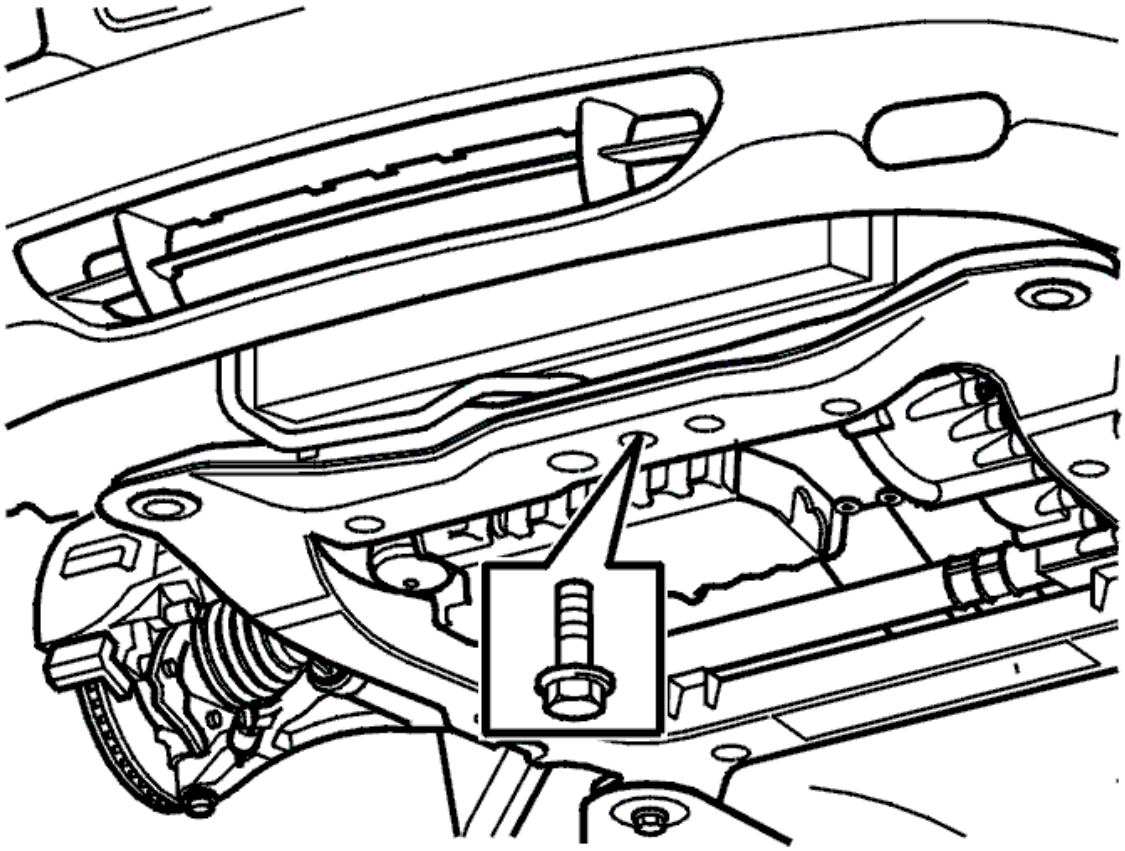

Fig. 236: Front Engine Pad Screw
Courtesy of VOLVO CARS CORPORATION

Remove the lower bolt to the engine pad.

REMOVING THE LOWER BOLT TO THE REAR ENGINE PAD

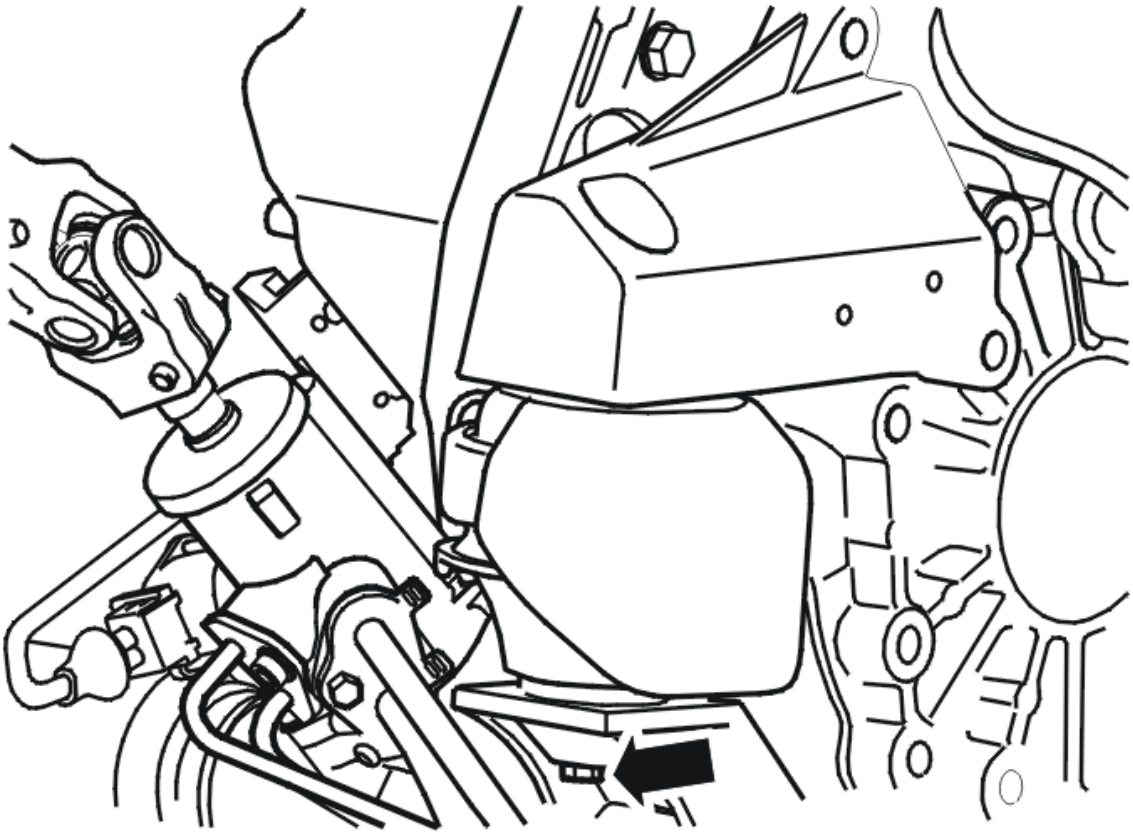

Fig. 237: Removing Engine Pad Bolt
Courtesy of VOLVO CARS CORPORATION

Release the heated oxygen sensor (HO2S) connectors, x2, from the subframe.

Fold aside the protective plate under the steering gear to gain access to the engine pad's lower bolt. Remove the engine pad's bolt.

REMOVING THE STEERING SHAFT JOINT, LOWER

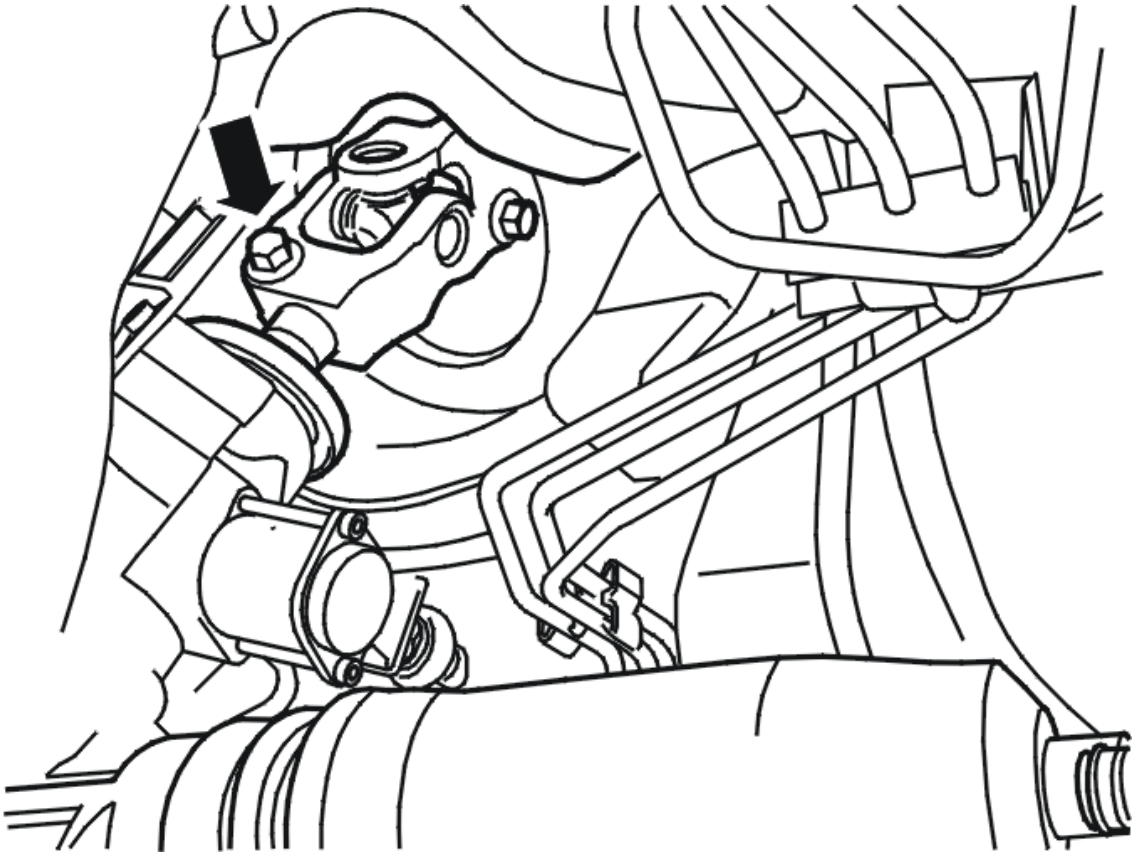

Fig. 238: Removing Steering Wheel Shaft
Courtesy of VOLVO CARS CORPORATION

NOTE: **Turn the steering wheel until optimum access to the bolt is achieved. Lock the steering wheel and take out the ignition key, so that the steering wheel lock is activated.**

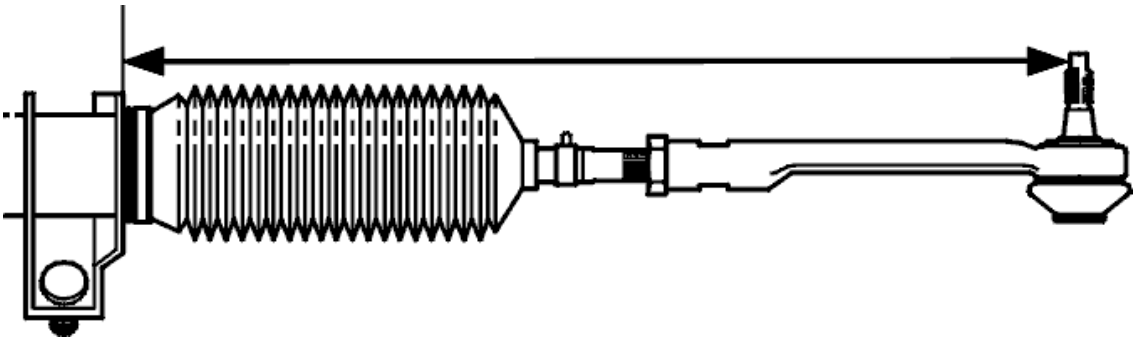

Fig. 239: Identifying Length Of Track Rod In Relation To Steering Gear Housing
Courtesy of VOLVO CARS CORPORATION

NOTE: **On one side, measure the length of the track rod in relation to the steering gear housing. Make a note of the measurement.**

Remove:

- the bolt to the lower steering shaft joint
- the connector to the solenoid.

LOWERING THE SUBFRAME

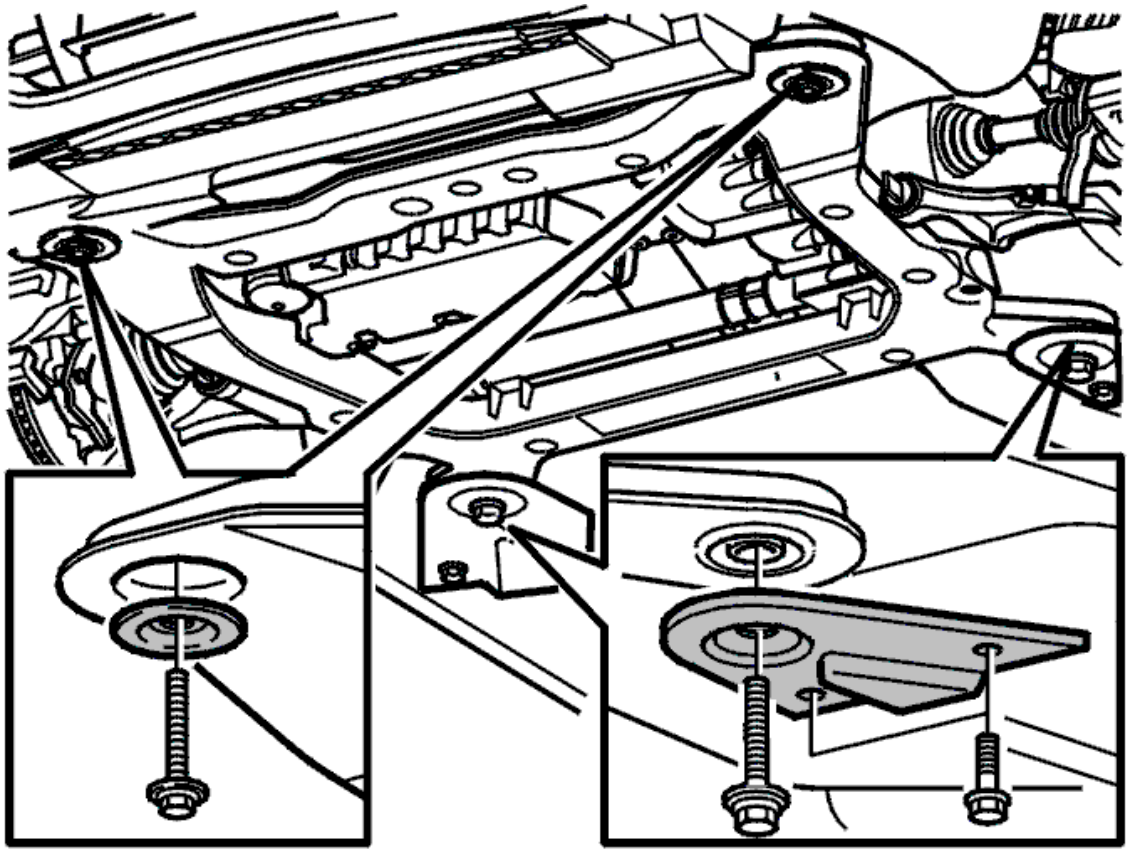

Fig. 240: Identifying Bolts, Washers And Brackets In Sub-Frame
Courtesy of VOLVO CARS CORPORATION

NOTE: Press the joint up from the steering gear.

Make sure that no pipes or lines are loaded or trapped when lowering.

Position a lifting table under the subframe.

Remove on both sides:

- the bolts to the subframe's brackets at the rear edge
- the bolts to the subframe in the front and rear edge
- the subframe's brackets.

Release the heated oxygen sensor (HO2S) lines from the anti-roll bar. Lower the subframe carefully.

REMOVING THE PRESSURE PIPE, CONTINUED

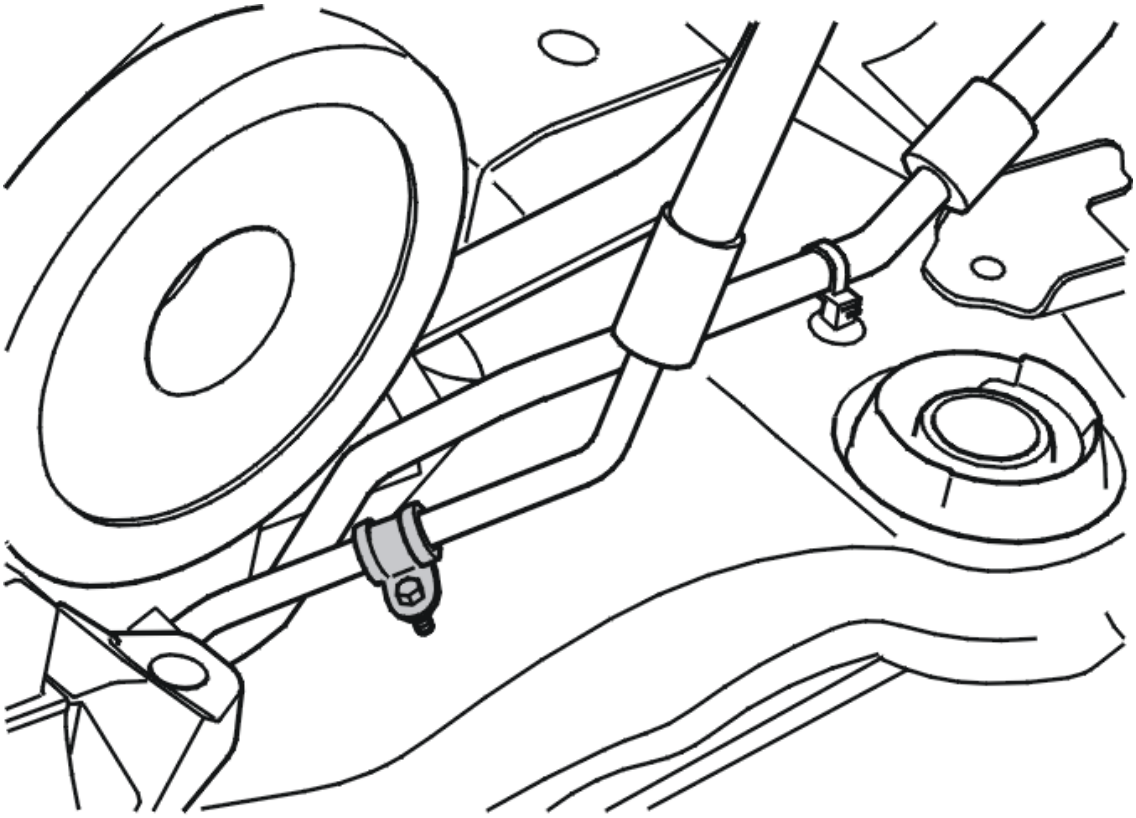

Fig. 241: Removing Pressure Pipe
Courtesy of VOLVO CARS CORPORATION

Position a container under the steering gear. Remove the bolt to the oil pipe bracket on the subframe.

Release the pipe from the clips.

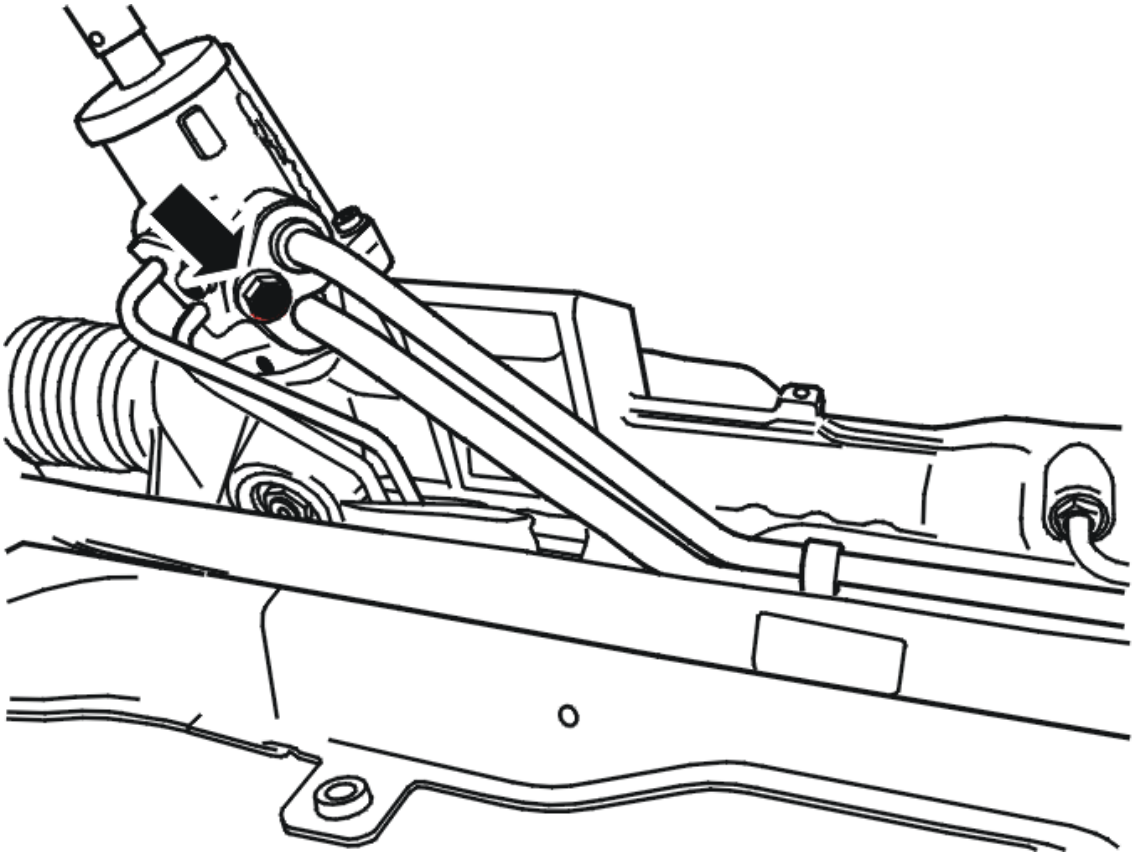

Fig. 242: Removing Power Steering Pipe
Courtesy of VOLVO CARS CORPORATION

Remove:

- the pipes' bolt on the valve housing
- the pipe.

INSTALLATION

INSTALLING THE PRESSURE PIPE

CAUTION: Use new O-rings.

Install:

- the pipe in the power steering pump
- the bolt (1) in accordance with: **SUMMARY OF TIGHTENING TORQUES FOR SPECIFIC COMPONENTS**
- the nut (2) M6
- the bolt (3) M6

- the bolt, M6, to the oil pipe bracket on the subframe
- the pipe in the clips
- the pipe in the valve housing
- the pipes' bolt on the steering gear/valve housing in accordance with: **SUMMARY OF TIGHTENING TORQUES FOR SPECIFIC COMPONENTS** .

INSTALLING THE SUBFRAME

CAUTION: Make sure that no pipes or lines are loaded or trapped when raising the subframe.

Raise the subframe.

Install the sub-frame's four screws together with the sub-frame's brackets and engine heater, if installed.

Use new screws. Lube the screws with oil.

Tighten acc. to: **SUMMARY OF TIGHTENING TORQUES FOR SPECIFIC COMPONENTS** . First tighten the screws on the sub-frame's left side, then on the right.

Tighten the screws for the brackets M10.

Install the heated oxygen sensor's cables on the anti-roll bar.

Remove the lifting table.

FITTING THE LOWER BOLT TO THE REAR ENGINE PAD

HINT: Unscrew the upper nut in order to facilitate fitting the lower bolt.

Install:

- the lower bolt to the engine pad, M10 x1.
- the heated oxygen sensor (HO2S) connectors on the subframe, x2. Refit the protective plate under the steering gear.

FITTING THE LOWER BOLT TO THE FRONT ENGINE PAD

Fit the lower bolt to the engine pad, M10 x1.

INSTALLING THE GEARBOX BOLTS TO THE LOWER TORQUE ROD

Fit the bolts, x2, in accordance with: **SUMMARY OF TIGHTENING TORQUES FOR SPECIFIC COMPONENTS** .

INSTALLING THE STEERING SHAFT JOINT, LOWER

Install:

- the lower steering shaft joint
- the bolt, M8
- the connector to the solenoid.

INSTALLING THE EXHAUST PIPES BETWEEN FRONT AND REAR CATALYTIC CONVERTERS

NOTE: To ensure that there is no exhaust leakage, see: FLANGED JOINT, ASSEMBLING .

Install:

- both exhaust pipes
- both exhaust pipes' nuts, M8.

INSTALLING THE PROTECTIVE COVER UNDER THE ENGINE

Install:

- the protective cover under the engine
- the bolts, M8 x6.

INSTALLING THE PROTECTIVE PLATE

Move the protective plate up in the bumper cover. Press forward until the mounting brackets enter the subframe.

Fit the bolts, M10.

FITTING THE BOLTS TO THE RIGHT-HAND ENGINE PAD

Fit the bolts, x2, in accordance with: **SUMMARY OF TIGHTENING TORQUES FOR SPECIFIC COMPONENTS** .

INSTALLING THE WING LINER

Install:

- the wing liner
- the plastic nuts, x2.

REMOVING THE LIFTING TOOL

Remove the lifting tool: see **9995716** , kit: see **9997070** and lifting hooks: see **9995460** .

FITTING THE BOLTS TO THE TORQUE ROD

Fit the bolts, M10 x2, at the suspension turrets on both sides.

FILLING THE POWER STEERING FLUID RESERVOIR

Fit the battery cable.

CAUTION: Avoid skin contact with the oil.

Install:

- the hose with the clamp to the oil reservoir
- the oil reservoir.

Fill the power steering fluid reservoir.

NOTE: For the correct oil grade use Volvo power steering fluid, part number: 116 1529-1.

Turn the steering wheel between both end positions several times.

Check and fill with oil as necessary.

Apply the parking brake. Start the engine.

A: Turn the steering wheel slowly to the right, keep it at the end position for 2 seconds.

B: Turn the steering wheel slowly to the left, keep it at the end position for 2 seconds.

Repeat steps A and B 10 times.

INSTALLING THE PROTECTIVE COVER OVER THE POWER STEERING PUMP

Install:

- the protective cover
- the plastic bolt
- the upper rear engine casing.

FINISHING

Remove the oil filler cap.

Install:

- the upper front engine casing

- the oil filler cap
- the front wheels on both sides in accordance with, see **INSTALLING WHEELS** .

POWER STEERING PUMP, REPLACING

NOTE: The illustrations in this service information are used for different model years and/or models. Some variation may occur. However, the essential information in the illustrations is always correct.

REMOVAL

PREPARATORY WORK

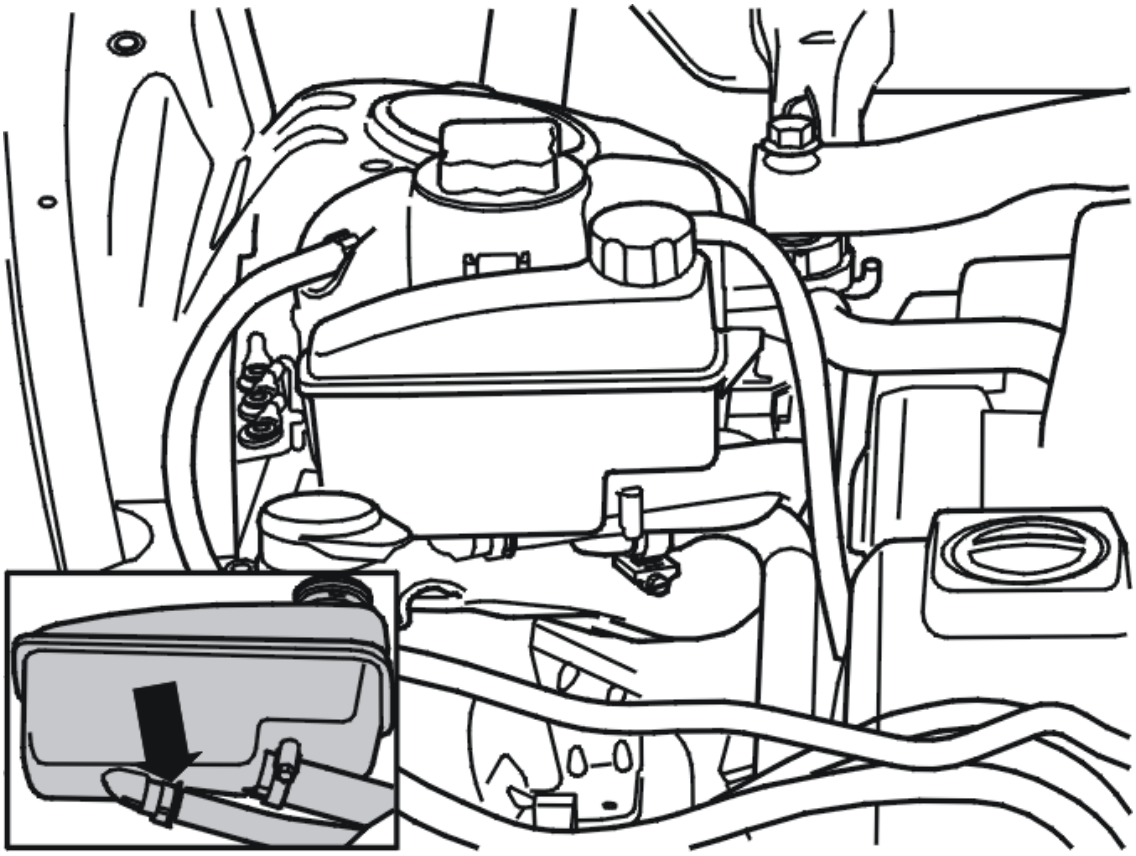

Fig. 243: Draining Oil Reservoir
Courtesy of VOLVO CARS CORPORATION

WARNING: **Avoid skin contact with the oil.**

Lift up the oil reservoir. Place paper under the oil reservoir for any oil spillage.

Position a container under the oil reservoir. Remove the hose with the clamp from the oil reservoir.

Drain the oil.

REMOVING THE INTAKE MANIFOLD.

Remove the intake manifold in accordance with: **INTAKE MANIFOLD/GASKET, REPLACING** .

REMOVING THE AUXILIARIES BELT/BELT TENSIONER

Remove the auxiliaries belt in accordance with: **AUXILIARIES BELT/BELT TENSIONER, REPLACEMENT** .

REMOVING THE POWER STEERING PUMP

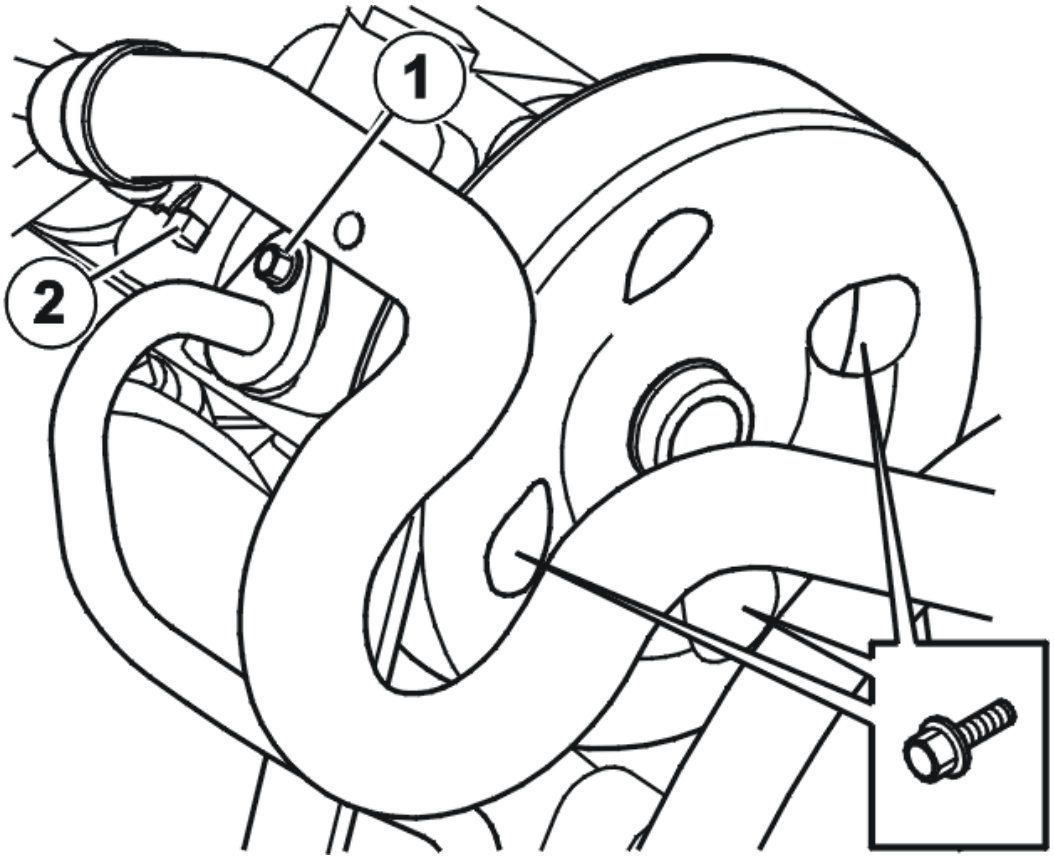

Fig. 244: Removing Power Steering Pump
Courtesy of VOLVO CARS CORPORATION

Remove:

- the bolt to the pressure pipe (1)
- the pressure pipe
- the delivery hose with the clamp (2).
- the 3 x screws for the power steering pump
- the power steering pump.

INSTALLATION

NOTE: For tightening torques, see: TIGHTENING TORQUE .

INSTALLING THE POWER STEERING PUMP

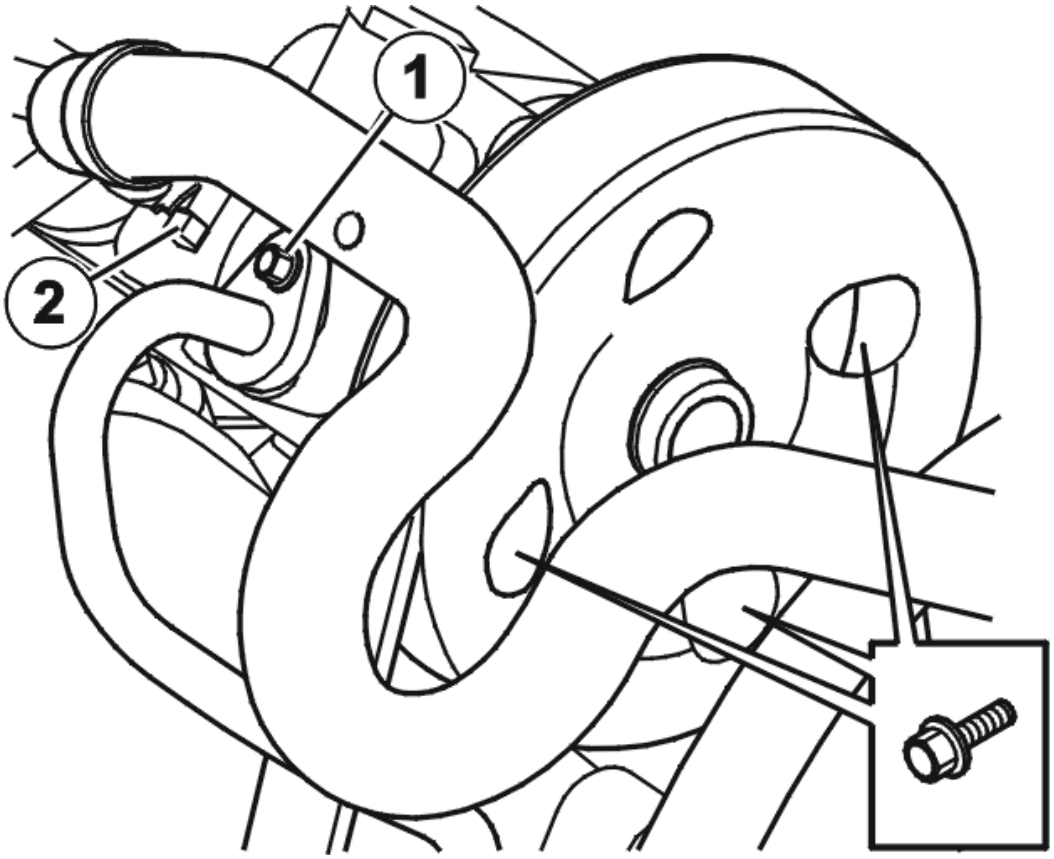

Fig. 245: Installing Power Steering Pump
Courtesy of VOLVO CARS CORPORATION

Install:

- the power steering pump
- the bolts, M8 x3
- the pressure pipe. Use a new O-ring
- the screw for the pressure pipe (1). Tighten. See **SUMMARY OF TIGHTENING TORQUES FOR SPECIFIC COMPONENTS**
- the delivery hose with the clamp (2).

INSTALLING THE AUXILIARIES BELT/BELT TENSIONER

Install the auxiliaries belt in accordance with: **AUXILIARIES BELT/BELT TENSIONER, REPLACEMENT** .

INSTALLING THE INTAKE MANIFOLD

Install the intake manifold in accordance with: **INTAKE MANIFOLD/GASKET, REPLACING** .

FINISHING

WARNING: Avoid skin contact with the oil.

Install:

- the hose with the clamp to the oil reservoir
- the oil reservoir.

Fill the power steering fluid reservoir.

NOTE: Use Volvo power steering fluid, P/N 116 1529-1 to ensure the correct oil quality.

Hang the oil reservoir from the hood catch. Use welding wire or similar. Ensure that the hose is extended.

Turn the steering wheel between both end positions 10 times.

Check and fill with oil as necessary.

Apply the parking brake. Start the engine.

A: Turn the steering wheel slowly to the right, keep it at the end position for a maximum of 2 seconds.

B: Turn the steering wheel to the left, keep it at the end position for a maximum of 2 seconds.

Switch off the engine and wait 5 minutes. Repeat step A and B 10 times. Repeat the procedure. Switch off the engine and wait 5 minutes. Repeat step A and B 10 times.

Reinstall the oil reservoir. Check the oil level.

REPLACING POWER STEERING PUMP PULLEY

Special tools:

see **9995737**

see **9995738**

see **9995575**

see **9995628**

REMOVING PULLEY

Fig. 246: Removing Pulley Using Puller 999 5737
Courtesy of VOLVO CARS CORPORATION

Remove the power steering pump. See **POWER STEERING PUMP, REPLACING**

Secure the power steering pump in a vice

Remove the pulley. Use see **9995737** .

INSTALLING PULLEY, ALTERNATIVE 1

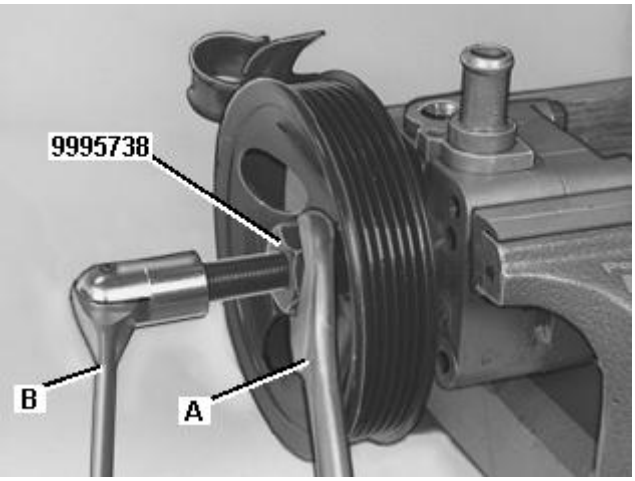

Fig. 247: Installing Pulley
Courtesy of VOLVO CARS CORPORATION

Install the pulley. Lubricate the pump shaft with oil

Use see **9995738** .

- Counterhold using B

- Tighten with A.

INSTALLING PULLEY, ALTERNATIVE 2

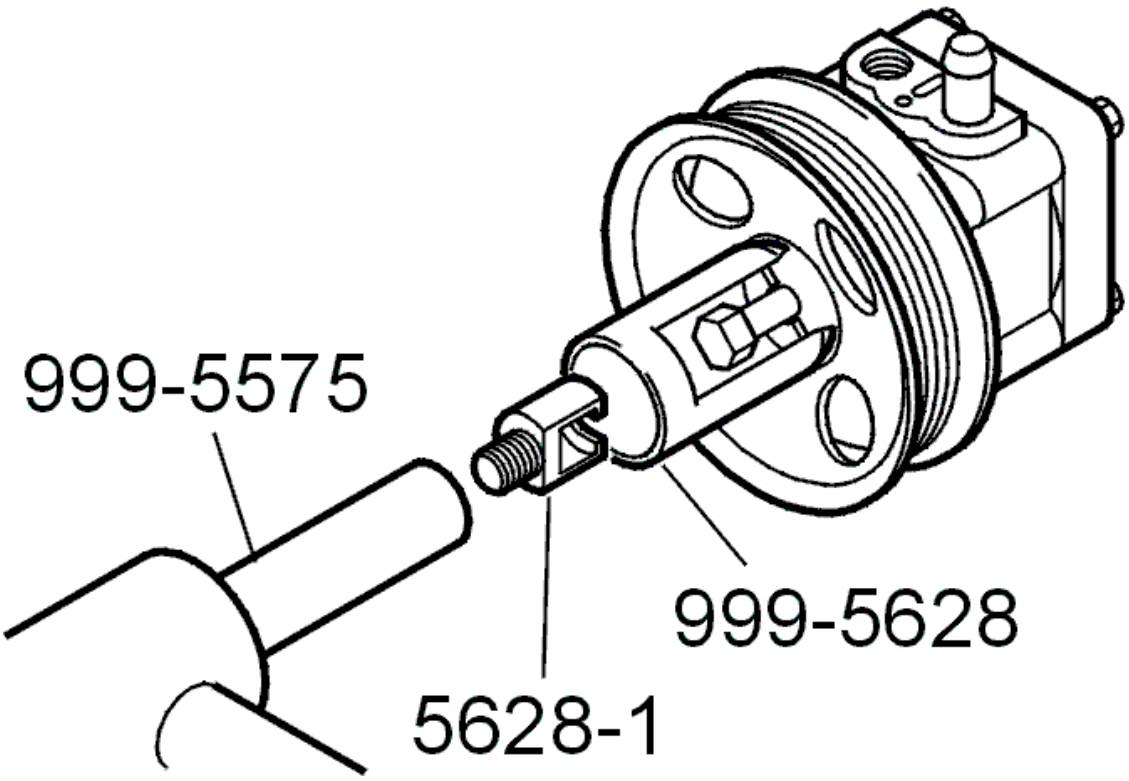

Fig. 248: Installing Pulley Using Special Service Tools
Courtesy of VOLVO CARS CORPORATION

Install the screw on the pump shaft.

NOTE: Use a screw with the correct thread (M8x75 mm).

Install special tool see **9995628** on compression tool see **9995575** .

Lubricate the pump shaft and install the pulley.

Install tool see **9995628** on the pulley. Hook tool see **9995628** onto the pump shaft screw.

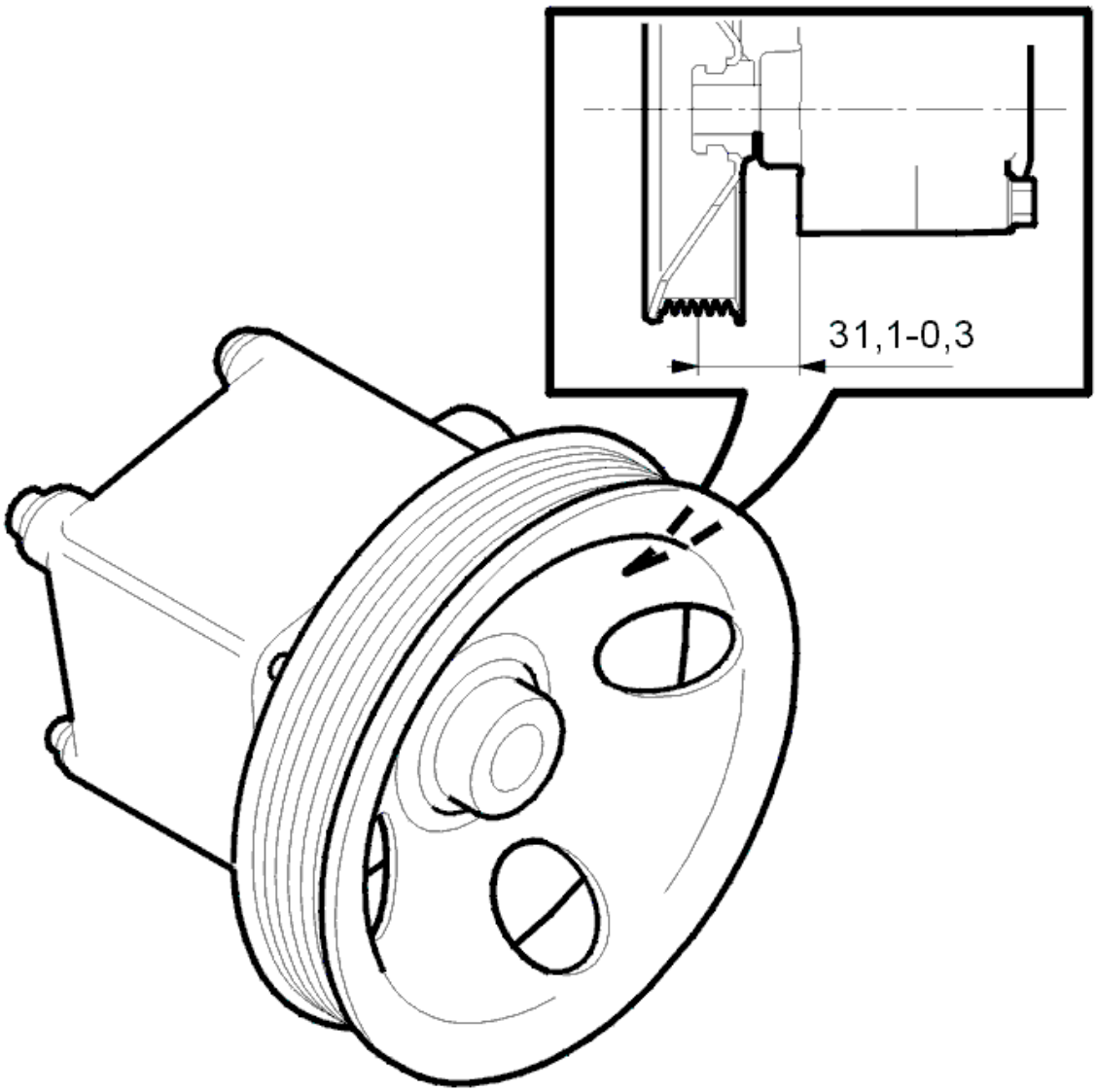

Fig. 249: Pulley Measurements
Courtesy of VOLVO CARS CORPORATION

Press in the pulley to the listed measurement

Install the power steering pump. See **POWER STEERING PUMP, REPLACING**.

RETURN PIPE/HOSE, STEERING GEAR, REPLACEMENT

Special tools:

see **9995460**

see **9995716**

see **9997070**

NOTE: **The illustrations in this service information are used for different model years and/or models. Some variation may occur. However, the essential information in the illustrations is always correct.**

REMOVAL

PREPARATIONS

Remove:

- the battery cable, see: **BATTERY, DISCONNECTING**
- the front wheels on both sides.

REMOVING THE RETURN PIPE

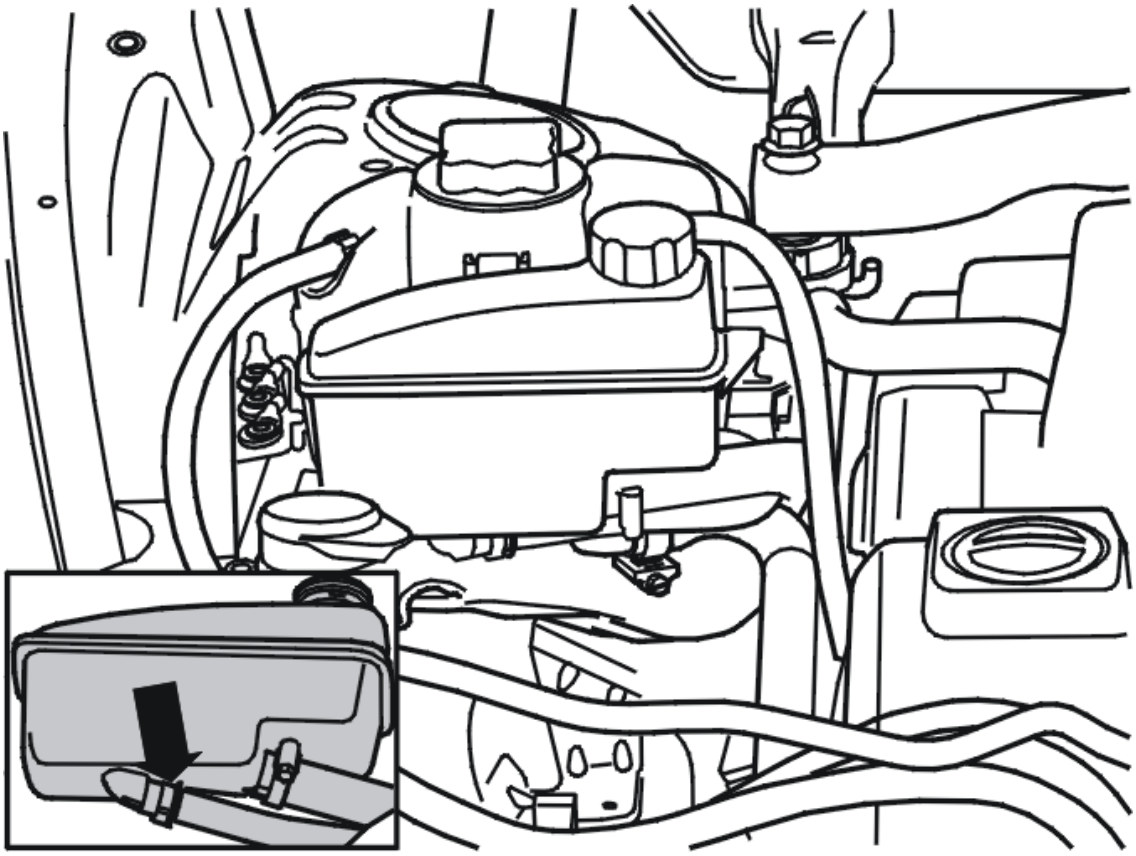

Fig. 250: Removing Return Pipe
Courtesy of VOLVO CARS CORPORATION

WARNING: **Avoid skin contact with the oil.**

Lift up the oil reservoir. Place paper under the oil reservoir for any oil spillage.

Position a container under the oil reservoir. Remove the hose with the clamp from the oil reservoir. Drain the oil.

NOTE: Make a note of the oil pipe's location

Release the oil hose from the tie strap and the clip on the engine cooling fan (FC).

REMOVING THE BOLTS TO THE TORQUE ROD

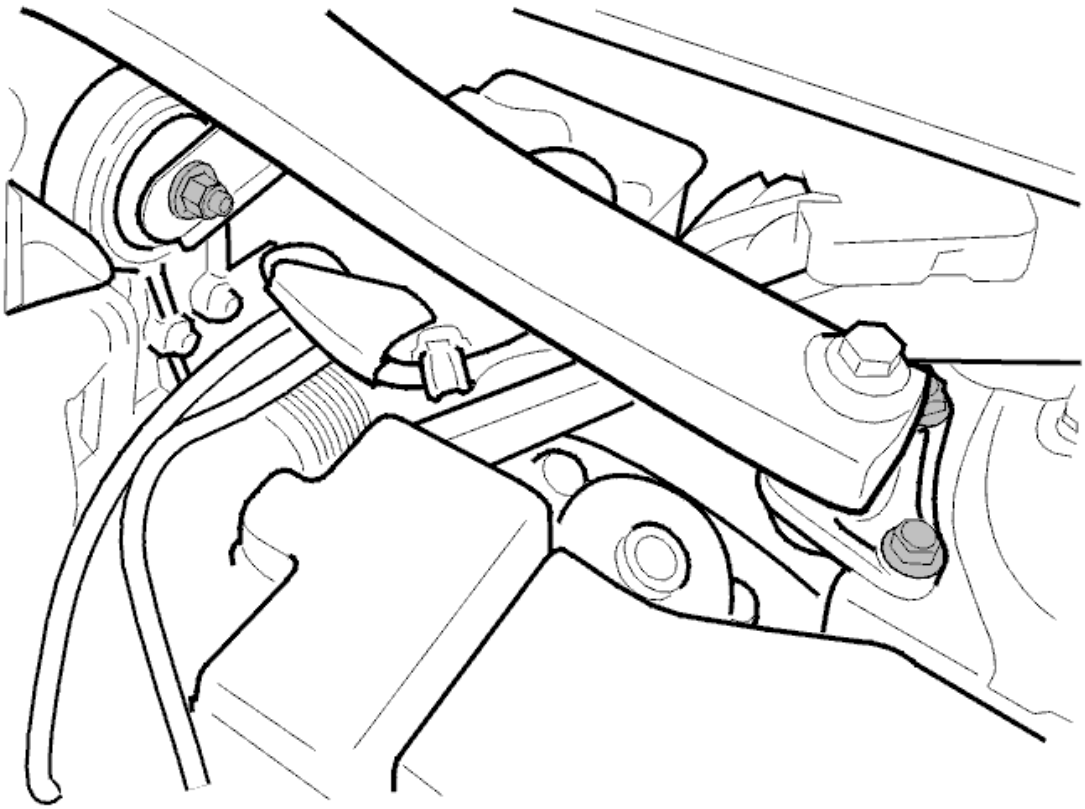

Fig. 251: Engine Stabilizer Brace
Courtesy of VOLVO CARS CORPORATION

Remove the bolts, x2, at the suspension turrets on both sides.

INSTALLING THE LIFTING TOOL

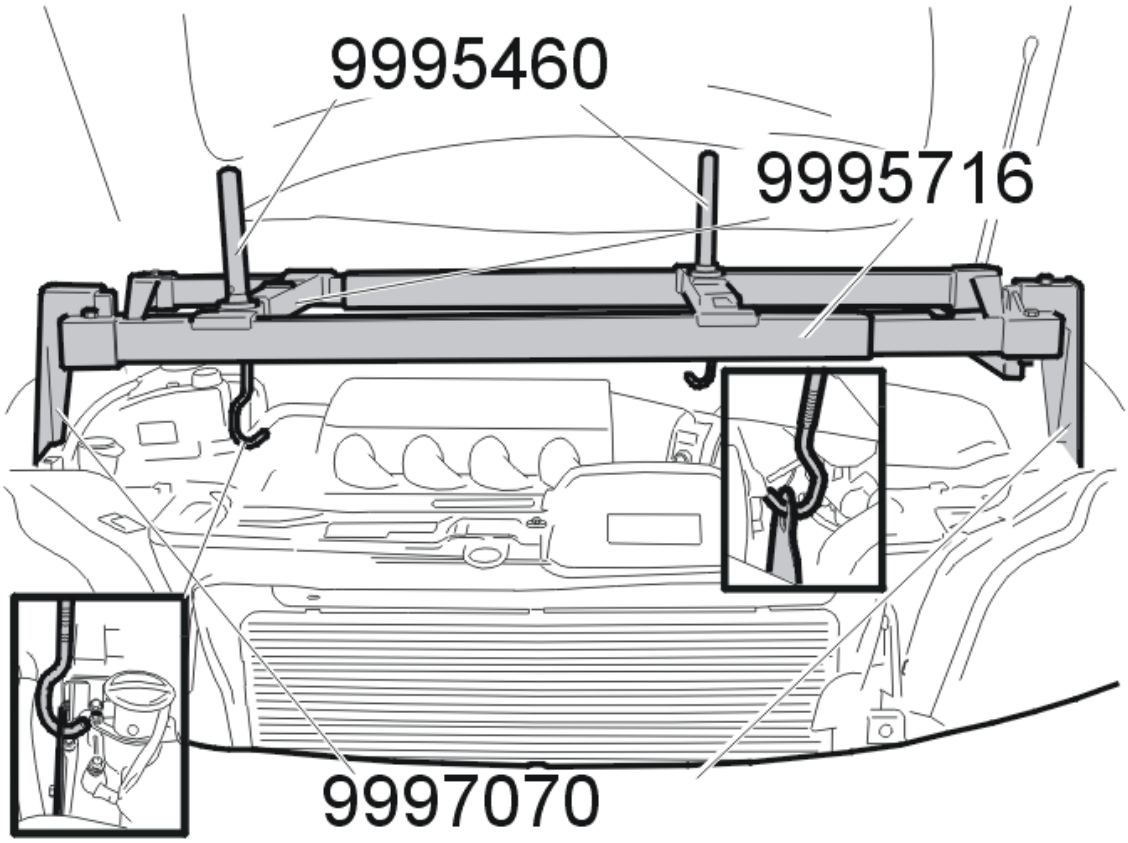

Fig. 252: Installing Lifting Tool
Courtesy of VOLVO CARS CORPORATION

NOTE: **When lifting the engine make sure that the lifting eye does not scratch the torque rod. Tape the torque rod and keep it away from the eye.**

Remove:

- the oil filler cap
- the upper front engine casing by pulling it straight up.

Install:

- the oil filler cap
- the lifting tool: see **9995716** converted with the kit: see **9997070** and lifting hooks: see **9995460** . Lift up the engine slightly so that the engine pads are unloaded.

REMOVING THE WING LINER

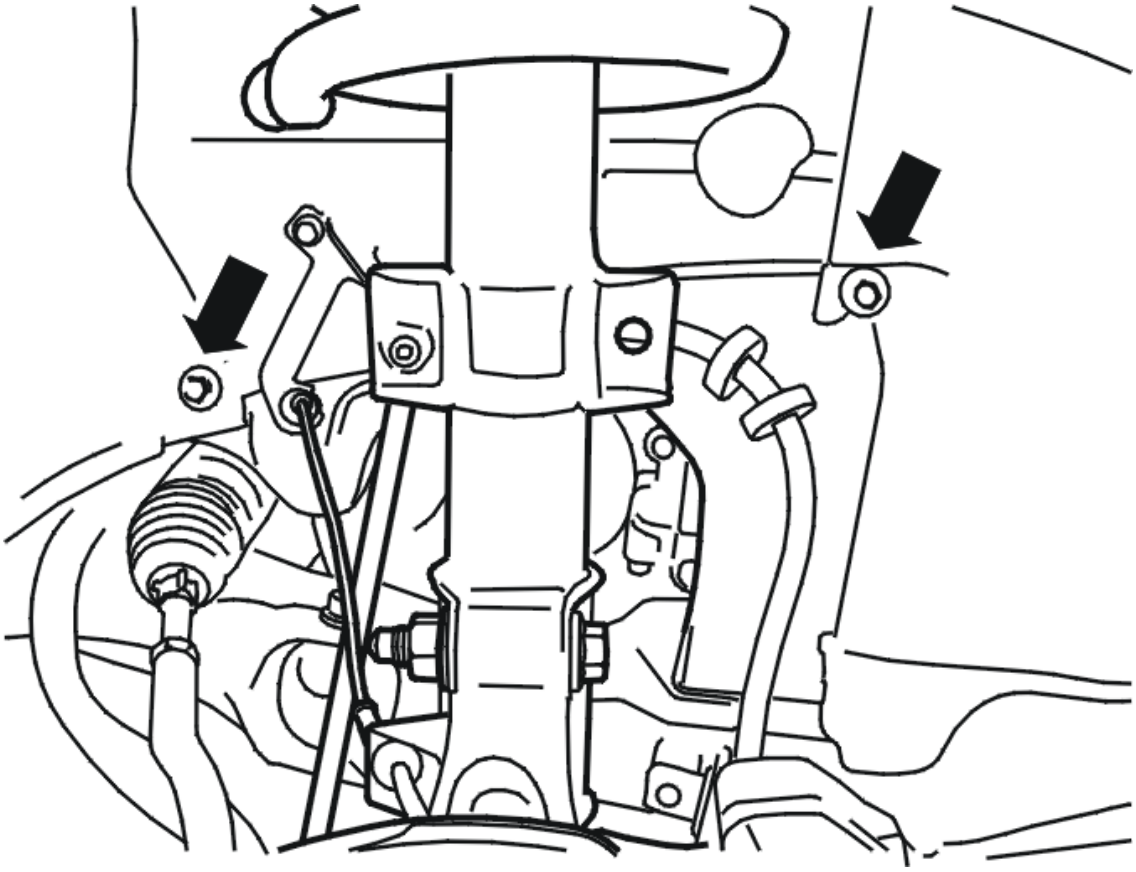

Fig. 253: removing Wing Liner
Courtesy of VOLVO CARS CORPORATION

Remove:

- the plastic nuts, x2
- the wing liner.

REMOVING THE BOLTS TO THE RIGHT-HAND ENGINE PAD

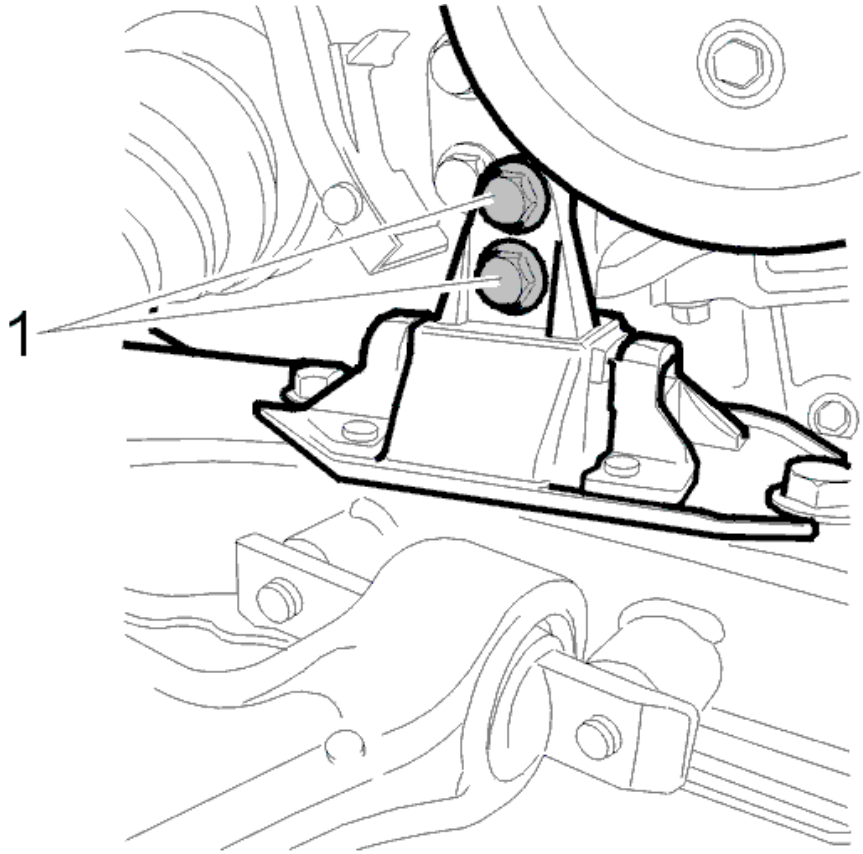

Fig. 254: Identifying Right-Hand Engine Mounting Screws
Courtesy of VOLVO CARS CORPORATION

Remove the bolts (1), x2.

REMOVING THE PROTECTIVE PLATE

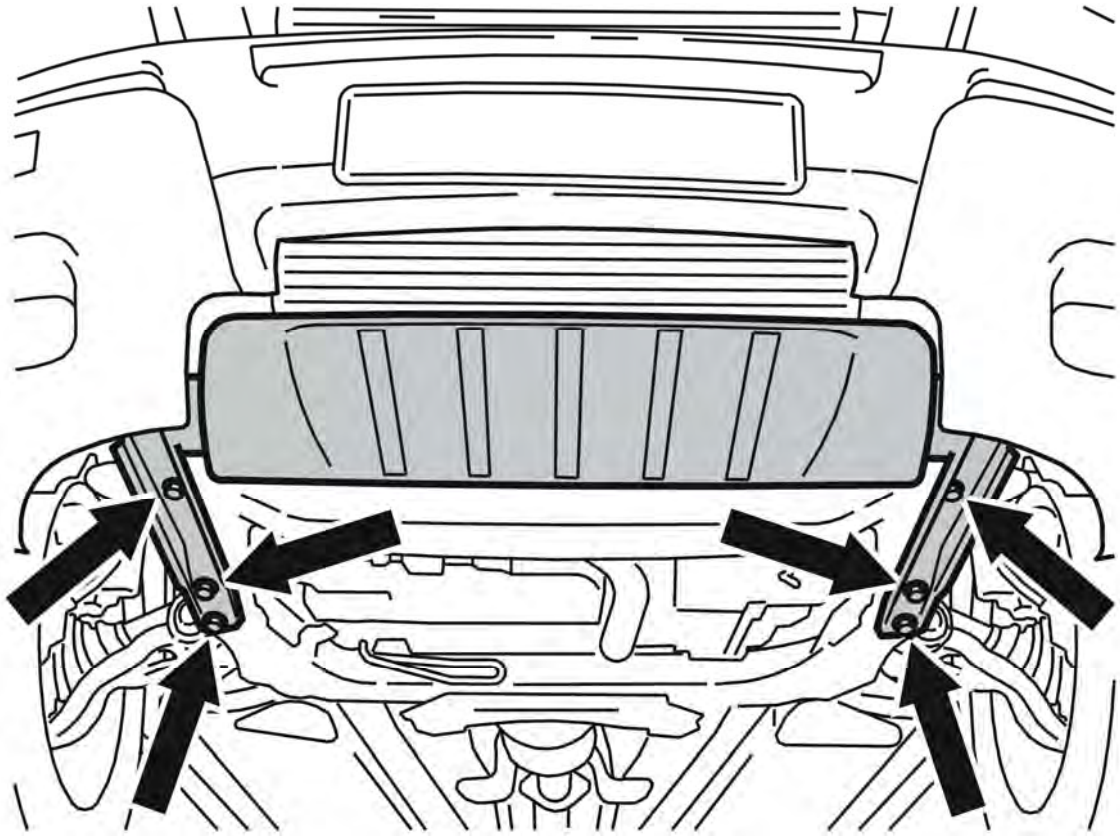

Fig. 255: Splash Guard. Protective Plate And Screws
Courtesy of VOLVO CARS CORPORATION

Remove the 6 screws.

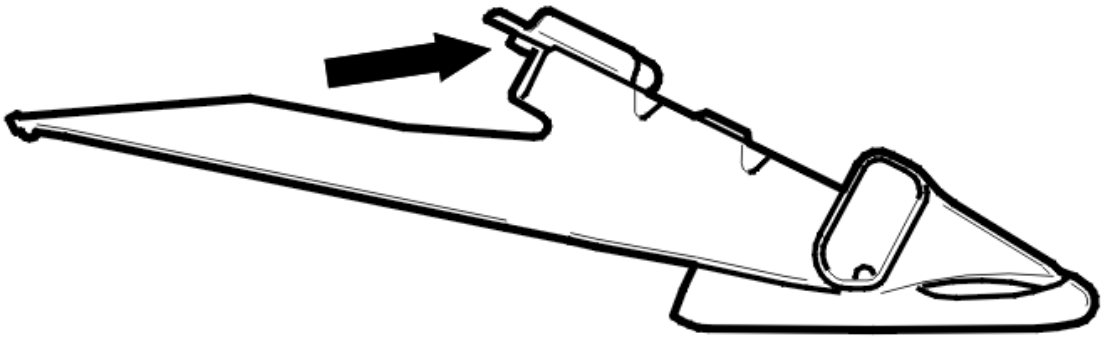

Fig. 256: Identifying Protective Plate
Courtesy of VOLVO CARS CORPORATION

NOTE: There is a guide sleeve on the upper mounting for the plate. This must be lifted slightly so that the panel can be slid forward.

Raise and move the protective plate forward. Remove the protective plate.

REMOVING THE PROTECTIVE COVER UNDER THE ENGINE

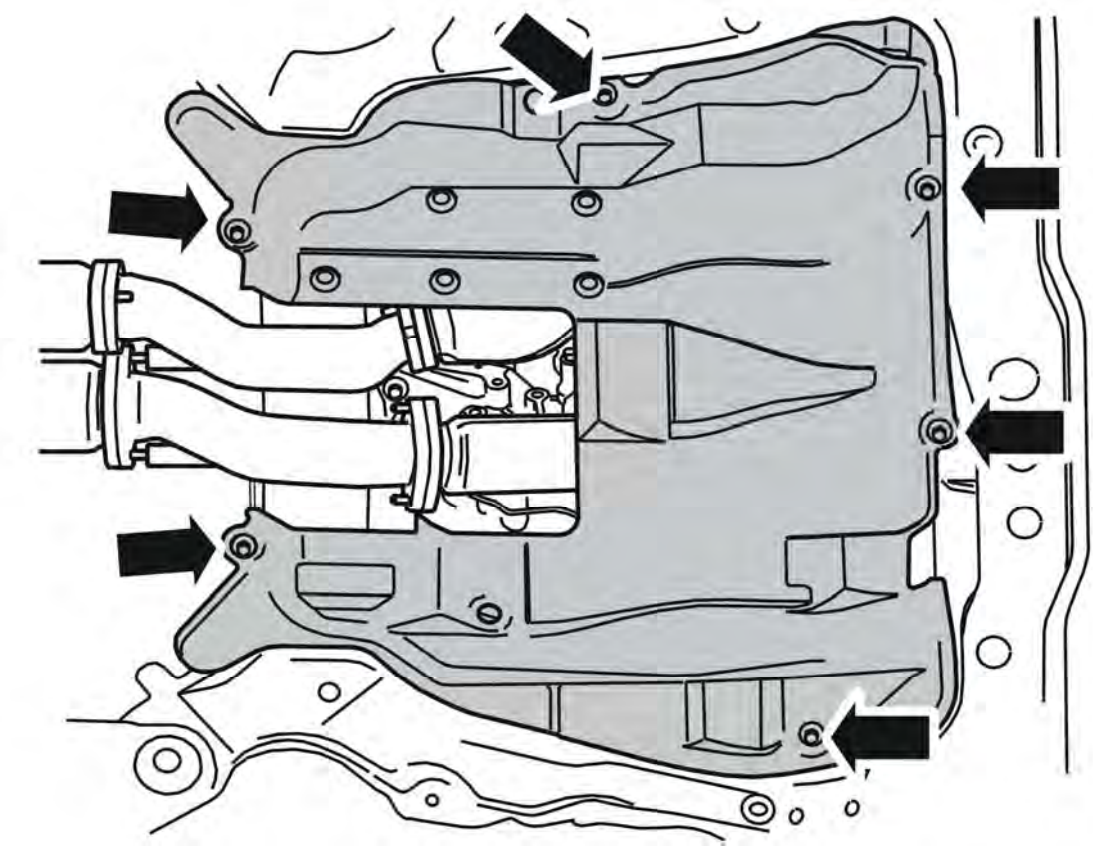

Fig. 257: Removing Splash Guard
Courtesy of VOLVO CARS CORPORATION

Remove:

- the bolts, x6
- the protective cover under the engine.

REMOVING THE GEARBOX BOLTS TO THE LOWER TORQUE ROD

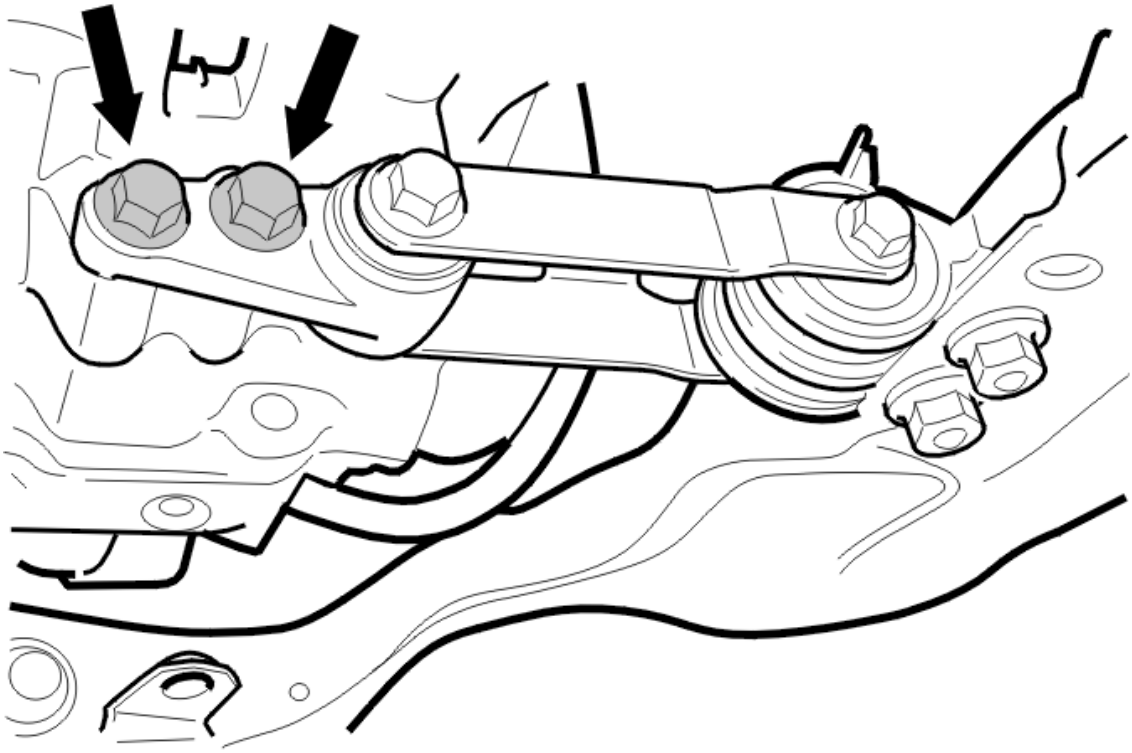

Fig. 258: Identifying Gearbox Bolts
Courtesy of VOLVO CARS CORPORATION

Remove the bolts, x2.

REMOVING THE EXHAUST PIPES BETWEEN FRONT AND REAR CATALYTIC CONVERTERS

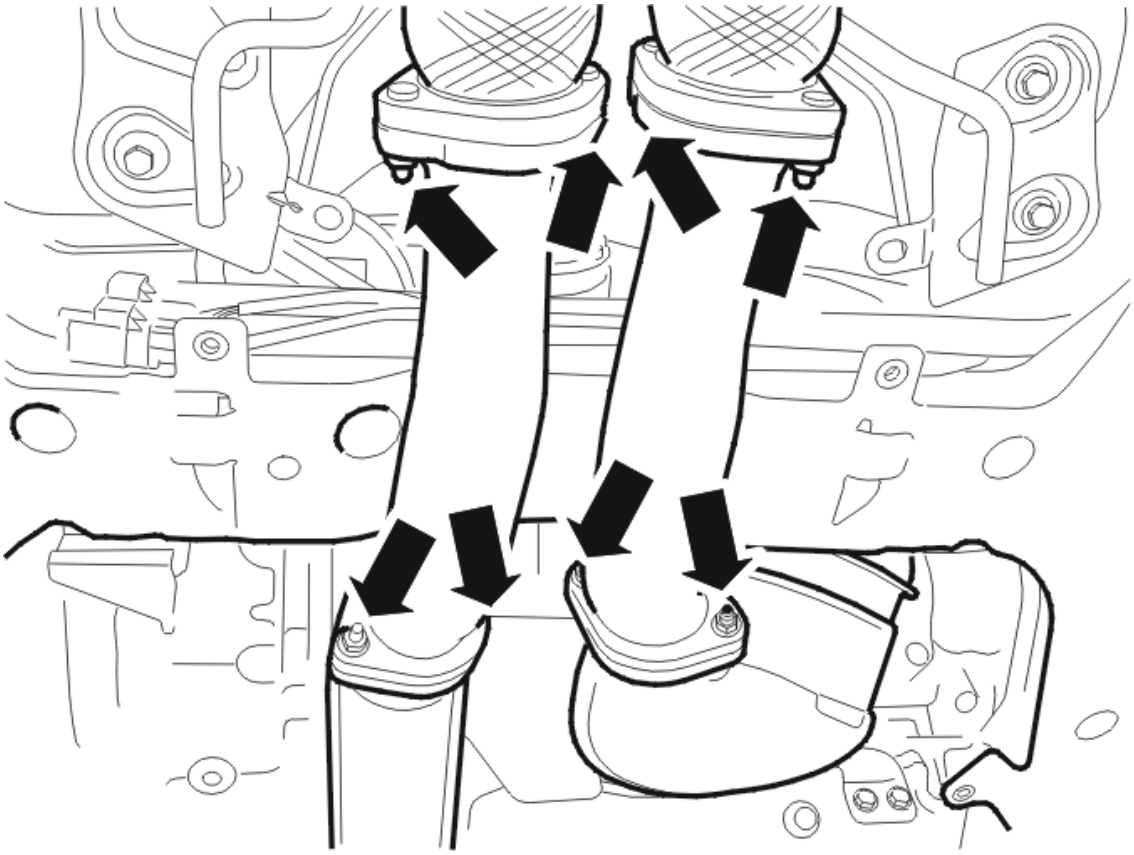

Fig. 259: Removing Exhaust Pipes
Courtesy of VOLVO CARS CORPORATION

Remove:

- both exhaust pipes' nuts
- both exhaust pipes.

REMOVING THE LOWER BOLT TO THE FRONT ENGINE PAD

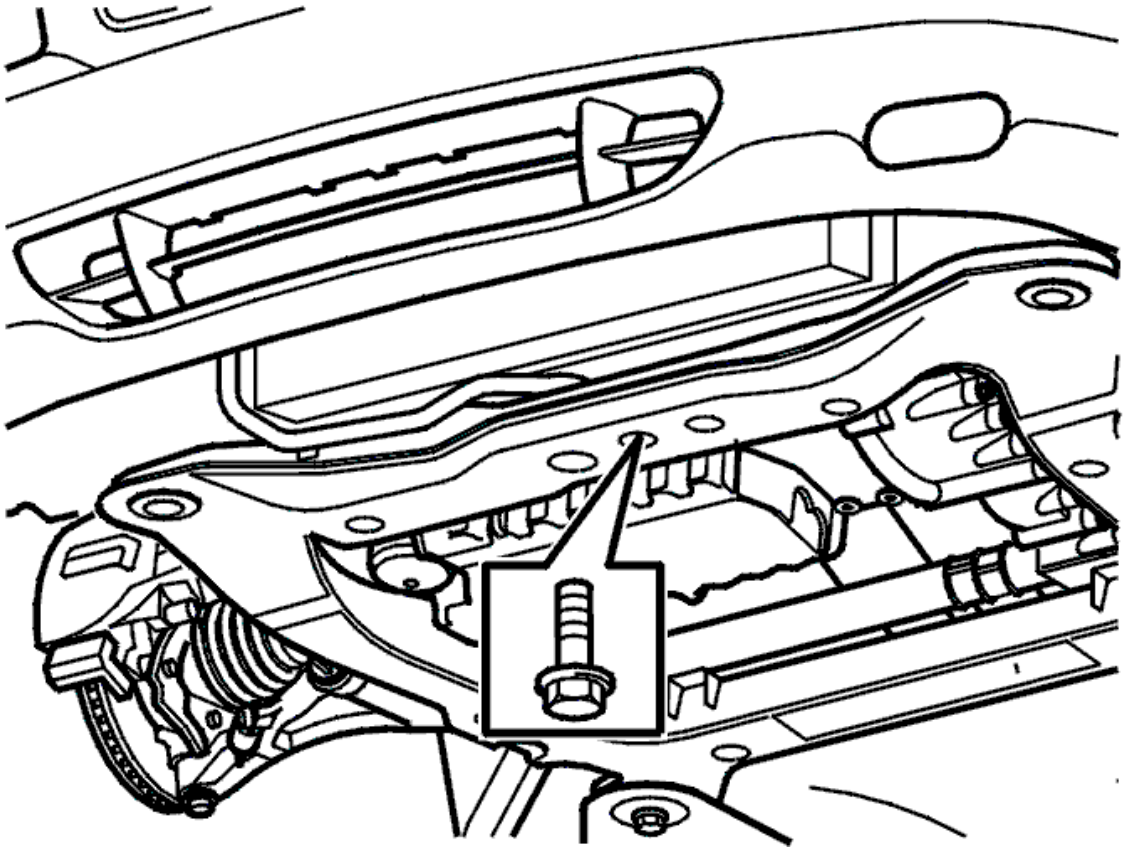

Fig. 260: Front Engine Pad Screw
Courtesy of VOLVO CARS CORPORATION

Remove the lower bolt to the engine pad.

REMOVING THE LOWER BOLT TO THE REAR ENGINE PAD

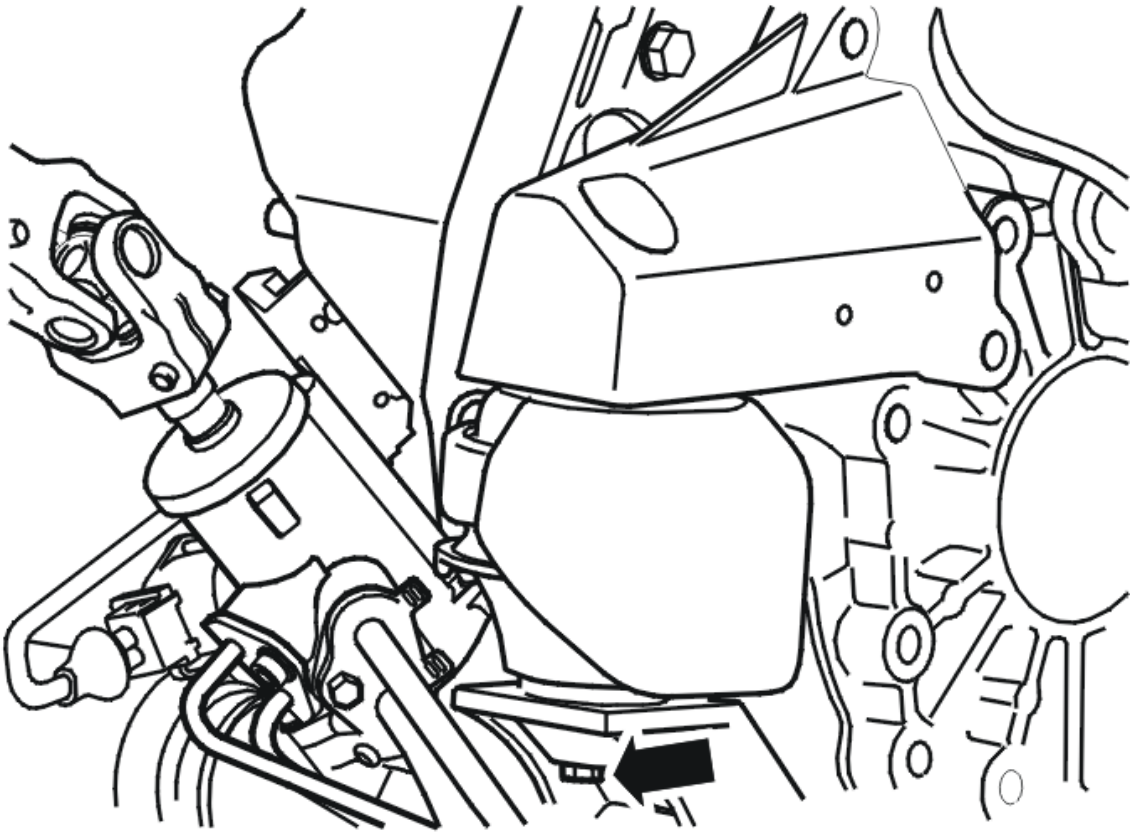

Fig. 261: Removing Engine Pad Bolt
Courtesy of VOLVO CARS CORPORATION

Release the heated oxygen sensor (HO2S) connectors, x2, from the subframe.

Fold aside the protective plate under the steering gear to gain access to the engine pad's lower bolt.

Remove the engine pad's bolt.

REMOVING THE LOWER STEERING SHAFT JOINT

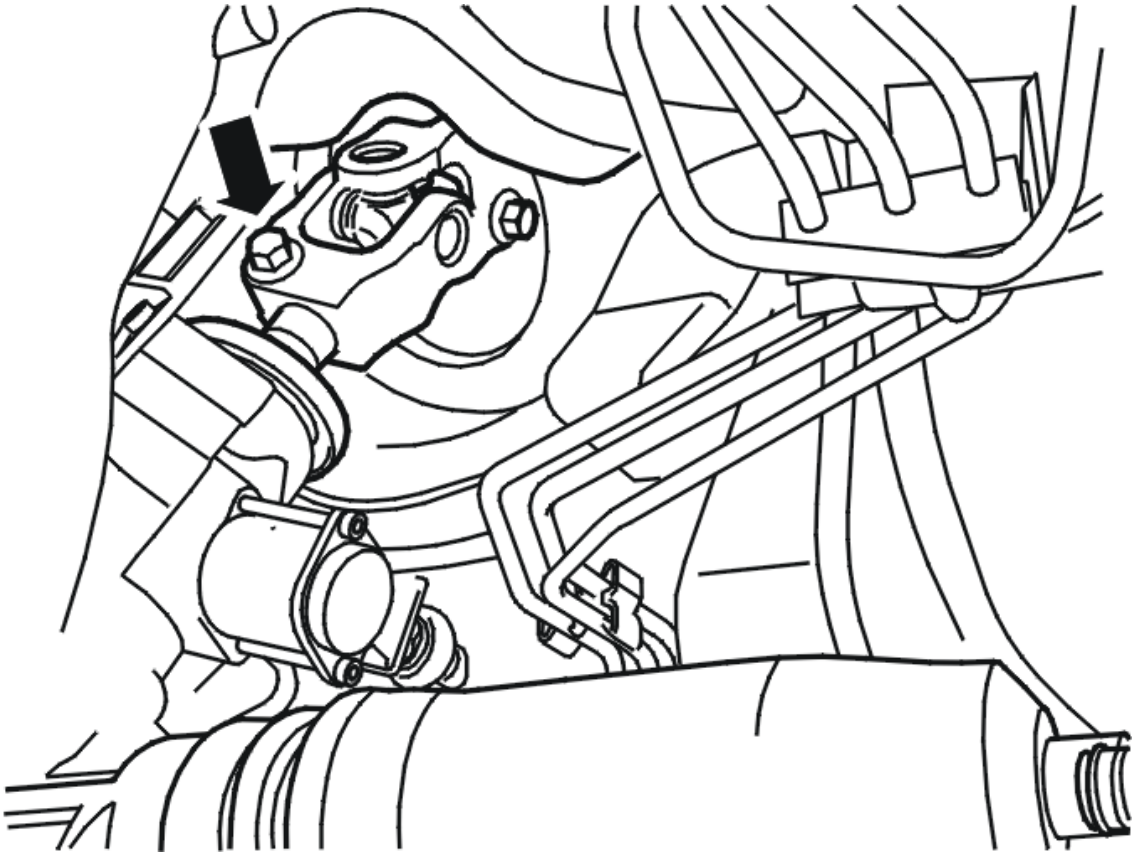

Fig. 262: Removing Steering Shaft Joint
Courtesy of VOLVO CARS CORPORATION

NOTE: **Turn the steering wheel until optimum access to the bolt is achieved. Lock the steering wheel and take out the ignition key, so that the steering wheel lock is activated.**

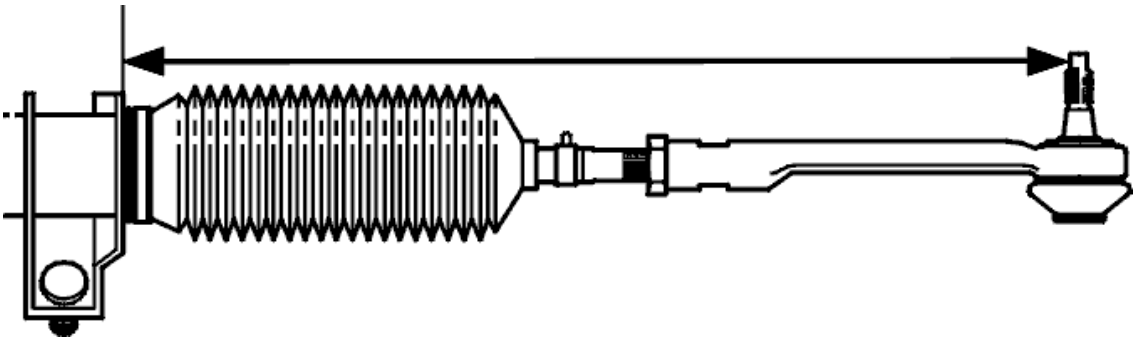

Fig. 263: Identifying Length Of Track Rod In Relation To Steering Gear Housing
Courtesy of VOLVO CARS CORPORATION

NOTE: **On one side, measure the length of the track rod in relation to the steering gear housing. Make a note of the measurement.**

Remove:

- the bolt to the lower steering shaft joint
- the connector to the solenoid.

LOWERING THE SUBFRAME

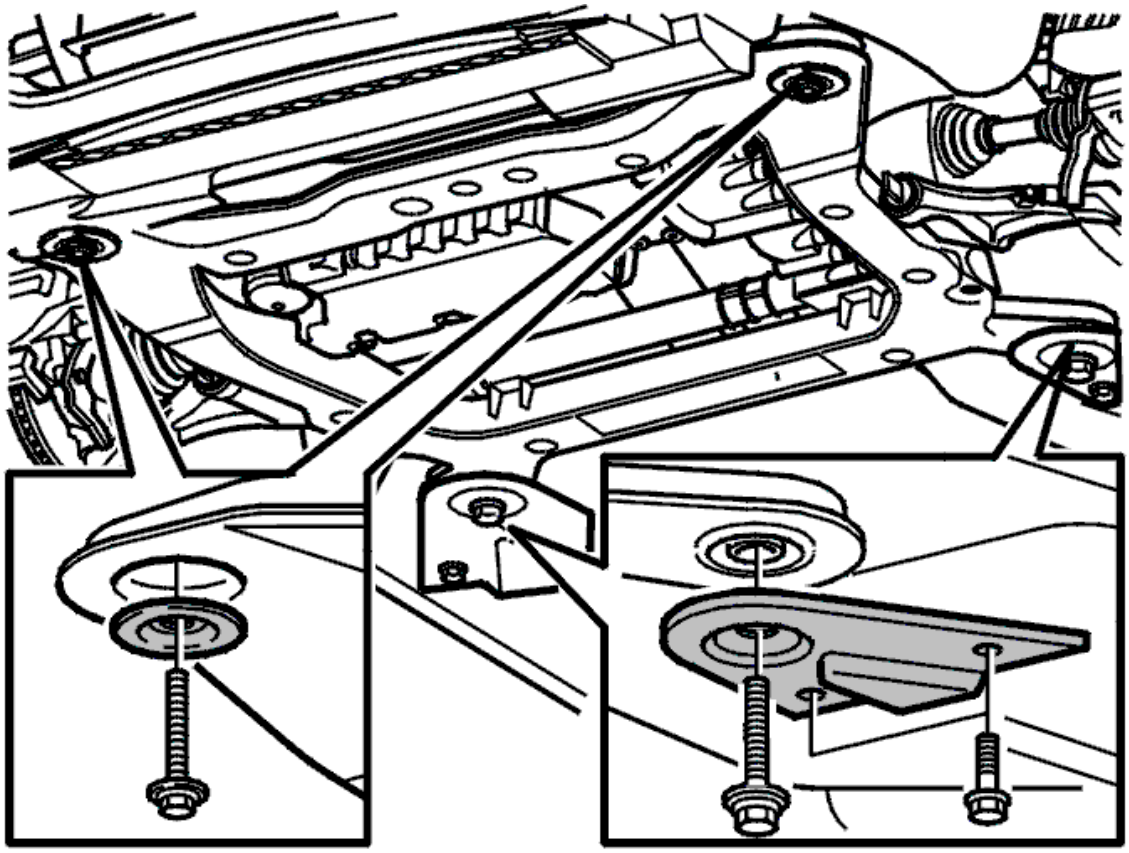

Fig. 264: Identifying Bolts, Washers And Brackets In Sub-Frame
Courtesy of VOLVO CARS CORPORATION

NOTE: Press the joint up from the steering gear. Make sure that no pipes or lines are loaded or trapped when lowering.

Position a lifting table under the subframe.

Remove on both sides:

- the bolts to the subframe's brackets at the rear edge
- the bolts to the subframe in the front and rear edge
- the subframe's brackets.

Release the heated oxygen sensor (HO2S) cables from the anti-roll bar.

Lower the subframe carefully.

REMOVING THE RETURN PIPE, CONTINUED

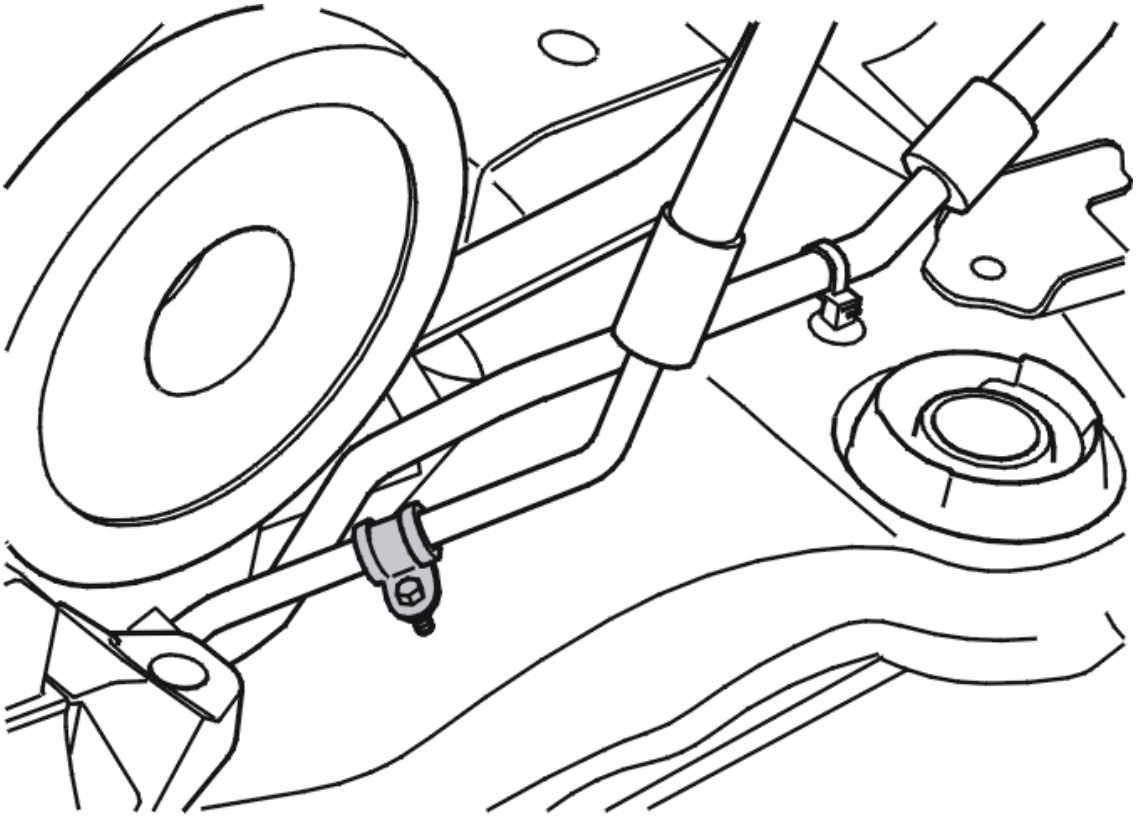

Fig. 265: Removing Return Pipe
Courtesy of VOLVO CARS CORPORATION

Release the pipe from the clips on the subframe.

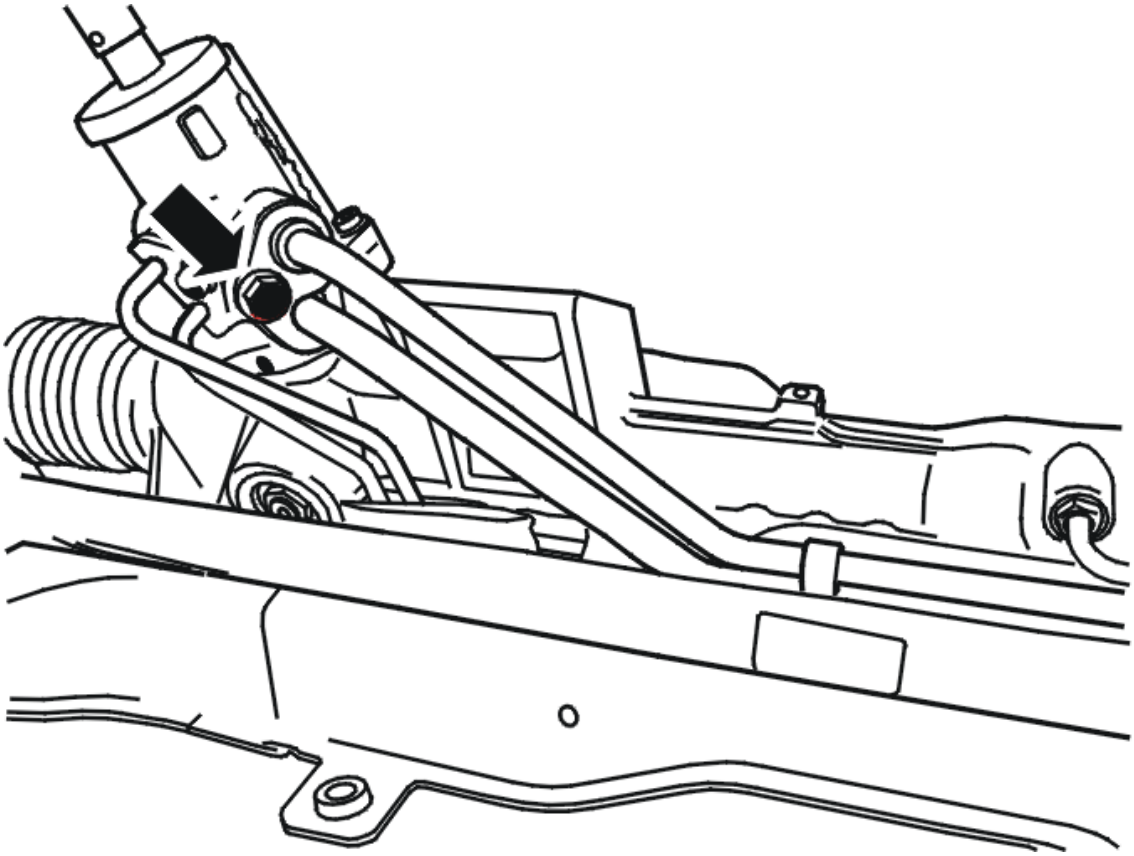

Fig. 266: Removing Power Steering Pipe
Courtesy of VOLVO CARS CORPORATION

Place a container under the steering gear.

Remove:

- the pipes' bolt on the valve housing
- the pipe.

INSTALLATION

NOTE: For tightening torques, see: TIGHTENING TORQUE .

INSTALLING THE RETURN PIPE

NOTE: Use a new O-ring.

Install:

- the hose with the clamp to the oil reservoir
- the oil reservoir

- the pipe in the clip and the clamp on the engine cooling fan (FC)
- the pipe in the clips on the subframe
- the pipe in the valve housing
- the pipes' bolt, M8, on the valve housing.

INSTALLING THE SUBFRAME

Install the sub-frame. See: **SUB-FRAME FRONT, REPLACING (2007, 2008)** or **SUB-FRAME FRONT, REPLACING (2005, 2006)** .

FITTING THE LOWER BOLT TO THE REAR ENGINE PAD

HINT: Unscrew the upper nut in order to facilitate fitting the lower bolt.

Install:

- the lower bolt to the engine pad, M10, x1
- the 2 x heated oxygen sensor (HO2S) connectors on the subframe. Reinstall the protective plate under the steering gear.

FITTING THE LOWER BOLT TO THE FRONT ENGINE PAD

Fit the lower bolt to the engine pad, M10, x1.

INSTALLING THE GEARBOX BOLTS TO THE LOWER TORQUE ROD

Fit the bolts, x2, in accordance with: **SUMMARY OF TIGHTENING TORQUES FOR SPECIFIC COMPONENTS** .

INSTALLING THE LOWER STEERING SHAFT JOINT

Install:

- the lower steering shaft joint
- the bolt, M8
- the connector to the solenoid.

INSTALLING THE EXHAUST PIPES BETWEEN FRONT AND REAR CATALYTIC CONVERTERS

NOTE: To ensure that there is no exhaust leakage, see: FLANGED JOINT, ASSEMBLING

Install:

- both exhaust pipes
- both exhaust pipes' nuts M8.

INSTALLING THE PROTECTIVE COVER UNDER THE ENGINE

Install:

- the protective cover under the engine
- the bolts, M8, x6.

INSTALLING THE PROTECTIVE PLATE

Move the protective plate up in the bumper cover. Press forward until the mounting brackets enter the subframe. Fit the bolts, M10.

FITTING THE BOLTS TO THE RIGHT-HAND ENGINE PAD

Fit the bolts, x2, in accordance with: **SUMMARY OF TIGHTENING TORQUES FOR SPECIFIC COMPONENTS** .

INSTALLING THE WING LINER

Install:

- the wing liner
- the plastic nuts, x2.

REMOVING THE LIFTING TOOL

Remove the lifting tool: see **9995716** , the kit: see **9997070** and lifting hooks: see **9995460** .

FITTING THE BOLTS TO THE TORQUE ROD

Fit the bolts, M10 x2, at the suspension turrets on both sides.

FILLING THE POWER STEERING FLUID RESERVOIR

CAUTION: Avoid skin contact with the oil.

NOTE: For the correct oil grade use Volvo power steering fluid, part number: 116 1529-1.

Fit the battery cable. Fill the power steering fluid reservoir.

Turn the steering wheel between both end positions several times.

Check and fill with oil as necessary.

Apply the parking brake.

Start the engine.

A: Turn the steering wheel slowly to the right, keep it at the end position for 2 seconds.

B: Turn the steering wheel slowly to the left, keep it at the end position for 2 seconds. Repeat steps A and B 10 times.

FINISHING

Remove the oil filler cap.

Install:

- the upper front engine casing
- the oil filler cap
- the front wheels on both sides in accordance with: **INSTALLING WHEELS** .

STEERING

Steering - Specifications, Electrical/Electronic

SIGNAL SPECIFICATION, STEERING WHEEL MODULE (SWM) (2003-2004)

SIGNAL SPECIFICATION

General

Ul_{low} , voltage close to 0 V.

UI_{bat} , battery voltage

NOTE: **It is important to connect the breakout box and check the ground terminals before taking readings.**

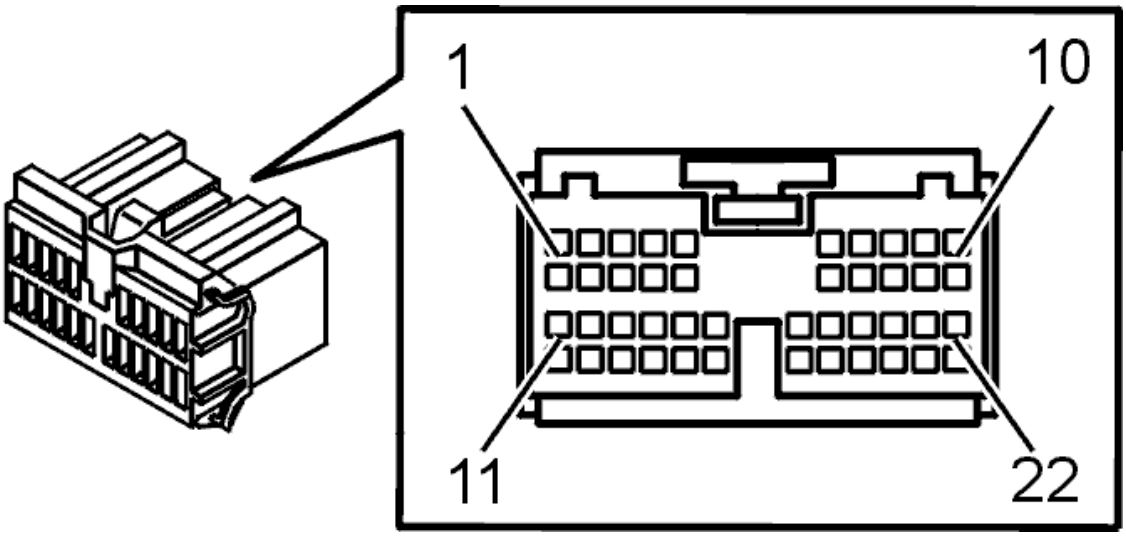

Fig. 1: Identifying Connector (F) Terminals
Courtesy of VOLVO CARS CORPORATION

Connector A

CONNECTOR A

Control module terminal	Breakout box terminal	Signal type	Ignition on	Other
A1	#1	30-supply (power supply from battery)	U_{bat}	-
A2	#2	Ix, index path (Speed adjustment screw)	Digital signal	-
A3	#3	B, reference path (Speed	Digital signal	-

		adjustment screw)		
A4	#4	R1, sector (Speed adjusted screw)	Digital signal	-
A5	#5	A, reference path (Speed adjustment screw)	Digital signal	-
A6	#6	15-supply (Speed adjustment screw) (power supply from ignition switch, positions I and II)	U_{bat}	-
A7	#7	LED current 2 (Speed adjustment screw)	0-25 mA	Monitors signals R1, R2, R3 and R4
A8	#8	Ground	U_{low}	-
A9	#9	CAN H	Digital signal	-
A10	#10	CAN H	Digital signal	-
A11	#11	R3, sector (Speed adjusted screw)	Digital signal	-
A12	#12	LED current (Speed adjustment screw)	0-25 mA	Monitors signals A, B, Ix and Iy
A13	#13	R2, sector (Speed adjusted screw)	Digital signal	-
A14	#14	Signal ground from Speed adjustment screw	U_{low}	-
A15	#15	Horn	U_{bat}	Short-circuited to ground on activation
A16	#16	ground (battery)	U_{low}	-
A17	#17	Iy, index path (Speed adjustment screw)	Digital signal	-
A18	#18	R4, sector (Speed adjusted screw)	Digital signal	-
A19	#19	CAN L	Digital signal	-
A20	#20	CAN L	Digital signal	-
A21	#21	Wiper out	Digital signal	-
A22	#22	ground (battery)	U_{low}	-

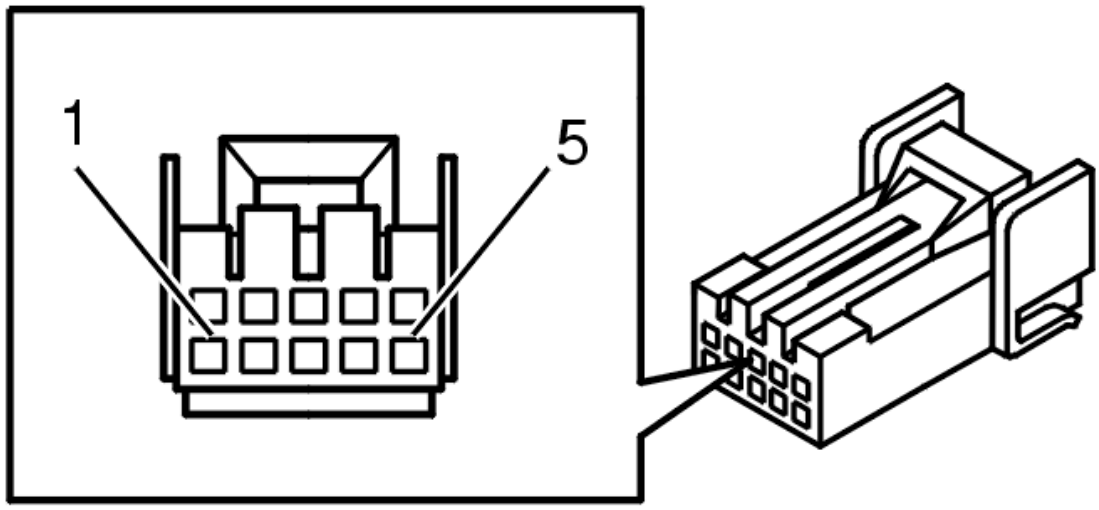

Fig. 2: 10 CD Changer Connector Terminals
Courtesy of VOLVO CARS CORPORATION

Connector B

CONNECTOR B (TO CRUISE CONTROL SWITCH)

Control module terminal	Breakout box terminal	Signal type	Ignition on	Other
B1	#26	Synchronizing signal	Synchronizing signal which starts from 12V	-
B2	#27	Power supply	5 V	-
B3	#28	Signal ground	U_{low}	-
B4	#29	-	-	-
B5	#30	-	-	-

SIGNAL SPECIFICATION, STEERING WHEEL ANGLE SENSOR MODULE (SAS) (2005-2012)

SIGNAL SPECIFICATION

SIGNAL SPECIFICATION

Connector A

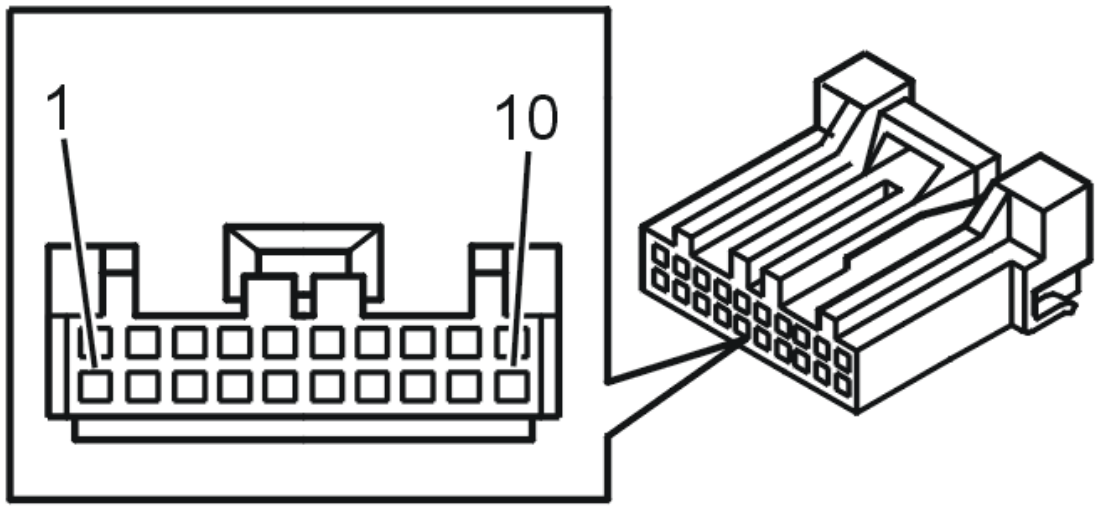

Fig. 3: Identifying Connector A Terminals
Courtesy of VOLVO CARS CORPORATION

All the values given below are between the relevant terminal stated in column 1 and terminal #A2 (ground). This applies unless otherwise indicated in brackets.

NOTE: **It is important to connect the breakout box and check ground terminals before reading off.**

U=	DC voltage in volts (V)	U_{AC} =	AC voltage in volts (V)
U_{bat} =	battery voltage	F =	frequency in Hertz (Hz)
U_{low} =	voltage approximately 0 V	% duty =	duty cycle (pulse ratio) as a percentage (%)
t =	time in milliseconds (ms)		

Terminal in the breakout box	Control module terminal	Signal type	Ignition on	Other
#1	#1	-	-	
#2	#2	Ground	U_{low}	
#3	#3	Control module communication cable CAN_L	During communication the voltage is 1.5-2.5 V	
#4	#4	Control module communication cable CAN_H	During communication the voltage is 2.0-3.5 V	
#5	#5	-	-	
#6	#6	-	-	
#7	#7	Communication cable LIN central electronic module	During communication the	

		(CEM)	voltage is 0 V - U_{bat}	
#8	#8	Power supply	U_{bat}	15i-supply, from the ignition switch
#9	#9	Windshield wipers	-	
#10	#10	Horn	U_{low}	Short-circuit to ground when activated

STEERING

Steering - Specifications, Other

VEHICLE COMMUNICATION, STEERING WHEEL ANGLE SENSOR MODULE (SAS) (B5254T2; 2005-2007)

DESCRIPTION OF PARAMETERS

INTRODUCTION / STATUS

STEERING WHEEL ANGLE SENSOR MODULE

The steering wheel angle sensor module (SAS) must be initiated before values can be read off. Initiation is carried out by turning the steering wheel more than 5° in either direction.

STEERING WHEEL ANGLE

The value displays the steering wheel angle in degrees.

0° = Steering wheel in the straight forward position

1° to 500° = Steering wheel angle

STEERING WHEEL MOVEMENT SPEED

The value displays the steering wheel turning speed in °/second.

Measurement range: 0 - 255°/second

STEERING DIRECTION

The value indicates in which direction the steering wheel is turned.

The values displayed are **right** or **left** .

POWER SUPPLY

The value indicates battery voltage at the steering wheel angle sensor module (SAS).

Measurement range: 5 - 15 V

DESCRIPTION OF VEHICLE COMMUNICATION INFORMATION

VEHICLE COMMUNICATION

CONTENTS

Select type of description.

- see **DESCRIPTION OF FROZEN VALUES**
- see **STATUS IDENTIFIER, DESCRIPTION**
- see **COUNTERS, DESCRIPTION**

DESCRIPTION OF FROZEN VALUES

READING CODES

Frozen values are parameter values that are stored when a diagnostic trouble code (DTC) is stored.

The steering wheel angle sensor module (SAS) must be initiated before values can be read off. Initiation is carried out by turning the steering wheel more than 5° in either direction.

STEERING WHEEL ANGLE

The value displays the steering wheel angle in degrees.

0° = Steering wheel in the straight forward position

1° - 720° = Angle of the steering wheel when turning to the left

-1° - -720° = Angle of the steering wheel when turning to the right

STEERING WHEEL ANGLE SPEED

The value displays the steering wheel turning speed in °/second.

Measurement range: 0-255°/secs.

STEERING DIRECTION

The value indicates in which direction the steering wheel is turned.

The values displayed are **right** and **left** .

POWER SUPPLY

The value indicates battery voltage at the steering wheel angle sensor module (SAS).

Measurement range: 5 - 15 V

ENGINE, RUNNING

The value indicates the status of the engine when the diagnostic trouble code (DTC) was stored.

OFF = Engine not running.

On = Engine running.

PASSENGER COMPARTMENT TEMPERATURE

The value indicates the passenger compartment temperature when the diagnostic trouble code (DTC) was stored. The transmission control module (TCM) obtains the value via the controller area network (CAN) from the central electronic module (CEM). The value is given in °C.

OUTSIDE TEMPERATURE

The value indicates the outside temperature when the diagnostic trouble code (DTC) was stored. The transmission control module (TCM) obtains the value via the controller area network (CAN) from the central electronic module (CEM). The value is given in °C.

BATTERY VOLTAGE

The value displays the voltage the first and last times the diagnostic trouble code (DTC) was stored. The transmission control module (TCM) obtains the value via the controller area network (CAN) from the central electronic module (CEM). The value is given in volts (V).

MILEAGE

The value indicates the total mileage of the car at the time the diagnostic trouble code (DTC) was stored. The transmission control module (TCM) obtains the value via the controller area network (CAN) from the central electronic module (CEM).

VEHICLE COMMUNICATION, STEERING WHEEL ANGLE SENSOR MODULE (SAS) (B6294T; 2005-2006)

DESCRIPTION OF PARAMETERS

see **DESCRIPTION OF PARAMETERS**

DESCRIPTION OF VEHICLE COMMUNICATION INFORMATION

see **DESCRIPTION OF VEHICLE COMMUNICATION INFORMATION**

VEHICLE COMMUNICATION, STEERING WHEEL ANGLE SENSOR MODULE (SAS) (B6324S; 2007-2010)

DESCRIPTION OF PARAMETERS

see **DESCRIPTION OF PARAMETERS**

DESCRIPTION OF VEHICLE COMMUNICATION INFORMATION

VEHICLE COMMUNICATION

CONTENTS

Select type of description.

- see **DESCRIPTION OF FROZEN VALUES**
- see **DESCRIPTION OF STATUS IDENTIFIER**
- see **DESCRIPTION OF COUNTER**

DESCRIPTION OF FROZEN VALUES

READING CODES

Frozen values are parameter values that are stored when a diagnostic trouble code (DTC) is stored.

The steering wheel angle sensor module (SAS) must be initiated before values can be read off. Initiation is carried out by turning the steering wheel more than 5° in either direction.

GLOBAL TIME

The value shows the actual time in seconds when the diagnostic trouble code was stored. The steering wheel angle sensor module (SAS) obtains the value from the central electronic module (CEM) via the controller area network (CAN).

TOTAL MILEAGE

The value shows the total mileage in kilometres when the diagnostic trouble code was stored. The steering wheel angle sensor module (SAS) obtains the value from the central electronic module (CEM) via the controller area network (CAN).

POWER SUPPLY, CENTRAL ELECTRONIC MODULE (CEM)

The value shows the battery voltage when the diagnostic trouble code was stored. The steering wheel angle sensor module (SAS) obtains the value from the central electronic module (CEM) via the controller area network (CAN).

ENGINE RUNNING

The status indicates whether or not the engine was running when the diagnostic trouble code was stored. The steering wheel angle sensor module (SAS) obtains the value from the central electronic module (CEM) via the controller area network (CAN).

The status displayed is **Yes** and **No** .

PASSENGER COMPARTMENT TEMPERATURE

The value shows the cabin temperature in degrees centigrade at the time the diagnostic trouble code was stored. The steering wheel angle sensor module (SAS) obtains the value from the central electronic module (CEM) via the controller area network (CAN).

OUTSIDE TEMPERATURE

The value shows the outside temperature in degrees centigrade at the time the diagnostic trouble code was stored. The steering wheel angle sensor module (SAS) obtains the value from the central electronic module (CEM) via the controller area network (CAN).

POWER SUPPLY, STEERING WHEEL ANGLE SENSOR MODULE (SAS)

The value shows the power supply in volts at the steering wheel angle sensor module (SAS) when the diagnostic trouble code was stored.

STEERING WHEEL ANGLE

The value displays the steering wheel angle in degrees.

0° = Steering wheel in the straight forward position

1° - 720° = Angle of the steering wheel when turning to the left

-1° - -720° = Angle of the steering wheel when turning to the right

STEERING WHEEL ANGLE SPEED

The value shows the speed (in degrees per second) at which the steering wheel is turned.

Measurement range: 0 - 255 degrees/sec.

STEERING WHEEL ANGLE, STEERING DIRECTION

The value indicates in which direction the steering wheel is turned.

The values displayed are **right** and **left** .

VEHICLE COMMUNICATION, STEERING WHEEL ANGLE SENSOR MODULE (SAS) (B6324S5; 2011-2012)

DESCRIPTION OF PARAMETERS

see **DESCRIPTION OF PARAMETERS**

DESCRIPTION OF VEHICLE COMMUNICATION INFORMATION

see **DESCRIPTION OF VEHICLE COMMUNICATION INFORMATION**

VEHICLE COMMUNICATION, STEERING WHEEL ANGLE SENSOR MODULE (SAS) (B8444S; 2005-2011)

DESCRIPTION OF PARAMETERS

see **DESCRIPTION OF PARAMETERS**

DESCRIPTION OF VEHICLE COMMUNICATION INFORMATION

see **DESCRIPTION OF VEHICLE COMMUNICATION INFORMATION**

STEERING

Steering - Symptom Related Diagnostic Procedures

CHECKING REAR WINDSHIELD WASHING (2003-2004)

CHECKING REAR WINDSHIELD WASHING

CHECKING COMPONENTS

Activate the tailgate washer with the wiper switch. Read off the status.

HINT: If the wiper switch status is OK the fault is not in the steering wheel module (SWM).

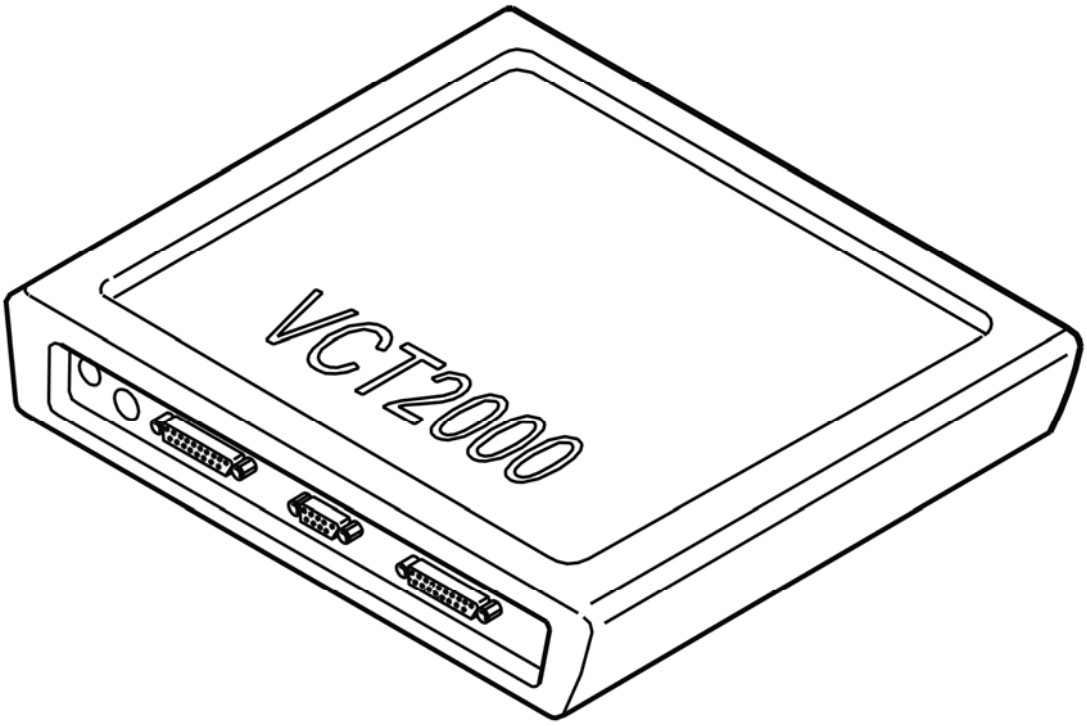

Fig. 1: Identifying VCT2000 Diagnostic Tool Symbol In VIDA
Courtesy of VOLVO CARS CORPORATION

Was the wiper switch status OK?

- **YES**

  FAULT NOT FOUND: Troubleshooting has been completed.

- **NO**

  Refer to **REPLACING THE COMPONENT**

REPLACING THE COMPONENT

Replace the wiper switch.

Other information:

- To replace the wiper switch, see **WASHER / WIPER SWITCH, REPLACING** .
- **Continue**

  Refer to **CHECKING COMPONENTS**

CHECKING COMPONENTS

Activate the tailgate washer. Read off the status.

HINT: If the tailgate washer status is OK the fault is in the tailgate washer.

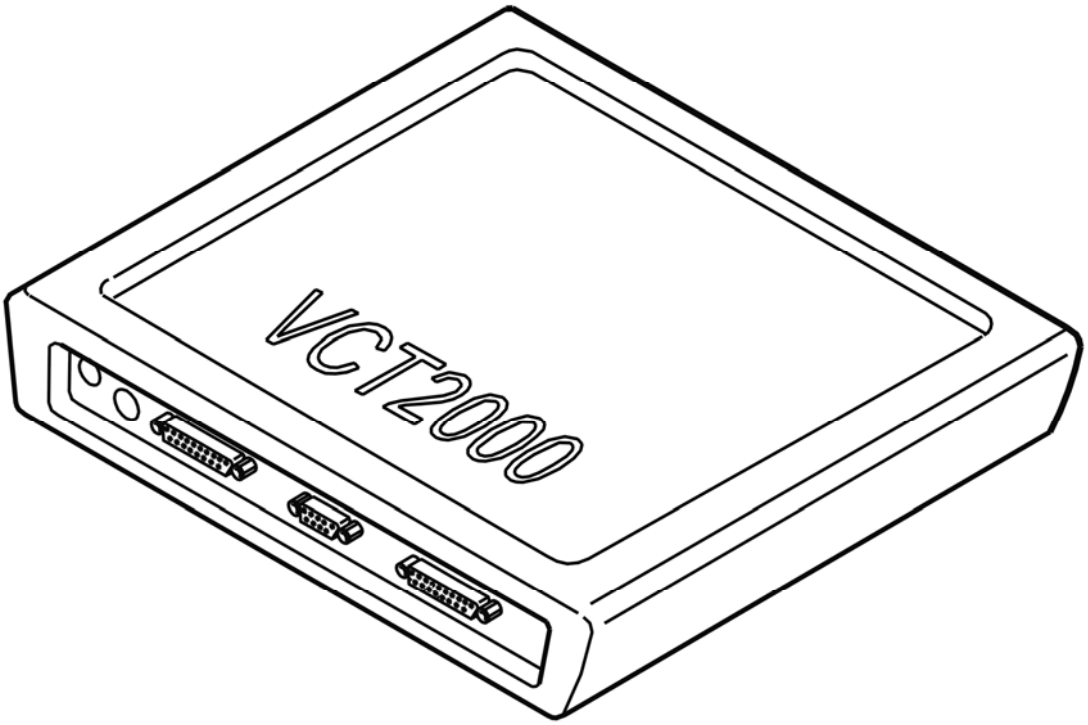

Fig. 2: Identifying VCT2000 Diagnostic Tool Symbol In VIDA
Courtesy of VOLVO CARS CORPORATION

Was the tailgate washer status OK?

- **YES**

  OKAY: Troubleshooting has been completed.

- **NO**

  Refer to **REPLACING THE COMPONENT**

REPLACING THE COMPONENT

Try replacing the steering wheel module (SWM).

CAUTION: A new control module is delivered without software. The control module must be programmed in order to function after replacement.

Other information:

- To replace and program the steering wheel module (SWM), see **STEERING WHEEL MODULE (SWM), REPLACING** .

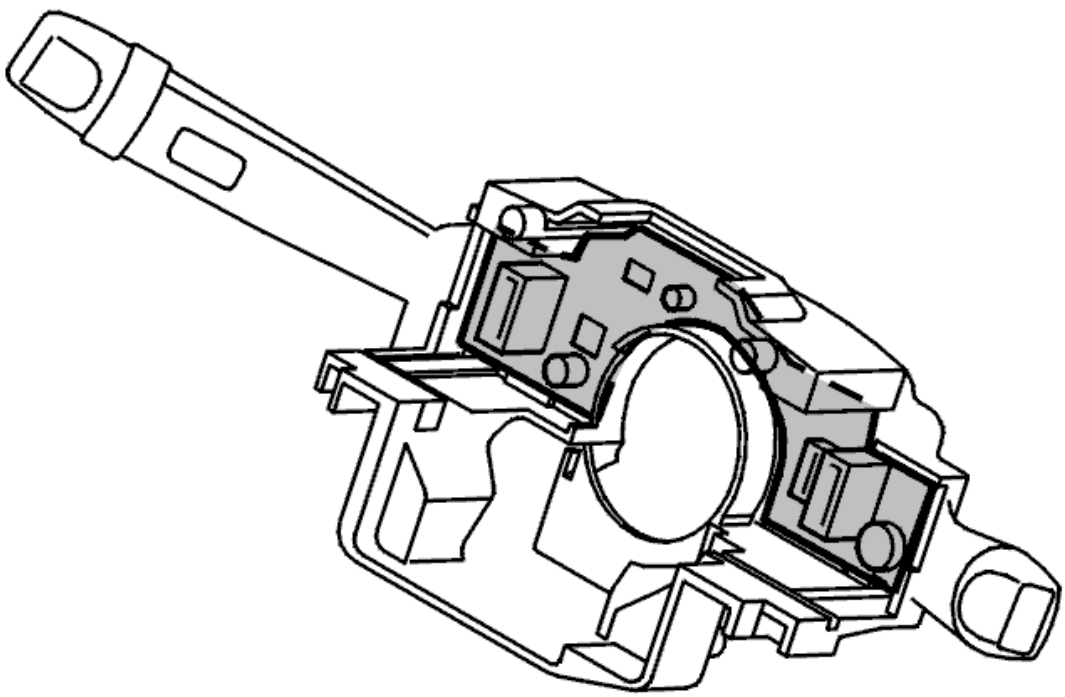

Fig. 3: Identifying Steering Wheel Module

Courtesy of VOLVO CARS CORPORATION

Was a fault detected?

FAULT-TRACING INFORMATION

Condition

- No steering wheel module diagnostic trouble codes (DTCs) are stored in the central electronic module.
- No diagnostic trouble codes (DTCs) are stored in the steering wheel module.

Possible Source

- Defective tailgate washer.
- Defective control module.

Fault symptom[s]

- Rear windshield washing does not operate.

CHECKING THE AUDIO / CARPHONE SWITCH (2003-2004)

CHECKING THE AUDIO / CARPHONE SWITCH

CHECKING COMPONENTS

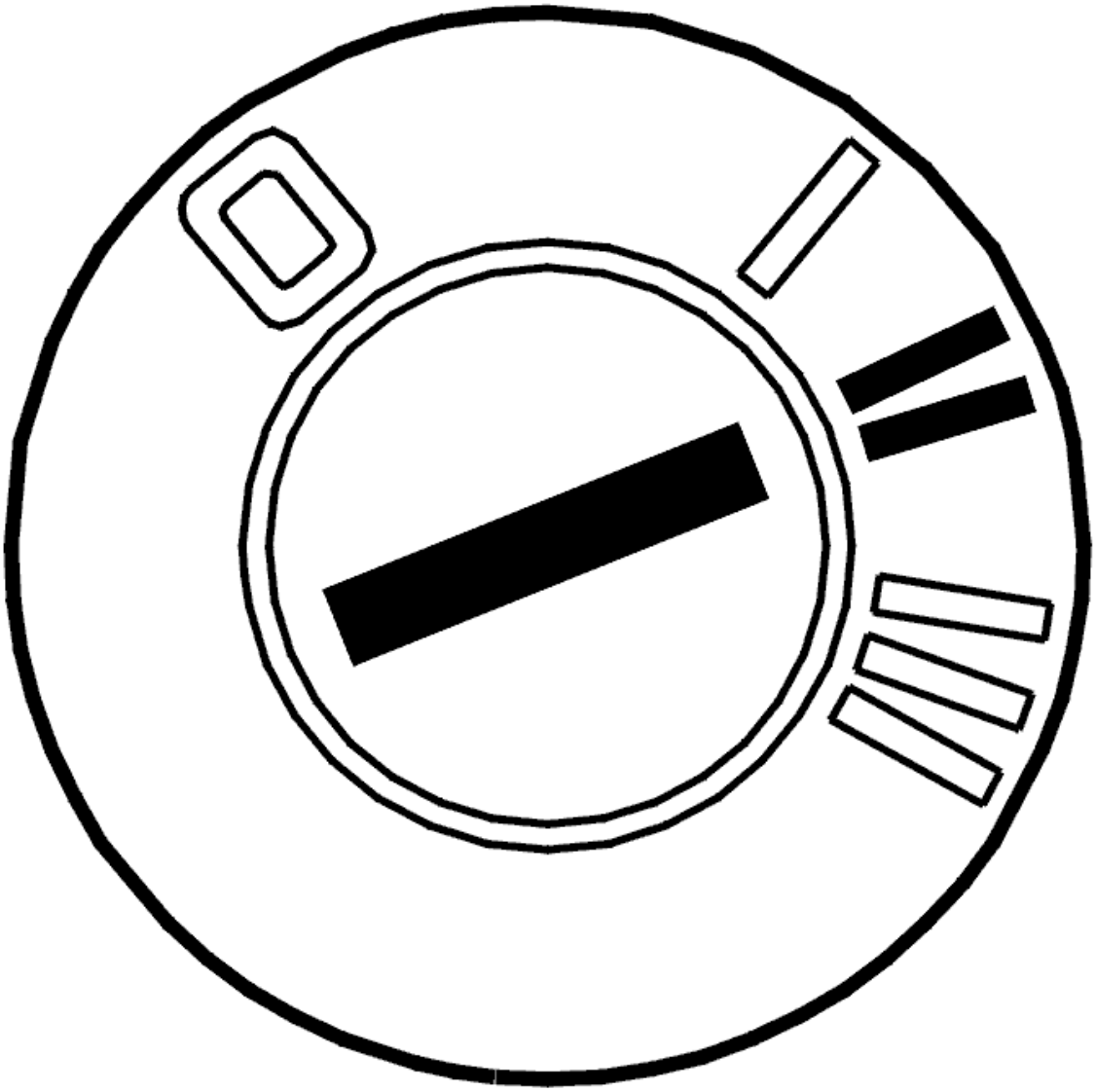

Fig. 4: Identifying Ignition ON
Courtesy of VOLVO CARS CORPORATION

- Ignition on.

  Activate and read off the status of the buttons in the audio / carphone switch.

  If the readings give a correct result, the fault is not in the steering wheel module (SWM).

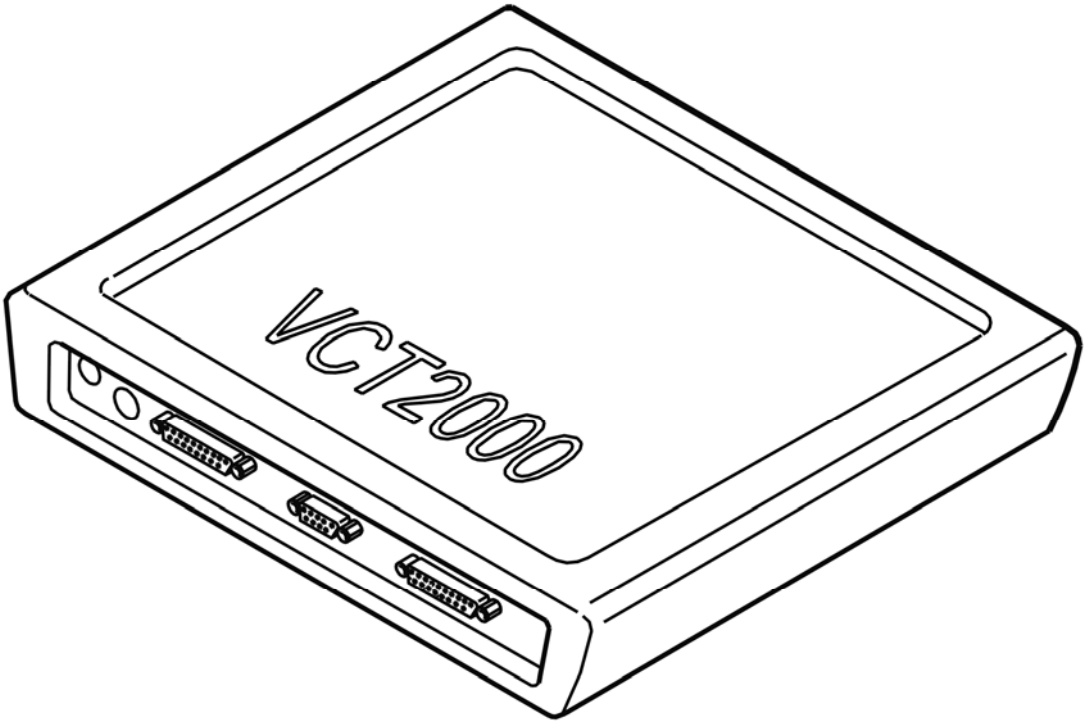

Fig. 5: Identifying VCT2000 Diagnostic Tool Symbol In VIDA
Courtesy of VOLVO CARS CORPORATION

Was the audio / carphone switch status OK?

- **YES**

  FAULT NOT FOUND: Troubleshooting has been completed.

- **NO**

  Refer to **CAR EQUIPMENT**

CAR EQUIPMENT

Is the car equipped with the Road Traffic Information (RTI) system?

- **YES**

  Refer to **CHECKING COMPONENTS AND WIRING**

- **NO**

  Refer to **CHECKING COMPONENTS AND WIRING**

CHECKING COMPONENTS AND WIRING

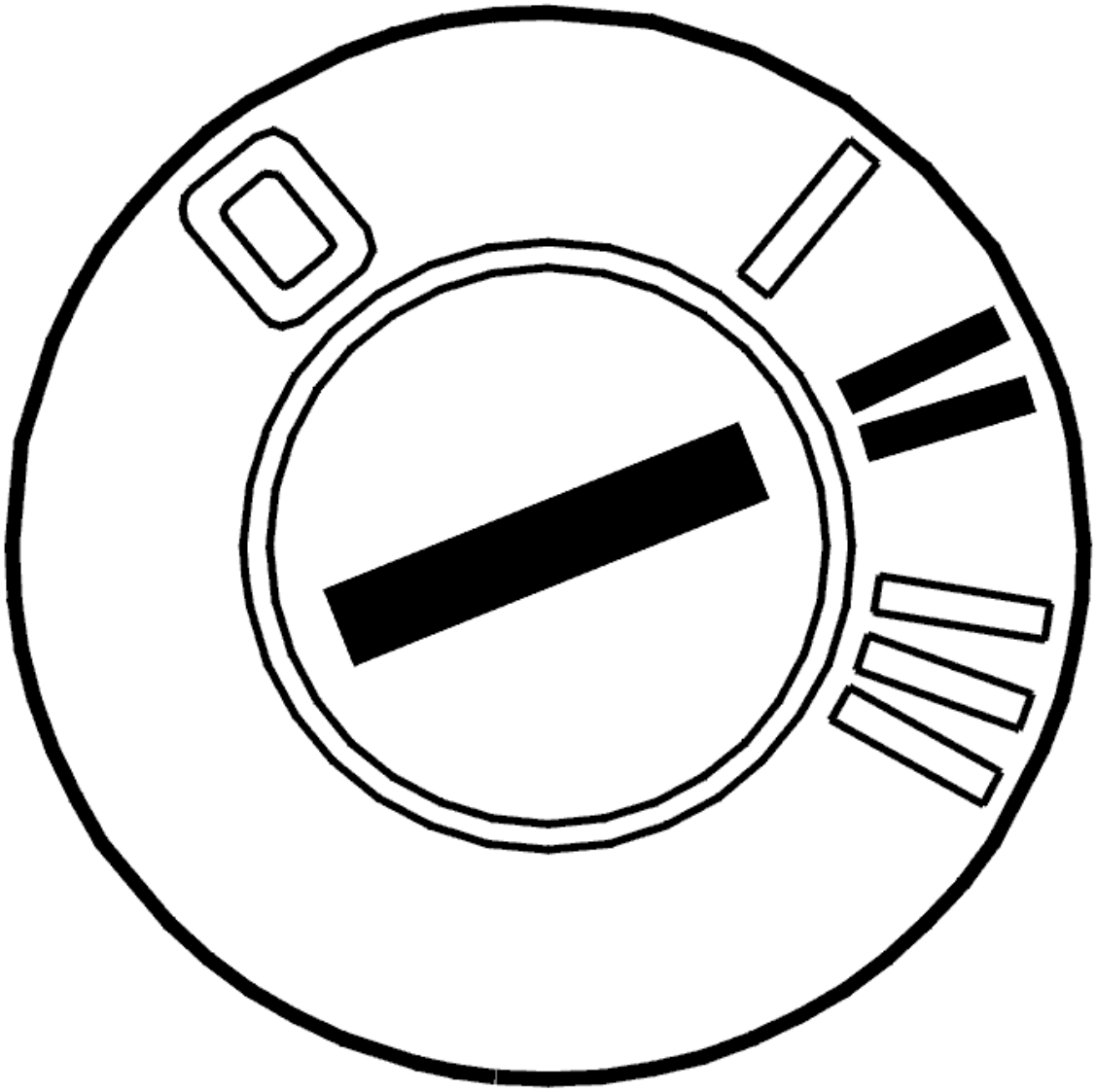

Fig. 6: Identifying Ignition ON
Courtesy of VOLVO CARS CORPORATION

- Ignition off
- Disconnect the RTI switch
- Ignition on.

Activate and read off the status of the buttons in the audio / carphone switch.

If the readings give a correct result, the fault is in the RTI switch.

Other information:

- To access the RTI switch, see **RTI SWITCH** .

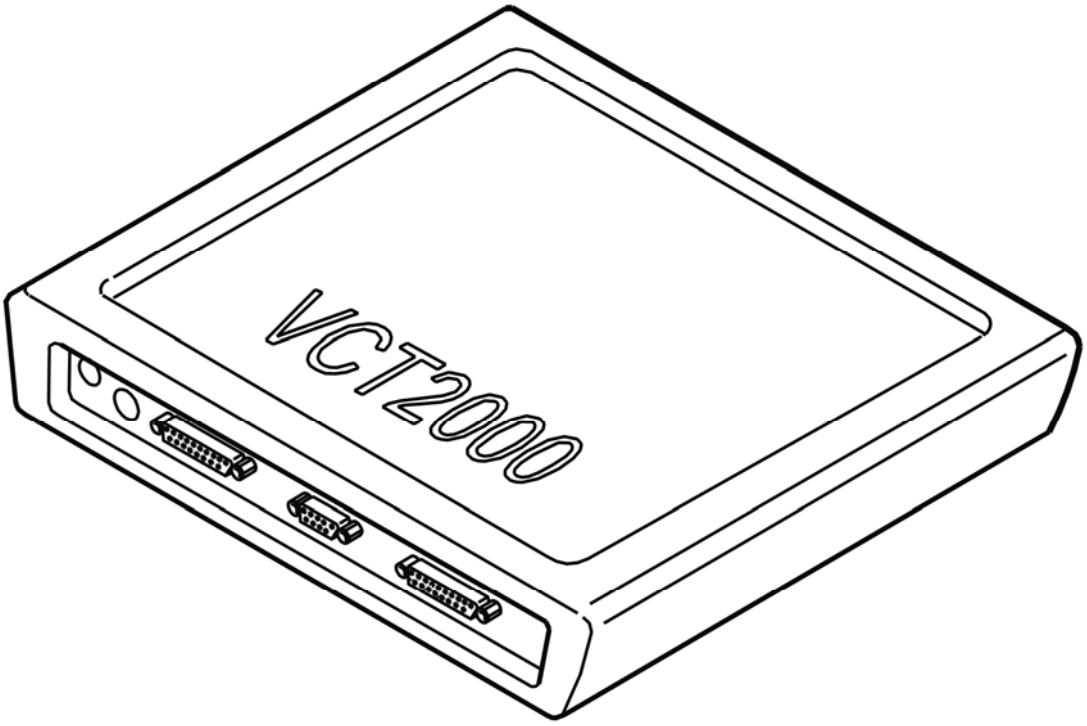

Fig. 7: Identifying VCT2000 Diagnostic Tool Symbol In VIDA
Courtesy of VOLVO CARS CORPORATION

Was the audio / carphone switch status OK?

- **YES**

  OKAY: Troubleshooting has been completed.

- **NO**

  Refer to **CHECKING COMPONENTS AND WIRING**

CHECKING COMPONENTS AND WIRING

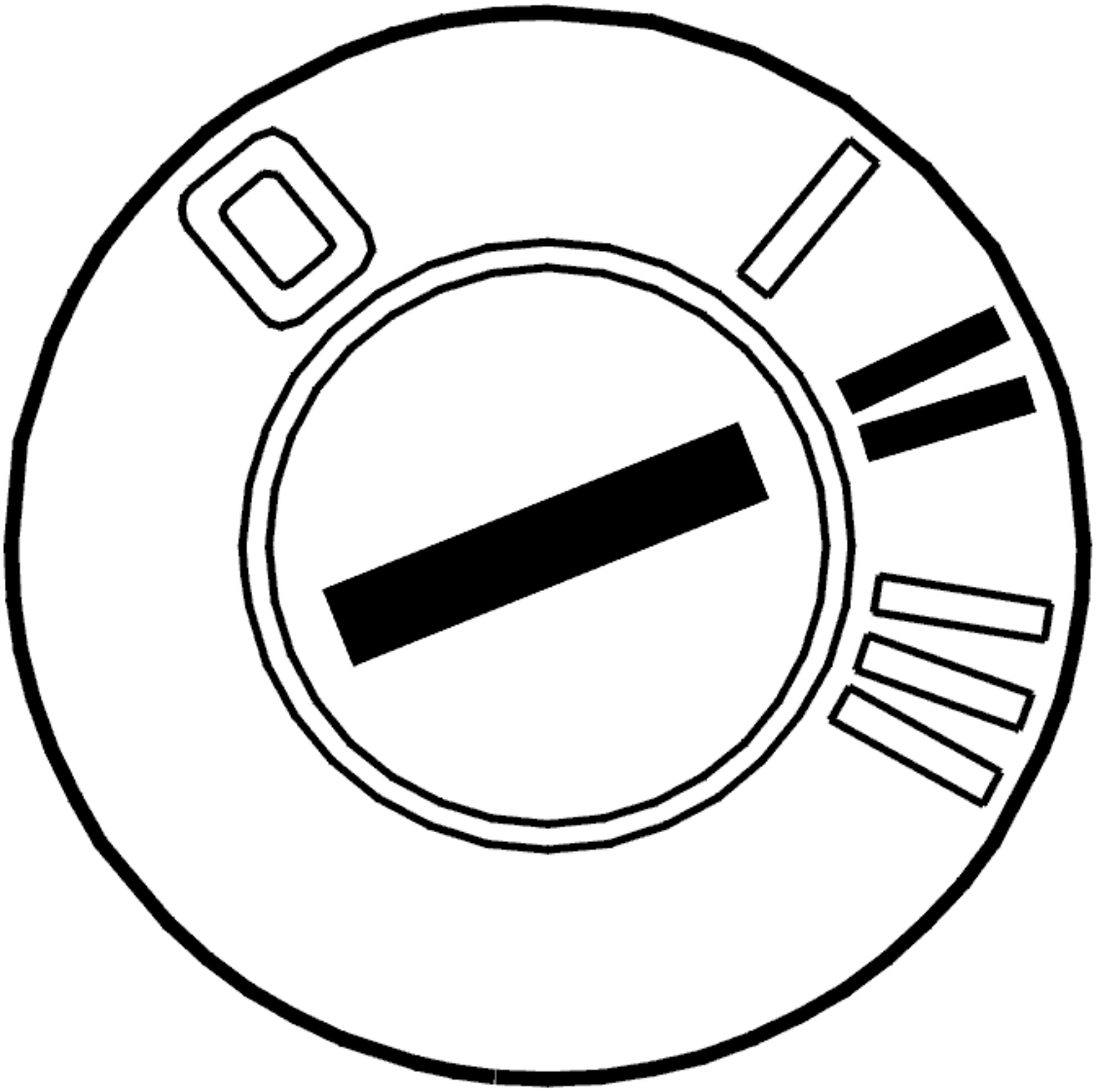

Fig. 8: Identifying Ignition ON
Courtesy of VOLVO CARS CORPORATION

- Ignition off
- Disconnect the audio / carphone switch by disconnecting the lower connector on the audio / carphone switch
- Ignition on.

  Activate the buttons. Read off the status of the buttons in the cruise control switch

  If the readings give a correct result, the fault is in the audio / carphone switch.

  Other information:

  - To access the audio / carphone switch, see **KEYPAD STEERING WHEEL, REPLACING** .

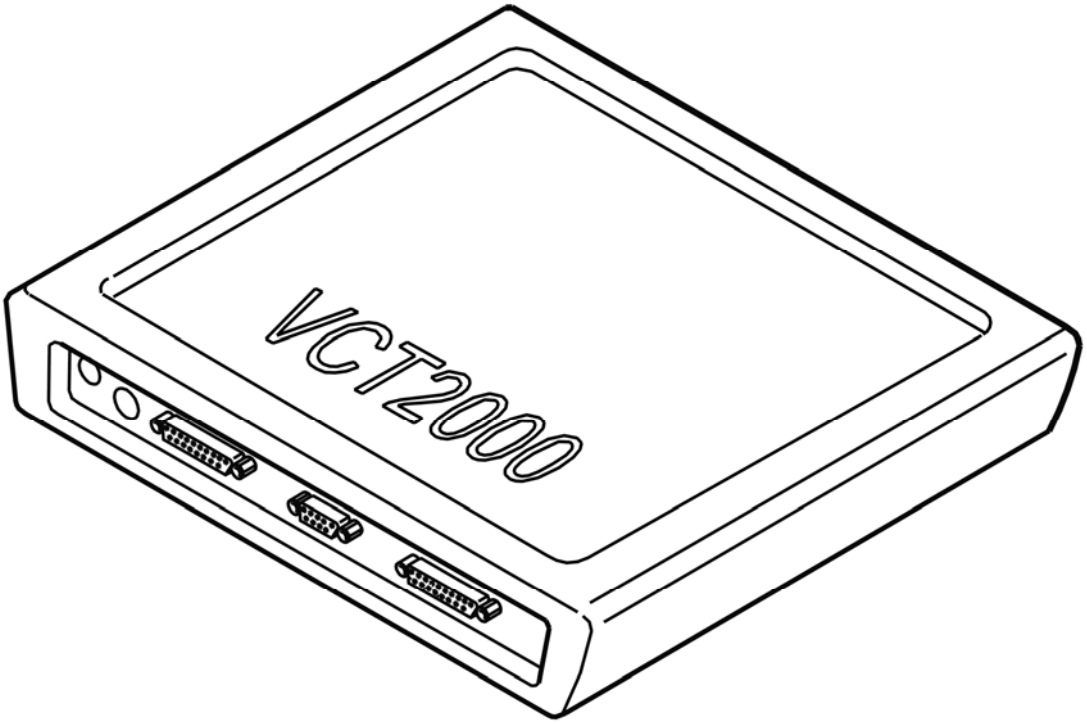

Fig. 9: Identifying VCT2000 Diagnostic Tool Symbol In VIDA
Courtesy of VOLVO CARS CORPORATION

Was the status of the cruise control switch OK?

- **YES**

  OKAY: Troubleshooting has been completed.

- **NO**

  Refer to **CHECKING COMPONENTS AND WIRING**

CHECKING COMPONENTS AND WIRING

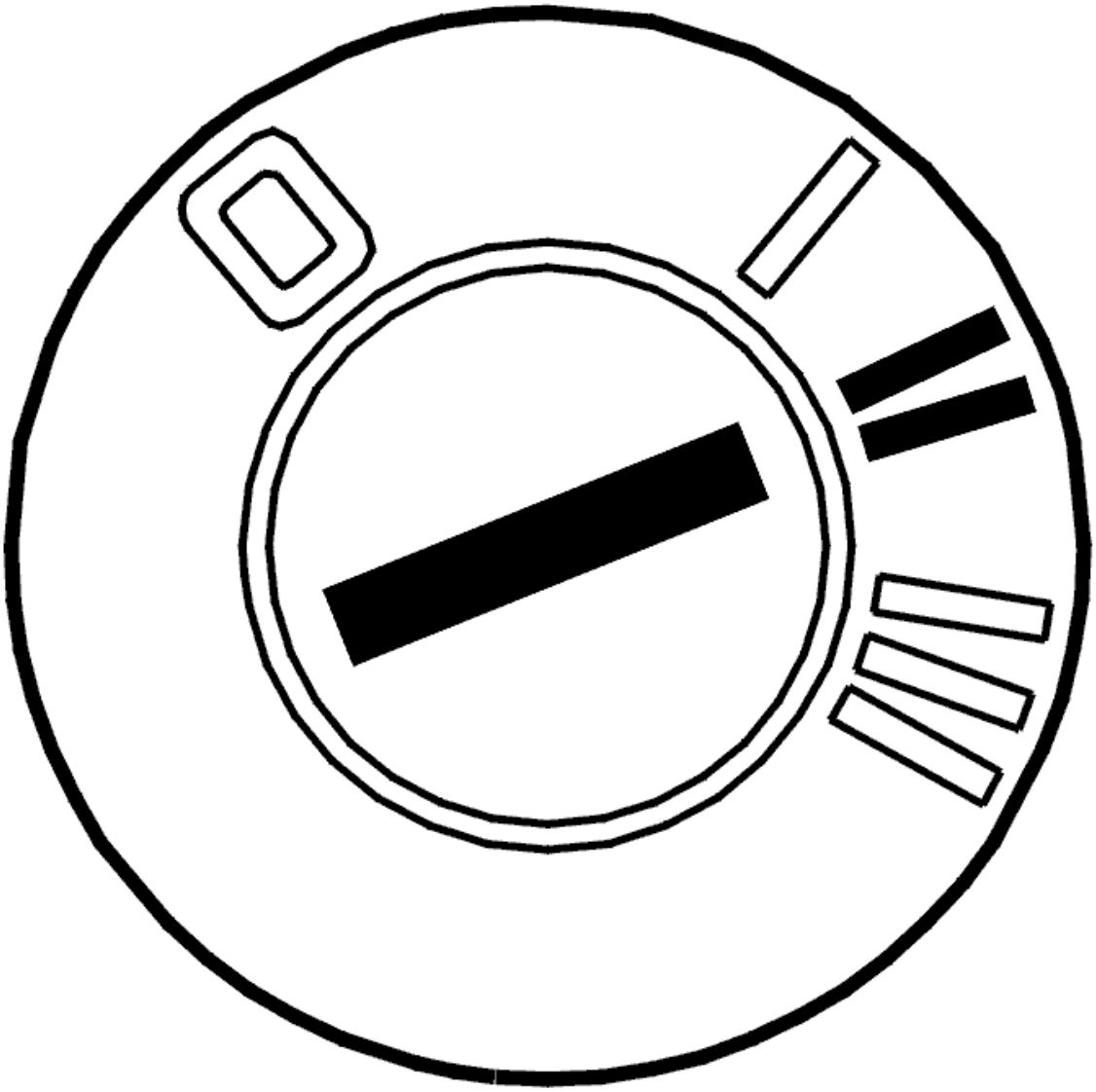

Fig. 10: Identifying Ignition ON
Courtesy of VOLVO CARS CORPORATION

- Ignition off
- Disconnect the audio / carphone wiring by disconnecting the lower connector on the cruise control switch
- Ignition on.

  Activate the buttons. Read off the status of the buttons in the cruise control switch

  If the readings give a correct result, the fault is in the wiring between the audio / carphone switch and the cruise control switch.

  Other information:

  - To access the cruise control switch, see **KEYPAD STEERING WHEEL, REPLACING** .

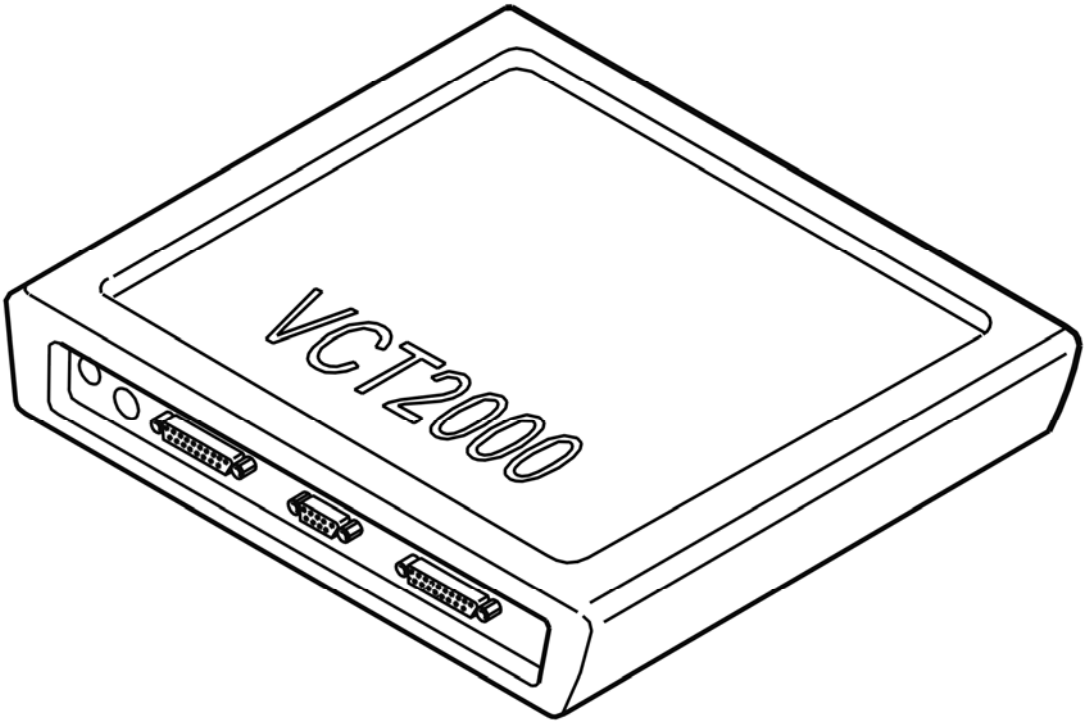

Fig. 11: Identifying VCT2000 Diagnostic Tool Symbol In VIDA
Courtesy of VOLVO CARS CORPORATION

Was the status of the cruise control switch OK?

- **YES**

  OKAY: Troubleshooting has been completed.

- **no**

  Refer to **CHECKING COMPONENTS AND WIRING**

CHECKING COMPONENTS AND WIRING

Check the voltage between terminals #B1 and #B3. Voltage must be approximately 12 V.

Check the voltage between terminals #B2 and #B3. Voltage must be approximately 5 V.

Check the voltage between terminal #B3 and the battery negative terminal. Voltage must be approximately 0 V.

If the above readings are OK, the fault is in the cruise control switch.

Other information:

- To connect the breakout box, see **CONNECTING THE BREAKOUT BOX** .

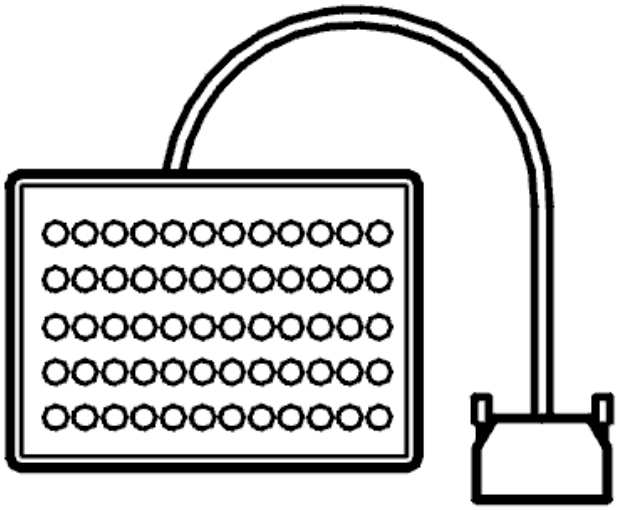

Fig. 12: Breakout Box
Courtesy of VOLVO CARS CORPORATION

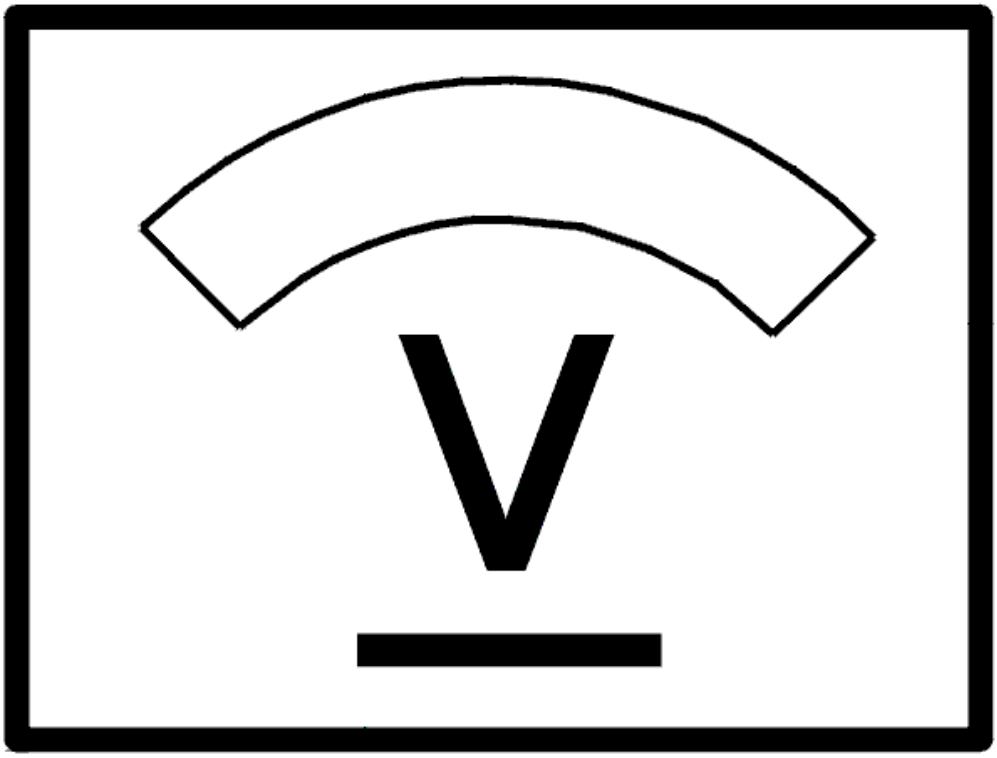

Fig. 13: Identifying Voltage Display
Courtesy of VOLVO CARS CORPORATION

TROUBLE-SHOOTING INFORMATION

Condition

- No SWM diagnostic trouble codes are displayed in the CEM
- No diagnostic trouble codes are displayed in the PHM.

Possible Source

- Open circuit, short-circuit to earth or short-circuit to voltage supply on the wire
- Defective RTI switch unit
- Defective audio/telephone switch unit

- Defective cruise-control switch unit.

Fault symptom[s]

- Audio/telephone switch unit does not work.

CHECKING THE AUDIO / CARPHONE SWITCH (2003-2004)

CHECKING THE AUDIO / CARPHONE SWITCH

CHECKING COMPONENTS AND WIRING

Is the car equipped with the Road Traffic Information (RTI) system?

- **YES**

  Refer to **CHECKING COMPONENTS AND WIRING**

- **NO**

  Refer to **CHECKING COMPONENTS AND WIRING**

CHECKING COMPONENTS AND WIRING

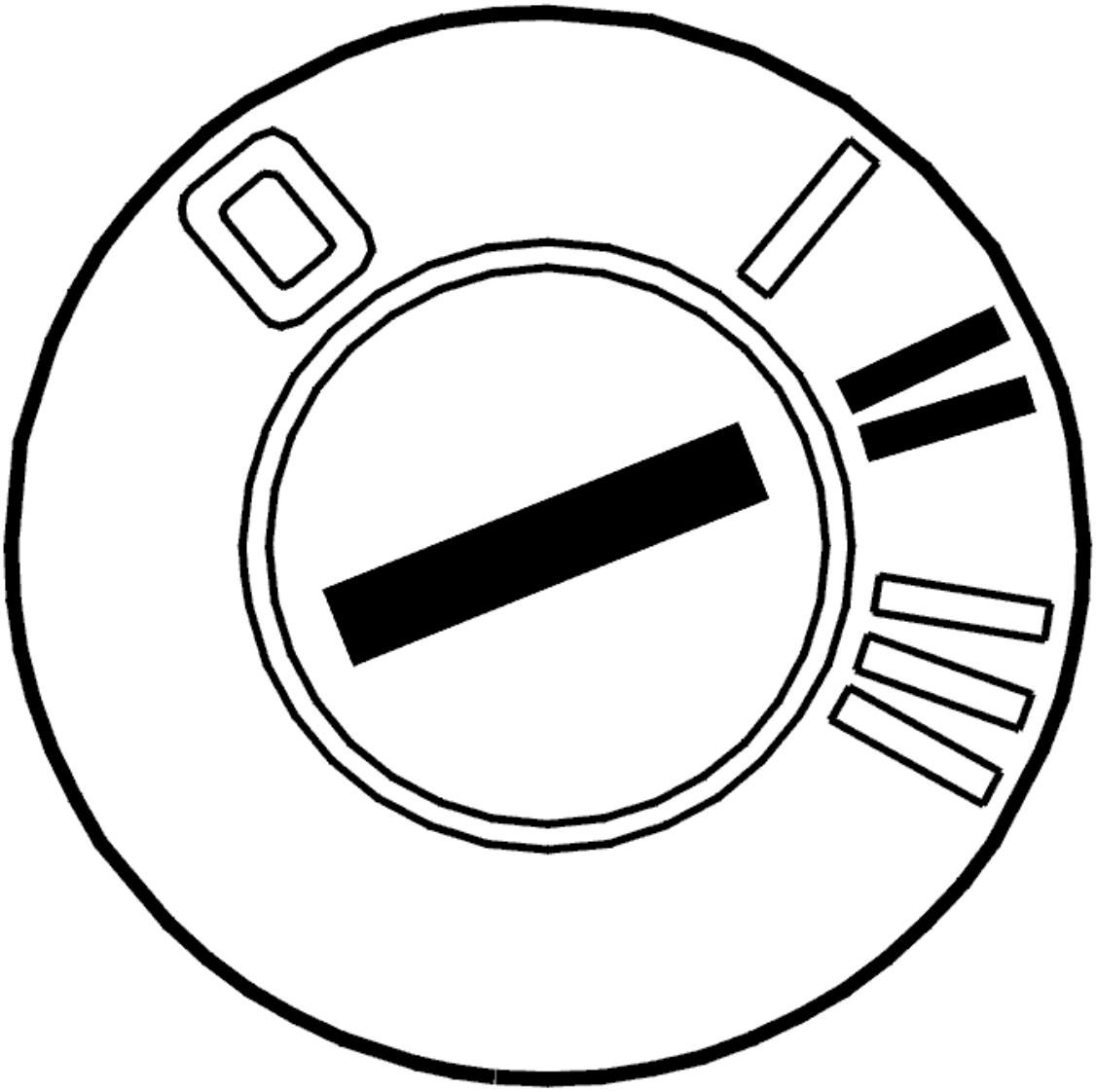

Fig. 14: Identifying Ignition ON
Courtesy of VOLVO CARS CORPORATION

- Ignition off
- Disconnect the RTI switch
- Ignition on.

Activate and read off the status of the buttons in the audio / carphone switch.

If the readings give a correct result, the fault is in the RTI switch.

Other information:

- To access the RTI switch, see **RTI SWITCH** .

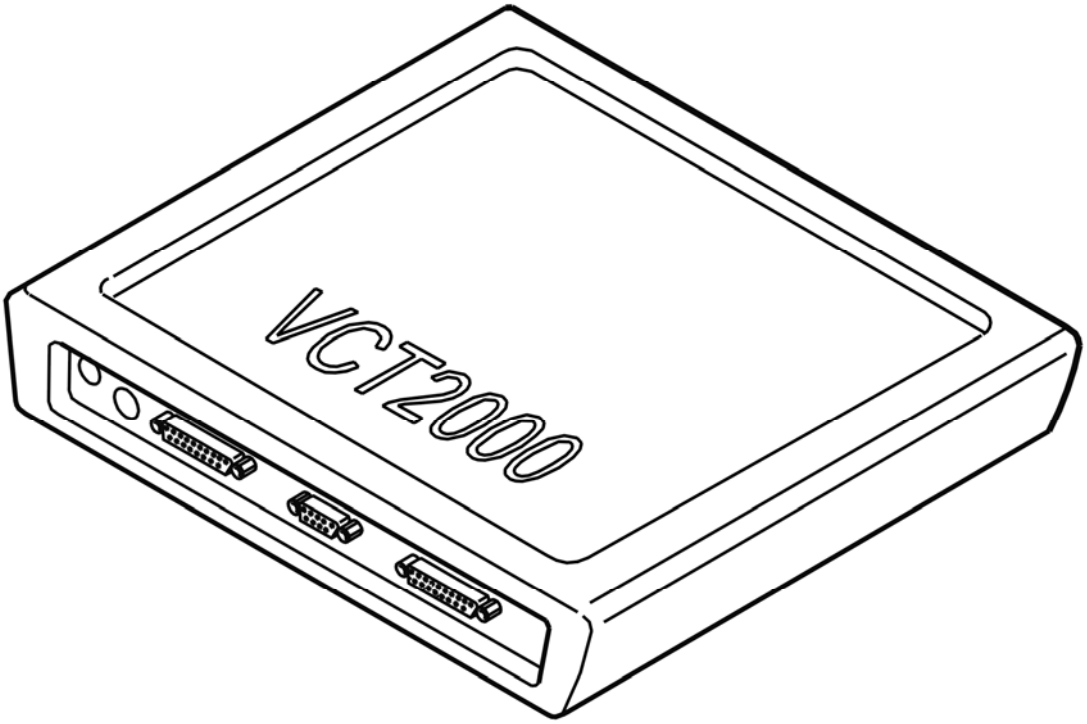

Fig. 15: Identifying VCT2000 Diagnostic Tool Symbol In VIDA
Courtesy of VOLVO CARS CORPORATION

Was the audio / carphone switch status OK?

- **YES**

  OKAY: Troubleshooting has been completed.

- **NO**

  Refer to **CHECKING COMPONENTS AND WIRING**

CHECKING COMPONENTS AND WIRING

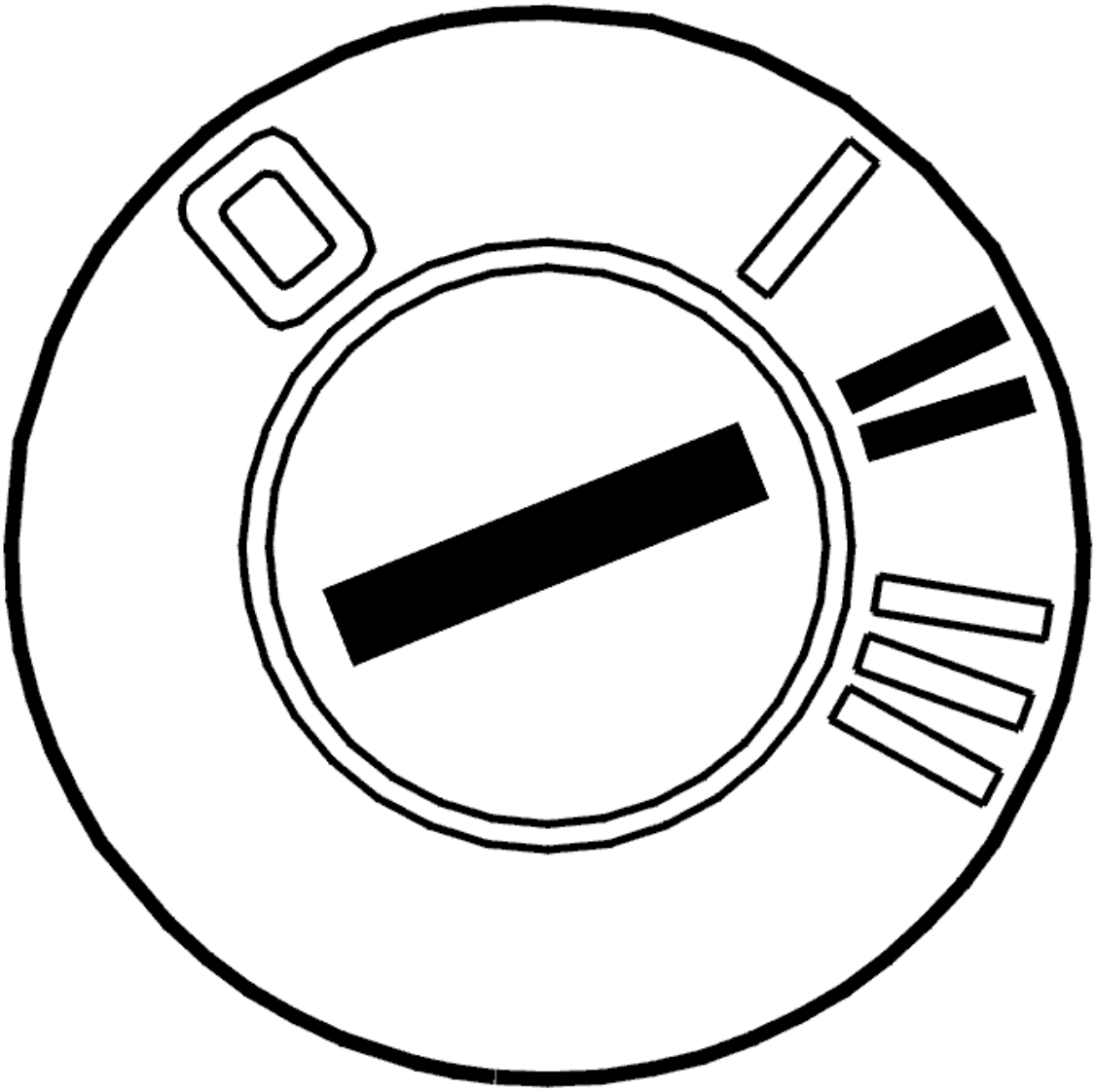

Fig. 16: Identifying Ignition ON
Courtesy of VOLVO CARS CORPORATION

- Ignition off
- Disconnect the audio / carphone switch by disconnecting the lower connector on the audio / carphone switch
- Ignition on.

  Activate the buttons. Read off the status of the buttons in the cruise control switch

  If the readings give a correct result, the fault is in the audio / carphone switch.

  Other information:

  - To access the audio / carphone switch, see **KEYPAD STEERING WHEEL, REPLACING** .

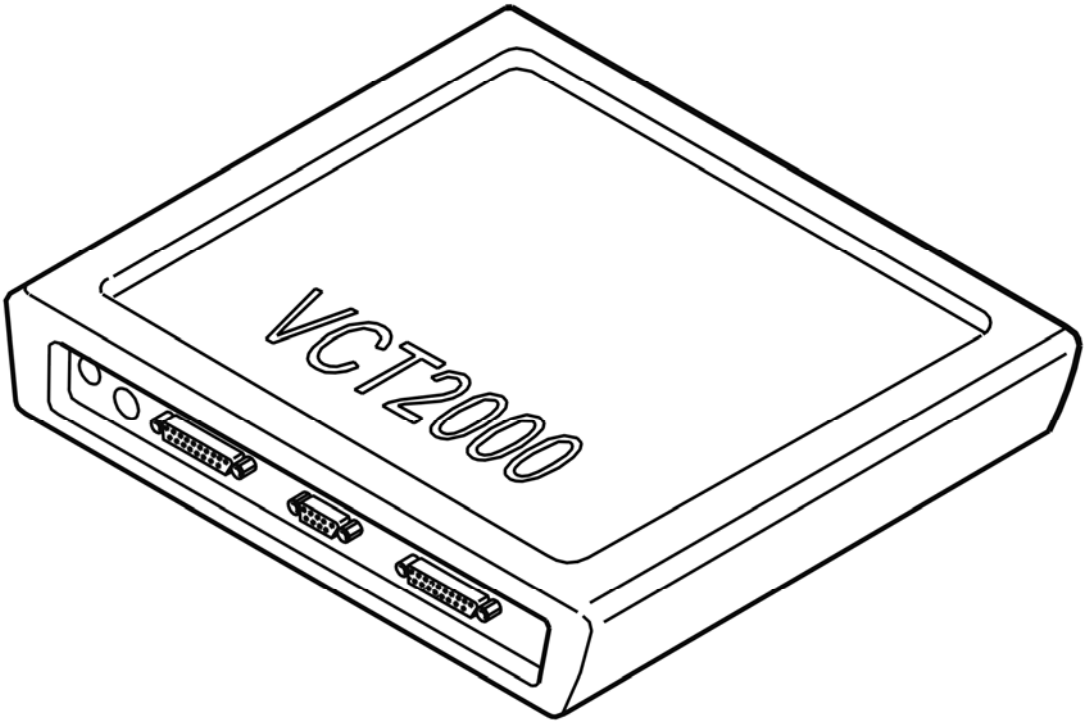

Fig. 17: Identifying VCT2000 Diagnostic Tool Symbol In VIDA
Courtesy of VOLVO CARS CORPORATION

Was the status of the cruise control switch OK?

- **YES**

  OKAY: Troubleshooting has been completed.

- **NO**

  Refer to **CHECKING COMPONENTS AND WIRING**

CHECKING COMPONENTS AND WIRING

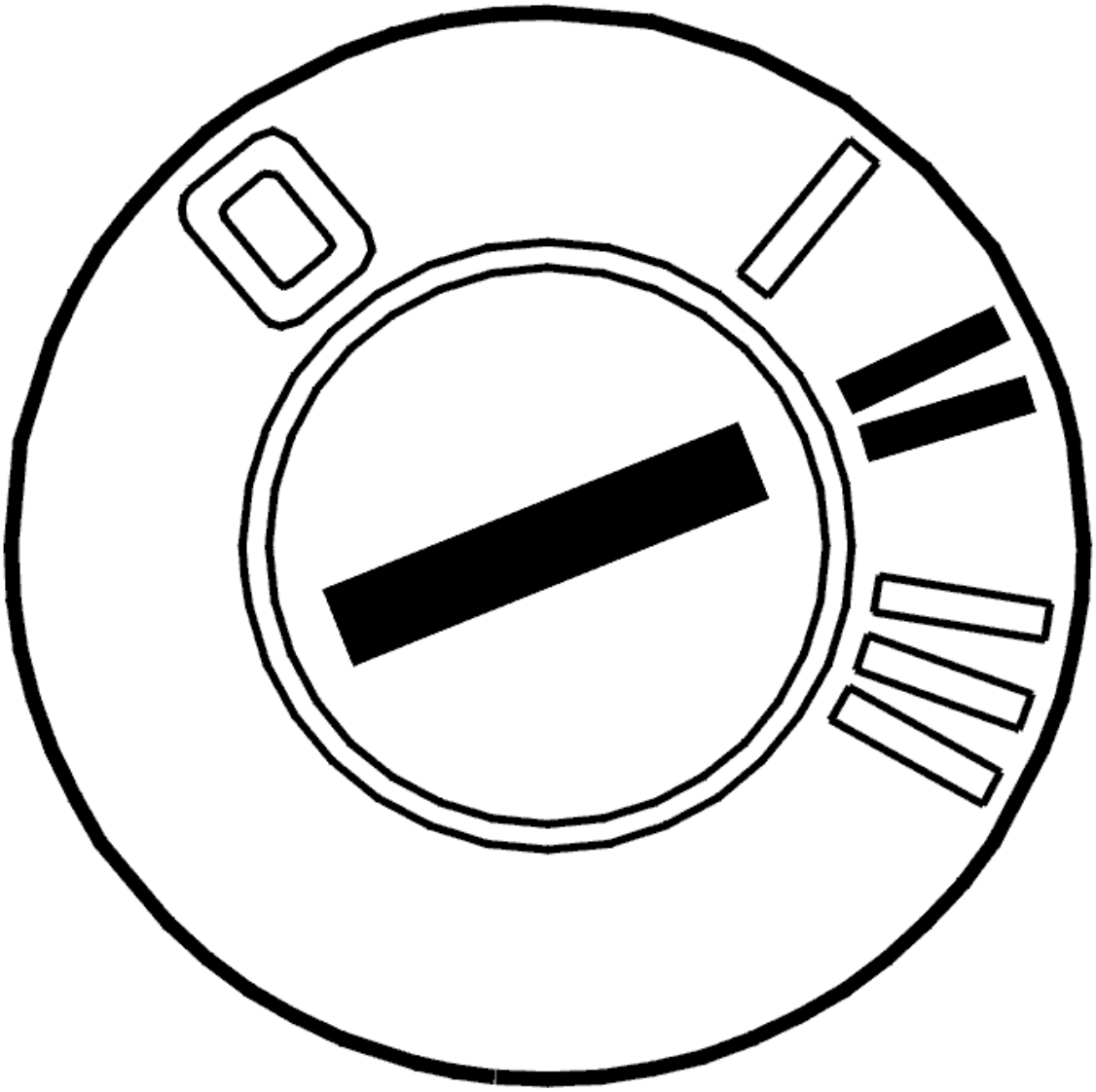

Fig. 18: Identifying Ignition ON
Courtesy of VOLVO CARS CORPORATION

- Ignition off
- Disconnect the audio / carphone wiring by disconnecting the lower connector on the cruise control switch
- Ignition on.

  Activate the buttons. Read off the status of the buttons in the cruise control switch

  If the readings give a correct result, the fault is in the wiring between the audio / carphone switch and the cruise control switch.

  Other information:

  - To access the cruise control switch, see **KEYPAD STEERING WHEEL, REPLACING** .

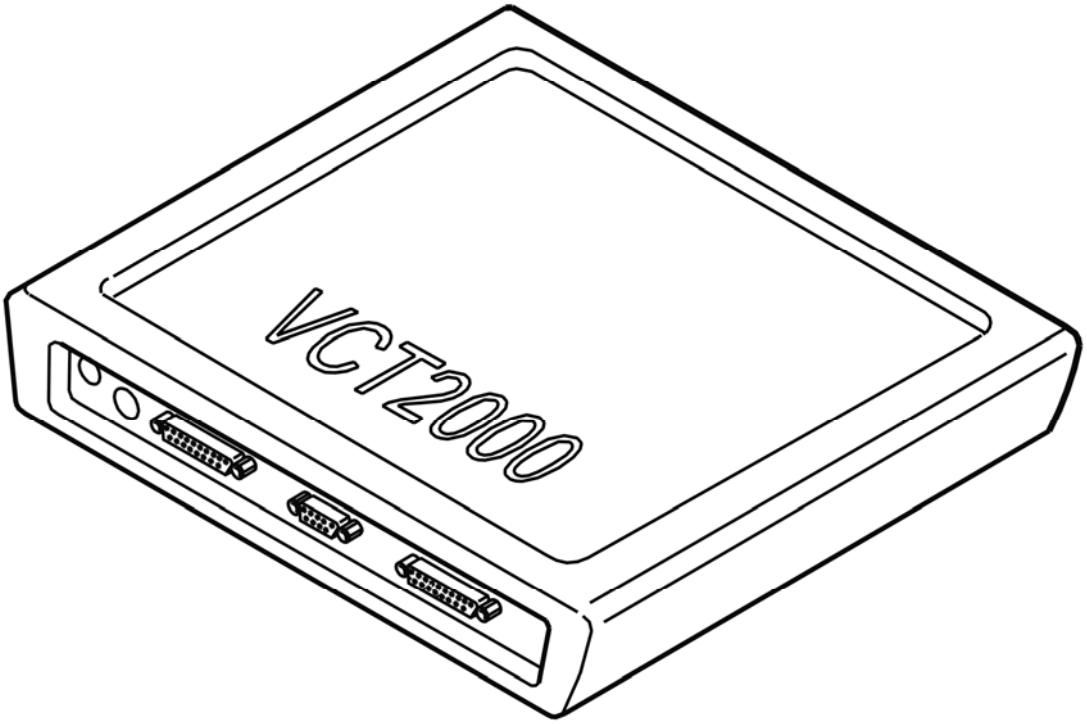

Fig. 19: Identifying VCT2000 Diagnostic Tool Symbol In VIDA
Courtesy of VOLVO CARS CORPORATION

Was the status of the cruise control switch OK?

- **YES**

  OKAY: Troubleshooting has been completed.

- **NO**

  Refer to **CHECKING COMPONENTS AND WIRING**

CHECKING COMPONENTS AND WIRING

Check the voltage between terminals #B1 and #B3. Voltage must be approximately 12 V.

Check the voltage between terminals #B2 and #B3. Voltage must be approximately 5 V.

Check the voltage between terminal #B3 and the battery negative terminal. Voltage must be approximately 0 V.

If the above readings are OK, the fault is in the cruise control switch.

Other information:

- To connect the breakout box, see **CONNECTING THE BREAKOUT BOX**

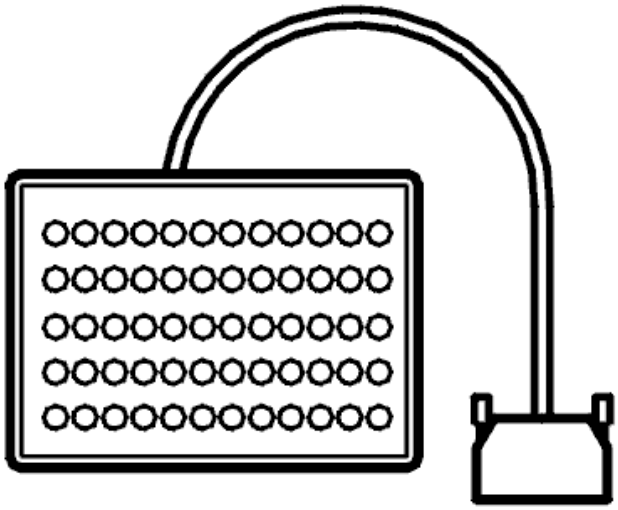

Fig. 20: Breakout Box
Courtesy of VOLVO CARS CORPORATION

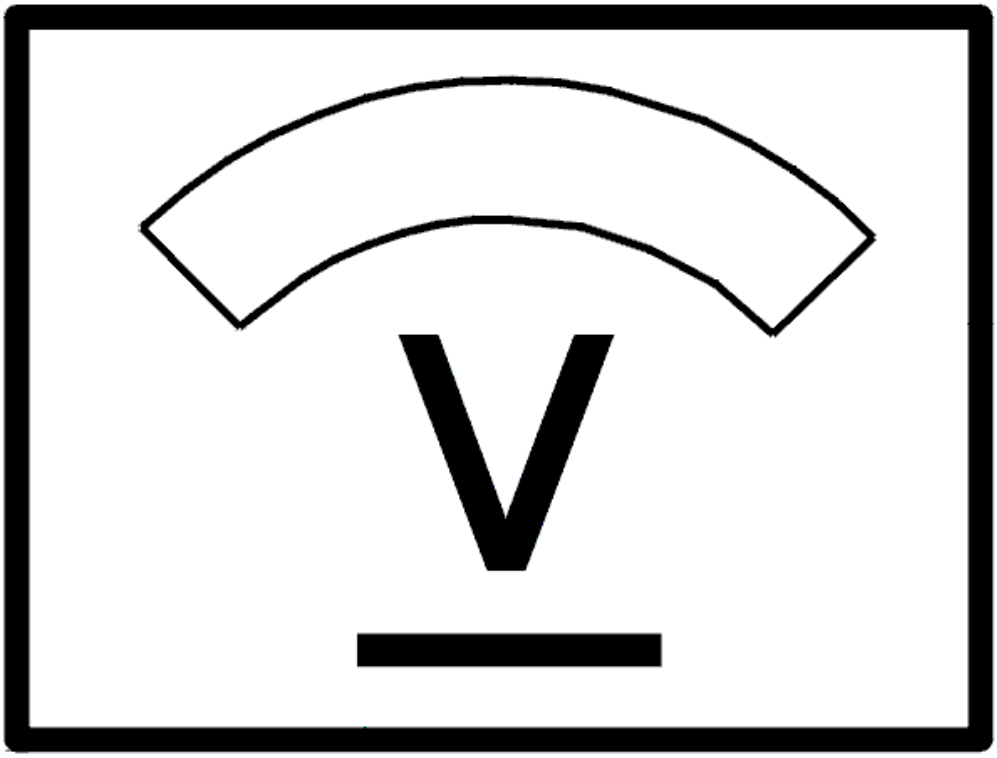

Fig. 21: Identifying Voltage Display
Courtesy of VOLVO CARS CORPORATION

TROUBLE-SHOOTING INFORMATION

Condition

- No SWM diagnostic trouble codes are displayed in the CEM
- No diagnostic trouble codes are displayed in the PHM.

Possible Source

- Open circuit, short-circuit to earth or short-circuit to voltage supply on the wire
- Defective RTI switch unit
- Defective audio/telephone switch unit

- Defective cruise-control switch unit.

Fault symptom[s]

- Audio/telephone switch unit does not work.

CHECKING THE CONTACT REEL (2003-2004)

CHECKING THE CONTACT REEL

CHECKING COMPONENTS AND WIRING

Disconnect the contact reel from the steering wheel module (SWM).

Take resistance readings between terminals #B1 and #B2. The resistance must be infinite.

Take resistance readings between terminals #B1 and #B3. The resistance must be infinite.

Take resistance readings between terminals #B2 and #B3. The resistance must be infinite.

Check the cable between terminal #B1 and contact reel terminal #1. Check for an open-circuit.

Check the cable between terminal #B2 and contact reel terminal #2. Check for an open-circuit.

Check the cable between terminal #B3 and contact reel terminal #3. Check for an open-circuit.

Remedy as necessary.

Other information:

- For information about signals, see **SIGNAL SPECIFICATION**
- To connect the breakout box, see **CONNECTING THE BREAKOUT BOX**
- To access or replace the contact reel, see **CONTACT REEL, REPLACEMENT**
- see **CHECKING WIRING AND TERMINALS** .

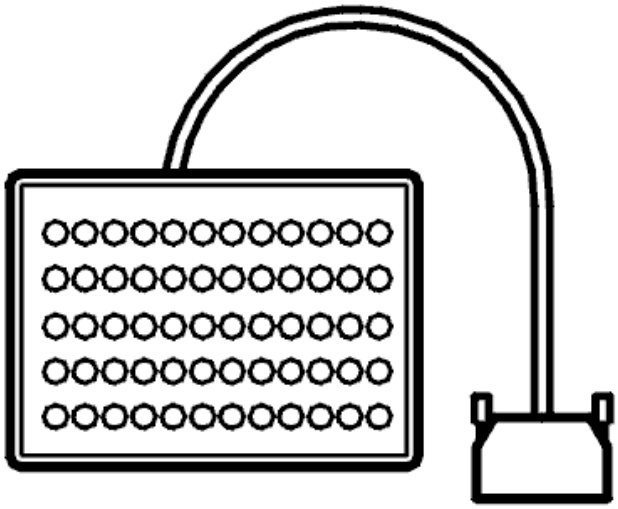

Fig. 22: Breakout Box
Courtesy of VOLVO CARS CORPORATION

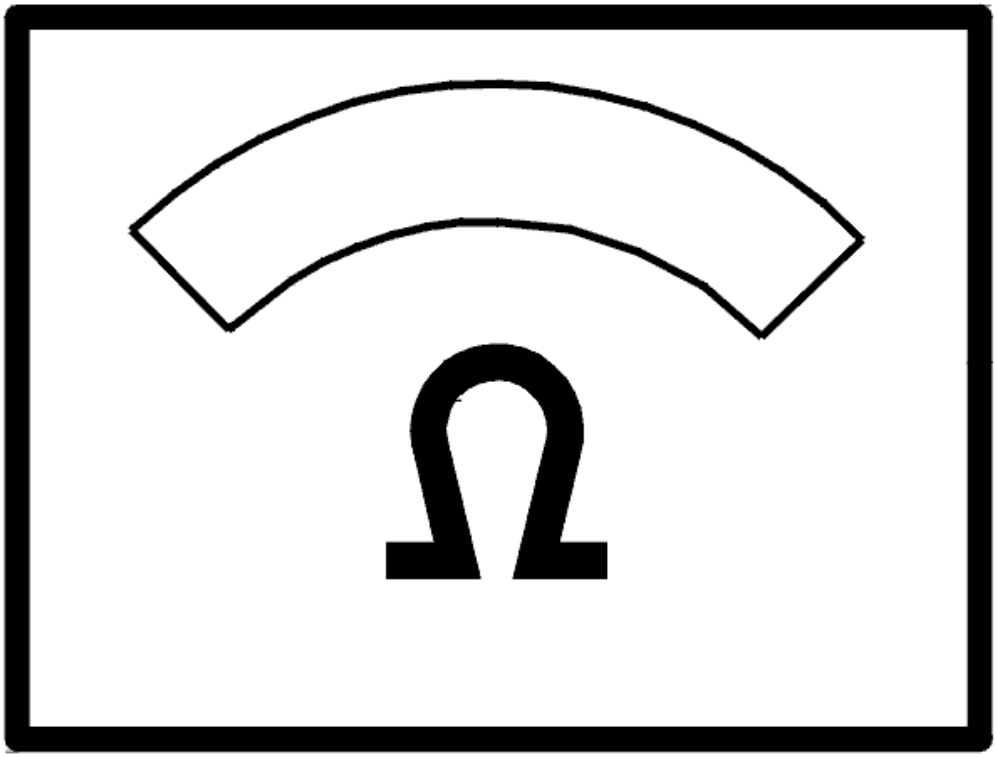

Fig. 23: Identifying Ohm Meter
Courtesy of VOLVO CARS CORPORATION

FAULT-TRACING INFORMATION

Condition

- No PHM DTCs are stored in the Central electronic module (CEM).
- No DTCs are stored in the Steering wheel module (SWM).

Possible Source

- Open-circuit, short-circuit to supply voltage or short-circuit to ground in the cable.
- Faulty contact reel.

Fault symptom[s]

- Steering wheel keypads does not work

CHECKING THE CRUISE CONTROL SWITCH (2003-2004)

CHECKING THE CRUISE CONTROL SWITCH

CHECKING COMPONENTS AND WIRING

Ignition off.

Ignition on.

Read off the status of the buttons in the cruise control switch.

If the cruise control switch is functioning the fault is outside the steering wheel module (SWM).

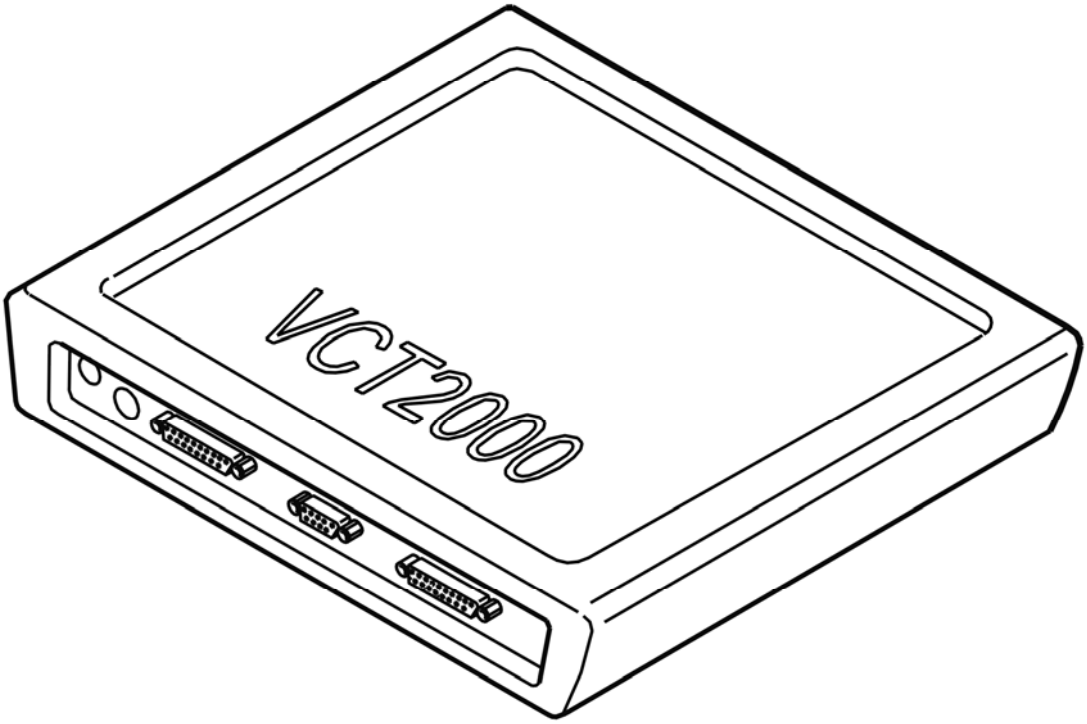

Fig. 24: Identifying VCT2000 Diagnostic Tool Symbol In VIDA
Courtesy of VOLVO CARS CORPORATION

Is the cruise control switch working?

- **YES**

  FAULT NOT FOUND: Troubleshooting has been completed.

- **NO**

  Refer to **CAR EQUIPMENT**

CAR EQUIPMENT

Is the car equipped with RTI?

- **YES**

  Refer to **CHECKING COMPONENTS AND WIRING**

- **NO**

  Refer to **CHECKING COMPONENTS AND WIRING**

CHECKING COMPONENTS AND WIRING

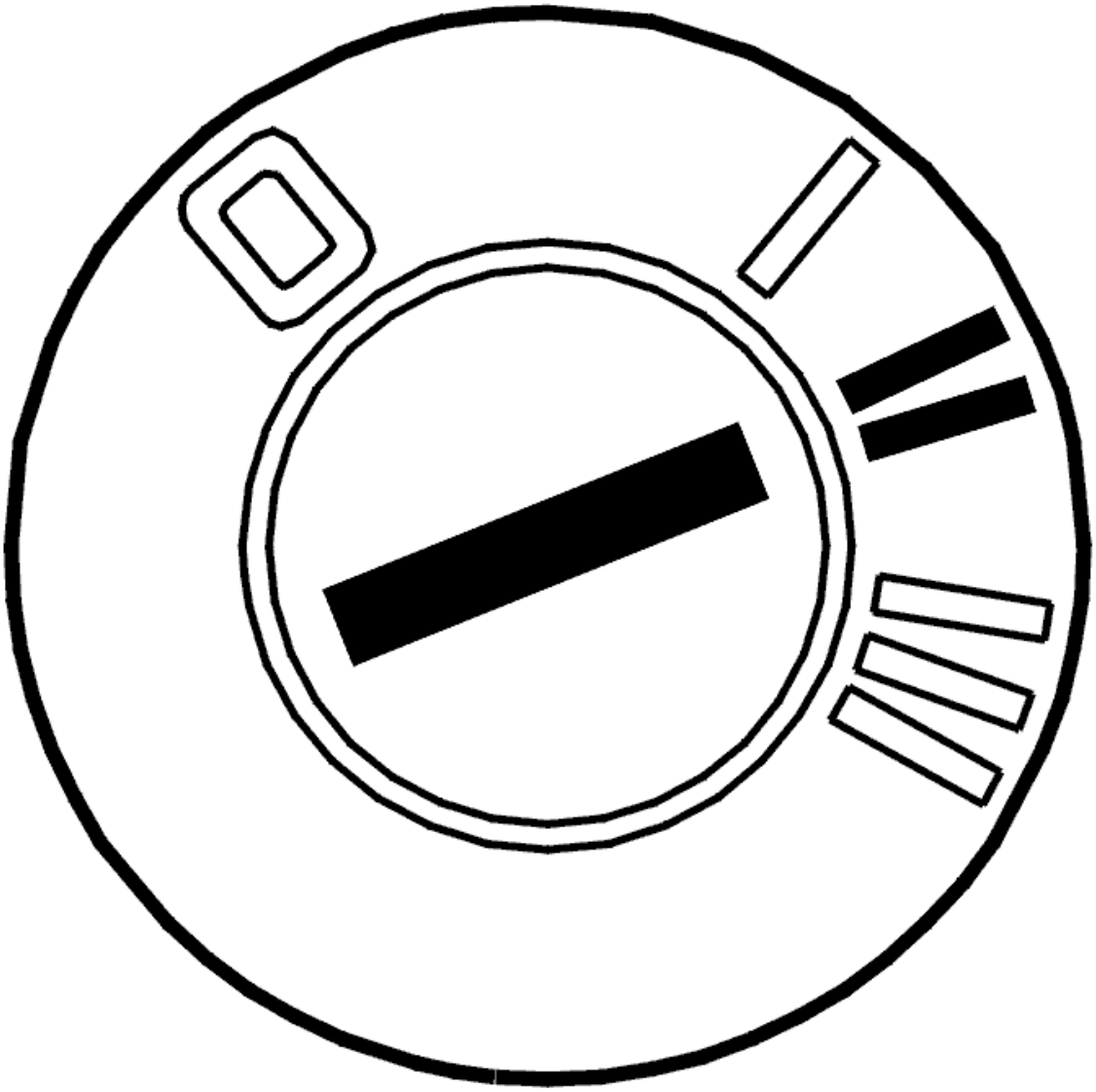

Fig. 25: Identifying Ignition ON
Courtesy of VOLVO CARS CORPORATION

- Ignition off
- Disconnect the RTI switch
- Ignition on.

Activate and read off the status of the buttons in the audio / carphone switch.

If the readings give a correct result, the fault is in the RTI switch.

Other information:

- To access the RTI switch, see **RTI SWITCH** .

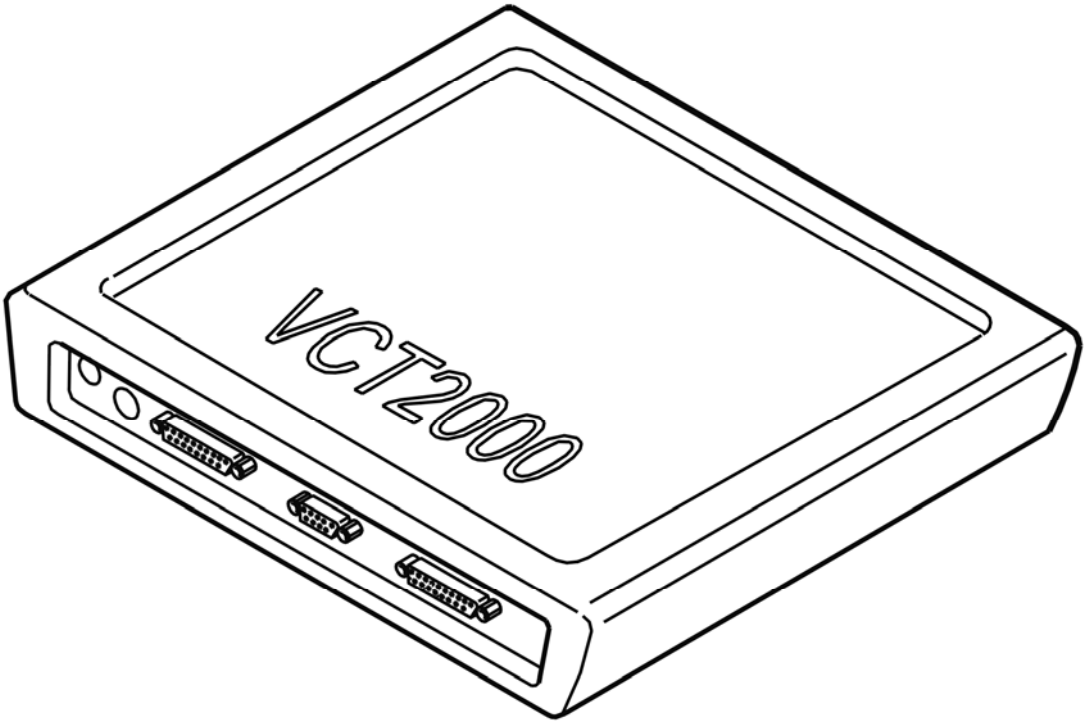

Fig. 26: Identifying VCT2000 Diagnostic Tool Symbol In VIDA
Courtesy of VOLVO CARS CORPORATION

Was the audio / carphone switch status OK?

- **YES**

  OKAY: Troubleshooting has been completed.

- **NO**

  Refer to **CHECKING COMPONENTS AND WIRING**

CHECKING COMPONENTS AND WIRING

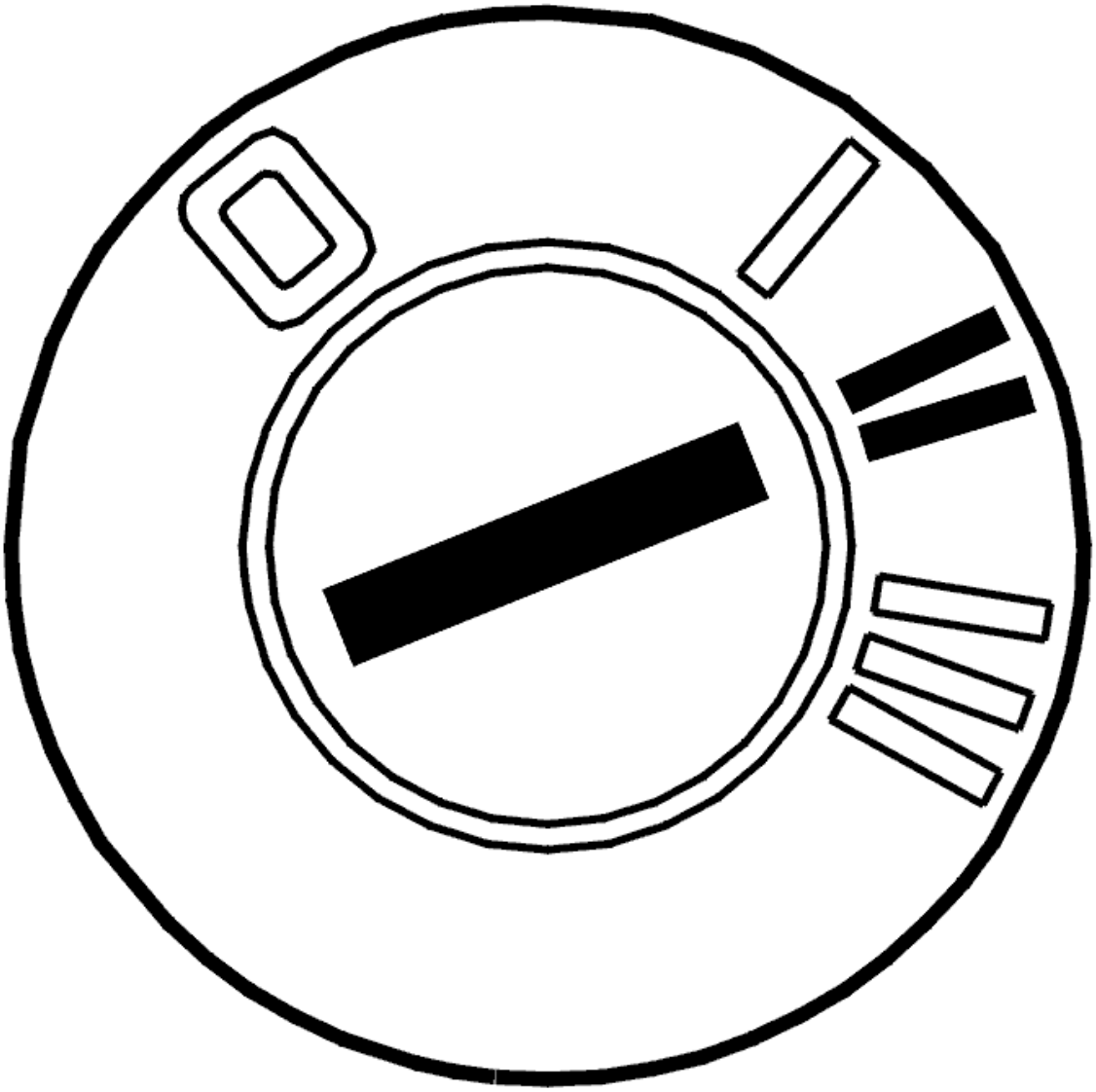

Fig. 27: Identifying Ignition ON
Courtesy of VOLVO CARS CORPORATION

- Ignition off
- Disconnect the audio / carphone switch by disconnecting the lower connector on the audio / carphone switch
- Ignition on.

  Activate the buttons. Read off the status of the buttons in the cruise control switch

  If the readings give a correct result, the fault is in the audio / carphone switch.

  Other information:

  - To access the audio / carphone switch, see **KEYPAD STEERING WHEEL, REPLACING** .

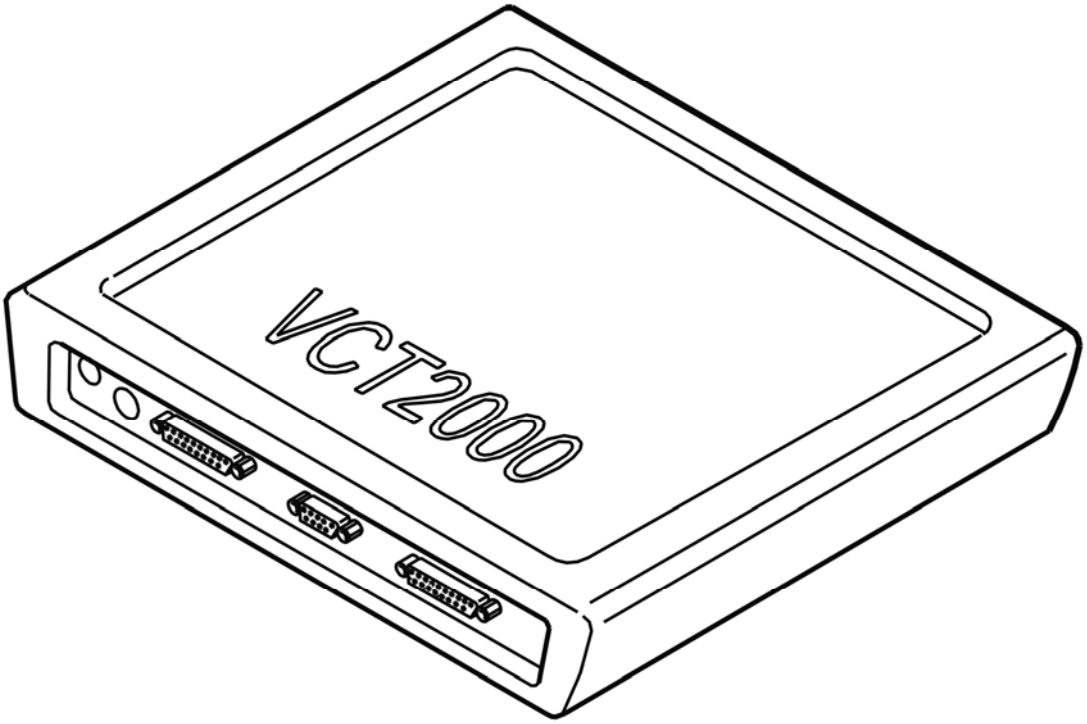

Fig. 28: Identifying VCT2000 Diagnostic Tool Symbol In VIDA
Courtesy of VOLVO CARS CORPORATION

Was the status of the cruise control switch OK?

- **YES**

  OKAY: Troubleshooting has been completed.

- **NO**

  Refer to **CHECKING COMPONENTS AND WIRING**

CHECKING COMPONENTS AND WIRING

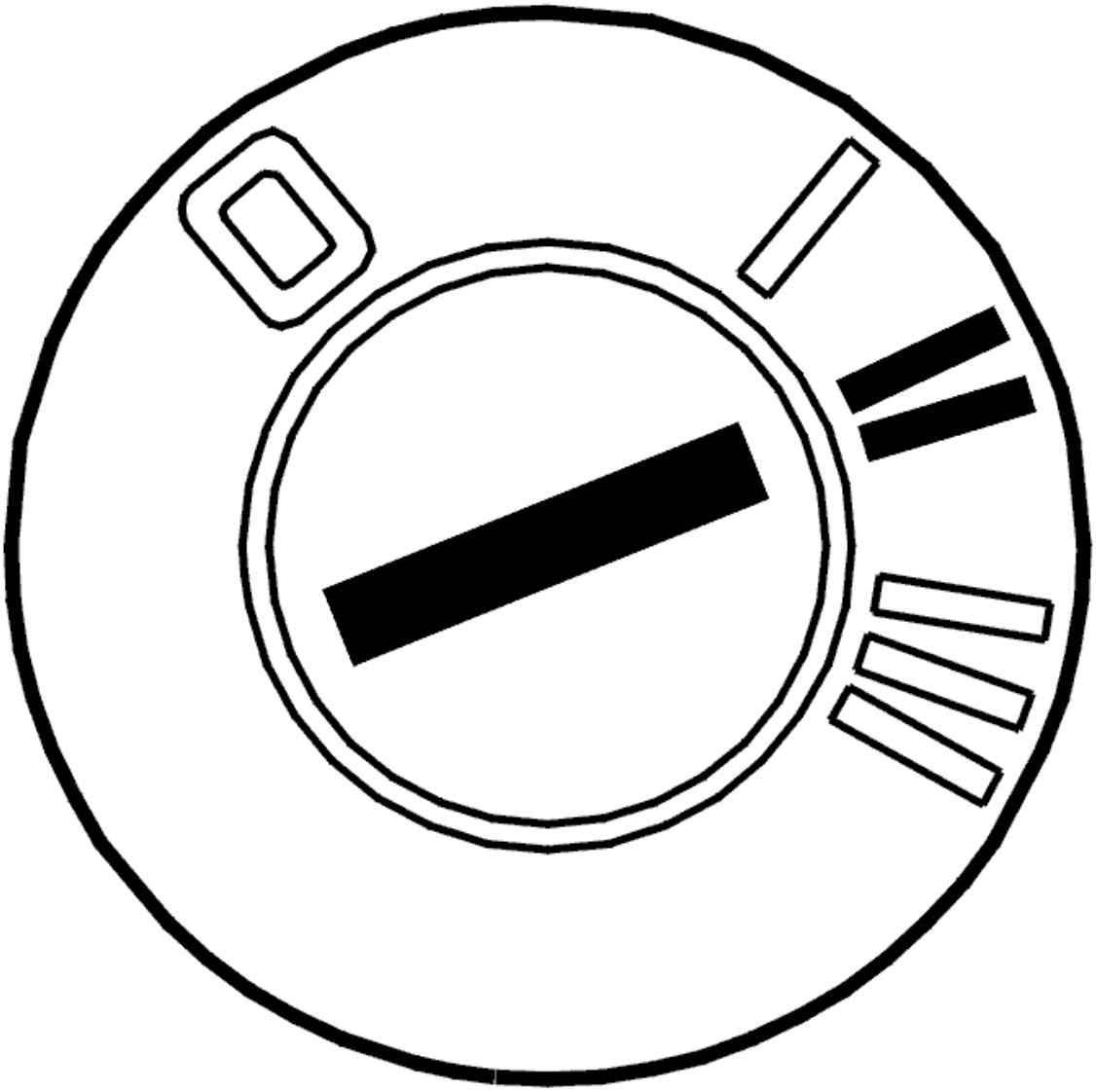

Fig. 29: Identifying Ignition ON
Courtesy of VOLVO CARS CORPORATION

- Ignition off
- Disconnect the audio / carphone wiring by disconnecting the lower connector on the cruise control switch
- Ignition on.

  Activate the buttons. Read off the status of the buttons in the cruise control switch

  If the readings give a correct result, the fault is in the wiring between the audio / carphone switch and the cruise control switch.

  Other information:

  - To access the cruise control switch, see **RTI SWITCH** .

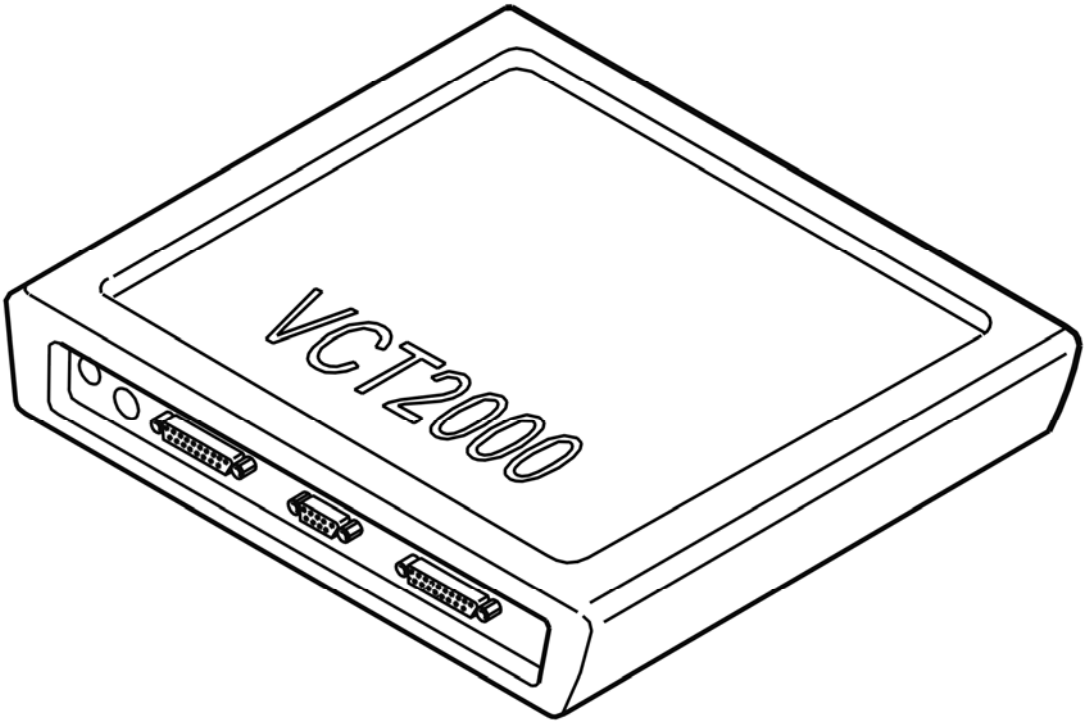

Fig. 30: Identifying VCT2000 Diagnostic Tool Symbol In VIDA
Courtesy of VOLVO CARS CORPORATION

Was the status of the cruise control switch OK?

- **YES**

  OKAY: Troubleshooting has been completed.

- **NO**

  Refer to **CHECKING COMPONENTS AND WIRING**

CHECKING COMPONENTS AND WIRING

Check the voltage between terminals #B1 and #B3. Voltage must be approximately 12 V.

Check the voltage between terminals #B2 and #B3. Voltage must be approximately 5 V.

Check the voltage between terminal #B3 and the battery negative terminal. Voltage must be approximately 0 V.

If the above readings are OK, the fault is in the cruise control switch.

Other information:

- To connect the breakout box, see **CONNECTING THE BREAKOUT BOX** .

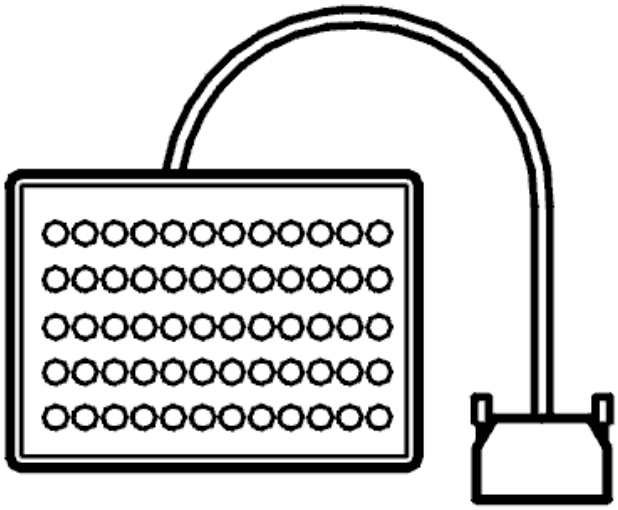

Fig. 31: Breakout Box
Courtesy of VOLVO CARS CORPORATION

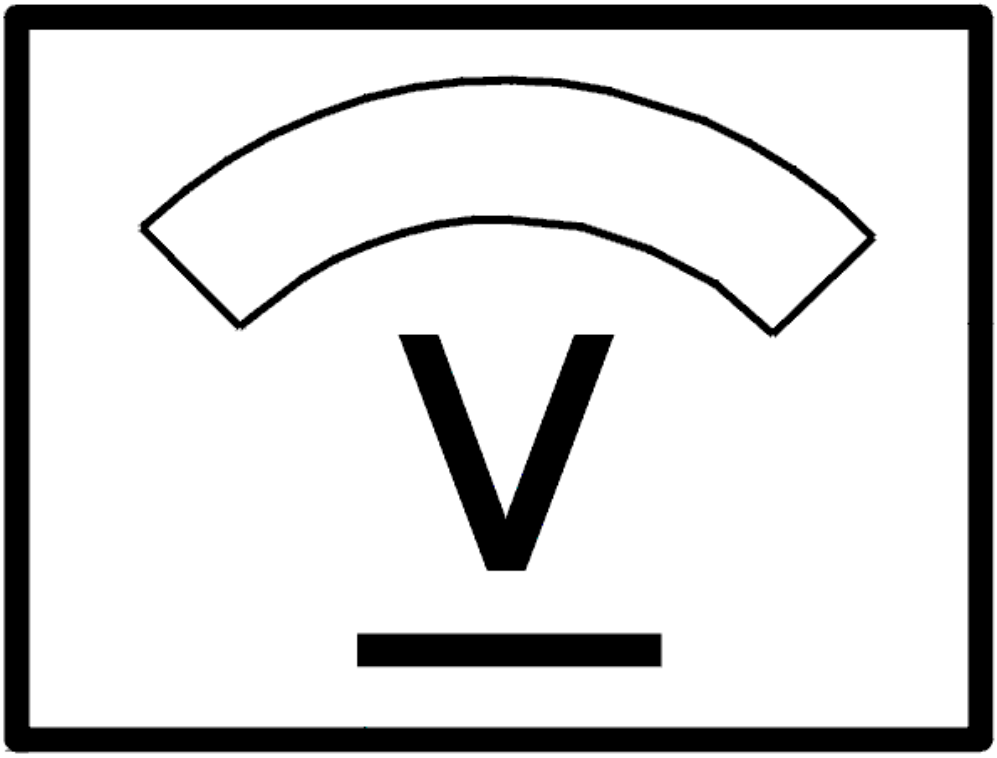

Fig. 32: Identifying Voltage Display
Courtesy of VOLVO CARS CORPORATION

FAULT-TRACING INFORMATION

Condition

- No SWM DTCs are stored in the Central electronic module (CEM).
- No DTCs are stored in the Phone module (PHM).

Possible Source

- Open-circuit, short-circuit to supply voltage or short-circuit to ground in the cable.
- Defective power switch RTI.
- Defective power switch audio/phone.

- Defective power switch cruise control.

Fault symptom[s]

- Cruise control does not operate

CHECKING THE ERROR MESSAGE (2003-2004)

CHECKING THE ERROR MESSAGE

TROUBLE-SHOOTING INFORMATION

NOTE: Many serious error messages cannot be erased from the display window. This remains in the display window until the error concerned has been dealt with.

CHECKING THE READ AND RESET BUTTON ON THE TURN SIGNAL LAMP SWITCH (2003-2004)

CHECKING THE READ AND RESET BUTTON ON THE TURN SIGNAL LAMP SWITCH

CHECKING COMPONENTS

Activate the read and reset button on the turn signal lamp switch. Read off the status.

HINT: If the read and reset button status is OK the fault is not in the steering wheel module (SWM).

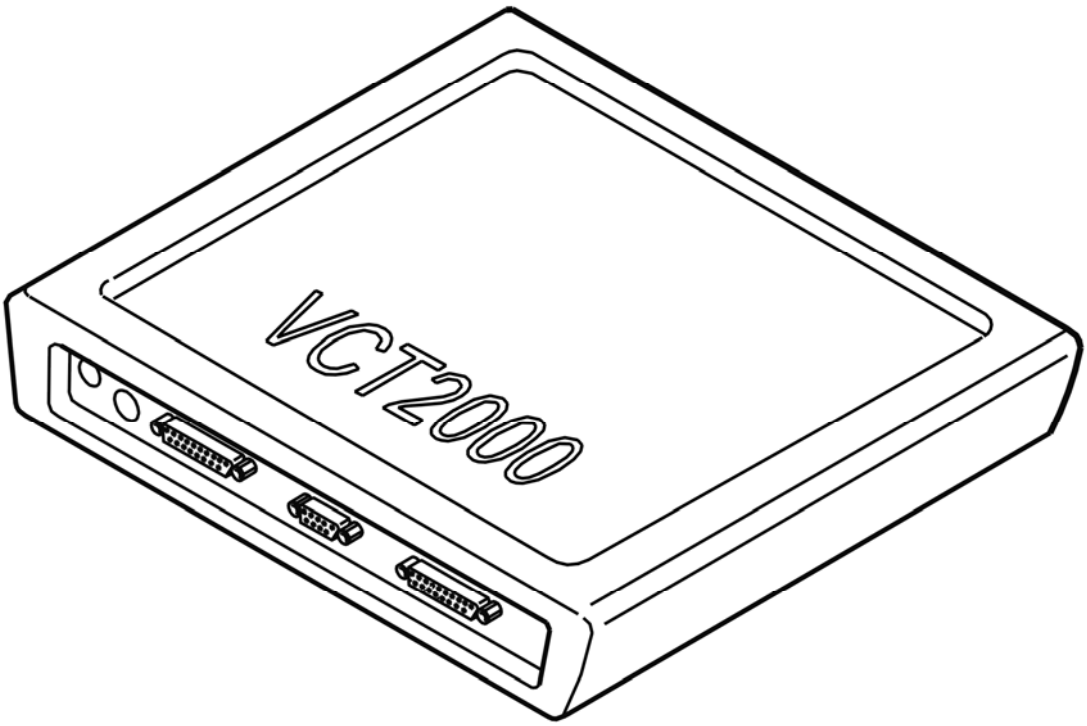

Fig. 33: Identifying VCT2000 Diagnostic Tool Symbol In VIDA
Courtesy of VOLVO CARS CORPORATION

Was the status of the read and reset button correct?

- **YES**

  FAULT NOT FOUND: Troubleshooting has been completed.

- **NO**

  Refer to **REPLACING THE COMPONENT**

REPLACING THE COMPONENT

Replace the turn signal lamp switch

Other information:

- To replace the turn signal lamp switch, see **TURN SIGNAL SWITCH, REPLACING** .

- **Continue**

  Refer to **CHECKING COMPONENTS**

CHECKING COMPONENTS

Activate the reset button on the turn signal lamp switch. Read off the status.

HINT: If the read and reset button status is OK, the fault is in the turn signal lamp switch.

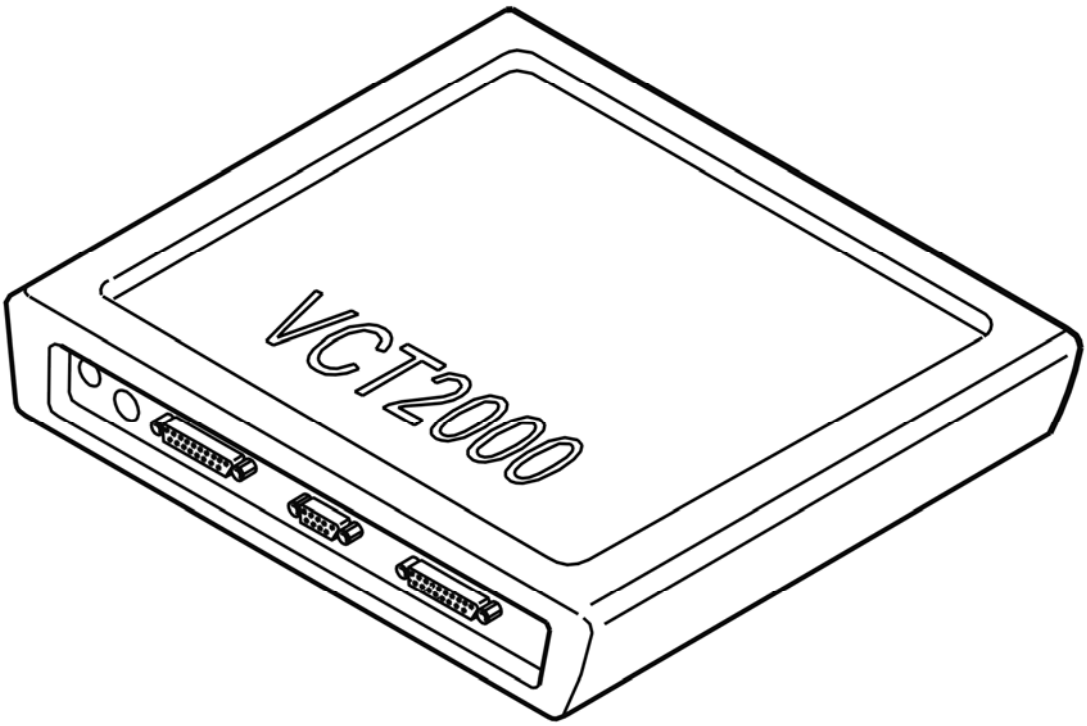

Fig. 34: Identifying VCT2000 Diagnostic Tool Symbol In VIDA
Courtesy of VOLVO CARS CORPORATION

Was the status of the read and reset button correct?

- **YES**

  OKAY: Troubleshooting has been completed.

- **NO**

  Refer to **REPLACING THE COMPONENT**

REPLACING THE COMPONENT

Try replacing the steering wheel module (SWM).

CAUTION: A new control module is delivered without software. The control module must be programmed in order to function after replacement.

Other information:

- To replace and program the steering wheel module (SWM), see **STEERING WHEEL MODULE (SWM), REPLACING** .

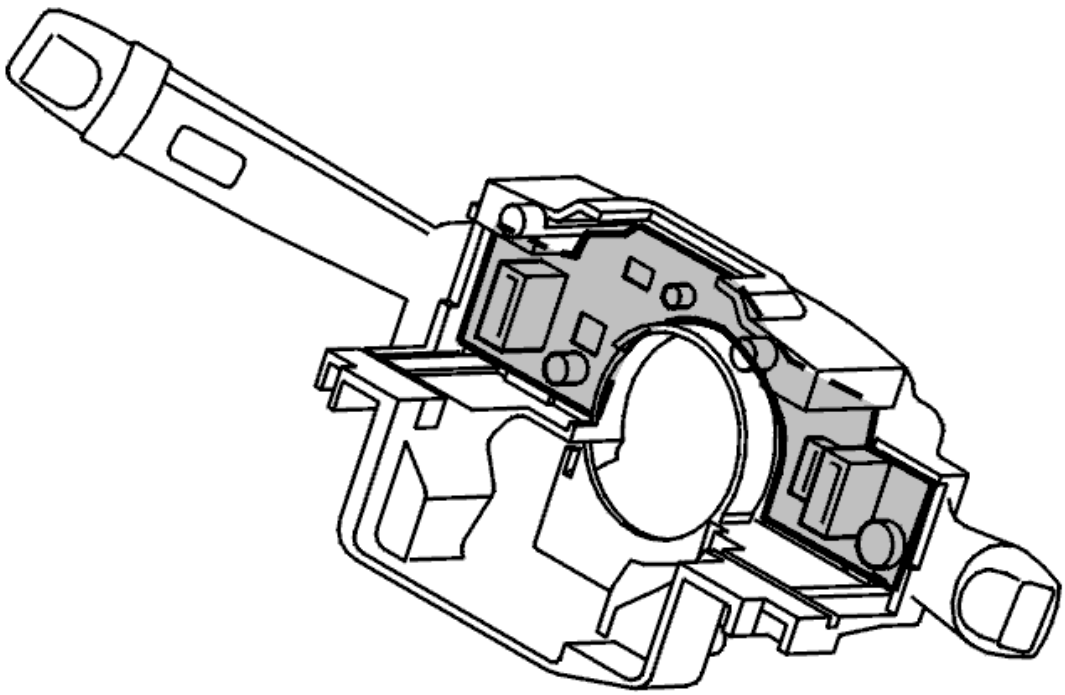

Fig. 35: Identifying Steering Wheel Module
Courtesy of VOLVO CARS CORPORATION

TROUBLE-SHOOTING INFORMATION

Condition

- No SWM diagnostic trouble codes are displayed in the CEM
- No diagnostic trouble codes are displayed in the SWM.

Possible Source

- Defective indicator switch
- Defective control unit.

Fault symptom[s]

- Parking heater does not work.

CHECKING THE READ BUTTON ON THE TURN SIGNAL LAMP SWITCH (2003-2004)

CHECKING THE READ BUTTON ON THE TURN SIGNAL LAMP SWITCH

CHECKING COMPONENTS

Activate the read button on the turn signal lamp switch. Read off the status.

HINT: If the read button status is OK the fault is not in the steering wheel module (SWM).

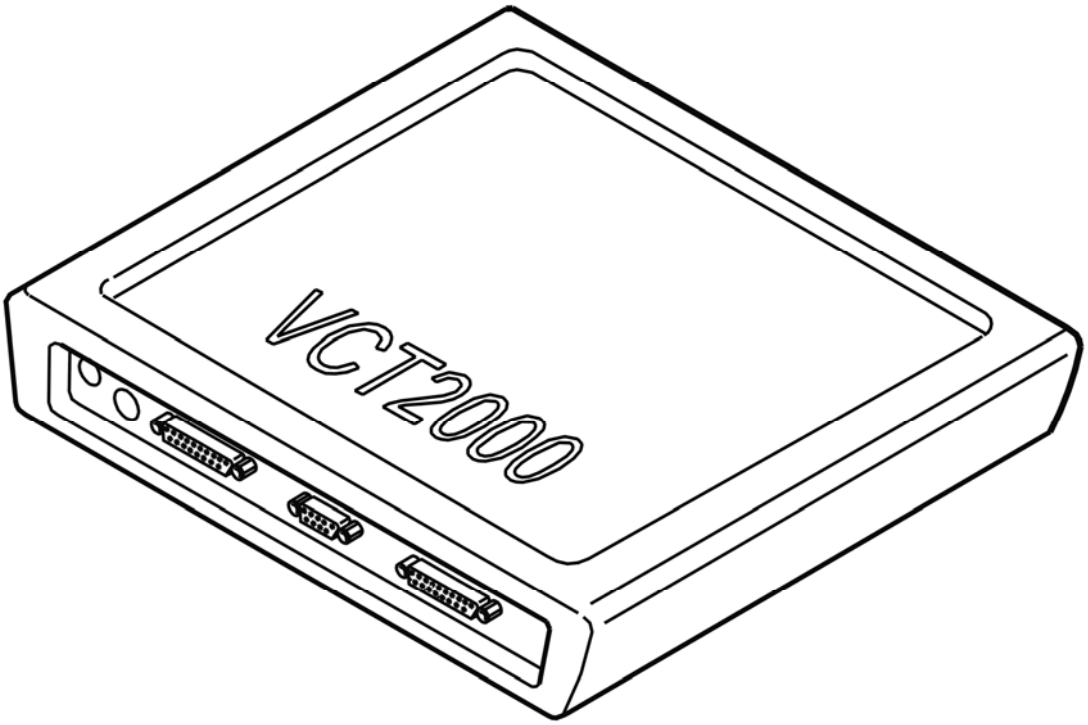

Fig. 36: Identifying VCT2000 Diagnostic Tool Symbol In VIDA
Courtesy of VOLVO CARS CORPORATION

Was the status of the read button correct?

- **YES**

  FAULT NOT FOUND: Troubleshooting has been completed.

- **NO**

  Refer to **REPLACING THE COMPONENT**

REPLACING THE COMPONENT

Replace the turn signal lamp switch

Other information:

- To replace the turn signal lamp switch, see **TURN SIGNAL SWITCH, REPLACING** .
- **Continue**

  Refer to **CHECKING COMPONENTS**

CHECKING COMPONENTS

Activate the read button on the turn signal lamp switch. Read off the status.

HINT: If the read button status is OK, the fault is in the turn signal lamp switch.

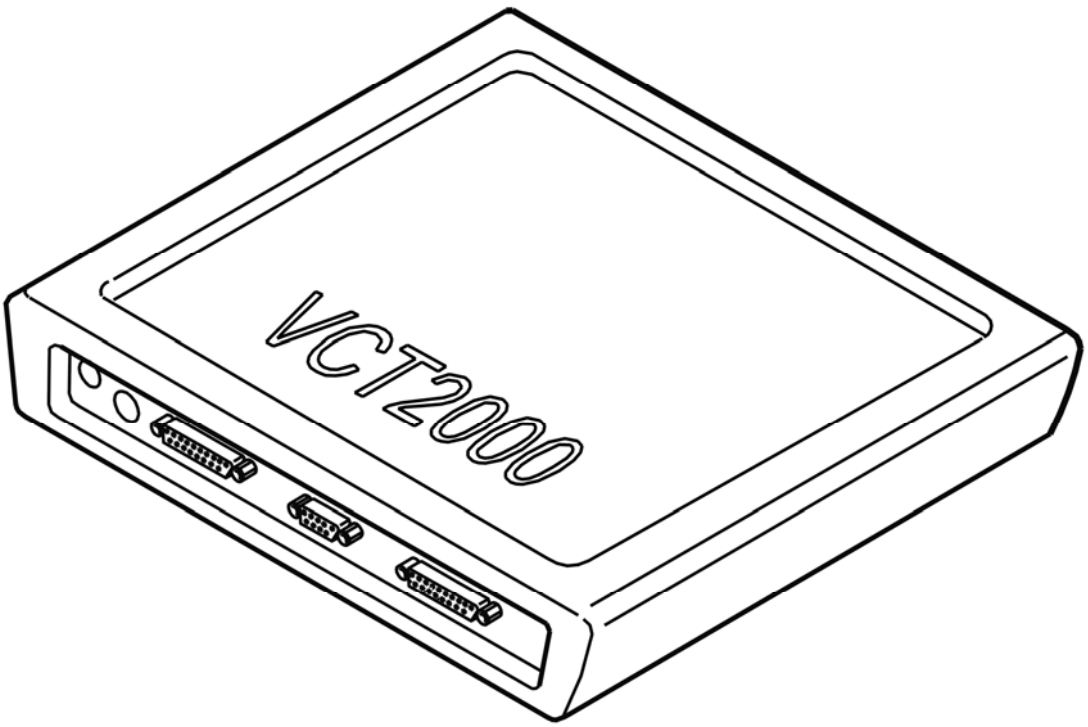

Fig. 37: Identifying VCT2000 Diagnostic Tool Symbol In VIDA
Courtesy of VOLVO CARS CORPORATION

Was the status of the read button correct?

- **YES**

  OKAY: Troubleshooting has been completed.

- **NO**

  Refer to **REPLACING THE COMPONENT**

REPLACING THE COMPONENT

Try replacing the steering wheel module (SWM).

CAUTION: A new control module is delivered without software. The control module must be programmed in order to function after replacement.

Other information:

- To replace and program the steering wheel module (SWM), see **STEERING WHEEL MODULE (SWM), REPLACING** .

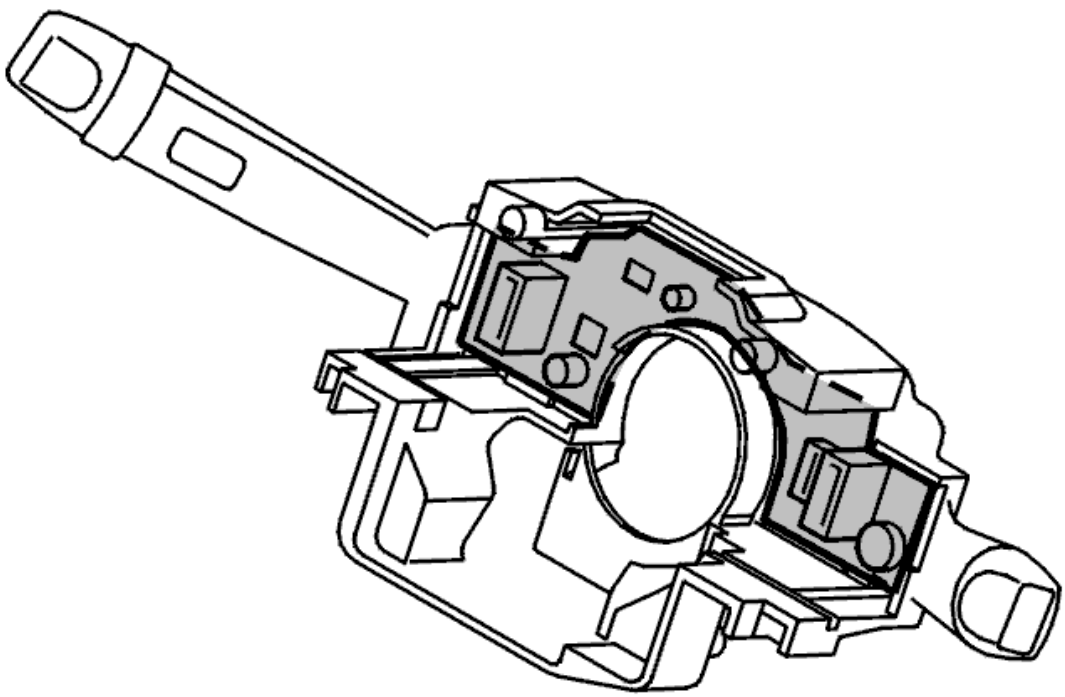

Fig. 38: Identifying Steering Wheel Module

Courtesy of VOLVO CARS CORPORATION

TROUBLE-SHOOTING INFORMATION

Condition

- No SWM diagnostic trouble codes are displayed in the CEM
- No diagnostic trouble codes are displayed in the SWM.

Possible Source

- Defective indicator switch
- Defective control unit.

Fault symptom[s]

- Text message in combined instrument cannot be erased.

CHECKING THE RTI SWITCH (2003-2004)

CHECKING THE RTI SWITCH

CHECKING COMPONENTS AND WIRING

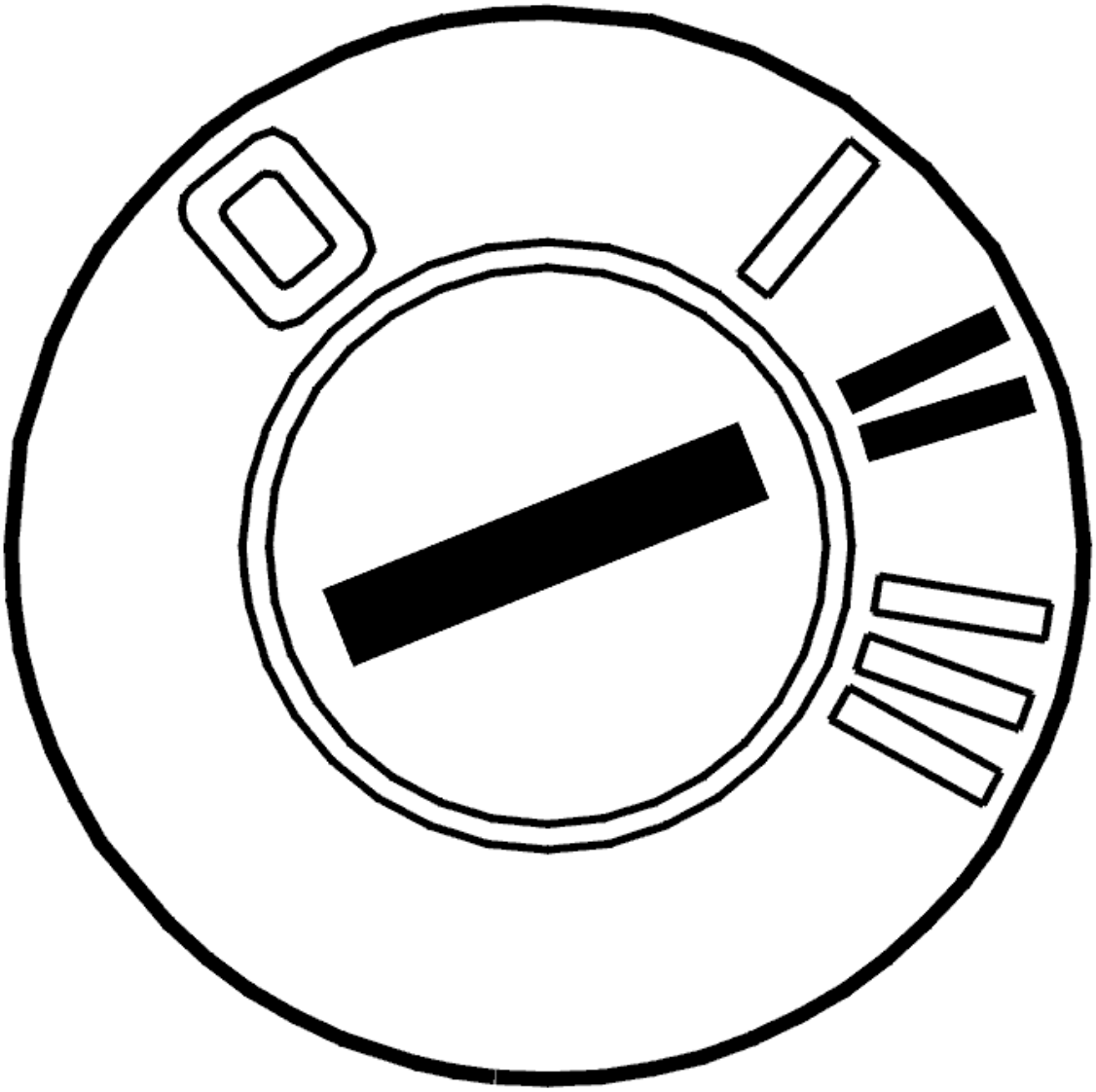

Fig. 39: Identifying Ignition ON
Courtesy of VOLVO CARS CORPORATION

- Ignition off
- Disconnect the RTI switch
- Ignition on.

  Activate and read off the status of the buttons in the audio / carphone switch.

  If the readings give a correct result, the fault is in the RTI switch.

  Other information:

  - To access the RTI switch, see **KEYPAD STEERING WHEEL, REPLACING** .

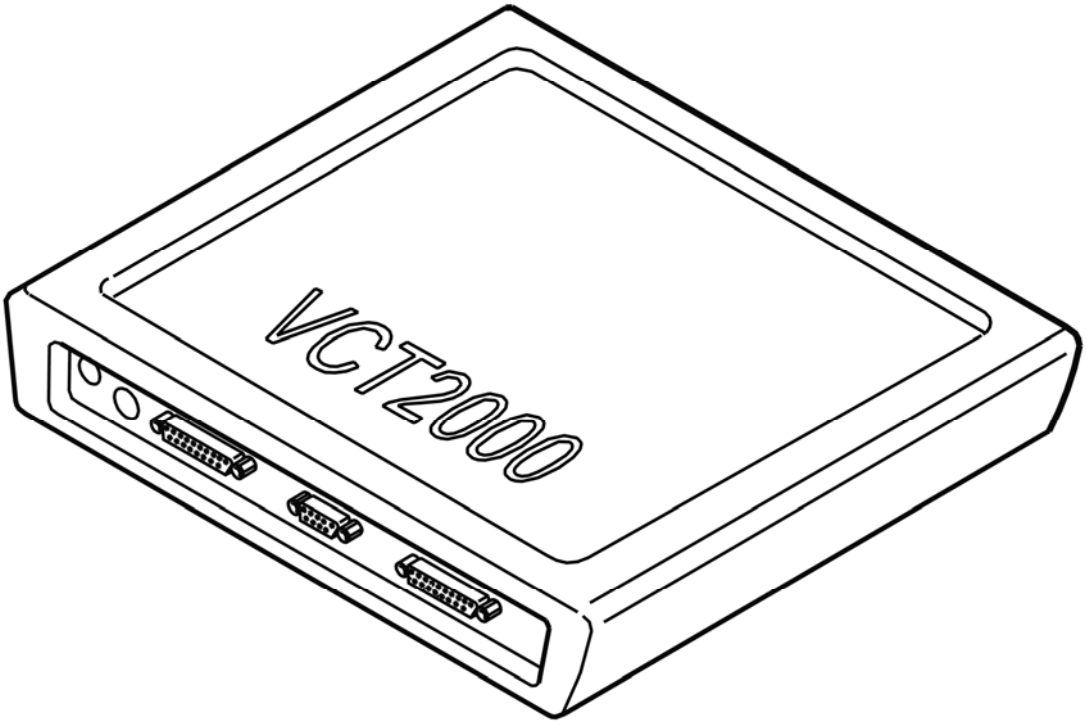

Fig. 40: Identifying VCT2000 Diagnostic Tool Symbol In VIDA
Courtesy of VOLVO CARS CORPORATION

Was the audio / carphone switch status OK?

- **YES**

  OKAY: Troubleshooting has been completed.

- **NO**

  Refer to **CHECKING COMPONENTS AND WIRING**

CHECKING COMPONENTS AND WIRING

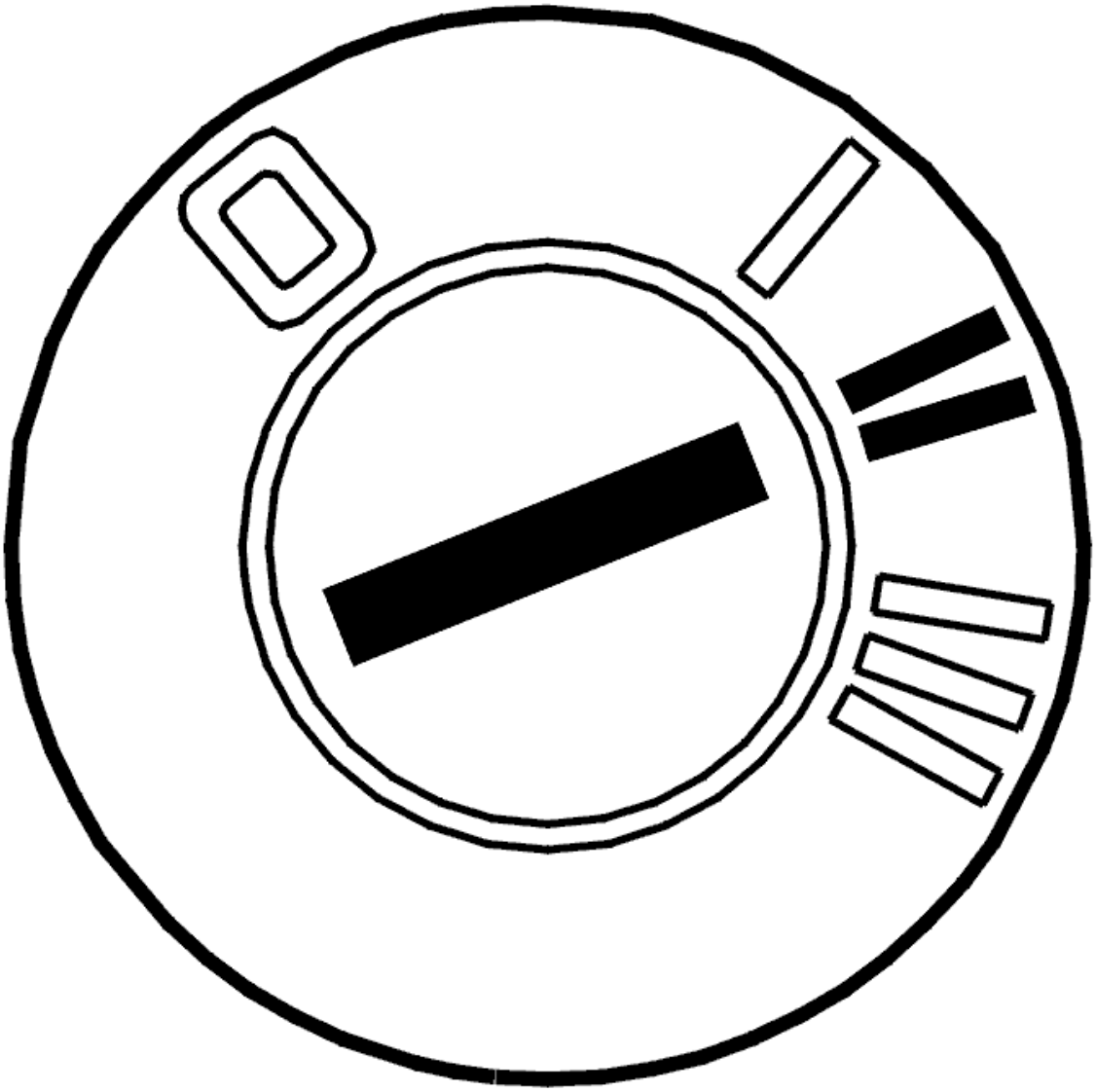

Fig. 41: Identifying Ignition ON
Courtesy of VOLVO CARS CORPORATION

- Ignition off
- Disconnect the audio / carphone switch by disconnecting the lower connector on the audio / carphone switch
- Ignition on.

  Activate the buttons. Read off the status of the buttons in the cruise control switch

  If the readings give a correct result, the fault is in the audio / carphone switch.

  Other information:

  - To access the audio / carphone switch, see **KEYPAD STEERING WHEEL, REPLACING** .

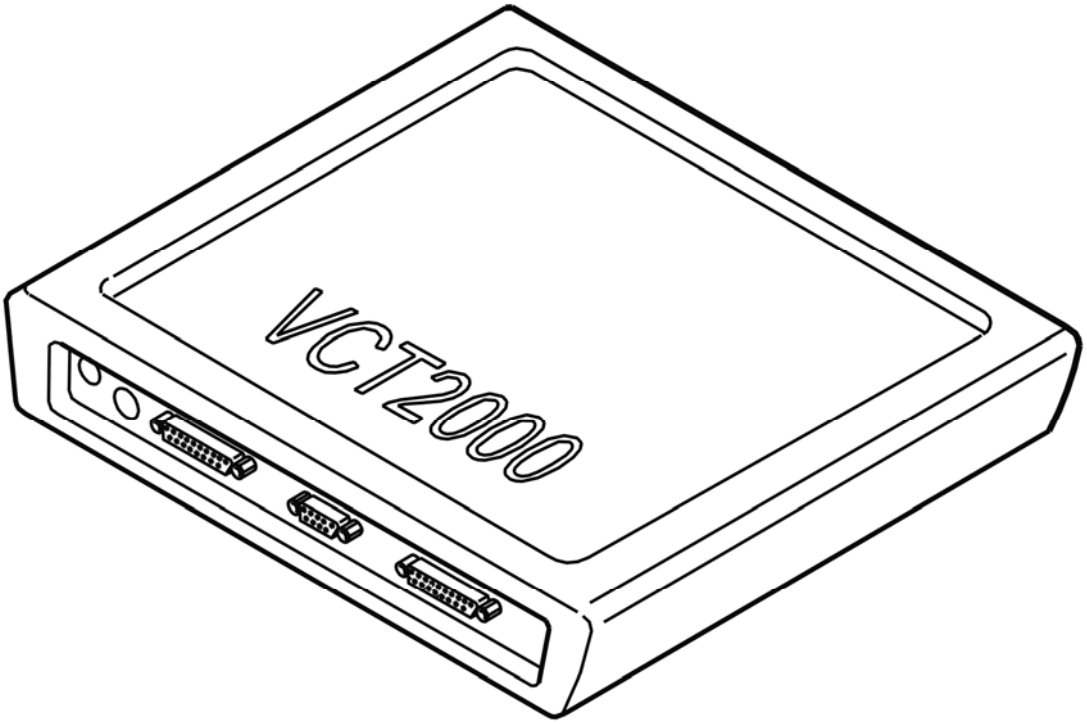

Fig. 42: Identifying VCT2000 Diagnostic Tool Symbol In VIDA
Courtesy of VOLVO CARS CORPORATION

Was the status of the cruise control switch OK?

- **YES**

  OKAY: Troubleshooting has been completed.

- **NO**

  Refer to **CHECKING COMPONENTS AND WIRING**

CHECKING COMPONENTS AND WIRING

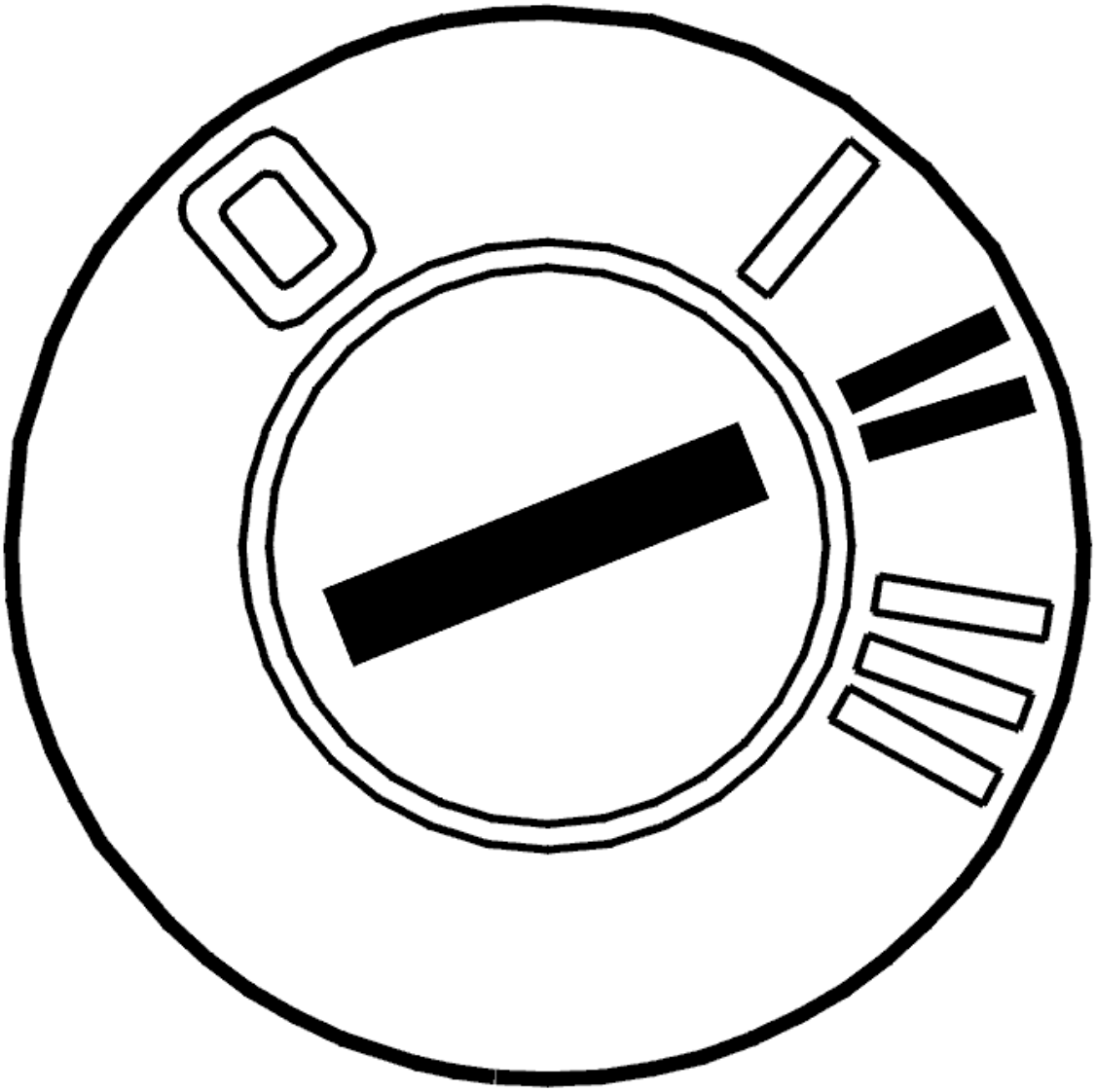

Fig. 43: Identifying Ignition ON
Courtesy of VOLVO CARS CORPORATION

- Ignition off
- Disconnect the audio / carphone wiring by disconnecting the lower connector on the cruise control switch
- Ignition on.

  Activate the buttons. Read off the status of the buttons in the cruise control switch

  If the readings give a correct result, the fault is in the wiring between the audio / carphone switch and the cruise control switch.

  Other information:

  - To access the cruise control switch, see **KEYPAD STEERING WHEEL, REPLACING** .

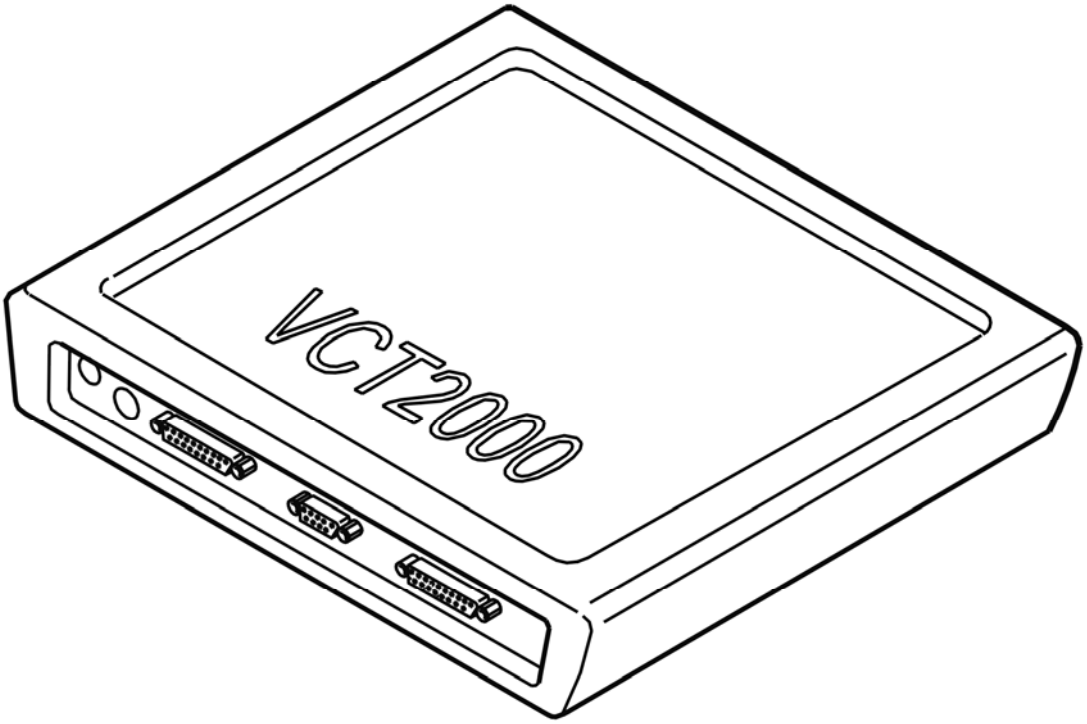

Fig. 44: Identifying VCT2000 Diagnostic Tool Symbol In VIDA
Courtesy of VOLVO CARS CORPORATION

Was the status of the cruise control switch OK?

- **YES**

  OKAY: Troubleshooting has been completed.

- **NO**

  Refer to **CHECKING COMPONENTS AND WIRING**

CHECKING COMPONENTS AND WIRING

Check the voltage between terminals #B1 and #B3. Voltage must be approximately 12 V.

Check the voltage between terminals #B2 and #B3. Voltage must be approximately 5 V.

Check the voltage between terminal #B3 and the battery negative terminal. Voltage must be approximately 0 V.

If the above readings are OK, the fault is in the cruise control switch.

Other information:

- To connect the breakout box, see **CONNECTING THE BREAKOUT BOX** .

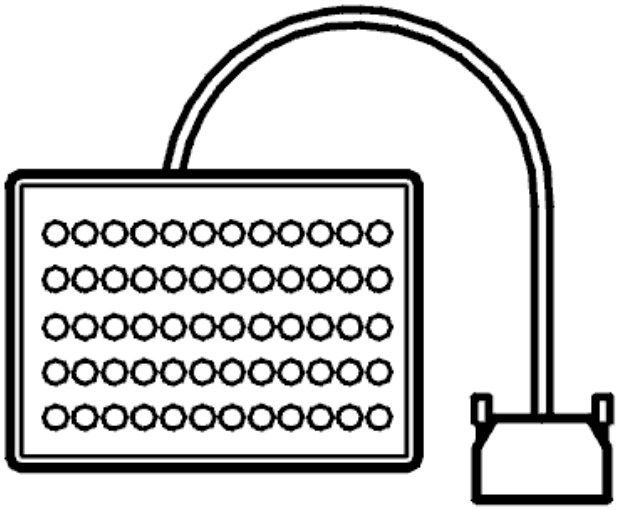

Fig. 45: Breakout Box
Courtesy of VOLVO CARS CORPORATION

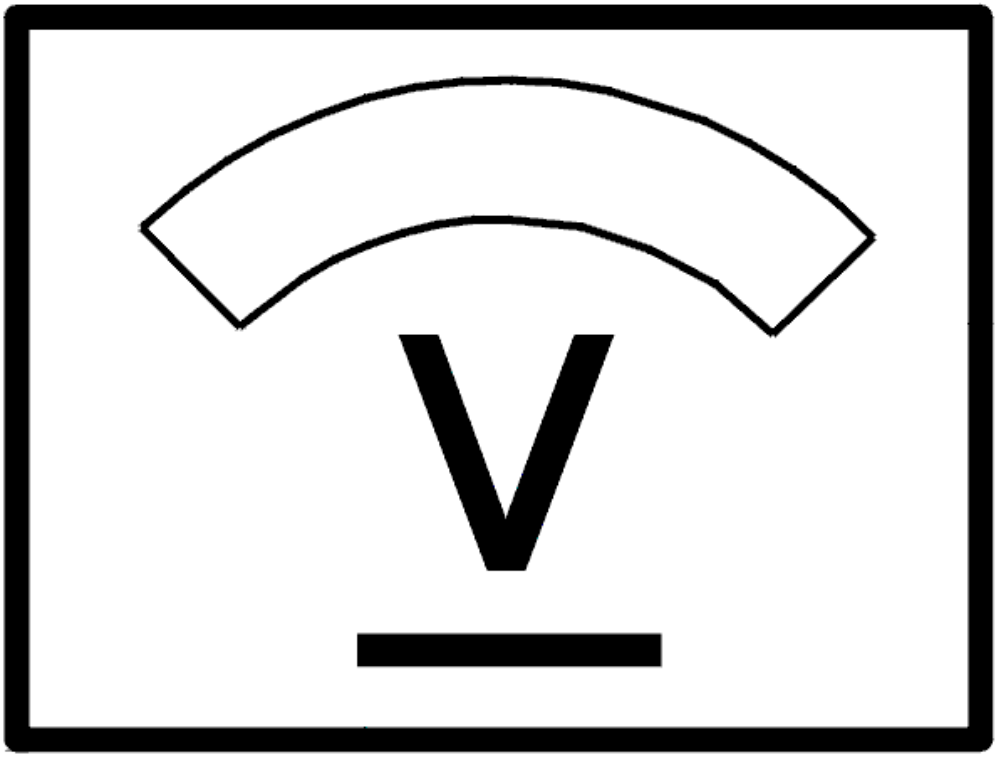

Fig. 46: Identifying Voltage Display
Courtesy of VOLVO CARS CORPORATION

TROUBLE-SHOOTING INFORMATION

Condition

- No SWM diagnostic trouble codes are displayed in the CEM
- No diagnostic trouble codes are displayed in the PHM.

Possible Source

- Open circuit, short-circuit to earth or short-circuit to voltage supply on the wire
- Defective RTI switch unit
- Defective audio/telephone switch unit

- Defective cruise-control switch unit.

Fault symptom[s]

- RTI switch unit does not work.

CHECKING THE STEERING WHEEL MODULE (SWM) (2003-2004)

CHECKING THE STEERING WHEEL MODULE (SWM)

FAULT-TRACING INFORMATION

Before continuing with fault-tracing, the following must be checked:

- All tests for the relevant symptom must have been carried out
- No component, connector or wiring faults etc. should have been detected.

Have all tests been carried out and no faults detected?

- **YES**

  Refer to **REPLACING THE COMPONENT**

- **NO**

  FAULT NOT FOUND: Troubleshooting has been completed.

REPLACING THE COMPONENT

Try replacing the steering wheel module (SWM).

CAUTION: A new control module is delivered without software. The control module must be programmed in order to function after replacement.

Other information:

- To replace and program the steering wheel module (SWM), see **STEERING WHEEL MODULE (SWM), REPLACING** .

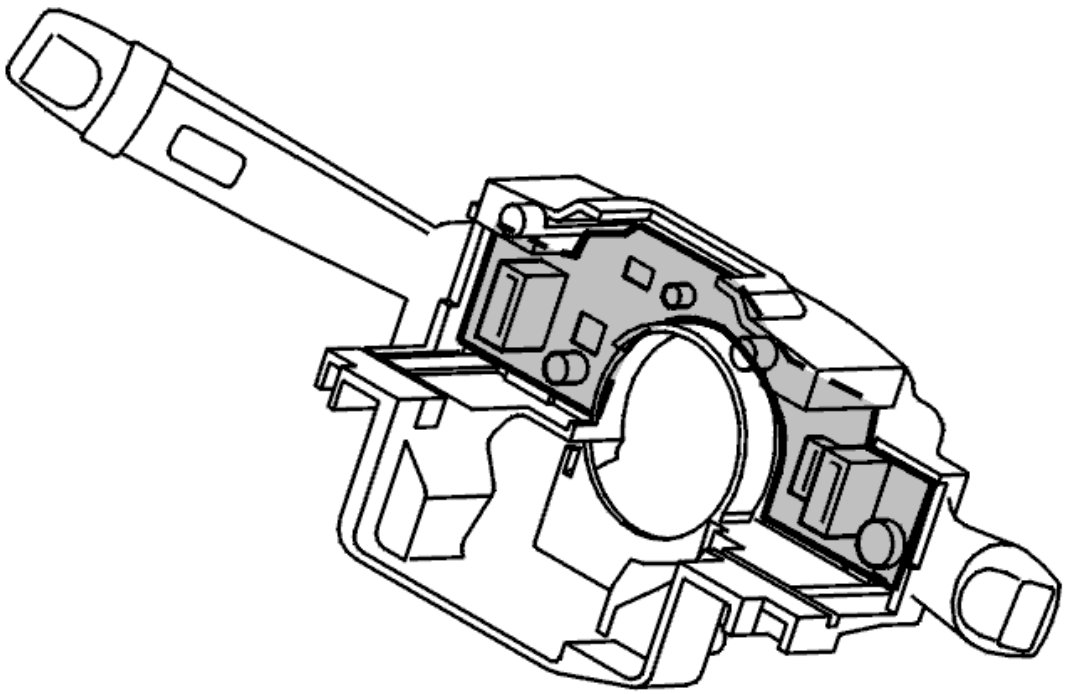

Fig. 47: Identifying Steering Wheel Module
Courtesy of VOLVO CARS CORPORATION

FAULT-TRACING INFORMATION

Condition

- No PHM DTCs are stored in the Central electronic module (CEM).
- No DTCs are stored in the Steering wheel module (SWM).

Possible Source

- Faulty control module.

Fault symptom[s]

- Steering wheel keypads does not work
- Turn signal lever does not work
- Windshield wiper does not work

CHECKING THE TAILGATE WIPER (2003-2004)

CHECKING THE TAILGATE WIPER

CHECKING COMPONENTS

Activate the tailgate wiper using the wiper switch. Read off the status.

HINT: If the wiper switch status is OK, the fault is not in the steering wheel module (SWM).

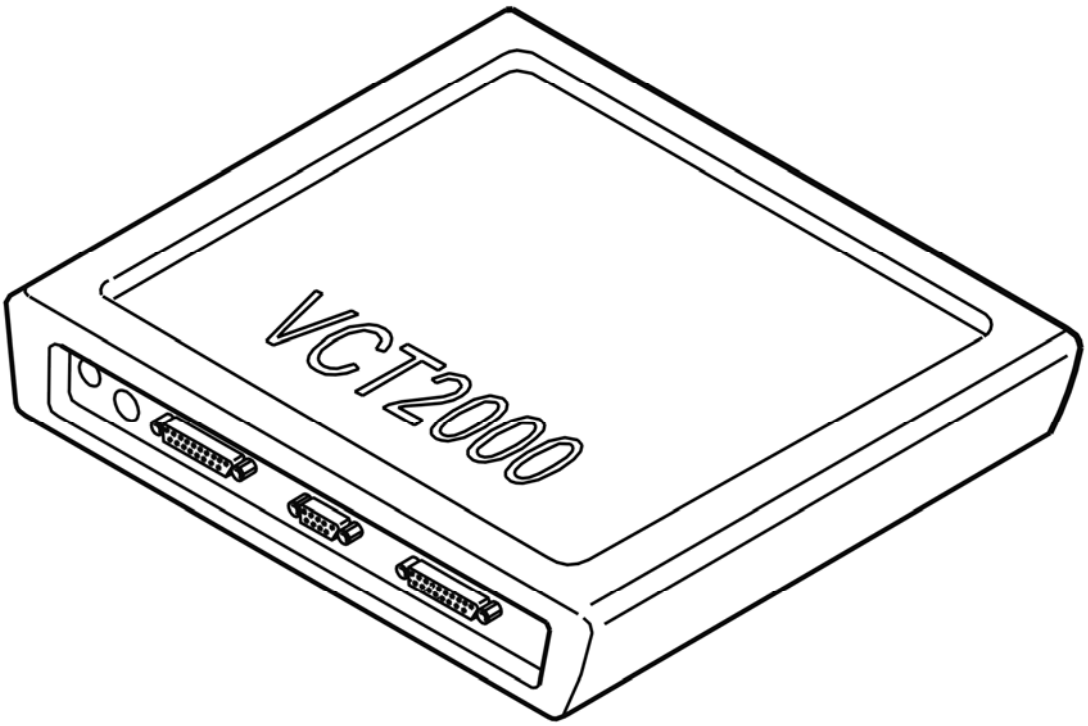

Fig. 48: Identifying VCT2000 Diagnostic Tool Symbol In VIDA
Courtesy of VOLVO CARS CORPORATION

Was the tailgate wiper status OK?

- **YES**

  FAULT NOT FOUND: Troubleshooting has been completed.

- **NO**

  Refer to **REPLACING COMPONENTS**

REPLACING COMPONENTS

Check the tailgate wiper fuse; replace as necessary.

Replace relay 2/16.

Other information:

- For further information about the fuses and relays, see the appropriate service information.
- To access the relay/fuse box in the cargo compartment: see **RELAY/FUSE BOX CARGO COMPARTMENT/REAR ELECTRONIC MODULE (REM), REPLACING**

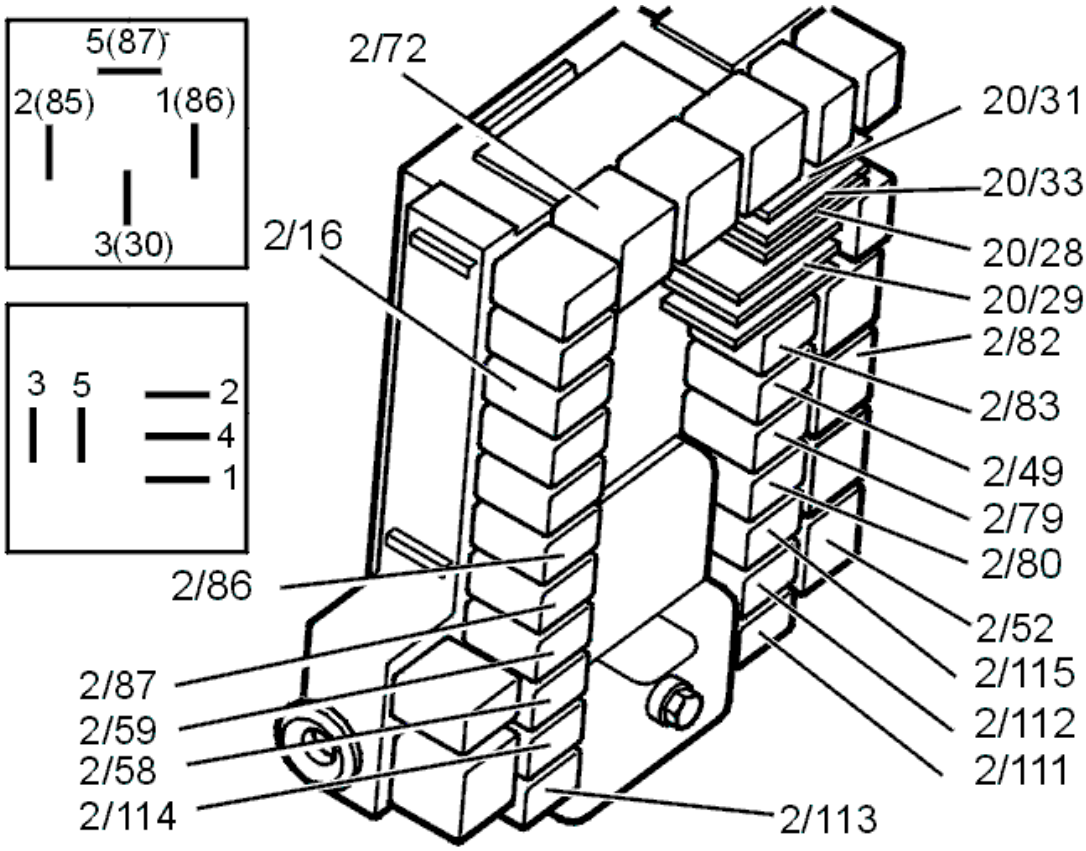

Fig. 49: Identifying Relay / Fuse Box
Courtesy of VOLVO CARS CORPORATION

- **Continue**

  Refer to **CHECKING COMPONENTS**

CHECKING COMPONENTS

Activate the tailgate wiper. Read off the status.

HINT: If the readout of tailgate wiper status was OK, the fault was caused by a damaged fuse or relay. The fuse can blow if relays are activated in the wrong order. This can happen when the key is turned from position I to position II and the wiper arm is activated at the same time.

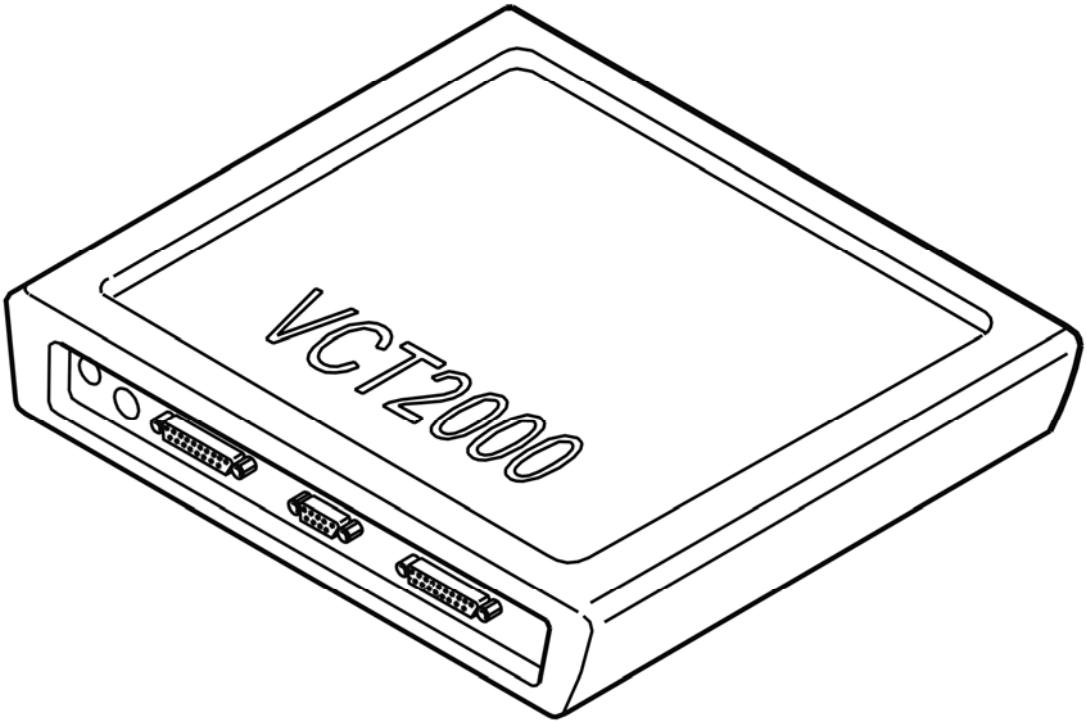

Fig. 50: Identifying VCT2000 Diagnostic Tool Symbol In VIDA
Courtesy of VOLVO CARS CORPORATION

Was the tailgate wiper status OK?

- **YES**

  OKAY: Troubleshooting has been completed.

- **NO**

  Refer to **REPLACING THE COMPONENT**

REPLACING THE COMPONENT

Replace the wiper switch.

Other information:

- For replacing the wiper switch:**WASHER / WIPER SWITCH, REPLACING**

- **Continue**

  Refer to **CHECKING COMPONENTS**

CHECKING COMPONENTS

Activate the tailgate wiper. Read off the status.

HINT: If the tailgate wiper switch status is OK the fault is in the tailgate wiper.

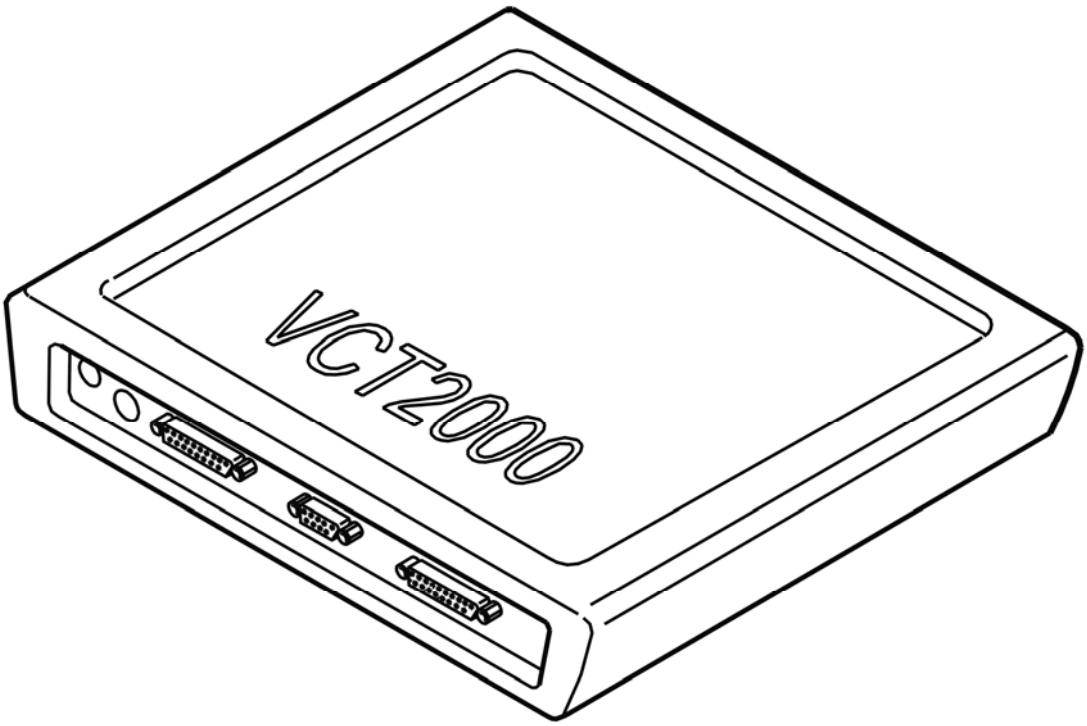

Fig. 51: Identifying VCT2000 Diagnostic Tool Symbol In VIDA
Courtesy of VOLVO CARS CORPORATION

Was the tailgate wiper status OK?

- **YES**

  OKAY: Troubleshooting has been completed.

- **NO**

  Refer to **REPLACING THE COMPONENT**

REPLACING THE COMPONENT

Try replacing the steering wheel module (SWM).

CAUTION: A new control module is delivered without software. The control module must be programmed in order to function after replacement.

Other information:

- For replacing and programming and replacing the control module: **STEERING WHEEL MODULE (SWM), REPLACING**

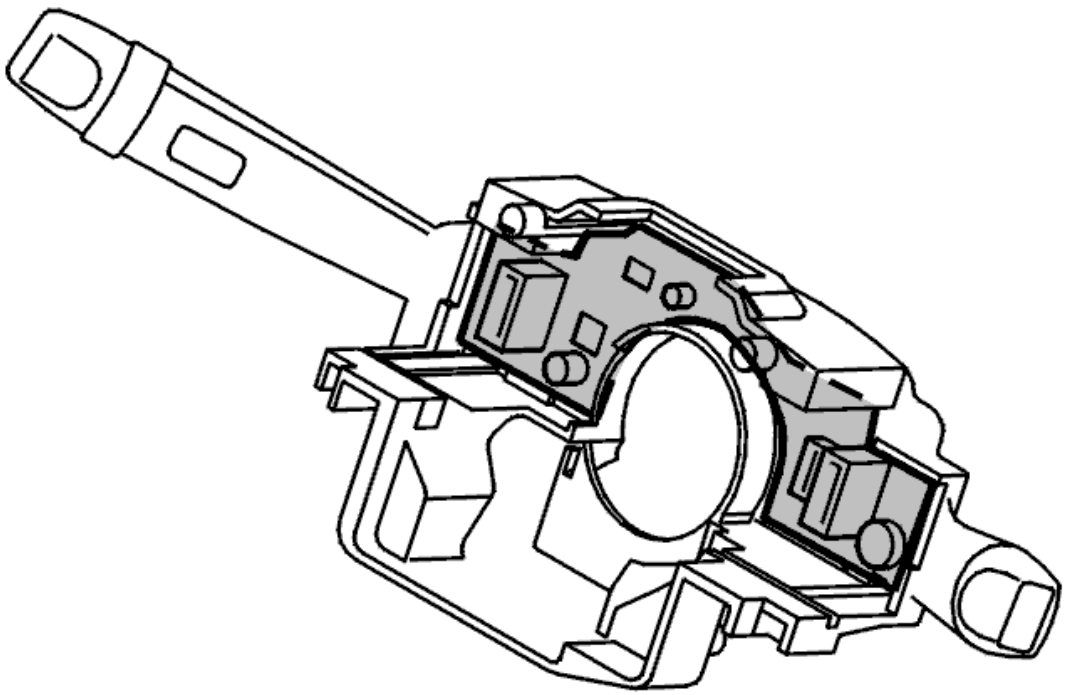

Fig. 52: Identifying Steering Wheel Module
Courtesy of VOLVO CARS CORPORATION

RELAY/FUSE BOX CARGO COMPARTMENT/REAR ELECTRONIC MODULE (REM), REPLACING

NOTE: As the illustrations in this service information are used for different model years and / or models, some variation may occur. However, the essential information in the illustrations is always correct.

EXPOSING THE INTEGRATED RELAY/FUSEBOX IN THE CARGO COMPARTMENT

Switch off the ignition.

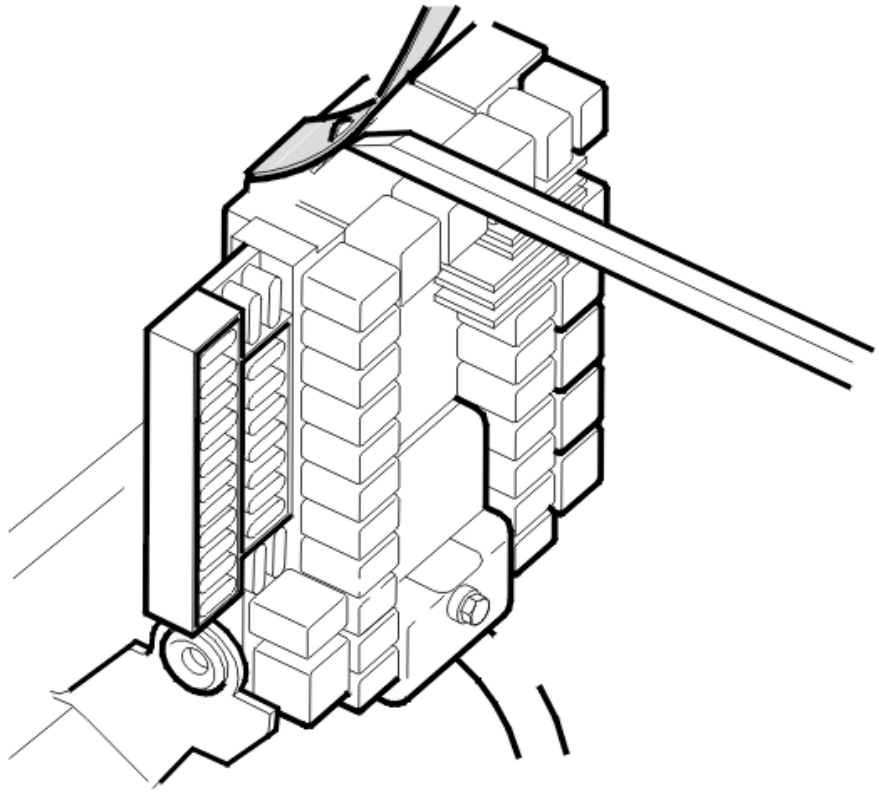

Fig. 53: Lifting Cargo Compartment/Rear Relay/Fusebox Catch
Courtesy of VOLVO CARS CORPORATION

Remove the left side panel in the cargo compartment.

Release the integrated relay/fusebox. Lift the catch by the upper edge and angle out the integrated relay/fusebox.

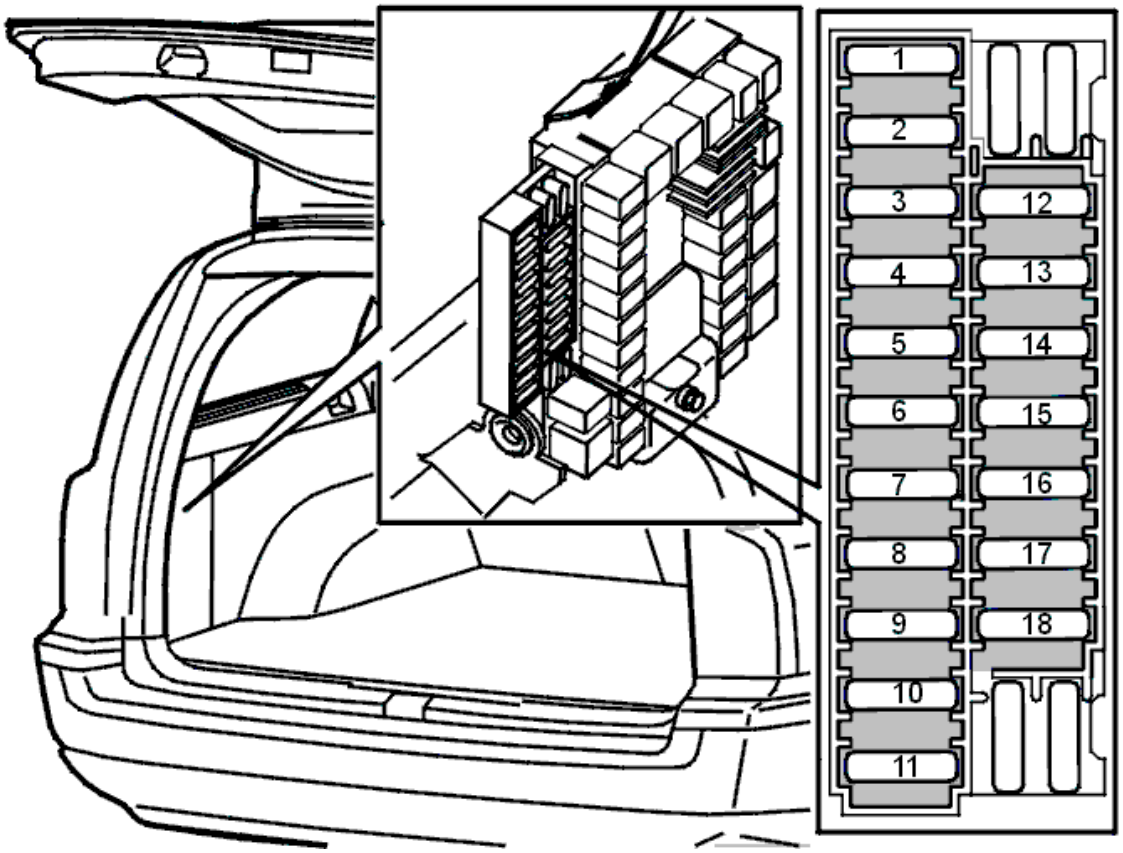

Fig. 54: Cargo Compartment/Rear Relay/Fusebox Fuse Locations
Courtesy of VOLVO CARS CORPORATION

HINT: The rear panel in the side panel of the cargo compartment can be removed to change fuses.

RELAY AND FUSE LOCATION, 11D

For the location of the relays and fuses, see:

1. Appropriate service information for relevant model year
2. Decals at both the integrated relay box and fusebox in the car
3. Pocket data book
4. Owner's Manual.

INSTALLING THE INTEGRATED RELAY / FUSEBOX IN THE CARGO COMPARTMENT

Align the integrated relay/fusebox in the grooves in the bracket and press into place.

Install the left side panel in the cargo compartment.

REPLACING THE REAR ELECTRONIC MODULE (REM)

The rear electronic module (REM) is a separate unit in the relay box in the cargo compartment.

CAUTION: New software can only be ordered when the control module is installed in the car. VIDA (Volvo Scan Tool) reads off the new control module identity which is required to order the correct software.

Release the relay and fuse box. See **EXPOSING THE INTEGRATED RELAY/FUSEBOX IN THE CARGO COMPARTMENT**.

REMOVING THE CONTROL MODULE

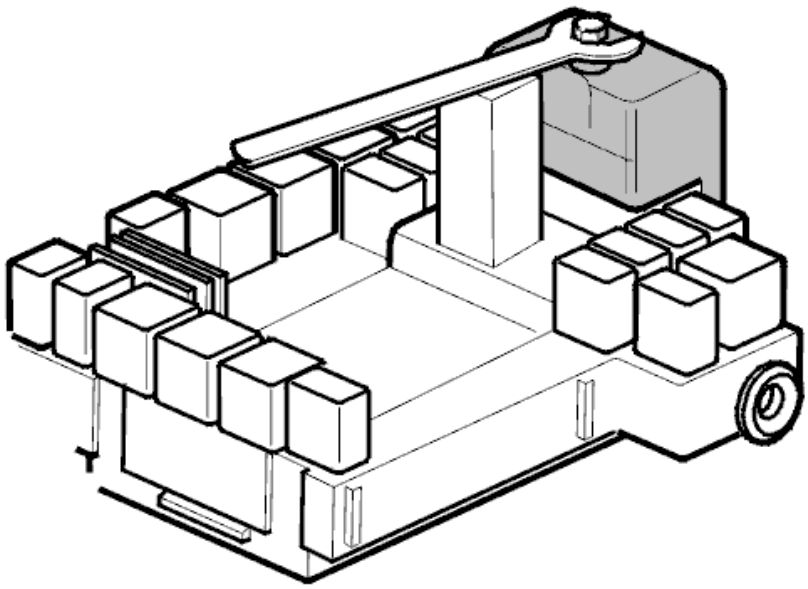

Fig. 55: Disconnecting Control Module Connector
Courtesy of VOLVO CARS CORPORATION

Unscrew the screw holding the connector so that it is free of its threads. Check that the screw is free with your fingers.

Disconnect the connector. Use an open spanner and a support. See the illustration.

NOTE: Do not damage the terminal pins. Always check that the control module and control module box connectors do not have bent or damaged terminals or socket / sleeves. This may have been the cause of the fault.

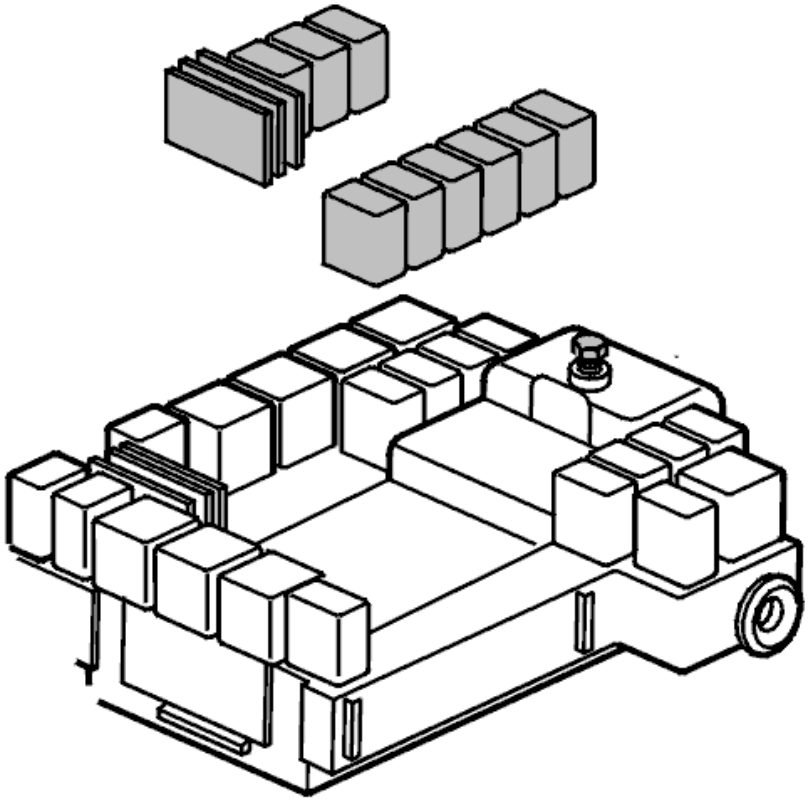

Fig. 56: Identifying Relay Box In Passenger Compartment/Cargo Compartment
Courtesy of VOLVO CARS CORPORATION

Remove all relays and shunts bridged to the control module. Note the locations.

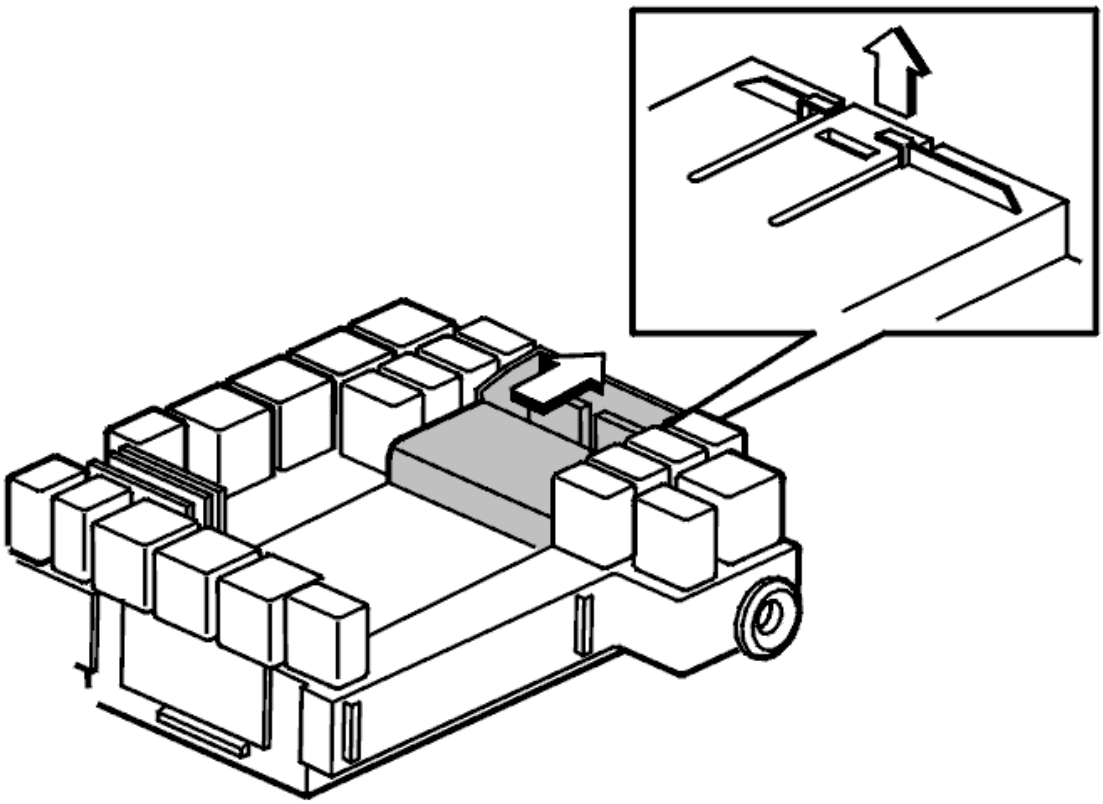

Fig. 57: Identifying Control Module Removal
Courtesy of VOLVO CARS CORPORATION

Release the catch on the rear. Use a screwdriver.

Lift and pull out the control module.

CHECK

Check that the control module connectors are intact.

INSTALLING THE CONTROL MODULE

- Press the control module into place so that the catch on the rear engages
- Position the connector. **Carefully** press the connector down.

NOTE: The pins are fragile. Check that the connector goes straight down into the control module.

- Tighten the screw for the connector
- Check that the connector cover is correctly positioned. Remedy if necessary
- Install the relays and shunts. Note their locations
- Install the integrated relay / fusebox. See **INSTALLING THE INTEGRATED RELAY / FUSEBOX**

IN THE CARGO COMPARTMENT.

ORDERING SOFTWARE

Order the software. See 9438285 .

FAULT-TRACING INFORMATION

Condition

- No steering wheel module diagnostic trouble codes (DTCs) are stored in the central electronic module.
- No diagnostic trouble codes (DTCs) are stored in the steering wheel module.

Possible Source

- Defective tailgate wiper.
- Defective control module.

Fault symptom[s]

- The rear windshield wiper motor does not operate.

CHECKING THE TURN SIGNAL LAMP SWITCH (2003-2004)

CHECKING THE TURN SIGNAL LAMP SWITCH

CHECKING COMPONENTS

Activate the turn signal lamp switch. Read off the status.

HINT: If the turn signal lamp switch status is OK, the fault is not in the steering wheel module (SWM).

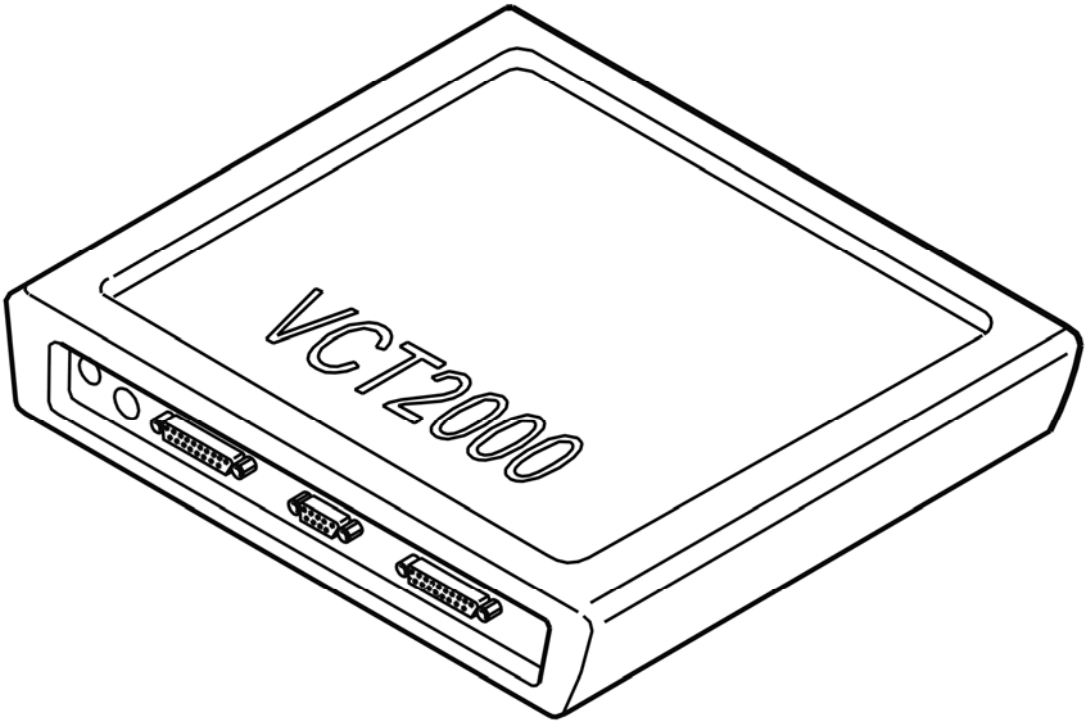

Fig. 58: Identifying VCT2000 Diagnostic Tool Symbol In VIDA
Courtesy of VOLVO CARS CORPORATION

Was the status of the turn signal lamp switch correct?

- **YES**

  FAULT NOT FOUND: Troubleshooting has been completed.

- **NO**

  Refer to **REPLACING THE COMPONENT**

REPLACING THE COMPONENT

Replace the turn signal lamp switch

Other information:

- To replace the turn signal lamp switch, see **TURN SIGNAL SWITCH, REPLACING** .

- **Continue**

  Refer to **CHECKING COMPONENTS**

CHECKING COMPONENTS

Activate the turn signal lamp switch. Read off the status.

HINT: If the turn signal lamp switch status is OK, the fault is in the turn signal lamp switch.

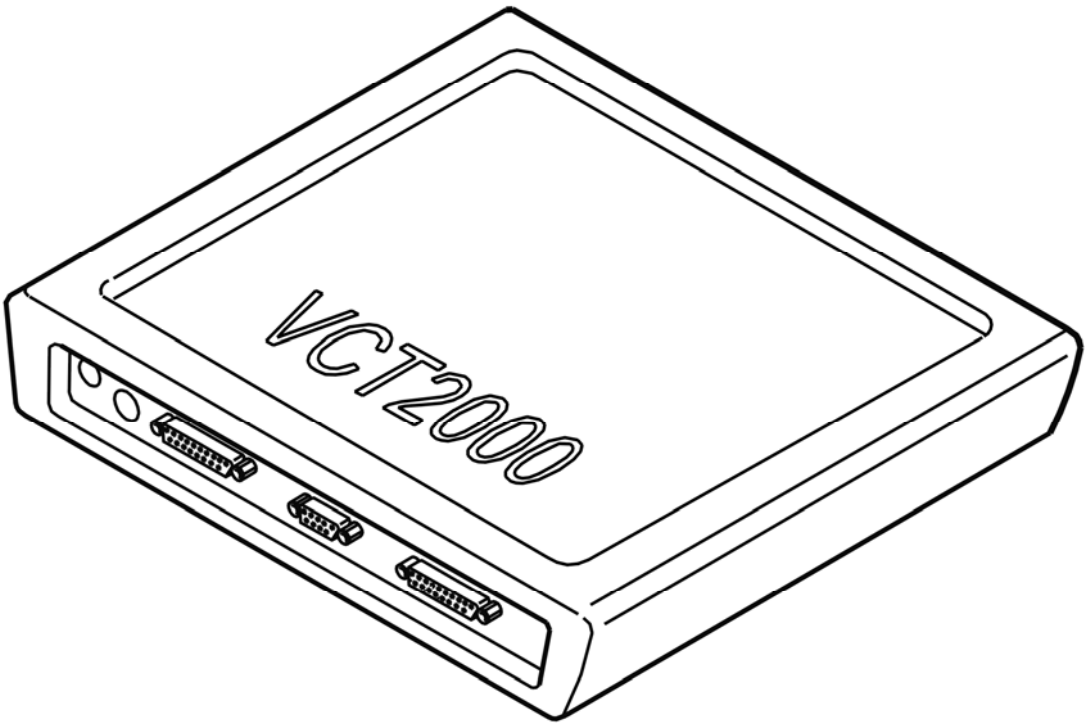

Fig. 59: Identifying VCT2000 Diagnostic Tool Symbol In VIDA
Courtesy of VOLVO CARS CORPORATION

Was the status of the turn signal lamp switch correct?

- **YES**

  OKAY: Troubleshooting has been completed.

- **NO**

  Refer to **REPLACING THE COMPONENT**

REPLACING THE COMPONENT

Try replacing the steering wheel module (SWM).

CAUTION: A new control module is delivered without software. The control module must be programmed in order to function after replacement.

Other information:

- To replace and program the steering wheel module (SWM), see **STEERING WHEEL MODULE (SWM), REPLACING** .

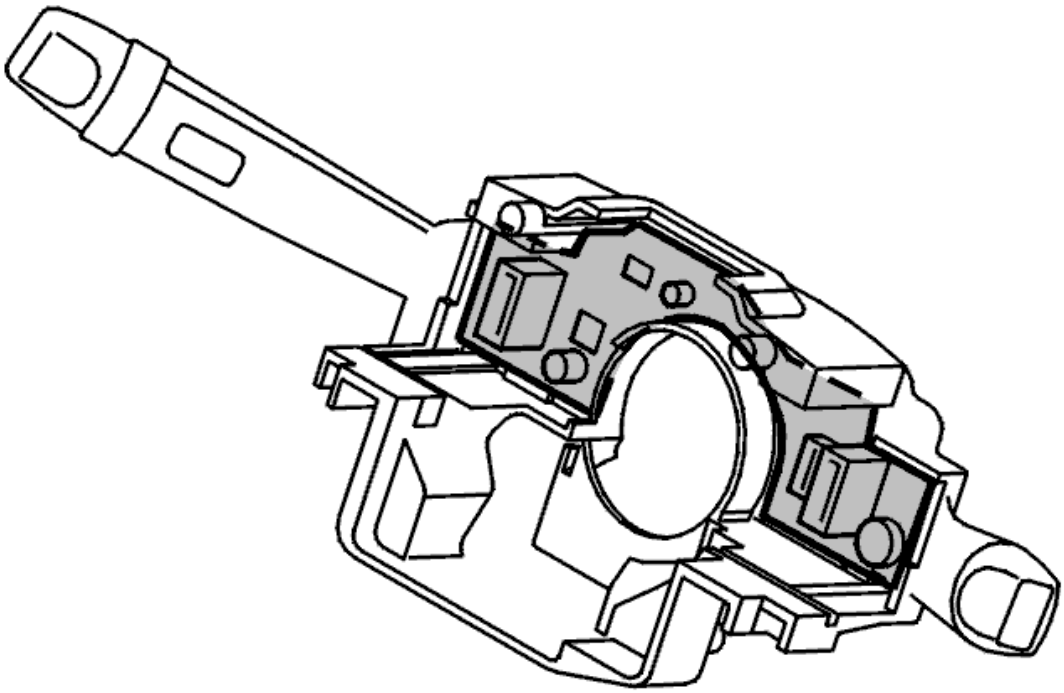

Fig. 60: Identifying Steering Wheel Module
Courtesy of VOLVO CARS CORPORATION

FAULT-TRACING INFORMATION

Condition

- No SWM DTCs are stored in the Central electronic module (CEM).
- No DTCs are stored in the Steering wheel module (SWM).

Possible Source

- Faulty turn signal lamp switch.
- Faulty control module.

Fault symptom[s]

- Direction indicators, malfunction

CHECKING THE WINDSHIELD WIPER SWITCH (2003-2004)

CHECKING THE WINDSHIELD WIPER SWITCH

CHECKING COMPONENTS

Activate the windshield wiper switch. Read off the status.

HINT: If the wiper switch status is OK the fault is not in the steering wheel module (SWM).

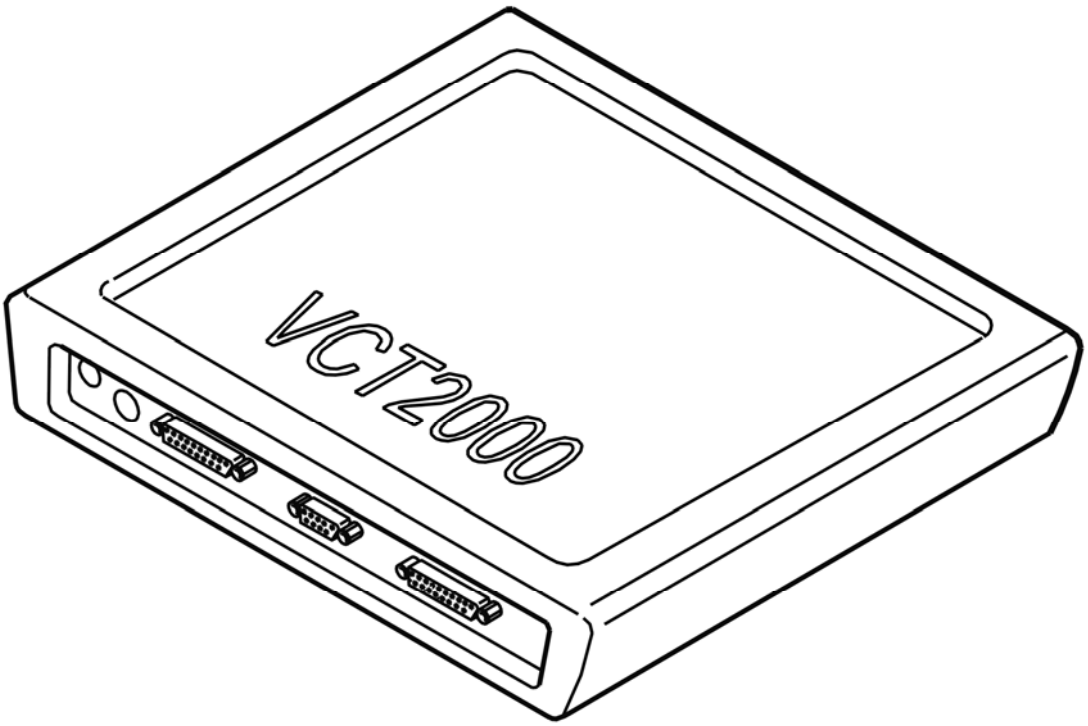

Fig. 61: Identifying VCT2000 Diagnostic Tool Symbol In VIDA
Courtesy of VOLVO CARS CORPORATION

Was the wiper switch status OK?

- **YES**

  FAULT NOT FOUND: Troubleshooting has been completed.

- **NO**

  Refer to **REPLACING THE COMPONENT**

REPLACING THE COMPONENT

Replace the wiper switch

Other information:

- To replace the wiper switch, see **WASHER / WIPER SWITCH, REPLACING** .
- **Continue**

  Refer to **CHECKING COMPONENTS**

CHECKING COMPONENTS

Activate the windshield wiper switch. Read off the status.

HINT: The fault is in the windshield wiper switch if the windshield wiper switch status is OK.

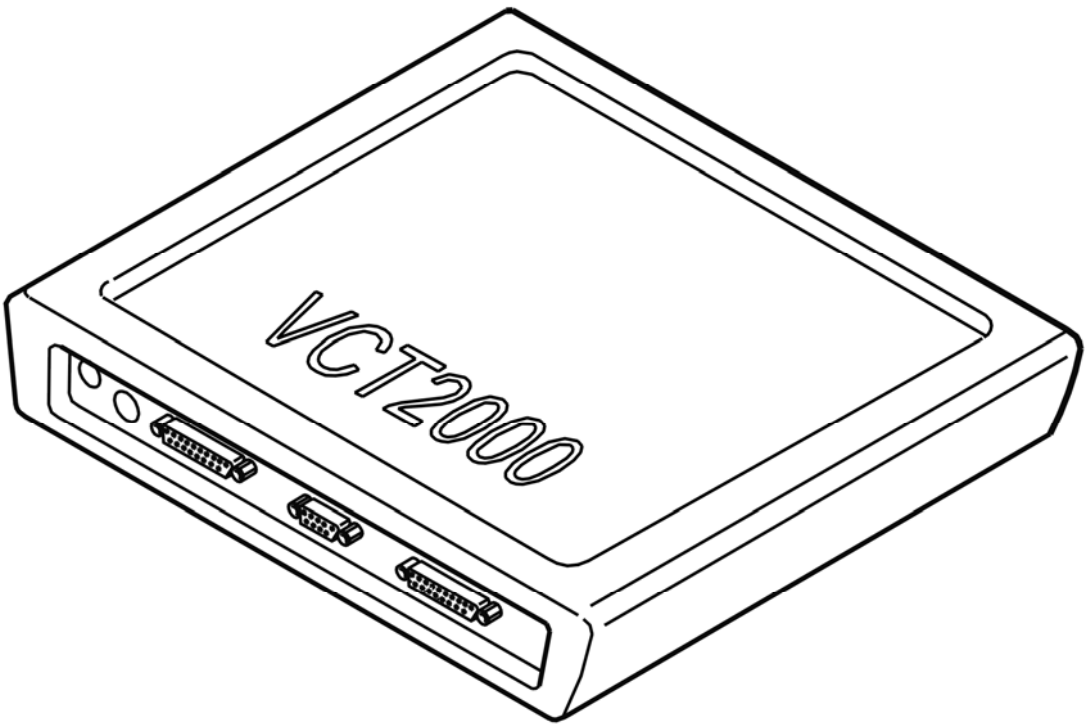

Fig. 62: Identifying VCT2000 Diagnostic Tool Symbol In VIDA
Courtesy of VOLVO CARS CORPORATION

Was the wiper switch status OK?

- **YES**

  OKAY: Troubleshooting has been completed.

- **NO**

  Refer to **REPLACING THE COMPONENT**

REPLACING THE COMPONENT

Try replacing the steering wheel module (SWM).

CAUTION: A new control module is delivered without software. The control module must be programmed in order to function after replacement.

Other information:

- To replace and program the steering wheel module (SWM), see **STEERING WHEEL MODULE (SWM), REPLACING** .

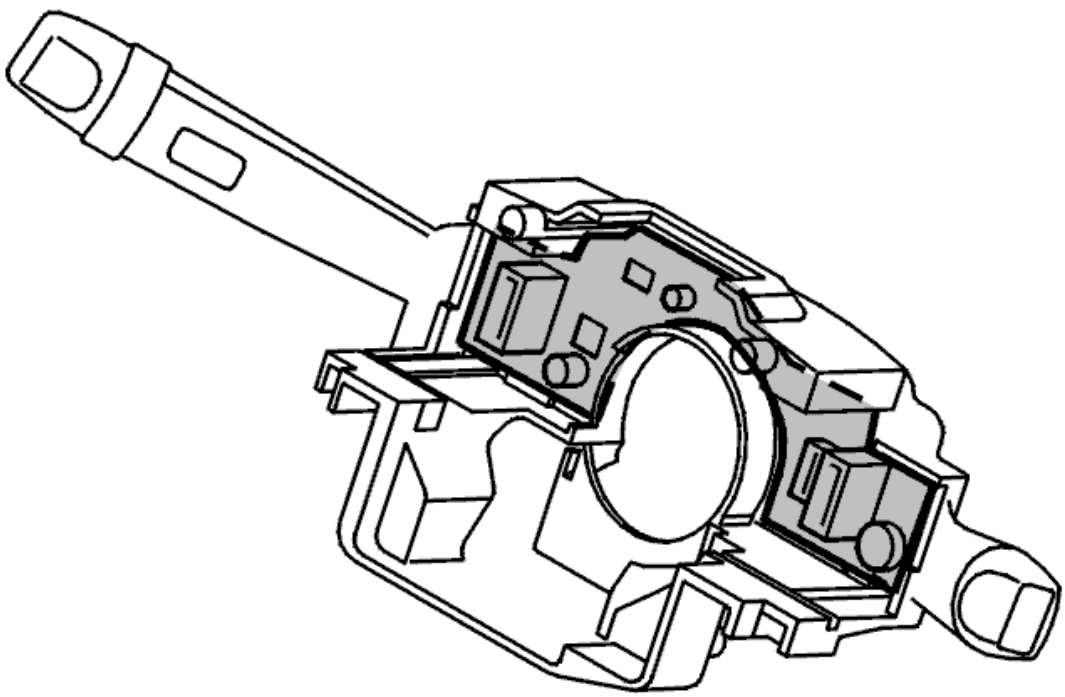

Fig. 63: Identifying Steering Wheel Module

Courtesy of VOLVO CARS CORPORATION

TROUBLE-SHOOTING INFORMATION

Condition

- No SWM diagnostic trouble codes are displayed in the CEM
- No diagnostic trouble codes are displayed in the SWM.

Possible Source

- Defective windscreen-wiper switch
- Defective control unit.

Fault symptom[s]

- Windscreen wipers operate at low speed.

CHECKING WINDSHIELD WASHING (2003-2004)

CHECKING WINDSHIELD WASHING

CHECKING COMPONENTS

Activate the windshield washer using the windshield wiper switch. Read off the status.

HINT: If the wiper switch status is OK the fault is not in the steering wheel module (SWM).

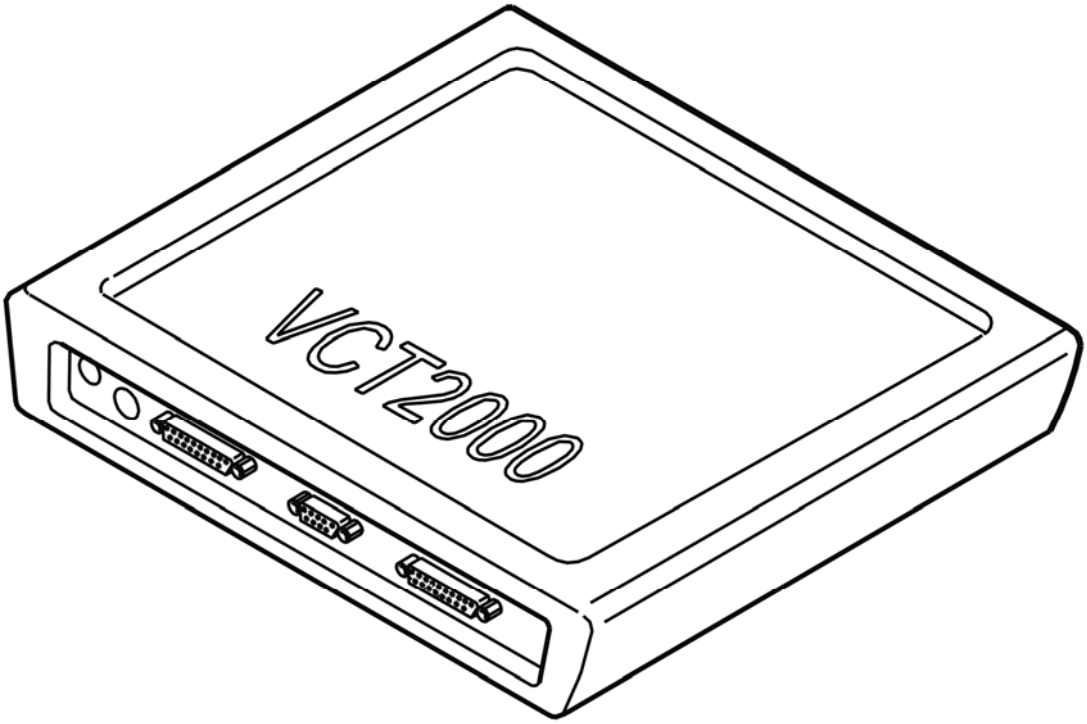

Fig. 64: Identifying VCT2000 Diagnostic Tool Symbol In VIDA
Courtesy of VOLVO CARS CORPORATION

Was the wiper switch status OK?

- **YES**

  FAULT NOT FOUND: Troubleshooting has been completed.

- **NO**

  Refer to **REPLACING THE COMPONENT**

REPLACING THE COMPONENT

Replace the wiper switch.

Other information:

- To replace the wiper switch, see **WASHER / WIPER SWITCH, REPLACING** .

- **Continue**

  Refer to **CHECKING COMPONENTS**

CHECKING COMPONENTS

Activate the washer using the windshield wiper switch. Read off the status.

HINT: The fault is in the windshield wiper switch if the windshield wiper switch status is OK.

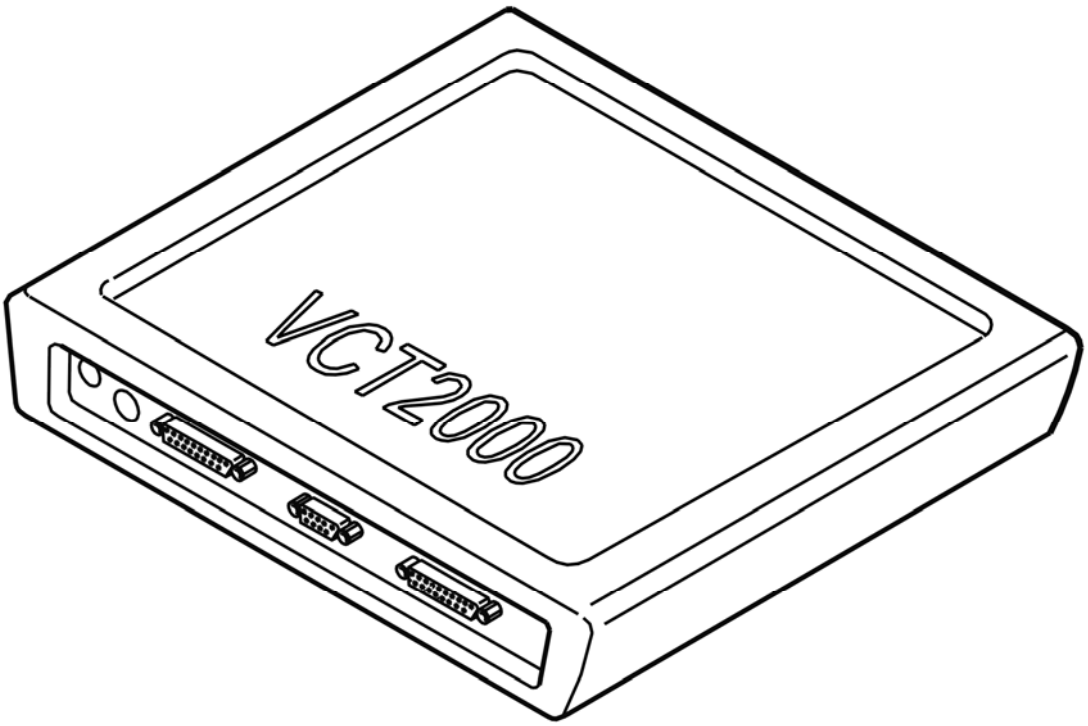

Fig. 65: Identifying VCT2000 Diagnostic Tool Symbol In VIDA
Courtesy of VOLVO CARS CORPORATION

Was the wiper switch status OK?

- **YES**

  OKAY: Troubleshooting has been completed.

- **NO**

  Refer to **REPLACING THE COMPONENT**

REPLACING THE COMPONENT

Try replacing the steering wheel module (SWM).

CAUTION: A new control module is delivered without software. The control module must be programmed in order to function after replacement.

Other information:

- To replace and program the steering wheel module (SWM), see **STEERING WHEEL MODULE (SWM), REPLACING** .

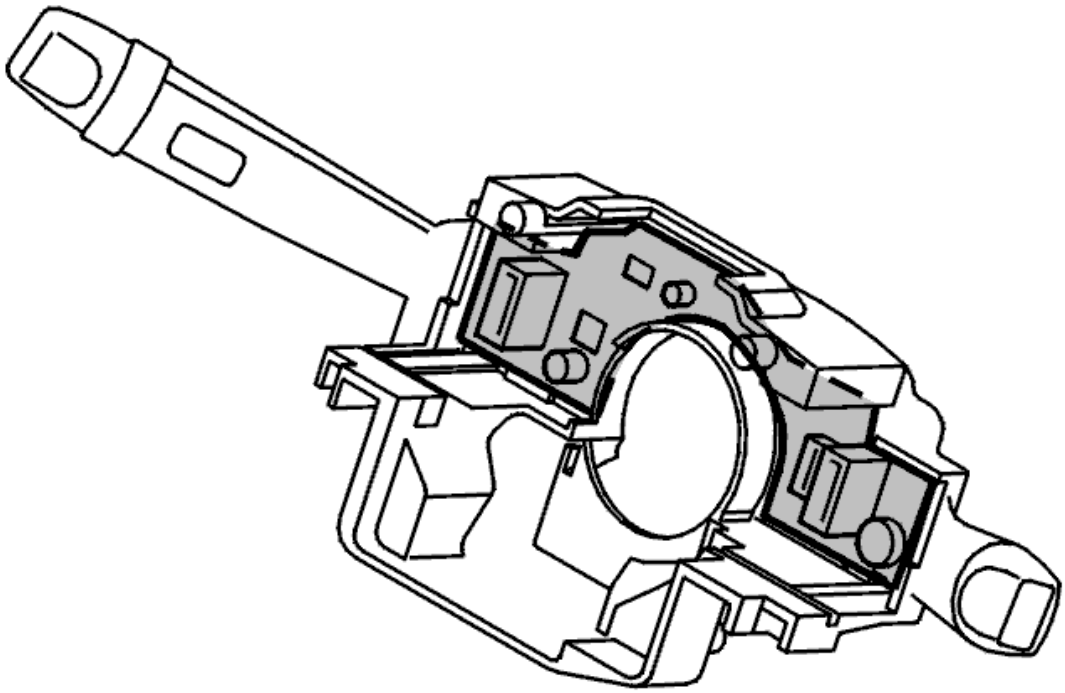

Fig. 66: Identifying Steering Wheel Module
Courtesy of VOLVO CARS CORPORATION

TROUBLE-SHOOTING INFORMATION

Condition

- No SWM diagnostic trouble codes are displayed in the CEM
- No diagnostic trouble codes are displayed in the SWM.

Possible Source

- Defective windscreen-wiper switch
- Defective control unit.

Fault symptom[s]

- Front windscreen washer does not work.

GENERAL INFORMATION

Power transmission

STEERING SHAFT BOOT

CHECKING THE BOOT FOR THE STEERING SHAFT/FIREWALL

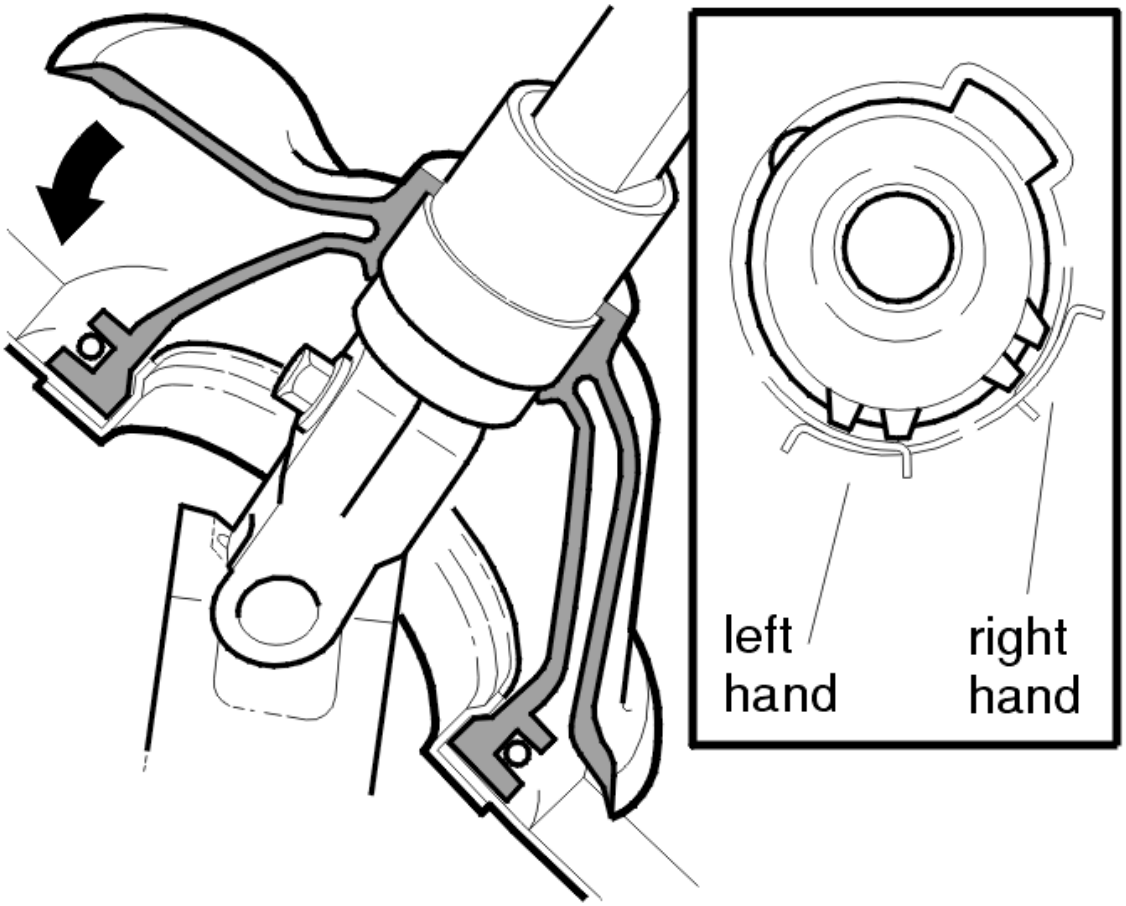

Fig. 1: Identifying Bearing In Boot
Courtesy of VOLVO CARS CORPORATION

Check that the bearing in the boot is in position.

If it has become detached apply a little grease to the edge of the boot (around the hole). Press the bearing back down into the boot.

Check that the boot is correctly positioned against the firewall and that the snap ring is correctly positioned. Adjust if necessary.

NOTE: **It is essential that the above checks are carried out. Otherwise there may be noise from the transmission/engine and road noise in the passenger**

compartment.

STEERING WHEEL

Body and interior

STEERING WHEEL

STEERING WHEEL, REPLACING

REMOVING THE STEERING WHEEL

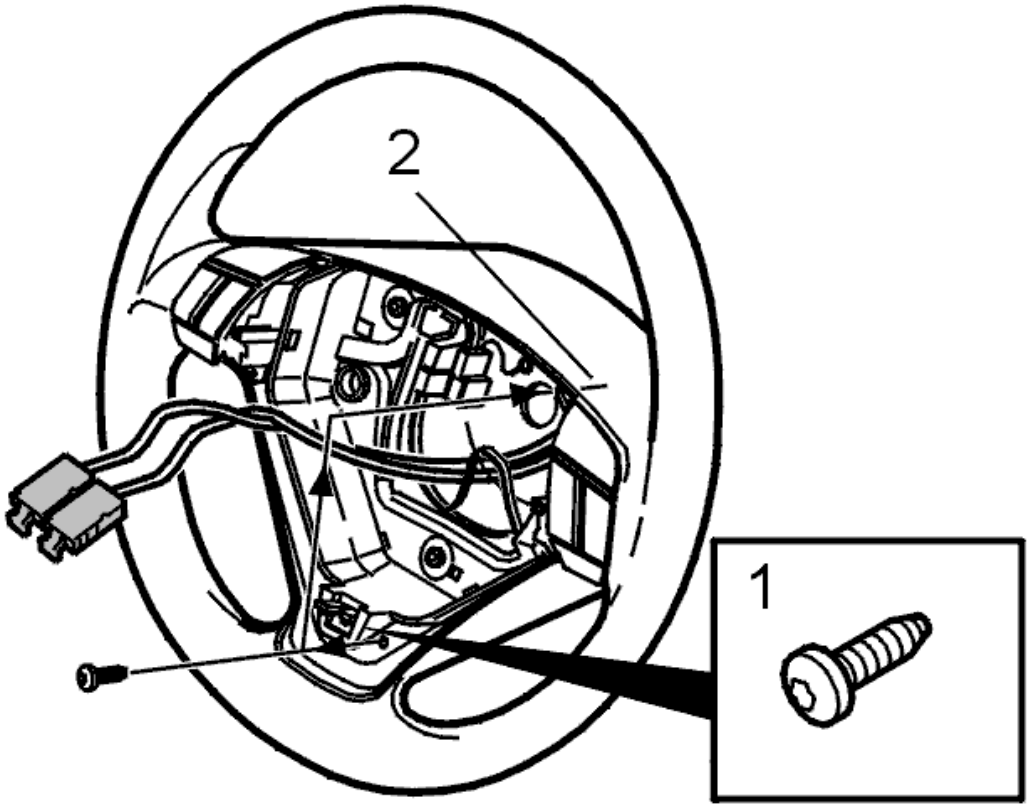

Fig. 1: Driver's Airbag Module
Courtesy of VOLVO CARS CORPORATION

- Remove the driver's airbag module. See **INTERIOR EQUIPMENT - REMOVAL, REPLACEMENT AND INSTALLATION** .
- Lock the contact reel in position using a screw (2).

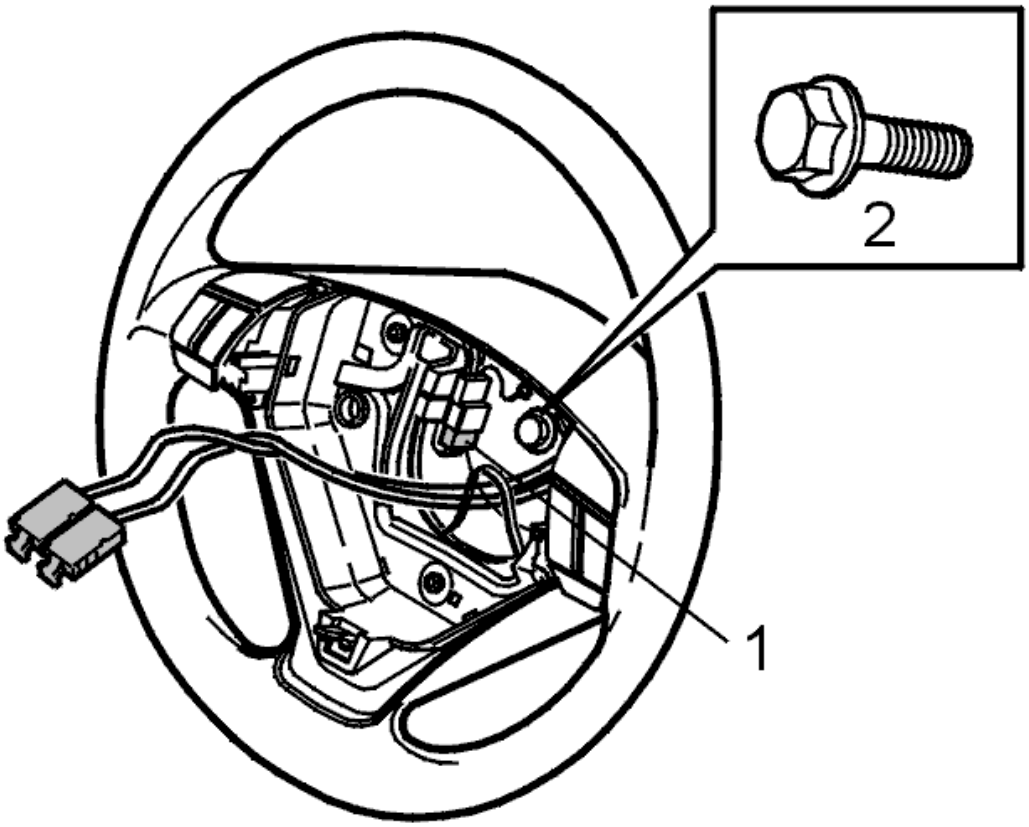

Fig. 2: Identifying Steering Wheel And Screw
Courtesy of VOLVO CARS CORPORATION

- Remove the screw steering wheel - steering column (2).
- Pull the steering wheel straight back.

INSTALLING THE STEERING WHEEL

Install:

the steering wheel.

the screw for the steering wheel - steering column. Use a new screw. Tighten according to:**TIGHTENING TORQUE**

STEERING COLUMN SWITCHES

Suspension and steering

STEERING COLUMN SWITCHES

KEYPAD UNIT, STEERING WHEEL, REPLACING

REMOVING THE KEYPAD

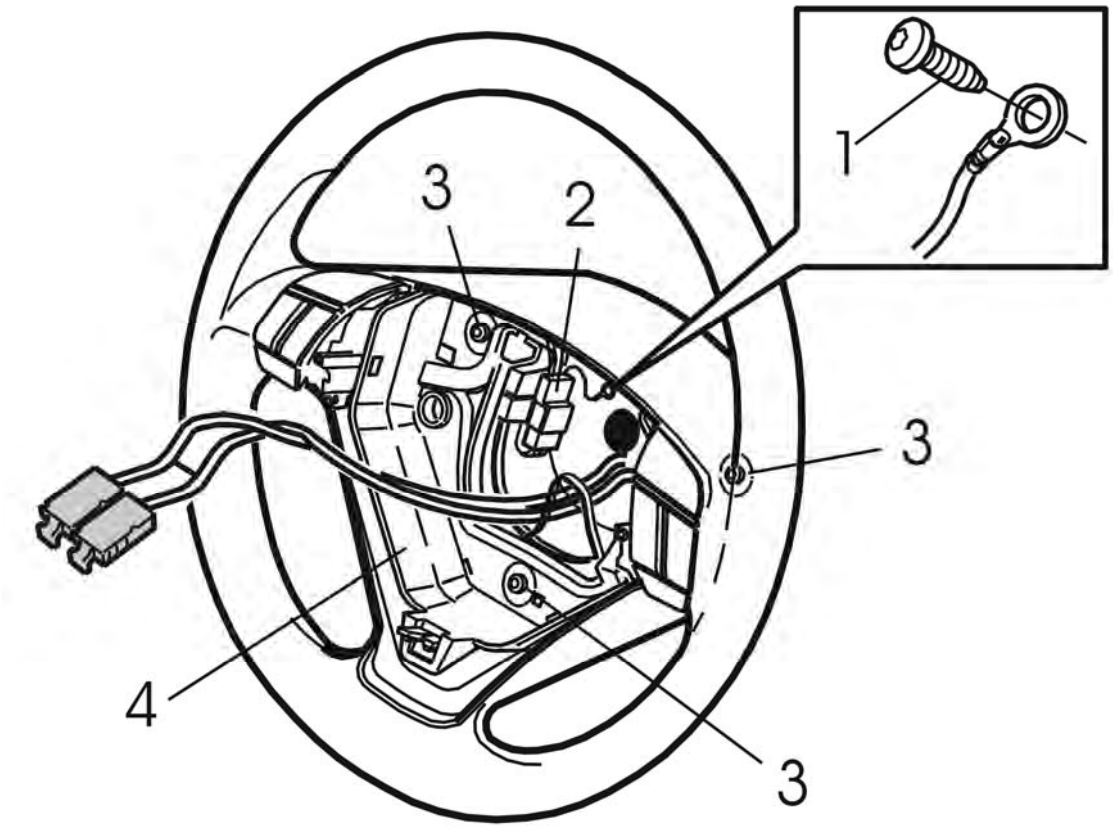

Fig. 1: Identifying Keypad Steering Wheel Assembly
Courtesy of VOLVO CARS CORPORATION

Remove the driver's airbag module. See **INTERIOR EQUIPMENT - REMOVAL, REPLACEMENT AND INSTALLATION** .

Remove screw (1).

Disconnect the ground lead.

Disconnect the green connector (2).

Remove the three screws (3). Remove the plastic bracket.

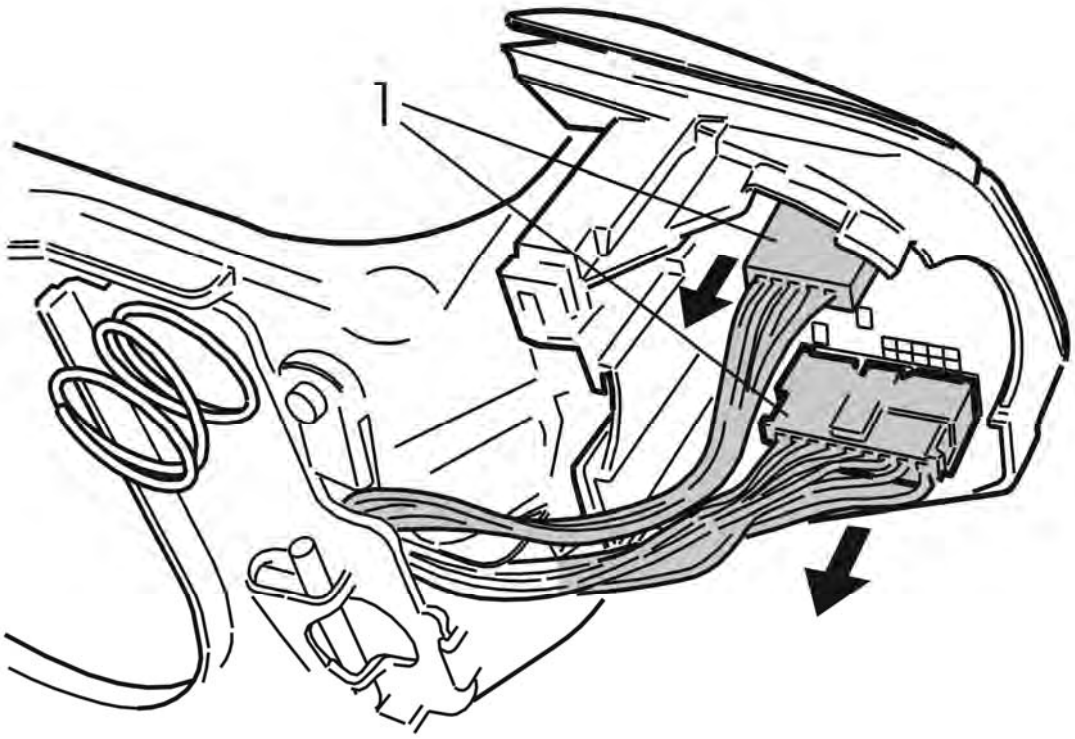

Fig. 2: Identifying Keypad Connectors
Courtesy of VOLVO CARS CORPORATION

Disconnect the connectors (1) for the keypad. Press the catches in.

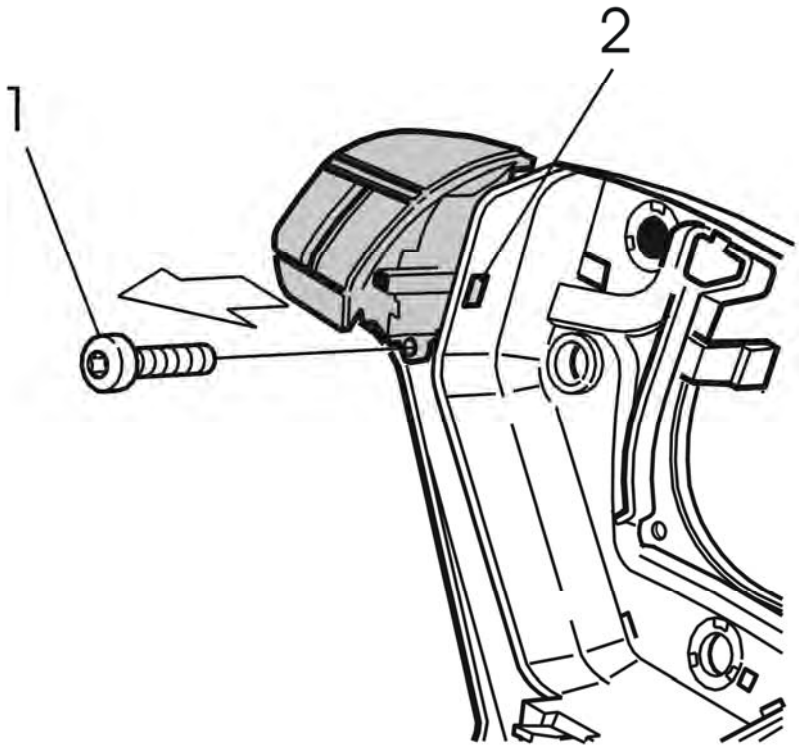

Fig. 3: Identifying Left Steering Wheel Keypad
Courtesy of VOLVO CARS CORPORATION

Remove the screw (1) from keypad.

Press in the catch (2) and pull the keypad from the socket.

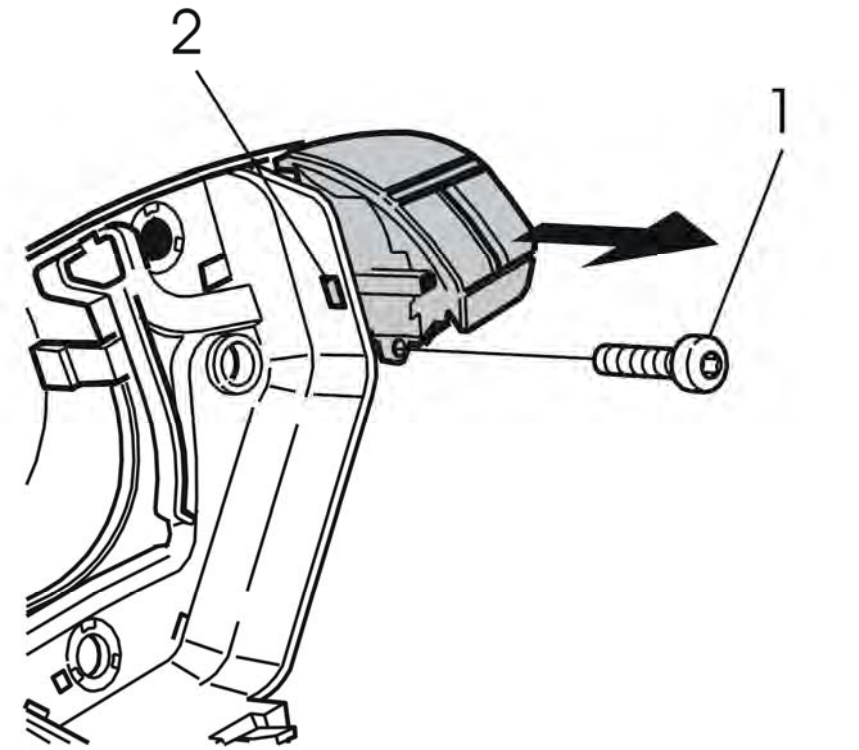

Fig. 4: Identifying Right Steering Wheel Keypad
Courtesy of VOLVO CARS CORPORATION

Remove the screw (1) from keypad.

Press in the catch (2) and pull the keypad from the socket.

INSTALLING KEYPAD

Install:

- the keypad
- the screw
- the connectors for the keypad
- the three screws
- the green connector
- the ground lead and screw
- the driver's airbag module. See **INTERIOR EQUIPMENT - REMOVAL, REPLACEMENT AND INSTALLATION** .

NAVIGATION SYSTEM

Suspension and steering

NAVIGATION SYSTEM

RTI SWITCH

REMOVING THE STEERING WHEEL MODULE

Remove the steering wheel module according to **STEERING WHEEL MODULE** .

REMOVING THE KEYPAD

Remove the keypad according to **KEYPAD UNIT, STEERING WHEEL, REPLACING** .

REMOVING THE SWITCH

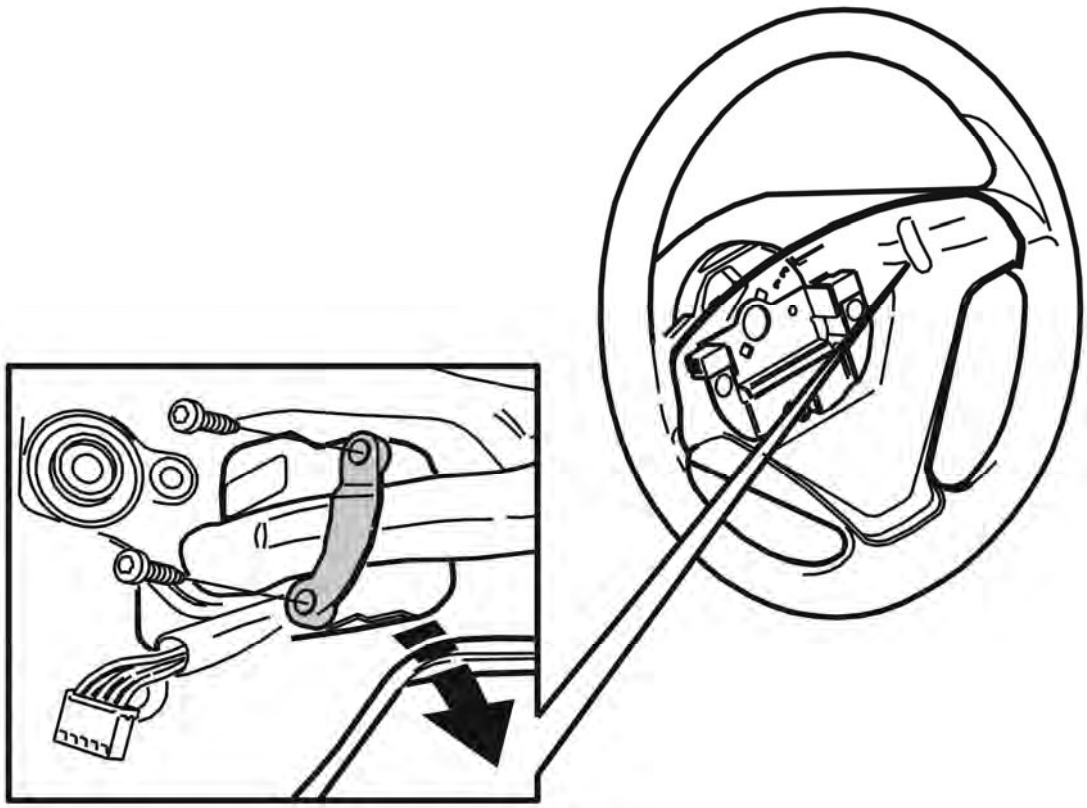

Fig. 1: Identifying Removal Of Road Traffic Information Switches
Courtesy of VOLVO CARS CORPORATION

- Remove the two screws from the mounting bracket
- Press the keypad out of the steering wheel cover.

INSTALLATION

In reverse order.

SUSPENSION

General - Design And Function

CHASSIS/SUSPENSION

CHASSIS/SUSPENSION

See **CHASSIS/SUSPENSION**

SUSPENSION

Front Wheel Suspension - Cleaning, Inspection And Adjustment

WHEEL KNUCKLE, SPRING STRUT

WHEEL KNUCKLE/SPRING STRUT, CALIBRATING

MEASURING BEFORE REMOVAL

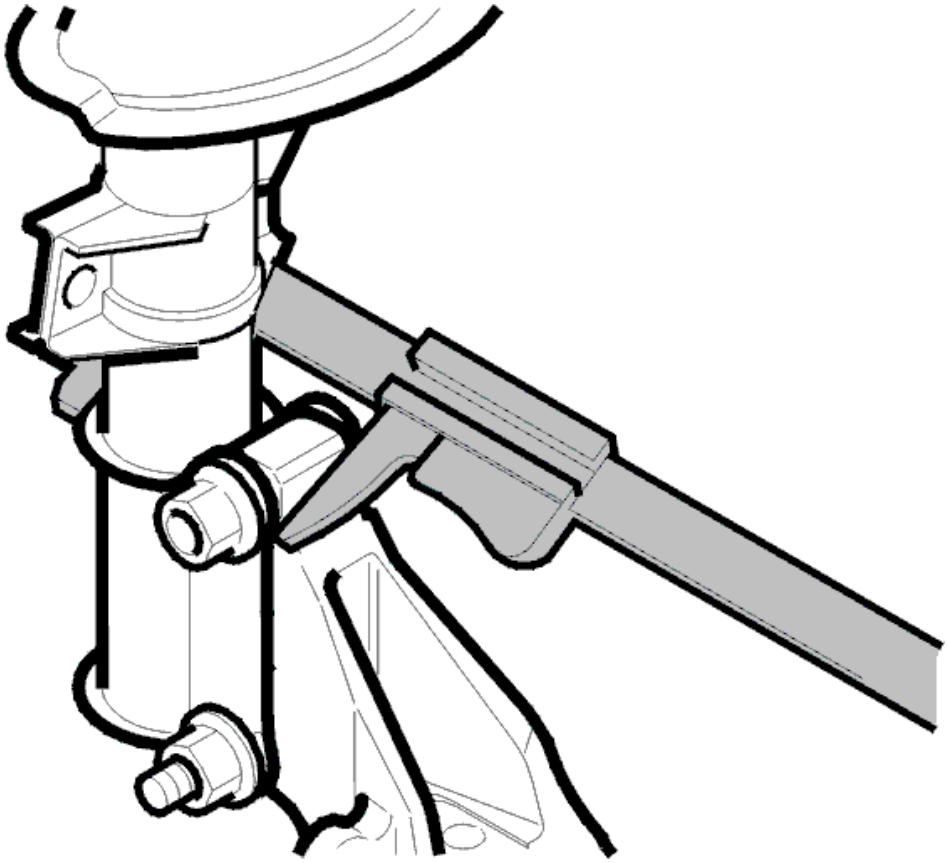

Fig. 1: Measuring Over Wheel Spindle/Spring Strut At Upper Screw
Courtesy of VOLVO CARS CORPORATION

The measurements are made so that the same camber angle can be obtained when installing.

Measure over the wheel spindle/spring strut at the upper screw as shown.

Before measuring clean off any dirt from the measuring surfaces.

Note the measurement.

INSTALLING THE SPRING STRUT/WHEEL SPINDLE

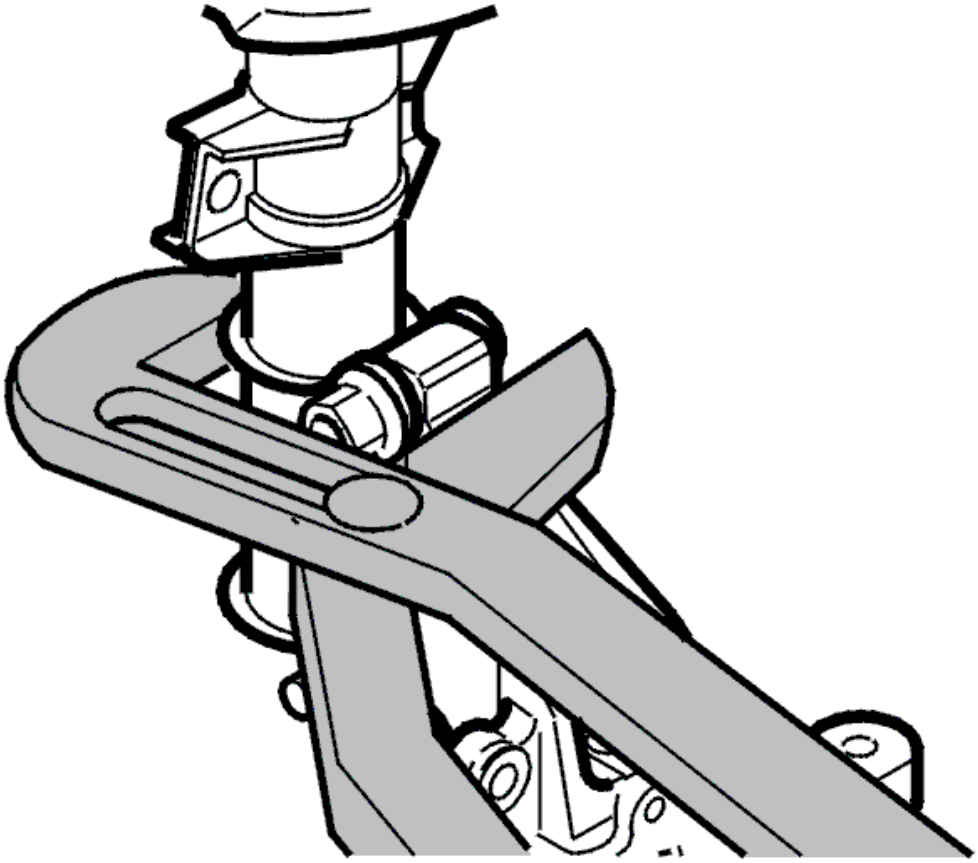

Fig. 2: Installing Spring Strut On Wheel Spindle
Courtesy of VOLVO CARS CORPORATION

Install the spring strut on the wheel spindle. Use **new screws and nuts** .

Adjust in accordance with the measured values.

Tighten to **105 Nm** . Angle-tighten **90°** . Use bevel protractor see **9512050** .

SUSPENSION

Front Wheel Suspension - Removal, Replacement And Installation

FRONT AXLE CROSSMEMBER, CONTROL ARM (2003-2012)

BALL JOINT, REPLACING

Special tools:

see **9992709**

see **9995467**

see **9995682**

see **9995781**

see **9995796**

see **9997076**

see **9997149**

see **9997230**

see **9997255**

see **9997256**

REMOVAL

Raise the vehicle.

Remove the front wheel.

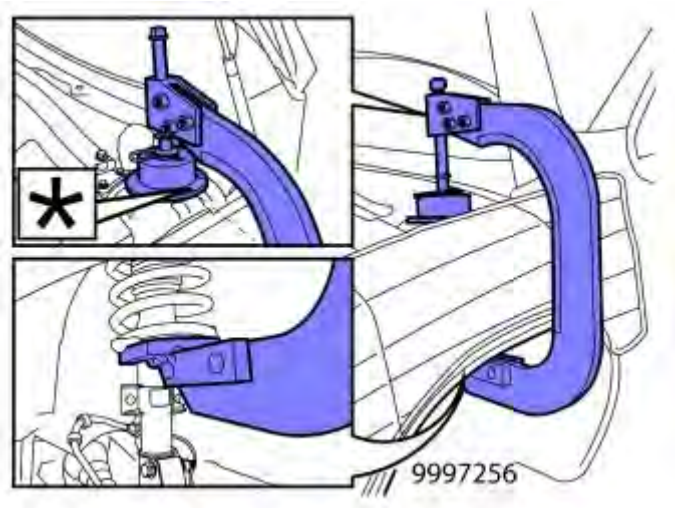

Fig. 1: Removing Spring Using 999 7256
Courtesy of VOLVO CARS CORPORATION

Place see **9997256** against the underneath of the spring strut seat and on the suspension strut in the engine compartment.

NOTE: The tool's upper seat has a marking that is directed towards the wing.

Align the tool against the spring strut seat.

Tighten the tool to light contact. Then tighten so that the spring is compressed approximately 60 mm.

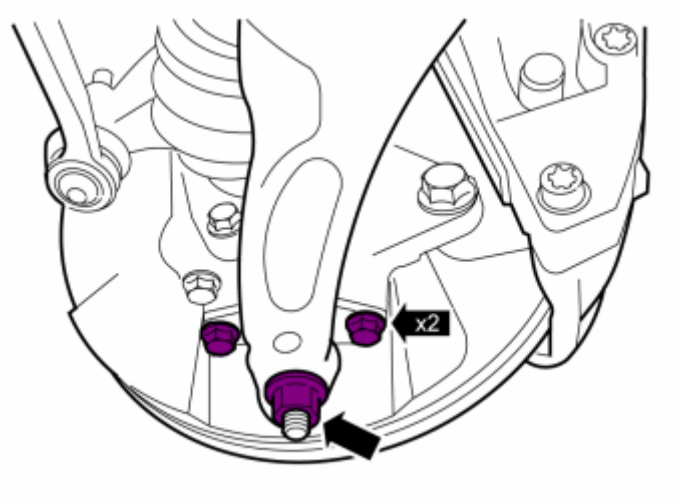

Fig. 2: Ball Joint Nut
Courtesy of VOLVO CARS CORPORATION

Remove:

- the ball joint nut (clean the exposed threads outside the nut before removing).

- the 2 x ball joint screws.

INSTALLING THE PRESS TOOL

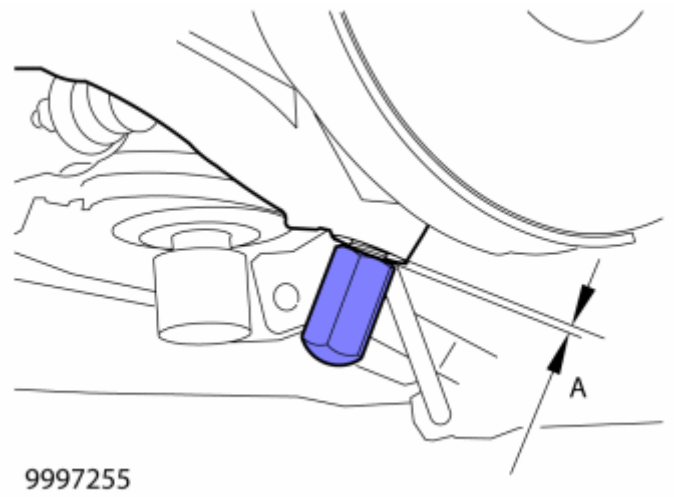

Fig. 3: Press Tool 99907255
Courtesy of VOLVO CARS CORPORATION

When installing see **9997255** , install the tool's cap nut for the ball joint. Ensure that there is a clearance of 1-1.5 mm (A) between the nut and control arm.

NOTE: Thoroughly check that the correct nut is used as there are two different thread pitches.

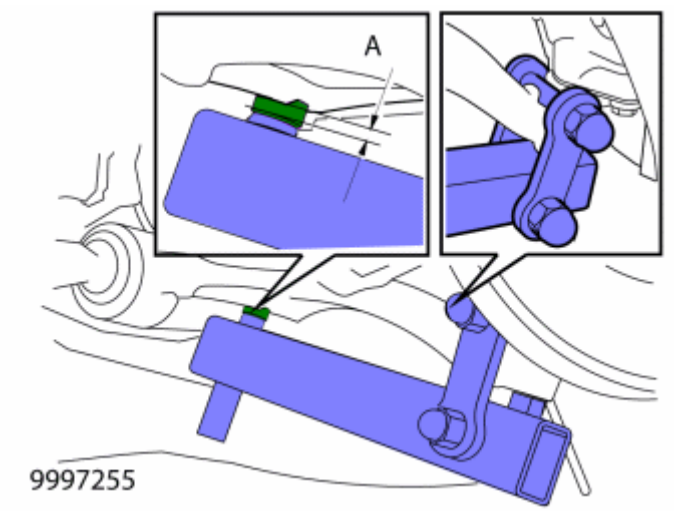

Fig. 4: Press Tool 99907255
Courtesy of VOLVO CARS CORPORATION

Install the tool as illustrated.

NOTE: Turn the seat on the screw so that the side with the least height (A) points forward in the direction of the vehicle.

Turn the tool's screw so that the ball joint releases from the control arm.

Remove the tool.

REMOVING SPRING STRUT FROM CONTROL ARM

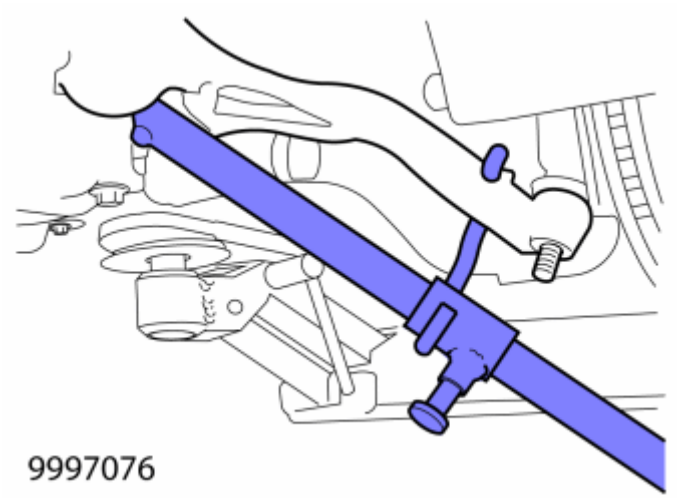

Fig. 5: Identifying Unhooking Control Arm From Ball Joint Using Lever 999 7076
Courtesy of VOLVO CARS CORPORATION

Unhook the control arm from the ball joint. Use see **9997076** .

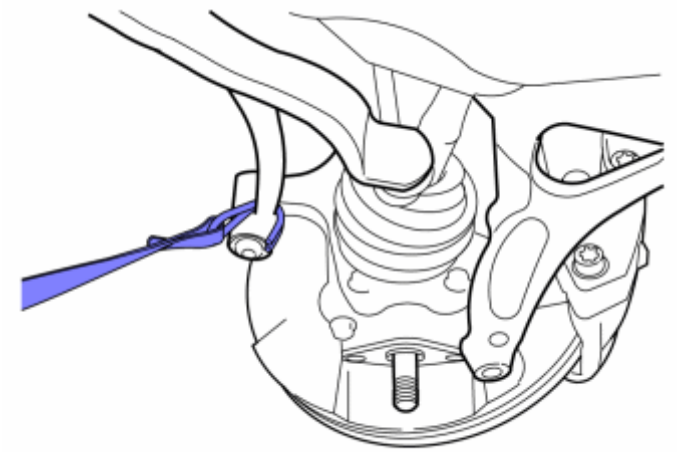

Fig. 6: Tensioner Band 999 5682
Courtesy of VOLVO CARS CORPORATION

Move the spring strut back slightly to expose the ball joint. Hold the spring strut in place using see **9995682** .

REMOVING THE BALL JOINT FROM THE WHEEL SPINDLE

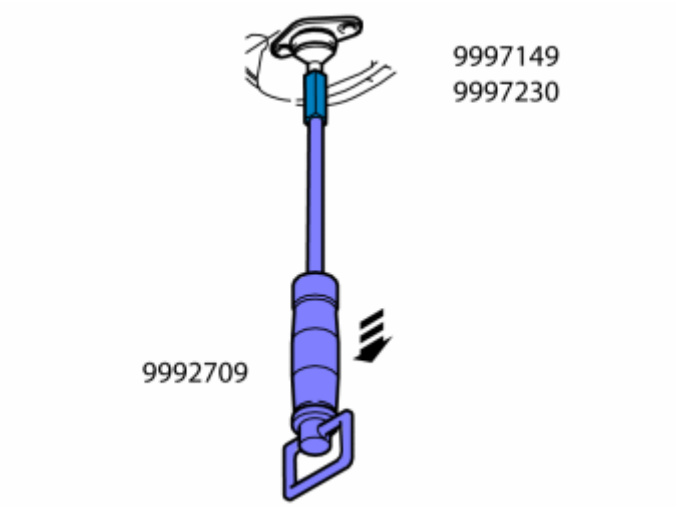

Fig. 7: Removing Ball Joint Using Special Service Tools
Courtesy of VOLVO CARS CORPORATION

Install:

- see **9997149** (coarse thread pitch) For earlier versions use: see **9997230** (fine thread pitch) for later versions, on the ball joint
- see **9992709** on the nut.

Tap loose the ball joint.

CLEANING THE BALL JOINT MOUNTING

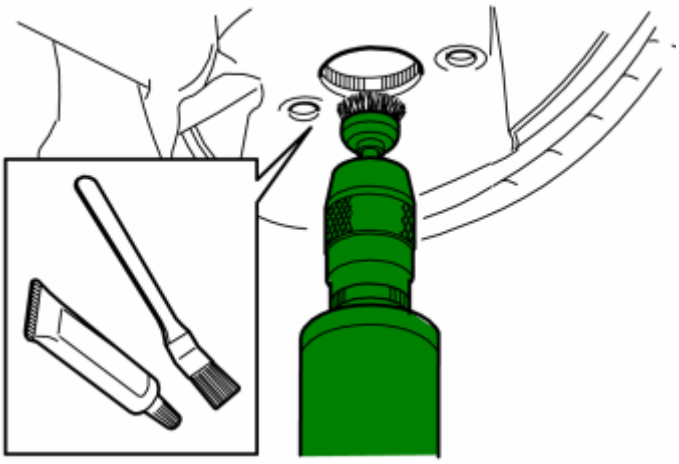

Fig. 8: Cleaning Ball Joint Mounting
Courtesy of VOLVO CARS CORPORATION

WARNING: Always use protective goggles.

Clean the seat for the ball joint and the contact surfaces with a rotating steel brush. Grease the seat with wheel bearing grease, P/N 1161689.

INSTALLATION

INSTALLING GUIDE SCREWS

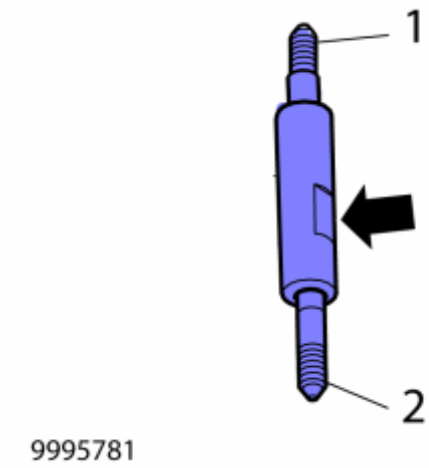

Fig. 9: Identifying Press Tool 999 5781
Courtesy of VOLVO CARS CORPORATION

see **9995781** have a wrench grip (see arrow) which is symmetrically positioned.

Use the screw (2) with the shortest distance from the wrench grip turned downwards.

INSTALLING BALL JOINT

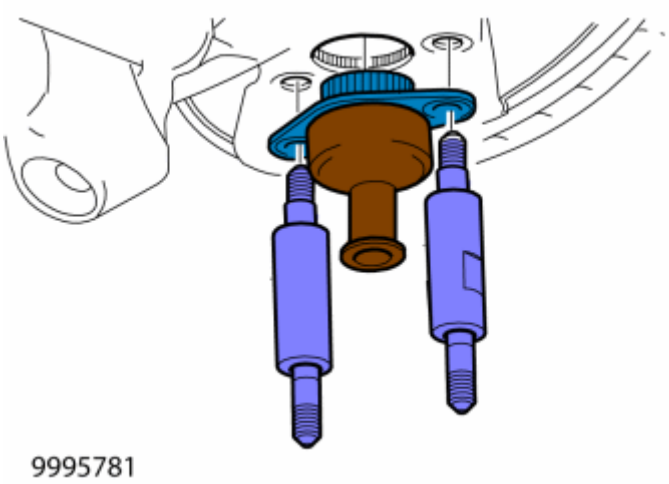

Fig. 10: Identifying Ball Joint & Press Tool 999 5781

Courtesy of VOLVO CARS CORPORATION

NOTE: Take care not to damage the ball joint boot.

Temporarily remove the protective cap from the ball joint.

Install the new ball joint loosely using see **9995781** .

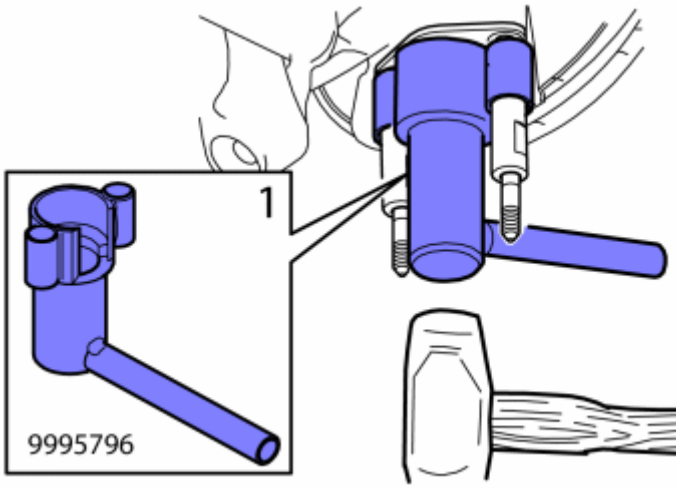

Fig. 11: Press Tool 999 5796
Courtesy of VOLVO CARS CORPORATION

NOTE: Take care not to damage the ball joint boot.

Press up the ball joint against the seat with see **9995796** .

Check that the ball joint is centered in the seat.

Drive in the ball joint with a copper hammer.

Remove the 2 x guide screws.

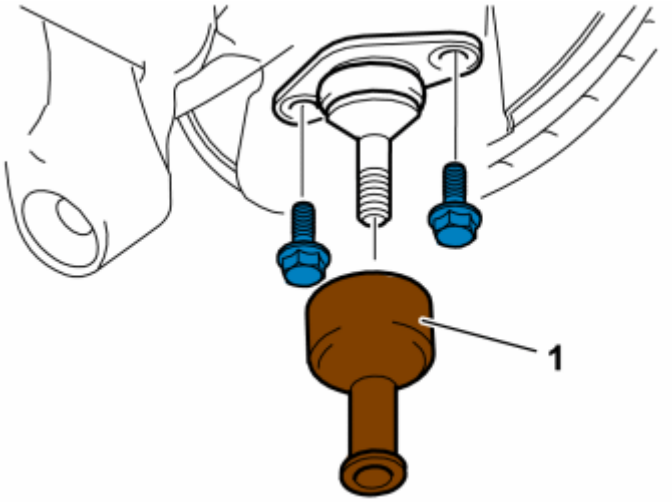

Fig. 12: Installing Protective Cap On Ball Joint
Courtesy of VOLVO CARS CORPORATION

Install new protective cap on the ball joint.

Tighten the ball joint with the new screws x 2. Tighten to 50 Nm.

INSTALLING BALL JOINT IN LINK ARM

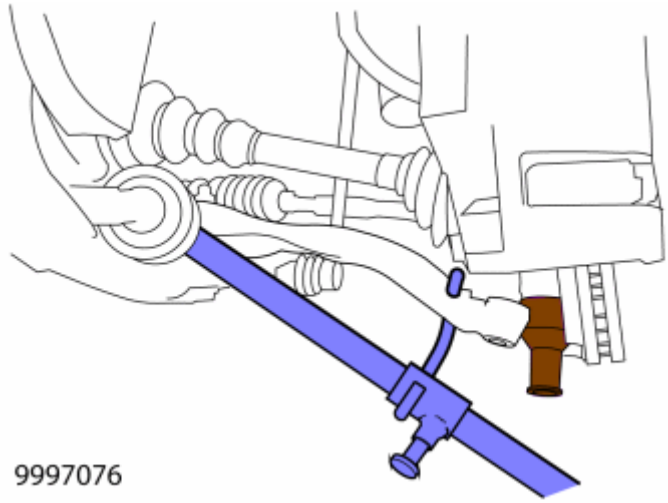

Fig. 13: Installing Ball Joint Using Lever 999 5467
Courtesy of VOLVO CARS CORPORATION

NOTE: Position the lever's hook on the control arm so that it comes into contact with the ball joint boot when installed on the control arm.

Remove the retaining strap from the spring strut.

Press the control arm down with lever see **9997076** .

Remove the protective cap from the ball joint. Align the ball joint lug in the control arm.

INSTALLING THE NUT TO THE BALL JOINT

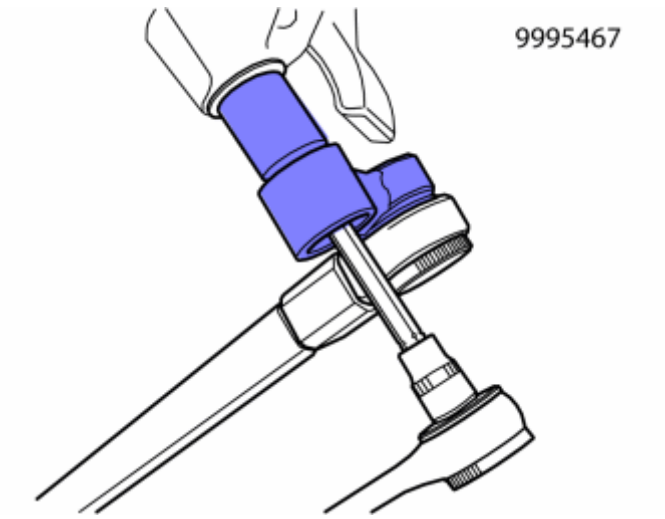

Fig. 14: Identifying Ball Joint Nut & Tool 9995467
Courtesy of VOLVO CARS CORPORATION

NOTE: The ball joint pin may not rotate. Use: Torx wrench TX 40 as counterhold in order to prevent damaging the rubber boot.

Use socket see **9995467** as adapter for the torque wrench or a ring wrench adapter that is deigned for the torque wrench.

Install the nut. Tighten to 100 Nm.

Rust protect the thread outside the nut.

FINISHING

Remove the spring tensioner.

Install the wheel. See: **INSTALLING WHEELS** .

BUSHINGS LINK ARM, REPLACING

Special tools:

see **9997209**

see **9997210**

see **9997211**

see **9997051**

REPLACING

NOTE: **As the illustrations in this service information are used for different model years and / or models, some variation may occur. However, the essential information in the illustrations is always correct.**

PREPARATORY WORK

REMOVING LINK ARM

Remove the link arm according to: **CONTROL ARM FRONT, REPLACING**.

NOTE: **The following method shows the position of the bushings in relation to the link arm.**

This method shows work done on left link arm. The placement on the right side is mirror-imaged.

NOTE: **It is very important for the bushings characteristics and service life that they are positioned correctly.**

REMOVAL

REMOVING THE FRONT BUSHING

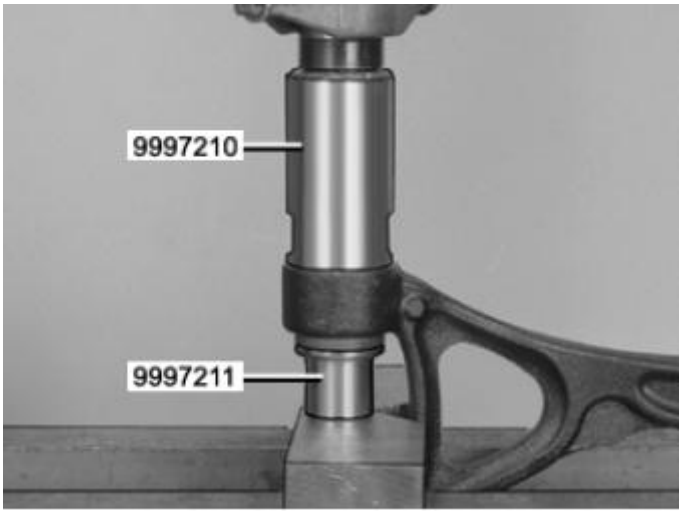

Fig. 15: Pressing Out Front Bushing Using Special Service Tools
Courtesy of VOLVO CARS CORPORATION

Place the link arm in a workshop press. Use see **9997211** and see **9997210** .

Press out the bushing.

INSTALLATION

INSTALLING THE FRONT BUSHING

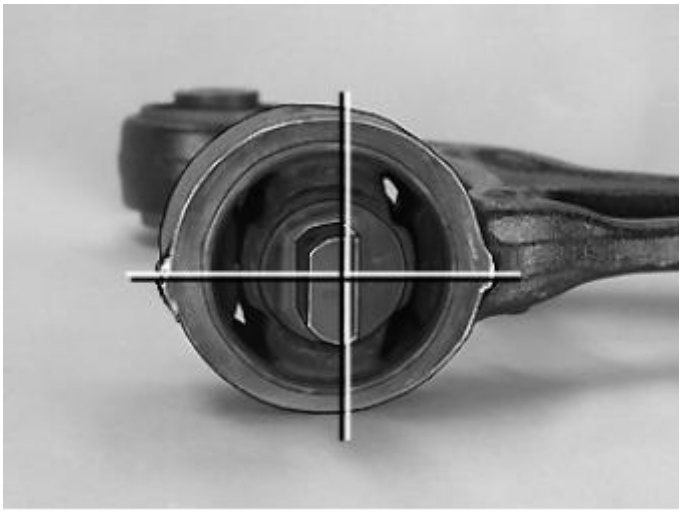

Fig. 16: Positioning Front Bushing In Link Arm
Courtesy of VOLVO CARS CORPORATION

NOTE: Pay close attention to the bushing's position in the link arm.

INSTALLING THE FRONT BUSHING, CONTINUED

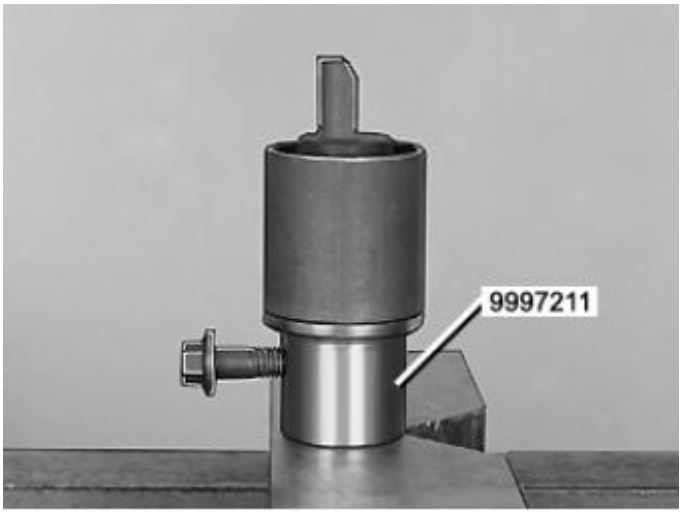

Fig. 17: Installing Front Bushing
Courtesy of VOLVO CARS CORPORATION

Use see **9997211** and place the bushing in the drift. The side of the bushing's stub axle, that has the smaller of the plane surfaces, shall be facing the screw hole. Install one of the screws for the bushing loosely through the drift's hole.

INSTALLING THE FRONT BUSHING, CONTINUED

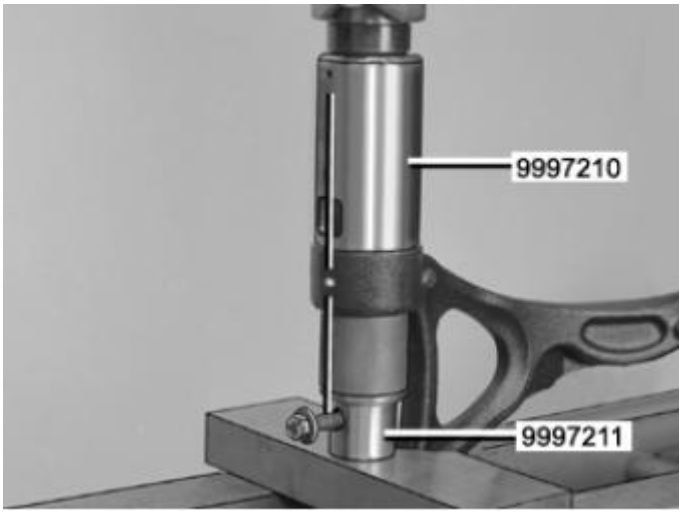

Fig. 18: Installing Front Bushing
Courtesy of VOLVO CARS CORPORATION

Align the drifts so that the screw ends up directly opposite casting joint on the link arm.

Use see **9997210** and turn it with the hole centered in the same direction as the screw/casting joint.

Carefully press in the bushing until the threaded hole in the bushing's shaft can be seen through the sleeve's hole.

INSTALLING THE FRONT BUSHING, CONTINUED

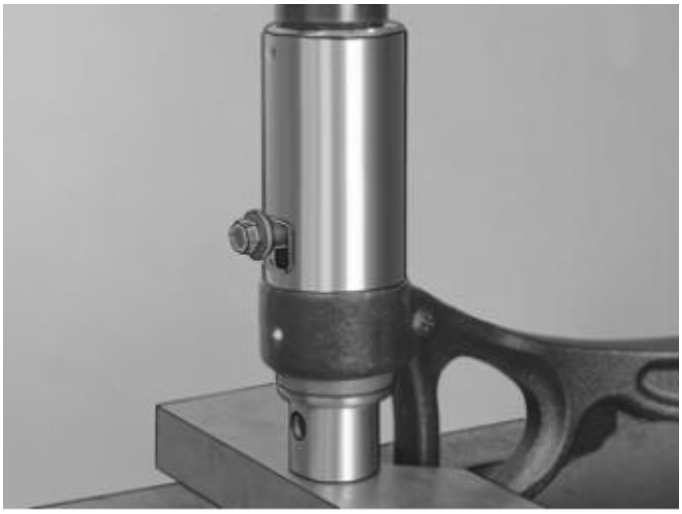

Fig. 19: Installing Front Bushing
Courtesy of VOLVO CARS CORPORATION

Transfer the screw and tighten it in so far that the screw's unthreaded part covers the edge on the sleeve's hole.

Press in the bushing until the screw's unthreaded part just touches the hole's upper edge. The bushing is now in the right position.

REMOVAL

REMOVING THE REAR BUSHING

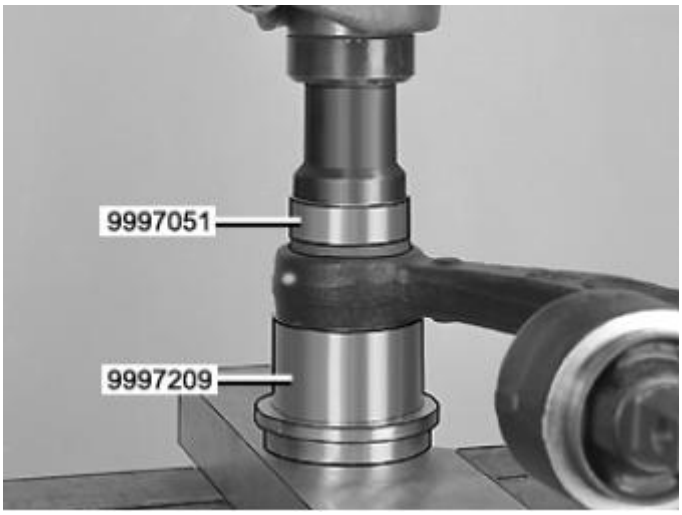

Fig. 20: Removing Rear Bushing Using Special Service Tools
Courtesy of VOLVO CARS CORPORATION

Place the link arm in a workshop press. Use see **9997209** and see **9997051** , and a suitable sleeve.

Press out the bushing.

INSTALLATION

INSTALLING THE REAR BUSHING

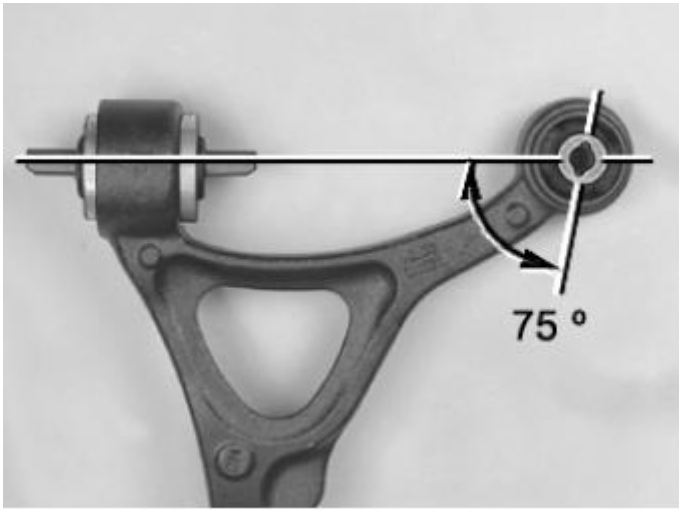

Fig. 21: Positioning Rear Bushing In Link Arm
Courtesy of VOLVO CARS CORPORATION

NOTE: Pay close attention to the bushing's position in the link arm.

The two slots in the bushing's inner sleeve shall be placed in 75 degrees direction in relation to the longitudinal line.

Mark up the bushing and link arm with a color marker.

INSTALLING THE REAR BUSHING, CONTINUED

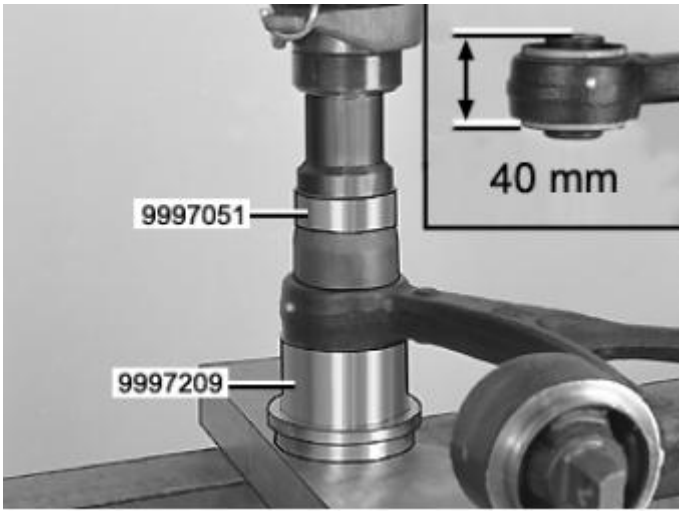

Fig. 22: Installing Rear Bushing Using Special Service Tools
Courtesy of VOLVO CARS CORPORATION

Place the link arm in a workshop press. Use see **9997209** and see **9997051** , and a suitable sleeve.

Press in the bushing so that the distance on the plane between the bushing's inner sleeve and the machined surface on the link arm becomes 40 mm.

FINISHING

INSTALLING THE LINK ARM

Install the link arm according to: **CONTROL ARM FRONT, REPLACING**.

CONTROL ARM FRONT, REPLACING

Special tools:

see **9997062**

NOTE: **The illustrations in this service information are used for different model years and/or models. Some variation may occur. However, the essential information in the illustrations is always correct.**

REPLACING

REMOVING THE BALL JOINT FROM THE CONTROL ARM

Remove the ball joint from the control arm. See **BALL JOINT, REPLACING**

REMOVING THE DRIVE SHAFT

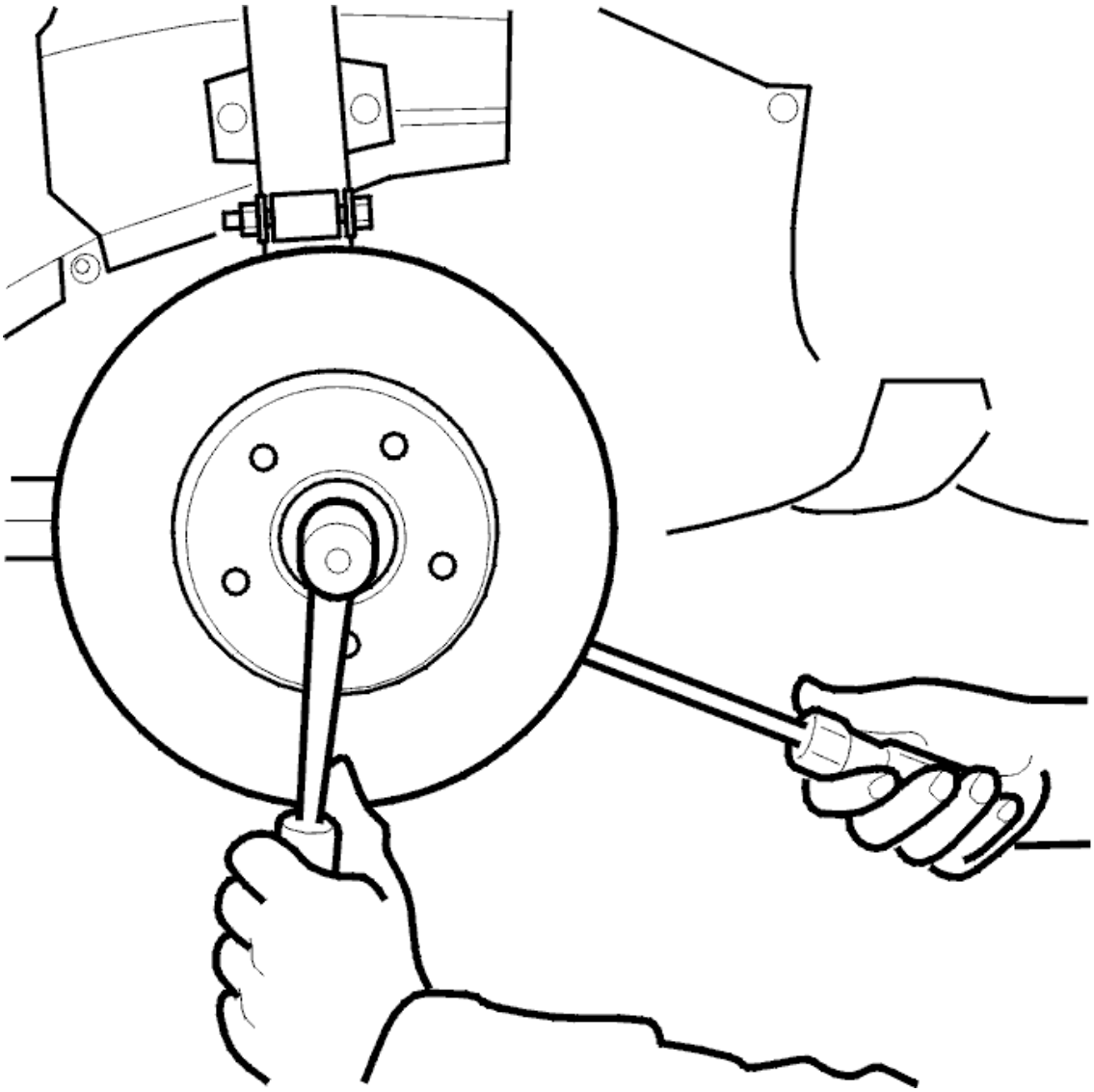

Fig. 23: Identifying Drive Shaft Screw Removal Using A Screwdriver As A Counter Hold On Brake Disc
Courtesy of VOLVO CARS CORPORATION

Remove the screw for the drive shaft. Use a screwdriver as a counterhold on the brake disc.

Remove the drive shaft from the hub. Knock the drive shaft out using a brass drift.

Fold aside the spring strut.

REMOVING THE SPLASH GUARD

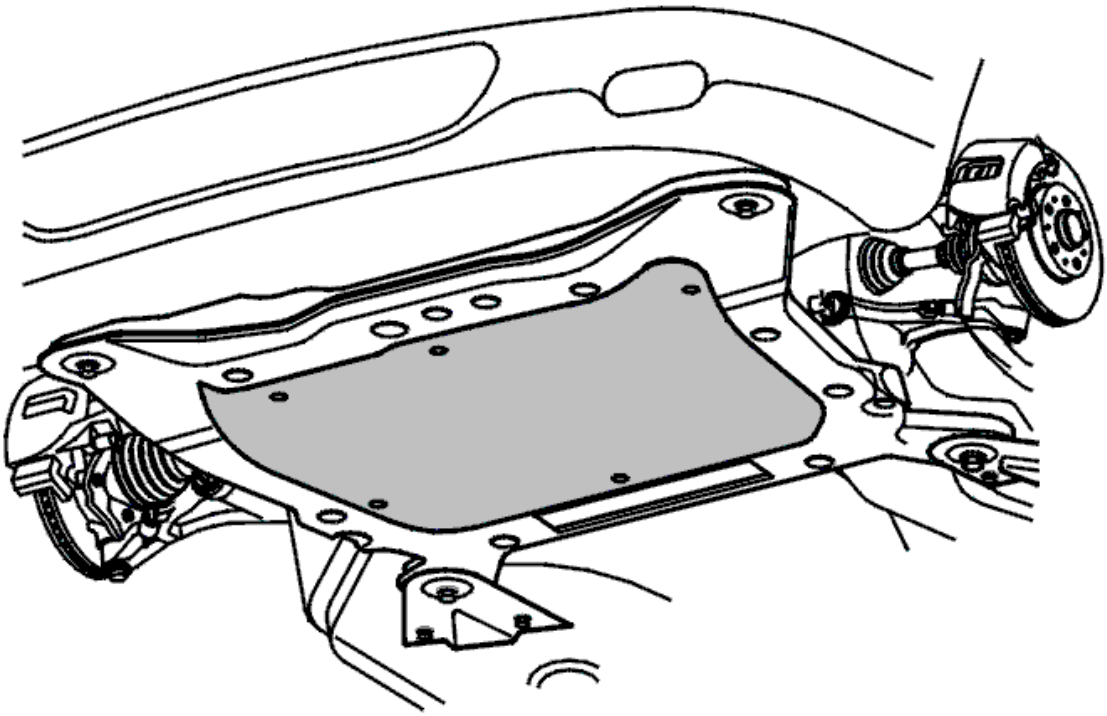

Fig. 24: Identifying Splash Guard Under Engine
Courtesy of VOLVO CARS CORPORATION

Remove the splash guard under the engine.

REMOVING THE CONTROL ARM

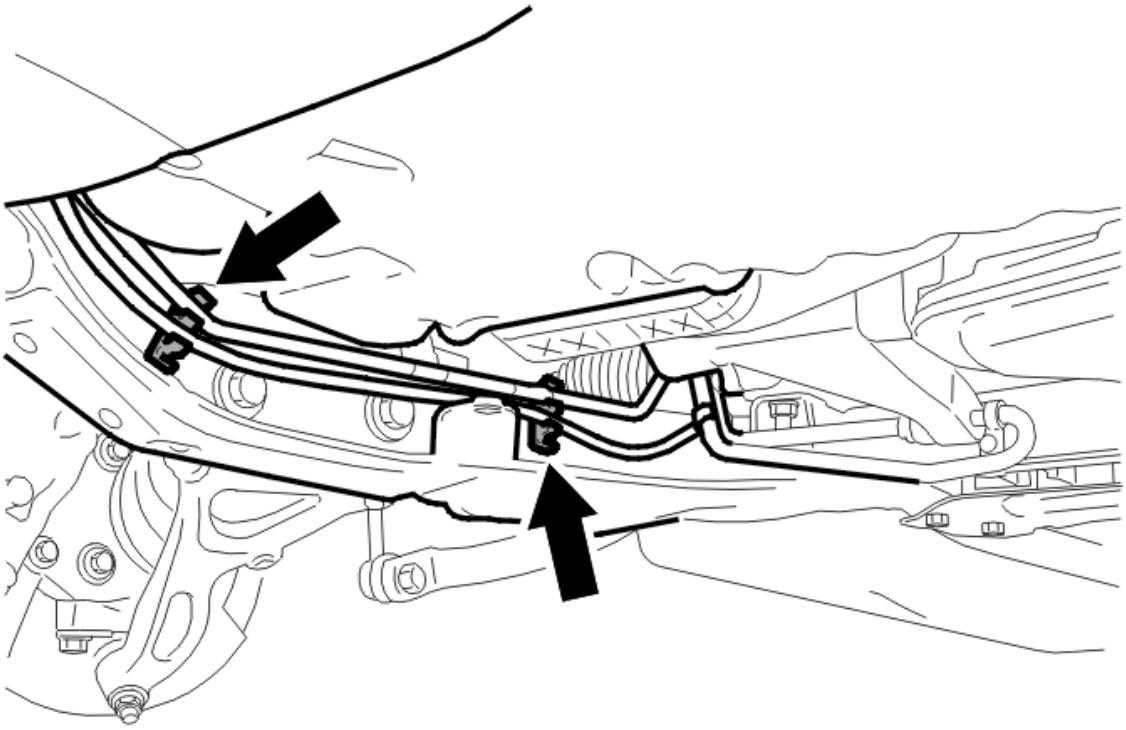

Fig. 25: Identifying Oil Pipe For Steering Gear, Screw Clip For Steering Gear Return Line And Fuel Line For Engine Block Heater
Courtesy of VOLVO CARS CORPORATION

Applies to the right-hand side only:

Remove the hose for the EVAP canister and the fuel line for the engine block heater (where applicable) from their mountings. Move the hose and fuel line to one side.

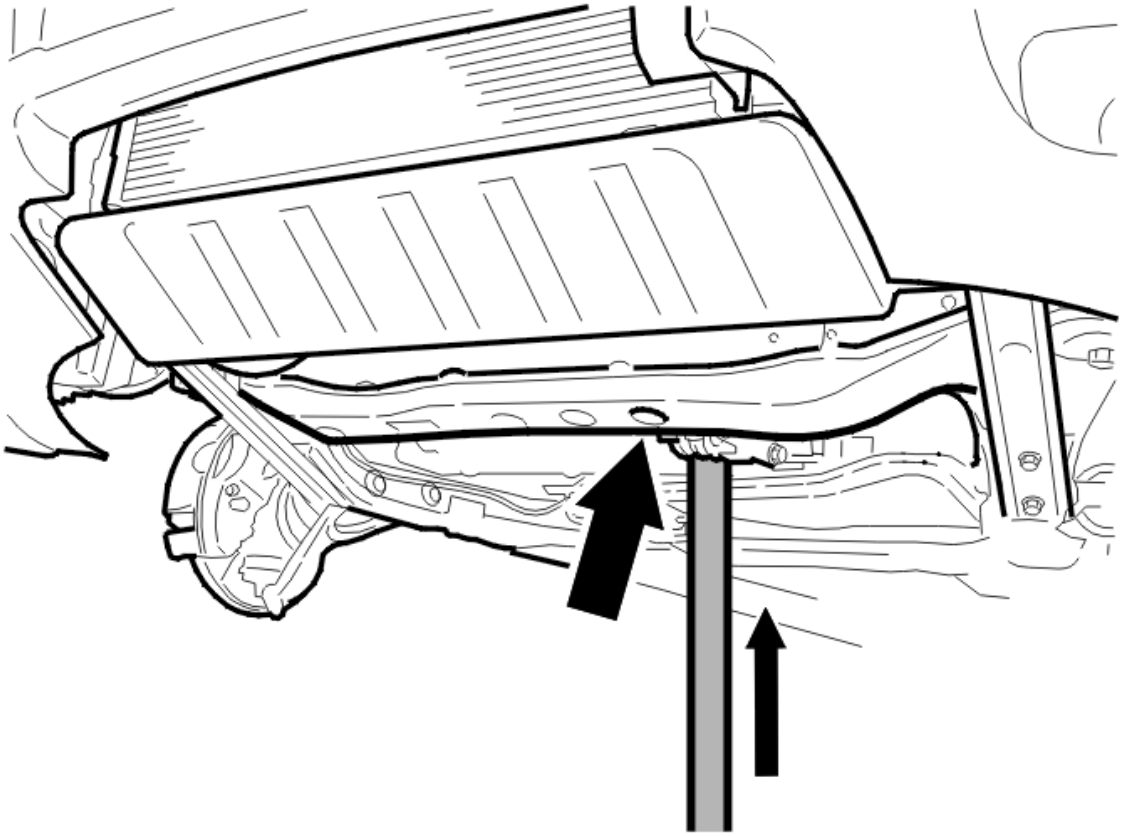

Fig. 26: Front Engine Pad Screw
Courtesy of VOLVO CARS CORPORATION

Only applies to cars with 4T65EV transmissions when removing the left-hand control arm:

Remove the screw for the front engine pad. Lift the engine approximately 10mm using a mobile jack to remove the rear screw on the front mounting for the control arm.

NOTE: **Position the mobile jack so that it is raised towards the front right mounting screw for the lower torque rod bracket.**

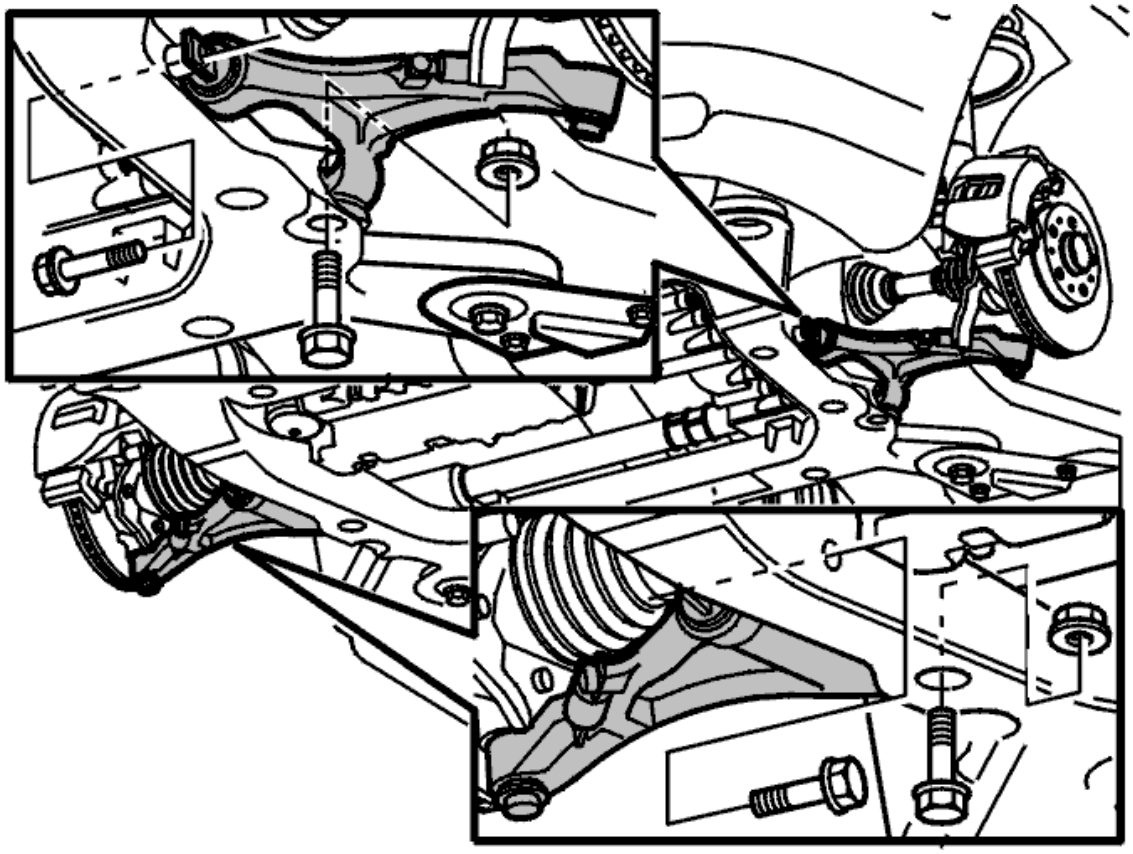

Fig. 27: Removing Control Arm
Courtesy of VOLVO CARS CORPORATION

Applies to all models:

Remove:

- the two screws
- the screw and nut
- the control arm.

INSTALLING

TIGHTENING TORQUE

For tightening torques, see **TIGHTENING TORQUE** .

INSTALLING THE CONTROL ARM

Install:

- the control arm
- the screw and nut

- the two screws.

NOTE: Use new screws.

For tightening torques, see **TIGHTENING TORQUE**

Only applies to cars with 4T65EV transmissions when removing the left-hand control arm:

Lower the engine. Install the screw for the front engine pad. M10.

Applies to the right-hand side only:

Install the hose for the EVAP canister and the fuel line for the engine block heater (if applicable) in their mountings.

INSTALLING THE DRIVE SHAFT

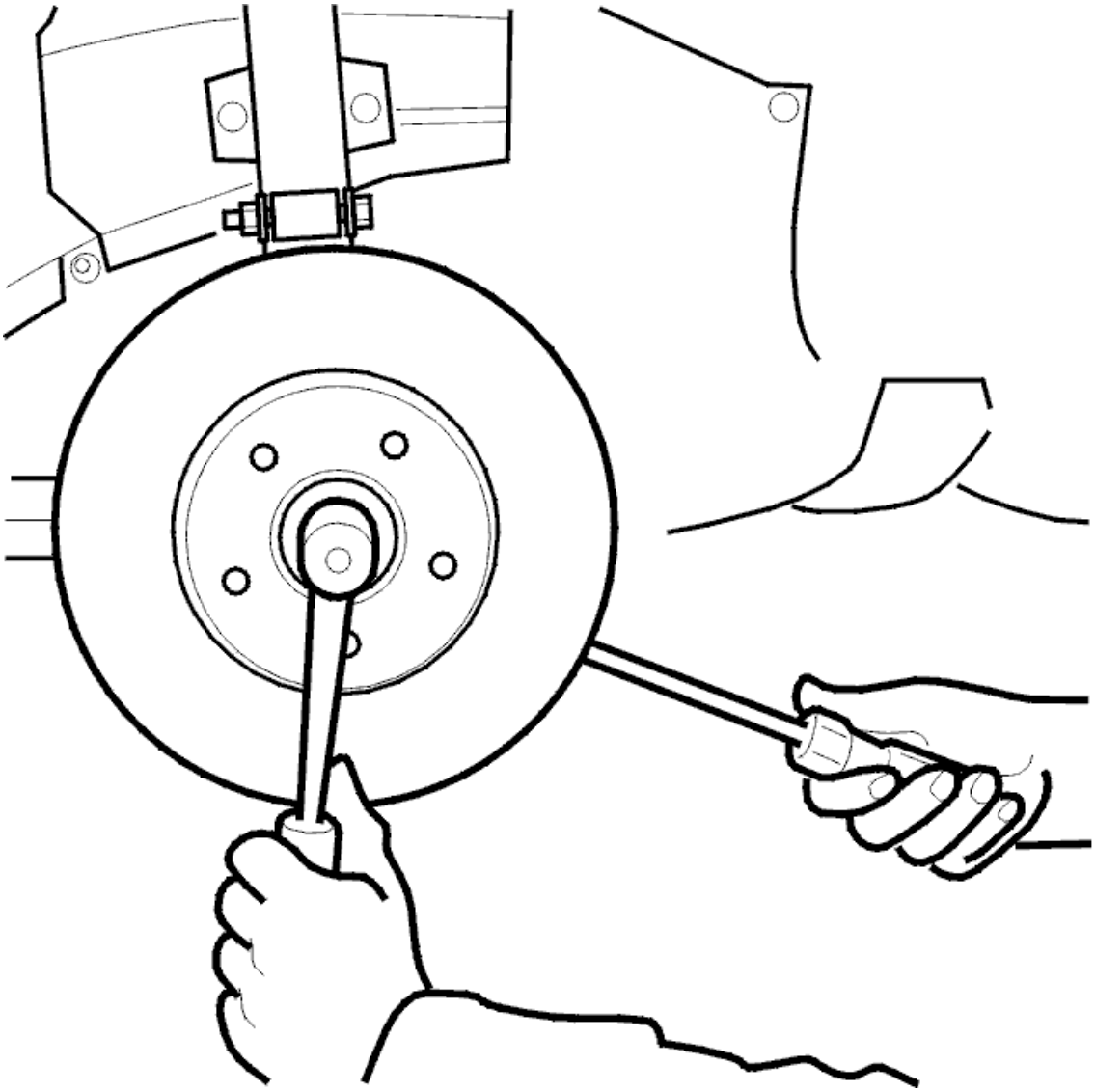

Fig. 28: Identifying Drive Shaft Screw Removal Using A Screwdriver As A Counter Hold On Brake Disc
Courtesy of VOLVO CARS CORPORATION

Install the drive shaft in the hub.

Install a new screw. Use a screwdriver as a counterhold.

For tightening torques, see **TIGHTENING TORQUE** .

INSTALLING THE NUT FOR THE BALL JOINT

Install the nut. M12.

INSTALLING THE SPLASH GUARD

Install the splashguard under the engine. M8.

FINISHING

Install the wheel. See **INSTALLING WHEELS**

WHEEL SPINDLE, SPRING STRUT (2003-2006)

STUB AXLE, REPLACING

Special tools:

see **9995045**

see **9512050**

see **9997062**

NOTE: **The illustrations in this service information are used for different model years and/or models. Some variation may occur. However, the essential information in the illustrations is always correct.**

REMOVING THE STUB AXLE

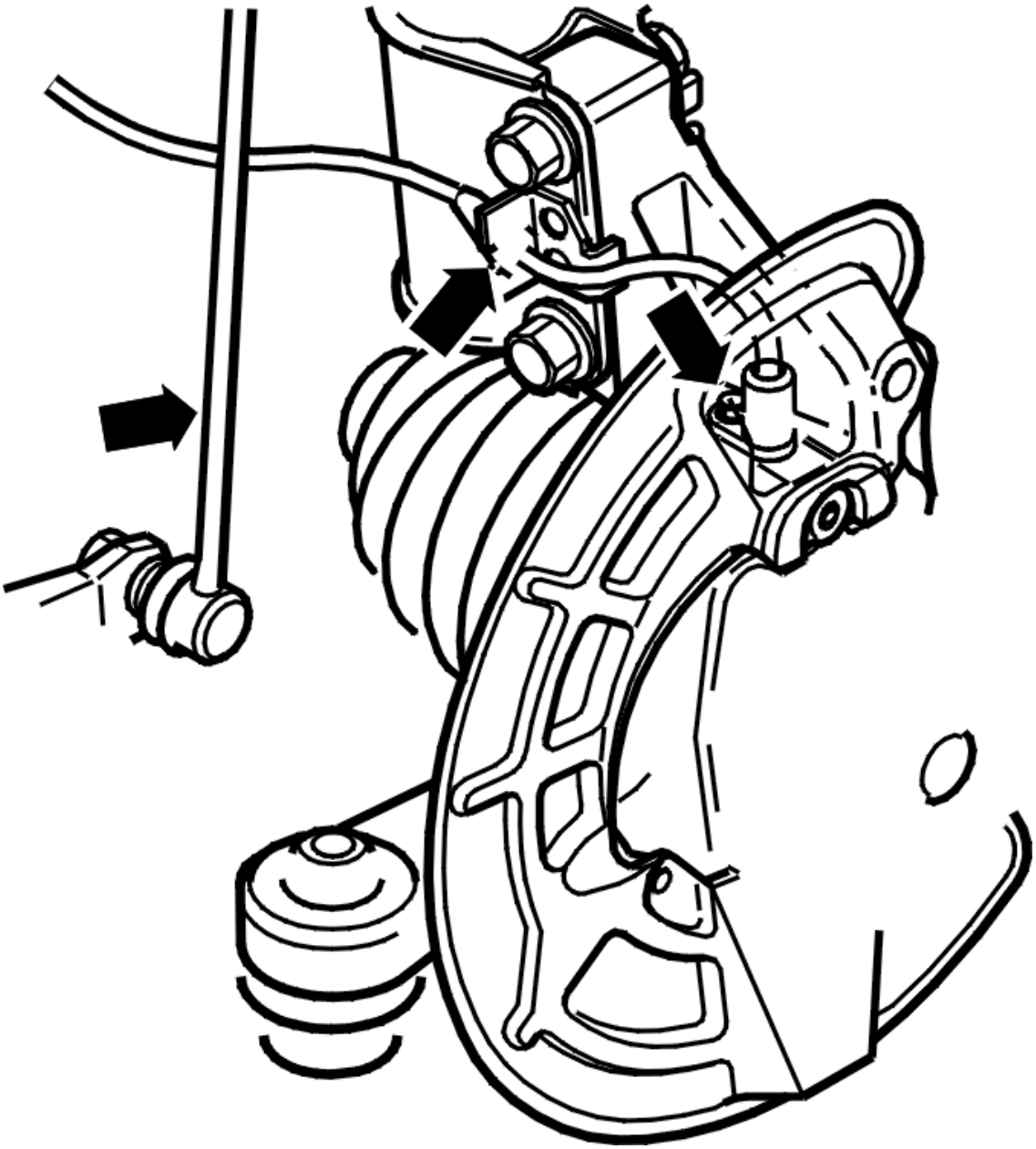

Fig. 29: Identifying ABS Line
Courtesy of VOLVO CARS CORPORATION

Raise the car.

Remove:

- the wheel
- the anti-roll bar link from the spring strut. Use a fixed spanner as a counterhold
- the ABS sensor. Hang up the sensor using a piece of wire
- The ABS sensor cable from the spring strut.

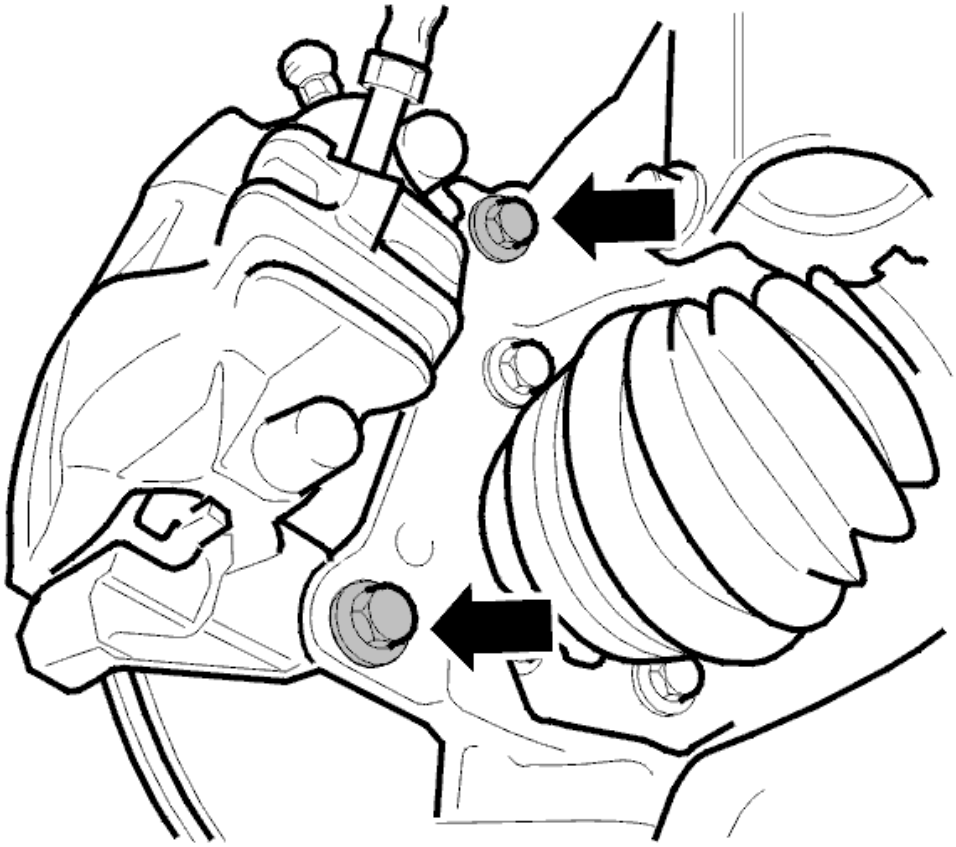

Fig. 30: Identifying Brake Caliper Mounting Screws
Courtesy of VOLVO CARS CORPORATION

Remove:

- the brake calliper mounting screws. Hang the calliper up using a piece of wire.

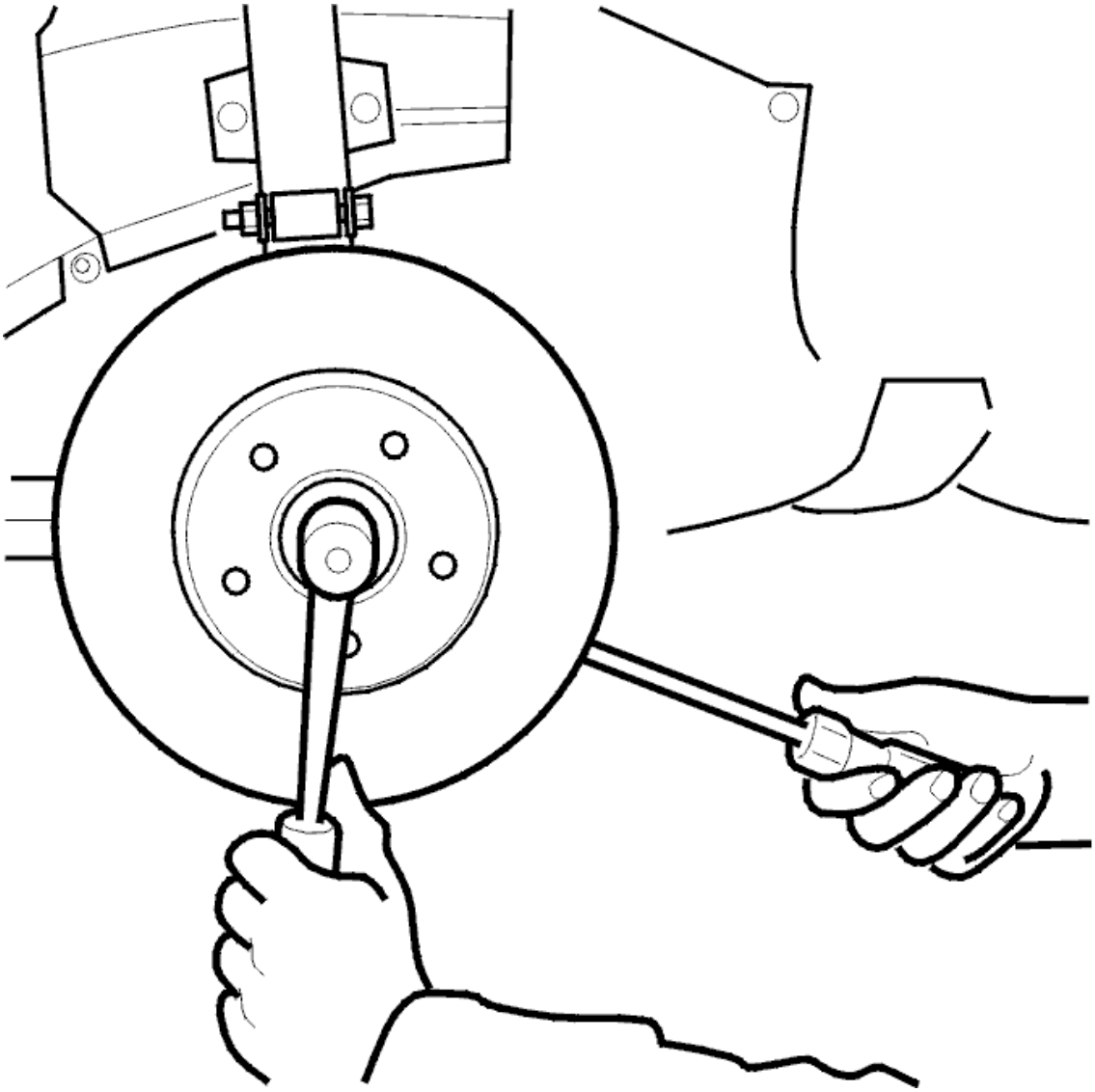

Fig. 31: Identifying Drive Shaft Screw Removal Using A Screwdriver As A Counter Hold On Brake Disc
Courtesy of VOLVO CARS CORPORATION

Remove:

- the drive shaft screw. Use a screwdriver as a counterhold on the brake disc
- the locating pin holding the brake disc
- the brake disc. Detach the end of the drive shaft in the hub by knocking the drive shaft into the hub approximately 10-15 mm. Use a rubber or copper mallet
- the track rod ends from the steering arm.

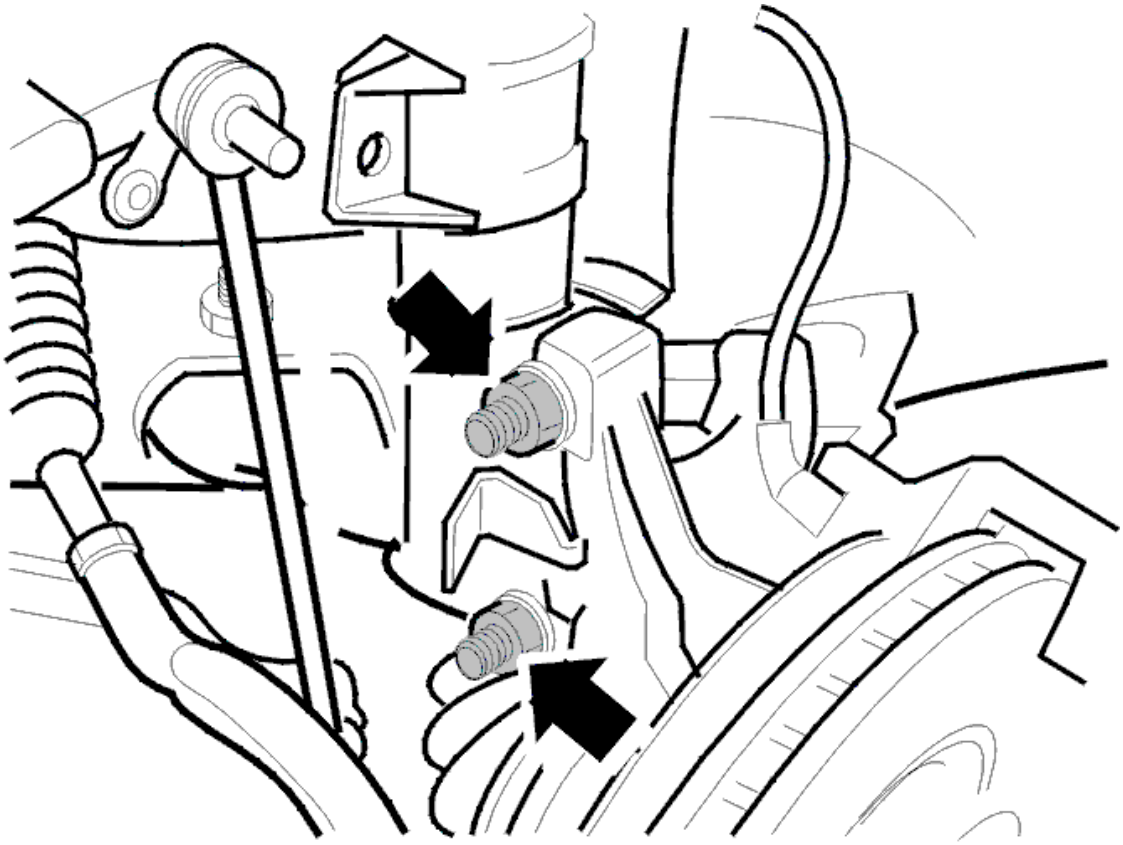

Fig. 32: Identifying Retaining Spring Strut Wheel Spindle Screws
Courtesy of VOLVO CARS CORPORATION

Measure the position of the wheel spindle and spring strut. See **WHEEL KNUCKLE / SPRING STRUT, CALIBRATING** .

Remove both the screws retaining the spring strut in the stub axle.

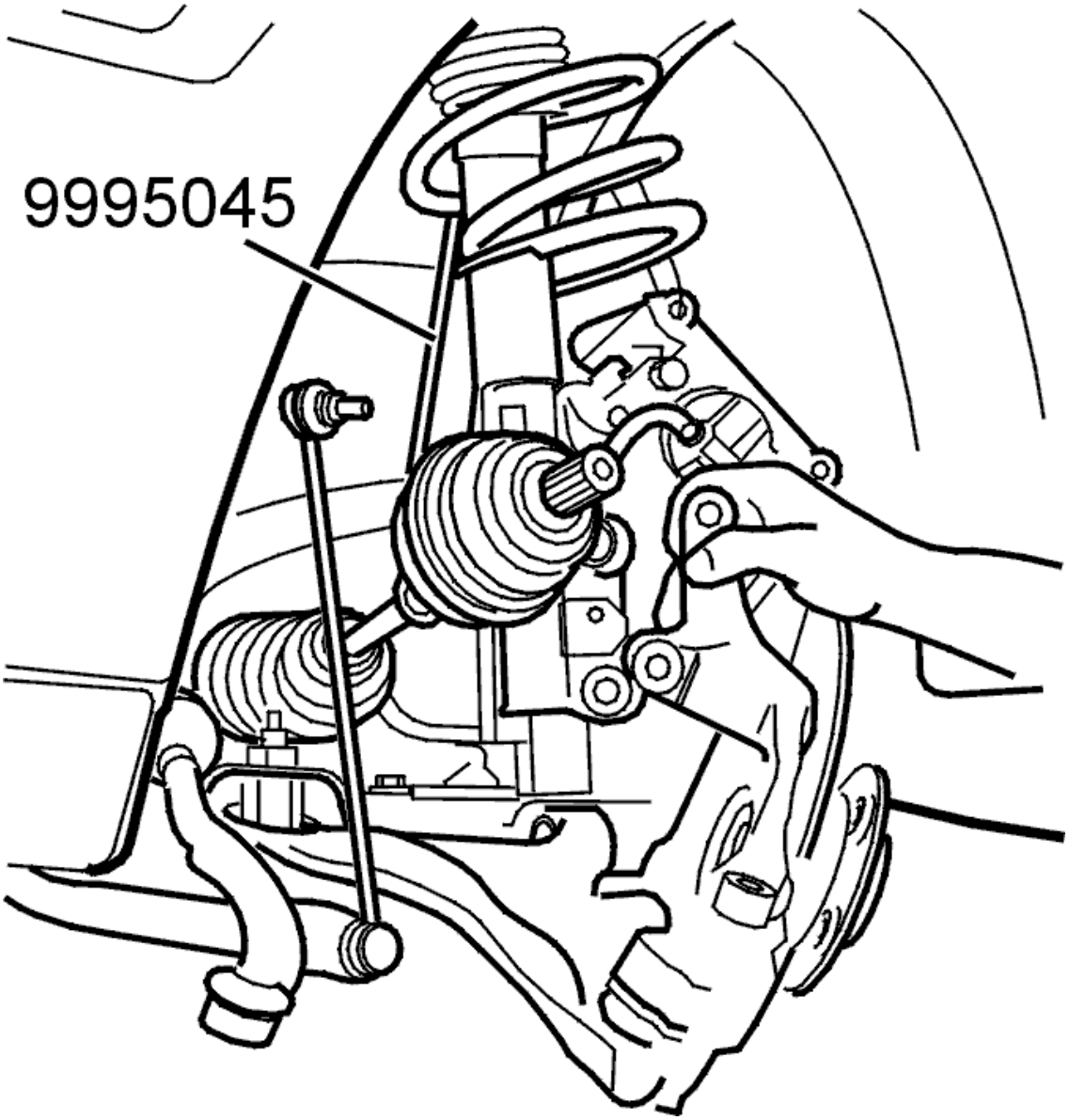

Fig. 33: Removing Stub Axle
Courtesy of VOLVO CARS CORPORATION

Press out the stub axle. At the same time pull the drive shaft from the gearbox.

Hang the drive shaft from a hook see **9995045** .

NOTE: Be careful to not damage the drive shaft boot.

Loosen the ball joint from the control arm. See **BALL JOINT, REPLACING**

TIGHTENING TORQUE

For tightening torques, see **TIGHTENING TORQUE** .

INSTALLING THE STUB AXLE

Install:

- the stub axle on the trailing arm
- a new nut on the ball joint. Tighten. For tightening torques, see **TIGHTENING TORQUE** . Use a Torx spanner as counterhold.

NOTE: Make sure that the mating surfaces on the ball joint and control arm are clean.

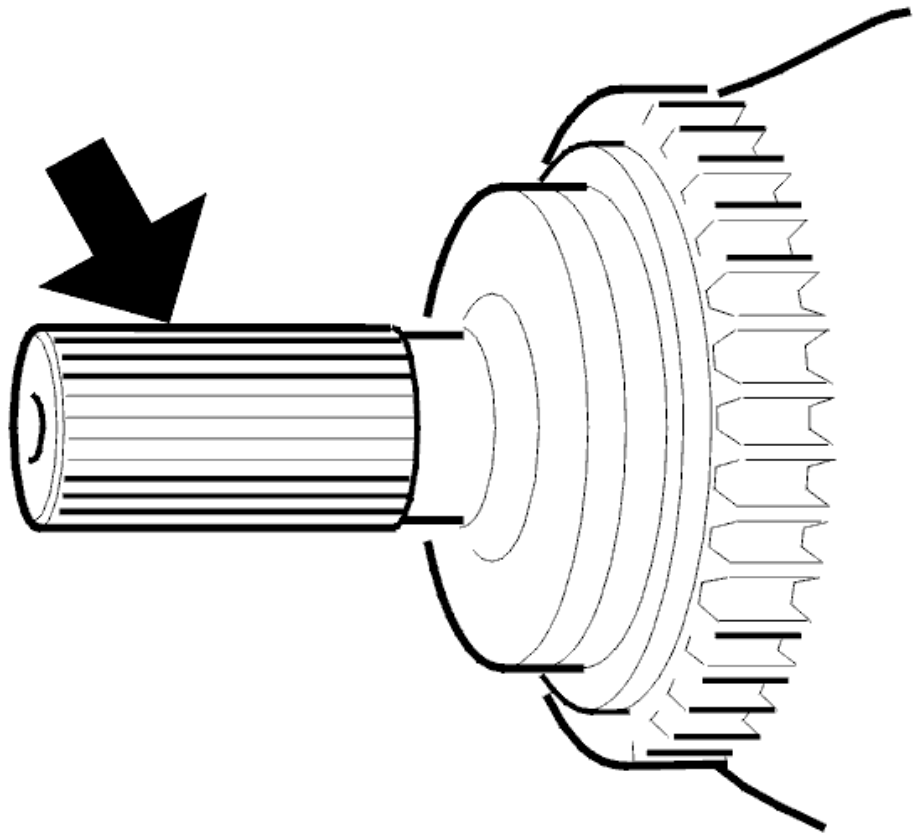

Fig. 34: Identifying Drive Shaft Splines
Courtesy of VOLVO CARS CORPORATION

Clean the splines on the drive shaft.

Turn in the stub axle and locate the drive shaft in the hub.

Install drive shaft screw and finger-tighten.

Lubricate the screw.

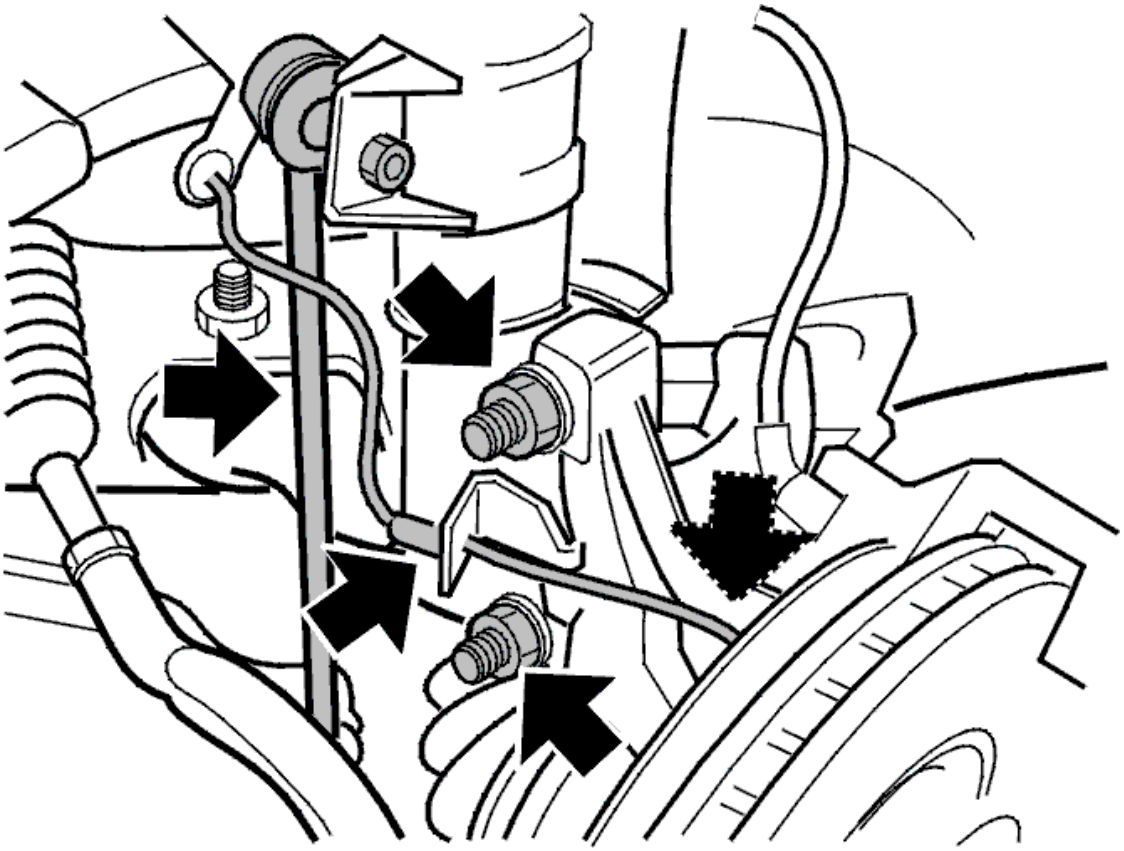

Fig. 35: Identifying Spring Strut To Wheel Spindle Bolts And Nuts, Anti-Roll Bar And ABS Wire
Courtesy of VOLVO CARS CORPORATION

Install:

- both screws retaining the spring strut in the stub axle. Use new screws and nuts.

Adjust the position of the stub axle and spring strut acc. to **WHEEL KNUCKLE / SPRING STRUT, CALIBRATING** . Tighten. For tightening torques, see **TIGHTENING TORQUE** . Use bevel protractor see **9512050** .

Install:

- the anti-roll bar link to the spring strut. Use a new nut. (M12) Counterhold using a Torx spanner so that the boot is not damaged
- the ABS sensor cable
- ABS sensor onto the stub axle. Tighten the ABS sensor. (M6).

NOTE: **Make sure that the sensor seat in the stub axle is absolutely clean. Clean the ABS sensor with a soft brush.**

Install:

- the track rod end onto the stub axle. Use a new nut. For tightening torques, see **TIGHTENING TORQUE** .

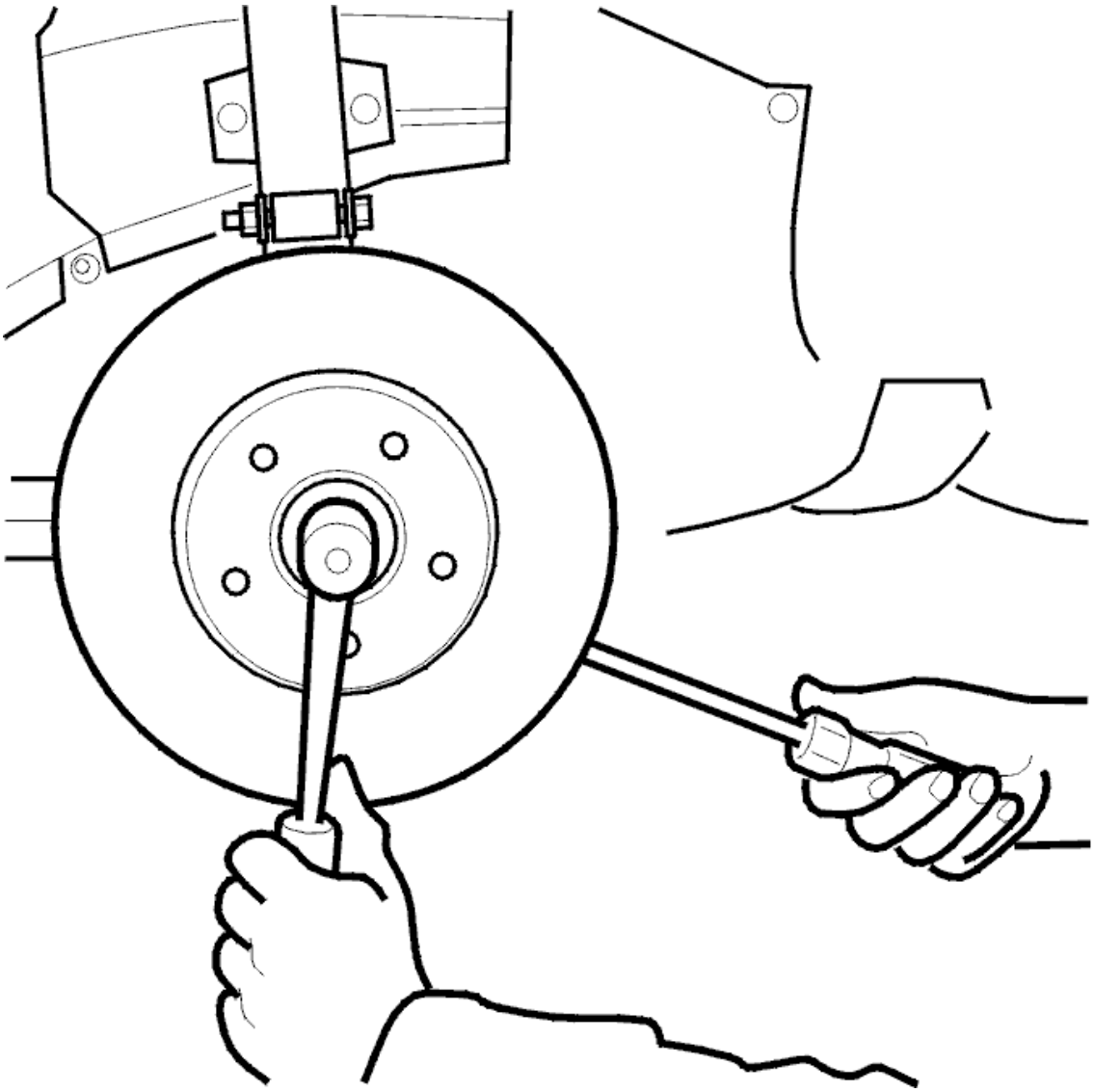

Fig. 36: Identifying Drive Shaft Screw Removal Using A Screwdriver As A Counter Hold On Brake Disc
Courtesy of VOLVO CARS CORPORATION

Install:

- the brake disc. Tighten the brake disc locating pin. (M6).

NOTE: Make sure that the brake disc's and hub's mating surfaces are clean.

Tighten the drive shaft screw. Use a screwdriver as a counterhold on the brake disc. For tightening torques, see **TIGHTENING TORQUE** .

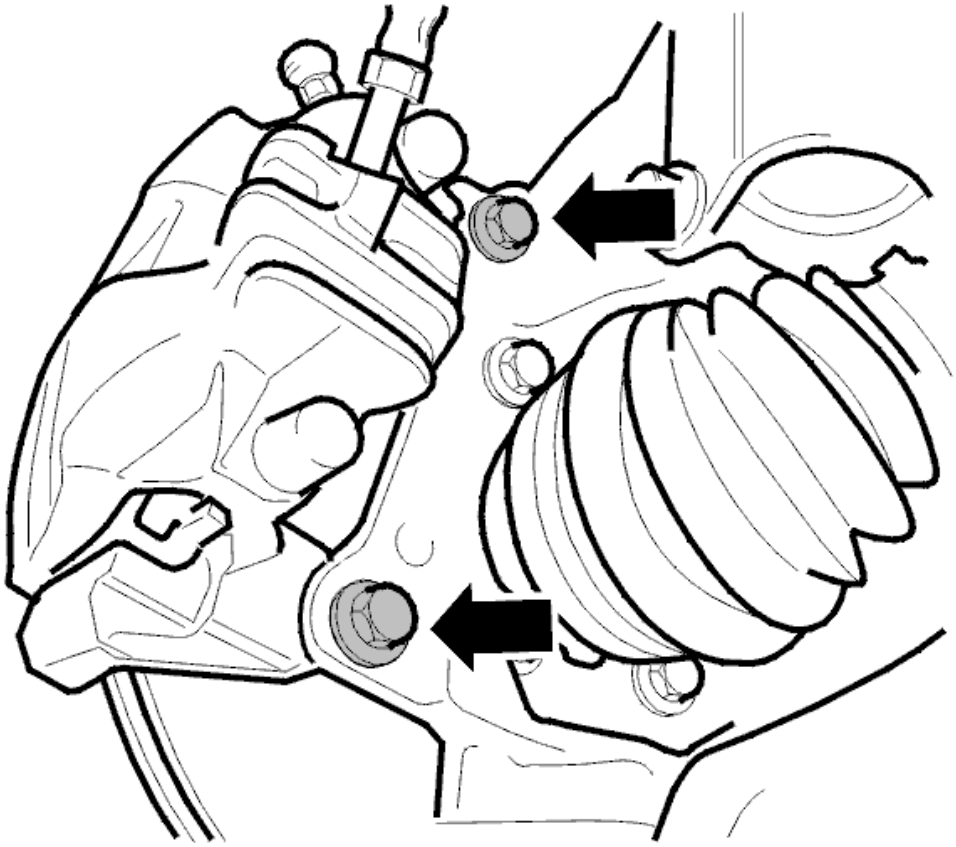

Fig. 37: Identifying Brake Caliper Mounting Screws
Courtesy of VOLVO CARS CORPORATION

Install:

- the brake calliper. Use new screws. For tightening torques, see **TIGHTENING TORQUE**
- the wheel. See **INSTALLING WHEELS** .

WHEEL SPINDLE, SPRING STRUT (2007-2012)

LIMITERS, REPLACING

Special tools:

see **9997083**

see **9997020**

NOTE: **As the illustrations in this service information are used for different model years and / or models, some variation may occur. However, the essential information in the illustrations is always correct.**

REMOVAL

REMOVING LIMITER

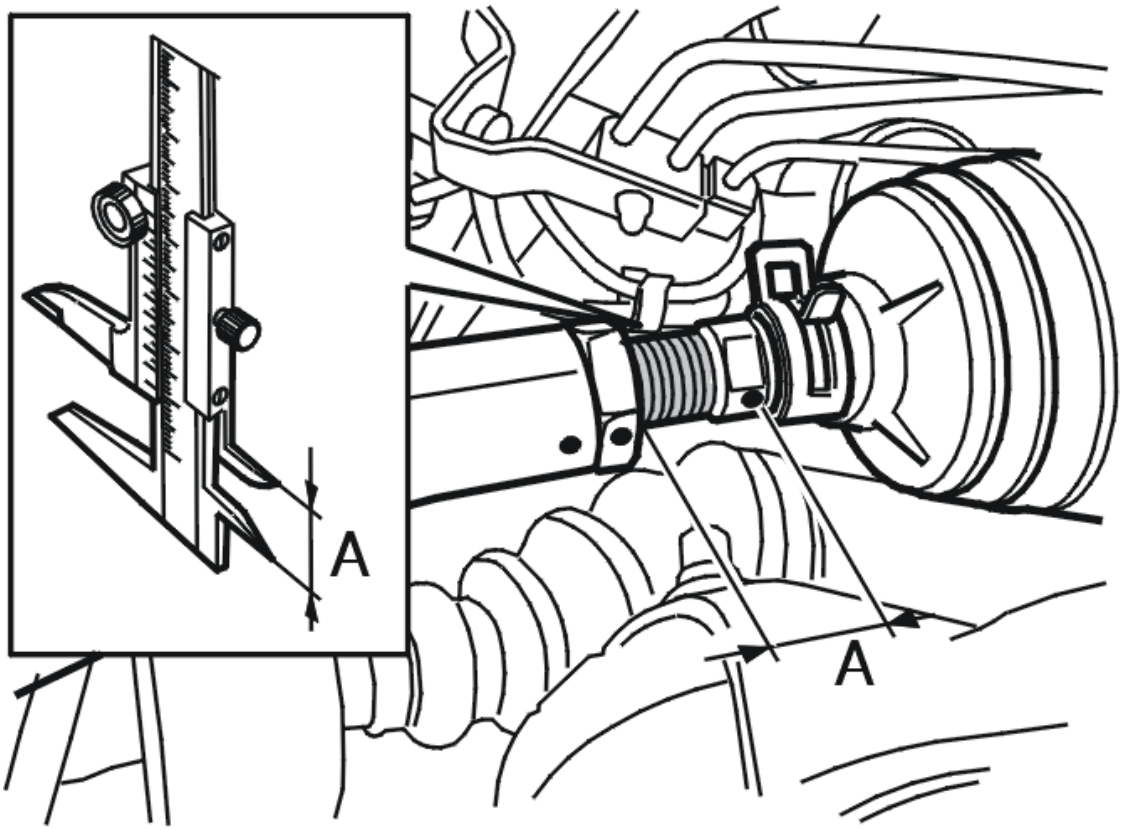

Fig. 38: Identifying Distance Between Lock Nut & Edge Of Wrench Grip
Courtesy of VOLVO CARS CORPORATION

Remove the wheel.

Clean the boot and the surrounding area thoroughly.

Measure the distance between the lock nut and the edge of the wrench grip.

Note the measurement.

MARKING

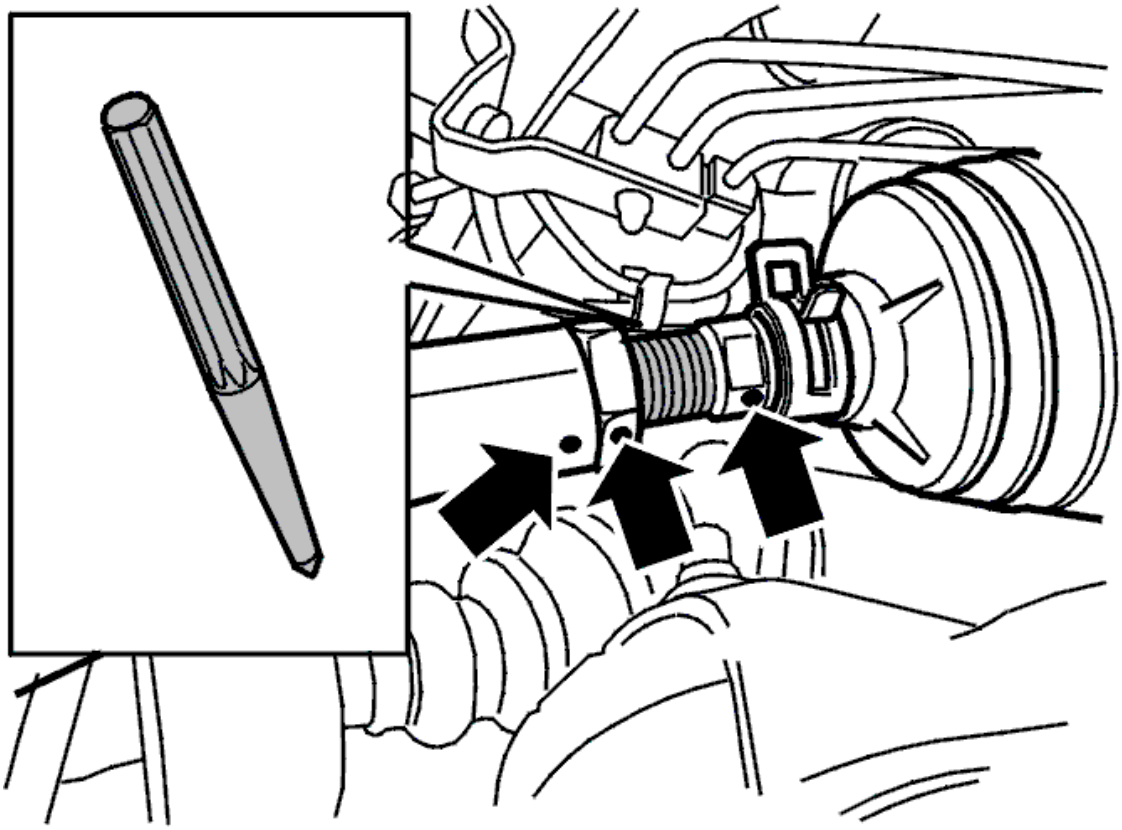

Fig. 39: Identifying Marked Up Ball Joint, Lock Nut & Tie Rod
Courtesy of VOLVO CARS CORPORATION

Mark up the ball joint, the lock nut and the tie rod as illustrated.

Front wheel alignment is not necessary if the outer steering arm is secured in the original position.

REMOVING THE OUTER STEERING ARM AND BOOT

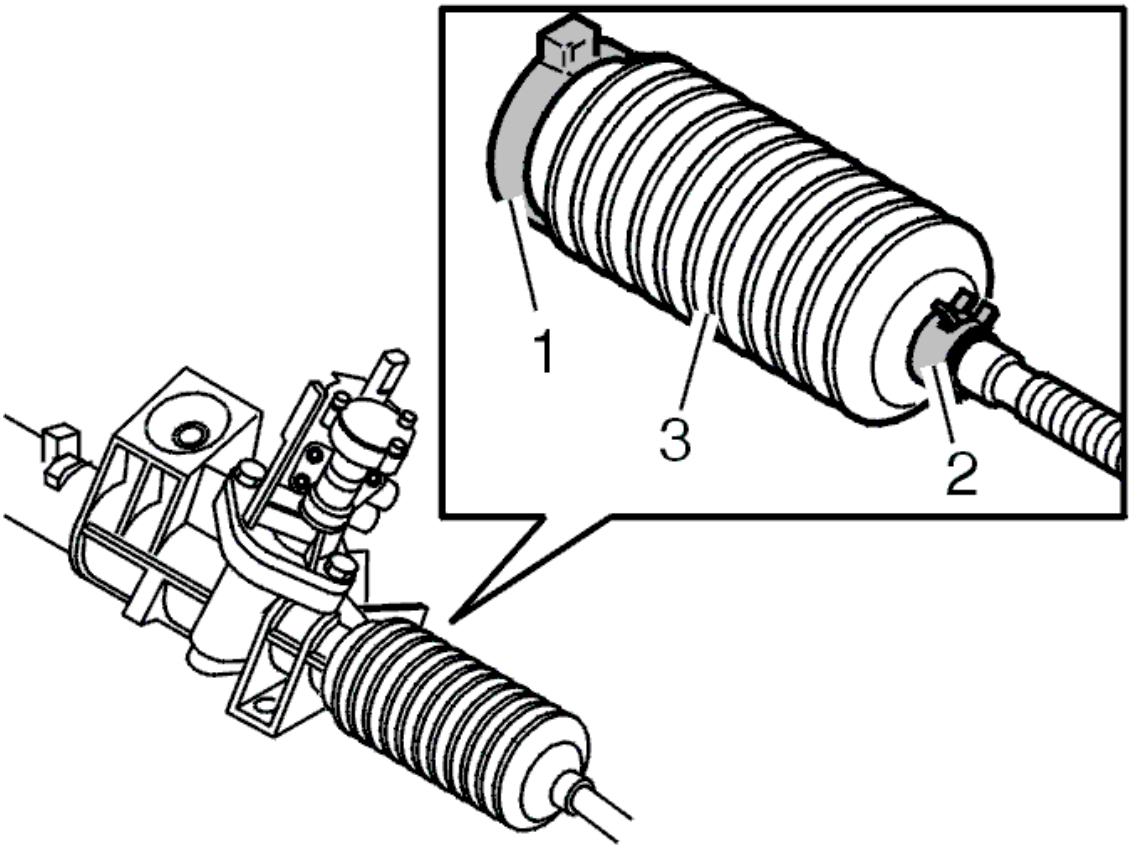

Fig. 40: Identifying Outer Steering Arm & Boot
Courtesy of VOLVO CARS CORPORATION

Remove the steering arm from the wheel spindle

Slacken off the lock nut.

Remove:

- the steering arm and the lock nut
- the clamps (1) and (2).

Tape the threads on the inner steering arm to protect the boot when removing.

Remove the boot (3).

INSTALLING THE COUNTERHOLD

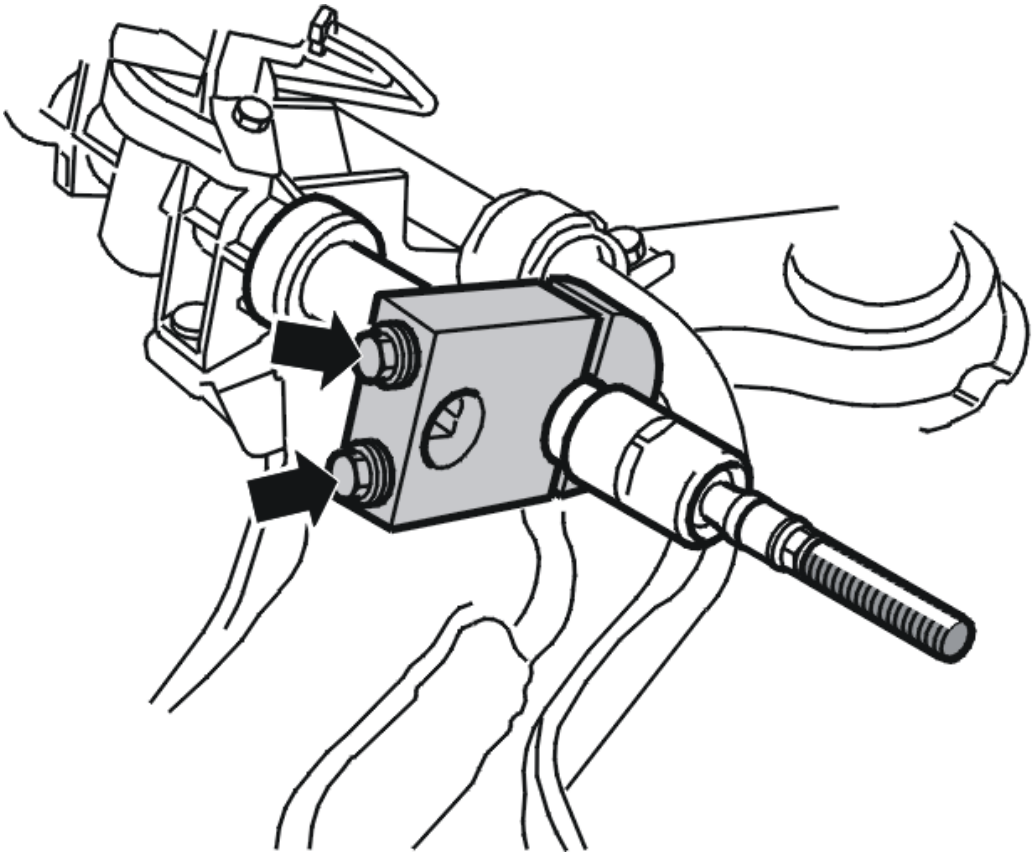

Fig. 41: Counter Hold
Courtesy of VOLVO CARS CORPORATION

Clean the surfaces on the steering rack and the tool **thoroughly** .

NOTE: **Cleanliness is very important as the seals in the steering gear are sensitive to scratches on the rack.**

Install counterhold see **9997020** .

Tighten to **25 Nm** .

Position the counterhold as close to the limiter as possible. When replacing with a longer limiter, measure the new limiter and position the counterhold so that there is enough space for the new limiter.

REMOVING LIMITER

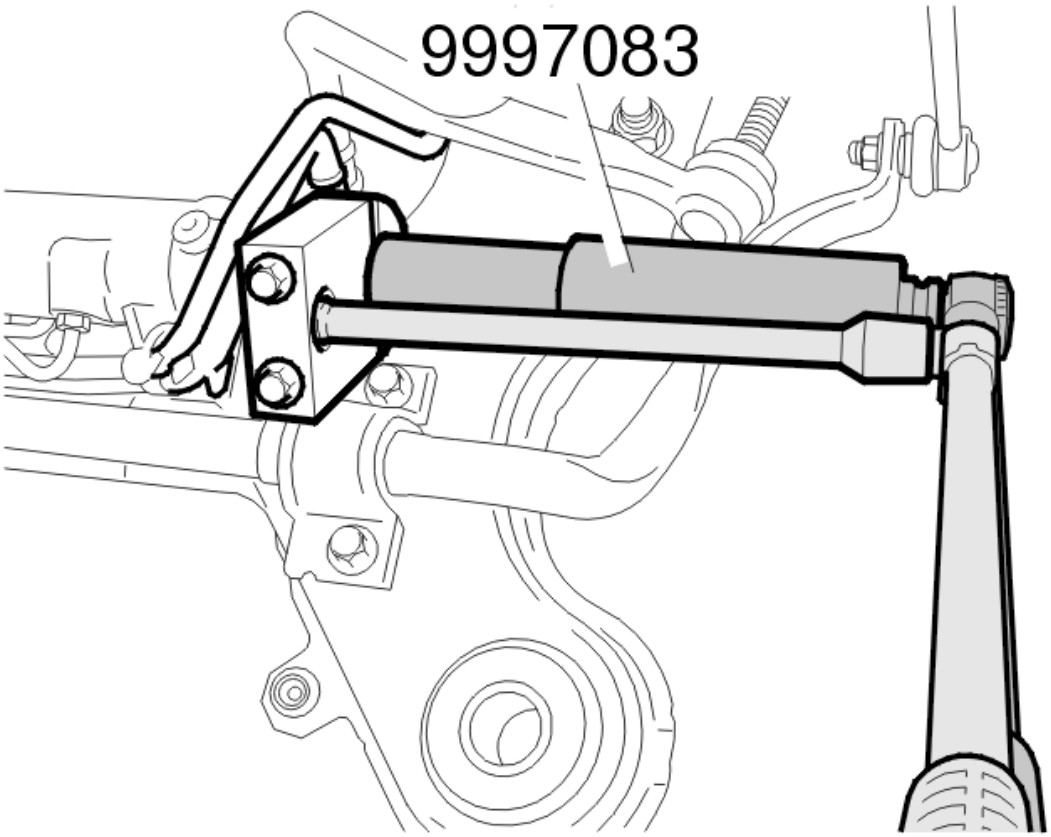

Fig. 42: Identifying Steering Arm Tool (999 7083)
Courtesy of VOLVO CARS CORPORATION

Use tool see **9997083** to remove the steering arm Ensure that the connecting rods used are the same length.

Remove:

- the steering arm from the steering gear
- the limiter.

INSTALLATION

INSTALLING LIMITER

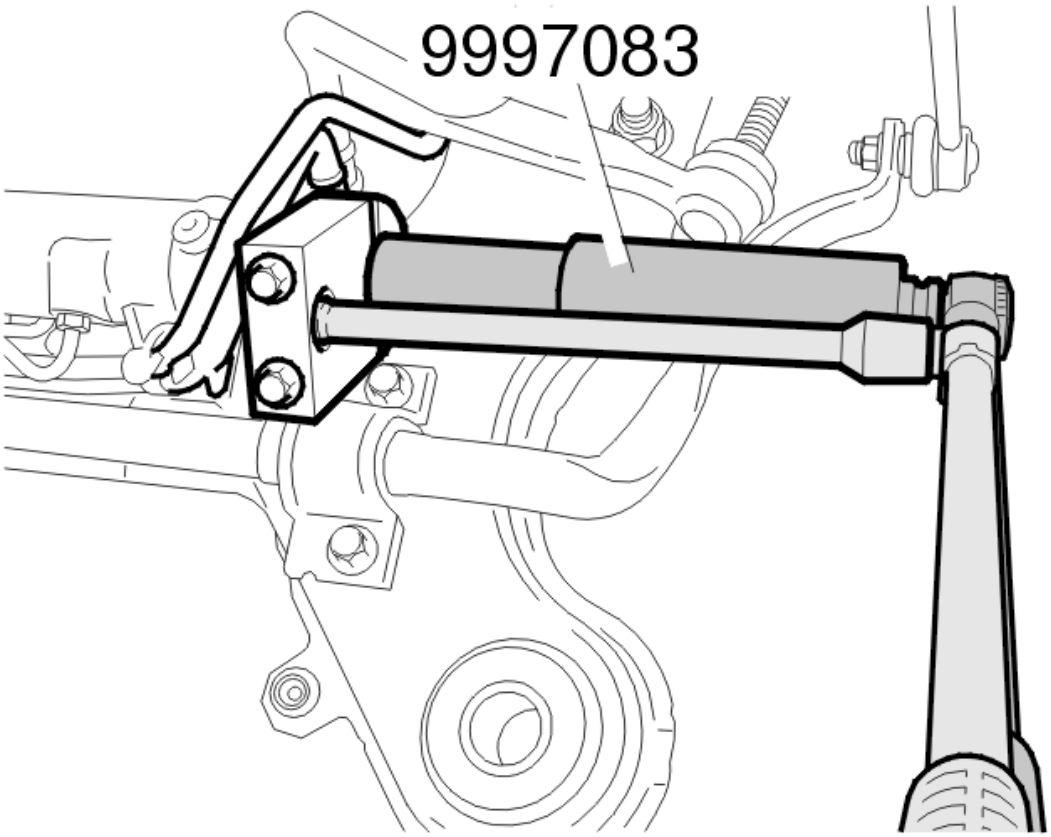

Fig. 43: Identifying Steering Arm Tool (999 7083)
Courtesy of VOLVO CARS CORPORATION

Install:

- the new limiter
- the tie rod. Use thread sealant **1161053** . For tightening, see **TIGHTENING TORQUE** .

Remove counterhold see **9997020** and socket see **9997083** .

Clean the steering rack after removing the tools. Check the steering rack for damage.

INSTALLING THE BOOT

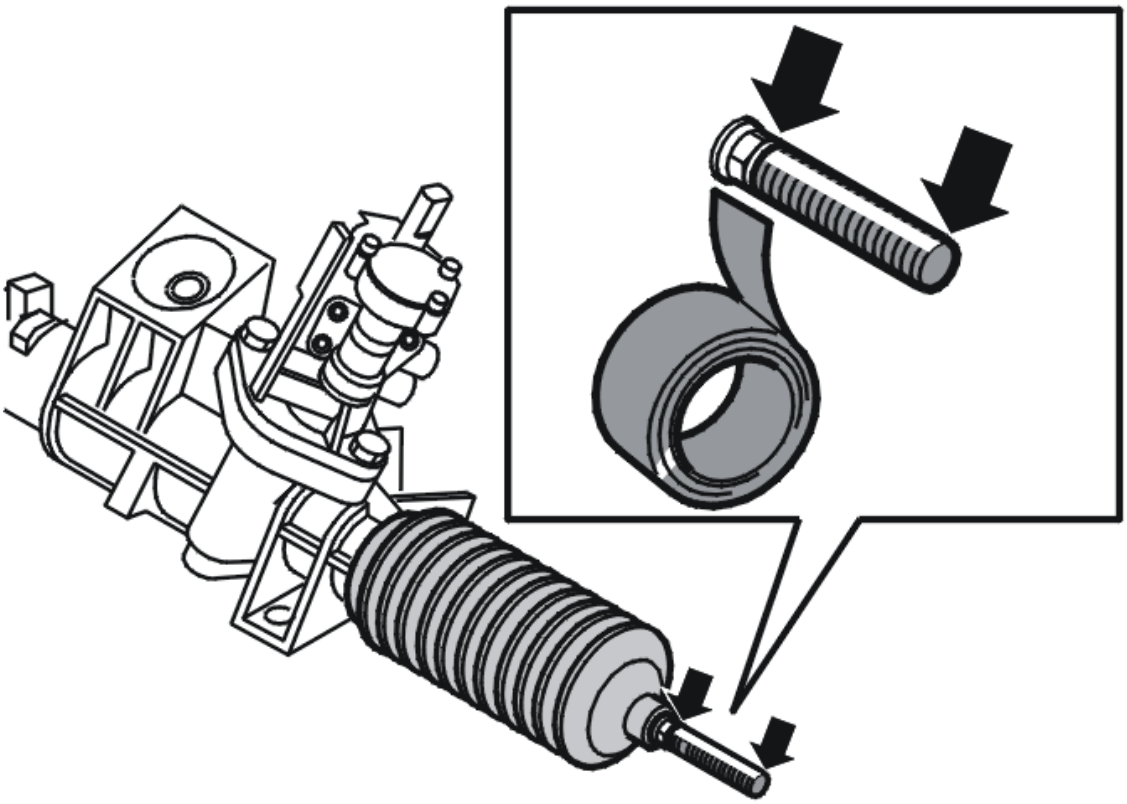

Fig. 44: Ensuring That Tape Is In Place On Threads
Courtesy of VOLVO CARS CORPORATION

Check that the boot is undamaged. Use a new boot if in any doubt.

Ensure that the tape is in place on the threads. Install the boot using new clamps.

Remove the tape.

INSTALLING THE OUTER STEERING ARM

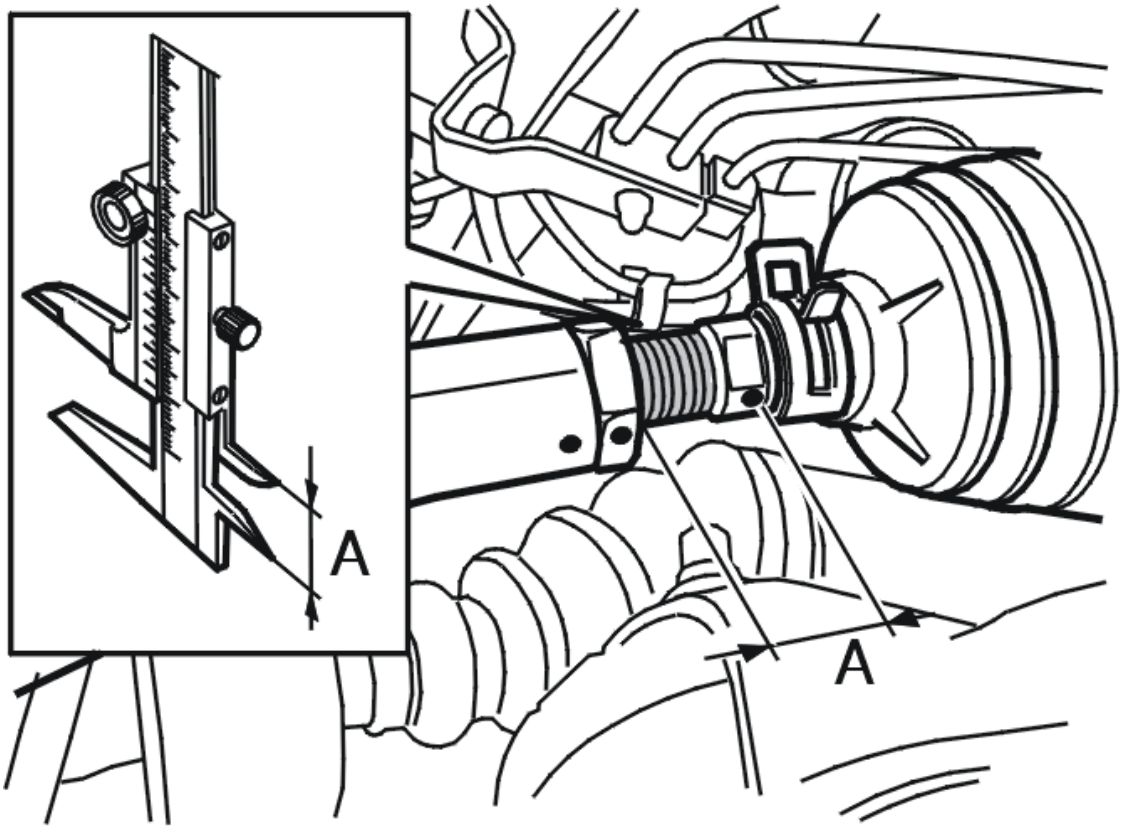

Fig. 45: Identifying Distance Between Lock Nut & Edge Of Wrench Grip
Courtesy of VOLVO CARS CORPORATION

Install:

- the outer steering arm. Ensure that the markings and the measurements more or less correspond
- the steering arm on the wheel spindle. Use a counterhold and tighten. For tightening torques, see **TIGHTENING TORQUE** .

Adjust so that the markings and measurement A correspond to the tightened lock nut.

Tighten the locknut. For tightening torques, see **TIGHTENING TORQUE** .

Install the wheels. See **INSTALLING WHEELS** .

SPRING FRONT, REPLACEMENT

Special tools:

see **9995467**

see **9995469**

see **9512050**

see **9512911**

see **9512914**

REPLACING

NOTE: **The illustrations in this service information are used for different model years and/or models. Some variation may occur. However, the essential information in the illustrations is always correct.**

PREPARATIONS

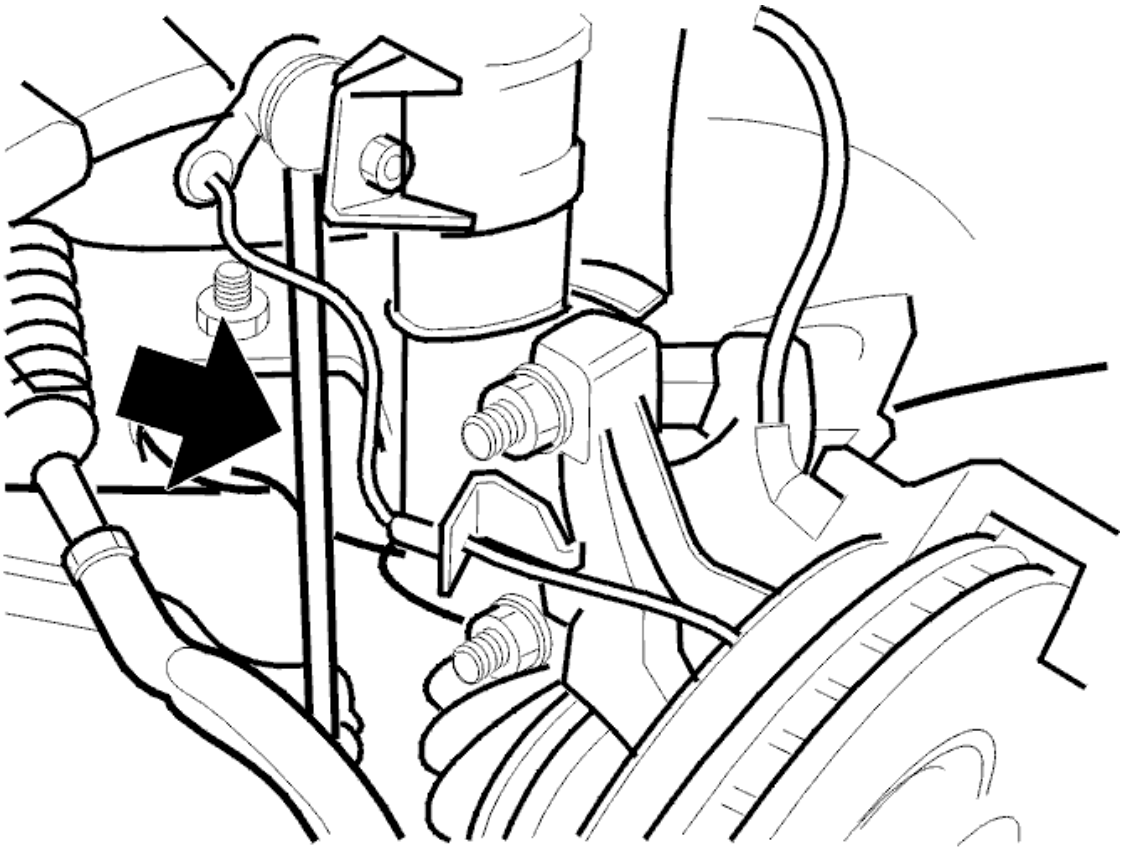

Fig. 46: Anti-Roll Bar
Courtesy of VOLVO CARS CORPORATION

Remove:

- the wheel
- the anti-roll bar link from the spring strut.

NOTE: **Use a Torx wrench as a counterhold so that the boot is not damaged.**

Remove:

- the ABS line from the spring strut.
- The ABS sensor. Hang up the sensor using a piece of wire.

MEASURE THE SPRING STRUT POSITION IN RELATION TO THE WHEEL SPINDLE BEFORE REMOVAL

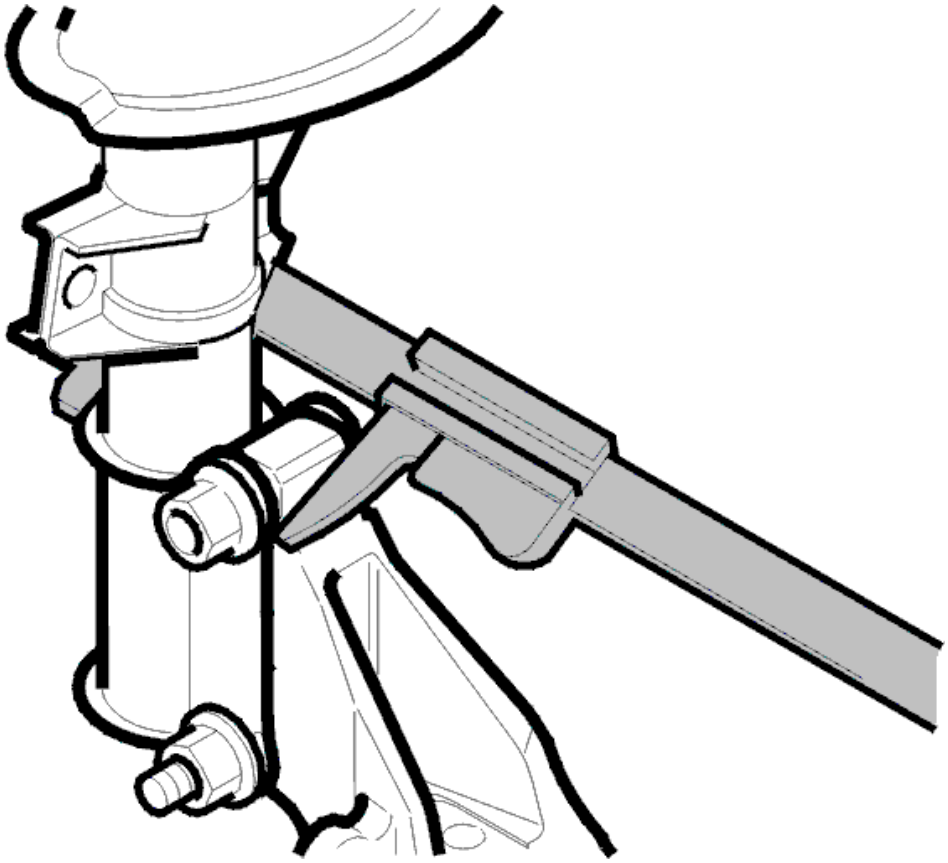

Fig. 47: Measuring Over Wheel Spindle/Spring Strut At Upper Screw
Courtesy of VOLVO CARS CORPORATION

NOTE: The measurements are taken so that the same camber angle can be obtained when installing.

Measure over the stub axle and spring strut at the upper screw as illustrated. Before measuring clean off any dirt from the measuring surfaces.

Note the measurement.

REMOVING THE SPRING STRUT

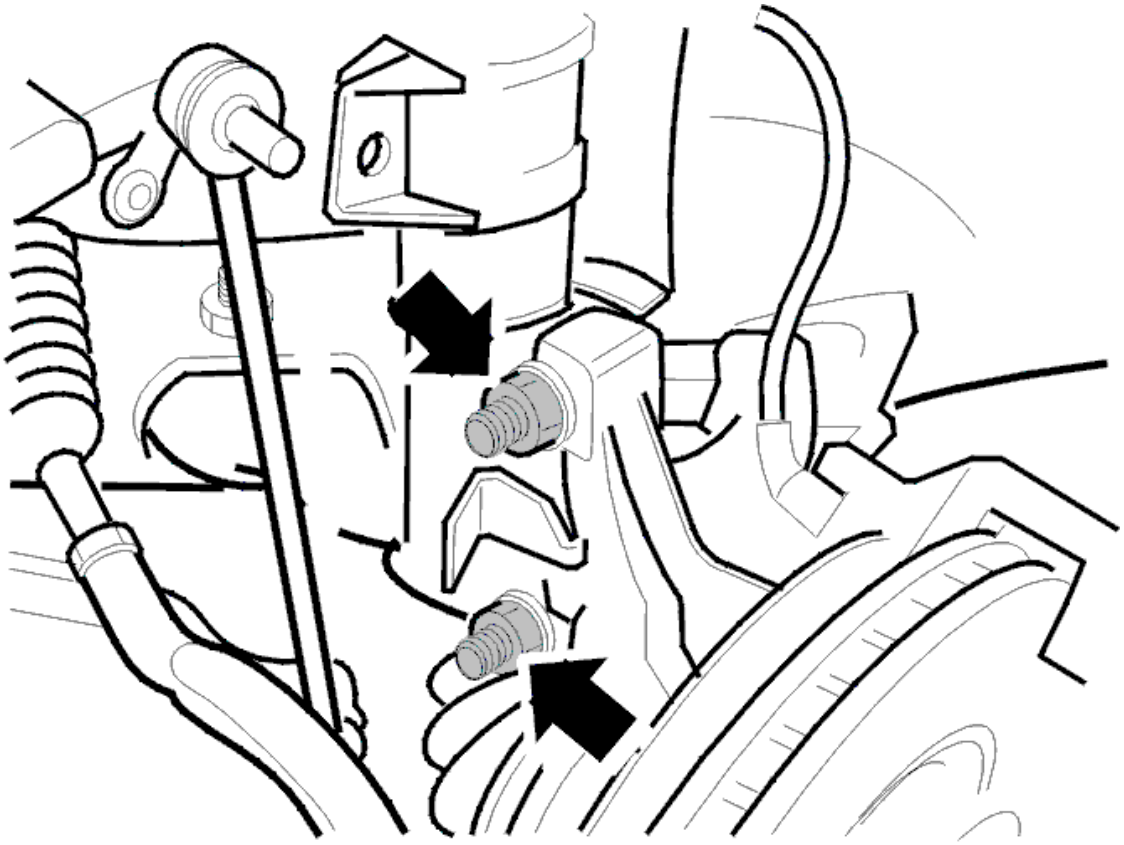

Fig. 48: Identifying Retaining Spring Strut Wheel Spindle Screws
Courtesy of VOLVO CARS CORPORATION

Remove both the nuts from the screws in the spring strut - wheel spindle.

Fig. 49: Securing Wheel Spindle With A Piece Of Wire So It Cannot Turn Outward
Courtesy of VOLVO CARS CORPORATION

Remove the two screws for the spring strut wheel spindle.

Secure the wheel spindle with a piece of wire so that it cannot turn outwards when removed from the spring

strut.

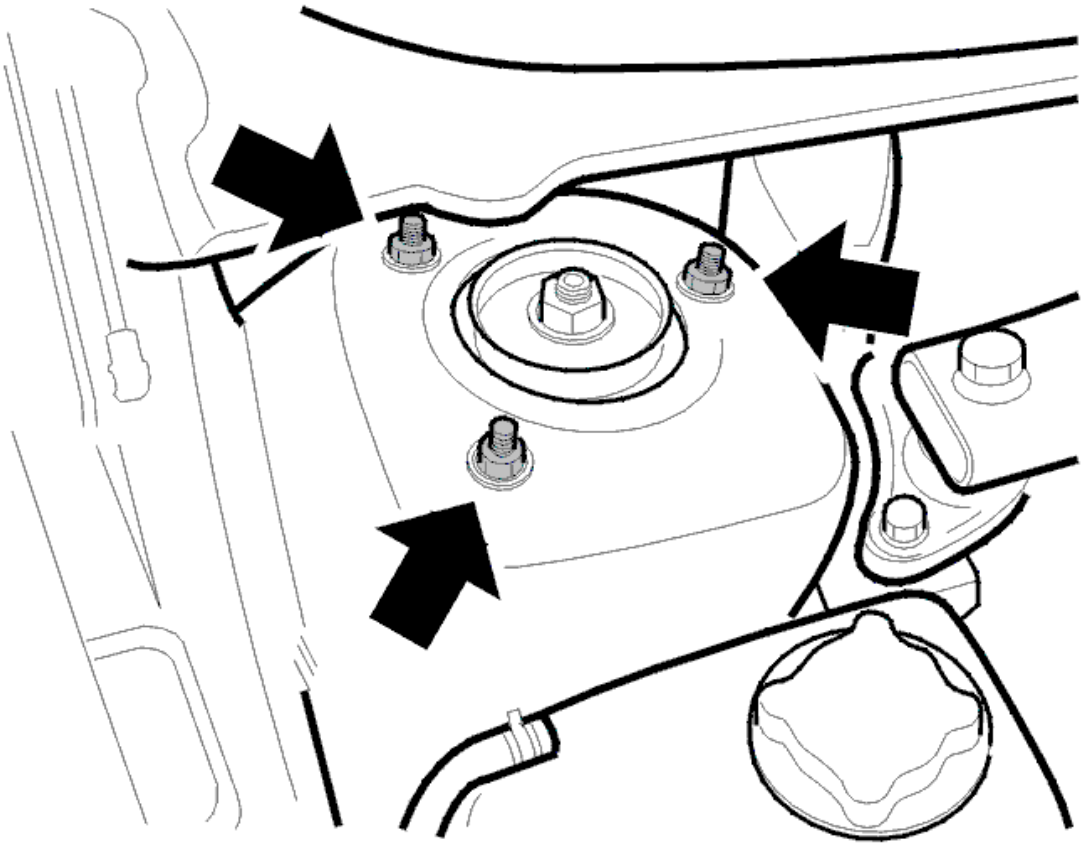

Fig. 50: Locating Nuts Holding Spring Strut Mounting In Bodywork
Courtesy of VOLVO CARS CORPORATION

Remove:

- the three nuts holding the spring strut in the bodywork
- the spring strut.

REMOVING THE SHOCK ABSORBER BEARING

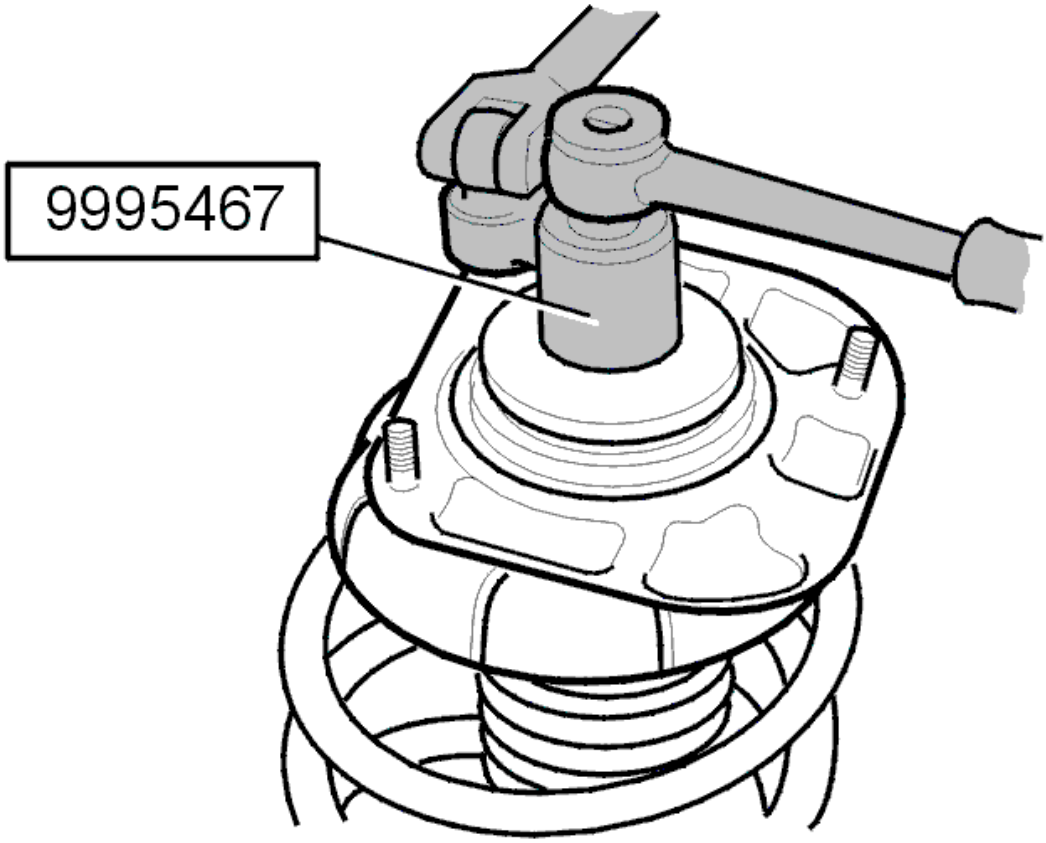

Fig. 51: Identifying Shock Absorber Bearing Nut
Courtesy of VOLVO CARS CORPORATION

Secure the spring strut in a vise.

Remove:

- the nut for the shock absorber bearing. Use socket see **9995467** and a 3/8" Torx-wrench as a counterhold.
- the washer
- the support.

REMOVING THE SPRING

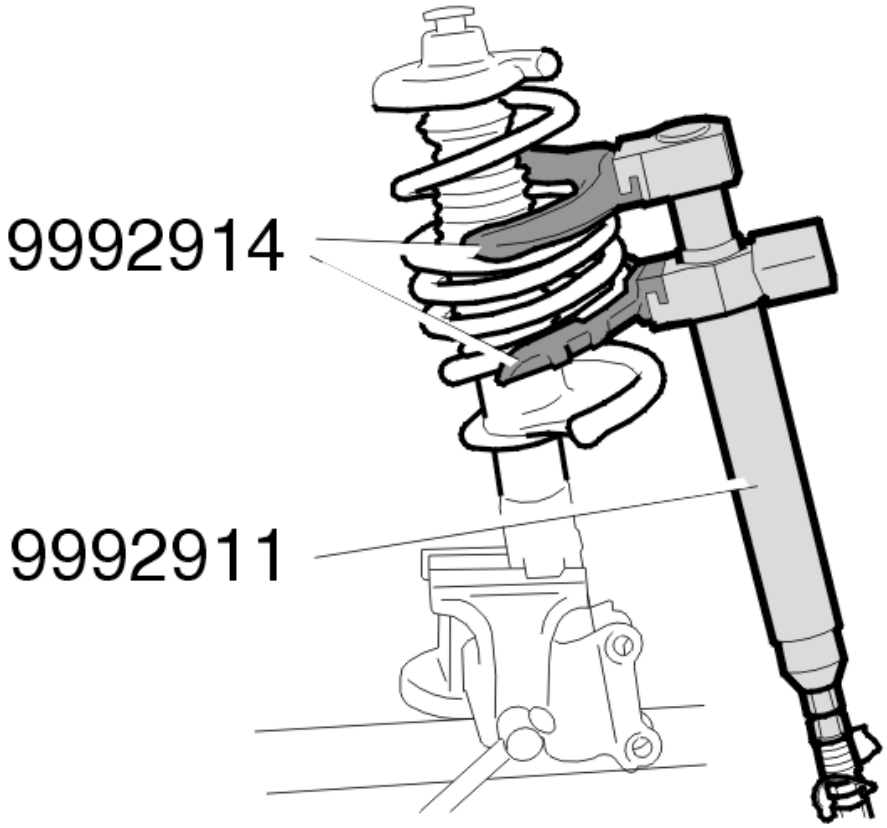

Fig. 52: Removing Spring
Courtesy of VOLVO CARS CORPORATION

Take the load off the spring seat. Use hydraulic tool see **9512911** with see **9512914** .

Remove:

- the fixing nut on the shock absorber. Use socket see **9995469** and a 3/8" Torx-wrench as a counterhold.
- the spring seat
- the spring
- the rubber bump stop and gaiter.

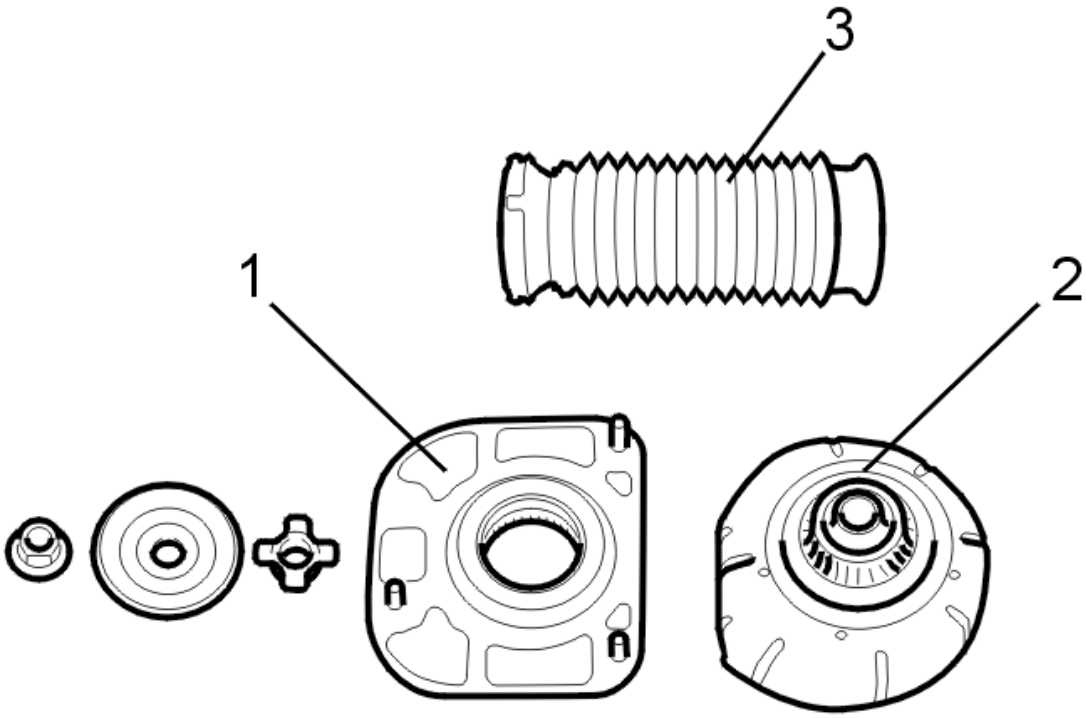

Fig. 53: Shock Absorber Support Plate, Spring Seat And Rubber Bump Stop With Boot
Courtesy of VOLVO CARS CORPORATION

Check that the shock absorber support plate (1), the spring seat (2) and the rubber bump stop with boot (3) are undamaged. Replace if necessary.

INSTALLING

INSTALLING THE SPRING

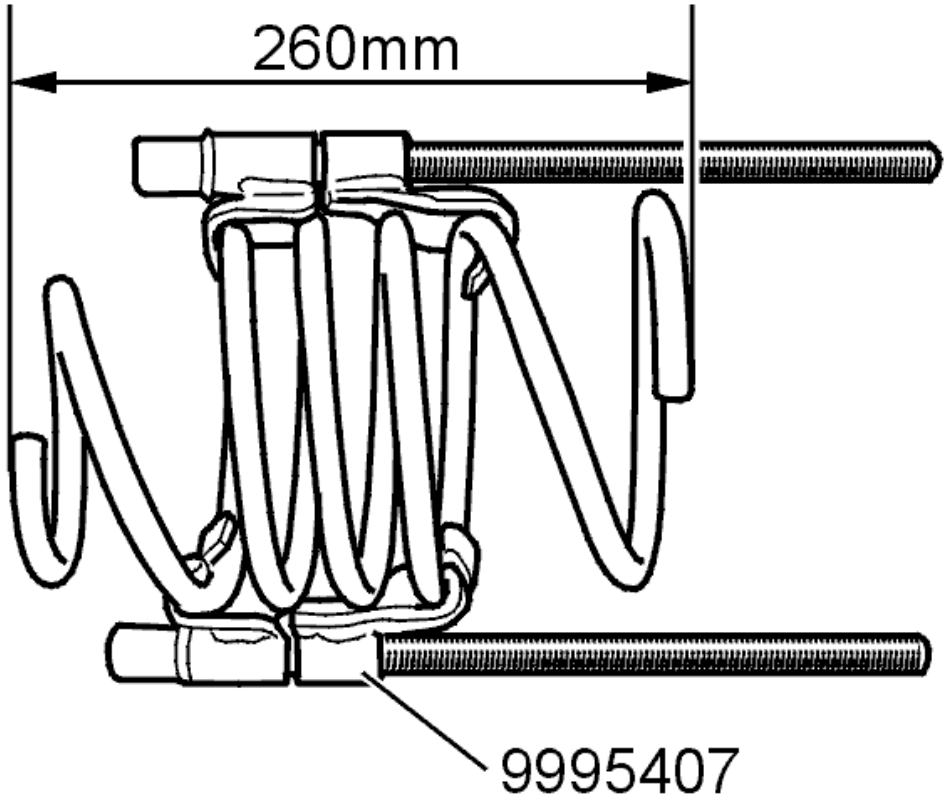

Fig. 54: Spring Clamp 999 5047
Courtesy of VOLVO CARS CORPORATION

Compress the new spring to a length of approximately 260 mm. Use spring clamps see **9512911** with see **9512914** .

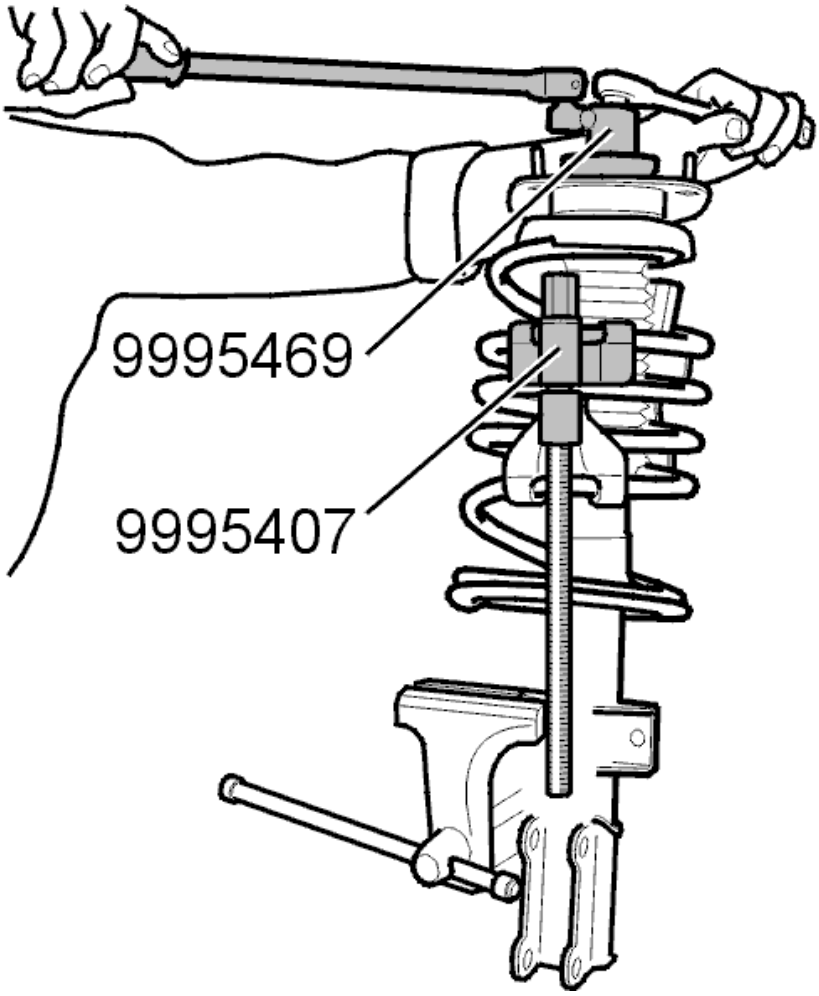

Fig. 55: Installing Spring
Courtesy of VOLVO CARS CORPORATION

Install:

- the bump stop with the boot
- the spring
- the spring seat.

Install the fixing nut. Tighten. See **TIGHTENING TORQUE** . Use socket see **9995469** and a 3/8" Torx-wrench as a counterhold.

Remove the spring clamps.

INSTALLING THE SHOCK ABSORBER BEARING

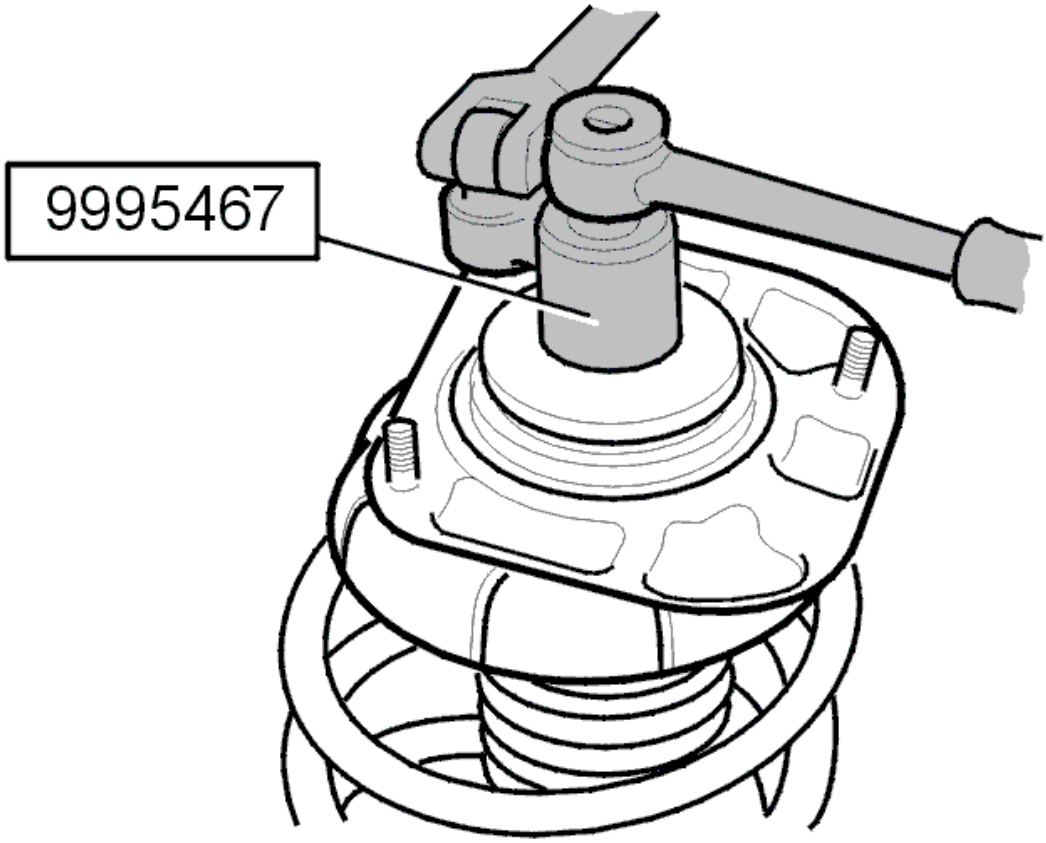

Fig. 56: Identifying Shock Absorber Bearing Nut
Courtesy of VOLVO CARS CORPORATION

Install:

- bearing
- washer
- the nut and tighten. See: **TIGHTENING TORQUE** . Use socket see **9995467** and a 3/8" Torx-wrench as a counterhold.

INSTALLING THE SPRING STRUT

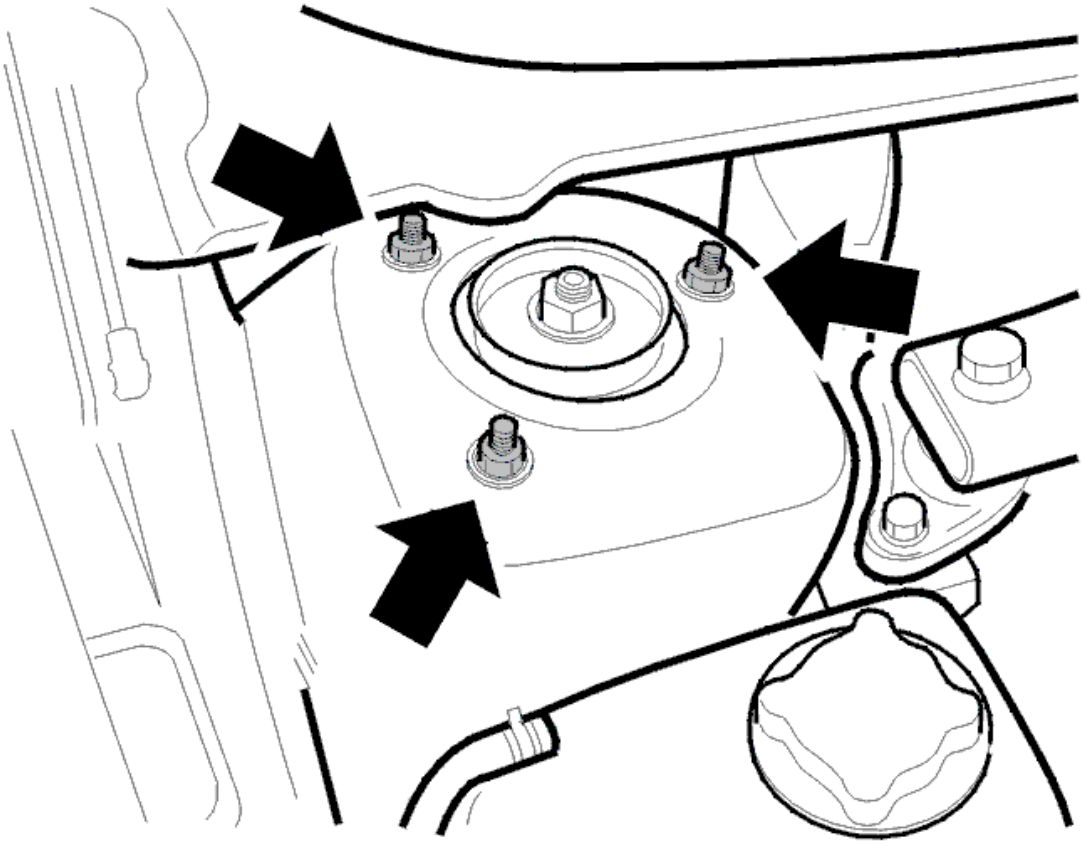

Fig. 57: Locating Nuts Holding Spring Strut Mounting In Bodywork
Courtesy of VOLVO CARS CORPORATION

Install the spring strut in the bodywork using new nuts. Tighten. See **TIGHTENING TORQUE** .

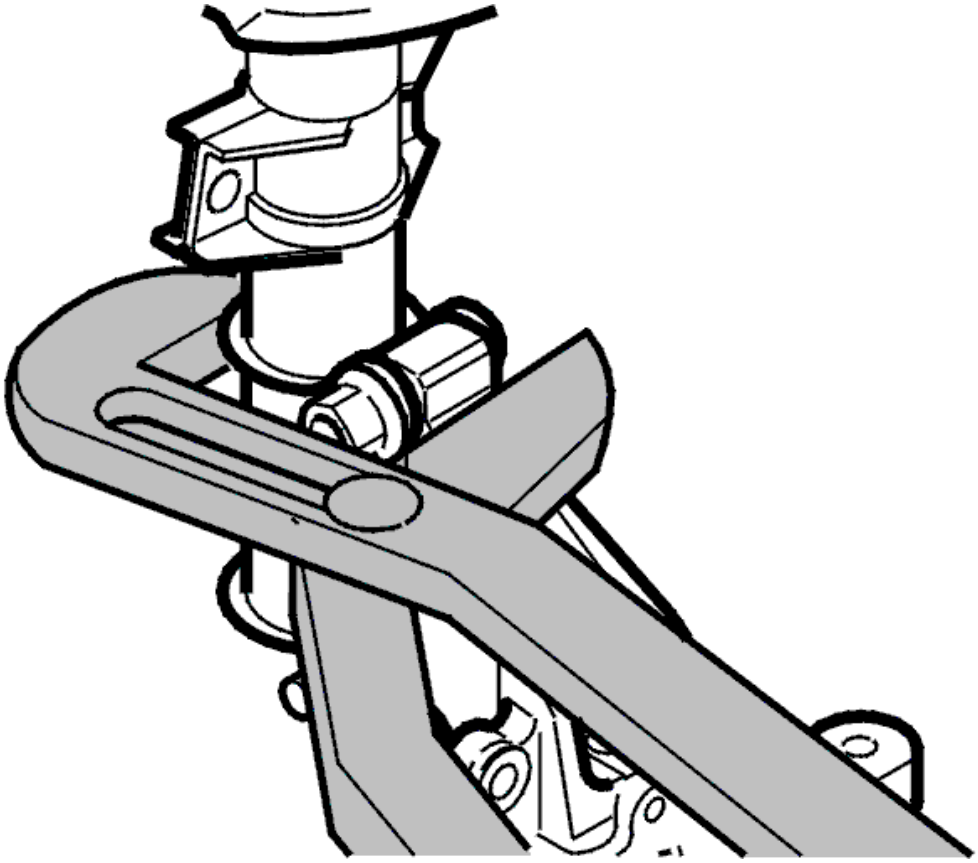

Fig. 58: Installing Spring Strut On Wheel Spindle
Courtesy of VOLVO CARS CORPORATION

Install the spring strut on the stub axle. Use new screws and new nuts.

Adjust the spring strut and stub axle to the measured value. See.

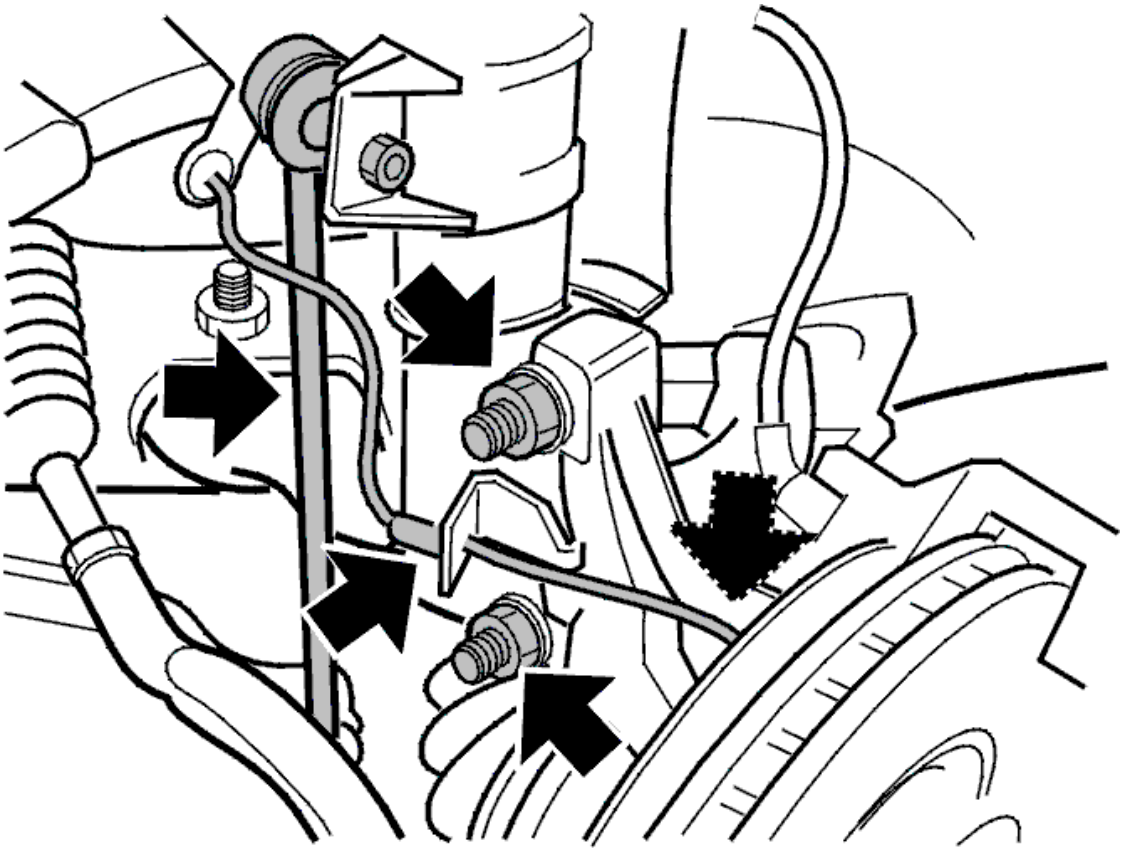

Fig. 59: Identifying Spring Strut To Wheel Spindle Bolts And Nuts, Anti-Roll Bar And ABS Wire
Courtesy of VOLVO CARS CORPORATION

Tighten, see: **TIGHTENING TORQUE** . Use protractor see **9512050** .

Install:

- the anti-roll bar link to the spring strut. Use a new nut. Tighten. See: **TIGHTENING TORQUE** . Counterhold using a Torx wrench to prevent damage to the boot.
- The ABS sensor. Tighten to **10 Nm** .

NOTE: **Ensure that the ABS sensor seat in the stub axle is absolutely clean. Clean the ABS sensor with a soft brush.**

Install:

- the ABS sensor cable in the bracket.
- the wheel. See **INSTALLING WHEELS** .

Check and adjust the headlights' alignment according to: **HEADLAMPS, ALIGNING**

STUB AXLE, REPLACING

see **STUB AXLE, REPLACING**

SUSPENSION

General - Cleaning, Inspection And Adjustment

WHEEL ALIGNMENT

WHEEL ALIGNMENT, CHECKING / ADJUSTING

CHECKING/ADJUSTING

NOTE: **When working on the steering or wheel alignment on cars with DSTC, the adaptation of the steering wheel angle must be set to zero using VIDA (Volvo scan tool). Test drive. See TEST DRIVE FORM (DSTC (DYNAMIC STABILITY AND TRACTION CONTROL) /BRAKE CONTROL MODULE), DESCRIPTION .**

NOTE: **For tightening torques, see: TIGHTENING TORQUE .**

NOTE: **When checking and adjusting front wheel alignment the following applies:**

- Any adjustment to the front camber angle must always be carried out before adjusting the toe angle.
- Since the car's rear wheels also have adjustable toe angles, the front toe angle must always be adjusted in relation to the car's geometric driving axis (the thrust line). This is to achieve maximum stability and minimum tyre wear.
- All measurements must be made using alignment equipment for four-wheel drive vehicles.
- All measurements must be made with the car empty
- All measurements must be made with a full fuel tank
- Check all the tire pressures before beginning measurement.

CHECK PLAY, FRONT

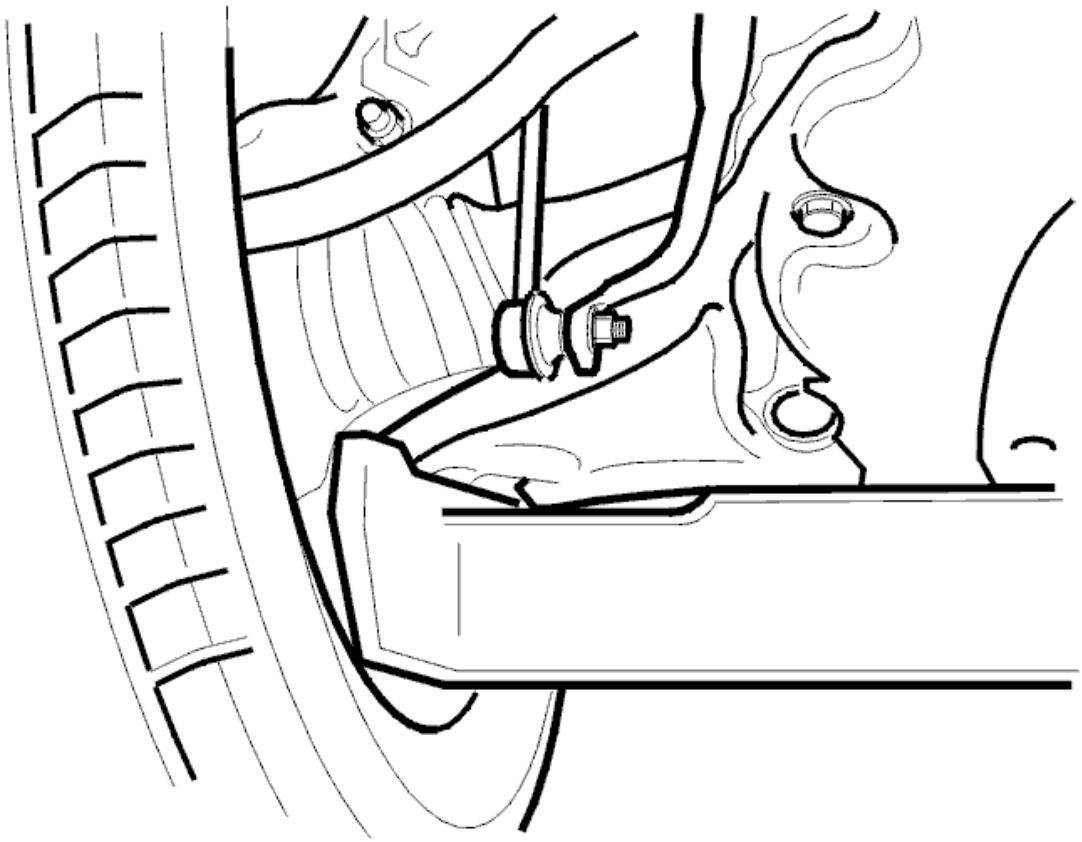

Fig. 1: Checking Front Play
Courtesy of VOLVO CARS CORPORATION

Raise the front end. Lift under the control arms as close to the ball joint as possible.

Check that there is no play in

- the tie rods
- the wheel bearings
- the upper spring strut mounting
- the ball joints or control arm bushings.

If there is play in any of the components above, this must be remedied before the wheel settings are checked/adjusted.

CHECKING PLAY, REAR

Lift up the rear suspension.

NOTE: Only the toe angle can be adjusted on the rear end but the camber angle must also be checked.

Check that there is no play in

- the wheel bearings. (If there is play the hub assembly must be replaced)
- the control arms, lateral link and track rod.

If there is play in any of the components above, this must be remedied before the wheel settings are checked/adjusted.

INSTALLING THE TEST EQUIPMENT

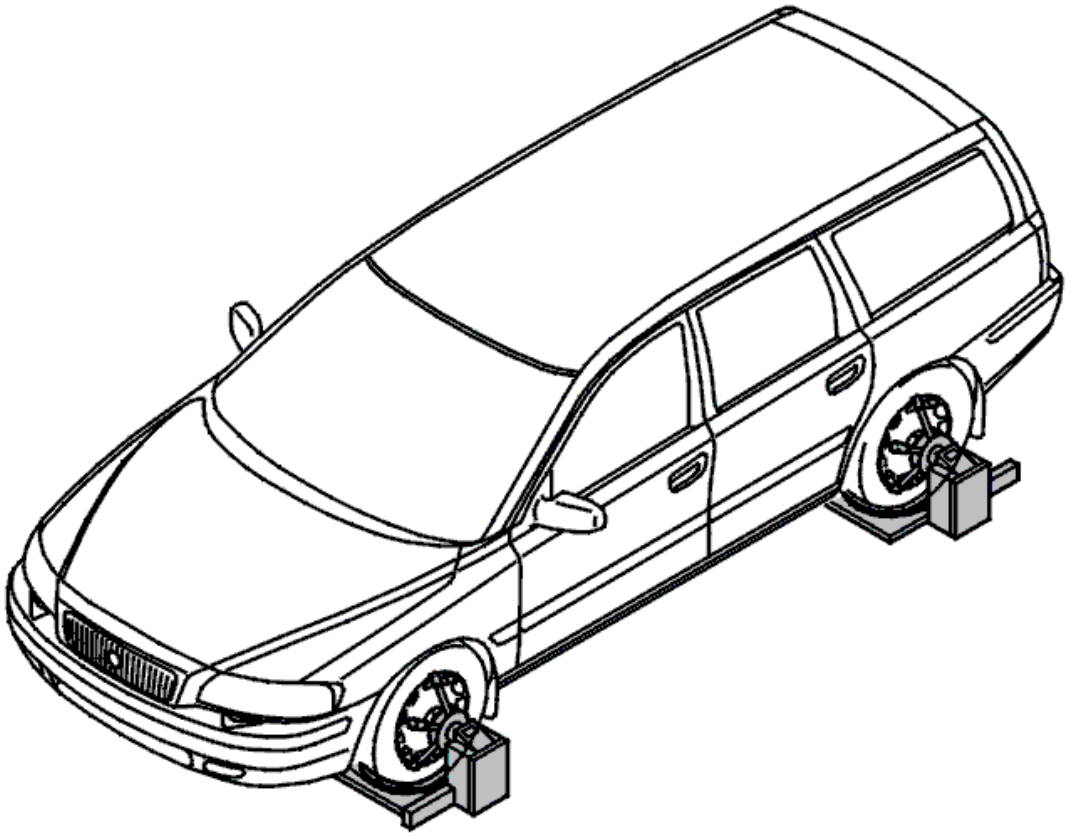

Fig. 2: Identifying Test Equipment Set Up On Front And Rear Wheels
Courtesy of VOLVO CARS CORPORATION

Set up the test equipment on the front and rear wheels. Set up the test equipment according to the instructions.

Position the turntables under the front wheels. Use turntables which take up lateral movement

NOTE: The car must stand level when the front wheels are on the turntables. This is to ensure that the correct values are obtained when checking the camber and caster.

Bounce the front and rear suspension heavily a few times when the car has sunk onto the turntables. This is so that the suspension resumes the normal setting.

HINT: The following order of work is recommended for best results

- Step 1 Camber angle front check/adjust.
- Step 2 Rear suspension angles check/adjust.
- Step 3 Check/adjust front toe angle.

CHECKING THE CAMBER ANGLE, FRONT

Check the camber angle on both sides.

ADJUSTING THE CAMBER ANGLE, FRONT

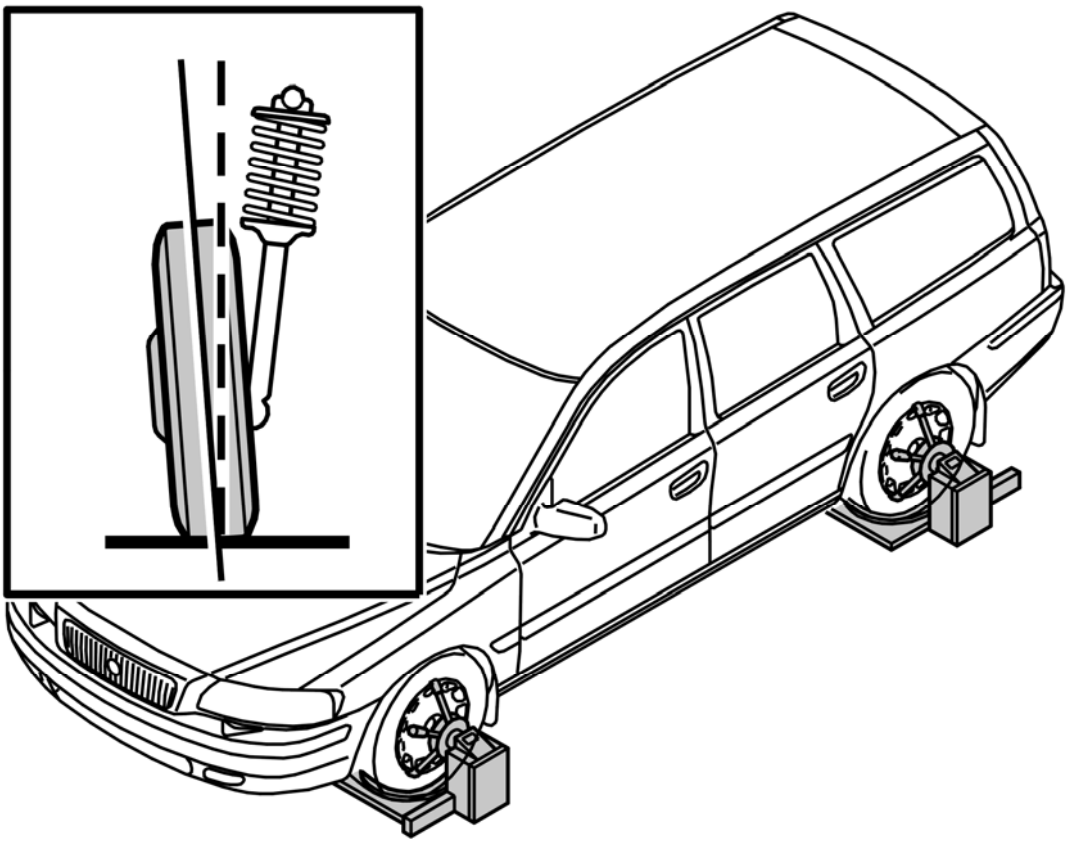

Fig. 3: Adjusting Camber Angle
Courtesy of VOLVO CARS CORPORATION

Conditions

The camber angle is adjusted by moving the stub axle at the upper hole in the spring strut outwards or inwards depending on the value measured.

If the stub axle is centered in the spring strut, the degree of adjustment is ± 0.5°.

Adjustment

Raise the front end.

Remove

- the instrument
- the wheel.

Replace the screws and nuts securing the spring strut to the stub axle. Tighten to light contact.

Press the stub axle in or out to the maximum, depending on the value measured in relation to the spring strut.

Tighten the screws according to **TIGHTENING TORQUE** .

Install

- the wheel. See **INSTALLING WHEELS** .
- the instrument and make a new adjustment according to the instructions.

Lower the car on the turn table. Rock the car a few times. Check the values.

CHECKING THE CAMBER ANGLE, REAR

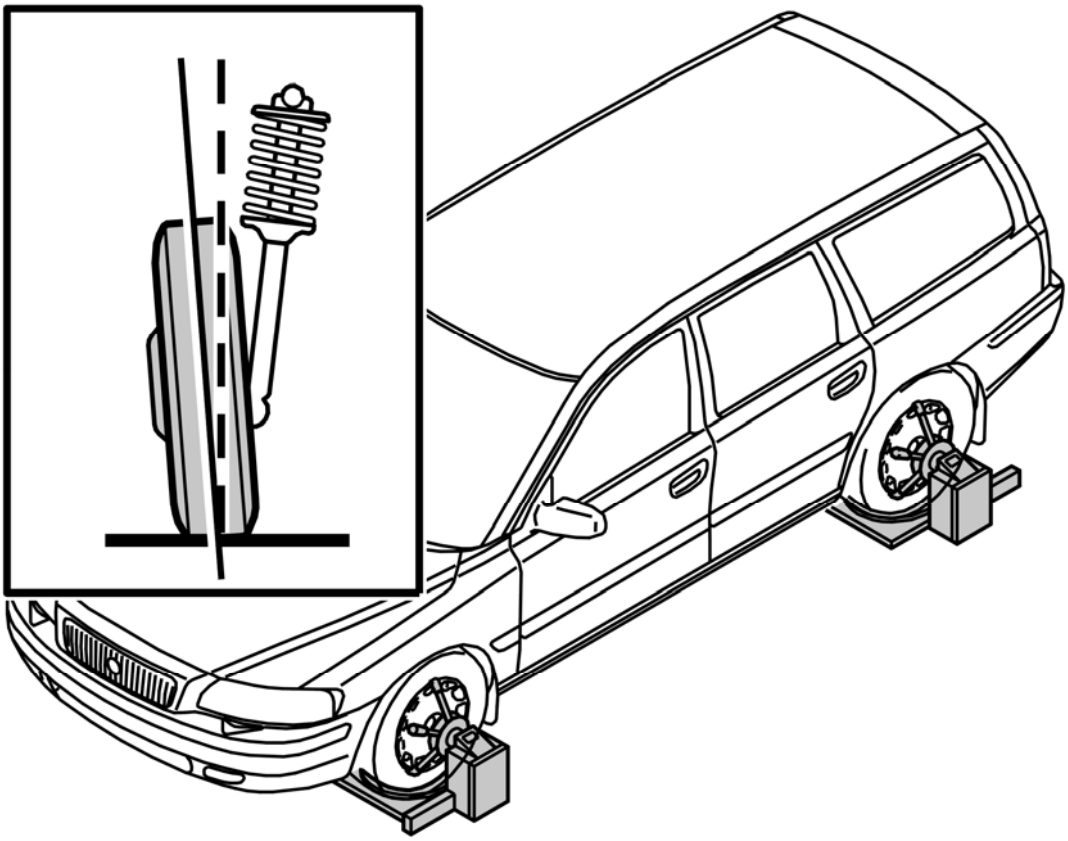

Fig. 4: Adjusting Camber Angle
Courtesy of VOLVO CARS CORPORATION

Check the camber angle on both sides.

CHECKING REAR TOE ANGLE

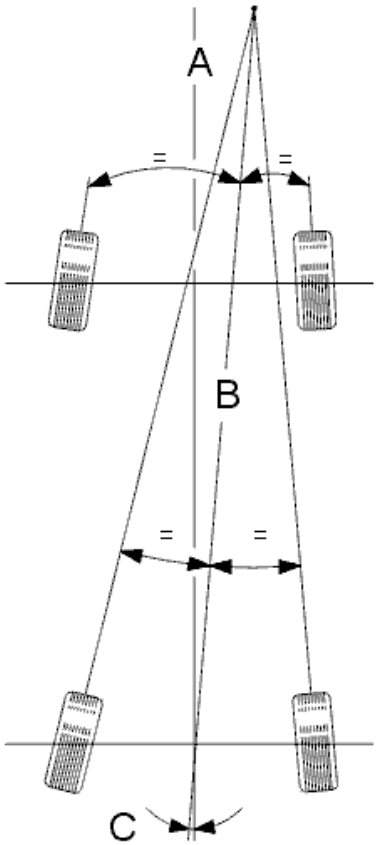

Fig. 5: Checking That Instruments Are Adjusted In Relation To Each Other On Front And Rear Axles
Courtesy of VOLVO CARS CORPORATION

NOTE: Always check thrust angle when checking/adjusting rear toe angle.

Check that the instruments are adjusted in relation to each other on the front and rear axles. This is extremely important so that the rear wheel toe angle can be adjusted in relation to the car's thrust line (geometric driving axis). The thrust line is the line created when the toe angles for the rear wheels are equally divided. See the illustration.

The difference between the symmetry line of the wheels and the thrust line is called the thrust angle. The thrust angle must not deviate by more than a maximum of 0° ± 0.25° from the symmetry line of the wheels.

NOTE: The differences in the diagram are heavily exaggerated in order to illustrate the differences.

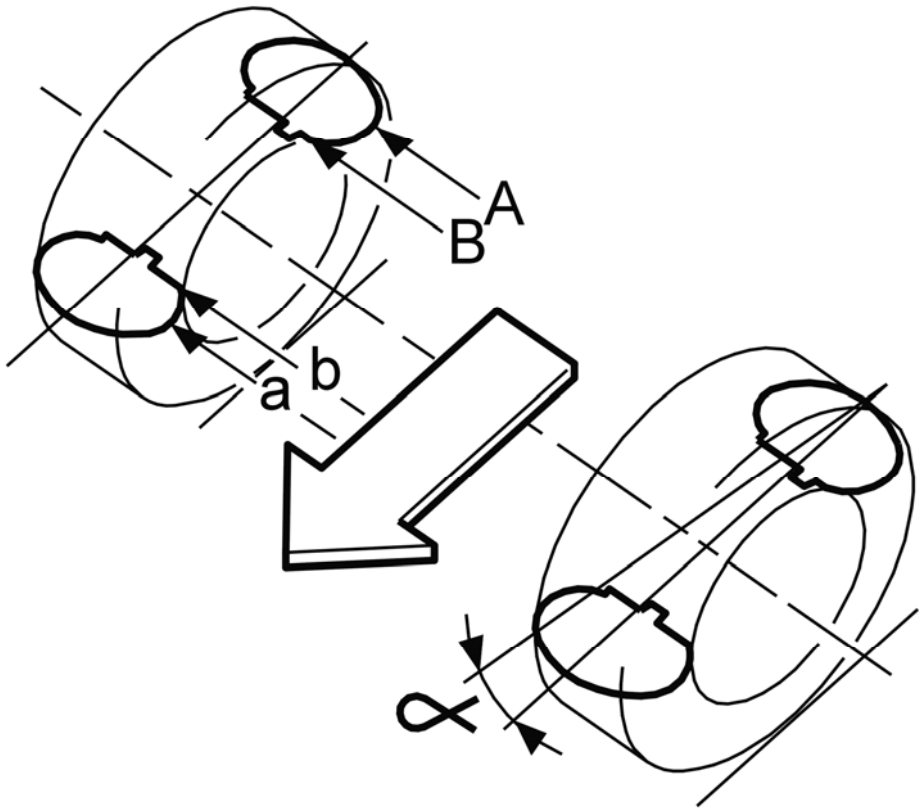

Fig. 6: Checking Symmetry Line Of Wheels, Thrust Line, And Thrust Angle
Courtesy of VOLVO CARS CORPORATION

Check

- the symmetry line of the wheels
- the thrust line
- the thrust angle
- Toe angle.

ADJUSTING REAR TOE ANGLE

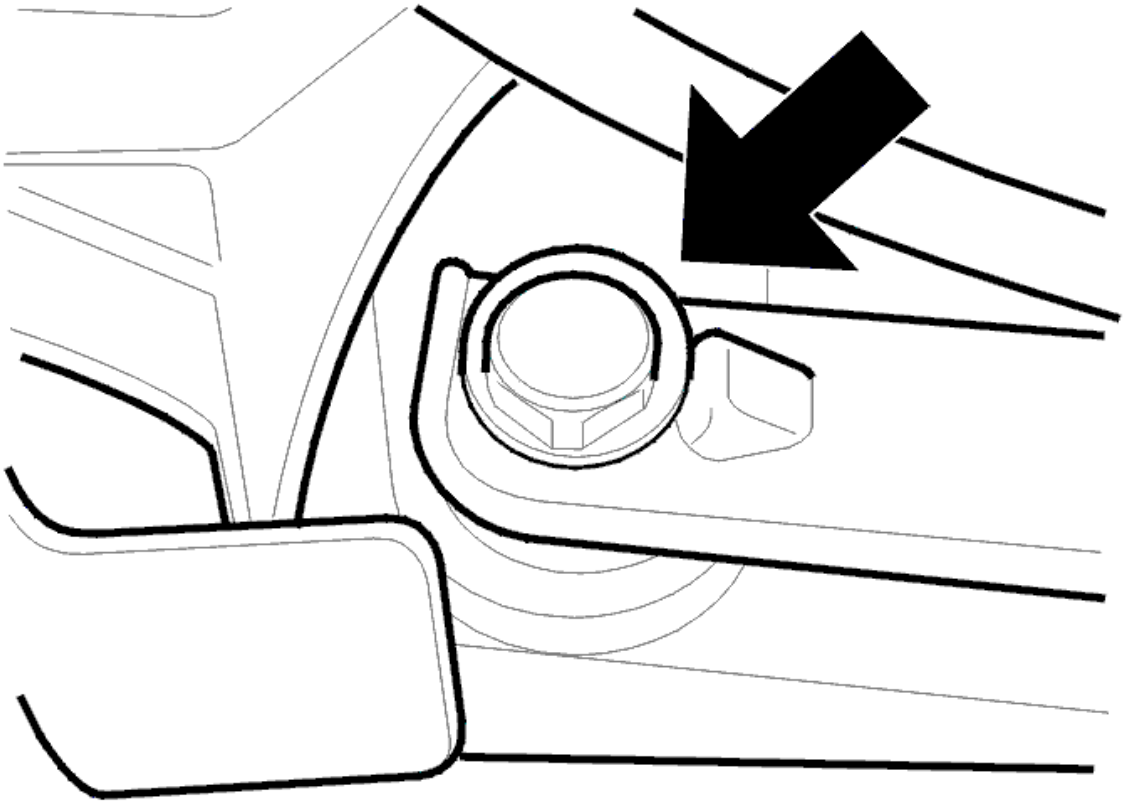

Fig. 7: Identifying Screw For Drive Shaft Mounting
Courtesy of VOLVO CARS CORPORATION

- Slacken off the inner nut on the track rod
- Adjust the toe angle using the eccentric screw. Tighten the nuts slightly.
- Check the thrust angle. If it does not comply with the specified value, undo the nuts and readjust the toe angle.
- Tighten the nut. See: **TIGHTENING TORQUE** .

CHECKING THE CASTER ANGLE, FRONT

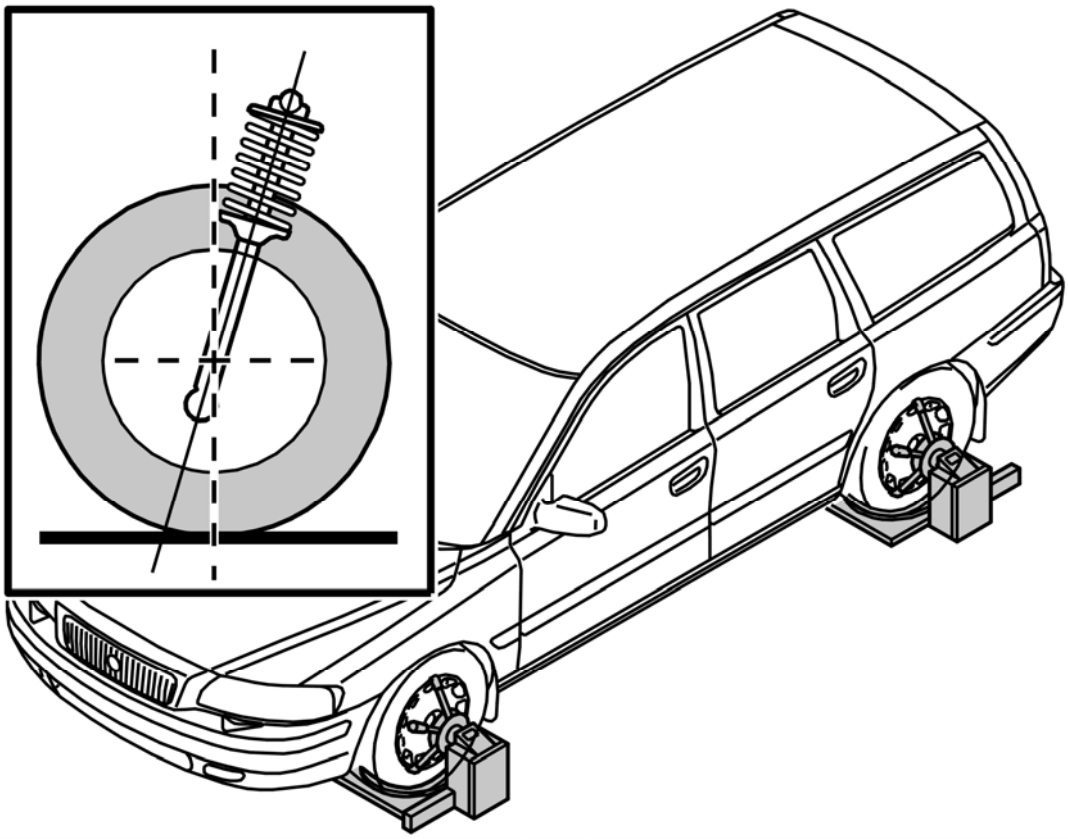

Fig. 8: Checking Caster Angle
Courtesy of VOLVO CARS CORPORATION

Check the caster angle on both sides.

The correct value is 4.0° ± 1.0°. The caster angle must not vary by more than 0.25° between the left and right-hand sides.

CHECKING FRONT TOE ANGLE

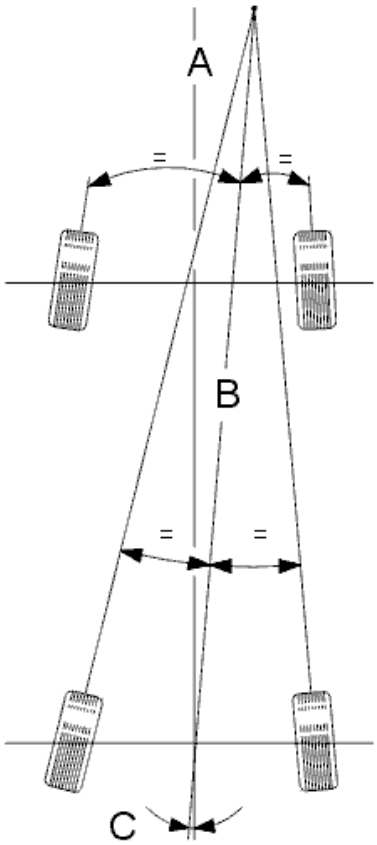

Fig. 9: Checking That Instruments Are Adjusted In Relation To Each Other On Front And Rear Axles
Courtesy of VOLVO CARS CORPORATION

Check that the instruments are calibrated to each other on the front and rear axles. This is very important so that the front toe angle can be adjusted in relation to the thrust line of the car (geometric driving axis). The thrust line is the line formed when the rear wheel toe angles are divided equally, see illustration.

The difference between the symmetry line of the wheels and the thrust line is called the thrust angle. The thrust angle must not deviate by more than a maximum of 0° ± 0.25° from the symmetry line of the wheels.

NOTE: The differences in the diagram are heavily exaggerated in order to illustrate the differences.

Check

- the symmetry line of the wheels
- the thrust line
- the thrust angle.

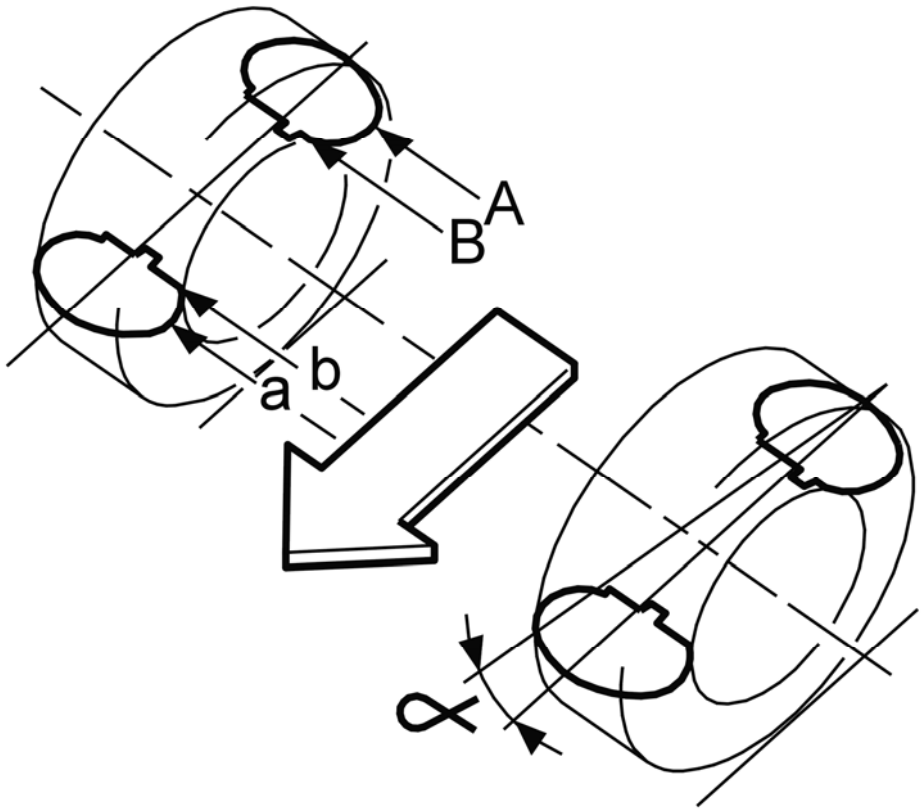

Fig. 10: Checking Symmetry Line Of Wheels, Thrust Line, And Thrust Angle
Courtesy of VOLVO CARS CORPORATION

ADJUSTING FRONT TOE ANGLE

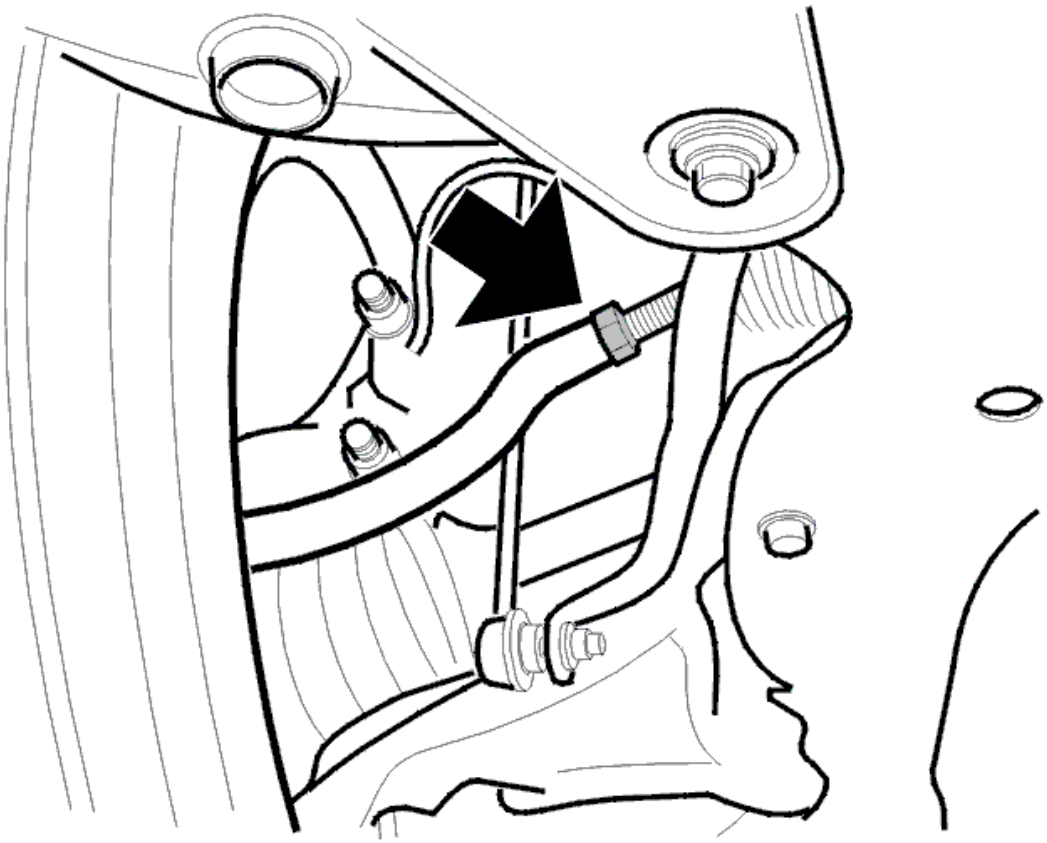

Fig. 11: Identifying Lock Nut, Outer Steering Arm Inner To Steering Arm Inner
Courtesy of VOLVO CARS CORPORATION

Adjust with the tie rods after loosening the lock nuts. Adjusting towards a positive value will give toe-in and towards a negative value toe-out.

NOTE: The lengths of the tie rods must not vary between themselves by more than 2mm. Measure between the lock nut and the edge of thread.

Tighten the lock nut, outer steering arm inner to steering arm inner. See: **TIGHTENING TORQUE** .

Treat the strut threads using rustproofing agent after tightening.

ADJUSTING THE POSITION OF THE STEERING WHEEL

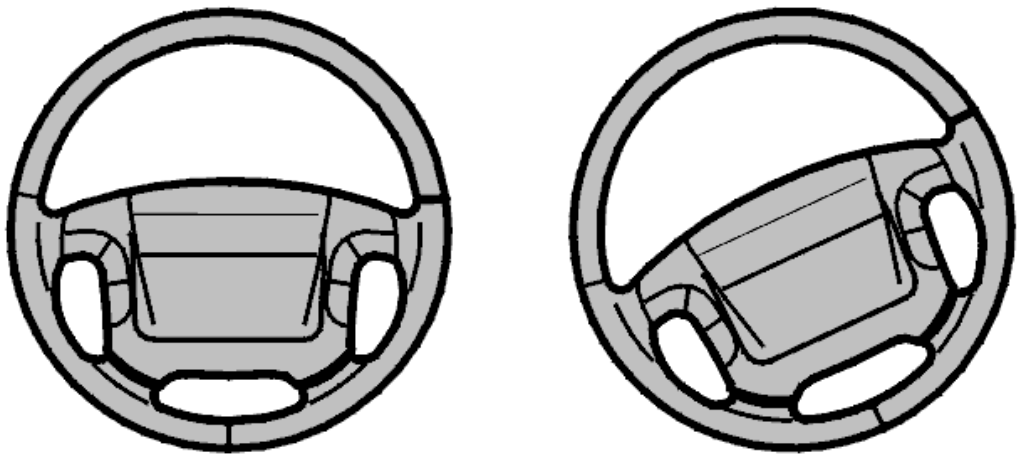

Fig. 12: Identifying Minor Misalignment Of Steering Wheel
Courtesy of VOLVO CARS CORPORATION

A minor misalignment of the steering wheel can be adjusted in conjunction with adjusting the toe angle above.

For larger deviations in the steering wheel, adjust the position of the steering wheel. See **ADJUSTING THE POSITION OF THE STEERING WHEEL**.

ADJUSTING THE POSITION OF THE STEERING WHEEL

Special tools:

see **9988695**

CAUTION: Cars with DSTC systems. When working on the steering or wheel alignment, the adaptation of the steering wheel angle must be set to zero using the diagnostic tool. Test drive. See TEST DRIVE FORM (DSTC (DYNAMIC STABILITY AND TRACTION CONTROL) /BRAKE CONTROL MODULE), DESCRIPTION .

CHECKING THE STEERING WHEEL POSITION

- Drive the car straight forward and check that the steering wheel is in the "straight ahead" position

- If the steering wheel position is incorrect adjust as follows.

ADJUSTING THE STEERING WHEEL POSITION

REMOVE THE STEERING WHEEL

- Remove the driver's airbag module. See **INTERIOR EQUIPMENT - REMOVAL, REPLACEMENT AND INSTALLATION** .

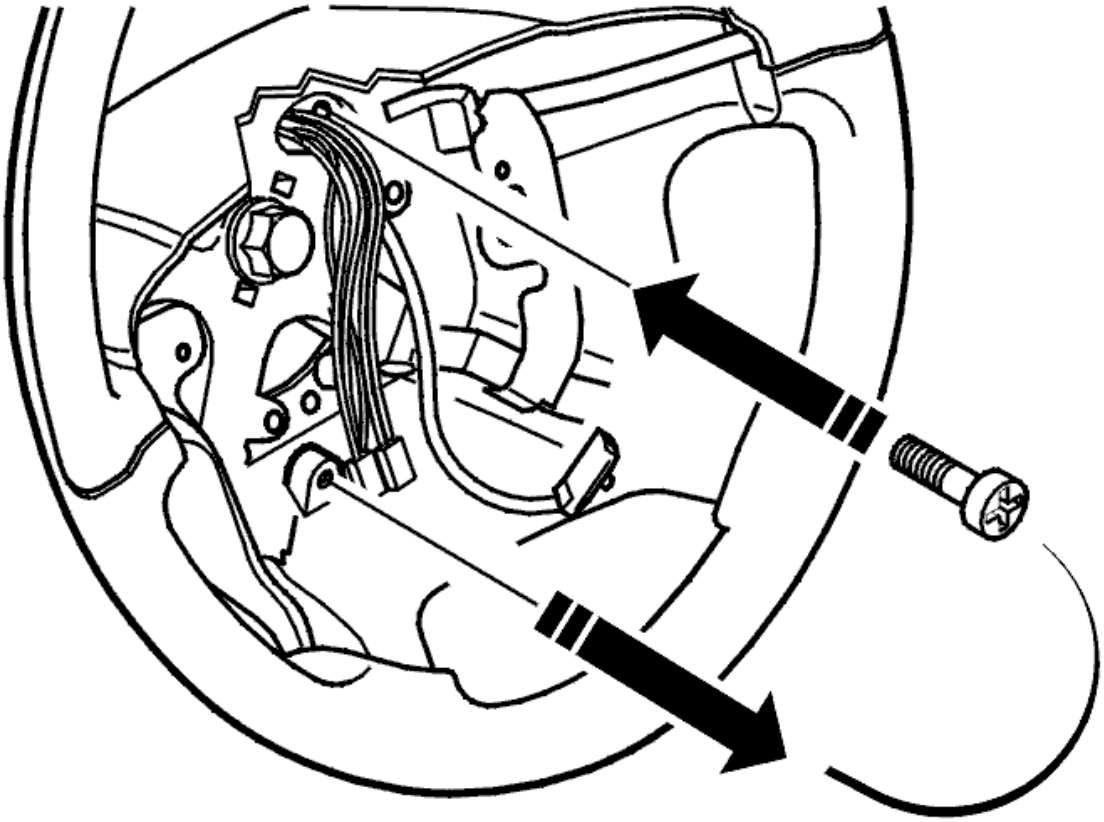

Fig. 13: Locking Screw From Parking Hole In Steering Wheel
Courtesy of VOLVO CARS CORPORATION

- Remove the locking screw from the ""parking hole"" in the steering wheel. Install the screw in the contact reel.

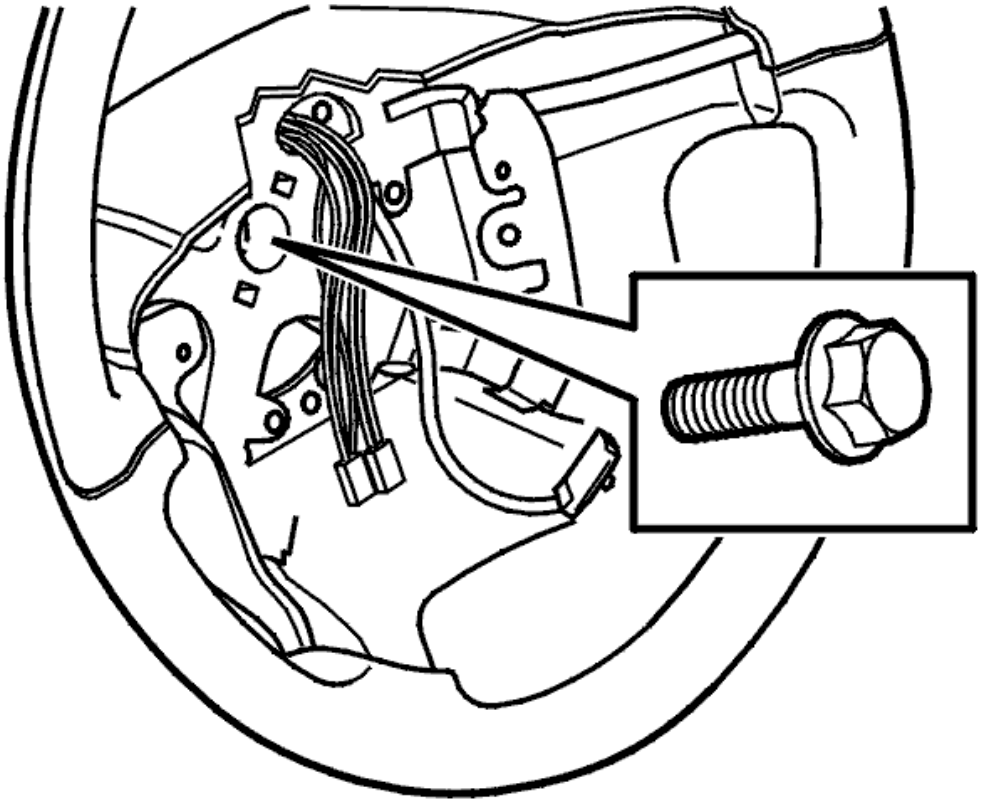

Fig. 14: Identifying Steering Wheel Screw
Courtesy of VOLVO CARS CORPORATION

- Remove the steering wheel screw
- Ensure that the front wheels and steering wheel are in the straight-ahead position
- Remove the steering wheel.

NOTE: **Take care to ensure that the connector does not catch on the steering wheel during removal.**

ZERO THE CONTACT REEL

Zero the contact reel. See **CONTACT REEL DRIVER AIRBAG MODULE, RESETTING** .

INSTALL THE STEERING WHEEL AND CHECK THE STEERING WHEEL POSITION

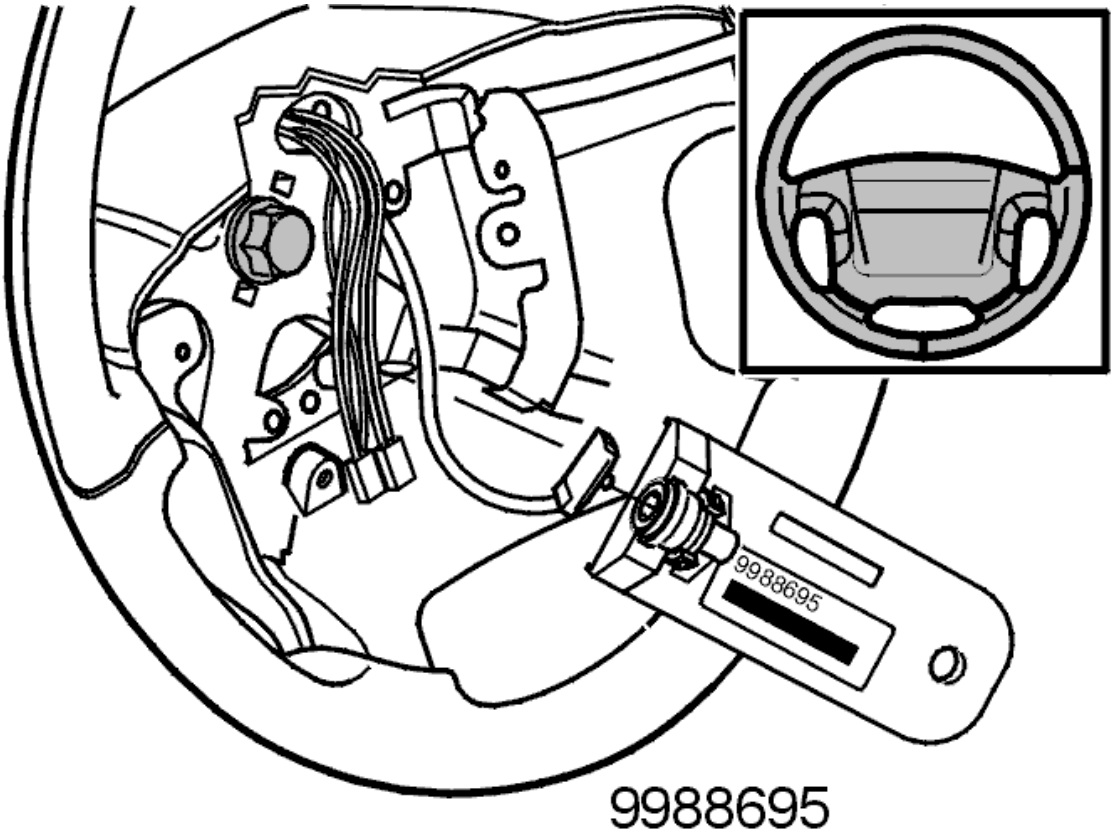

Fig. 15: Pulling Connectors From Contact Reel Through Steering Wheel
Courtesy of VOLVO CARS CORPORATION

NOTE: Ensure that front wheels are pointing straight ahead.

- Pull the connectors from the contact reel through the steering wheel
- Install the steering wheel carefully so that both catches on the contact reel are seated in the two recesses in the steering wheel hub
- Install the steering wheel screw. Use a **new screw** . Finger tighten.

CAUTION: Do not turn the steering wheel when it is on the steering shaft. Since the contact reel is locked, it will be damaged beyond repair if the wheel is turned in this situation.

- Remove the locking screw holding the contact reel. Install the contact reel in the parking hole in the steering wheel
- Connect tool see **9988695** to the contact reel cable
- Drive the car straight forward and check that the steering wheel is in the "straight ahead" position
- If the steering wheel position is incorrect repeat the adjustment.

TIGHTEN THE SCREW IN THE CENTER OF THE STEERING WHEEL

- Remove tool 998 8695
- Tighten the screw in the center of the steering wheel. Tighten to **35 Nm**
- Check that the SRS light is extinguished, i. e. that no DTCs are present.

INSTALL THE STEERING WHEEL MODULE

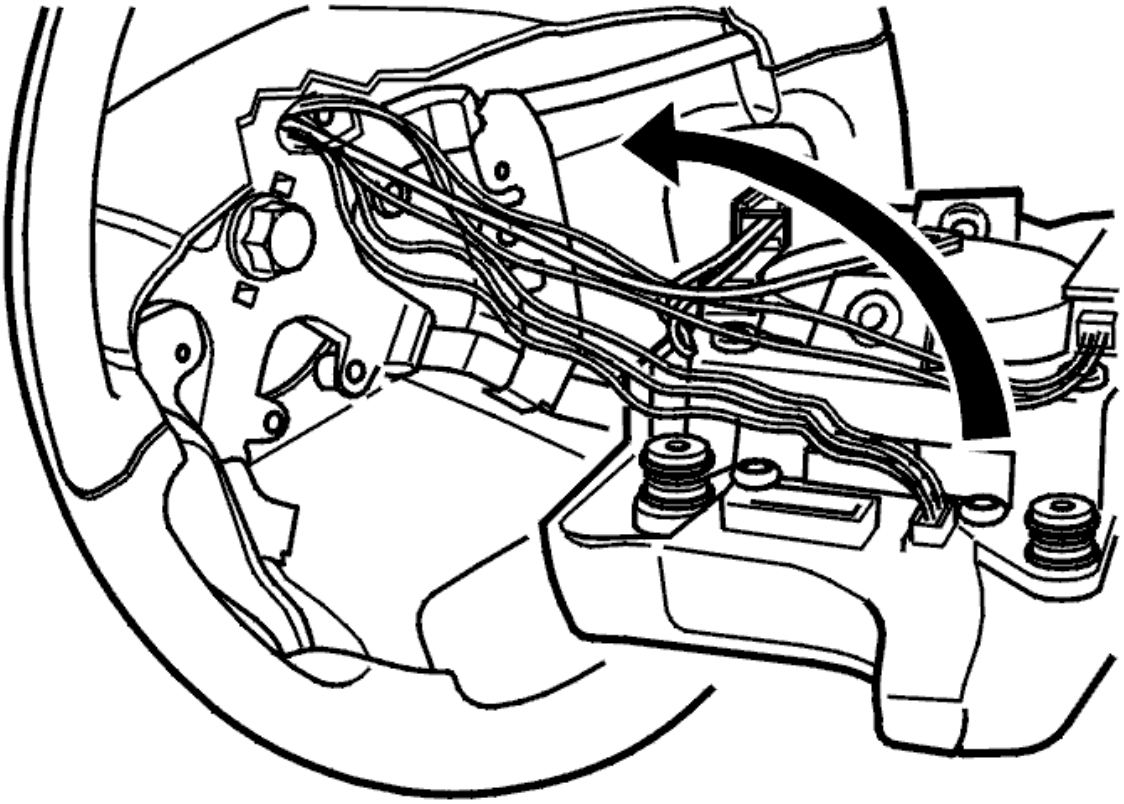

Fig. 16: Folding In Steering Wheel Module & Ensuring Wiring Lies Free And Is Not Trapped
Courtesy of VOLVO CARS CORPORATION

- Turn the ignition key to position I to unlock the steering wheel
- Position the lower section of the steering wheel module against the steering wheel
- Connect the connector
- Fold in the steering wheel module. Ensure that wiring lies free and is not trapped
- Secure the steering wheel module with the Torx screws from the side
- Tighten the steering wheel module screws. Tighten to **10 Nm** .

CHECK THE FUNCTION

Ensure that the steering wheel turns easily and that the steering lock functions.

Check that no diagnostic trouble codes (DTCs) have been stored while the repair was carried out.

SUSPENSION

General - Specifications, Mechanical

TIGHTENING TORQUE

GENERAL TIGHTENING TORQUE

NOTE: Screws coated with a locking fluid or self locking nuts must be replaced with new when reinstalled.

See the table below to find the tightening torques for components not included in the summary.

Nuts and screws which are not self locking can be reused provided that they are in good condition.

TIGHTENING TORQUE

Applies to screwed joint with strength class 8.8.	
Thread	Tightening torque (Nm)
M5	5
M6	10
M7	17
M8	24
M10	50
M12	80
M14	130

SUMMARY OF TIGHTENING TORQUES FOR SPECIFIC COMPONENTS

NOTE: Screws coated with locking fluid or sealant must be replaced with new when reinstalled.

Always use **new screws and nuts** when angle tightening. Any exceptions to this rule will be indicated in the method.

Angle-tightening in tight spaces. See **SCREWED JOINT, TORQUE/ANGLE TIGHTENING** .

Rear wheel hub in wheel bearing housing (M12)	Step 1: 20 Nm Step 2: 45 Nm Step 3: Angle-tighten 60°
Drive shaft in front wheel hub not XC90 (M10)	Step 1: 35 Nm Step 2: Angle-tighten 90°
Drive shaft in front wheel hub, only XC90 (M10)	Step 1: 35 Nm Step 2: Angle-tighten 120°
Tire pressure sensor in rim	8 Nm

Tire pressure sensor in valve.	1.4 Nm
Front wheel hub in steering arm (M12)	Step 1: 20 Nm Step 2: 45 Nm Step 3: Angle-tighten 60°
Wheel in hub (M14)	Step 1: 20 Nm Step 2: 140 Nm
Anti-roll bar link in shock absorber front (M12)	90 Nm
Anti-roll bar link in anti-roll bar front (M10)	60 Nm
Anti-roll bar link to spring strut	50 Nm
Shock absorber bearing rear upper in shock absorber (M12)	60 Nm
Shock absorber bearing front upper in shock absorber (M14)	70 Nm
Shock absorber in steering arm (M14) XC90	Step 1: 105 Nm Step 2: Angle-tighten 75°
Spring front, retaining nut	70 Nm
Spring strut in body	25 Nm

SUSPENSION

General - Specifications, Mechanical

TIGHTENING TORQUE

GENERAL TIGHTENING TORQUE

NOTE: Screws coated with a locking fluid or self locking nuts must be replaced with new when reinstalled.

See the table below to find the tightening torques for components not included in the summary.

Nuts and screws which are not self locking can be reused provided that they are in good condition.

CHART

Applies to screwed joint with strength class 8.8.	
Thread	Tightening torque (Nm)
M5	5
M6	10
M7	17
M8	24
M10	50
M12	80
M14	130

SUMMARY OF TIGHTENING TORQUES FOR SPECIFIC COMPONENTS

NOTE: Screws coated with locking fluid or sealant must be replaced with new when reinstalled.

Always use **new screws and nuts** when angle tightening. Any exceptions to this rule will be indicated in the method.

Angle-tightening in tight spaces. See **SCREWED JOINT, TORQUE/ANGLE TIGHTENING** .

Bushing housing upper link arm in sub-frame rear XC90 (M12)	1st step, 65 Nm 2nd step, 90°
Rear sub-frame in body (M12)	100 Nm
Rear cross member	25 Nm
Spring strut/Wheel spindle	1st step, 105 Nm 2nd step, 60°
Ball joint in wheel spindle, aluminum from and incl. w919 not XC90 (M10)	40 Nm

Ball joint in link arm XC90 (M14)	100 Nm
Ball joint in control arm aluminum (not XC90) (M12)	1st step, 50 Nm. 2nd step, 40°
Ball joint in control arm steel (not XC90) (M14)	100 Nm
Drive shaft ball joint	1st step, 35 Nm. 2nd step, 90°
Anti-roll bar to link	50 Nm
Cover rear sub-frame AWD (not XC90) (M12)	100 Nm.
Cover rear sub-frame AWD (not XC90)	80 Nm
Link arm front in sub-frame, front mounting (M12)	1st step, 65 Nm. 2nd step, 105°
Link arm front in sub-frame, rear mounting (M14)	1st step, 105 Nm. 2nd step, 180°
Control arm, rear, lower to subframe (applies to XC90)	1st step, 65 Nm 2nd step, 180°
Lock nut outer steering joint against inner steering joint (M14)	70 Nm
Return hose in steering gear (M18)	25 Nm
Screw for steering wheel - steering column (M14)	1st step, 30 Nm 2nd step, 30°
Steering wheel lock in steering column (M8)	18 Nm
Dirt deflector in longitudinal stay not XC90 and R-line (M8)	10 Nm
Lower steering column/steering shaft wing screw - lock nut (M8) not XC90	30 Nm
Lower steering shaft joint to steering gear locking screw (M8) not XC90	25 Nm
Joint for steering column/steering shaft locking screw (M8) XC90	32 Nm
Joint for steering gear locking nut (M8) XC90	25 Nm
Outer screws for the track rod XC90	90 Nm
Eccentric screw and nut for the track rod XC90	90 Nm
Tie rod, inner nut	80 Nm
Tie rod's ball joint to steering gear	100 Nm
Steering arm/tie rod end in wheel spindle steel	70 Nm
Steering joint in wheel spindle aluminum	1st step, 50 Nm 2nd step, 40°
Steering joint in wheel spindle XC90	1st step, 50 Nm 2nd step, 35°
Steering gear	50 Nm
Support plate	50 Nm
Pressure line to steering gear (M16)	25 Nm
Pressure hose in pump (M16)	32 Nm

Delivery line to power steering pump XC90	30Nm
Cross member	25 Nm
Heat shield plate in steering gear (M5)	6 Nm

SUSPENSION

Rear Wheel Suspension - Removal, Replacement And Installation

BUSHING REAR SUB-FRAME, REPLACING (2007-2012)

Special tools	
	T9992709 SLEDGE (EXTRACT-OVERDRIVE) J **Tool number:** T9992709 **Tool description:** SLEDGE (EXTRACT-OVERDRIVE) J **Tool boards:**
	T9512923 HYDRAULIC HOLE CYLINDER **Tool number:** T9512923 **Tool description:** HYDRAULIC HOLE CYLINDER **Tool boards:**
	T9512566 HYDRAULIC PUMP **Tool number:** T9512566 **Tool description:** HYDRAULIC PUMP **Tool boards:**
	T9997243 SOCKET **Tool number:** T9997243 **Tool description:** SOCKET **Tool boards:**
	T9997049 SOCKET (800 AWD, P2X) **Tool number:** T9997049 **Tool description:** SOCKET (800 AWD, P2X) **Tool boards:**
	T9997054 ADAPTER INCL. 2 PCS. MC6C M6X12 (800 AWD, P2X) **Tool number:** T9997054 **Tool description:** ADAPTER INCL. 2 PCS. MC6C M6X12 (800 AWD, P2X) **Tool boards:**
	T9997037 PULLER ROD M14X400 (800 AWD, P2X) **Tool number:** T9997037 **Tool description:** PULLER ROD M14X400 (800 AWD, P2X) **Tool boards:**
	T9997244 ANVIL BLOCK **Tool number:** T9997244 **Tool description:** ANVIL BLOCK **Tool boards:**
	T9997097 DRIFT **Tool number:** T9997097 **Tool description:** DRIFT **Tool boards:**

NOTE: **Some variation may occur. However, the essential information in the illustrations is always correct.**

NEW DESIGN OF THE BUSHING

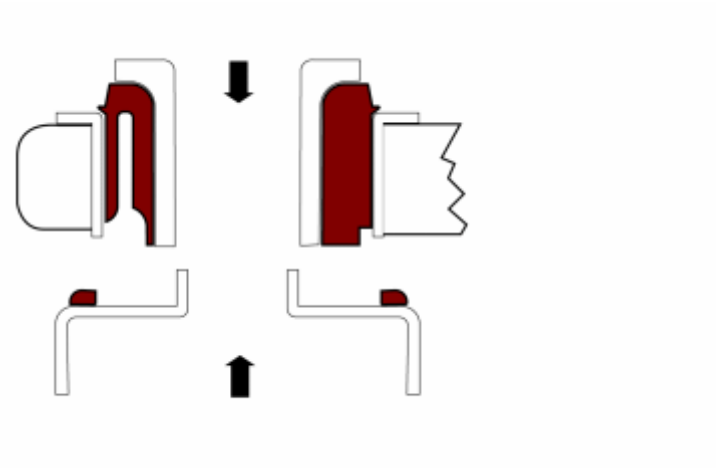

Fig. 1: New Design Of The Bushing
Courtesy of VOLVO CARS CORPORATION

This replacement method applies to new designs of the bushing. The figure illustrates the new design.

See **BUSHING REAR SUB-FRAME, REPLACING** for the replacement method for the early design.

REMOVING

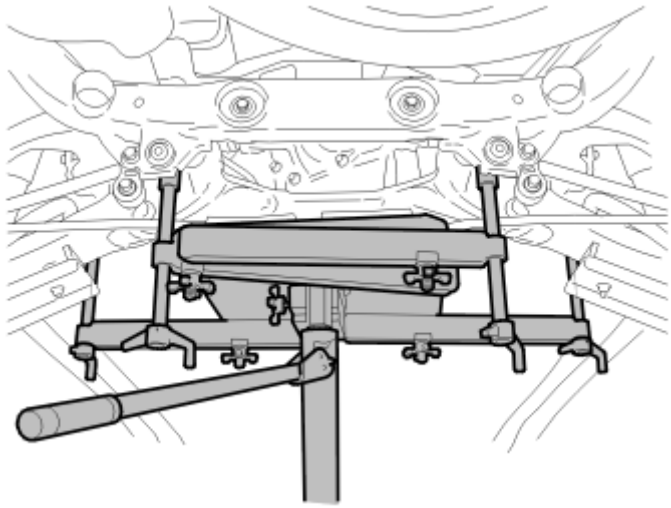

Fig. 2: Lowering Sub-Frame
Courtesy of VOLVO CARS CORPORATION

Remove:

- the rear wheels
- the bracket between the filler pipe and the washer on the right-hand side
- the screws in the bracket under the exhaust pipe.

Position a lifting table under the sub-frame.

Apply the lifting table so that the load is taken off the sub-frame screws.

Remove the 2 x rear screws.

Carefully lower the sub-frame approximately 70 mm.

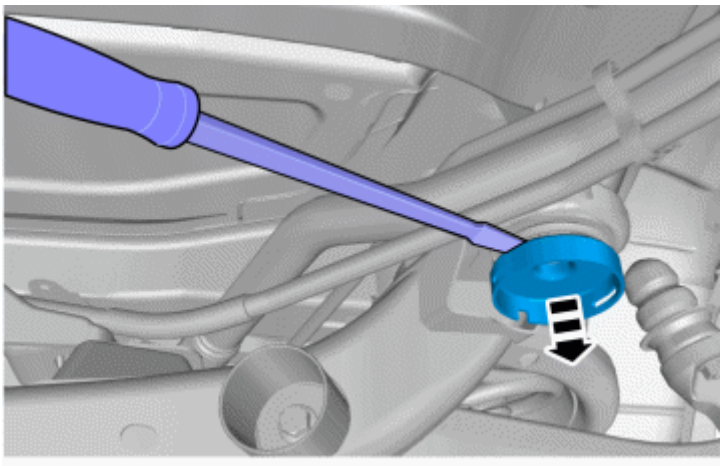

Fig. 3: Removing Bushing Washer
Courtesy of VOLVO CARS CORPORATION

Remove the washer from the bushing. Use a large screwdriver.

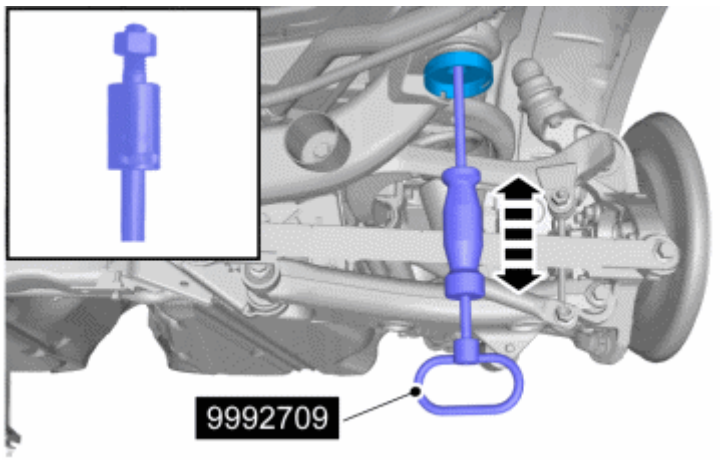

Fig. 4: Using Special Service Tool 999 2709 To Remove Washer
Courtesy of VOLVO CARS CORPORATION

If the washer is difficult to remove, use see **9992709** together with a socket has an outside diameter of 27 mm.

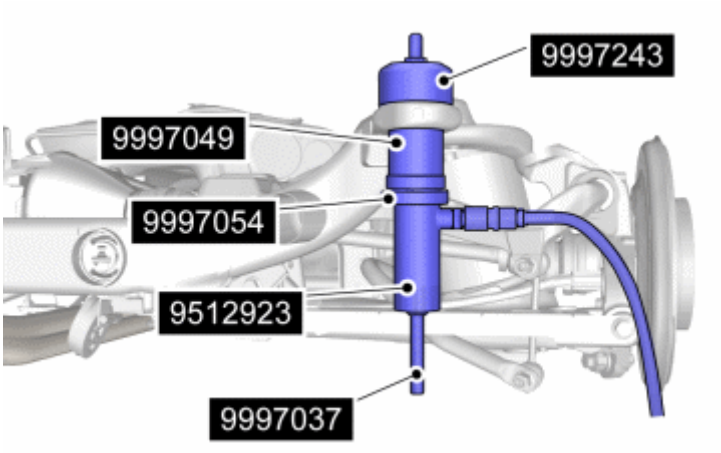

Fig. 5: Pressing Out Bushing Using Special Service Tools
Courtesy of VOLVO CARS CORPORATION

Press out the bushing

Use special tool:

- see **9512923** together with see **9512566**
- see **9997243**
- see **9997049**
- see **9997054**
- see **9997037**

INSTALLING

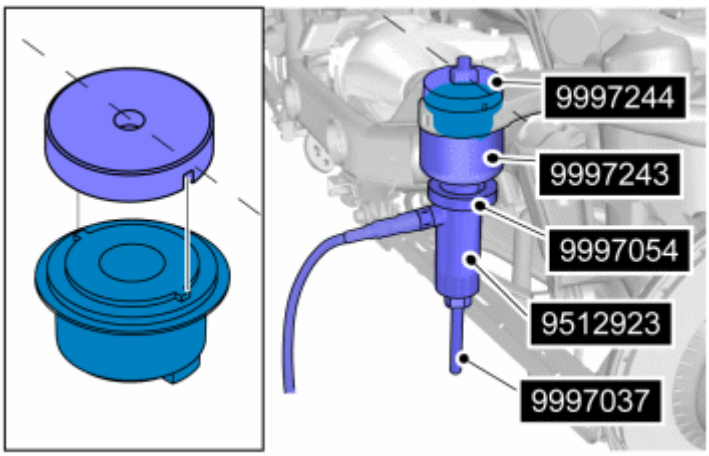

Fig. 6: Aligning Bushing
Courtesy of VOLVO CARS CORPORATION

NOTE: Align the bushing in relation to the sub-frame as illustrated.

Press in the bushing.

Use special tool:

- see **9512923** together with see **9512566**
- see **9997244**
- see **9997243**
- see **9997054**
- see **9997037**

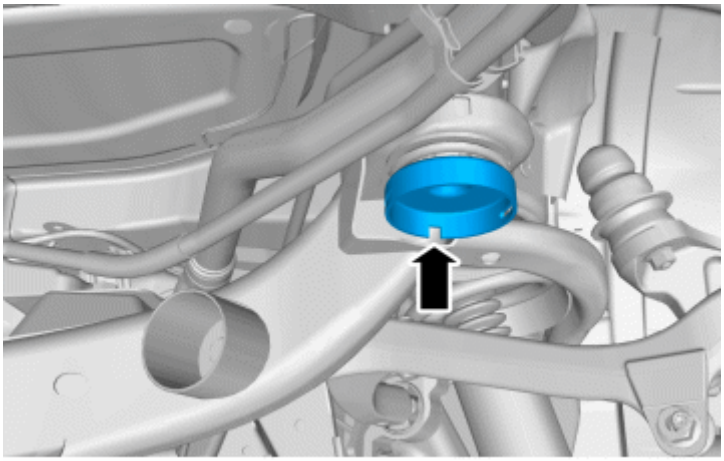

Fig. 7: Identifying Correct Washer Installation
Courtesy of VOLVO CARS CORPORATION

NOTE: The cutout on the washer (see arrow), should be directed forward to be seated correctly for the filler pipe support.

Use see **9512923** together with see **9512566**

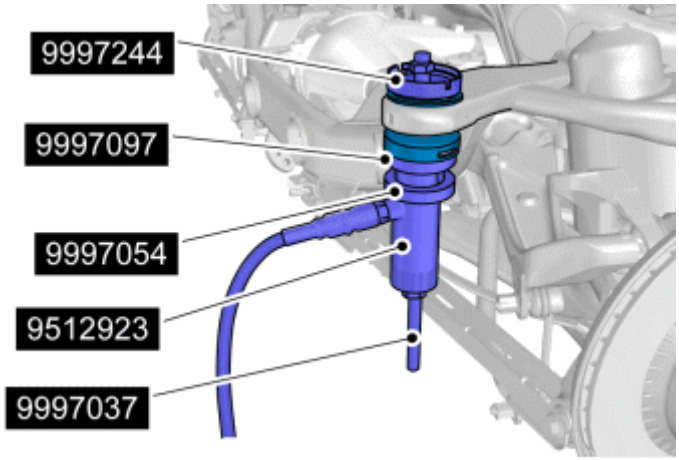

Fig. 8: Pressing In Washer Using Special Service Tools
Courtesy of VOLVO CARS CORPORATION

Press the washer in position.

Use special tool:

- see **9997244** must be turned with the flat side against the bushing
- see **9997097** must be turned with the flat side against the washer
- see **9997054**
- see **9512923** together with see **9512566**
- see **9997037**

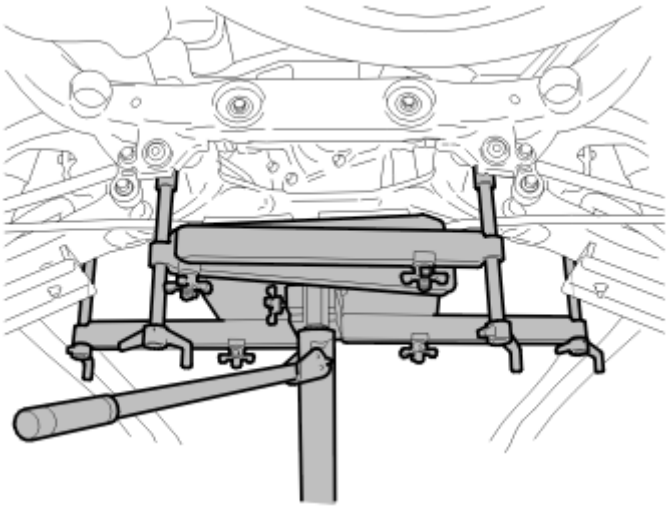

Fig. 9: Lowering Sub-Frame
Courtesy of VOLVO CARS CORPORATION

Carefully raise the vehicle's rear suspension.

> WARNING: **Always ensure that the vehicle rests on the lift's lift arms when working with the lifting table.**

Install:

- the screws for the sub-frame, 2 pc. Tighten, see: **SUMMARY OF TIGHTENING TORQUES FOR SPECIFIC COMPONENTS**
- the bracket for the filler pipe
- the 2 x M8 screws in the bracket under the exhaust pipe.

Remove the lifting table.

Install the rear wheels. See **INSTALLING WHEELS** .

STAY, ARM, JOINT (2003-2006)

BUSHING FRONT LATERAL LINK, REPLACING

Special tools:

see **9997054**

see **9997034**

see **9997132**

see **9995082**

see **9997098**

NOTE: **The illustrations in this service information are used for different model years and/or models. Some variation may occur. However, the essential information in the illustrations is always correct.**

REMOVAL

DISCONNECTING THE LATERAL LINK

Remove the front mounting for the lateral link. See **LATERAL LINK, REPLACING** fold the lateral link down.

REMOVING THE BUSHING

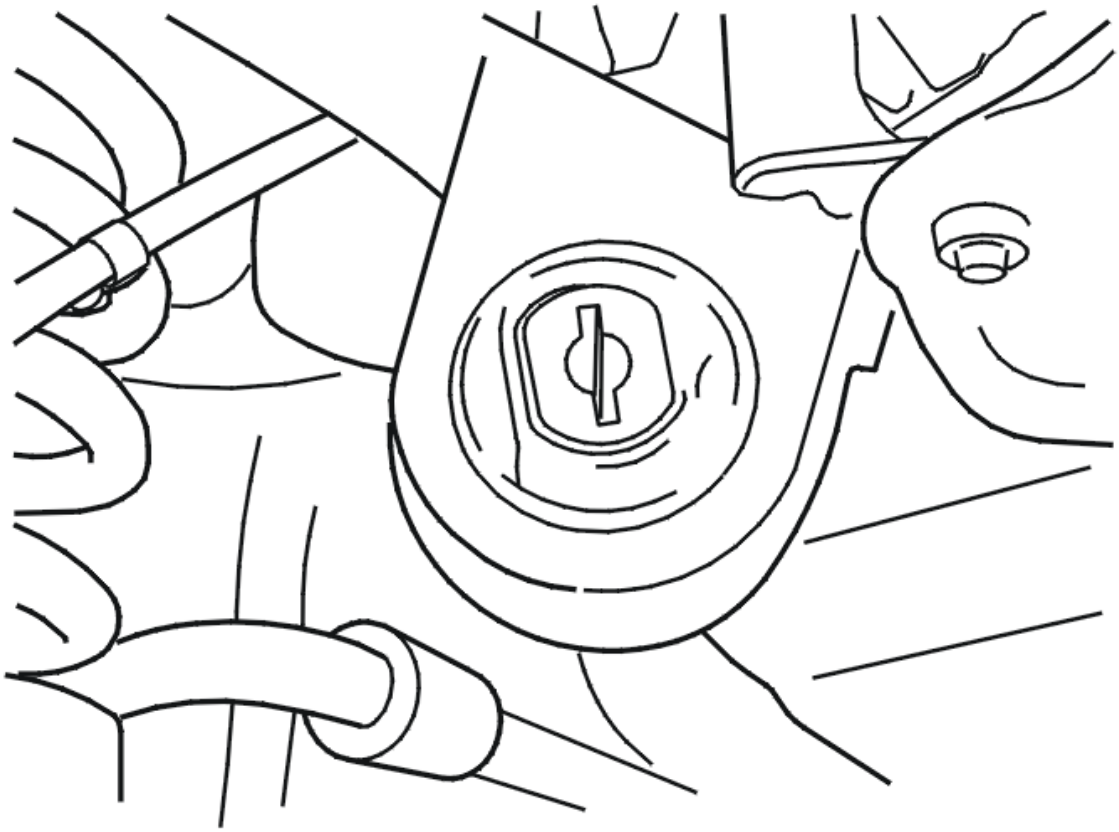

Fig. 10: Noting Position Of Bushing
Courtesy of VOLVO CARS CORPORATION

NOTE: Note the position of the bushing, lengthwise and direction of rotation.

If the vulcanizations of the bushing are defective, turn the center so that the mating surfaces are opposite each other.

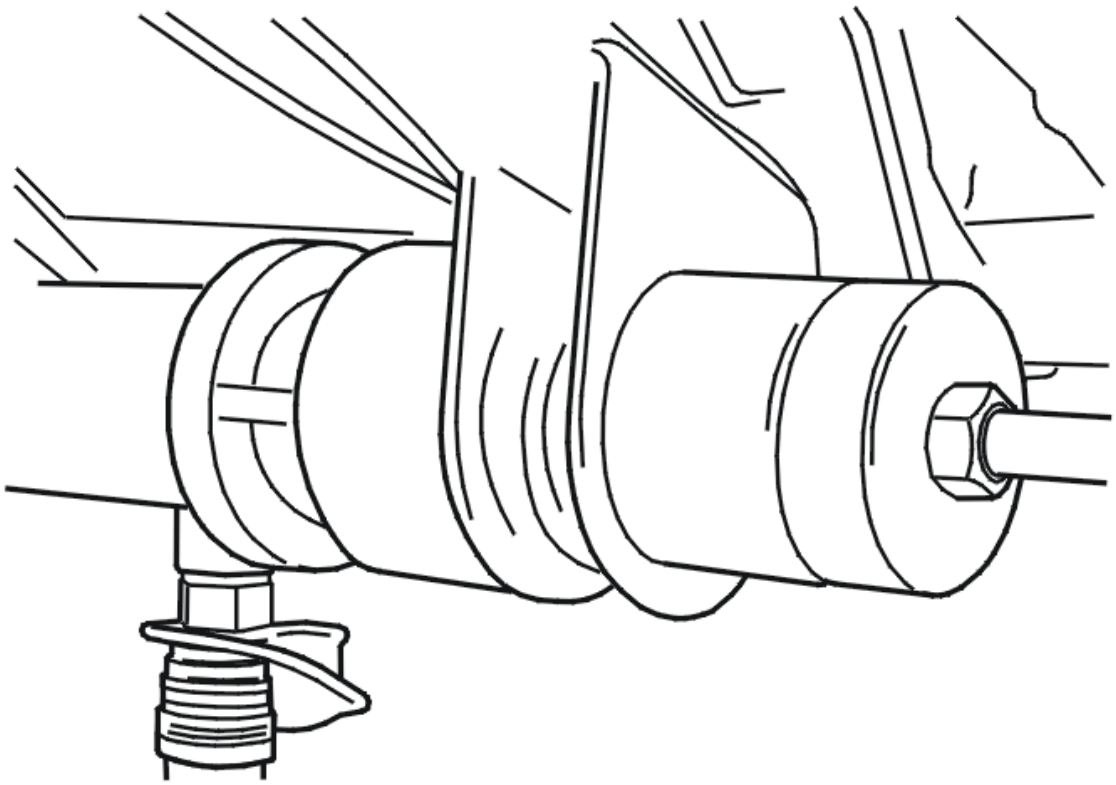

Fig. 11: Installing Hydraulic Cylinder
Courtesy of VOLVO CARS CORPORATION

Install the hydraulic cylinder as illustrated.

Use see **9997054** with connecting rod see **9997034** , nut see **9997132** , drift see **9995082** and drift: see **9997098** .

Pull the bushing out

INSTALLATION

INSTALLING THE BUSHING

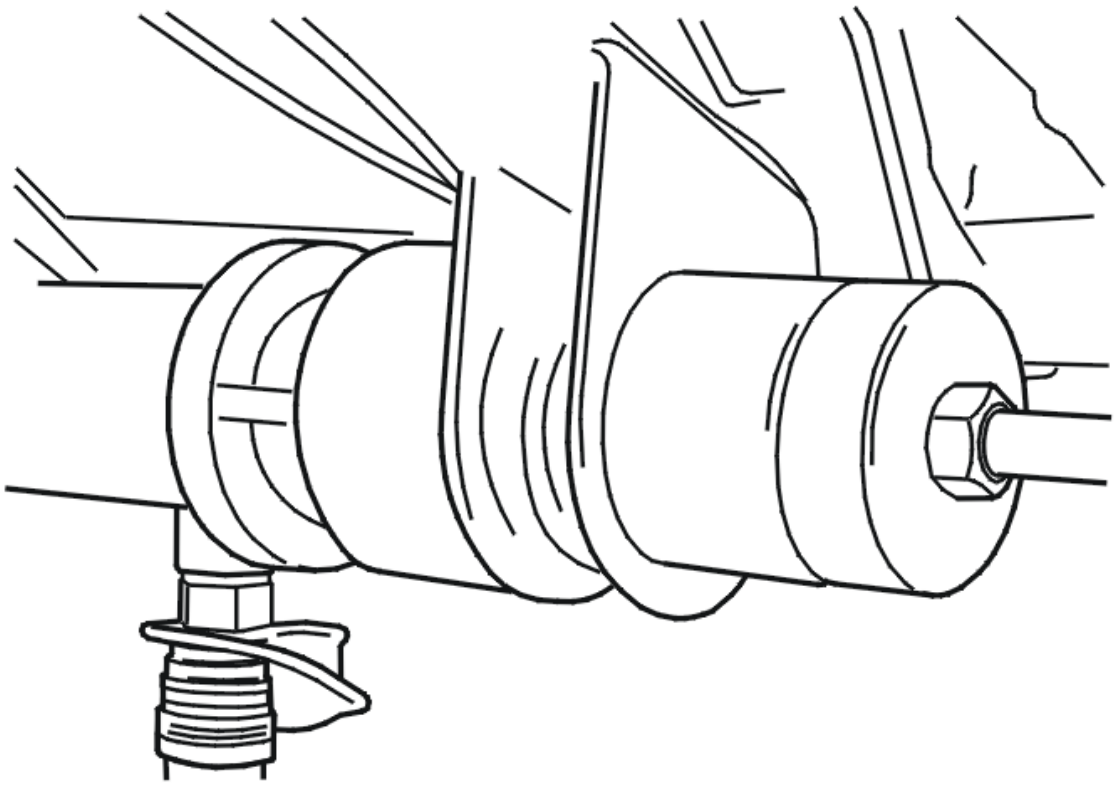

Fig. 12: Installing Bushing
Courtesy of VOLVO CARS CORPORATION

Install the new bushing in the same position as the old bushing. See the notes.

Press in the new bushing

INSTALLING THE LATERAL LINK

Fold the lateral link up.

Install the front mounting for the lateral link. See **LATERAL LINK, REPLACING**.

BUSHING FRONT SUB-FRAME, REPLACING

Special tools	
	T9512923 HYDRAULIC HOLE CYLINDER **Tool number:** T9512923 **Tool description:** HYDRAULIC HOLE CYLINDER **Tool boards:**
	T9512566 HYDRAULIC PUMP **Tool number:** T9512566 **Tool description:** HYDRAULIC PUMP

	Tool boards:
	T9997034 PULLER ROD M12X400 (800 AWD, P2X) **Tool number:** T9997034 **Tool description:** PULLER ROD M12X400 (800 AWD, P2X) **Tool boards:**
	T9997046 PUNCH (800 AWD, P2X) **Tool number:** T9997046 **Tool description:** PUNCH (800 AWD, P2X) **Tool boards:**
	T9997054 ADAPTER INCL. 2 PCS. MC6C M6X12 (800 AWD, P2X) **Tool number:** T9997054 **Tool description:** ADAPTER INCL. 2 PCS. MC6C M6X12 (800 AWD, P2X) **Tool boards:**
	T9997094 SUPPORT **Tool number:** T9997094 **Tool description:** SUPPORT **Tool boards:**
	T9997095 SOCKET **Tool number:** T9997095 **Tool description:** SOCKET **Tool boards:**
	T9997096 RING **Tool number:** T9997096 **Tool description:** RING **Tool boards:**
	T9997132 NUT M12 **Tool number:** T9997132 **Tool description:** NUT M12 **Tool boards:**
	T9995082 SLEEVE (REAR CONTROL ARM BUSHING) 240, 260, X40 **Tool number:** T9995082 **Tool description:** SLEEVE (REAR CONTROL ARM BUSHING) 240, 260, X40 **Tool boards:**

REMOVING

Remove the rear wheels.

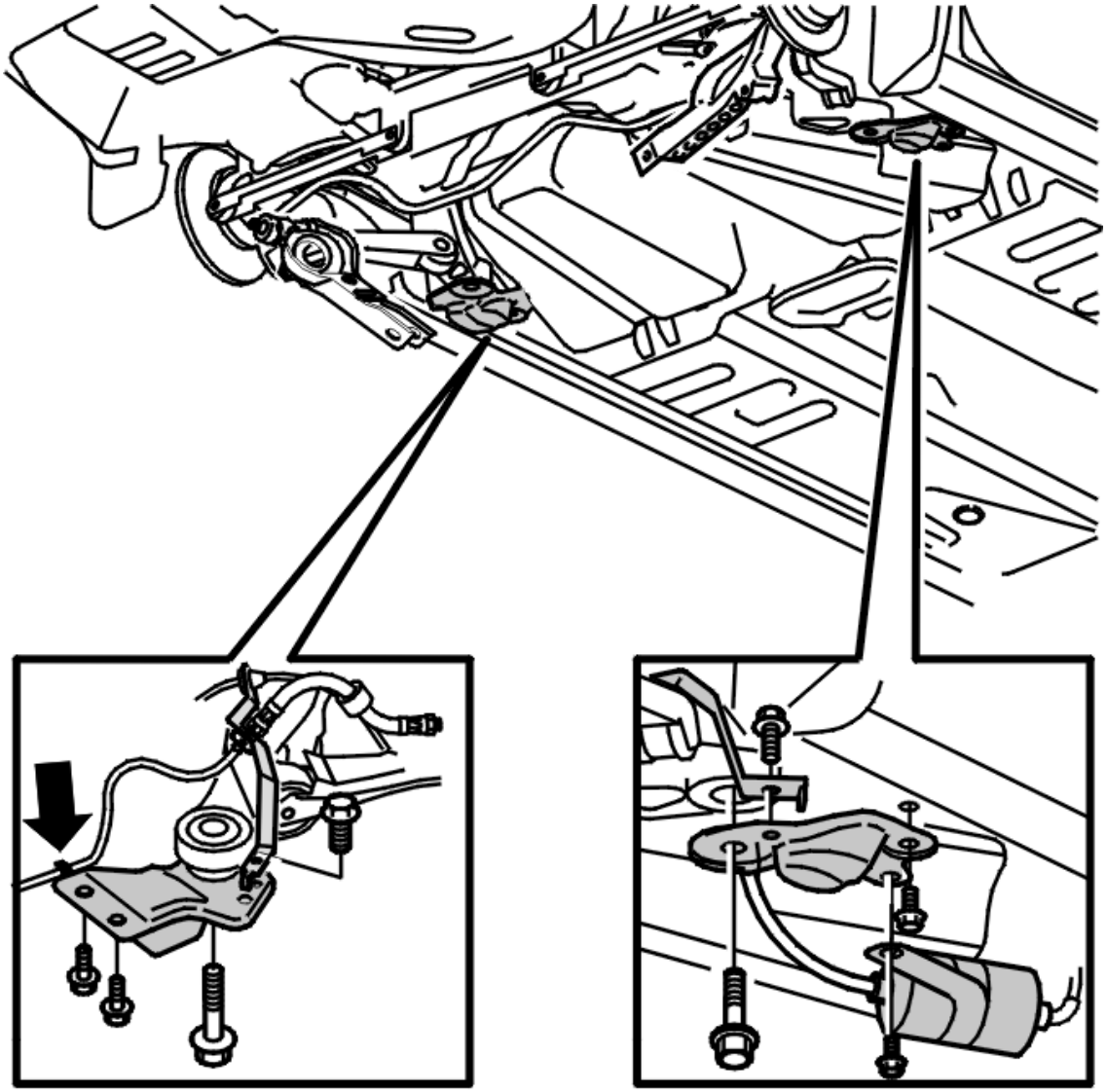

Fig. 13: Brake Hose Mounting Stays From Mountings On Brackets
Courtesy of VOLVO CARS CORPORATION

Position a lifting table under the rear suspension.

Remove:

- the 2 x front mountings for the sub-frame
- the 4 x screws for the subframe brackets
- the brake hose mounting stays from mountings on the brackets
- the brake pipes from the plastic clips
- the mounting for the fuel filter on the right bracket.

Lower the rear suspension carefully.

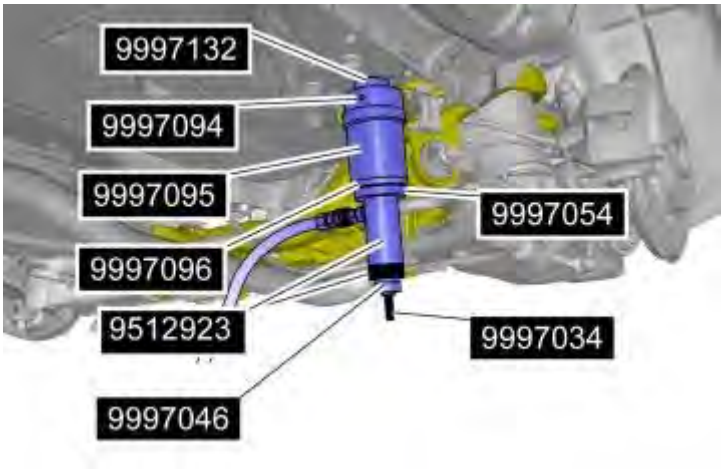

Fig. 14: Pressing Out Bushing Using Special Service Tool
Courtesy of VOLVO CARS CORPORATION

Press out the bushing

Use special tool:

- see **9512923** together with see **9512566**
- see **9997034**
- see **9997046**
- see **9997054**
- see **9997094**
- see **9997095**
- see **9997096**
- see **9997132**

INSTALLATION

NOTE: **For tightening torques, see: SUMMARY OF TIGHTENING TORQUES FOR SPECIFIC COMPONENTS .**

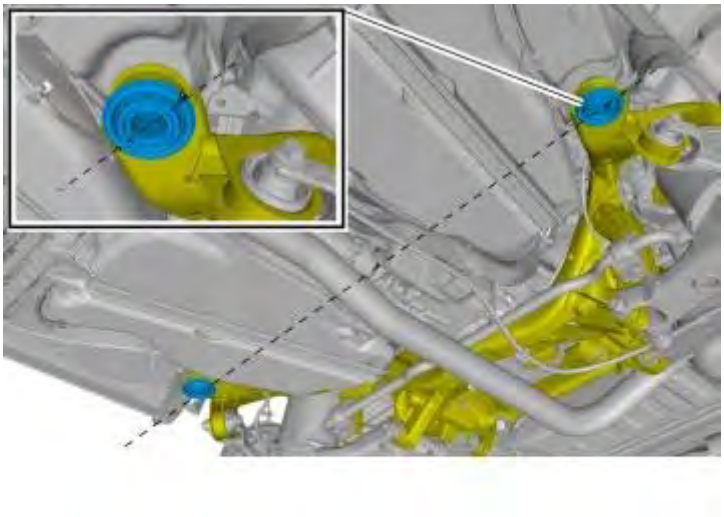

Fig. 15: Aligning Bushings In Relation To Sub-Frame
Courtesy of VOLVO CARS CORPORATION

NOTE: Align the bushing in relation to the sub-frame.

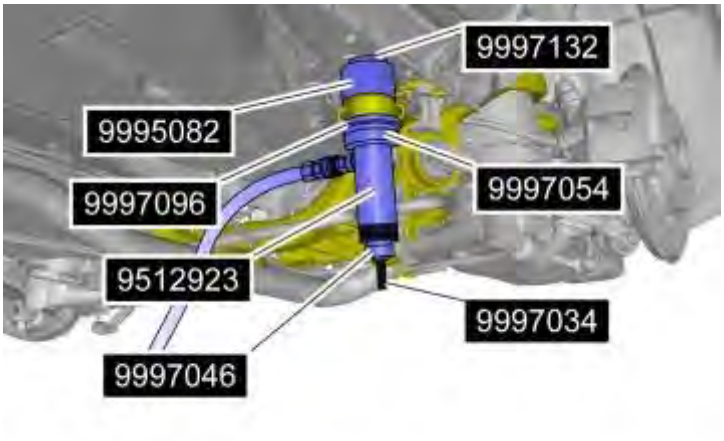

Fig. 16: Pressing In Bushing Using Special Service Tools
Courtesy of VOLVO CARS CORPORATION

Press in the bushing.

Use special tool:

- see **9512923** together with see **9512566**
- see **9995082**
- see **9997034**

- see **9997046**
- see **9997054**
- see **9997096**
- see **9997132**

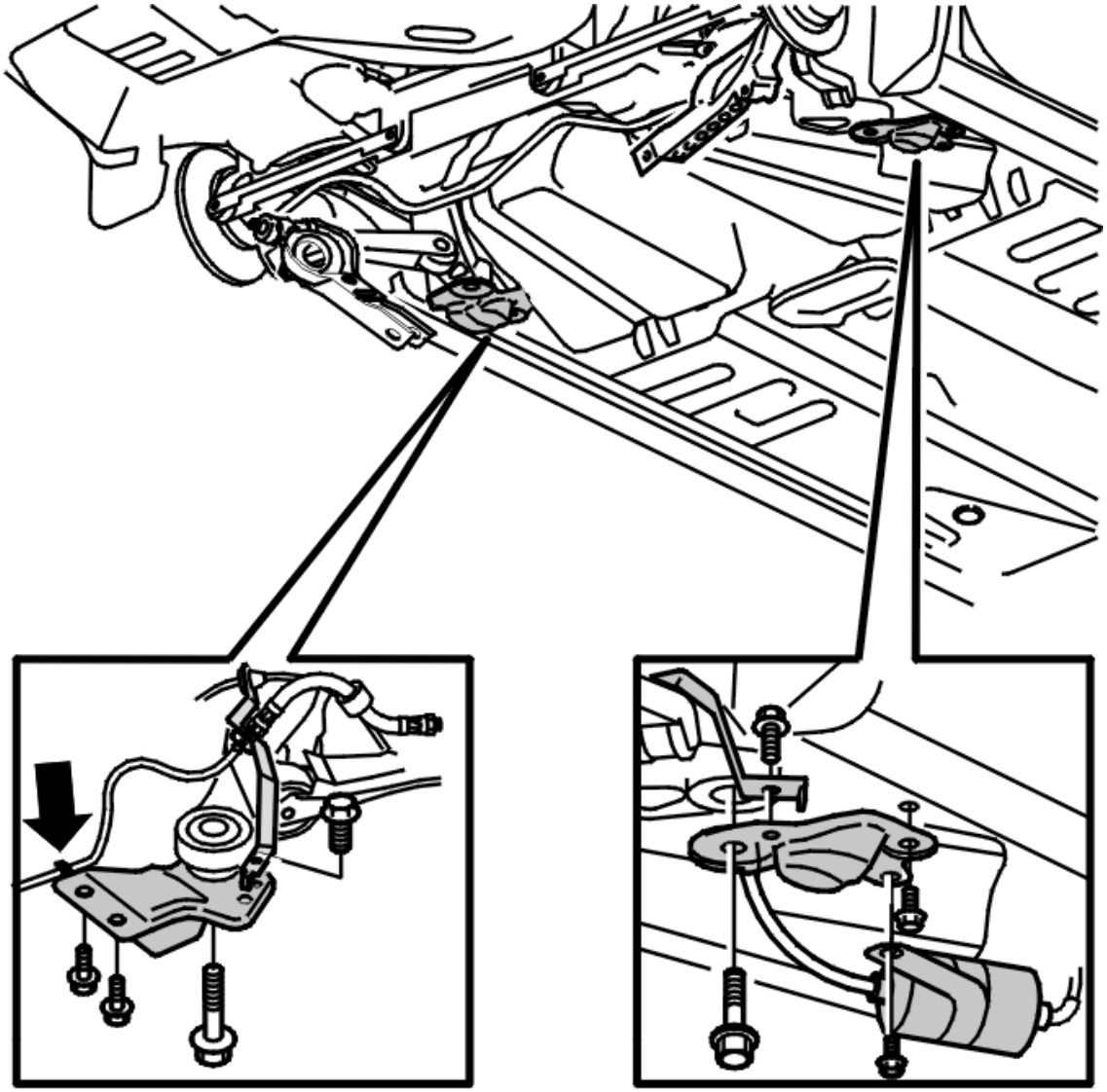

Fig. 17: Brake Hose Mounting Stays From Mountings On Brackets
Courtesy of VOLVO CARS CORPORATION

WARNING: **Always check that the car does not lift from the lifting arms of the car lift when working with the lifting table.**

Carefully raise the rear suspension.

Install:

- the bracket for the fuel pre-filter, (M8)
- the bracket for the brake pipe, (M8)
- the 4 x M12 screws for the brackets to the sub-frame.

Tighten, see: **SUMMARY OF TIGHTENING TORQUES FOR SPECIFIC COMPONENTS** .

Install the rear wheels. See **INSTALLING WHEELS** .

BUSHING INNER CONTROL ARM LOWER, REPLACE

Special tools:

see **9997054**

see **9997035**

see **9997037**

see **9997099**

NOTE: **The illustrations in this service information are used for different model years and/or models. Some variation may occur. However, the essential information in the illustrations is always correct.**

PREPARATORY WORK

Remove the rear wheels.

REMOVAL

REMOVING THE INNER MOUNTING FOR THE CONTROL ARM

Fig. 18: Removing Inner Mounting
Courtesy of VOLVO CARS CORPORATION

Slacken off the upper screw for the control arm

Remove:

- the screw in the sub-frame for the lower control arm
- the screw for the inner mounting for the lateral link. See **TIE ROD, REPLACING**.

REMOVING THE ANTI-ROLL BAR

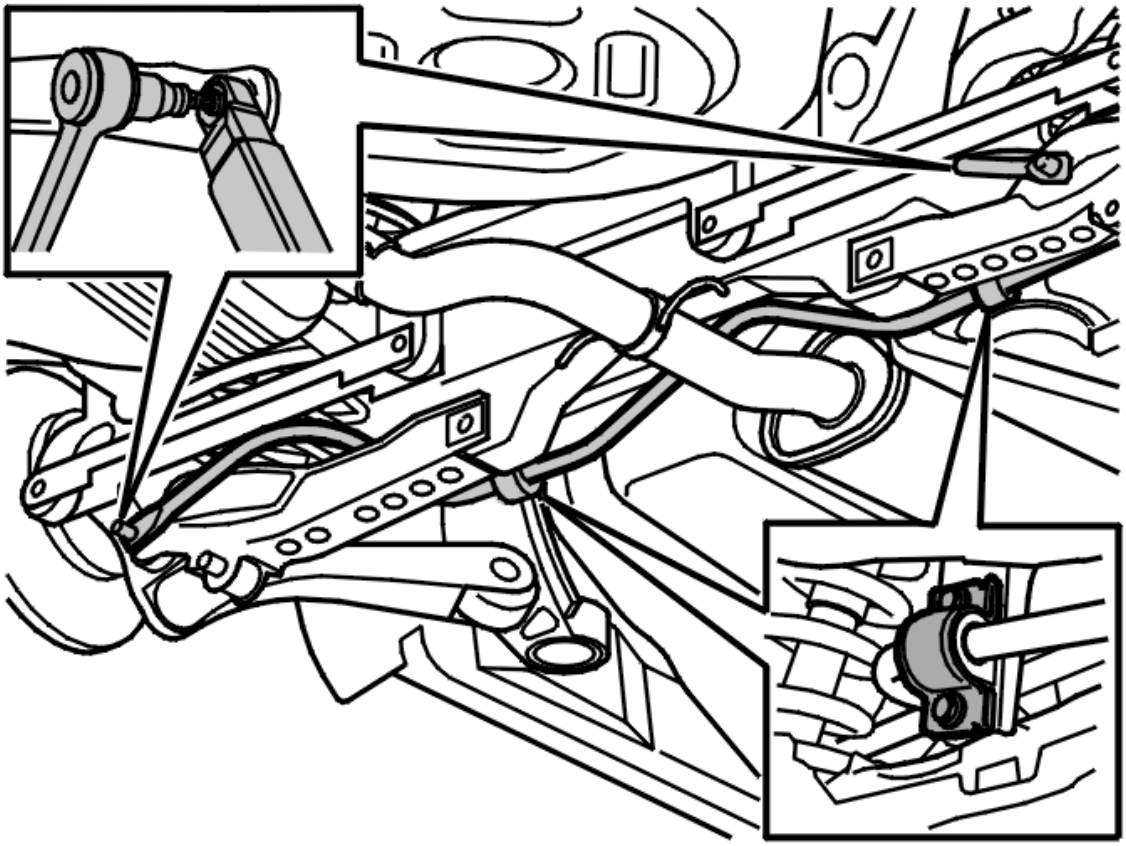

Fig. 19: Removing Anti-Roll Bar
Courtesy of VOLVO CARS CORPORATION

Remove:

- the anti-roll bar from the outer mounting on the side bushing must be replaced. Use a Torx wrench as a counterhold so that the boot is not damaged
- the screws holding the anti-roll bar in the sub-frame.

Raise the outer end of the control arm slightly so that the inner section of the control arm tips down to release the inner bushing.

REMOVING THE BUSHING

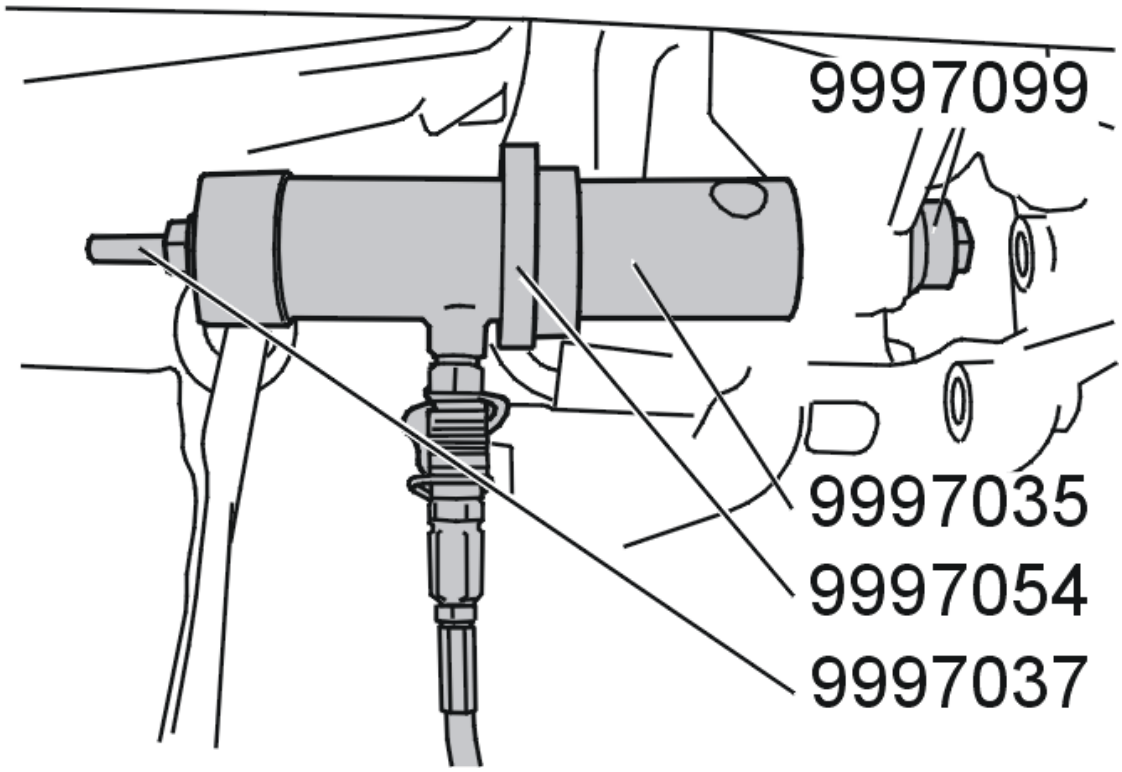

Fig. 20: Removing Bushing Using Special Service Tool
Courtesy of VOLVO CARS CORPORATION

NOTE: Mark up the position of the bushing before removing.

Install the hydraulic cylinder as illustrated.

Use see **9997054** with see **9997035** , connecting rod (M14X400) see **9997037** and see **9997099** on the other side of the bushing.

Pull the bushing out

INSTALLATION

NOTE: For tightening torques, see: TIGHTENING TORQUE .

INSTALLING THE BUSHING

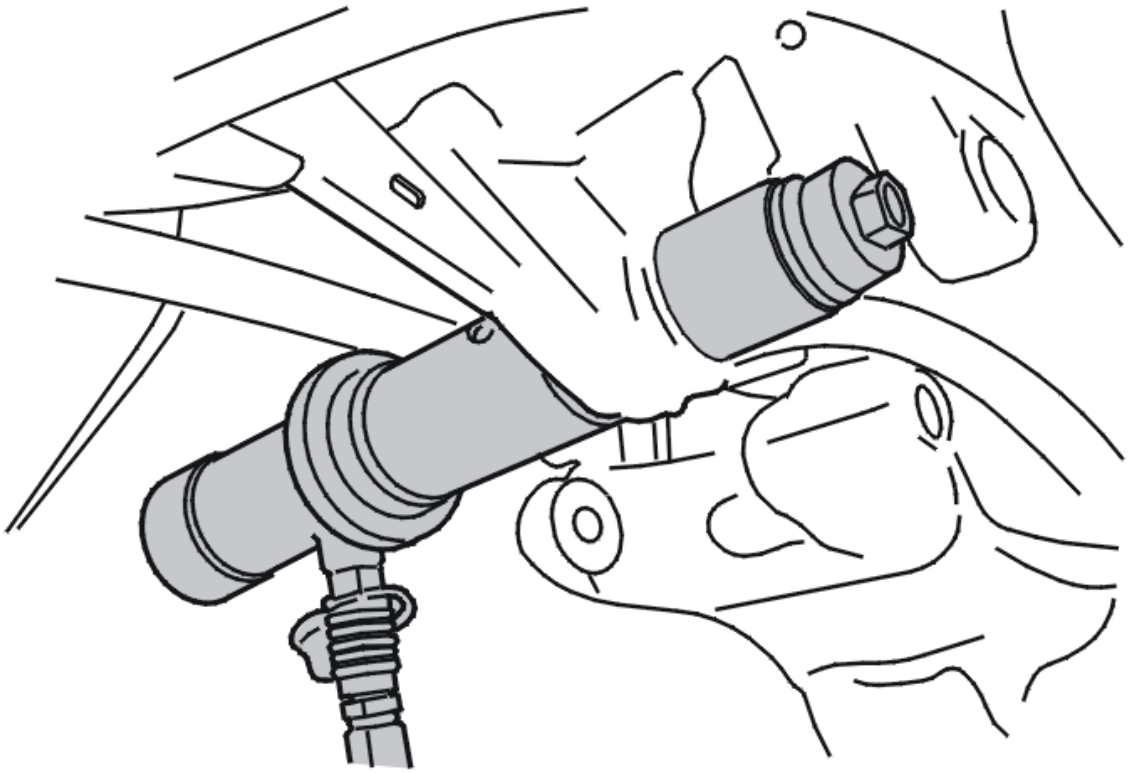

Fig. 21: Installing Bushing
Courtesy of VOLVO CARS CORPORATION

NOTE: Install the bushing according to the previous markings.

Install the new bushing. Pull the bushing through the sub-frame as illustrated.

INSTALLING THE ANTI-ROLL BAR

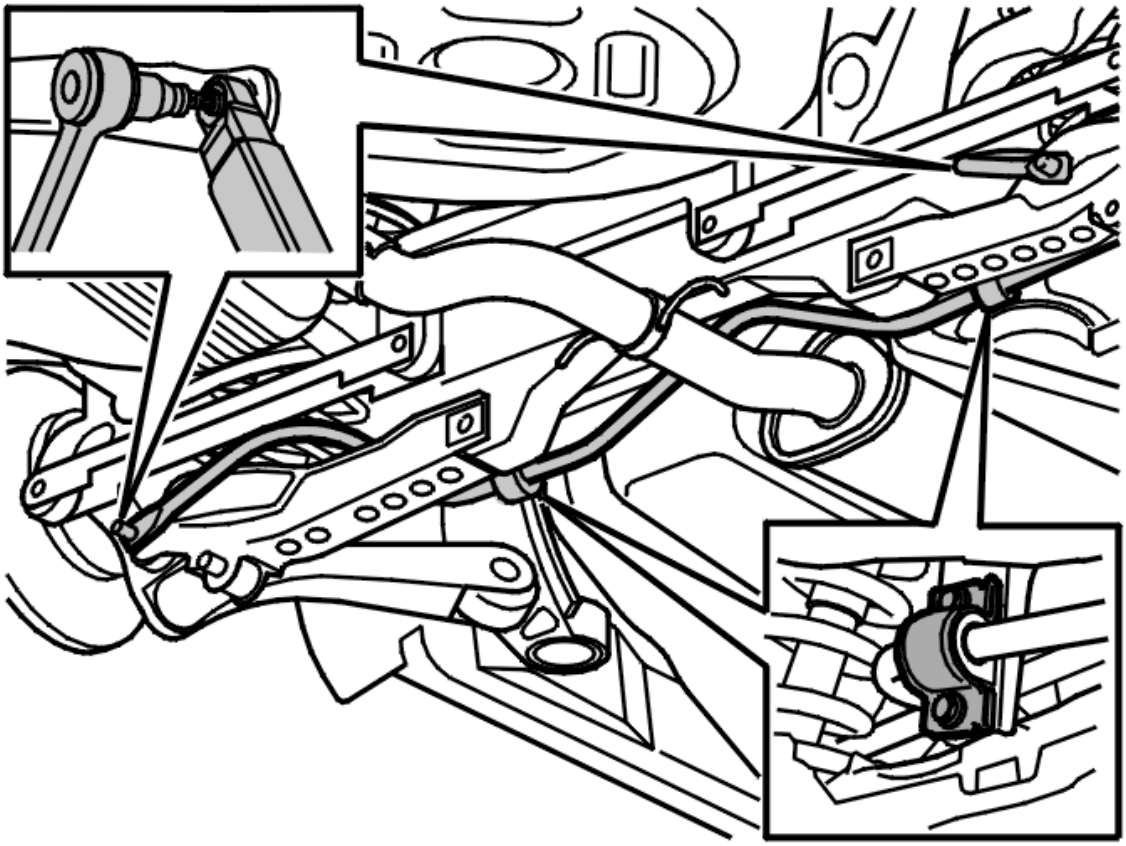

Fig. 22: Installing Anti-Roll Bar
Courtesy of VOLVO CARS CORPORATION

Lower the outer ends of the control arm to the original position.

Tighten. See: **TIGHTENING TORQUE** .

Install:

- the 2 x M12 screws holding the anti-roll bar in the sub-frame
- the anti roll bar outer mountings.

Use a Torx wrench as a counterhold so that the boot is not damaged.

INSTALLING THE INNER MOUNTING FOR THE CONTROL ARM

Fig. 23: Installing Inner Mounting
Courtesy of VOLVO CARS CORPORATION

Install:

- the screw in the sub-frame for the lower control arm
- the screw for the inner mounting for the lateral link. See **TIE ROD, REPLACING**.

Tighten. See: **TIGHTENING TORQUE** .

Tighten the M12 upper screw for the arm.

Tighten the M12 screw for the inner mounting for the control arm.

FINISHING

Install the rear wheels. See **INSTALLING WHEELS** .

BUSHING INNER CONTROL ARM UPPER, REPLACE

Special tools:

see **9997054**

see **9997049**

see **9997037**

see **9997038**

see **9997036**

NOTE: The illustrations in this service information are used for different model years and/or models. Some variation may occur. However, the essential information in the illustrations is always correct.

PREPARATORY WORK

Remove the rear wheels.

REMOVING THE UPPER CONTROL ARM

NOTE: Remove the upper control arm. See CONTROL ARM UPPER, REPLACING.

REMOVAL

REMOVING THE BUSHING

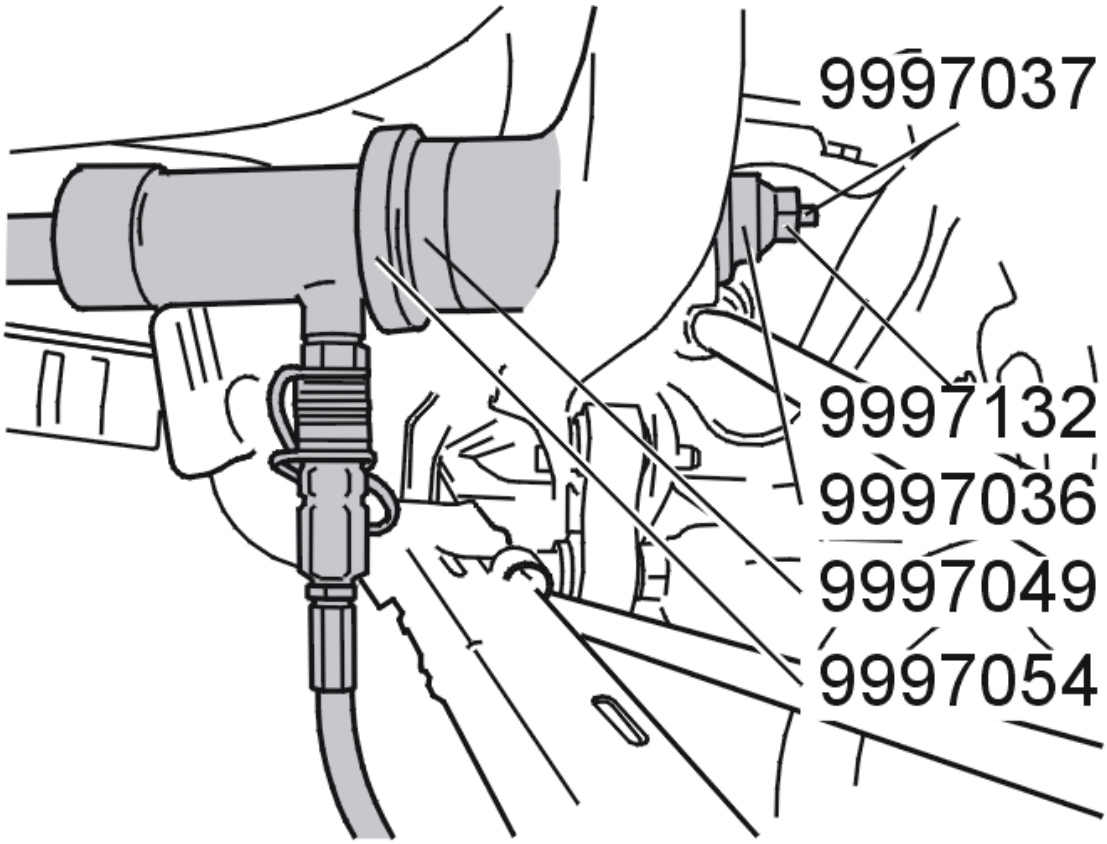

Fig. 24: Removing The Bushing Using Special Service Tools
Courtesy of VOLVO CARS CORPORATION

NOTE: Mark up the position of the bushing before removing.

Install the hydraulic cylinder as illustrated.

Use see **9997054** with see **9997049** , connecting rod see **9997037** and see **9997036** on the other side of the bushing.

Pull the bushing out

INSTALLATION

INSTALLING THE BUSHING

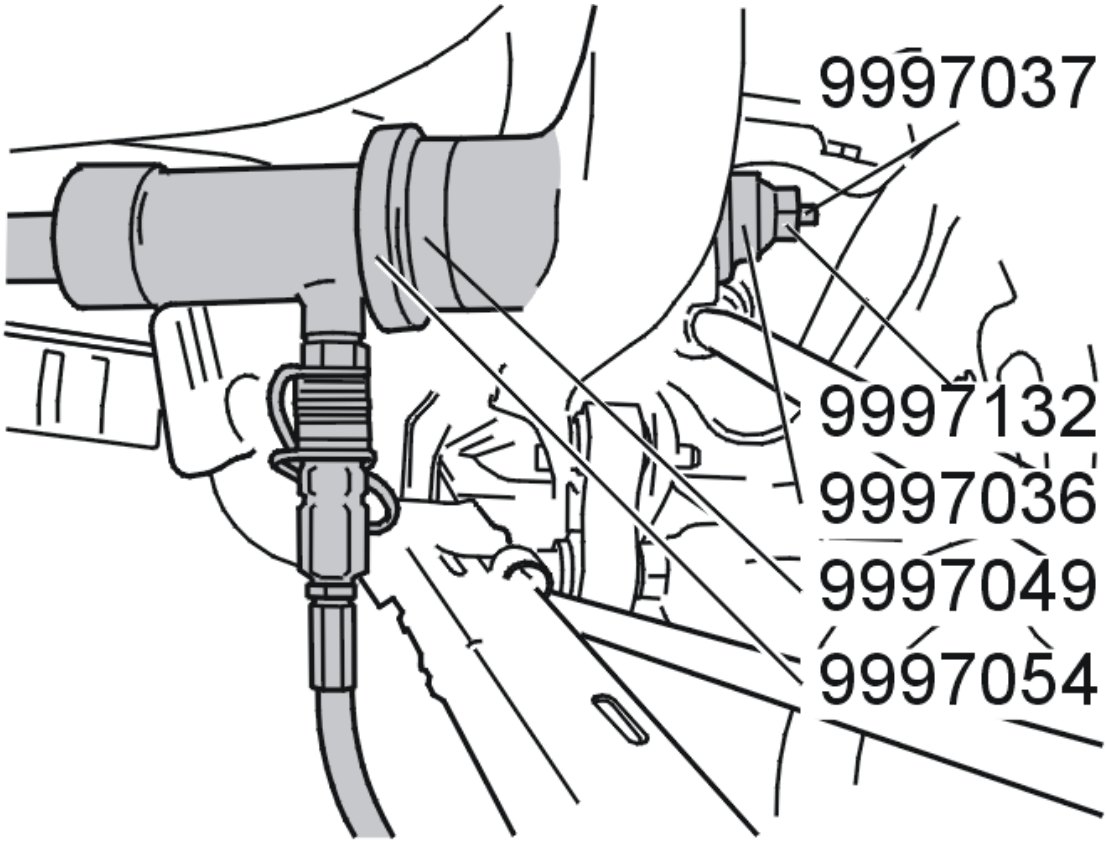

Fig. 25: Installing Bushing Using Special Service Tools
Courtesy of VOLVO CARS CORPORATION

NOTE: Install the bushing according to the previous markings.

HINT: Lubricate the bushing. Use soap solution so that the bushing slides through the sub-frame more easily.

Install the new bushing. Pull the bushing through the sub-frame as illustrated.

Install the hydraulic cylinder as illustrated

Use see **9997054** with see **9997049** , connecting rod see **9997037** , cone see **9997038** , drift see **9997036** on the other side of the bushing.

INSTALLING THE LOWER OUTER CONTROL ARM MOUNTING

Install the control arm. See: **CONTROL ARM UPPER, REPLACING**.

FINISHING

Install the rear wheels. See **INSTALLING WHEELS** .

BUSHING INNER TIE ROD, REPLACING

Special tools:

see **9997054**

see **9997034**

see **9997132**

see **9997049**

see **9997036**

NOTE: The illustrations in this service information are used for different model years and/or models. Some variation may occur. However, the essential information in the illustrations is always correct.

REMOVAL

REMOVE THE TIE ROD

Remove the inner mounting of the tie rod. See **TIE ROD, REPLACING** and fold the tie rod down.

REMOVING THE BUSHING

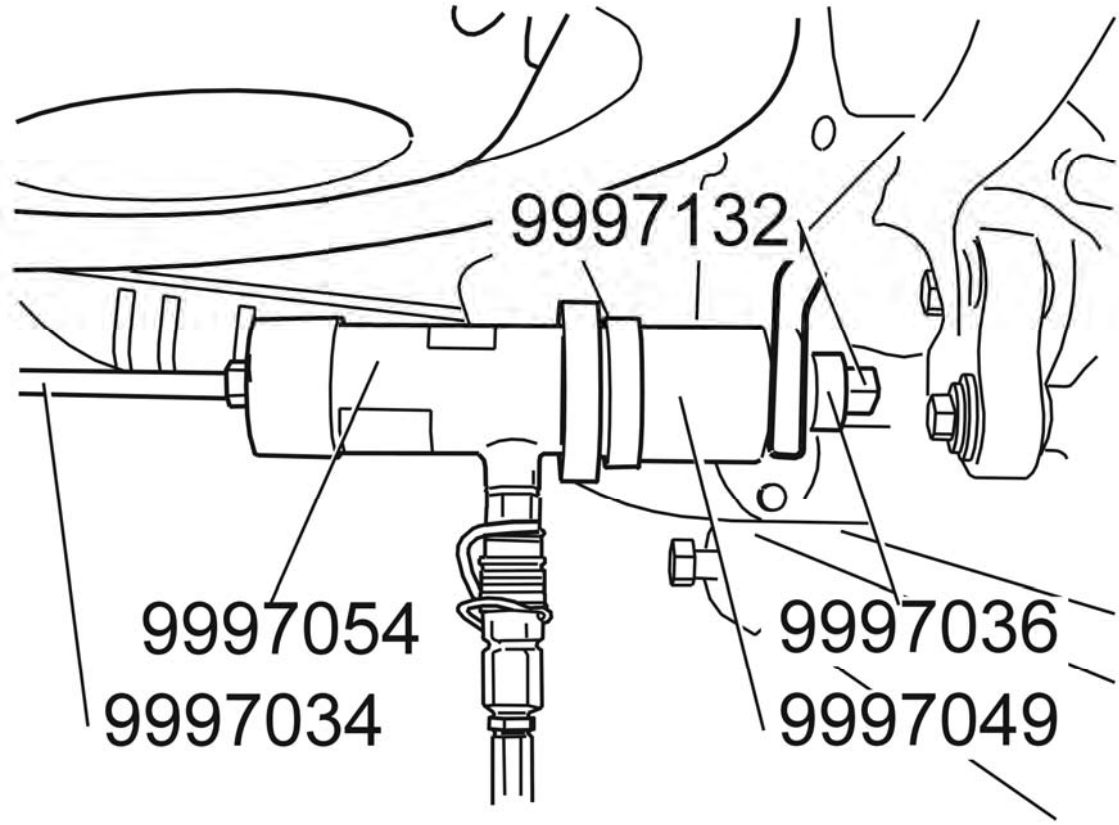

Fig. 26: Removing Bushing Using Special Service Tools
Courtesy of VOLVO CARS CORPORATION

NOTE: Note the position of the bushing before removal.

Install the hydraulic cylinder as illustrated.

Use see **9997054** with connecting rod see **9997034** , nut: see **9997132** , socket: see **9997049** and drift: see **9997036** .

Pull the bushing out

INSTALLATION

INSTALLING THE BUSHING

NOTE: Pull in the new bushing to the same position as previously noted

Install the new bushing on the other side of the mounting lug. Pull in the bushing in the same direction as it was pulled out.

INSTALLING TIE ROD

Install the inner mounting of the tie rod. See **TIE ROD, REPLACING**.

BUSHING OUTER CONTROL ARM LOWER, REPLACING

Special tools:

see **9997054**

see **9997035**

see **9997044**

see **9997034**

see **9997032**

see **9997045**

NOTE: The illustrations in this service information are used for different model years and/or models. Some variation may occur. However, the essential information in the illustrations is always correct.

PREPARATORY WORK

Remove the rear wheels.

DETACH THE LOWER OUTER CONTROL ARM MOUNTING

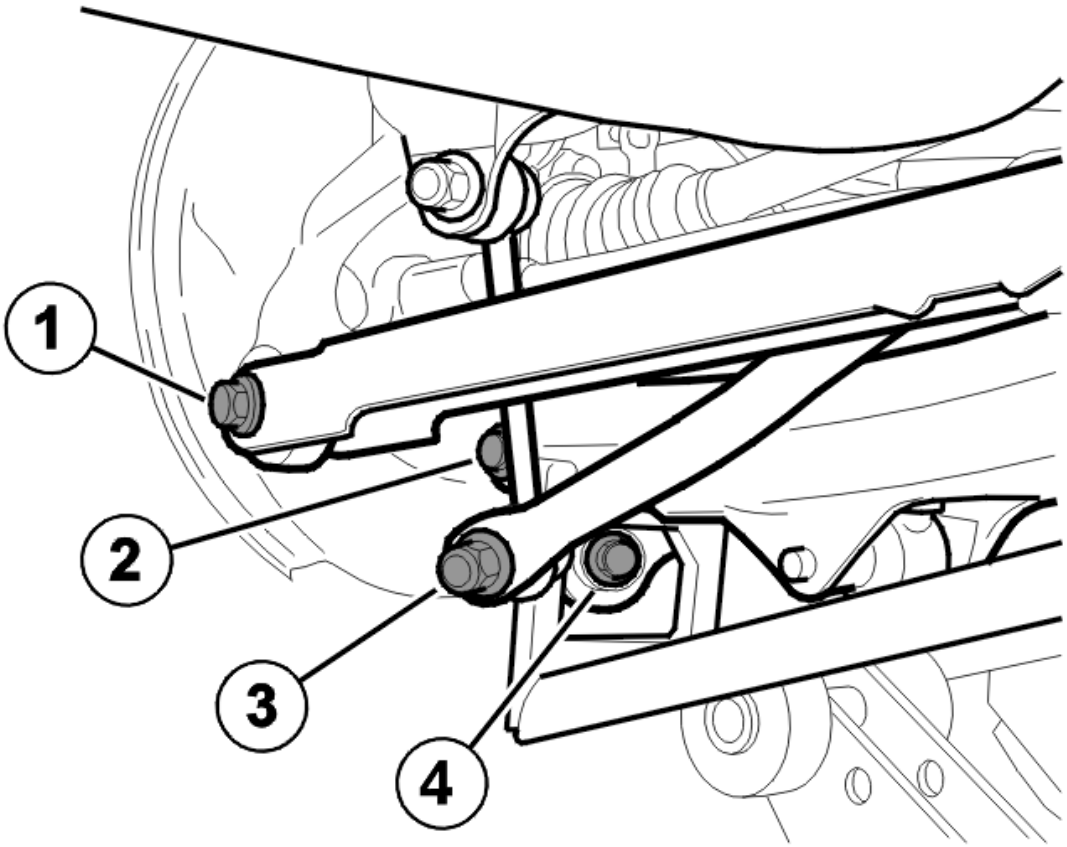

Fig. 27: Detaching Lower Outer Control Arm Mounting
Courtesy of VOLVO CARS CORPORATION

Remove:

- the nut mounting
- anti-roll bar link (3). Counter hold using torx
- the screw (2) as illustrated.

Raise the spindle to release the bushing.

REMOVAL

REMOVING THE BUSHING

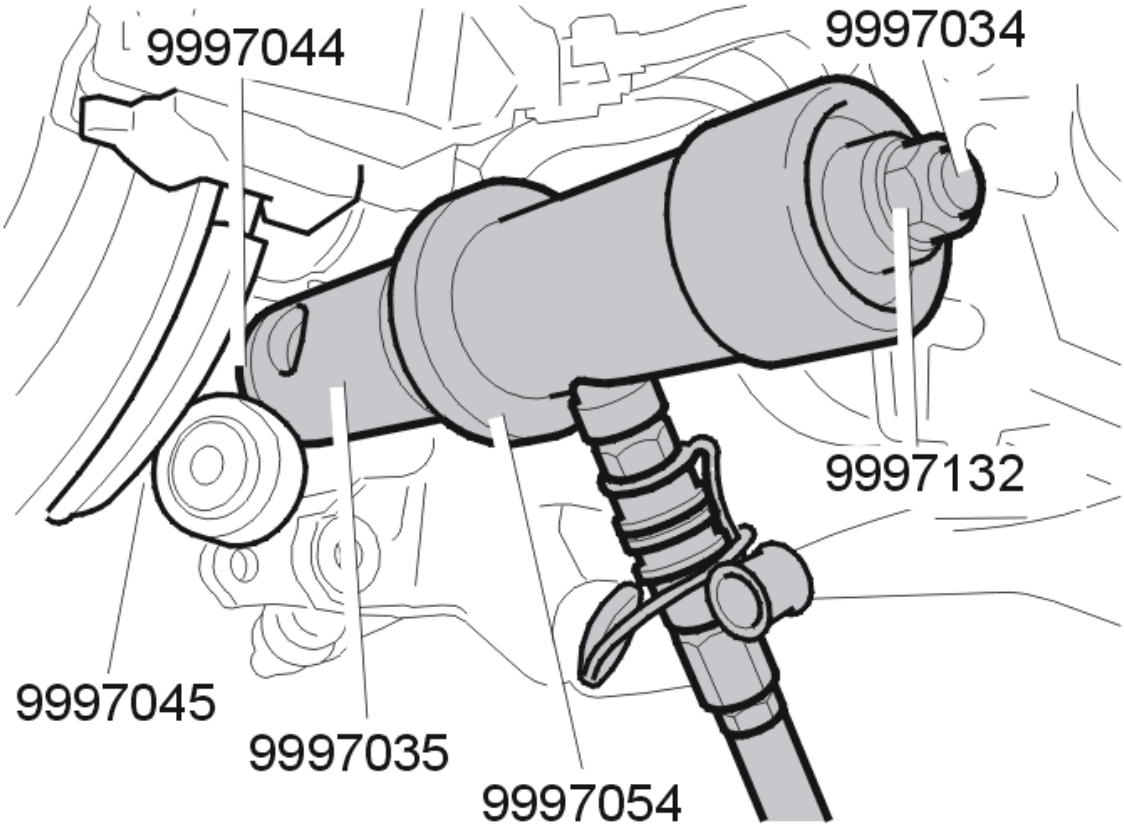

Fig. 28: Removing Bushing Using Special Service Tools
Courtesy of VOLVO CARS CORPORATION

NOTE: Mark up the position of the bushing before removing.

Install the hydraulic cylinder as illustrated.

Use see **9997054** with see **9997035** , socket) see **9997044** , connecting rod see **9997034** , nut: see **9997032** and see **9997045** .

Pull the bushing out

INSTALLATION

INSTALLING THE BUSHING

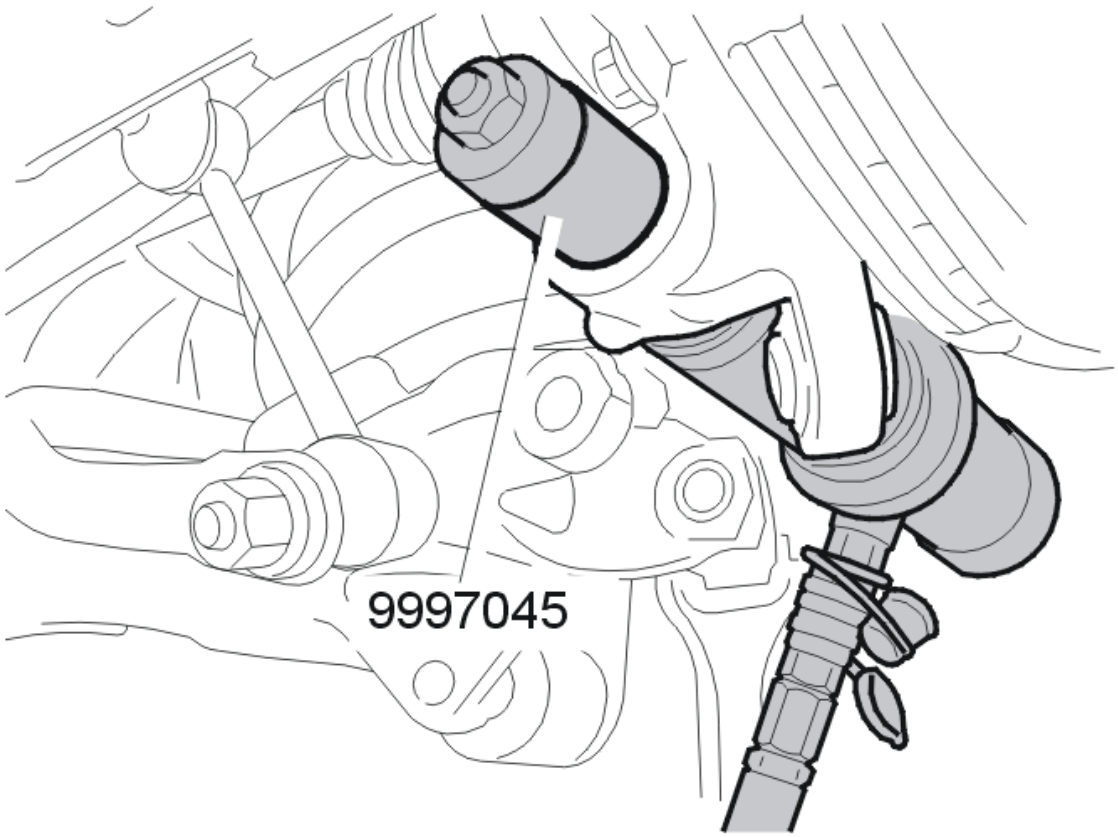

Fig. 29: Installing Bushing Using Special Service Tools
Courtesy of VOLVO CARS CORPORATION

NOTE: Install the bushing according to the previous markings.

Use see **9997054** with see **9997035** , socket see **9997044** , connecting rod see **9997034** , nut: see **9997032** and see **9997045** on the other side of the bushing.

Install the new bushing on the other side of the mounting lug. Pull in the bushing in the same direction as it was pulled out.

INSTALLING THE LOWER OUTER CONTROL ARM MOUNTING

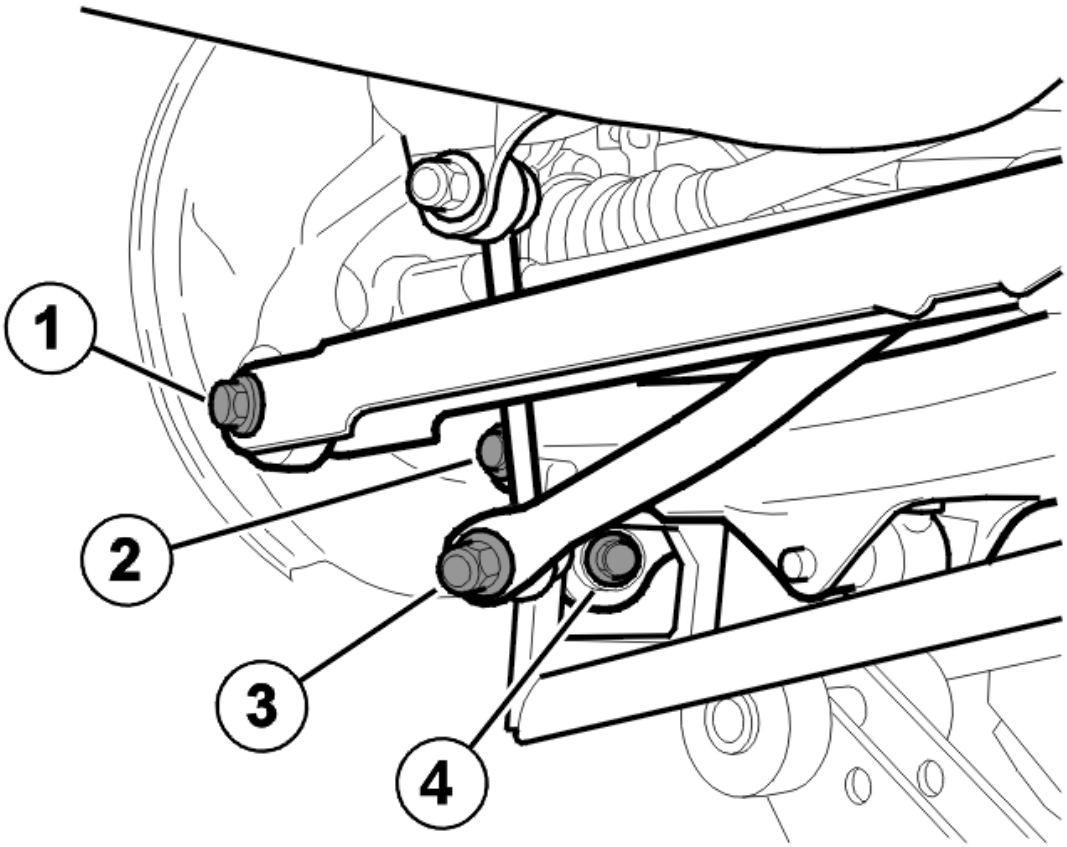

Fig. 30: Installing Lower Control Arm Mounting
Courtesy of VOLVO CARS CORPORATION

Lower the spindle. Install the screw.

Tighten the M12 screw (2) to the control arm mounting.

Tighten the M12 nut to the mounting on the anti-roll bar link (3).

Counterhold using a Torx wrench so that the boot does not rotate.

FINISHING

Install the rear wheels. See **INSTALLING WHEELS** .

BUSHING OUTER CONTROL ARM UPPER, REPLACING

Special tools:

see **9512923**

see **9997031**

see **9997030**

see **9997039**

see **9997054**

see **9997049**

see **9997037**

see **9997038**

see **9997098**

see **9997132**

NOTE: **The illustrations in this service information are used for different model years and/or models. Some variation may occur. However, the essential information in the illustrations is always correct.**

PREPARATORY WORK

Remove the rear wheels.

REMOVING THE WHEEL SPINDLE

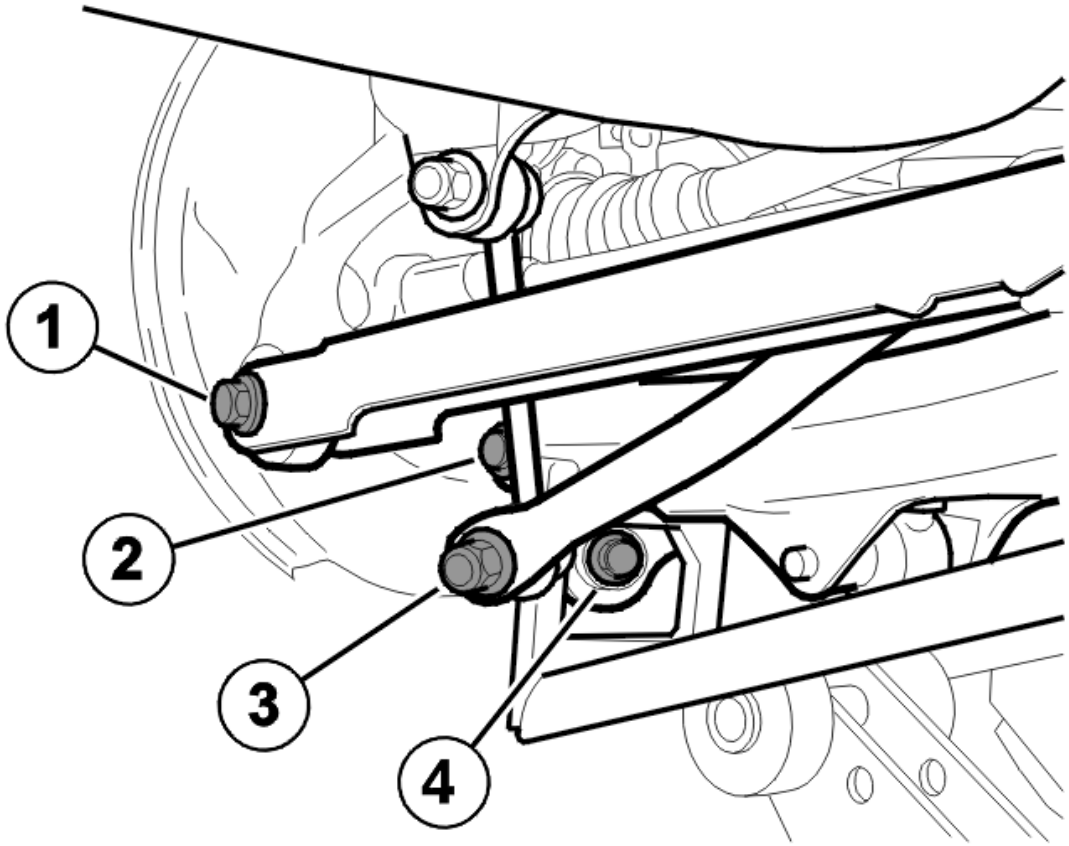

Fig. 31: Removing Control Arm Mounting And Assembly
Courtesy of VOLVO CARS CORPORATION

Remove:

- the screw for the mounting in the tie rod (1)
- the screw for the mounting in the control arm (2)
- the nut for the mounting in the anti-roll bar link (3).

Counterhold using a Torx wrench so that the boot does not rotate.

DISCONNECTING THE CONTROL ARM

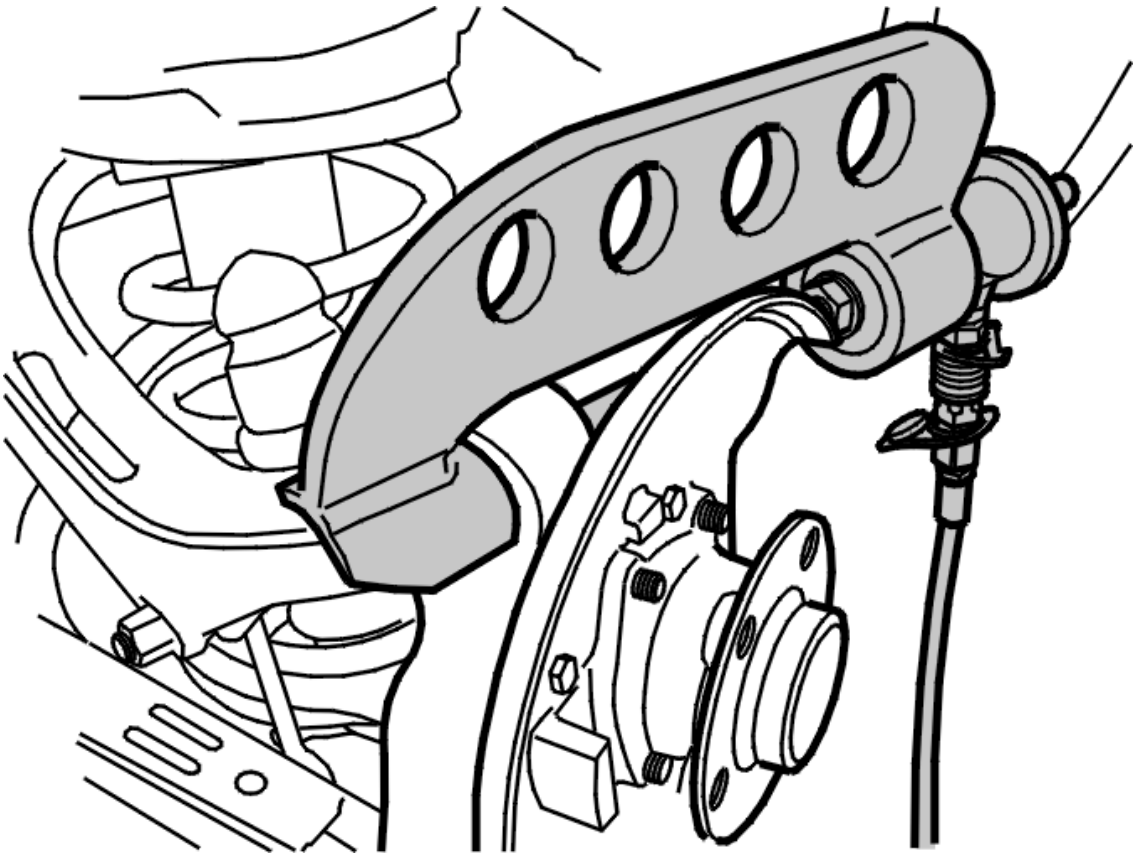

Fig. 32: Screw And Wheel Spindle From Upper Control Arm
Courtesy of VOLVO CARS CORPORATION

Slacken off the screw for the outer control arm mounting. Slacken off 3 turns.

Use tool see **9512923** together with: see **9997031** and see **9997030** together with see **9997039** .

Press off the wheel spindle.

NOTE: Only press until the bushing releases from the splined area.

Remove the screw.

REMOVAL

REMOVING THE BUSHING

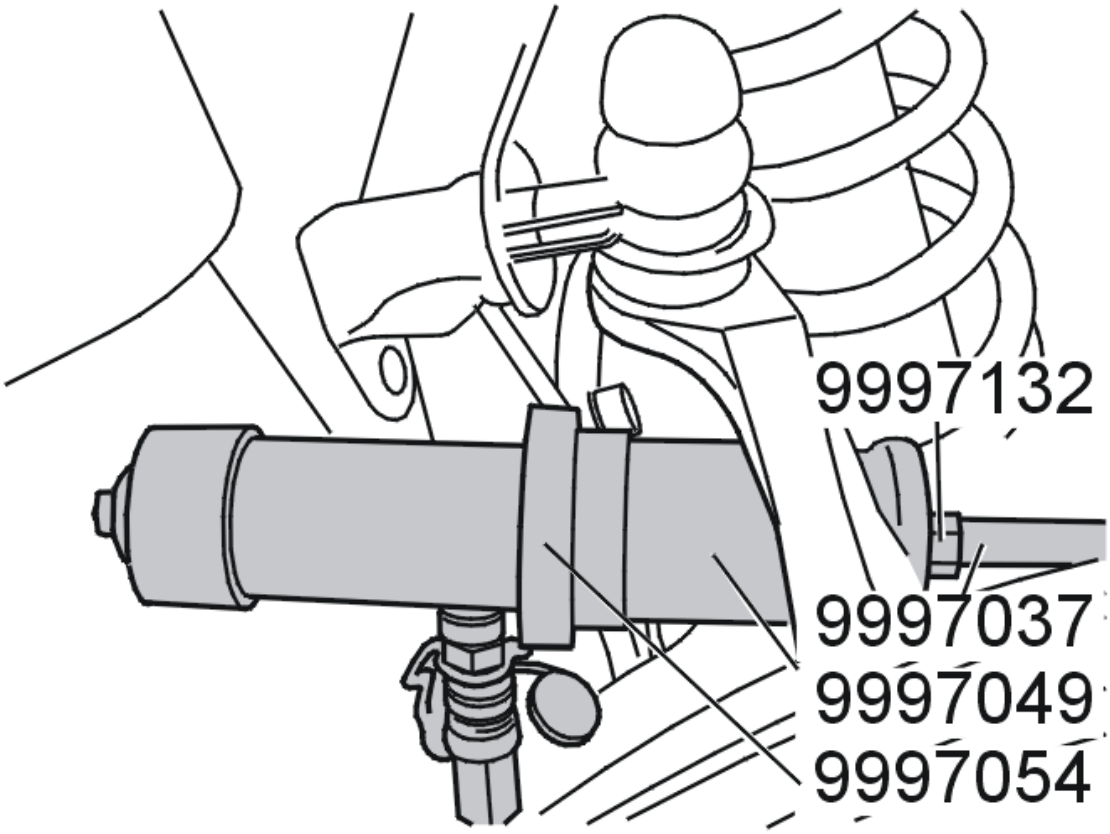

Fig. 33: Removing Bushing Using Special Service Tools
Courtesy of VOLVO CARS CORPORATION

NOTE: Mark up the position of the bushing before removing.

Install the hydraulic cylinder as illustrated.

Use see **9997054** with see **9997049** , connecting rod see **9997037** and see **9997132** on the other side of the bushing.

Pull the bushing out

INSTALLATION

INSTALLING THE BUSHING

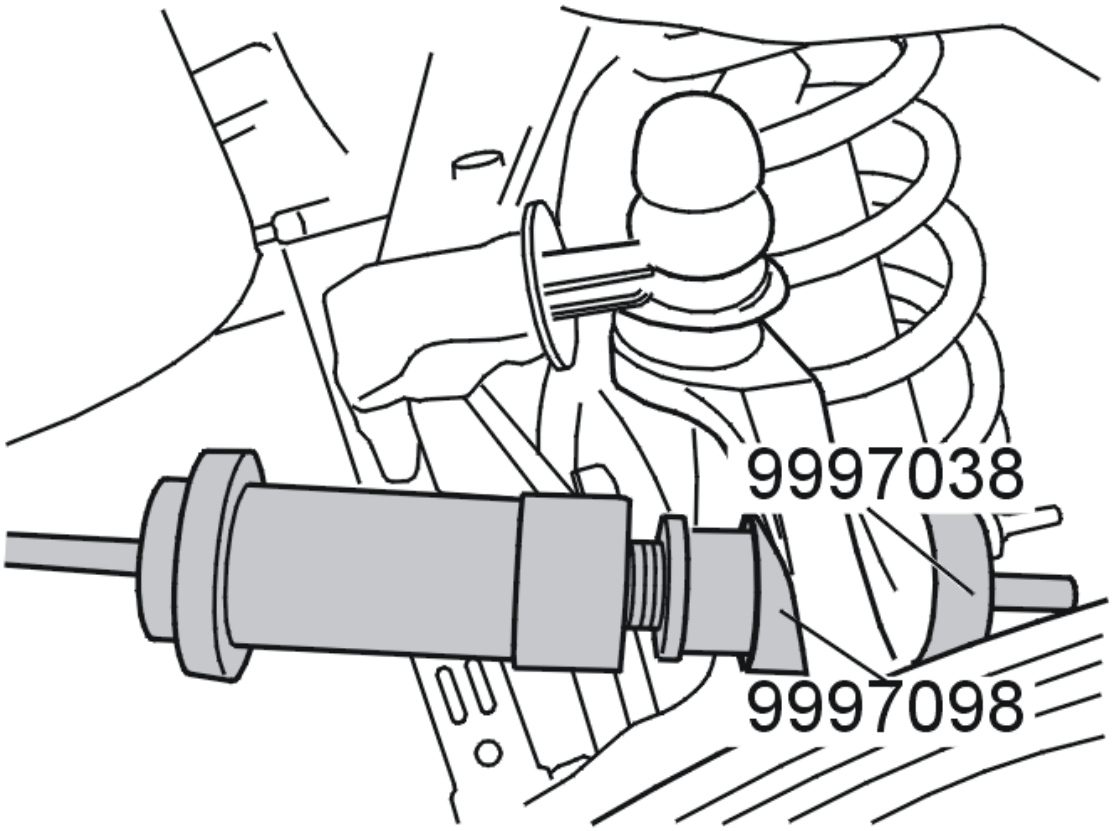

Fig. 34: Installing Bushing Using Special Service Tools
Courtesy of VOLVO CARS CORPORATION

NOTE: Install the bushing according to the previous markings.

HINT: Lubricate the bushing. Use a soap solution so that the bushing slides through the spindle more easily.

Install the new bushing. Pull the bushing through the spindle as illustrated.

Use see **9997054** with see **9997038** , connecting rod see **9997037** , nut see **9997132** , drift see **9997098** on the other side of the bushing.

INSTALLING THE LOWER OUTER CONTROL ARM MOUNTING

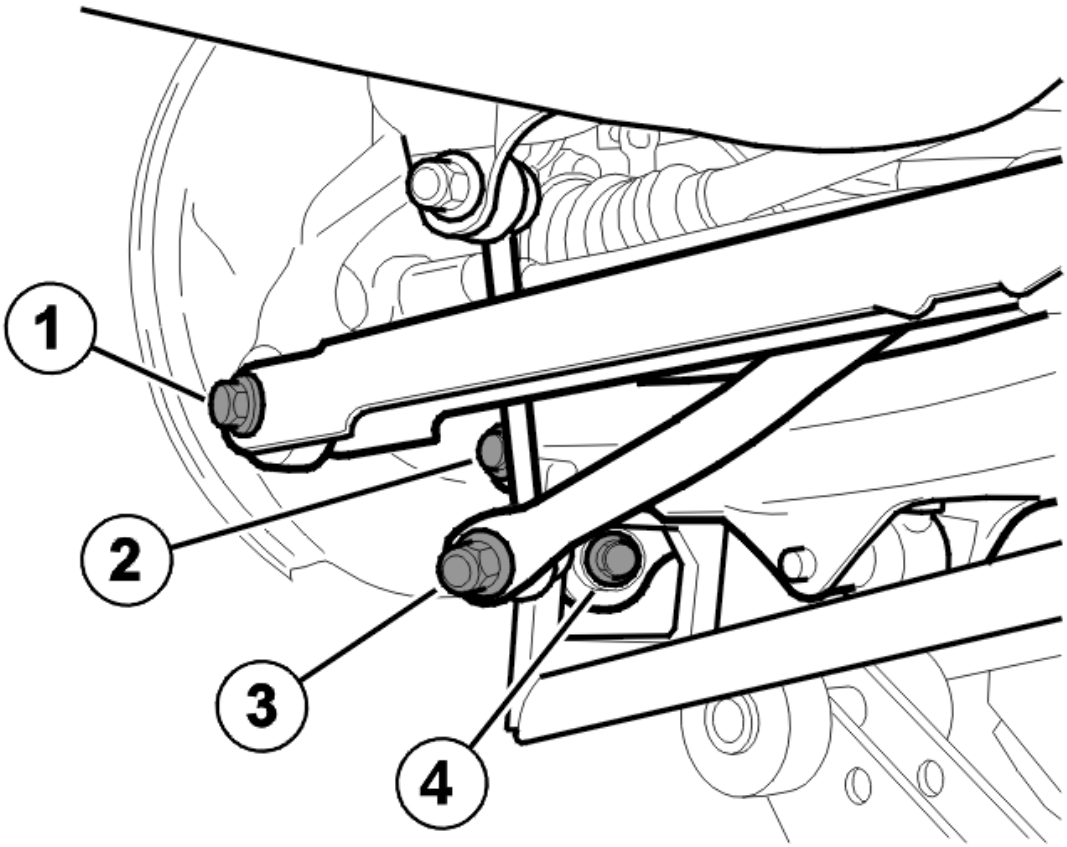

Fig. 35: Installing Lower Control Arm Mounting
Courtesy of VOLVO CARS CORPORATION

Install:

- the M12 nut for the mounting in the anti-roll bar link (3). Counterhold using a Torx wrench so that the boot does not rotate
- the M12 screw for the mounting in the control arm (2)
- the M12 screw for the mounting in the tie rod (1).

FINISHING

Install the rear wheels. See **INSTALLING WHEELS** .

BUSHING OUTER TIE ROD, REPLACING

Special tools:

see **9997054**

see **9997035**

see **9997044**

see **9997034**

see **9997036**

see **9997132**

NOTE: **The illustrations in this service information are used for different model years and/or models. Some variation may occur. However, the essential information in the illustrations is always correct.**

REMOVAL

REMOVE THE TIE ROD

Remove the inner mounting of the tie rod. See **TIE ROD, REPLACING** and fold the tie rod down.

REMOVING THE BUSHING

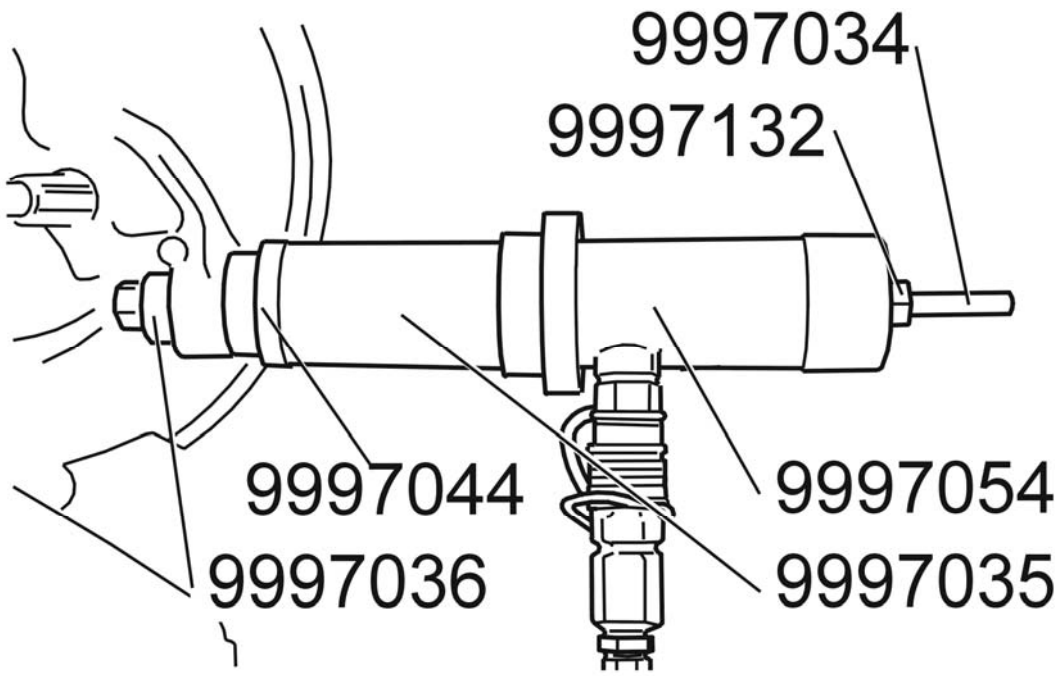

Fig. 36: Removing Bushing Using Special Service Tools
Courtesy of VOLVO CARS CORPORATION

NOTE: **Note the position of the bushing before removal.**

Install the hydraulic cylinder as illustrated.

Use see **9997054** with socket see **9997035** , socket see **9997034** , connecting rod see **9997034** , drift see **9997036** and see **9997132**

Pull the bushing out

INSTALLATION

INSTALLING THE BUSHING

NOTE: Pull in the new bushing to the same position as previously noted

Install the new bushing on the other side of the mounting lug. Pull in the bushing in the same direction as it was pulled out.

INSTALLING TIE ROD

Install the inner mounting of the tie rod. See **TIE ROD, REPLACING**.

BUSHING REAR LATERAL LINK, REPLACING

Special tools:

see **9997054**

see **9997032**

see **9997134**

see **9997146**

see **9997145**

see **9997150**

see **9997147**

NOTE: The illustrations in this service information are used for different model years and/or models. Some variation may occur. However, the essential information in the illustrations is always correct.

PREPARATORY WORK

Remove the rear wheels.

DISCONNECTING THE LATERAL LINK

Remove the rear mounting for the lateral link. See **LATERAL LINK, REPLACING**.

Fold the lateral link down.

REMOVAL

REMOVING THE BUSHING

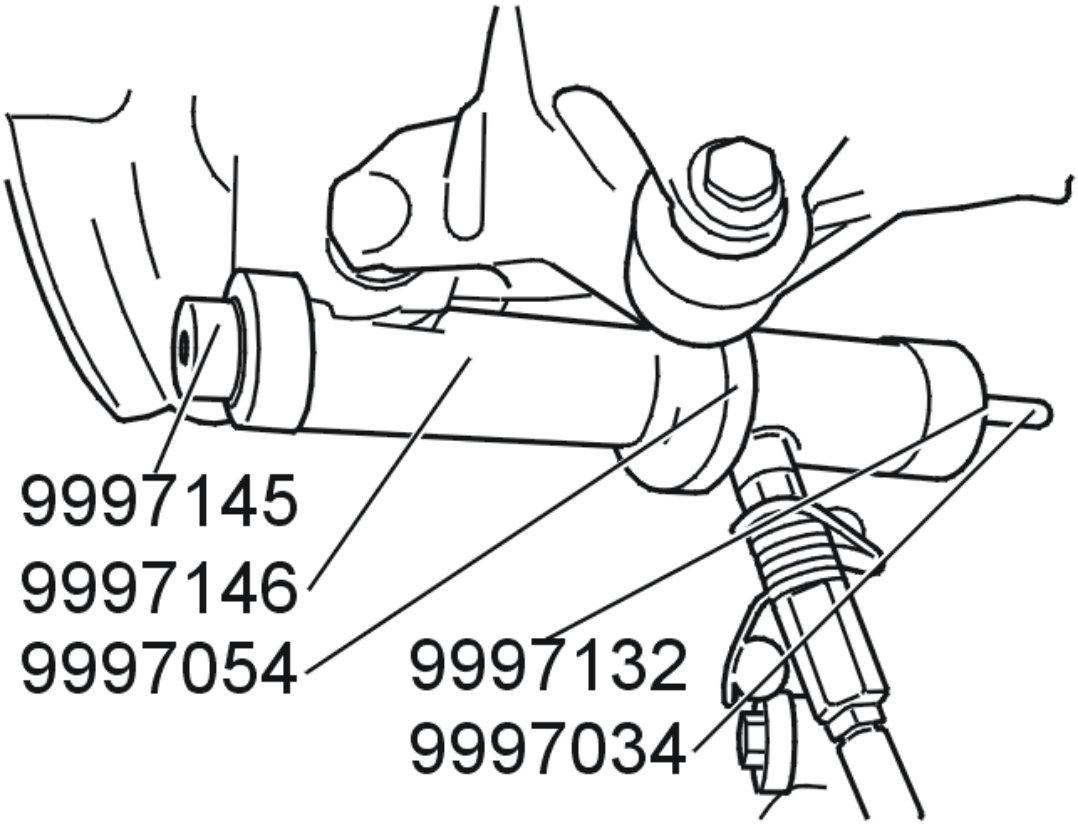

Fig. 37: Removing Bushing Using Special Service Tools
Courtesy of VOLVO CARS CORPORATION

NOTE: Note the position of the bushing.

Install the hydraulic cylinder as illustrated.

Use see **9997054** with see **9997032** and connecting rod (M12X400) see **9997034** , socket: see **9997146** and see **9997145** .

Pull the bushing out

INSTALLATION

INSTALLING THE BUSHING

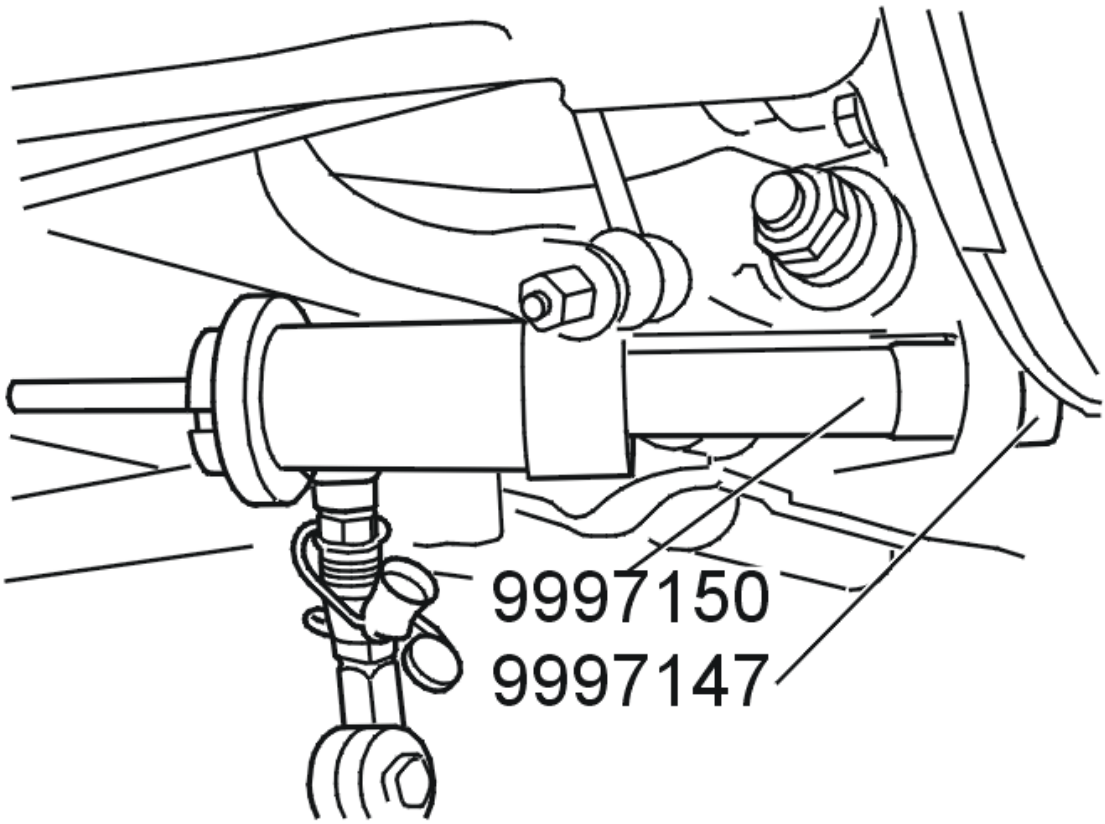

Fig. 38: Installing Bushing Using Special Service Tools
Courtesy of VOLVO CARS CORPORATION

Install the bushing according to the previous markings.

Install the hydraulic cylinder as illustrated.

Use see **9997150** with see **9997147** .

Press in the new bushing.

INSTALLING THE LATERAL LINK

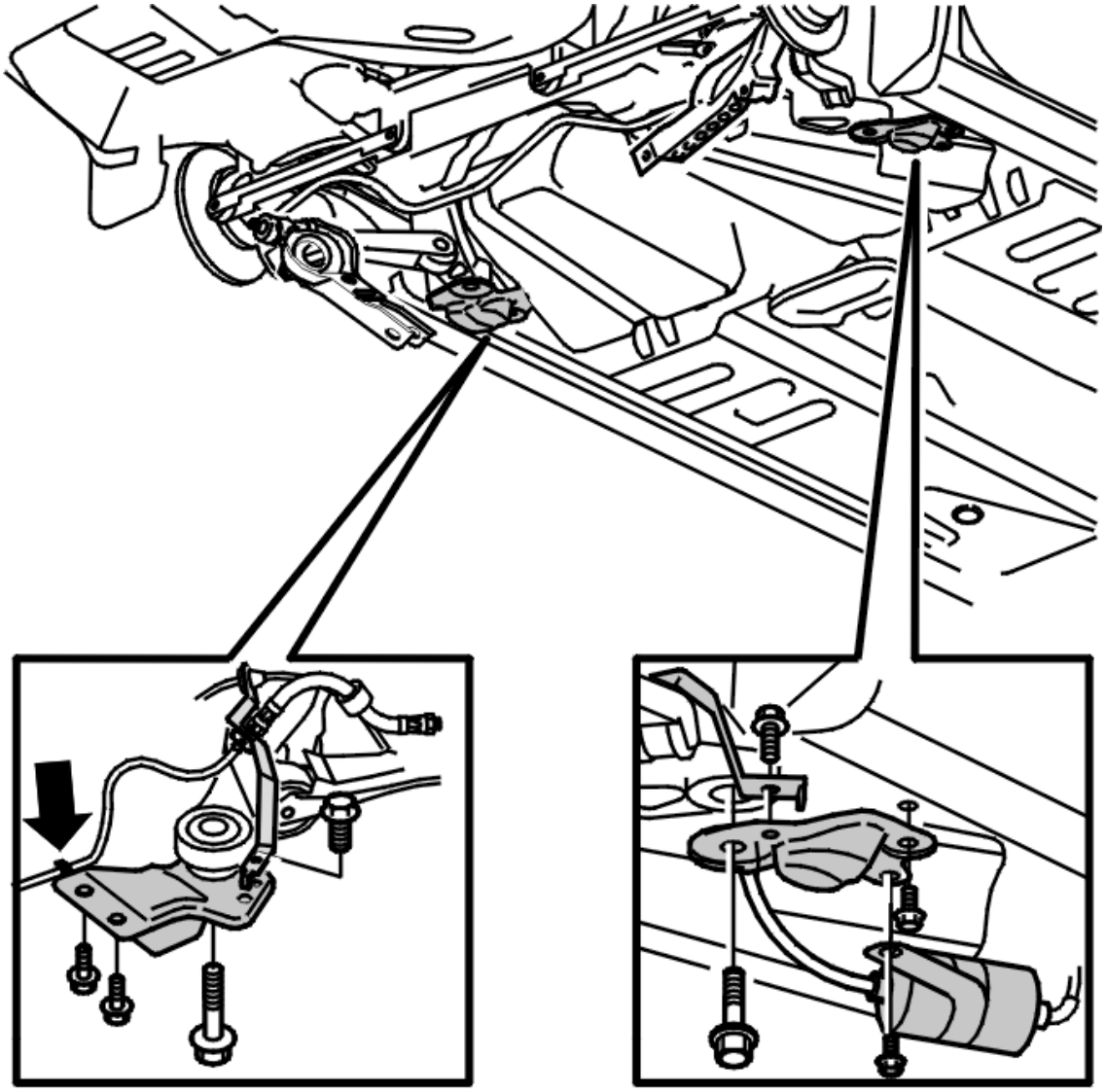

Fig. 39: Brake Hose Mounting Stays From Mountings On Brackets
Courtesy of VOLVO CARS CORPORATION

Fold the lateral link up.

Install the front mounting for the lateral link. See **LATERAL LINK, REPLACING**.

FINISHING

Install the wheels. See: **INSTALLING WHEELS** .

BUSHING REAR SUB-FRAME, REPLACING

Special tools	
	T9997054 ADAPTER INCL. 2 PCS. MC6C M6X12 (800 AWD, P2X) **Tool number:** T9997054

	Tool description: ADAPTER INCL. 2 PCS. MC6C M6X12 (800 AWD, P2X) **Tool boards:**
	T9997096 RING **Tool number:** T9997096 **Tool description:** RING **Tool boards:**
	T9997095 SOCKET **Tool number:** T9997095 **Tool description:** SOCKET **Tool boards:**
	T9997046 PUNCH (800 AWD, P2X) **Tool number:** T9997046 **Tool description:** PUNCH (800 AWD, P2X) **Tool boards:**
	T9997132 NUT M12 **Tool number:** T9997132 **Tool description:** NUT M12 **Tool boards:**
	T9997034 PULLER ROD M12X400 (800 AWD, P2X) **Tool number:** T9997034 **Tool description:** PULLER ROD M12X400 (800 AWD, P2X) **Tool boards:**
	T9512923 HYDRAULIC HOLE CYLINDER **Tool number:** T9512923 **Tool description:** HYDRAULIC HOLE CYLINDER **Tool boards:**
	T9512566 HYDRAULIC PUMP **Tool number:** T9512566 **Tool description:** HYDRAULIC PUMP **Tool boards:**
	T9997244 ANVIL BLOCK **Tool number:** T9997244 **Tool description:** ANVIL BLOCK **Tool boards:**
	T9997243 SOCKET **Tool number:** T9997243 **Tool description:** SOCKET **Tool boards:**
	T9997037 PULLER ROD M14X400 (800 AWD, P2X) **Tool number:** T9997037 **Tool description:** PULLER ROD M14X400 (800 AWD, P2X) **Tool boards:**
	T9997097 DRIFT **Tool number:** T9997097 **Tool description:** DRIFT **Tool boards:**

NOTE: **Some variation may occur. However, the essential information in the illustrations is always correct.**

EARLY DESIGN OF THE BUSHING

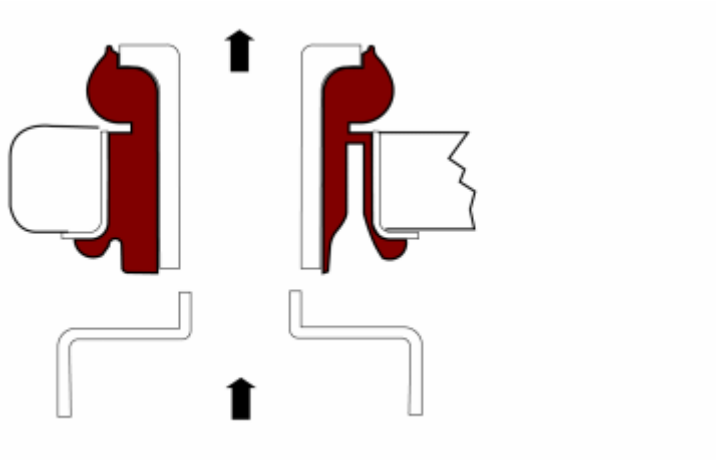

Fig. 40: Early Design Of The Bushing
Courtesy of VOLVO CARS CORPORATION

This replacement method applies to the early design of the bushing. The figure illustrates the early design.

See **BUSHING REAR SUB-FRAME, REPLACING** for the replacement method for the new design.

REMOVING

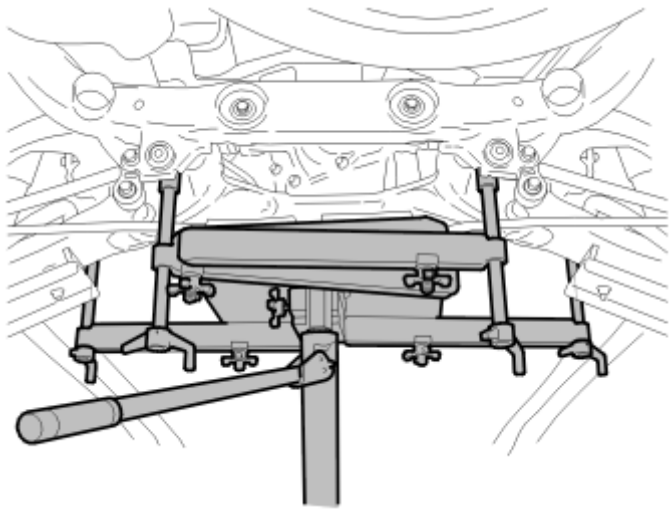

Fig. 41: Lowering Sub-Frame
Courtesy of VOLVO CARS CORPORATION

Remove:

- the rear wheels

- the screws in the bracket under the exhaust pipe.

Position a lifting table under the sub-frame.

Apply the lifting table so that the load is taken off the sub-frame screws.

Remove the 2 x rear screws.

Carefully lower the sub-frame approximately 70 mm.

REMOVING THE BUSHING

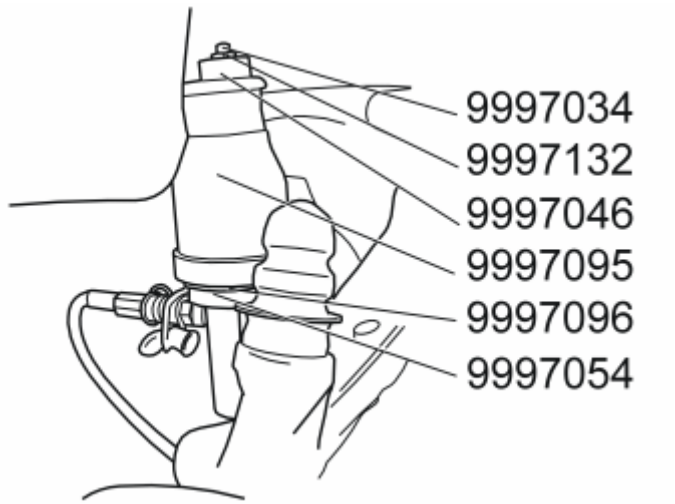

Fig. 42: Removing Bushing Using Special Service Tools
Courtesy of VOLVO CARS CORPORATION

NOTE: Mark up the bushing position in relation to the sub-frame.

Install the hydraulic cylinder. Use see **9997054** with see **9997096** , socket see **9997095** , drift see **9997046** , nut: see **9997132** and connecting rod see **9997034** .

Pull the bushing out.

INSTALLING

INSTALLING THE NEW BUSHING DESIGN

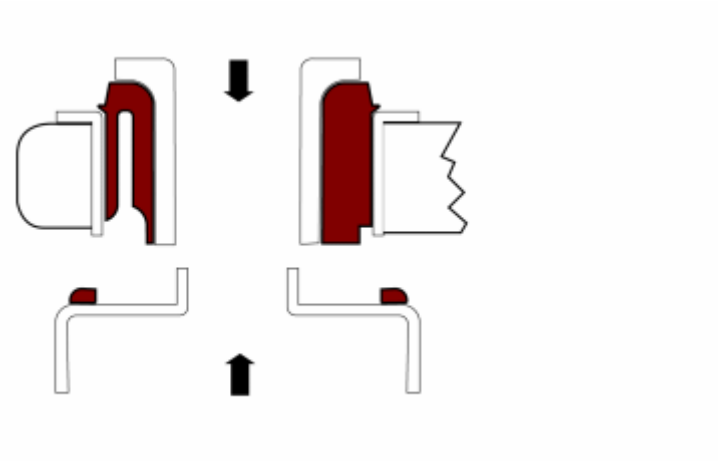

Fig. 43: Installing The New Bushing Design
Courtesy of VOLVO CARS CORPORATION

The figure illustrates the new design.

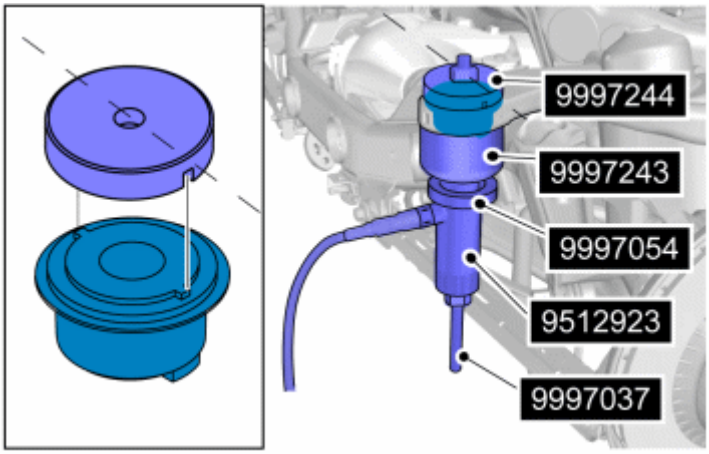

Fig. 44: Aligning The Bushing In Relation To Sub-Frame
Courtesy of VOLVO CARS CORPORATION

NOTE: Align the bushing in relation to the sub-frame as illustrated.

Press in the bushing.

Use special tool:

- see **9512923** together with see **9512566**
- see **9997244**
- see **9997243**
- see **9997054**
- see **9997037**

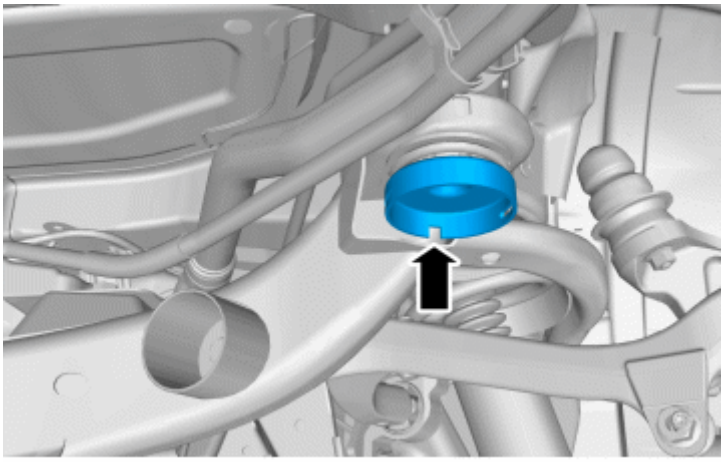

Fig. 45: Seating Washer In Correct Position
Courtesy of VOLVO CARS CORPORATION

NOTE: The cutout on the washer (see arrow), should be directed forward to be seated correctly for the filler pipe support.

Use see **9512923** together with see **9512566**

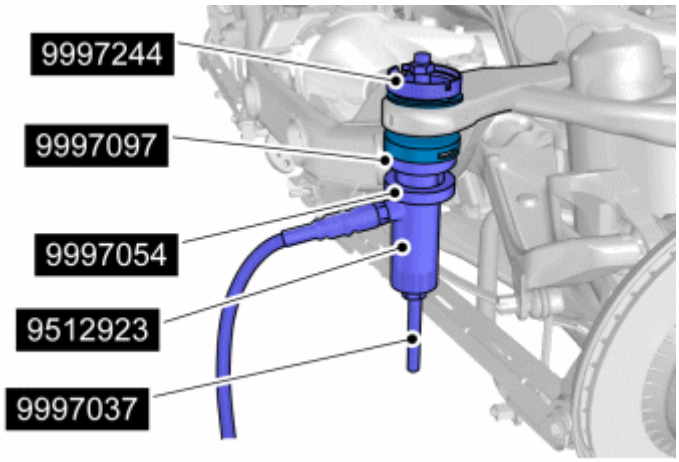

Fig. 46: Installing Washer Using Special Service Tool
Courtesy of VOLVO CARS CORPORATION

Press the washer in position.

Use special tool:

- see **9997244** must be turned with the flat side against the bushing
- see **9997097** must be turned with the flat side against the washer
- see **9997054**
- see **9512923** together with see **9512566**
- see **9997037**

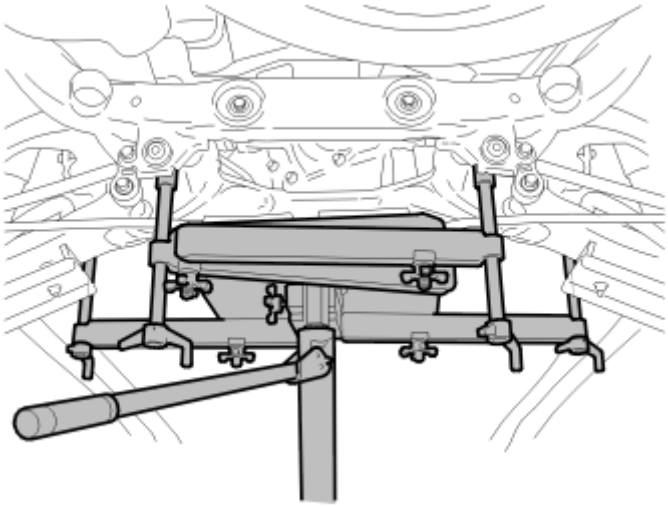

Fig. 47: Lowering Sub-Frame
Courtesy of VOLVO CARS CORPORATION

Carefully raise the vehicle's rear suspension.

WARNING: **Always ensure that the vehicle rests on the lift's lift arms when working with the lifting table.**

Install:

- the screws for the sub-frame, 2 pc. Tighten, see: **SUMMARY OF TIGHTENING TORQUES FOR SPECIFIC COMPONENTS**
- the bracket for the filler pipe
- the 2 x M8 screws in the bracket under the exhaust pipe.

Remove the lifting table.

Install the rear wheels. See **INSTALLING WHEELS** .

CONTROL ARM LOWER, REPLACING

NOTE: **As the illustrations in this service information are used for different model years and / or models, some variation may occur. However, the essential information in the illustrations is always correct.**

REMOVING THE LOWER CONTROL ARM

Fig. 48: Removing Lower Control Arm
Courtesy of VOLVO CARS CORPORATION

Remove:

- the spring. See **SPRING REAR, REPLACING**
- the screw in the sub-frame for the lower control arm
- the control arm
- control arm rail (5740-1).

TIGHTENING TORQUE

For tightening torques, see **TIGHTENING TORQUE** .

NOTE: Tighten all joints and rubber bushings with the rear suspension in the normal position.

INSTALLING THE LOWER CONTROL ARM

Install:

- rail (5742-1) in the control arm

- the control arm in the sub-frame. Do not tighten yet
- the spring. See **SPRING REAR, REPLACING** .

Raise the control arms to their normal position using the tensioner. See **TENSIONER 999 5659, USER INSTRUCTIONS**.

Tighten the M12 screw for the inner mounting for the control arm.

NOTE: **If the car is equipped with Bi-Xenon lamps, the position sensor must be calibrated. Carry out calibration according to VIDA (Volvo scan tool).**

CONTROL ARM UPPER, REPLACING

Special tools:

see **9512923**

see **9997031**

see **9997030**

see **9997039**

see **9985434**

see **9997074**

see **9995659**

NOTE: **The illustrations in this service information are used for different model years and / or models. Some variation may occur. However, the essential information in the illustrations is always correct.**

REMOVING

PREPARATORY WORK

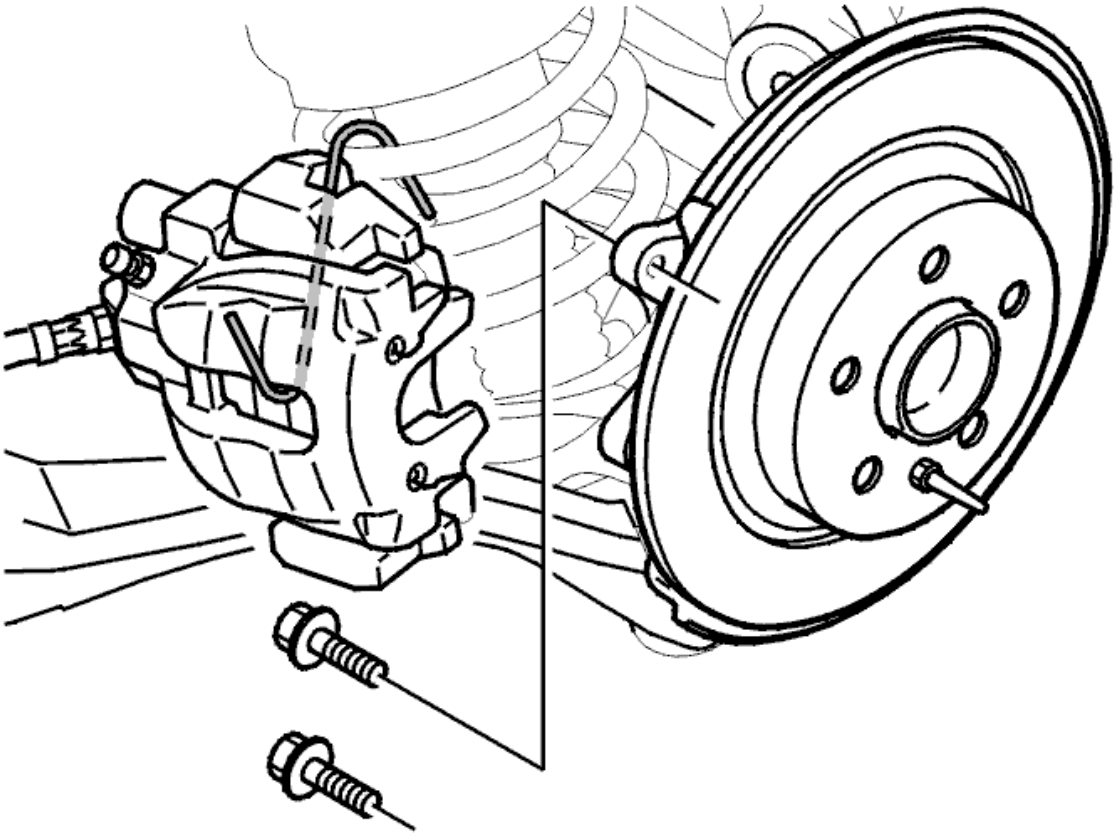

Fig. 49: Brake Caliper Components
Courtesy of VOLVO CARS CORPORATION

Raise the vehicle.

Remove:

- the wheel
- the brake caliper. Hang the brake caliper on a hook in the sub-frame.

REMOVING THE UPPER CONTROL ARM

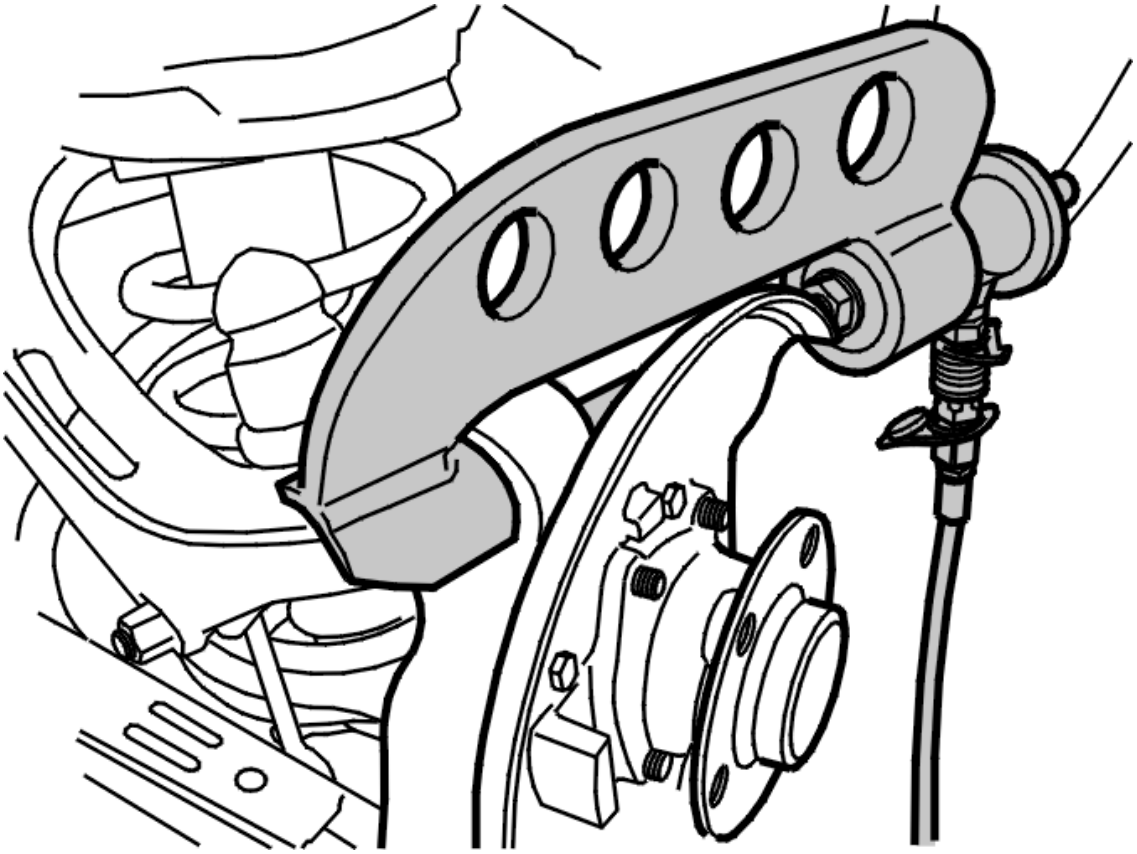

Fig. 50: Screw And Wheel Spindle From Upper Control Arm
Courtesy of VOLVO CARS CORPORATION

Slacken off the screw for the outer control arm mounting. Slacken off three turns.

Use tool: see **9512923** , see **9997031** and see **9997030** together with threaded rod see **9997039** .

Press off the wheel spindle.

Remove:

- the screw
- the screw for the drive shaft.

Press in the drive shaft and remove the spindle.

NOTE: Only press until the bushing releases from the splined area.

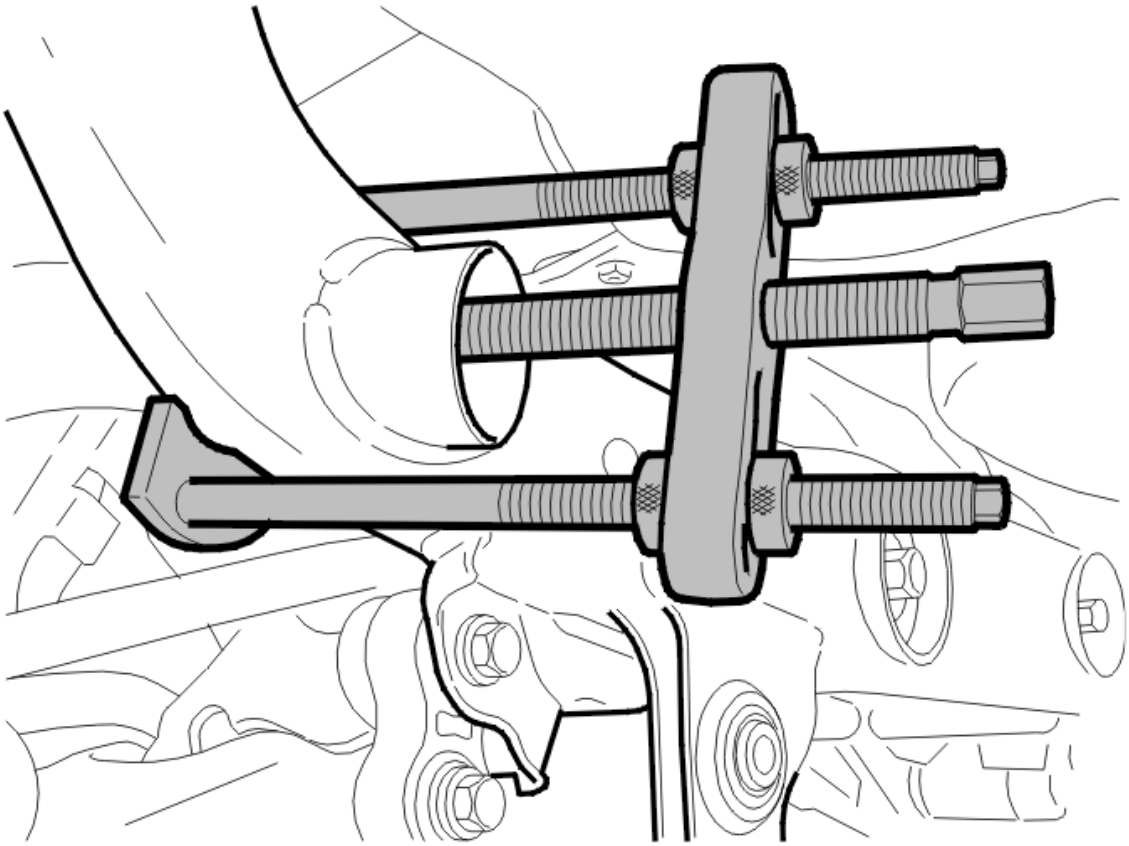

Fig. 51: Removing Rear Control Arm Mounting
Courtesy of VOLVO CARS CORPORATION

Slacken off the screw three turns for the rear control arm mounting. Use puller see **9985434** with counterhold see **9997074** .

Remove:

- the screw for the inner rear control arm mounting
- the two screws for the inner front control arm mounting
- the control arm.

INSTALLING

TIGHTENING TORQUE

For tightening torques, see **TIGHTENING TORQUE** .

INSTALLING THE UPPER CONTROL ARM

Install:

- the screws for the inner rear control arm mounting

- the screws for the front inner control arm mounting
- the screws for the outer control arm mounting.

Install tensioner see **9995659** . See **TENSIONER 999 5659, USER INSTRUCTIONS**.

NOTE: The tensioner must be positioned as far out as possible on the tensioner plates to achieve the correct lifting force.

Tighten:

- the screws for the inner rear control arm mounting (M12)
- the screws for the front inner control arm mounting (M12)
- the screws for the outer control arm mounting (M12).

NOTE: Tighten the screws when the rear suspension is in the normal position.

FINISHING

Remove tensioner see **9995659** . See **TENSIONER 999 5659, USER INSTRUCTIONS**.

Install the wheel. See **INSTALLING WHEELS** .

NOTE: If the car is equipped with Bi-Xenon lamps, the position sensor must be calibrated. Carry out calibration according to VIDA (Volvo scan tool).

LATERAL LINK, REPLACING

NOTE: As the illustrations in this service information are used for different model years and / or models, some variation may occur. However, the essential information in the illustrations is always correct.

PREPARATION

Remove the wheel.

Install tensioner see **9995659** . See **TENSIONER 999 5659, USER INSTRUCTIONS**. Set the rear suspension to the normal position.

REMOVING THE LATERAL LINK

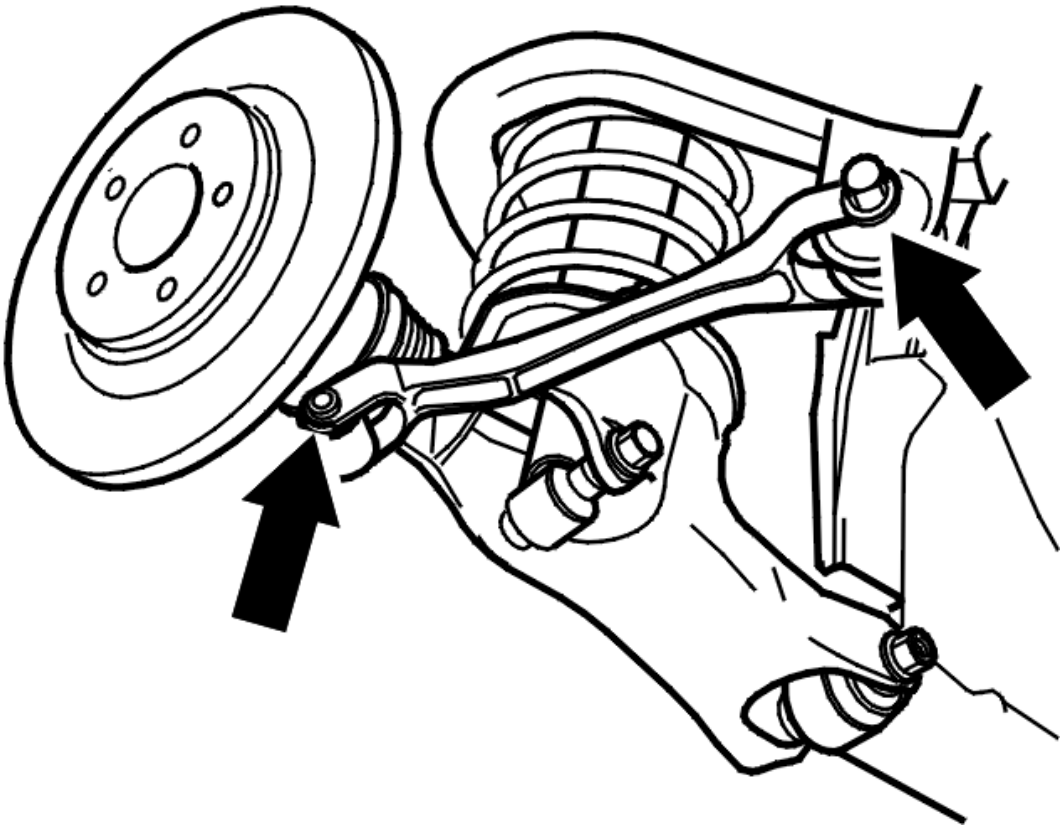

Fig. 52: Removing Lateral Link
Courtesy of VOLVO CARS CORPORATION

Remove:

- both the screws for the lateral link
- the lateral link.

TIGHTENING TORQUE

For tightening torques, see **TIGHTENING TORQUE** .

INSTALLING THE LATERAL LINK

Install the lateral link. Use new screws.

Tighten the screws (M12).

FINISHING

Lower and remove the tensioner. See **TENSIONER 999 5659, USER INSTRUCTIONS**.

TIE ROD, REPLACING

NOTE: **As the illustrations in this service information are used for different model years and / or models, some variation may occur. However, the essential information in the illustrations is always correct.**

REMOVAL

REMOVING THE TRACK ROD

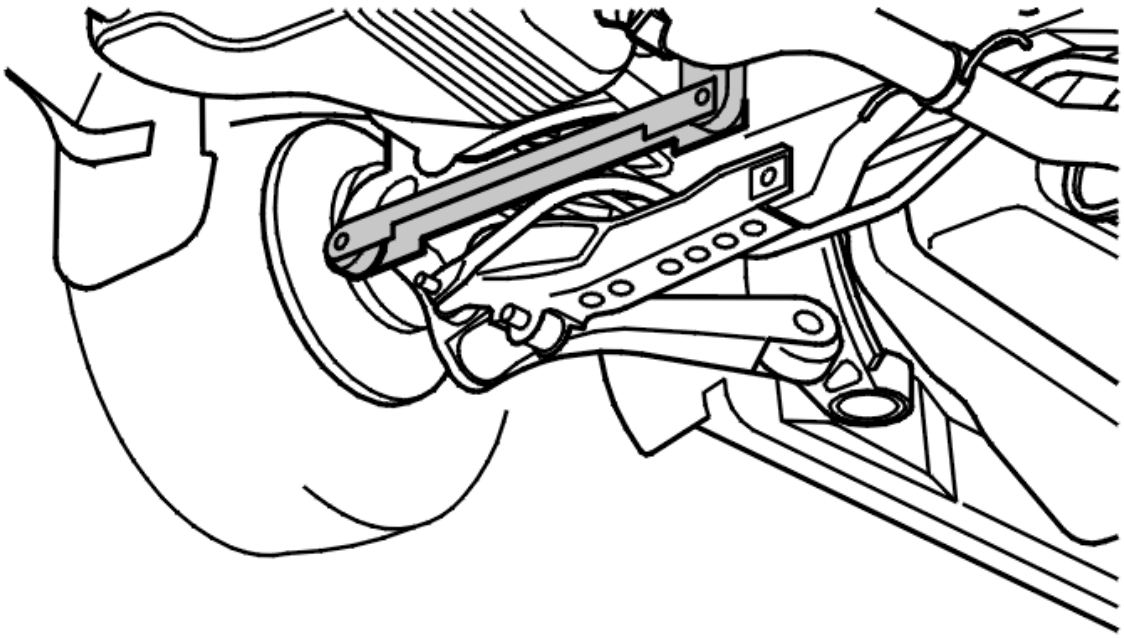

Fig. 53: Removing Track Rod
Courtesy of VOLVO CARS CORPORATION

Remove:

- the wheel
- the mounting for the parking brake cable on the tie rod
- the inner and outer tie rod retaining screws
- the track rod.

INSTALLATION

NOTE: **For tightening torques, see: TIGHTENING TORQUE .**

INSTALLING TRACK ROD

Install:

- the track rod
- the inner and outer retaining screws for the track rod. Do not tighten yet
- the mounting for the handbrake cable.

Install tensioner see **9995659** . Tighten the rear suspension to the normal position. See **TENSIONER 999 5659, USER INSTRUCTIONS**.

Tighten the outer tie rod screw (M12). See **SUMMARY OF TIGHTENING TORQUES FOR SPECIFIC COMPONENTS** .

Tighten the eccentric screw and nut (M12). See **SUMMARY OF TIGHTENING TORQUES FOR SPECIFIC COMPONENTS** .

Remove the tensioner and mountings.

Install the wheel. See: **INSTALLING WHEELS** .

Carry out wheel alignment. See: **WHEEL ALIGNMENT, CHECKING / ADJUSTING** .

WHEEL KNUCKLE REAR

REMOVING

NOTE: Removal steps in this procedure may contain installation details.

Remove the following items:

- spring. See **SPRING REAR, REPLACING**
- brake shoes. See **BRAKE SHOES PARKING BRAKE, REPLACING**
- wheel hub. See **REAR WHEEL HUB, REPLACING**

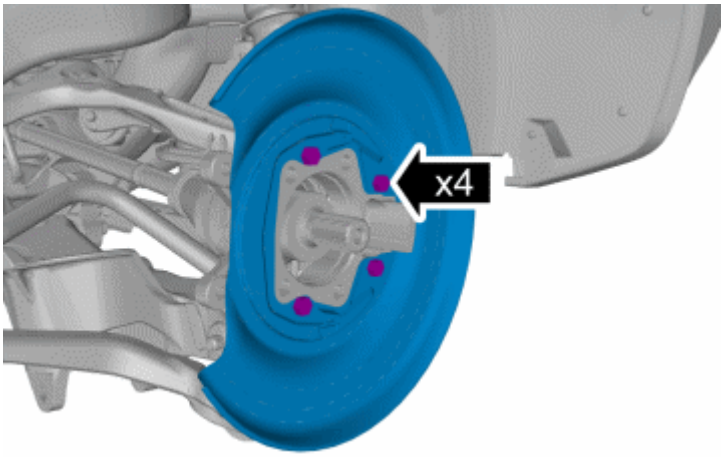

Fig. 54: Wheel Knuckle Rear Torque Specifications (1 Of 3)
Courtesy of VOLVO CARS CORPORATION

Torque: M6

10 Nm

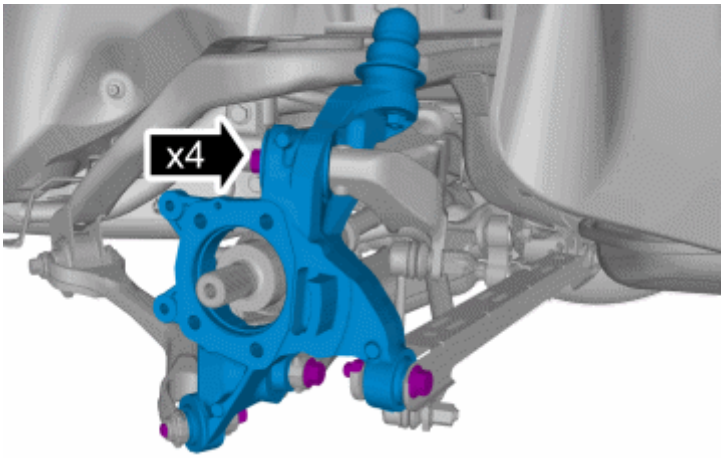

Fig. 55: Wheel Knuckle Rear Torque Specifications (2 Of 3)
Courtesy of VOLVO CARS CORPORATION

Torque: M12

80 Nm

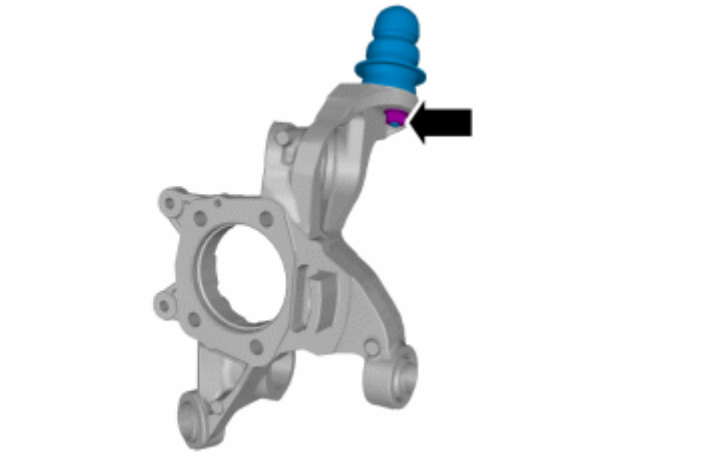

Fig. 56: Wheel Knuckle Rear Torque Specifications (3 Of 3)
Courtesy of VOLVO CARS CORPORATION

Torque: M8

24 Nm

INSTALLING

NOTE: Only tighten the nuts and screws when the suspension is in the normal drive position.

Follow the instruction. See **TENSIONER 999 5659, USER INSTRUCTIONS**

To install, reverse the removal procedure.

Check the rear wheel alignment. See **WHEEL ALIGNMENT, CHECKING / ADJUSTING**

SUB-FRAME REAR, REPLACING (B5254T2, AW55-50/51SN; 2003-2007)

Special tools:

see **9995500**

see **9512923**

see **9997030**

see **9997031**

see **9997039**

see **9985434**

see **9997074**

see **9995659**

NOTE: As the illustrations in this service information are used for different model years and / or models, some variation may occur. However, the essential information in the illustrations is always correct.

REMOVAL

PREPARATORY WORK

Reassemble and lock the self-adjuster unit for the parking brake. See **PARKING BRAKE SELF-ADJUSTMENT, RESETTING** .

Raise the car.

Remove the wheels.

REMOVING THE EXHAUST SYSTEM

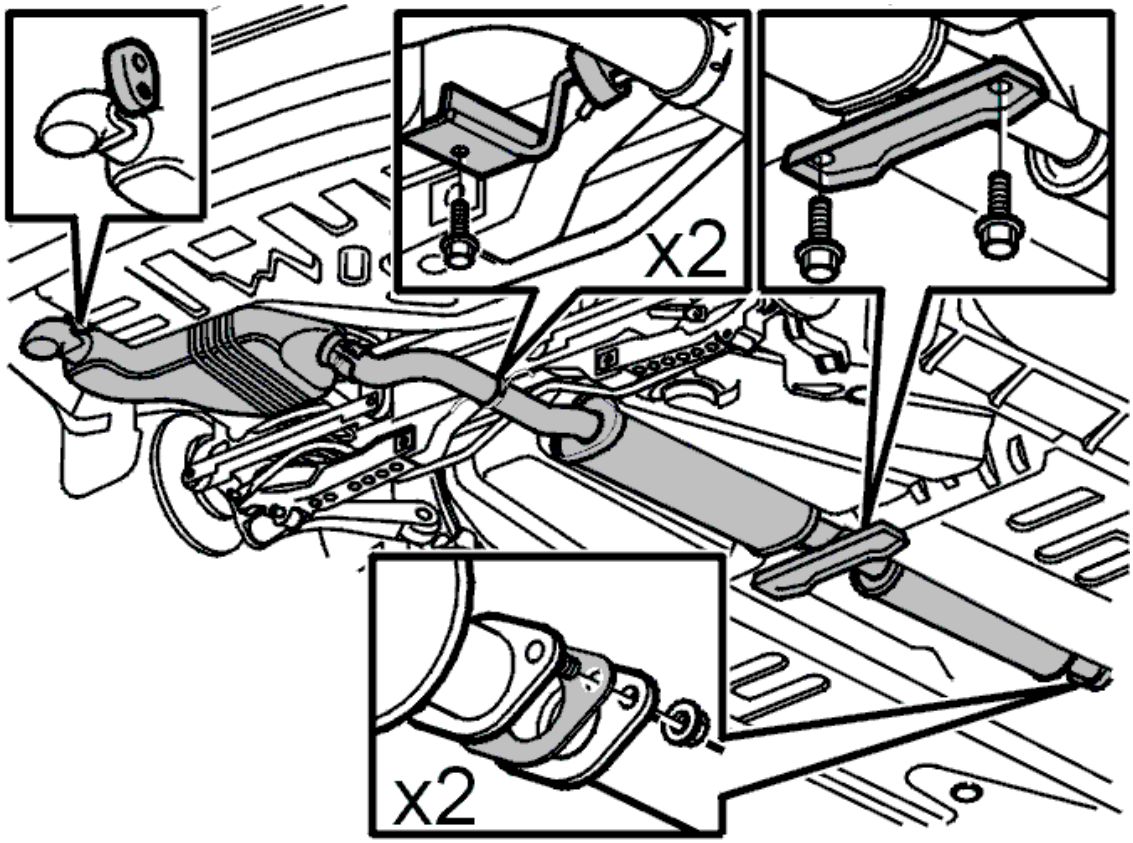

Fig. 57: Exhaust System, Brackets And Fasteners
Courtesy of VOLVO CARS CORPORATION

Start at the front when separating the three-way catalytic converter (TWC).

Hang up the three-way catalytic converter (TWC) on a hook.

Remove:

- the mountings in the sub-frame
- the rearmost exhaust mounting
- the screws for the bracket.

REMOVING THE SPRING

Install tensioner see **9995659** . See **TENSIONER 999 5659, USER INSTRUCTIONS**.

NOTE: The tensioner must be positioned as far out as possible on the tensioner plates to provide the correct lifting force.

Press the tensioner up approximately 25mm from the normal position.

Remove the screw from the lower mounting for the shock absorber.

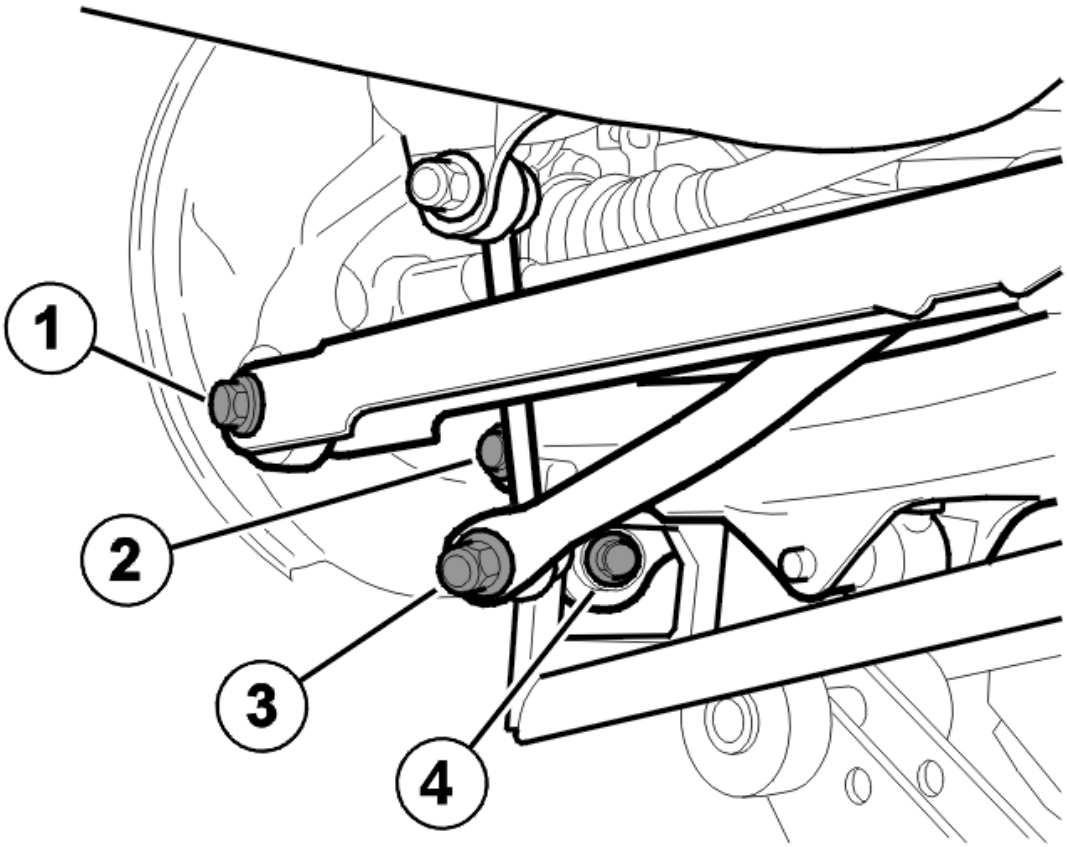

Fig. 58: Tie Rod, Control Arm, Anti-Roll Bar Links
Courtesy of VOLVO CARS CORPORATION

Remove:

- the inner and outer screws for the tie rod
- the tie rod (1)
- the anti-roll bar link from the anti-roll bar (3). Use a Torx wrench as a counterhold so that the boot is not damaged
- the screws for the lateral link (4)
- the lateral link
- the screw for the control arm in the wheel spindle (2).

Lower the control arm with the tensioner. The spring is now unloaded.

Remove tensioner see **9995659** . See **TENSIONER 999 5659, USER INSTRUCTIONS**.

Press the control arm down by hand.

Remove:

- the spring

- the screw for the inner mounting for the control arm in the sub-frame
- the control arm.

REMOVING BRAKE COMPONENTS

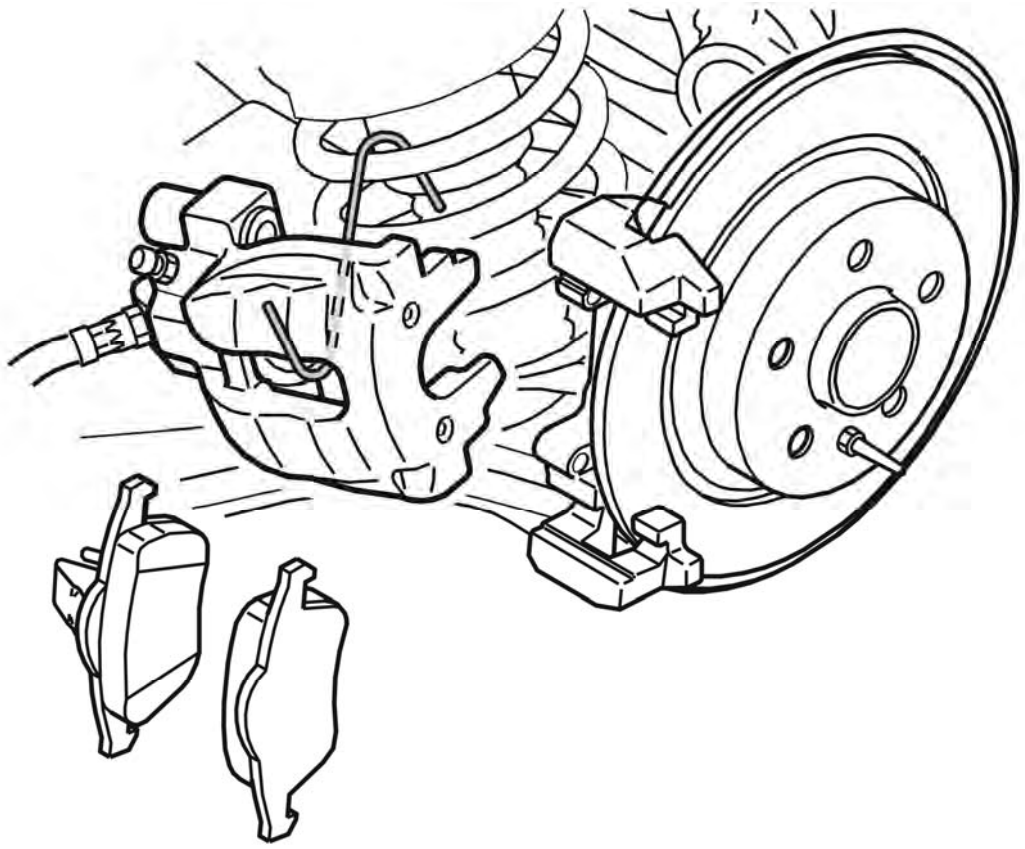

Fig. 59: Brake Caliper And Brake Pads
Courtesy of VOLVO CARS CORPORATION

Remove:

- the sliding pin for the brake caliper
- the brake pads
- the brake caliper, hang the brake caliper on a hook in the sub-frame
- the screw for the ABS sensor
- the ABS sensor
- the ABS line on the wheel spindle.

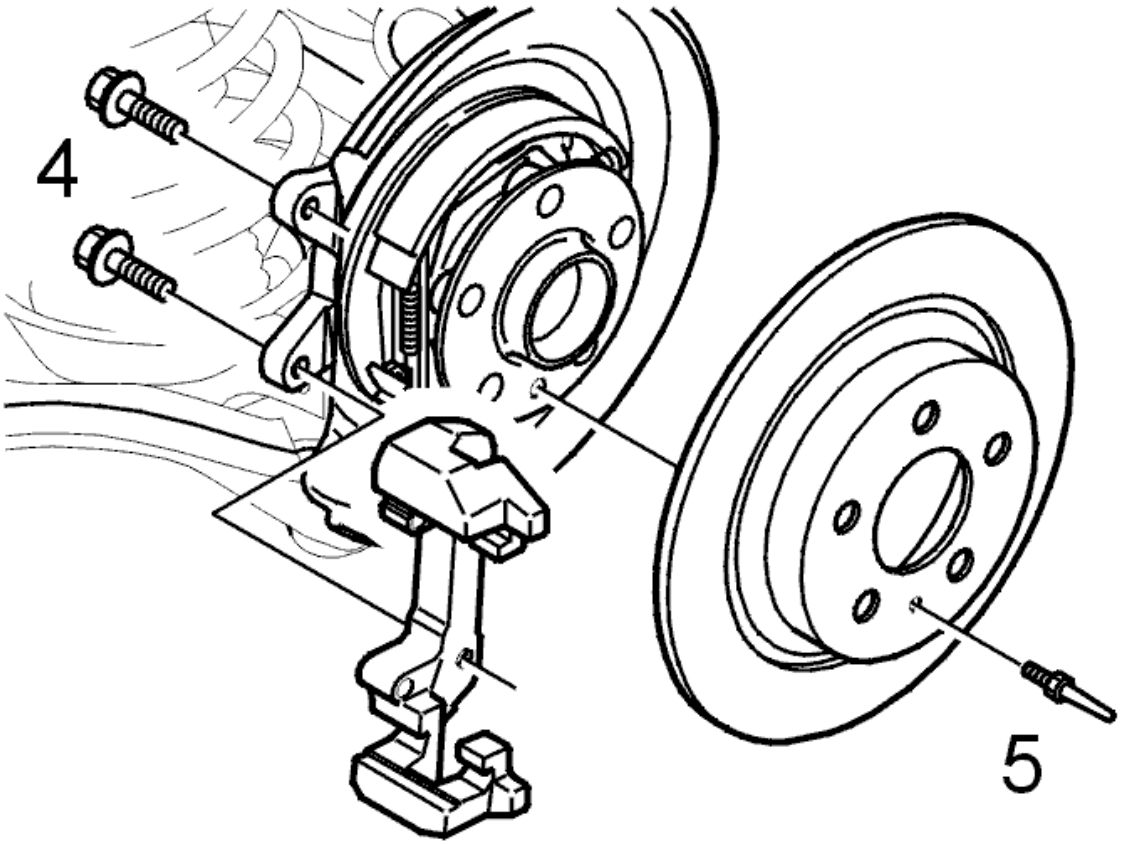

Fig. 60: Identifying Brake Caliper And Disc Brake Screws
Courtesy of VOLVO CARS CORPORATION

Remove:

- the screws for the brake caliper holder (4)
- the brake caliper holder
- the screw for the brake disc (5)
- the brake disc.

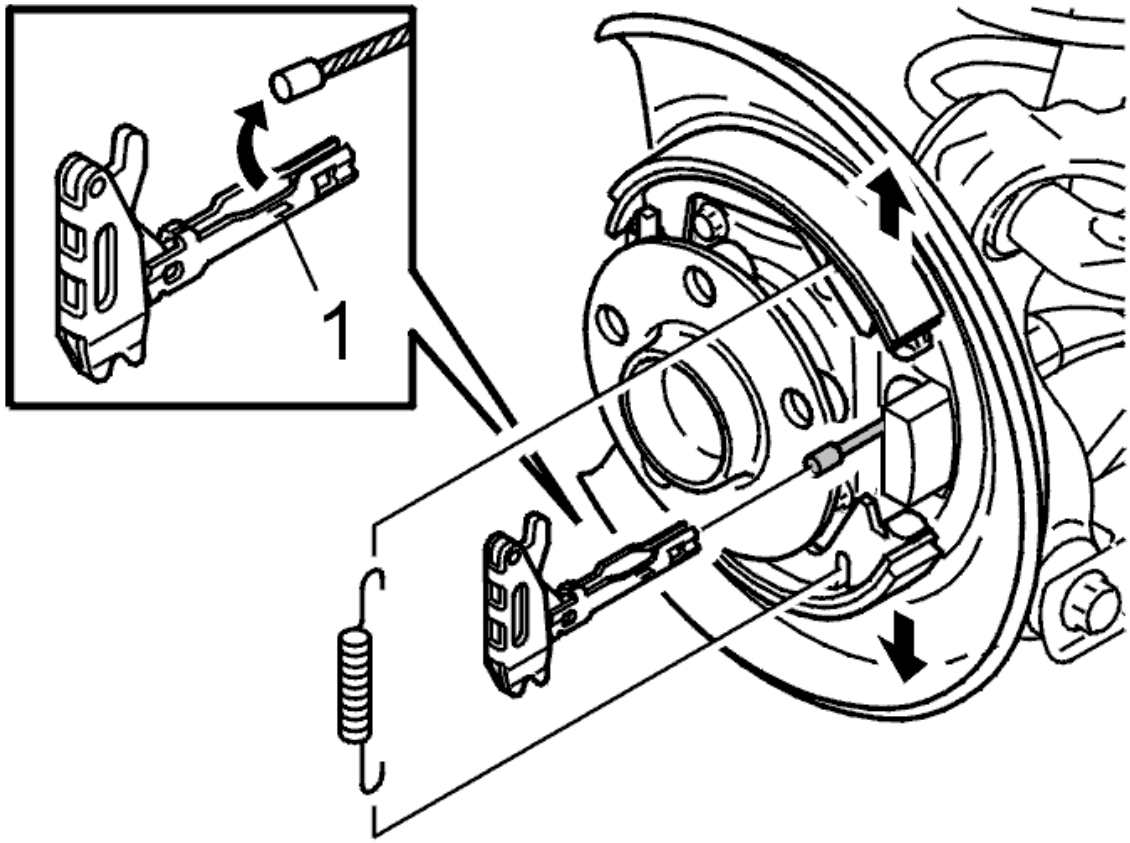

Fig. 61: Identifying Return Spring And Expander
Courtesy of VOLVO CARS CORPORATION

Remove:

- the return spring at the expander
- the expander.

Lift the brake shoe slightly. Grip the expander and pull it outwards to access the cable.

Unhook or pry apart the expander (1) by the mechanical cable to remove it.

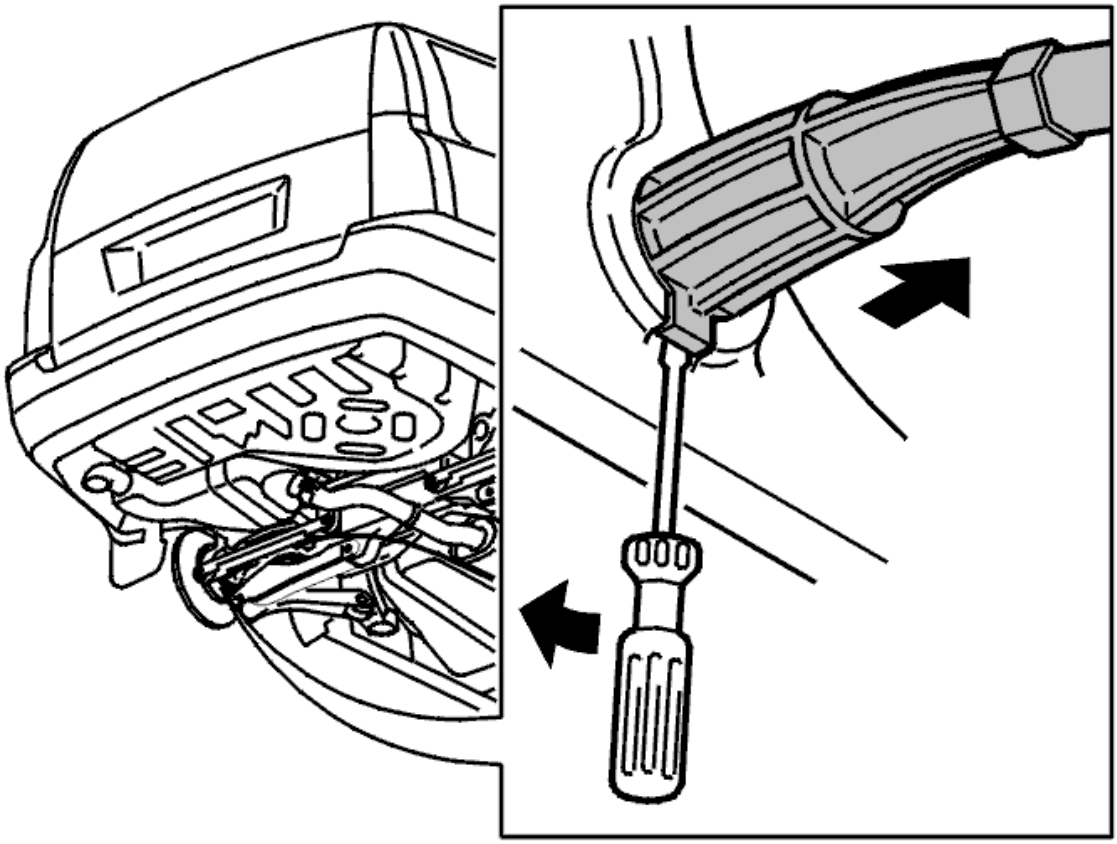

Fig. 62: Removing Guide Sleeve
Courtesy of VOLVO CARS CORPORATION

Remove the guide sleeve for the cable sleeve. Apply a screwdriver between the guide sleeve lug and wheel arch. Pry apart slightly to remove the sleeve.

LOWERING THE SUB-FRAME

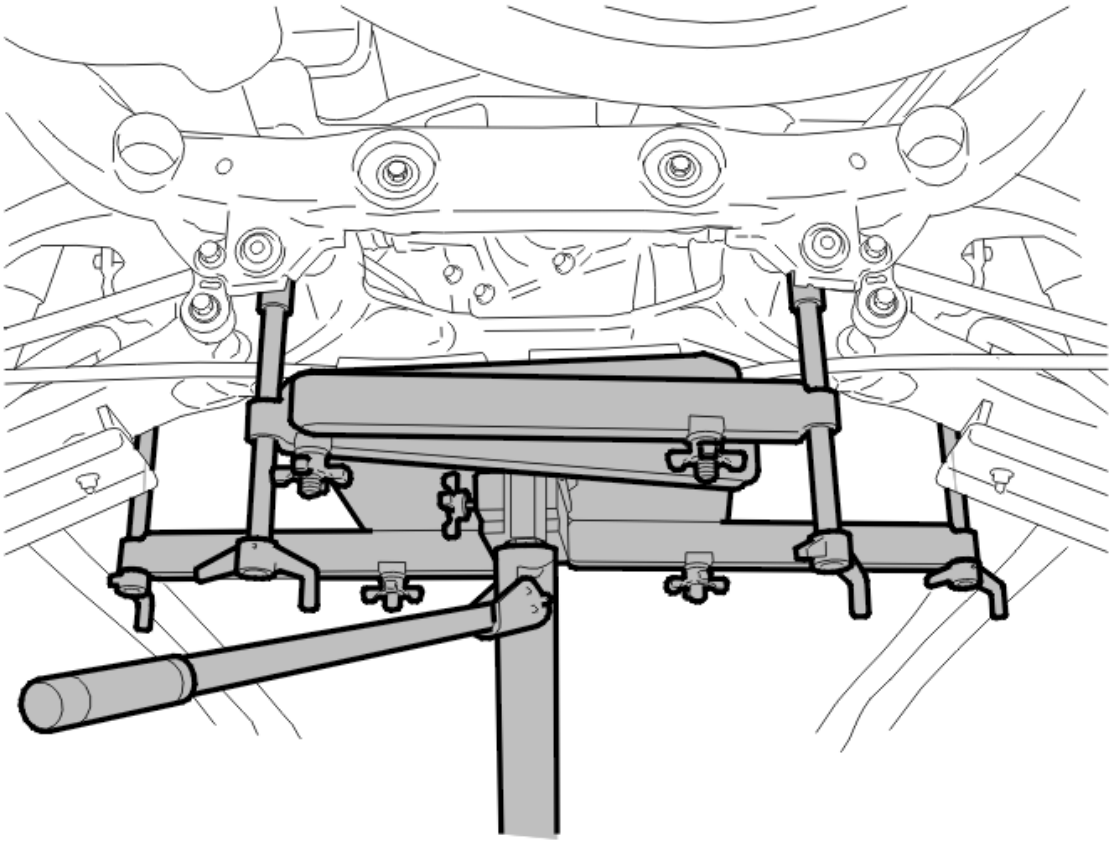

Fig. 63: Lowering Sub-Frame
Courtesy of VOLVO CARS CORPORATION

Position a lifting table under the sub-frame.

Install the lifting table so that the load is taken off the sub-frame screws. Remove the bracket for the fuel pre-filter and brake pipes. Remove the sub-frame screws with the accompanying washers and brackets. Carefully lower the sub-frame approximately 100 mm.

Remove:

- the pressure pump
- the hose for the carbon filter container
- the plastic clips.

Lower the sub-frame.

REMOVING THE SHOCK ABSORBER

Remove the upper shock absorber nut. Use socket see **9995500** and a Torx wrench as a counterhold.

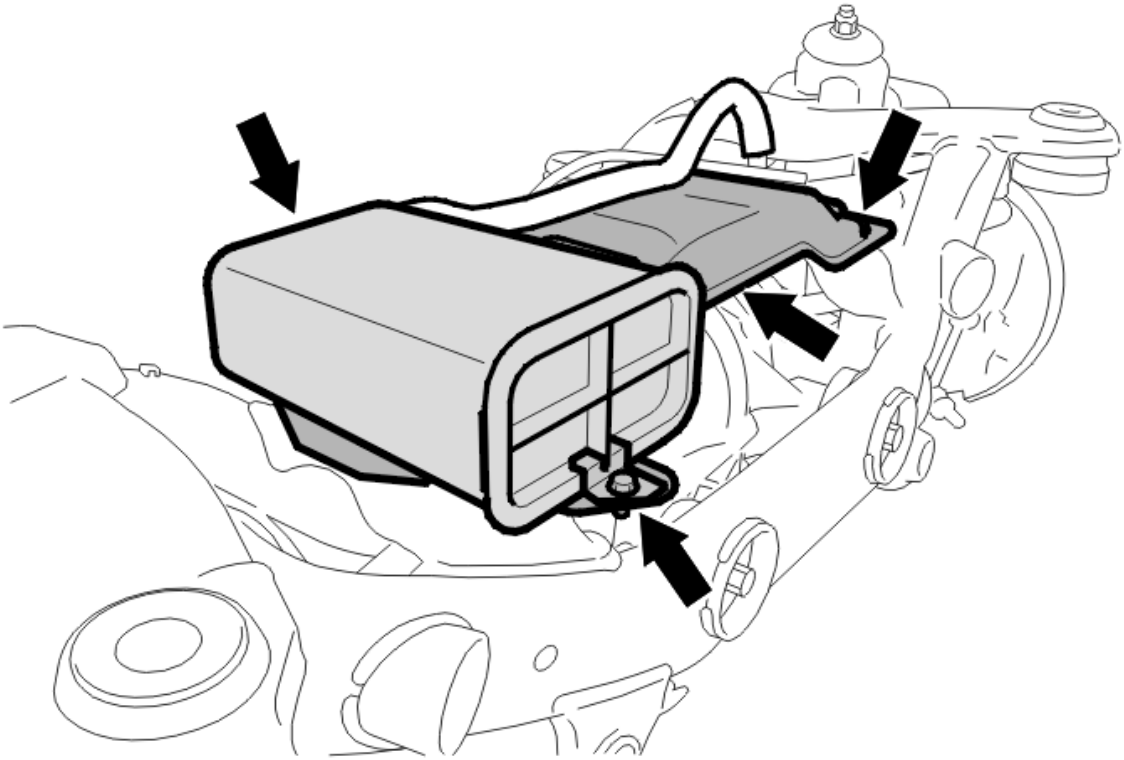

Fig. 64: Identifying Carbon Filter Container/Rear Axle Member Cover
Courtesy of VOLVO CARS CORPORATION

Remove:

- the screw for the carbon filter container
- the carbon filter container
- the screws for the cover on the rear axle member
- the rear axle member cover.

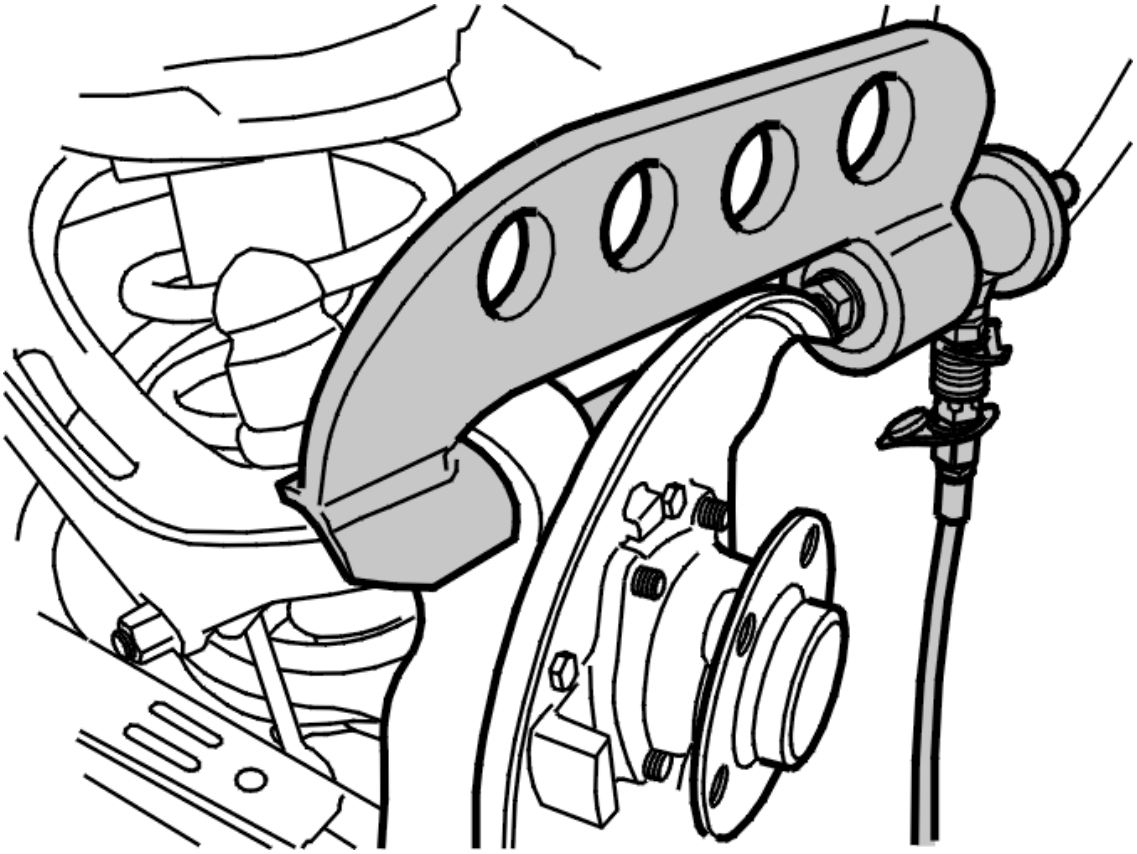

Fig. 65: Screw And Wheel Spindle From Upper Control Arm
Courtesy of VOLVO CARS CORPORATION

Slacken off the screw for the outer control arm mounting three turns.

Use tool: hydraulic hole cylinder see **9512923** , locating pin see **9997031** and mounting bracket see **9997030** together with threaded rod see **9997039** .

Press off the wheel spindle.

Remove:

- the screw
- wheel spindle.

NOTE: Only press until the bushing releases from the splined area.

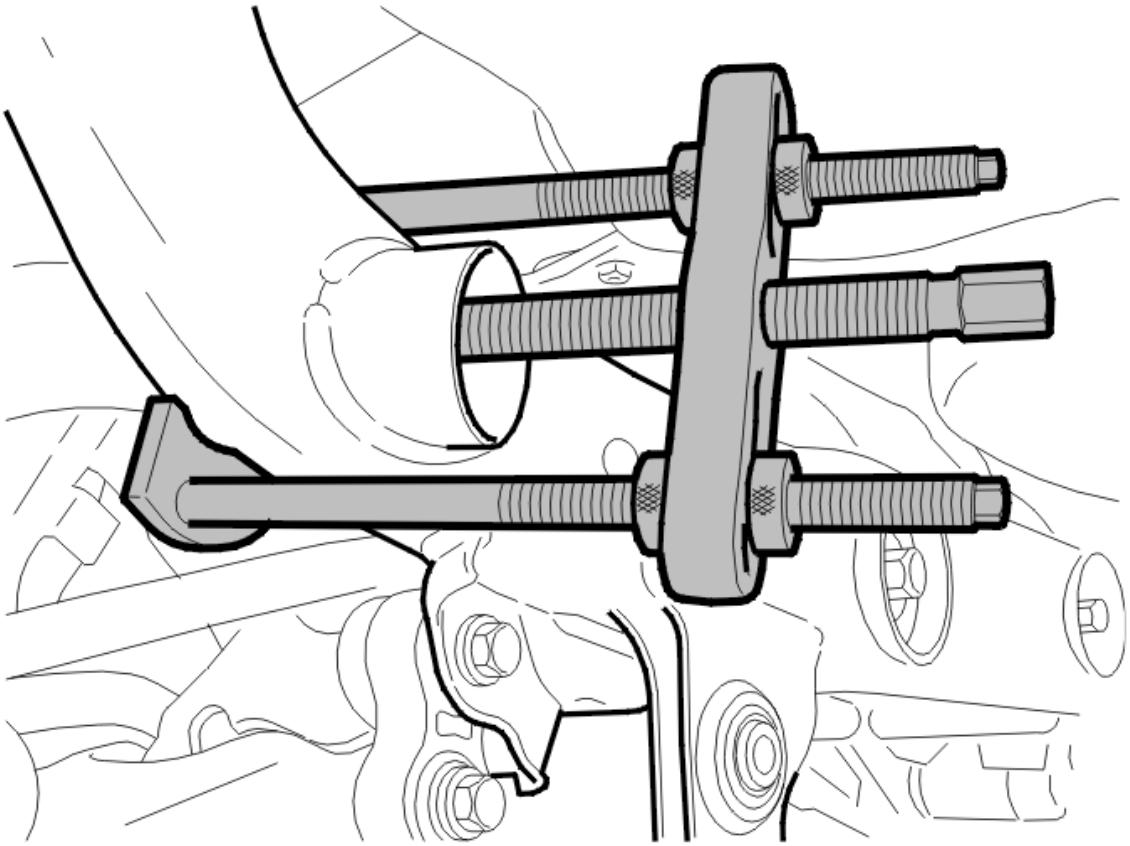

Fig. 66: Removing Inner Rear Control Arm Mounting
Courtesy of VOLVO CARS CORPORATION

Remove the 2 screws for the inner front control arm mounting.

Slacken off the screw three turns for the inner rear control arm mounting. Use puller see **9985434** with counterhold see **9997074** .

NOTE: Only press until the bushing releases from the splined area.

Remove the screw.

Remove:

- the upper control arm
- the 4 screws for the anti-roll bar
- the anti-roll bar.

INSTALLATION

TIGHTENING TORQUE

For tightening torques, see **TIGHTENING TORQUE** .

INSTALLING THE SUB-FRAME

Install:

- the anti-roll bar
- the 4 M10 screws for the anti-roll bar in the sub-frame.

INSTALLING THE SHOCK ABSORBER

Raise the new shock absorber to the upper mounting.

Install the new nut. Tighten. See **TIGHTENING TORQUE** .

NOTE: Ensure that the bushing seats correctly in the opening in the rear suspension.

Install:

- the sub-frame
- the M12 screws for the sub-frame cover
- the carbon filter container
- the M6 screws for the carbon filter container.

INSTALLING THE UPPER CONTROL ARM

Install:

- the screws for the rear control arm mounting. Only tighten a few turns
- the front upper control arm mounting using an M12 screw.

INSTALLING THE WHEEL SPINDLE

Install the screw on the outer control arm mounting in the wheel spindle. Only tighten a few turns.

LIFTING THE SUB-FRAME

Lift up the sub-frame approximately 100 mm from the upper position.

Install:

- the clamp for the pressure pump hose
- the pressure pump on the bracket
- the plastic clips.

Raise the sub-frame to the upper position.

Install:

- the bracket for the fuel filter using an M6 screw
- the bracket for the brake pipes using an M6 screw
- the M6 screws for the bracket for the sub-frame front mounting
- the 4 M12 screws for the sub-frame.

For tightening torques, see **TIGHTENING TORQUE** .

INSTALLING THE SPRING

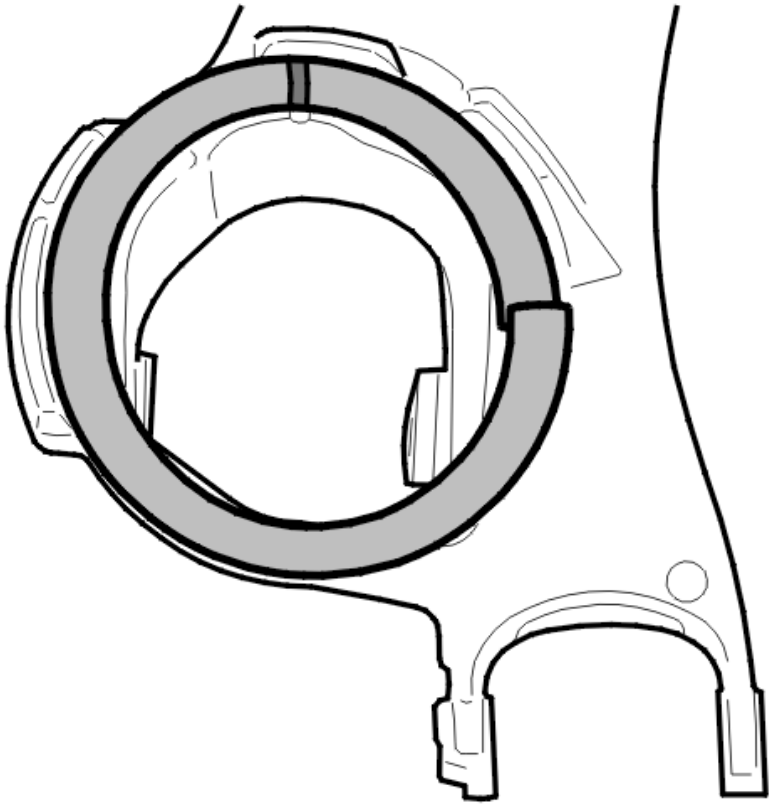

Fig. 67: Lower Control Arm
Courtesy of VOLVO CARS CORPORATION

Install:

- the lower control arm
- the screw for the lower control arm on the sub-frame. Finger tighten
- the spring.

Press up the control arm by hand.

Install the screw on the control arm in the wheel spindle. Finger tighten.

NOTE: Check that the spring is correctly installed in the lower spring seat.

Install:

- the parking brake cable
- the expander
- the spring for the parking brake shoes
- the brake disc
- the 1 M6 screw for the brake disc
- the ABS sensor using an M6 screw
- the ABS line on the wheel spindle and the lateral link.

INSTALLING THE BRAKE CALIPER

Install:

- the brake caliper holder
- the sliding pin for the brake caliper. Tighten. See **TIGHTENING TORQUE**
- the brake pads.

Install tensioner see **9995659** . See **TENSIONER 999 5659, USER INSTRUCTIONS**.

Press the tensioner up approximately 25mm from the normal position.

NOTE: The tensioner must be positioned as far out as possible on the tensioner plates to provide the correct lifting force.

Install the screw for the lower mounting for the shock absorber. Finger tighten.

Press the control arms up into the normal position.

Tighten (lower control arm):

- the lower control arm in the wheel spindle using an M12 screw
- the lower inner control arm mounting in the sub-frame using an M12 screw
- the lower mounting for the shock absorber using an M12 screw.

Tighten:

- the M12 screws for the lateral link
- the M12 screws for the tie rod
- the anti-roll bar link for the anti-roll bar using an M12 screw.

Use a Torx wrench as a counterhold so that the boot is not damaged.

Tighten (upper control arm):

- the rear upper control arm mounting using an M12 screw
- the upper control arm mounting in the wheel spindle using an M12 screw.

INSTALLING THE EXHAUST SYSTEM

Install the exhaust system. See **EXHAUST SYSTEM, REPLACING** .

FINISHING

Remove tensioner see **9995659** . See **TENSIONER 999 5659, USER INSTRUCTIONS**.

Install the wheel. See **INSTALLING WHEELS** .

Activate the self adjuster for the parking brake. See **PARKING BRAKE SELF-ADJUSTMENT, RESETTING** .

Align the wheels. See **WHEEL ALIGNMENT, CHECKING / ADJUSTING** .

SUB-FRAME REAR, REPLACING/INSTALLATION (4T65 AWD 2003-2012)

REPLACING

Special tools:

see **9512923**

see **9985434**

see **9995500**

see **9995659**

see **9997031**

see **9997030**

see **9997039**

see **9997074**

see **9997060**

NOTE: **Since the illustrations in this service information are used for different model years and / or models, some variation may occur. However, the essential**

information in the illustrations is always correct.

PREPARATORY WORK

REMOVING WHEELS

Raise the vehicle.

Remove the wheels.

REMOVAL

REMOVING THE EXHAUST SYSTEM

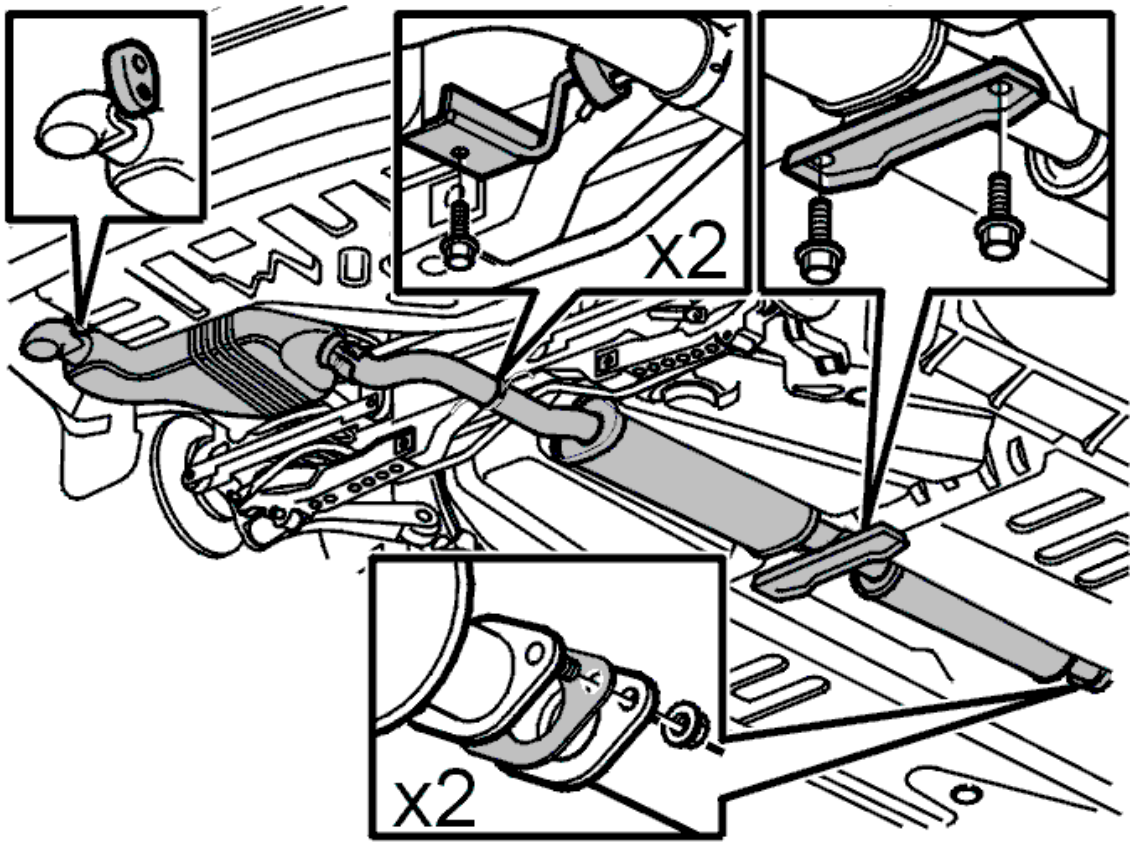

Fig. 68: Exhaust System, Brackets And Fasteners
Courtesy of VOLVO CARS CORPORATION

Start at the front when separating the three-way catalytic converter (TWC).

Hang up the three-way catalytic converter (TWC) on a hook.

Remove:

- the mountings in the sub-frame

- the rearmost exhaust mounting
- the screws in the bracket.

REMOVING THE POSITION SENSOR

NOTE: Only applies to cars with Bi-Xenon lights.

Remove the position sensor for Bi-Xenon lamps. See **POSITION SENSOR BI-XENON LAMPS, REPLACING** .

REMOVING THE SPRING

Install tensioner see **9995659** . See **TENSIONER 999 5659, USER INSTRUCTIONS**.

NOTE: The tensioner must be positioned as far out as possible on the tensioner plates to provide the correct lifting force.

Press the tensioner up approximately 25 mm from the normal position.

Remove the screw from the lower mounting for the shock absorber.

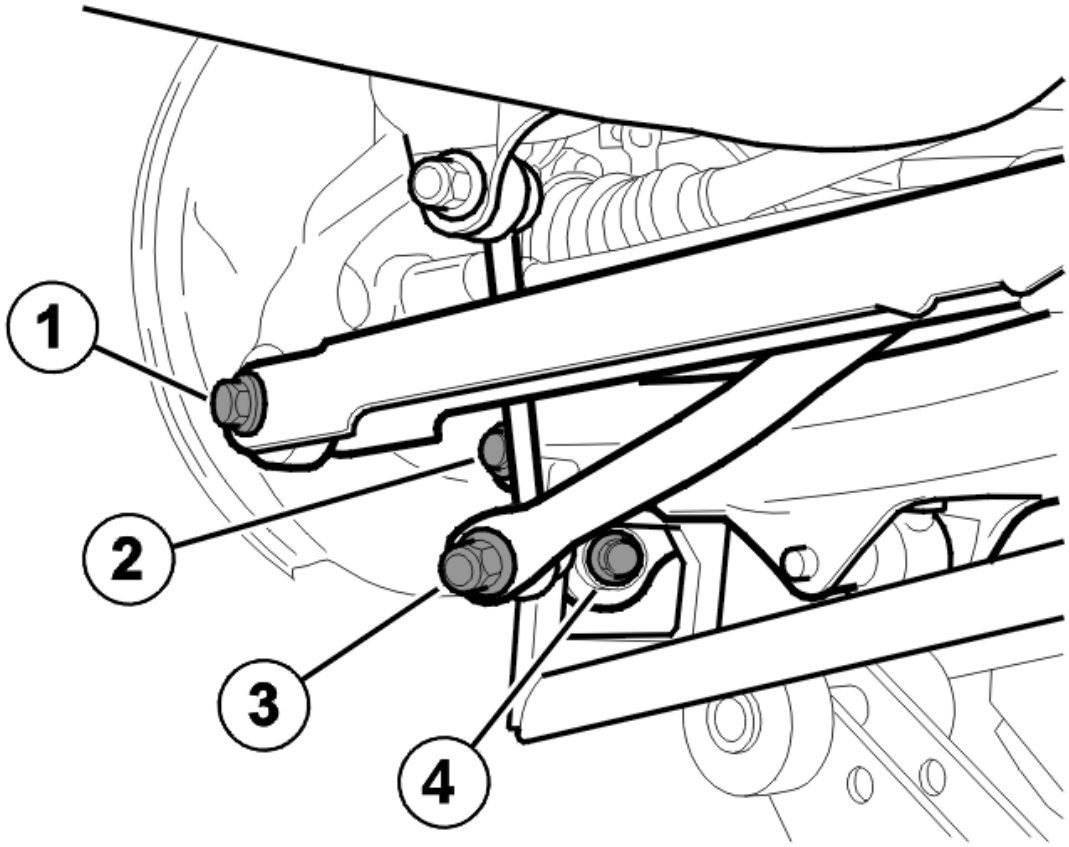

Fig. 69: Tie Rod, Control Arm, Anti-Roll Bar Links
Courtesy of VOLVO CARS CORPORATION

Remove:

- the inner and outer screws for the tie rod
- the tie rod (1)
- the link from the anti-roll bar (3). Use a Torx wrench as a counterhold so that the boot is not damaged
- the screws for the lateral link (4)
- the lateral link
- the screw for the control arm in the wheel spindle (2).

Lower the control arm with the tensioner. The spring is now unloaded.

Remove tensioner see **9995659** see: **TENSIONER 999 5659, USER INSTRUCTIONS**.

Press the control arm down by hand.

Remove:

- the spring
- the screw in the inner mounting on the control arm in the sub-frame
- the control arm.

REMOVING THE BRAKE CALIPER

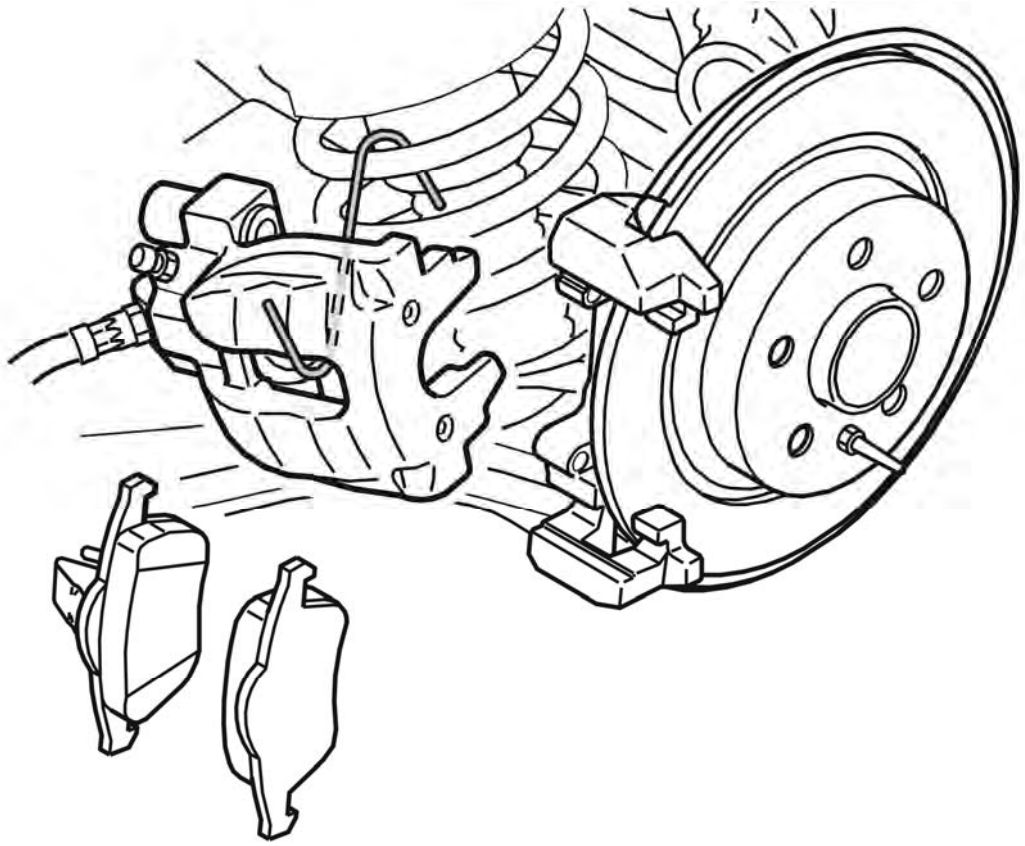

Fig. 70: Brake Caliper And Brake Pads
Courtesy of VOLVO CARS CORPORATION

Remove:

- the sliding pin for the brake caliper
- the brake pads
- the brake caliper. Hang the brake caliper on a hook in the sub-frame
- the screw for the ABS sensor
- the ABS sensor
- the ABS line on the wheel spindle.

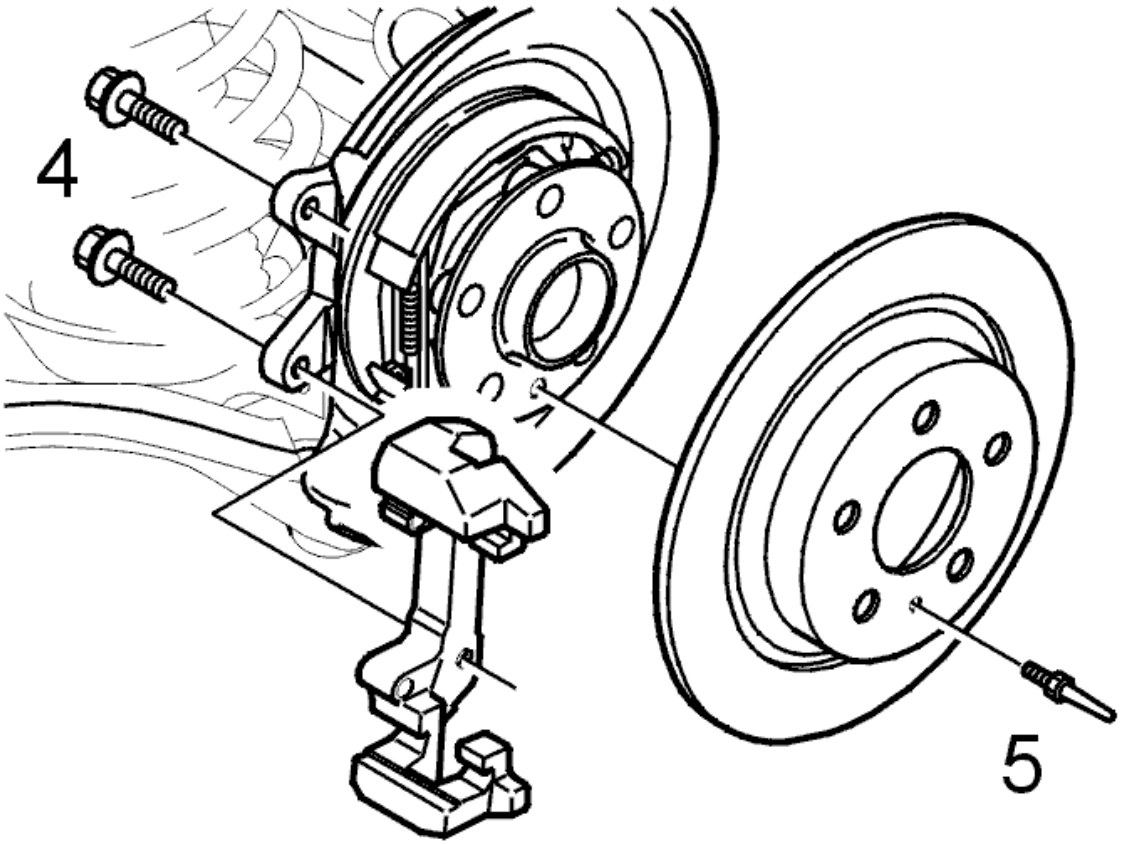

Fig. 71: Brake Caliper And Brake Disc Screws
Courtesy of VOLVO CARS CORPORATION

Remove:

- the screws for the holder on the brake caliper (4)
- the holder for the brake caliper
- the screw for the brake disc (5)
- the brake disc.

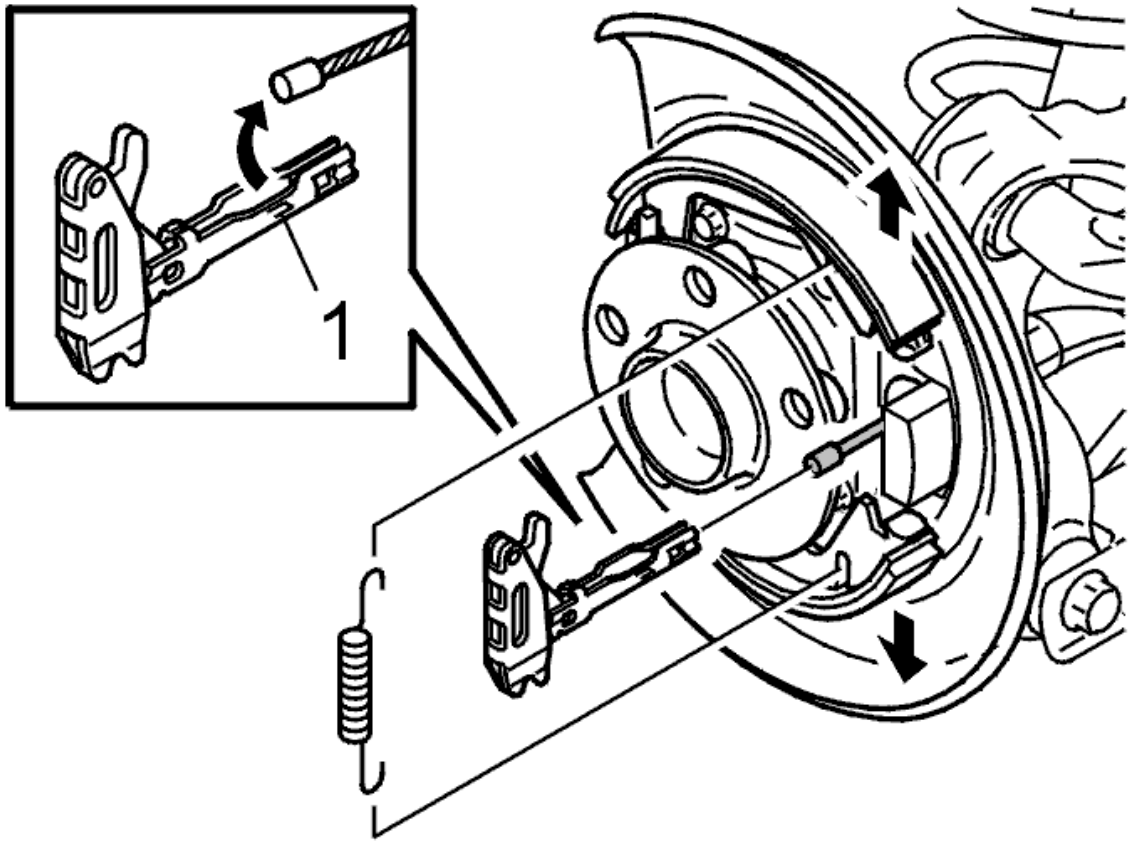

Fig. 72: Identifying Return Spring And Expander
Courtesy of VOLVO CARS CORPORATION

Remove:

- the return spring at the expander
- the expander.

Lift the brake shoe slightly. Grip the expander and pull it outwards to access the cable.

Unhook or pry apart the expander (1) by the mechanical cable to remove it.

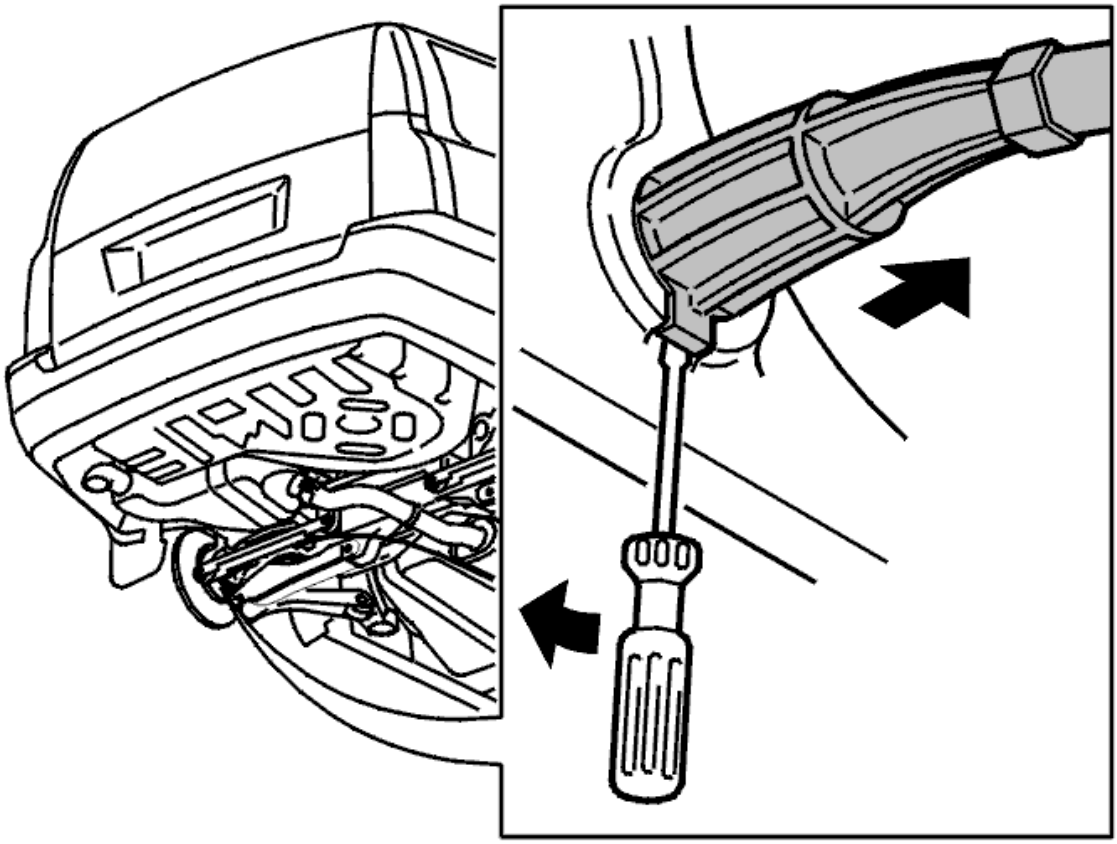

Fig. 73: Removing Guide Sleeve
Courtesy of VOLVO CARS CORPORATION

Remove the guide sleeve for the cable sleeve. Apply a screwdriver between the guide sleeve lug and wheel arch. Pry apart slightly to remove the sleeve.

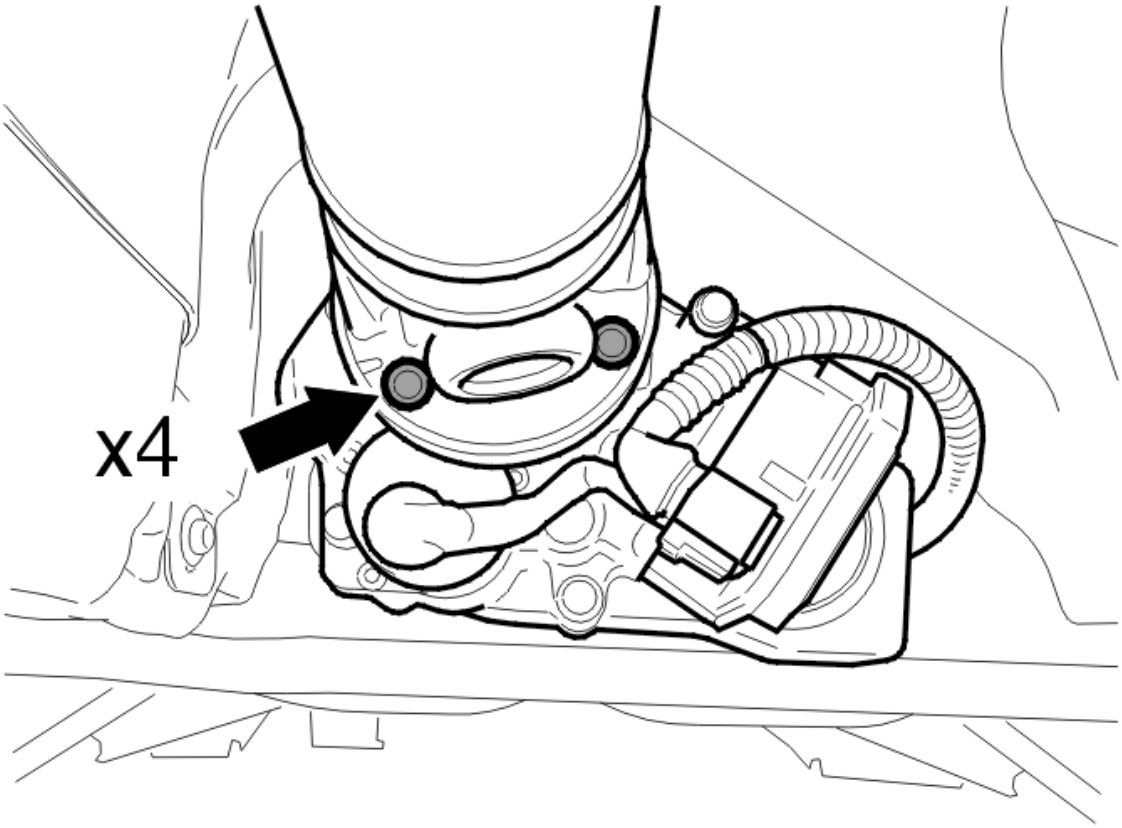

Fig. 74: Identifying Propeller Shaft Bolts
Courtesy of VOLVO CARS CORPORATION

NOTE: Only applies to vehicles with 6-cylinder engines.

Pay attention to the following when removing propeller shaft

Follow instructions. See **PROPELLER SHAFT, SPECIAL INFORMATION**

NOTE: Only applies to cars with AWD.

Remove:

- the 4 screws for the propeller shaft
- the propeller shaft
- the power supply cable and the clamps for the Active on Demand coupling (AOC).

LOWERING THE SUB-FRAME

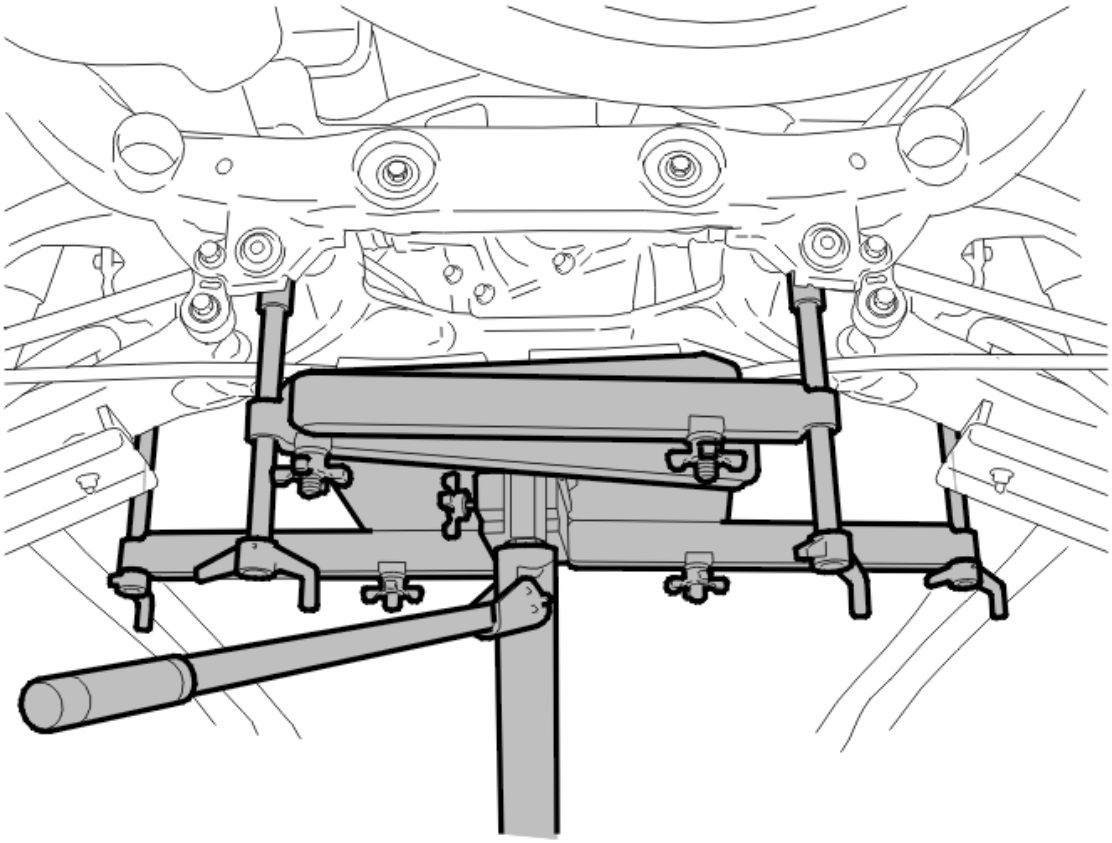

Fig. 75: Lowering Sub-Frame
Courtesy of VOLVO CARS CORPORATION

Position a lifting table under the sub-frame.

Apply the lifting table so that the load is taken off the sub-frame screws. Remove the bracket for the fuel pre-filter and brake pipe. Remove the sub-frame screws with accompanying washers and brackets. Carefully lower the sub-frame approximately 100 mm.

Remove:

- the pressure pump
- the hose for the carbon filter container
- the plastic clips.

Lower the sub-frame.

REMOVING THE SHOCK ABSORBER

Remove the upper shock absorber nut. Use socket see **9995500** and a Torx wrench as a counterhold.

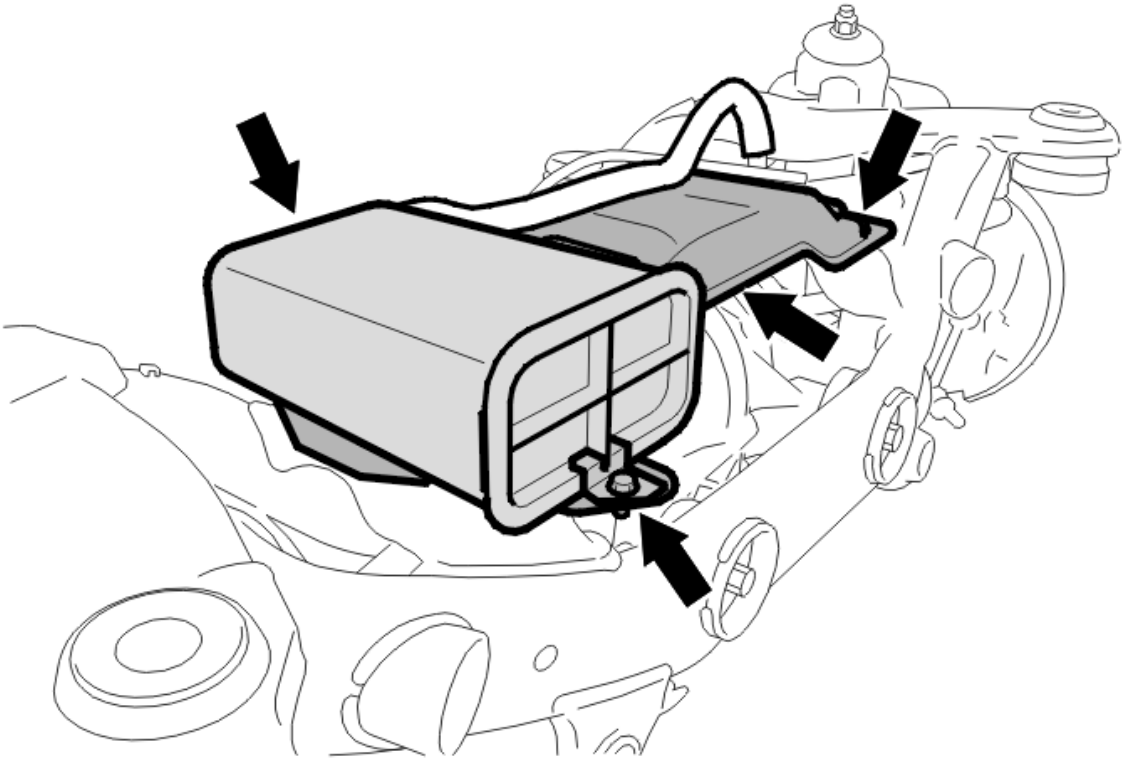

Fig. 76: Identifying Carbon Filter Container/Sub-Frame Cover
Courtesy of VOLVO CARS CORPORATION

Remove:

- the screw for the carbon filter container
- the carbon filter container
- the screws for the sub-frame cover
- the cover on the sub-frame.

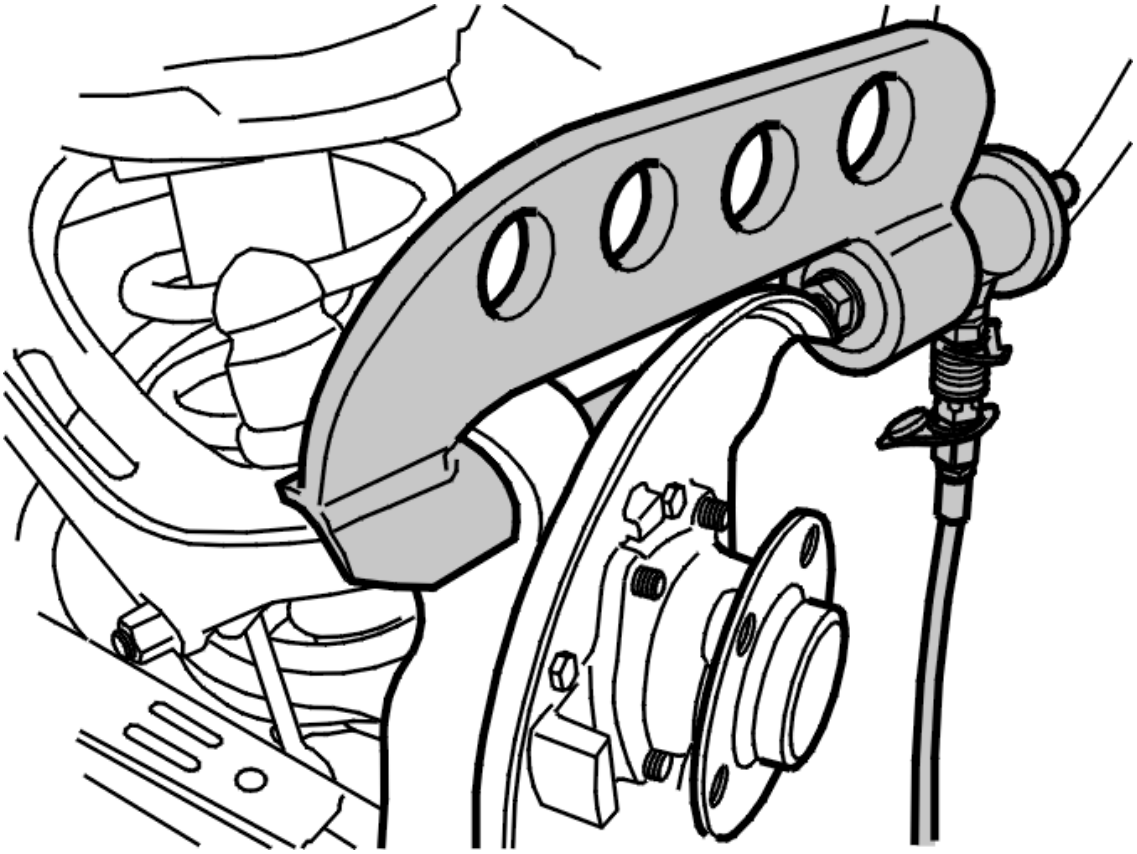

Fig. 77: Screw And Wheel Spindle From Upper Control Arm
Courtesy of VOLVO CARS CORPORATION

Slacken off the screw for the outer control arm mounting. Slacken off 3 turns.

Use: see **9512923** , see **9997031** and see **9997030** together with threaded rod see **9997039** .

Press off the wheel spindle.

NOTE: Only applies to cars with AWD.

Remove:

- the screw
- the screw for the drive shaft.

Press in the drive shaft and remove the spindle.

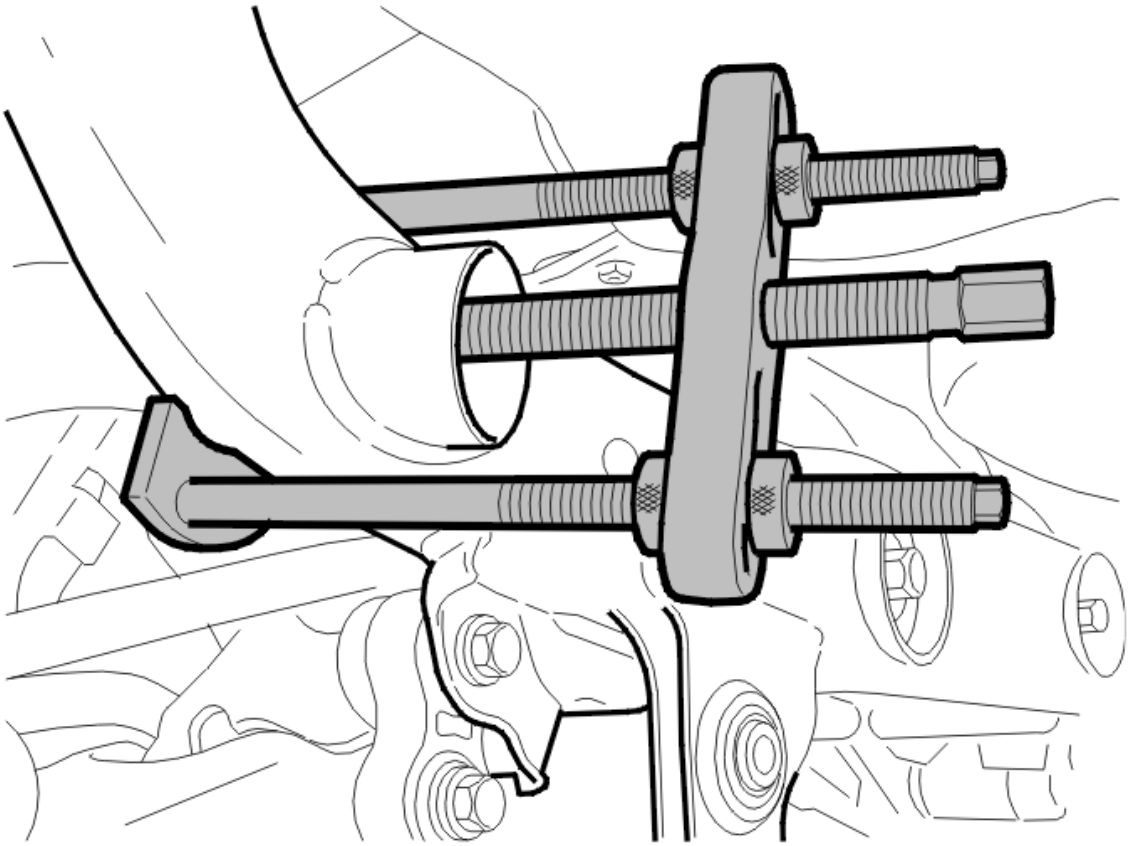

Fig. 78: Removing Inner Rear Control Arm Mounting
Courtesy of VOLVO CARS CORPORATION

Remove the 2 screws for the inner front control arm mounting.

Slacken off the screw for the inner rear control arm mounting. Slacken off 3 turns. Use puller see **9985434** with counterhold see **9997074** .

NOTE: Only press until the bushing releases from its splined area.

Remove the screw.

Remove:

- the upper control arm
- the 4 x screws for the anti-roll bar
- the anti-roll bar.

REMOVING THE DRIVE SHAFT FROM THE FINAL DRIVE

NOTE: Only applies to cars with AWD.

Remove the drive shafts.

Use a larger screwdriver. Position the tip of the screwdriver between the constant velocity joint and the final drive.

Tap firmly so that the snap ring for the drive shaft releases. Pull out the drive shaft. Do not damage the drive shaft seal.

Install sealing plug see **9997060** .

REMOVING THE FINAL DRIVE

NOTE: Only applies to cars with AWD.

Remove:

- the 3 screws for the final drive
- the final drive.

INSTALLATION

NOTE: For tightening torques, see: TIGHTENING TORQUE .

NOTE: To ensure that there is no exhaust leakage, see: FLANGED JOINT, ASSEMBLING .

INSTALLING THE SUB-FRAME

NOTE: Only applies to cars with AWD.

Install:

- the final drive
- the 3 M12 screws for the final drive
- the drive shafts
- the anti-roll bar
- the 4 x M10 screws for the anti-roll bar in the sub-frame
- the anti-roll bar
- the 4 x M10 screws for the anti-roll bar in the sub-frame.

INSTALLING THE SHOCK ABSORBER

Raise the new shock absorber to the upper mounting.

Install the new nut.

For tightening torques, see: **SUMMARY OF TIGHTENING TORQUES FOR SPECIFIC**

COMPONENTS .

NOTE: Make sure that the bushing seats correctly in the opening in the rear end.

Install:

- the sub-frame
- the M12 screws for the sub-frame cover
- the carbon filter container
- the M6 screws for the carbon filter container.

INSTALLING THE UPPER CONTROL ARM

Install:

- the screws for the rear control arm mounting. Only tighten a few turns
- the front upper control arm mounting, M12.

INSTALLING THE WHEEL SPINDLE

Install the screw on the outer control arm mounting in the wheel spindle. Only tighten a few turns.

NOTE: Only applies to cars with AWD.

Install the drive shaft in the wheel spindle, M10.

LIFTING SUB-FRAME

Lift up the sub-frame approximately 100 mm from the upper position.

Install:

- the clamp for the hose on the pressure pump
- the pressure pump on the bracket
- the plastic clips.

Raise the sub-frame to the upper position.

Install:

- the bracket for the fuel pre-filter, M6
- the bracket for the brake pipe, M6
- the M6 screws for the front mounting for the bracket on the sub-frame
- the 4 x M12 screws for the sub-frame. For model year 2005- see **SUMMARY OF TIGHTENING TORQUES FOR SPECIFIC COMPONENTS** .

INSTALLING THE PROPELLER SHAFT

NOTE: Only applies to cars with AWD.

Install:

- the propeller shaft
- the 4 x screws for the propeller shaft. Tighten. See **SUMMARY OF TIGHTENING TORQUES FOR SPECIFIC COMPONENTS** .
- the power supply cable and the clamps for the Active on Demand coupling (AOC).

INSTALLING THE SPRING

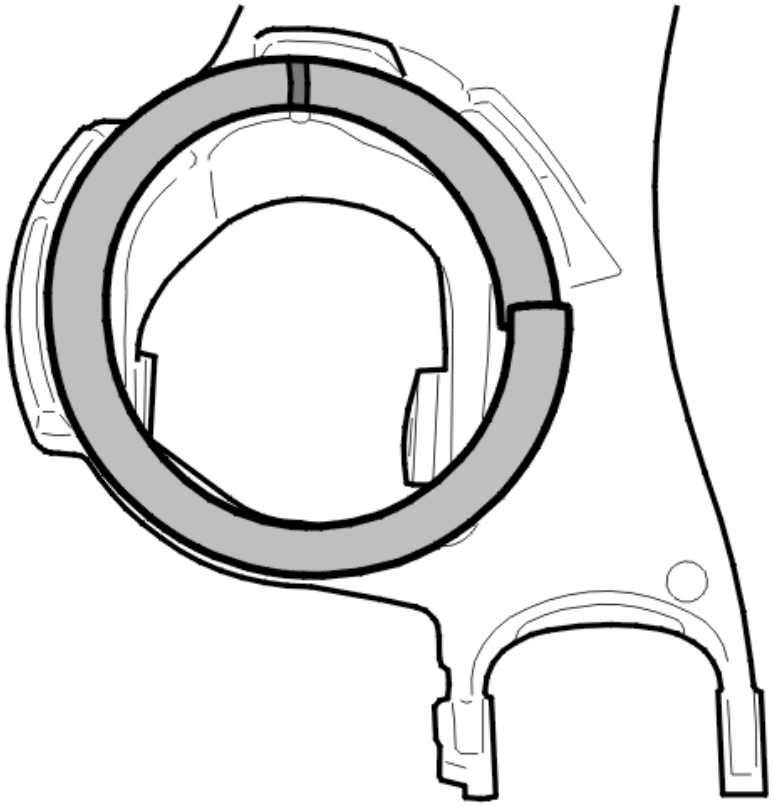

Fig. 79: Lower Control Arm
Courtesy of VOLVO CARS CORPORATION

Install:

- the lower control arm
- the screw holding the lower control arm to the sub-frame. Finger tighten
- the spring

Press up the control arm by hand.

Install the screw for the control arm in the wheel spindle. Finger tighten.

NOTE: Check that the spring ends up correctly installed in the lower spring seat.

Install:

- the parking brake cable
- the expander
- the spring for the parking brake shoes
- the brake disc
- the M6 screw for the brake disc
- the ABS sensor, M6
- the ABS line on the wheel spindle and the lateral link.

INSTALLING THE BRAKE CALIPER

Install:

- the holder for the brake caliper
- the sliding pin for the brake caliper. Tighten. See **SUMMARY OF SPECIFIC COMPONENTS AND TIGHTENING TORQUES** .
- the brake pads
- the tensioner see **9995659** . See **TENSIONER 999 5659, USER INSTRUCTIONS**.

Press the tensioner up approximately 25 mm from the normal position.

NOTE: The tensioner must be positioned as far out as possible on the tensioner plates to provide the correct lifting force.

Install the screw for the lower mounting for the shock absorber. Finger tighten.

Move the control arms to the normal position. See **NORMAL POSITION** .

Tighten:

- the M12 screws for the tie rod
- the M12 screws for the lateral link
- the anti-roll bar link, M12, to the anti-roll bar. Use a Torx wrench as a counterhold on the ball joint so that the rubber boot is not damaged

Tighten (lower control arm):

- the lower control arm, M12, in the wheel spindle
- the lower inner control arm mounting, M12, in the sub-frame

- the lower mounting, M12, in the shock absorber.

Tighten (upper control arm):

- the rear upper control arm mounting, M12
- the upper control arm mounting in the wheel spindle, M12.

REMOVING THE TENSIONER

Remove tensioner. see **9995659** See: **TENSIONER 999 5659, USER INSTRUCTIONS**.

INSTALLING THE POSITION SENSOR

NOTE: Only applies to cars with Bi-Xenon lights.

Install the position sensor for Bi-Xenon lamps. See **POSITION SENSOR BI-XENON LAMPS, REPLACING** .

INSTALLING THE EXHAUST SYSTEM

Install the exhaust system. See **EXHAUST SYSTEM, REPLACING** .

INSTALLING WHEELS

Install the wheels. See: **INSTALLING WHEELS** .

Carry out wheel alignment in accordance with: **WHEEL ALIGNMENT, CHECKING / ADJUSTING** .

NOTE: If the vehicle is equipped with Bi-Xenon lamps, the position sensor must be calibrated. Calibrate according to Vehicle communication, Function group 3, Electrical system, Rear electronic module (REM).

NORMAL POSITION

Special tools:

see **9985972**

NORMAL POSITION

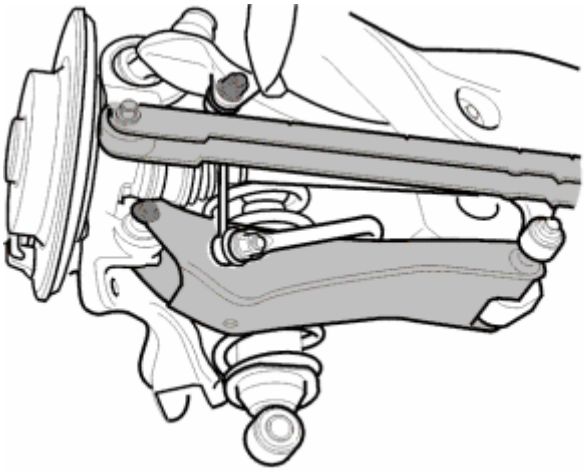

Fig. 80: Lifting Up Suspension With A Jack 998 5972 To Its Normal Position
Courtesy of VOLVO CARS CORPORATION

Lift up the suspension with a jack see **9985972** to its normal position.

NOTE: Normal position specification is not available.

TENSIONER 999 5659 (2003-2012)

USER INSTRUCTIONS

Special tools:

see **9995659**

see **9997061**

see **9989761**

NOTE: The illustrations in this service information are used for different model years and/or models. Some variation may occur. However, the essential information in the illustrations is always correct.

PREPARATION

Raise the vehicle.

Remove the handbrake cable mountings from the sub-frame.

Install the tensioner.

NOTE: The tensioner must be positioned as far out as possible on the tensioner plates

to provide the correct lifting force.

USE THE TENSIONER

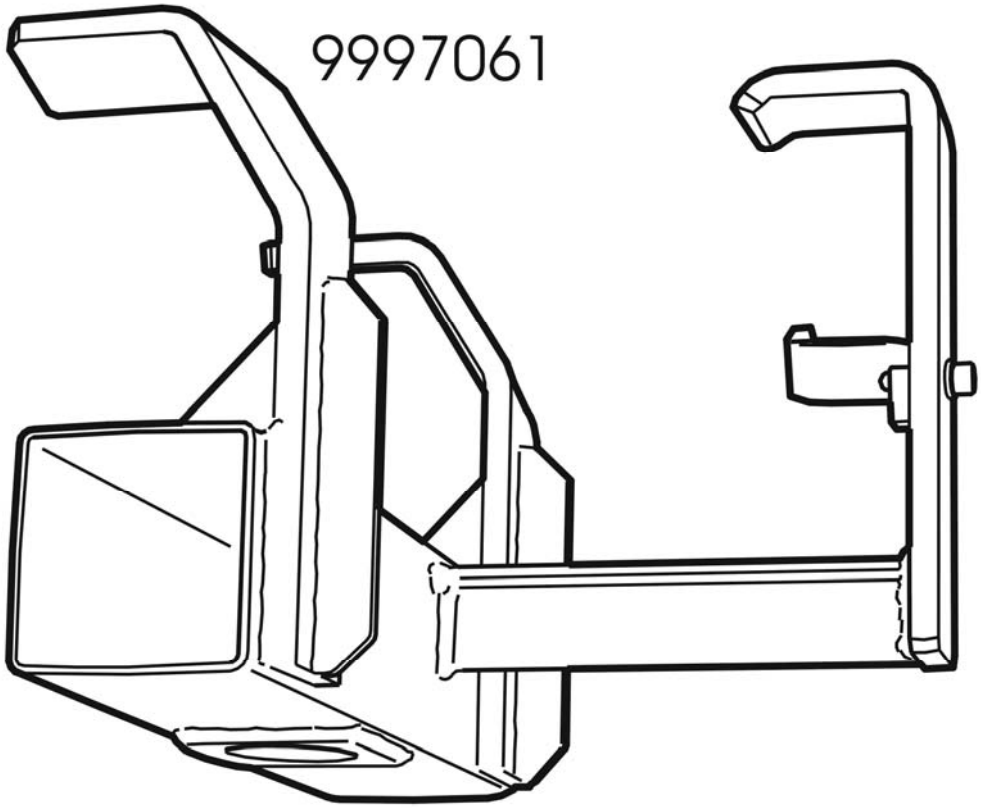

Fig. 81: Identifying Mounting 9997061
Courtesy of VOLVO CARS CORPORATION

Tensioner see **9995659** is used when working on the suspension. It is vital that the screwed joints for the rubber bushings are tightened in the normal position (in the same position as when the car is on the ground and has three people in the car and a full fuel tank).

The tensioner relieves the pressure on the components in the suspension when removing and installing.

The tool is secured to the sub-frame with mounting see **9997061** . This means that the lift stability is not affected during work.

NOTE: Thoroughly check that the power cable to the AOC connection does not get trapped between tool 9997061 and the sub frame.

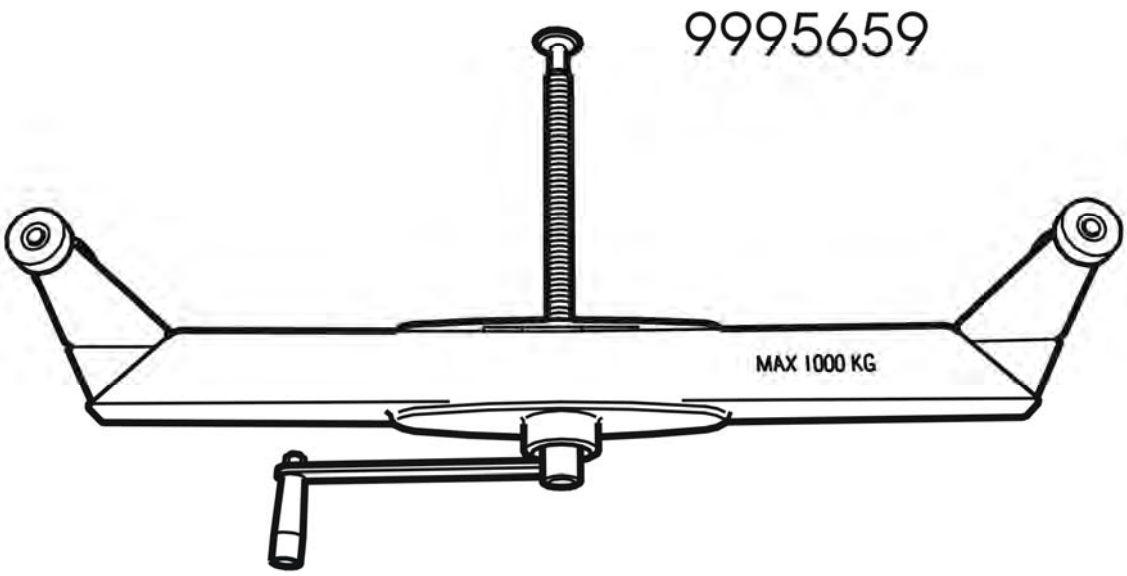

Fig. 82: Identifying Tensioner Caliper 9995659
Courtesy of VOLVO CARS CORPORATION

Install the threaded bar on the tensioner caliper see **9995659** .

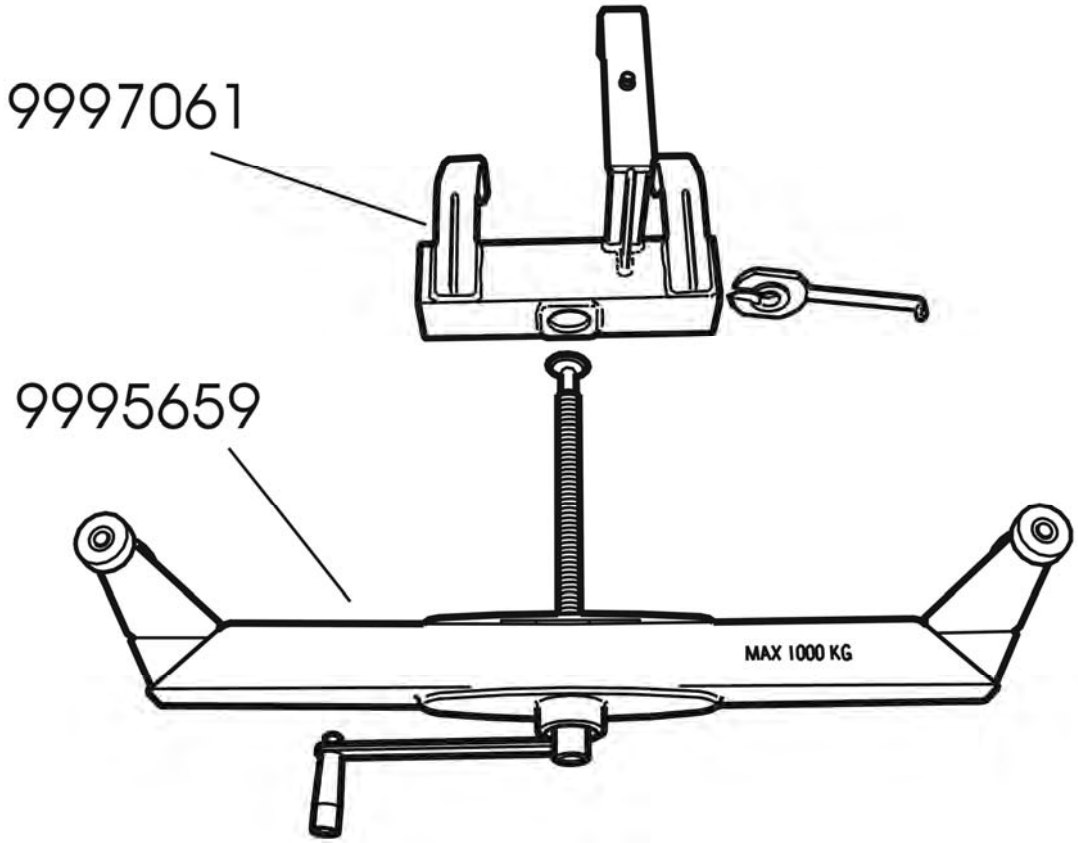

Fig. 83: Identifying Threaded Bar 9995659 And Mounting 9997061
Courtesy of VOLVO CARS CORPORATION

Lift up the tensioner caliper with the threaded bar see **9995659** .

Insert the threaded bar in the mounting see **9997061** from underneath.

Insert the locking washer with the handle in from the side in mounting see **9997061** under the threaded screw.

Lock the screw in the locking washer. Align the locking washer in the mounting.

NOTE: The locking washer has a locating pin which must be aligned with the screw.

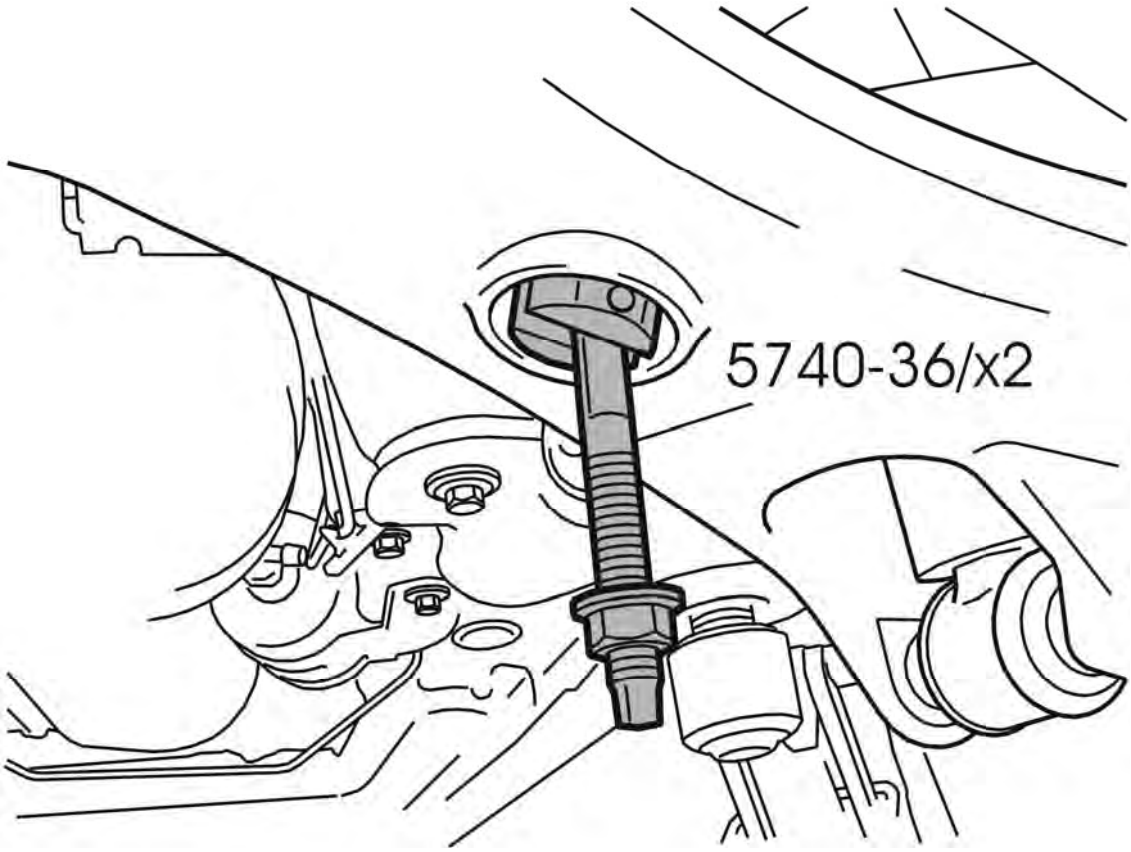

Fig. 84: Identifying Screws From Kit 9989761
Courtesy of VOLVO CARS CORPORATION

Install the 2 screws (5740-3c) from kit see **9989761** in the control arm holes.

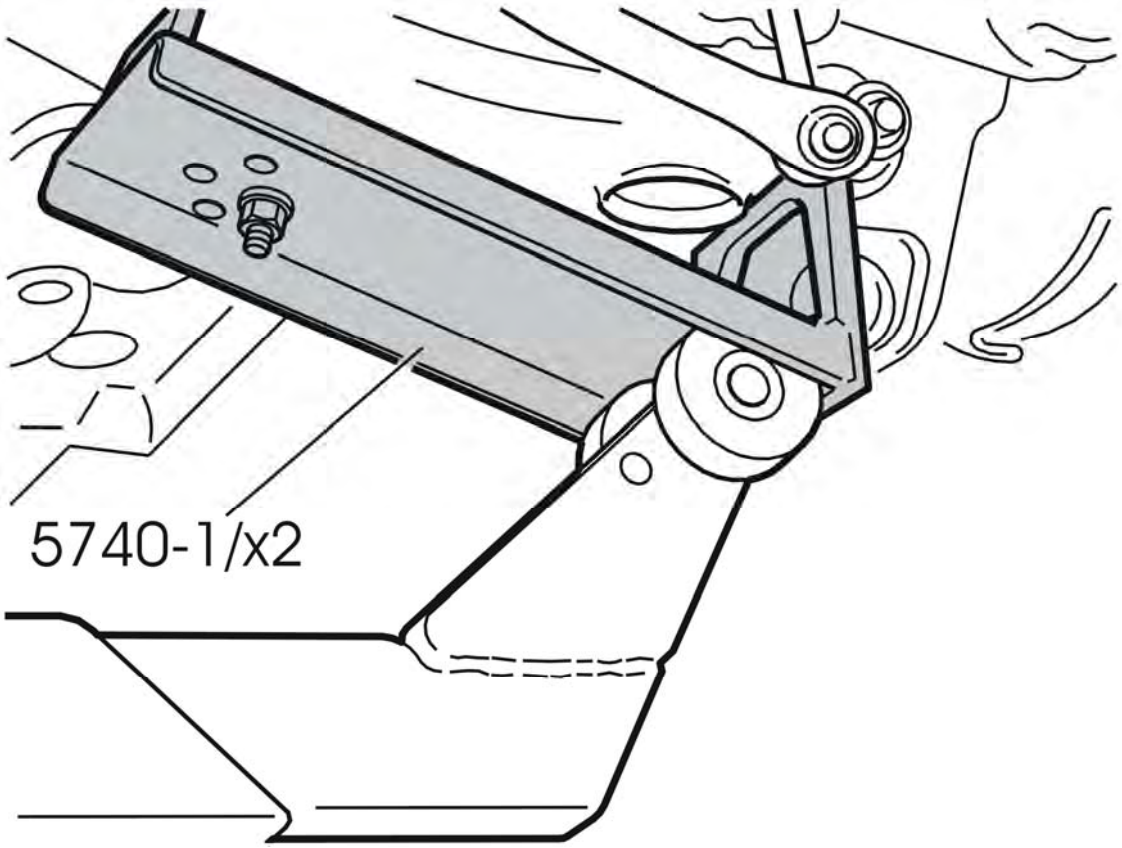

Fig. 85: Identifying Rails 5740-1
Courtesy of VOLVO CARS CORPORATION

Install the rails 5740-1 modified according to (VM-277) on the control arms.

Make sure that the outer support lugs of the rail come in contact with the edge of the cast holes in the control arms and that the inner of the two center holes is used for the screw.

Make sure that the rollers on the tensioner comes in contact with the rails on both sides.

NOTE: The tensioner must be positioned as far out as possible on the rails with the lifting arms extended equally on both sides to provide the correct lifting force.

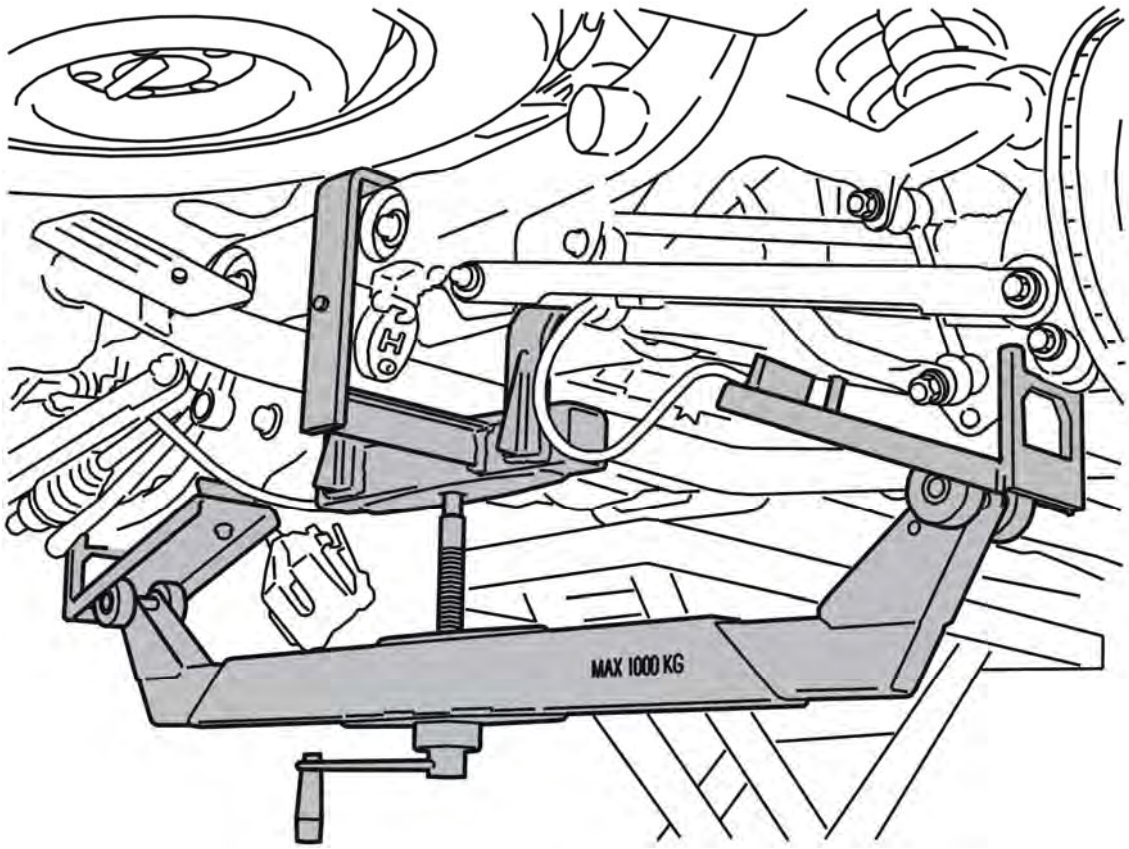

Fig. 86: Identifying Control Arms At Normal Position
Courtesy of VOLVO CARS CORPORATION

Raise the control arms to their normal position using the tensioner.

NORMAL POSITION

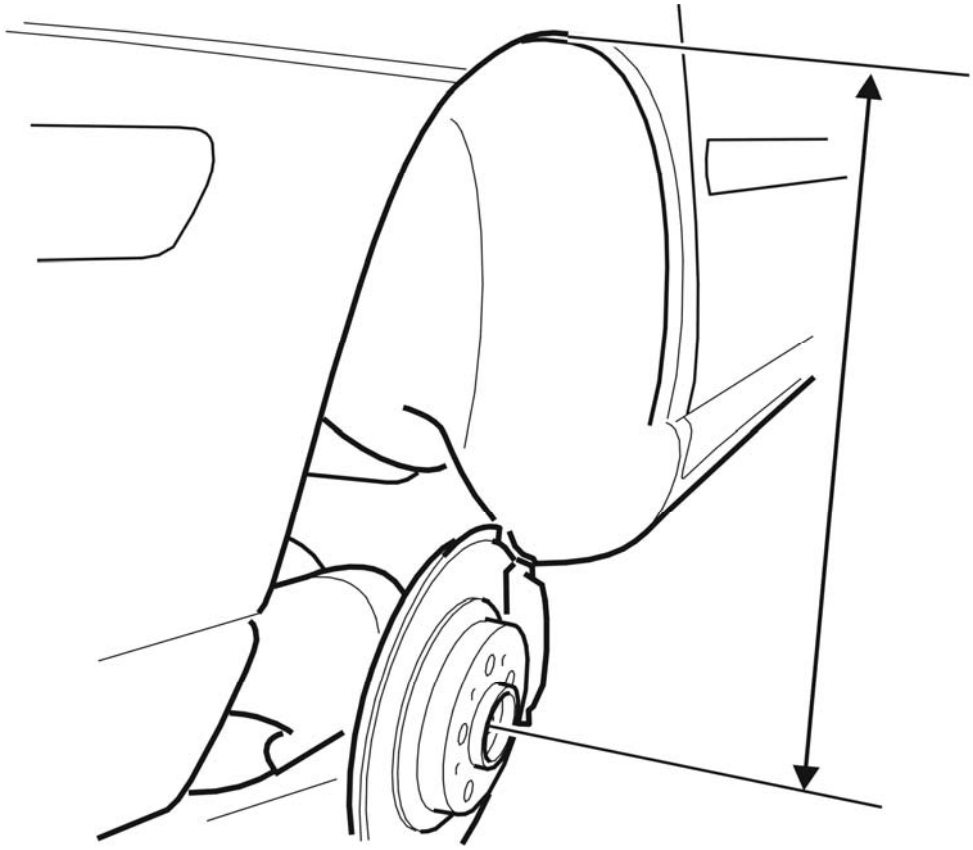

Fig. 87: Checking Distance From Fender Edge To Center Of Wheel
Courtesy of VOLVO CARS CORPORATION

The normal position of the rear suspension is 453 mm from the wing edge to the center of the wheel.

REMOVING THE TENSIONER

Detach the tensioner, pull out the fork and lower the tensioner using the threaded bar.

Remove:

- mounting see **9995659** from the sub frame.
- the rails 5740-1 from the control arms.

Install the handbrake cable mountings in the sub-frame.

SUSPENSION

Rear Wheel Suspension - Symptom Verification

INFORMATION AND VERIFICATION. REAR WHEEL SUSPENSION/RUST/CORROSION (2006-12)

REAR WHEEL SUSPENSION/RUST/CORROSION

SYMPTOM AND FUNCTION DESCRIPTION

NOTE: The symptom should always be verified together with the customer.

The following tips may be of help to decide if the symptom is due to a product feature or if continued troubleshooting is needed.

HINT: Surface corrosion is OK.

SUSPENSION

Shock Absorbers, Anti-Roll And Bar Levelling - Installation Instructions, Accessories

LEVEL CONTROL

LEVEL CONTROL

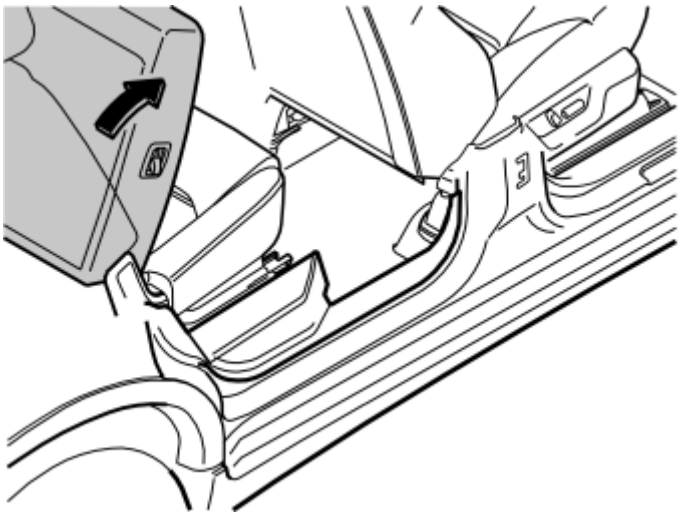

Fig. 1: Folding Front Backrest
Courtesy of VOLVO CARS CORPORATION

- Fold the front backrest forward in the second row of seats.

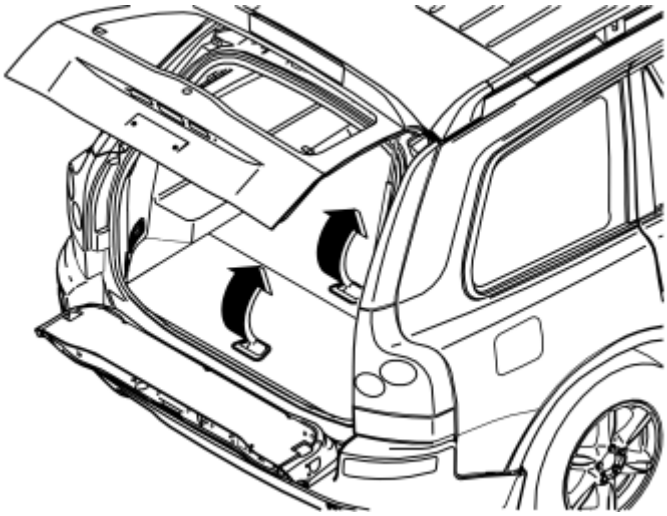

Fig. 2: Removing Two Center Floor Hatches
Courtesy of VOLVO CARS CORPORATION

- Remove the two floor hatches by first lifting up a little and then pulling them out of their mountings at the front edge.

If the rear floor hatch has bag holders underneath, the floor hatch is secured by a strap with knob on each short side of the storage box.

- Turn the knob 90° and remove the straps.

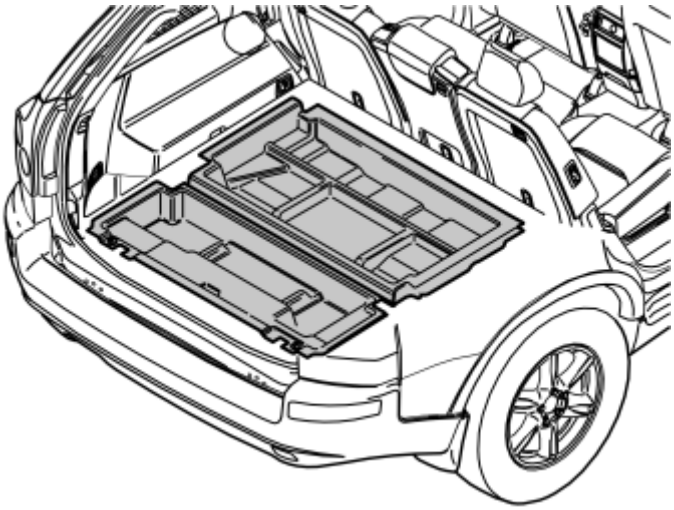

Fig. 3: Identifying Storage Boxes
Courtesy of VOLVO CARS CORPORATION

- Remove the two storage boxes.

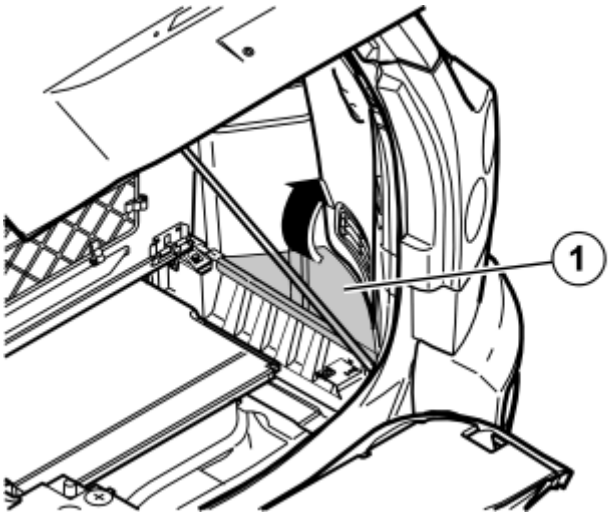

Fig. 4: Remove Right And Left Side Storage Boxes
Courtesy of VOLVO CARS CORPORATION

- Remove the two side floor hatches on the right and left-hand sides in the cargo compartment.

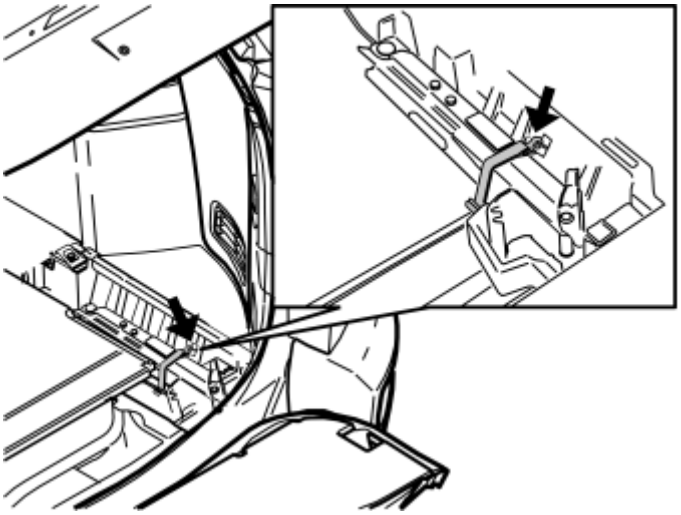

Fig. 5: Identifying Restraining Strap For Jack
Courtesy of VOLVO CARS CORPORATION

- Remove the strap from the jack and lift it out.

REMOVING LOAD FLOOR SUPPORT

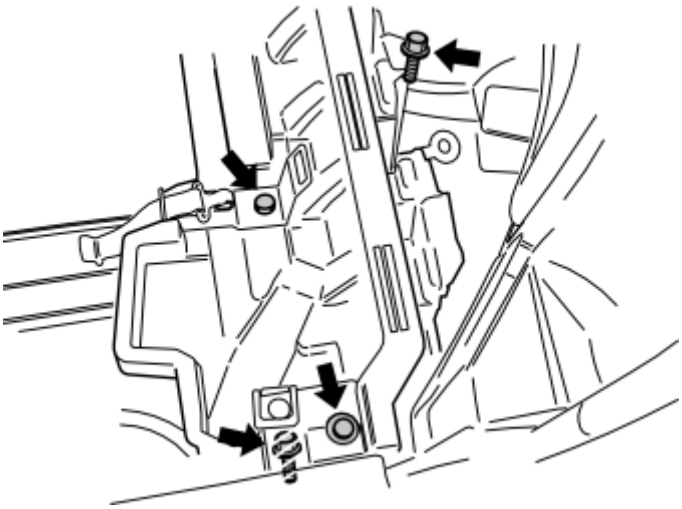

Fig. 6: Load Floor Support Screws
Courtesy of VOLVO CARS CORPORATION

- Remove the four screws holding the load floor support at the rear edge.

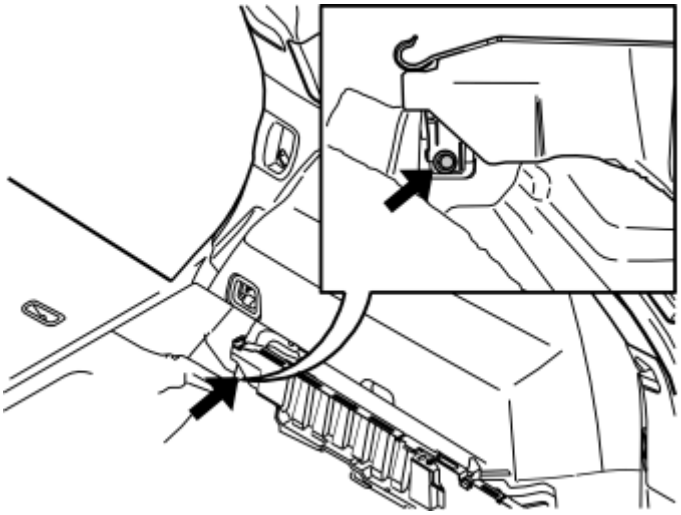

Fig. 7: Removing Jack Strap
Courtesy of VOLVO CARS CORPORATION

- Remove the screw at the front edge of the load floor support.

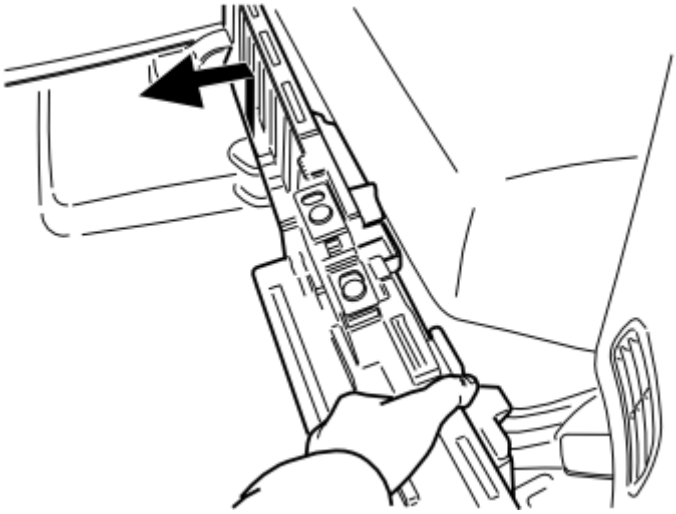

Fig. 8: Removing Load Floor Support
Courtesy of VOLVO CARS CORPORATION

- Carefully pull off the load floor support at the front edge by lifting it up slightly so that it releases from the insulation. Then pull it slightly in towards the center of the car. Pull carefully as the load floor support is fragile.

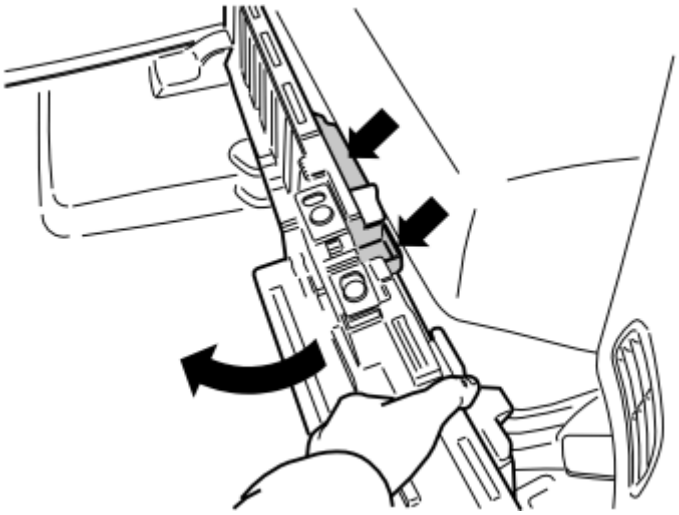

Fig. 9: Removing Load Floor Support
Courtesy of VOLVO CARS CORPORATION

- Carefully pull off the load floor support at the rear edge by first pressing in the side panel slightly at the rear edge, opposite the two stud screws on the load floor support so that it goes free and then lift it out.

NOTE: Do not damage the load floor support as it is fragile.

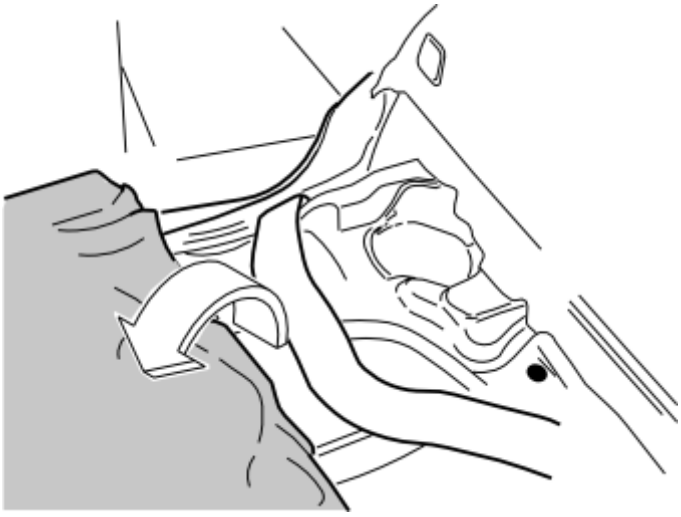

Fig. 10: Folding Insulation
Courtesy of VOLVO CARS CORPORATION

- Fold the insulation from the shock absorber mounting in the cargo compartment to one side.

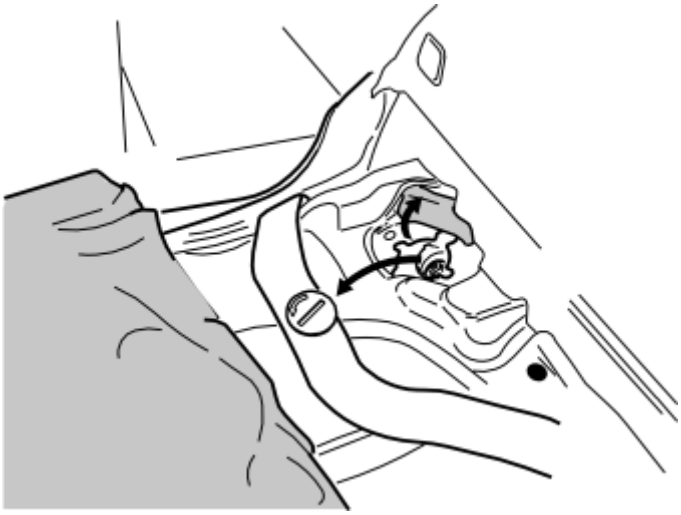

Fig. 11: Removing Shock Absorber Mounting Cover
Courtesy of VOLVO CARS CORPORATION

- Carefully fold the foam rubber seal from the upper shock absorber mounting to one side.
- Remove the cover from above the shock absorber mounting.

REMOVING SHOCK ABSORBER

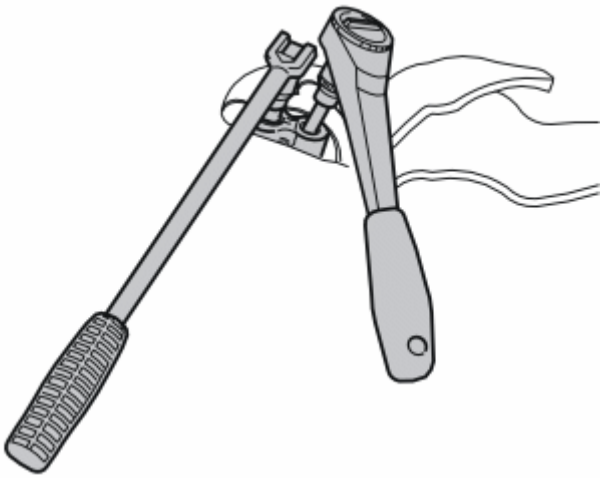

Fig. 12: Removing Shock Absorber Upper Bearing Nut Using 999 5500
Courtesy of VOLVO CARS CORPORATION

- Remove the nut for the shock absorber's upper bearing. Use sleeve part no. 9995500 and Torx socket 40 as counterhold.
- Place the nut to one side, a new panel is in the kit.
- Repeat steps, see **REMOVING LOAD FLOOR SUPPORT** and **REMOVING SHOCK ABSORBER** for the other side.

REMOVING/INSTALLING SHOCK ABSORBER

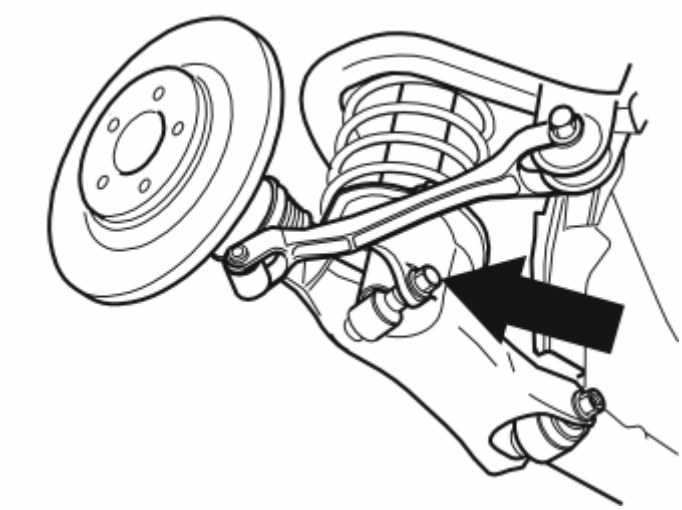

Fig. 13: Shock Absorber/Lower Control Arm Mounting Screw
Courtesy of VOLVO CARS CORPORATION

- Raise the car.
- Remove the wheels.
- Remove the lower screw in the shock absorber's mounting at the lower control arm. Place the screw to one side, a new one is in the kit.
- Remove the shock absorber.

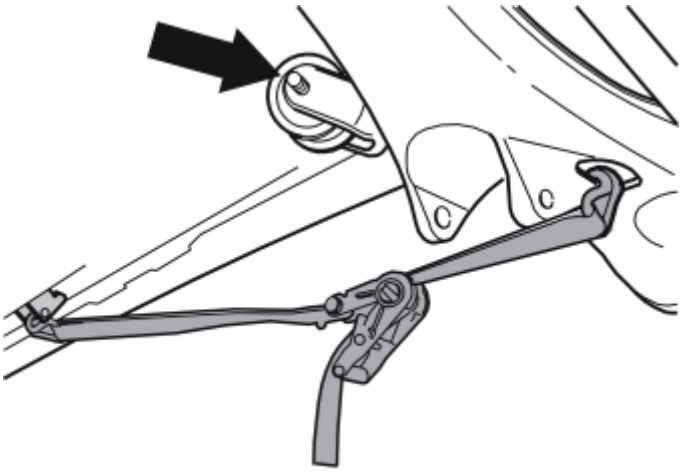

Fig. 14: Relieving Load On Lateral Links Front Mounting Screw
Courtesy of VOLVO CARS CORPORATION

- Secure a strap between the jack mounting and outer hole in the underneath of the lower control arm to relieve the load from the screw for the lateral link's front mounting.

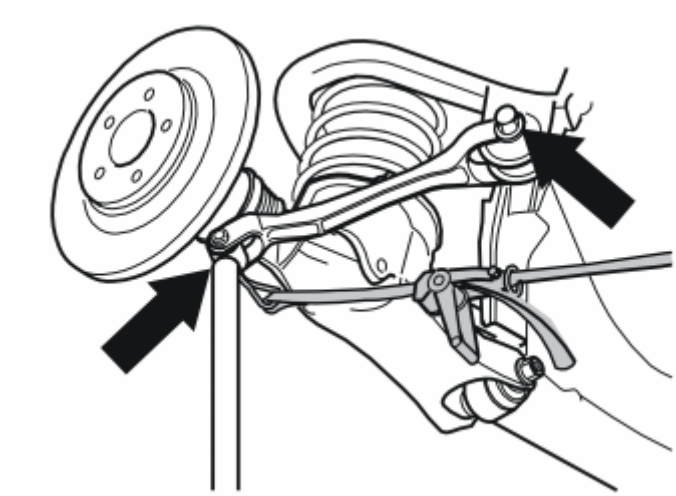

Fig. 15: Removing Lateral Link Screw
Courtesy of VOLVO CARS CORPORATION

- Take the workshop lift and position it under the lateral link's rear mounting in the wheel spindle to relieve the load from the screw for the lateral link's front mounting.
- Remove the screw in the lateral link's front mounting and relieve the load at the same time using the strap and workshop lift.
- Put away the screw, new is included in the kit.

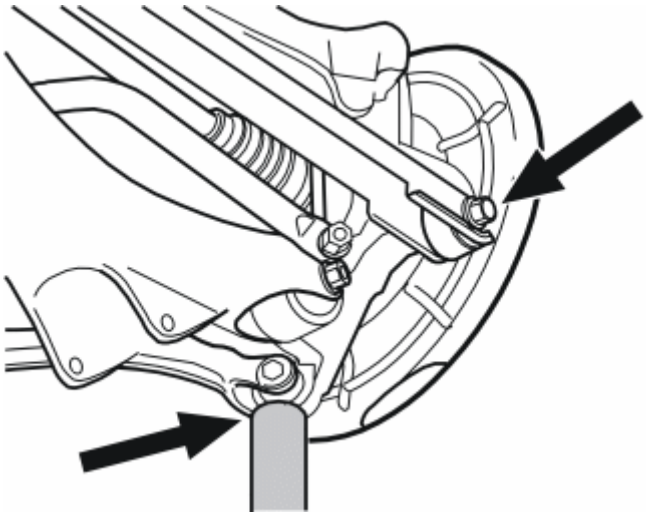

Fig. 16: Removing Screw And Nut From Track Rods
Courtesy of VOLVO CARS CORPORATION

- Remove the screw and nut for the track rod's mounting in the wheel spindle and place the end above the mounting.
- Discard the screw and nut. There are new ones in the kit.

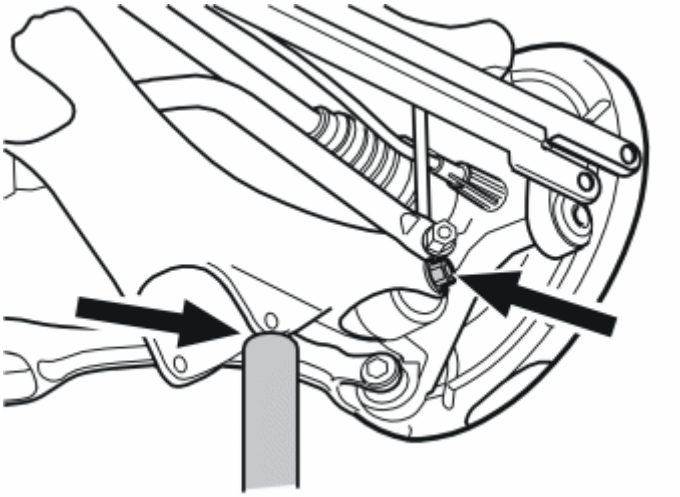

Fig. 17: Positioning Lift Under Rear Mounting Eye
Courtesy of VOLVO CARS CORPORATION

- Position the workshop lift under the rear mounting eye for the shock absorber's lower mounting, to relieve the load from the screw for the lower control arm's mounting in the wheel spindle.
- Relieve the load, remove the screw and lower the workshop lift carefully.
- Put away the screw, new is included in the kit.

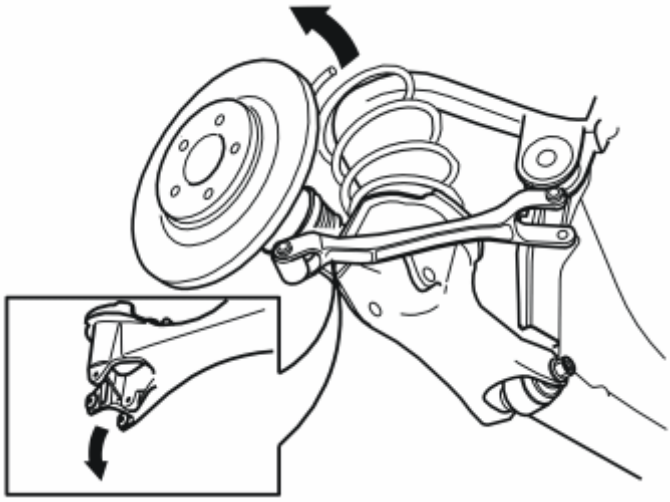

Fig. 18: Lowering Control Arm's Outer End
Courtesy of VOLVO CARS CORPORATION

- Lower the lower control arm's outer end as far as possible so that the old spring can be removed upwards.

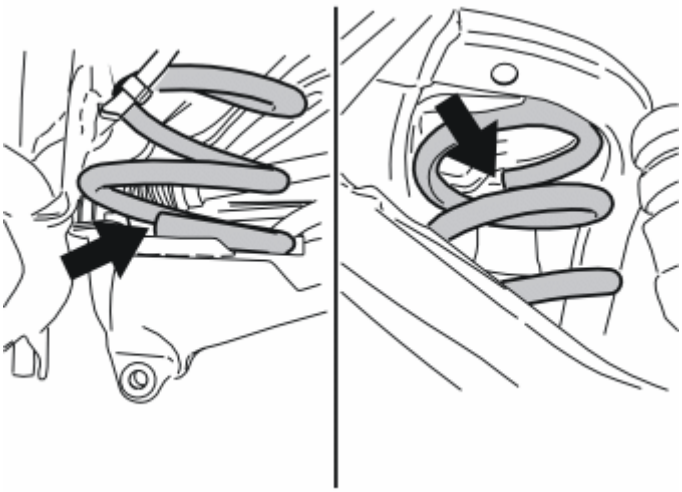

Fig. 19: Installing Spring
Courtesy of VOLVO CARS CORPORATION

- Take the new spring from the kit, insert it from above with the wider part of the spring facing down. The control arm may need pushing down slightly to get the spring in place.
- Position the spring's ends against the relevant stop in the upper mounting and control arm.
- Take the workshop lift and position it under the rear eyelet for the shock absorber's mounting in the control arm.
- Carefully push the control arm up into position. Take a new M12x100 screw from the kit and tighten the control arm to the wheel spindle. Do not tighten fully yet.

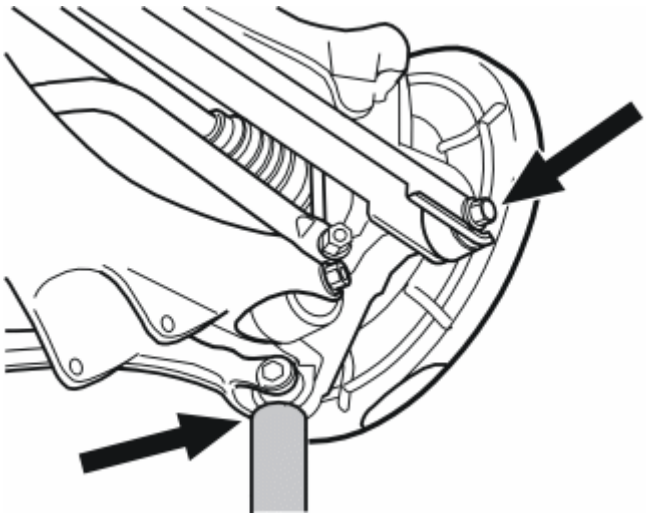

Fig. 20: Installing Track Rod
Courtesy of VOLVO CARS CORPORATION

- Take a new M12x60 screw and nut from the kit for the track rod.
- Place the track rod's loose end into position.
- Place the workshop lift under the lateral link's rear mounting in the wheel spindle.

- Press the wheel spindle up and align the screw in the track rod and wheel spindle. Install the nut, but do not tighten fully yet,

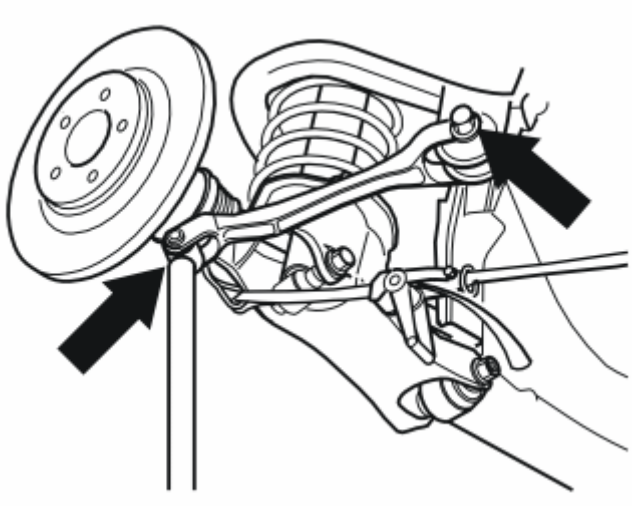

Fig. 21: Installing Lateral Link's Front End
Courtesy of VOLVO CARS CORPORATION

- Take a new M12x100 screw from the kit for the lateral link's front mounting.
- Insert the lateral link's front end into position by pushing the wheel spindle up using the workshop lift. Use the lateral link's mounting in the wheel spindle as a lifting point. Adjust to the correct position using the strap and install the new screw. Do not tighten fully yet.

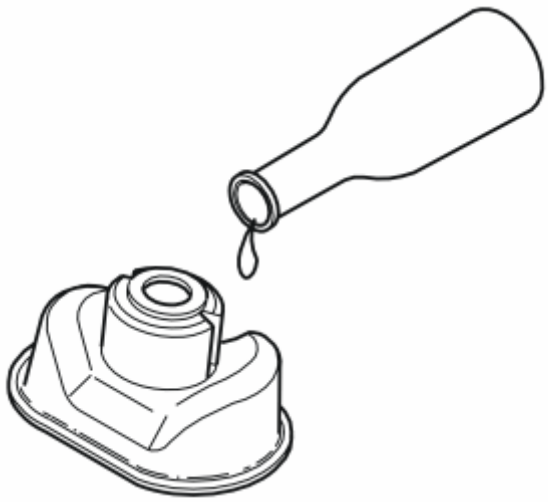

Fig. 22: Lubricating Shock Absorber's Upper Bearing
Courtesy of VOLVO CARS CORPORATION

- Take the shock absorber's upper bearing and lubricate it using soapy water or similar to that it slides into the upper mounting more easily.

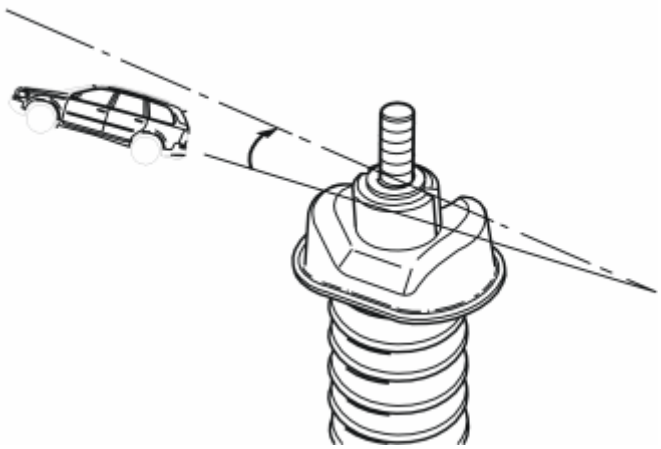

Fig. 23: Positioning Bearing On Shock Absorber
Courtesy of VOLVO CARS CORPORATION

- Take the new shock absorber from the kit and install the bearing. Ensure that the bearing is positioned on the shock absorber with the bearing slightly turned in relation to the length of the car, to fit in the corresponding hole in the upper mounting in the body.

INSTALLING SHOCK ABSORBER

- Move up the new shock absorber through the lower control arm, spring and up into the mounting in the body. Ensure that the loose bearing does not rotate on the shock absorber and ends up in the wrong position.
- Take a new M12x110 screw from the kit and tighten the shock absorber. Torque tighten to **80 Nm (59 lbf. ft.)** .
- Remove the strap and workshop lift.
- Repeat steps, see **REMOVING/INSTALLING SHOCK ABSORBER** and **INSTALLING SHOCK ABSORBER** for the other side.

INSTALLING SHOCK ABSORBER, CONTINUED

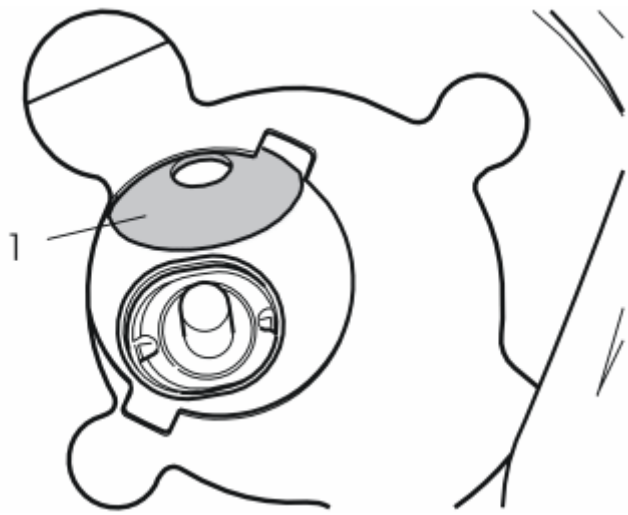

Fig. 24: Positioning Upper Shock Absorber Bearing
Courtesy of VOLVO CARS CORPORATION

- Lower the car to almost ground level.
- Take a jack and position it under the shock absorber's lower mounting and raise slightly.
- Check that the upper shock absorber bearing is correctly positioned in its upper mounting in the body by moving the loose washer (1) for the bearing that is located there. The bearing must be positioned in the upper mounting as illustrated.

INSTALLING SHOCK ABSORBER, CONTINUED

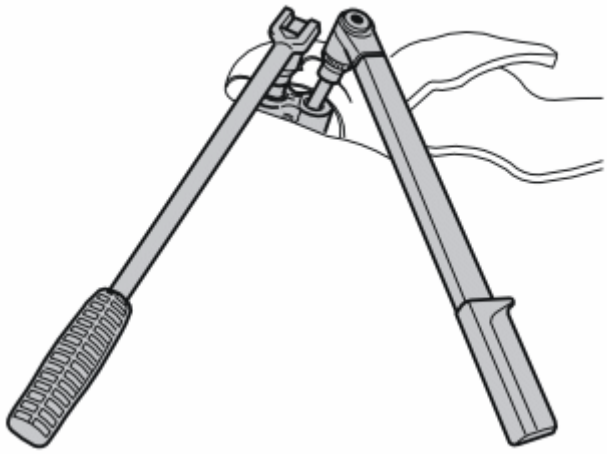

Fig. 25: Installing Shock Absorber Assembly
Courtesy of VOLVO CARS CORPORATION

- When the bearing is correctly positioned, raise further using the jack until the bearing is fully up in the mounting.
- Pull out the washer and install it on the shock absorber
- Take a new nut from the kit, install it on the shock absorber and tighten. Torque tighten to **80 Nm (59 lbf.**

ft.) . Use sleeve part no. 999 5500 and Torx socket 40 as counterhold.

- Remove the jack.
- Repeat steps, see **INSTALLING SHOCK ABSORBER, CONTINUED** and **INSTALLING SHOCK ABSORBER, CONTINUED** for the other side.

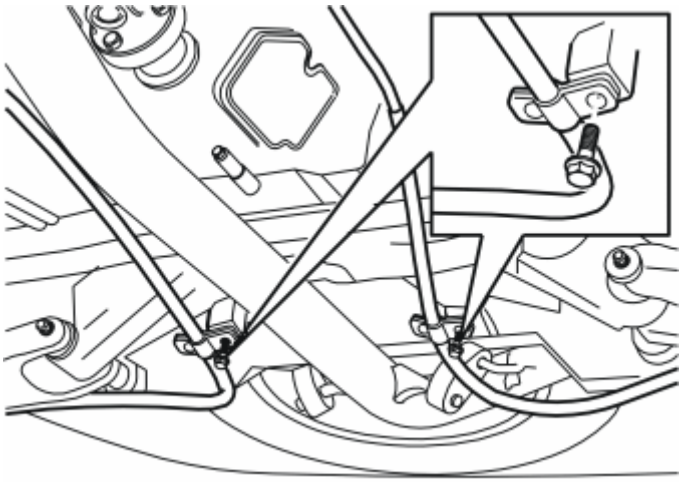

Fig. 26: Releasing Parking Brake Cables
Courtesy of VOLVO CARS CORPORATION

- Raise the car.
- Release the parking brake cables' mountings from the sub frame.

RELIEVING THE LOAD FROM THE REAR SUSPENSION USING TENSIONER 999 5659

Illustration A

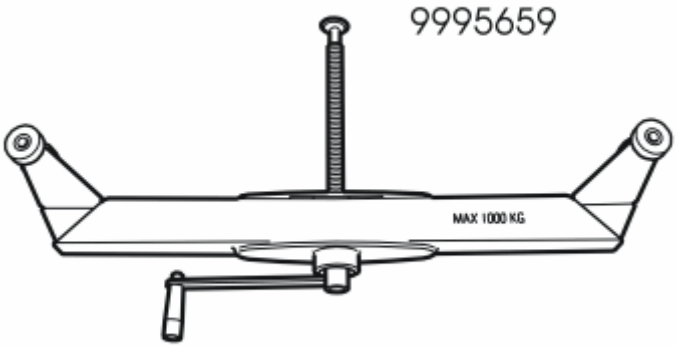

Fig. 27: Special Service Tool -Tensioner 999 5659
Courtesy of VOLVO CARS CORPORATION

Tensioner, part no. 999 5659, is used when working with suspension because it is extremely important that the screwed joint to the rubber bushings is tightened in the normal position, i. e. same position as when the car is on the ground with three people in the car and a full tank of fuel. Use the tensioner to relieve the load from the component parts in the suspension when at removal/installation.

Illustration B

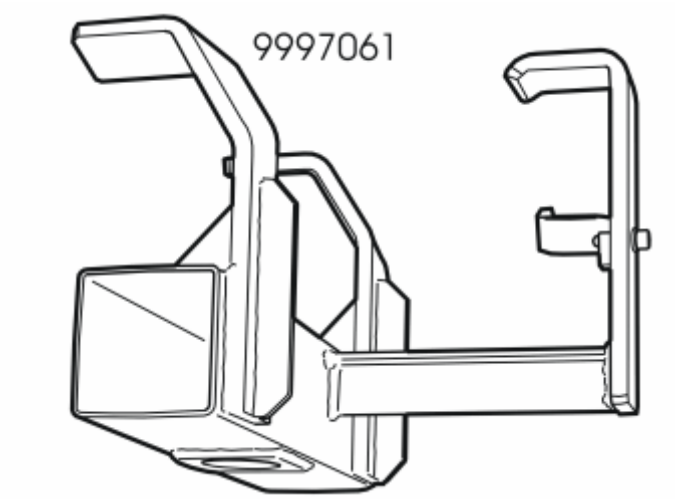

Fig. 28: Special Service Tool - Mounting 999 7061
Courtesy of VOLVO CARS CORPORATION

The tool is attached in the subframe itself with mounting part no. 999 7061. This means that the stability of the lift is not affected during work.

Illustration C

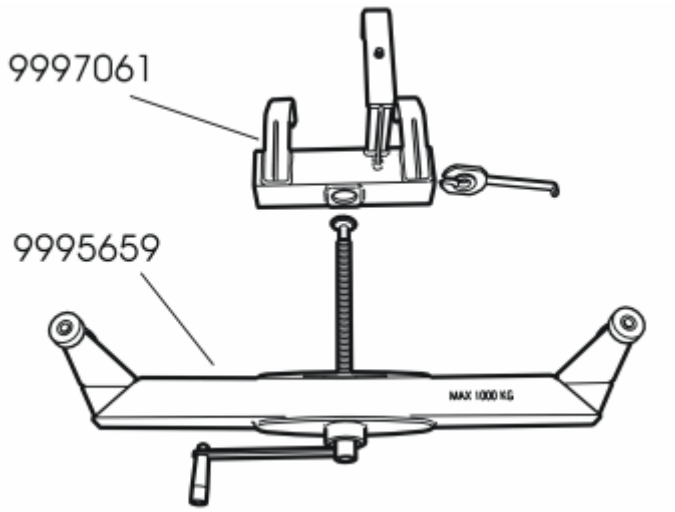

Fig. 29: Installing Tensioner To Mounting
Courtesy of VOLVO CARS CORPORATION

- Install the threaded bar on the tensioner (part no. 999 5659).

- Lift up the tensioner with the threaded bar (part no. 999 5659).
- Insert the threaded bar into the mounting (part no. 999 7061) from underneath.
- Take the locking washer with handle and insert it from the side into the mounting (part no. 999 7061) under the threaded screw.
- Lock the screw in the locking washer and align the locking washer into the mounting.

NOTE: The locking washer has a guide pin that must fit the screw.

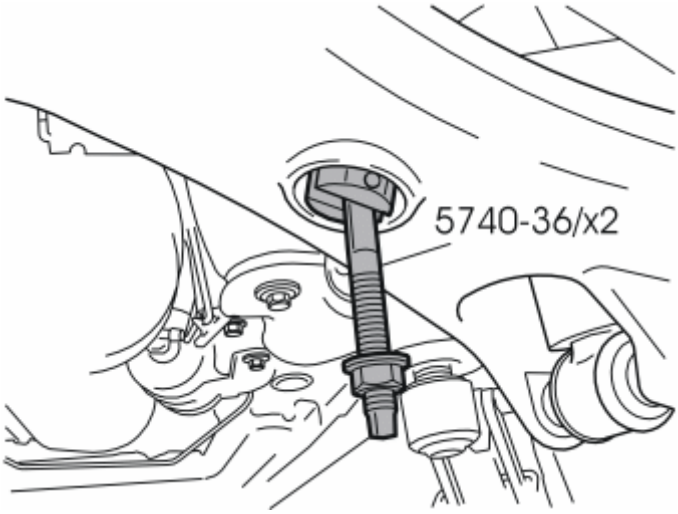

Fig. 30: Installing Screws Into Control Arm's Hole
Courtesy of VOLVO CARS CORPORATION

- Install the two screws, part no. 5470-36, from kit, part no. 998 9761, into the control arms' holes.

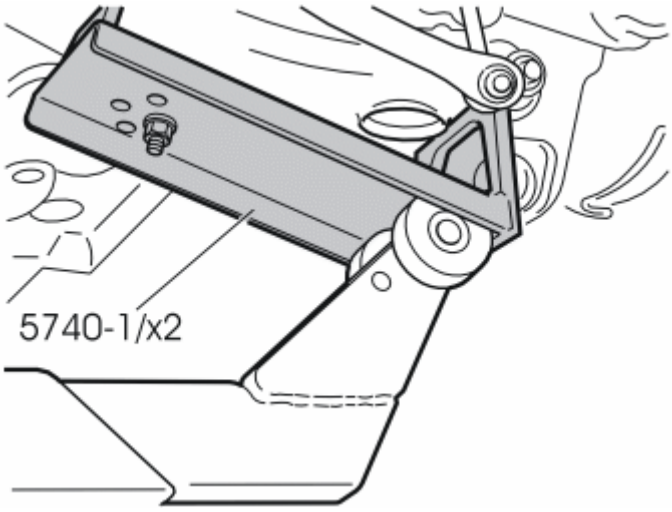

Fig. 31: Installing Rails Onto Control Arm
Courtesy of VOLVO CARS CORPORATION

- Install the rails, part no. 5740-1, modified according to VM-276, on the control arms. Ensure that the rollers are against the rails on both sides of the control arms.

NOTE: **The tensioner must be applied as far out as possible on the tensioner plates in order to provide the correct lifting force.**

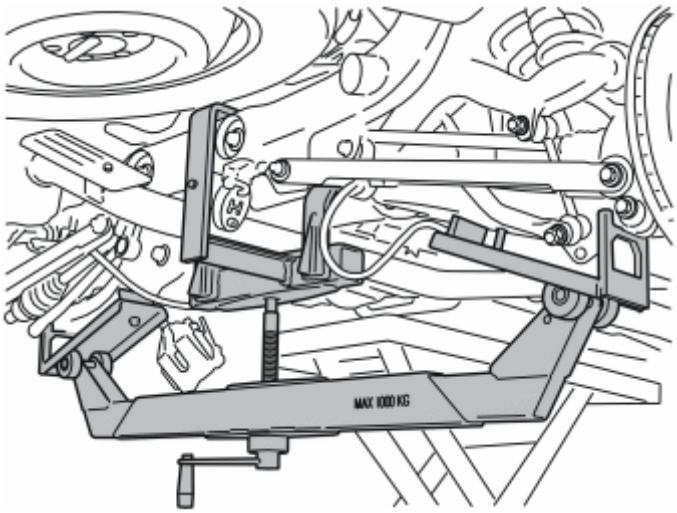

Fig. 32: Adjusting Control Arms Using Tensioner
Courtesy of VOLVO CARS CORPORATION

- Move the control arms up to the normal position using the tensioner.

Fig. 33: Setting Control Arms
Courtesy of VOLVO CARS CORPORATION

- Move the control arms up so far that the dimension between the wheel center and the wing edge is 453 mm (17 13/16").

  The track rod's mountings in the wheel spindles **80 Nm (59 lbf. ft.)**

  The control arms' lower mountings in the wheel spindles **80 Nm (59 lbf. ft.)**

  The lateral link's front mountings in the body **80 Nm (59 lbf. ft.)**
- Torque tighten the screws in the slackened joint as follows:

The track rod's mountings in the wheel spindles **80 Nm (59 lbf. ft.)**
The control arms' lower mountings in the wheel spindles **80 Nm (59 lbf. ft.)**
The lateral link's front mountings in the body **80 Nm (59 lbf. ft.)**

- Remove the tensioner with component parts.
- Reinstall the mountings for the parking brake cables in the subframe.

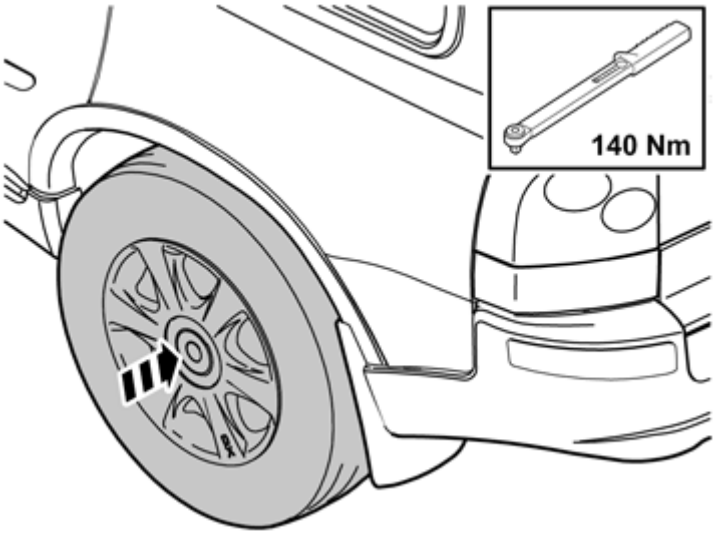

Fig. 34: Installing Wheels
Courtesy of VOLVO CARS CORPORATION

- Lower the car.
- Reinstall the wheels. Tighten the wheel bolts alternately and torque tighten to **140 Nm (103 lbf. ft.)**
- Reinstall the covers and the foam rubber seals over the upper shock absorber mountings.
- Fold the insulation panels and floor mats back.
- Reset the seats.

Reinstall:

- load floor support
- the jack
- the side floor hatches
- the storage boxes
- the floor hatches.

Fig. 35: VIDA Logo
Courtesy of VOLVO CARS CORPORATION

- Perform wheel alignment. Information available in VIDA under:
    1. Repair
    2. Clean, check and adjust
    3. 6 Suspension, steering
    4. 60 general
    5. Wheel alignment
    6. Wheel angles, check/adjust

SUSPENSION

Shock Absorbers, Anti-Roll And Bar Levelling - Removal, Replacement And Installation

ANTI-ROLL BAR

ANTI-ROLL BAR FRONT, REPLACING

Special tools:

see **9997018**

see **9995185**

see **9997070**

see **9995716**

see **9995460**

NOTE: **The illustrations in this service information are used for different model years and/or models. Some variation may occur. However, the essential information in the illustrations is always correct.**

REMOVING

REMOVING THE ANTI-ROLL BAR

NOTE: **The anti-roll bar's bushings and caps are vulcanized to the anti-roll bar and cannot be replaced separately.**

PREPARATION

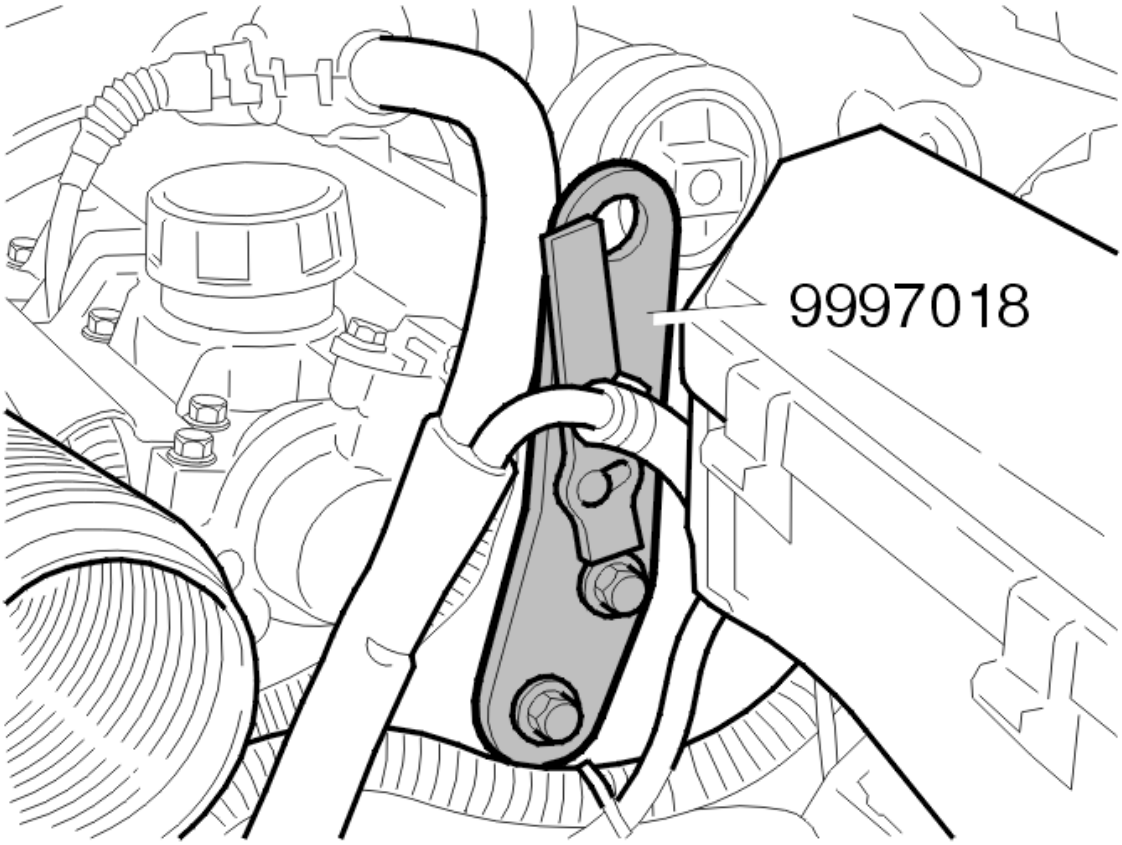

Fig. 1: Installing Lifting Eye
Courtesy of VOLVO CARS CORPORATION

Applies only to the T6:

Install lifting eye see **9997018** on the left side of the engine at the 2 screws.

Lock the lifting lug using the catch.

INSTALLING LIFTING TOOLS

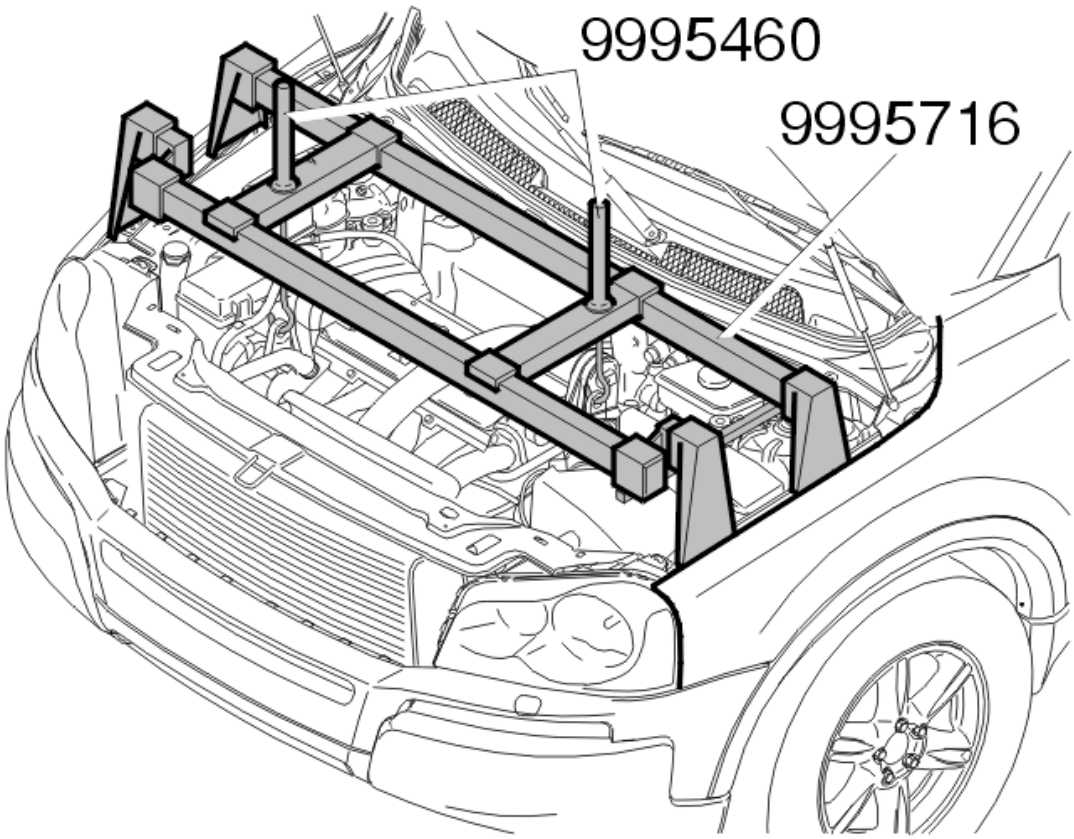

Fig. 2: Installing Lifting Tools
Courtesy of VOLVO CARS CORPORATION

Install lifting tool see **9995716** , modified according to the tool bulletin for version C and lifting hooks see **9995460** .

Lift the engine to relieve the load on the engine pads.

REMOVING THE RIGHT ENGINE MOUNTING

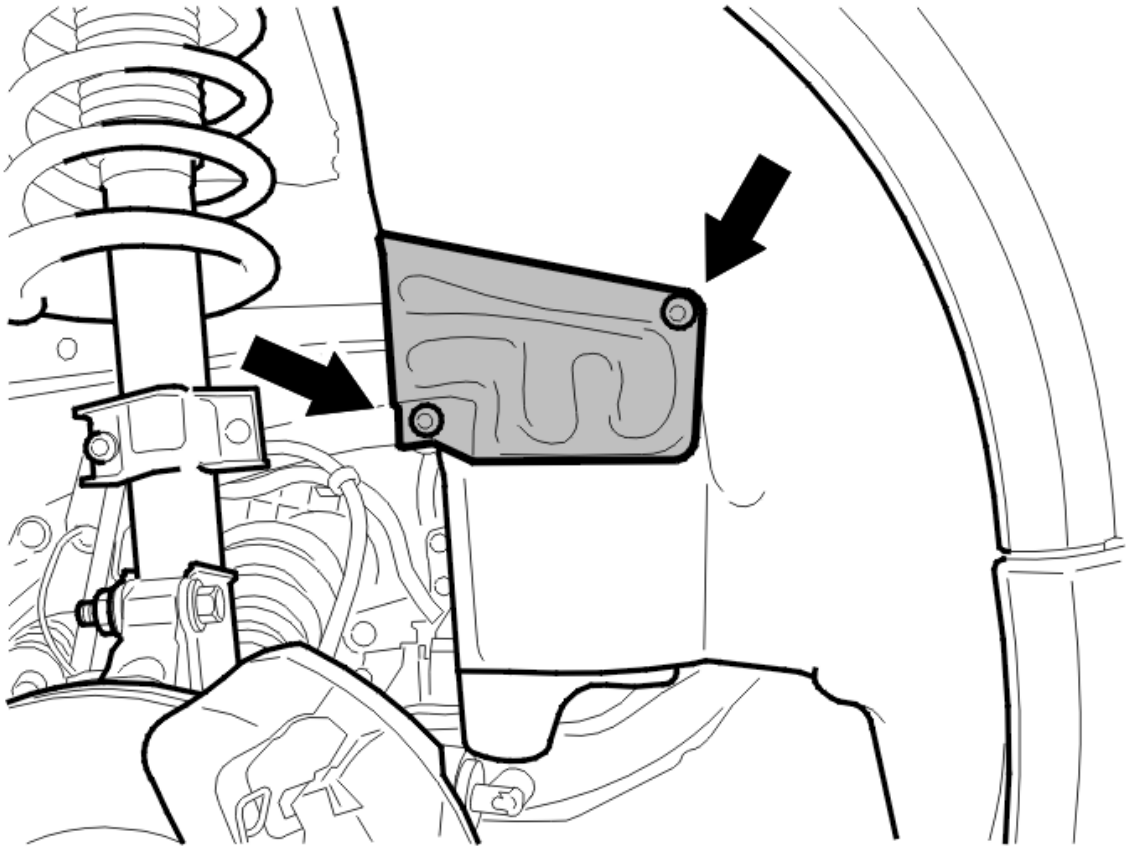

Fig. 3: Identifying Fender Liner Plastic Nuts And Protective Plate
Courtesy of VOLVO CARS CORPORATION

Remove the front wheels.

Slacken off the right lower front part of the fender liner.

Remove:

- the plastic nuts on the fender liner
- the protective plate.

Bend out the fender liner.

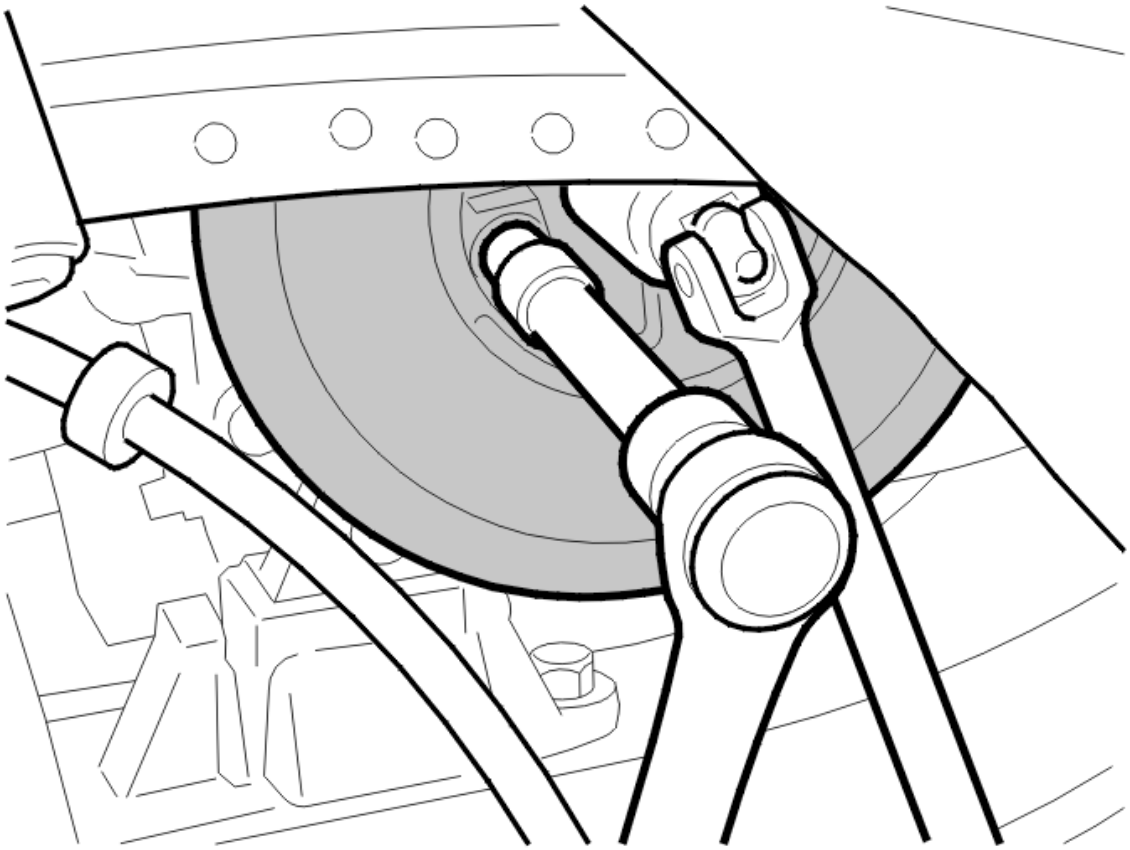

Fig. 4: Counterholding Crankshaft Central Nut
Courtesy of VOLVO CARS CORPORATION

Applies only to the T6:

Remove the four vibration damper screws. Counterhold the crankshaft central nut.

Remove the vibration damper.

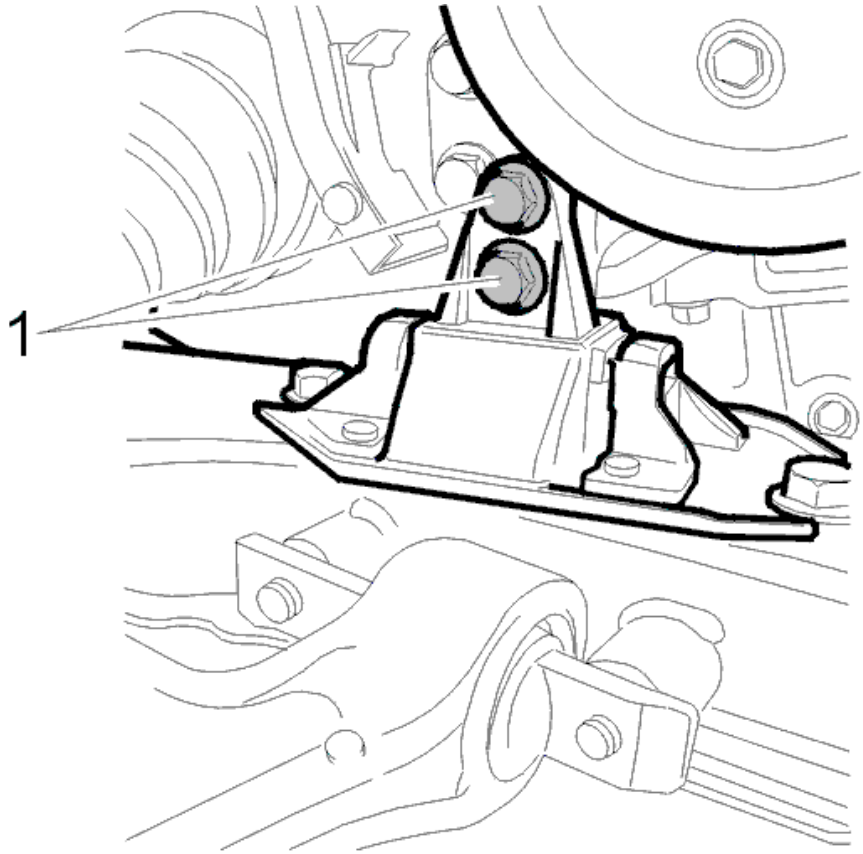

Fig. 5: Identifying Right-Hand Engine Mounting Screws
Courtesy of VOLVO CARS CORPORATION

Remove both screws for the right hand engine mounting (1).

REMOVING THE SPLASH GUARD UNDER ENGINE

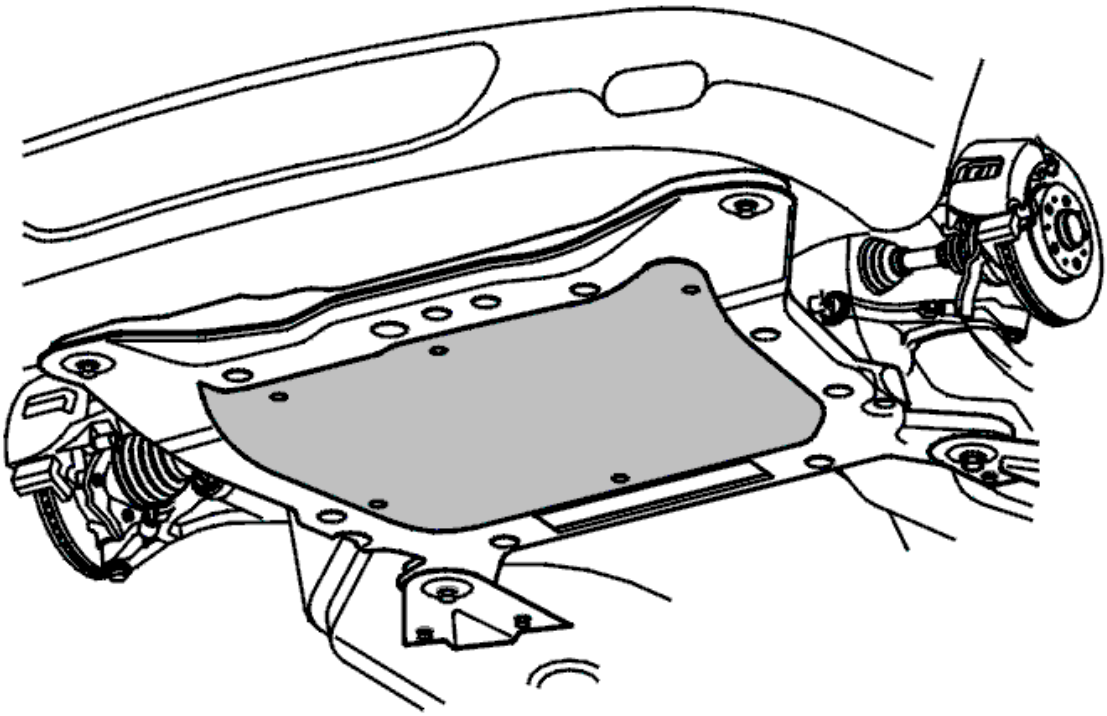

Fig. 6: Identifying Splash Guard Under Engine
Courtesy of VOLVO CARS CORPORATION

Remove the splash guard under the engine.

REMOVING THE SKID PLATE

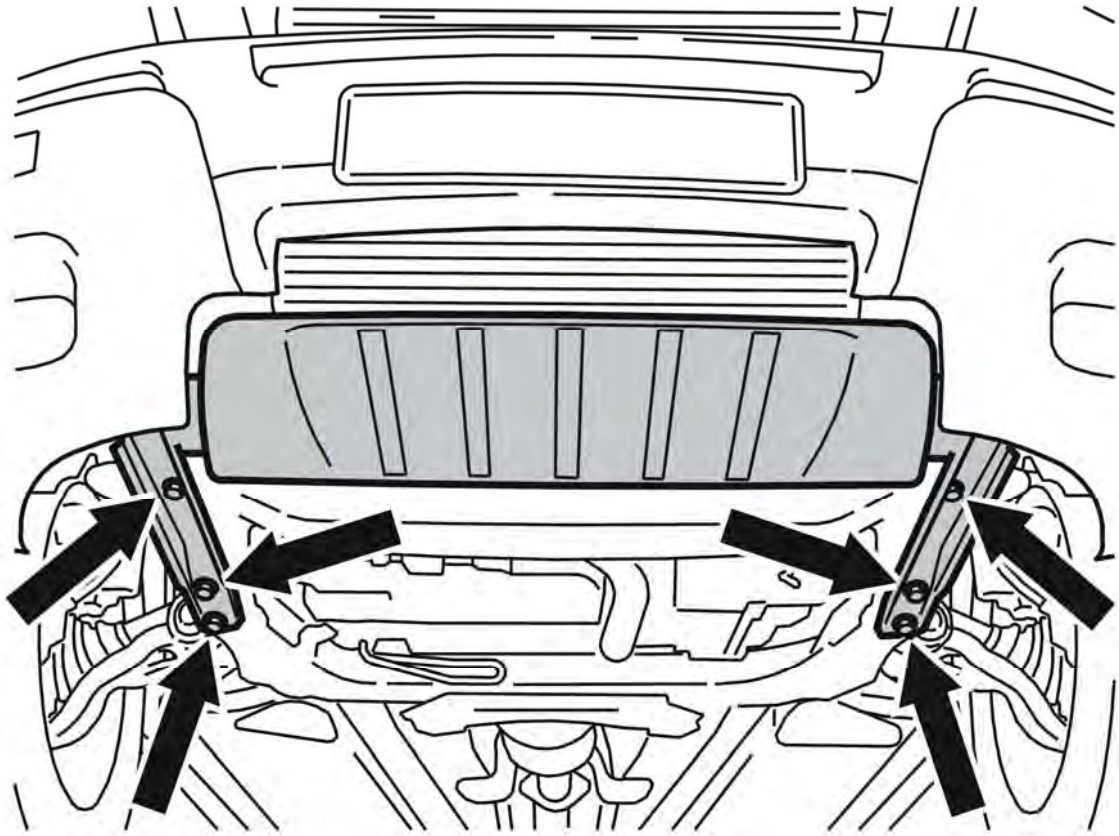

Fig. 7: Splash Guard. Protective Plate And Screws
Courtesy of VOLVO CARS CORPORATION

Remove the 6 screws.

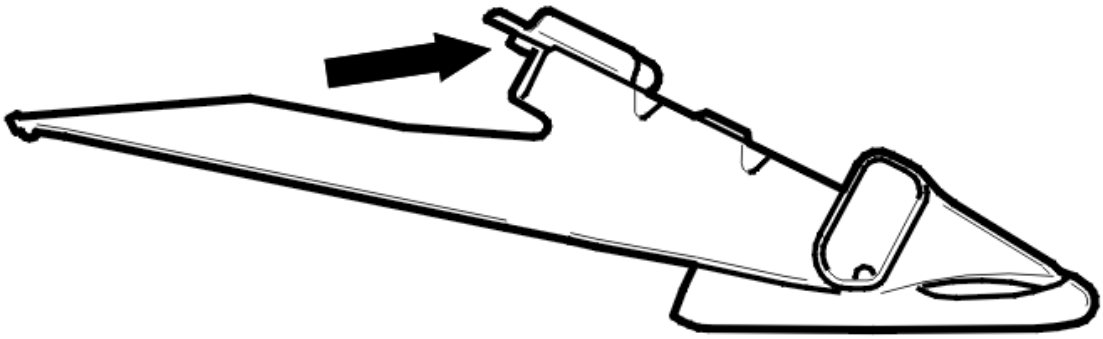

Fig. 8: Identifying Protective Plate
Courtesy of VOLVO CARS CORPORATION

Lift and slide the splash guard forward.

Remove the protective plate.

NOTE: **The plate's upper mounting has a guide sleeve and therefore it must be lifted slightly so that the panel can be slid forward.**

REMOVING THE SIPS MEMBER

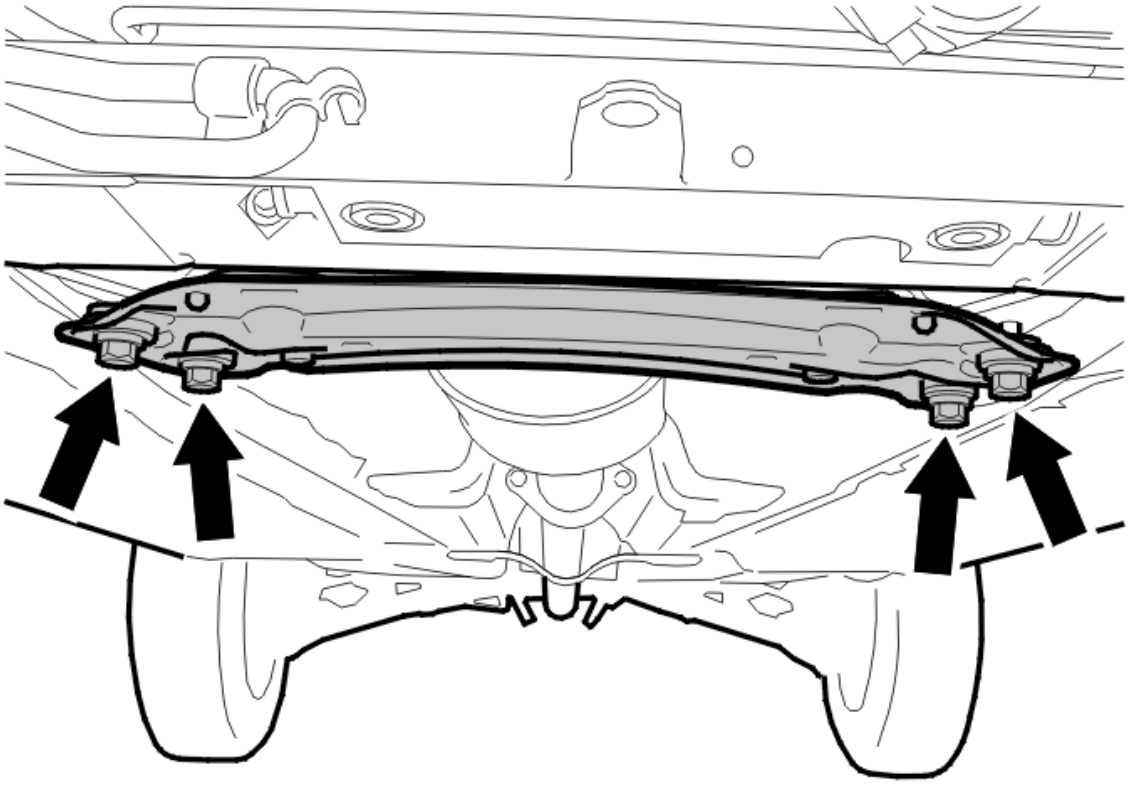

Fig. 9: Identifying SIPS Member
Courtesy of VOLVO CARS CORPORATION

Remove:

- the four mounting screws
- the brake pipe from the snap fastener on the member
- The SIPS member.

REMOVING THE EXHAUST MOUNTING

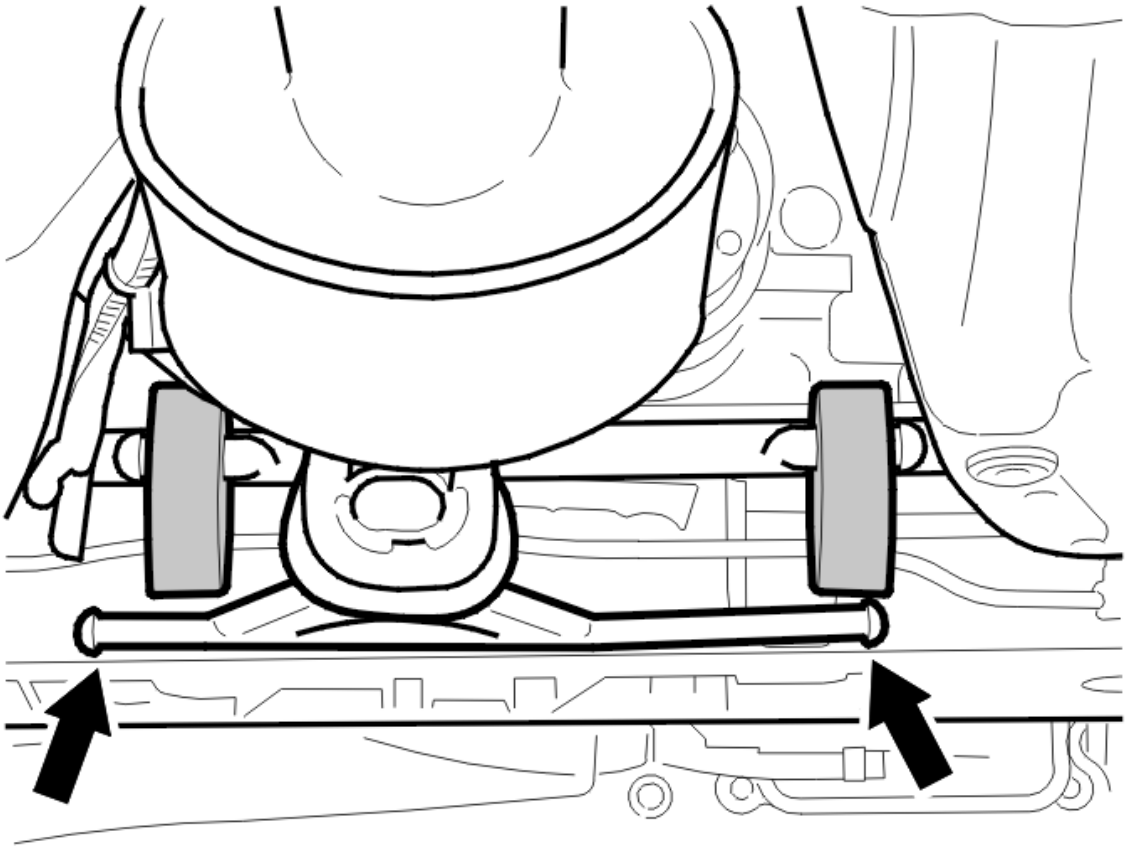

Fig. 10: Identifying Exhaust Pipe Rubber Mountings
Courtesy of VOLVO CARS CORPORATION

Remove the rubber mountings for the exhaust pipe.

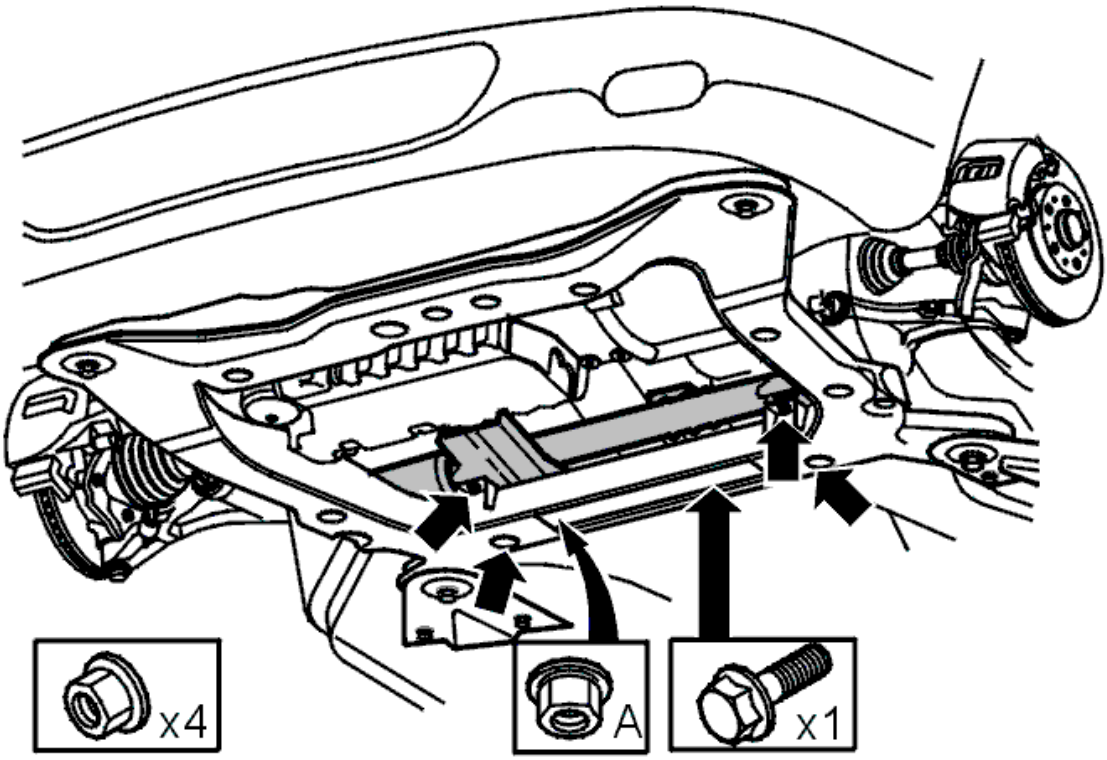

Fig. 11: Identifying Bolt And Nut Holding Steering Gear To Sub-Frame
Courtesy of VOLVO CARS CORPORATION

Remove the four nuts and screws holding the steering gear to the sub-frame.

Remove the power steering line from the clips on the sub-frame.

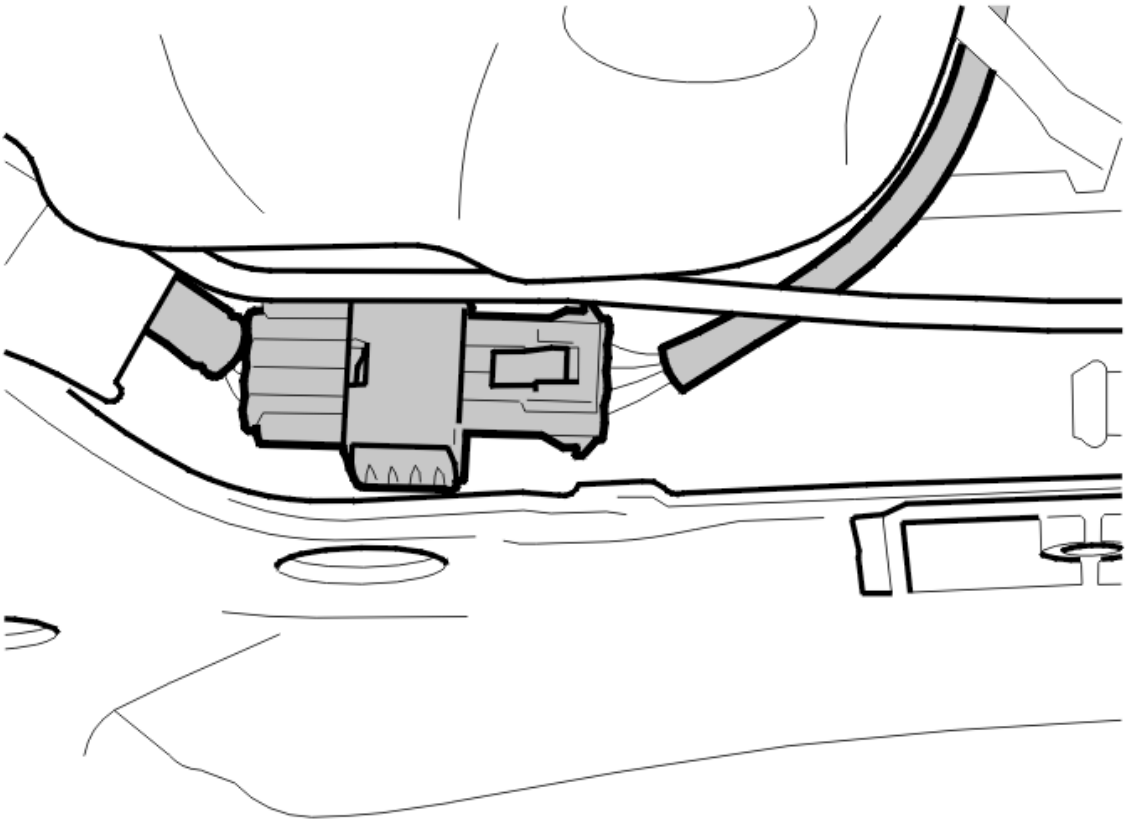

Fig. 12: Identifying Heated Oxygen Sensor (HO2S) Connector
Courtesy of VOLVO CARS CORPORATION

Remove the bracket for the heated oxygen sensor (HO2S) from the sub-frame..

Remove the heated oxygen sensor's wiring from the right side of the **sub-frame.** .

LOWERING THE SUB-FRAME

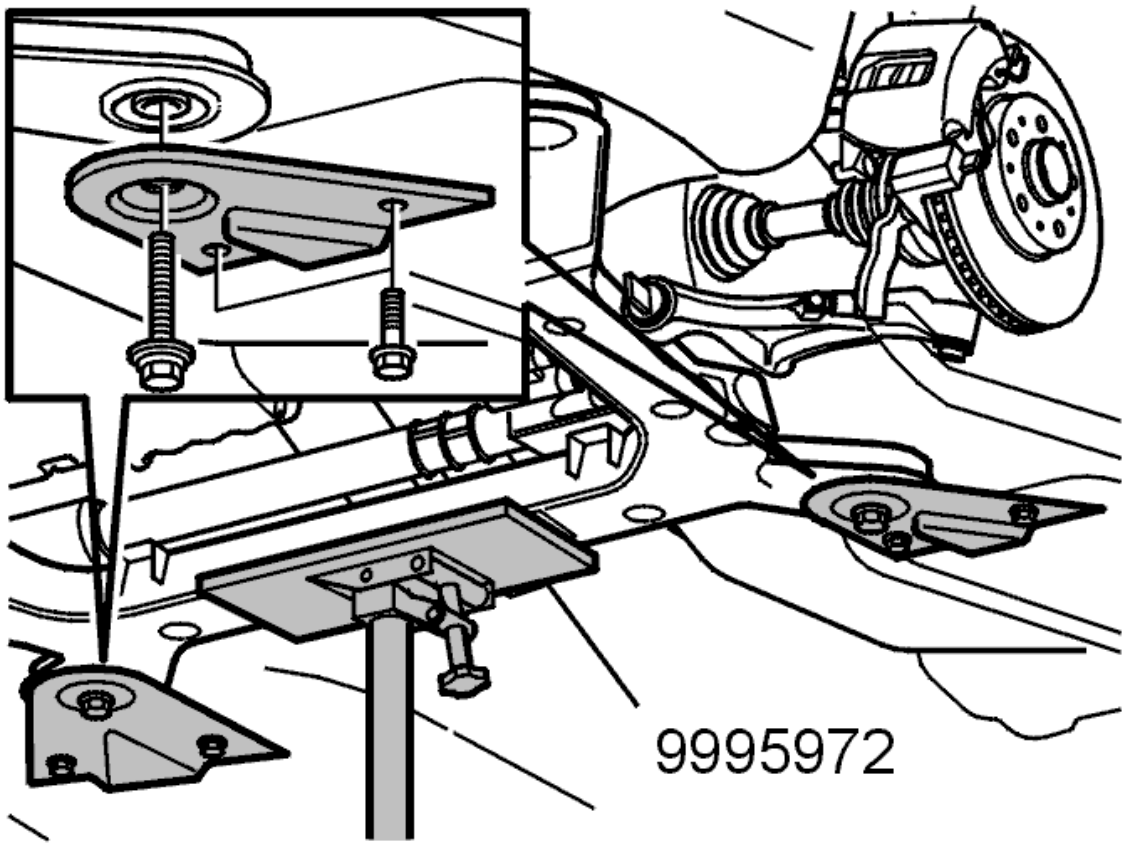

Fig. 13: Identifying Rear Sub-Frame Screws, Brackets & Washers
Courtesy of VOLVO CARS CORPORATION

Position a mobile jack with universal plate see **9995972** at the rear of the sub-frame.

Remove the following on both sides:

- the two screws holding the sub-frame bracket in the body
- the rear screw for the sub-frame with the bracket and washer.

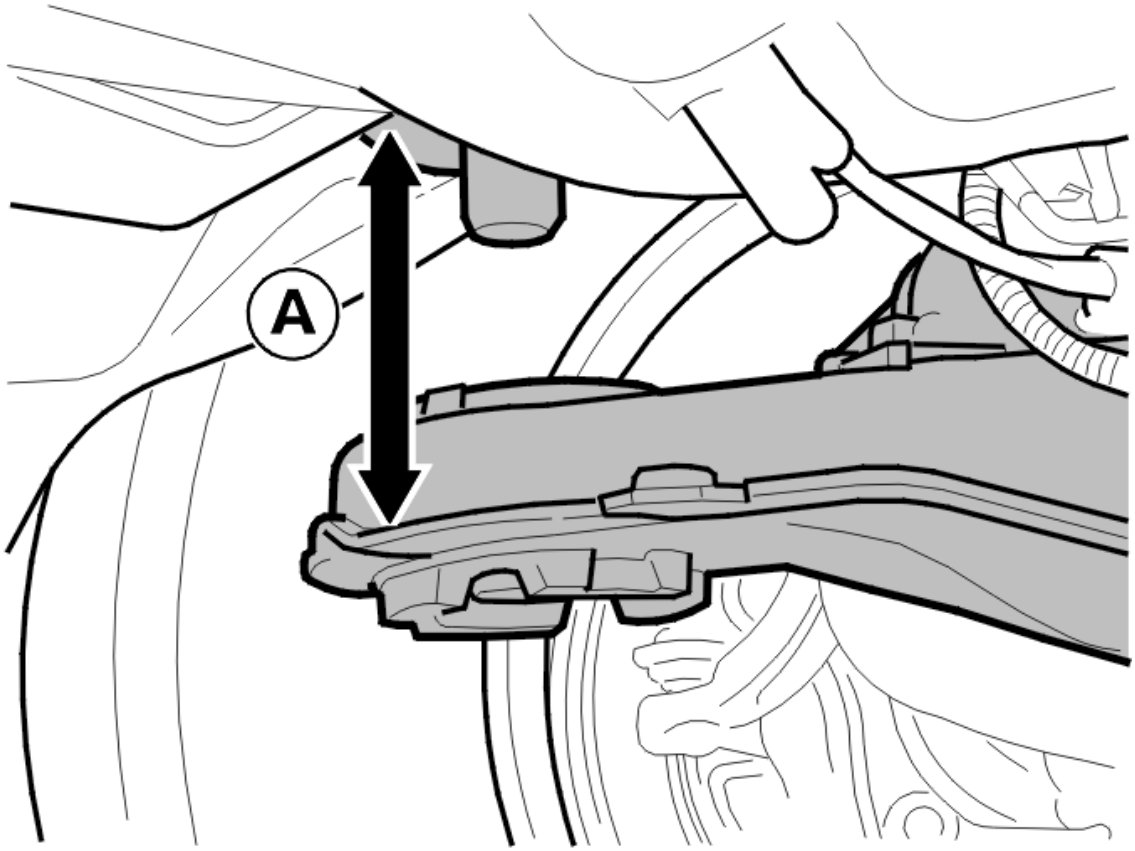

Fig. 14: Lowering Sub-Frame
Courtesy of VOLVO CARS CORPORATION

Carefully lower the sub-frame until the clearance A between the sub-frame and the body is 110 mm.

REMOVING THE ANTI-ROLL BAR

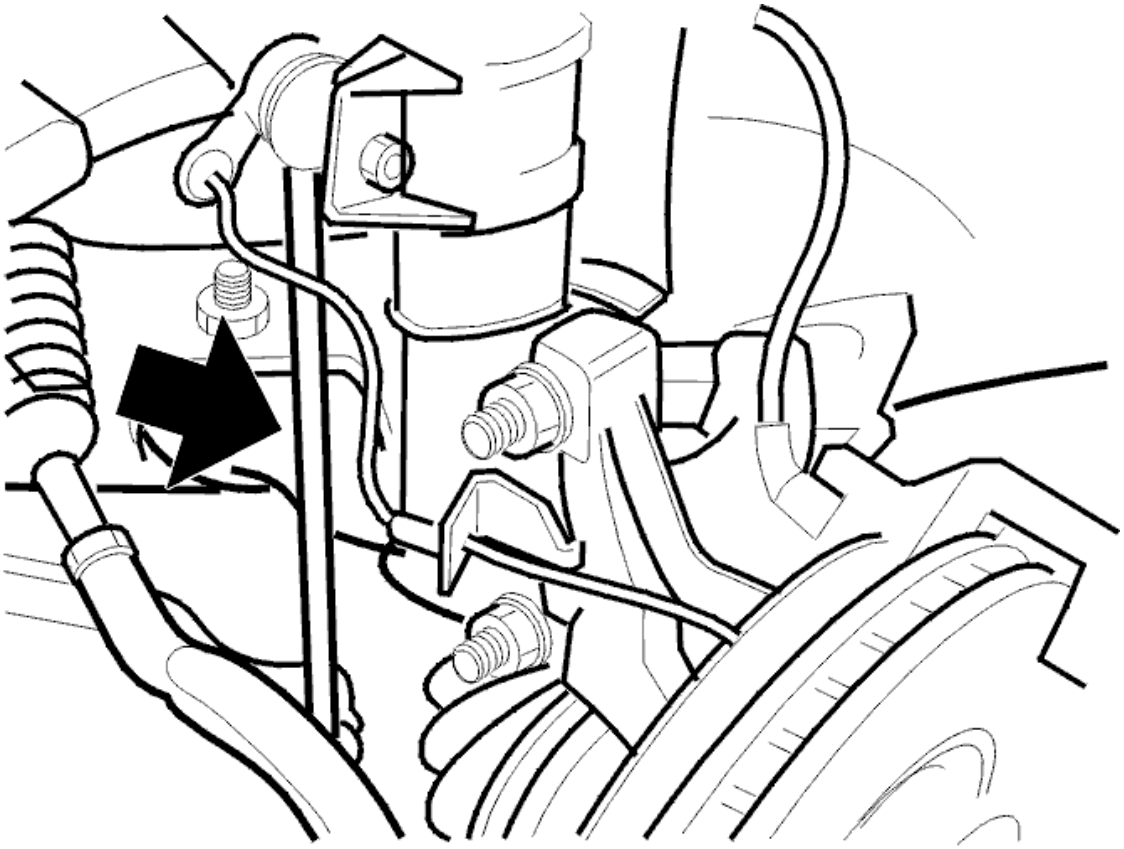

Fig. 15: Anti-Roll Bar
Courtesy of VOLVO CARS CORPORATION

Remove the anti-roll bar on both sides. Use a Torx wrench as a counterhold so that the boot is not damaged.

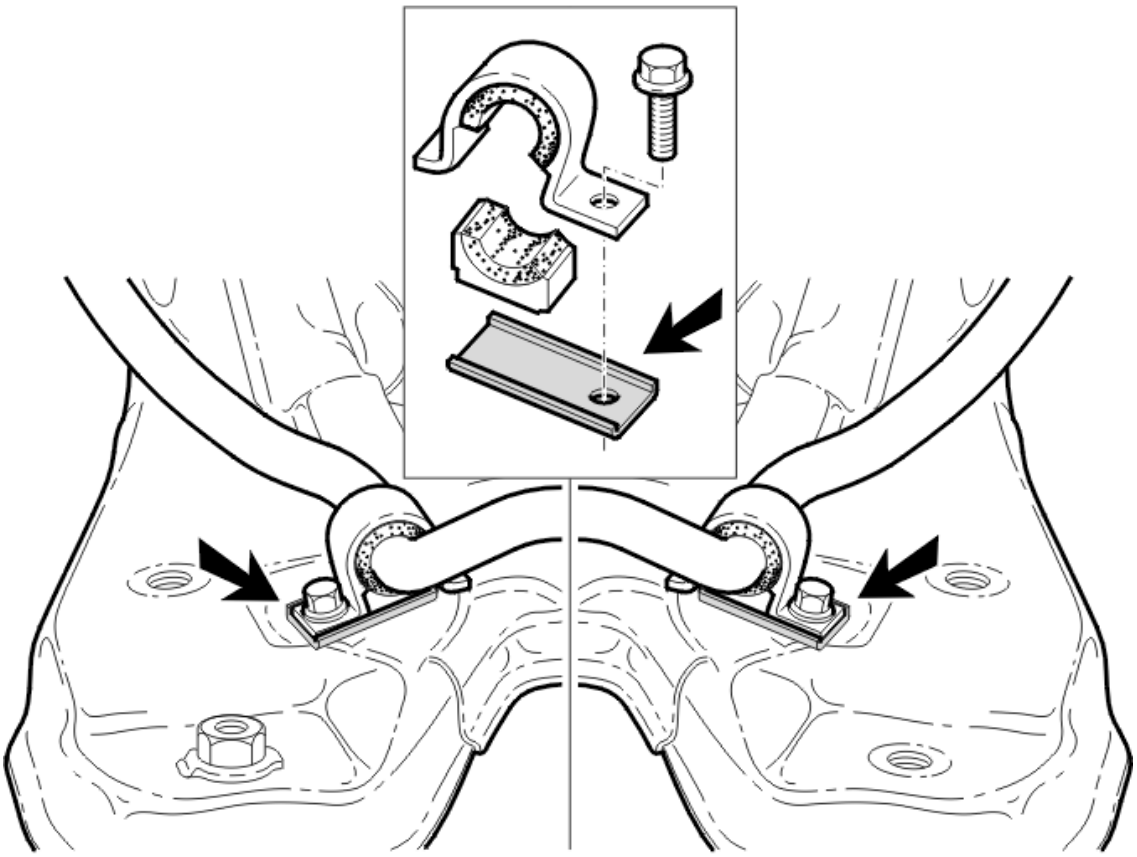

Fig. 16: Anti-Roll Bar Installation Components
Courtesy of VOLVO CARS CORPORATION

Remove:

- the screws for the anti-roll bar
- the anti-roll bar.

INSTALLATION

NOTE: **To ensure that there is no exhaust leakage, see: FLANGED JOINT, ASSEMBLING .**

NOTE: **For tightening torques, see TIGHTENING TORQUE .**

INSTALLING THE ANTI-ROLL BAR

Remove:

- the anti-roll bar
- the screws for the anti-roll bar. (M10)
- the nut for the anti-roll bar link on both sides. (M12).

Use a Torx wrench as a counterhold so that the gaiter is not damaged.

INSTALLING THE SUB-FRAME

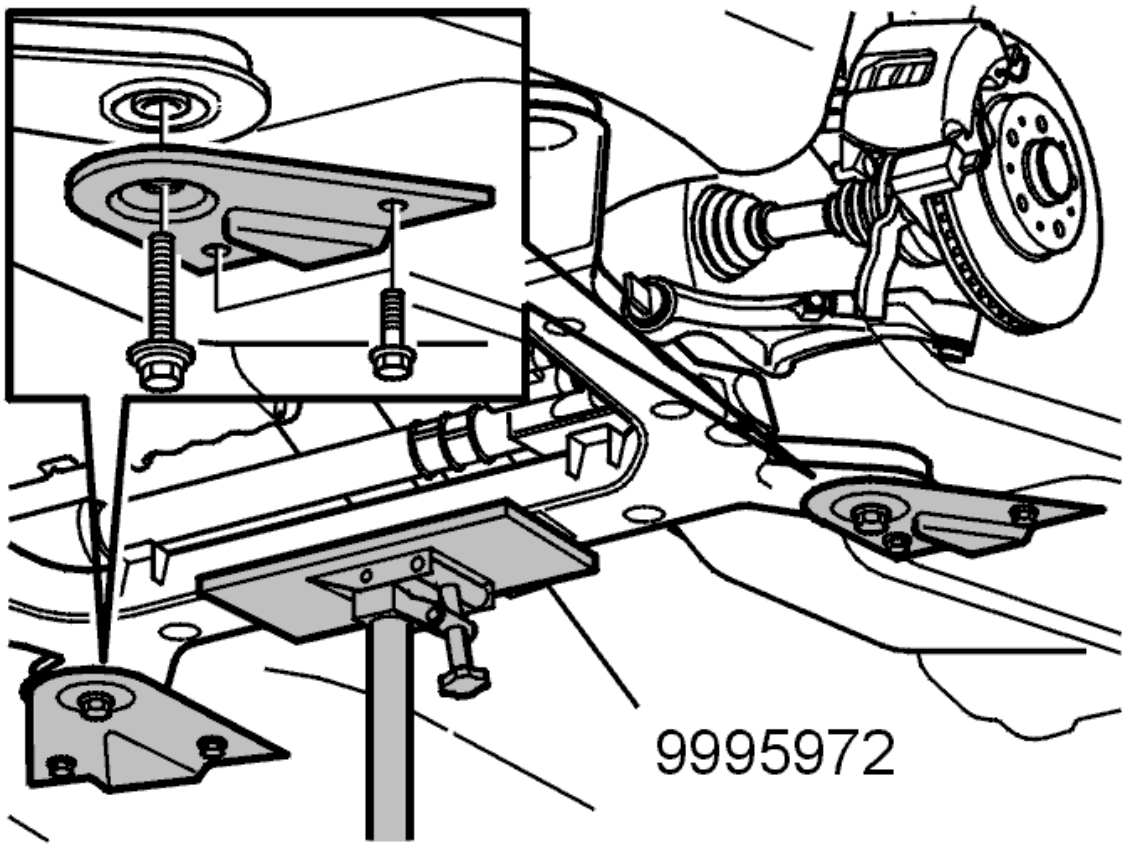

Fig. 17: Identifying Rear Sub-Frame Screws, Brackets & Washers
Courtesy of VOLVO CARS CORPORATION

Raise the subframe.

Install the sub-frame's four screws together with the sub-frame's brackets and engine heater, if installed.

Use new screws. Lube the screws with oil.

Tighten acc. to: **TIGHTENING TORQUE** . First tighten the screws on the sub-frame's left side, then on the right.

Tighten the screws for the brackets M10 with 50 Nm.

Remove the lifting table.

INSTALLING THE NUTS AND SCREW FOR THE STEERING GEAR

Install the four nuts and the screw holding the steering gear. Use new nuts and a new screw. (M10)

INSTALLING THE EXHAUST MOUNTING

Install the rubber mountings for the exhaust pipe.

HINT: Use soap solution to facilitate installing the rubber mountings.

INSTALLING THE SIPS MEMBER

Install:

- the brake pipe in the snap fastener on the member
- The SIPS member.
- the four screws for the SIPS (side impact protection system) member mounting. (M8).

INSTALLING THE SKID PLATE

Move the skid plate up into the bumper wraparound.

Press forwards until the mounting brackets engage in the sub frame.

Install:

- the six screws. (M10)
- the splash guard under the engine. (M8).

INSTALLING THE RIGHT-HAND ENGINE MOUNTING

Install the two screws for the right-hand engine mounting. Use new screws.

Fold the fender liner back into position.

Install:

- the skid plate
- the plastic nuts
- the front wheel. See **INSTALLING WHEELS** .

Applies only to the T6:

Install the four screws for the vibration damper. Use new screws.

For tightening torques, see **TIGHTENING TORQUE** .

REMOVING LIFTING TOOLS

Remove:

- lifting tools see **9995716** and lifting hooks see **9995460** .
- lifting eye see **9997018** .

ANTI-ROLL BAR LINK FRONT, REPLACING

NOTE: **As the illustrations in this service information are used for different model years and / or models, some variation may occur. However, the essential information in the illustrations is always correct.**

REMOVING THE ANTI-ROLL BAR LINK

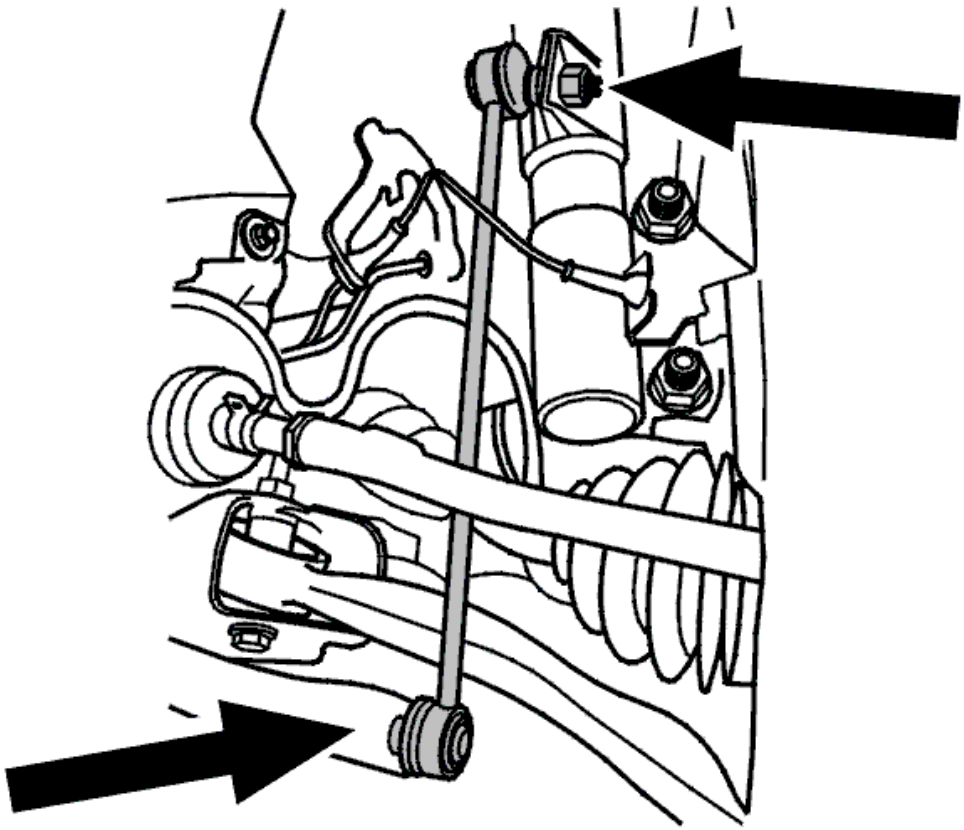

Fig. 18: Anti-Roll Bar Link From Mountings
Courtesy of VOLVO CARS CORPORATION

Remove:

- the wheel
- the anti-roll bar link from the mountings. Use socket see **9995500** and a Torx wrench as a counterhold so that the boot is not damaged.

INSTALLING THE ANTI-ROLL BAR LINK

Install:

- the anti-roll bar link in the spring strut. See: **SUMMARY OF TIGHTENING TORQUES FOR SPECIFIC COMPONENTS**
- the anti-roll bar link in the anti-roll bar. See: **SUMMARY OF TIGHTENING TORQUES FOR SPECIFIC COMPONENTS** .

NOTE: Use socket see 9995500 and a Torx wrench as a counterhold so that the boot is not damaged.

- the wheel. See **INSTALLING WHEELS** .

ANTI-ROLL BAR LINK REAR, REPLACING

NOTE: As the illustrations in this service information are used for different model years and / or models, some variation may occur. However, the essential information in the illustrations is always correct.

REMOVING THE ANTI-ROLL BAR LINK

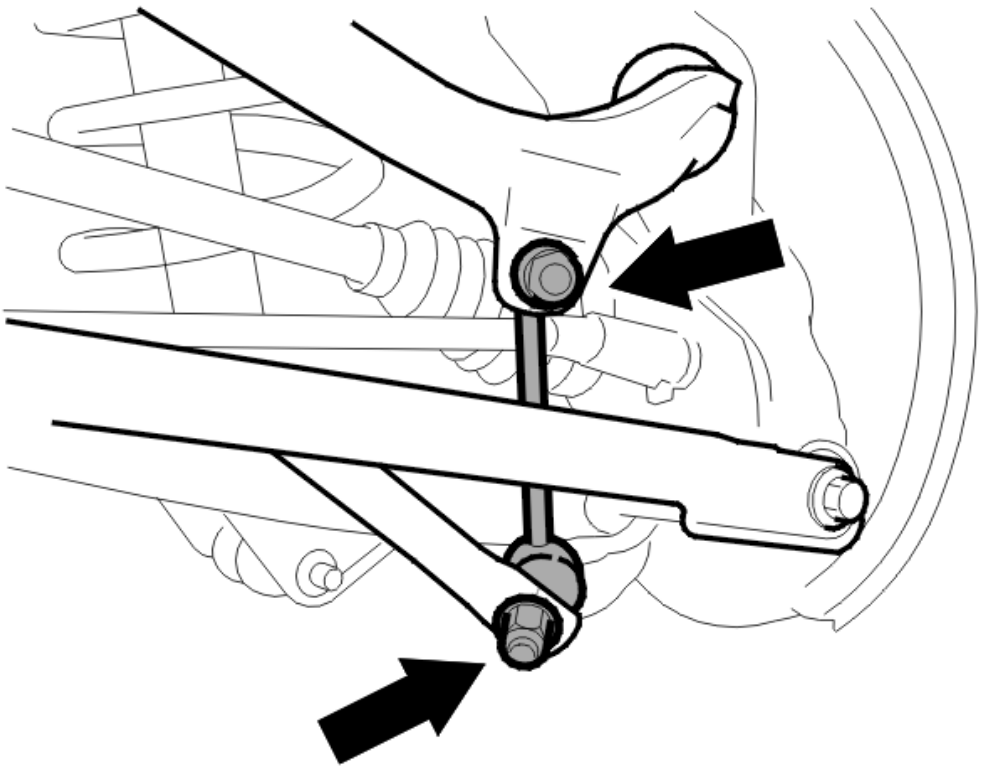

Fig. 19: Removing Anti-Roll Bar Link
Courtesy of VOLVO CARS CORPORATION

Remove:

- the wheel
- the anti-roll bar link from the mountings. Use a Torx wrench as a counterhold so that the boot is not damaged.

INSTALLING THE ANTI-ROLL BAR LINK

Install the anti-roll bar link.

Use new nuts. Tighten the nuts. Tighten to **80 Nm** .

Use a Torx wrench as a counterhold so that the boot is not damaged.

Install the wheel. See **INSTALLING WHEELS** .

ANTI-ROLL BAR REAR, REPLACING

NOTE: **As the illustrations in this service information are used for different model years and / or models, some variation may occur. However, the essential information in the illustrations is always correct.**

REMOVING

REMOVING THE EXHAUST SYSTEM

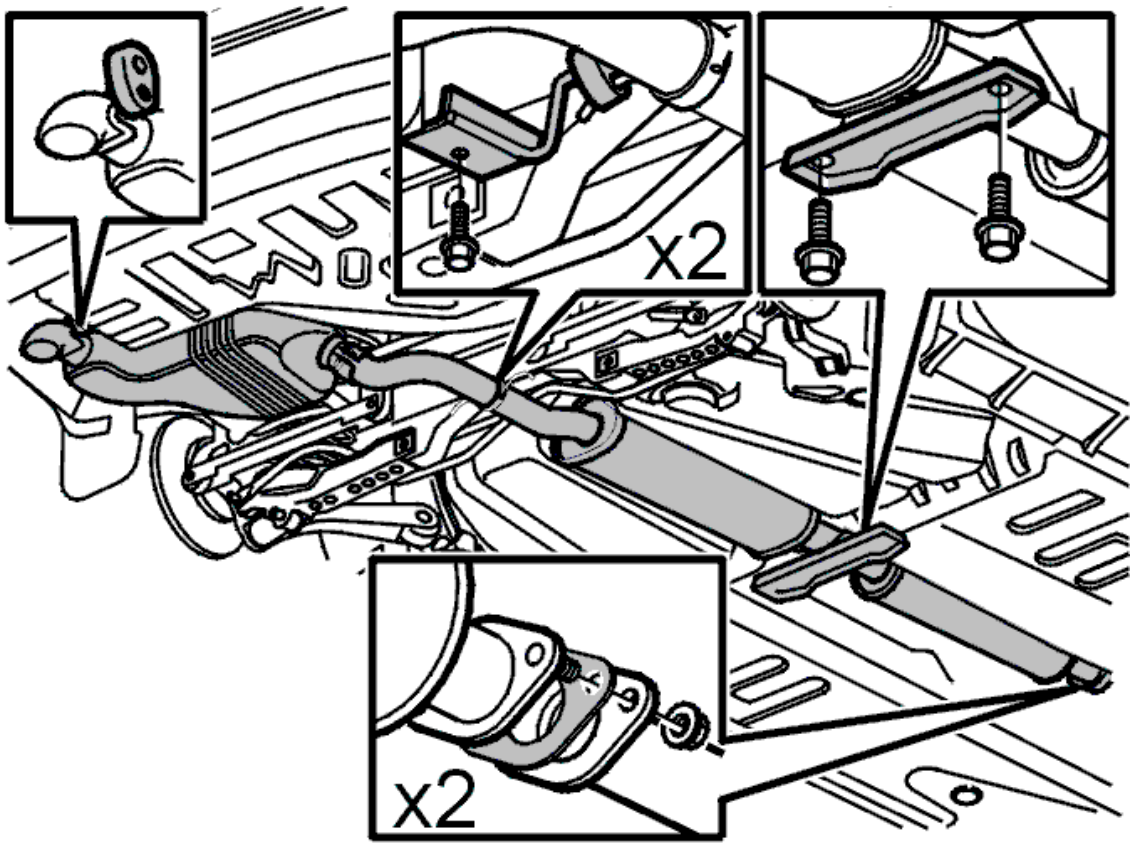

Fig. 20: Exhaust System, Brackets And Fasteners
Courtesy of VOLVO CARS CORPORATION

Raise the car.

Remove the exhaust system. Start from the front by separating the system after the three-way catalytic converter (TWC).

Hang up the three-way catalytic converter (TWC) on a hook.

Remove:

- the mountings in the sub-frame
- the exhaust mounting at the back
- the screws for the cross member.

REMOVING THE SPRING

Remove the spring on the left-hand side. See: **SPRING REAR, REPLACING** .

REMOVING THE ANTI-ROLL BAR

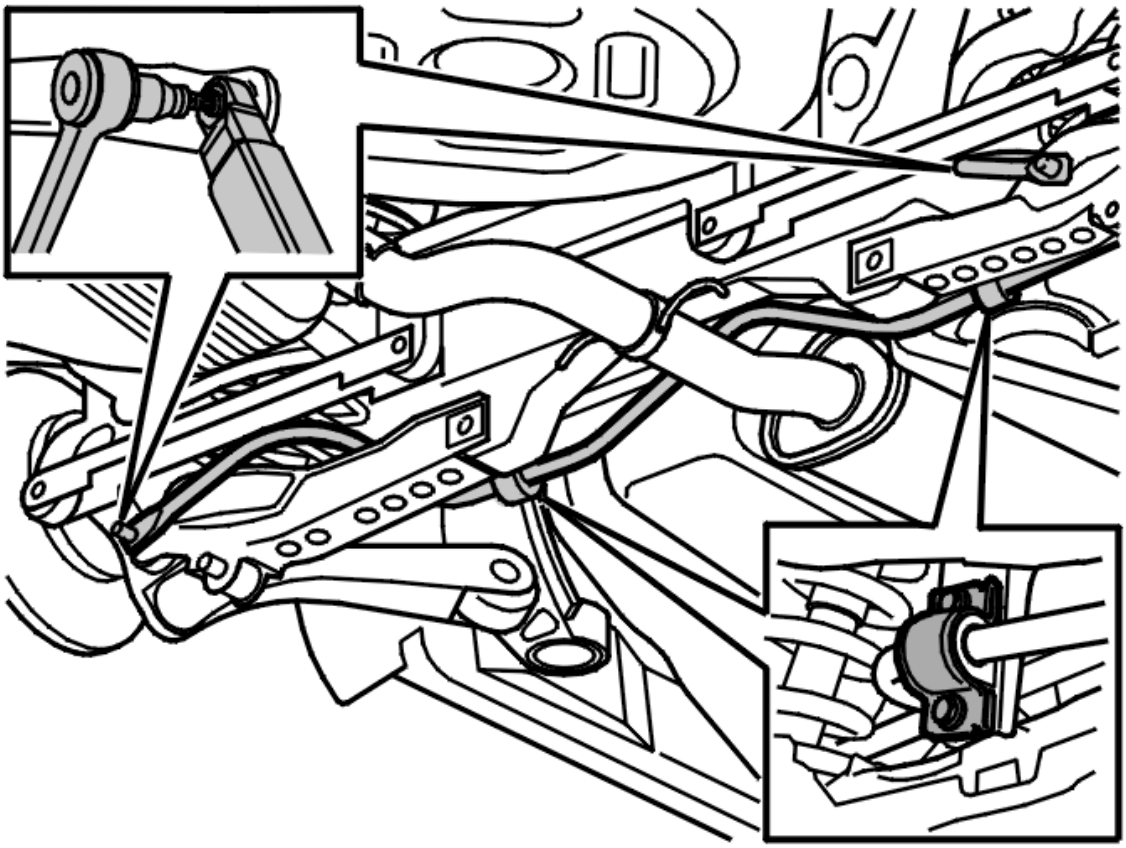

Fig. 21: Removing Anti-Roll Bar Link

Courtesy of VOLVO CARS CORPORATION

Remove:

- the anti-roll bar from the outer mountings. Use a Torx wrench as a counterhold so that the boot is not damaged
- the screws holding the anti-roll bar in the sub-frame.

INSTALLATION

NOTE: To ensure that there is no exhaust leakage, see: FLANGED JOINT, ASSEMBLING .

NOTE: For tightening torques, see: TIGHTENING TORQUE .

INSTALLING THE ANTI-ROLL BAR

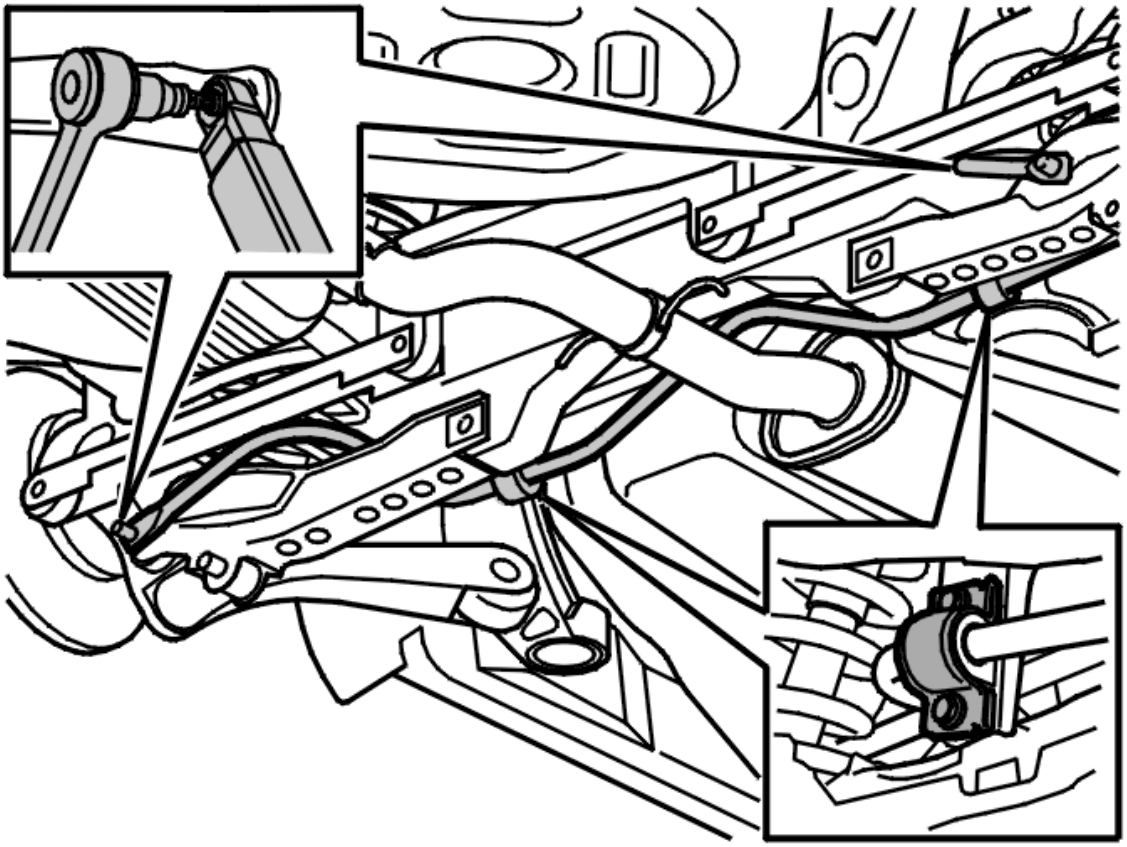

Fig. 22: Installing Anti-Roll Bar
Courtesy of VOLVO CARS CORPORATION

NOTE: The parking brake cable must be under the anti-roll bar.

Insert the anti-roll bar past the removed shock absorber.

Install:

- the 2 M12 screws holding the anti-roll bar in the sub-frame
- the anti roll bar outer mountings. Use a Torx wrench as a counterhold so that the boot is not damaged.

INSTALLING THE SPRING

Install the spring. See: **SPRING REAR, REPLACING** .

INSTALLING THE EXHAUST SYSTEM

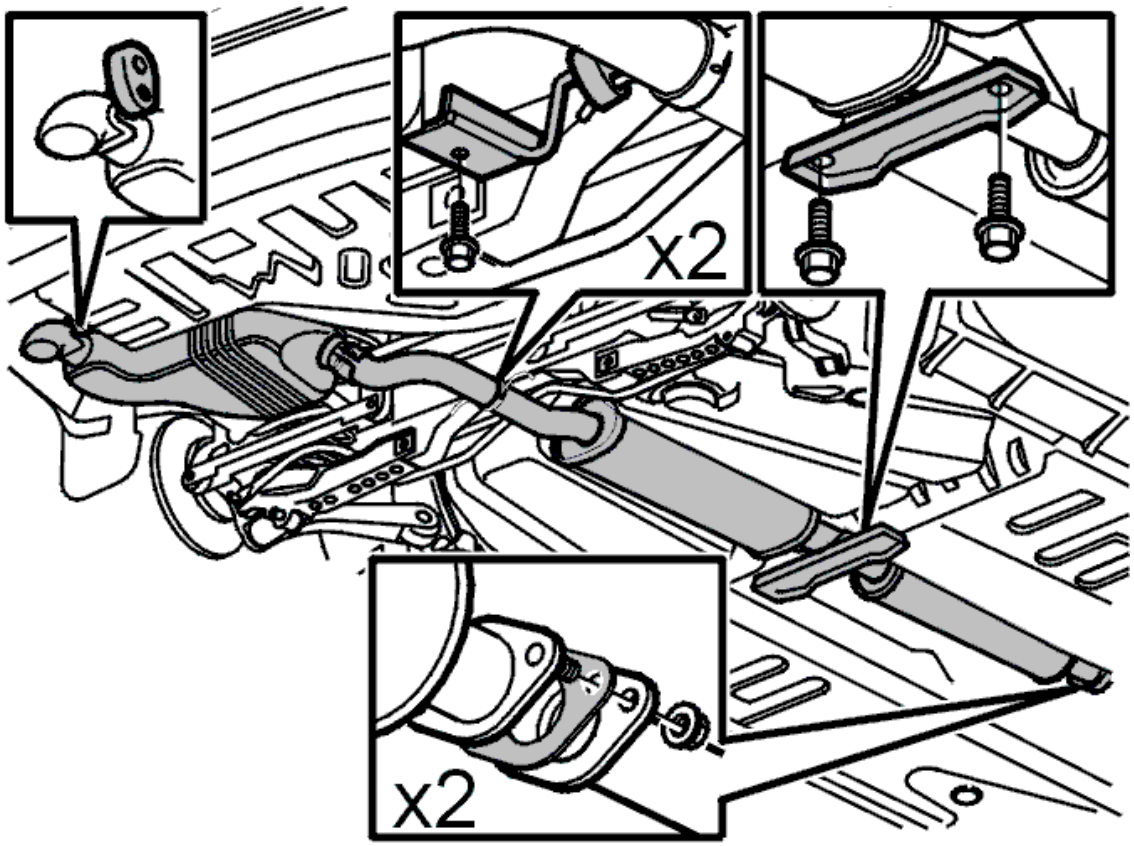

Fig. 23: Exhaust System, Brackets And Fasteners
Courtesy of VOLVO CARS CORPORATION

Install:

- the mountings in the sub-frame
- the 2 M8 nuts in the flange to the three-way catalytic converter (TWC)
- the exhaust mounting at the back
- the cross member
- the 2 M8 screws for the cross member.

NOTE: Install a new flange gasket.

Lower the car.

SHOCK ABSORBER

BEARING SHOCK ABSORBER FRONT, REPLACING

Special tools:

see **9995467**

see **9512050**

REPLACING

NOTE: **As the illustrations in this service information are used for different model years and / or models, some variation may occur. However, the essential information in the illustrations is always correct.**

PREPARATIONS

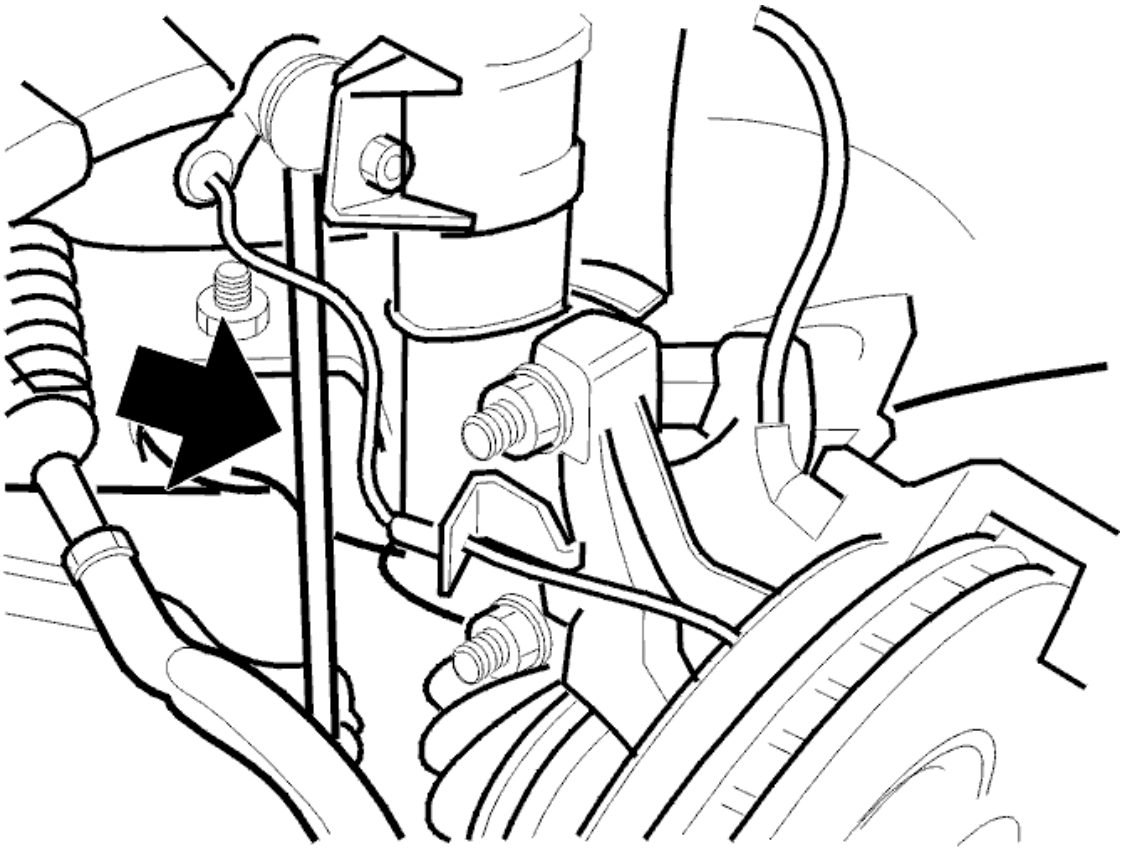

Fig. 24: Anti-Roll Bar
Courtesy of VOLVO CARS CORPORATION

Remove:

- the wheel
- the anti-roll bar link from the spring strut.

NOTE: Use a Torx wrench as a counterhold so that the boot is not damaged.

Remove:

- the ABS line from the spring strut
- the ABS sensor. Hang up the sensor using a piece of wire.

MEASURE THE SPRING STRUT POSITION IN RELATION TO THE WHEEL SPINDLE BEFORE REMOVAL

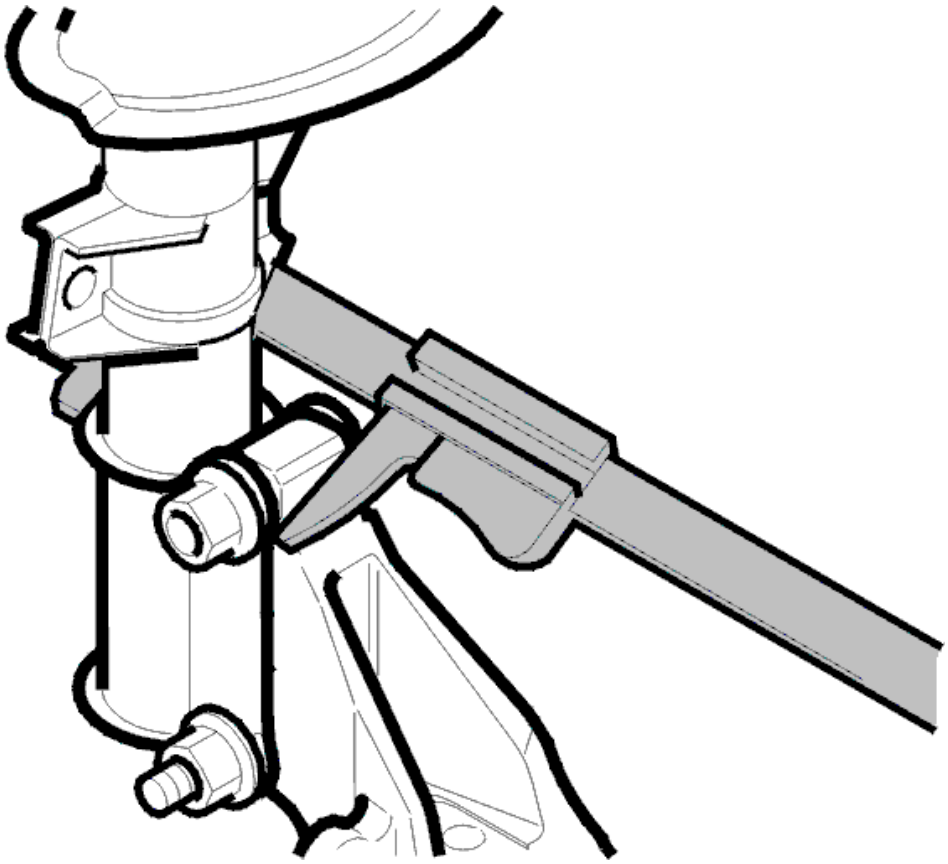

Fig. 25: Measuring Over Wheel Spindle/Spring Strut At Upper Screw
Courtesy of VOLVO CARS CORPORATION

NOTE: The measurements are made so that the same camber angle can be obtained when installing.

Measure over the wheel spindle and spring strut at the upper screw as illustrated. Before measuring clean off any dirt from the measuring surfaces.

Note the measurement.

REMOVING THE SPRING STRUT

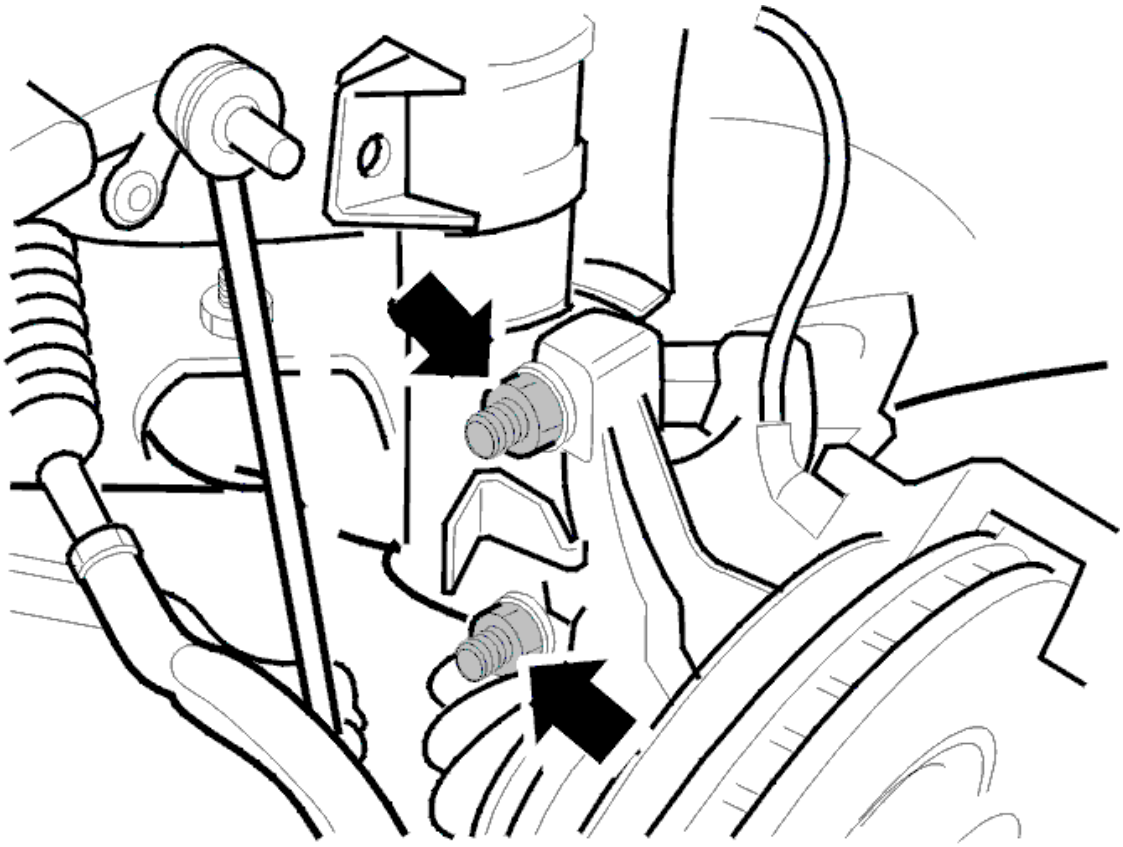

Fig. 26: Identifying Retaining Spring Strut Wheel Spindle Screws
Courtesy of VOLVO CARS CORPORATION

Remove both the screws retaining the spring strut in the wheel spindle.

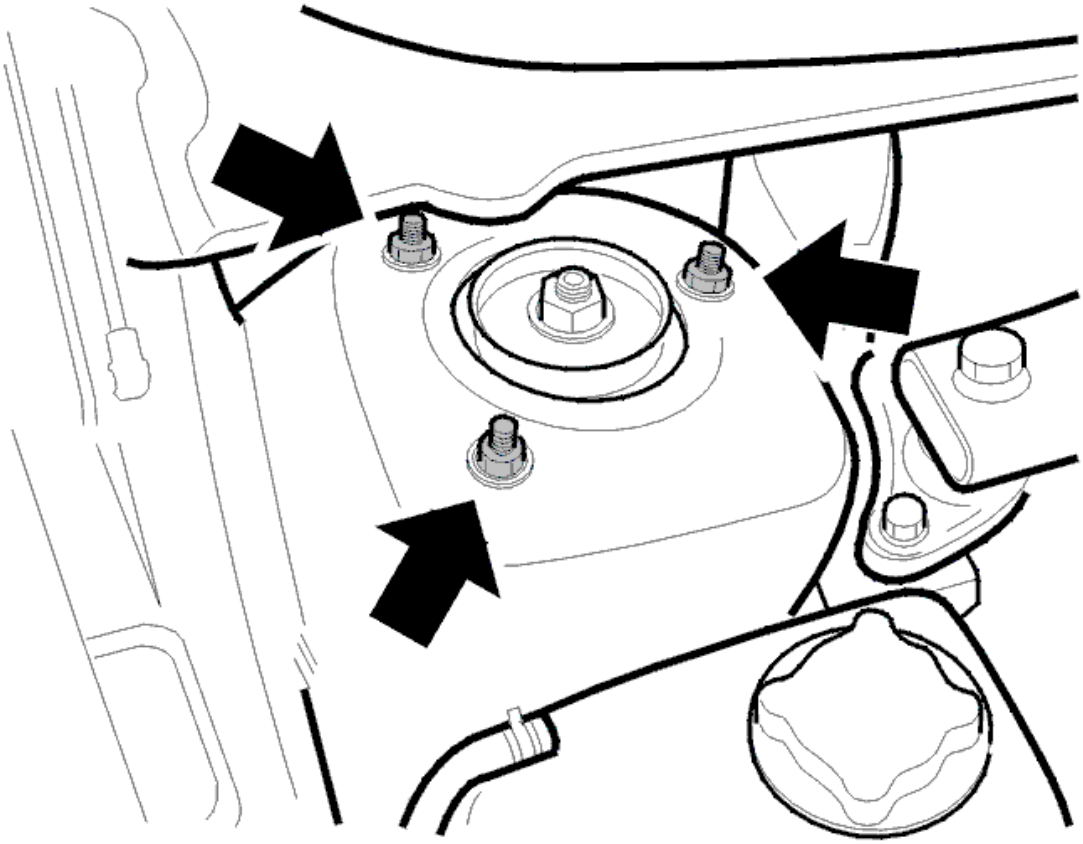

Fig. 27: Locating Nuts Holding Spring Strut Mounting In Bodywork
Courtesy of VOLVO CARS CORPORATION

Remove:

- the three nuts holding the spring strut in the bodywork
- the spring strut.

REMOVING THE SHOCK ABSORBER BEARING

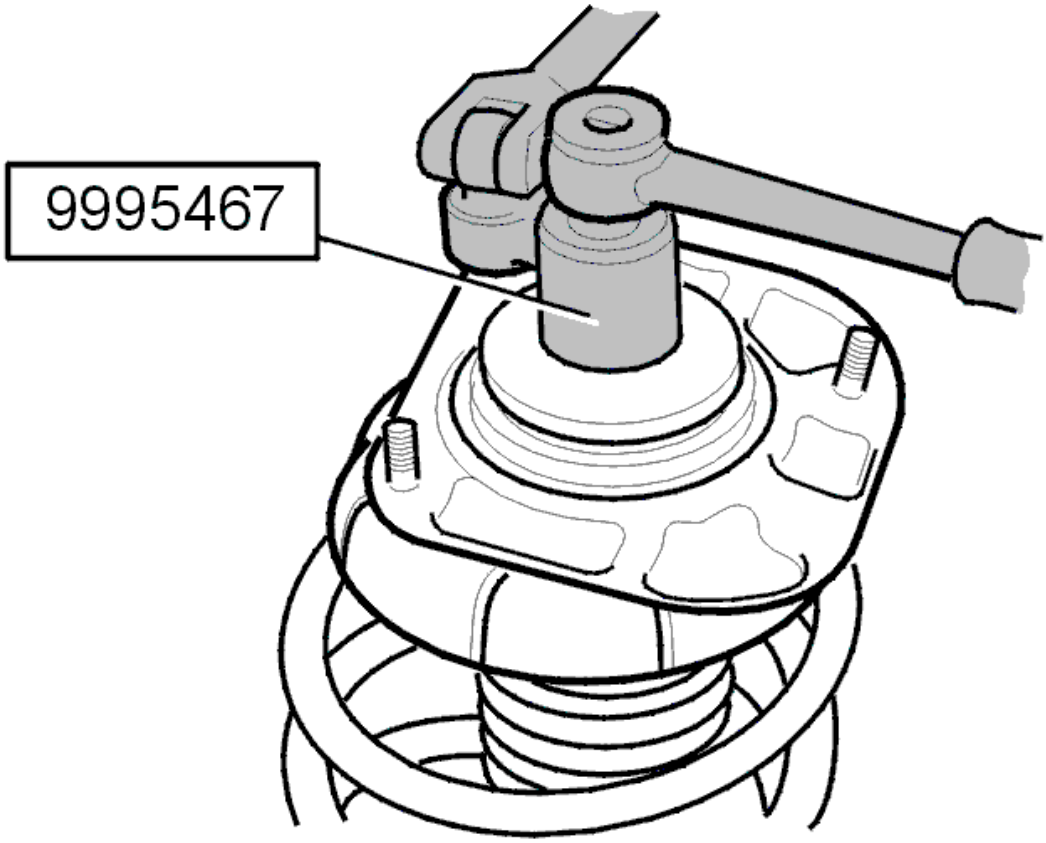

Fig. 28: Identifying Shock Absorber Bearing Nut
Courtesy of VOLVO CARS CORPORATION

Secure the spring strut in a vise.

Remove:

- the nut for the shock absorber bearing. Use socket see **9995467** and a 3/8" Torx-wrench as a counterhold
- washer
- mounting.

INSTALLING

INSTALLING THE SHOCK ABSORBER BEARING

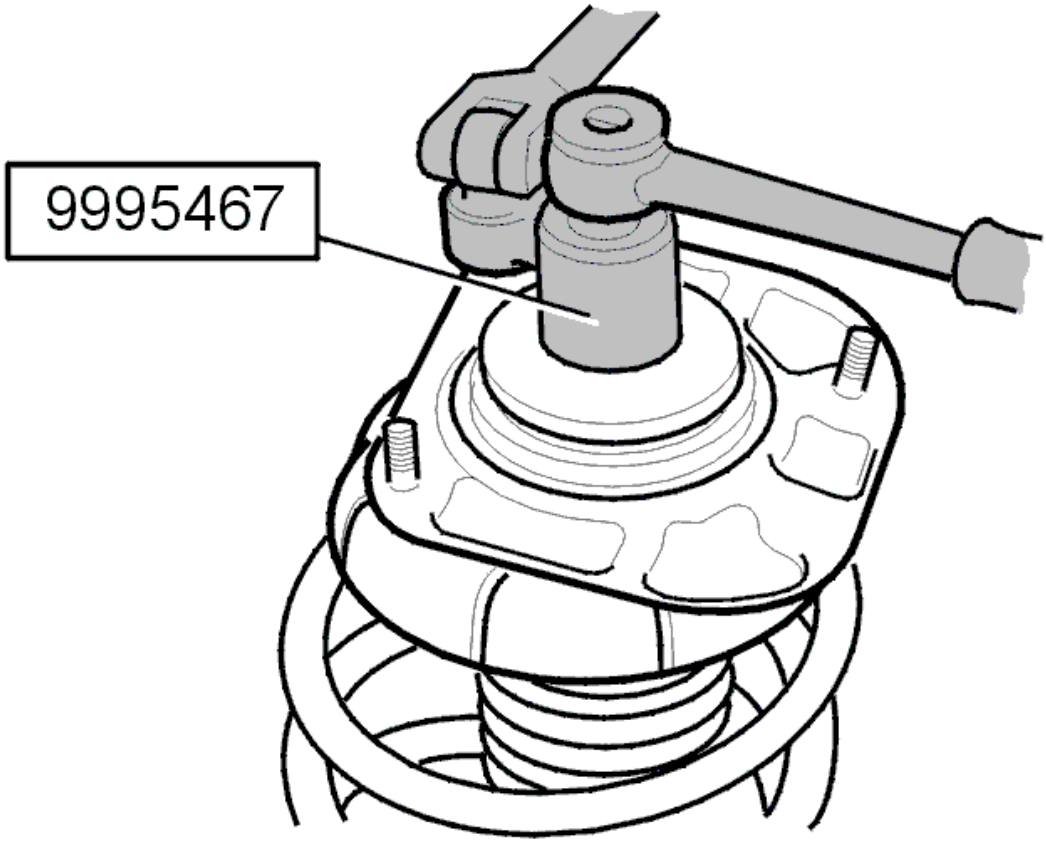

Fig. 29: Identifying Shock Absorber Bearing Nut
Courtesy of VOLVO CARS CORPORATION

Install:

- bearing
- washer
- the nut. Tighten to **70 Nm** . Use socket see **9995467** and a 3/8" Torx-wrench as a counterhold.

INSTALLING THE SPRING STRUT

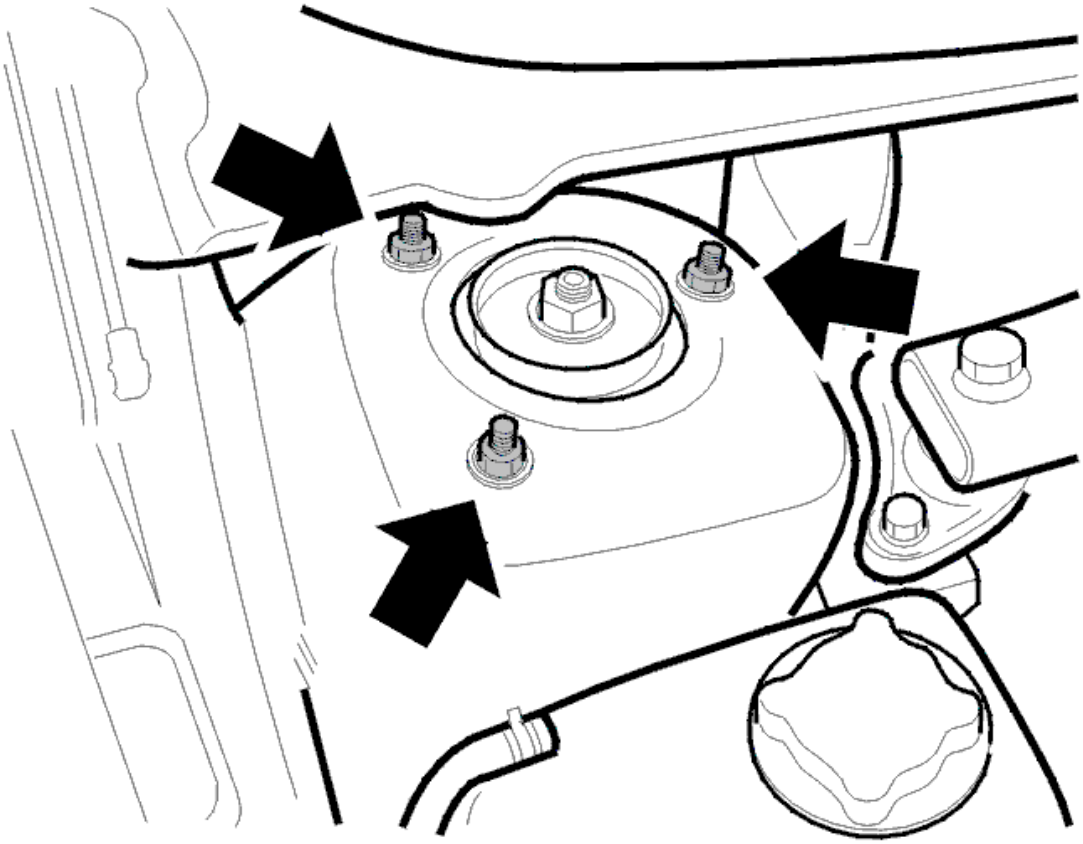

Fig. 30: Locating Nuts Holding Spring Strut Mounting In Bodywork
Courtesy of VOLVO CARS CORPORATION

Install the spring strut in the bodywork using the new nuts. Tighten to **25 Nm** .

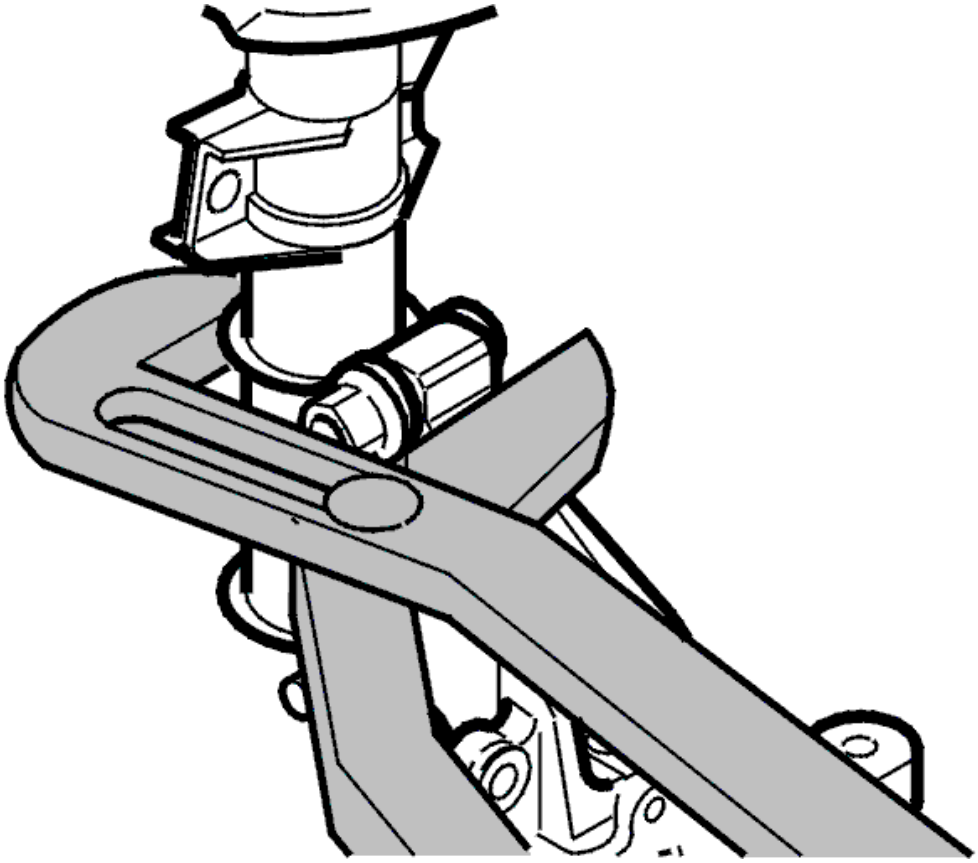

Fig. 31: Installing Spring Strut On Wheel Spindle
Courtesy of VOLVO CARS CORPORATION

Install the spring strut on the wheel spindle. Use new screws and new nuts.

Adjust the spring strut and wheel spindle to the measured value. See.

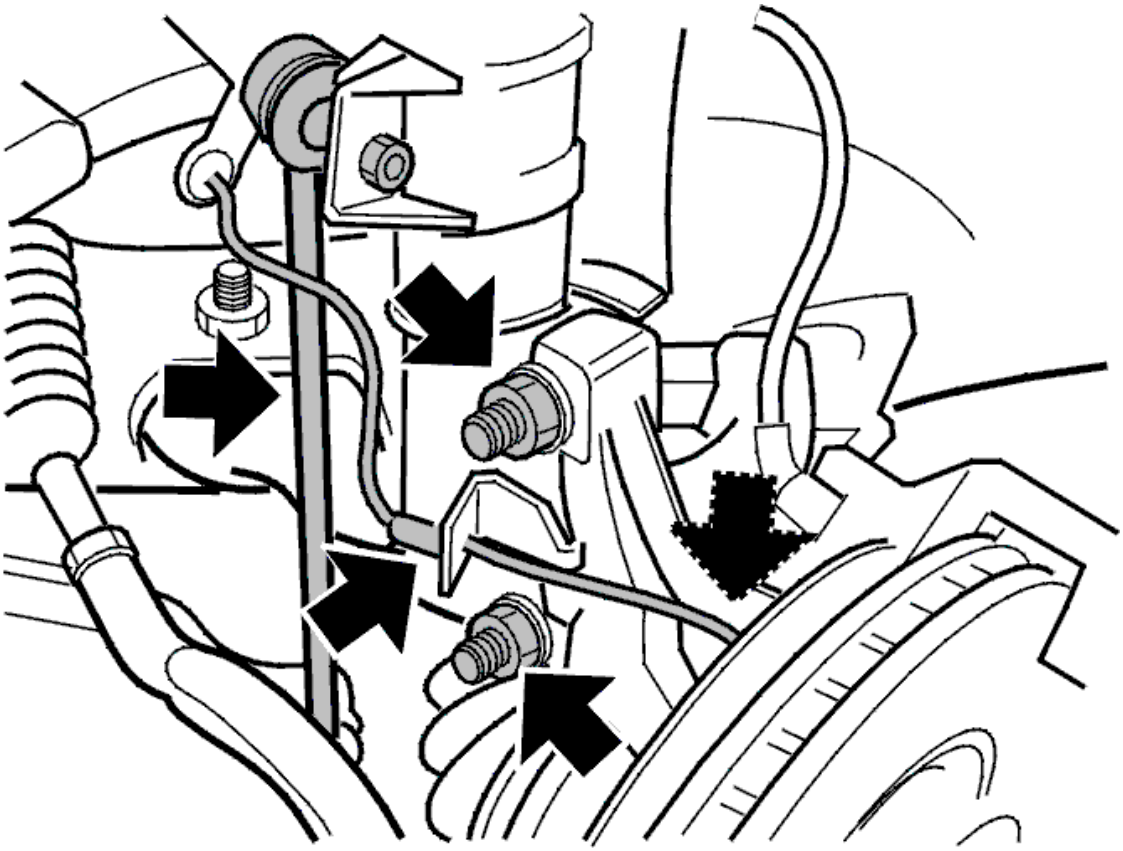

Fig. 32: Identifying Spring Strut To Wheel Spindle Bolts And Nuts, Anti-Roll Bar And ABS Wire
Courtesy of VOLVO CARS CORPORATION

Tighten to **105 Nm** . Angle-tighten 90°. Use bevel protractor see **9512050** .

Install:

- the anti-roll bar link to the spring strut. Use a new nut. Tighten to **50 Nm** . Counterhold using a Torx wrench to prevent damage to the boot
- the ABS sensor. Tighten to **10 Nm** .

NOTE: **Ensure that the ABS sensor seat in the wheel spindle is absolutely clean. Clean the ABS sensor with a soft brush.**

Install:

- the ABS sensor cable in the bracket
- the wheel. See **INSTALLING WHEELS** .

SHOCK ABSORBER FRONT, REPLACEMENT

Special tools:

see **9995467**

see **9995469**

REPLACING

NOTE: **The illustrations in this service information are used for different model years and/or models. Some variation may occur. However, the essential information in the illustrations is always correct.**

REMOVING THE SPRING STRUT

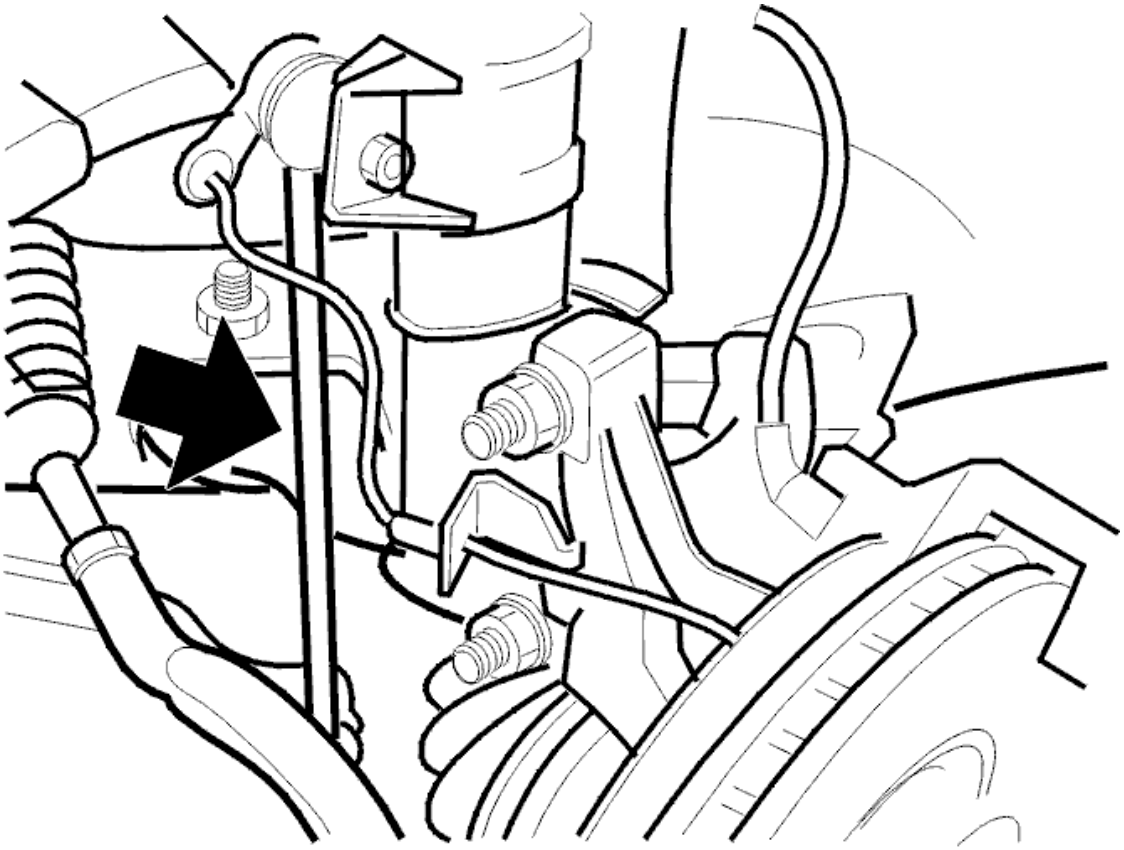

Fig. 33: Anti-Roll Bar
Courtesy of VOLVO CARS CORPORATION

Remove:

- the wheel
- the anti-roll bar link from the spring strut.

NOTE: **Use a Torx wrench as a counterhold so that the boot is not damaged.**

Remove:

- the ABS line from the spring strut.
- The ABS sensor. Hang up the sensor using a piece of wire.

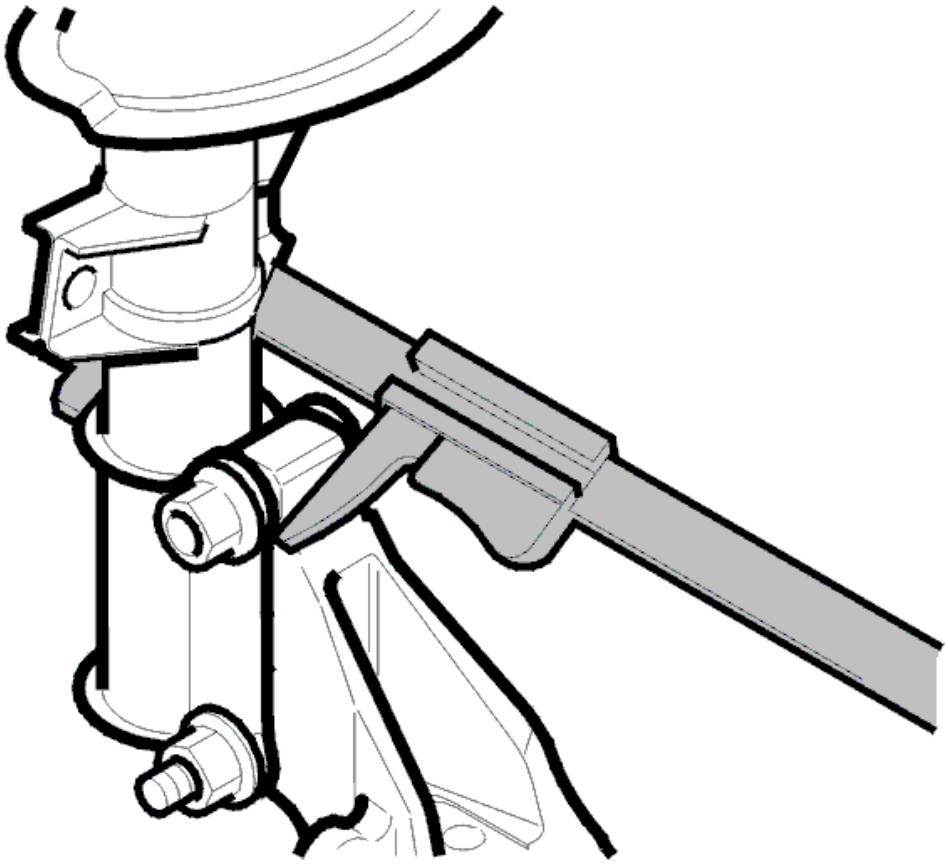

Fig. 34: Measuring Over Wheel Spindle/Spring Strut At Upper Screw
Courtesy of VOLVO CARS CORPORATION

Measure the spring strut position in relation to the stub axle before removal.

NOTE: The measurements are taken so that the same camber angle can be obtained when installing.

Measure over the stub axle / spring strut at the upper screw as illustrated.

Before measuring clean off any dirt from the measuring surfaces.

Note the measurement.

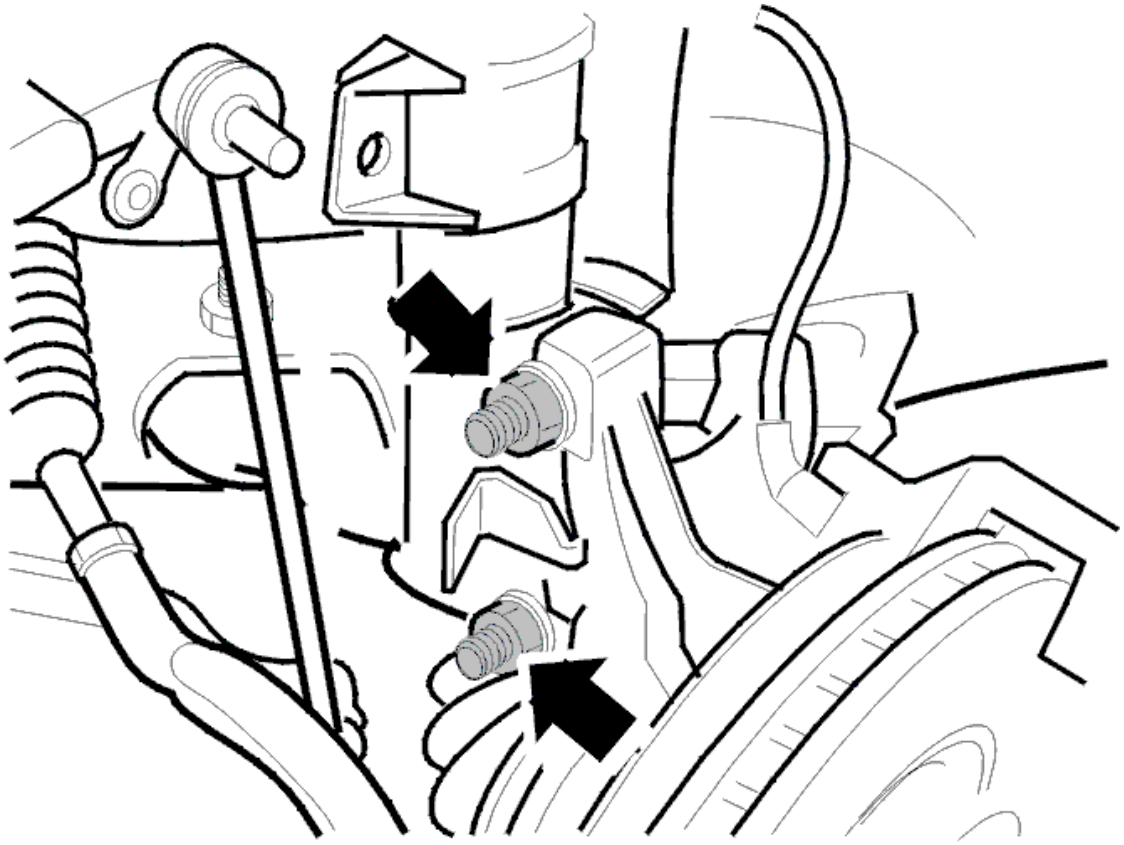

Fig. 35: Identifying Retaining Spring Strut Wheel Spindle Screws
Courtesy of VOLVO CARS CORPORATION

Remove both the nuts from the screws in the spring strut - wheel spindle.

Fig. 36: Securing Wheel Spindle With A Piece Of Wire So It Cannot Turn Outward
Courtesy of VOLVO CARS CORPORATION

Remove the two screws for the spring strut wheel spindle.

Secure the wheel spindle with a piece of wire so that it cannot turn outwards when removed from the spring

strut.

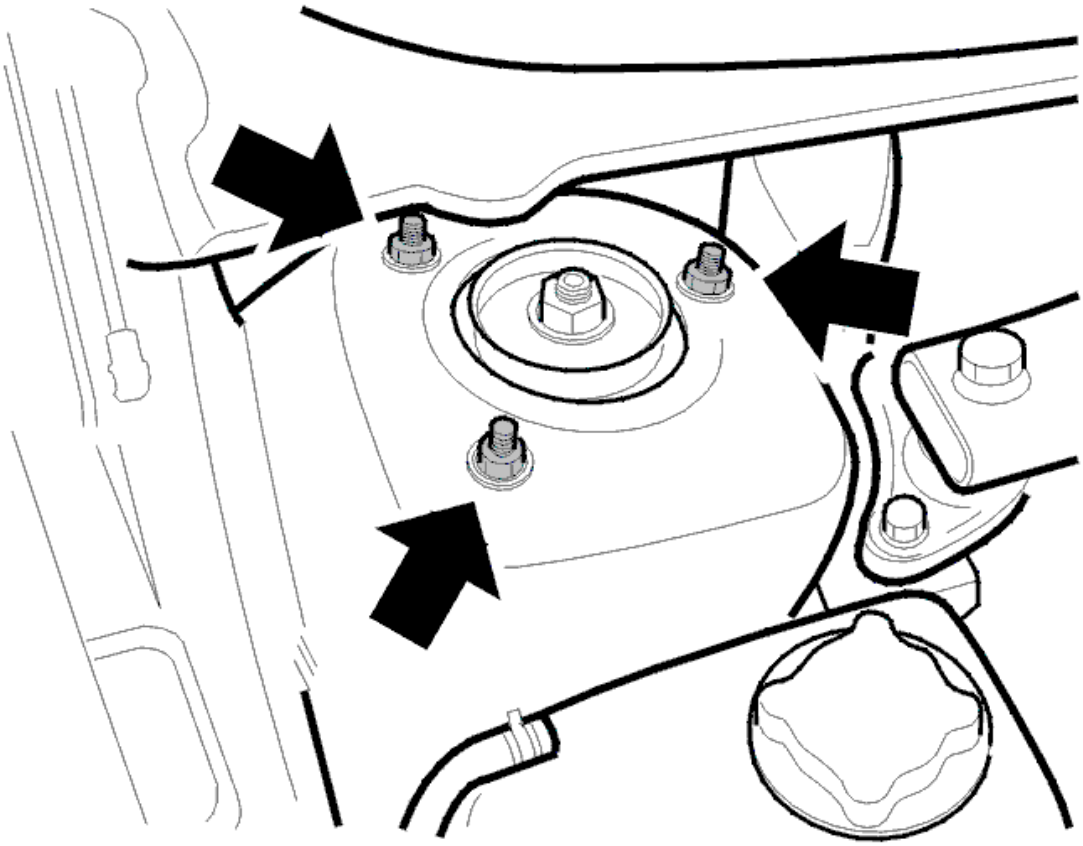

Fig. 37: Locating Nuts Holding Spring Strut Mounting In Bodywork
Courtesy of VOLVO CARS CORPORATION

Remove:

- the three nuts holding the spring strut in the bodywork
- the spring strut.

REMOVING THE SHOCK ABSORBER BEARING

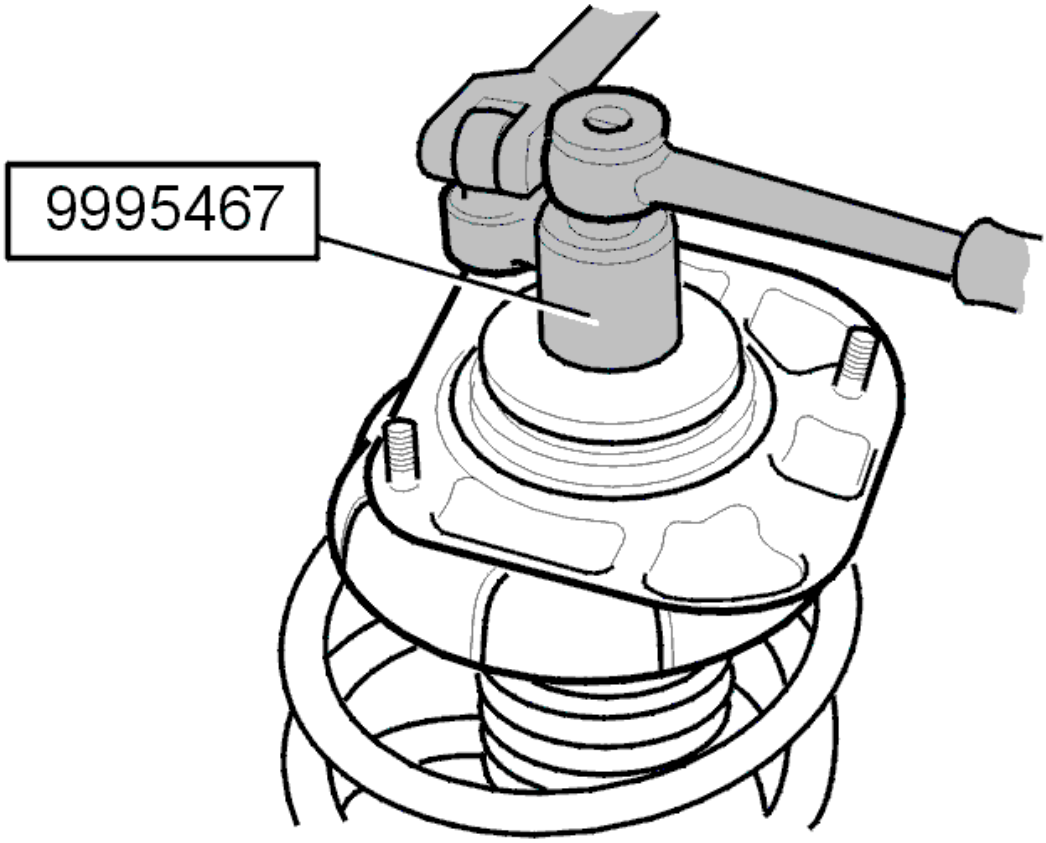

Fig. 38: Identifying Shock Absorber Bearing Nut
Courtesy of VOLVO CARS CORPORATION

Secure the spring strut in a vice.

Remove:

- the nut for the shock absorber bearing. Use socket see **9995467** and a 3/8" Torx wrench as a counterhold
- washer
- mounting.

REMOVING THE SPRING

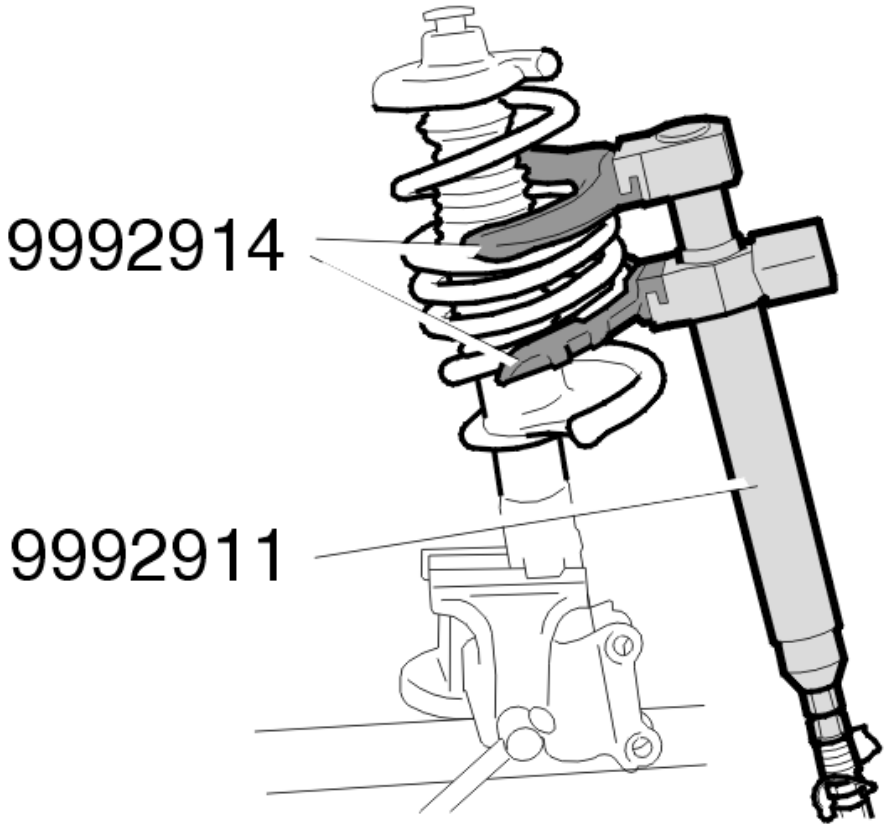

Fig. 39: Removing Spring
Courtesy of VOLVO CARS CORPORATION

Take the load off the spring seat.

Use hydraulic tool see **9512911** with see **9512914** .

Remove:

- the securing nut on the shock absorber. Use socket see **9995469** and a 3/8" Torx wrench as a counterhold
- the spring seat
- the spring
- the rubber bump stop and gaiter.

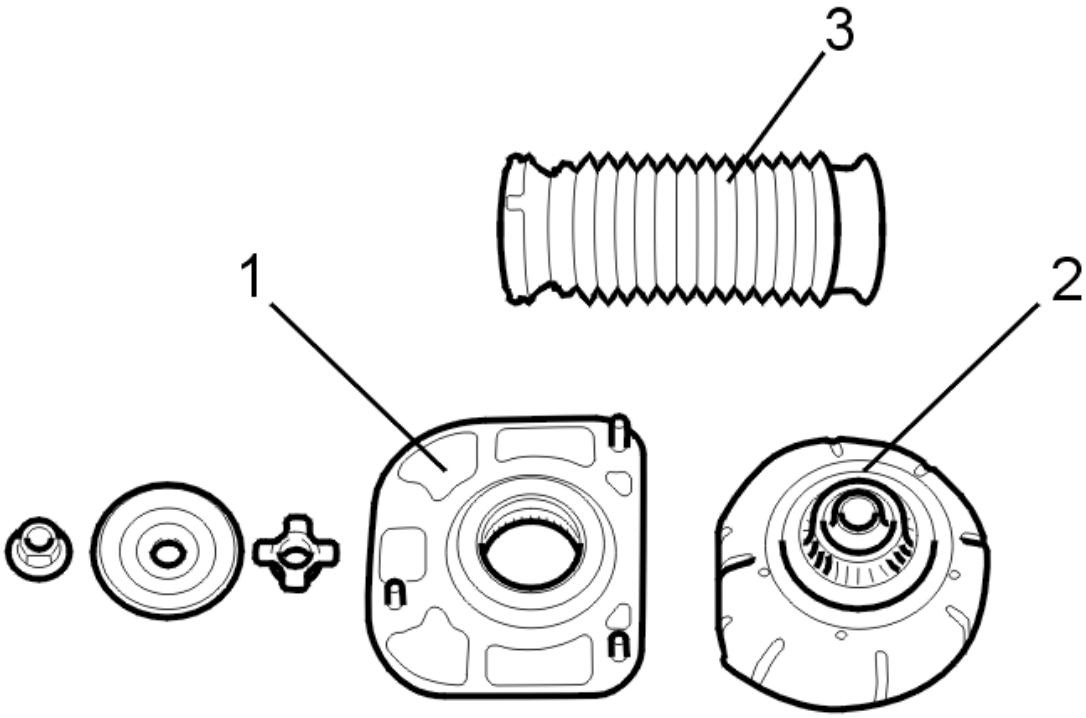

Fig. 40: Shock Absorber Support Plate, Spring Seat And Rubber Bump Stop With Boot
Courtesy of VOLVO CARS CORPORATION

Check that the spring strut bearing (1), spring seat (2) and rubber bump stop with boot (3) are free of damage. Replace if necessary.

INSTALLING

INSTALLING THE SPRING

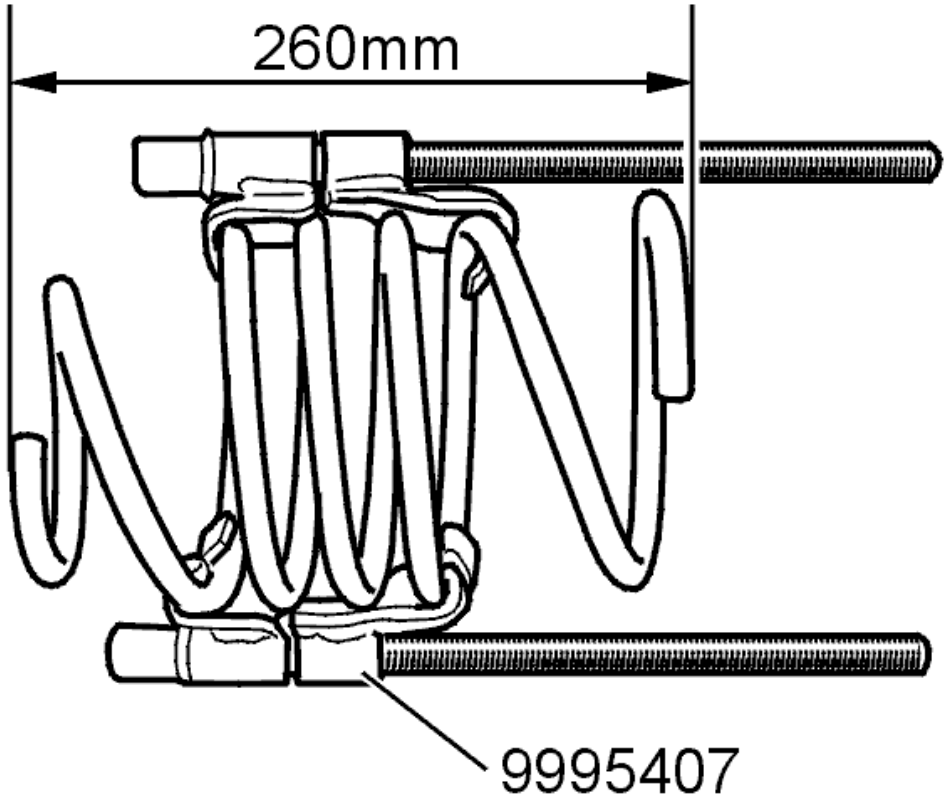

Fig. 41: Compressing Spring
Courtesy of VOLVO CARS CORPORATION

Compress the new spring to a length of approximately 260 mm. Use hydraulic tool see **9512911** with see **9512914** .

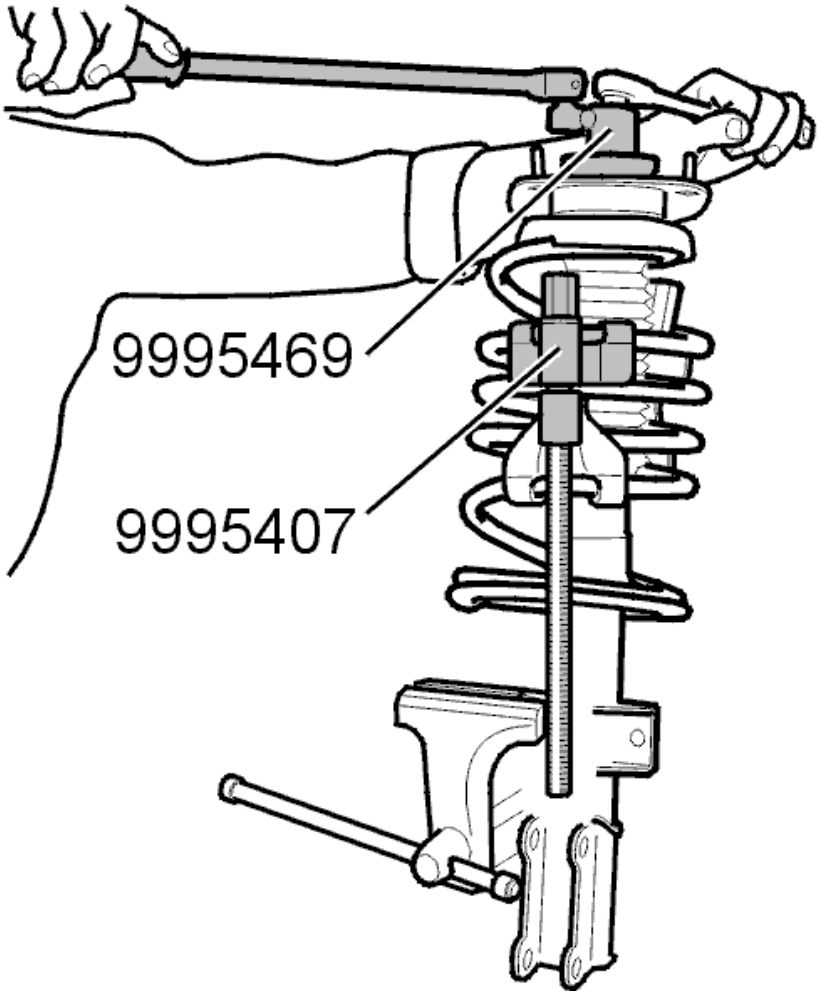

Fig. 42: Identifying Spring Compression Tools
Courtesy of VOLVO CARS CORPORATION

Install:

- the bump stop with the boot
- the spring
- the spring seat.

Install the fixing nut. Tighten to **70 Nm** . Use socket see **9995469** and a 3/8" Torx wrench as a counterhold.

Remove the hydraulic tool.

INSTALLING THE SHOCK ABSORBER BEARING

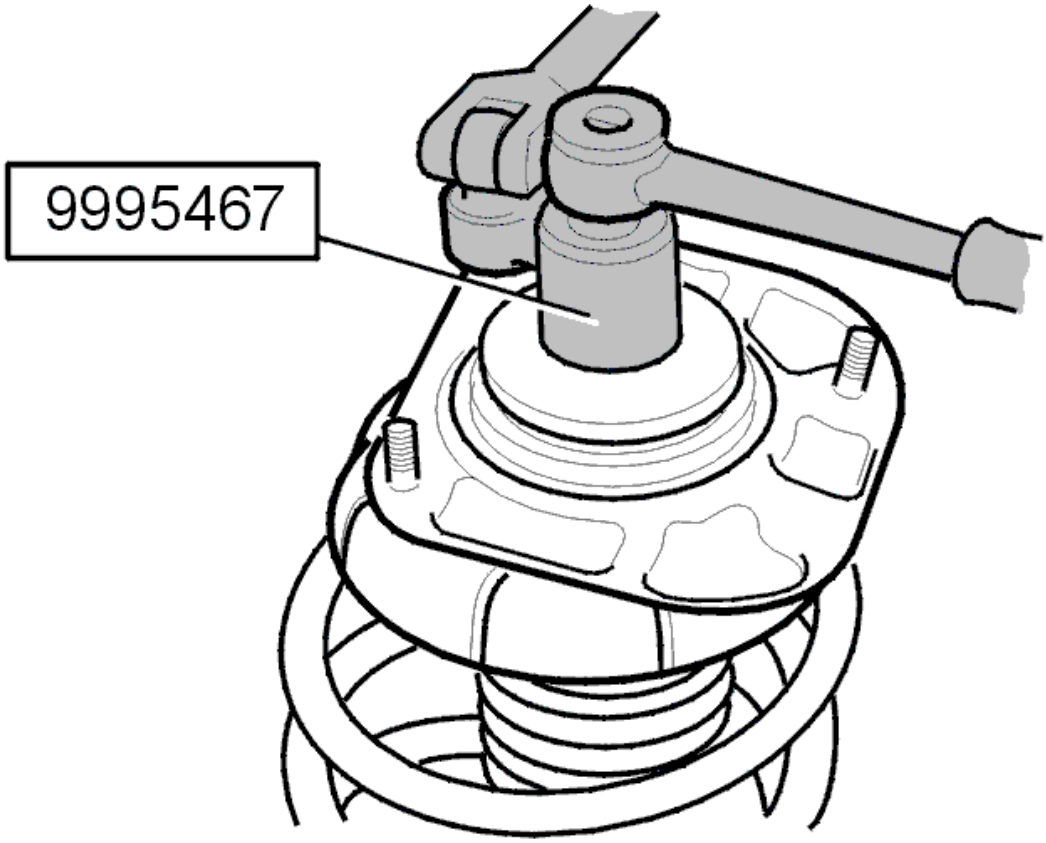

Fig. 43: Identifying Shock Absorber Bearing Nut
Courtesy of VOLVO CARS CORPORATION

Install:

- bearing
- washer
- the nut. Tighten to **70 Nm** . Use socket see **9995467** and a 3/8" Torx wrench as a counterhold.

INSTALLING THE SPRING STRUT

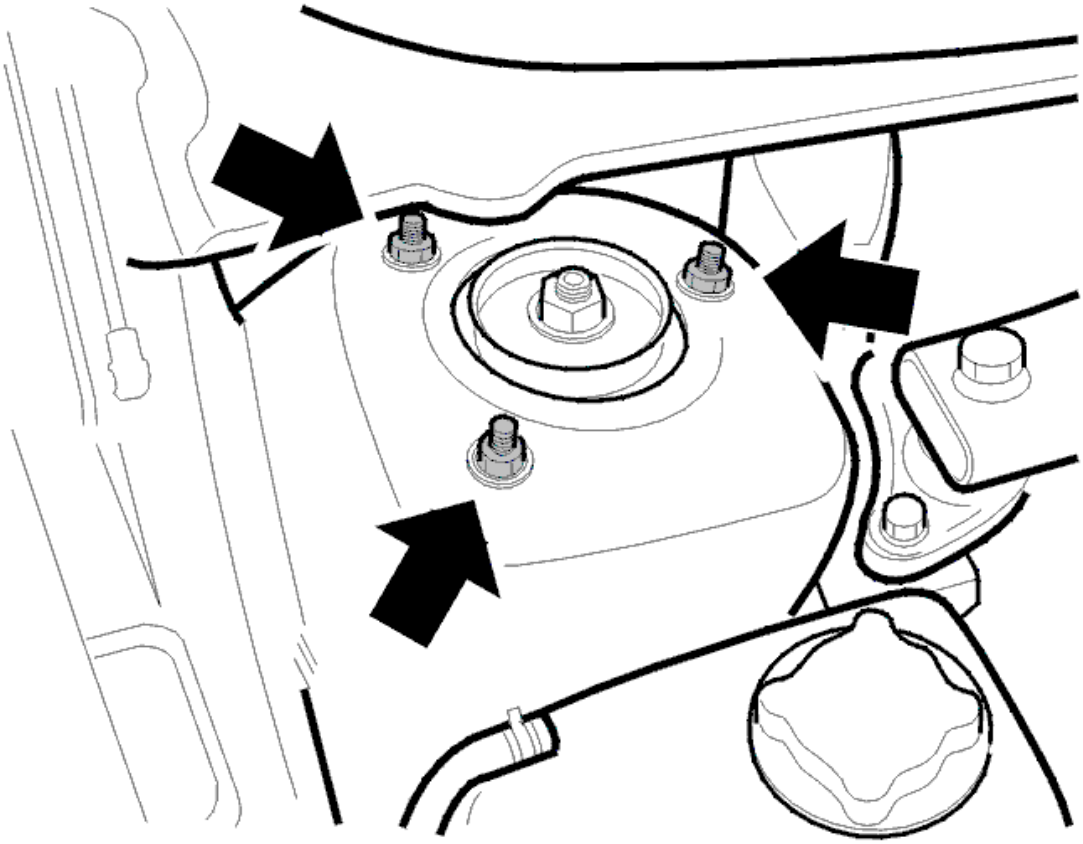

Fig. 44: Locating Nuts Holding Spring Strut Mounting In Bodywork
Courtesy of VOLVO CARS CORPORATION

Install the spring strut in the bodywork using the new nuts. Tighten to **25 Nm** .

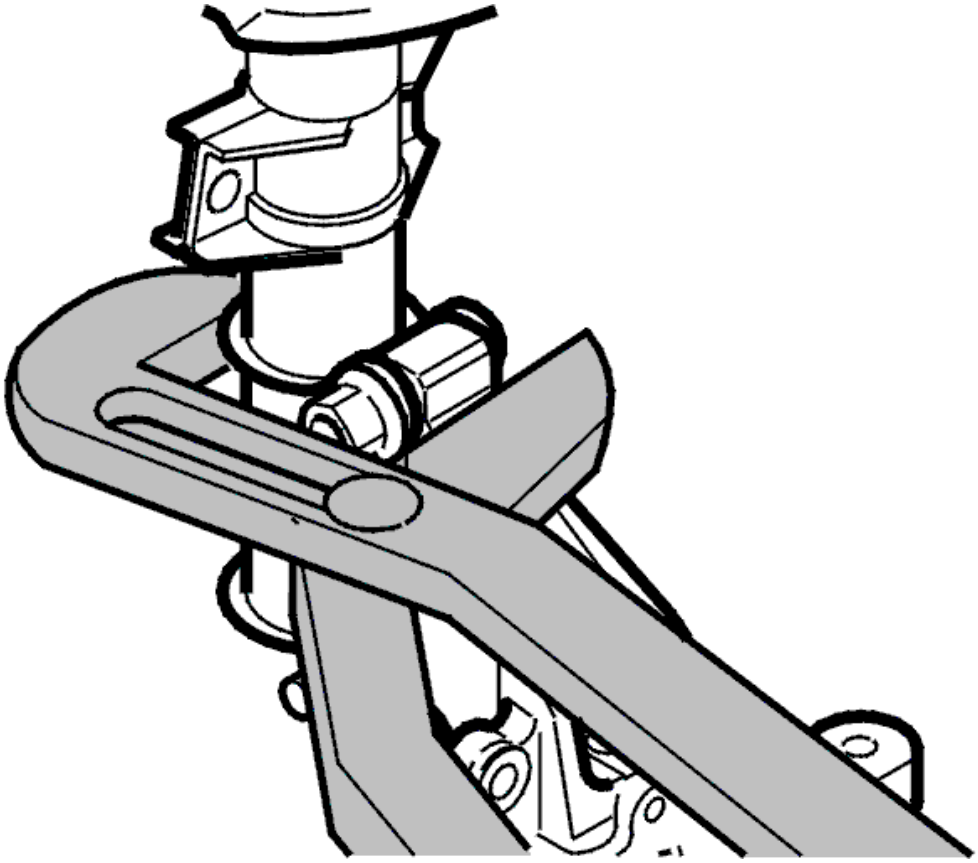

Fig. 45: Installing Spring Strut On Wheel Spindle
Courtesy of VOLVO CARS CORPORATION

Install the spring strut on the stub axle. Use new screws and new nuts.

Adjust the spring strut and stub axle to the measured value.

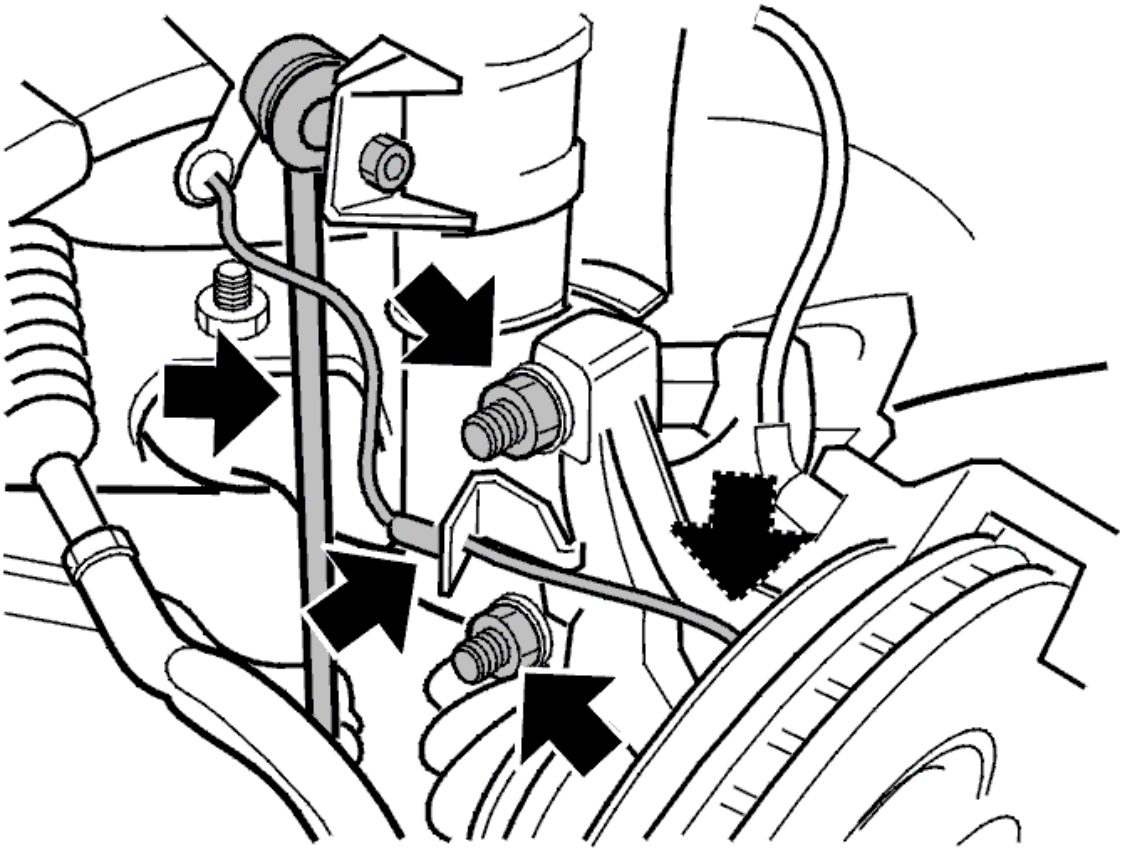

Fig. 46: Identifying Spring Strut To Wheel Spindle Bolts And Nuts, Anti-Roll Bar And ABS Wire
Courtesy of VOLVO CARS CORPORATION

Tighten to **105 Nm** and angle-tighten to 90°. Use protractor see **9512050** .

Install:

- the anti-roll bar link to the spring strut. Use a new nut. Tighten to **50 Nm** . Counterhold using a Torx spanner to prevent damage to the boot.
- The ABS sensor. Tighten to **10 Nm** .

NOTE: **Ensure that the ABS sensor seat in the stub axle is absolutely clean. Clean the ABS sensor with a soft brush.**

Install:

- the ABS sensor cable in the bracket.
- the wheel. See **INSTALLING WHEELS** .

Align the wheels. See **WHEEL ALIGNMENT, CHECKING / ADJUSTING** .

SHOCK ABSORBER REAR, REPLACING

Special tools:

see **9995500**

see **9995659**

NOTE: **The illustrations in this service information are used for different model years and/or models. Some variation may occur. However, the essential information in the illustrations is always correct.**

REMOVAL

PREPARATORY WORK

Raise the vehicle.

Remove the wheels.

Install tensioner see **9995659** . See **TENSIONER 999 5659, USER INSTRUCTIONS** .

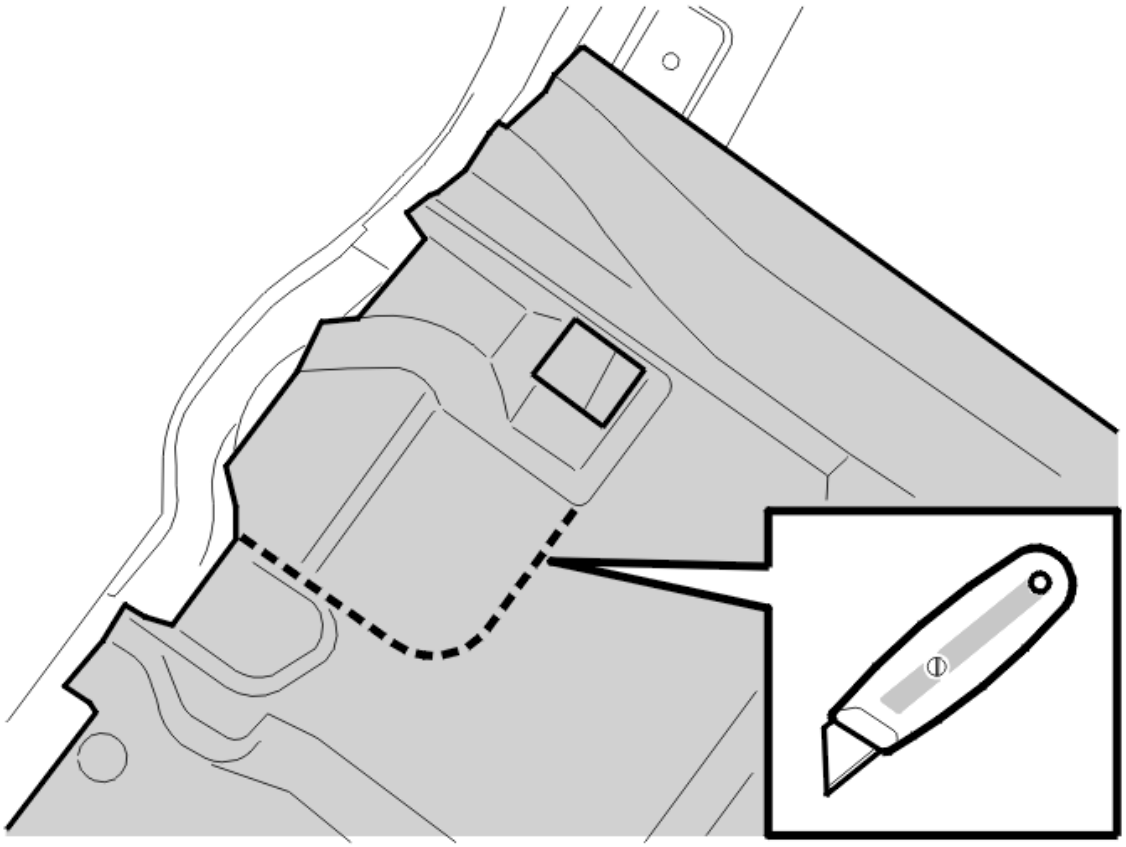

Fig. 47: Accessing Front Floor Hatch
Courtesy of VOLVO CARS CORPORATION

5 seats:

Remove:

- the front floor hatch
- the form-moulded floor mat.

Fold the soundproofing over the damper mounting out of the way.

7 seats:

Slide the seat cushion back on the rear row of seats.

Lift up the carpet.

Cut up the soundproofing as illustrated.

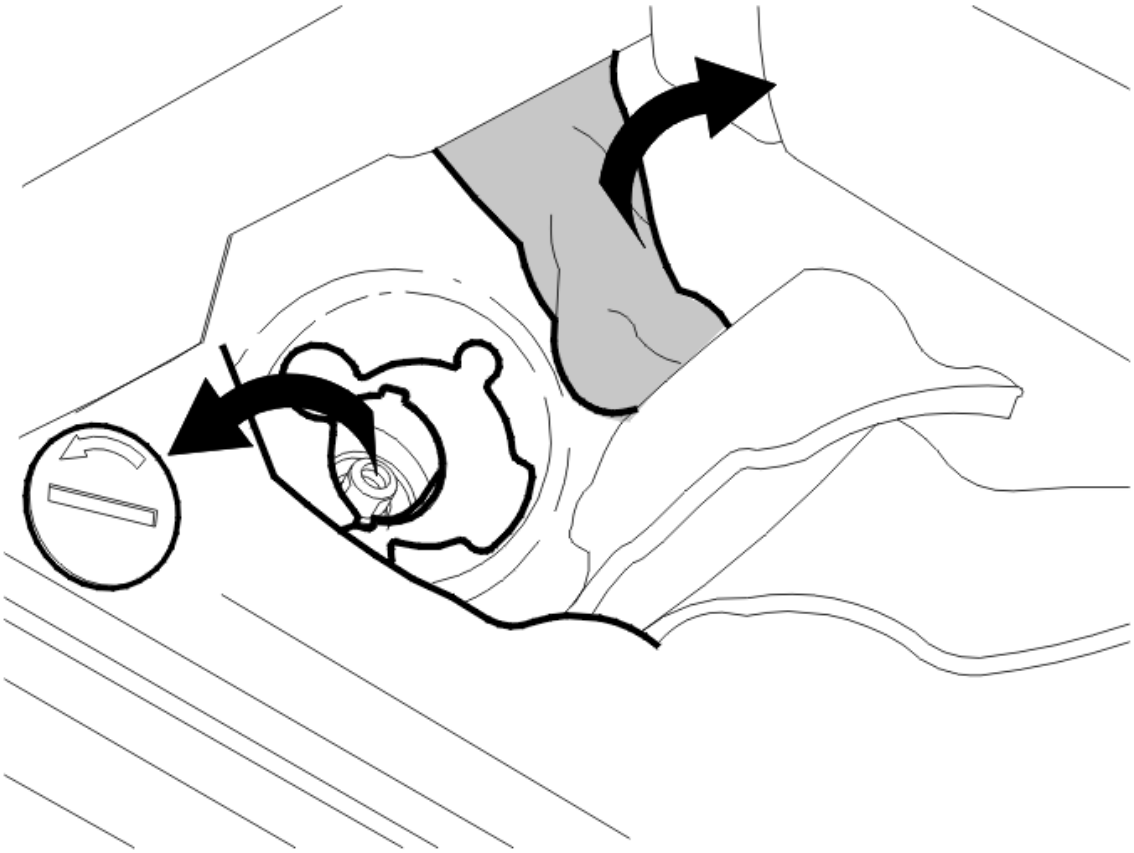

Fig. 48: Removing Cover From Splash Guard
Courtesy of VOLVO CARS CORPORATION

Fold up the soundproofing. Remove the cover on the splash guard.

REMOVING THE REAR DAMPER

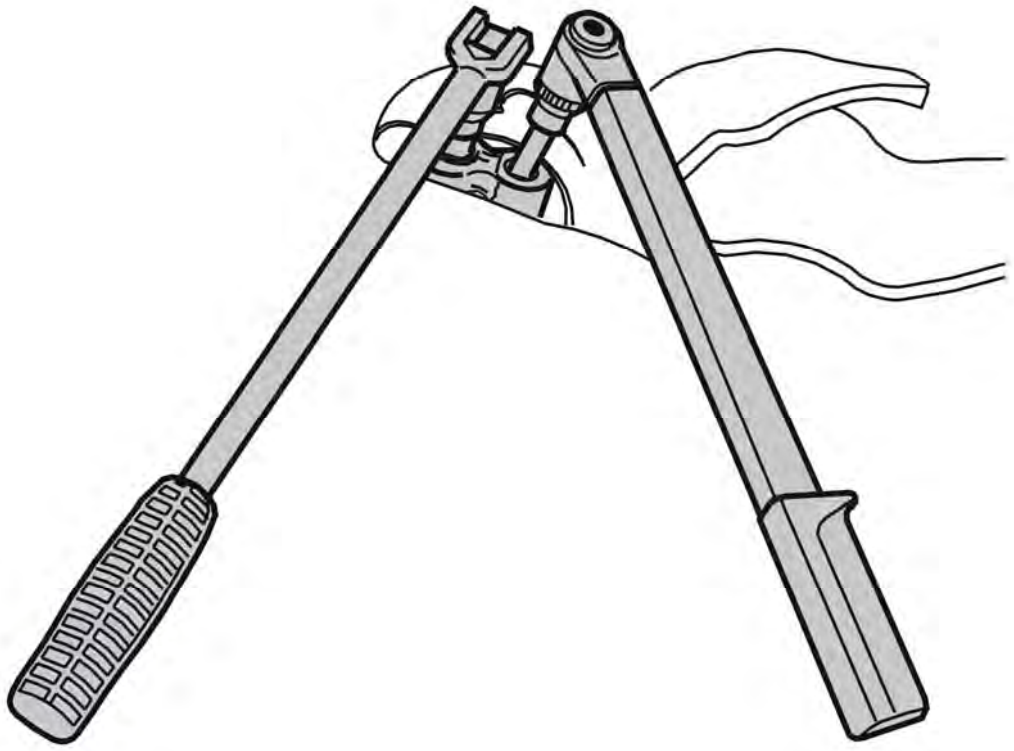

Fig. 49: Removing Rear Damper
Courtesy of VOLVO CARS CORPORATION

Remove the damper nut. Use socket see **9995500** and a Torx-wrench as a counterhold.

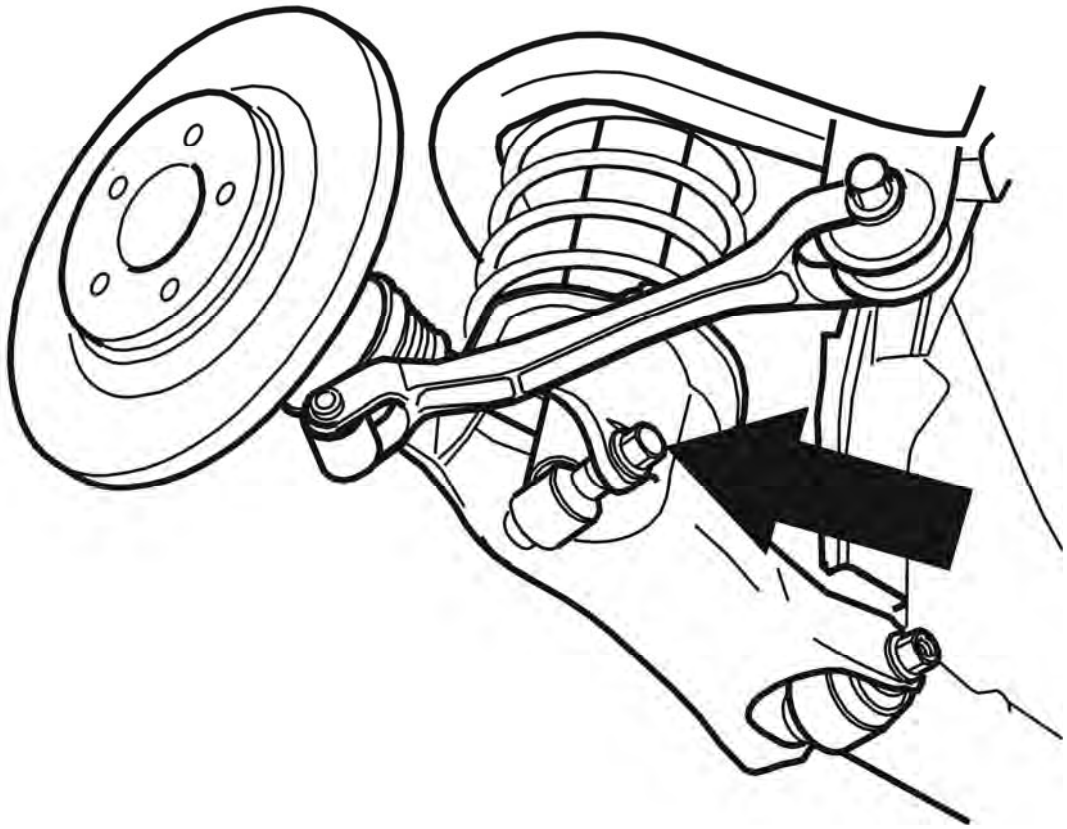

Fig. 50: Removing Lower Damper Mounting Screw
Courtesy of VOLVO CARS CORPORATION

Remove:

- the screw in the lower mounting for the damper
- the shock absorber.

INSTALLATION

TIGHTENING TORQUE

For further information about tightening torques, see **TIGHTENING TORQUE** .

INSTALLING THE REAR DAMPER

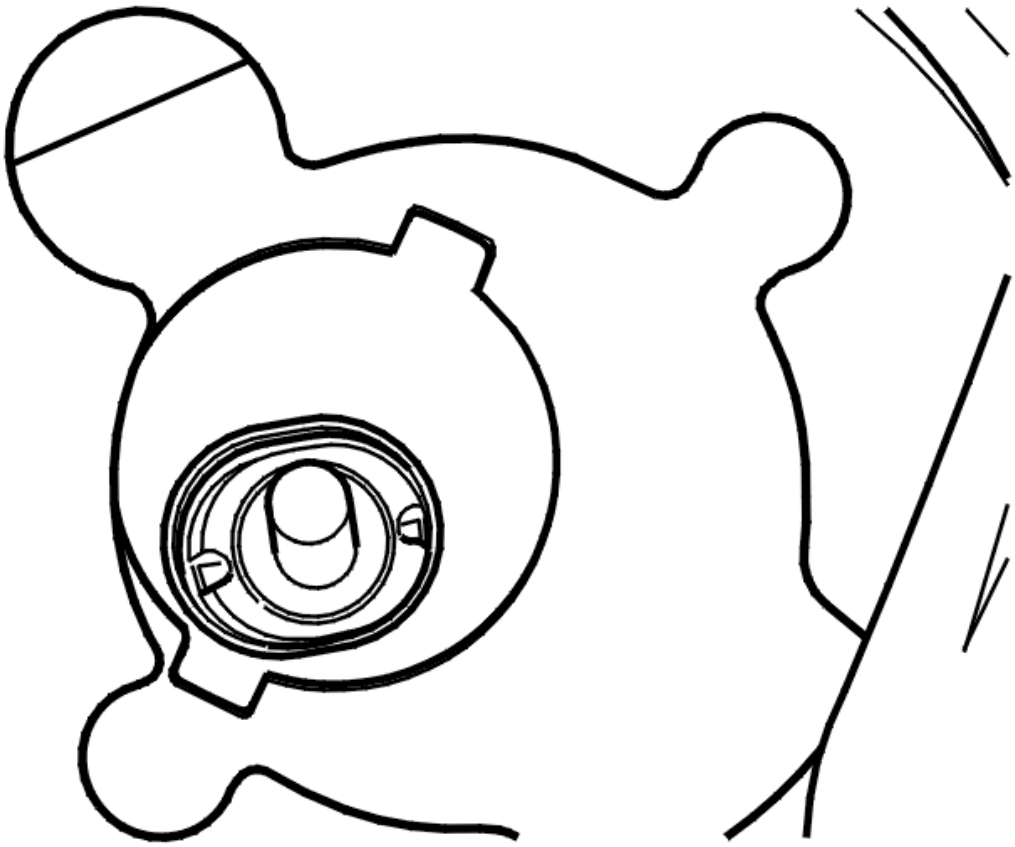

Fig. 51: Installing Rear Damper
Courtesy of VOLVO CARS CORPORATION

Insert the new shock absorber through the control arm to the upper mounting.

Install the new nut loosely.

NOTE: Ensure that the bush seats correctly in the opening in the rear suspension

Fix the damper in the lower mounting.

Tighten the M12 screw.

Tighten the upper nut for the damper. Tighten to **60 Nm** .

Reinstall the carpet.

NOTE: 5 seats: Reinstall the front floor hatch.

7 seats: Slide the seat cushion forward.

FINISHING

Remove the tensioner according to: **TENSIONER 999 5659, USER INSTRUCTIONS** .

Install the wheel. See: **INSTALLING WHEELS** .

Check and adjust the headlights' alignment according to: **HEADLAMPS, ALIGNING**

SUSPENSION

Shock Absorbers, Anti-Roll And Bar Levelling - Symptom Verification

INFORMATION AND VERIFICATION. SHOCK ABSORPTION/HARSH RIDE

SHOCK ABSORPTION/HARSH RIDE

SYMPTOM AND FUNCTION DESCRIPTION

NOTE: The symptom should always be verified together with the customer.

The following tips may be of help to decide if the symptom is due to a product feature or if continued troubleshooting is needed.

HINT: Chassis lowering, low-profile tires, as well as incorrect tire pressure may give rough running.

INFORMATION AND VERIFICATION. SHOCK ABSORPTION/MUSHY RIDE

SHOCK ABSORPTION/MUSHY RIDE

SYMPTOM AND FUNCTION DESCRIPTION

NOTE: The symptom should always be verified together with the customer.

The following tips may be of help to decide if the symptom is due to a product feature or if continued troubleshooting is needed.

HINT: XC-models may be experienced as spongy when driving due to their large wheels.

HINT: Incorrect tire pressure may give a feel of spongy running.

SUSPENSION

Springs - Removal, Replacement And Installation

FRONT SPRING, SCREW AND TORSION SPRING (2003-06)

SPRING FRONT, REPLACEMENT

See **SPRING FRONT, REPLACEMENT**

REAR SPRING, SCREW AND TORSION SPRING (2003-12)

SPRING REAR, REPLACING

Special tools:

see **9995659**

NOTE: **As the graphics in this service information are used for different model years and/or models, some variation may occur. However, the essential information in the graphics is always correct.**

REMOVING THE REAR SPRING

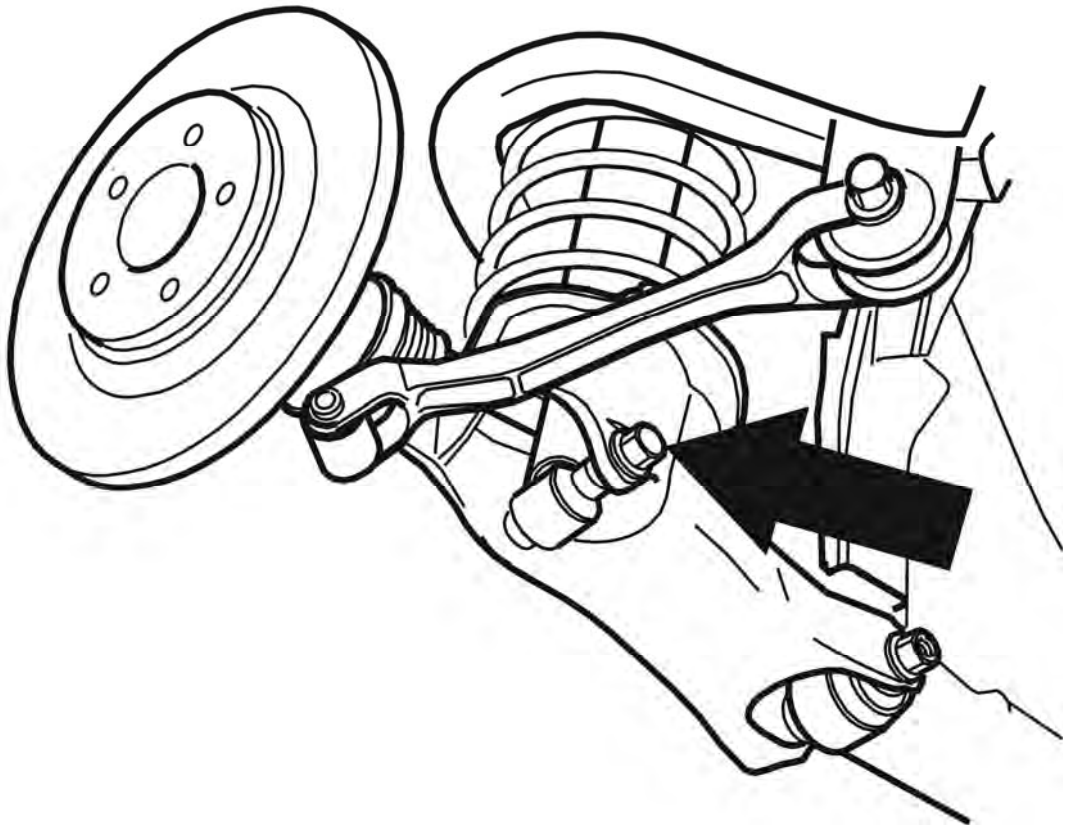

Fig. 1: Identifying Screw From Lower Mounting For Shock Absorber
Courtesy of VOLVO CARS CORPORATION

Raise the vehicle.

Remove the wheels.

Install tensioner see **9995659** . See **TENSIONER 999 5659, USER INSTRUCTIONS** .

Press the tensioner up approximately 25 mm.

Remove the screw from the lower mounting for the shock absorber.

Press up the tensioner to the normal position.

Only cars with Bi-Xenon lamps

Remove the position sensor for Bi-Xenon lamps. See **POSITION SENSOR BI-XENON LAMPS, REPLACING** .

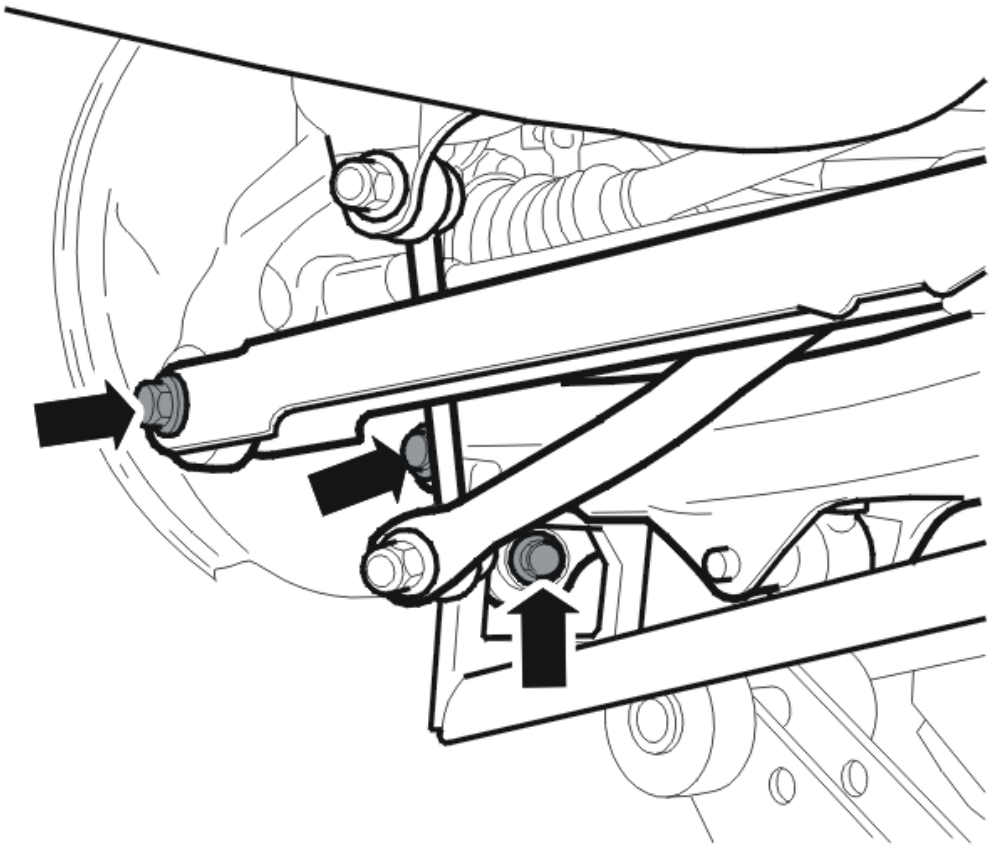

Fig. 2: Identifying Screws For Cross Stay, Longitudinal Stay And Control Arm
Courtesy of VOLVO CARS CORPORATION

Remove:

- the screw for the cross stay and wheel spindle. Release the stay and let it rest against the top of the wheel spindle.
- the screw of the longitudinal stay and the wheel spindle
- the screw of the control arm and wheel spindle

Lower the control arm with the tensioner. The spring is now unloaded.

Lower the tensioner. Twist the tensioner so that it is positioned along the length of the car.

Press the control arm down by hand. Remove the spring.

TIGHTENING TORQUE

For tightening torques, see **TIGHTENING TORQUE** .

INSTALLING THE REAR SPRING

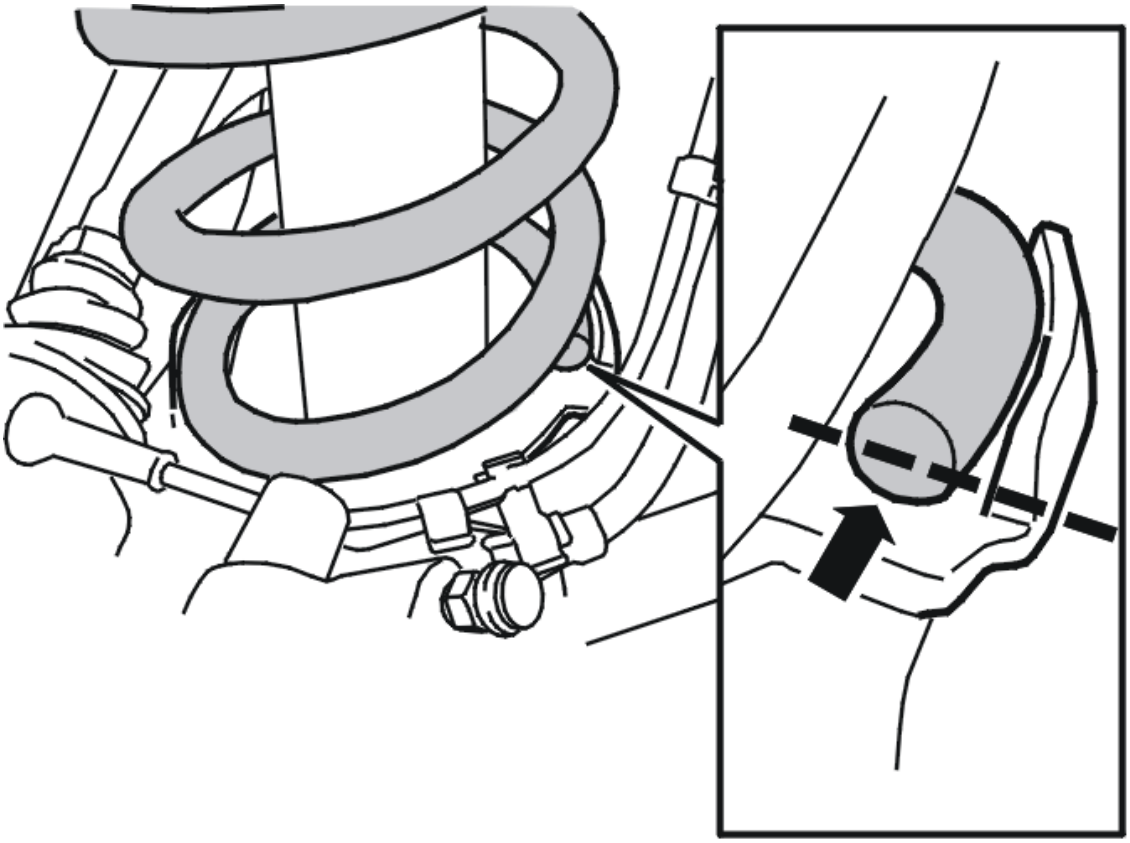

Fig. 3: Identifying New Spring
Courtesy of VOLVO CARS CORPORATION

Install the new spring.

Check that the spring is correctly installed in the lower spring seat.

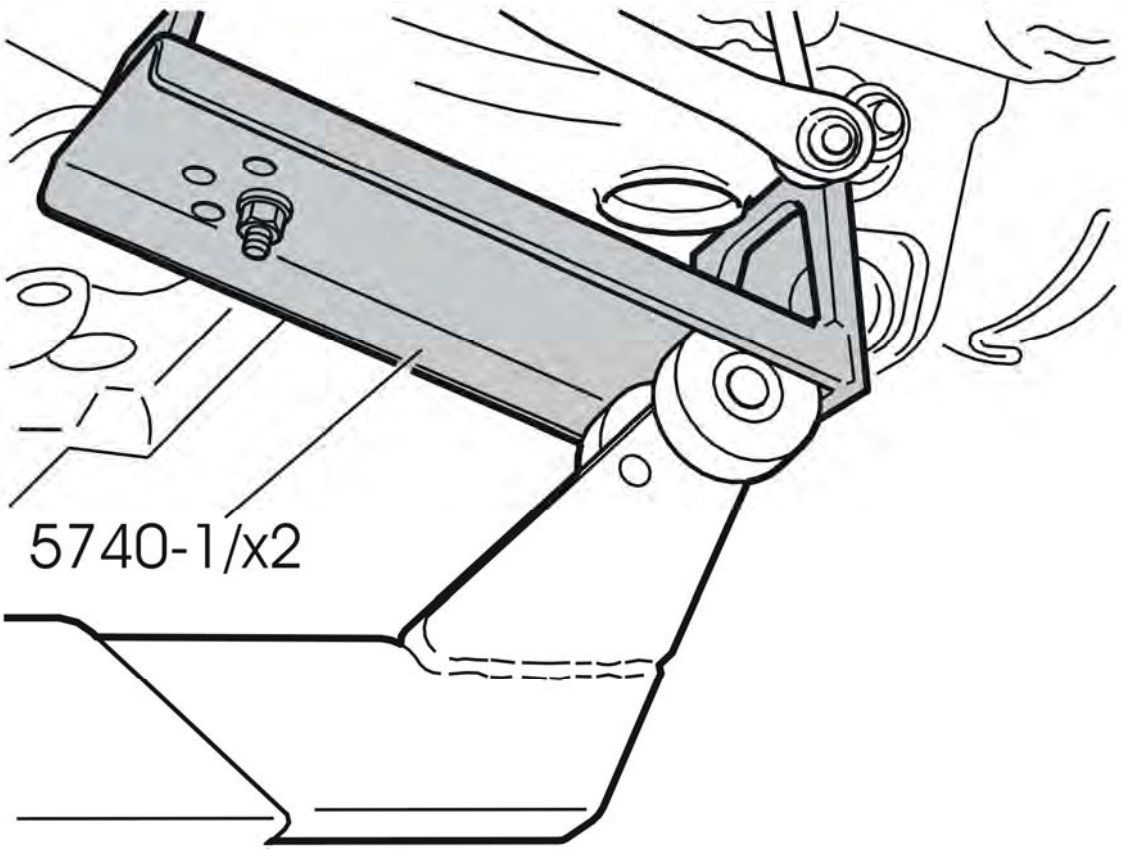

Fig. 4: Identifying Rails 5740-1
Courtesy of VOLVO CARS CORPORATION

Lift the removed control arm by hand. Position the tensioner in the rails.

NOTE: **The tensioner must be positioned as far out as possible on the tensioner plates to achieve the correct lifting force.**

NOTE: **make sure the shock absorber mounting fits into the control arm attachment lugs.**

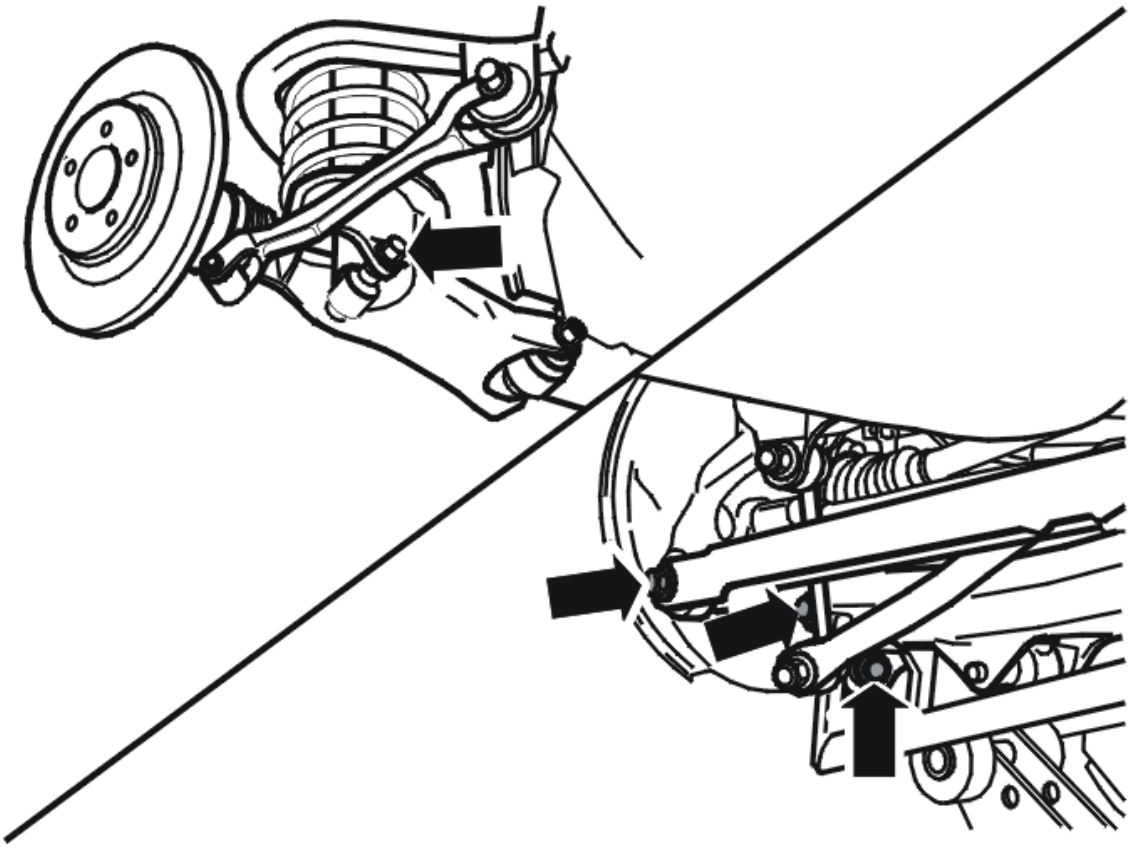

Fig. 5: Identifying Screw In Lower Mounting For Shock Absorber
Courtesy of VOLVO CARS CORPORATION

Lift the control arms so that the screw for the control arm and lateral link can be installed. Align the screw. Tighten by hand. Do not tighten yet.

Lower the tensioner. Install the screw in the lower mounting for the shock absorber. Do not tighten yet.

Tension the control arms to the normal position. See **TENSIONER 999 5659, USER INSTRUCTIONS** .

Tighten the screws for the control arm, lateral link and shock absorber. M12

Fit the cross stay to the wheel spindle with a new M12 lock nut. Tighten.

Only cars with Bi-Xenon lamps

Install the position sensor for Bi-Xenon lamps. See **POSITION SENSOR BI-XENON LAMPS, REPLACING** .

FINISHING

Remove the tensioner according to **TENSIONER 999 5659, USER INSTRUCTIONS** .

Install the wheel. See **INSTALLING WHEELS** .

Check and adjust the headlight's alignment according to **HEADLAMPS, ALIGNING**

SUSPENSION

Wheels, Tires, Hubs - Removal, Replacement And Installation

HUB AND BEARING

FRONT WHEEL HUB, REPLACING

Special tools:

see **9997062**

NOTE: **The illustrations in this service information are used for different model years and / or models. Therefore there may be some variation. However, the essential information in the illustrations is always correct.**

REMOVAL

PREPARATION

Remove the wheel.

REMOVING BRAKE CALIPERS

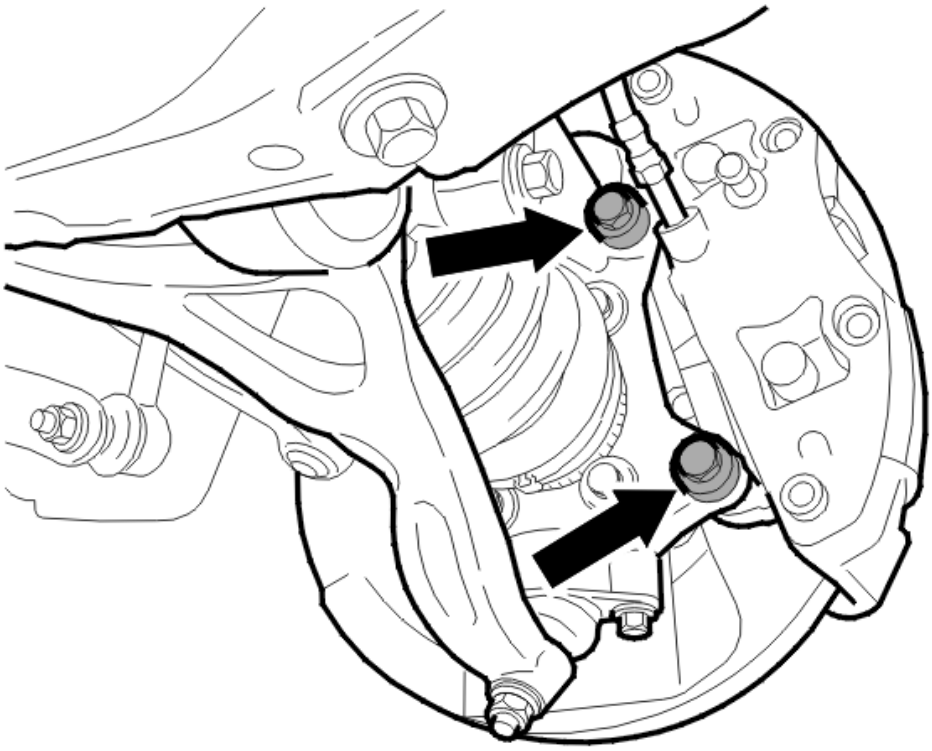

Fig. 1: Locating Brake Caliper Mounting Screws
Courtesy of VOLVO CARS CORPORATION

Remove:

- the two screws
- the brake caliper.

Hang up the caliper in a suitable position.

REMOVING THE SCREW FOR THE DRIVE SHAFT

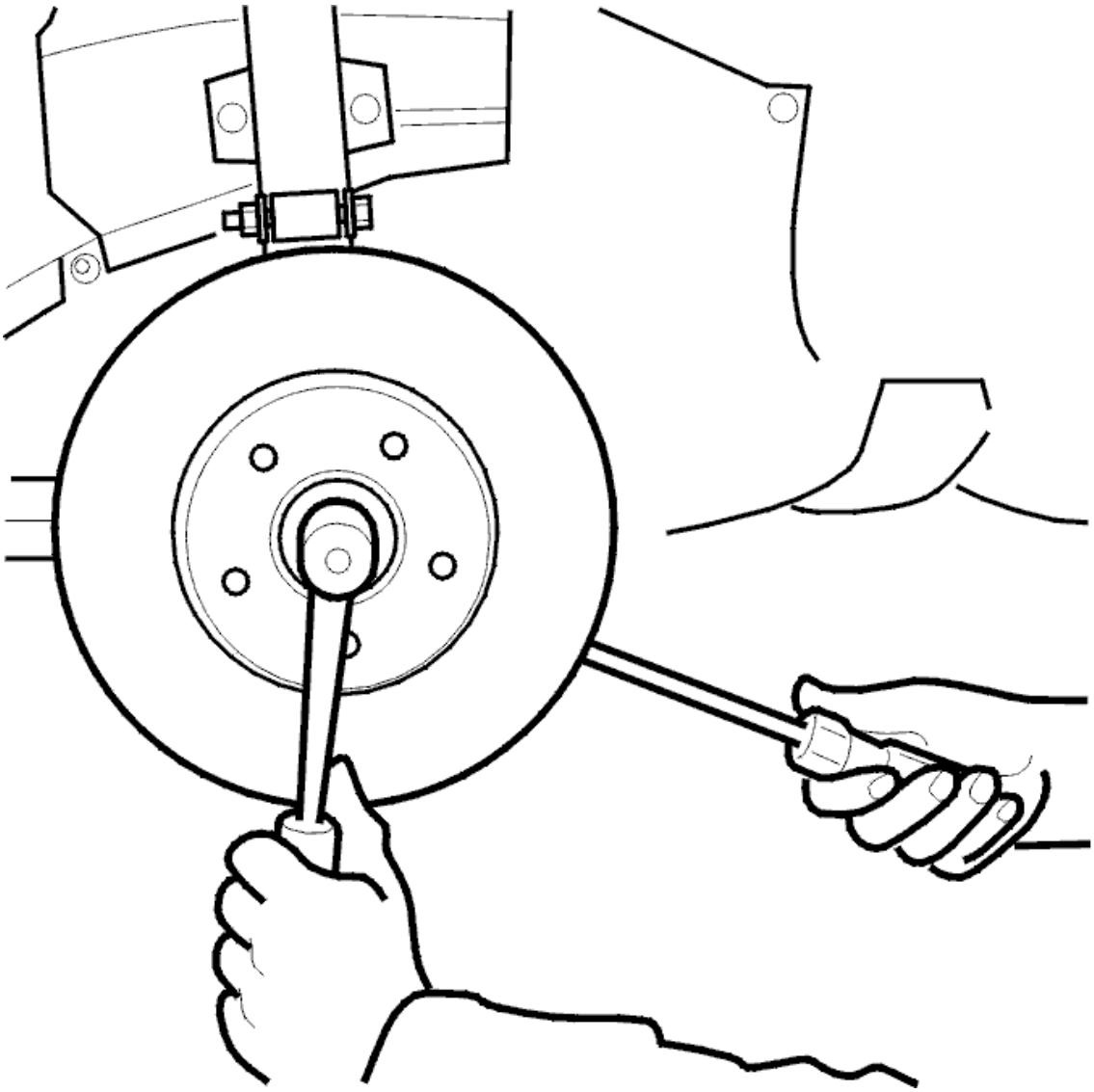

Fig. 2: Identifying Drive Shaft Screw Removal Using A Screwdriver As A Counter Hold On Brake Disc
Courtesy of VOLVO CARS CORPORATION

Remove the drive shaft screw. Use a screwdriver as a counterhold on the brake disc.

Detach the end of the drive shaft in the hub by knocking the drive shaft into the hub approximately 10-15 mm. Use a rubber or copper mallet.

REMOVING THE BRAKE DISC

Remove:

- the screw
- the brake disc.

DISCONNECTING THE STEERING ARM

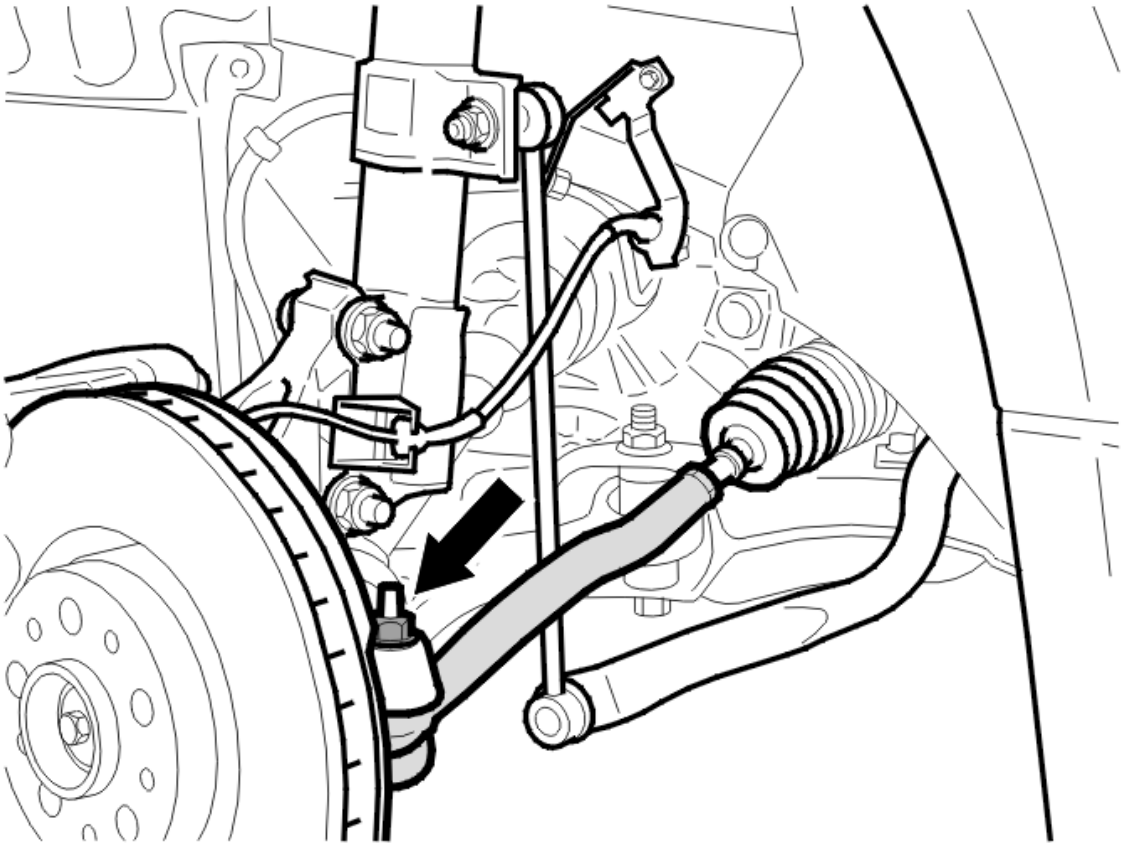

Fig. 3: Identifying Steering Arm Nut
Courtesy of VOLVO CARS CORPORATION

Remove the nut.

NOTE: Counterhold using the wrench grip so that the screw does not rotate and damage the rubber boot.

DISCONNECTING THE ANTI-ROLL BAR LINK

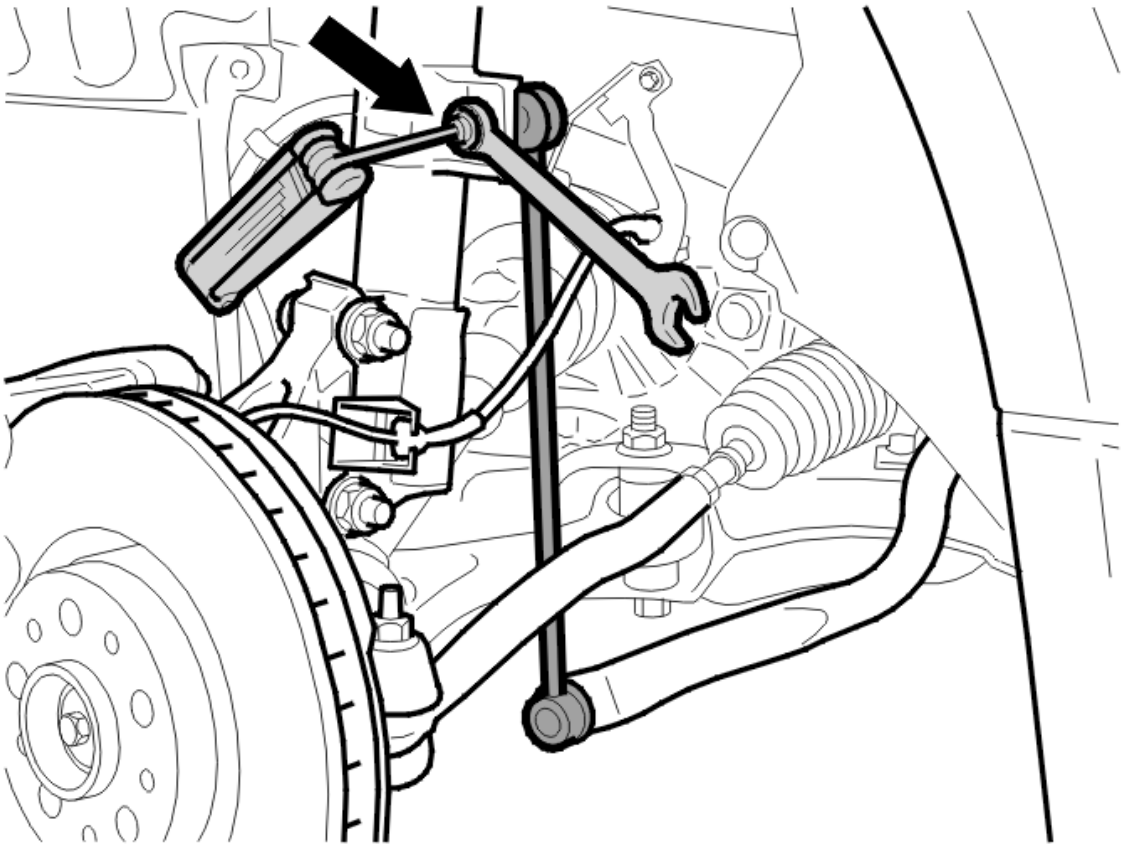

Fig. 4: Disconnecting Anti-Roll Bar Link
Courtesy of VOLVO CARS CORPORATION

Remove the nut. Pull the link out of its mounting.

NOTE: Counterhold using a Torx wrench so that the boot for the link is not damaged.

DISCONNECTING THE CABLE HARNESS FOR THE ABS SENSOR

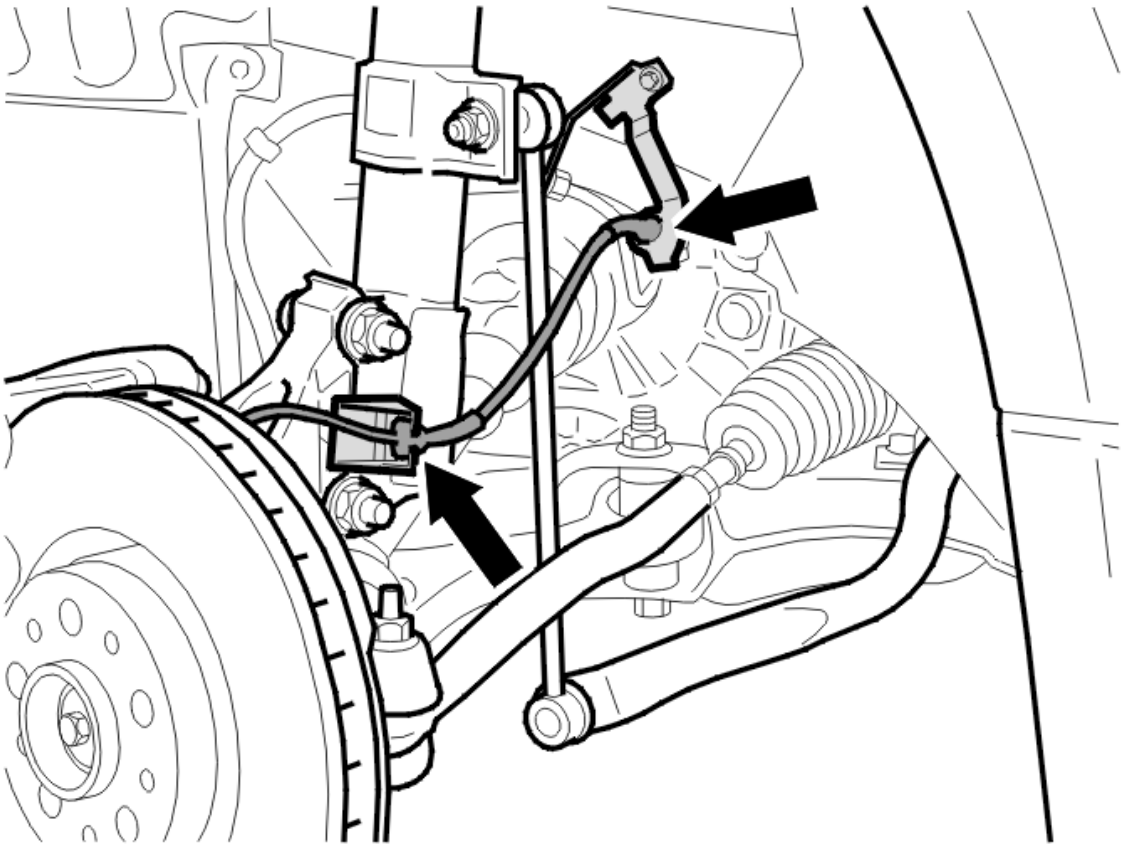

Fig. 5: Locating ABS Sensor And Brackets
Courtesy of VOLVO CARS CORPORATION

Remove the cable harness from its brackets.

REMOVING THE CONTROL ARM FROM THE BALL JOINT

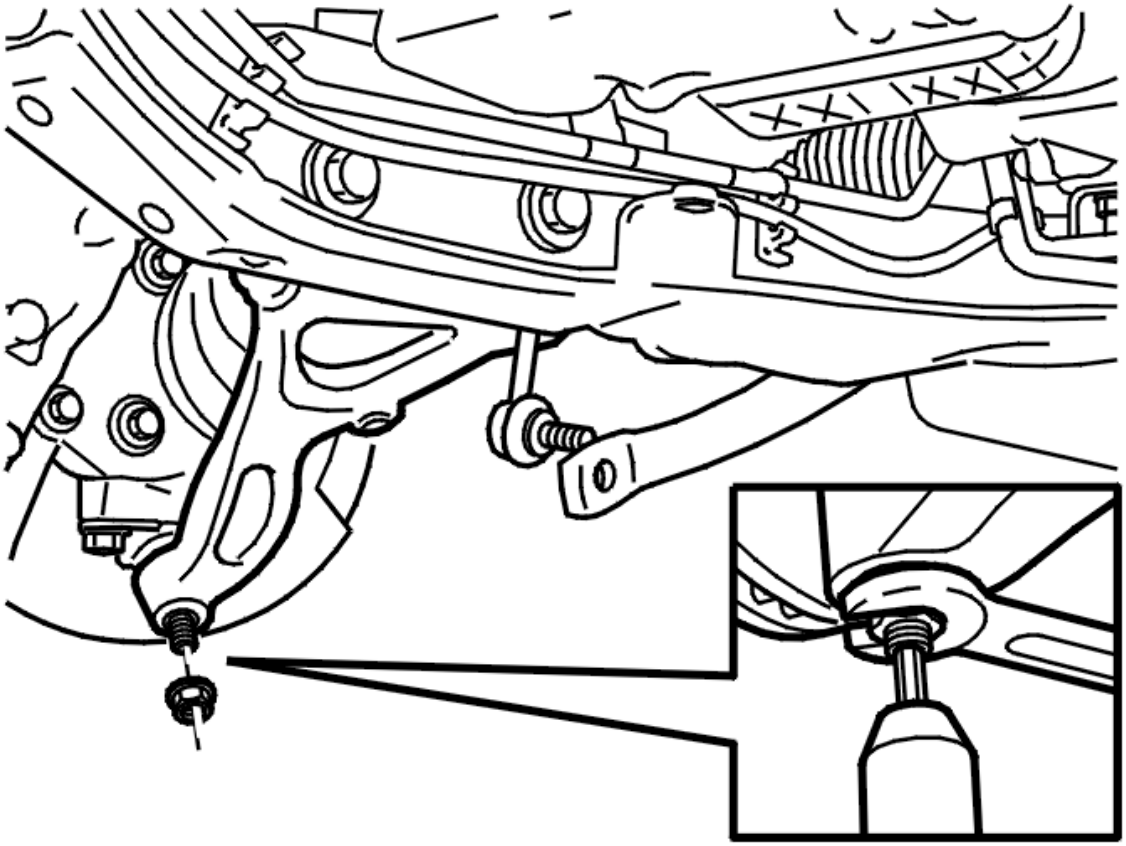

Fig. 6: Removing Control Arm From Ball Joint
Courtesy of VOLVO CARS CORPORATION

Remove the nut from the ball joint on both sides. Counterhold using a Torx wrench so that the ball joint boot is not damaged.

Press out the ball joints. Use special tool see **9997062** .

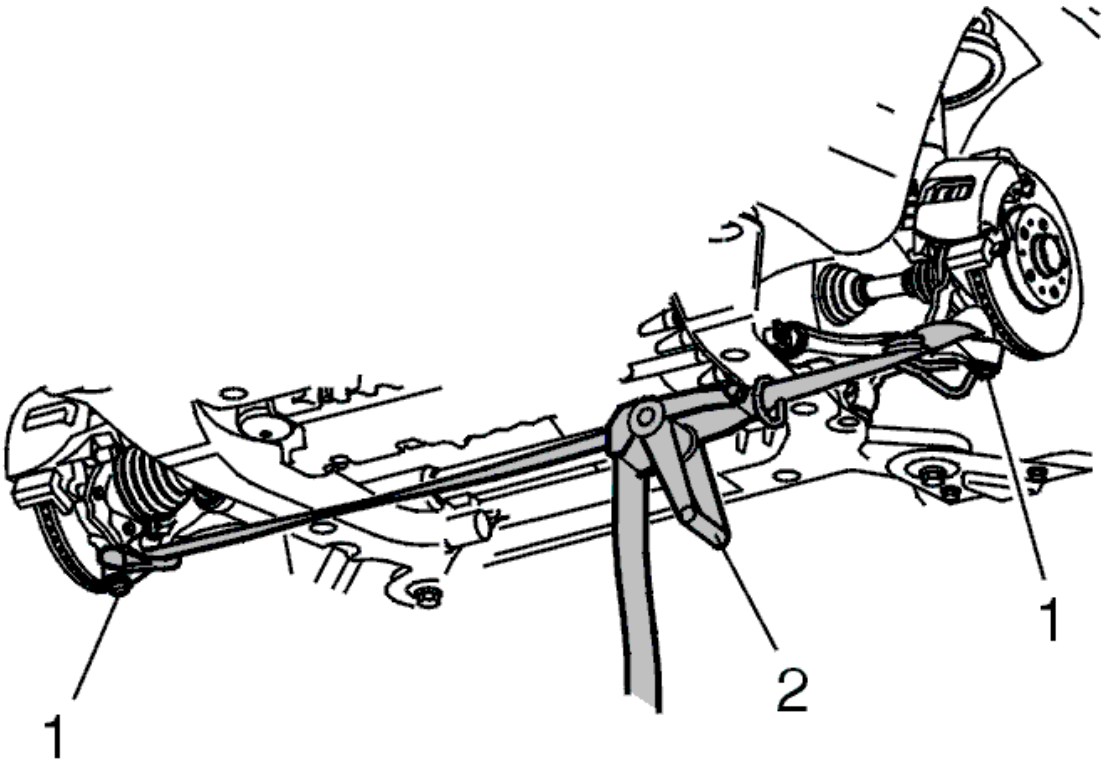

Fig. 7: Identifying Drive Shaft Installation
Courtesy of VOLVO CARS CORPORATION

Pull down the control arm (1) using a tension strap (2).

Release the spring strut from the control arm and drive shaft.

WARNING: Ensure that the tension strap is correctly secured in the control arms.

REMOVING THE HUB

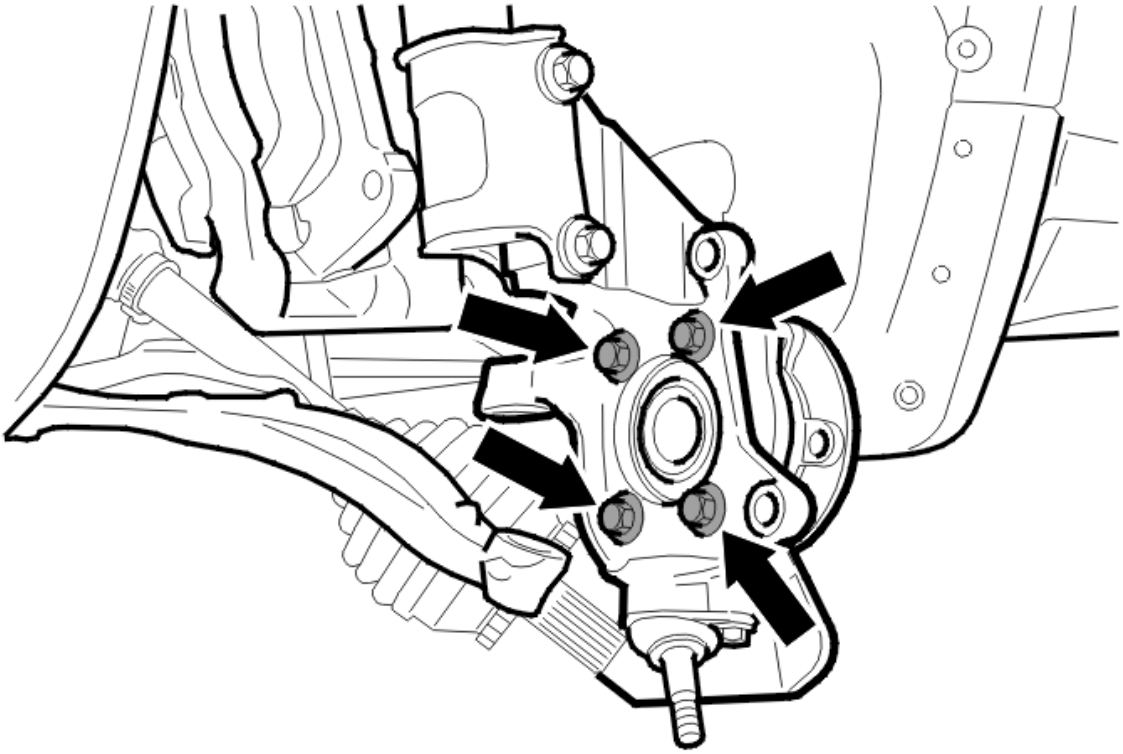

Fig. 8: Locating Hub Bolts
Courtesy of VOLVO CARS CORPORATION

Remove:

- the four screws
- the hub.

INSTALLATION

TIGHTENING TORQUE

For tightening torques, see **TIGHTENING TORQUE** .

INSTALLING THE HUB

Install:

- the hub
- the four screws.

For tightening torques, see **TIGHTENING TORQUE** .

INSTALLING THE CONTROL ARM ON THE BALL JOINT

Install the drive shaft in the hub. Align the ball joint against the control arm.

Release the tensioning strap between the control arms.

Install a nut on the ball joint. (M10)

NOTE: Counterhold using the Torx wrench so as not to damage the boot.

Remove the tensioner strap.

INSTALLING THE CABLE HARNESS FOR THE ABS SENSOR

Install the cable harness in the brackets.

INSTALLING THE ANTI-ROLL BAR LINK

Install:

- the anti-roll bar link
- the nut (M12).

NOTE: Counterhold using a Torx wrench so that the boot for the link is not damaged.

INSTALLING THE STEERING ARM

Install:

- the steering arm
- the nut.

For tightening torques, see **TIGHTENING TORQUE** .

NOTE: Counterhold using the wrench grip so that the screw does not rotates and damage the rubber boot.

INSTALLING THE BRAKE DISC

Install:

- the brake disc
- the screw.

INSTALLING THE DRIVE SHAFT SCREW

Install a new screw. Use a screwdriver as a counterhold.

For tightening torques, see **TIGHTENING TORQUE** .

INSTALLING BRAKE CALIPERS

Install:

- the brake caliper
- the two screws.

For tightening torques, see **TIGHTENING TORQUE** .

FINISHING

Install the wheel. See **INSTALLING WHEELS**.

REAR WHEEL HUB, REPLACING

Special tools:

see **9995659**

NOTE: **The illustrations in this service information are used for different model years and / or models. Therefore there may be some variation. However, the essential information in the illustrations is always correct.**

PREPARATORY WORK

ADJUSTING THE PARKING BRAKE

Loosen the parking brake adjustment. See **PARKING BRAKE SELF-ADJUSTMENT, RESETTING** or **PARKING BRAKE, ADJUSTING** .

REMOVAL

REMOVING REAR WHEELS

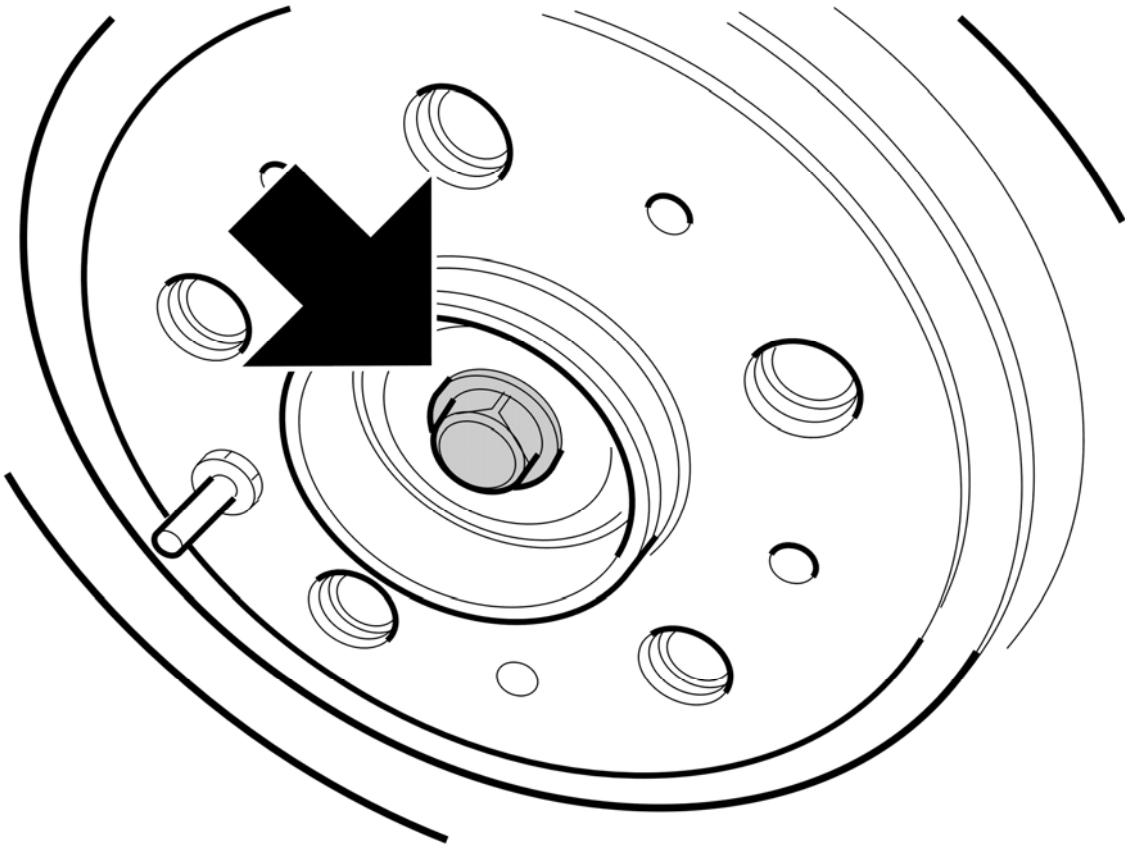

Fig. 9: Rear Wheel
Courtesy of VOLVO CARS CORPORATION

Remove the rear wheel.

REMOVING THE BRAKE CALIPER AND BRAKE DISC

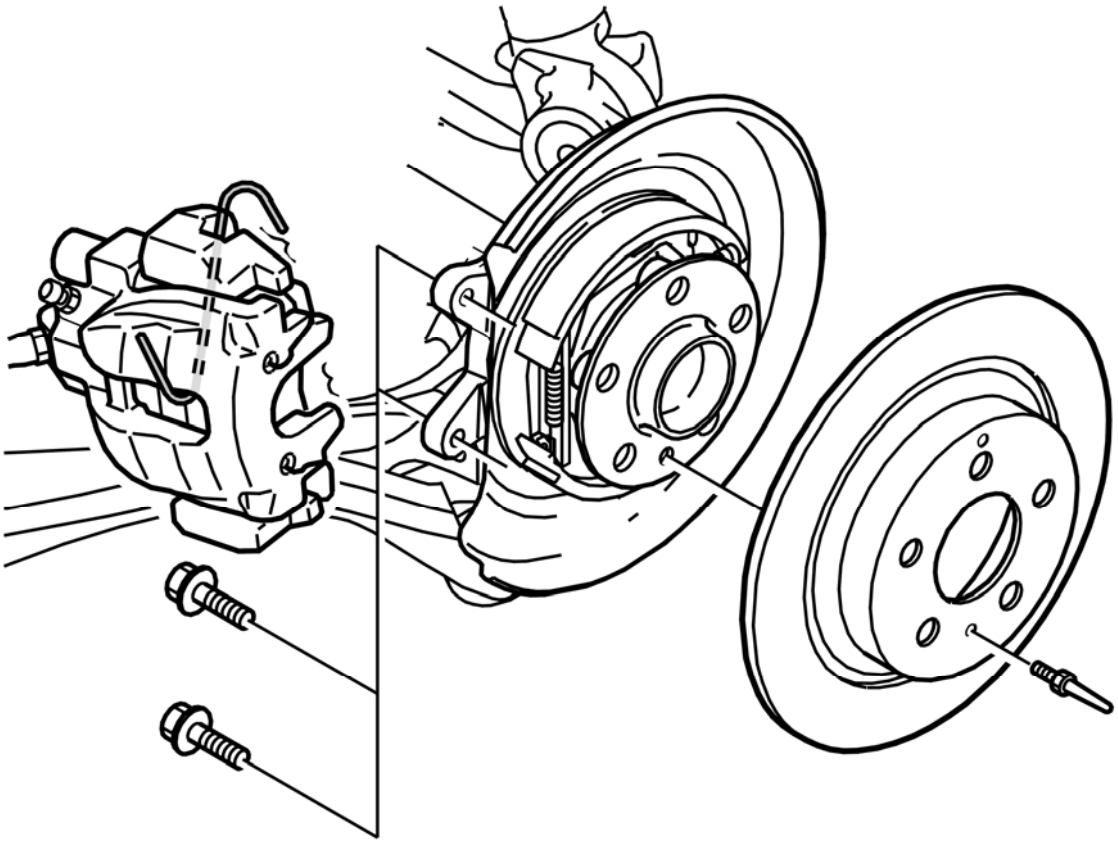

Fig. 10: Brake Caliper And Brake Disc
Courtesy of VOLVO CARS CORPORATION

Remove:

- the wheel sensor cable from the retainer on the brake hose
- the brake caliper mounting screws.

  Suspend the caliper in a steel wire.

- the brake disc locating pin/screw
- the brake disc.

REMOVING THE WHEEL SENSOR

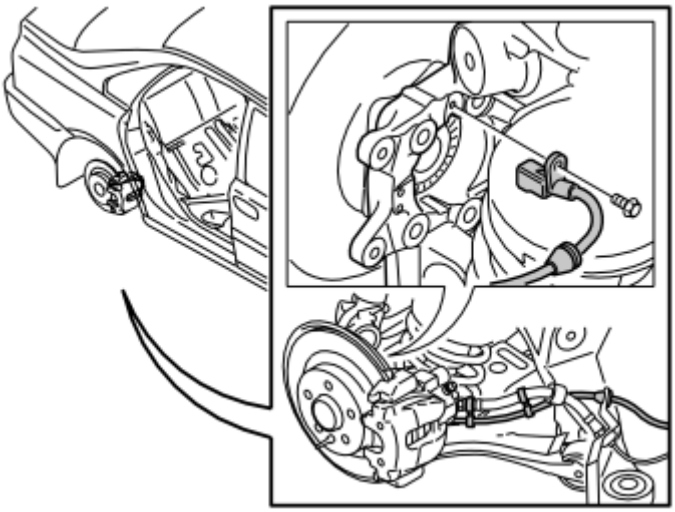

Fig. 11: Identifying Sensor From Wheel Spindle Removal
Courtesy of VOLVO CARS CORPORATION

Clean the area around the wheel sensor and remove the screw.

Carefully remove the sensor from the wheel spindle.

Bind the sensor so it is well protected.

INSTALLING THE TENSIONER

Install see **9995659** . See **TENSIONER 999 5659, USER INSTRUCTIONS** .

Support the rear suspension 500 mm up between the fender edge and the center of the wheel.

REMOVING THE HUB

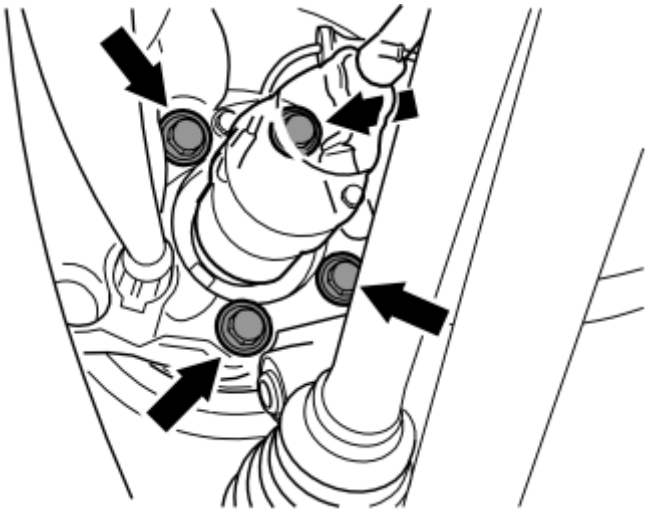

Fig. 12: Hub Screws
Courtesy of VOLVO CARS CORPORATION

Remove:

- the 4 screws
- the hub.

CLEANING

CHECKING AND CLEANING

Clean:

- the mating faces of the wheel hub in the wheel spindle
- the wheel sensor
- the sensor seat in the wheel spindle so it is absolutely clean
- the wheel sensor. Use a soft brush.

INSTALLATION

NOTE: For tightening torque, see TIGHTENING TORQUE or TIGHTENING TORQUE .

INSTALLING THE HUB

Install:

- the hub to the wheel spindle

  Use new screws. Tighten. See **TIGHTENING TORQUE** .

- The wheel sensor (M6). Tighten. See **TIGHTENING TORQUE** .

REMOVING THE TENSIONER

Remove the tensioner. See see **TENSIONER 999 5659, USER INSTRUCTIONS** .

INSTALLING THE BRAKE DISC AND BRAKE CALIPER

Install:

- the brake disc
- the brake disc locating pin/screw (M6). Tighten. See **TIGHTENING TORQUE** .
- the brake caliper
- the brake caliper mounting screws.

  Use new screws. Tighten. See **TIGHTENING TORQUE** .

- the wheel sensor cable to the retainer on the brake hose.

INSTALLING THE REAR WHEEL

Install the rear wheel. See **INSTALLING WHEELS**.

FINISHING

ADJUSTING THE PARKING BRAKE

Adjust the parking brake. See **PARKING BRAKE SELF-ADJUSTMENT, RESETTING** or **PARKING BRAKE, ADJUSTING** .

REAR WHEEL HUB AND DRIVE SHAFT, REPLACING

Special tools:

see **9995659**

NOTE: The illustrations in this service information are used for different model years and / or models. Therefore there may be some variation. However, the essential information in the illustrations is always correct.

PREPARATORY WORK

ADJUSTING THE PARKING BRAKE

Loosen the handbrake adjuster, see **PARKING BRAKE SELF-ADJUSTMENT, RESETTING** or **PARKING BRAKE, ADJUSTING** .

REMOVAL

REMOVAL OF SCREW FOR DRIVE SHAFT

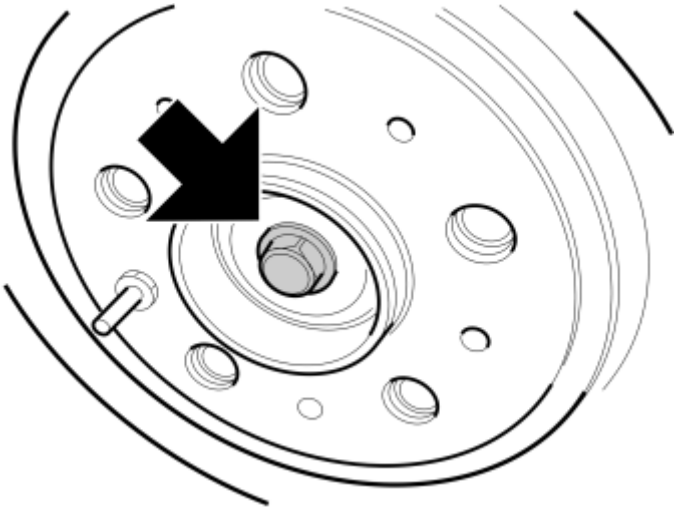

Fig. 13: Identifying Installation Of Screw To Drive Shaft
Courtesy of VOLVO CARS CORPORATION

Remove:

- the rear wheel
- the screw for the drive shaft.

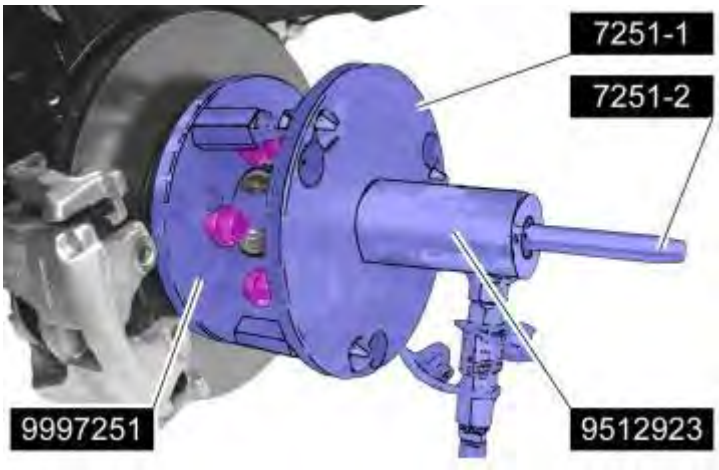

Fig. 14: Driveshaft In Hub
Courtesy of VOLVO CARS CORPORATION

see **9997251** , see **9512923**

REMOVING THE BRAKE CALIPER AND BRAKE DISC

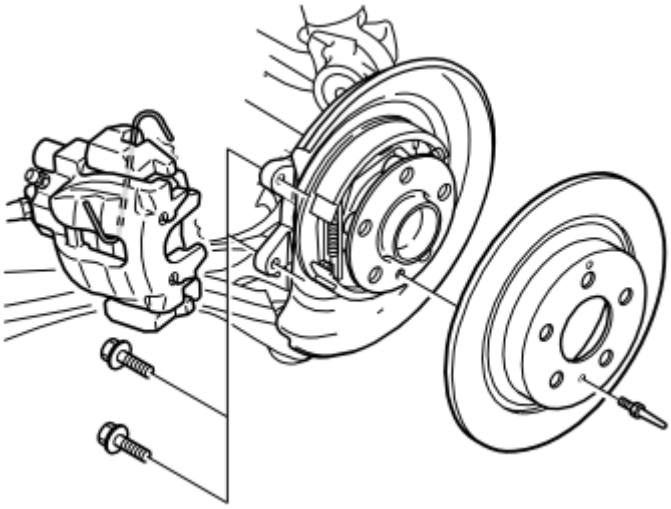

Fig. 15: Identifying Brake Disc, Brake Caliper & Screws
Courtesy of VOLVO CARS CORPORATION

Remove:

- the wheel sensor lead from the holder on the brake hose
- the brake caliper mounting screws.

Suspend the caliper with a steel wire.

- the brake disc locating pin/screw
- the brake disc.

REMOVING THE WHEEL SENSOR

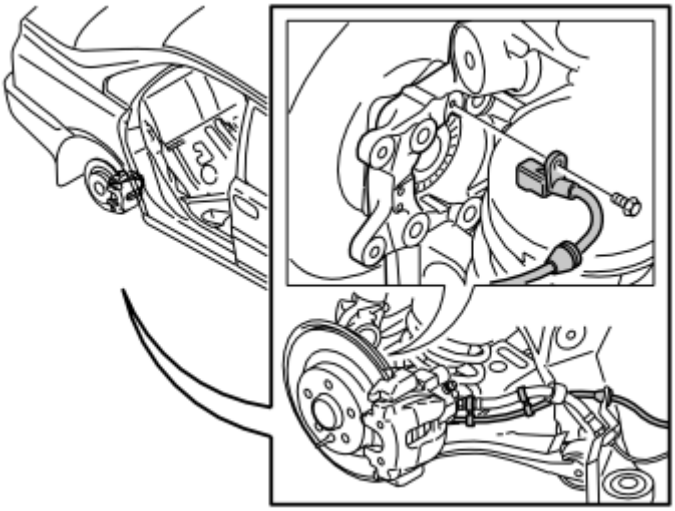

Fig. 16: Identifying Sensor From Wheel Spindle Removal
Courtesy of VOLVO CARS CORPORATION

Clean around the wheel sensor and remove the screw.

Carefully remove the sensor from the stub axle.

Tie up the sensor well protected.

INSTALLING THE TENSIONER

Fit see **9995659** as described in: **TENSIONER 999 5659, USER INSTRUCTIONS** .

Support the rear suspension 500 mm up between the wing edge and the center of the wheel.

REMOVING THE HUB

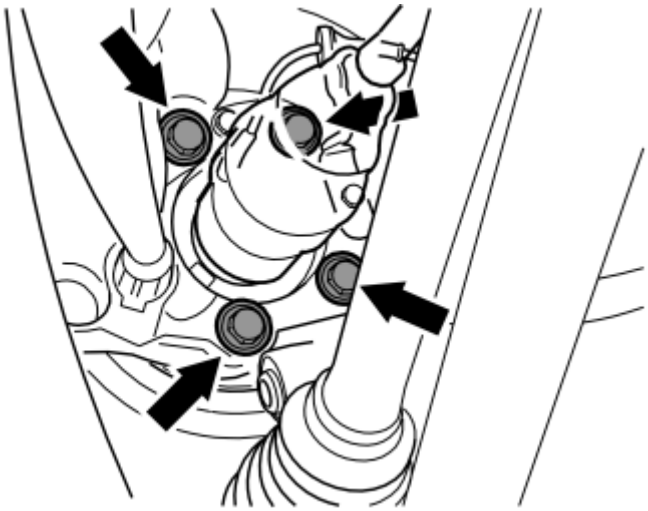

Fig. 17: Hub Screws
Courtesy of VOLVO CARS CORPORATION

Remove:

- the 4 screws
- the hub.

NOTE: **Make sure the drive shaft comes free from the rear wheel hub. There must not be any axial forces acting on the drive shaft joints.**

CLEANING

CHECKING AND CLEANING

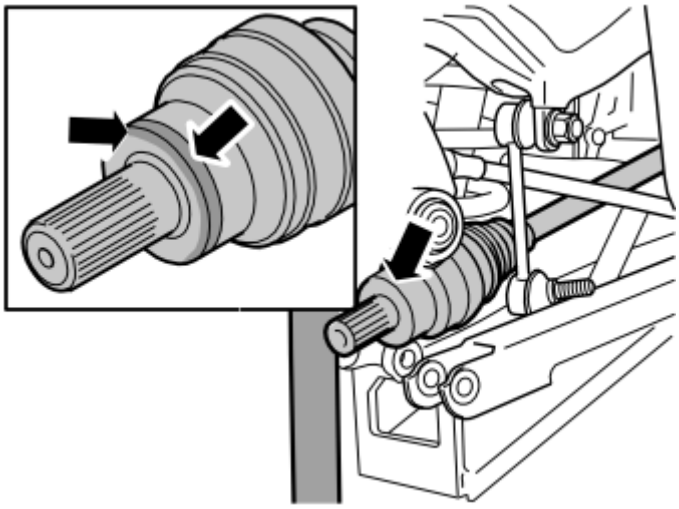

Fig. 18: Cleaning Drive Shaft End
Courtesy of VOLVO CARS CORPORATION

Clean:

- drive shaft end, especially rust on the edges, see illustration.

  (Outer wheel hub sealing ring will rest against this surface).

- the mating surfaces for wheel hub in stub axle
- the wheel sensor
- the seat for the sensor in the stub axle to ensure it is absolutely clean
- the wheel sensor. Use a soft brush.

GREASING THE SEAL

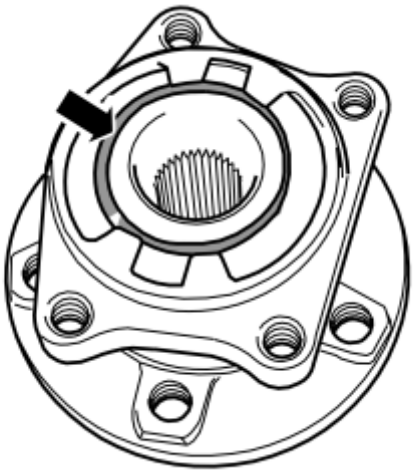

Fig. 19: Identifying Lubrication Point On Wheel Bearing Sealing Lip
Courtesy of VOLVO CARS CORPORATION

Lubricate the wheel bearing sealing lip abutting the drive shaft with a little wheel bearing grease. P/N 1161689.

Brush high pressure grease, P/N 1161246 onto the drive shaft so that the splines on the rear half of the drive shaft pin are filled.

INSTALLATION

NOTE: For tightening torque, see TIGHTENING TORQUE and TIGHTENING TORQUE .

INSTALLATION OF HUB AND DRIVE SHAFT

Install:

- the hub on the stub axle and drive shaft.

  Use new screws. Tighten. See: **SUMMARY OF TIGHTENING TORQUES FOR SPECIFIC COMPONENTS**

- a new screw loosely on the drive shaft. The screw will be tightened later
- the wheel sensor M6, tighten according to: **TIGHTENING TORQUE** .

REMOVING THE TENSIONER

Remove tensioner according to: **TENSIONER 999 5659, USER INSTRUCTIONS** .

INSTALLING THE BRAKE DISC AND BRAKE CALIPER

Install:

- the brake disc
- brake disc guide pin/screw M6, tighten according to: **TIGHTENING TORQUE**
- the brake caliper
- the brake caliper mounting screws.

  Use new screws. Tighten. See: **SUMMARY OF SPECIFIC COMPONENTS AND TIGHTENING TORQUES**

- the wheel sensor lead to the holder on the brake hose.

FITTING THE REAR WHEEL

Install the screw, M10 to the drive shaft. Use a new screw. Tighten.

Fit the rear wheel according to: **INSTALLING WHEELS**

FINISHING

ADJUSTING THE PARKING BRAKE

Adjust the hand brake according to: **PARKING BRAKE SELF-ADJUSTMENT, RESETTING** or **PARKING BRAKE, ADJUSTING** .

WHEELS

INSTALLING WHEELS

Special tools:

see **9512835**

INSTALLING

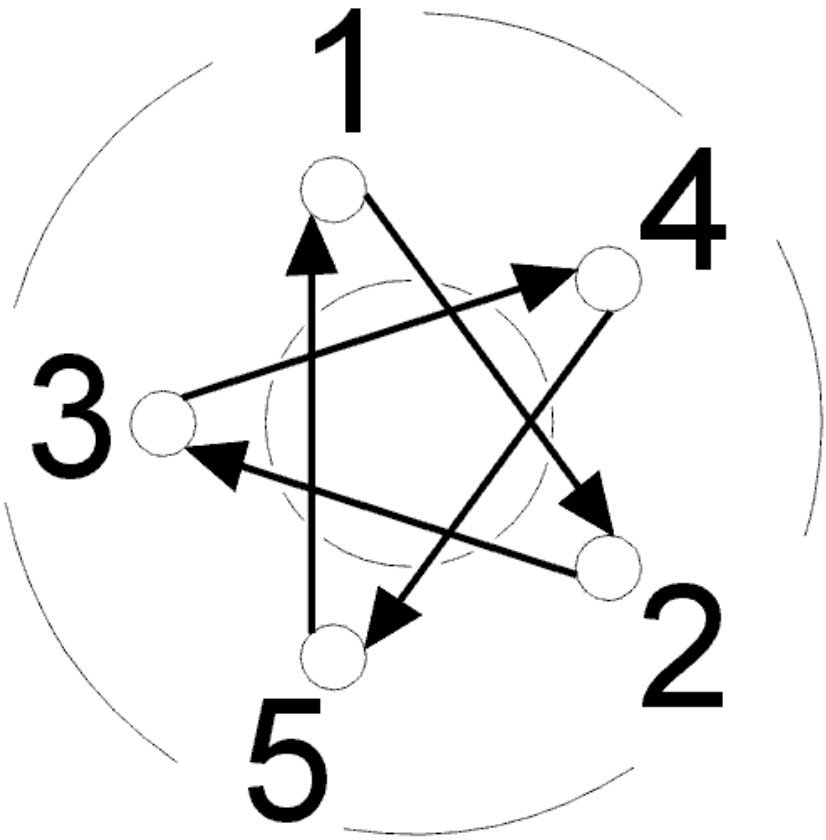

Fig. 20: Identifying Wheel Studs Tightening Sequence
Courtesy of VOLVO CARS CORPORATION

Ensure that the brake disc and wheel rim mating surfaces are clean. Grease the hub center location dowel for the rim. Use installation paste **1161397-3** .

Install the wheel studs lightly. Then tighten crosswise. Tighten to **140 Nm** . Use torque socket see **9512835** if an impact wrench is being used.

Crosswise tightening and torque tightening is important to prevent stresses in the brake disc.

NOTE: **The torque socket is designed for use with a standard, pneumatic impact nut runner providing a torque of 250-350 Nm .**

WHEELS, TIRES, HUBS

SPARE WHEEL WINCH

REMOVAL

APPLIES TO VEHICLES WITH 7 SEATS

Make sure that the third seat row is raised

Remove the jack

APPLIES TO ALL VEHICLES.

Remove the spare wheel

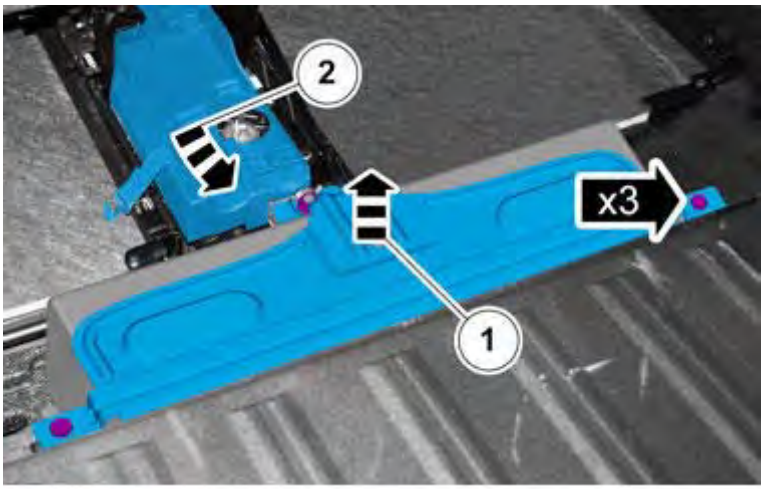

Fig. 21: Spare Wheel Winch Removal (1 of 6)
Courtesy of VOLVO CARS CORPORATION

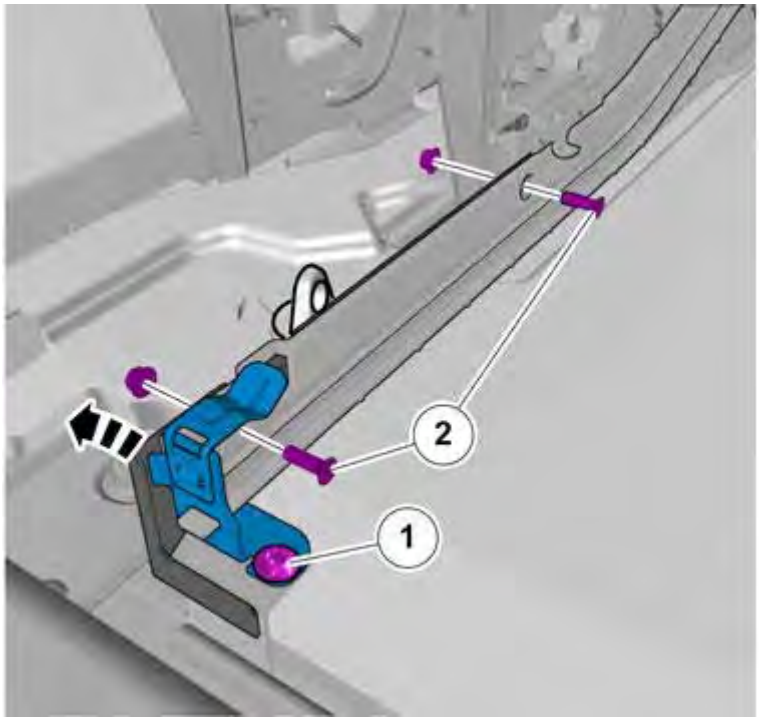

Fig. 22: Spare Wheel Winch Removal (2 of 6)
Courtesy of VOLVO CARS CORPORATION

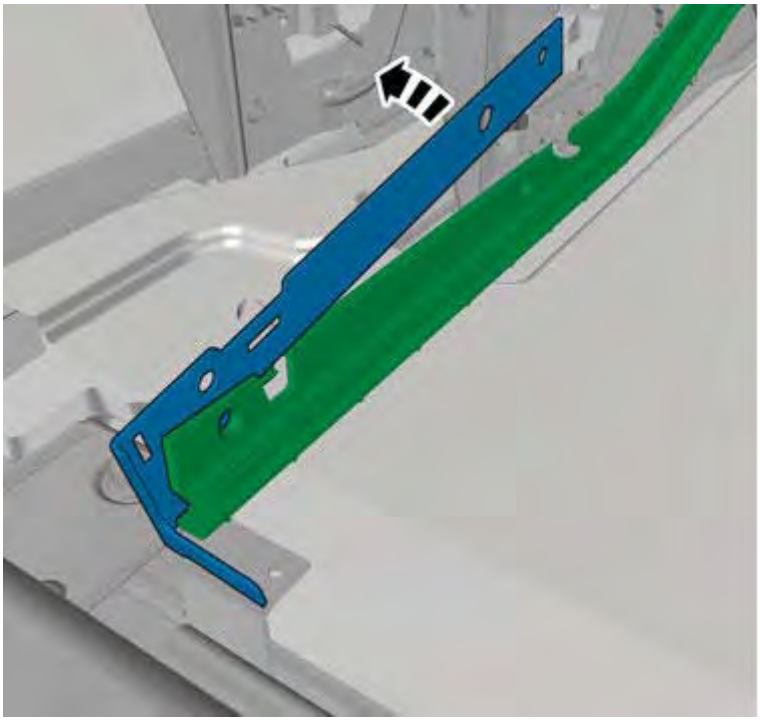

Fig. 23: Spare Wheel Winch Removal (3 of 6)
Courtesy of VOLVO CARS CORPORATION

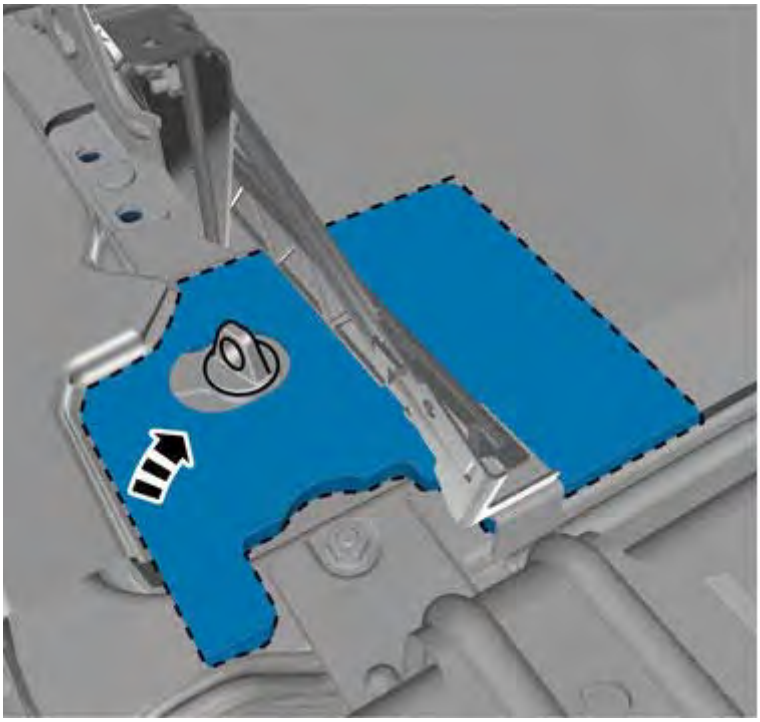

Fig. 24: Spare Wheel Winch Removal (4 of 6)
Courtesy of VOLVO CARS CORPORATION

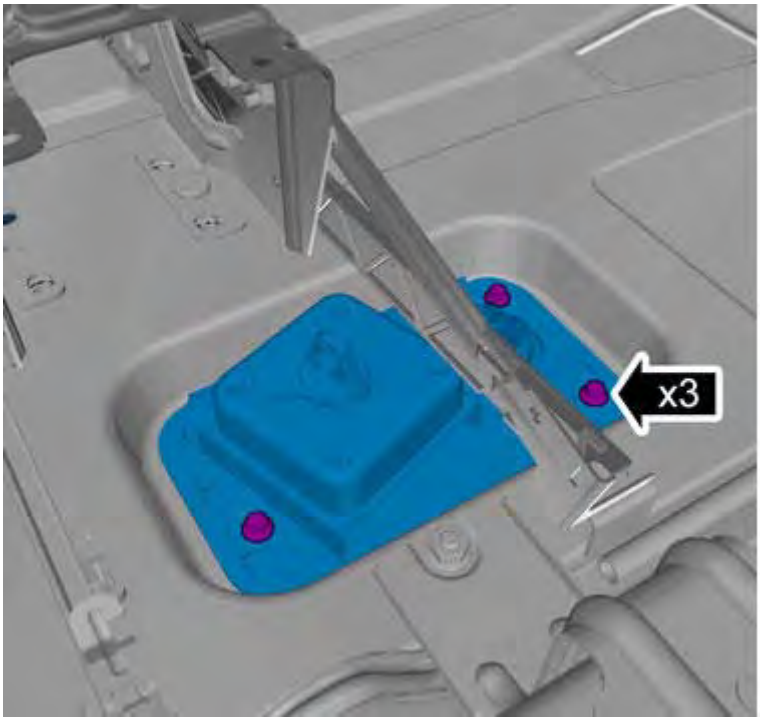

Fig. 25: Spare Wheel Winch Removal (5 of 6)
Courtesy of VOLVO CARS CORPORATION

Tighten to 10 Nm

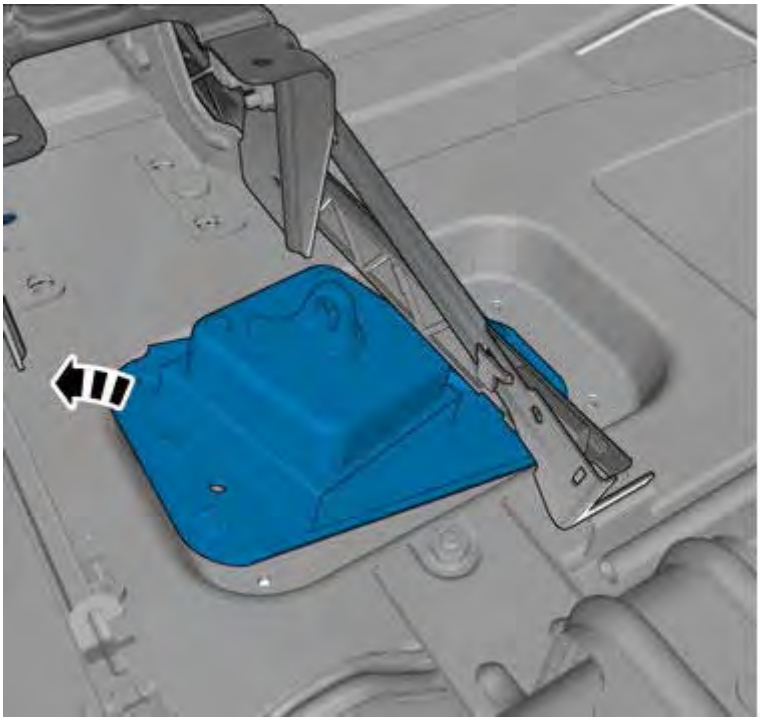

Fig. 26: Spare Wheel Winch Removal (6 of 6)
Courtesy of VOLVO CARS CORPORATION

INSTALLATION

APPLIES TO ALL VEHICLES.

Install in the reverse order.

WHEEL NUTS ANTI-THEFT PROTECTED

Special tools	
	T9997228 GROUND TERMINAL **Tool number:** T9997228 **Toll description:** GROUND TERMINAL **Tool boards:** EU16/17-1/5; SV16/17-1/5; US16/17-1/5
	T9989799 WELD NUT **Tool number:** T9989799 **Tool description:** WELD NUT **Tool boards:** EU16/17-1/5; SV16/17-1/5; US16/17-1/5
	T9997227 WELD PROTECTION **Tool number:** T9997227 **Tool description:** WELD PROTECTION **Tool boards:** EU16/17-1/5; SV16/17-1/5; US16/17-1/5

See information on welding, general. See **WELDING, GENERAL**

INSTALLATION

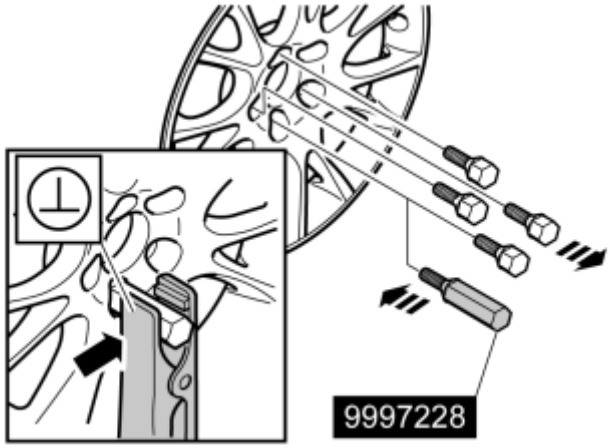

Fig. 27: Installing Special Tool (9997228)
Courtesy of VOLVO CARS CORPORATION

see **9997228**

Torque: Ground screw

25 Nm

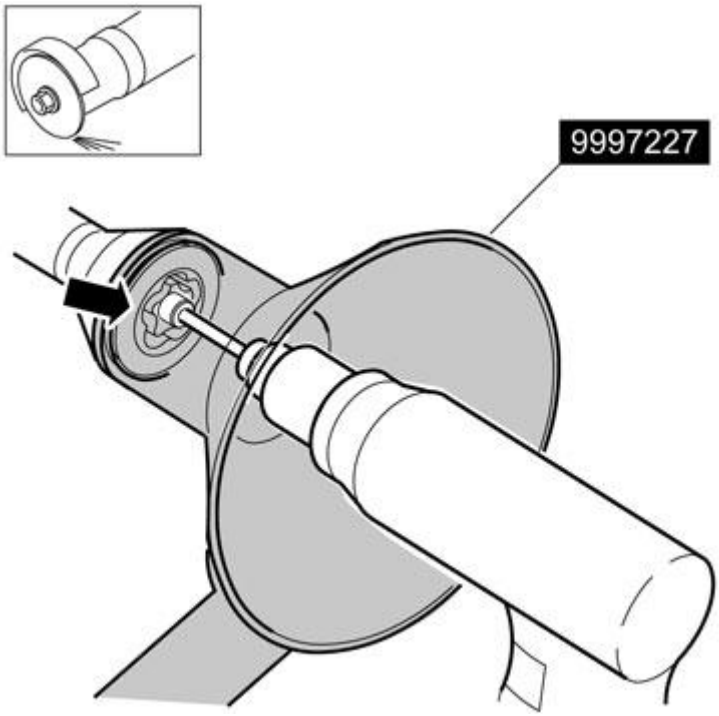

Fig. 28: Identifying Weld Protection Tool
Courtesy of VOLVO CARS CORPORATION

see **9997227**

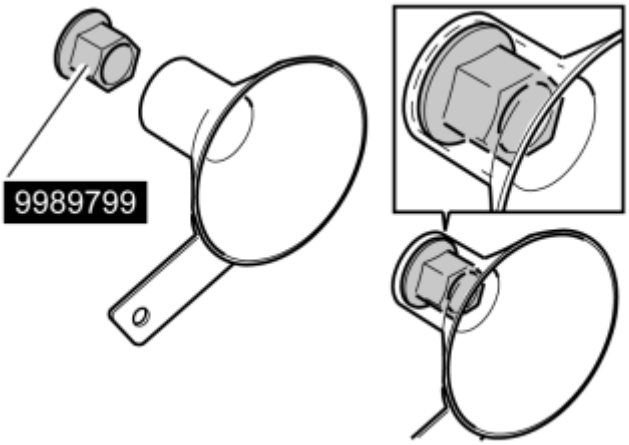

Fig. 29: Placing Weld Nut In Welding Position
Courtesy of VOLVO CARS CORPORATION

see **9989799**

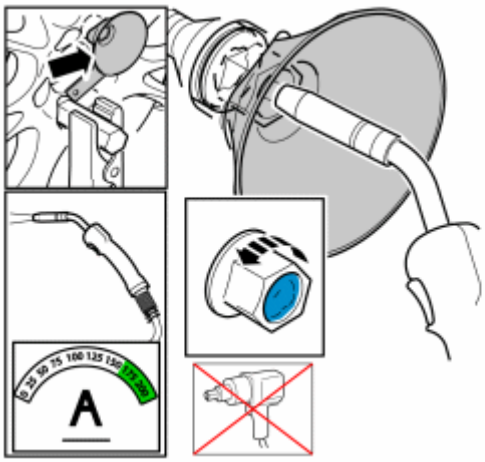

Fig. 30: Pressing Welding Protection With Weld Nut Into Broken Wheel Nut/Lock Nut
Courtesy of VOLVO CARS CORPORATION

WHEEL AND WHEEL TRIM (2011-2012)

WHEEL NUTS ANTI-THEFT PROTECTED

Special tools	
	999 7438 Hole saw **Tool number:** 999 7438 **Tool description:** Hole saw **Tool boards:** 70
	981 4127 Spiral socket **Tool number:** 981 4127 **Tool description:** Spiral socket **Tool boards:** 70

REMOVAL

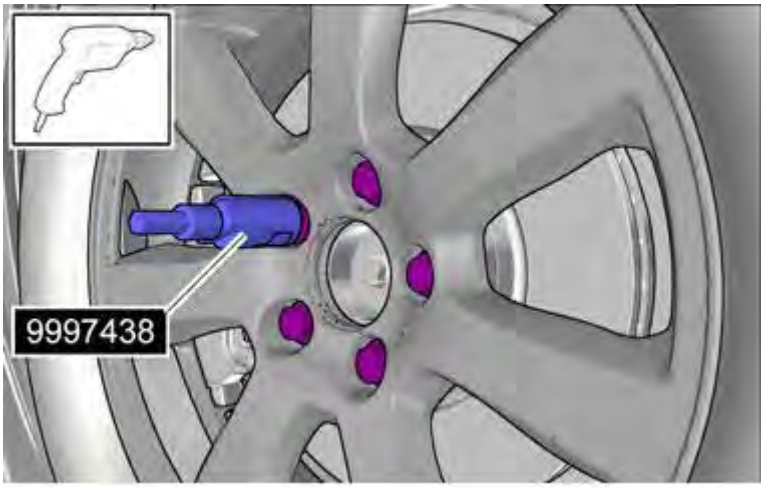

Fig. 31: Identifying Hole Saw (9997438)

Courtesy of VOLVO CARS CORPORATION

see **9997438**

Fig. 32: Installing Extraction Tool (9814127)
Courtesy of VOLVO CARS CORPORATION

see **9814127**

HUB SEAL

REMOVAL

NOTE: Removal steps in this procedure may contain installation details.

For rear wheel hub replacement see: **REAR WHEEL HUB AND DRIVE SHAFT, REPLACING**

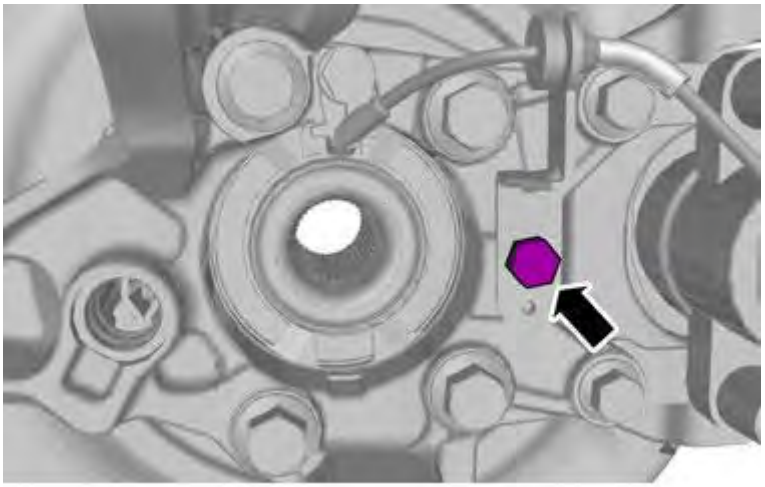

Fig. 33: Seal Bracket Bolt
Courtesy of VOLVO CARS CORPORATION

Fig. 34: Removing Seal
Courtesy of VOLVO CARS CORPORATION

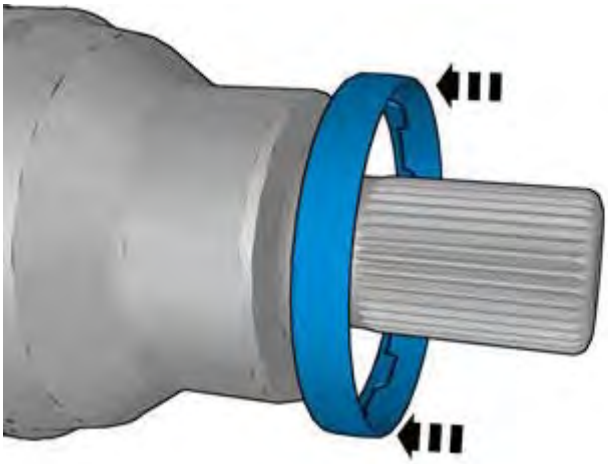

Fig. 35: Removing Outer Shaft Ring
Courtesy of VOLVO CARS CORPORATION

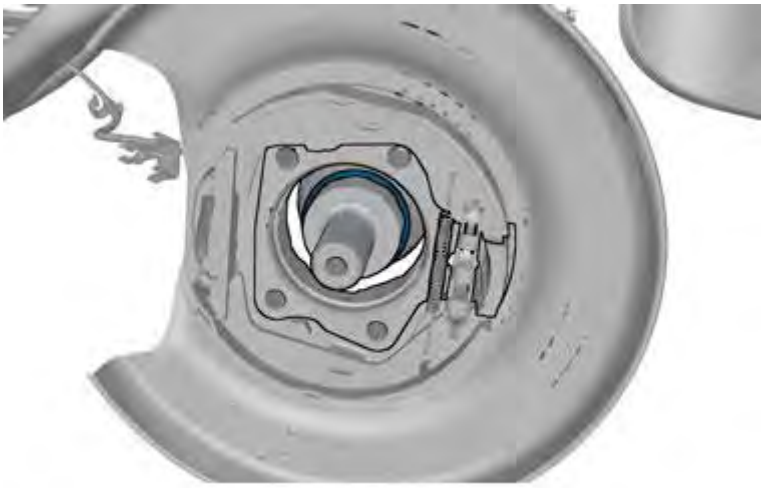

Fig. 36: Installing Outer Shaft Ring
Courtesy of VOLVO CARS CORPORATION

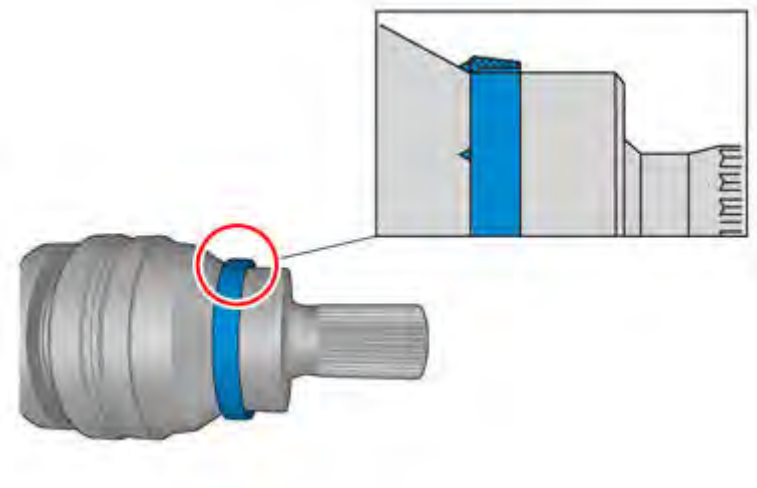

Fig. 37: Seal Positioning
Courtesy of VOLVO CARS CORPORATION

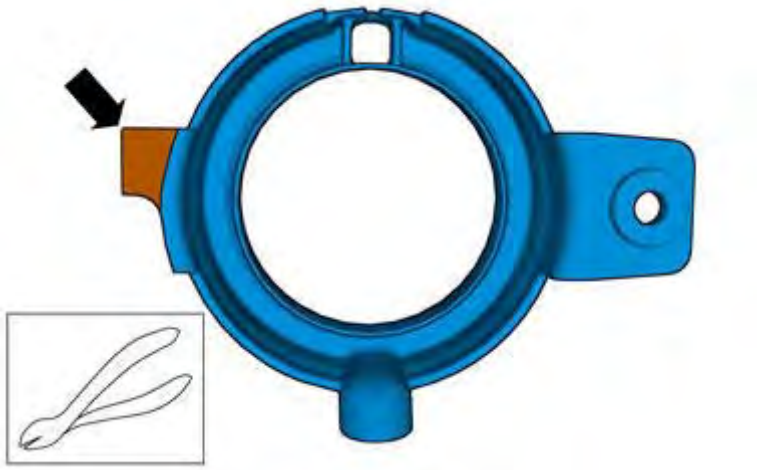

Fig. 38: Seal Preparation
Courtesy of VOLVO CARS CORPORATION

Fig. 39: Seal
Courtesy of VOLVO CARS CORPORATION

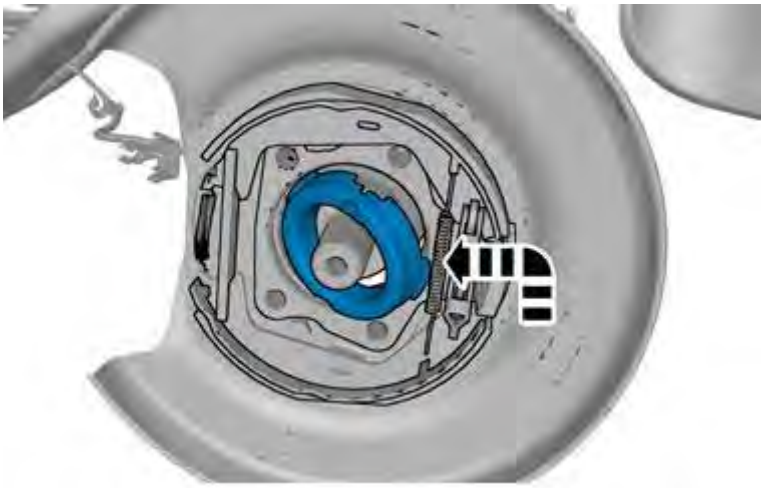

Fig. 40: Installing Seal
Courtesy of VOLVO CARS CORPORATION

Fig. 41: Installing Seal
Courtesy of VOLVO CARS CORPORATION

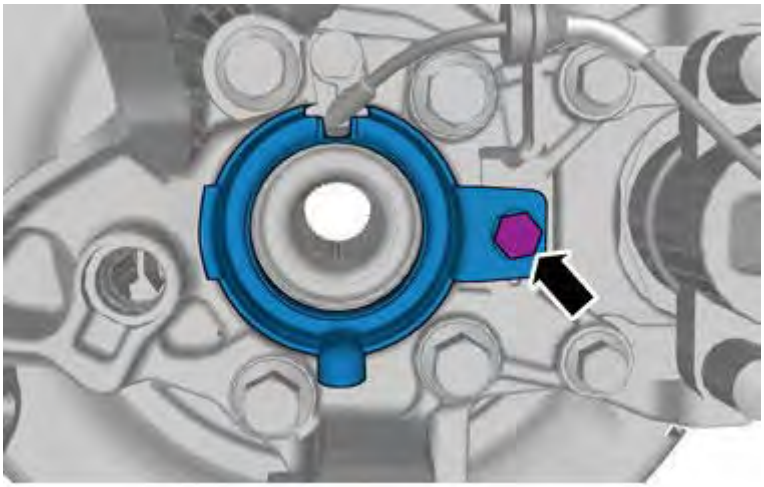

Fig. 42: Installing Seal Bracket
Courtesy of VOLVO CARS CORPORATION

Torque: M6

10 Nm

INSTALLATION

Install in the reverse order.

TIRE CONTROL (2006-2007)

TYRE PRESSURE SENSOR, REPLACEMENT

	Special tools
	T9512987 TPMS tool **Tool number:** T9512987 **Tool description:** TPMS tool **Tool boards:**

Special tools:

see **9512987**

NOTE: **The illustrations in this service information are used for different model years and/or models. Some variation may occur. However, the essential information in the illustrations is always correct.**

REMOVAL

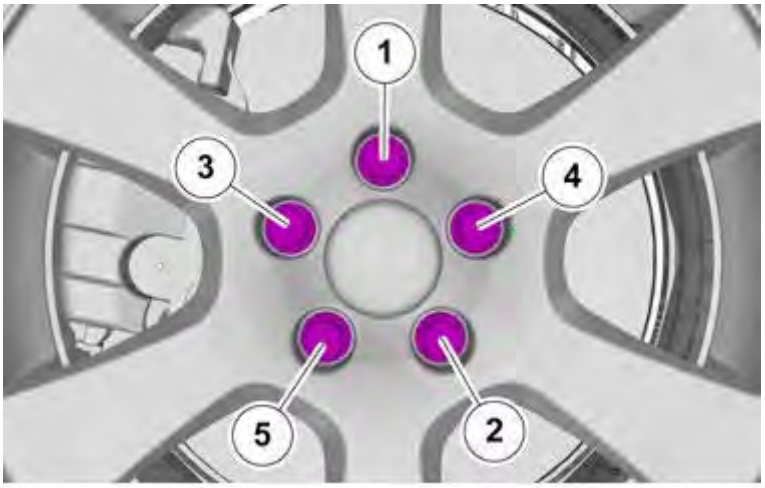

Fig. 43: Identifying Lug Nut Tightening Using Cross Pattern
Courtesy of VOLVO CARS CORPORATION

WARNING: **Make sure that the mating faces are clean and free of corrosion and foreign material.**

Tightening torque: Wheel to wheel hub

- Step 1: 20 Nm
- Step 2: 140 Nm

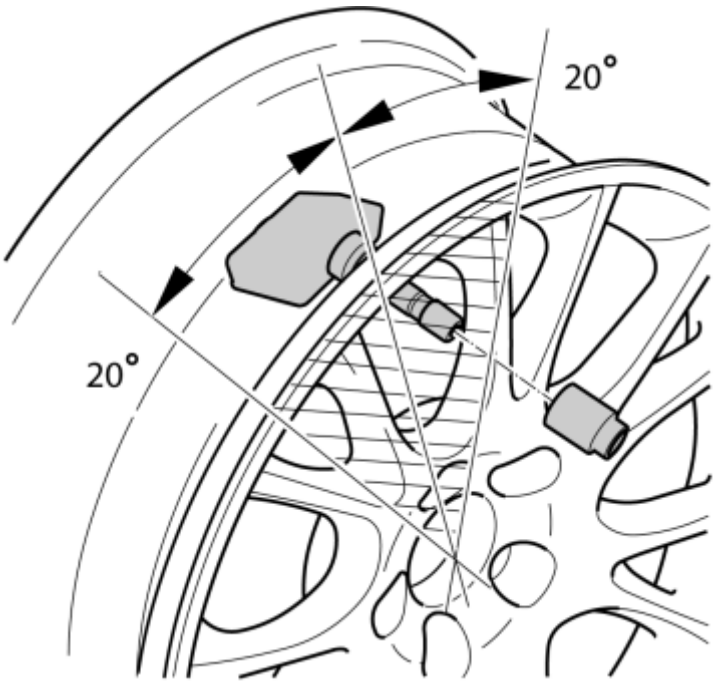

Fig. 44: Removing/Installing Sensor
Courtesy of VOLVO CARS CORPORATION

CAUTION: Make sure not to use any tools within the marked area.

CAUTION: Make sure to start just outside of the marked area and continue in the direction away from the valve.

CAUTION: Release the tire bead from the wheel rim diagonally opposite to the valve.

Remove:

- the tire from the rim
- the nut

  Tightening torque: Pressure sensor 8 Nm

- the sensor

INSTALLATION

Install in the reverse order.

ACTIVATION

After replacing the pressure sensor, activate in UEM with TPMS tool 9512987

TIRE CONTROL (2008)

PRESSURE SENSOR TIRE

REMOVAL

NOTE: Removal steps in this procedure may contain installation details.

Remove the wheel.

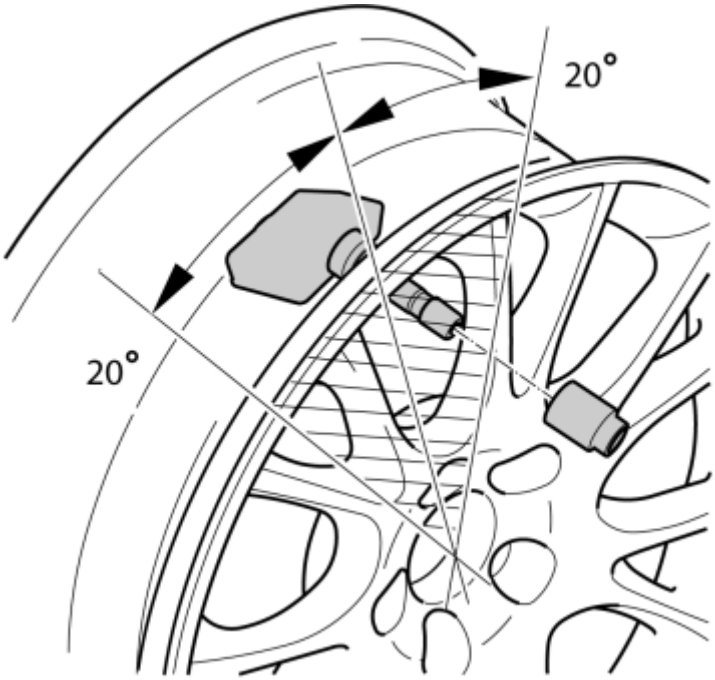

Fig. 45: Removing/Installing Sensor
Courtesy of VOLVO CARS CORPORATION

CAUTION: Do not use tools within the marked area.

CAUTION: Always start outside the marked area and continue in the direction from the valve.

CAUTION: Release the tire bead from the wheel rim diagonally opposite to the valve.

Remove the tire from the rim.

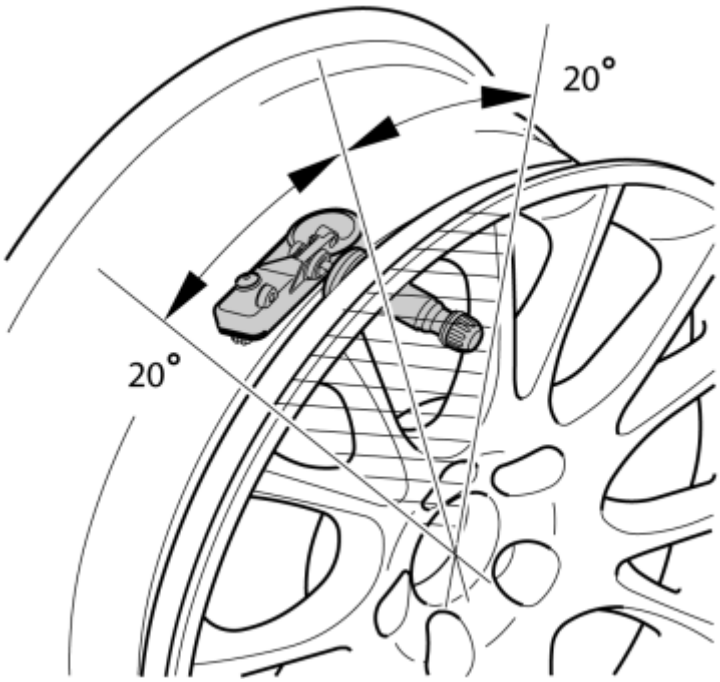

Fig. 46: Identifying Marked Area
Courtesy of VOLVO CARS CORPORATION

CAUTION: Do not use tools within the marked area.

CAUTION: Always start outside the marked area and continue in the direction from the valve.

CAUTION: Release the tire bead from the wheel rim diagonally opposite to the valve.

Remove the tire from the rim.

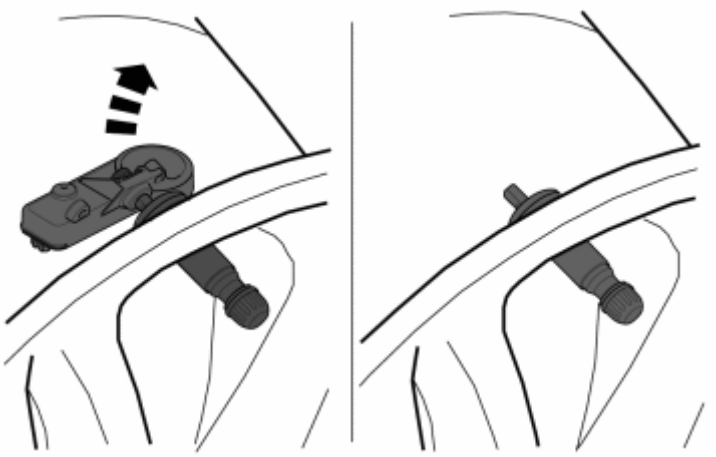

Fig. 47: Identifying Sensor & Valve
Courtesy of VOLVO CARS CORPORATION

NOTE: Always use new valves when replacing tires.

Remove the following items:

- sensor from valve.
- valve.

NOTE: Always use new gaskets when replacing tires.

Install the following items:

- the sensor.
- the nut.

Tighten the pressure sensor. See **TIGHTENING TORQUE**

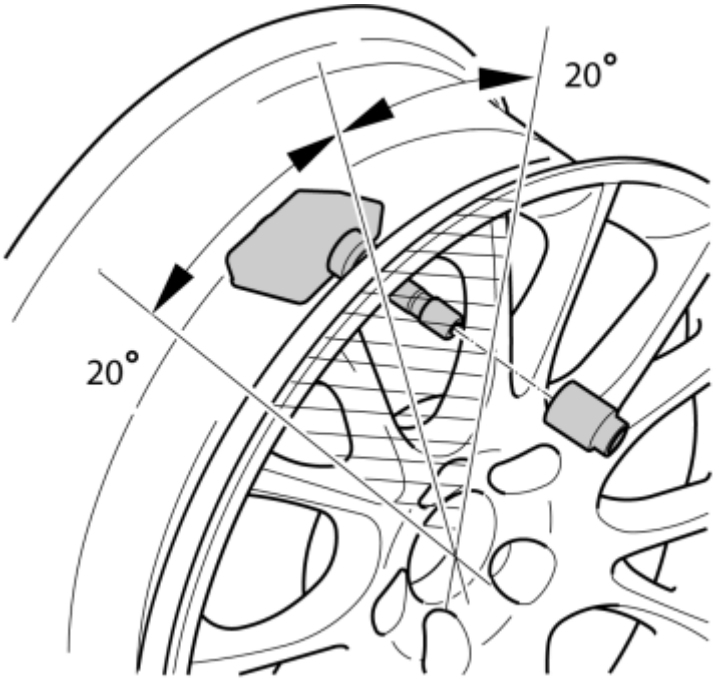

Fig. 48: Removing/Installing Sensor
Courtesy of VOLVO CARS CORPORATION

CAUTION: Do not use tools within the marked area.

CAUTION: Always start outside the marked area and continue in the direction from the valve.

Fit the tire and balance the wheel.

Install the sensor on the valve. Tighten screw. See **TIGHTENING TORQUE**

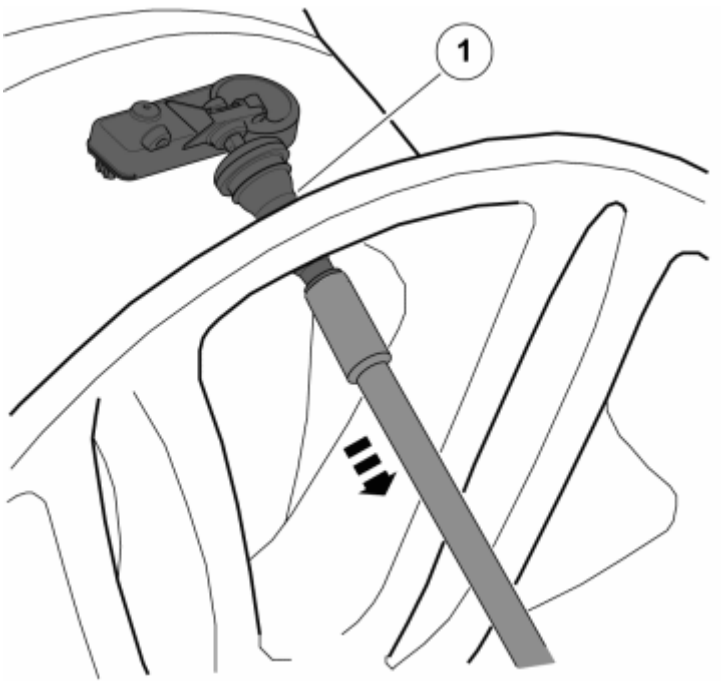

Fig. 49: Identifying Valve
Courtesy of VOLVO CARS CORPORATION

Brush the valve (1) with soapy water and install the valve on the rim.

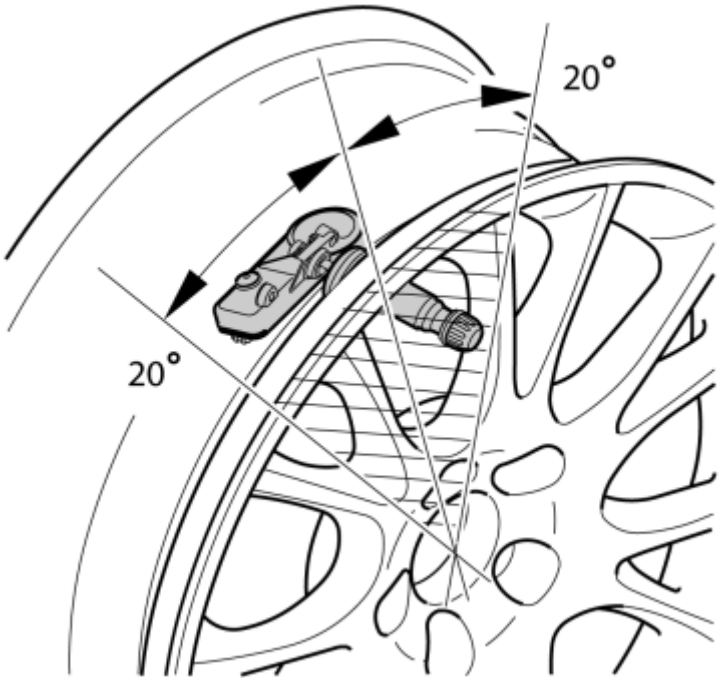

Fig. 50: Identifying Marked Area
Courtesy of VOLVO CARS CORPORATION

CAUTION: Do not use tools within the marked area.

CAUTION: Always start outside the marked area and continue in the direction from the valve.

Fit the tire and balance the wheel.

ALL VEHICLES

Install wheel. See **INSTALLING WHEELS**

After replacing sensors, the control module does not need programming. The control module contacts the sensor itself after a few minutes driving. LF initiator can be used.

TIRE CONTROL (2009-2012)

PRESSURE SENSOR TIRE

REMOVAL

NOTE: Removal steps in this procedure may contain installation details.

Remove the wheel.

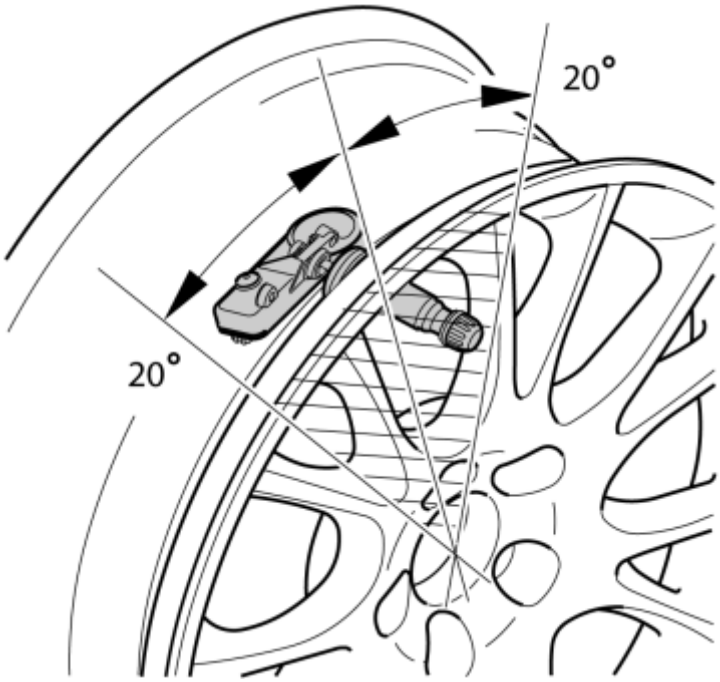

Fig. 51: Identifying Marked Area
Courtesy of VOLVO CARS CORPORATION

CAUTION: Do not use tools within the marked area.

CAUTION: Always start outside the marked area and continue in the direction from the valve.

CAUTION: Release the tire bead from the wheel rim diagonally opposite to the valve.

Remove the tire from the rim.

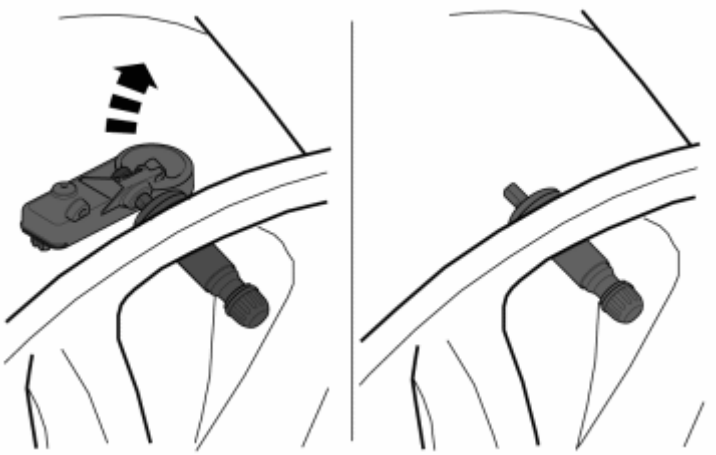

Fig. 52: Identifying Sensor & Valve
Courtesy of VOLVO CARS CORPORATION

NOTE: Always use new valves when replacing tires.

Remove the following items:

- sensor from valve.
- valve.

INSTALLING

Install the sensor on the valve. Tighten screw. See **TIGHTENING TORQUE** .

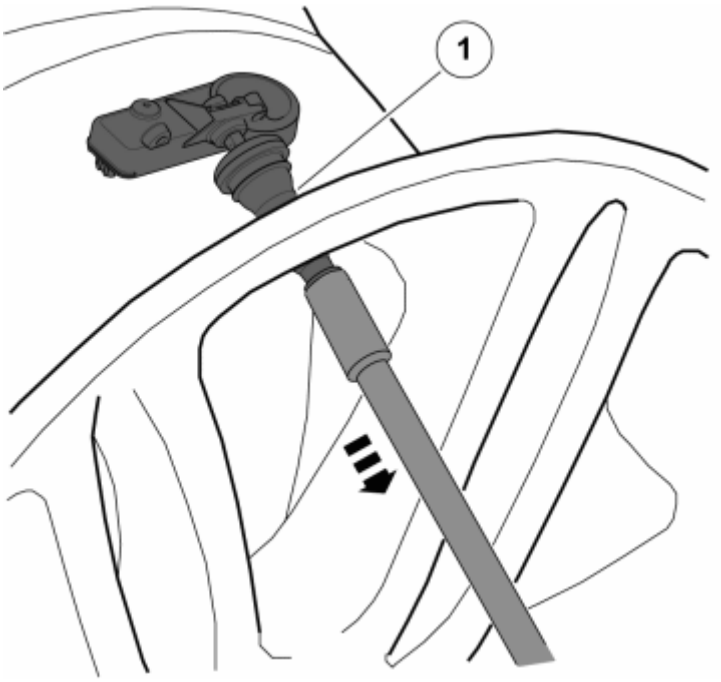

Fig. 53: Identifying Valve
Courtesy of VOLVO CARS CORPORATION

Brush the valve (1) with soapy water and install the valve on the rim.

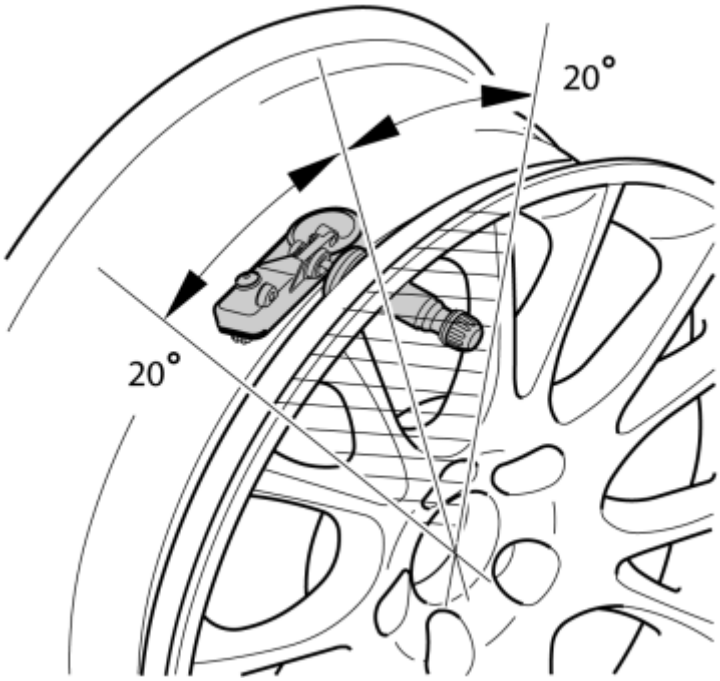

Fig. 54: Identifying Marked Area
Courtesy of VOLVO CARS CORPORATION

CAUTION: Do not use tools within the marked area.

CAUTION: Always start outside the marked area and continue in the direction from the valve.

Fit the tire and balance the wheel.

Install wheel. See **INSTALLING WHEELS**

After replacing sensors, the control module does not need programming. The control module contacts the sensor itself after a few minutes driving. LF initiator can be used.

SUSPENSION

Wheels, Tires, Hubs - Symptom Verification

INFORMATION AND VERIFICATION. TIRES/PULLS/DRIFTS

TIRES/PULLS/DRIFTS

SYMPTOM AND FUNCTION DESCRIPTION

NOTE: The symptom should always be verified together with the customer.

The following tips may be of help to decide if the symptom is due to a product feature or if continued troubleshooting is needed.

HINT: Check the tire pressure.

INFORMATION AND VERIFICATION. TIRES/VIBRATION/OUT OF ROUND

TIRES/VIBRATION/OUT OF ROUND

SYMPTOM AND FUNCTION DESCRIPTION

NOTE: The symptom should always be verified together with the customer.

The following tips may be of help to decide if the symptom is due to a product feature or if continued troubleshooting is needed.

HINT: The tires may be slightly flattened after parking during a colder period.

SUSPENSION

Wheels, Tyres, Hubs - Cleaning, Inspection And Adjustment

HUB AND BEARING

FRONT WHEEL HUB, MEASURING LATERAL RUNOUT

Special tools:

see **9995418**

see **9995507**

NOTE: **As the illustrations in this service information are used for different model years and / or models, some variation may occur. However, the essential information in the illustrations is always correct.**

PREPARATION

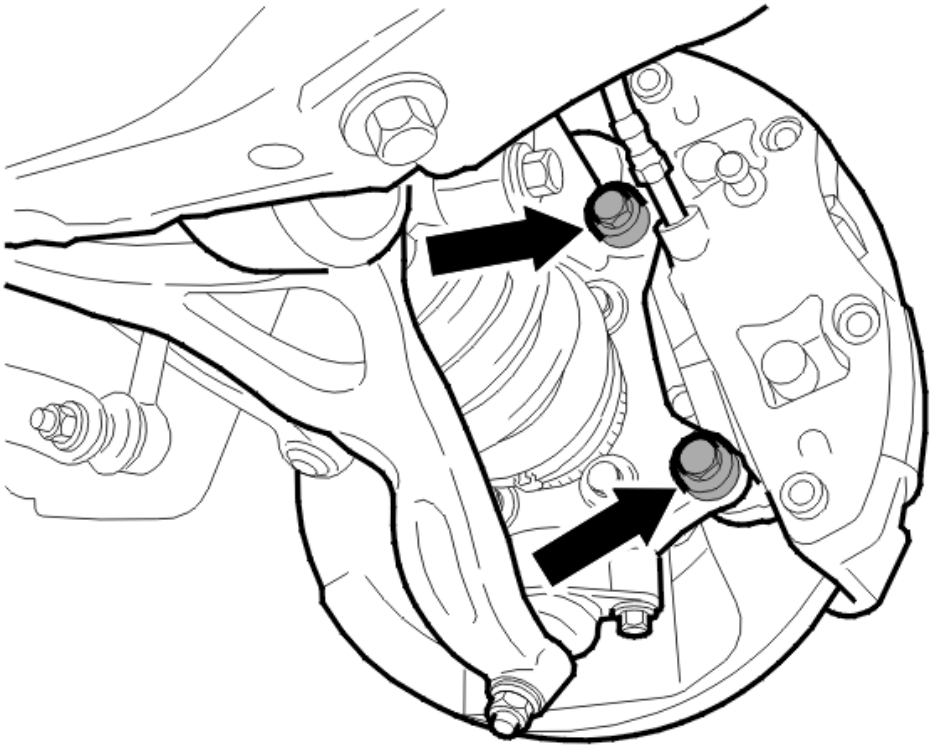

Fig. 1: Locating Brake Caliper Mounting Screws
Courtesy of VOLVO CARS CORPORATION

Take out measurement tool set see **9995418** .

Remove:

- the wheel
- the mounting screws for the brake caliper holder.

Hang the brake caliper from the spring using a wire.

Remove:

- 1 screw
- the brake disc.

INSTALLING THE DIAL GAUGE

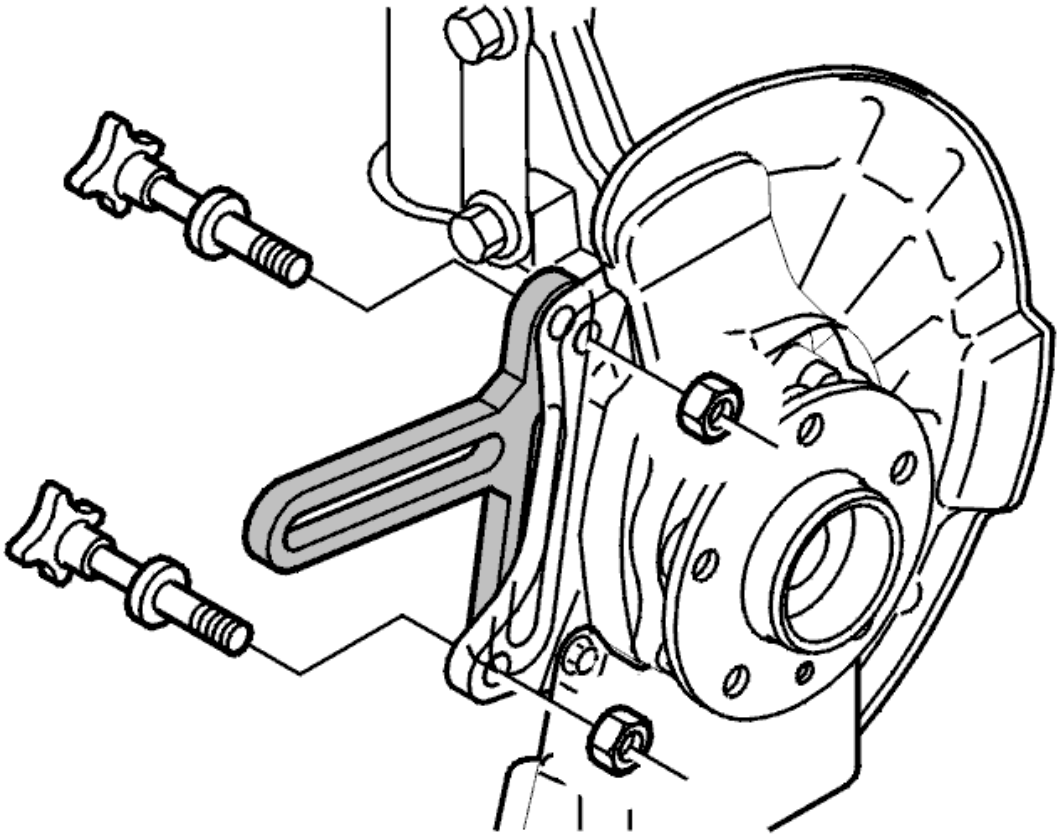

Fig. 2: Brake Caliper Bracket
Courtesy of VOLVO CARS CORPORATION

Install the bracket, included in the test equipment, in the upper mounting hole for the brake caliper first.

Press the bracket against the constant velocity joint housing.

Then install the lower mounting screw in the hole. At the same time, secure the bracket using the lower screw. Tighten the nuts.

Use the M12 screws and nuts included in kit see **9995507** .

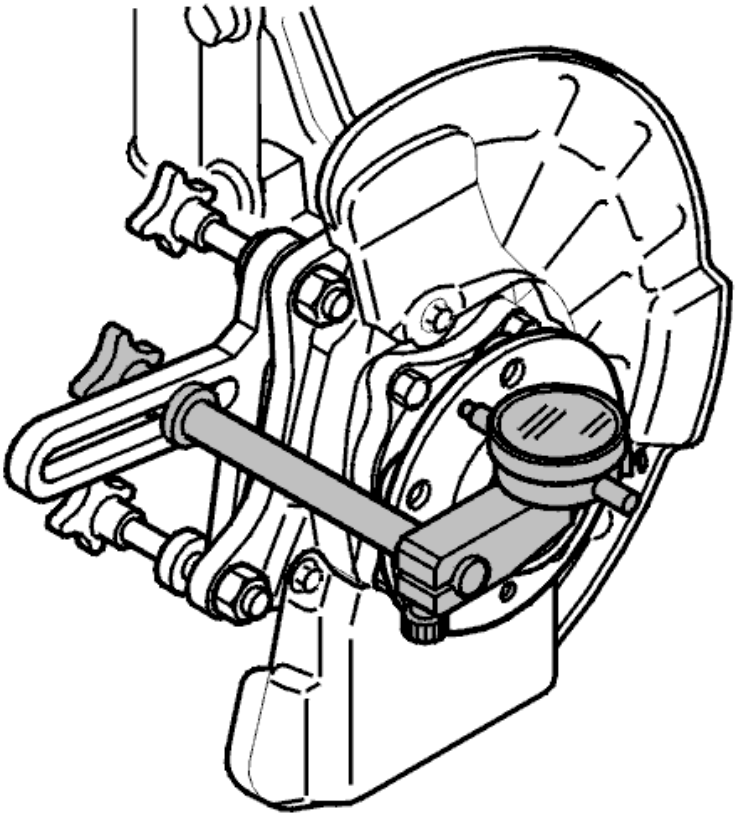

Fig. 3: Dial Gauge In Bracket
Courtesy of VOLVO CARS CORPORATION

Install the dial gauge in the bracket as illustrated.

MEASURING LATERAL RUN-OUT

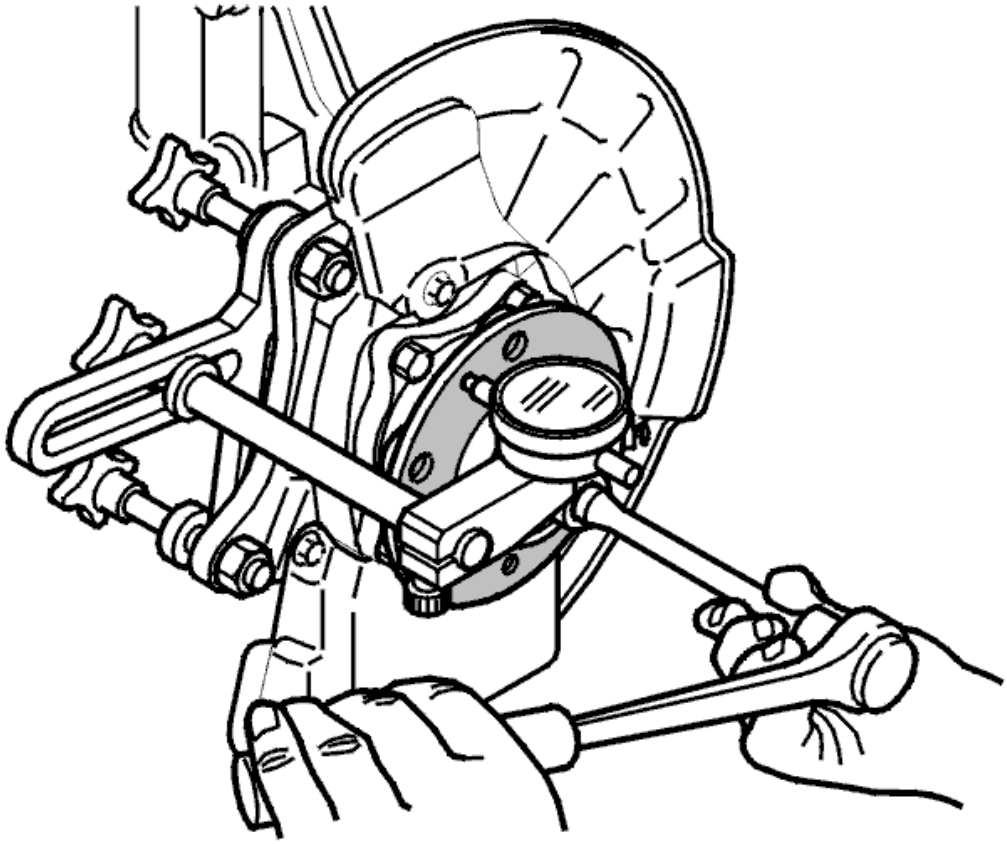

Fig. 4: Identifying Test Gauge Point Against Hub Flange
Courtesy of VOLVO CARS CORPORATION

Put the test gauge point against the hub flange as illustrated.

Rotate the hub gently. Use a socket to help.

Note the test gauge run-out. Hub maximum lateral run-out: 0.020 mm.

If the lateral run-out exceeds this value, replace the hub.

To replace the hub, see **FRONT WHEEL HUB, REPLACING** .

FINISHING

NOTE: For tightening torques, see: TIGHTENING TORQUE .

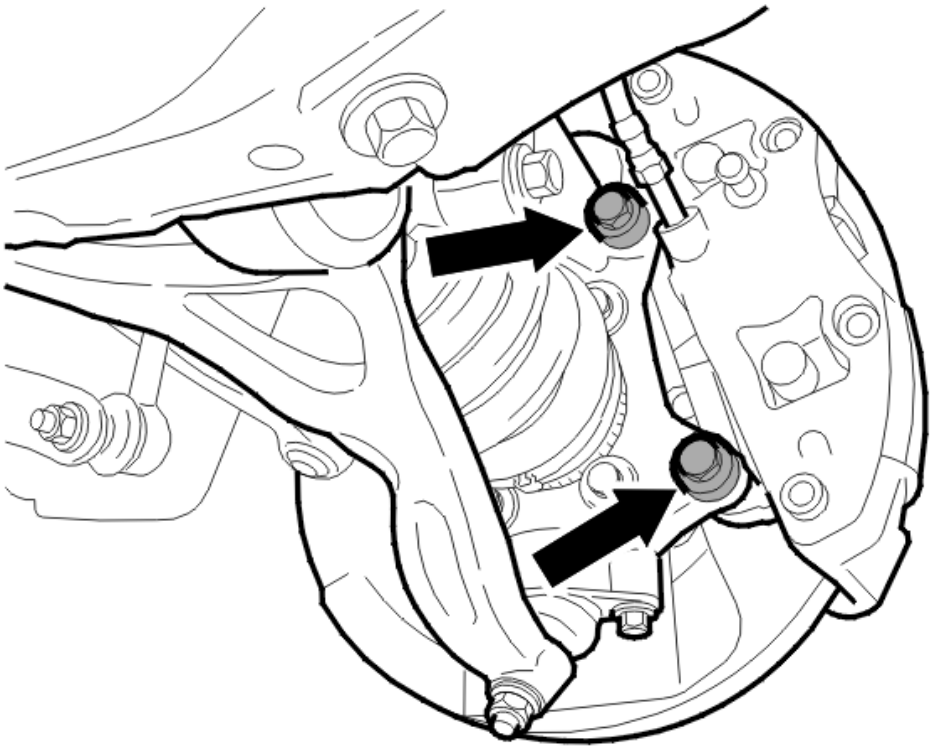

Fig. 5: Locating Brake Caliper Mounting Screws
Courtesy of VOLVO CARS CORPORATION

Remove the test equipment

Install:

- the brake disc
- the M6 screw
- the brake caliper and the caliper holder.

Tighten. See: **TIGHTENING TORQUE** .

NOTE: Use new mounting screws.

Install the wheel. See **INSTALLING WHEELS** .

REAR WHEEL HUB, MEASURING LATERAL RUNOUT

Special tools:

see **9995418**

see **9995507**

PREPARATIONS

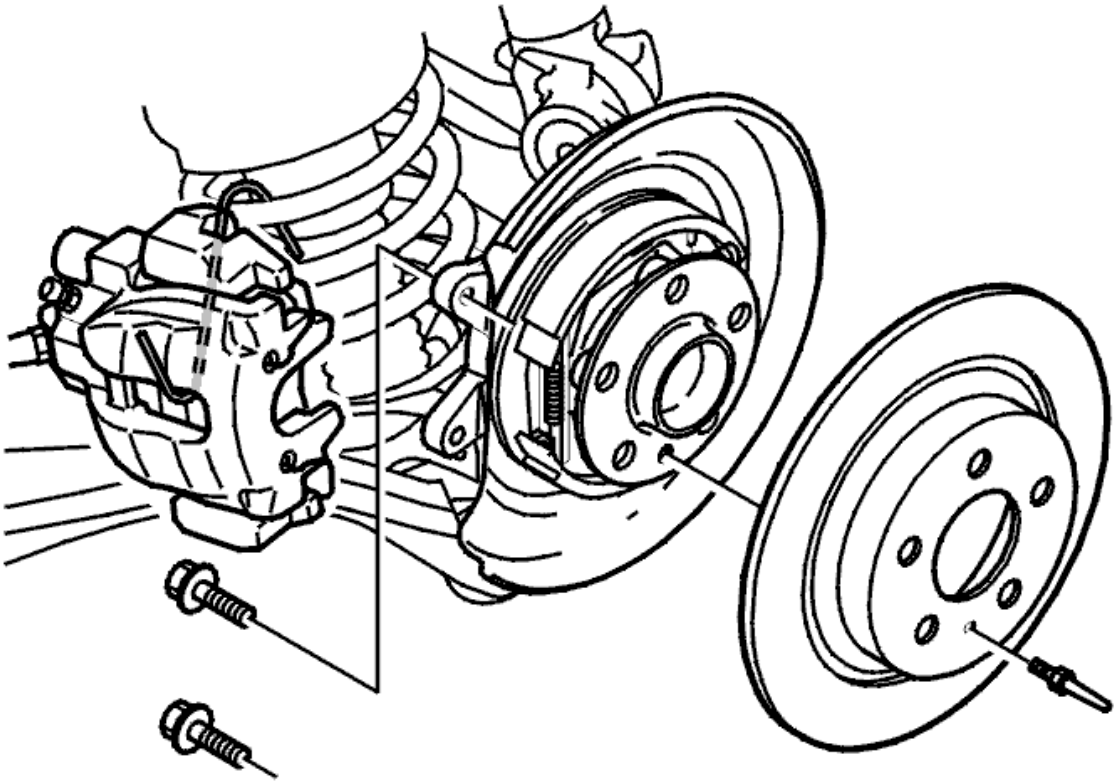

Fig. 6: Brake Caliper, Mounting Screws, Holder And Brake Disc
Courtesy of VOLVO CARS CORPORATION

Take out measurement tool set see **9995418** .

Remove:

- the wheel
- the mounting screws for the brake caliper holder. Hang the brake caliper from the spring using a wire
- the brake disc.

INSTALL THE BRACKET INCLUDED IN THE TEST EQUIPMENT

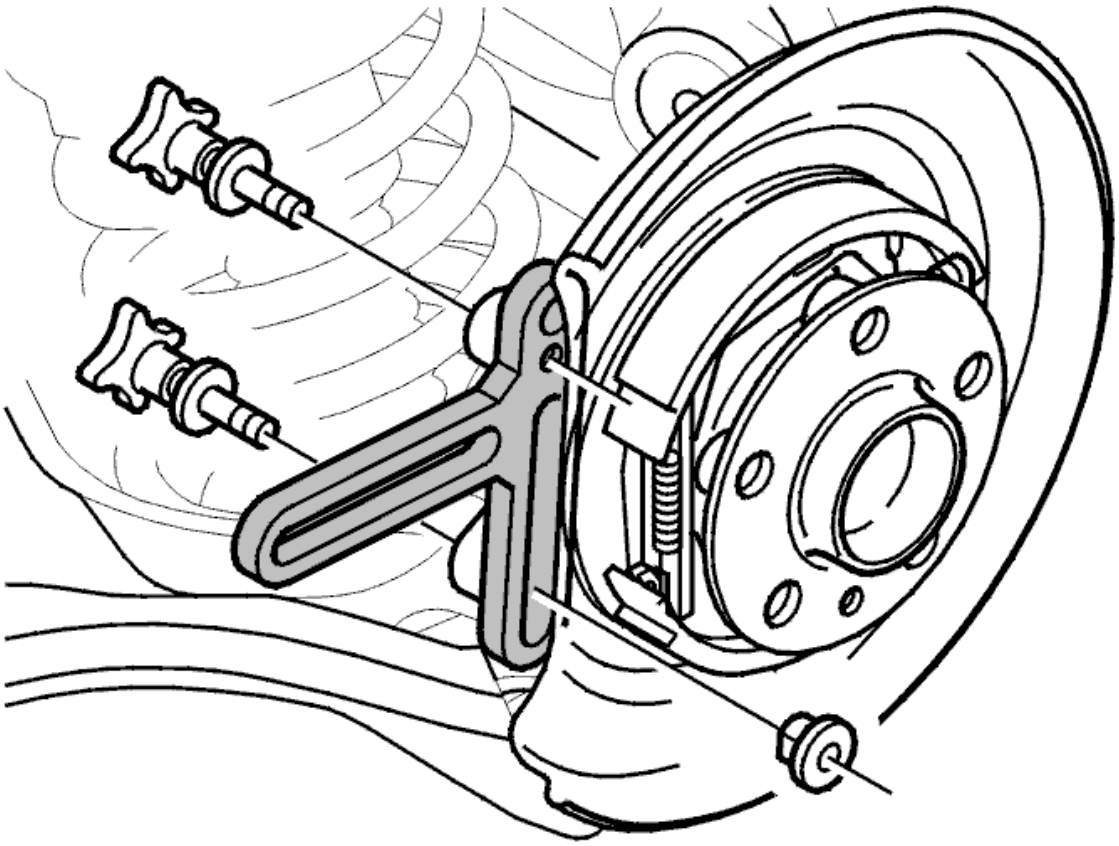

Fig. 7: Bracket On Mounting Hole For Brake Caliper
Courtesy of VOLVO CARS CORPORATION

Install the bracket on the mounting hole for the brake caliper. Use the M8 screws and nuts included in the kit: see **9995507** .

NOTE: The lower nut is specially manufactured and should be located in the bracket.

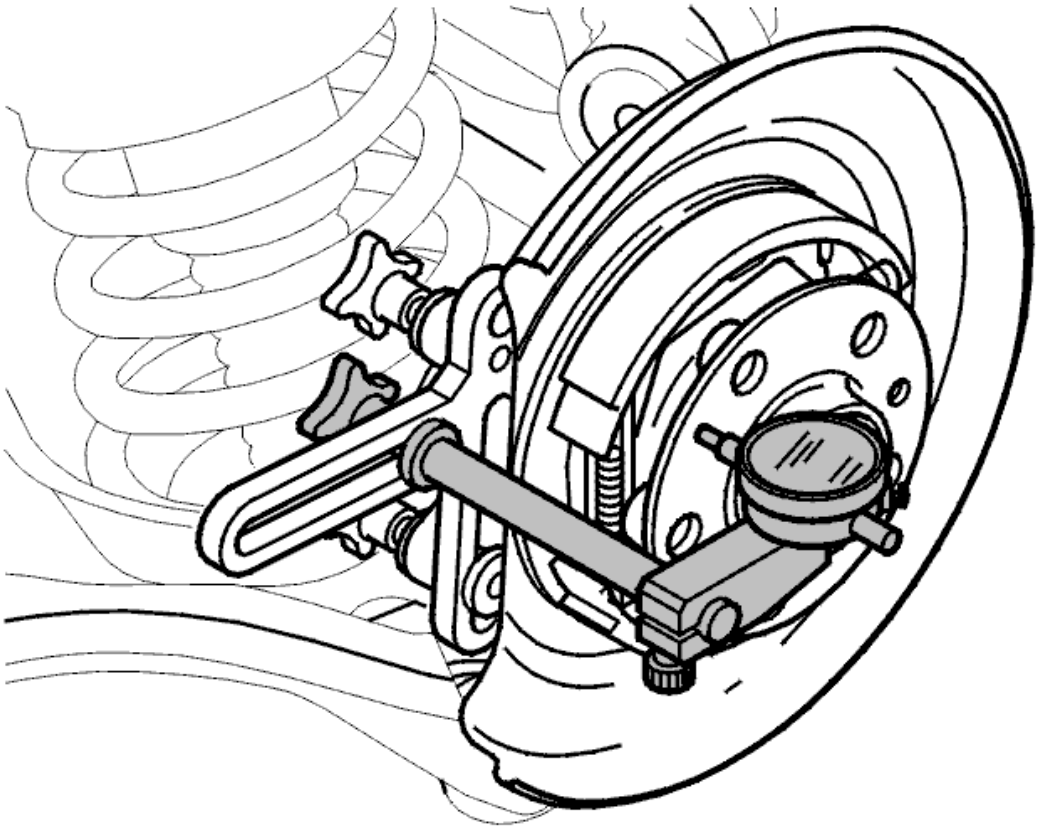

Fig. 8: Dial Gauge In Bracket
Courtesy of VOLVO CARS CORPORATION

Install the dial gauge in the bracket as illustrated.

MEASURE THE LATERAL RUN OUT

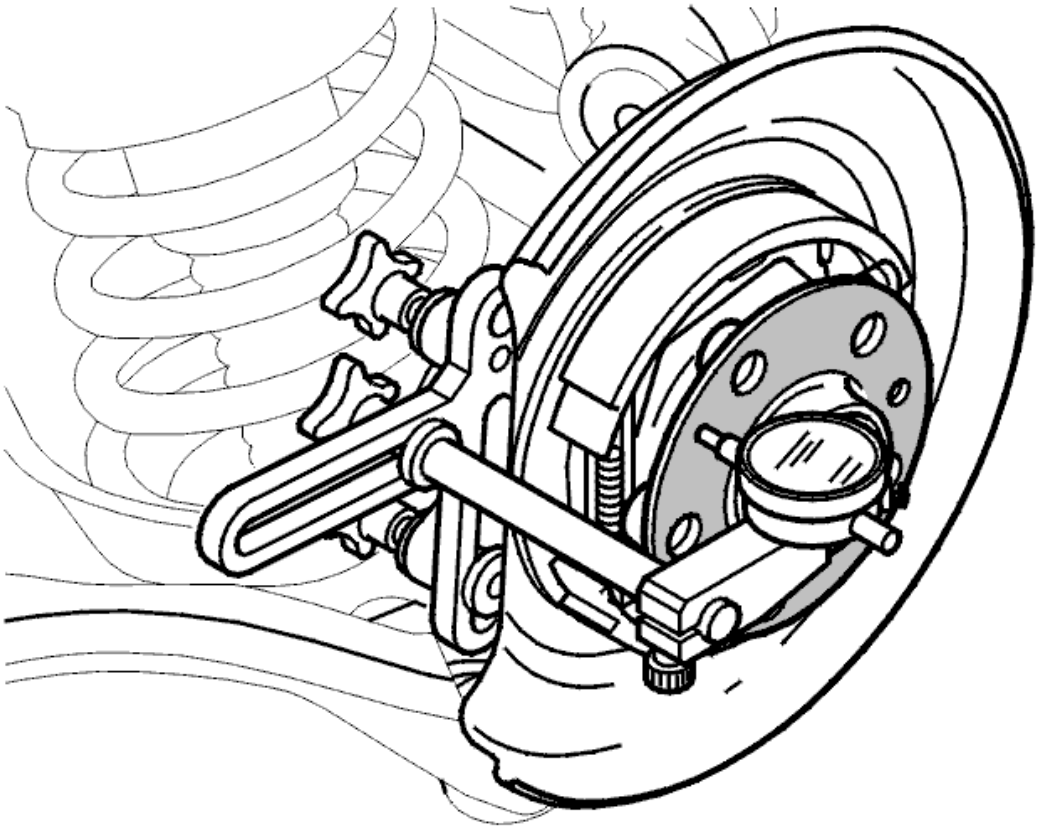

Fig. 9: Identifying Test Gauge Point Against Hub Flange
Courtesy of VOLVO CARS CORPORATION

Put the test gauge point against the hub flange as illustrated.

Rotate the hub gently.

Note the test gauge run-out. Hub maximum lateral run-out: 0.020 mm.

If lateral run-out exceeds the value, replace the hub.

To replace the hub, FWD, see **REAR WHEEL HUB, REPLACING** .

To replace the hub, AWD, see **REAR WHEEL HUB, REPLACING** .

FINISHING WORK

NOTE: For tightening torques, see: TIGHTENING TORQUE .

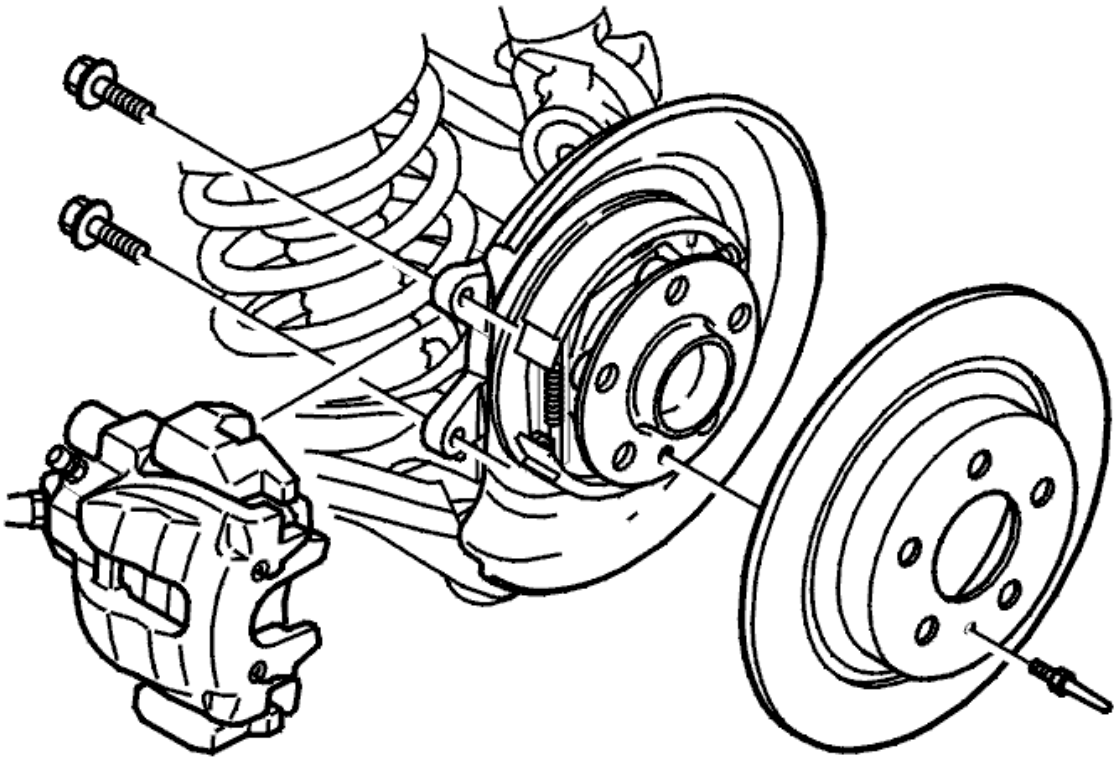

Fig. 10: Brake Disc And Caliper Holder
Courtesy of VOLVO CARS CORPORATION

Remove the test equipment

Install:

- the brake disc
- the 1 M6 screw
- the brake caliper and the caliper holder.

Tighten. See: **TIGHTENING TORQUE** .

NOTE: Use new mounting screws.

Install the wheel

see **INSTALLING WHEELS** .

TIRES

TIRE MOUNTING, CHECKING

CHECKING THAT THE TIRES ARE CORRECTLY MOUNTED

The tire should be mounted on the rim with the DOT marking outwards to counteract the taper.

NOTE: Does not apply to tires on which the direction of rotation is marked.

SUSPENSION

Power transmission

SUSPENSION

WHEELS

Materials	
Designation	**Part number**
Installation paste	1161397

REMOVAL

NOTE: Removal steps in this procedure may contain installation details.

See information about lifting points body, see **JACKING POINTS, BODY**

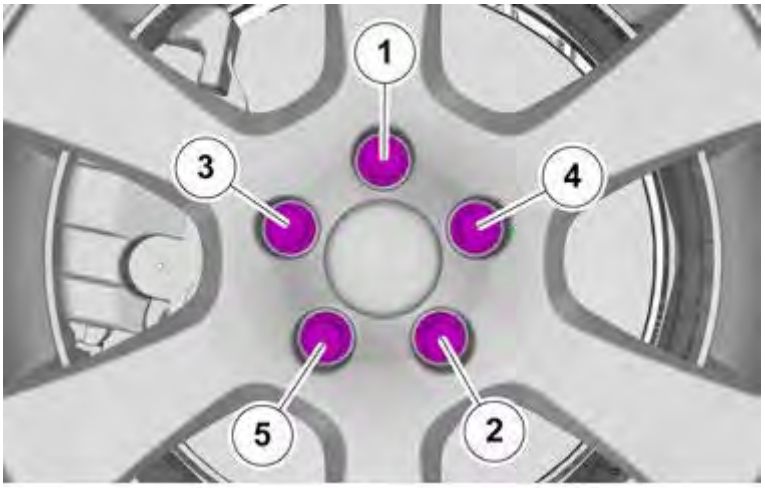

Fig. 1: Identifying Lug Nut Tightening Using Cross Pattern
Courtesy of VOLVO CARS CORPORATION

WARNING: Make sure that the mating faces are clean and free of corrosion and foreign material.

Use: Installation paste, 1161397

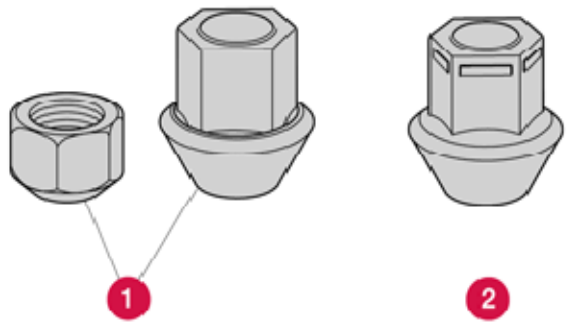

Fig. 2: Identifying Bolt Heads
Courtesy of VOLVO CARS CORPORATION

1. **Torque: Wheel to hub (early version)**

   • Stage 1: 20 Nm

   • Stage 2: 110 Nm

2. **Torque: Wheel to wheel hub**

   • Stage 1: 20 Nm

   • Stage 2: 130 Nm

INSTALLATION

To install, reverse the removal procedure.

TRANSMISSION

Power transmission

TRANSMISSION

CHECKING INTERNAL COMPONENTS OF THE TRANSMISSION (B8444S, TF-80SC AWD)

CHECKING SOLENOIDS AND TEMPERATURE SENSOR

CHECKING SHIFT SOLENOIDS

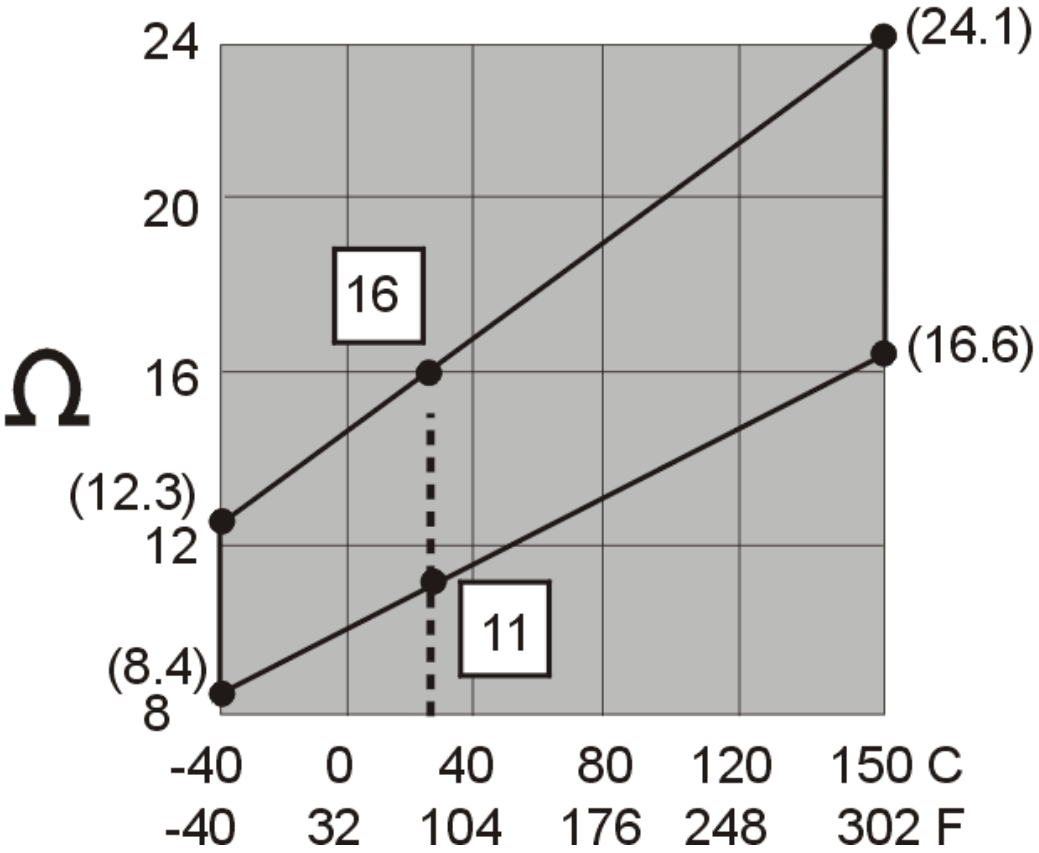

Fig. 1: Identifying Ohms Resistance Temperature Graph
Courtesy of VOLVO CARS CORPORATION

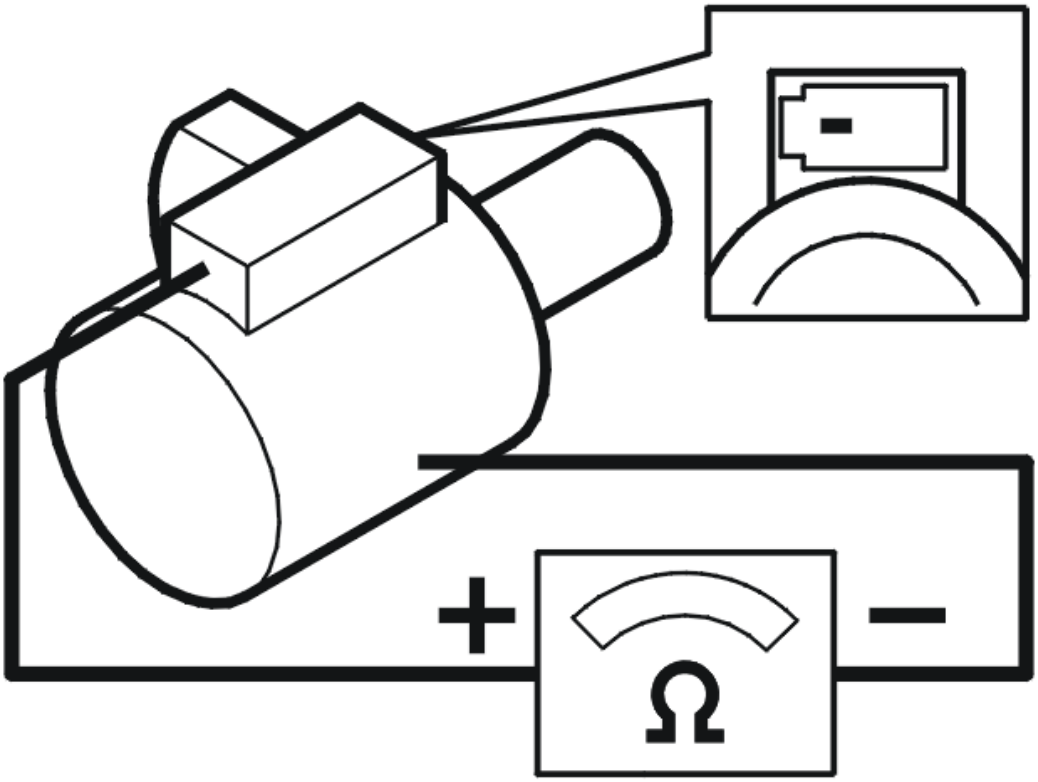

Fig. 2: Identifying Check For Ohms Resistance
Courtesy of VOLVO CARS CORPORATION

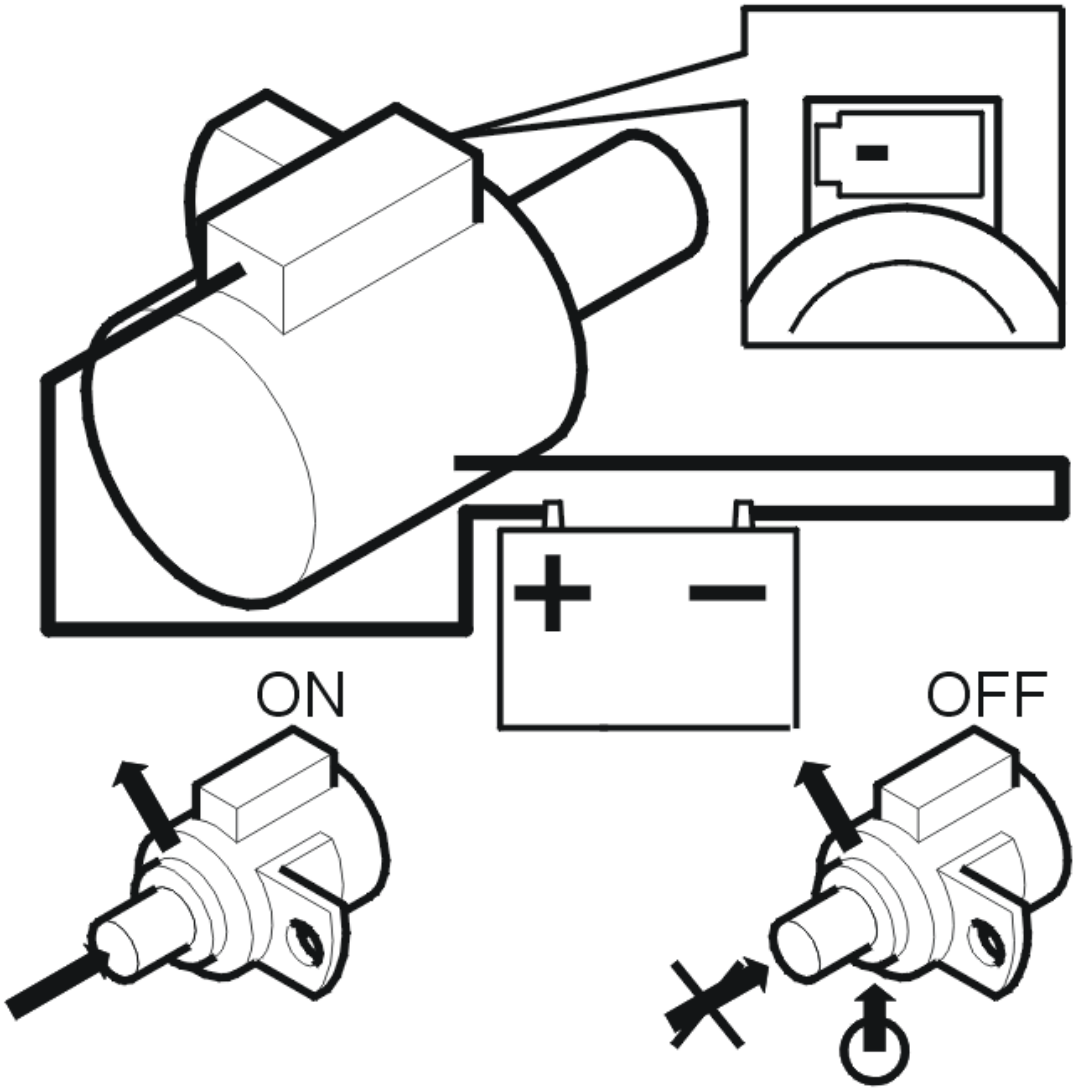

Fig. 3: Identifying Gear Shift Solenoid Check
Courtesy of VOLVO CARS CORPORATION

NOTE: **Do not damage components and terminals when test measuring. Handle components and terminals carefully.**

Check 1

Connect an ohmmeter between terminal #1 and the outer casing of the gear shift solenoid. For resistance values, see the table below.

When measuring at temperatures other than +20 °C a test measurement must be taken at +20 °C. This is to establish if the resistance is correct or not.

Component	Note	Resistance (ohms)

Gear shift solenoid S1, S2	Resistance between the solenoid pins and the solenoid casing/transmission housing	+20 °C= 11-16 ohms

Check 2

Connect a temporary voltage supply (+) to gear shift solenoid terminal # 1 and a temporary ground terminal (-) to the gearshift solenoid outer casing. Check the function of the solenoid.

Check 3

Connect a temporary voltage supply (+) to gear shift solenoid terminal # 1 and a temporary ground terminal (-) to the gearshift solenoid outer casing. Blow using compressed air according as shown in the illustration. Check the function of the solenoid.

CHECKING THE LINE PRESSURE SOLENOID SLT, SLC1, SLC2, SLC3, SLB1 AND LOCK-UP SOLENOID SLU

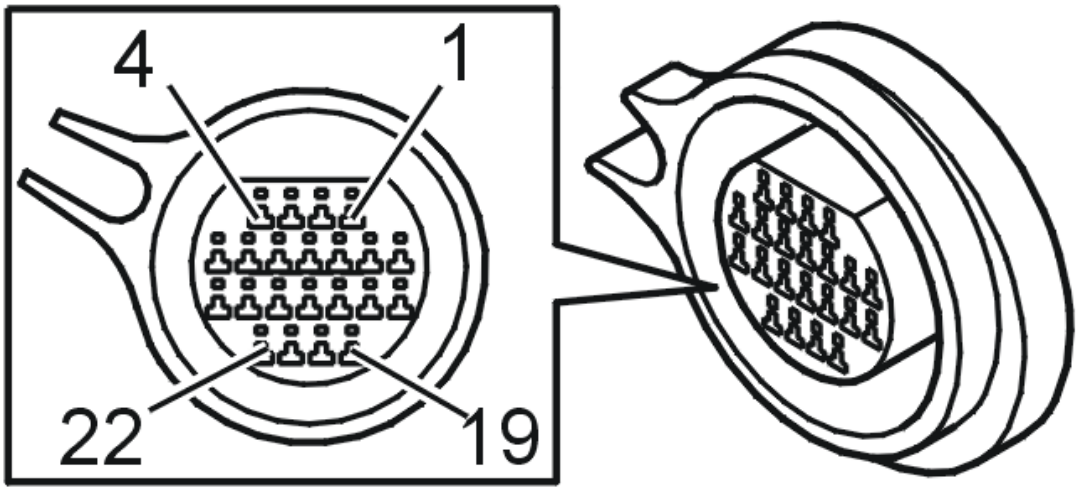

Fig. 4: Identifying Connector B Terminals
Courtesy of VOLVO CARS CORPORATION

Connect the breakout box. See:**CONNECTING THE BREAKOUT BOX**

NOTE: **Do not damage components and terminals when test measuring. Handle components and terminals carefully.**

Check 1

Connect an ohmmeter to the breakout box between the terminals for the selected solenoid. For resistance values, see the table below.

for line pressure solenoid SLT:

- terminals #B3 (#3) and #B1 (#1)

for lock-up solenoid SLU:

- terminals #B9 (#9) and #B4 (#4)

for line pressure solenoid SLB1:

- terminals #B21 (#21) and #B16 (#16)

for line pressure solenoid SLC1:

- terminals #B11 (#11) and #B10 (#10)

for line pressure solenoid SLC2:

- terminals #B17 (#17) and #B18 (#18)

for line pressure solenoid SLC3:

- terminals #B14 (#14) and #B22 (#22)

When measuring at temperatures other than +20 °C a test measurement must be taken at +20 °C. This is to establish if the resistance is correct or not.

Component	Note	Resistance (ohms)
Lock-up solenoid (SLU) Line pressure solenoids (SLT), (SLC1),(SLC2),(SLC3),(SLB1)	Resistance between solenoid pins	+20 °C= 5.0-5.6 ohms

CHECKING THE OIL TEMPERATURE SENSOR

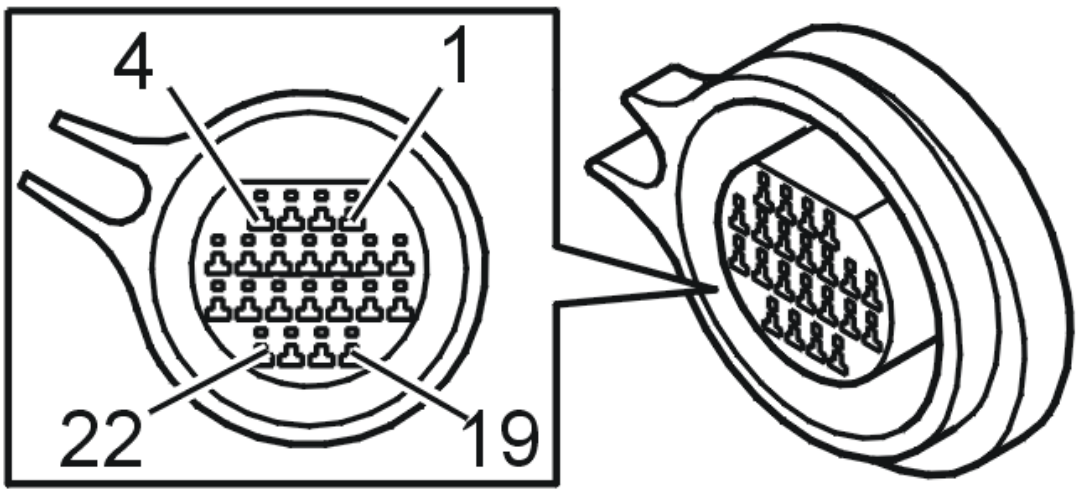

Fig. 5: Identifying Connector B Terminals
Courtesy of VOLVO CARS CORPORATION

Connect the breakout box. See:**CONNECTING THE BREAKOUT BOX**

NOTE: **Do not damage components and terminals when test measuring. Handle components and terminals carefully.**

Check 1

Connect an ohmmeter between # A7 and #A8 on the breakout box.

Start the engine and run it at idle speed to raise the temperature of the transmission.

For resistance values, see the table below.

A test measurement must be taken at all three temperatures. This is to establish if the resistance is correct or not.

Component	Note	Resistance (ohms)
Oil temperature sensor	Resistance between the temperature sensor terminals	+10 °C= 5620-7310 ohms
		+25 °C= 3500 ohms
		+110 °C= 220-270 ohms

CHECKING INPUT AND OUTPUT SPEED SENSORS FOR TRANSMISSION

CHECKING THE INPUT AND OUTPUT SPEED SENSORS FOR THE TRANSMISSION

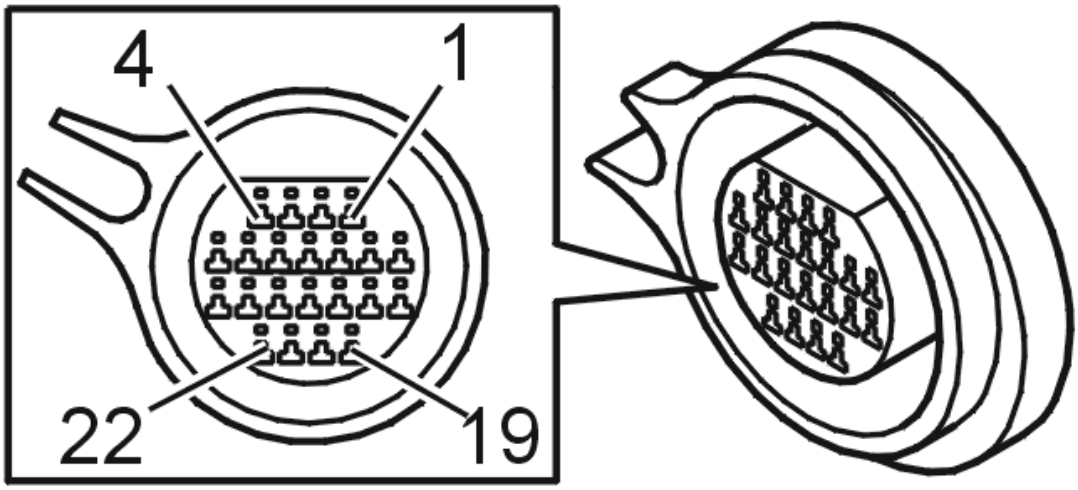

Fig. 6: Identifying Connector B Terminals
Courtesy of VOLVO CARS CORPORATION

NOTE: The transmission control module (TCM) must not be connected.

Connect the breakout box. See:**CONNECTING THE BREAKOUT BOX**

NOTE: Do not damage components and terminals when test measuring. Handle components and terminals carefully.

Check 1

Connect an ohmmeter between the sensor terminals on the breakout box. Check the resistance. The resistance must be more than 1 Mohms but not infinite.

For transmission input speed sensor:

- terminal #12 and #13 on the breakout box

For transmission output speed sensor:

- terminal #19 and #20 on the breakout box

NOTE: Check the resistance using an ohmmeter which can measure resistances above 10 Mohms.

If the resistance is 0 ohms it means that the cables are short-circuited to each other or that the sensor is faulty.

If resistance is infinite it means that there is an open circuit in the circuit.

Check the wiring. Measure the resistance between a terminal and a ground point.

If the resistance is 0 ohms it means that the cable has a short-circuit to ground.

If resistance is infinite it means that there is an open circuit in the circuit.

Check 2

Connect a temporary voltage supply to:

transmission input speed sensor:

- terminal #A12 on the breakout box

transmission output speed sensor:

- terminal #A19 on the breakout box

Connect a temporary ground terminal via a 100 ohms resistor and an ammeter/voltmeter to:

transmission input speed sensor:

- terminal #A13 on the breakout box

transmission output speed sensor:

- terminal #A20 on the breakout box

Move the gear selector lever to gear position **N** . Raise the vehicle so that the drive wheels hang freely. Measure the current/voltage while spinning the wheels in the same direction. For values, see the table below.

Component	Note	Current (mA)
Transmission input speed sensor Transmission output speed sensor	Current between the sensor terminals	High = 12-16 mA Low= 4-8 mA

Component	Note	Voltage (V)
Transmission input speed sensor Transmission output speed sensor	Voltage between the sensor terminals	Highapprox. 1.4 V below Ubat Lowapprox. 0.8 V below U_{bat}

CHECKING INTERNAL COMPONENTS OF THE TRANSMISSION (B6324S, TF-80SC; B6324S, TF-80SC AWD)

CHECKING SOLENOIDS AND TEMPERATURE SENSOR

CHECKING SHIFT SOLENOIDS

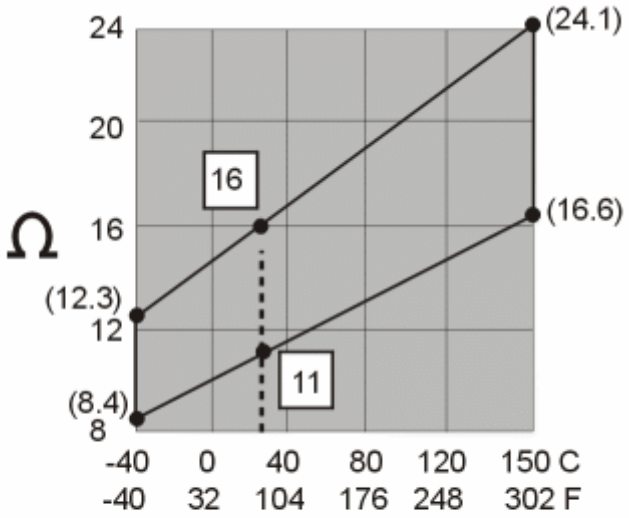

Fig. 7: Identifying Ohms Resistance Temperature Graph

Courtesy of VOLVO CARS CORPORATION

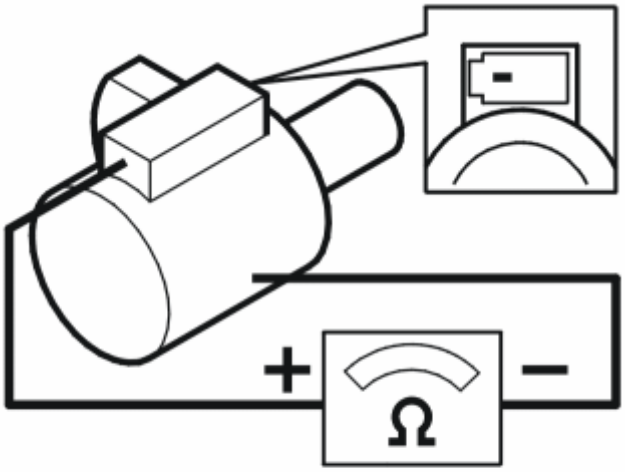

Fig. 8: Identifying Transmission Shift Solenoid Positive (+) And Negative (-) Terminals
Courtesy of VOLVO CARS CORPORATION

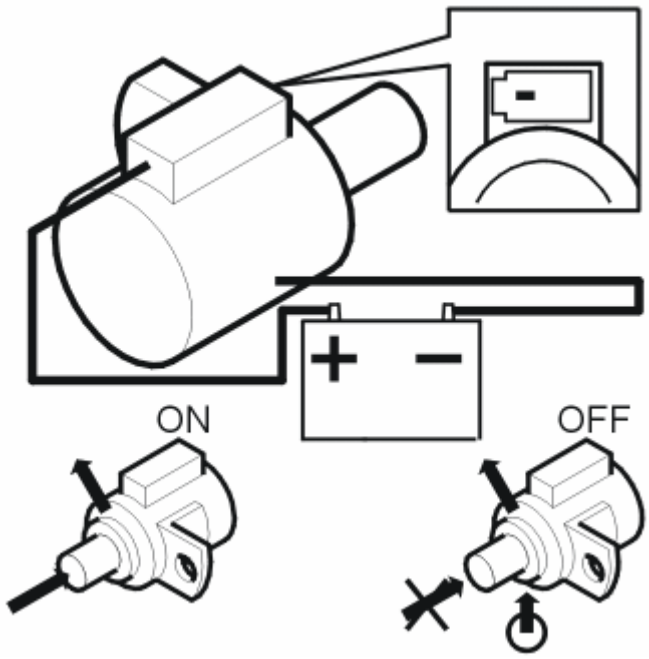

Fig. 9: Identifying Transmission Shift Solenoid On/Off Function With Supplied Battery Voltage
Courtesy of VOLVO CARS CORPORATION

NOTE: Do not damage components and terminals when test measuring. Handle

components and terminals carefully.

Check 1

Connect an ohmmeter between terminal #1 and the outer casing of the gear shift solenoid. For resistance values, see the table below.

When measuring at temperatures other than +20 °C a test measurement must be taken at +20 °C. This is to establish if the resistance is correct or not.

Component	Note	Resistance (ohms)
Gear shift solenoid S1, S2	Resistance between the solenoid pins and the solenoid casing/transmission housing	+20 °C= 11-16 ohms

Check 2

Connect a temporary voltage supply (+) to gear shift solenoid terminal # 1 and a temporary ground terminal (-) to the gearshift solenoid outer casing. Check the function of the solenoid.

Check 3

Connect a temporary voltage supply (+) to gear shift solenoid terminal # 1 and a temporary ground terminal (-) to the gearshift solenoid outer casing. Blow using compressed air according as shown in the illustration. Check the function of the solenoid.

CHECKING THE LINE PRESSURE SOLENOID SLT, SLC1, SLC2, SLC3, SLB1 AND LOCK-UP SOLENOID SLU

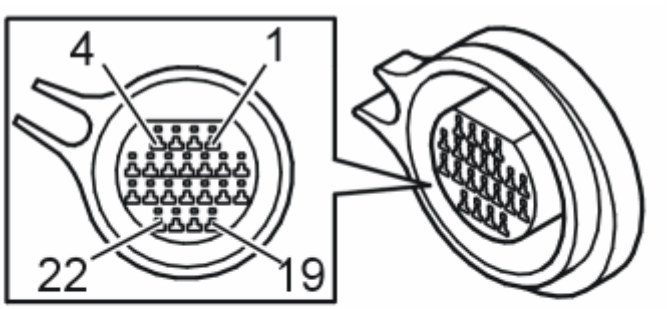

Fig. 10: Identifying 22--Pin Connector
Courtesy of VOLVO CARS CORPORATION

Connect the breakout box. See: **CONNECTING THE BREAKOUT BOX**

NOTE: Do not damage components and terminals when test measuring. Handle components and terminals carefully.

Check 1

Connect an ohmmeter to the breakout box between the terminals for the selected solenoid. For resistance values, see the table below.

for line pressure solenoid SLT:

- terminals #B3 (#3) and #B1 (#1)

for lock-up solenoid SLU:

- terminals #B9 (#9) and #B4 (#4)

for line pressure solenoid SLB1:

- terminals #B21 (#21) and #B16 (#16)

for line pressure solenoid SLC1:

- terminals #B11 (#11) and #B10 (#10)

for line pressure solenoid SLC2:

- terminals #B17 (#17) and #B18 (#18)

for line pressure solenoid SLC3:

- terminals #B14 (#14) and #B22 (#22)

When measuring at temperatures other than +20 °C a test measurement must be taken at +20 °C. This is to establish if the resistance is correct or not.

Component	Note	Resistance (ohms)
Lock-up solenoid (SLU) Line pressure solenoids (SLT), (SLC1),(SLC2),(SLC3),(SLB1)	Resistance between solenoid pins	+20 °C= 5.0-5.6 ohms

CHECKING THE OIL TEMPERATURE SENSOR

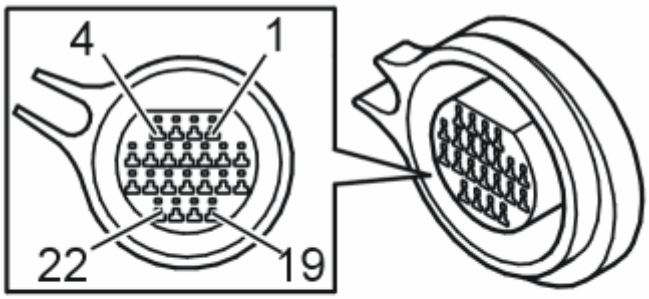

Fig. 11: Identifying 22--Pin Connector
Courtesy of VOLVO CARS CORPORATION

Connect the breakout box. See: **CONNECTING THE BREAKOUT BOX**

NOTE: **Do not damage components and terminals when test measuring. Handle components and terminals carefully.**

Check 1

Connect an ohmmeter between # A7 and #A8 on the breakout box.

Start the engine and run it at idle speed to raise the temperature of the transmission.

For resistance values, see the table below.

A test measurement must be taken at all three temperatures. This is to establish if the resistance is correct or not.

Component	Note	Resistance (ohms)
Oil temperature sensor	Resistance between the temperature sensor terminals	+10 °C= 5620-7310 ohms
		+25 °C= 3500ohms
		+110 °C= 220-270 ohms

CHECKING INPUT AND OUTPUT SPEED SENSORS FOR TRANSMISSION

CHECKING THE INPUT AND OUTPUT SPEED SENSORS FOR THE TRANSMISSION

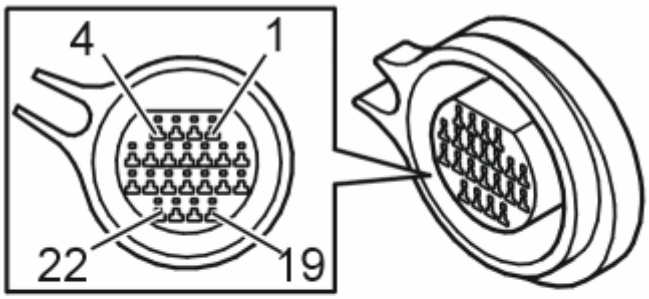

Fig. 12: Identifying 22--Pin Connector
Courtesy of VOLVO CARS CORPORATION

NOTE: The transmission control module (TCM) must not be connected.

Connect the breakout box. See: **CONNECTING THE BREAKOUT BOX**

NOTE: Do not damage components and terminals when test measuring. Handle components and terminals carefully.

Check 1

Connect an ohmmeter between the sensor terminals on the breakout box. Check the resistance. The resistance must be more than 1 Mohms but not infinite.

For transmission input speed sensor:

- terminal #12 and #13 on the breakout box

For transmission output speed sensor:

- terminal #19 and #20 on the breakout box

NOTE: Check the resistance using an ohmmeter which can measure resistances above 10 Mohms.

If the resistance is 0 ohms it means that the cables are short-circuited to each other or that the sensor is faulty.

If resistance is infinite it means that there is an open circuit in the circuit.

Check the wiring. Measure the resistance between a terminal and a ground point.

If the resistance is 0 ohms it means that the cable has a short-circuit to ground.

If resistance is infinite it means that there is an open circuit in the circuit.

Check 2

Connect a temporary voltage supply to:

transmission input speed sensor:

- terminal #A12 on the breakout box

transmission output speed sensor:

- terminal #A19 on the breakout box

Connect a temporary ground terminal via a 100 ohms resistor and an ammeter/voltmeter to:

transmission input speed sensor:

- terminal #A13 on the breakout box

transmission output speed sensor:

- terminal #A20 on the breakout box

Move the gear selector lever to gear position **N** . Raise the vehicle so that the drive wheels hang freely. Measure the current/voltage while spinning the wheels in the same direction. For values, see the table below.

Component	Note	Current (mA)
Transmission input speed sensor Transmission output speed sensor	Current between the sensor terminals	High = 12-16 mA Low= 4-8 mA

Component	Note	Voltage (V)
Transmission input speed sensor Transmission output speed sensor	Voltage between the sensor terminals	Highapprox. 1.4 V below Ubat Lowapprox. 0.8 V below U_{bat}

CONNECTING BREAKOUT BOX, TRANSMISSION CONTROL MODULE (TCM)

Special tools:

see **9511428**

see **9511504**

CONNECTING THE BREAKOUT BOX TO THE AUTOMATIC TRANSMISSION CONTROL MODULE (TCM)

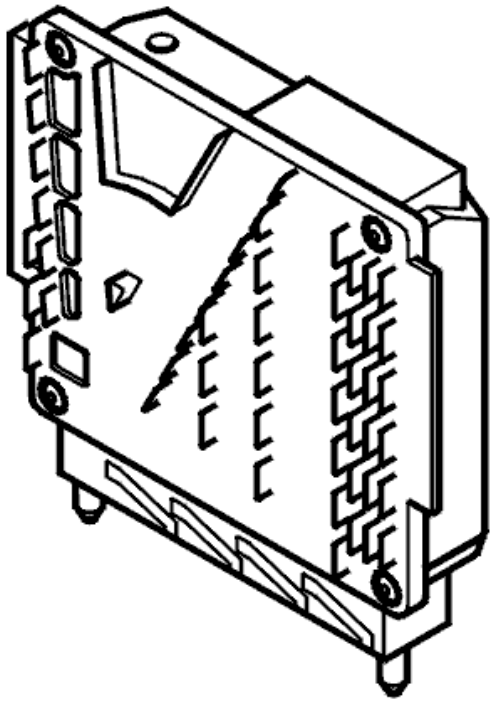

Fig. 13: Identifying Transmission Control Module
Courtesy of VOLVO CARS CORPORATION

- Ignition off.
- Disconnect the automatic transmission control module (TCM)) according to. See **TRANSMISSION CONTROL MODULE (TCM), REPLACING** .
- Check that the male and female terminals in the control module and control module connector are intact and secure and that the wiring to the female terminals is properly secured to the pins.
- Pay particular attention to the terminals related to the diagnostic trouble code (DTC)/symptom. See **SIGNAL DESCRIPTION. TRANSMISSION CONTROL MODULE (TCM)** .
- Connect adapter see **9511504** to the control module connector (wiring side) and connect breakout box see **9511428** to the adapter.
- The breakout box is designed to facilitate reading off the control module input and output signals when the control module is connected; and the cable and component resistance when the control module is disconnected. Using a breakout box reduces the risk of accidental short-circuits and damaged connector pins.

RESETTING TRANSMISSION FLUID CHANGE COUNTER

RESETTING TRANSMISSION FLUID CHANGE COUNTER

HINT: The transmission control module (TCM) has a counter for the oil quality. The counter counts up if the transmission is exposed to too high a load or an ambient temperature that is too high. If the counter

is not reset when the oil is drained or changed, there is a risk that a diagnostic trouble code (DTC) will be stored in faulty circumstances. Therefore it is important that the "Transmission oil change" counter is reset.

NOTE: **This applies only when the transmission fluid is changed and when the fluid is changed when repairs are carried out to the transmission temperature sensor.**

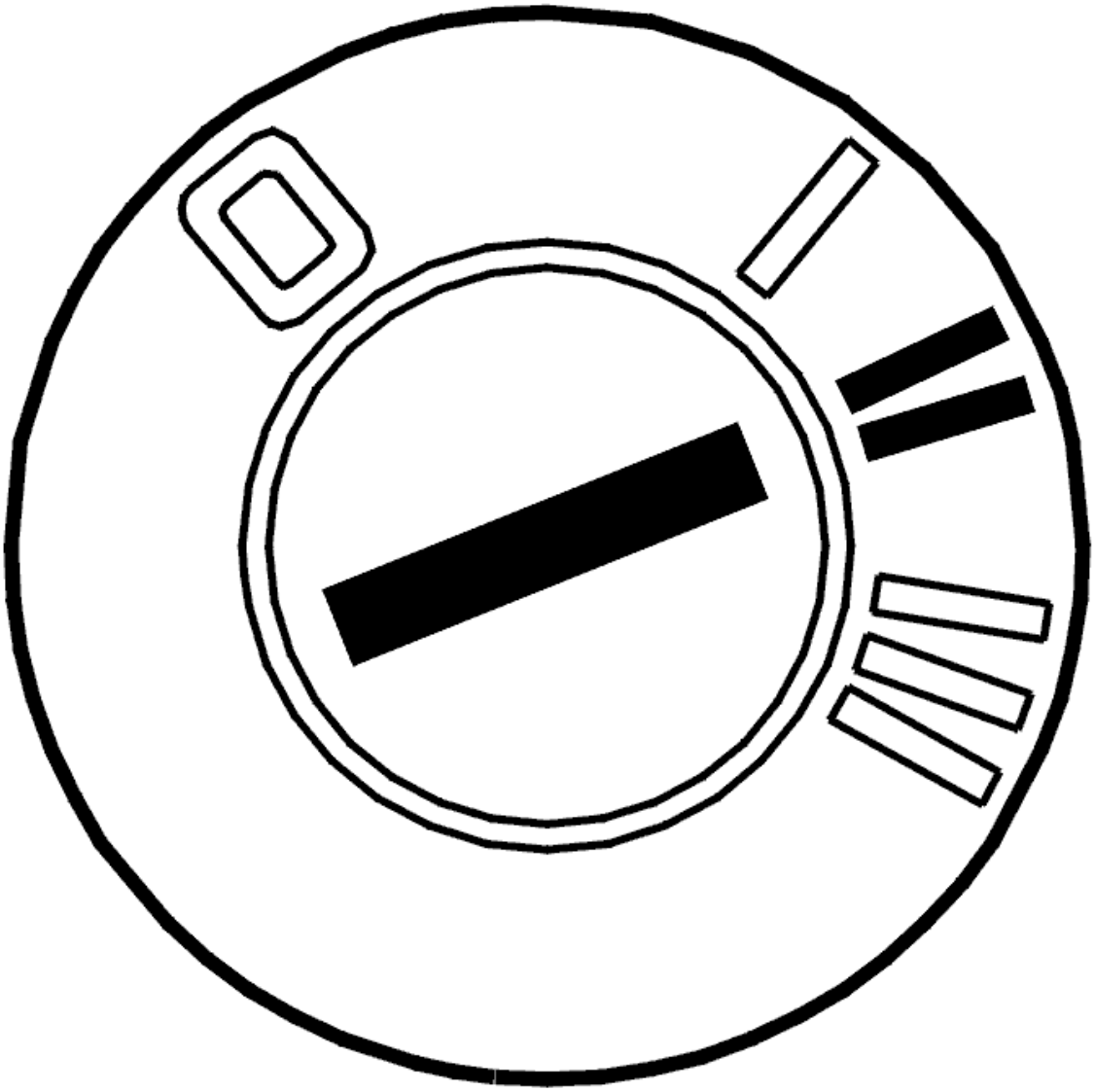

Fig. 14: Identifying Ignition ON
Courtesy of VOLVO CARS CORPORATION

- Ignition on.

  Reset the counter by using the VCT2000 (or appropriate scan tool).

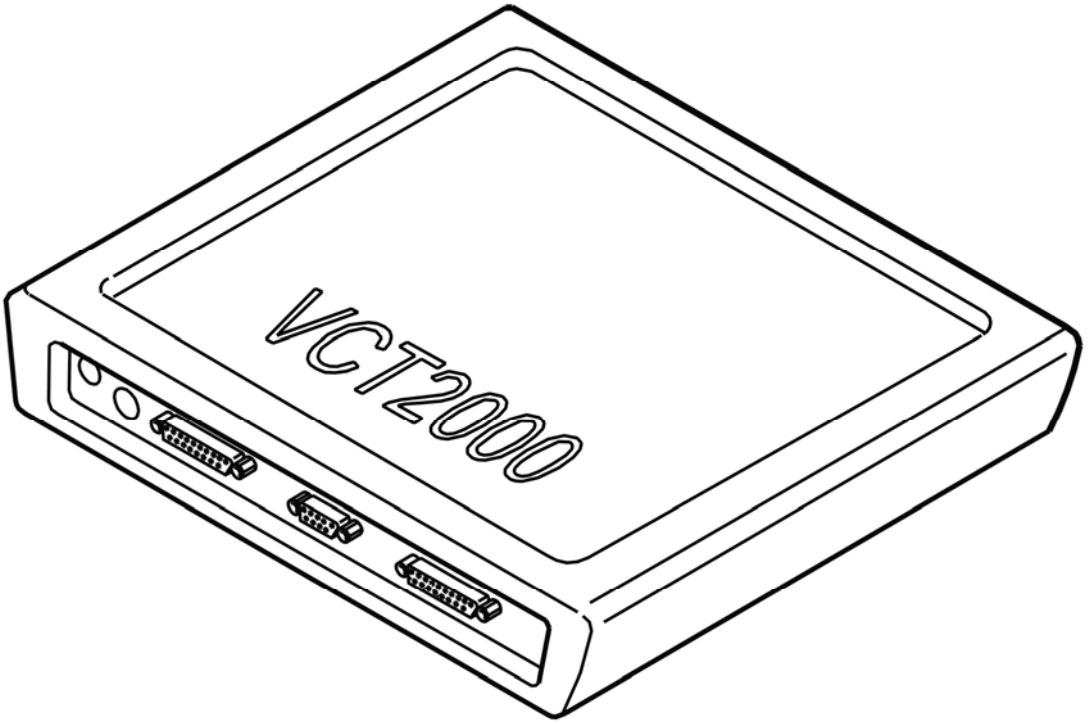

Fig. 15: Identifying VCT2000 Diagnostic Tool Symbol In VIDA
Courtesy of VOLVO CARS CORPORATION

- **Continue**

  Refer to **TEST DRIVE SCHEDULE, DESCRIPTION** .

TRANSMISSION

Power transmission

TRANSMISSION

EMERGENCY MODE IN CASE OF MALFUNCTION

EXPLANATION

The Transmission Control Module (TCM) activates the Emergency mode function in the event of certain malfunctions so that any damage is not made worse, resulting in complete transmission breakdown. The Transmission Control Module (TCM) can activate the function in 2 different stages, depending on the severity of the malfunction.

Function	Description
Emergency mode 1	-Adaptation function is blocked. -The lock-up function is blocked. -Slip lock-up function is blocked. -Neutral check function is blocked. -The transmission only shifts to 3rd gear and reverse gear. All other shifts are blocked.
Emergency mode 2	-The transmission only shifts to 5th gear and reverse gear. All other shifts are blocked.

TRANSMISSION

Engine with mountings and equipment-Ignition and control systems

TRANSMISSION

PEDAL POSITION SENSOR, CLUTCH, REPLACING

NOTE: **As the illustrations in this service information are used for different model years and / or models, some variation may occur. However, the essential information is always correct.**

REMOVAL

CLUTCH PEDAL POSITION SENSOR

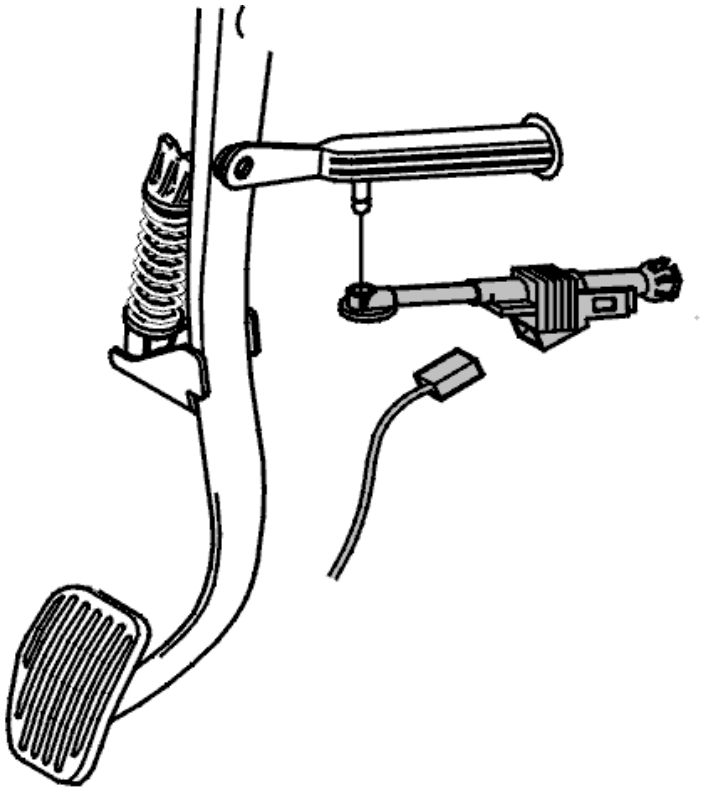

Fig. 1: Clutch Pedal Position Sensor
Courtesy of VOLVO CARS CORPORATION

- Ignition off
- Remove the soundproofing panel. See **SOUNDPROOFING PANEL, REPLACING**
- Remove the two ball connectors from the master cylinder and the arm

- Disconnect the connector.

INSTALLATION

CLUTCH PEDAL POSITION SENSOR

In reverse order.

TRANSMISSION

Power transmission

TRANSMISSION

FROZEN VALUES FOR THE TRANSMISSION CONTROL MODULE (TCM), DESCRIPTION

GENERAL INFORMATION

Frozen values are parameter values that are stored when a diagnostic trouble code (DTC) is stored.

Not all the parameters described need to be implemented in the control module. This varies from system to system. Parameters can also vary depending on which type of transmission the car has.

Certain parameters can be displayed without a value or with implausible values. This can occur if the control module has not stored a value, when a base value has been stored instead or if the parameter is received via the CAN network when there is an error on the CAN network. For example, the transmission speed value may be excessive if the fault occurs for the transmission speed sensor.

Definition of an operating cycle

The definition of an operating cycle varies depending on the software version.

Alternative definitions

- The ignition has been switched off, then switched on and finally switched off again
- The ignition has been switched off, the engine started and finally the ignition switched off again
- The ignition has been off, the engine started, the car driven at a speed above 30 km/h for more than 3 minutes and finally the ignition switched off again.

DIAGNOSTIC TROUBLE CODE (DTC)

The diagnostic trouble code (DTC) the frozen values are stored for.

COUNTER 2

Counts the number of operating cycles in which the tests have been completed without the fault being detected again. If the value is zero there is a fault or the control module test for the fault has not been carried out.

ENGINE, STATUS

The value indicates the status of the engine when the diagnostic trouble code (DTC) was stored.

OFF = Engine not running.

On = Engine running.

OUTSIDE TEMPERATURE

The value indicates the outside temperature when the diagnostic trouble code (DTC) was stored. The transmission control module (TCM) obtains the value via the Control Area Network (CAN) from the central electronic module.

COUNTS - THE OPERATING CYCLES SINCE THE DIAGNOSTIC TROUBLE CODE (DTC) WAS FIRST/LAST STORED

The value indicates the number of operating cycles since the diagnostic trouble code (DTC) was **first** or **last** stored.

TIME SINCE THE DIAGNOSTIC TROUBLE CODE (DTC) WAS FIRST/LAST STORED

The time in hours since the diagnostic trouble code (DTC) was **first** or **last** stored. The transmission control module (TCM) obtains the value via the Control Area Network (CAN) from the central electronic module. The time is the total time that the central electronic module has been running.

The difference between the "last" time and the "first" time is the time from the when the diagnostic trouble code (DTC) was first stored to when it was last stored. If the same amount of hours are displayed, the fault has only been detected once.

THE VOLTAGE IN THE CENTRAL ELECTRONIC MODULE WHEN THE DIAGNOSTIC TROUBLE CODE (DTC) WAS FIRST/LAST STORED

The value indicates the voltage in volts the **first** or **last** time the diagnostic trouble code (DTC) was stored. The transmission control module (TCM) obtains the value via the Control Area Network (CAN) from the central electronic module.

TOTAL MILEAGE SINCE THE DIAGNOSTIC TROUBLE CODE (DTC) WAS FIRST / LAST STORED

The value indicates the mileage in kilometers and miles the **first** and **last** time the diagnostic trouble code (DTC) was stored. The transmission control module (TCM) obtains the value via the Control Area Network (CAN) from the central electronic module.

PASSENGER COMPARTMENT TEMPERATURE

The value indicates the passenger compartment temperature when the diagnostic trouble code (DTC) was stored. The transmission control module (TCM) obtains the value via the Control Area Network (CAN) from the central electronic module.

OIL TEMPERATURE

The value indicates the temperature of the transmission fluid. The value is calculated based on the oil temperature sensor signal.

GEAR RATIOS

The value indicates the transmission gear ratio.

EXPECTED GEAR RATIO

The value indicates the gear ratio anticipated by the transmission control module (TCM).

CALCULATED SPEED OF THE SIGNAL FROM THE TRANSMISSION SPEED SENSOR (OUTPUT SPEED)

The value indicates the calculated speed based on the signal from the transmission speed sensor (output speed).

SPEED SIGNAL, CALCULATED FROM THE ENGINE SPEED (RPM)

The value indicates the speed, calculated using the engine speed.

GEAR ACCORDING TO THE SHIFT SOLENOIDS

The value indicates the selected gear (according to the gear solenoids). The value indicated depends on the transmission type.

The following values can be displayed: Back-up (reverse) gear, Gear 1, Gear 2, Gear 3, Gear 4, Gear 5.

GEAR-SHIFT POSITION SENSOR

The value indicates the gear-shift position sensor gear-shift position sensor based on the signal from the gear selector assembly. The following values can be displayed: P, R, N, D, 4/Tip, 3/Tip, 2, L.

ACCELERATOR PEDAL (AP) POSITION

The value indicates the position of the accelerator pedal (AP). The transmission control module (TCM) obtains the value via the Control Area Network (CAN) from the central electronic module.

TRANSMISSION SPEED SENSOR, OUTPUT SPEED

The value indicates the output speed from the transmission speed sensor.

TRANSMISSION SPEED SENSOR, INPUT SPEED

The value indicates the input speed from the transmission speed sensor. The speed can be generated with the engine idling and the gear selector in P/N position. If the gear selector is in any other position, a gear is engaged and the transmission input shaft is connected to the output shaft and an RPM will not be indicated until the car is driven. Depending on slippage in the torque converter the transmission speed and the engine speed will differ when the lock-up function is not engaged. With lock-up engaged the transmission speed should be the same as engine speed (RPM).

GEAR-SHIFT POSITION SENSOR, POSITION

The value indicates the calculated position of the gear-shift position sensor. The following values can be displayed: P, R, N, D, 4/Tip, 3/Tip, 2, L.

ENGINE SPEED (RPM)

The engine control module (ECM) transmits the engine speed (RPM) on the Control area network (CAN) from which the transmission control module (TCM) retrieves the signal which it then compares with its own speed sensor signal.

The value indicates the engine speed (RPM).

POSITION OF THE GEAR-SHIFT POSITION SENSOR ABCPA

The value indicates the position of the gear-shift position sensor. See the table below.

• = High signal

- = Low signal (grounded)

AW50-42 (WITH 6 AND 7 GEAR POSITIONS)

Gear shift position	A	B	C	PA
P	-	•	•	-
R	-	-	•	•
N	•	-	•	-
D	•	-	-	•
3	-	-	-	-
2 (L)	-	•	-	•
1	•	•	-	-

AW55-50 (ALSO WITH GEARTRONIC)

Gear shift position	A	B	C	PA
P	-	•	•	-
R	-	-	•	•
N	•	-	•	-
D (Geartronic)	•	-	-	•
4	-	-	-	-
3	-	•	-	•
L	•	•	-	-

4T65 (ALSO WITH GEARTRONIC)

Gear shift position	A	B	C	PA
P	-	•	•	-
R	-	-	•	•
N	•	-	•	-
D	•	-	-	•
3 (Geartronic)	-	-	-	-
2	-	•	-	•
1	•	•	-	-

SYSTEM VOLTAGE

The value indicates the system voltage. The value is given in volts (V).

ENGINE TORQUE

The value indicates the engine torque. The value is given in Nm.

ENGINE COOLANT TEMPERATURE (ECT)

The engine control module (ECM) transmits a signal indicating the engine coolant temperature (ECT) on the Control area network (CAN). The value indicates the temperature. The value is given in °C.

KICKDOWN, STATUS

The engine control module (ECM) transmits a signal indicating the accelerator pedal (AP) position. During rapid acceleration, with the accelerator pedal (AP) almost fully depressed, the transmission control module (TCM) receives a signal about kickdown.

Off = Kickdown is not activated.

On = Kickdown is activated.

GEAR ACCORDING TO SOLENOIDS

The value indicates the calculated gear position according to the control module. The value indicated depends on the transmission type.

The following values can be displayed: Back-up (reverse) gear, Gear 1, Gear 2, Gear 3, Gear 4, Gear 5.

TRANSMISSION

Power transmission

TRANSMISSION

GEARBOX CABLES, REPLACING

Special tools:

see **9997071**

see **9997077**

NOTE: **As the illustrations in this service information are used for different model years and / or models, some variation may occur. However, the essential information is always correct.**

REMOVAL

REMOVING THE AIR CLEANER (ACL) HOUSING

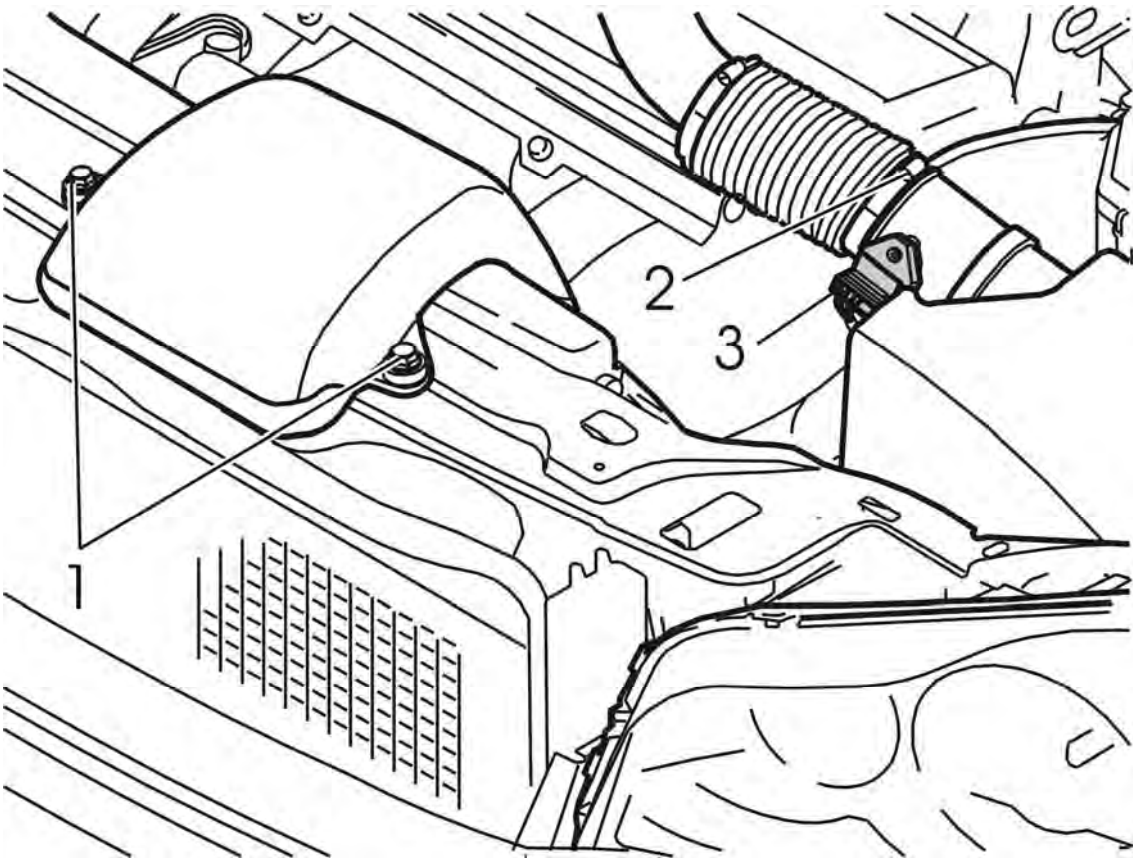

Fig. 1: Air Cleaner (ACL) Housing

Courtesy of VOLVO CARS CORPORATION

Remove:

- the fresh air intake hose
- the air cleaner (ACL) housing assembly with the intake pipe.

REMOVE THE MECHANICAL GEAR SELECTOR CABLES FROM THE BRACKET AND THE LEVERS ON THE GEARBOX

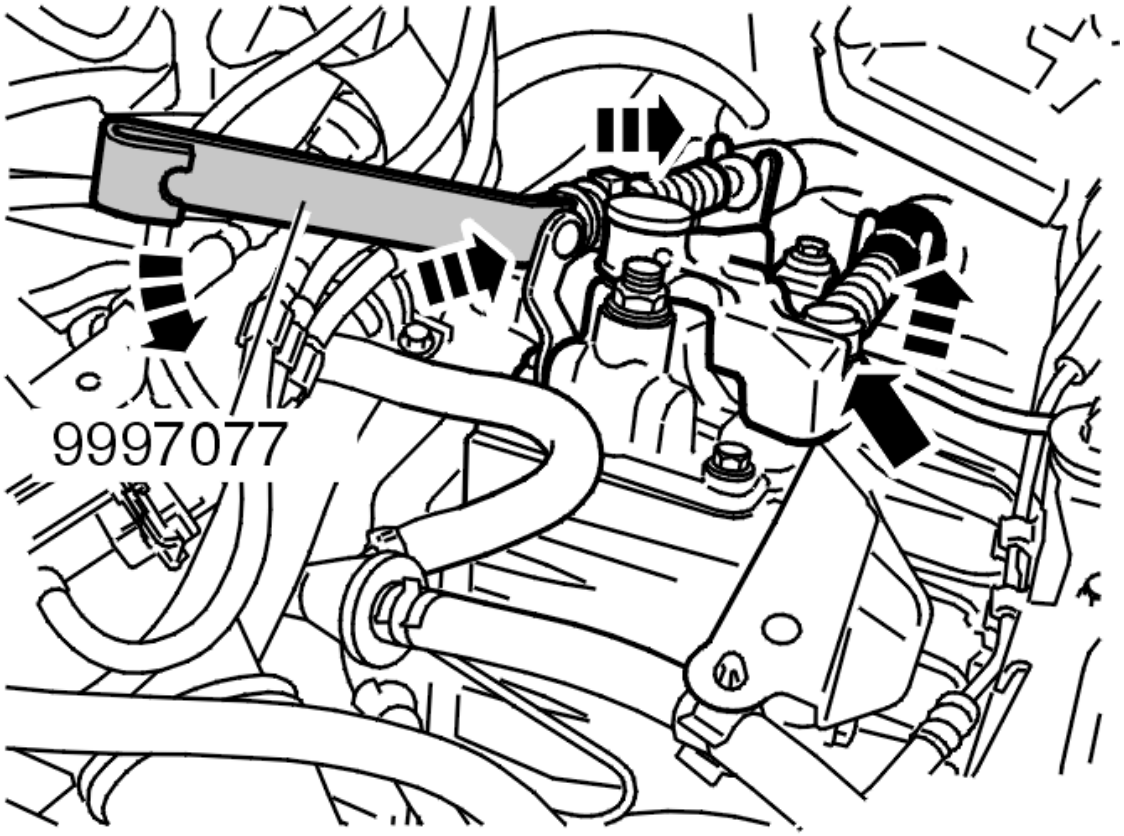

Fig. 2: Identifying Gear Selector Cables
Courtesy of VOLVO CARS CORPORATION

Remove:

- the gear selector cables from the levers. Use jimmy bar see **9997077**
- the mechanical cables from the bracket by moving the sleeves back on the cable sleeves.

REMOVING CENTRE TUNNEL CONSOLE

Remove the center console. See **CENTER CONSOLE, REPLACING** .

REMOVING THE RUBBER LEAD-IN

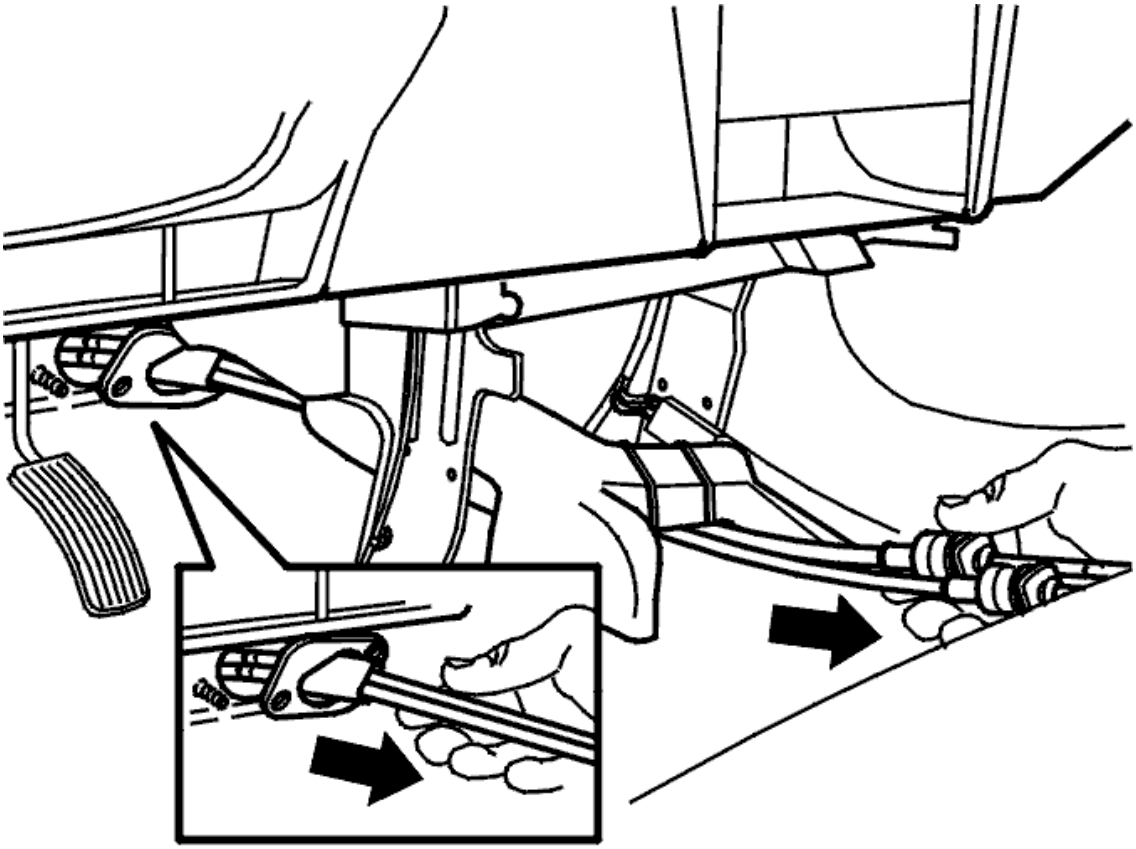

Fig. 3: Removing Rubber Lead-In
Courtesy of VOLVO CARS CORPORATION

Fold and roll the carpet under the accelerator pedal (AP). Fold and roll the carpet under the accelerator pedal (AP).

Remove the 2 nuts for the grommet for the gear selector cables at the firewall. Pull the gear selector cables approximately 10 cm into the passenger compartment.

REMOVING THE GEAR SELECTOR CABLE FROM THE BALL JOINT

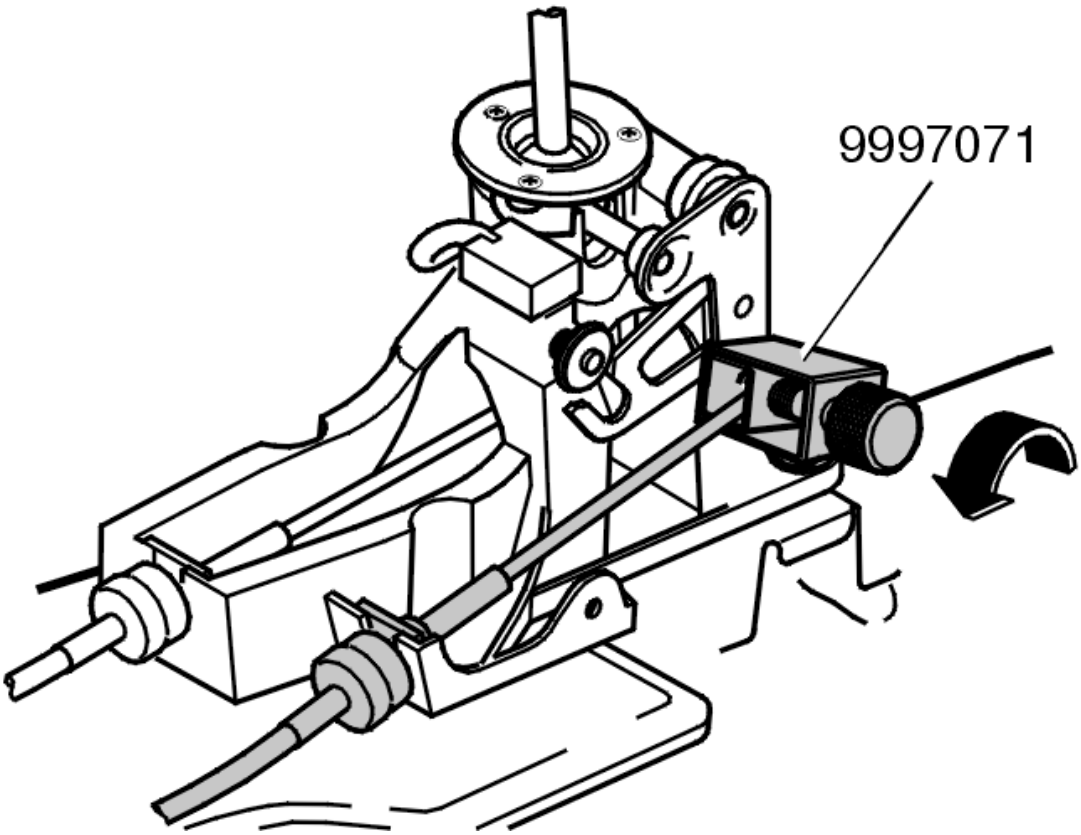

Fig. 4: Identifying Gear Selector Cable Removed From Ball Joint
Courtesy of VOLVO CARS CORPORATION

Remove the gear selector cable from the ball joint. Use puller see **9997071** .

HINT: The screw on the puller is turned counter-clockwise to pull the gear selector cable loose.

REMOVING THE GEAR SELECTOR ASSEMBLY

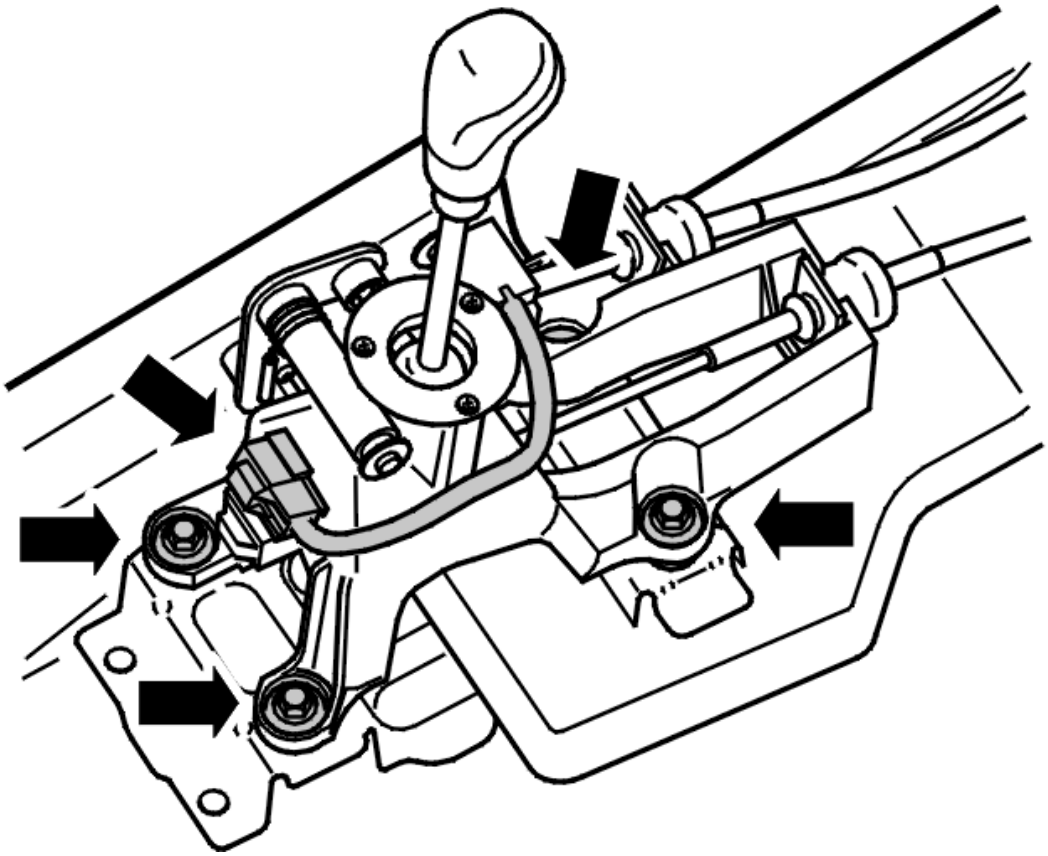

Fig. 5: Identifying Gear Selector Assembly
Courtesy of VOLVO CARS CORPORATION

Remove:

- the connector
- the screws for the gear selector assembly.

Lift the gear selector assembly and twist it so that the lower gear selector cable is accessible.

REMOVING THE GEAR SELECTOR CABLE FROM THE BALL JOINT AND GEAR SELECTOR ASSEMBLY

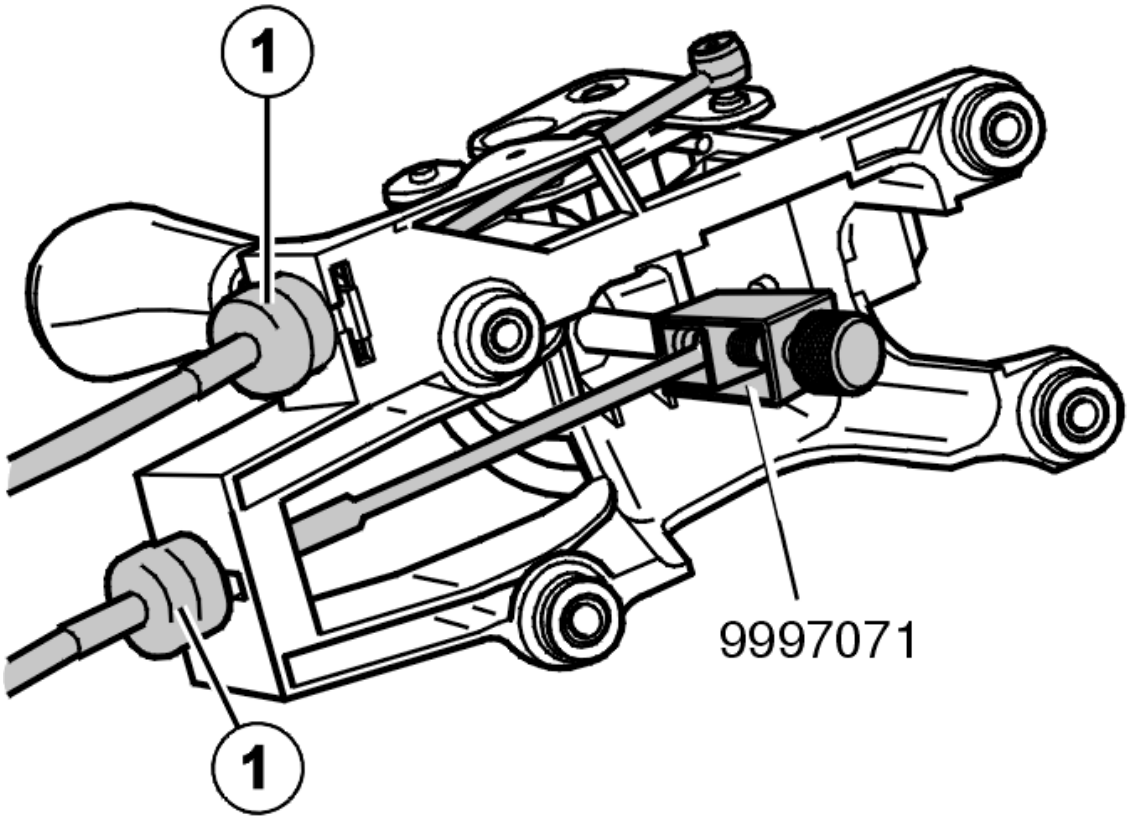

Fig. 6: Identifying Gear Selector Cable Removal From Ball Joint And Gear Selector Assembly
Courtesy of VOLVO CARS CORPORATION

Remove the gear selector cable from the ball joint. Use puller see **9997071** .

HINT: The screw on the puller is turned counter-clockwise to pull the gear selector cable loose.

Carefully pry up the catches (1) and slide the cable sleeves upwards on both the gear selector cables.

Remove the gear selector assembly.

PREPARATIONS FOR INSTALLING THE MECHANICAL CABLES

Secure a cable using tape to the engine compartment end of the mechanical cable before pulling it out to make reinstallation easier

REMOVING THE GEAR SELECTOR CABLES

Pull the gear selector cables straight out.

HINT: It is easier taking one gear selector cable through the firewall at a time.

HINT: Do not damage the cable harnesses in the center console when removing the gear selector cable.

INSTALLATION

NOTE: For tightening torques, see TIGHTENING TORQUE .

INSTALLING THE GEAR SELECTOR CABLES FROM THE INSIDE OF THE PASSENGER COMPARTMENT

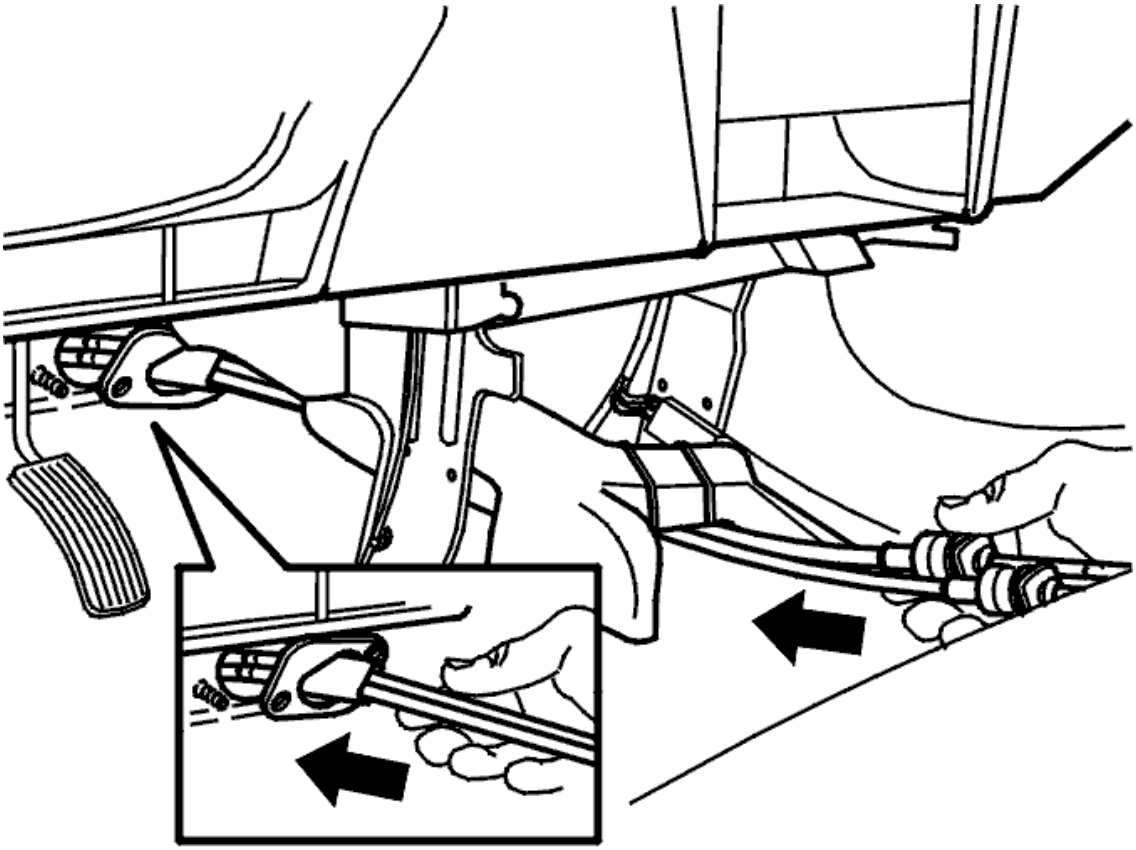

Fig. 7: Installing Gear Selector Cables From Inside Of Passenger Compartment
Courtesy of VOLVO CARS CORPORATION

Install the gear selector cables under the heater unit on the left-hand side, down towards the hole in the firewall.

NOTE: Be extremely careful when running the rubber bellows for the gear selector cables through the hole in the firewall. Do not damage the gear selector cables.

Feed the gear selector cables through the hole slightly.

HINT: Have a colleague pull through the pre-routed cable.

Pull out the gear selector cables so that the rubber grommet is approximately 10 cm from the firewall.

INSTALLING THE GEAR SELECTOR CABLES AND GEAR SELECTOR ASSEMBLY

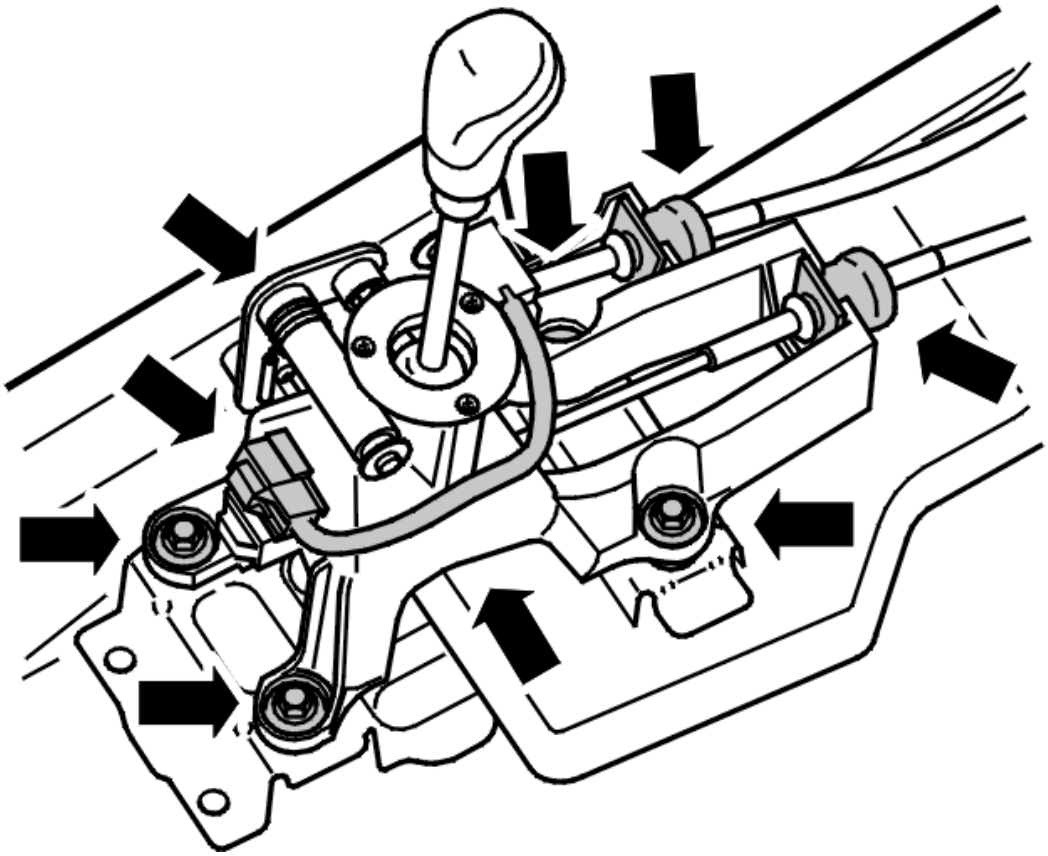

Fig. 8: Identifying Gear Selector Cables And Gear Selector Assembly
Courtesy of VOLVO CARS CORPORATION

Install:

- the gear selector cables on the levers on the gear selector assembly. Press into place by hand
- the sleeves for the gear selector cables on the gear selector assembly
- the gear selector assembly on the bodywork (M8)
- the connector on the gear selector assembly.

INSTALLING SERVICE CLIPS

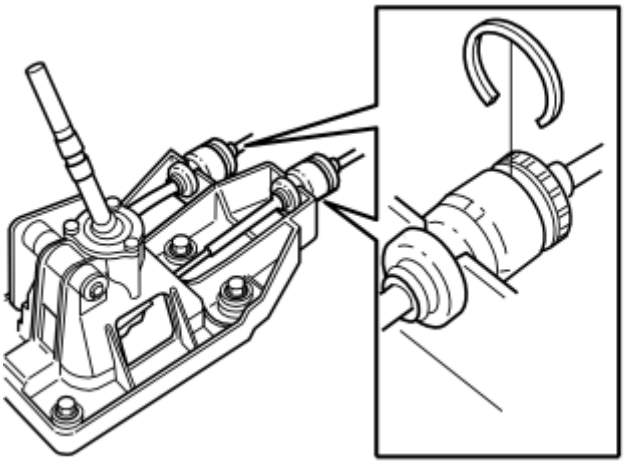

Fig. 9: Gear Selector And Clip
Courtesy of VOLVO CARS CORPORATION

NOTE: The automatic transmission has a gear selector cable while the manual transmission has two gear selector cables.

Ensure that the gear selector cable is engaged before fitting the blue clip. Press the clip into position as shown in the illustration.

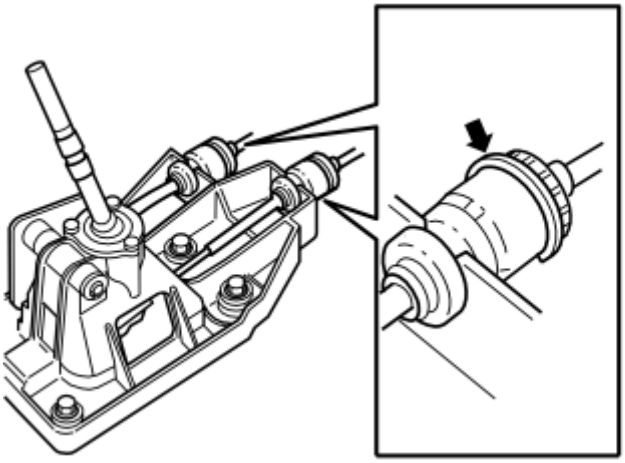

Fig. 10: Clip Positioned In Groove
Courtesy of VOLVO CARS CORPORATION

Check that the clip is positioned in the groove as shown in the illustration.

INSTALLING THE RUBBER GROMMET

Align the grommet on the studs. Install the M6 nuts.

FEEDING IN THE GEAR SELECTOR CABLE FROM THE ENGINE COMPARTMENT

Use the cable to correctly route the gear selector cables. The gear selector cable must be routed past the steering

gear and up to the gearbox bracket.

INSTALLING THE CENTRE TUNNEL CONSOLE

Install the center console. See **CENTER CONSOLE, REPLACING** .

INSTALLING THE GEAR SELECTOR CABLES ON THE GEARBOX

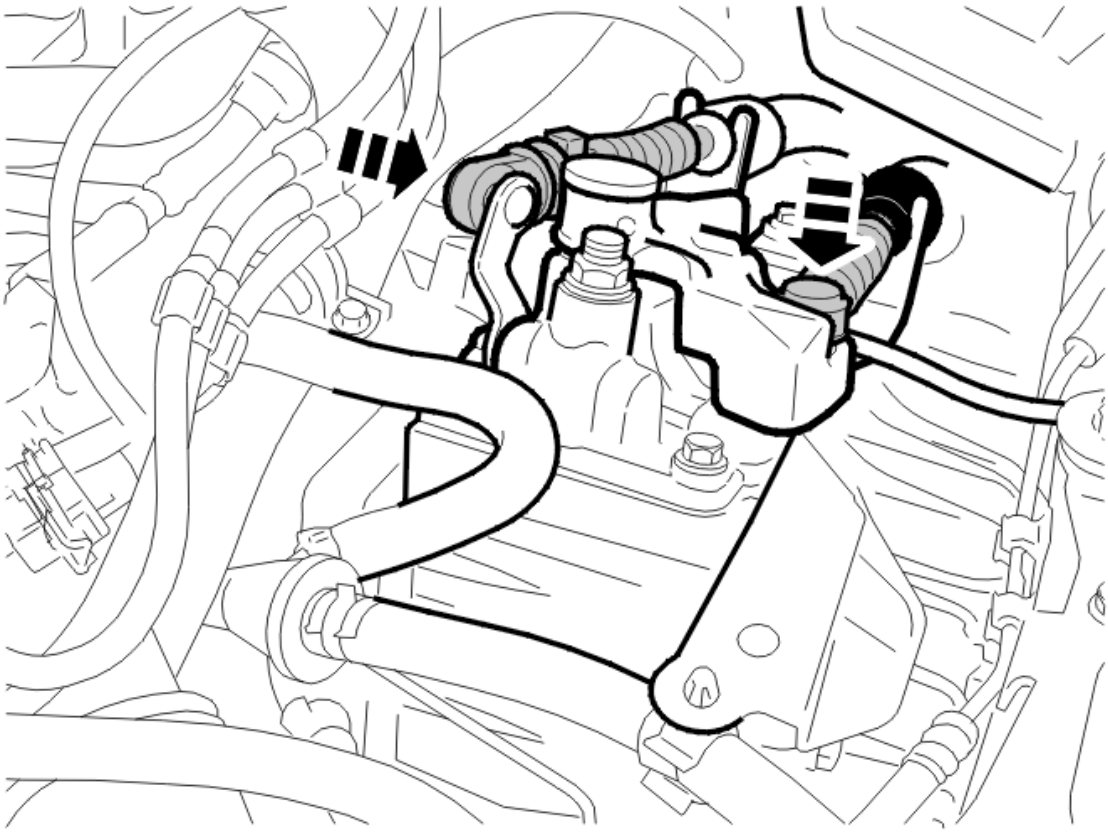

Fig. 11: Connecting Gear Selector Cables On Bracket And Inner Lever
Courtesy of VOLVO CARS CORPORATION

NOTE: Connect the gear selector cable with the white sleeve to the inner hole on the bracket and the inner lever to the gearbox.

Release the adjuster on the mechanical cable before installing it.

Install:

- the gear selector cables on the bracket
- the outer gear selector cable on the gear selector cable. Press into place by hand.

Fig. 12: Identifying Gear Selector Lever
Courtesy of VOLVO CARS CORPORATION

Check that the gear selector lever is in neutral.

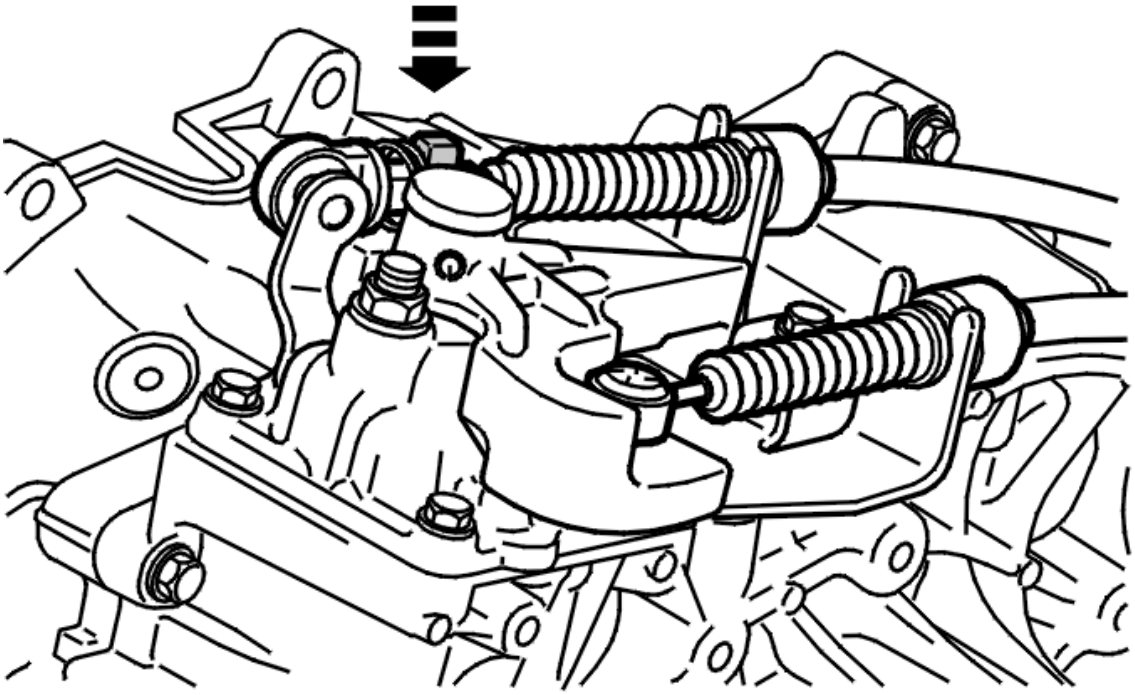

Fig. 13: Installing Inner Gear Selector Cable On Lever
Courtesy of VOLVO CARS CORPORATION

Install the inner gear selector cable on the lever. Press into place by hand.

Press the adjuster into place so that it is locked on the cable.

INSTALLING SERVICE CLIPS

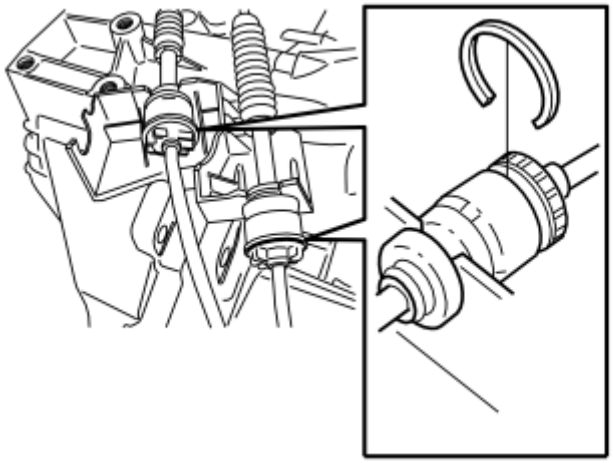

Fig. 14: Gear Selector Cable And Clip
Courtesy of VOLVO CARS CORPORATION

NOTE: The automatic transmission has a gear selector cable while the manual transmission has two gear selector cables.

Ensure that the gear selector cable is engaged before fitting the blue clip. Press the clip into position as shown in the illustration.

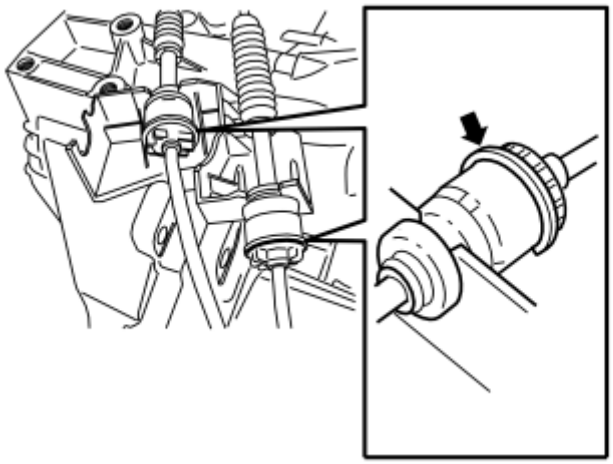

Fig. 15: Clip Positioned In Groove
Courtesy of VOLVO CARS CORPORATION

Check that the clip is positioned in the groove as shown in the illustration.

INSTALLING THE AIR CLEANER (ACL) HOUSING

Install the air cleaner (ACL) housing, including all hoses and electrical terminals.

FINAL CHECK

Check that the gear positions are working.

GEARBOX INPUT SPEED SENSOR, REPLACING

NOTE: The illustrations in this service information are used for different model years and/or models. Some variation may occur. However, the essential information in the illustrations is always correct.

REMOVING/INSTALLING

REMOVAL

Remove/install the control module. See: **CONTROL SYSTEM, REPLACING** .

INSTALLATION

NOTE: For tightening torques, see: SUMMARY OF TIGHTENING TORQUES FOR

SPECIFIC COMPONENTS .

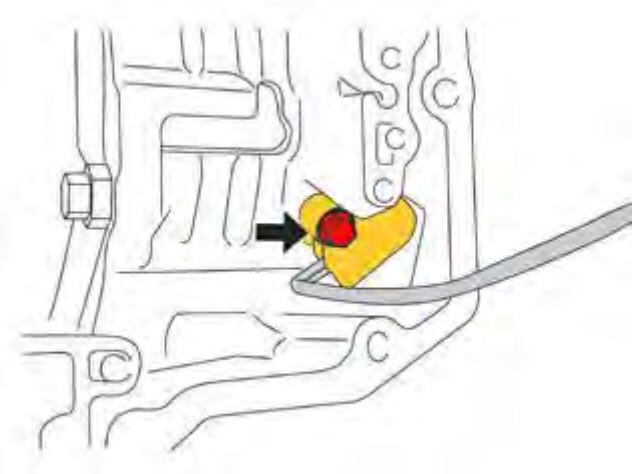

Fig. 16: Identifying Bolt
Courtesy of VOLVO CARS CORPORATION

GUIDE SLEEVE, KEY INTERLOCK CABLE

Fig. 17: Center Console Assembly
Courtesy of VOLVO CARS CORPORATION

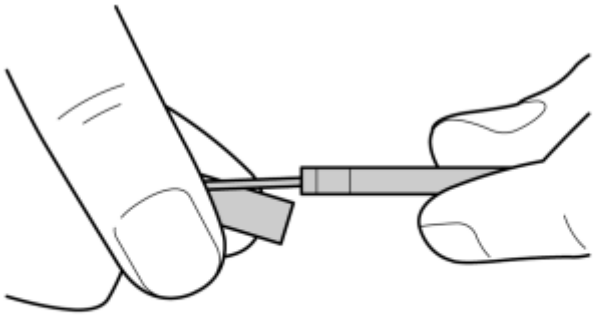

Fig. 18: Identifying Cable Pulled Out Of Cable Sleeve
Courtesy of VOLVO CARS CORPORATION

Press the spring towards the cable sleeve.

Pull the cable out of the cable sleeve (approximately 10 mm).

Remove the guide sleeve.

Remove the spring. Ensure that the broken section of the guide sleeve is removed from the cable sleeve.

Install a new guide sleeve in reverse order.

DRIVELINE/AXLES

General - Design And Function

TRANSMISSION (AW50/51 AWD; AW55-50/51SN; 2003-2007)

DESIGN

see **DESIGN**

FUNCTION

see **FUNCTION**

OVERVIEW

see **OVERVIEW**

TRANSMISSION (TF-80SC; TF-80SC AWD; 2011-2012)

DESIGN AND FUNCTION

UPDATES IN AUTOMATIC TRANSMISSION TF80-SC GENERATION 2

1

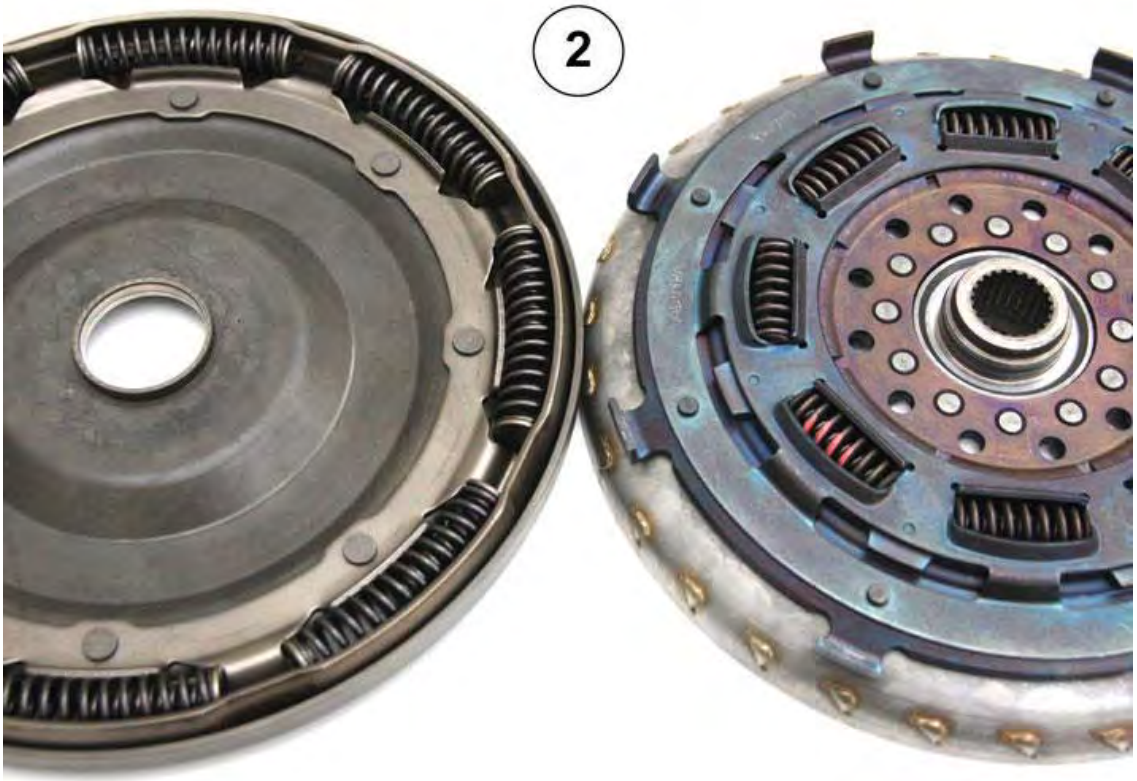
2

Fig. 1: Tarered Bearing, Torque Converter
Courtesy of VOLVO CARS CORPORATION

3

4

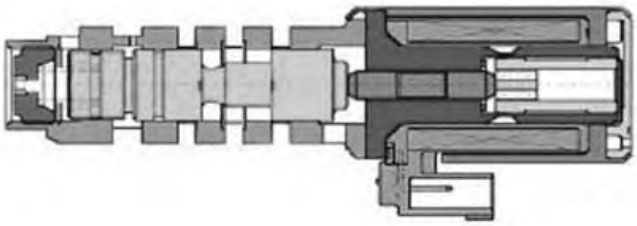

5

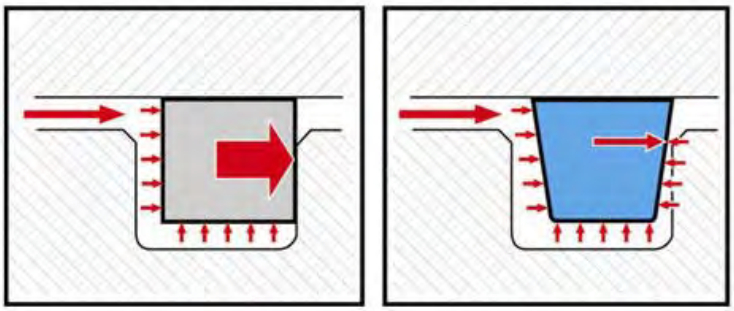

6

Fig. 2: TCM, Solenoid, Seal Rings, And Friction Pad
Courtesy of VOLVO CARS CORPORATION

1. **Tapered bearings** - To reduce the inner friction losses, some of the tapered bearings now have bigger diameter and shorter length of bearing rollers. This change gives fewer rollers and thus less friction.
2. **Torque converter** - To reduce noise/sound when locking at lower engine rpms, the LTD (Long Travel Damper) has been provided with an inner circle of damping springs
3. **TCM** (**T** ransmission **C** ontrol **M** odule) - TCM has the same hardware as before but the software has been changed.
4. **Solenoids** - Faster shifting has been achieved by making all linear solenoids that control the clutch systems more effective. This change has been achieved by removing the hydraulic part of the solenoids. Further, the magnetic flow in the solenoid has been increased and gap between thrust piston and magnetic coil has been reduced to increase power.
5. **Seal rings** - New seal rings with smaller sealing surface contributes to reducing the inner friction. By tapering the seal, the sealing surface is reduced as is the pressure on the sealing surface.
6. **Friction pads** - The new friction pads on the discs reduce the impact of drag losses between the friction pads. This has been achieved by optimizing the oil flow channels between the friction surfaces.

TRANSMISSION COMPONENTS

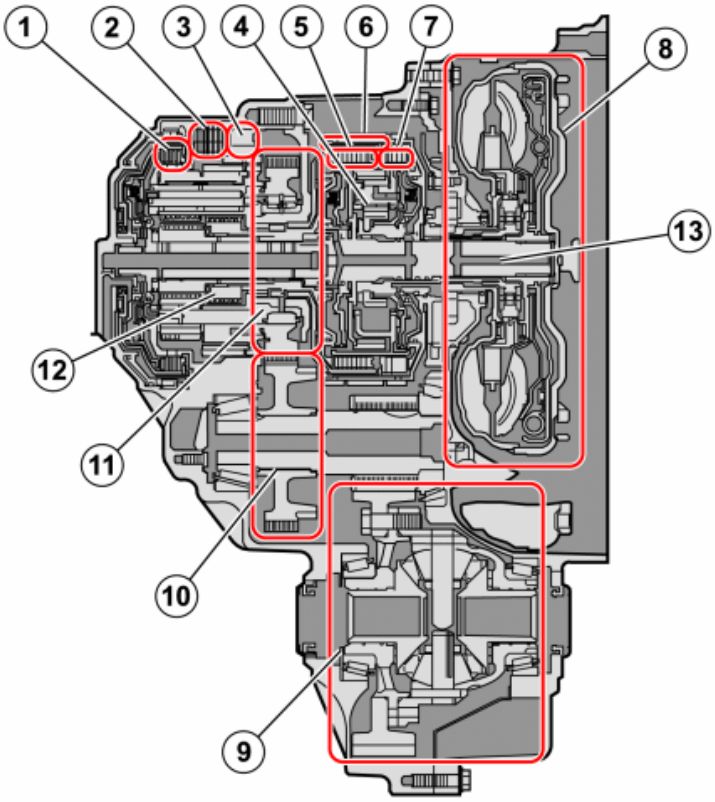

Fig. 3: Identifying Cross-Section Of Transmission
Courtesy of VOLVO CARS CORPORATION

Number	Designation	Number	Designation
1	Clutch C2	8	Torque converter
2	Brake B2	9	Differential unit
3	Freewheel F1	10	Driven counter rotating gear
4	Front planetary train	11	Driven gear
5	Clutch C1	12	Rear planetary train, Ravigneaux
6	Brake B1	13	Input shaft
7	Clutch C3		

TORQUE CONVERTER WITH LOCK-UP

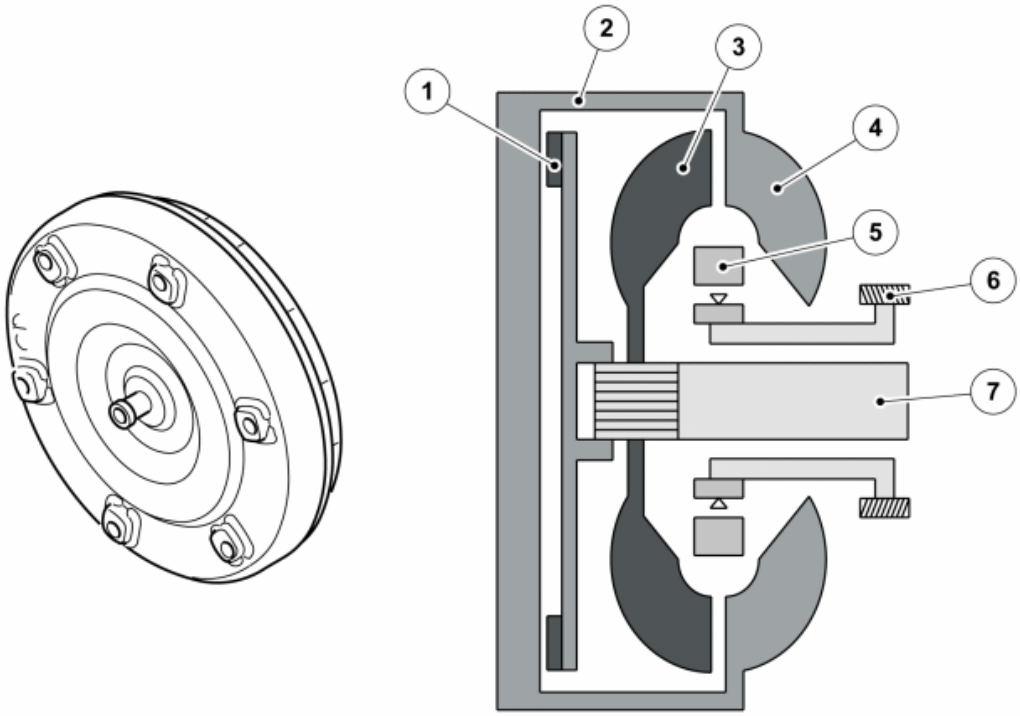

Fig. 4: Identifying Cross Section Of Torque Converter With Lock-Up
Courtesy of VOLVO CARS CORPORATION

Number	Designation	Number	Designation
1	Lock-up-clutch	5	Stator
2	Casing	6	Oil pump
3	Turbine rotor	7	Input shaft
4	Pump rotor		

The torque converter is between the engine and the automatic transmission. It consists of a round metal casing

which contains three impellers. The torque converter is filled with oil. The first impeller, pump rotor, is secured in the torque converter casing, which is connected to the engine's crankshaft via a carrier plate. The pump rotor rotates with the crankshaft.

The second impeller, the turbine rotor, is connected to the transmission's input shaft and is driven by the oil that is circulated by the pump rotor.

The third impeller, the stator, is located between the pump rotor and the turbine rotor.

There is a hydraulically controlled lock-up clutch with a friction plate in the torque converter. The turbine rotor can connect with the torque converter housing via the lock-up clutch. This reduces fuel consumption.

The torque converter functions like a hydraulic automatic clutch. At idle, the pump action is too weak to drive the turbine rotor and thus the vehicle is stationary. When the engine speed is increased the turbine rotor starts to drive in a smooth way. Thanks to the stator rotor, the torque converter can also reinforce the engine's torque when starting and low driving speed.

The rotating impellers and the oil in the torque converter "slip" slightly. This gives a certain power loss, which slightly increases fuel consumption.

When the vehicle is moving the torque converter's reinforcement of the engine's torque is not needed. In this situation the lock-up function is activated and, at a certain speed, mechanically connects the transmission's input shaft with the engine. This is automatic and cannot be affected by the driver. The engine speed drops and, since the torque converter's slipping disappears, fuel consumption is also reduced.

PLANETARY TRAIN

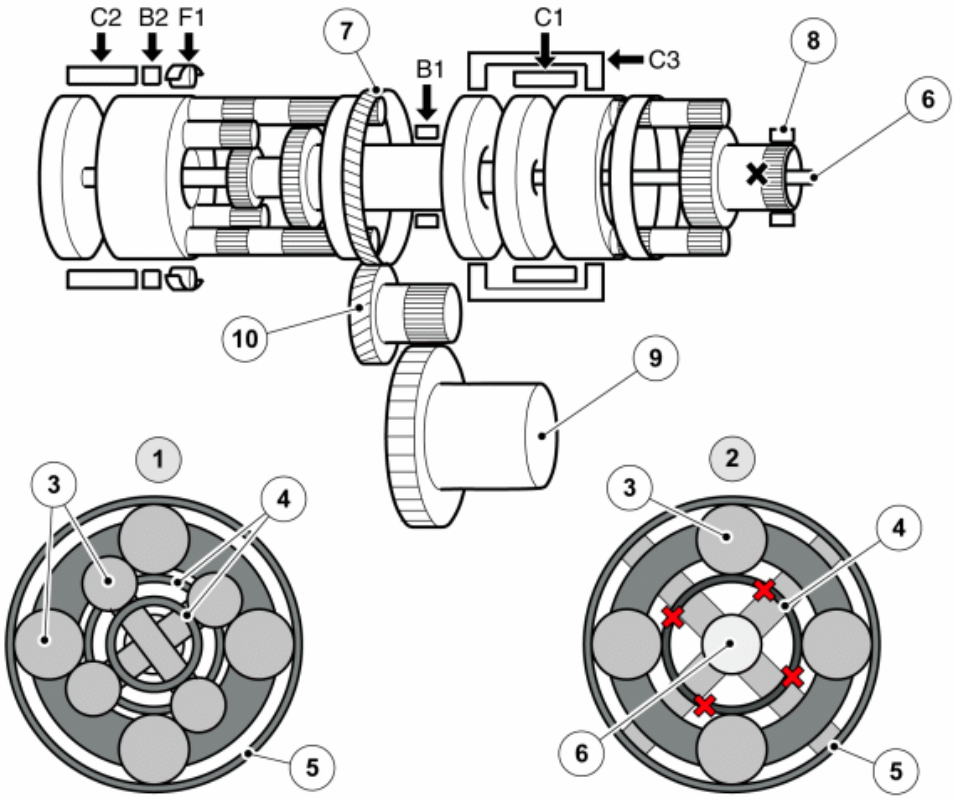

Fig. 5: Identifying Planetary Train
Courtesy of VOLVO CARS CORPORATION

X = locked

Number	Designation	Number	Designation
1	Rear planetary train, (Ravigneaux)	6	Input shaft
2	Front planetary train	7	Driven gear
3	Planetary gear	8	Oil pump
4	Sun gear	9	Differential
5	Ring gear	10	Driven counter rotating gear

Unique to the TF-80SC is a Ravigneaux planetary gear connected in series to a conventional planetary gear. The conventional planetary gear creates a reduction in RPM in the Ravigneaux planetary gear for 1st gear up to 5th gear and reverse.

The planetary gear's ratios are controlled by 3 clutches (C1, C2, C3) and 2 brakes (B1, B2).

The number of planetary gears depends on the engine's cylinder displacement and can therefore differ from what is shown here.

Planetary train, Ravigneaux

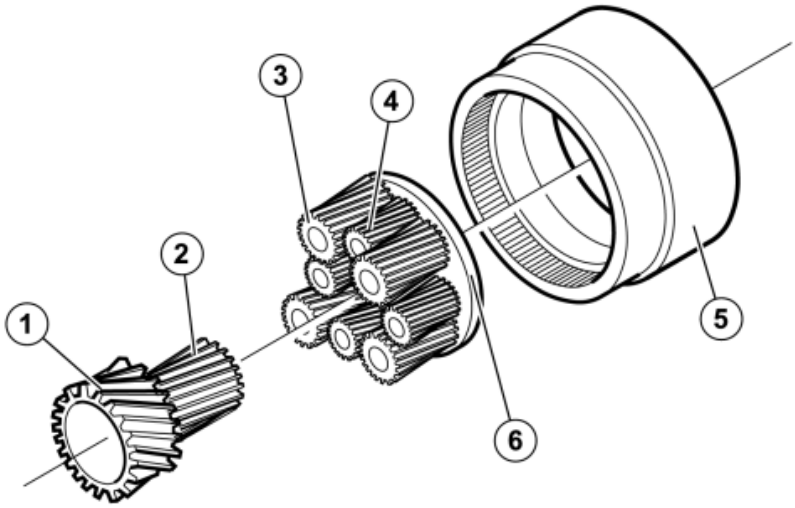

Fig. 6: Identifying Ravigneaux Planetary Train
Courtesy of VOLVO CARS CORPORATION

Number	Designation	Number	Designation
1	Large sun gear	4	Inner planetary gear
2	Small sun gear	5	Ring gear
3	Outer planetary gear	6	Planetary wheel carrier

The characteristic of a Ravigneaux planetary train is that several gears can be used in comparison to a conventional planetary train. It is compact (takes up little room) in relation to the number of possible ratios. The Ravigneaux planetary train has two sun gears of different diameters and sets of two planetary gears, an inner and outer set. The inner planetary gears are constantly connected to the outer planetary gears and the small sun gear. The outer planetary gears are constantly connected to the ring gear and large sun gear.

The planetary train has a common planetary gear carrier for both sets of planetary gears.

Principles of function

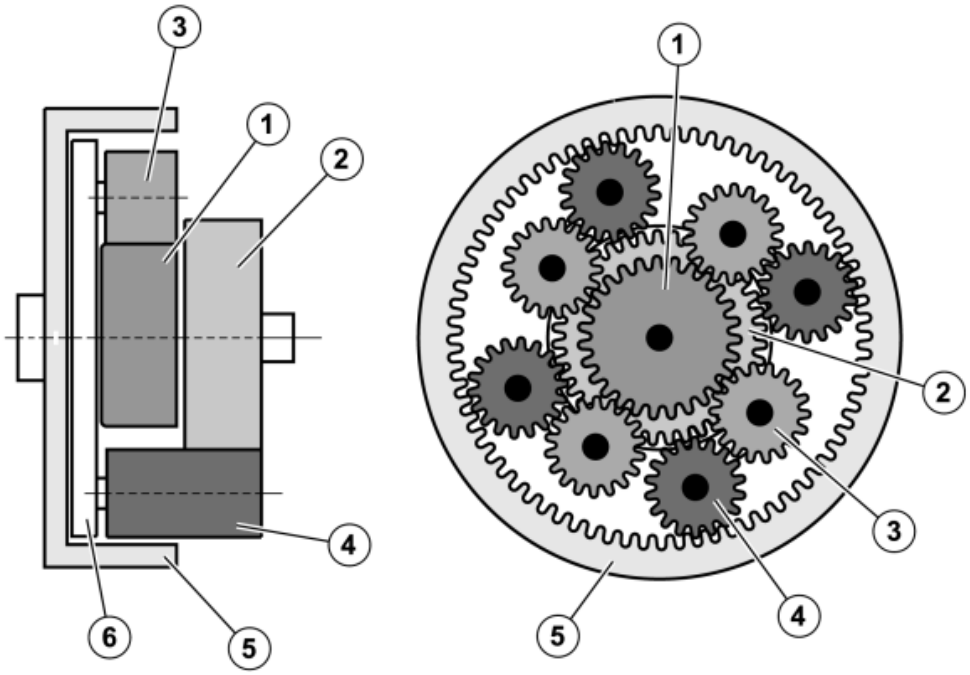

Fig. 7: Identifying Cross-Section Of Ravigneaux Planetary Train
Courtesy of VOLVO CARS CORPORATION

Number	Designation	Number	Designation
1	Small sun gear	4	Outer planetary gear
2	Large sun gear	5	Ring gear
3	Inner planetary gear	6	Planetary wheel carrier

The ratios are obtained through different combinations of locked and/or connected components. The table displays the principle for how the ratios are obtained from large ratio, 1, to small ratio, 6, and counter rotation (i. e. reverse with large ratio).

Combination	Power in	Locked	Power out
1	Small sun gear	Planetary gear carrier	Ring gear
2	Small sun gear	Large sun gear	Ring gear
3	Small sun gear and large sun gear	No component	Ring gear
4	Small sun gear and planetary gear carrier	No component	Ring gear
5	Large sun gear and planetary gear carrier	No component	Ring gear
6	Planetary gear carrier	Large sun gear	Ring gear

Reverse	Large sun gear	Planetary gear carrier	Ring gear

OIL PUMP

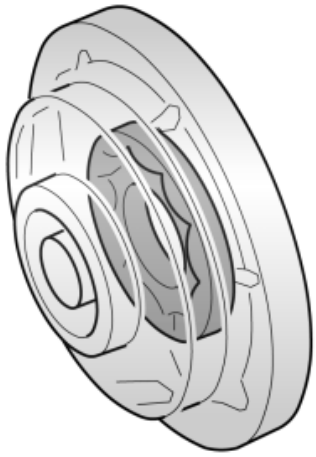

Fig. 8: Identifying Oil Pump
Courtesy of VOLVO CARS CORPORATION

The oil pump is of "non-crescent" type and is located after the torque converter. It is driven by the engine's crankshaft via the torque converter housing.

The oil pump supplies the hydraulics with oil and supplies the other components of the transmission with oil for lubrication and cooling. Excess oil is routed back to the oil sump.

OIL COOLER

The oil is routed in/out in separate lines to the external oil cooler.

THE HYDRAULIC SYSTEM

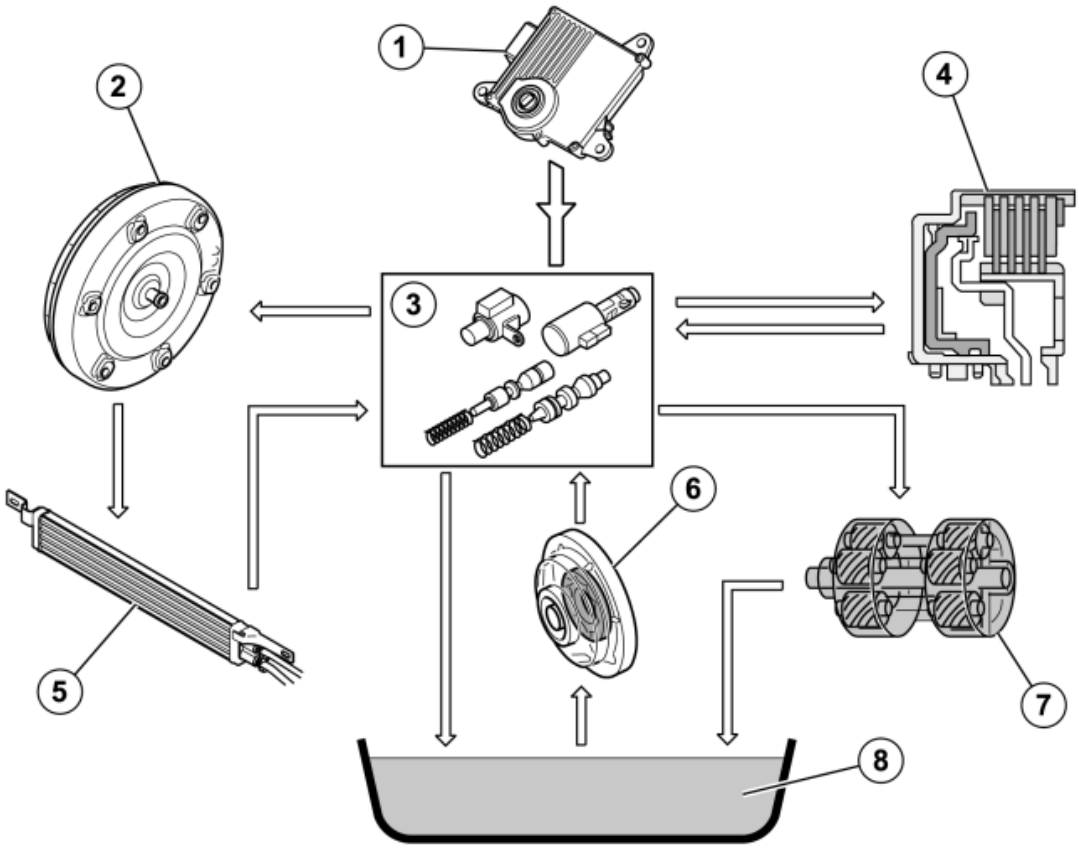

Fig. 9: Identifying Hydraulic System
Courtesy of VOLVO CARS CORPORATION

Number	Designation	Number	Designation
1	Transmission control module (TCM)	5	Oil cooler
2	Torque converter	6	Oil pump
3	Valves and solenoids	7	Planetary train
4	Clutches and brakes	8	Oil sump

The transmission's hydraulic system consists of oil pump, torque converter, hydraulic control system and oil cooler.

The solenoids, which control the hydraulic valves, are located in the transmission's control system, which are mounted on the front edge of the transmission. The solenoids are activated by the Transmission control module (TCM).

The oil pump supplies the hydraulics with oil and supplies the other components of the transmission with oil for lubrication and cooling. Excess oil is routed back to the oil sump.

CAUTION: The transmission oil differs from conventional ATF oil properties. Always use transmission oil that is specified for this transmission. Otherwise the

function of the transmission will be damaged.

The oil level is checked though a level pipe (transmission does not have conventional oil dipstick).

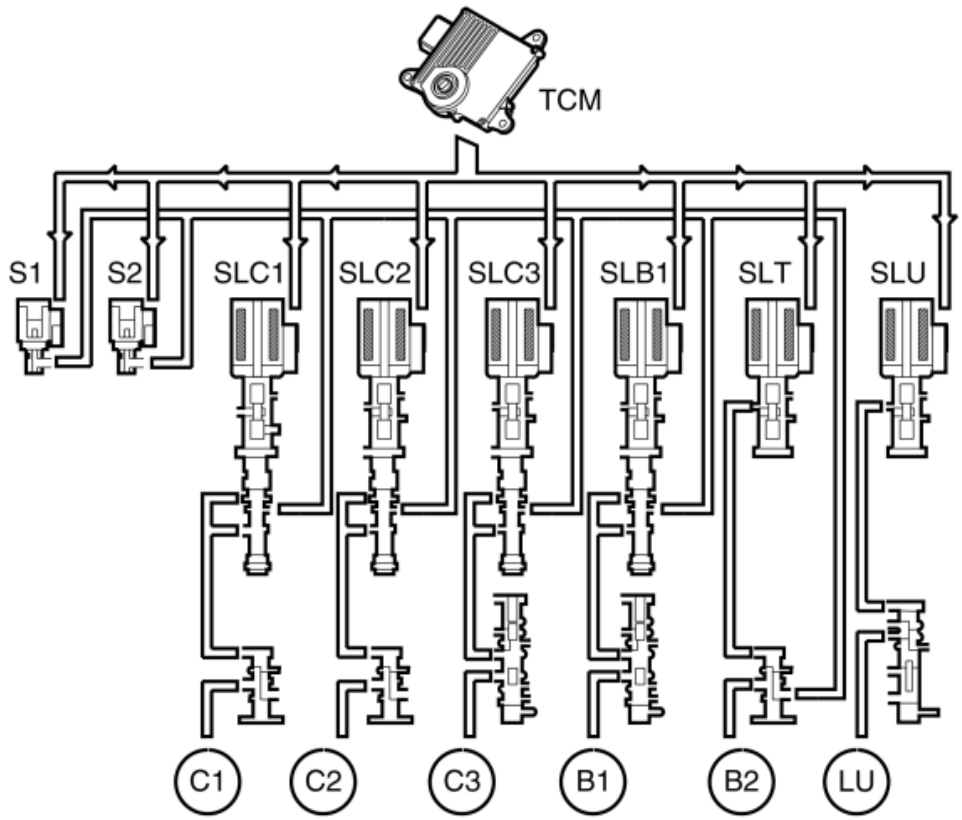

Fig. 10: Identifying Transmission Control Module (TCM), Solenoids And Sensors
Courtesy of VOLVO CARS CORPORATION

S1 = Solenoid, S1	SLU = Lock-up solenoid, SLU
S2 = Solenoid, S2	C1 = Clutch, C1
SLC1 = Line pressure solenoid, SLC1	C2 = Clutch, C2
SLC2 = Line pressure solenoid, SLC2	C3 = Clutch, C3
SLC3 = Line pressure solenoid, SLC3	B1 = Brake, B1
SLB1 = Line pressure solenoid, SLB1	B2 = Brake, B2
SLT = Line pressure solenoid, SLT	LU = Lock-up

Shifting occurs by the oil pump building up hydraulic pressure. The hydraulic valves, which are controlled by their respective solenoids, send the hydraulic pressure to the relevant clutch, brake or lock-up depending on which signals come from the Transmission control module (TCM).

Hydraulic pressure chamber

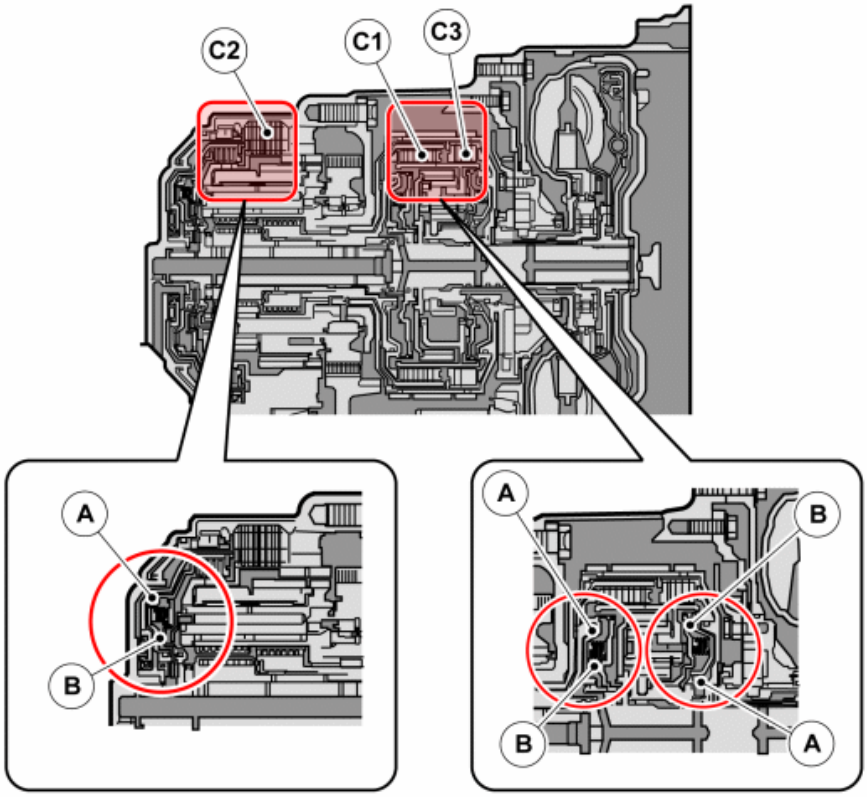

Fig. 11: Identifying Hydraulic Pressure Chambers
Courtesy of VOLVO CARS CORPORATION

A = Piston's hydraulic pressure chamber

B = Counter acting hydraulic pressure chamber

When the rotation of the clutch increases, the centrifugal force affects the oil inside the clutch. The hydraulic pressure increases and the clutch engages. The centrifugal force means that a difference occurs in the rotation between the input and output shafts, which can mean a shift judder. To solve this, there is an extra pressure chamber opposite the piston's hydraulic pressure chamber. This extra pressure chamber means that the centrifugal force also works in the opposite direction and therefore affects the pressure from the piston's hydraulic pressure chamber. In addition, the clutch does not engage too soon.

GEAR SELECTOR ASSEMBLY

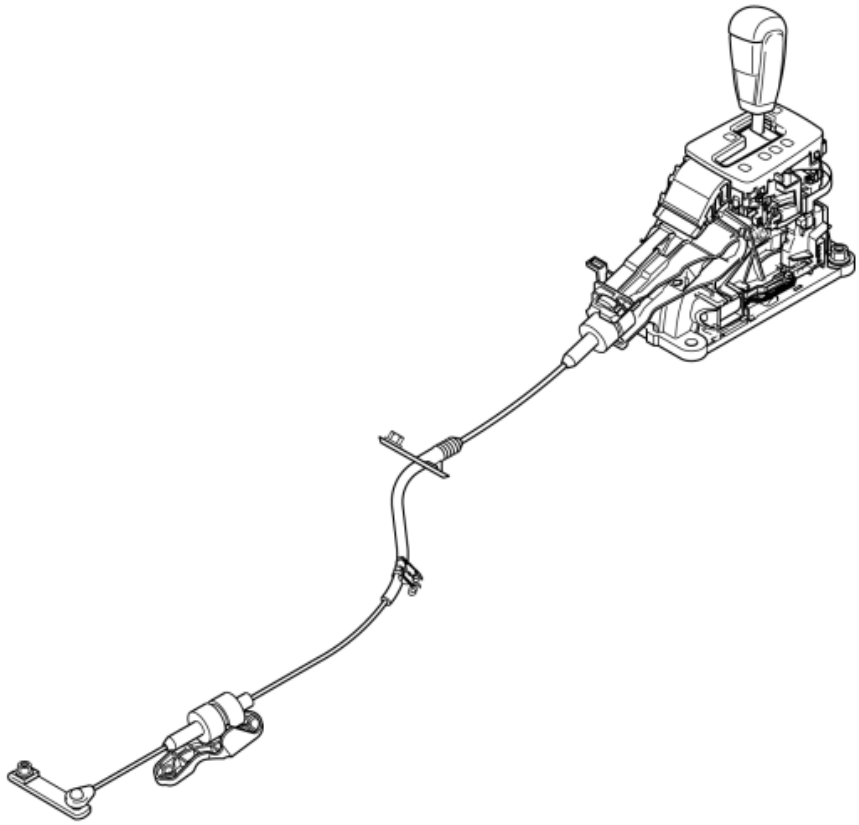

Fig. 12: Identifying Gear Selector Assembly
Courtesy of VOLVO CARS CORPORATION

The gear selector assembly is in the tunnel console. It is mechanically connected to the transmission by a cable which moves the gear valve. The gear valve is integrated in the Transmission control module (TCM). The gear selected is indicated by a row of LEDs in the top panel on the gear selector assembly.

Gear selector assemblies with Geartronic, in addition to P/R/N/D modes, have a manual (M) shifting mode. The manual gear positions can be selected at any point while driving. The engaged gear is locked until the driver selects another gear. The automatic transmission only down shifts if the vehicle slows down to very low speed. To downshift the gear selector must be moved to minus (-). To upshift the gear selector must be moved to plus (+). At start, 3rd is the highest possible gear.

The engine can only be started in position P or N.

THE DIFFERENT GEAR SELECTOR POSITIONS:

Position	Meaning	Function
P	Park	The transmission's output shaft is locked, so that the vehicle does not roll. This position should be selected when the engine is started or the vehicle is parked.
R	Reverse	Reverse gear. This mode may only be engaged when the vehicle is completely

		stationary.
N	Neutral	Neutral means that no gear is engaged. The engine can start and run freely.
D	Drive	When D is engaged, the engine drives the vehicle forward except when idling. The D position is used for all forward motion. Up and down shifting occurs automatically depending on acceleration and speed.
M	Manual	This position allows the driver to change gears manually.

POWER FLOW

Clutches, brakes and freewheel

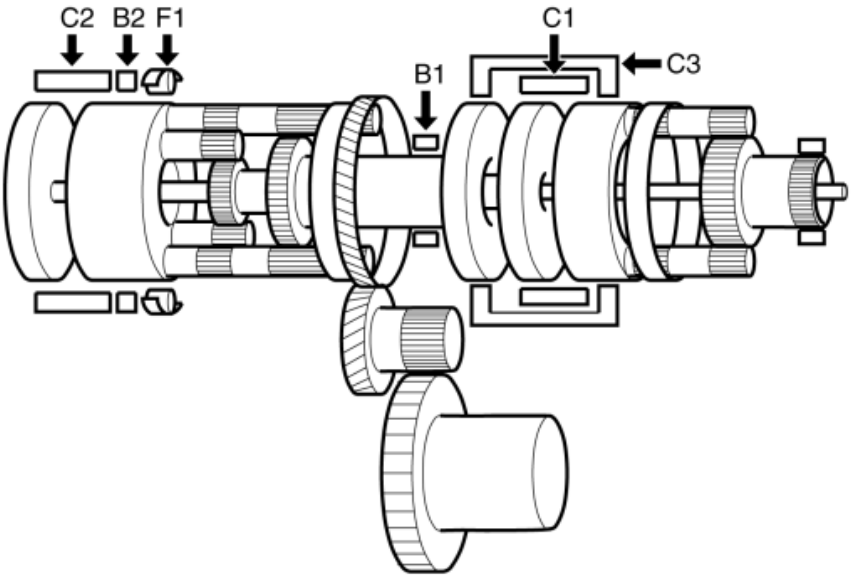

Fig. 13: Identifying Clutches, Brakes And Freewheel
Courtesy of VOLVO CARS CORPORATION

Clutch/Brakes	Function
Clutch C1	Connects the front planetary gear carrier with the rear planetary train's small sun gear.
Clutch C2	Connects the input shaft with the rear planetary gear carrier.
Clutch C3	Connects the front planetary gear carrier with the rear planetary train's large sun gear.

Brake B1	Locks the rear planetary train's large sun gear.
Brake B2	Locks the rear planetary train's planetary gear carrier.
Freewheel F1	Locks the rear planetary gear carrier so that it does not go counter-clockwise.

Position D, 1st gear

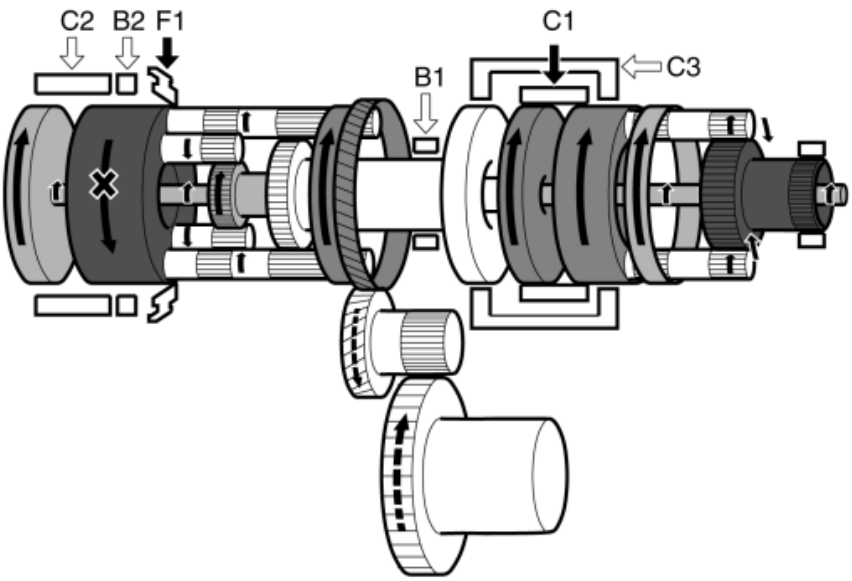

Fig. 14: Identifying Position D For 1st Gear
Courtesy of VOLVO CARS CORPORATION

Solenoid						Clutch			Brakes		Freewheel
SLC1	SLC 2	SLC 3	SLB1	S1	S2	C1	C2	C3	B1	B2	F1
-	X	X	X	-	-	X	-	-	-	-*	X

X = activated

- = not activated

* B2 is only active during engine braking.

Planetary train unit	Power in	Locked	Power out
Front	Ring gear	Sun gear	Planetary gear carrier
Rear	Small sun gear	Planetary gear carrier	Ring gear

The input shaft rotates clockwise, the same direction as the torque converter's turbine rotor.

The front planetary train's ring gear rotates clockwise.

The front planetary train's planetary gear rotates clockwise on its shafts. Because the front planetary train's sun gear is locked by the oil pump, the planetary train's planetary gear presses against the front planetary train's ring gear, and therefore rotates around the sun gear. Because the front planetary train's ring gear has inner teeth, the direction of rotation does not change.

The front planetary gear carrier rotates clockwise.

Clutch C1 rotates clockwise and connects the front planetary gear carrier with the rear planetary train's small sun gear.

Rear planetary train's sun gear rotates clockwise.

The rear planetary train's inner planetary gear rotates counter-clockwise on its shaft. The rear planetary gear carrier attempts to rotate counter-clockwise but is prevented by freewheel F1.

The rear planetary train's outer planetary gear rotates clockwise on its shafts. The rear planetary train's small sun gear rotates counter-clockwise, at idle.

The rear planetary train's ring gear rotates clockwise using the rear planetary train's outer planetary gear. Because the rear planetary train's ring gear has inner teeth, the direction of rotation does not change.

The driven gear rotates clockwise. Because the rear planetary train's ring gear is on the driven gear, the driven gear rotates in the same direction as the rear planetary train's ring gear.

The counter-rotating gear rotates counter-clockwise.

The differential's ring gear rotates clockwise.

Position D, 2nd gear

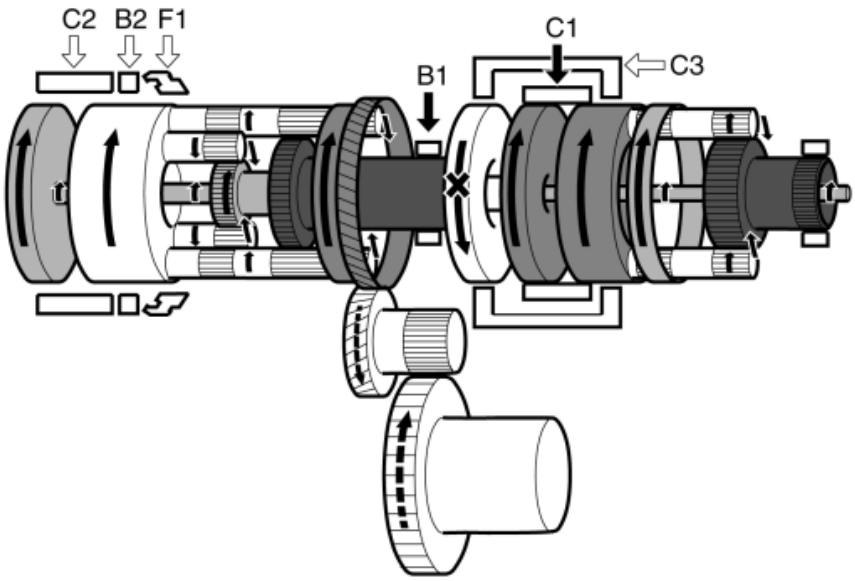

Fig. 15: Identifying Position D For 2nd Gear
Courtesy of VOLVO CARS CORPORATION

Solenoid						Clutch			Brakes		Freewheel
SLC1	SLC 2	SLC 3	SLB1	S1	S2	C1	C2	C3	B1	B2	F1
-	X	X	-	-	-	X	-	-	X	-	-

X = activated

- = not activated

Planetary train unit	Power in	Locked	Power out
Front	Ring gear	Sun gear	Planetary gear carrier
Rear	Small sun gear	Large sun gear	Ring gear

The input shaft rotates clockwise, the same direction as the torque converter's turbine rotor.

The front planetary train's ring gear rotates clockwise.

The front planetary train's planetary gear rotates clockwise on its shafts. Because the front planetary train's sun gear is locked by the oil pump, the planetary train's planetary gear presses against the front planetary train's ring gear, and therefore rotates around the sun gear. Because the front planetary train's ring gear has inner teeth, the

direction of rotation does not change.

The front planetary gear carrier rotates clockwise.

Clutch C1 rotates clockwise and connects the front planetary gear carrier with the rear planetary train's small sun gear.

Rear planetary train's sun gear rotates clockwise.

The rear planetary train's large sun gear is locked by brake B1.

The rear planetary train's inner planetary gear rotates counter-clockwise on its shaft.

The rear planetary train's outer planetary gear rotates clockwise on its shafts.

The rear planetary train's ring gear rotates clockwise using the rear planetary train's outer planetary gear. Because the rear planetary train's ring gear has inner teeth, the direction of rotation does not change.

The driven gear rotates clockwise. Because the rear planetary train's ring gear is on the driven gear, the driven gear rotates in the same direction as the rear planetary train's ring gear.

The counter-rotating gear rotates counter-clockwise.

The differential's ring gear rotates clockwise.

Engine brake

When the engine brake works, the driven force is transferred from the tires.

Position D, 3rd gear

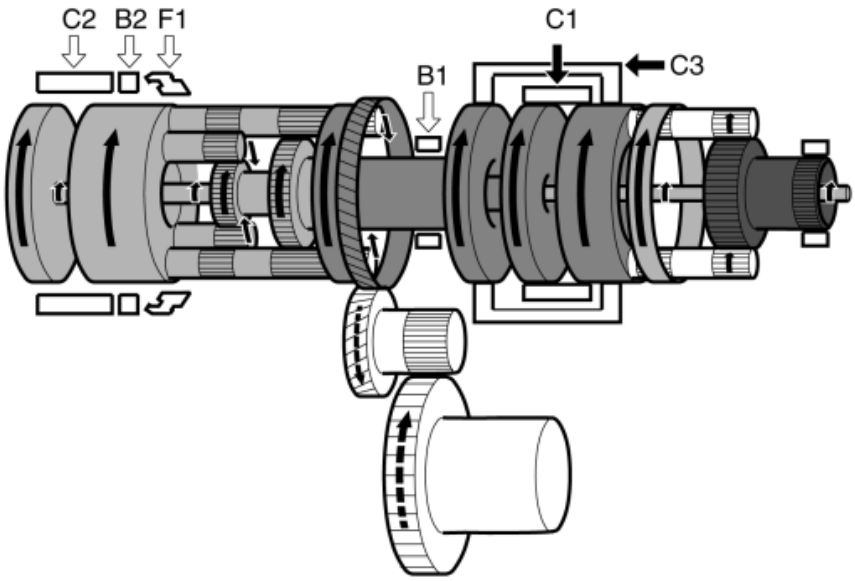

Fig. 16: Identifying Position D For 3rd Gear
Courtesy of VOLVO CARS CORPORATION

Solenoid						Clutch			Brakes		Freewheel
SLC1	SLC 2	SLC 3	SLB1	S1	S2	C1	C2	C3	B1	B2	F1
-	X	-	X	-	-	X	-	X	-	-	-

X = activated

- = not activated

Planetary train unit	Power in	Locked	Power out
Front	Ring gear	Sun gear	Planetary gear carrier
Rear	Small sun gear and large sun gear	No component	Ring gear

The input shaft rotates clockwise, the same direction as the torque converter's turbine rotor.

The front planetary train's ring gear rotates clockwise.

The front planetary train's planetary gear rotates clockwise on its shafts. Because the front planetary train's sun gear is locked by the oil pump, the planetary train's planetary gear presses against the front planetary train's ring

gear, and therefore rotates around the sun gear. Because the front planetary train's ring gear has inner teeth, the direction of rotation does not change.

The front planetary gear carrier rotates clockwise.

Clutch C1 rotates clockwise and connects the front planetary gear carrier with the rear planetary train's small sun gear.

Clutch C3 rotates clockwise and connects the front planetary gear carrier with the rear planetary train's large sun gear.

The rear planetary train rotates clockwise. Because the rear planetary train's inner and outer planetary gears are in constant engagement with each other, they are kinetically locked in relation to each other. The kinetic energy from both the rear planetary train's sun gears is therefore transferred to the rear planetary train's ring gear.

The rear planetary train's ring gear rotates clockwise.

The driven gear rotates clockwise. Because the rear planetary train's ring gear is on the driven gear, the driven gear rotates in the same direction as the rear planetary train's ring gear.

The counter-rotating gear rotates counter-clockwise.

The differential's ring gear rotates clockwise.

Engine brake

When the engine brake works, the driven force is transferred from the tires.

Position D, 4th gear

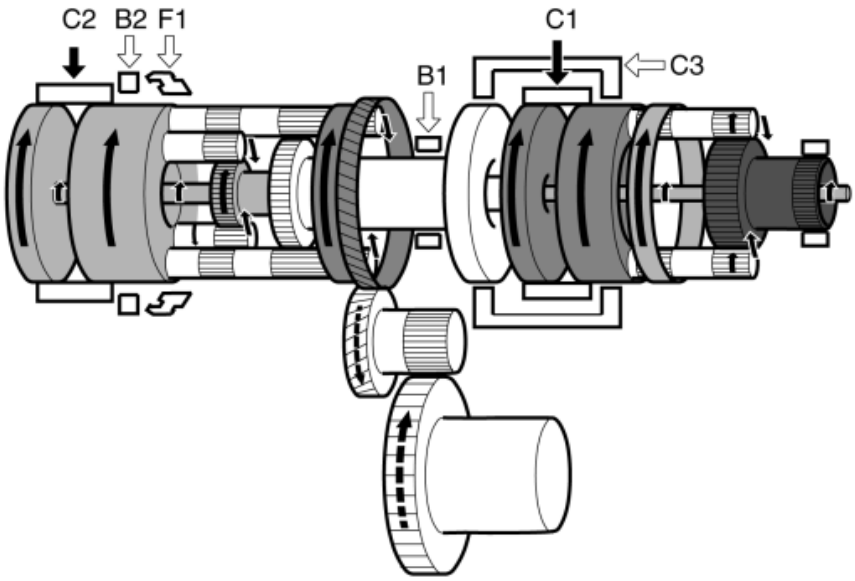

Fig. 17: Identifying Position D For 4th Gear
Courtesy of VOLVO CARS CORPORATION

Solenoid						Clutch			Brakes		Freewheel
SLC1	SLC 2	SLC 3	SLB1	S1	S2	C1	C2	C3	B1	B2	F1
-	-	X	X	-	-	X	X	-	-	-	-

X = activated

- = not activated

Planetary train unit	Power in	Locked	Power out
Front	Ring gear	Sun gear	Planetary gear carrier
Rear	Small sun gear and planetary gear carrier	No component	Ring gear

The input shaft rotates clockwise, the same direction as the torque converter's turbine rotor.

The front planetary train's ring gear rotates clockwise.

The front planetary train's planetary gear rotates clockwise on its shafts. Because the front planetary train's sun gear is locked by the oil pump, the planetary train's planetary gear presses against the front planetary train's ring

gear, and therefore rotates around the sun gear. Because the front planetary train's ring gear has inner teeth, the direction of rotation does not change.

The front planetary gear carrier rotates clockwise.

Clutch C1 rotates clockwise and connects the front planetary gear carrier with the rear planetary train's small sun gear.

The intermediate shaft rotates clockwise, the same direction as the input shaft.

Clutch C2 rotates clockwise.

The rear planetary gear carrier rotates clockwise.

The rear planetary train's inner planetary gear rotates clockwise on its shafts.

The rear planetary train's outer planetary gear rotates counter-clockwise on its shafts.

The rear planetary train's ring gear rotates clockwise. Because the rear planetary train's outer planetary gear rotation pulls away from the rear planetary gear carrier's rotation, the ring gear's speed is lower than the speed at the planetary carrier.

The driven gear rotates clockwise. Because the rear planetary train's ring gear is on the driven gear, the driven gear rotates in the same direction as the rear planetary train's ring gear.

The counter-rotating gear rotates counter-clockwise.

The differential's ring gear rotates clockwise.

Engine brake

When the engine brake works, the driven force is transferred from the tires.

Position D, 5th gear

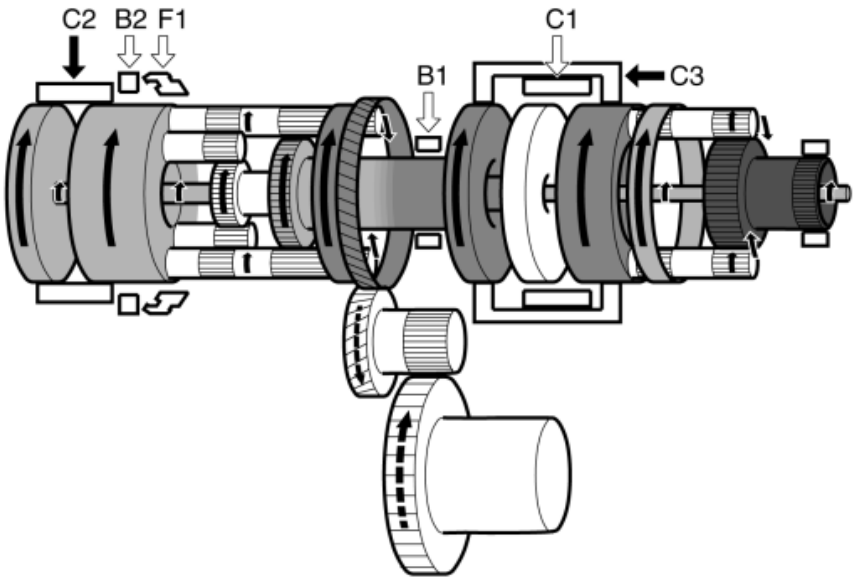

Fig. 18: Identifying Position D For 5th Gear
Courtesy of VOLVO CARS CORPORATION

Solenoid						Clutch			Brakes		Freewheel
SLC1	SLC 2	SLC 3	SLB1	S1	S2	C1	C2	C3	B1	B2	F1
X	-	-	X	-	-	-	X	X	-	-	-

X = activated

- = not activated

Planetary train unit	Power in	Locked	Power out
Front	Ring gear	Sun gear	Planetary gear carrier
Rear	Large sun gear and planetary gear carrier	No component	Ring gear

The input shaft rotates clockwise, the same direction as the torque converter's turbine rotor.

The front planetary train's ring gear rotates clockwise.

The front planetary train's planetary gear rotates clockwise on its shafts. Because the front planetary train's sun gear is locked by the oil pump, the planetary train's planetary gear presses against the front planetary train's ring

gear, and therefore rotates around the sun gear. Because the front planetary train's ring gear has inner teeth, the direction of rotation does not change.

The front planetary gear carrier rotates clockwise.

Clutch C3 rotates clockwise and connects the front planetary gear carrier with the rear planetary train's large sun gear.

The rear planetary train's large sun gear rotated clockwise. Its speed is reduced by the front planetary train so that the speed becomes lower than the speed of the input shaft.

The intermediate shaft rotates clockwise, the same direction as the input shaft.

Clutch C2 rotates clockwise.

The rear planetary gear carrier rotates clockwise.

The rear planetary train's outer planetary gear rotates clockwise. Because the rear planetary gear carrier rotates faster than the rear planetary train's large sun gear, the inner planetary gears are pressed outwards by the speed difference and rotate clockwise on their shafts.

The rear planetary train's ring gear rotates clockwise. Because the rear planetary train's outer planetary gear rotation is added to the rear planetary gear carrier's rotation, the ring gear's speed is greater than the speed at the planetary carrier.

The driven gear rotates clockwise. Because the rear planetary train's ring gear is on the driven gear, the driven gear rotates in the same direction as the rear planetary train's ring gear.

The counter-rotating gear rotates counter-clockwise.

The differential's ring gear rotates clockwise.

Engine brake

When the engine brake works, the driven force is transferred from the tires.

Position D, 6th gear

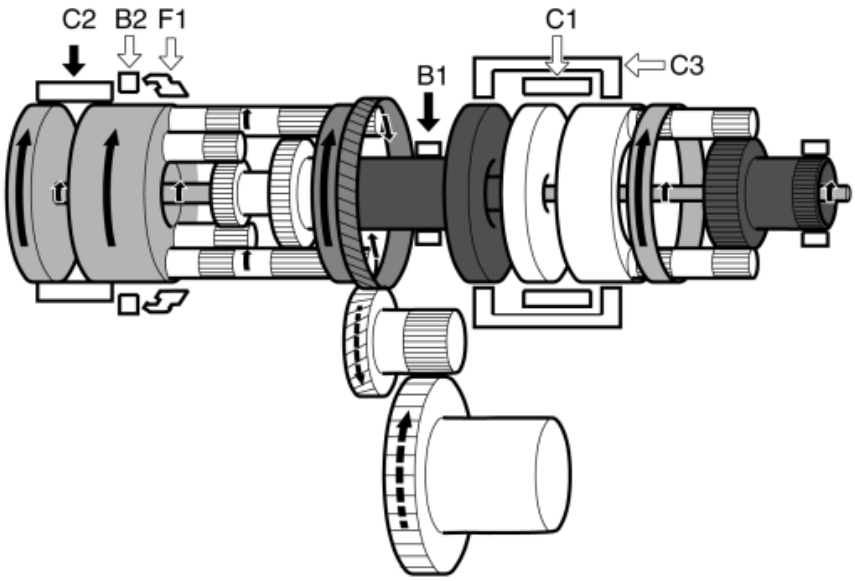

Fig. 19: Identifying Position D For 6th Gear
Courtesy of VOLVO CARS CORPORATION

Solenoid						Clutch			Brakes		Freewheel
SLC1	SLC 2	SLC 3	SLB1	S1	S2	C1	C2	C3	B1	B2	F1
X	-	X	-	-	-	-	X	-	X	-	-

X = activated

- = not activated

Planetary train unit	Power in	Locked	Power out
Front	No component	No component	No component
Rear	Planetary gear carrier	Large sun gear	Ring gear

The input shaft rotates clockwise, the same direction as the torque converter's turbine rotor.

The intermediate shaft rotates clockwise, the same direction as the torque converter's turbine rotor

Brake B1 locks the rear planetary train's large sun gear.

Clutch C2 connects the intermediate shaft with the rear planetary gear carrier.

The rear planetary gear carrier rotates clockwise.

The rear planetary train's outer planetary gear rotates clockwise on its shafts. Because the rear planetary train's large sun gear is locked, the planetary train's outer planetary gear can always increase the speed.

The rear planetary train's ring gear rotates clockwise. Because the rear planetary train's outer planetary gear rotation is added to the rear planetary gear carrier's rotation, the ring gear's speed is greater than the speed at the planetary carrier.

The driven gear rotates clockwise. Because the rear planetary train's ring gear is on the driven gear, the driven gear rotates in the same direction as the rear planetary train's ring gear.

The counter-rotating gear rotates counter-clockwise.

The differential's ring gear rotates clockwise.

Engine brake

When the engine brake works, the driven force is transferred from the tires.

Position R, reverse gear

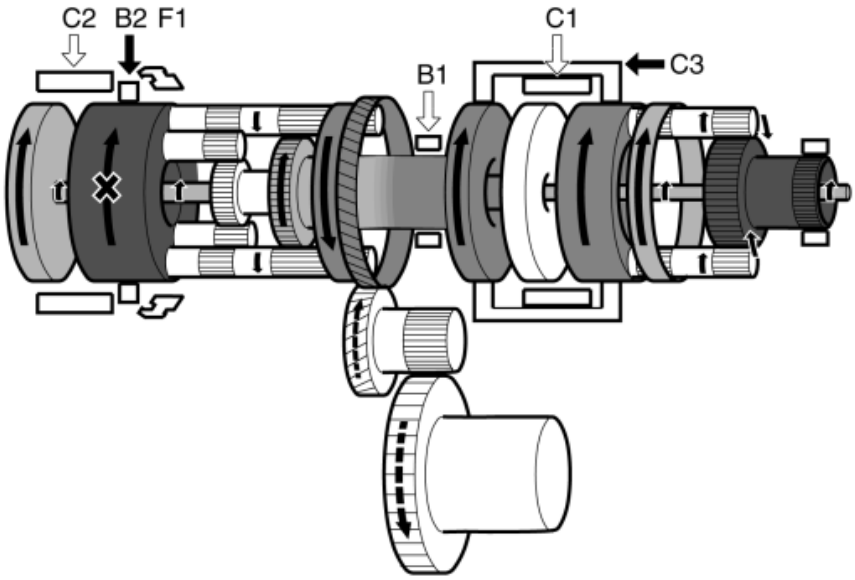

Fig. 20: Identifying Position R For Reverse Gear
Courtesy of VOLVO CARS CORPORATION

Speed	Solenoid						Clutch			Brakes		Freewheel
	SLC1	SLC 2	SLC 3	SLB1	S1	S2	C1	C2	C3	B1	B2	F1
Max 7 km/h	X	X	X	-	X	-	-	-	X	-	X	-
Above 7 km/h	X	X	X	X	X	-	-	-	-	-	X	-

X = activated

- = not activated

Planetary train unit	Power in	Locked	Power out
Front	Ring gear	Sun gear	Planetary gear carrier
Rear	Large sun gear	Planetary gear carrier	Ring gear

The input shaft rotates clockwise, the same direction as the torque converter's turbine rotor.

The front planetary train's ring gear rotates clockwise.

The front planetary train's planetary gear rotates clockwise on its shafts. Because the front planetary train's sun gear is locked by the oil pump, the planetary train's planetary gear presses against the front planetary train's ring gear, and therefore rotates around the sun gear. Because the front planetary train's ring gear has inner teeth, the direction of rotation does not change.

The front planetary gear carrier rotates clockwise.

Clutch C3 rotates clockwise and connects the front planetary gear carrier with the rear planetary train's large sun gear.

The rear planetary train's large sun gear rotates clockwise.

Brake B2 locks the rear planetary gear carrier.

The rear planetary train's outer planetary gear rotates counter-clockwise.

The rear planetary train's ring gear rotates counter-clockwise using the rear planetary train's outer planetary gear. Because the rear planetary train's ring gear has inner teeth, the direction of rotation does not change.

The driven gear rotates counter-clockwise. Because the rear planetary train's ring gear is on the driven gear, the driven gear rotates in the same direction as the rear planetary train's ring gear.

The counter-rotating gear rotates clockwise.

The differential's ring gear rotates counter-clockwise.

Engine brake

When the engine brake works, the driven force is transferred from the tires.

DIFFERENTIAL

Fig. 21: Identifying Differential
Courtesy of VOLVO CARS CORPORATION

The differential consists of the differential housing, large and small differential gears, shaft journals and thrust washers. The differential housing is completely sealed so that if a drive shaft is removed no dirt can penetrate and no oil can run out.

The differential distributes power equally between the drive wheels, even if they are rotating at different speeds. When driving straight ahead, the ring gear and differential housing rotate at the same speed as the drive shafts and the driving wheels. When cornering, the differential gears rotate to compensate for the different speeds of the wheels. Because the small differential gears are rotating on the shaft journal, the drive shafts can rotate at different speeds. Power is transferred from the differential housing to the drive shafts via the small differential gears in the same way as when driving straight ahead. Both drive wheels still have the same driven power.

AWD

Cars with four wheel drive have a splined pin on the differential housing. The sleeve on the pin connects the differential housing with the bevel gear. This transfers the power to the rear wheels.

TEST PLUGS

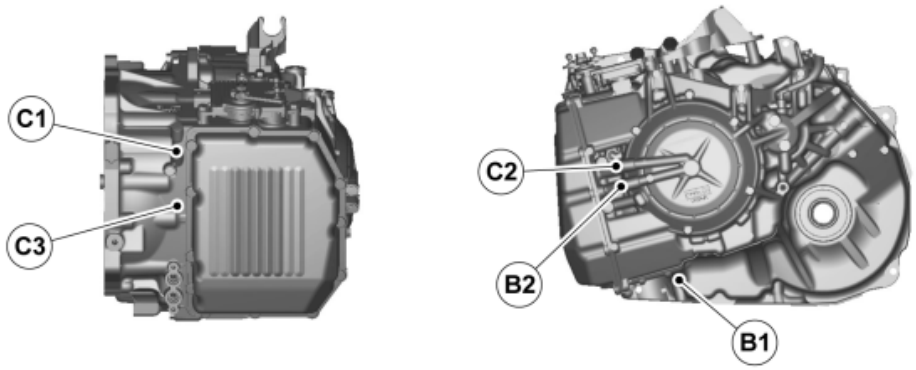

Fig. 22: Locating Test Plugs
Courtesy of VOLVO CARS CORPORATION

IDENTIFICATION PLATE

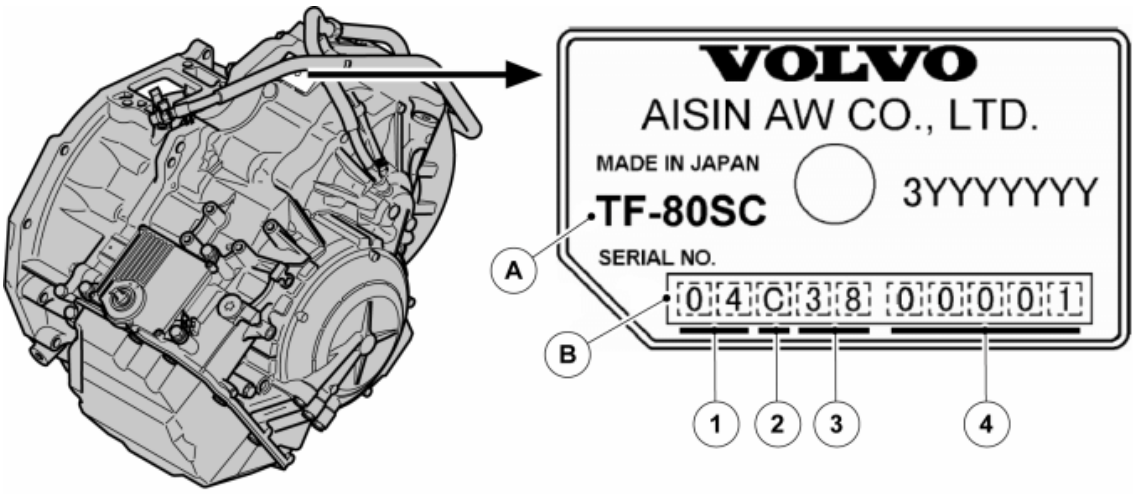

Fig. 23: Identifying Identification (ID) Plate
Courtesy of VOLVO CARS CORPORATION

A. Model number (**T** ransverse **F** wd, **S** lipping lock-up, integrated **C** omputer)

B. Serial number

1. Production year (04 indicates 2004)
2. Production month (C indicates March)
3. Transmission model (38 indicates TF-80SC)
4. Sequence number

	A	B	C	D	E	F	G	H	J	K	L	M

Month	1	2	3	4	5	6	7	8	9	10	11	12

OVERVIEW

AUTOMATIC TRANSMISSION TF80SC GENERATION 2

Fig. 24: Transmission Unit
Courtesy of VOLVO CARS CORPORATION

HINT: The shape of the transmission casing differs depending on which engine is included in the driveline.

This transmission has been updated on several points to meet high demands for fuel economy and comfort. TF80SC Gen 2 replaces earlier versions of TF80SC.

Changes compared to earlier version:

- Solenoids
- tapered bearings
- friction pads
- Seals
- oil with lower viscosity

- "lock-up" at lower engine rpm
- software in **TCM** (**T** ransmission **C** ontrol **M** odule)
- fastening AC bracket (6-cyl. engines)

These changes contribute to lower internal losses and, together with upshifting at lower engine rpms, faster downshifts, the result is lower fuel consumption, better shifting quality, and higher efficiency.

TF-80SL (TF-80SL AWD) is an electronically controlled 6-speed automatic transmission with Geartronic.

The Geartronic function combines two transmissions in one. One adaptive 6-gear automatic transmission which enables relaxed driving, and a "manually" shifted transmission which enables more active driving with manual shifting. In case of manual shifting, the gear selector is pushed forward to upshift to a higher gear and it's pulled back to downshift to a lower gear. However, in certain situations the Transmission control module (TCM) assumes the gearshifting decisions

TF-80SL has a lock-up-function on all forward gears except 1st gear. The torque converter has a locked and slipping lock-up-function.

Gearshifts are controlled by an hydraulic operating system. Gearshifts take place without freewheeling and completely automatically in terms of load and speed.

TF-80SL has two planetary gear units, a front and a rear, whose shifts are controlled by a number of clutches and brakes. The rear planetary gear is of the Ravigneaux type.

The oil level is checked by level pipe (the transmission does not have a conventional dipstick).

The transmission has a total of 8 solenoids that control the hydraulic flow. 6 of these solenoids control the shift process, 1 solenoid controls the torque converter's lock-up function and 1 solenoid controls the system pressure.

The gear selector sensor is integrated in the Transmission control module (TCM). The Transmission control module (TCM) is integrated in the transmission.

TRANSMISSION (TF-80SC AWD; 2005-2012)

DESIGN AND FUNCTION

see **DESIGN AND FUNCTION**

OVERVIEW

see **OVERVIEW**

TRANSMISSION (TF-80SC; 2007-2012)

DESIGN AND FUNCTION

see **DESIGN AND FUNCTION**

OVERVIEW

see **OVERVIEW**

TRANSMISSION

Power transmission

TRANSMISSION

INPUT SPEED SENSOR TRANSMISSION, REPLACING (4T65AWD 2003-)

INPUT SPEED SENSOR TRANSMISSION, REPLACING

REMOVING THE LINE PRESSURE SOLENOID

NOTE: The line pressure solenoid must be removed to access the input speed sensor.

See **SOLENOID LINE PRESSURE, REPLACING** .

REMOVING THE INPUT SPEED SENSOR

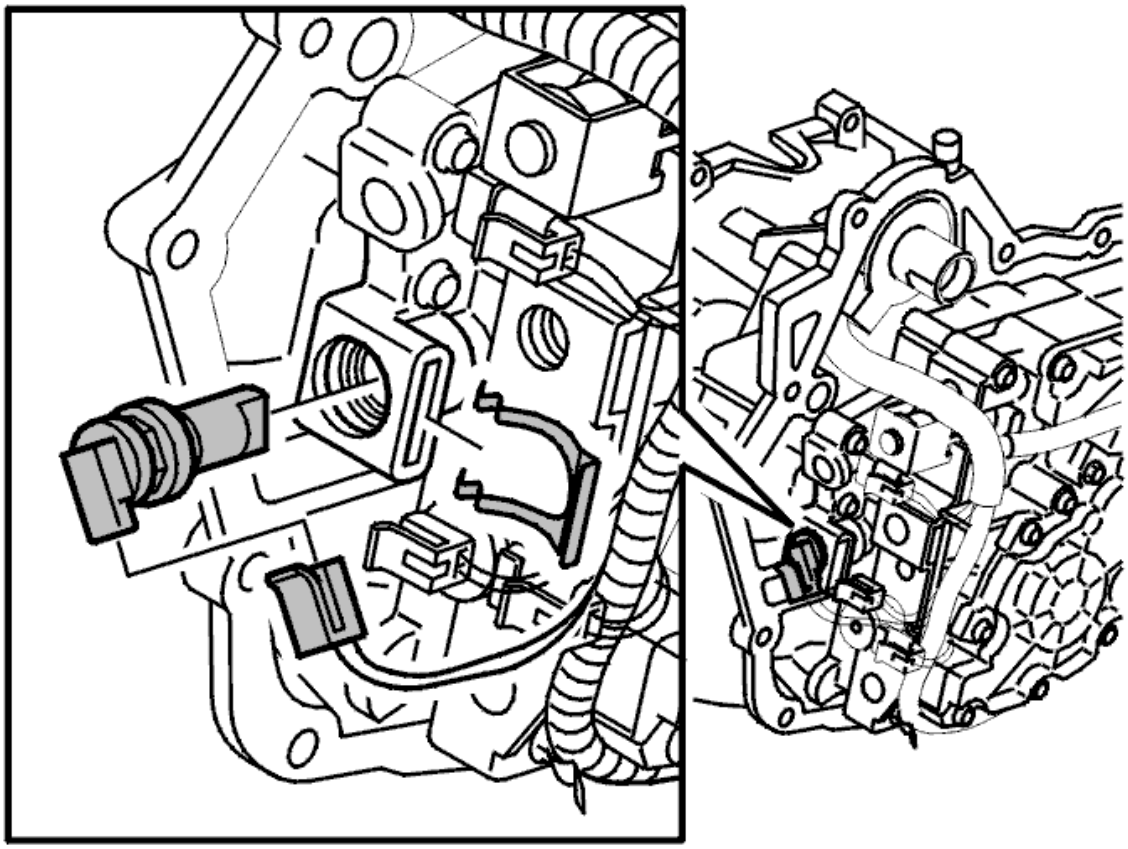

Fig. 1: Input Speed Sensor
Courtesy of VOLVO CARS CORPORATION

NOTE: Note the position of the input speed sensor during removal. This is important for installation.

Remove:

- the connector
- the clip. Use a narrow screwdriver to remove the clip
- the speed sensor.

INSTALLING THE INPUT SPEED SENSOR

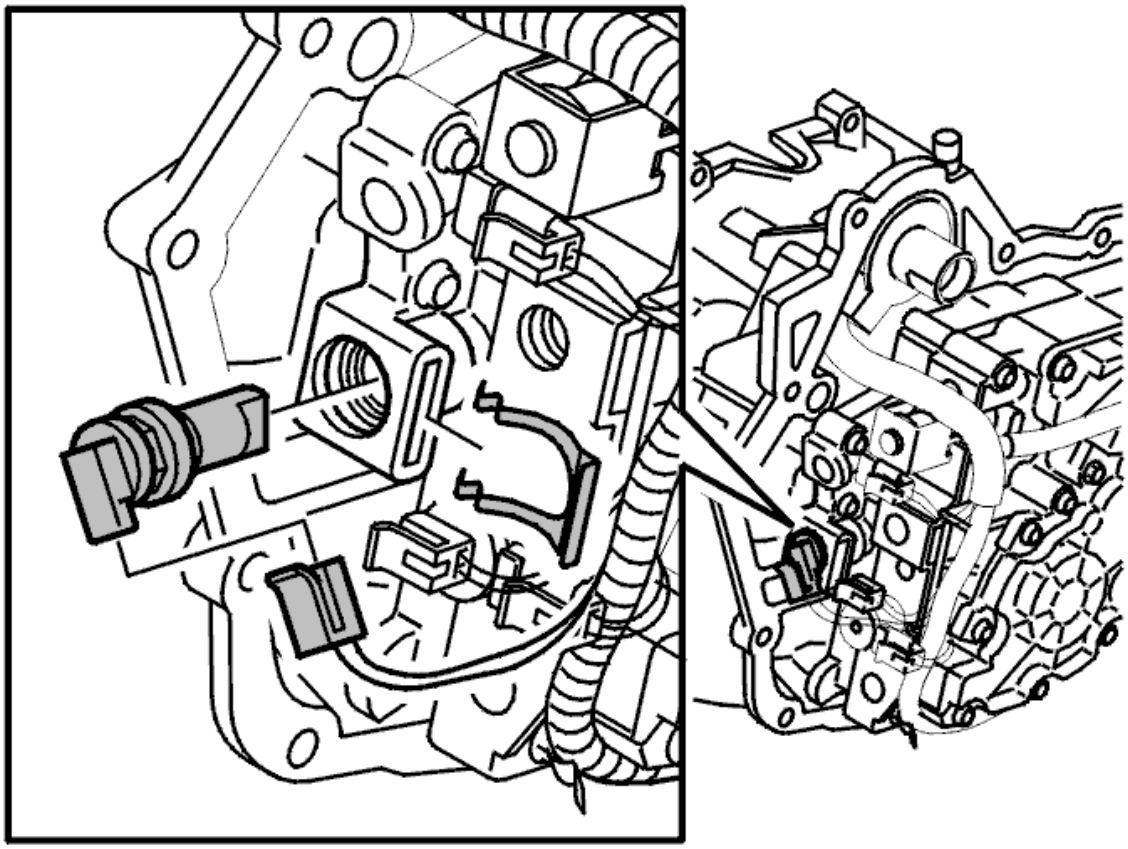

Fig. 2: Input Speed Sensor
Courtesy of VOLVO CARS CORPORATION

NOTE: Install the input speed sensor in the same position noted when it was removed.

Install:

- the input speed sensor
- the clip
- the connector.

Check that the input speed sensor is secure.

INSTALLING THE LINE PRESSURE SOLENOID

See **SOLENOID LINE PRESSURE, REPLACING** .

INPUT SPEED SENSOR/OUTPUT SPEED SENSOR, REPLACING (AW50/51 AWD; AW55-50/51SN; 2003-2007)

NOTE: **As the illustrations in this service information are used for different model years and / or models, some variation may occur. However, the essential information is always correct.**

REMOVAL

PREPARATIONS

Switch off the ignition.

REMOVING THE AIR CLEANER (ACL) HOUSING

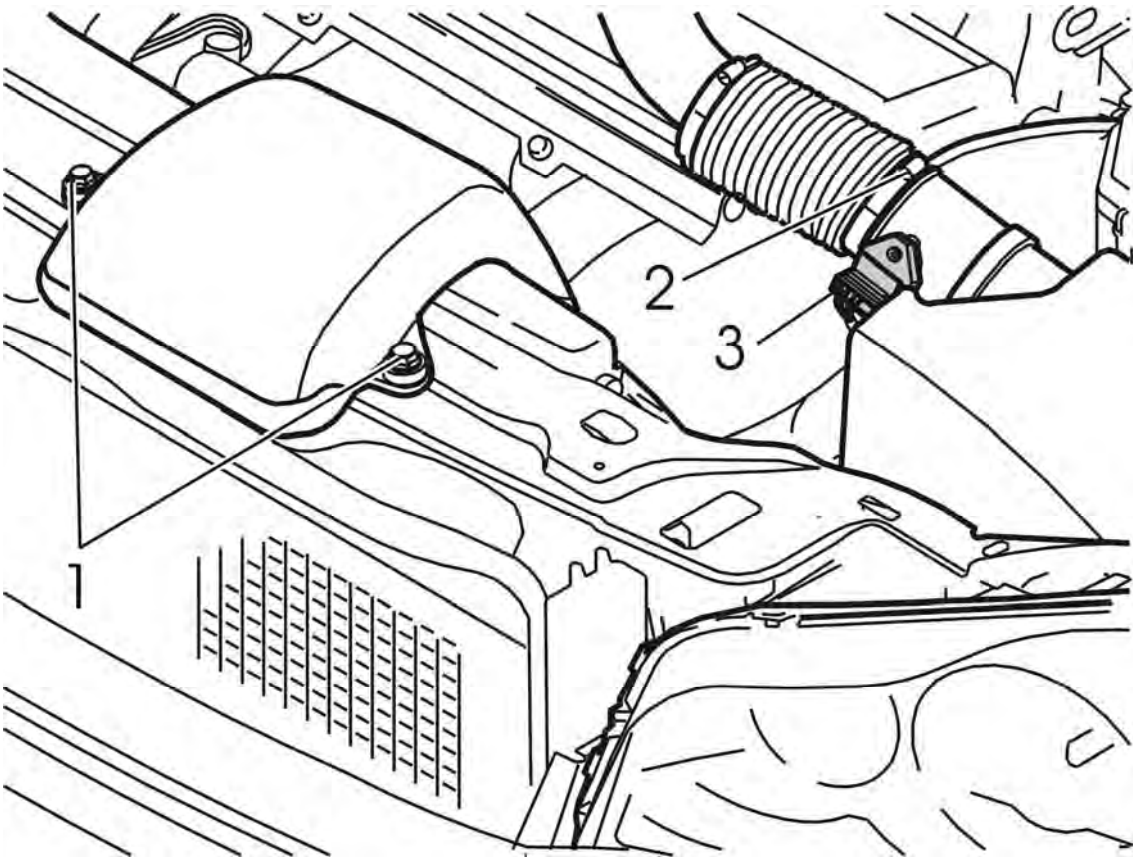

Fig. 3: Air Cleaner (ACL) Housing
Courtesy of VOLVO CARS CORPORATION

Ignition off.

Remove the air cleaner housing ACL assembly with the intake pipe.

1. The intake manifold
2. The hose from the mass air flow (MAF) sensor
3. Connector.

Pull the air cleaner (ACL) housing out of its mountings.

REMOVING THE CABLE HARNESS

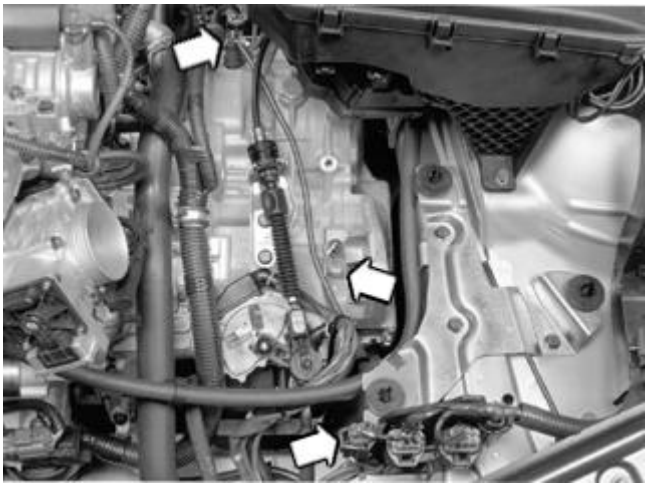

Fig. 4: Air Cleaner (ACL) Housing Cable Harness
Courtesy of VOLVO CARS CORPORATION

Remove the mounting for the cable harness from the cover for the control system.

Unhook the mounting with the connectors for the cable harness from the bracket for the air cleaner (ACL) housing.

Remove the tie straps from the cable harness.

Separate the connectors for the transmission output speed sensor and the transmission input speed sensor.

Unhook the connectors from the mounting.

Clean thoroughly around the sensors.

Remove the sensors and the cable harness.

INSTALLATION

NOTE: For tightening torques, see TIGHTENING TORQUE .

INSTALLING THE SENSOR

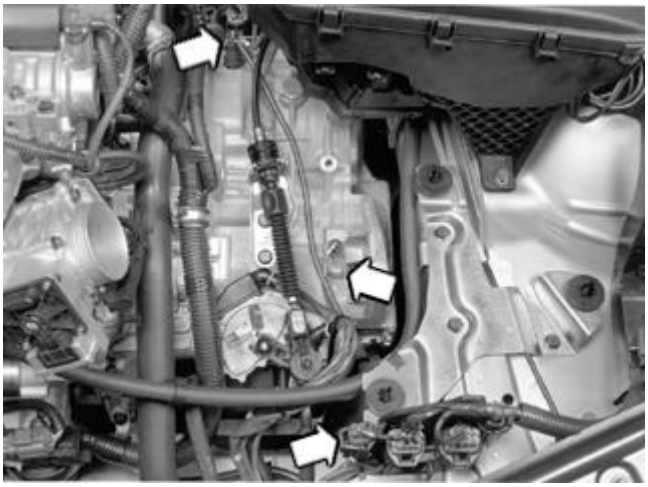

Fig. 5: Air Cleaner (ACL) Housing Cable Harness
Courtesy of VOLVO CARS CORPORATION

Install the new sensors.

Apply a little petroleum jelly to the O-rings for the sensors. Tighten. See **SUMMARY OF TIGHTENING TORQUES FOR SPECIFIC COMPONENTS** .

- Install the connectors for the sensors on the mounting. Assemble the connectors
- Install the tie straps for the cable harness
- Hook the mounting for the connectors on to the bracket for the air cleaner (ACL) housing
- Secure the cable harness mounting in the control system cover.

INSTALLING THE AIR CLEANER (ACL) HOUSING

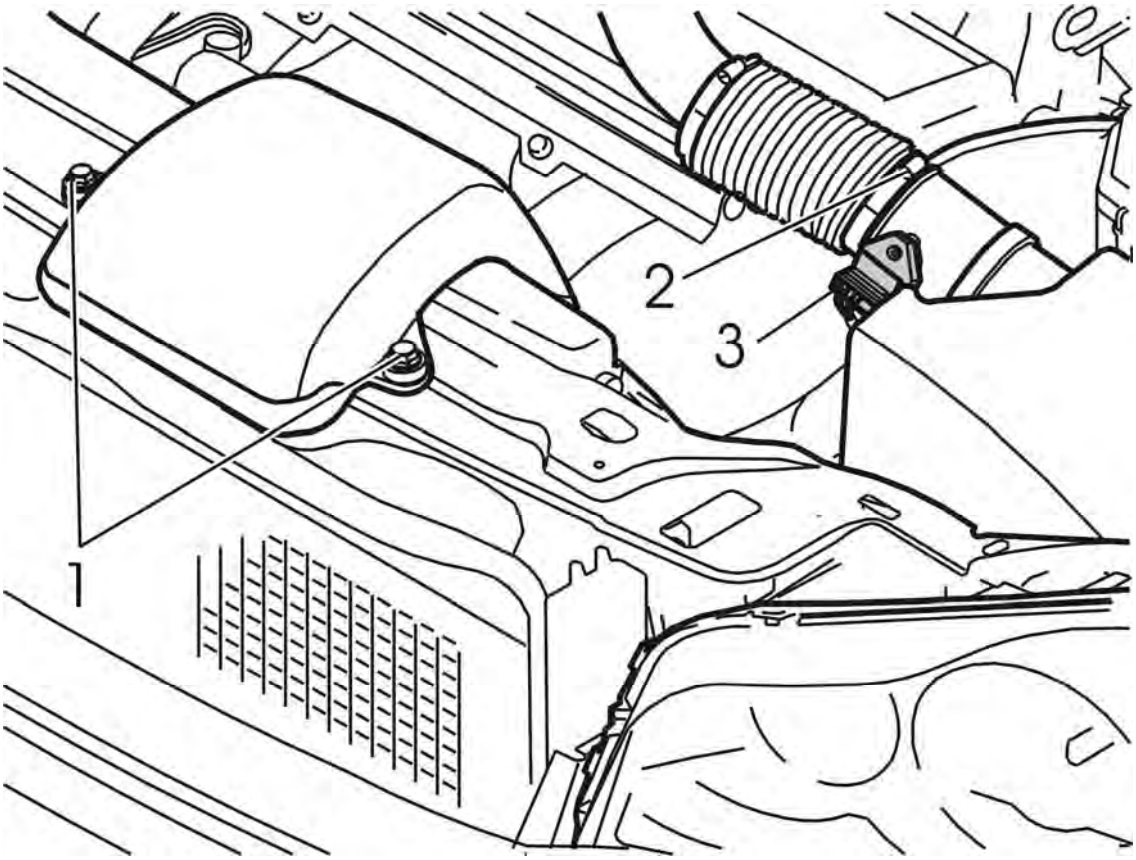

Fig. 6: Air Cleaner (ACL) Housing
Courtesy of VOLVO CARS CORPORATION

Install the air cleaner (ACL) housing, including all hoses and electrical terminals.

Check and erase any diagnostic trouble codes (DTCs).

LINE PRESSURE/STALL SPEED, CHECKING

Special tools:

see **9992531**

see **9995074**

NOTE: **As the illustrations in this service information are used for different model years and / or models, some variation may occur. However, the essential information is always correct.**

CHECKING THE OIL LEVEL

Check the oil level. See **OIL LEVEL, CHECKING**

Ignition off.

REMOVING THE AIR CLEANER (ACL) HOUSING

Remove the air cleaner housing. See **INTAKE AND EXHAUST SYSTEM - REMOVAL, REPLACEMENT AND INSTALLATION**

MANOMETER CONNECTION

Connect the hose and manometer see **9992531** to the transaxle (position D).

Installing the air cleaner (ACL) housing

Install the air cleaner (ACL) housing, including all hoses and electrical terminals.

CHECKING THE ENGINE IDLING SPEED

Start the engine. Allow it to idle in neutral.

Check the idling speed. See: **SYSTEM PRESSURE/STALL SPEED**

CHECKING THE LINE PRESSURE

Depress the brake pedal.

Move the gear selector to position D and read off the line pressure. See: **SYSTEM PRESSURE/STALL SPEED**

CHECKING THE STALL SPEED

Check the stall speed when checking the line pressure.

The stall speed test gives an indication of the condition of the torque converter, the transmission clutches and the engine.

For the test to be accurate the following conditions must be met:

- the engine must be properly tuned
- the line pressure must be correct
- the oil level in the transmission must be correct and the transmission must be at operating temperature.

NOTE: Never conduct a stall speed check when the line pressure is too low.

CHECK

Air conditioning (AC) must be off.

Chock all four wheels.

Start the engine.

CAUTION: Apply the parking brake. Press down hard on the brake pedal using your left foot during the test.

NOTE: Do not test the stall speed for longer than 5 seconds.

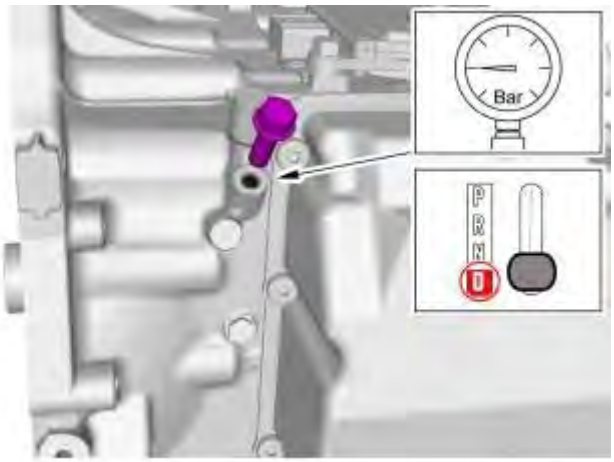

Fig. 7: View Of Inspecting Pressure
Courtesy of VOLVO CARS CORPORATION

Move the gear selector to position **D** .

Depress the accelerator pedal all the way, **max 5 seconds** .

Read off the speed (RPM) as well line pressure. See **SYSTEM PRESSURE/STALL SPEED**

If the speed exceeds the table values, see **High stall speed** if speed is below the table values, see **Low stall speed** .

NO TITLE

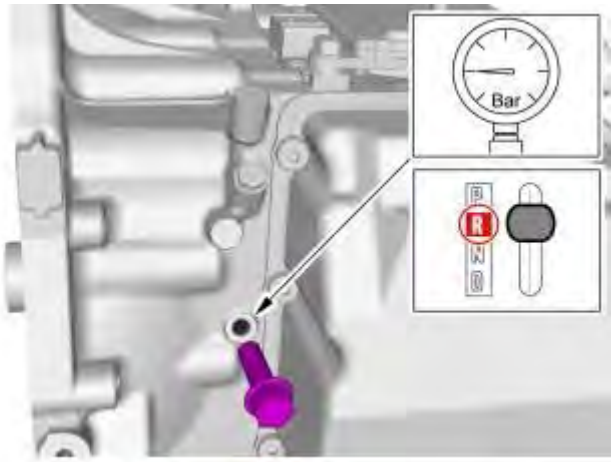

Fig. 8: View Of Inspecting Pressure On R Position
Courtesy of VOLVO CARS CORPORATION

Transfer the manometer to the socket for checking in position R.

Move the gear selector to position **R** .

Depress the accelerator pedal all the way, **max 5 seconds** .

Read off the speed (RPM) as well line pressure. See **SYSTEM PRESSURE/STALL SPEED**

If the speed exceeds the table values, see **High stall speed** if speed is below the table values, see **Low stall speed** .

HIGH STALLING SPEED

The test conditions described in, see **CHECK** above, have been met. Is the acceleration time from 0-100 km/h normal?

If the stalling speed recorded exceeds the normal value by more than 300 RPM:

Check if the oil is discolored or smells burnt. See **OIL GRADE, CHECKING (AW50/51 AWD; AW55-50/51SN)**

If the oil is OK, replace the torque converter.

see **TRANSMISSION - REMOVAL, REPLACEMENT AND INSTALLATION**

Dirty oil indicates worn or burnt clutch plates. Replace the transmission.

see **TRANSMISSION - REMOVAL, REPLACEMENT AND INSTALLATION**

Check the stall speed again after replacing the transmission.

LOW STALLING SPEED

The test conditions described in, see **CHECK** above have been met.

Try a new torque converter if the stall speed recorded is below the normal value by more than 300 RPM.

see **TRANSMISSION - REMOVAL, REPLACEMENT AND INSTALLATION**

Check the stalling speed again after replacing the torque converter

If the fault remains, replace the transmission. See **TRANSMISSION - REMOVAL, REPLACEMENT AND INSTALLATION**

After the check is completed:

Ignition off.

Remove both the manometer connection and the manometer.

Install:

- the test plug. Check that the O-ring is undamaged. Replace if necessary. Tighten. See **SUMMARY OF TIGHTENING TORQUES FOR SPECIFIC COMPONENTS**
- the bracket for the side member
- the holder for the connectors on the bracket
- the cover for the bracket.

LUBRICATION TRANSMISSION

TRANSMISSION, MANUAL

Designation	P/N	Package quantity
M56, M58, M59, M65, M66	1161 745	1 liter
MMT6, MTX75, IB5	1161 723	1 liter
	1161 724	4 liters

TRANSMISSION, AUTOMATIC

Designation	P/N	Package quantity
AW50-42, AW42AWD, 4T65xxx	1161 521	1 liter
	1161 621	4 liters
AW50/55-50, AW50AWD, TF-80SCAWD	1161 540	1 liter
	1161 640	4 liters
MPS6	1161 838	1 liter
	1161 839	4 liters

OTHER

Designation	P/N	Package quantity
Bevel gear	1161 648	1 liter
Chain housing	1161 745	1 liter
Clutch four-wheel drive	1161 641	0.3 liters
Final drive	1161 620	1 liter
Universal oil	1161 657	0, 2 liter
PFPE-grease aerosol	307 59651	0.15 liters

CONSTANT VELOCITY JOINT BOOT, GREASE QUANTITY

Engine/transmission	Wheel side	Transmission side
B8444S/B6324S/TF-80SCAWD	150g / 2X80g = 160g	180g / 3x65g = 195g
D5244T4/TF-80SC	150g / 2X80g = 160g	180g / 3x65g = 195g
D5254T6/TF-80SC	203g / 2X80g + 1X60g = 220g	140g / 1X85g + 1X65g = 150g
B5254T6/M66	150g / 2X80g = 160g	100g / 1X120g
D5244T4/M66	150g / 2X80g = 160g	100g / 1X120g
D4204T/MPS6	120g / 1X120g	174g / 3X65g = 195g

TRANSMISSION

Power transmission

TRANSMISSION

OIL COOLER, FLUSH CLEANING

NOTE: **When replacing the transmission, the oil cooler must always be flushed clean because there may be particles in the oil cooler.**

PREPARATIONS

A vacuum oil extractor is used to suck the oil through the oil cooler when flushing the oil cooler.

The following material is required to flush the oil cooler:

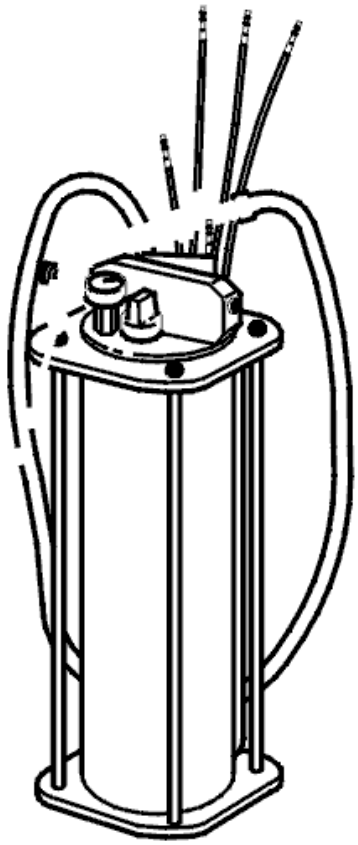

Fig. 1: Identifying Vacuum Extractor
Courtesy of VOLVO CARS CORPORATION

Vacuum extractor.

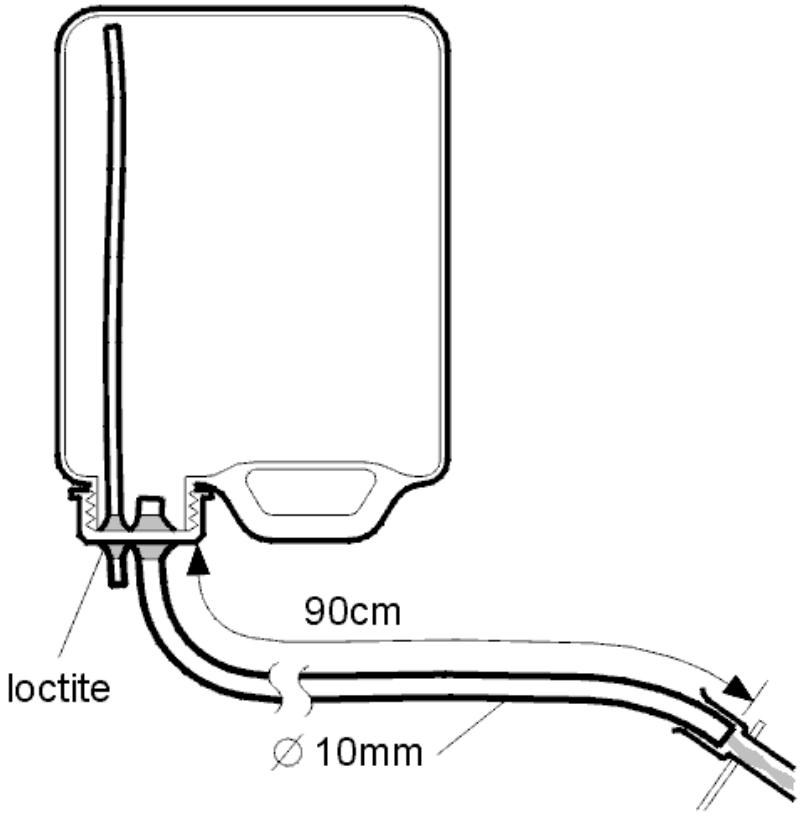

Fig. 2: 5 L. Plastic Container
Courtesy of VOLVO CARS CORPORATION

5 l. Plastic container.

Plastic hose

Inner diameter: O 10 mm.

Length: 900 mm.

Assemble as shown in the illustration.

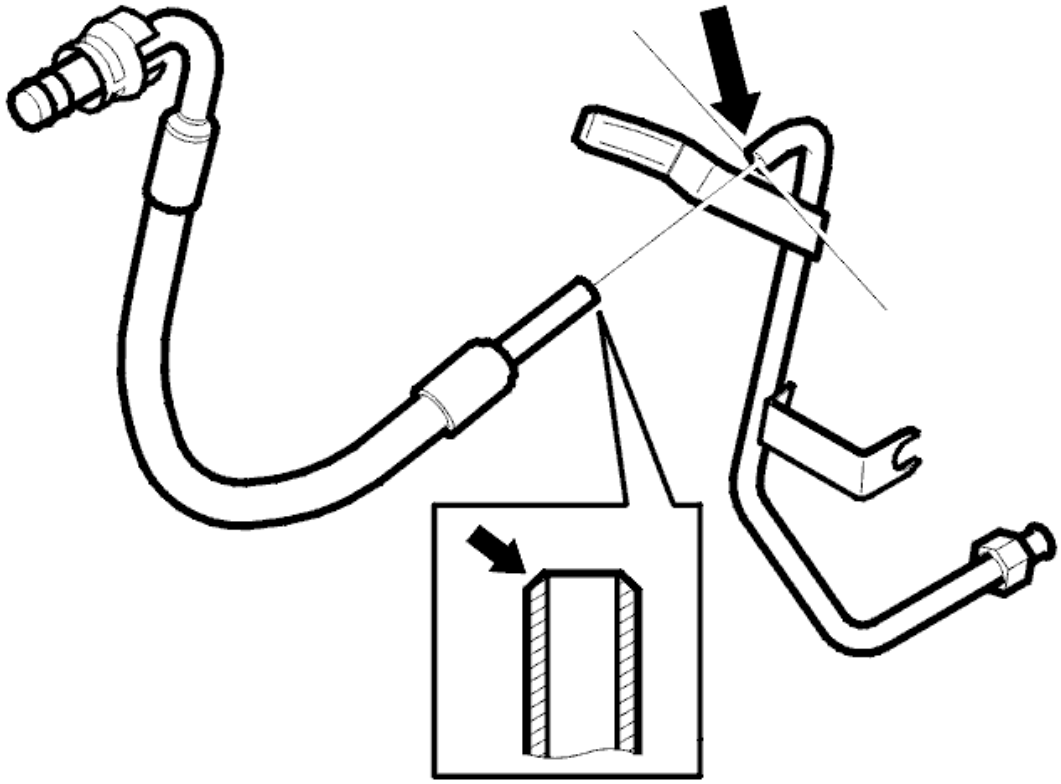

Fig. 3: Cutting Pipe
Courtesy of VOLVO CARS CORPORATION

Upper oil hose and pipe. This oil hose must be on the upper section of the oil cooler.

Cut the pipe as shown in the illustration. Smooth of the edge of the pipe.

NOTE: Blow the pipe clean.

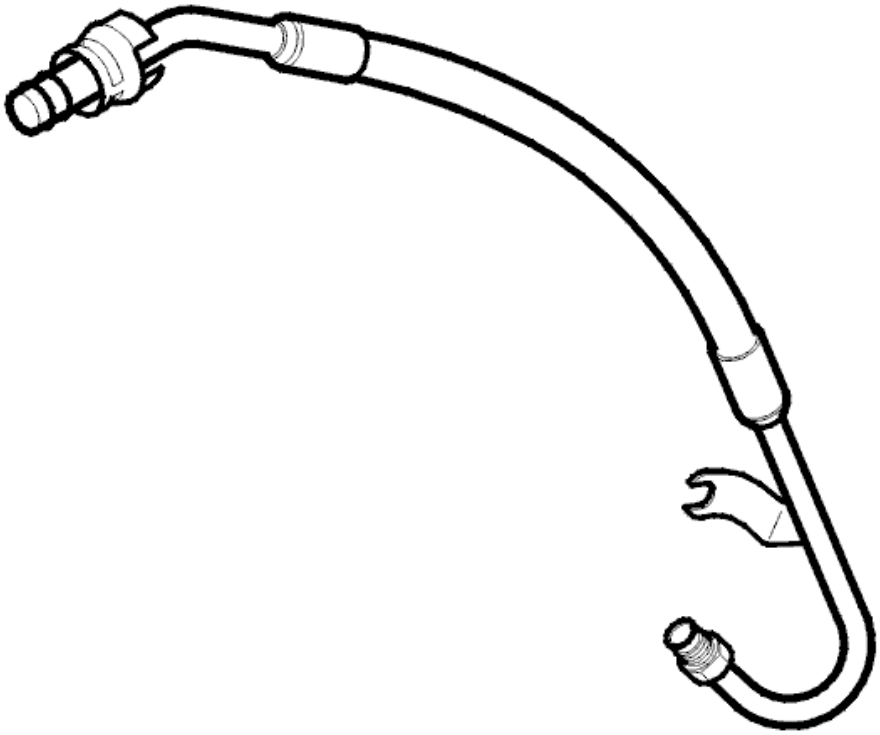

Fig. 4: Locating Lower Oil Hose And Pipe
Courtesy of VOLVO CARS CORPORATION

Lower oil hose and pipe. This oil hose must be on the lower section of the oil cooler.

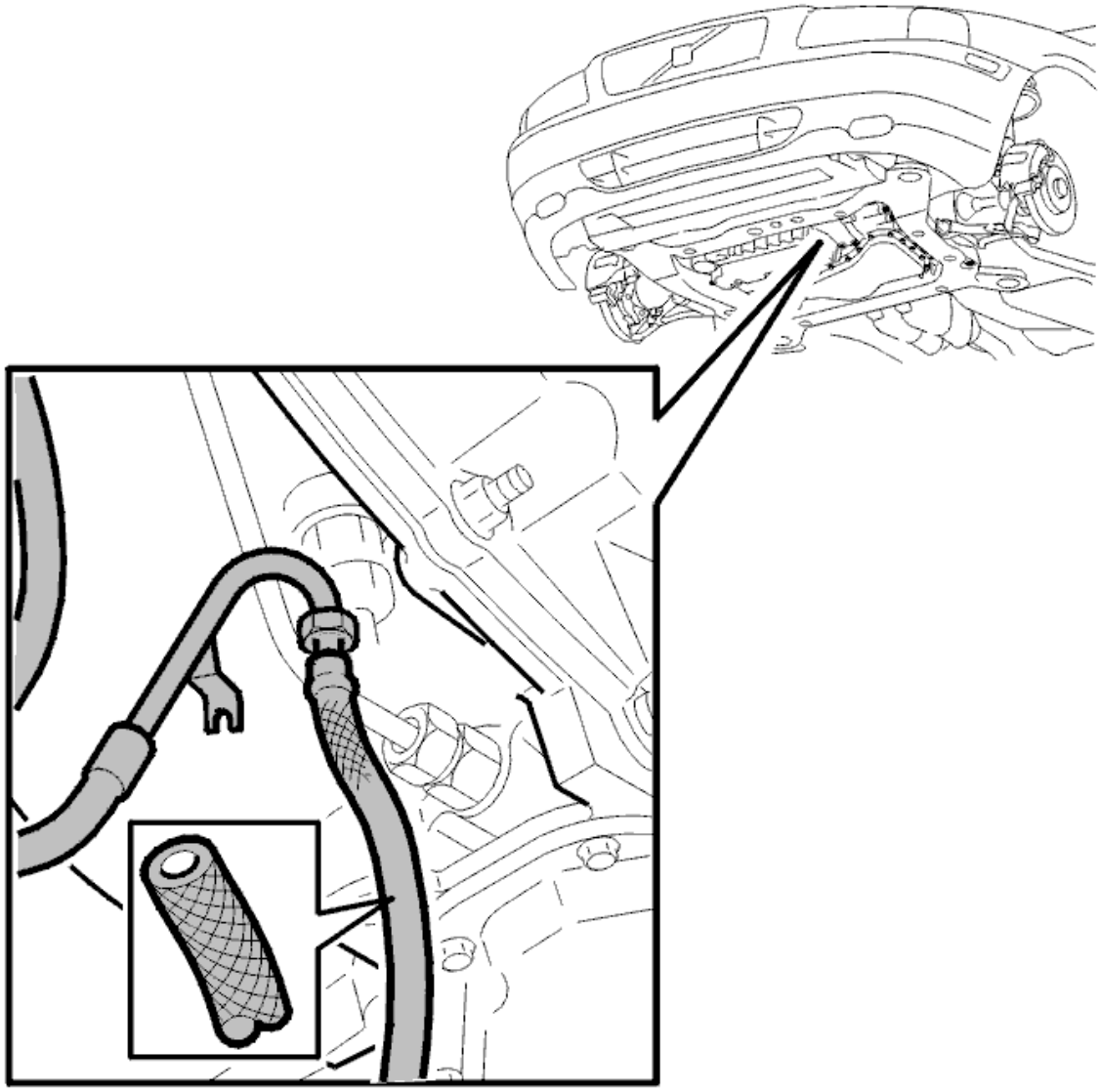

Fig. 5: Hose Installed On The Oil Pipe
Courtesy of VOLVO CARS CORPORATION

Plastic hose (compressed air hose).

Inner diameter: O 10 mm.

Length: 200 mm.

Press the hose into place on the lower oil pipe.

CONNECTING COMPONENTS TO THE VACUUM EXTRACTOR

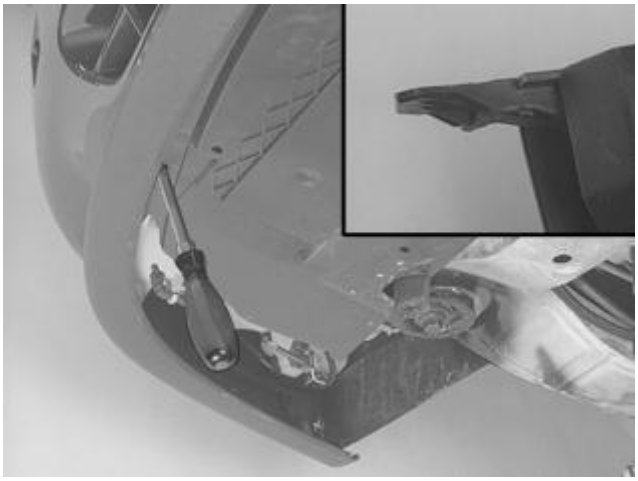

Fig. 6: Identifying Air Baffle And Splash Guard Under Engine
Courtesy of VOLVO CARS CORPORATION

Raise the car.

Remove the front air baffle.

Detach and push the lower oil hose away from the **oil cooler** . A small amount of oil will run out.

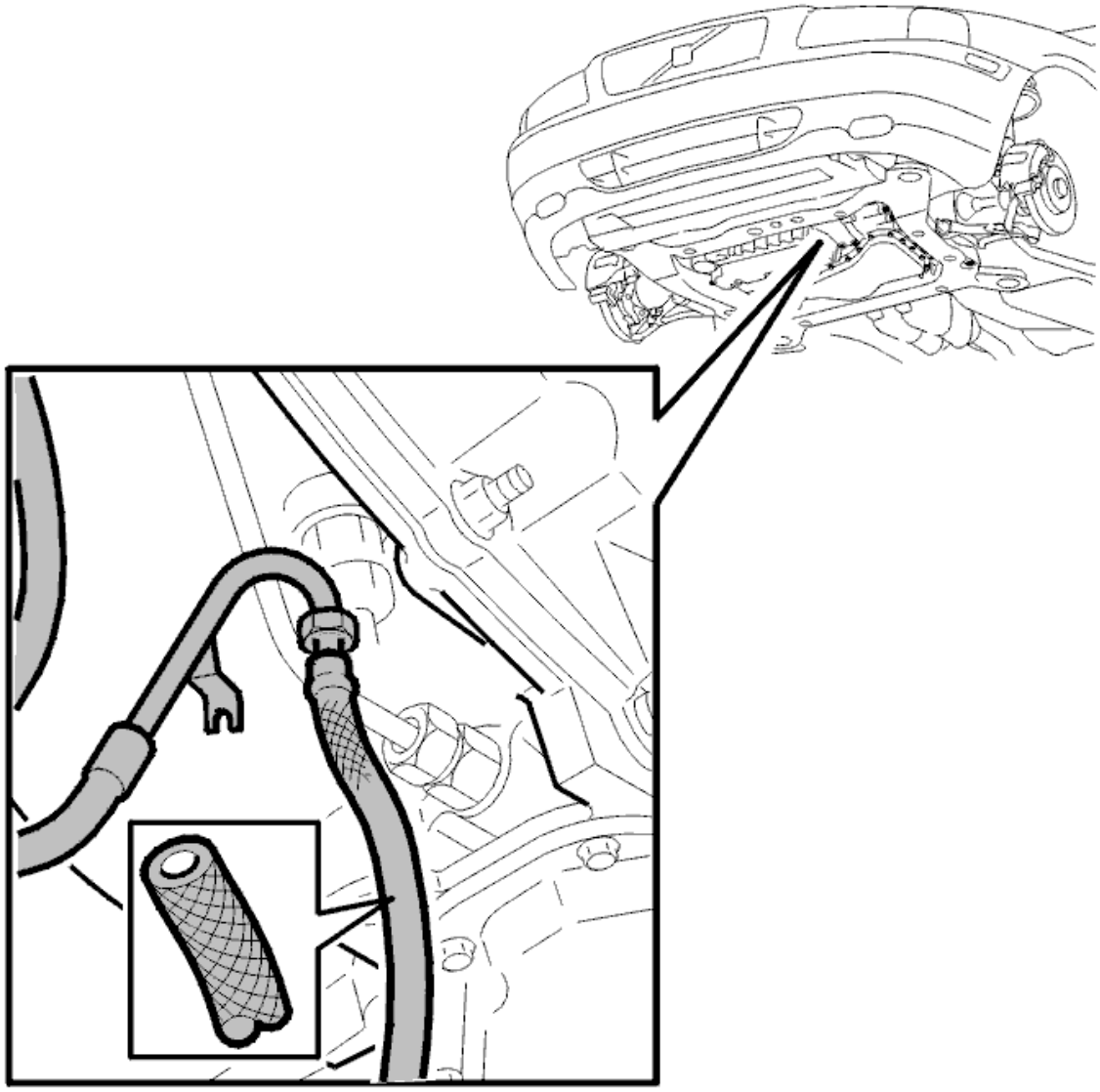

Fig. 7: Hose Installed On The Oil Pipe
Courtesy of VOLVO CARS CORPORATION

Connect the loose lower oil hose to the oil cooler. Move the loose hose out of the way.

Lower the car.

DETACHING AND INSTALLING THE UPPER OIL HOSE AND PIPE

Detach and push the upper oil hose away from the oil cooler.

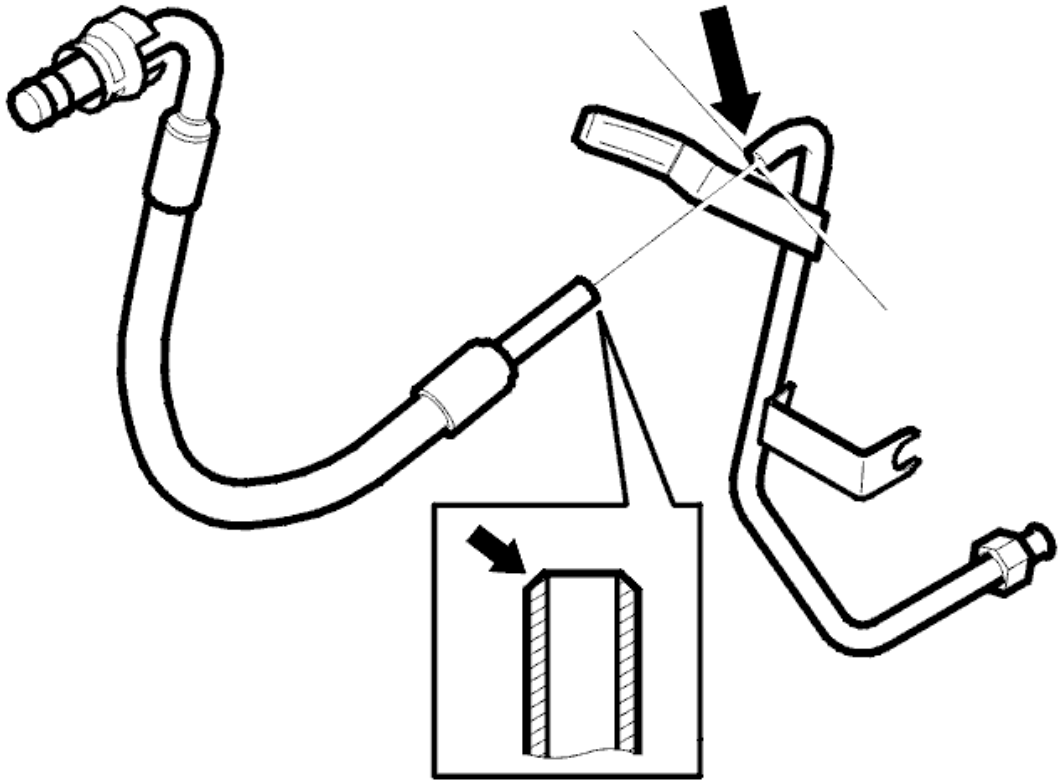

Fig. 8: Cutting Pipe
Courtesy of VOLVO CARS CORPORATION

Install the cut oil hose and pipe on the oil cooler.

Filling with oil

Fill the plastic container with 2 liters of oil.

NOTE: Only approved automatic transmission fluid may be used.

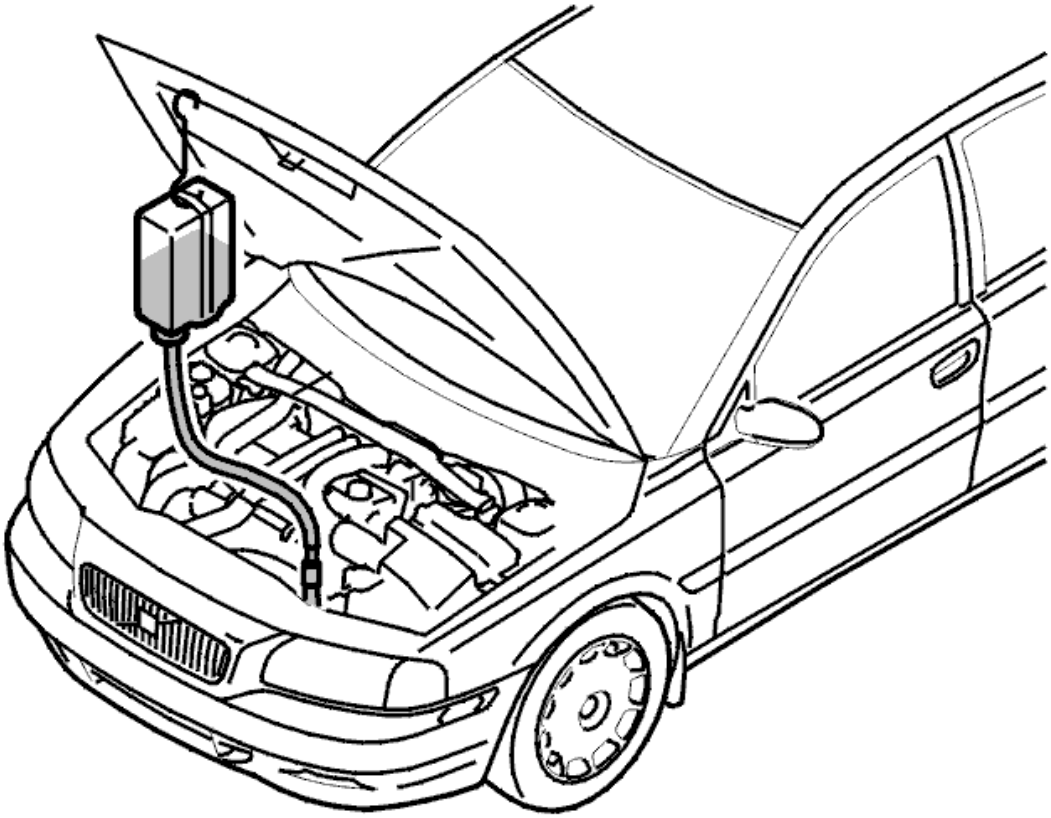

Fig. 9: Plastic Container Hanging Under Hood
Courtesy of VOLVO CARS CORPORATION

Connect the hose from the plastic container to the cut oil pipe. Hang the plastic container under the hood.

Raise the car.

FLUSHING

Charge the vacuum extractor.

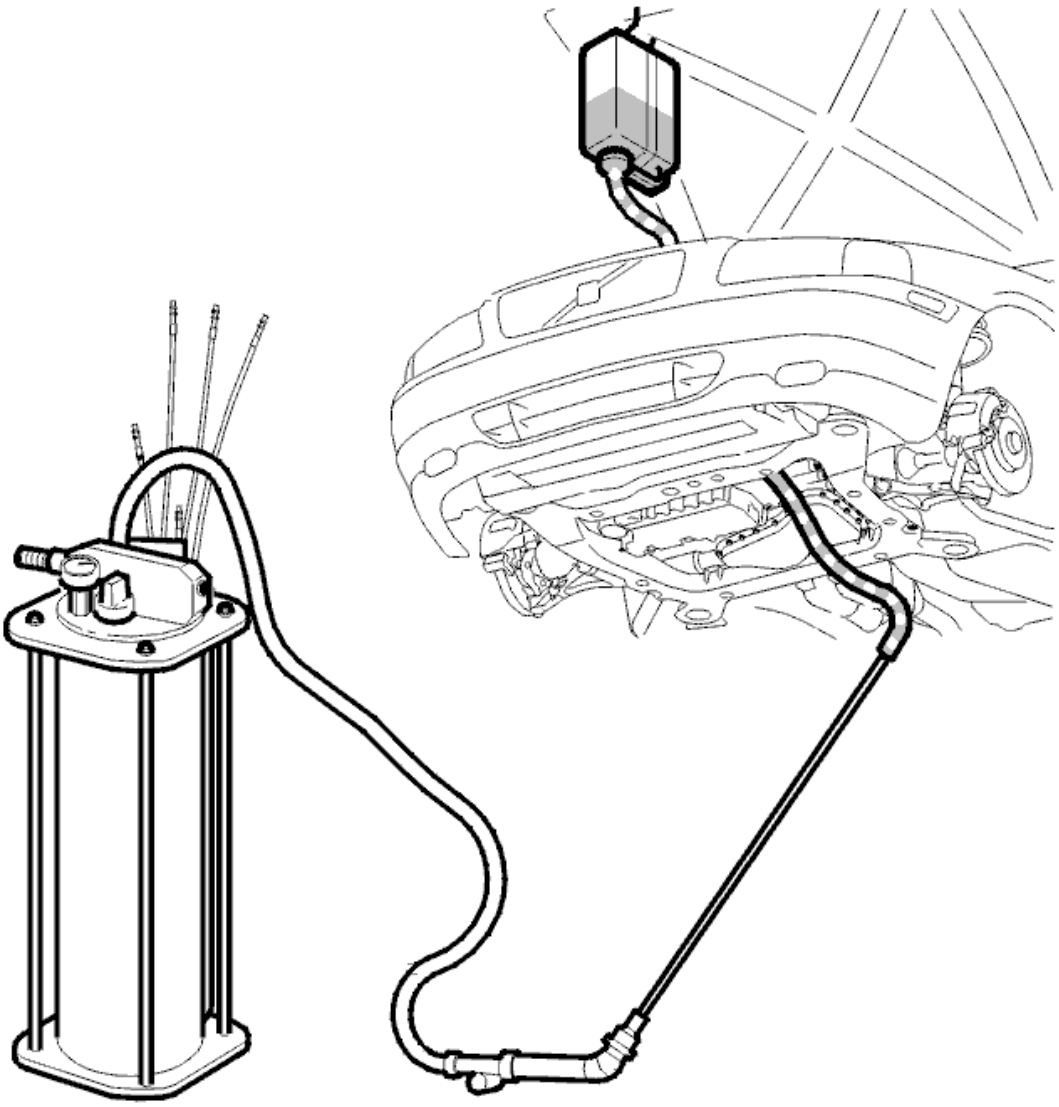

Fig. 10: Connecting Vacuum Extractor
Courtesy of VOLVO CARS CORPORATION

Connecting the vacuum extractor

Connect an oil pipe with an external diameter of O 10 mm from the vacuum extractor. Connect the oil pipe to the short hose.

Flushing

Open the cock and suck the oil out of the oil cooler. Check that the filler container is not completely drained. (There should be a little oil left in the hose.) Flow: 2 liters take approximately 40 seconds.

If the level sinks slowly the flushing must be repeated. If the level still sinks slowly replace the oil cooler.

REMOVING AND INSTALLING THE EXISTING OIL HOSES

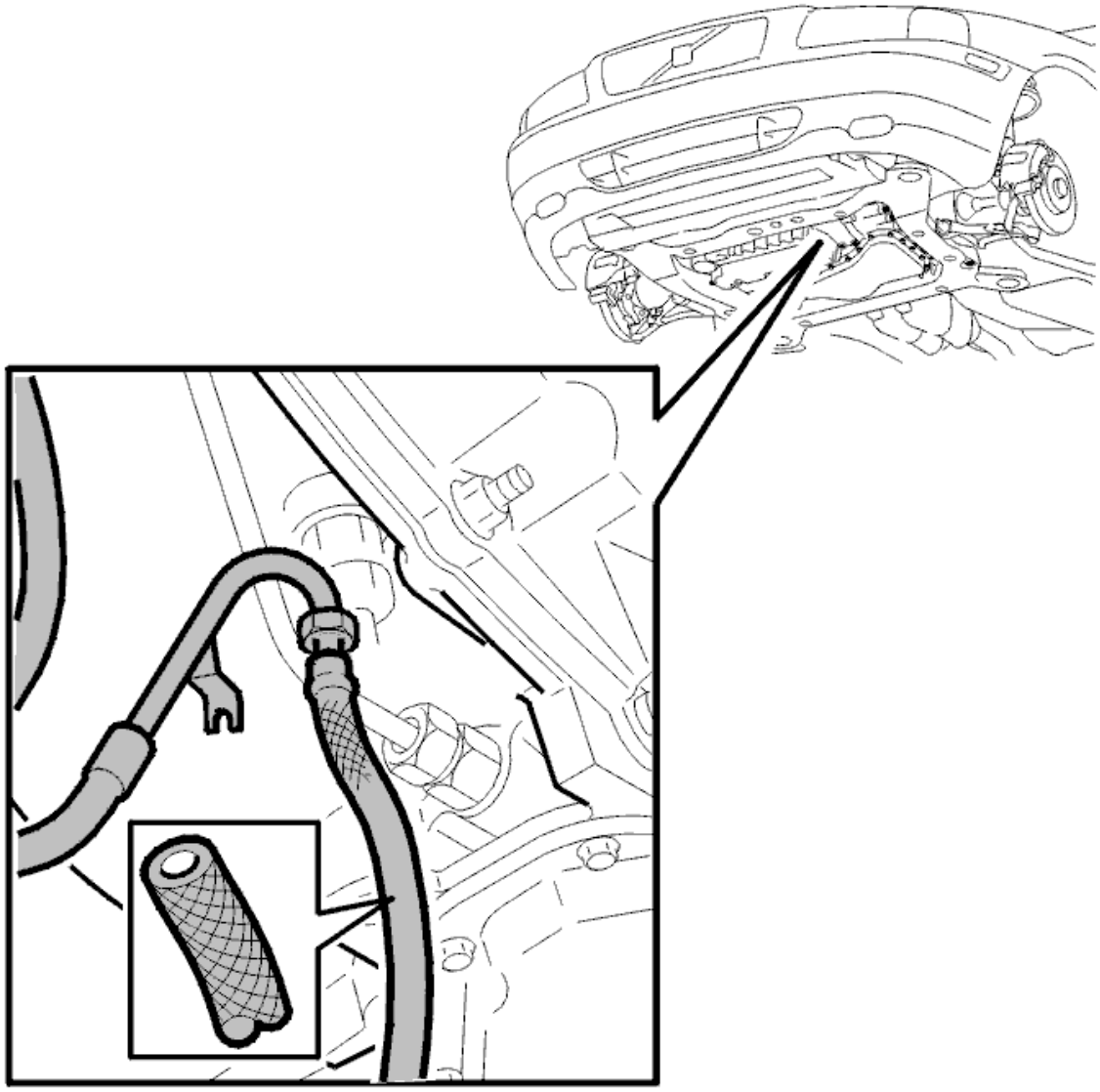

Fig. 11: Hose Installed On The Oil Pipe
Courtesy of VOLVO CARS CORPORATION

Remove the hose and reinstall the existing hose for the oil cooler.

Reinstall the air baffle.

Lower the car.

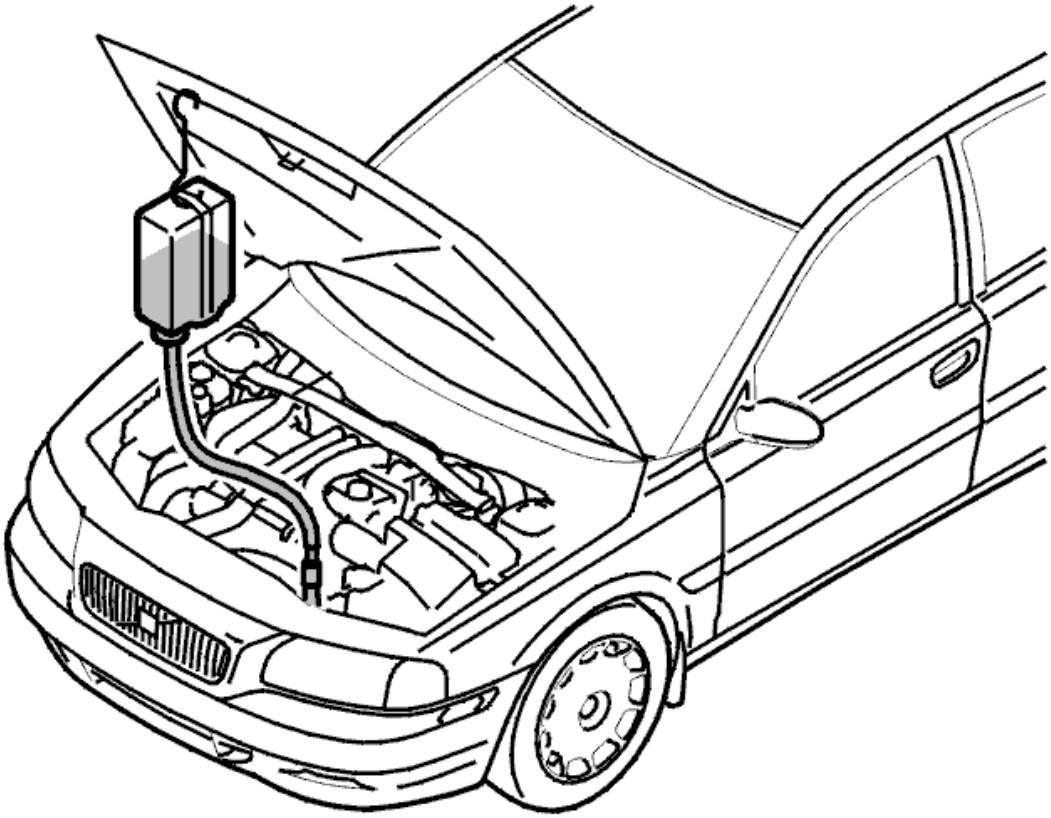

Fig. 12: Plastic Container Hanging Under Hood
Courtesy of VOLVO CARS CORPORATION

Remove the plastic container and the oil pipe from the oil cooler.

Reinstall the existing oil hose on the oil cooler.

Checking the transmission fluid level

Check the level. See **OIL LEVEL, CHECKING** .

OIL GRADE, CHECKING (AW50/51 AWD; AW55-50/51SN)

CHECK THE OIL

NOTE: **Oil grade: Only ATF-oil, Volvo part number 1161540-8 (1-liter container) may be used.**

WARNING: **Avoid skin contact with the oil.**

Check the oil. Take a sample with the dipstick.

Is the oil discolored or does it smell burnt?

- Check if diagnostic trouble code TCM-0042, TCM-0046 is stored.
- Also troubleshoot the transmission according to code TCM-0046.
- When changing the oil. See **TRANSMISSION FLUID, REPLACING** .

Is there coolant in the oil (oil grey-colored)?

- Check the oil for coolant, see **CHECKING FOR COOLANT IN THE OIL**
- Determine the cause why there is coolant in the oil.
- Replace the gearbox. See **TRANSMISSION - REMOVAL, REPLACEMENT AND INSTALLATION** .

NOTE: **Always replace the cooler and the additional oil cooler (where applicable) if there are signs of water in the transmission oil.**

Flush the oil cooler, pipes and oil hoses

Use only ATF-oil, Volvo part no. 1161540-8 (1-liter container).

WARNING: **Avoid skin contact with the oil.**

OIL GRADE, CHECKING (TF-80SC; TF-80SC AWD)

NOTE: **As the illustrations in this service information are used for different model years and / or models, some variation may occur. However, the essential information is always correct.**

WARNING: **Avoid skin contact with the transmission fluid.**

CHECK

CHECKING OIL

NOTE: **Oil grade: Only automatic transmission fluid, Volvo P/N 116 1540-8 (1 liter container) may be used.**

Check the oil. Take a sample with the dipstick.

Is the oil discolored or does it smell burnt?

- Check whether diagnostic trouble codes (DTC) TCM 0042 or TCM 0046 are stored

- Also fault-trace the transmission for diagnostic trouble code (DTC) TCM-0046
- When replacing oil, see: **TRANSAXLE OIL** .

Is there water in the oil (gray discoloration)?

- Determine the cause of the water in the oil
- Replace the transmission. See: **TRANSMISSION - REMOVAL, REPLACEMENT AND INSTALLATION** .

NOTE: Always replace the radiator and the additional oil cooler (where applicable) if there are signs of water in the transmission fluid.

Flush out the oil lines

Only automatic transmission fluid, Volvo P/N 116 1540-8 (1 liter containers) may be used.

WARNING: Avoid skin contact with the transmission fluid.

OIL LEVEL, CHECKING

WARNING: Oil grade: Only automatic transmission fluid (ATF). Dexron III (the fluid must have a G license). This is usually given as "Dexron III (G-xxxxx)" where xxxxx is a 5 digit serial number. "Dexron III-G" (without a number) may also occur. The Volvo P/N for this oil is 1161521-8 (1 liter container).

WARNING: Avoid skin contact with the transmission fluid.

CONDITIONS

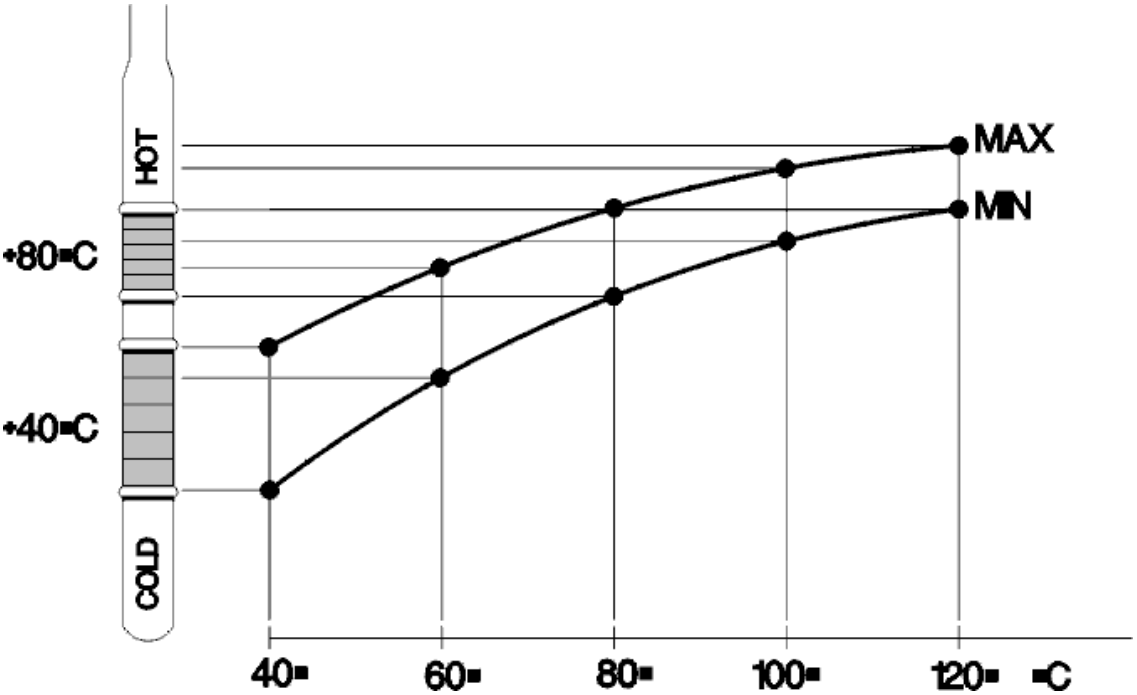

Fig. 13: Identifying Oil Level Graph
Courtesy of VOLVO CARS CORPORATION

The difference between the MAX and MIN volumes is 0.5 liters. Check the oil temperature in the transmission.

At room temperature (+20 °C) the oil level is close to the MIN mark on the "cold area".

At room temperature (+20 °C) and **low oil level** the oil barely reaches the dipstick.

The "cold range" (+40 °C) is reached after approximately 15 minutes idling in the workshop, while the "hot range" (+80 °C) is reached after approximately 30 minutes highway driving at an air temperature above +15 °C.

NOTE: **Carry out the check at an oil temperature of +80 °C. Go to car communication function group 4. Select the digital display parameter. Select the parameter for the transmission oil temperature.**

PREPARING TO CHECK THE OIL LEVEL

Park the car on a level surface.

Apply the parking brake.

Apply the foot brake.

Let the engine idle.

Move the gear selector lever to position P.

MOVE THE GEAR SELECTOR THROUGH ALL POSITIONS. WAIT IN EACH POSITION FOR APPROXIMATELY 3 SECONDS

Move gear selector to position P and wait approximately 2 minutes before checking the oil level.

The dipstick must be pushed down **as far as possible** into the dipstick tube.

CAUTION: Wipe the dipstick with a nylon cloth or similar. Do not use a cloth which may leave fluff or threads.

LOW LEVEL (TOPPING UP)

TOP UP WITH OIL THROUGH THE DIPSTICK PIPE

Take account of the temperature when topping up with oil. See **PREPARING TO CHECK THE OIL LEVEL**.

HIGH LEVEL (OVERFILLING)

WARNING: The oil may be very hot if the car has just been driven. Avoid skin contact with the transmission fluid.

WARNING: The transmission must not be operated if the oil level is too high. This can cause increased operating temperatures and oil leakage.

DRAIN OFF OIL

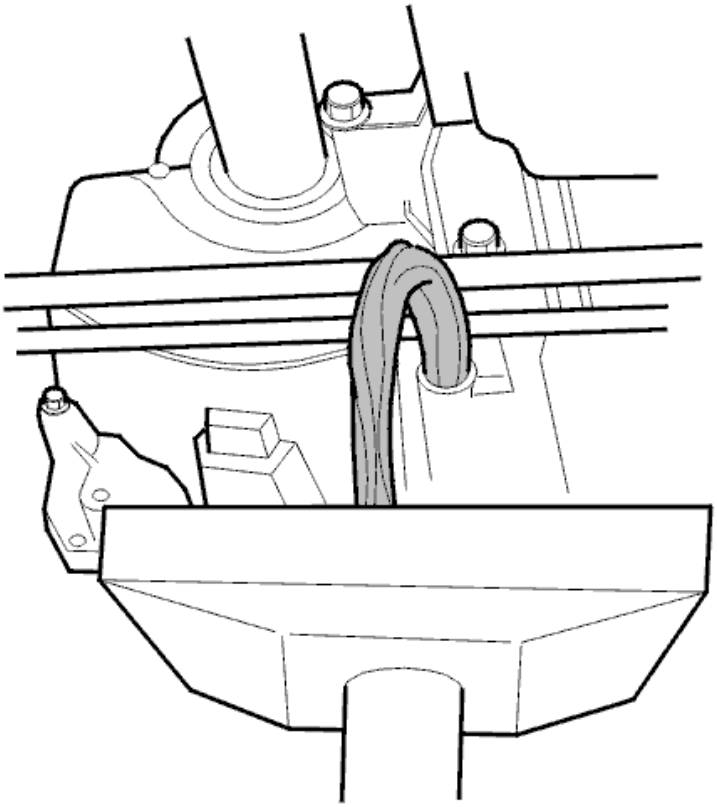

Fig. 14: Draining Off Oil
Courtesy of VOLVO CARS CORPORATION

Undo the drain plug.

Allow some of the oil to drain out and reinstall the plug. Tighten to **40 Nm** .

Check the level taking account of the temperature. See **CONDITIONS**, **PREPARING TO CHECK THE OIL LEVEL** and **MOVE THE GEAR SELECTOR THROUGH ALL POSITIONS. WAIT IN EACH POSITION FOR APPROXIMATELY 3 SECONDS**.

The oil can also be sucked out through the dipstick pipe using an oil suction syringe with a narrow gauge hose.

NOTE: Strict cleanliness is important.

OUTPUT SPEED SENSOR TRANSMISSION, REPLACING

NOTE: As the illustrations in this service information are used for different model years and / or models, some variation may occur. However, the essential information in the illustrations is always correct.

CAUTION: Avoid skin contact with the transmission fluid.

PREPARATORY WORK

REMOVING THE WHEELS AND COMPONENTS

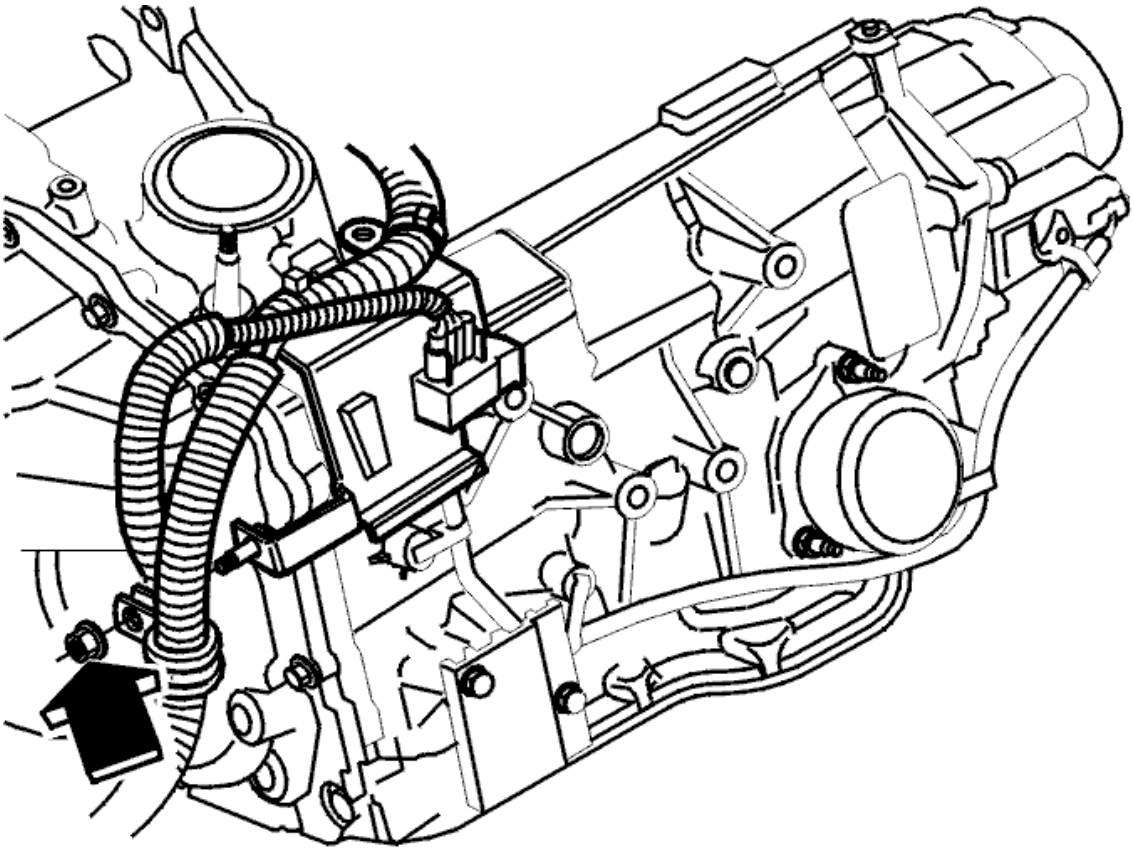

Fig. 15: Heated Oxygen Sensor Connector
Courtesy of VOLVO CARS CORPORATION

Remove:

- the left front wheel
- the nut for the holder for the heated oxygen sensor (HO2S) connectors.

Unhook the clamp from the stud.

REMOVAL

REMOVING ENGINE COMPARTMENT COMPONENTS

Remove:

- the air cleaner (ACL) housing. See **GEAR SELECTOR CABLES, REPLACING**
- the preheating hose.

REMOVING THE SCREW HOLDING THE BRACKET FOR THE HEATED OXYGEN SENSORS (HO2S)

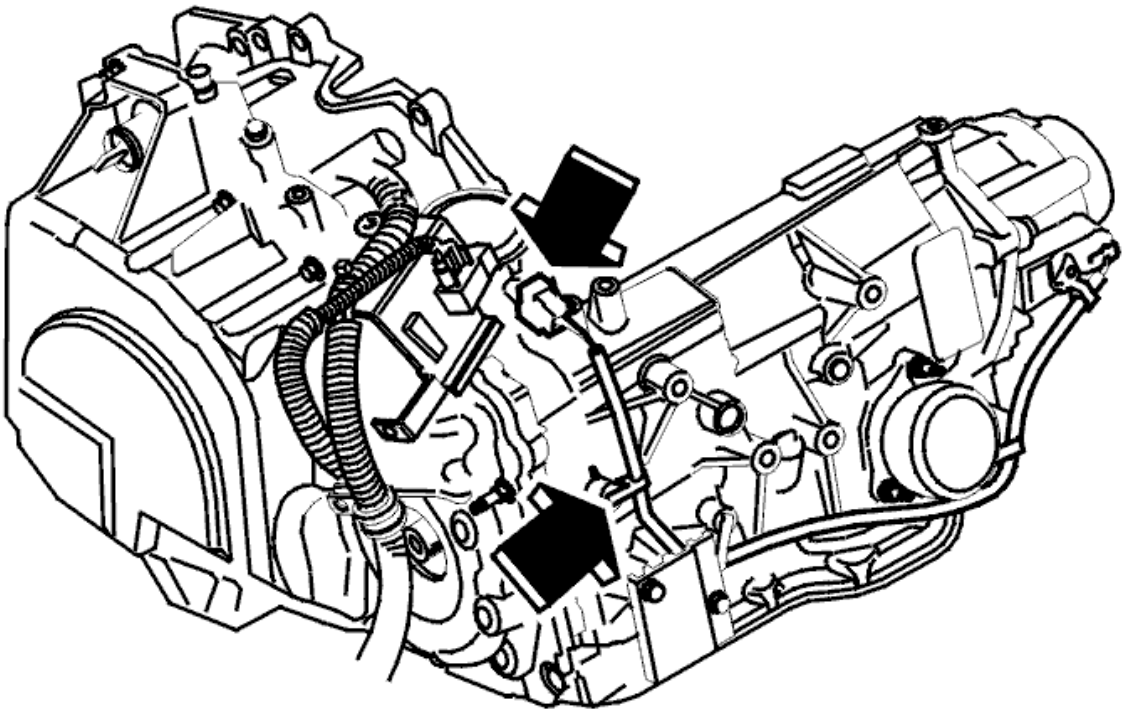

Fig. 16: Heated Oxygen Sensors Bracket
Courtesy of VOLVO CARS CORPORATION

Unhook the bracket from the stud on the transmission. Move it to one side.

Separate the vehicle speed sensor (VSS) connectors.

Disconnect the connector from the holder on the transmission and the nearest clamp.

NOTE: New clamps are included with the new sensor.

REMOVING THE SENSOR

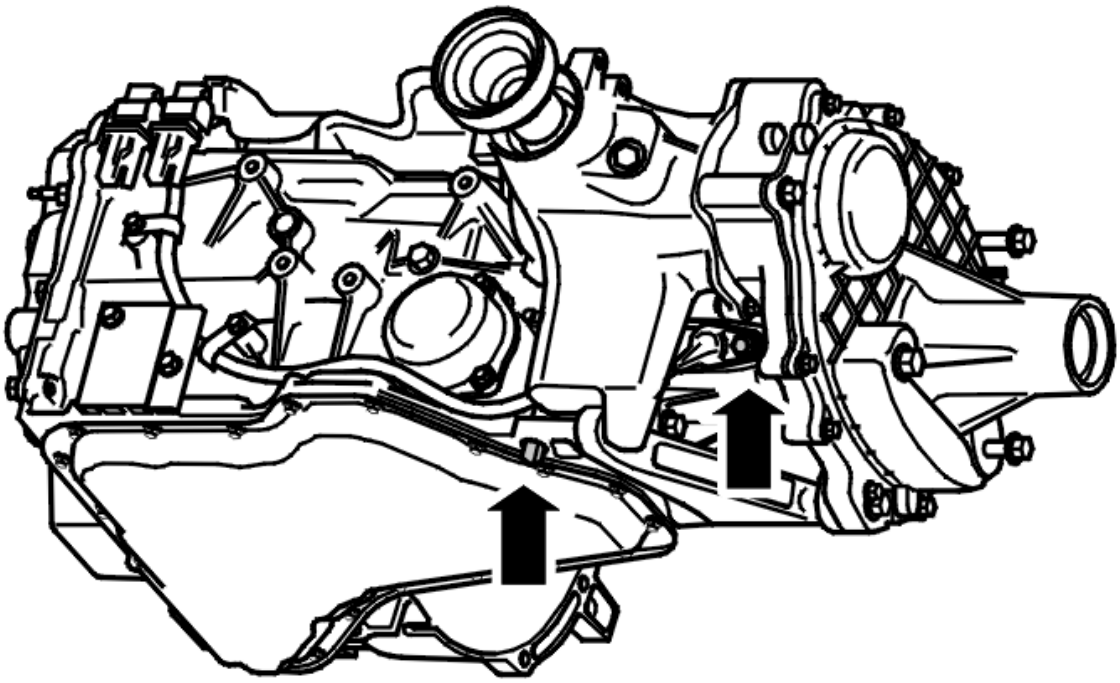

Fig. 17: Removing Transmission Output Speed Sensor (1 Of 2)
Courtesy of VOLVO CARS CORPORATION

Remove the splash guard under the engine. See **TRANSMISSION OIL / OIL FILTER, REPLACING** .

Place a container underneath the transmission.

Press the clamp nearest the sensor up out of its hole. Use a large screwdriver.

Remove:

- the screw holding the sensor
- the sensor.

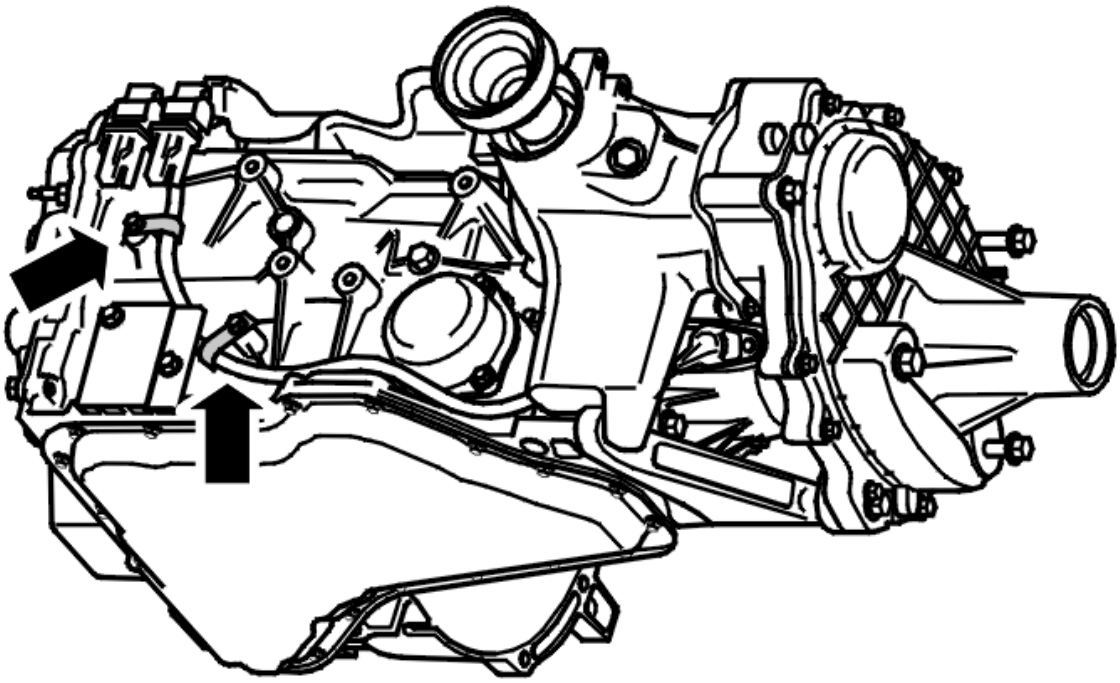

Fig. 18: Removing Transmission Output Speed Sensor (2 Of 2)
Courtesy of VOLVO CARS CORPORATION

Remove the remaining clamps.

INSTALLATION

INSTALLING THE SENSOR

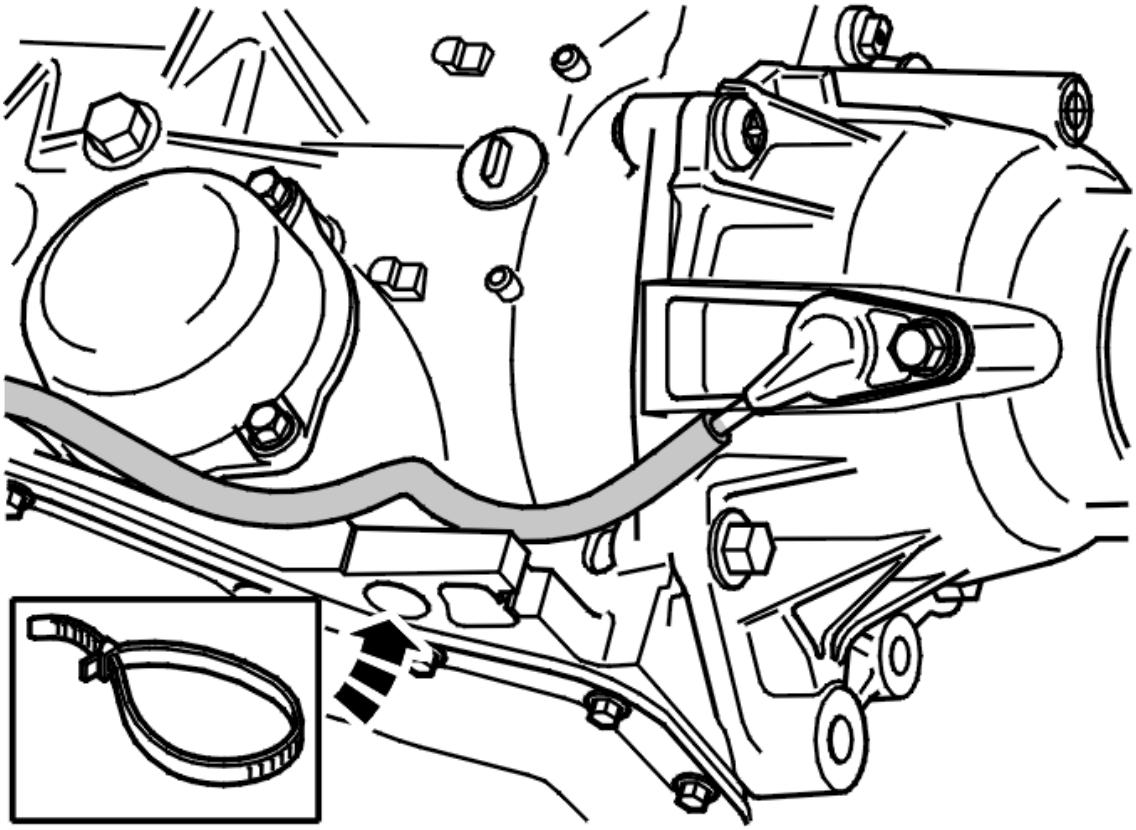

Fig. 19: Installing Transmission Output Speed Sensor (1 Of 2)
Courtesy of VOLVO CARS CORPORATION

Lubricate the new sensor's O-ring. Tighten the screw. See **SUMMARY OF TIGHTENING TORQUES FOR SPECIFIC COMPONENTS** .

Use a tie strap through the hole to secure the cable instead of the original clamp nearest the sensor.

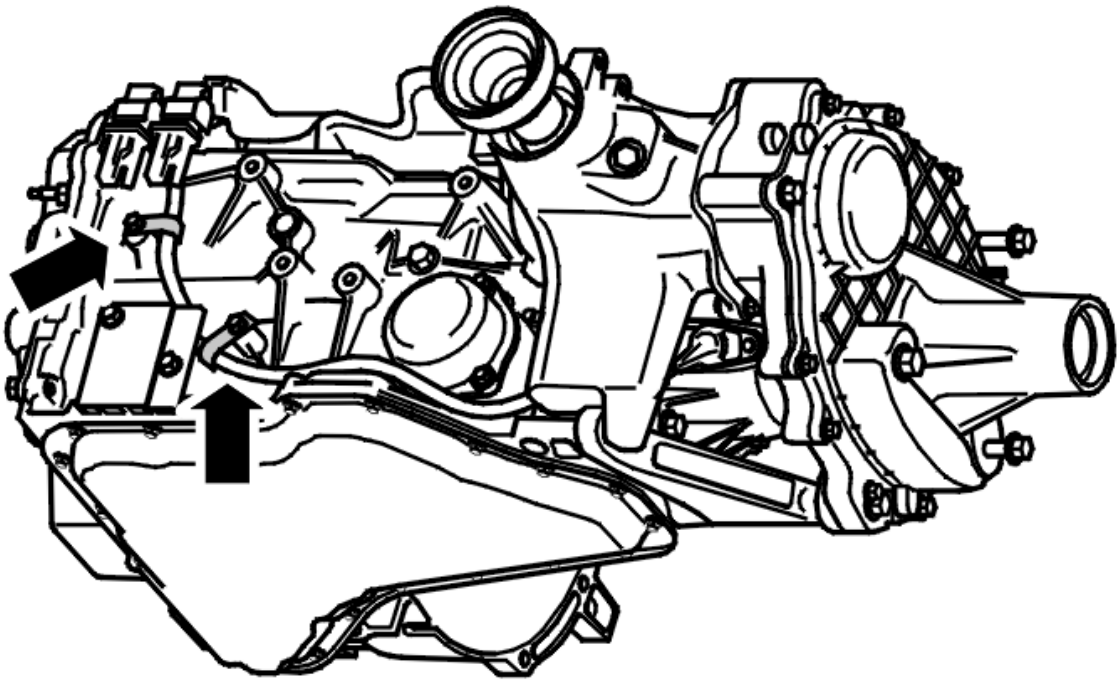

Fig. 20: Installing Transmission Output Speed Sensor (2 Of 2)
Courtesy of VOLVO CARS CORPORATION

Slide the cable up. Press the clamp for the sensor cable into place on the transmission.

Install the splashguard under the engine.

CONNECT THE CONNECTOR. SECURE THE CONNECTOR TO THE HOLDER

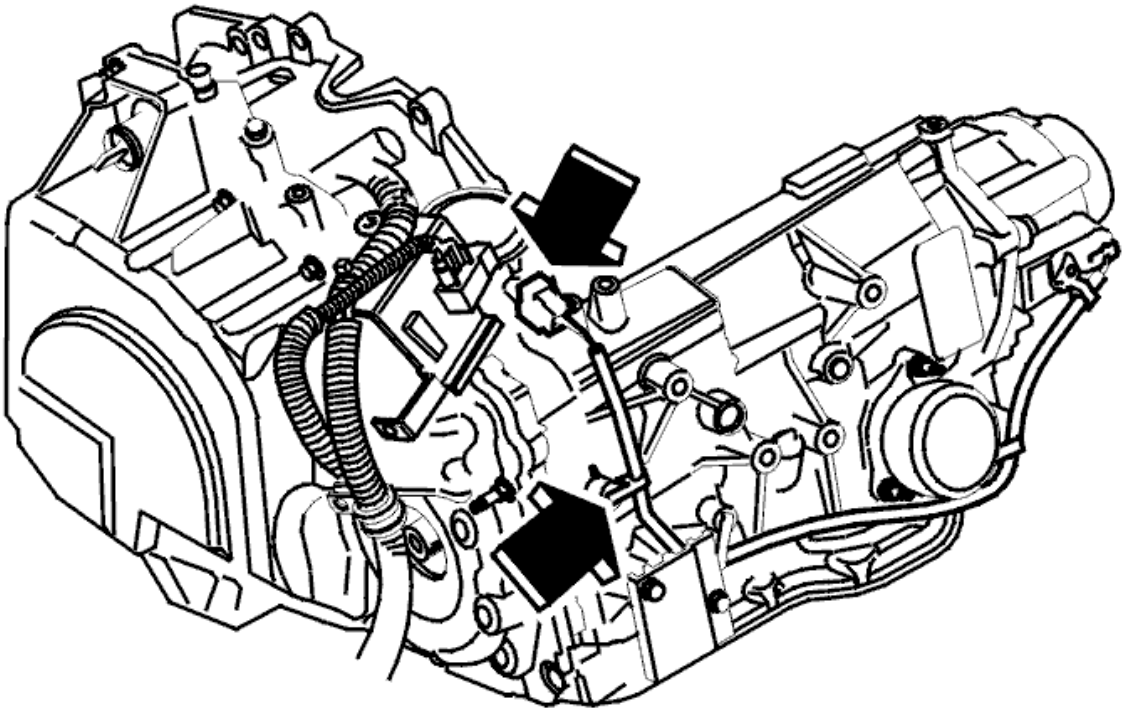

Fig. 21: Heated Oxygen Sensors Bracket
Courtesy of VOLVO CARS CORPORATION

Press the remaining clamps onto the cable.

Install:

- the bracket for the heated oxygen sensor (HO2S) cable harness. Tighten the screw
- the air cleaner (ACL) housing. See **GEAR SELECTOR CABLES, REPLACING**
- the preheating hose.

FINISHING

INSTALLING AND CHECKING COMPONENTS

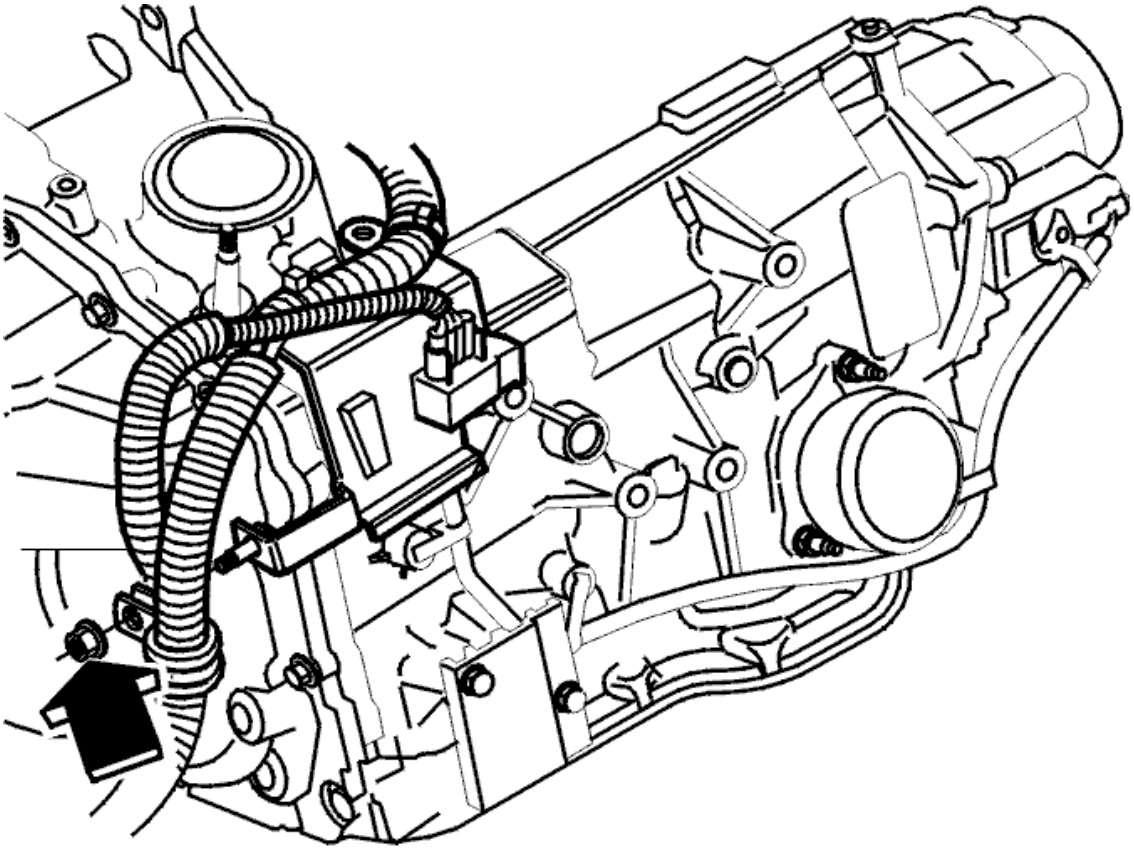

Fig. 22: Heated Oxygen Sensor Connector
Courtesy of VOLVO CARS CORPORATION

Install:

- the clamp and nut on the stud for the cable harness bracket for the heated oxygen sensor (HO2S)
- the wheel. See **INSTALLING WHEELS** .

Check the transmission oil level

Erase diagnostic trouble codes (DTCs)

MISCELLANEOUS

Miscellaneous - Removal, Replacement And Installation

OIL COOLER, TRANSMISSION (B6294T, 4T65 AWD; 2003-06)

AUXILIARY OIL COOLER, REPLACING

NOTE: **As the graphics in this service information are used for different model years and/or models, some variation may occur. However, the essential information in the graphics is always correct.**

FRONT LOWER OIL COOLER, REPLACING

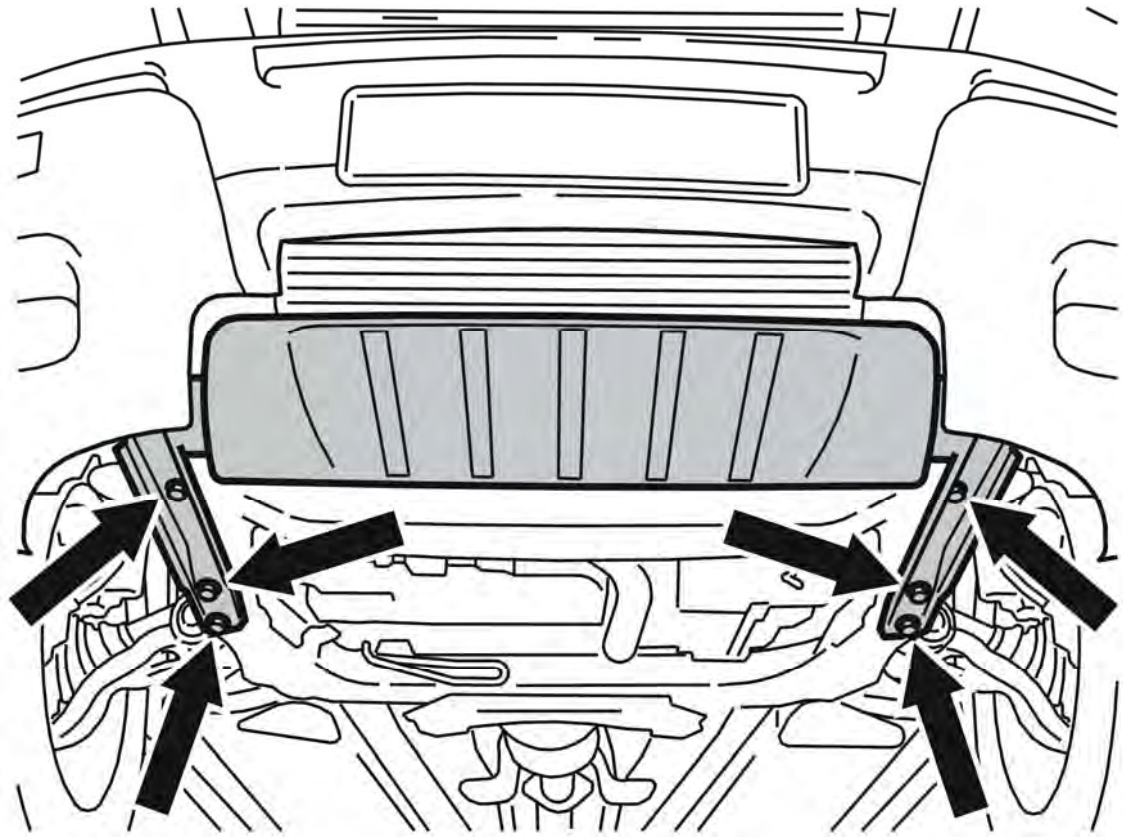

Fig. 1: Splash Guard. Protective Plate And Screws
Courtesy of VOLVO CARS CORPORATION

Remove the 6 M10 screws from the front protective panel.

BLOCK BOTH THE OIL HOSES USING HOSE CLIPS

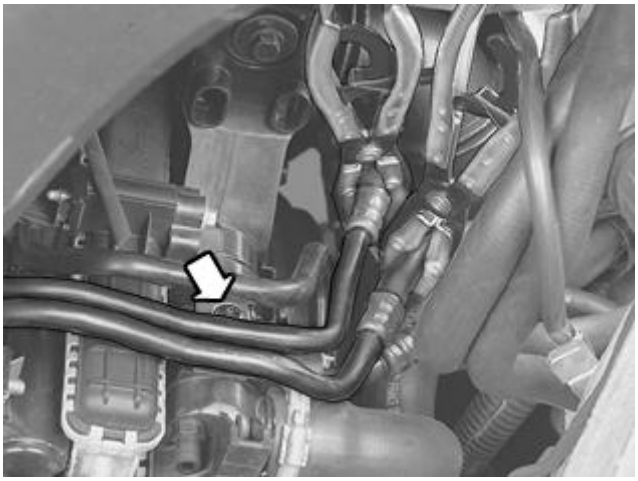

Fig. 2: Oil Hoses
Courtesy of VOLVO CARS CORPORATION

Remove the screw holding the oil pipes in the radiator on the left-hand side.

REMOVE THE OIL COOLER FROM THE COOLER UNIT

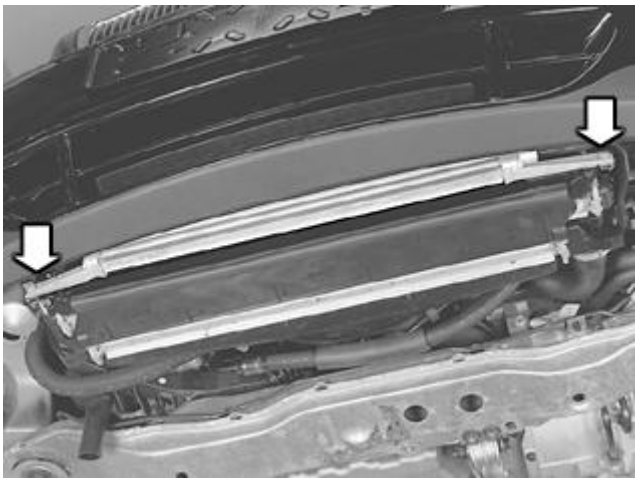

Fig. 3: Oil Pipe
Courtesy of VOLVO CARS CORPORATION

Remove:

- the 2 screws securing the oil cooler in the radiator assembly
- the oil pipes from the oil cooler.

Use a container to collect any fluid spillage.

REMOVE THE COMPONENTS FROM THE OIL COOLER

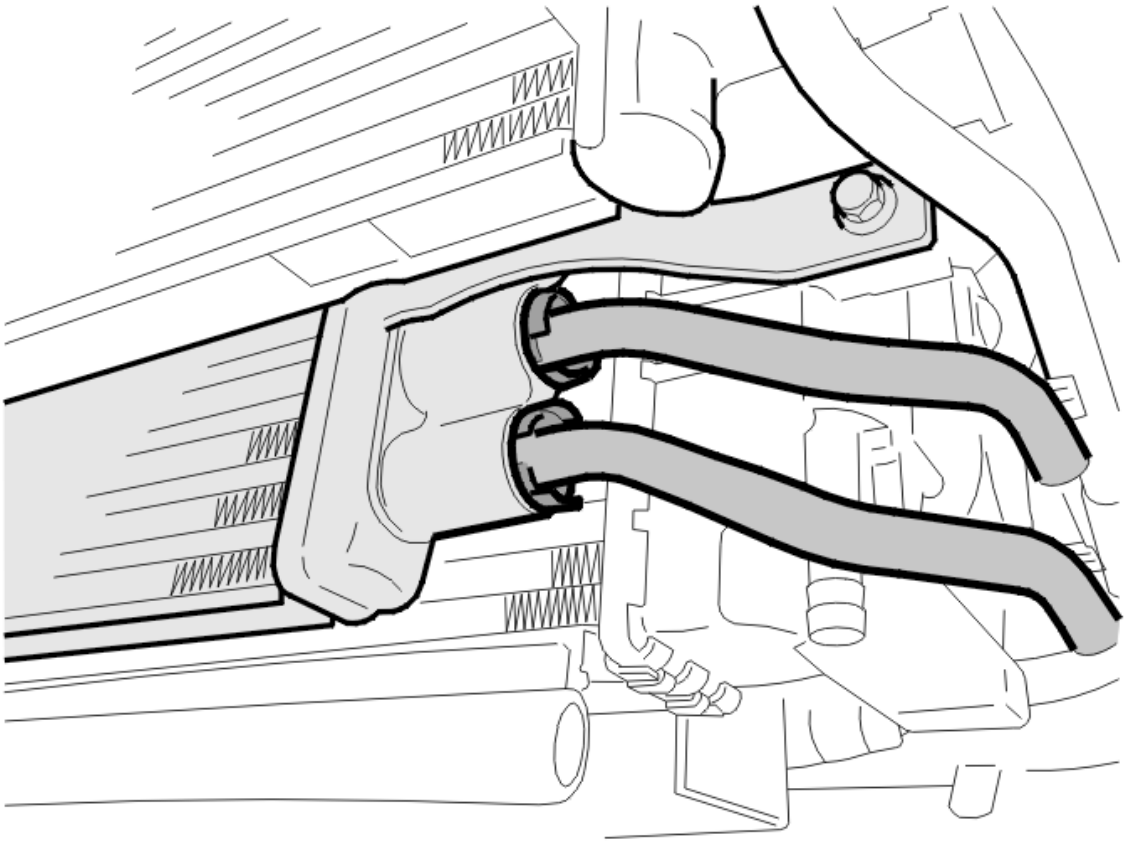

Fig. 4: Identifying Oil Cooler And Pipes
Courtesy of VOLVO CARS CORPORATION

Remove:

- the oil pipes by clamping the clips together and pulling straight out
- the oil cooler.

NOTE: **There is a small amount of oil still in the oil cooler.**

NOTE: **Measure the amount of oil remaining in the oil cooler. Fill the transmission with the same quantity of new oil.**

INSTALL THE OIL COOLER IN THE COOLER UNIT

NOTE: **For tightening torques, see TIGHTENING TORQUE .**

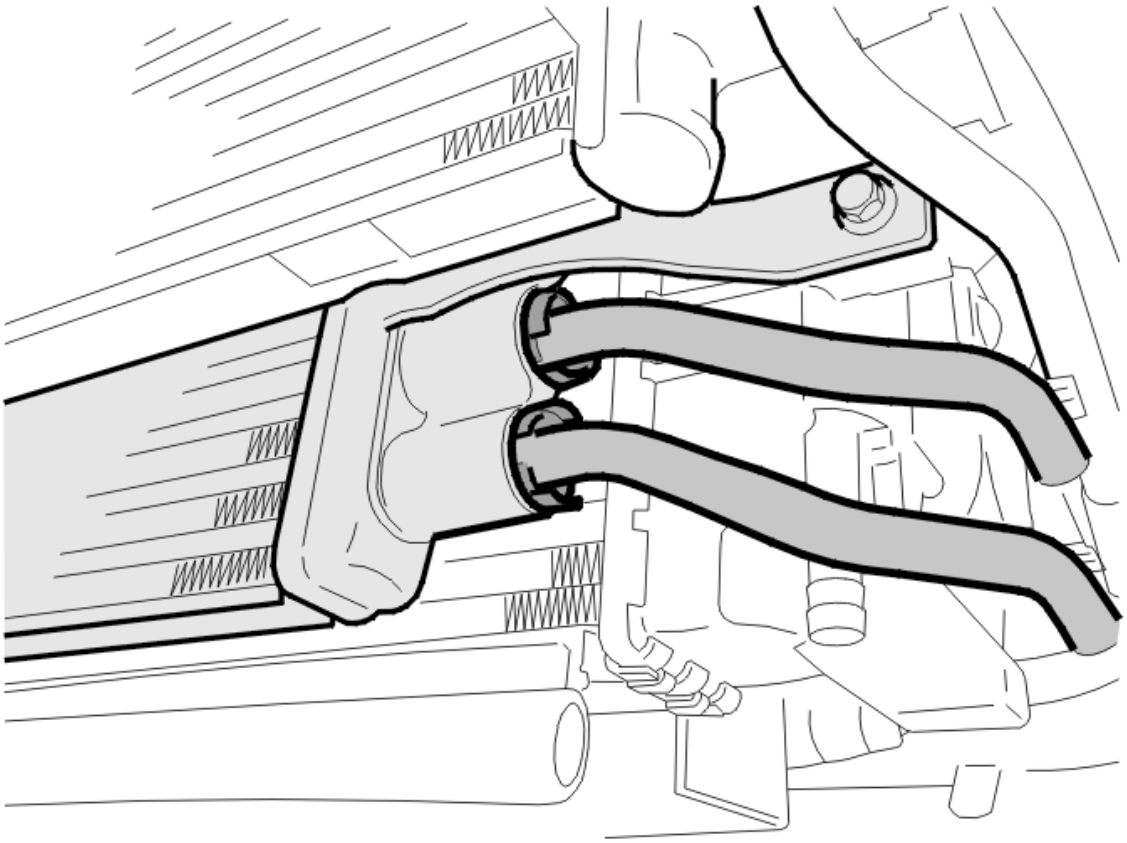

Fig. 5: Identifying Oil Cooler And Pipes
Courtesy of VOLVO CARS CORPORATION

Install:

- new O-rings on the oil pipes. Lubricate the O-rings using Automatic Transmission Fluid (ATF), ATF. Press the oil pipes into position.

INSTALL THE OIL COOLER IN THE COOLER UNIT

Fig. 6: Oil Pipe

Courtesy of VOLVO CARS CORPORATION

Tighten the two (M6) mounting screws.

INSTALL THE SCREW FOR THE OIL PIPES ON THE LEFT-HAND SIDE

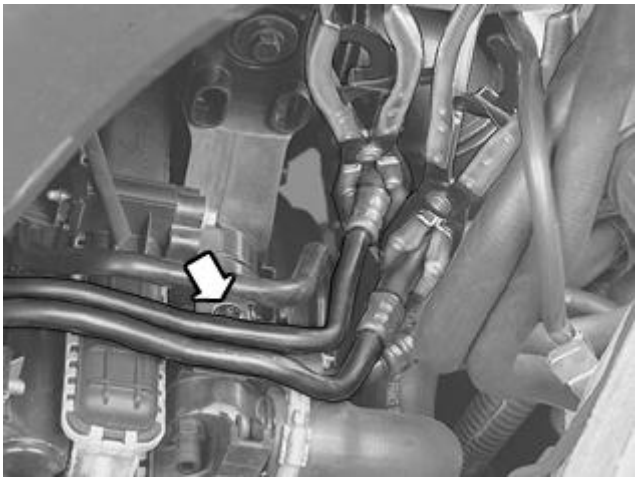

Fig. 7: Oil Hoses
Courtesy of VOLVO CARS CORPORATION

Tighten the screw (M6).

Remove the hose clips.

Fill with new oil according to the specifications for the car

Start the engine and check for any **leakage** at the oil cooler and the oil pipes.

Check the oil level .

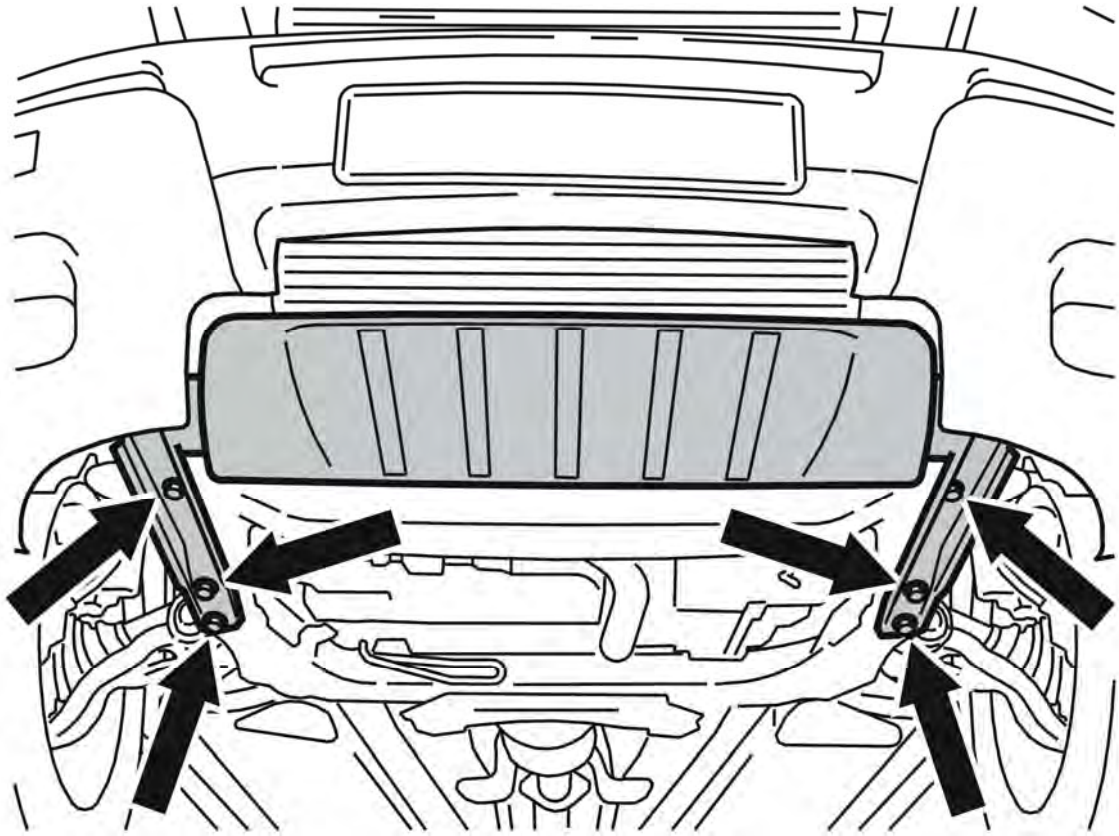

Fig. 8: Splash Guard. Protective Plate And Screws
Courtesy of VOLVO CARS CORPORATION

Install:

- the 6 M10 screws for the front protective panel.

MISCELLANEOUS

Miscellaneous - Installation Instructions, Accessories

OIL COOLER (2003-2012)

OIL COOLER

PREPARATIONS

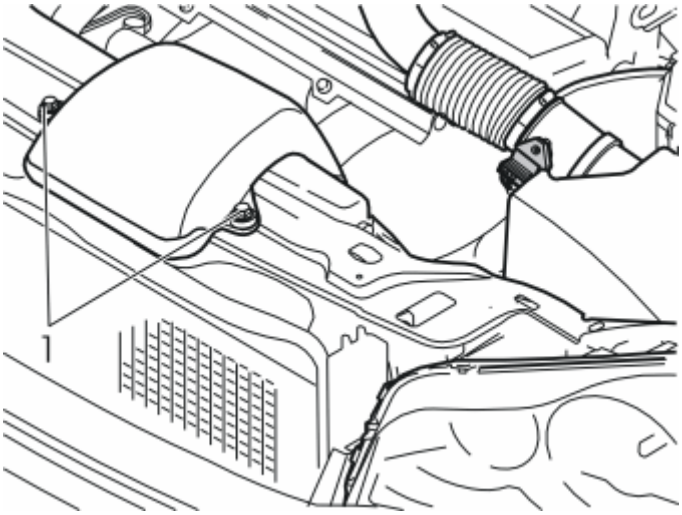

Fig. 1: Removing Air Cleaner Intake Manifold
Courtesy of VOLVO CARS CORPORATION

- remove the two screws (1) from the intake pipe for the air cleaner (ACL)
- Remove the intake pipe. Place the intake manifold to one side.

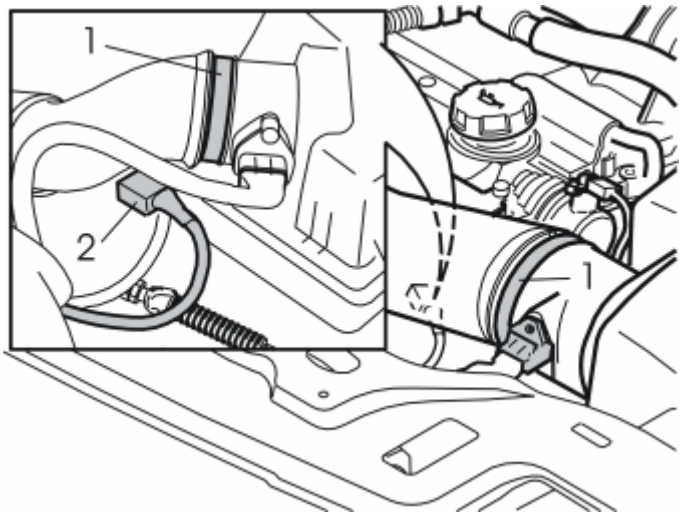

Fig. 2: Identifying Hose Clamp And Cable
Courtesy of VOLVO CARS CORPORATION

- Fully disconnect the hose clamp (1)
- Remove the vacuum valve and its hoses and the cable (2) from the mounting on the reverse of the air cleaner (ACL), in the lower right-hand corner. Move the vacuum valve away from the gearbox
- Pull the air cleaner (ACL) from its mounting in the side member. Pull the air cleaner (ACL) up slightly. Detach the hose from the air cleaner (ACL). The hose may need to be heated with a hot-air gun before it can be detached
- Move the air cleaner (ACL) to one side so that the gearbox is accessible.

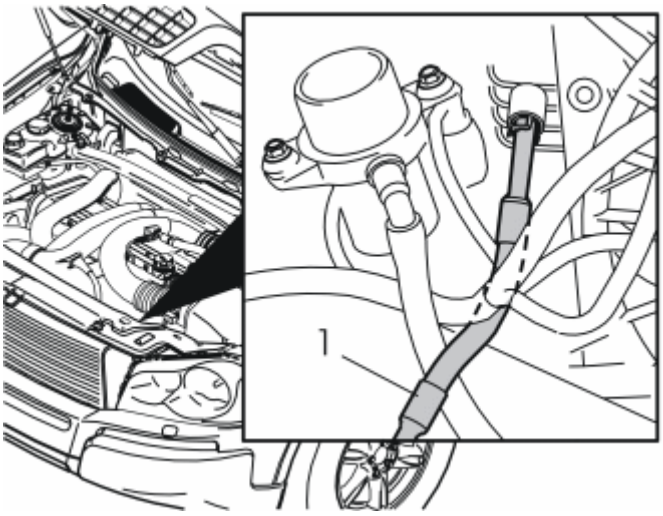

Fig. 3: Identifying Hose Between Radiator And Gearbox
Courtesy of VOLVO CARS CORPORATION

- Remove the hose (1) between the radiator and the gearbox
- Place the hose to one side. It will not be reused.

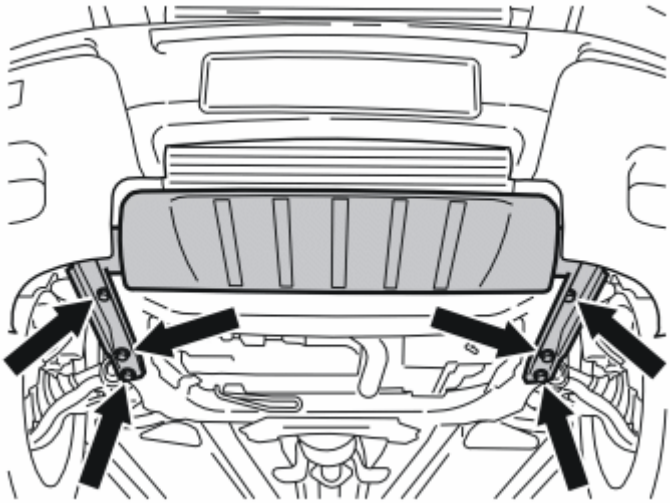

Fig. 4: Skid Plate
Courtesy of VOLVO CARS CORPORATION

- Remove the front skid plate. First remove the six screws (1) on the underneath

- With the assistance of a colleague, pull the skid plate forwards. Pull one of the corners until the mounting lug on that side of the skid plate releases from the sub-frame. Then pull off the other corner

NOTE: It may be necessary to carefully bend down the lower edge of the bumper cover while pulling the skid plate forward.

INSTALLING THE OIL COOLER

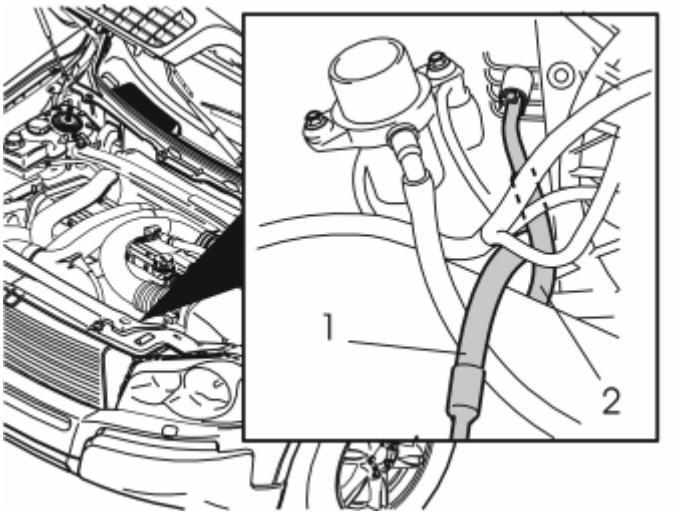

Fig. 5: Identifying Hoses Connected To Gearbox And Oil Cooler
Courtesy of VOLVO CARS CORPORATION

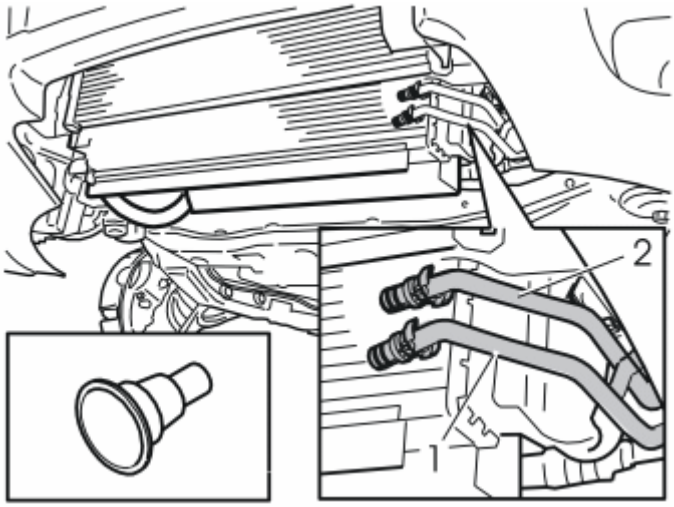

Fig. 6: Identifying Hoses Routed To Oil Cooler
Courtesy of VOLVO CARS CORPORATION

- Remove the two hoses from the kit and remove the dust covers
- Insert the hoses down to the left-hand side of the radiator. Connect the hoses in the engine compartment to the gearbox (1) and radiator (2) where the hose was removed earlier. Do not tighten the connection nut
- Route the hoses between the left-hand side of the radiator and the pipe to the air conditioning (A/C)

system.

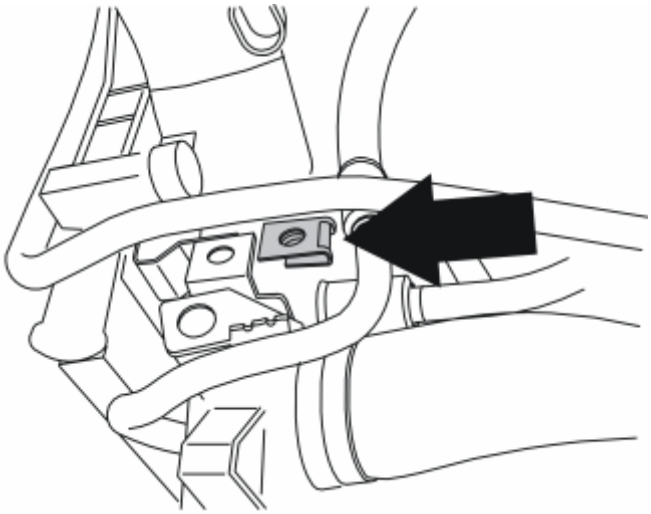

Fig. 7: Identifying Nut Clip
Courtesy of VOLVO CARS CORPORATION

- Take the nut clip from the kit and press it into place on the lower left edge of the radiator on the existing mounting.

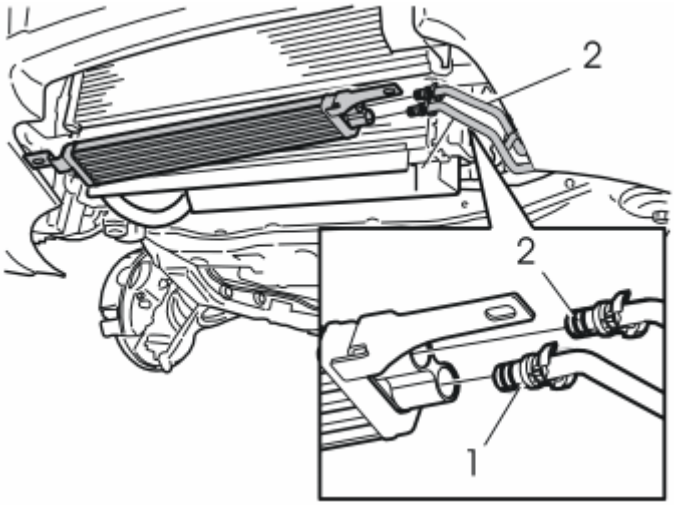

Fig. 8: Identifying Hoses Connected To Oil Cooler
Courtesy of VOLVO CARS CORPORATION

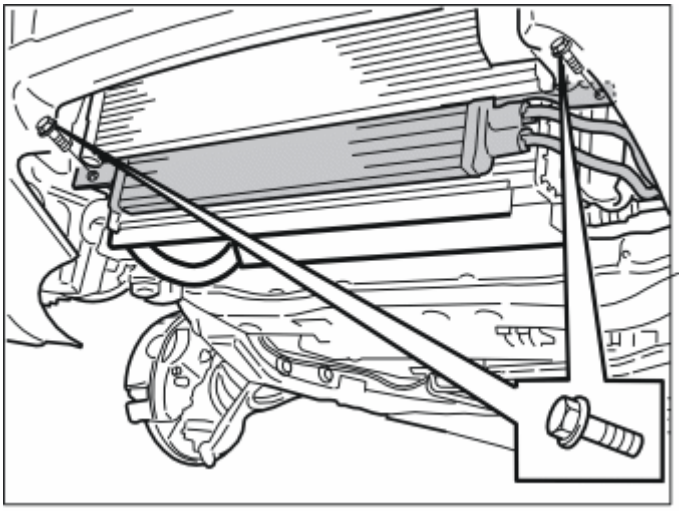

Fig. 9: Identifying Oil Cooler
Courtesy of VOLVO CARS CORPORATION

- Take the oil cooler from the kit. Connect the hose from the gearbox (1) and the hose from the radiator (2) to the oil cooler
- Ensure that the mounting lug for the lower hose is beneath the mounting lug for the upper hose
- Take the two M6x16 screws from the kit. Secure the oil cooler to the existing mountings. Tighten the screws. Tighten to **10 Nm (7 lbf. ft)** .

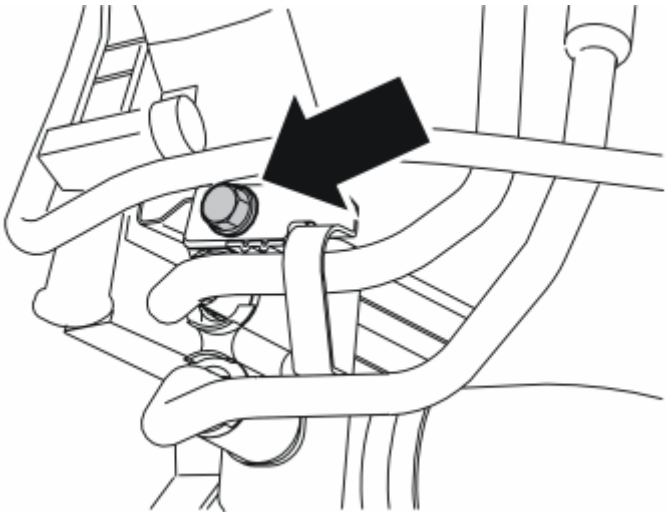

Fig. 10: Identifying M6 Screw
Courtesy of VOLVO CARS CORPORATION

- Take the M6x14 screw from the kit. Tighten both the mounting lugs for the hoses to the mounting in the radiator. Tighten the screw. Tighten to **10 Nm (7 lbf. ft)**
- Tighten the connection nut on the hose to the gearbox. Tighten to **40 Nm (29 lbf. ft.)** .

FINISHING WORK

- Reinstall the front skid plate. Tighten the screws. Tighten to **50 Nm (37 lbf. ft.)**
- Reinstall the air cleaner (ACL). Connect the removed components
- Reinstall the intake manifold on the air cleaner (ACL). Tighten the screws. Tighten to **10 Nm (7 lbf. ft.)** .

- Fill with 0.2 l of oil (see the manual for the oil type)
- Run the engine and top up the oil to the correct level.

TRANSMISSION

Power transmission

TRANSMISSION

PRINTED CIRCUIT BOARD GEAR SELECTOR ASSEMBLY/TOP PANEL, GEARTRONIC, REPLACING

REMOVAL

REMOVING THE GEAR SELECTOR KNOB

Remove the gear selector knob. See **TRANSMISSION - REMOVAL, REPLACEMENT AND INSTALLATION** .

REMOVING THE CENTER CONSOLE

See **CENTER CONSOLE, REPLACING** .

REMOVING THE TOP PANEL FROM THE GEAR SELECTOR ASSEMBLY

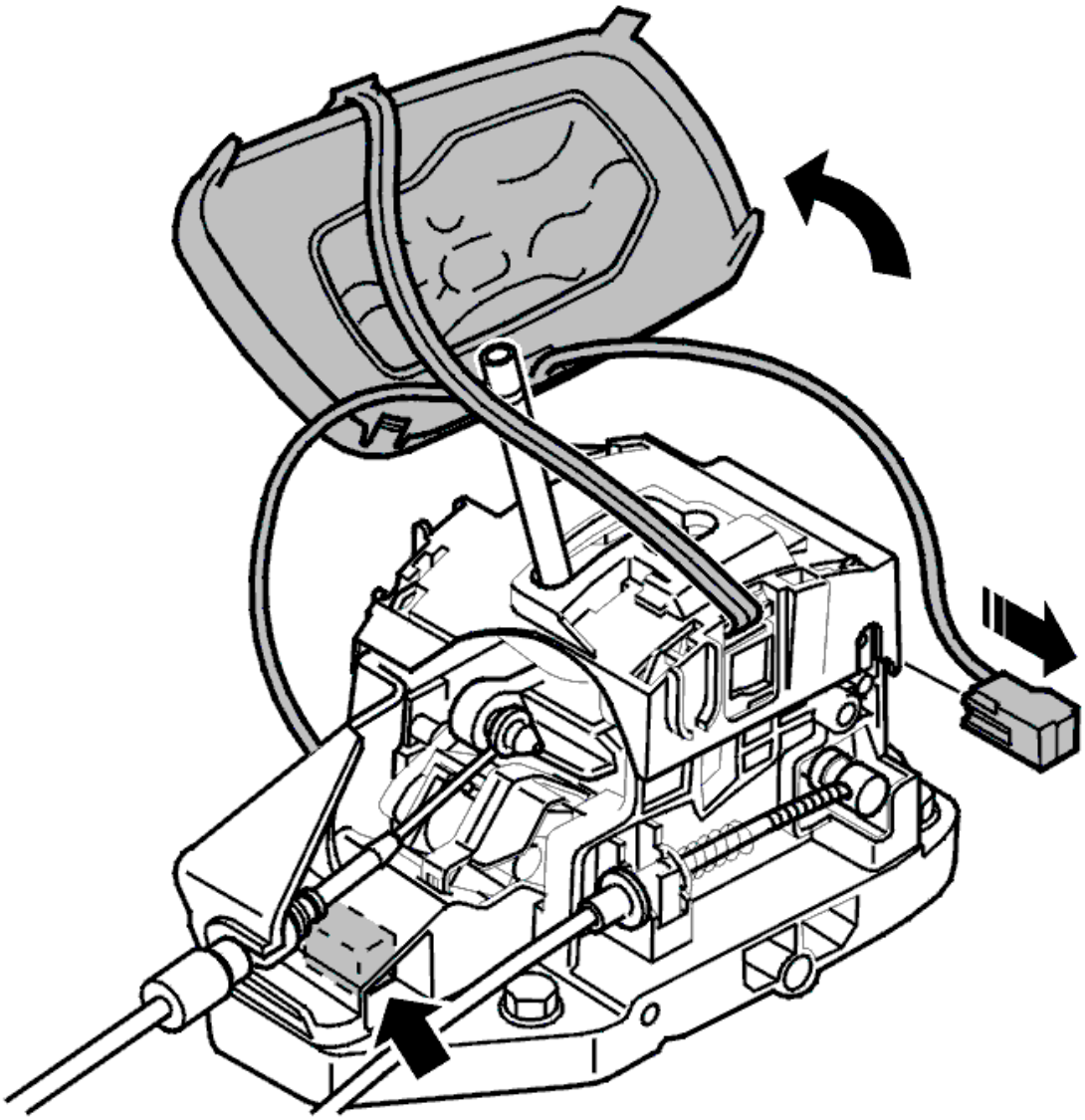

Fig. 1: Identifying Removal Of Top Panel From The Gear Selector Assembly
Courtesy of VOLVO CARS CORPORATION

Separate the connectors.

Remove:

- the rear connector
- the cables from the clips.

REMOVING THE GEAR SELECTOR ASSEMBLY STOP

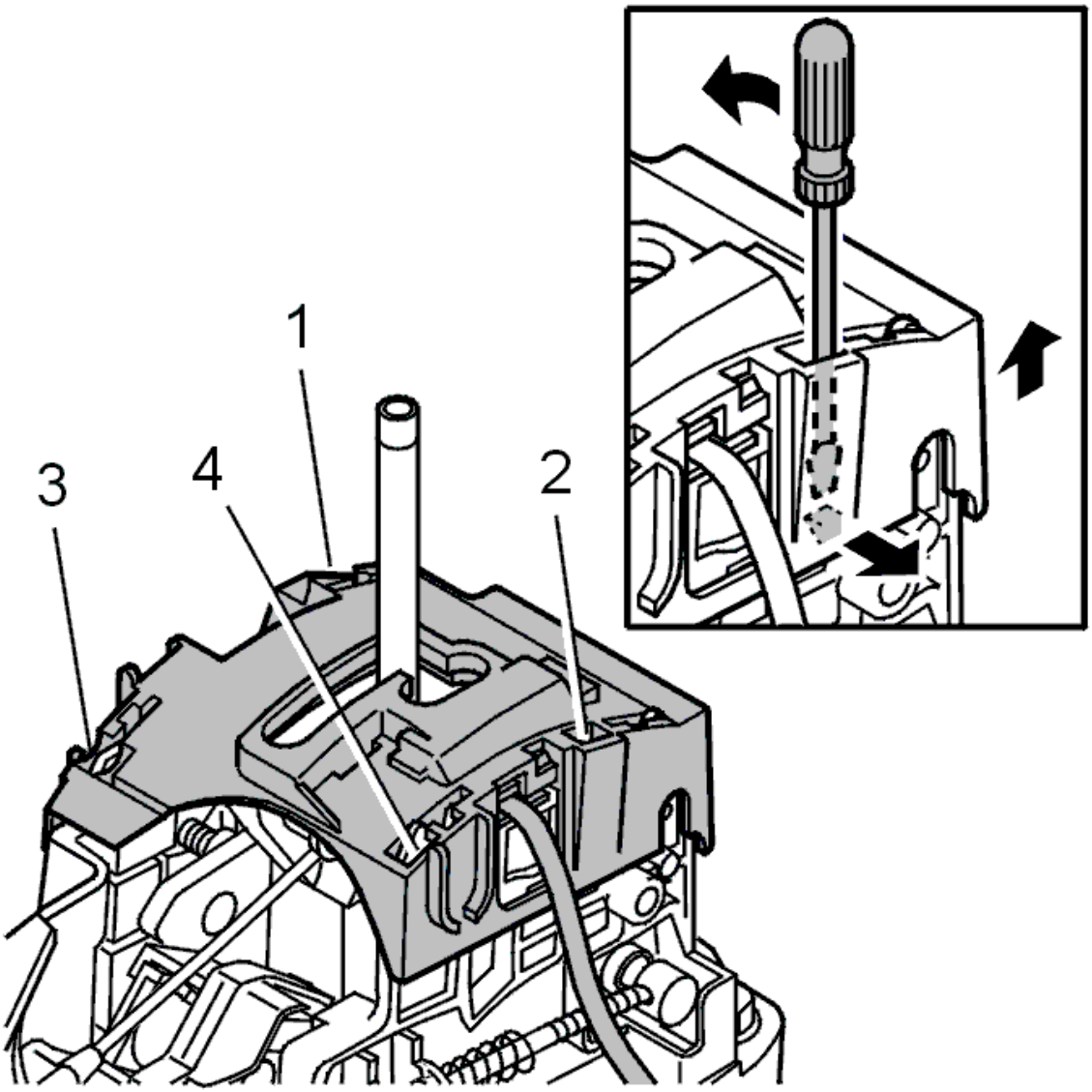

Fig. 2: Identifying Removal of Gear Selector Assembly Stop
Courtesy of VOLVO CARS CORPORATION

Use a screwdriver.

Insert the screwdriver in the slots (1-4). Carefully pry in towards the gear selector assembly with the screwdriver. Pull the gear selector assembly stop up to release the catch

REMOVING THE PRINTED CIRCUIT BOARD FROM THE GEAR SELECTOR ASSEMBLY STOP

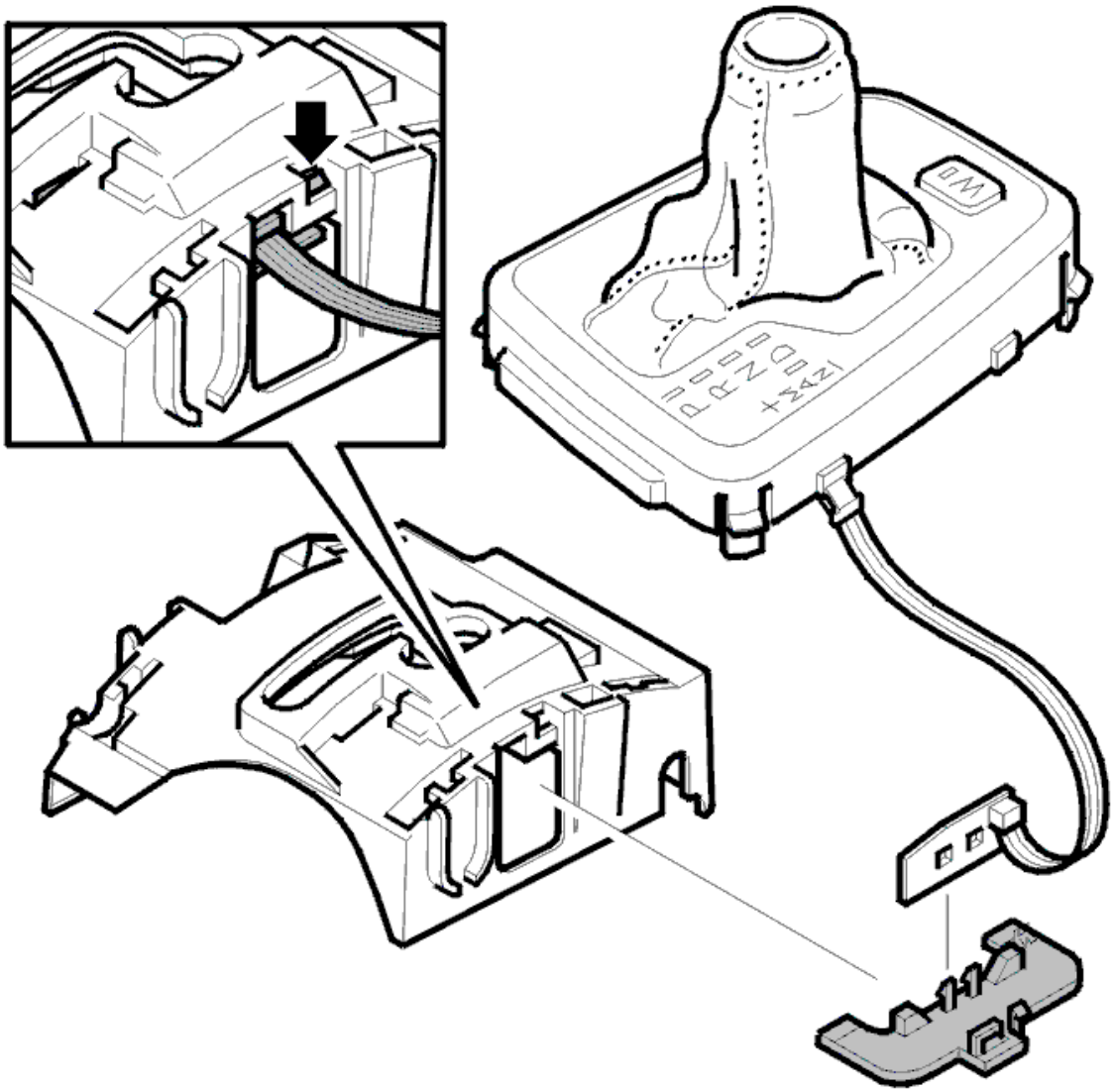

Fig. 3: Identifying Removal Of Printed Circuit Board From The Gear Selector Assembly Stop
Courtesy of VOLVO CARS CORPORATION

Release the holder from the gear selector assembly stop.

Remove the printed circuit board. Press out both the catches in the printed circuit board.

Pull the printed circuit board straight out of the holder.

REMOVING THE GEAR SELECTOR BOOT FROM THE TOP PANEL

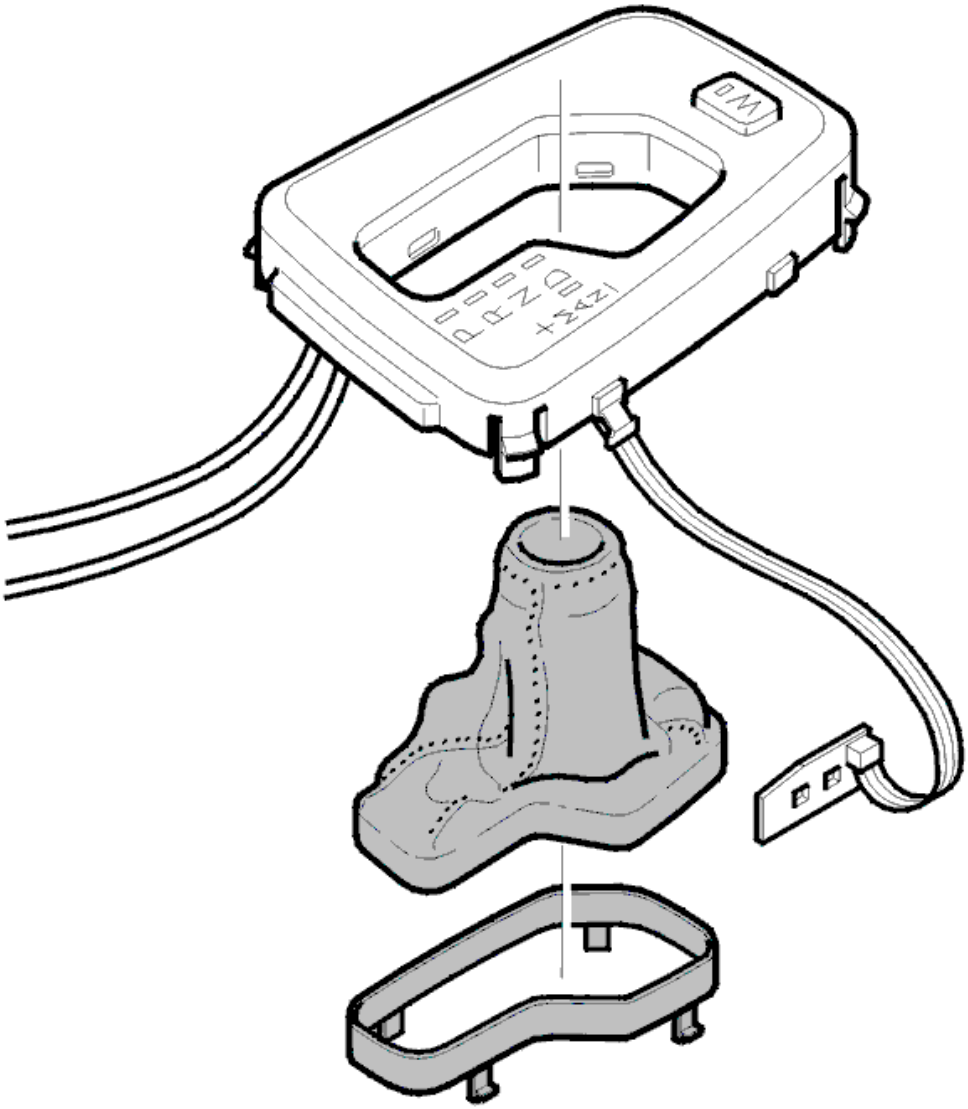

Fig. 4: Gear Selector Boot And Top Panel
Courtesy of VOLVO CARS CORPORATION

Press out the 4 catches from the top panel. Remove the boot.

Replace the top panel and printed circuit board.

Transfer the boot to the new top panel.

INSTALLATION

INSTALLING THE PRINTED CIRCUIT BOARD ON THE HOLDER AND GEAR SELECTOR ASSEMBLY STOP

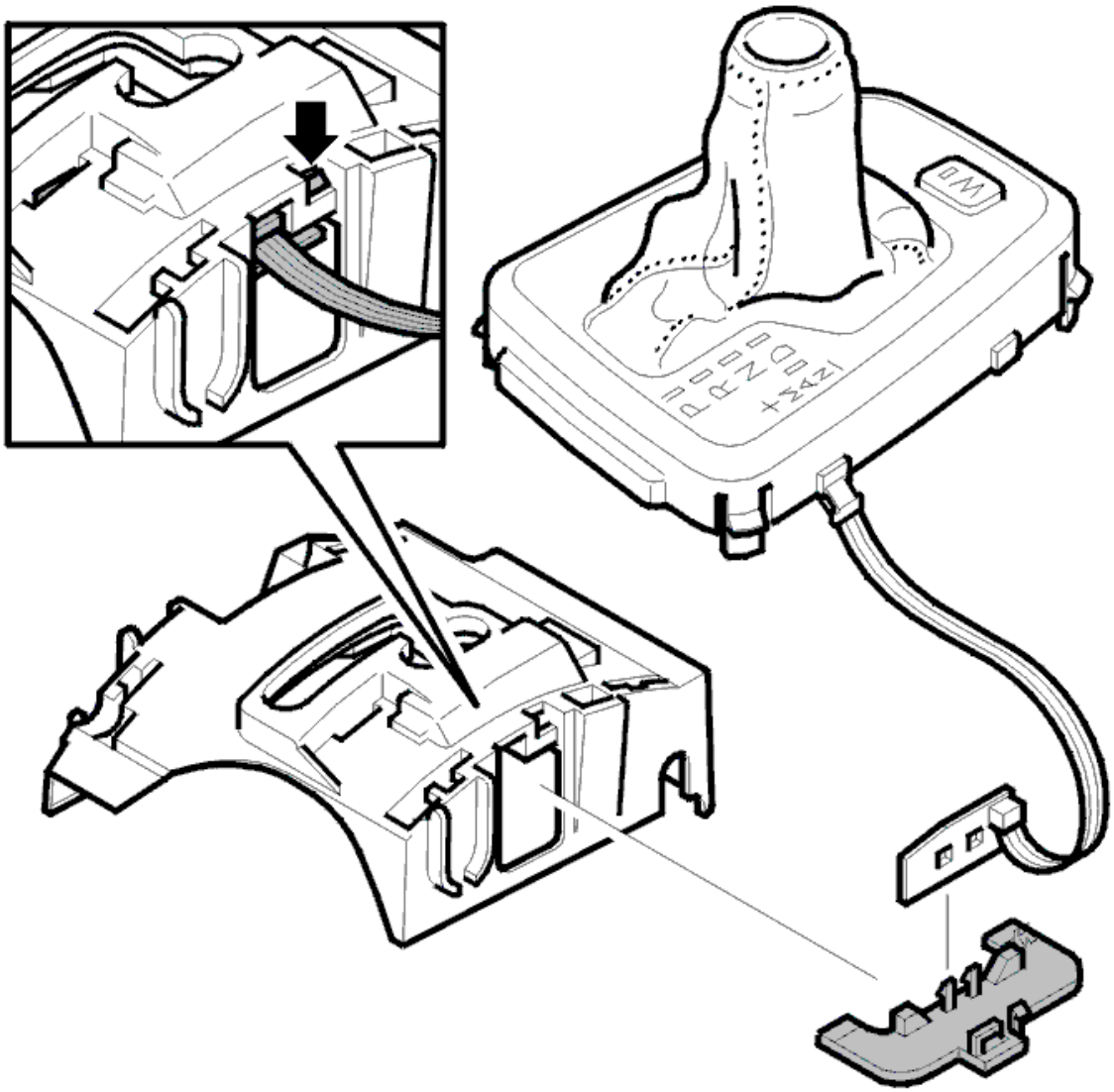

Fig. 5: Identifying Removal Of Printed Circuit Board From The Gear Selector Assembly Stop
Courtesy of VOLVO CARS CORPORATION

Install:

- the printed circuit board in its holder. Secure it with its two locks
- the holder for the gear selector assembly stop. Lock it into place.

INSTALLING THE GEAR SELECTOR ASSEMBLY STOP

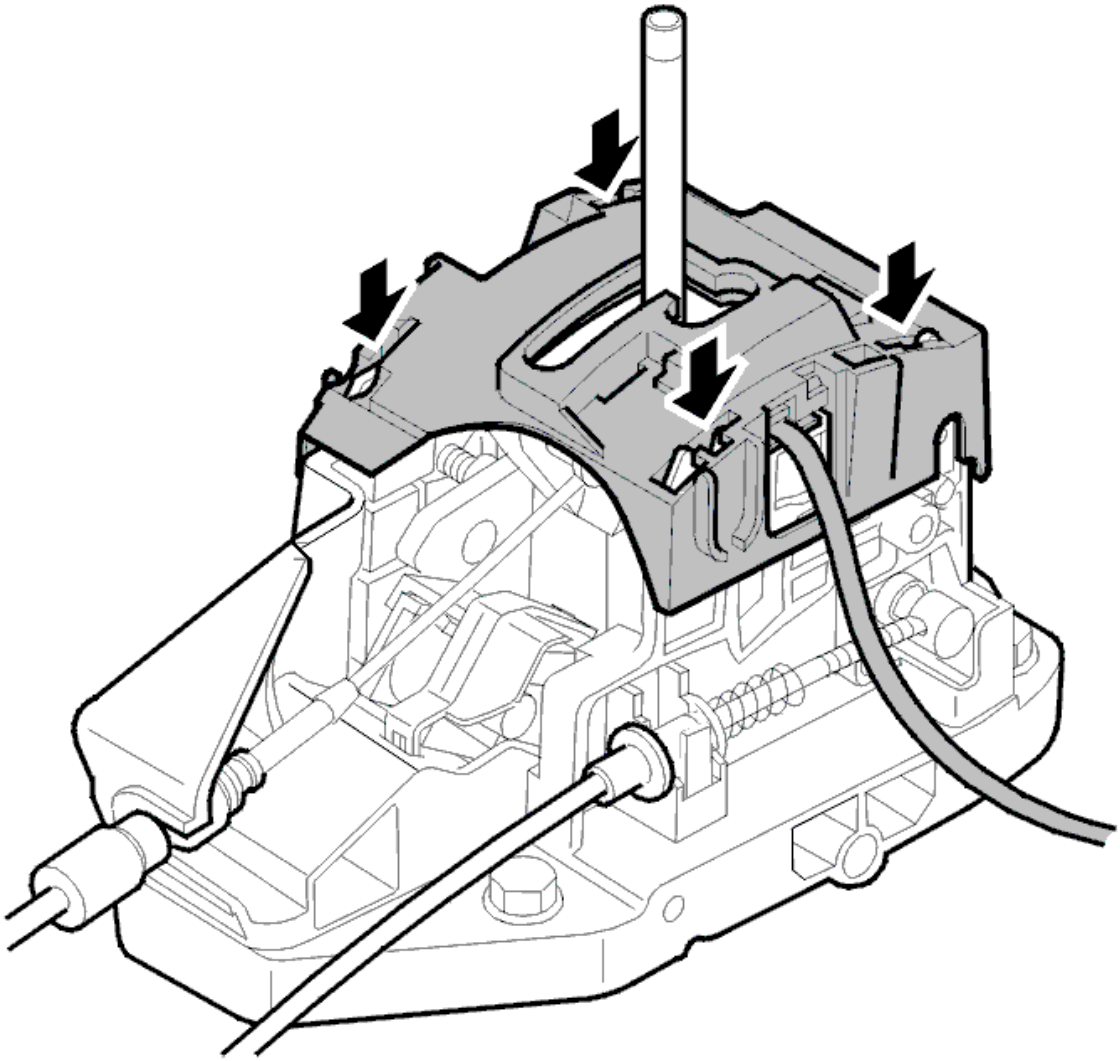

Fig. 6: Identifying Installation Of Gear Selector Assembly
Courtesy of VOLVO CARS CORPORATION

Press the gear selector assembly stop into place on the gear selector assembly.

NOTE: Check that the gear selector assembly stop is secure.

INSTALLING THE TOP PANEL ON THE GEAR SELECTOR ASSEMBLY

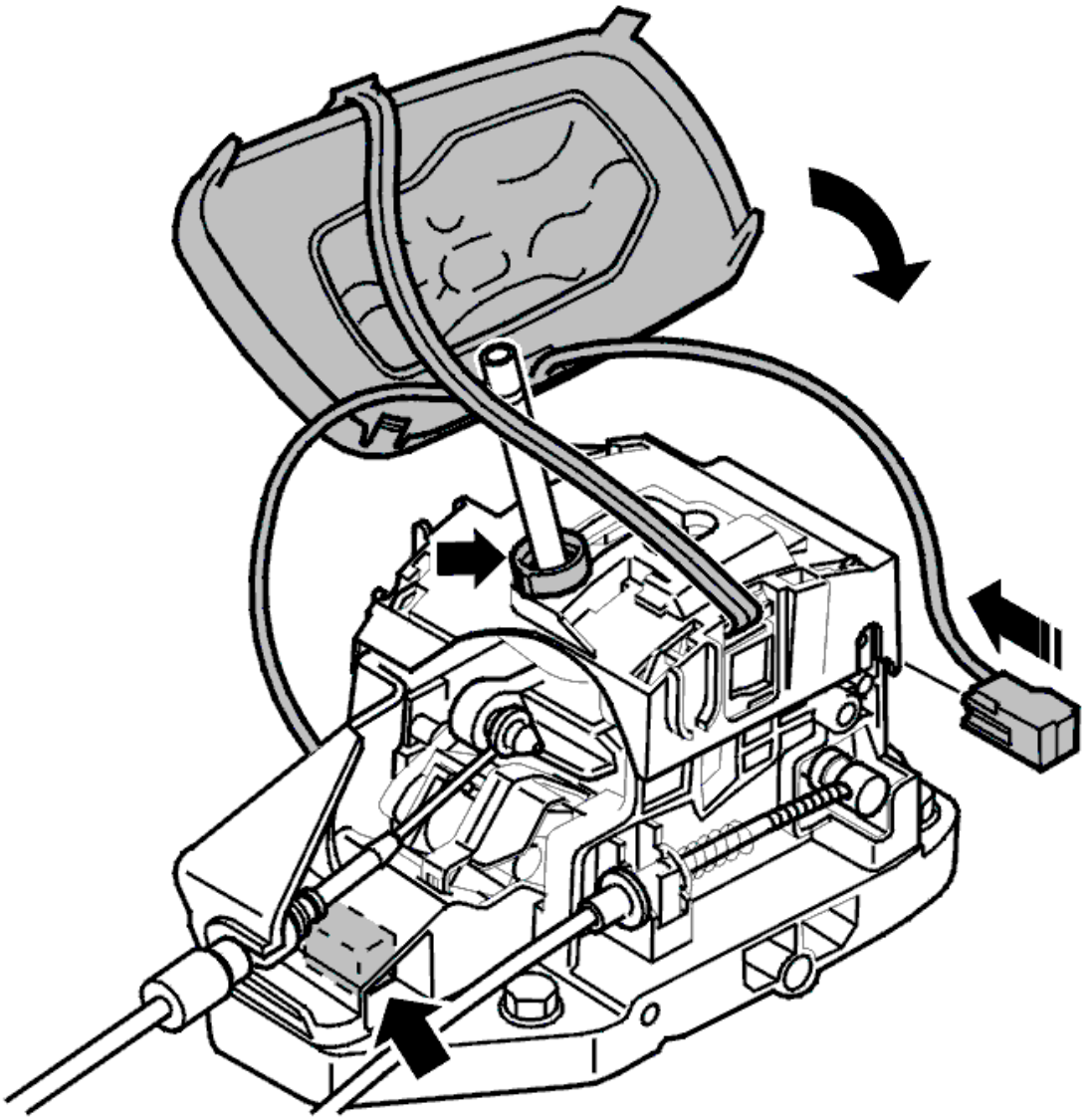

Fig. 7: Identifying Installation Of Top Panel On The Gear Selector Assembly
Courtesy of VOLVO CARS CORPORATION

NOTE: First install the locking sleeve for the boot on the gear selector lever.

Connect the connectors to the gear selector assembly switches.

Install the connectors on the gear selector assembly.

INSTALLING THE GEAR SELECTOR KNOB

Install the gear selector knob. See:**TRANSMISSION - REMOVAL, REPLACEMENT AND INSTALLATION** .

CHECKING THE SHIFT POSITIONS

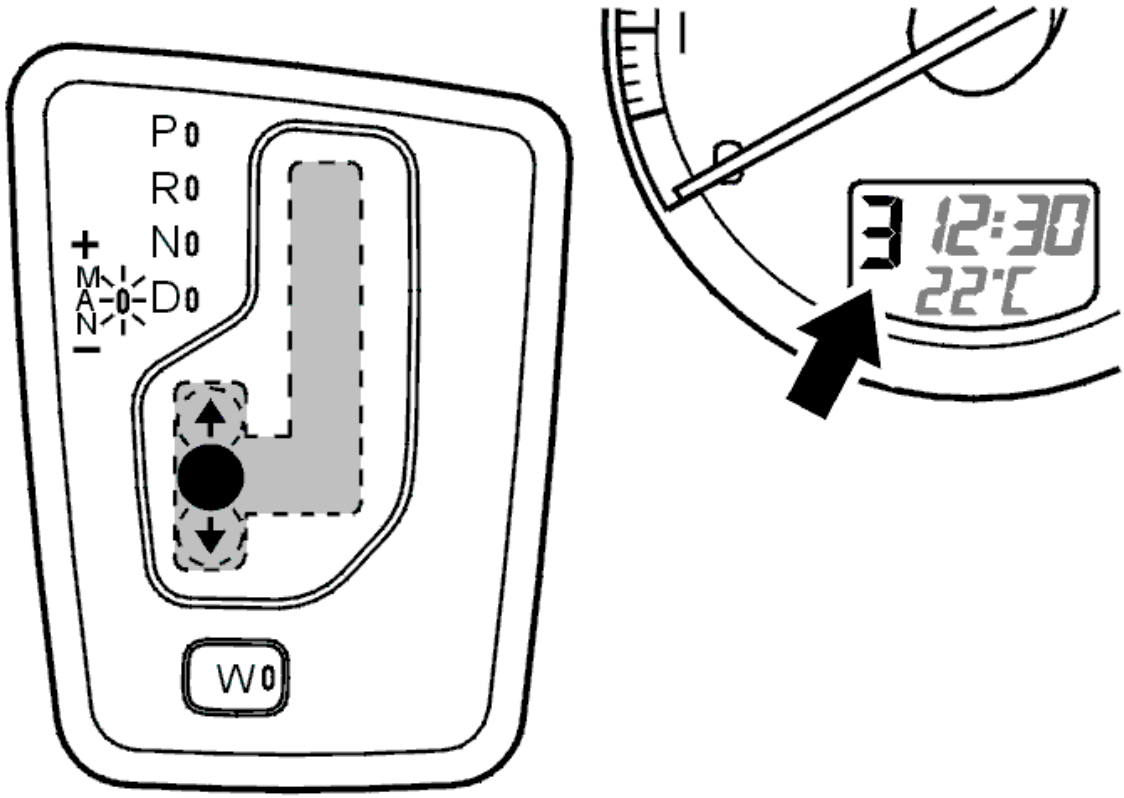

Fig. 8: Checking Shift Positions
Courtesy of VOLVO CARS CORPORATION

Switch on the ignition.

Shift the gear selector through all the shift positions.

Ensure that the letters and/or digits on the display on the combined instrument panel correspond to the shift positions on the top panel.

INSTALLING THE CENTER CONSOLE

See **CENTER CONSOLE, REPLACING** .

PRINTED CIRCUIT BOARD GEAR SELECTOR ASSEMBLY/TOP PANEL, REPLACING

REMOVAL

REMOVING THE GEAR SELECTOR KNOB

Remove the gear selector knob. See:**TRANSMISSION - REMOVAL, REPLACEMENT AND INSTALLATION** .

REMOVING THE CENTER CONSOLE

Remove center console. See:**CENTER CONSOLE, REPLACING** .

REMOVING THE TOP PANEL FROM THE GEAR SELECTOR ASSEMBLY

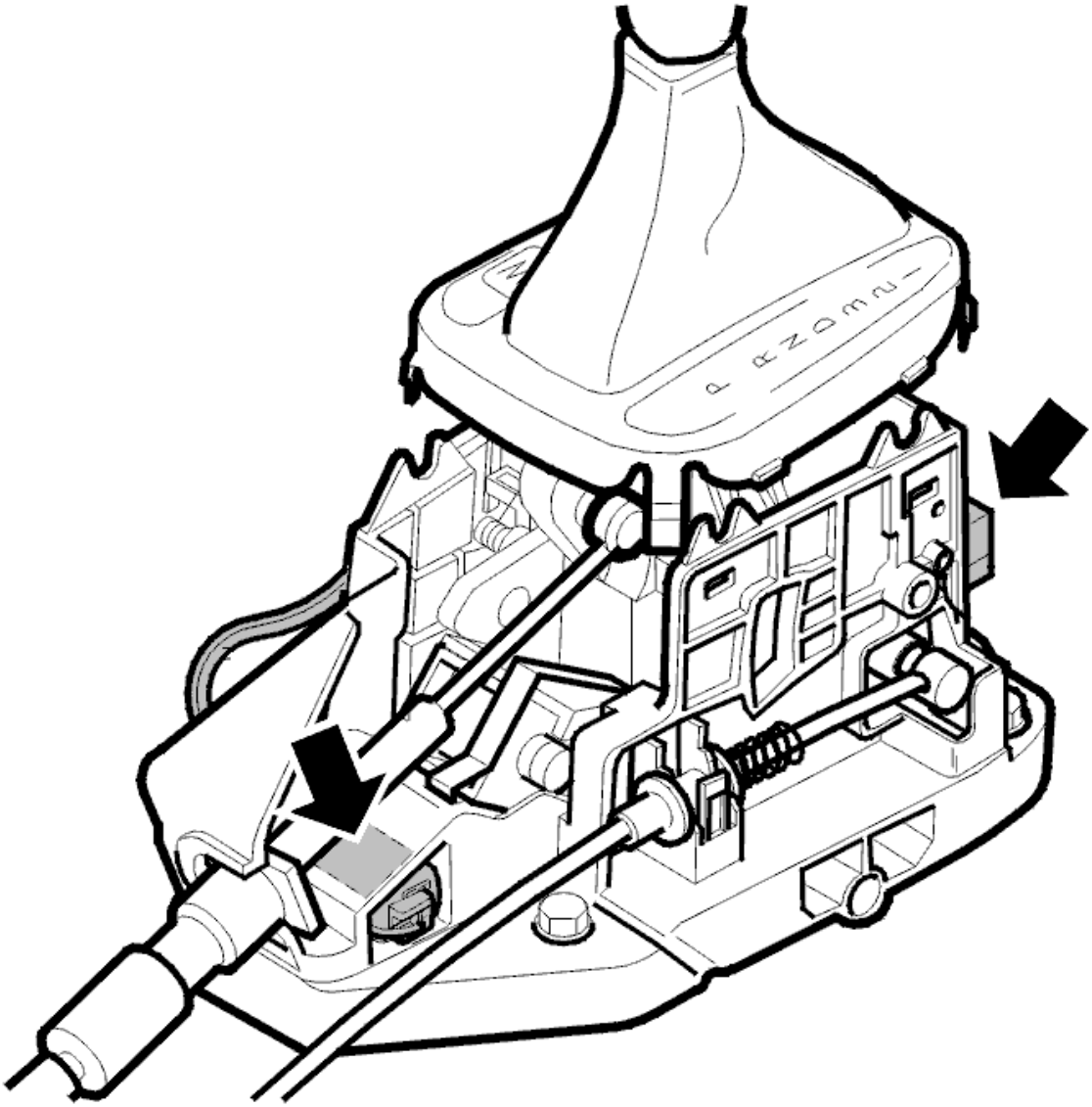

Fig. 9: Removing/Installing Top Panel From Gear Selector Assembly
Courtesy of VOLVO CARS CORPORATION

Remove:

- the wiring from the clips at the gear selector assembly
- the connectors from the gear selector assembly. Separate the connectors
- the top panel with the boot from the gear selector assembly.

REMOVING THE GEAR SELECTOR BOOT FROM THE TOP PANEL

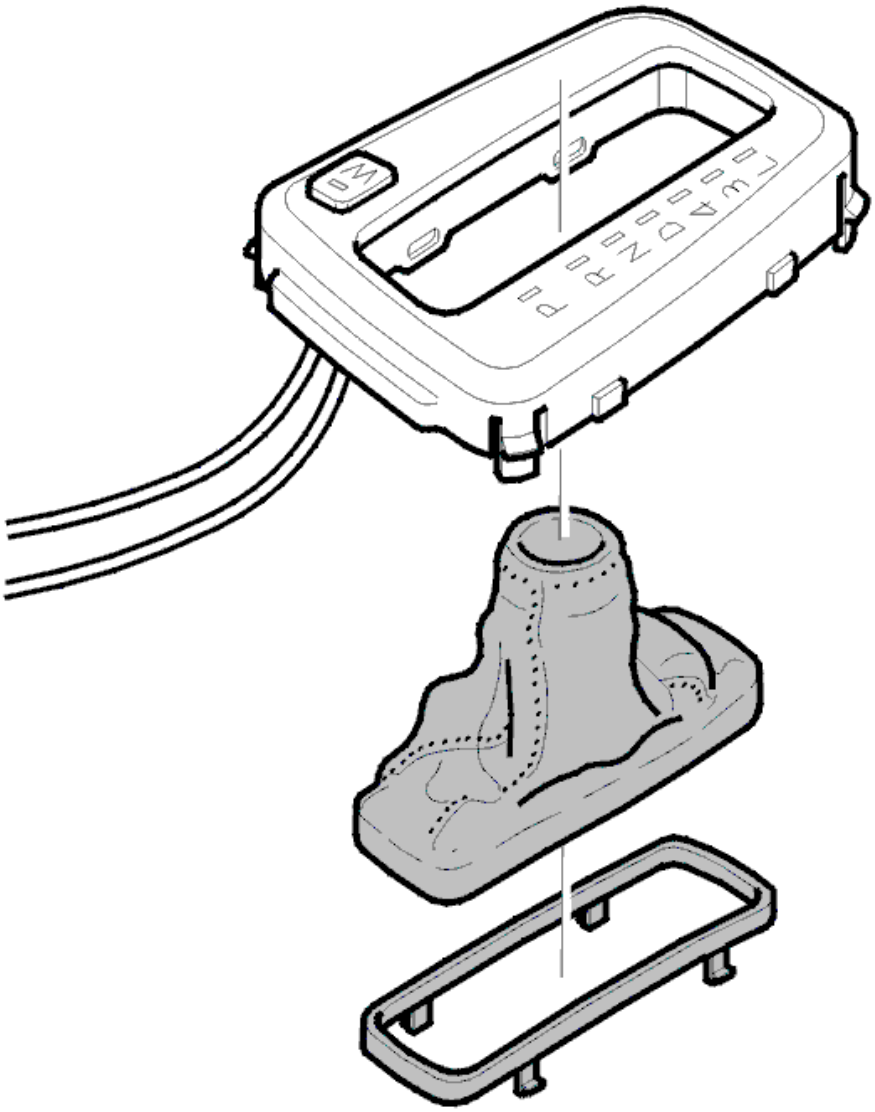

Fig. 10: Gear Selector Boot And Top Panel
Courtesy of VOLVO CARS CORPORATION

Remove the boot holder from the top panel.

Replace the top panel and printed circuit board.

Transfer the boot to the new top panel.

INSTALLATION

INSTALLING THE GEAR SELECTOR BOOT ON THE TOP PANEL

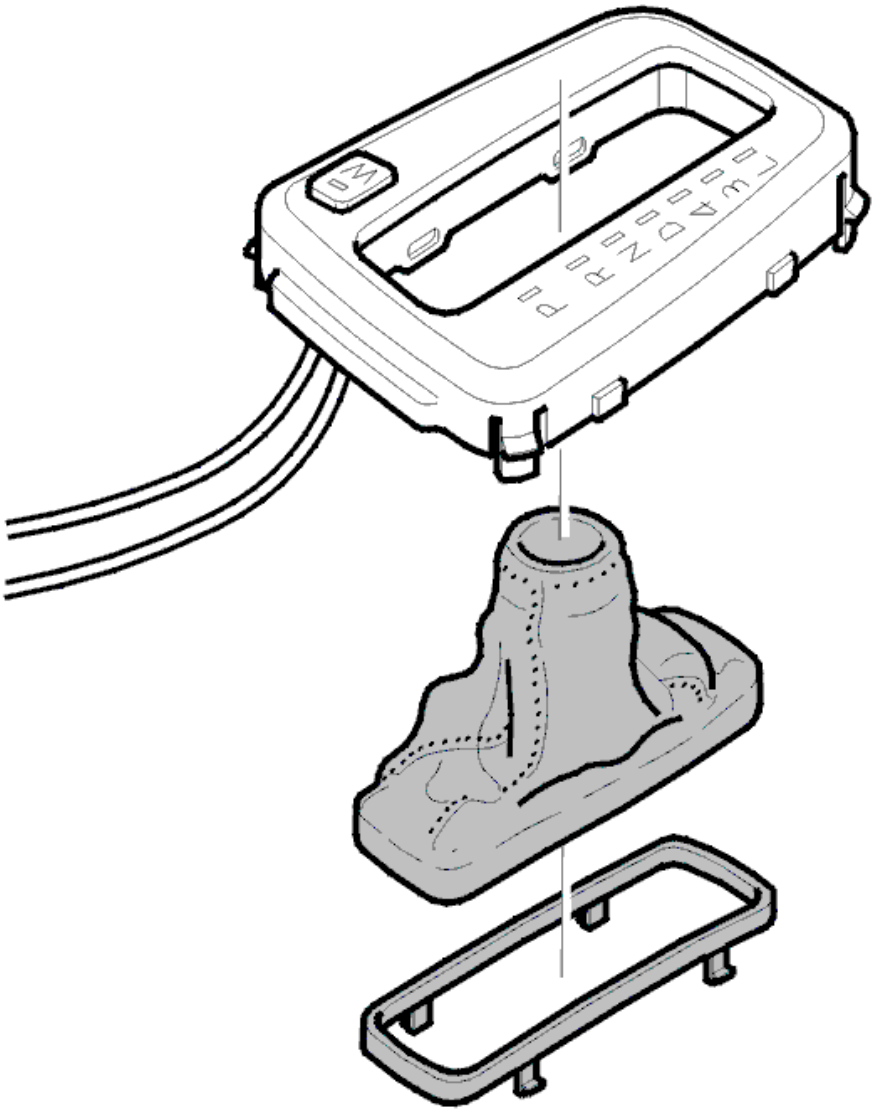

Fig. 11: Gear Selector Boot And Top Panel
Courtesy of VOLVO CARS CORPORATION

Install the boot on the top panel.

INSTALLING THE TOP PANEL ON THE GEAR SELECTOR ASSEMBLY

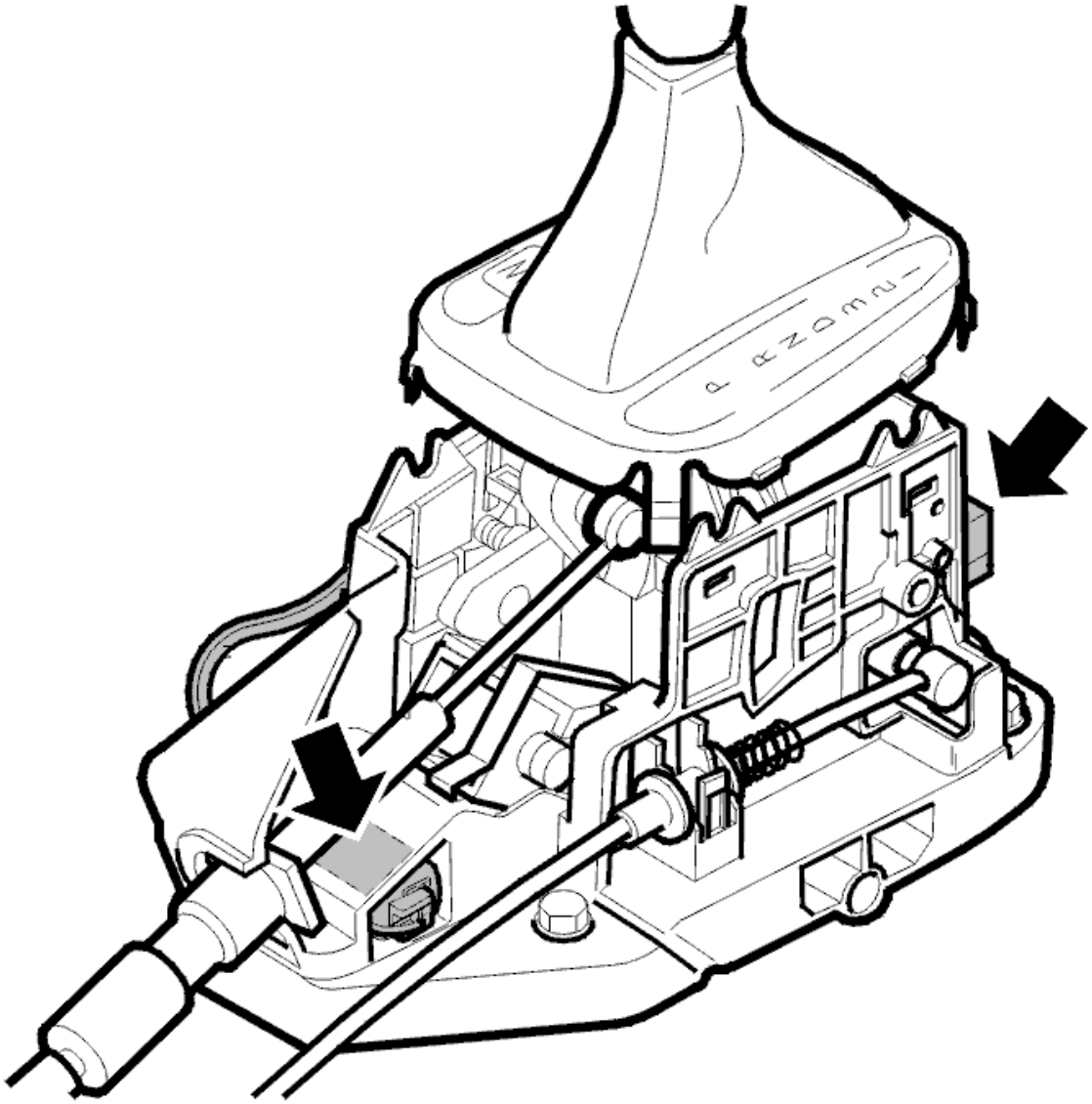

Fig. 12: Removing/Installing Top Panel From Gear Selector Assembly
Courtesy of VOLVO CARS CORPORATION

Install the top panel and boot on the gear selector assembly.

Connect the connectors to the gear selector assembly switches.

INSTALLING THE GEAR SELECTOR KNOB

Install the gear selector knob. See:**TRANSMISSION - REMOVAL, REPLACEMENT AND INSTALLATION** .

INSTALLING THE CENTER CONSOLE

Install the center console. See:**CENTER CONSOLE, REPLACING** .

TRANSMISSION

Power transmission

TRANSMISSION

REPLACING THE SEALING RING FOR THE OIL PUMP

Special tools:

see **9995069**

see **9995117**

NOTE: **As the illustrations in this service information are used for different model years and / or models, some variation may occur. However, the essential information is always correct.**

REMOVAL

REMOVING THE TRANSMISSION

Remove the transmission according to **TRANSMISSION - REMOVAL, REPLACEMENT AND INSTALLATION** .

REMOVING THE TORQUE CONVERTER

Pull the torque converter straight out of the transmission. Check the torque converter throat for damage.

REMOVING THE SEALING RING FROM THE OIL PUMP

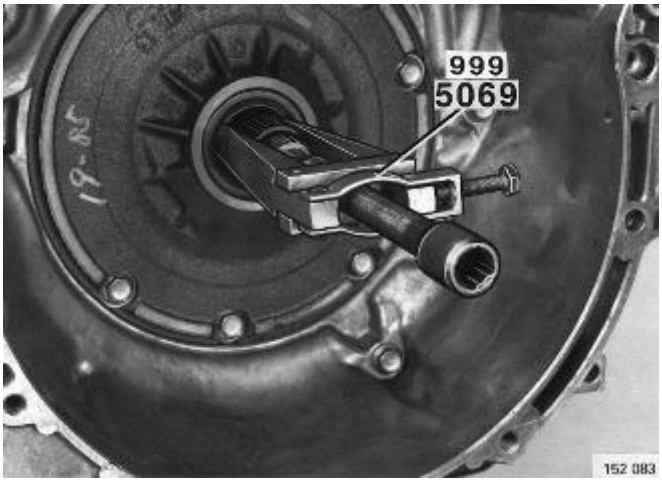

Fig. 1: Identifying Oil Pump Sealing Ring
Courtesy of VOLVO CARS CORPORATION

Use extractor see **9995069** .

INSTALLATION

INSTALLING A NEW SEALING RING ON THE OIL PUMP

Fig. 2: Identifying Oil Pump Sealing Ring & Drift Tool 9995117
Courtesy of VOLVO CARS CORPORATION

Use drift see **9995117** .

NOTE: Drift 9995117 has been modified according to the Volvo Workshop Guide.

INSTALLING THE TORQUE CONVERTER

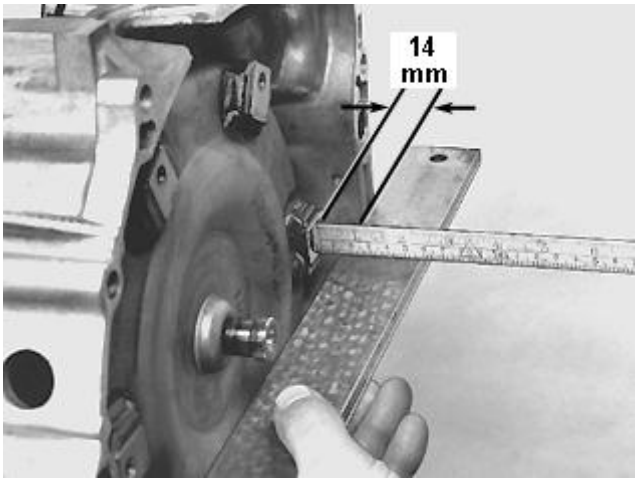

Fig. 3: Checking Distance Between Cover And Mounting Lugs Using Ruler
Courtesy of VOLVO CARS CORPORATION

Lubricate the torque converter throat with ATF oil.

NOTE: Take care not to damage the oil pump during installation.

Make sure torque converter is as far into the transmission as possible. Check with a ruler. The distance between the cover and retaining tabs must be **approximately 14 mm** .

INSTALLING THE TRANSMISSION

Install the transmission according to **TRANSMISSION - REMOVAL, REPLACEMENT AND INSTALLATION** .

SIGNAL DESCRIPTION. TRANSMISSION CONTROL MODULE (TCM)

All values contained below are between the terminal in column 1 and #A53 (signal ground), unless otherwise indicated in brackets.

NOTE: **It is important to connect the breakout box and check ground terminals before taking readings.**

U =	DC voltage in volts (V)	U_{AC} =	AC voltage in volts (V)
U_{bat} =	battery voltage	f =	frequency in Hertz (Hz)
U_{low} =	voltage approximately 0 V	%duty =	duty cycle (pulse ratio) as a percentage (%)
t =	time in milliseconds (ms)		

CONNECTOR A #A35 - #A70

Breakout box terminal	Control module terminal	Signal type	Ignition on	Engine idling	Other
#A35	#A35	Power supply	Ubat		Supply from fuse 16 in the integrated relay/fusebox in the engine compartment
#A37	#A37	Signal, oil temperature sensor	Cold transmission (+20°C): U=2.4 V Hot transmission (+100°C): U=0.3-0.5 V		U decreases with increasing temperature
#A39	#A39	Signal, vehicle speed sensor (VSS)	Tooth against sensor: 14 mA Cover against sensor: 7 mA		The sensor generates a pulsed signal (quadratic wave) with fixed pulse ratio when the pulse wheel rotates. Frequency increases with speed
#A41	#A41	Signal, transmission speed sensor	Tooth against sensor: 14 mA Cover against sensor: 7 mA		The sensor generates a pulsed signal (quadratic wave) with fixed pulse ratio when the pulse wheel rotates. Frequency increases with speed

#A45	#A45	Signal, gear-shift position sensor C	Gear selector position D, 3, L: U=0-0.5 V Other positions: U=0-2 V below Ubat	Signal grounded in positions D, 3, L
#46	#A46	Signal, gear-shift position sensor A	Gear selector position P, R, 3, L: U=0-0.5 V Other positions: U=0-2 V below Ubat	Signal grounded in positions N, D
#A50	#A50	Control signal, shift solenoid S1	Activated: U=0-2 V below Ubat Not activated: Ulow	The solenoid receives a signal when activated by the transmission control module (TCM) it is in 2nd and 3rd gears
#A51	#A51	Control signal, lock-up solenoid SL	Activated: U=0-2 V below Ubat Not activated: Ulow	The solenoid receives voltage when it is activated by the transmission control module (TCM)
#A52	#A52	Control signal, line pressure solenoid STH	U=1.6 V	Voltage decreases with increasing throttle opening
#A53	#A53	Signal ground (SG)	Ulow	-
#A55	#A55	Signal ground oil temperature sensor (OTG)	Ulow	Ground
#A57	#A57	Power supply, vehicle speed sensor (VSS)	Uapprox.1 V	-
#A59	#A59	Power supply, engine speed (RPM) sensor	Uapprox.1 V	-
#B3	#A63	Signal, gear-shift position sensor PA	Gear selector position P, N, 3: U=0-0.5 V Other positions: U=0-2 V below Ubat	Signal grounded in positions P, N, 3
#B4	#A64	Signal, gear-shift position sensor B	Gear selector position R, N, D, 3, L: U=0-0.5 V Other positions: U=0-2 V below Ubat	Signal grounded in positions R, N, D, 3
#B8	#A68	Control signal, shift solenoid S2	Activated: U=0-2 V below Ubat Not activated: Ulow	The solenoid receives voltage when activated by the transmission control module (TCM) in 1st and 2nd gears
#B10	#A70	Signal ground, line pressure solenoid STH	f=300 Hz Frequency is constant, independent of driving conditions. The signal duty cycle is modified when line pressure is adapted	-

CONNECTOR B #B1 - #B22

Breakout box terminal	Control module terminal	Signal type	Ignition on	Engine idling	Other
#B11	#B1	Communication cable control modules (Control area network (CAN))	2-3 V		Between transmission control module (TCM) and engine control module (ECM)
#B12	#B2	Communication cable control modules (Control area network (CAN))	2-3 V		Between transmission control module (TCM) and ABS control unit and also central electronic module (CEM)
#B23	#B13	Communication cable control modules (Control area network (CAN))	2-3 V		Between transmission control module (TCM) and engine control module (ECM)
#B24	#B14	Communication cable control modules (Control area network (CAN))	2-3 V		Between transmission control module (TCM) and ABS control unit and also central electronic module (CEM)
#B31	#B21	Communication cable VULCANO light	-		Between transmission control module (TCM) and gear selector module (GSM)
#B32	#B22	Diagnosis cable K-link	-		-

TRANSMISSION

Power transmission

TRANSMISSION

SPLINES GREASING

NOTE: Since the illustrations in this service information are used for different model years and/or models, some variation may occur. However, the essential information in the illustrations is always correct.

GREASING THE SPLINES

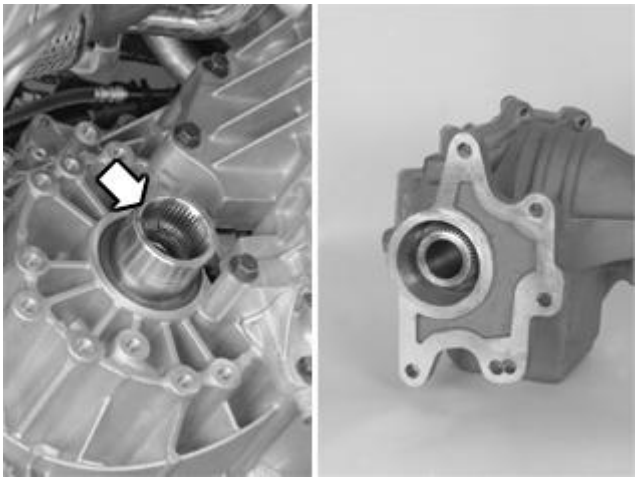

Fig. 1: Identifying Splines
Courtesy of VOLVO CARS CORPORATION

NOTE: Use all the grease in the package.

Always grease the splines joint between the transmission and the bevel gear. Greasing is carried out to avoid corrosion between the terminal sleeve and the bevel gear tubular shaft.

Check that the terminal sleeve on the transmission is free of damage and corrosion. Otherwise the sleeve must be replaced with a new one.

Use grease, P/N 1161748. Thoroughly lubricate the splines in the terminal sleeve.

TABLES - RATIOS AND SHIFT PATTERNS

NOTE: When comparing the ratio with table 1, the relationship can vary up to ± 1%, which is normal.

TABLE 1 - RATIO

Gear	non-turbo XC90
1	3.275
2	1.758
3	1.121
4	0.790

TABLE 2 - SOLENOID POSITION

Solenoid locked in position	Shift pattern	Action
S1 locked in position On	1 - 1 - 4 - 4	Replace control system
S1 locked in position Off	2 - 2 - 3 - 3	Replace control system
S2 locked in position On	1 - 2 - 2 - 1	Replace control system
S2 locked in position Off	4 - 3 - 3 - 4	Replace control system

TABLE 3 - VALVE STUCK DURING UPSHIFT

Mechanical shift valve	Shift pattern	Action
Valve 1-2 stuck	2 - 2 - 3 - 4	Replacing the control system
Valve 2-3 stuck	1 - 3 - 3 - 4	Replacing the control system
Valve 2-3 stuck	3 - 3 - 3 - 4	Replacing the control system
Valve 3-4 stuck	1 - 2 - 4 - 4	Replacing the control system

TABLE 4 - VALVE STUCK DURING DOWNSHIFT

Mechanical shift valve	Shift pattern	Action
Valve 1-2 stuck	1 - 1 - 3 - 4	Replacing the control system
Valve 2-3 stuck	1 - 2 - 2 - 2	Replacing the control system
Valve 2-3 stuck (or internal fault in gearbox)	1 - 2 - 2 - 4	Checking engine braking
Valve 3-4 stuck	1 - 2 - 3 - 3	Replacing the transmission

TEMPERATURE SENSOR, GEARBOX FLUID, REPLACING

TEMPERATURE SENSOR FLUID TRANSMISSION, REPLACING (4T65AWD)

SIDE COVER, TRANSMISSION, REMOVING

See **SIDE COVER TRANSMISSION, REMOVING** .

REMOVING THE TEMPERATURE SENSOR

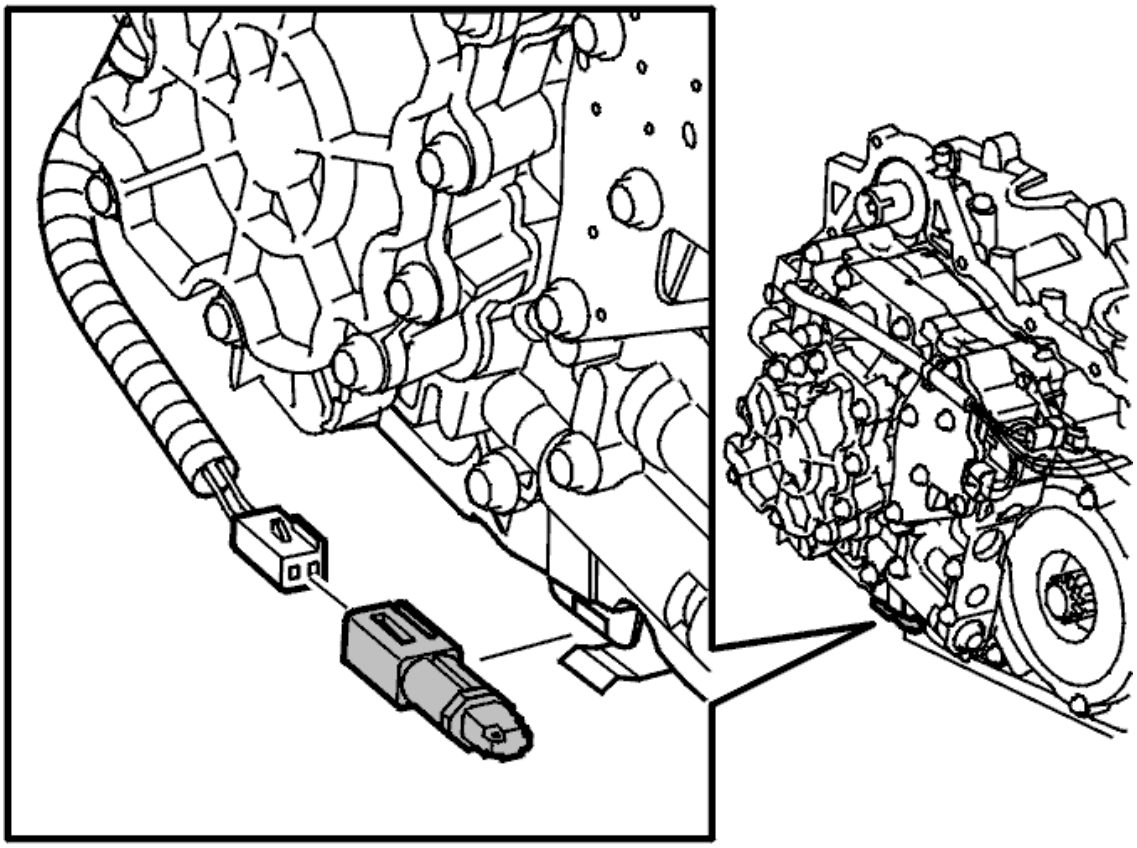

Fig. 2: Temperature Sensor
Courtesy of VOLVO CARS CORPORATION

Remove:

- the temperature sensor from the clip
- the temperature sensor from the connector. Use a small screwdriver. Bend up the mounting so that the small catch is released when the connector is pulled.

INSTALLING THE TEMPERATURE SENSOR

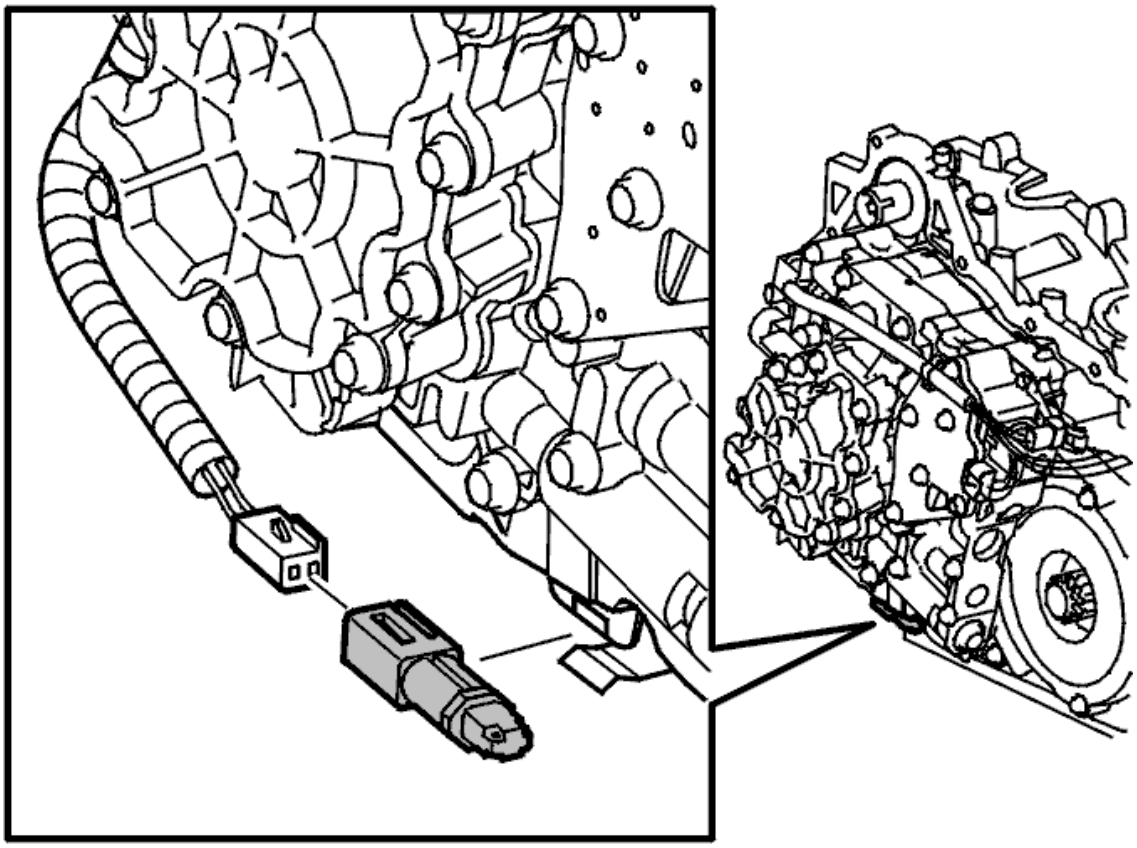

Fig. 3: Temperature Sensor
Courtesy of VOLVO CARS CORPORATION

Install:

- the temperature sensor to the connector
- the temperature sensor from the clip.

INSTALLING THE SIDE COVER ON THE TRANSMISSION

See **SIDE COVER TRANSMISSION, INSTALLING** .

TEST DRIVING ACTIVE ON DEMAND COUPLING, MANUAL TRANSMISSION

TEST DRIVING

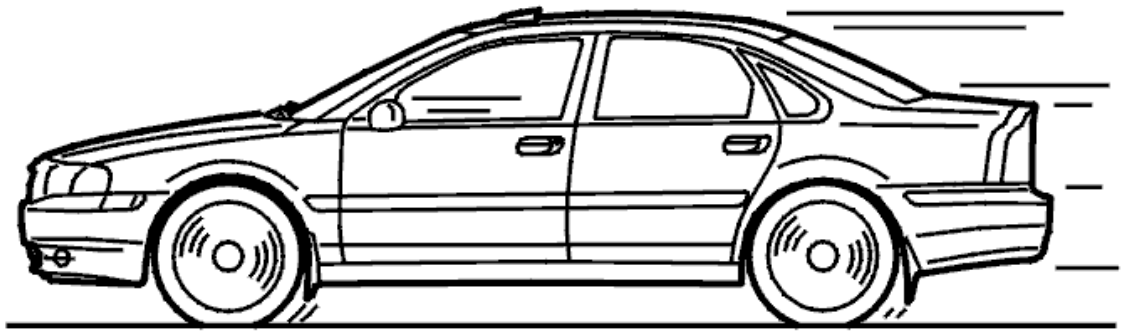

Fig. 4: Identifying Test Drive
Courtesy of VOLVO CARS CORPORATION

WARNING: **Observe all traffic regulations during the test drive.**

HINT: The test drive consists of two tests. The first test is at low engine speeds (RPM). The second is at higher engine speeds (RPM).

HINT: At low engine speeds (RPM), four wheel drive is normally disengaged. At high engine speeds, four wheel drive will be engaged. This will have a braking effect when the clutch is depressed and the accelerator pedal (AP) is released.

HINT: The stopping distance with four wheel drive engaged must be approximately half the distance of that when four wheel drive is disengaged.

The test drive

Drive the car in a circle at full lock (the smallest turning circle) at a speed of approximately 10 km/h. Press the clutch and release the accelerator pedal (AP). Let the car come to a standstill.

Note how long it took for the car to stop.

Repeat the test. Increase the engine speed to 3000-4000 RPM. Let the car come to a standstill.

The car will stop in half the distance it took to stop in the first test if the function is correct.

Drive the car while looking out for any faults in functions or noise from the rear suspension.

If there is a fault or noise, stop the test drive. Return to the workshops. Fault trace the symptoms.

TEST-DRIVE SCHEDULE, AW55-50/51SN WITH TCM-002E

Perform the following test-drive:

NOTE: Read through the whole document before starting to test-drive.

1. Check the oil temperature in the transmission via read-out. Suitable temperature range is 40-65 °C.

   Vehicles with GearTronic lever carrier:

   1. Perform the same step as above once more with the gear lever in GearTronic-position with 4th gear selected. Try also to keep the engine in the same engine speed range as during the previous check. In this position, slipping lock-up will not be possible, only locked lock-up. Then the indicator light will be on with a steady glow.
2. Start Activation of gear indication using VIDA (Volvo scan tool)

   NOTE: The activation only applies during one driving cycle.

   Vehicles with GearTronic lever carrier:

   1. Perform the same step as above once more with the gear lever in GearTronic-position with 4th gear selected. Try also to keep the engine in the same engine speed range as during the previous check. In this position, slipping lock-up will not be possible, only locked lock-up. Then the indicator light will be on with a steady glow.
3. Drive the vehicle with light load, approx. 60 km/h (37 mph) in 4th gear (engine speed approx. 1600 RPM). Check status of lock-up via control light IND.

   HINT: The problems occur at slipping lock-up (IND-light flashes).

   Vehicles with GearTronic lever carrier:

   1. Perform the same step as above once more with the gear lever in GearTronic-position with 4th gear selected. Try also to keep the engine in the same engine speed range as during the previous check. In this position, slipping lock-up will not be possible, only locked lock-up. Then the indicator light will be on with a steady glow.
4. When the IND-light flashes, throttle up slightly on a slight uphill grade. Pay attention to if a brief vibration occurs, and that slipping lock-up is turned off. The engine speed should increase by approx. 500 RPM.

Vehicles with GearTronic lever carrier:

1. Perform the same step as above once more with the gear lever in GearTronic-position with 4th gear selected. Try also to keep the engine in the same engine speed range as during the previous check. In this position, slipping lock-up will not be possible, only locked lock-up. Then the indicator light will be on with a steady glow.

5. Check if the vibrations follow the speed or if they are brief vibrations.

NOTE: It is likely that no new diagnostic trouble code will be stored as the diagnosis requires that the malfunction occurs during a number of driving cycles to enable storing of the diagnostic trouble.

Perform one of the alternatives below:

1. Vibrations occur both at slipping and locked lock-up: replace transmission.

   see **TRANSMISSION - REMOVAL, REPLACEMENT AND INSTALLATION**

2. Vibrations only occur at slipping lock-up: replace torque converter.
3. Vibrations only occur at locked lock-up: replace transmission.

   see **TRANSMISSION - REMOVAL, REPLACEMENT AND INSTALLATION**

4. Vibrations follow the speed:

   Investigate other components, such as tire imbalance and similar.

5. No vibrations can be detected:

   No further troubleshooting is required.

TEST PRESSURIZATION

Special tools:

see **9985496**

COOLING SYSTEM TEST PRESSURIZATION

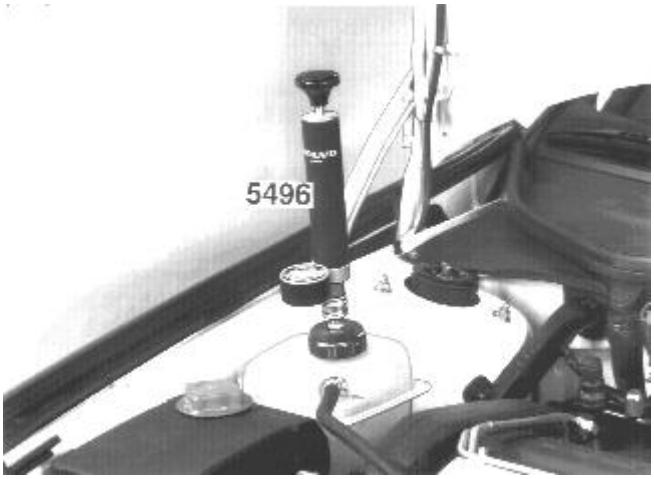

Fig. 5: Identifying Pressure Tester 9985496 On Expansion Tank Cover
Courtesy of VOLVO CARS CORPORATION

Use pressure tester see **9985496** .

Connect the tester to the expansion tank cover.

Pump up the pressure and check for leaks.

- the pressure must be **150 kPa**
- the pressure in the system must be stable.

NOTE: Allow the pressure to stabilize for a few minutes.

TRANSMISSION

Electrical system

TRANSMISSION

TEMPERATURE SENSOR, TRANSAXLE FLUID, (TFT)

The temperature sensor is a part of the control system's cable harness.

Replace the control system's wiring harness. See **CABLE HARNESS, CONTROL SYSTEM, GEARBOX, REPLACING**

To install, reverse the removal procedure

TRANSMISSION INPUT SPEED SENSOR, INPUT SHAFT, TRANSAXLE (TSS)

NOTE: **The illustrations in this service information are used for different model years and/or models. Some variation may occur. However, the essential information in the illustrations is always correct.**

Remove the control system. See **CONTROL SYSTEMS** .

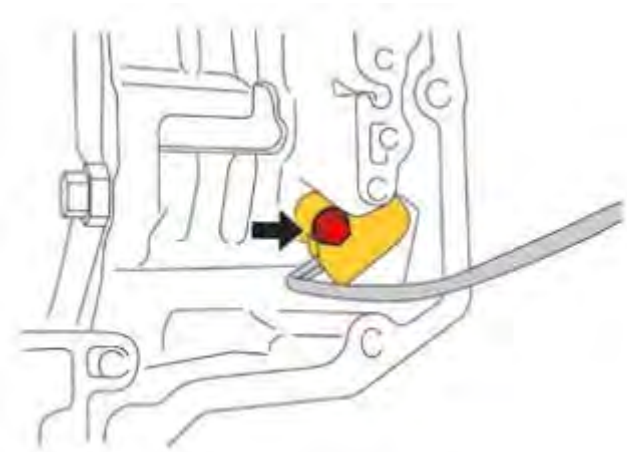

Fig. 1: Identifying Transmission Input Speed Sensor Bolt
Courtesy of VOLVO CARS CORPORATION

Tightening torque: M6. See: **TIGHTENING TORQUE** .

Install the control system. See **CONTROL SYSTEMS** .

TRANSMISSION

Power transmission

TRANSMISSION

TIGHTENING TORQUE

GENERAL TIGHTENING TORQUES

CAUTION: Screws coated with a locking fluid or self locking nuts must be replaced with new when reinstalled.

See the table below to find the tightening torques for components not included in the summary.

Nuts and screws which are not self locking can be reused provided that they are in good condition.

Applies to screwed joint with strength class 8.8.	
Thread	Tightening torque (Nm)
M5	5
M6	10
M7	17
M8	24
M10	50
M12	80
M14	130

SUMMARY OF TIGHTENING TORQUES FOR SPECIFIC COMPONENTS

CAUTION: Screws coated with locking fluid or sealant must always be replaced with new when reinstalled.

Always use **new screws and nuts** when angle tightening. Any exceptions to this rule will be indicated in the method.

Angle tightening in tight spaces, see **SCREWED JOINT, TORQUE/ANGLE TIGHTENING** .

AW

The nut for the lever and gear shift linkage rod	16 Nm
Oil plug for transmission	40 Nm
Screw, carrier plate - torque converter 6 screws	35 Nm
Screw, oil pipe - dipstick pipe - transmission	15 Nm

Screw, oil pipe - transmission	6 Nm
Transmission input speed sensor/transmission output speed sensor	5.5 Nm
Mounting to transmission, (M10)	Step 1 30 Nm Step 2 160°

M56/M66

Back-up (reversing) lamps switch	25 Nm
Engine mount (M12)	Step 1 30 Nm Stage 2 80°
Oil plug for transmission	35 Nm

MMT6/MTX75/IB5/B6/MPS6

Engine mount, left side	Screw, M14, 120 Nm, Nuts, 4 pieces., 35 Nm + 60°
Oil plug for transmission	35 Nm
Screw drive shaft - wheel hub	35 Nm + 90°
Screw clutch cylinder	10 Nm
Flywheel (applies to MPS6)	114 Nm

AWD

Final drive against rear bushing	80 Nm
Bevel gear screw - transmission	75 Nm
Propeller shaft CV	Stage 1..... The screws opposite each other. Tighten to 10 Nm Stage 2..... All screws. Tighten to 25 Nm.
Level/filler plug final drive housing **NOTE:** **2 plugs, 1 for the Active on Demand Coupling and 1 for the final drive**	35 Nm
Level/filler plug, bevel gear	35 Nm
Oil plug, final drive	35 Nm
Oil plug, Active On-Demand Coupling	35 Nm
Pinion nut (Active on Demand Coupling)	100 Nm
Screw oil pump (Active on Demand Coupling)	5.5 Nm
Screw control module (Active on Demand Coupling)	5.5 Nm
Adjusting nut bevel gear	50 Nm

TRANSMISSION

Transmission - Component location

COMPONENT PLACEMENT, TRANSMISSION CONTROL MODULE (TCM) (B6324S, TF-80SC; B6324S, TF-80SC AWD; 2007-2012)

LOCATION OF COMPONENTS

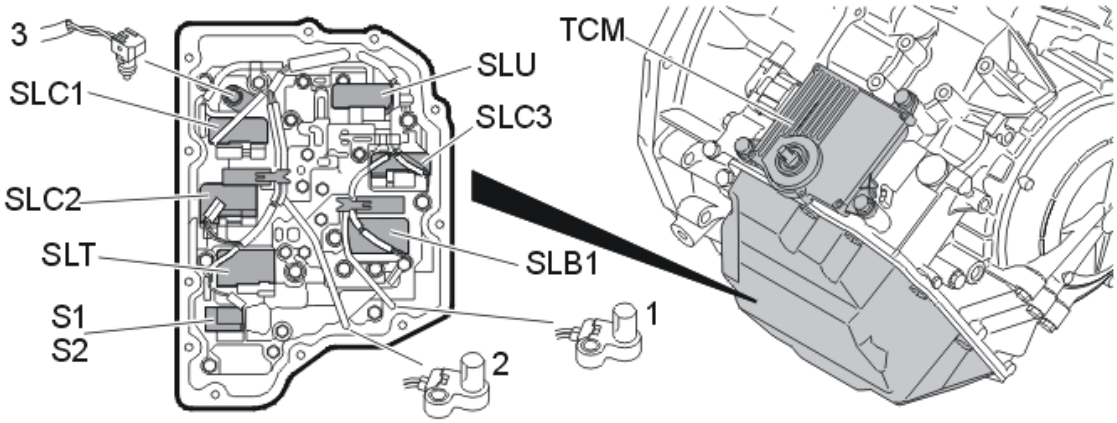

Fig. 1: Locating Transmission Output, Input And Oil Temperature Sensors
Courtesy of VOLVO CARS CORPORATION

1. Transmission input speed sensor:
2. Transmission output speed sensor:
3. Oil temperature sensor.

LOCATION OF COMPONENTS (AW50/51 AWD; AW55-50/51SN; 2003-2007)

LOCATION OF COMPONENTS, SOLENOIDS

SOLENOIDS

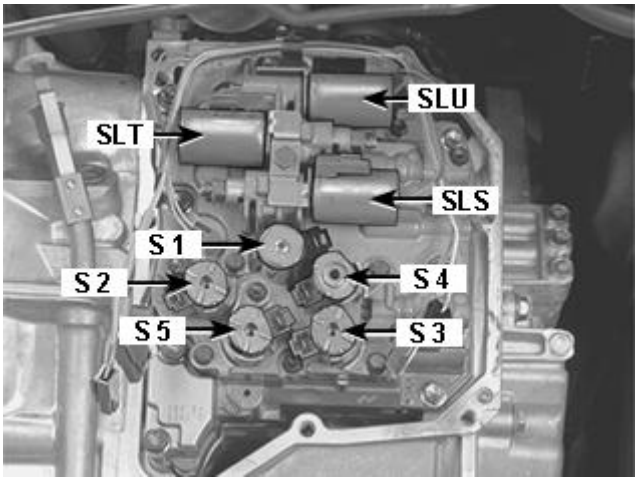

Fig. 2: Identifying S1-S5, SLT, SLU And SLS Solenoids
Courtesy of VOLVO CARS CORPORATION

Shift solenoid S1
Shift solenoid S2
Shift solenoid S3
Shift solenoid S4
Shift solenoid S5
Lock-up solenoid SLU
Throttle solenoid SLT
Line pressure solenoid SLS.

LOCATION OF COMPONENTS, TRANSMISSION CONTROL MODULE (TCM) (4T65 AWD; 2003-2006)

LOCATION OF COMPONENTS

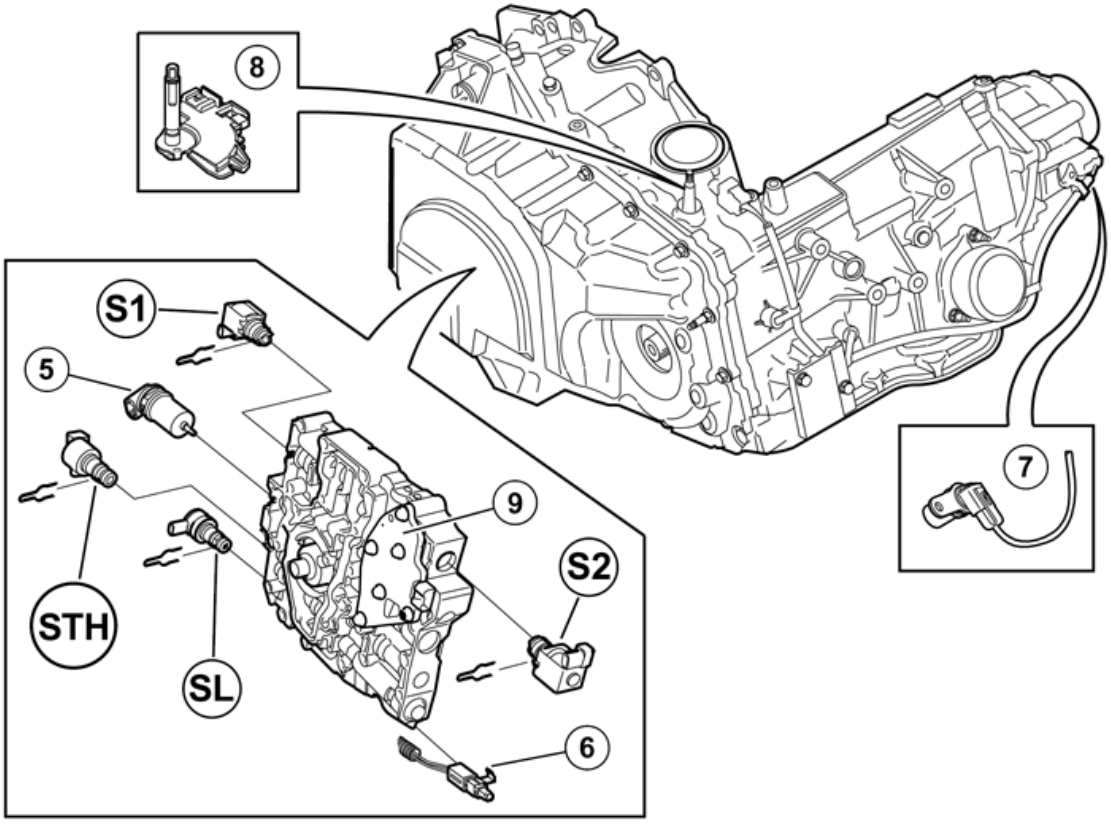

Fig. 3: Locating Transmission Input, Output, Oil Temperature, Gear-Shift Position And Pressure Sensors.
Courtesy of VOLVO CARS CORPORATION

- 5. Transmission input speed sensor.
- 6. Oil temperature sensor.
- 7. Transmission output speed sensor.
- 8. Gear-shift position sensor
- 9. Pressure sensor, lock-up function.

LOCATION OF COMPONENTS, TRANSMISSION CONTROL MODULE (TCM) (B8444S, TF-80SC AWD; 2006-2011)

LOCATION OF COMPONENTS

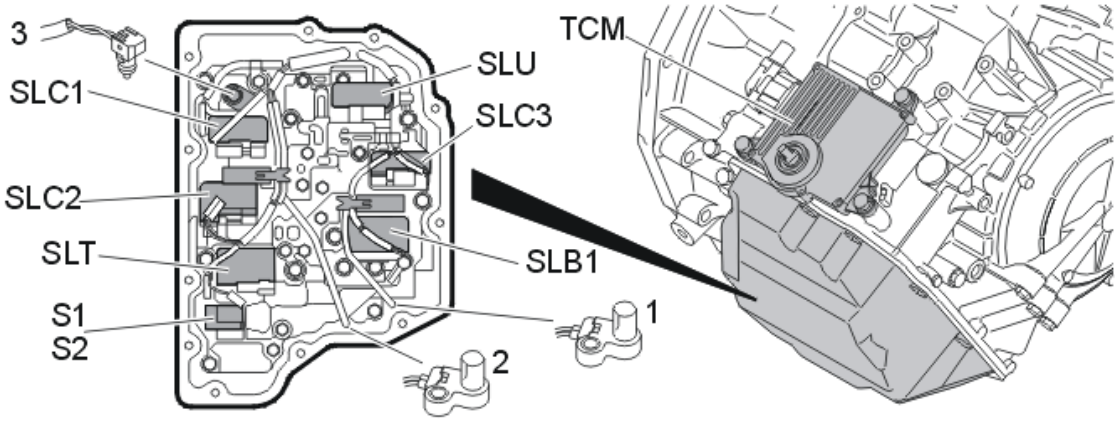

Fig. 4: Locating Transmission Output, Input And Oil Temperature Sensors
Courtesy of VOLVO CARS CORPORATION

1. Transmission input speed sensor:
2. Transmission output speed sensor:
3. Oil temperature sensor.

LOCATION OF COMPONENTS, TRANSMISSION CONTROL MODULE (TCM) (TF-80SC AWD; 2005)

LOCATION OF COMPONENTS

see **LOCATION OF COMPONENTS**

TRANSMISSION

Transmission - Design and Function

EMERGENCY PROGRAMS IN THE EVENT OF A FAULT (4T65 AWD; 2003-2006)

EMERGENCY PROGRAMS IN THE EVENT OF A FAULT

An emergency program is activated to deal with the fault when the transmission control module (TCM) detects a transmission fault (permanent fault). The control system then implements corrective action to protect the transmission, while leaving the car in the best possible driveable condition. Minor malfunctions do not activate an emergency program.

There are different programs depending on the type of fault:

Emergency mode I
Emergency mode II
Emergency mode III
Limp-home mode

Emergency mode I is activated in the event of minor faults and the Limp-home mode is activated for the most serious faults. If the malfunction is intermittent, the transmission control module (TCM) returns to normal operation the next time the ignition is switched on.

Emergency mode I

- The warning lamp in the combined instrument panel lights (S80), flashes (S/V/C70) for certain diagnostic trouble codes (DTCs).
- The transmission shifts in all gears but transmits no signal to the lock-up solenoid. This means that lock-up is not available.

Emergency mode II

- Remedy as for Emergency mode I.
- No reduction of line pressure when moving the gear selector between positions P-R, N-R and N-D. This results in harsh shifting.
- No torque limiting request from the engine control module (ECM) during gear shifting.
- The warning lamp in the combined instrument panel lights / flashes.

Emergency mode III

- Remedy as for Emergency modes I and II.
- No control of line pressure solenoid SLT. Constant maximum system pressure. This results in harsh shifting and harsher gear engagement in positions P-R, N-R and N-D.

Limp-home mode

- The transmission control module (TCM) interrupts the activation of all solenoids. This results in the transmission not shifting at all. The transmission operates only in 3rd gear in positions 3 and L, 4th gear in position D and reverse in position R. Shifting can only be carried out manually between 3rd and 4th gear and reverse gear.
- No control of line pressure solenoid STH. Constant maximum system pressure. This results in harsh shifting and harsher gear engagement in positions P-R, N-R and N-D.
- The warning lamp in the combined instrument panel flashes.

NOTE: When starting and driving, the gear selector should first be moved to position L to minimize stress on the transmission.

TRANSMISSION CONTROL MODULE (TCM) (4T65 AWD; 2003-2006)

DESIGN

see **DESIGN**

DOWNLOADING SOFTWARE AND REPLACING THE CONTROL MODULE

see **DOWNLOADING SOFTWARE AND REPLACING THE CONTROL MODULE**

FUNCTION

see **FUNCTION**

SYSTEM OVERVIEW

see **SYSTEM OVERVIEW**

TCM DIAGNOSTIC FUNCTIONS

see **TCM DIAGNOSTIC FUNCTIONS**

TRANSMISSION CONTROL MODULE (TCM) (AW50/51 AWD; AW55-50/51SN; 2003-2007)

DESIGN

see **DESIGN**

DOWNLOADING SOFTWARE AND REPLACING THE CONTROL MODULE

see **DOWNLOADING SOFTWARE AND REPLACING THE CONTROL MODULE**

FUNCTION

see **FUNCTION**

SYSTEM OVERVIEW

see **SYSTEM OVERVIEW**

TRANSMISSION CONTROL MODULE (TCM) DIAGNOSTIC FUNCTIONS

see **TRANSMISSION CONTROL MODULE (TCM) DIAGNOSTIC FUNCTIONS**

TRANSMISSION CONTROL MODULE (TCM) (TF-80SC; 2007-2012)

DESIGN

see **DESIGN**

DIAGNOSTIC FUNCTIONS

see **DIAGNOSTIC FUNCTIONS**

DOWNLOADING SOFTWARE AND REPLACING THE CONTROL MODULE

see **DOWNLOADING SOFTWARE AND REPLACING THE CONTROL MODULE**

FUNCTION

see **FUNCTION**

SYSTEM OVERVIEW

see **SYSTEM OVERVIEW**

TRANSMISSION CONTROL MODULE (TCM) (TF-80SC AWD; 2005-2012)

DESIGN

see **DESIGN**

DIAGNOSTIC FUNCTIONS

see **DIAGNOSTIC FUNCTIONS**

DOWNLOADING SOFTWARE AND REPLACING THE CONTROL MODULE

see **DOWNLOADING SOFTWARE AND REPLACING THE CONTROL MODULE**

FUNCTION

see **FUNCTION**

SYSTEM OVERVIEW

see **SYSTEM OVERVIEW**

TCM-0001: SHIFT SOLENOID S1. SIGNAL TOO HIGH (4T65 AWD; 2003-2006)

DIAGNOSTIC TROUBLE CODE (DTC) INFORMATION

Condition

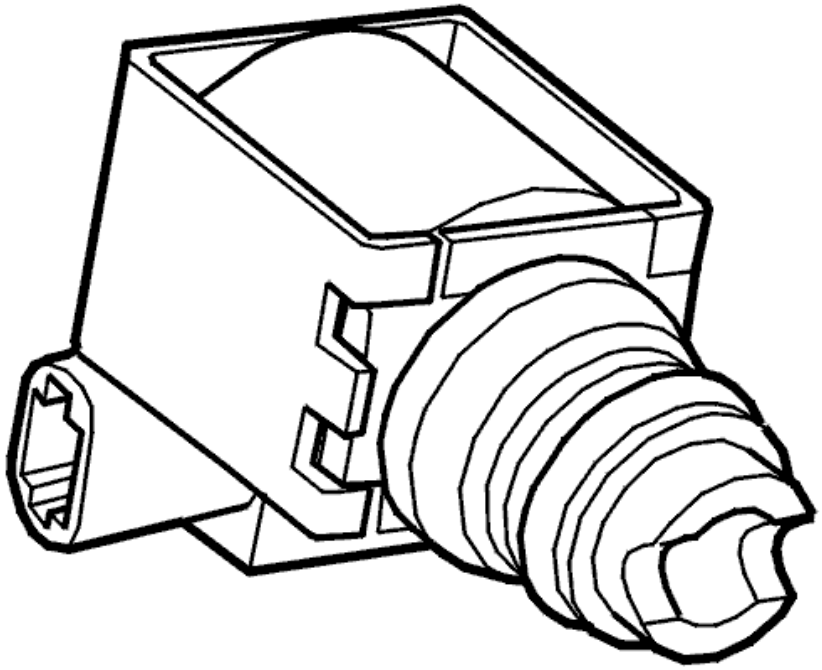

Fig. 1: Identifying Shift Solenoid S1 And S2
Courtesy of VOLVO CARS CORPORATION

Shift solenoids S2 and S1 operate in tandem to control gear-shifting. The solenoids are controlled by power stages in the transmission control module (TCM). The transmission control module (TCM) opens the power stages to activate the solenoids and sends a voltage through the circuit. Solenoid S1 is activated in 1st and 4th gears. Diagnostic trouble code (DTC) TCM-0001 is stored if the control module registers that the signal in the solenoid S1 circuit is too high when the solenoid should not be activated.

Substitute Value

- The control module "Limp Home" program has been initiated.

Possible Source

- Short-circuit to supply voltage in the signal cable.

Fault symptom[s]

- General orange warning lamp lit.
- Malfunction indicator lamp (MIL) lit.
- Harsh gear shifting.
- No shifting.
- No lock-up function.

HINT: Harsh shifting - due to disabled line pressure solenoid STH control. This results in constant maximum line pressure and leads to harsher shifting and gear engagement.

HINT: No shifting -because the transmission control module (TCM) prevents activation of the solenoids. This stops gear-shifting.

SIGNAL TOO HIGH

CHECKS

CHECKING THE TEMPERATURE SENSOR

HINT: In some cases, the diagnostic trouble code (DTC) may be caused by a defective oil temperature sensor. Check the function of the oil temperature sensor first.

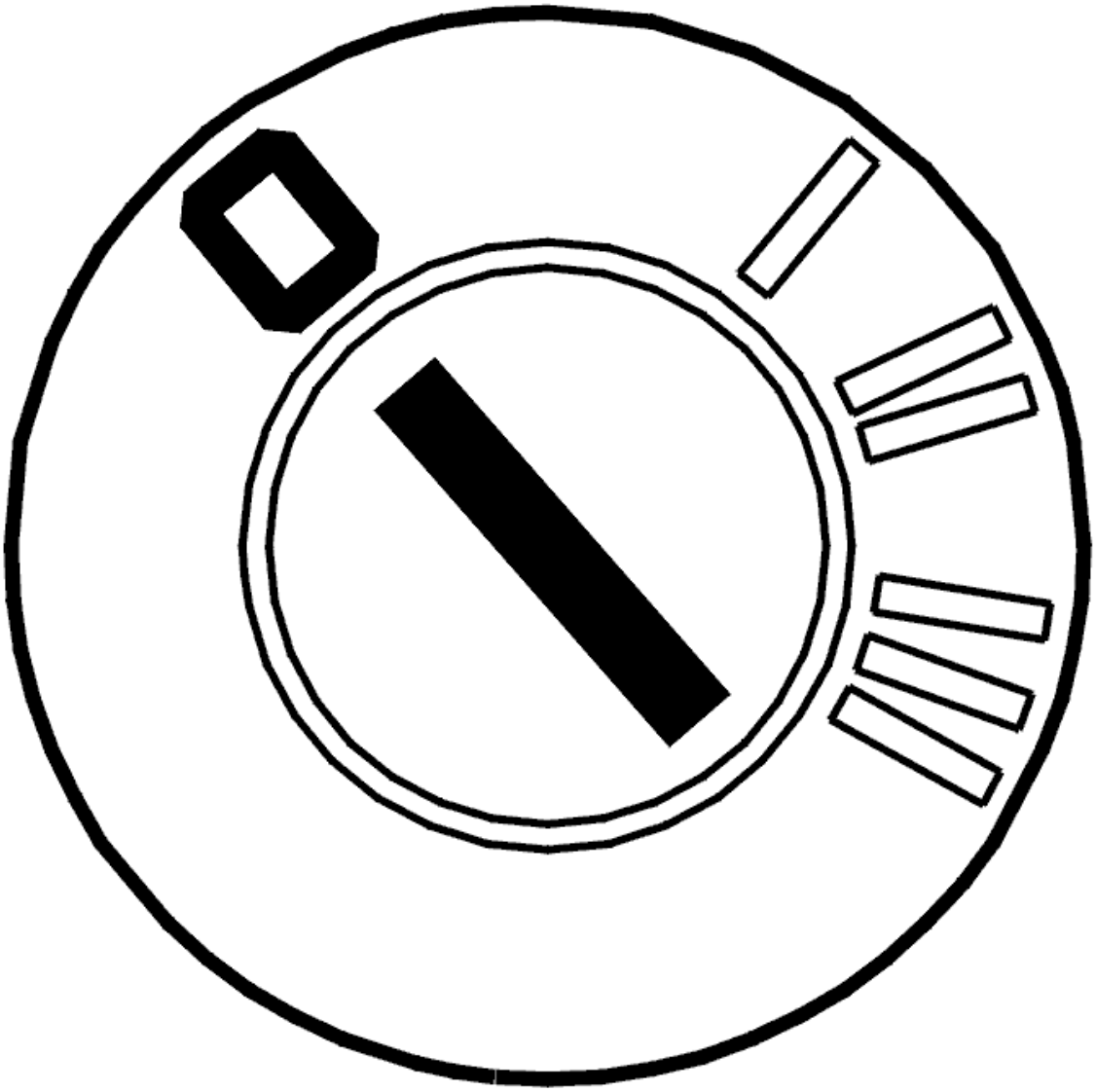

Fig. 2: Identifying Ignition OFF
Courtesy of VOLVO CARS CORPORATION

- Ignition off
- Read off the oil temperature.

  Check that the function of the temperature sensor is OK. Test drive the car to increase the temperature of the transmission fluid. Read off the temperature again. Check that the temperature has increased.

  HINT: If the temperature is outside its permitted range, fault-trace the temperature sensor.

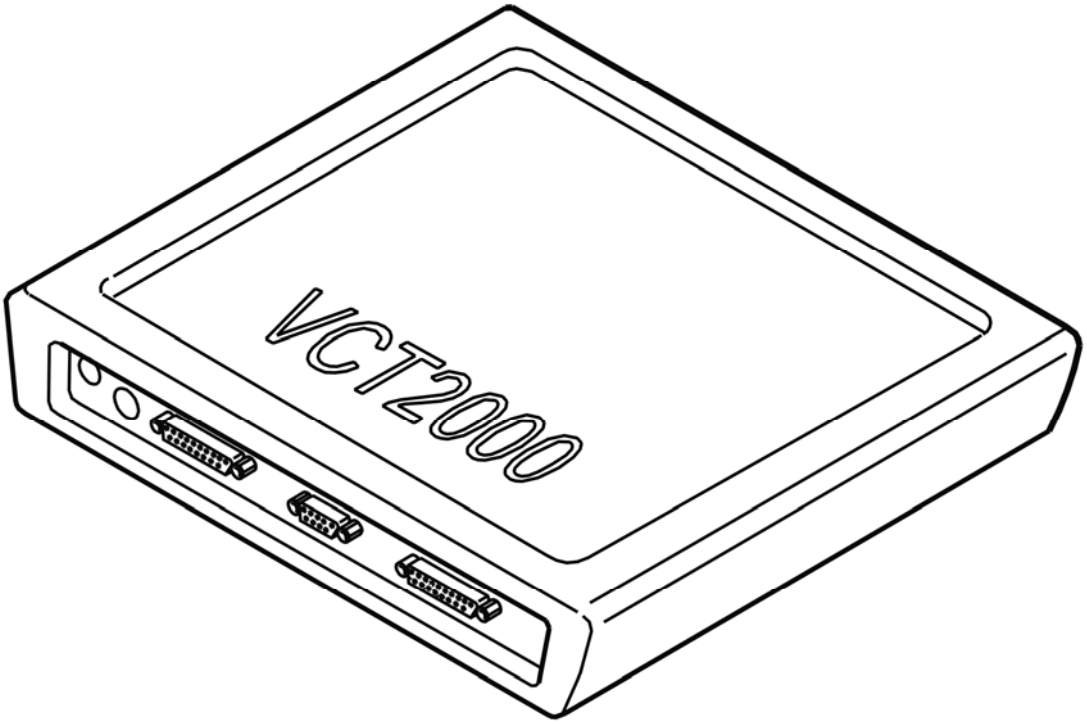

Fig. 3: Identifying VCT2000 Diagnostic Tool Symbol In VIDA
Courtesy of VOLVO CARS CORPORATION

Is the oil temperature within its permitted range?

- **YES**

  Refer to **CHECKING SHIFT SOLENOID S1**

- **NO**

  Refer to **SIGNAL TOO HIGH**

CHECKING SHIFT SOLENOID S1

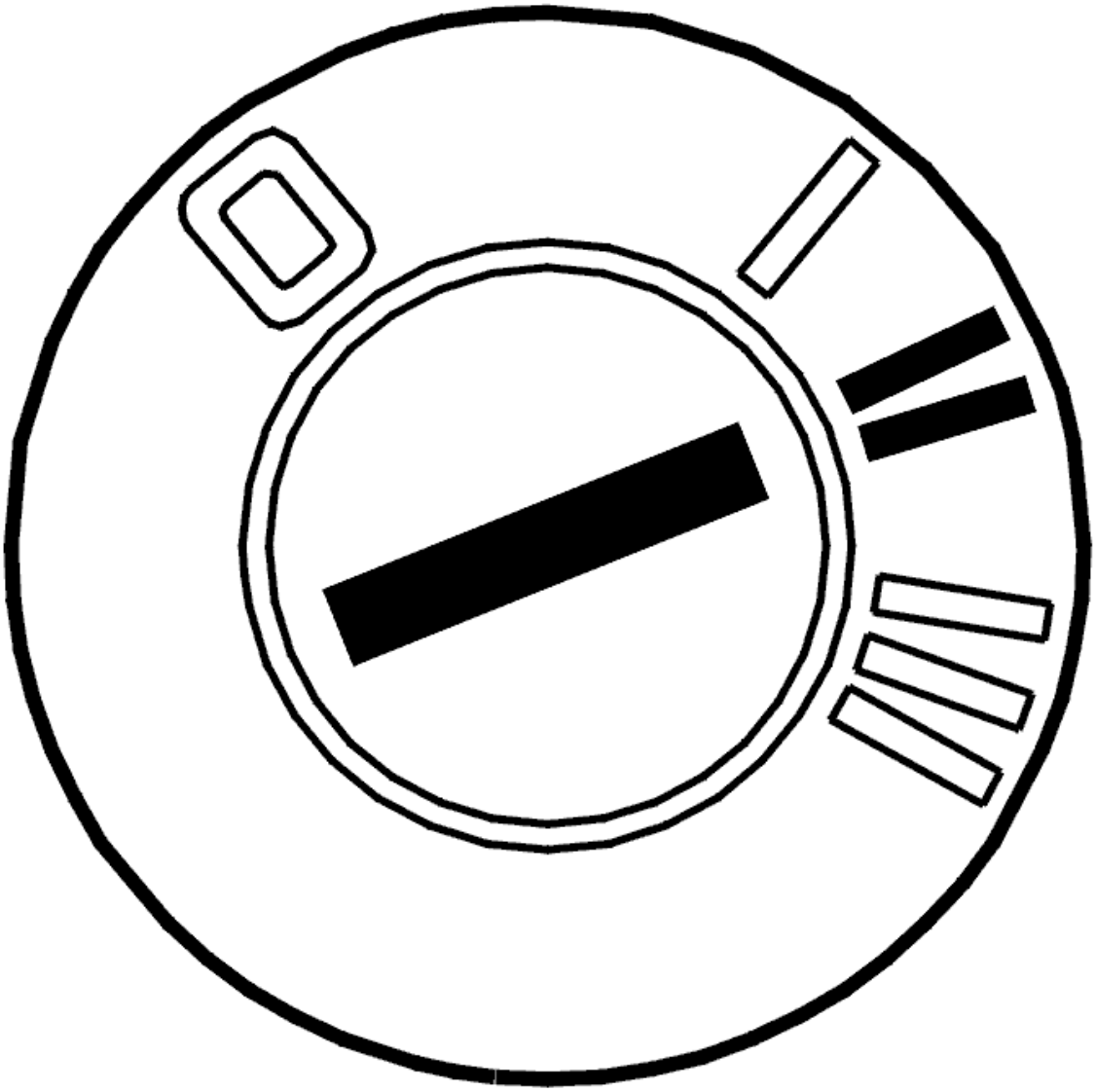

Fig. 4: Identifying Ignition ON
Courtesy of VOLVO CARS CORPORATION

- Ignition on
- Gear selector in position P
- Activate solenoid S1.

The value must change between OFF and ON.

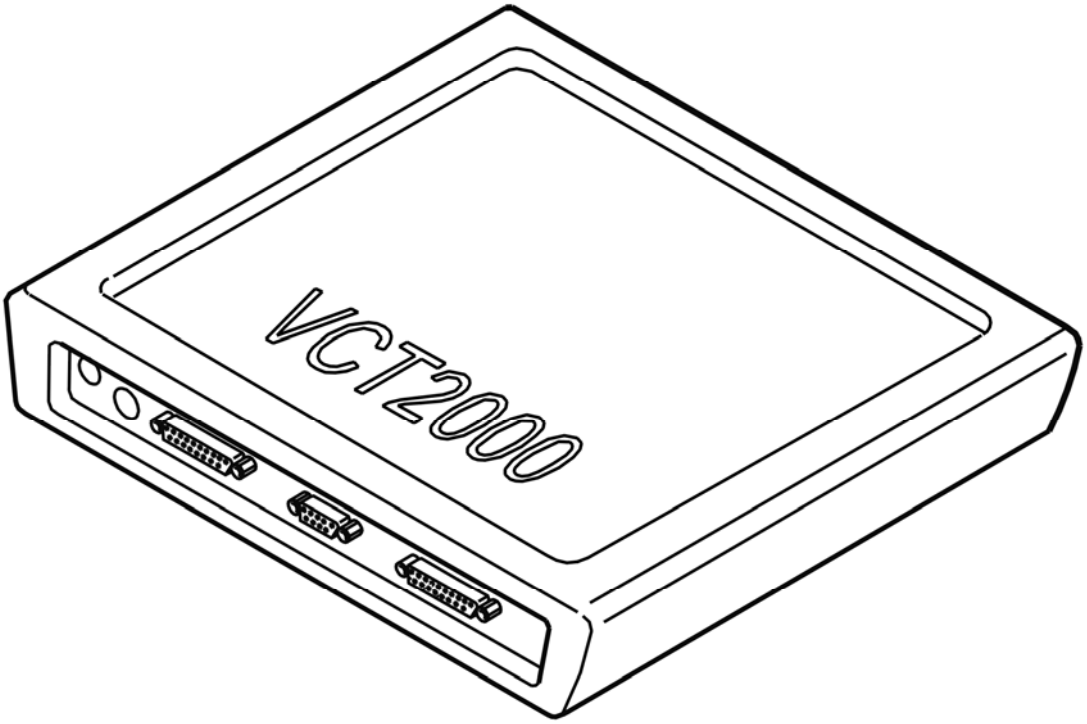

Fig. 5: Identifying VCT2000 Diagnostic Tool Symbol In VIDA
Courtesy of VOLVO CARS CORPORATION

Does the value change?

- **YES**

  Refer to **INTERMITTENT FAULT**

- **NO**

  see **CHECKING THE WIRING**

CHECKING THE WIRING

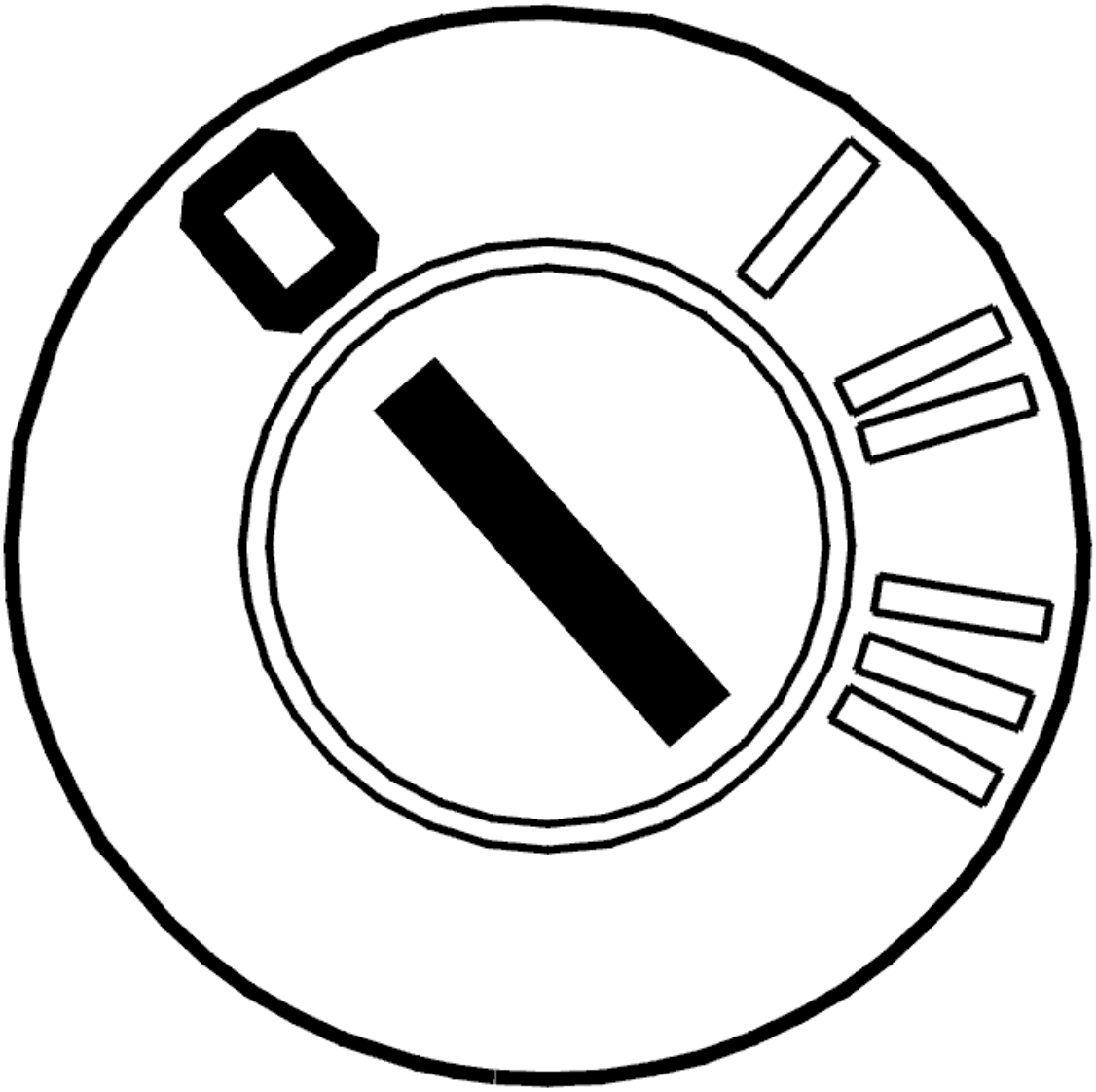

Fig. 6: Identifying Ignition OFF
Courtesy of VOLVO CARS CORPORATION

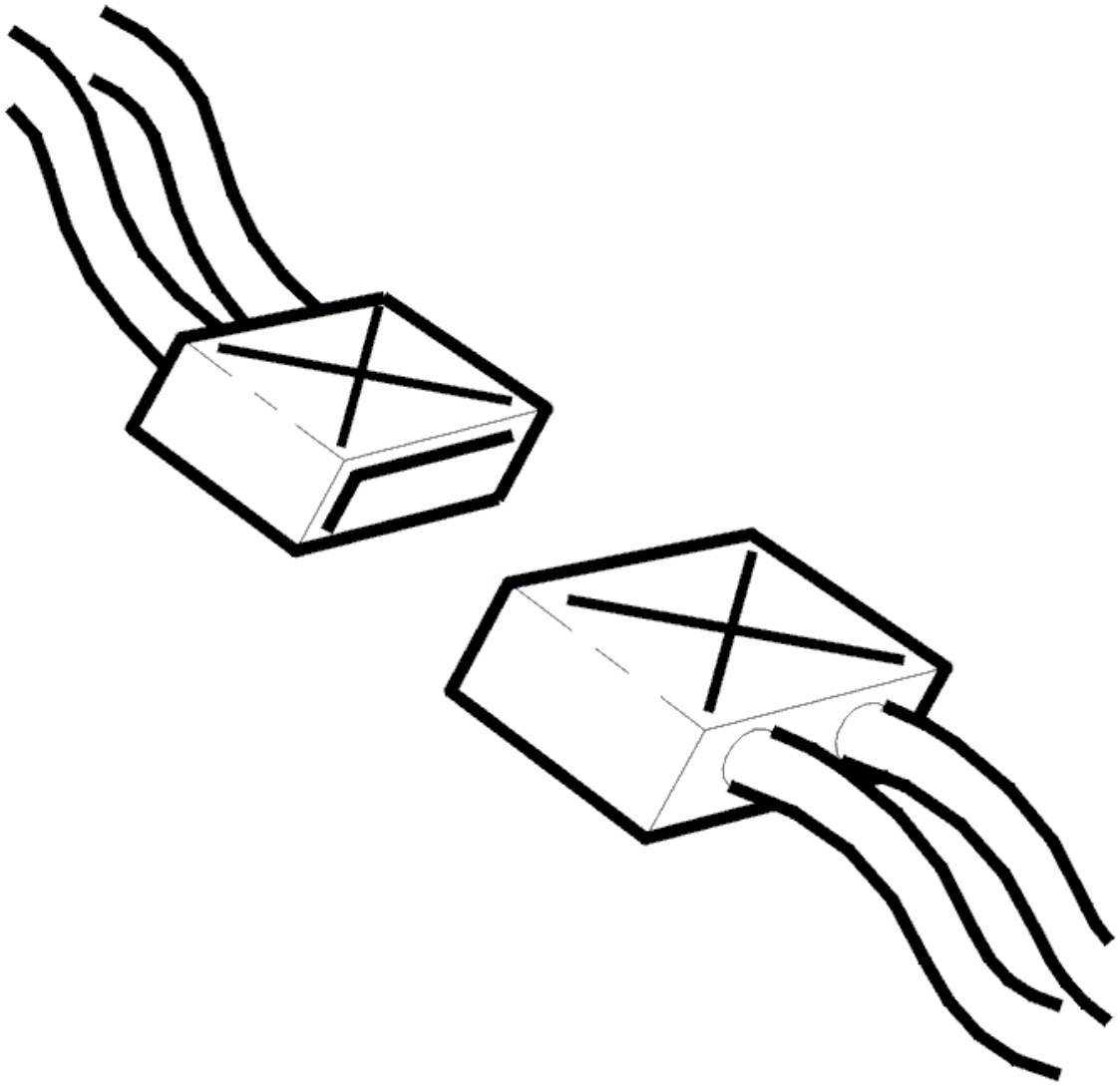

Fig. 7: Identifying Connectors
Courtesy of VOLVO CARS CORPORATION

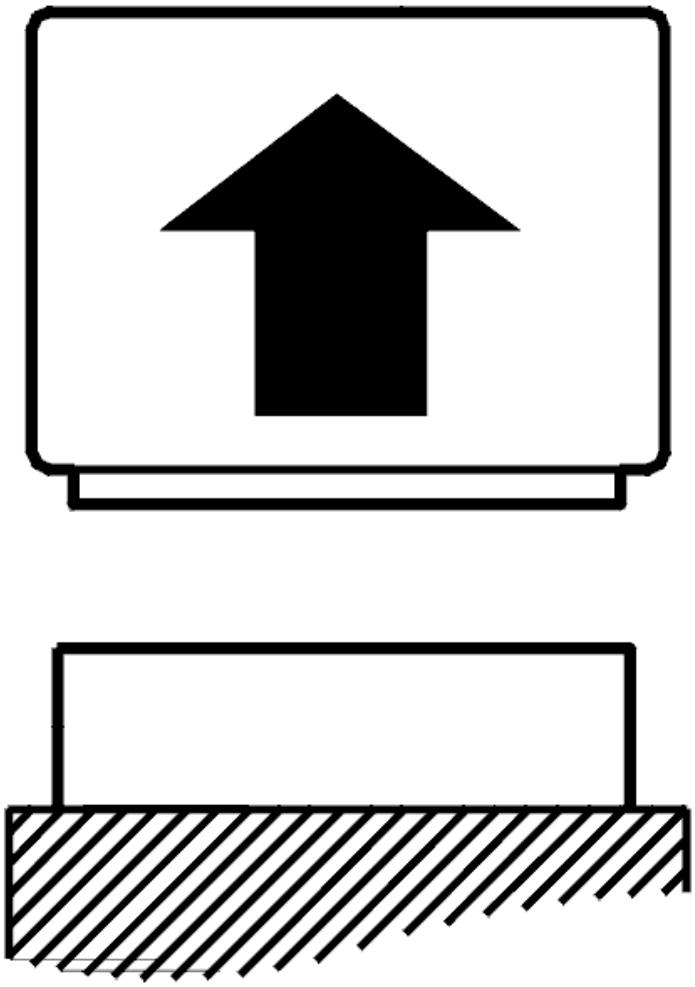

Fig. 8: Identifying Control Module Disconnected
Courtesy of VOLVO CARS CORPORATION

- Ignition off
- Connect the breakout box
- Disconnect the control module.
- Disconnect the transmission connector
- Connect adapter see **9511505** and breakout box see **9813190** to the transmission connector (transmission side).

  Check the cable between control module terminal #50 (#A50) and transmission connector terminal #A (#A1). Check for a short-circuit to supply voltage.

  Check the cable between control module terminal #53 (#A53) and transmission connector terminal #E (#A5) (control module side). Check for a short-circuit to supply voltage.

HINT: Also check all the other power supply cables in the circuit.

Remedy as necessary.

Other information:

- To connect the breakout box to the control module, see **CONNECTING THE BREAKOUT BOX**
- To connect the breakout box to the transmission connector, see **CONNECTING THE BREAKOUT BOX, GM AUTOMATIC TRANSMISSIONS**
- For information about signals, see **SIGNAL SPECIFICATION**
- see **CHECKING WIRING AND TERMINALS**

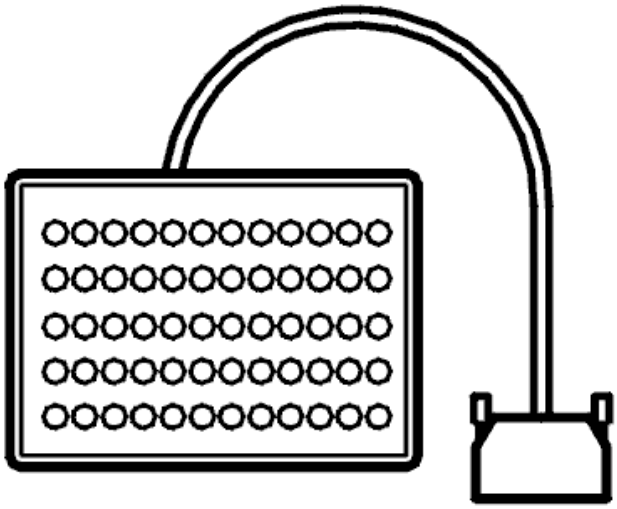

Fig. 9: Identifying Breakout Box
Courtesy of VOLVO CARS CORPORATION

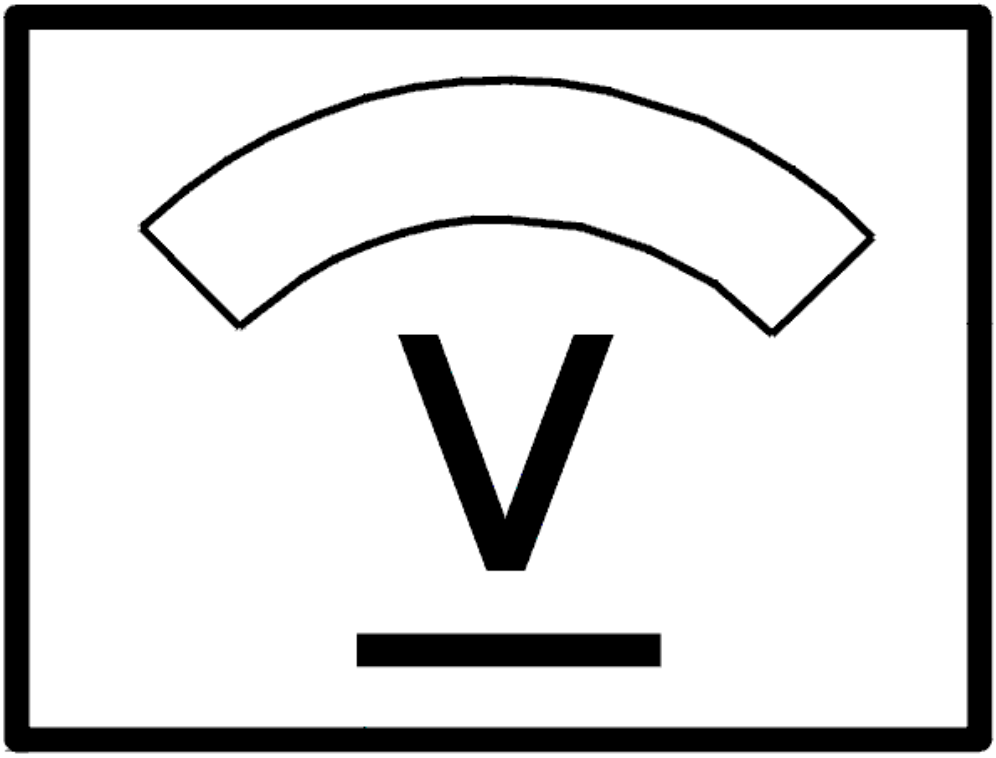

Fig. 10: Identifying Voltage Display
Courtesy of VOLVO CARS CORPORATION

Was a fault detected?

- **YES**

  Refer to **VERIFICATION**

- **NO**

  Refer to **CHECKING THE CONTROL MODULE**

CHECKING THE CONTROL MODULE

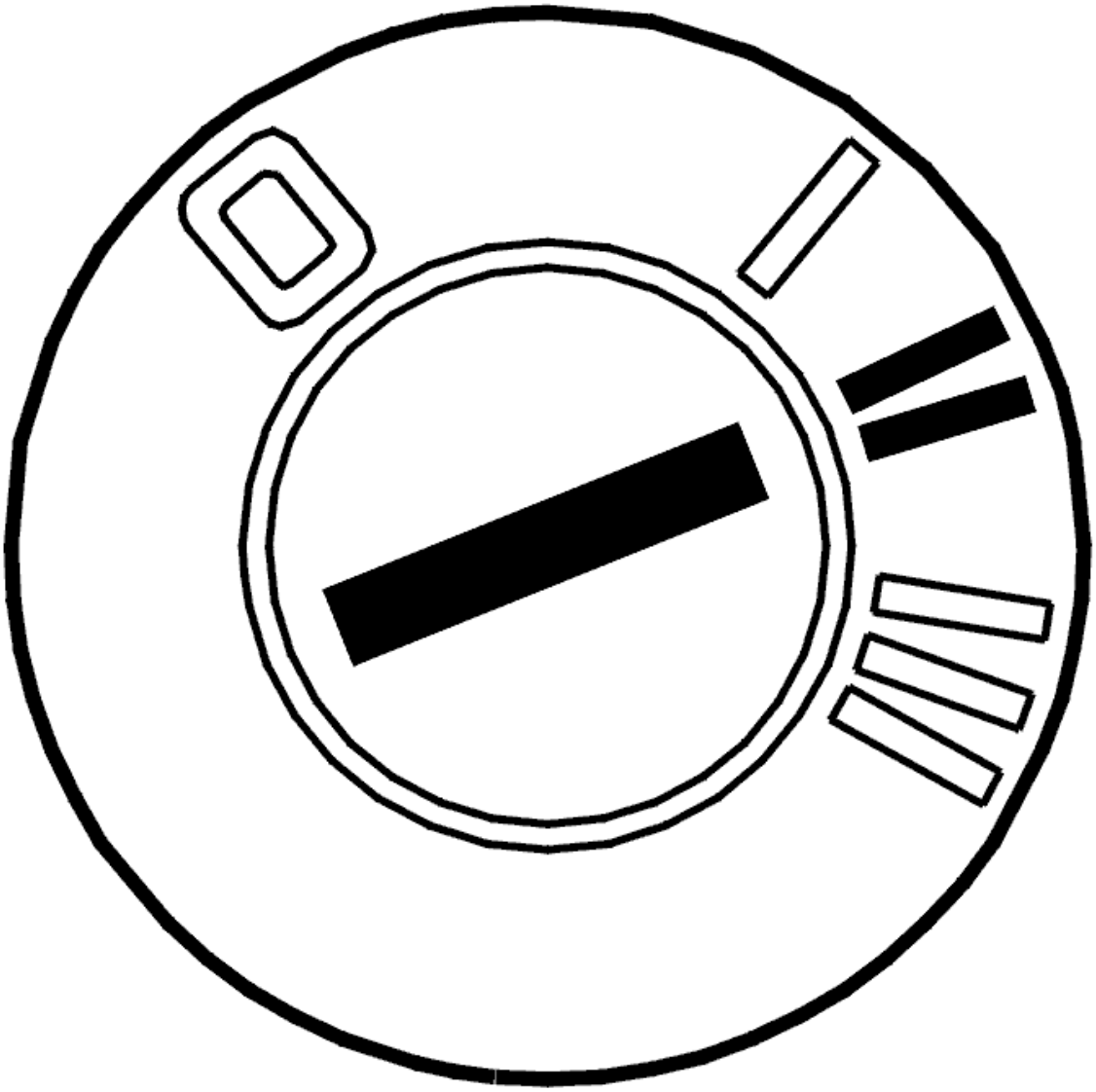

Fig. 11: Identifying Ignition ON
Courtesy of VOLVO CARS CORPORATION

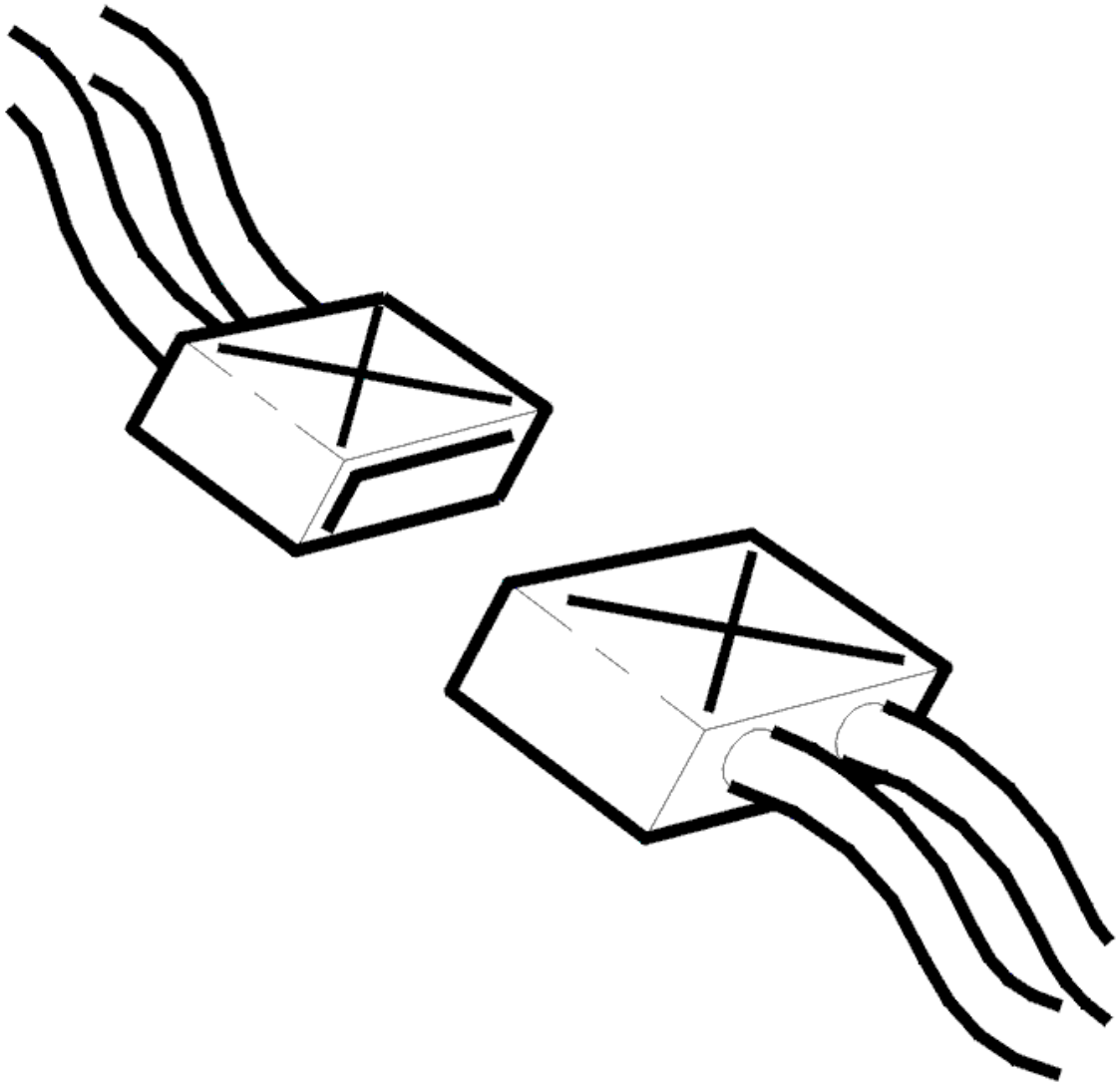

Fig. 12: Identifying Connectors
Courtesy of VOLVO CARS CORPORATION

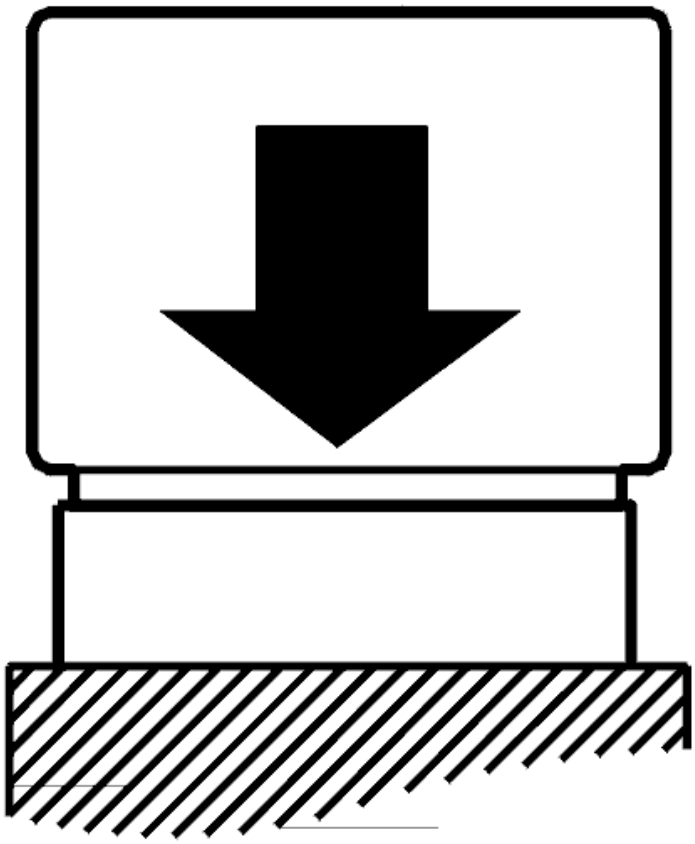

Fig. 13: Identifying Connecting Control Module
Courtesy of VOLVO CARS CORPORATION

- Ignition off
- The breakout box connected
- Control module connected.
- Transmission connector disconnected
- Ignition on
- Gear selector in position P
- Activate and read off the status of solenoid S1.

  Connect a voltmeter between terminals #50 (#A50) and #53 (#A53) while activating solenoid S1. The voltage must be approximately 0 V when the solenoid is not activated (OFF) and above 9 V when the solenoid is activated (ON).

The control module is OK if the voltage changes as above when the solenoid is activated/not activated. The control module is defective if the voltage does not change.

NOTE: **If the system voltage is too low, this may result in a low voltage value when solenoid S1 is activated. Check the system voltage and remedy as necessary.**

NOTE: **When removing the transmission connector, the control module may store diagnostic trouble codes (DTCs) for the gear-shift position sensor, the shift solenoids and the temperature sensor etc.**

Other information

- To disconnect the transmission connector, see **CONNECTING THE BREAKOUT BOX, GM AUTOMATIC TRANSMISSIONS**
- To replace the control module, see **TRANSMISSION CONTROL MODULE (TCM), REPLACING**
- For information about signals, see **SIGNAL SPECIFICATION** .

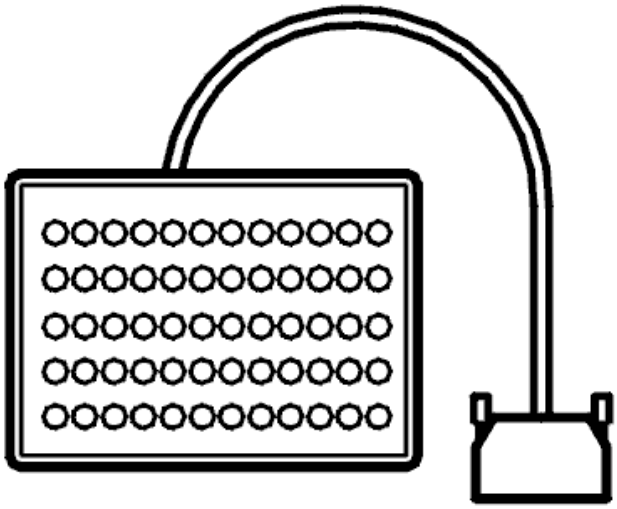

Fig. 14: Identifying Breakout Box
Courtesy of VOLVO CARS CORPORATION

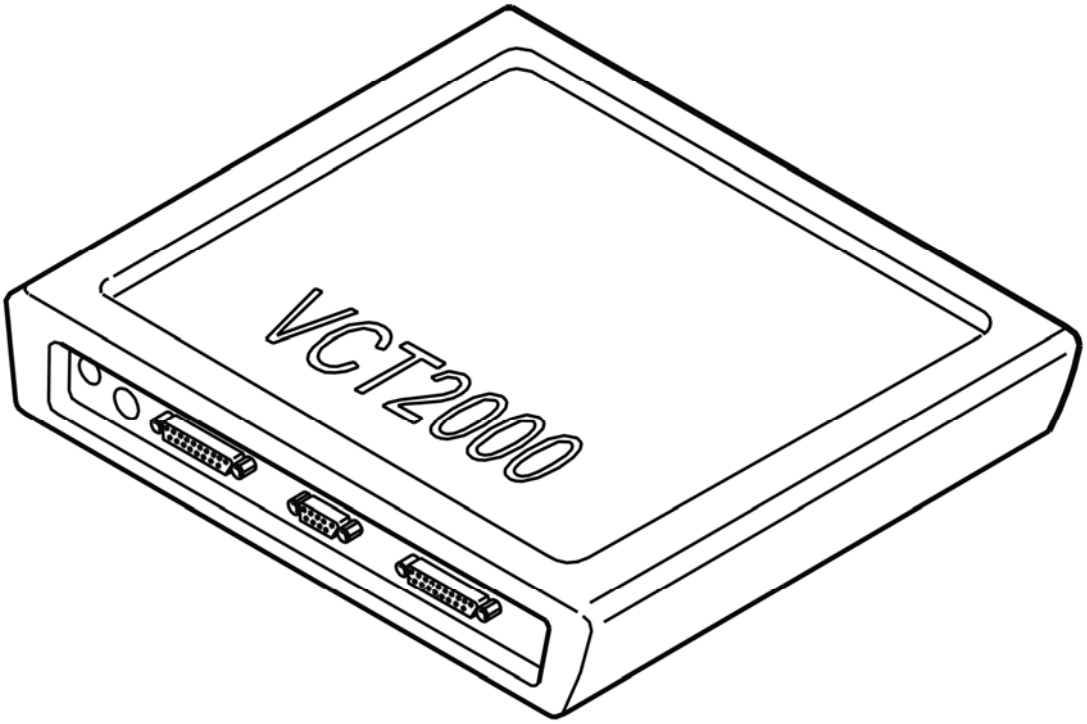

Fig. 15: Identifying VCT2000 Diagnostic Tool Symbol In VIDA
Courtesy of VOLVO CARS CORPORATION

Was the control module defective?

- **YES**

  Refer to **VERIFICATION**

- **NO**

  Refer to **CHECKING THE WIRING AND COMPONENT**

CHECKING THE WIRING AND COMPONENT

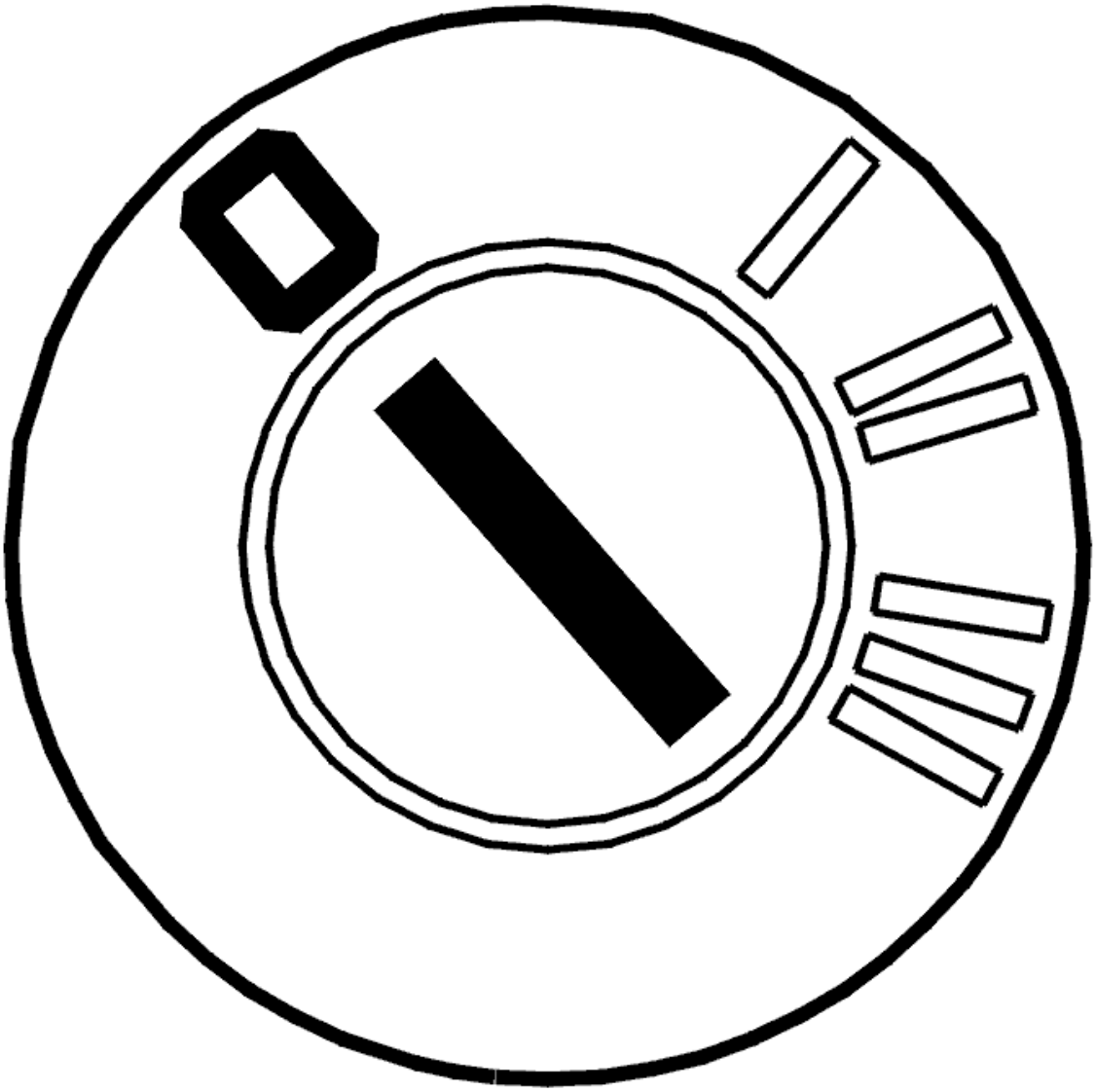

Fig. 16: Identifying Ignition OFF
Courtesy of VOLVO CARS CORPORATION

- Ignition off
- Open the transmission control system.

  Check the cable between transmission connector (transmission side) terminal #A (#A1) and solenoid S1 terminals #A and #E (#A5) and solenoid S1 terminal B. Check for a short-circuit to supply voltage.

  Check all the cables in the wiring harness from the transmission connector to the transmission components. Check for a short-circuit to each other.

  HINT: Check solenoid S1 by measuring the solenoid resistance between terminals #A and #B. The resistance must be between 18 and 25 ohms.

  Remedy as necessary.

Other information:

- To connect the breakout box to the transmission connector, see **CONNECTING THE BREAKOUT BOX, GM AUTOMATIC TRANSMISSIONS**
- To open the transmission control system, For removal, see **SIDE COVER TRANSMISSION, REMOVING** . To install, see **SIDE COVER TRANSMISSION, INSTALLING**
- To replace solenoid S1, see **SOLENOID SHIFTING 2-3, REPLACING**
- To replace the cable harness, see **TEMPERATURE SENSOR FLUID, TRANSAXLE, (TFT)**
- For information about signals, see **SIGNAL SPECIFICATION**
- see **CHECKING WIRING AND TERMINALS**

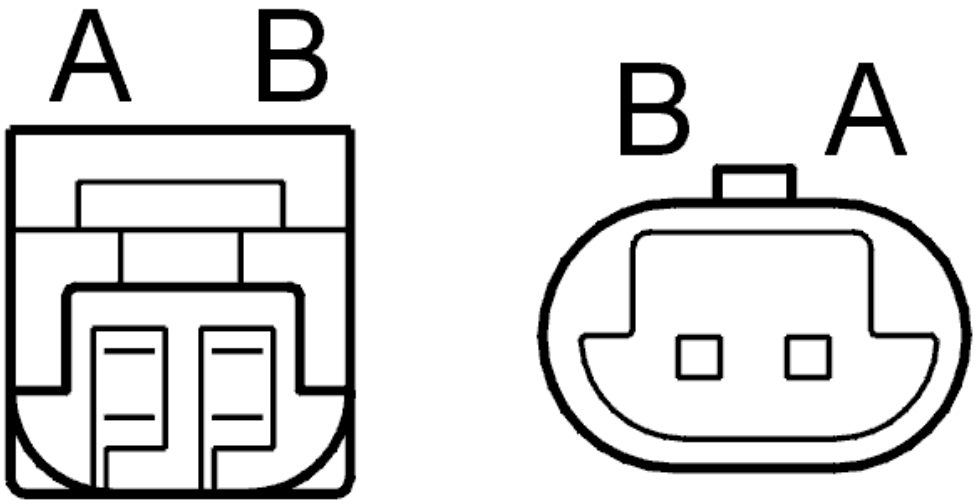

Fig. 17: Identifying Transmission Connector Terminals
Courtesy of VOLVO CARS CORPORATION

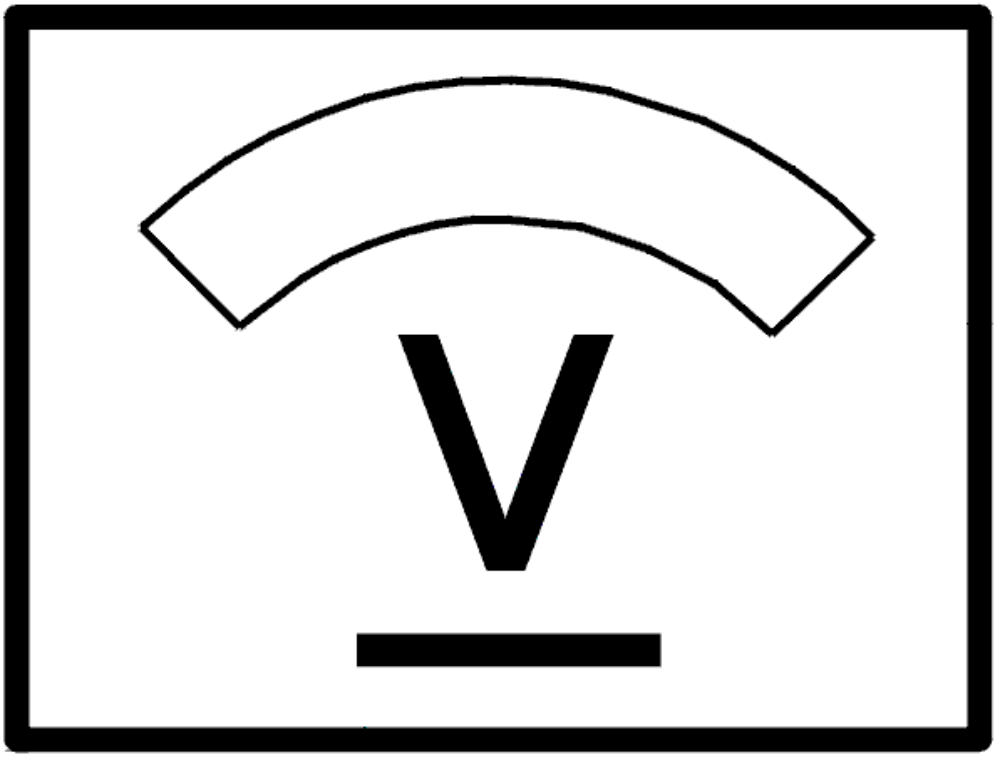

Fig. 18: Identifying Voltage Display
Courtesy of VOLVO CARS CORPORATION

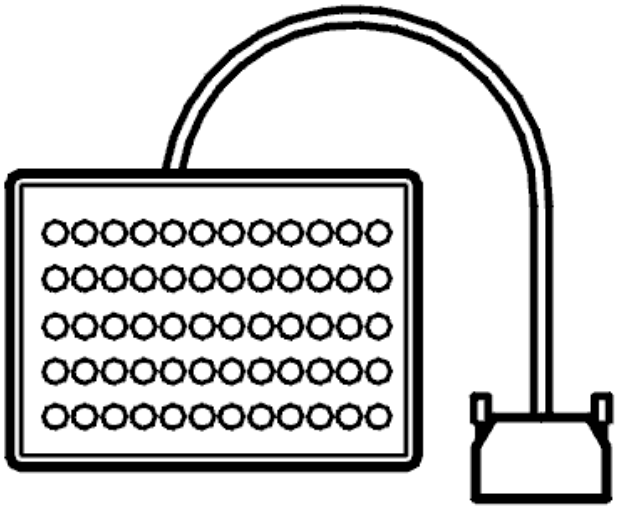

Fig. 19: Identifying Breakout Box
Courtesy of VOLVO CARS CORPORATION

- **Continue**

  Refer to **RESETTING THE ADAPTATION**

INTERMITTENT FAULT

Check the cable between control module terminal #50 (#A50) and transmission connector (control module side) terminal #A (#A1). Check for an intermittent short-circuit to supply voltage.

Check the cable between control module terminal #53 (#A53) and transmission connector (control module side) terminal #A (#A5). Check for an intermittent short-circuit to supply voltage.

HINT: With the ignition off and an ohmmeter connected to control module terminals #50 (#A50) and #53 (#A53), the resistance must be 18-25 ohms.

Remedy as necessary.

Other information

- To connect the breakout box, see **CONNECTING THE BREAKOUT BOX**
- To connect the breakout box to the transmission connector, see **CONNECTING THE BREAKOUT BOX, GM AUTOMATIC TRANSMISSIONS**
- To replace solenoid S1, see **SOLENOID SHIFTING 2-3, REPLACING**
- To replace the cable harness, see **TEMPERATURE SENSOR FLUID, TRANSAXLE, (TFT)**
- For information about signals, see **SIGNAL SPECIFICATION**
- see **CHECKING WIRING AND TERMINALS**

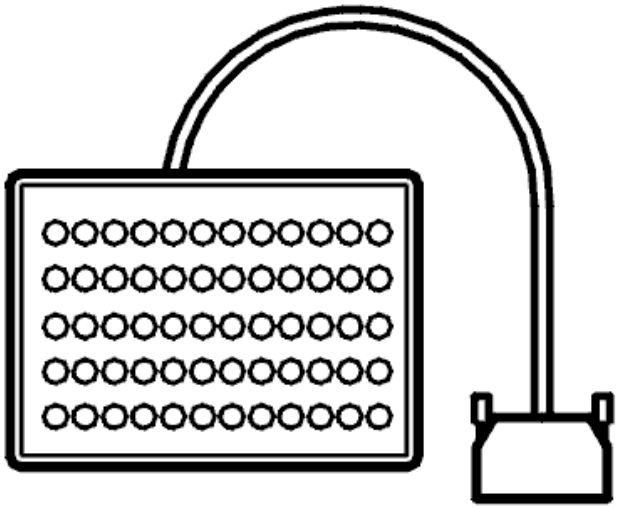

Fig. 20: Identifying Breakout Box
Courtesy of VOLVO CARS CORPORATION

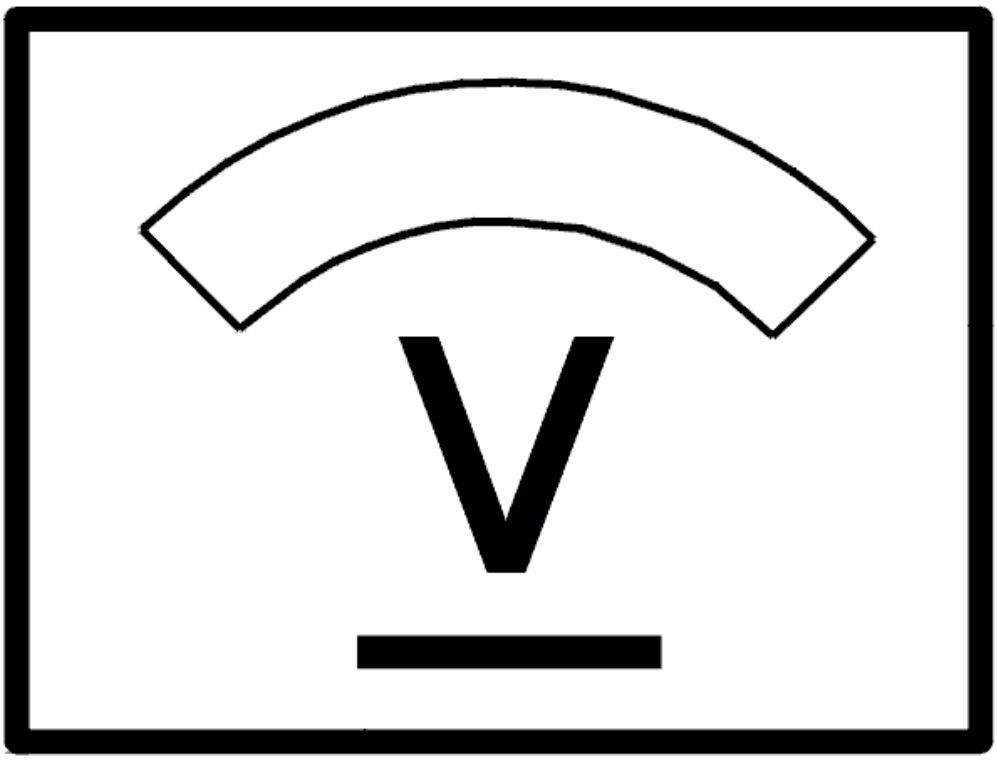

Fig. 21: Identifying Voltage Display
Courtesy of VOLVO CARS CORPORATION

- **Continue**

  Refer to **INFORMATION**

RESETTING THE ADAPTATION

RESETTING ADAPTATION AND THE COUNTER FOR "TRANSMISSION OIL CHANGE"

HINT: The transmission has torque controlled adaptive pressure control. Pressure control means that the transmission regulates the pressure itself during each gear shift. This avoids harsh gear shifting. Each gear shift is evaluated by the control module and stored in the memory. This allows for compensation for wear and tear in the transmission and clutch. It is important that the adaptation in the memory is reset after the transmission has been repaired. This is to ensure normal operation. The oil is replaced during

repair; the "Transmission oil change" counter must be reset. If the counter is not reset when the fluid is drained and replaced, there is a risk that a diagnostic trouble code (DTC) will be stored in incorrect circumstances.

NOTE: **This applies only if the transmission or one of the components in the transmission have been replaced.**

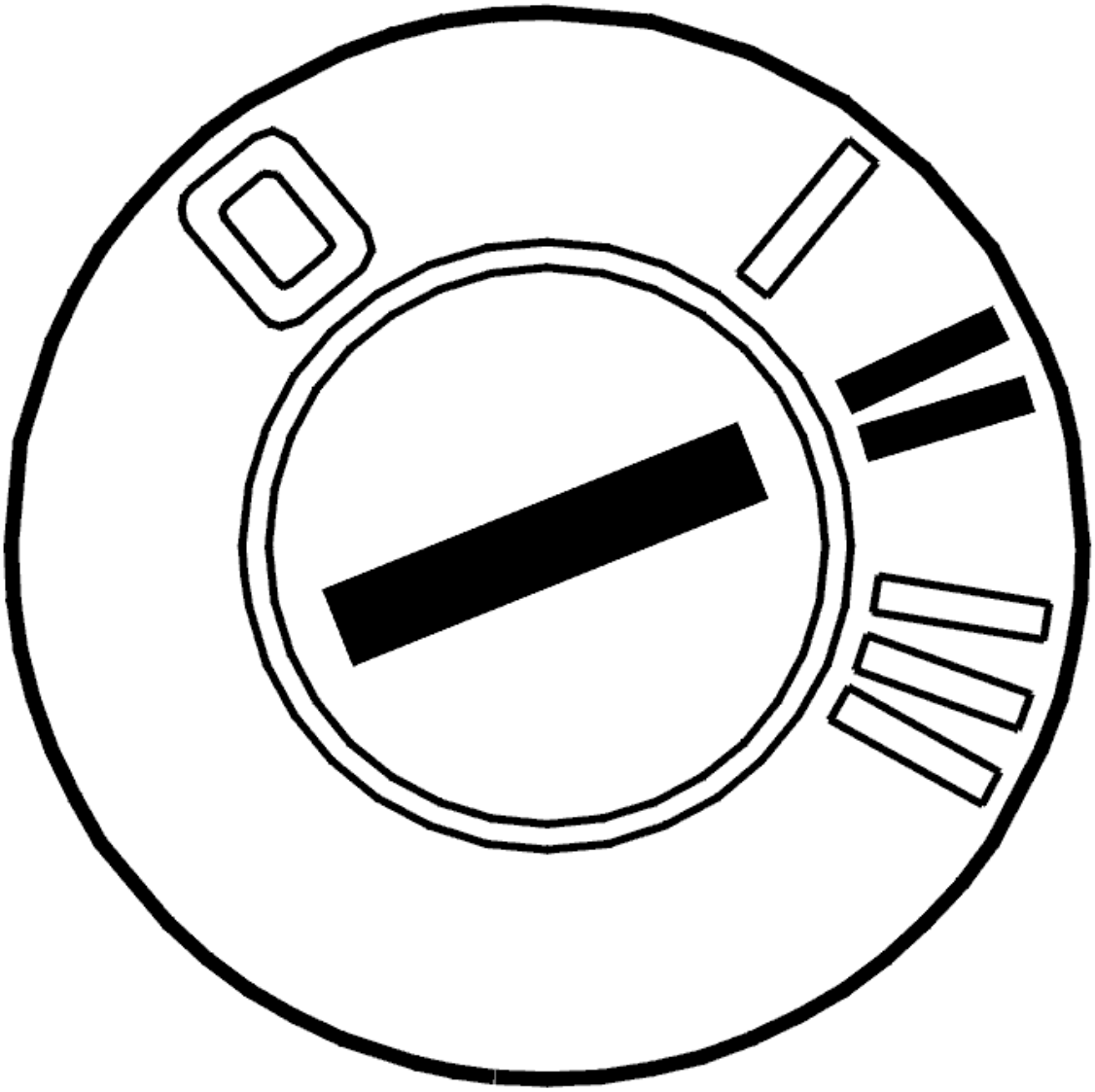

Fig. 22: Identifying Ignition ON
Courtesy of VOLVO CARS CORPORATION

- Ignition on.

  Click on the VCT2000 symbol to reset the adaptation and counter.

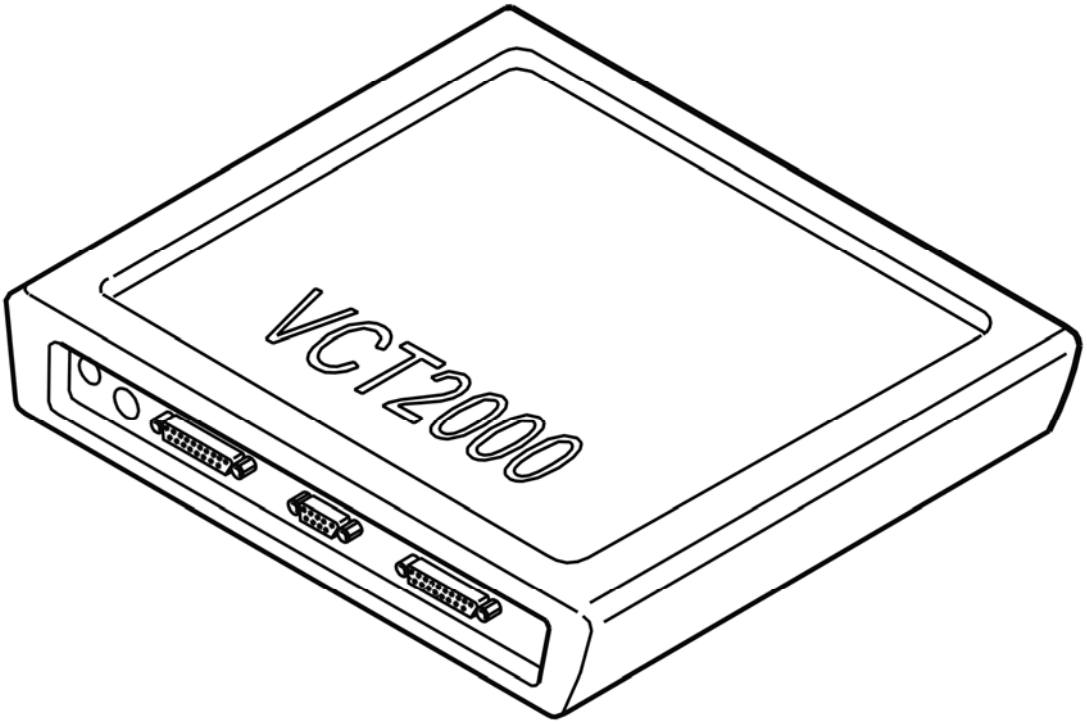

Fig. 23: Identifying VCT2000 Diagnostic Tool Symbol In VIDA
Courtesy of VOLVO CARS CORPORATION

- **Continue**

  Refer to **VERIFICATION**

VERIFICATION

VERIFICATION

HINT: After carrying out the repair, check that the fault has been remedied.

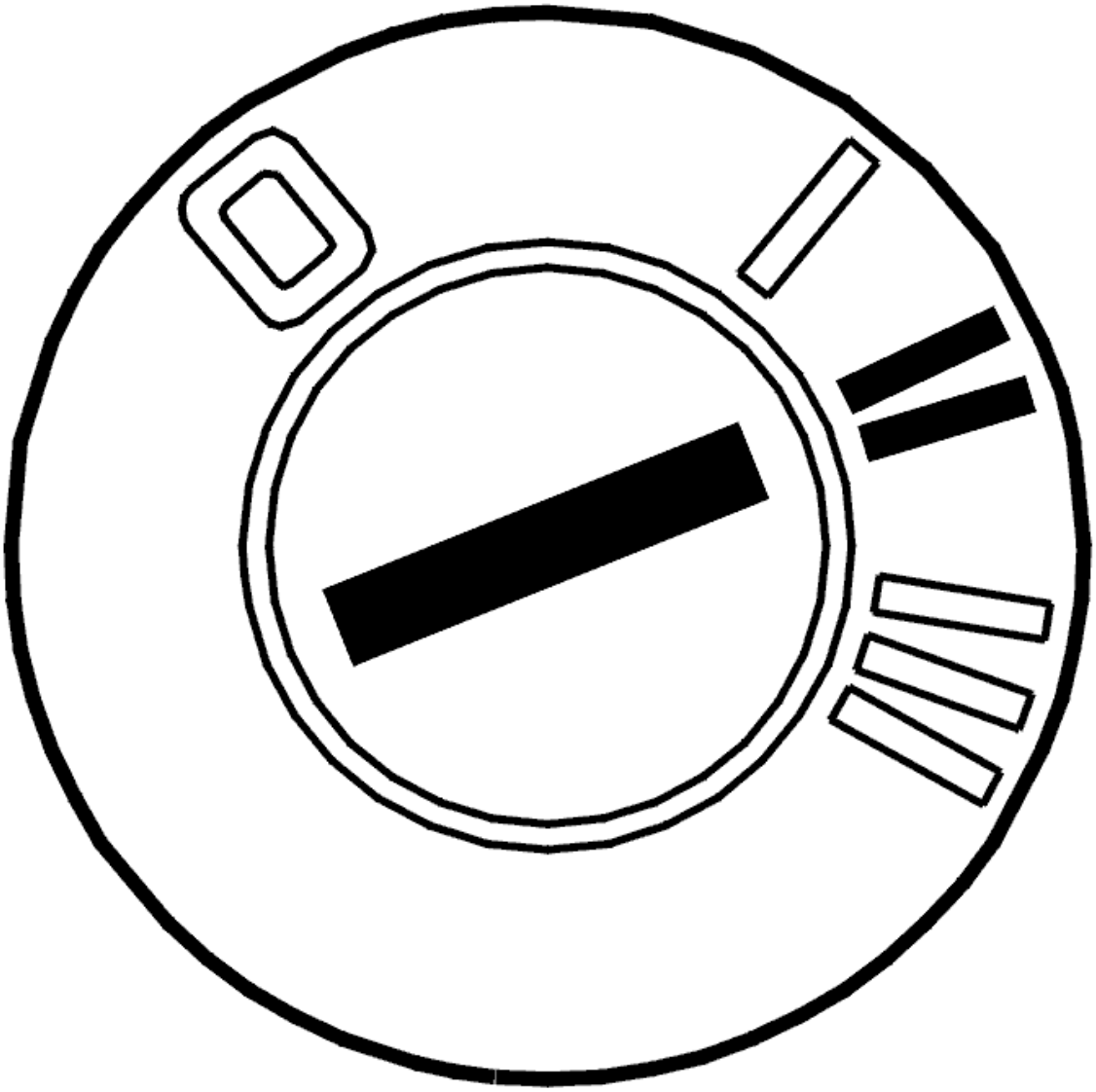

Fig. 24: Identifying Ignition ON
Courtesy of VOLVO CARS CORPORATION

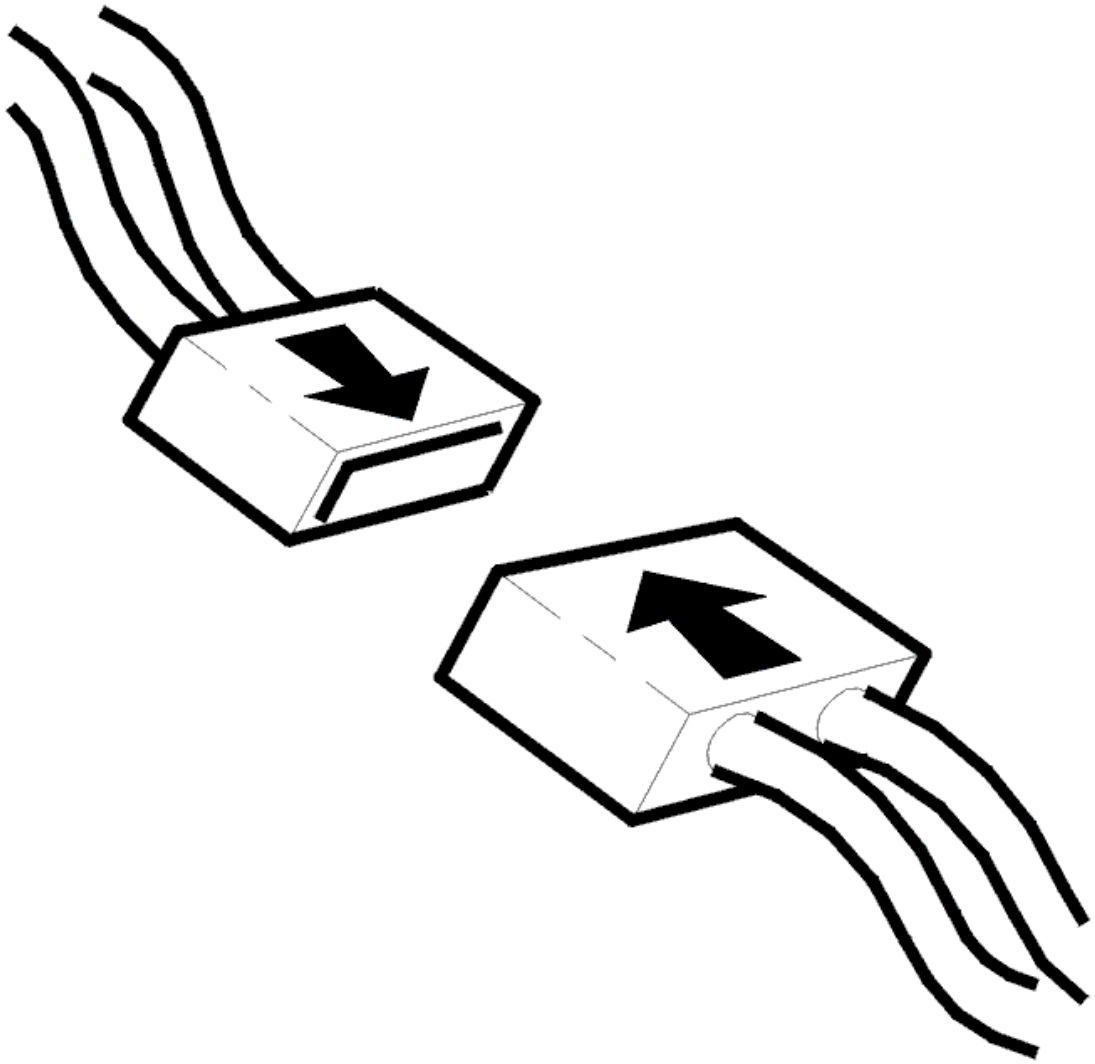

Fig. 25: Identifying Connector(s) Reinstallation
Courtesy of VOLVO CARS CORPORATION

- Ignition off.
- Wait at least 90 seconds.
- Reconnect the connectors, reinstall components etc.
- Ignition on.
- Gear selector in position P.
- Activate solenoid S1.

  The value should change between OFF and ON.

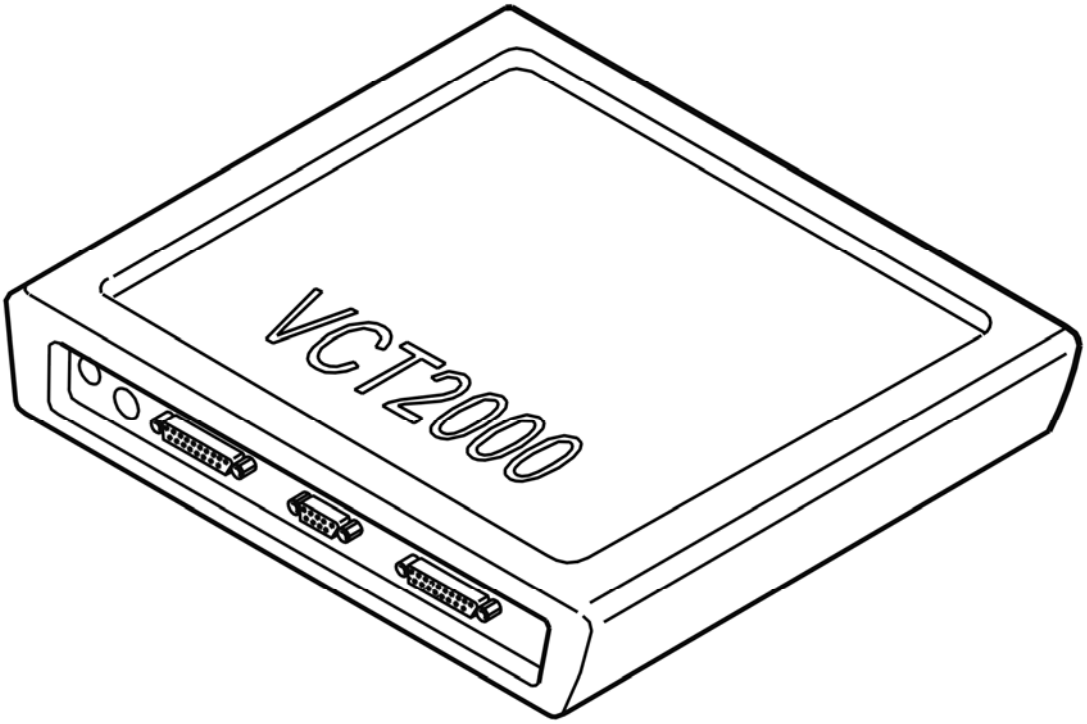

Fig. 26: Identifying VCT2000 Diagnostic Tool Symbol In VIDA
Courtesy of VOLVO CARS CORPORATION

Does the value change?

- **YES**

  VERIFIED: Troubleshooting has been completed.

- **NO**

  Refer to **INFORMATION**

INFORMATION

FAULT-TRACING INFORMATION

The fault should have been detected and remedied. As this is not the case fault-tracing has failed.

Exit fault-tracing for this diagnostic trouble code (DTC) or make another attempt.

INFORMATION

FAULT-TRACING INFORMATION

If the fault is intermittent, do not verify fault-tracing if the fault does not recur.

It is possible to view the information again, or leave fault-tracing for this diagnostic trouble code (DTC).

SIGNAL TOO HIGH

CHECKING THE FUNCTION OF THE OIL TEMPERATURE SENSOR

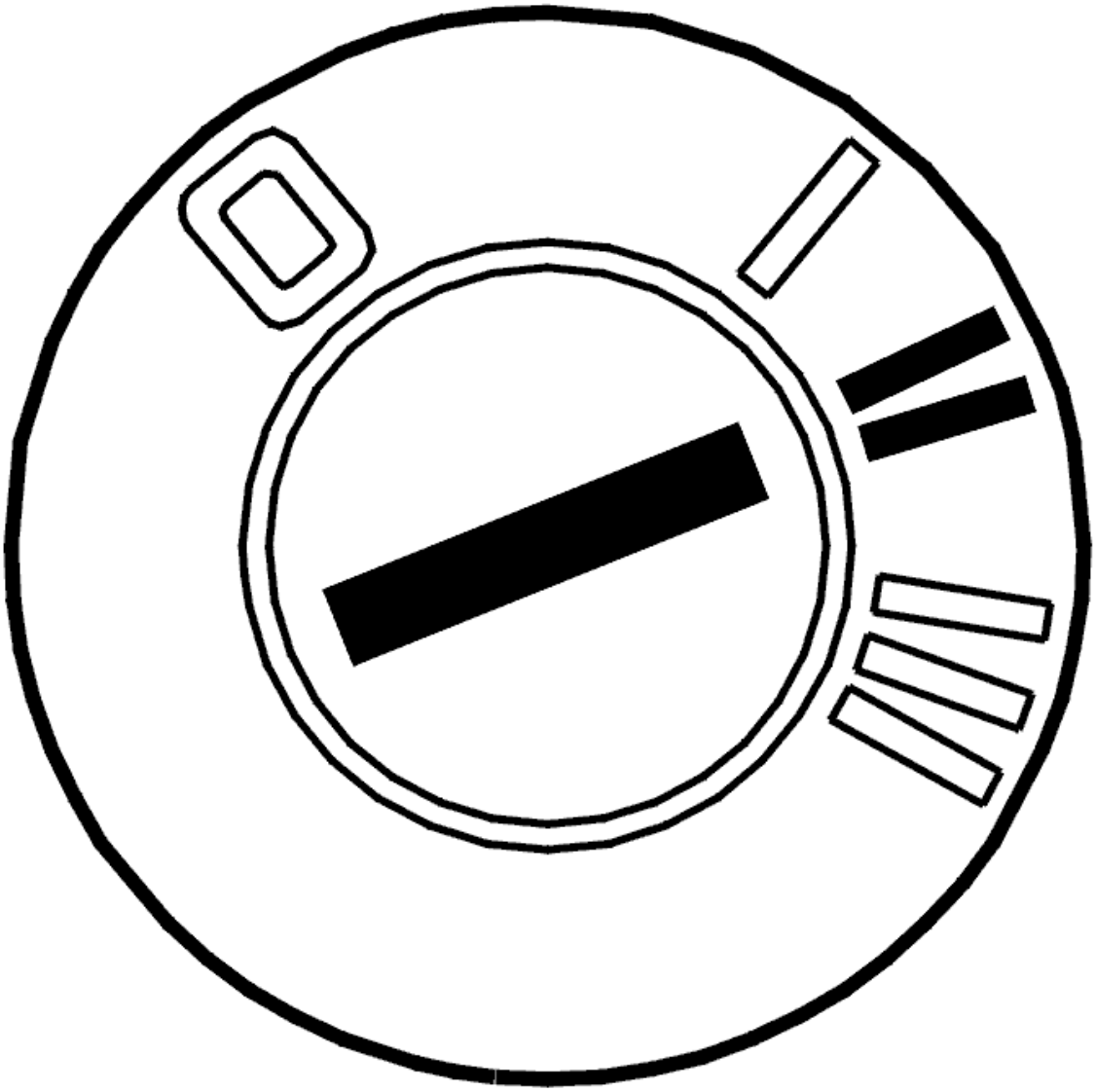

Fig. 27: Identifying Ignition ON
Courtesy of VOLVO CARS CORPORATION

- Ignition on
- Read off the oil temperature.

  Check that the temperature is within its permitted range.

Compare with the transmission temperature.

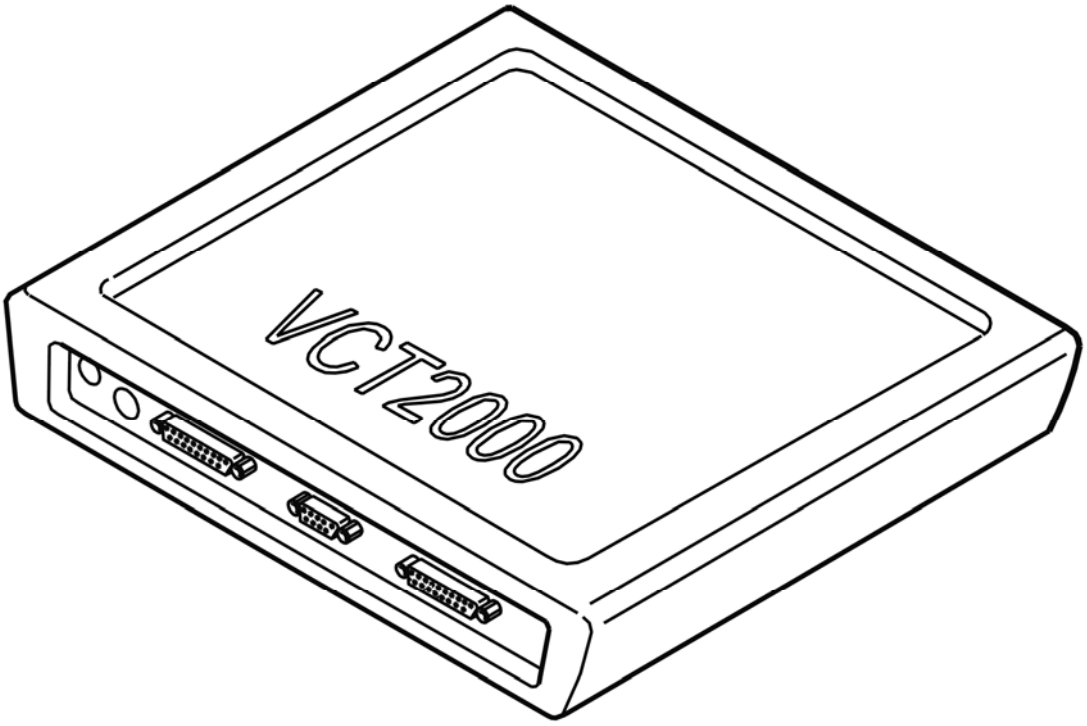

Fig. 28: Identifying VCT2000 Diagnostic Tool Symbol In VIDA
Courtesy of VOLVO CARS CORPORATION

Is the transmission temperature within its permitted range?

- **YES**

  Refer to **INTERMITTENT FAULT**

- **NO**

  Refer to **CHECKING TRANSMISSION FLUID TEMPERATURE SENSOR**

CHECKING TRANSMISSION FLUID TEMPERATURE SENSOR

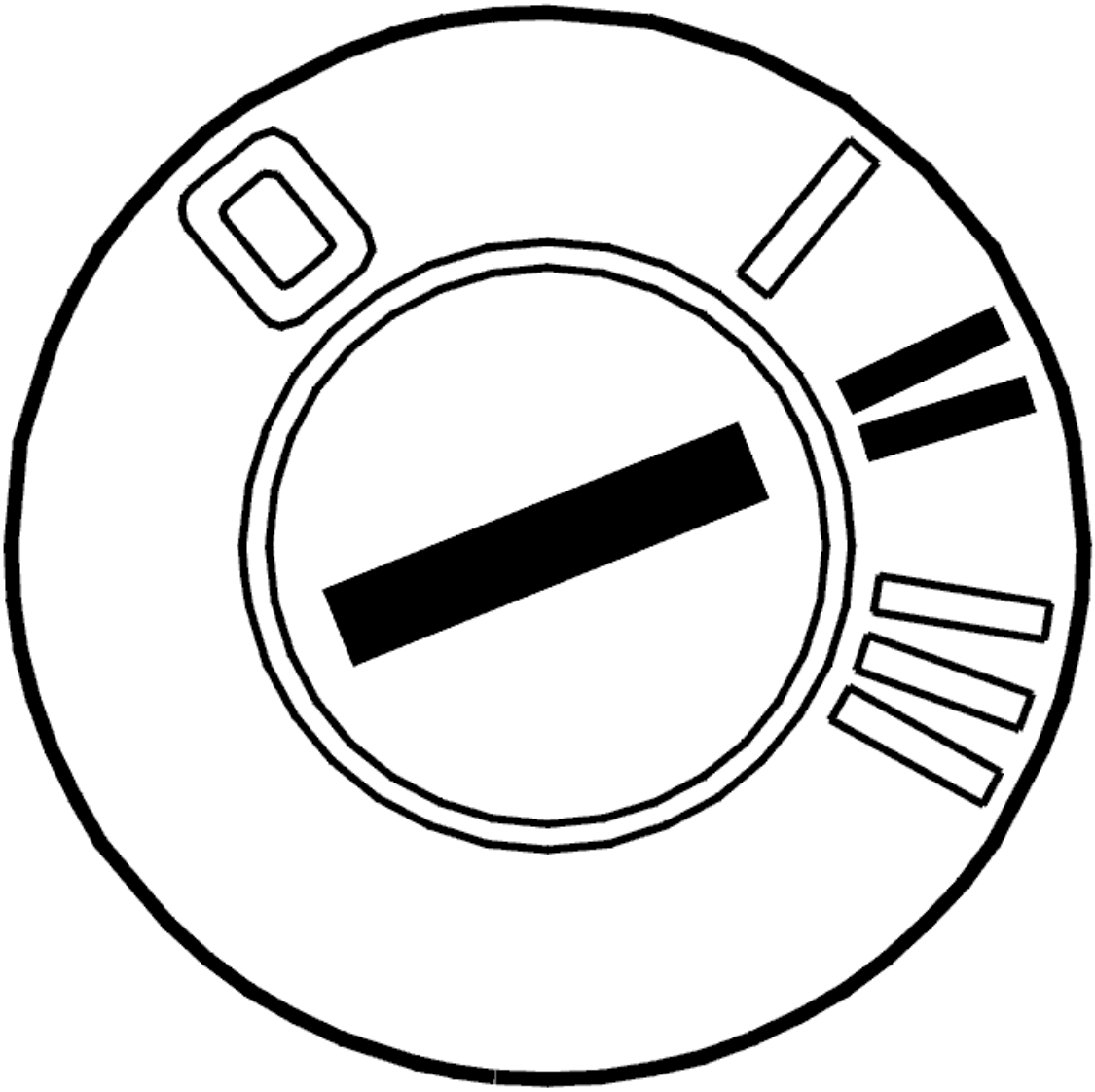

Fig. 29: Identifying Ignition ON
Courtesy of VOLVO CARS CORPORATION

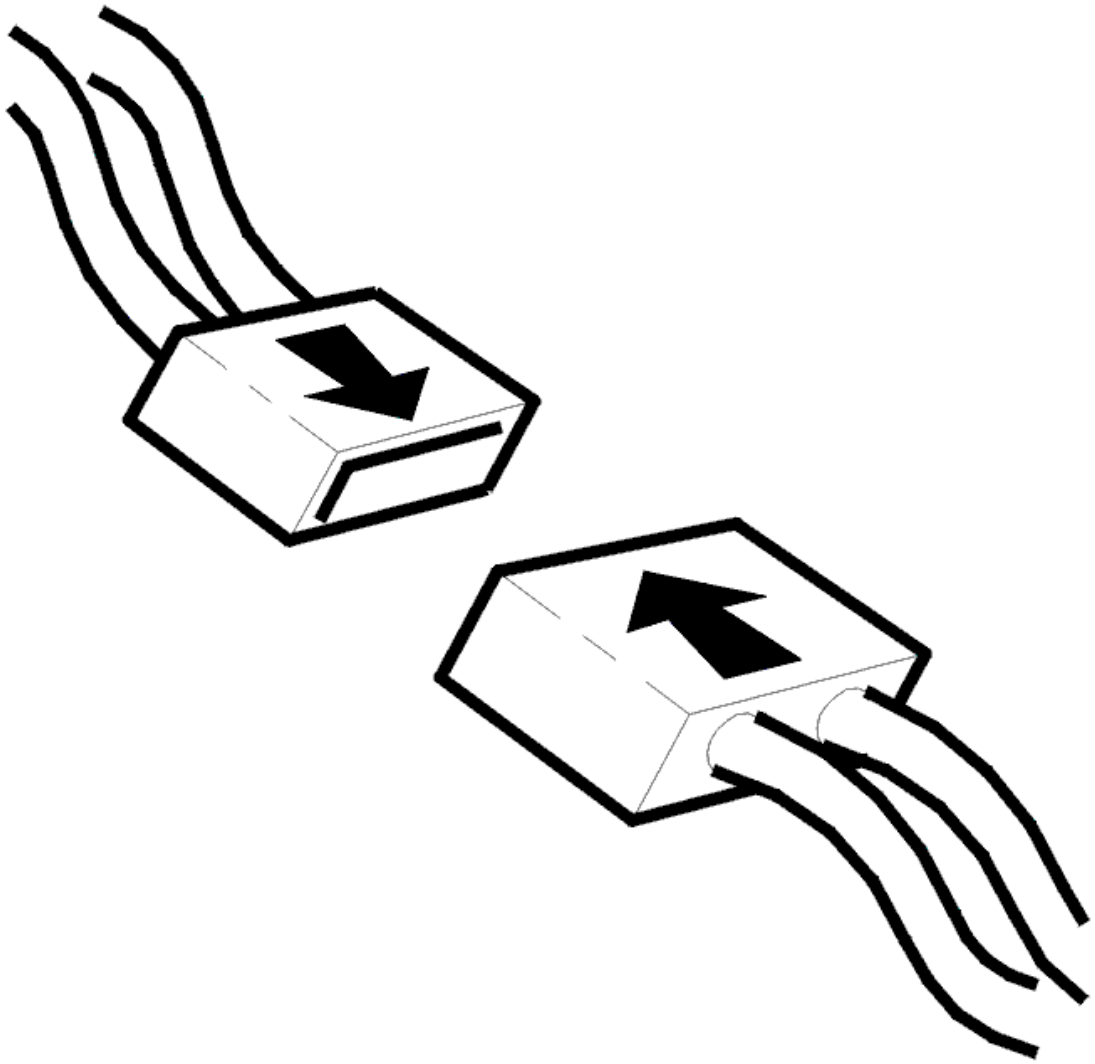

Fig. 30: Identifying Connector(s) Reinstallation
Courtesy of VOLVO CARS CORPORATION

- Ignition off
- Check the control module and transmission connectors. Check for contact resistance and oxidation
- Reconnect the control module and transmission connectors
- Ignition on
- Read off the oil temperature.

  Check that the temperature is within its permitted range.

  Compare with the transmission temperature.

  If the transmission temperature is within its permitted range, the cause of the fault was contact resistance or oxidation in the control module or transmission connector.

Other information

- To disconnect the control module, see **TRANSMISSION CONTROL MODULE (TCM), REPLACING**
- To connect the breakout box to the transmission connector, see **CONNECTING THE BREAKOUT BOX, GM AUTOMATIC TRANSMISSIONS**
- see **CHECKING WIRING AND TERMINALS**

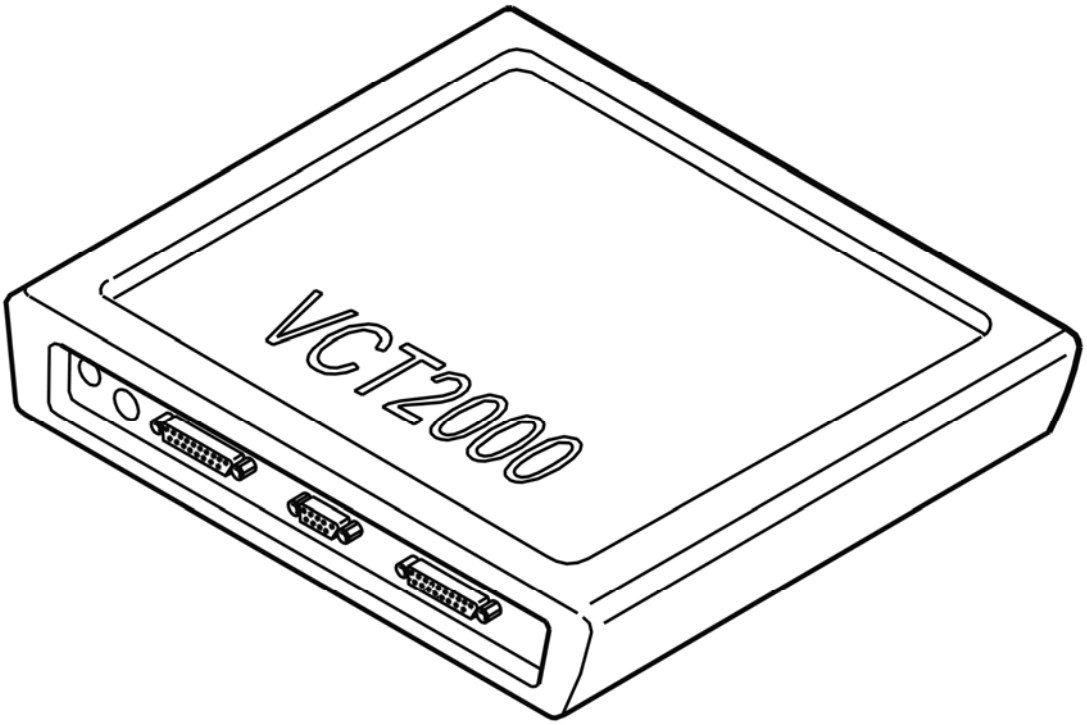

Fig. 31: Identifying VCT2000 Diagnostic Tool Symbol In VIDA
Courtesy of VOLVO CARS CORPORATION

Was the transmission temperature within its permitted range?

- **YES**

  OKAY: Troubleshooting has been completed.

- **NO**

  Refer to **CHECKING THE TEMPERATURE SENSOR**

CHECKING THE TEMPERATURE SENSOR

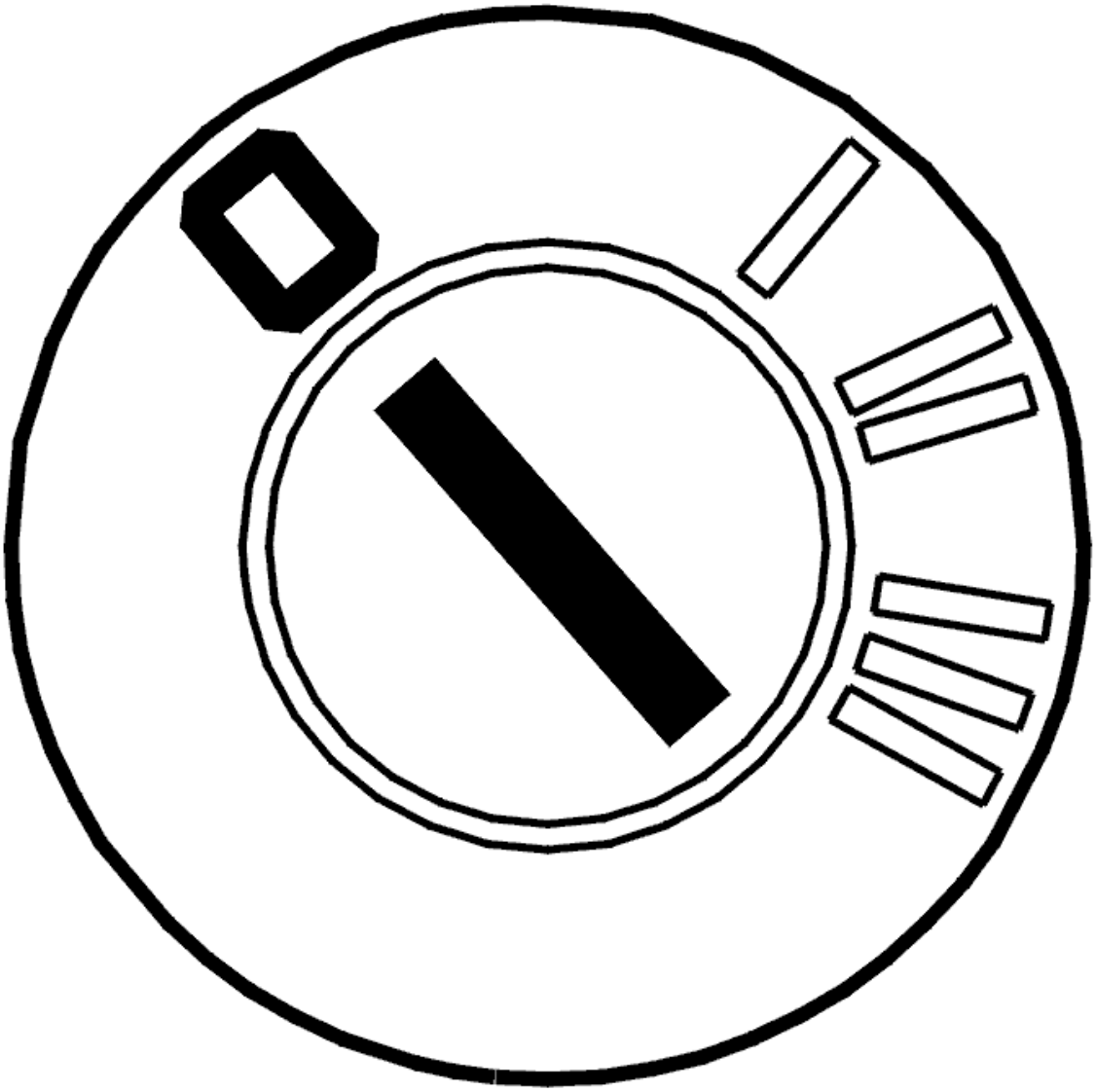

Fig. 32: Identifying Ignition OFF
Courtesy of VOLVO CARS CORPORATION

- Ignition off
- Disconnect the transmission connector
- Connect adapter see **9511505** and see **9813190** to the transmission connector (transmission side)
- Connect an ohmmeter between terminals #L (terminal #A11) and #M (terminal #A12).

  The resistance must be 3.4-3.6 kohms at 20 °C.

  Other information

  - To connect the breakout box to the transmission connector, see **CONNECTING THE BREAKOUT BOX, GM AUTOMATIC TRANSMISSIONS**
  - For information about signals, see **SIGNAL SPECIFICATION**

- For information about the resistance values, see **COMPONENT RESISTANCE VALUES**

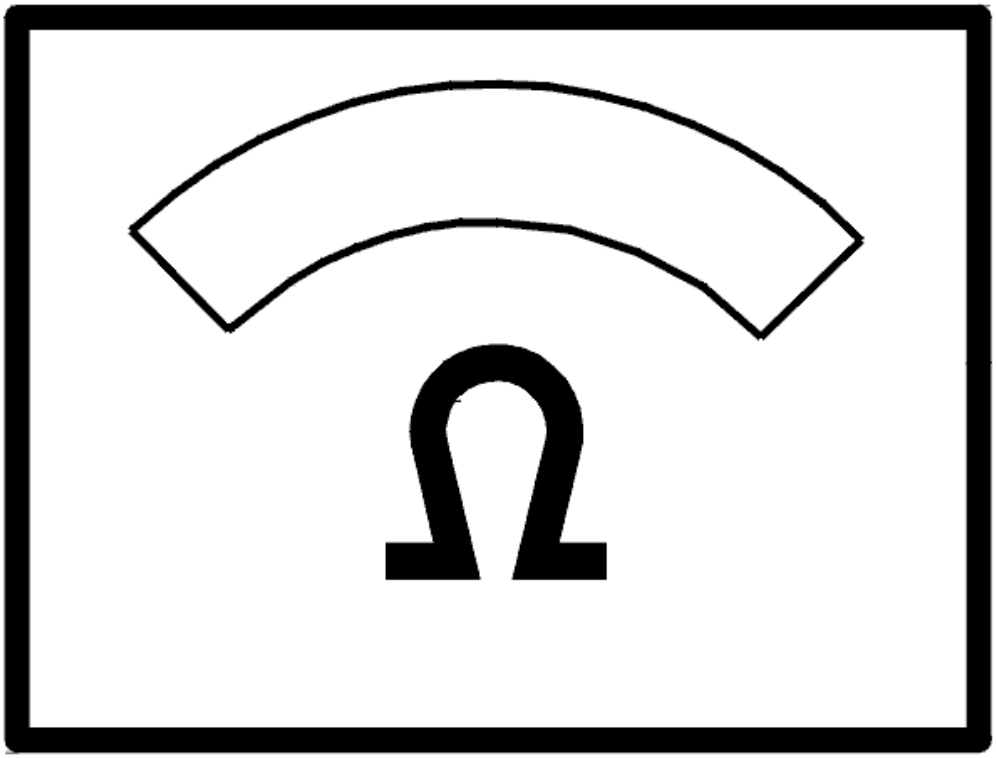

Fig. 33: Identifying Ohms Display
Courtesy of VOLVO CARS CORPORATION

Was the resistance OK?

- **YES**

  Refer to **CHECKING THE WIRING**

- **NO**

  Refer to **CHECKING THE WIRING AND COMPONENT**

CHECKING THE WIRING

- Breakout box connected to the control module
- Breakout box connected to the transmission connector.

Check the cable between control module terminal #37 (#A37) and transmission connector (control module side) terminal #L (#A11). Check for an open-circuit. Check for a short-circuit to supply voltage.

Check the cable between control module terminal #55 (#A55) and transmission connector (control module side) terminal #M (#A12). Check for an open-circuit. Check for a short-circuit to supply voltage.

Remedy as necessary.

Other information

- To connect the breakout box, see **CONNECTING THE BREAKOUT BOX**
- To connect the breakout box to the transmission connector, see **CONNECTING THE BREAKOUT BOX, GM AUTOMATIC TRANSMISSIONS**
- For information about signals, see **SIGNAL SPECIFICATION**
- see **CHECKING WIRING AND TERMINALS**

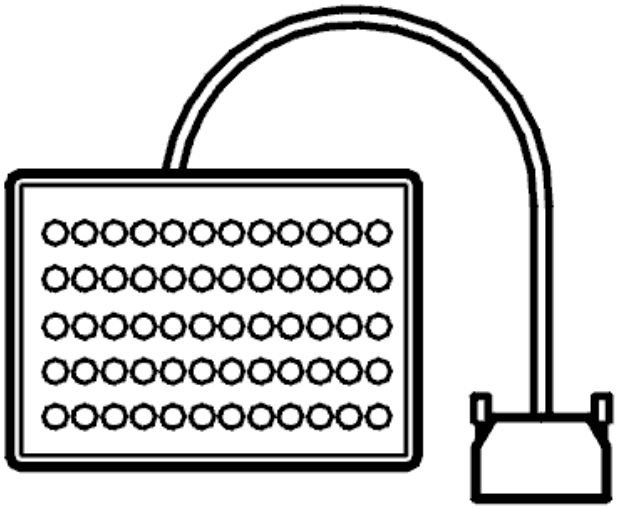

Fig. 34: Identifying Breakout Box
Courtesy of VOLVO CARS CORPORATION

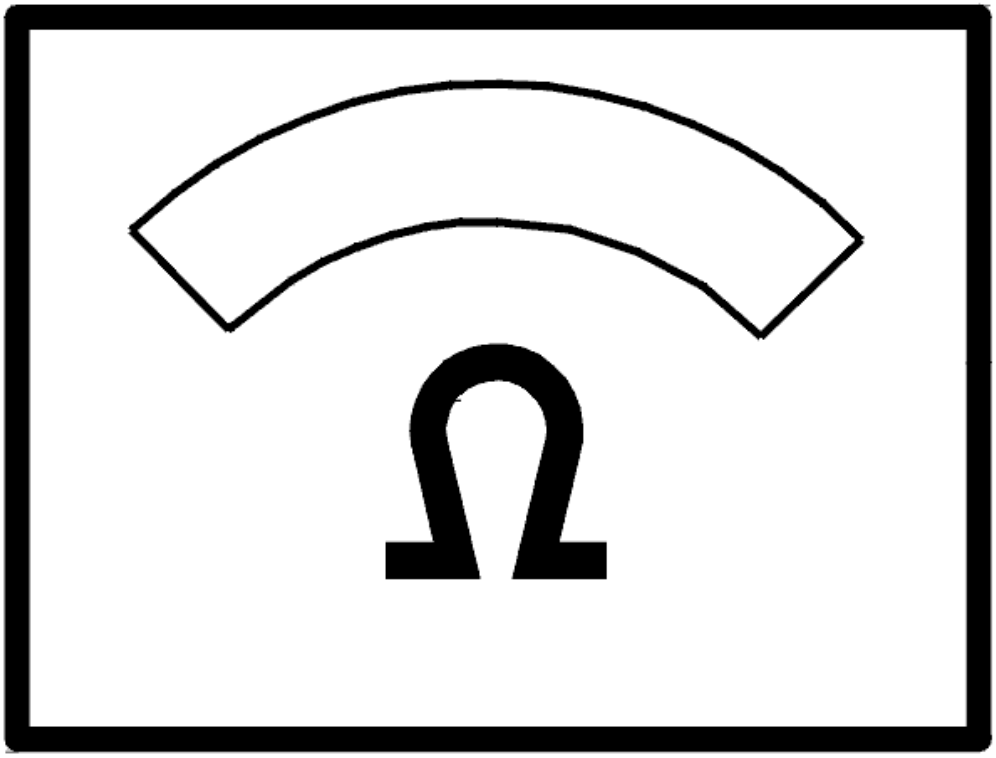

Fig. 35: Identifying Ohms Display
Courtesy of VOLVO CARS CORPORATION

Was a fault detected?

- **YES**

  Refer to **VERIFICATION**

- **NO**

  Refer to **CHECKING THE WIRING AND COMPONENT**

CHECKING THE WIRING AND COMPONENT

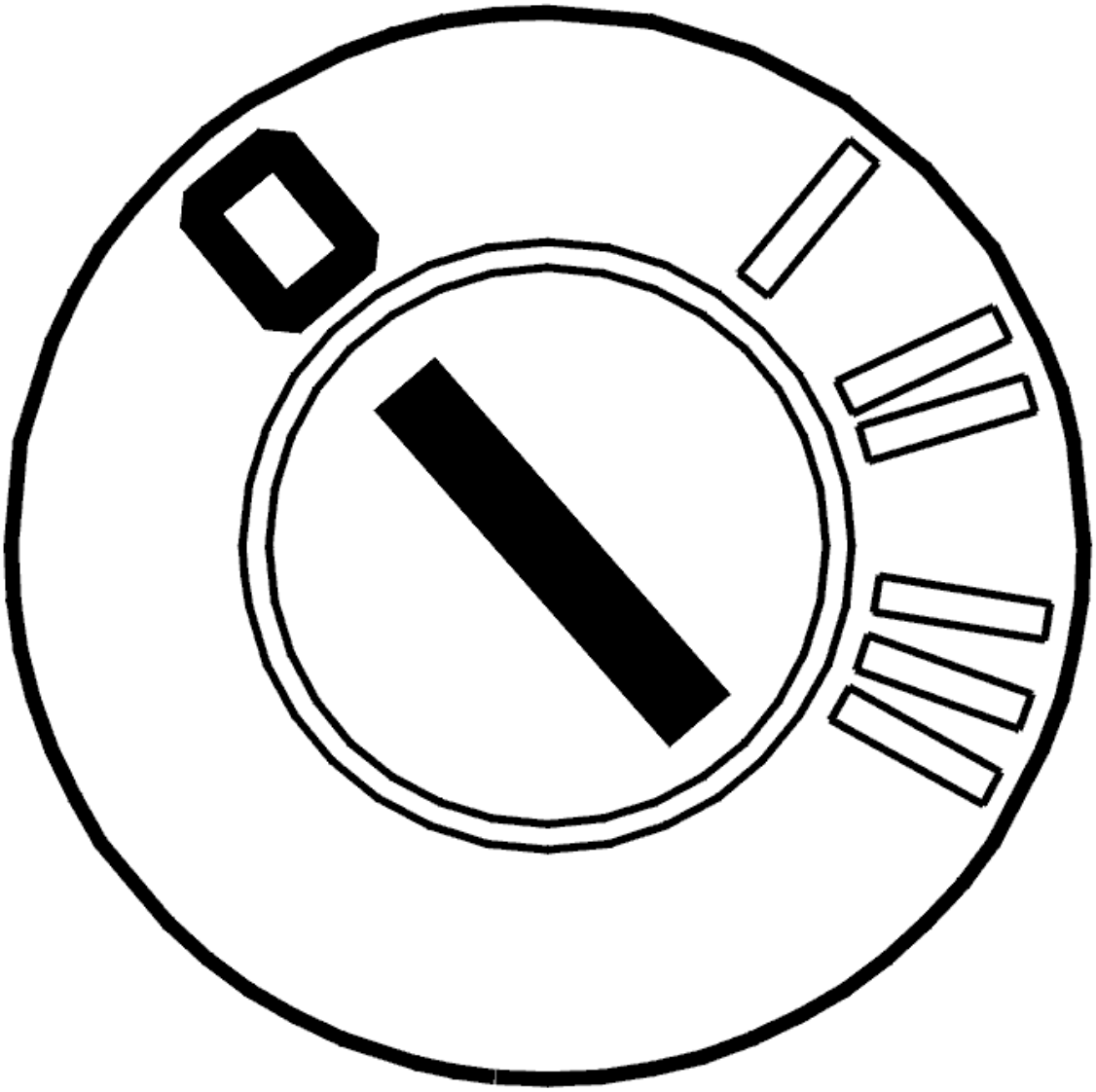

Fig. 36: Identifying Ignition OFF
Courtesy of VOLVO CARS CORPORATION

- Ignition off
- Open the transmission control system.

  Check the cable between transmission terminal #L (#A11) and temperature sensor terminal #A. Check for an open-circuit. Check for a short-circuit to supply voltage.

  Check the cable between transmission terminal #M (#A12) and temperature sensor terminal #B. Check for an open-circuit. Check for a short-circuit to supply voltage.

  HINT: Check the temperature sensor by measuring the resistance between temperature sensor connector terminals #A and #B. The resistance must be between 3.5-3.6 kohms at 20° C.

  Remedy as necessary.

Other information:

- To connect the breakout box, see **CONNECTING THE BREAKOUT BOX**
- To connect the breakout box to the transmission connector, see **CONNECTING THE BREAKOUT BOX, GM AUTOMATIC TRANSMISSIONS**
- To replace the cable harness, see **TEMPERATURE SENSOR FLUID, TRANSAXLE, (TFT)**
- To replace the temperature sensor, see **TEMPERATURE SENSOR FLUID TRANSMISSION, REPLACING**
- For information about signals, see **SIGNAL SPECIFICATION**
- For information about the resistance values, see **COMPONENT RESISTANCE VALUES**
- see **CHECKING WIRING AND TERMINALS**

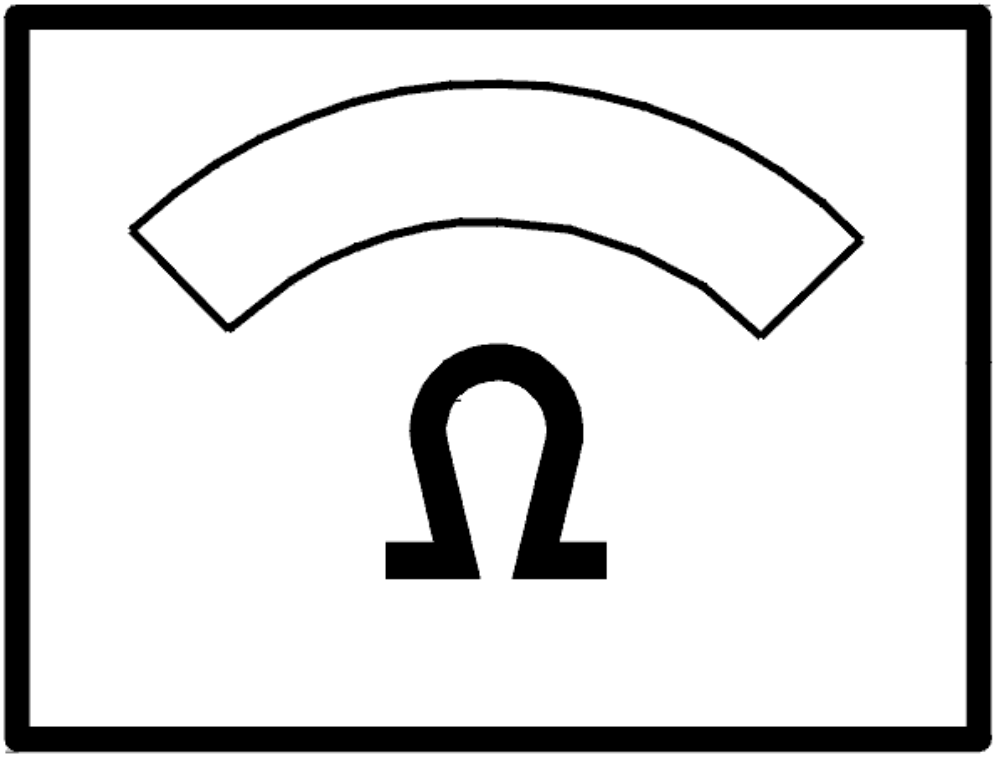

Fig. 37: Identifying Ohms Display
Courtesy of VOLVO CARS CORPORATION

- **Continue**

  Refer to **RESETTING TRANSMISSION FLUID CHANGE COUNTER**

INTERMITTENT FAULT

Check the control module and automatic transmission connector. Check for contact resistance and oxidation. Remedy if necessary.

Check the cable between control module terminal #A37 (#A37) and transmission connector (control module side) terminal #11. Check for an intermittent open-circuit. Check for an intermittent short-circuit to supply voltage.

Check the cable between control module terminal #A55 (#A55) and transmission connector (control module side) terminal #12. Check for an intermittent open-circuit. Check for an intermittent short-circuit to supply voltage.

Remedy as necessary.

Other information

- To connect the breakout box, see **CONNECTING THE BREAKOUT BOX**
- To connect the breakout box to the transmission connector, see **CONNECTING THE BREAKOUT BOX, GM AUTOMATIC TRANSMISSIONS**
- For information about signals, see **SIGNAL SPECIFICATION**
- see **CHECKING WIRING AND TERMINALS**

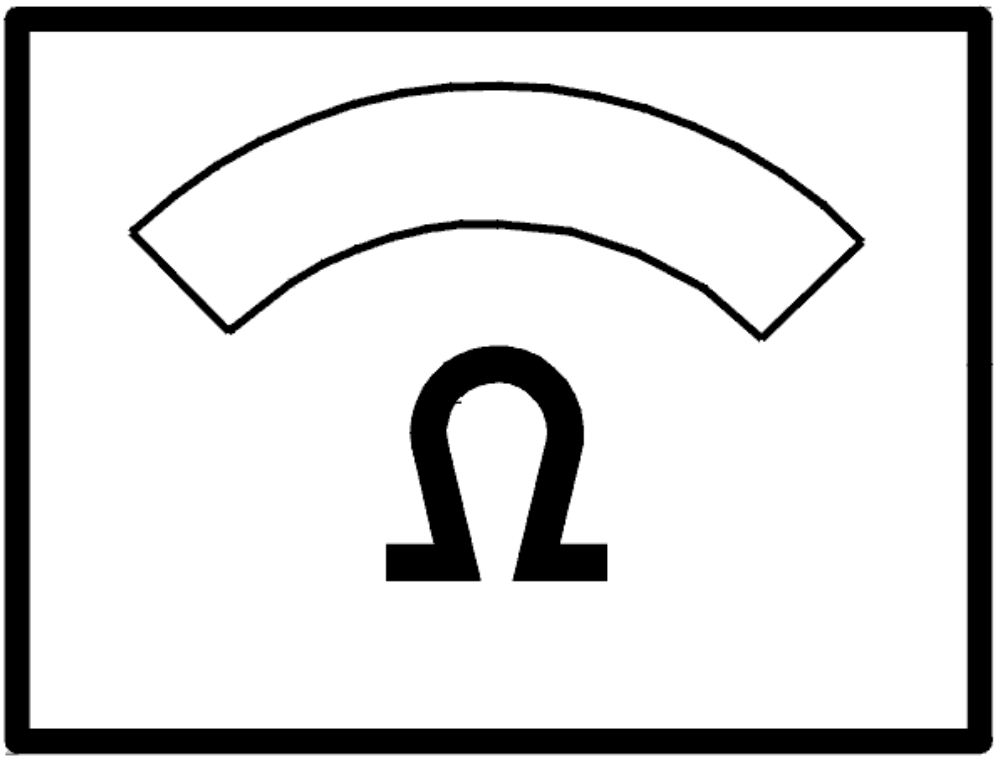

Fig. 38: Identifying Ohms Display
Courtesy of VOLVO CARS CORPORATION

- **Continue**

  Refer to **INFORMATION**

RESETTING TRANSMISSION FLUID CHANGE COUNTER

RESETTING TRANSMISSION FLUID CHANGE COUNTER

HINT: The transmission control module (TCM) has a counter for the oil quality. The counter counts up if the transmission is exposed to too high a load or an ambient temperature that is too high. If the counter is not reset when the oil is drained or changed, there is a risk that a diagnostic trouble code (DTC) will be stored in faulty circumstances. Therefore it is important that the "Transmission oil change" counter is reset.

NOTE: **This applies only when the transmission fluid is changed and when the fluid is changed when repairs are carried out to the transmission temperature sensor.**

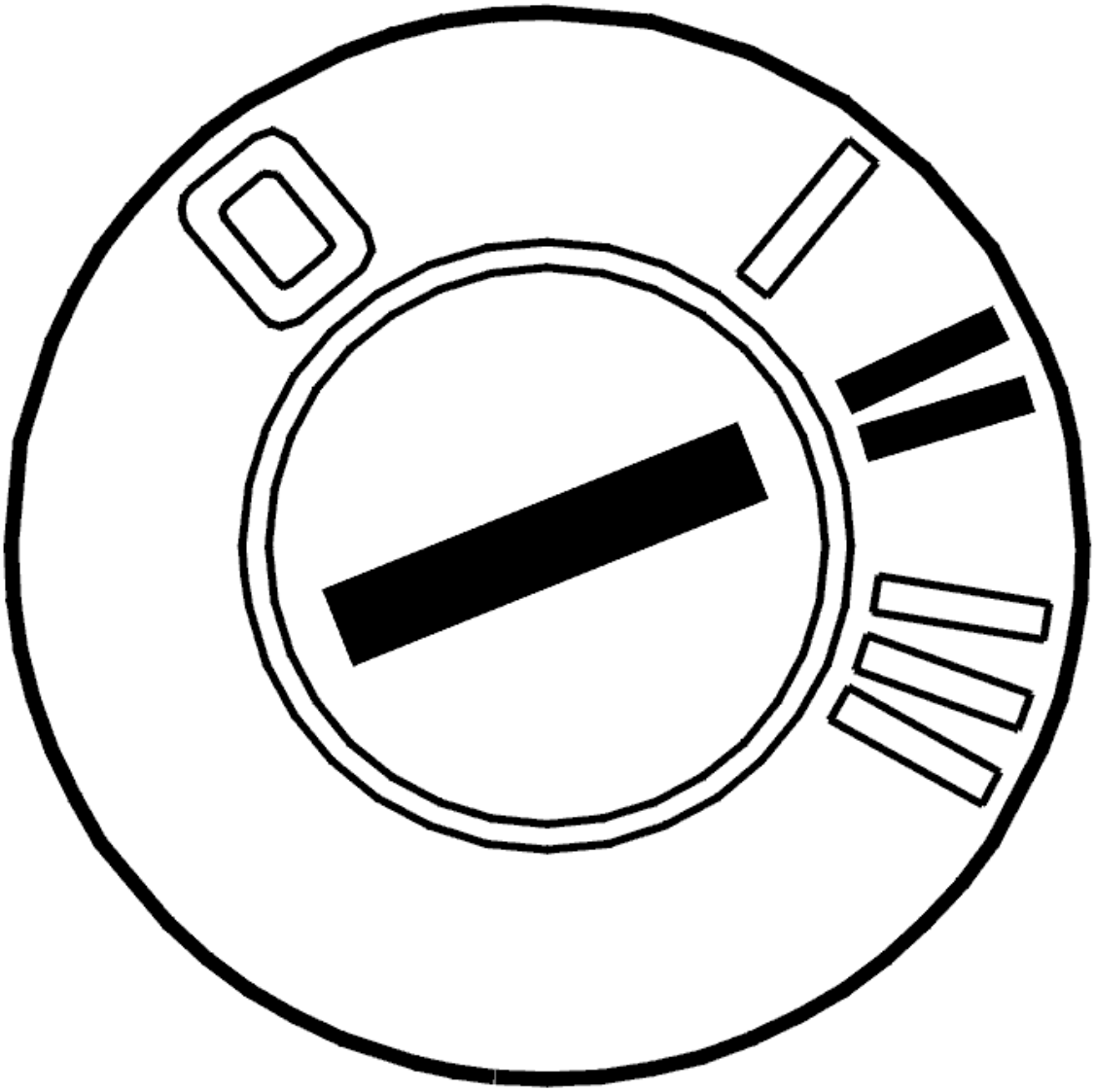

Fig. 39: Identifying Ignition ON
Courtesy of VOLVO CARS CORPORATION

- Ignition on.

  Reset the counter by clicking on the VCT 2000 symbol.

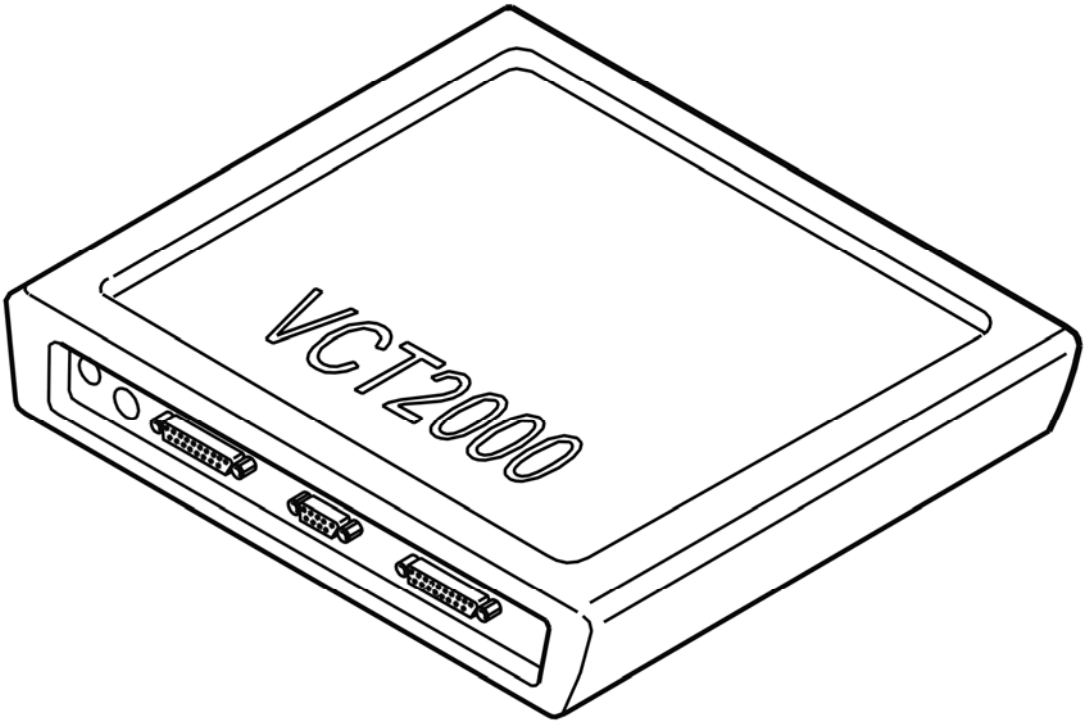

Fig. 40: Identifying VCT2000 Diagnostic Tool Symbol In VIDA
Courtesy of VOLVO CARS CORPORATION

- **Continue**

  Refer to **VERIFICATION**

VERIFICATION

VERIFICATION

HINT: After carrying out the repair check that the fault has been remedied.

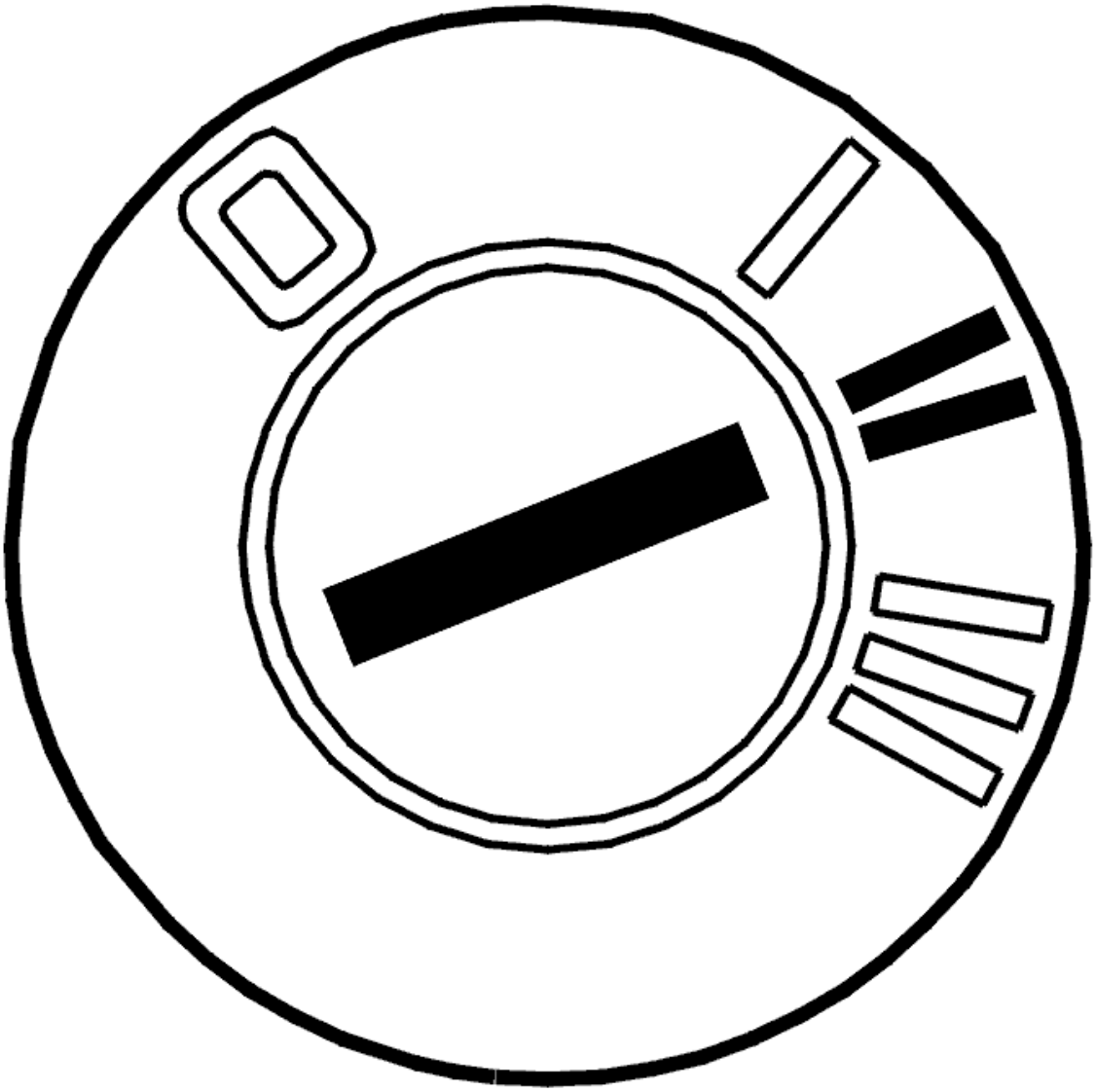

Fig. 41: Identifying Ignition ON
Courtesy of VOLVO CARS CORPORATION

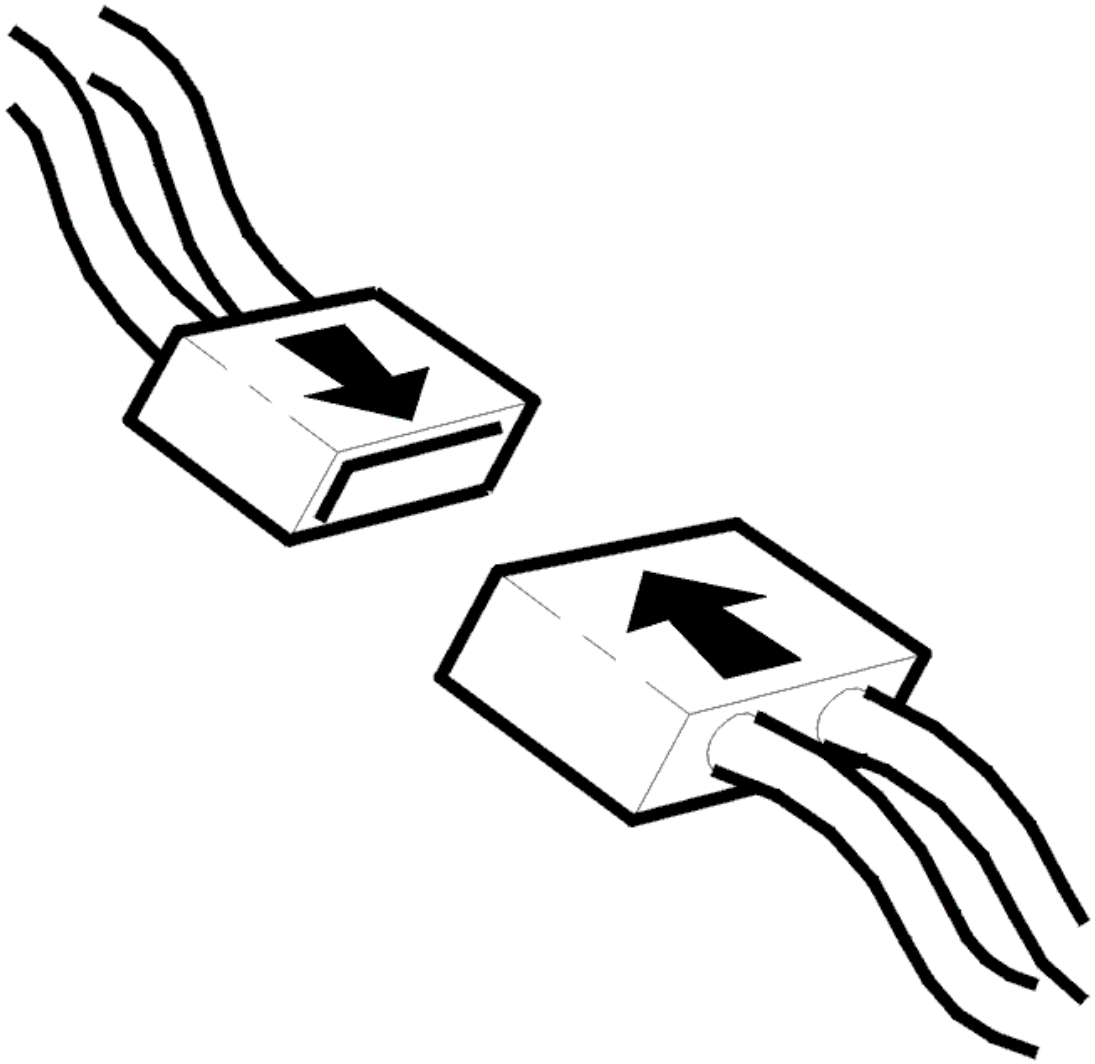

Fig. 42: Identifying Connector(s) Reinstallation
Courtesy of VOLVO CARS CORPORATION

- Ignition off.
- Reinstall connectors, components etc.
- Ignition on.
- Read off oil temperature.

  Check that the transmission oil temperature is within its permitted range. Compare with the transmission temperature.

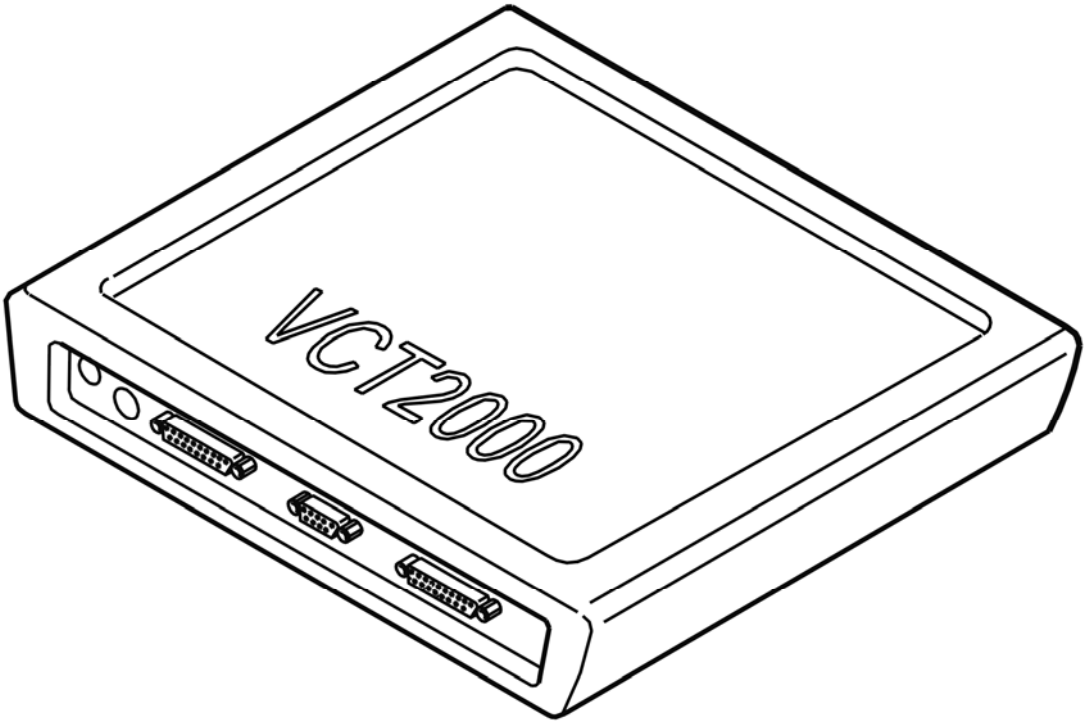

Fig. 43: Identifying VCT2000 Diagnostic Tool Symbol In VIDA
Courtesy of VOLVO CARS CORPORATION

Is the oil temperature within its permitted range?

- **YES**

  VERIFIED: Troubleshooting has been completed.

- **NO**

  Refer to **INFORMATION**

TCM-0001: SHIFT SOLENOID S1. SIGNAL TOO HIGH (AW50/51 AWD; AW55-50/51SN; 2003-2007)

DIAGNOSTIC TROUBLE CODE (DTC) INFORMATION

Condition

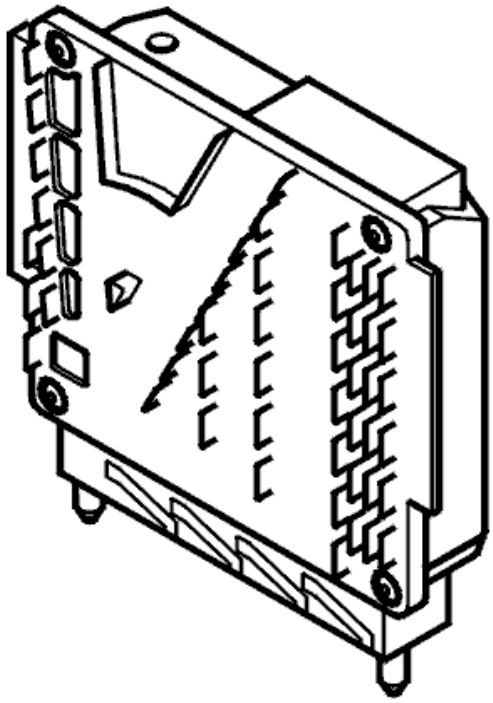

Fig. 44: Identifying Transmission Control Module (TCM)
Courtesy of VOLVO CARS CORPORATION

Shift solenoids S1, S2, S3, S4 and S5 operate in tandem to control gear-shifting. The solenoids are controlled by power stages in the transmission control module (TCM). The transmission control module (TCM) opens the power stages to activate the solenoids and sends a voltage through the circuit. Diagnostic trouble codes (DTCs) TCM-0001, TCM-0007, TCM-0101 TCM-0107 or TCM-010A are stored (depending on the solenoid) if the transmission control module (TCM) registers that the signal in circuits S1, S2, S3, S4 or S5 is too high when the solenoid should not be activated.

Substitute Value

- The transmission control module (TCM) "Emergency mode I" program has been initiated.

Possible Source

- Short-circuit to supply voltage in the signal cable.
- Internal fault in the control module.

Fault symptom[s]

- General orange warning lamp lit.
- Malfunction indicator lamp (MIL) lit.

- Harsh gear shifting.
- No shifting.
- No lock-up function.

SIGNAL TOO HIGH

CHECKS

CHECKING THE TEMPERATURE SENSOR

HINT: In some cases, the diagnostic trouble code (DTC) may be caused by a defective oil temperature sensor. Check the function of the oil temperature sensor first.

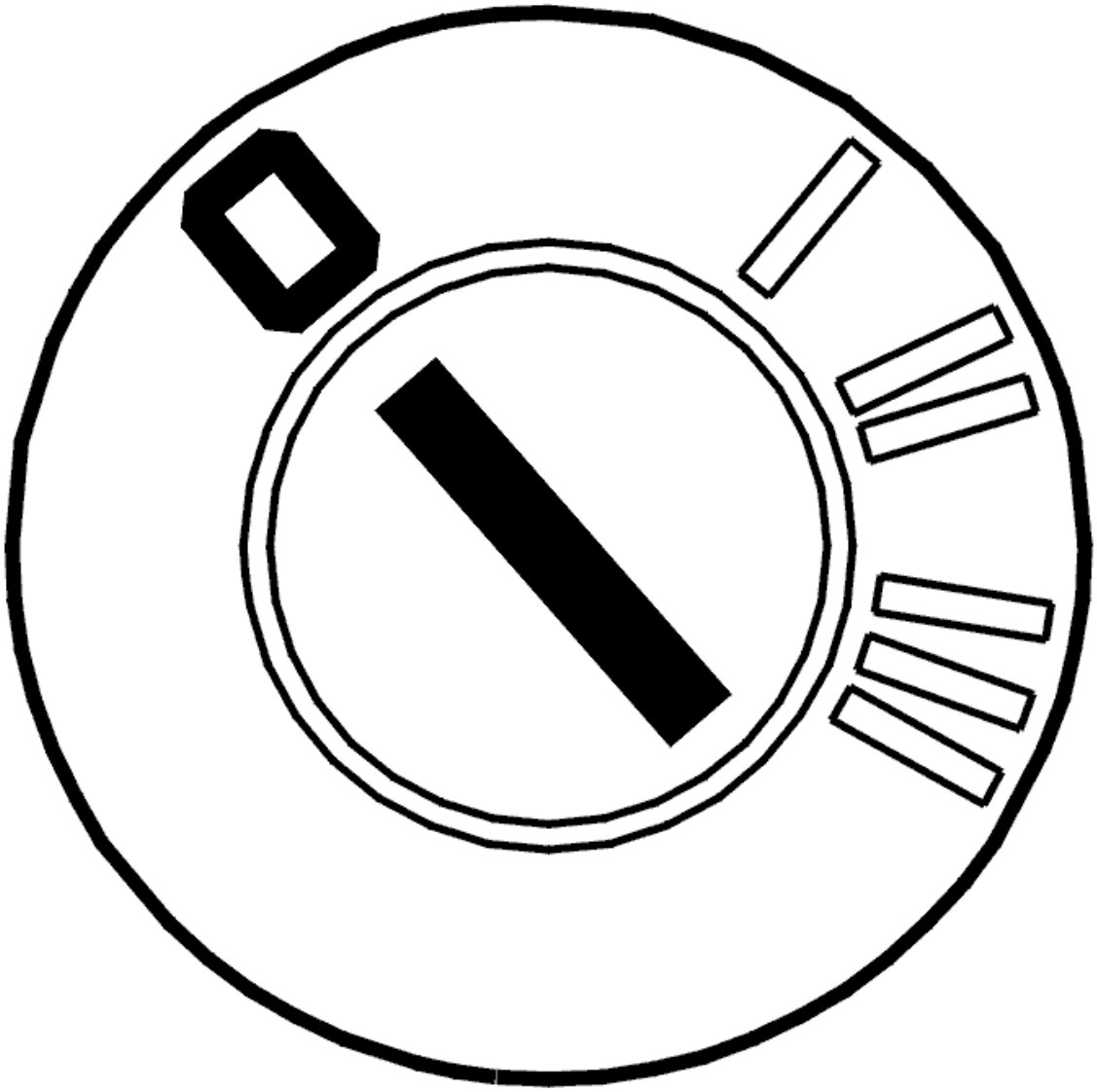

Fig. 45: Identifying Ignition OFF
Courtesy of VOLVO CARS CORPORATION

- Ignition off
- Read off the oil temperature.

  Check that the function of the temperature sensor is OK. Test drive the car to increase the temperature of the transmission fluid. Read off the temperature again. Check that the temperature has increased.

NOTE: **If the temperature is outside its permitted range, fault-trace the temperature sensor.**

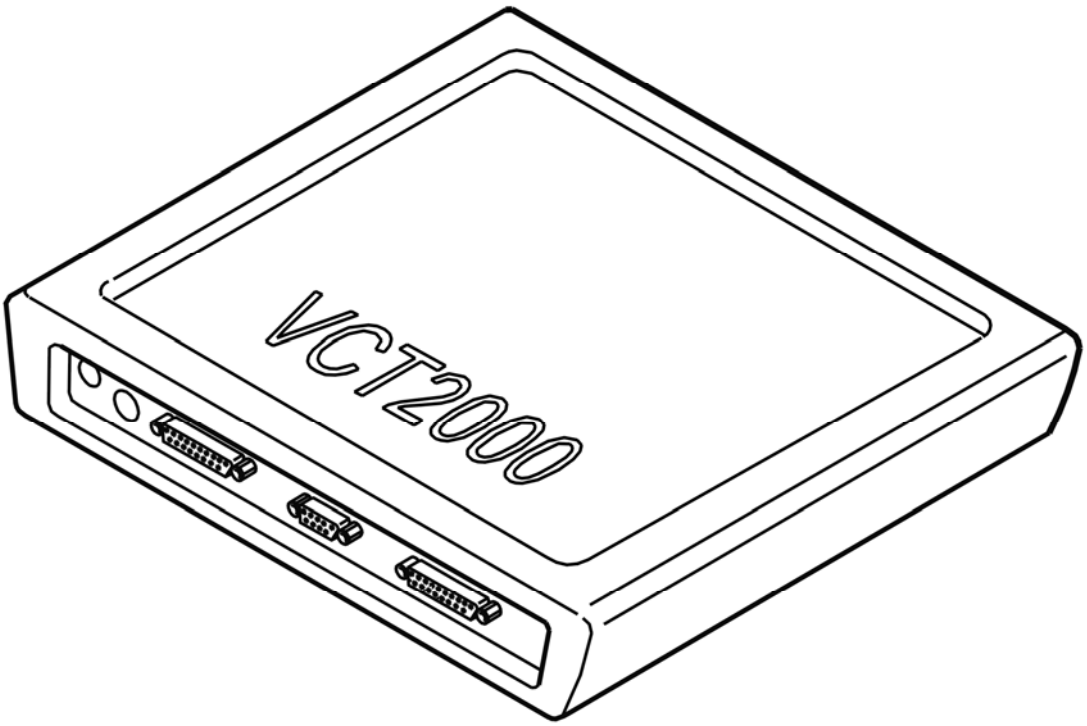

Fig. 46: Identifying VCT2000 Diagnostic Tool Symbol In VIDA
Courtesy of VOLVO CARS CORPORATION

Is the oil temperature within its permitted range?

- **YES**

  Refer to **CHECKING SHIFT SOLENOID S1**

- **NO**

  Refer to **FAULTY SIGNAL**

CHECKING SHIFT SOLENOID S1

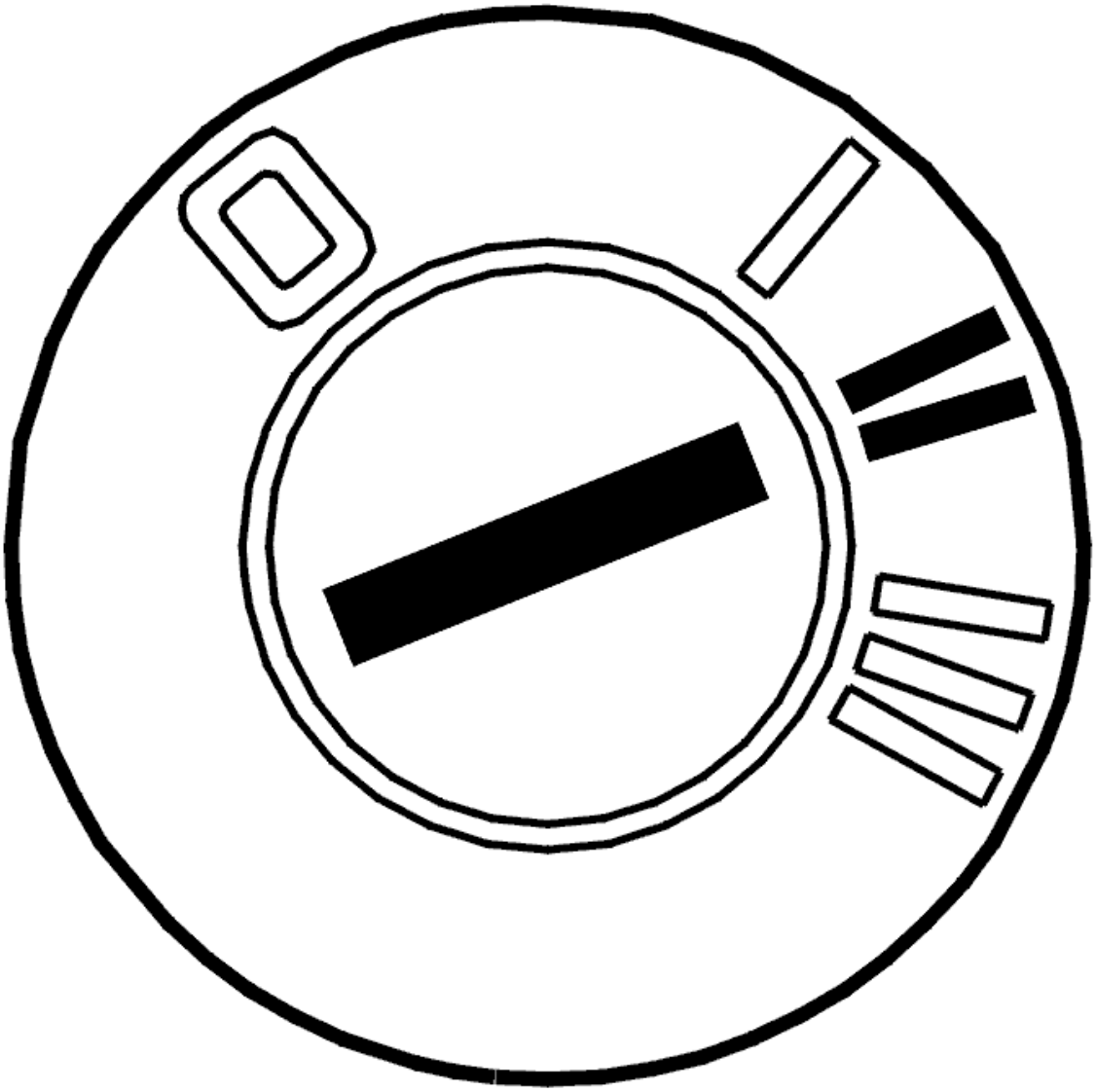

Fig. 47: Identifying Ignition ON
Courtesy of VOLVO CARS CORPORATION

- Ignition on
- Gear selector in position P
- Activate solenoid S1.

  The value must change between OFF and ON.

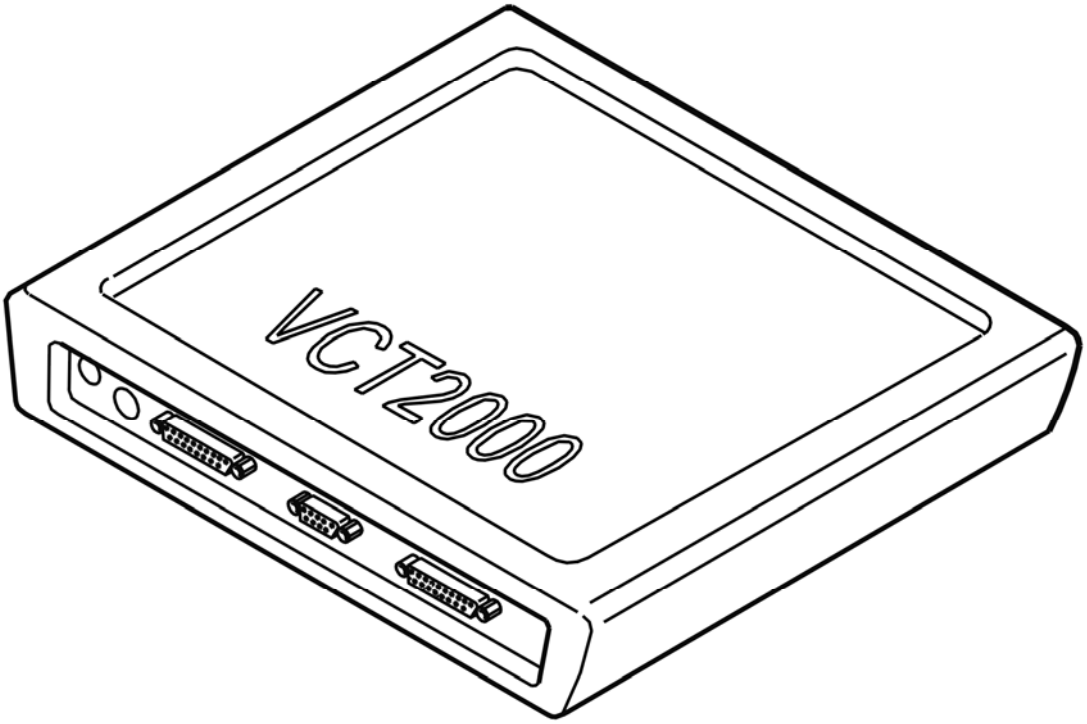

Fig. 48: Identifying VCT2000 Diagnostic Tool Symbol In VIDA
Courtesy of VOLVO CARS CORPORATION

Does the value change?

- **YES**

  Refer to **INTERMITTENT FAULT**

- **NO**

  Refer to **CHECKING THE WIRING**

CHECKING THE WIRING

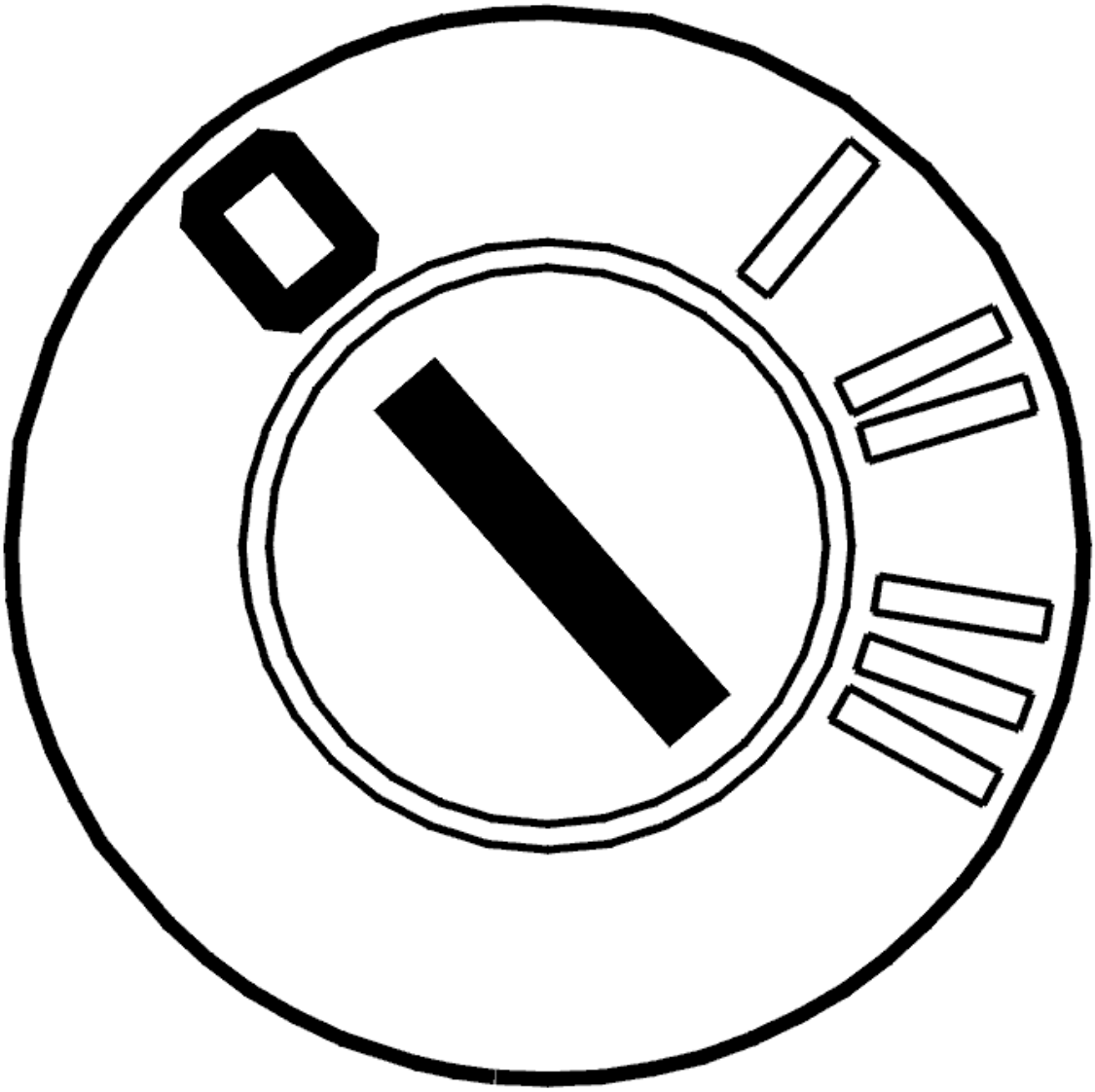

Fig. 49: Identifying Ignition OFF
Courtesy of VOLVO CARS CORPORATION

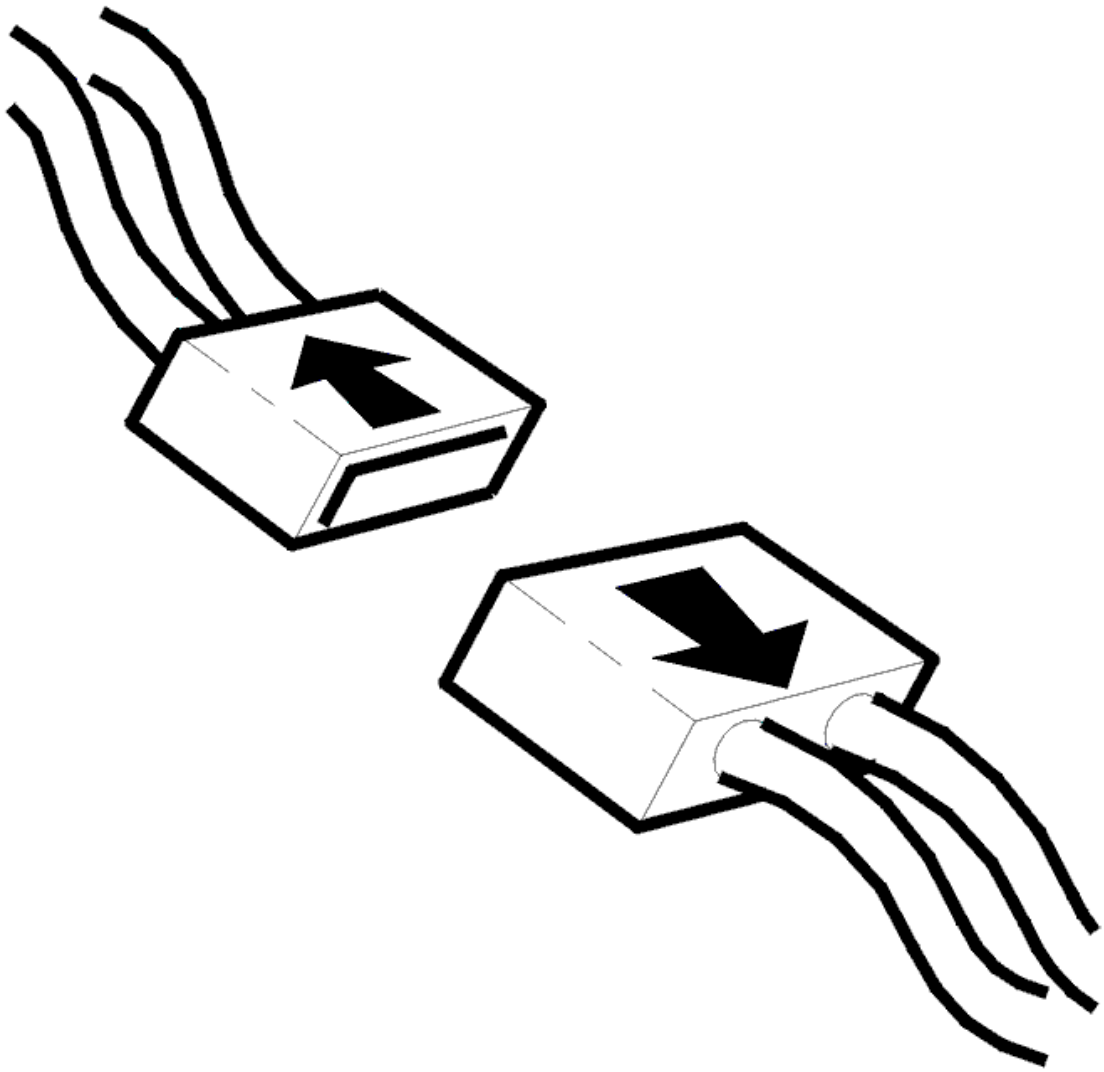

Fig. 50: Identifying Connector(s) Disconnected
Courtesy of VOLVO CARS CORPORATION

- Ignition off
- Disconnect transmission connector C.

  Check the cable between control module terminal #A50 (#A50) and transmission connector terminal #C1 (control module side). Check for a short-circuit to supply voltage according to **SHORT-CIRCUIT TO SUPPLY VOLTAGE. PERMANENT FAULTS** . Also check against the other cables in the circuit.

  Other information:

  - To connect the breakout box, see **CONNECTING THE BREAKOUT BOX**
  - To disconnect the transmission connectors, see **CONNECTORS, TRANSMISSION, DISCONNECTING / CONNECTING**

- For information about signals, see **SIGNAL DESCRIPTION. TRANSMISSION CONTROL MODULE (TCM)** .

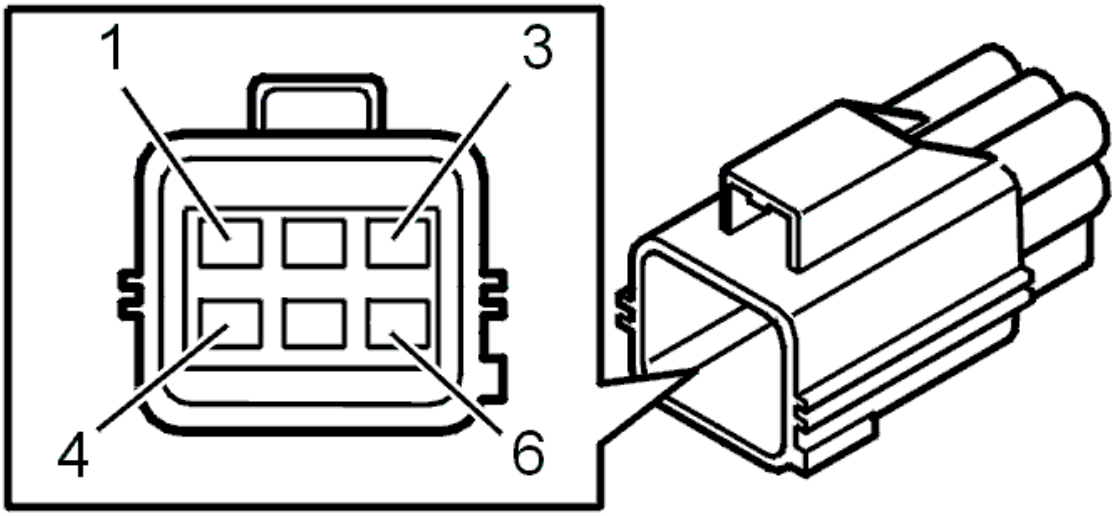

Fig. 51: Identifying Transmission Connector Terminals
Courtesy of VOLVO CARS CORPORATION

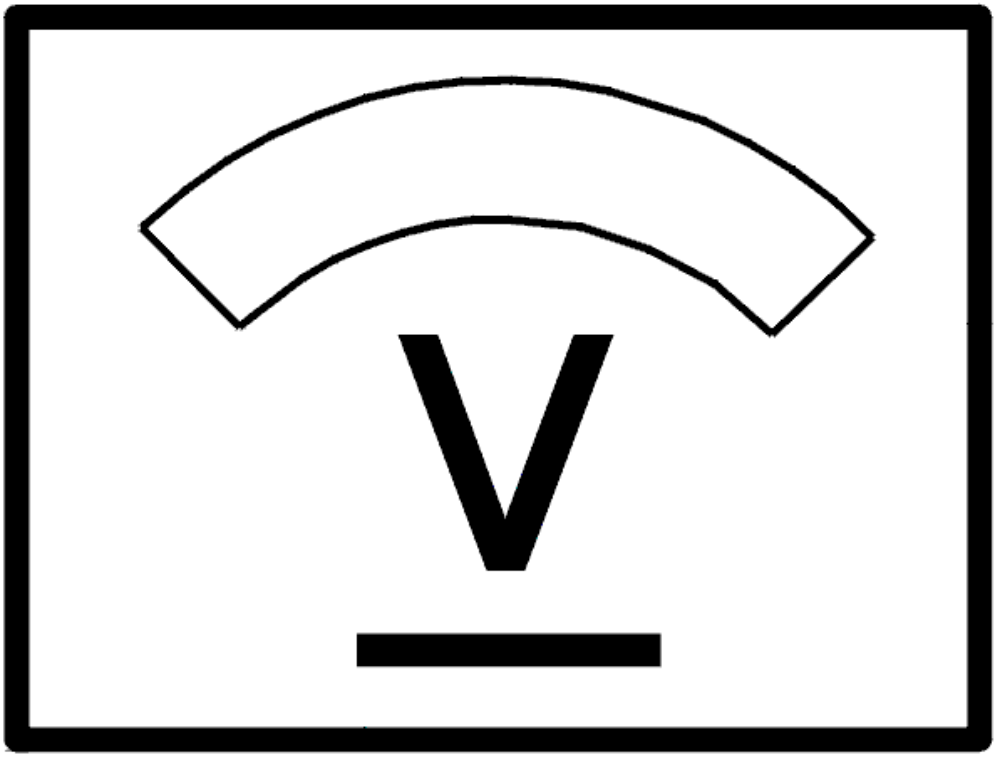

Fig. 52: Identifying Voltage Display
Courtesy of VOLVO CARS CORPORATION

Was a fault detected?

- **YES**

  Refer to **VERIFICATION**

- **NO**

  Refer to **CHECKING THE WIRING AND COMPONENT**

CHECKING THE WIRING AND COMPONENT

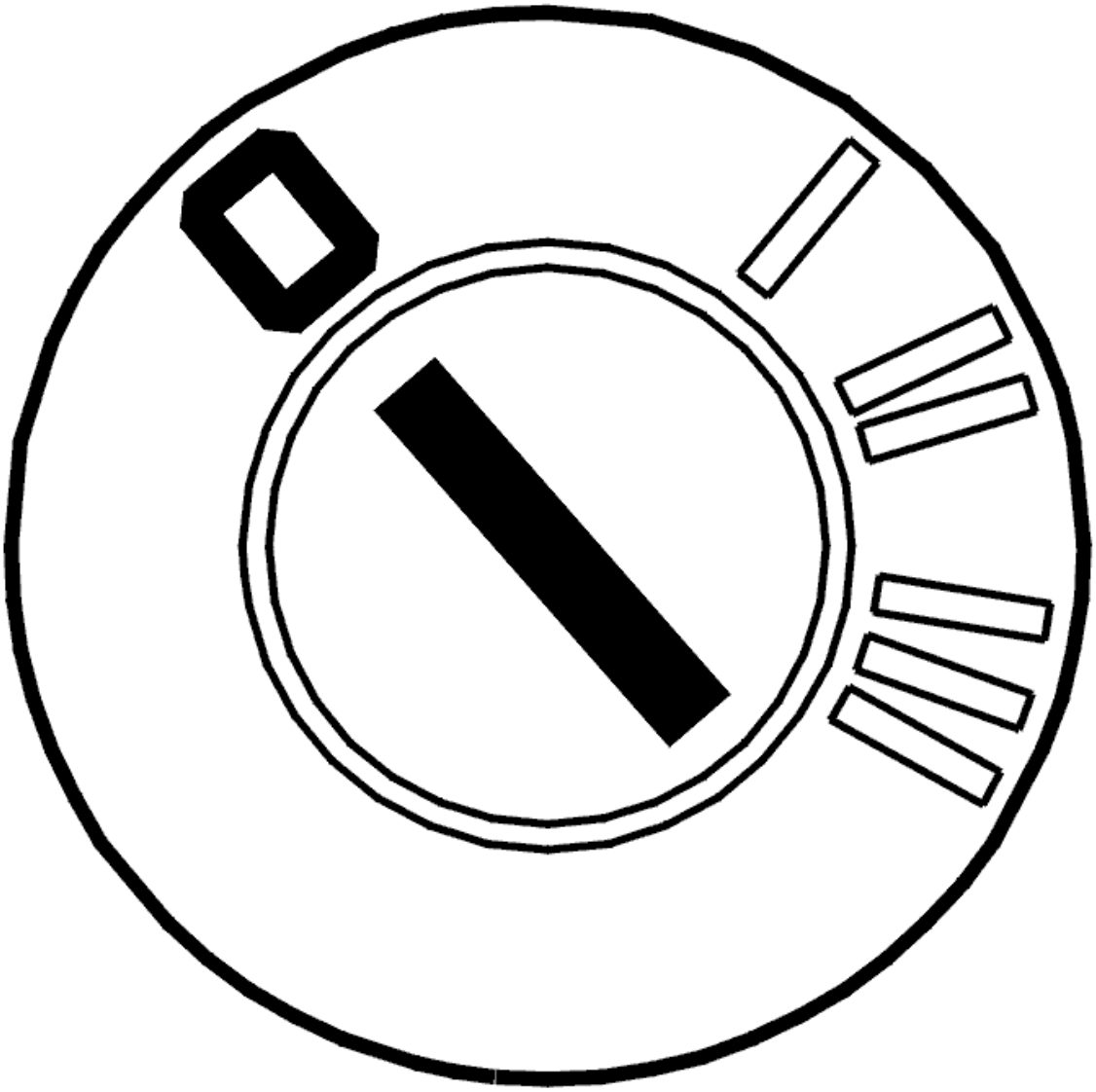

Fig. 53: Identifying Ignition OFF
Courtesy of VOLVO CARS CORPORATION

- Ignition off
- Open the control system.

  Check the cable between transmission connector terminal #C1 (transmission side) and the connector for solenoid S1. Check for a short-circuit to supply voltage according to **SHORT-CIRCUIT TO SUPPLY VOLTAGE. PERMANENT FAULTS** . Also check against the other cables in the circuit.

  Replace solenoid S1 if no faults are found in the cable.

  Remedy as necessary.

  Other information:

- To connect the breakout box, see **CONNECTING THE BREAKOUT BOX**
- To disconnect the transmission connectors, see **CONNECTORS, TRANSMISSION, DISCONNECTING / CONNECTING**
- To replace the cable harness for the control system, see **TEMPERATURE SENSOR FLUID, TRANSAXLE, (TFT)**
- To open the control system and to check or replace solenoid S1, see **SOLENOID CONTROL SYSTEM, REPLACING**
- For information about signals, see **SIGNAL DESCRIPTION. TRANSMISSION CONTROL MODULE (TCM)** .

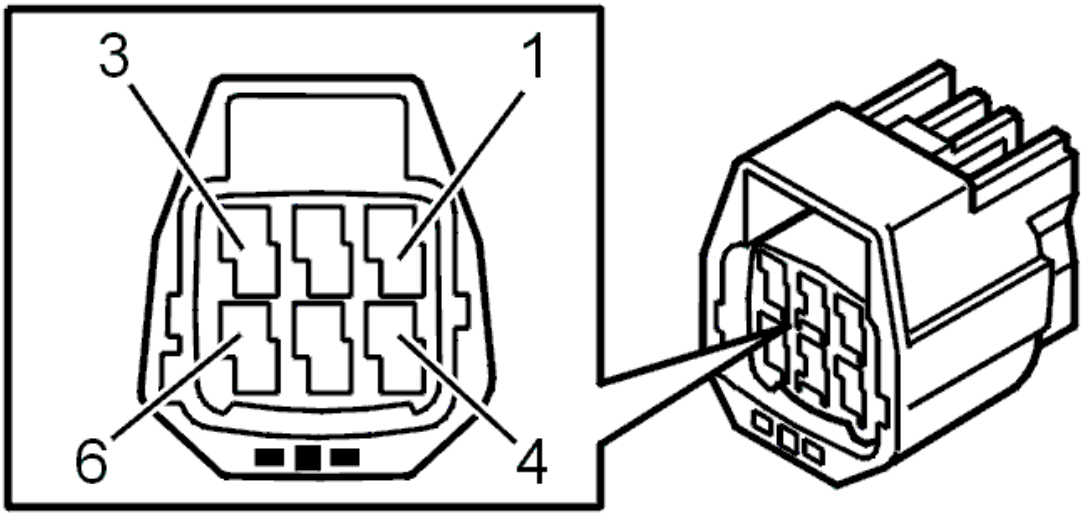

Fig. 54: Identifying 6-Pin Transmission Connector Terminals
Courtesy of VOLVO CARS CORPORATION

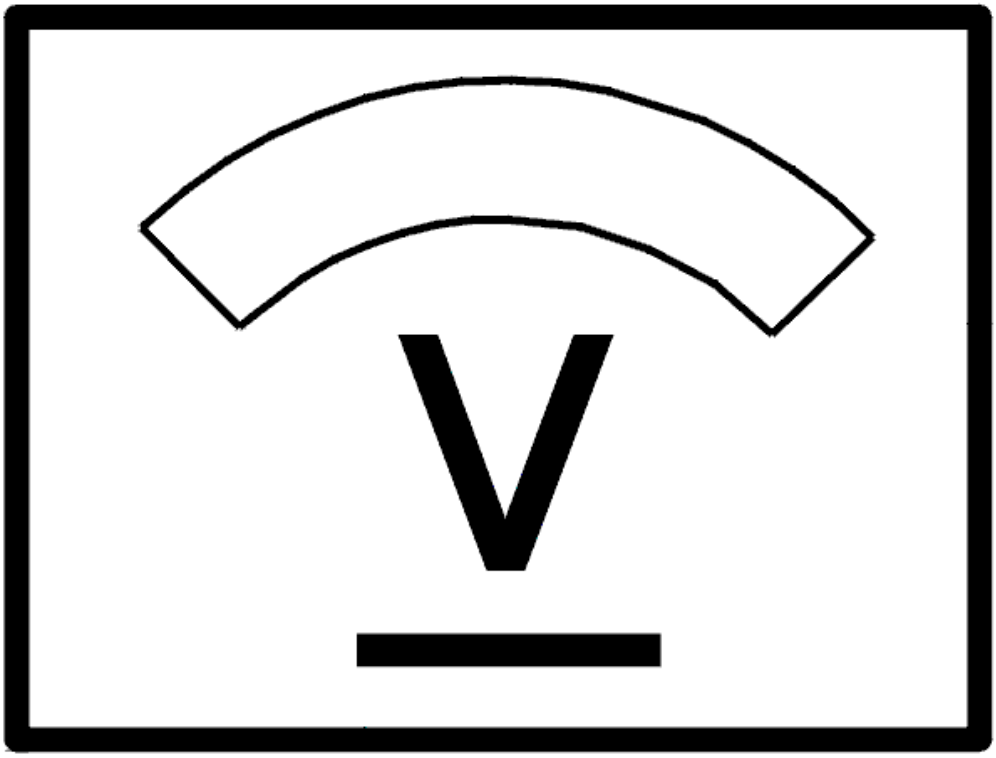

Fig. 55: Identifying Voltage Display
Courtesy of VOLVO CARS CORPORATION

- **Continue**

  Refer to **RESETTING THE ADAPTATION**

INTERMITTENT FAULT

Check the cable between control module terminal #A50 (#A50)and transmission connector terminal #C1. Check for an intermittent short-circuit to supply voltage according to **SHORT-CIRCUIT TO SUPPLY VOLTAGE, INTERMITTENT FAULTS** .

Remedy as necessary.

Other information:

- To connect the breakout box, see **CONNECTING THE BREAKOUT BOX**
- To disconnect the transmission connectors, see **CONNECTORS, TRANSMISSION, DISCONNECTING / CONNECTING**
- For information about signals, see **SIGNAL DESCRIPTION. TRANSMISSION CONTROL MODULE (TCM)** .

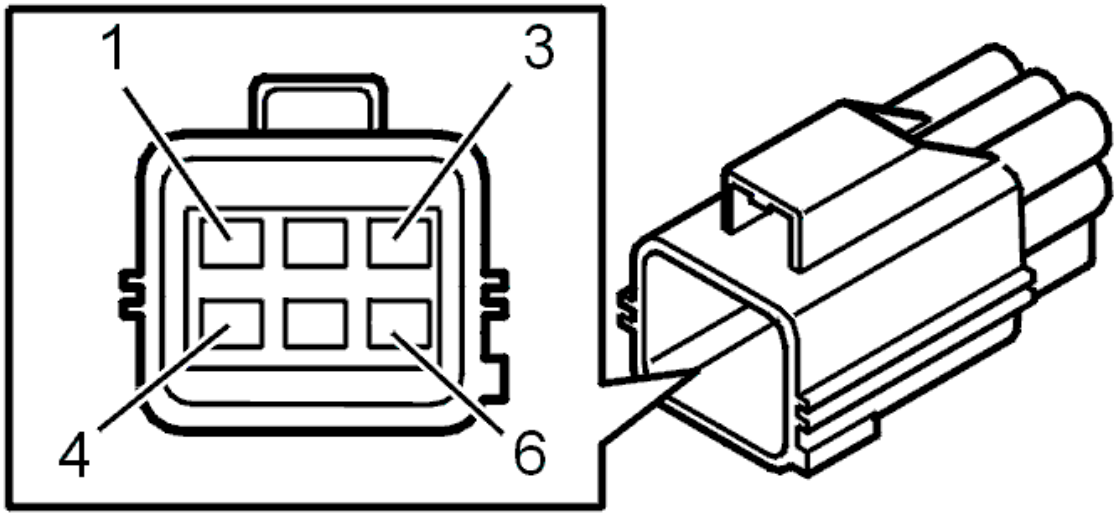

Fig. 56: Identifying Transmission Connector Terminals
Courtesy of VOLVO CARS CORPORATION

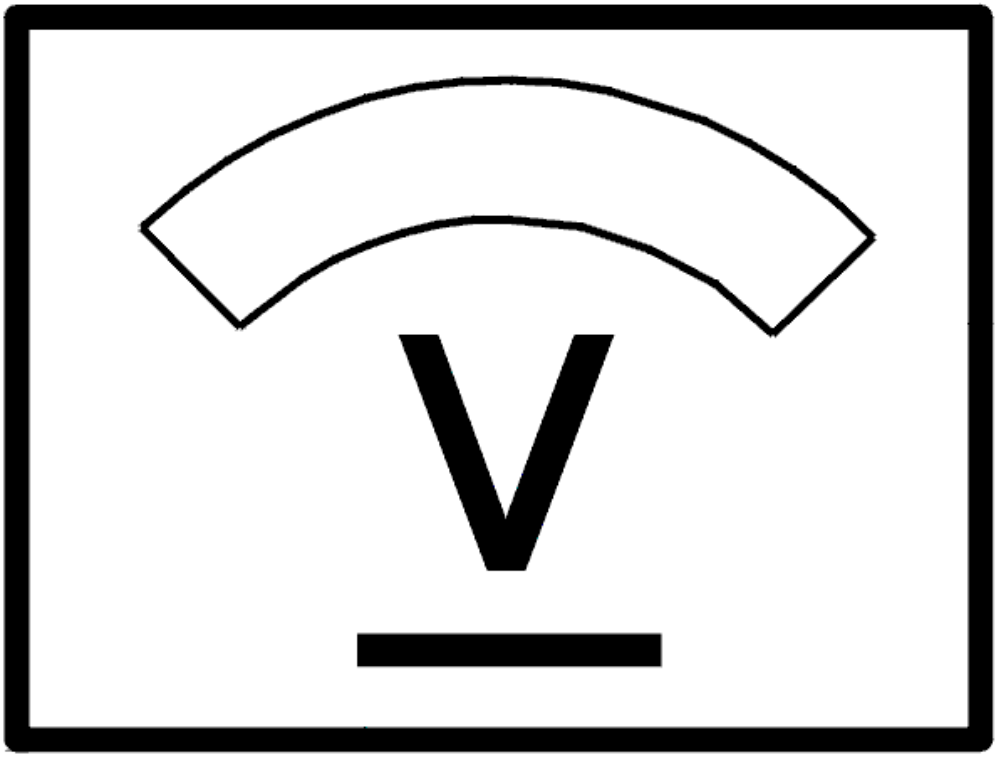

Fig. 57: Identifying Voltage Display
Courtesy of VOLVO CARS CORPORATION

- **Continue**

  Refer to **INFORMATION**

RESETTING THE ADAPTATION

RESETTING ADAPTATION AND THE COUNTER FOR "TRANSMISSION OIL CHANGE"

HINT: The transmission has torque controlled adaptive pressure control. Pressure control means that the transmission regulates the pressure itself during each gear shift. This avoids harsh gear shifting. Each gear shift is evaluated by the control module and stored in the memory. This allows for compensation for wear and tear in the transmission and clutch. It is important that the adaptation in the memory is reset after the transmission has been repaired. This is to ensure normal operation. The oil is replaced during

repair; the "Transmission oil change" counter must be reset. If the counter is not reset when the fluid is drained and replaced, there is a risk that a diagnostic trouble code (DTC) will be stored in incorrect circumstances.

NOTE: This applies only if the transmission or one of the components in the transmission have been replaced.

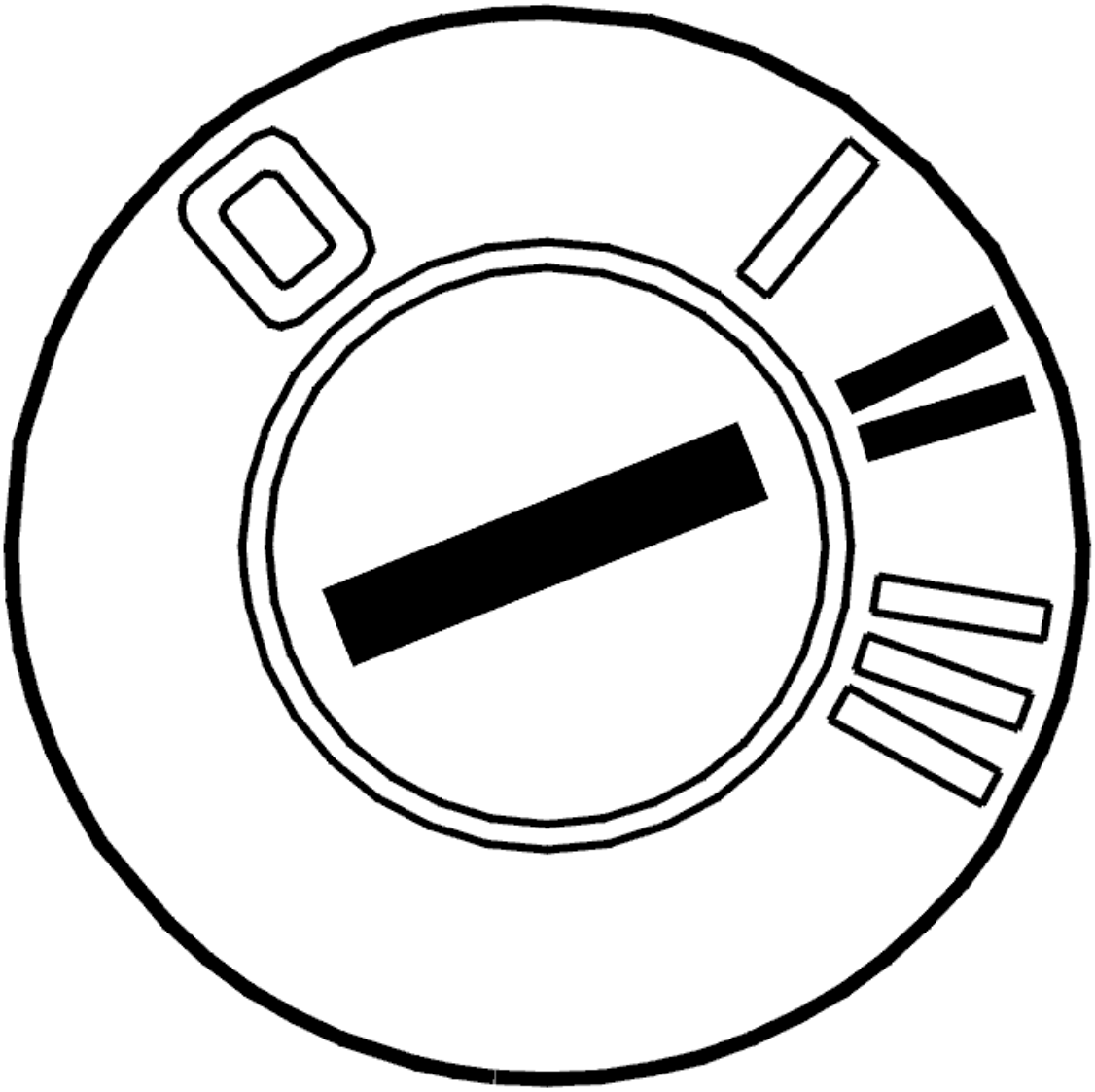

Fig. 58: Identifying Ignition ON
Courtesy of VOLVO CARS CORPORATION

- Ignition on.

  Click on the VCT2000 symbol to reset the adaptation and counter.

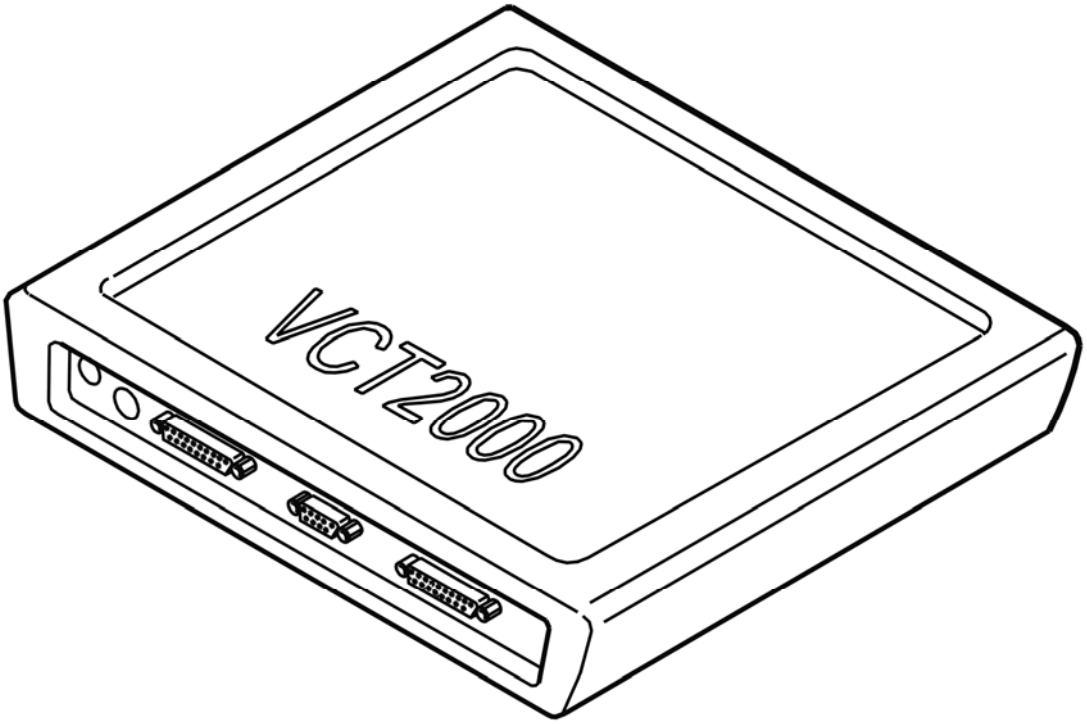

Fig. 59: Identifying VCT2000 Diagnostic Tool Symbol In VIDA
Courtesy of VOLVO CARS CORPORATION

- **Continue**

  Refer to **VERIFICATION**

VERIFICATION

VERIFICATION

HINT: After the repair it is necessary to check that the fault has been rectified.

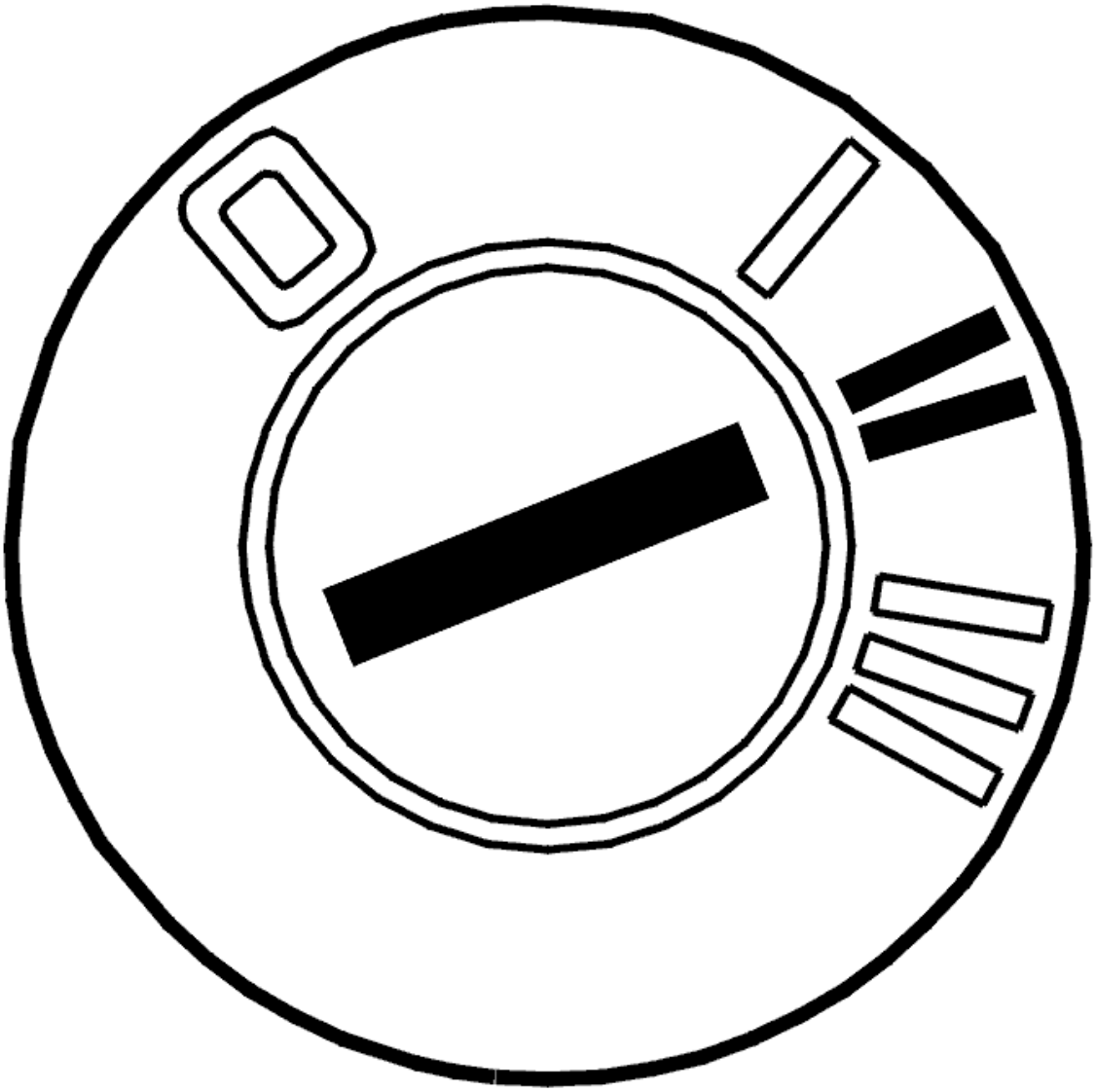

Fig. 60: Identifying Ignition ON
Courtesy of VOLVO CARS CORPORATION

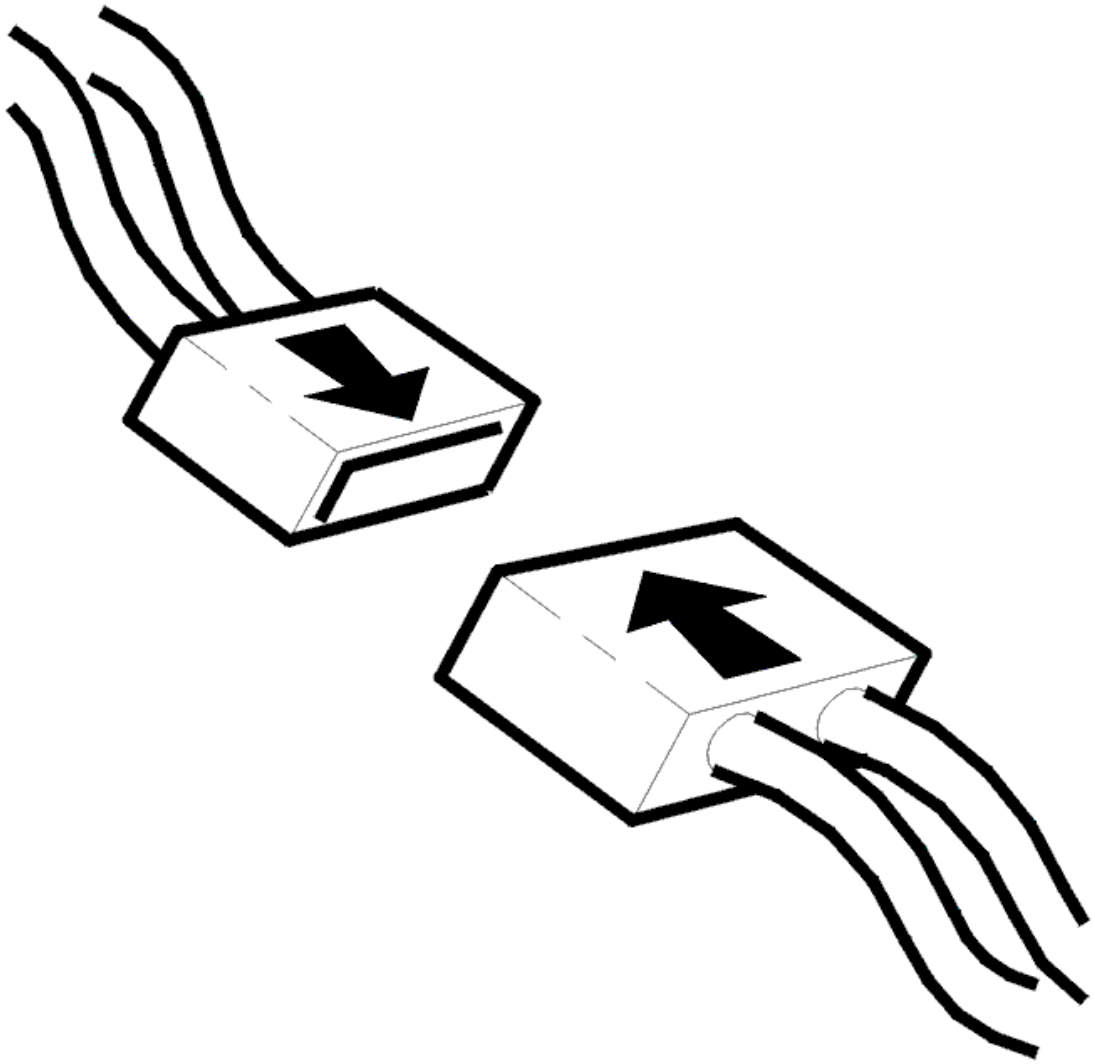

Fig. 61: Identifying Connector(s) Reinstallation
Courtesy of VOLVO CARS CORPORATION

- Ignition off.
- Wait for at least 90 seconds.
- Connect the connectors, install the components etc.
- Ignition on.
- Gear selector in position P.
- Activate solenoid S1.

  The value should change between OFF and ON.

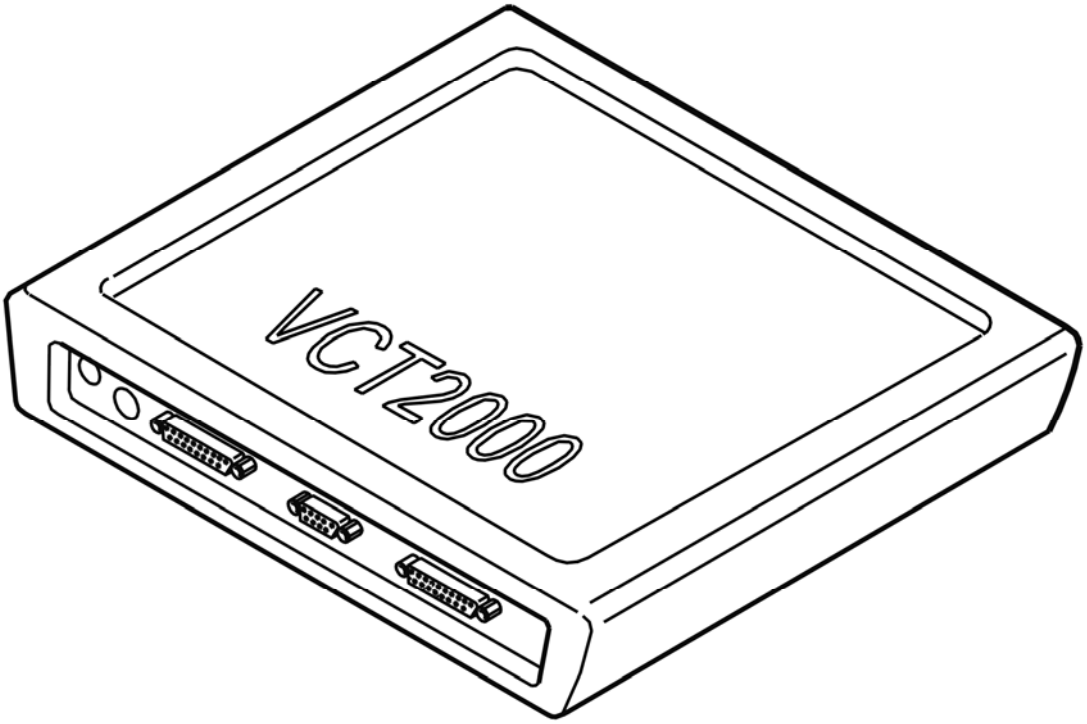

Fig. 62: Identifying VCT2000 Diagnostic Tool Symbol In VIDA
Courtesy of VOLVO CARS CORPORATION

Does the value change?

- **YES**

  VERIFIED: Troubleshooting has been completed.

- **NO**

  Refer to **INFORMATION**

INFORMATION

FAULT-TRACING INFORMATION

The fault should have been detected and remedied. As this is not the case fault-tracing has failed.

Exit fault-tracing for this diagnostic trouble code (DTC) or make another attempt.

INFORMATION

FAULT-TRACING INFORMATION

If the fault is intermittent, do not verify fault-tracing if the fault does not recur.

It is possible to view the information again, or leave fault-tracing for this diagnostic trouble code (DTC).

FAULTY SIGNAL

CHECKING TRANSMISSION FLUID TEMPERATURE SENSOR

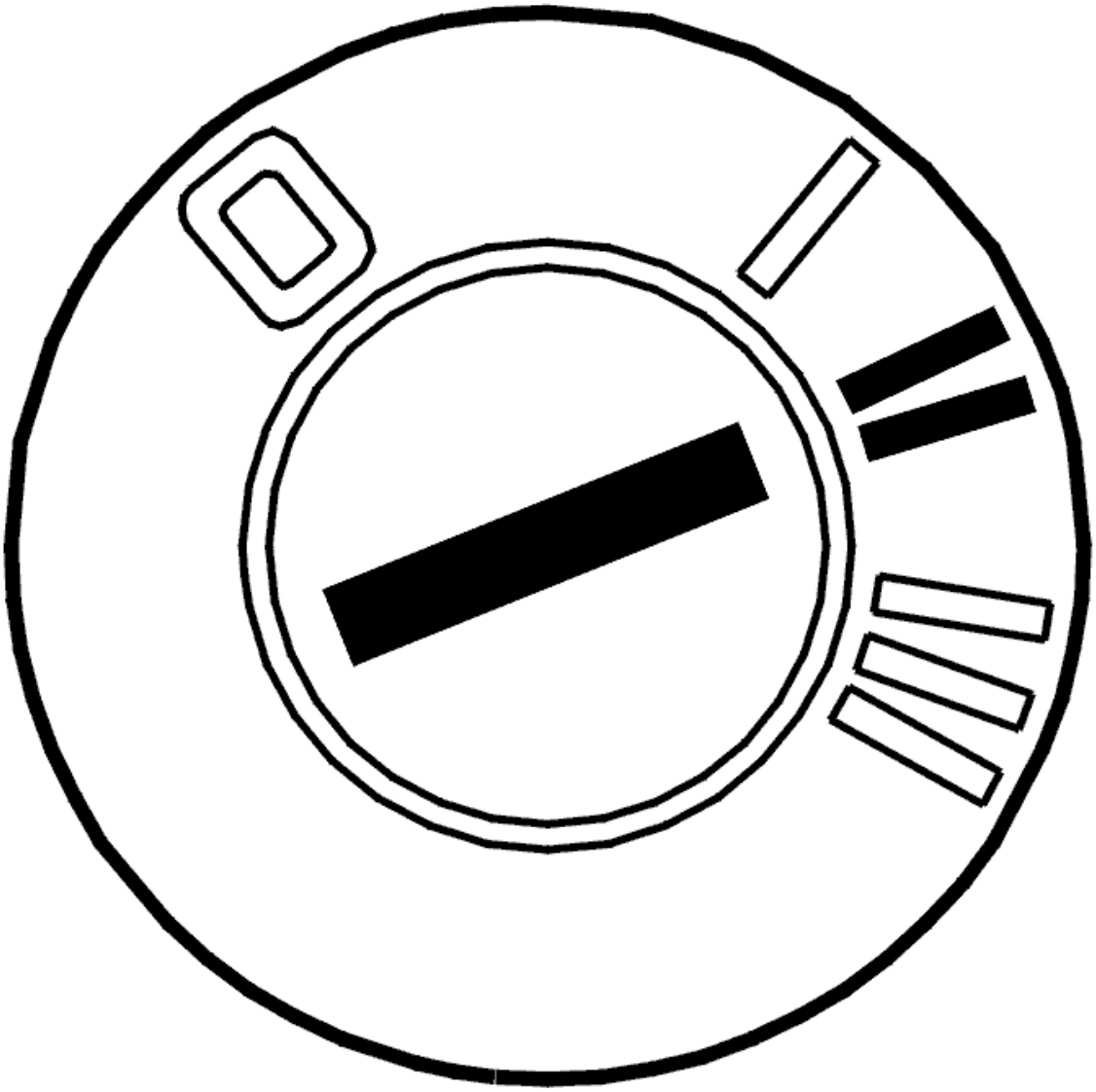

Fig. 63: Identifying Ignition ON
Courtesy of VOLVO CARS CORPORATION

- Ignition on
- Read off the oil temperature.

  Check that the temperature is within its permitted range.

Compare with the transmission temperature.

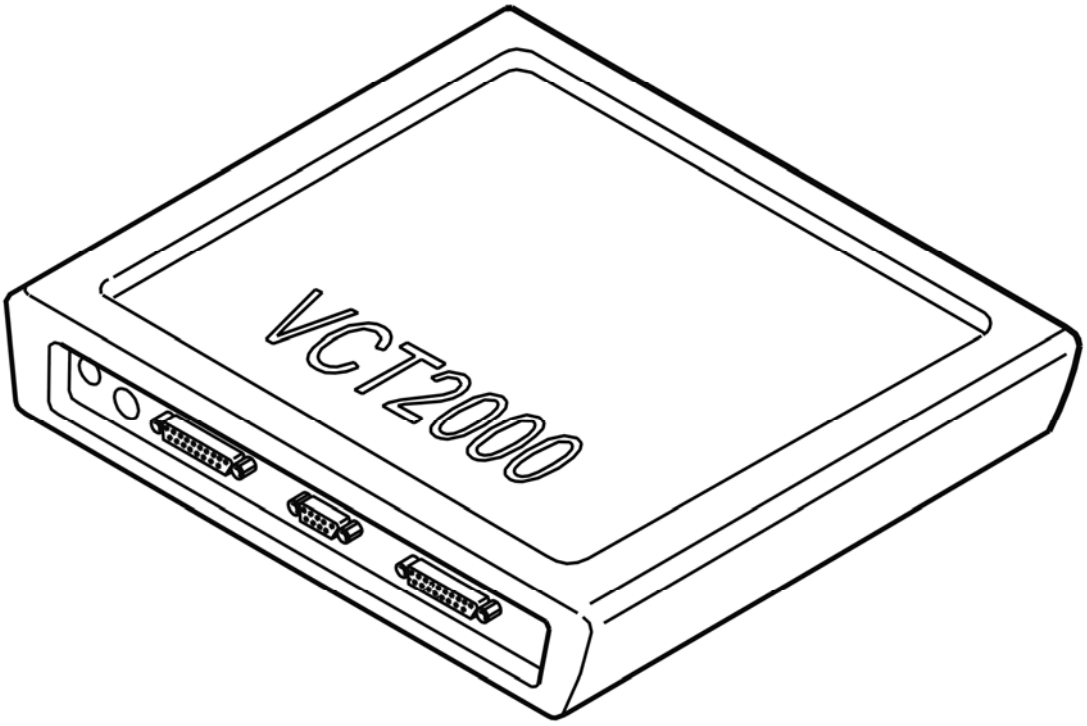

Fig. 64: Identifying VCT2000 Diagnostic Tool Symbol In VIDA
Courtesy of VOLVO CARS CORPORATION

Was the transmission temperature within its permitted range?

- **YES**

  Refer to **INTERMITTENT FAULT**

- **NO**

  Refer to **CHECKING TRANSMISSION FLUID TEMPERATURE SENSOR**

CHECKING TRANSMISSION FLUID TEMPERATURE SENSOR

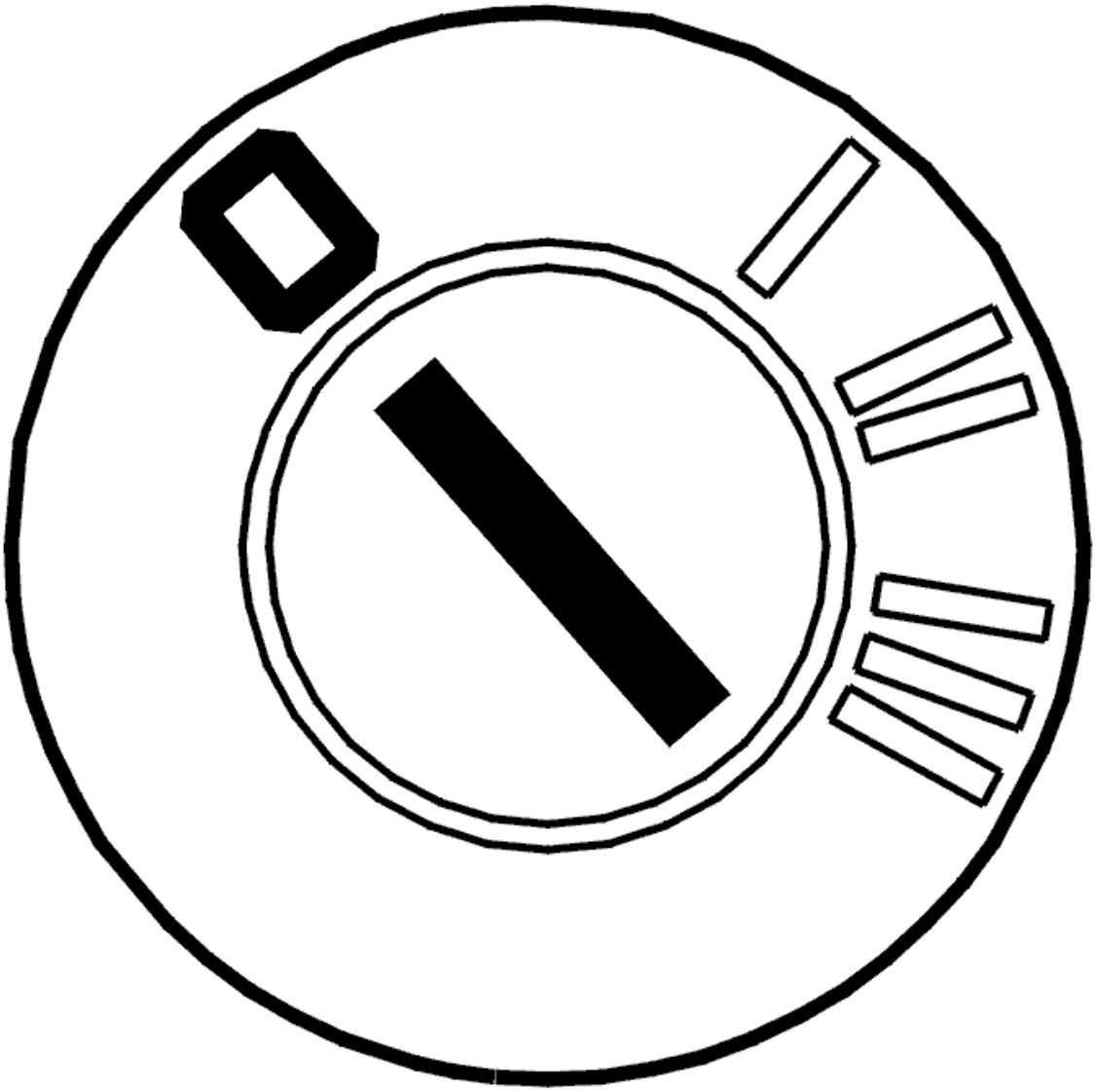

Fig. 65: Identifying Ignition OFF
Courtesy of VOLVO CARS CORPORATION

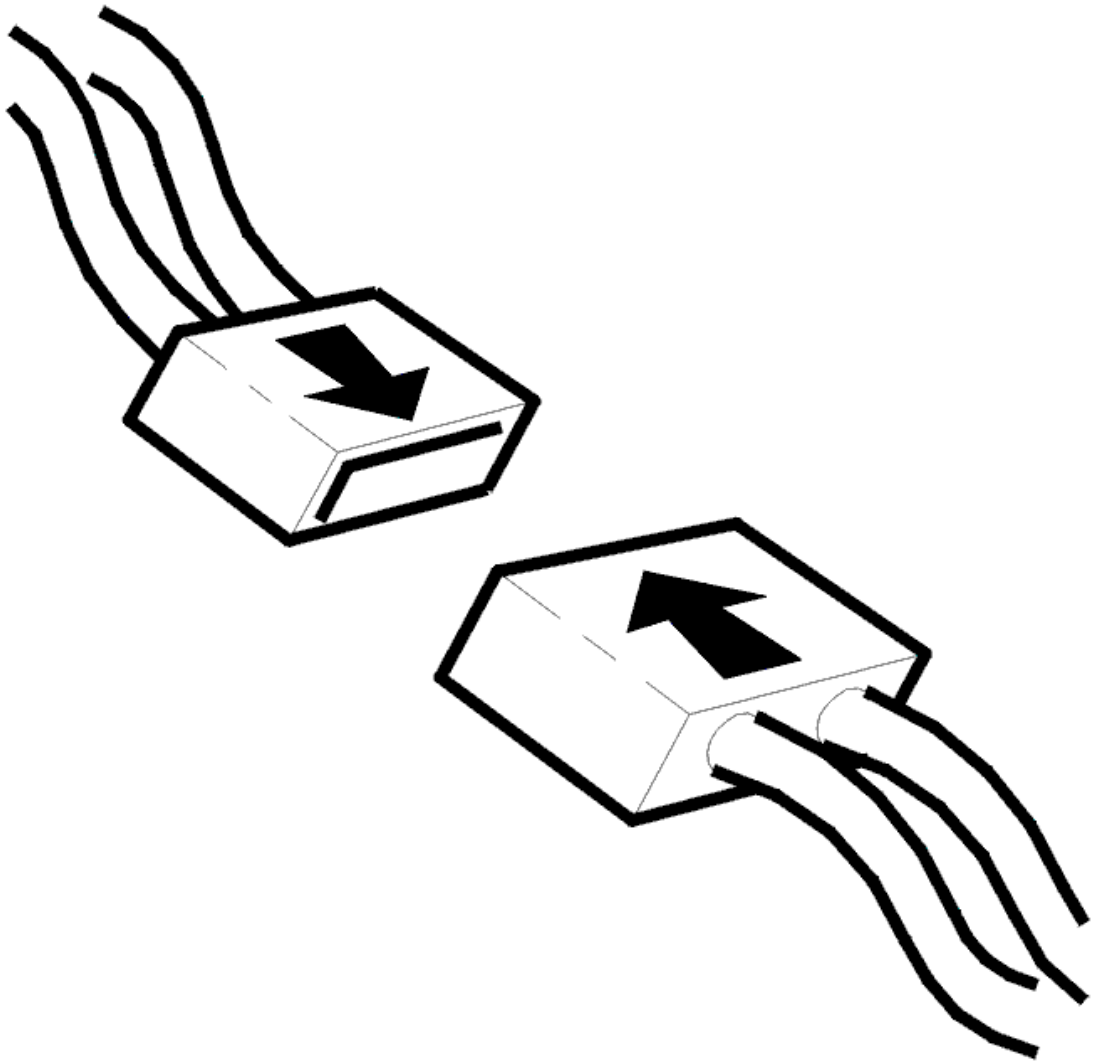

Fig. 66: Identifying Connector(s) Reinstallation
Courtesy of VOLVO CARS CORPORATION

- Ignition off
- Transmission connector D disconnected.

  Check the temperature sensor. Measure the resistance between transmission connector D terminals #D7 and #D8.

  The resistance must be 4.5-6 kohms at 20°C.

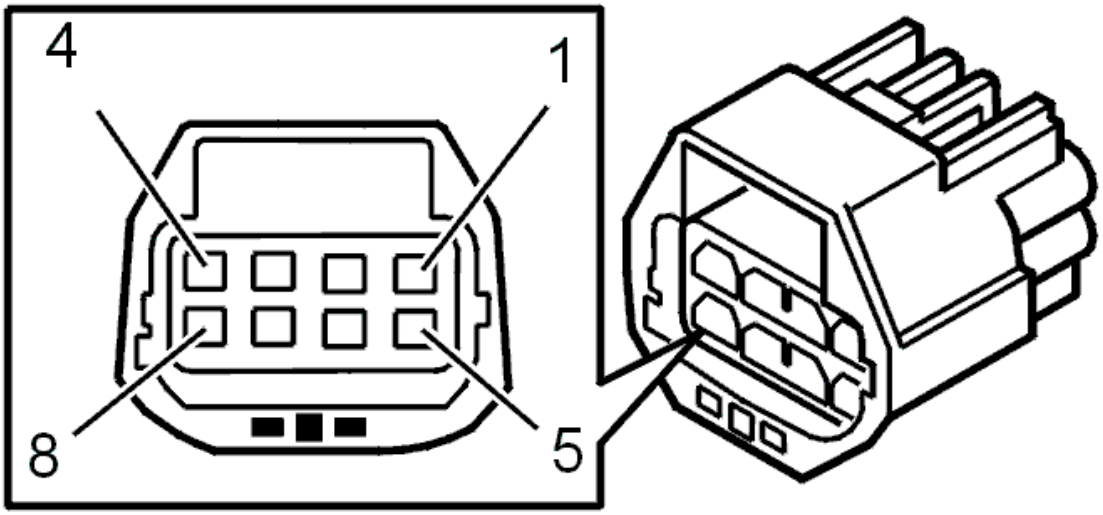

Fig. 67: Identifying 8-Pin Transmission Connector Terminals
Courtesy of VOLVO CARS CORPORATION

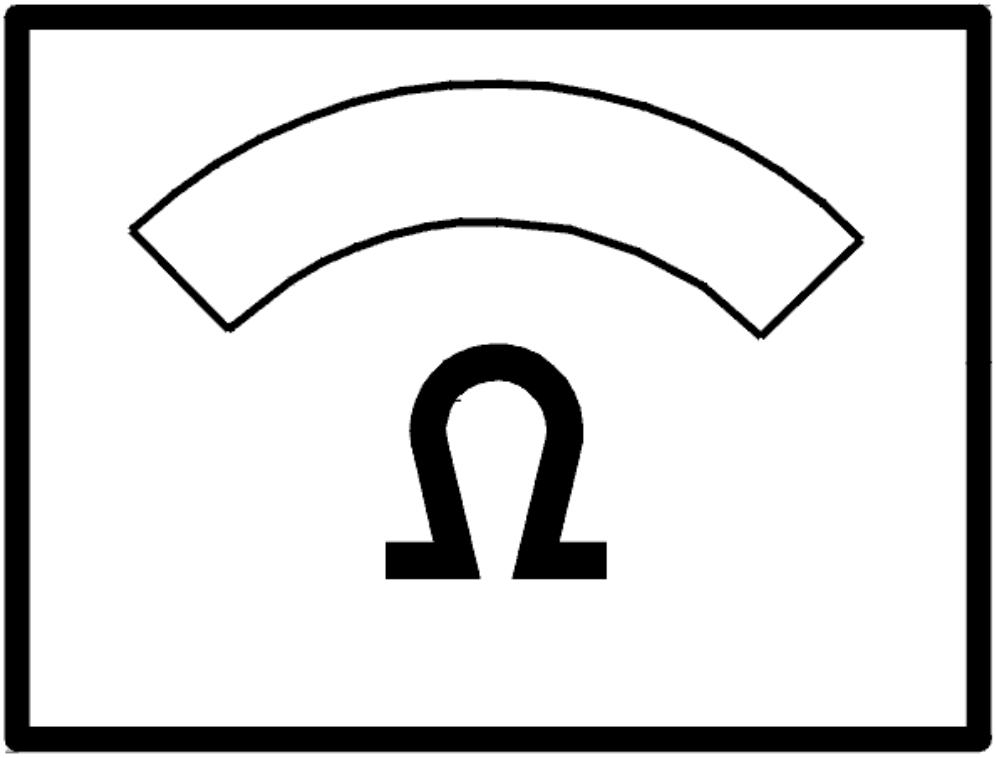

Fig. 68: Identifying Ohms Display
Courtesy of VOLVO CARS CORPORATION

Was the resistance OK?

- **YES**

  Refer to **CHECKING TRANSMISSION FLUID TEMPERATURE SENSOR**

- **NO**

  Refer to **CHECKING THE CABLE AND COMPONENT**

CHECKING TRANSMISSION FLUID TEMPERATURE SENSOR

Check the cable between control module terminal #A37 (#A37) and transmission connector terminal #D7

(control module side). Check for an open-circuit according to **OPEN-CIRCUIT, PERMANENT FAULTS** .

Check the cable between control module terminal #A55 (#A55)and transmission connector terminal #D8 (control module side). Check for an open-circuit according to **OPEN-CIRCUIT, PERMANENT FAULTS** .

Remedy as necessary.

Other information:

- To connect the breakout box, see **CONNECTING THE BREAKOUT BOX**
- To disconnect the transmission connectors, see **CONNECTORS, TRANSMISSION, DISCONNECTING / CONNECTING**
- For information about signals, see **SIGNAL DESCRIPTION. TRANSMISSION CONTROL MODULE (TCM)** .

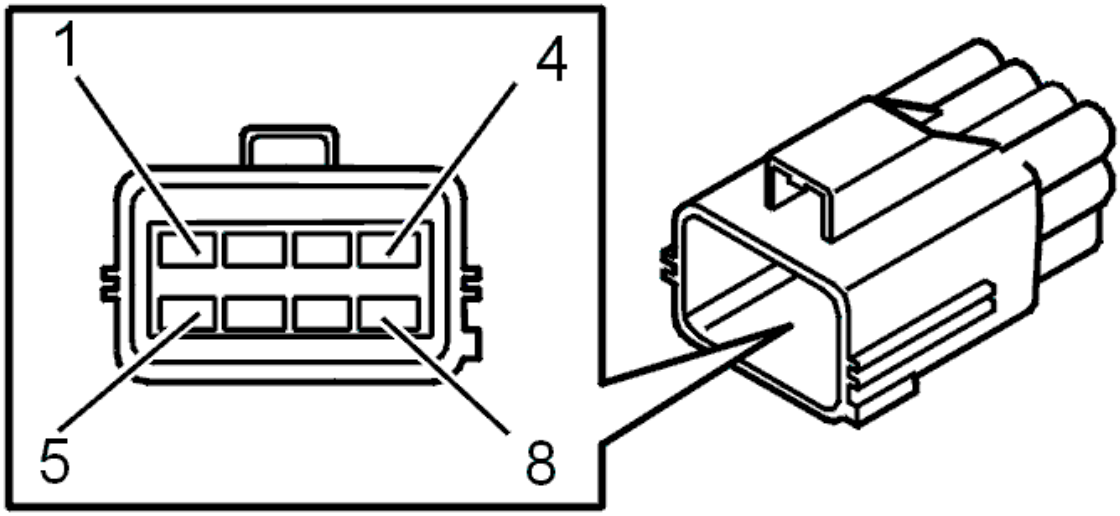

Fig. 69: Identifying Transmission Connector Terminals
Courtesy of VOLVO CARS CORPORATION

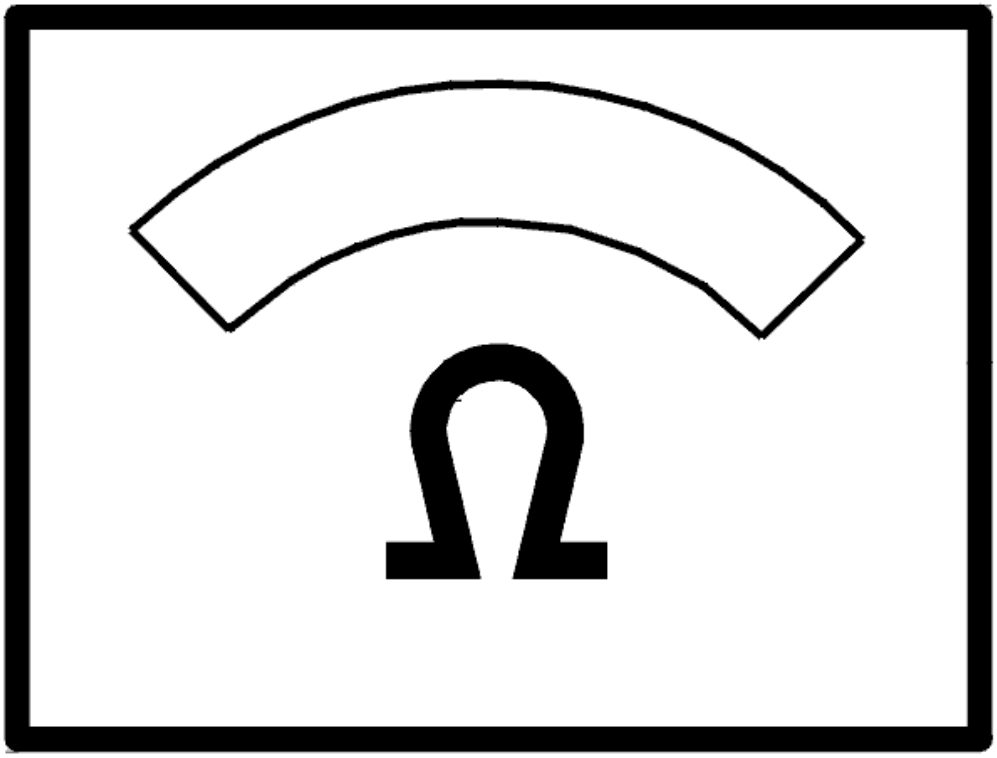

Fig. 70: Identifying Ohms Display
Courtesy of VOLVO CARS CORPORATION

Was a fault detected?

- **YES**

  Refer to **VERIFICATION**

- **NO**

  Refer to **CHECKING THE CABLE AND COMPONENT**

CHECKING THE CABLE AND COMPONENT

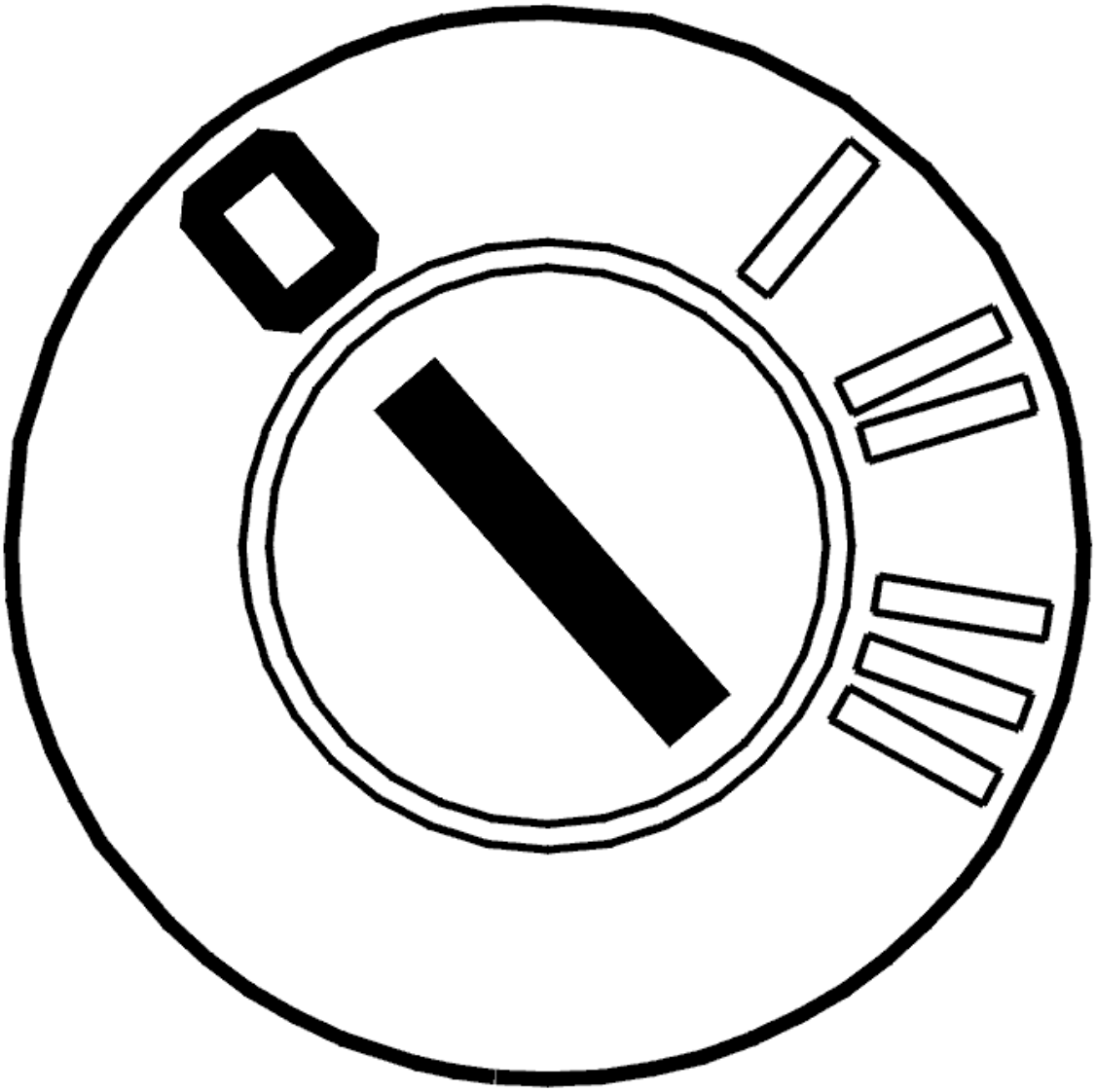

Fig. 71: Identifying Ignition OFF
Courtesy of VOLVO CARS CORPORATION

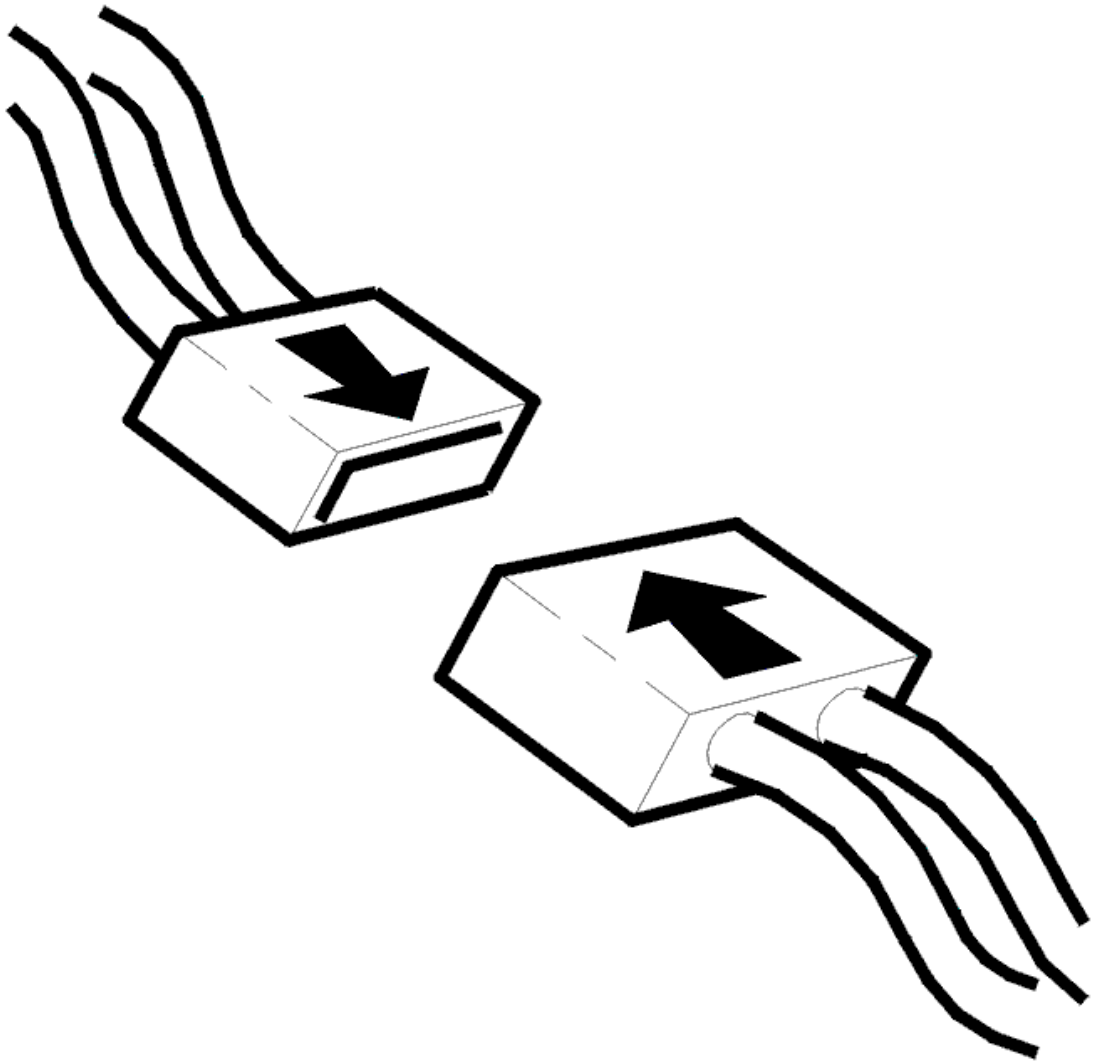

Fig. 72: Identifying Connector(s) Reinstallation
Courtesy of VOLVO CARS CORPORATION

- Ignition off
- Open the transmission control system.

  Check the cable between transmission connector terminal #D7 and temperature sensor terminal #1. Check the cable between transmission connector #D8 and temperature sensor terminal #2. Check for an open-circuit according to **OPEN-CIRCUIT, PERMANENT FAULTS** .

  Also check the cables for a short-circuit to each other.

  HINT: Check the temperature sensor. With the ignition off and transmission connector D disconnected, measure the resistance between transmission connector D terminals #D7 and #D8. The resistance must be 4.5-6 kohms at 20 °C.

Remedy as necessary.

Other information:

- To connect the breakout box, see **CONNECTING THE BREAKOUT BOX**
- To disconnect the transmission connectors, see **CONNECTORS, TRANSMISSION, DISCONNECTING / CONNECTING**
- To open the transmission control system and to check or replace the temperature sensor, see **SOLENOID CONTROL SYSTEM, REPLACING**
- For information about signals, see **SIGNAL DESCRIPTION. TRANSMISSION CONTROL MODULE (TCM)** .

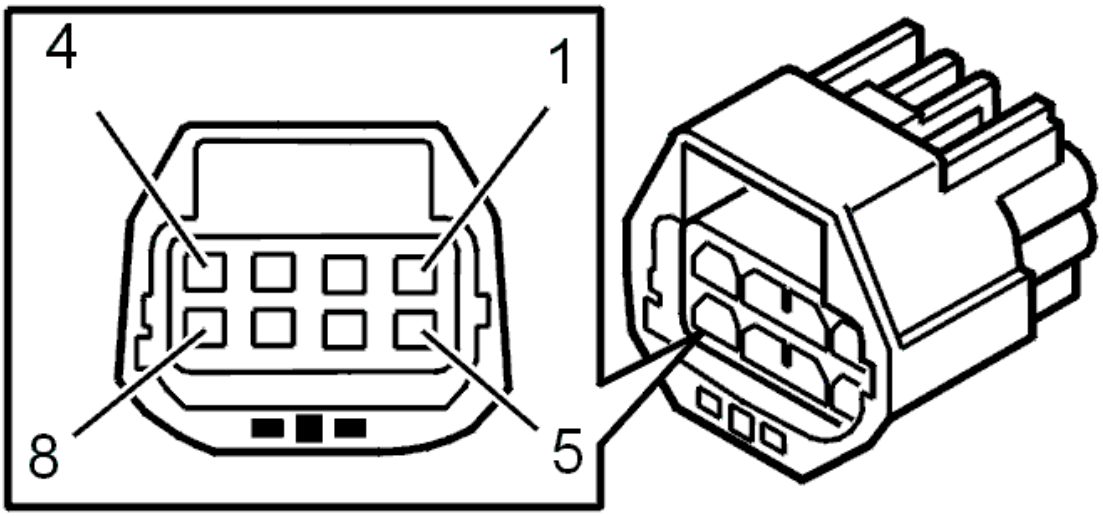

Fig. 73: Identifying 8-Pin Transmission Connector Terminals
Courtesy of VOLVO CARS CORPORATION

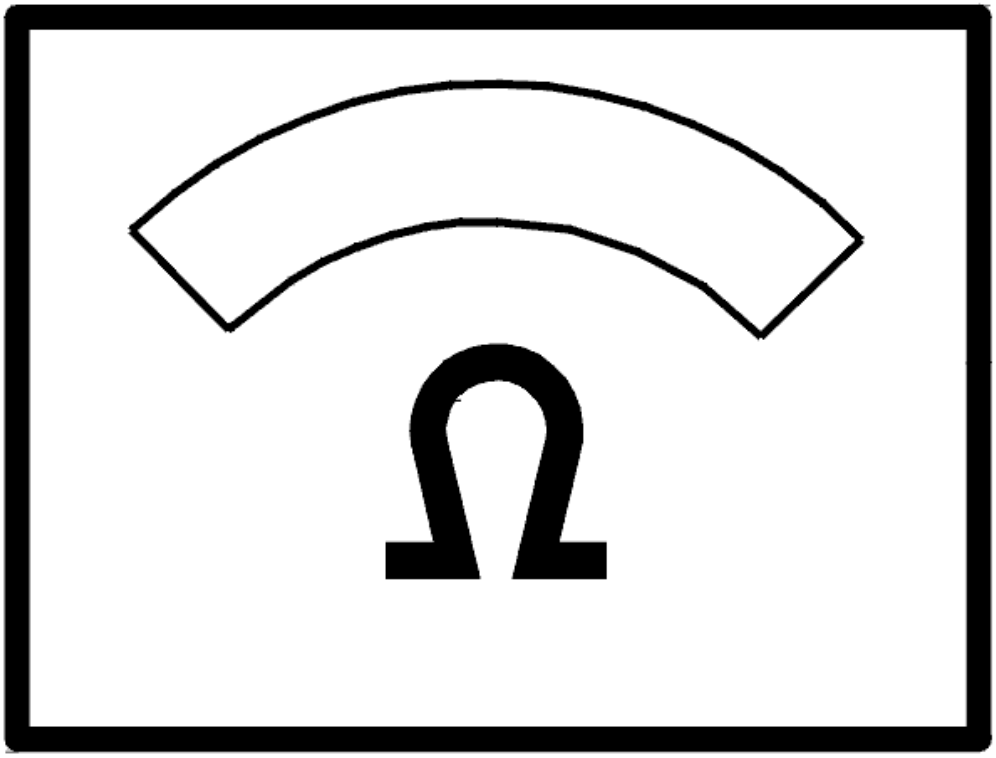

Fig. 74: Identifying Ohms Display
Courtesy of VOLVO CARS CORPORATION

- **Continue**

  Refer to **RESETTING TRANSMISSION FLUID CHANGE COUNTER**

INTERMITTENT FAULT

Check the transmission control module (TCM) and transmission connector D. Check for contact resistance and oxidation according to **CONTACT RESISTANCE AND OXIDATION** .

Check the cable between transmission control module (TCM) terminal #A37 (#A37) and transmission connector terminal #D7 (control module side). Check for an intermittent open-circuit according to **OPEN-CIRCUIT, INTERMITTENT FAULTS** .

Check the cable between control module terminal #A55 (#A55)and transmission connector terminal #D8 (control module side). Check for an intermittent open-circuit according to **OPEN-CIRCUIT, INTERMITTENT FAULTS** .

Remedy as necessary.

Other information:

- To connect the breakout box, see **CONNECTING THE BREAKOUT BOX**
- To disconnect the transmission connectors, see **CONNECTORS, TRANSMISSION, DISCONNECTING / CONNECTING**
- For information about signals, see **SIGNAL DESCRIPTION. TRANSMISSION CONTROL MODULE (TCM)** .

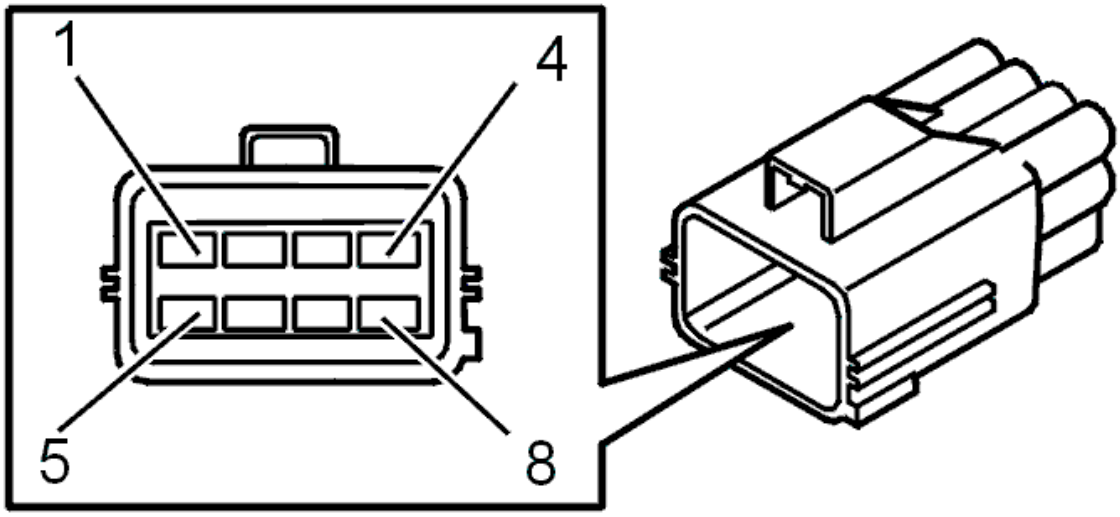

Fig. 75: Identifying Transmission Connector Terminals
Courtesy of VOLVO CARS CORPORATION

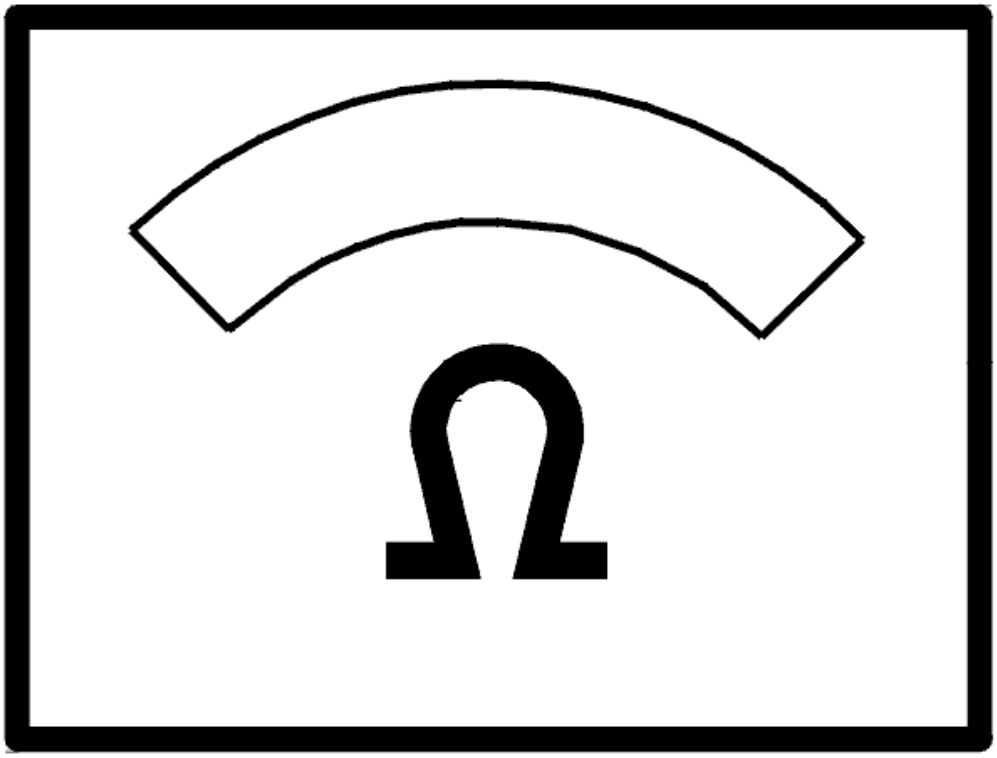

Fig. 76: Identifying Ohms Display
Courtesy of VOLVO CARS CORPORATION

- **Continue**

  Refer to **INFORMATION**

RESETTING TRANSMISSION FLUID CHANGE COUNTER

RESETTING TRANSMISSION FLUID CHANGE COUNTER

HINT: The transmission control module (TCM) has a counter for the oil quality. The counter counts up if the transmission is exposed to too high a load or an ambient temperature that is too high. If the counter is not reset when the oil is drained or changed, there is a risk that a diagnostic trouble code (DTC) will be stored in faulty circumstances. Therefore it is important that the "Transmission oil change" counter is reset.

NOTE: **This applies only when the transmission fluid is changed and when the fluid is changed when repairs are carried out to the transmission temperature sensor.**

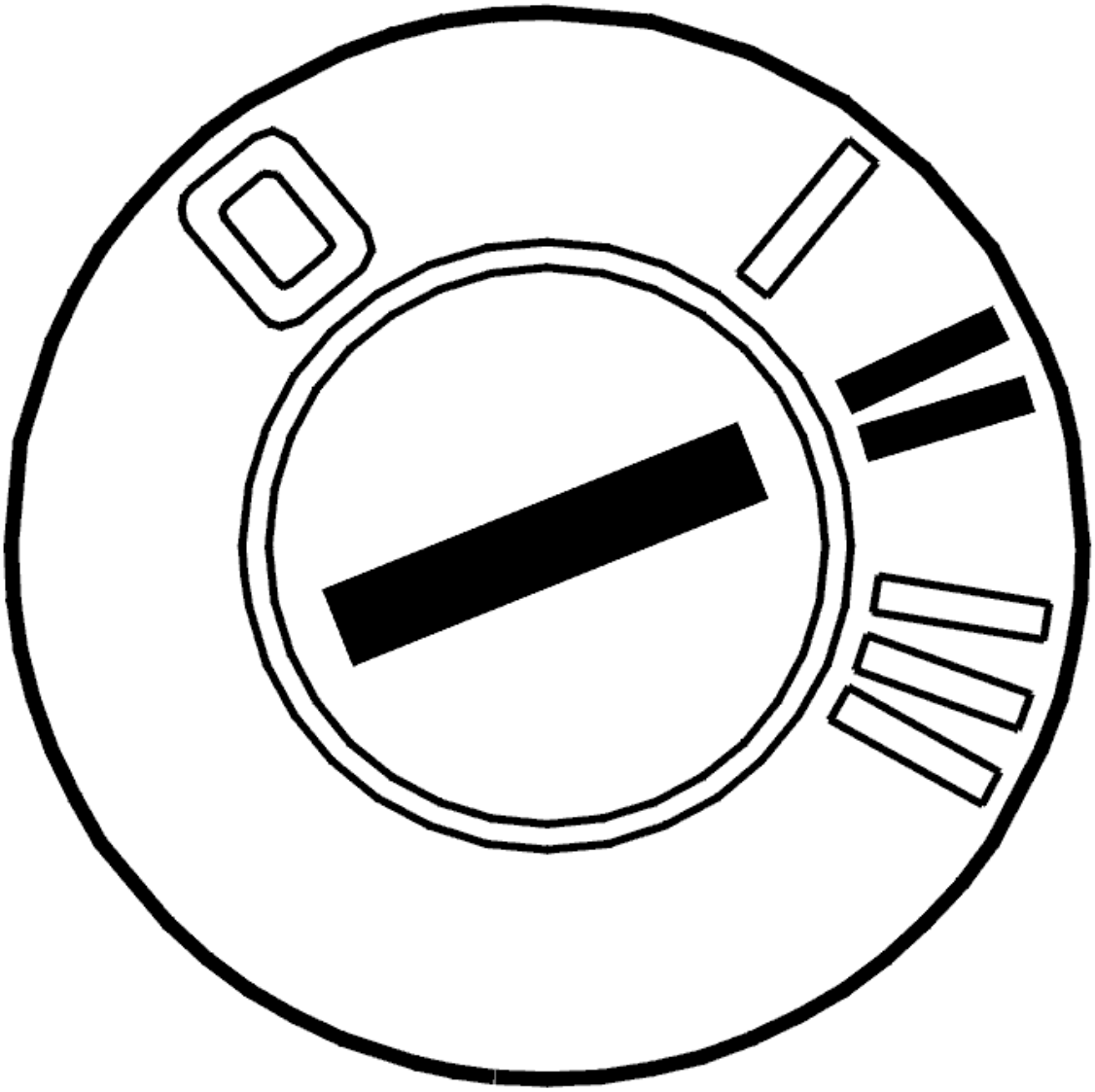

Fig. 77: Identifying Ignition ON
Courtesy of VOLVO CARS CORPORATION

- Ignition on.

  Reset the counter by clicking on the VCT 2000 symbol.

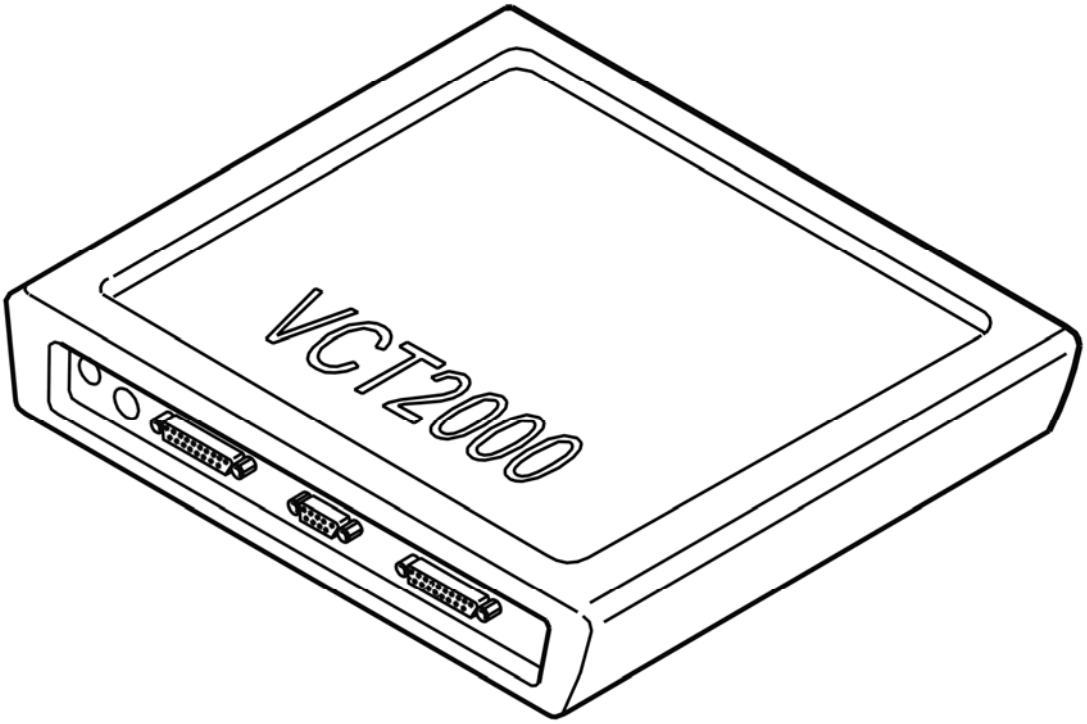

Fig. 78: Identifying VCT2000 Diagnostic Tool Symbol In VIDA
Courtesy of VOLVO CARS CORPORATION

- **Continue**

  Refer to **VERIFICATION**

VERIFICATION

VERIFICATION

HINT: After carrying out the repair, check that the fault has been remedied.

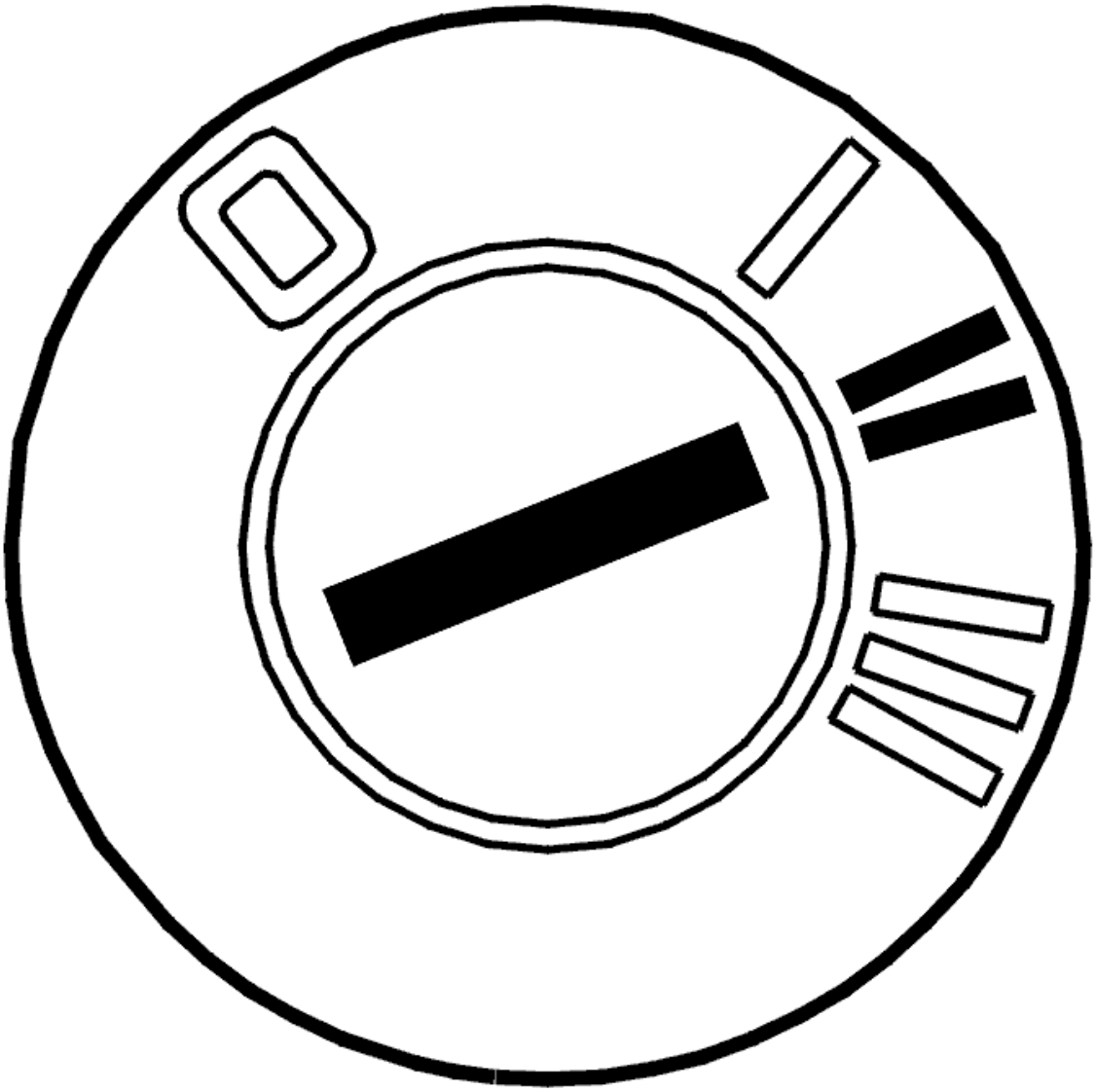

Fig. 79: Identifying Ignition ON
Courtesy of VOLVO CARS CORPORATION

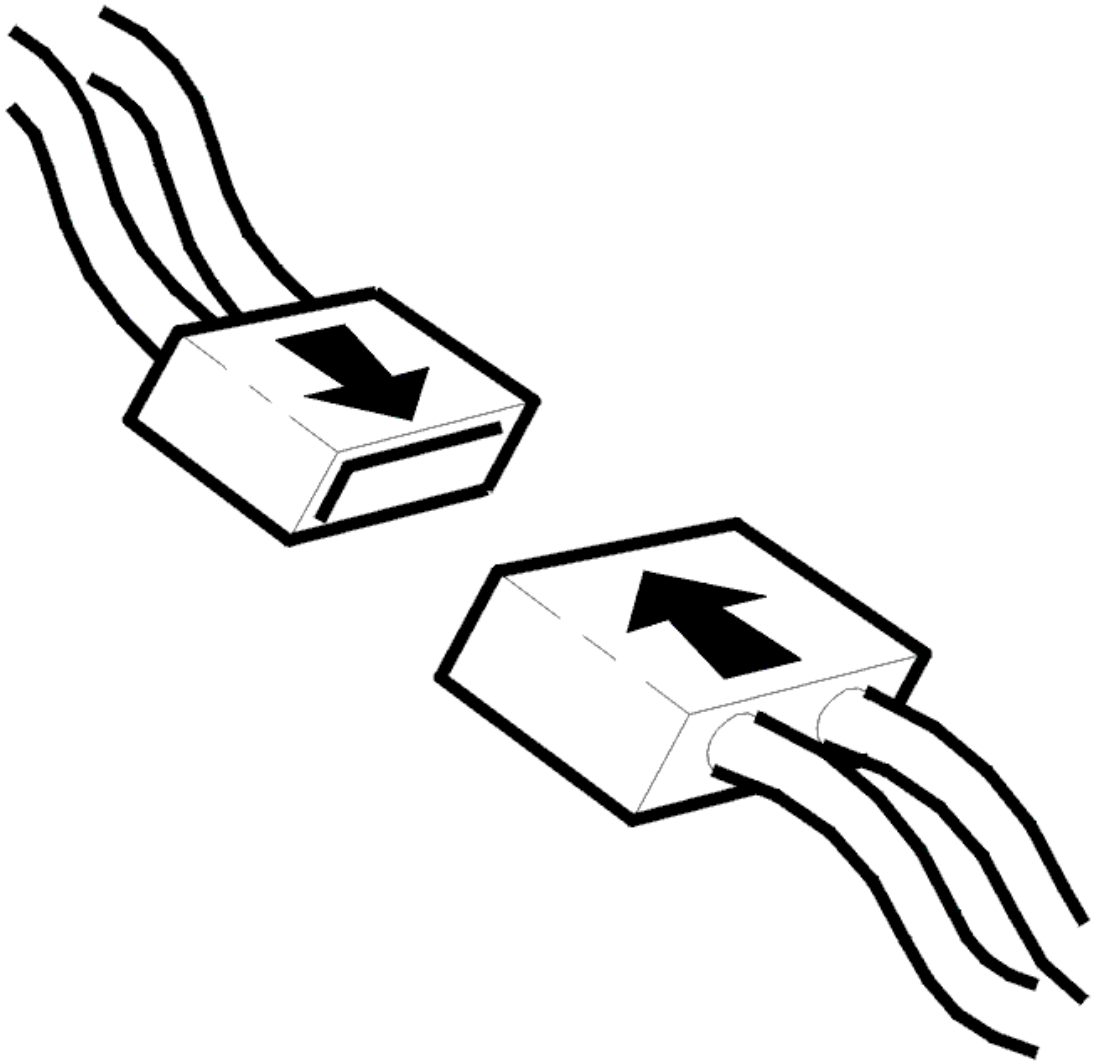

Fig. 80: Identifying Connector(s) Reinstallation
Courtesy of VOLVO CARS CORPORATION

- Ignition off.
- Reinstall the connectors, components etc.
- Ignition on.
- Read off the oil temperature.

Check that the transmission oil temperature is within its permitted range.

Compare with the transmission temperature.

NOTE: **The transmission temperature sensor is located inside the control unit and can be affected by the heat given off by the solenoids.**

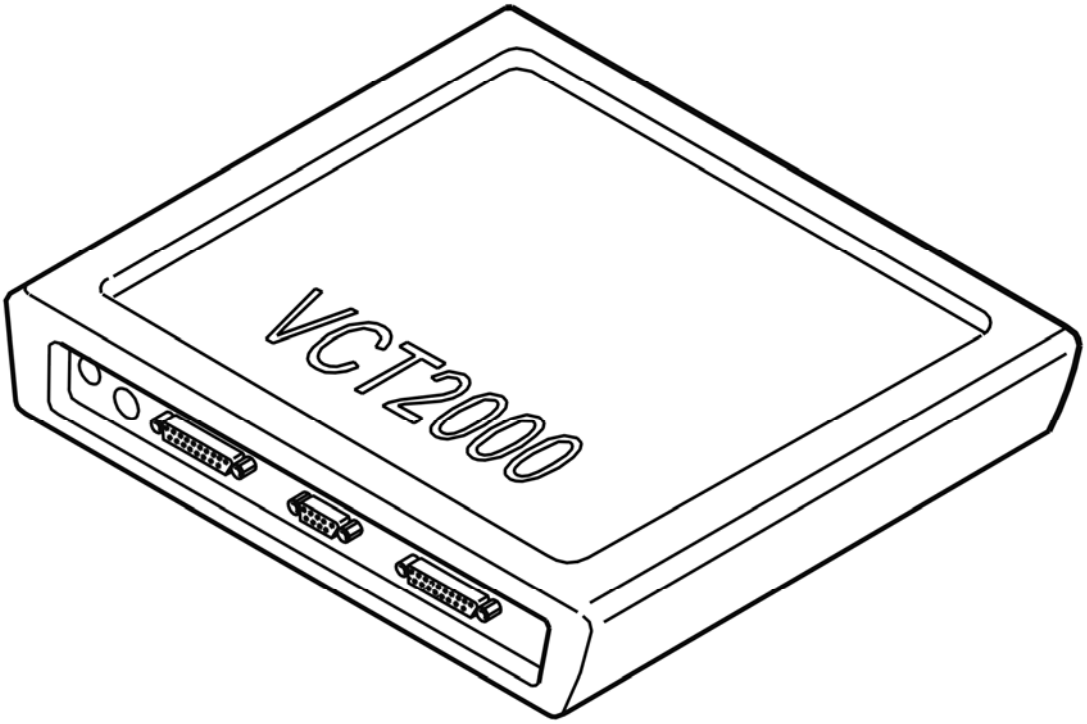

Fig. 81: Identifying VCT2000 Diagnostic Tool Symbol In VIDA
Courtesy of VOLVO CARS CORPORATION

Is the oil temperature within its permitted range?

- **YES**

  VERIFIED: Troubleshooting has been completed.

- **NO**

  Refer to **INFORMATION**

TCM-0002: SHIFT SOLENOID S1. SIGNAL MISSING (4T65 AWD; 2003-2006)

DIAGNOSTIC TROUBLE CODE (DTC) INFORMATION

Condition

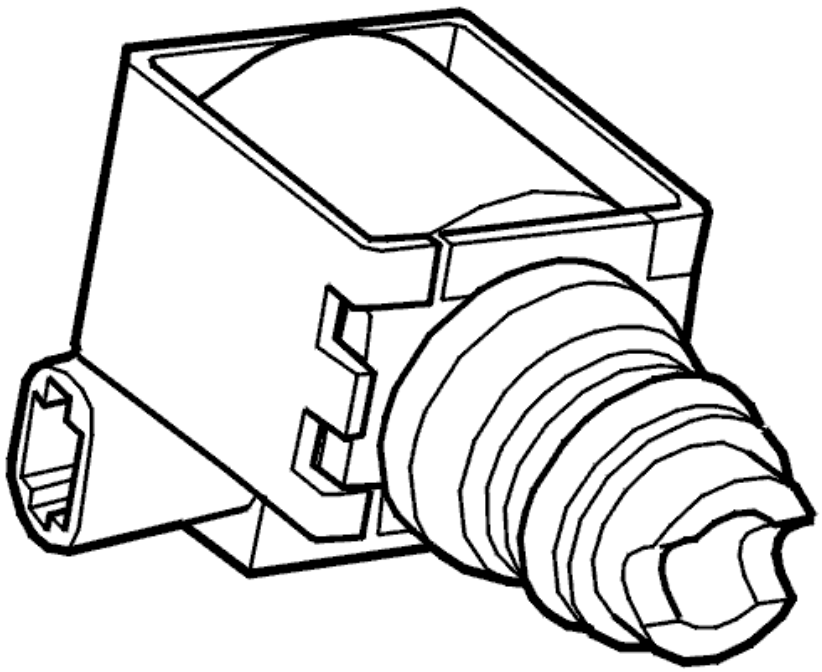

Fig. 82: Identifying Shift Solenoid S1 And S2
Courtesy of VOLVO CARS CORPORATION

Shift solenoids S2 and S1 operate in tandem to control gear-shifting. The solenoids are controlled by power stages in the transmission control module (TCM). The transmission control module (TCM) opens the power stages to activate the solenoids and sends a voltage through the circuit. Solenoid S1 is activated in 1st and 4th gears. Diagnostic trouble code (DTC) TCM-0002 is stored if the control module registers that the signal in the solenoid S1 circuit is missing when the solenoid is activated.

Substitute Value

- The control module "Limp Home" program has been initiated.

Possible Source

- Contact resistance in the terminals.
- Open-circuit in the signal cable.
- Defective solenoid.

Fault symptom[s]

- General orange warning lamp lit.
- Malfunction indicator lamp (MIL) lit.

- Harsh gear shifting.
- No shifting.
- No lock-up function.

HINT: Harsh shifting - due to disabled line pressure solenoid STH control. This results in constant maximum line pressure and leads to harsher shifting and gear engagement.

HINT: No shifting -because the transmission control module (TCM) prevents activation of the solenoids. This stops gear-shifting.

SIGNAL MISSING

CHECKS

CHECKING THE TEMPERATURE SENSOR

HINT: In some cases, the diagnostic trouble code (DTC) may be caused by a defective oil temperature sensor. Check the function of the oil temperature sensor first.

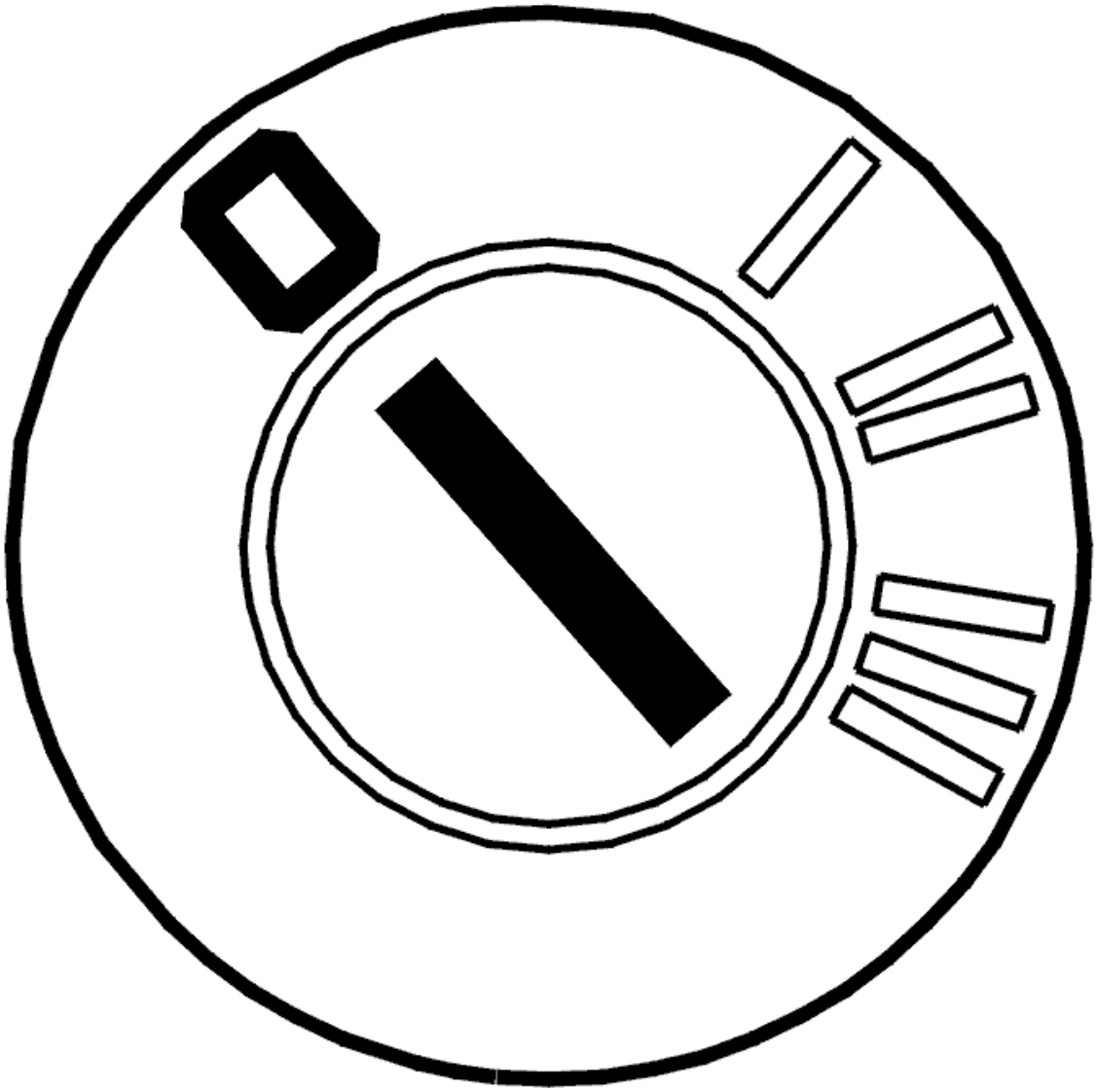

Fig. 83: Identifying Ignition OFF
Courtesy of VOLVO CARS CORPORATION

- Ignition off
- Read off the oil temperature.

  Check that the function of the temperature sensor is OK. Test drive the car to increase the temperature of the transmission fluid. Read off the temperature again. Check that the temperature has increased.

  HINT: If the temperature is outside its permitted range, fault-trace the temperature sensor.

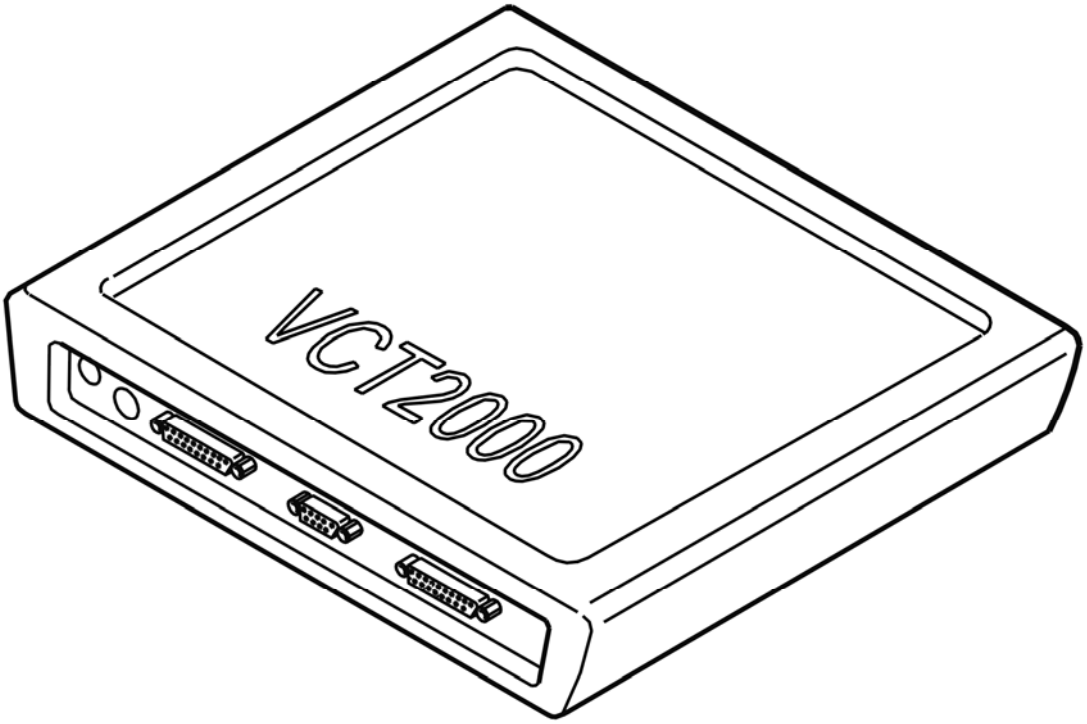

Fig. 84: Identifying VCT2000 Diagnostic Tool Symbol In VIDA
Courtesy of VOLVO CARS CORPORATION

Is the oil temperature within its permitted range?

- **YES**

  Refer to **CHECKING SHIFT SOLENOID S1**

- **NO**

  Refer to **SIGNAL TOO HIGH**

CHECKING SHIFT SOLENOID S1

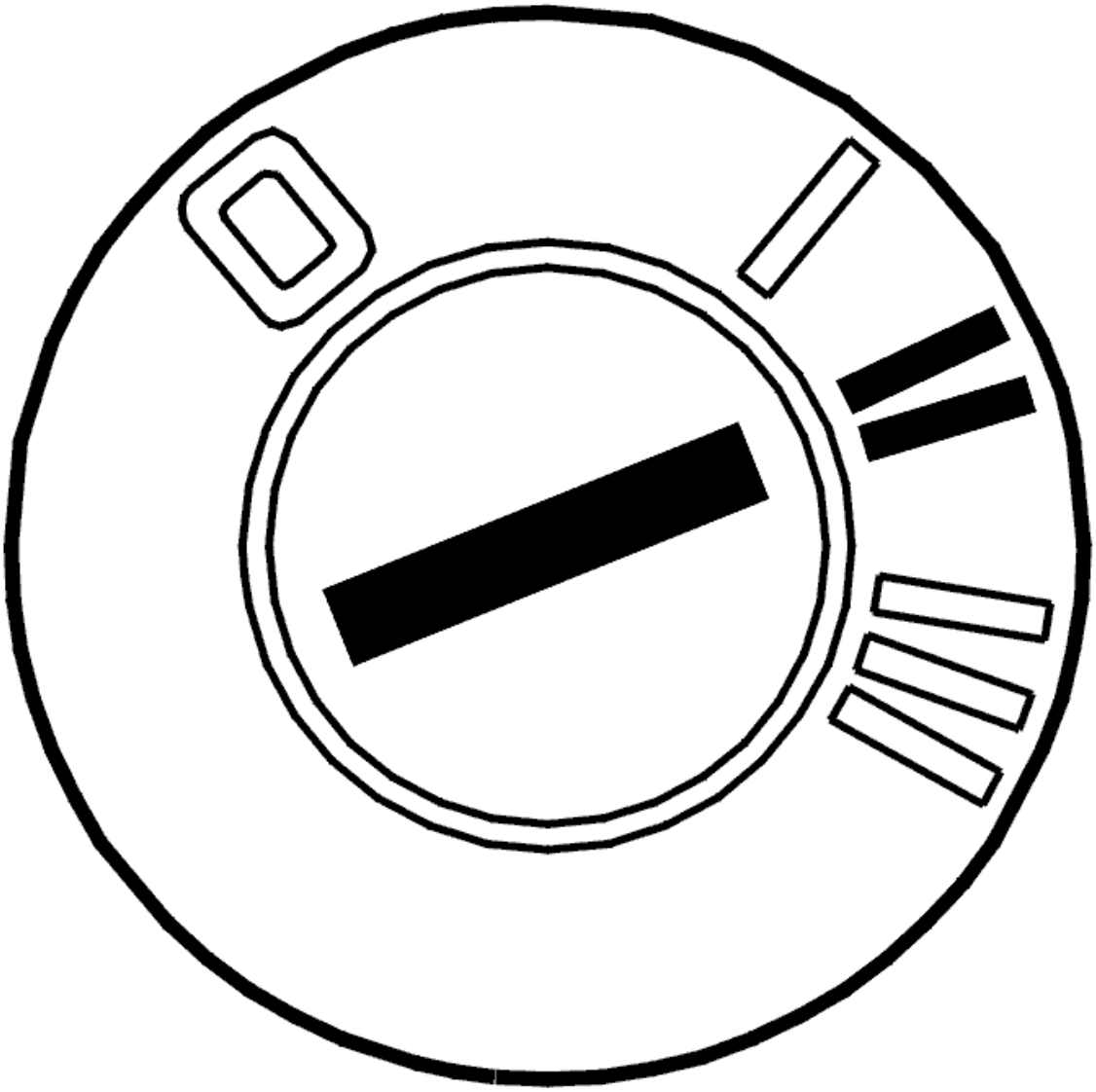

Fig. 85: Identifying Ignition ON
Courtesy of VOLVO CARS CORPORATION

- Ignition off
- Check the control module and automatic transmission connectors for contact resistance and oxidation according to **CONTACT RESISTANCE AND OXIDATION** . Remedy if necessary
- Ignition on
- Gear selector in position P
- Activate solenoid S1
- Read off the current across solenoid S1.

  The current must oscillate between approximately 0 and 1.5 A.

  If the current oscillates, the problem was caused by contact resistance and oxidation.

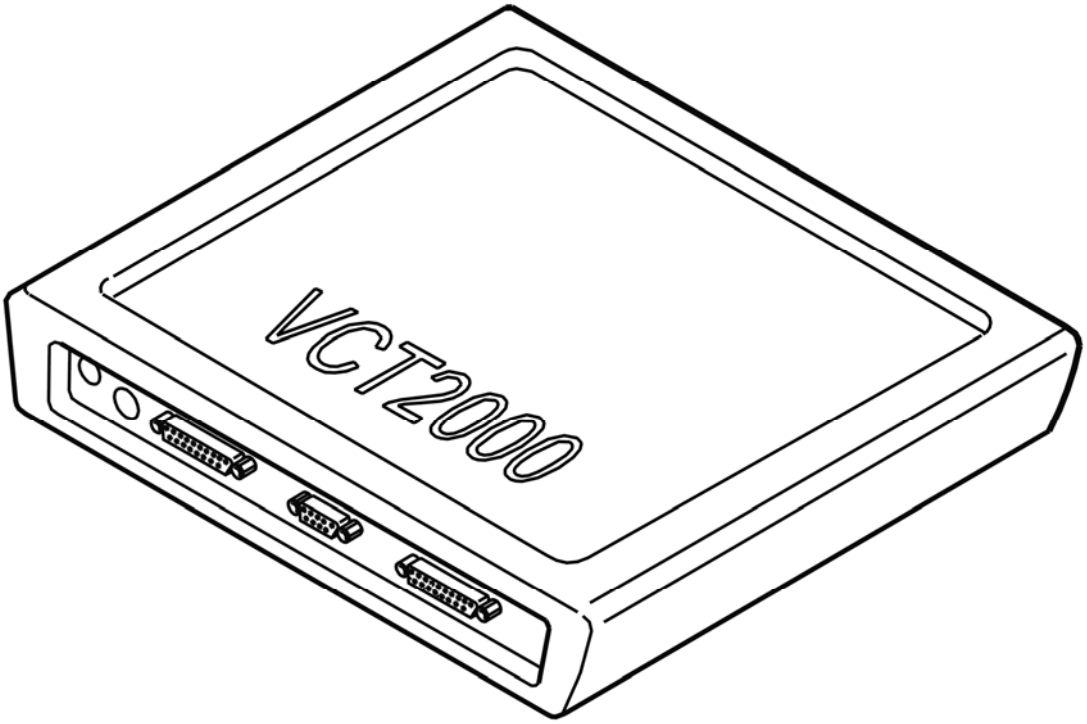

Fig. 86: Identifying VCT2000 Diagnostic Tool Symbol In VIDA
Courtesy of VOLVO CARS CORPORATION

Does the current oscillate?

- **YES**

  Refer to **INTERMITTENT FAULT**

- **NO**

  Refer to **CHECKING SOLENOID S1**

CHECKING SOLENOID S1

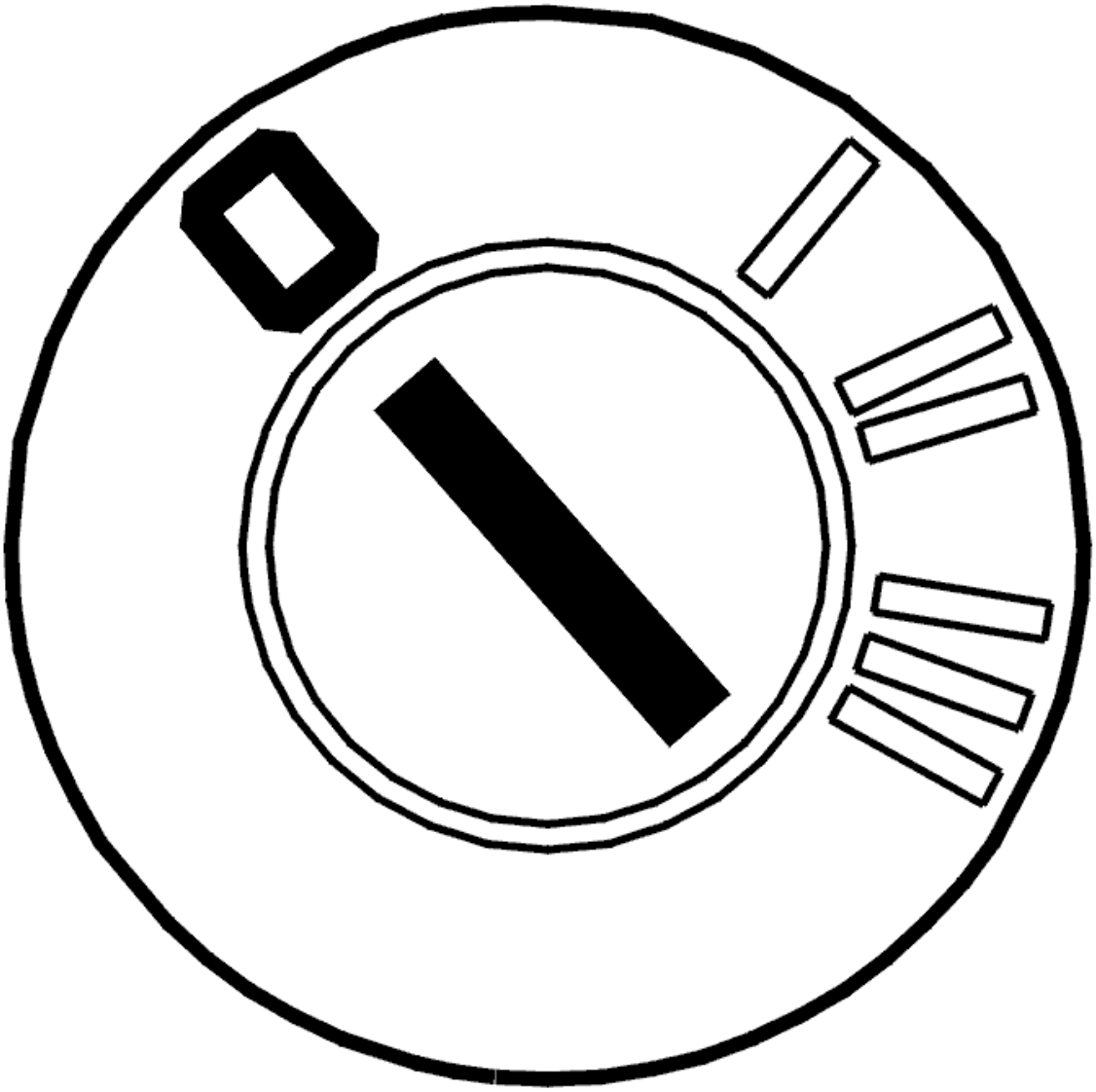

Fig. 87: Identifying Ignition OFF
Courtesy of VOLVO CARS CORPORATION

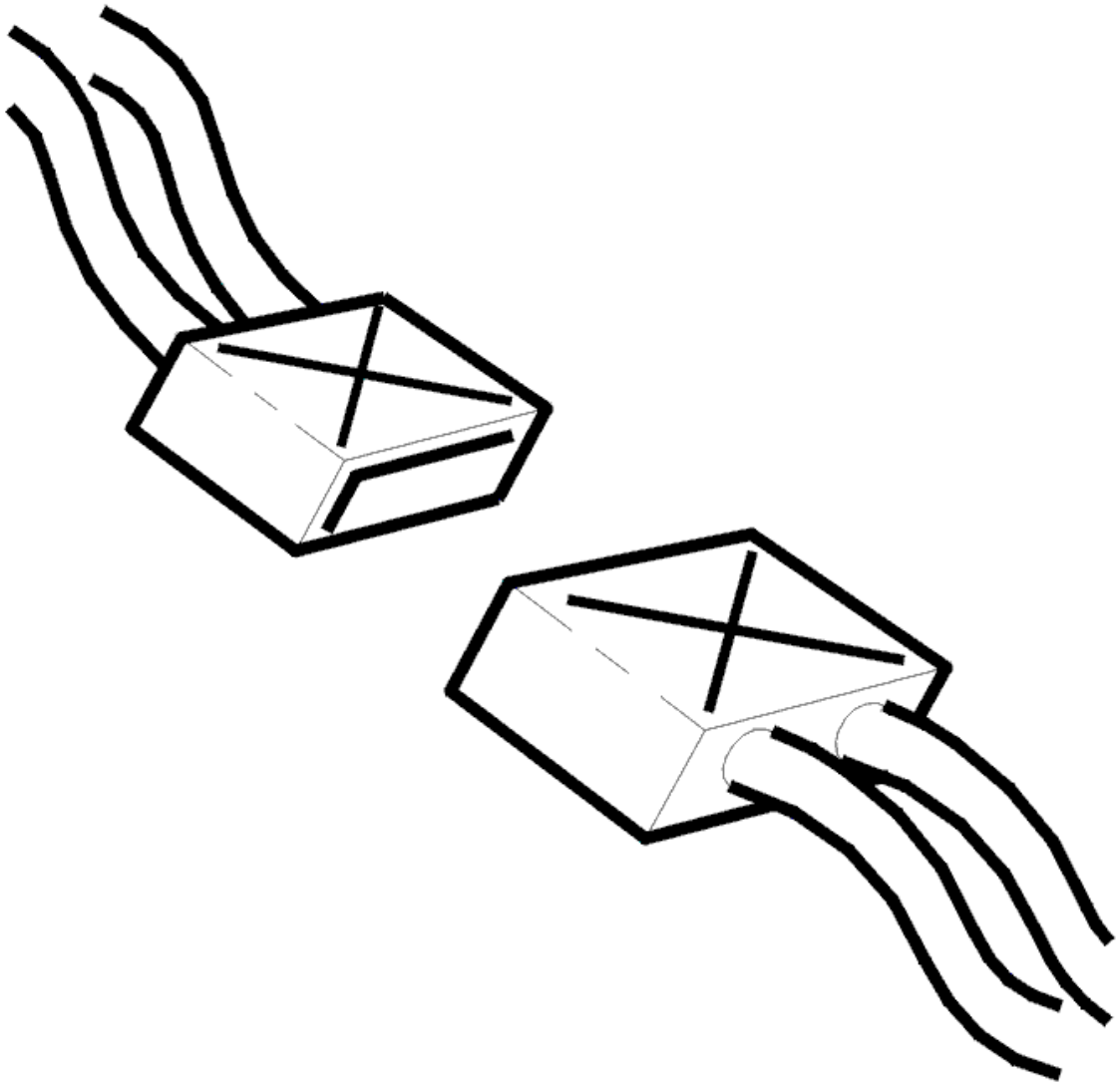

Fig. 88: Identifying Connectors
Courtesy of VOLVO CARS CORPORATION

- Ignition off
- Disconnect the automatic transmission connector
- Connect adapter see **9511505** and breakout box see **9813190** to the transmission connector (transmission side)
- Connect an ohmmeter between terminals #A (#A1) and #E (#A5).

  The resistance for solenoid S1 resistance must be between 18 and 30 ohms.

  Other information:

  - To connect the breakout box to the transmission connector, see **CONNECTING THE BREAKOUT BOX, GM AUTOMATIC TRANSMISSIONS**

- To connect the breakout box, see **CONNECTING THE BREAKOUT BOX**
- For information about signals, see **SIGNAL SPECIFICATION** .

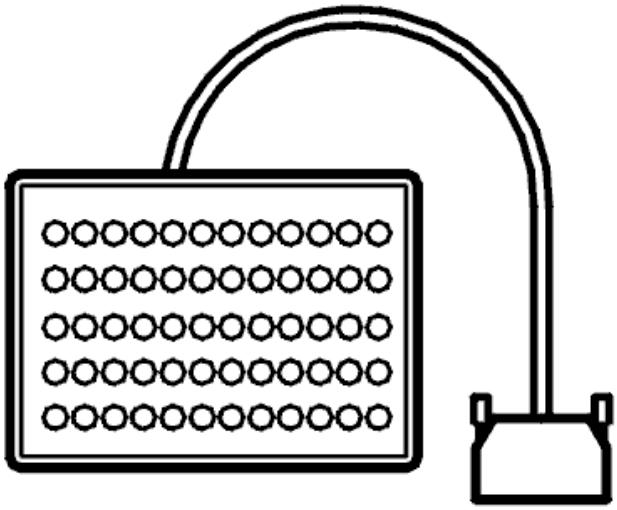

Fig. 89: Identifying Breakout Box
Courtesy of VOLVO CARS CORPORATION

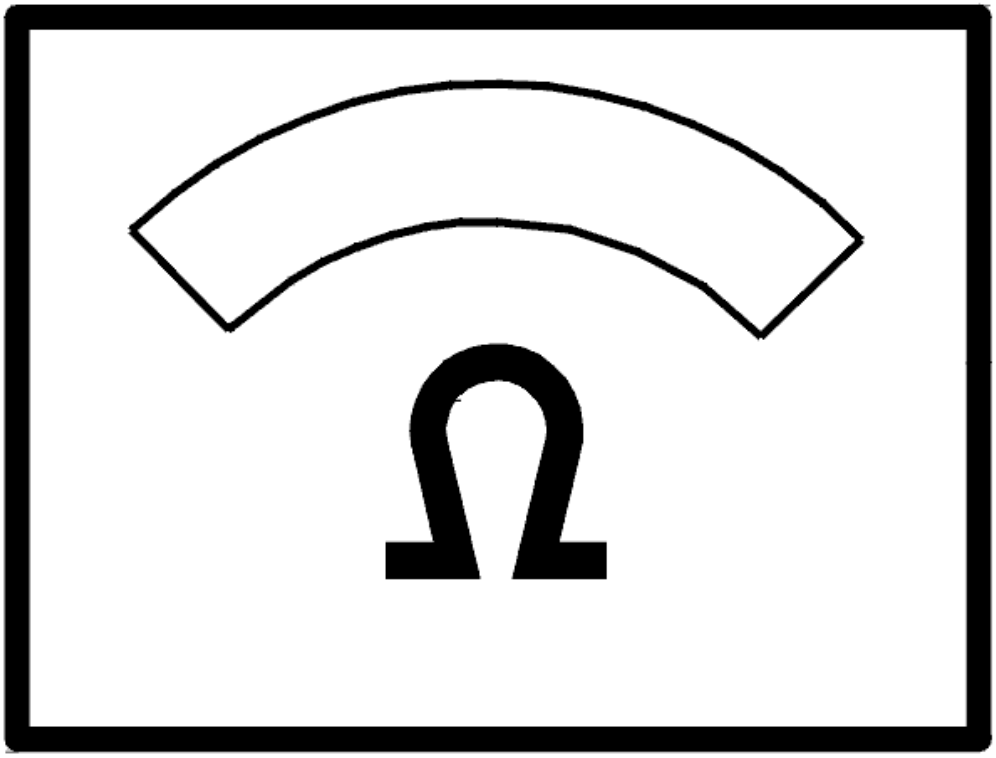

Fig. 90: Identifying Ohms Display
Courtesy of VOLVO CARS CORPORATION

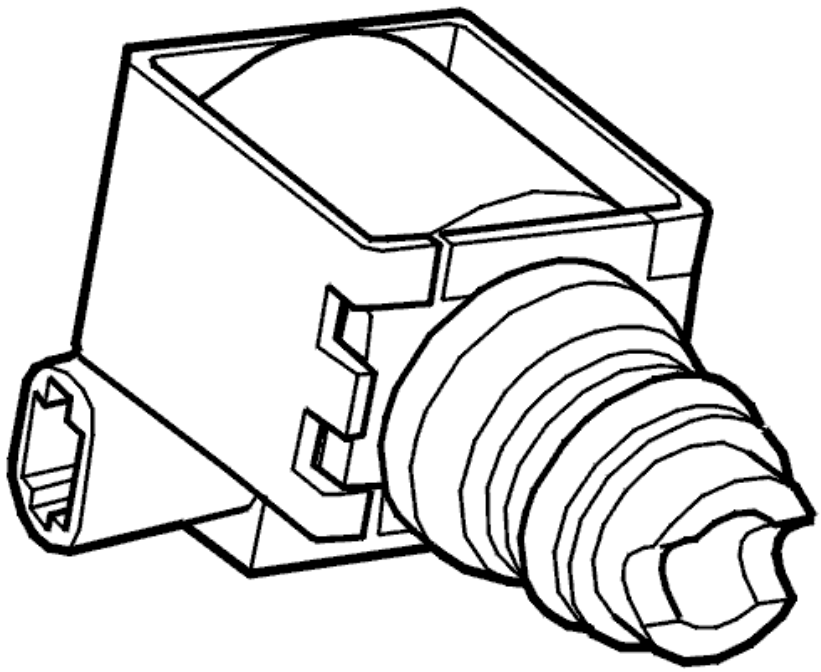

Fig. 91: Identifying Shift Solenoid S1 And S2
Courtesy of VOLVO CARS CORPORATION

Was the resistance OK?

- **YES**

  Refer to **CHECKING THE WIRING**

- **NO**

  Refer to **CHECKING THE WIRING AND COMPONENT**

CHECKING THE CONTROL MODULE

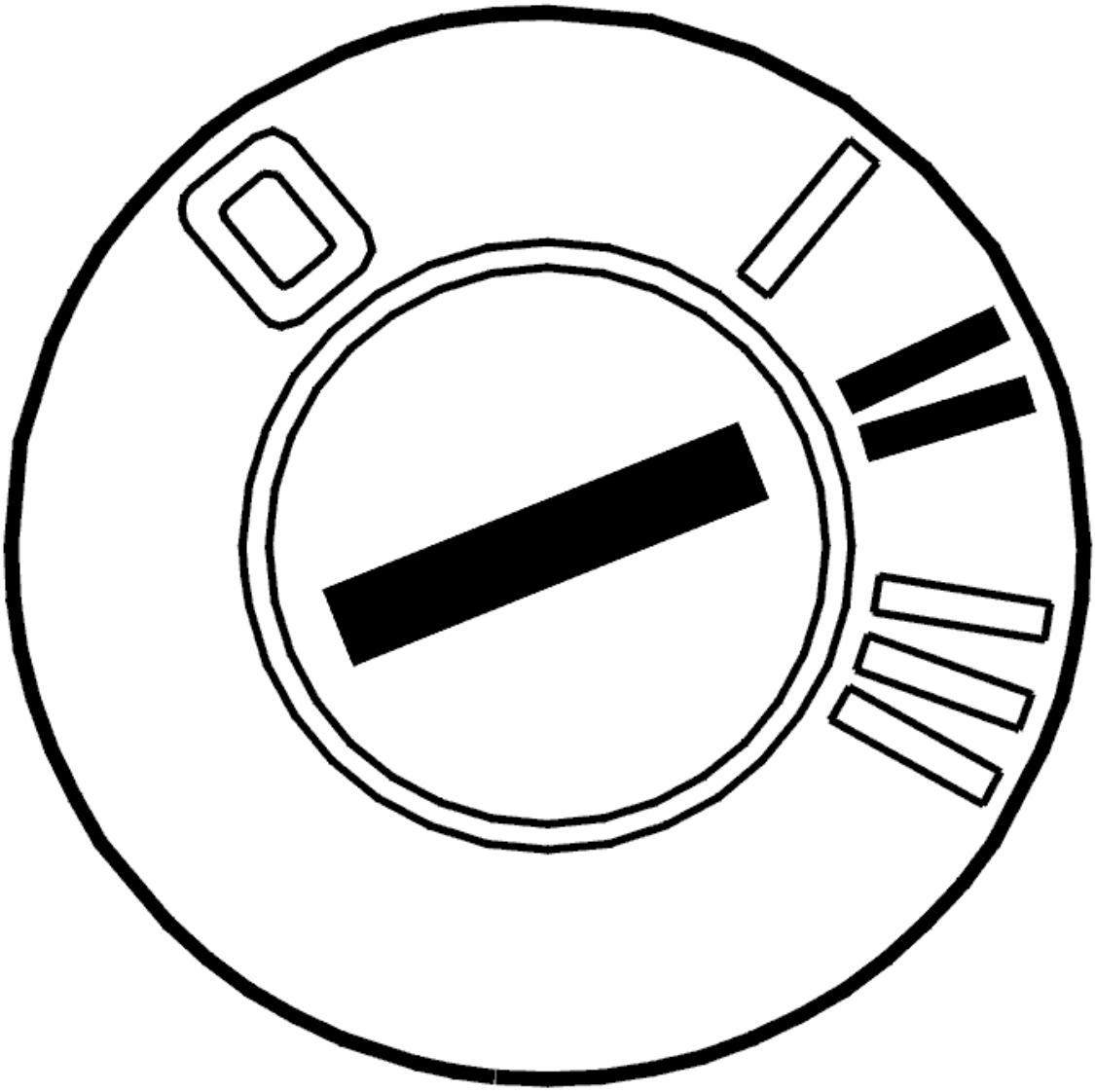

Fig. 92: Identifying Ignition ON
Courtesy of VOLVO CARS CORPORATION

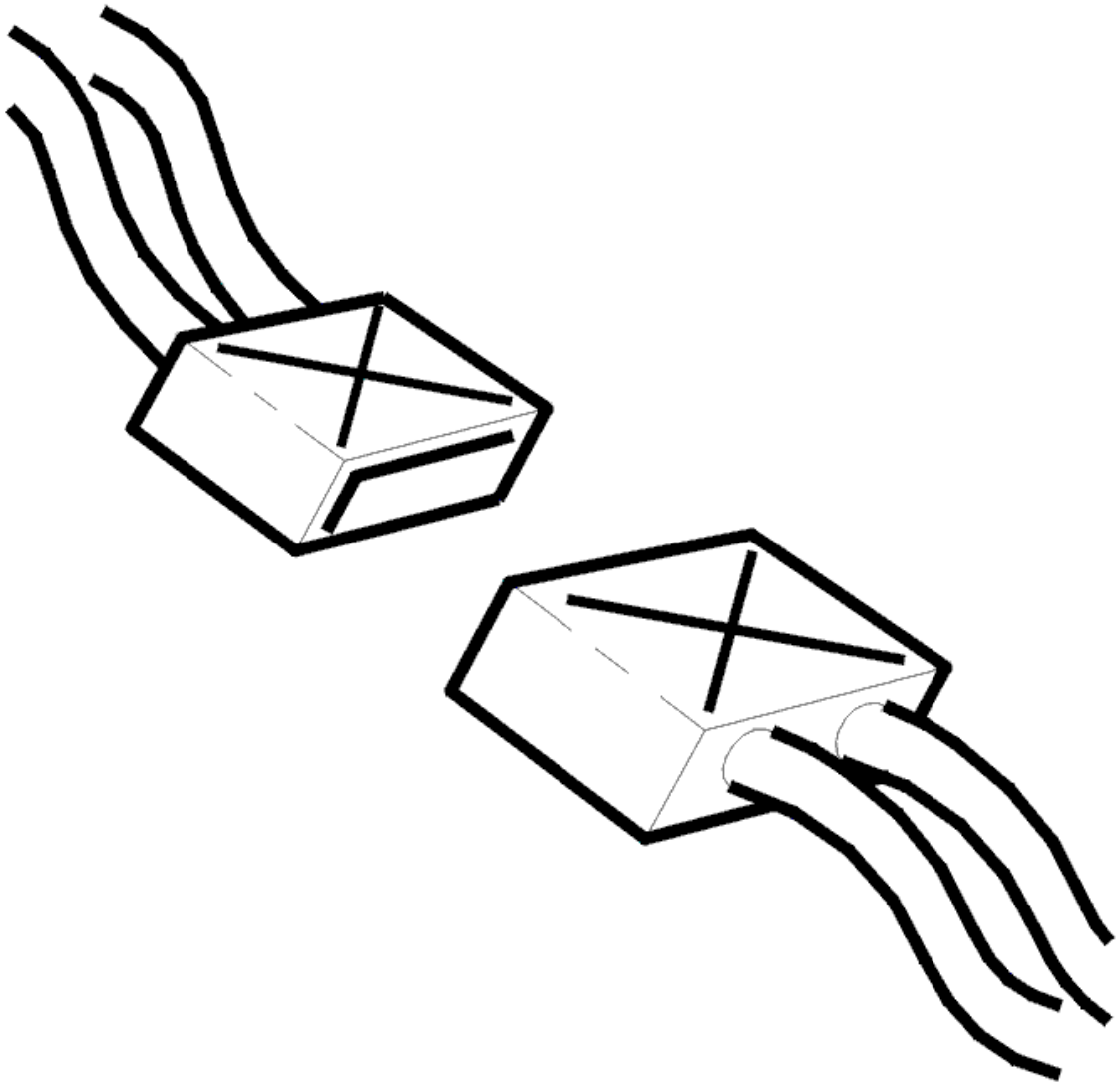

Fig. 93: Identifying Connectors
Courtesy of VOLVO CARS CORPORATION

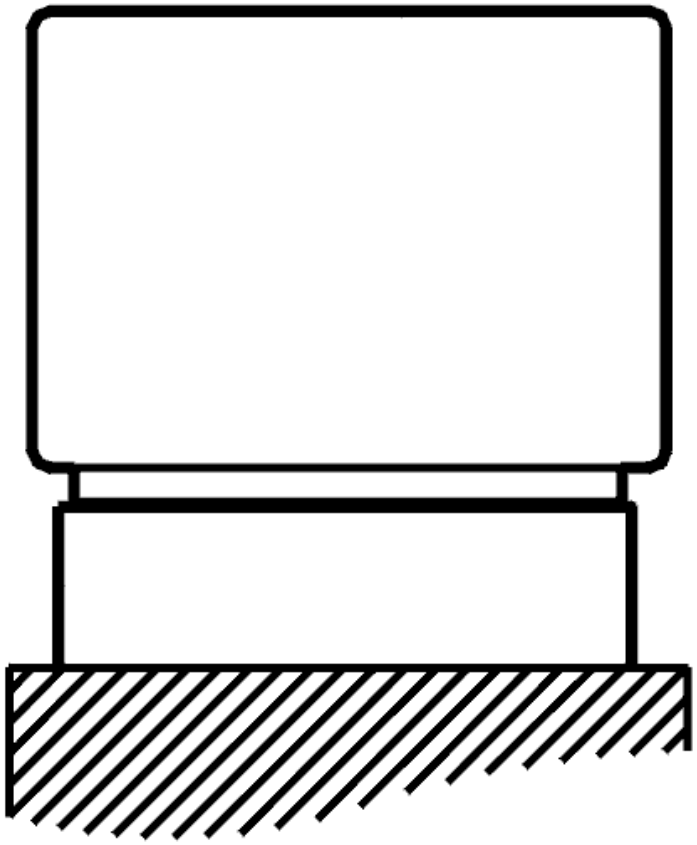

Fig. 94: Identifying Control Unit Connected
Courtesy of VOLVO CARS CORPORATION

- Ignition off
- The breakout box connected
- Control module connected.
- Transmission connector disconnected
- Ignition on
- Gear selector in position P.

Check the circuit for solenoid S1 by connecting an ohmmeter between terminals #50 (#A50) and #53 (#A53). The resistance must be between 7 and 13 Kohms. Try a new control module if the resistance is infinite.

Remedy as necessary.

NOTE: **Diagnostic trouble codes (DTCs) for the gear-shift position sensor and the solenoids may be stored when disconnecting the transmission connector.**

Other information:

- To connect the breakout box, see **CONNECTING THE BREAKOUT BOX**
- To replace the control module, see **TRANSMISSION CONTROL MODULE (TCM), REPLACING**
- For information about signals, see **SIGNAL SPECIFICATION** .

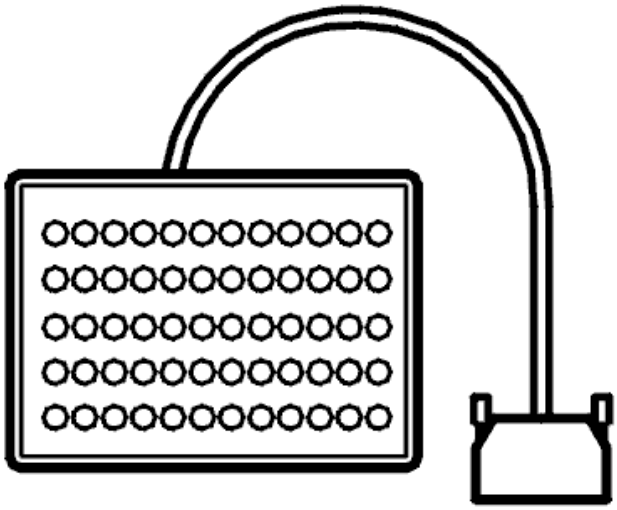

Fig. 95: Identifying Breakout Box
Courtesy of VOLVO CARS CORPORATION

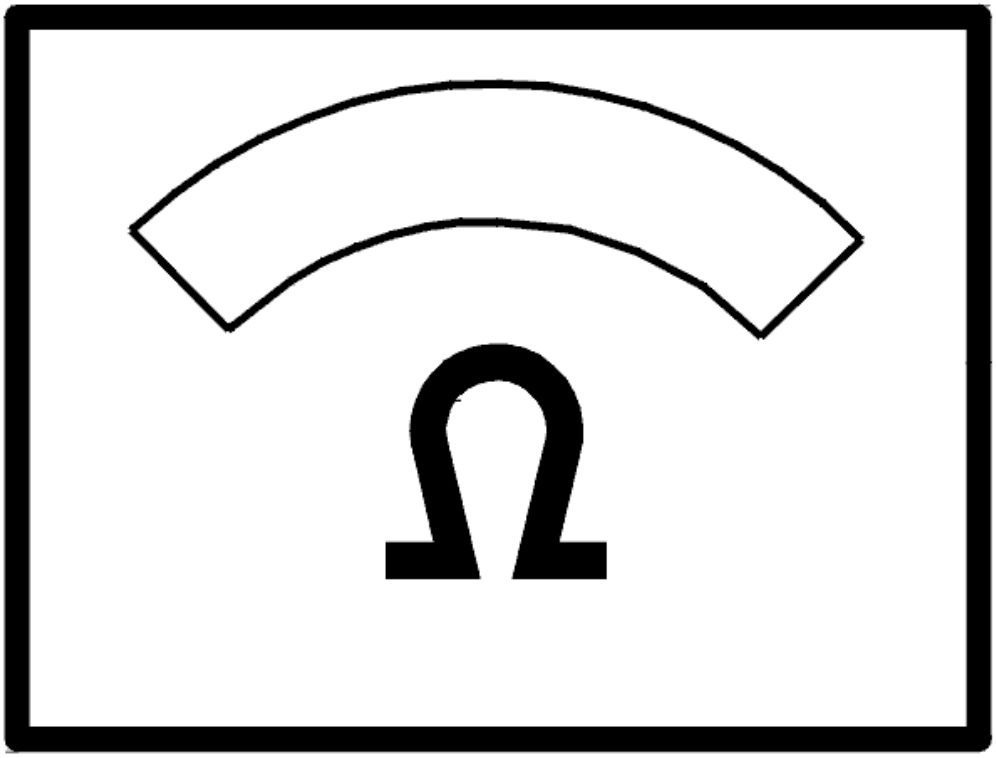

Fig. 96: Identifying Ohms Display
Courtesy of VOLVO CARS CORPORATION

Was the resistance incorrect?

- **YES**

  Refer to **VERIFICATION**

- **NO**

  FAULT NOT FOUND: Troubleshooting has been completed.

CHECKING THE WIRING

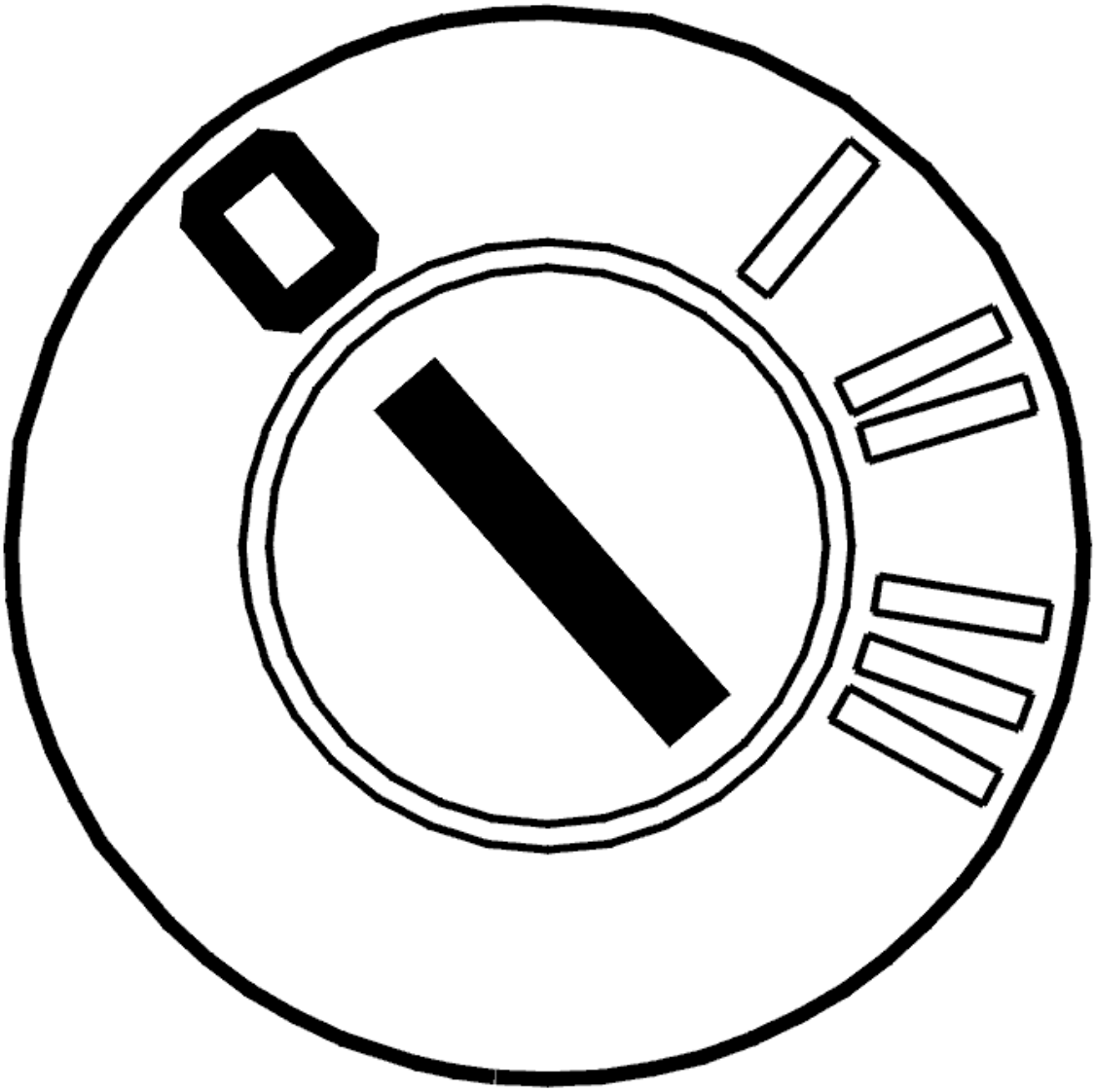

Fig. 97: Identifying Ignition OFF
Courtesy of VOLVO CARS CORPORATION

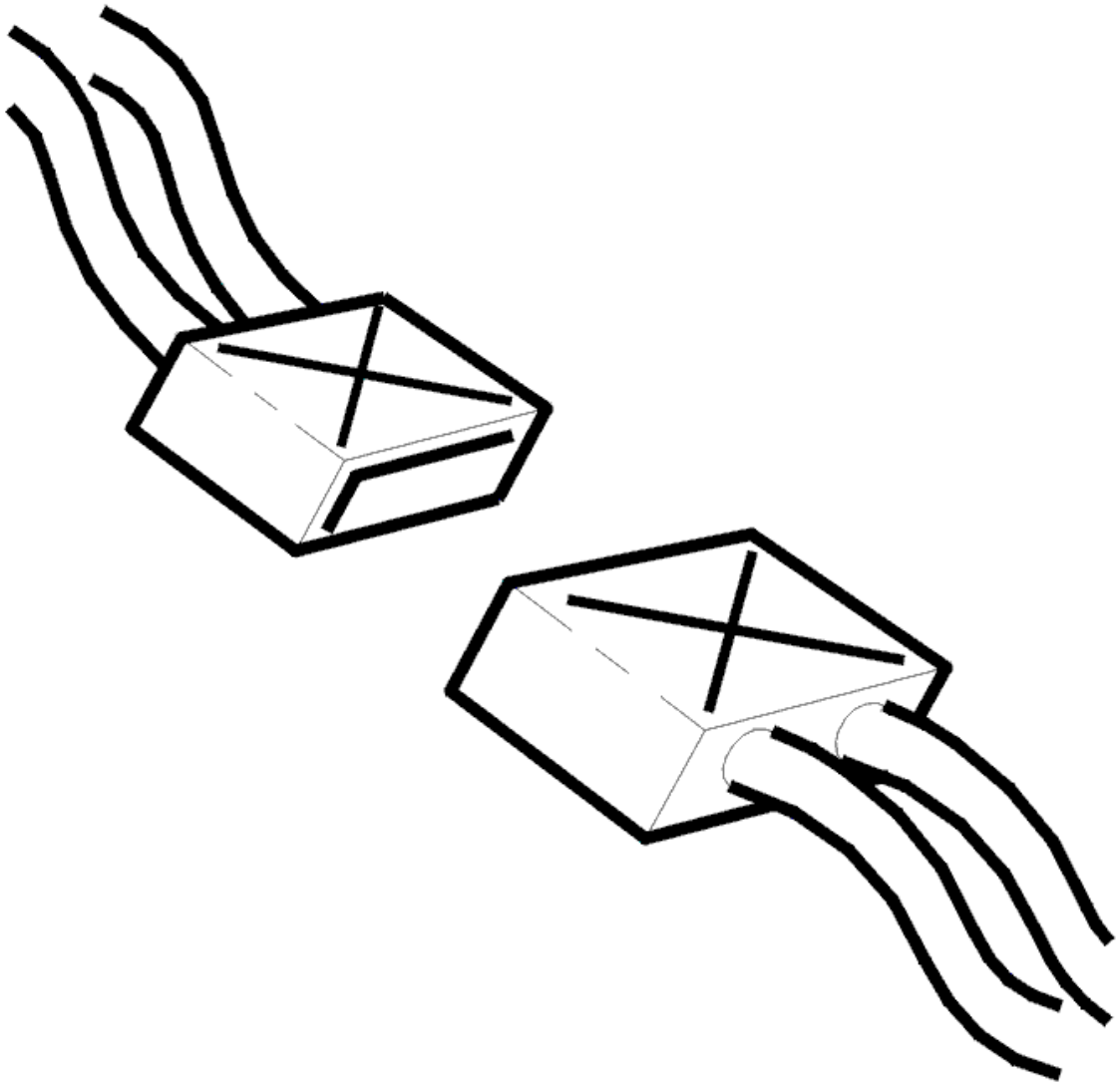

Fig. 98: Identifying Connectors
Courtesy of VOLVO CARS CORPORATION

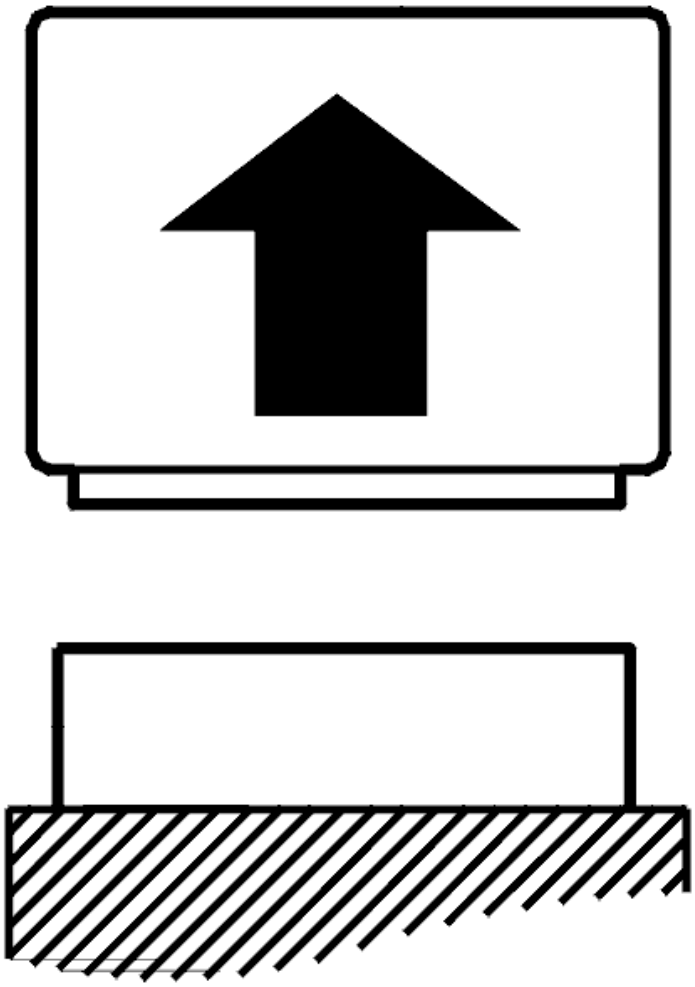

Fig. 99: Identifying Control Module Disconnected
Courtesy of VOLVO CARS CORPORATION

- Ignition off
- Connect the breakout box to the transmission
- Disconnect the control module
- Disconnect the transmission connector
- Connect adapter see **9511505** and breakout box see **9813190** to the transmission connector (control module side).

  Check the cable between control module terminal #A50 (#A50) and transmission connector terminal #A (#A1). Check for an open-circuit. See **OPEN-CIRCUIT, PERMANENT FAULTS** .

  Check the cable between control module terminal #A53 and transmission connector terminal #E (#A5). Check for an open-circuit. See **OPEN-CIRCUIT, PERMANENT FAULTS** .

Remedy as necessary.

Other information:

- To connect the breakout box, see **CONNECTING THE BREAKOUT BOX**
- To connect the breakout box to the transmission connector, see **CONNECTING THE BREAKOUT BOX, GM AUTOMATIC TRANSMISSIONS**
- For information about signals, see **SIGNAL SPECIFICATION** .

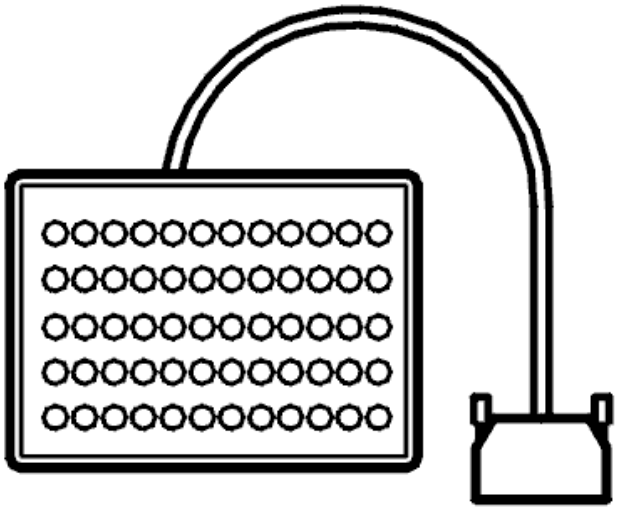

Fig. 100: Identifying Breakout Box
Courtesy of VOLVO CARS CORPORATION

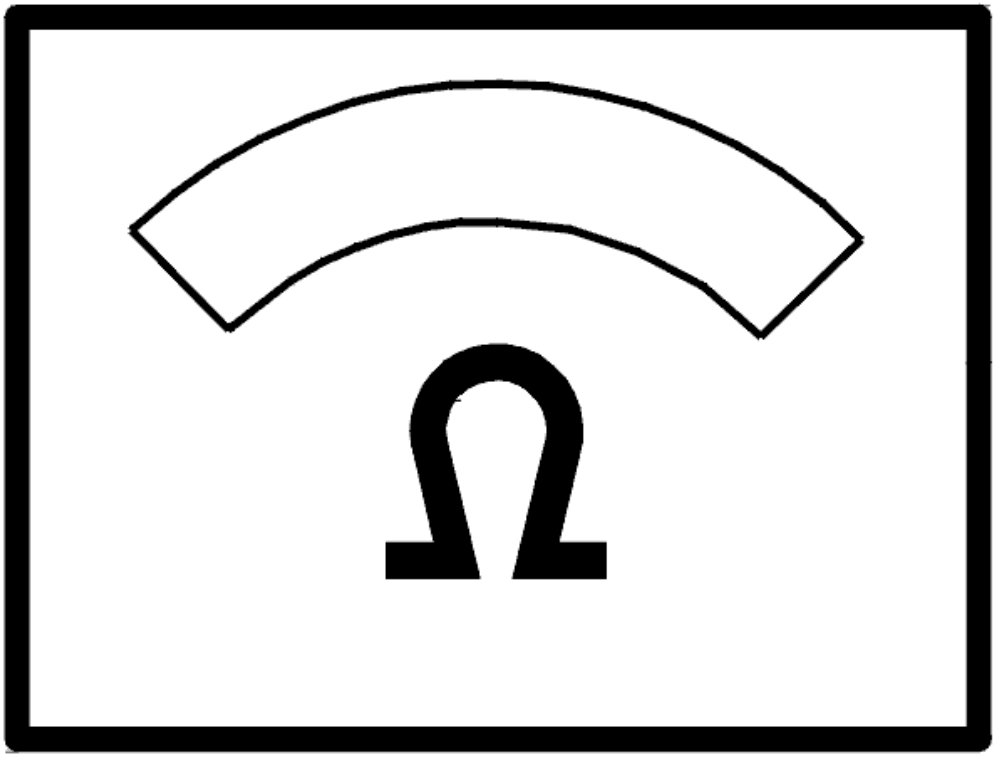

Fig. 101: Identifying Ohms Display
Courtesy of VOLVO CARS CORPORATION

Was a fault detected?

- **YES**

  Refer to **VERIFICATION**

- **NO**

  Refer to **CHECKING THE CONTROL MODULE**

CHECKING THE WIRING AND COMPONENT

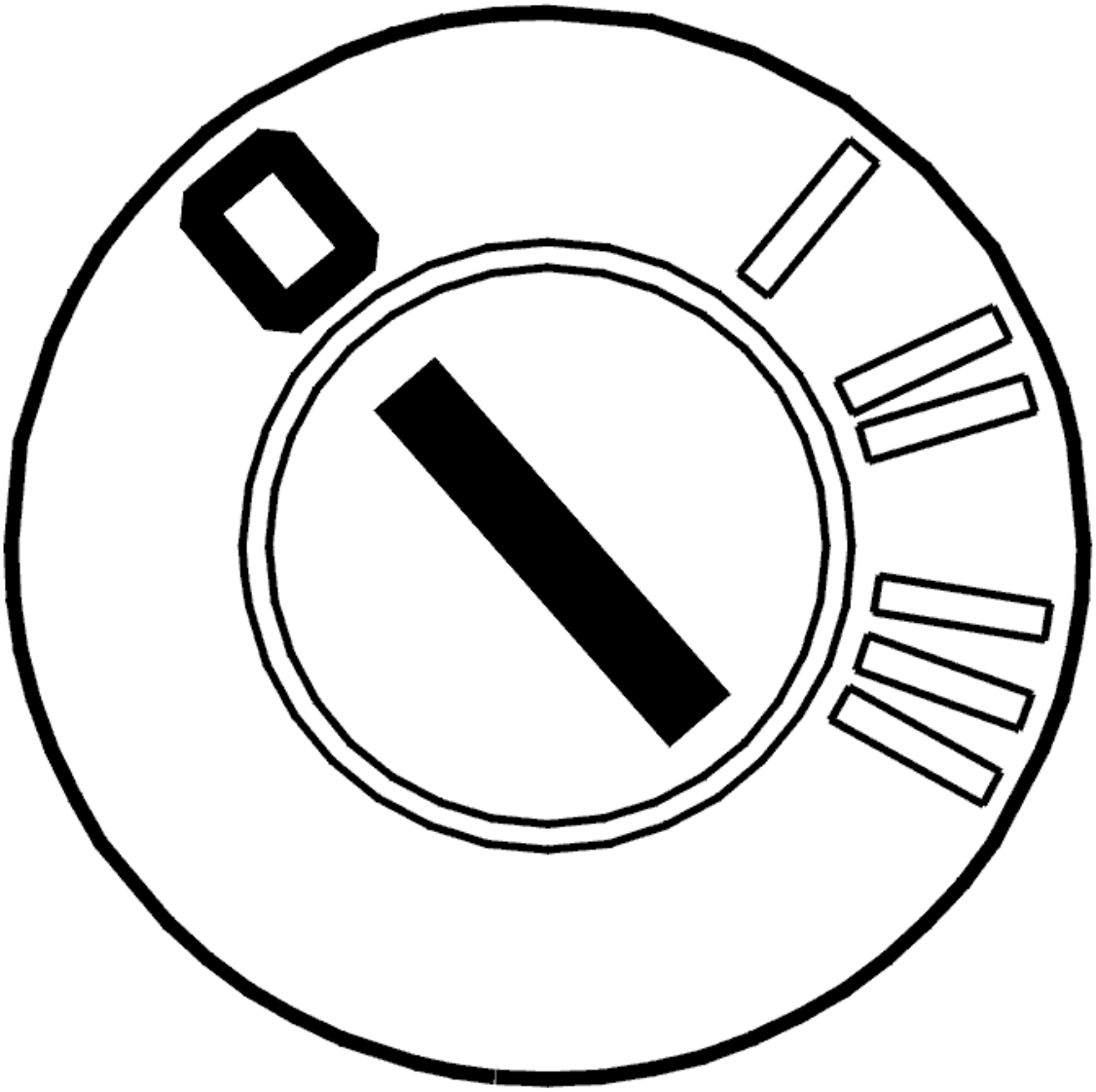

Fig. 102: Identifying Ignition OFF
Courtesy of VOLVO CARS CORPORATION

- Ignition off
- Open the transmission control system.

  Check the cable between transmission connector (transmission side) terminal #A (#A1) and solenoid S1 terminals #A and #E (#A5) and solenoid S1 terminal #B. Check for an open-circuit. See **OPEN-CIRCUIT, PERMANENT FAULTS** .

  HINT: Check solenoid S1 by measuring the solenoid resistance between terminals A and B. The resistance must be between 18 and 30 ohms.

  Remedy as necessary.

  Other information:

- To open the transmission control system, For removal, see **SIDE COVER TRANSMISSION, REMOVING** To install, see **SIDE COVER TRANSMISSION, INSTALLING**
- To connect the breakout box to the transmission connector, see **CONNECTING THE BREAKOUT BOX, GM AUTOMATIC TRANSMISSIONS**
- To replace solenoid S1, see **SOLENOID SHIFTING 2-3, REPLACING**
- To replace the cable harness, see **TEMPERATURE SENSOR FLUID, TRANSAXLE, (TFT)**
- For information about signals, see **SIGNAL SPECIFICATION** .

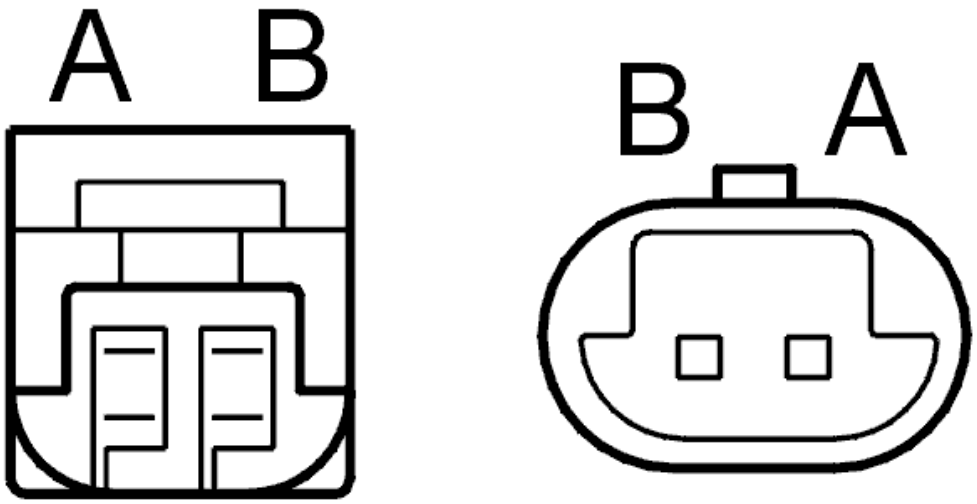

Fig. 103: Identifying Transmission Connector Terminals
Courtesy of VOLVO CARS CORPORATION

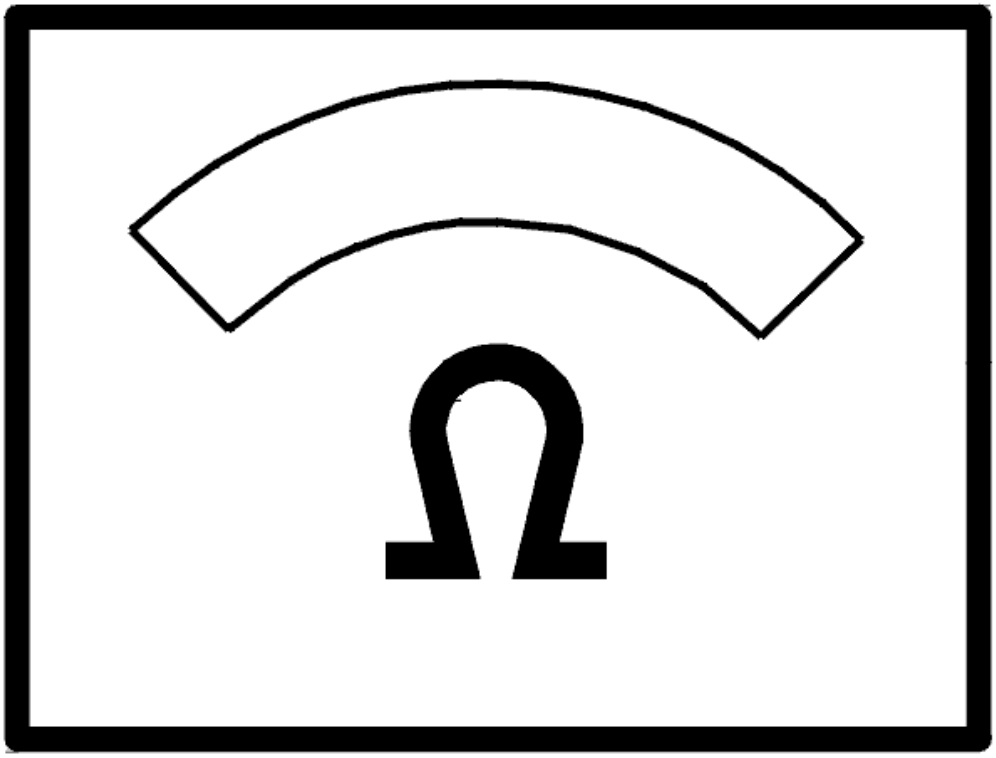

Fig. 104: Identifying Ohms Display
Courtesy of VOLVO CARS CORPORATION

- **Continue**

  Refer to **RESETTING THE ADAPTATION**

INTERMITTENT FAULT

Check the cable between control module terminal #A50 and transmission connector terminal #A (#A1) (control module side). Check for an intermittent open-circuit. See **OPEN-CIRCUIT, INTERMITTENT FAULTS** . Check for contact resistance and oxidation. See **CONTACT RESISTANCE AND OXIDATION** .

Check the cable between control module terminal #A53 and transmission connector terminal #E (#A5) (control module side). Check for an intermittent open-circuit. See **OPEN-CIRCUIT, INTERMITTENT FAULTS** . Check for contact resistance and oxidation. See **CONTACT RESISTANCE AND OXIDATION** .

Remedy as necessary.

Other information:

- To connect the breakout box, see **CONNECTING THE BREAKOUT BOX**
- To connect the breakout box to the transmission connector, see **CONNECTING THE BREAKOUT BOX, GM AUTOMATIC TRANSMISSIONS**
- To replace solenoid S1, see **SOLENOID SHIFTING 2-3, REPLACING**
- To replace the cable harness, see **TEMPERATURE SENSOR FLUID, TRANSAXLE, (TFT)**
- For information about signals, see **SIGNAL SPECIFICATION** .

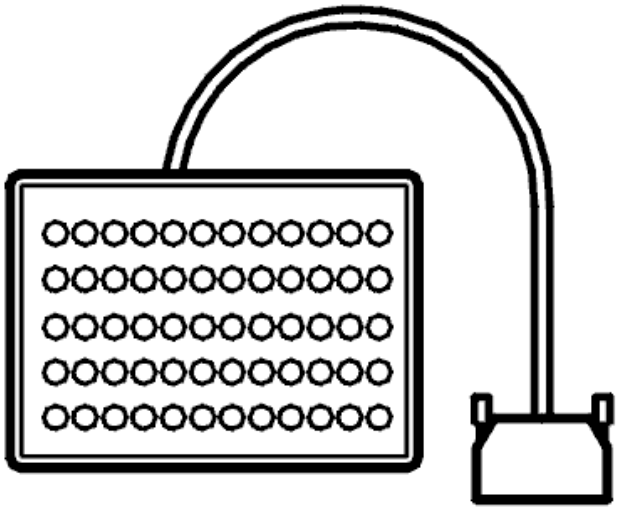

Fig. 105: Identifying Breakout Box
Courtesy of VOLVO CARS CORPORATION

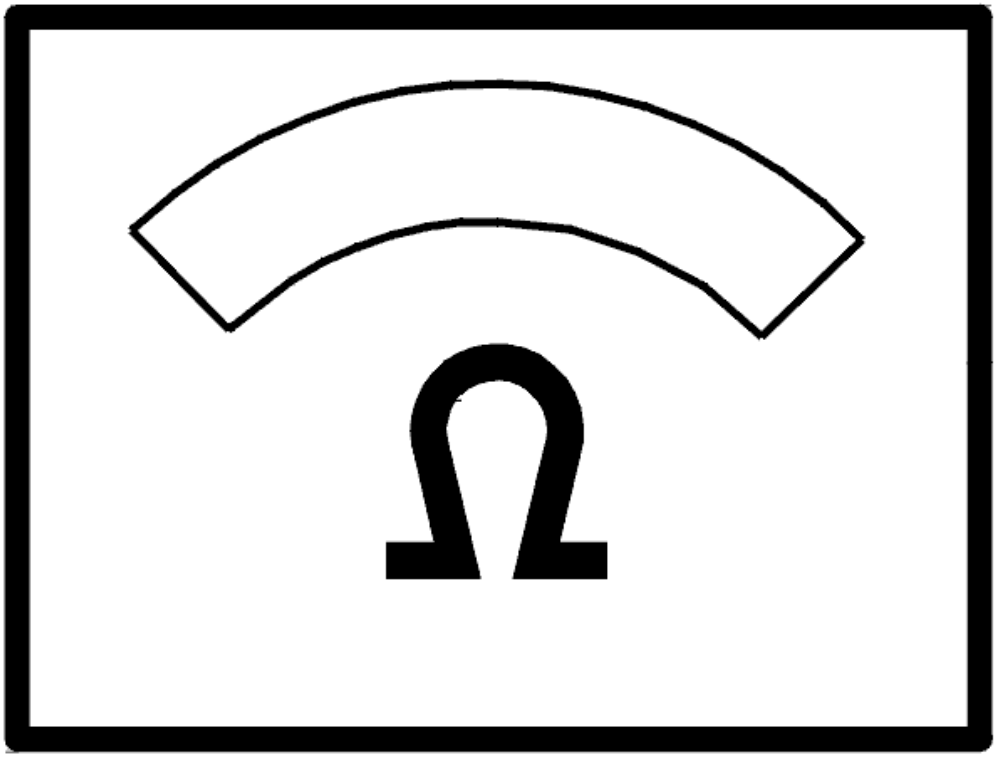

Fig. 106: Identifying Ohms Display
Courtesy of VOLVO CARS CORPORATION

- **Continue**

  Refer to **INFORMATION**

RESETTING THE ADAPTATION

RESETTING ADAPTATION AND THE COUNTER FOR "TRANSMISSION OIL CHANGE"

HINT: The transmission has torque controlled adaptive pressure control. Pressure control means that the transmission regulates the pressure itself during each gear shift. This avoids harsh gear shifting. Each gear shift is evaluated by the control module and stored in the memory. This allows for compensation for wear and tear in the transmission and clutch. It is important that the adaptation in the memory is reset after the transmission has been repaired. This is to ensure normal operation. The oil is replaced during

repair; the "Transmission oil change" counter must be reset. If the counter is not reset when the fluid is drained and replaced, there is a risk that a diagnostic trouble code (DTC) will be stored in incorrect circumstances.

NOTE: This applies only if the transmission or one of the components in the transmission have been replaced.

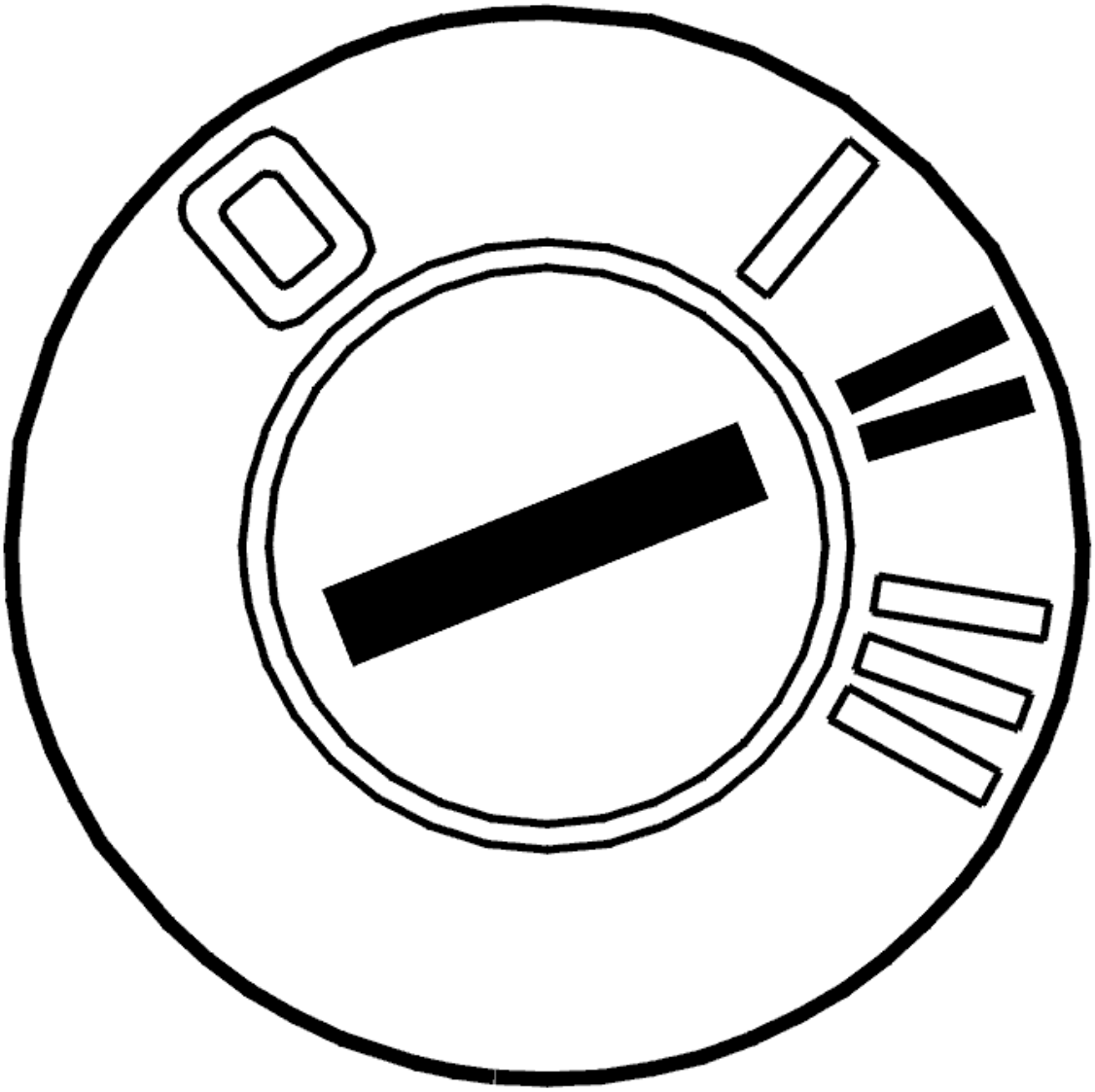

Fig. 107: Identifying Ignition ON
Courtesy of VOLVO CARS CORPORATION

- Ignition on.

  Click on the VCT2000 symbol to reset the adaptation and counter.

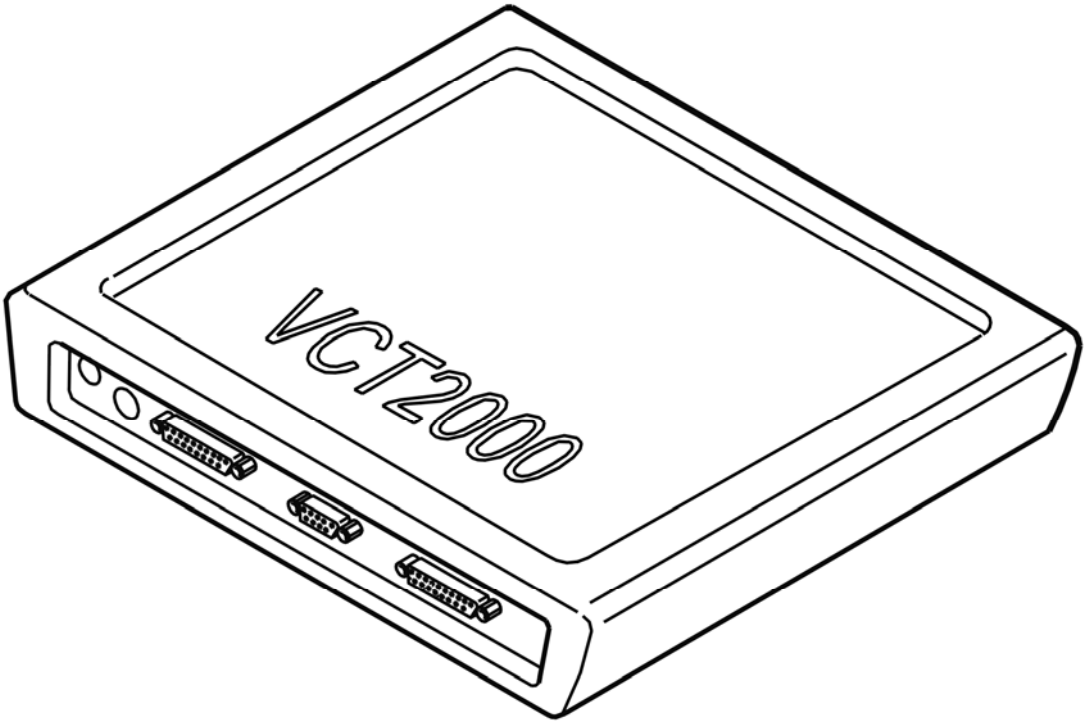

Fig. 108: Identifying VCT2000 Diagnostic Tool Symbol In VIDA
Courtesy of VOLVO CARS CORPORATION

- **Continue**

  Refer to **VERIFICATION**

VERIFICATION

VERIFICATION

HINT: After carrying out the repair, check that the fault has been remedied.

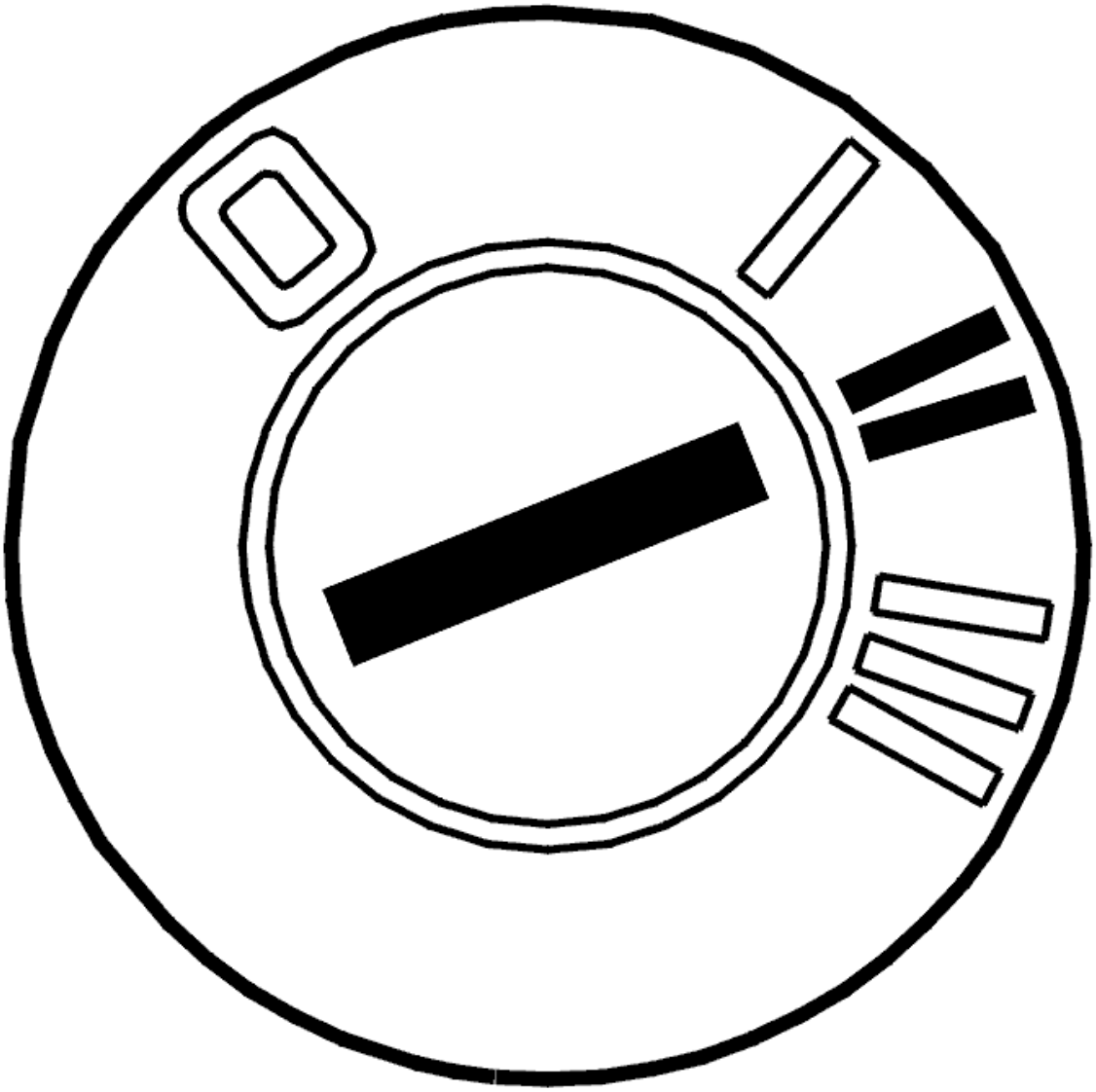

Fig. 109: Identifying Ignition ON
Courtesy of VOLVO CARS CORPORATION

- Ignition on.
- Gear selector in position P.
- Activate solenoid S1.
- Read off the current across solenoid S1.

The current should oscillate between approximately 0 and 1.5 A.

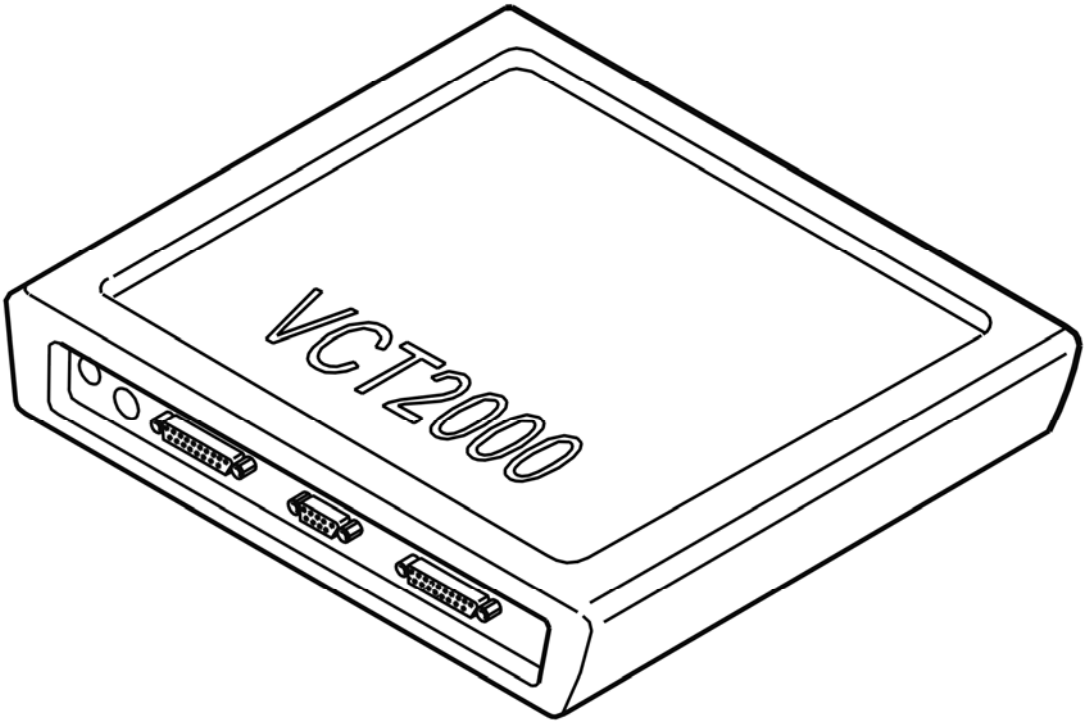

Fig. 110: Identifying VCT2000 Diagnostic Tool Symbol In VIDA
Courtesy of VOLVO CARS CORPORATION

Does the current oscillate?

- **YES**

  VERIFIED: Troubleshooting has been completed.

- **NO**

  Refer to **INFORMATION**

INFORMATION

FAULT-TRACING INFORMATION

The fault should have been detected and remedied. As this is not the case fault-tracing has failed.

Exit fault-tracing for this diagnostic trouble code (DTC) or make another attempt.

INFORMATION

FAULT-TRACING INFORMATION

If the fault is intermittent, do not verify fault-tracing if the fault does not recur.

It is possible to view the information again, or leave fault-tracing for this diagnostic trouble code (DTC).

SIGNAL TOO HIGH

CHECKING THE FUNCTION OF THE OIL TEMPERATURE SENSOR

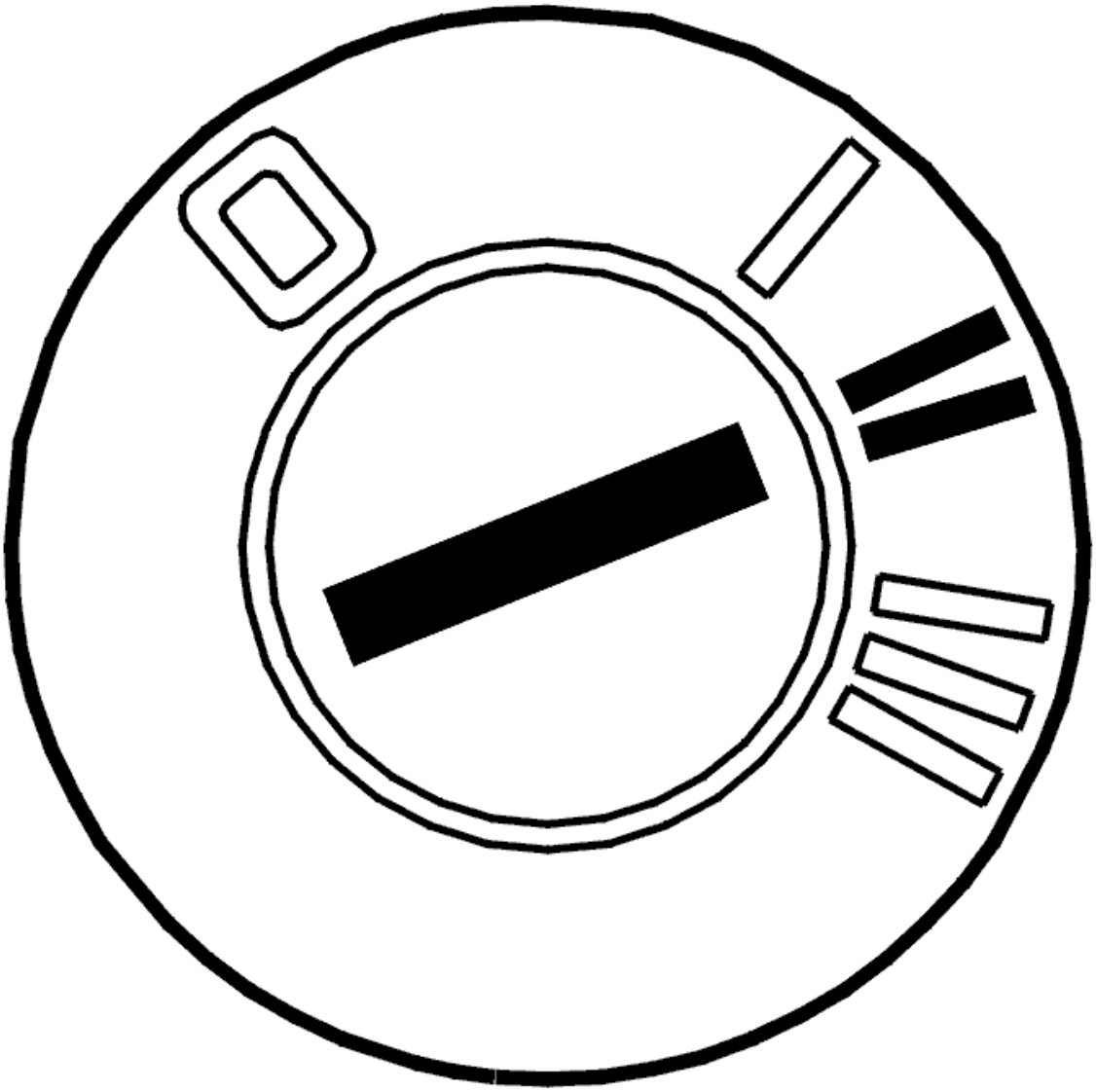

Fig. 111: Identifying Ignition ON
Courtesy of VOLVO CARS CORPORATION

- Ignition on
- Read off the oil temperature.

  Check that the temperature is within its permitted range.

Compare with the transmission temperature.

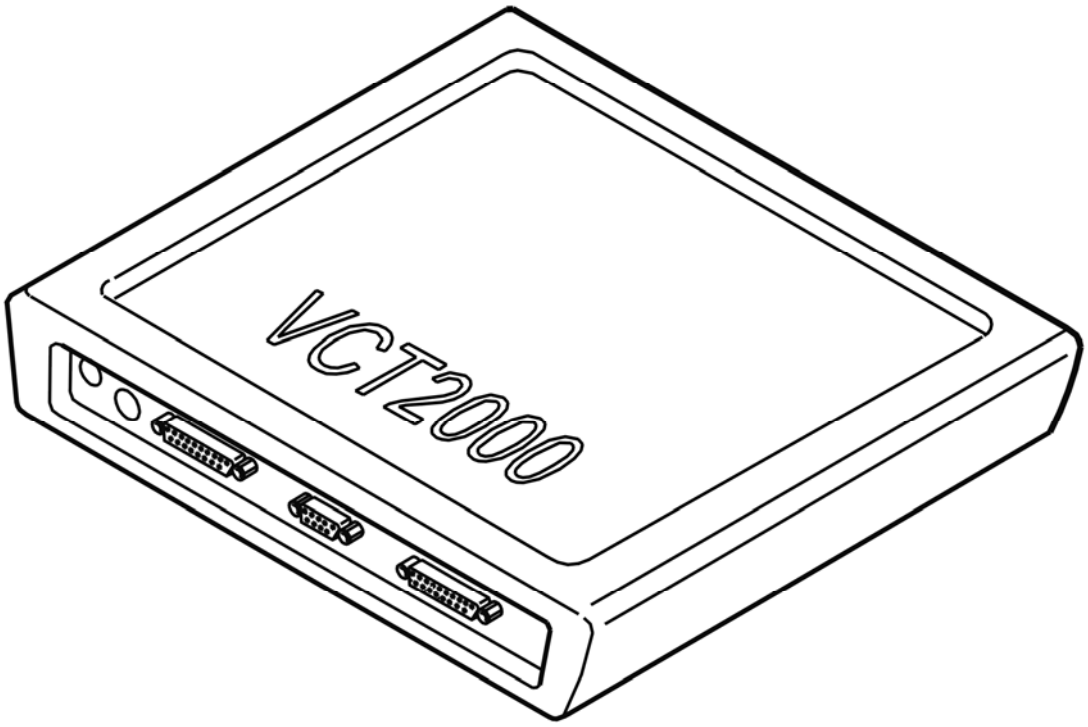

Fig. 112: Identifying VCT2000 Diagnostic Tool Symbol In VIDA
Courtesy of VOLVO CARS CORPORATION

Is the transmission temperature within its permitted range?

- **YES**

  Refer to **INTERMITTENT FAULT**

- **NO**

  Refer to **CHECKING TRANSMISSION FLUID TEMPERATURE SENSOR**

CHECKING TRANSMISSION FLUID TEMPERATURE SENSOR

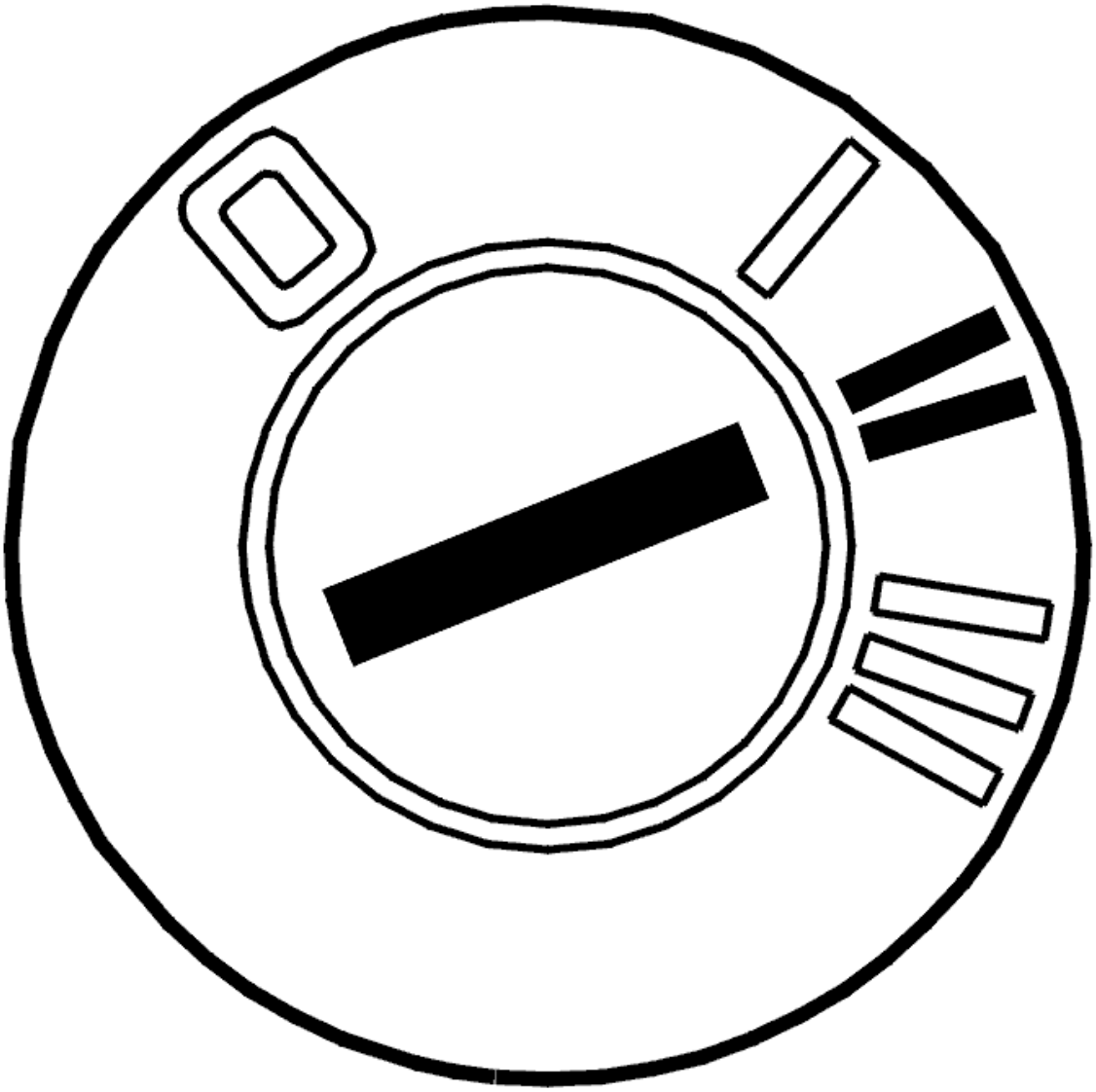

Fig. 113: Identifying Ignition ON
Courtesy of VOLVO CARS CORPORATION

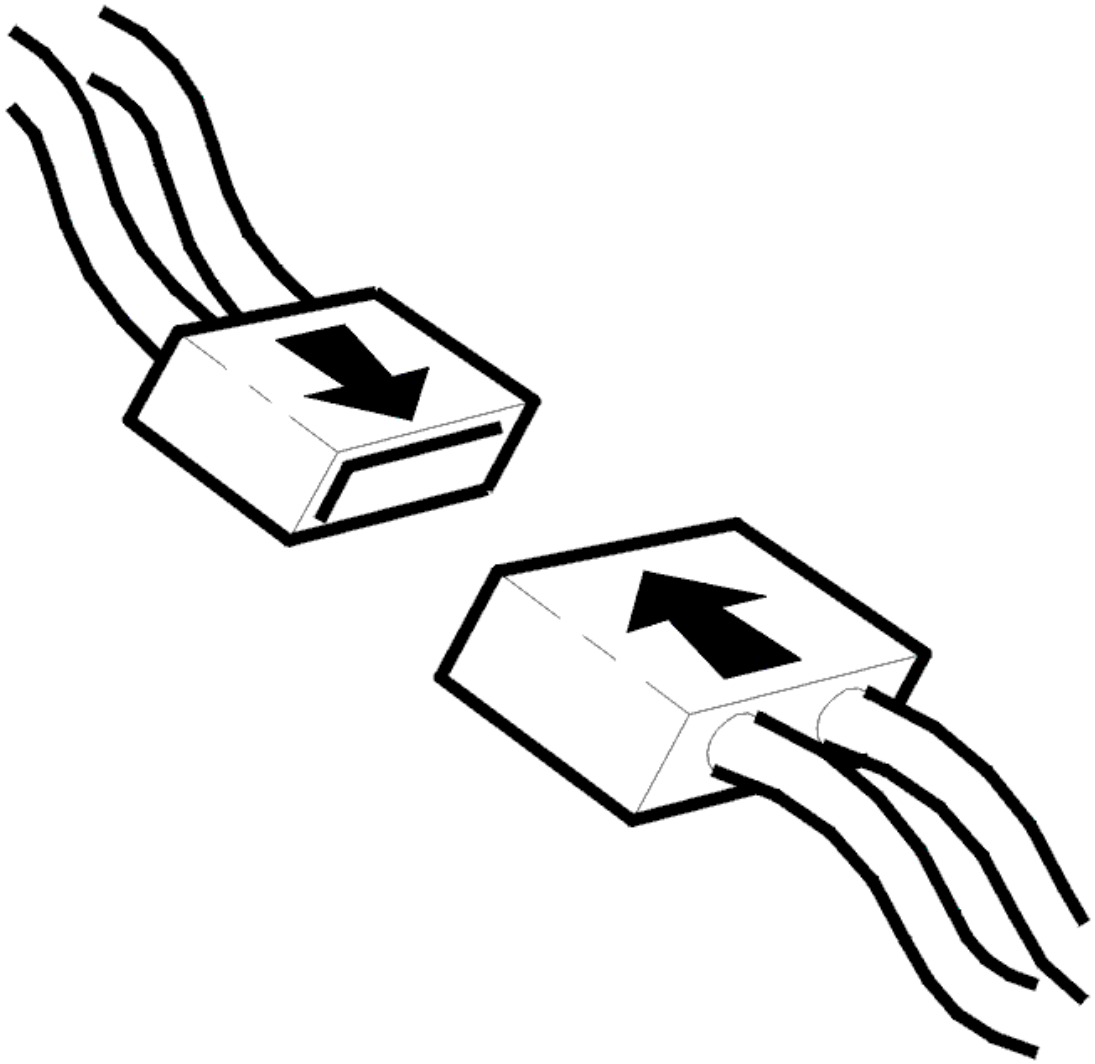

Fig. 114: Identifying Connector(s) Reinstallation
Courtesy of VOLVO CARS CORPORATION

- Ignition off
- Check the control module and transmission connectors. Check for contact resistance and oxidation
- Reconnect the control module and transmission connectors
- Ignition on
- Read off the oil temperature.

  Check that the temperature is within its permitted range.

  Compare with the transmission temperature.

  If the transmission temperature is within its permitted range, the cause of the fault was contact resistance or oxidation in the control module or transmission connector.

Other information

- To disconnect the control module, see **TRANSMISSION CONTROL MODULE (TCM), REPLACING**
- To connect the breakout box to the transmission connector, see **CONNECTING THE BREAKOUT BOX, GM AUTOMATIC TRANSMISSIONS**
- see **CHECKING WIRING AND TERMINALS**

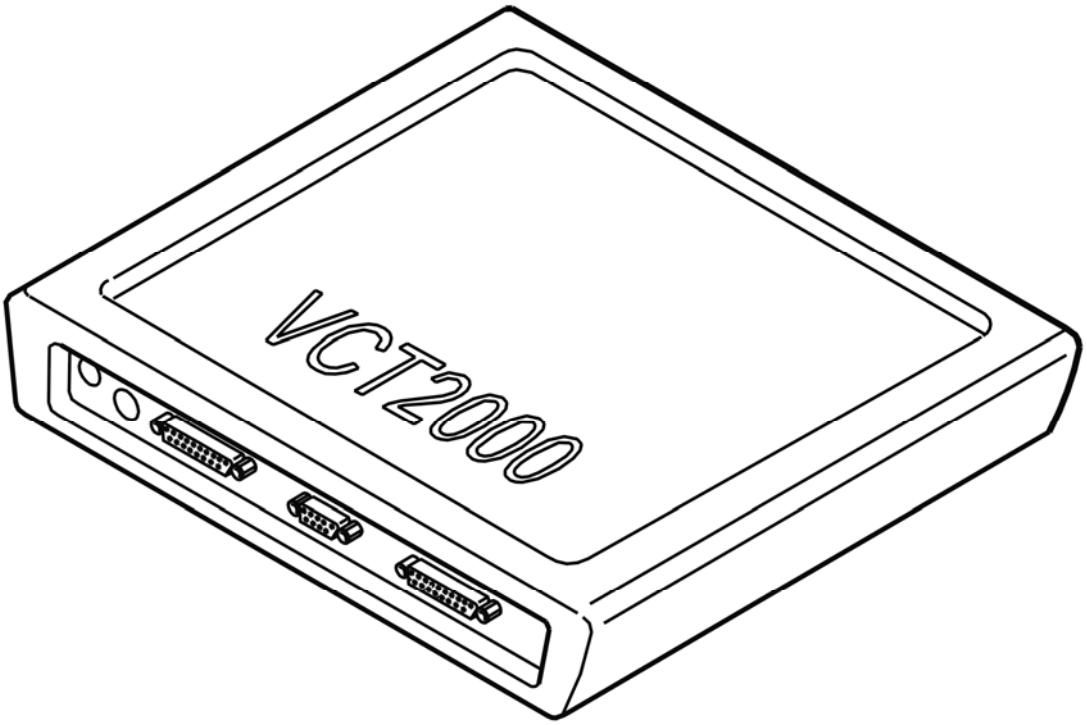

Fig. 115: Identifying VCT2000 Diagnostic Tool Symbol In VIDA
Courtesy of VOLVO CARS CORPORATION

Was the transmission temperature within its permitted range?

- **YES**

  OKAY: Troubleshooting has been completed.

- **NO**

  Refer to **CHECKING THE TEMPERATURE SENSOR**

CHECKING THE TEMPERATURE SENSOR

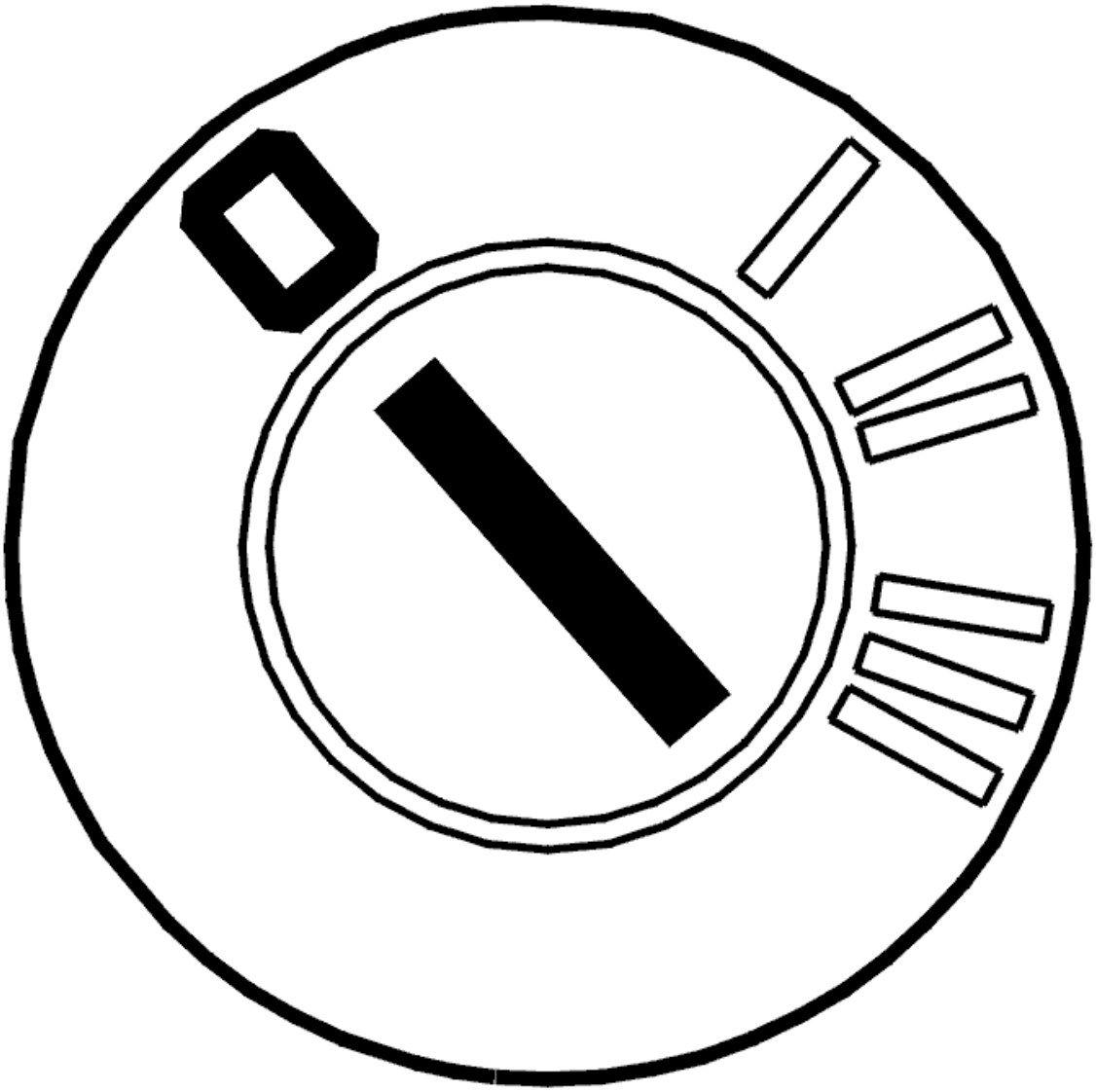

Fig. 116: Identifying Ignition OFF
Courtesy of VOLVO CARS CORPORATION

- Ignition off
- Disconnect the transmission connector
- Connect adapter see **9511505** and see **9813190** to the transmission connector (transmission side)
- Connect an ohmmeter between terminals #L (terminal #A11) and #M (terminal #A12).

  The resistance must be 3.4-3.6 kohms at 20 °C.

  Other information

  - To connect the breakout box to the transmission connector, see **CONNECTING THE BREAKOUT BOX, GM AUTOMATIC TRANSMISSIONS**
  - For information about signals, see **SIGNAL SPECIFICATION**

- For information about the resistance values, see **COMPONENT RESISTANCE VALUES**
- For information about the resistance values, see **COMPONENT RESISTANCE VALUES** .

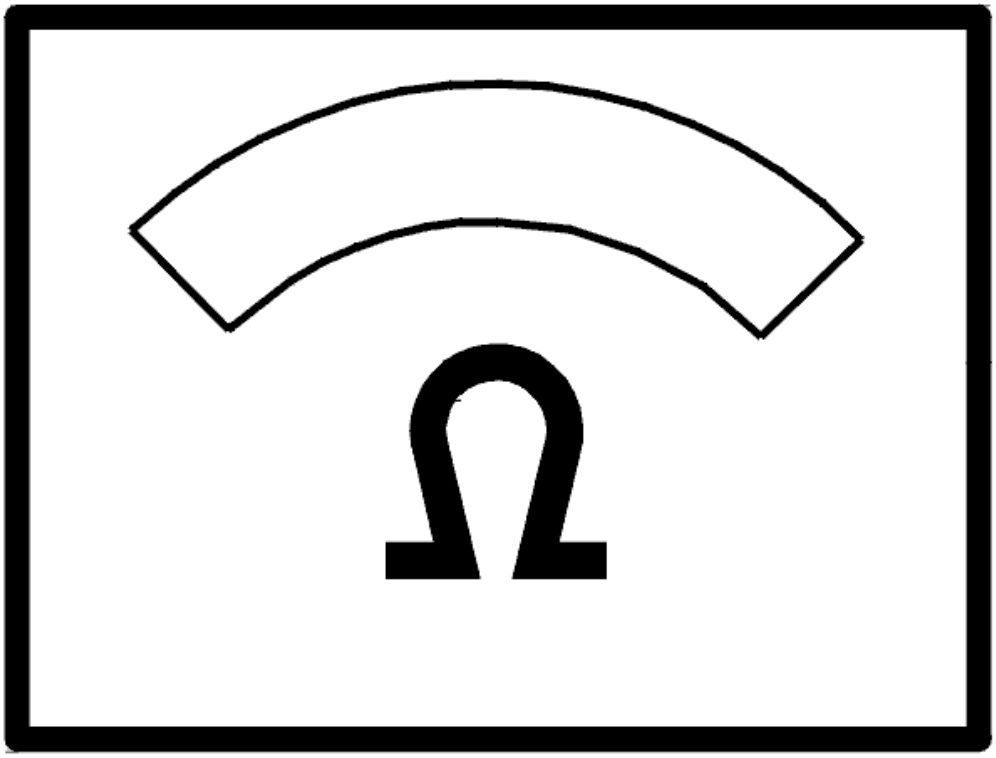

Fig. 117: Identifying Ohms Display
Courtesy of VOLVO CARS CORPORATION

Was the resistance OK?

- **YES**

  Refer to **CHECKING THE WIRING**

- **NO**

  Refer to **CHECKING THE WIRING AND COMPONENT**

CHECKING THE WIRING

- Breakout box connected to the control module
- Breakout box connected to the transmission connector.

Check the cable between control module terminal #37 (#A37) and transmission connector (control module side) terminal #L (#A11). Check for an open-circuit. Check for a short-circuit to supply voltage.

Check the cable between control module terminal #55 (#A55) and transmission connector (control module side) terminal #M (#A12). Check for an open-circuit. Check for a short-circuit to supply voltage.

Remedy as necessary.

Other information

- To connect the breakout box, see **CONNECTING THE BREAKOUT BOX**
- To connect the breakout box to the transmission connector, see **CONNECTING THE BREAKOUT BOX, GM AUTOMATIC TRANSMISSIONS**
- For information about signals, see **SIGNAL SPECIFICATION**
- see **CHECKING WIRING AND TERMINALS**

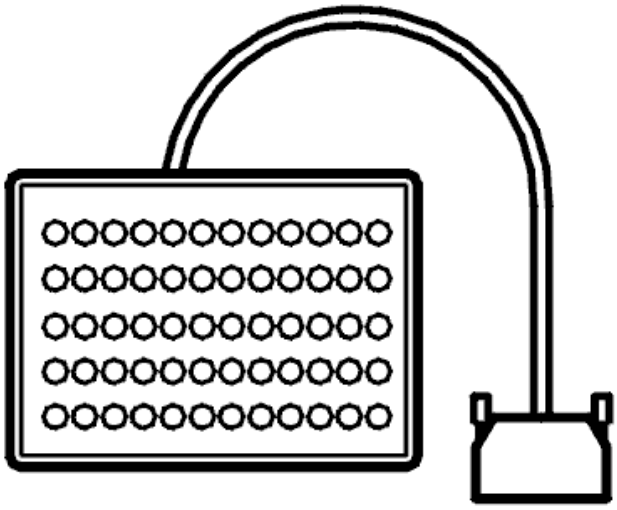

Fig. 118: Identifying Breakout Box
Courtesy of VOLVO CARS CORPORATION

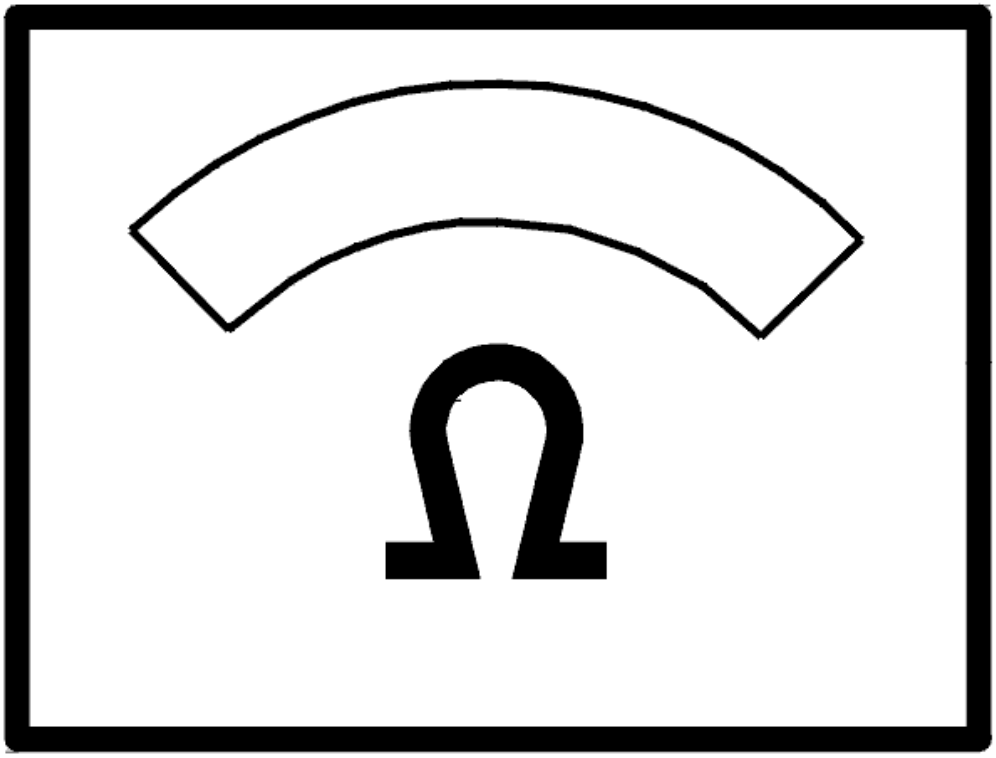

Fig. 119: Identifying Ohms Display
Courtesy of VOLVO CARS CORPORATION

Was a fault detected?

- **YES**

  Refer to **VERIFICATION**

- **NO**

  Refer to **CHECKING THE WIRING AND COMPONENT**

CHECKING THE WIRING AND COMPONENT

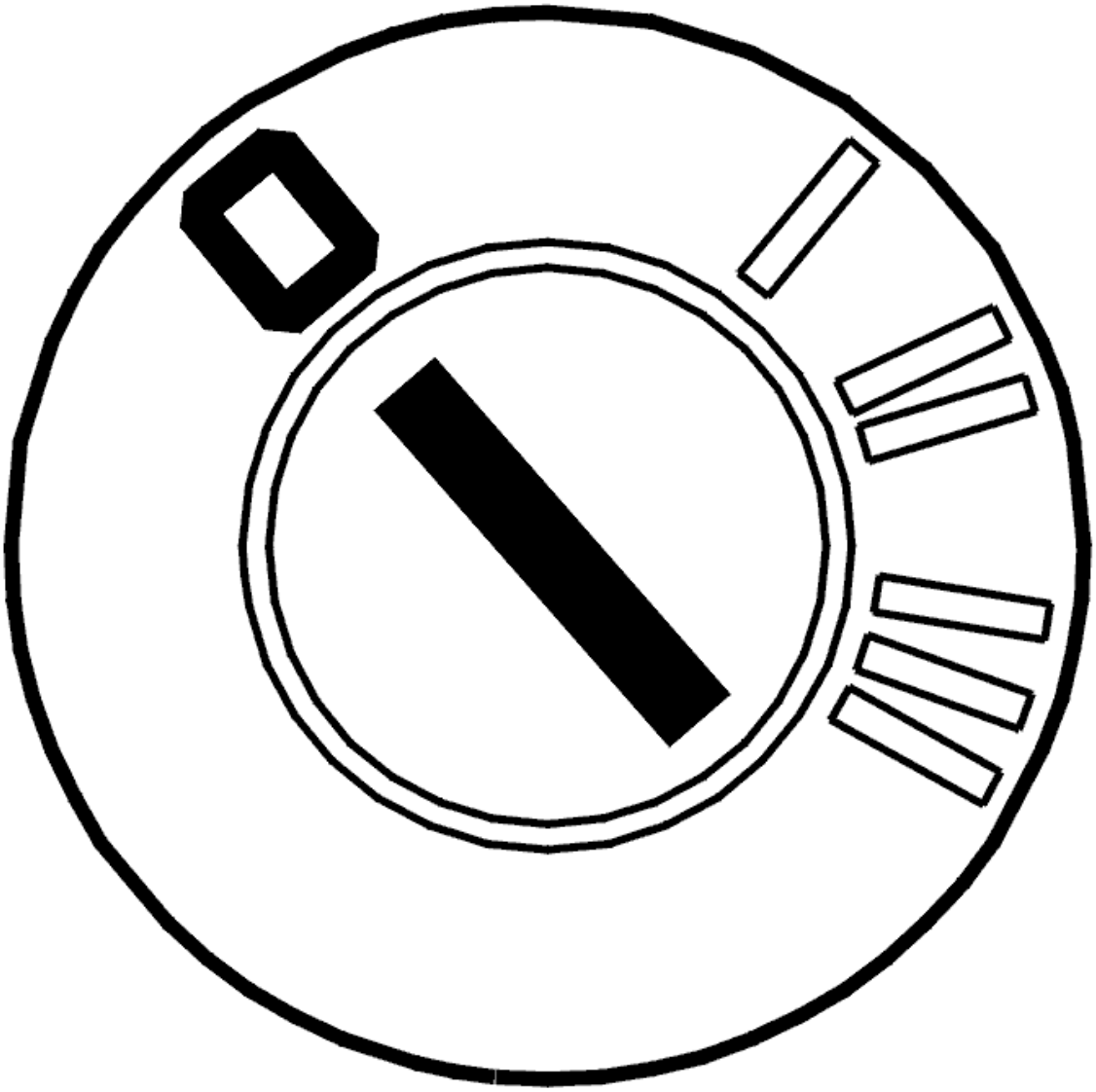

Fig. 120: Identifying Ignition OFF
Courtesy of VOLVO CARS CORPORATION

- Ignition off
- Open the transmission control system.

  Check the cable between transmission terminal #L (#A11) and temperature sensor terminal #A. Check for an open-circuit. Check for a short-circuit to supply voltage.

  Check the cable between transmission terminal #M (#A12) and temperature sensor terminal #B. Check for an open-circuit. Check for a short-circuit to supply voltage.

  HINT: Check the temperature sensor by measuring the resistance between temperature sensor connector terminals #A and #B. The resistance must be between 3.5-3.6 kohms at 20° C.

  Remedy as necessary.

Other information:

- To connect the breakout box, see **CONNECTING THE BREAKOUT BOX**
- To connect the breakout box to the transmission connector, see **CONNECTING THE BREAKOUT BOX, GM AUTOMATIC TRANSMISSIONS**
- To replace the cable harness, see **TEMPERATURE SENSOR FLUID, TRANSAXLE, (TFT)**
- To replace the temperature sensor, see **TEMPERATURE SENSOR FLUID TRANSMISSION, REPLACING**
- For information about signals, see **SIGNAL SPECIFICATION**
- For information about the resistance values, see **COMPONENT RESISTANCE VALUES**
- see **CHECKING WIRING AND TERMINALS**

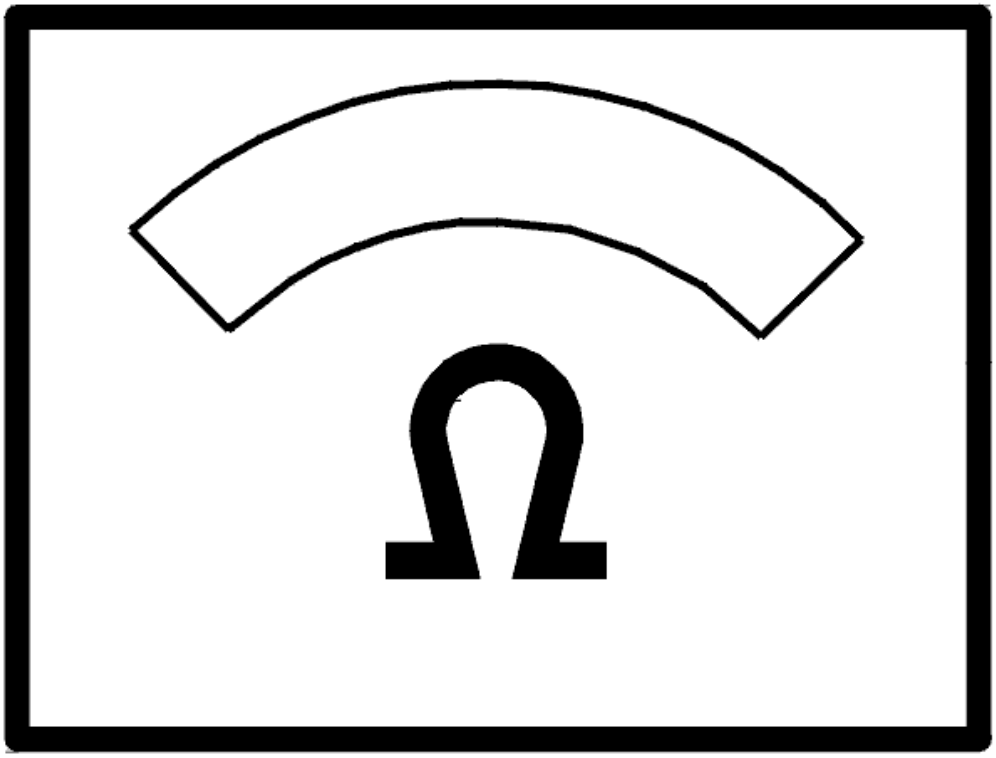

Fig. 121: Identifying Ohms Display
Courtesy of VOLVO CARS CORPORATION

- **Continue**

  Refer to **RESETTING TRANSMISSION FLUID CHANGE COUNTER**

INTERMITTENT FAULT

Check the control module and automatic transmission connector. Check for contact resistance and oxidation. Remedy if necessary.

Check the cable between control module terminal #A37 (#A37) and transmission connector (control module side) terminal #11. Check for an intermittent open-circuit. Check for an intermittent short-circuit to supply voltage.

Check the cable between control module terminal #A55 (#A55) and transmission connector (control module side) terminal #12. Check for an intermittent open-circuit. Check for an intermittent short-circuit to supply voltage.

Remedy as necessary.

Other information

- To connect the breakout box, see **CONNECTING THE BREAKOUT BOX**
- To connect the breakout box to the transmission connector, see **CONNECTING THE BREAKOUT BOX, GM AUTOMATIC TRANSMISSIONS**
- For information about signals, see **SIGNAL SPECIFICATION**
- see **CHECKING WIRING AND TERMINALS**

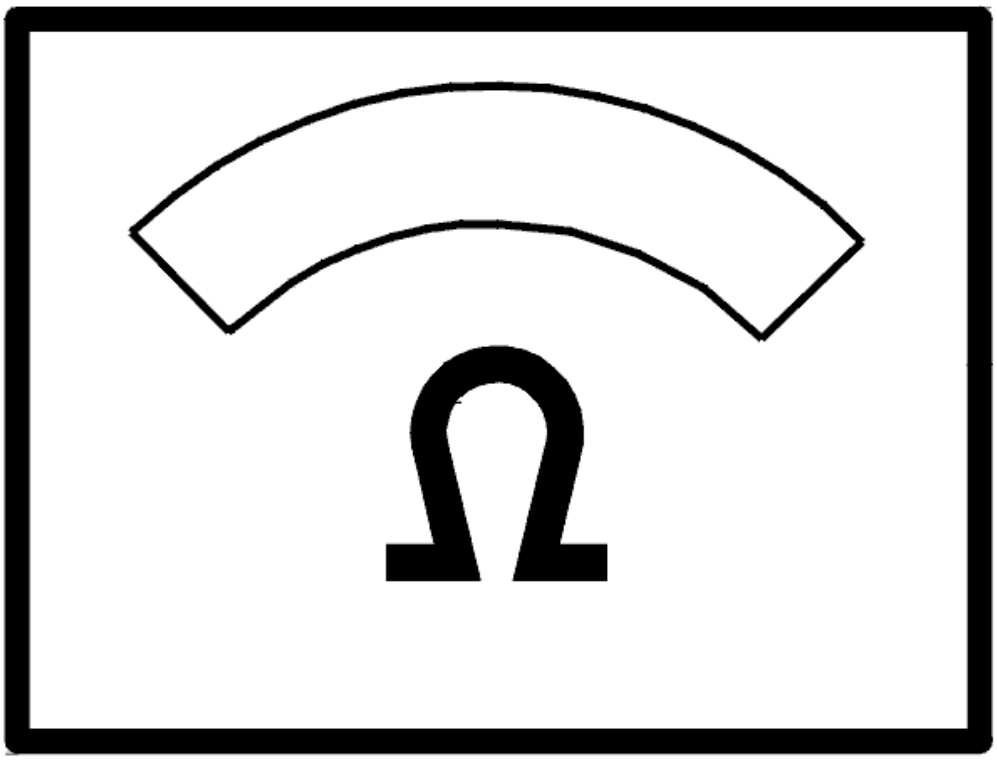

Fig. 122: Identifying Ohms Display
Courtesy of VOLVO CARS CORPORATION

- **Continue**

  Refer to **INFORMATION**

RESETTING TRANSMISSION FLUID CHANGE COUNTER

RESETTING TRANSMISSION FLUID CHANGE COUNTER

HINT: The transmission control module (TCM) has a counter for the oil quality. The counter counts up if the transmission is exposed to too high a load or an ambient temperature that is too high. If the counter is not reset when the oil is drained or changed, there is a risk that a diagnostic trouble code (DTC) will be stored in faulty circumstances. Therefore it is important that the "Transmission oil change" counter is reset.

NOTE: **This applies only when the transmission fluid is changed and when the fluid is changed when repairs are carried out to the transmission temperature sensor.**

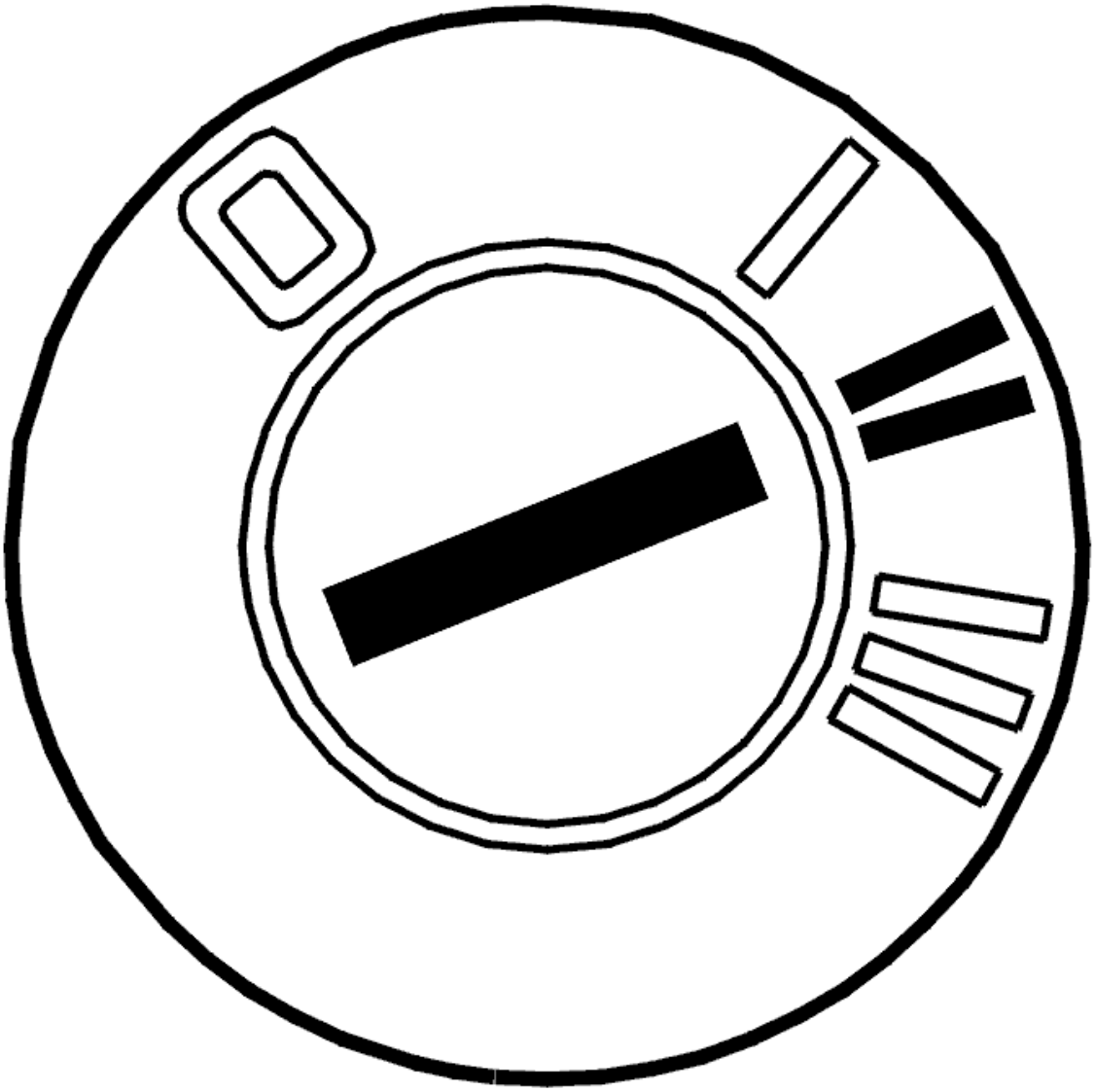

Fig. 123: Identifying Ignition ON
Courtesy of VOLVO CARS CORPORATION

- Ignition on.

  Reset the counter by clicking on the VCT 2000 symbol.

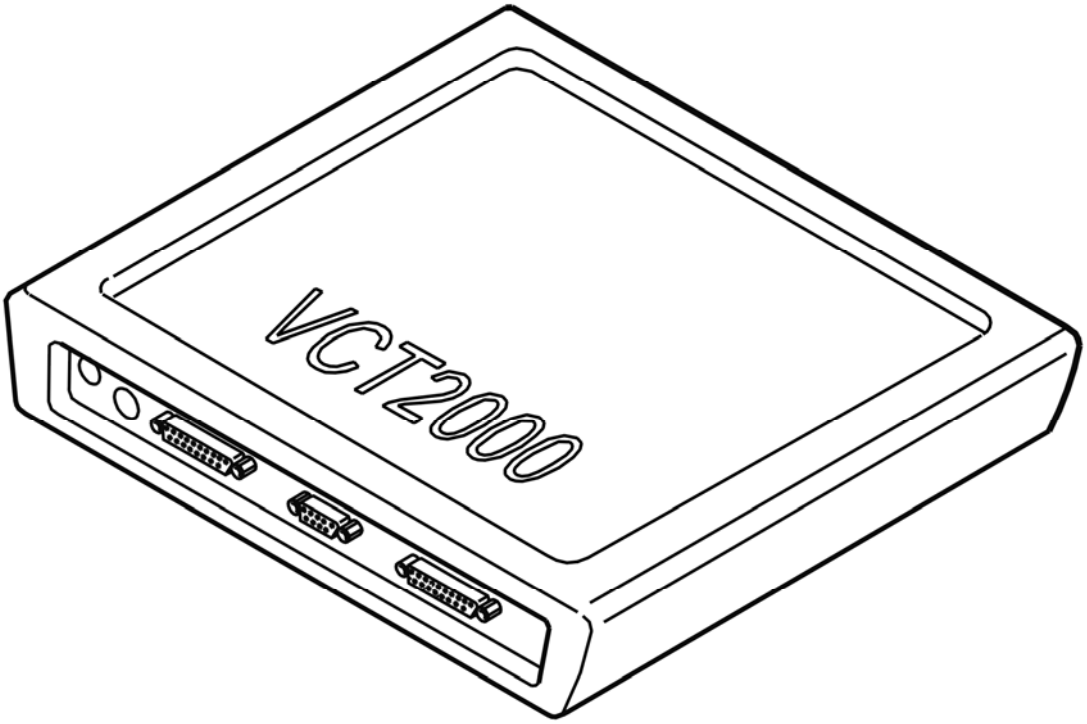

Fig. 124: Identifying VCT2000 Diagnostic Tool Symbol In VIDA
Courtesy of VOLVO CARS CORPORATION

- **Continue**

  Refer to **VERIFICATION**

VERIFICATION

VERIFICATION

HINT: After carrying out the repair check that the fault has been remedied.

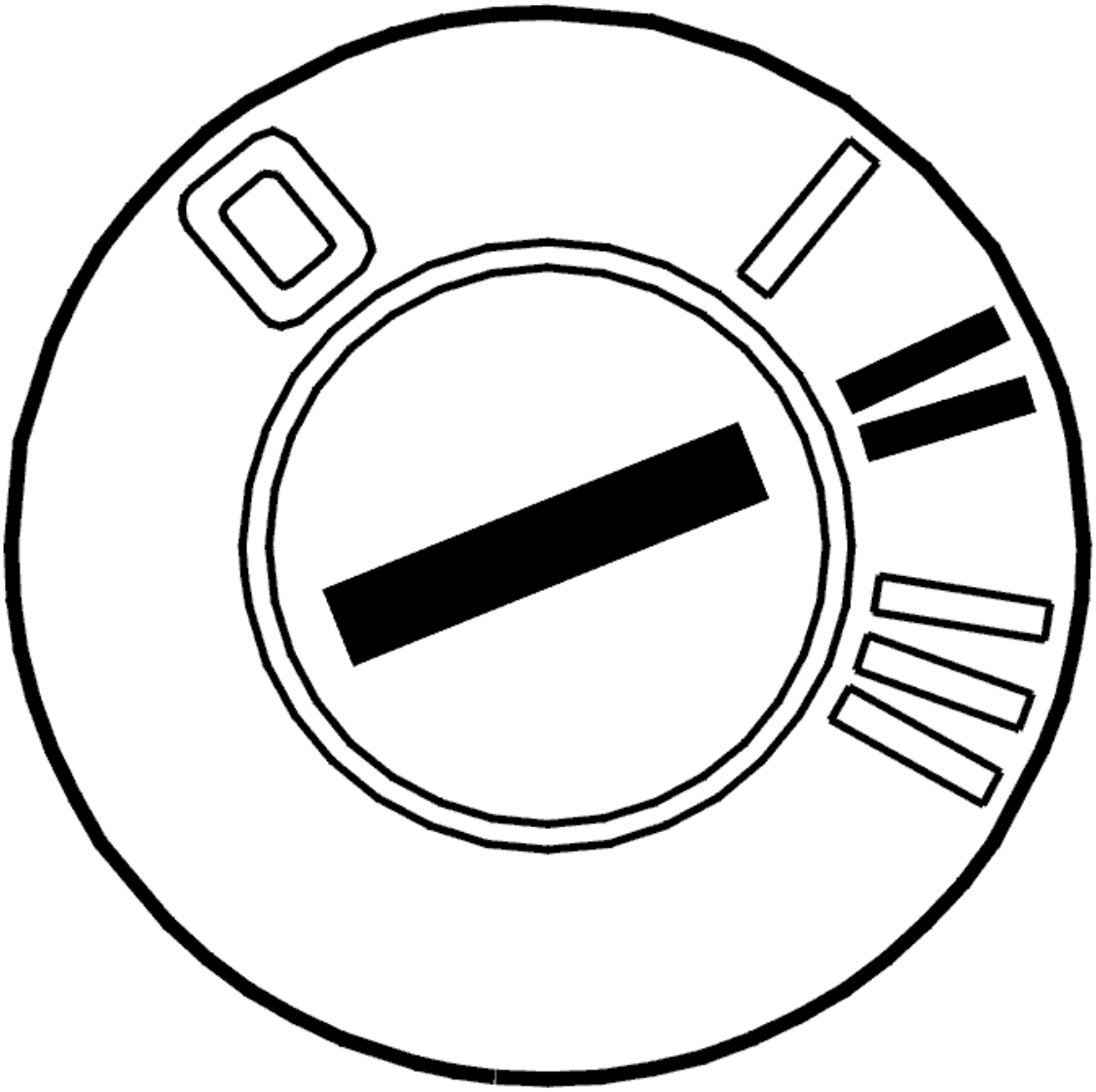

Fig. 125: Identifying Ignition ON
Courtesy of VOLVO CARS CORPORATION

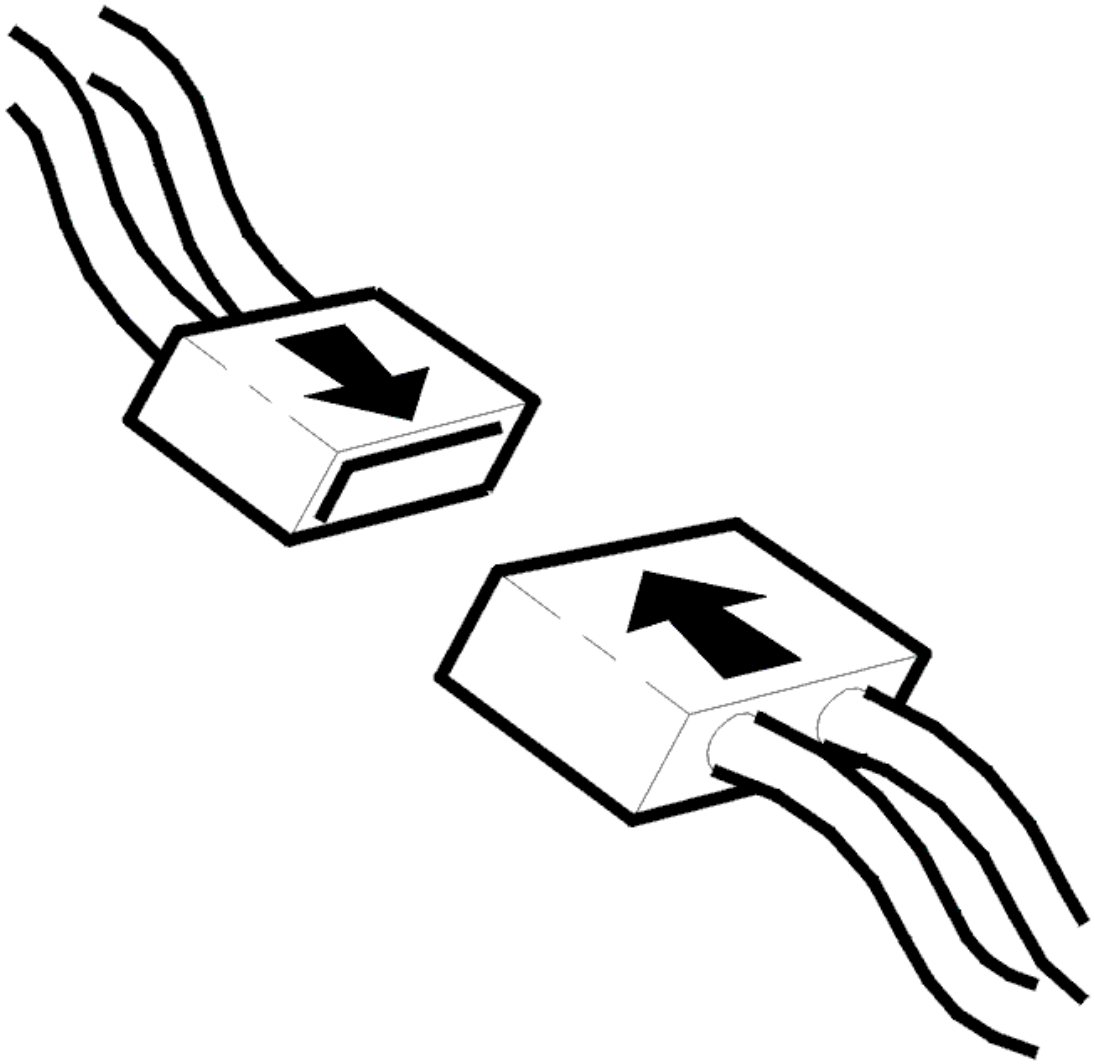

Fig. 126: Identifying Connector(s) Reinstallation
Courtesy of VOLVO CARS CORPORATION

- Ignition off.
- Reinstall connectors, components etc.
- Ignition on.
- Read off oil temperature.

  Check that the transmission oil temperature is within its permitted range. Compare with the transmission temperature.

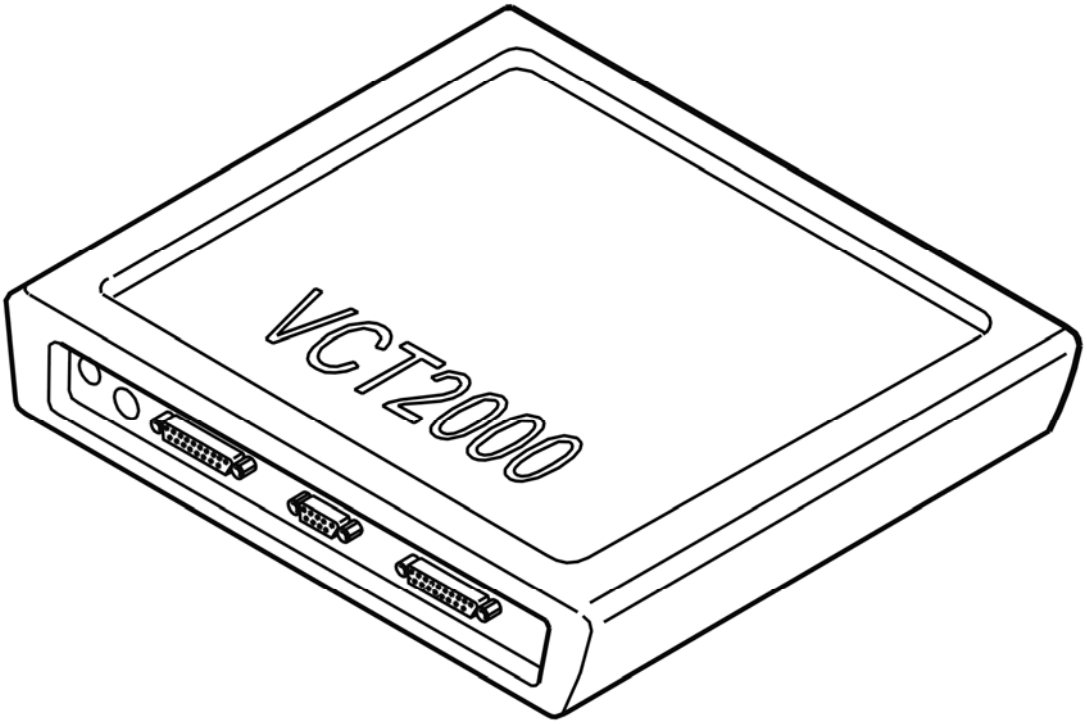

Fig. 127: Identifying VCT2000 Diagnostic Tool Symbol In VIDA
Courtesy of VOLVO CARS CORPORATION

Is the oil temperature within its permitted range?

- **YES**

  VERIFIED: Troubleshooting has been completed.

- **NO**

  Refer to **INFORMATION**

TCM-0002: SHIFT SOLENOID S1. SIGNAL MISSING (AW50/51 AWD; AW55-50/51SN; 2003-2007)

DIAGNOSTIC TROUBLE CODE (DTC) INFORMATION

Condition

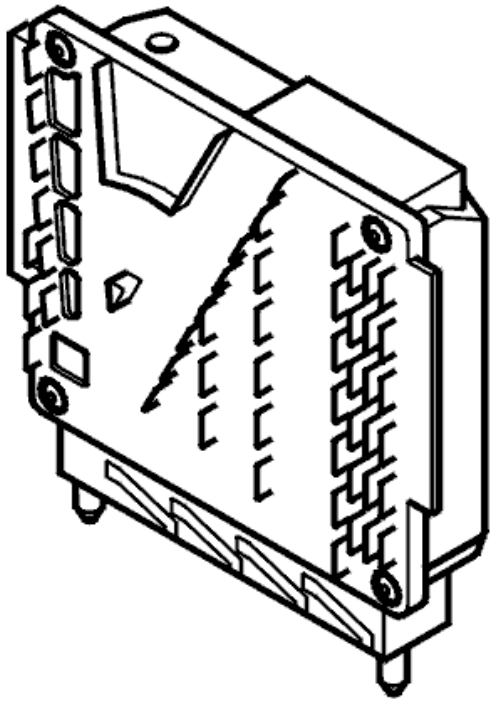

Fig. 128: Identifying Transmission Control Module (TCM)
Courtesy of VOLVO CARS CORPORATION

Shift solenoids S1, S2, S3, S4 and S5 operate in tandem to control gear-shifting. The solenoids are controlled by power stages in the transmission control module (TCM). The transmission control module (TCM) opens the power stages to activate the solenoids and sends a voltage through the circuit. Diagnostic trouble codes (DTCs) TCM-0002, TCM-0008, TCM-0102, TCM-0108 or TCM-010B are stored (depending on the solenoid) if the transmission control module (TCM) registers that the signal in circuits S1, S2, S3, S4 or S5 is missing when the solenoid is activated.

Substitute Value

- The transmission control module (TCM) "Emergency mode I" program has been initiated.

Possible Source

- Contact resistance in terminals.
- Open-circuit in the signal cable.
- Defective solenoid.
- Internal fault in the control module.

Fault symptom[s]

- General orange warning lamp lit.
- Malfunction indicator lamp (MIL) lit.
- Harsh gear shifting.
- No shifting.
- No lock-up function.

SIGNAL MISSING

CHECKS

CHECKING THE TEMPERATURE SENSOR

HINT: In some cases, the diagnostic trouble code (DTC) may be caused by a defective oil temperature sensor. Check the function of the oil temperature sensor first.

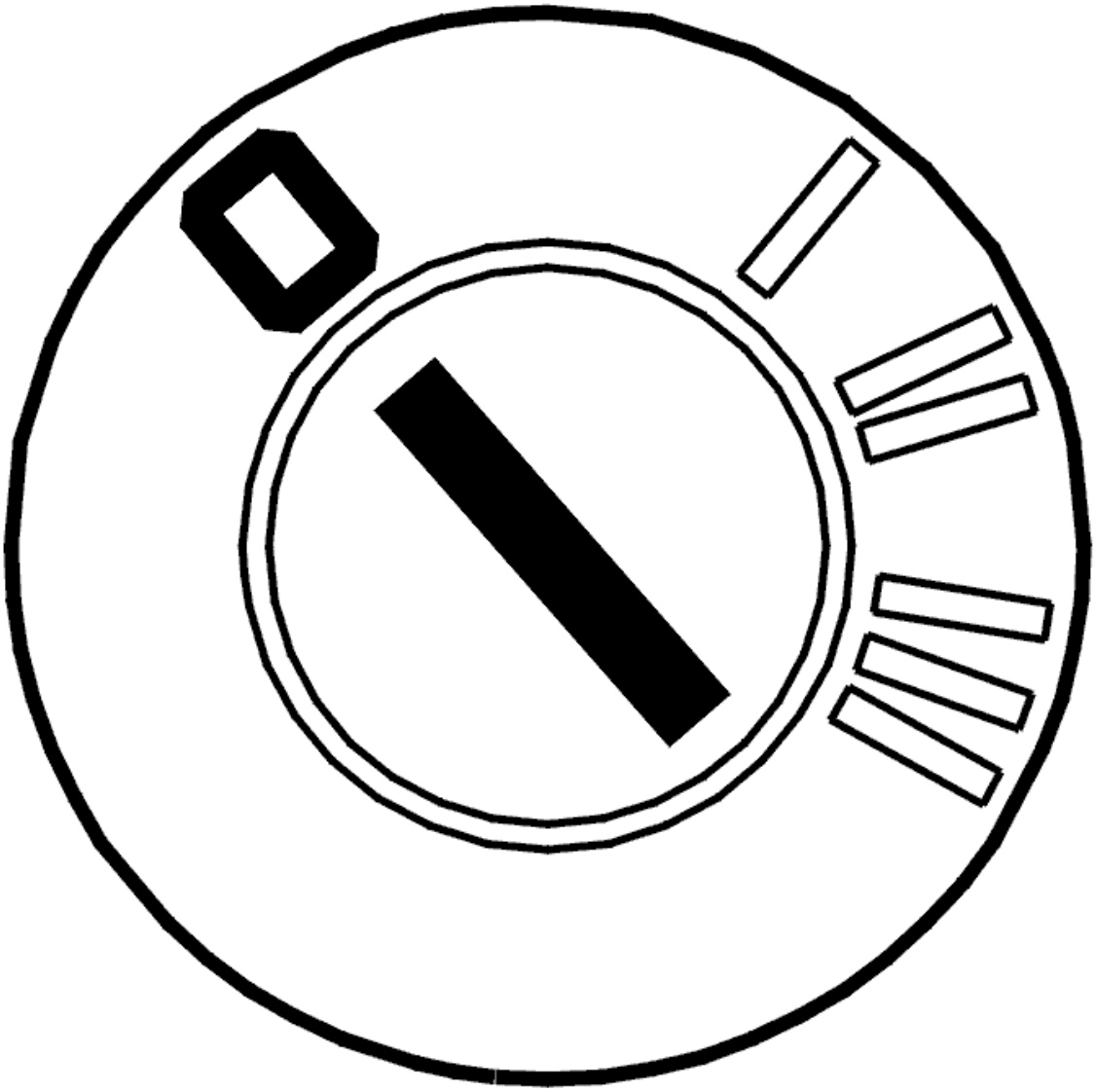

Fig. 129: Identifying Ignition OFF
Courtesy of VOLVO CARS CORPORATION

- Ignition off
- Read off the oil temperature.

  Check that the function of the temperature sensor is OK. Test drive the car to increase the temperature of the transmission fluid. Read off the temperature again. Check that the temperature has increased.

  HINT: If the temperature is outside its permitted range, fault-trace the temperature sensor.

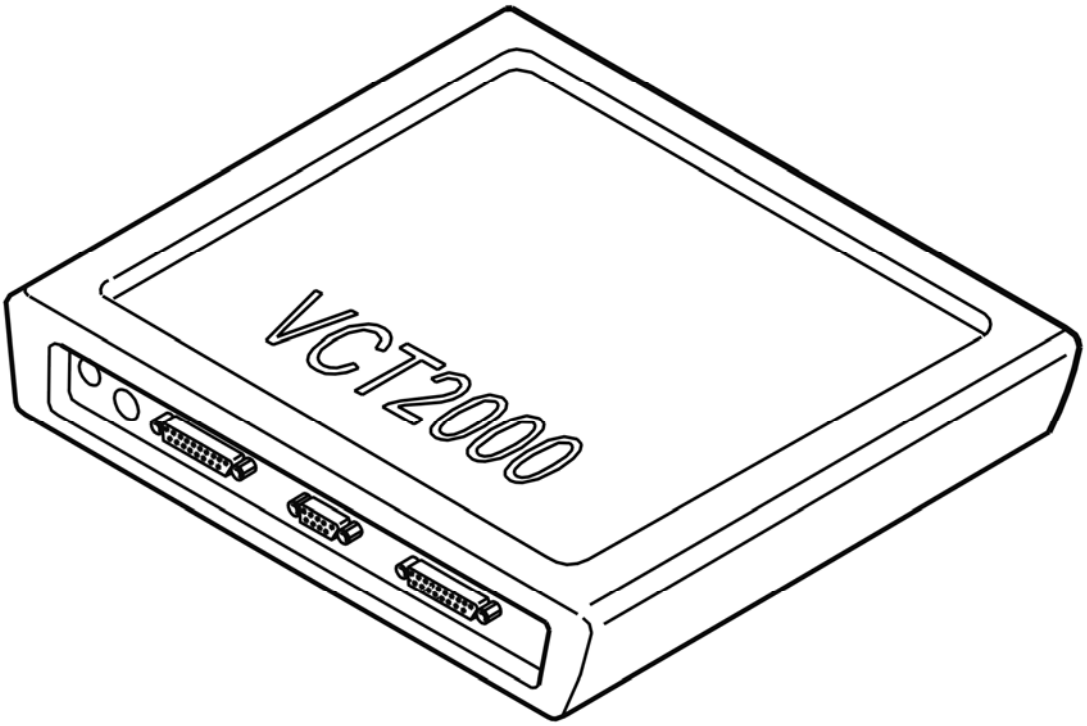

Fig. 130: Identifying VCT2000 Diagnostic Tool Symbol In VIDA
Courtesy of VOLVO CARS CORPORATION

Is the oil temperature within its permitted range?

- **YES**

  Refer to **CHECKING SHIFT SOLENOID S1**

- **NO**

  Refer to **FAULTY SIGNAL**

CHECKING SHIFT SOLENOID S1

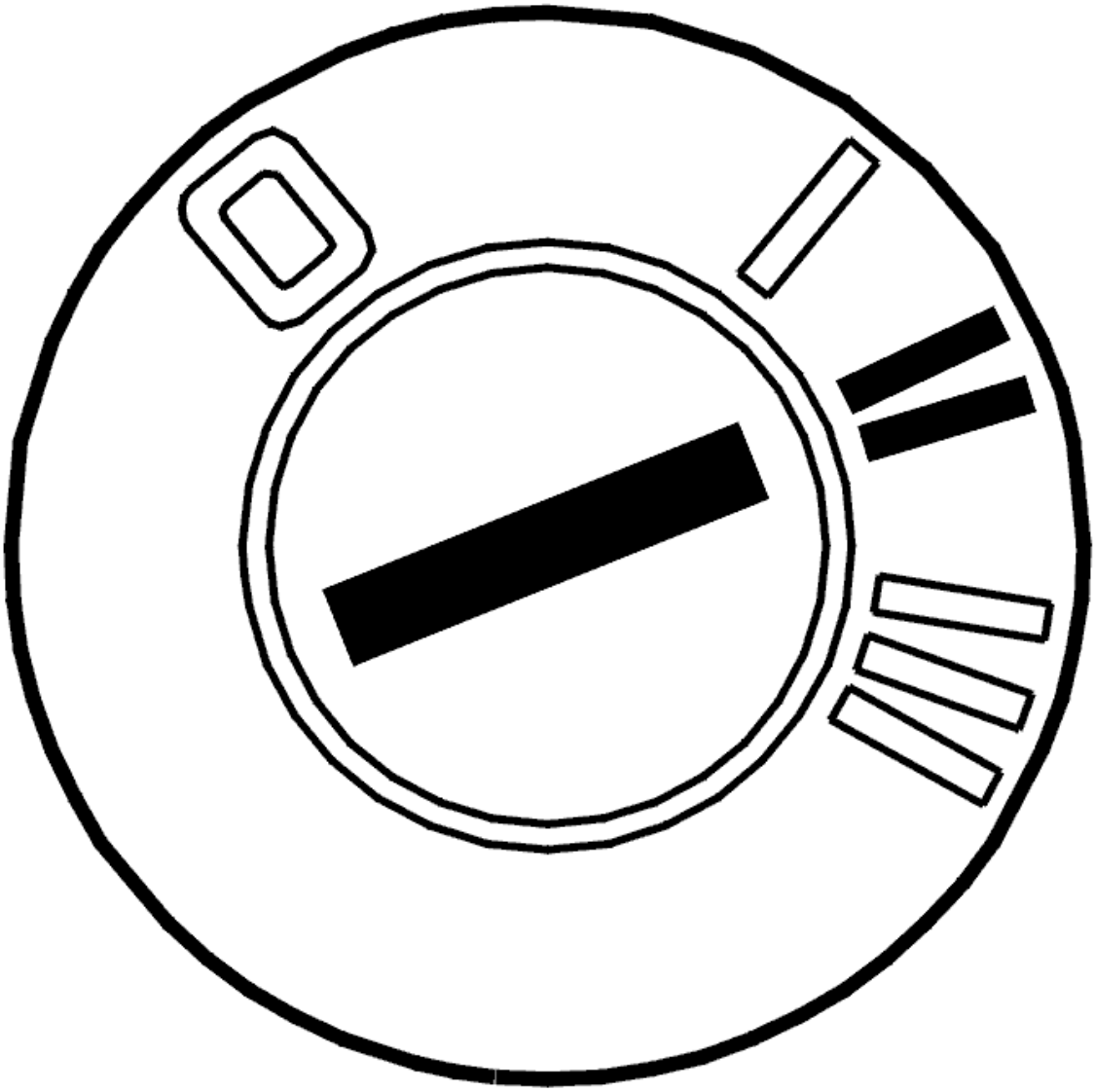

Fig. 131: Identifying Ignition ON
Courtesy of VOLVO CARS CORPORATION

- Ignition on
- Gear selector in position P
- Activate solenoid S1.

  The current should oscillate between 0 and approximately 1.5 A.

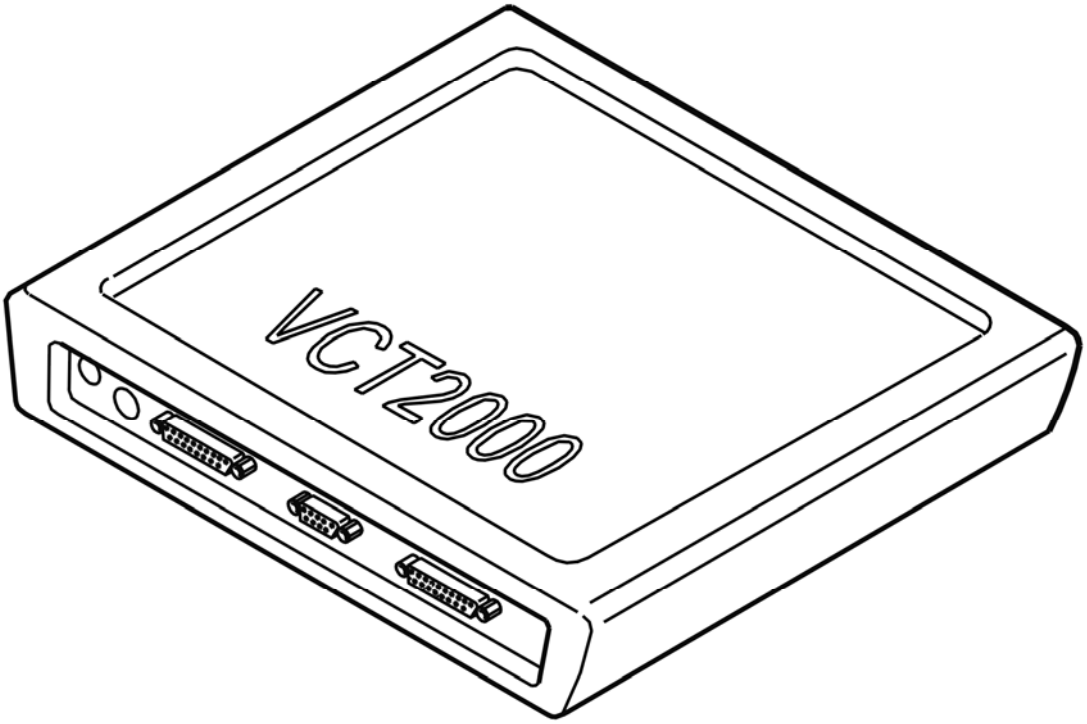

Fig. 132: Identifying VCT2000 Diagnostic Tool Symbol In VIDA
Courtesy of VOLVO CARS CORPORATION

Does the current oscillate?

- **YES**

  Refer to **INTERMITTENT FAULT**

- **NO**

  Refer to **CHECKING RESISTANCE**

CHECKING RESISTANCE

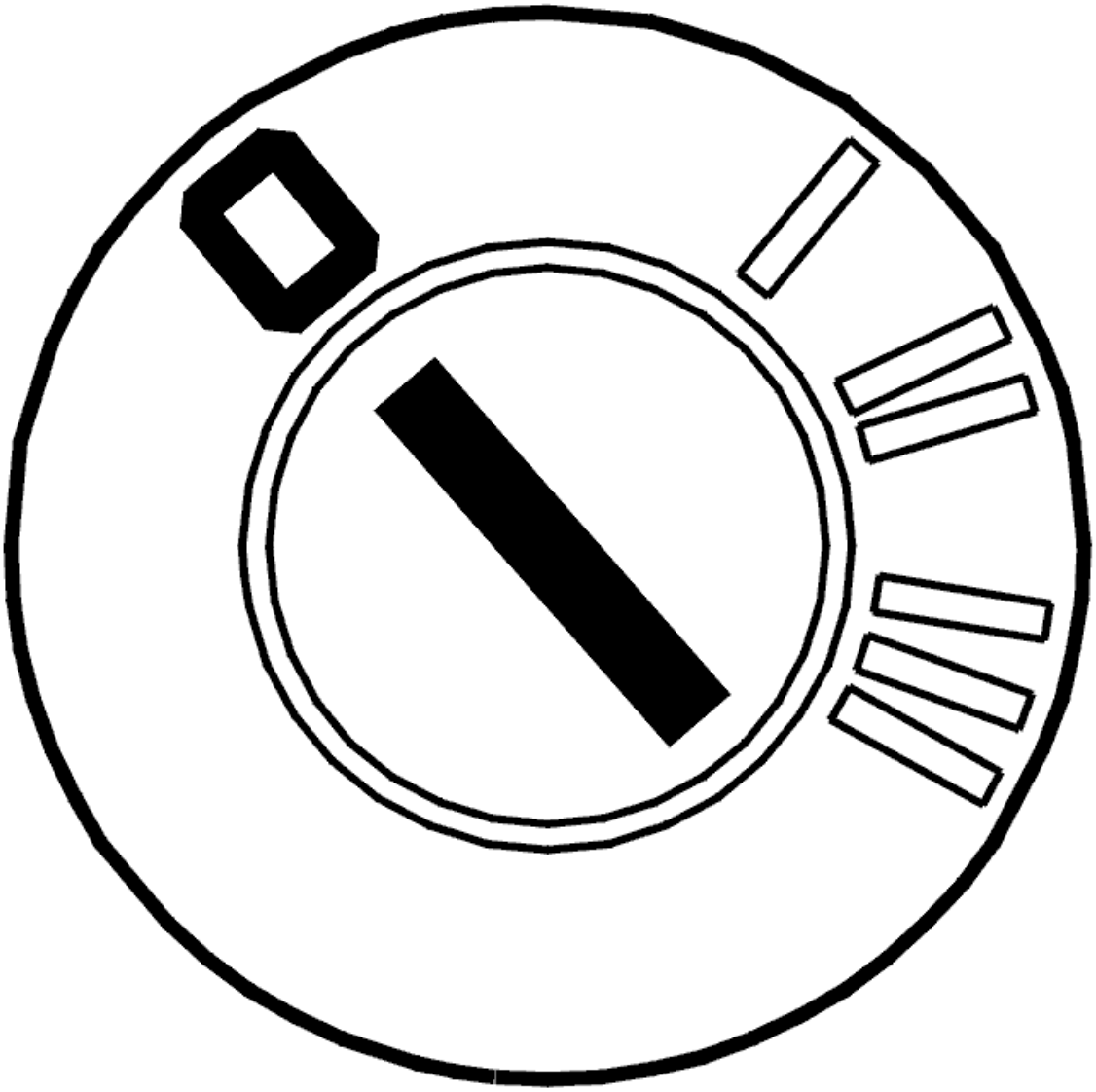

Fig. 133: Identifying Ignition OFF
Courtesy of VOLVO CARS CORPORATION

- Ignition off
- Disconnect the transmission connector.

  Check solenoid S1 by measuring the resistance between transmission connector terminal #C1 and the transmission housing. The resistance must be 12-16 ohms.

  Other information:

  - To disconnect the transmission connectors, see **CONNECTORS, TRANSMISSION, DISCONNECTING / CONNECTING**
  - For information about signals, see **SIGNAL DESCRIPTION. TRANSMISSION CONTROL MODULE (TCM)** .

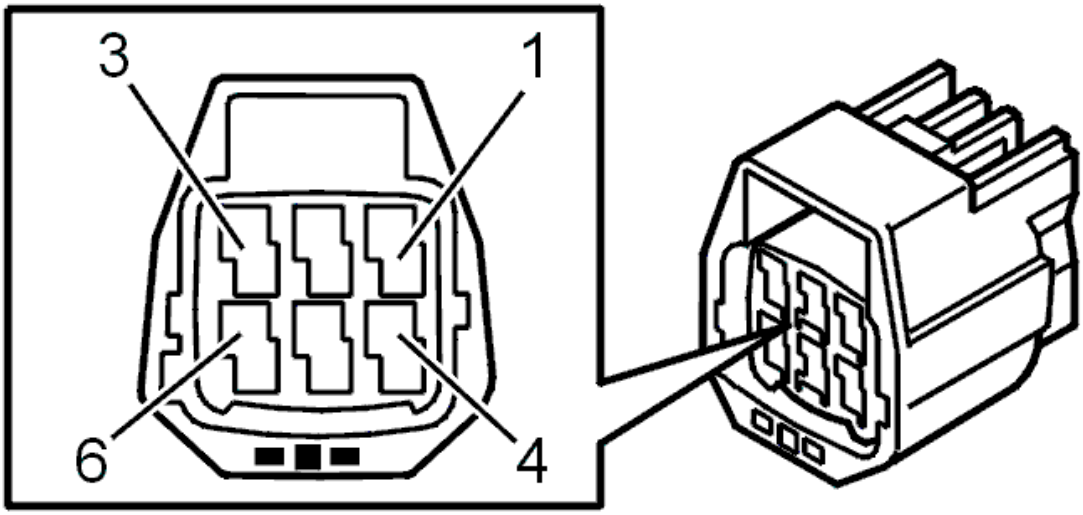

Fig. 134: Identifying 6-Pin Transmission Connector Terminals
Courtesy of VOLVO CARS CORPORATION

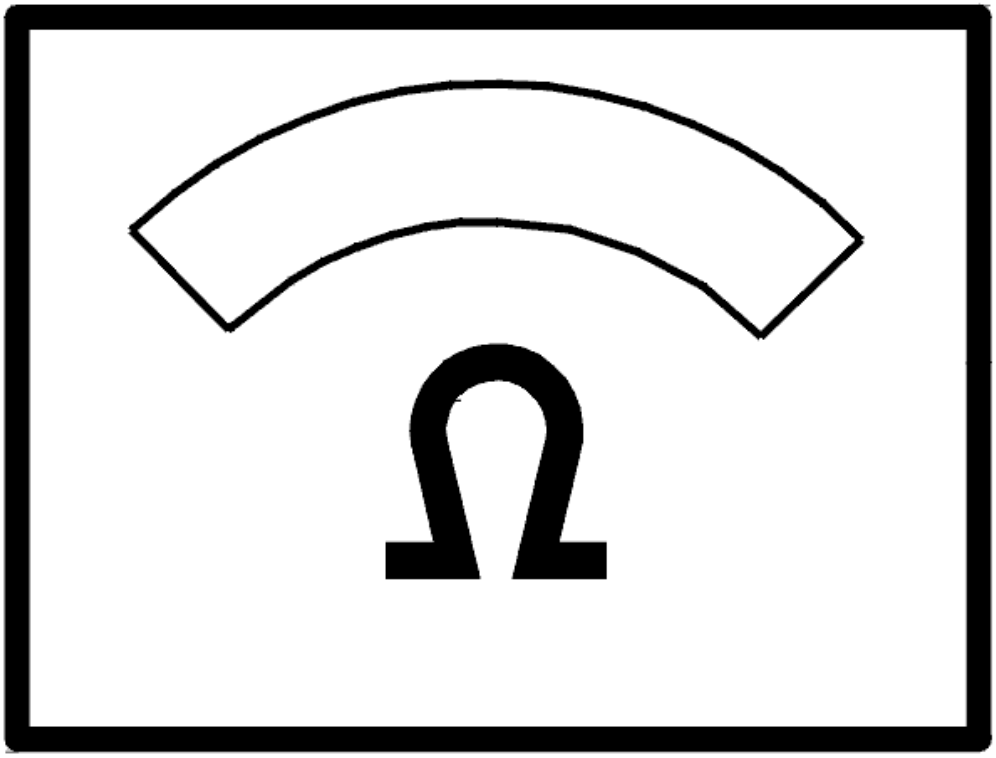

Fig. 135: Identifying Ohms Display
Courtesy of VOLVO CARS CORPORATION

Was the resistance OK?

- **YES**

  Refer to **CHECKING THE WIRING**

- **NO**

  Refer to **CHECKING THE WIRING AND COMPONENT**

CHECKING THE WIRING

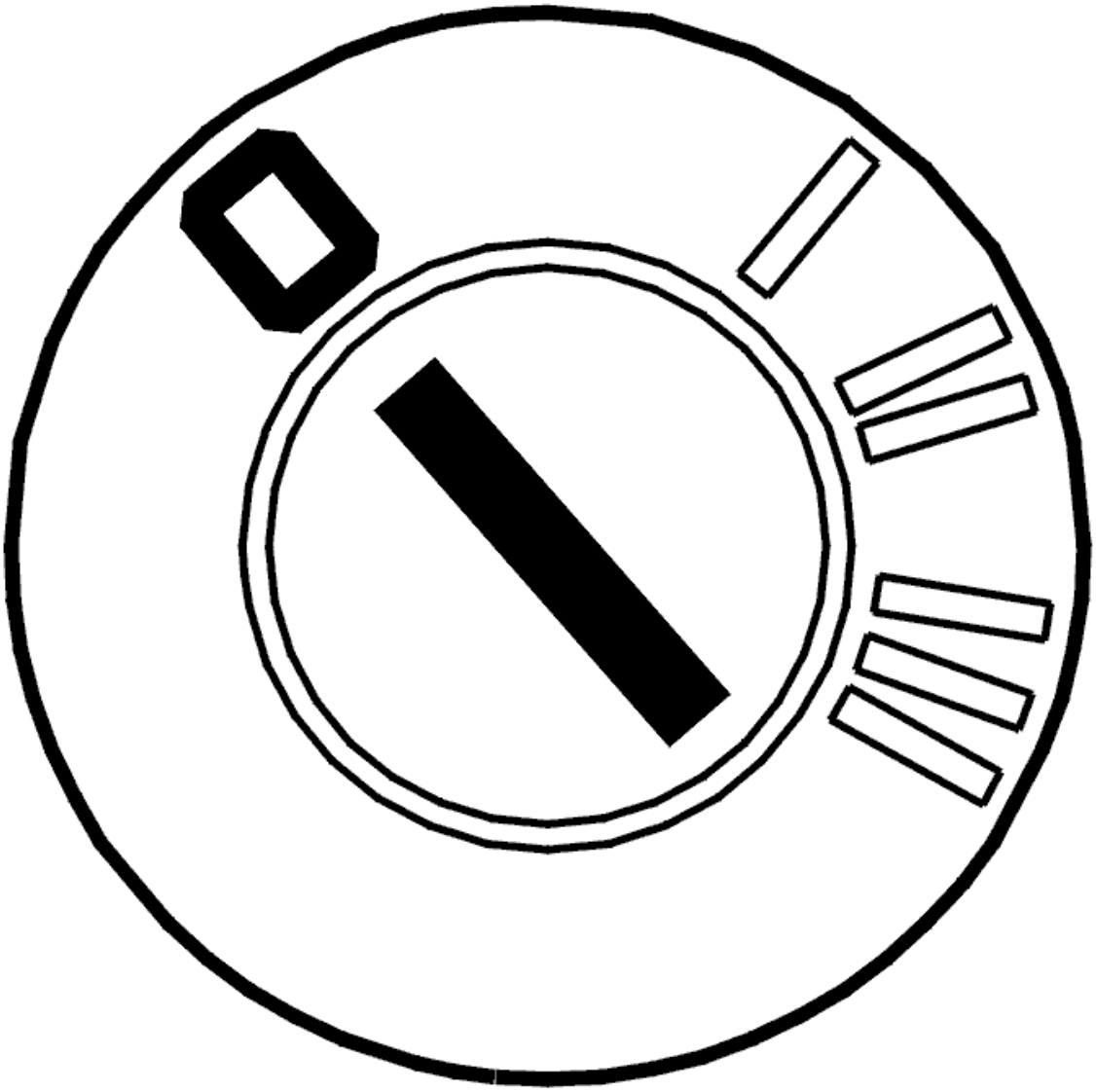

Fig. 136: Identifying Ignition OFF
Courtesy of VOLVO CARS CORPORATION

- Ignition off.

  Check the cable between control module terminal #A50 (#A50) and transmission connector terminal #C1 (control module side). Check for an open-circuit according to **OPEN-CIRCUIT, PERMANENT FAULTS** .

  Remedy as necessary.

  Other information:

  - To connect the breakout box, see **CONNECTING THE BREAKOUT BOX**
  - To disconnect the transmission connectors, see **CONNECTORS, TRANSMISSION, DISCONNECTING / CONNECTING**

- For information about signals, see **SIGNAL DESCRIPTION. TRANSMISSION CONTROL MODULE (TCM)** .

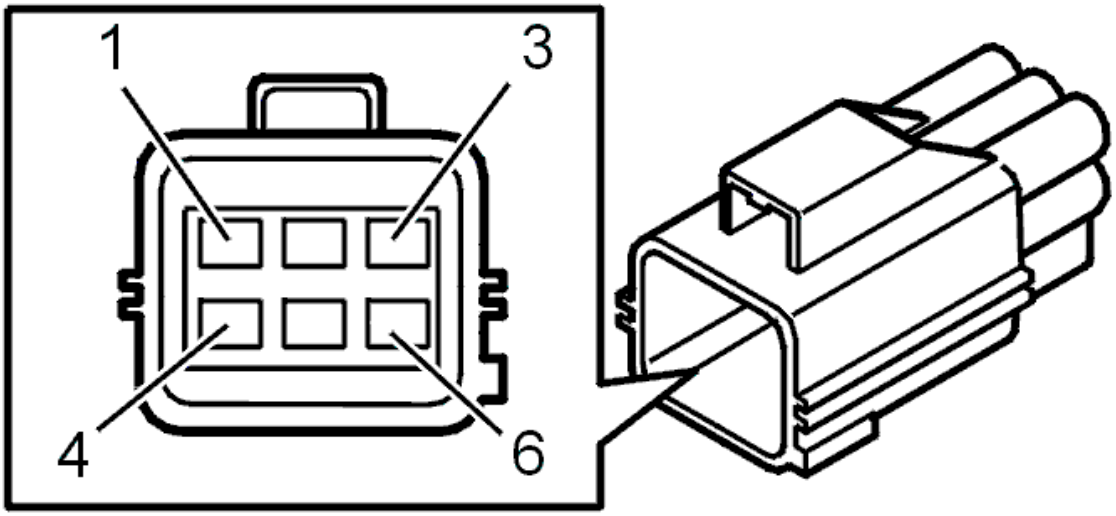

Fig. 137: Identifying Transmission Connector Terminals
Courtesy of VOLVO CARS CORPORATION

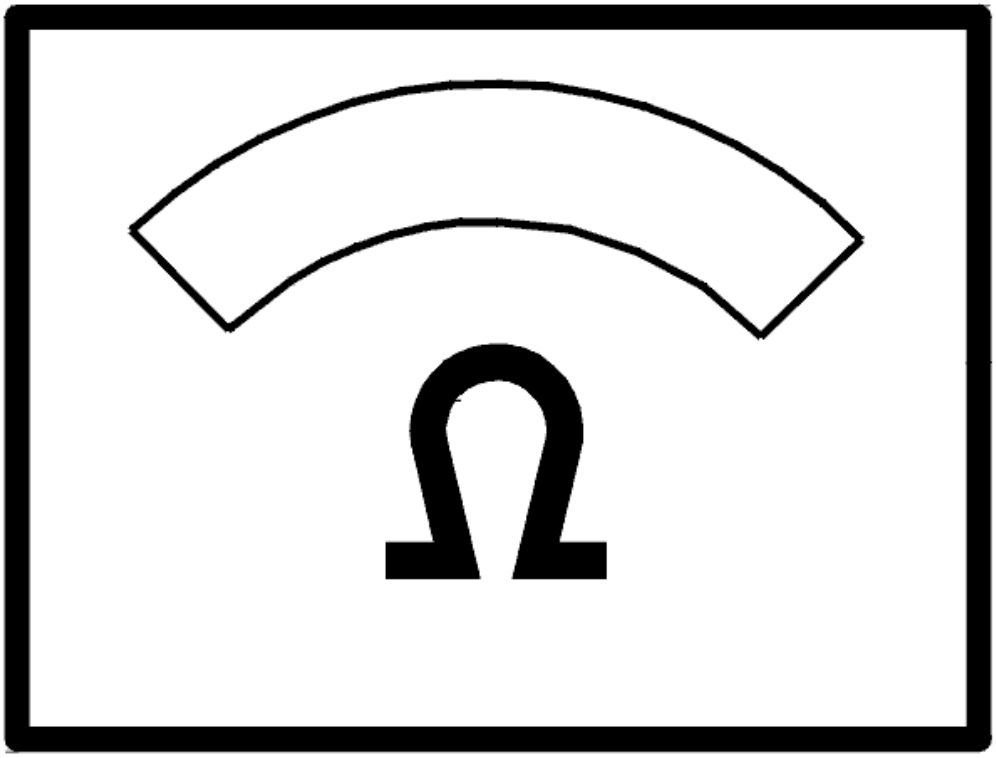

Fig. 138: Identifying Ohms Display
Courtesy of VOLVO CARS CORPORATION

Was a fault detected?

- **YES**

  Refer to **VERIFICATION**

- **NO**

  Refer to **CHECKING THE CONTROL MODULE**

CHECKING THE CONTROL MODULE

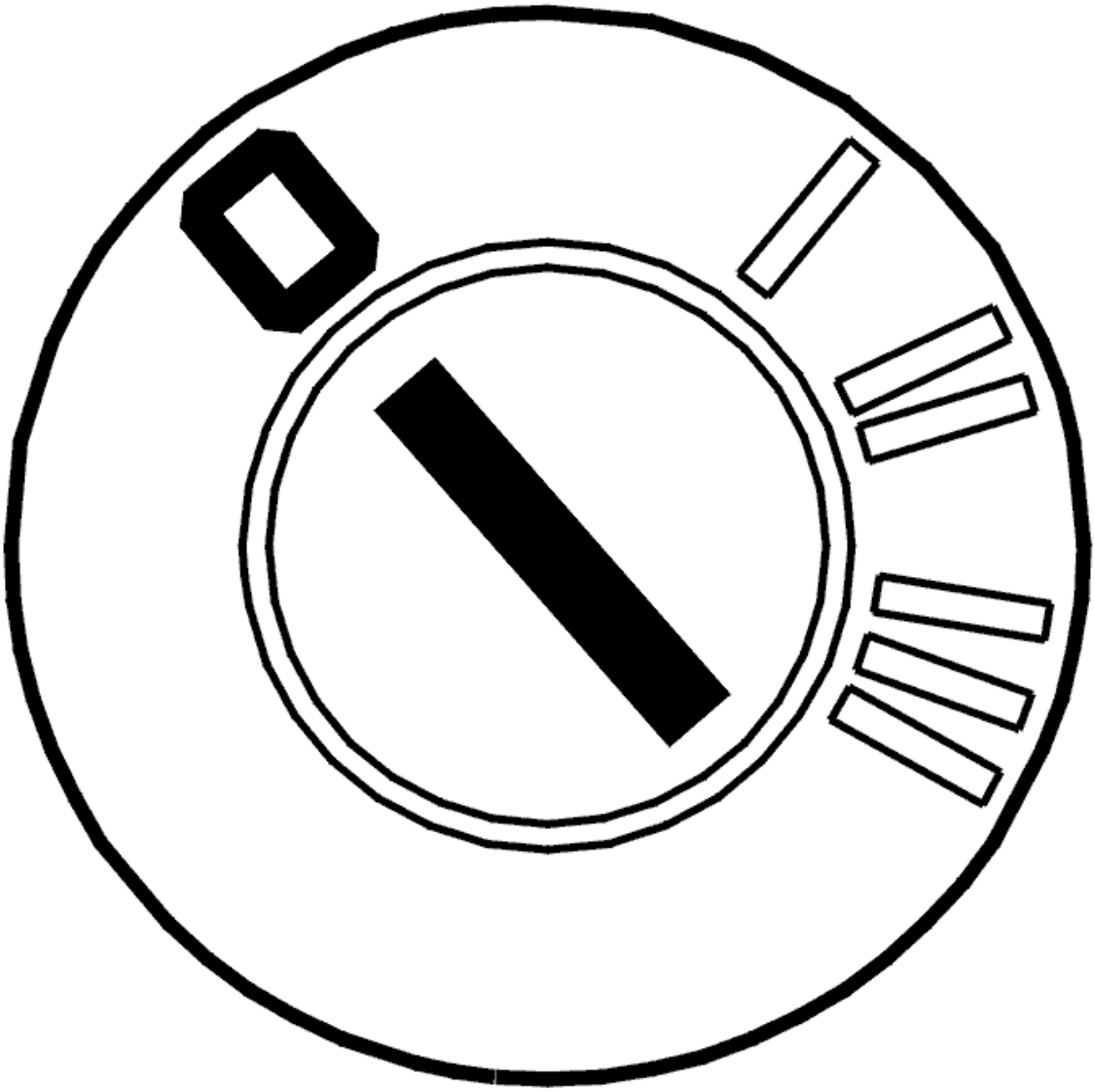

Fig. 139: Identifying Ignition OFF
Courtesy of VOLVO CARS CORPORATION

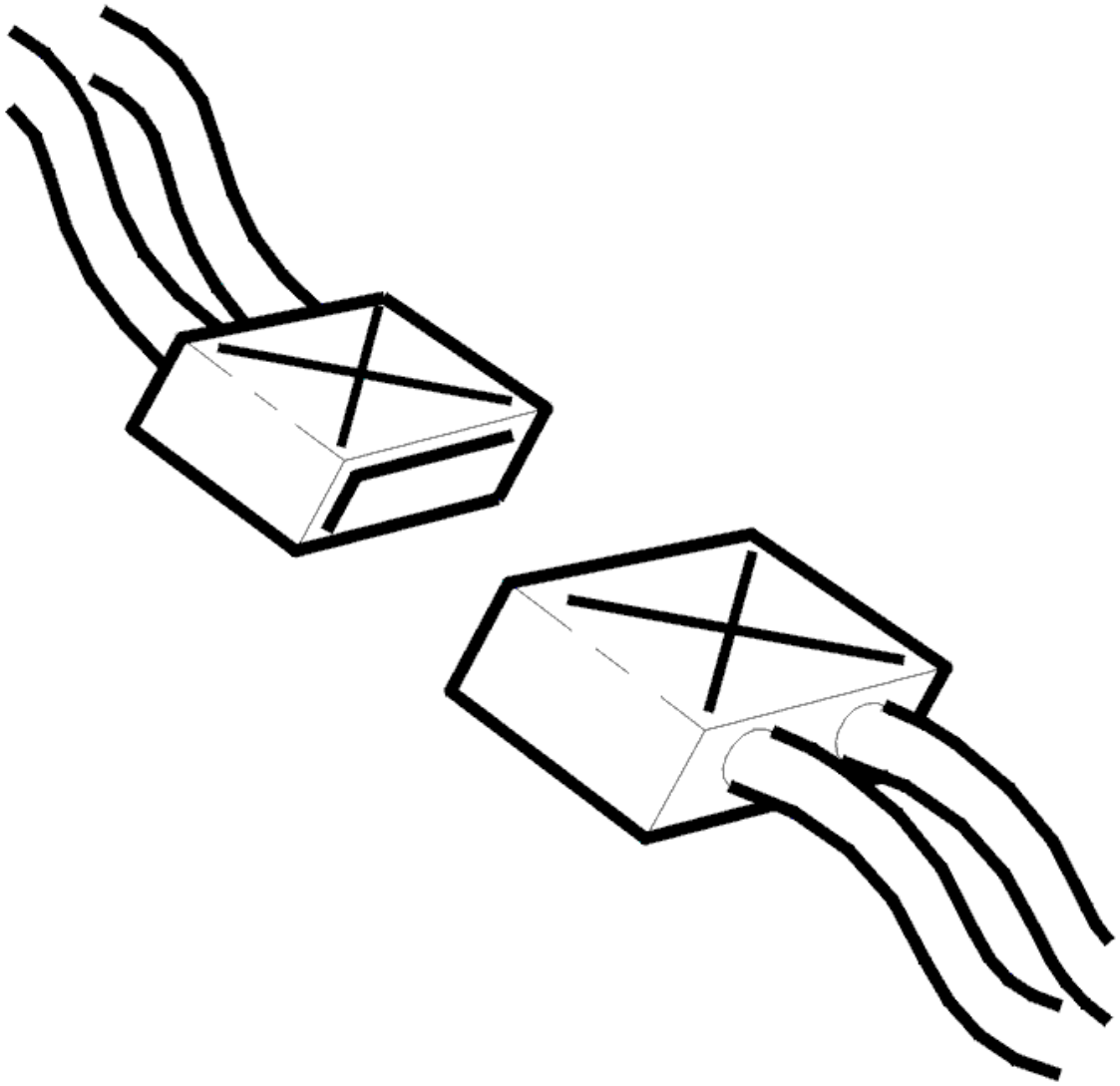

Fig. 140: Identifying Connectors
Courtesy of VOLVO CARS CORPORATION

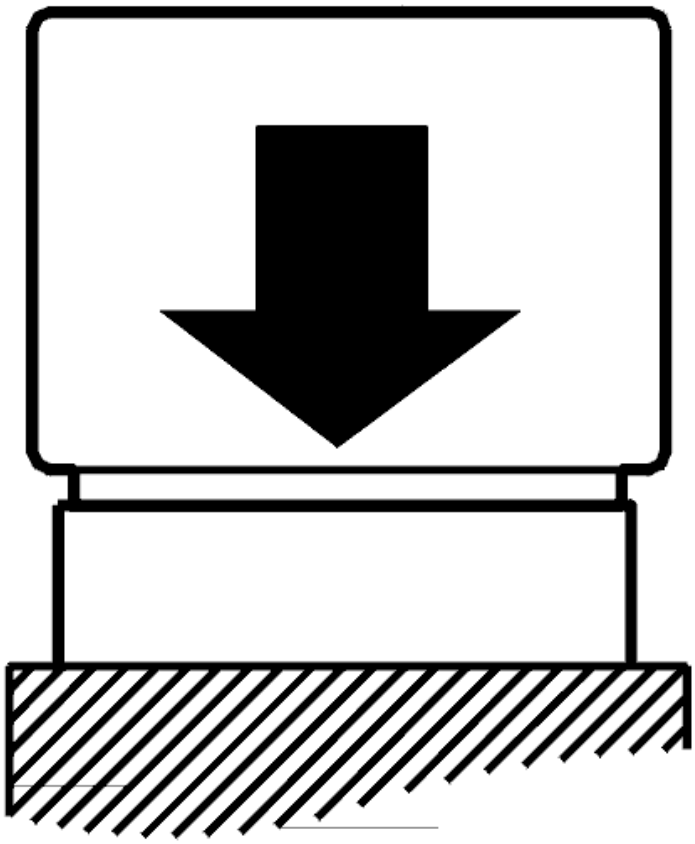

Fig. 141: Identifying Connecting Control Module
Courtesy of VOLVO CARS CORPORATION

- Ignition off
- The breakout box connected
- Connect the control module.
- Transmission connector disconnected
- Gear selector in position P.

Check the transmission control module (TCM) by measuring the resistance between terminals #A50 (#A50) and #A53 (#A53) on the breakout box. The resistance must be approximately 9 kohms.

NOTE: **When removing the transmission connector, the control module may store diagnostic trouble codes (DTCs) for the gear-shift position sensor, the shift solenoids, the temperature sensor etc.**

Try a new control module if the resistance is infinite.

Other information:

- To disconnect the transmission connectors, see **CONNECTORS, TRANSMISSION, DISCONNECTING / CONNECTING**
- To replace the control module, see **TRANSMISSION CONTROL MODULE (TCM), REPLACING**
- For information about signals, see **SIGNAL DESCRIPTION. TRANSMISSION CONTROL MODULE (TCM)** .

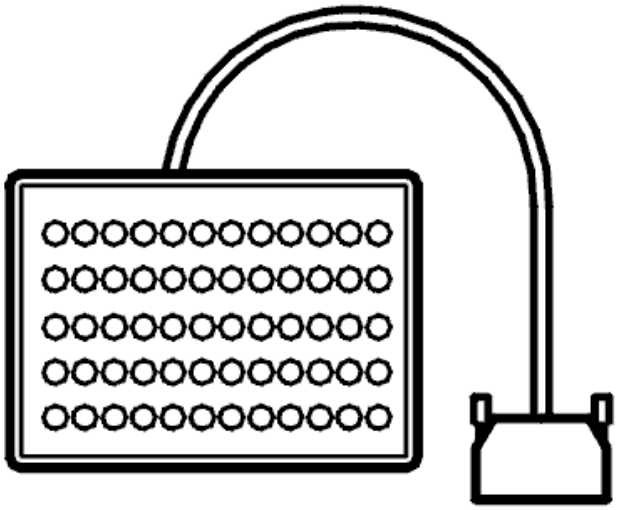

Fig. 142: Identifying Breakout Box
Courtesy of VOLVO CARS CORPORATION

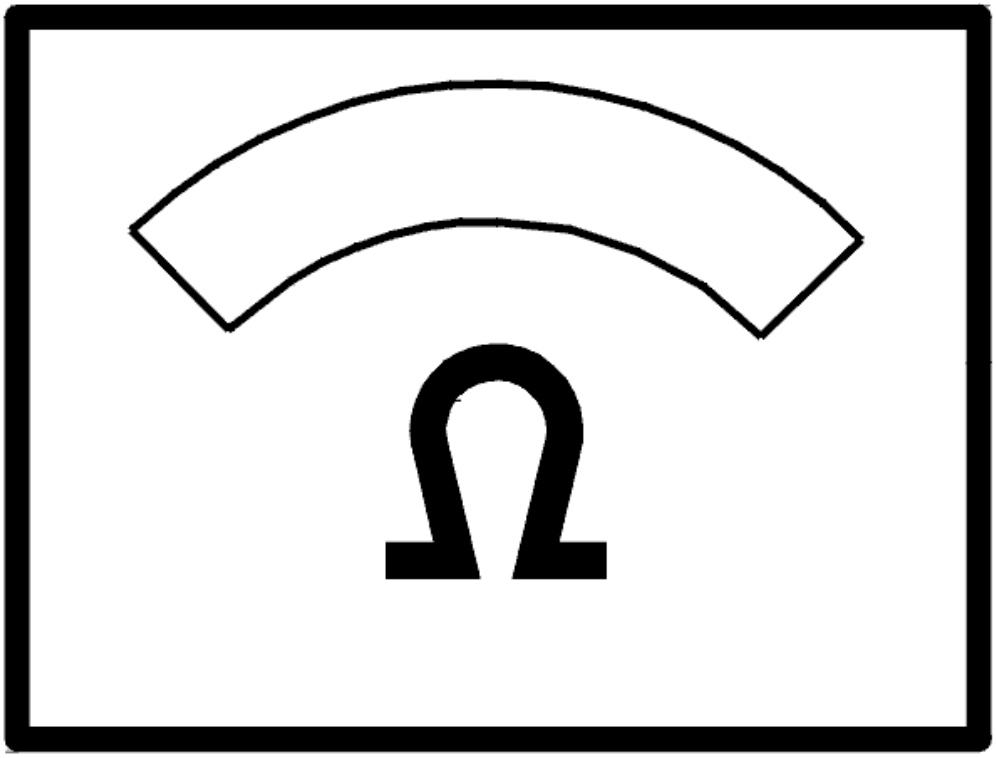

Fig. 143: Identifying Ohms Display
Courtesy of VOLVO CARS CORPORATION

Was the resistance OK?

- **YES**

  FAULT NOT FOUND: Troubleshooting has been completed.

- **NO**

  Refer to **VERIFICATION**

CHECKING THE WIRING AND COMPONENT

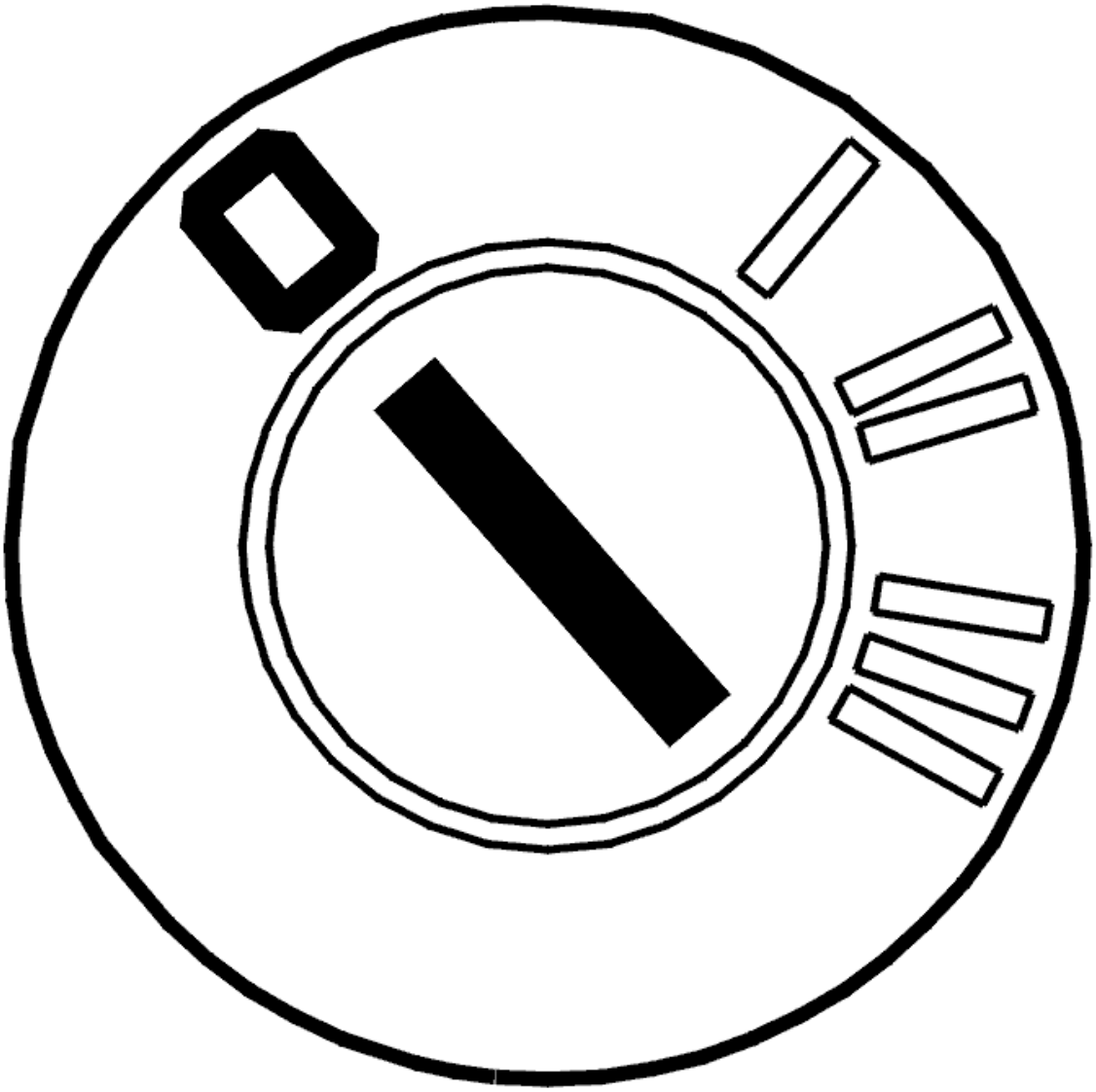

Fig. 144: Identifying Ignition OFF
Courtesy of VOLVO CARS CORPORATION

- Ignition off
- Open the control system.

  Check the cable between transmission connector terminal #C1 (transmission side) and the connector for solenoid S1. Check for an open-circuit according to **OPEN-CIRCUIT, PERMANENT FAULTS** .

  - Check solenoid S1. Measure the resistance between the terminal on solenoid S1 and the transmission housing. The resistance must be 12-16 ohms.

  Remedy as necessary.

  Other information:

- To disconnect the transmission connectors, see **CONNECTORS, TRANSMISSION, DISCONNECTING / CONNECTING**
- To replace the cable harness for the control system, see **TEMPERATURE SENSOR FLUID, TRANSAXLE, (TFT)**
- To open the control system and to check or replace solenoid S1, see **SOLENOID CONTROL SYSTEM, REPLACING**
- For information about signals, see **SIGNAL DESCRIPTION. TRANSMISSION CONTROL MODULE (TCM)** .

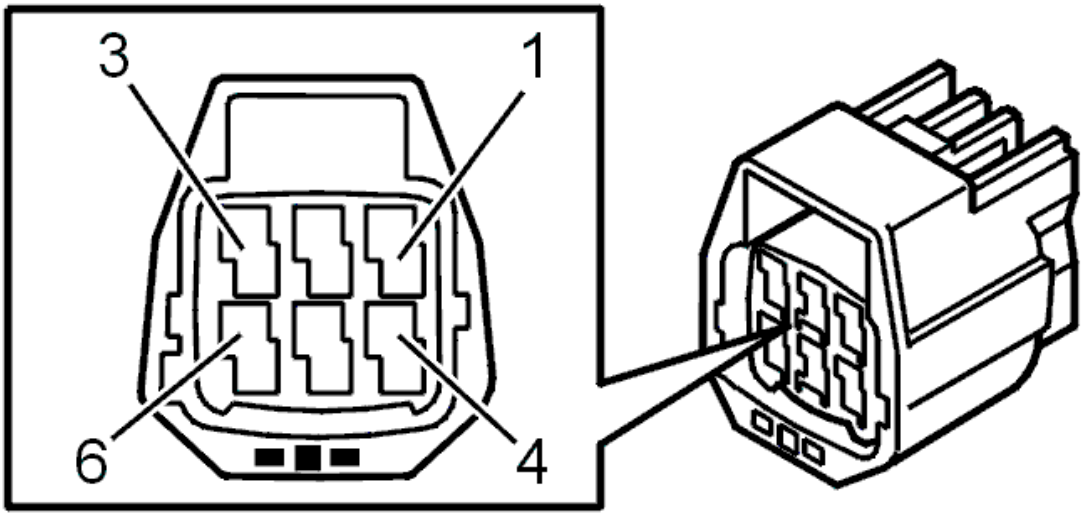

Fig. 145: Identifying 6-Pin Transmission Connector Terminals
Courtesy of VOLVO CARS CORPORATION

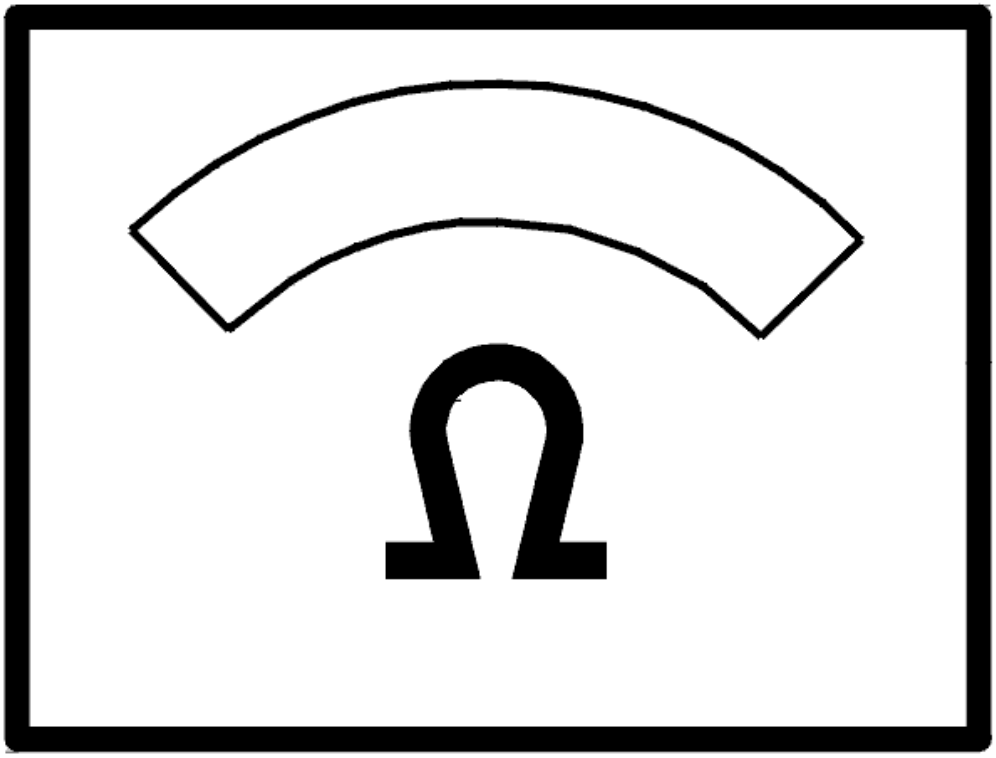

Fig. 146: Identifying Ohms Display
Courtesy of VOLVO CARS CORPORATION

- **Continue**

  Refer to **RESETTING THE ADAPTATION**

VERIFICATION

HINT: After carrying out the repair, check that the fault has been remedied.

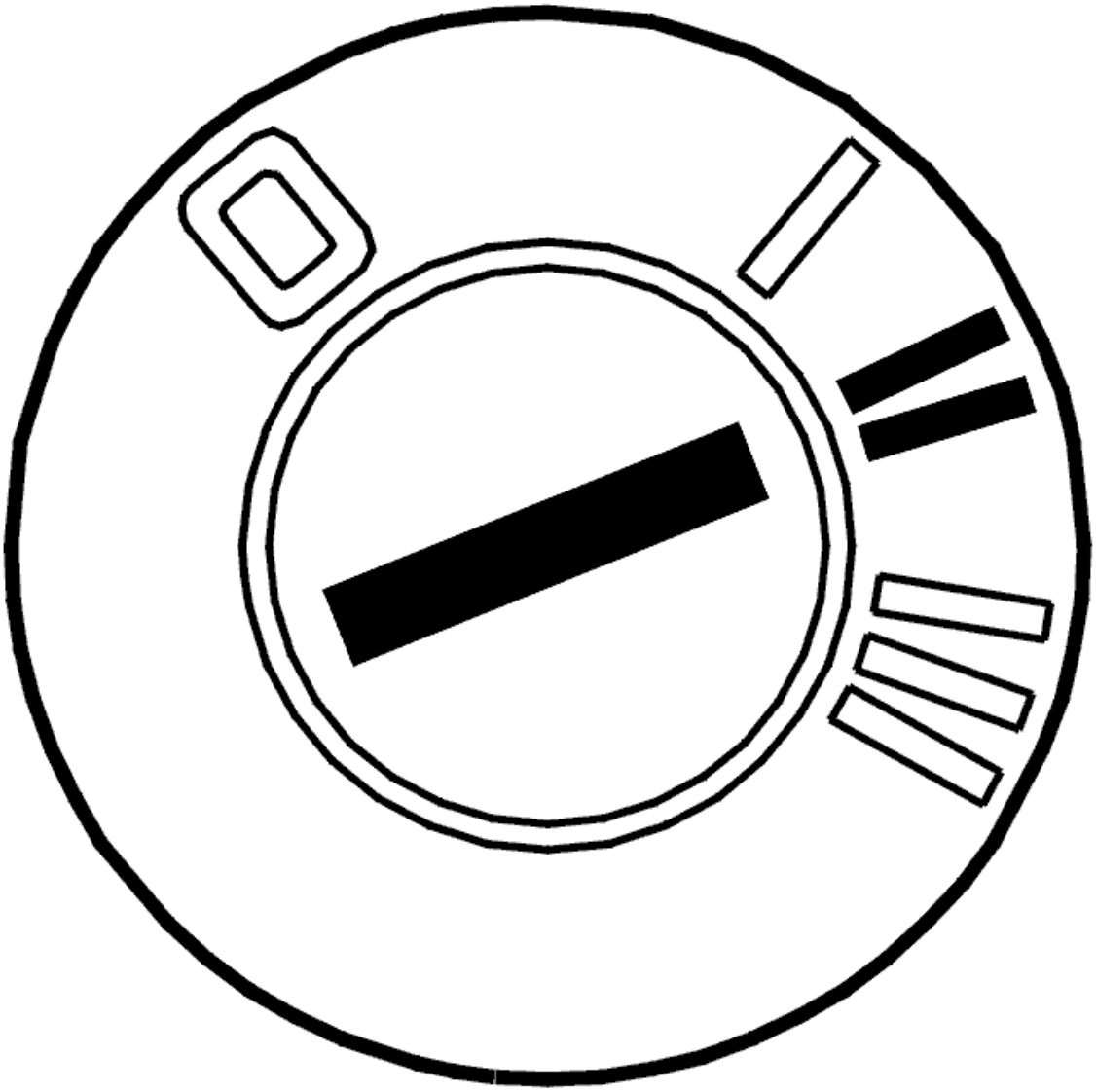

Fig. 147: Identifying Ignition ON
Courtesy of VOLVO CARS CORPORATION

- Ignition on
- Gear selector in position P
- Activate solenoid S1.

The current should oscillate between 0 and approximately 1.5 A.

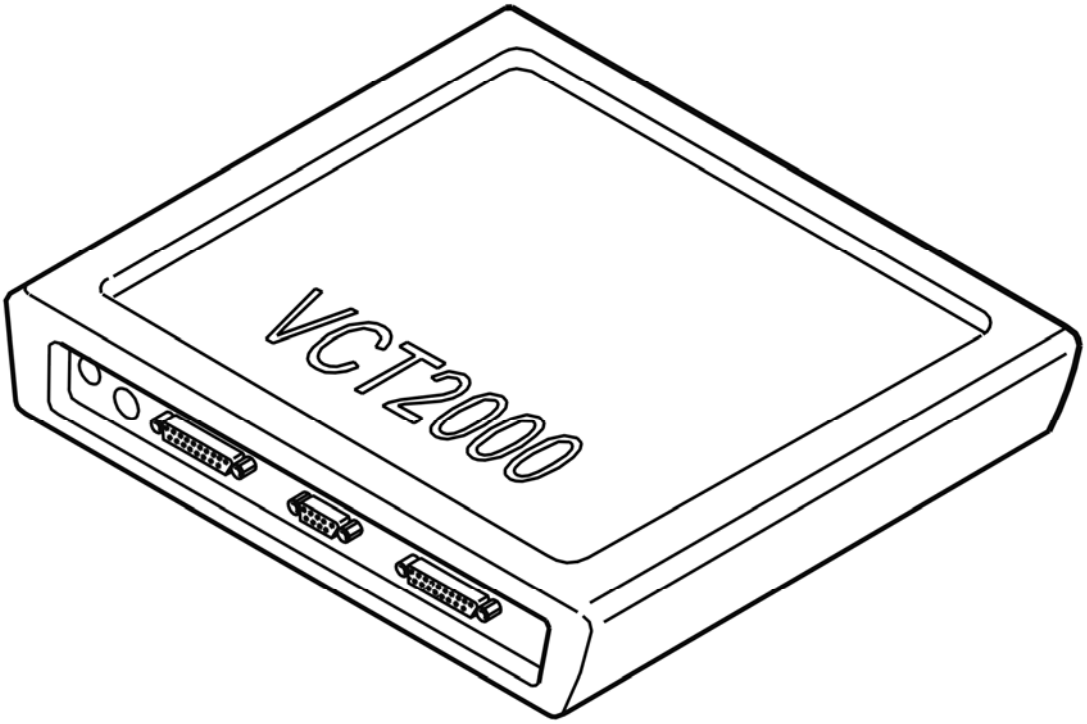

Fig. 148: Identifying VCT2000 Diagnostic Tool Symbol In VIDA
Courtesy of VOLVO CARS CORPORATION

Does the current oscillate?

- **YES**

  OKAY: Troubleshooting has been completed.

- **NO**

  Refer to **INFORMATION**

INTERMITTENT FAULT

Check the control module and transmission connectors for contact resistance and oxidation according to **CONTACT RESISTANCE AND OXIDATION**

Check the cable between control module terminal #50 (#A50) and transmission connector terminal #C1. Check for an intermittent open-circuit according to **OPEN-CIRCUIT, INTERMITTENT FAULTS** .

- Check the circuit for solenoid S1: Switch off the ignition. Disconnect the control module. Measure the resistance between terminals #A50 (#A50) and #A53 (#A53) on the breakout box. The resistance must be 12-16 ohms.

Remedy as necessary.

Other information:

- To connect the breakout box, see **CONNECTING THE BREAKOUT BOX**
- To disconnect the transmission connectors, see **CONNECTORS, TRANSMISSION, DISCONNECTING / CONNECTING**
- For information about signals, see **SIGNAL DESCRIPTION. TRANSMISSION CONTROL MODULE (TCM)** .

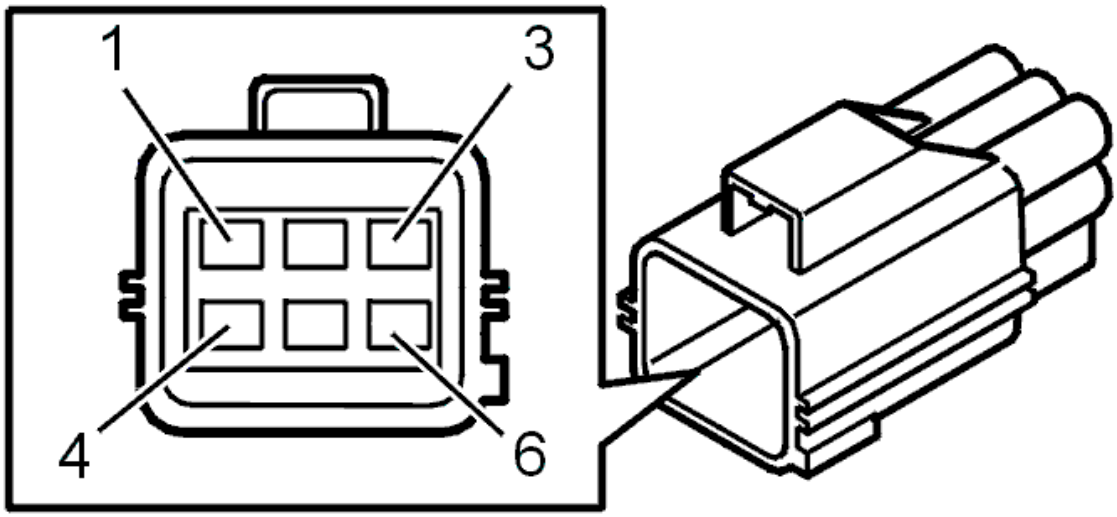

Fig. 149: Identifying Transmission Connector Terminals
Courtesy of VOLVO CARS CORPORATION

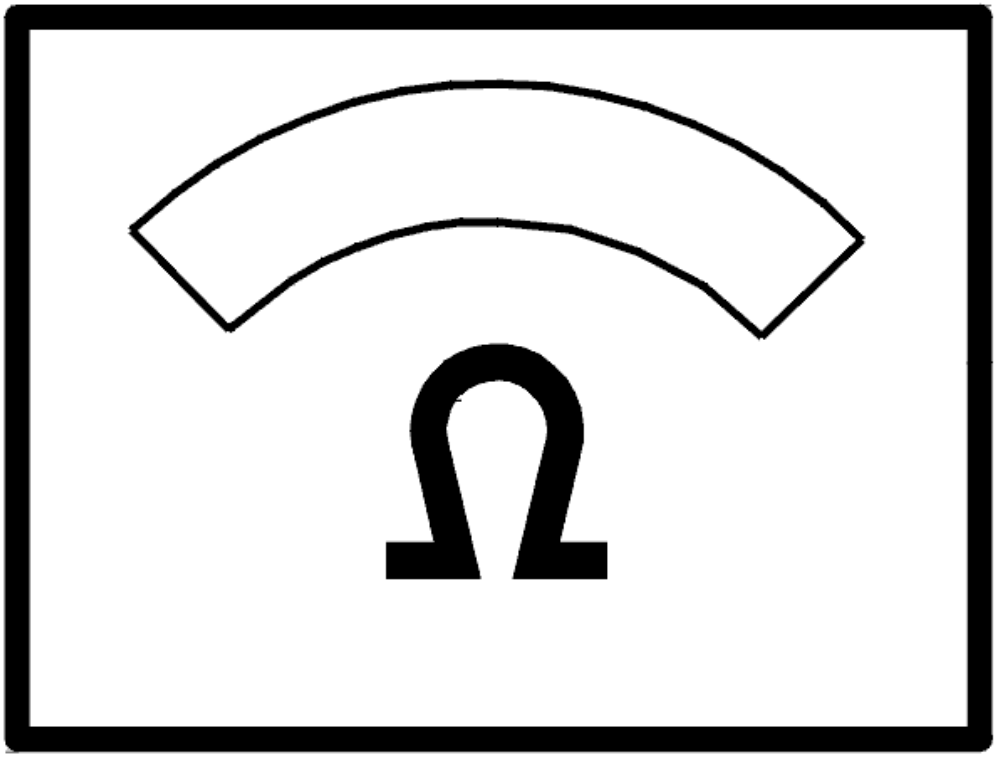

Fig. 150: Identifying Ohms Display
Courtesy of VOLVO CARS CORPORATION

- **Continue**

  Refer to **INFORMATION**

RESETTING THE ADAPTATION

RESETTING ADAPTATION AND THE COUNTER FOR "TRANSMISSION OIL CHANGE"

HINT: The transmission has torque controlled adaptive pressure control. Pressure control means that the transmission regulates the pressure itself during each gear shift. This avoids harsh gear shifting. Each gear shift is evaluated by the control module and stored in the memory. This allows for compensation for wear and tear in the transmission and clutch. It is important that the adaptation in the memory is reset after the transmission has been repaired. This is to ensure normal operation. The oil is replaced during

repair; the "Transmission oil change" counter must be reset. If the counter is not reset when the fluid is drained and replaced, there is a risk that a diagnostic trouble code (DTC) will be stored in incorrect circumstances.

NOTE: **This applies only if the transmission or one of the components in the transmission have been replaced.**

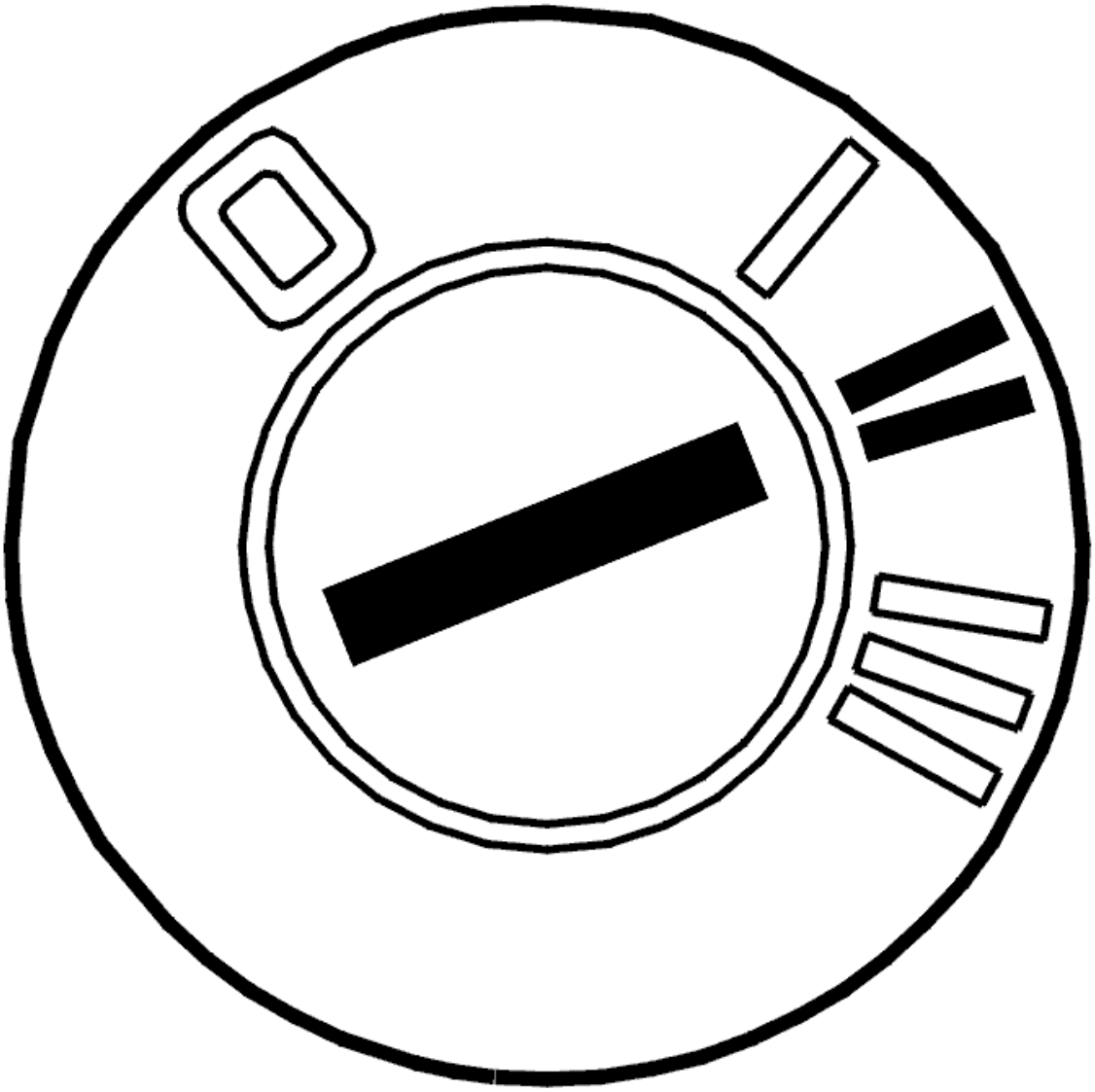

Fig. 151: Identifying Ignition ON
Courtesy of VOLVO CARS CORPORATION

- Ignition on.

  Click on the VCT2000 symbol to reset the adaptation and counter.

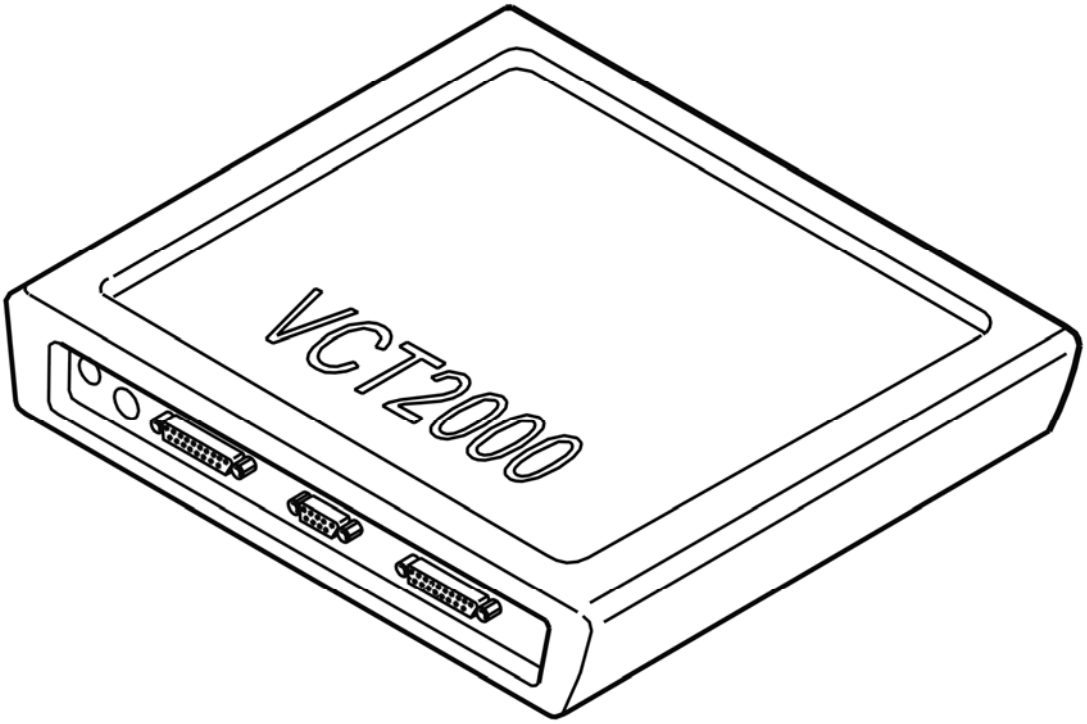

Fig. 152: Identifying VCT2000 Diagnostic Tool Symbol In VIDA
Courtesy of VOLVO CARS CORPORATION

- **Continue**

  Refer to **VERIFICATION**

INFORMATION

FAULT-TRACING INFORMATION

The fault should have been detected and remedied. As this is not the case fault-tracing has failed.

Exit fault-tracing for this diagnostic trouble code (DTC) or make another attempt.

INFORMATION

FAULT-TRACING INFORMATION

If the fault is intermittent, do not verify fault-tracing if the fault does not recur.

It is possible to view the information again, or leave fault-tracing for this diagnostic trouble code (DTC).

FAULTY SIGNAL

CHECKING TRANSMISSION FLUID TEMPERATURE SENSOR

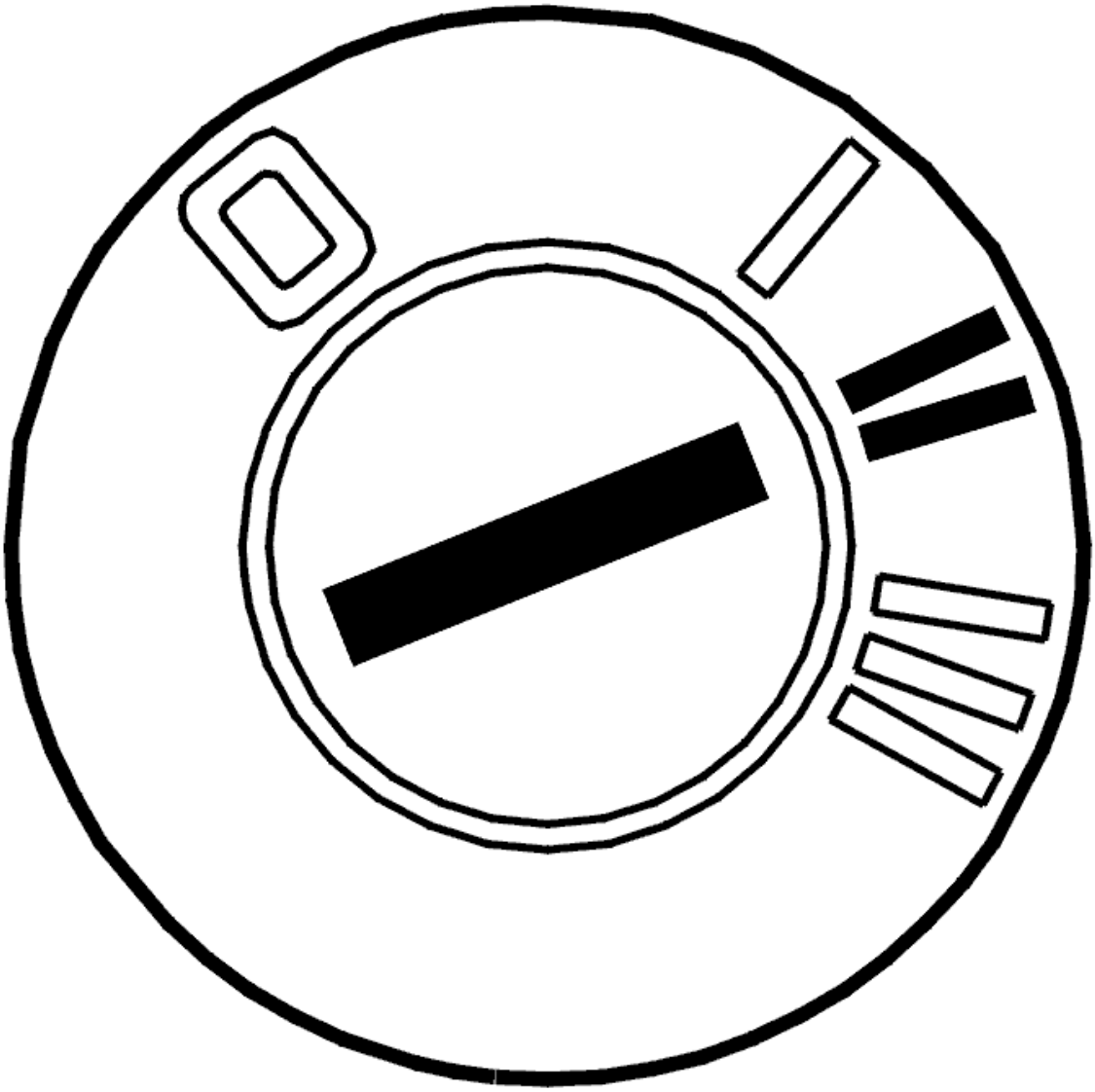

Fig. 153: Identifying Ignition ON
Courtesy of VOLVO CARS CORPORATION

- Ignition on
- Read off the oil temperature.

  Check that the temperature is within its permitted range.

  Compare with the transmission temperature.

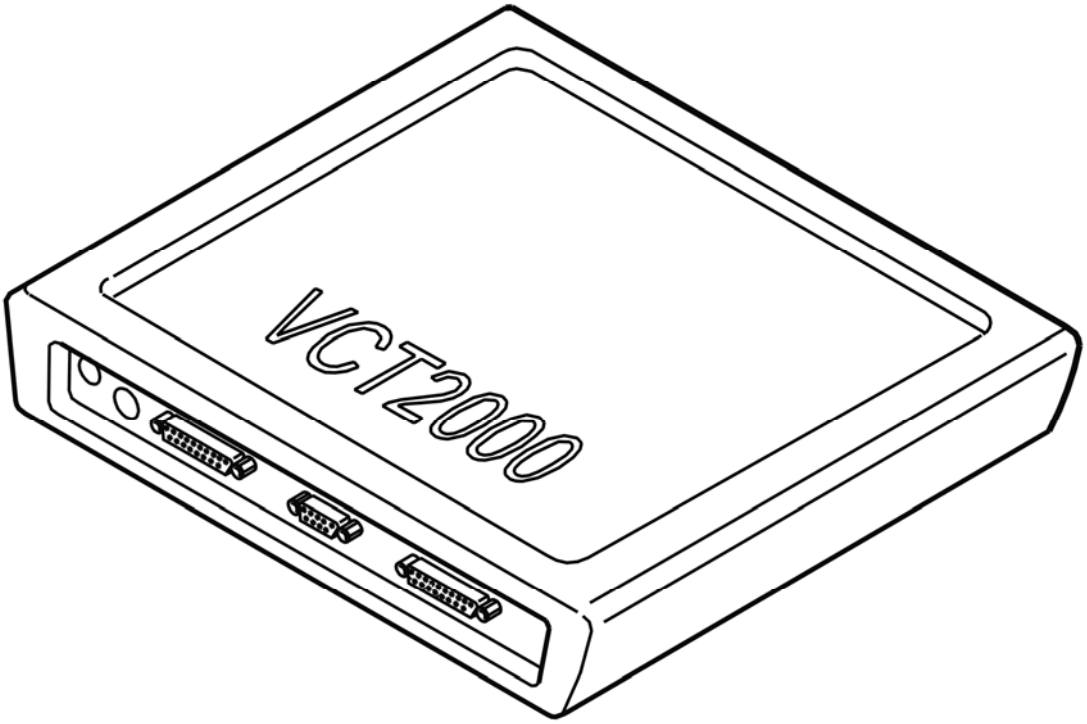

Fig. 154: Identifying VCT2000 Diagnostic Tool Symbol In VIDA
Courtesy of VOLVO CARS CORPORATION

Was the transmission temperature within its permitted range?

- **YES**

  Refer to **INTERMITTENT FAULT**

- **NO**

  Refer to **CHECKING TRANSMISSION FLUID TEMPERATURE SENSOR**

CHECKING TRANSMISSION FLUID TEMPERATURE SENSOR

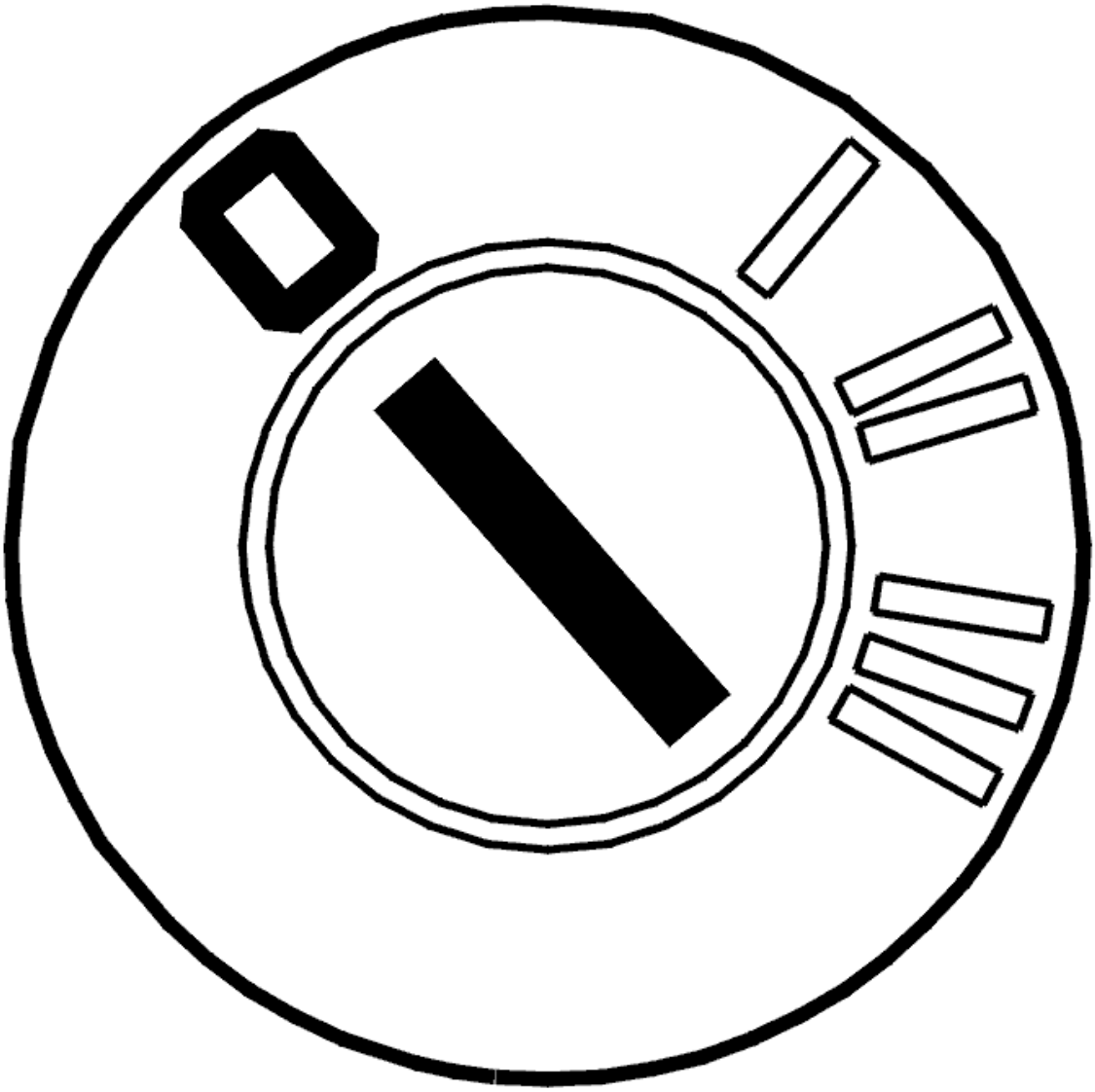

Fig. 155: Identifying Ignition OFF
Courtesy of VOLVO CARS CORPORATION

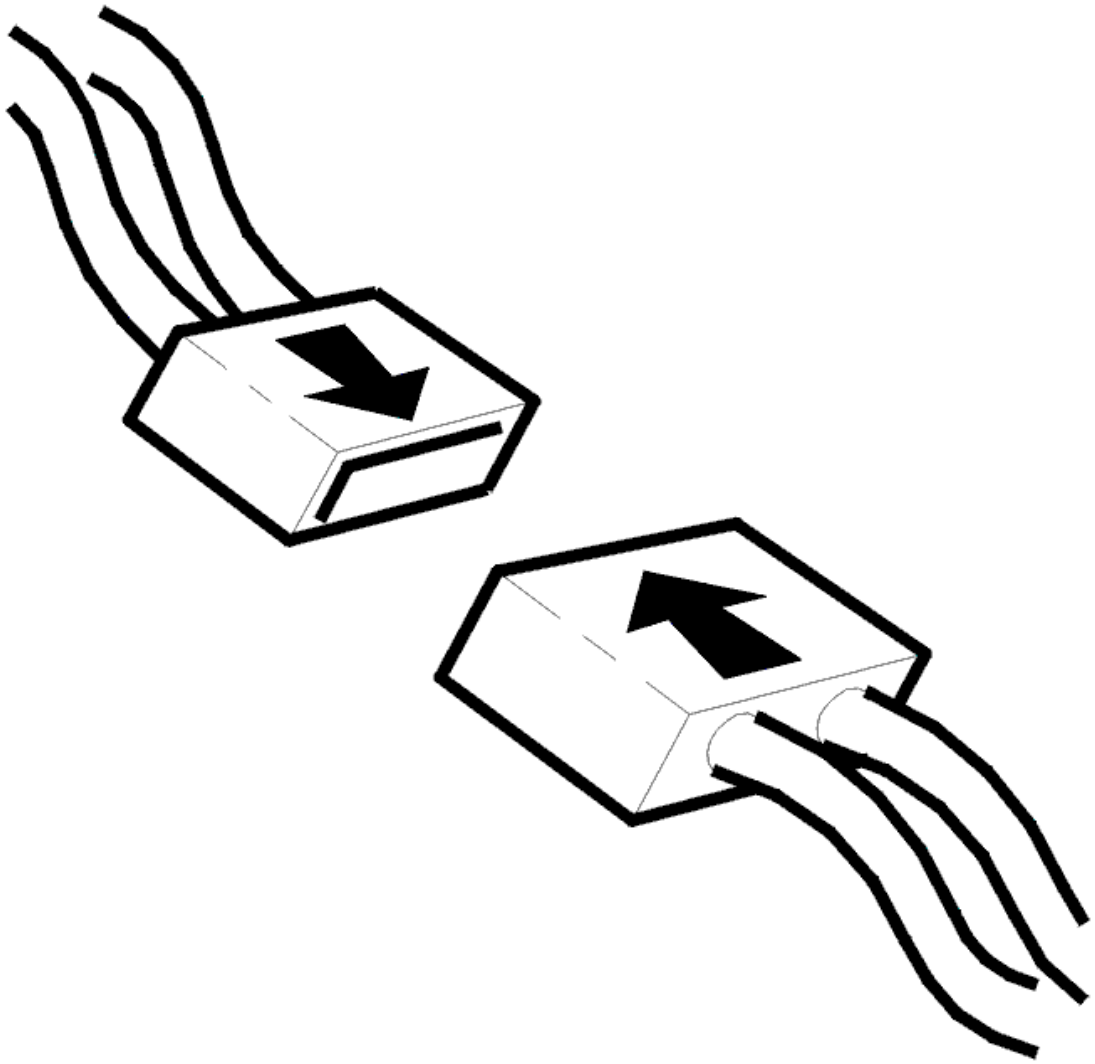

Fig. 156: Identifying Connector(s) Reinstallation
Courtesy of VOLVO CARS CORPORATION

- Ignition off
- Transmission connector D disconnected.

  Check the temperature sensor. Measure the resistance between transmission connector D terminals #D7 and #D8.

  The resistance must be 4.5-6 kohms at 20°C.

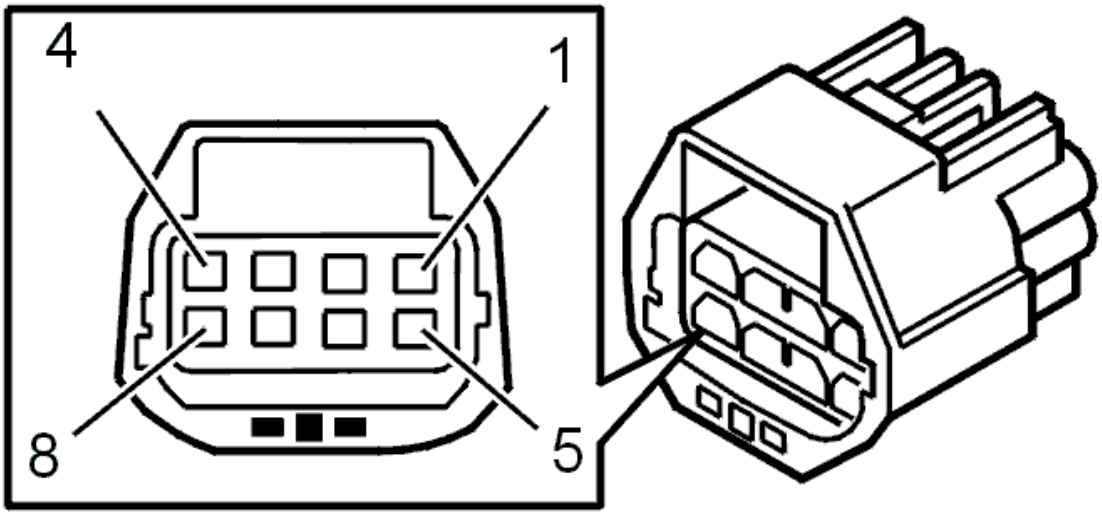

Fig. 157: Identifying 8-Pin Transmission Connector Terminals
Courtesy of VOLVO CARS CORPORATION

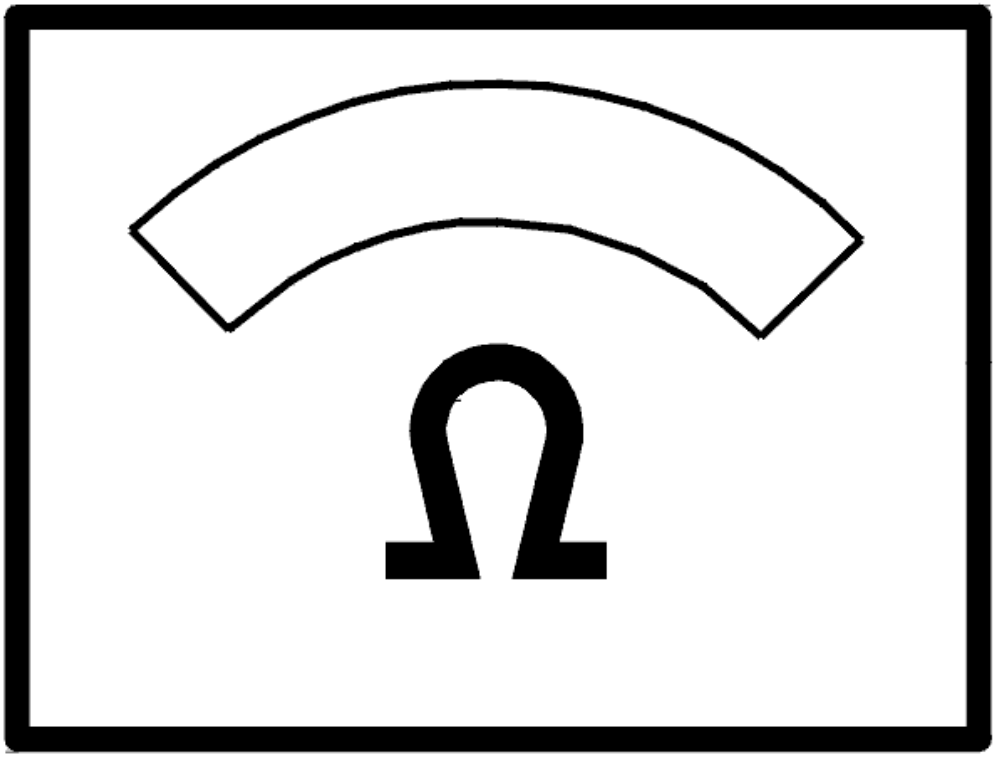

Fig. 158: Identifying Ohms Display
Courtesy of VOLVO CARS CORPORATION

Was the resistance OK?

- **YES**

  Refer to **CHECKING TRANSMISSION FLUID TEMPERATURE SENSOR**

- **NO**

  Refer to **CHECKING THE CABLE AND COMPONENT**

CHECKING TRANSMISSION FLUID TEMPERATURE SENSOR

Check the cable between control module terminal #A37 (#A37) and transmission connector terminal #D7

(control module side). Check for an open-circuit according to **OPEN-CIRCUIT, PERMANENT FAULTS** .

Check the cable between control module terminal #A55 (#A55)and transmission connector terminal #D8 (control module side). Check for an open-circuit according to **OPEN-CIRCUIT, PERMANENT FAULTS** .

Remedy as necessary.

Other information:

- To connect the breakout box, see **CONNECTING THE BREAKOUT BOX**
- To disconnect the transmission connectors, see **CONNECTORS, TRANSMISSION, DISCONNECTING / CONNECTING**
- For information about signals, see **SIGNAL DESCRIPTION. TRANSMISSION CONTROL MODULE (TCM)** .

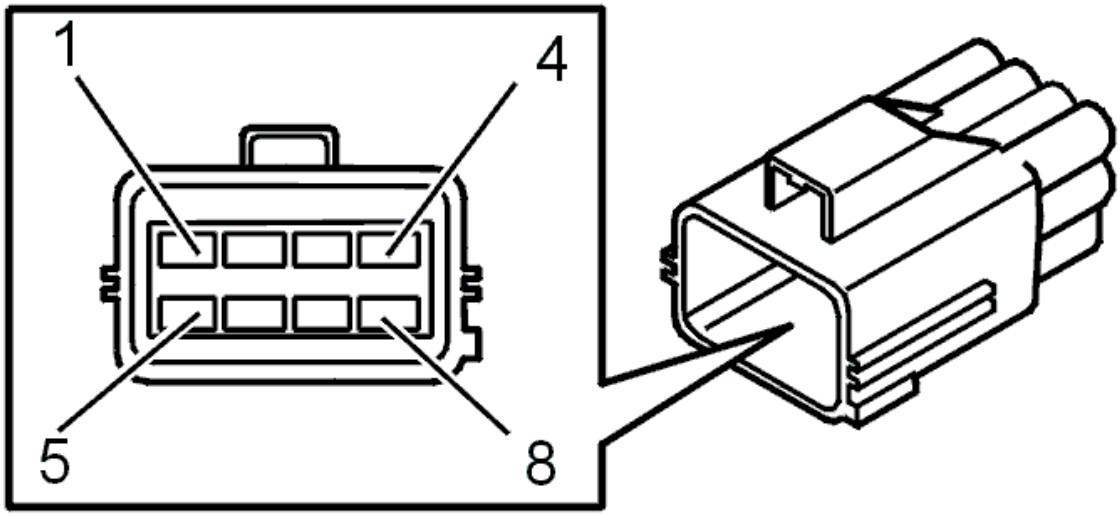

Fig. 159: Identifying Transmission Connector Terminals
Courtesy of VOLVO CARS CORPORATION

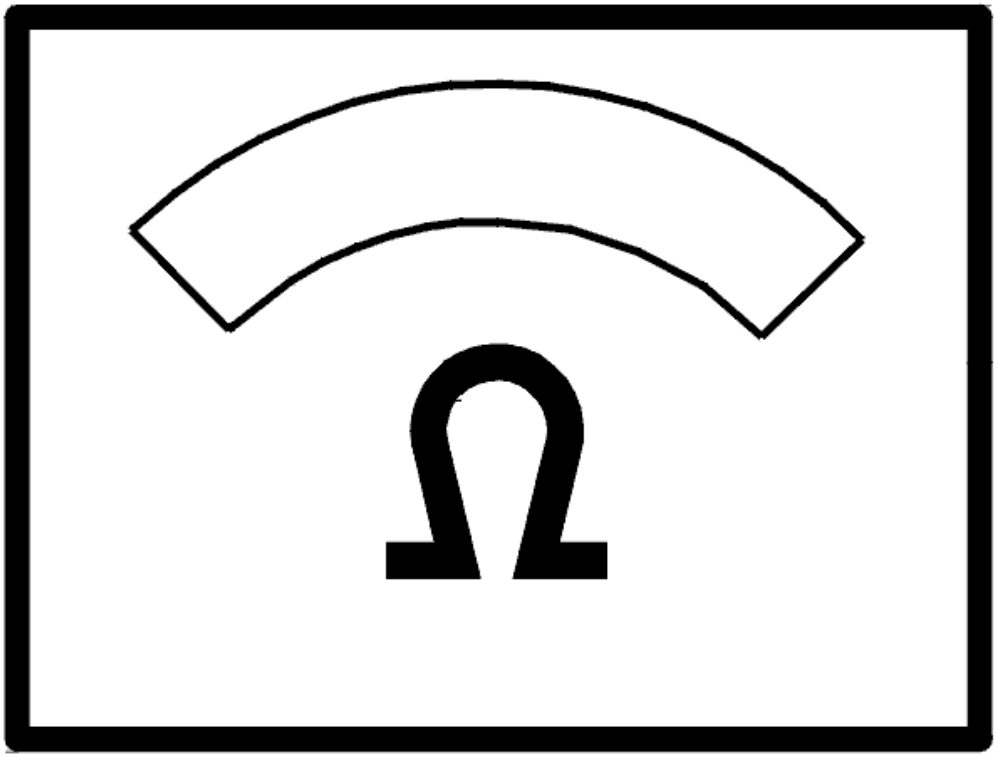

Fig. 160: Identifying Ohms Display
Courtesy of VOLVO CARS CORPORATION

Was a fault detected?

- **YES**

  Refer to **VERIFICATION**

- **NO**

  Refer to **CHECKING THE CABLE AND COMPONENT**

CHECKING THE CABLE AND COMPONENT

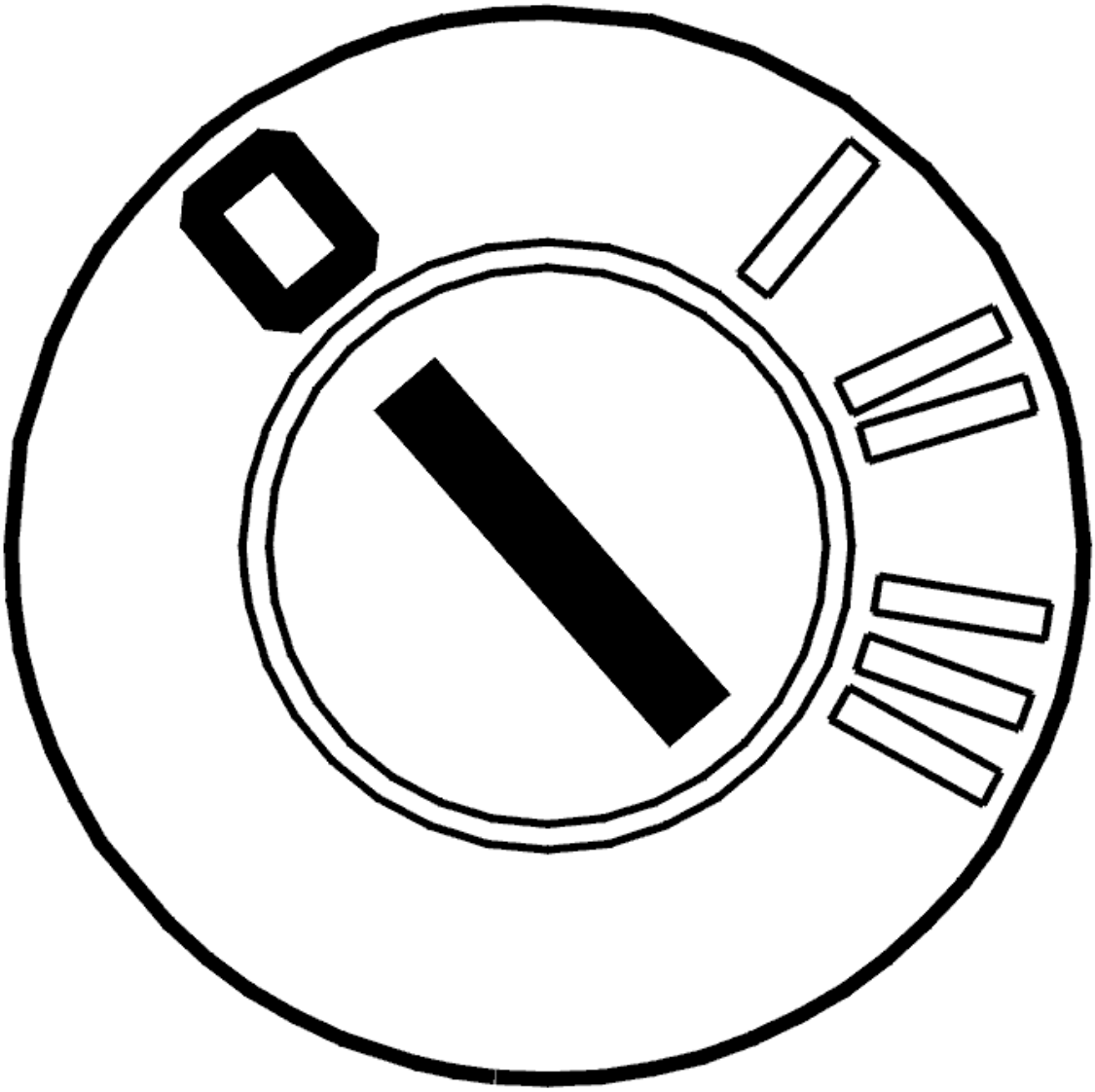

Fig. 161: Identifying Ignition OFF
Courtesy of VOLVO CARS CORPORATION

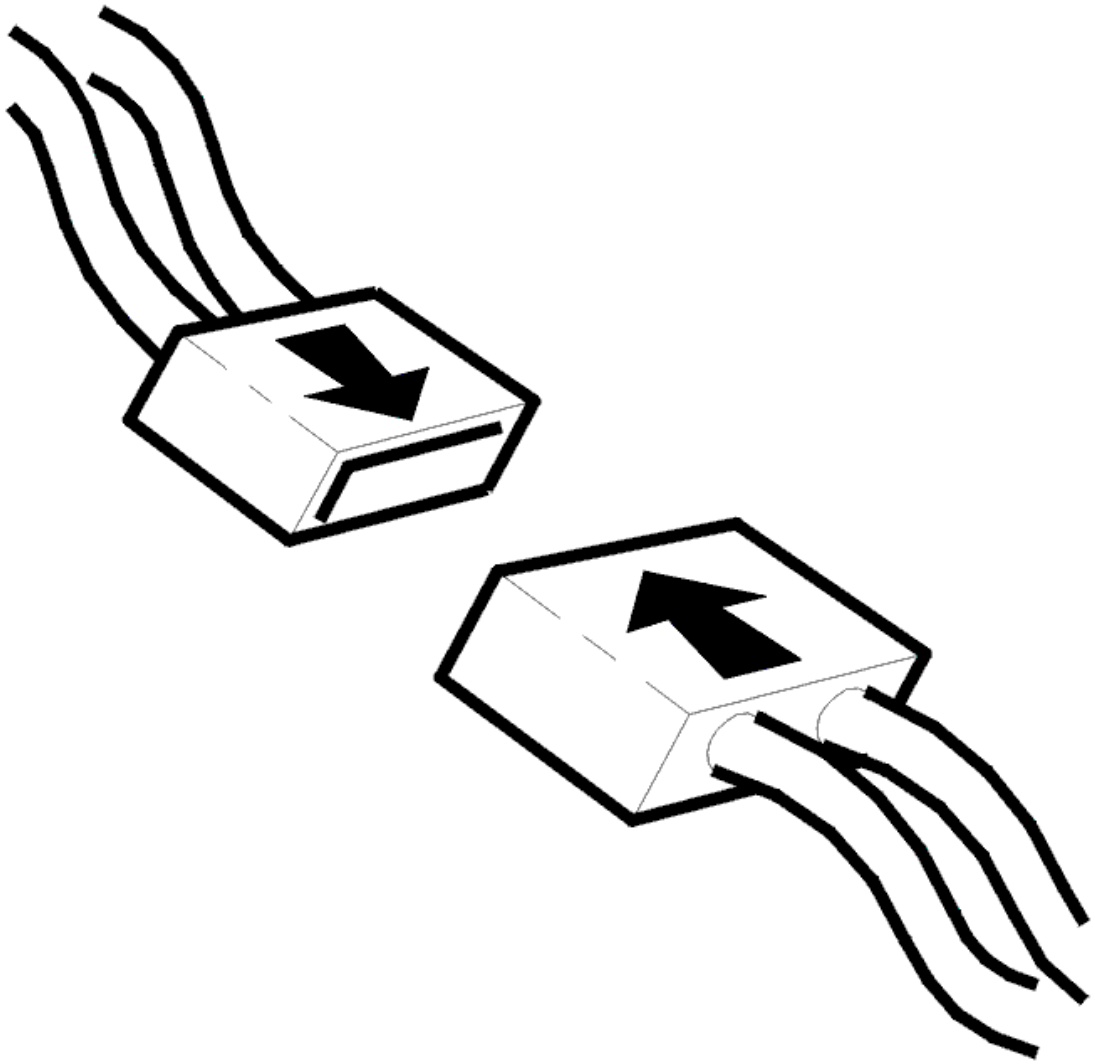

Fig. 162: Identifying Connector(s) Reinstallation
Courtesy of VOLVO CARS CORPORATION

- Ignition off
- Open the transmission control system.

  Check the cable between transmission connector terminal #D7 and temperature sensor terminal #1. Check the cable between transmission connector #D8 and temperature sensor terminal #2. Check for an open-circuit according to **OPEN-CIRCUIT, PERMANENT FAULTS** .

  Also check the cables for a short-circuit to each other.

  HINT: Check the temperature sensor. With the ignition off and transmission connector D disconnected, measure the resistance between transmission connector D terminals #D7 and #D8. The resistance must be 4.5-6 kohms at 20 °C.

Remedy as necessary.

Other information:

- To connect the breakout box, see **CONNECTING THE BREAKOUT BOX**
- To disconnect the transmission connectors, see **CONNECTORS, TRANSMISSION, DISCONNECTING / CONNECTING**
- To open the transmission control system and to check or replace the temperature sensor, see **SOLENOID CONTROL SYSTEM, REPLACING**
- For information about signals, see **SIGNAL DESCRIPTION. TRANSMISSION CONTROL MODULE (TCM)** .

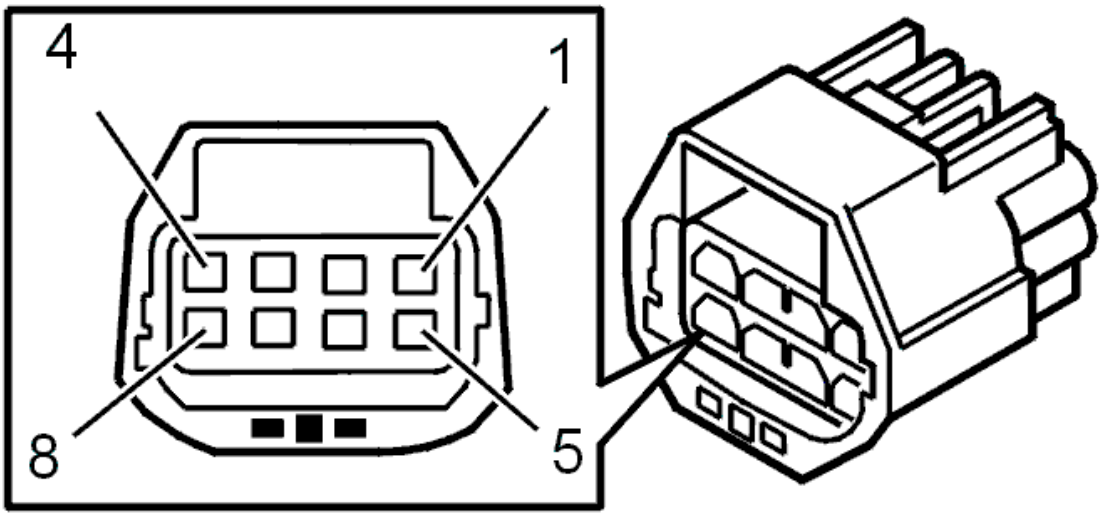

Fig. 163: Identifying 8-Pin Transmission Connector Terminals
Courtesy of VOLVO CARS CORPORATION

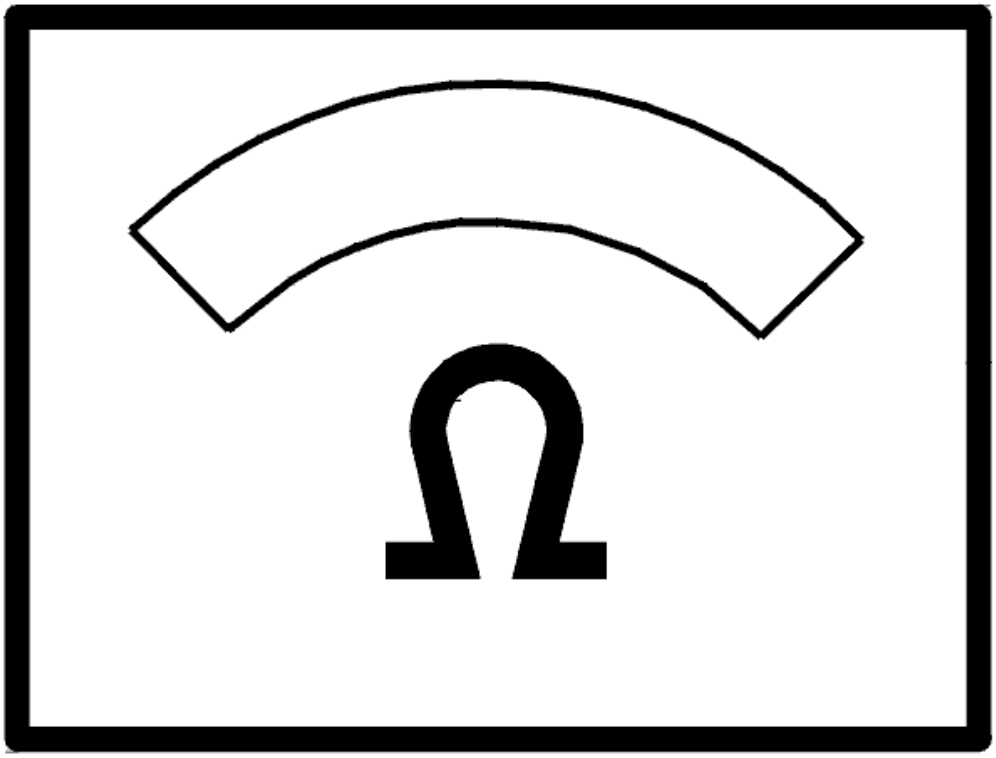

Fig. 164: Identifying Ohms Display
Courtesy of VOLVO CARS CORPORATION

- **Continue**

  Refer to **RESETTING TRANSMISSION FLUID CHANGE COUNTER**

INTERMITTENT FAULT

Check the transmission control module (TCM) and transmission connector D. Check for contact resistance and oxidation according to **CONTACT RESISTANCE AND OXIDATION** .

Check the cable between transmission control module (TCM) terminal #A37 (#A37) and transmission connector terminal #D7 (control module side). Check for an intermittent open-circuit according to **OPEN-CIRCUIT, INTERMITTENT FAULTS** .

Check the cable between control module terminal #A55 (#A55)and transmission connector terminal #D8 (control module side). Check for an intermittent open-circuit according to **OPEN-CIRCUIT, INTERMITTENT FAULTS** .

Remedy as necessary.

Other information:

- To connect the breakout box, see **CONNECTING THE BREAKOUT BOX**
- To disconnect the transmission connectors, see **CONNECTORS, TRANSMISSION, DISCONNECTING / CONNECTING**
- For information about signals, see **SIGNAL DESCRIPTION. TRANSMISSION CONTROL MODULE (TCM)** .

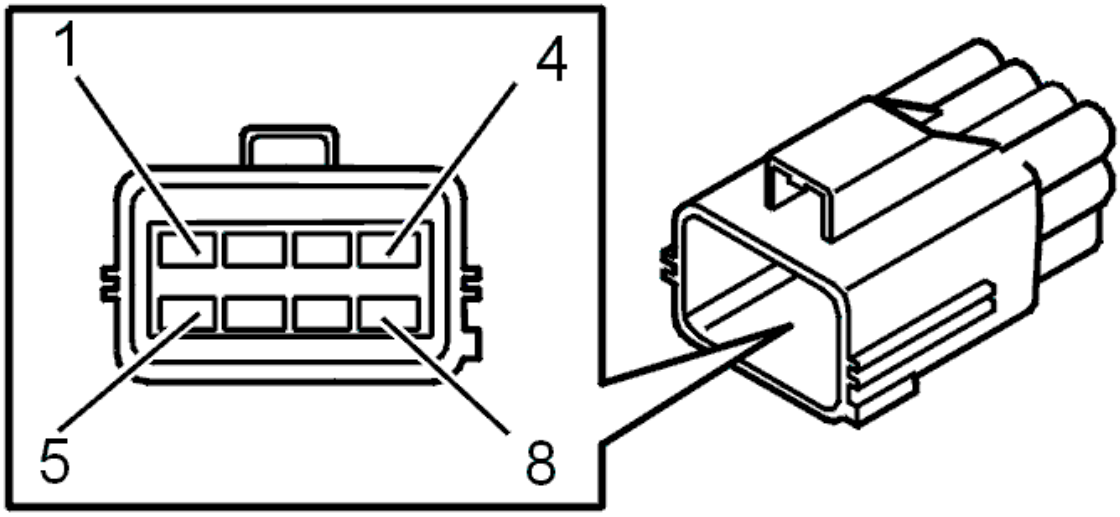

Fig. 165: Identifying Transmission Connector Terminals
Courtesy of VOLVO CARS CORPORATION

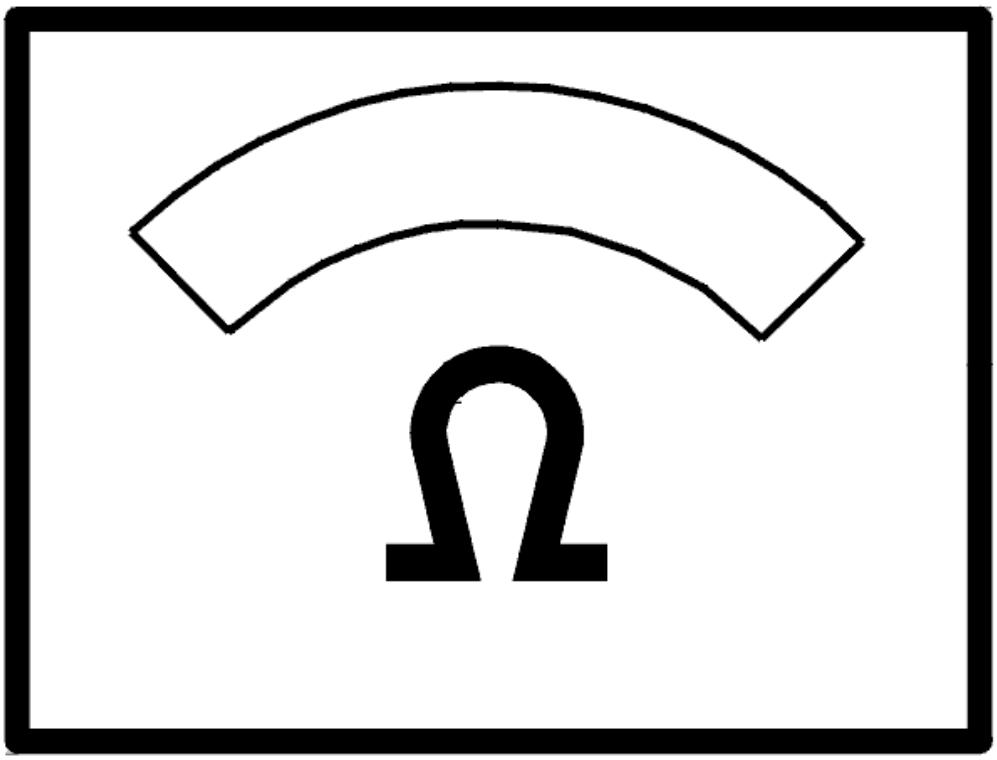

Fig. 166: Identifying Ohms Display
Courtesy of VOLVO CARS CORPORATION

- **Continue**

  Refer to **INFORMATION**

RESETTING TRANSMISSION FLUID CHANGE COUNTER

RESETTING TRANSMISSION FLUID CHANGE COUNTER

HINT: The transmission control module (TCM) has a counter for the oil quality. The counter counts up if the transmission is exposed to too high a load or an ambient temperature that is too high. If the counter is not reset when the oil is drained or changed, there is a risk that a diagnostic trouble code (DTC) will be stored in faulty circumstances. Therefore it is important that the "Transmission oil change" counter is reset.

NOTE: **This applies only when the transmission fluid is changed and when the fluid is changed when repairs are carried out to the transmission temperature sensor.**

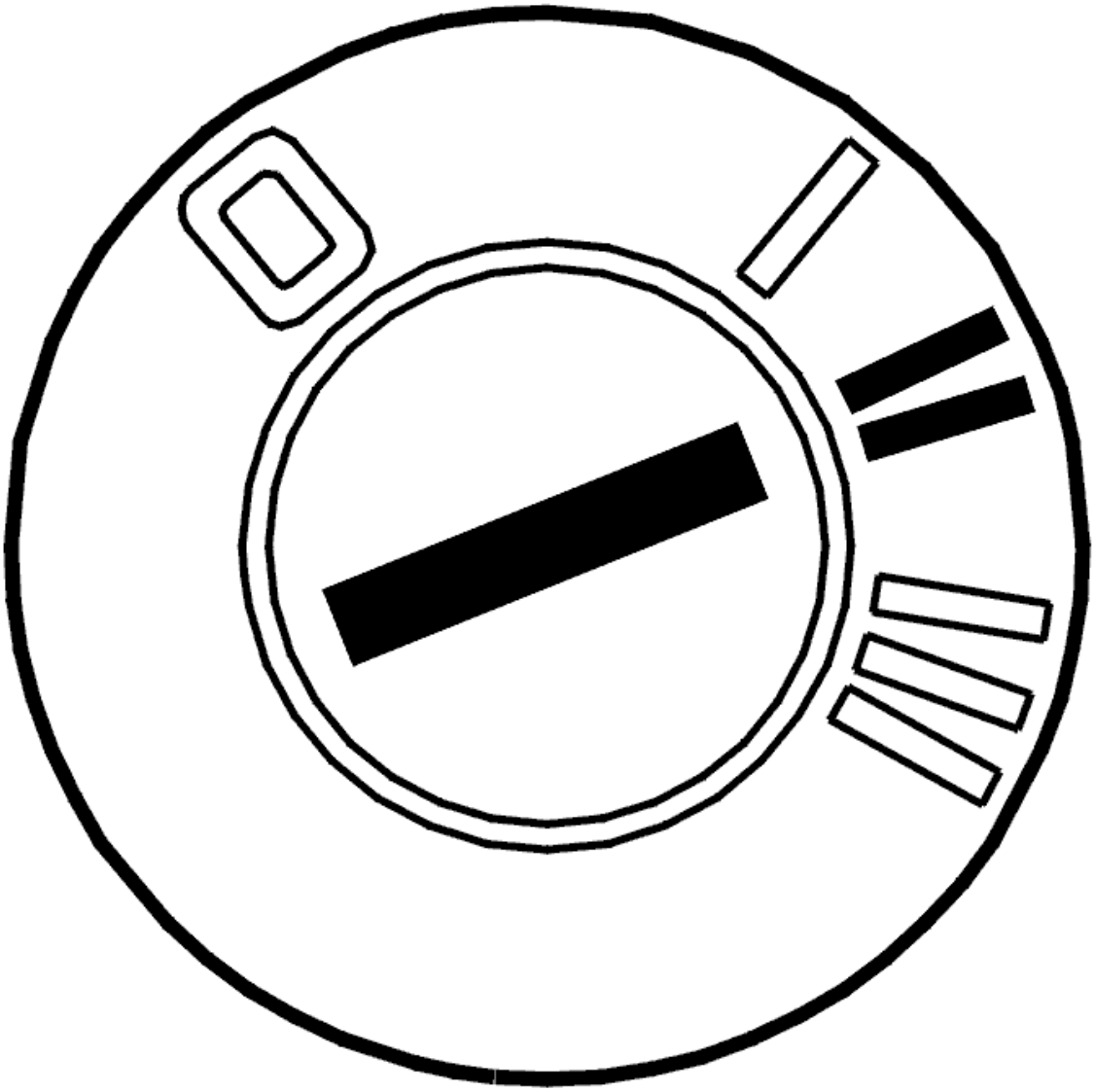

Fig. 167: Identifying Ignition ON
Courtesy of VOLVO CARS CORPORATION

- Ignition on.

  Reset the counter by clicking on the VCT 2000 symbol.

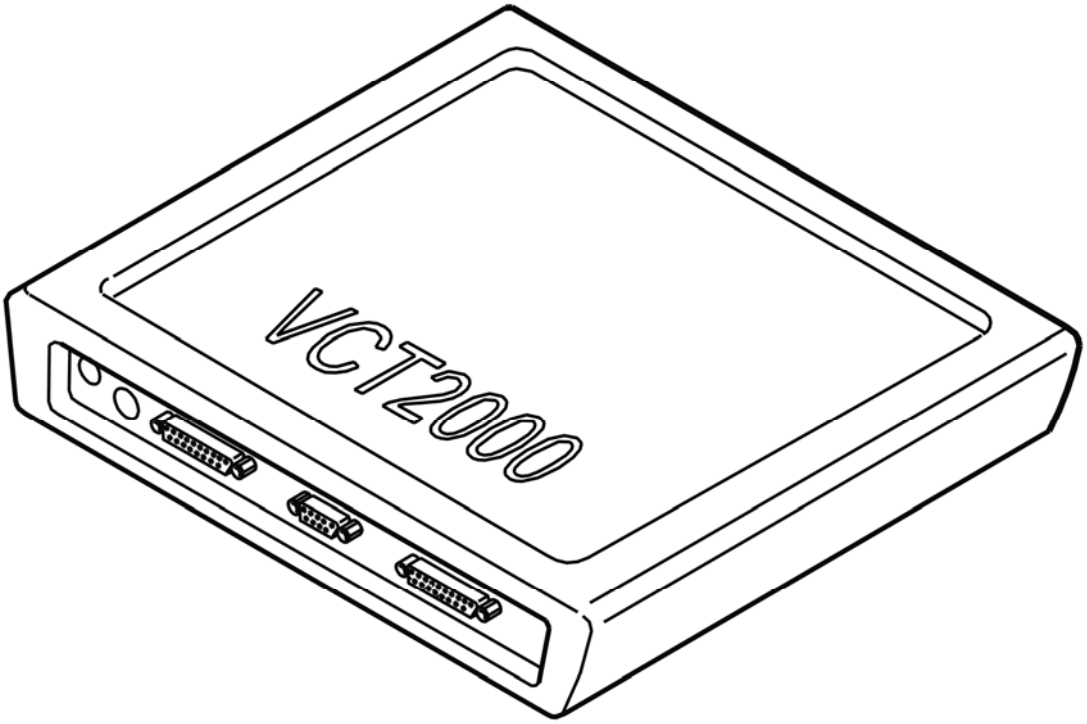

Fig. 168: Identifying VCT2000 Diagnostic Tool Symbol In VIDA
Courtesy of VOLVO CARS CORPORATION

- **Continue**

  Refer to **VERIFICATION**

VERIFICATION

VERIFICATION

HINT: After carrying out the repair, check that the fault has been remedied.

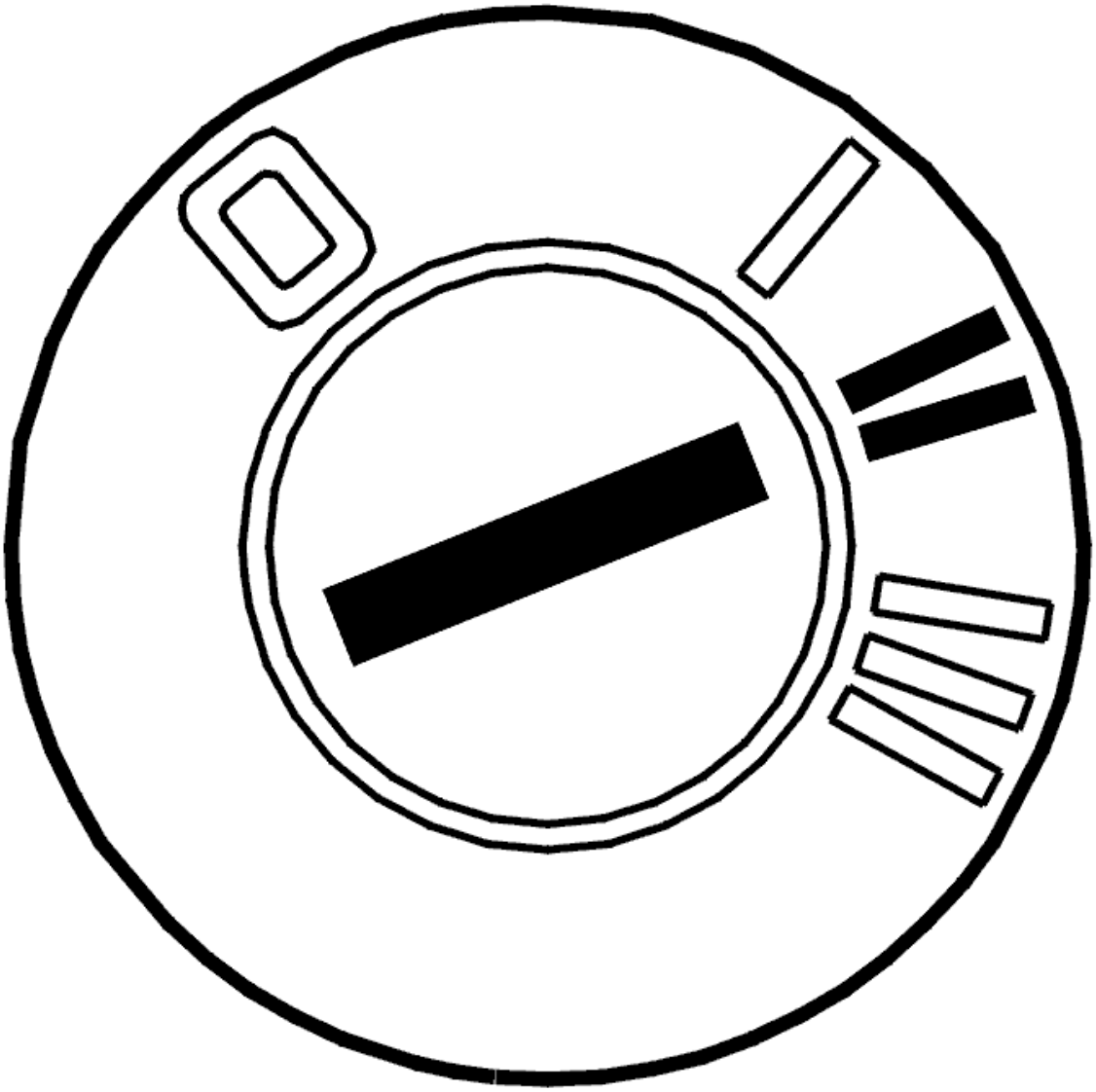

Fig. 169: Identifying Ignition ON
Courtesy of VOLVO CARS CORPORATION

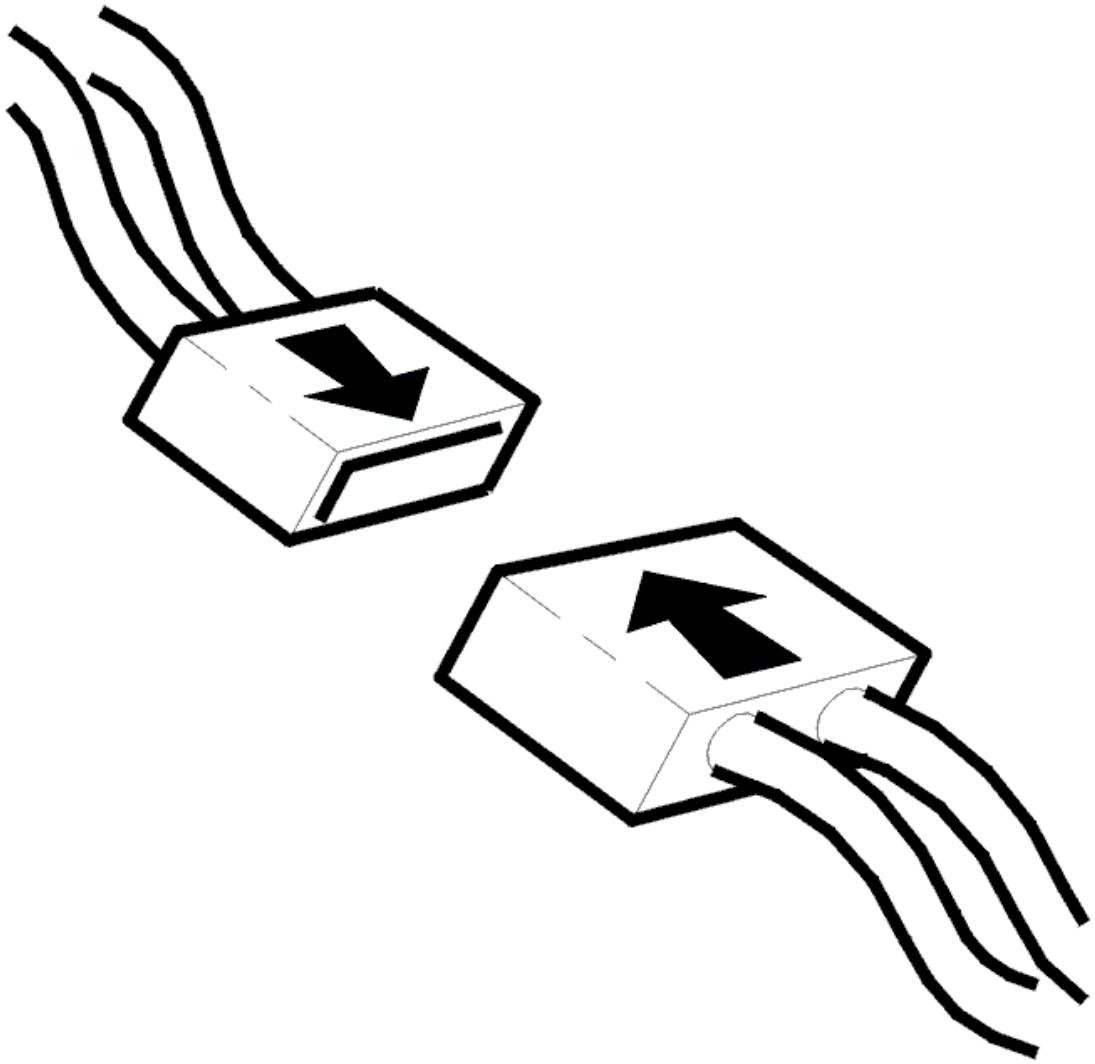

Fig. 170: Identifying Connector(s) Reinstallation
Courtesy of VOLVO CARS CORPORATION

- Ignition off.
- Reinstall the connectors, components etc.
- Ignition on.
- Read off the oil temperature.

Check that the transmission oil temperature is within its permitted range.

Compare with the transmission temperature.

NOTE: **The transmission temperature sensor is located inside the control unit and can be affected by the heat given off by the solenoids.**

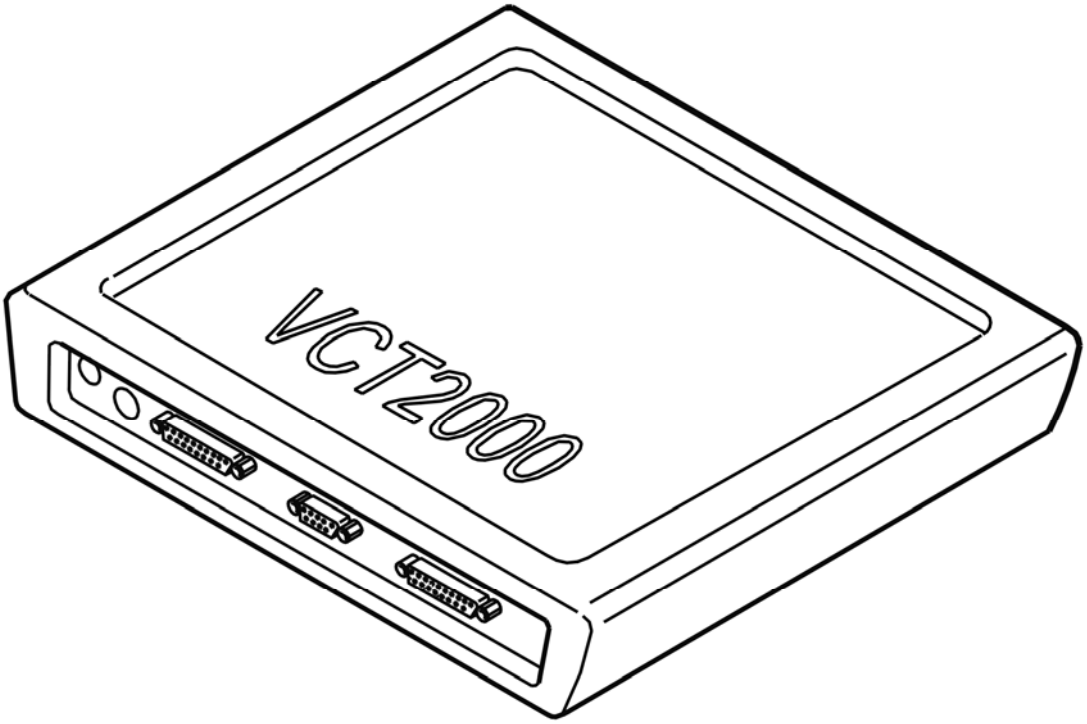

Fig. 171: Identifying VCT2000 Diagnostic Tool Symbol In VIDA
Courtesy of VOLVO CARS CORPORATION

Is the oil temperature within its permitted range?

- **YES**

  VERIFIED: Troubleshooting has been completed.

- **NO**

  Refer to **INFORMATION**

TCM-0003: SHIFT SOLENOID S1. SIGNAL TOO LOW (4T65 AWD; 2003-2006)

DIAGNOSTIC TROUBLE CODE (DTC) INFORMATION

Condition

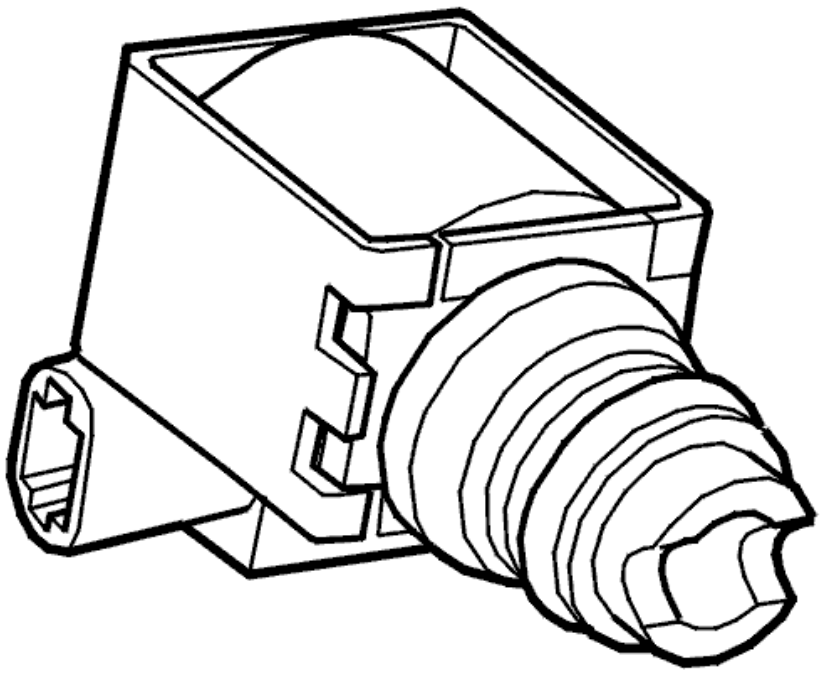

Fig. 172: Identifying Shift Solenoid S1 And S2
Courtesy of VOLVO CARS CORPORATION

Shift solenoids S2 and S1 operate in tandem to control gear-shifting. Solenoid S1 is activated in 1st and 4th gears. Diagnostic trouble code (DTC) TCM-0003 is stored if the control module registers that the signal in the solenoid S1 circuit is too low when the solenoid should be activated. Solenoid S1 cannot then be activated.

Substitute Value

- The control module "Limp Home" program has been initiated.

Possible Source

- Short-circuit to ground in the signal cable.
- Defective solenoid.

Fault symptom[s]

- The automatic transmission warning lamp flashes.
- No lock-up function.
- Harsh gear shifting.
- No shifting.

HINT: Harsh shifting because there is no line pressure solenoid STH control. This results in constant maximum line pressure.

HINT: No shifting -because the transmission control module (TCM) prevents activation of the solenoids. This stops gear-shifting.

SIGNAL TOO LOW

CHECKS

CHECKING THE TEMPERATURE SENSOR

HINT: In some cases, the diagnostic trouble code (DTC) may be caused by a defective oil temperature sensor. Check the function of the oil temperature sensor first.

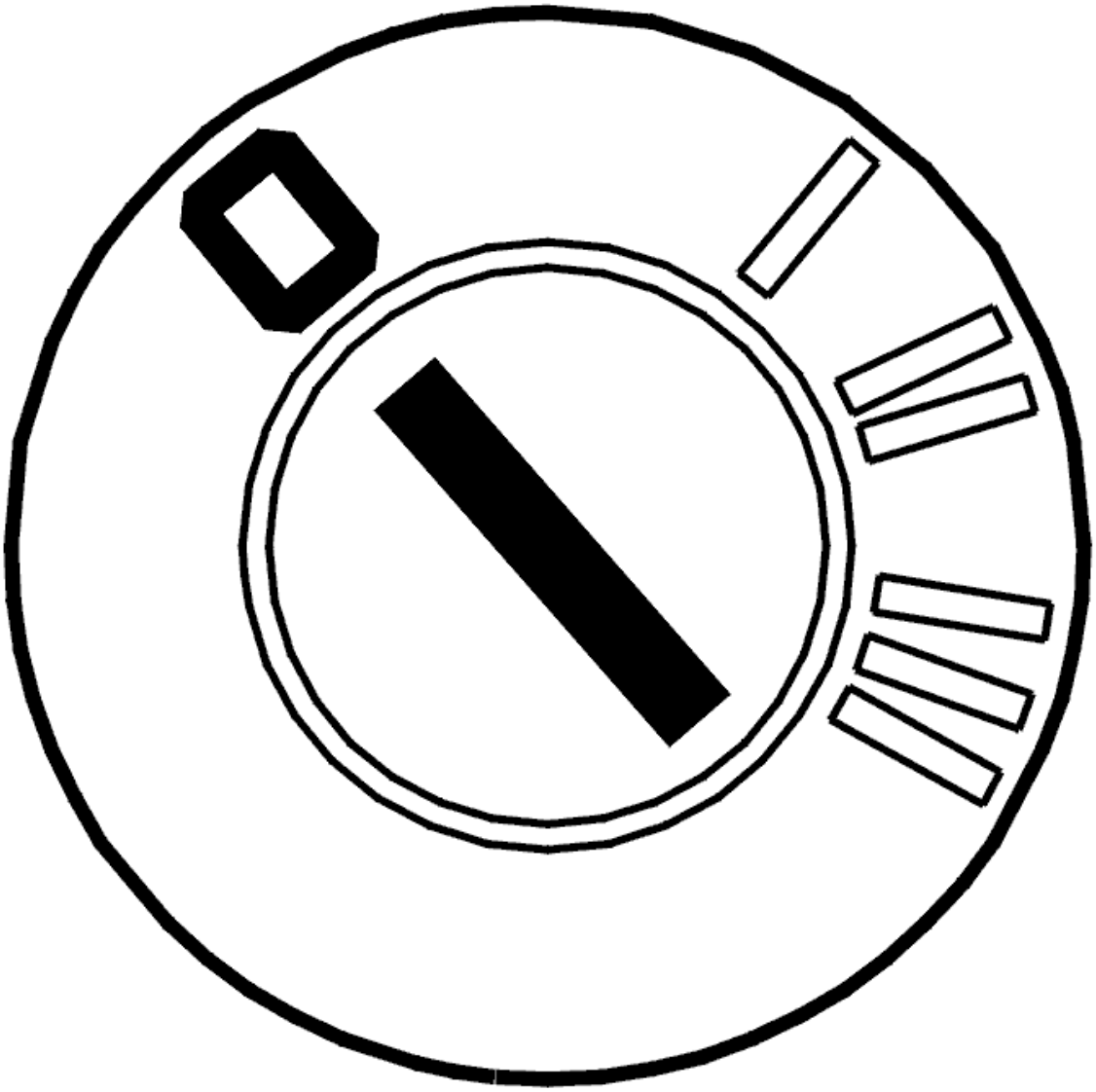

Fig. 173: Identifying Ignition OFF
Courtesy of VOLVO CARS CORPORATION

- Ignition off
- Read off the oil temperature.

  Check that the function of the temperature sensor is OK. Test drive the car to increase the temperature of the transmission fluid. Read off the temperature again. Check that the temperature has increased.

  HINT: If the temperature is outside its permitted range, fault-trace the temperature sensor.

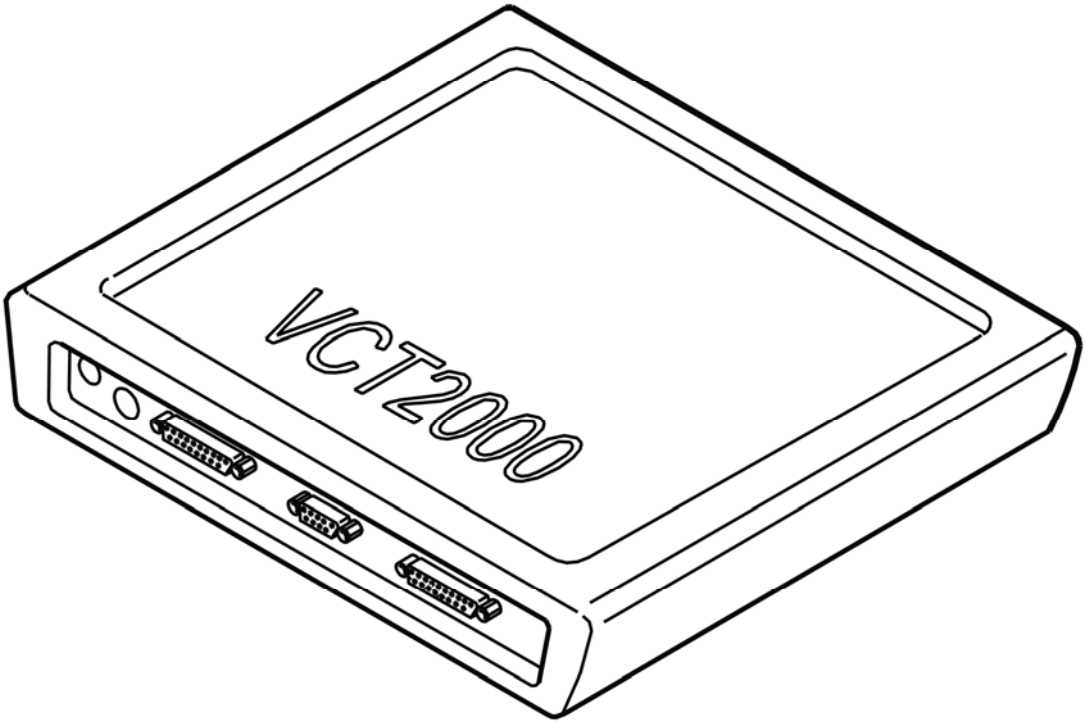

Fig. 174: Identifying VCT2000 Diagnostic Tool Symbol In VIDA
Courtesy of VOLVO CARS CORPORATION

Is the oil temperature within its permitted range?

- **YES**

  Refer to **CHECKING SHIFT SOLENOID S1**

- **NO**

  Refer to **SIGNAL TOO HIGH**

CHECKING SHIFT SOLENOID S1

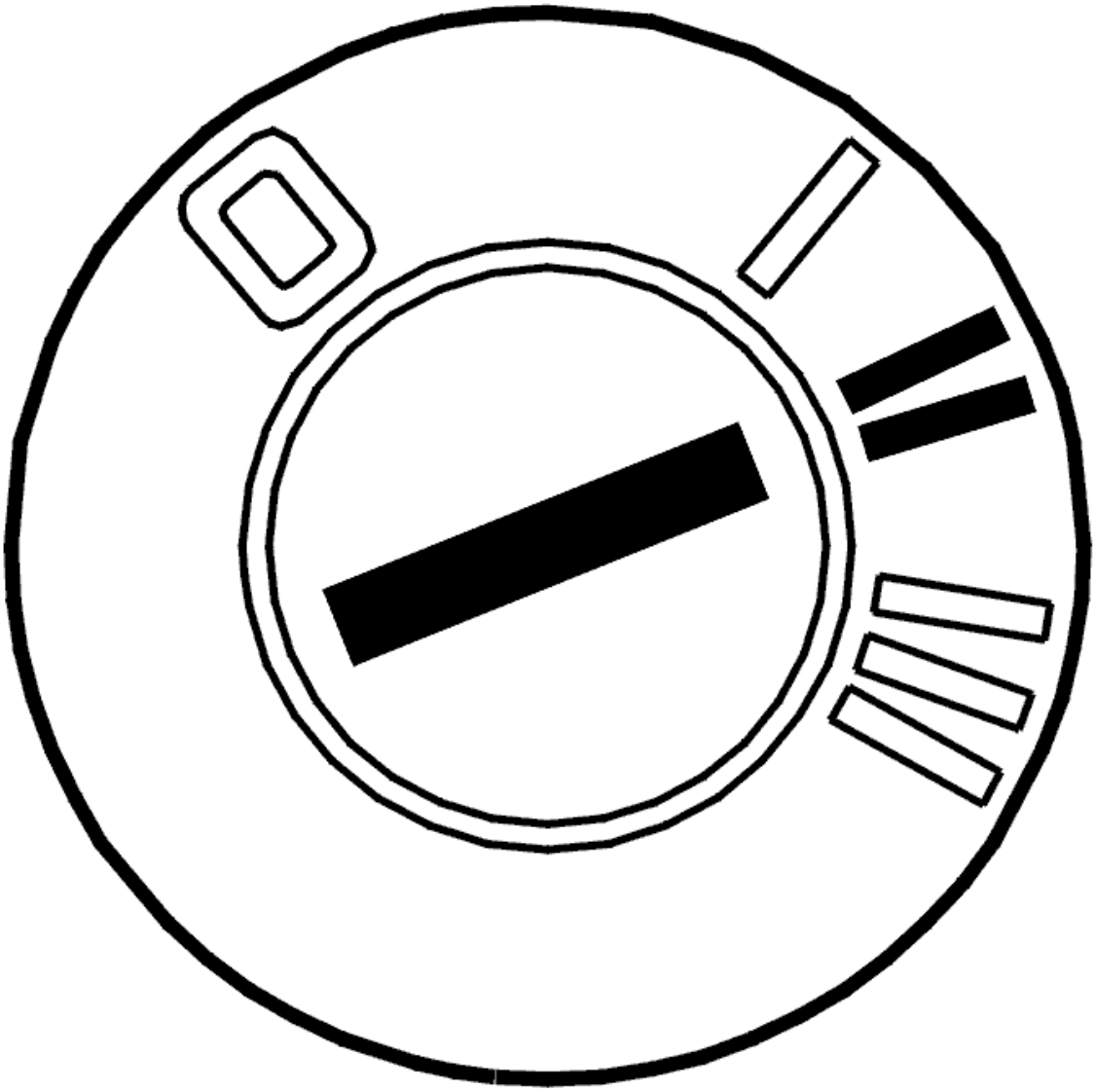

Fig. 175: Identifying Ignition ON
Courtesy of VOLVO CARS CORPORATION

- Ignition off
- Check the control module and automatic transmission connectors for contact resistance and oxidation according to **CONTACT RESISTANCE AND OXIDATION** . Remedy if necessary
- Ignition on
- Gear selector in position P
- Activate solenoid S1.

  The value must change between OFF and ON.

  If the value oscillates, the fault was caused by contact resistance and oxidation.

  Other information:

- To disconnect the control module, see **TRANSMISSION CONTROL MODULE (TCM), REPLACING**
- To disconnect the transmission connector, see **CONNECTING THE BREAKOUT BOX, GM AUTOMATIC TRANSMISSIONS**
- For information about signals, see **SIGNAL SPECIFICATION** .

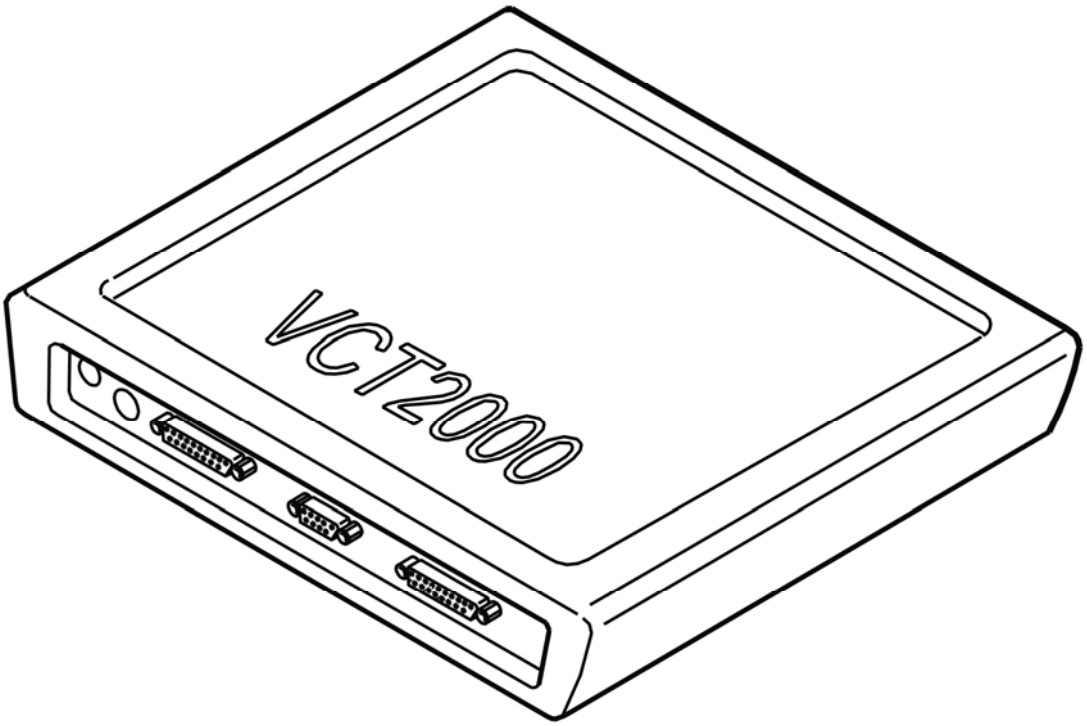

Fig. 176: Identifying VCT2000 Diagnostic Tool Symbol In VIDA
Courtesy of VOLVO CARS CORPORATION

Does the value change?

- **YES**

  Refer to **INTERMITTENT FAULT**

- **NO**

  Refer to **CHECKING SOLENOID S1**

CHECKING SOLENOID S1

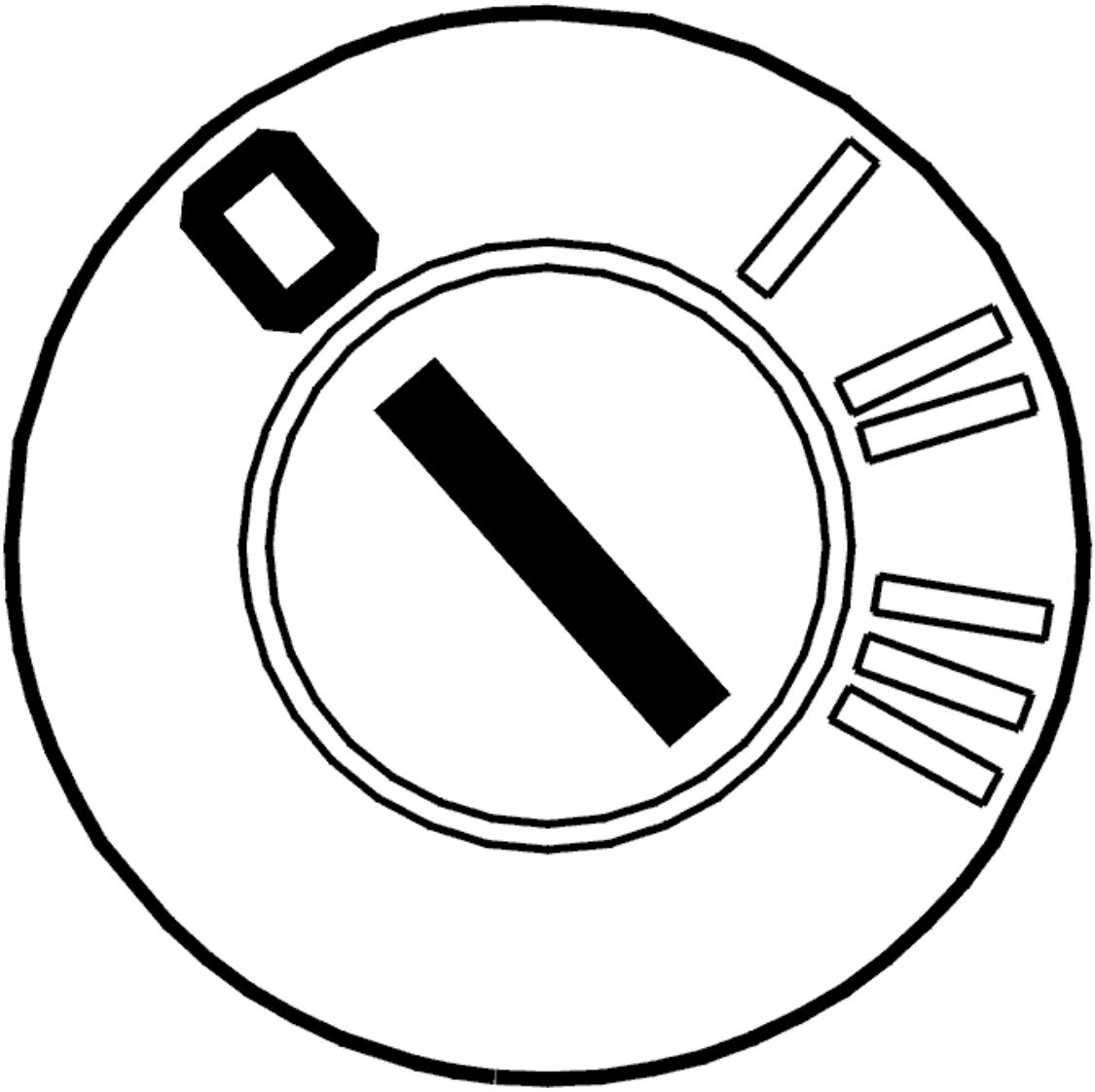

Fig. 177: Identifying Ignition OFF
Courtesy of VOLVO CARS CORPORATION

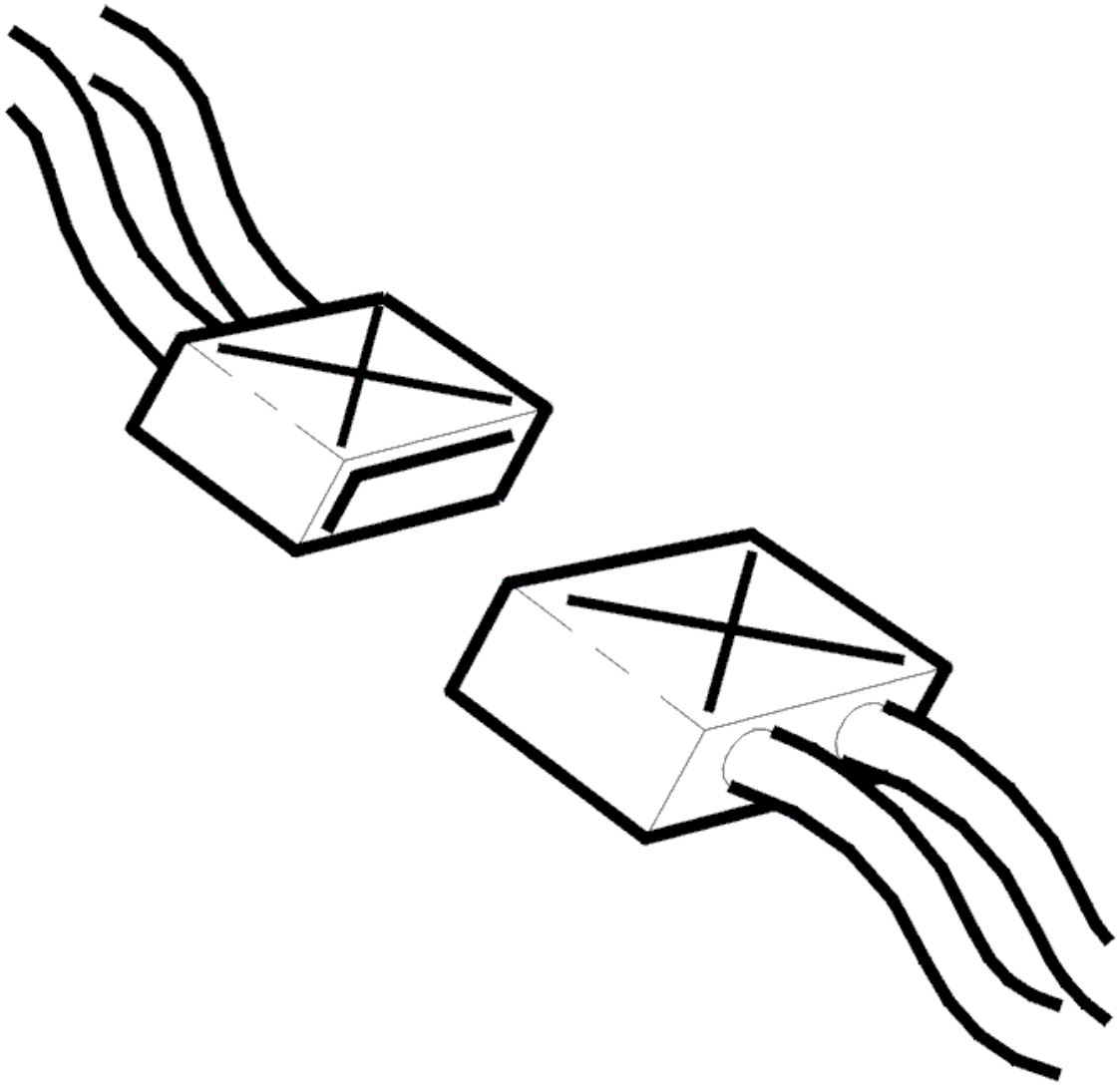

Fig. 178: Identifying Connectors
Courtesy of VOLVO CARS CORPORATION

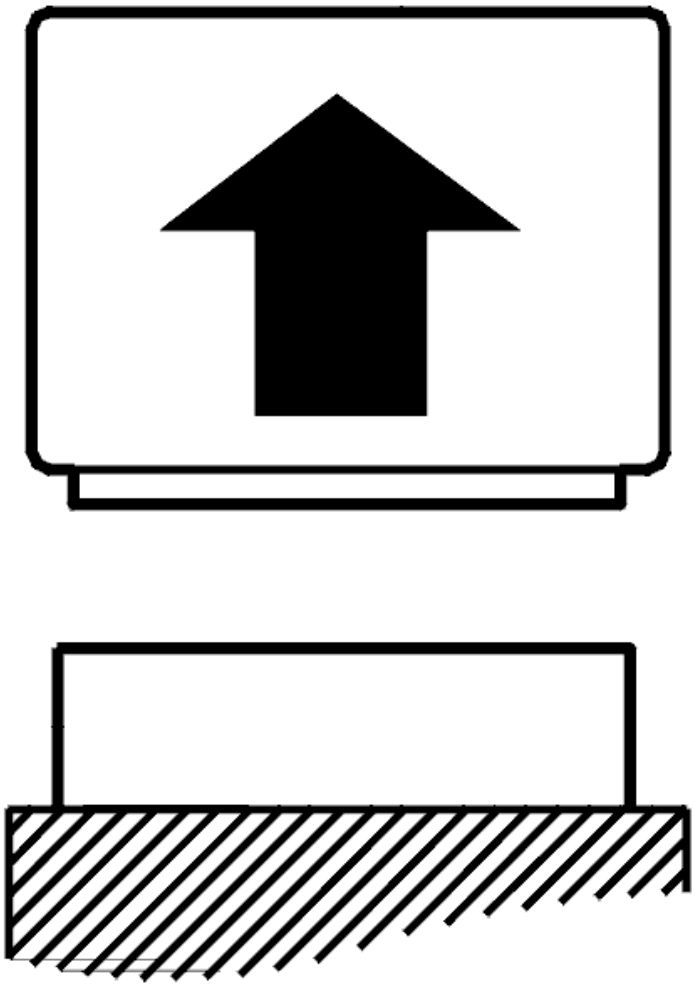

Fig. 179: Identifying Control Module Disconnected
Courtesy of VOLVO CARS CORPORATION

- Ignition off
- Disconnect the automatic transmission connector
- Connect adapter see **9511505** and breakout box see **9813190** to the transmission connector (transmission side)
- Connect an ohmmeter between terminals #A (#A1) and #E (#A5).

  The resistance for solenoid S1 resistance must be between 18 and 30 ohms.

  Other information:

  - To connect the breakout box, see **CONNECTING THE BREAKOUT BOX**
  - To connect the breakout box to the transmission connector, see **CONNECTING THE**

BREAKOUT BOX, GM AUTOMATIC TRANSMISSIONS

- For information about signals, see **SIGNAL SPECIFICATION** .

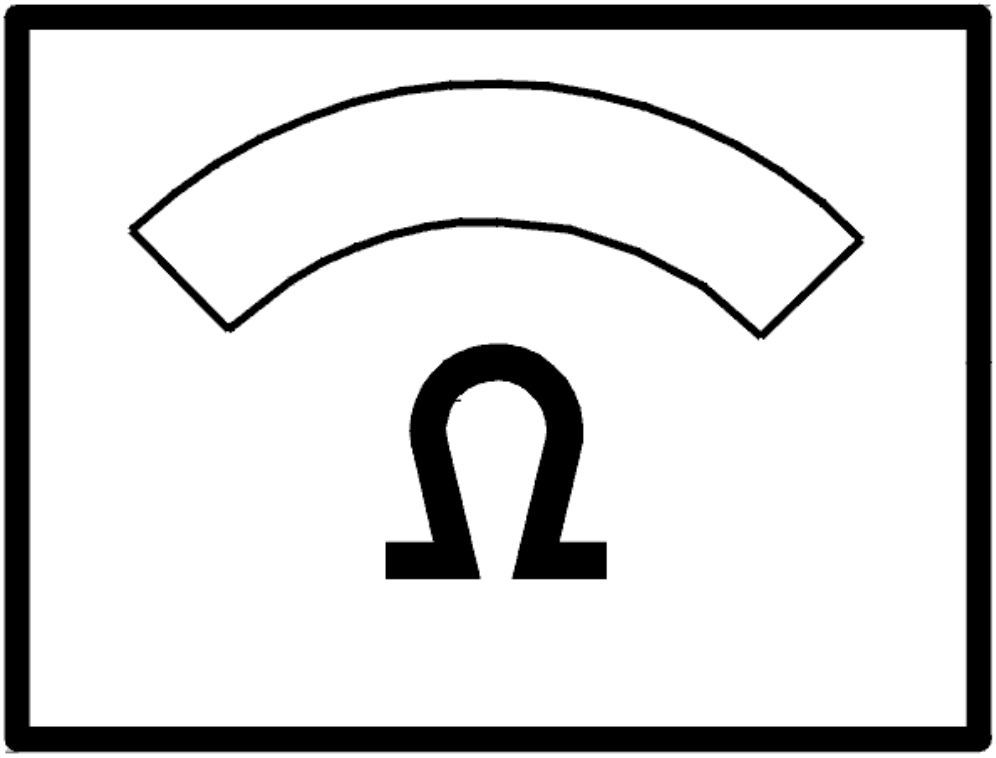

Fig. 180: Identifying Ohms Display
Courtesy of VOLVO CARS CORPORATION

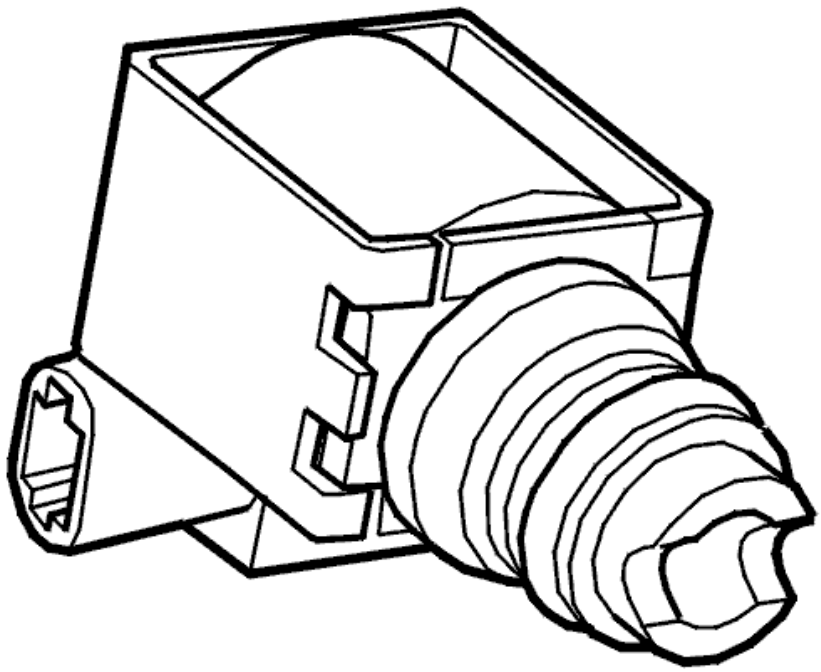

Fig. 181: Identifying Shift Solenoid S1 And S2
Courtesy of VOLVO CARS CORPORATION

Was the resistance OK?

- **YES**

  Refer to **CHECKING THE WIRING**

- **NO**

  Refer to **CHECKING THE WIRING AND COMPONENT**

CHECKING THE CONTROL MODULE

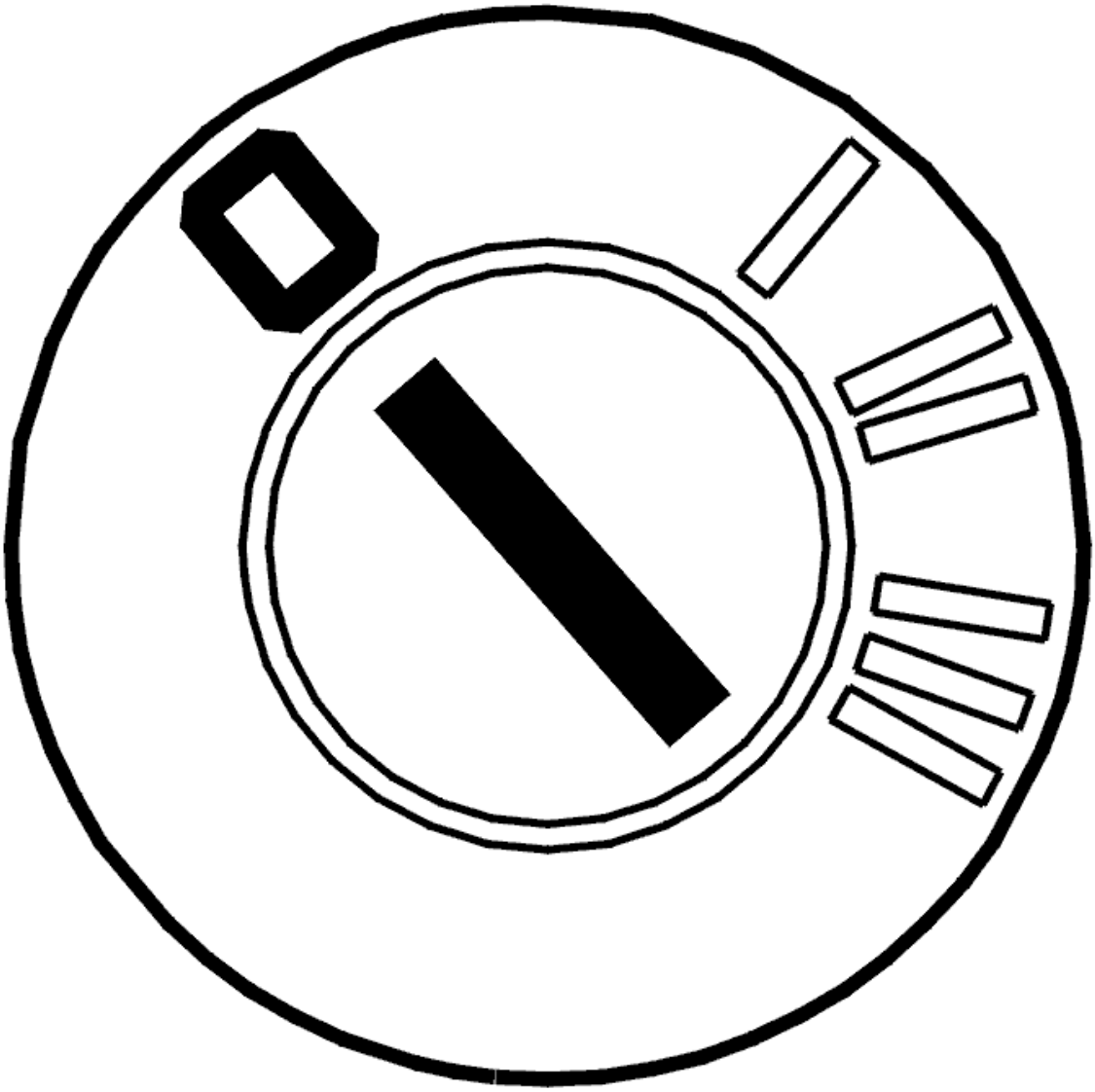

Fig. 182: Identifying Ignition OFF
Courtesy of VOLVO CARS CORPORATION

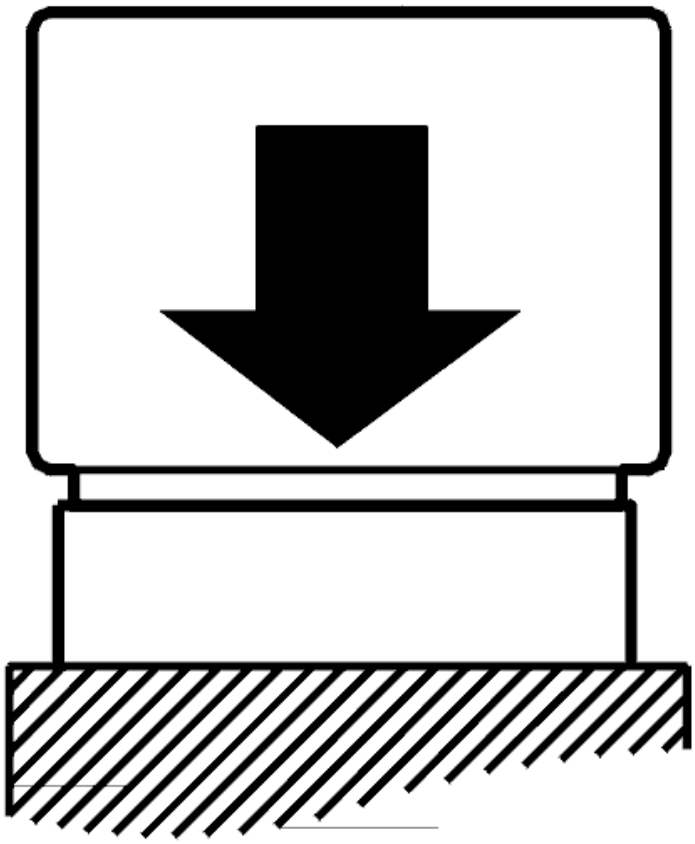

Fig. 183: Identifying Connecting Control Module
Courtesy of VOLVO CARS CORPORATION

- Ignition off
- The breakout box connected
- Control module connected
- Transmission connector disconnected
- Ignition on
- Gear selector in position P.

Check the circuit for solenoid S1 by connecting an ohmmeter between terminals #50 (#A50) and #53 (#A53). The resistance must be between 7 and 13 Kohms. Try a new control module if the resistance is 0.

Remedy as necessary.

Other information:

- To connect the breakout box, see **CONNECTING THE BREAKOUT BOX**
- To replace the control module, see **TRANSMISSION CONTROL MODULE (TCM), REPLACING**
- For information about signals, see **SIGNAL SPECIFICATION** .

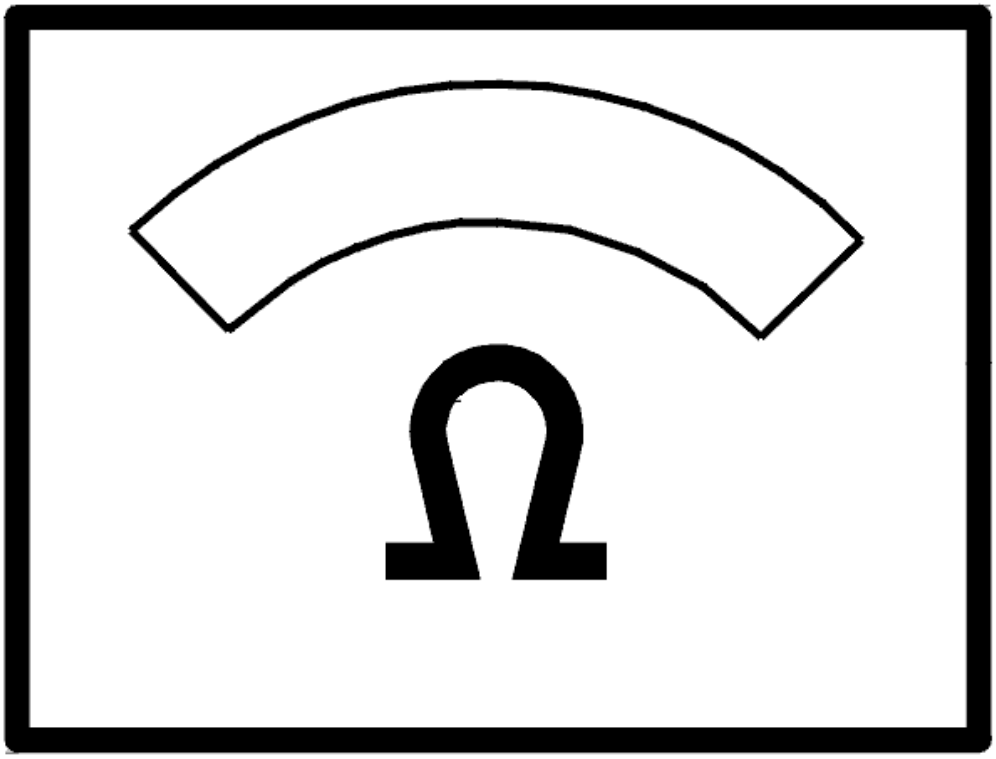

Fig. 184: Identifying Ohms Display
Courtesy of VOLVO CARS CORPORATION

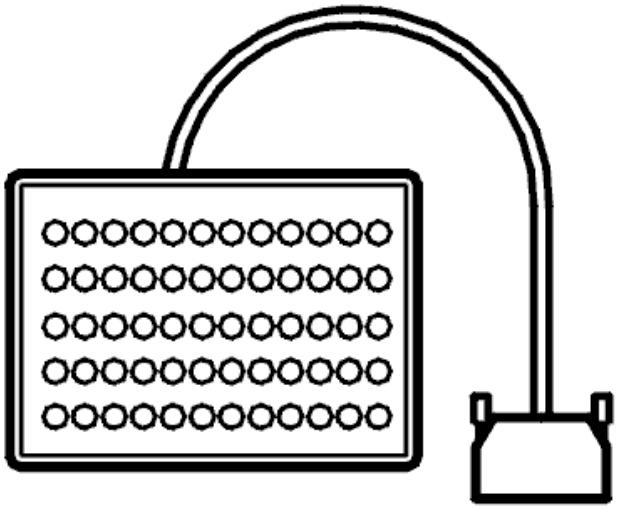

Fig. 185: Identifying Breakout Box
Courtesy of VOLVO CARS CORPORATION

Was the resistance incorrect?

- **YES**

  Refer to **VERIFICATION**

- **NO**

  FAULT NOT FOUND: Troubleshooting has been completed.

CHECKING THE WIRING

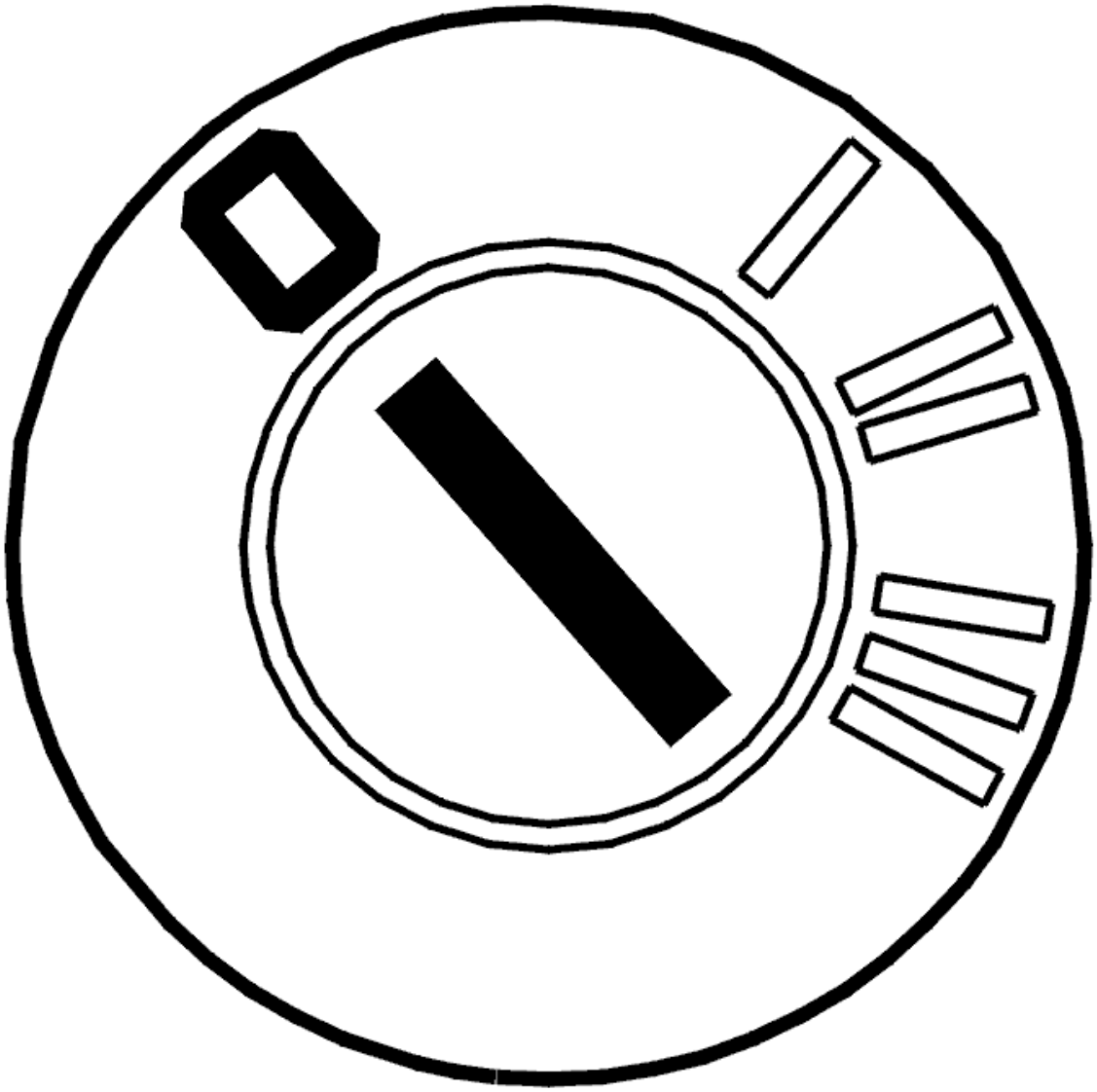

Fig. 186: Identifying Ignition OFF
Courtesy of VOLVO CARS CORPORATION

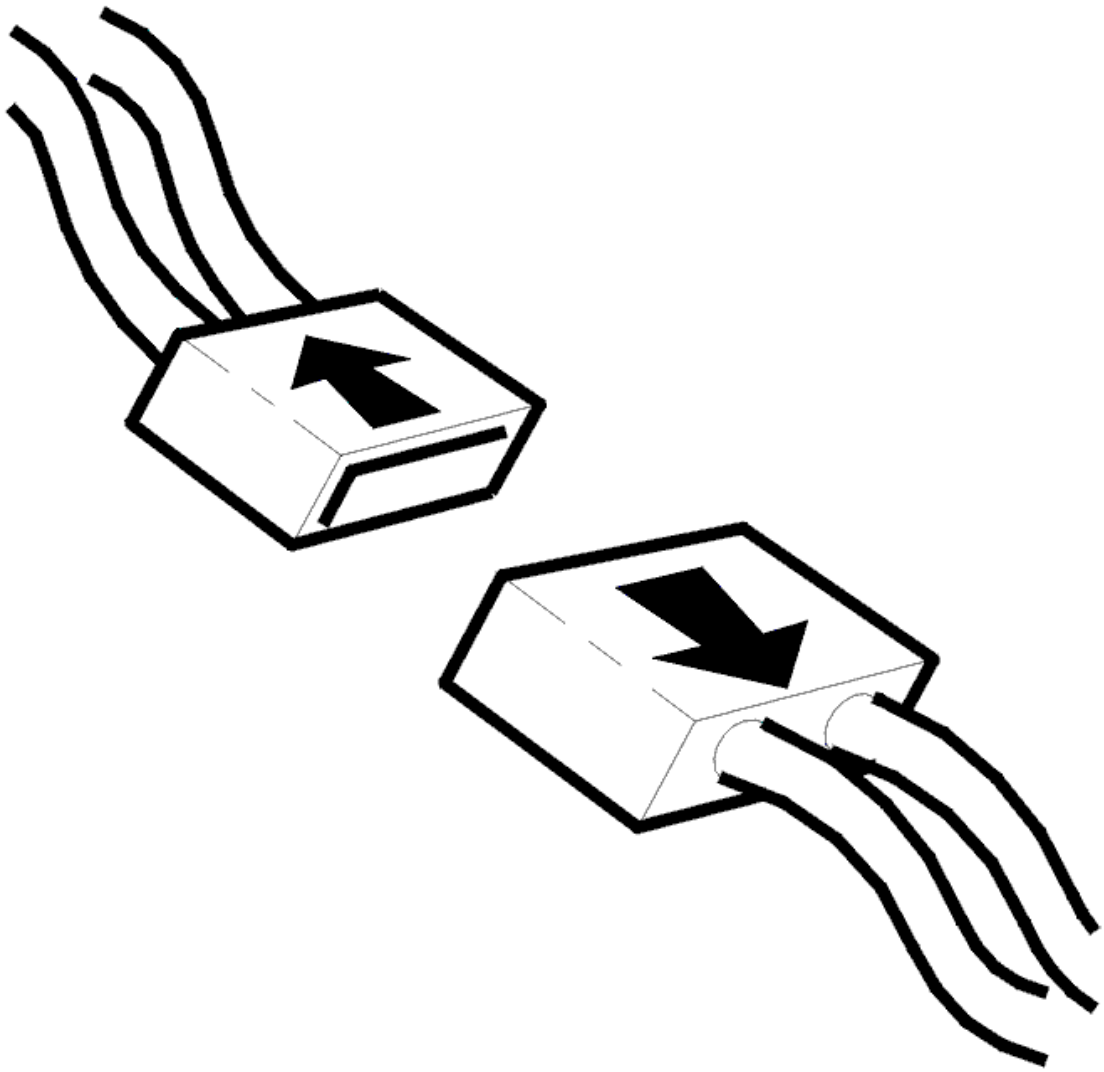

Fig. 187: Identifying Connector(s) Disconnected
Courtesy of VOLVO CARS CORPORATION

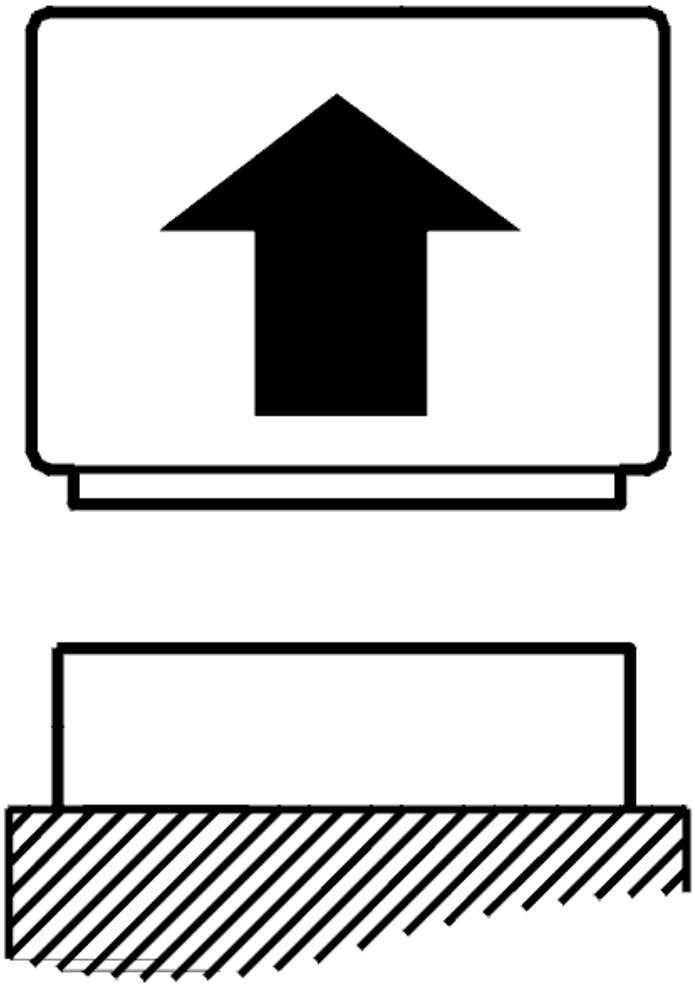

Fig. 188: Identifying Control Module Disconnected
Courtesy of VOLVO CARS CORPORATION

- Ignition off
- Connect the breakout box
- Disconnect the control module.
- Disconnect the transmission connector
- Connect adapter see **9511505** and breakout box see **9813190** to the transmission connector (transmission side).

  Check the cable between control module terminal #50 (#A50) and transmission connector terminal #A (#A1). Check for a short-circuit to ground. See **SHORT-CIRCUIT TO GROUND, PERMANENT FAULTS** .

  Check the cable between control module terminal #53 (#A53) and transmission connector terminal #E

(#A5). Check for a short-circuit to ground. See **SHORT-CIRCUIT TO GROUND, PERMANENT FAULTS** .

Other information:

- To connect the breakout box, see **CONNECTING THE BREAKOUT BOX**
- To connect the breakout box to the transmission connector, see **CONNECTING THE BREAKOUT BOX, GM AUTOMATIC TRANSMISSIONS**
- For information about signals, see **SIGNAL SPECIFICATION** .

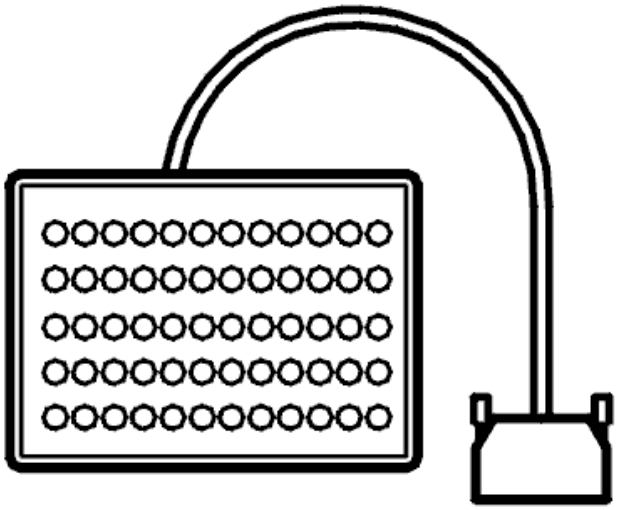

Fig. 189: Identifying Breakout Box
Courtesy of VOLVO CARS CORPORATION

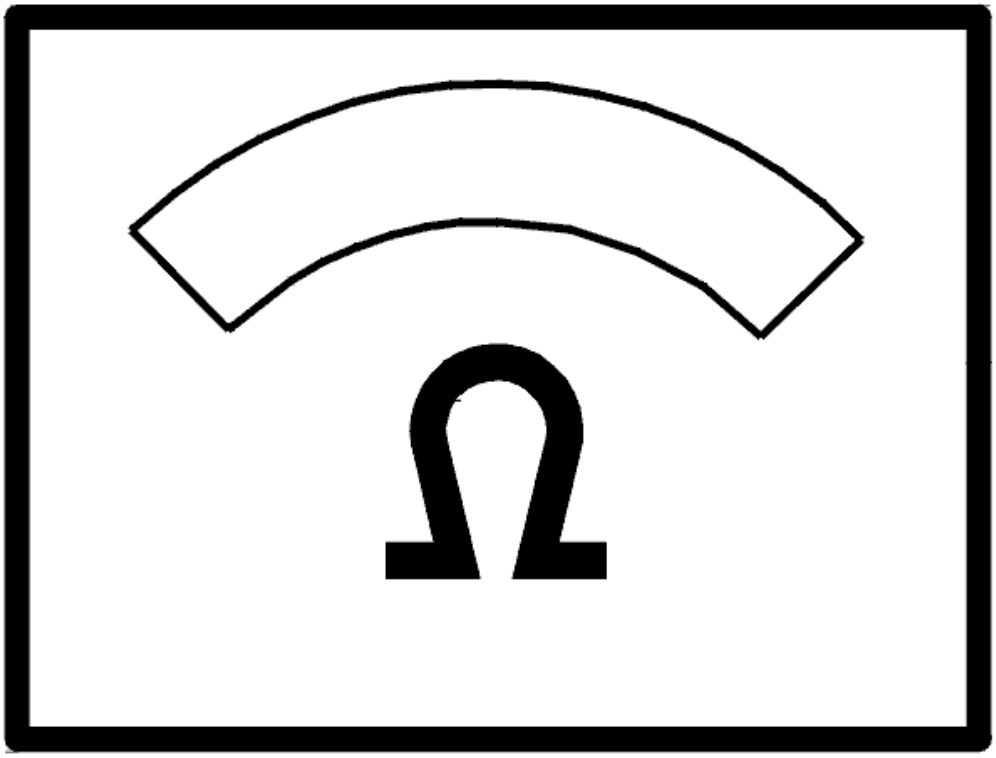

Fig. 190: Identifying Ohms Display
Courtesy of VOLVO CARS CORPORATION

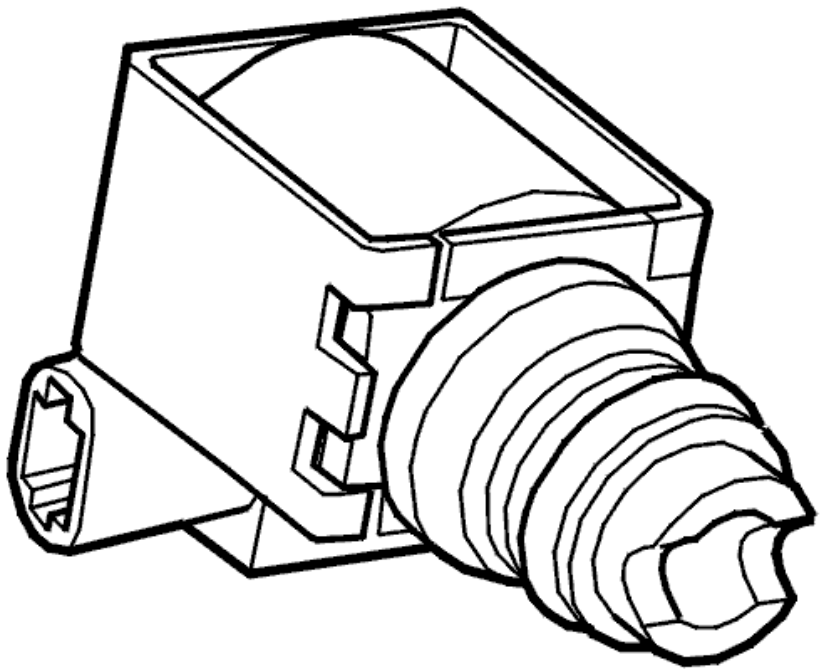

Fig. 191: Identifying Shift Solenoid S1 And S2
Courtesy of VOLVO CARS CORPORATION

Was a fault detected?

- **YES**

  Refer to **VERIFICATION**

- **NO**

  Refer to **CHECKING THE CONTROL MODULE**

CHECKING THE WIRING AND COMPONENT

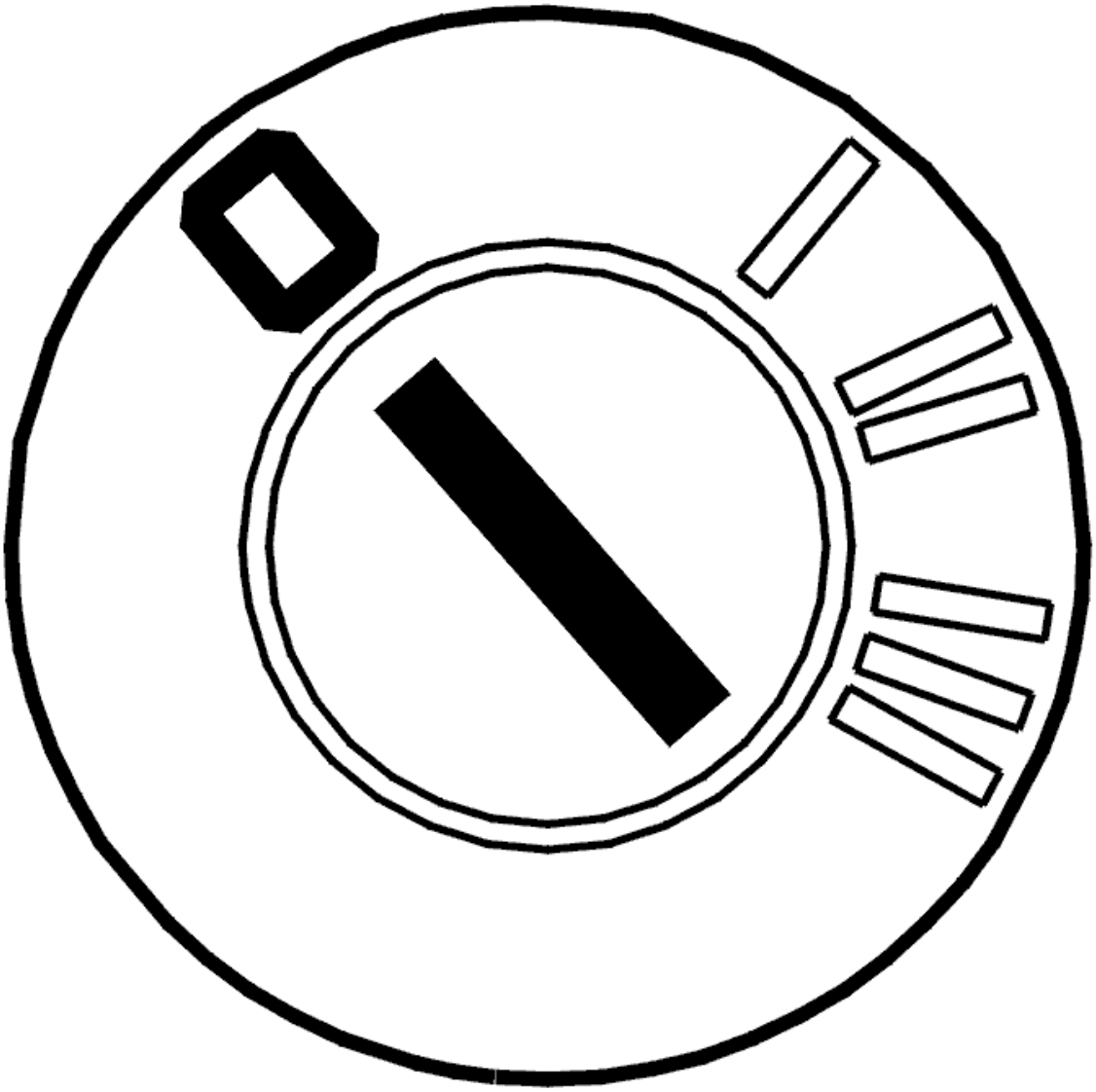

Fig. 192: Identifying Ignition OFF
Courtesy of VOLVO CARS CORPORATION

- Ignition off
- Open the transmission control system.

  Check the cable between transmission connector (transmission side) terminal #A (#A1) and solenoid S1 terminals #A and #E (#A5) and solenoid S1 #B. Check for a short-circuit to ground. See **SHORT-CIRCUIT TO GROUND, PERMANENT FAULTS** .

  HINT: Check solenoid S1 by measuring the solenoid resistance between terminals A and B. The resistance must be between 18 and 25 ohms.

  Remedy as necessary.

  Other information:

- To open the transmission control system, For removal, see **SIDE COVER TRANSMISSION, REMOVING** .
- To connect the breakout box to the transmission connector, see **CONNECTING THE BREAKOUT BOX, GM AUTOMATIC TRANSMISSIONS**
- To replace solenoid S1, see **SOLENOID SHIFTING 2-3, REPLACING**
- To replace the cable harness, see **TEMPERATURE SENSOR FLUID, TRANSAXLE, (TFT)**
- For information about signals, see **SIGNAL SPECIFICATION** .

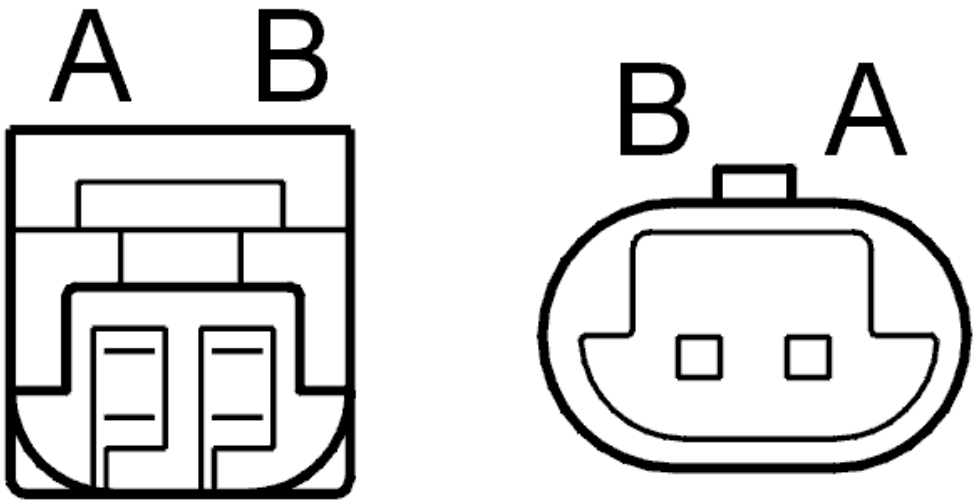

Fig. 193: Identifying Transmission Connector Terminals
Courtesy of VOLVO CARS CORPORATION

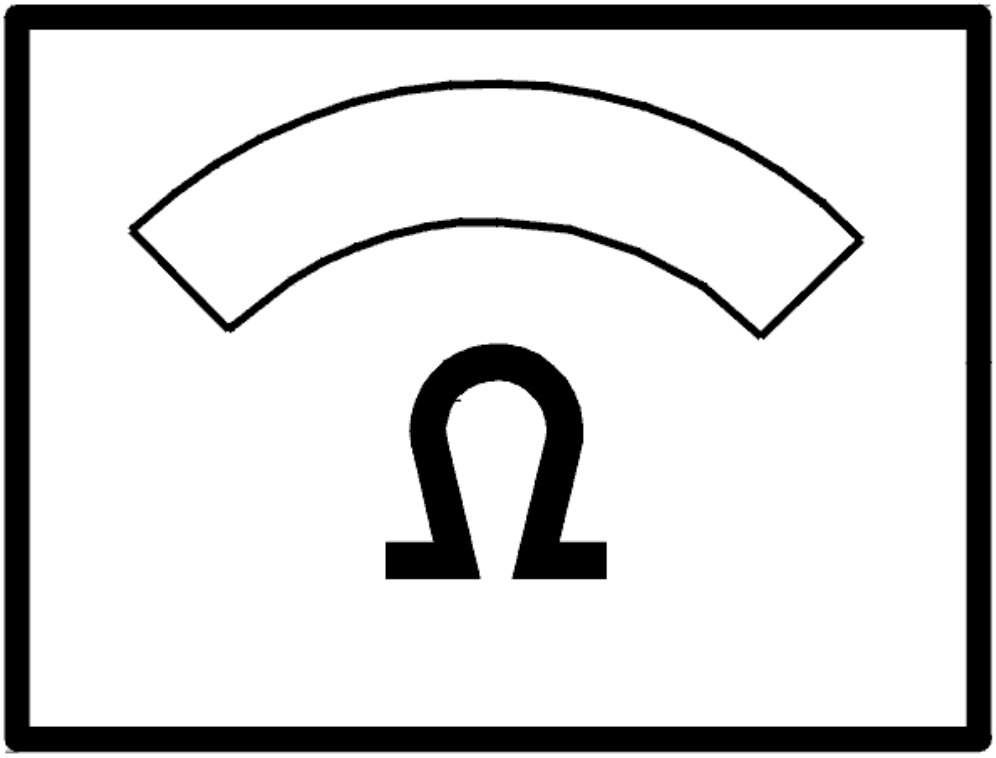

Fig. 194: Identifying Ohms Display
Courtesy of VOLVO CARS CORPORATION

- **Continue**

  Refer to **RESETTING THE ADAPTATION**

INTERMITTENT FAULT

Check the cable between control module terminal #A50 and transmission connector terminal #A (#A1) (control module side). Check for an intermittent short-circuit to ground. See **SHORT-CIRCUIT TO GROUND, INTERMITTENT FAULTS** . Check for contact resistance and oxidation. See **CONTACT RESISTANCE AND OXIDATION** .

Check the cable between control module terminal #A53 and transmission connector terminal #E (#A5) (control module side). Check for an intermittent short-circuit to ground. See **SHORT-CIRCUIT TO GROUND,**

INTERMITTENT FAULTS . Check for contact resistance and oxidation. See **CONTACT RESISTANCE AND OXIDATION** .

Remedy as necessary.

Other information:

- To connect the breakout box, see **CONNECTING THE BREAKOUT BOX**
- To connect the breakout box to the transmission connector, see **CONNECTING THE BREAKOUT BOX, GM AUTOMATIC TRANSMISSIONS**
- For information about signals, see **SIGNAL SPECIFICATION** .

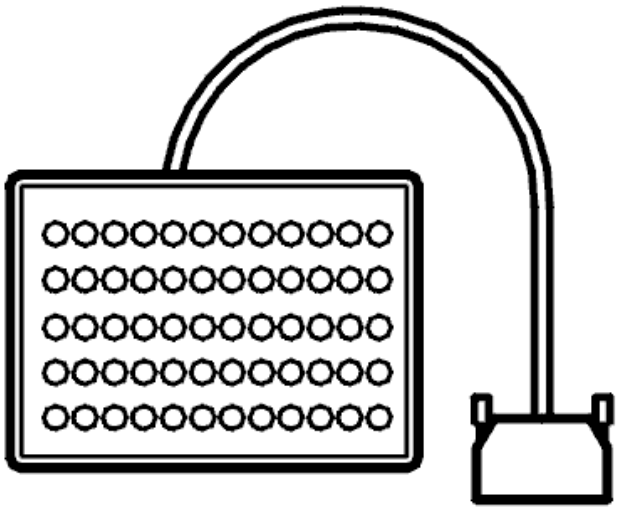

Fig. 195: Identifying Breakout Box
Courtesy of VOLVO CARS CORPORATION

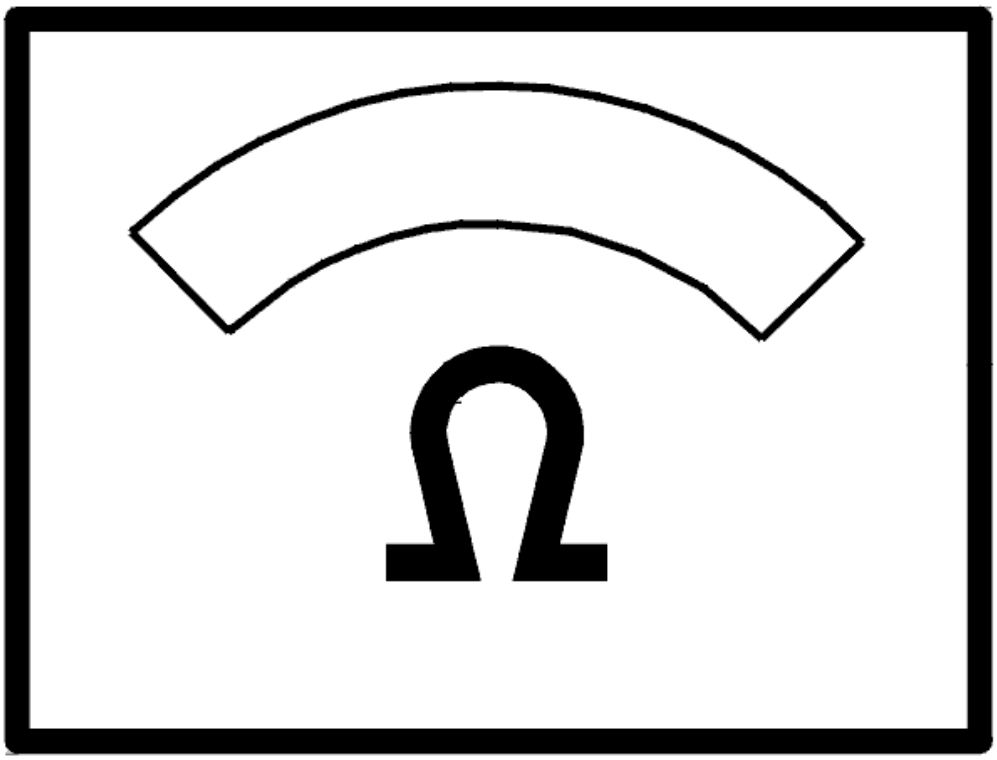

Fig. 196: Identifying Ohms Display
Courtesy of VOLVO CARS CORPORATION

- **Continue**

  Refer to **INFORMATION**

RESETTING THE ADAPTATION

RESETTING ADAPTATION AND THE COUNTER FOR "TRANSMISSION OIL CHANGE"

HINT: The transmission has torque controlled adaptive pressure control. Pressure control means that the transmission regulates the pressure itself during each gear shift. This avoids harsh gear shifting. Each gear shift is evaluated by the control module and stored in the memory. This allows for compensation for wear and tear in the transmission and clutch. It is important that the adaptation in the memory is reset after the transmission has been repaired. This is to ensure normal operation. The oil is replaced during

repair; the "Transmission oil change" counter must be reset. If the counter is not reset when the fluid is drained and replaced, there is a risk that a diagnostic trouble code (DTC) will be stored in incorrect circumstances.

NOTE: This applies only if the transmission or one of the components in the transmission have been replaced.

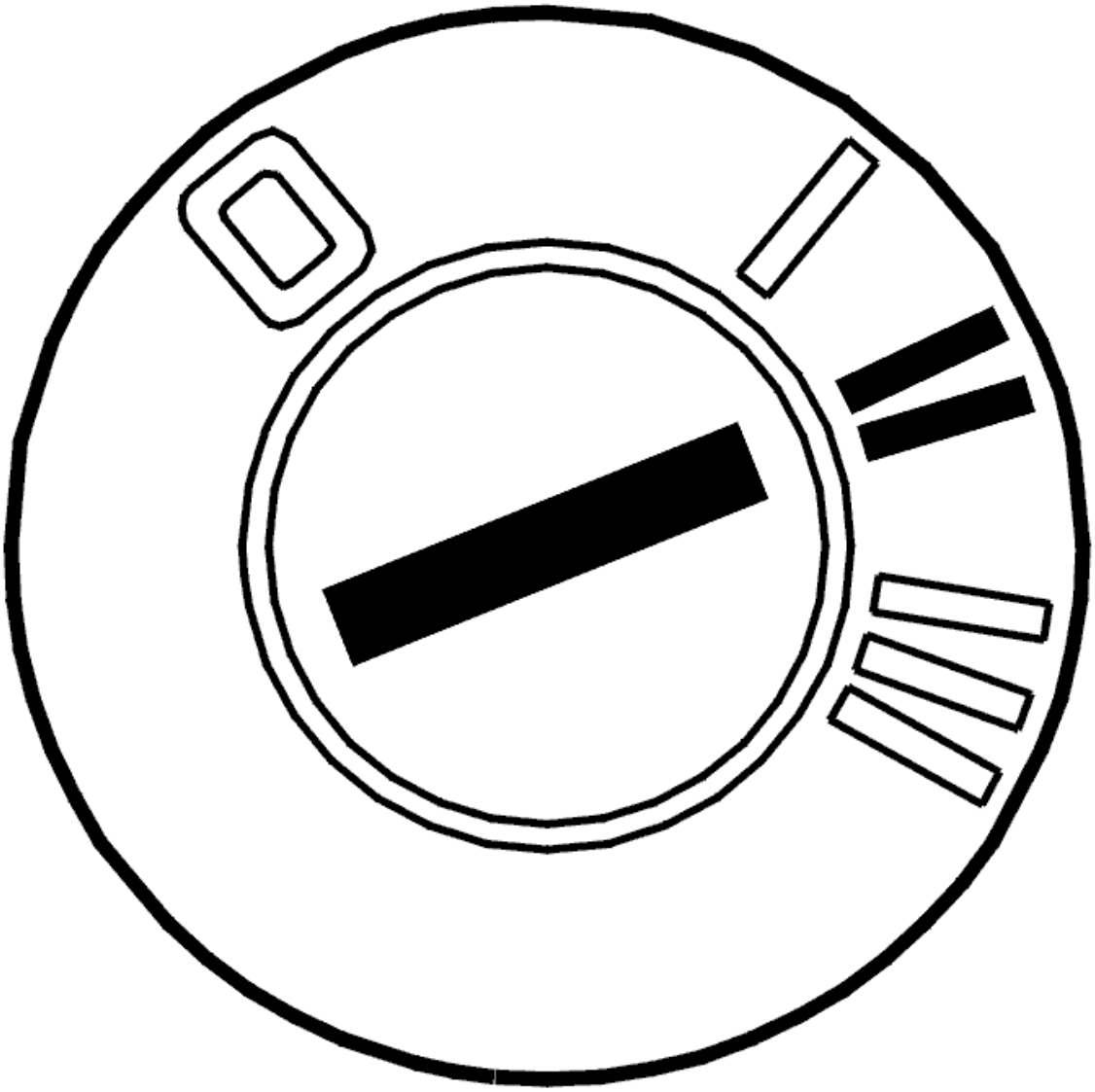

Fig. 197: Identifying Ignition ON
Courtesy of VOLVO CARS CORPORATION

- Ignition on.

  Click on the VCT2000 symbol to reset the adaptation and counter.

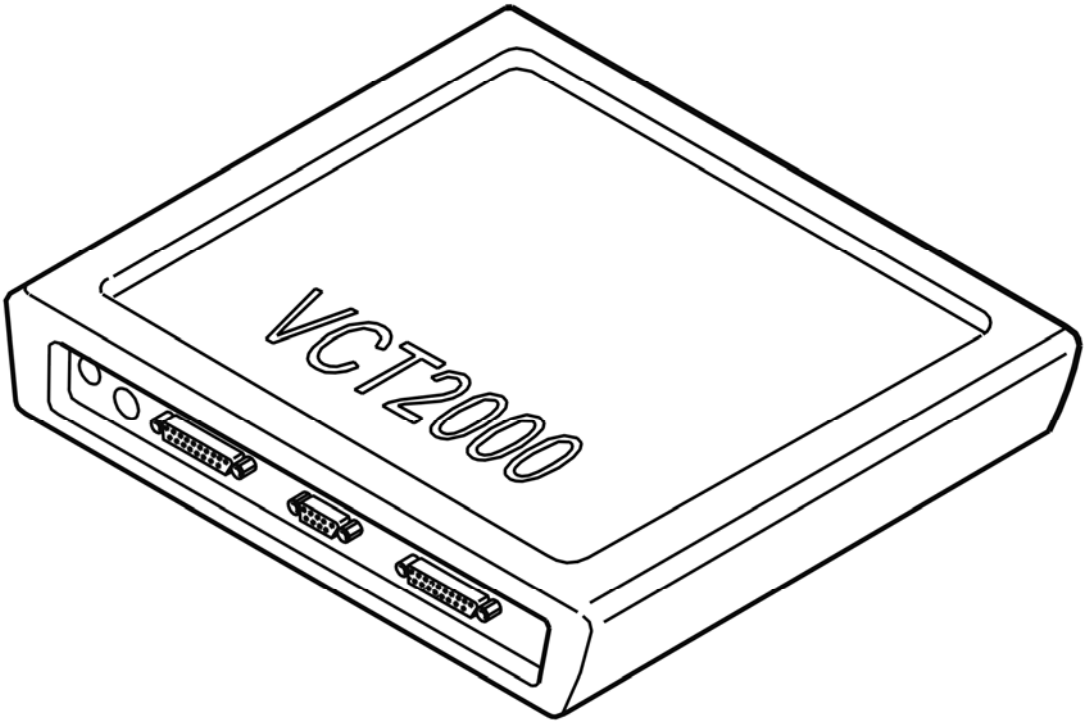

Fig. 198: Identifying VCT2000 Diagnostic Tool Symbol In VIDA
Courtesy of VOLVO CARS CORPORATION

- **Continue**

  Refer to **VERIFICATION.**

VERIFICATION

VERIFICATION

HINT: After carrying out the repair, check that the fault has been remedied.

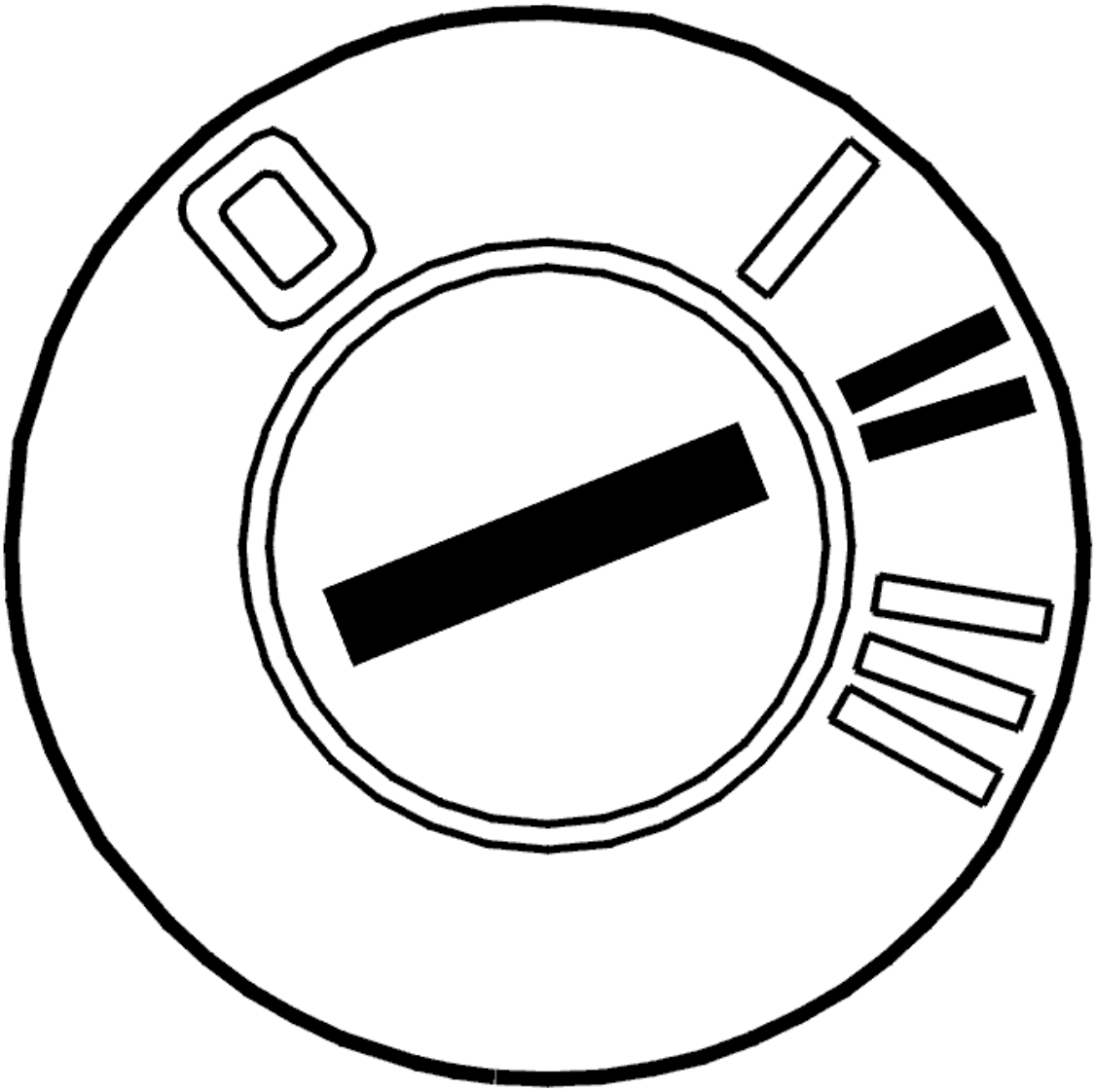

Fig. 199: Identifying Ignition ON
Courtesy of VOLVO CARS CORPORATION

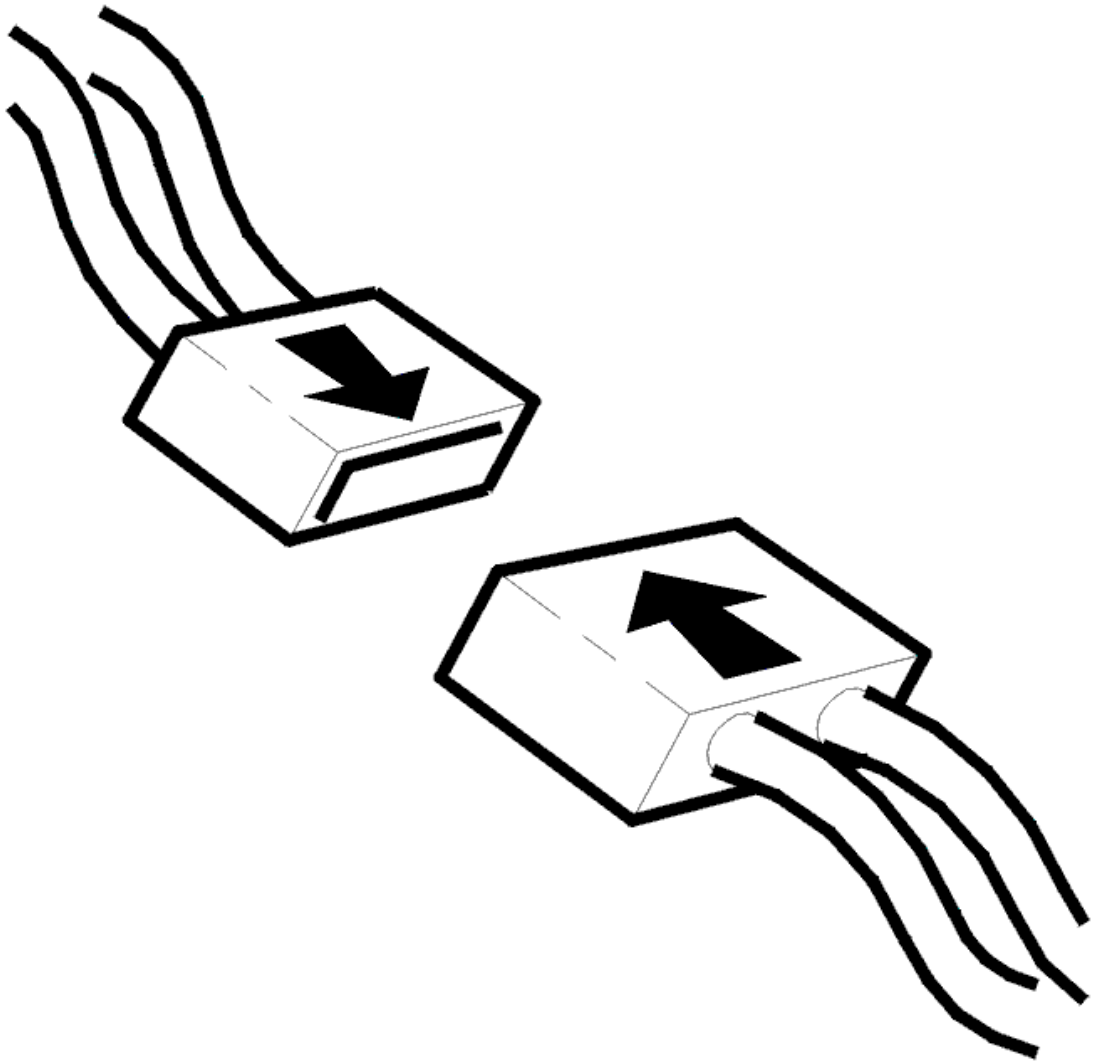

Fig. 200: Identifying Connector(s) Reinstallation
Courtesy of VOLVO CARS CORPORATION

- Ignition off.
- Wait at least 90 seconds.
- Reconnect the connectors, reinstall components etc.
- Ignition on.
- Gear selector in position P.
- Activate solenoid S1.

  The value should change between OFF and ON.

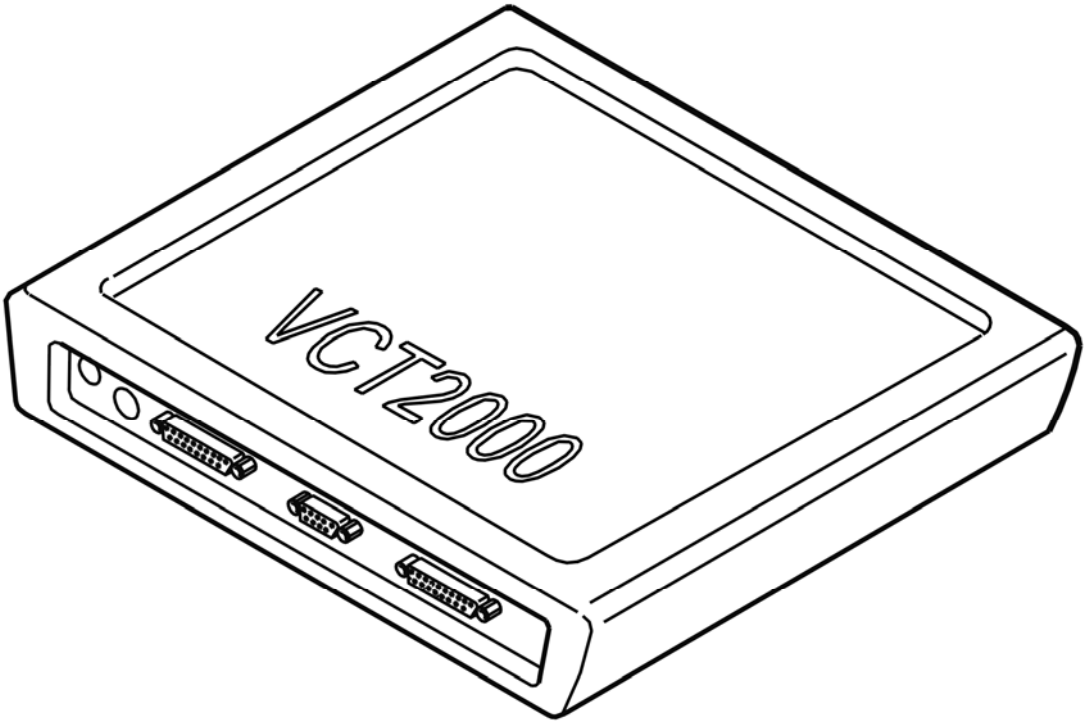

Fig. 201: Identifying VCT2000 Diagnostic Tool Symbol In VIDA
Courtesy of VOLVO CARS CORPORATION

Does the value change?

- **YES**

  VERIFIED: Troubleshooting has been completed.

- **NO**

  Refer to **INFORMATION**

INFORMATION

FAULT-TRACING INFORMATION

The fault should have been detected and remedied. As this is not the case fault-tracing has failed.

Exit fault-tracing for this diagnostic trouble code (DTC) or make another attempt.

INFORMATION

FAULT-TRACING INFORMATION

If the fault is intermittent, do not verify fault-tracing if the fault does not recur.

It is possible to view the information again, or leave fault-tracing for this diagnostic trouble code (DTC).

SIGNAL TOO HIGH

CHECKING THE FUNCTION OF THE OIL TEMPERATURE SENSOR

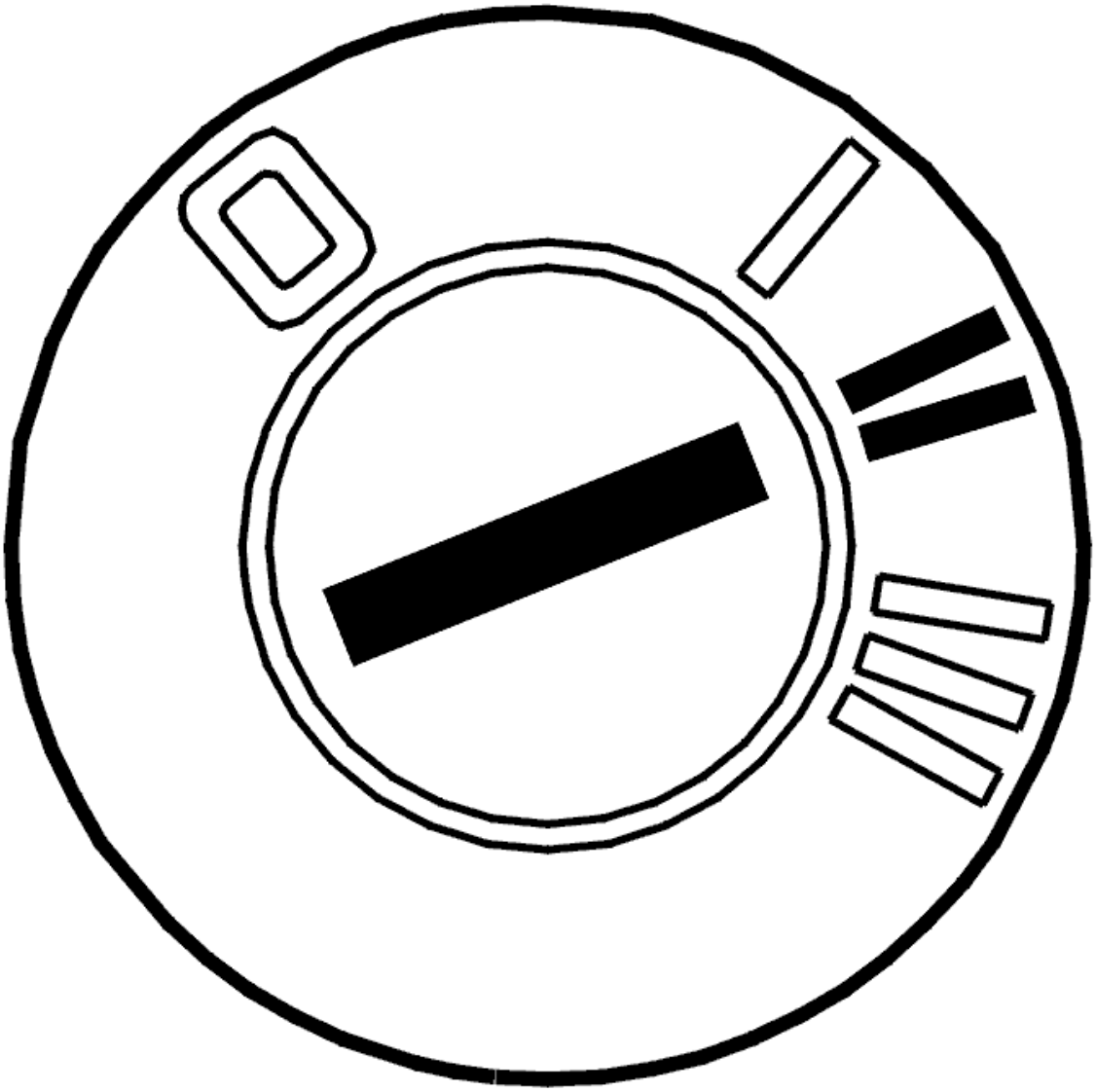

Fig. 202: Identifying Ignition ON
Courtesy of VOLVO CARS CORPORATION

- Ignition on
- Read off the oil temperature.

  Check that the temperature is within its permitted range.

Compare with the transmission temperature.

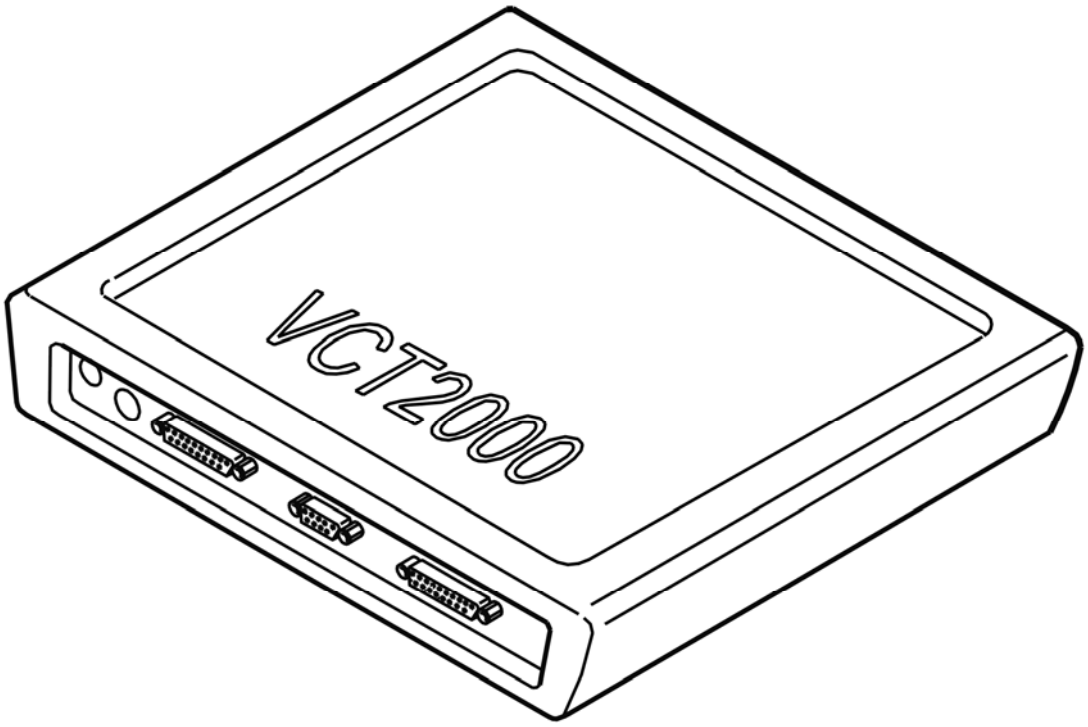

Fig. 203: Identifying VCT2000 Diagnostic Tool Symbol In VIDA
Courtesy of VOLVO CARS CORPORATION

Is the transmission temperature within its permitted range?

- **YES**

  Refer to **INTERMITTENT FAULT**

- **NO**

  Refer to **CHECKING TRANSMISSION FLUID TEMPERATURE SENSOR**

CHECKING TRANSMISSION FLUID TEMPERATURE SENSOR

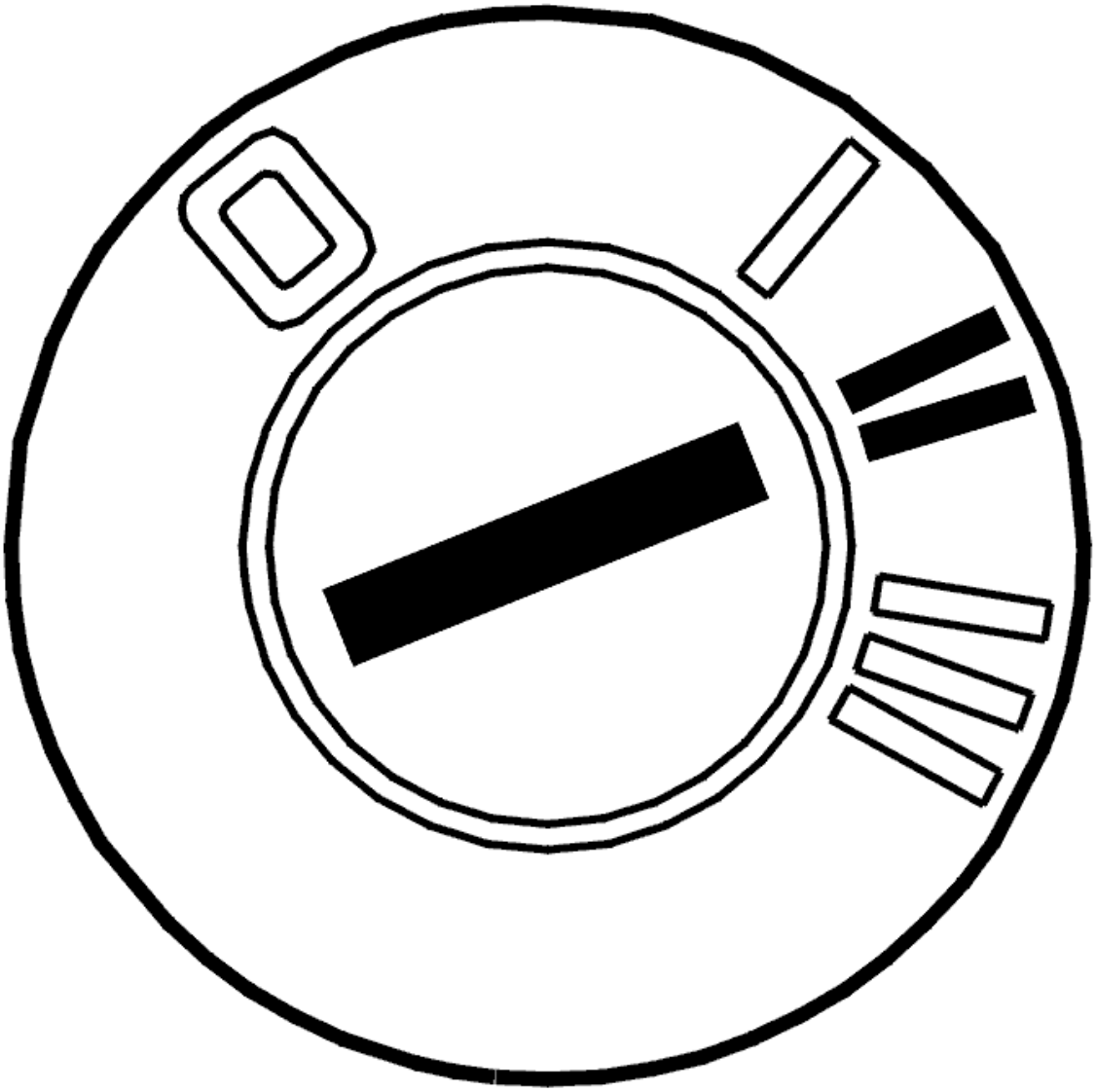

Fig. 204: Identifying Ignition ON
Courtesy of VOLVO CARS CORPORATION

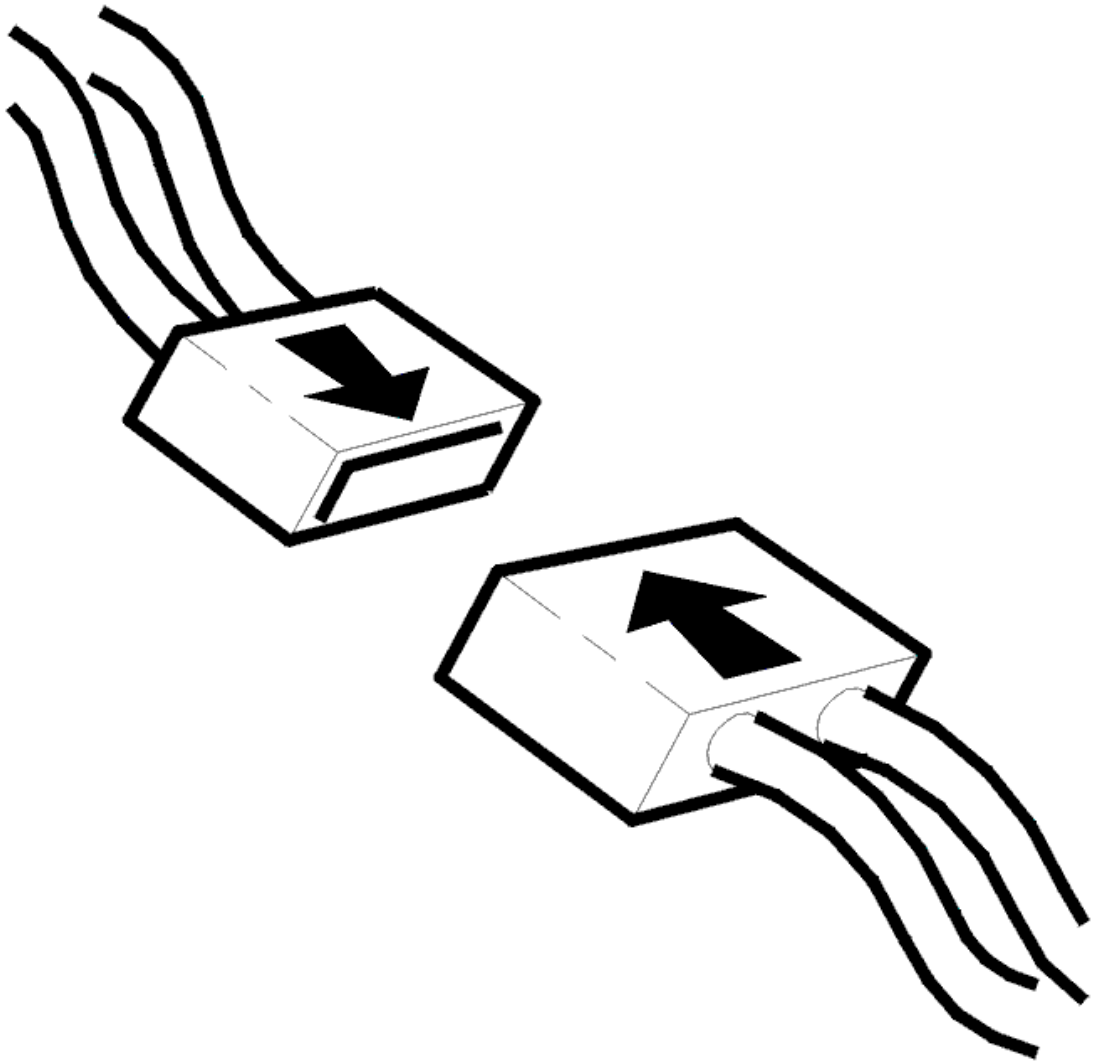

Fig. 205: Identifying Connector(s) Reinstallation
Courtesy of VOLVO CARS CORPORATION

- Ignition off
- Check the control module and transmission connectors. Check for contact resistance and oxidation
- Reconnect the control module and transmission connectors
- Ignition on
- Read off the oil temperature.

  Check that the temperature is within its permitted range.

  Compare with the transmission temperature.

  If the transmission temperature is within its permitted range, the cause of the fault was contact resistance or oxidation in the control module or transmission connector.

Other information

- To disconnect the control module, see **TRANSMISSION CONTROL MODULE (TCM), REPLACING**
- To connect the breakout box to the transmission connector, see **CONNECTING THE BREAKOUT BOX, GM AUTOMATIC TRANSMISSIONS**
- see **CHECKING WIRING AND TERMINALS**

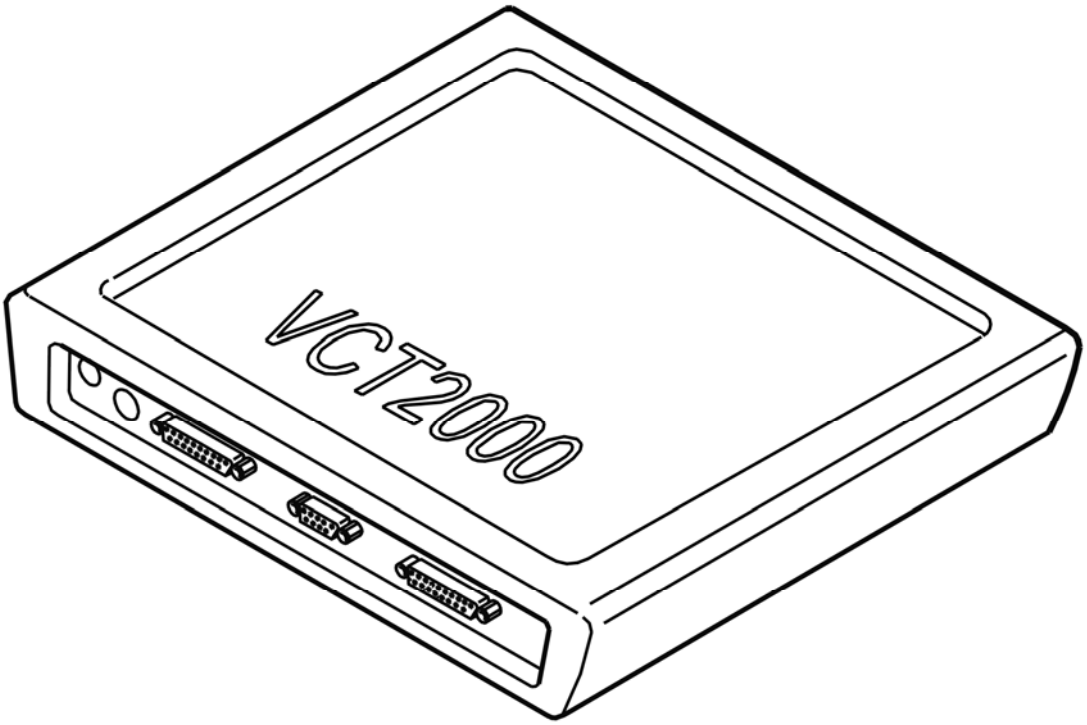

Fig. 206: Identifying VCT2000 Diagnostic Tool Symbol In VIDA
Courtesy of VOLVO CARS CORPORATION

Was the transmission temperature within its permitted range?

- **YES**

  OKAY: Troubleshooting has been completed.

- **NO**

  Refer to **CHECKING THE TEMPERATURE SENSOR**

CHECKING THE TEMPERATURE SENSOR

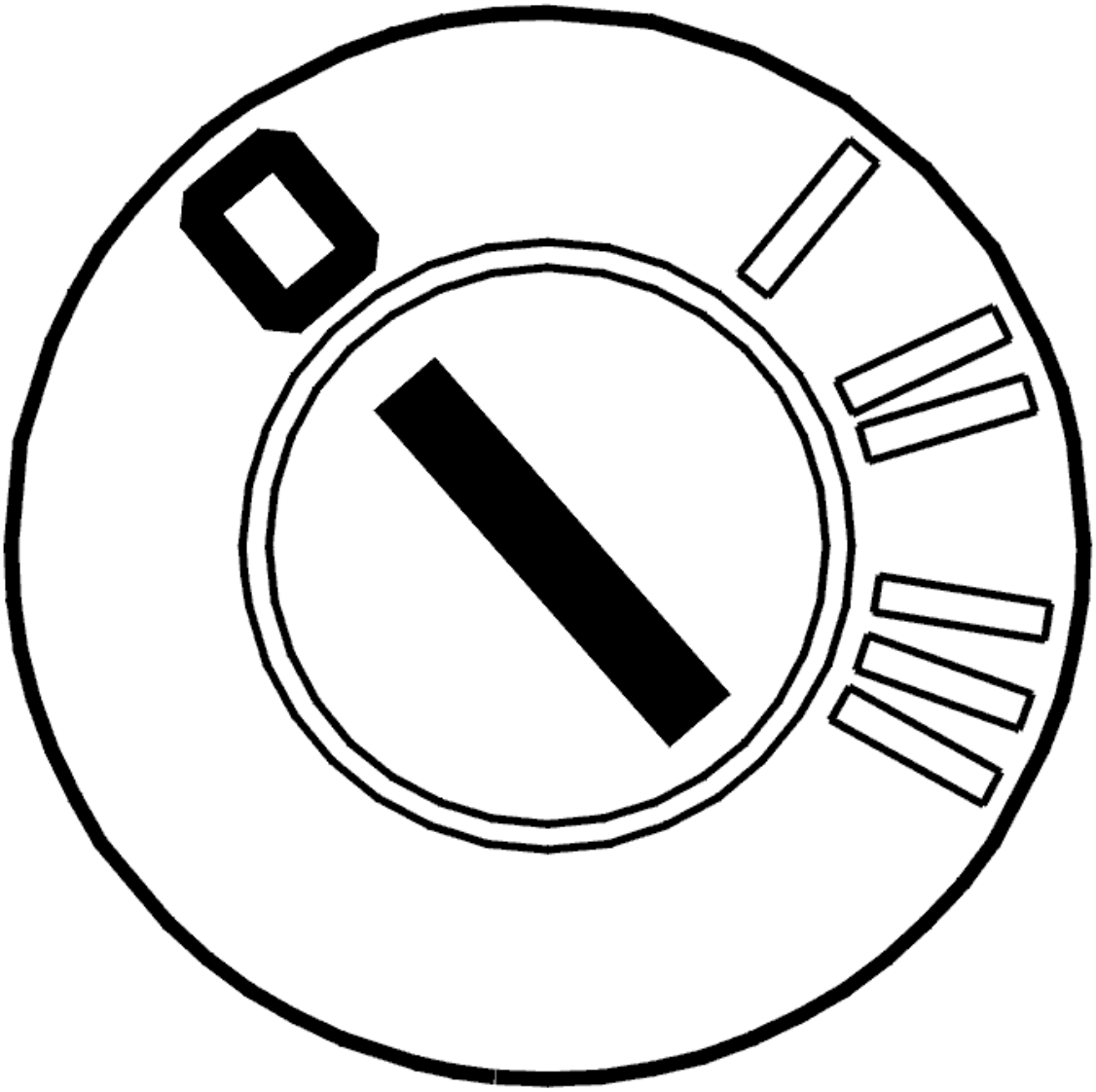

Fig. 207: Identifying Ignition OFF
Courtesy of VOLVO CARS CORPORATION

- Ignition off
- Disconnect the transmission connector
- Connect adapter see **9511505** and see **9813190** to the transmission connector (transmission side)
- Connect an ohmmeter between terminals #L (terminal #A11) and #M (terminal #A12).

  The resistance must be 3.4-3.6 kohms at 20 °C.

  Other information

  - To connect the breakout box to the transmission connector, see **CONNECTING THE BREAKOUT BOX, GM AUTOMATIC TRANSMISSIONS**
  - For information about signals, see **SIGNAL SPECIFICATION**

- For information about the resistance values, see **COMPONENT RESISTANCE VALUES**
- For information about the resistance values, see **COMPONENT RESISTANCE VALUES** .

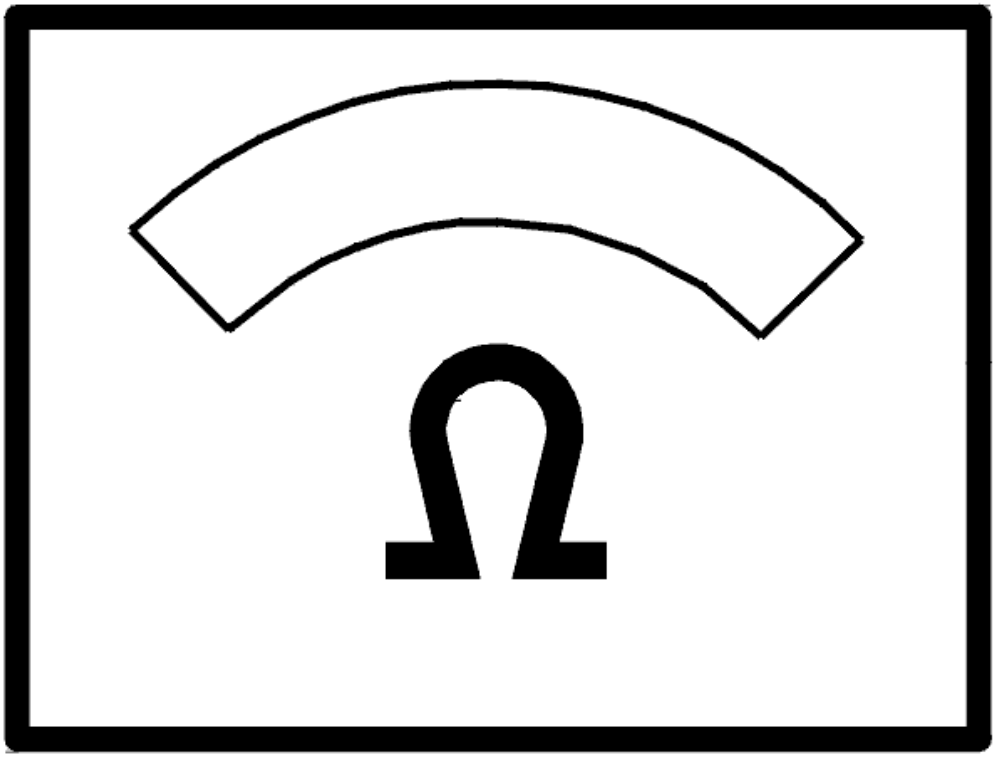

Fig. 208: Identifying Ohms Display
Courtesy of VOLVO CARS CORPORATION

Was the resistance OK?

- **YES**

  Refer to **CHECKING THE WIRING**

- **NO**

  Refer to **CHECKING THE WIRING AND COMPONENT**

CHECKING THE WIRING

- Breakout box connected to the control module
- Breakout box connected to the transmission connector.

Check the cable between control module terminal #37 (#A37) and transmission connector (control module side) terminal #L (#A11). Check for an open-circuit. Check for a short-circuit to supply voltage.

Check the cable between control module terminal #55 (#A55) and transmission connector (control module side) terminal #M (#A12). Check for an open-circuit. Check for a short-circuit to supply voltage.

Remedy as necessary.

Other information

- To connect the breakout box, see **CONNECTING THE BREAKOUT BOX**
- To connect the breakout box to the transmission connector, see **CONNECTING THE BREAKOUT BOX, GM AUTOMATIC TRANSMISSIONS**
- For information about signals, see **SIGNAL SPECIFICATION**
- see **CHECKING WIRING AND TERMINALS**

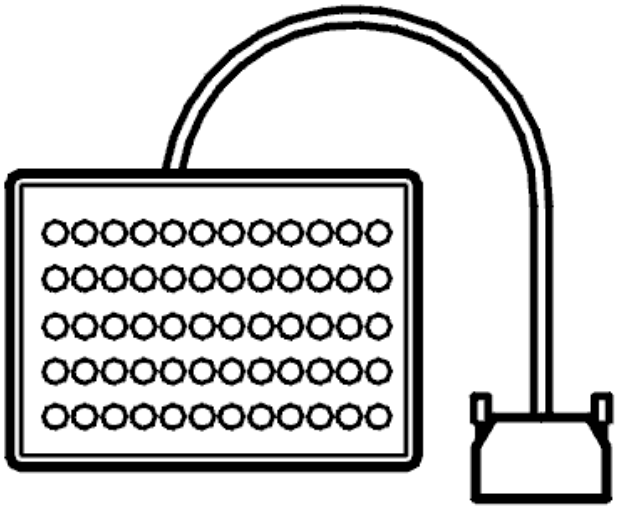

Fig. 209: Identifying Breakout Box
Courtesy of VOLVO CARS CORPORATION

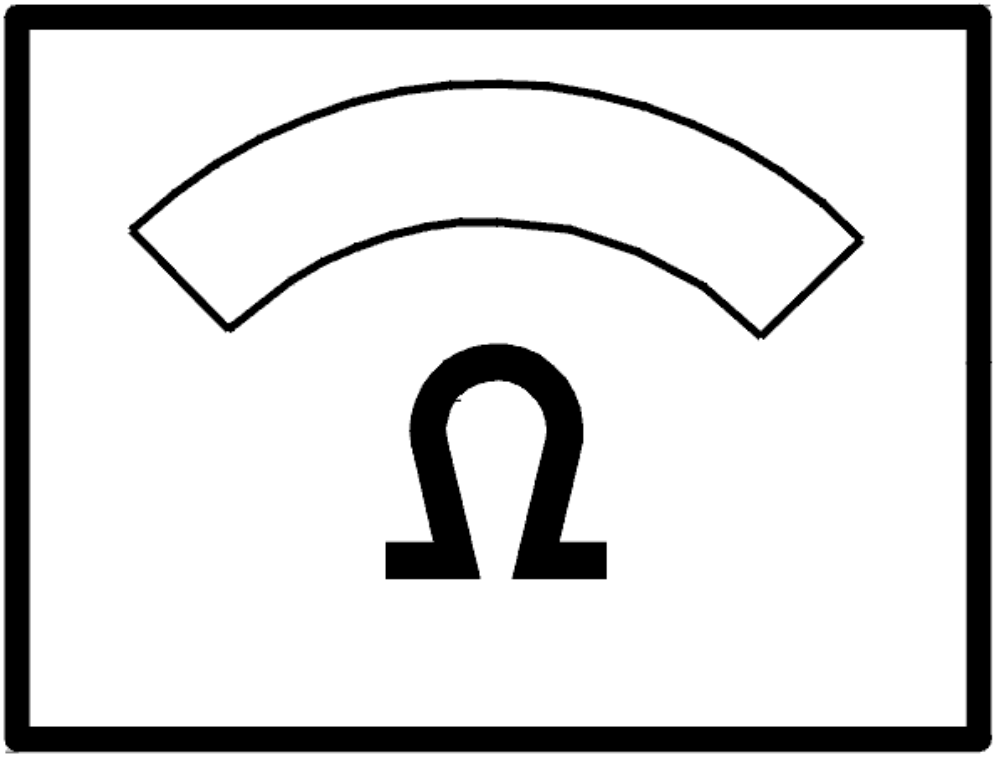

Fig. 210: Identifying Ohms Display
Courtesy of VOLVO CARS CORPORATION

Was a fault detected?

- **YES**

  Refer to **VERIFICATION**

- **NO**

  Refer to **CHECKING THE WIRING AND COMPONENT**

CHECKING THE WIRING AND COMPONENT

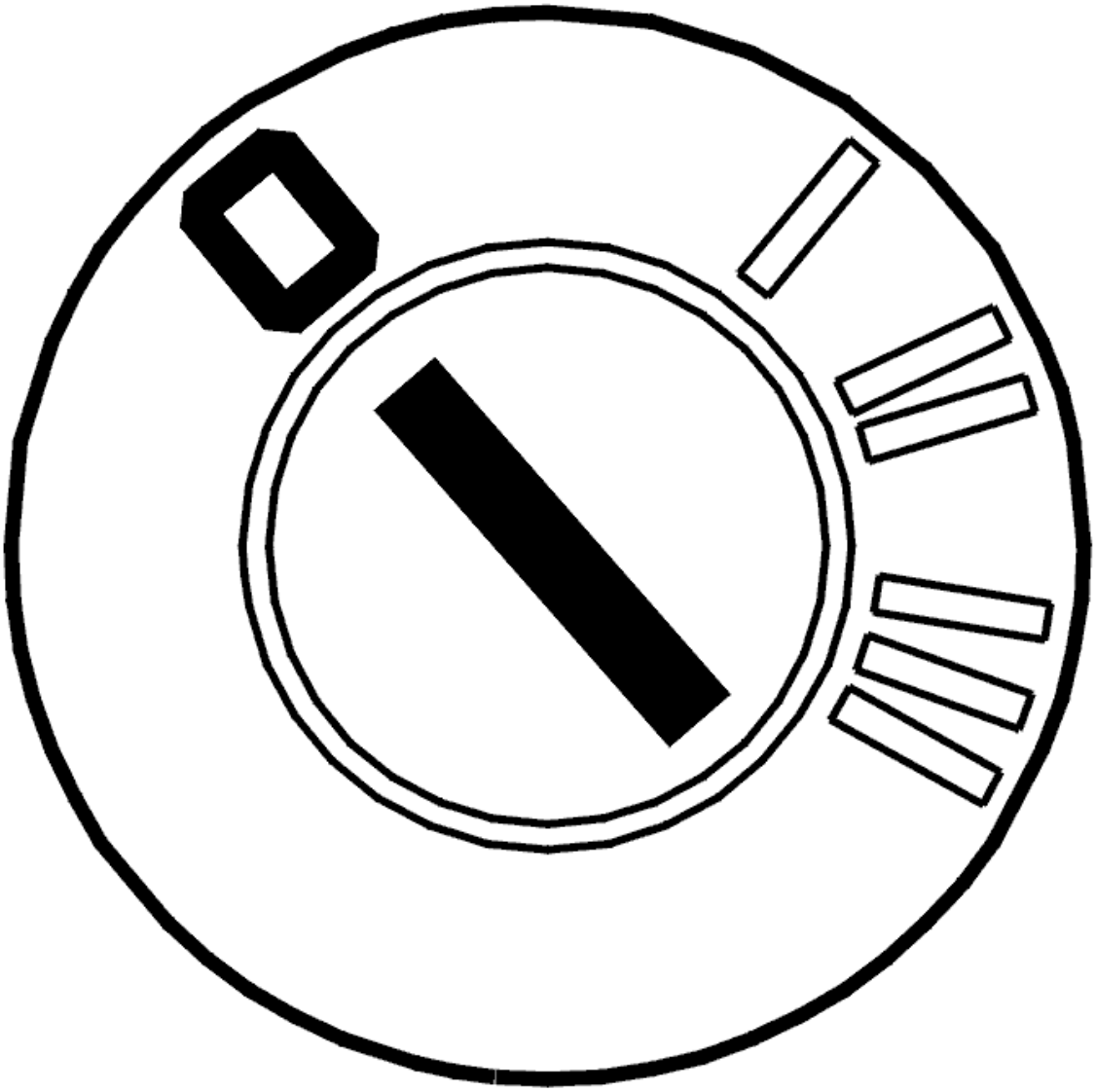

Fig. 211: Identifying Ignition OFF
Courtesy of VOLVO CARS CORPORATION

- Ignition off
- Open the transmission control system.

  Check the cable between transmission terminal #L (#A11) and temperature sensor terminal #A. Check for an open-circuit. Check for a short-circuit to supply voltage.

  Check the cable between transmission terminal #M (#A12) and temperature sensor terminal #B. Check for an open-circuit. Check for a short-circuit to supply voltage.

  HINT: Check the temperature sensor by measuring the resistance between temperature sensor connector terminals #A and #B. The resistance must be between 3.5-3.6 kohms at 20° C.

  Remedy as necessary.

Other information:

- To connect the breakout box, see **CONNECTING THE BREAKOUT BOX**
- To connect the breakout box to the transmission connector, see **CONNECTING THE BREAKOUT BOX, GM AUTOMATIC TRANSMISSIONS**
- To replace the cable harness, see **TEMPERATURE SENSOR FLUID, TRANSAXLE, (TFT)**
- To replace the temperature sensor, see **TEMPERATURE SENSOR FLUID TRANSMISSION, REPLACING**
- For information about signals, see **SIGNAL SPECIFICATION**
- For information about the resistance values, see **COMPONENT RESISTANCE VALUES**
- see **CHECKING WIRING AND TERMINALS**

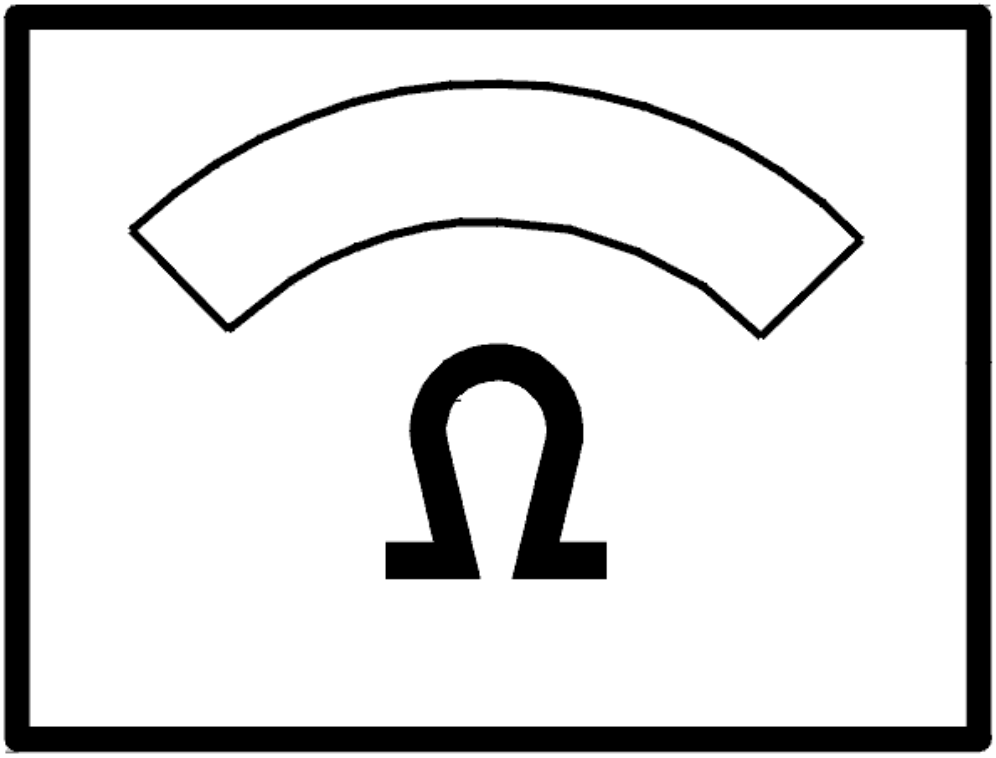

Fig. 212: Identifying Ohms Display
Courtesy of VOLVO CARS CORPORATION

- **Continue**

  Refer to **RESETTING TRANSMISSION FLUID CHANGE COUNTER**

INTERMITTENT FAULT

Check the control module and automatic transmission connector. Check for contact resistance and oxidation. Remedy if necessary.

Check the cable between control module terminal #A37 (#A37) and transmission connector (control module side) terminal #11. Check for an intermittent open-circuit. Check for an intermittent short-circuit to supply voltage.

Check the cable between control module terminal #A55 (#A55) and transmission connector (control module side) terminal #12. Check for an intermittent open-circuit. Check for an intermittent short-circuit to supply voltage.

Remedy as necessary.

Other information

- To connect the breakout box, see **CONNECTING THE BREAKOUT BOX**
- To connect the breakout box to the transmission connector, see **CONNECTING THE BREAKOUT BOX, GM AUTOMATIC TRANSMISSIONS**
- For information about signals, see **SIGNAL SPECIFICATION**
- see **CHECKING WIRING AND TERMINALS**

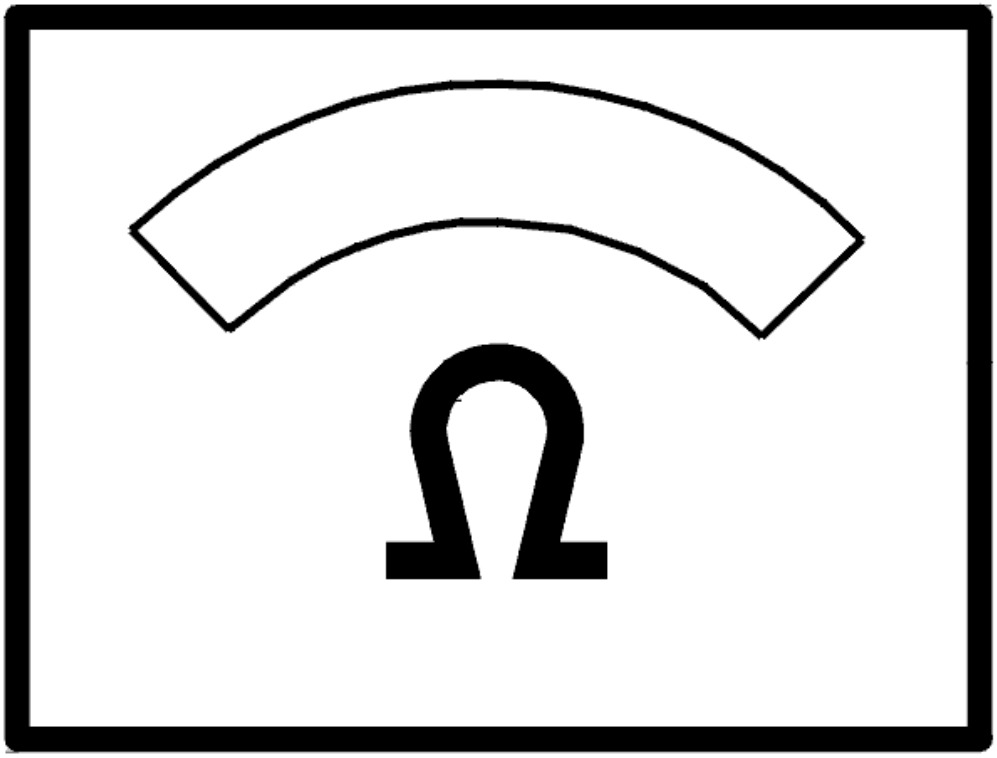

Fig. 213: Identifying Ohms Display
Courtesy of VOLVO CARS CORPORATION

- **Continue**

  Refer to **INFORMATION**

RESETTING TRANSMISSION FLUID CHANGE COUNTER

RESETTING TRANSMISSION FLUID CHANGE COUNTER

HINT: The transmission control module (TCM) has a counter for the oil quality. The counter counts up if the transmission is exposed to too high a load or an ambient temperature that is too high. If the counter is not reset when the oil is drained or changed, there is a risk that a diagnostic trouble code (DTC) will be stored in faulty circumstances. Therefore it is important that the "Transmission oil change" counter is reset.

NOTE: **This applies only when the transmission fluid is changed and when the fluid is changed when repairs are carried out to the transmission temperature sensor.**

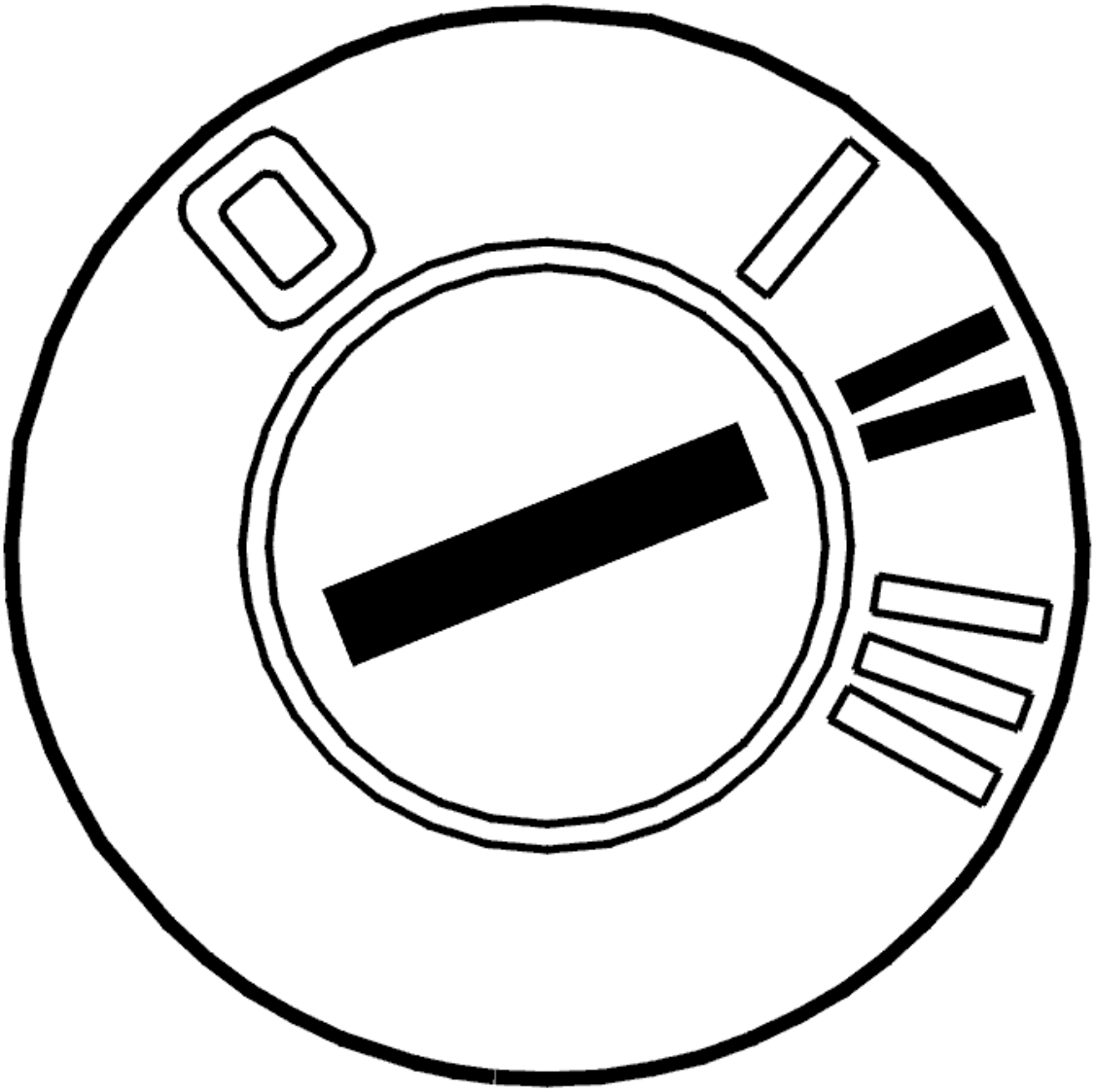

Fig. 214: Identifying Ignition ON
Courtesy of VOLVO CARS CORPORATION

- Ignition on.

  Reset the counter by clicking on the VCT 2000 symbol.

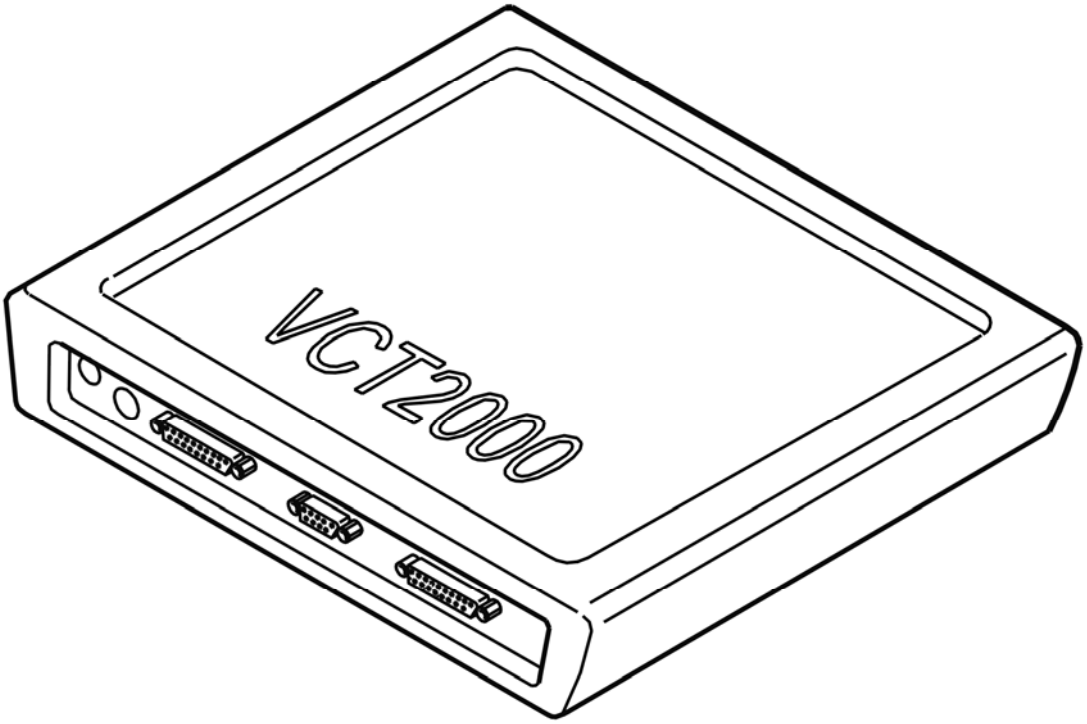

Fig. 215: Identifying VCT2000 Diagnostic Tool Symbol In VIDA
Courtesy of VOLVO CARS CORPORATION

- **Continue**

  Refer to **VERIFICATION**

VERIFICATION

VERIFICATION

HINT: After carrying out the repair check that the fault has been remedied.

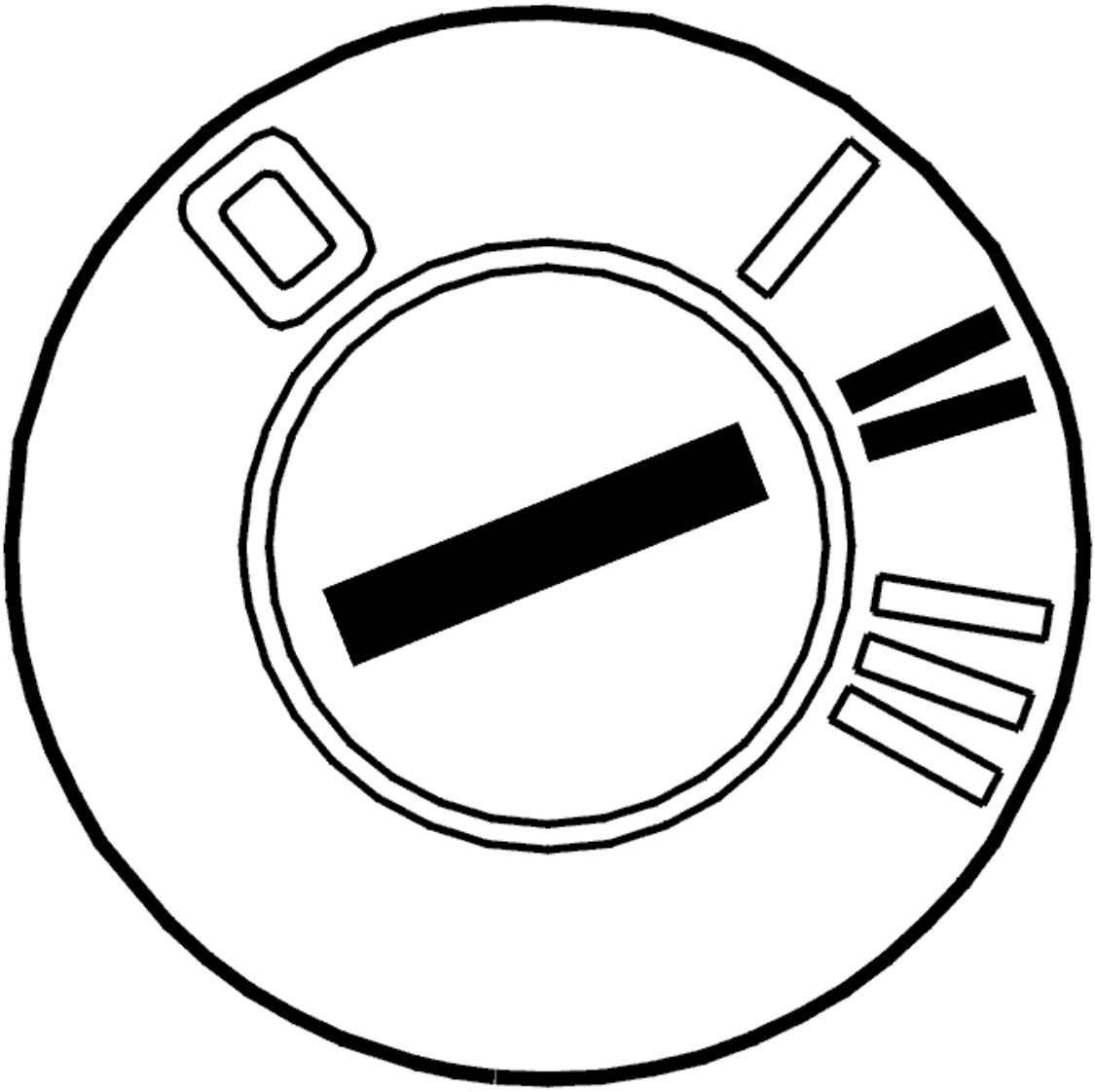

Fig. 216: Identifying Ignition ON
Courtesy of VOLVO CARS CORPORATION

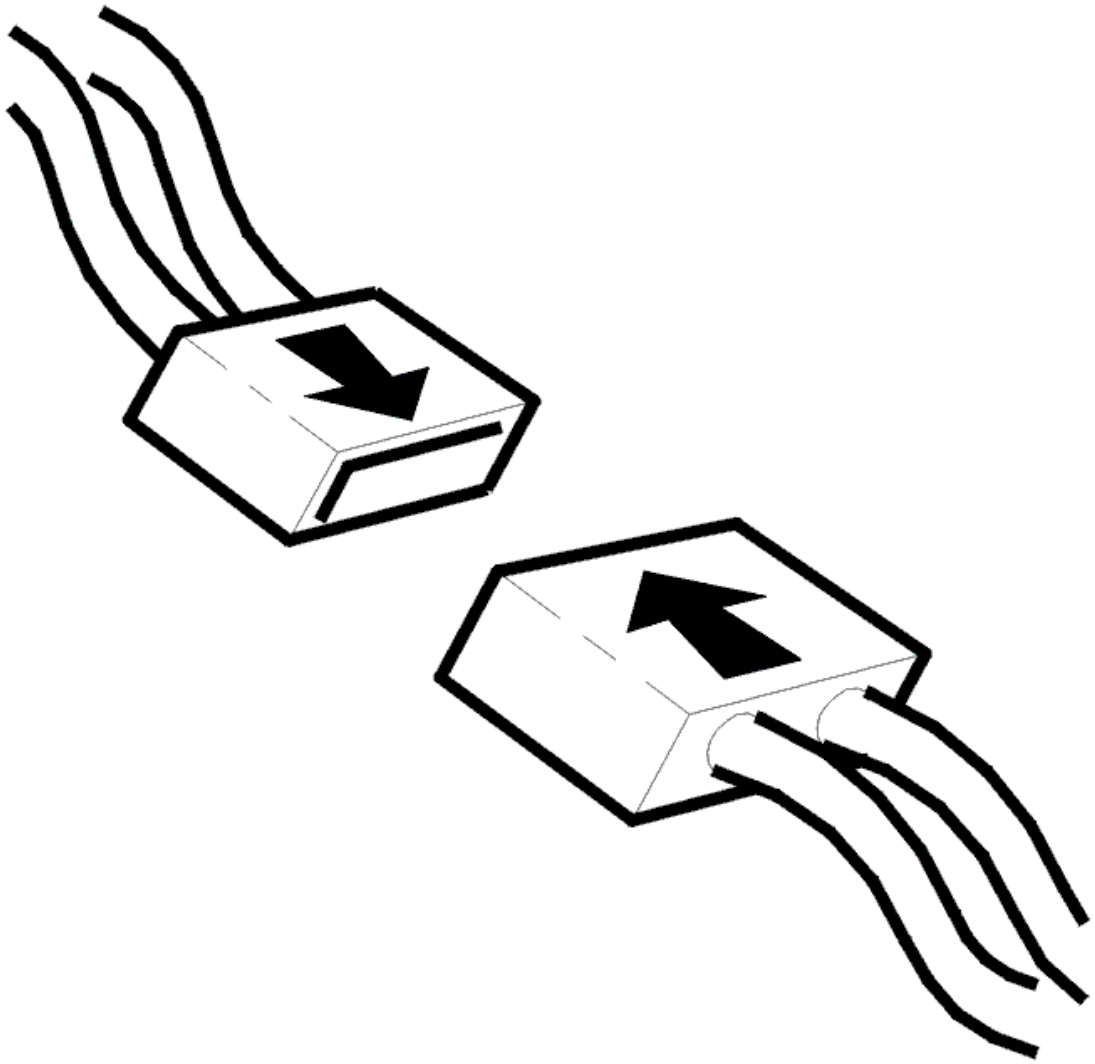

Fig. 217: Identifying Connector(s) Reinstallation
Courtesy of VOLVO CARS CORPORATION

- Ignition off.
- Reinstall connectors, components etc.
- Ignition on.
- Read off oil temperature.

  Check that the transmission oil temperature is within its permitted range. Compare with the transmission temperature.

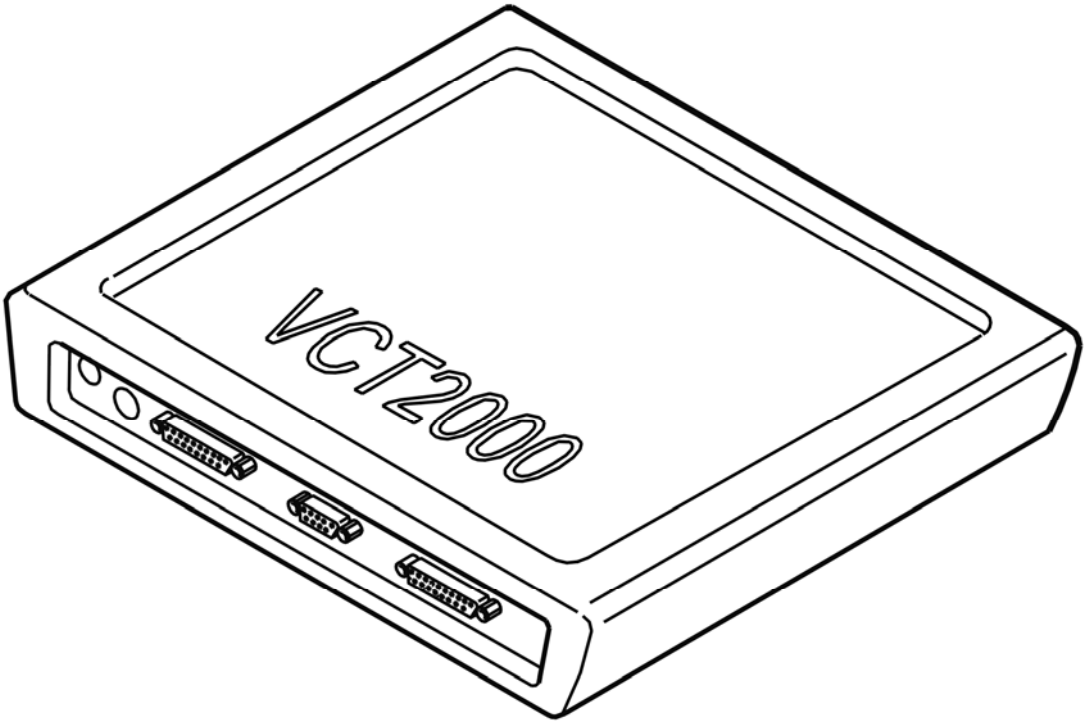

Fig. 218: Identifying VCT2000 Diagnostic Tool Symbol In VIDA
Courtesy of VOLVO CARS CORPORATION

Is the oil temperature within its permitted range?

- **YES**

  VERIFIED: Troubleshooting has been completed.

- **NO**

  Refer to **INFORMATION**

TCM-0003: SHIFT SOLENOID S1. SIGNAL TOO LOW (AW50/51 AWD; AW55-50/51SN; 2003-2007)

DIAGNOSTIC TROUBLE CODE (DTC) INFORMATION

Condition

Shift solenoids S1, S2, S3, S4 and S5 operate in tandem to control gear-shifting. Diagnostic trouble codes (DTCs) TCM-0003, TCM-0009, TCM-0103, TCM-0109 or TCM-010C are stored if the transmission control module (TCM) registers that there is a short-circuit to ground in circuits S1, S2, S3, S4 or S5 when the solenoid

should be activated.

Substitute Value

- The transmission control module (TCM) "Emergency mode I" program has been initiated.

Possible Source

- Short-circuit to ground in the signal cable.
- Defective solenoid.
- Internal fault in the control module.

Fault symptom[s]

- General orange warning lamp lit.
- No lock-up function.
- Harsh gear shifting.
- No shifting.

SIGNAL TOO LOW

CHECKS

CHECKING THE TEMPERATURE SENSOR

HINT: In some cases, the diagnostic trouble code (DTC) may be caused by a defective oil temperature sensor. Check the function of the oil temperature sensor first.

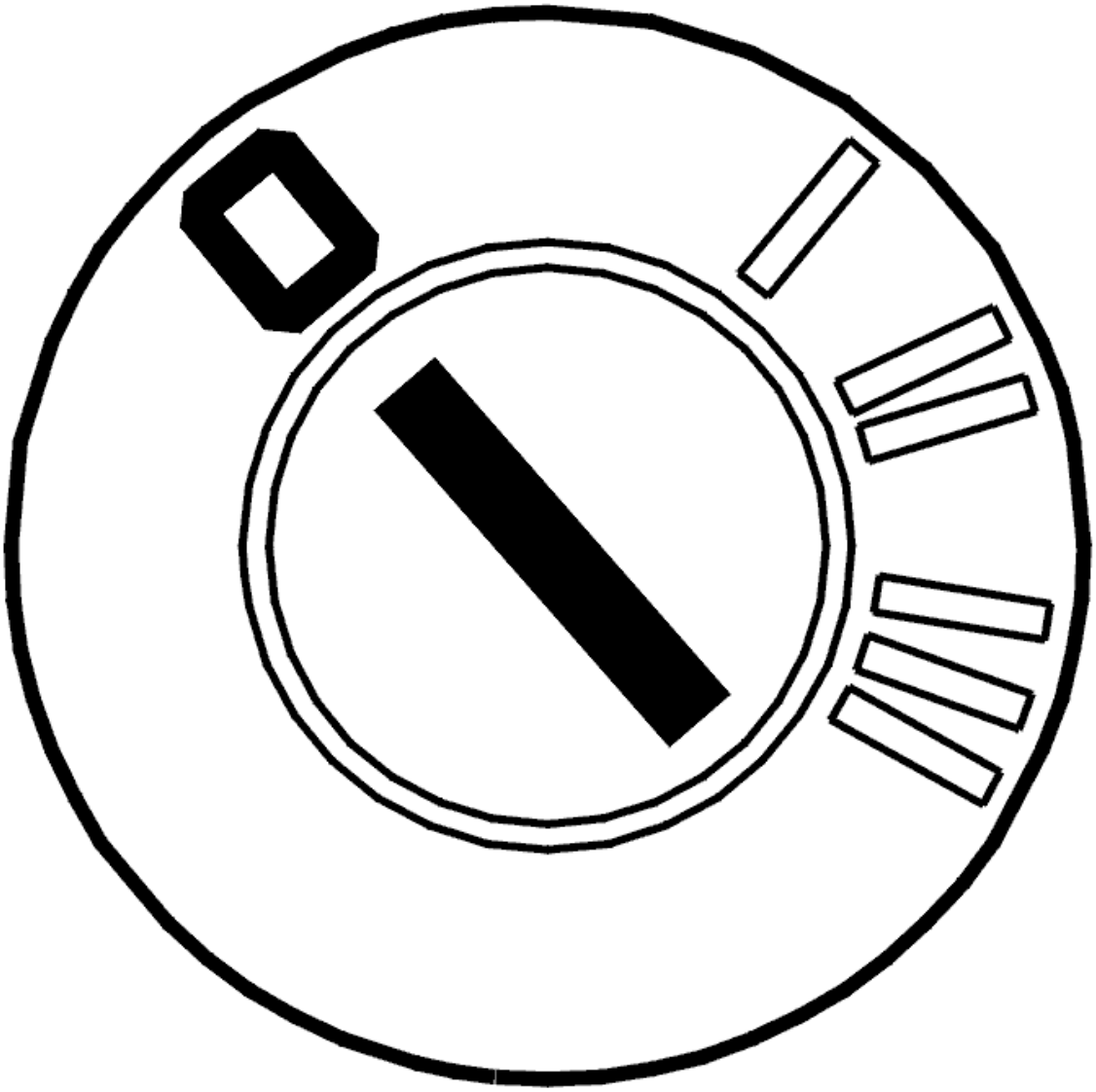

Fig. 219: Identifying Ignition OFF
Courtesy of VOLVO CARS CORPORATION

- Ignition off
- Read off the oil temperature.

  Check that the function of the temperature sensor is OK. Test drive the car to increase the temperature of the transmission fluid. Read off the temperature again. Check that the temperature has increased.

  HINT: If the temperature is outside its permitted range, fault-trace the temperature sensor.

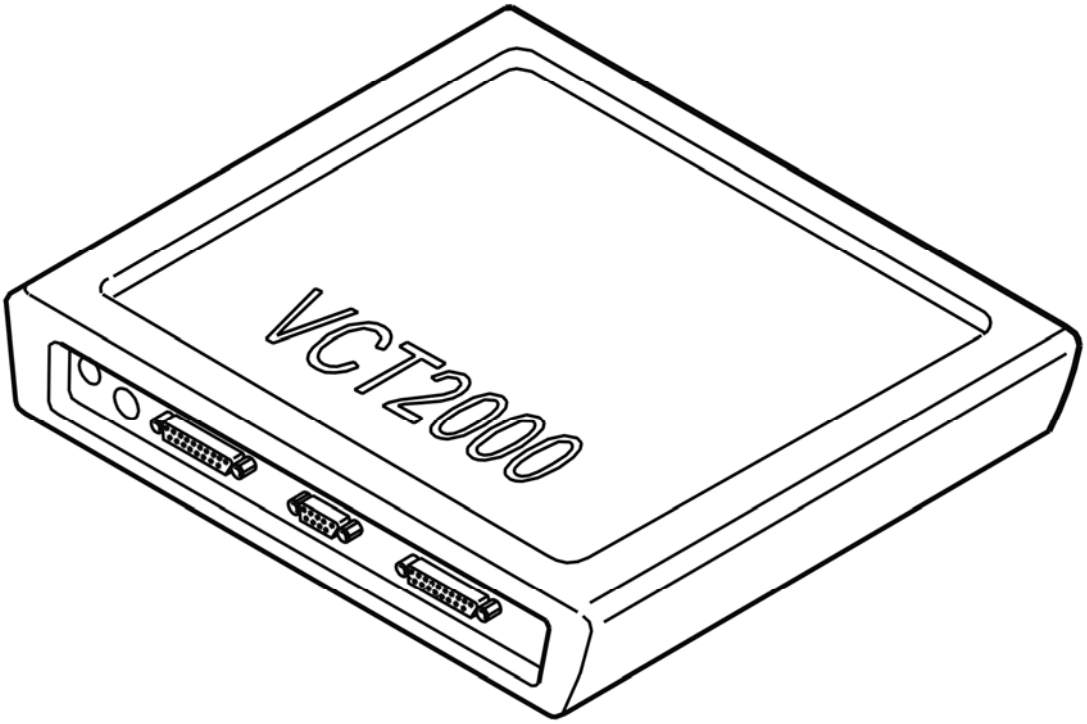

Fig. 220: Identifying VCT2000 Diagnostic Tool Symbol In VIDA
Courtesy of VOLVO CARS CORPORATION

Is the oil temperature within its permitted range?

- **YES**

  Refer to **CHECKING SHIFT SOLENOID S1**

- **NO**

  Refer to **FAULTY SIGNAL**

CHECKING SHIFT SOLENOID S1

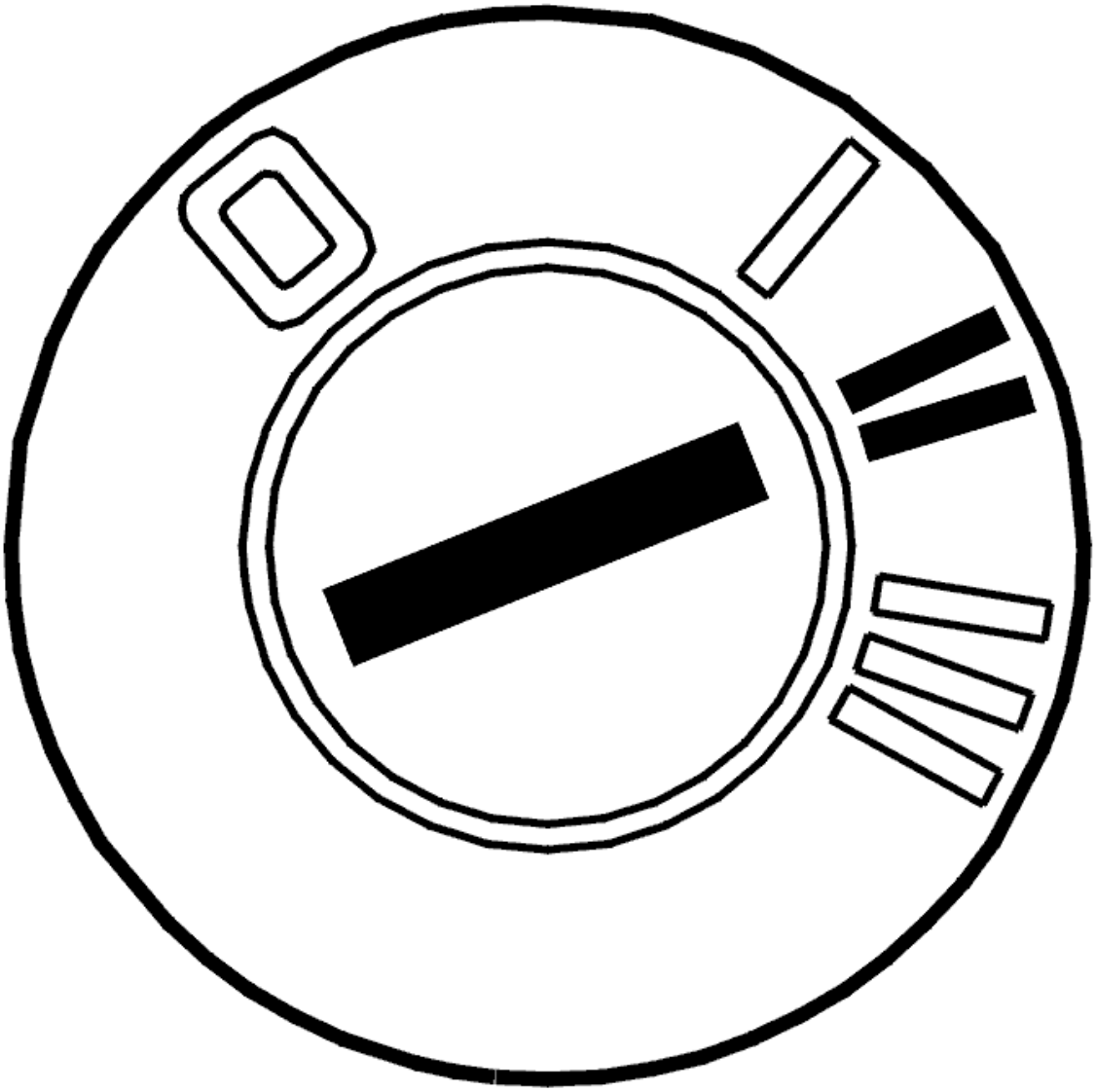

Fig. 221: Identifying Ignition ON
Courtesy of VOLVO CARS CORPORATION

- Ignition on
- Gear selector in position P
- Activate solenoid S1.

The value must change between OFF and ON.

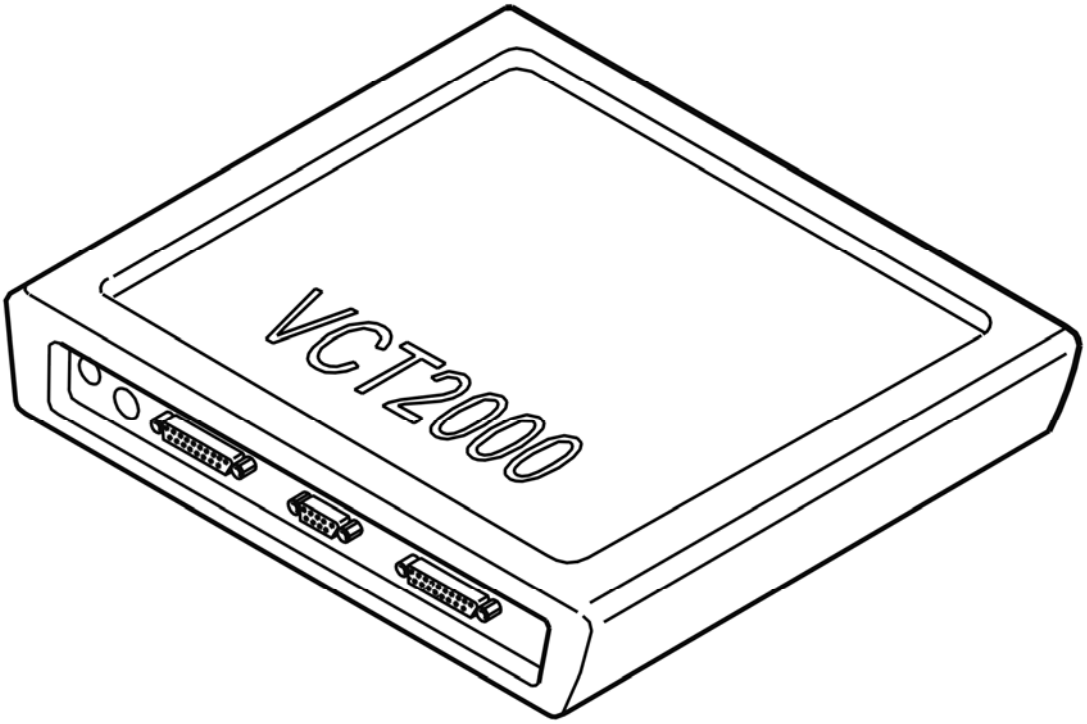

Fig. 222: Identifying VCT2000 Diagnostic Tool Symbol In VIDA
Courtesy of VOLVO CARS CORPORATION

Does the value change?

- **YES**

  Refer to **INTERMITTENT FAULT**

- **NO**

  Refer to **CHECKING RESISTANCE**

CHECKING RESISTANCE

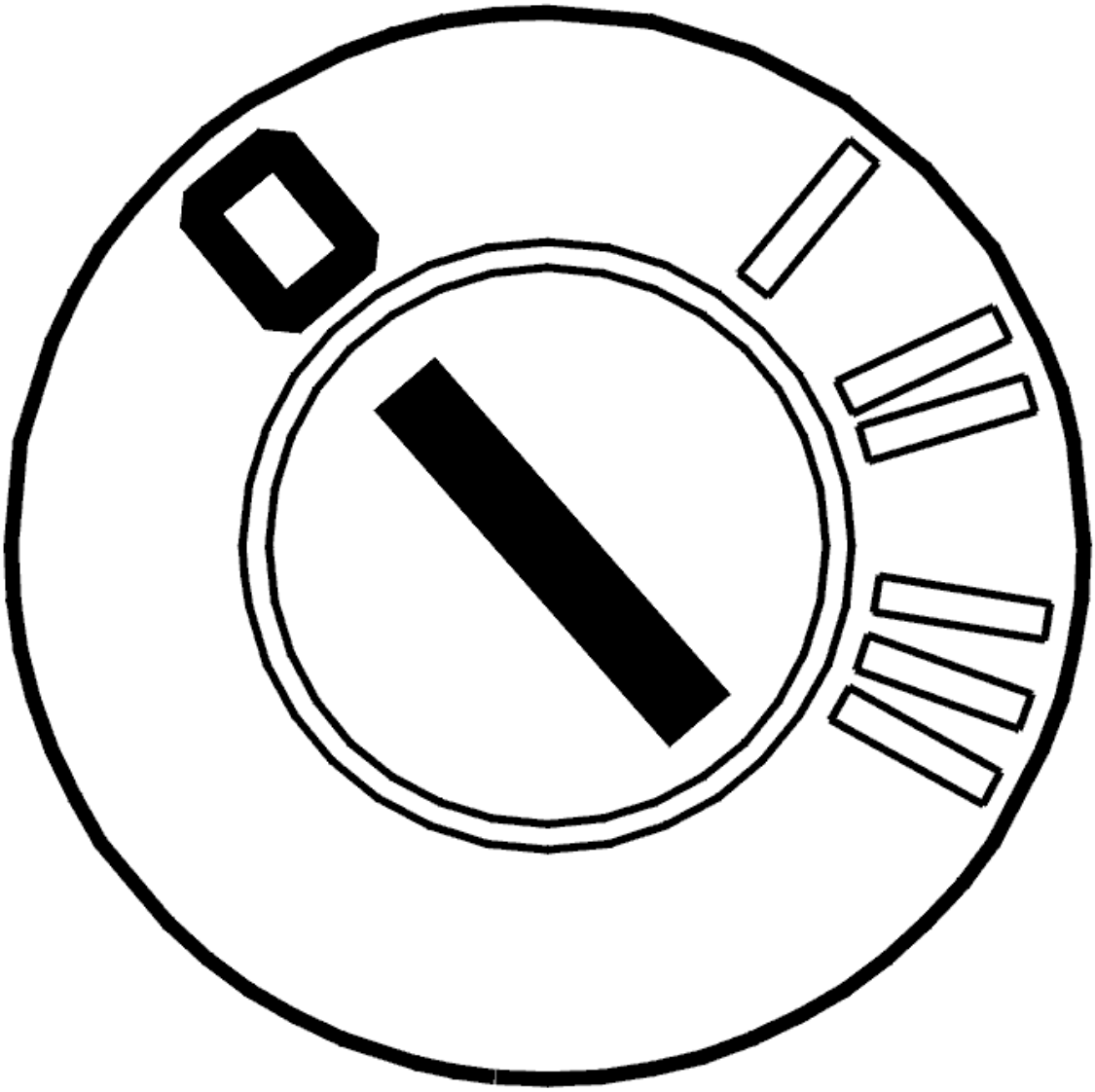

Fig. 223: Identifying Ignition OFF
Courtesy of VOLVO CARS CORPORATION

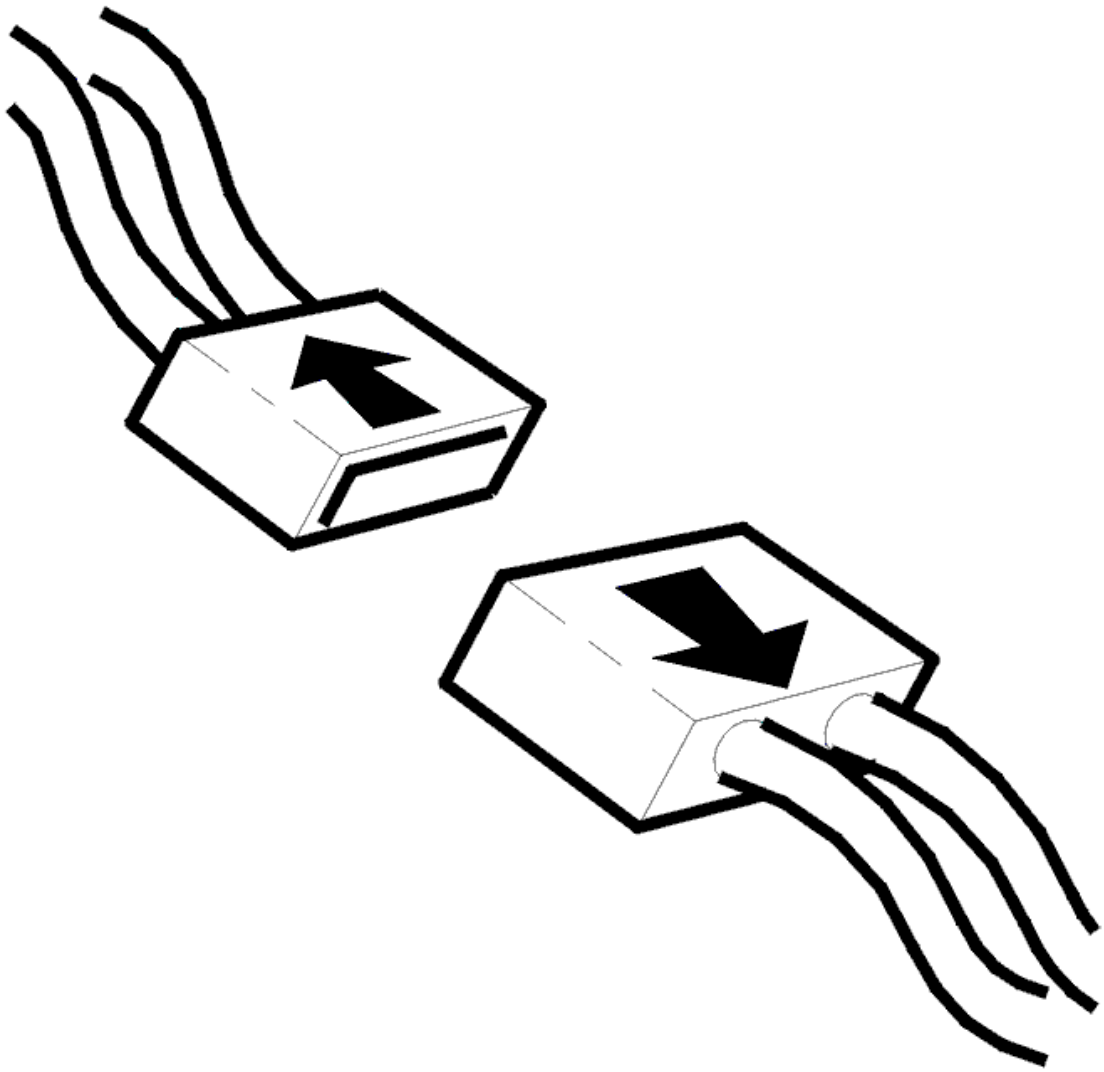

Fig. 224: Identifying Connector(s) Disconnected
Courtesy of VOLVO CARS CORPORATION

- Ignition off
- Disconnect transmission connector C.

  Check solenoid S1 by measuring the resistance between transmission connector terminal #C1 and the transmission housing. The resistance must be 12-16 ohms.

  Other information:

  - To disconnect the transmission connectors, see **CONNECTORS, TRANSMISSION, DISCONNECTING / CONNECTING**
  - For information about signals, see **SIGNAL DESCRIPTION. TRANSMISSION CONTROL MODULE (TCM)** .

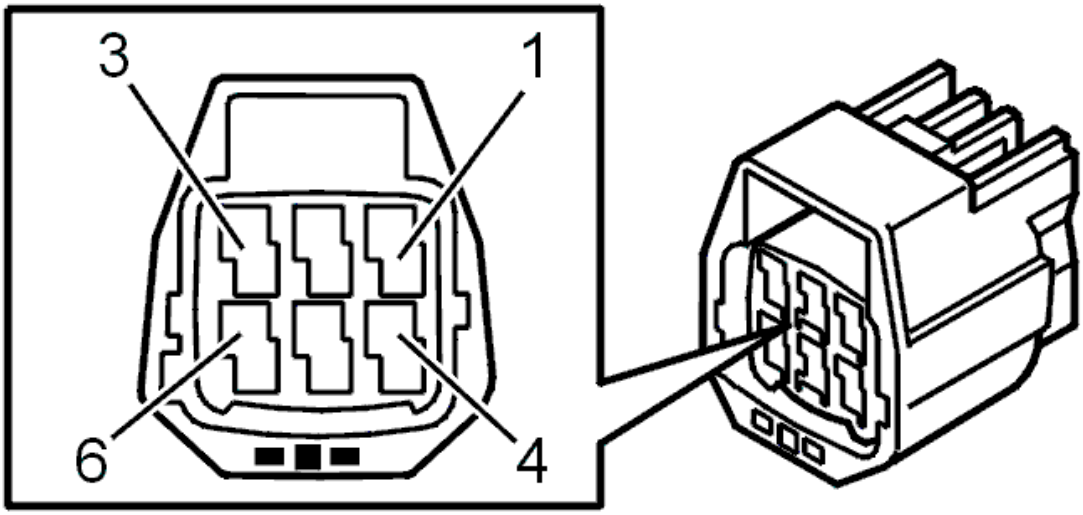

Fig. 225: Identifying 6-Pin Transmission Connector Terminals
Courtesy of VOLVO CARS CORPORATION

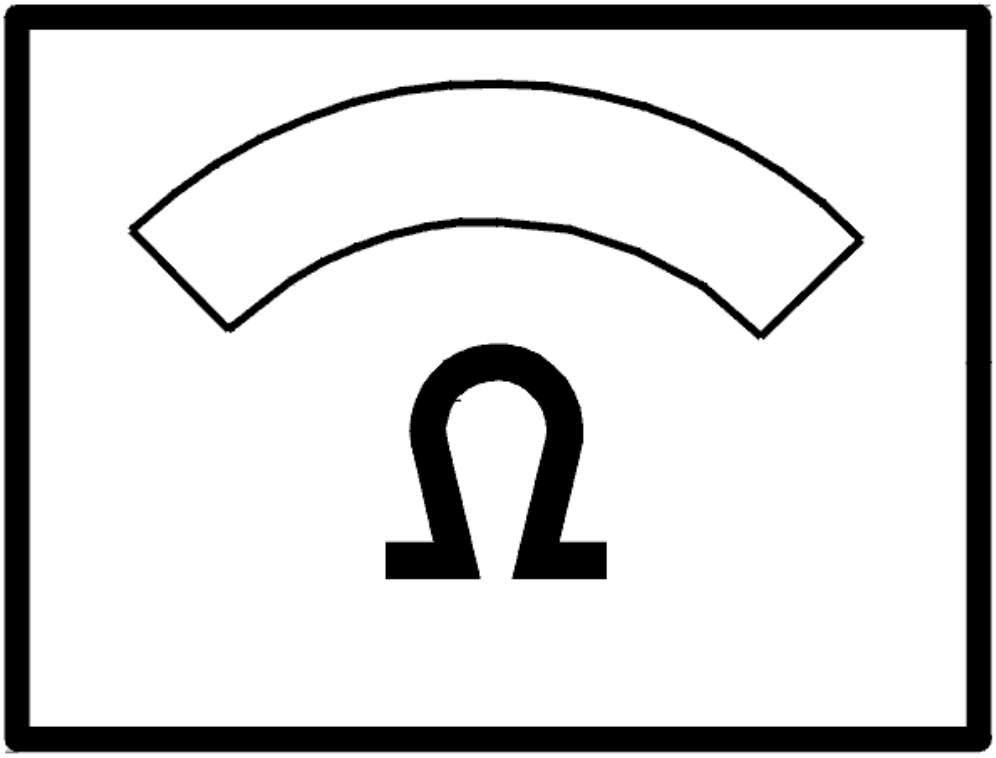

Fig. 226: Identifying Ohms Display
Courtesy of VOLVO CARS CORPORATION

Was the resistance OK?

- **YES**

  Refer to **CHECKING THE WIRING**

- **NO**

  Refer to **CHECKING THE WIRING AND COMPONENT**

CHECKING THE WIRING

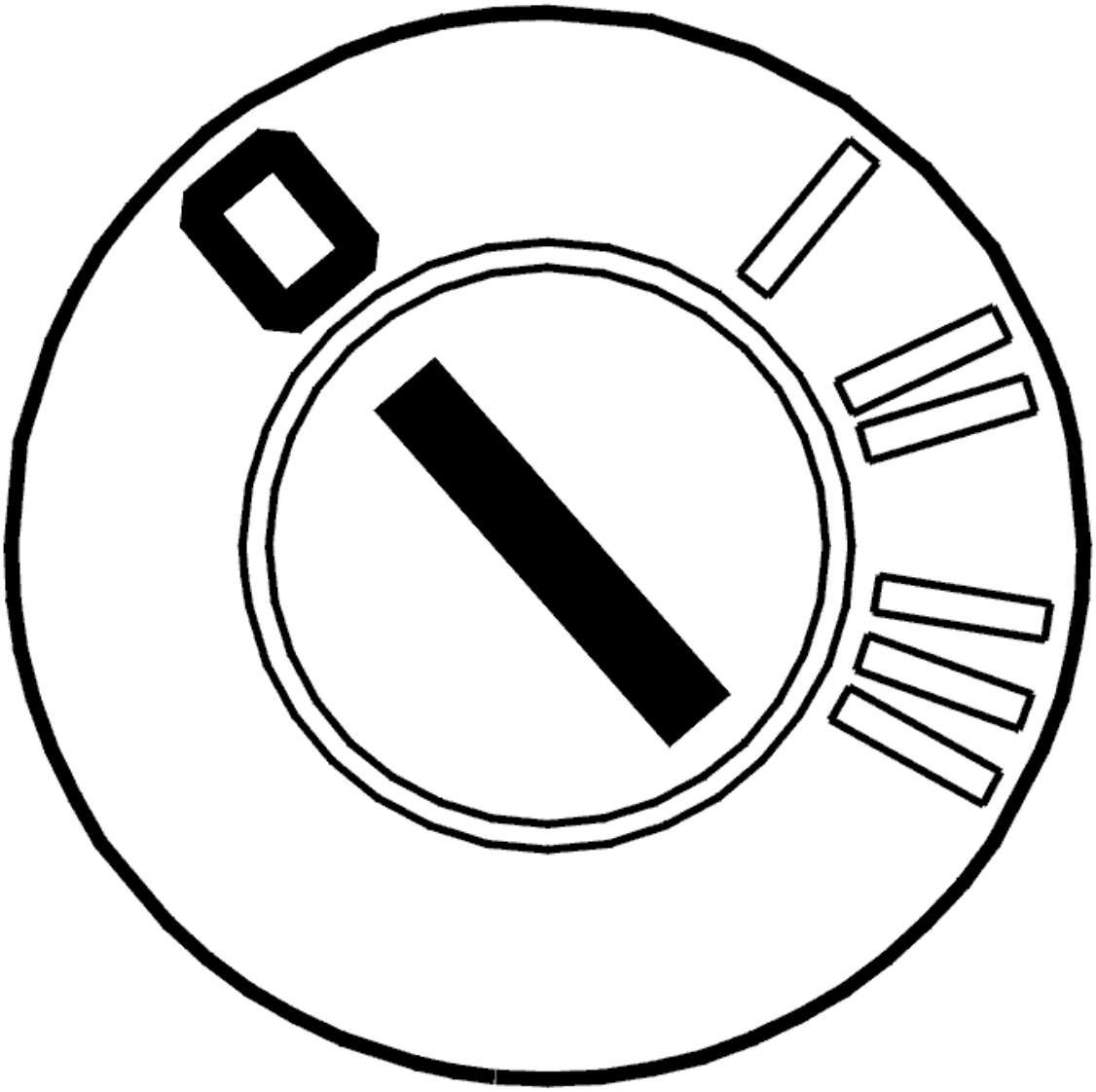

Fig. 227: Identifying Ignition OFF
Courtesy of VOLVO CARS CORPORATION

- Ignition off.

  Check the cable between control module terminal #A50 (#A50) and transmission connector terminal #C1 (control module side). Check for a short-circuit to ground according to **SHORT-CIRCUIT TO GROUND, PERMANENT FAULTS** .

  Remedy as necessary.

  Other information:

  - To connect the breakout box, see **CONNECTING THE BREAKOUT BOX**
  - To disconnect the transmission connectors, see **CONNECTORS, TRANSMISSION, DISCONNECTING / CONNECTING**

- For information about signals, see **SIGNAL DESCRIPTION. TRANSMISSION CONTROL MODULE (TCM)** .

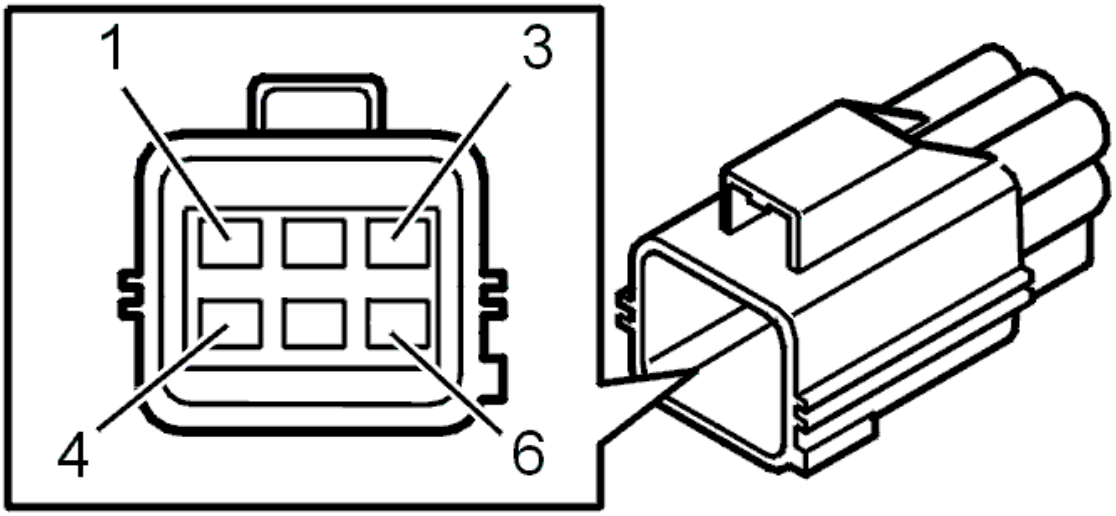

Fig. 228: Identifying Transmission Connector Terminals
Courtesy of VOLVO CARS CORPORATION

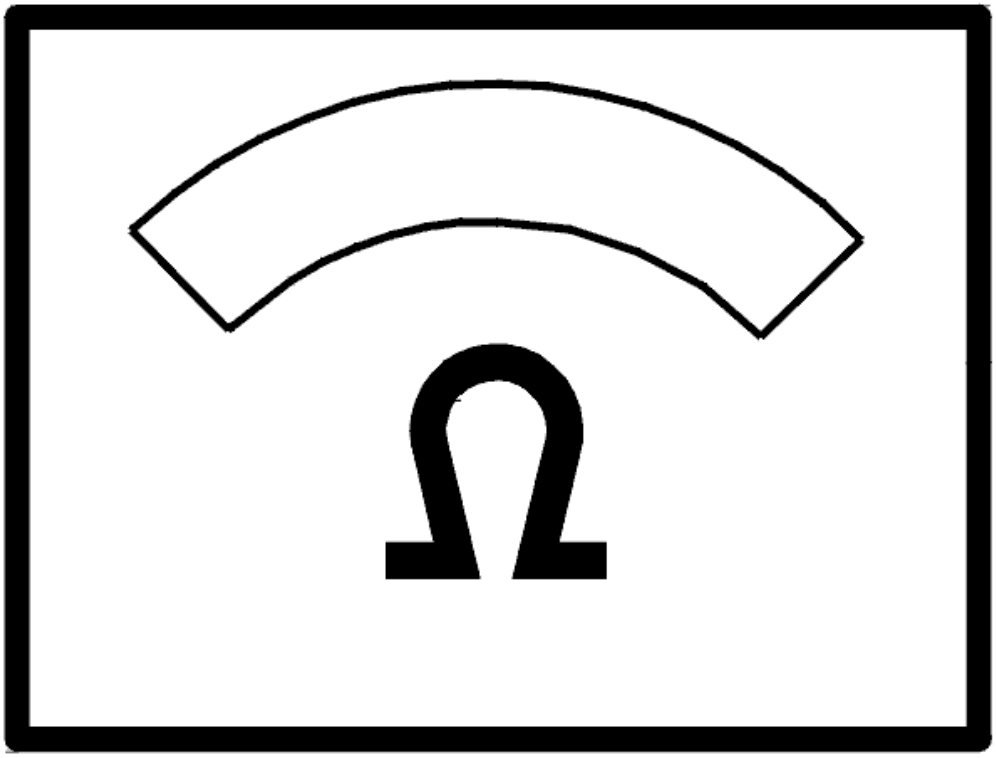

Fig. 229: Identifying Ohms Display
Courtesy of VOLVO CARS CORPORATION

Was a fault detected?

- **YES**

  Refer to **VERIFICATION**

- **NO**

  Refer to **CHECKING THE CONTROL MODULE**

CHECKING THE CONTROL MODULE

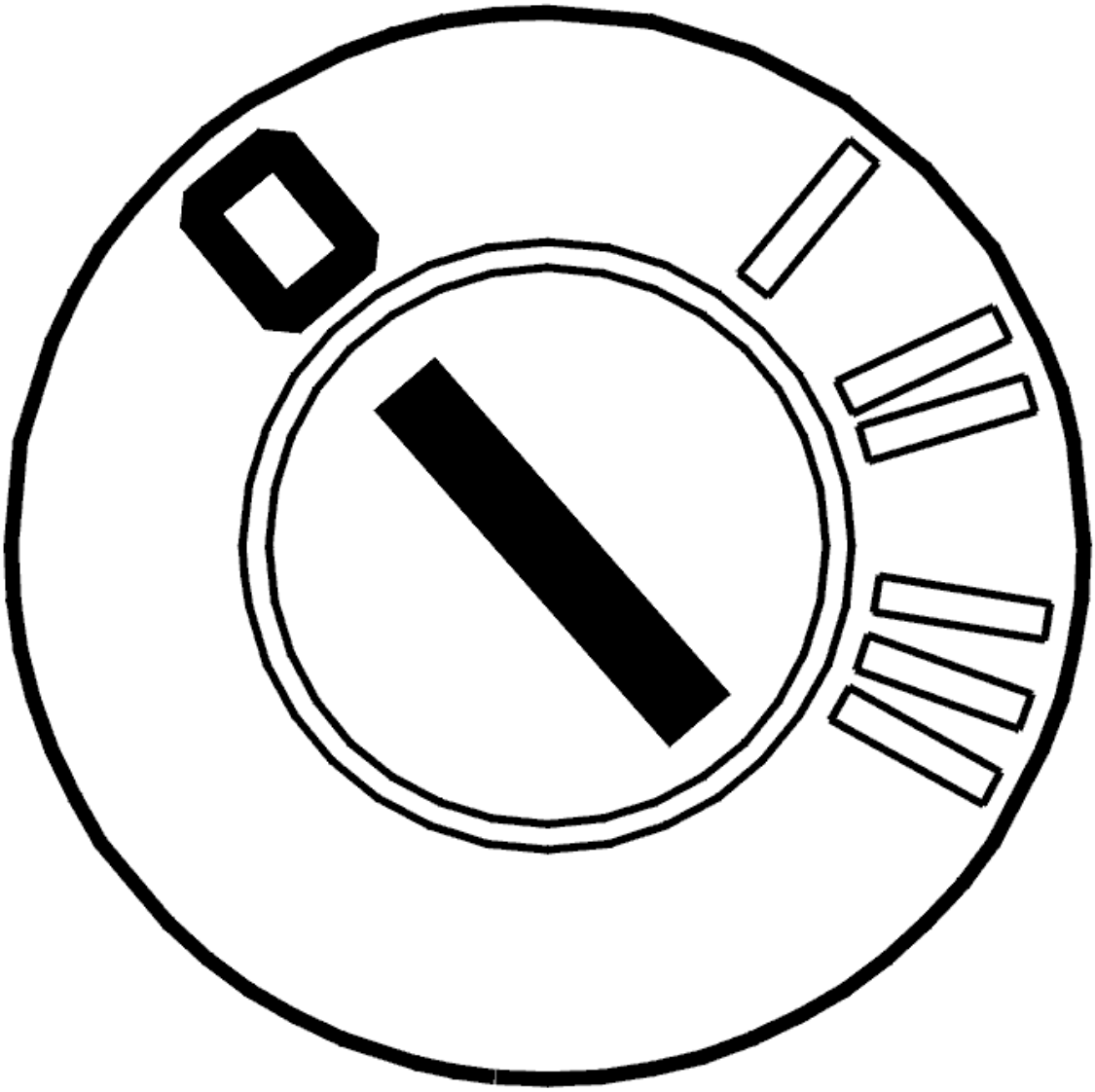

Fig. 230: Identifying Ignition OFF
Courtesy of VOLVO CARS CORPORATION

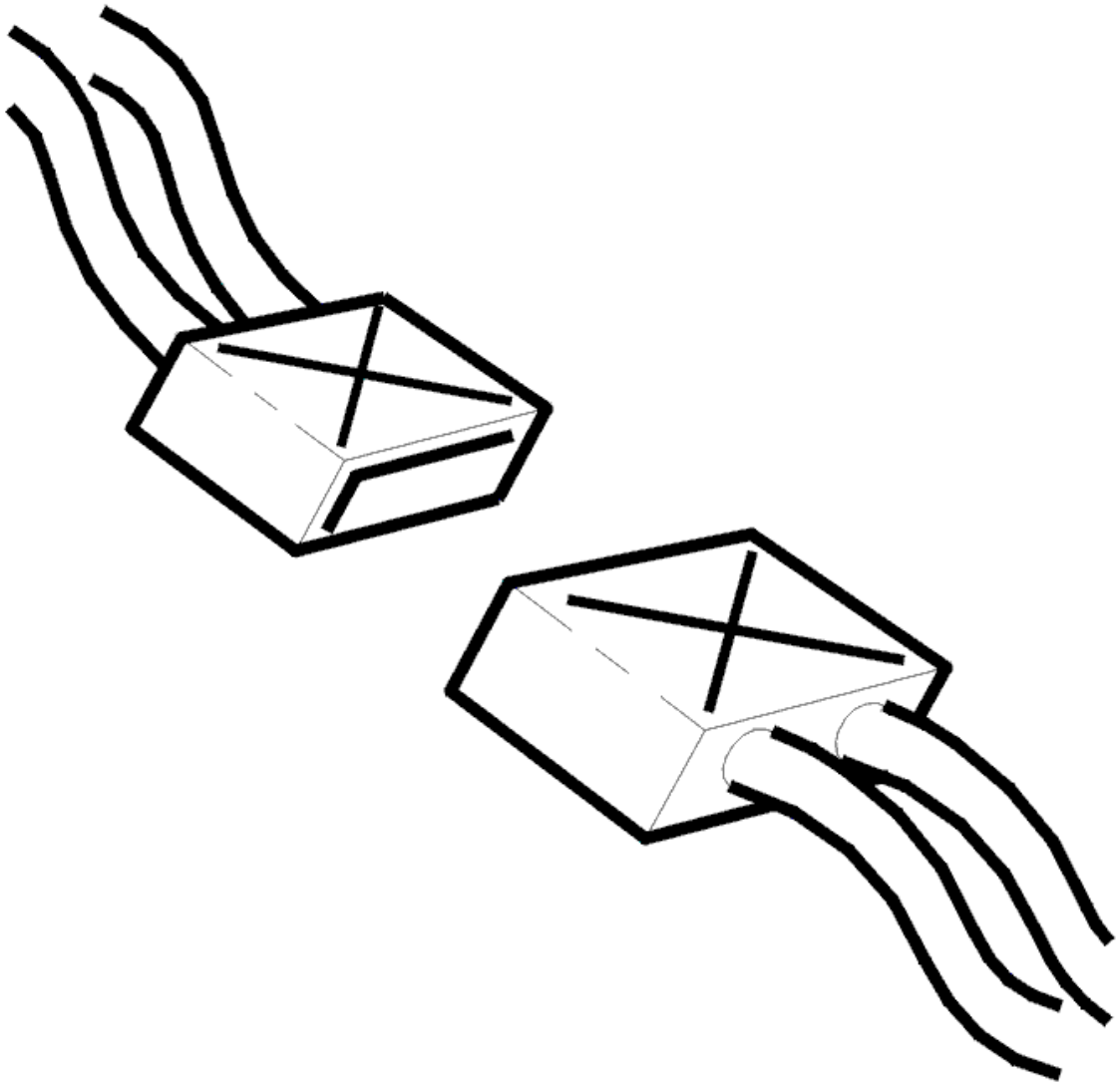

Fig. 231: Identifying Connectors
Courtesy of VOLVO CARS CORPORATION

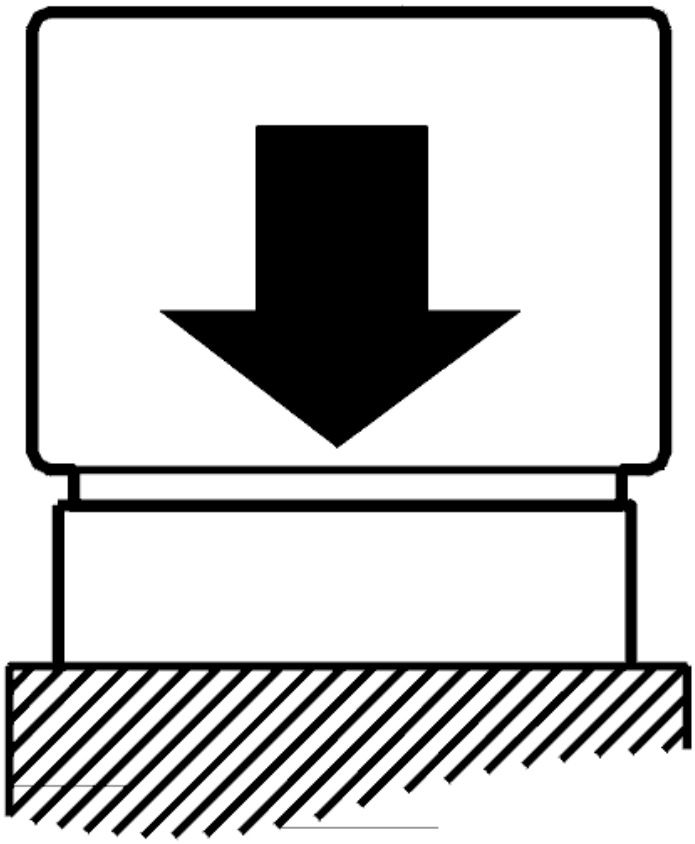

Fig. 232: Identifying Connecting Control Module
Courtesy of VOLVO CARS CORPORATION

- Ignition off
- The breakout box connected
- Connect the control module.
- Transmission connector disconnected
- Gear selector in position P.

Check the transmission control module (TCM) by measuring the resistance between terminals #A50 (#A50) and #A53 (#A53) on the breakout box. The resistance must be approximately 9 kohms.

NOTE: **When removing the transmission connector, the control module may store diagnostic trouble codes (DTCs) for the gear-shift position sensor, the shift solenoids, the temperature sensor etc.**

Try a new control module if the resistance is infinite.

Other information:

- To disconnect the transmission connectors, see **CONNECTORS, TRANSMISSION, DISCONNECTING / CONNECTING**
- To replace the control module, see **TRANSMISSION CONTROL MODULE (TCM), REPLACING**
- For information about signals, see **SIGNAL DESCRIPTION. TRANSMISSION CONTROL MODULE (TCM)** .

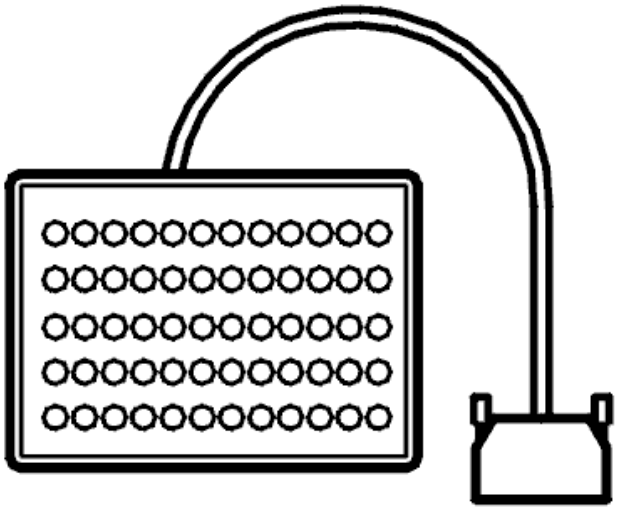

Fig. 233: Identifying Breakout Box
Courtesy of VOLVO CARS CORPORATION

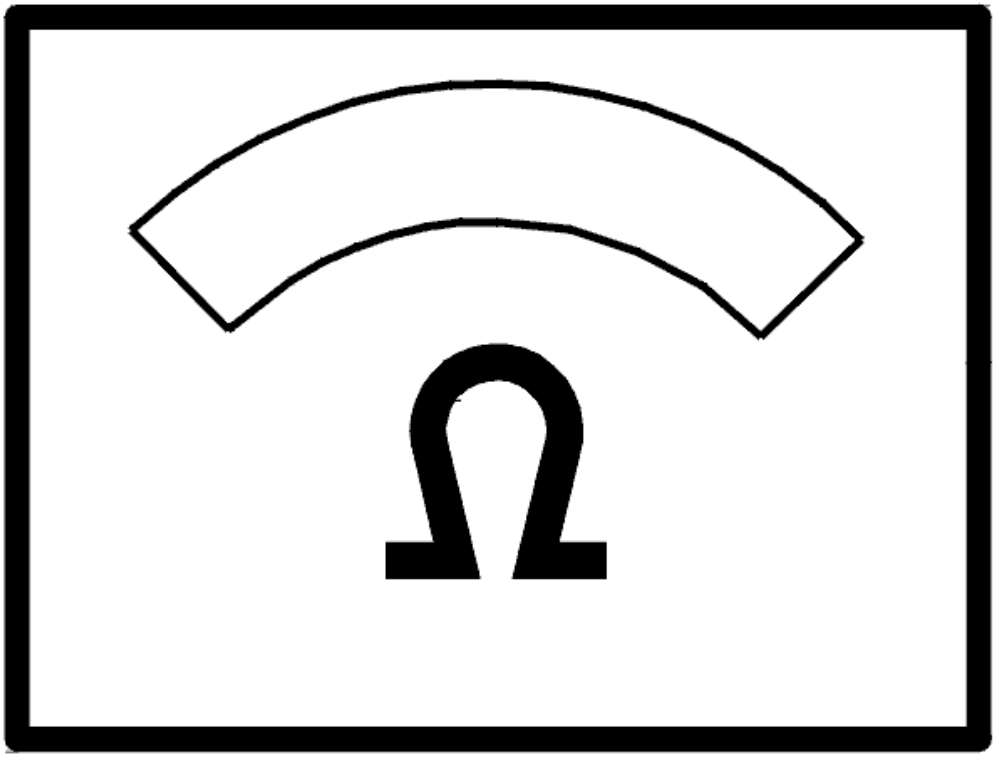

Fig. 234: Identifying Ohms Display
Courtesy of VOLVO CARS CORPORATION

Was the resistance OK?

- **YES**

  FAULT NOT FOUND: Troubleshooting has been completed.

- **NO**

  Refer to **VERIFICATION**

CHECKING THE WIRING AND COMPONENT

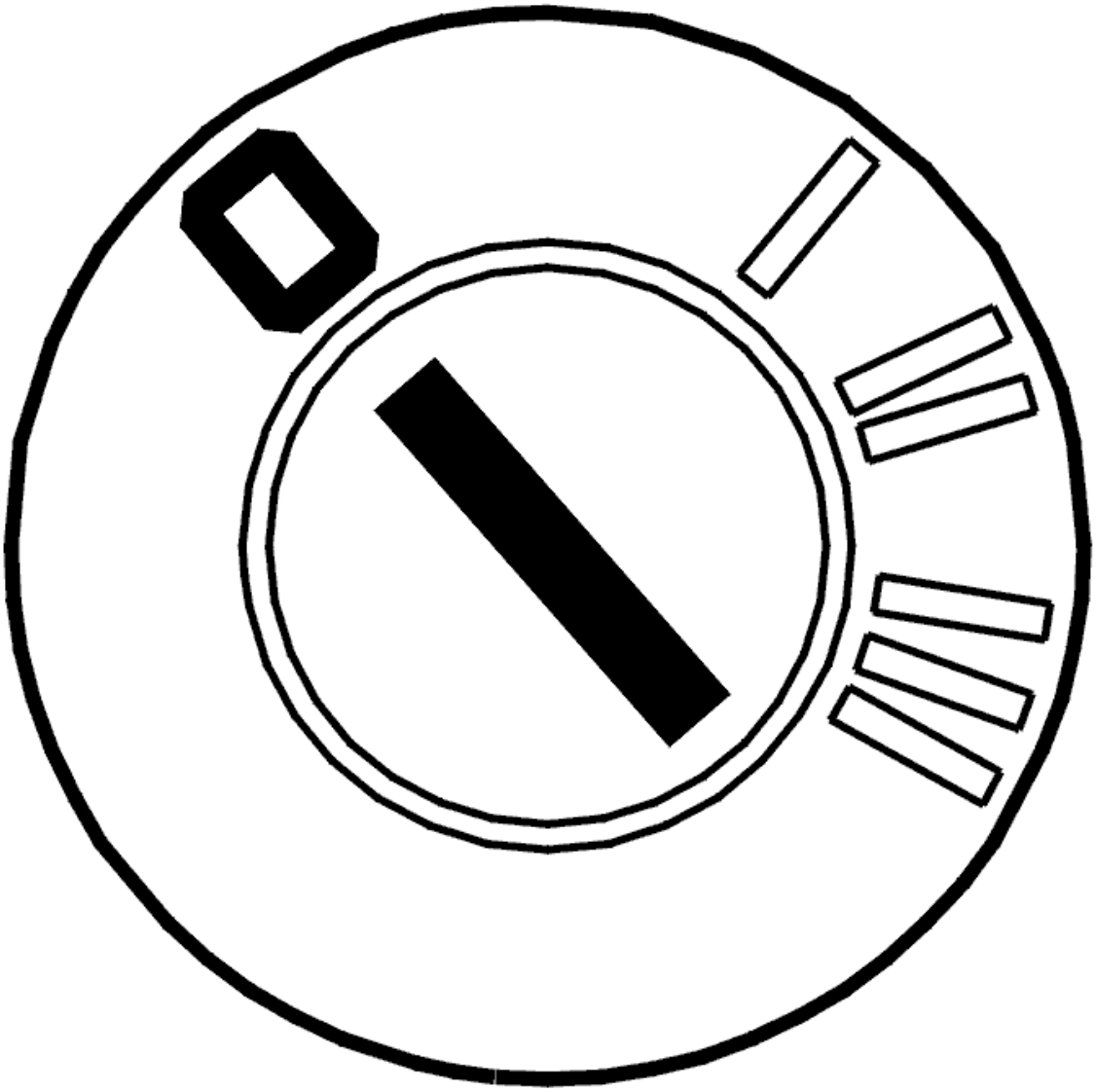

Fig. 235: Identifying Ignition OFF
Courtesy of VOLVO CARS CORPORATION

- Ignition off
- Open the control system.

  Check the cable between transmission connector terminal #C1 (transmission side) and the connector for solenoid S1. Check for a short-circuit to ground according to **SHORT-CIRCUIT TO GROUND, PERMANENT FAULTS** .

  Check solenoid S1 by measuring the resistance between the terminal pin on solenoid S1 and the transmission housing. The resistance must be 12-16 ohms. Replace solenoid S1 if the resistance is incorrect.

  Remedy as necessary.

Other information:

- To disconnect the transmission connectors, see **CONNECTORS, TRANSMISSION, DISCONNECTING / CONNECTING**
- To replace the cable harness for the control system, see **TEMPERATURE SENSOR FLUID, TRANSAXLE, (TFT)**
- To open the control system and to check or replace solenoid S1, see **SOLENOID CONTROL SYSTEM, REPLACING**
- For information about signals, see **SIGNAL DESCRIPTION. TRANSMISSION CONTROL MODULE (TCM)** .

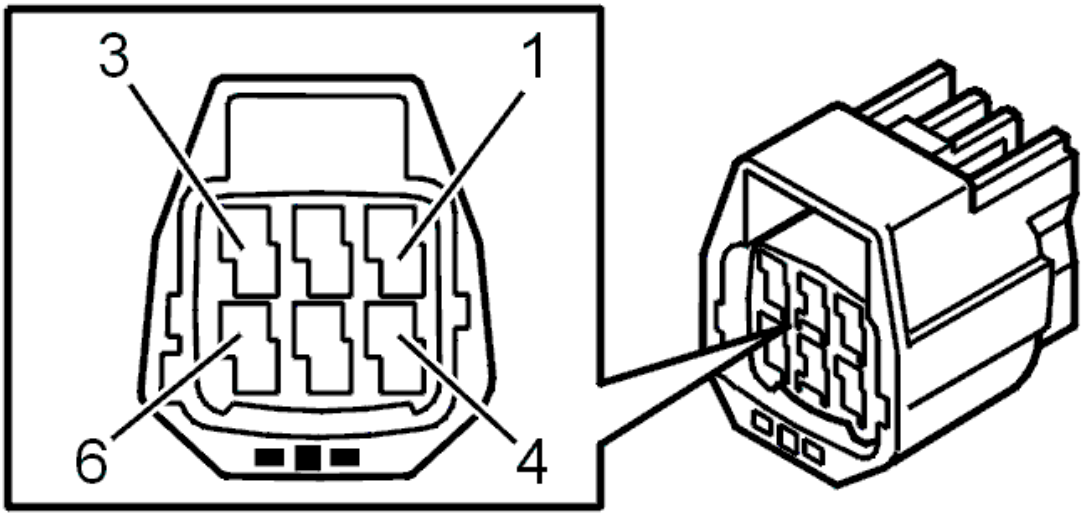

Fig. 236: Identifying 6-Pin Transmission Connector Terminals
Courtesy of VOLVO CARS CORPORATION

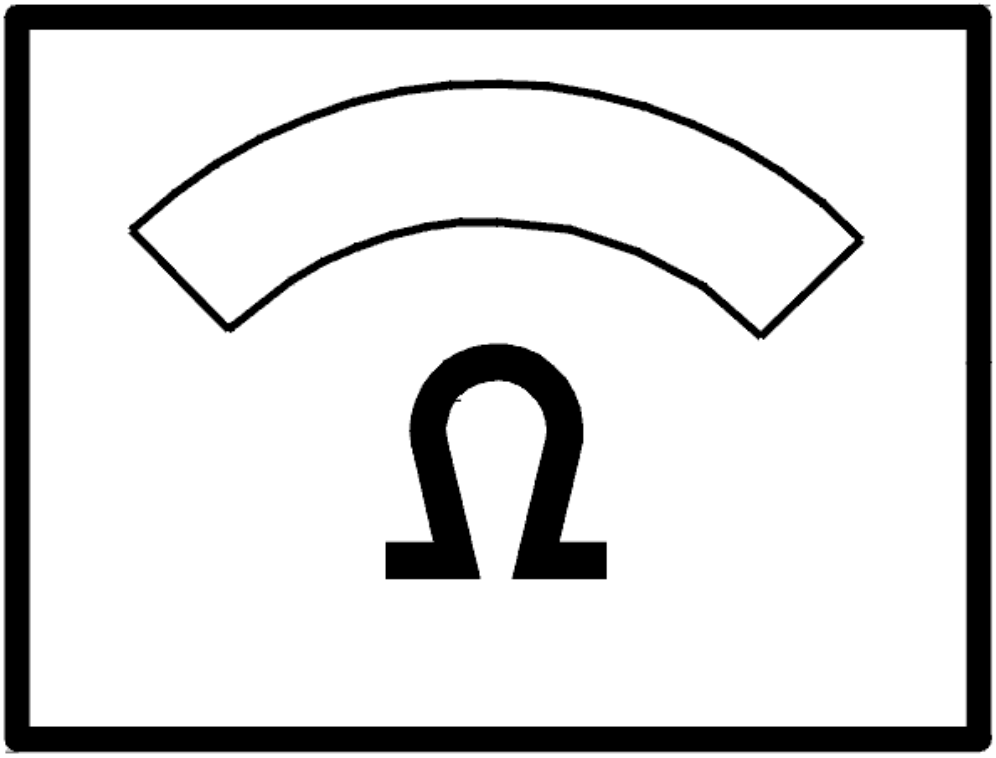

Fig. 237: Identifying Ohms Display
Courtesy of VOLVO CARS CORPORATION

- **Continue**

  Refer to **RESETTING THE ADAPTATION**

INTERMITTENT FAULT

Check the control module and transmission connectors for contact resistance and oxidation according to **CONTACT RESISTANCE AND OXIDATION** . Check the cable between control module terminal #A50 (#A50)and transmission connector terminal #C1. Check for an intermittent short-circuit to ground according to **SHORT-CIRCUIT TO GROUND, INTERMITTENT FAULTS** .

- Check the circuit for solenoid S1: Switch off the ignition. Disconnect the control module. Measure the resistance between terminals #A50 (#A50) and #A53 (#A53) on the breakout box. The resistance must be

12-16 ohms.

Remedy as necessary.

Other information:

- To connect the breakout box, see **CONNECTING THE BREAKOUT BOX**
- For information about signals, see **SIGNAL DESCRIPTION. TRANSMISSION CONTROL MODULE (TCM)** .

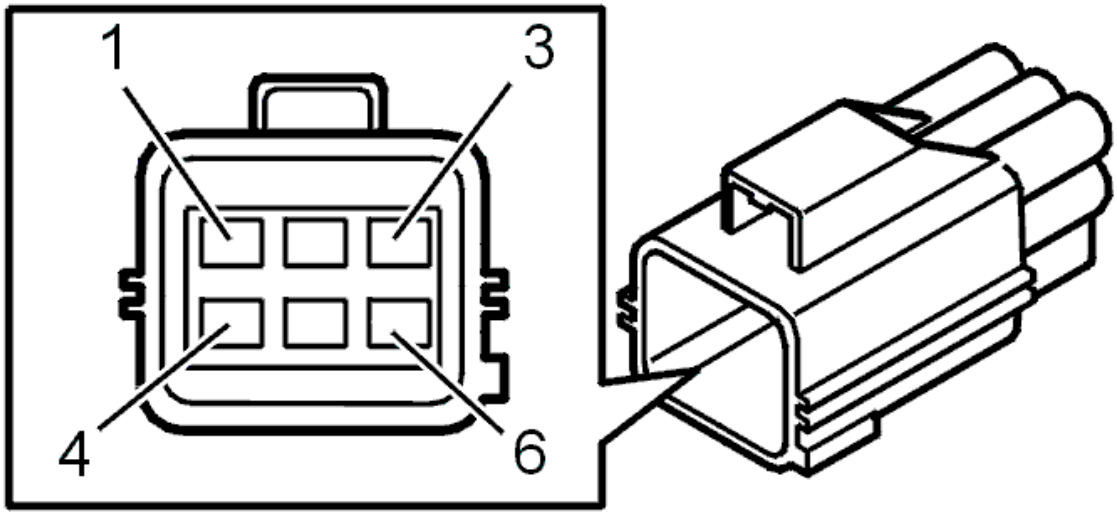

Fig. 238: Identifying Transmission Connector Terminals
Courtesy of VOLVO CARS CORPORATION

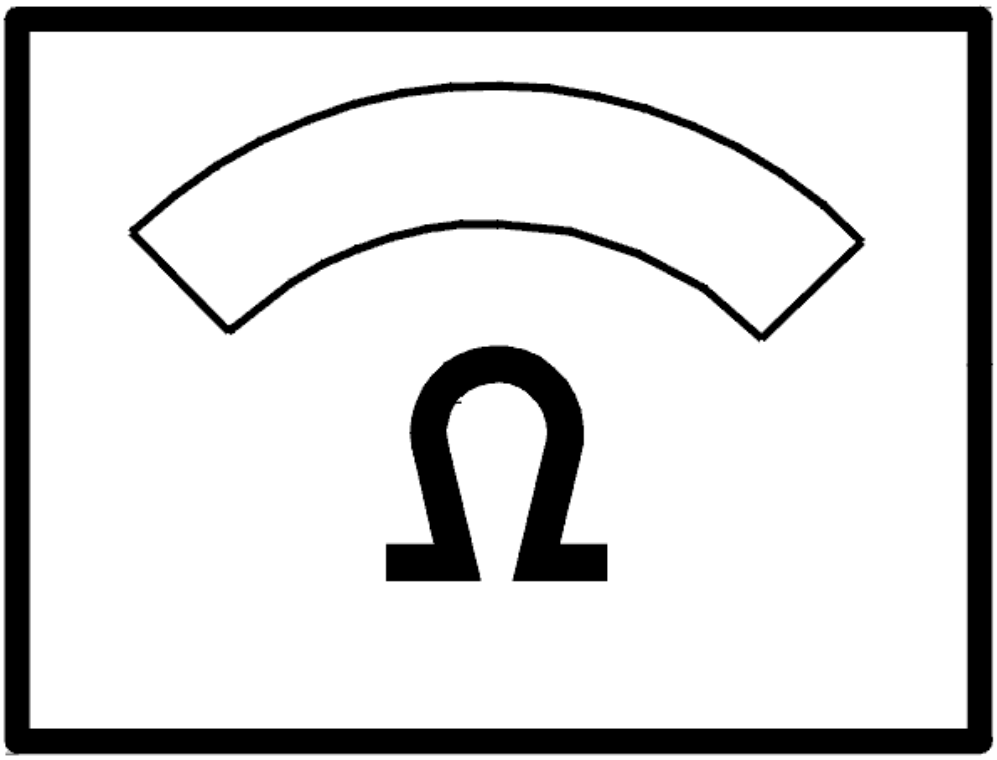

Fig. 239: Identifying Ohms Display
Courtesy of VOLVO CARS CORPORATION

- **Continue**

  Refer to **INFORMATION**

RESETTING THE ADAPTATION

RESETTING ADAPTATION AND THE COUNTER FOR "TRANSMISSION OIL CHANGE"

HINT: The transmission has torque controlled adaptive pressure control. Pressure control means that the transmission regulates the pressure itself during each gear shift. This avoids harsh gear shifting. Each gear shift is evaluated by the control module and stored in the memory. This allows for compensation for wear and tear in the transmission and clutch. It is important that the adaptation in the memory is reset after the transmission has been repaired. This is to ensure normal operation. The oil is replaced during

repair; the "Transmission oil change" counter must be reset. If the counter is not reset when the fluid is drained and replaced, there is a risk that a diagnostic trouble code (DTC) will be stored in incorrect circumstances.

NOTE: This applies only if the transmission or one of the components in the transmission have been replaced.

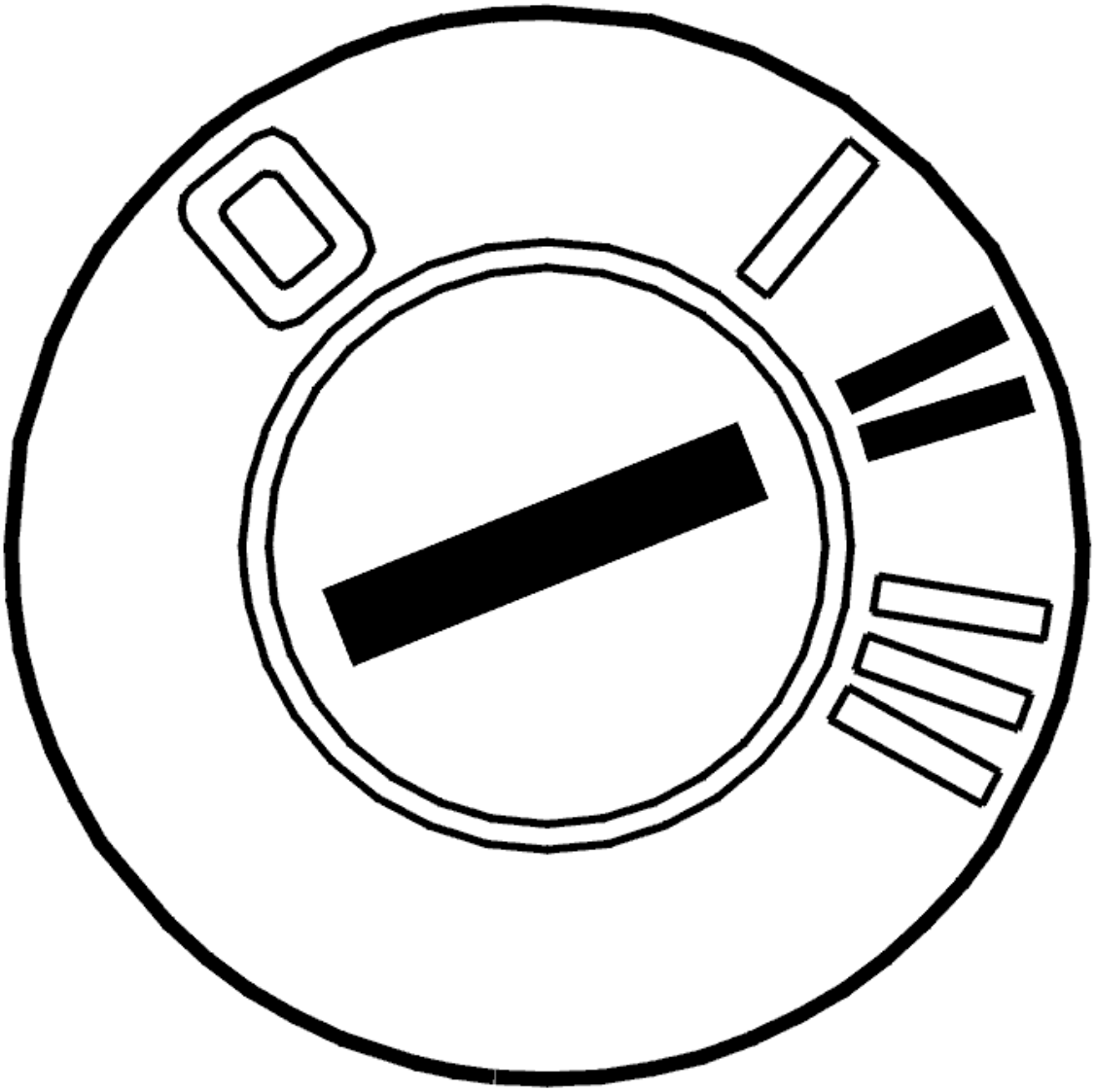

Fig. 240: Identifying Ignition ON
Courtesy of VOLVO CARS CORPORATION

- Ignition on.

  Click on the VCT2000 symbol to reset the adaptation and counter.

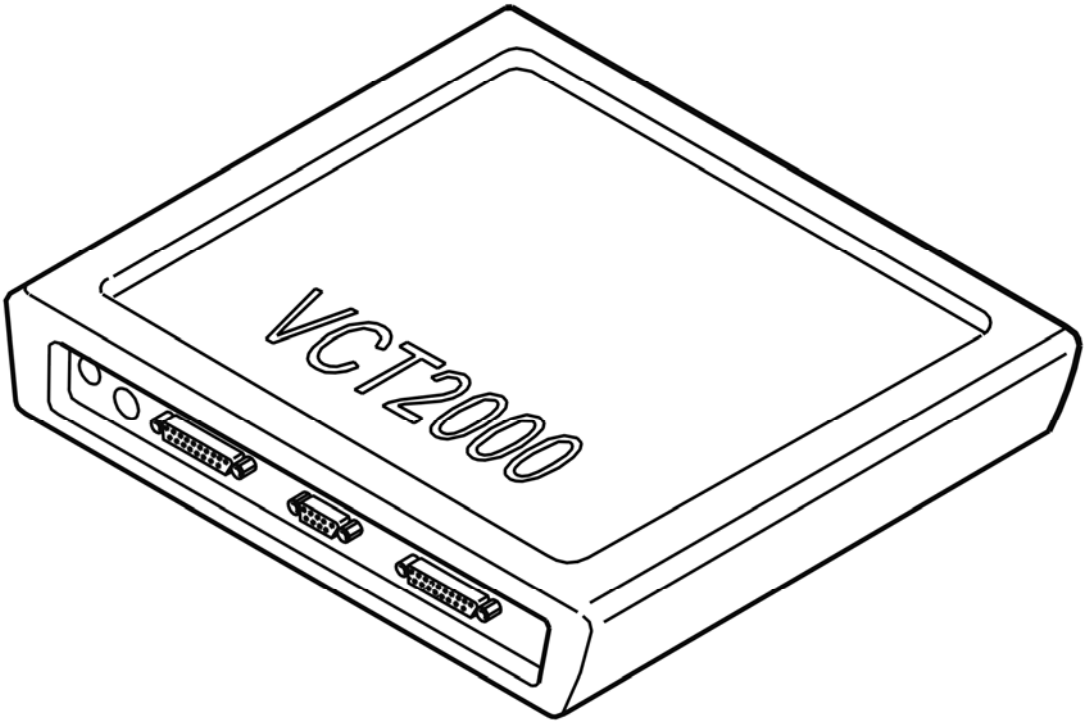

Fig. 241: Identifying VCT2000 Diagnostic Tool Symbol In VIDA
Courtesy of VOLVO CARS CORPORATION

- **Continue**

  Refer to **VERIFICATION**

VERIFICATION

VERIFICATION

HINT: After the repair it is necessary to check that the fault has been rectified.

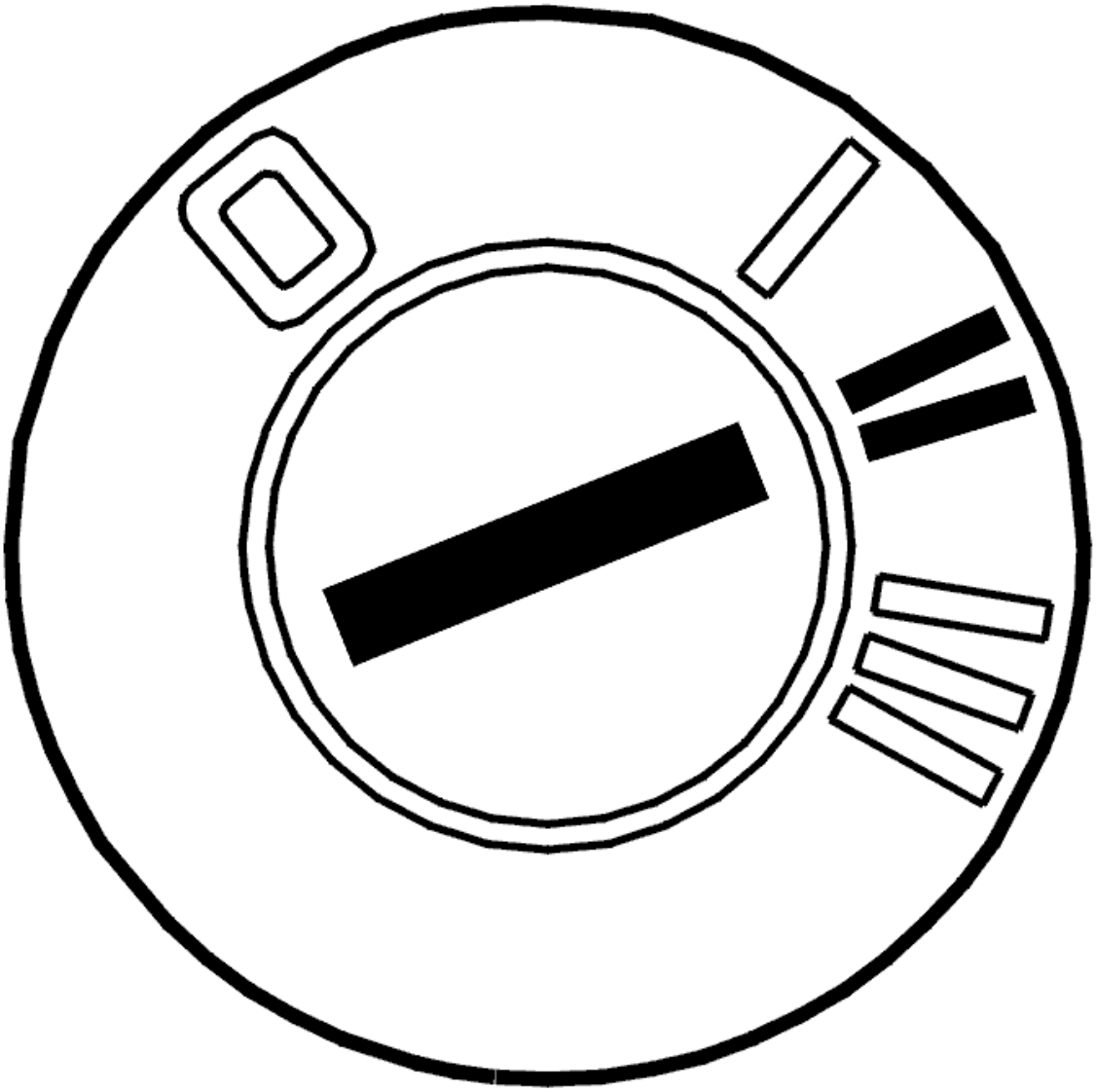

Fig. 242: Identifying Ignition ON
Courtesy of VOLVO CARS CORPORATION

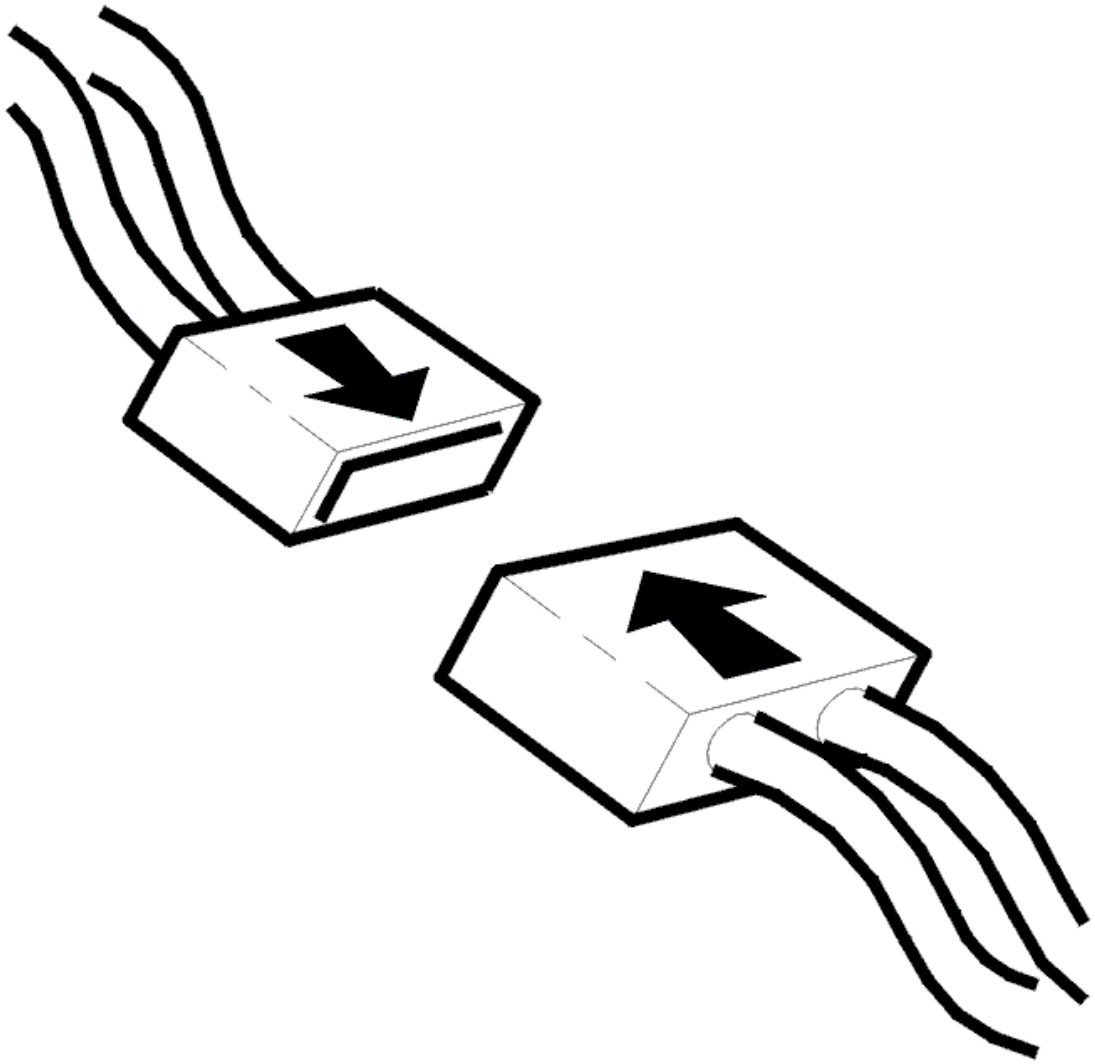

Fig. 243: Identifying Connector(s) Reinstallation
Courtesy of VOLVO CARS CORPORATION

- Ignition off.
- Wait for at least 90 seconds.
- Connect the connectors, install the components etc.
- Ignition on.
- Gear selector in position P.
- Activate solenoid S1.

  The value should change between OFF and ON.

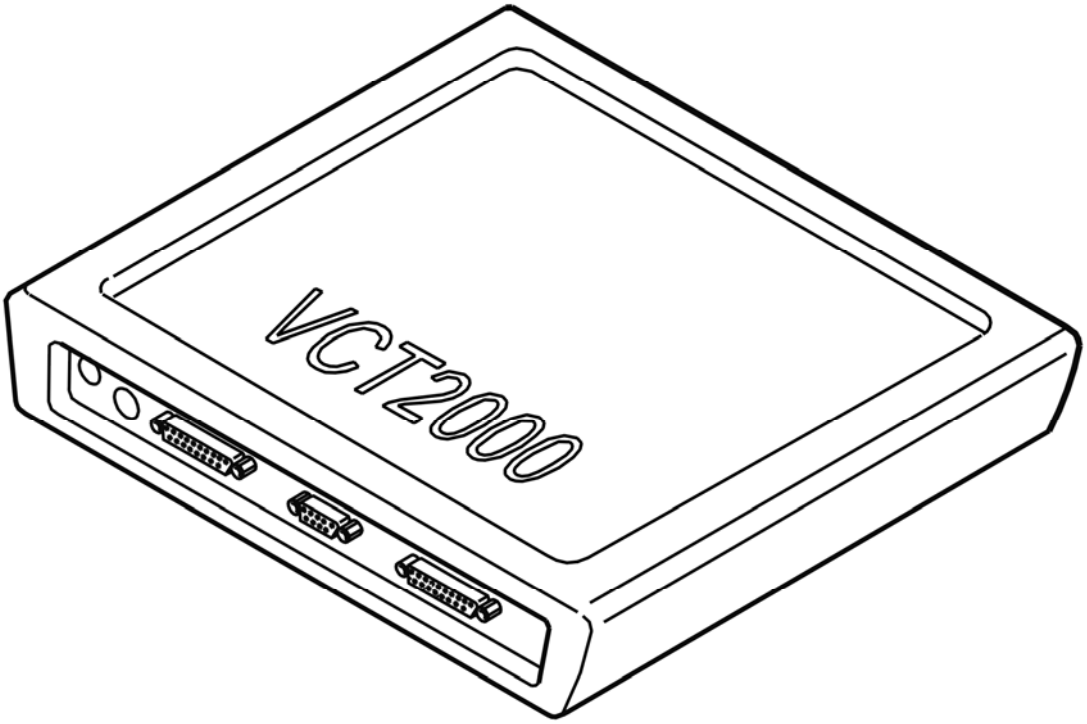

Fig. 244: Identifying VCT2000 Diagnostic Tool Symbol In VIDA
Courtesy of VOLVO CARS CORPORATION

Does the value change?

- **YES**

  VERIFIED: Troubleshooting has been completed.

- **NO**

  Refer to **INFORMATION**

INFORMATION

FAULT-TRACING INFORMATION

The fault should have been detected and remedied. As this is not the case fault-tracing has failed.

Exit fault-tracing for this diagnostic trouble code (DTC) or make another attempt.

INFORMATION

FAULT-TRACING INFORMATION

If the fault is intermittent, do not verify fault-tracing if the fault does not recur.

It is possible to view the information again, or leave fault-tracing for this diagnostic trouble code (DTC).

FAULTY SIGNAL

CHECKING TRANSMISSION FLUID TEMPERATURE SENSOR

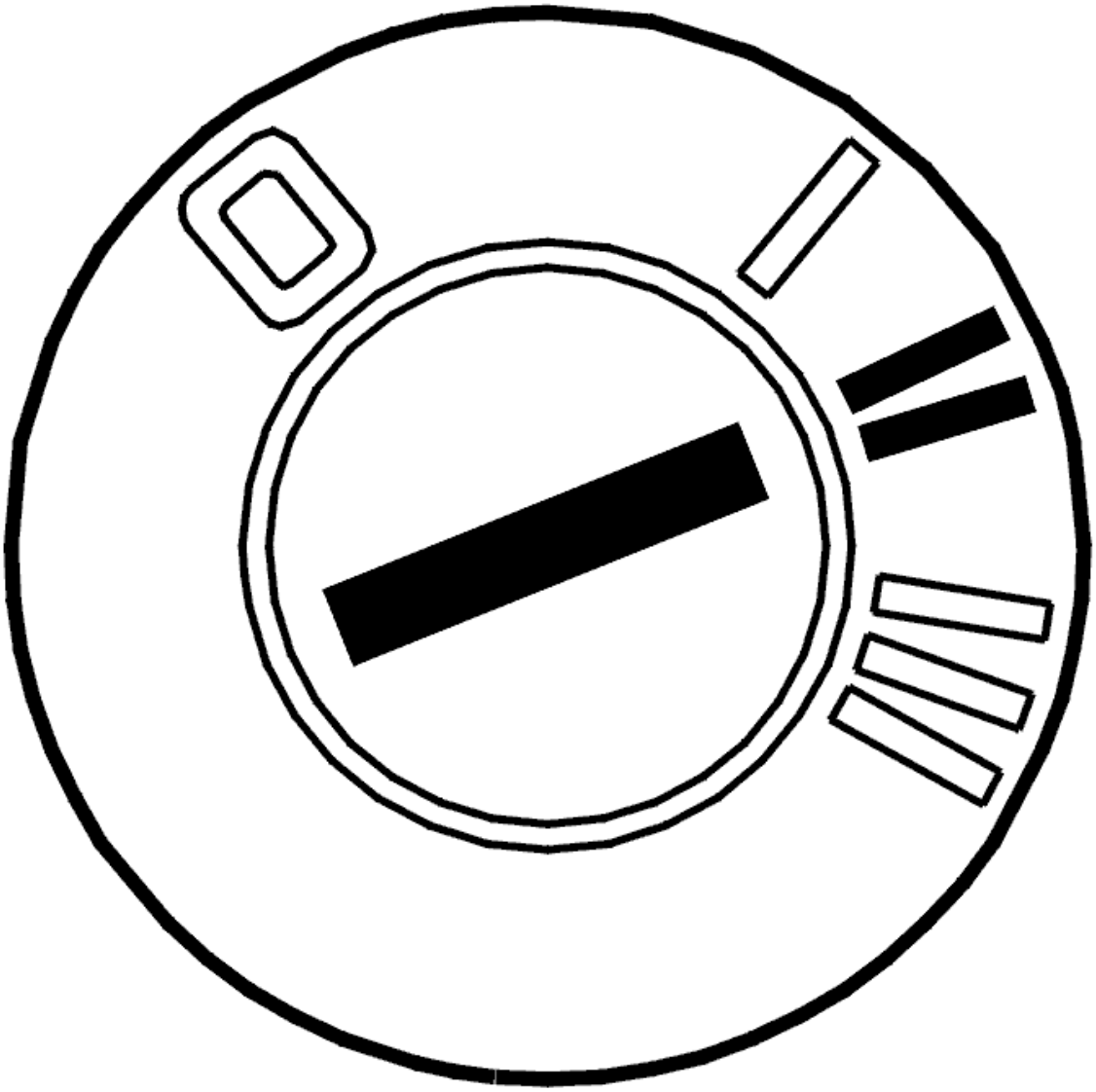

Fig. 245: Identifying Ignition ON
Courtesy of VOLVO CARS CORPORATION

- Ignition on
- Read off the oil temperature.

  Check that the temperature is within its permitted range.

Compare with the transmission temperature.

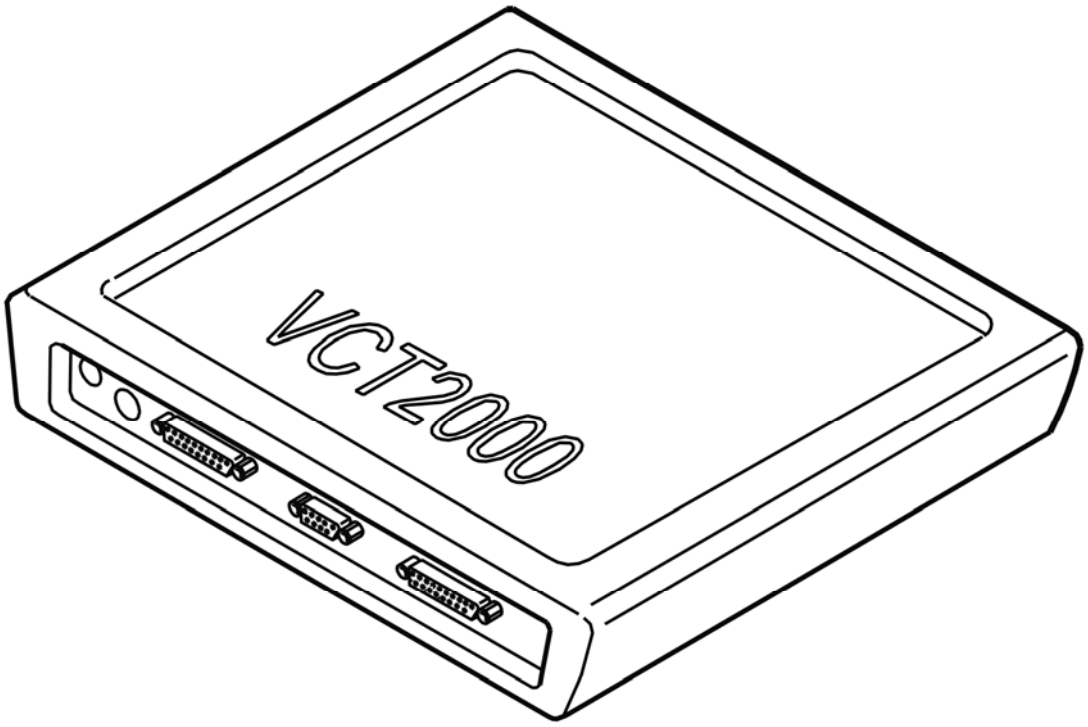

Fig. 246: Identifying VCT2000 Diagnostic Tool Symbol In VIDA
Courtesy of VOLVO CARS CORPORATION

Was the transmission temperature within its permitted range?

- **YES**

  Refer to **INTERMITTENT FAULT**

- **NO**

  Refer to **CHECKING TRANSMISSION FLUID TEMPERATURE SENSOR**

CHECKING TRANSMISSION FLUID TEMPERATURE SENSOR

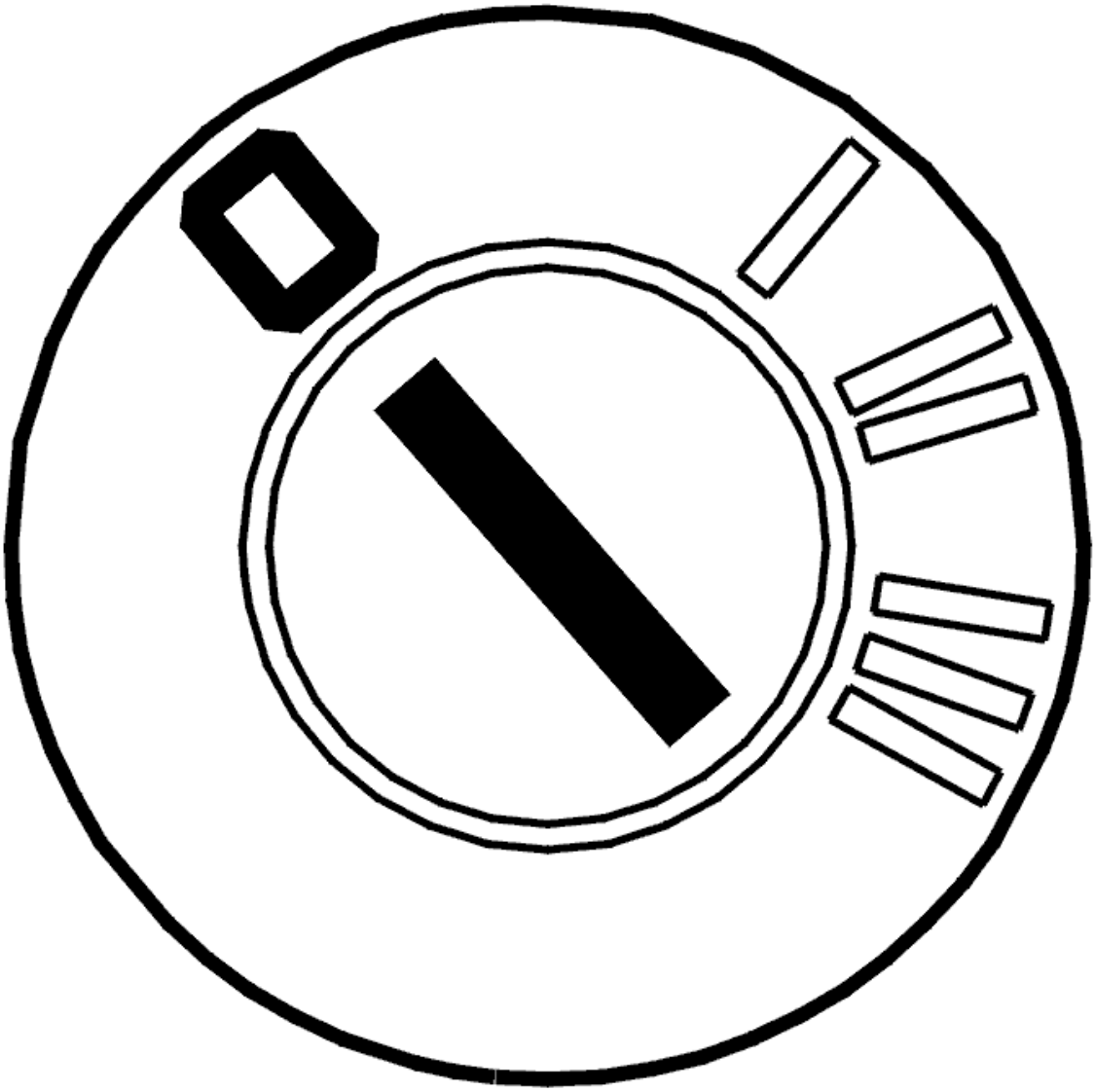

Fig. 247: Identifying Ignition OFF
Courtesy of VOLVO CARS CORPORATION

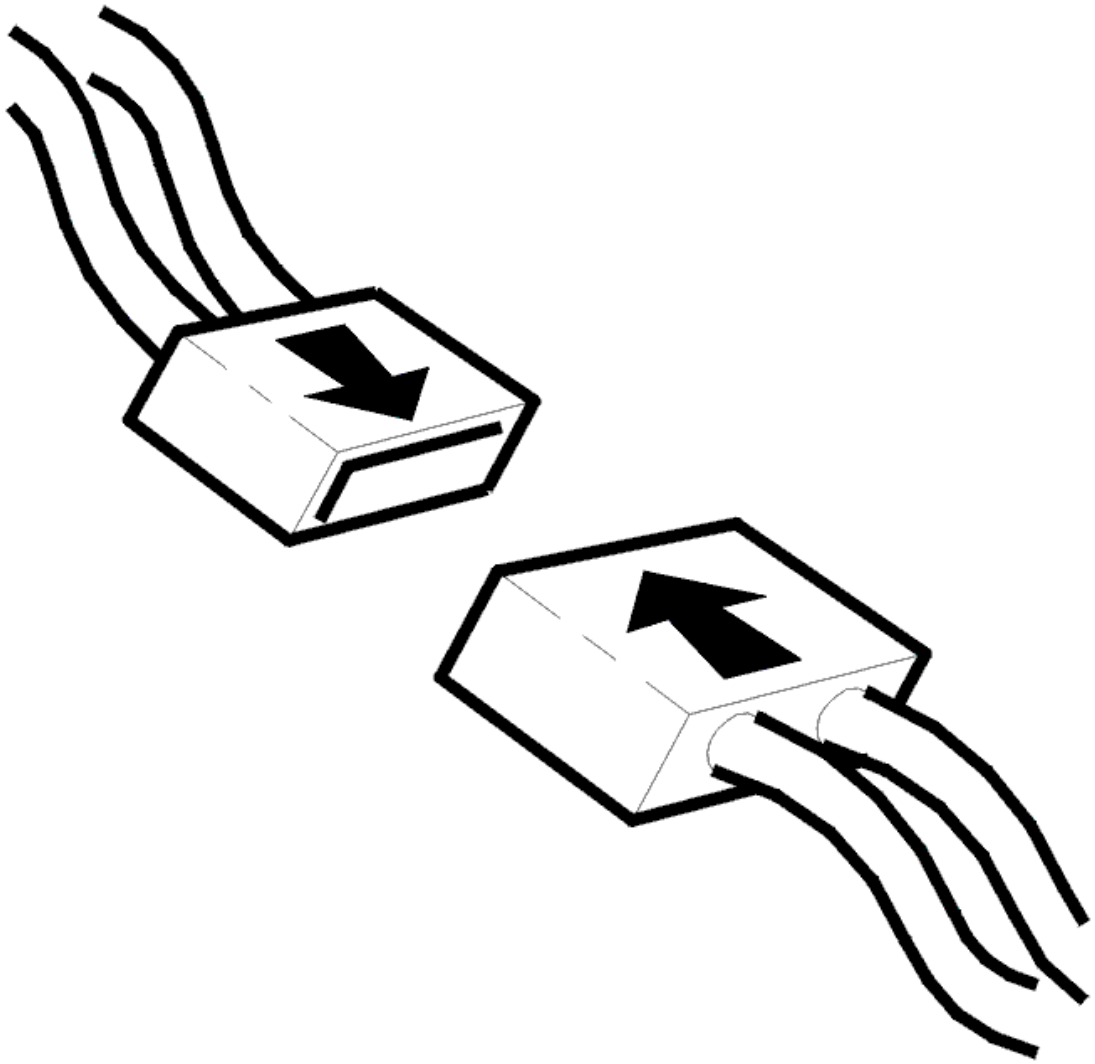

Fig. 248: Identifying Connector(s) Reinstallation
Courtesy of VOLVO CARS CORPORATION

- Ignition off
- Transmission connector D disconnected.

  Check the temperature sensor. Measure the resistance between transmission connector D terminals #D7 and #D8.

  The resistance must be 4.5-6 kohms at 20°C.

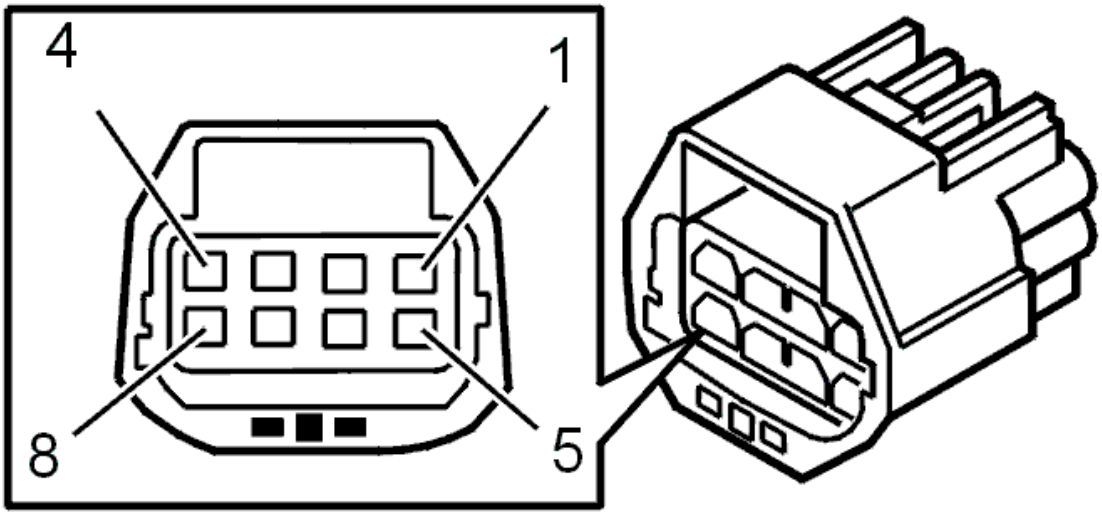

Fig. 249: Identifying 8-Pin Transmission Connector Terminals
Courtesy of VOLVO CARS CORPORATION

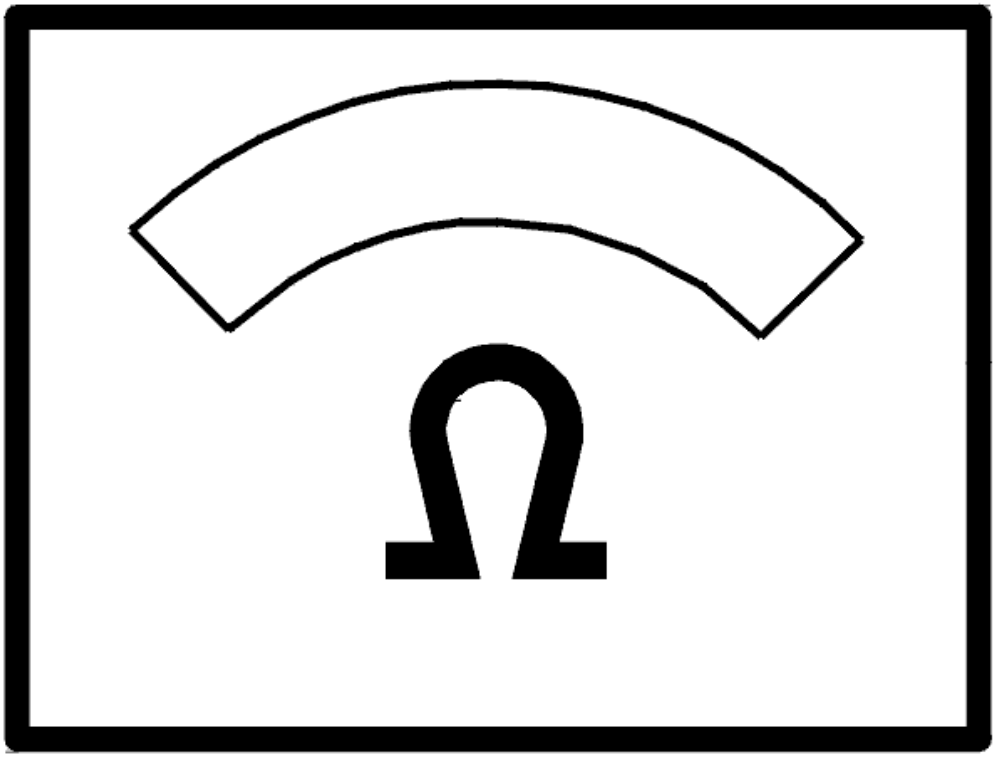

Fig. 250: Identifying Ohms Display
Courtesy of VOLVO CARS CORPORATION

Was the resistance OK?

- **YES**

  Refer to **CHECKING TRANSMISSION FLUID TEMPERATURE SENSOR**

- **NO**

  Refer to **CHECKING THE CABLE AND COMPONENT**

CHECKING TRANSMISSION FLUID TEMPERATURE SENSOR

Check the cable between control module terminal #A37 (#A37) and transmission connector terminal #D7

(control module side). Check for an open-circuit according to **OPEN-CIRCUIT, PERMANENT FAULTS** .

Check the cable between control module terminal #A55 (#A55)and transmission connector terminal #D8 (control module side). Check for an open-circuit according to **OPEN-CIRCUIT, PERMANENT FAULTS** .

Remedy as necessary.

Other information:

- To connect the breakout box, see **CONNECTING THE BREAKOUT BOX**
- To disconnect the transmission connectors, see **CONNECTORS, TRANSMISSION, DISCONNECTING / CONNECTING**
- For information about signals, see **SIGNAL DESCRIPTION. TRANSMISSION CONTROL MODULE (TCM)** .

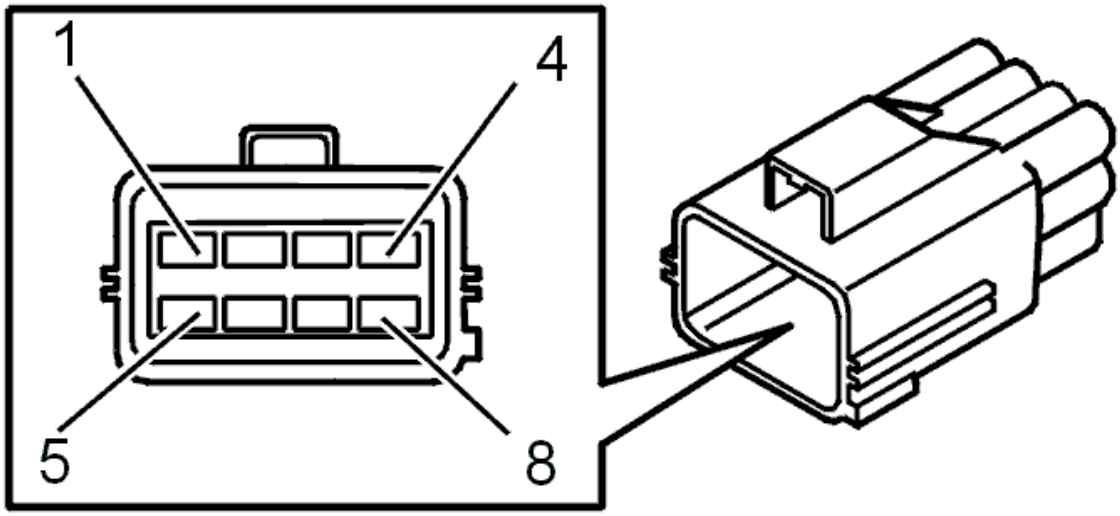

Fig. 251: Identifying Transmission Connector Terminals
Courtesy of VOLVO CARS CORPORATION

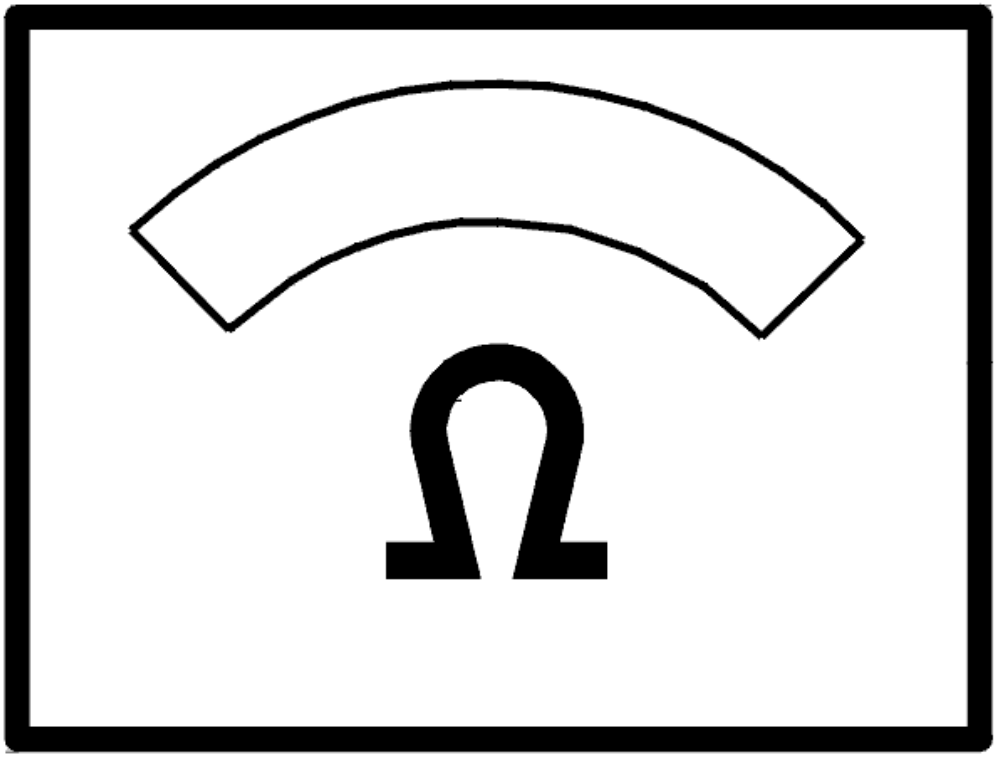

Fig. 252: Identifying Ohms Display
Courtesy of VOLVO CARS CORPORATION

Was a fault detected?

- **YES**

  Refer to **VERIFICATION**

- **NO**

  Refer to **CHECKING THE CABLE AND COMPONENT**

CHECKING THE CABLE AND COMPONENT

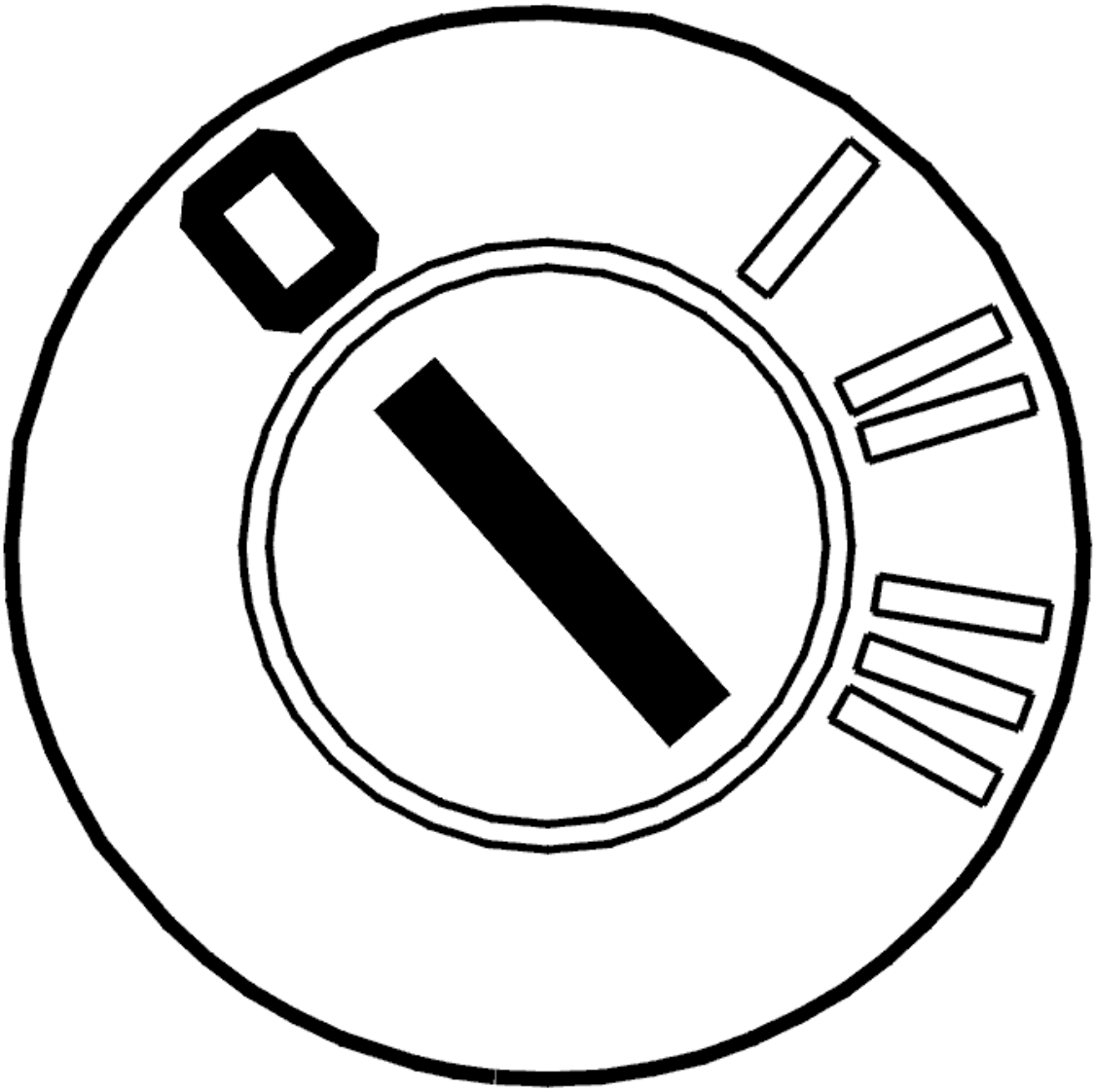

Fig. 253: Identifying Ignition OFF
Courtesy of VOLVO CARS CORPORATION

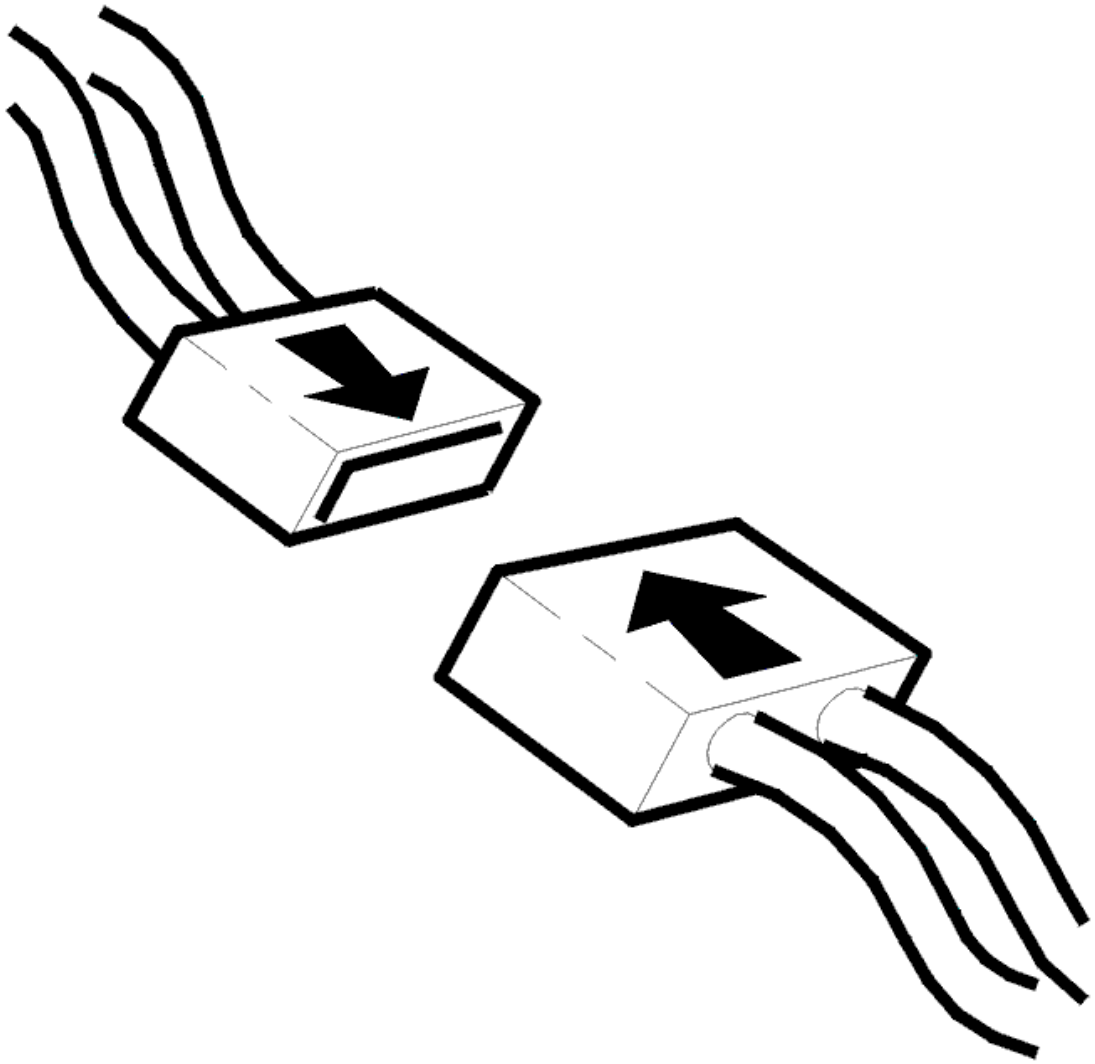

Fig. 254: Identifying Connector(s) Reinstallation
Courtesy of VOLVO CARS CORPORATION

- Ignition off
- Open the transmission control system.

  Check the cable between transmission connector terminal #D7 and temperature sensor terminal #1. Check the cable between transmission connector #D8 and temperature sensor terminal #2. Check for an open-circuit according to **OPEN-CIRCUIT, PERMANENT FAULTS** .

  Also check the cables for a short-circuit to each other.

  HINT: Check the temperature sensor. With the ignition off and transmission connector D disconnected, measure the resistance between transmission connector D terminals #D7 and #D8. The resistance must be 4.5-6 kohms at 20 °C.

Remedy as necessary.

Other information:

- To connect the breakout box, see **CONNECTING THE BREAKOUT BOX**
- To disconnect the transmission connectors, see **CONNECTORS, TRANSMISSION, DISCONNECTING / CONNECTING**
- To open the transmission control system and to check or replace the temperature sensor, see **SOLENOID CONTROL SYSTEM, REPLACING**
- For information about signals, see **SIGNAL DESCRIPTION. TRANSMISSION CONTROL MODULE (TCM)** .

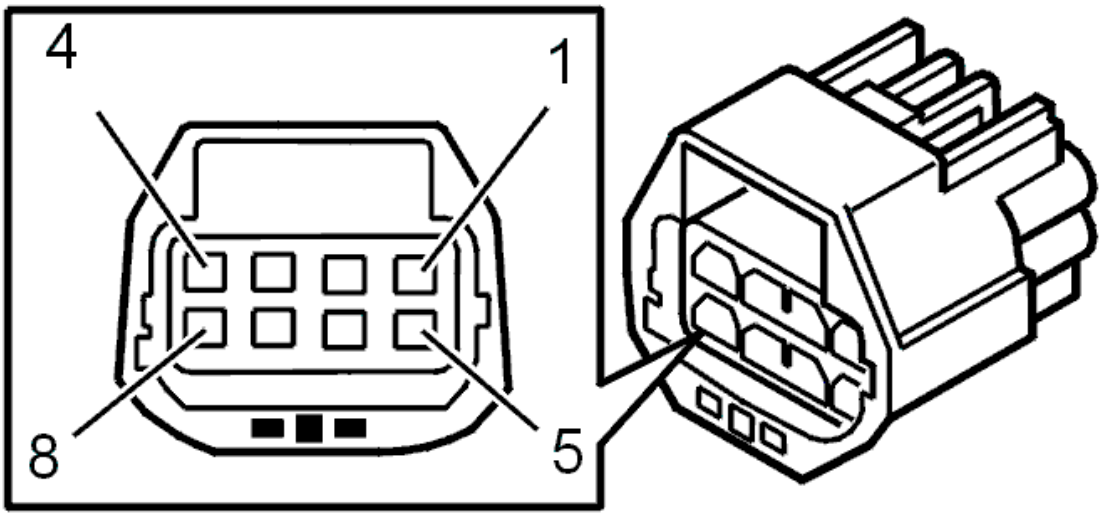

Fig. 255: Identifying 8-Pin Transmission Connector Terminals
Courtesy of VOLVO CARS CORPORATION

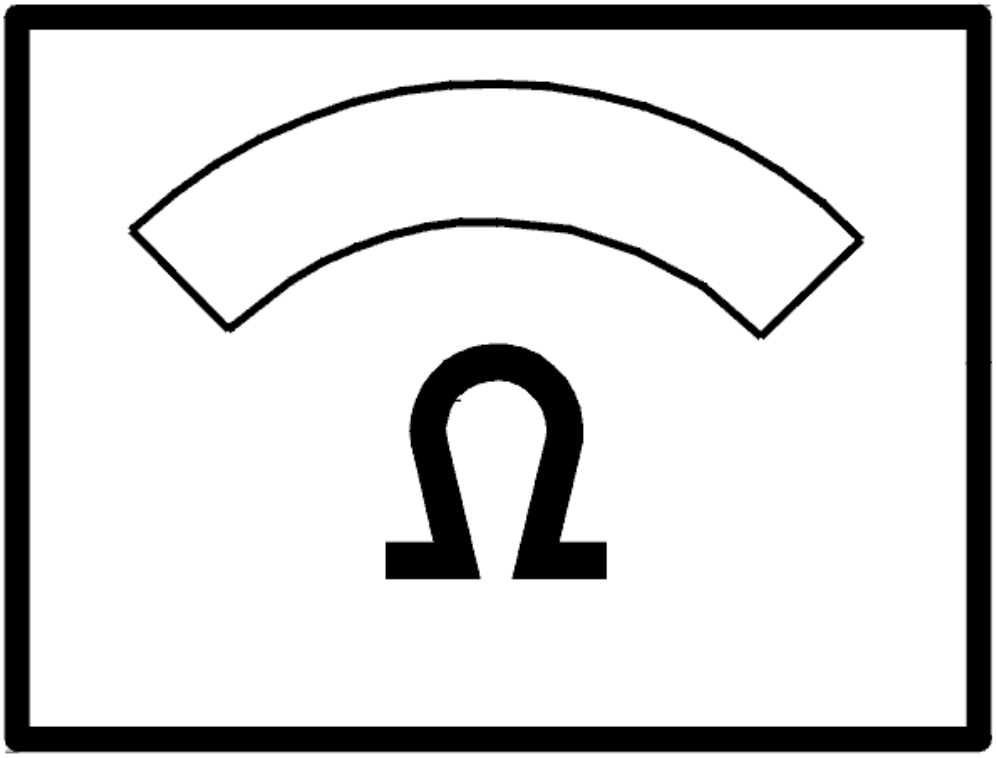

Fig. 256: Identifying Ohms Display
Courtesy of VOLVO CARS CORPORATION

- **Continue**

  Refer to **RESETTING TRANSMISSION FLUID CHANGE COUNTER**

INTERMITTENT FAULT

Check the transmission control module (TCM) and transmission connector D. Check for contact resistance and oxidation according to **CONTACT RESISTANCE AND OXIDATION** .

Check the cable between transmission control module (TCM) terminal #A37 (#A37) and transmission connector terminal #D7 (control module side). Check for an intermittent open-circuit according to **OPEN-CIRCUIT, INTERMITTENT FAULTS** .

Check the cable between control module terminal #A55 (#A55)and transmission connector terminal #D8 (control module side). Check for an intermittent open-circuit according to **OPEN-CIRCUIT, INTERMITTENT FAULTS** .

Remedy as necessary.

Other information:

- To connect the breakout box, see **CONNECTING THE BREAKOUT BOX**
- To disconnect the transmission connectors, see **CONNECTORS, TRANSMISSION, DISCONNECTING / CONNECTING**
- For information about signals, see **SIGNAL DESCRIPTION. TRANSMISSION CONTROL MODULE (TCM)** .

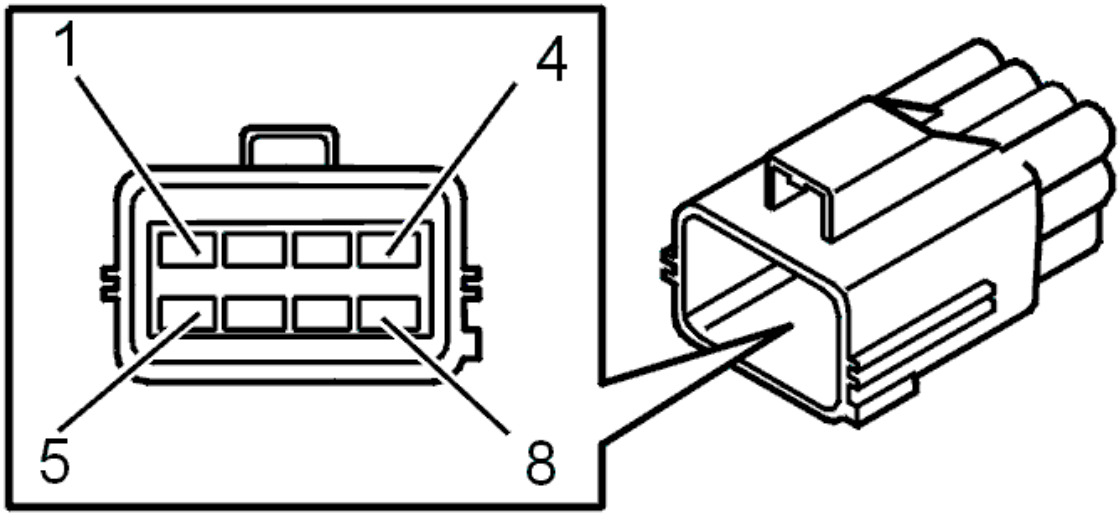

Fig. 257: Identifying Transmission Connector Terminals
Courtesy of VOLVO CARS CORPORATION

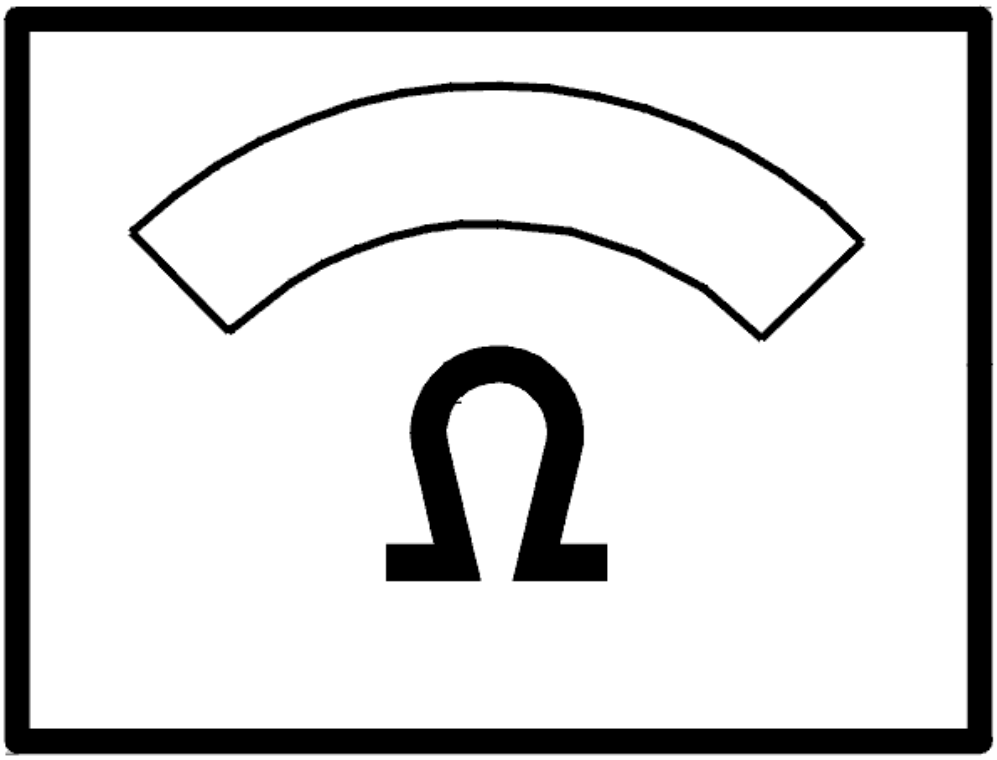

Fig. 258: Identifying Ohms Display
Courtesy of VOLVO CARS CORPORATION

- **Continue**

  Refer to **INFORMATION**

RESETTING TRANSMISSION FLUID CHANGE COUNTER

RESETTING TRANSMISSION FLUID CHANGE COUNTER

HINT: The transmission control module (TCM) has a counter for the oil quality. The counter counts up if the transmission is exposed to too high a load or an ambient temperature that is too high. If the counter is not reset when the oil is drained or changed, there is a risk that a diagnostic trouble code (DTC) will be stored in faulty circumstances. Therefore it is important that the "Transmission oil change" counter is reset.

NOTE: **This applies only when the transmission fluid is changed and when the fluid is changed when repairs are carried out to the transmission temperature sensor.**

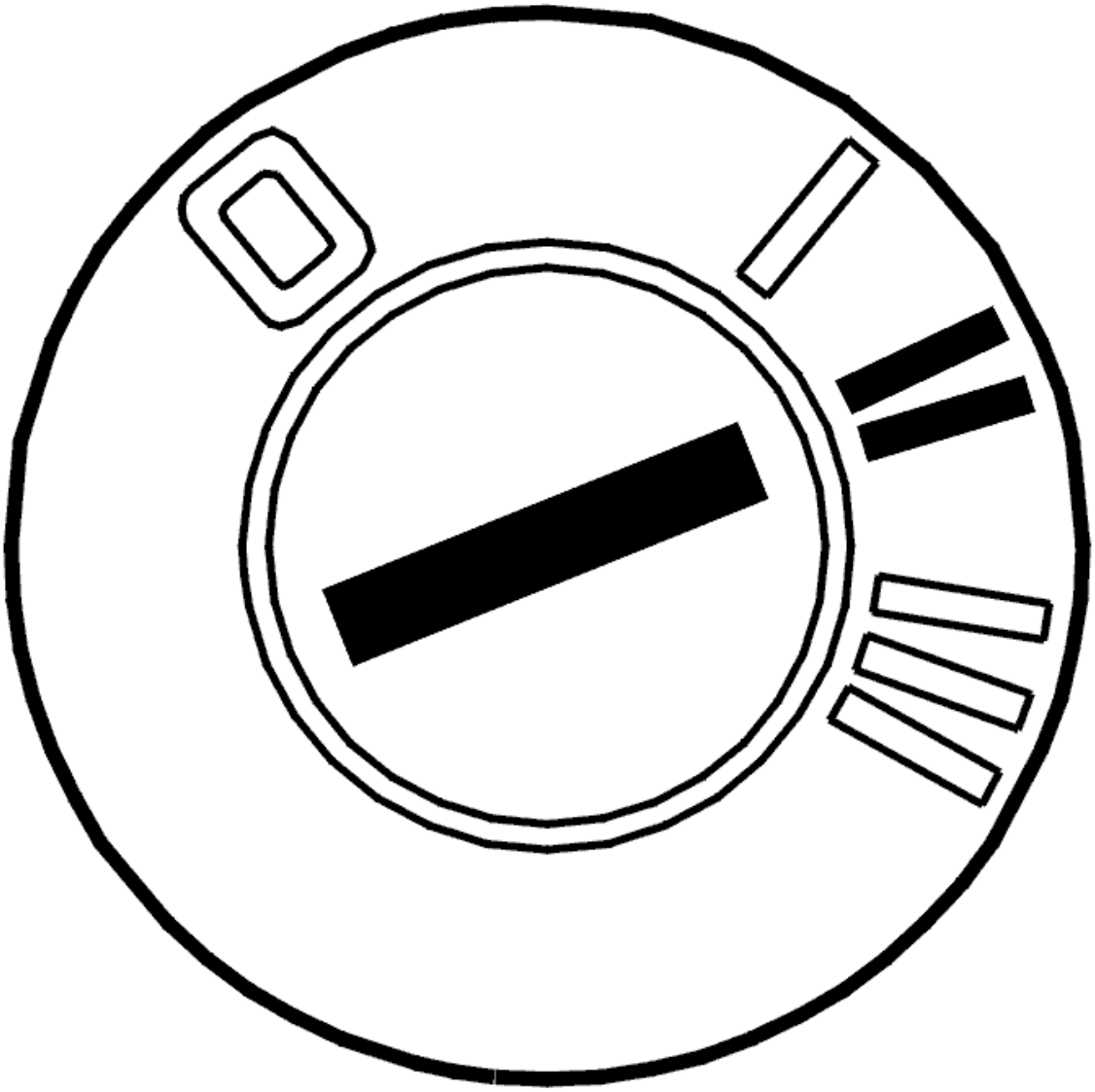

Fig. 259: Identifying Ignition ON
Courtesy of VOLVO CARS CORPORATION

- Ignition on.

  Reset the counter by clicking on the VCT 2000 symbol.

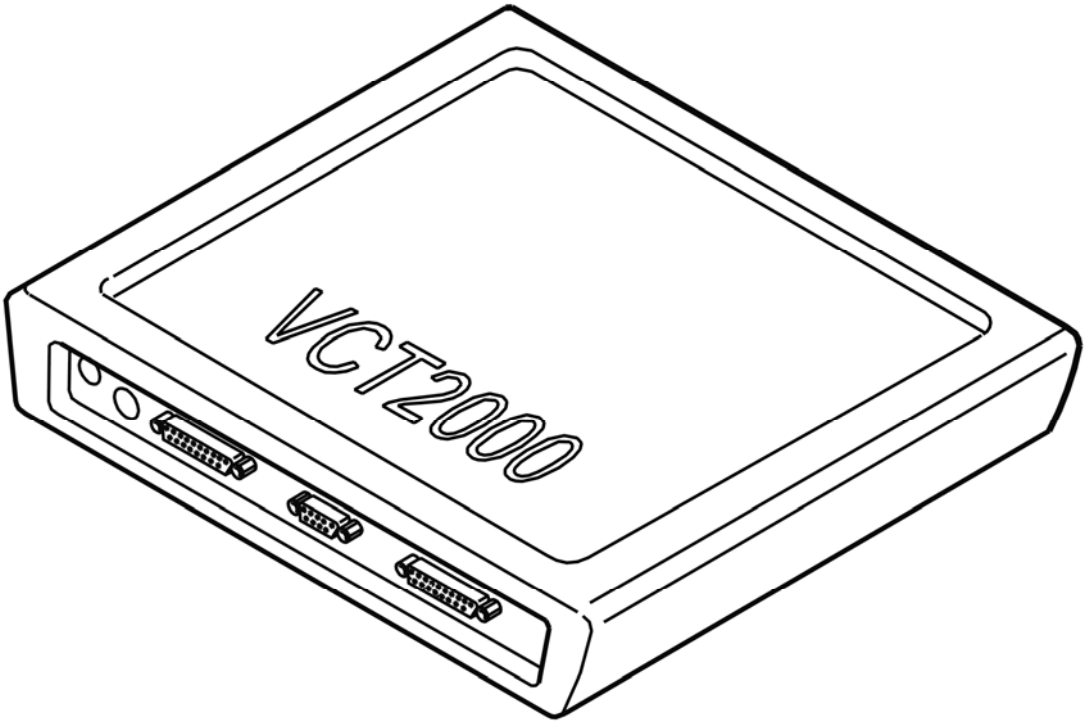

Fig. 260: Identifying VCT2000 Diagnostic Tool Symbol In VIDA
Courtesy of VOLVO CARS CORPORATION

- **Continue**

  Refer to **VERIFICATION**

VERIFICATION

VERIFICATION

HINT: After carrying out the repair, check that the fault has been remedied.

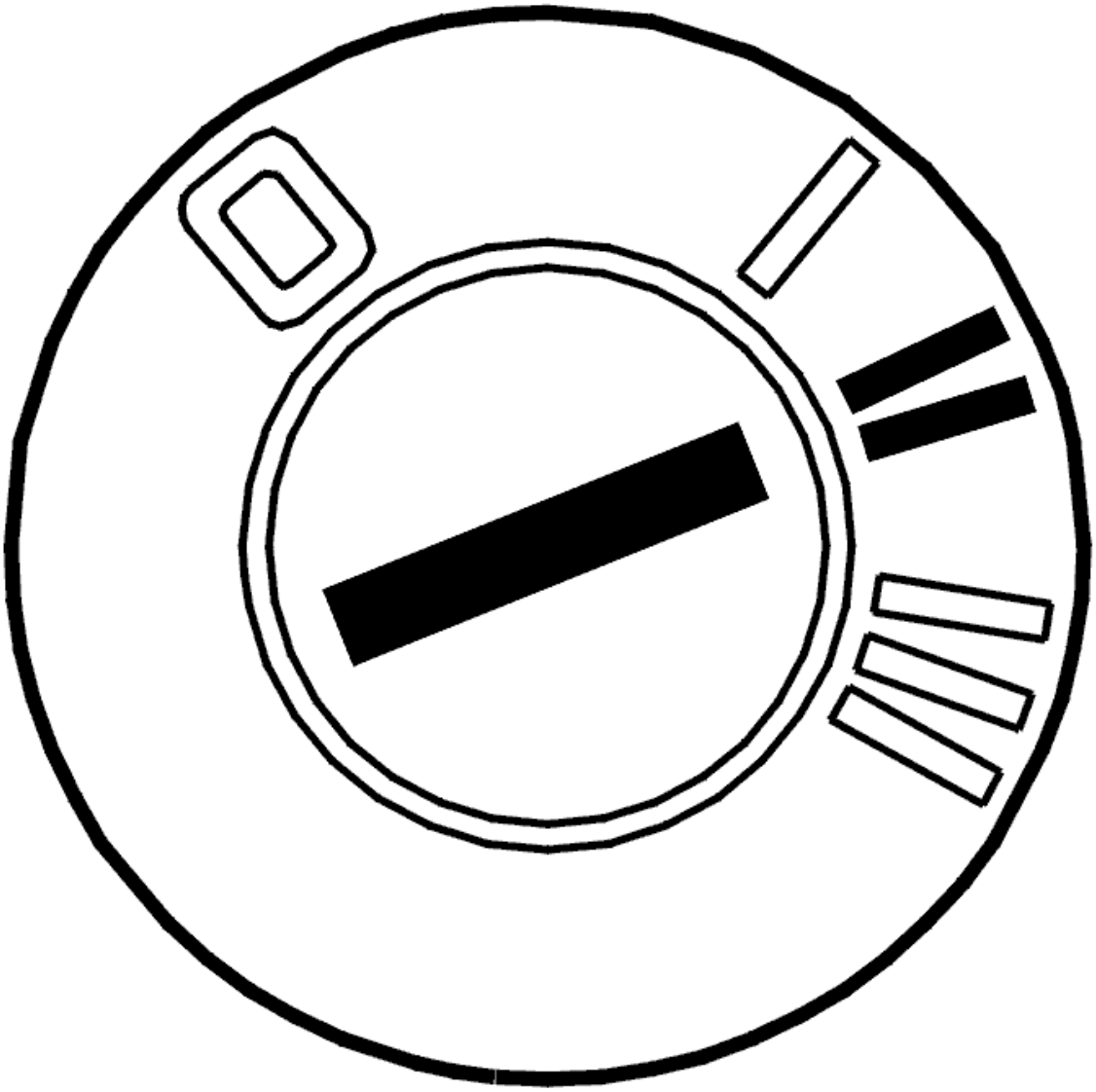

Fig. 261: Identifying Ignition ON
Courtesy of VOLVO CARS CORPORATION

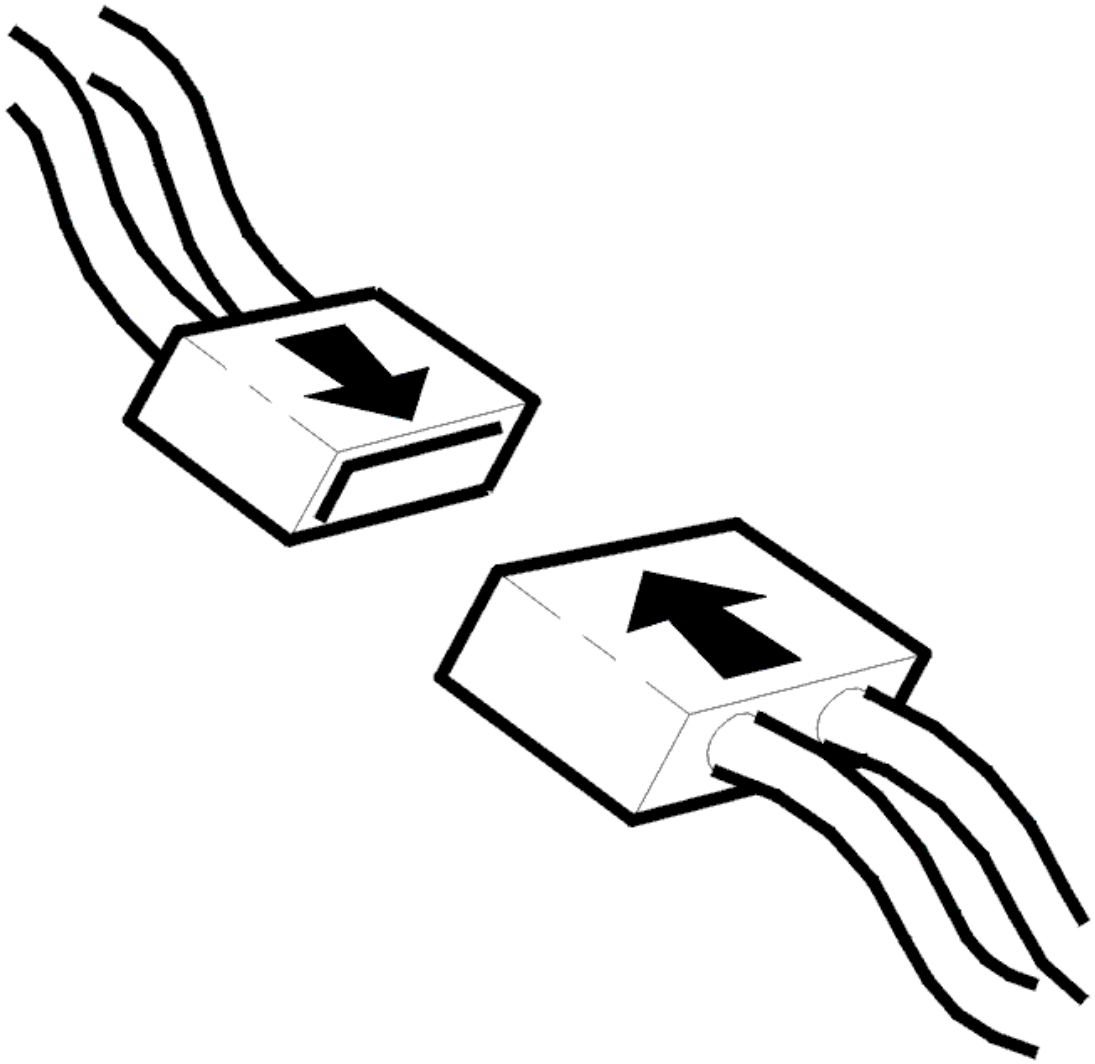

Fig. 262: Identifying Connector(s) Reinstallation
Courtesy of VOLVO CARS CORPORATION

- Ignition off.
- Reinstall the connectors, components etc.
- Ignition on.
- Read off the oil temperature.

Check that the transmission oil temperature is within its permitted range.

Compare with the transmission temperature.

NOTE: **The transmission temperature sensor is located inside the control unit and can be affected by the heat given off by the solenoids.**

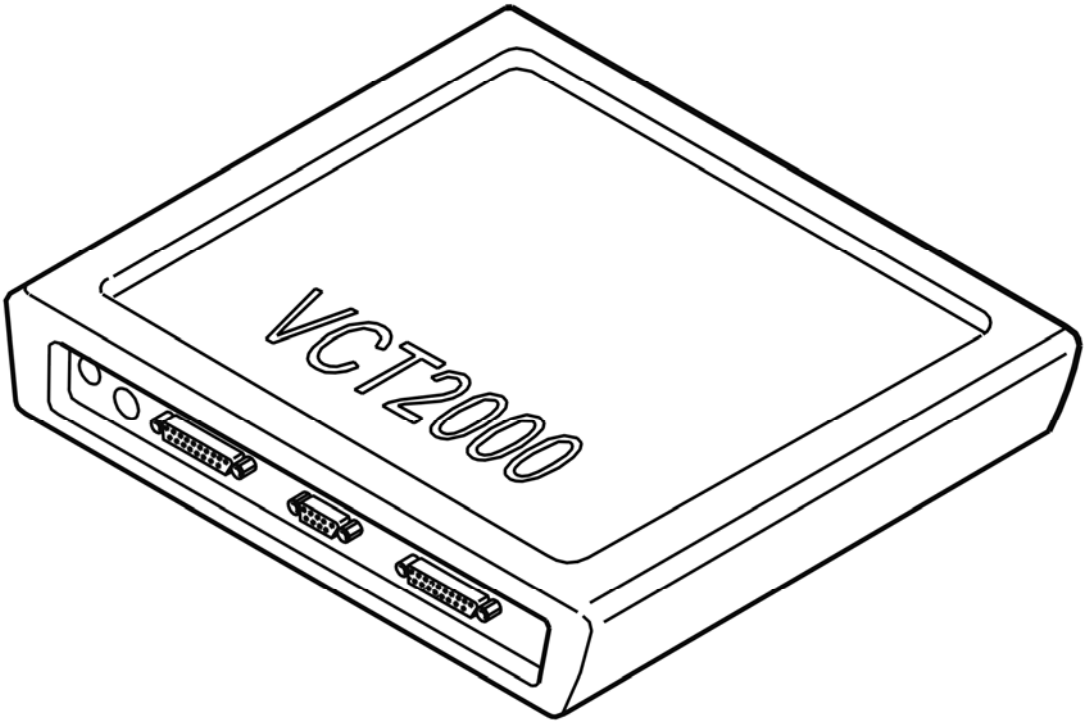

Fig. 263: Identifying VCT2000 Diagnostic Tool Symbol In VIDA
Courtesy of VOLVO CARS CORPORATION

Is the oil temperature within its permitted range?

- **YES**

  VERIFIED: Troubleshooting has been completed.

- **NO**

  Refer to **INFORMATION**

TCM-0007: SHIFT SOLENOID S2. SIGNAL TOO HIGH (4T65 AWD; 2003-2006)

DIAGNOSTIC TROUBLE CODE (DTC) INFORMATION

Condition

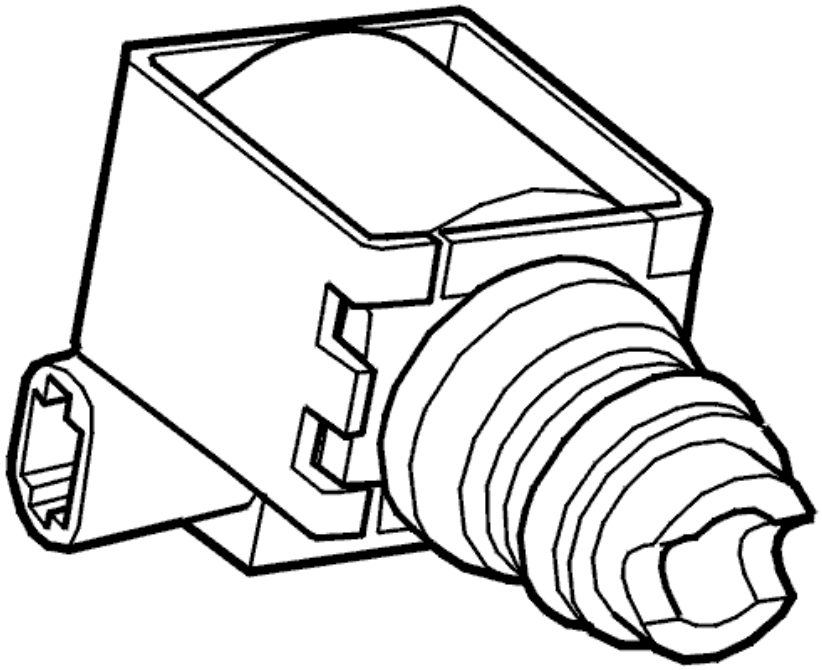

Fig. 264: Identifying Shift Solenoid S1 And S2
Courtesy of VOLVO CARS CORPORATION

Shift solenoids S2 and S1 operate in tandem to control gear-shifting. The solenoids are controlled by power stages in the transmission control module (TCM). The transmission control module (TCM) opens the power stages to activate the solenoids and sends a voltage through the circuit. Solenoid S2 is activated in 1st and 2nd gears. Diagnostic trouble code (DTC) TCM-0007 is stored if the control module registers that the signal in the circuit is too high when the solenoid should not be activated.

Substitute Value

- The control module "Limp Home" program has been initiated.

Possible Source

- Short-circuit to supply voltage in the signal cable.

Fault symptom[s]

- General orange warning lamp lit.
- Malfunction indicator lamp (MIL) lit.
- No lock-up function.
- Harsh gear shifting.

- No shifting.

HINT: Harsh shifting - due to disabled line pressure solenoid STH control. This results in constant maximum line pressure and leads to harsher shifting and gear engagement.

HINT: No shifting -because the transmission control module (TCM) prevents activation of the solenoids. This stops gear-shifting.

SIGNAL TOO HIGH

CHECKS

CHECKING THE TEMPERATURE SENSOR

HINT: In some cases, the diagnostic trouble code (DTC) may be caused by a defective oil temperature sensor. Check the function of the oil temperature sensor first.

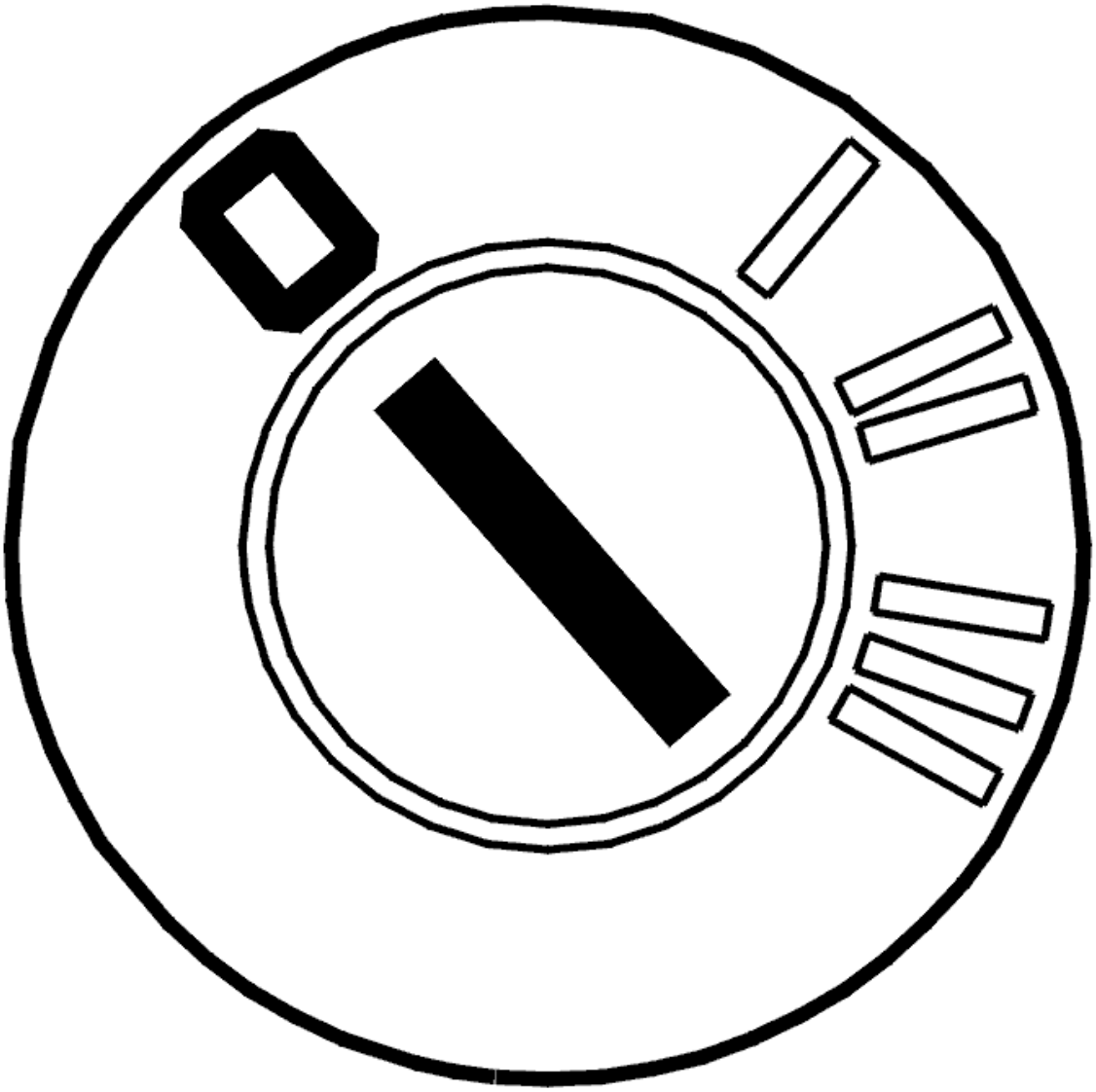

Fig. 265: Identifying Ignition OFF
Courtesy of VOLVO CARS CORPORATION

- Ignition off
- Read off the oil temperature.

  Check that the function of the temperature sensor is OK. Test drive the car to increase the temperature of the transmission fluid. Read off the temperature again. Check that the temperature has increased.

  HINT: If the temperature is outside its permitted range, fault-trace the temperature sensor.

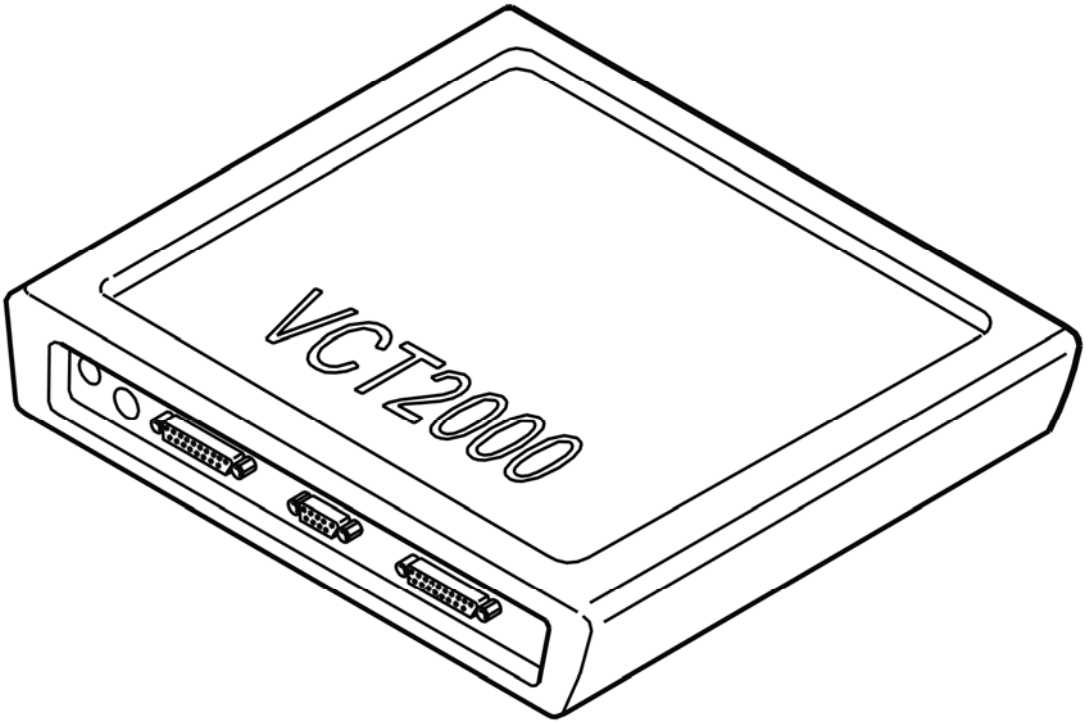

Fig. 266: Identifying VCT2000 Diagnostic Tool Symbol In VIDA
Courtesy of VOLVO CARS CORPORATION

Is the oil temperature within its permitted range?

- **YES**

  Refer to **CHECKING SHIFT SOLENOID S2**

- **NO**

  Refer to **SIGNAL TOO HIGH**

CHECKING SHIFT SOLENOID S2

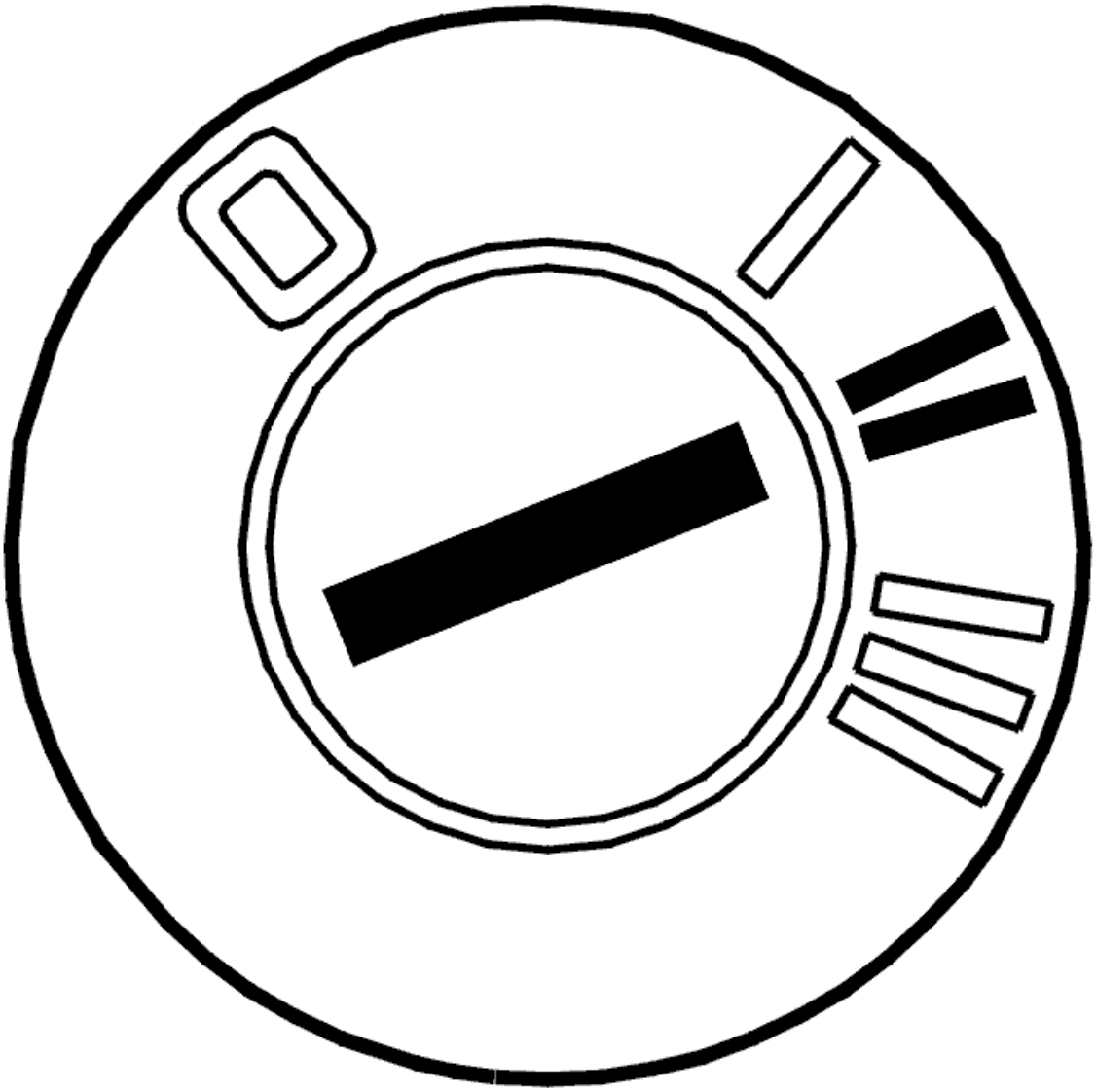

Fig. 267: Identifying Ignition ON
Courtesy of VOLVO CARS CORPORATION

- Ignition on
- Gear selector in position P
- Activate solenoid S2.

The value must change between OFF and ON.

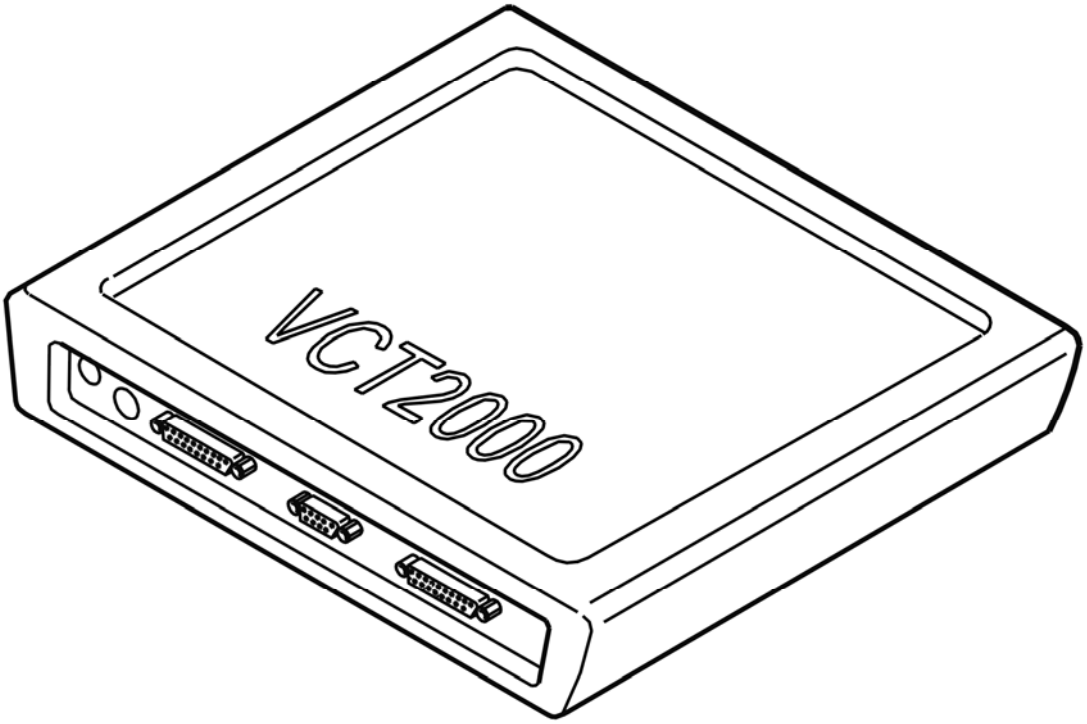

Fig. 268: Identifying VCT2000 Diagnostic Tool Symbol In VIDA
Courtesy of VOLVO CARS CORPORATION

Does the value change?

- **YES**

  Refer to **INTERMITTENT FAULT**

- **NO**

  Refer to **CHECKING THE WIRING**

CHECKING THE WIRING

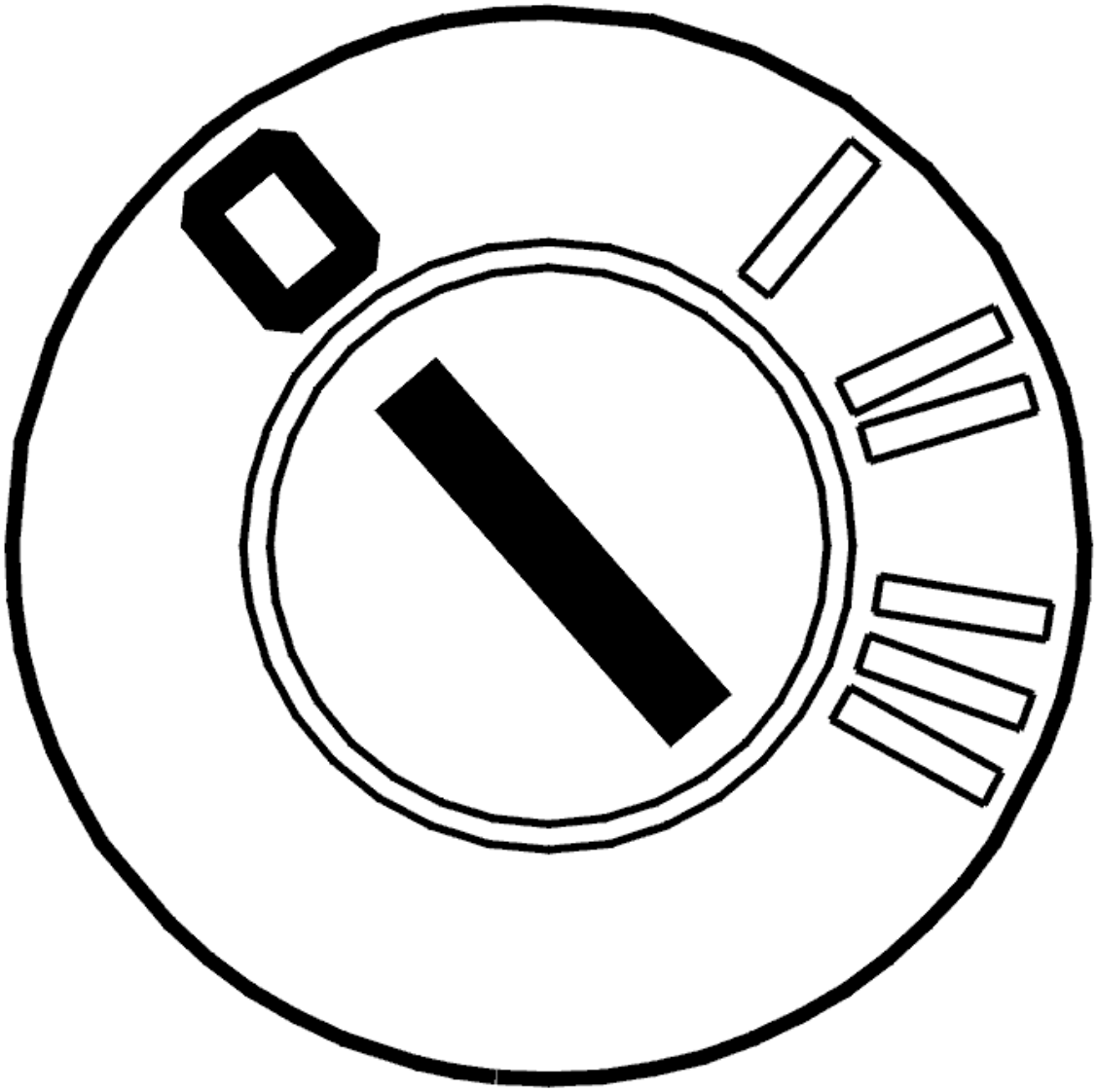

Fig. 269: Identifying Ignition OFF
Courtesy of VOLVO CARS CORPORATION

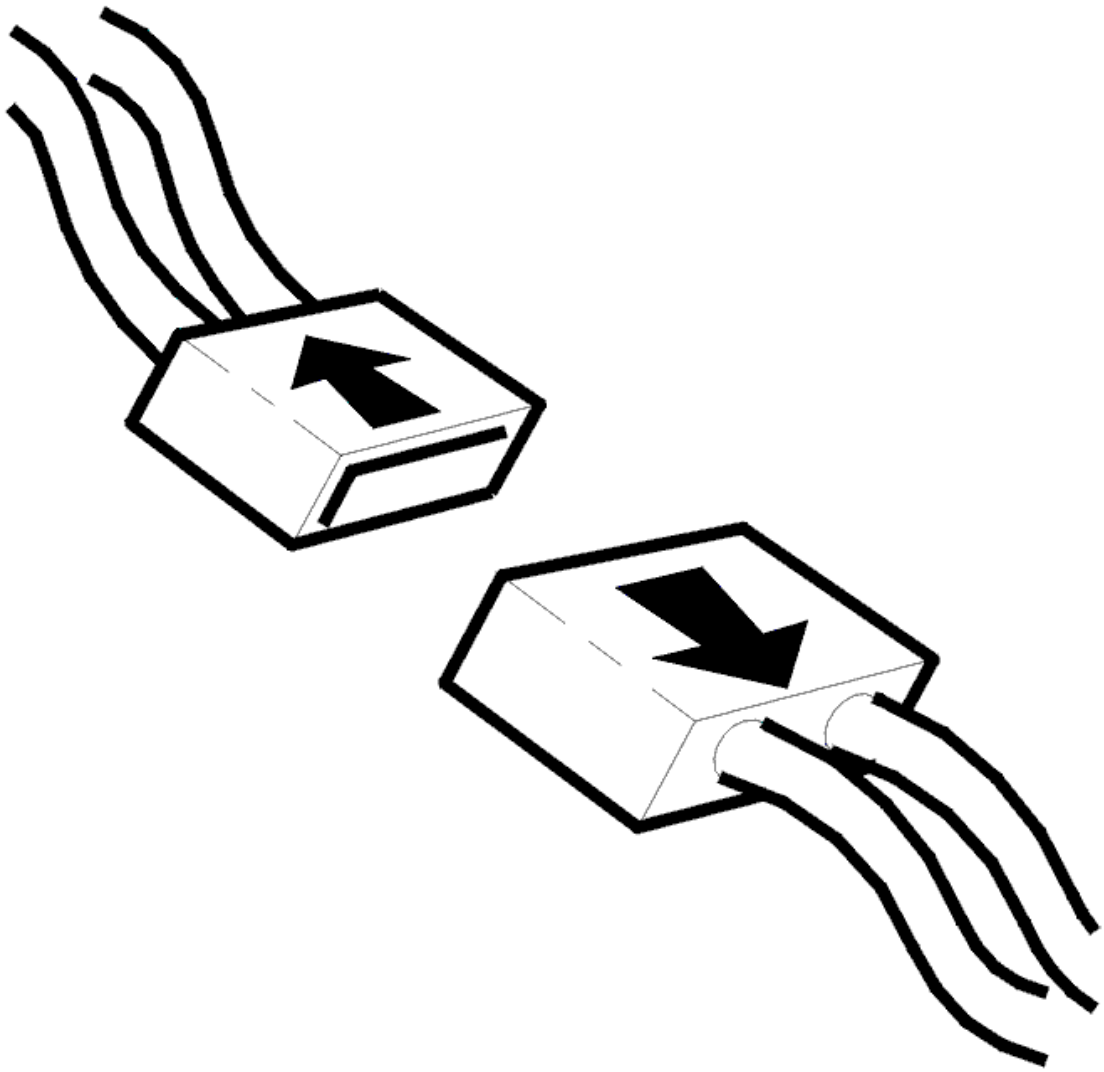

Fig. 270: Identifying Connector(s) Disconnected
Courtesy of VOLVO CARS CORPORATION

- Ignition off
- Disconnect the transmission connector
- Connect adapter see **9511505** and breakout box see **9813190** to the transmission connector (control module side).

  Check the cable between control module terminal #A68 (#B8) and transmission connector terminal #B (#A2) (control module side). Check for a short-circuit to supply voltage.

  Check the cable between control module terminal #53 (#A53) and transmission connector terminal #E (#A5) (control module side). Check for a short-circuit to supply voltage.

  HINT: Also check all the other power supply cables in the circuit.

Remedy as necessary.

Other information:

- To connect the breakout box, see **CONNECTING THE BREAKOUT BOX**
- To connect the breakout box to the transmission connector, see **CONNECTING THE BREAKOUT BOX, GM AUTOMATIC TRANSMISSIONS**
- For information about signals, see **SIGNAL SPECIFICATION**
- see **CHECKING WIRING AND TERMINALS**

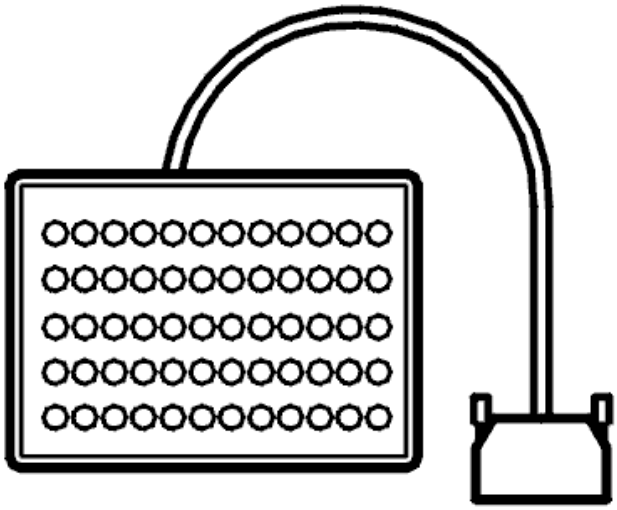

Fig. 271: Identifying Breakout Box
Courtesy of VOLVO CARS CORPORATION

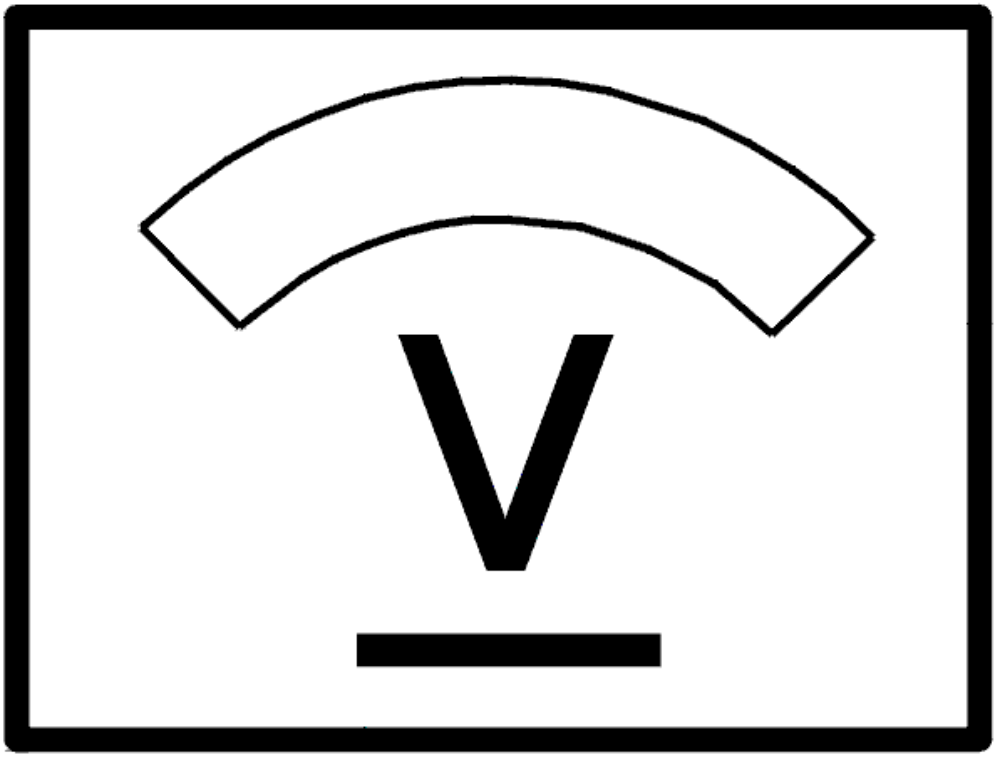

Fig. 272: Identifying Voltage Display
Courtesy of VOLVO CARS CORPORATION

Was a fault detected?

- **YES**

  Refer to **VERIFICATION**

- **NO**

  Refer to **CHECKING THE CONTROL MODULE**

CHECKING THE CONTROL MODULE

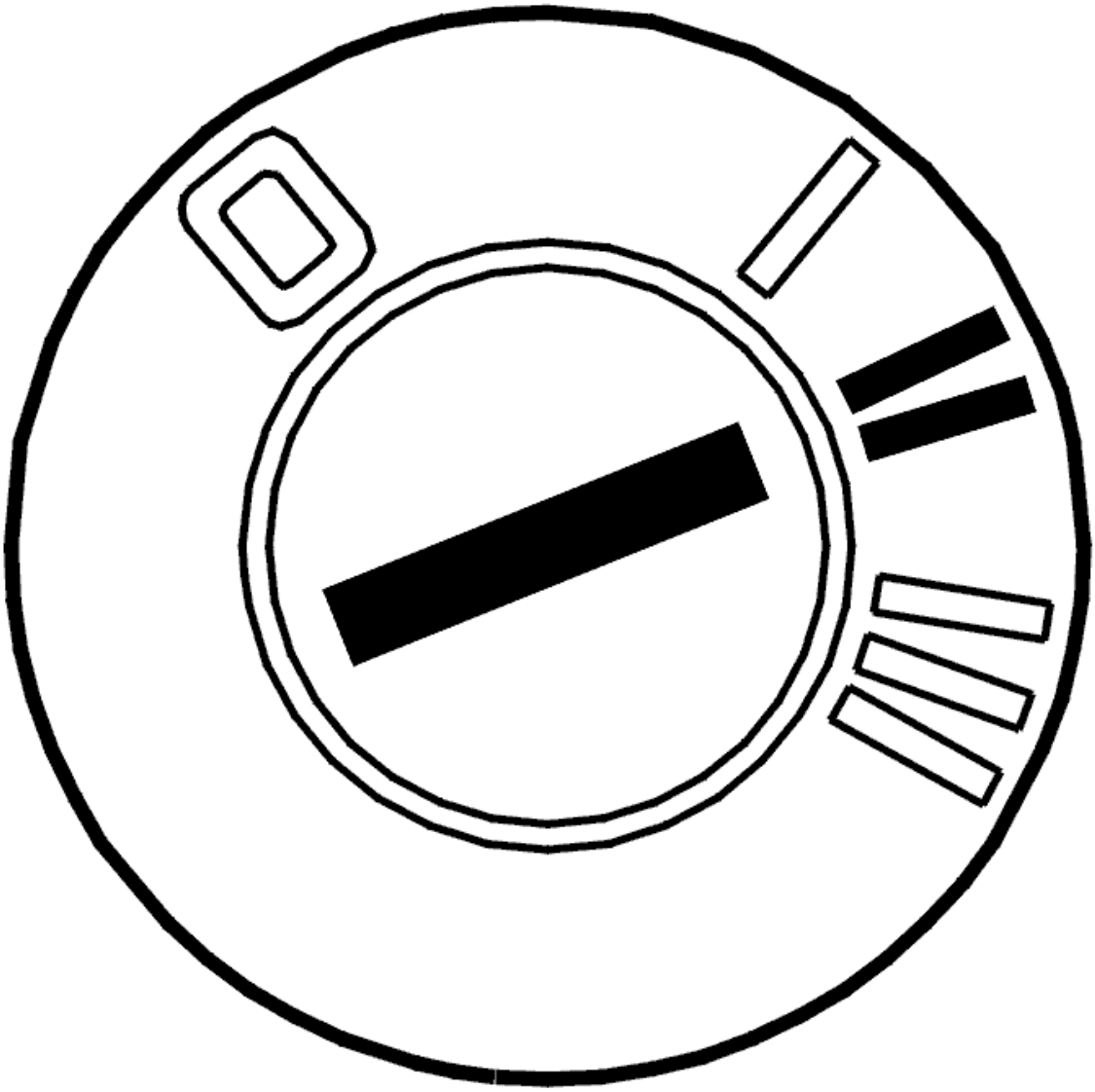

Fig. 273: Identifying Ignition ON
Courtesy of VOLVO CARS CORPORATION

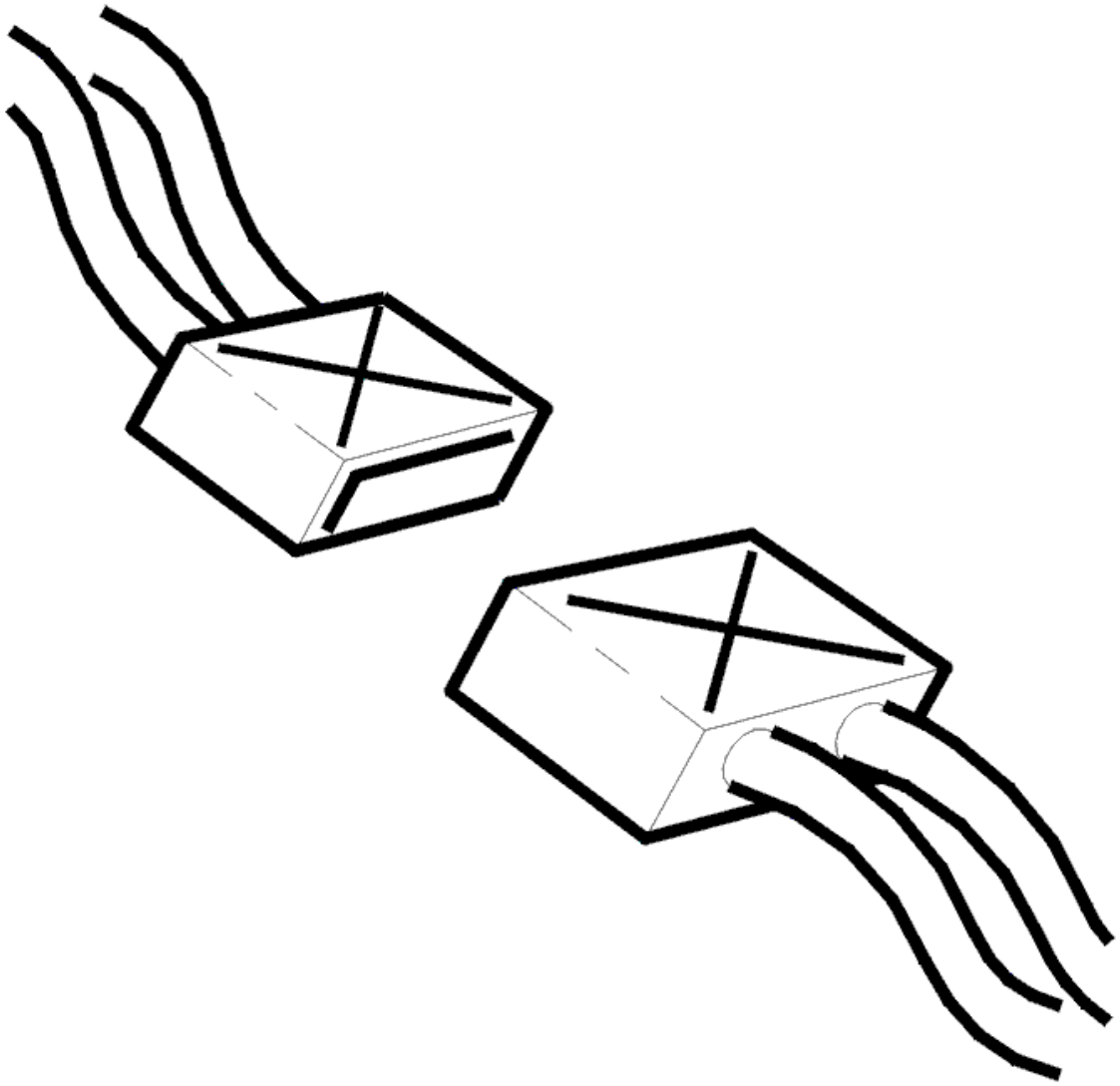

Fig. 274: Identifying Connectors
Courtesy of VOLVO CARS CORPORATION

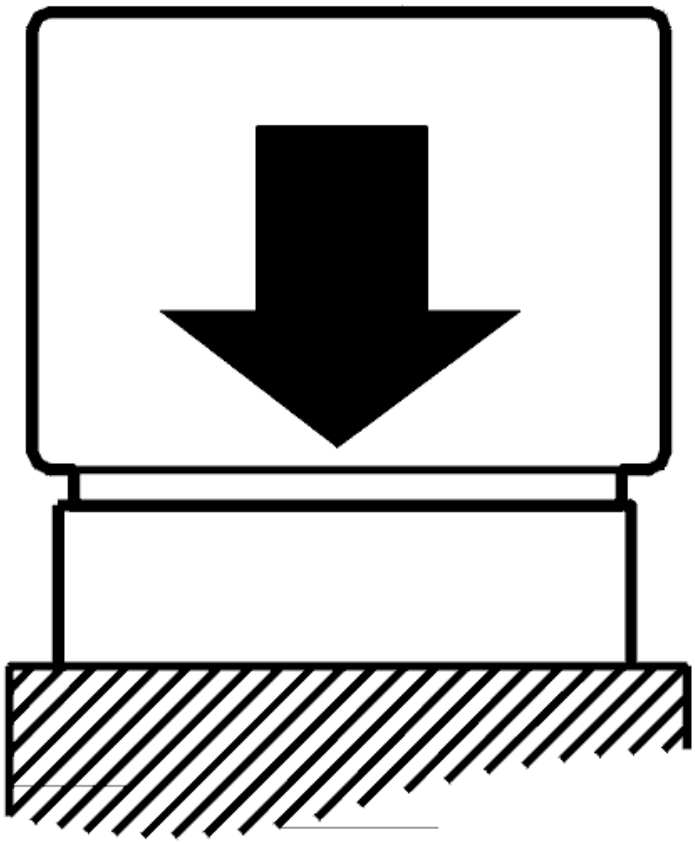

Fig. 275: Identifying Connecting Control Module
Courtesy of VOLVO CARS CORPORATION

- Ignition off
- The breakout box connected
- Transmission control module (TCM) connected.
- Transmission connector disconnected
- Ignition on
- Gear selector in position P
- Activate and read off the status of solenoid S2.

  Connect a voltmeter between terminals #B8 (#A68) and #A53 (#A53) while activating solenoid S2. The voltage must be approximately 0 V when the solenoid is not activated (OFF) and above 9 V when the solenoid is activated (ON).

The control module is OK if the voltage changes as above when the solenoid is activated/not activated. The control module is defective if the voltage does not change.

NOTE: **If the system voltage is too low this may result in a low voltage value when solenoid S2 is activated. Check the system voltage and remedy as necessary.**

NOTE: **When removing the transmission connector, the control module may store diagnostic trouble codes (DTCs) for the gear-shift position sensor, the shift solenoids and the temperature sensor etc.**

Other information:

- To disconnect the transmission connector, see **CONNECTING THE BREAKOUT BOX, GM AUTOMATIC TRANSMISSIONS**
- To replace the transmission control module (TCM), see **TRANSMISSION CONTROL MODULE (TCM), REPLACING**
- For information about signals, see **SIGNAL SPECIFICATION** .

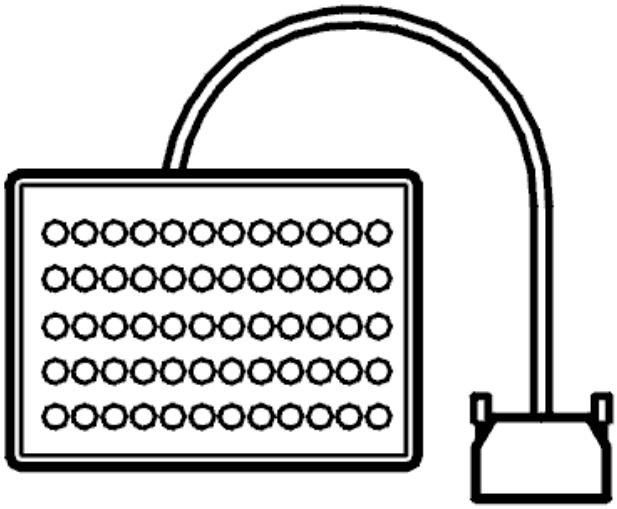

Fig. 276: Identifying Breakout Box
Courtesy of VOLVO CARS CORPORATION

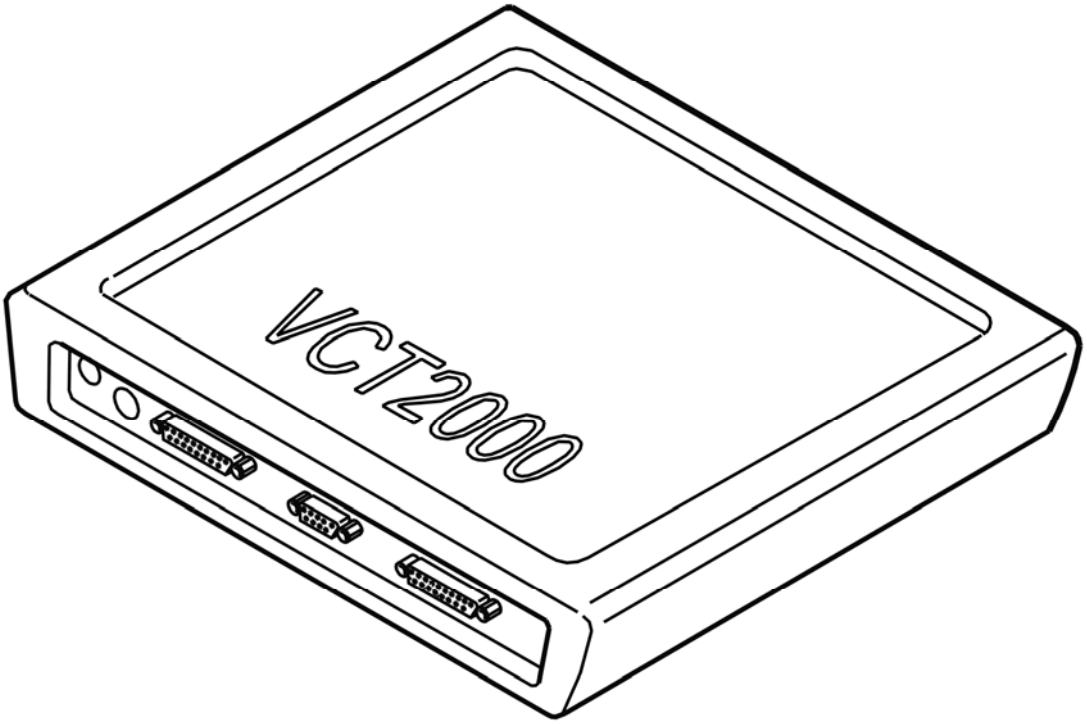

Fig. 277: Identifying VCT2000 Diagnostic Tool Symbol In VIDA
Courtesy of VOLVO CARS CORPORATION

Was the control module defective?

- **YES**

  Refer to **VERIFICATION**

- **NO**

  Refer to **CHECKING THE WIRING AND COMPONENT**

CHECKING THE WIRING AND COMPONENT

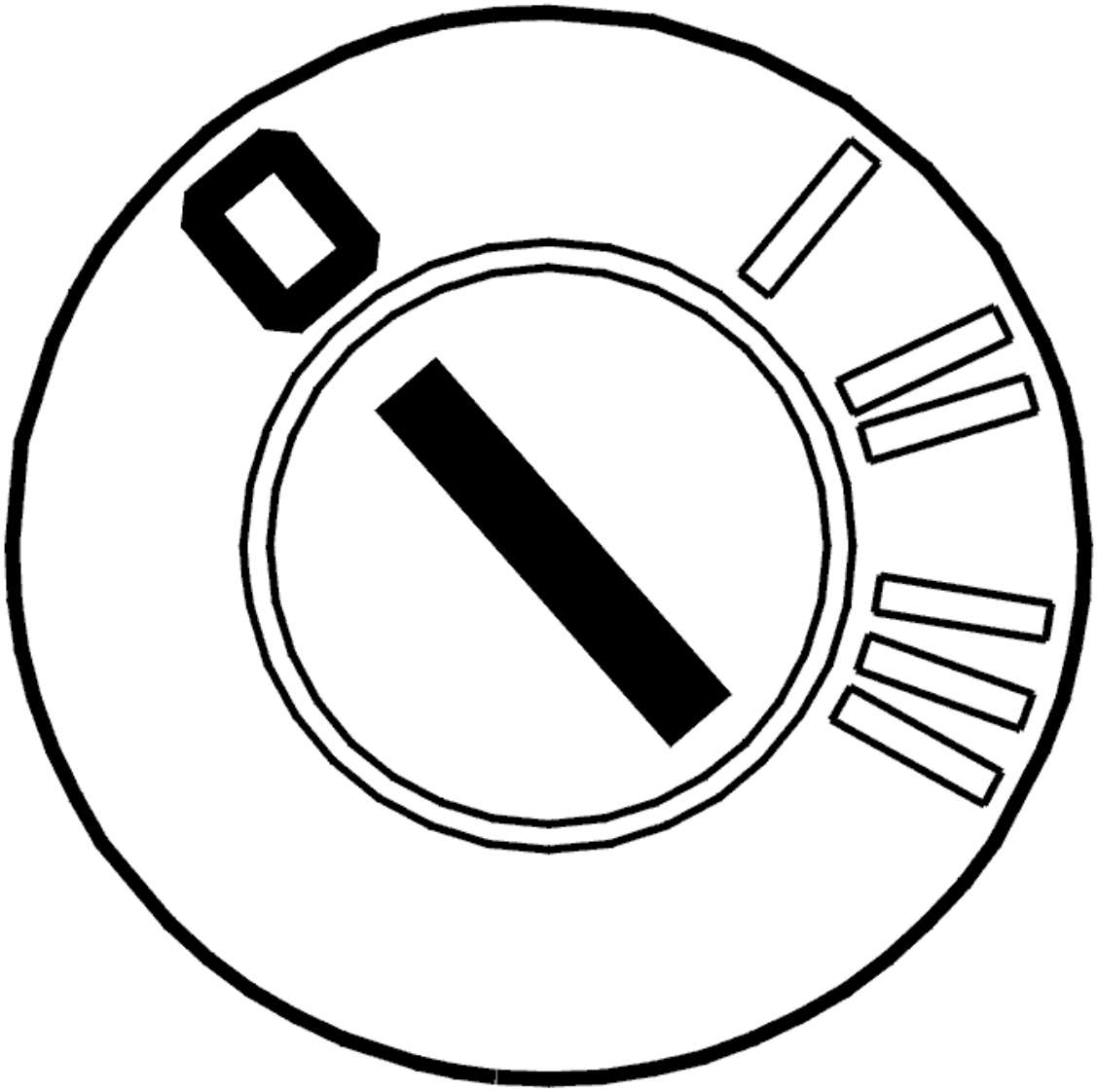

Fig. 278: Identifying Ignition OFF
Courtesy of VOLVO CARS CORPORATION

- Ignition off
- Open the transmission control system.

  Check the cable between transmission connector (transmission side) terminal #B (#A2) and solenoid S2 terminals #A and #E (#A5) and solenoid S2 terminal #B. Check for a short-circuit to supply voltage.

  Check all the cables in the wiring harness from the transmission connector to the transmission components. Check for a short-circuit to each other.

  HINT: Check solenoid S2 by measuring the solenoid resistance between terminals #A and #B. The resistance must be between 18 and 25 ohms.

  Remedy as necessary.

Other information:

- To connect the breakout box to the transmission connector, see **CONNECTING THE BREAKOUT BOX, GM AUTOMATIC TRANSMISSIONS**
- To open the transmission control system, For removal, see **SIDE COVER TRANSMISSION, REMOVING** To install, see
- To replace solenoid S2, see **SOLENOID SHIFTING 2-3, REPLACING**
- To replace the cable harness, see **TEMPERATURE SENSOR FLUID, TRANSAXLE, (TFT)**
- For information about signals, see **SIGNAL SPECIFICATION**
- see **CHECKING WIRING AND TERMINALS**

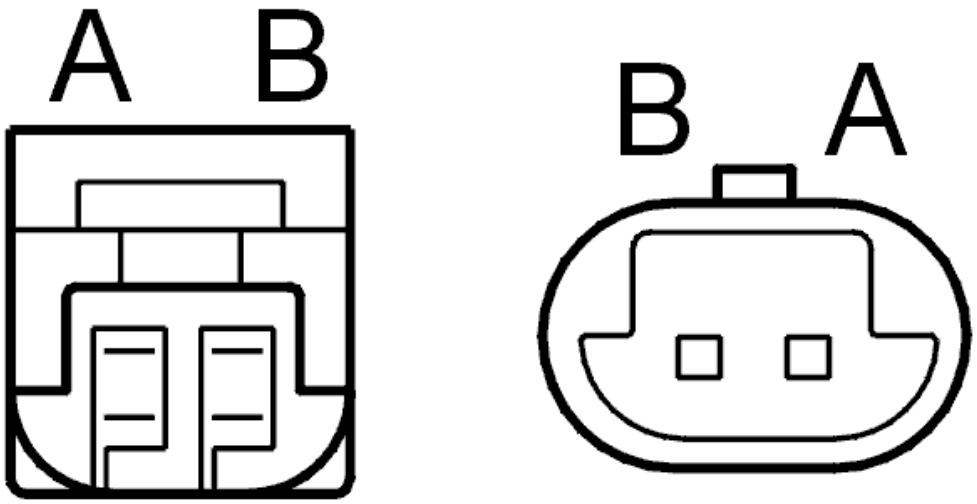

Fig. 279: Identifying Transmission Connector Terminals
Courtesy of VOLVO CARS CORPORATION

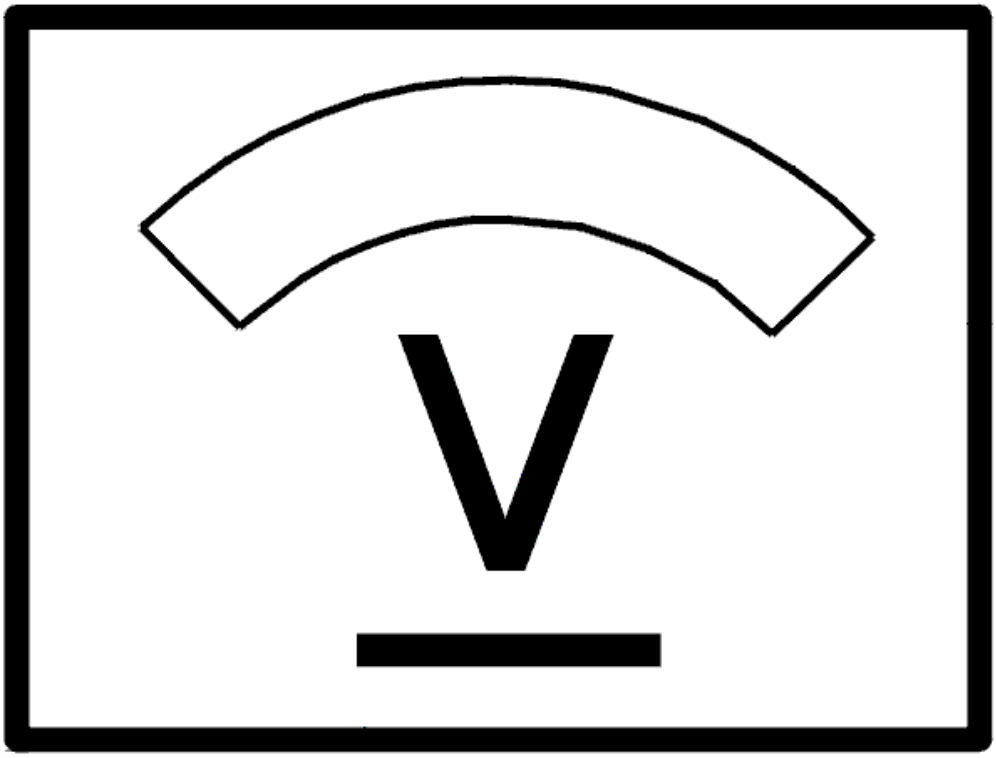

Fig. 280: Identifying Voltage Display
Courtesy of VOLVO CARS CORPORATION

- **Continue**

  Refer to **RESETTING THE ADAPTATION**

INTERMITTENT FAULT

Check the cable between control module terminal #A68 (#B8) and transmission connector terminal #B (#A2) (control module side). Check for an intermittent short-circuit to supply voltage.

Check the cable between control module terminal #53 (#A53) and transmission connector terminal #E (#A5) (control module side). Check for an intermittent short-circuit to supply voltage.

Remedy as necessary.

Other information

- To connect the breakout box to the control module, see **CONNECTING THE BREAKOUT BOX**
- To connect the breakout box to the transmission connector, see **CONNECTING THE BREAKOUT BOX, GM AUTOMATIC TRANSMISSIONS**
- To replace solenoid S2, see **SOLENOID SHIFTING 2-3, REPLACING**
- For information about signals, see **SIGNAL SPECIFICATION**
- see **CHECKING WIRING AND TERMINALS**

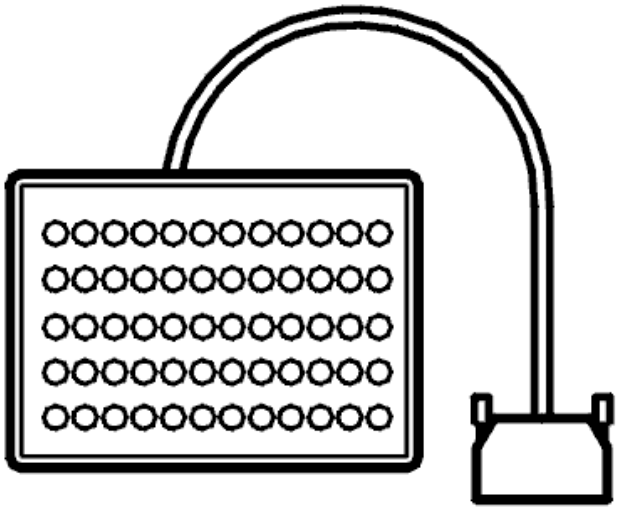

Fig. 281: Identifying Breakout Box
Courtesy of VOLVO CARS CORPORATION

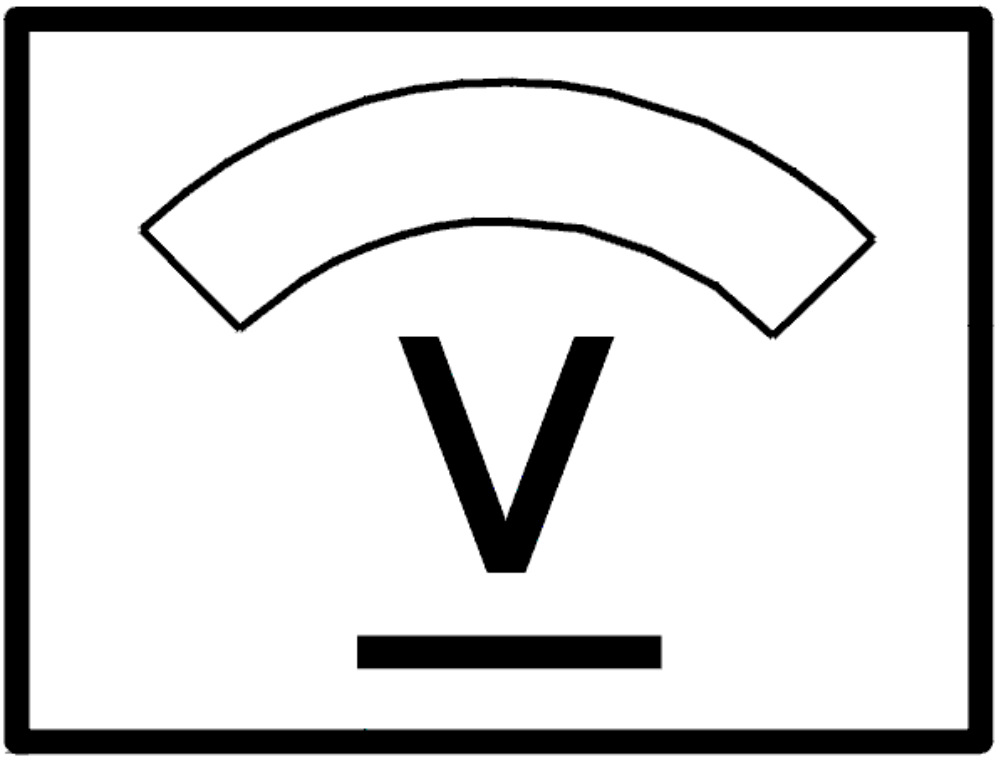

Fig. 282: Identifying Voltage Display
Courtesy of VOLVO CARS CORPORATION

- **Continue**

  Refer to **INFORMATION**

RESETTING THE ADAPTATION

RESETTING ADAPTATION AND THE COUNTER FOR "TRANSMISSION OIL CHANGE"

HINT: The transmission has torque controlled adaptive pressure control. Pressure control means that the transmission regulates the pressure itself during each gear shift. This avoids harsh gear shifting. Each gear shift is evaluated by the control module and stored in the memory. This allows for compensation for wear and tear in the transmission and clutch. It is important that the adaptation in the memory is reset after the transmission has been repaired. This is to ensure normal operation. The oil is replaced during

repair; the "Transmission oil change" counter must be reset. If the counter is not reset when the fluid is drained and replaced, there is a risk that a diagnostic trouble code (DTC) will be stored in incorrect circumstances.

NOTE: **This applies only if the transmission or one of the components in the transmission have been replaced.**

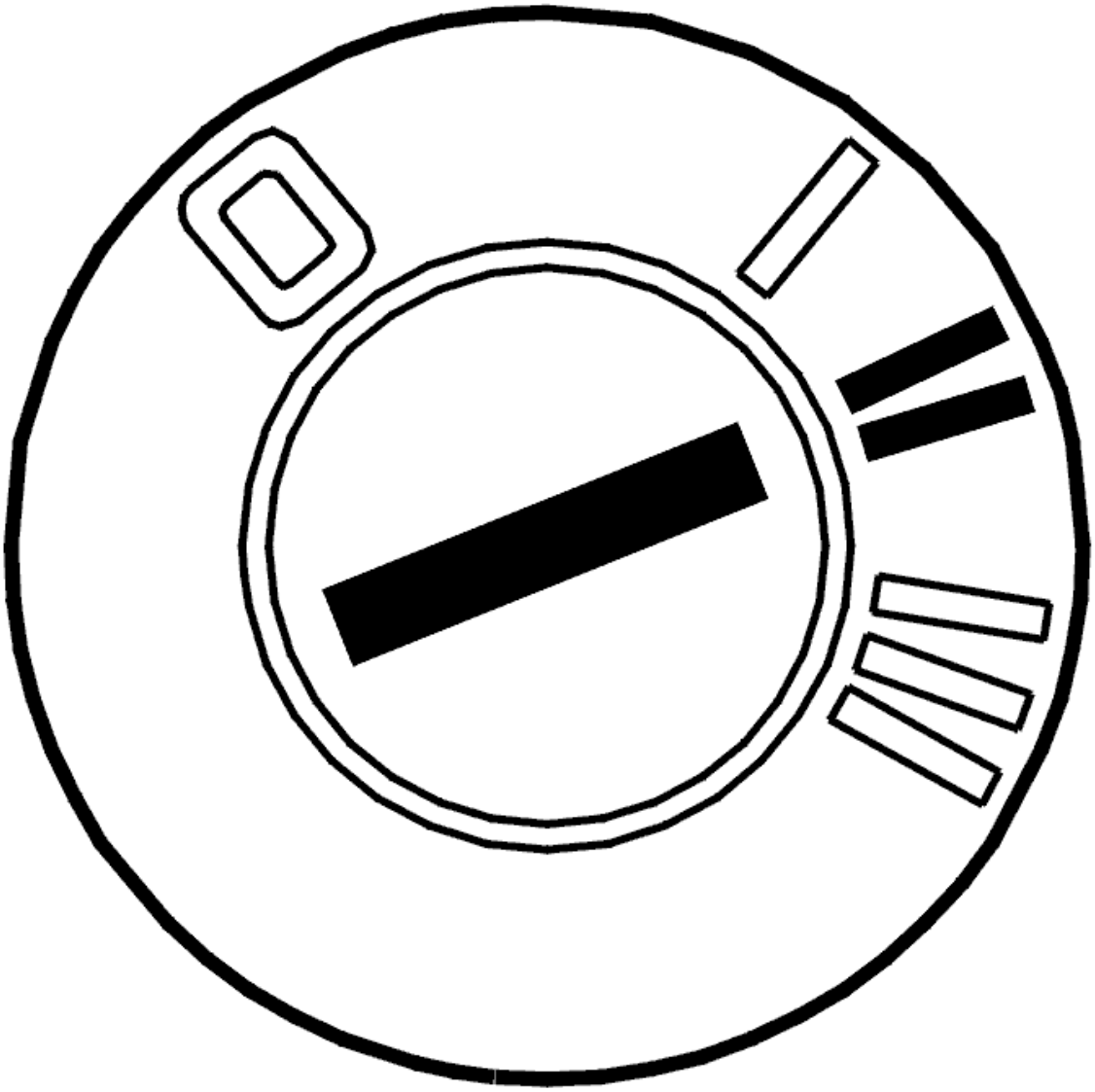

Fig. 283: Identifying Ignition ON
Courtesy of VOLVO CARS CORPORATION

- Ignition on.

  Click on the VCT2000 symbol to reset the adaptation and counter.

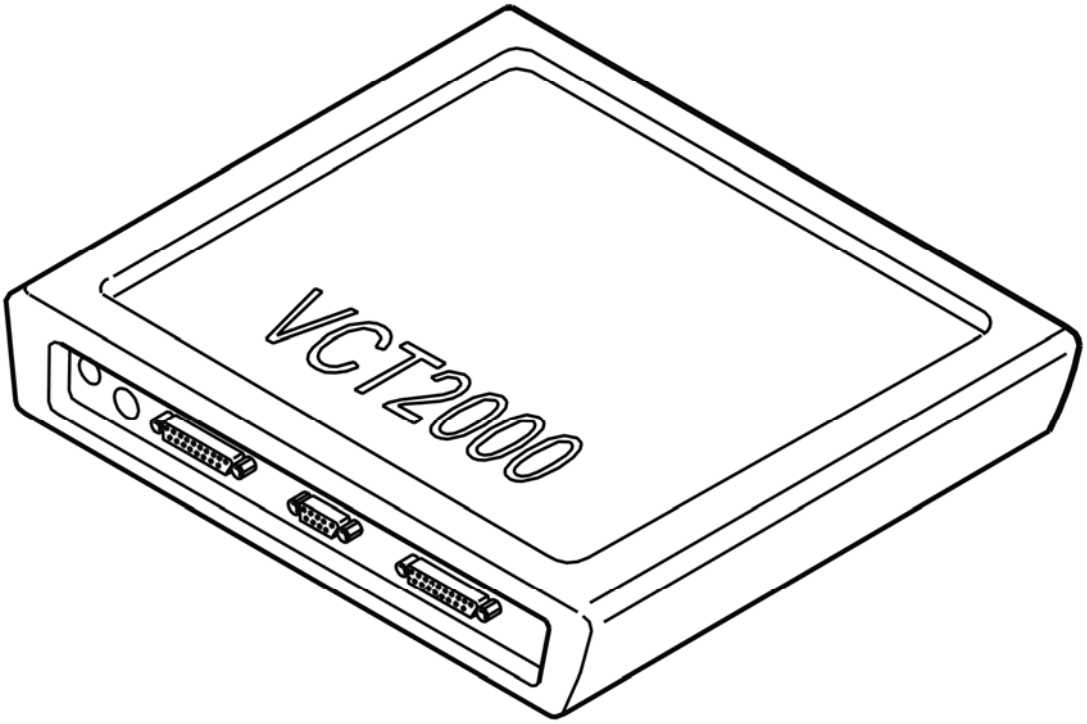

Fig. 284: Identifying VCT2000 Diagnostic Tool Symbol In VIDA
Courtesy of VOLVO CARS CORPORATION

- **Continue**

  Refer to **VERIFICATION**

VERIFICATION

VERIFICATION

HINT: After carrying out the repair, check that the fault has been remedied.

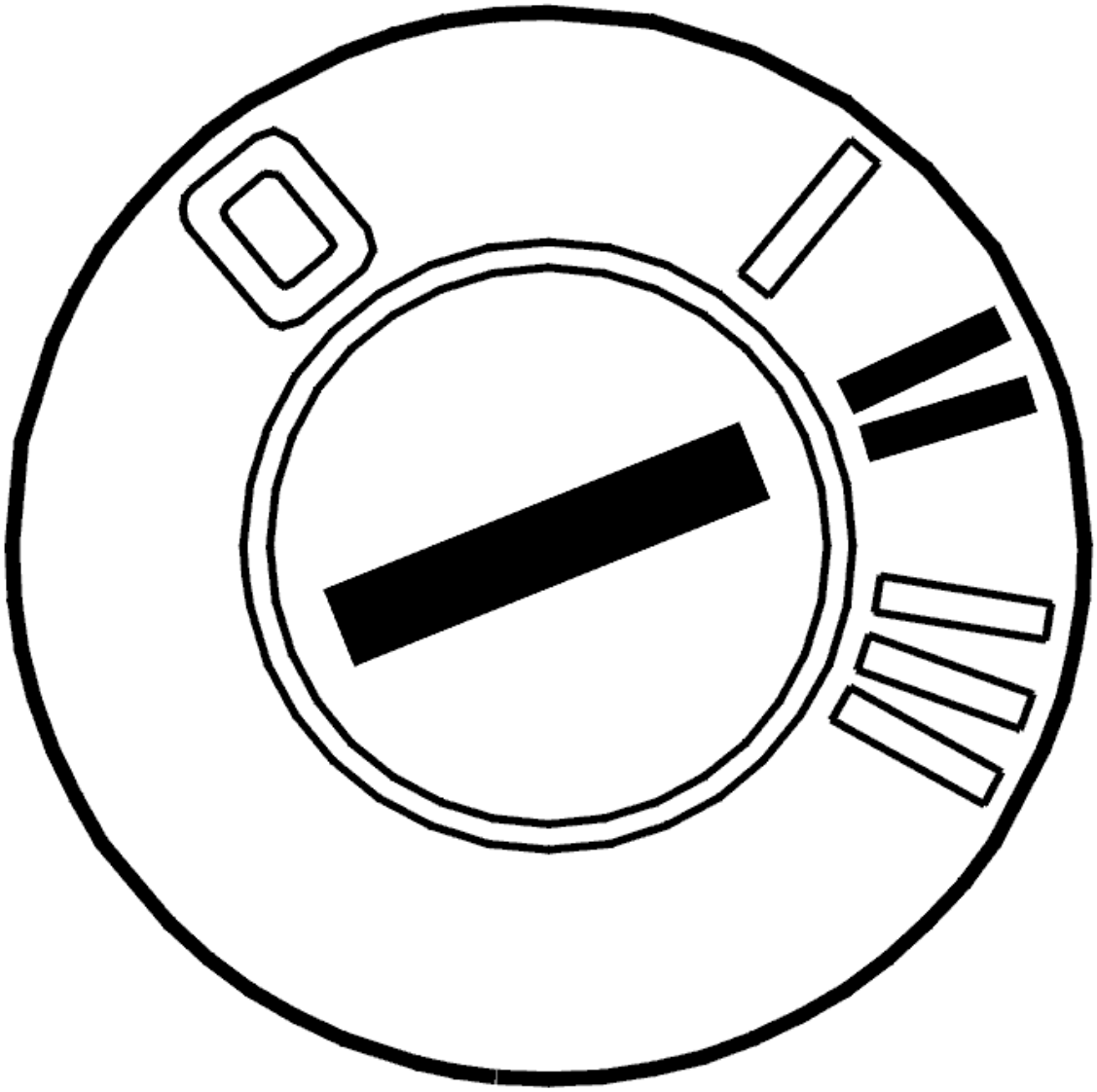

Fig. 285: Identifying Ignition ON
Courtesy of VOLVO CARS CORPORATION

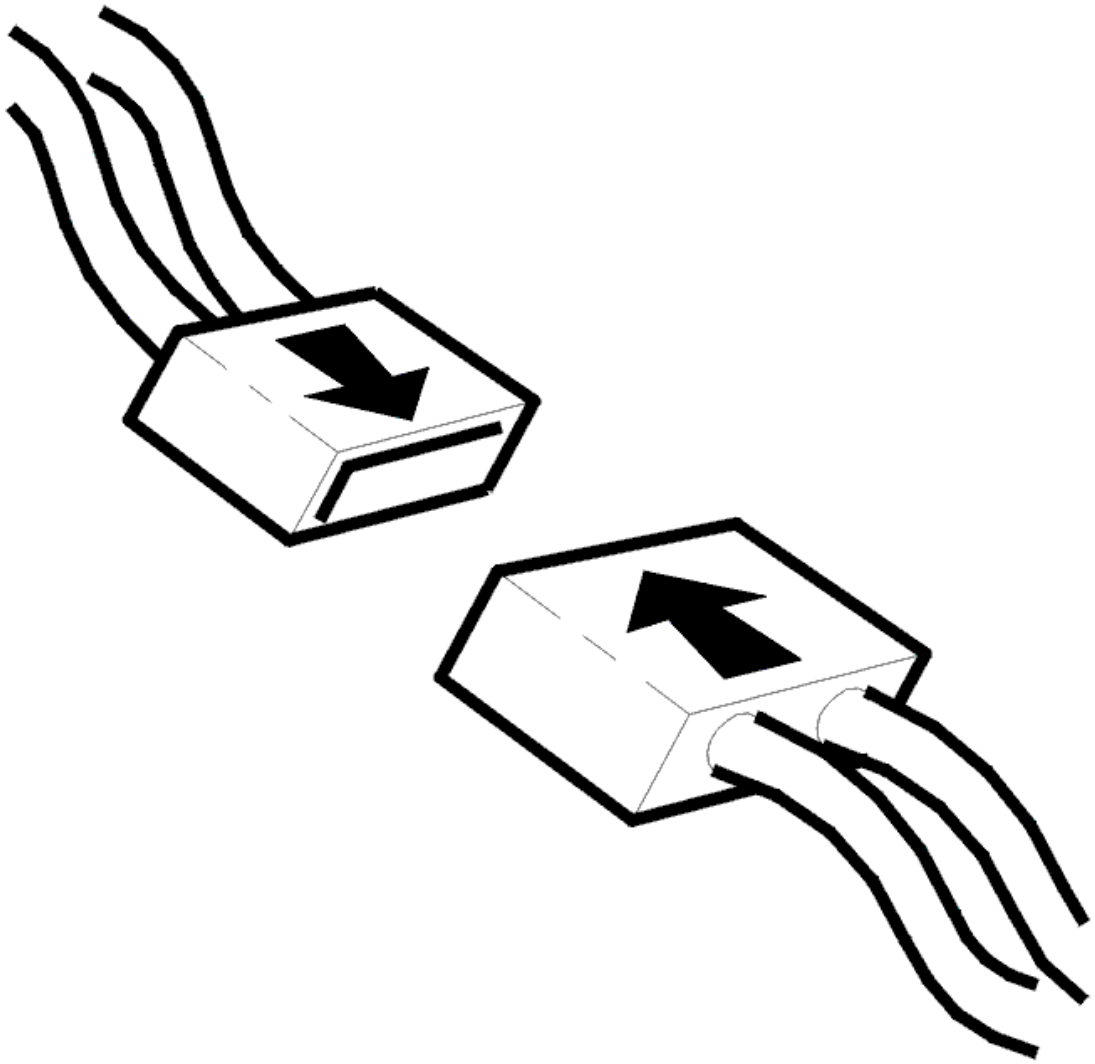

Fig. 286: Identifying Connector(s) Reinstallation
Courtesy of VOLVO CARS CORPORATION

- Ignition off.
- Wait at least 90 seconds.
- Reconnect the connectors, reinstall components etc.
- Ignition on.
- Gear selector in position P.
- Activate solenoid S2.

  The value should change between OFF and ON.

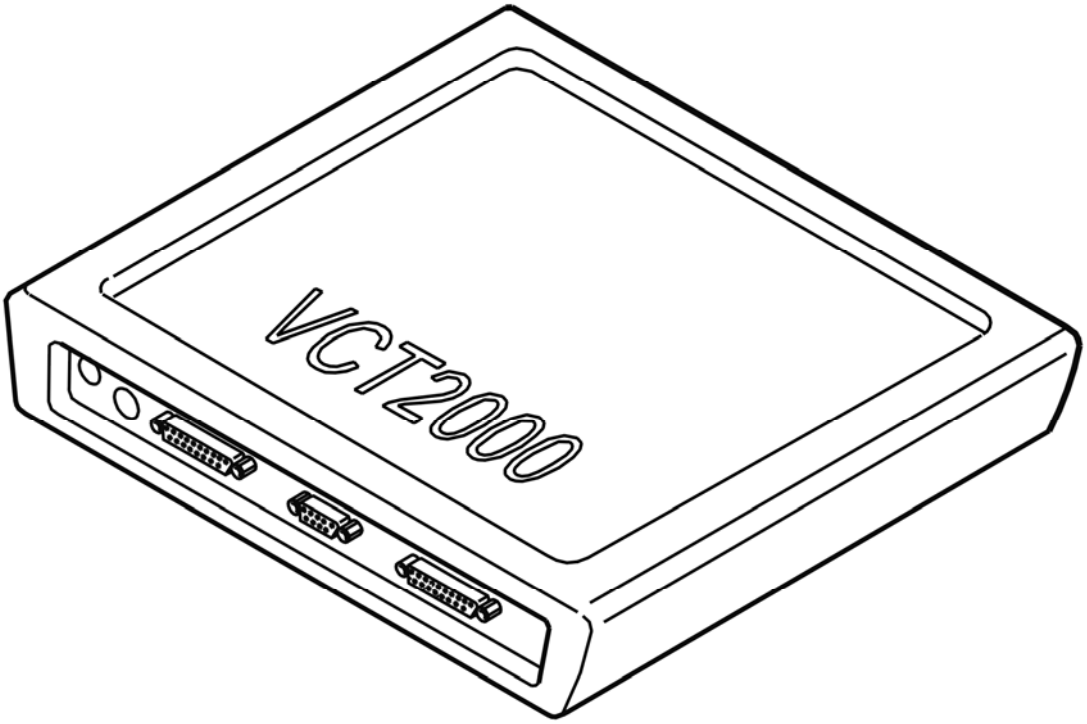

Fig. 287: Identifying VCT2000 Diagnostic Tool Symbol In VIDA
Courtesy of VOLVO CARS CORPORATION

Does the value change?

- **YES**

  VERIFIED: Troubleshooting has been completed.

- **NO**

  Refer to **INFORMATION**

INFORMATION

FAULT-TRACING INFORMATION

The fault should have been detected and remedied. As this is not the case fault-tracing has failed.

Exit fault-tracing for this diagnostic trouble code (DTC) or make another attempt.

INFORMATION

FAULT-TRACING INFORMATION

If the fault is intermittent, do not verify fault-tracing if the fault does not recur.

It is possible to view the information again, or leave fault-tracing for this diagnostic trouble code (DTC).

SIGNAL TOO HIGH

CHECKING THE FUNCTION OF THE OIL TEMPERATURE SENSOR

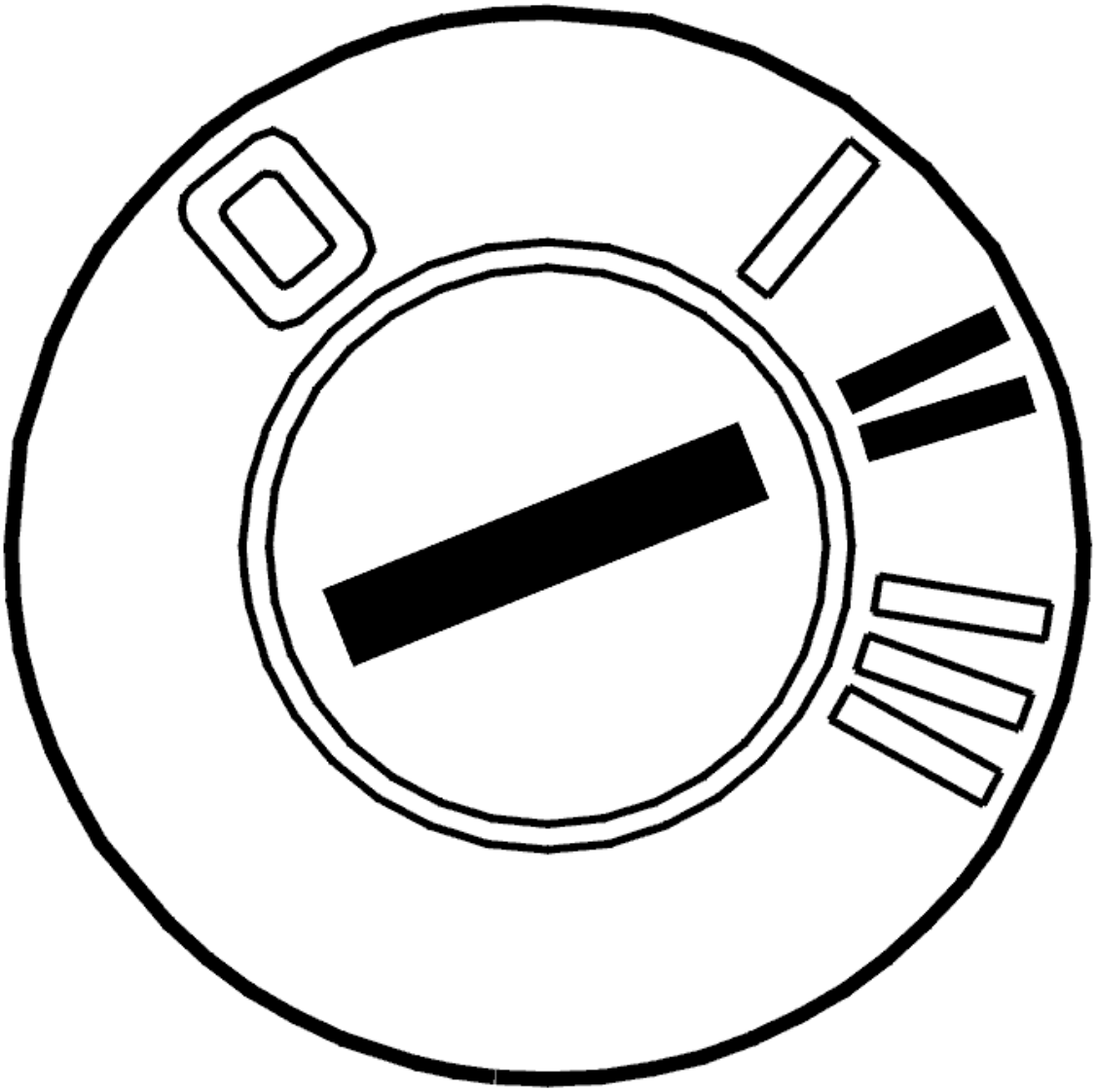

Fig. 288: Identifying Ignition ON
Courtesy of VOLVO CARS CORPORATION

- Ignition on
- Read off the oil temperature.

  Check that the temperature is within its permitted range.

Compare with the transmission temperature.

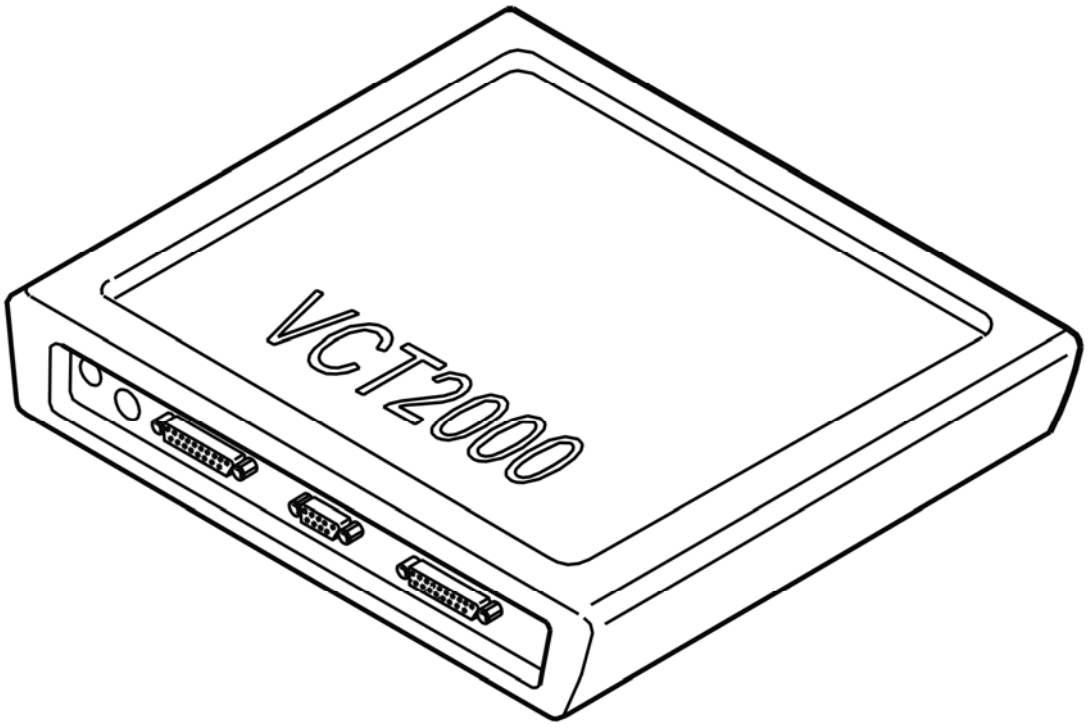

Fig. 289: Identifying VCT2000 Diagnostic Tool Symbol In VIDA
Courtesy of VOLVO CARS CORPORATION

Is the transmission temperature within its permitted range?

- **YES**

  Refer to **INTERMITTENT FAULT**

- **NO**

  Refer to **CHECKING TRANSMISSION FLUID TEMPERATURE SENSOR**

CHECKING TRANSMISSION FLUID TEMPERATURE SENSOR

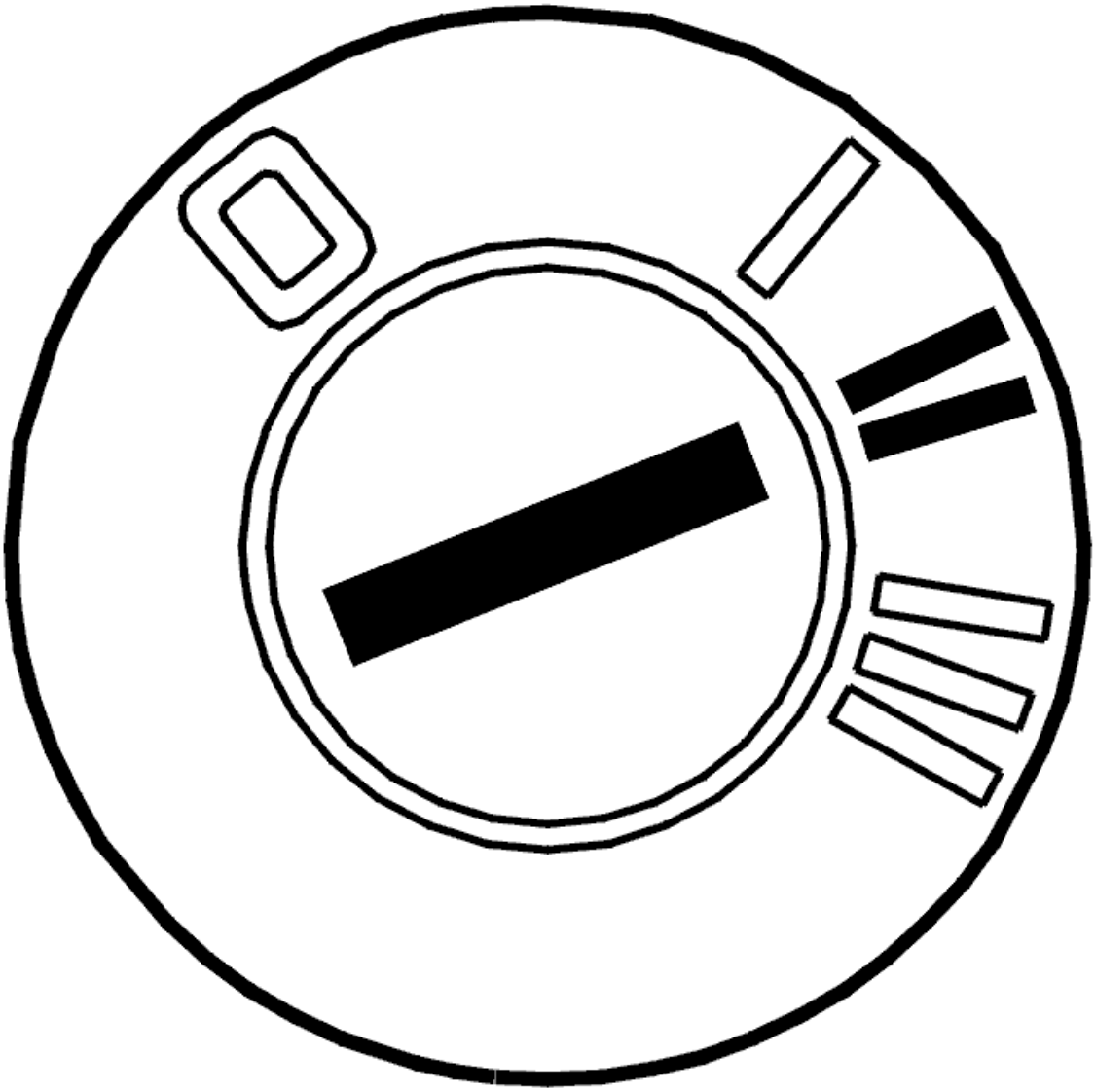

Fig. 290: Identifying Ignition ON
Courtesy of VOLVO CARS CORPORATION

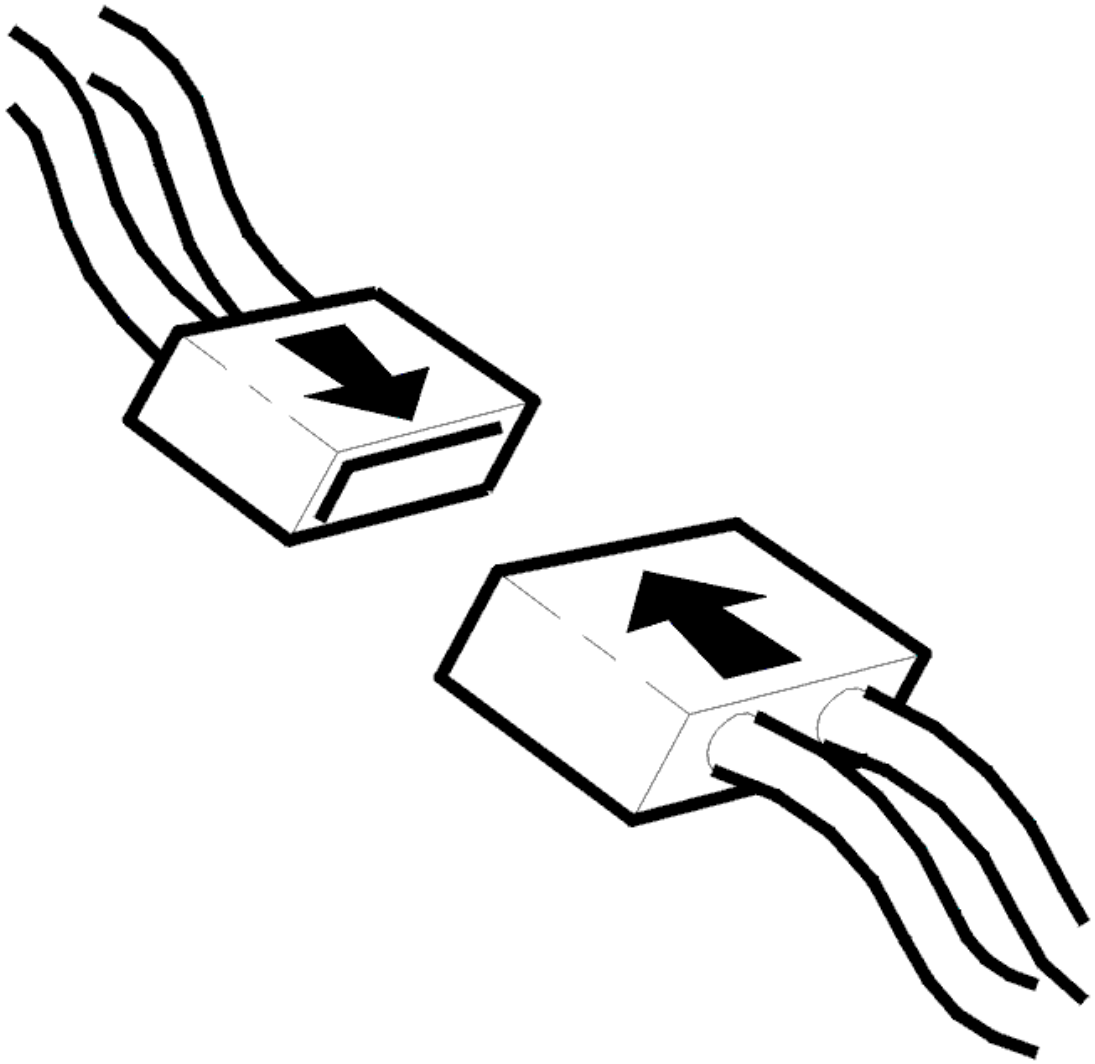

Fig. 291: Identifying Connector(s) Reinstallation
Courtesy of VOLVO CARS CORPORATION

- Ignition off
- Check the control module and transmission connectors. Check for contact resistance and oxidation
- Reconnect the control module and transmission connectors
- Ignition on
- Read off the oil temperature.

  Check that the temperature is within its permitted range.

  Compare with the transmission temperature.

  If the transmission temperature is within its permitted range, the cause of the fault was contact resistance or oxidation in the control module or transmission connector.

Other information

- To disconnect the control module, see **TRANSMISSION CONTROL MODULE (TCM), REPLACING**
- To connect the breakout box to the transmission connector, see **CONNECTING THE BREAKOUT BOX, GM AUTOMATIC TRANSMISSIONS**
- see **CHECKING WIRING AND TERMINALS**

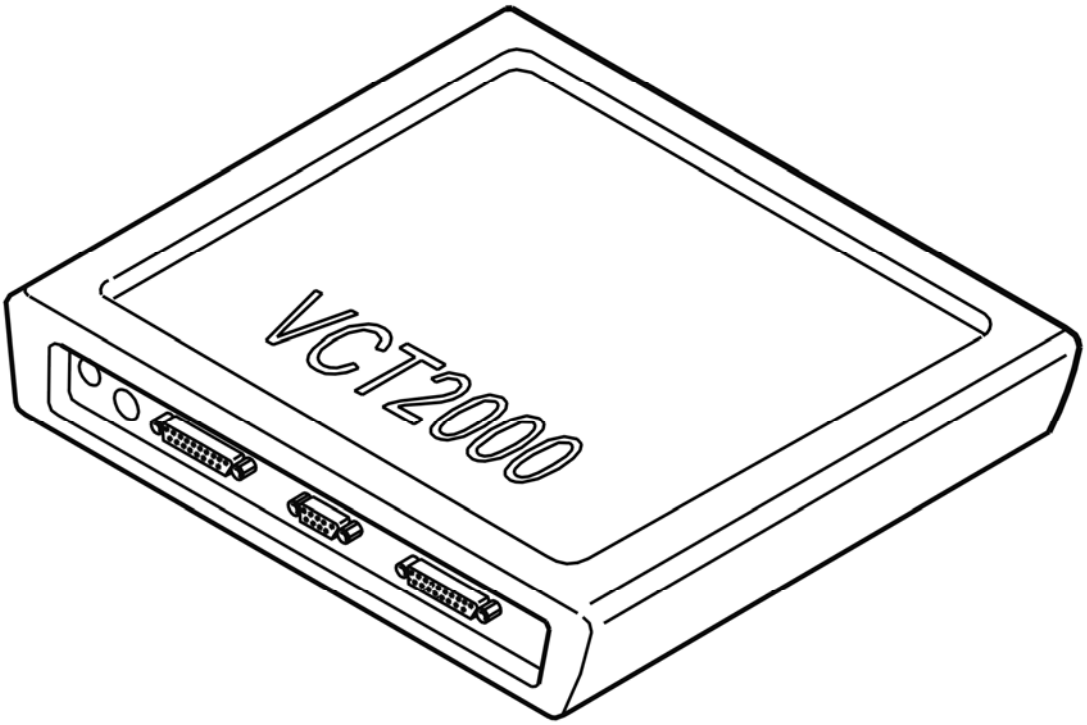

Fig. 292: Identifying VCT2000 Diagnostic Tool Symbol In VIDA
Courtesy of VOLVO CARS CORPORATION

Was the transmission temperature within its permitted range?

- **YES**

  OKAY: Troubleshooting has been completed.

- **NO**

  Refer to **CHECKING THE TEMPERATURE SENSOR**

CHECKING THE TEMPERATURE SENSOR

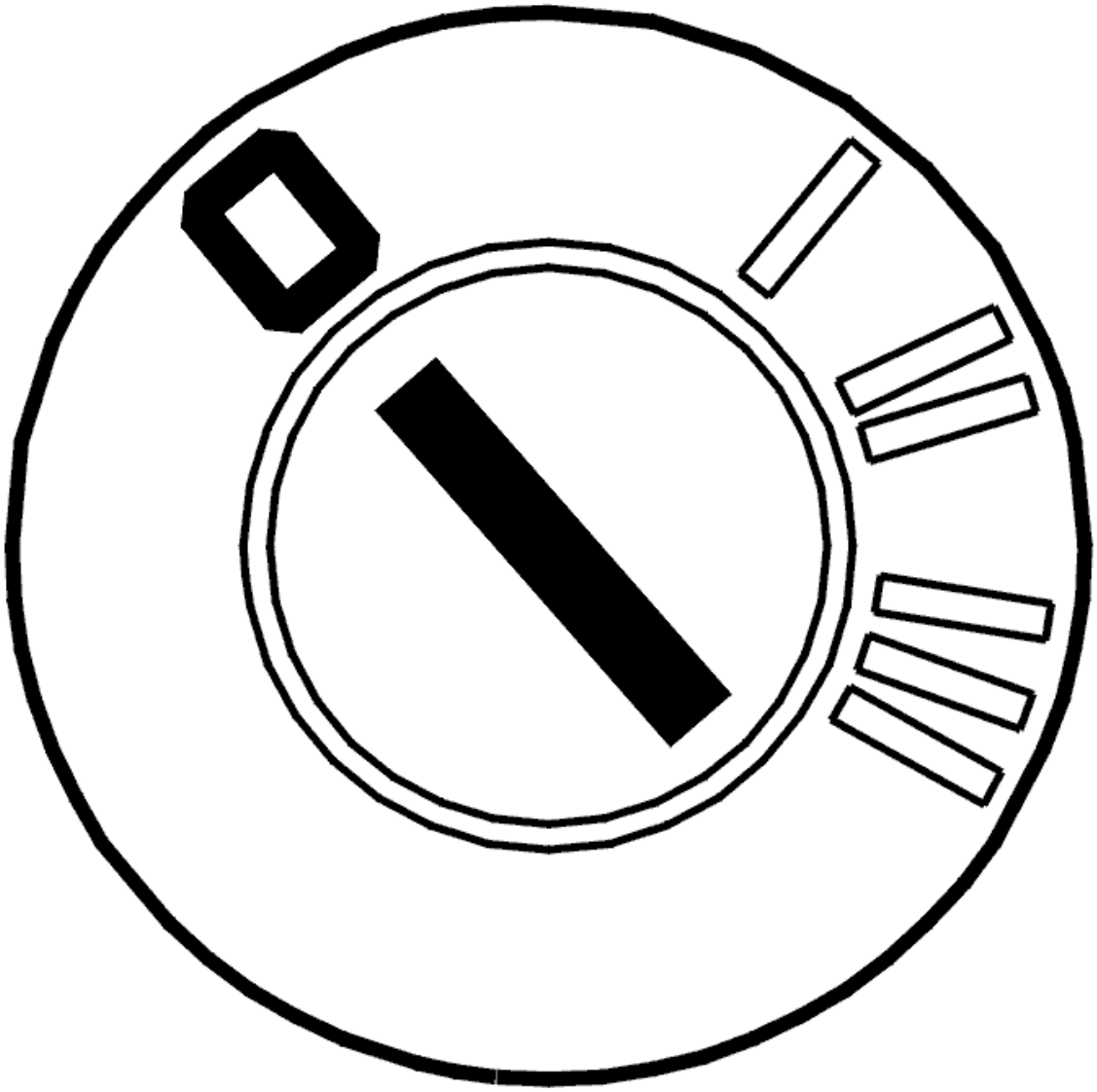

Fig. 293: Identifying Ignition OFF
Courtesy of VOLVO CARS CORPORATION

- Ignition off
- Disconnect the transmission connector
- Connect adapter see **9511505** and see **9813190** to the transmission connector (transmission side)
- Connect an ohmmeter between terminals #L (terminal #A11) and #M (terminal #A12).

  The resistance must be 3.4-3.6 kohms at 20 °C.

  Other information

  - To connect the breakout box to the transmission connector, see **CONNECTING THE BREAKOUT BOX, GM AUTOMATIC TRANSMISSIONS**
  - For information about signals, see **SIGNAL SPECIFICATION**

- For information about the resistance values, see **COMPONENT RESISTANCE VALUES**
- For information about the resistance values, see **COMPONENT RESISTANCE VALUES** .

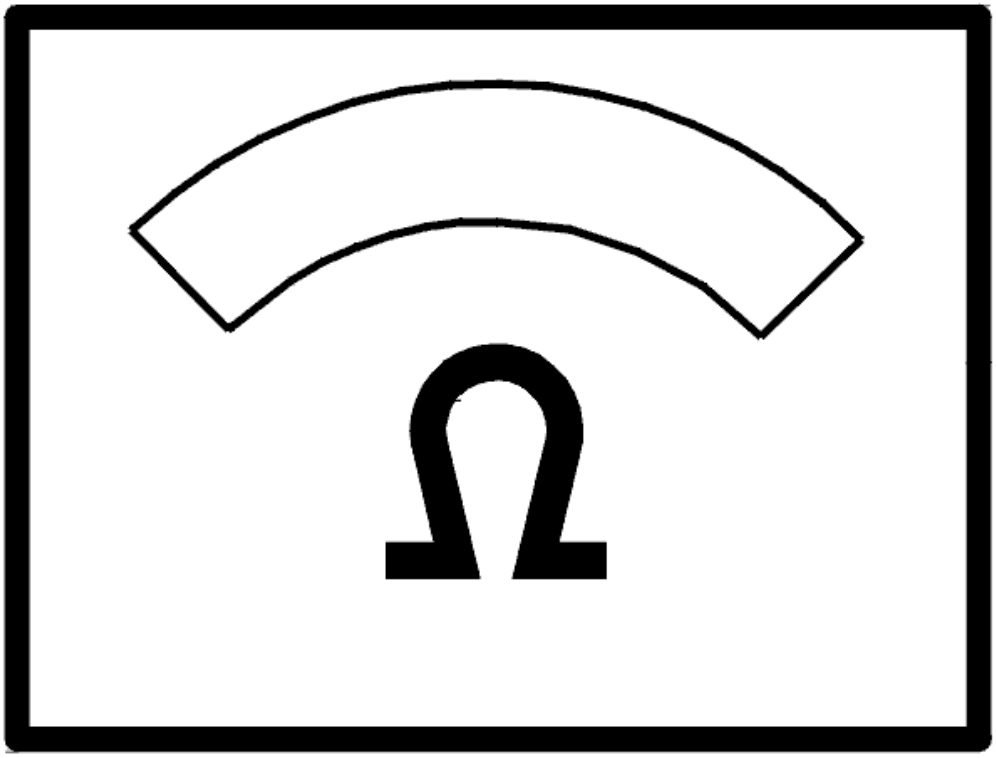

Fig. 294: Identifying Ohms Display
Courtesy of VOLVO CARS CORPORATION

Was the resistance OK?

- **YES**

  Refer to **CHECKING THE WIRING**

- **NO**

  Refer to **CHECKING THE WIRING AND COMPONENT**

CHECKING THE WIRING

- Breakout box connected to the control module
- Breakout box connected to the transmission connector.

Check the cable between control module terminal #37 (#A37) and transmission connector (control module side) terminal #L (#A11). Check for an open-circuit. Check for a short-circuit to supply voltage.

Check the cable between control module terminal #55 (#A55) and transmission connector (control module side) terminal #M (#A12). Check for an open-circuit. Check for a short-circuit to supply voltage.

Remedy as necessary.

Other information

- To connect the breakout box, see **CONNECTING THE BREAKOUT BOX**
- To connect the breakout box to the transmission connector, see **CONNECTING THE BREAKOUT BOX, GM AUTOMATIC TRANSMISSIONS**
- For information about signals, see **SIGNAL SPECIFICATION**
- see **CHECKING WIRING AND TERMINALS**

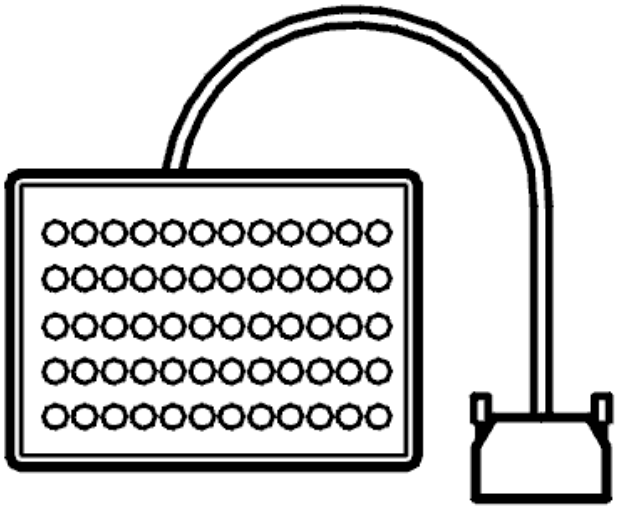

Fig. 295: Identifying Breakout Box
Courtesy of VOLVO CARS CORPORATION

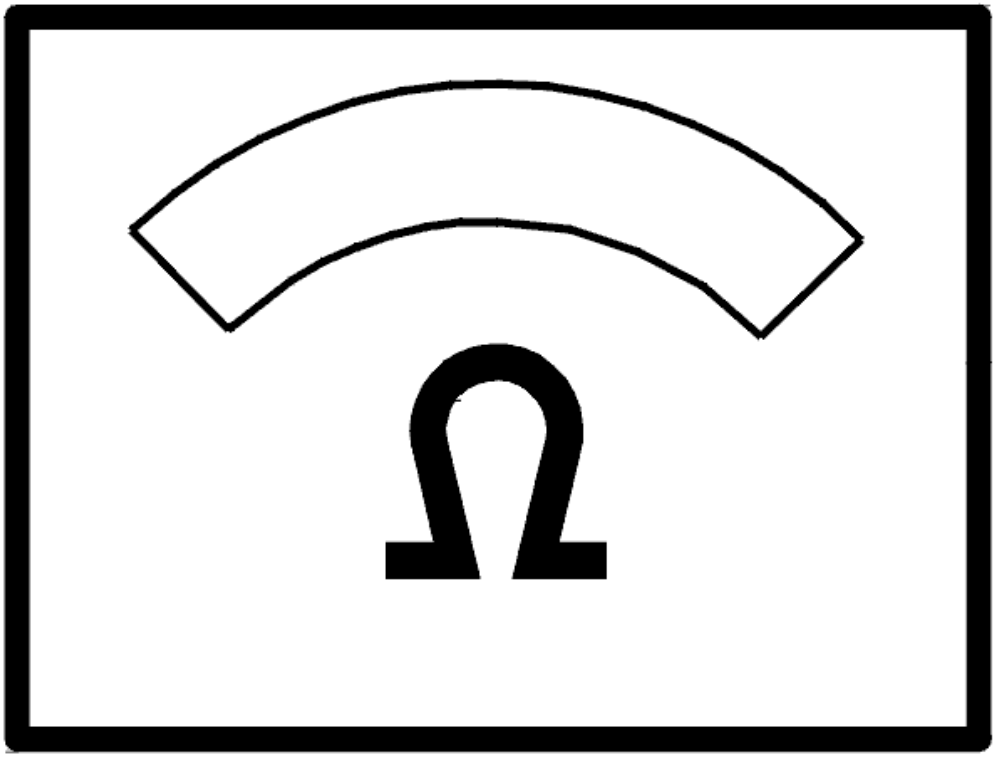

Fig. 296: Identifying Ohms Display
Courtesy of VOLVO CARS CORPORATION

Was a fault detected?

- **YES**

  Refer to **VERIFICATION**

- **NO**

  Refer to **CHECKING THE WIRING AND COMPONENT**

CHECKING THE WIRING AND COMPONENT

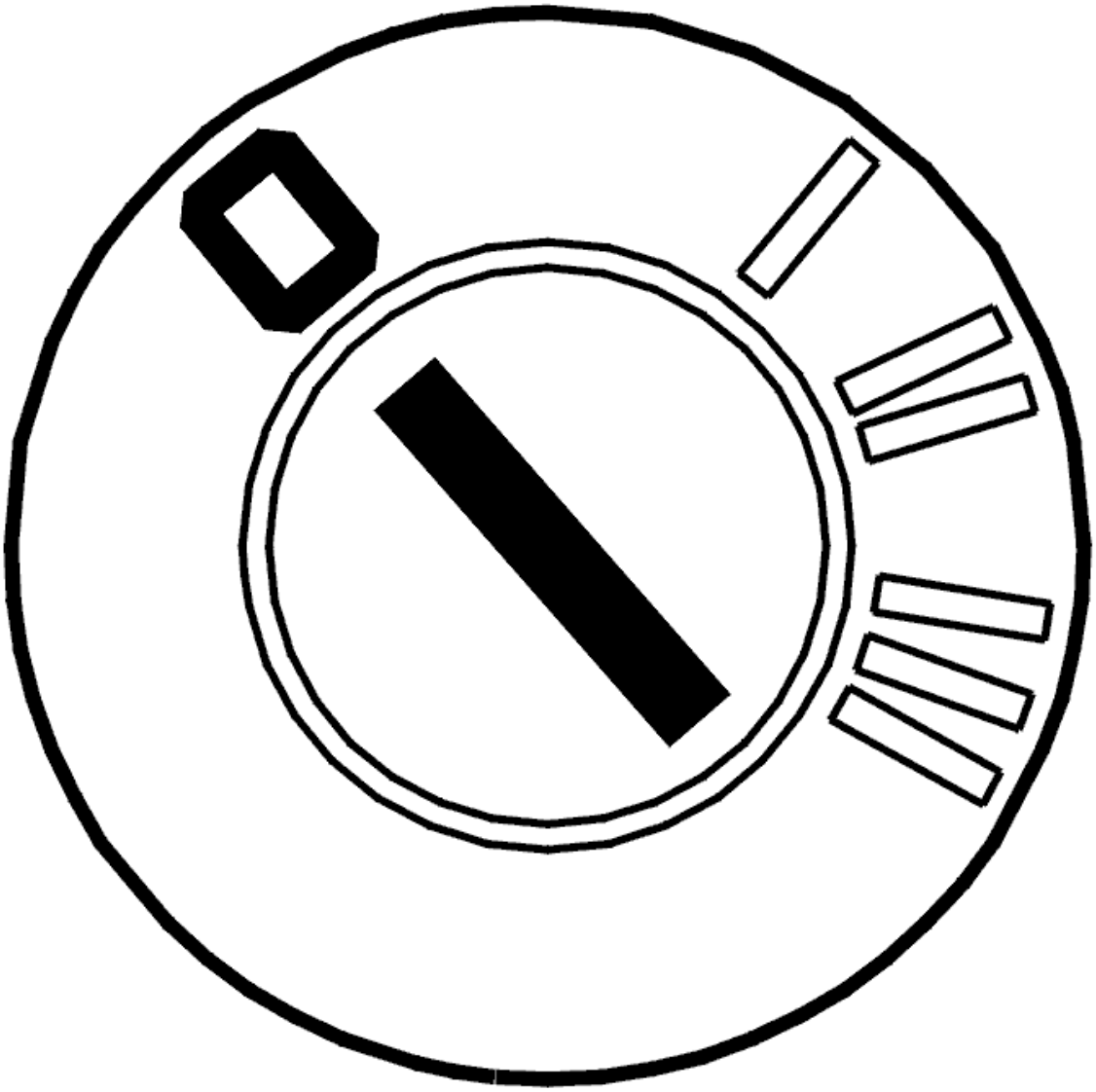

Fig. 297: Identifying Ignition OFF
Courtesy of VOLVO CARS CORPORATION

- Ignition off
- Open the transmission control system.

  Check the cable between transmission terminal #L (#A11) and temperature sensor terminal #A. Check for an open-circuit. Check for a short-circuit to supply voltage.

  Check the cable between transmission terminal #M (#A12) and temperature sensor terminal #B. Check for an open-circuit. Check for a short-circuit to supply voltage.

  HINT: Check the temperature sensor by measuring the resistance between temperature sensor connector terminals #A and #B. The resistance must be between 3.5-3.6 kohms at 20° C.

  Remedy as necessary.

Other information:

- To connect the breakout box, see **CONNECTING THE BREAKOUT BOX**
- To connect the breakout box to the transmission connector, see **CONNECTING THE BREAKOUT BOX, GM AUTOMATIC TRANSMISSIONS**
- To replace the cable harness, see **TEMPERATURE SENSOR FLUID, TRANSAXLE, (TFT)**
- To replace the temperature sensor, see **TEMPERATURE SENSOR FLUID TRANSMISSION, REPLACING**
- For information about signals, see **SIGNAL SPECIFICATION**
- For information about the resistance values, see **COMPONENT RESISTANCE VALUES**
- see **CHECKING WIRING AND TERMINALS**

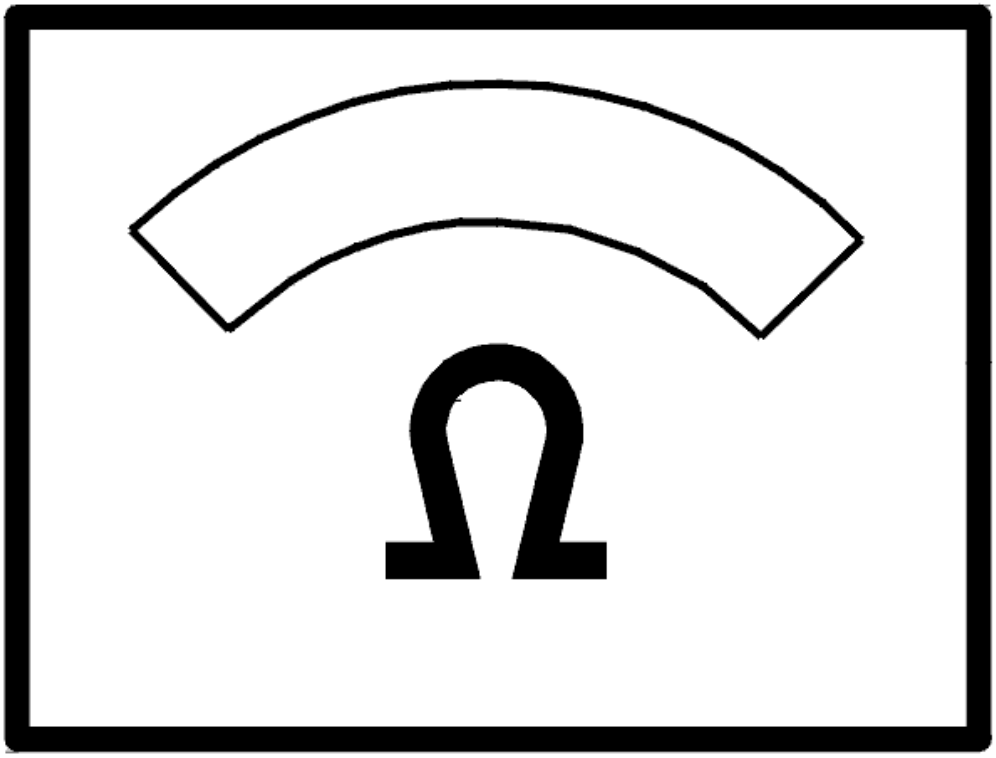

Fig. 298: Identifying Ohms Display
Courtesy of VOLVO CARS CORPORATION

- **Continue**

  Refer to **RESETTING TRANSMISSION FLUID CHANGE COUNTER**

INTERMITTENT FAULT

Check the control module and automatic transmission connector. Check for contact resistance and oxidation. Remedy if necessary.

Check the cable between control module terminal #A37 (#A37) and transmission connector (control module side) terminal #11. Check for an intermittent open-circuit. Check for an intermittent short-circuit to supply voltage.

Check the cable between control module terminal #A55 (#A55) and transmission connector (control module side) terminal #12. Check for an intermittent open-circuit. Check for an intermittent short-circuit to supply voltage.

Remedy as necessary.

Other information

- To connect the breakout box, see **CONNECTING THE BREAKOUT BOX**
- To connect the breakout box to the transmission connector, see **CONNECTING THE BREAKOUT BOX, GM AUTOMATIC TRANSMISSIONS**
- For information about signals, see **SIGNAL SPECIFICATION**
- see **CHECKING WIRING AND TERMINALS**

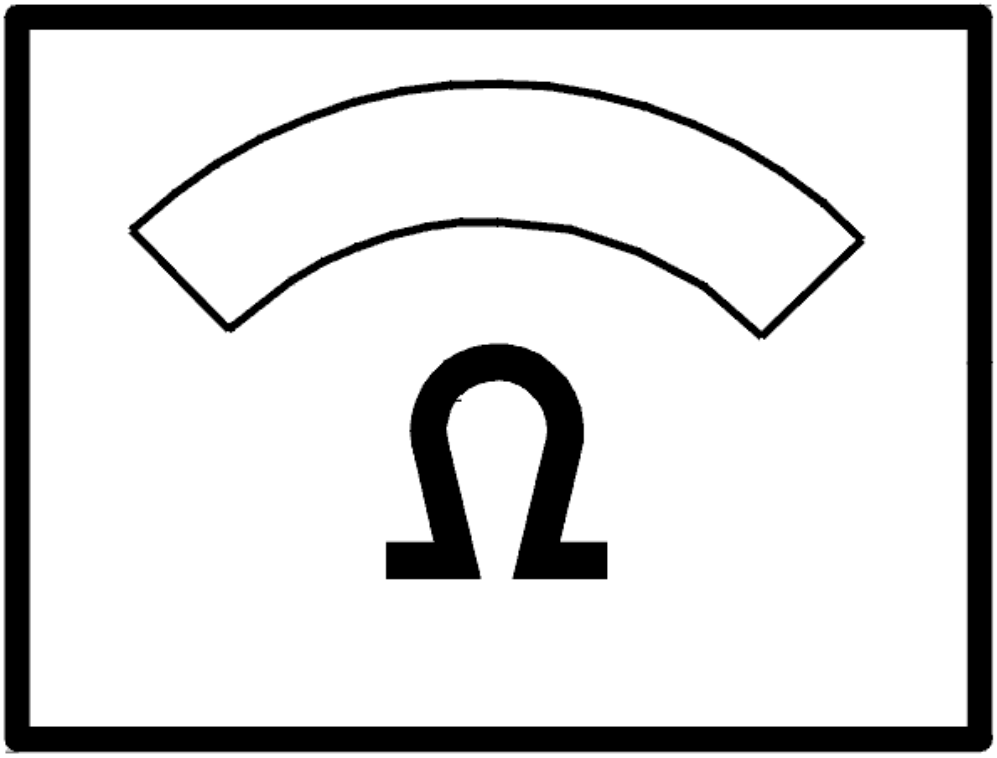

Fig. 299: Identifying Ohms Display
Courtesy of VOLVO CARS CORPORATION

- **Continue**

  Refer to **INFORMATION**

RESETTING TRANSMISSION FLUID CHANGE COUNTER

RESETTING TRANSMISSION FLUID CHANGE COUNTER

HINT: The transmission control module (TCM) has a counter for the oil quality. The counter counts up if the transmission is exposed to too high a load or an ambient temperature that is too high. If the counter is not reset when the oil is drained or changed, there is a risk that a diagnostic trouble code (DTC) will be stored in faulty circumstances. Therefore it is important that the "Transmission oil change" counter is reset.

NOTE: **This applies only when the transmission fluid is changed and when the fluid is changed when repairs are carried out to the transmission temperature sensor.**

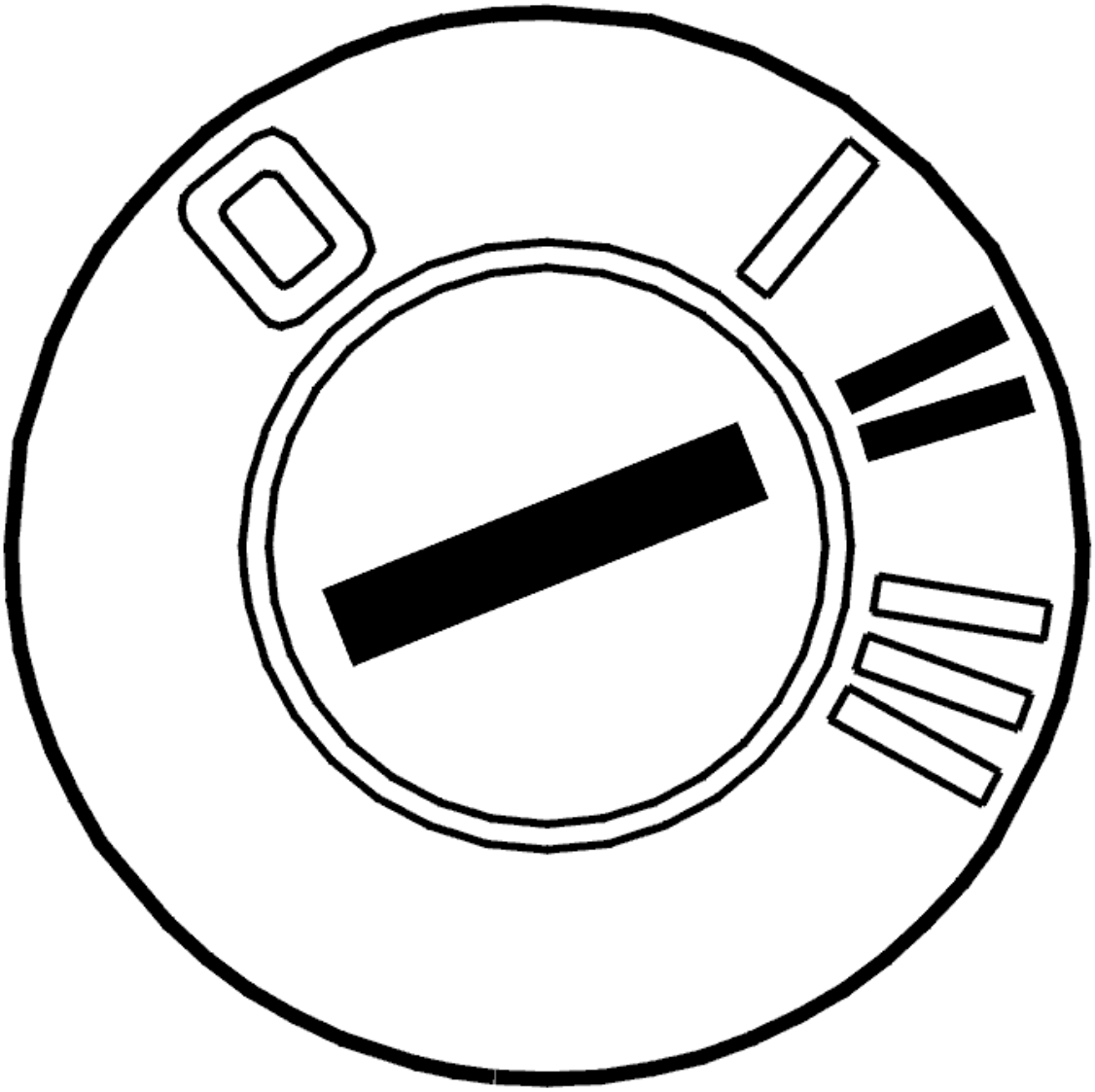

Fig. 300: Identifying Ignition ON
Courtesy of VOLVO CARS CORPORATION

- Ignition on.

  Reset the counter by clicking on the VCT 2000 symbol.

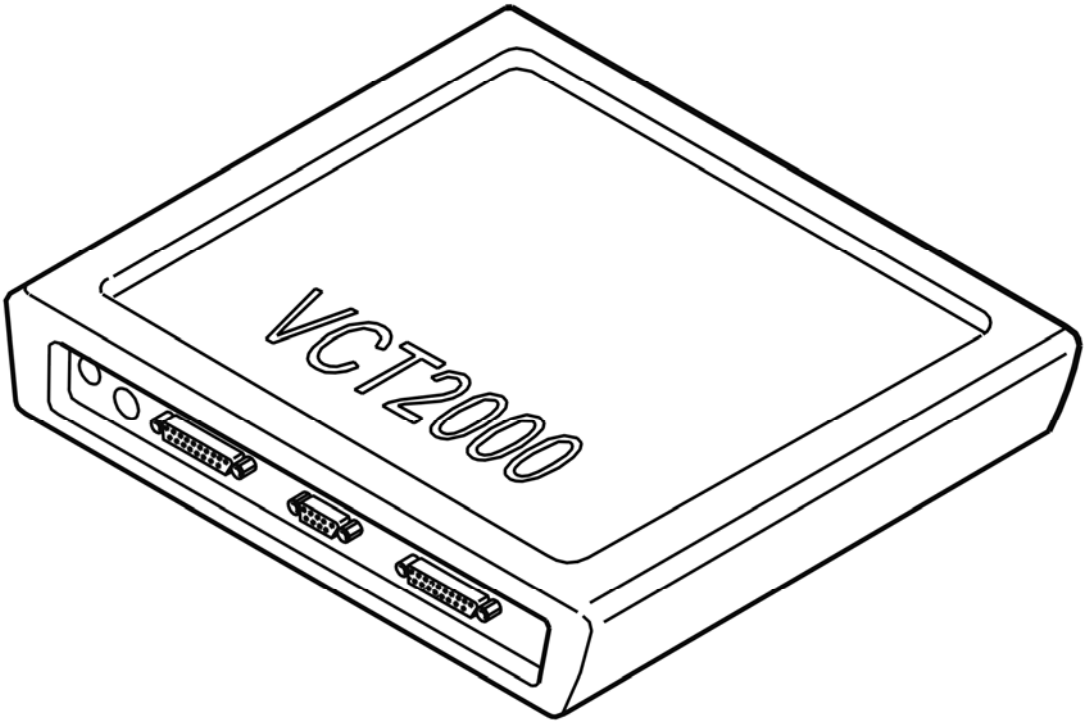

Fig. 301: Identifying VCT2000 Diagnostic Tool Symbol In VIDA
Courtesy of VOLVO CARS CORPORATION

- **Continue**

  Refer to **VERIFICATION**

VERIFICATION

VERIFICATION

HINT: After carrying out the repair check that the fault has been remedied.

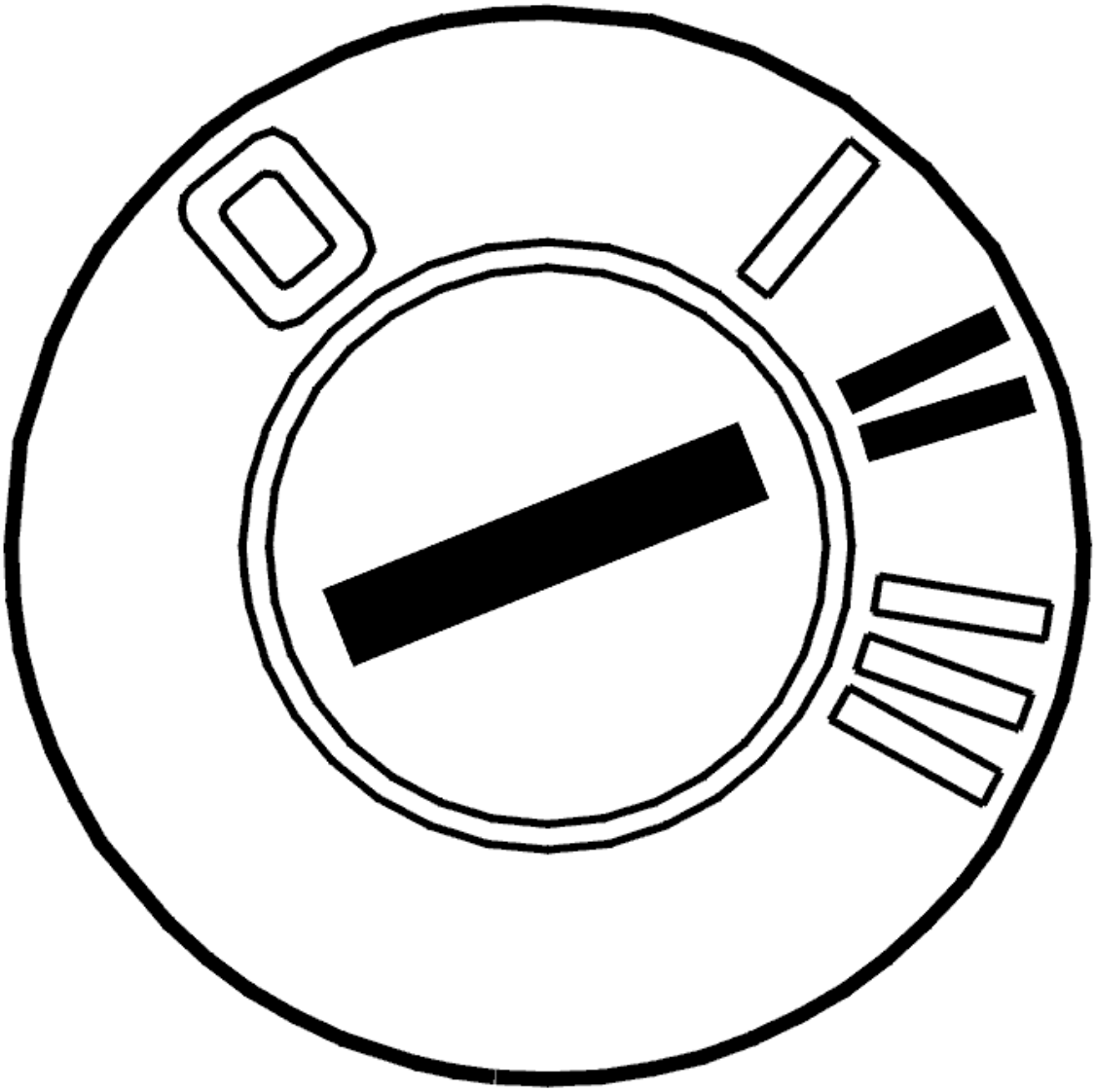

Fig. 302: Identifying Ignition ON
Courtesy of VOLVO CARS CORPORATION

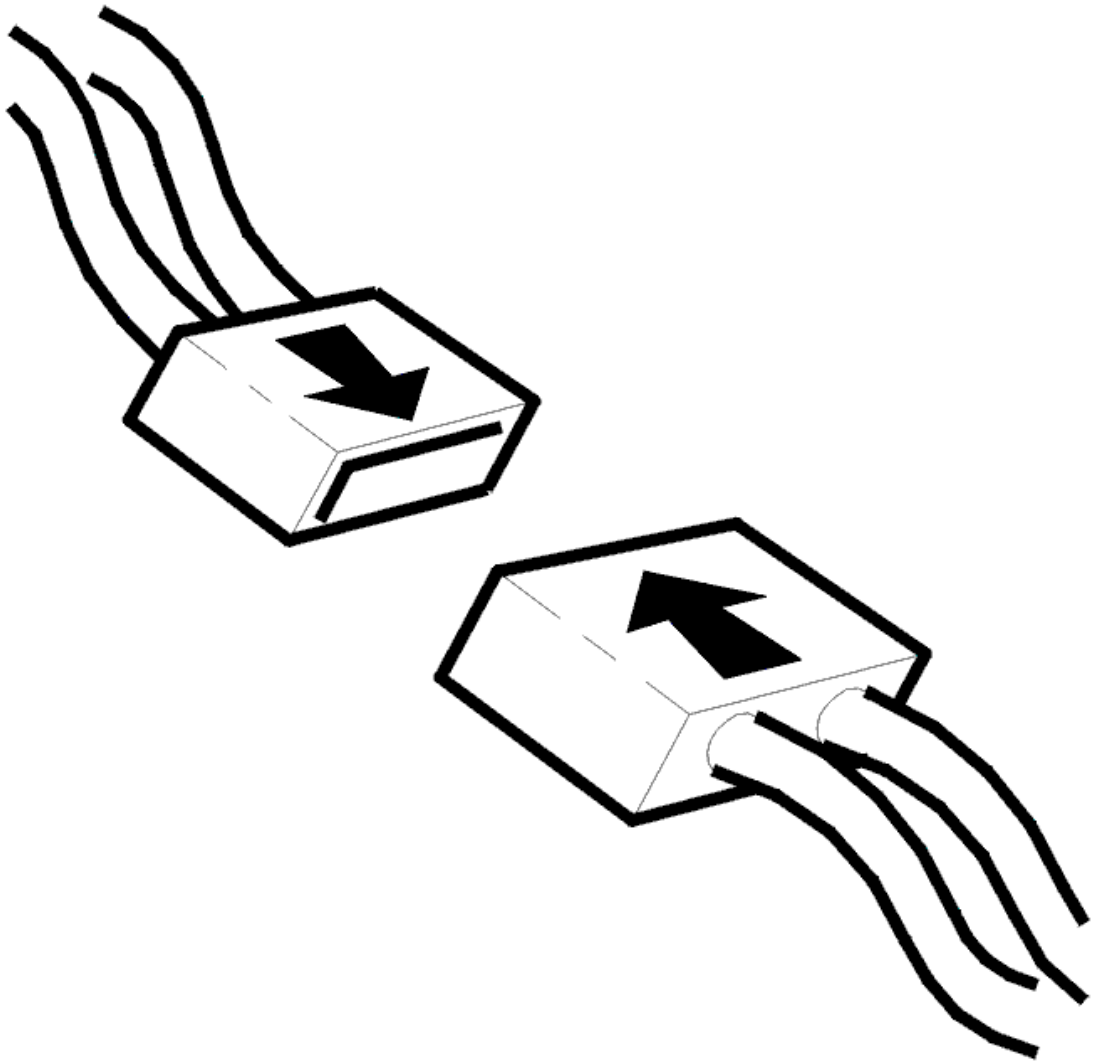

Fig. 303: Identifying Connector(s) Reinstallation
Courtesy of VOLVO CARS CORPORATION

- Ignition off.
- Reinstall connectors, components etc.
- Ignition on.
- Read off oil temperature.

  Check that the transmission oil temperature is within its permitted range. Compare with the transmission temperature.

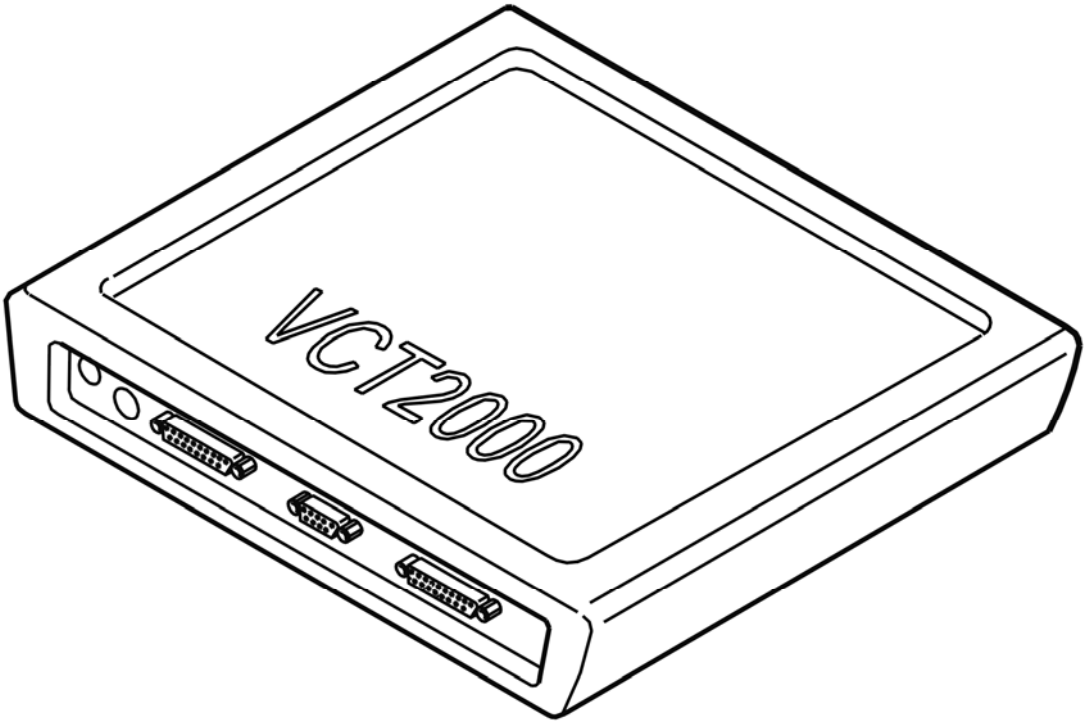

Fig. 304: Identifying VCT2000 Diagnostic Tool Symbol In VIDA
Courtesy of VOLVO CARS CORPORATION

Is the oil temperature within its permitted range?

- **YES**

  VERIFIED: Troubleshooting has been completed.

- **NO**

  Refer to **INFORMATION**

TCM-0007: SHIFT SOLENOID S2. SIGNAL TOO HIGH (AW50/51 AWD; AW55-50/51SN; 2003-2007)

DIAGNOSTIC TROUBLE CODE (DTC) INFORMATION

see **DIAGNOSTIC TROUBLE CODE (DTC) INFORMATION**

SIGNAL TOO HIGH

CHECKS

CHECKING THE TEMPERATURE SENSOR

HINT: In some cases, the diagnostic trouble code (DTC) may be caused by a defective oil temperature sensor. Check the function of the oil temperature sensor first.

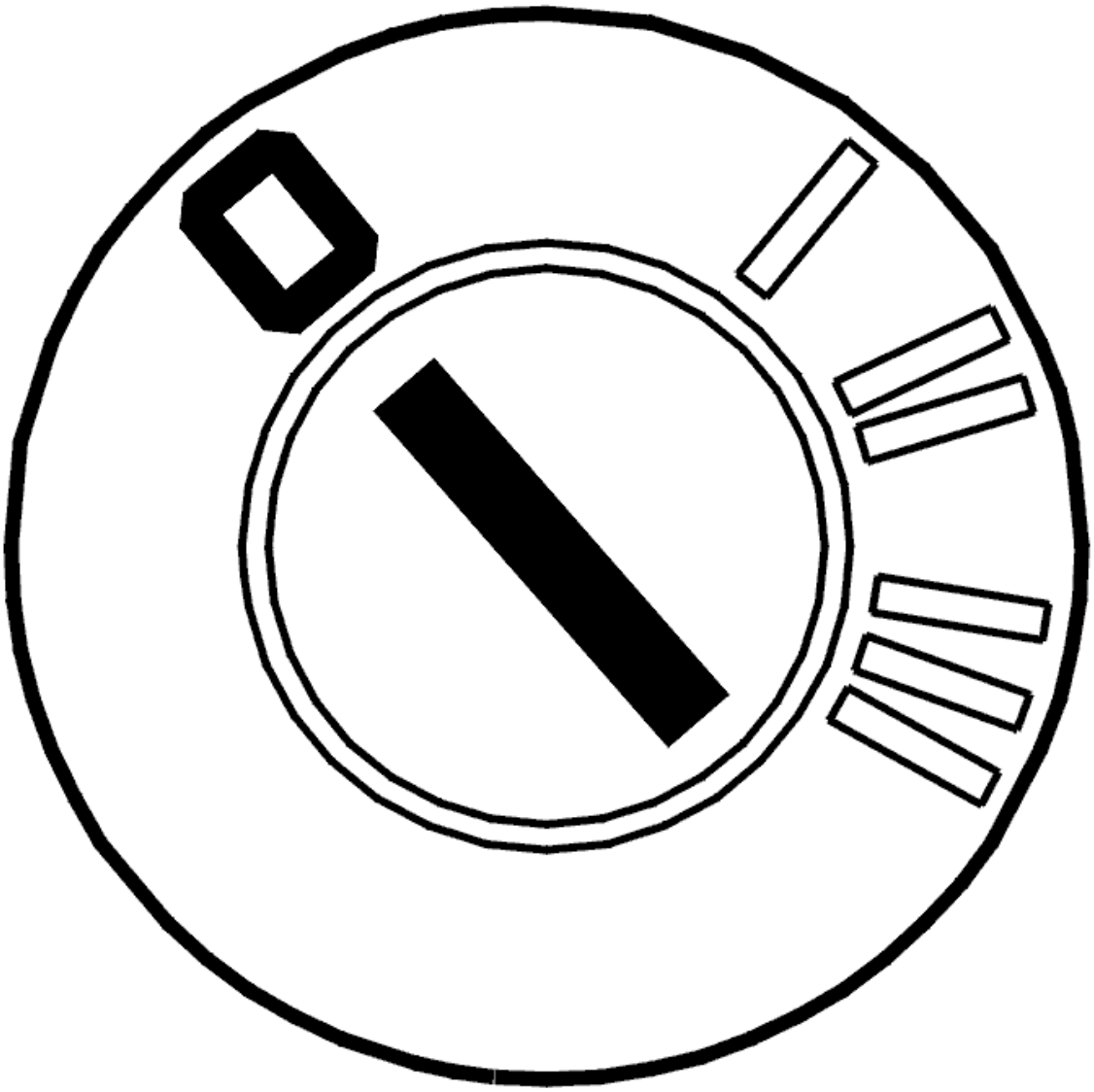

Fig. 305: Identifying Ignition OFF
Courtesy of VOLVO CARS CORPORATION

- Ignition off
- Read off the oil temperature.

  Check that the function of the temperature sensor is OK. Test drive the car to increase the temperature of the transmission fluid. Read off the temperature again. Check that the temperature has increased.

NOTE: If the temperature is outside its permitted range, fault-trace the

temperature sensor.

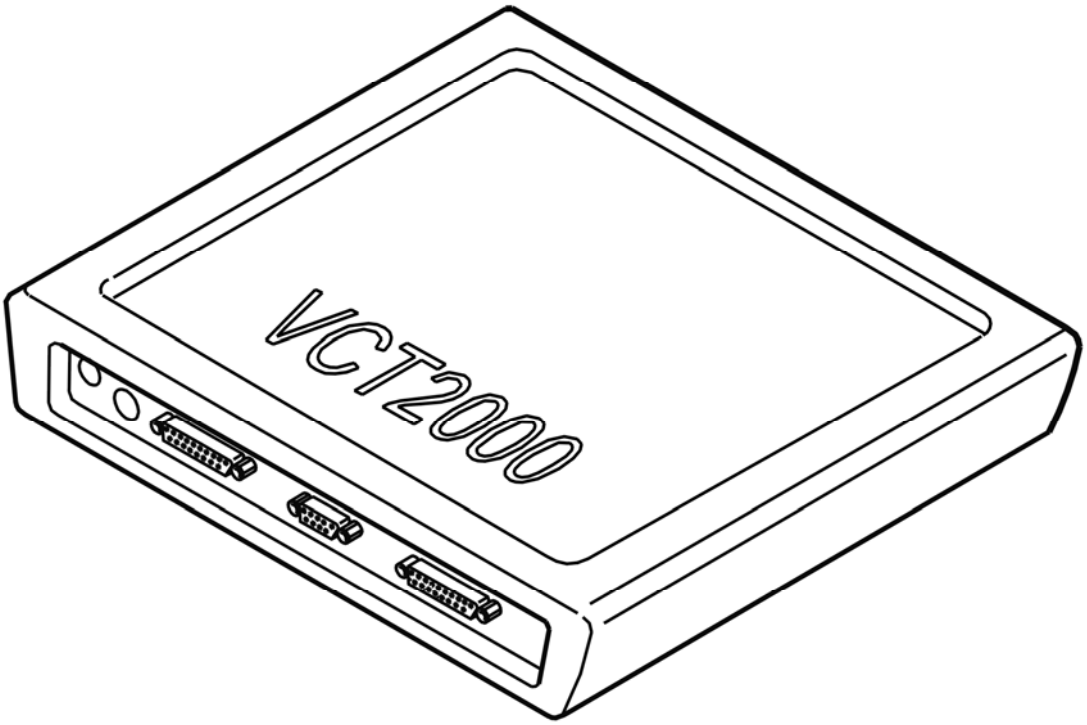

Fig. 306: Identifying VCT2000 Diagnostic Tool Symbol In VIDA
Courtesy of VOLVO CARS CORPORATION

Is the oil temperature within its permitted range?

- **YES**

  Refer to **CHECKING SHIFT SOLENOID S2**

- **NO**

  Refer to **FAULTY SIGNAL**

CHECKING SHIFT SOLENOID S2

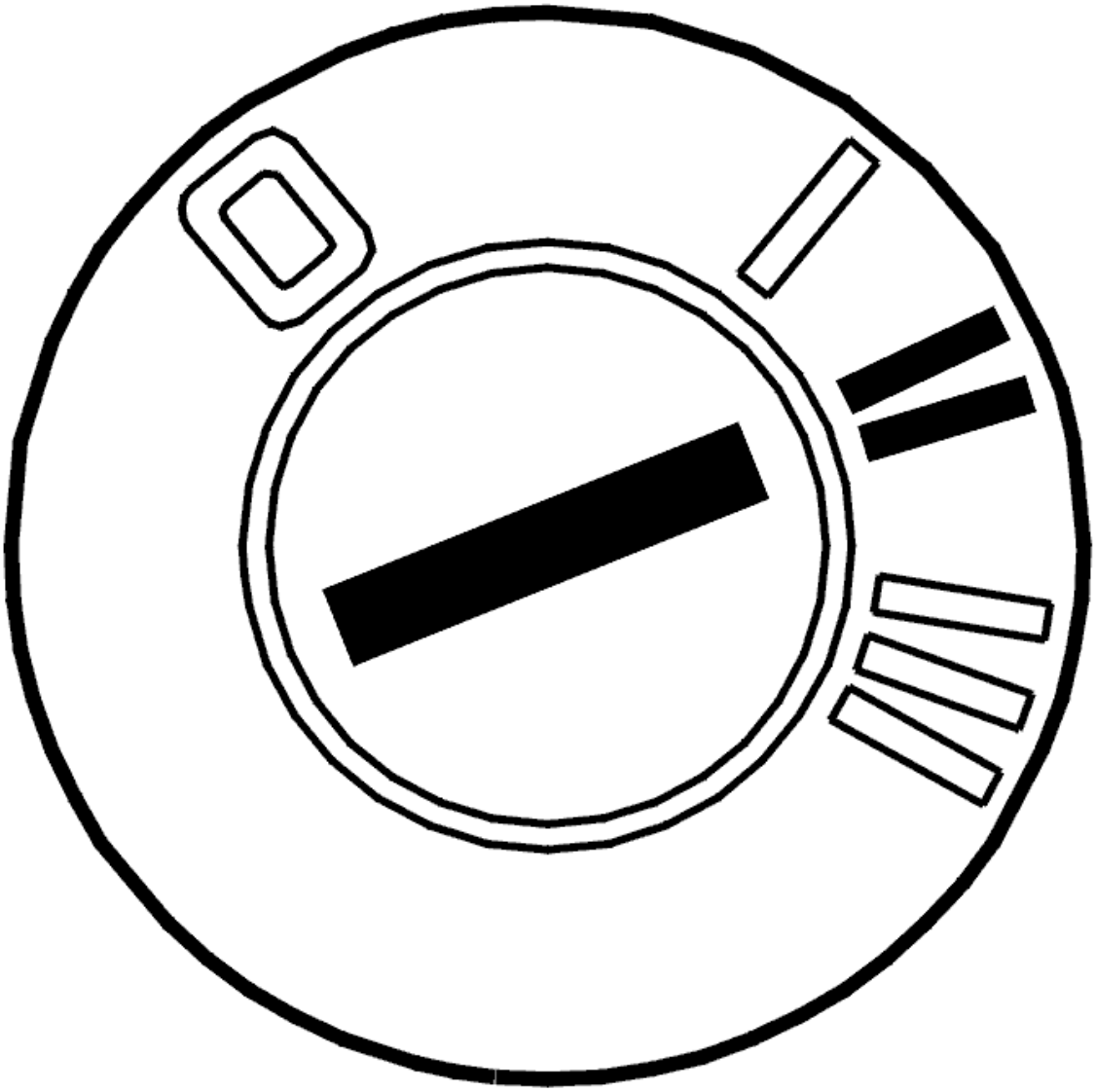

Fig. 307: Identifying Ignition ON
Courtesy of VOLVO CARS CORPORATION

- Ignition on
- Gear selector in position P
- Activate solenoid S2.

The value must change between OFF and ON.

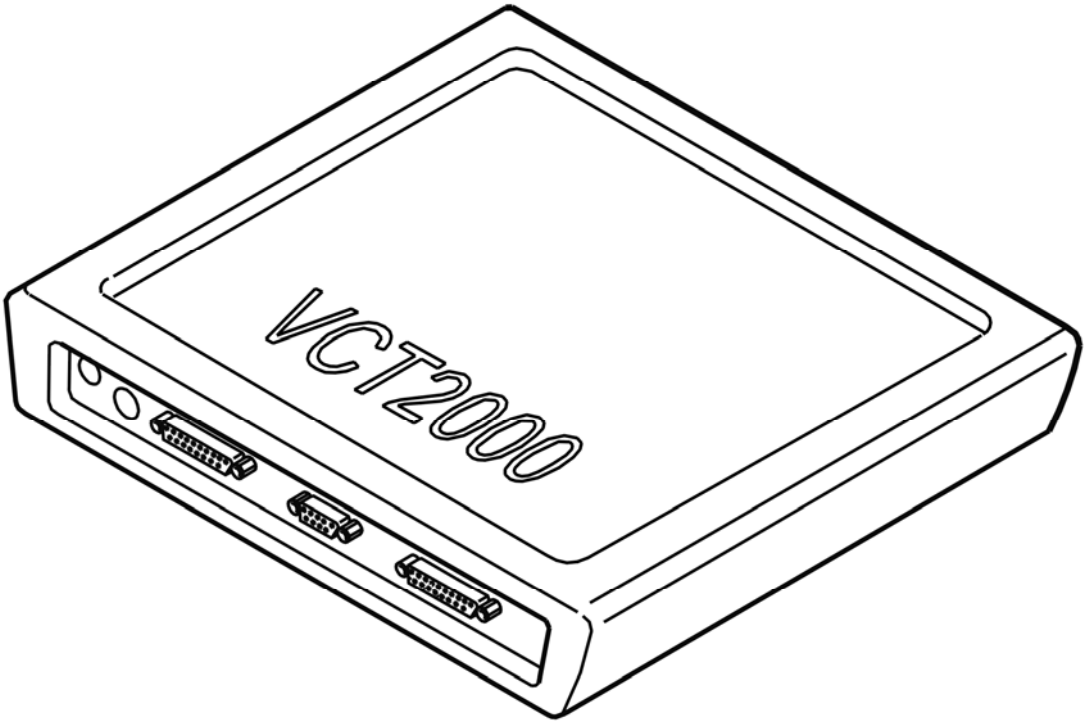

Fig. 308: Identifying VCT2000 Diagnostic Tool Symbol In VIDA
Courtesy of VOLVO CARS CORPORATION

Does the value change?

- **YES**

  Refer to **INTERMITTENT FAULT**

- **NO**

  Refer to **CHECKING THE WIRING**

CHECKING THE WIRING

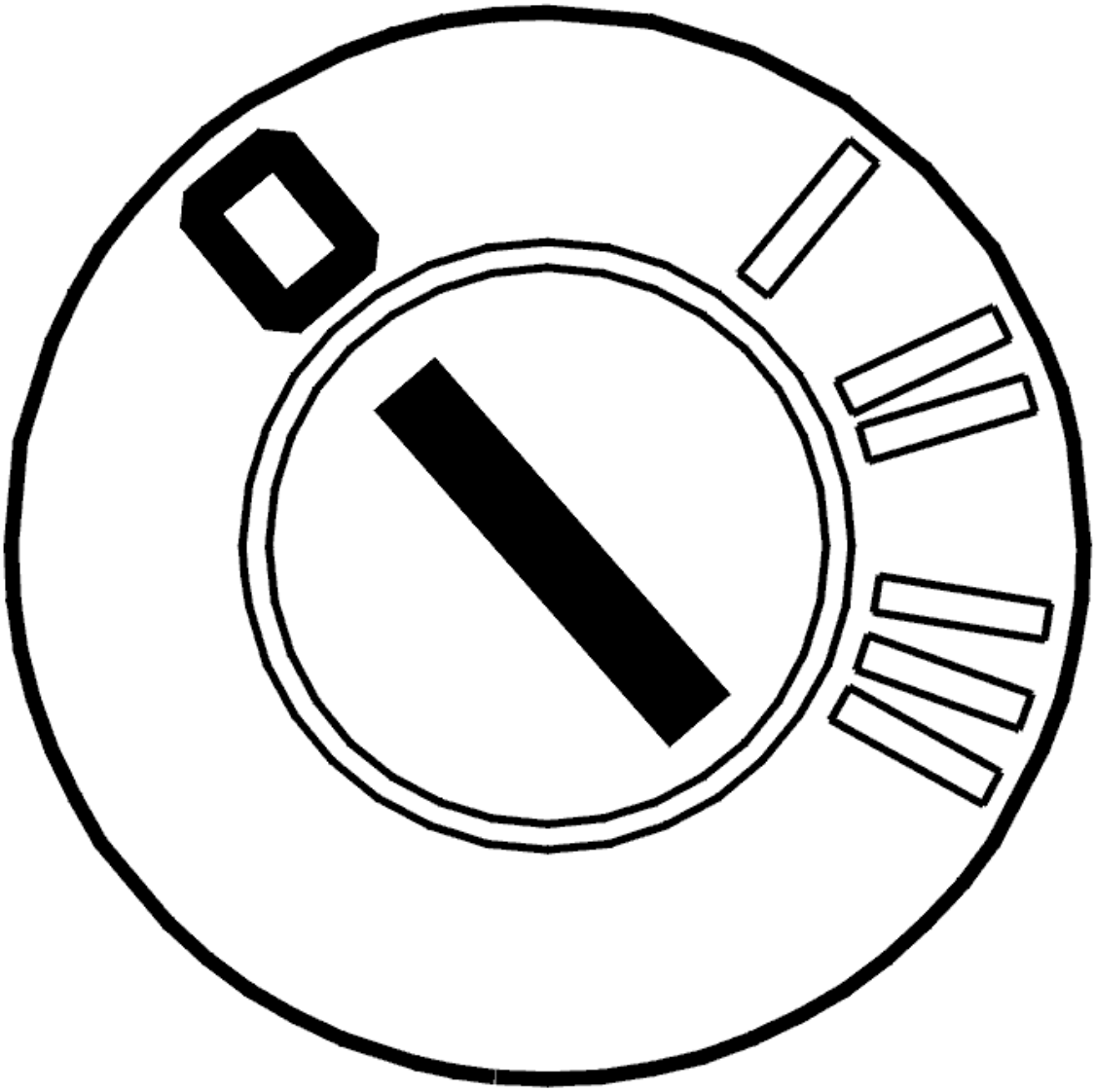

Fig. 309: Identifying Ignition OFF
Courtesy of VOLVO CARS CORPORATION

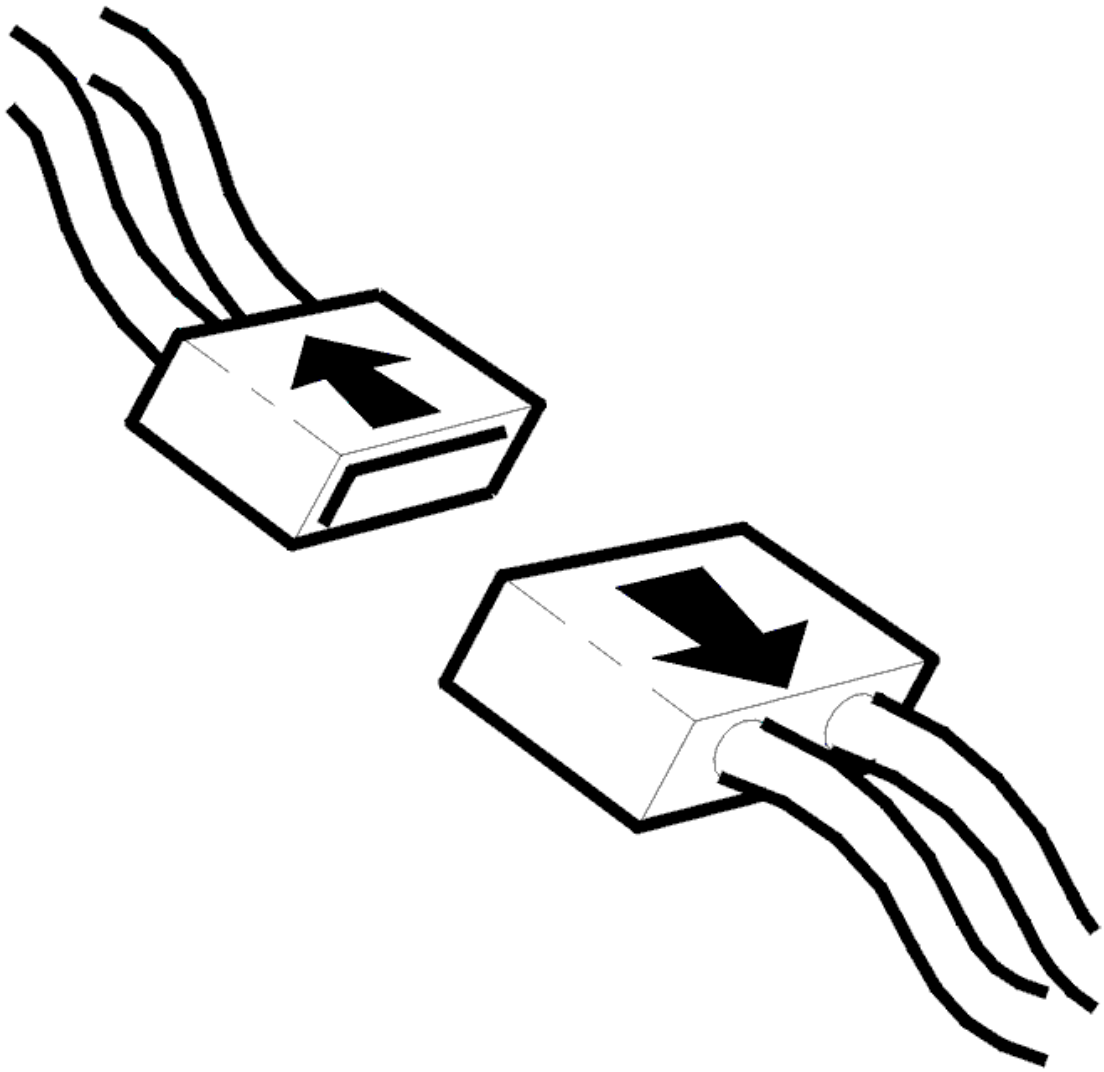

Fig. 310: Identifying Connector(s) Disconnected
Courtesy of VOLVO CARS CORPORATION

- Ignition off
- Disconnect transmission connector C.

  Check the cable between control module terminal #B8 (#A68) and transmission connector terminal #C2 (control module side). Check for a short-circuit to supply voltage according to **SHORT-CIRCUIT TO SUPPLY VOLTAGE. PERMANENT FAULTS** . Also check against the other cables in the circuit.

  Other information:

  - To connect the breakout box, see **CONNECTING THE BREAKOUT BOX**
  - To disconnect the transmission connectors, see **CONNECTORS, TRANSMISSION, DISCONNECTING / CONNECTING**

- For information about signals, see **SIGNAL DESCRIPTION. TRANSMISSION CONTROL MODULE (TCM)** .

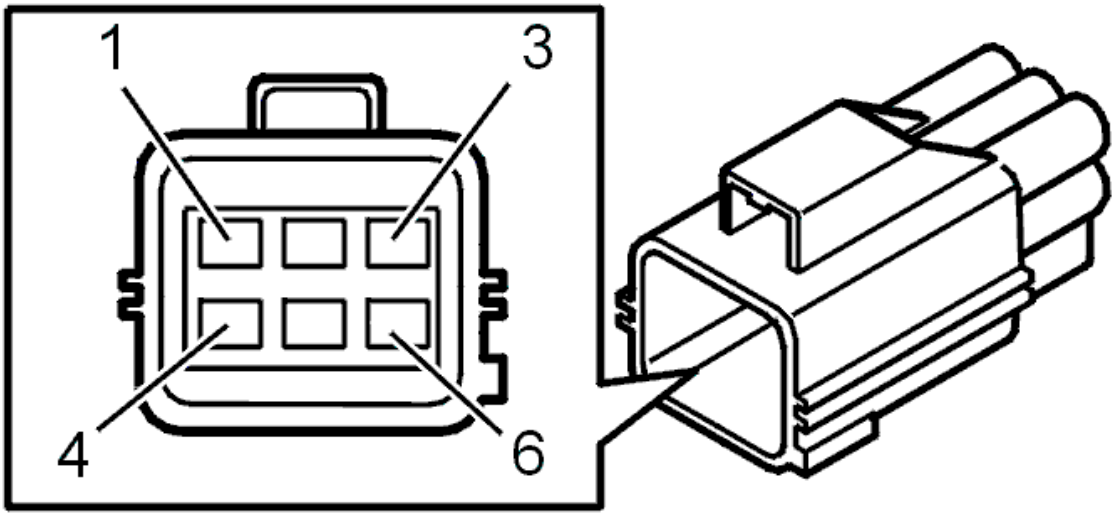

Fig. 311: Identifying Transmission Connector Terminals
Courtesy of VOLVO CARS CORPORATION

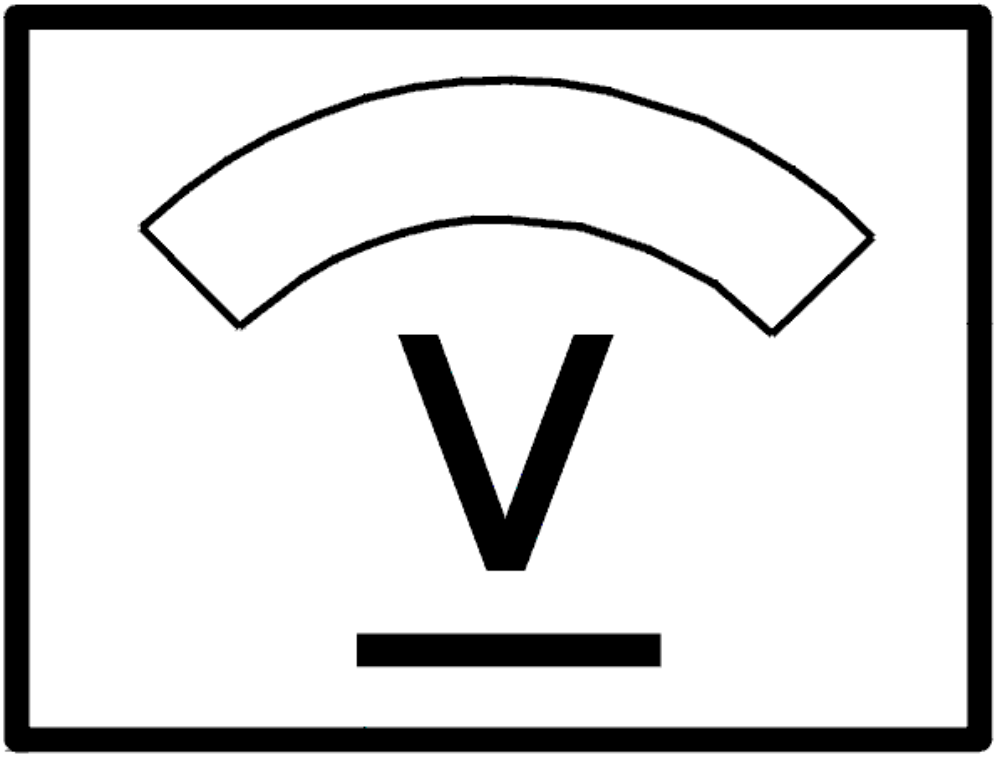

Fig. 312: Identifying Voltage Display
Courtesy of VOLVO CARS CORPORATION

Was a fault detected?

- **YES**

  Refer to **VERIFICATION**

- **NO**

  Refer to **CHECKING THE WIRING AND COMPONENT**

CHECKING THE WIRING AND COMPONENT

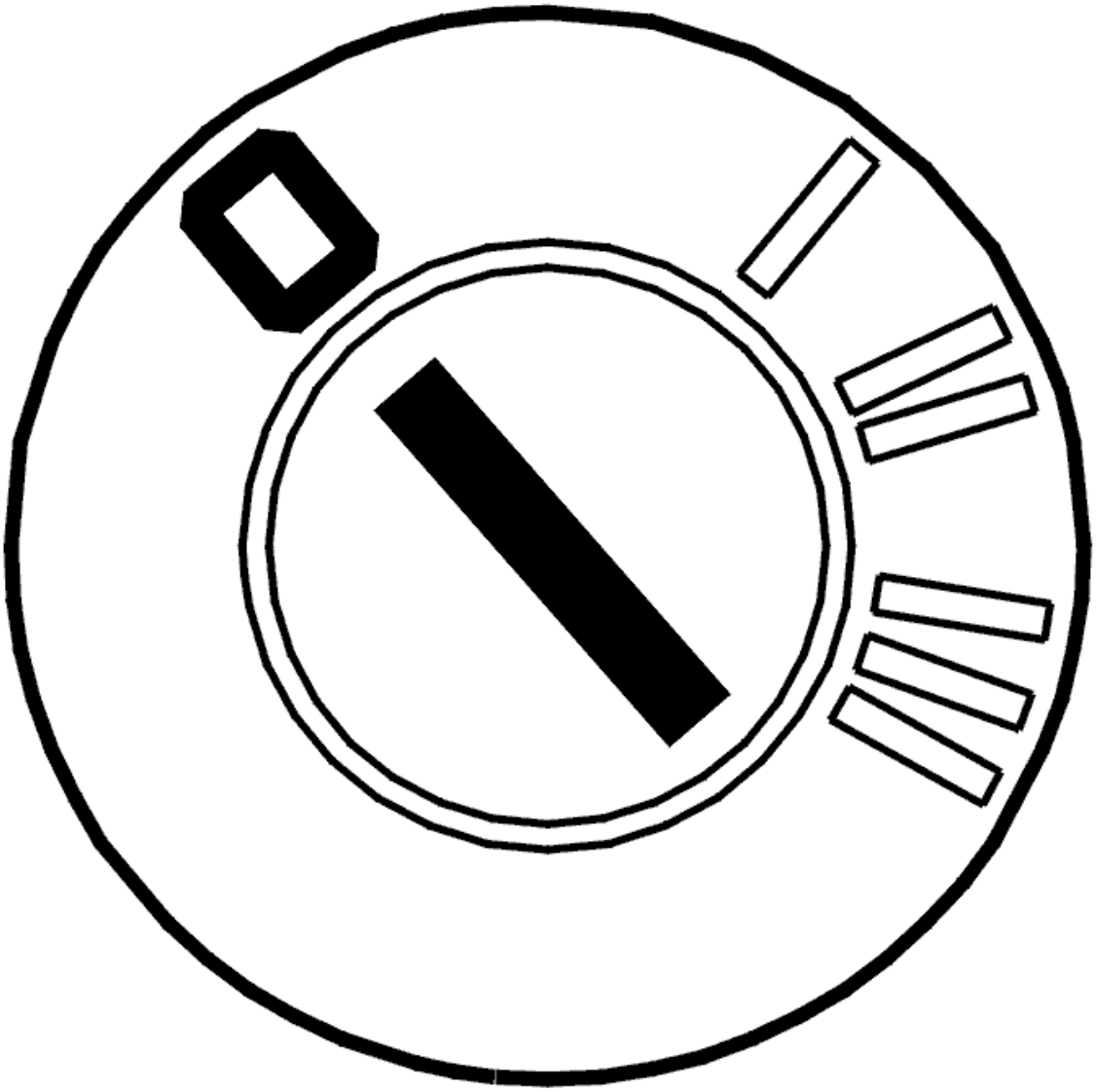

Fig. 313: Identifying Ignition OFF
Courtesy of VOLVO CARS CORPORATION

- Ignition off
- Open the control system.

  Check the cable between transmission connector terminal #C2 (transmission side) and the connector for solenoid S2. Check for a short-circuit to supply voltage according to **SHORT-CIRCUIT TO SUPPLY VOLTAGE. PERMANENT FAULTS** . Also check against the other cables in the circuit.

  Replace solenoid S2 if no faults are found in the cable.

  Remedy as necessary.

  Other information:

- To connect the breakout box, see **CONNECTING THE BREAKOUT BOX**
- To disconnect the transmission connectors, see **CONNECTORS, TRANSMISSION, DISCONNECTING / CONNECTING**
- To replace the cable harness for the control system, see **TEMPERATURE SENSOR FLUID, TRANSAXLE, (TFT)**
- To open the control system and to check or replace solenoid S2, see **SOLENOID CONTROL SYSTEM, REPLACING**
- For information about signals, see **SIGNAL DESCRIPTION. TRANSMISSION CONTROL MODULE (TCM)** .

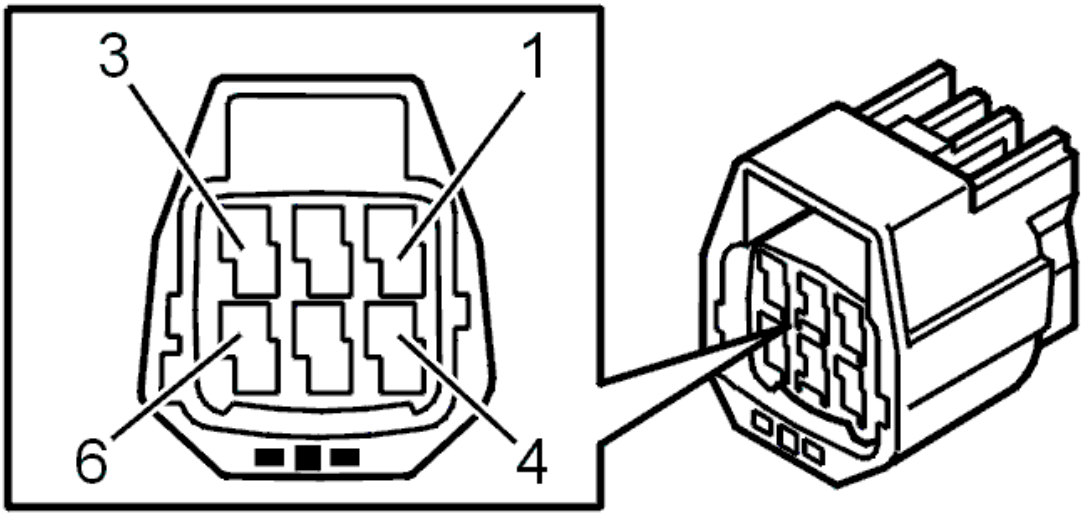

Fig. 314: Identifying 6-Pin Transmission Connector Terminals
Courtesy of VOLVO CARS CORPORATION

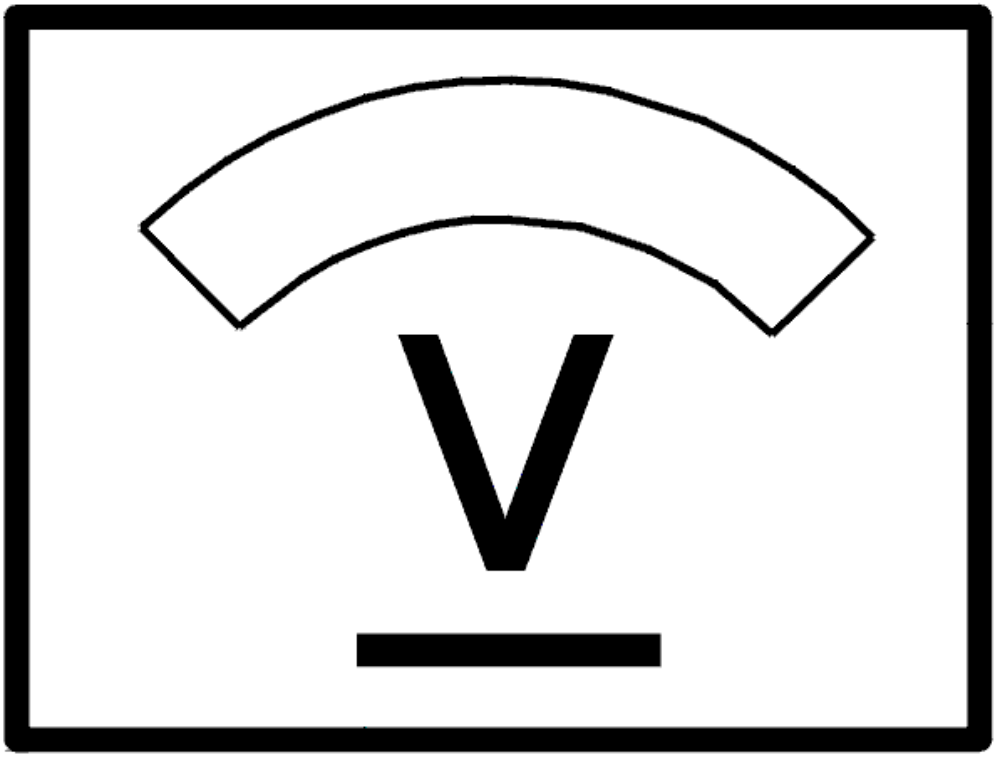

Fig. 315: Identifying Voltage Display
Courtesy of VOLVO CARS CORPORATION

- **Continue**

  Refer to **RESETTING THE ADAPTATION**

INTERMITTENT FAULT

Check the cable between control module terminal #B8 (#A68) and transmission connector terminal #C2. Check for an intermittent short-circuit to supply voltage according to **SHORT-CIRCUIT TO SUPPLY VOLTAGE, INTERMITTENT FAULTS** .

Remedy as necessary.

Other information:

- To connect the breakout box, see **CONNECTING THE BREAKOUT BOX**
- To disconnect the transmission connectors, see **CONNECTORS, TRANSMISSION, DISCONNECTING / CONNECTING**
- For information about signals, see **SIGNAL DESCRIPTION. TRANSMISSION CONTROL MODULE (TCM)** .

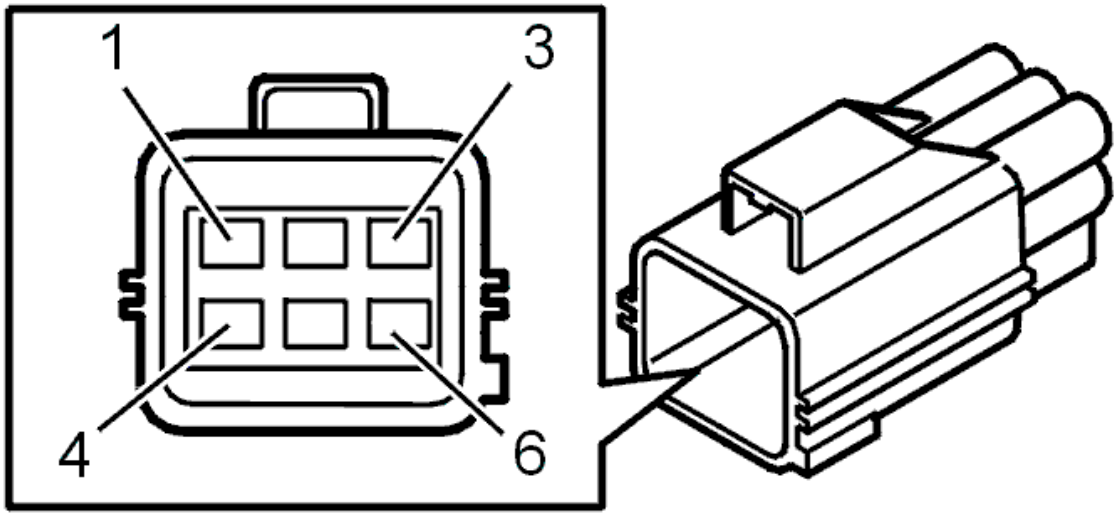

Fig. 316: Identifying Transmission Connector Terminals
Courtesy of VOLVO CARS CORPORATION

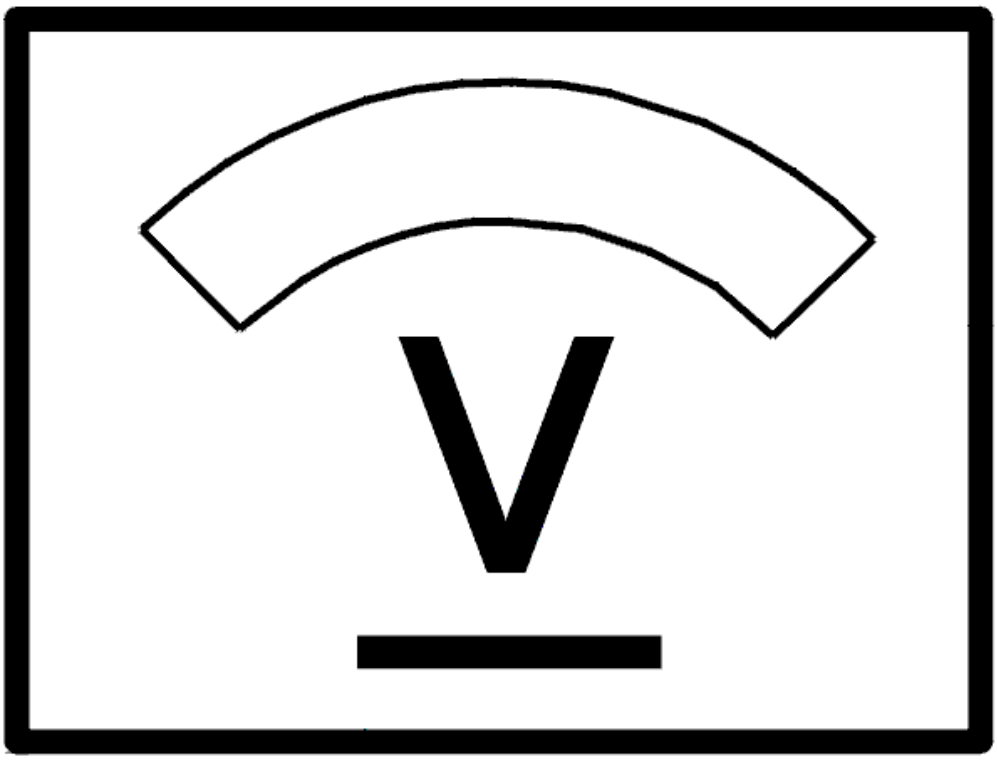

Fig. 317: Identifying Voltage Display
Courtesy of VOLVO CARS CORPORATION

- **Continue**

  Refer to **INFORMATION**

RESETTING THE ADAPTATION

RESETTING ADAPTATION AND THE COUNTER FOR "TRANSMISSION OIL CHANGE"

HINT: The transmission has torque controlled adaptive pressure control. Pressure control means that the transmission regulates the pressure itself during each gear shift. This avoids harsh gear shifting. Each gear shift is evaluated by the control module and stored in the memory. This allows for compensation for wear and tear in the transmission and clutch. It is important that the adaptation in the memory is reset after the transmission has been repaired. This is to ensure normal operation. The oil is replaced during

repair; the "Transmission oil change" counter must be reset. If the counter is not reset when the fluid is drained and replaced, there is a risk that a diagnostic trouble code (DTC) will be stored in incorrect circumstances.

NOTE: **This applies only if the transmission or one of the components in the transmission have been replaced.**

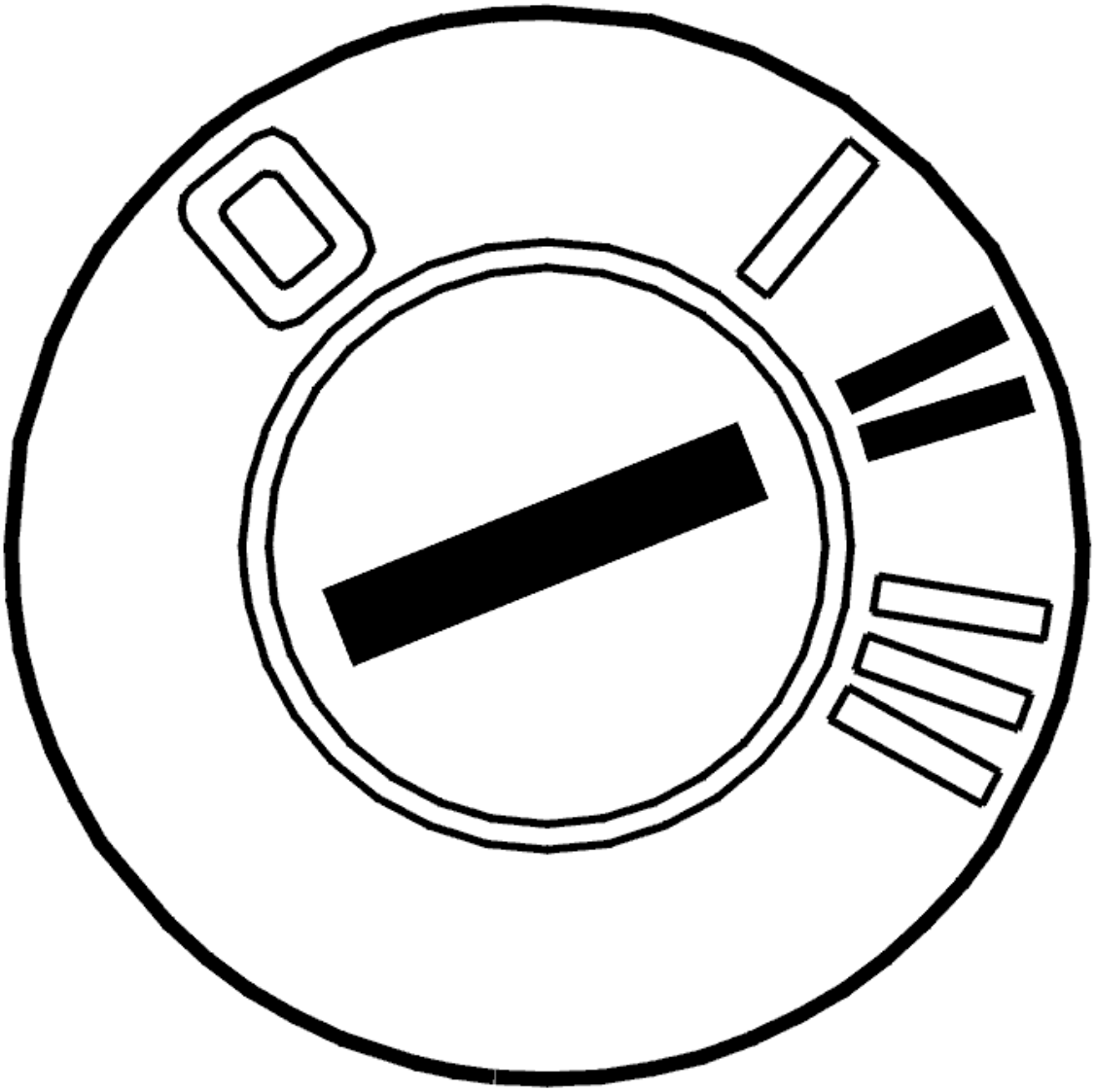

Fig. 318: Identifying Ignition ON
Courtesy of VOLVO CARS CORPORATION

- Ignition on.

  Click on the VCT2000 symbol to reset the adaptation and counter.

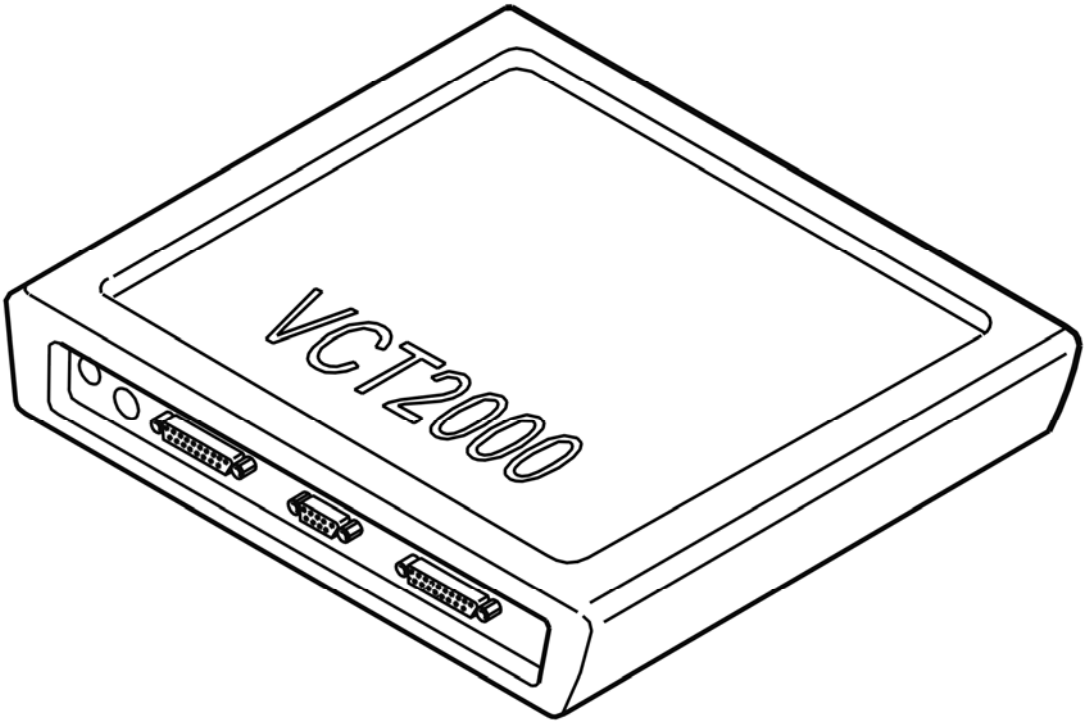

Fig. 319: Identifying VCT2000 Diagnostic Tool Symbol In VIDA
Courtesy of VOLVO CARS CORPORATION

- **Continue**

  Refer to **VERIFICATION**

VERIFICATION

VERIFICATION

HINT: After the repair it is necessary to check that the fault has been rectified.

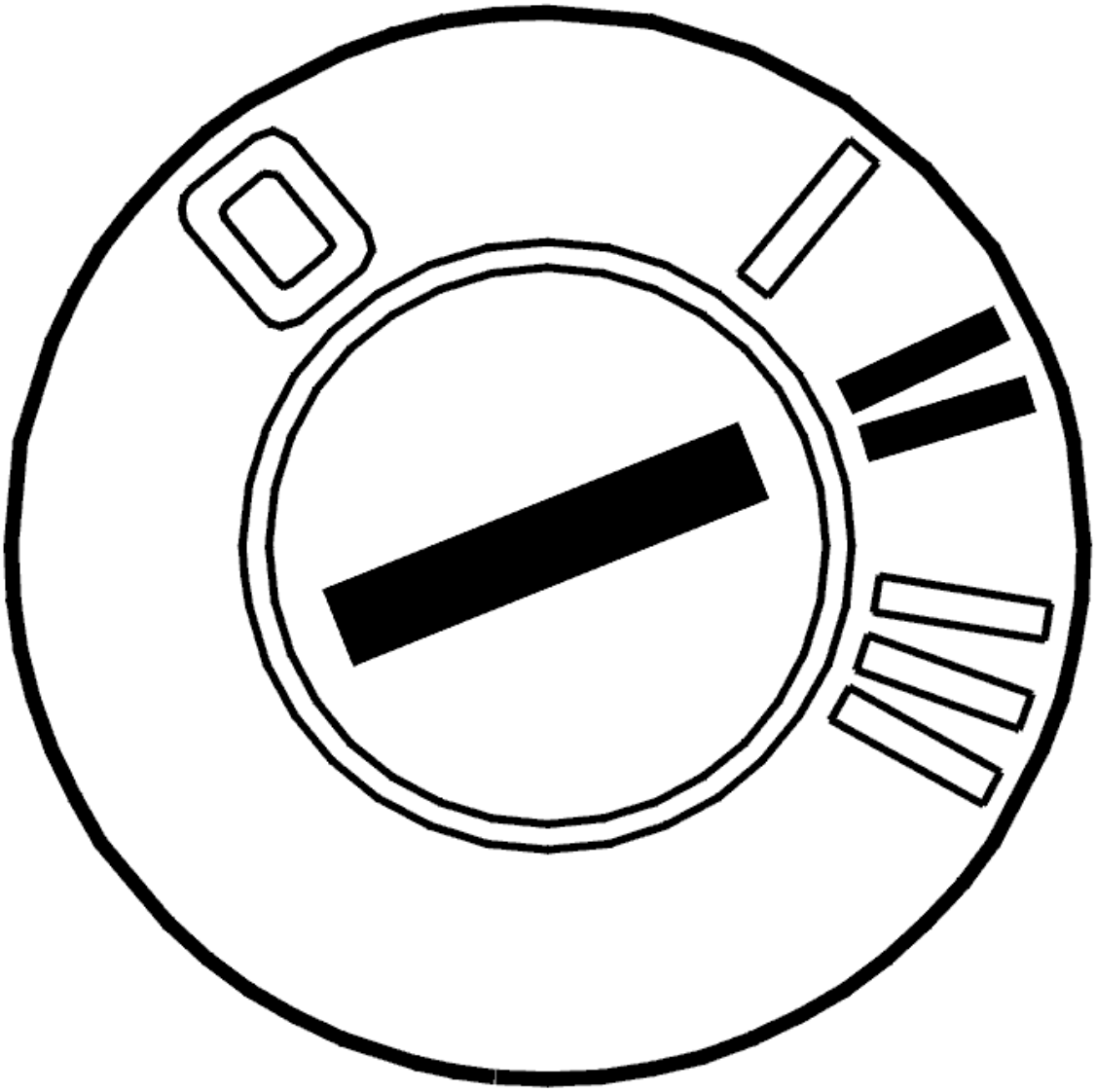

Fig. 320: Identifying Ignition ON
Courtesy of VOLVO CARS CORPORATION

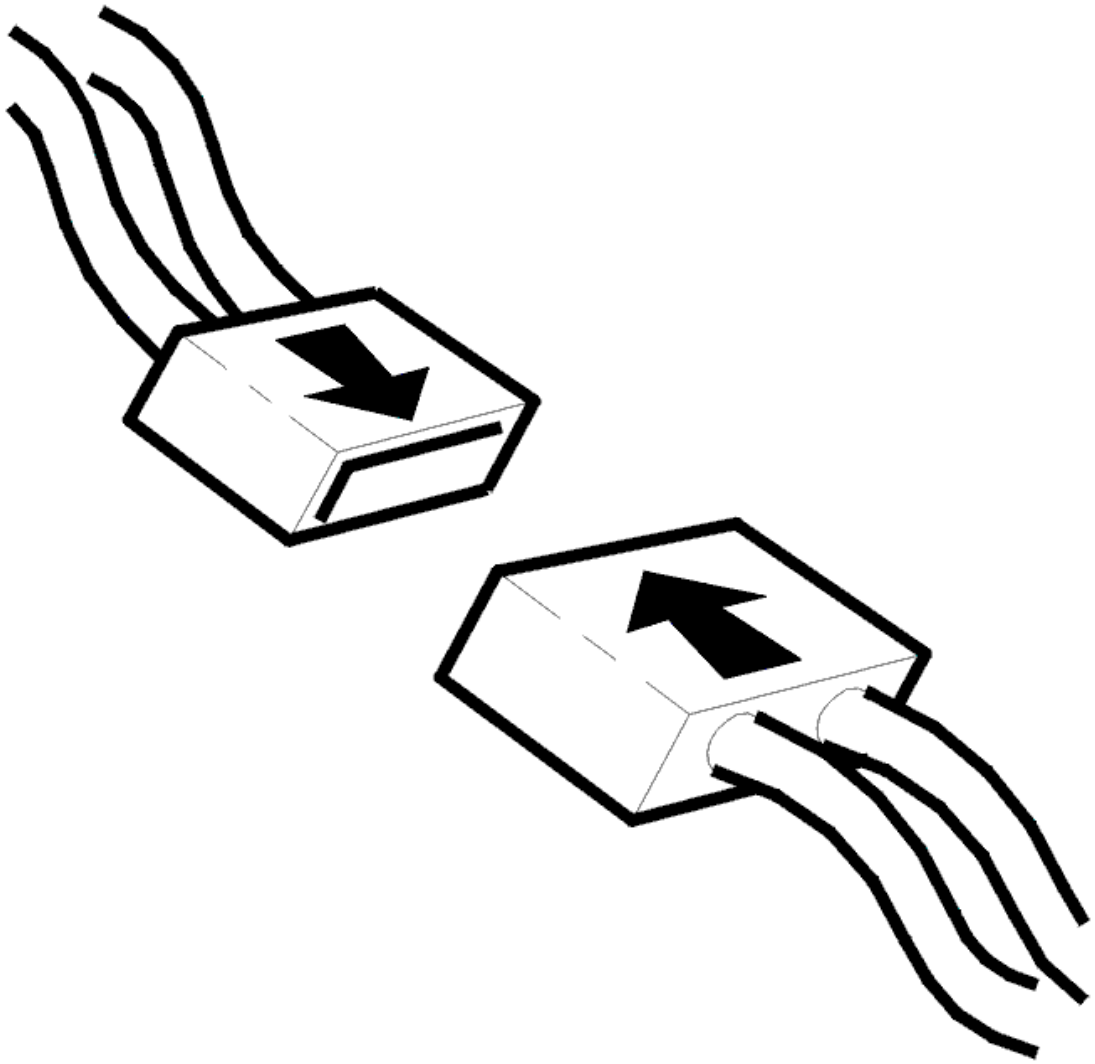

Fig. 321: Identifying Connector(s) Reinstallation
Courtesy of VOLVO CARS CORPORATION

- Ignition off.
- Wait for at least 90 seconds.
- Connect the connectors, install the components etc.
- Ignition on.
- Gear selector in position P.
- Activate solenoid S2.

  The value should change between OFF and ON.

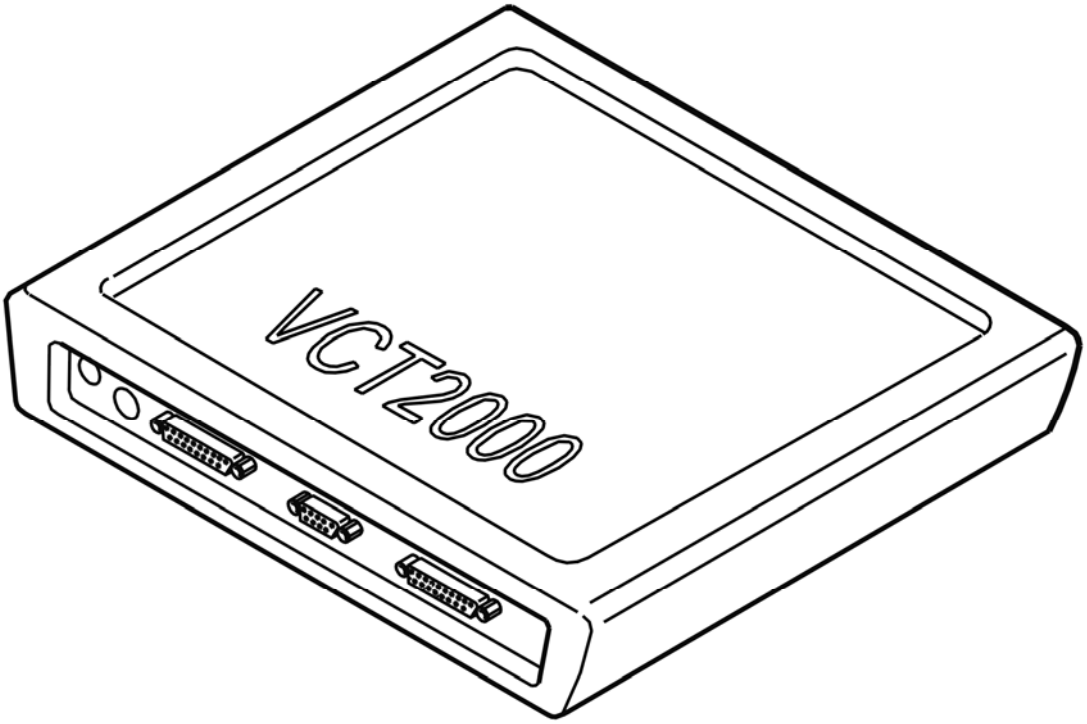

Fig. 322: Identifying VCT2000 Diagnostic Tool Symbol In VIDA
Courtesy of VOLVO CARS CORPORATION

Does the value change?

- **YES**

  VERIFIED: Troubleshooting has been completed.

- **NO**

  Refer to **INFORMATION**

INFORMATION

FAULT-TRACING INFORMATION

The fault should have been detected and remedied. As this is not the case fault-tracing has failed.

Exit fault-tracing for this diagnostic trouble code (DTC) or make another attempt.

INFORMATION

FAULT-TRACING INFORMATION

If the fault is intermittent, do not verify fault-tracing if the fault does not recur.

It is possible to view the information again, or leave fault-tracing for this diagnostic trouble code (DTC).

FAULTY SIGNAL

CHECKING TRANSMISSION FLUID TEMPERATURE SENSOR

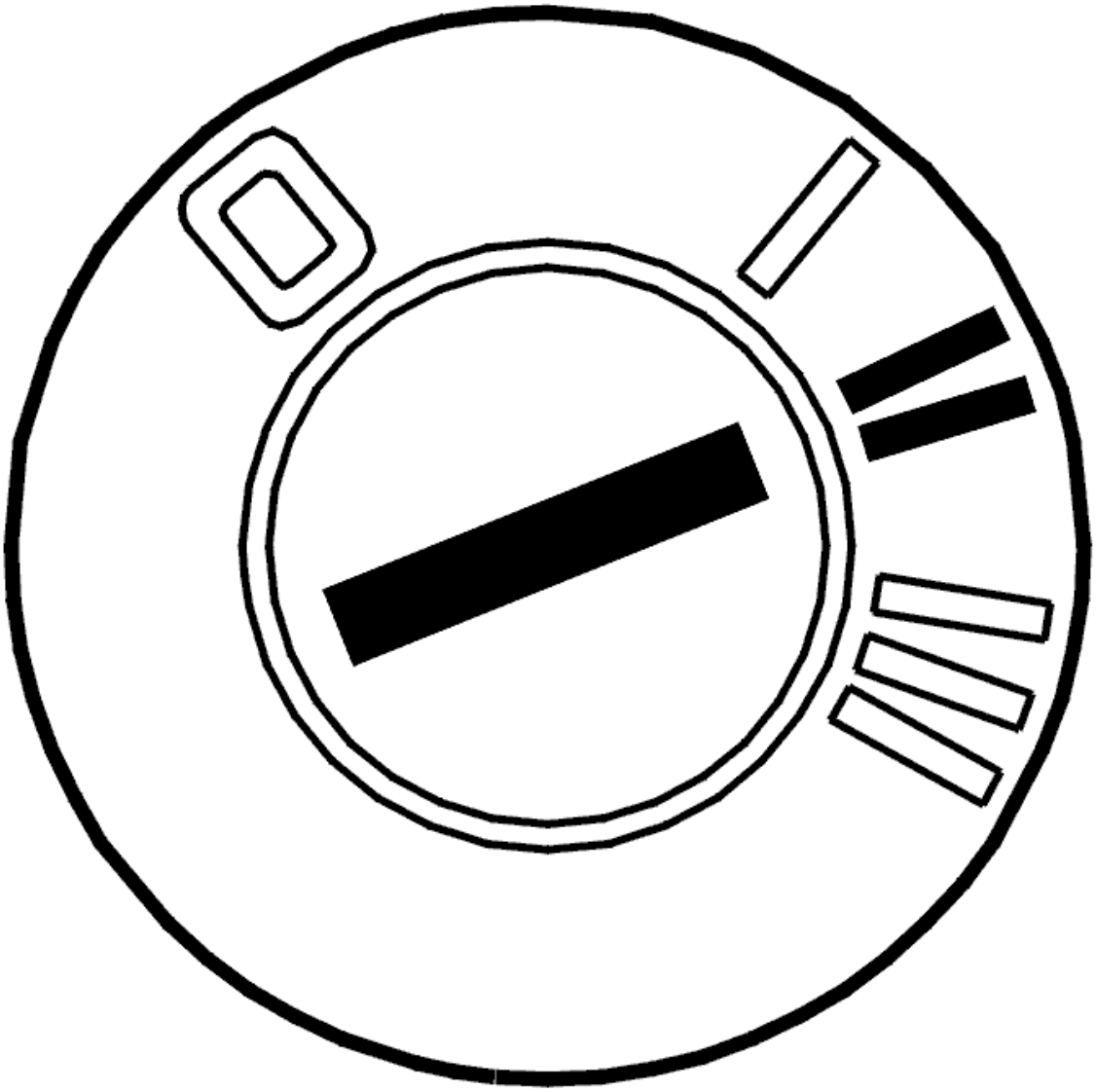

Fig. 323: Identifying Ignition ON
Courtesy of VOLVO CARS CORPORATION

- Ignition on
- Read off the oil temperature.

  Check that the temperature is within its permitted range.

Compare with the transmission temperature.

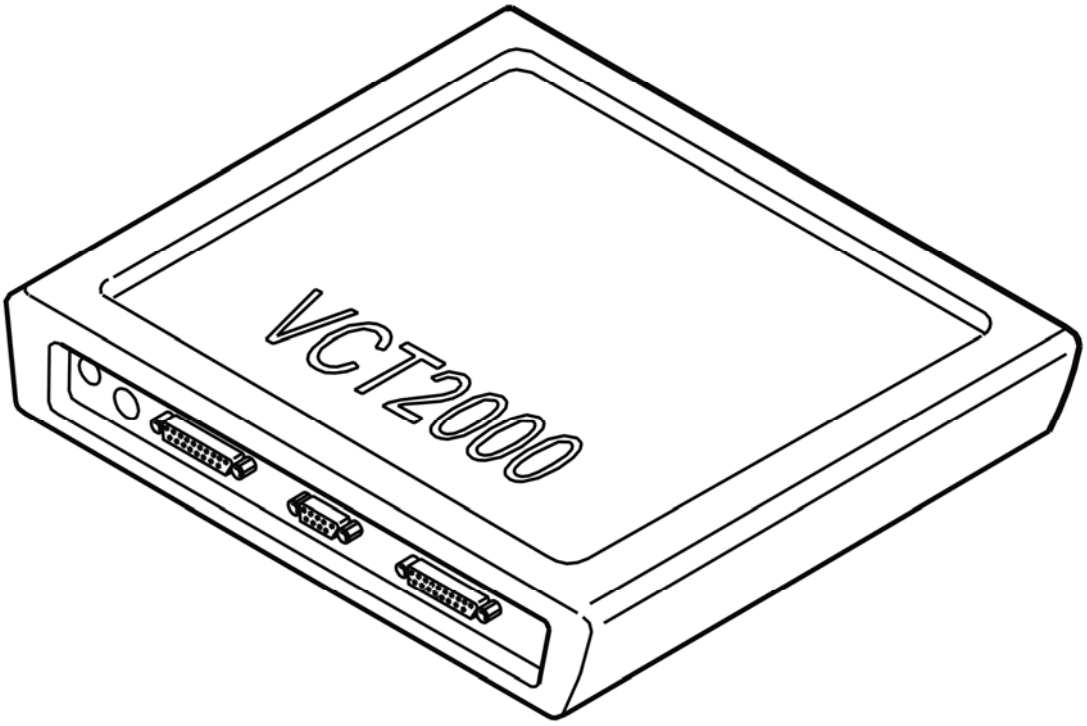

Fig. 324: Identifying VCT2000 Diagnostic Tool Symbol In VIDA
Courtesy of VOLVO CARS CORPORATION

Was the transmission temperature within its permitted range?

- **YES**

  Refer to **INTERMITTENT FAULT**

- **NO**

  Refer to **CHECKING TRANSMISSION FLUID TEMPERATURE SENSOR**

CHECKING TRANSMISSION FLUID TEMPERATURE SENSOR

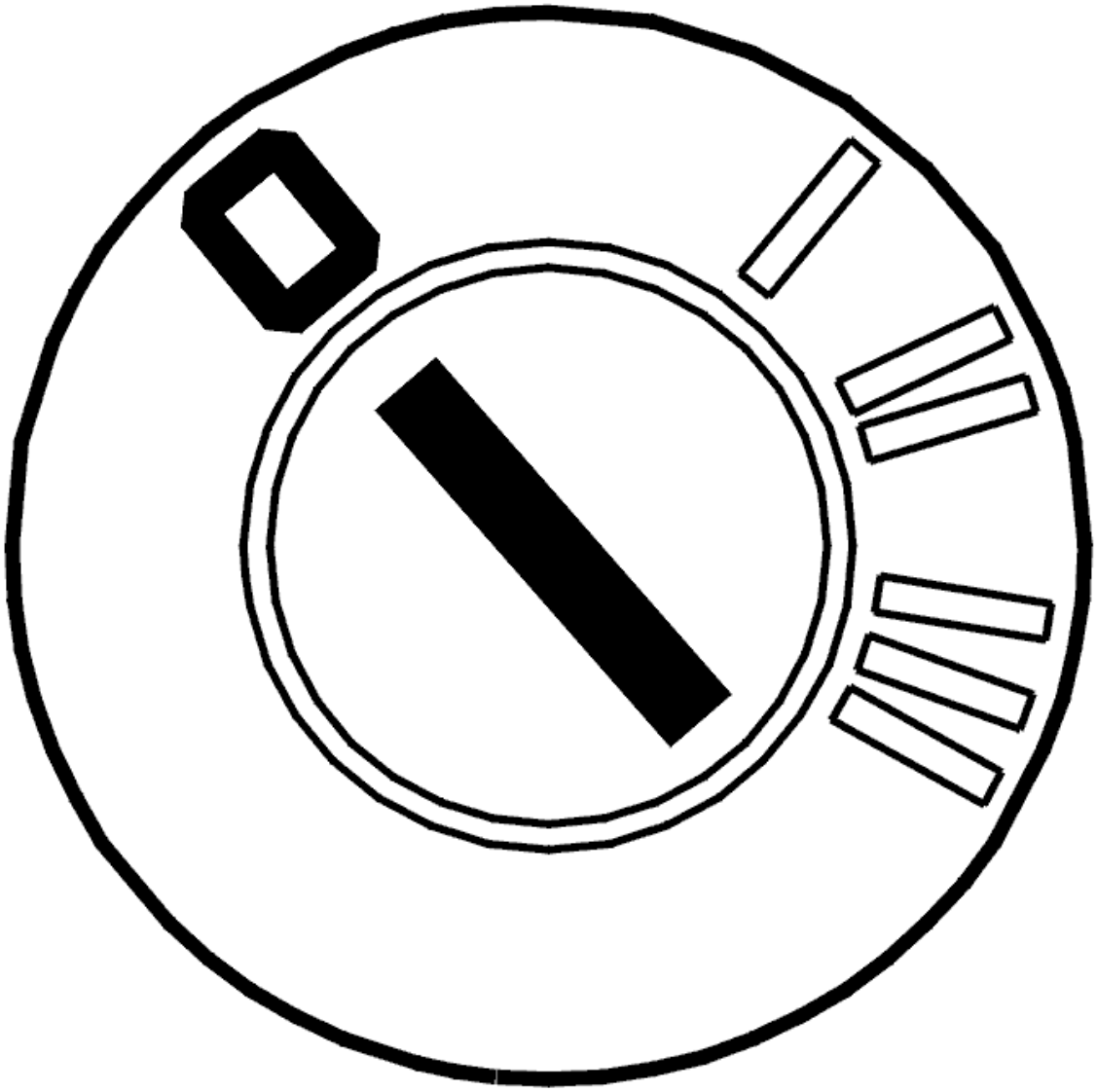

Fig. 325: Identifying Ignition OFF
Courtesy of VOLVO CARS CORPORATION

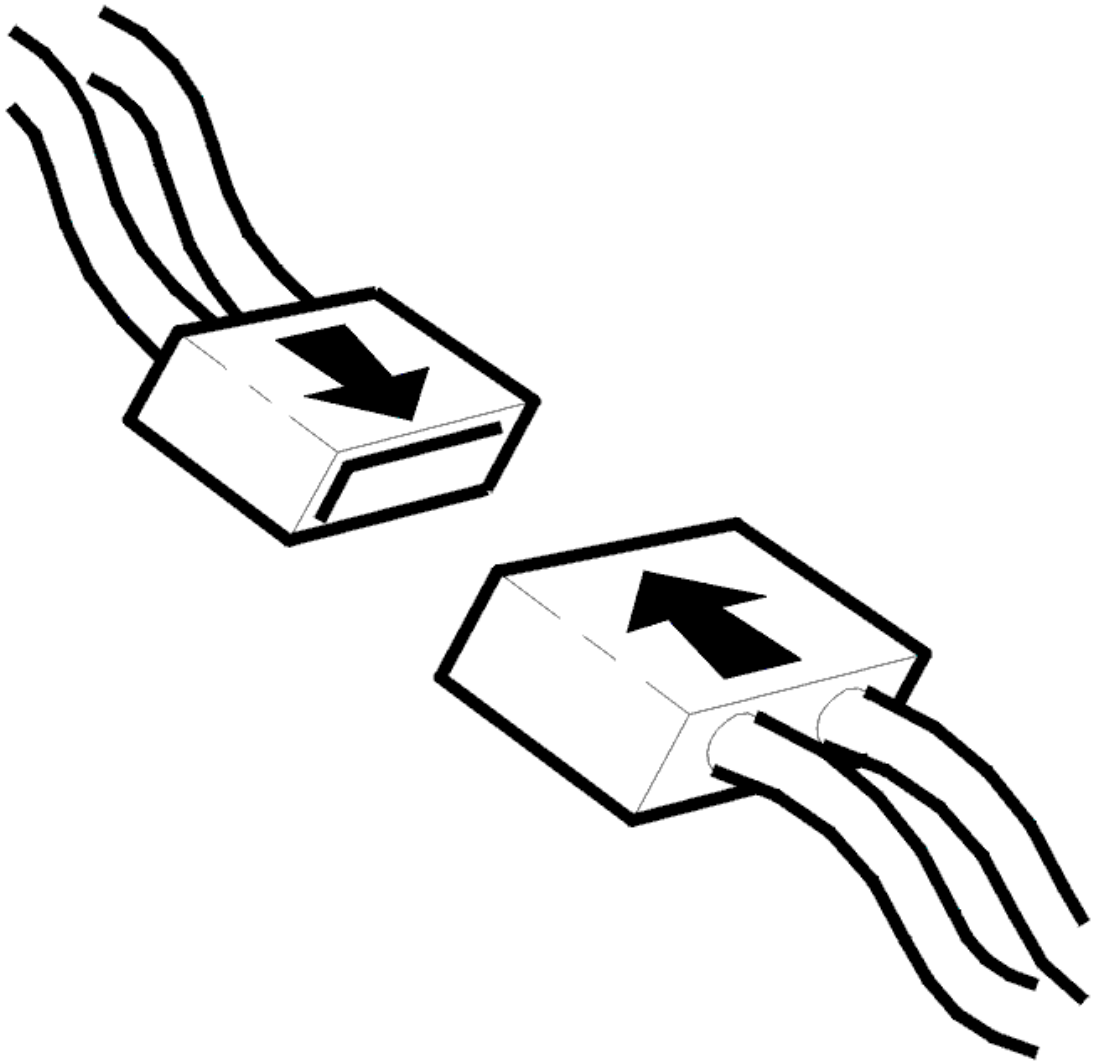

Fig. 326: Identifying Connector(s) Reinstallation
Courtesy of VOLVO CARS CORPORATION

- Ignition off
- Transmission connector D disconnected.

  Check the temperature sensor. Measure the resistance between transmission connector D terminals #D7 and #D8.

  The resistance must be 4.5-6 kohms at 20°C.

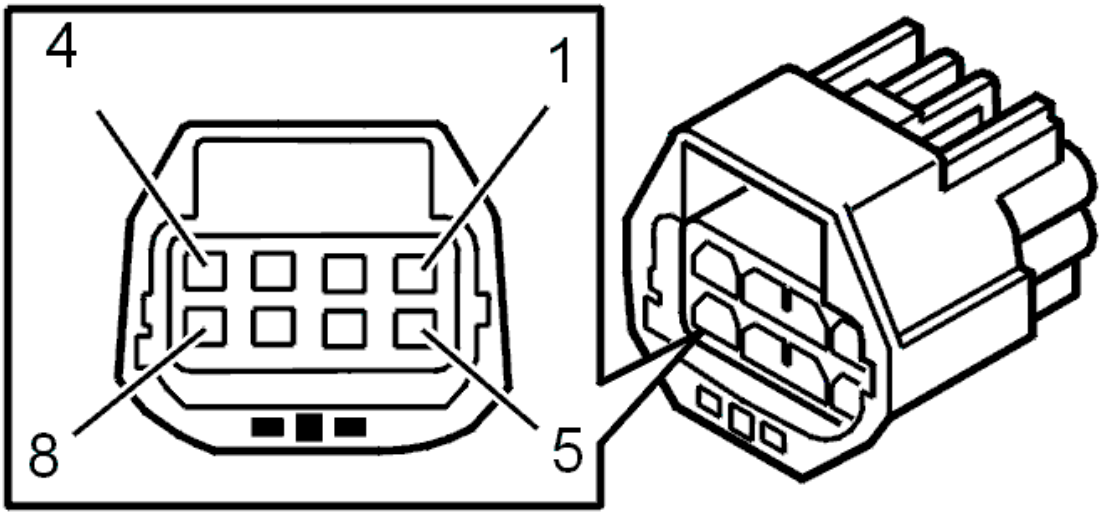

Fig. 327: Identifying 8-Pin Transmission Connector Terminals
Courtesy of VOLVO CARS CORPORATION

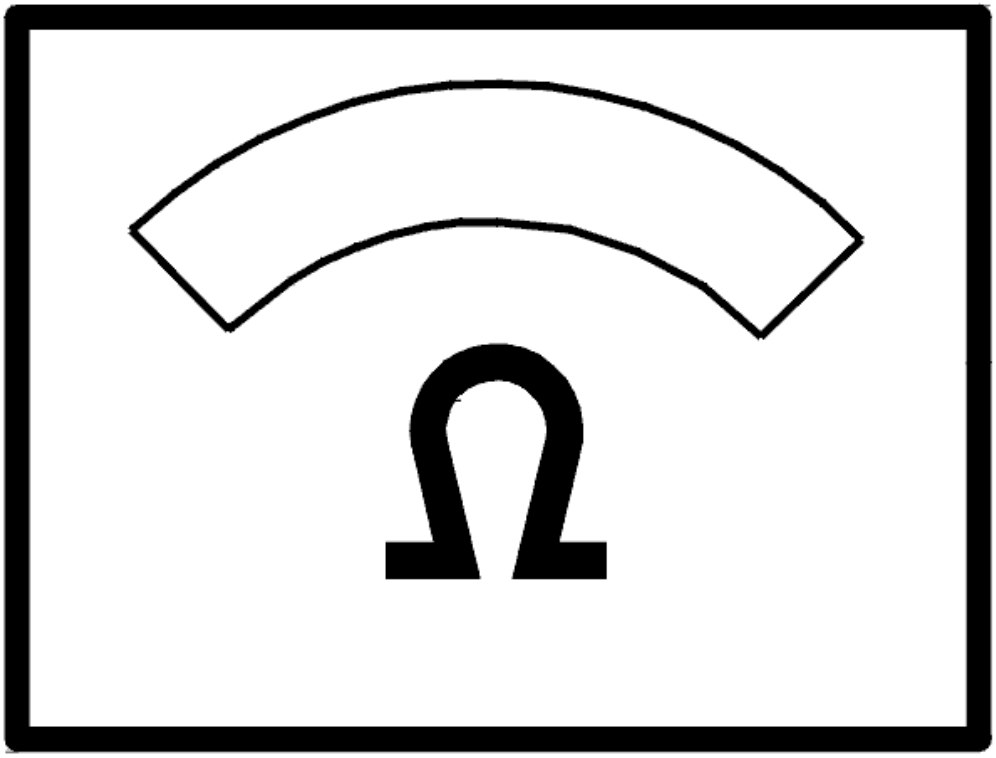

Fig. 328: Identifying Ohms Display
Courtesy of VOLVO CARS CORPORATION

Was the resistance OK?

- **YES**

  Refer to **CHECKING TRANSMISSION FLUID TEMPERATURE SENSOR**

- **NO**

  Refer to **CHECKING THE CABLE AND COMPONENT**

CHECKING TRANSMISSION FLUID TEMPERATURE SENSOR

Check the cable between control module terminal #A37 (#A37) and transmission connector terminal #D7

(control module side). Check for an open-circuit according to **OPEN-CIRCUIT, PERMANENT FAULTS** .

Check the cable between control module terminal #A55 (#A55)and transmission connector terminal #D8 (control module side). Check for an open-circuit according to **OPEN-CIRCUIT, PERMANENT FAULTS** .

Remedy as necessary.

Other information:

- To connect the breakout box, see **CONNECTING THE BREAKOUT BOX**
- To disconnect the transmission connectors, see **CONNECTORS, TRANSMISSION, DISCONNECTING / CONNECTING**
- For information about signals, see **SIGNAL DESCRIPTION. TRANSMISSION CONTROL MODULE (TCM)** .

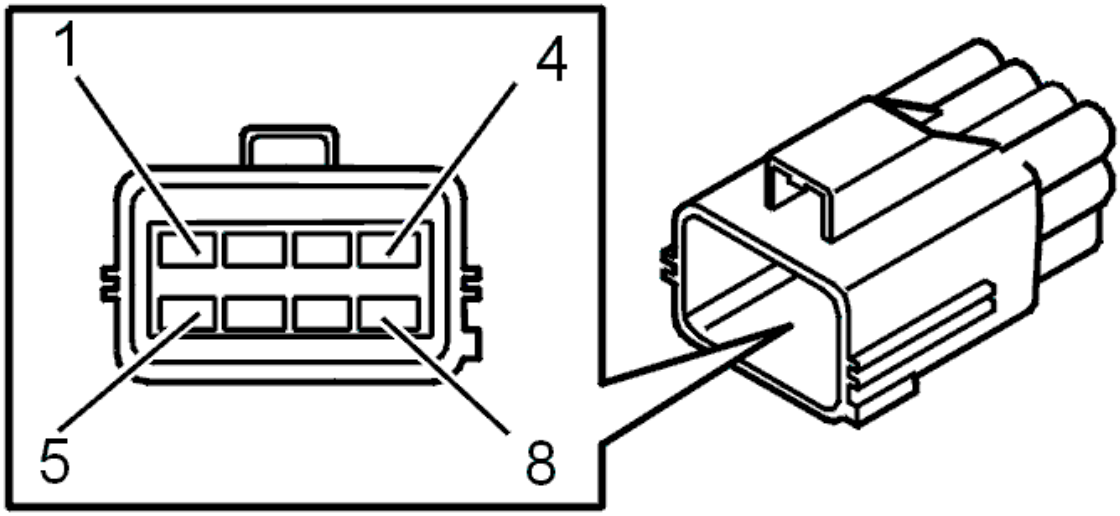

Fig. 329: Identifying Transmission Connector Terminals
Courtesy of VOLVO CARS CORPORATION

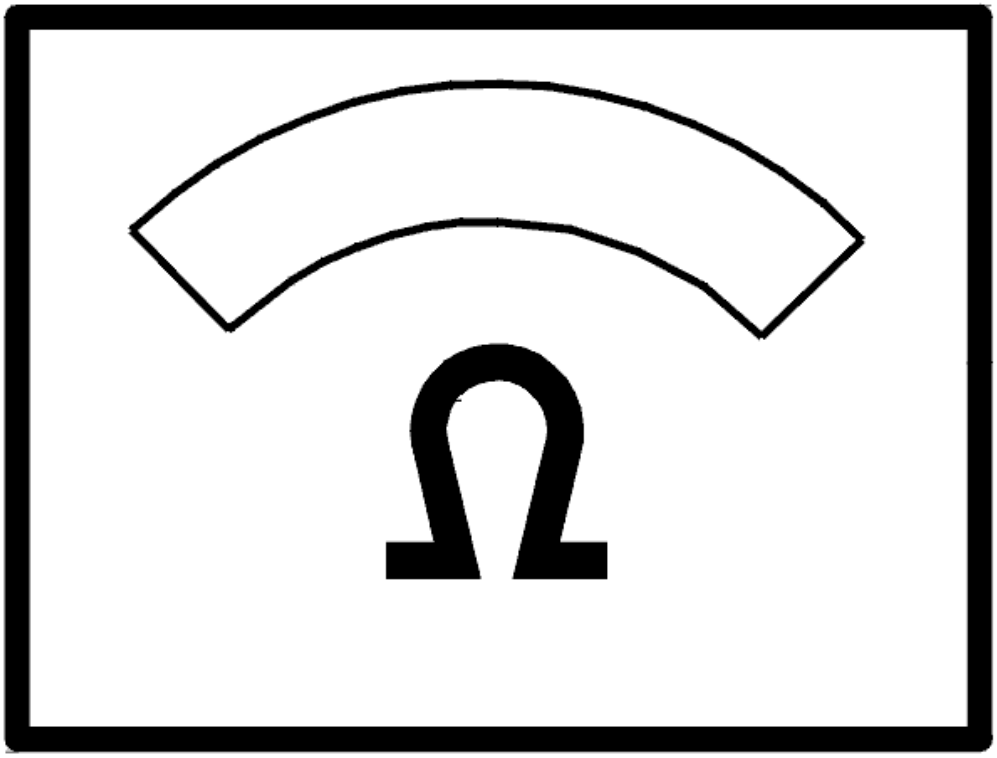

Fig. 330: Identifying Ohms Display
Courtesy of VOLVO CARS CORPORATION

Was a fault detected?

- **YES**

  Refer to **VERIFICATION**

- **NO**

  Refer to **CHECKING THE CABLE AND COMPONENT**

CHECKING THE CABLE AND COMPONENT

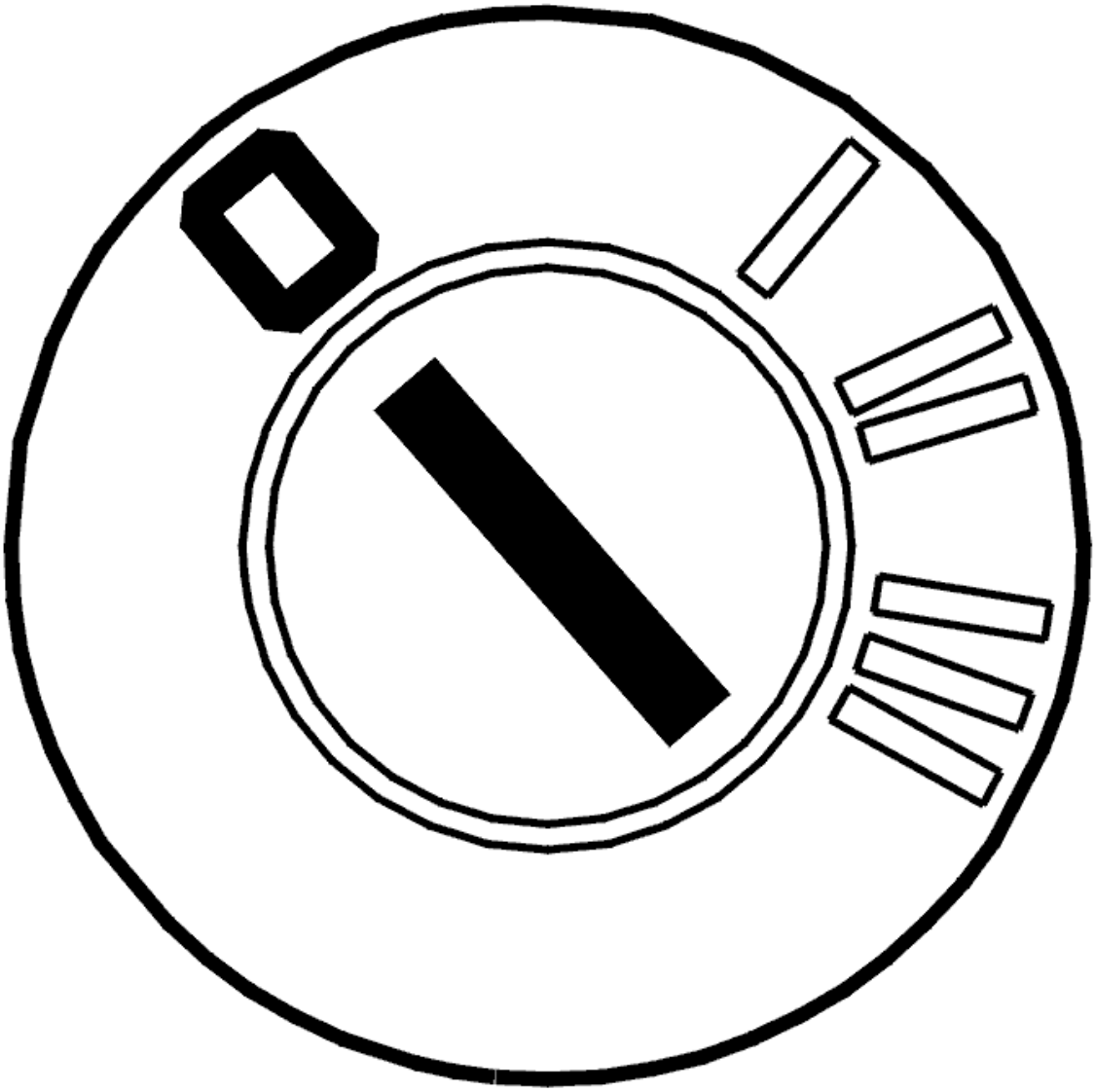

Fig. 331: Identifying Ignition OFF
Courtesy of VOLVO CARS CORPORATION

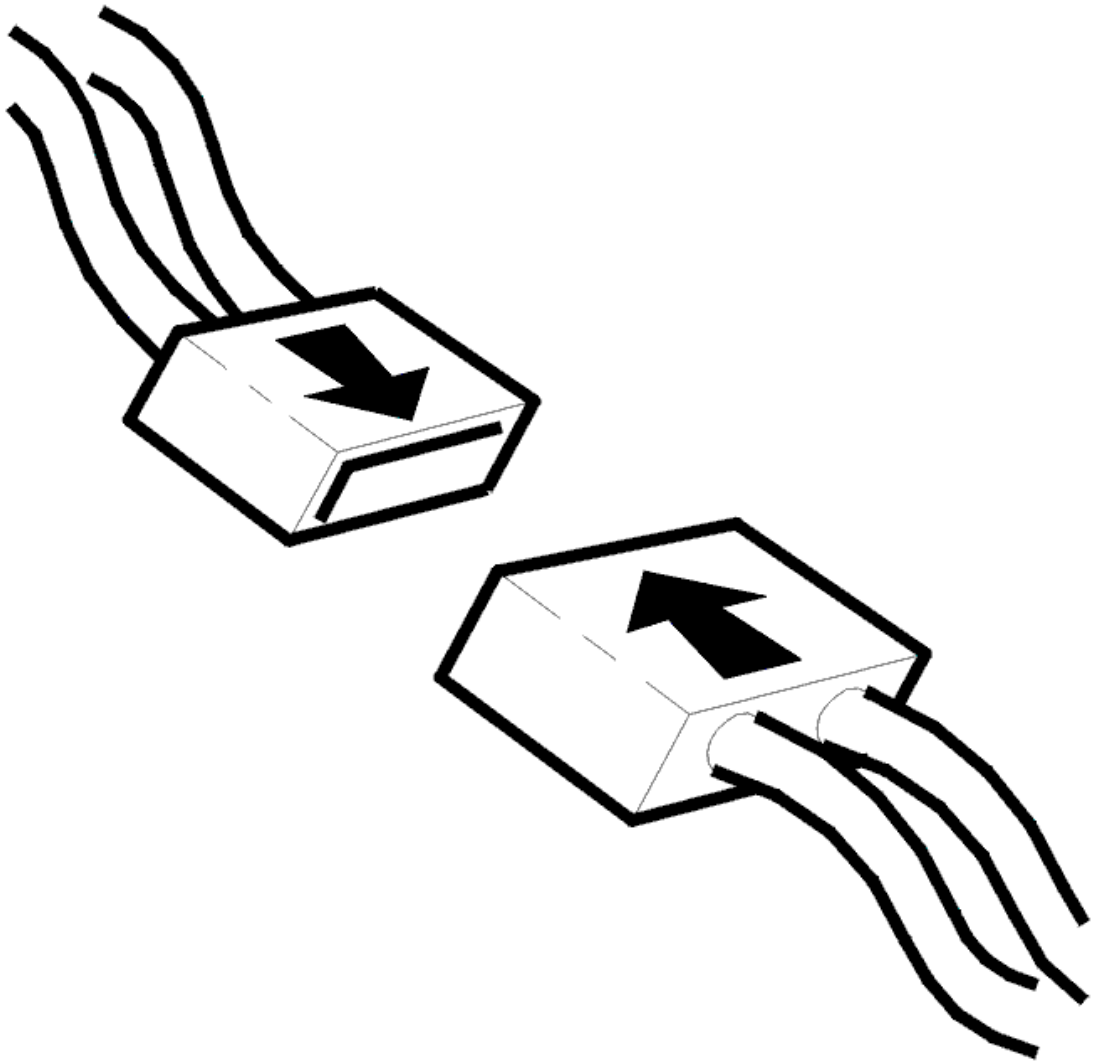

Fig. 332: Identifying Connector(s) Reinstallation
Courtesy of VOLVO CARS CORPORATION

- Ignition off
- Open the transmission control system.

  Check the cable between transmission connector terminal #D7 and temperature sensor terminal #1. Check the cable between transmission connector #D8 and temperature sensor terminal #2. Check for an open-circuit according to **OPEN-CIRCUIT, PERMANENT FAULTS** .

  Also check the cables for a short-circuit to each other.

  HINT: Check the temperature sensor. With the ignition off and transmission connector D disconnected, measure the resistance between transmission connector D terminals #D7 and #D8. The resistance must be 4.5-6 kohms at 20 °C.

Remedy as necessary.

Other information:

- To connect the breakout box, see **CONNECTING THE BREAKOUT BOX**
- To disconnect the transmission connectors, see **CONNECTORS, TRANSMISSION, DISCONNECTING / CONNECTING**
- To open the transmission control system and to check or replace the temperature sensor, see **SOLENOID CONTROL SYSTEM, REPLACING**
- For information about signals, see **SIGNAL DESCRIPTION. TRANSMISSION CONTROL MODULE (TCM)** .

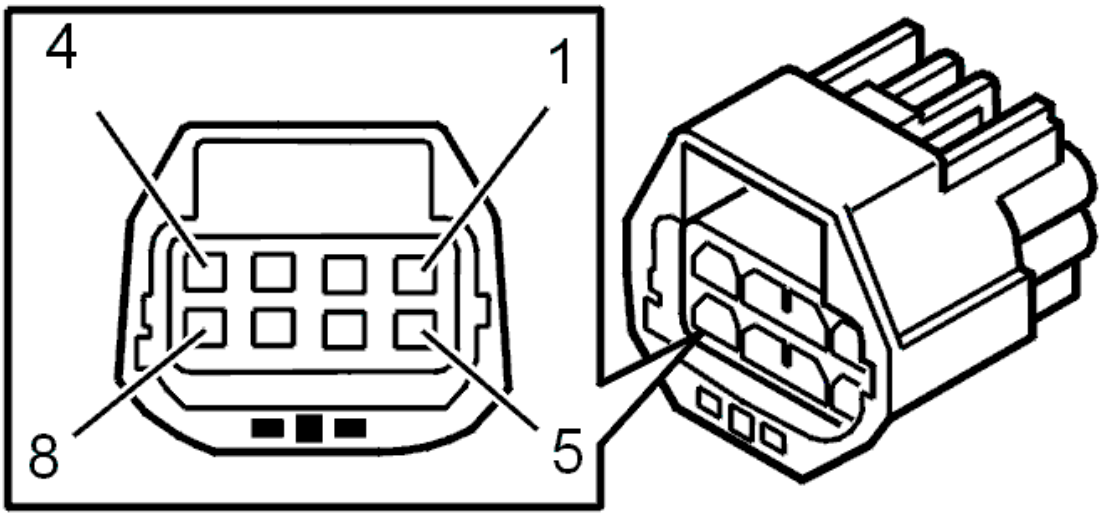

Fig. 333: Identifying 8-Pin Transmission Connector Terminals
Courtesy of VOLVO CARS CORPORATION

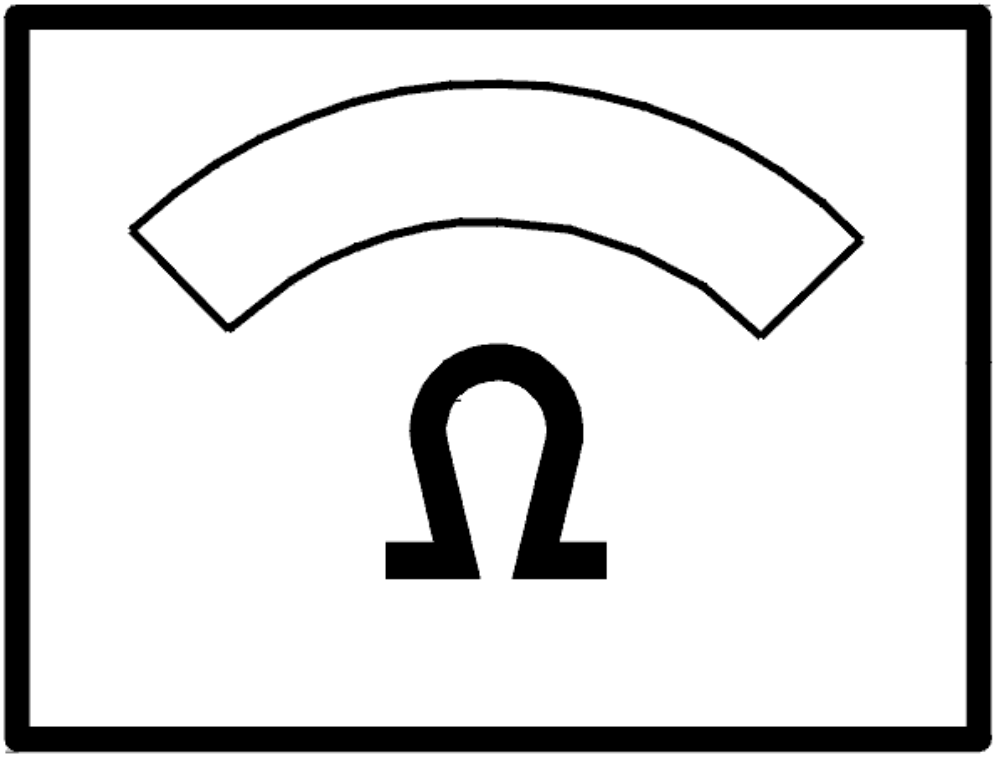

Fig. 334: Identifying Ohms Display
Courtesy of VOLVO CARS CORPORATION

- **Continue**

  Refer to **RESETTING TRANSMISSION FLUID CHANGE COUNTER**

INTERMITTENT FAULT

Check the transmission control module (TCM) and transmission connector D. Check for contact resistance and oxidation according to **CONTACT RESISTANCE AND OXIDATION** .

Check the cable between transmission control module (TCM) terminal #A37 (#A37) and transmission connector terminal #D7 (control module side). Check for an intermittent open-circuit according to **OPEN-CIRCUIT, INTERMITTENT FAULTS** .

Check the cable between control module terminal #A55 (#A55)and transmission connector terminal #D8 (control module side). Check for an intermittent open-circuit according to **OPEN-CIRCUIT, INTERMITTENT FAULTS** .

Remedy as necessary.

Other information:

- To connect the breakout box, see **CONNECTING THE BREAKOUT BOX**
- To disconnect the transmission connectors, see **CONNECTORS, TRANSMISSION, DISCONNECTING / CONNECTING**
- For information about signals, see **SIGNAL DESCRIPTION. TRANSMISSION CONTROL MODULE (TCM)** .

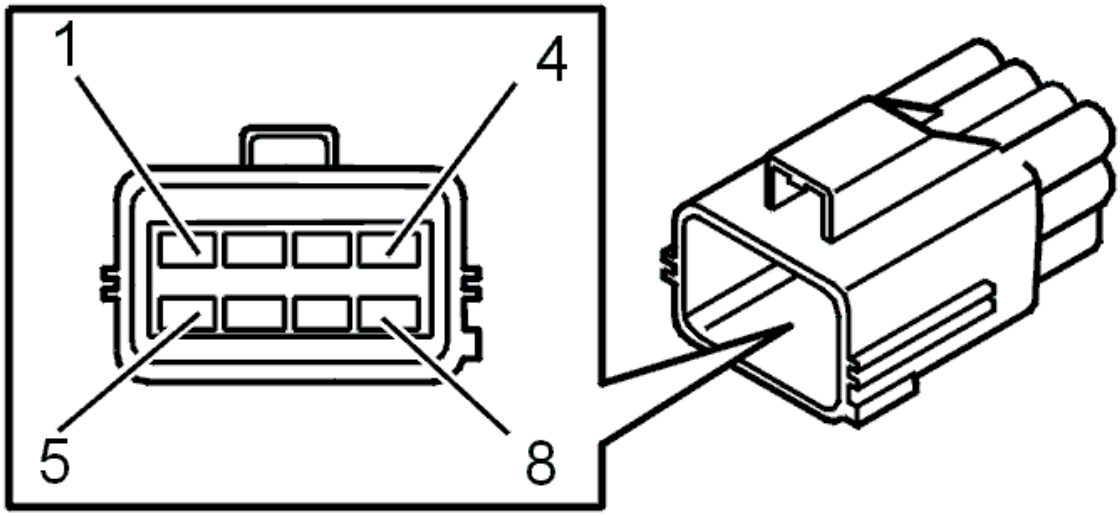

Fig. 335: Identifying Transmission Connector Terminals
Courtesy of VOLVO CARS CORPORATION

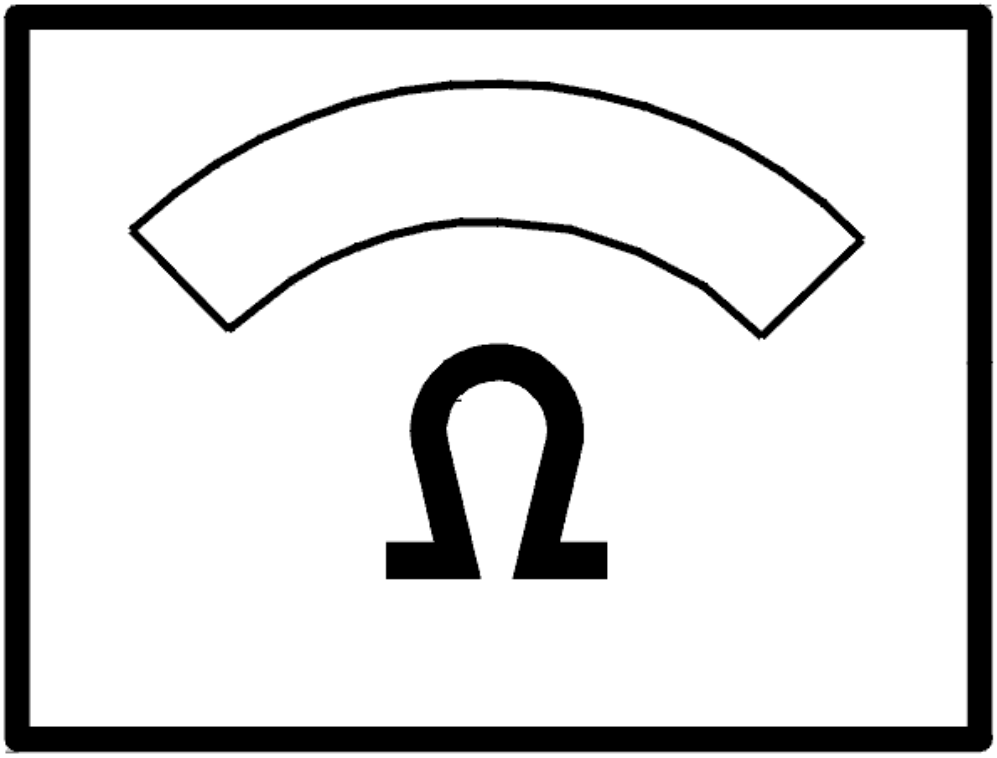

Fig. 336: Identifying Ohms Display
Courtesy of VOLVO CARS CORPORATION

- **Continue**

  Refer to **INFORMATION**

RESETTING TRANSMISSION FLUID CHANGE COUNTER

RESETTING TRANSMISSION FLUID CHANGE COUNTER

HINT: The transmission control module (TCM) has a counter for the oil quality. The counter counts up if the transmission is exposed to too high a load or an ambient temperature that is too high. If the counter is not reset when the oil is drained or changed, there is a risk that a diagnostic trouble code (DTC) will be stored in faulty circumstances. Therefore it is important that the "Transmission oil change" counter is reset.

NOTE: **This applies only when the transmission fluid is changed and when the fluid is changed when repairs are carried out to the transmission temperature sensor.**

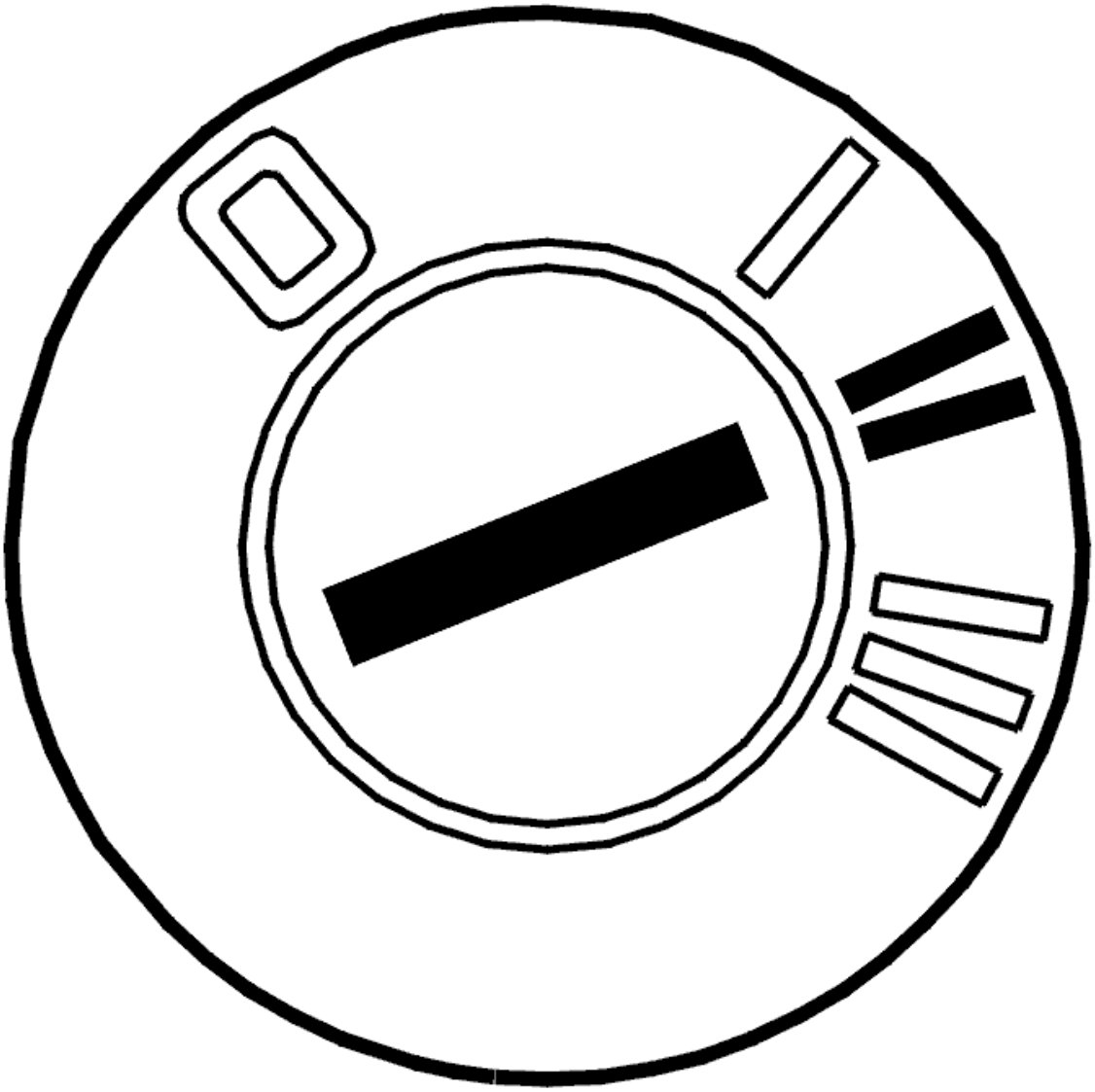

Fig. 337: Identifying Ignition ON
Courtesy of VOLVO CARS CORPORATION

- Ignition on.

  Reset the counter by clicking on the VCT 2000 symbol.

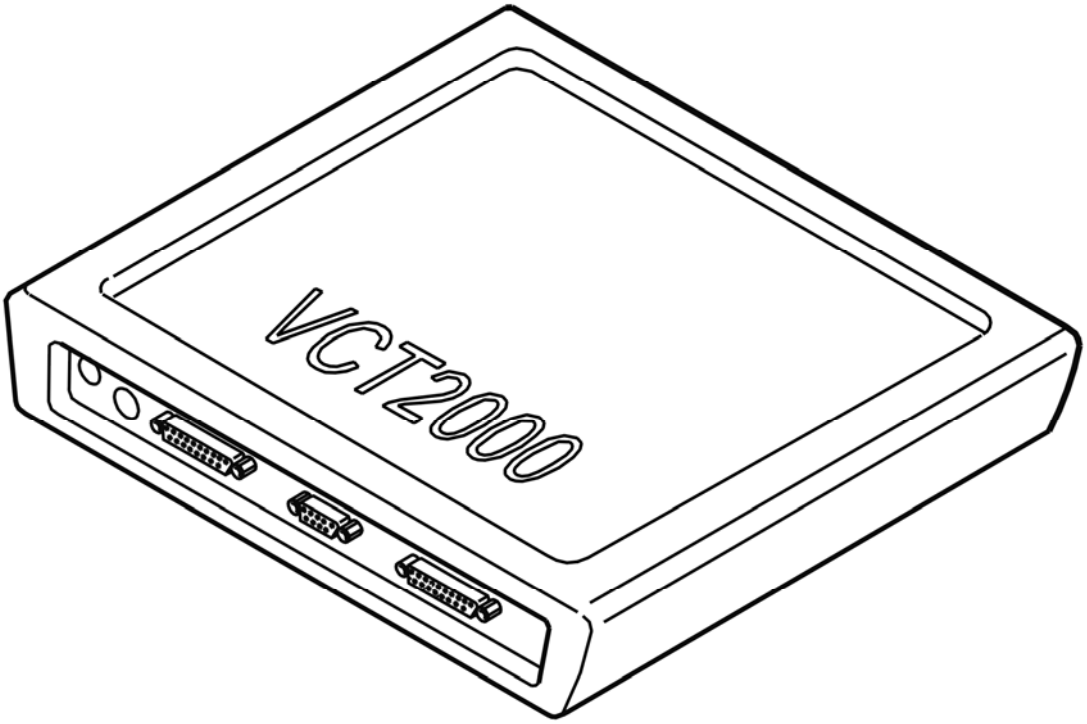

Fig. 338: Identifying VCT2000 Diagnostic Tool Symbol In VIDA
Courtesy of VOLVO CARS CORPORATION

- **Continue**

  Refer to **VERIFICATION**

VERIFICATION

VERIFICATION

HINT: After carrying out the repair, check that the fault has been remedied.

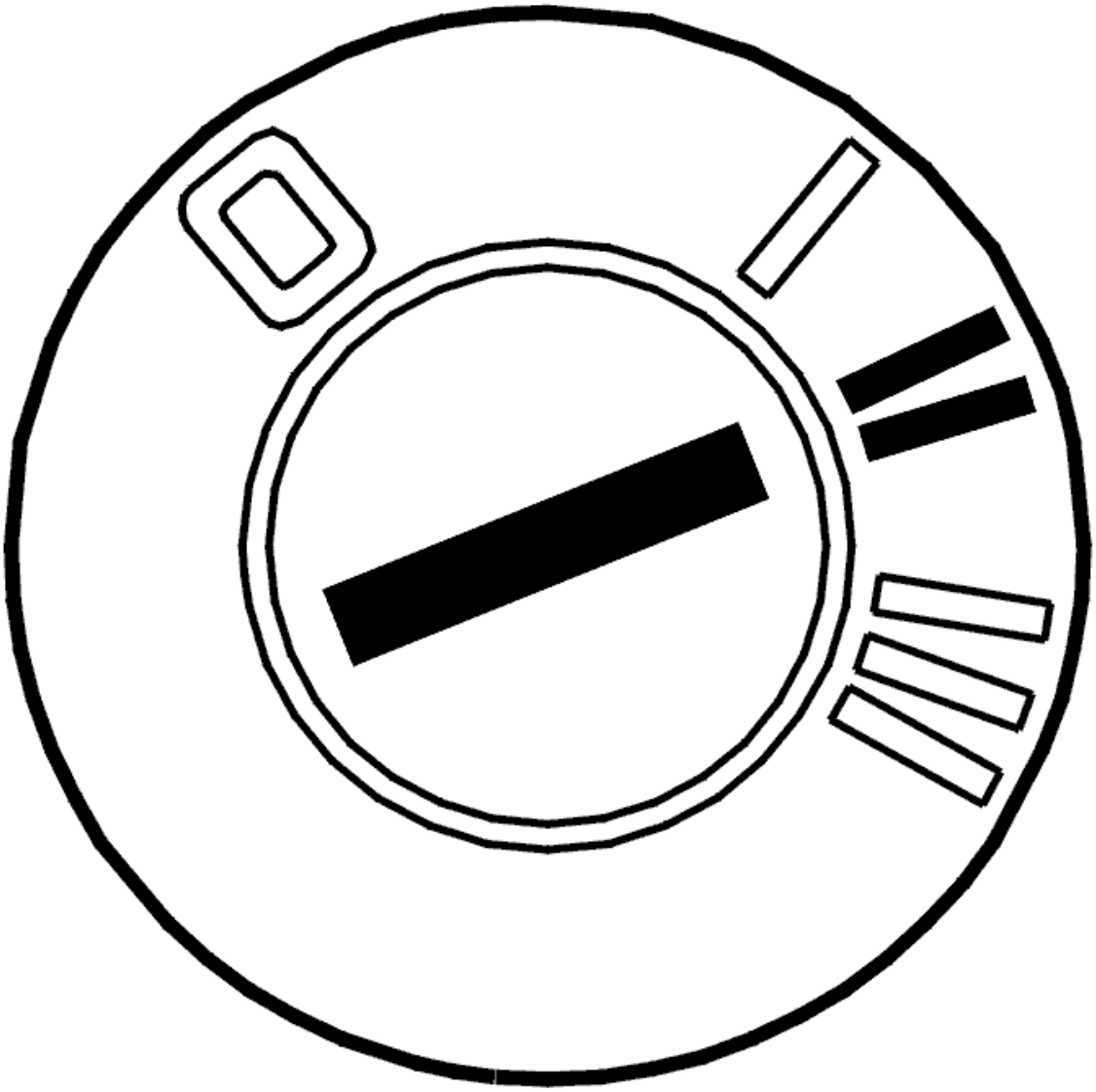

Fig. 339: Identifying Ignition ON
Courtesy of VOLVO CARS CORPORATION

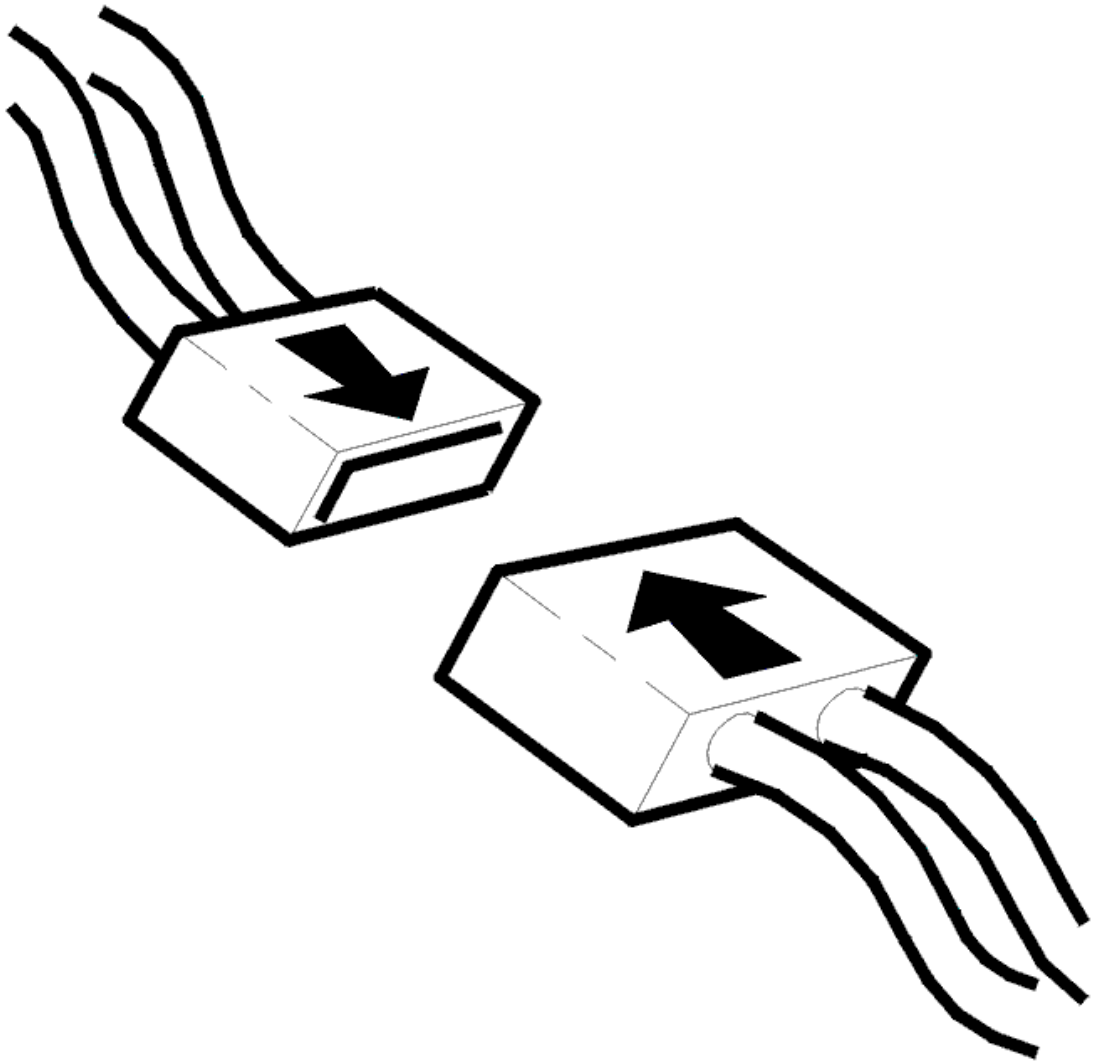

Fig. 340: Identifying Connector(s) Reinstallation
Courtesy of VOLVO CARS CORPORATION

- Ignition off.
- Reinstall the connectors, components etc.
- Ignition on.
- Read off the oil temperature.

Check that the transmission oil temperature is within its permitted range.

Compare with the transmission temperature.

NOTE: **The transmission temperature sensor is located inside the control unit and can be affected by the heat given off by the solenoids.**

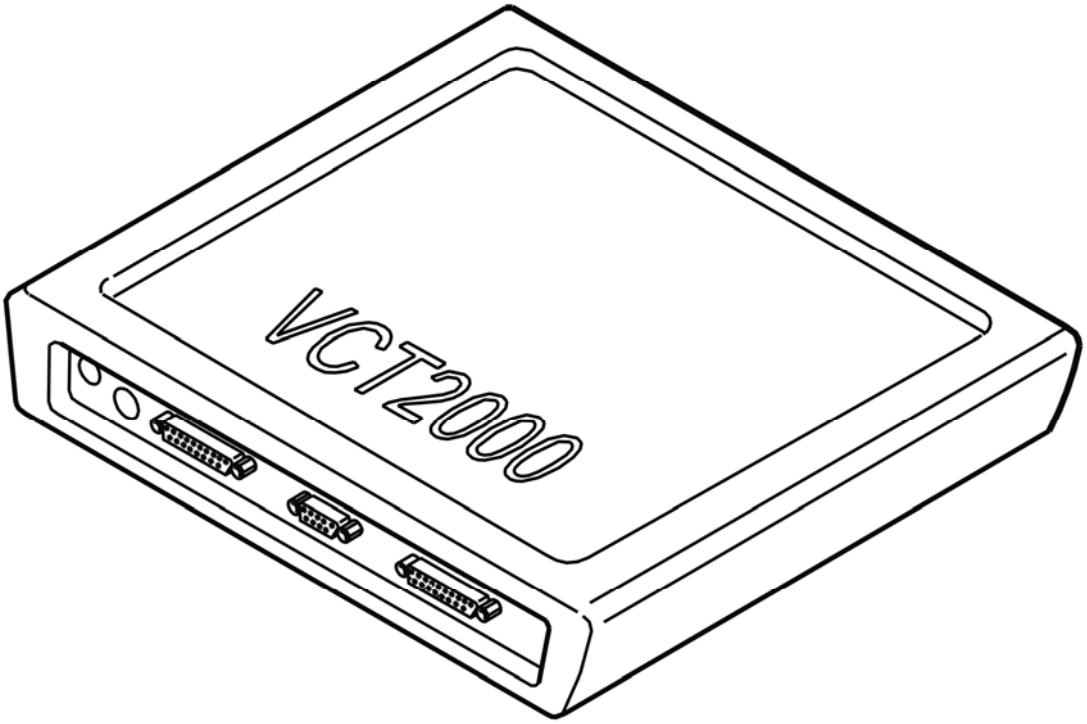

Fig. 341: Identifying VCT2000 Diagnostic Tool Symbol In VIDA
Courtesy of VOLVO CARS CORPORATION

Is the oil temperature within its permitted range?

- **YES**

  VERIFIED: Troubleshooting has been completed.

- **NO**

  Refer to **INFORMATION**

TCM-0008: SHIFT SOLENOID S2. SIGNAL MISSING (4T65 AWD; 2003-2006)

DIAGNOSTIC TROUBLE CODE (DTC) INFORMATION

Condition

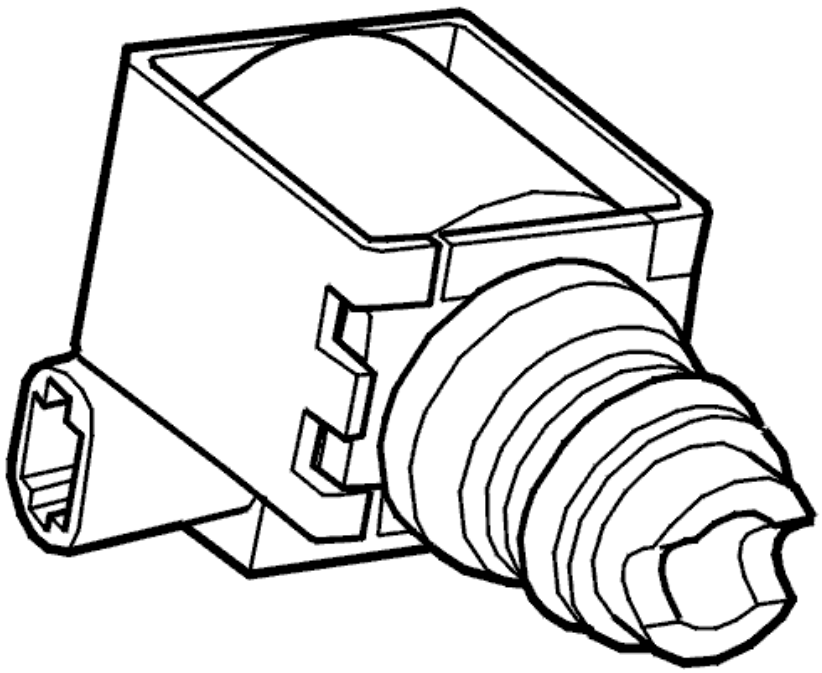

Fig. 342: Identifying Shift Solenoid S1 And S2
Courtesy of VOLVO CARS CORPORATION

Shift solenoids S2 and S1 operate in tandem to control gear-shifting. The solenoids are controlled by power stages in the transmission control module (TCM). The transmission control module (TCM) opens the power stages to activate the solenoids and sends a voltage through the circuit. Solenoid S2 is activated in 1st and 2nd gears. Diagnostic trouble code (DTC) TCM-0008 is stored if the control module registers an open-circuit in the solenoid S2 circuit when the solenoid is activated.

Substitute Value

- The control module "Limp Home" program has been initiated.

Possible Source

- Contact resistance in the terminals.
- Open-circuit in the signal cable.

- Defective solenoid.

Fault symptom[s]

- General orange warning lamp lit.
- Malfunction indicator lamp (MIL) lit.
- No lock-up function.
- No shifting.
- Harsh gear shifting.

HINT: Harsh shifting - due to disabled line pressure solenoid STH control. This results in constant maximum line pressure and leads to harsher shifting and gear engagement.

HINT: No shifting -because the transmission control module (TCM) prevents activation of the solenoids. This stops gear-shifting.

SIGNAL MISSING

CHECKS

CHECKING THE TEMPERATURE SENSOR

HINT: In some cases, the diagnostic trouble code (DTC) may be caused by a defective oil temperature sensor. Check the function of the oil temperature sensor first.

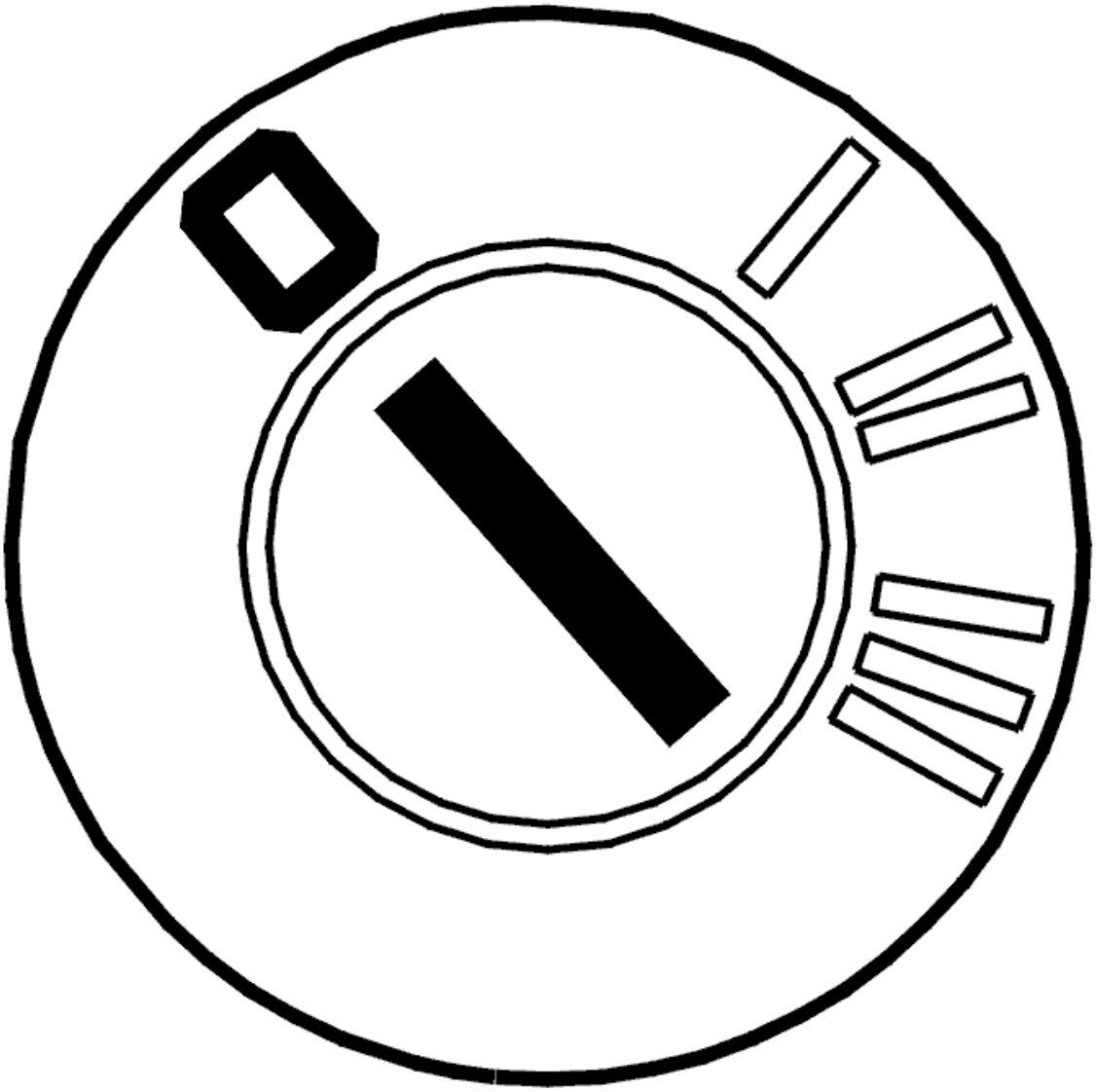

Fig. 343: Identifying Ignition OFF
Courtesy of VOLVO CARS CORPORATION

- Ignition off
- Read off the oil temperature.

  Check that the function of the temperature sensor is OK. Test drive the car to increase the temperature of the transmission fluid. Read off the temperature again. Check that the temperature has increased.

  HINT: If the temperature is outside its permitted range, fault-trace the temperature sensor.

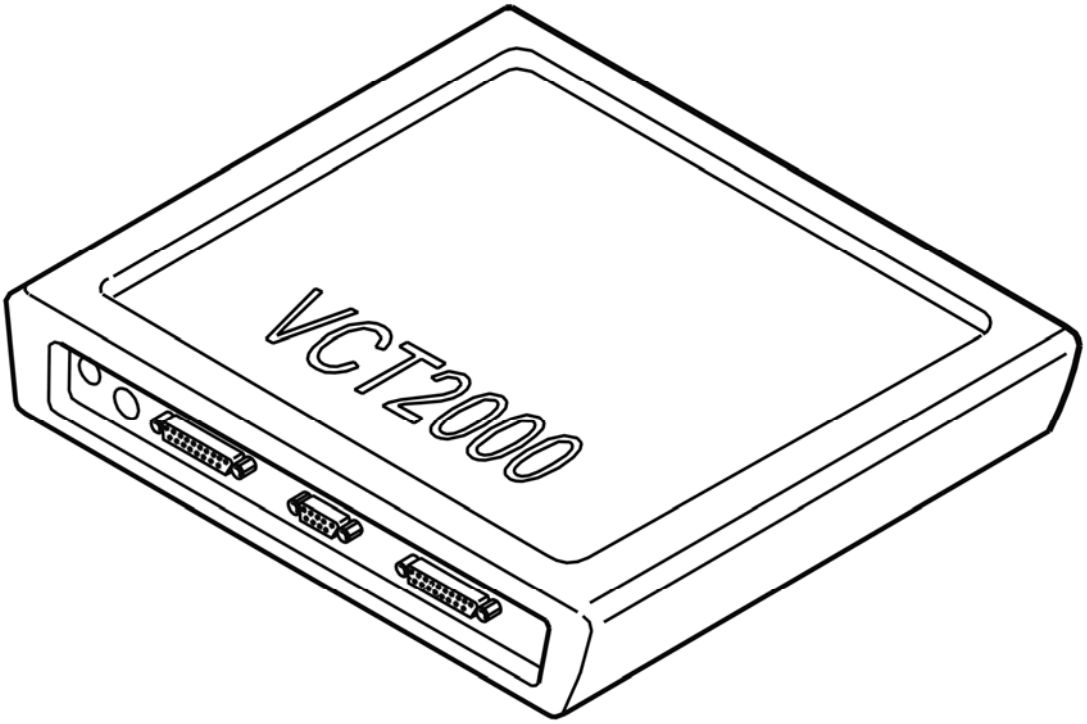

Fig. 344: Identifying VCT2000 Diagnostic Tool Symbol In VIDA
Courtesy of VOLVO CARS CORPORATION

Is the oil temperature within its permitted range?

- **YES**

  Refer to **CHECKING SHIFT SOLENOID S2**

- **NO**

  Refer to **SIGNAL TOO HIGH**

CHECKING SHIFT SOLENOID S2

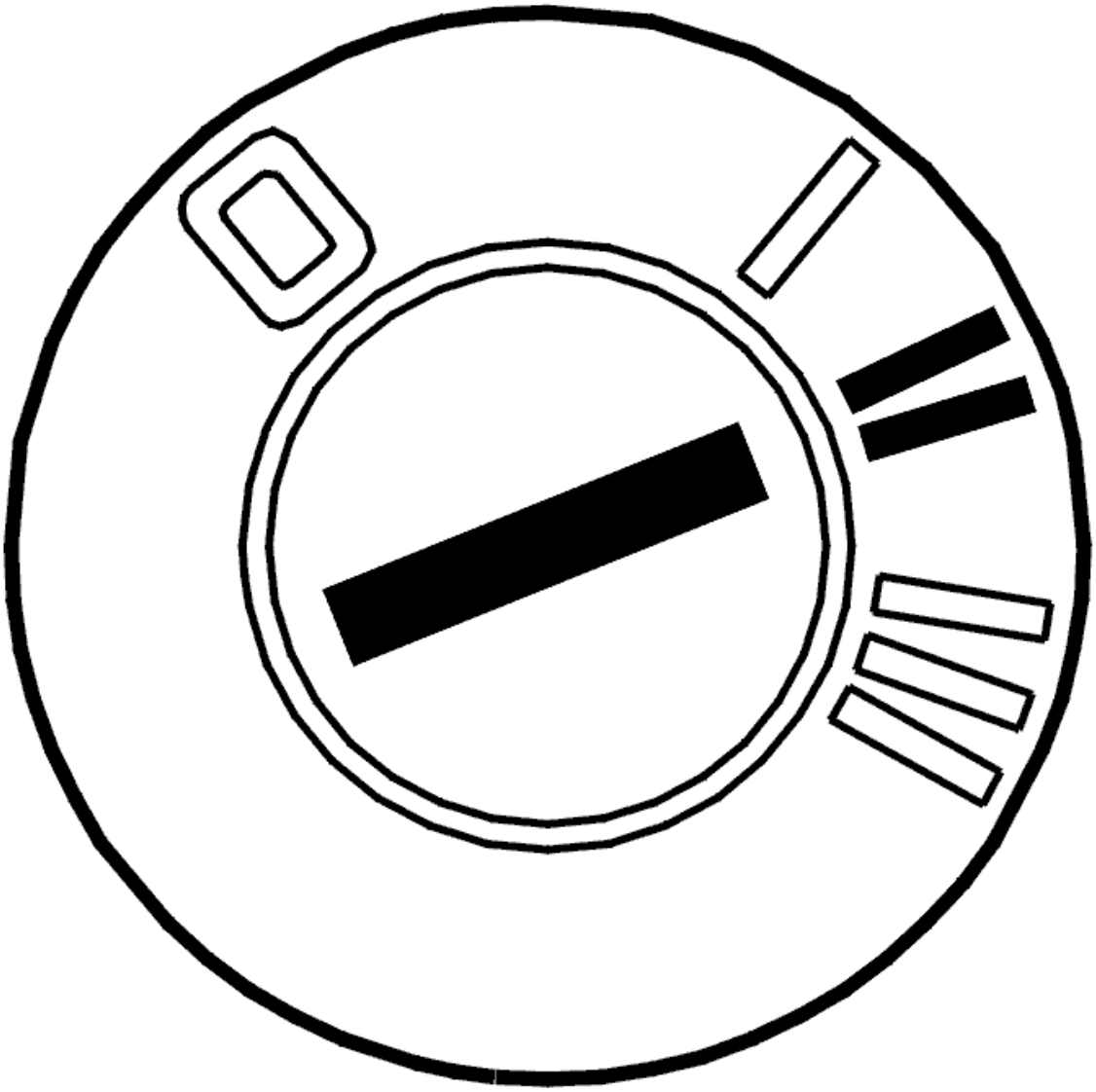

Fig. 345: Identifying Ignition ON
Courtesy of VOLVO CARS CORPORATION

- Ignition off
- Check the control module and automatic transmission connectors for contact resistance and oxidation according to **CONTACT RESISTANCE AND OXIDATION** . Remedy if necessary
- Ignition on
- Gear selector in position P
- Activate solenoid S2
- Read off the current across solenoid S2.

  The current must oscillate between approximately 0 and 1.5 A.

  Other information:

- To disconnect the control module, see **TRANSMISSION CONTROL MODULE (TCM), REPLACING**
- To disconnect the transmission connector, see **CONNECTING THE BREAKOUT BOX, GM AUTOMATIC TRANSMISSIONS**
- For information about signals, see **SIGNAL SPECIFICATION** .

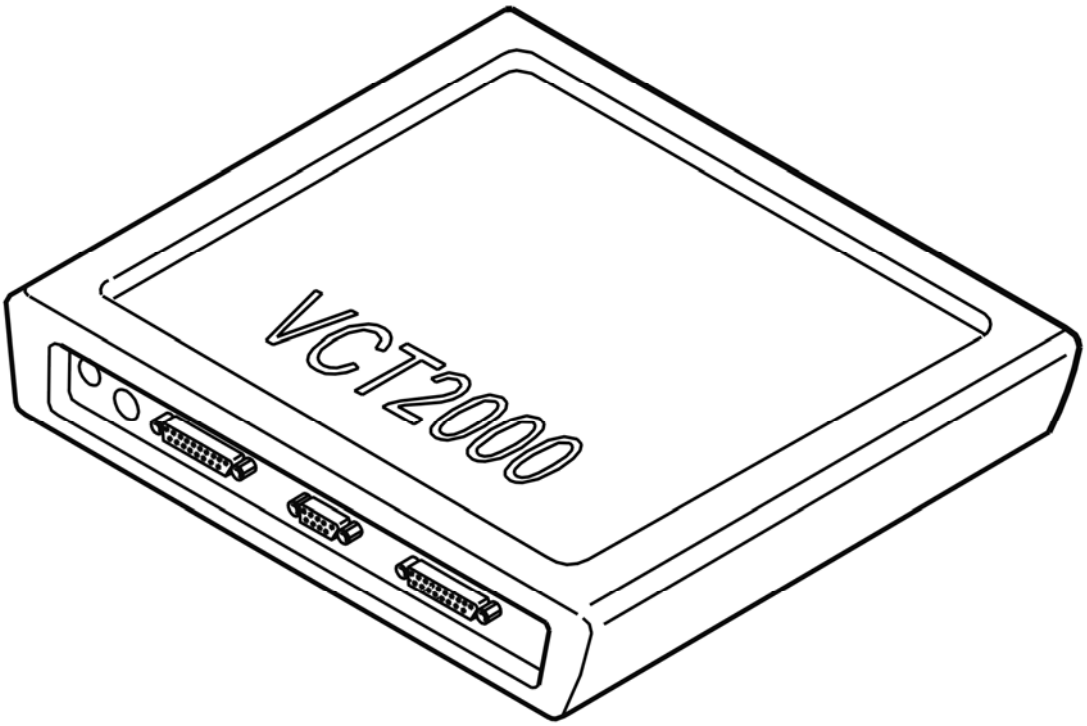

Fig. 346: Identifying VCT2000 Diagnostic Tool Symbol In VIDA
Courtesy of VOLVO CARS CORPORATION

Does the current oscillate?

- **YES**

  Refer to **INTERMITTENT FAULT**

- **NO**

  Refer to **CHECKING SOLENOID S2**

CHECKING SOLENOID S2

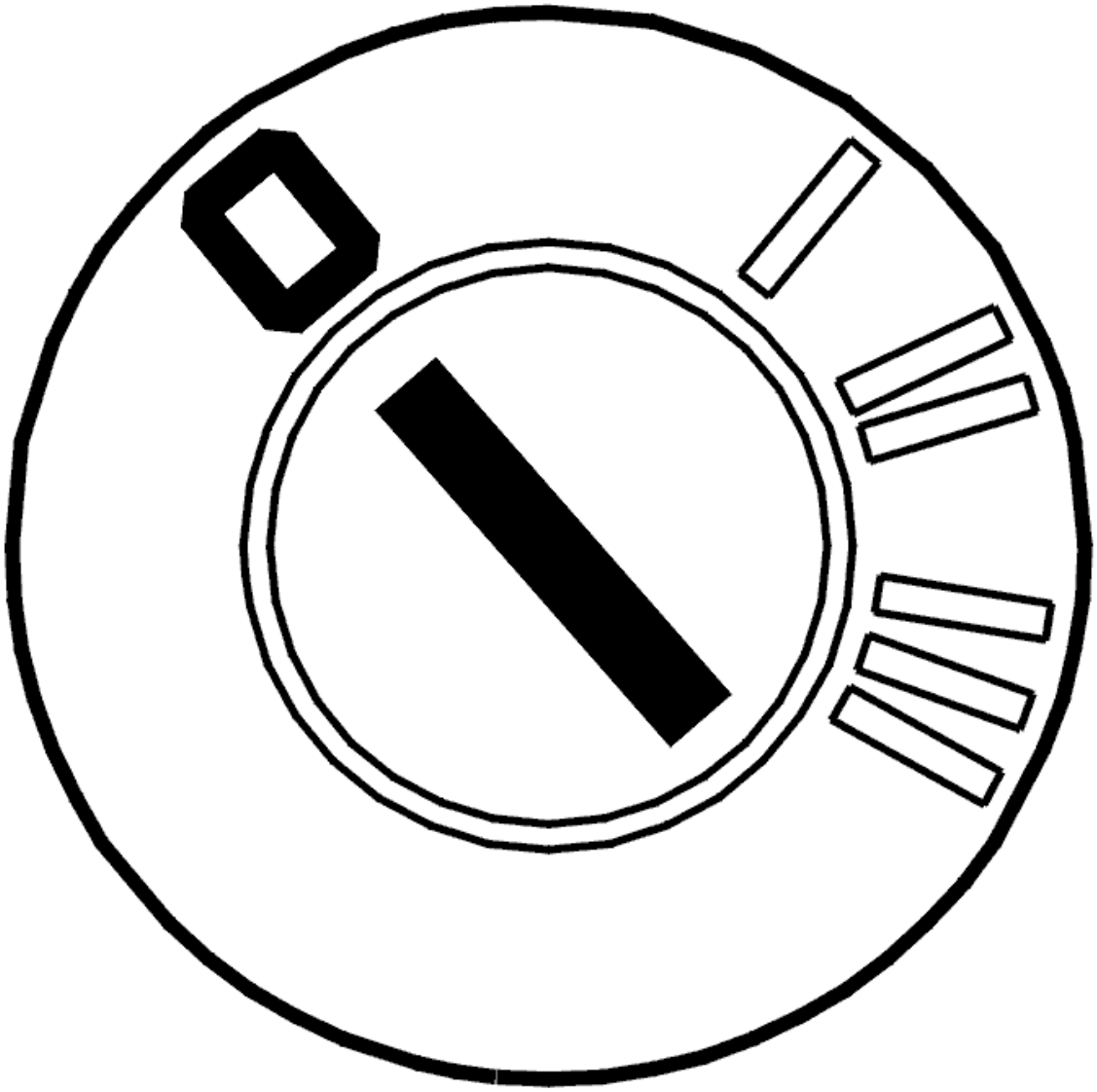

Fig. 347: Identifying Ignition OFF
Courtesy of VOLVO CARS CORPORATION

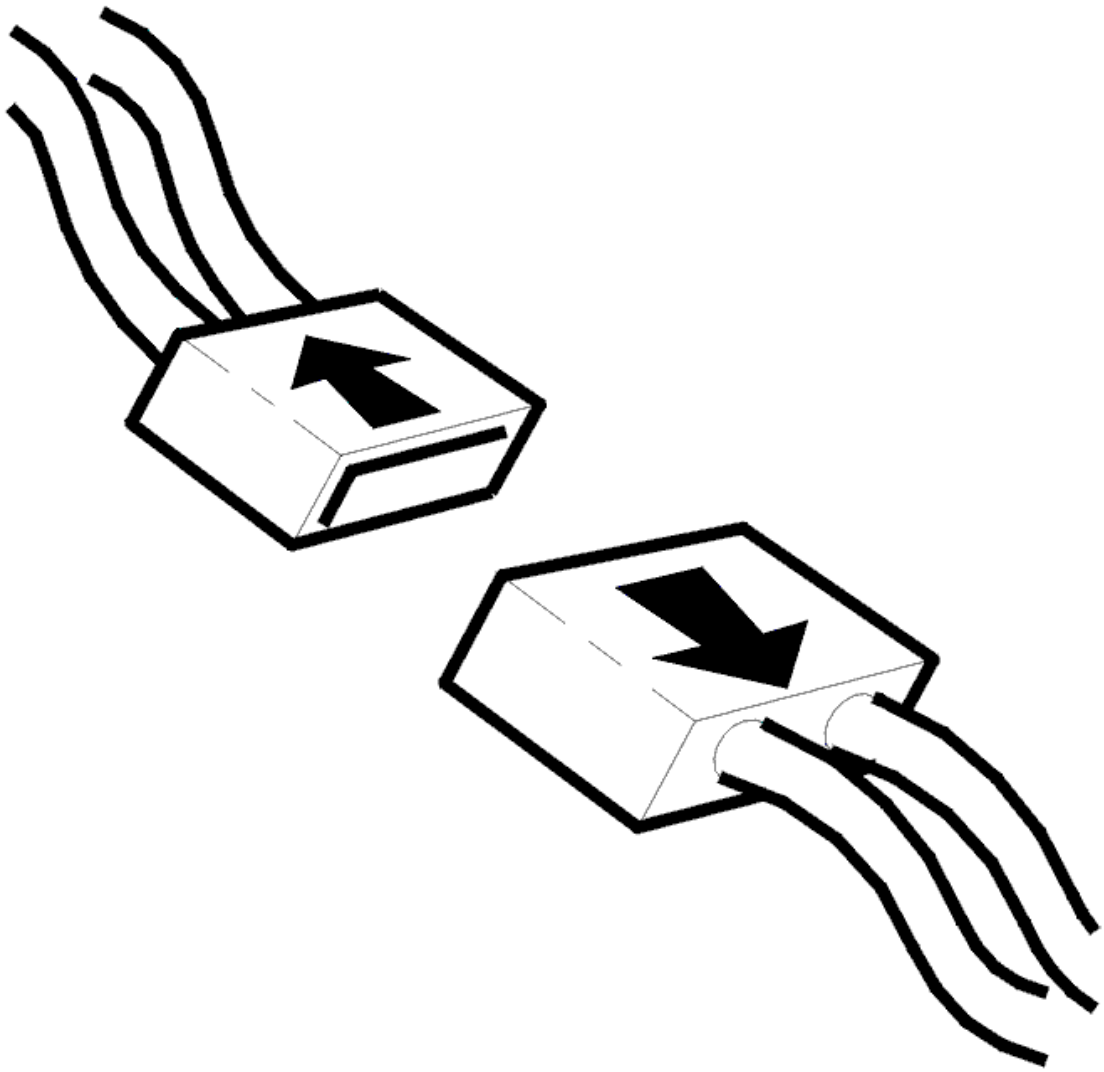

Fig. 348: Identifying Connector(s) Disconnected
Courtesy of VOLVO CARS CORPORATION

- Ignition off
- Disconnect the automatic transmission connector
- Connect adapter see **9511505** and breakout box see **9813190** to the transmission connector (transmission side)
- Connect an ohmmeter between terminals #B (#A2) and #E (#A5).

  The solenoid S2 resistance must be between 18 and 30 ohms.

  Other information:

  - To connect the breakout box to the transmission connector, see **CONNECTING THE BREAKOUT BOX, GM AUTOMATIC TRANSMISSIONS**

- For information about signals, see **SIGNAL SPECIFICATION** .

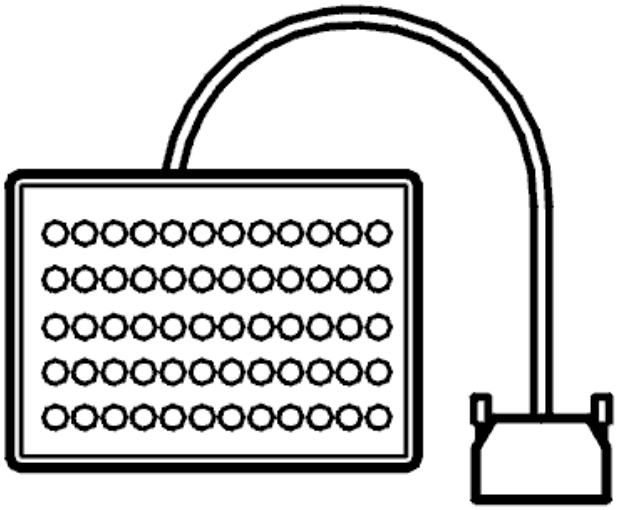

Fig. 349: Identifying Breakout Box
Courtesy of VOLVO CARS CORPORATION

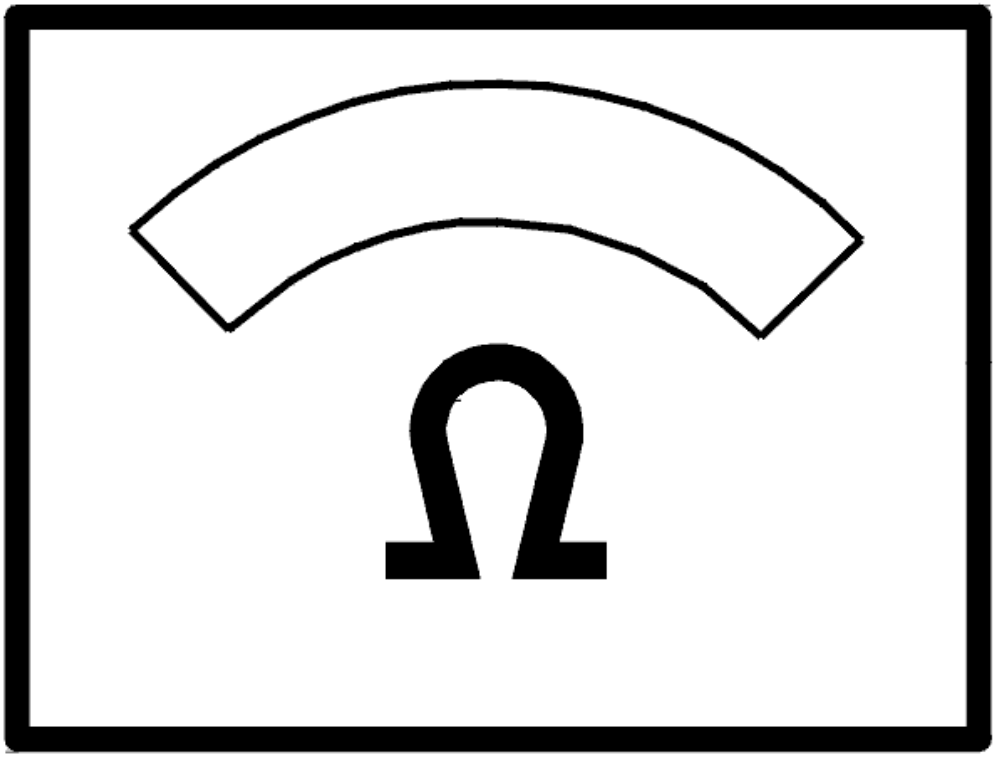

Fig. 350: Identifying Ohms Display
Courtesy of VOLVO CARS CORPORATION

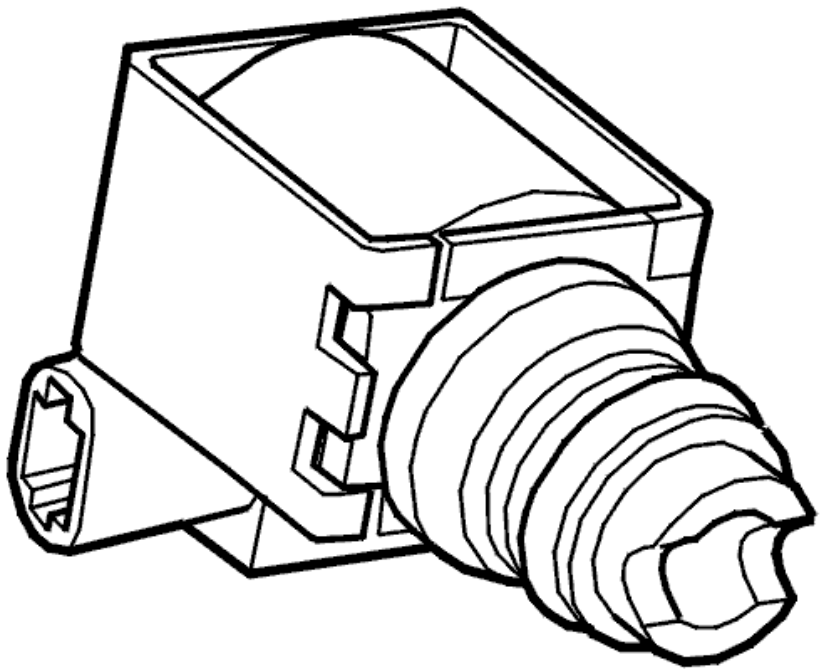

Fig. 351: Identifying Shift Solenoid S1 And S2
Courtesy of VOLVO CARS CORPORATION

Was the resistance OK?

- **YES**

  Refer to **CHECKING THE WIRING**

- **NO**

  Refer to **CHECKING THE WIRING AND COMPONENT**

CHECKING THE CONTROL MODULE

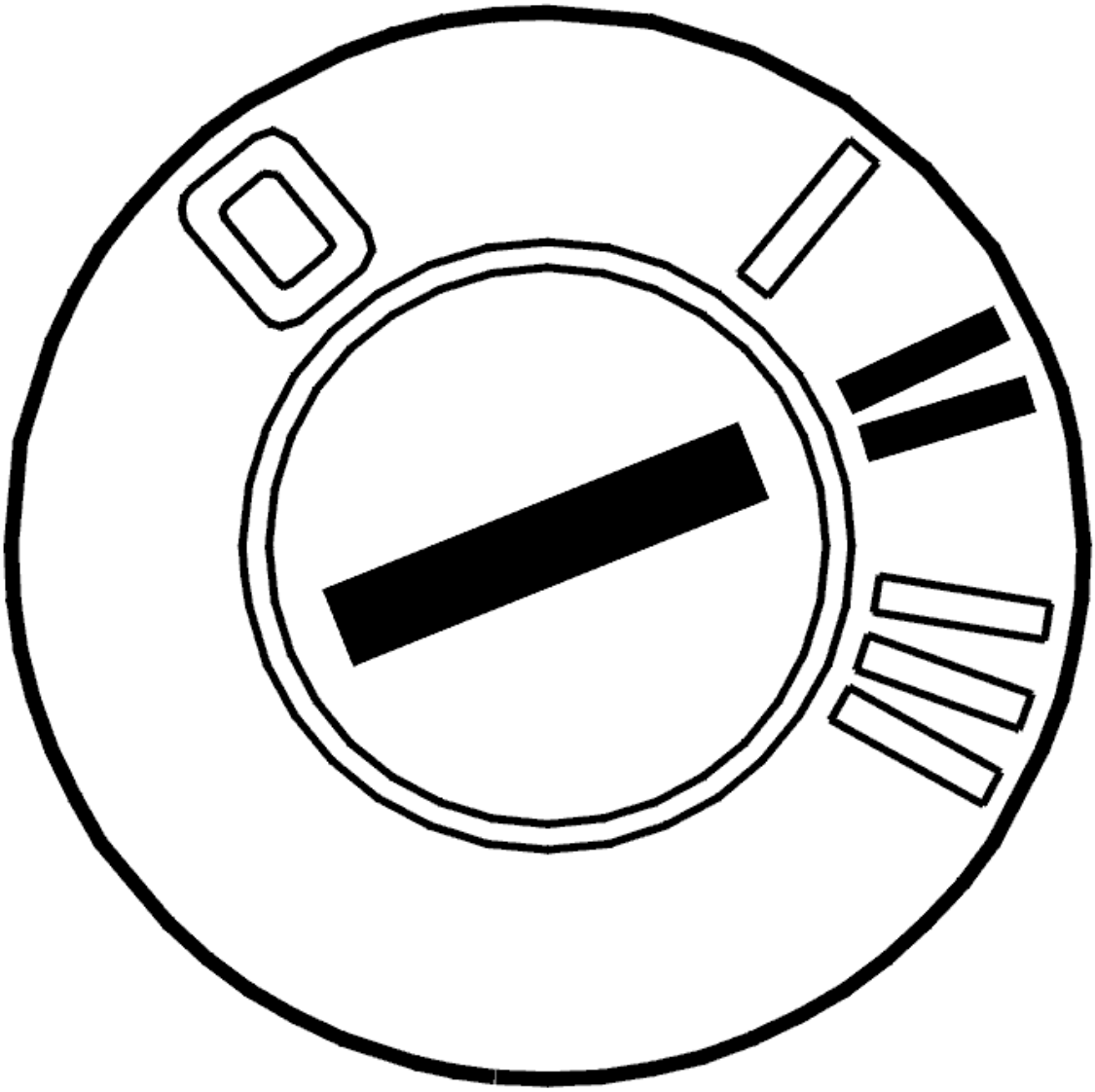

Fig. 352: Identifying Ignition ON
Courtesy of VOLVO CARS CORPORATION

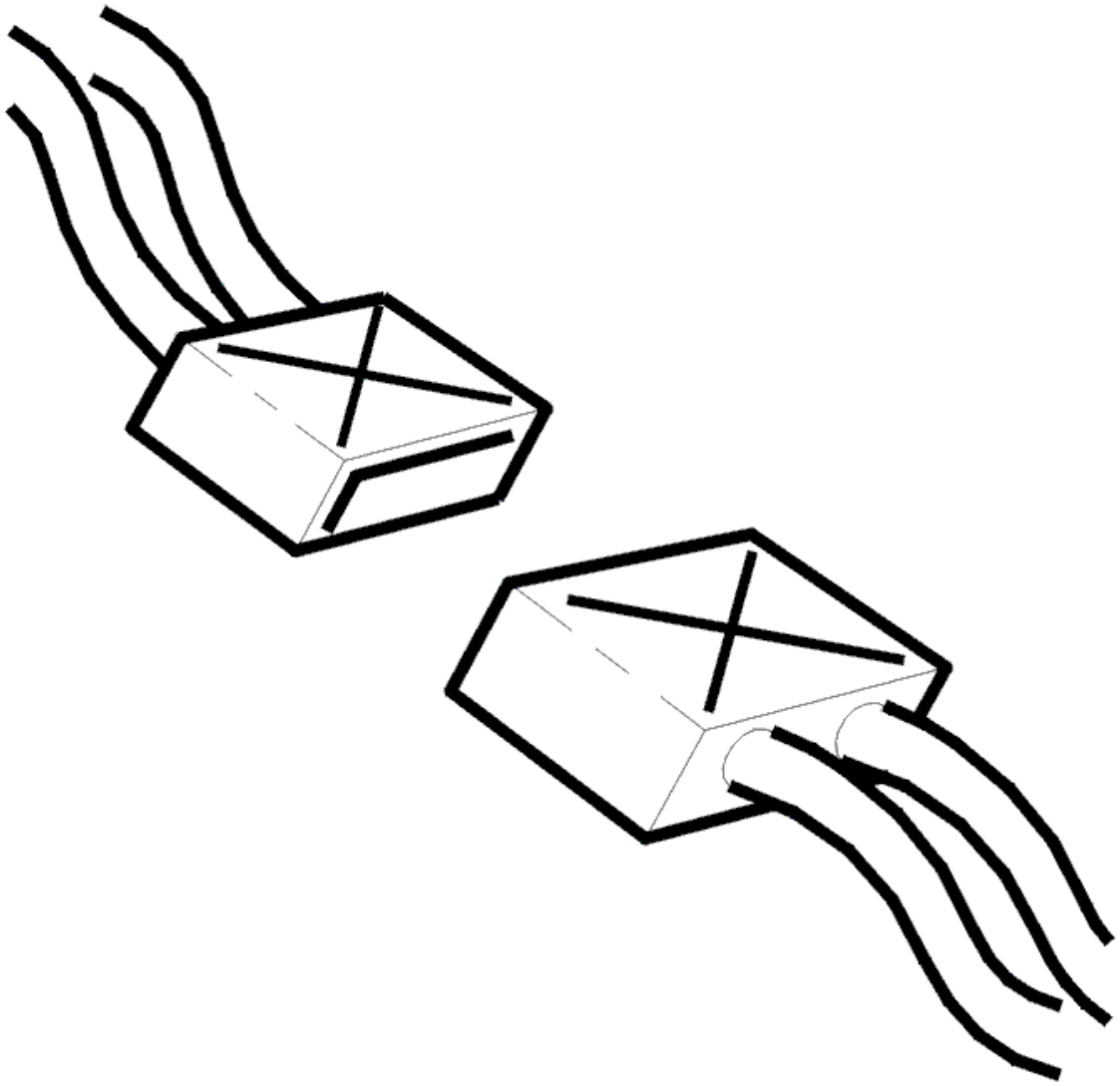

Fig. 353: Identifying Connectors
Courtesy of VOLVO CARS CORPORATION

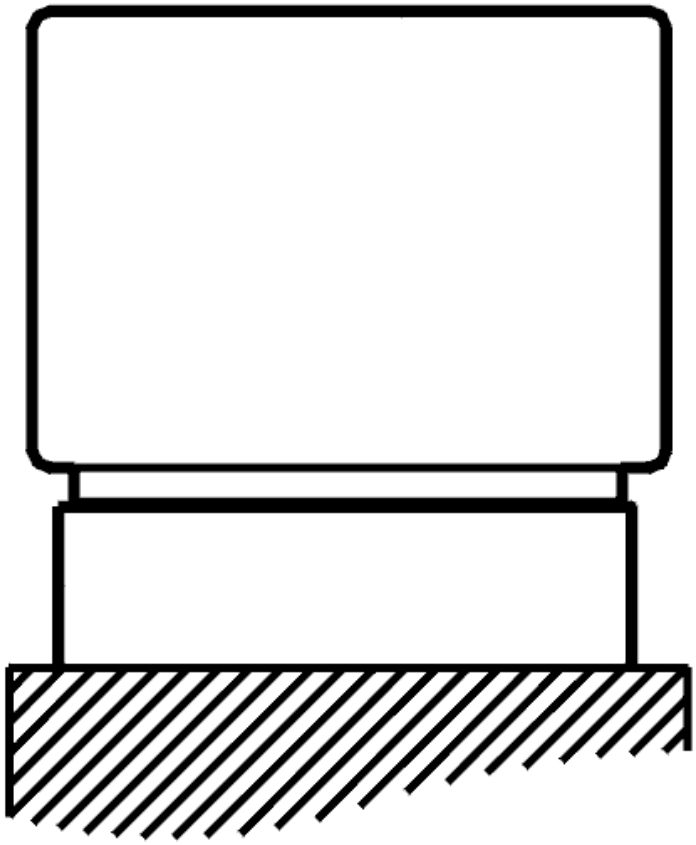

Fig. 354: Identifying Control Unit Connected
Courtesy of VOLVO CARS CORPORATION

- Ignition off
- The breakout box connected
- Control module connected.
- Transmission connector disconnected
- Ignition on
- Gear selector in position P.

Check the circuit for solenoid S2 by connecting an ohmmeter between terminals #68 (#B8) and #53 (#A53). The resistance must be between 7 and 13 kohms. Try a new control module if the resistance is infinite.

Remedy as necessary.

Other information:

- To connect the breakout box, see **CONNECTING THE BREAKOUT BOX**
- To replace the control module, see **TRANSMISSION CONTROL MODULE (TCM), REPLACING**
- For information about signals, see **SIGNAL SPECIFICATION** .

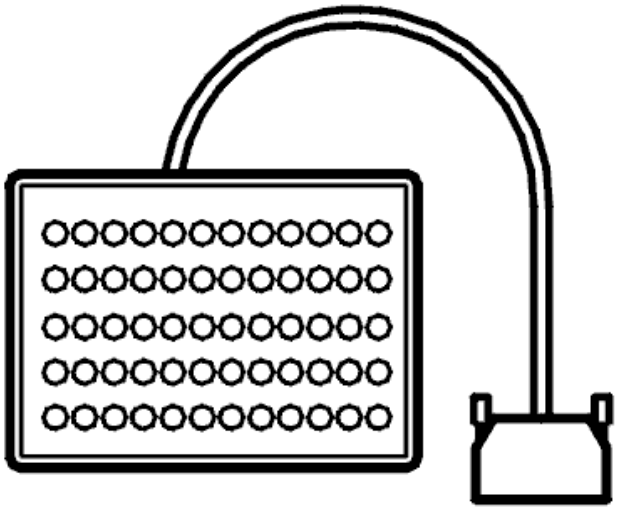

Fig. 355: Identifying Breakout Box
Courtesy of VOLVO CARS CORPORATION

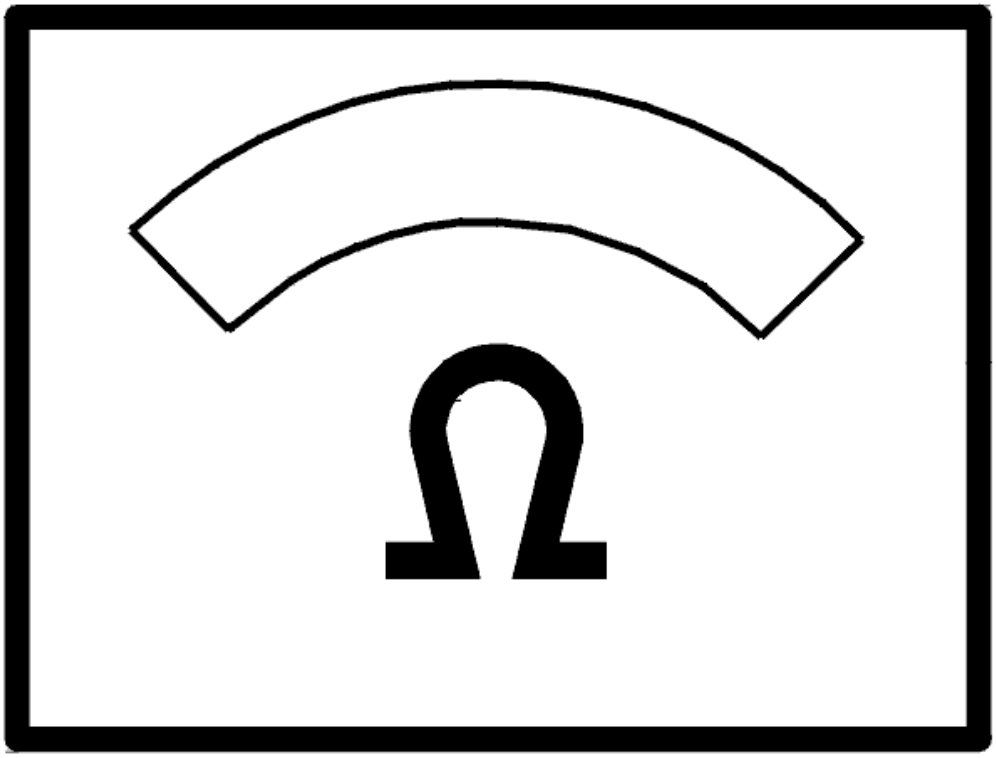

Fig. 356: Identifying Ohms Display
Courtesy of VOLVO CARS CORPORATION

Was the resistance incorrect?

- **YES**

  Refer to **VERIFICATION**

- **NO**

  FAULT NOT FOUND: Troubleshooting has been completed.

CHECKING THE WIRING

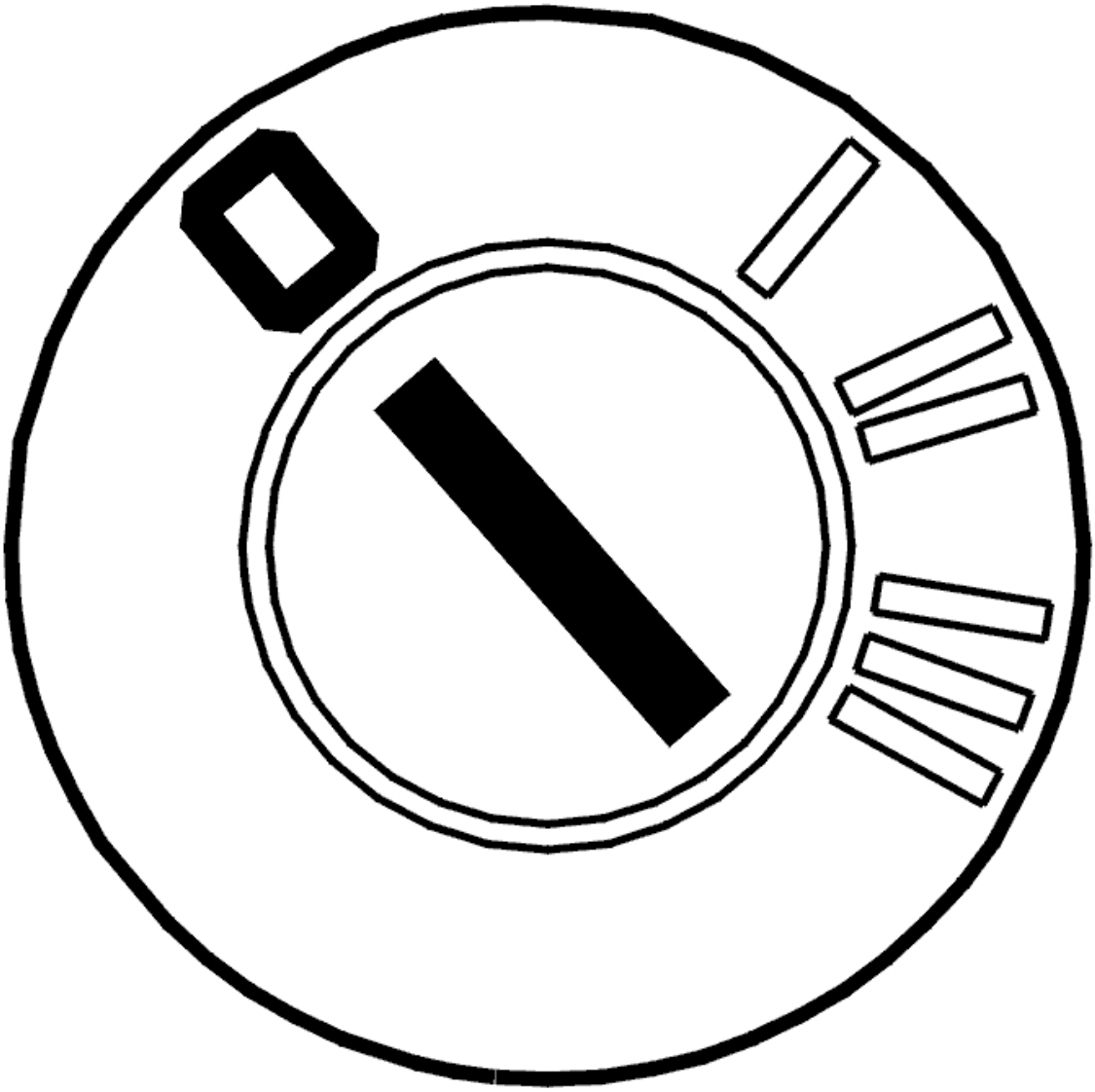

Fig. 357: Identifying Ignition OFF
Courtesy of VOLVO CARS CORPORATION

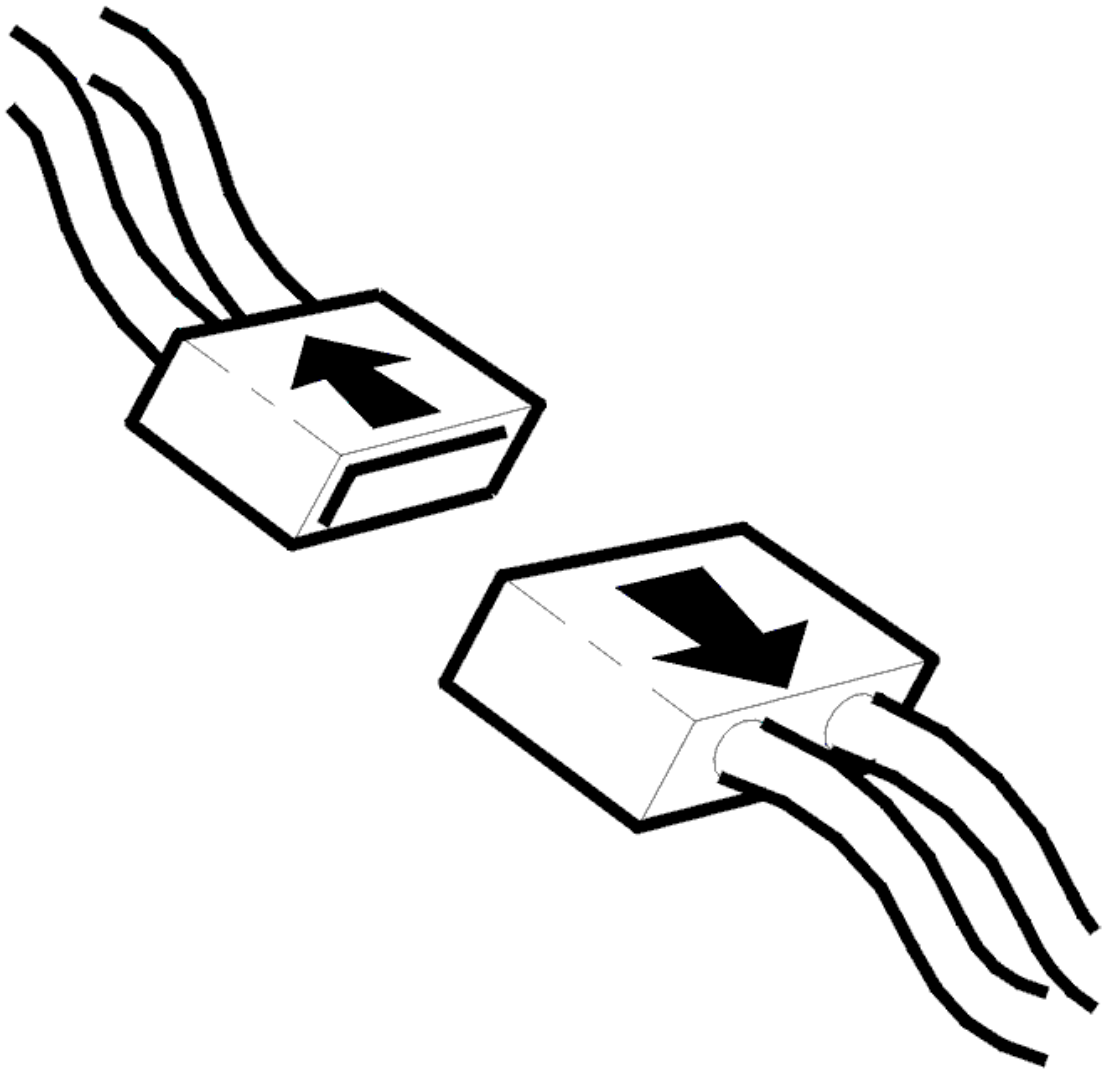

Fig. 358: Identifying Connector(s) Disconnected
Courtesy of VOLVO CARS CORPORATION

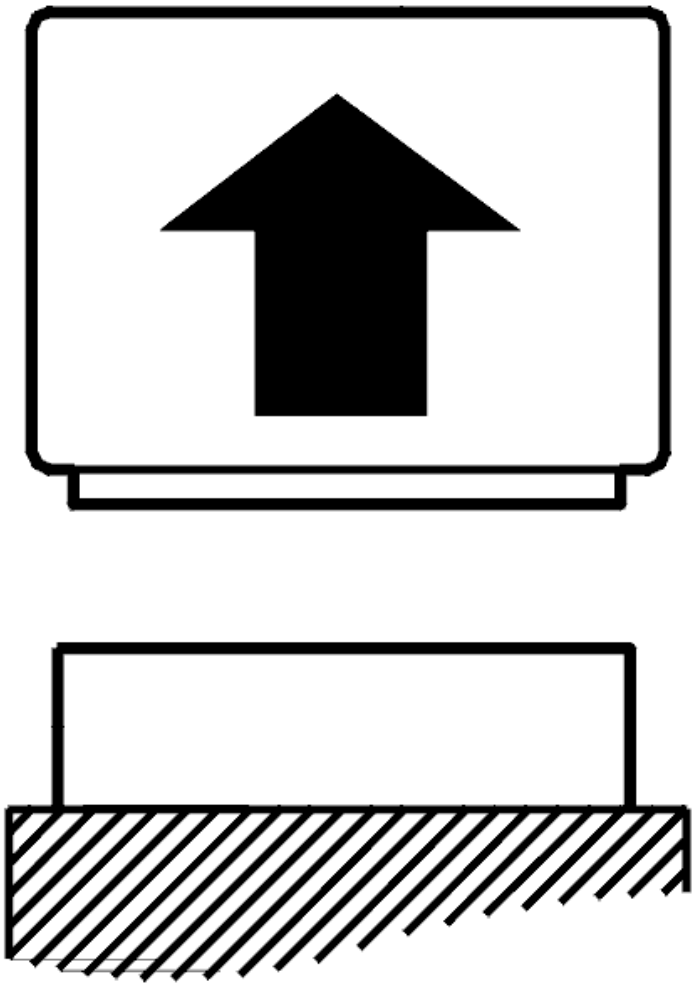

Fig. 359: Identifying Control Module Disconnected
Courtesy of VOLVO CARS CORPORATION

- Ignition off
- Connect the breakout box to the transmission
- Disconnect the control module.
- Disconnect the transmission connector
- Connect adapter see **9511505** and breakout box see **9813190** to the transmission connector (transmission side).

  Check the cable between control module terminal #A68 (#B8) and transmission connector terminal #B (#A2) (control module side). Check for an open-circuit. See **OPEN-CIRCUIT, PERMANENT FAULTS** .

  Check the cable between control module terminal #A53 and transmission connector terminal #E (#A5)

(control module side). Check for an open-circuit. See **OPEN-CIRCUIT, PERMANENT FAULTS** .

Remedy as necessary.

Other information:

- To connect the breakout box, see **CONNECTING THE BREAKOUT BOX**
- To connect the breakout box to the transmission connector, see **CONNECTING THE BREAKOUT BOX, GM AUTOMATIC TRANSMISSIONS**
- For information about signals, see **SIGNAL SPECIFICATION** .

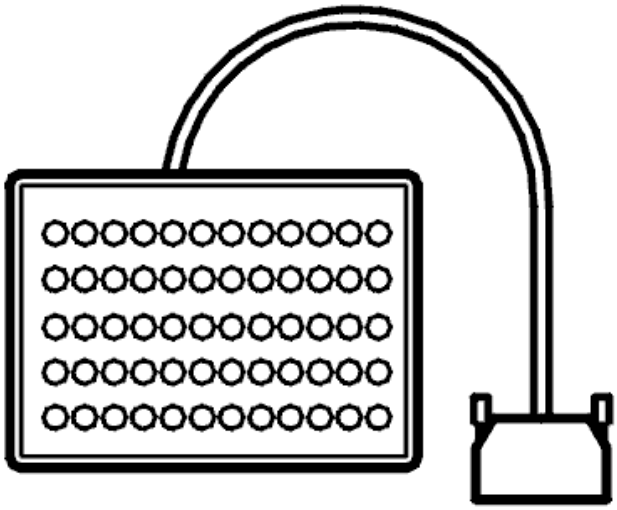

Fig. 360: Identifying Breakout Box
Courtesy of VOLVO CARS CORPORATION

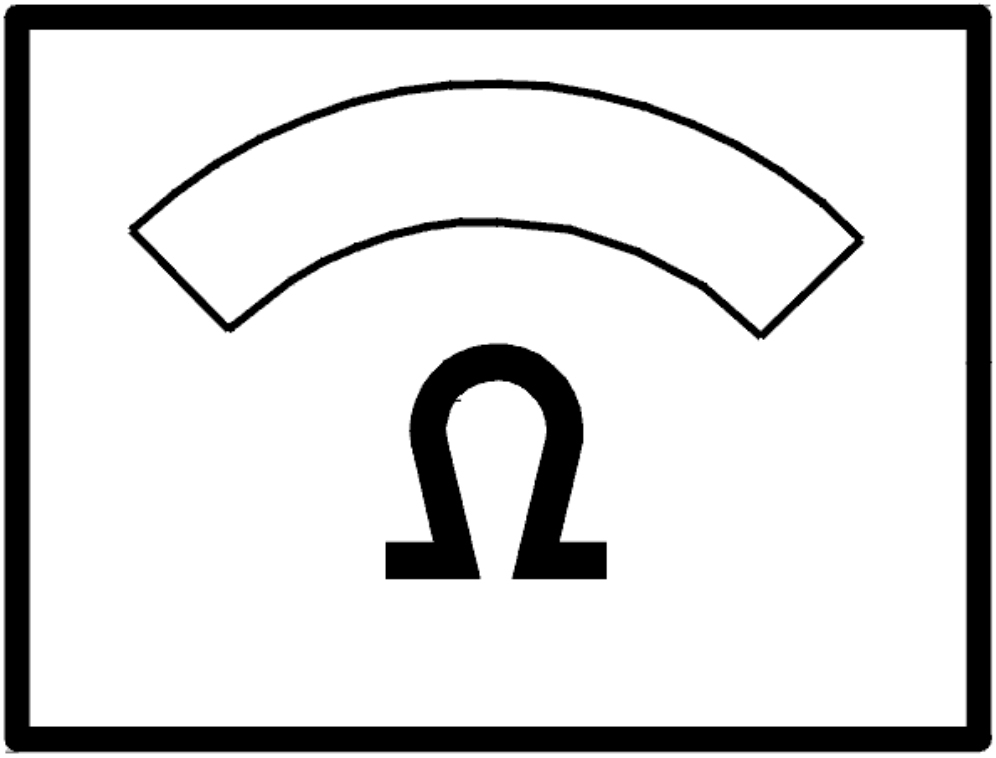

Fig. 361: Identifying Ohms Display
Courtesy of VOLVO CARS CORPORATION

Was a fault detected?

- **YES**

  Refer to **VERIFICATION**

- **NO**

  Refer to **CHECKING THE CONTROL MODULE**

CHECKING THE WIRING AND COMPONENT

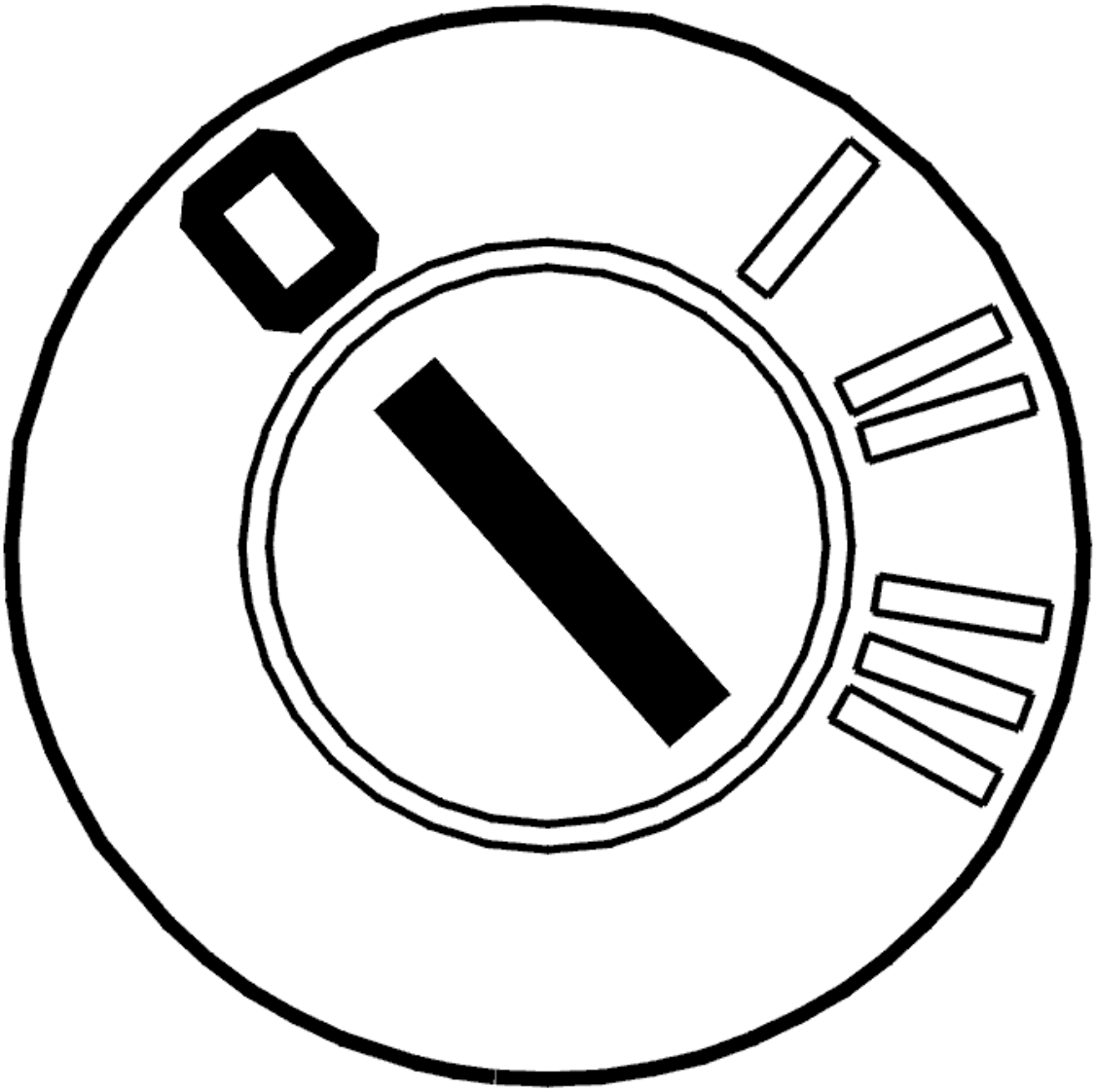

Fig. 362: Identifying Ignition OFF
Courtesy of VOLVO CARS CORPORATION

- Ignition off
- To open the transmission control system, For removal, see **SIDE COVER TRANSMISSION, REMOVING** To install, see **SIDE COVER TRANSMISSION, INSTALLING**

  Check the cable between transmission connector (transmission side) terminal #B (#A2) and solenoid S2 terminals #1 and #E (#A5) and solenoid S2 terminal #2. Check for an open-circuit. See **OPEN-CIRCUIT, PERMANENT FAULTS** .

  HINT: Check solenoid S2 by measuring the solenoid resistance between terminals 1 and 2. The resistance must be between 18 and 25 ohms.

  Remedy as necessary.

Other information:

- To remove the transmission, see **TRANSMISSION, REMOVING**
- To install the transmission, see **TRANSMISSION, INSTALLING (2003, 2004)** or **TRANSMISSION, INSTALLING (2005, 2006)**
- To connect the breakout box to the transmission connector, see **CONNECTING THE BREAKOUT BOX, GM AUTOMATIC TRANSMISSIONS**
- To replace solenoid S2, see **SOLENOID SHIFTING 2-3, REPLACING**
- To replace the cable harness, see **TEMPERATURE SENSOR FLUID, TRANSAXLE, (TFT)**
- For information about signals, see **SIGNAL SPECIFICATION** .

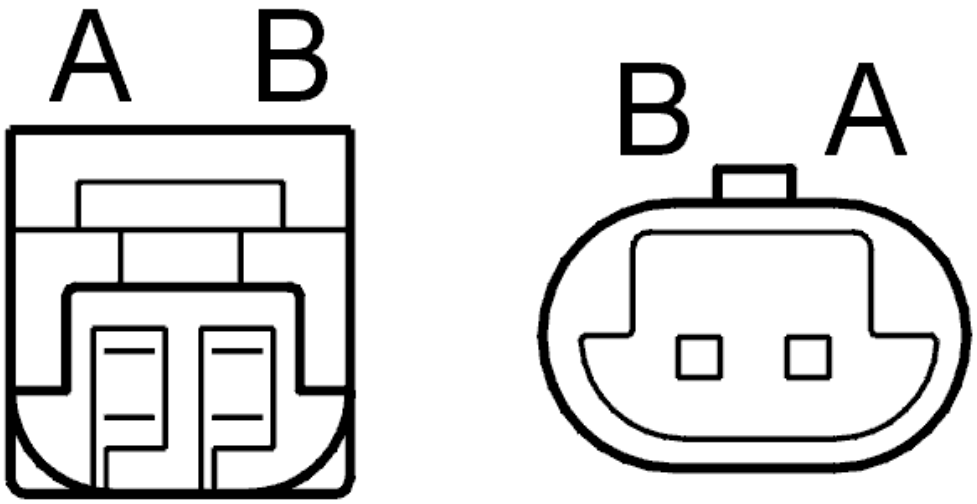

Fig. 363: Identifying Transmission Connector Terminals
Courtesy of VOLVO CARS CORPORATION

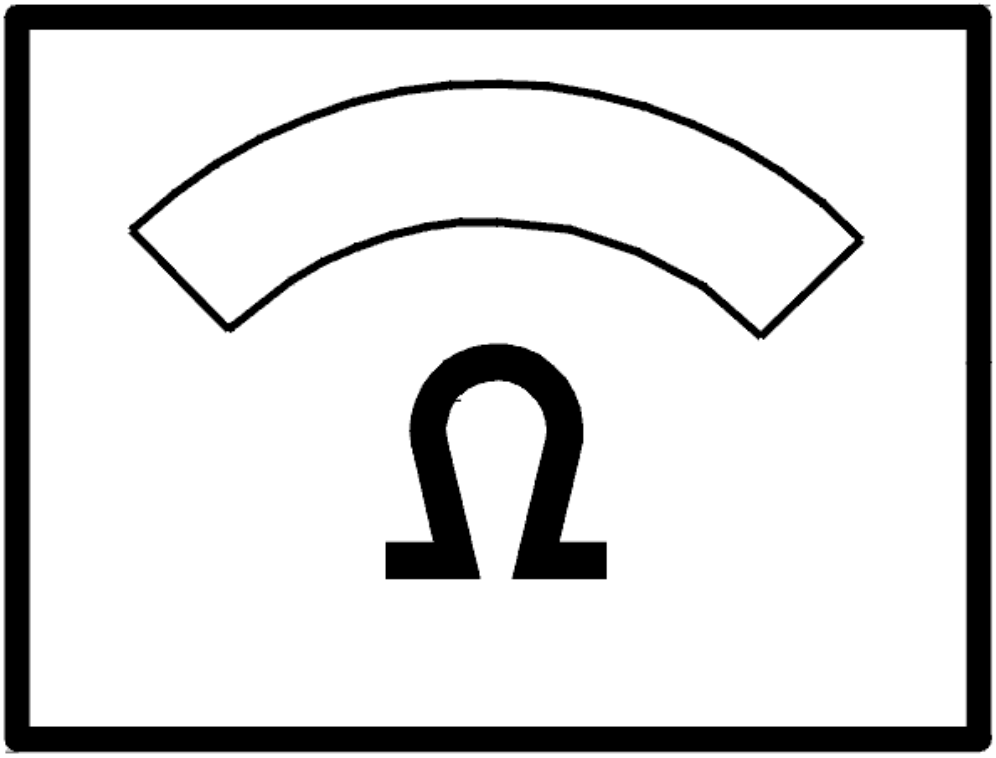

Fig. 364: Identifying Ohms Display
Courtesy of VOLVO CARS CORPORATION

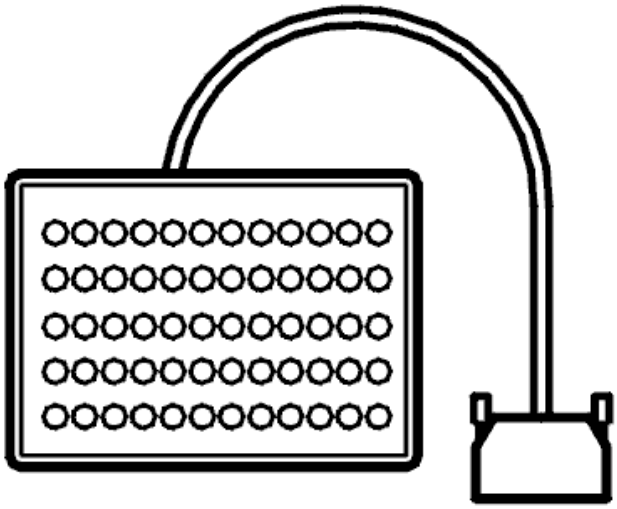

Fig. 365: Identifying Breakout Box
Courtesy of VOLVO CARS CORPORATION

- **Continue**

  Refer to **RESETTING THE ADAPTATION**

INTERMITTENT FAULT

Check the cable between control module terminal #A68 (#B8) and transmission connector terminal #B (#A2) (control module side). Check for an intermittent open-circuit. See **OPEN-CIRCUIT, INTERMITTENT FAULTS** . Check for contact resistance and oxidation. See **CONTACT RESISTANCE AND OXIDATION** .

Check the cable between control module terminal #A53 and transmission connector terminal #E (#A5) (control module side). Check for an intermittent open-circuit. See **OPEN-CIRCUIT, INTERMITTENT FAULTS** . Check for contact resistance and oxidation. See **CONTACT RESISTANCE AND OXIDATION** .

Remedy as necessary.

Other information:

- To connect the breakout box, see **CONNECTING THE BREAKOUT BOX**
- To connect the breakout box to the transmission connector, see **CONNECTING THE BREAKOUT BOX, GM AUTOMATIC TRANSMISSIONS**
- To replace solenoid S2, see **SOLENOID SHIFTING 2-3, REPLACING**
- To replace the cable harness, see **TEMPERATURE SENSOR FLUID, TRANSAXLE, (TFT)**
- For information about signals, see **SIGNAL SPECIFICATION** .

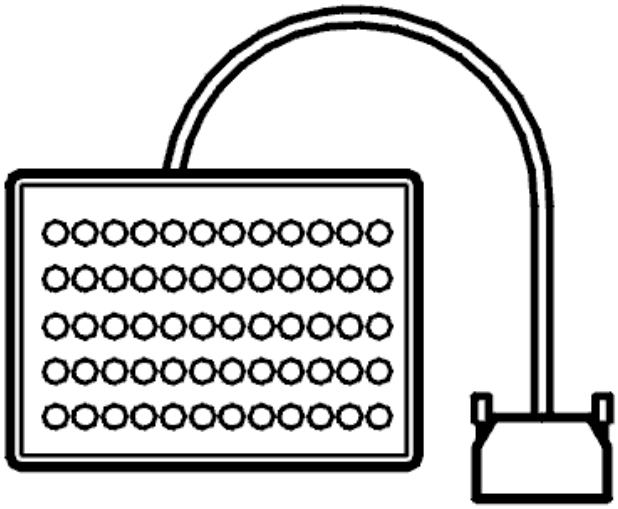

Fig. 366: Identifying Breakout Box
Courtesy of VOLVO CARS CORPORATION

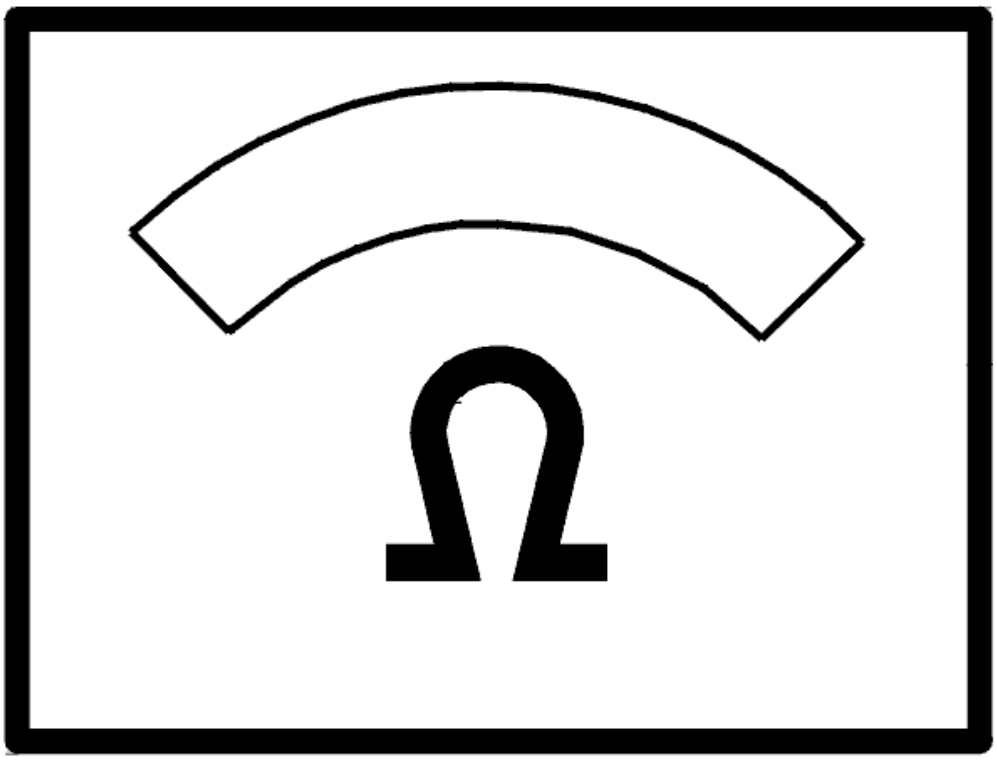

Fig. 367: Identifying Ohms Display
Courtesy of VOLVO CARS CORPORATION

- **Continue**

  Refer to **INFORMATION**

RESETTING THE ADAPTATION

RESETTING ADAPTATION AND THE COUNTER FOR "TRANSMISSION OIL CHANGE"

HINT: The transmission has torque controlled adaptive pressure control. Pressure control means that the transmission regulates the pressure itself during each gear shift. This avoids harsh gear shifting. Each gear shift is evaluated by the control module and stored in the memory. This allows for compensation for wear and tear in the transmission and clutch. It is important that the adaptation in the memory is reset after the transmission has been repaired. This is to ensure normal operation. The oil is replaced during

repair; the "Transmission oil change" counter must be reset. If the counter is not reset when the fluid is drained and replaced, there is a risk that a diagnostic trouble code (DTC) will be stored in incorrect circumstances.

NOTE: This applies only if the transmission or one of the components in the transmission have been replaced.

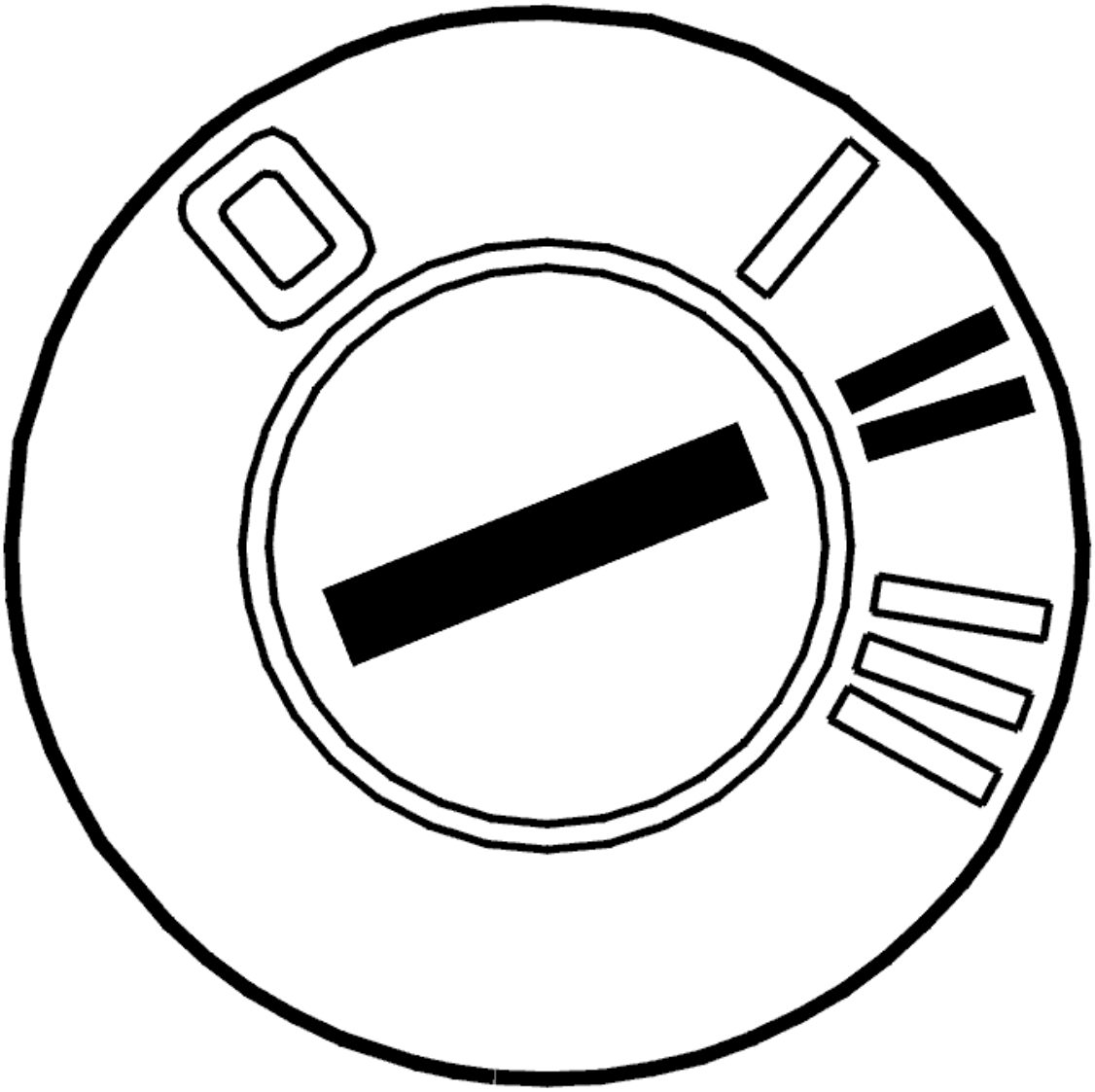

Fig. 368: Identifying Ignition ON
Courtesy of VOLVO CARS CORPORATION

- Ignition on.

  Click on the VCT2000 symbol to reset the adaptation and counter.

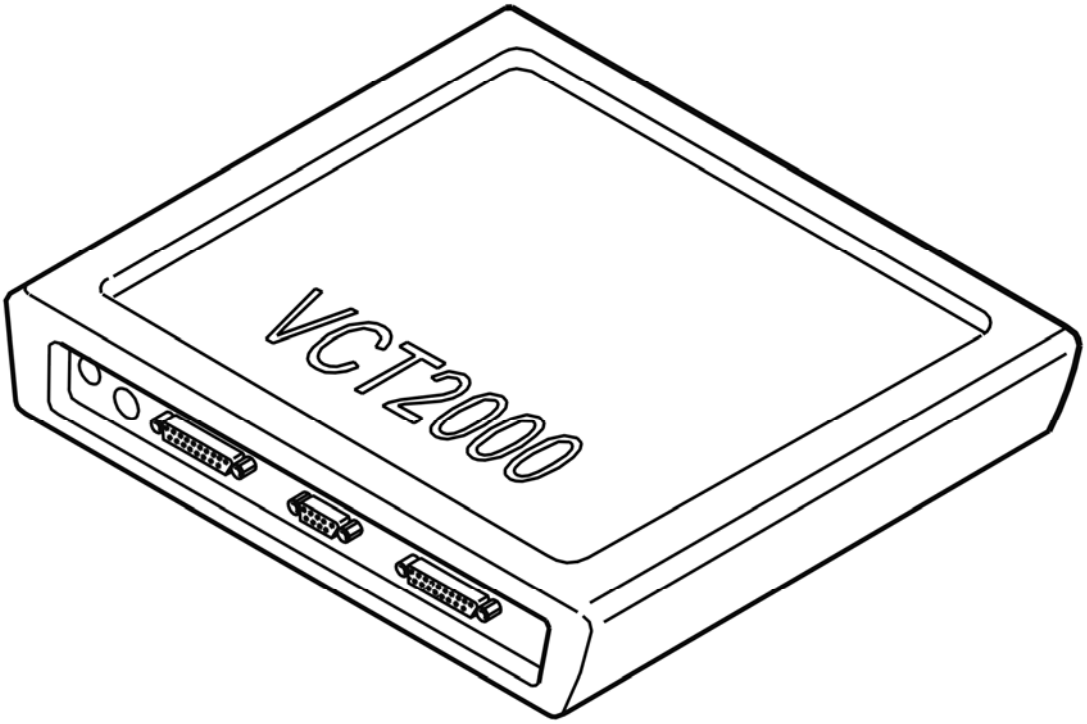

Fig. 369: Identifying VCT2000 Diagnostic Tool Symbol In VIDA
Courtesy of VOLVO CARS CORPORATION

- **Continue**

  Refer to **VERIFICATION**

VERIFICATION

VERIFICATION

HINT: After carrying out the repair, check that the fault has been remedied.

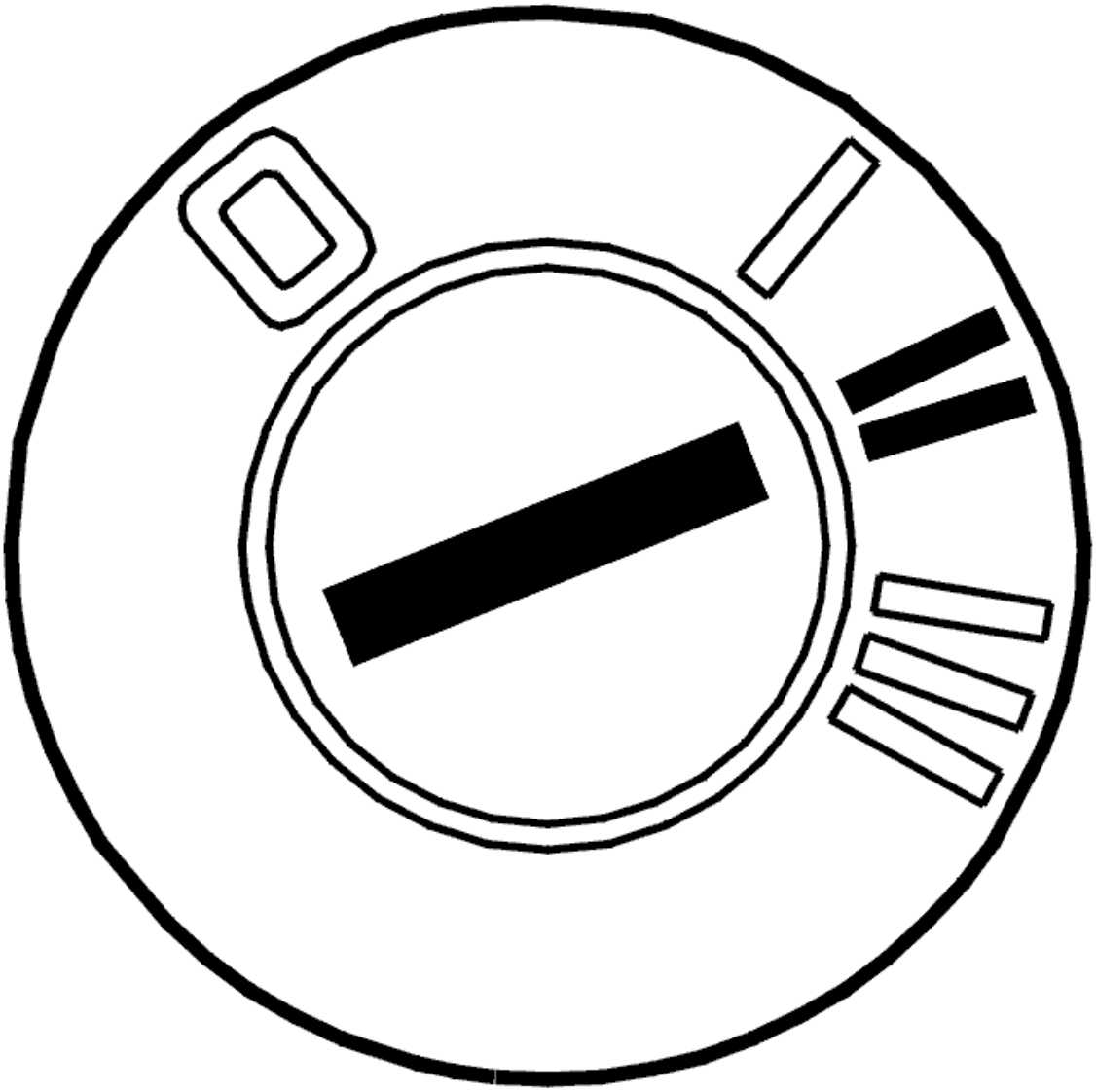

Fig. 370: Identifying Ignition ON
Courtesy of VOLVO CARS CORPORATION

- Ignition on.
- Gear selector in position P.
- Activate solenoid S2.
- Read off the current across solenoid S2.

The current should oscillate between approximately 0 and 1.5 A.

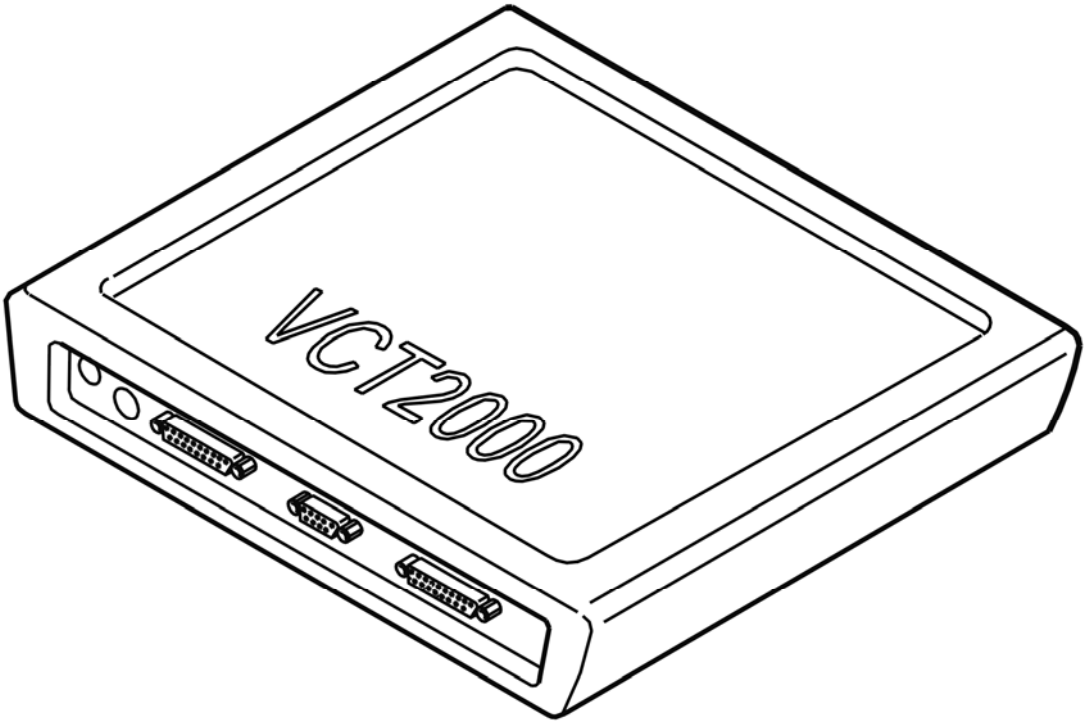

Fig. 371: Identifying VCT2000 Diagnostic Tool Symbol In VIDA
Courtesy of VOLVO CARS CORPORATION

Does the current oscillate?

- **YES**

  VERIFIED: Troubleshooting has been completed.

- **NO**

  Refer to **INFORMATION**

INFORMATION

FAULT-TRACING INFORMATION

The fault should have been detected and remedied. As this is not the case fault-tracing has failed.

Exit fault-tracing for this diagnostic trouble code (DTC) or make another attempt.

INFORMATION

FAULT-TRACING INFORMATION

If the fault is intermittent, do not verify fault-tracing if the fault does not recur.

It is possible to view the information again, or leave fault-tracing for this diagnostic trouble code (DTC).

SIGNAL TOO HIGH

CHECKING THE FUNCTION OF THE OIL TEMPERATURE SENSOR

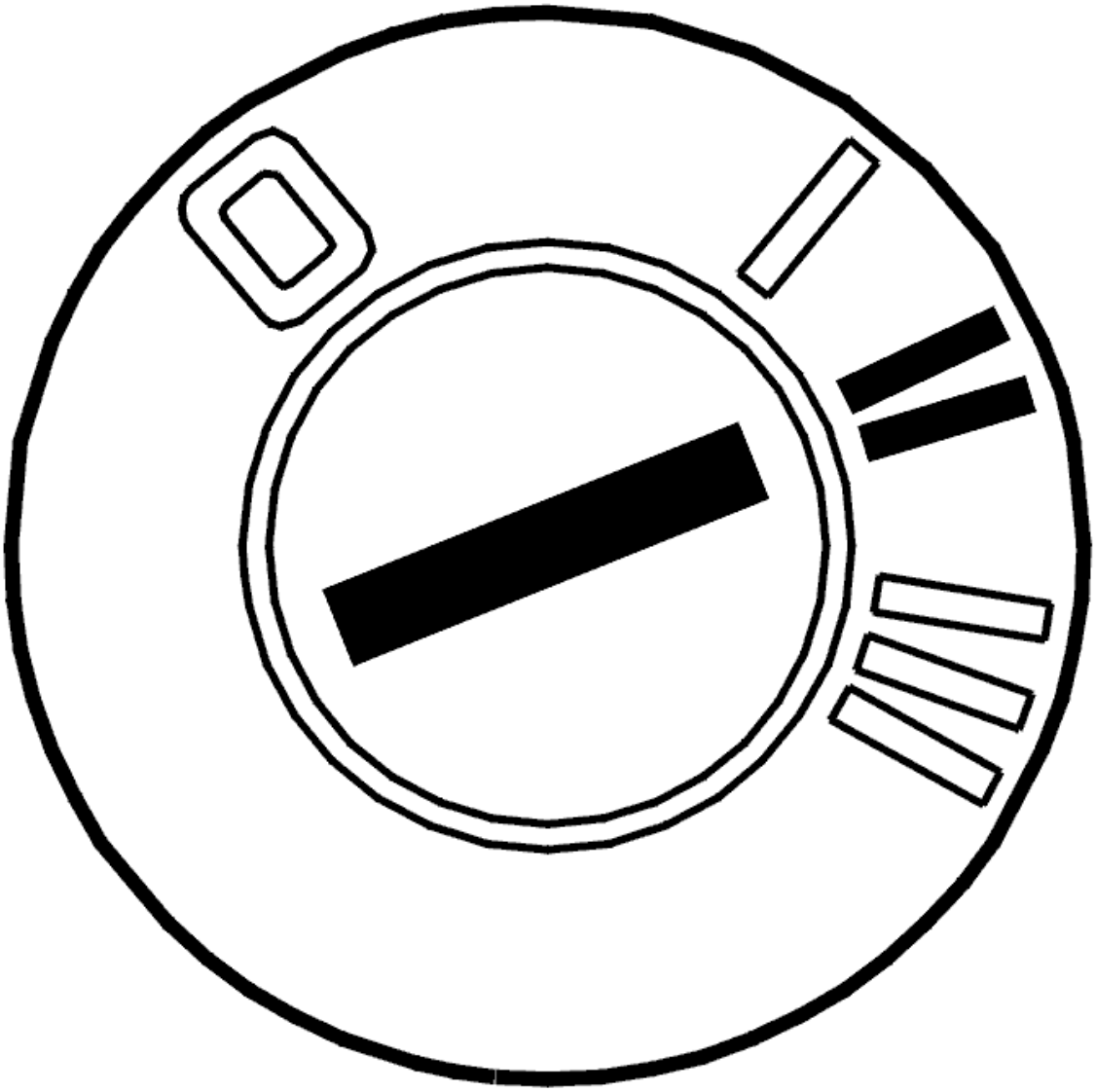

Fig. 372: Identifying Ignition ON
Courtesy of VOLVO CARS CORPORATION

- Ignition on
- Read off the oil temperature.

  Check that the temperature is within its permitted range.

Compare with the transmission temperature.

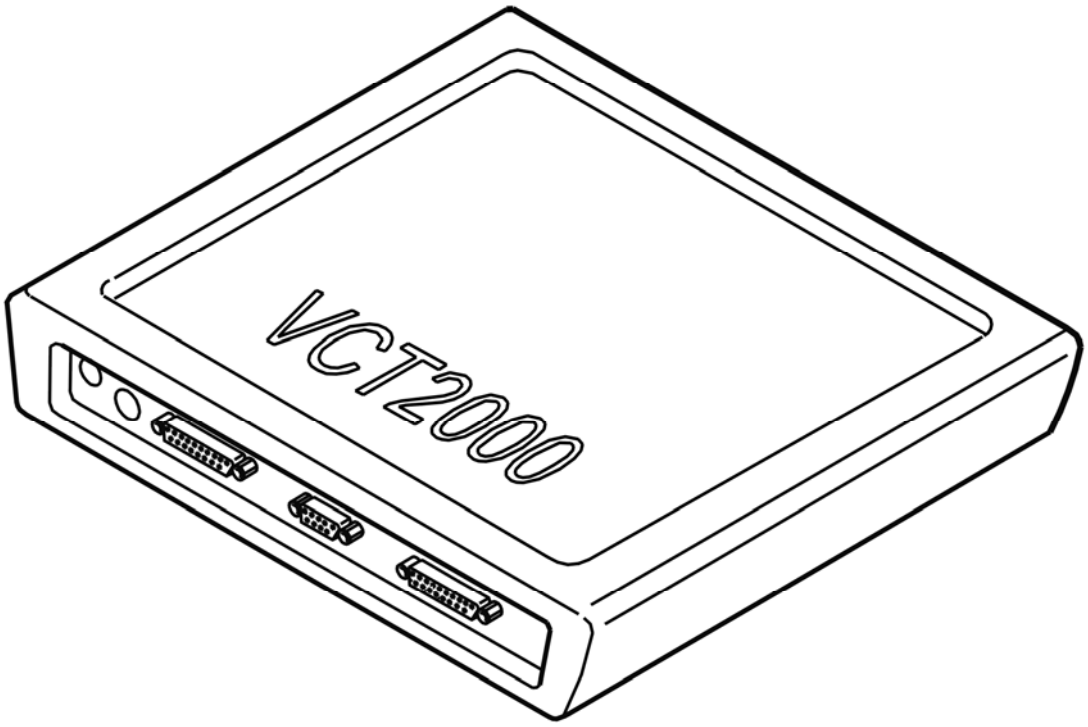

Fig. 373: Identifying VCT2000 Diagnostic Tool Symbol In VIDA
Courtesy of VOLVO CARS CORPORATION

Is the transmission temperature within its permitted range?

- **YES**

  Refer to **INTERMITTENT FAULT**

- **NO**

  Refer to **CHECKING TRANSMISSION FLUID TEMPERATURE SENSOR**

CHECKING TRANSMISSION FLUID TEMPERATURE SENSOR

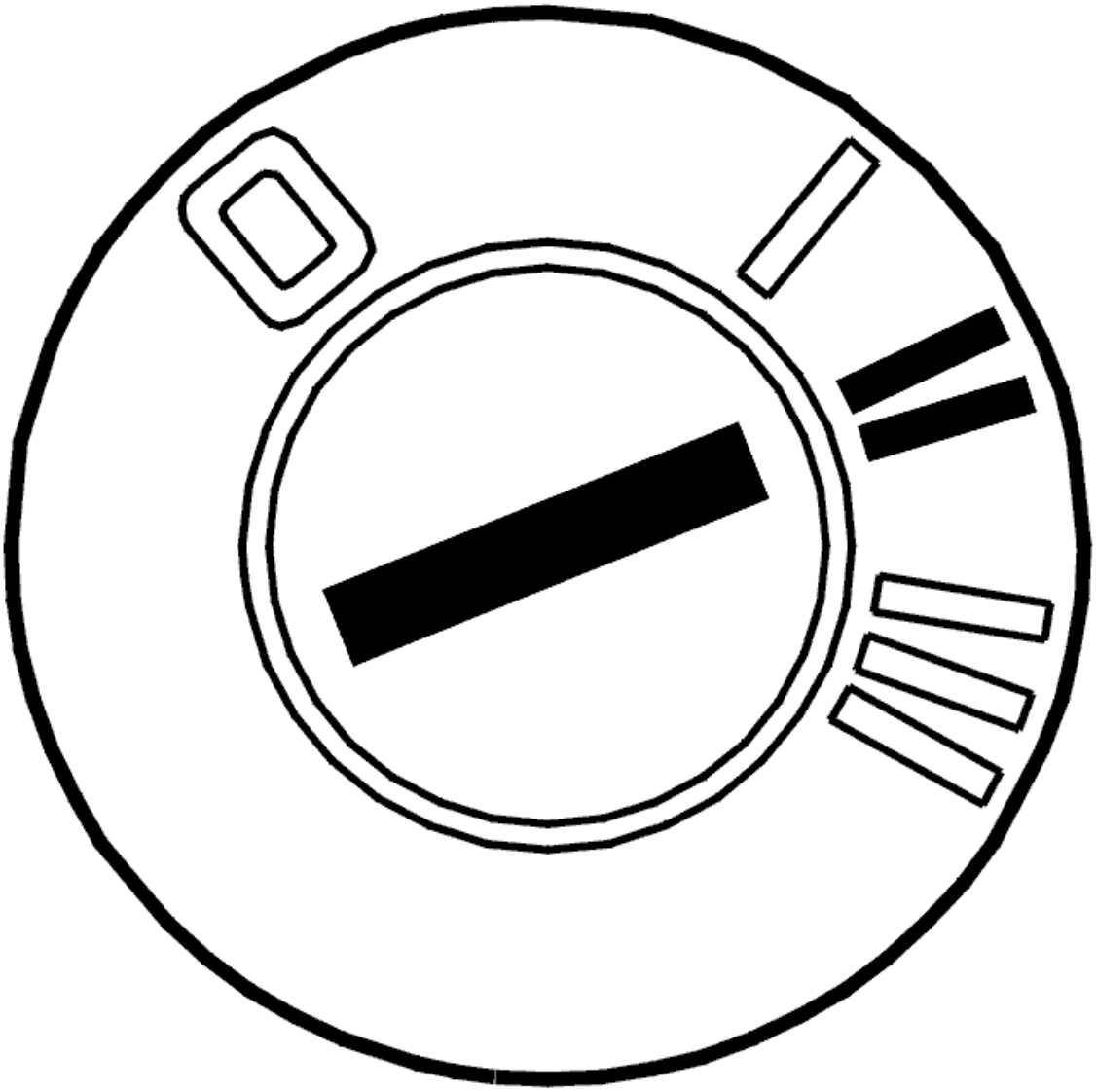

Fig. 374: Identifying Ignition ON
Courtesy of VOLVO CARS CORPORATION

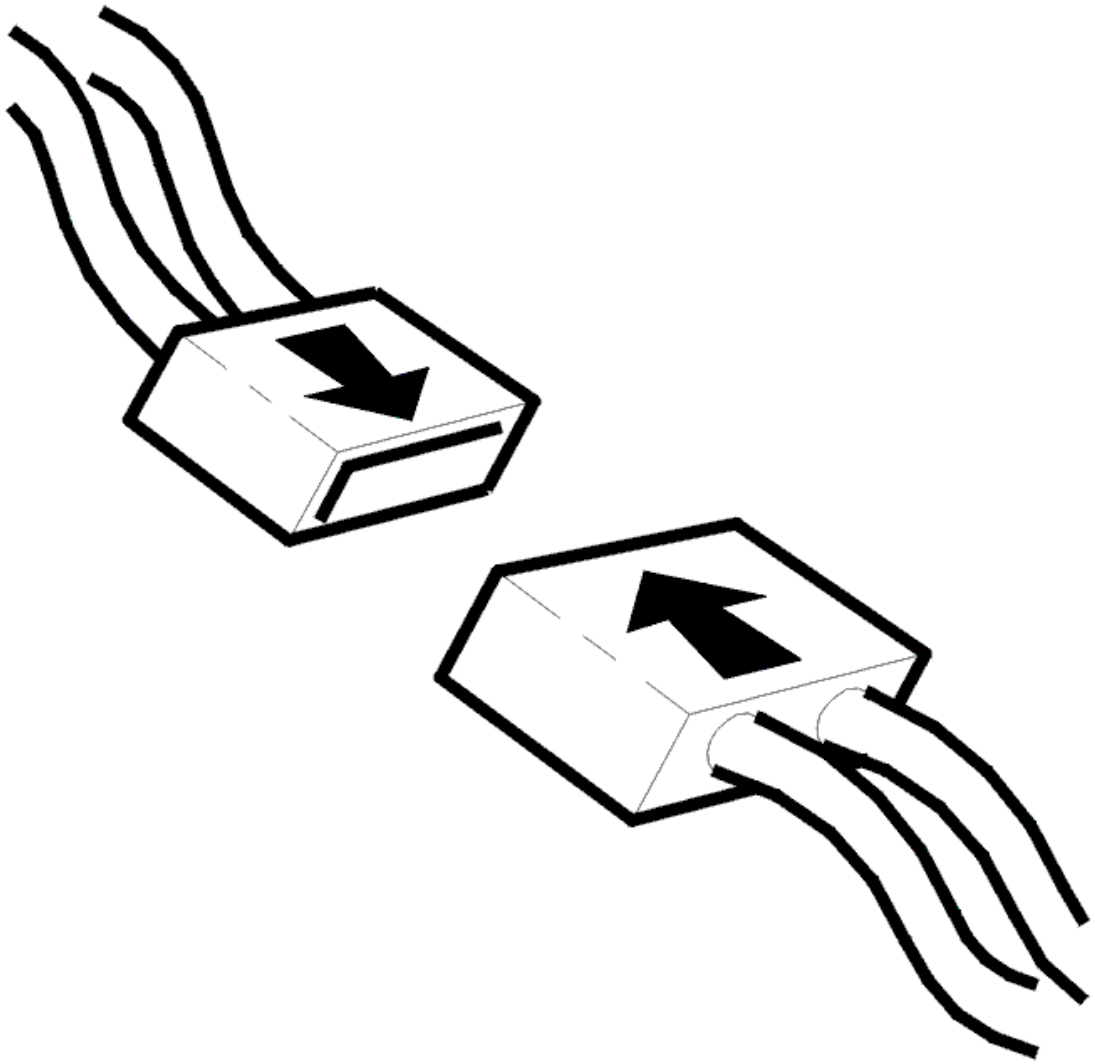

Fig. 375: Identifying Connector(s) Reinstallation
Courtesy of VOLVO CARS CORPORATION

- Ignition off
- Check the control module and transmission connectors. Check for contact resistance and oxidation
- Reconnect the control module and transmission connectors
- Ignition on
- Read off the oil temperature.

  Check that the temperature is within its permitted range.

  Compare with the transmission temperature.

  If the transmission temperature is within its permitted range, the cause of the fault was contact resistance or oxidation in the control module or transmission connector.

Other information

- To disconnect the control module, see **TRANSMISSION CONTROL MODULE (TCM), REPLACING**
- To connect the breakout box to the transmission connector, see **CONNECTING THE BREAKOUT BOX, GM AUTOMATIC TRANSMISSIONS**
- see **CHECKING WIRING AND TERMINALS**

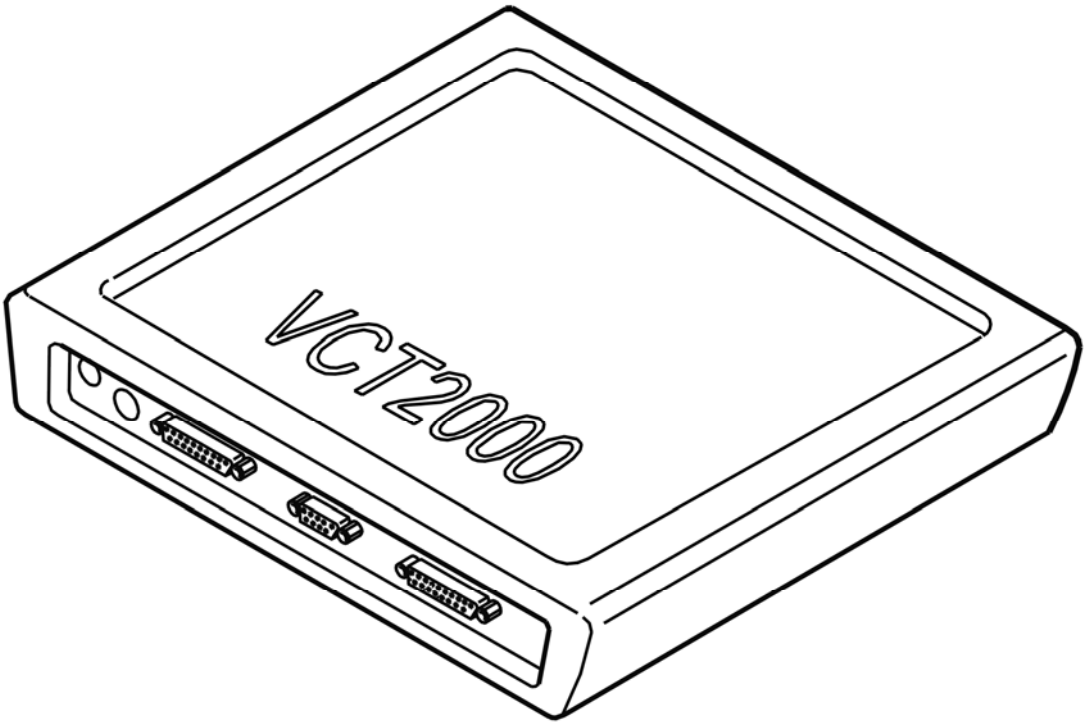

Fig. 376: Identifying VCT2000 Diagnostic Tool Symbol In VIDA
Courtesy of VOLVO CARS CORPORATION

Was the transmission temperature within its permitted range?

- **YES**

  OKAY: Troubleshooting has been completed.

- **NO**

  Refer to **CHECKING THE TEMPERATURE SENSOR**

CHECKING THE TEMPERATURE SENSOR

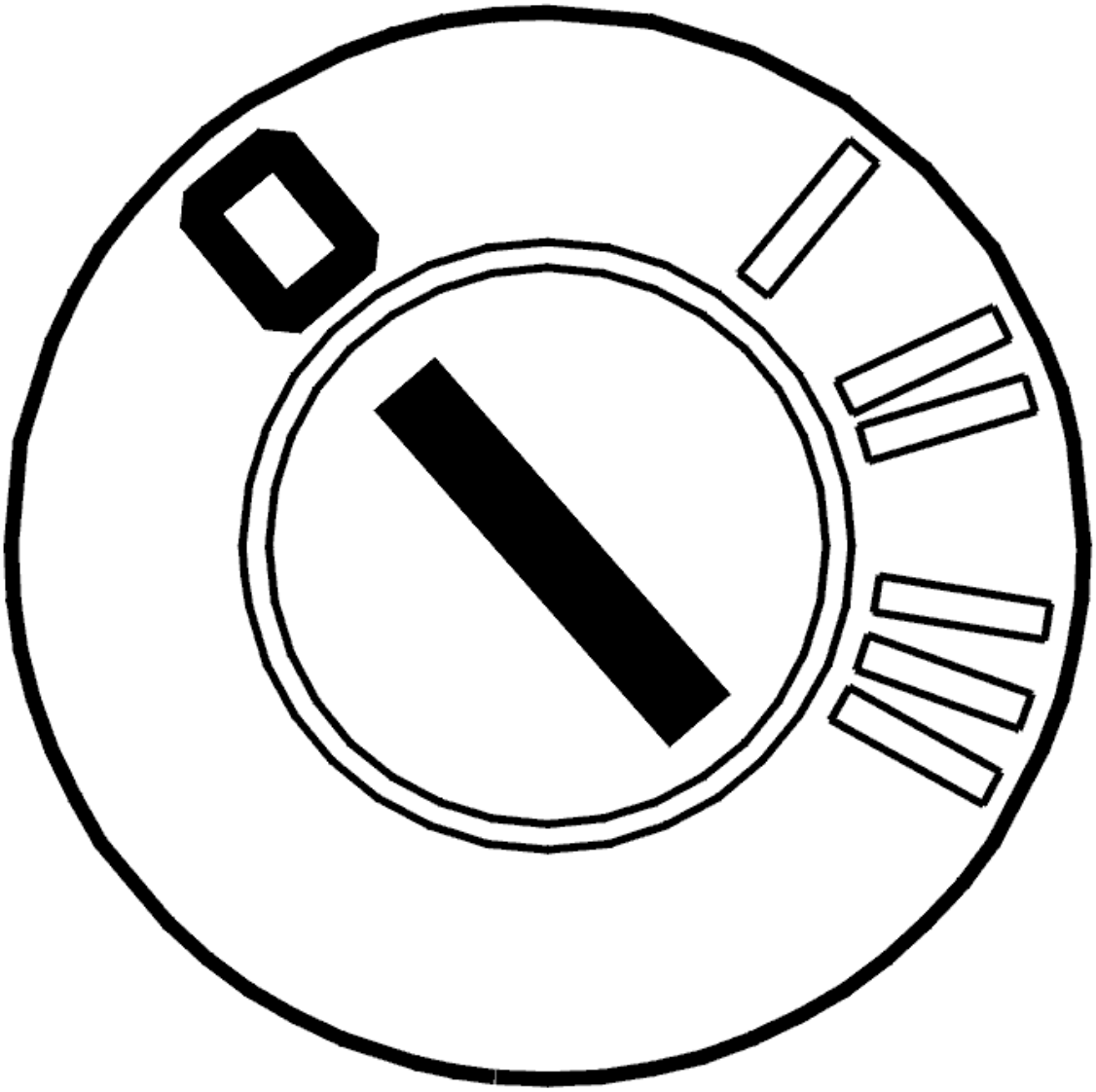

Fig. 377: Identifying Ignition OFF
Courtesy of VOLVO CARS CORPORATION

- Ignition off
- Disconnect the transmission connector
- Connect adapter see **9511505** and see **9813190** to the transmission connector (transmission side)
- Connect an ohmmeter between terminals #L (terminal #A11) and #M (terminal #A12).

  The resistance must be 3.4-3.6 kohms at 20 °C.

  Other information

  - To connect the breakout box to the transmission connector, see **CONNECTING THE BREAKOUT BOX, GM AUTOMATIC TRANSMISSIONS**
  - For information about signals, see **SIGNAL SPECIFICATION**

- For information about the resistance values, see **COMPONENT RESISTANCE VALUES**
- For information about the resistance values, see **COMPONENT RESISTANCE VALUES** .

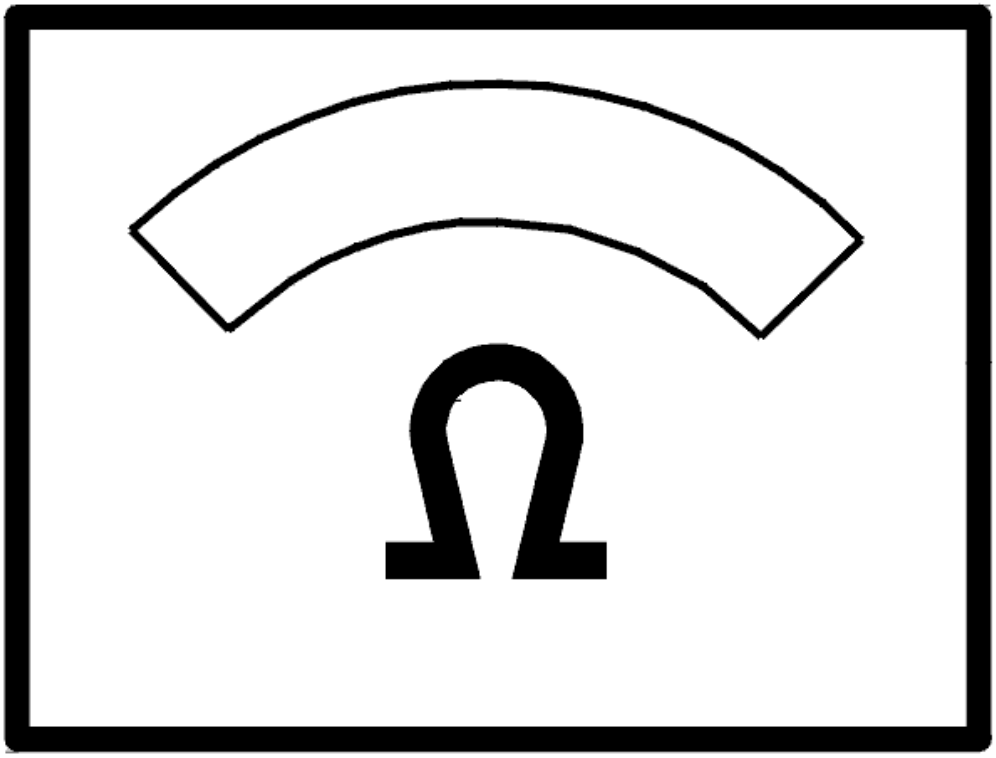

Fig. 378: Identifying Ohms Display
Courtesy of VOLVO CARS CORPORATION

Was the resistance OK?

- **YES**

  Refer to **CHECKING THE WIRING**

- **NO**

  Refer to **CHECKING THE WIRING AND COMPONENT**

CHECKING THE WIRING

- Breakout box connected to the control module
- Breakout box connected to the transmission connector.

Check the cable between control module terminal #37 (#A37) and transmission connector (control module side) terminal #L (#A11). Check for an open-circuit. Check for a short-circuit to supply voltage.

Check the cable between control module terminal #55 (#A55) and transmission connector (control module side) terminal #M (#A12). Check for an open-circuit. Check for a short-circuit to supply voltage.

Remedy as necessary.

Other information

- To connect the breakout box, see **CONNECTING THE BREAKOUT BOX**
- To connect the breakout box to the transmission connector, see **CONNECTING THE BREAKOUT BOX, GM AUTOMATIC TRANSMISSIONS**
- For information about signals, see **SIGNAL SPECIFICATION**
- see **CHECKING WIRING AND TERMINALS**

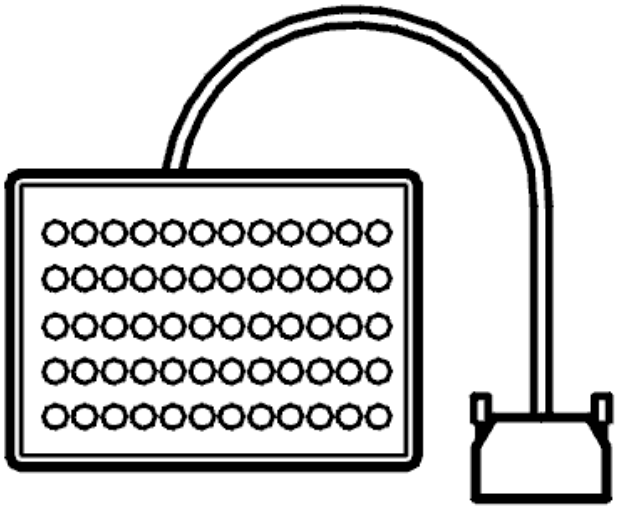

Fig. 379: Identifying Breakout Box
Courtesy of VOLVO CARS CORPORATION

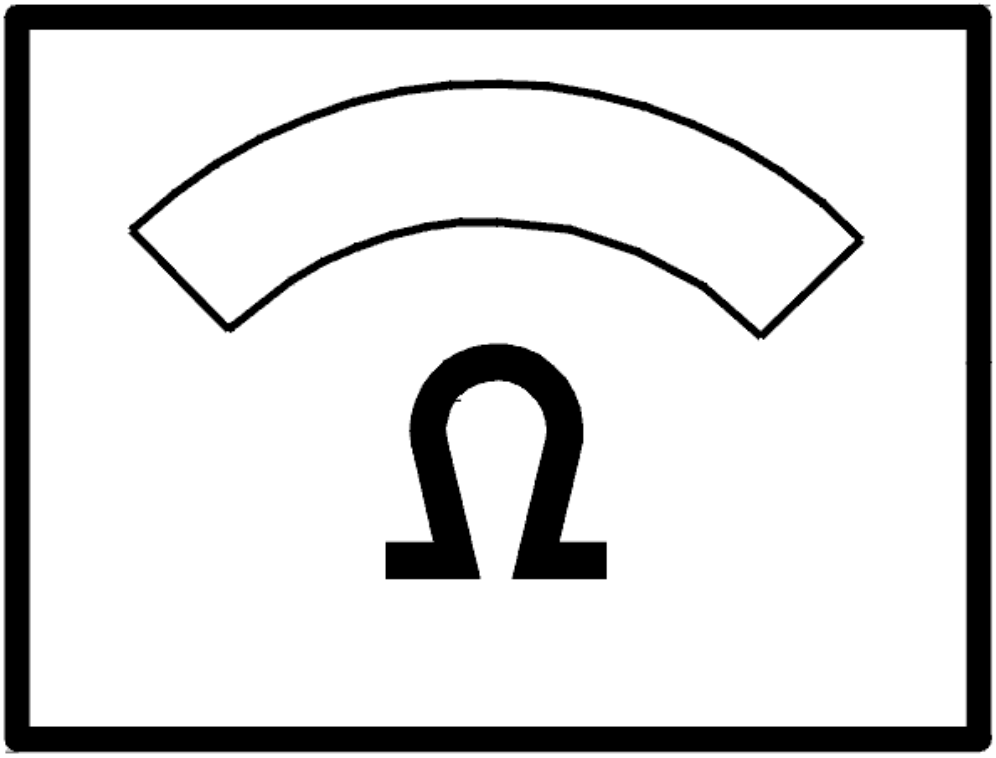

Fig. 380: Identifying Ohms Display
Courtesy of VOLVO CARS CORPORATION

Was a fault detected?

- **YES**

  Refer to **VERIFICATION**

- **NO**

  Refer to **CHECKING THE WIRING AND COMPONENT**

CHECKING THE WIRING AND COMPONENT

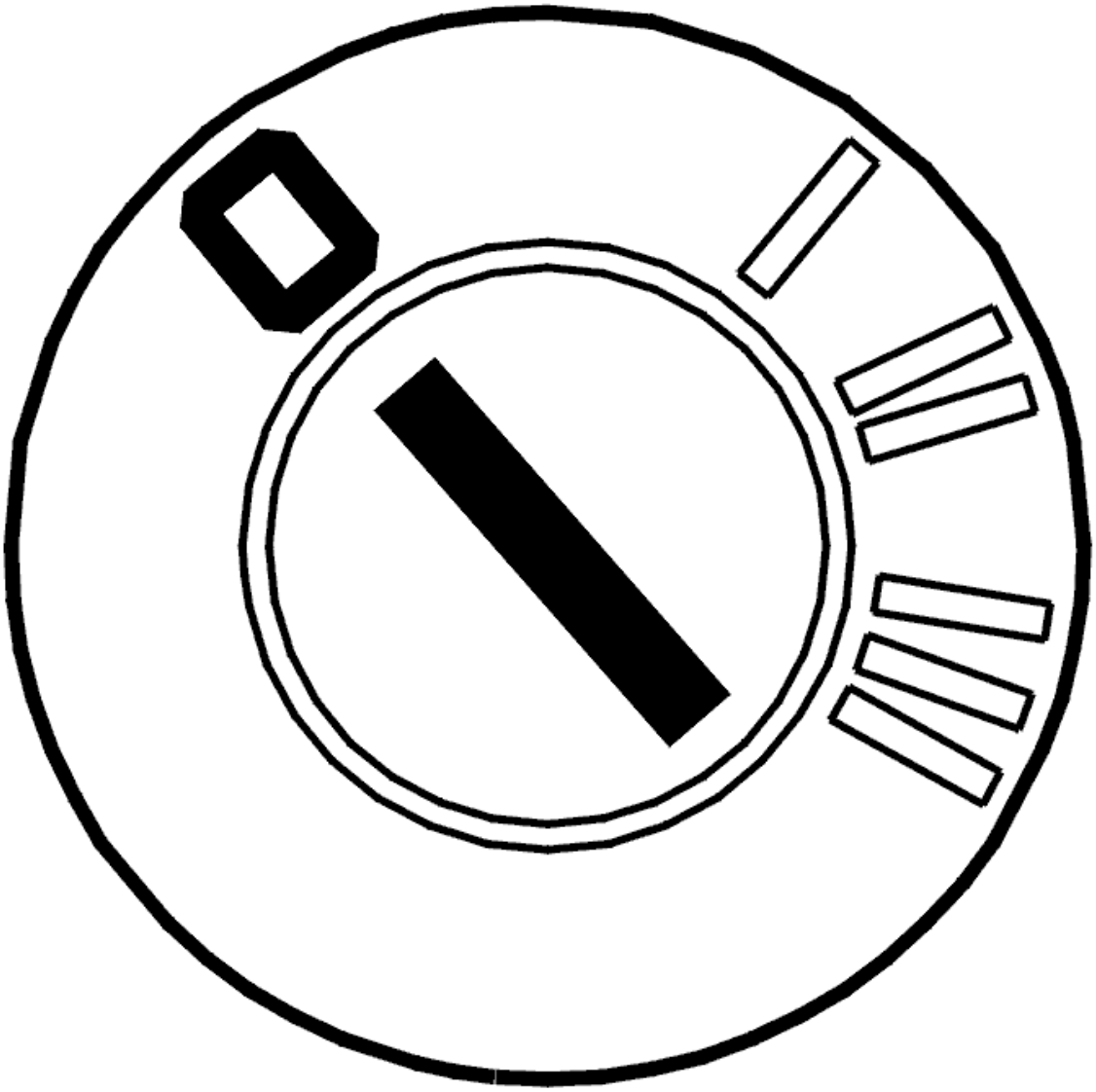

Fig. 381: Identifying Ignition OFF
Courtesy of VOLVO CARS CORPORATION

- Ignition off
- Open the transmission control system.

  Check the cable between transmission terminal #L (#A11) and temperature sensor terminal #A. Check for an open-circuit. Check for a short-circuit to supply voltage.

  Check the cable between transmission terminal #M (#A12) and temperature sensor terminal #B. Check for an open-circuit. Check for a short-circuit to supply voltage.

  HINT: Check the temperature sensor by measuring the resistance between temperature sensor connector terminals #A and #B. The resistance must be between 3.5-3.6 kohms at 20° C.

  Remedy as necessary.

Other information:

- To connect the breakout box, see **CONNECTING THE BREAKOUT BOX**
- To connect the breakout box to the transmission connector, see **CONNECTING THE BREAKOUT BOX, GM AUTOMATIC TRANSMISSIONS**
- To replace the cable harness, see **TEMPERATURE SENSOR FLUID, TRANSAXLE, (TFT)**
- To replace the temperature sensor, see **TEMPERATURE SENSOR FLUID TRANSMISSION, REPLACING**
- For information about signals, see **SIGNAL SPECIFICATION**
- For information about the resistance values, see **COMPONENT RESISTANCE VALUES**
- see **CHECKING WIRING AND TERMINALS**

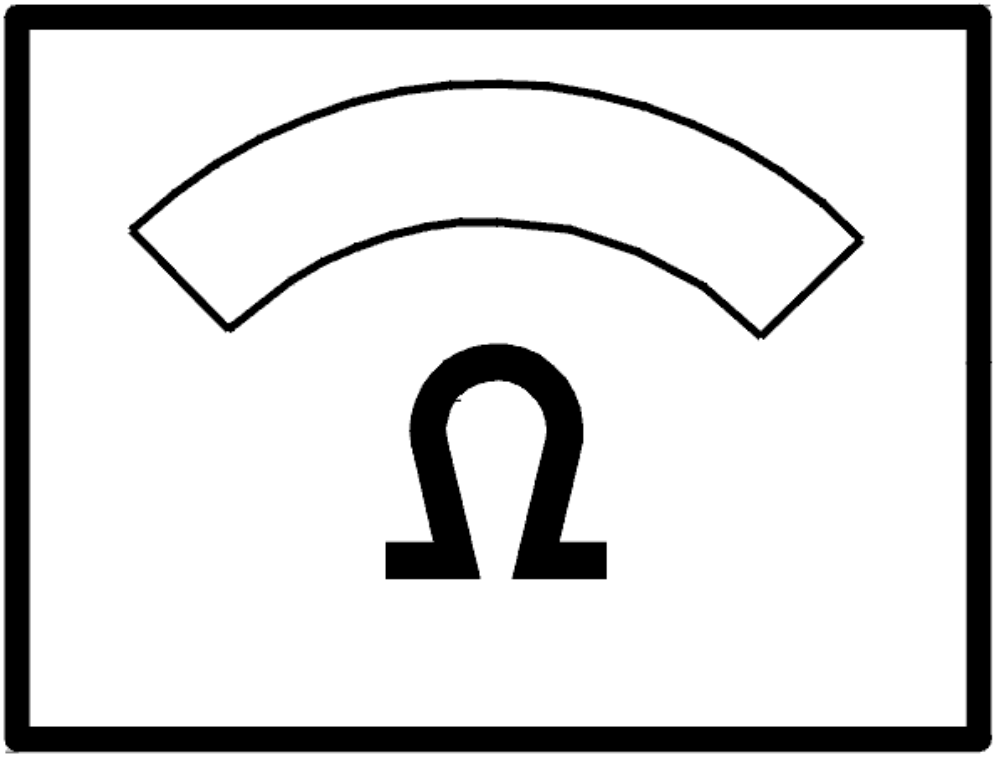

Fig. 382: Identifying Ohms Display
Courtesy of VOLVO CARS CORPORATION

- **Continue**

  Refer to **RESETTING TRANSMISSION FLUID CHANGE COUNTER**

INTERMITTENT FAULT

Check the control module and automatic transmission connector. Check for contact resistance and oxidation. Remedy if necessary.

Check the cable between control module terminal #A37 (#A37) and transmission connector (control module side) terminal #11. Check for an intermittent open-circuit. Check for an intermittent short-circuit to supply voltage.

Check the cable between control module terminal #A55 (#A55) and transmission connector (control module side) terminal #12. Check for an intermittent open-circuit. Check for an intermittent short-circuit to supply voltage.

Remedy as necessary.

Other information

- To connect the breakout box, see **CONNECTING THE BREAKOUT BOX**
- To connect the breakout box to the transmission connector, see **CONNECTING THE BREAKOUT BOX, GM AUTOMATIC TRANSMISSIONS**
- For information about signals, see **SIGNAL SPECIFICATION**
- see **CHECKING WIRING AND TERMINALS**

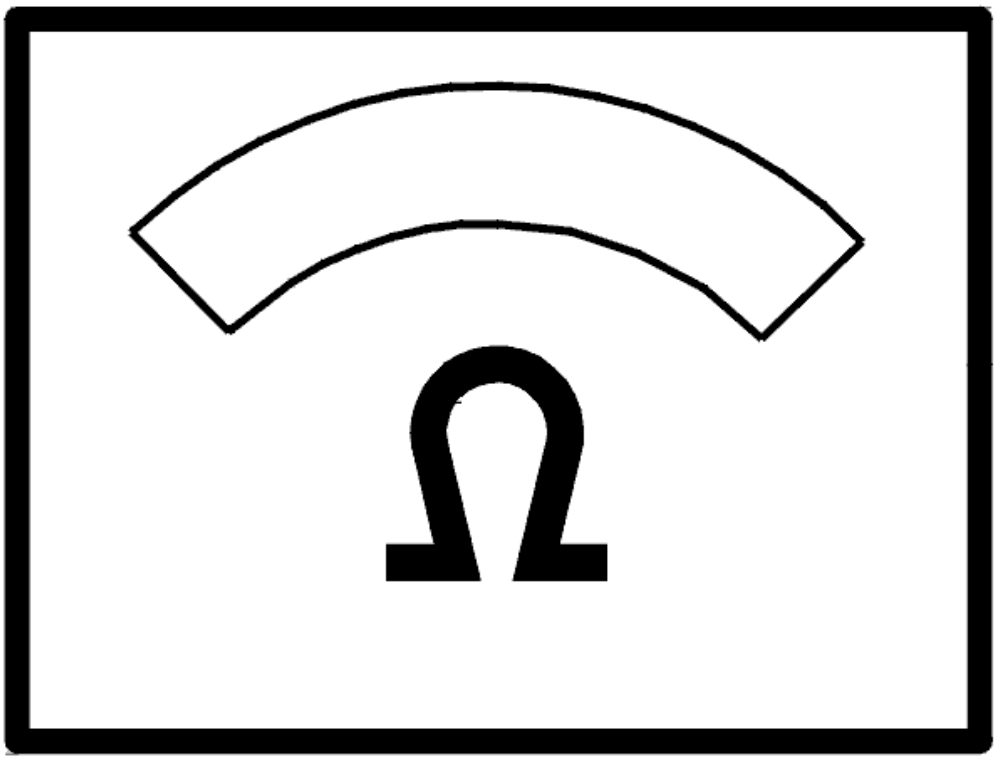

Fig. 383: Identifying Ohms Display
Courtesy of VOLVO CARS CORPORATION

- **Continue**

  Refer to **INFORMATION**

RESETTING TRANSMISSION FLUID CHANGE COUNTER

RESETTING TRANSMISSION FLUID CHANGE COUNTER

HINT: The transmission control module (TCM) has a counter for the oil quality. The counter counts up if the transmission is exposed to too high a load or an ambient temperature that is too high. If the counter is not reset when the oil is drained or changed, there is a risk that a diagnostic trouble code (DTC) will be stored in faulty circumstances. Therefore it is important that the "Transmission oil change" counter is reset.

NOTE: **This applies only when the transmission fluid is changed and when the fluid is changed when repairs are carried out to the transmission temperature sensor.**

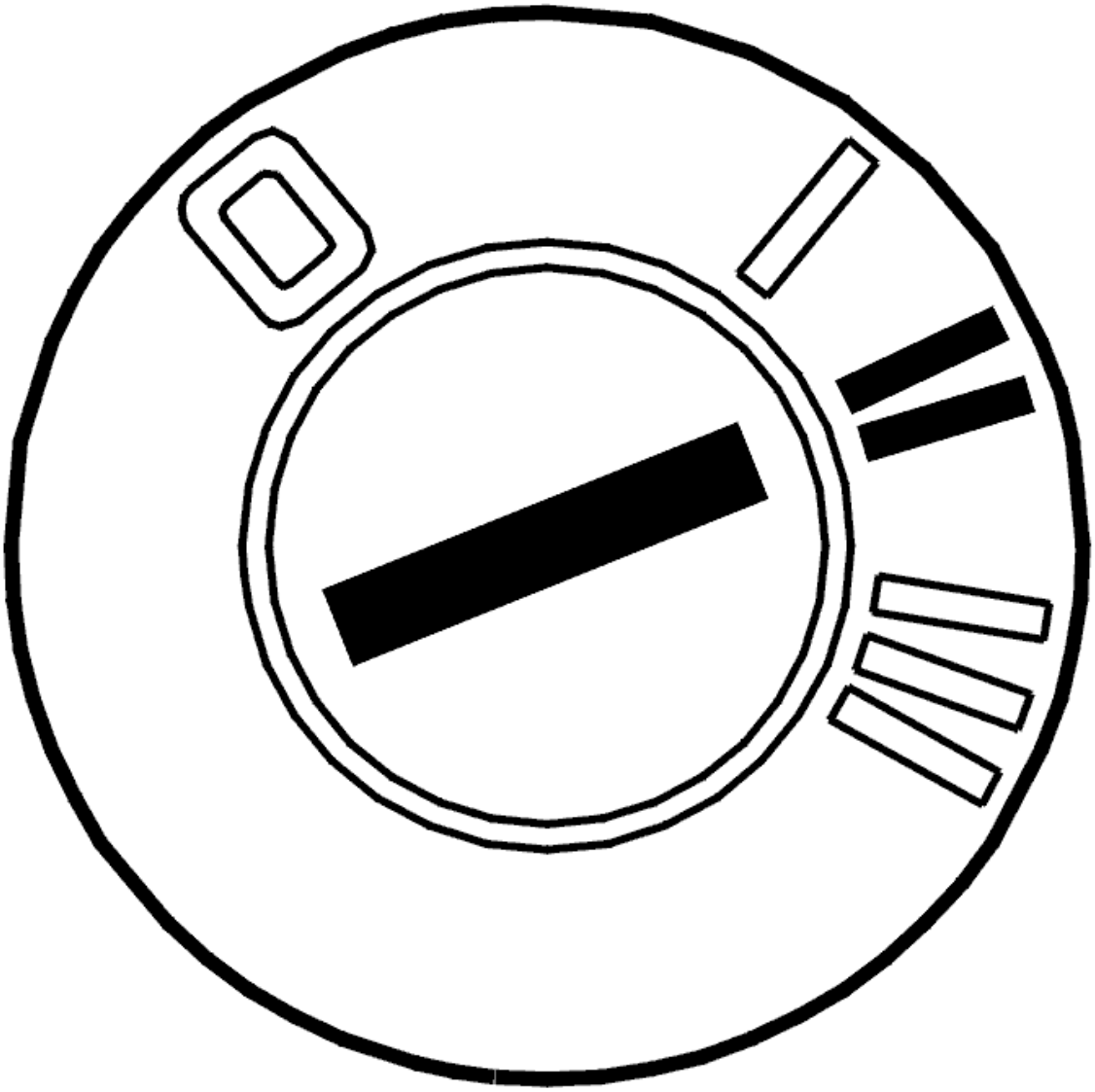

Fig. 384: Identifying Ignition ON
Courtesy of VOLVO CARS CORPORATION

- Ignition on.

  Reset the counter by clicking on the VCT 2000 symbol.

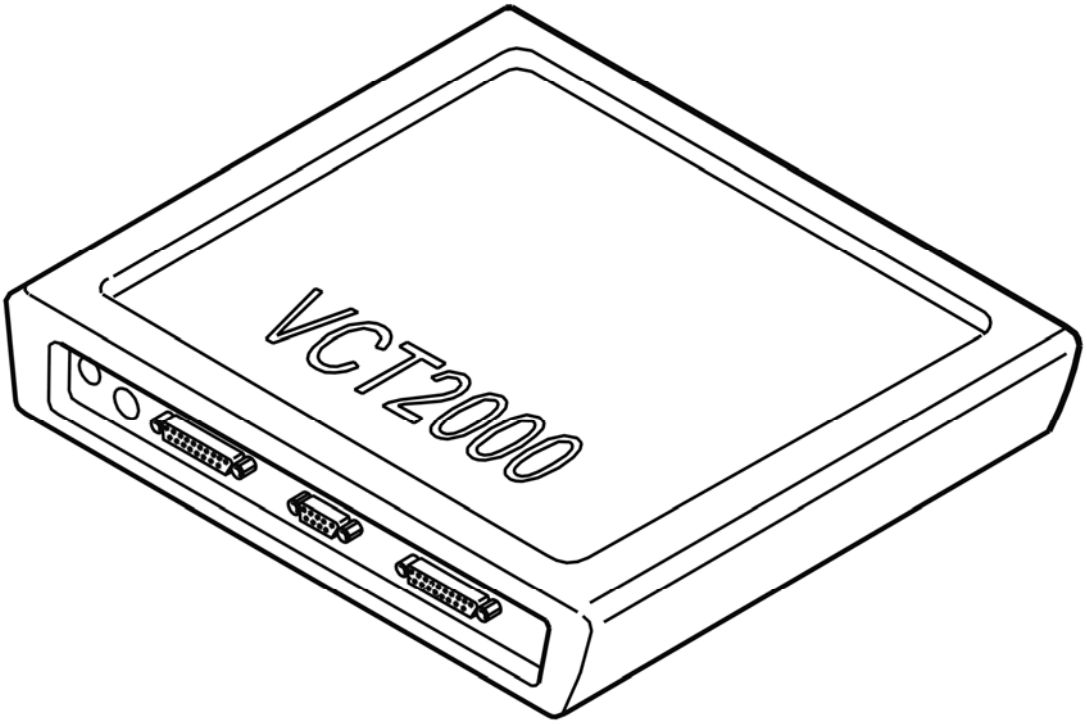

Fig. 385: Identifying VCT2000 Diagnostic Tool Symbol In VIDA
Courtesy of VOLVO CARS CORPORATION

- **Continue**

  Refer to **VERIFICATION**

VERIFICATION

VERIFICATION

HINT: After carrying out the repair check that the fault has been remedied.

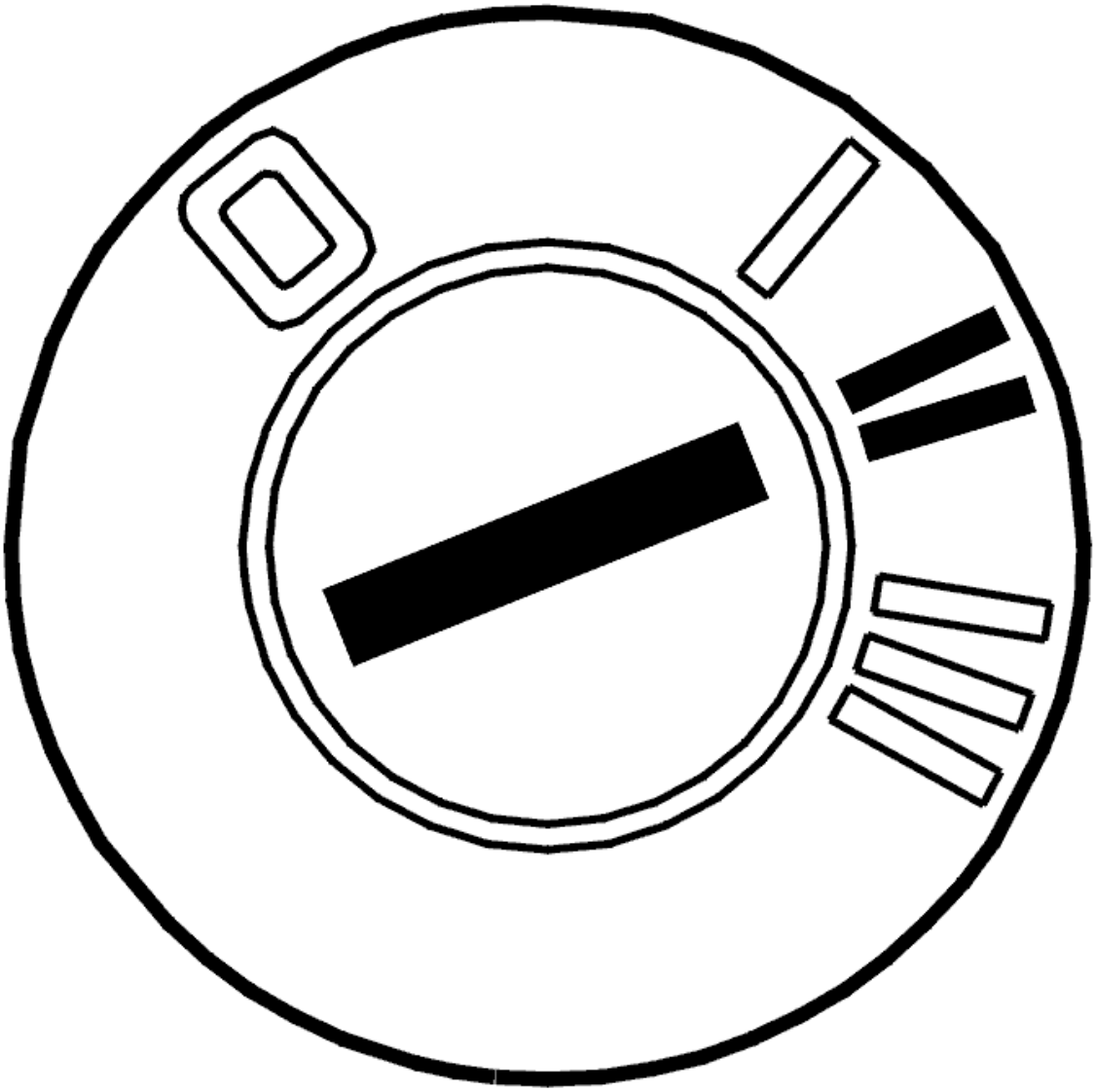

Fig. 386: Identifying Ignition ON
Courtesy of VOLVO CARS CORPORATION

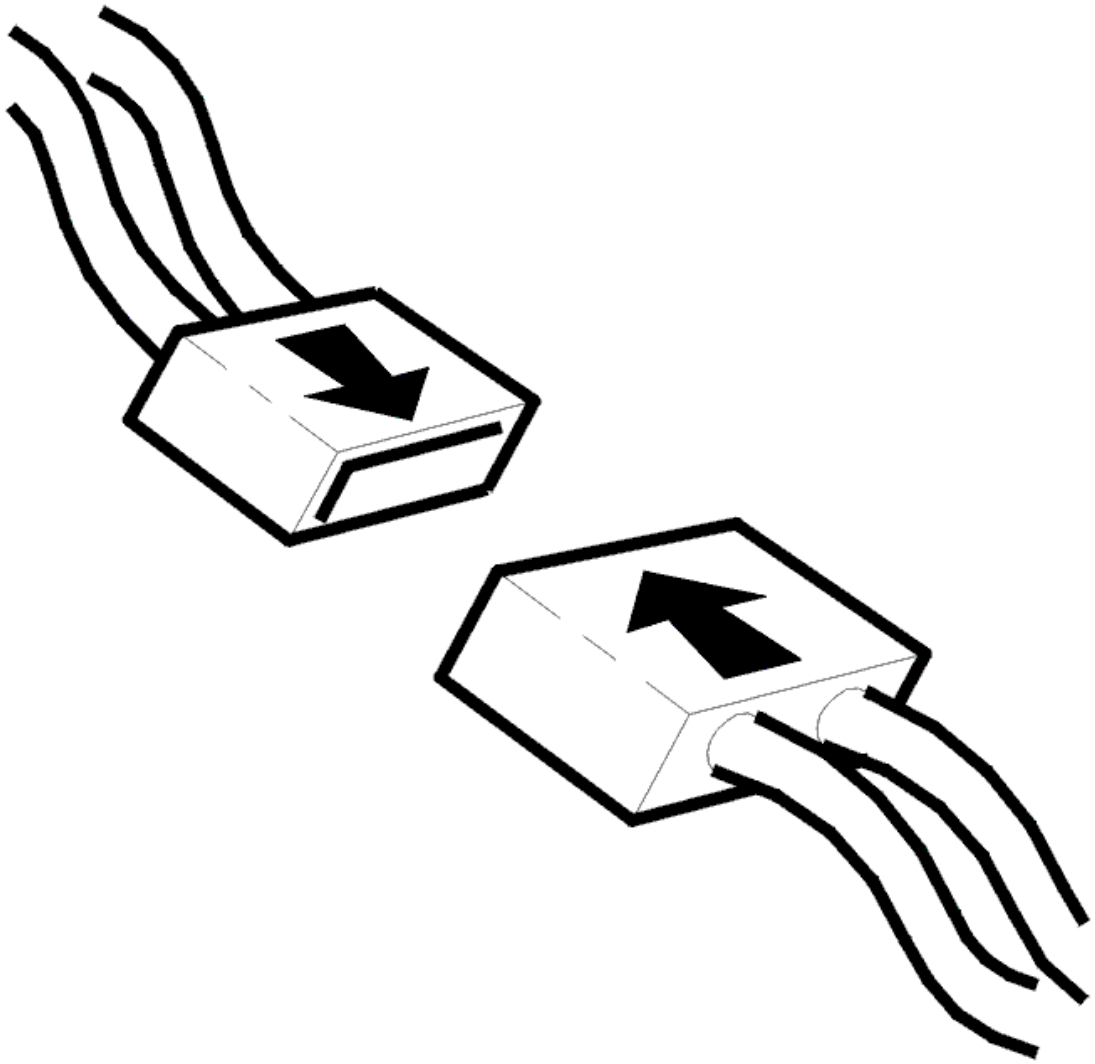

Fig. 387: Identifying Connector(s) Reinstallation
Courtesy of VOLVO CARS CORPORATION

- Ignition off.
- Reinstall connectors, components etc.
- Ignition on.
- Read off oil temperature.

  Check that the transmission oil temperature is within its permitted range. Compare with the transmission temperature.

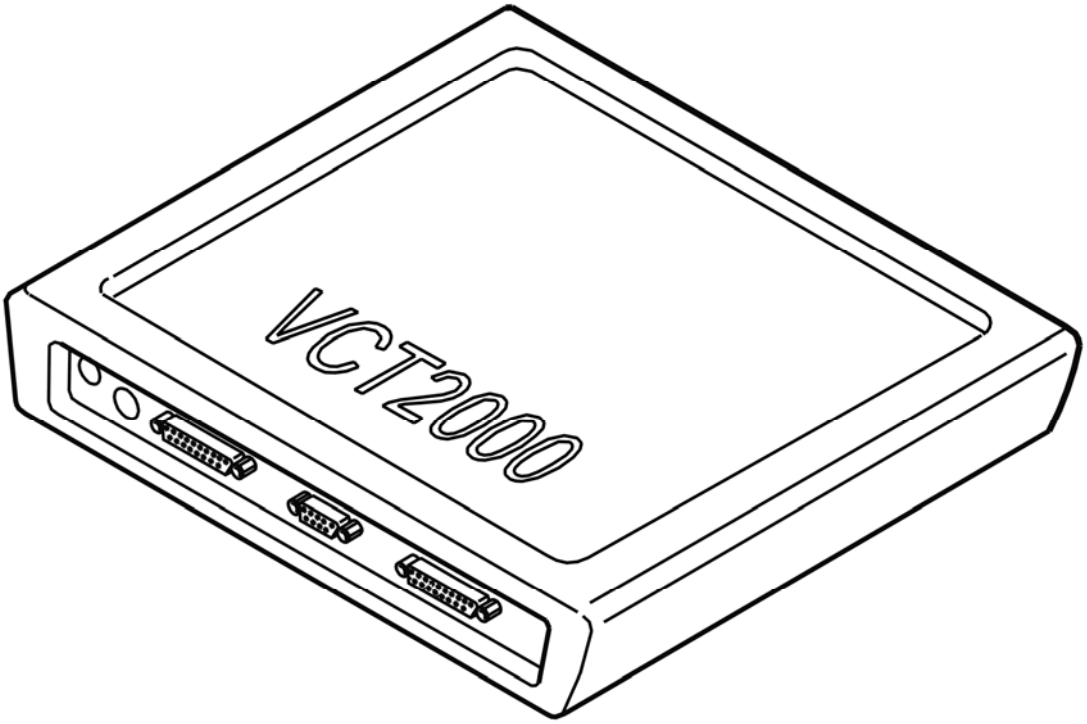

Fig. 388: Identifying VCT2000 Diagnostic Tool Symbol In VIDA
Courtesy of VOLVO CARS CORPORATION

Is the oil temperature within its permitted range?

- **YES**

  VERIFIED: Troubleshooting has been completed.

- **NO**

  Refer to **INFORMATION**

TCM-0008: SHIFT SOLENOID S2. SIGNAL MISSING (AW50/51 AWD; AW55-50/51SN; 2003-2007)

DIAGNOSTIC TROUBLE CODE (DTC) INFORMATION

see **DIAGNOSTIC TROUBLE CODE (DTC) INFORMATION**

SIGNAL MISSING

CHECKS

CHECKING THE TEMPERATURE SENSOR

HINT: In some cases, the diagnostic trouble code (DTC) may be caused by a defective oil temperature sensor. Check the function of the oil temperature sensor first.

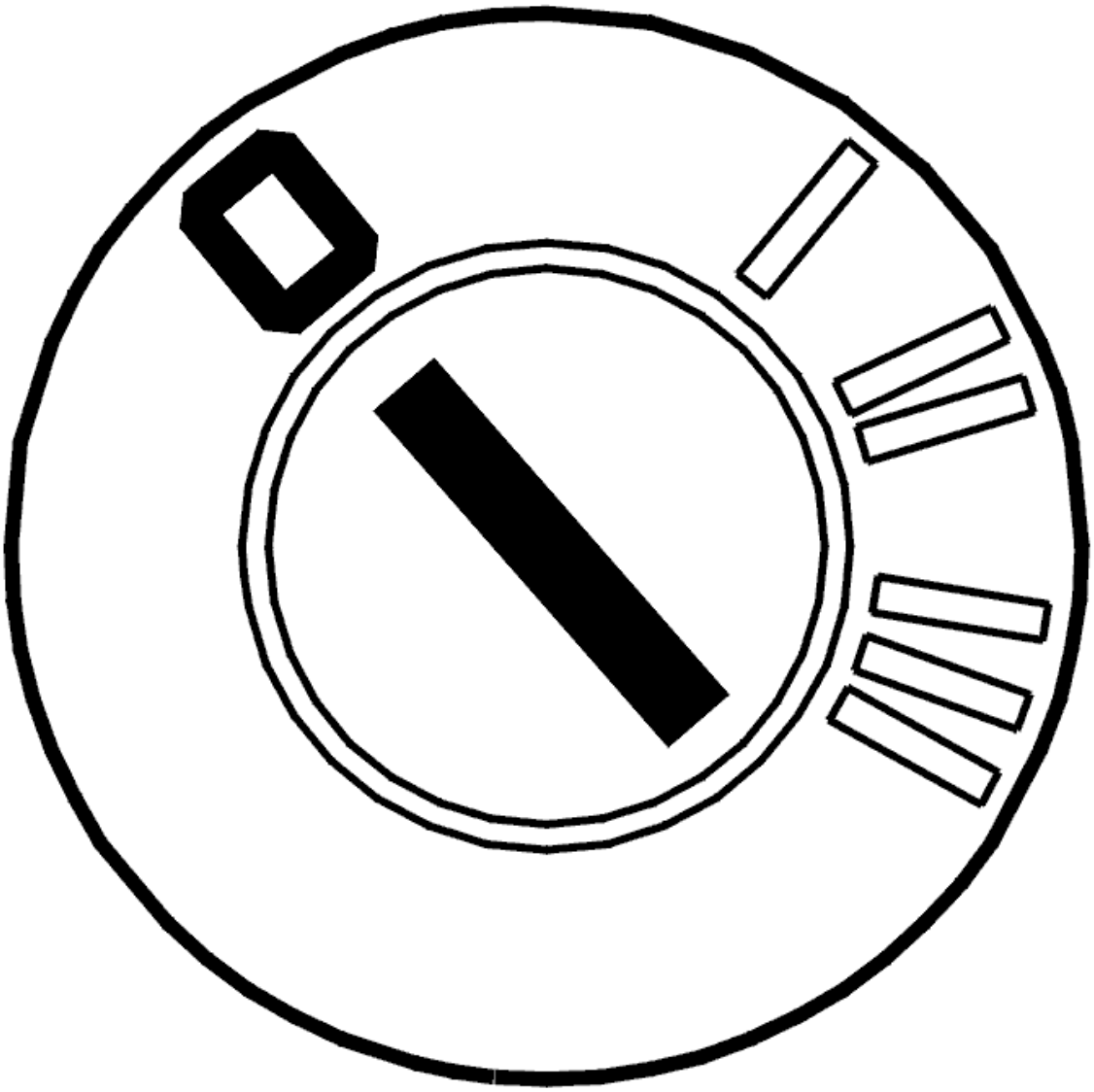

Fig. 389: Identifying Ignition OFF
Courtesy of VOLVO CARS CORPORATION

- Ignition off
- Read off the oil temperature.

  Check that the function of the temperature sensor is OK. Test drive the car to increase the temperature of the transmission fluid. Read off the temperature again. Check that the temperature has increased.

  HINT: If the temperature is outside its permitted range, fault-trace the temperature sensor.

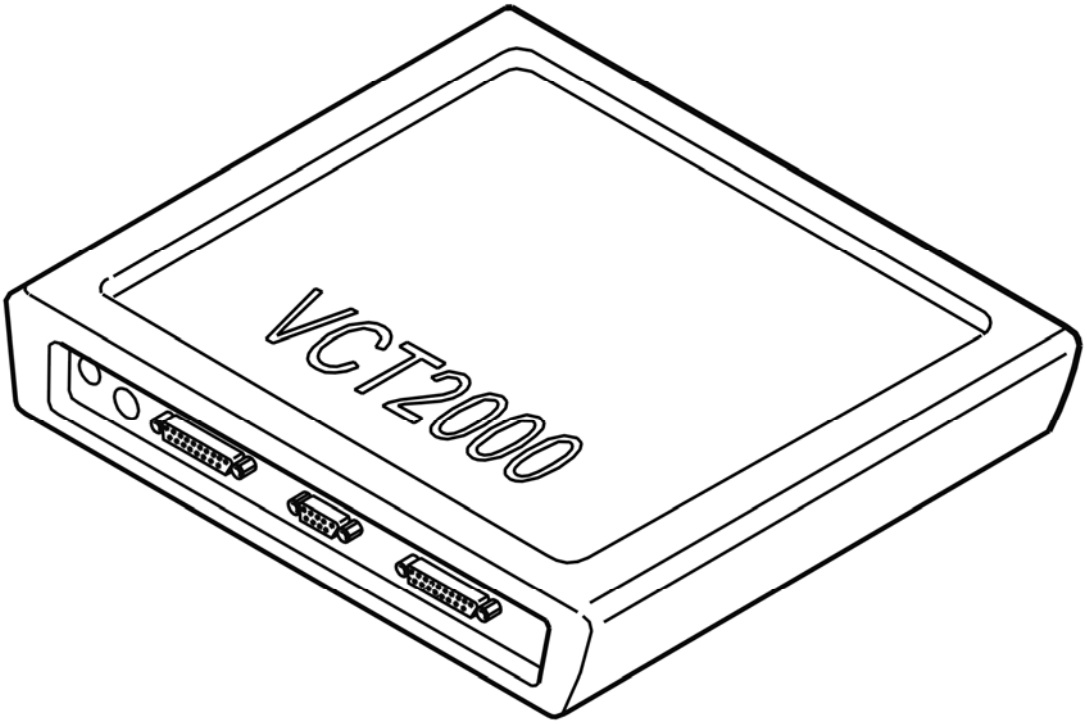

Fig. 390: Identifying VCT2000 Diagnostic Tool Symbol In VIDA
Courtesy of VOLVO CARS CORPORATION

Is the oil temperature within its permitted range?

- **YES**

  Refer to **CHECKING SHIFT SOLENOID S2**

- **NO**

  Refer to **FAULTY SIGNAL**

CHECKING SHIFT SOLENOID S2

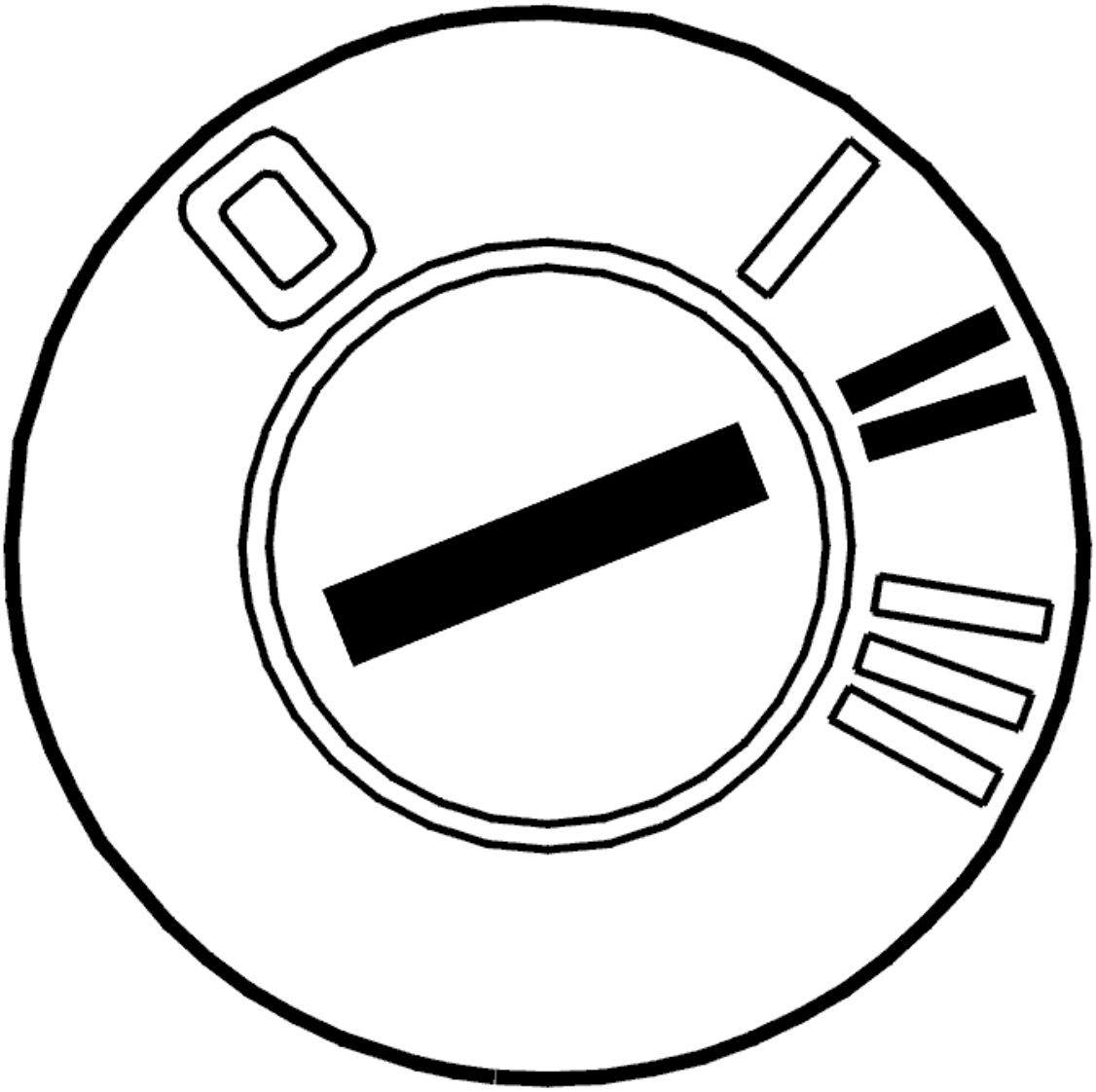

Fig. 391: Identifying Ignition ON
Courtesy of VOLVO CARS CORPORATION

- Ignition on
- Gear selector in position P
- Activate solenoid S2.

The current should oscillate between 0 and approximately 1.5 A.

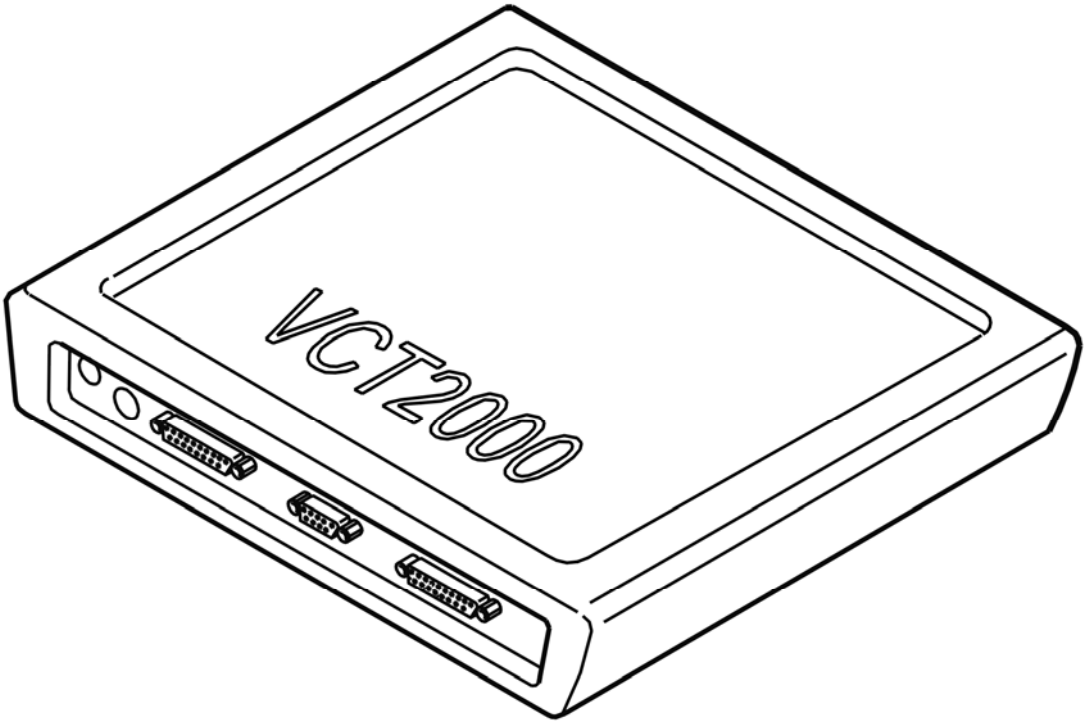

Fig. 392: Identifying VCT2000 Diagnostic Tool Symbol In VIDA
Courtesy of VOLVO CARS CORPORATION

Does the current oscillate?

- **YES**

  Refer to **INTERMITTENT FAULT**

- **NO**

  Refer to **CHECKING RESISTANCE**

CHECKING RESISTANCE

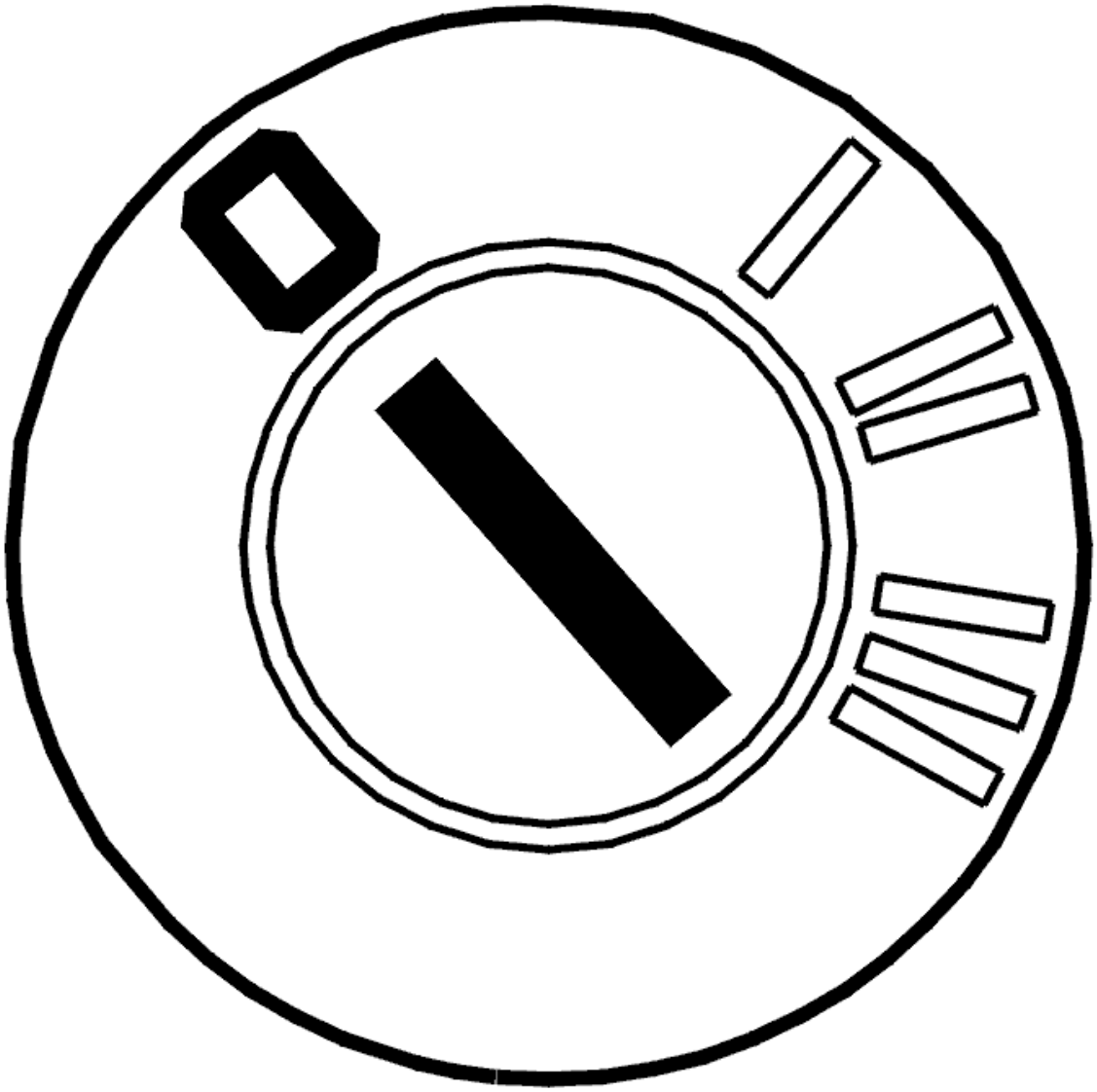

Fig. 393: Identifying Ignition OFF
Courtesy of VOLVO CARS CORPORATION

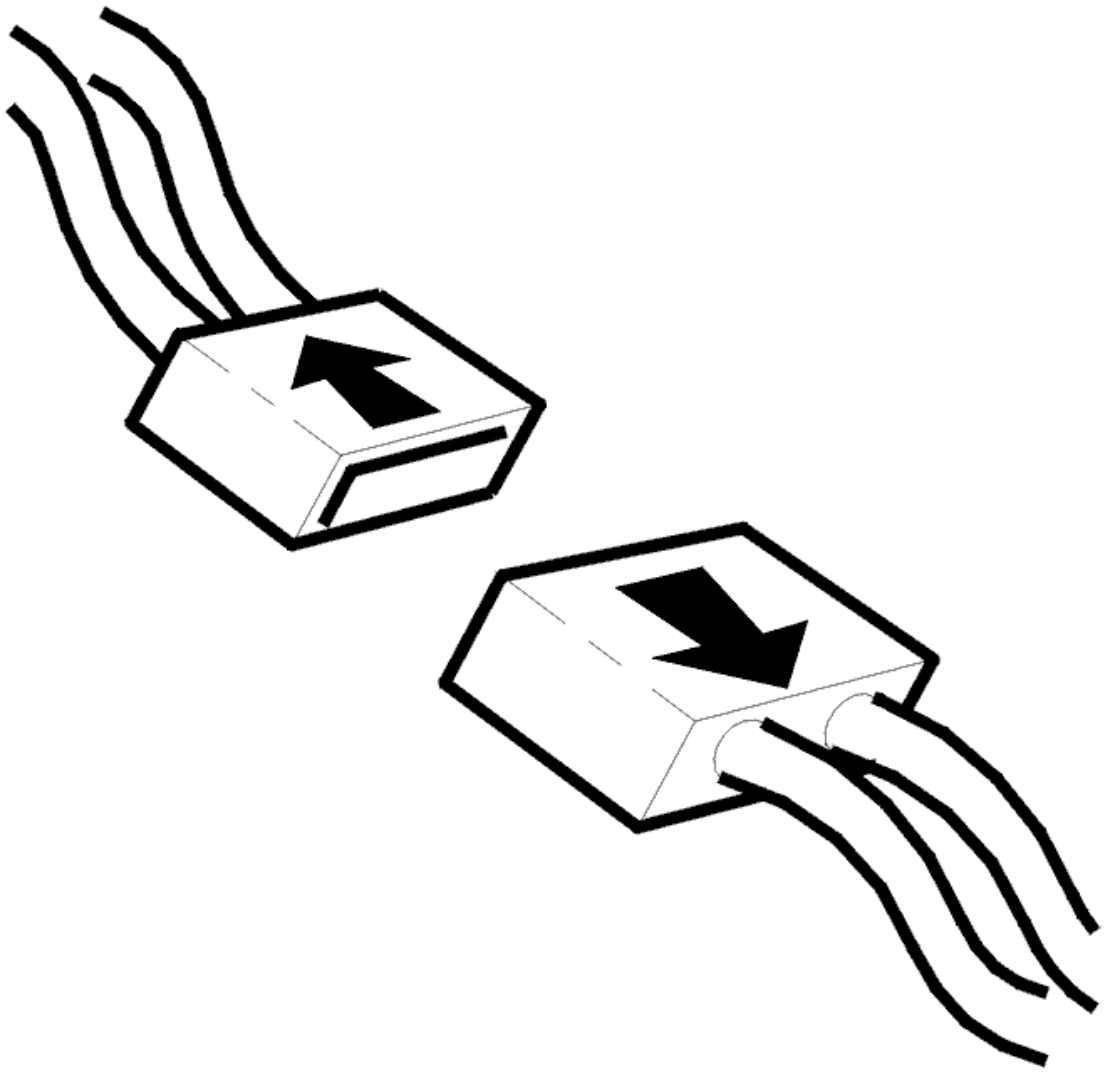

Fig. 394: Identifying Connector(s) Disconnected
Courtesy of VOLVO CARS CORPORATION

- Ignition off
- Disconnect transmission connector C.

  Check solenoid S2. Measure the resistance between transmission connector terminal #C2 and the transmission housing. The resistance should be 11-15 ohms at 20°C.

  Other information:

  - To disconnect the transmission connectors, see **CONNECTORS, TRANSMISSION, DISCONNECTING / CONNECTING**
  - For information about signals, see **SIGNAL DESCRIPTION. TRANSMISSION CONTROL MODULE (TCM)** .

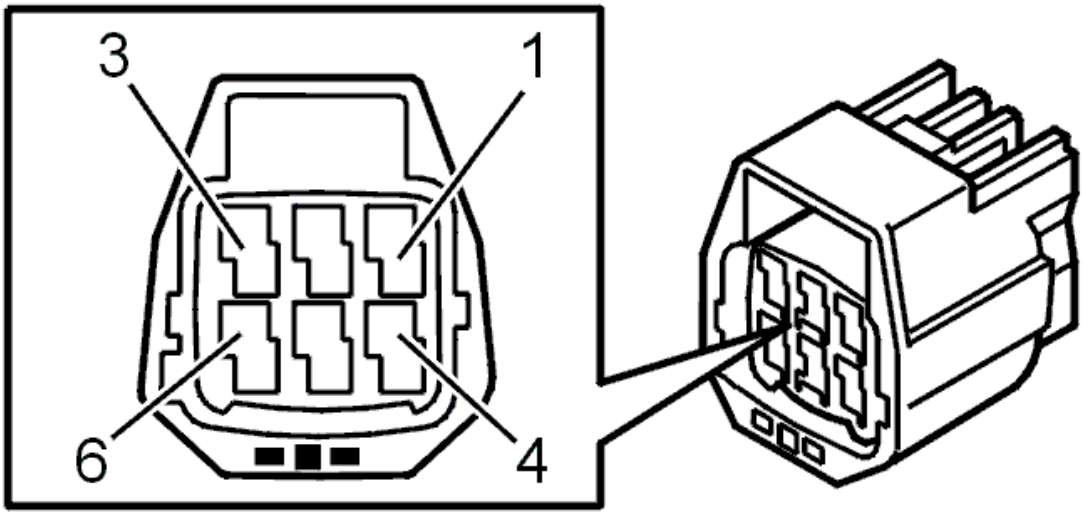

Fig. 395: Identifying 6-Pin Transmission Connector Terminals
Courtesy of VOLVO CARS CORPORATION

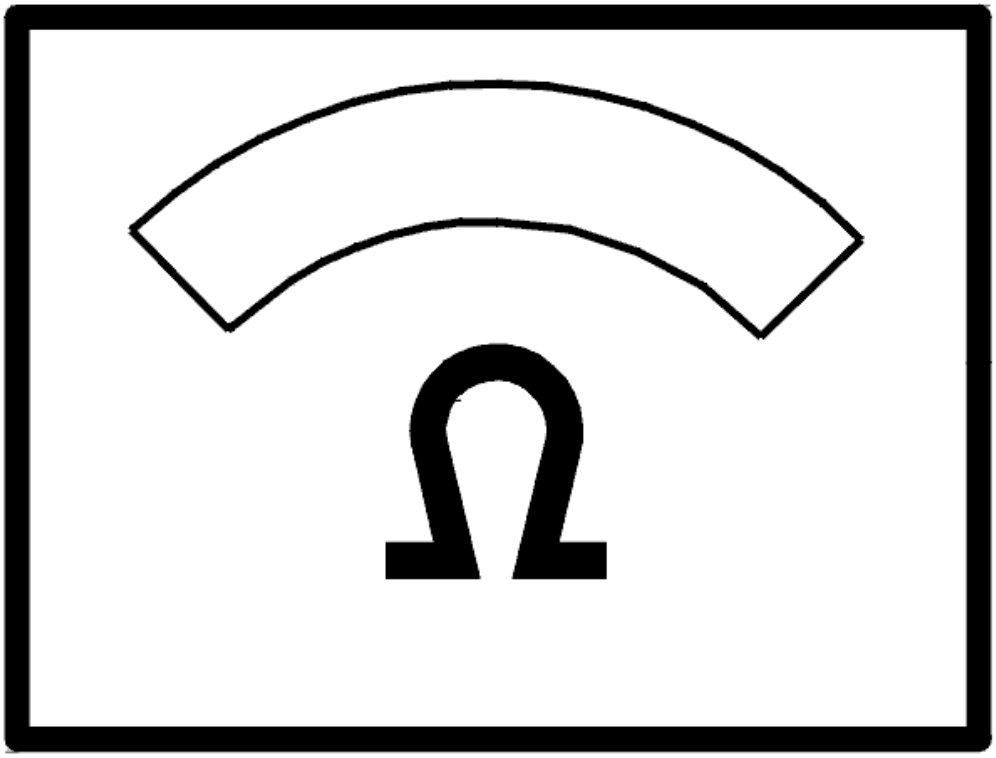

Fig. 396: Identifying Ohms Display
Courtesy of VOLVO CARS CORPORATION

Was the resistance OK?

- **YES**

  Refer to **CHECKING THE WIRING**

- **NO**

  Refer to **CHECKING THE WIRING AND COMPONENT**

CHECKING THE WIRING

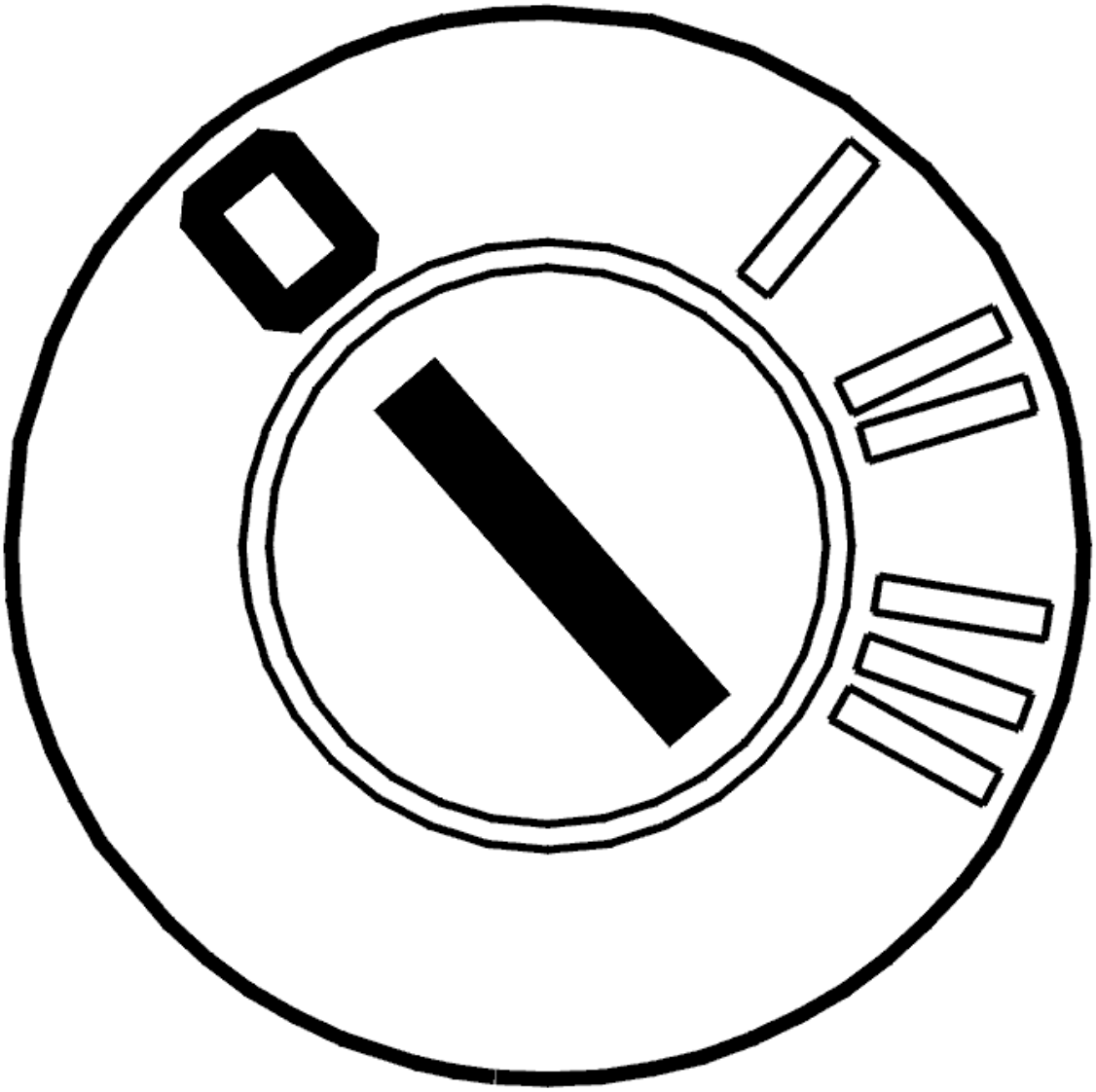

Fig. 397: Identifying Ignition OFF
Courtesy of VOLVO CARS CORPORATION

- Ignition off.

  Check the cable between control module terminal #B8 (#A68) and transmission connector #C2 (control module side). Check for an open-circuit according to **OPEN-CIRCUIT, PERMANENT FAULTS** .

  Remedy as necessary.

  Other information:

  - To connect the breakout box, see **CONNECTING THE BREAKOUT BOX**
  - To disconnect the transmission connectors, see **CONNECTORS, TRANSMISSION, DISCONNECTING / CONNECTING**

- For information about signals, see **SIGNAL DESCRIPTION. TRANSMISSION CONTROL MODULE (TCM)** .

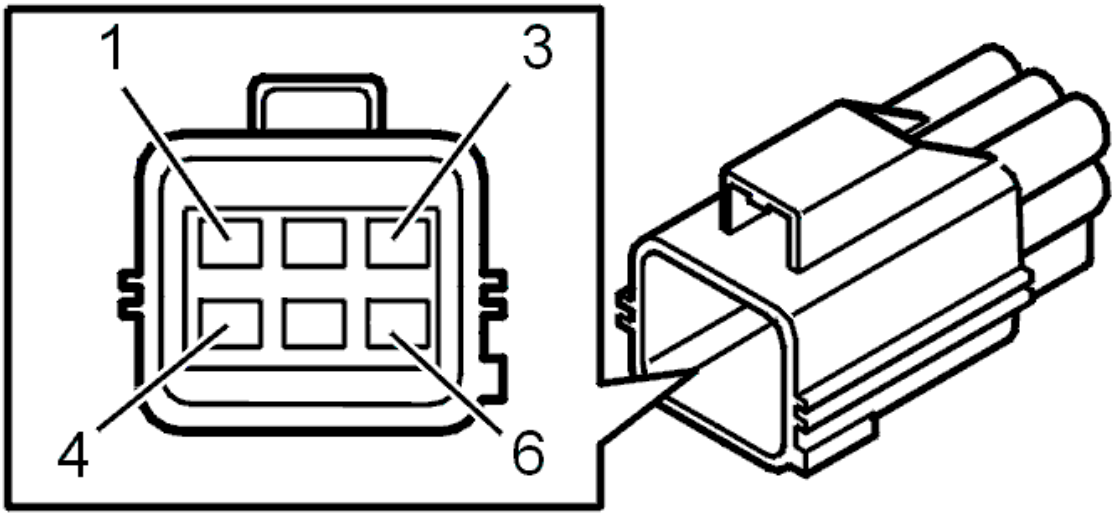

Fig. 398: Identifying Transmission Connector Terminals
Courtesy of VOLVO CARS CORPORATION

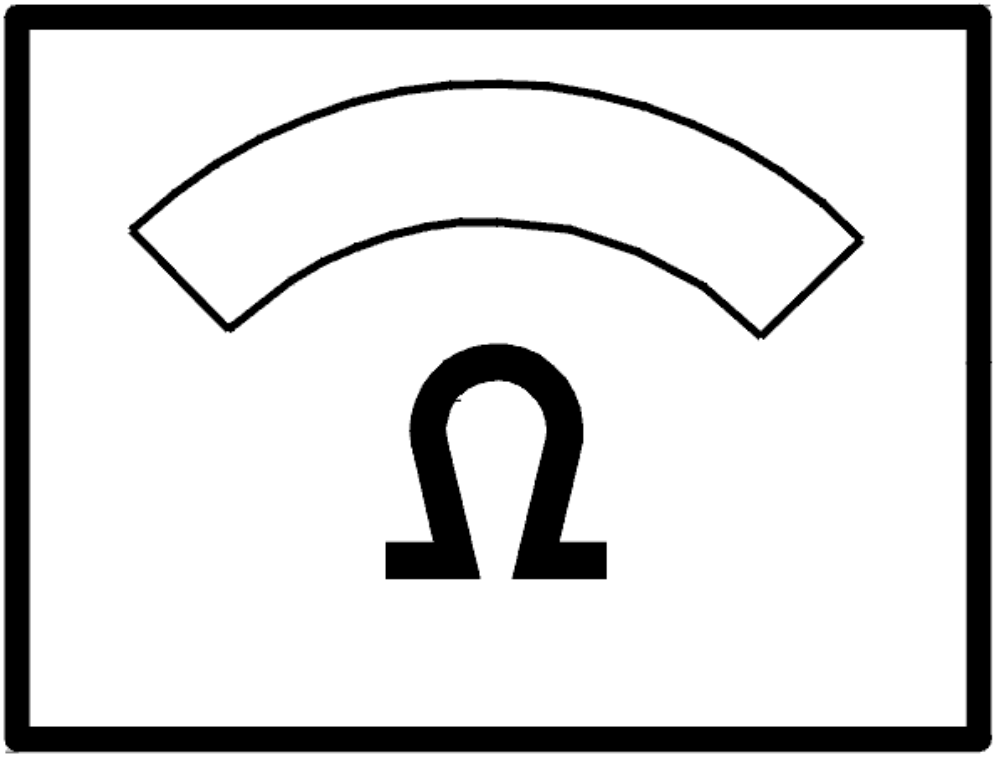

Fig. 399: Identifying Ohms Display
Courtesy of VOLVO CARS CORPORATION

Was a fault detected?

- **YES**

  Refer to **VERIFICATION**

- **NO**

  Refer to **CHECKING THE CONTROL MODULE**

CHECKING THE CONTROL MODULE

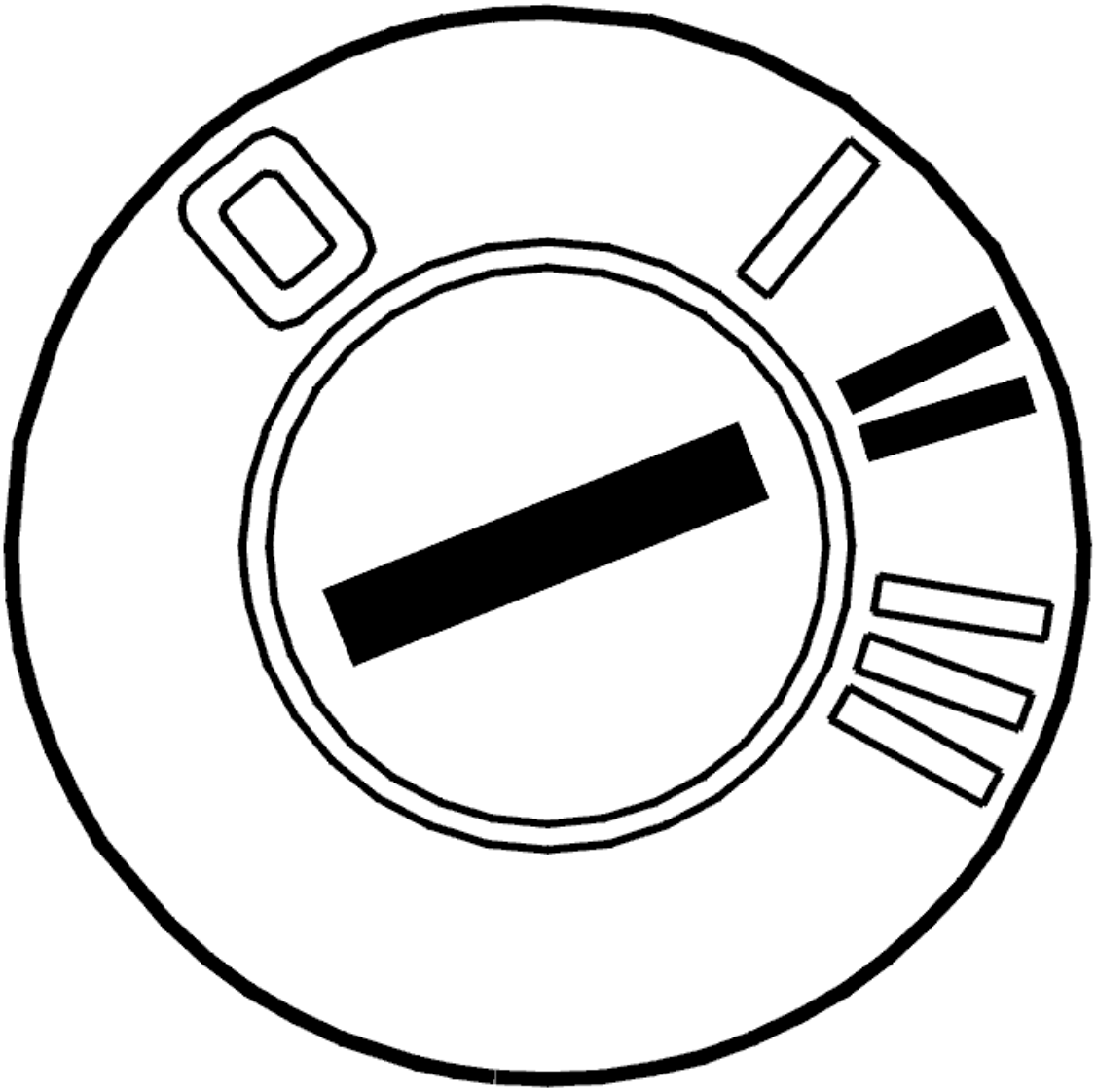

Fig. 400: Identifying Ignition ON
Courtesy of VOLVO CARS CORPORATION

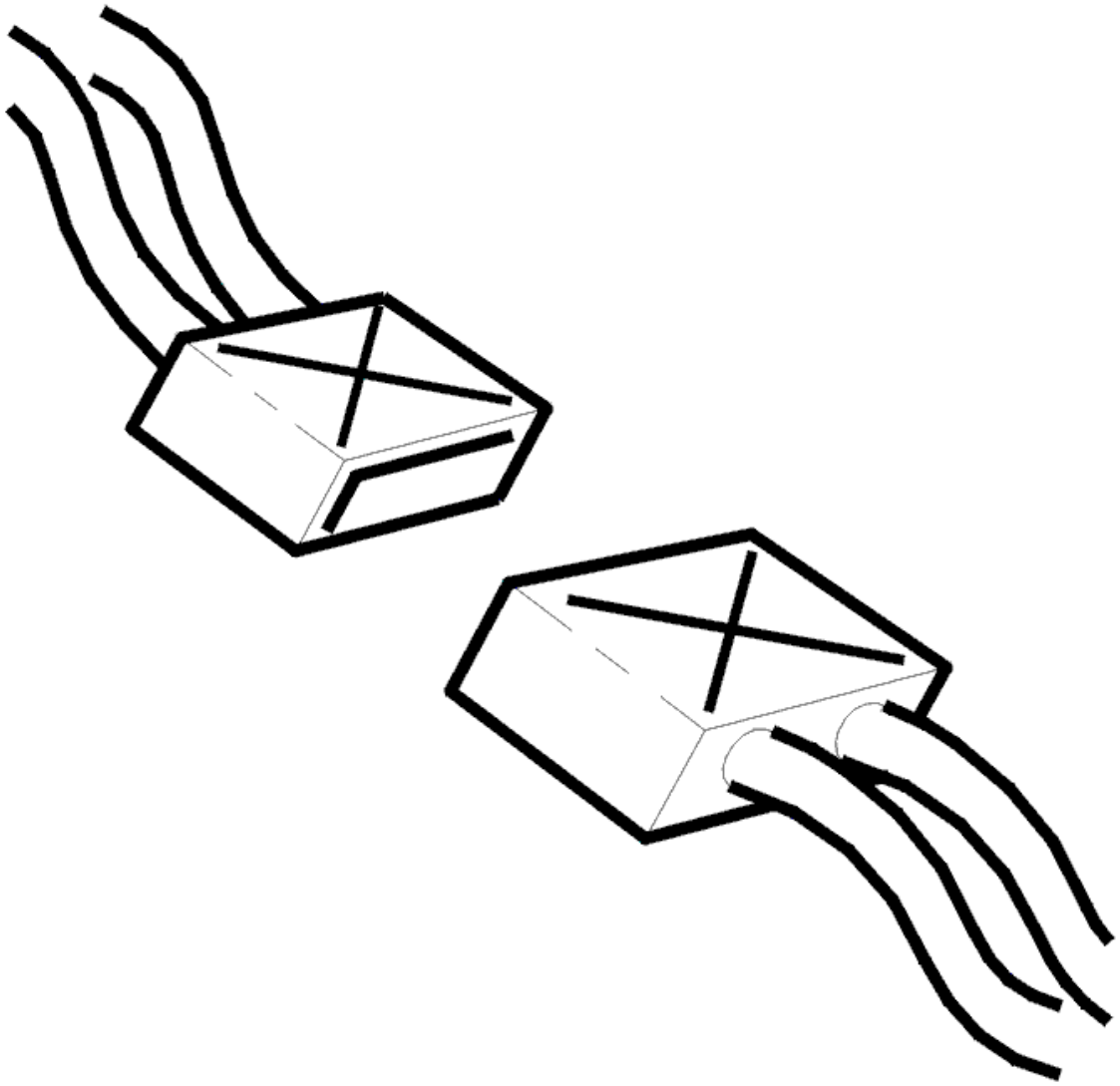

Fig. 401: Identifying Connectors
Courtesy of VOLVO CARS CORPORATION

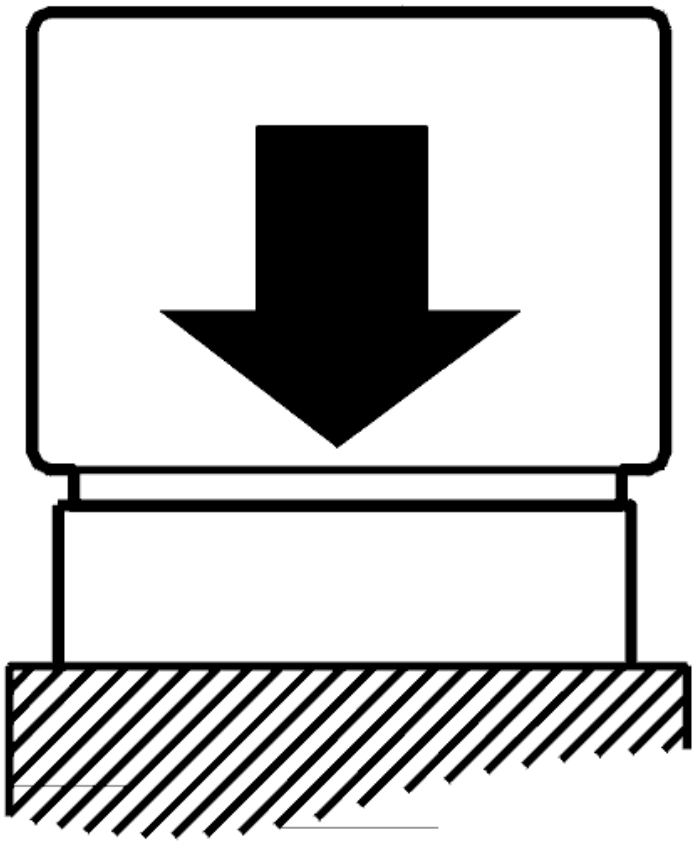

Fig. 402: Identifying Connecting Control Module
Courtesy of VOLVO CARS CORPORATION

- Ignition off
- The breakout box connected
- Connect the control module.
- Transmission connector disconnected
- Gear selector in position P.

Check the transmission control module (TCM) by measuring the resistance between terminals #B8 (#A68) and #A53 (#A53) on the breakout box. The resistance must be approximately 9 kohms.

NOTE: **When removing the transmission connector, the control module may store diagnostic trouble codes (DTCs) for the gear-shift position sensor, the shift solenoids, the temperature sensor etc.**

Try a new control module if the resistance is infinite.

Other information:

- To disconnect the transmission connectors, see **CONNECTORS, TRANSMISSION, DISCONNECTING / CONNECTING**
- To replace the control module, see **TRANSMISSION CONTROL MODULE (TCM), REPLACING**
- For information about signals, see **SIGNAL DESCRIPTION. TRANSMISSION CONTROL MODULE (TCM)** .

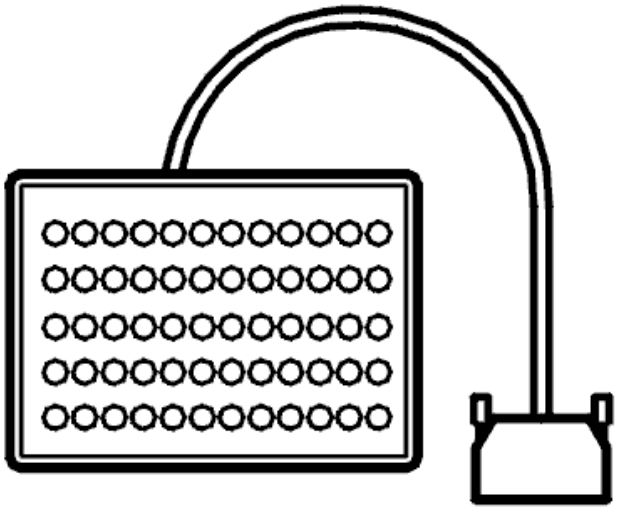

Fig. 403: Identifying Breakout Box
Courtesy of VOLVO CARS CORPORATION

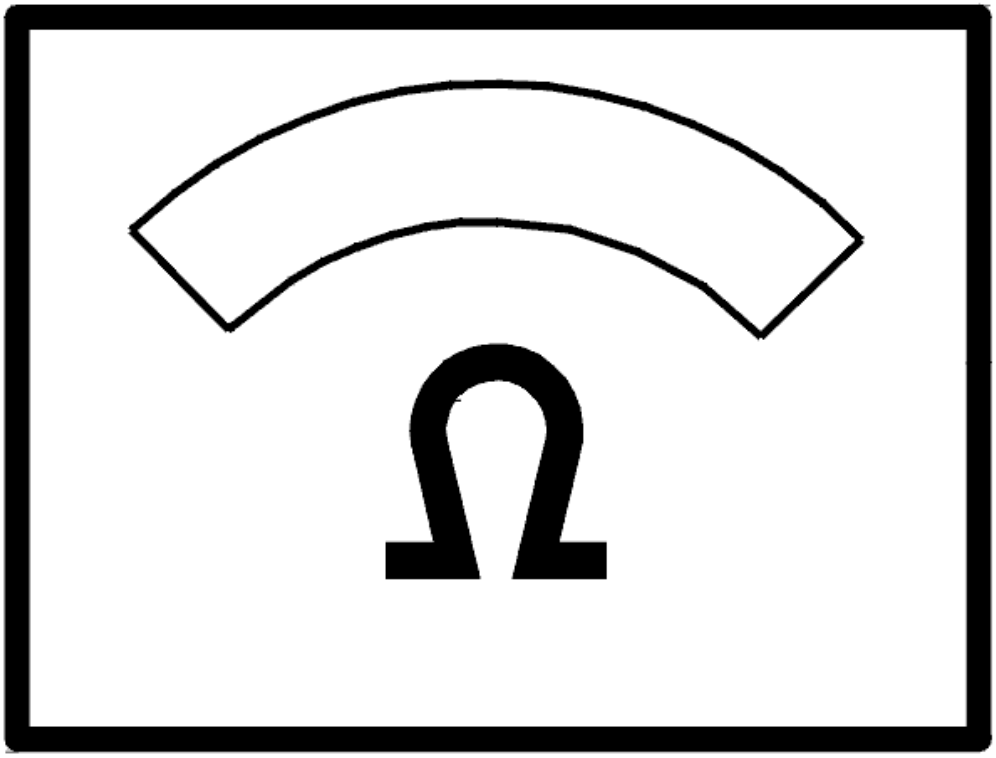

Fig. 404: Identifying Ohms Display
Courtesy of VOLVO CARS CORPORATION

Was the resistance OK?

- **YES**

  FAULT NOT FOUND: Troubleshooting has been completed.

- **NO**

  Refer to **VERIFICATION**

CHECKING THE WIRING AND COMPONENT

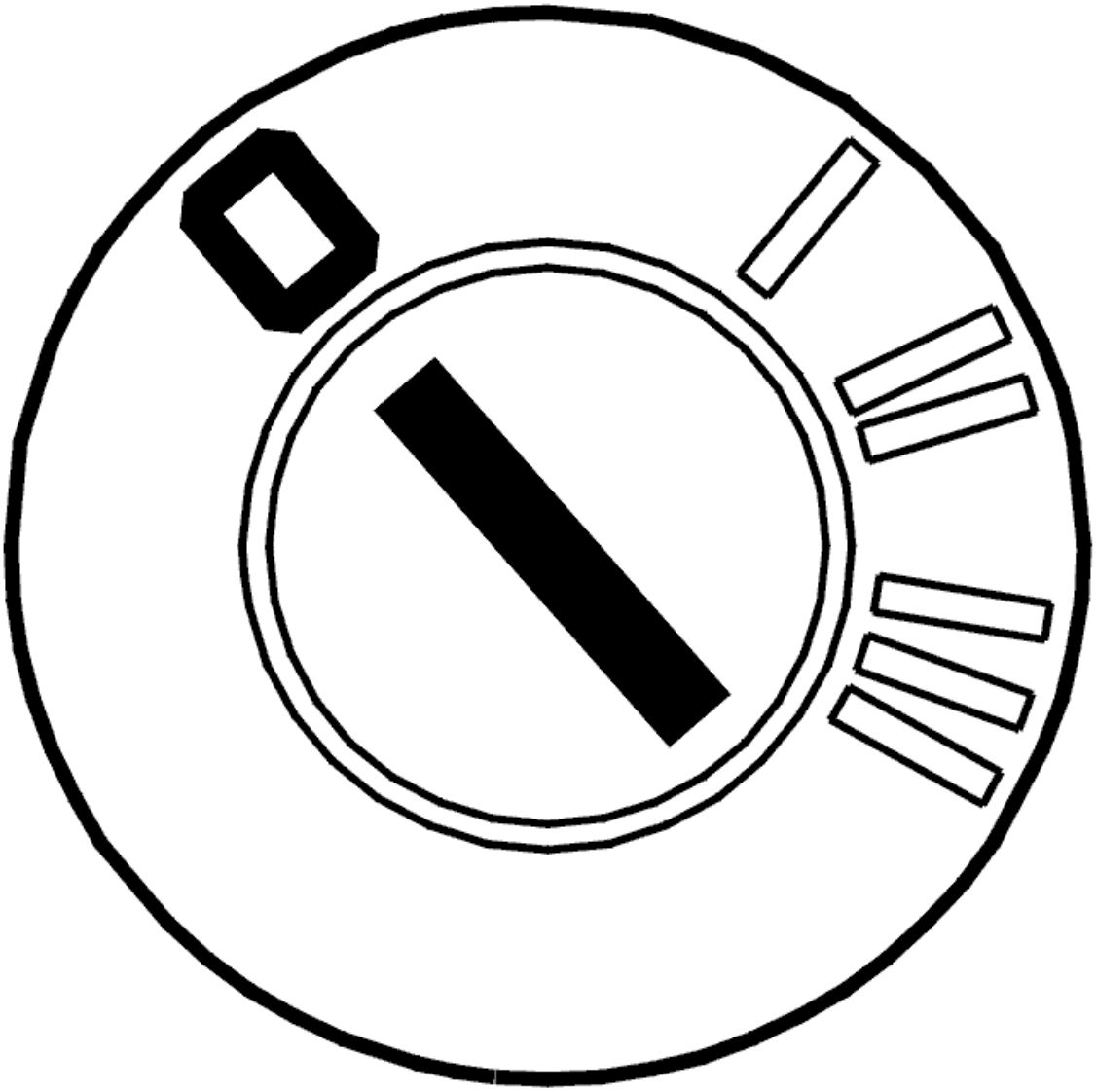

Fig. 405: Identifying Ignition OFF
Courtesy of VOLVO CARS CORPORATION

- Ignition off
- Open the control system.

  Check the cable between transmission connector terminal #C2 (transmission side) and the connector for solenoid S2. Check for an open-circuit according to **OPEN-CIRCUIT, PERMANENT FAULTS** .

  - Check solenoid S2 by measuring the resistance between the terminal pin on solenoid S2 and the transmission housing. The resistance must be 11-15 ohms.

  Remedy as necessary.

  Other information:

- To disconnect the transmission connectors, see **CONNECTORS, TRANSMISSION, DISCONNECTING / CONNECTING**
- To replace the cable harness for the control system, see **TEMPERATURE SENSOR FLUID, TRANSAXLE, (TFT)**
- To open the control system and to check or replace solenoid S2, see **SOLENOID CONTROL SYSTEM, REPLACING**
- For information about signals, see **SIGNAL DESCRIPTION. TRANSMISSION CONTROL MODULE (TCM)** .

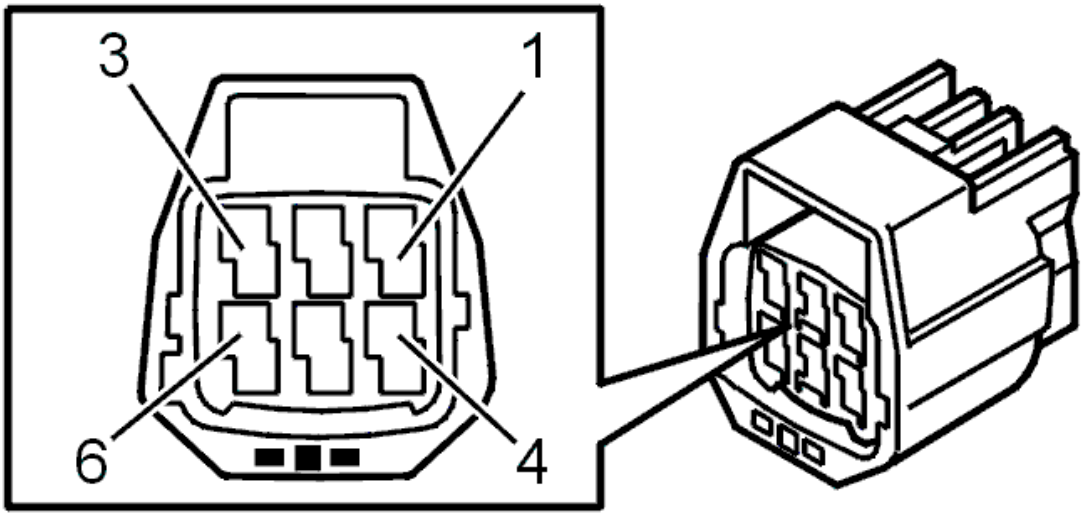

Fig. 406: Identifying 6-Pin Transmission Connector Terminals
Courtesy of VOLVO CARS CORPORATION

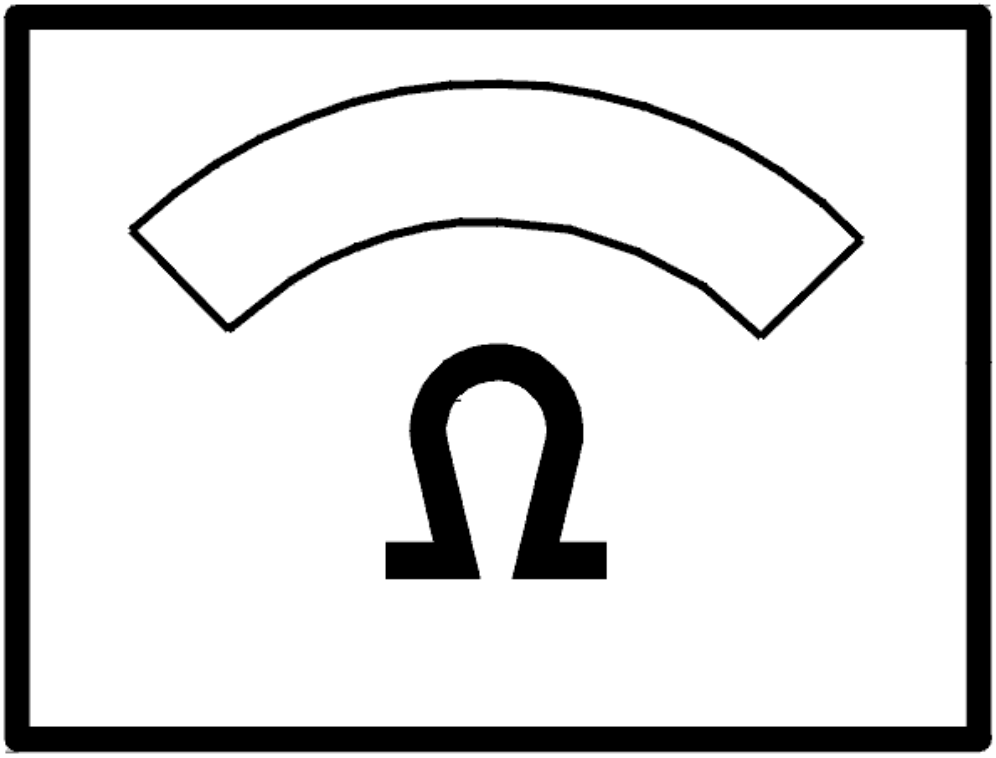

Fig. 407: Identifying Ohms Display
Courtesy of VOLVO CARS CORPORATION

- **Continue**

  Refer to **RESETTING THE ADAPTATION**

VERIFICATION

HINT: After carrying out the repair, check that the fault has been remedied.

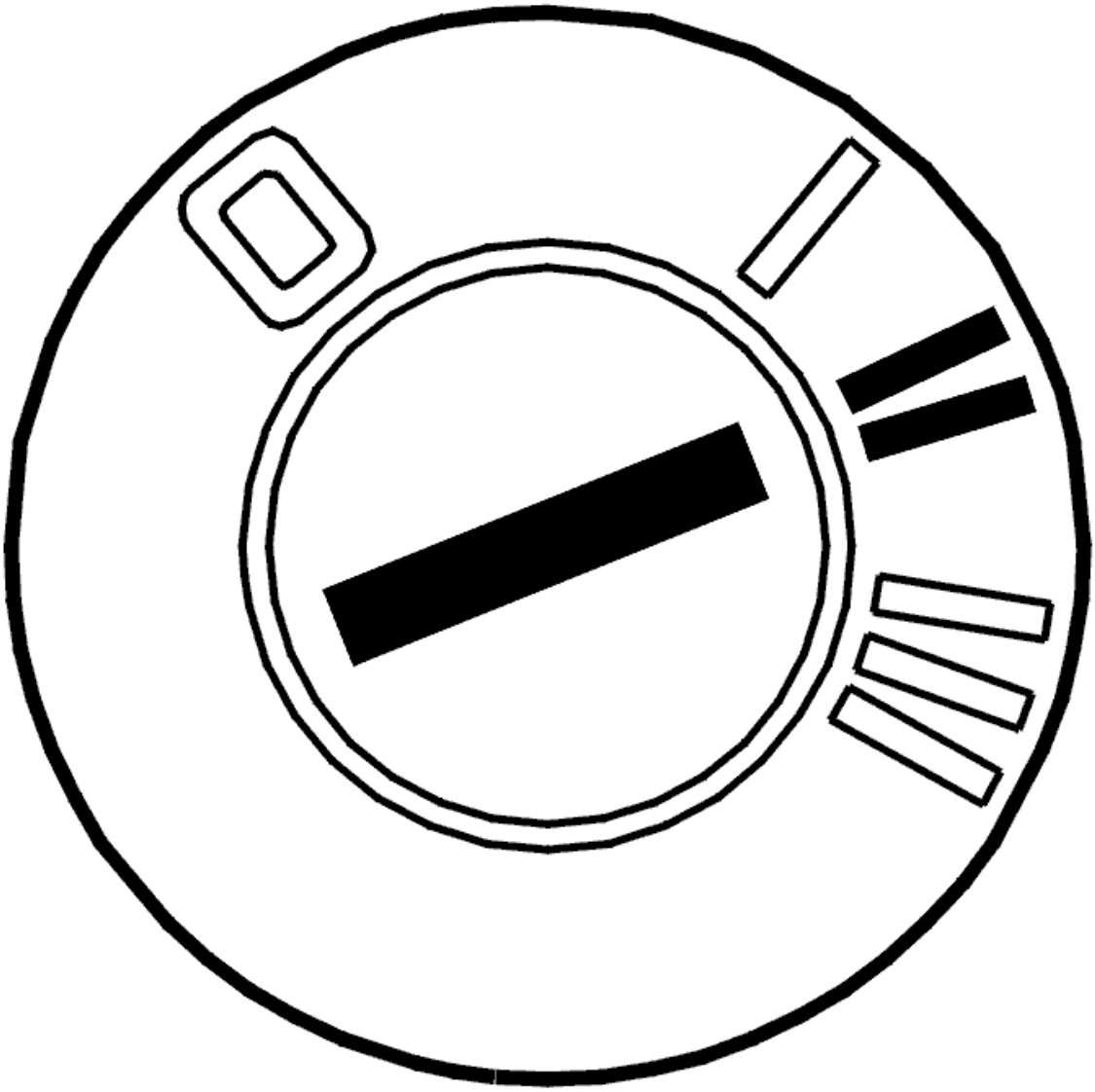

Fig. 408: Identifying Ignition ON
Courtesy of VOLVO CARS CORPORATION

- Ignition on
- Gear selector in position P
- Activate solenoid S2.

The current should oscillate between 0 and approximately 1.5 A.

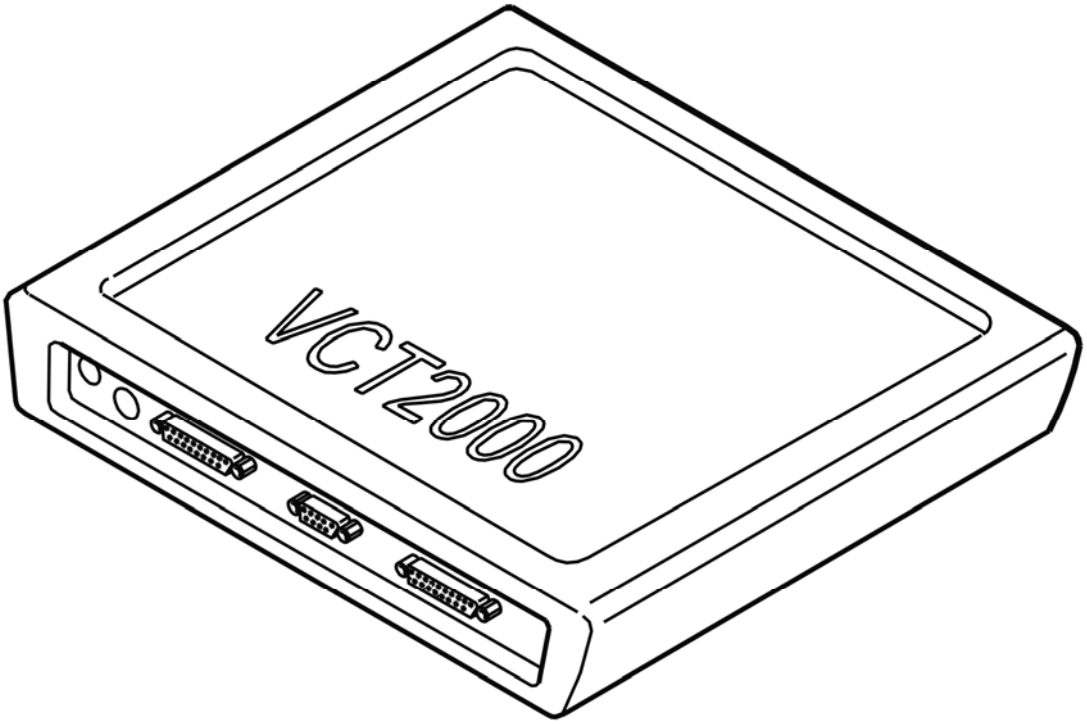

Fig. 409: Identifying VCT2000 Diagnostic Tool Symbol In VIDA
Courtesy of VOLVO CARS CORPORATION

Does the current oscillate?

- **YES**

  OKAY: Troubleshooting has been completed.

- **NO**

  Refer to **INFORMATION**

INTERMITTENT FAULT

Check the control module and transmission connectors. Check for contact resistance and oxidation. See **CONTACT RESISTANCE AND OXIDATION** .

Check the cable between control module terminal #B8 (#A68) and transmission connector terminal #C2. Check for an intermittent open-circuit according to **OPEN-CIRCUIT, INTERMITTENT FAULTS** .

- Check the circuit for solenoid S2. Switch off the ignition. Disconnect the control module. Measure the resistance between terminals #B8 (#A68) and #A53 (#A53) on the breakout box. The resistance must be 11-15 ohms.

Remedy as necessary.

Other information:

- To connect the breakout box, see **CONNECTING THE BREAKOUT BOX**
- To disconnect the transmission connectors, see **CONNECTORS, TRANSMISSION, DISCONNECTING / CONNECTING**
- For information about signals, see **SIGNAL DESCRIPTION. TRANSMISSION CONTROL MODULE (TCM)** .

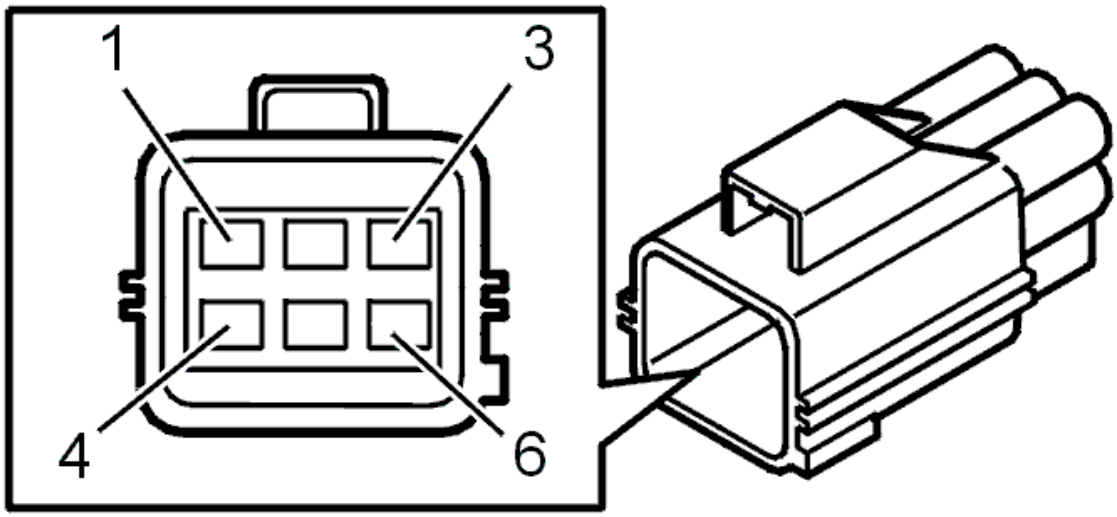

Fig. 410: Identifying Transmission Connector Terminals
Courtesy of VOLVO CARS CORPORATION

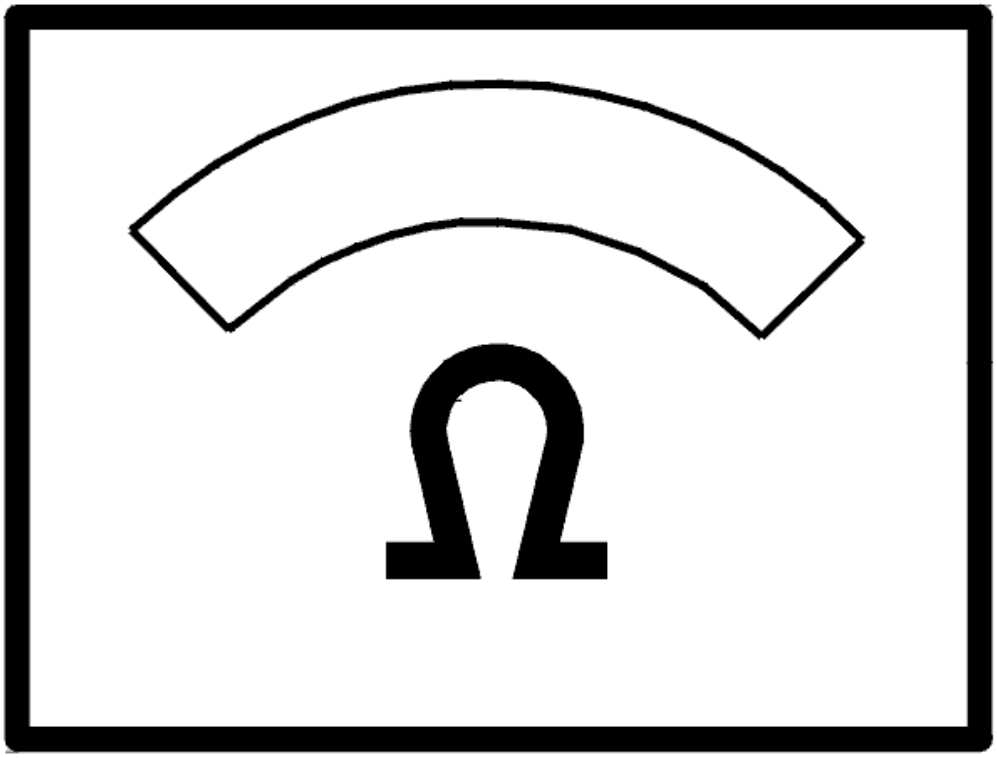

Fig. 411: Identifying Ohms Display
Courtesy of VOLVO CARS CORPORATION

- **Continue**

  Refer to **INFORMATION**

RESETTING THE ADAPTATION

RESETTING ADAPTATION AND THE COUNTER FOR "TRANSMISSION OIL CHANGE"

HINT: The transmission has torque controlled adaptive pressure control. Pressure control means that the transmission regulates the pressure itself during each gear shift. This avoids harsh gear shifting. Each gear shift is evaluated by the control module and stored in the memory. This allows for compensation for wear and tear in the transmission and clutch. It is important that the adaptation in the memory is reset after the transmission has been repaired. This is to ensure normal operation. The oil is replaced during

repair; the "Transmission oil change" counter must be reset. If the counter is not reset when the fluid is drained and replaced, there is a risk that a diagnostic trouble code (DTC) will be stored in incorrect circumstances.

NOTE: **This applies only if the transmission or one of the components in the transmission have been replaced.**

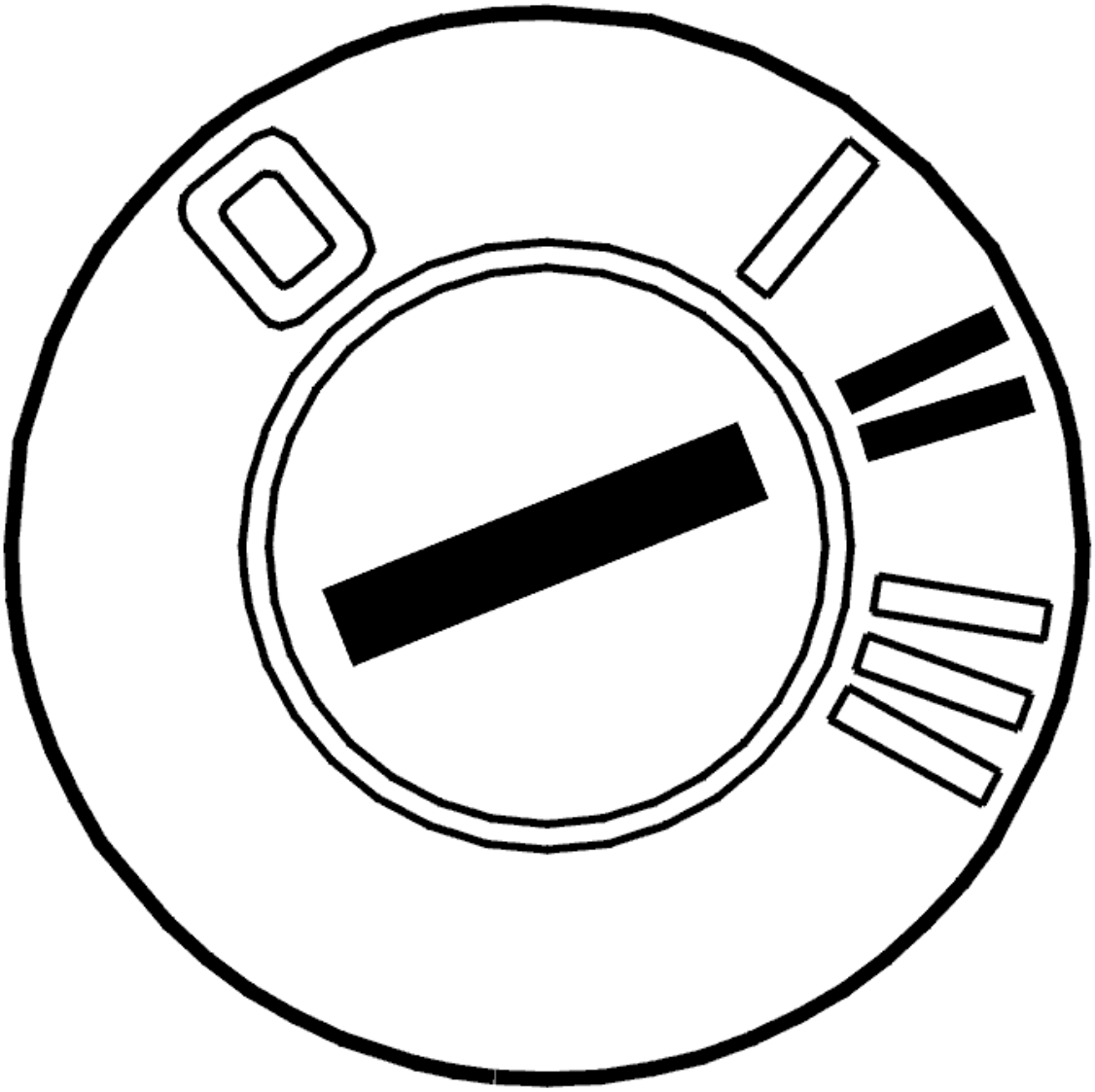

Fig. 412: Identifying Ignition ON
Courtesy of VOLVO CARS CORPORATION

- Ignition on.

  Click on the VCT2000 symbol to reset the adaptation and counter.

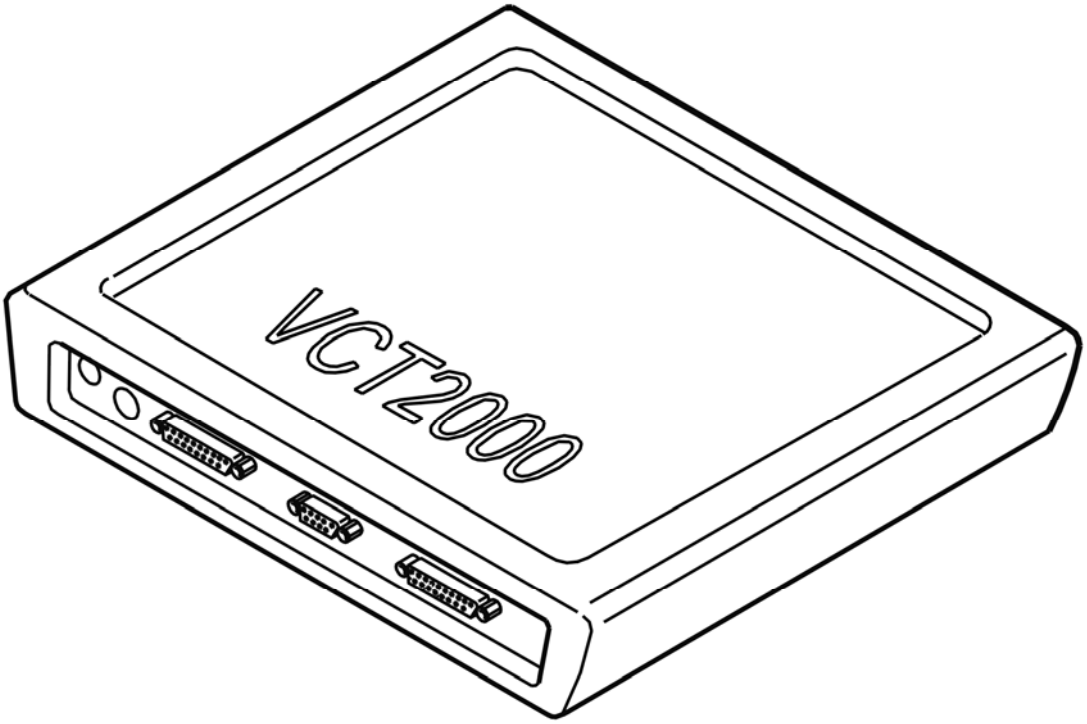

Fig. 413: Identifying VCT2000 Diagnostic Tool Symbol In VIDA
Courtesy of VOLVO CARS CORPORATION

- **Continue**

  Refer to **VERIFICATION**

INFORMATION

FAULT-TRACING INFORMATION

The fault should have been detected and remedied. As this is not the case fault-tracing has failed.

Exit fault-tracing for this diagnostic trouble code (DTC) or make another attempt.

INFORMATION

FAULT-TRACING INFORMATION

If the fault is intermittent, do not verify fault-tracing if the fault does not recur.

It is possible to view the information again, or leave fault-tracing for this diagnostic trouble code (DTC).

FAULTY SIGNAL

CHECKING TRANSMISSION FLUID TEMPERATURE SENSOR

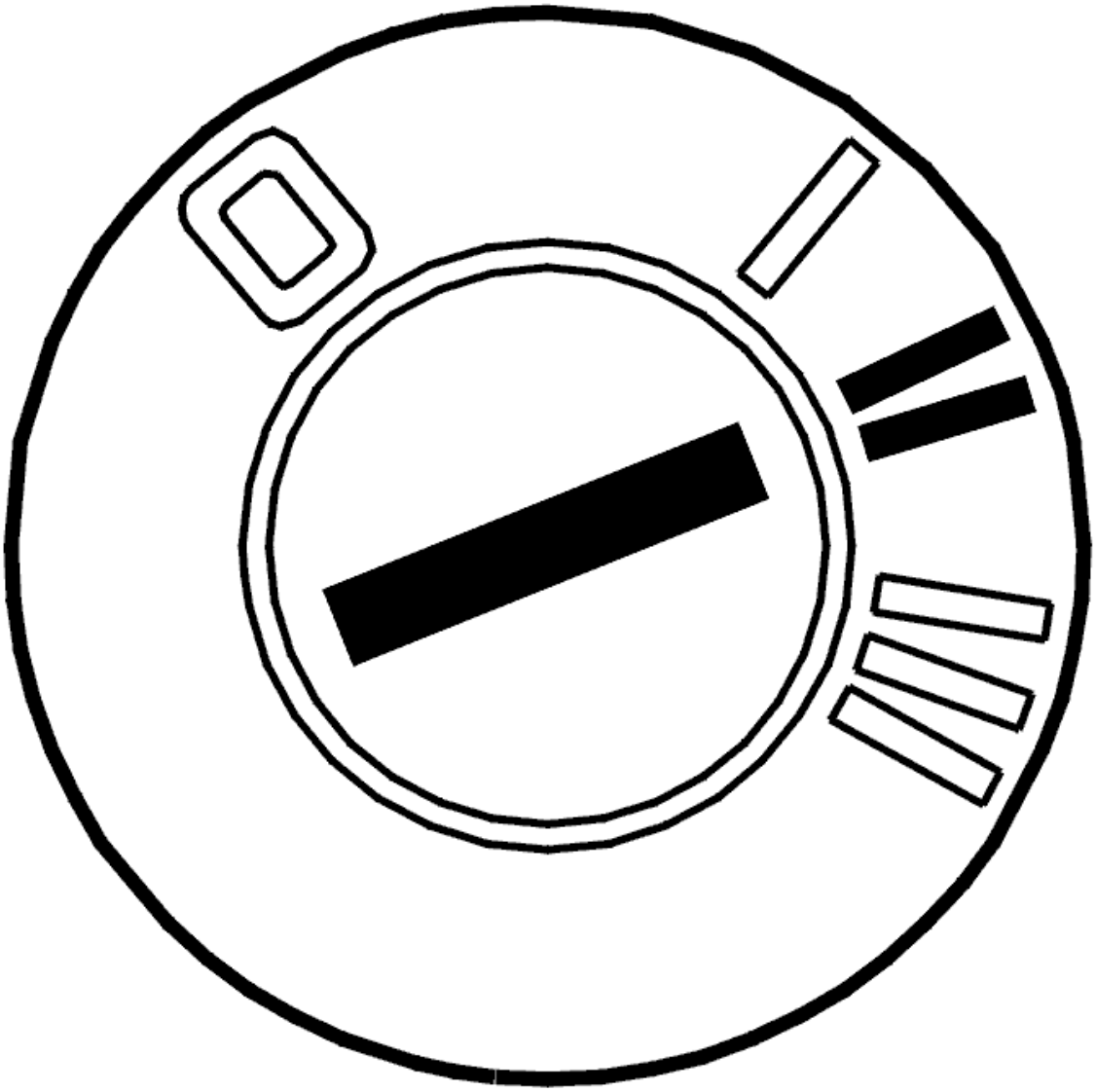

Fig. 414: Identifying Ignition ON
Courtesy of VOLVO CARS CORPORATION

- Ignition on
- Read off the oil temperature.

  Check that the temperature is within its permitted range.

  Compare with the transmission temperature.

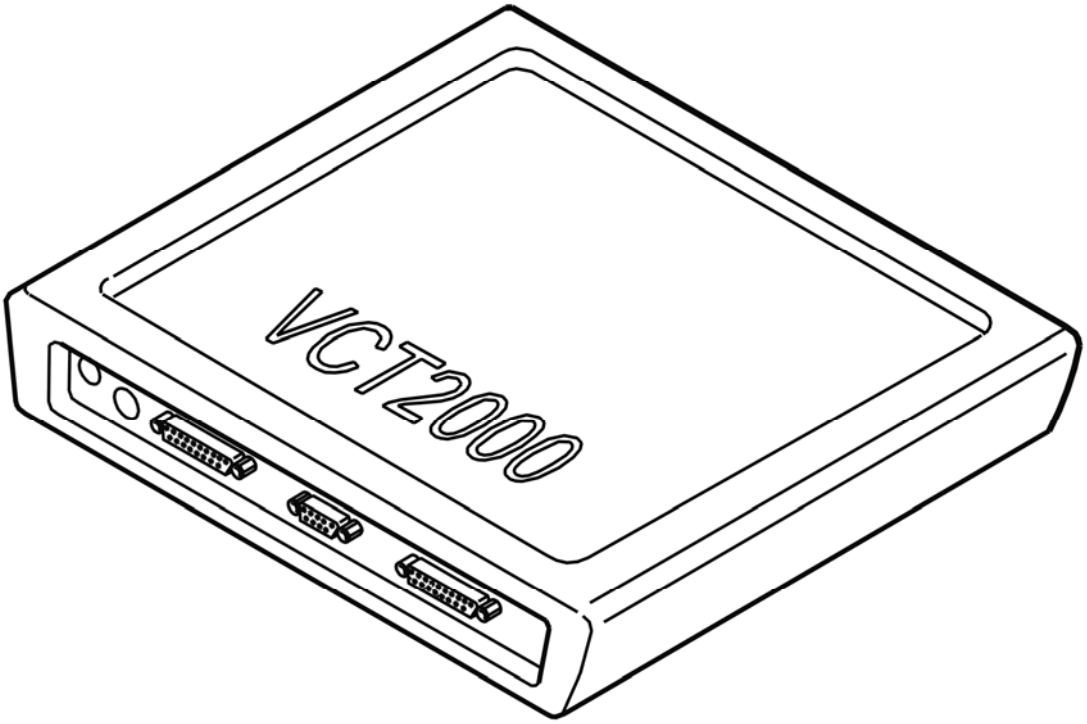

Fig. 415: Identifying VCT2000 Diagnostic Tool Symbol In VIDA
Courtesy of VOLVO CARS CORPORATION

Was the transmission temperature within its permitted range?

- **YES**

  Refer to **INTERMITTENT FAULT**

- **NO**

  Refer to **CHECKING TRANSMISSION FLUID TEMPERATURE SENSOR**

CHECKING TRANSMISSION FLUID TEMPERATURE SENSOR

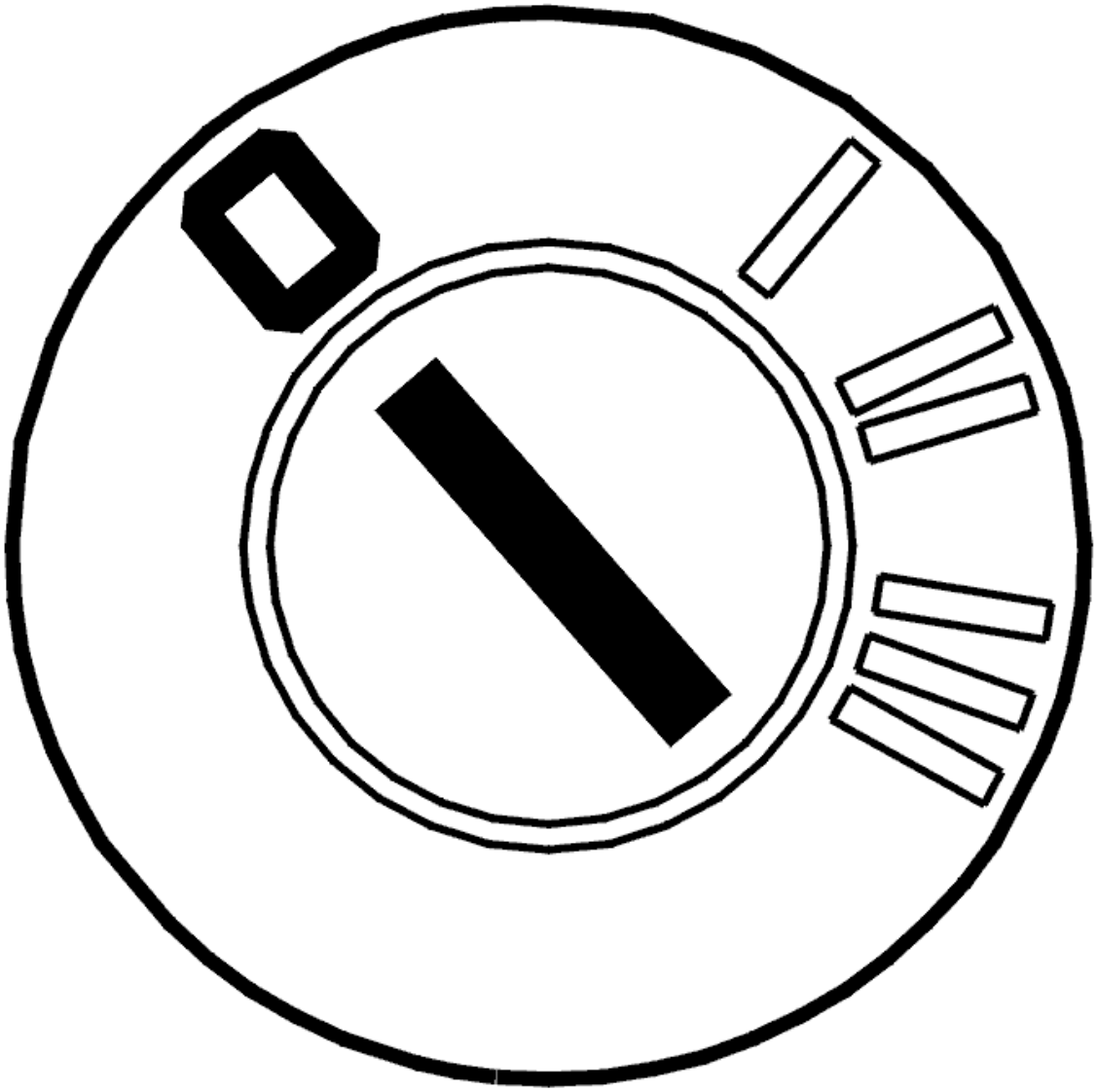

Fig. 416: Identifying Ignition OFF
Courtesy of VOLVO CARS CORPORATION

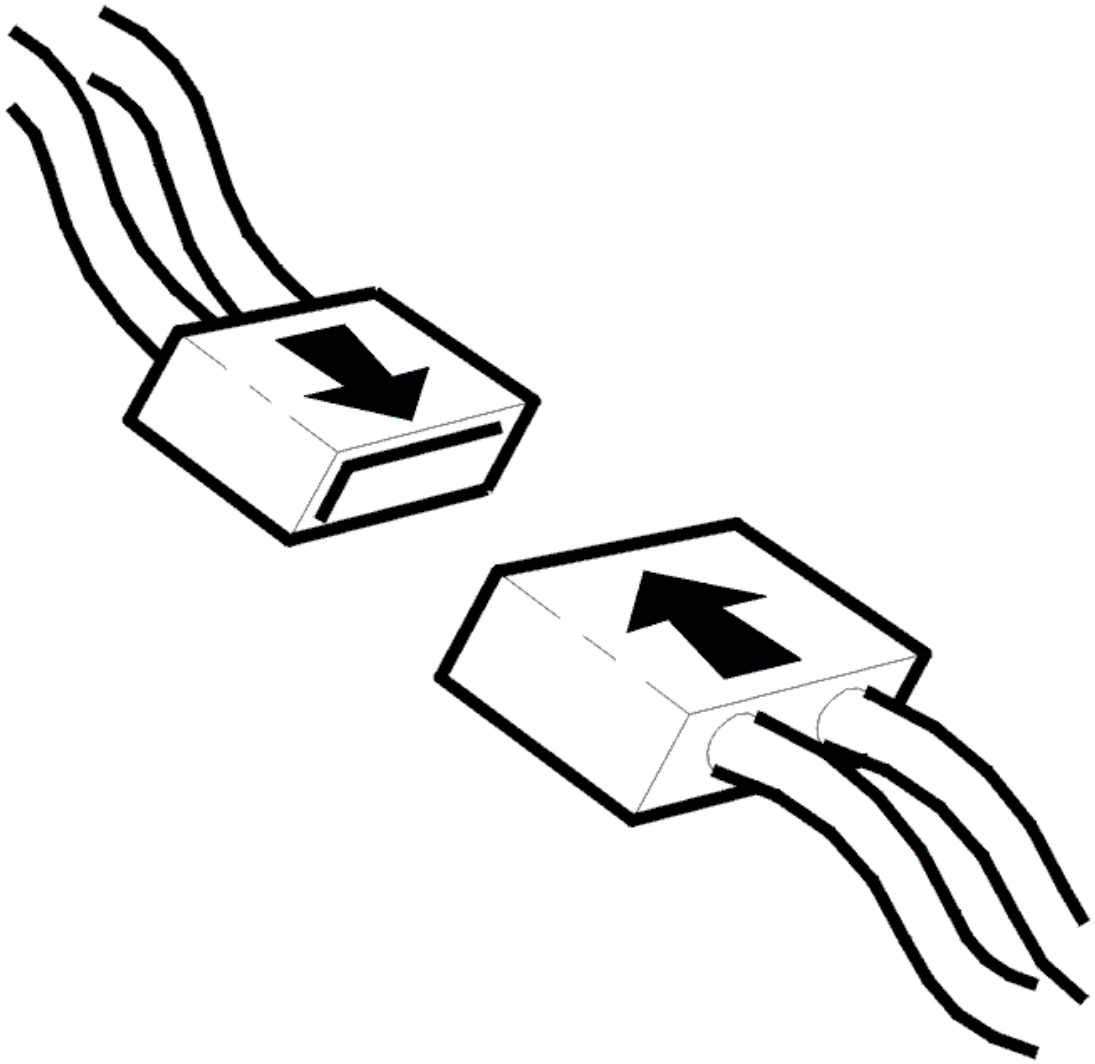

Fig. 417: Identifying Connector(s) Reinstallation
Courtesy of VOLVO CARS CORPORATION

- Ignition off
- Transmission connector D disconnected.

  Check the temperature sensor. Measure the resistance between transmission connector D terminals #D7 and #D8.

  The resistance must be 4.5-6 kohms at 20°C.

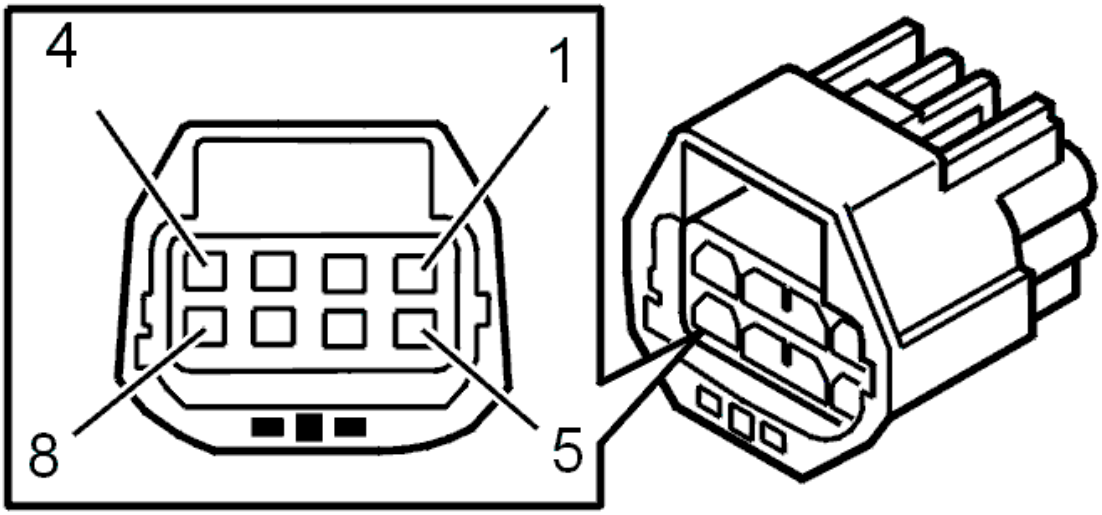

Fig. 418: Identifying 8-Pin Transmission Connector Terminals
Courtesy of VOLVO CARS CORPORATION

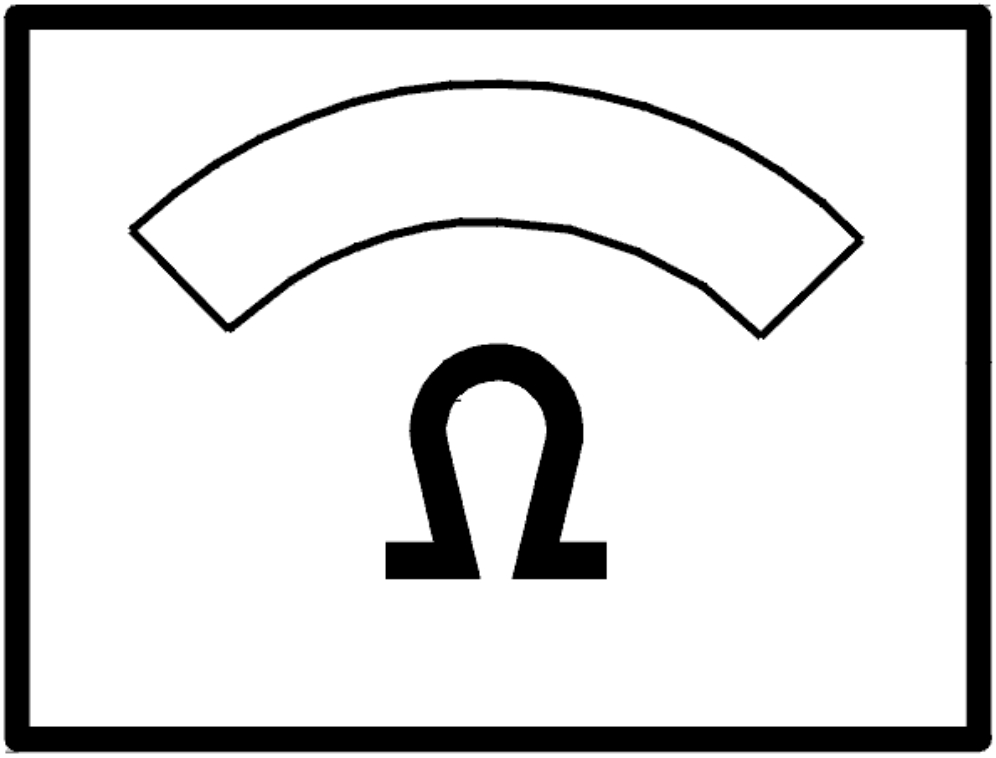

Fig. 419: Identifying Ohms Display
Courtesy of VOLVO CARS CORPORATION

Was the resistance OK?

- **YES**

  Refer to **CHECKING TRANSMISSION FLUID TEMPERATURE SENSOR**

- **NO**

  Refer to **CHECKING THE CABLE AND COMPONENT**

CHECKING TRANSMISSION FLUID TEMPERATURE SENSOR

Check the cable between control module terminal #A37 (#A37) and transmission connector terminal #D7

(control module side). Check for an open-circuit according to **OPEN-CIRCUIT, PERMANENT FAULTS** .

Check the cable between control module terminal #A55 (#A55)and transmission connector terminal #D8 (control module side). Check for an open-circuit according to **OPEN-CIRCUIT, PERMANENT FAULTS** .

Remedy as necessary.

Other information:

- To connect the breakout box, see **CONNECTING THE BREAKOUT BOX**
- To disconnect the transmission connectors, see **CONNECTORS, TRANSMISSION, DISCONNECTING / CONNECTING**
- For information about signals, see **SIGNAL DESCRIPTION. TRANSMISSION CONTROL MODULE (TCM)** .

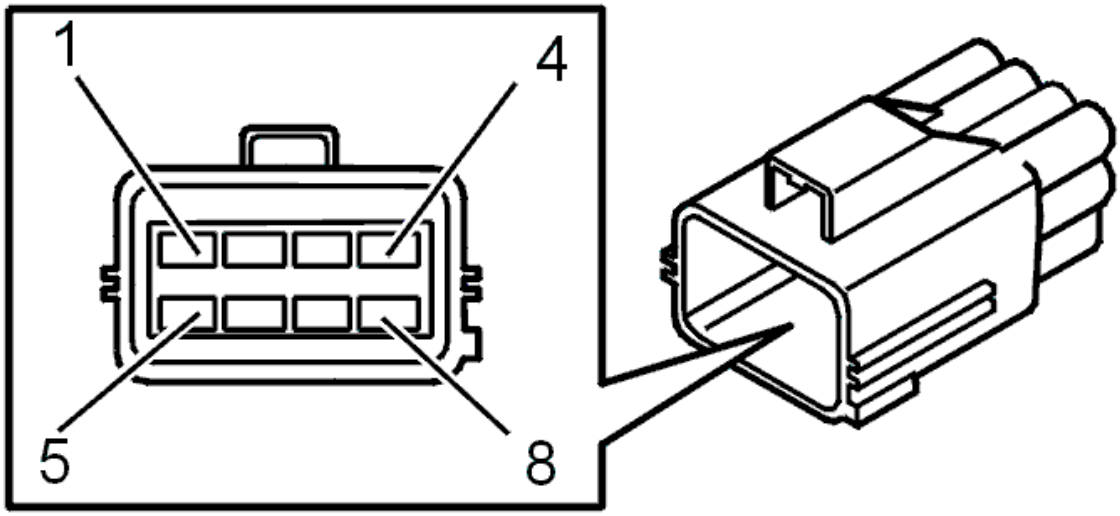

Fig. 420: Identifying Transmission Connector Terminals
Courtesy of VOLVO CARS CORPORATION

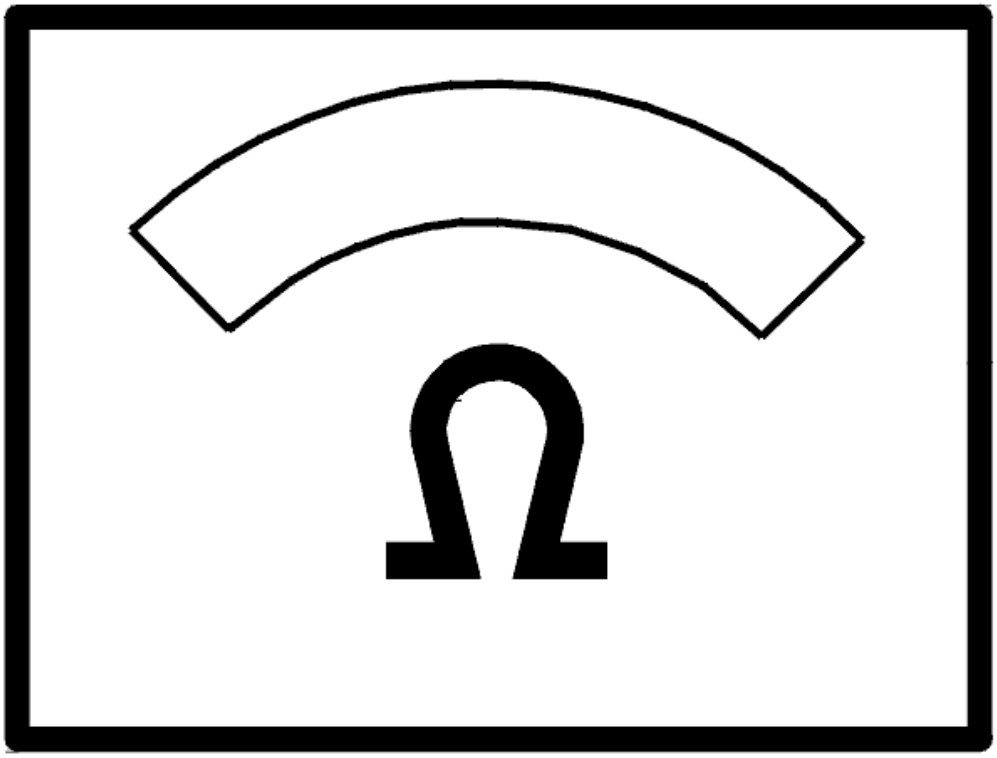

Fig. 421: Identifying Ohms Display
Courtesy of VOLVO CARS CORPORATION

Was a fault detected?

- **YES**

  Refer to **VERIFICATION**

- **NO**

  Refer to **CHECKING THE CABLE AND COMPONENT**

CHECKING THE CABLE AND COMPONENT

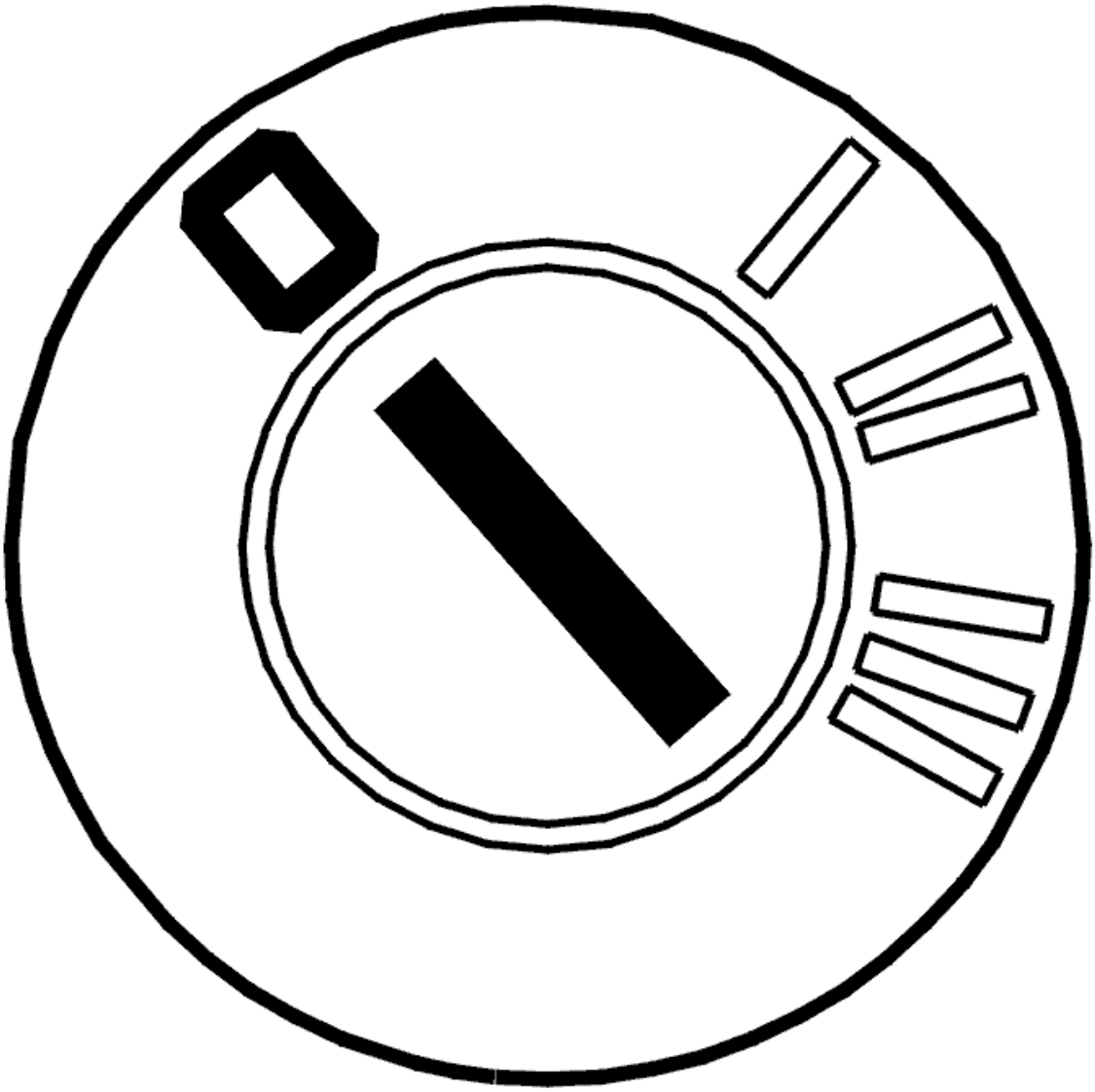

Fig. 422: Identifying Ignition OFF
Courtesy of VOLVO CARS CORPORATION

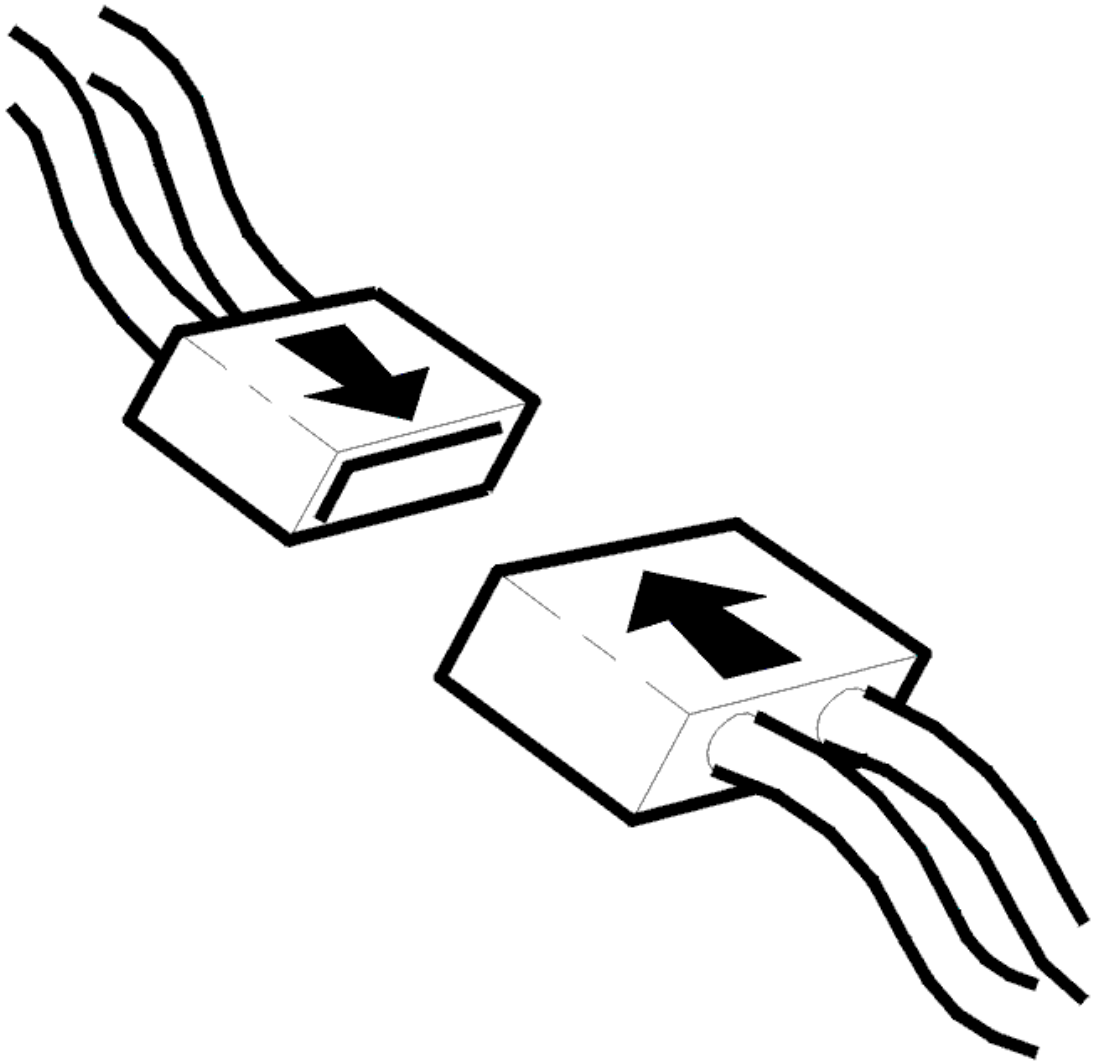

Fig. 423: Identifying Connector(s) Reinstallation
Courtesy of VOLVO CARS CORPORATION

- Ignition off
- Open the transmission control system.

  Check the cable between transmission connector terminal #D7 and temperature sensor terminal #1. Check the cable between transmission connector #D8 and temperature sensor terminal #2. Check for an open-circuit according to **OPEN-CIRCUIT, PERMANENT FAULTS** .

  Also check the cables for a short-circuit to each other.

  HINT: Check the temperature sensor. With the ignition off and transmission connector D disconnected, measure the resistance between transmission connector D terminals #D7 and #D8. The resistance must be 4.5-6 kohms at 20 °C.

Remedy as necessary.

Other information:

- To connect the breakout box, see **CONNECTING THE BREAKOUT BOX**
- To disconnect the transmission connectors, see **CONNECTORS, TRANSMISSION, DISCONNECTING / CONNECTING**
- To open the transmission control system and to check or replace the temperature sensor, see **SOLENOID CONTROL SYSTEM, REPLACING**
- For information about signals, see **SIGNAL DESCRIPTION. TRANSMISSION CONTROL MODULE (TCM)** .

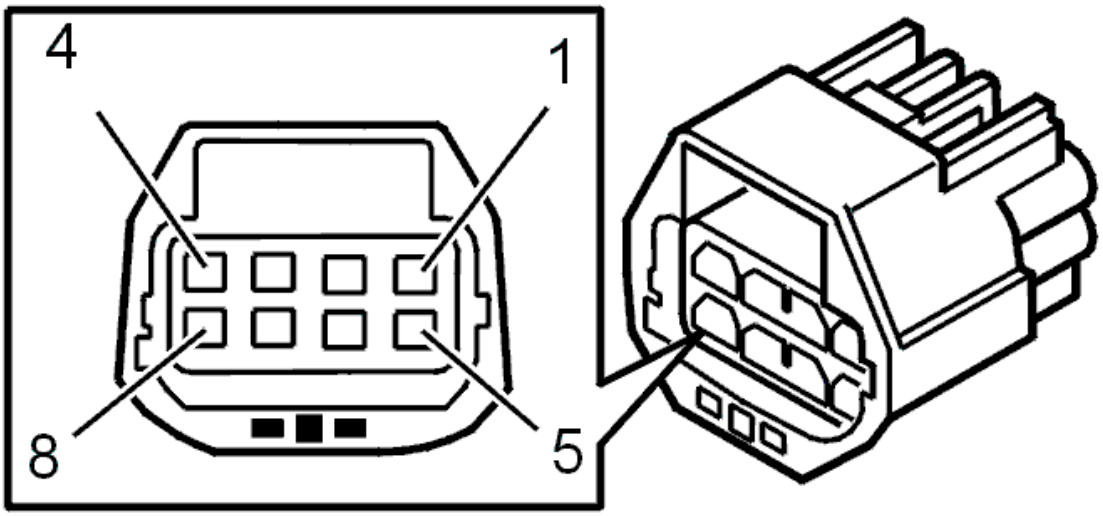

Fig. 424: Identifying 8-Pin Transmission Connector Terminals
Courtesy of VOLVO CARS CORPORATION

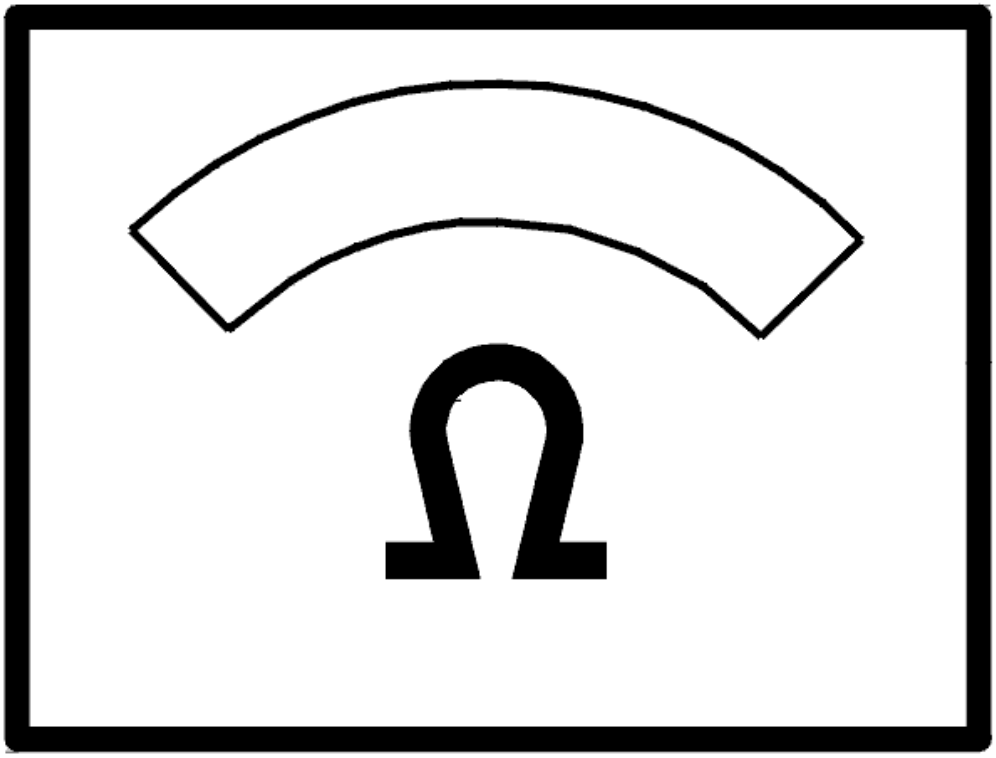

Fig. 425: Identifying Ohms Display
Courtesy of VOLVO CARS CORPORATION

- **Continue**

  Refer to **RESETTING TRANSMISSION FLUID CHANGE COUNTER**

INTERMITTENT FAULT

Check the transmission control module (TCM) and transmission connector D. Check for contact resistance and oxidation according to **CONTACT RESISTANCE AND OXIDATION** .

Check the cable between transmission control module (TCM) terminal #A37 (#A37) and transmission connector terminal #D7 (control module side). Check for an intermittent open-circuit according to **OPEN-CIRCUIT, INTERMITTENT FAULTS** .

Check the cable between control module terminal #A55 (#A55)and transmission connector terminal #D8 (control module side). Check for an intermittent open-circuit according to **OPEN-CIRCUIT, INTERMITTENT FAULTS** .

Remedy as necessary.

Other information:

- To connect the breakout box, see **CONNECTING THE BREAKOUT BOX**
- To disconnect the transmission connectors, see **CONNECTORS, TRANSMISSION, DISCONNECTING / CONNECTING**
- For information about signals, see **SIGNAL DESCRIPTION. TRANSMISSION CONTROL MODULE (TCM)** .

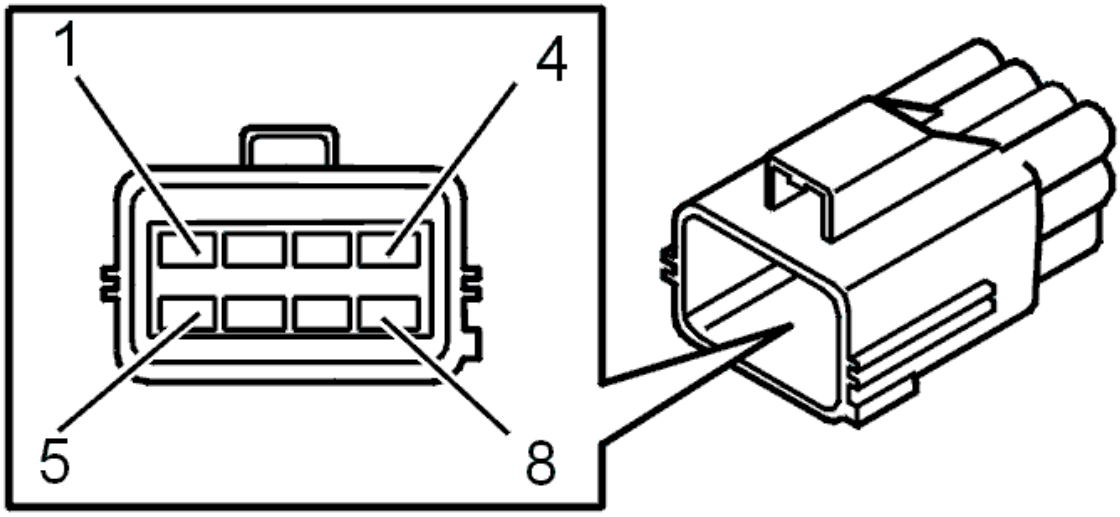

Fig. 426: Identifying Transmission Connector Terminals
Courtesy of VOLVO CARS CORPORATION

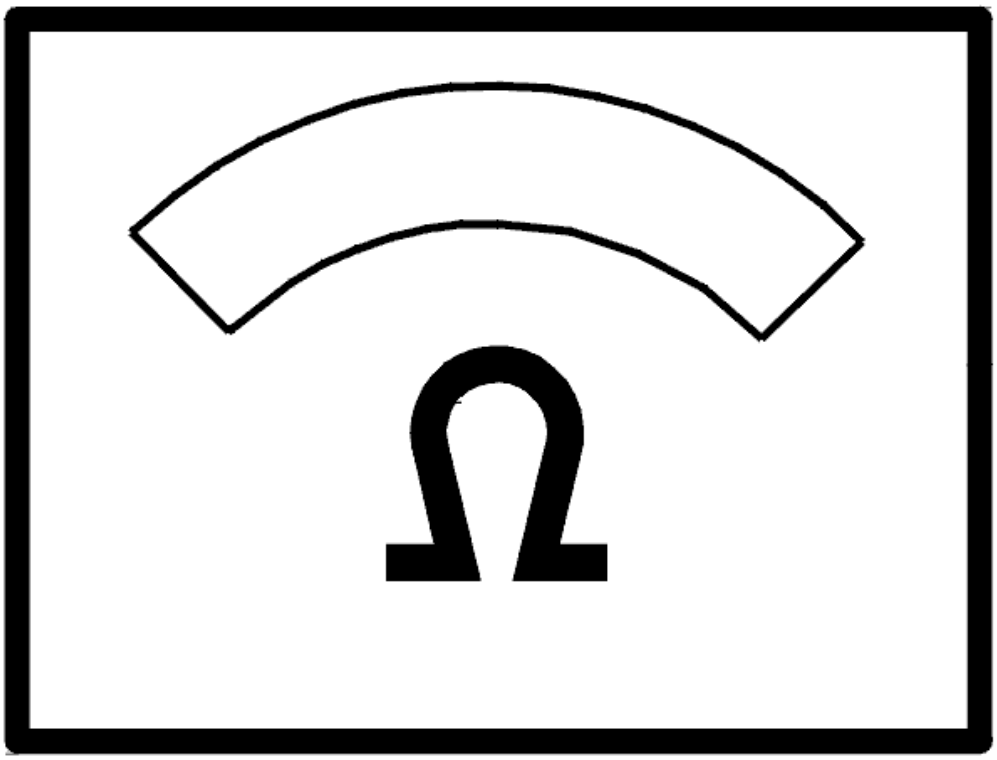

Fig. 427: Identifying Ohms Display
Courtesy of VOLVO CARS CORPORATION

- **Continue**

  Refer to **INFORMATION**

RESETTING TRANSMISSION FLUID CHANGE COUNTER

RESETTING TRANSMISSION FLUID CHANGE COUNTER

HINT: The transmission control module (TCM) has a counter for the oil quality. The counter counts up if the transmission is exposed to too high a load or an ambient temperature that is too high. If the counter is not reset when the oil is drained or changed, there is a risk that a diagnostic trouble code (DTC) will be stored in faulty circumstances. Therefore it is important that the "Transmission oil change" counter is reset.

NOTE: **This applies only when the transmission fluid is changed and when the fluid is changed when repairs are carried out to the transmission temperature sensor.**

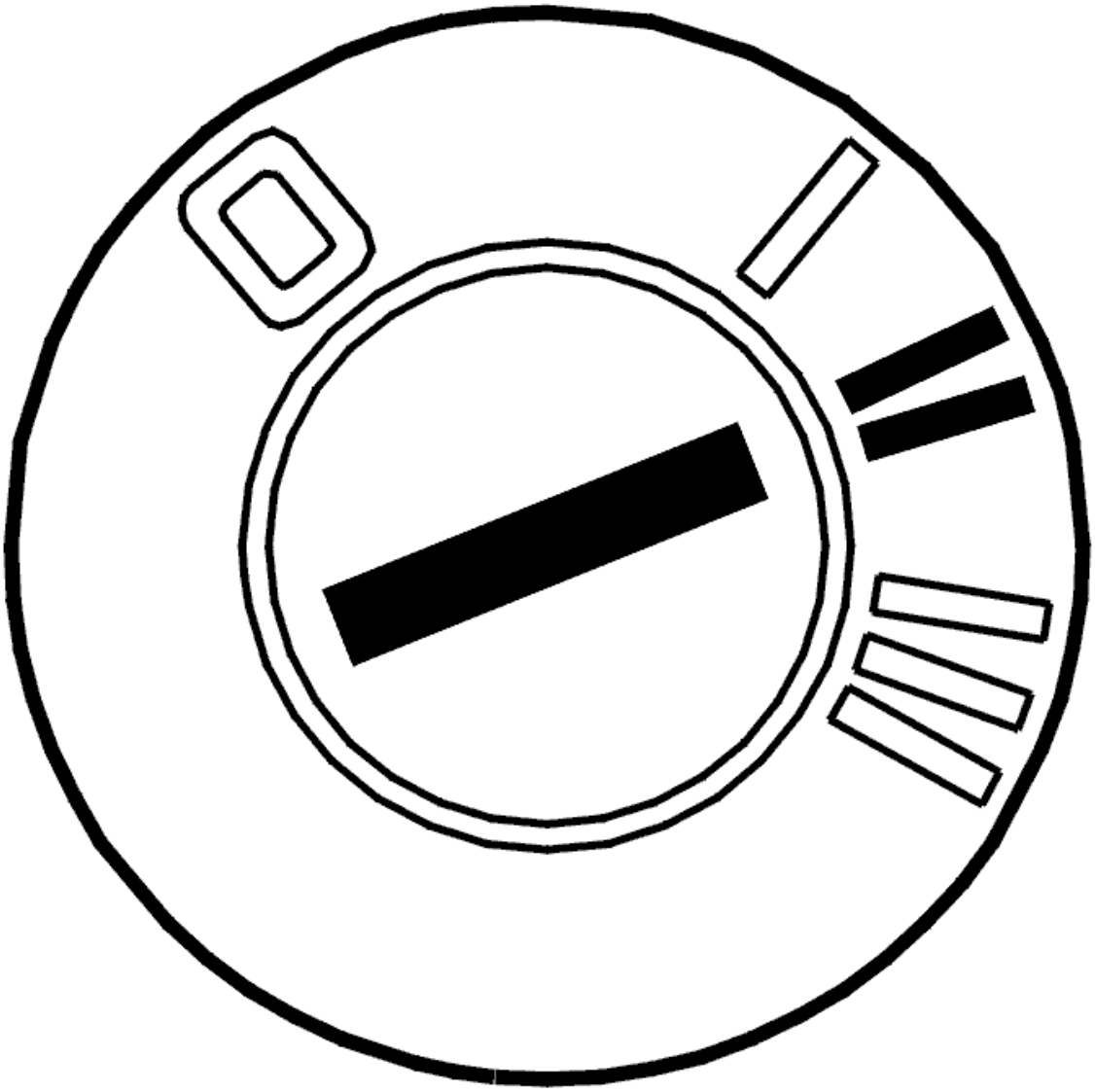

Fig. 428: Identifying Ignition ON
Courtesy of VOLVO CARS CORPORATION

- Ignition on.

  Reset the counter by clicking on the VCT 2000 symbol.

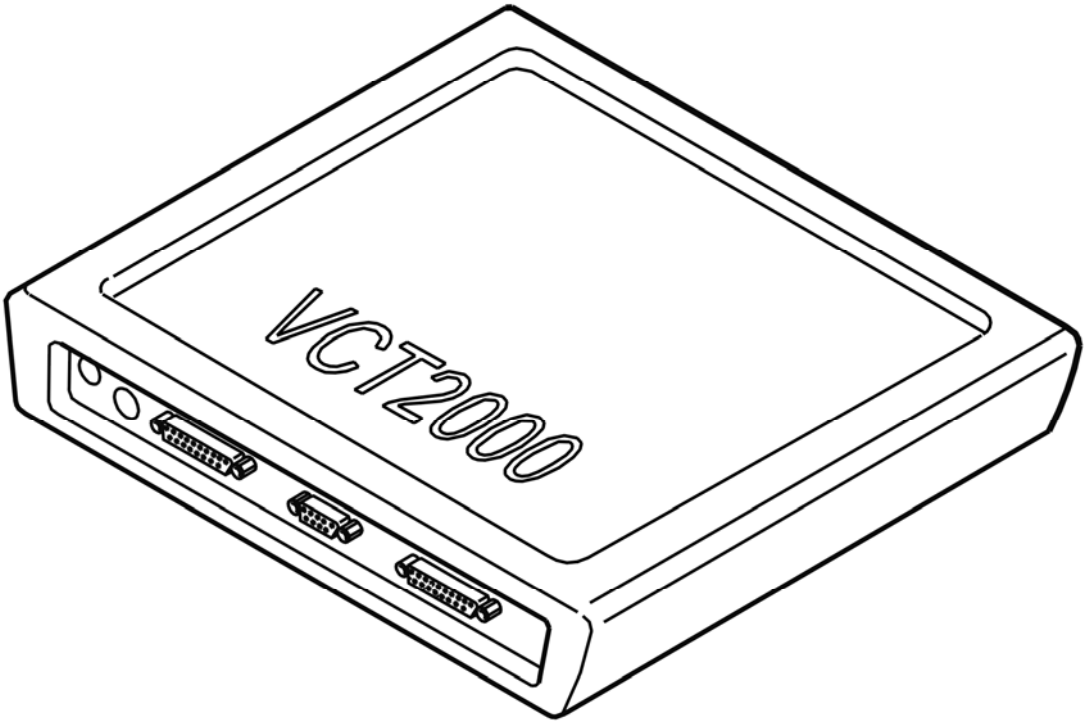

Fig. 429: Identifying VCT2000 Diagnostic Tool Symbol In VIDA
Courtesy of VOLVO CARS CORPORATION

- **Continue**

  Refer to **VERIFICATION**

VERIFICATION

VERIFICATION

HINT: After carrying out the repair, check that the fault has been remedied.

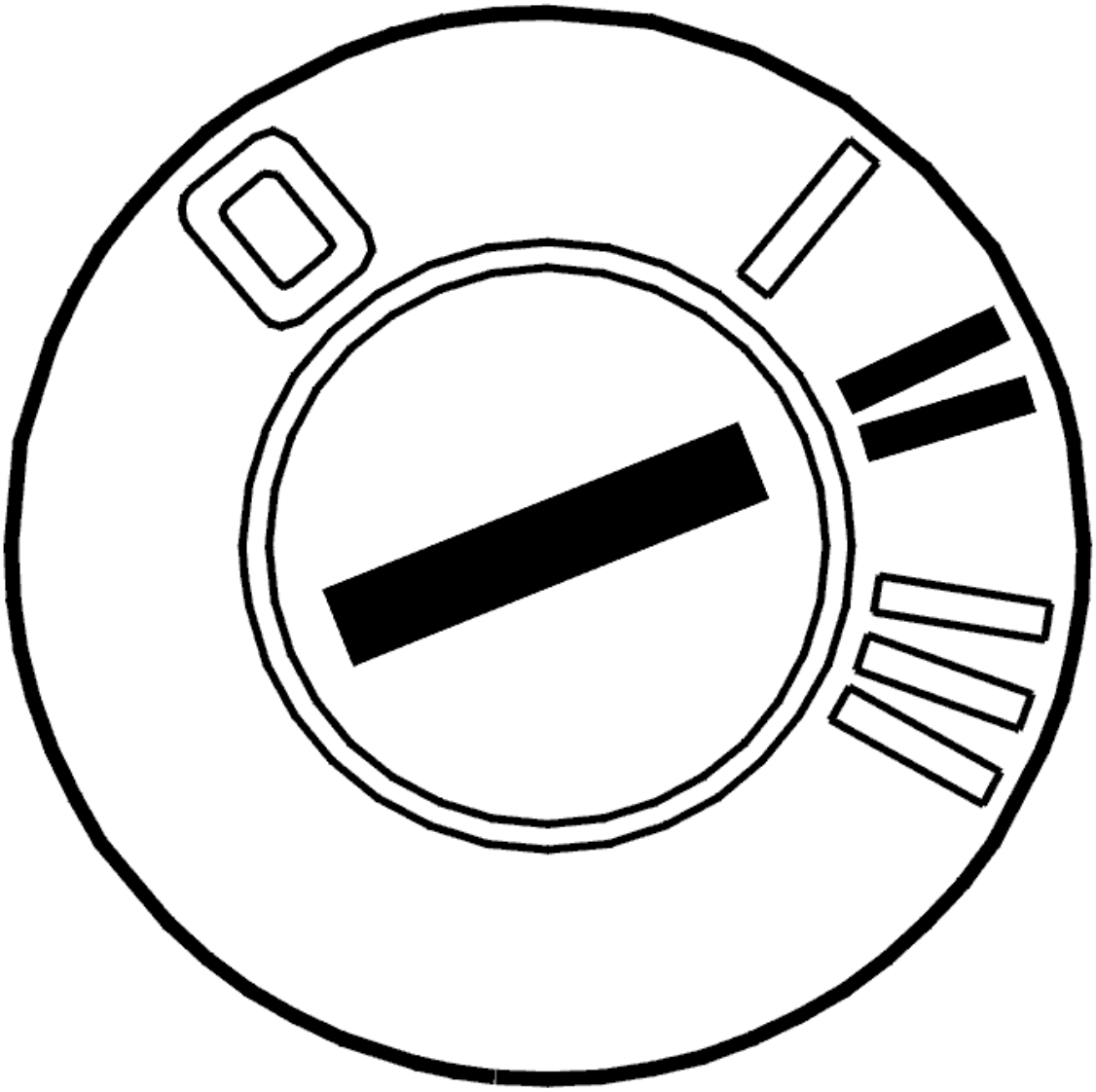

Fig. 430: Identifying Ignition ON
Courtesy of VOLVO CARS CORPORATION

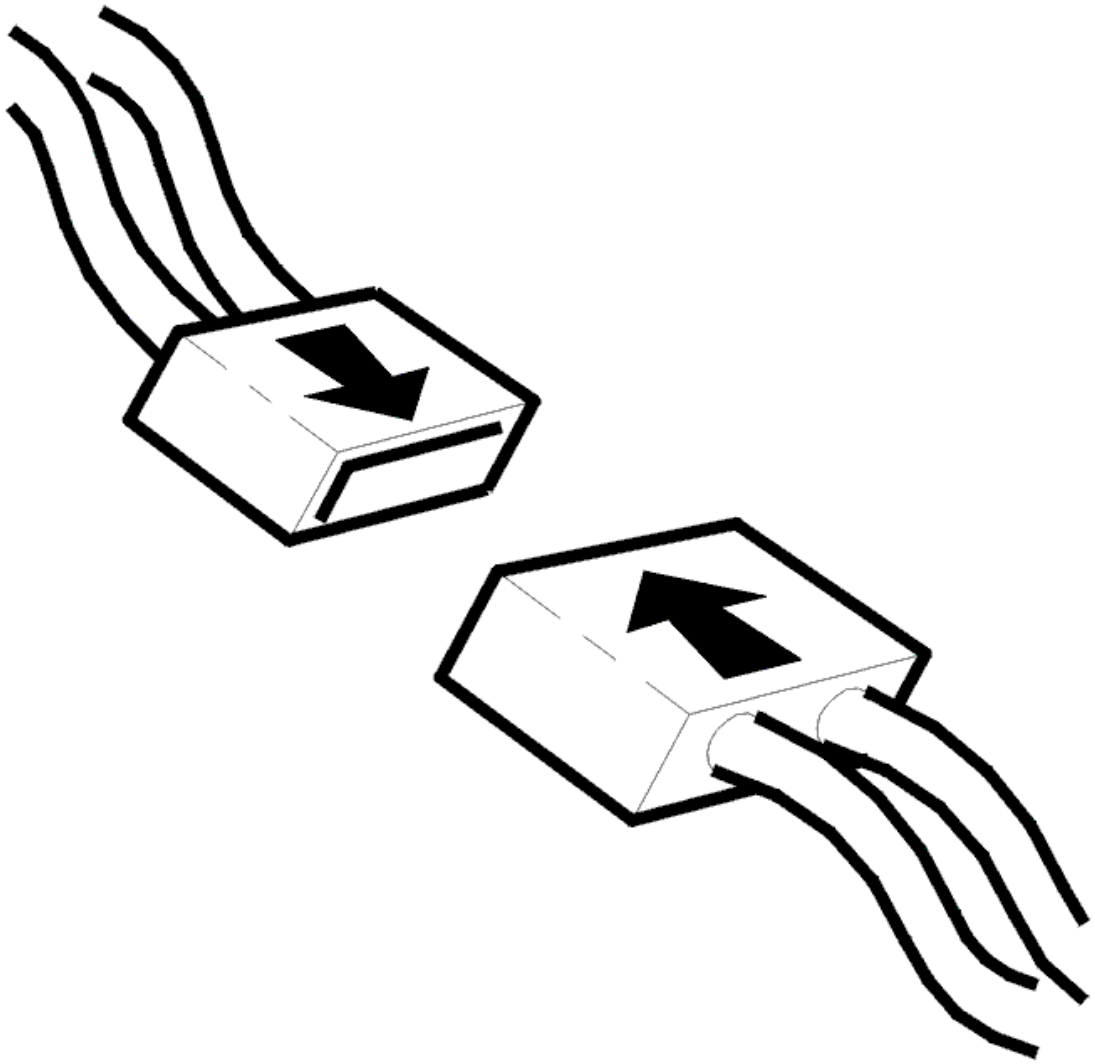

Fig. 431: Identifying Connector(s) Reinstallation
Courtesy of VOLVO CARS CORPORATION

- Ignition off.
- Reinstall the connectors, components etc.
- Ignition on.
- Read off the oil temperature.

Check that the transmission oil temperature is within its permitted range.

Compare with the transmission temperature.

NOTE: **The transmission temperature sensor is located inside the control unit and can be affected by the heat given off by the solenoids.**

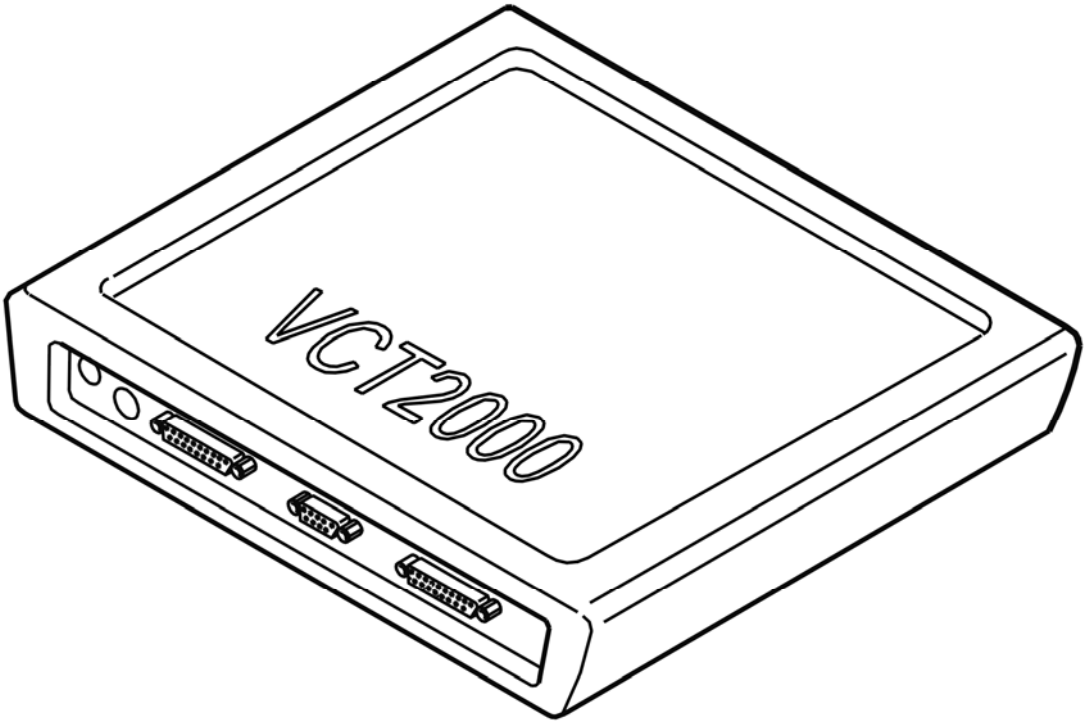

Fig. 432: Identifying VCT2000 Diagnostic Tool Symbol In VIDA
Courtesy of VOLVO CARS CORPORATION

Is the oil temperature within its permitted range?

- **YES**

  VERIFIED: Troubleshooting has been completed.

- **NO**

  Refer to **INFORMATION**

TCM-0009: SHIFT SOLENOID S2. SIGNAL TOO LOW (4T65 AWD; 2003-2006)

DIAGNOSTIC TROUBLE CODE (DTC) INFORMATION

Condition

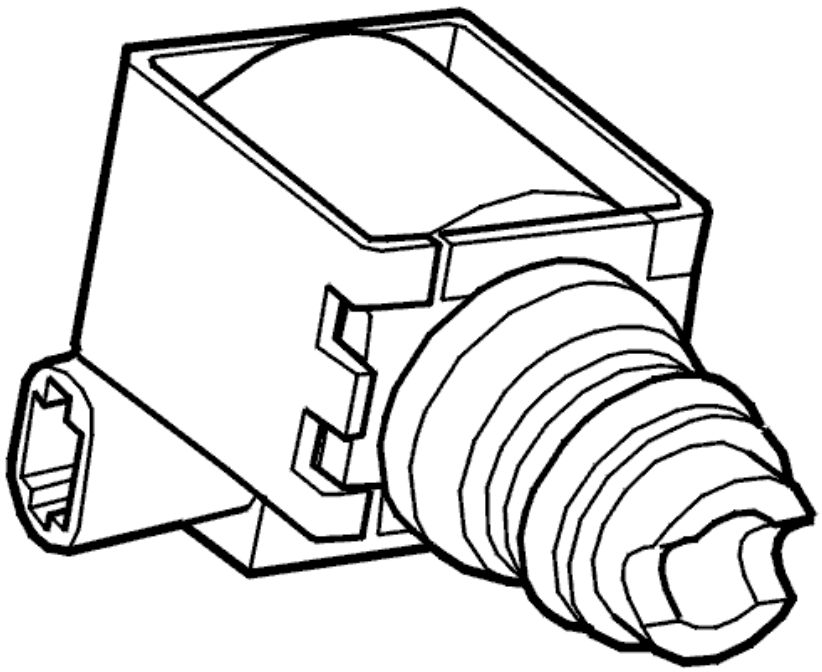

Fig. 433: Identifying Shift Solenoid S1 And S2
Courtesy of VOLVO CARS CORPORATION

Shift solenoids S2 and S1 operate in tandem to control gear-shifting. The solenoids are controlled by power stages in the transmission control module (TCM). The transmission control module (TCM) opens the power stages to activate the solenoids and sends a voltage through the circuit. Solenoid S2 is activated in 1st and 2nd gears. Diagnostic trouble code (DTC) TCM-0009 is stored if the control module registers that the signal in the solenoid S2 circuit is too low when the solenoid should be activated. Solenoid S2 cannot then be activated.

Substitute Value

- The control module "Limp Home" program has been initiated.

Possible Source

- Contact resistance in the terminals.
- Short-circuit to ground in the signal cable.
- Defective solenoid.

Fault symptom[s]

- General orange warning lamp lit.
- Malfunction indicator lamp (MIL) lit.

- Harsh gear shifting.
- No shifting.
- No lock-up function.

HINT: Harsh shifting - due to disabled line pressure solenoid STH control. This results in constant maximum line pressure and leads to harsher shifting and gear engagement.

HINT: No shifting -because the transmission control module (TCM) prevents activation of the solenoids. This stops gear-shifting.

SIGNAL TOO LOW

CHECKS

CHECKING THE TEMPERATURE SENSOR

HINT: In some cases, the diagnostic trouble code (DTC) may be caused by a defective oil temperature sensor. Check the function of the oil temperature sensor first.

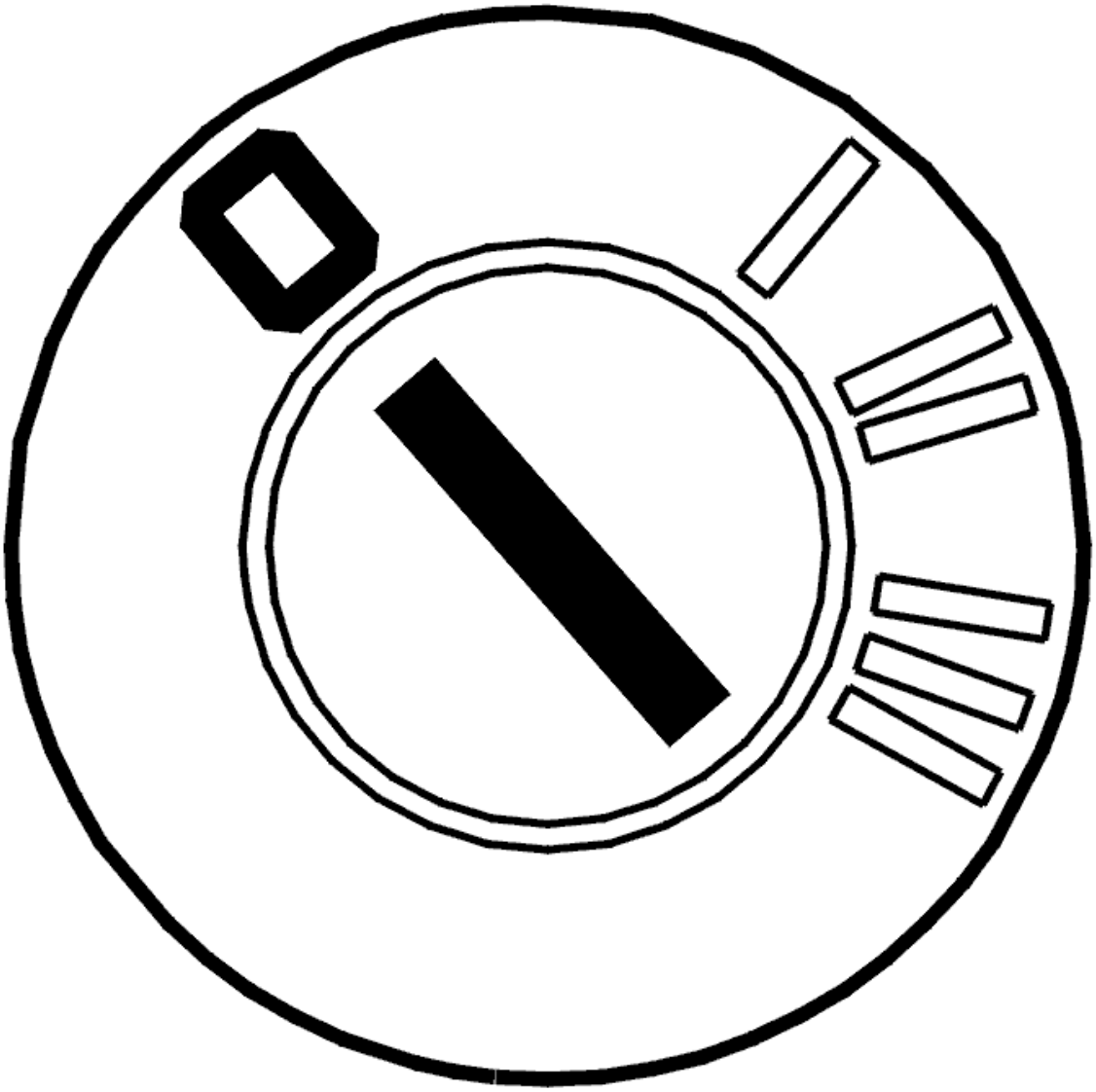

Fig. 434: Identifying Ignition OFF
Courtesy of VOLVO CARS CORPORATION

- Ignition off
- Read off the oil temperature.

  Check that the function of the temperature sensor is OK. Test drive the car to increase the temperature of the transmission fluid. Read off the temperature again. Check that the temperature has increased.

  HINT: If the temperature is outside its permitted range, fault-trace the temperature sensor.

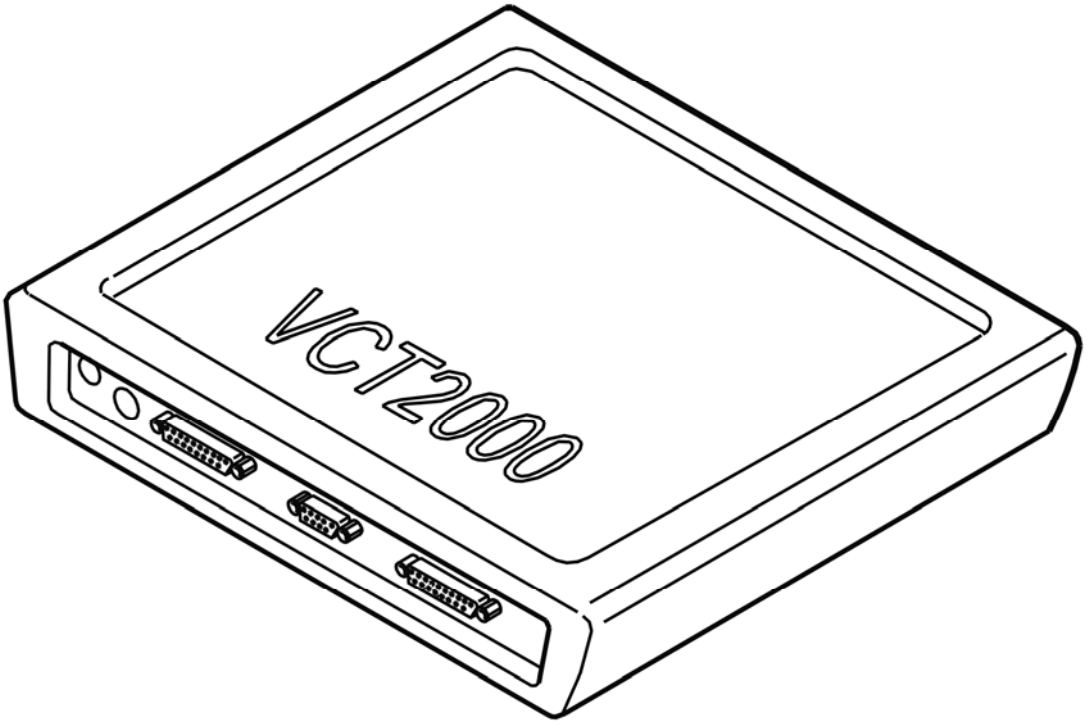

Fig. 435: Identifying VCT2000 Diagnostic Tool Symbol In VIDA
Courtesy of VOLVO CARS CORPORATION

Is the oil temperature within its permitted range?

- **YES**

  Refer to **CHECKING SHIFT SOLENOID S2**

- **NO**

  Refer to **SIGNAL TOO HIGH**

CHECKING SHIFT SOLENOID S2

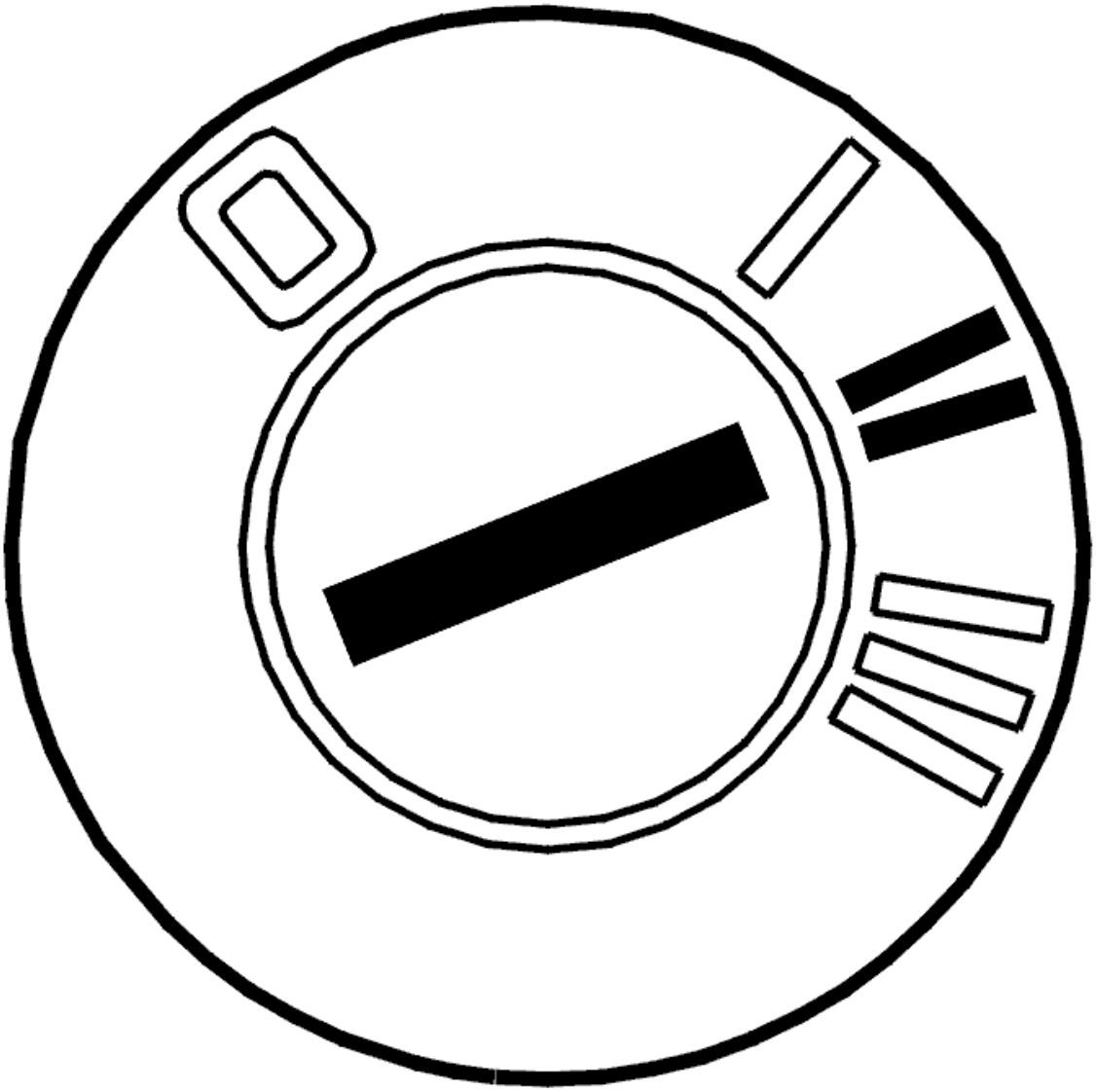

Fig. 436: Identifying Ignition ON
Courtesy of VOLVO CARS CORPORATION

- Ignition off
- Check the control module and automatic transmission connectors for contact resistance and oxidation according to **CONTACT RESISTANCE AND OXIDATION** . Remedy if necessary
- Ignition on
- Gear selector in position P
- Activate solenoid S2.

  The value must change between OFF and ON.

  If the value changes, the problem was caused by contact resistance and oxidation.

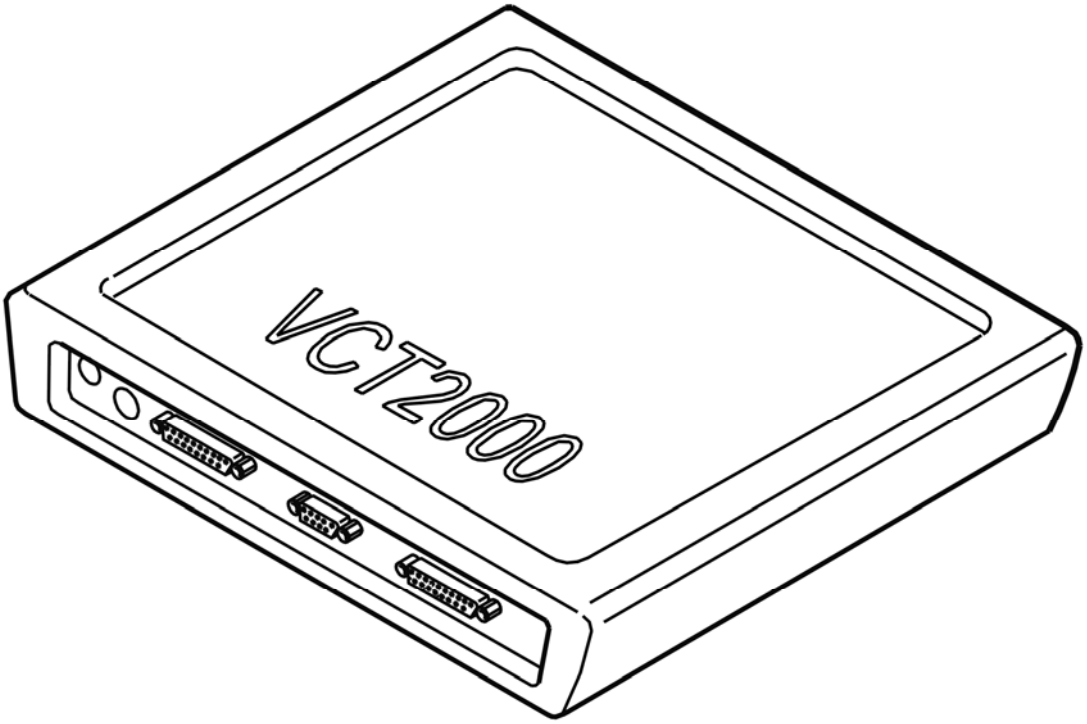

Fig. 437: Identifying VCT2000 Diagnostic Tool Symbol In VIDA
Courtesy of VOLVO CARS CORPORATION

Does the value change?

- **YES**

  Refer to **INTERMITTENT FAULT**

- **NO**

  Refer to **CHECKING SOLENOID S2**

CHECKING SOLENOID S2

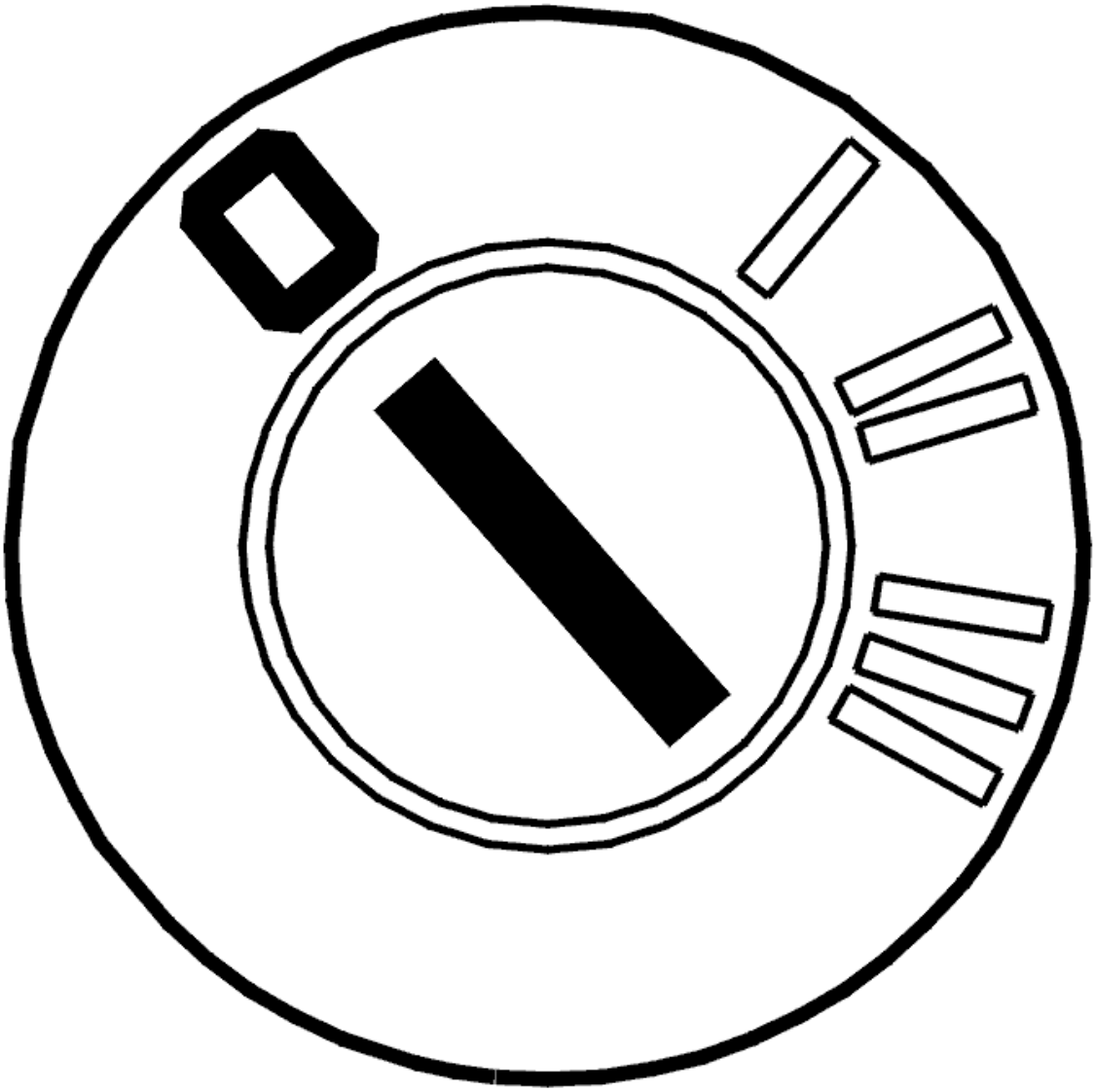

Fig. 438: Identifying Ignition OFF
Courtesy of VOLVO CARS CORPORATION

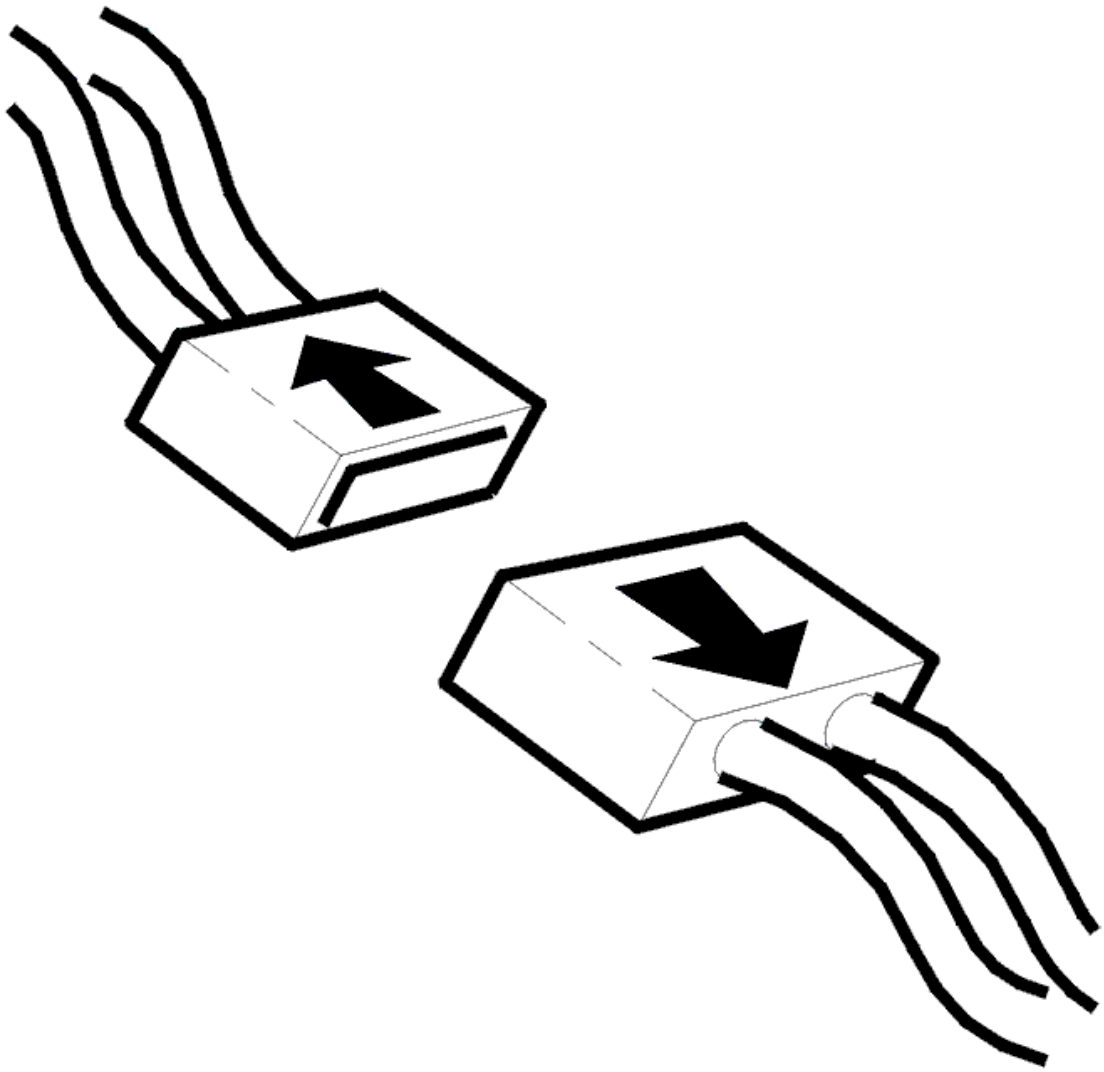

Fig. 439: Identifying Connector(s) Disconnected
Courtesy of VOLVO CARS CORPORATION

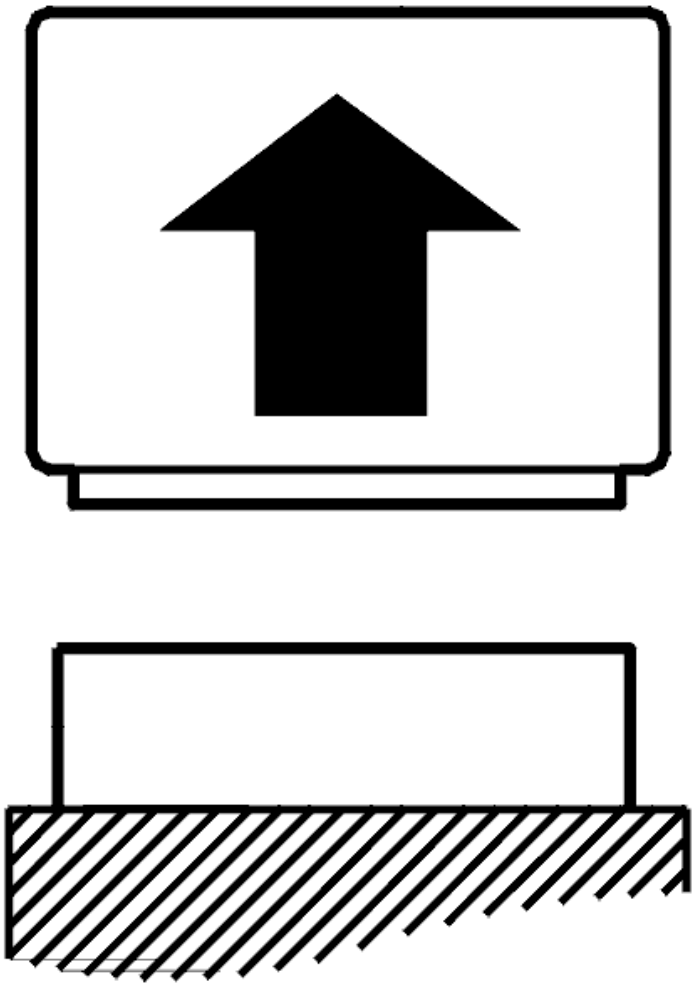

Fig. 440: Identifying Control Module Disconnected
Courtesy of VOLVO CARS CORPORATION

- Ignition off
- Disconnect the automatic transmission connector
- Connect adapter see **9511505** and breakout box see **9813190** to the transmission connector (transmission side)
- Connect an ohmmeter between terminals #B (#A1) and # E (#A5).

  The solenoid S2 resistance must be between 18 and 30 ohms.

  Other information:

  - To connect the breakout box to the transmission connector, see **CONNECTING THE BREAKOUT BOX, GM AUTOMATIC TRANSMISSIONS**

- To connect the breakout box, see **CONNECTING THE BREAKOUT BOX**
- For information about signals, see **SIGNAL SPECIFICATION** .

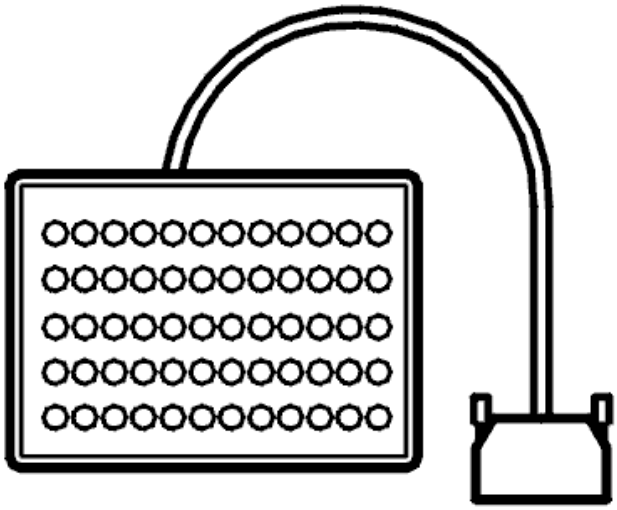

Fig. 441: Identifying Breakout Box
Courtesy of VOLVO CARS CORPORATION

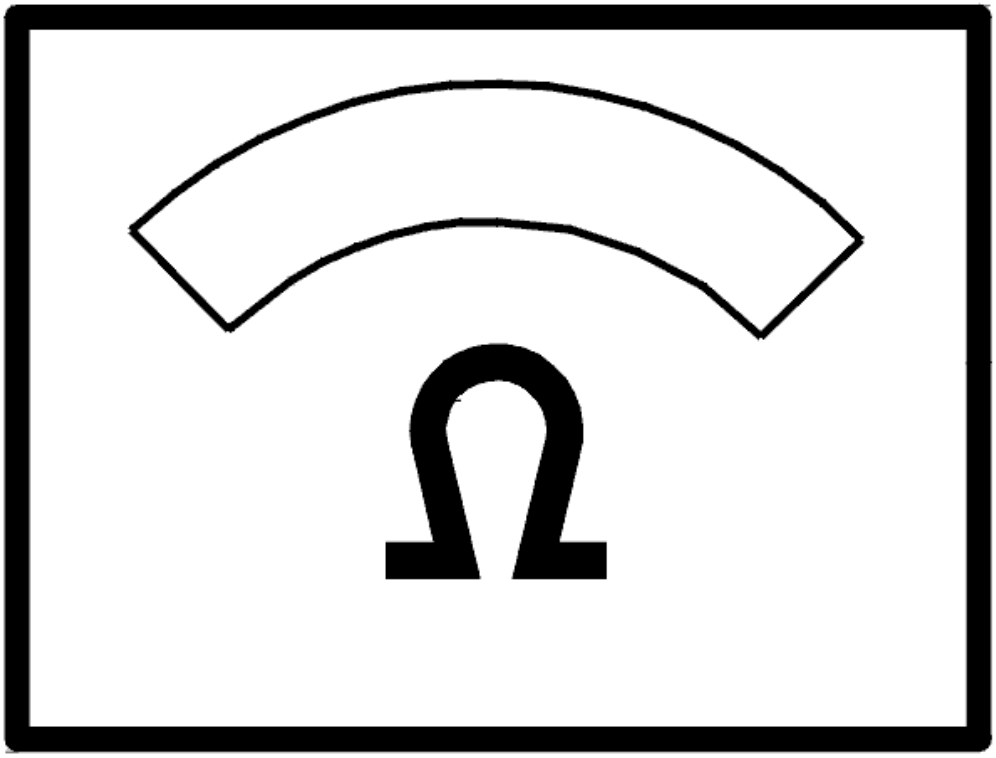

Fig. 442: Identifying Ohms Display
Courtesy of VOLVO CARS CORPORATION

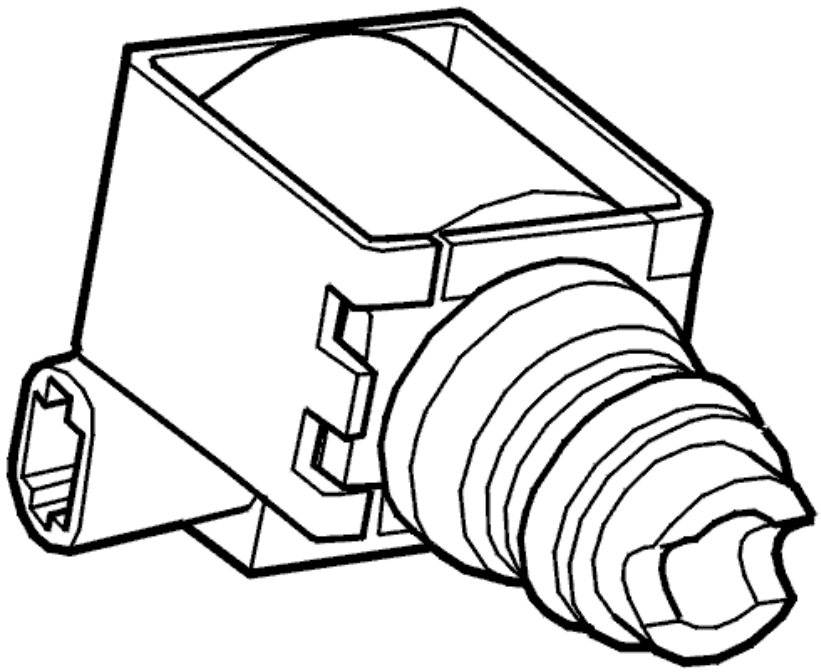

Fig. 443: Identifying Shift Solenoid S1 And S2
Courtesy of VOLVO CARS CORPORATION

Was the resistance OK?

- **YES**

  Refer to **CHECKING THE WIRING**

- **NO**

  Refer to **CHECKING THE WIRING AND COMPONENT**

CHECKING THE CONTROL MODULE

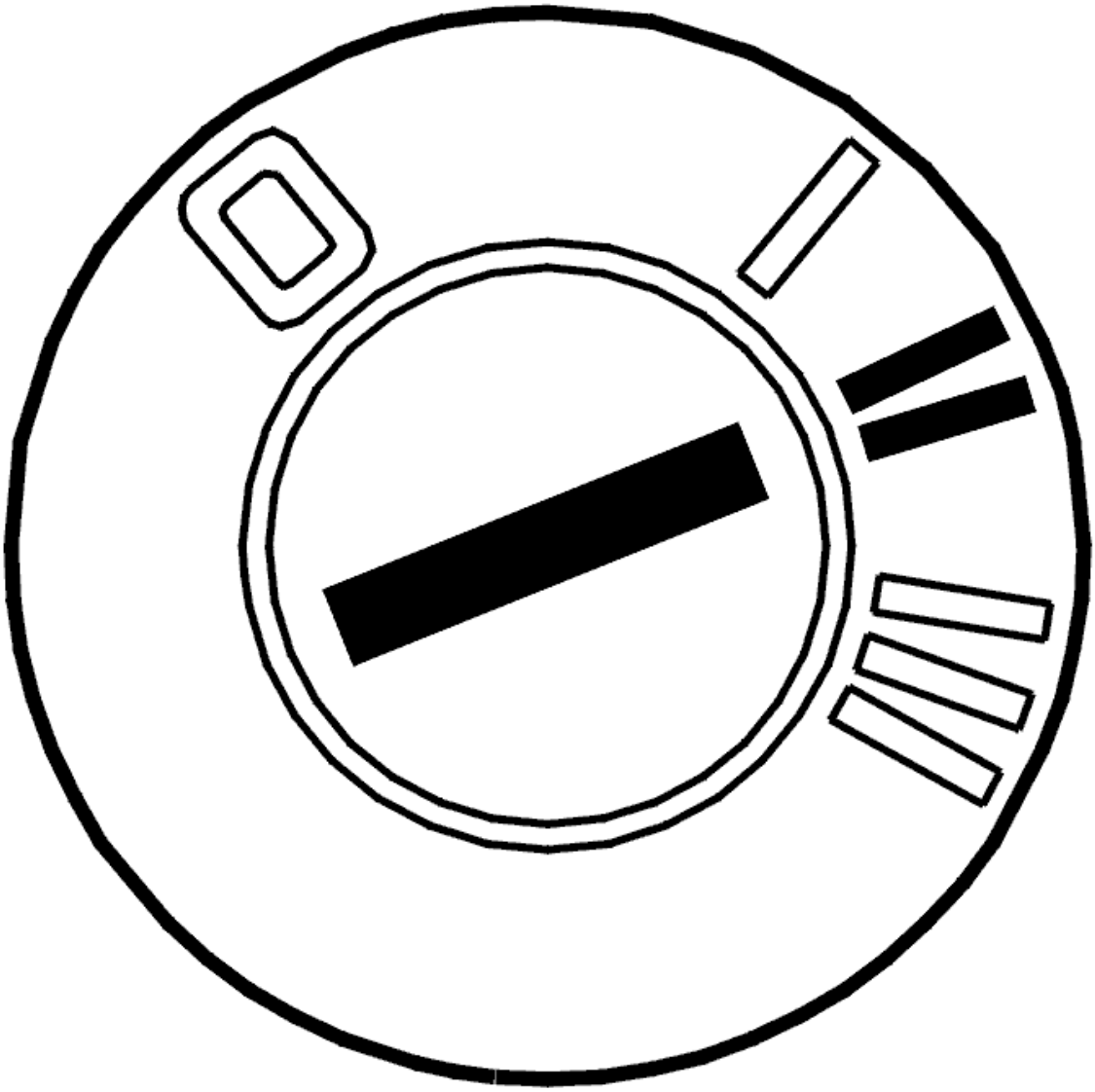

Fig. 444: Identifying Ignition ON
Courtesy of VOLVO CARS CORPORATION

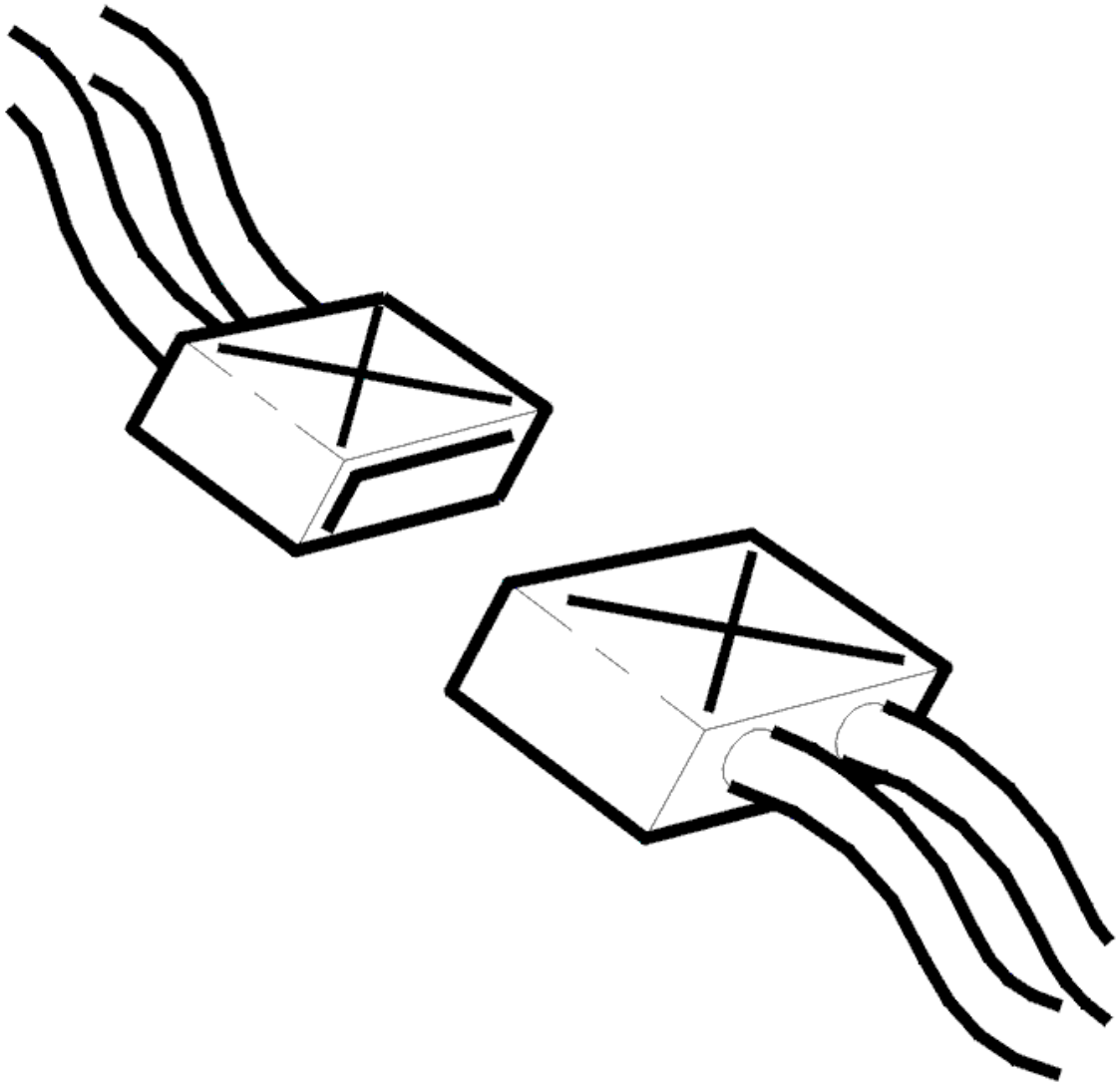

Fig. 445: Identifying Connectors
Courtesy of VOLVO CARS CORPORATION

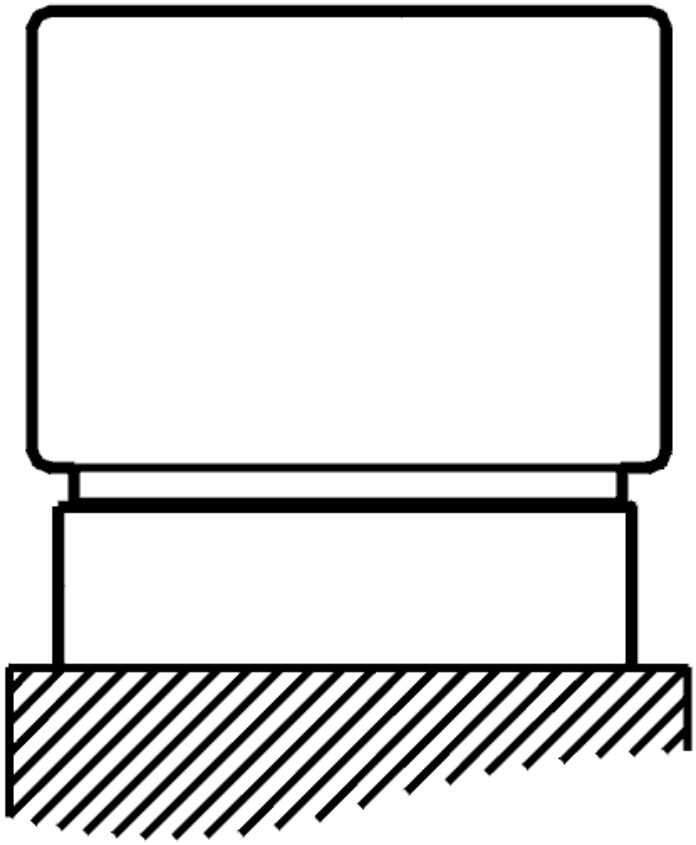

Fig. 446: Identifying Control Unit Connected
Courtesy of VOLVO CARS CORPORATION

- Ignition off
- The breakout box connected
- Control module connected.
- Transmission connector disconnected
- Ignition on
- Gear selector in position P.

Check the circuit for solenoid S2 by connecting an ohmmeter between terminals #68 (#B8) and #53 (#A53). The resistance must be between 7 and 13 kohms. Try a new control module if the resistance is infinite.

Remedy as necessary.

Other information:

- To connect the breakout box, see **CONNECTING THE BREAKOUT BOX**
- To replace the control module, see **TRANSMISSION CONTROL MODULE (TCM), REPLACING**
- For information about signals, see **SIGNAL SPECIFICATION** .

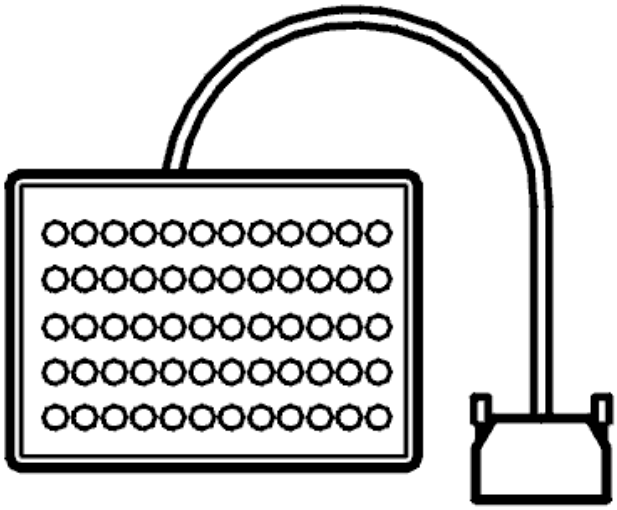

Fig. 447: Identifying Breakout Box
Courtesy of VOLVO CARS CORPORATION

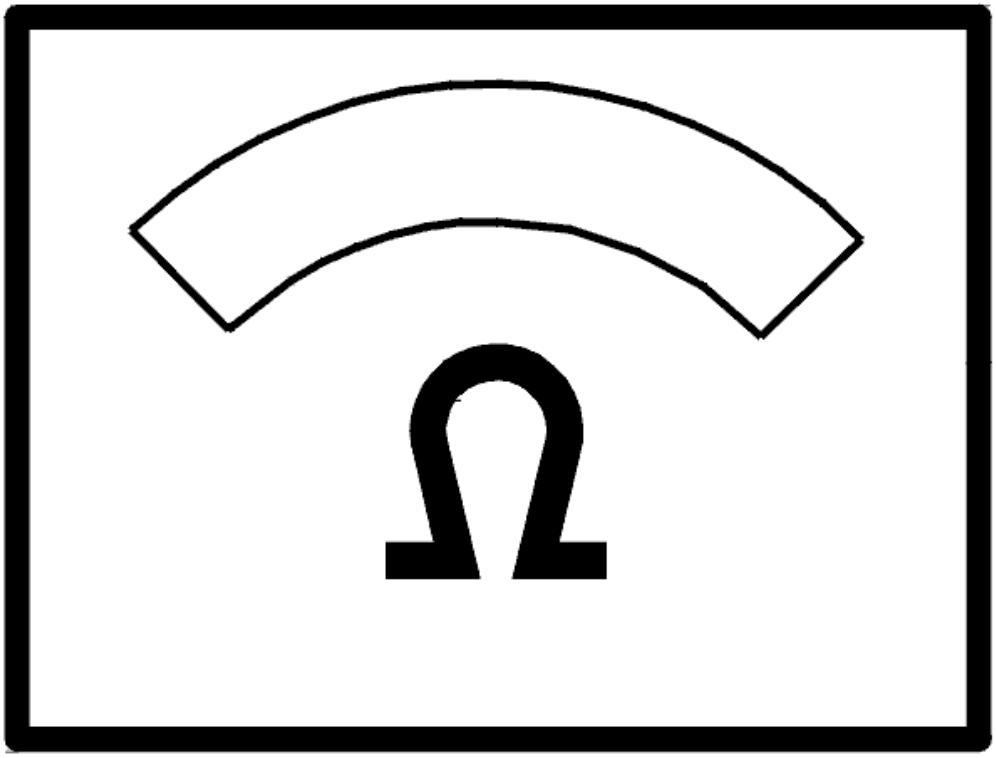

Fig. 448: Identifying Ohms Display
Courtesy of VOLVO CARS CORPORATION

Was the resistance incorrect?

- **YES**

  Refer to **VERIFICATION**

- **NO**

  FAULT NOT FOUND: Troubleshooting has been completed.

CHECKING THE WIRING

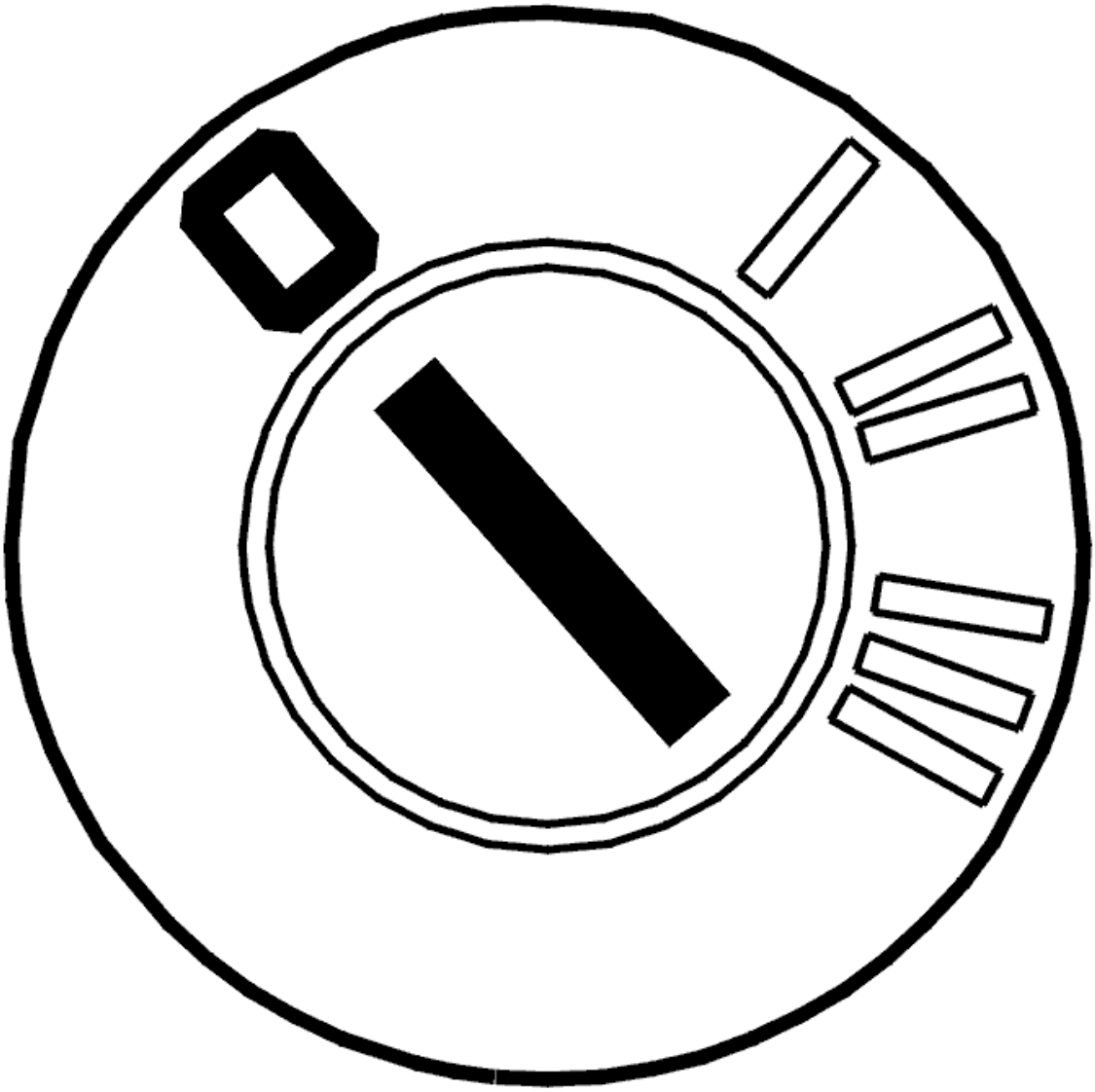

Fig. 449: Identifying Ignition OFF
Courtesy of VOLVO CARS CORPORATION

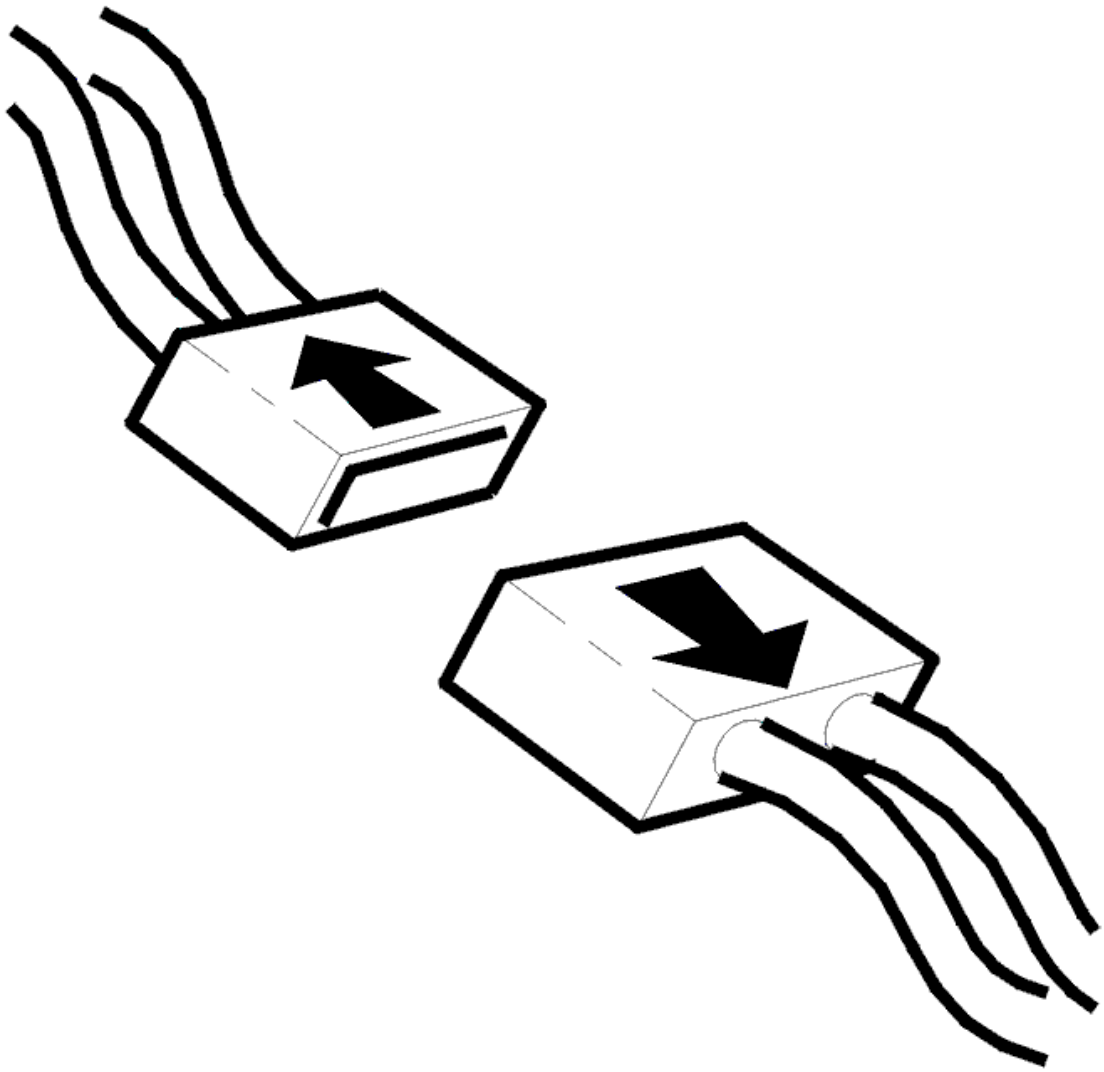

Fig. 450: Identifying Connector(s) Disconnected
Courtesy of VOLVO CARS CORPORATION

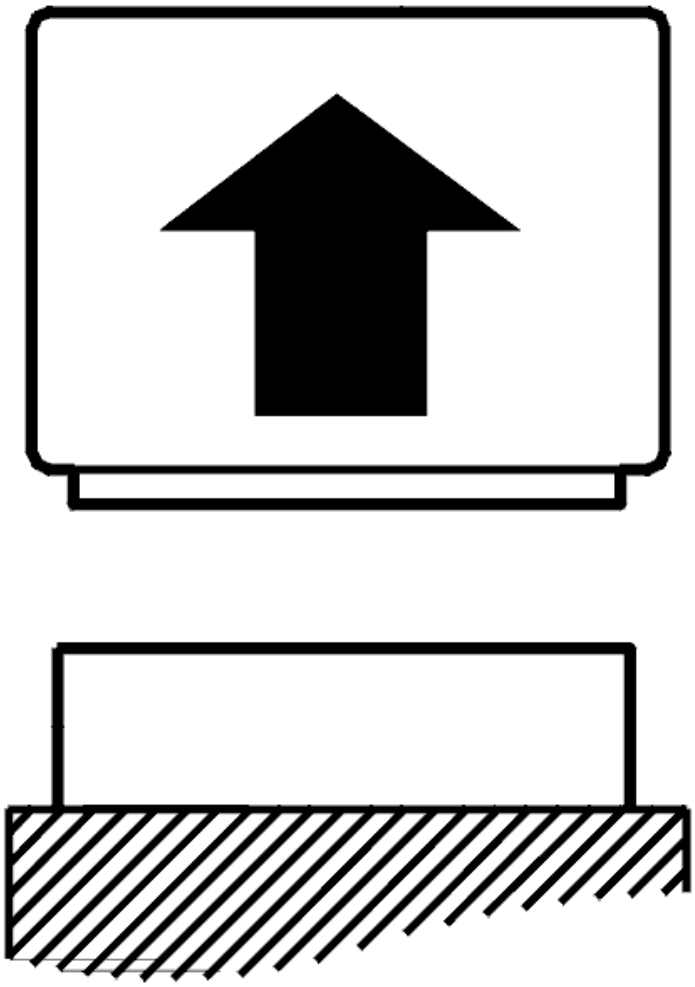

Fig. 451: Identifying Control Module Disconnected
Courtesy of VOLVO CARS CORPORATION

- Ignition off
- Connect the breakout box
- Disconnect the control module.
- Disconnect the transmission connector
- Connect adapter see **9511505** and breakout box see **9813190** to the transmission connector (transmission side).

  Check the cable between control module terminal #A68 (#B8) and transmission connector terminal #B (#A2) (control module side). Check for a short-circuit to ground. See **SHORT-CIRCUIT TO GROUND, PERMANENT FAULTS** .

  Check the cable between control module terminal #A53 and transmission connector (control module side)

terminal #E (#A5). Check for a short-circuit to ground. See **SHORT-CIRCUIT TO GROUND, PERMANENT FAULTS**

Remedy as necessary.

Other information:

- To connect the breakout box, see **CONNECTING THE BREAKOUT BOX**
- To connect the breakout box to the transmission connector, see **CONNECTING THE BREAKOUT BOX, GM AUTOMATIC TRANSMISSIONS**
- For information about signals, see **SIGNAL SPECIFICATION** .

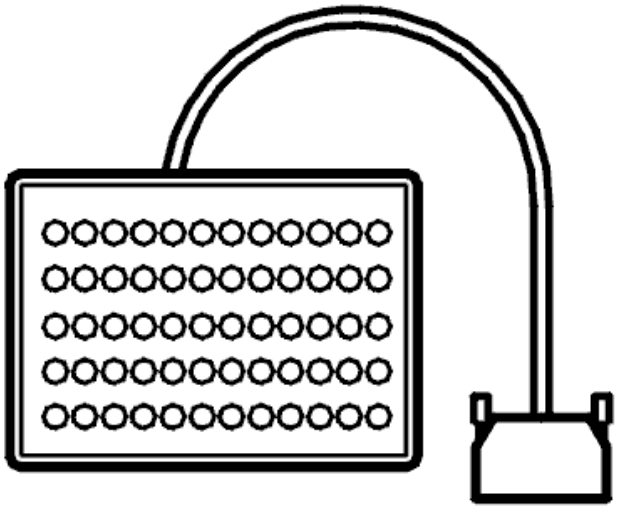

Fig. 452: Identifying Breakout Box
Courtesy of VOLVO CARS CORPORATION

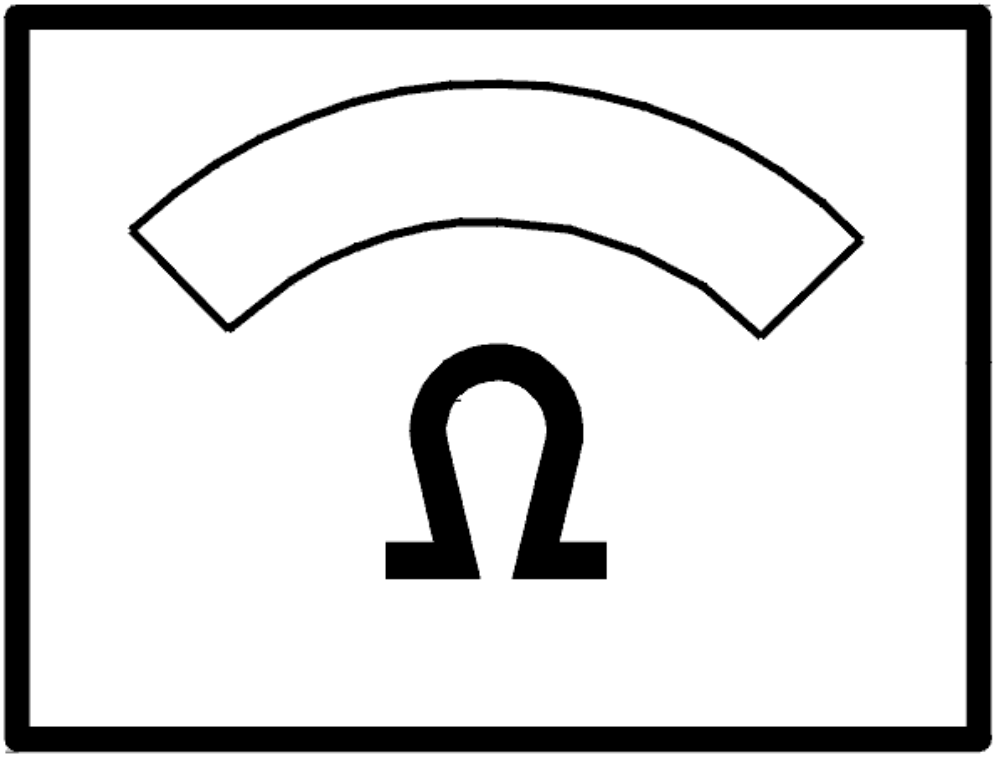

Fig. 453: Identifying Ohms Display
Courtesy of VOLVO CARS CORPORATION

Was a fault detected?

- **YES**

  Refer to **VERIFICATION**

- **NO**

  Refer to **CHECKING THE CONTROL MODULE**

CHECKING THE WIRING AND COMPONENT

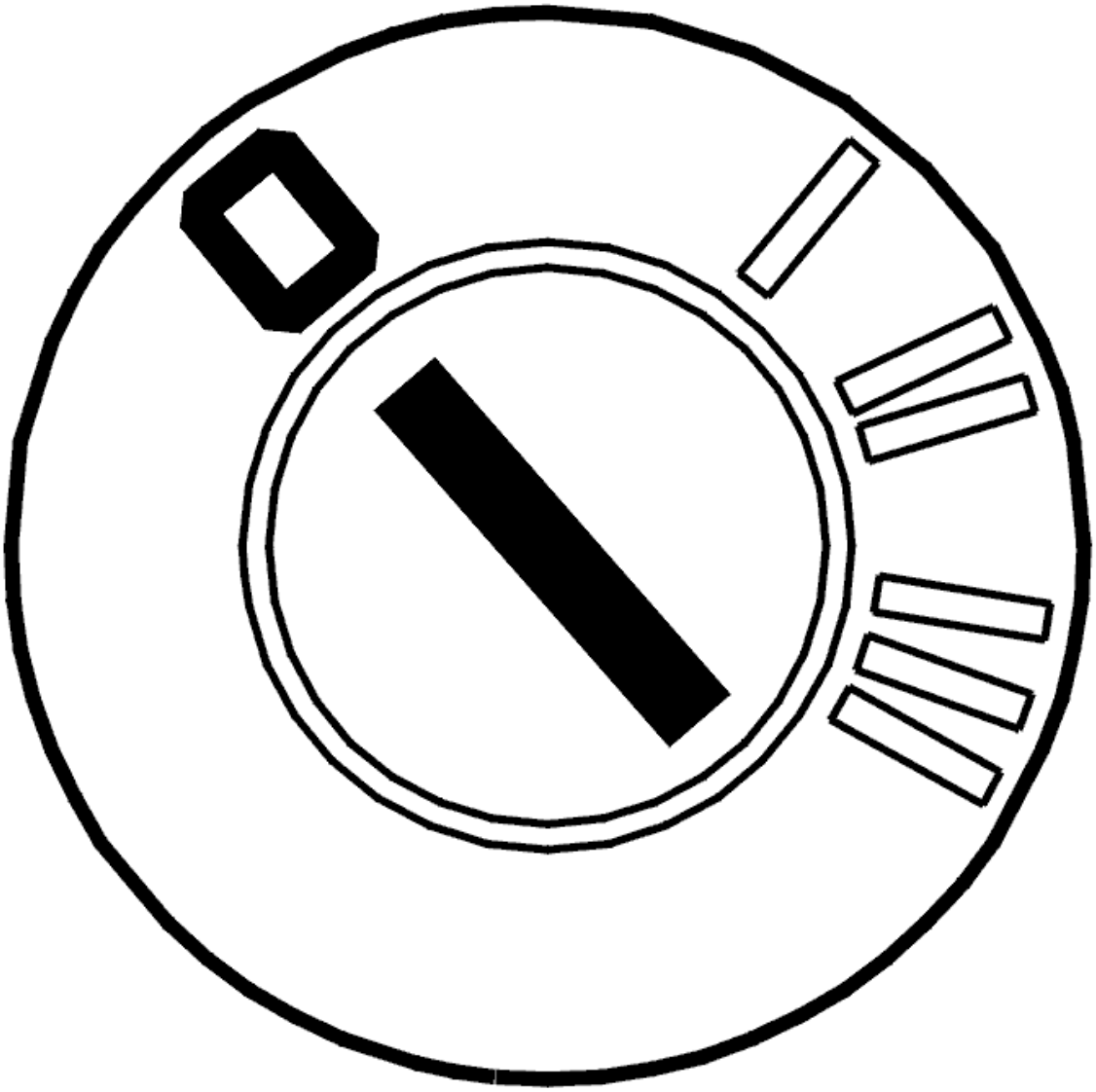

Fig. 454: Identifying Ignition OFF
Courtesy of VOLVO CARS CORPORATION

- Ignition off
- Open the transmission control system.

  Check the cable between transmission connector (transmission side) terminal #B (#A2) and solenoid S2 terminals #1 and #E (#A5) and solenoid S2 terminal #2. Check for an open-circuit. See **OPEN-CIRCUIT, PERMANENT FAULTS** .

  HINT: Check solenoid S2 by measuring the solenoid resistance between terminals 1 and 2. The resistance must be between 18 and 25 ohms.

  Remedy as necessary.

  Other information:

- To open the transmission control system, For removal, see **SIDE COVER TRANSMISSION, REMOVING** To install, see **SIDE COVER TRANSMISSION, INSTALLING**
- To connect the breakout box to the transmission connector, see **CONNECTING THE BREAKOUT BOX, GM AUTOMATIC TRANSMISSIONS**
- To replace solenoid S2, see **SOLENOID SHIFTING 2-3, REPLACING**
- To replace the cable harness, see **TEMPERATURE SENSOR FLUID, TRANSAXLE, (TFT)**
- For information about signals, see **SIGNAL SPECIFICATION** .

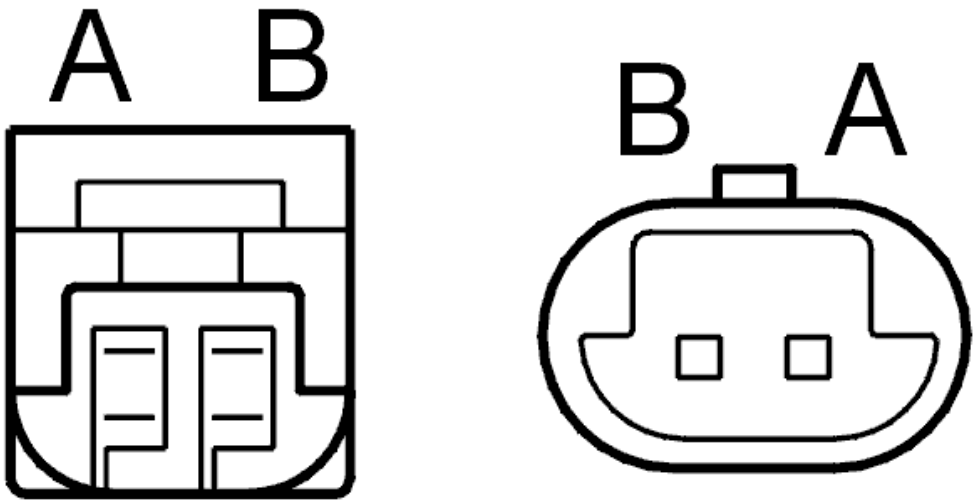

Fig. 455: Identifying Transmission Connector Terminals
Courtesy of VOLVO CARS CORPORATION

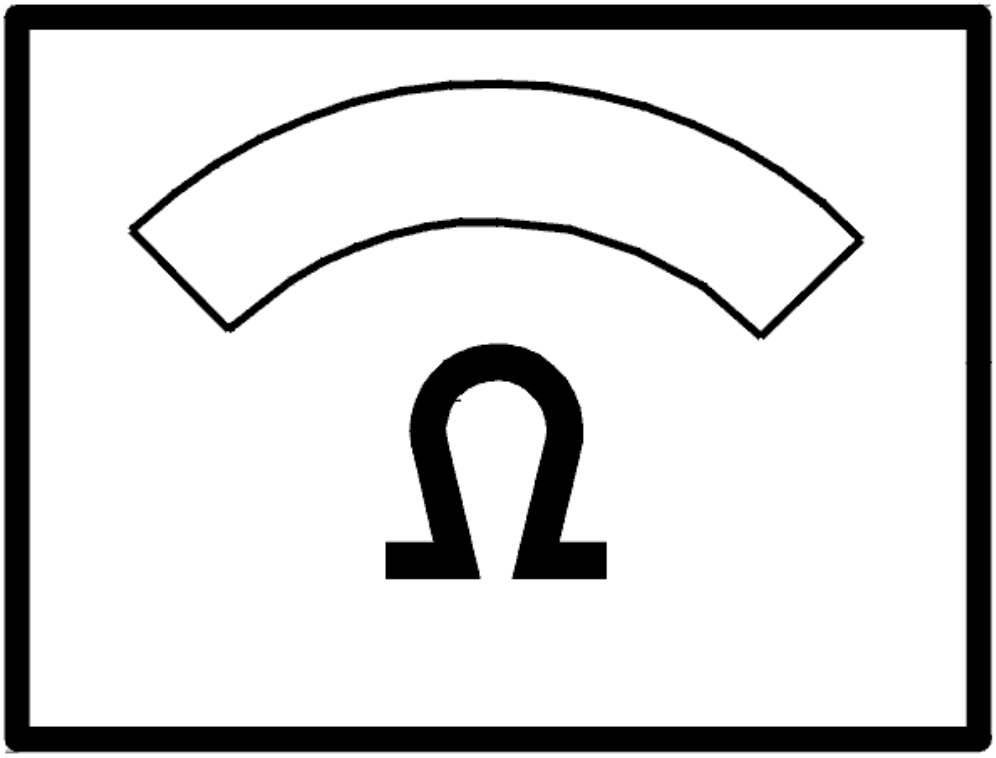

Fig. 456: Identifying Ohms Display
Courtesy of VOLVO CARS CORPORATION

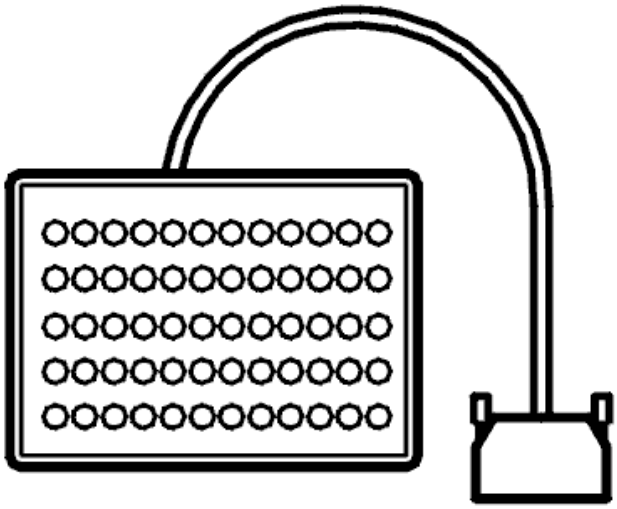

Fig. 457: Identifying Breakout Box
Courtesy of VOLVO CARS CORPORATION

- **Continue**

  Refer to **RESETTING THE ADAPTATION**

INTERMITTENT FAULT

Check the cable between control module terminal #A68 (#B8) and transmission connector terminal #2 (#A2) (control module side). Check for an intermittent short-circuit to ground. See **SHORT-CIRCUIT TO GROUND, INTERMITTENT FAULTS** . Check for contact resistance and oxidation. See **CONTACT RESISTANCE AND OXIDATION** .

Check the cable between control module terminal #A53 and transmission connector terminal #5 (#A5) (control module side). Check for an intermittent short-circuit to ground. See **SHORT-CIRCUIT TO GROUND, INTERMITTENT FAULTS** . Check for contact resistance and oxidation. See **CONTACT RESISTANCE AND OXIDATION** .

Remedy as necessary.

Other information:

- To connect the breakout box, see **CONNECTING THE BREAKOUT BOX**
- To connect the breakout box to the transmission connector, see **CONNECTING THE BREAKOUT BOX, GM AUTOMATIC TRANSMISSIONS**
- To replace solenoid S2, see **SOLENOID SHIFTING 2-3, REPLACING**
- To replace the cable harness, see **TEMPERATURE SENSOR FLUID, TRANSAXLE, (TFT)**
- For information about signals, see **SIGNAL SPECIFICATION** .

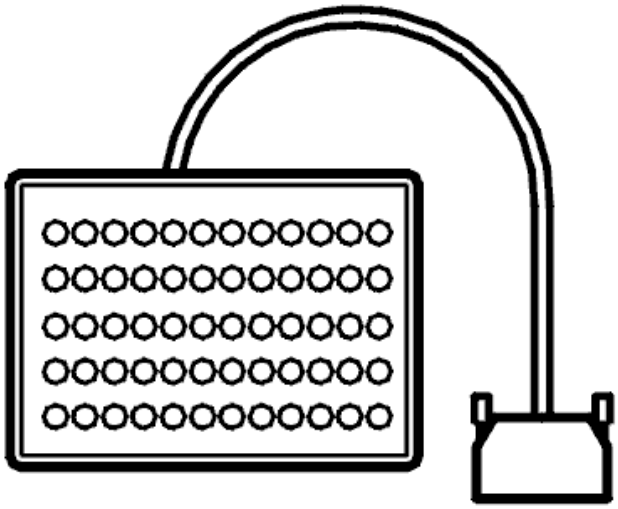

Fig. 458: Identifying Breakout Box
Courtesy of VOLVO CARS CORPORATION

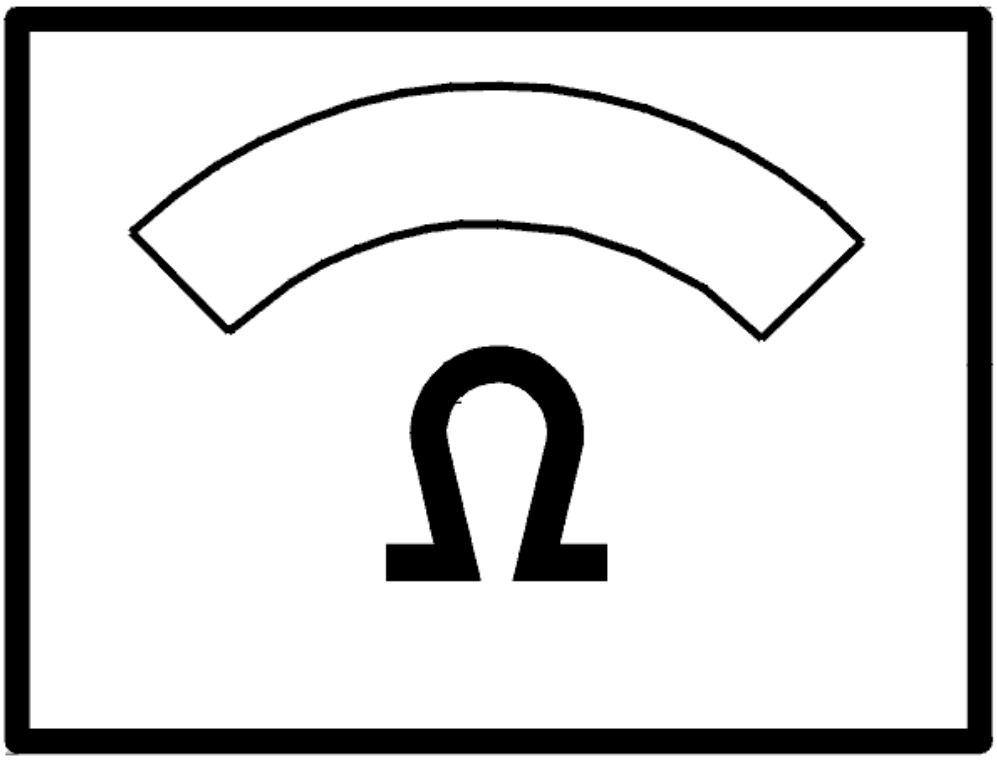

Fig. 459: Identifying Ohms Display
Courtesy of VOLVO CARS CORPORATION

- **Continue**

  Refer to **INFORMATION**

RESETTING THE ADAPTATION

RESETTING ADAPTATION AND THE COUNTER FOR "TRANSMISSION OIL CHANGE"

HINT: The transmission has torque controlled adaptive pressure control. Pressure control means that the transmission regulates the pressure itself during each gear shift. This avoids harsh gear shifting. Each gear shift is evaluated by the control module and stored in the memory. This allows for compensation for wear and tear in the transmission and clutch. It is important that the adaptation in the memory is reset after the transmission has been repaired. This is to ensure normal operation. The oil is replaced during

repair; the "Transmission oil change" counter must be reset. If the counter is not reset when the fluid is drained and replaced, there is a risk that a diagnostic trouble code (DTC) will be stored in incorrect circumstances.

NOTE: **This applies only if the transmission or one of the components in the transmission have been replaced.**

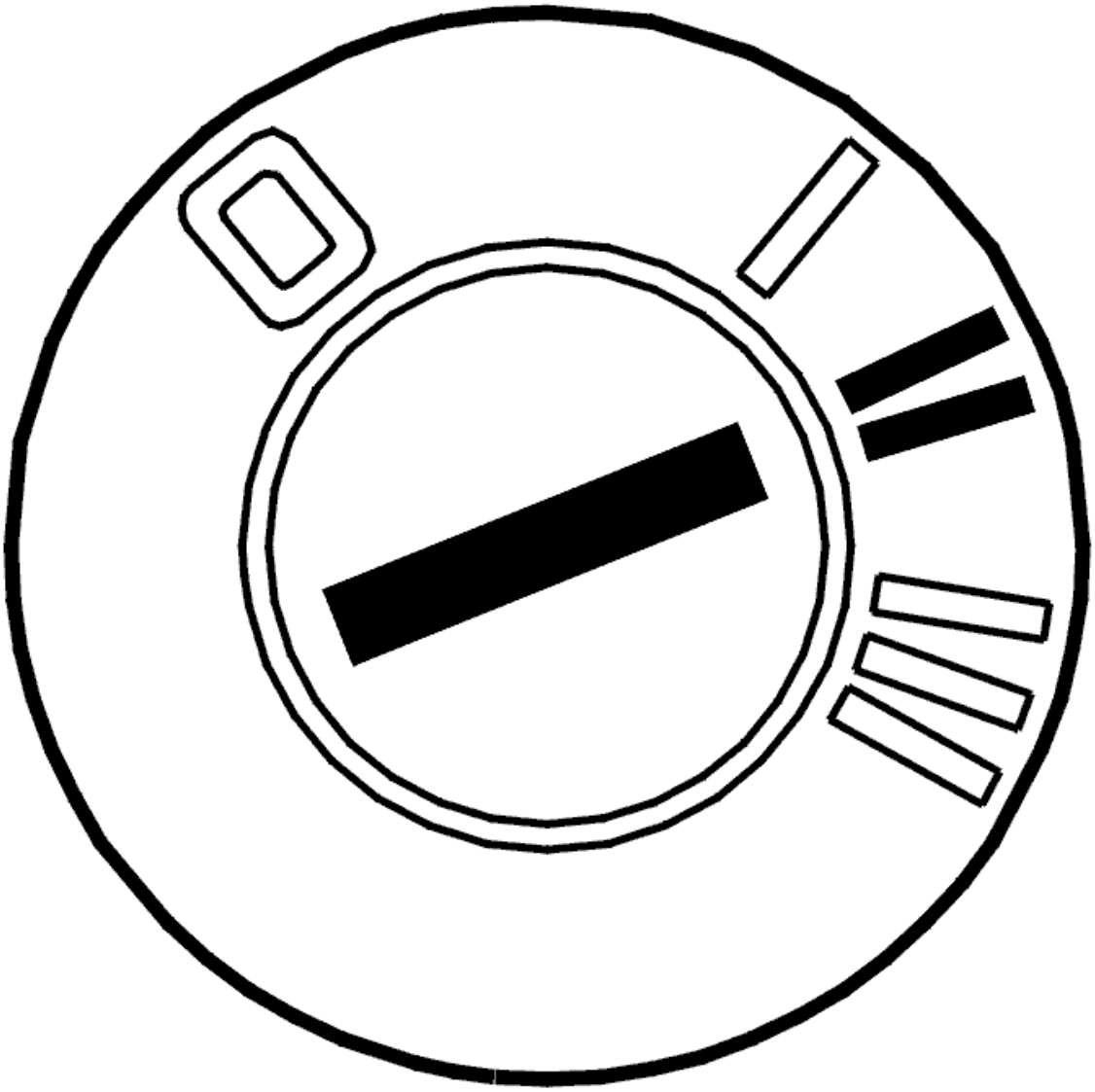

Fig. 460: Identifying Ignition ON
Courtesy of VOLVO CARS CORPORATION

- Ignition on.

  Click on the VCT2000 symbol to reset the adaptation and counter.

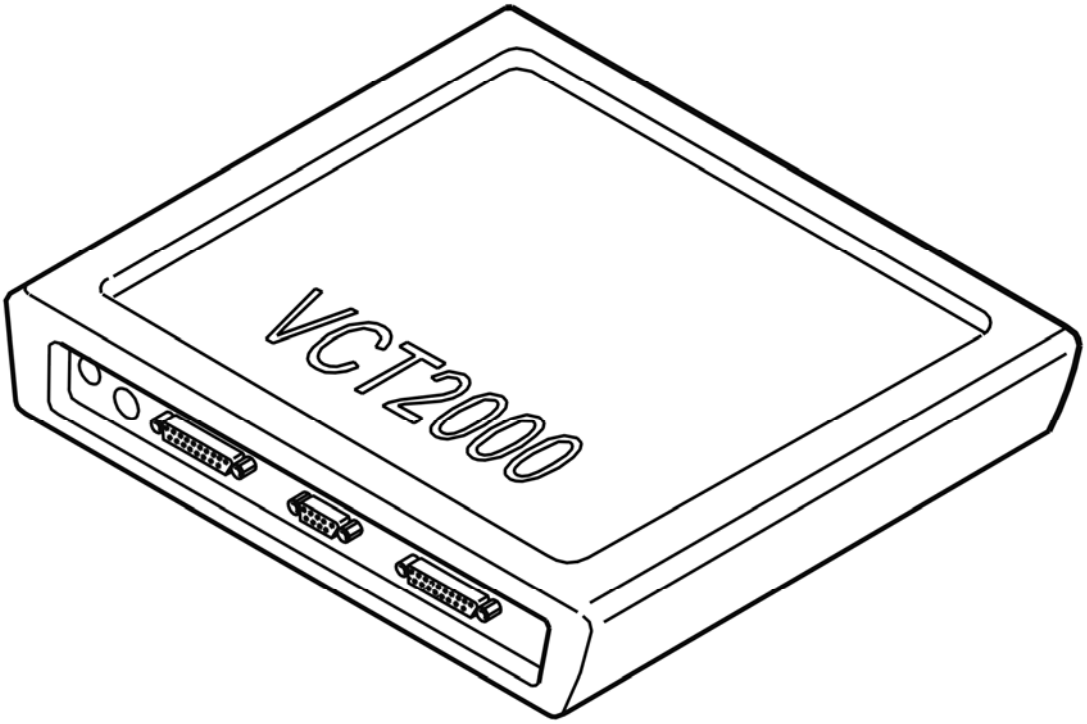

Fig. 461: Identifying VCT2000 Diagnostic Tool Symbol In VIDA
Courtesy of VOLVO CARS CORPORATION

- **Continue**

  Refer to **VERIFICATION**

VERIFICATION

VERIFICATION

HINT: After carrying out the repair, check that the fault has been remedied.

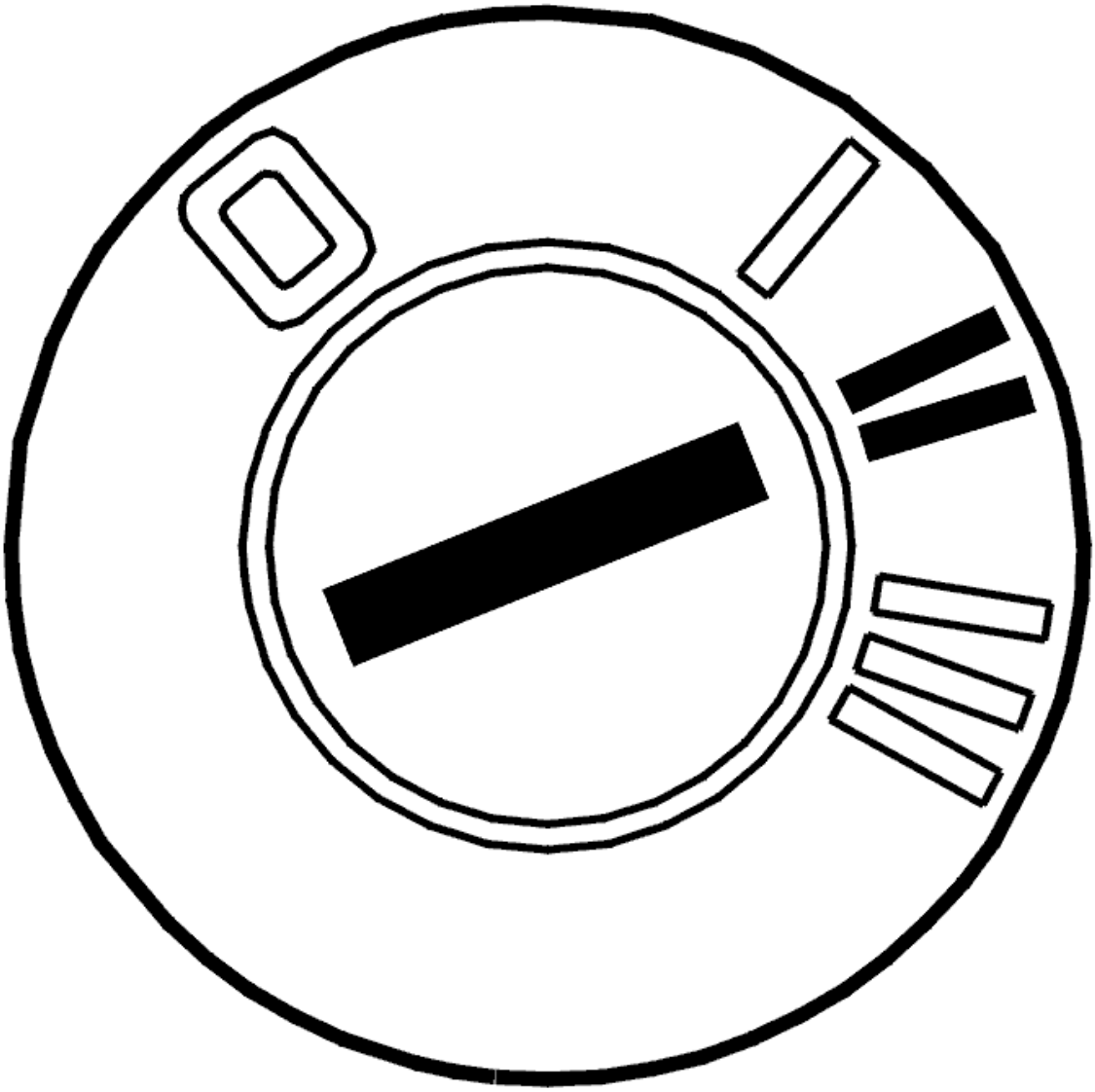

Fig. 462: Identifying Ignition ON
Courtesy of VOLVO CARS CORPORATION

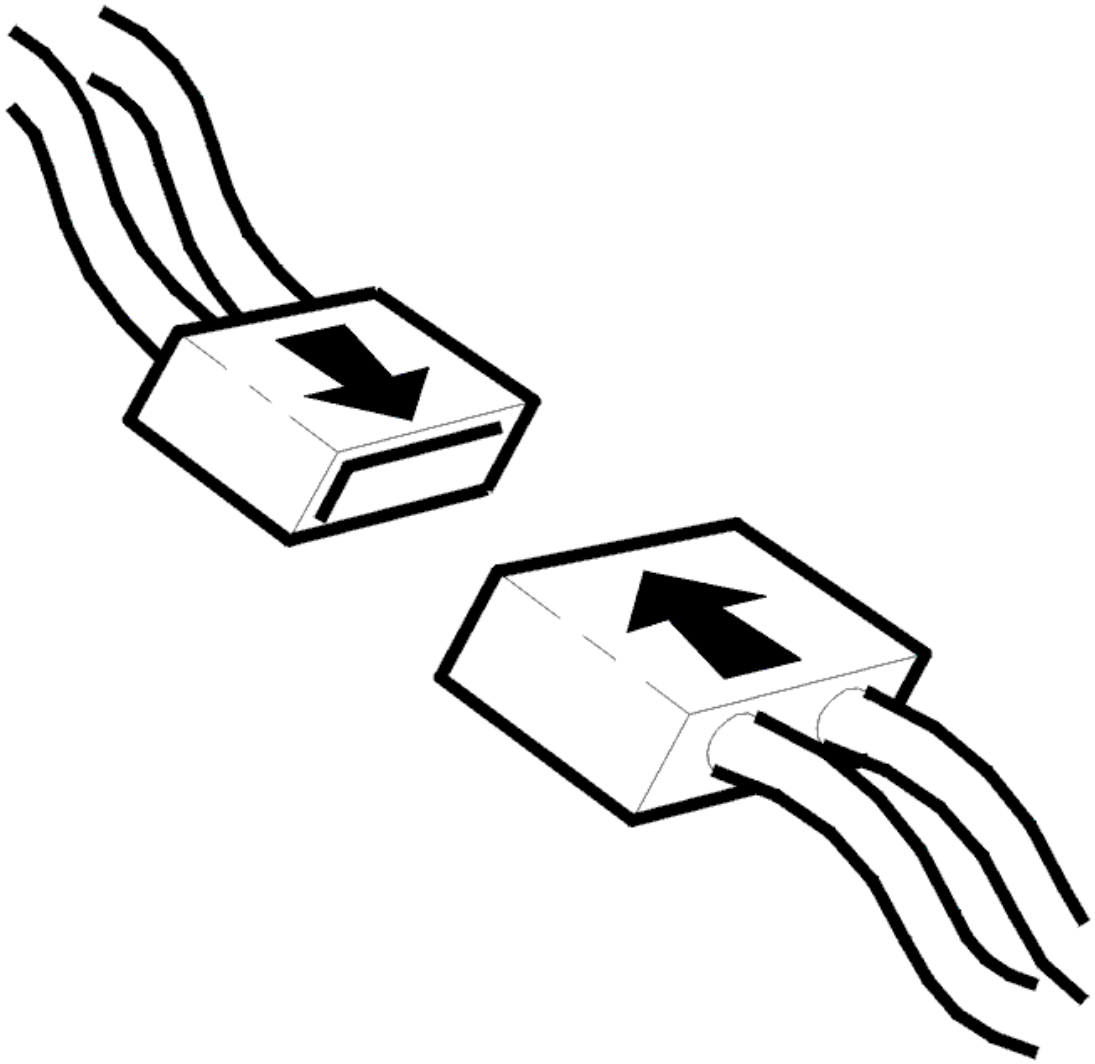

Fig. 463: Identifying Connector(s) Reinstallation
Courtesy of VOLVO CARS CORPORATION

- Ignition off.
- Wait at least 90 seconds.
- Reconnect the connectors, reinstall components etc.
- Ignition on.
- Gear selector in position P.
- Activate solenoid S2.

  The value should change between OFF and ON.

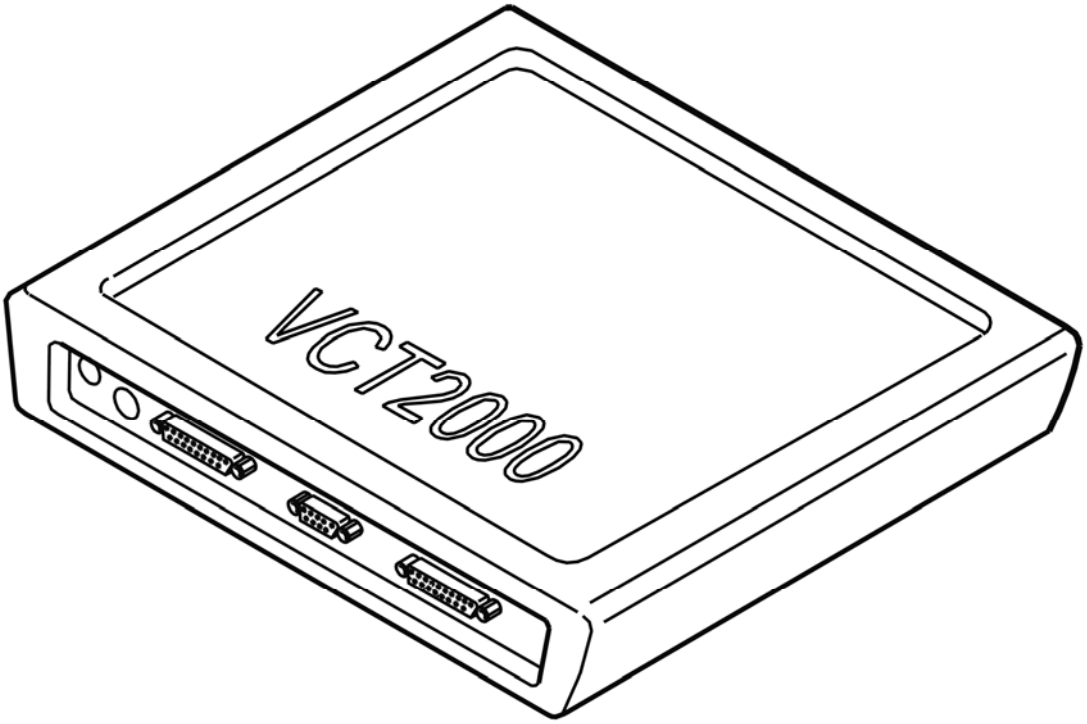

Fig. 464: Identifying VCT2000 Diagnostic Tool Symbol In VIDA
Courtesy of VOLVO CARS CORPORATION

Does the value change?

- **YES**

  VERIFIED: Troubleshooting has been completed.

- **NO**

  Refer to **INFORMATION**

INFORMATION

FAULT-TRACING INFORMATION

The fault should have been detected and remedied. As this is not the case fault-tracing has failed.

Exit fault-tracing for this diagnostic trouble code (DTC) or make another attempt.

INFORMATION

FAULT-TRACING INFORMATION

If the fault is intermittent, do not verify fault-tracing if the fault does not recur.

It is possible to view the information again, or leave fault-tracing for this diagnostic trouble code (DTC).

SIGNAL TOO HIGH

CHECKING THE FUNCTION OF THE OIL TEMPERATURE SENSOR

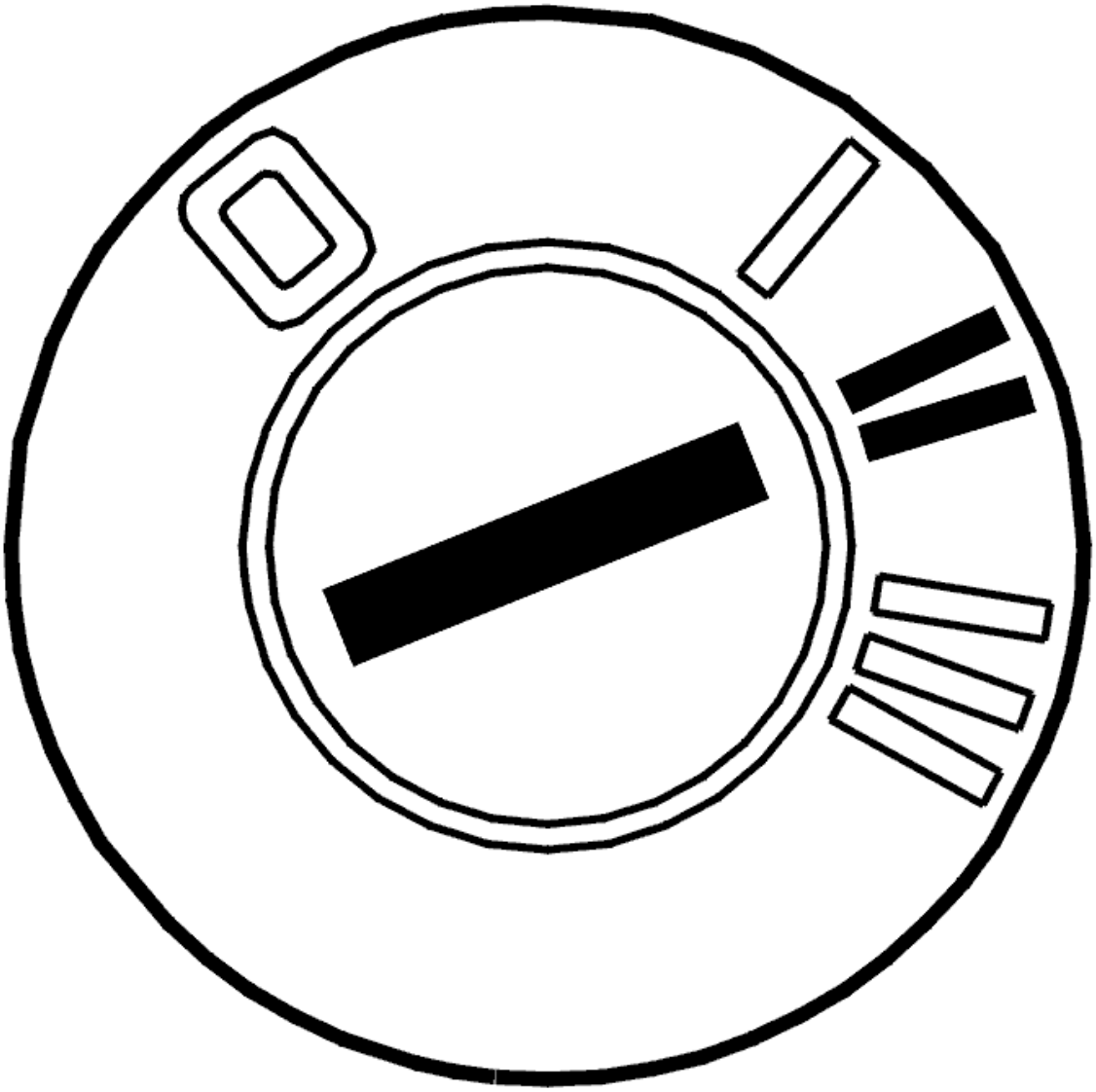

Fig. 465: Identifying Ignition ON
Courtesy of VOLVO CARS CORPORATION

- Ignition on
- Read off the oil temperature.

  Check that the temperature is within its permitted range.

Compare with the transmission temperature.

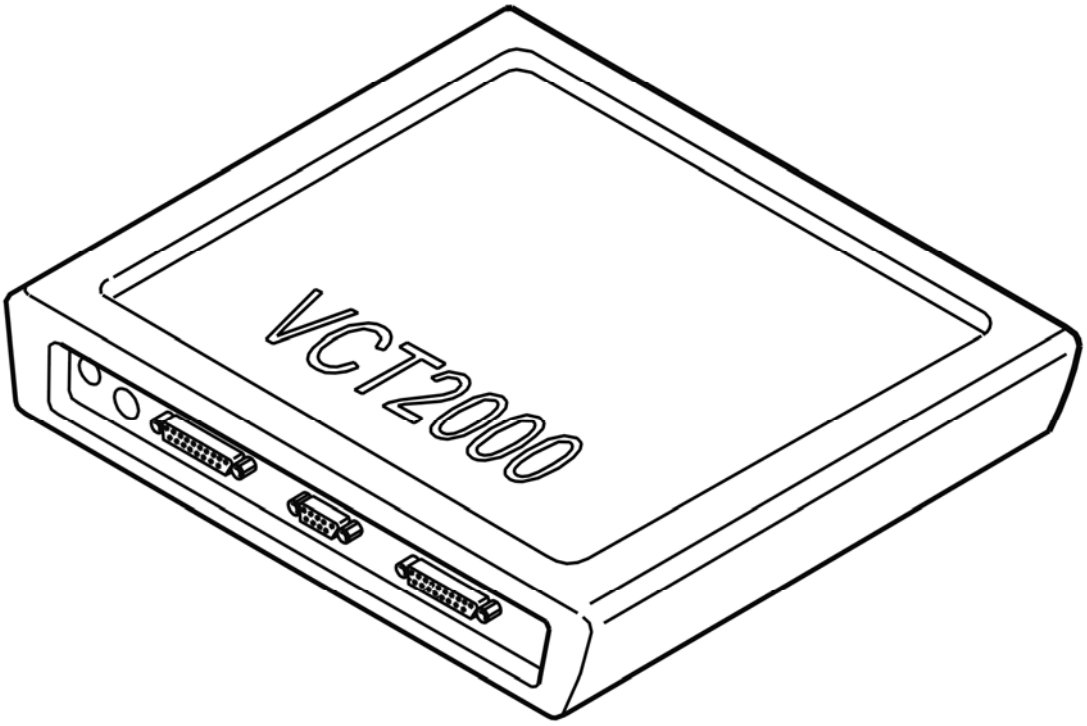

Fig. 466: Identifying VCT2000 Diagnostic Tool Symbol In VIDA
Courtesy of VOLVO CARS CORPORATION

Is the transmission temperature within its permitted range?

- **YES**

  Refer to **INTERMITTENT FAULT**

- **NO**

  Refer to **CHECKING TRANSMISSION FLUID TEMPERATURE SENSOR**

CHECKING TRANSMISSION FLUID TEMPERATURE SENSOR

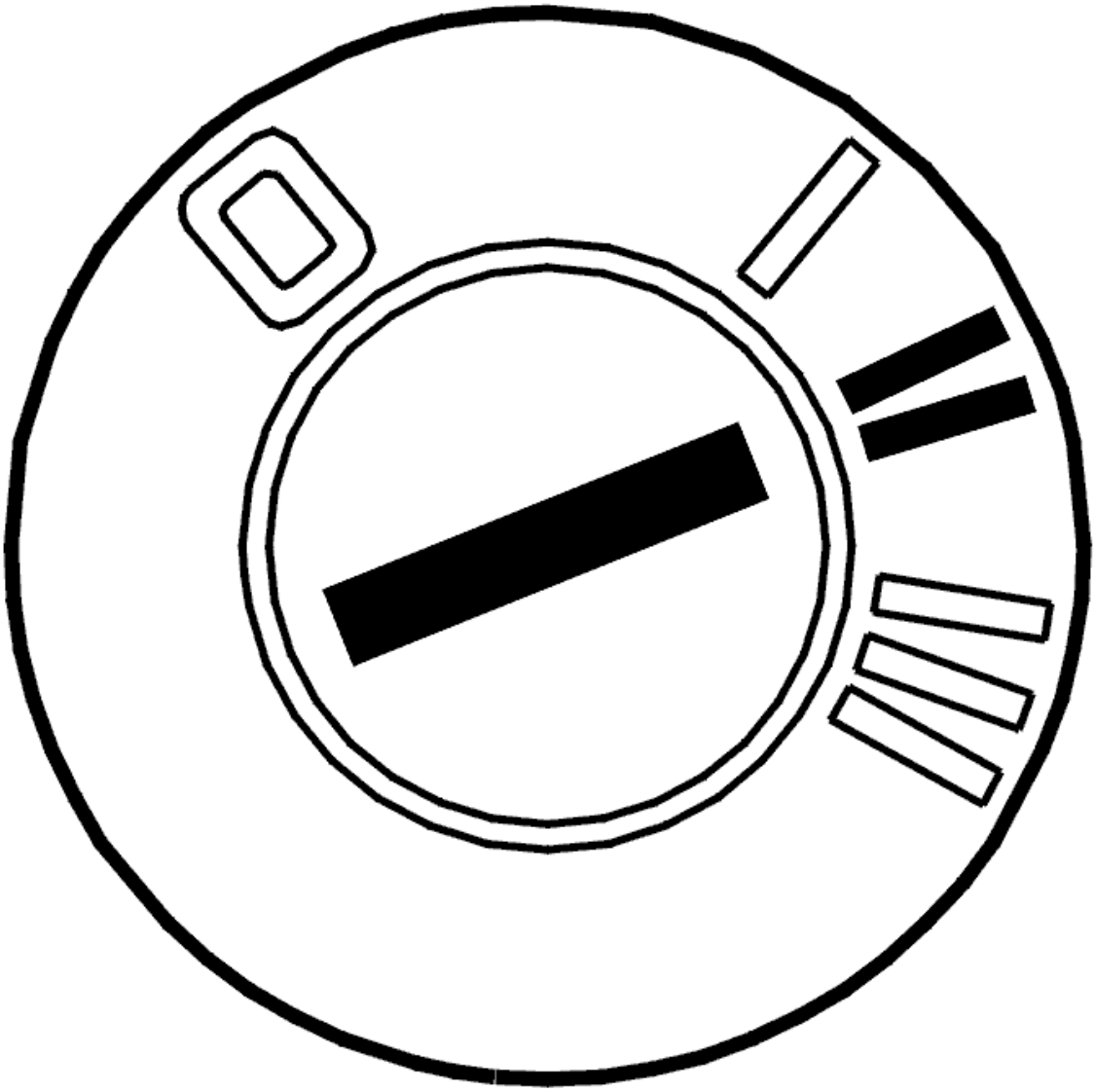

Fig. 467: Identifying Ignition ON
Courtesy of VOLVO CARS CORPORATION

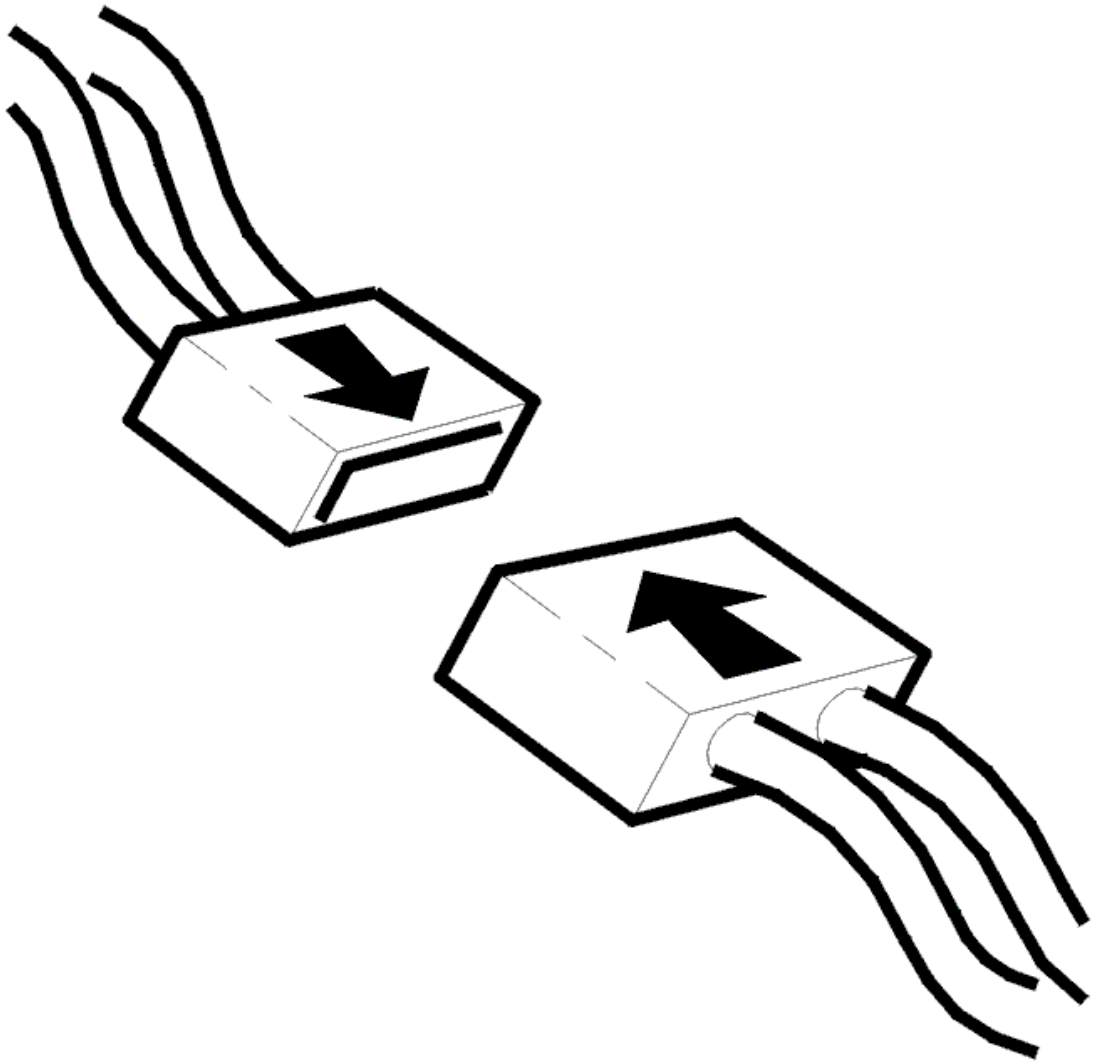

Fig. 468: Identifying Connector(s) Reinstallation
Courtesy of VOLVO CARS CORPORATION

- Ignition off
- Check the control module and transmission connectors. Check for contact resistance and oxidation
- Reconnect the control module and transmission connectors
- Ignition on
- Read off the oil temperature.

  Check that the temperature is within its permitted range.

  Compare with the transmission temperature.

  If the transmission temperature is within its permitted range, the cause of the fault was contact resistance or oxidation in the control module or transmission connector.

Other information

- To disconnect the control module, see **TRANSMISSION CONTROL MODULE (TCM), REPLACING**
- To connect the breakout box to the transmission connector, see **CONNECTING THE BREAKOUT BOX, GM AUTOMATIC TRANSMISSIONS**
- see **CHECKING WIRING AND TERMINALS**

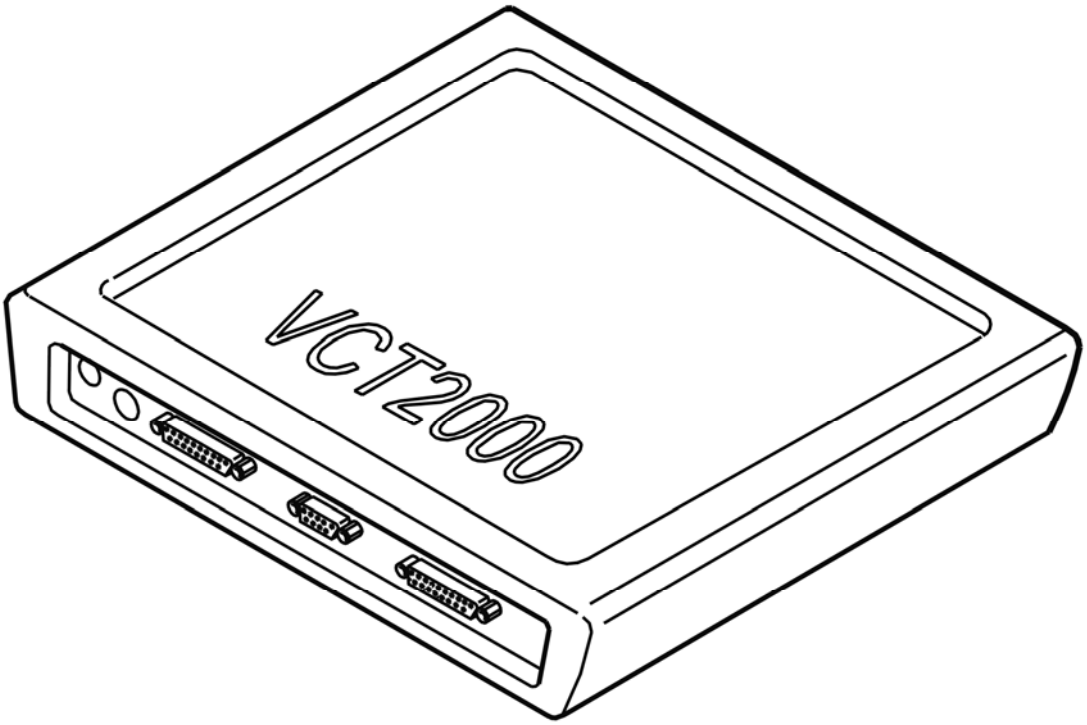

Fig. 469: Identifying VCT2000 Diagnostic Tool Symbol In VIDA
Courtesy of VOLVO CARS CORPORATION

Was the transmission temperature within its permitted range?

- **YES**

  OKAY: Troubleshooting has been completed.

- **NO**

  Refer to **CHECKING THE TEMPERATURE SENSOR**

CHECKING THE TEMPERATURE SENSOR

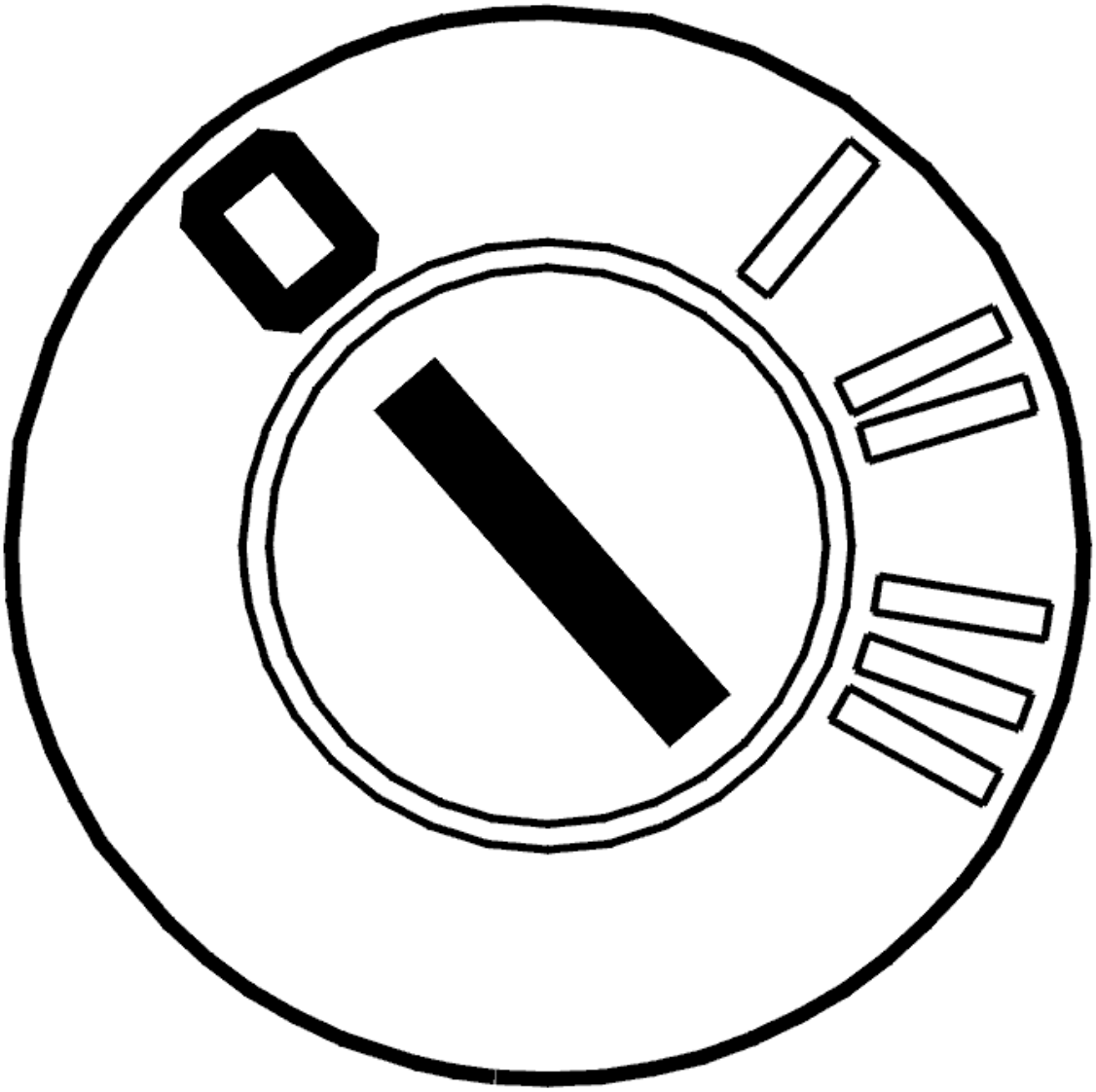

Fig. 470: Identifying Ignition OFF
Courtesy of VOLVO CARS CORPORATION

- Ignition off
- Disconnect the transmission connector
- Connect adapter see **9511505** and see **9813190** to the transmission connector (transmission side)
- Connect an ohmmeter between terminals #L (terminal #A11) and #M (terminal #A12).

  The resistance must be 3.4-3.6 kohms at 20 °C.

  Other information

  - To connect the breakout box to the transmission connector, see **CONNECTING THE BREAKOUT BOX, GM AUTOMATIC TRANSMISSIONS**
  - For information about signals, see **SIGNAL SPECIFICATION**

- For information about the resistance values, see **COMPONENT RESISTANCE VALUES**
- For information about the resistance values, see **COMPONENT RESISTANCE VALUES** .

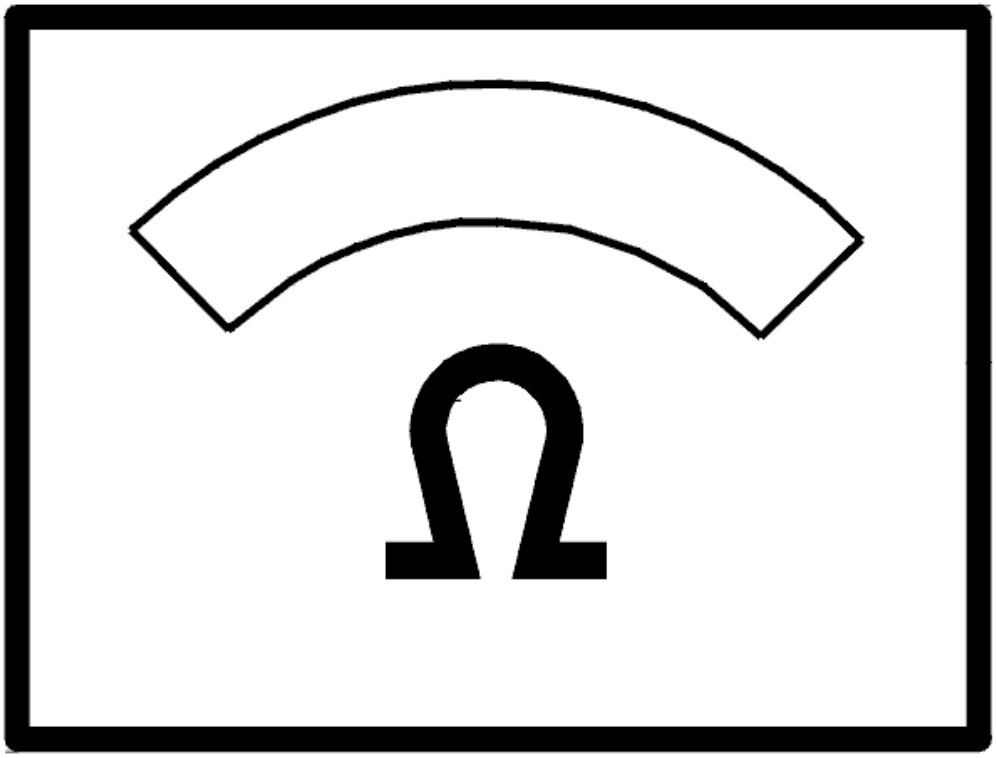

Fig. 471: Identifying Ohms Display
Courtesy of VOLVO CARS CORPORATION

Was the resistance OK?

- **YES**

  Refer to **CHECKING THE WIRING**

- **NO**

  Refer to **CHECKING THE WIRING AND COMPONENT**

CHECKING THE WIRING

- Breakout box connected to the control module
- Breakout box connected to the transmission connector.

Check the cable between control module terminal #37 (#A37) and transmission connector (control module side) terminal #L (#A11). Check for an open-circuit. Check for a short-circuit to supply voltage.

Check the cable between control module terminal #55 (#A55) and transmission connector (control module side) terminal #M (#A12). Check for an open-circuit. Check for a short-circuit to supply voltage.

Remedy as necessary.

Other information

- To connect the breakout box, see **CONNECTING THE BREAKOUT BOX**
- To connect the breakout box to the transmission connector, see **CONNECTING THE BREAKOUT BOX, GM AUTOMATIC TRANSMISSIONS**
- For information about signals, see **SIGNAL SPECIFICATION**
- see **CHECKING WIRING AND TERMINALS**

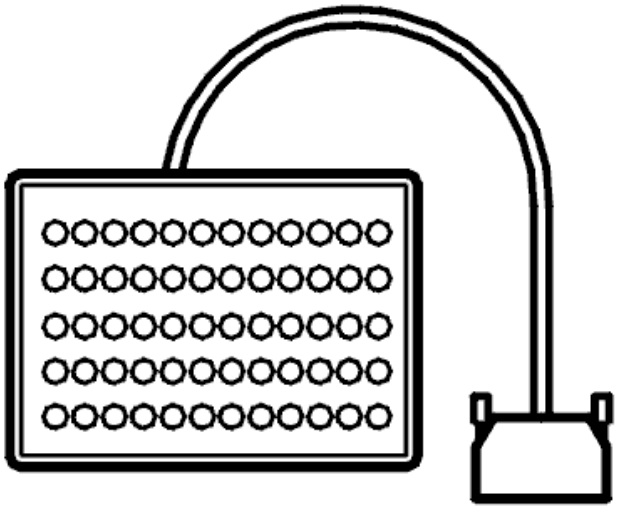

Fig. 472: Identifying Breakout Box
Courtesy of VOLVO CARS CORPORATION

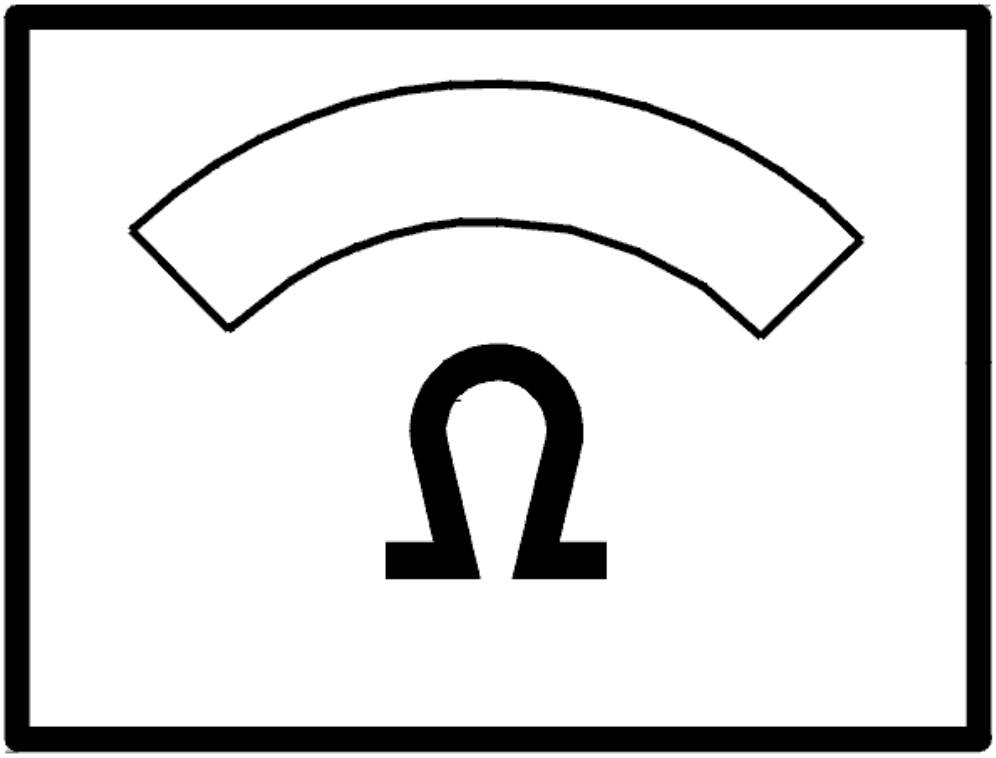

Fig. 473: Identifying Ohms Display
Courtesy of VOLVO CARS CORPORATION

Was a fault detected?

- **YES**

  Refer to **VERIFICATION**

- **NO**

  Refer to **CHECKING THE WIRING AND COMPONENT**

CHECKING THE WIRING AND COMPONENT

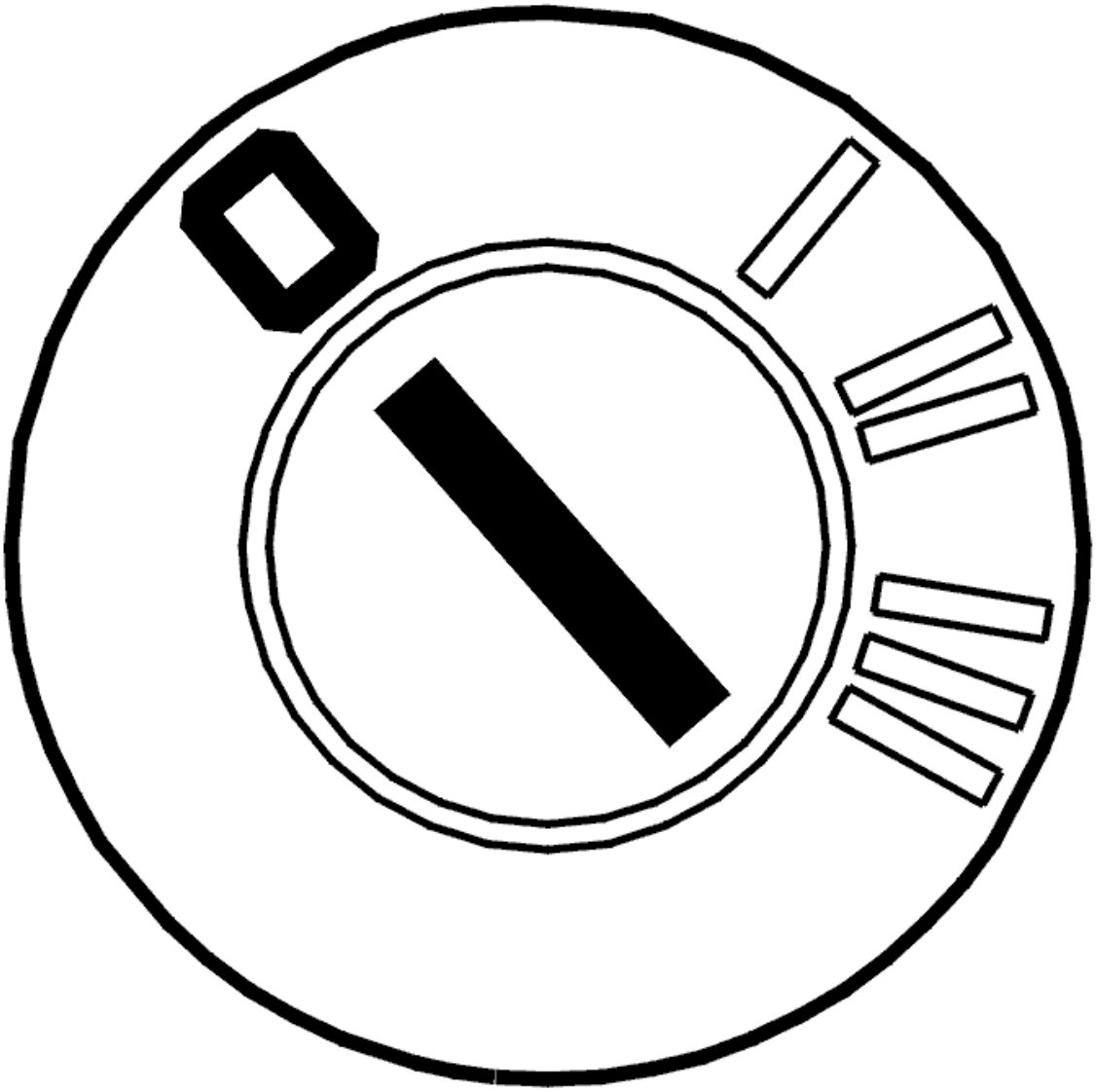

Fig. 474: Identifying Ignition OFF
Courtesy of VOLVO CARS CORPORATION

- Ignition off
- Open the transmission control system.

  Check the cable between transmission terminal #L (#A11) and temperature sensor terminal #A. Check for an open-circuit. Check for a short-circuit to supply voltage.

  Check the cable between transmission terminal #M (#A12) and temperature sensor terminal #B. Check for an open-circuit. Check for a short-circuit to supply voltage.

  HINT: Check the temperature sensor by measuring the resistance between temperature sensor connector terminals #A and #B. The resistance must be between 3.5-3.6 kohms at 20° C.

  Remedy as necessary.

Other information:

- To connect the breakout box, see **CONNECTING THE BREAKOUT BOX**
- To connect the breakout box to the transmission connector, see **CONNECTING THE BREAKOUT BOX, GM AUTOMATIC TRANSMISSIONS**
- To replace the cable harness, see **TEMPERATURE SENSOR FLUID, TRANSAXLE, (TFT)**
- To replace the temperature sensor, see **TEMPERATURE SENSOR FLUID TRANSMISSION, REPLACING**
- For information about signals, see **SIGNAL SPECIFICATION**
- For information about the resistance values, see **COMPONENT RESISTANCE VALUES**
- see **CHECKING WIRING AND TERMINALS**

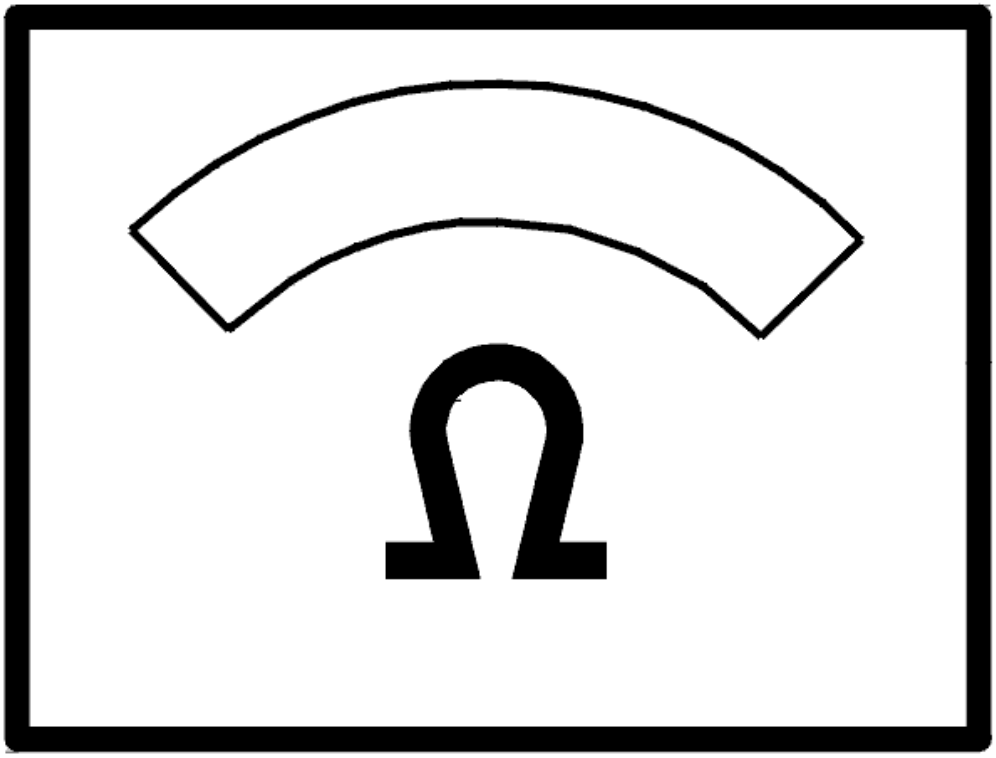

Fig. 475: Identifying Ohms Display
Courtesy of VOLVO CARS CORPORATION

- **Continue**

  Refer to **RESETTING TRANSMISSION FLUID CHANGE COUNTER**

INTERMITTENT FAULT

Check the control module and automatic transmission connector. Check for contact resistance and oxidation. Remedy if necessary.

Check the cable between control module terminal #A37 (#A37) and transmission connector (control module side) terminal #11. Check for an intermittent open-circuit. Check for an intermittent short-circuit to supply voltage.

Check the cable between control module terminal #A55 (#A55) and transmission connector (control module side) terminal #12. Check for an intermittent open-circuit. Check for an intermittent short-circuit to supply voltage.

Remedy as necessary.

Other information

- To connect the breakout box, see **CONNECTING THE BREAKOUT BOX**
- To connect the breakout box to the transmission connector, see **CONNECTING THE BREAKOUT BOX, GM AUTOMATIC TRANSMISSIONS**
- For information about signals, see **SIGNAL SPECIFICATION**
- see **CHECKING WIRING AND TERMINALS**

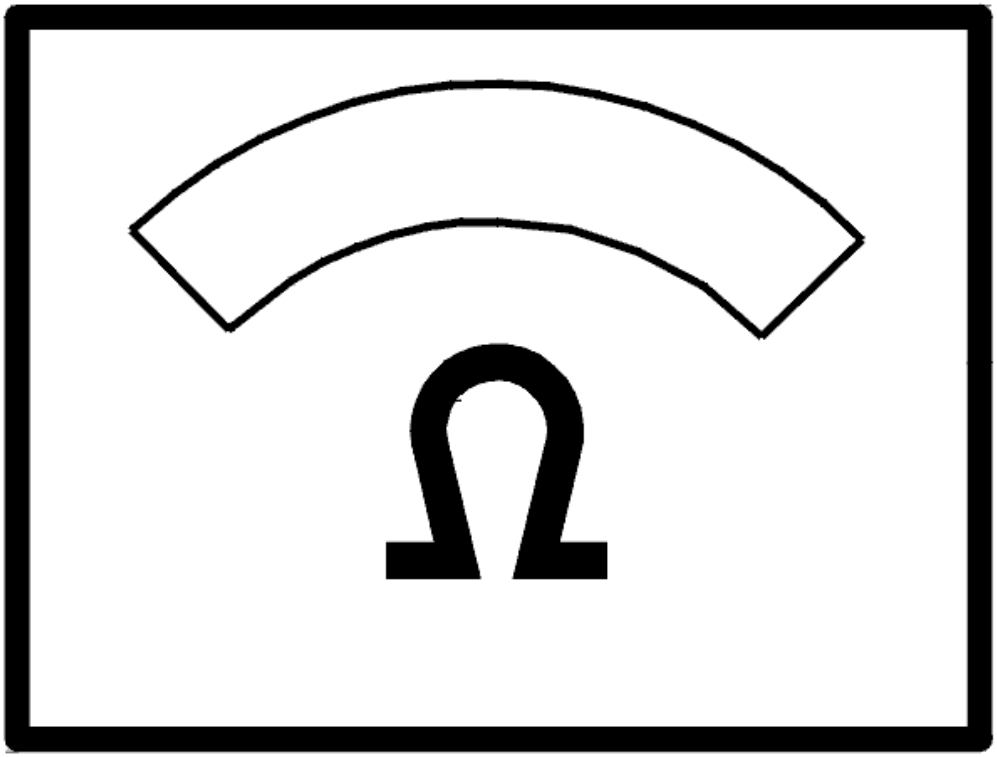

Fig. 476: Identifying Ohms Display
Courtesy of VOLVO CARS CORPORATION

- **Continue**

  Refer to **INFORMATION**

RESETTING TRANSMISSION FLUID CHANGE COUNTER

RESETTING TRANSMISSION FLUID CHANGE COUNTER

HINT: The transmission control module (TCM) has a counter for the oil quality. The counter counts up if the transmission is exposed to too high a load or an ambient temperature that is too high. If the counter is not reset when the oil is drained or changed, there is a risk that a diagnostic trouble code (DTC) will be stored in faulty circumstances. Therefore it is important that the "Transmission oil change" counter is reset.

NOTE: **This applies only when the transmission fluid is changed and when the fluid is changed when repairs are carried out to the transmission temperature sensor.**

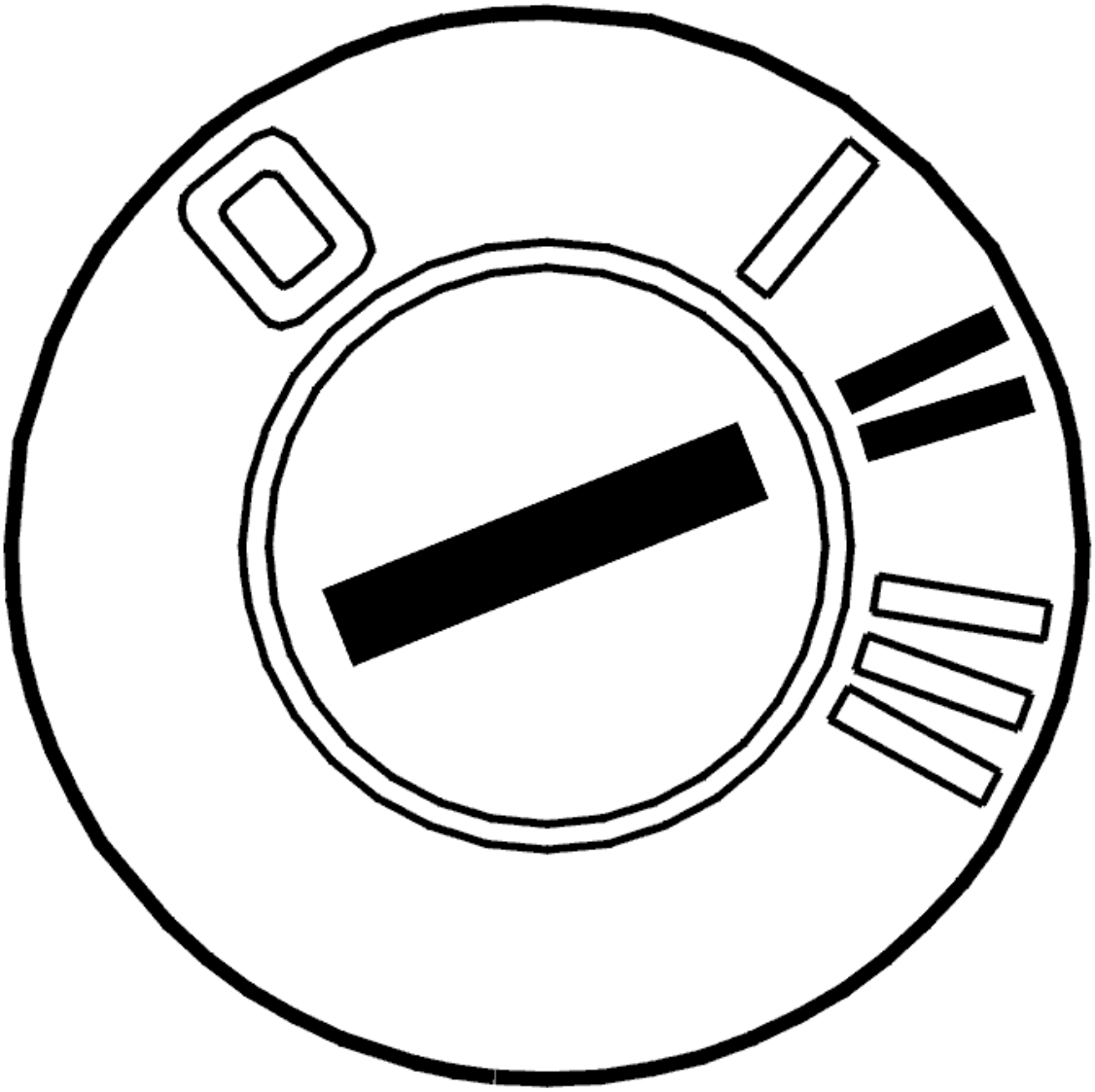

Fig. 477: Identifying Ignition ON
Courtesy of VOLVO CARS CORPORATION

- Ignition on.

  Reset the counter by clicking on the VCT 2000 symbol.

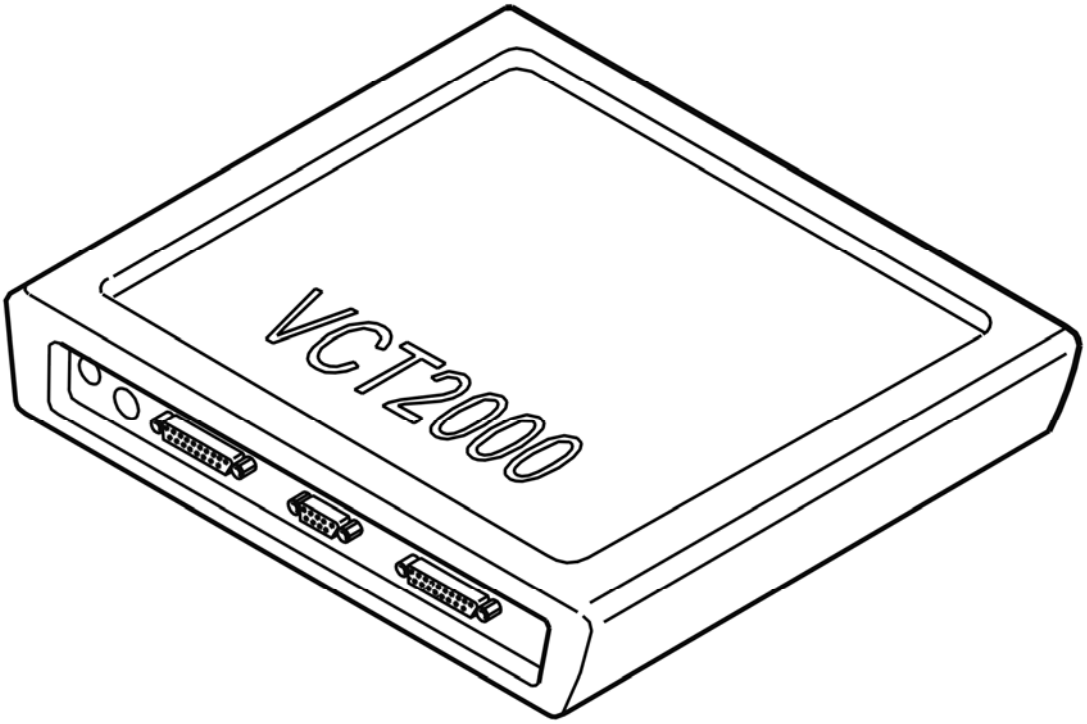

Fig. 478: Identifying VCT2000 Diagnostic Tool Symbol In VIDA
Courtesy of VOLVO CARS CORPORATION

- **Continue**

  Refer to **VERIFICATION**

VERIFICATION

VERIFICATION

HINT: After carrying out the repair check that the fault has been remedied.

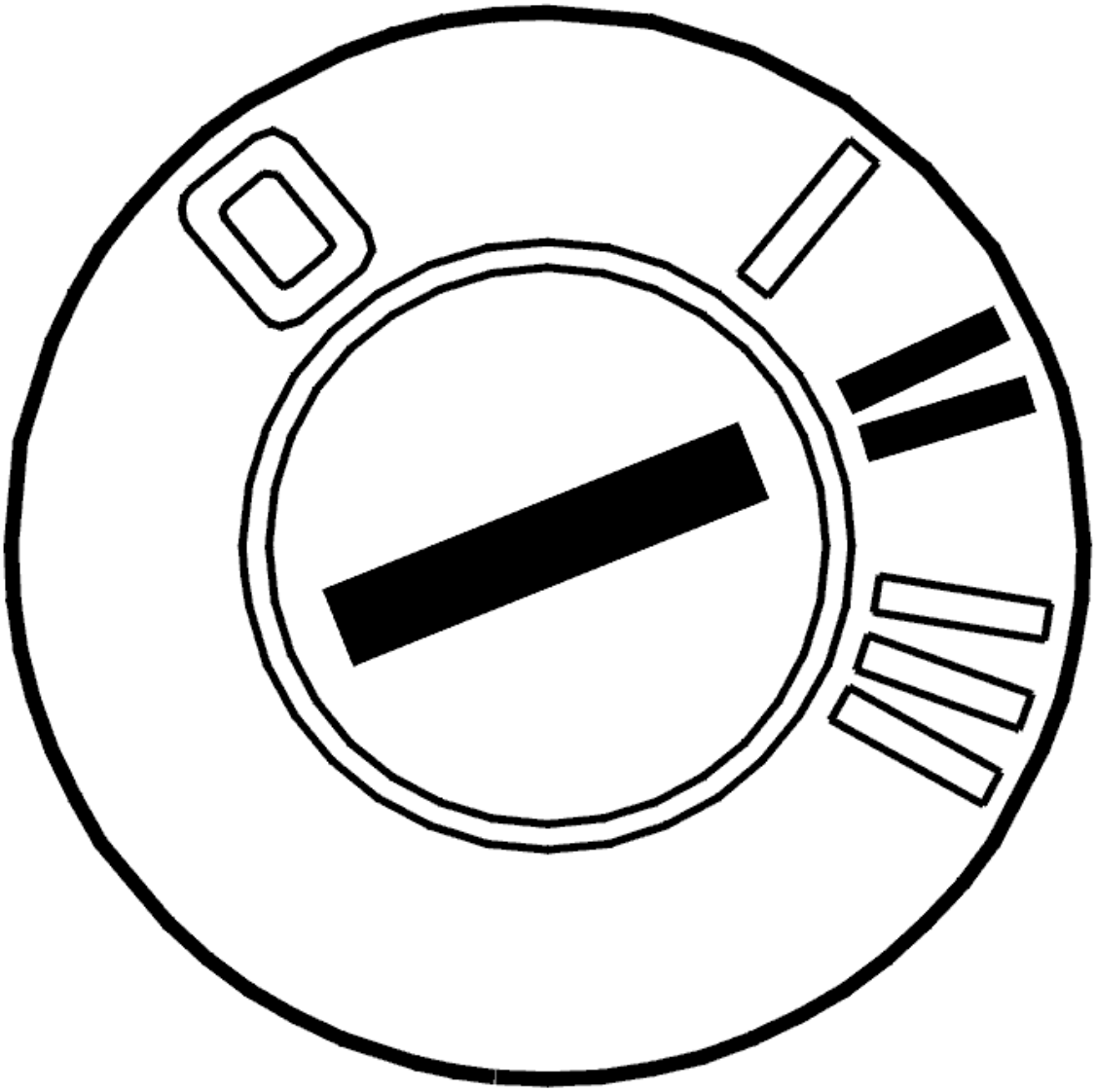

Fig. 479: Identifying Ignition ON
Courtesy of VOLVO CARS CORPORATION

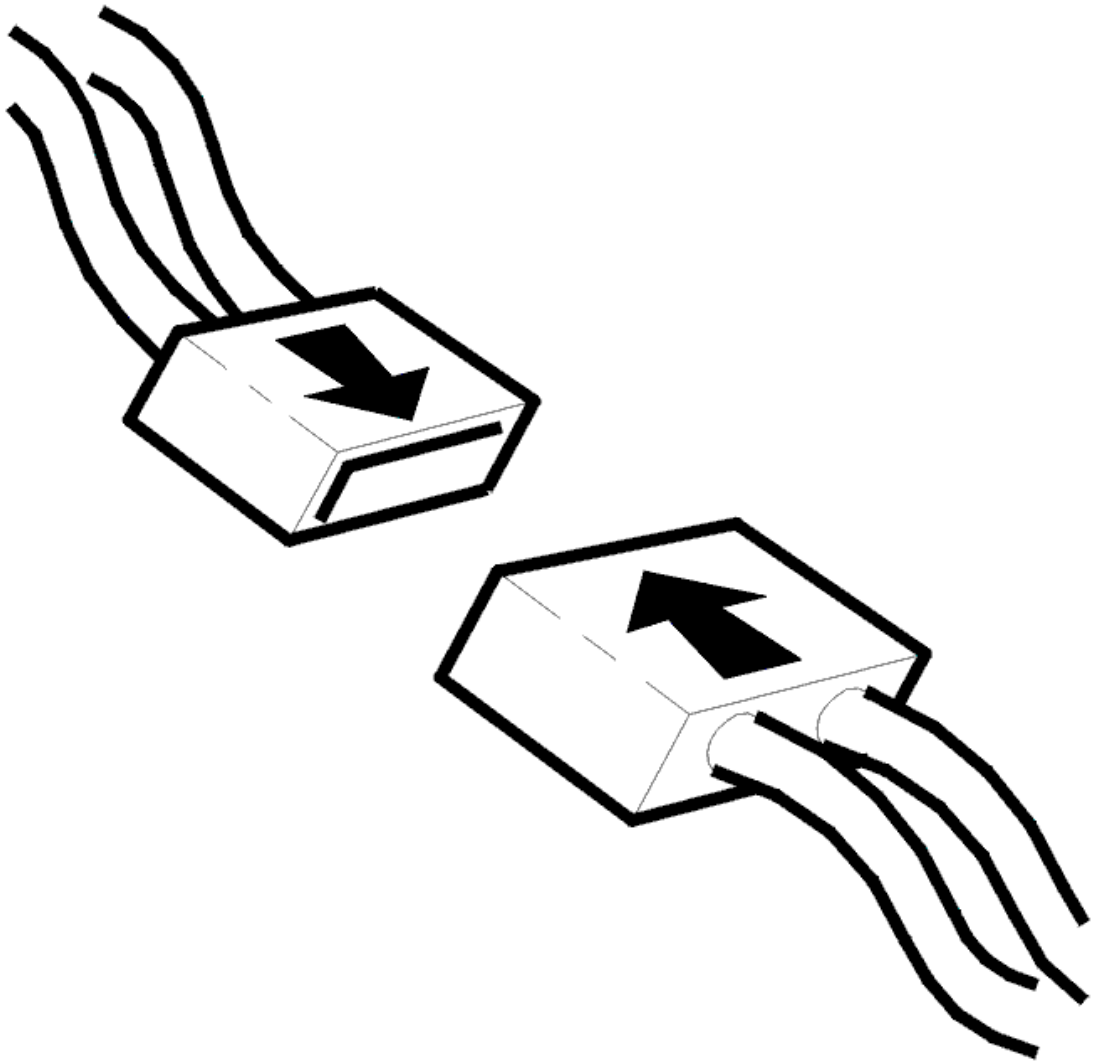

Fig. 480: Identifying Connector(s) Reinstallation
Courtesy of VOLVO CARS CORPORATION

- Ignition off.
- Reinstall connectors, components etc.
- Ignition on.
- Read off oil temperature.

  Check that the transmission oil temperature is within its permitted range. Compare with the transmission temperature.

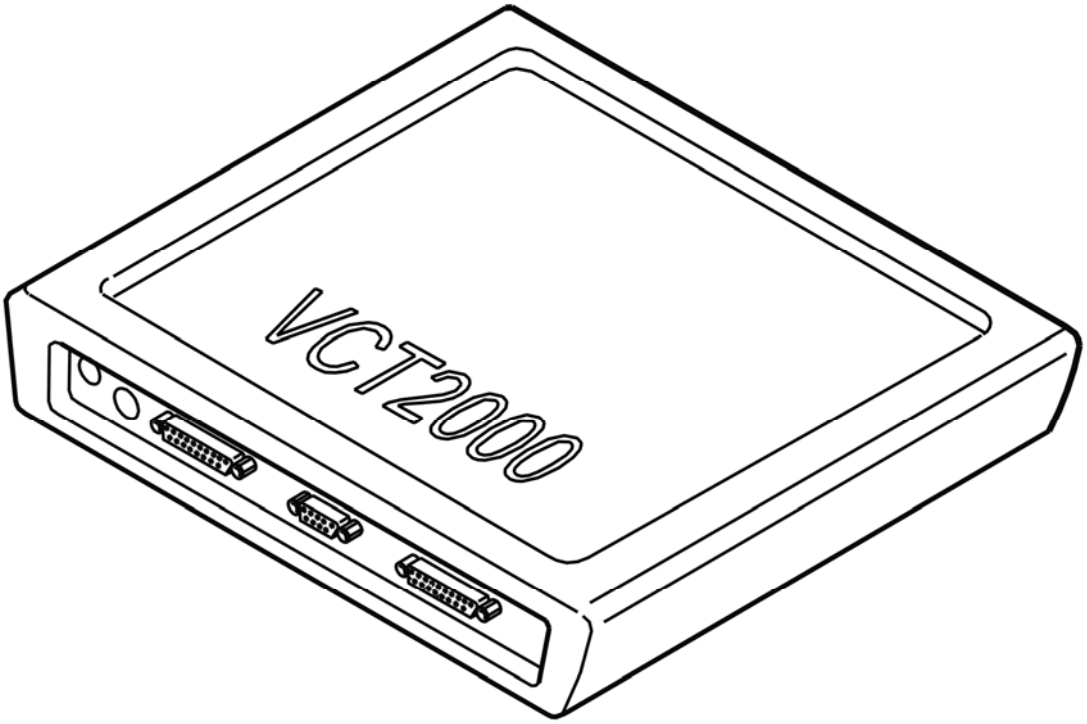

Fig. 481: Identifying VCT2000 Diagnostic Tool Symbol In VIDA
Courtesy of VOLVO CARS CORPORATION

Is the oil temperature within its permitted range?

- **YES**

  VERIFIED: Troubleshooting has been completed.

- **NO**

  Refer to **INFORMATION**

TCM-0009: SHIFT SOLENOID S2. SIGNAL TOO LOW (AW50/51 AWD; AW55-50/51SN; 2003-2007)

DIAGNOSTIC TROUBLE CODE (DTC) INFORMATION

see **DIAGNOSTIC TROUBLE CODE (DTC) INFORMATION**

SIGNAL TOO LOW

CHECKS

CHECKING THE TEMPERATURE SENSOR

HINT: In some cases, the diagnostic trouble code (DTC) may be caused by a defective oil temperature sensor. Check the function of the oil temperature sensor first.

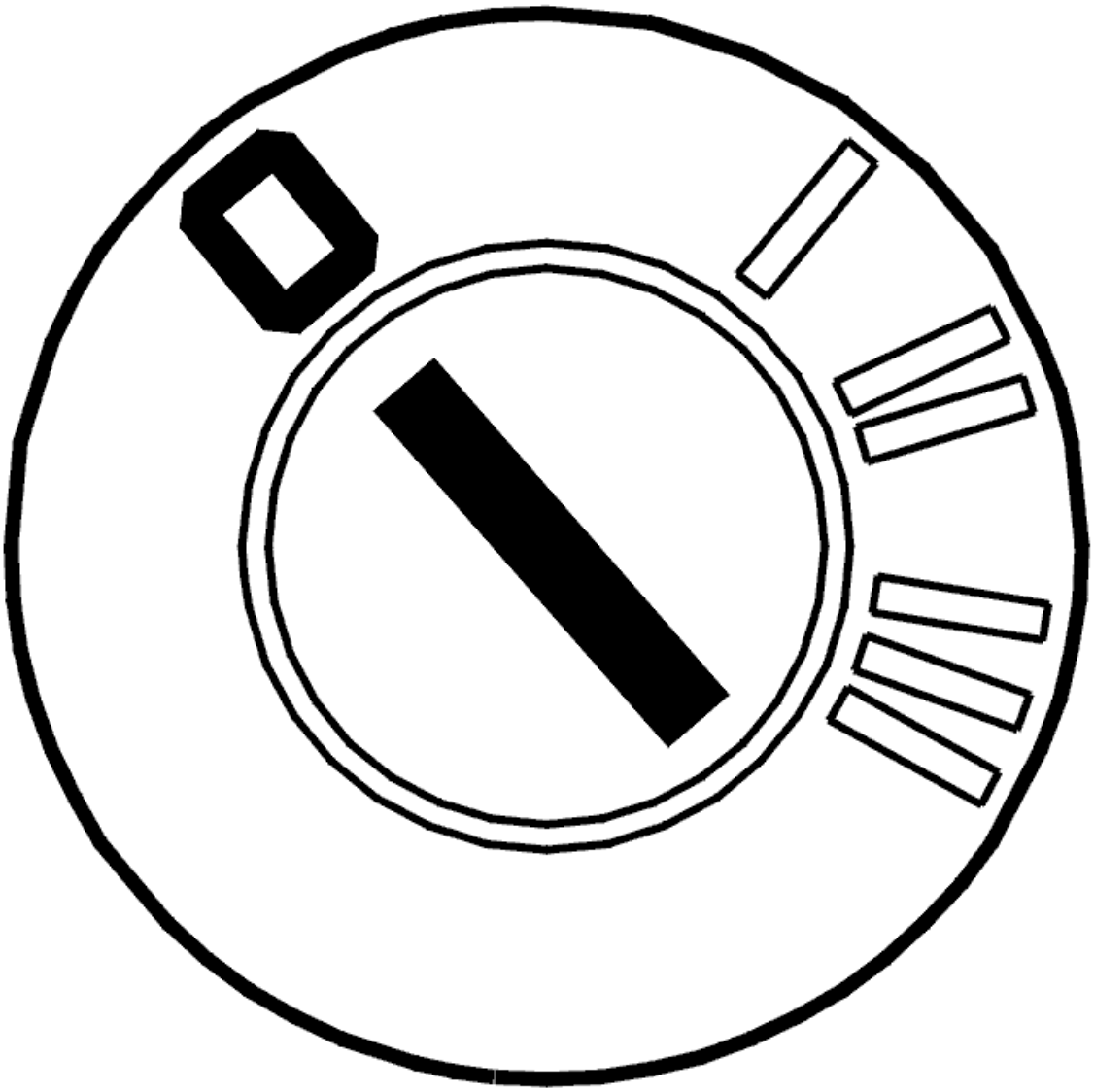

Fig. 482: Identifying Ignition OFF
Courtesy of VOLVO CARS CORPORATION

- Ignition off
- Read off the oil temperature.

  Check that the function of the temperature sensor is OK. Test drive the car to increase the temperature of the transmission fluid. Read off the temperature again. Check that the temperature has increased.

  HINT: If the temperature is outside its permitted range, fault-trace the temperature sensor.

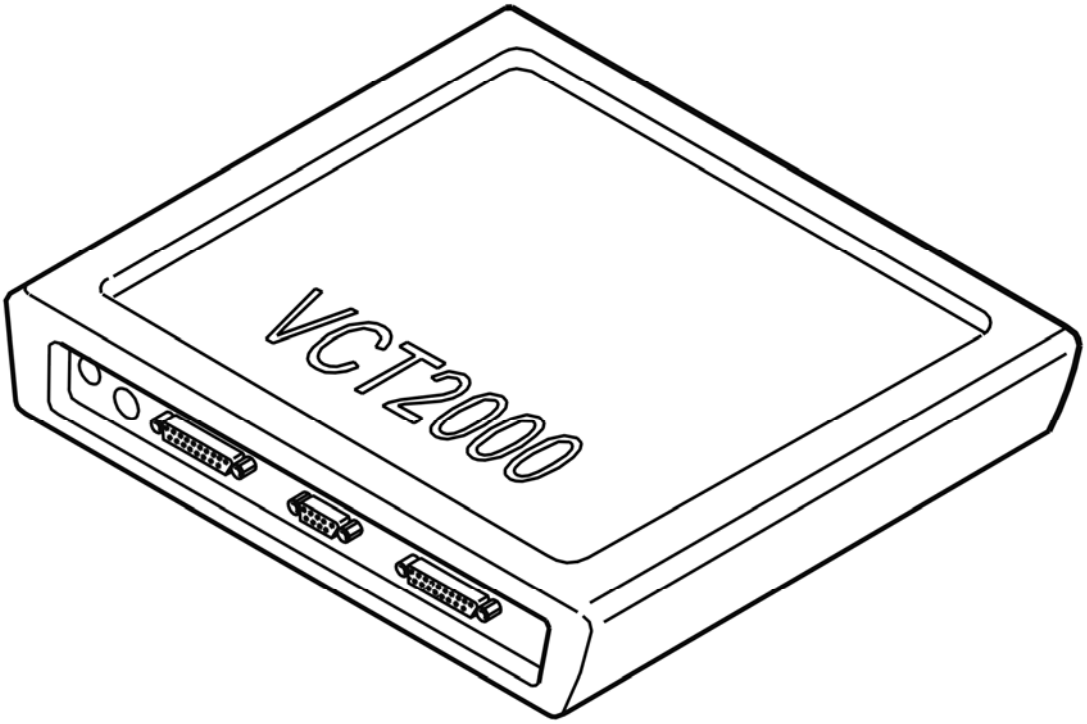

Fig. 483: Identifying VCT2000 Diagnostic Tool Symbol In VIDA
Courtesy of VOLVO CARS CORPORATION

Is the oil temperature within its permitted range?

- **YES**

  Refer to **CHECKING SHIFT SOLENOID S2**

- **NO**

  Refer to **FAULTY SIGNAL**

CHECKING SHIFT SOLENOID S2

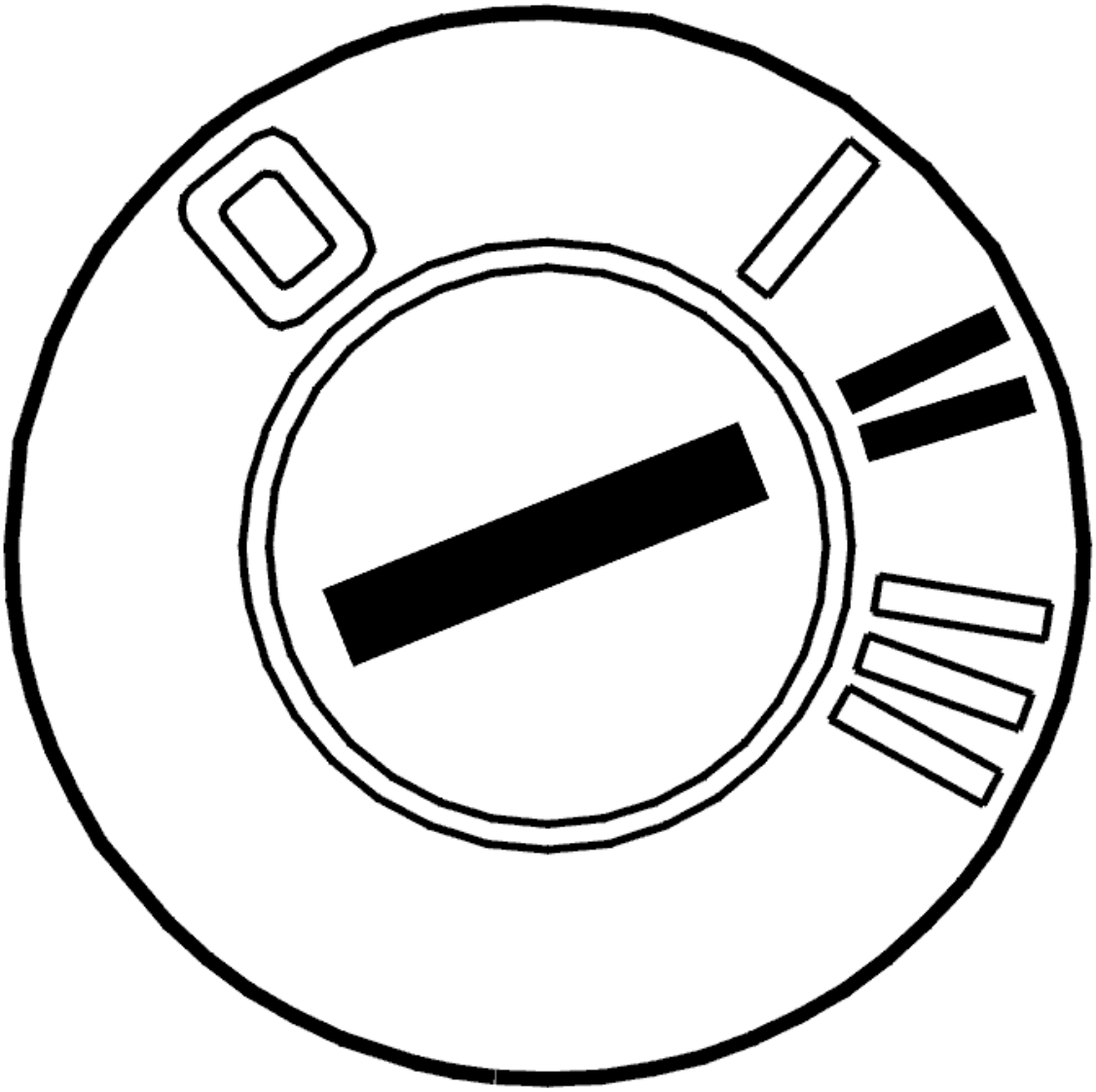

Fig. 484: Identifying Ignition ON
Courtesy of VOLVO CARS CORPORATION

- Ignition on
- Gear selector in position P
- Activate solenoid S2.

The value must change between OFF and ON.

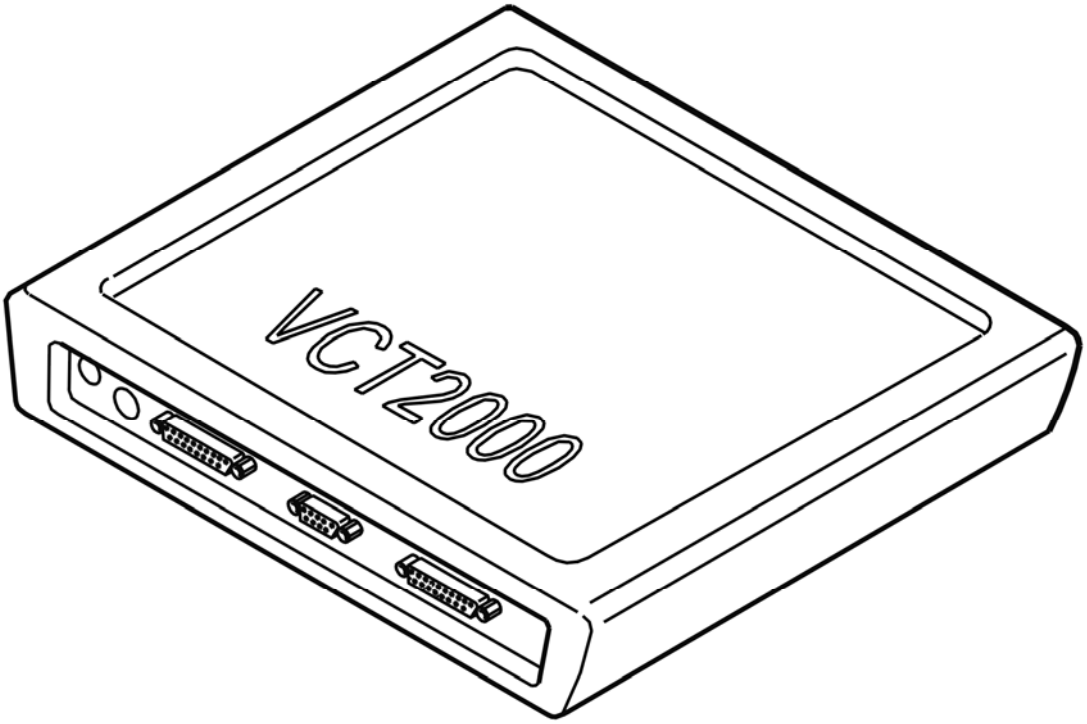

Fig. 485: Identifying VCT2000 Diagnostic Tool Symbol In VIDA
Courtesy of VOLVO CARS CORPORATION

Does the value change?

- **YES**

  Refer to **INTERMITTENT FAULT**

- **NO**

  Refer to **CHECKING RESISTANCE**

CHECKING RESISTANCE

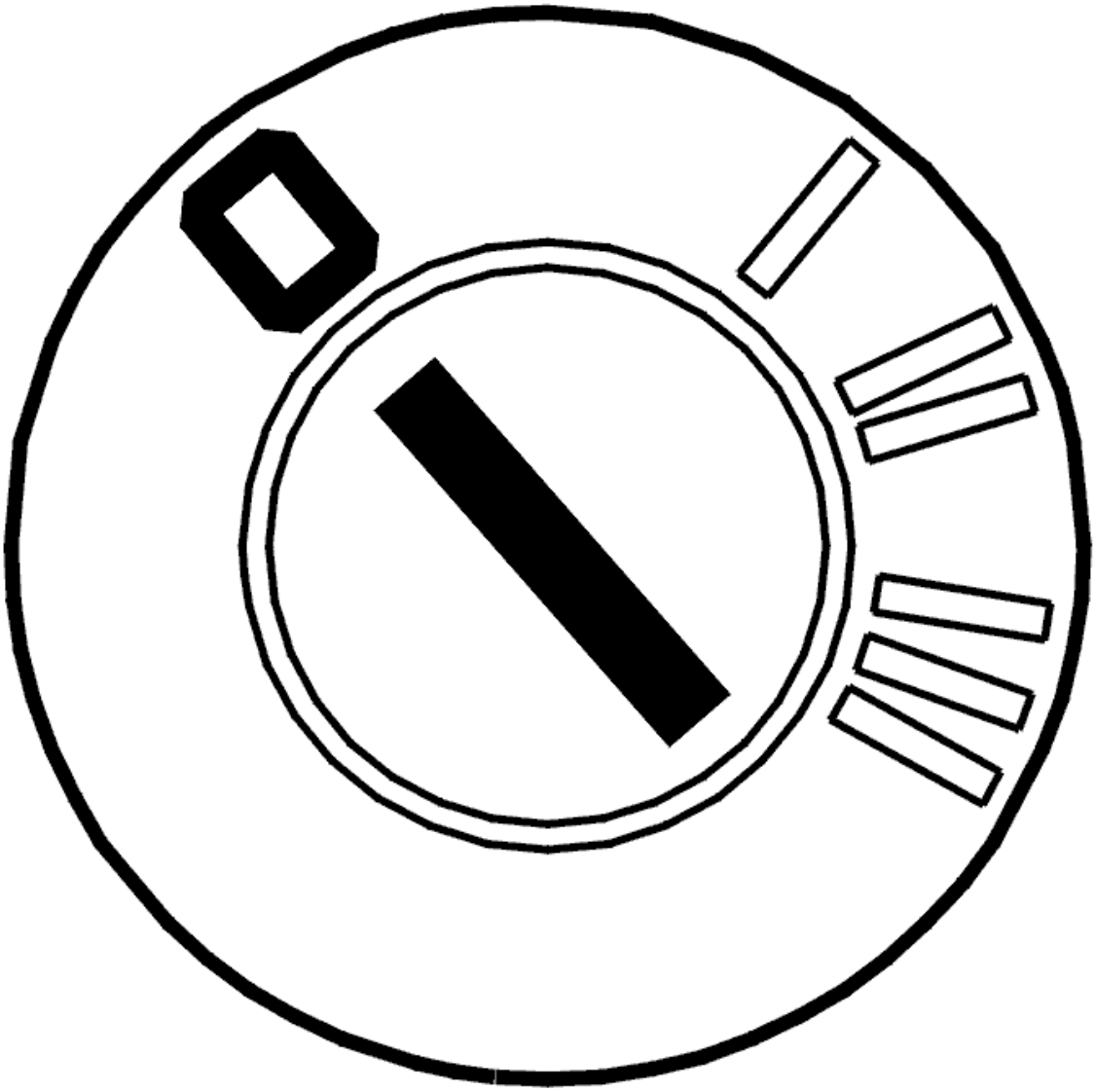

Fig. 486: Identifying Ignition OFF
Courtesy of VOLVO CARS CORPORATION

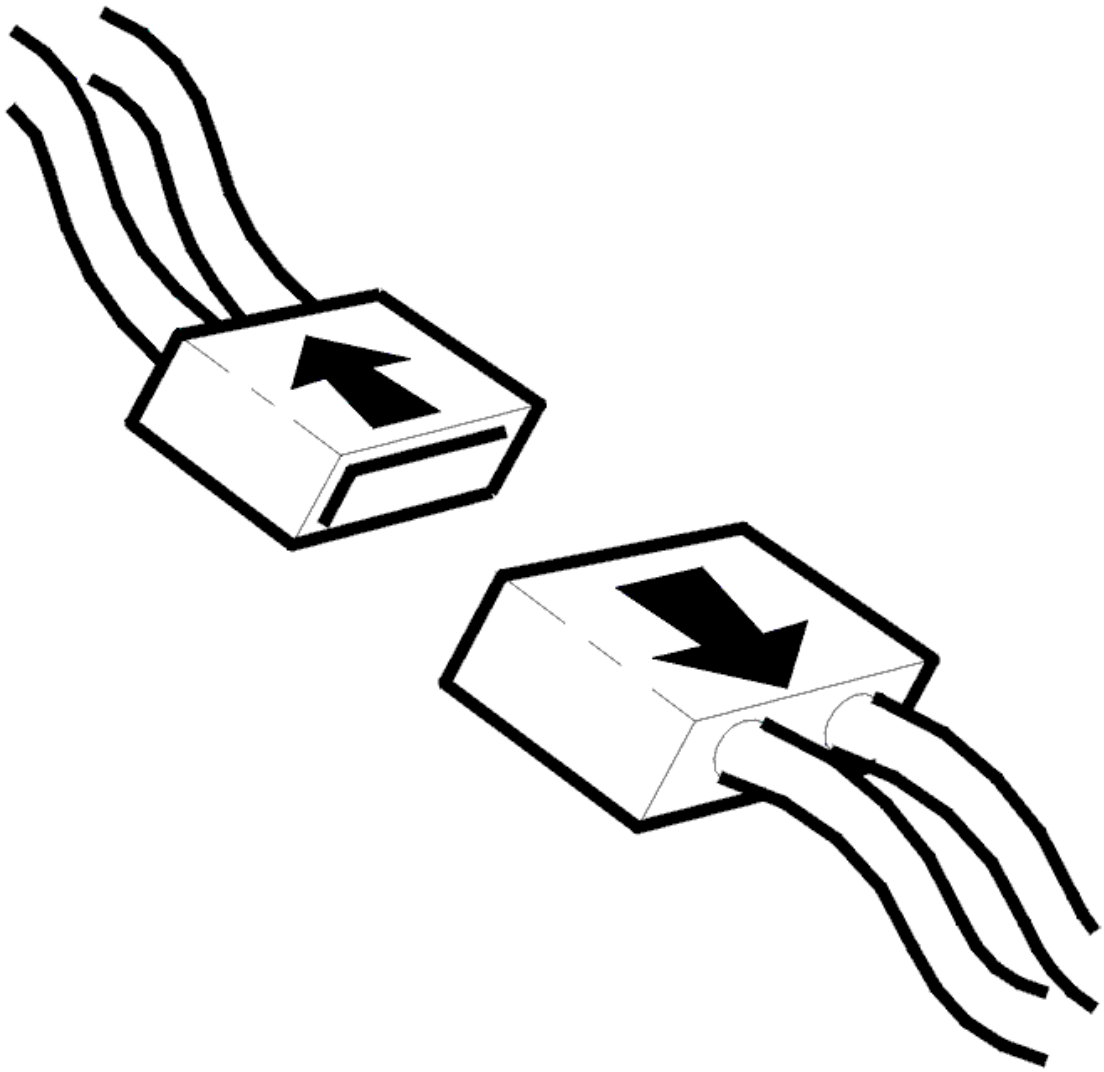

Fig. 487: Identifying Connector(s) Disconnected
Courtesy of VOLVO CARS CORPORATION

- Ignition off
- Disconnect transmission connector C.

  Check solenoid S2. Measure the resistance between transmission connector terminal #C2 and the transmission housing. The resistance must be 11-15 ohms.

  Other information:

  - To disconnect the transmission connectors, see **CONNECTORS, TRANSMISSION, DISCONNECTING / CONNECTING**
  - For information about signals, see **SIGNAL DESCRIPTION. TRANSMISSION CONTROL MODULE (TCM)** .

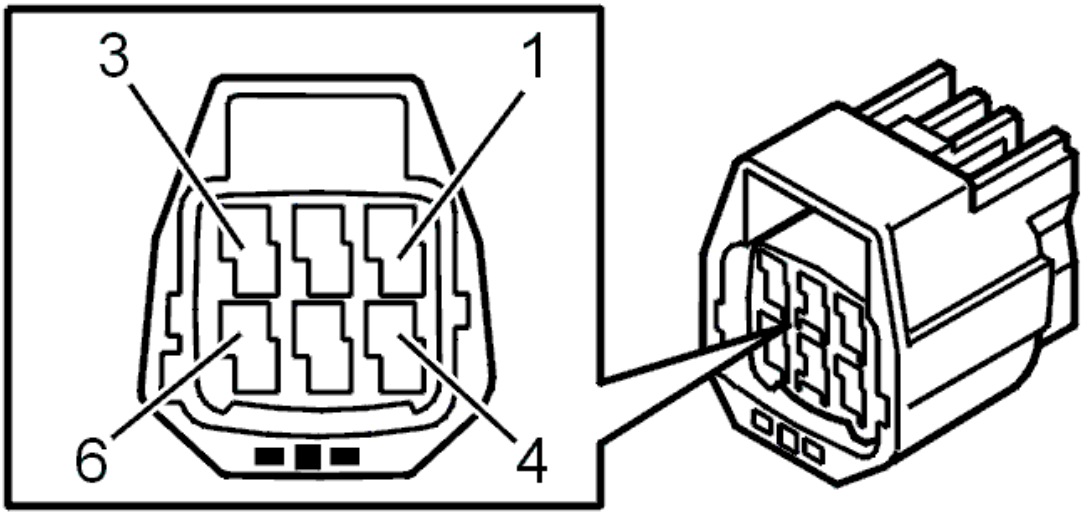

Fig. 488: Identifying 6-Pin Transmission Connector Terminals
Courtesy of VOLVO CARS CORPORATION

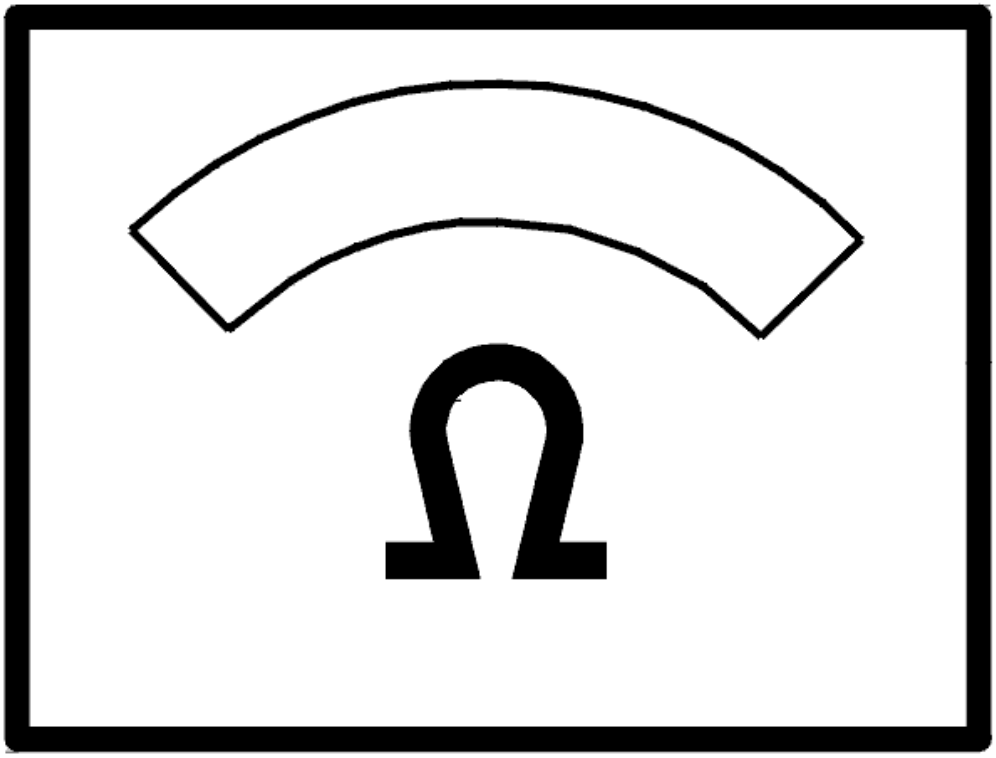

Fig. 489: Identifying Ohms Display
Courtesy of VOLVO CARS CORPORATION

Was the resistance OK?

- **YES**

  Refer to **CHECKING THE WIRING**

- **NO**

  Refer to **CHECKING THE WIRING AND COMPONENT**

CHECKING THE WIRING

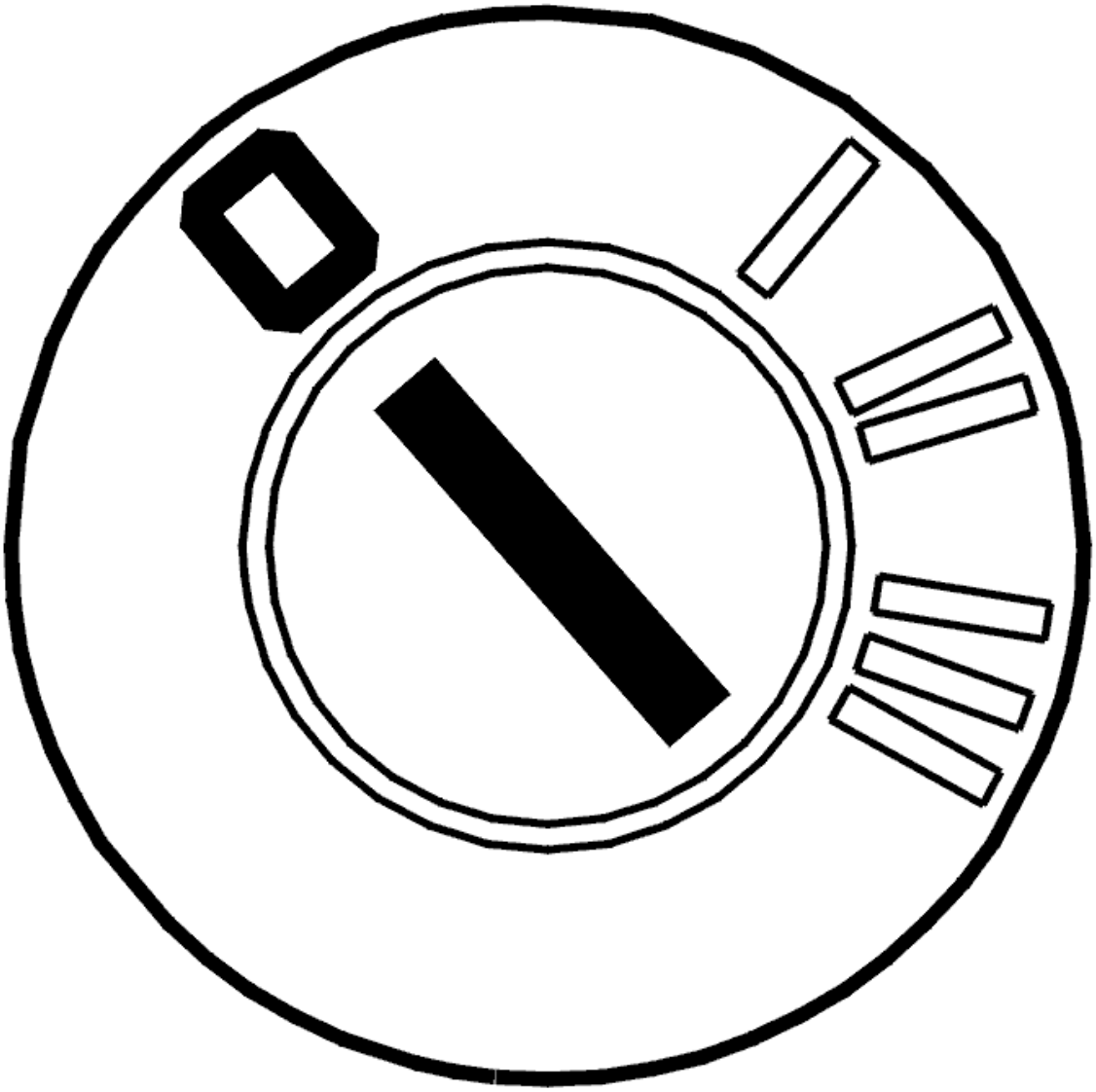

Fig. 490: Identifying Ignition OFF
Courtesy of VOLVO CARS CORPORATION

- Ignition off.

  Check the cable between control module terminal #B8 (#A68) and transmission connector terminal #C2 (control module side). Check for a short-circuit to ground according to **SHORT-CIRCUIT TO GROUND, PERMANENT FAULTS** .

  Remedy as necessary.

  Other information:

  - To connect the breakout box, see **CONNECTING THE BREAKOUT BOX**
  - To disconnect the transmission connector, see **CONNECTORS, TRANSMISSION, DISCONNECTING / CONNECTING**

- For information about signals, see **SIGNAL DESCRIPTION. TRANSMISSION CONTROL MODULE (TCM)** .

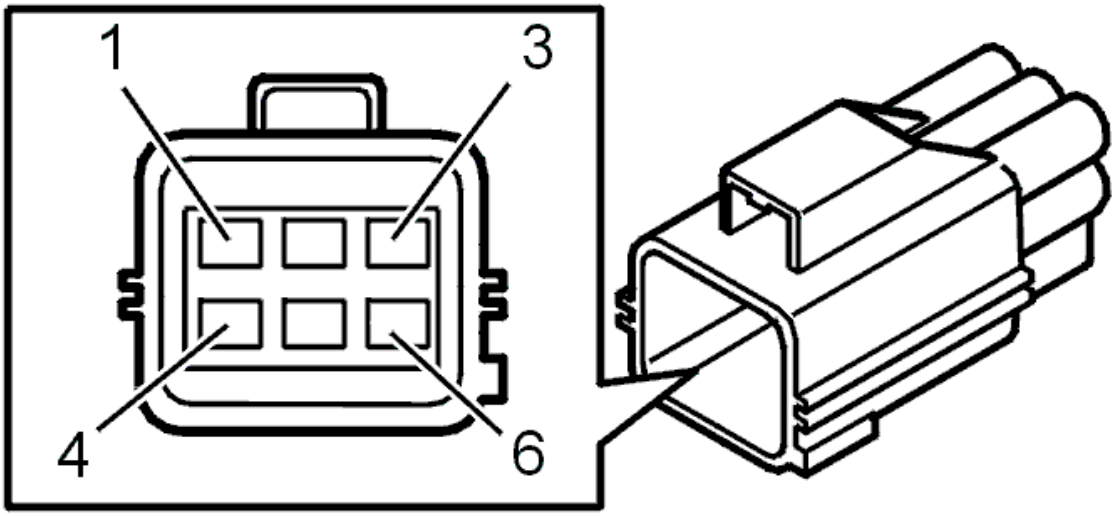

Fig. 491: Identifying Transmission Connector Terminals
Courtesy of VOLVO CARS CORPORATION

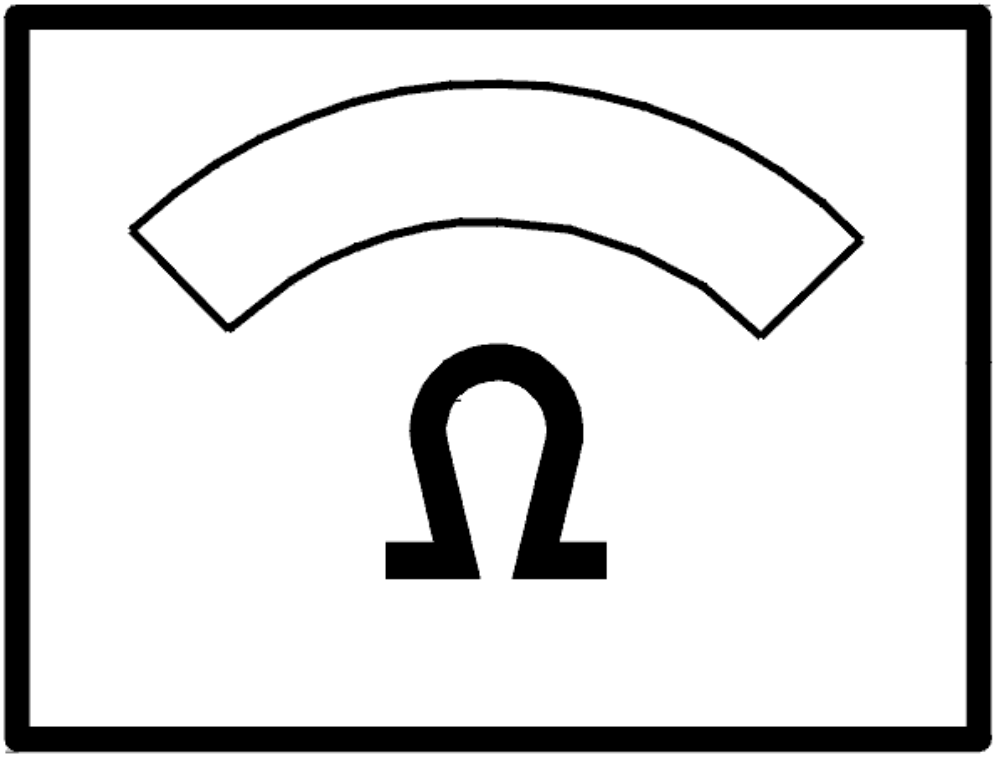

Fig. 492: Identifying Ohms Display
Courtesy of VOLVO CARS CORPORATION

Was a fault detected?

- **YES**

  Refer to **VERIFICATION**

- **NO**

  Refer to **CHECKING THE CONTROL MODULE**

CHECKING THE CONTROL MODULE

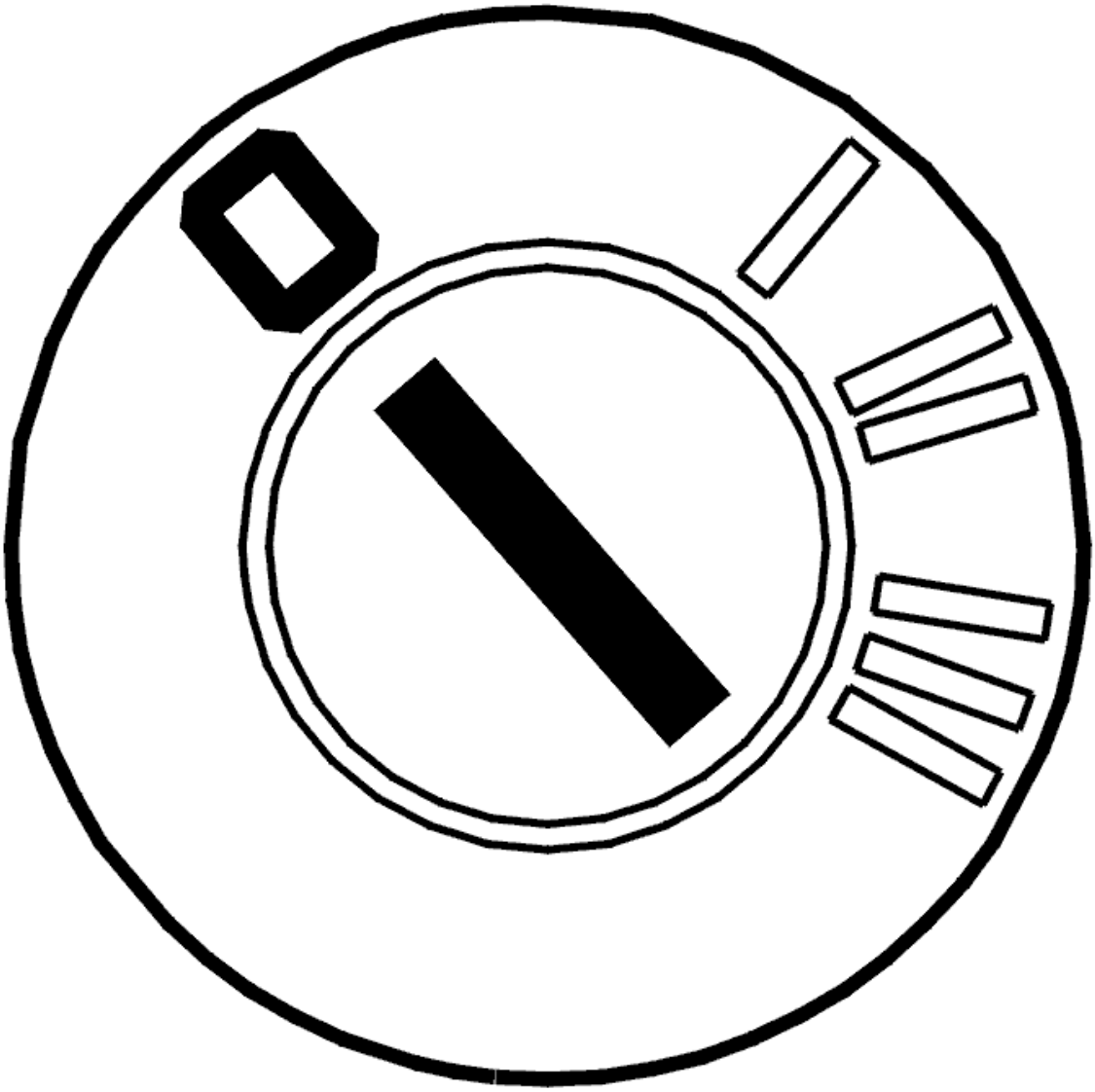

Fig. 493: Identifying Ignition OFF
Courtesy of VOLVO CARS CORPORATION

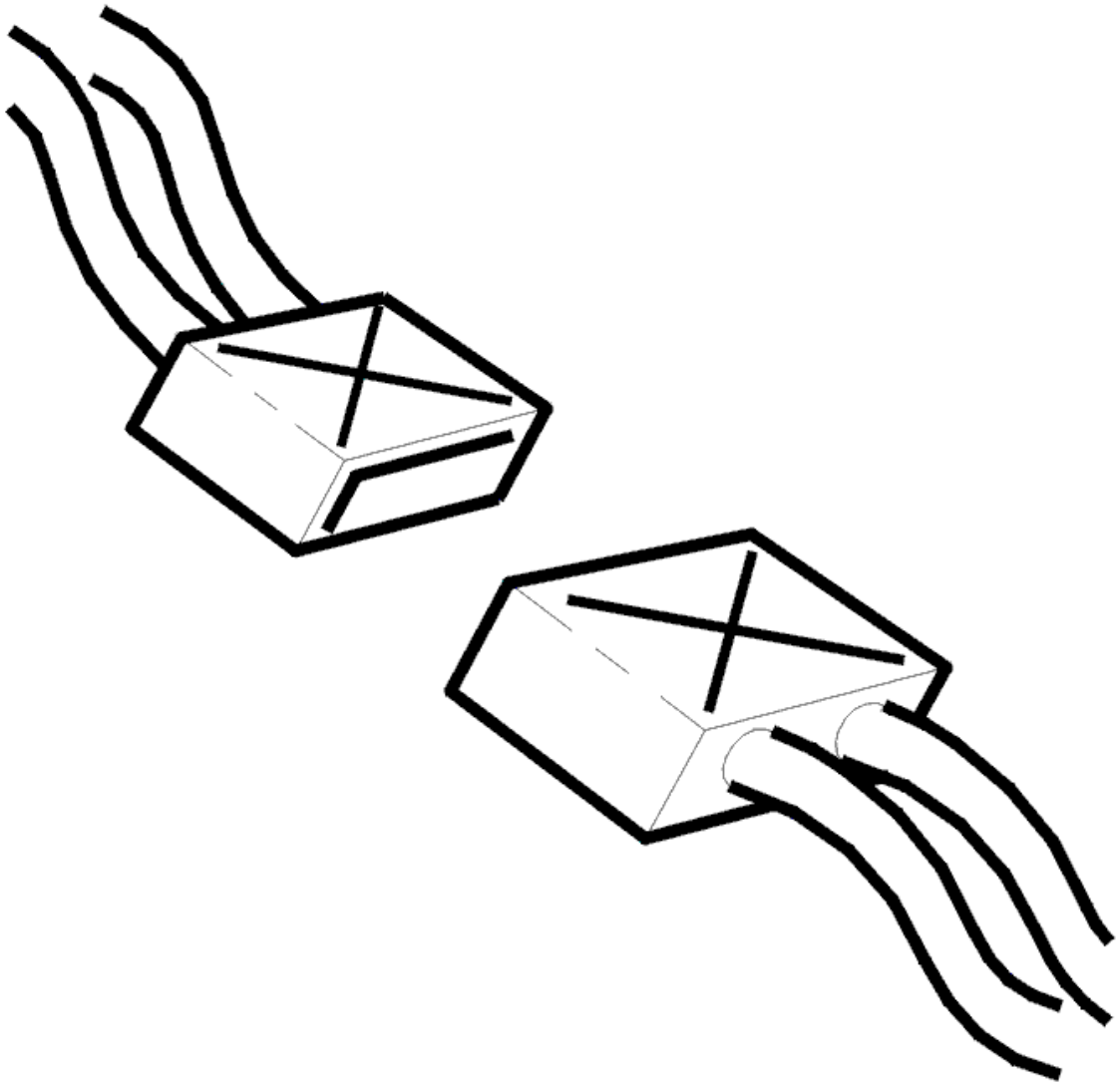

Fig. 494: Identifying Connectors
Courtesy of VOLVO CARS CORPORATION

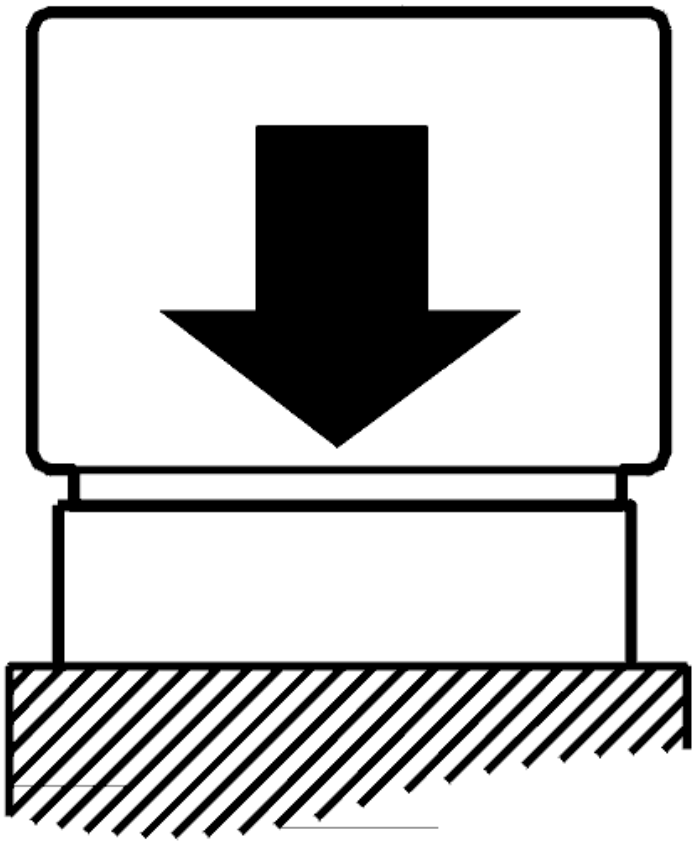

Fig. 495: Identifying Connecting Control Module
Courtesy of VOLVO CARS CORPORATION

- Ignition off
- The breakout box connected
- Connect the control module.
- Transmission connector disconnected
- Gear selector in position P.

Check the transmission control module (TCM) by measuring the resistance between terminals #B8 (#A68) and #A53 (#A53) on the breakout box. The resistance must be approximately 9 kohms.

NOTE: **When removing the transmission connector, the control module may store diagnostic trouble codes (DTCs) for the gear-shift position sensor, the shift solenoids, the temperature sensor etc.**

Try a new control module if the resistance is infinite.

Other information:

- To disconnect the transmission connectors, see **CONNECTORS, TRANSMISSION, DISCONNECTING / CONNECTING**
- To replace the control module, see **TRANSMISSION CONTROL MODULE (TCM), REPLACING**
- For information about signals, see **SIGNAL DESCRIPTION. TRANSMISSION CONTROL MODULE (TCM)** .

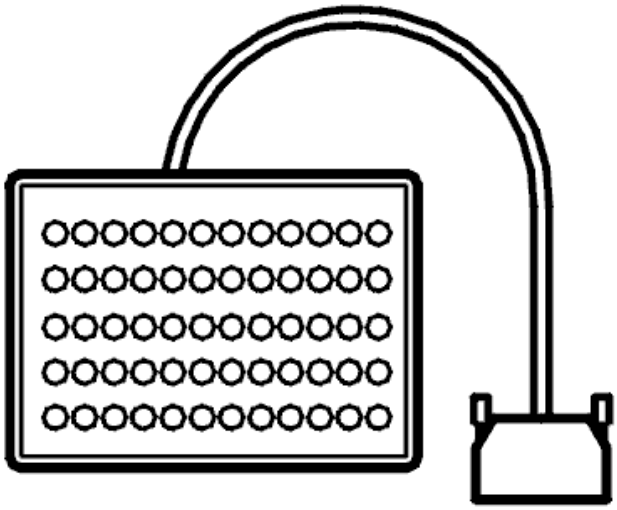

Fig. 496: Identifying Breakout Box
Courtesy of VOLVO CARS CORPORATION

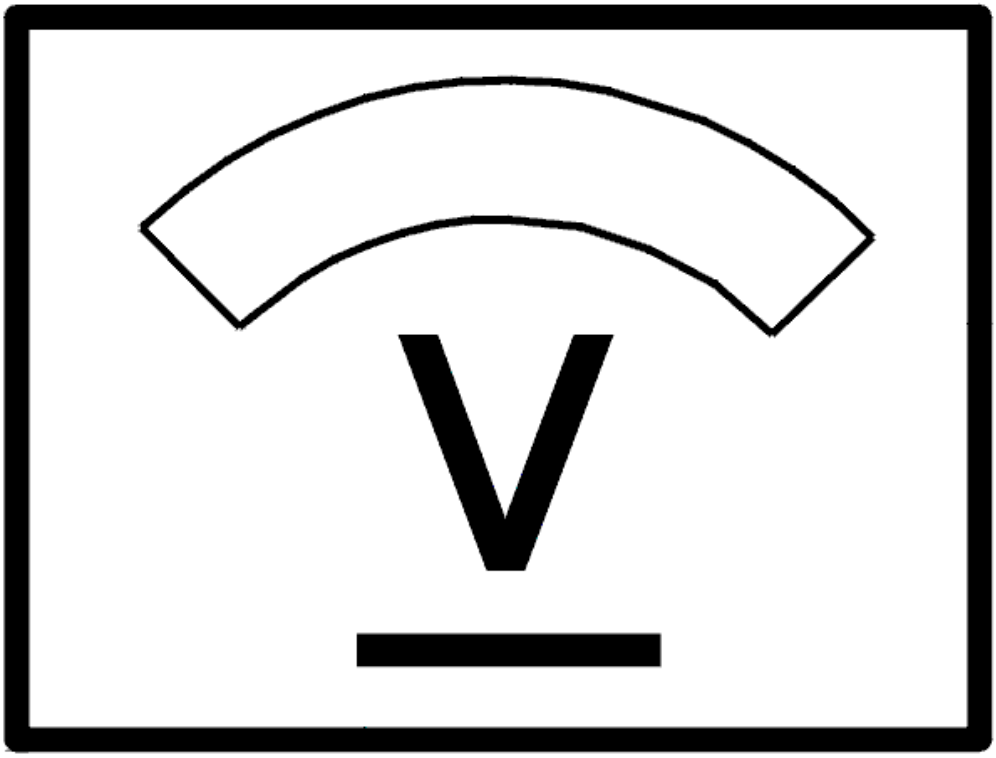

Fig. 497: Identifying Voltage Display
Courtesy of VOLVO CARS CORPORATION

Was the resistance OK?

- **YES**

  FAULT NOT FOUND: Troubleshooting has been completed.

- **NO**

  Refer to **VERIFICATION**

CHECKING THE WIRING AND COMPONENT

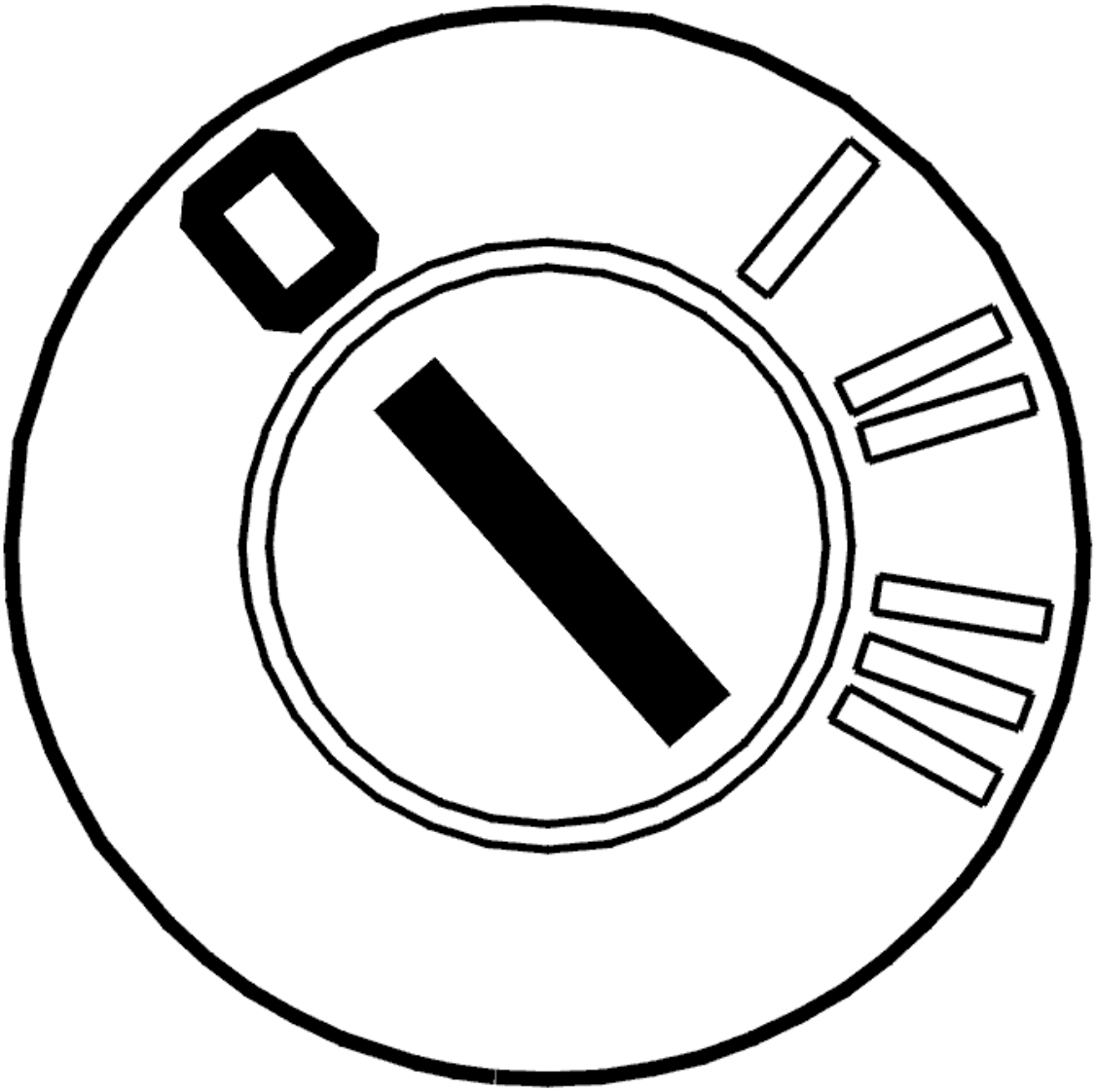

Fig. 498: Identifying Ignition OFF
Courtesy of VOLVO CARS CORPORATION

- Ignition off
- Open the control system.

  Check the cable between transmission connector terminal #C2 (transmission side) and the connector for solenoid S2. Check for a short-circuit to ground according to **SHORT-CIRCUIT TO GROUND, PERMANENT FAULTS** .

  Check solenoid S2 by measuring the resistance between the terminal pin on solenoid S2 and the transmission housing. The resistance should be 11-15 ohms at 20°C.

  Remedy as necessary.

  Other information:

- To disconnect the transmission connectors, see **CONNECTORS, TRANSMISSION, DISCONNECTING / CONNECTING**
- To open the control system and to check or replace solenoid S2, see **SOLENOID CONTROL SYSTEM, REPLACING**
- To replace the cable harness for the control system, see **TEMPERATURE SENSOR FLUID, TRANSAXLE, (TFT)**
- For information about signals, see **SIGNAL DESCRIPTION. TRANSMISSION CONTROL MODULE (TCM)** .

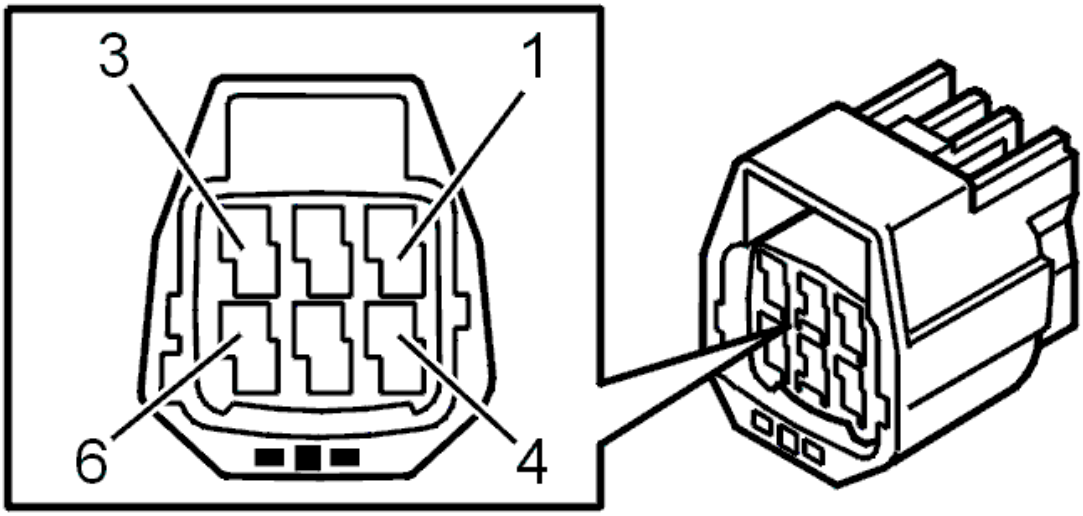

Fig. 499: Identifying 6-Pin Transmission Connector Terminals
Courtesy of VOLVO CARS CORPORATION

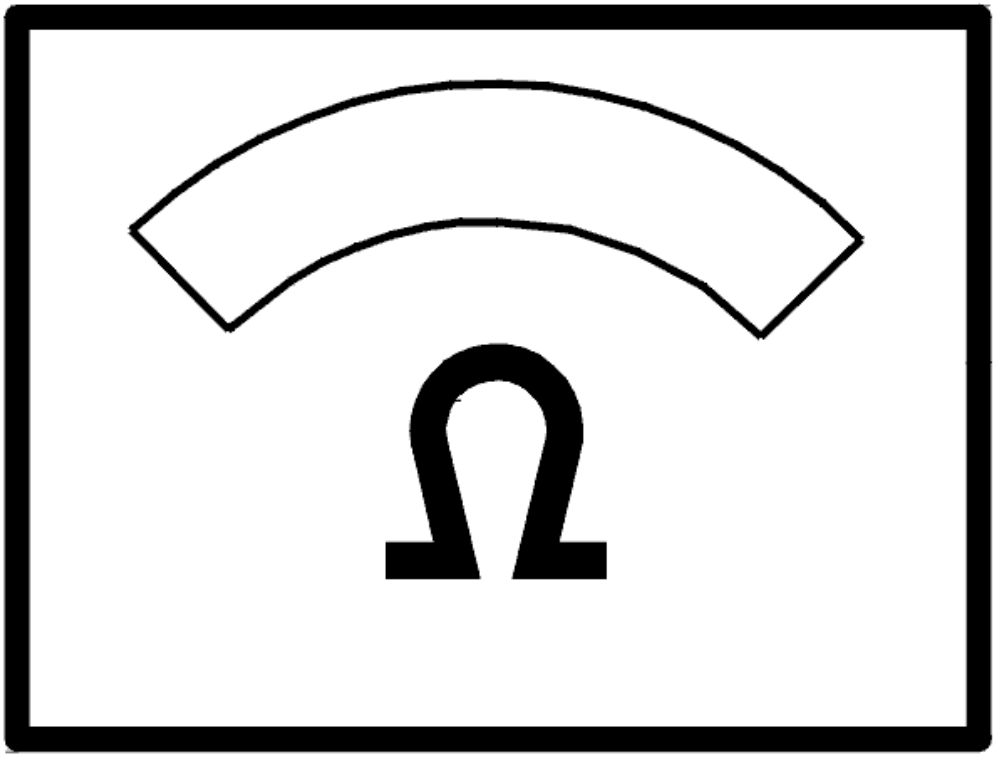

Fig. 500: Identifying Ohms Display
Courtesy of VOLVO CARS CORPORATION

- **Continue**

  Refer to **RESETTING THE ADAPTATION**

INTERMITTENT FAULT

Check the control module and transmission connectors. Check for contact resistance and oxidation. See **CONTACT RESISTANCE AND OXIDATION** .

Check the cable between control module terminal #B8 (#A68) and transmission connector terminal #C2. Check for an intermittent short-circuit to ground according to **SHORT-CIRCUIT TO GROUND, INTERMITTENT FAULTS**

- Check the circuit for solenoid S2. Switch off the ignition. Disconnect the control module. Measure the resistance between terminals #B8 (#A68) and #A53 (#A53) on the breakout box. The resistance must be 11-15 ohms.

Remedy as necessary.

Other information:

- To connect the breakout box, see **CONNECTING THE BREAKOUT BOX**
- To disconnect the transmission connectors, see **CONNECTORS, TRANSMISSION, DISCONNECTING / CONNECTING**
- For other values, see **SIGNAL DESCRIPTION. TRANSMISSION CONTROL MODULE (TCM)** .

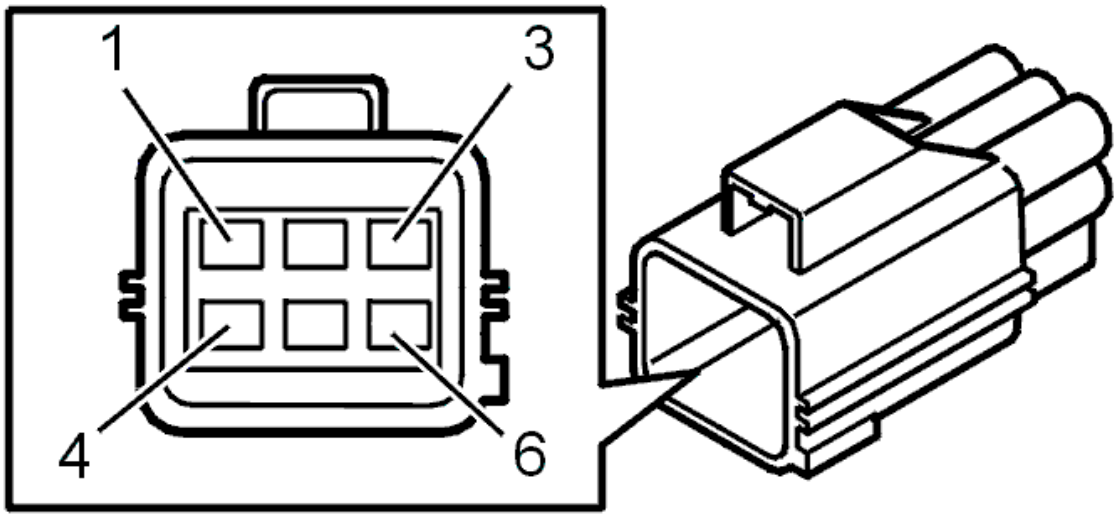

Fig. 501: Identifying Transmission Connector Terminals
Courtesy of VOLVO CARS CORPORATION

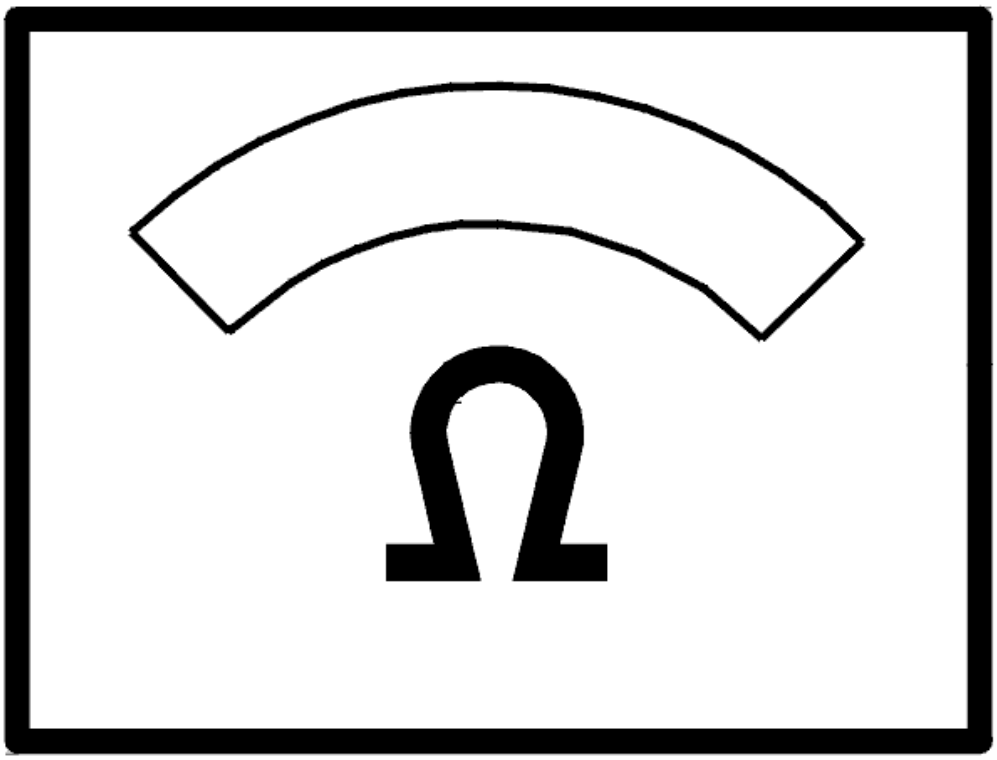

Fig. 502: Identifying Ohms Display
Courtesy of VOLVO CARS CORPORATION

- **Continue**

  Refer to **INFORMATION**

RESETTING THE ADAPTATION

RESETTING ADAPTATION AND THE COUNTER FOR "TRANSMISSION OIL CHANGE"

HINT: The transmission has torque controlled adaptive pressure control. Pressure control means that the transmission regulates the pressure itself during each gear shift. This avoids harsh gear shifting. Each gear shift is evaluated by the control module and stored in the memory. This allows for compensation for wear and tear in the transmission and clutch. It is important that the adaptation in the memory is reset after the transmission has been repaired. This is to ensure normal operation. The oil is replaced during

repair; the "Transmission oil change" counter must be reset. If the counter is not reset when the fluid is drained and replaced, there is a risk that a diagnostic trouble code (DTC) will be stored in incorrect circumstances.

NOTE: This applies only if the transmission or one of the components in the transmission have been replaced.

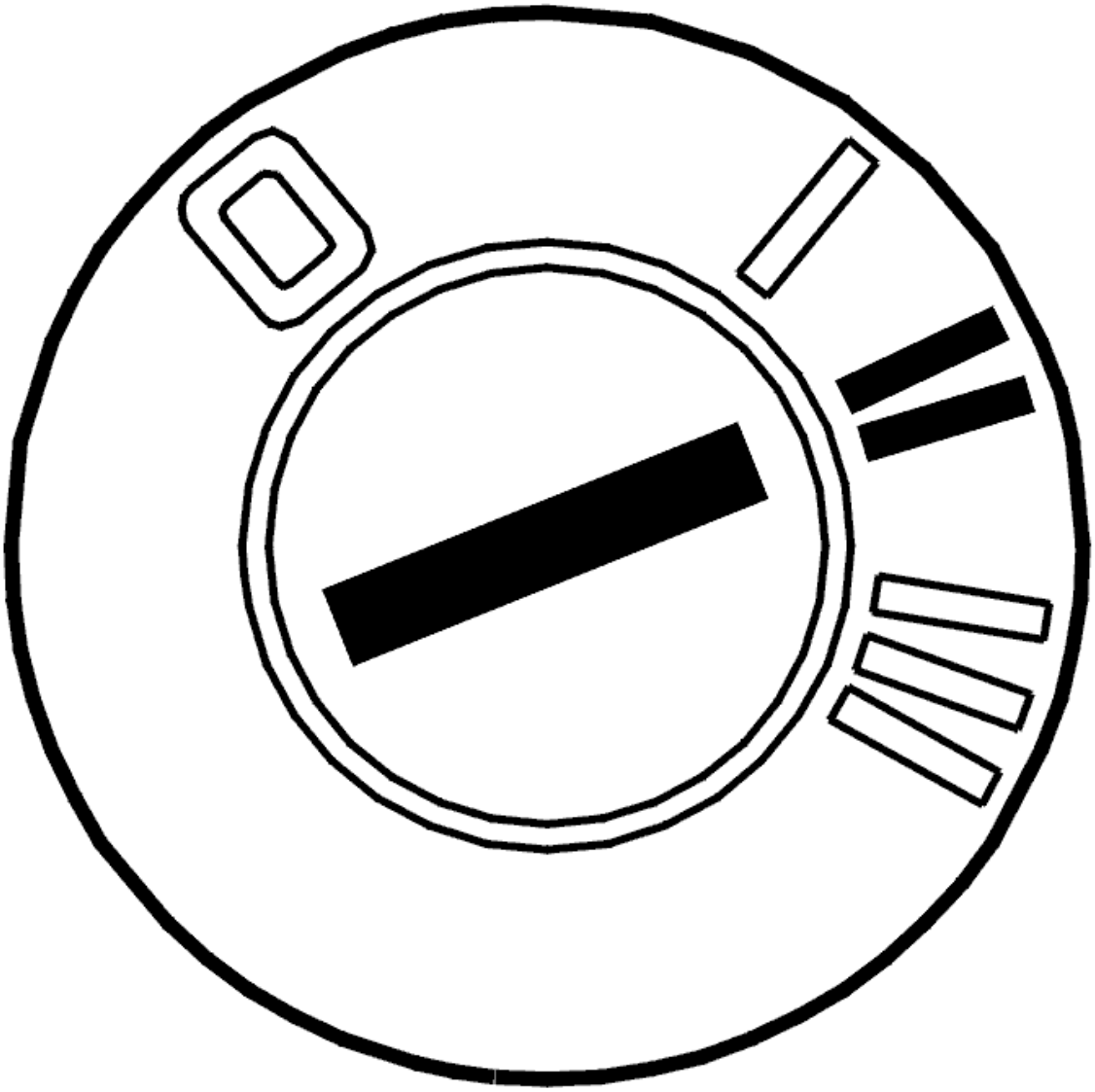

Fig. 503: Identifying Ignition ON
Courtesy of VOLVO CARS CORPORATION

- Ignition on.

  Click on the VCT2000 symbol to reset the adaptation and counter.

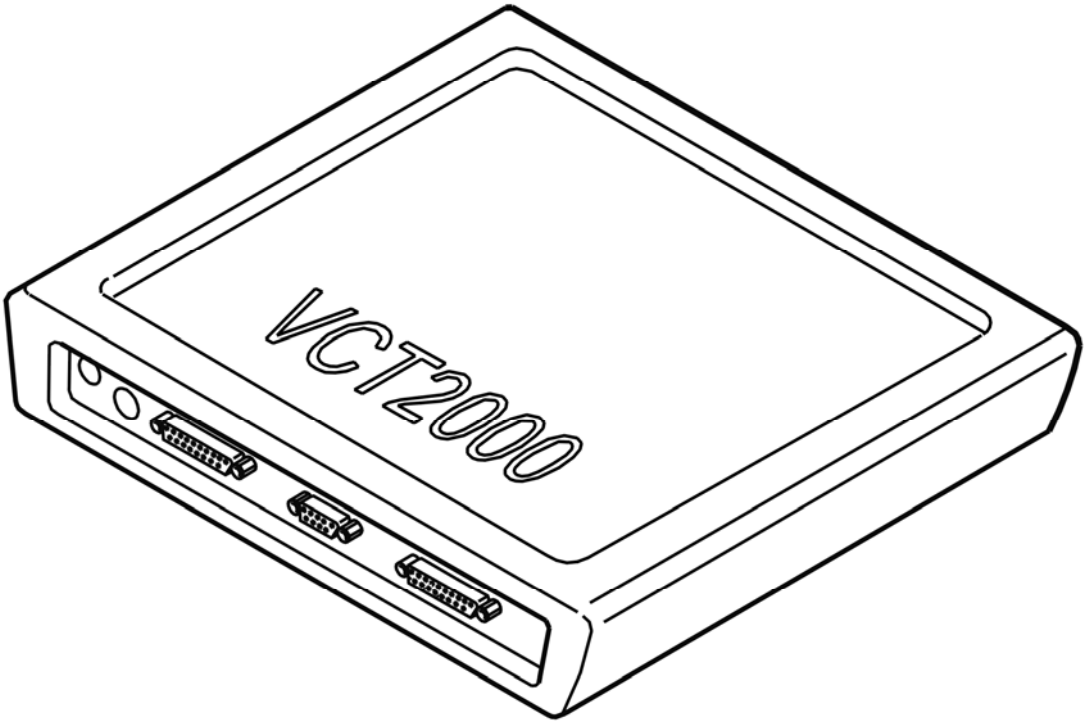

Fig. 504: Identifying VCT2000 Diagnostic Tool Symbol In VIDA
Courtesy of VOLVO CARS CORPORATION

- **Continue**

  Refer to **VERIFICATION**

VERIFICATION

VERIFICATION

HINT: After carrying out the repair, check that the fault has been remedied.

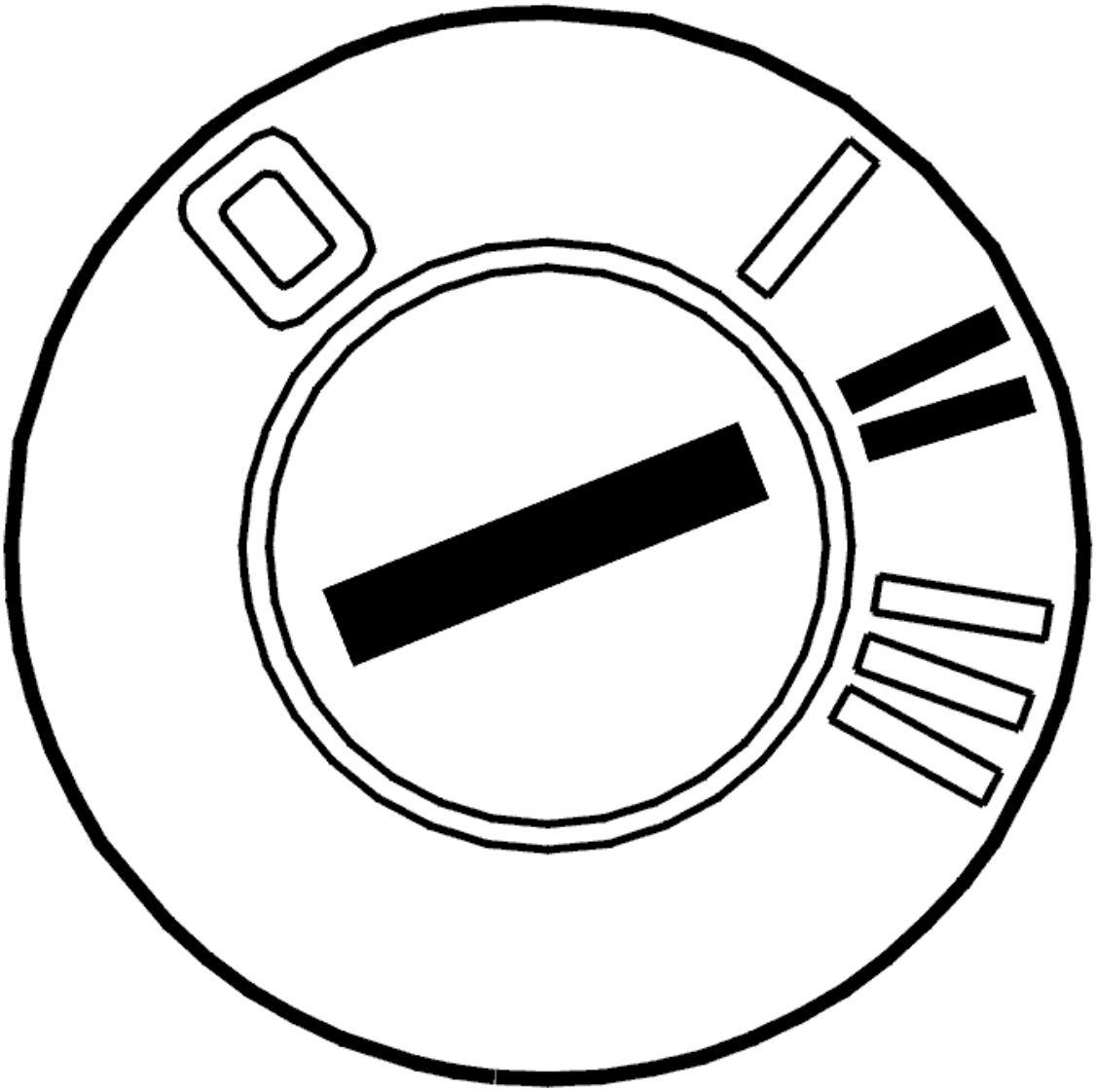

Fig. 505: Identifying Ignition ON
Courtesy of VOLVO CARS CORPORATION

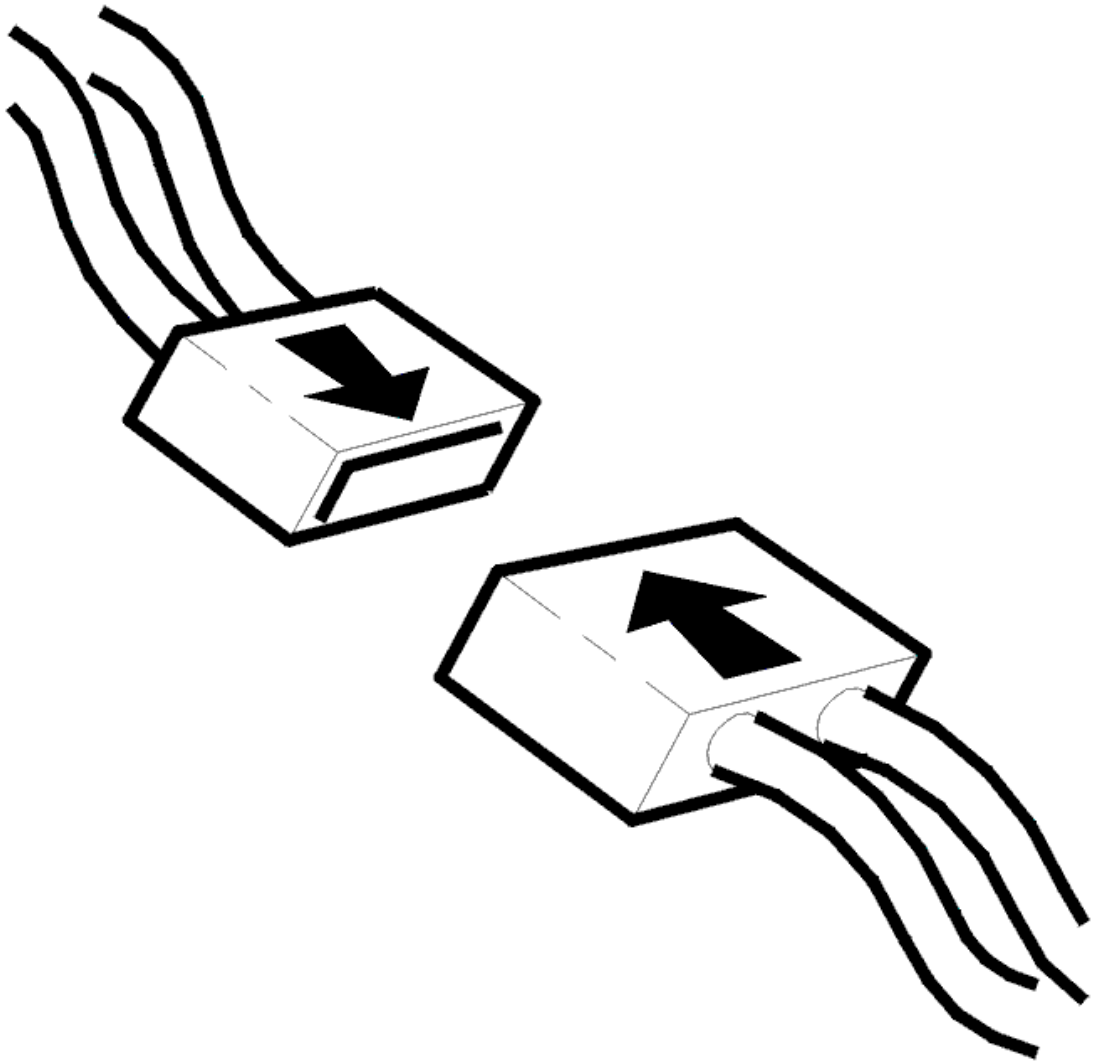

Fig. 506: Identifying Connector(s) Reinstallation
Courtesy of VOLVO CARS CORPORATION

- Ignition off.
- Reinstall the components, reconnect the connectors etc.
- Ignition on.
- Gear selector in position P.
- Activate solenoid S2.

  The value should change between OFF and ON.

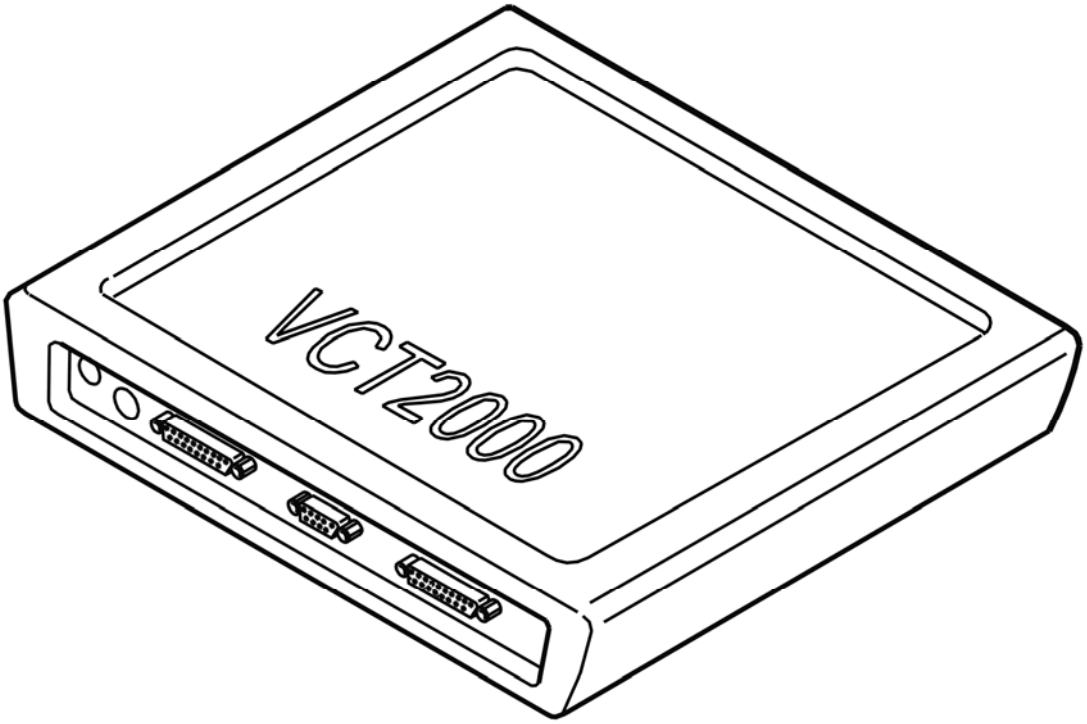

Fig. 507: Identifying VCT2000 Diagnostic Tool Symbol In VIDA
Courtesy of VOLVO CARS CORPORATION

Does the value change between OFF and ON?

- **YES**

  VERIFIED: Troubleshooting has been completed.

- **NO**

  Refer to **INFORMATION**

INFORMATION

FAULT-TRACING INFORMATION

The fault should have been detected and remedied. As this is not the case fault-tracing has failed.

Exit fault-tracing for this diagnostic trouble code (DTC) or make another attempt.

INFORMATION

FAULT-TRACING INFORMATION

If the fault is intermittent, do not verify fault-tracing if the fault does not recur.

It is possible to view the information again, or leave fault-tracing for this diagnostic trouble code (DTC).

FAULTY SIGNAL

CHECKING TRANSMISSION FLUID TEMPERATURE SENSOR

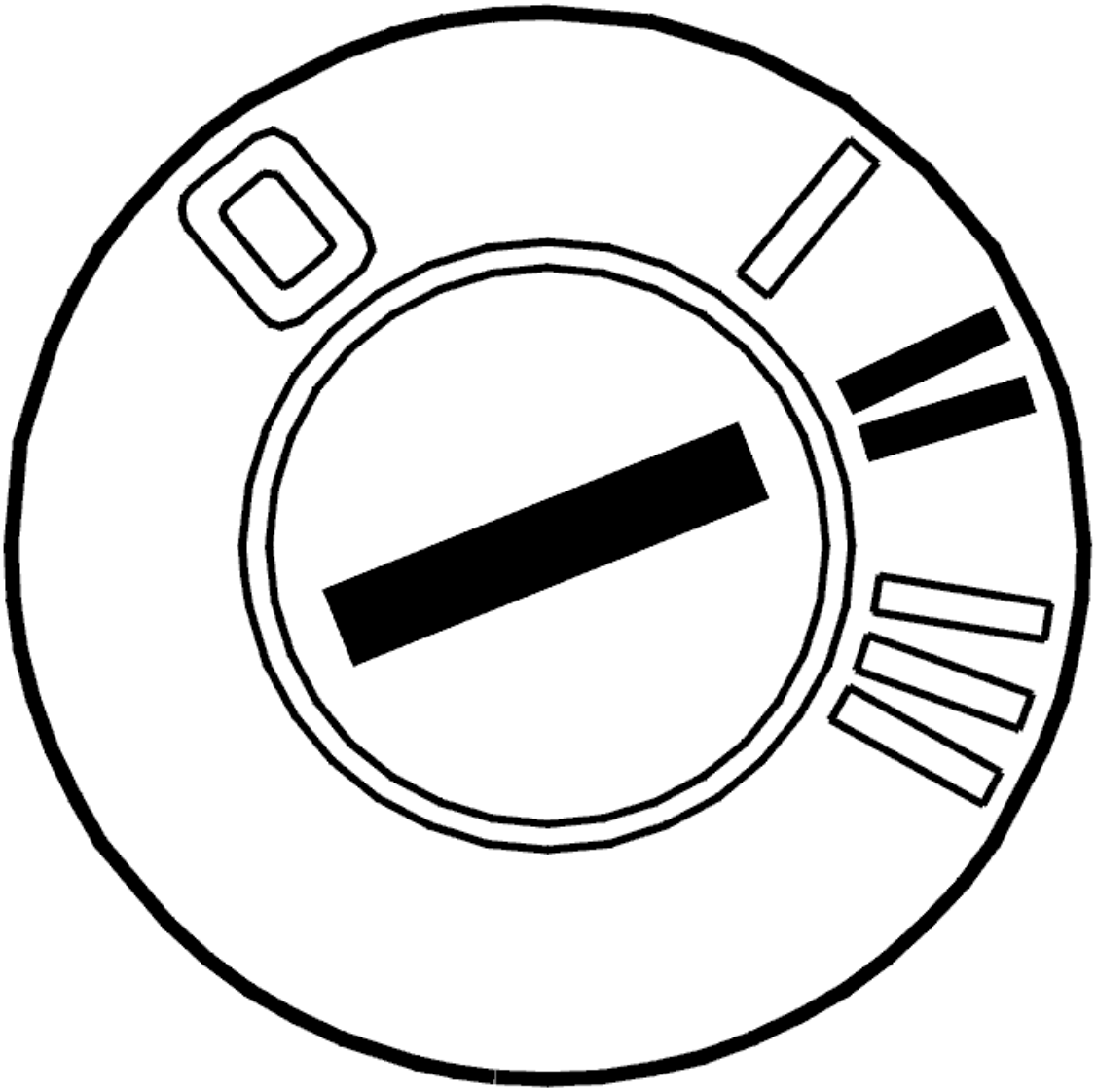

Fig. 508: Identifying Ignition ON
Courtesy of VOLVO CARS CORPORATION

- Ignition on
- Read off the oil temperature.

  Check that the temperature is within its permitted range.

Compare with the transmission temperature.

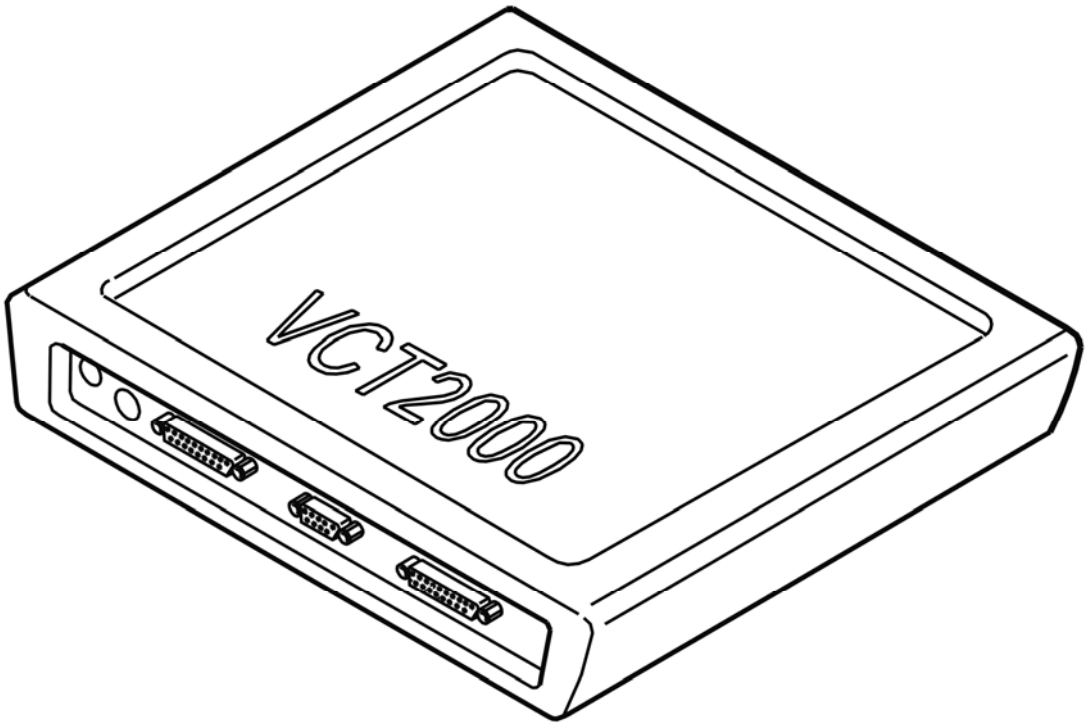

Fig. 509: Identifying VCT2000 Diagnostic Tool Symbol In VIDA
Courtesy of VOLVO CARS CORPORATION

Was the transmission temperature within its permitted range?

- **YES**

  Refer to **INTERMITTENT FAULT**

- **NO**

  Refer to **CHECKING TRANSMISSION FLUID TEMPERATURE SENSOR**

CHECKING TRANSMISSION FLUID TEMPERATURE SENSOR

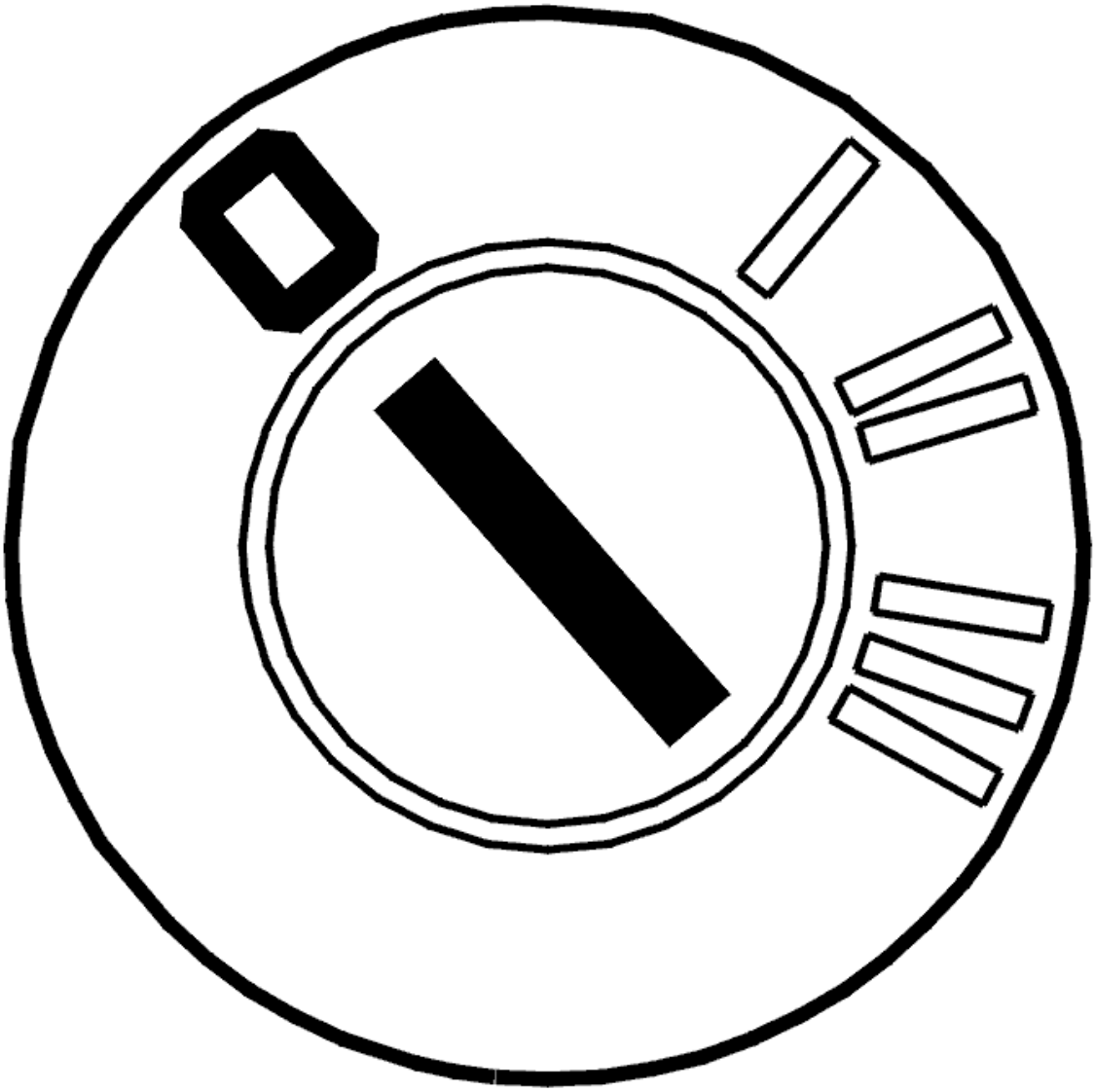

Fig. 510: Identifying Ignition OFF
Courtesy of VOLVO CARS CORPORATION

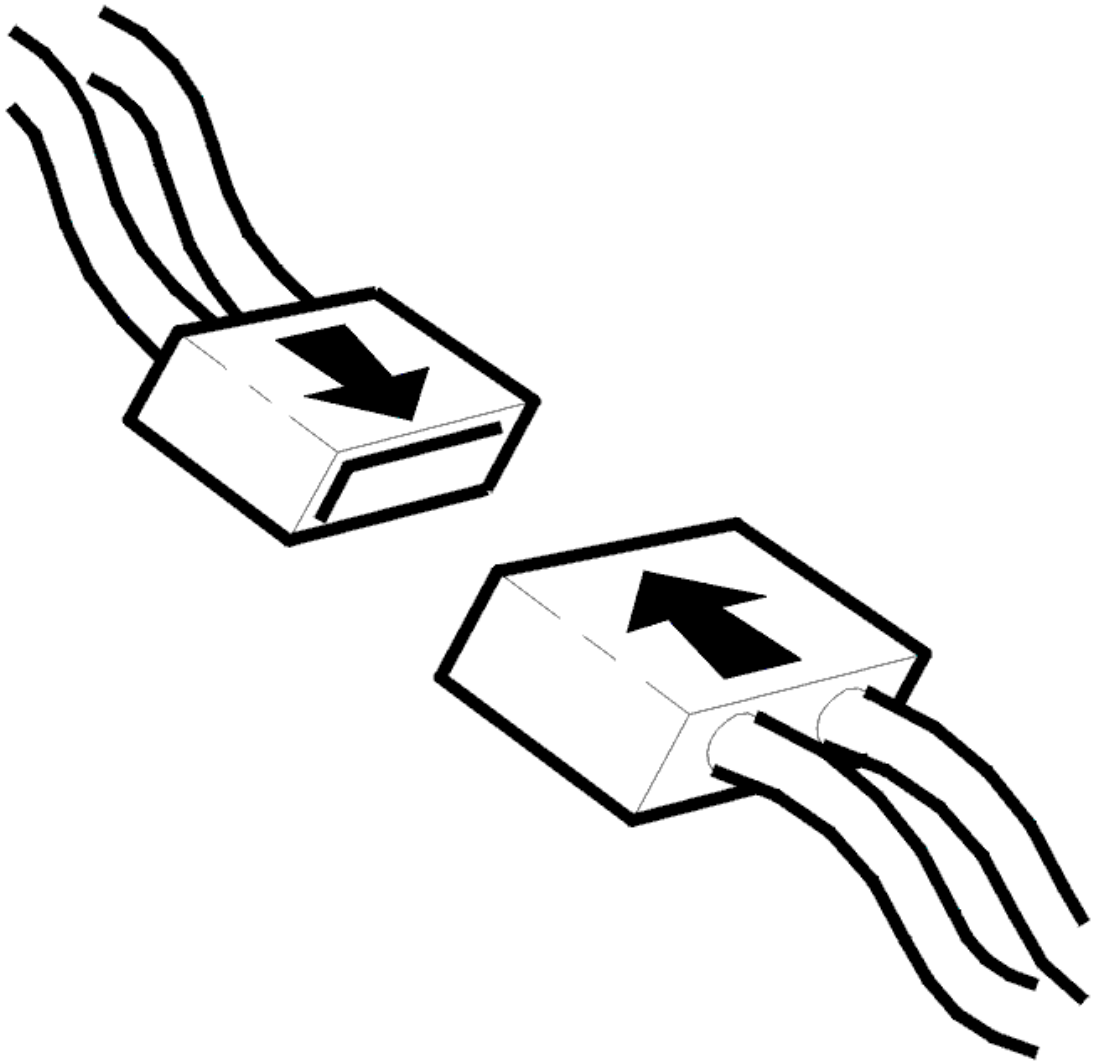

Fig. 511: Identifying Connector(s) Reinstallation
Courtesy of VOLVO CARS CORPORATION

- Ignition off
- Transmission connector D disconnected.

  Check the temperature sensor. Measure the resistance between transmission connector D terminals #D7 and #D8.

  The resistance must be 4.5-6 kohms at 20°C.

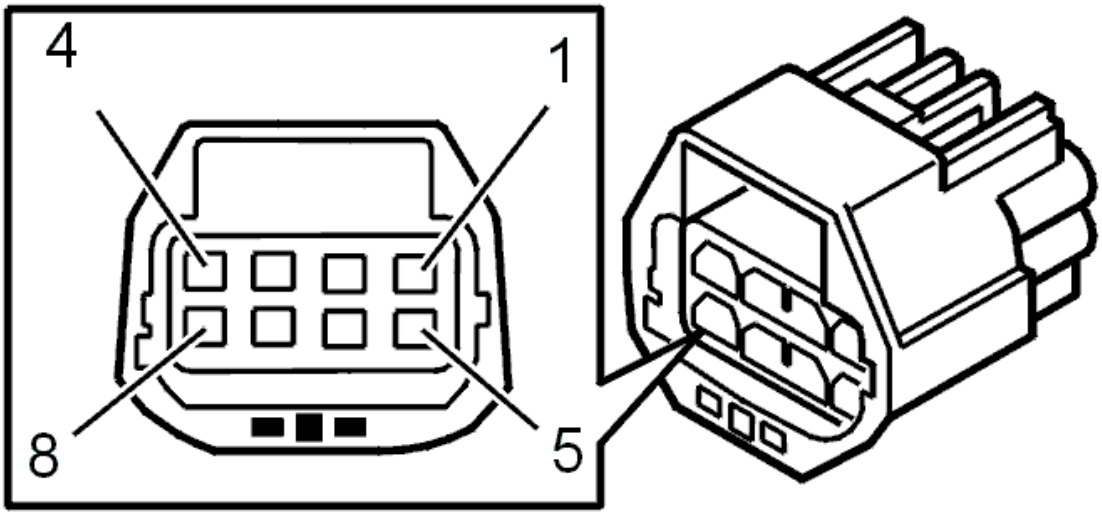

Fig. 512: Identifying 8-Pin Transmission Connector Terminals
Courtesy of VOLVO CARS CORPORATION

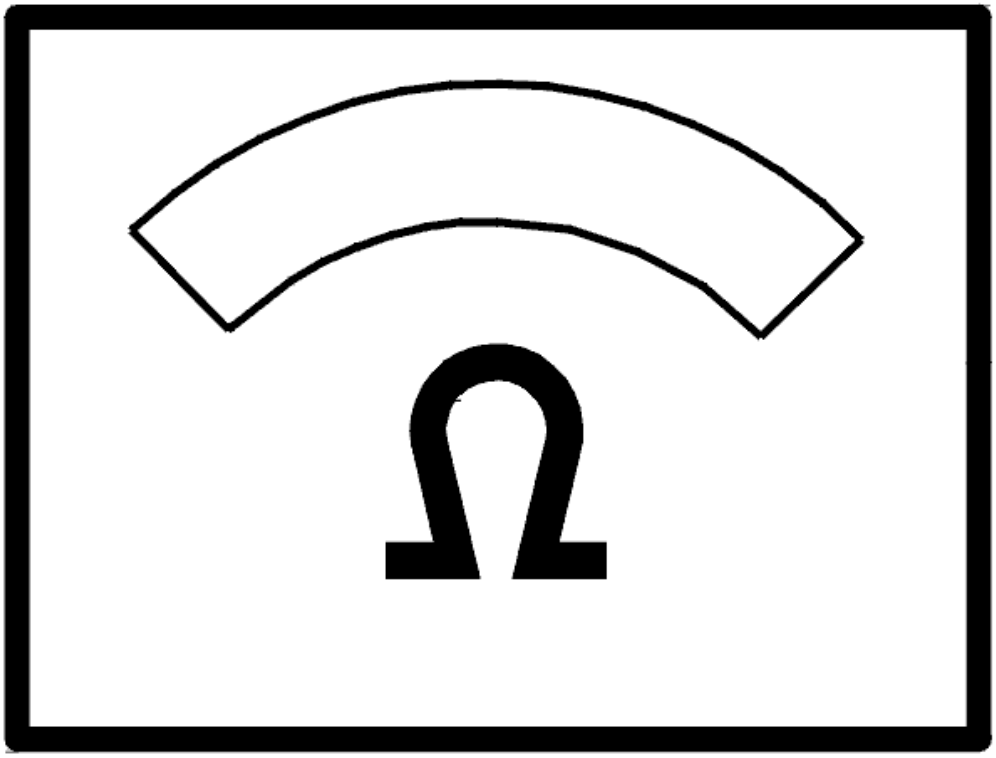

Fig. 513: Identifying Ohms Display
Courtesy of VOLVO CARS CORPORATION

Was the resistance OK?

- **YES**

  Refer to **CHECKING TRANSMISSION FLUID TEMPERATURE SENSOR**

- **NO**

  Refer to **CHECKING THE CABLE AND COMPONENT**

CHECKING TRANSMISSION FLUID TEMPERATURE SENSOR

Check the cable between control module terminal #A37 (#A37) and transmission connector terminal #D7

(control module side). Check for an open-circuit according to **OPEN-CIRCUIT, PERMANENT FAULTS** .

Check the cable between control module terminal #A55 (#A55)and transmission connector terminal #D8 (control module side). Check for an open-circuit according to **OPEN-CIRCUIT, PERMANENT FAULTS** .

Remedy as necessary.

Other information:

- To connect the breakout box, see **CONNECTING THE BREAKOUT BOX**
- To disconnect the transmission connectors, see **CONNECTORS, TRANSMISSION, DISCONNECTING / CONNECTING**
- For information about signals, see **SIGNAL DESCRIPTION. TRANSMISSION CONTROL MODULE (TCM)** .

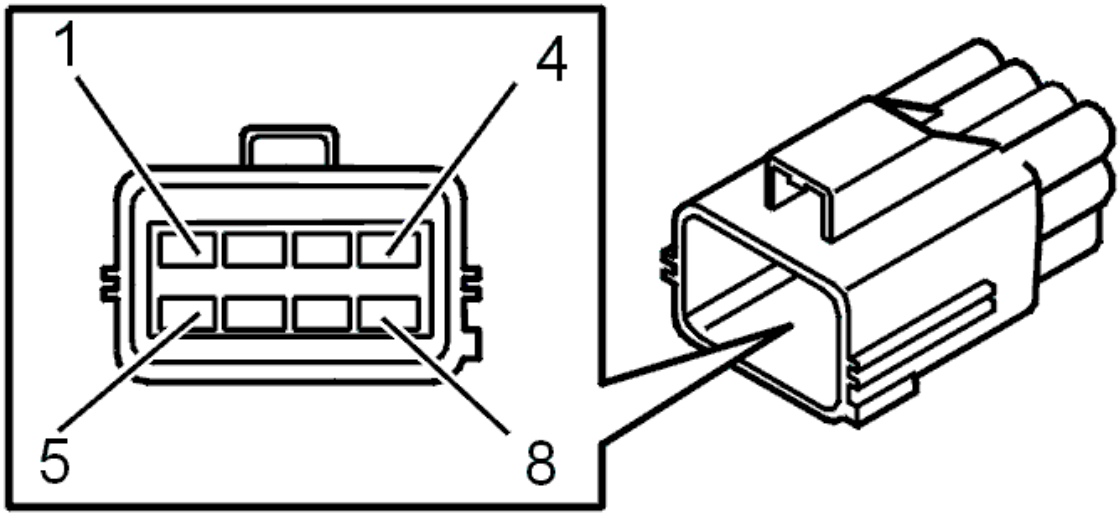

Fig. 514: Identifying Transmission Connector Terminals
Courtesy of VOLVO CARS CORPORATION

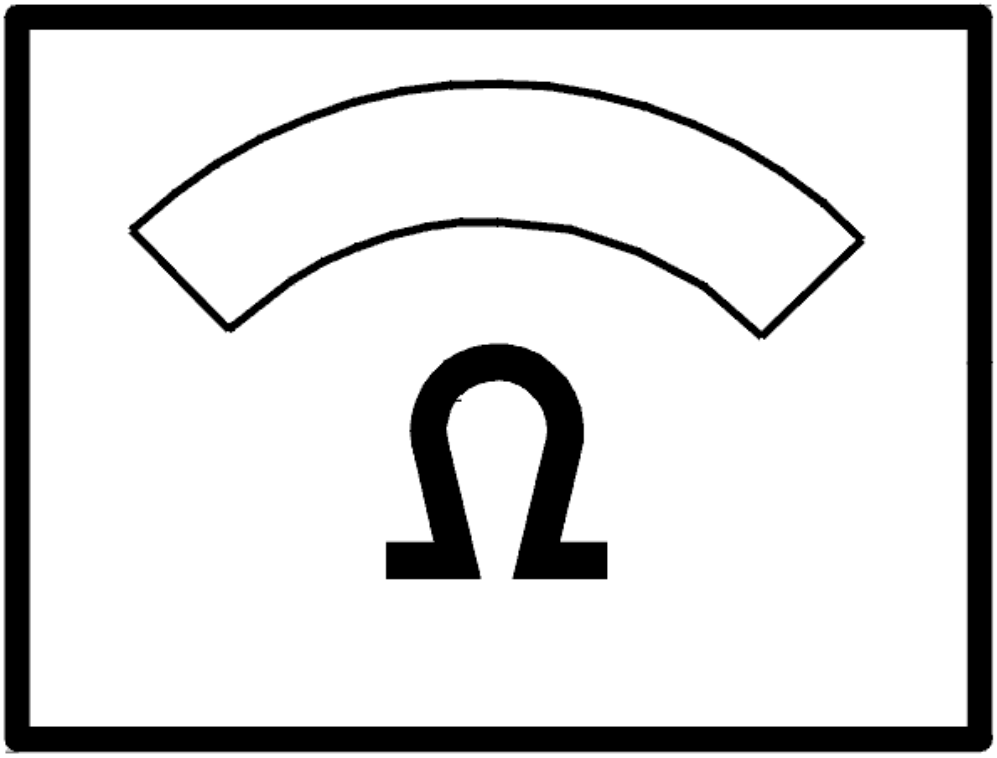

Fig. 515: Identifying Ohms Display
Courtesy of VOLVO CARS CORPORATION

Was a fault detected?

- **YES**

  Refer to **VERIFICATION**

- **NO**

  Refer to **CHECKING THE CABLE AND COMPONENT**

CHECKING THE CABLE AND COMPONENT

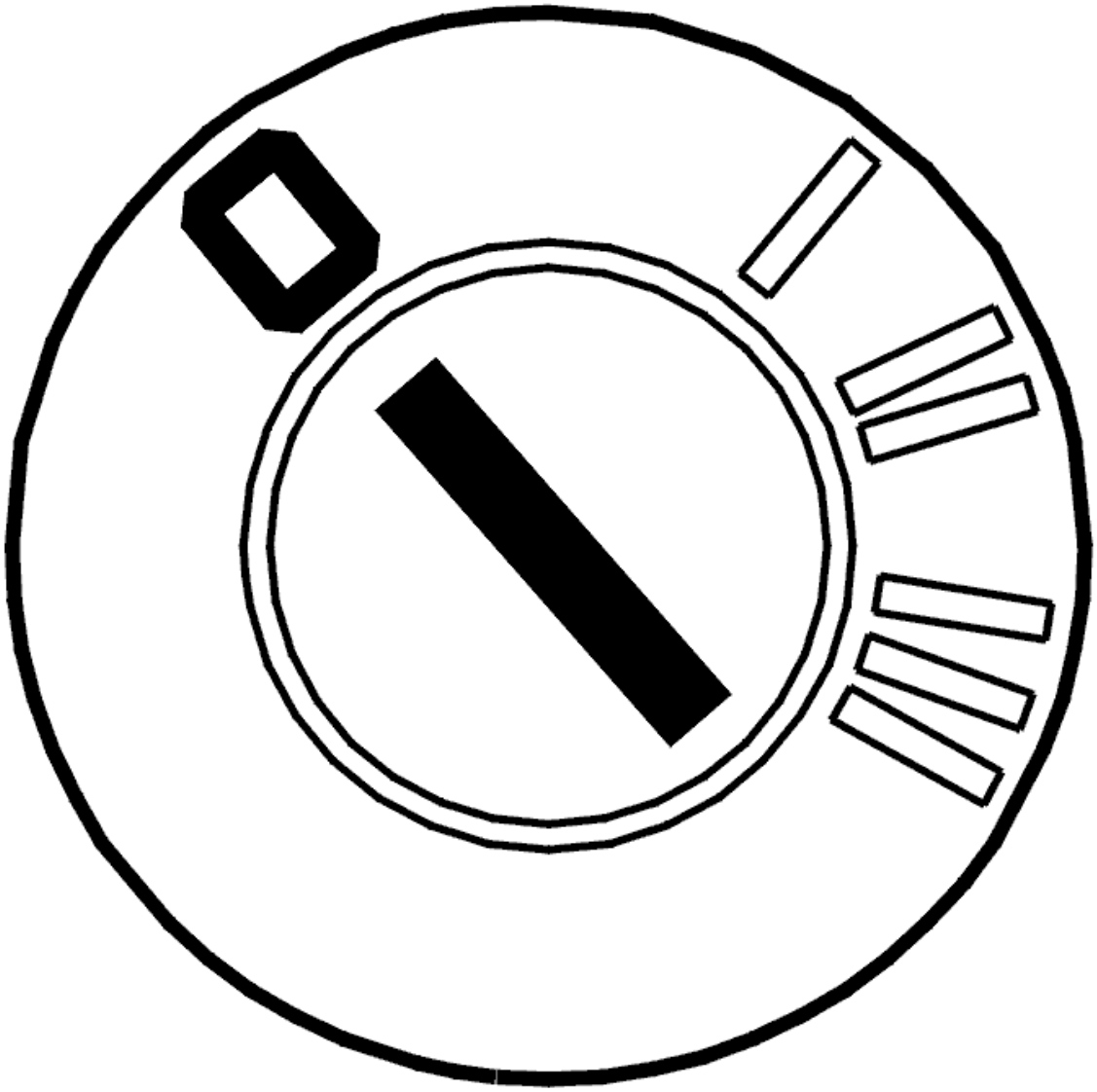

Fig. 516: Identifying Ignition OFF
Courtesy of VOLVO CARS CORPORATION

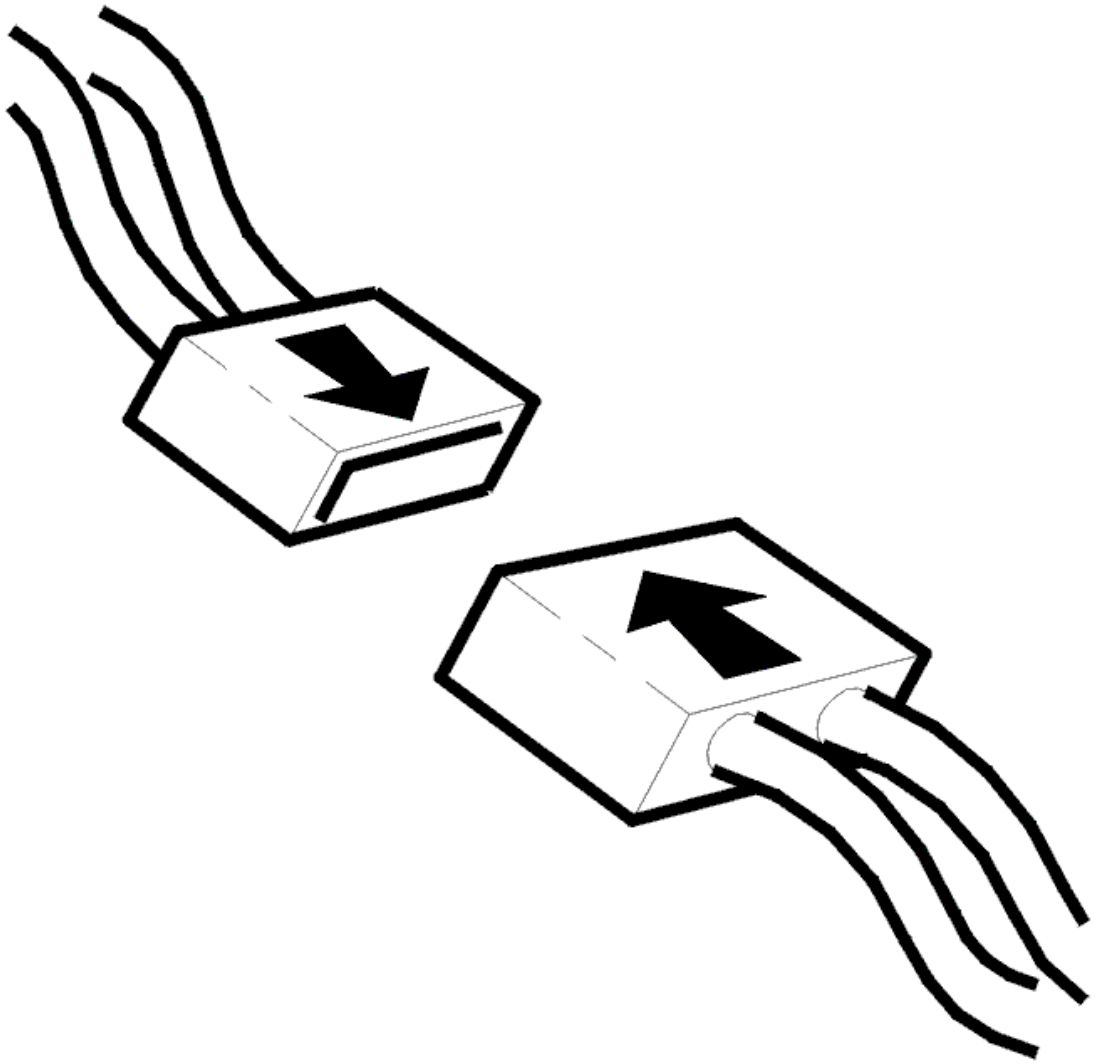

Fig. 517: Identifying Connector(s) Reinstallation
Courtesy of VOLVO CARS CORPORATION

- Ignition off
- Open the transmission control system.

  Check the cable between transmission connector terminal #D7 and temperature sensor terminal #1. Check the cable between transmission connector #D8 and temperature sensor terminal #2. Check for an open-circuit according to **OPEN-CIRCUIT, PERMANENT FAULTS** .

  Also check the cables for a short-circuit to each other.

  HINT: Check the temperature sensor. With the ignition off and transmission connector D disconnected, measure the resistance between transmission connector D terminals #D7 and #D8. The resistance must be 4.5-6 kohms at 20 °C.

Remedy as necessary.

Other information:

- To connect the breakout box, see **CONNECTING THE BREAKOUT BOX**
- To disconnect the transmission connectors, see **CONNECTORS, TRANSMISSION, DISCONNECTING / CONNECTING**
- To open the transmission control system and to check or replace the temperature sensor, see **SOLENOID CONTROL SYSTEM, REPLACING**
- For information about signals, see **SIGNAL DESCRIPTION. TRANSMISSION CONTROL MODULE (TCM)** .

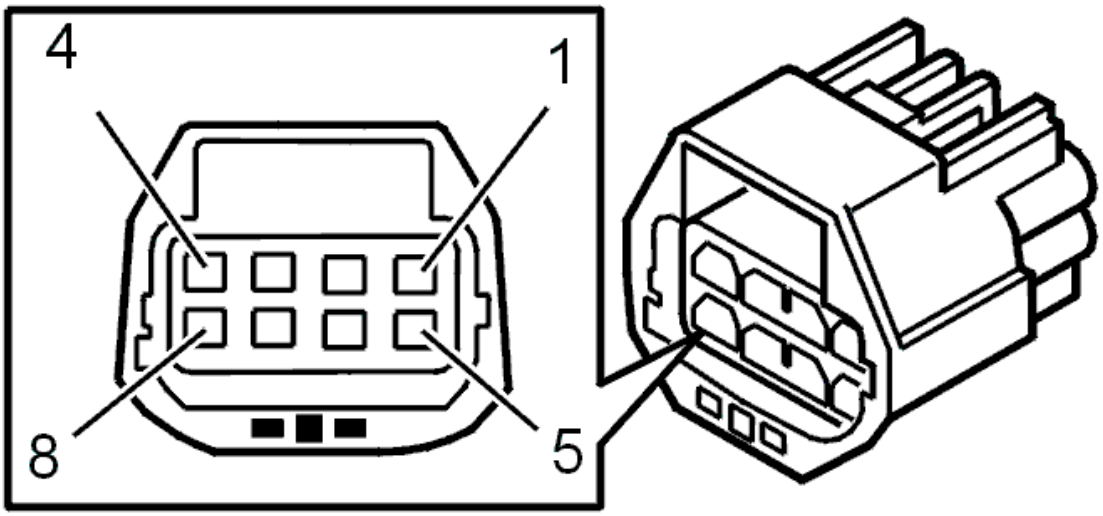

Fig. 518: Identifying 8-Pin Transmission Connector Terminals
Courtesy of VOLVO CARS CORPORATION

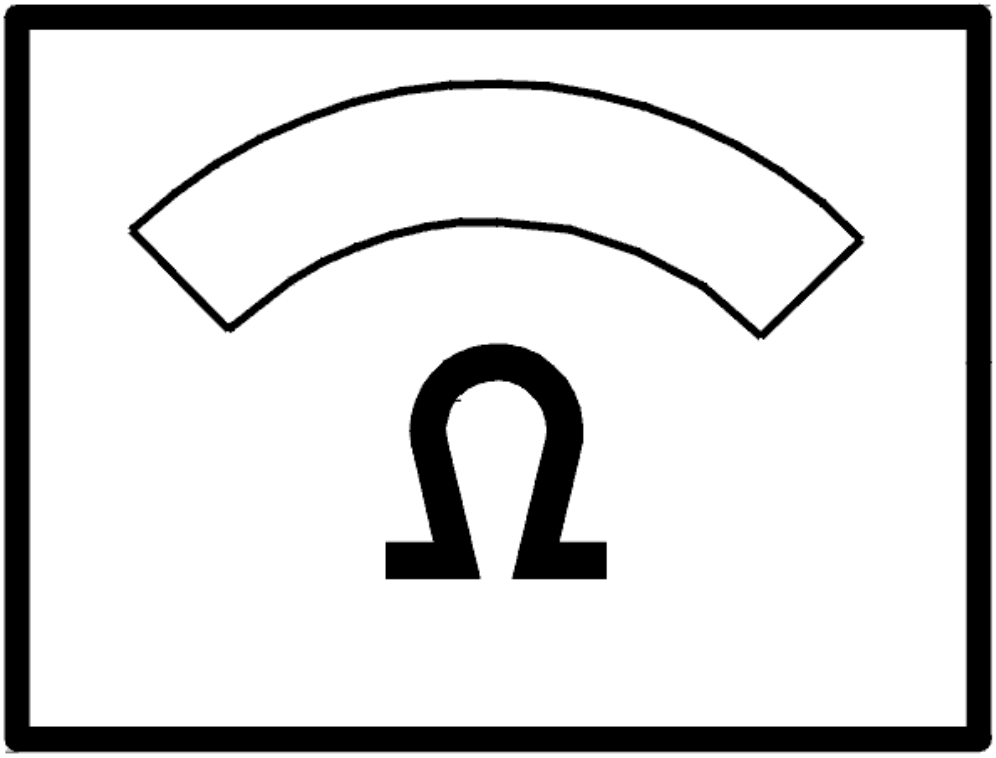

Fig. 519: Identifying Ohms Display
Courtesy of VOLVO CARS CORPORATION

- **Continue**

  Refer to **RESETTING TRANSMISSION FLUID CHANGE COUNTER**

INTERMITTENT FAULT

Check the transmission control module (TCM) and transmission connector D. Check for contact resistance and oxidation according to **CONTACT RESISTANCE AND OXIDATION** .

Check the cable between transmission control module (TCM) terminal #A37 (#A37) and transmission connector terminal #D7 (control module side). Check for an intermittent open-circuit according to **OPEN-CIRCUIT, INTERMITTENT FAULTS** .

Check the cable between control module terminal #A55 (#A55)and transmission connector terminal #D8 (control module side). Check for an intermittent open-circuit according to **OPEN-CIRCUIT, INTERMITTENT FAULTS** .

Remedy as necessary.

Other information:

- To connect the breakout box, see **CONNECTING THE BREAKOUT BOX**
- To disconnect the transmission connectors, see **CONNECTORS, TRANSMISSION, DISCONNECTING / CONNECTING**
- For information about signals, see **SIGNAL DESCRIPTION. TRANSMISSION CONTROL MODULE (TCM)** .

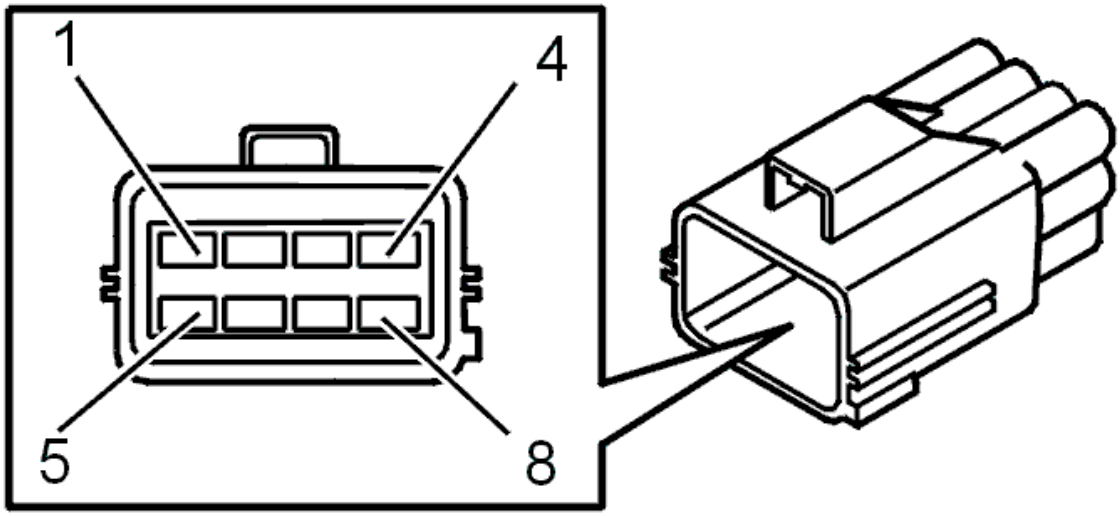

Fig. 520: Identifying Transmission Connector Terminals
Courtesy of VOLVO CARS CORPORATION

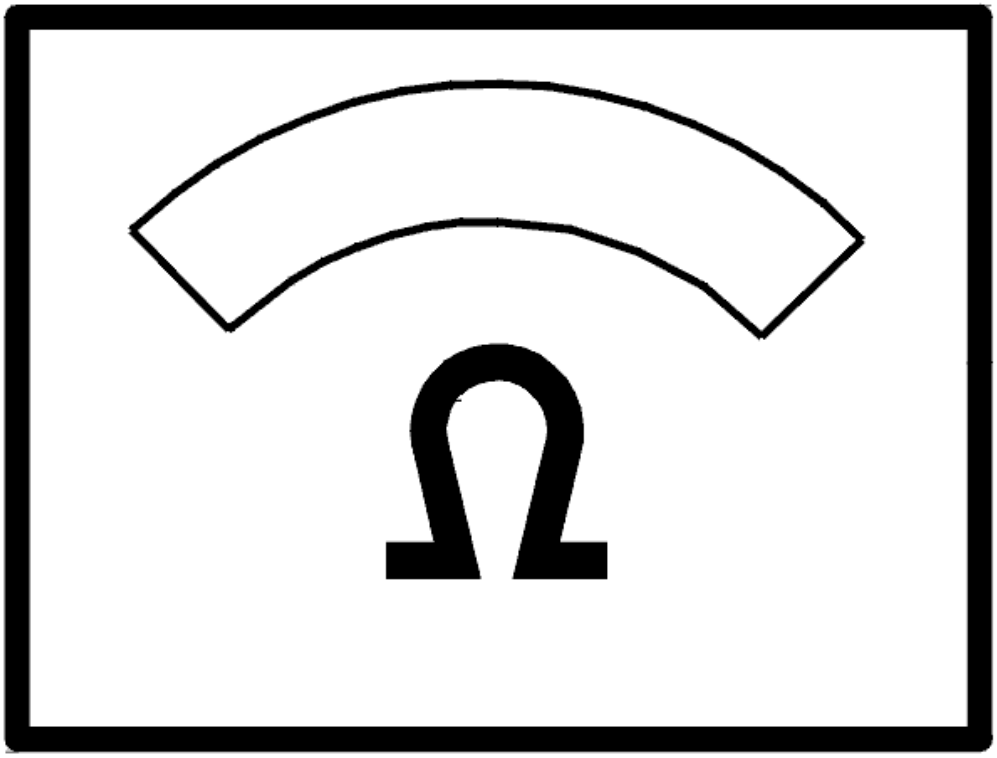

Fig. 521: Identifying Ohms Display
Courtesy of VOLVO CARS CORPORATION

- **Continue**

  Refer to **INFORMATION**

RESETTING TRANSMISSION FLUID CHANGE COUNTER

RESETTING TRANSMISSION FLUID CHANGE COUNTER

HINT: The transmission control module (TCM) has a counter for the oil quality. The counter counts up if the transmission is exposed to too high a load or an ambient temperature that is too high. If the counter is not reset when the oil is drained or changed, there is a risk that a diagnostic trouble code (DTC) will be stored in faulty circumstances. Therefore it is important that the "Transmission oil change" counter is reset.

NOTE: **This applies only when the transmission fluid is changed and when the fluid is changed when repairs are carried out to the transmission temperature sensor.**

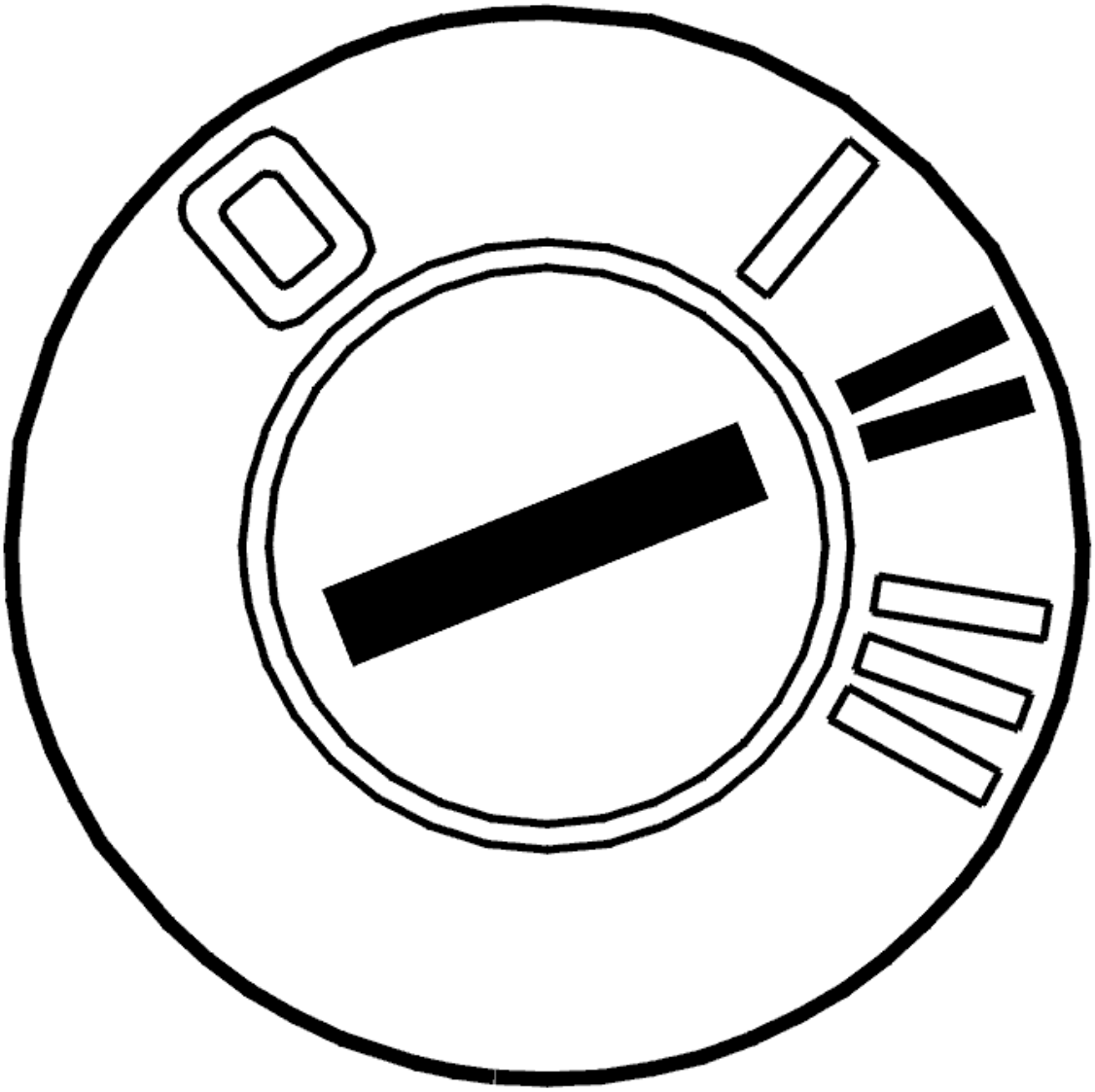

Fig. 522: Identifying Ignition ON
Courtesy of VOLVO CARS CORPORATION

- Ignition on.

  Reset the counter by clicking on the VCT 2000 symbol.

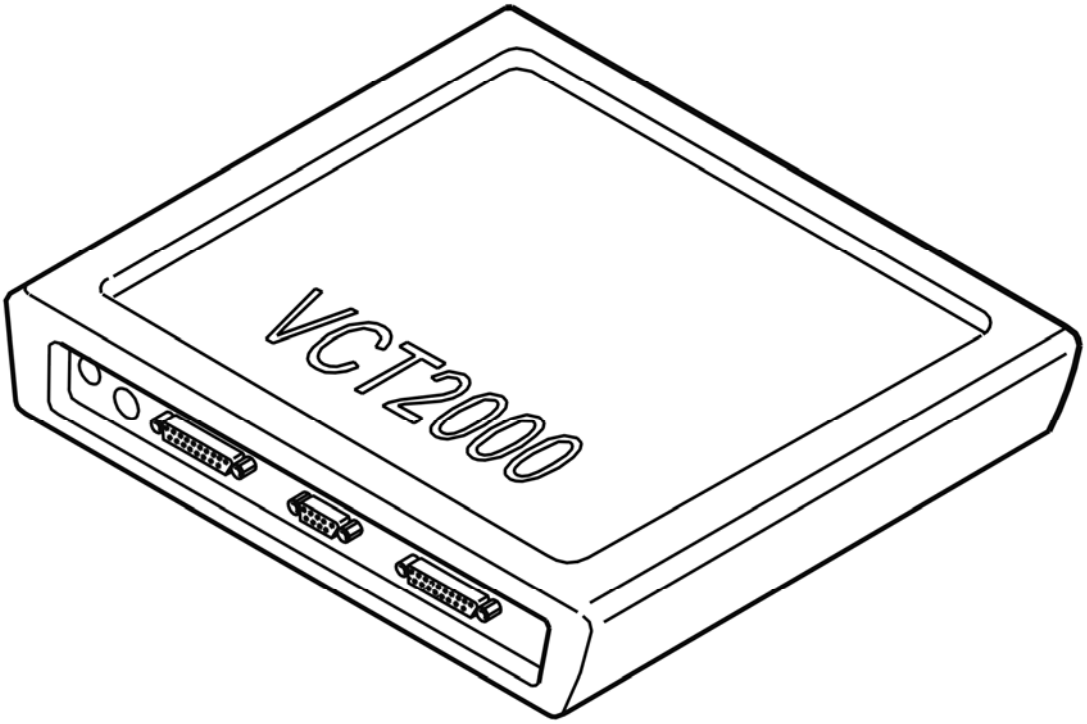

Fig. 523: Identifying VCT2000 Diagnostic Tool Symbol In VIDA
Courtesy of VOLVO CARS CORPORATION

- **Continue**

  Refer to **VERIFICATION**

VERIFICATION

VERIFICATION

HINT: After carrying out the repair, check that the fault has been remedied.

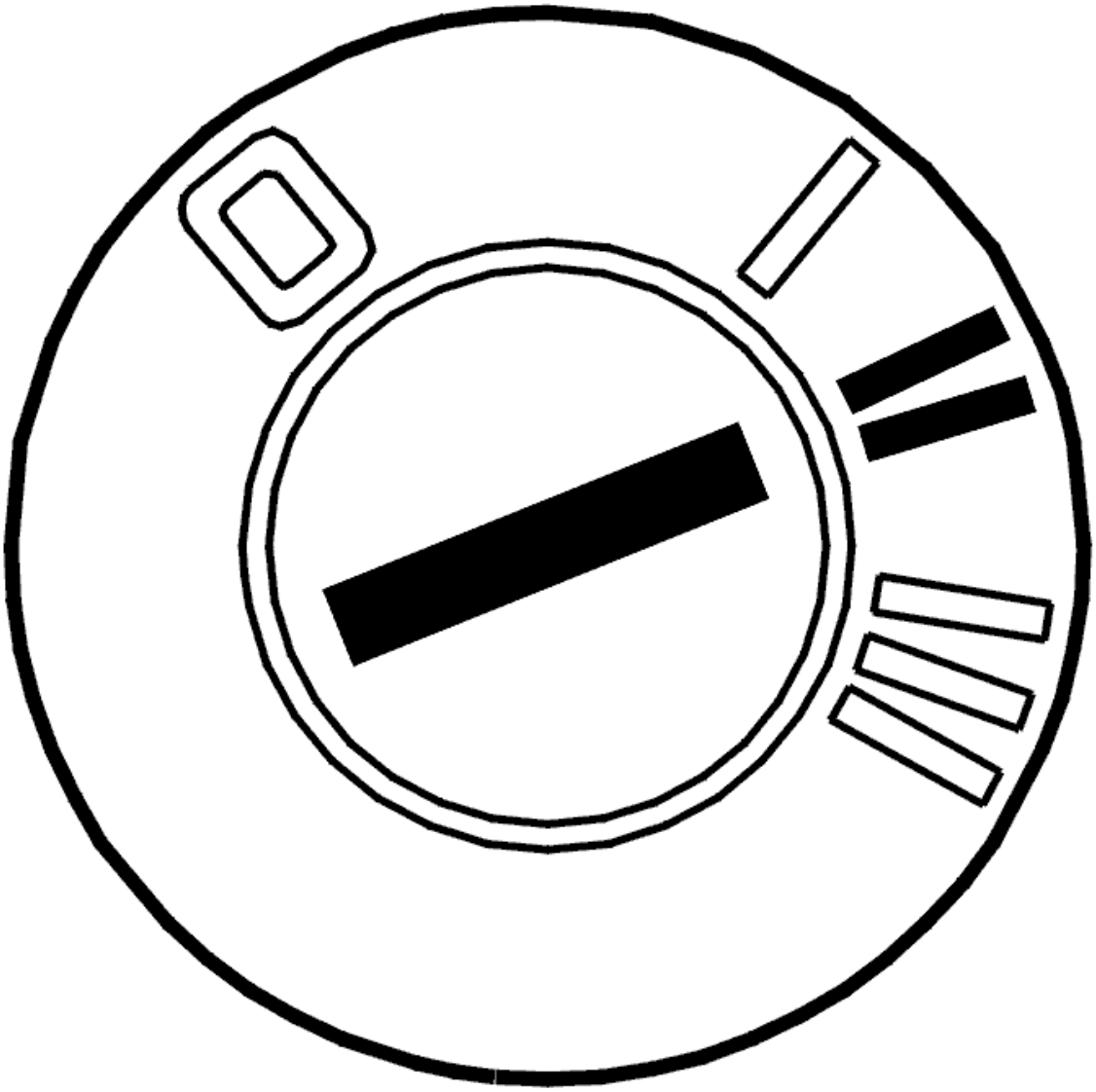

Fig. 524: Identifying Ignition ON
Courtesy of VOLVO CARS CORPORATION

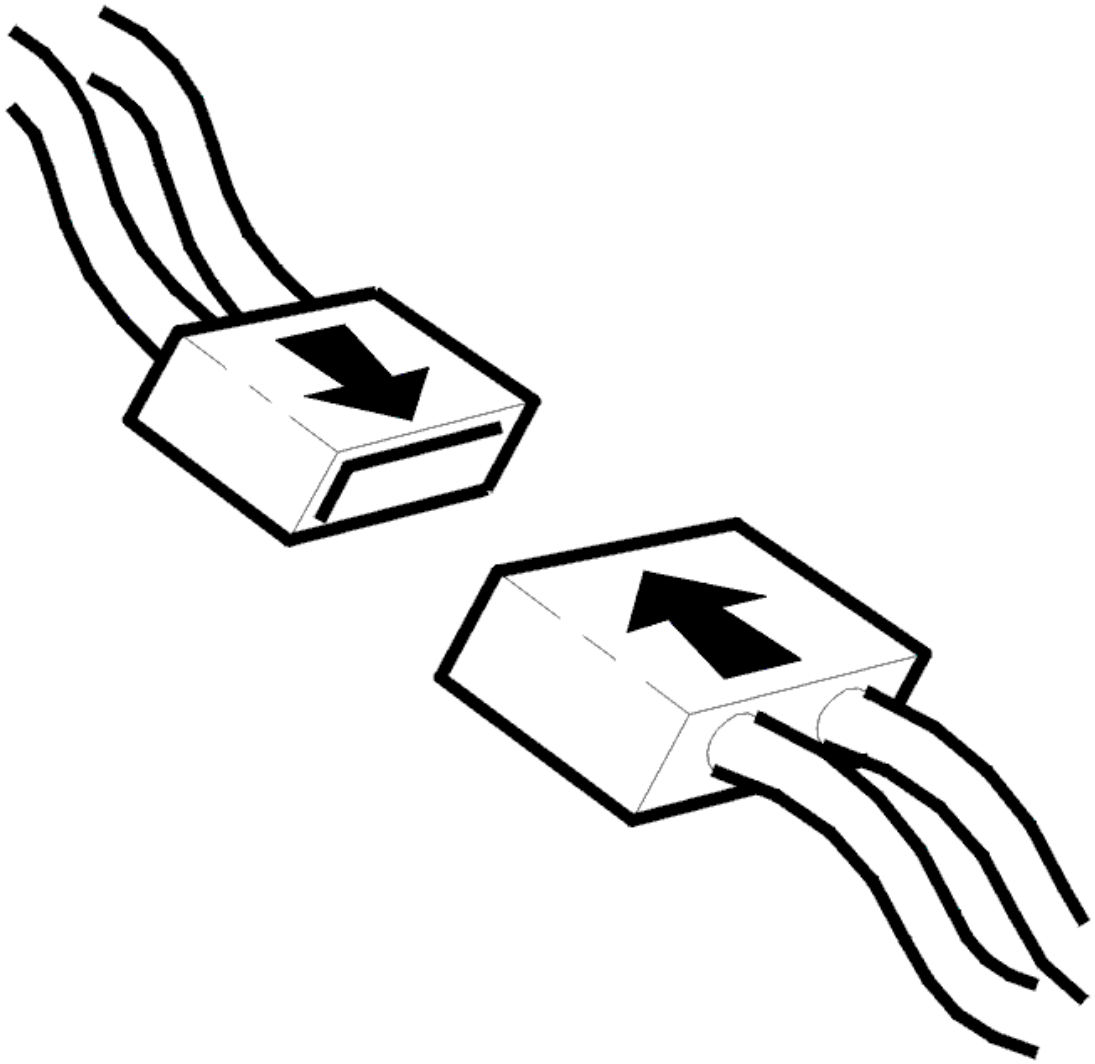

Fig. 525: Identifying Connector(s) Reinstallation
Courtesy of VOLVO CARS CORPORATION

- Ignition off.
- Reinstall the connectors, components etc.
- Ignition on.
- Read off the oil temperature.

Check that the transmission oil temperature is within its permitted range.

Compare with the transmission temperature.

NOTE: **The transmission temperature sensor is located inside the control unit and can be affected by the heat given off by the solenoids.**

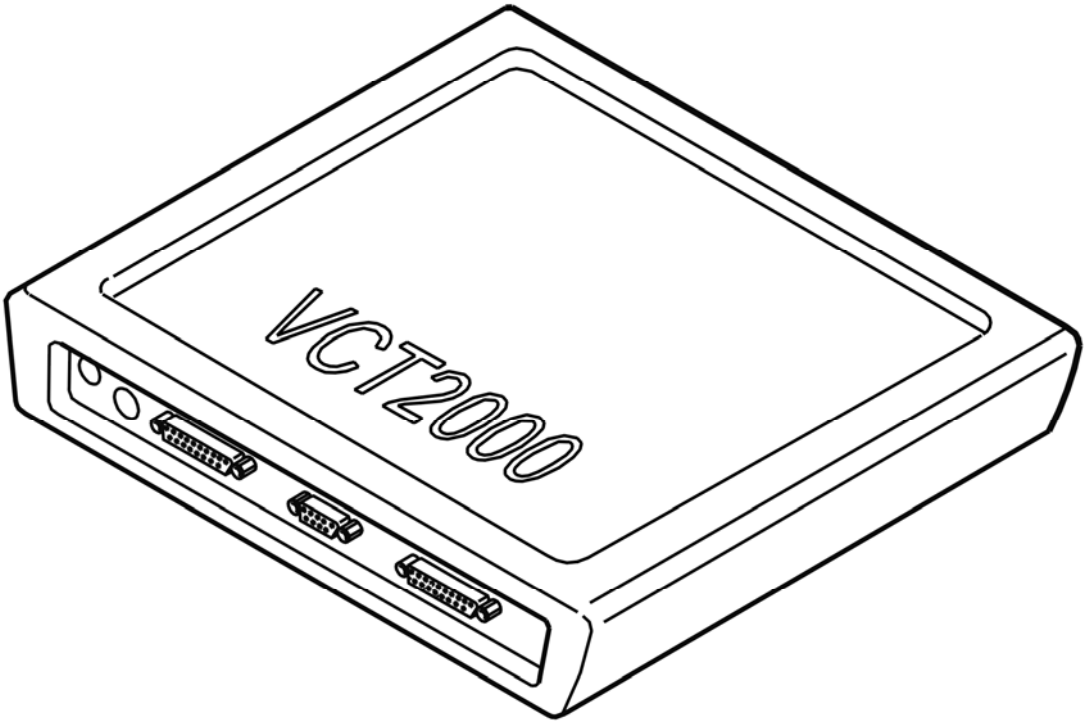

Fig. 526: Identifying VCT2000 Diagnostic Tool Symbol In VIDA
Courtesy of VOLVO CARS CORPORATION

Is the oil temperature within its permitted range?

- **YES**

  VERIFIED: Troubleshooting has been completed.

- **NO**

  Refer to **INFORMATION**

TCM-000B: SHIFT SOLENOID S1. HYDRAULIC FAULT (4T65 AWD; 2003-2006)

DIAGNOSTIC TROUBLE CODE (DTC) INFORMATION

Condition

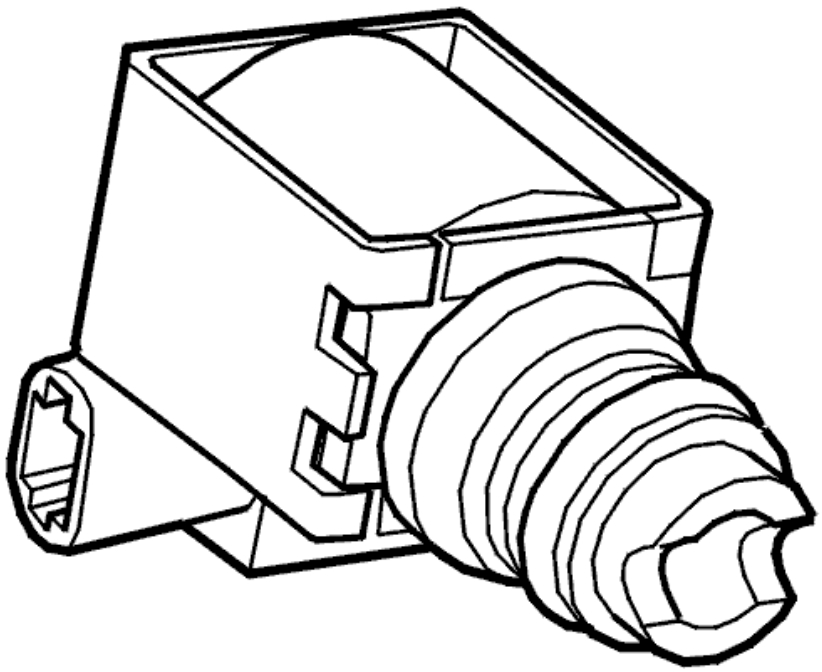

Fig. 527: Identifying Shift Solenoid S1 And S2
Courtesy of VOLVO CARS CORPORATION

The transmission control module (TCM) compares the speed signal from the brake control module (BCM) with the speed signal from the transmission. The control module also checks which gear is selected and compares it with the calculated gear. The speed signal from the brake control module (BCM) and the transmission speed signals should be almost identical, the transmission speed signal should be greater or lower than the brake control module (BCM) speed signal (vehicle speed must be above 30 km/h, engine speed (RPM) above 1400 rpm and transmission oil temperature over 20 °C).

Diagnostic trouble code (DTC) TCM-000B is stored if the control module detects that the vehicle speed and engine speed (RPM) signals do not correspond with the programmed values and that an "incorrect" gear is being used in relation to the calculated gear. This is because a solenoid fault has occurred in the hydraulic circuit for gears 1-2 or 3-4.

Substitute Value

- The control module "Limp-home" mode is engaged and only gear positions 3 and R are available. When the ignition is switched off, the control module switches to normal function and all four forward shift positions can be used.

Possible Source

- Glycol in the transmission fluid.

- The hydraulic valve for solenoid S1 has stuck in the open or closed position
- Defective control system (the solenoid binds or is stuck)
- Internal leakage in the transmission
- Warn or damaged clutch driven plates in the transmission.

Fault symptom[s]

- General orange warning lamp lit
- Malfunction indicator lamp (MIL) lit
- No shifting (may be intermittent)
- No lock-up function.

HINT: When the transmission control module (TCM) detects disrupted function, "Limp-home" mode is activated and only shift positions 3 and R are available. Lock-up function is also unavailable.

HYDRAULIC FAULT

CHECKS

CHECKING SOFTWARE

HINT: This may be due to old software in Engine control module (ECM). The fault can be rectified by updating the software in the Transmission Control Module (TCM).

Fig. 528: Identifying Transmission Control Module (TCM)
Courtesy of VOLVO CARS CORPORATION

It is possible to download new software to the Transmission Control Module (TCM). When ordering software, the vehicle's software and hardware are compared with Volvo's central database. If the comparison corresponds, the software is downloaded to the control module.

Check and download the latest software for the Transmission Control Module (TCM) if available and resume this fault tracing.

- **Continue**

  Refer to **CHECKING FOR COOLANT IN OIL**

CHECKING SHIFTING SOLENOIDS AND SHIFTING VALVES.

NOTE: **If the car has STC or DSTC, these functions must be disengaged. Press in the STC/DSTC button on the center console. Hold the button in for at least 2 seconds. The LED on the button must go out.**

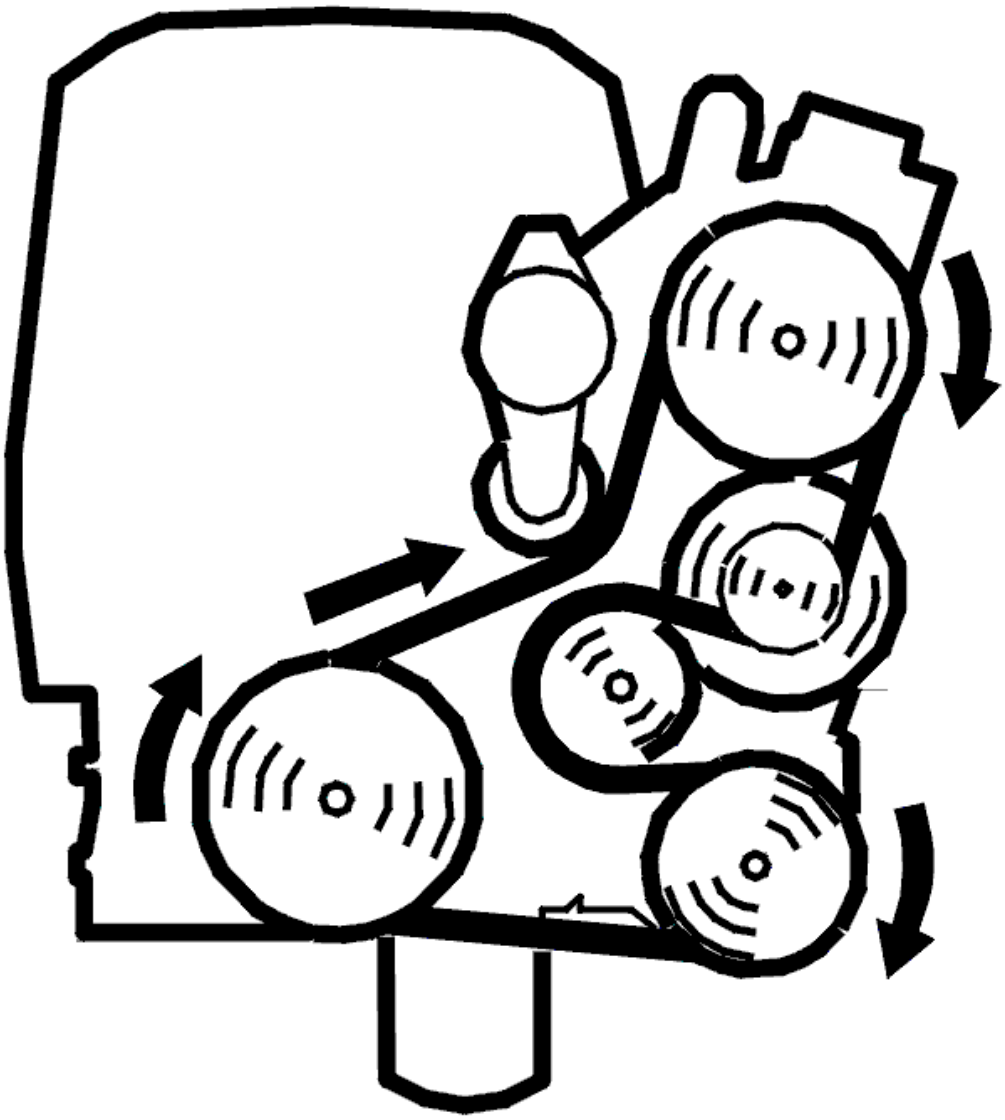

Fig. 529: Identifying Belt Routing
Courtesy of VOLVO CARS CORPORATION

- Ignition off
- Raise the car so that the drive wheels are clear of the ground.

WARNING: **Ensure that the car is safely raised.**

WARNING: **Check that there are no objects caught in the front tire treads.**

- Start the engine
- Deactivate STC/DSTC.
- Click the symbol for VCT2000 in order to start the test sequence.

NOTE: **The instructions in the test sequence must be followed carefully to obtain a correct result.**

NOTE: **Diagnostic trouble codes (DTCs) may be stored in the ABS system when the rear wheels are stationary and the front wheels rotate. Erase any diagnostic trouble codes (DTCs) stored in the ABS system after fault-tracing.**

Other information:

- To replace the control system:
  - For removal, see **CONTROL SYSTEM/VALVE HOUSING, REMOVING**
  - To install, see **CONTROL SYSTEM / VALVE HOUSING, INSTALLING** .
- see **TABLES - RATIOS AND SHIFT PATTERNS.**

Select alternative according to relevant test results:

1. Replacing the control system

   Refer to **RESETTING THE ADAPTATION**

2. Replacing the transmission

   Refer to **REPLACING THE TRANSMISSION**

3. Checking engine braking

   Refer to **CHECKING ENGINE BRAKING**

4. There is no incorrect shift pattern.

   Refer to **CHECKING DIAGNOSTIC TROUBLE CODES (DTCS)**

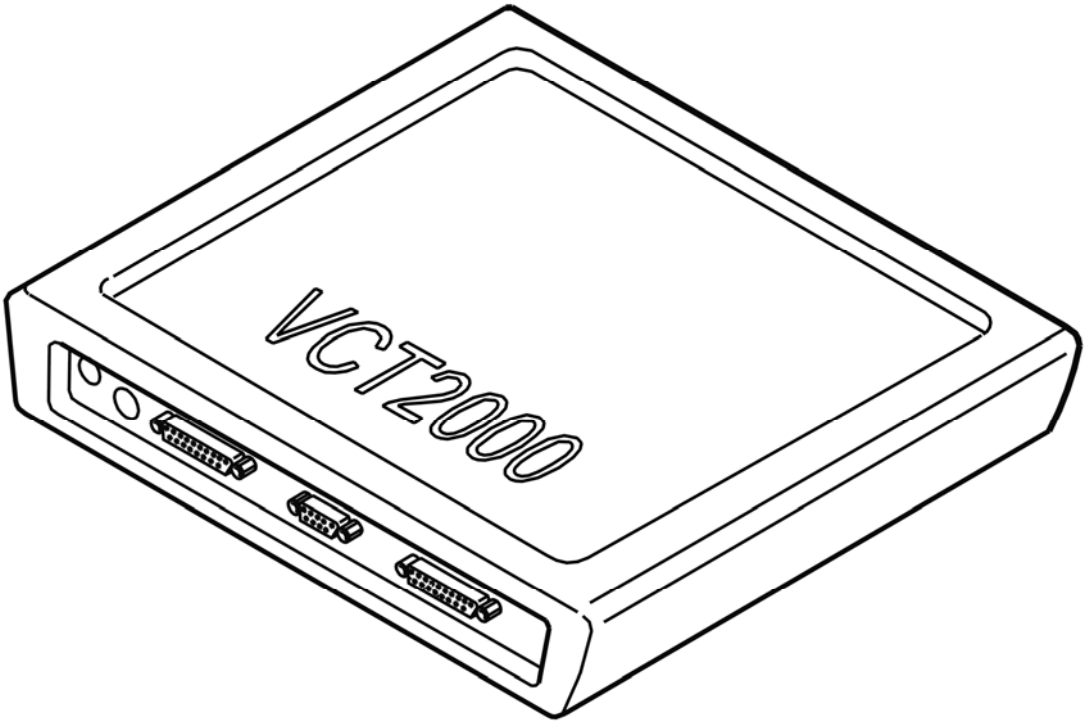

Fig. 530: Identifying VCT2000 Diagnostic Tool Symbol In VIDA
Courtesy of VOLVO CARS CORPORATION

CHECKING ENGINE BRAKING

HINT: Test drive the car to determine whether the fault is in the transmission or in the transmission control system. Test drive as follows:

- Start the engine and move the gear selector to position 1 (Geartronic 1)
- Accelerate up to 4500-6000 rpm and release the accelerator pedal (AP).

  If there is **no** engine breaking, there is an internal fault in the transmission. Replace the transmission.

  If there is engine breaking, there is an internal fault in the transmission control system. Replace the control system

  Other information:

  - To remove the transmission, see **TRANSMISSION, REMOVING**
  - To install the transmission, see **TRANSMISSION, INSTALLING (2003, 2004)** or **TRANSMISSION, INSTALLING (2005, 2006)**
  - To replace the control system, For removal, see **CONTROL SYSTEM/VALVE HOUSING, REMOVING** and To install, see **CONTROL SYSTEM / VALVE HOUSING, INSTALLING** .

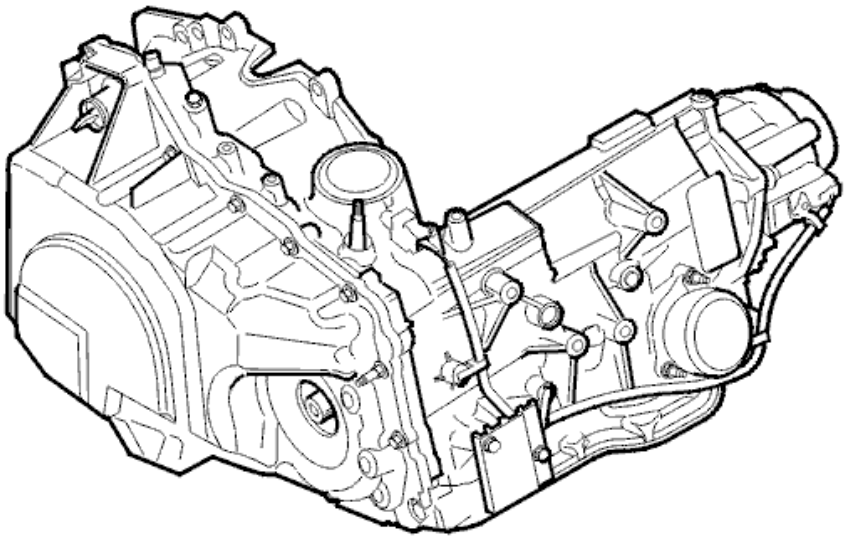

Fig. 531: Identifying Transmission
Courtesy of VOLVO CARS CORPORATION

- **Continue**

  Refer to **RESETTING THE ADAPTATION**

CHECKING DIAGNOSTIC TROUBLE CODES (DTCS)

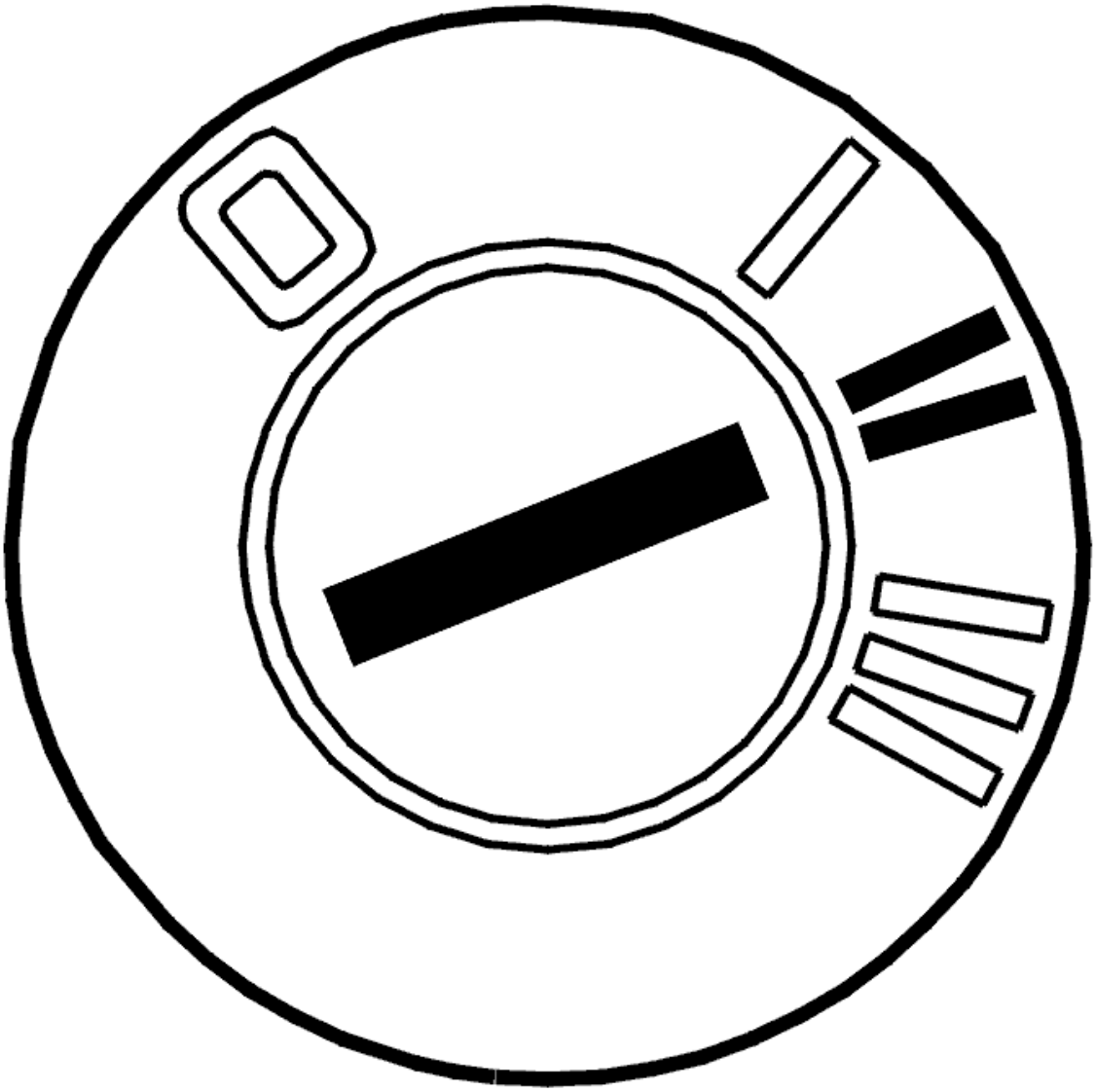

Fig. 532: Identifying Ignition ON
Courtesy of VOLVO CARS CORPORATION

- Ignition on
- Read off diagnostic trouble codes (DTCs).

  If any other diagnostic trouble codes (DTCs) than TCM-000B or TCM-000C are stored, these must be fault-traced and remedied after this fault-tracing is completed.

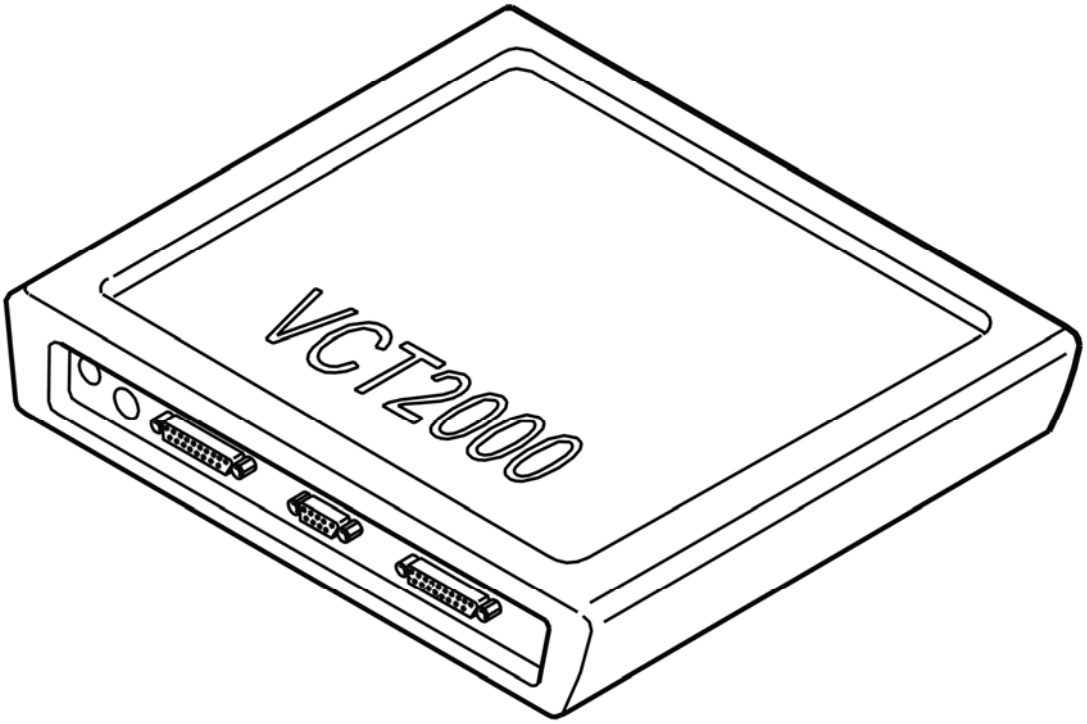

Fig. 533: Identifying VCT2000 Diagnostic Tool Symbol In VIDA
Courtesy of VOLVO CARS CORPORATION

- **Continue**

  Refer to **CHECKING DIAGNOSTIC TROUBLE CODES (DTCS)**

REPLACING THE TRANSMISSION

Fault-tracing indicates a mechanical fault in the transmission. Replace the transmission.

Other information:

- To remove the transmission, see **TRANSMISSION, REMOVING**
- To install the transmission, see **TRANSMISSION, INSTALLING (2003, 2004)** or **TRANSMISSION, INSTALLING (2005, 2006)** .

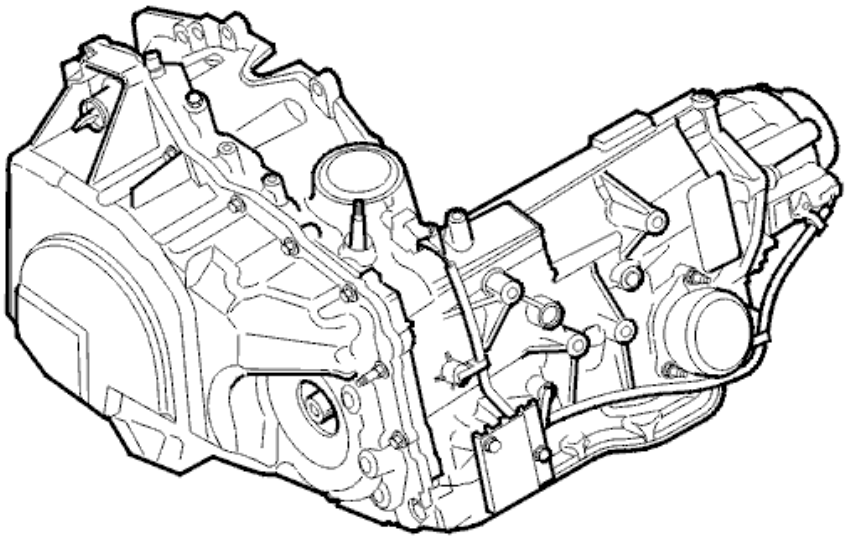

P2X

4301721D ©VOLVO

Fig. 534: Identifying Transmission
Courtesy of VOLVO CARS CORPORATION

- **Continue**

  Refer to **RESETTING THE ADAPTATION**

FAULT-TRACING INFORMATION

The fault-tracing indicates that the control module has previously detected a fault but that the fault is no longer active.

- **Continue**

  FAULT NOT FOUND: Troubleshooting has been completed.

CHECKING FOR COOLANT IN OIL

This fault may be due to coolant that has leaked into the transaxle.

Inspect according to:**CHECKING FOR COOLANT IN THE OIL**

If coolant is detected in the transaxle oil, the transaxle, radiator and hoses between the radiator and transaxle

must be replaced.

When replacing the transmission, the cooler unit, including the additional cooler must be replaced if applicable.

Other information:

- see **TRANSMISSION, REMOVING**
- see **TRANSMISSION, INSTALLING (2003, 2004)** or **TRANSMISSION, INSTALLING (2005, 2006)**

Was a fault detected?

- **YES**

  Refer to **RESETTING THE ADAPTATION**

- **NO**

  Refer to **CHECKING THE OIL LEVEL IN THE TRANSMISSION**

CHECKING DIAGNOSTIC TROUBLE CODES (DTCS)

ERASING DIAGNOSTIC TROUBLE CODES (DTCS)

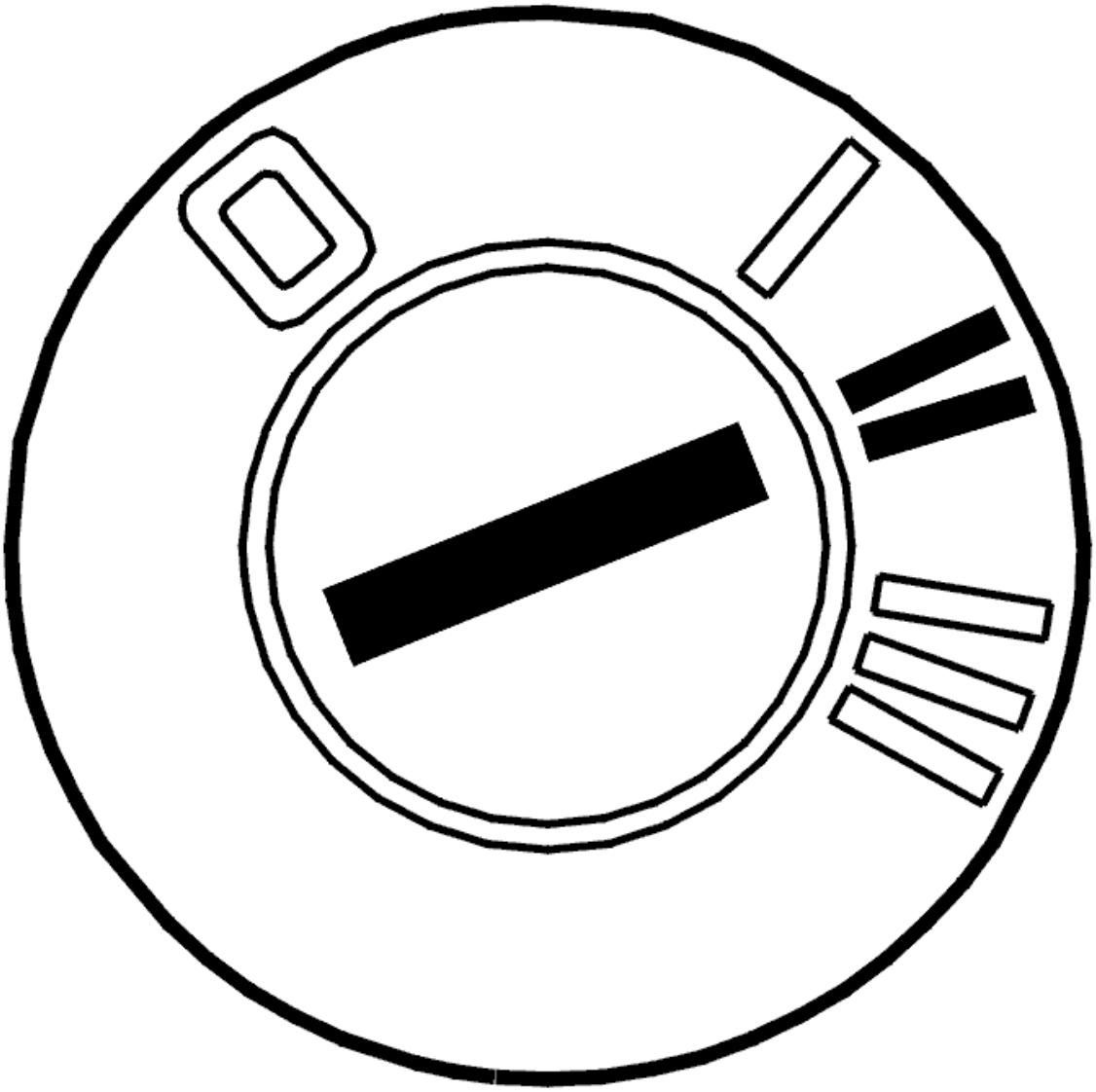

Fig. 535: Identifying Ignition ON
Courtesy of VOLVO CARS CORPORATION

- Ignition off
- Wait for two minutes to allow time for the diagnostic trouble codes (DTCs) to be stored in the control module memory
- Ignition on
- Erase diagnostic trouble codes (DTCs).

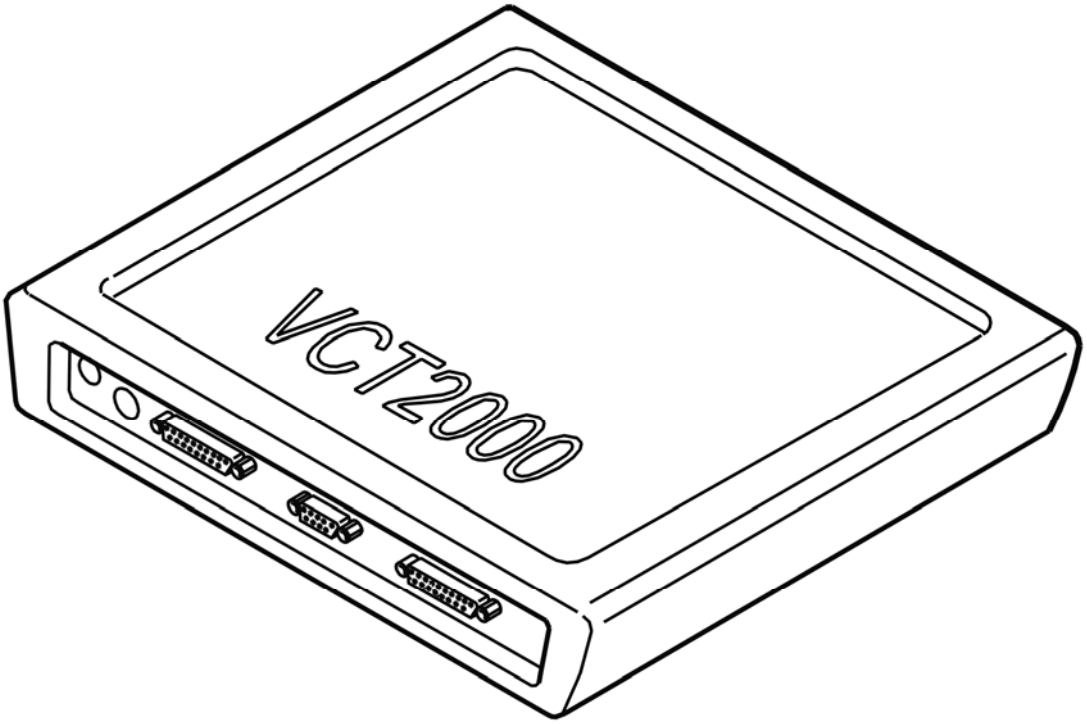

Fig. 536: Identifying VCT2000 Diagnostic Tool Symbol In VIDA
Courtesy of VOLVO CARS CORPORATION

- **Continue**

  Refer to **TEST DRIVING**

TEST DRIVING

NOTE: **Test drive the car according to the driving schedule below to check whether the fault is still active. The test drive is compiled in order to create the conditions in which the diagnostic trouble code (DTC) will be stored again if the fault is active.**

The TEST MODE function can be used to provoke any diagnostic trouble codes (DTC). The function reduces the conditions for how quickly diagnostic trouble codes (DTCs) are stored in the control module and the test drive becomes easier.

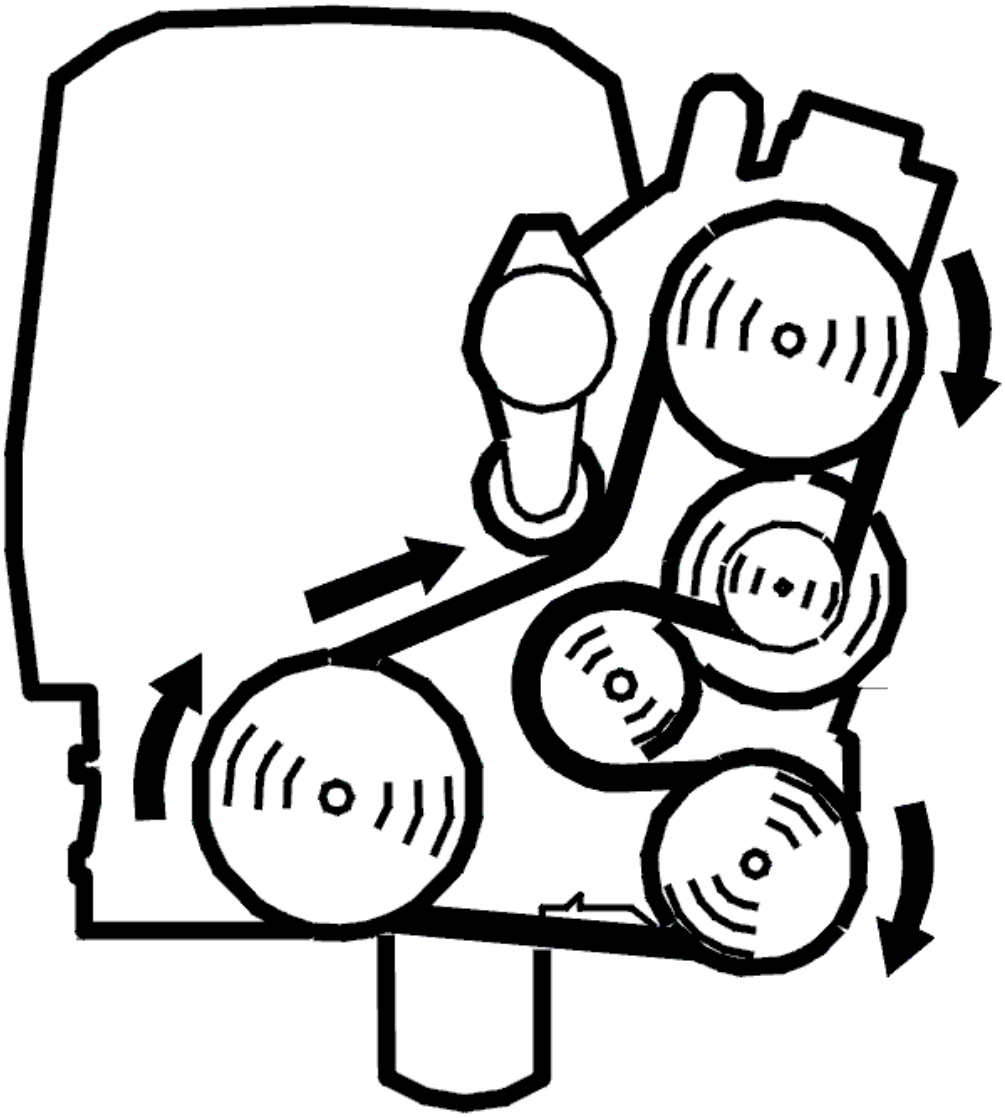

Fig. 537: Identifying Belt Routing
Courtesy of VOLVO CARS CORPORATION

- Start the engine
- Activate TEST MODE.

NOTE: Do not switch off the engine

- Disconnect the VIDA station. Test drive the car as described below.

WARNING: Please observe traffic regulations.

NOTE: Before test driving, the transmission should be at operating temperature,

approximately 80-90°C.

Move the gear selector to Geartronic position. Accelerate carefully until the speed is between 35-65 km/h.

Maintain a constant speed.

Shift up to second, third and fourth gears. Maintain a steady speed for approximately 15 seconds between shifts.

Criteria for diagnostic trouble code (DTC):

- The gear selector is in the desired gear position for at least 15 seconds
- Speed above 30 km/h
- Positive engine torque (no engine braking)
- Engine speed (RPM) above 2000 rpm.

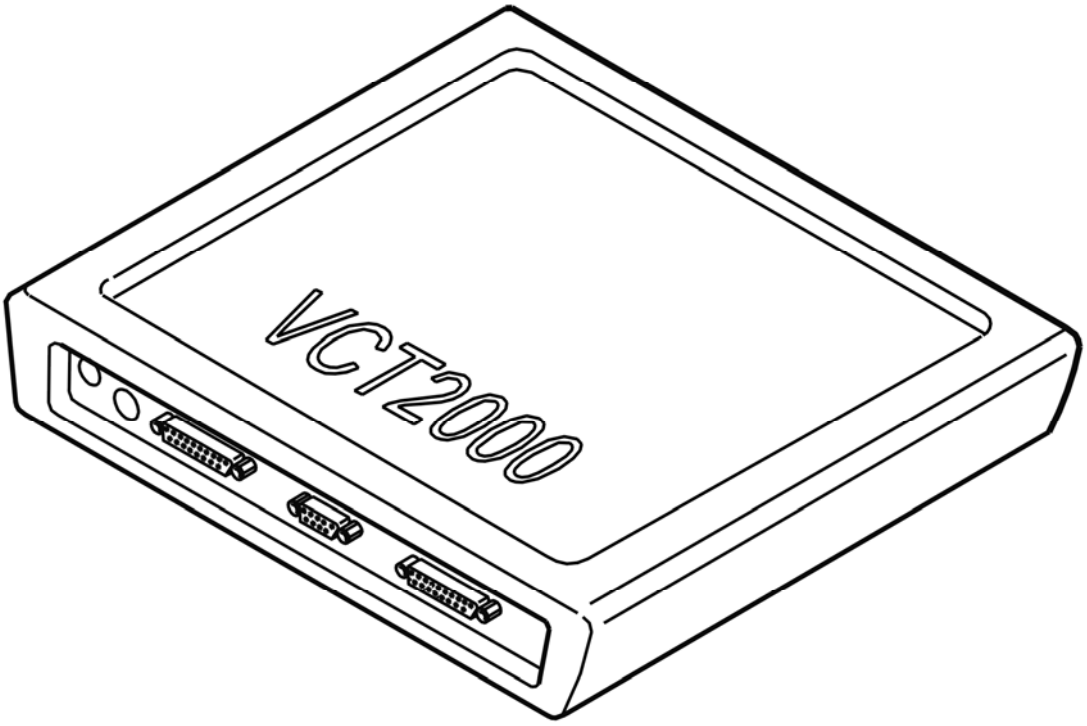

Fig. 538: Identifying VCT2000 Diagnostic Tool Symbol In VIDA
Courtesy of VOLVO CARS CORPORATION

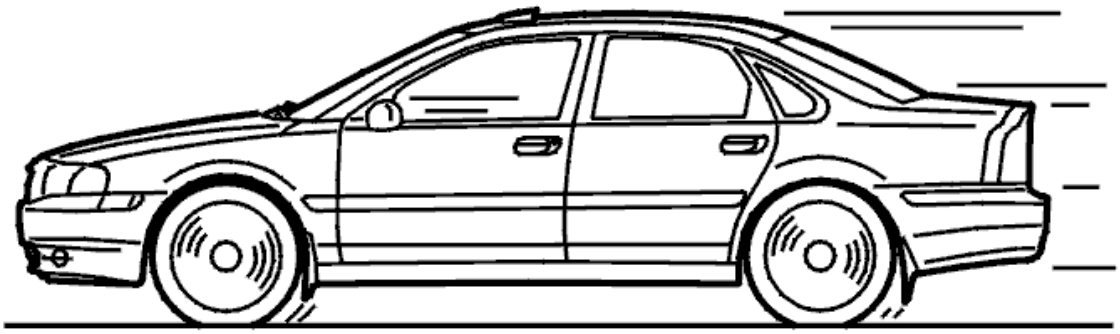

Fig. 539: Identifying Test Drive
Courtesy of VOLVO CARS CORPORATION

- **Continue**

Refer to **CHECKING DIAGNOSTIC TROUBLE CODES (DTCS)**

CHECKING DIAGNOSTIC TROUBLE CODES (DTCS)

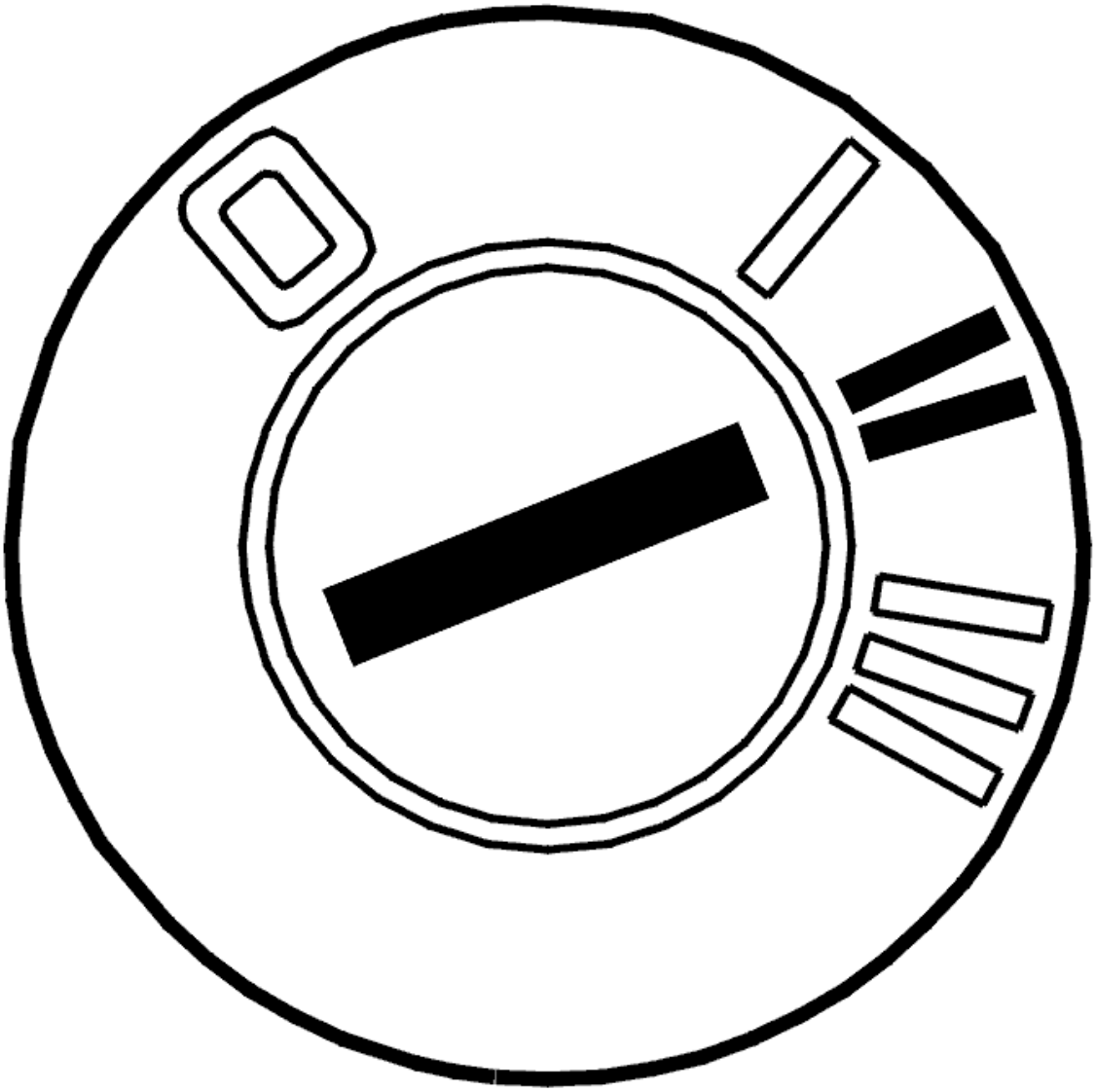

Fig. 540: Identifying Ignition ON
Courtesy of VOLVO CARS CORPORATION

- Ignition on
- Read off diagnostic trouble codes (DTCs).

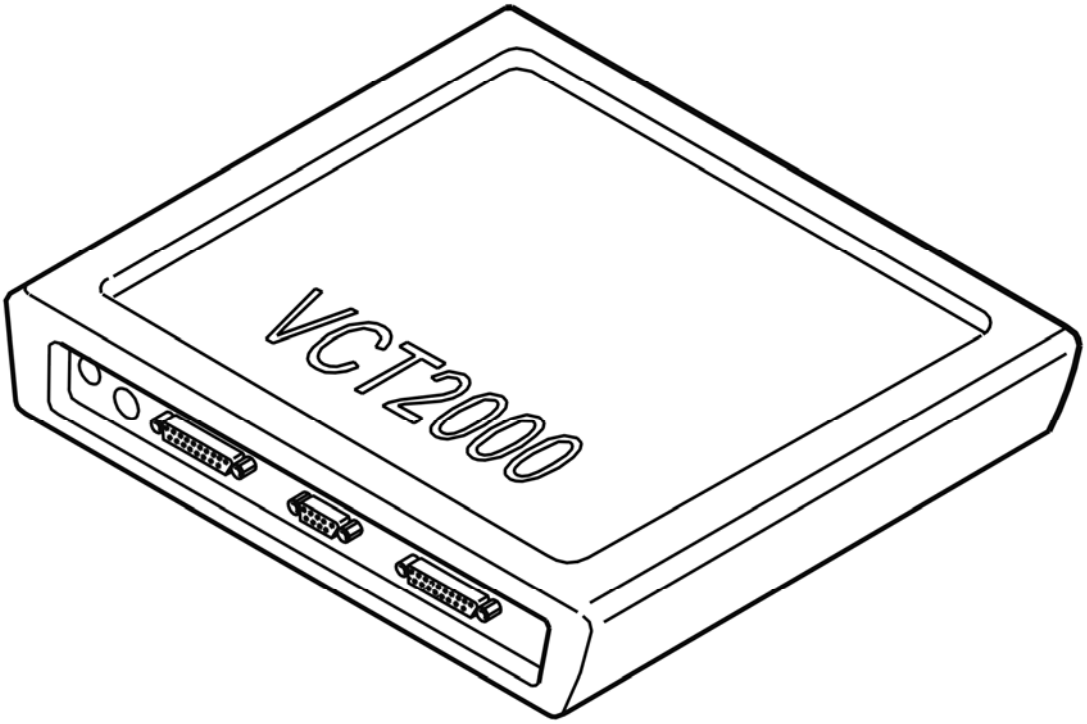

Fig. 541: Identifying VCT2000 Diagnostic Tool Symbol In VIDA
Courtesy of VOLVO CARS CORPORATION

Is diagnostic trouble code (DTC) TCM 000B or TCM-000C stored?

- **YES**

  Refer to **REPLACING THE TRANSMISSION**

- **NO**

  Refer to **FAULT-TRACING INFORMATION**

RESETTING THE ADAPTATION

RESETTING ADAPTATION AND THE COUNTER FOR "TRANSMISSION OIL CHANGE"

HINT: The transmission has torque controlled adaptive pressure control. Pressure control means that the transmission regulates the pressure itself during each gear shift. This avoids harsh gear shifting. Each gear shift is evaluated by the control module and stored in the memory. This allows for compensation for wear and tear in the transmission and clutch. It is important that the adaptation in the memory is reset after the transmission has been repaired. This is to ensure normal operation. The oil is replaced during repair; the "Transmission oil change" counter must be reset. If the counter is not reset when the fluid is drained and replaced, there is a risk that a diagnostic trouble code (DTC) will be stored in incorrect

circumstances.

NOTE: This applies only if the transmission or one of the components in the transmission have been replaced.

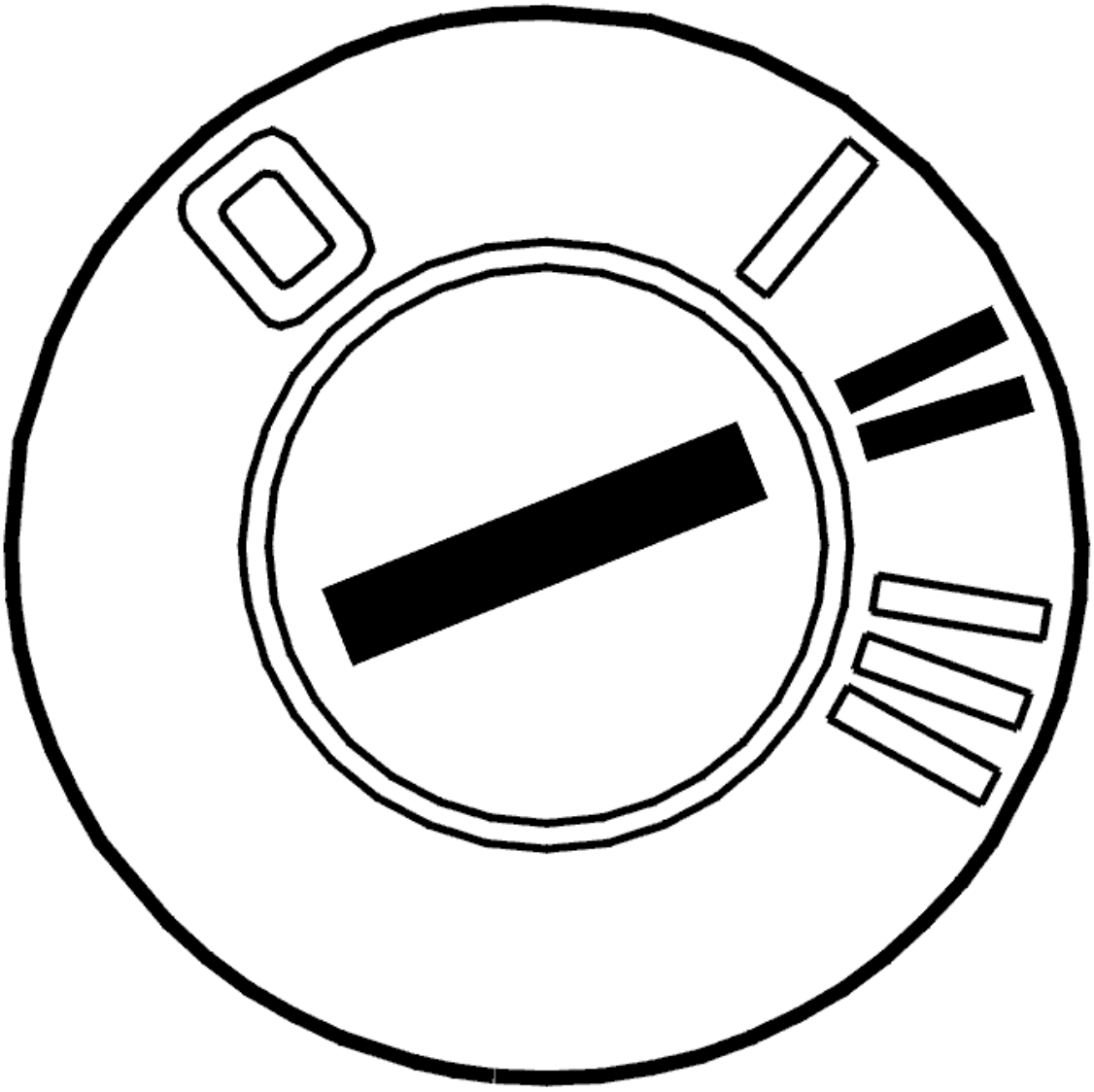

Fig. 542: Identifying Ignition ON
Courtesy of VOLVO CARS CORPORATION

- Ignition on.

  Click on the VCT2000 symbol to reset the adaptation and counter.

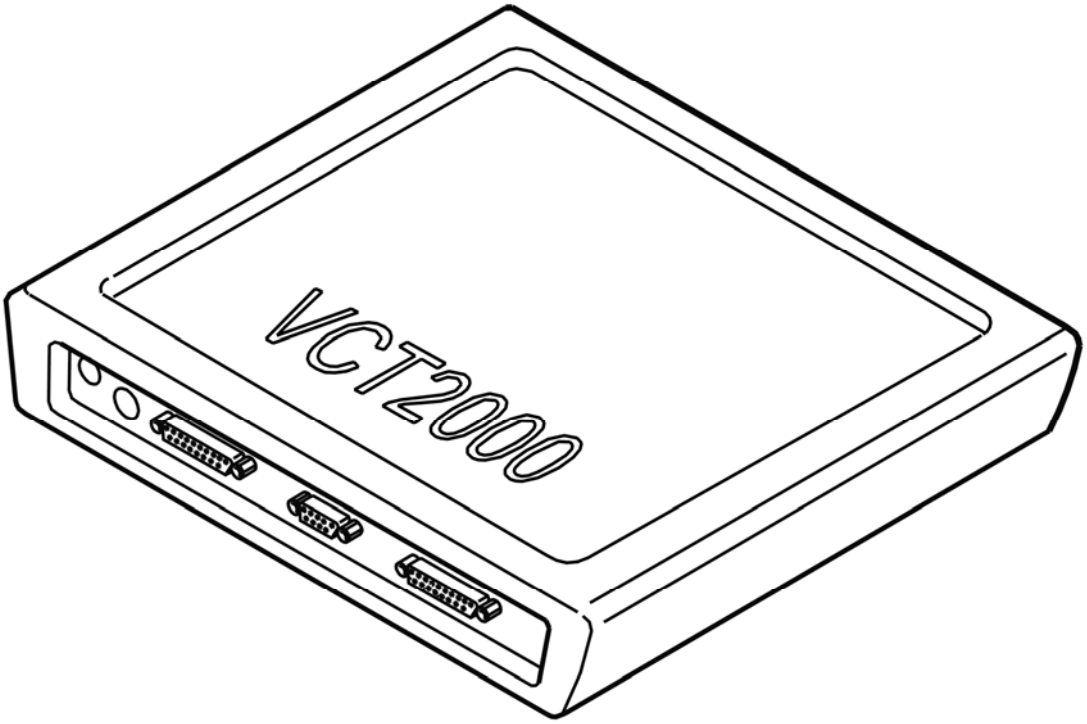

Fig. 543: Identifying VCT2000 Diagnostic Tool Symbol In VIDA
Courtesy of VOLVO CARS CORPORATION

- **Continue**

  Refer to **CHECKING DIAGNOSTIC TROUBLE CODES (DTCS)**

INFORMATION

FAULT-TRACING INFORMATION

The fault should have been detected and remedied. As this is not the case fault-tracing has failed.

Exit fault-tracing for this diagnostic trouble code (DTC) or make another attempt.

CHECKING THE OIL LEVEL IN THE TRANSMISSION

CHECK THE TRANSMISSION OIL LEVEL

NOTE: The transmission fluid level is extremely important for transmission function. Therefore it is imperative that it is correct. In addition the oil level is dependent on oil temperature.

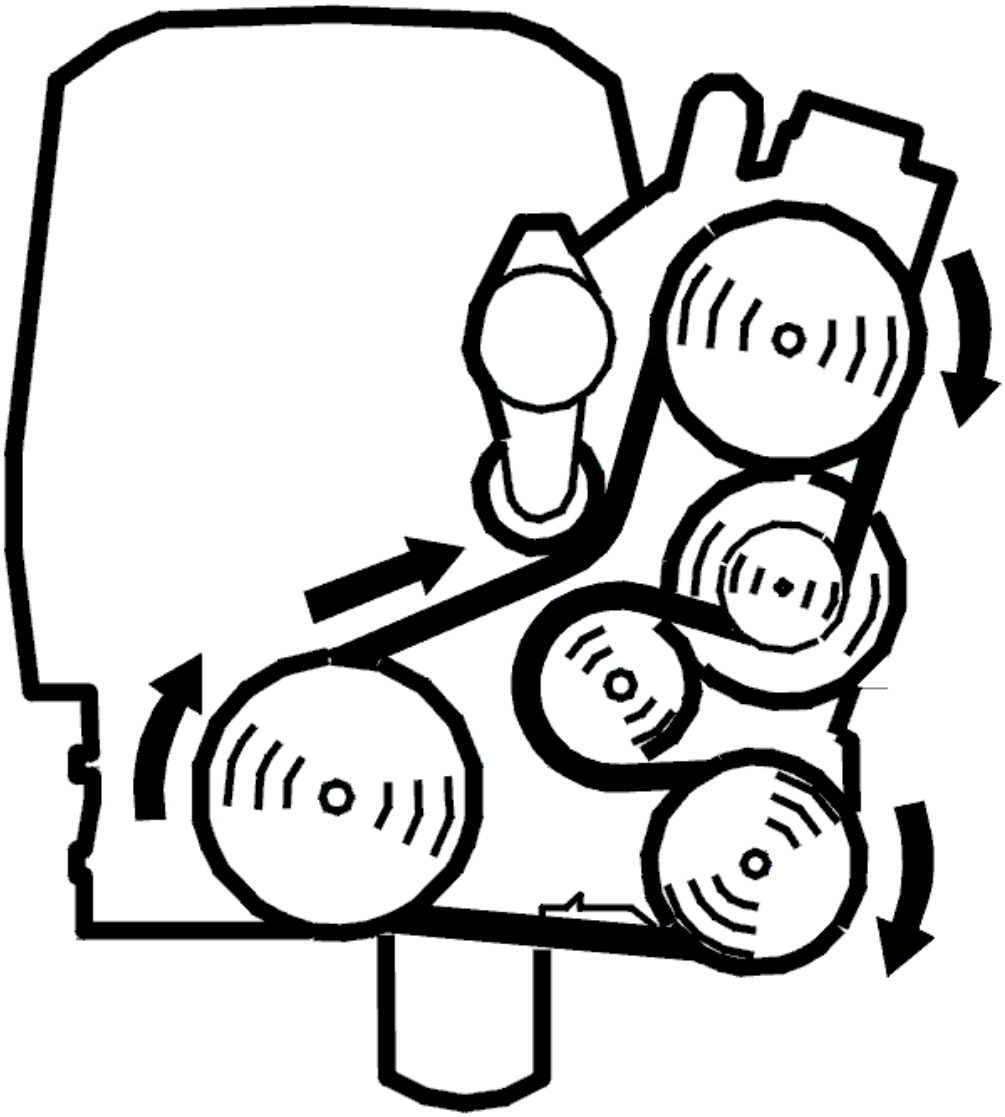

Fig. 544: Identifying Belt Routing
Courtesy of VOLVO CARS CORPORATION

- Start the car
- Read off the oil temperature.

When checking the gearbox oil level the oil temperature **must** be **80 °C - 90 °C** .

At the correct temperature, the oil level should be between "Min hot" and "Max hot".

Oil level

Too high: Drain the transmission fluid to the correct level
Too low: Check the transmission for leakage.

Remedy as necessary.

Other information:

- To check and adjust the oil level, see **OIL LEVEL, CHECKING** .

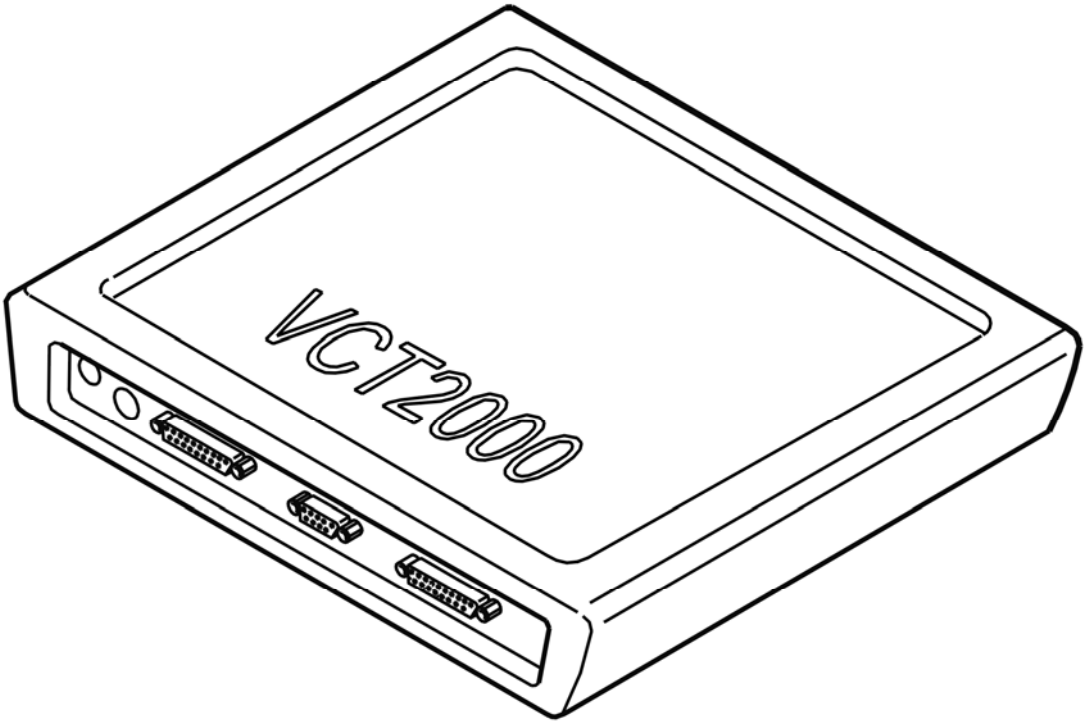

Fig. 545: Identifying VCT2000 Diagnostic Tool Symbol In VIDA
Courtesy of VOLVO CARS CORPORATION

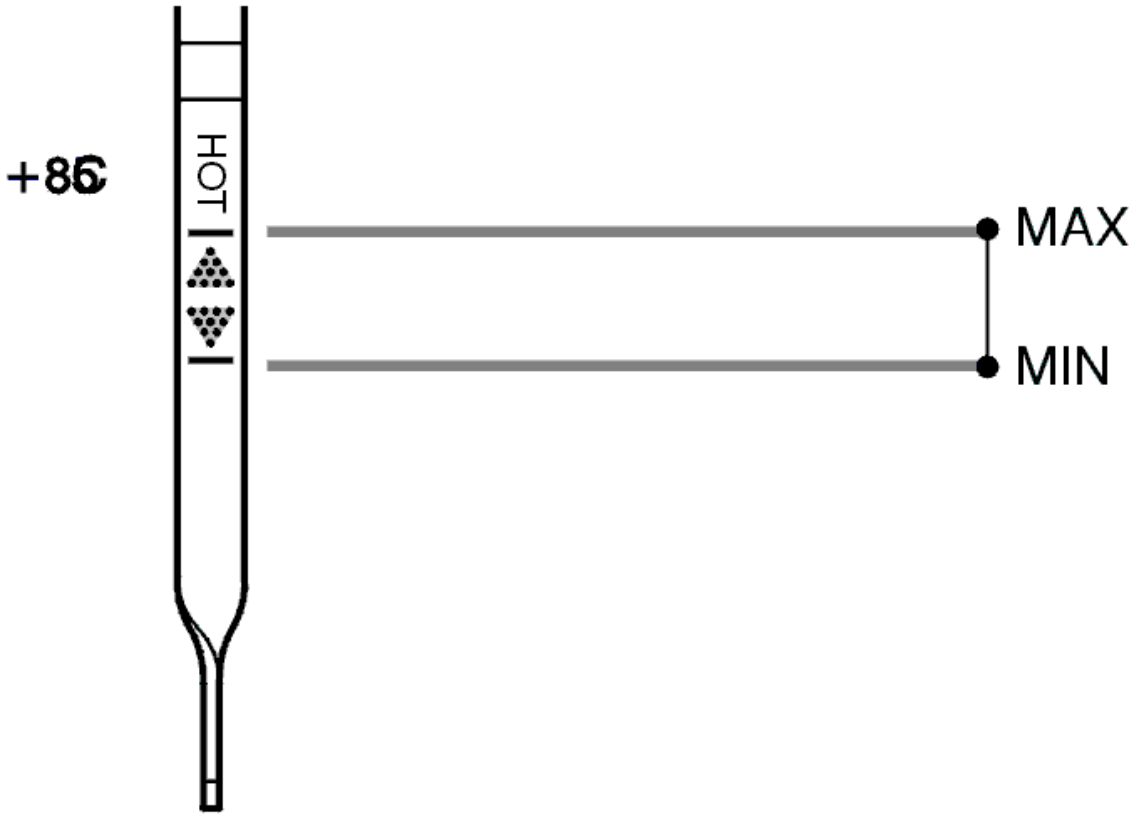

Fig. 546: Identifying Oil Level / Temperature
Courtesy of VOLVO CARS CORPORATION

Was the transmission fluid level correct?

- **YES**

  Refer to **CHECKING SHIFTING SOLENOIDS AND SHIFTING VALVES.**

- **NO**

  NOT OK

CHECKING DIAGNOSTIC TROUBLE CODES (DTCS)

ERASING DIAGNOSTIC TROUBLE CODES (DTCS)

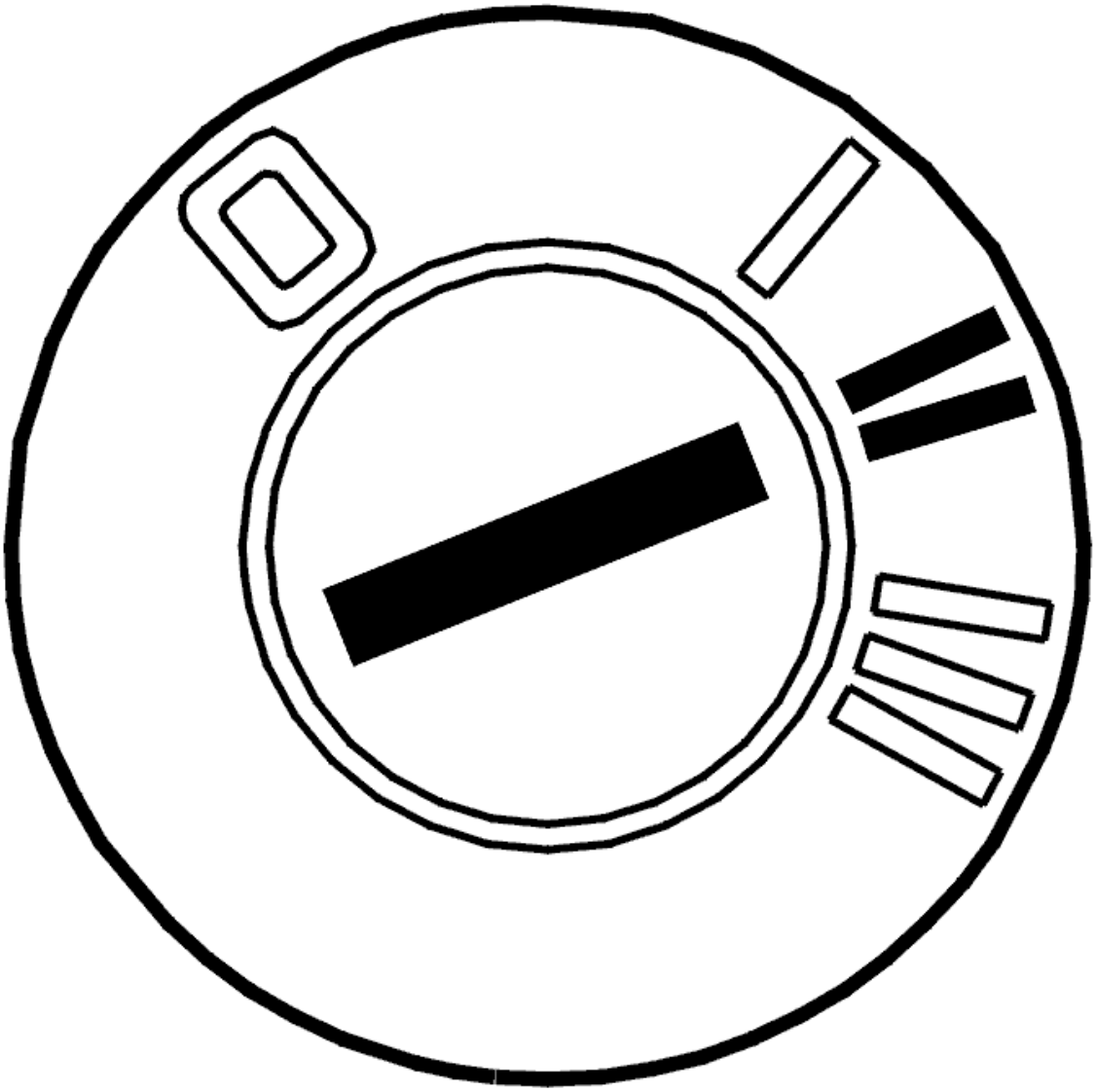

Fig. 547: Identifying Ignition ON
Courtesy of VOLVO CARS CORPORATION

- Ignition off
- Wait for two minutes to allow time for the diagnostic trouble codes (DTCs) to be stored in the control module memory
- Ignition on
- Erase diagnostic trouble codes (DTCs).

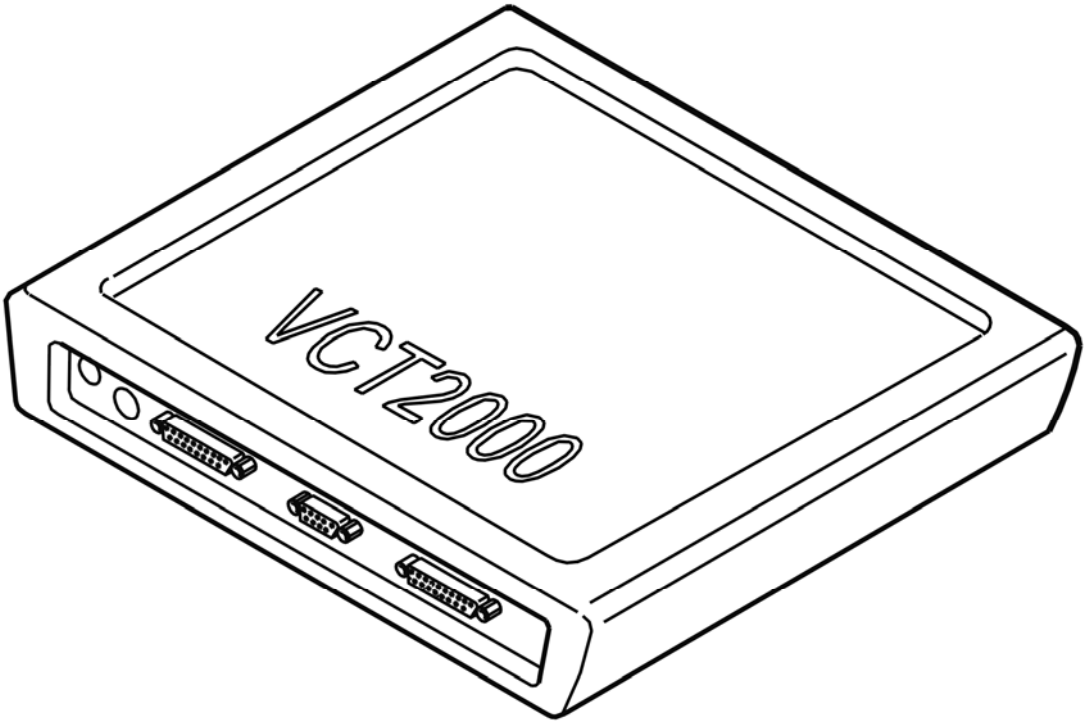

Fig. 548: Identifying VCT2000 Diagnostic Tool Symbol In VIDA
Courtesy of VOLVO CARS CORPORATION

- **Continue**

  Refer to **TEST DRIVING**

TEST DRIVING

NOTE: **Test drive the car according to the driving schedule below to check whether the fault is still active. The test drive is compiled in order to create the conditions in which the diagnostic trouble code (DTC) will be stored again if the fault is active.**

The TEST MODE function can be used to provoke any diagnostic trouble codes (DTC). The function reduces the conditions for how quickly diagnostic trouble codes (DTCs) are stored in the control module and the test drive becomes easier.

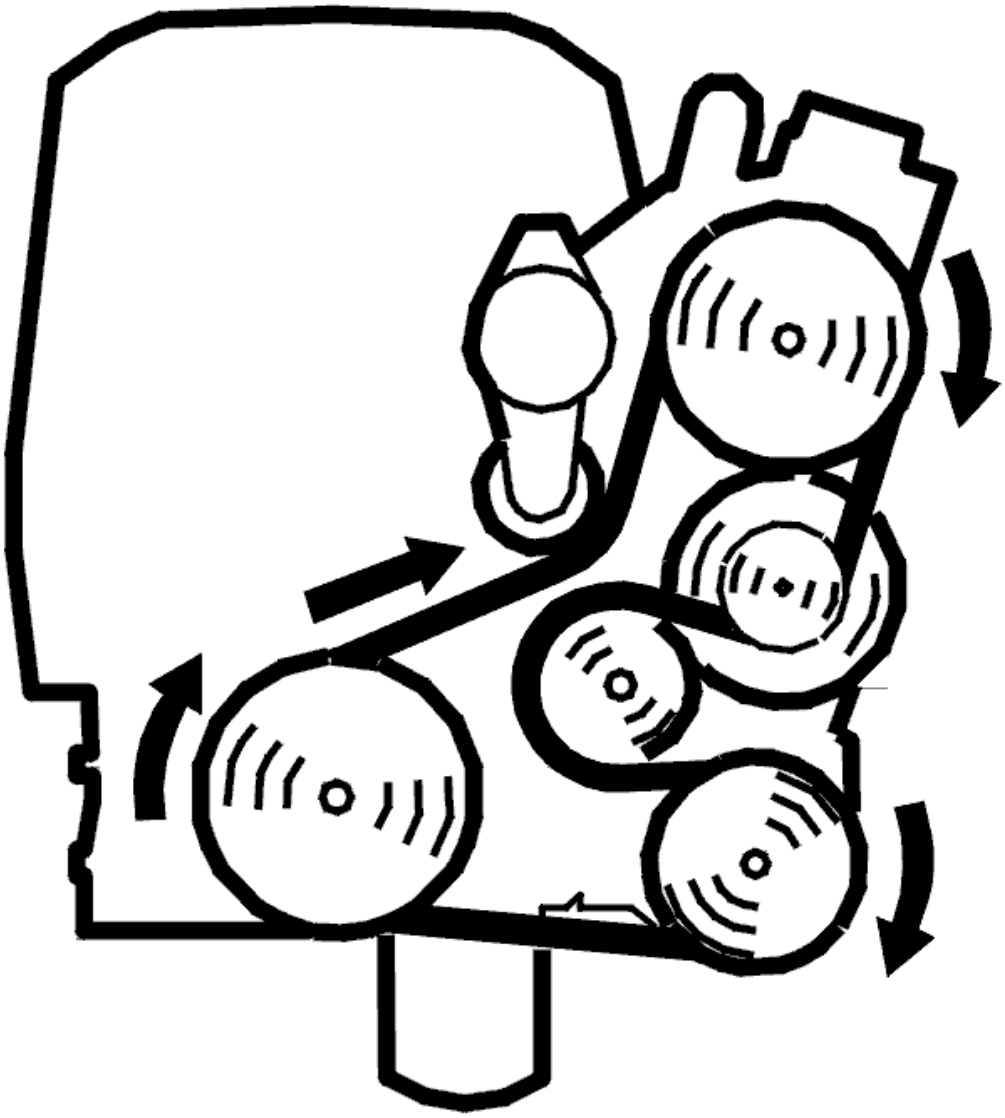

Fig. 549: Identifying Belt Routing
Courtesy of VOLVO CARS CORPORATION

- Start the engine
- Activate TEST MODE.

NOTE: Do not switch off the engine

- Disconnect the VIDA station. Test drive the car as described below.

WARNING: Please observe traffic regulations.

NOTE: Before test driving, the transmission should be at operating temperature,

approximately 80-90°C.

Move the gear selector to Geartronic position. Accelerate carefully until the speed is between 35-65 km/h.

Maintain a constant speed.

Shift up to second, third and fourth gears. Maintain a steady speed for approximately 15 seconds between shifts.

Criteria for diagnostic trouble code (DTC):

- The gear selector is in the desired gear position for at least 15 seconds
- Speed above 30 km/h
- Positive engine torque (no engine braking)
- Engine speed (RPM) above 2000 rpm.

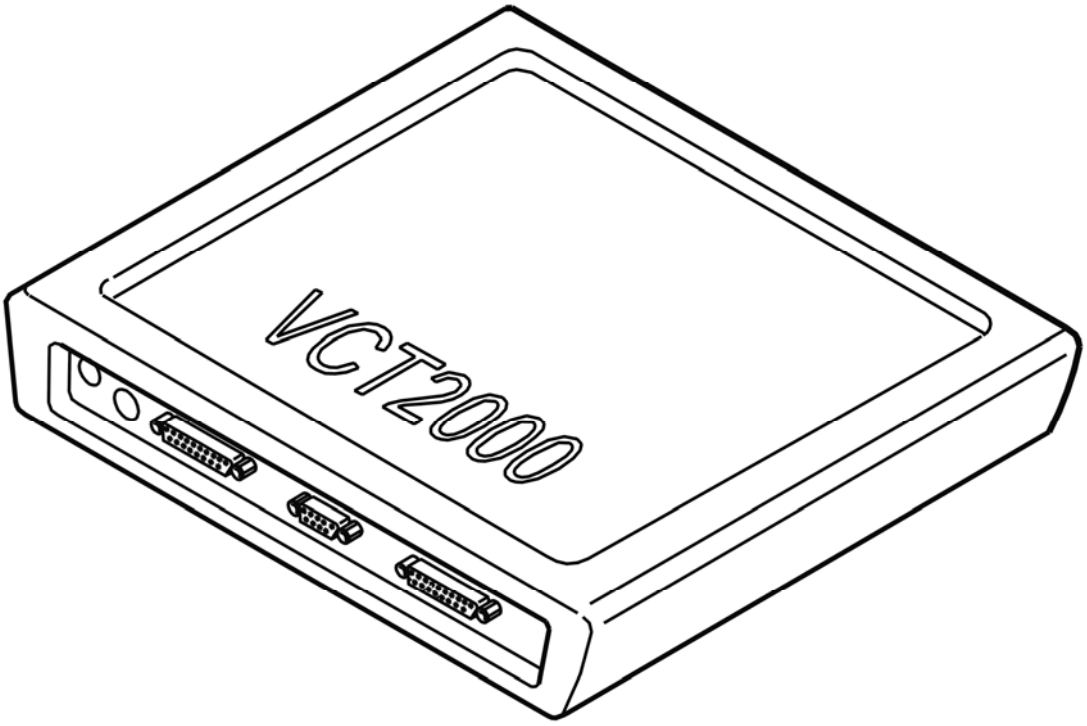

Fig. 550: Identifying VCT2000 Diagnostic Tool Symbol In VIDA
Courtesy of VOLVO CARS CORPORATION

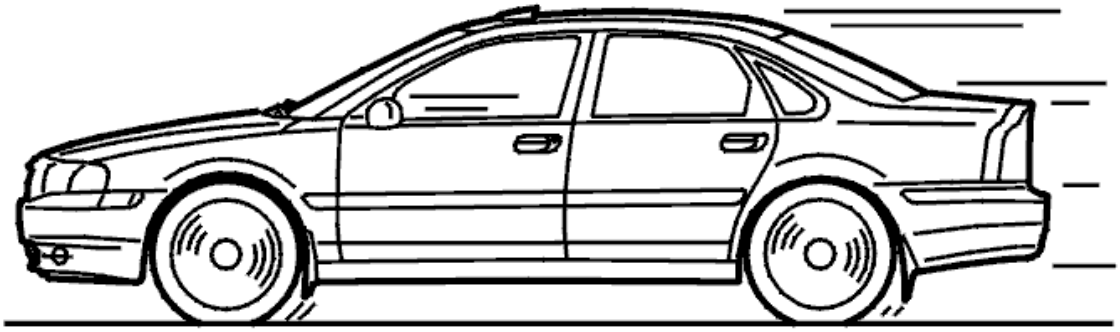

Fig. 551: Identifying Test Drive
Courtesy of VOLVO CARS CORPORATION

- **Continue**

Refer to **CHECKING DIAGNOSTIC TROUBLE CODES (DTCS)**

CHECKING DIAGNOSTIC TROUBLE CODES (DTCS)

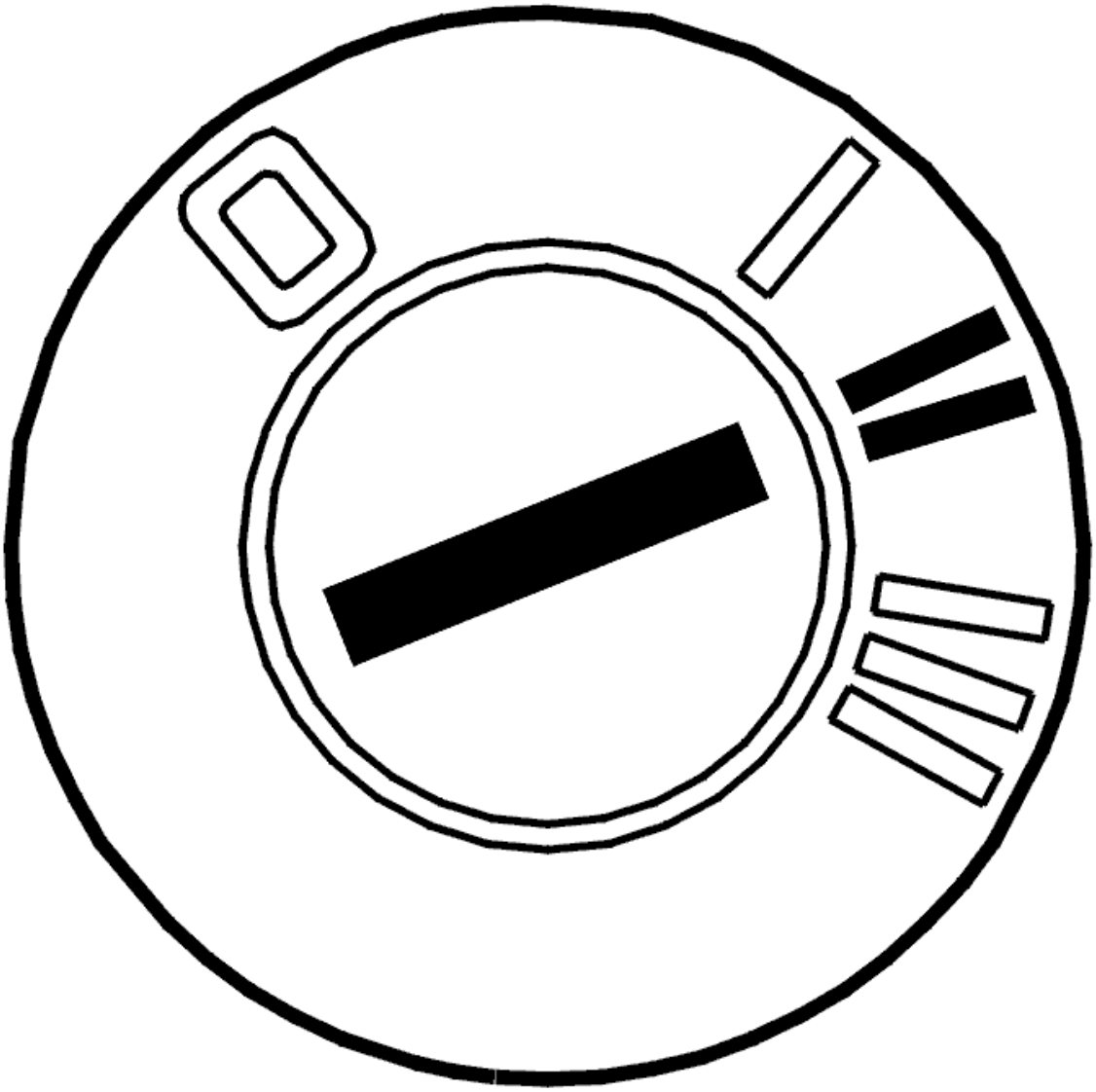

Fig. 552: Identifying Ignition ON
Courtesy of VOLVO CARS CORPORATION

- Ignition on
- Read off diagnostic trouble codes (DTCs).

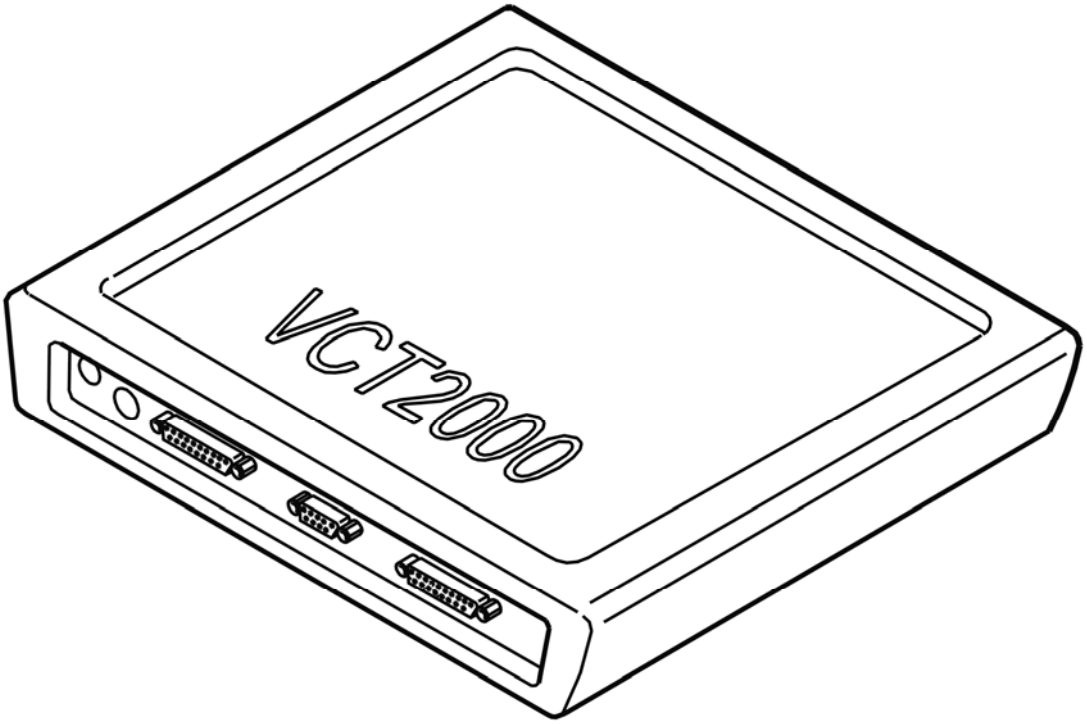

Fig. 553: Identifying VCT2000 Diagnostic Tool Symbol In VIDA
Courtesy of VOLVO CARS CORPORATION

Is diagnostic trouble code (DTC) TCM 000B or TCM-000C stored?

- **YES**

  Refer to **INFORMATION**

- **NO**

  NO DTC

TCM-000C: SHIFT SOLENOID S2. HYDRAULIC FAULT (4T65 AWD; 2003-2006)

DIAGNOSTIC TROUBLE CODE (DTC) INFORMATION

Condition

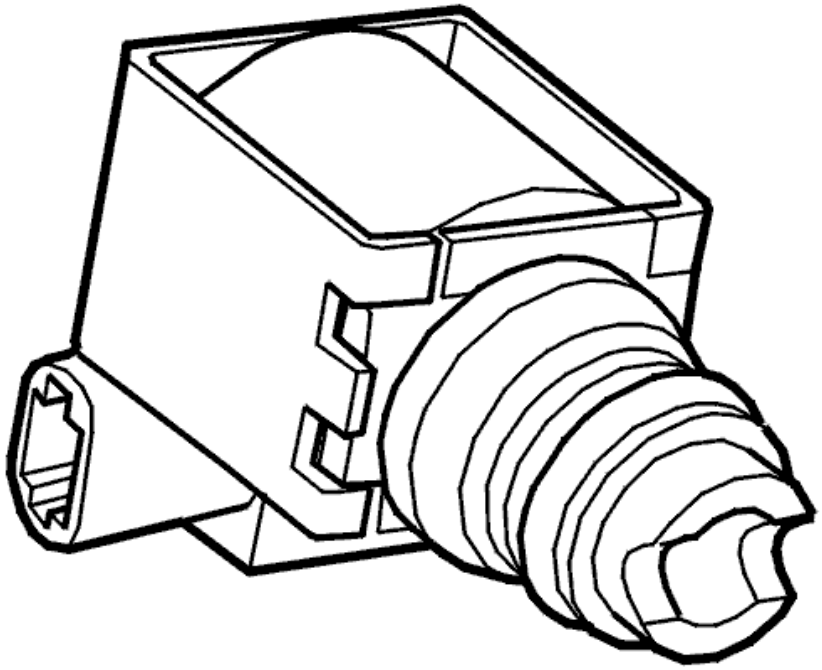

Fig. 1: Identifying Shift Solenoid S1 And S2
Courtesy of VOLVO CARS CORPORATION

The transmission control module (TCM) compares the speed signal from the brake control module (BCM) with the speed signal from the transmission. The control module also checks which gear is selected and compares it with the calculated gear. The speed signal from the brake control module (BCM) and the transmission speed signals should be almost identical, the transmission speed signal should be greater or lower than the brake control module (BCM) speed signal (vehicle speed must be above 30 km/h, engine speed (RPM) above 1400 RPM and transmission oil temperature over 20 °C).

Diagnostic trouble code (DTC) TCM-000C is stored if the control module detects that the vehicle speed and engine speed (RPM) signals do not correspond with the programmed values and that an "incorrect" gear has been selected. This is because a solenoid fault has occurred in the hydraulic circuit for gears 1-2 or 3-4.

Substitute Value

- The control module "Limp-home" mode is engaged and only gear positions 3 and R are available. When the ignition is switched off the control module switches to normal function and all four forward shift positions can be used.

Possible Source

- Glycol in the transmission fluid.
- The hydraulic valve for solenoid S2 has stuck in the open or closed position
- Defective control system (the solenoid binds or is stuck)
- Internal leakage in the transmission
- Warn or damaged clutch driven plates in the transmission.

Fault symptom[s]

- General orange warning lamp lit
- Malfunction indicator lamp (MIL) lit
- No shifting
- Harsh gear shifting
- No lock-up function.

HINT: When the transmission control module (TCM) detects disrupted function, "Limp-home" mode is activated and only shift positions 3 and R are available. Lock-up function is also unavailable.

HINT: Harsh shifting - due to disabled line pressure solenoid STH control. This results in constant maximum line pressure and leads to harsher shifting and gear engagement.

HYDRAULIC FAULT

see **HYDRAULIC FAULT**

TCM-000D: LINE PRESSURE SOLENOID STH. SIGNAL TOO HIGH. INTERMITTENT FAULT (4T65 AWD; 2003-2006)

DIAGNOSTIC TROUBLE CODE (DTC) INFORMATION

Condition

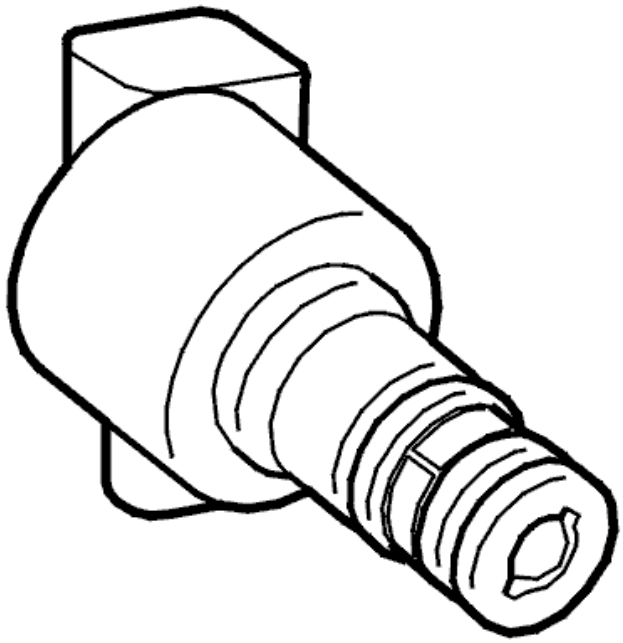

Fig. 2: Identifying Line Pressure Solenoid, STH
Courtesy of VOLVO CARS CORPORATION

Line pressure solenoid STH regulates line pressure in the transmission. The solenoid is controlled by an amplifier in the transmission control module (TCM) output. The transmission control module (TCM) uses the amplifier to control the current to the solenoid. A low amperage gives a high line pressure. A high amperage (approximately 1 A) gives a low line pressure. Amperage is primarily affected by throttle position. Diagnostic trouble code (DTC) TCM-000D is stored if the control module registers that the current is too high through the circuit. Solenoid STH is unable to control the system pressure.

Substitute Value

- The control module "Limp Home" program initiated.

Possible Source

- Short-circuit to supply voltage in the control signal wiring or signal wiring.
- Short-circuit between control signal cable and signal cable.
- Defective solenoid STH.

Fault symptom[s]

- General orange warning lamp lit.

- Malfunction indicator lamp (MIL) lit.
- No shifting.
- No lock-up function.

HINT: No shifting - because the transmission control module (TCM) prevents activation of the solenoids. This stops gear-shifting.

CAUTION: There is a danger that this fault will cause line pressure in the transmission to be too low, which will result in wear.

SIGNAL TOO HIGH. INTERMITTENT FAULT

INTERMITTENT FAULT

Check the wiring between control module terminal A52 and automatic transmission connector terminal C (#A3). Check the wiring between control module terminal A70 (#B10) and automatic transmission connector terminal D (#A4) for an intermittent short-circuit to supply voltage according to **SHORT-CIRCUIT TO SUPPLY VOLTAGE, INTERMITTENT FAULTS** .

Remedy as necessary.

Other information:

- To disconnect control module, see **TRANSMISSION CONTROL MODULE (TCM), REPLACING** .
- To connect the breakout box to the transmission connector, see **CONNECTING THE BREAKOUT BOX, GM AUTOMATIC TRANSMISSIONS** .
- To connect the breakout box, see **CONNECTING THE BREAKOUT BOX** .
- For information about signals, see **SIGNAL SPECIFICATION** .

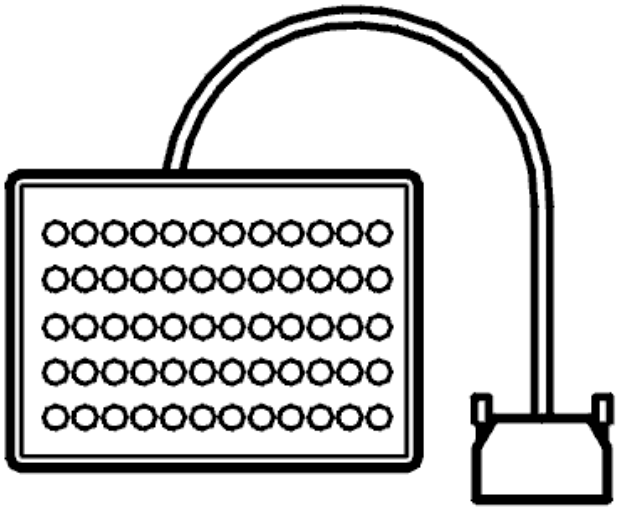

Fig. 3: Identifying Breakout Box
Courtesy of VOLVO CARS CORPORATION

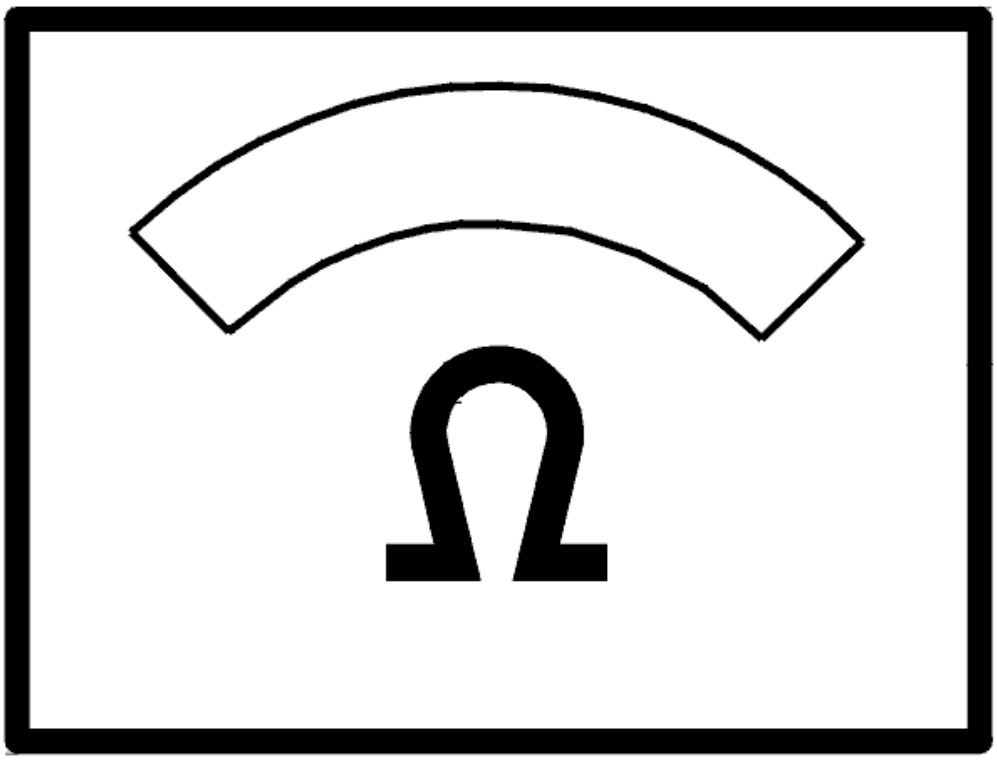

Fig. 4: Identifying Ohms Display
Courtesy of VOLVO CARS CORPORATION

- **Continue**

  Refer to **INFORMATION**

INFORMATION

FAULT-TRACING INFORMATION

If the fault is intermittent, do not verify fault-tracing if the fault does not recur.

It is possible to view the information again, or leave fault-tracing for this diagnostic trouble code (DTC).

TCM-000D: LINE PRESSURE SOLENOID STH. SIGNAL TOO HIGH.

PERMANENT FAULT (4T65 AWD; 2003-2006)

DIAGNOSTIC TROUBLE CODE (DTC) INFORMATION

see **DIAGNOSTIC TROUBLE CODE (DTC) INFORMATION**

SIGNAL TOO HIGH. PERMANENT FAULT

RESETTING THE ADAPTATION

RESETTING ADAPTATION AND THE COUNTER FOR "TRANSMISSION OIL CHANGE"

HINT: The transmission has torque controlled adaptive pressure control. Pressure control means that the transmission regulates the pressure itself during each gear shift. This avoids harsh gear shifting. Each gear shift is evaluated by the control module and stored in the memory. This allows for compensation for wear and tear in the transmission and clutch. It is important that the adaptation in the memory is reset after the transmission has been repaired. This is to ensure normal operation. The oil is replaced during repair; the "Transmission oil change" counter must be reset. If the counter is not reset when the fluid is drained and replaced, there is a risk that a diagnostic trouble code (DTC) will be stored in incorrect circumstances.

NOTE: **This applies only if the transmission or one of the components in the transmission have been replaced.**

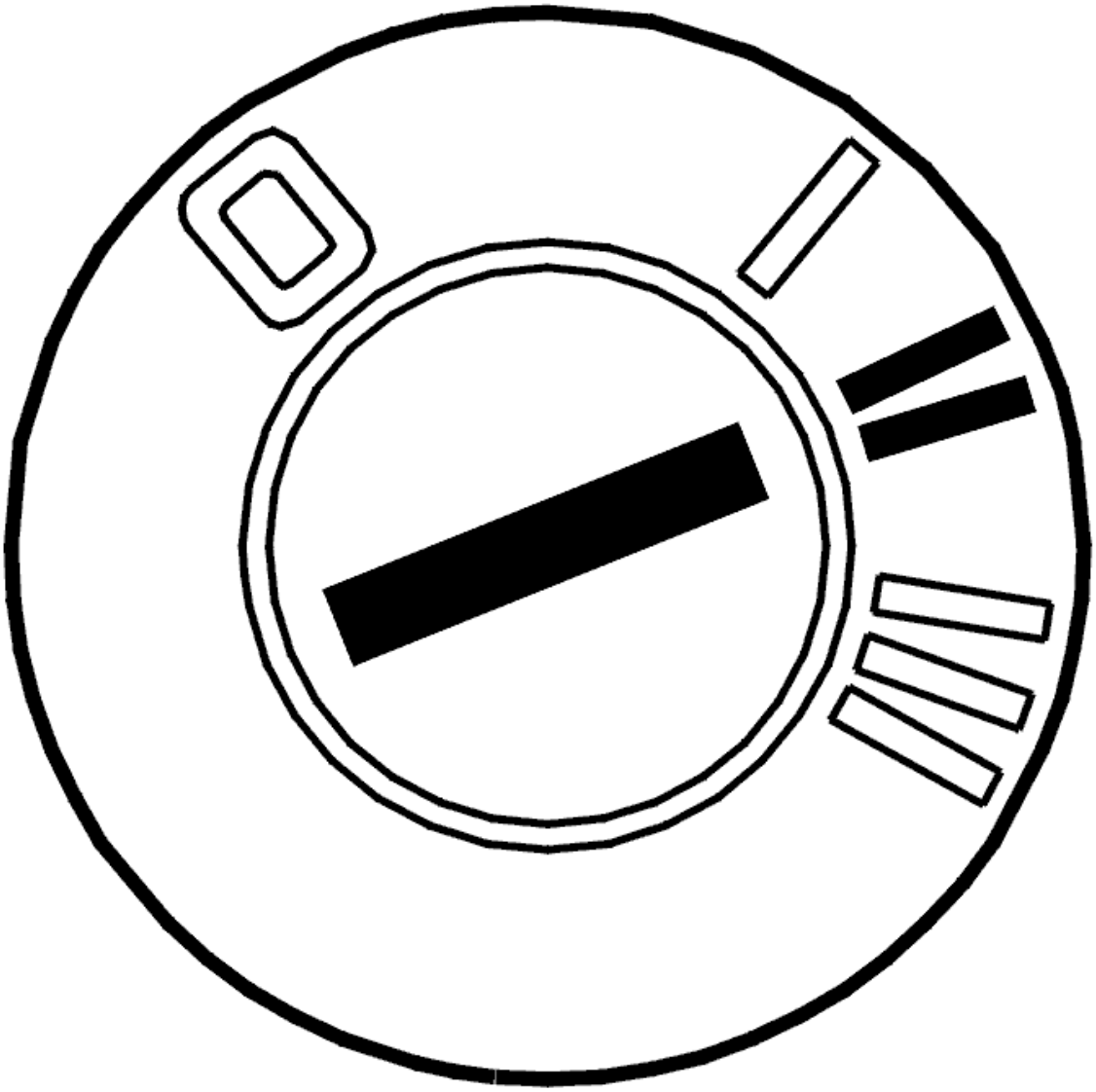

Fig. 5: Identifying Ignition ON
Courtesy of VOLVO CARS CORPORATION

- Ignition on.

  Click on the VCT2000 symbol to reset the adaptation and counter.

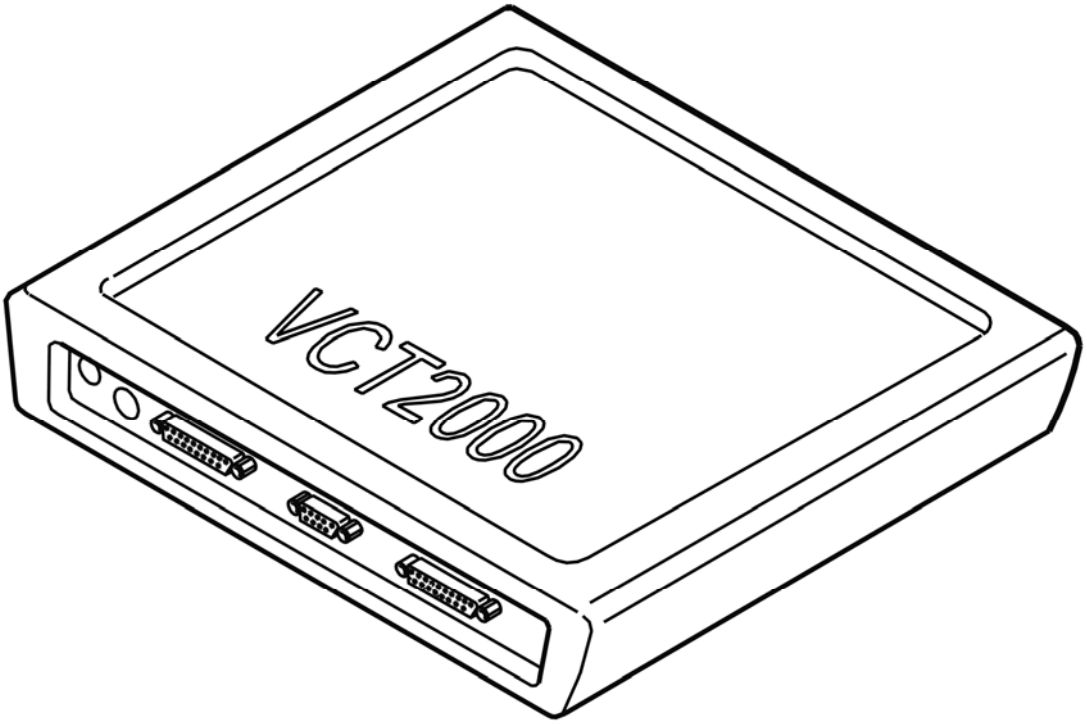

Fig. 6: Identifying VCT2000 Diagnostic Tool Symbol In VIDA
Courtesy of VOLVO CARS CORPORATION

- **Continue**

  Refer to **VERIFICATION**

VERIFICATION

VERIFICATION

HINT: After carrying out the repair, check that the fault has been remedied.

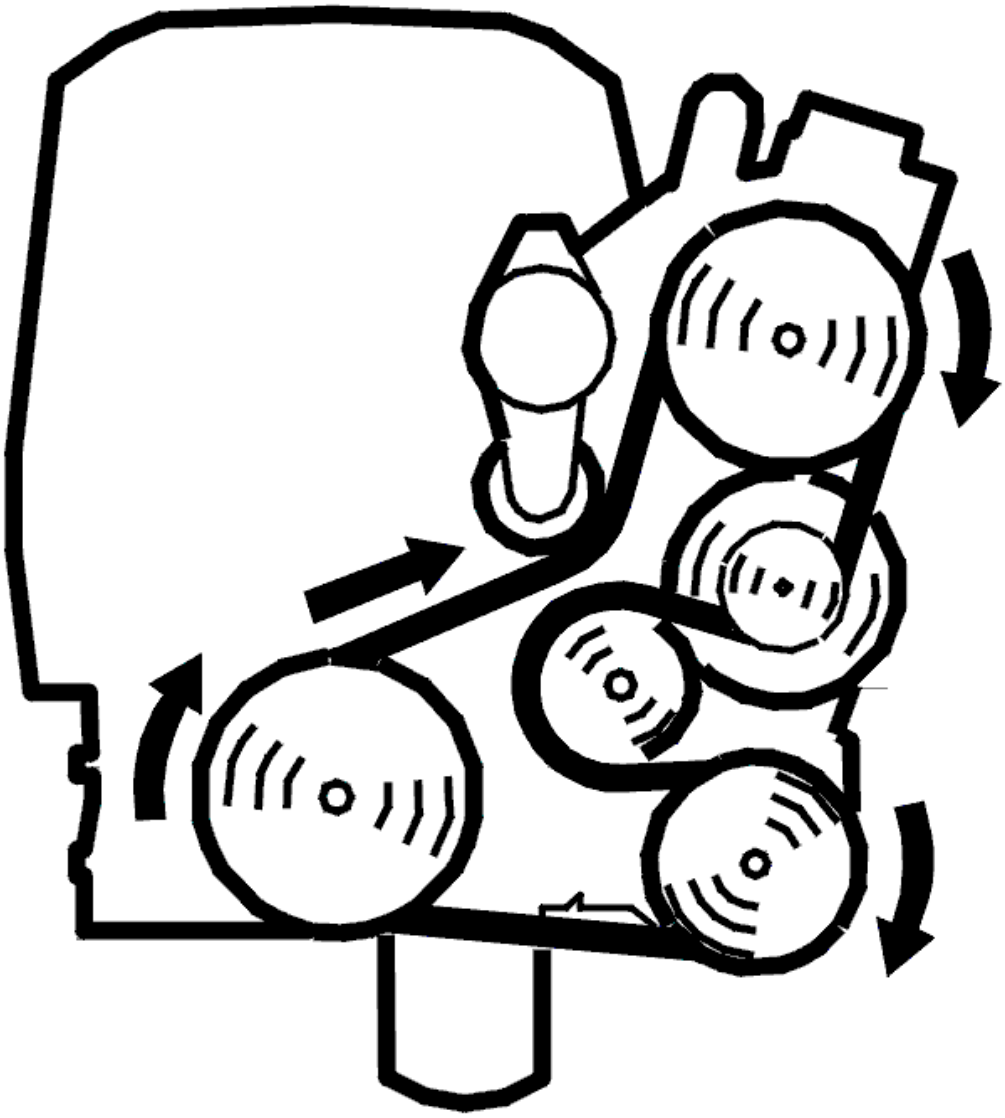

Fig. 7: Identifying Belt Routing
Courtesy of VOLVO CARS CORPORATION

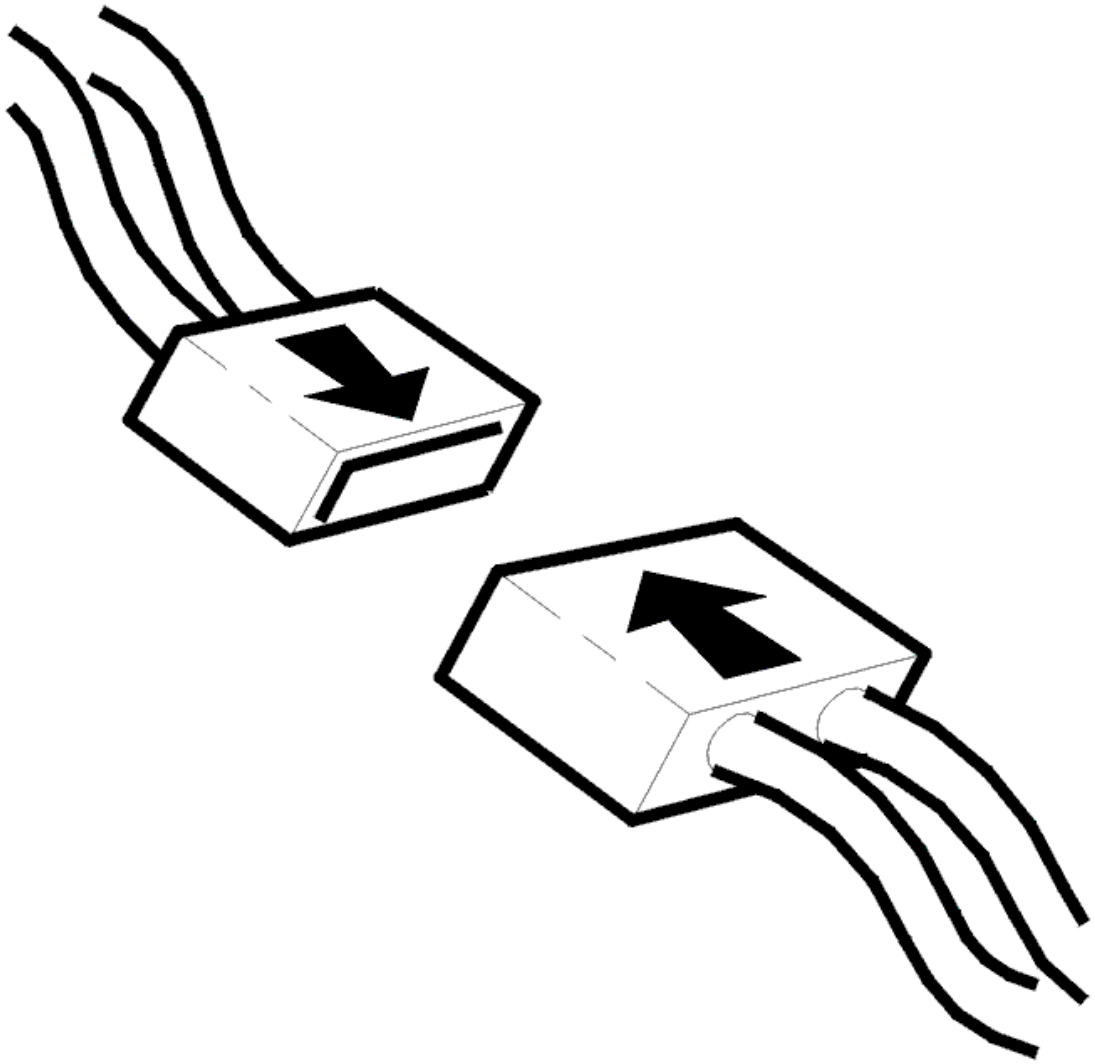

Fig. 8: Identifying Connector(s) Reinstallation
Courtesy of VOLVO CARS CORPORATION

- Ignition off.
- Reconnect the connectors, reinstall components etc.
- Raise the car so that the drive wheels are unimpeded.
- Start the car.
- Read off the current through the solenoid circuit.
- Lock the wheels with the brakes. Shift the gear selector to position D.
- Depress the accelerator pedal (AP) slowly.

  The current should decrease as the accelerator pedal (AP) is depressed.

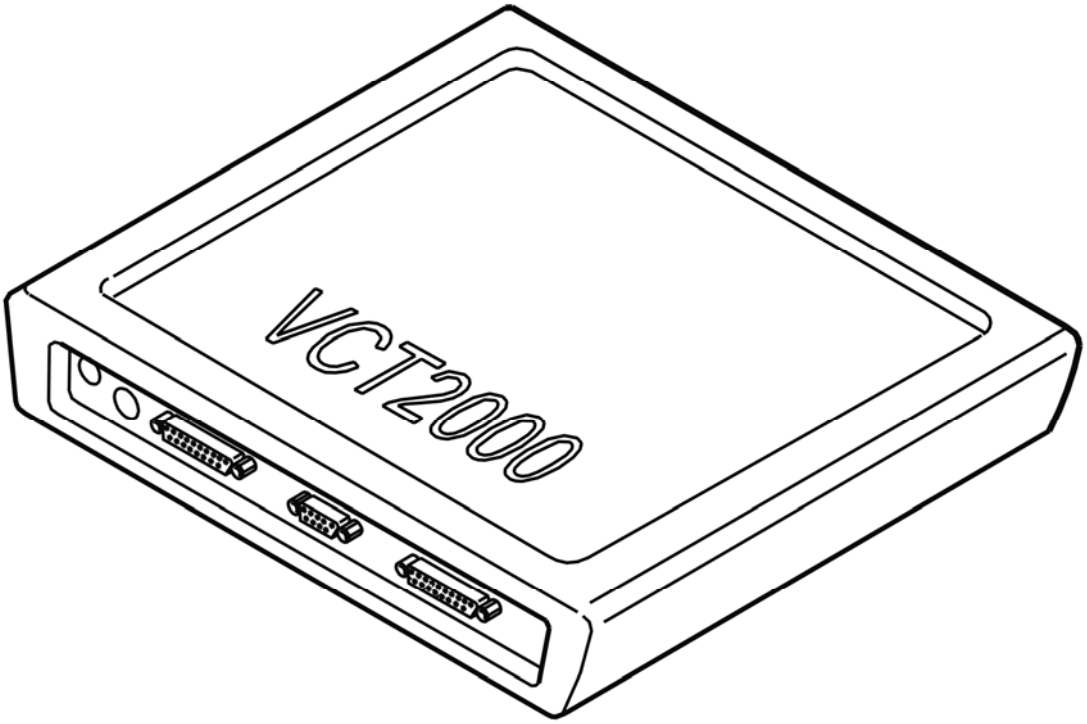

Fig. 9: Identifying VCT2000 Diagnostic Tool Symbol In VIDA
Courtesy of VOLVO CARS CORPORATION

Does the current decrease?

- **YES**

  VERIFIED: Troubleshooting has been completed.

- **NO**

  Refer to **INFORMATION**

INFORMATION

FAULT-TRACING INFORMATION

The fault should have been detected and remedied. As this is not the case fault-tracing has failed.

Exit fault-tracing for this diagnostic trouble code (DTC) or make another attempt.

TCM-000F: LINE PRESSURE SOLENOID STH. SIGNAL MISSING. INTERMITTENT FAULT (4T65 AWD; 2003-2006)

DIAGNOSTIC TROUBLE CODE (DTC) INFORMATION

Condition

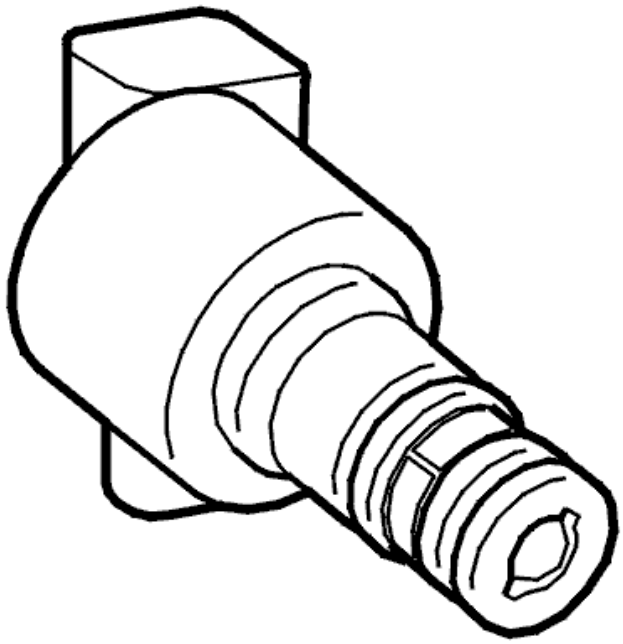

Fig. 10: Identifying Line Pressure Solenoid, STH
Courtesy of VOLVO CARS CORPORATION

Line pressure solenoid STH regulates the line pressure in the transmission. The solenoid is controlled by a power stage in the control module output. The transmission control module (TCM) uses the power stage to control the current to the solenoid. A low amperage results in a high line pressure. A high amperage (approximately 1 A) gives a low line pressure. The amperage is primarily affected by the throttle position. Diagnostic trouble code (DTC) TCM-000F is stored if the control module registers that there is no current in the circuit for solenoid STH. Solenoid STH cannot then control the line pressure.

Substitute Value

- The control module "Limp Home" program has been initiated.

Possible Source

- Contact resistance in the terminals.
- Open-circuit in the control signal cable or the signal cable.
- Defective solenoid STH.

Fault symptom[s]

- General orange warning lamp lit.
- Malfunction indicator lamp (MIL) lit.
- No lock-up function.
- Harsh gear shifting.

HINT: Harsh gear shifting can be caused by:

- No torque limiting request to engine control module (ECM) when shifting.
- No line pressure solenoid STH control. This results in constant maximum line pressure.

SIGNAL MISSING. INTERMITTENT FAULT

INTERMITTENT FAULT

Check the control module and transmission connectors for contact resistance and oxidation according to **CONTACT RESISTANCE AND OXIDATION**

Check the wiring between control module terminal A52 and transmission connector terminal C (#A3). Check the wiring between control module terminal A70 (#B10) and transmission connector terminal D (#A4) for an intermittent open-circuit according to **OPEN-CIRCUIT, INTERMITTENT FAULTS** .

HINT: With the ignition off, the transmission connector disconnected, and the breakout box connected, the resistance between terminals 3 and 4 should be approximately 3.5 ohms.

Remedy as necessary.

Other information:

- To connect the breakout box, see **CONNECTING THE BREAKOUT BOX** .
- To connect the breakout box to the transmission connector, see **CONNECTING THE BREAKOUT BOX, GM AUTOMATIC TRANSMISSIONS** .
- For information about signals, see **SIGNAL SPECIFICATION** .

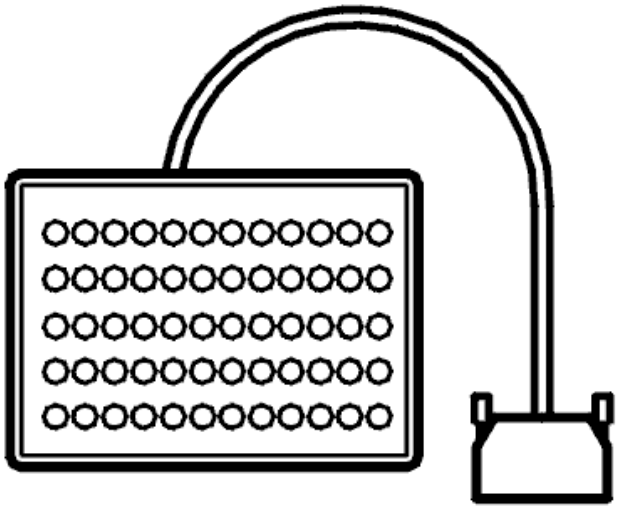

Fig. 11: Identifying Breakout Box
Courtesy of VOLVO CARS CORPORATION

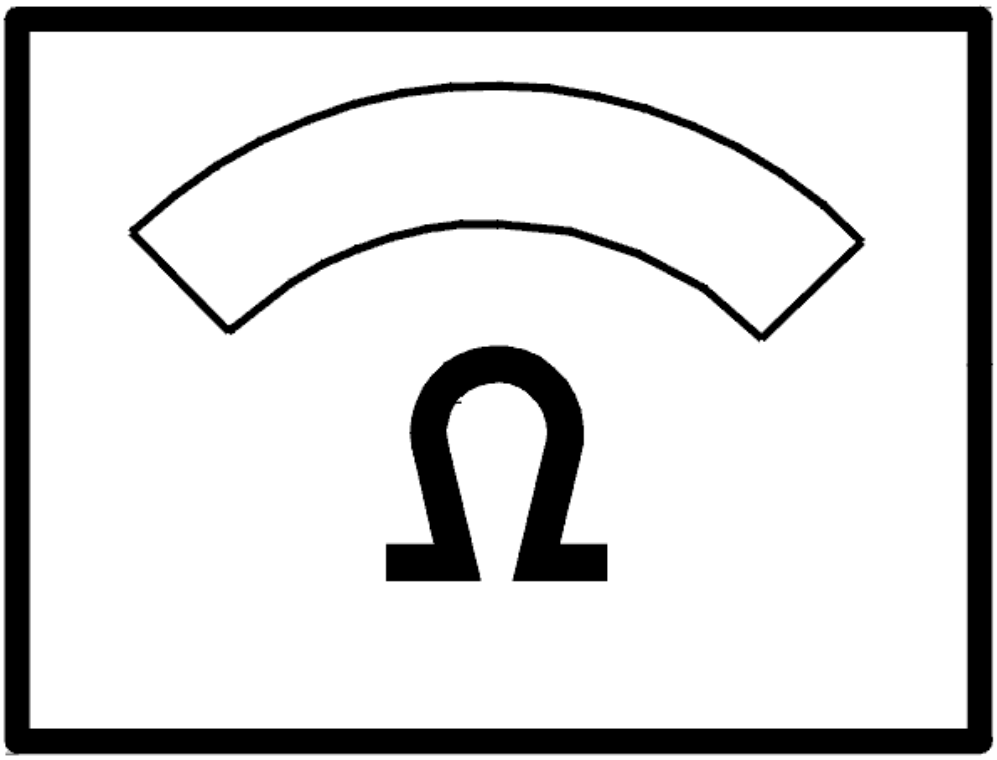

Fig. 12: Identifying Ohms Display
Courtesy of VOLVO CARS CORPORATION

- **Continue**

  Refer to **INFORMATION**

INFORMATION

FAULT-TRACING INFORMATION

If the fault is intermittent, do not verify fault-tracing if the fault does not recur.

It is possible to view the information again, or leave fault-tracing for this diagnostic trouble code (DTC).

TCM-000F: LINE PRESSURE SOLENOID STH. SIGNAL MISSING.

PERMANENT FAULT (4T65 AWD; 2003-2006)

DIAGNOSTIC TROUBLE CODE (DTC) INFORMATION

see **DIAGNOSTIC TROUBLE CODE (DTC) INFORMATION**

SIGNAL MISSING. PERMANENT FAULT

CHECKS

CHECKING LINE PRESSURE SOLENOID STH

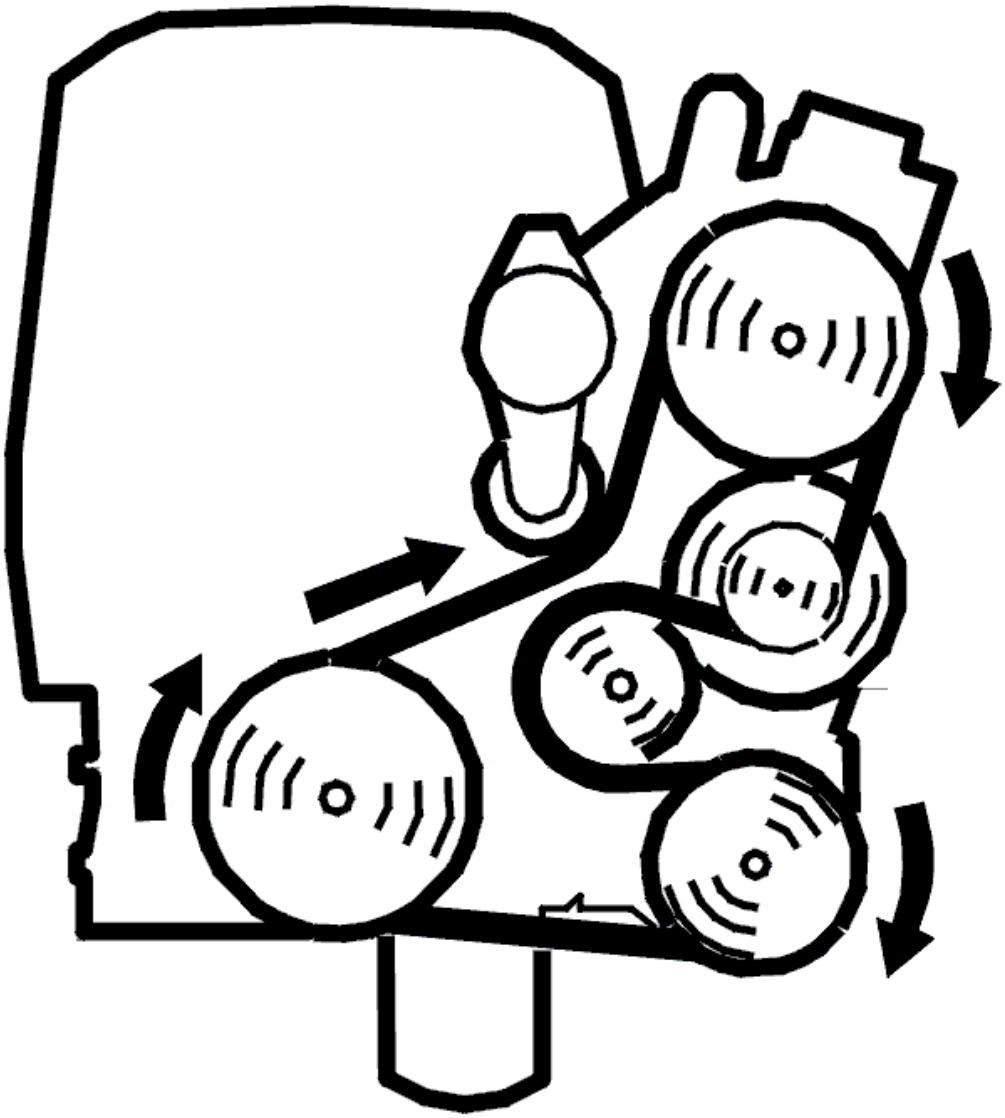

Fig. 13: Identifying Belt Routing
Courtesy of VOLVO CARS CORPORATION

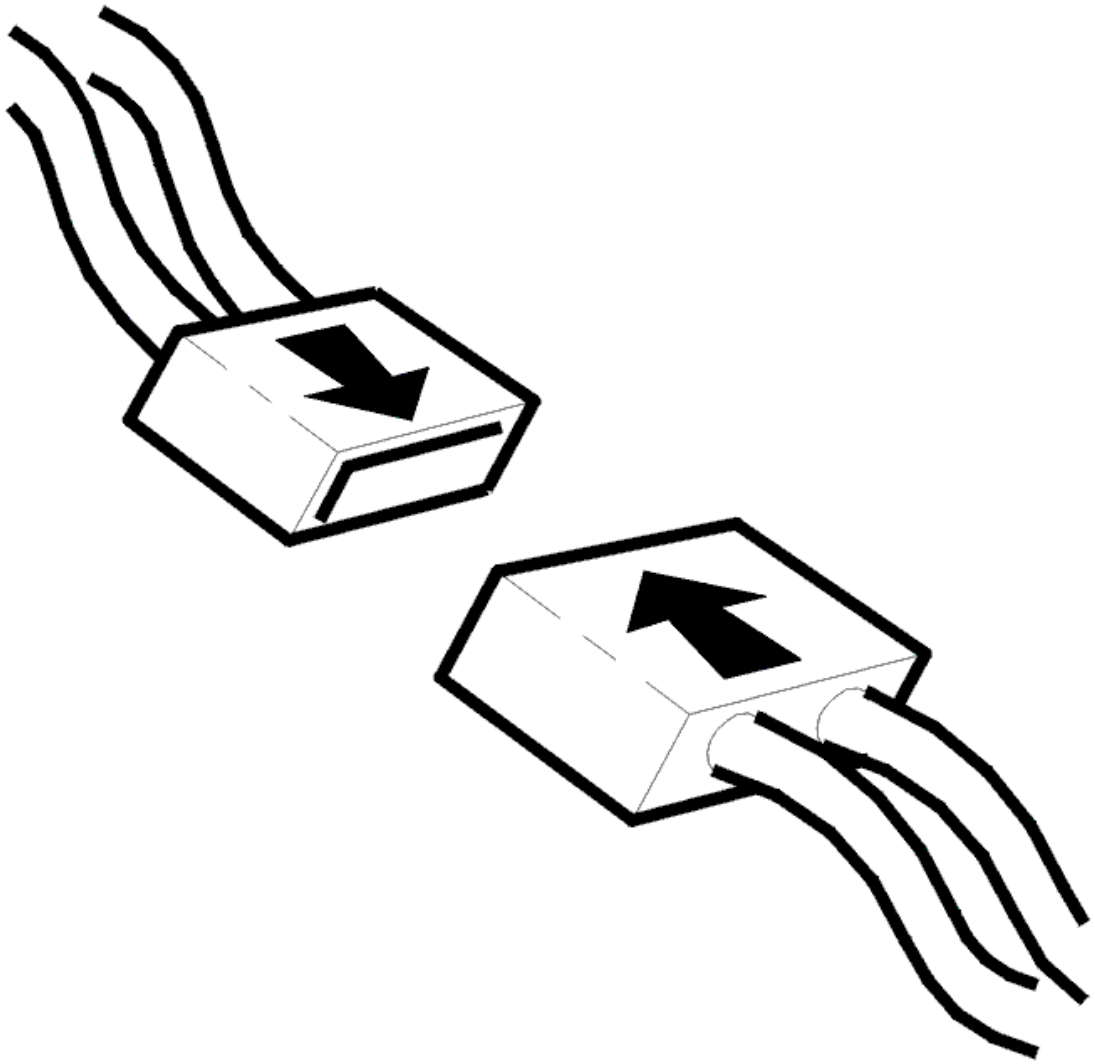

Fig. 14: Identifying Connector(s) Reinstallation
Courtesy of VOLVO CARS CORPORATION

- Ignition off
- Disconnect the automatic transmission and control module connectors
- Remedy contact resistance and oxidation in the control module and automatic transmission connectors. See **CONTACT RESISTANCE AND OXIDATION**
- Reinstall the components, reconnect the connectors etc.
- Raise the car so that the front wheels are off the ground
- Start the car
- Move the gear selector to position D
- Read off the current through the solenoid circuit
- Depress the accelerator pedal (AP) slowly.

The current should decrease as the accelerator pedal (AP) is depressed. If the current reduces as the accelerator pedal (AP) is depressed, the cause of the fault was contact resistance and oxidation.

Other information:

- To disconnect the control module, see **TRANSMISSION CONTROL MODULE (TCM), REPLACING**
- For information about signals, see **SIGNAL SPECIFICATION** .

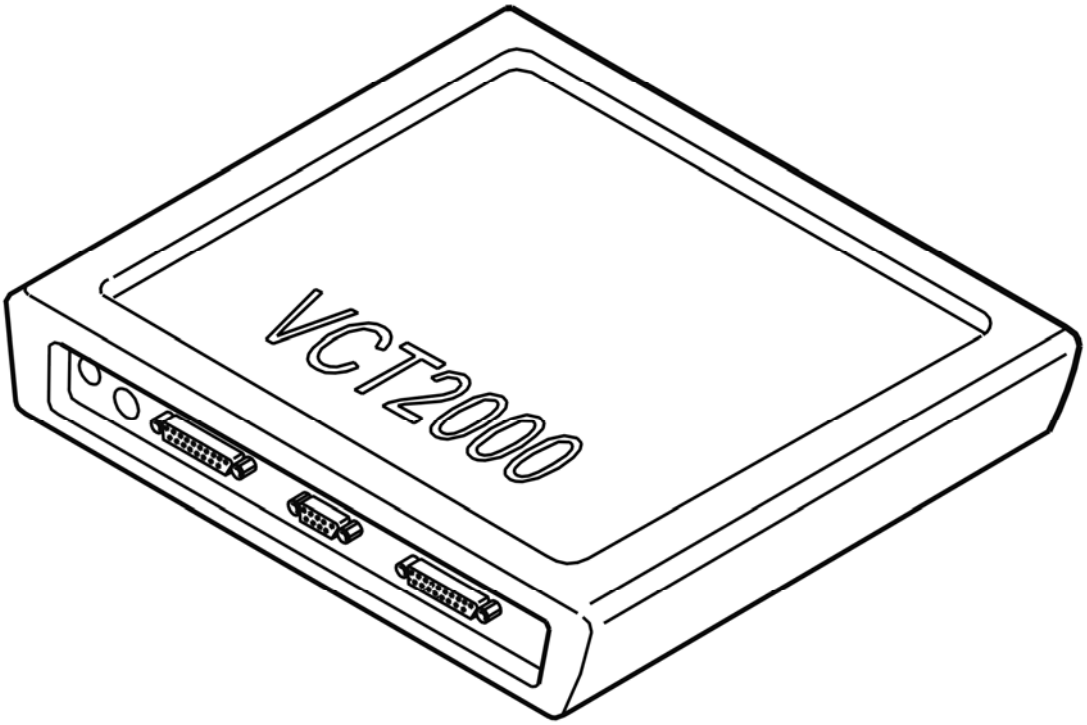

Fig. 15: Identifying VCT2000 Diagnostic Tool Symbol In VIDA
Courtesy of VOLVO CARS CORPORATION

Does the current reduce when the accelerator pedal (AP) is depressed?

- **YES**

  OKAY: Troubleshooting has been completed.

- **NO**

  Refer to **CHECKING SOLENOID STH**

CHECKING SOLENOID STH

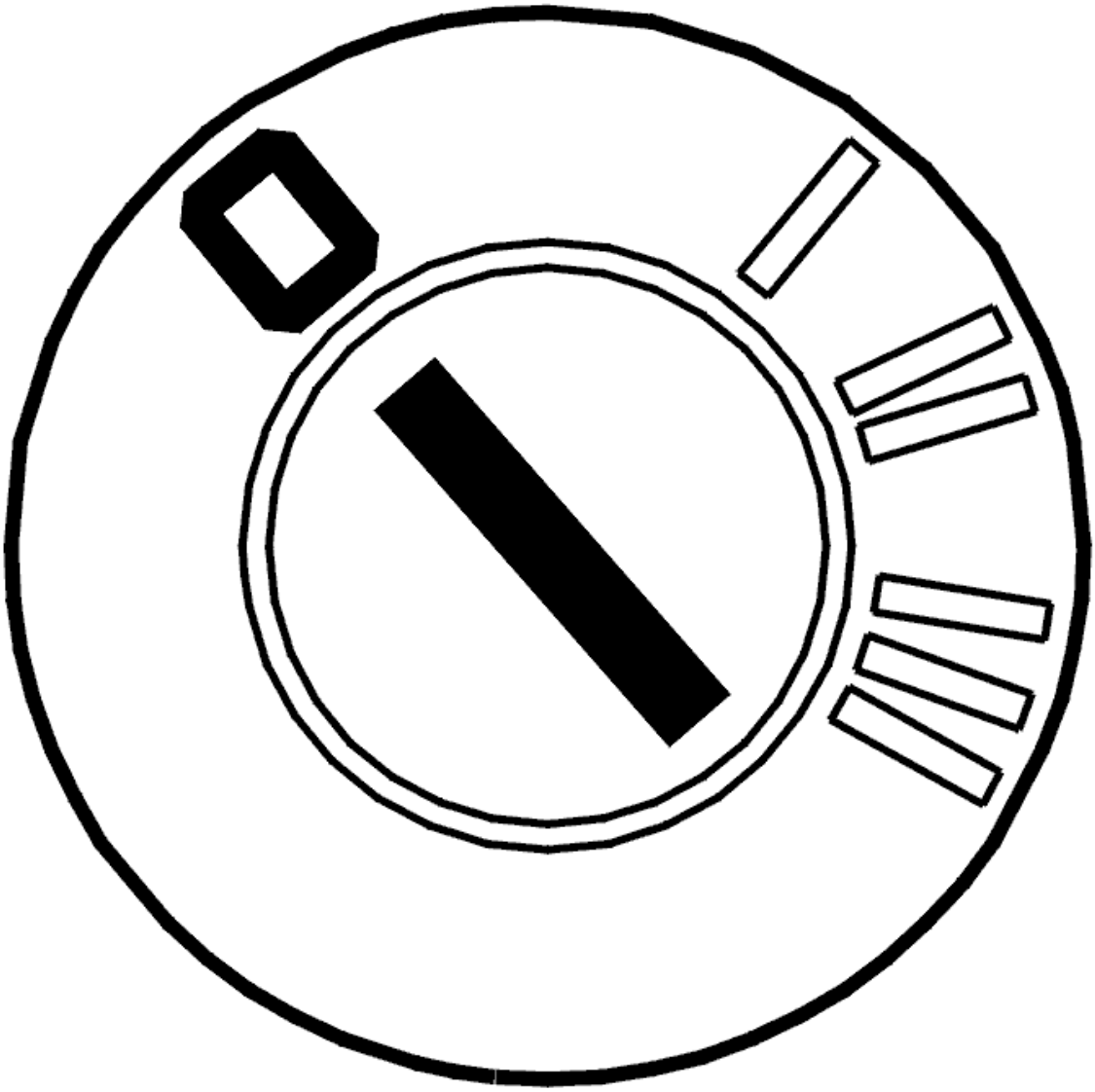

Fig. 16: Identifying Ignition OFF
Courtesy of VOLVO CARS CORPORATION

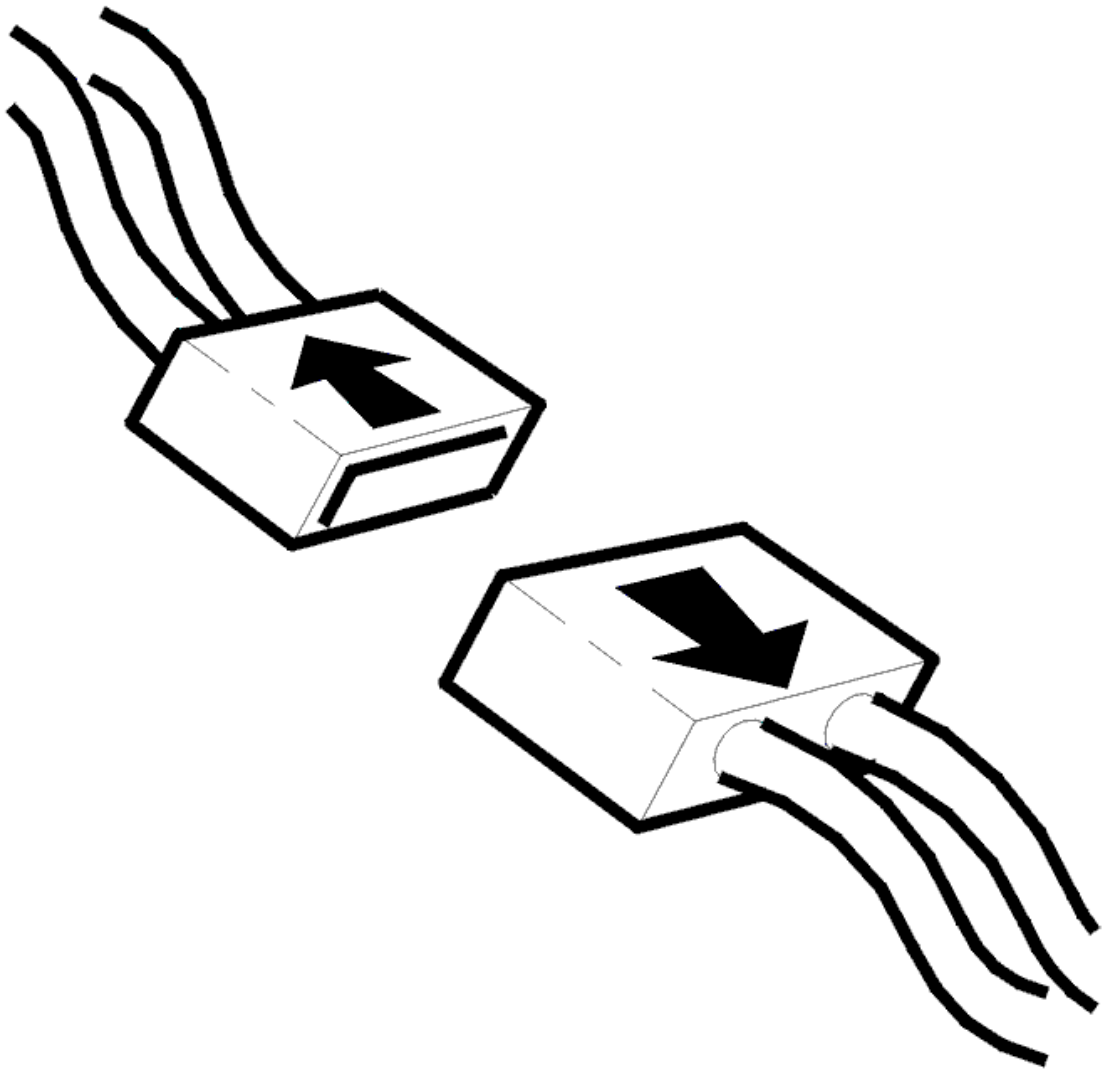

Fig. 17: Identifying Connector(s) Disconnected
Courtesy of VOLVO CARS CORPORATION

- Ignition off
- Disconnect the transmission connector
- Connect adapter see **9511505** and breakout box see **9813190** to the transmission connector (transmission side)
- Connect an ohmmeter between terminals #C (#A3) and #D (#A4) on the breakout box.

  The solenoid STH resistance must be between 3 and 5 ohms.

  Other information:

  - To connect the breakout box to the transmission connector, see **CONNECTING THE BREAKOUT BOX, GM AUTOMATIC TRANSMISSIONS**

- For information about signals, see **SIGNAL SPECIFICATION** .

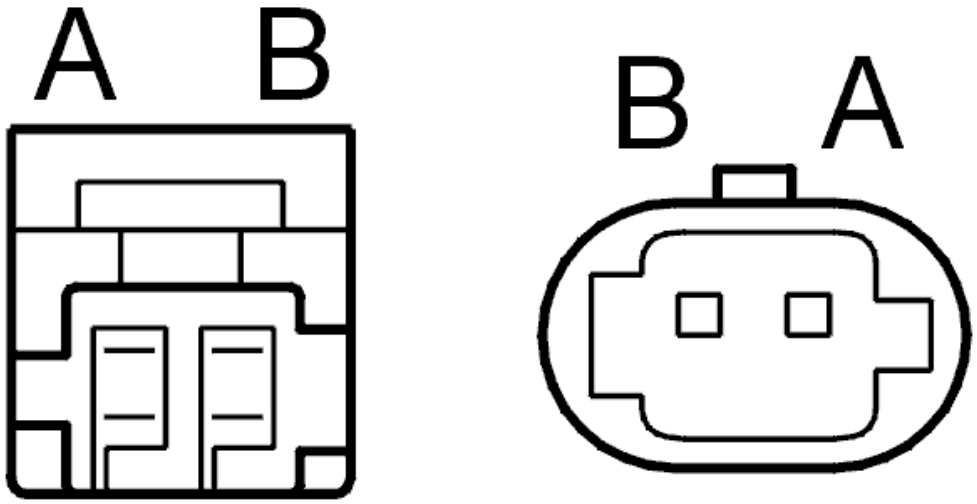

Fig. 18: Identifying Connector Terminals
Courtesy of VOLVO CARS CORPORATION

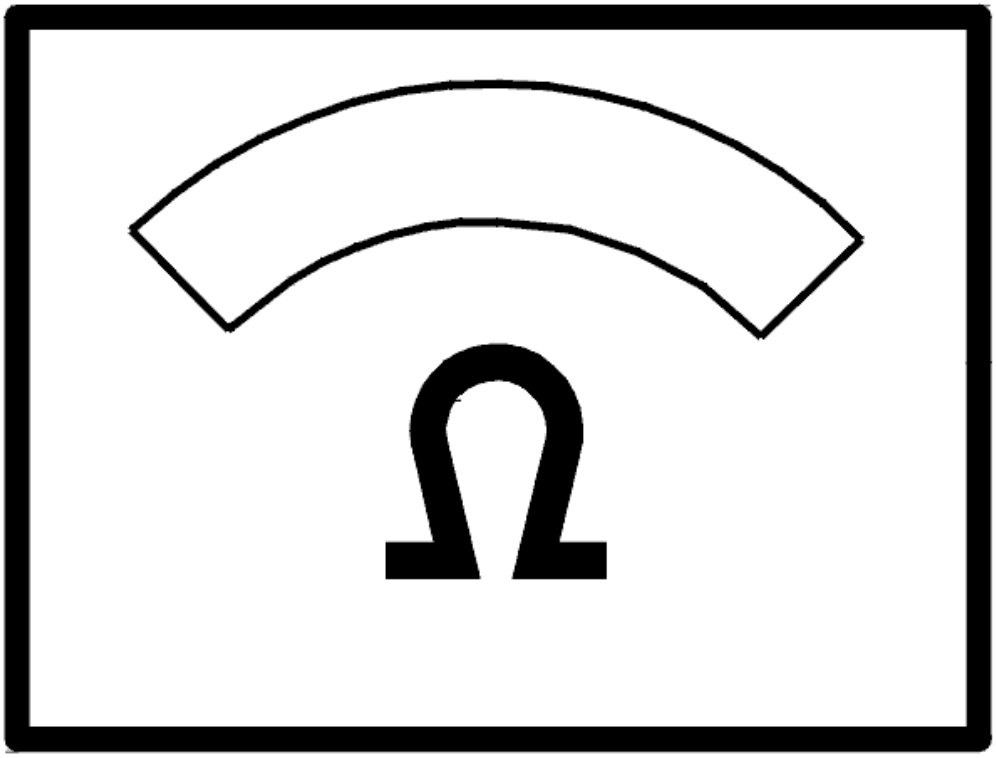

Fig. 19: Identifying Ohms Display
Courtesy of VOLVO CARS CORPORATION

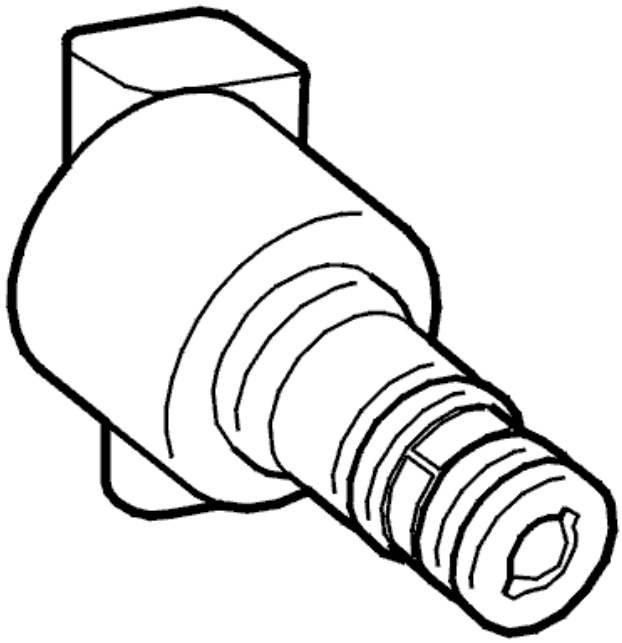

Fig. 20: Identifying Line Pressure Solenoid, STH
Courtesy of VOLVO CARS CORPORATION

Was the resistance OK?

- **YES**

  Refer to **CHECKING THE CABLES IN THE CIRCUIT FOR SOLENOID STH**

- **NO**

  Refer to **CHECKING THE WIRING AND COMPONENT**

CHECKING THE CABLES IN THE CIRCUIT FOR SOLENOID STH

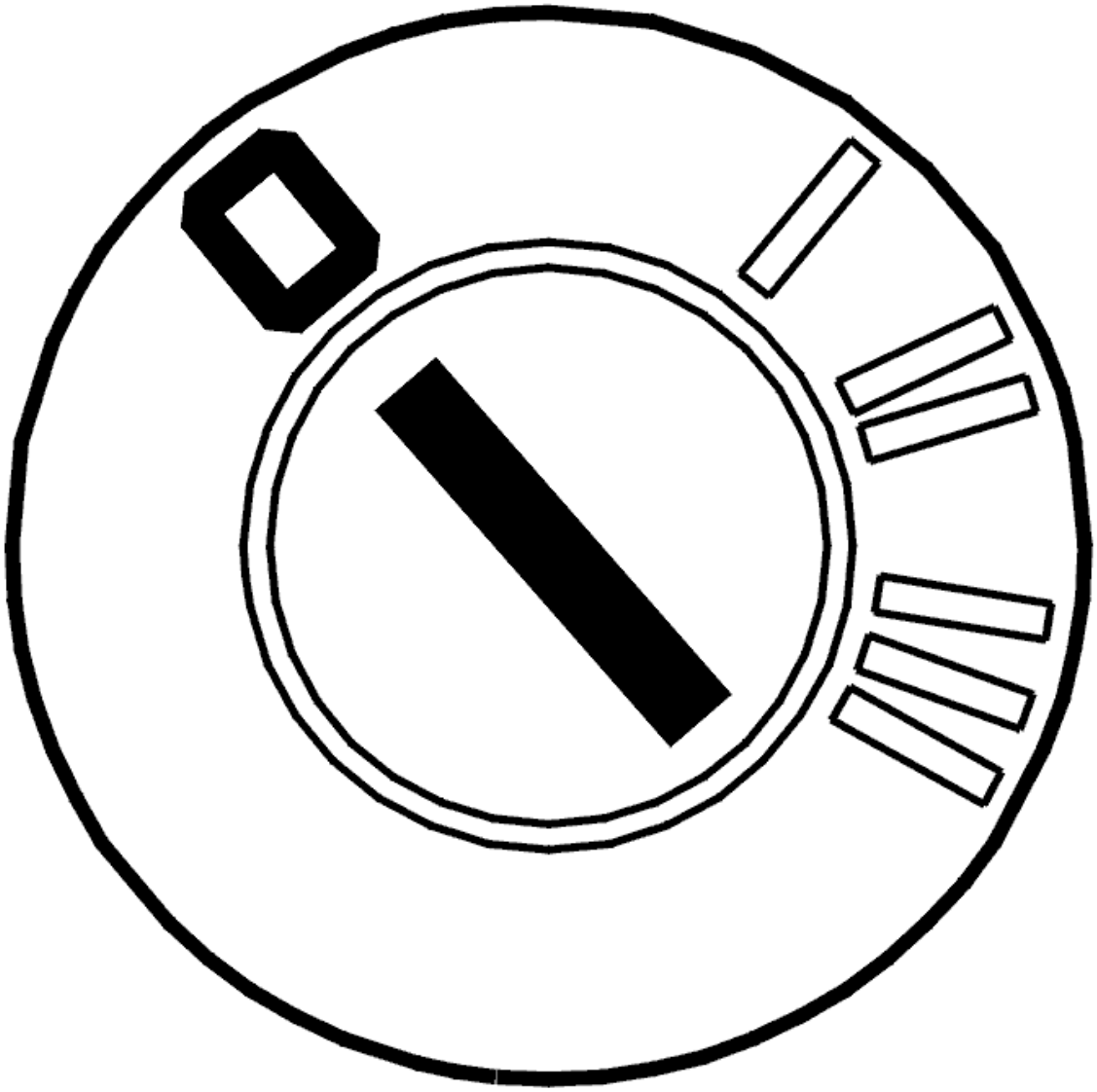

Fig. 21: Identifying Ignition OFF
Courtesy of VOLVO CARS CORPORATION

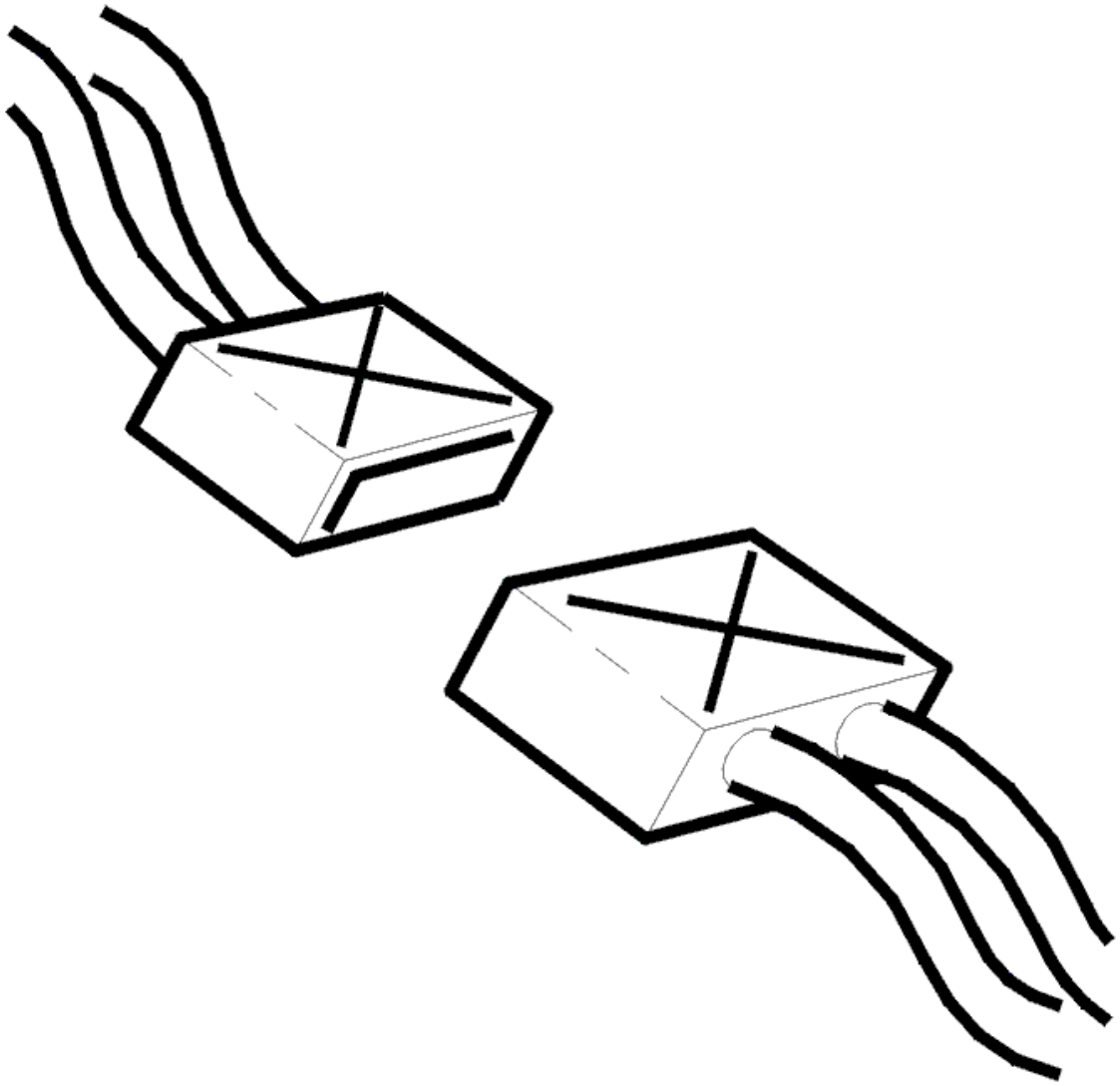

Fig. 22: Identifying Connectors
Courtesy of VOLVO CARS CORPORATION

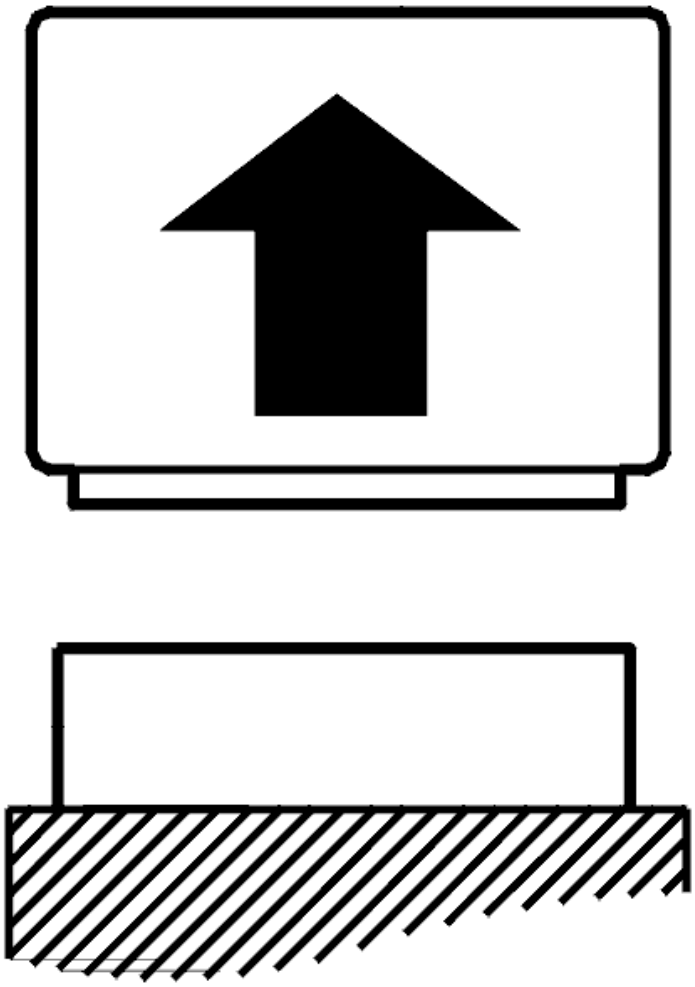

Fig. 23: Identifying Control Module Disconnected
Courtesy of VOLVO CARS CORPORATION

- Ignition off
- Connect the breakout box to the transmission
- Disconnect the control module.
- Disconnect the transmission connector
- Connect adapter see **9511505** and breakout box see **9813190** to the transmission connector (control module side).

  Check the cable between control module terminal #A52 and transmission connector terminal #C (#A3). Check for an open-circuit. See **OPEN-CIRCUIT, PERMANENT FAULTS** .

  Check the cable between control module terminal #A70 (#B10) and transmission connector terminal #D (#A4). Check for an open-circuit. See **OPEN-CIRCUIT, PERMANENT FAULTS** .

Other information:

- To connect the breakout box to the control module, see **CONNECTING THE BREAKOUT BOX**
- To connect the breakout box to the transmission connector, see **CONNECTING THE BREAKOUT BOX, GM AUTOMATIC TRANSMISSIONS**
- For information about signals, see **SIGNAL SPECIFICATION** .

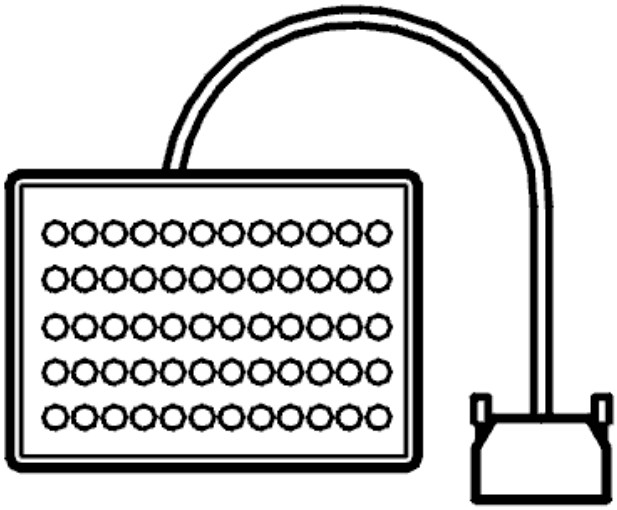

Fig. 24: Identifying Breakout Box
Courtesy of VOLVO CARS CORPORATION

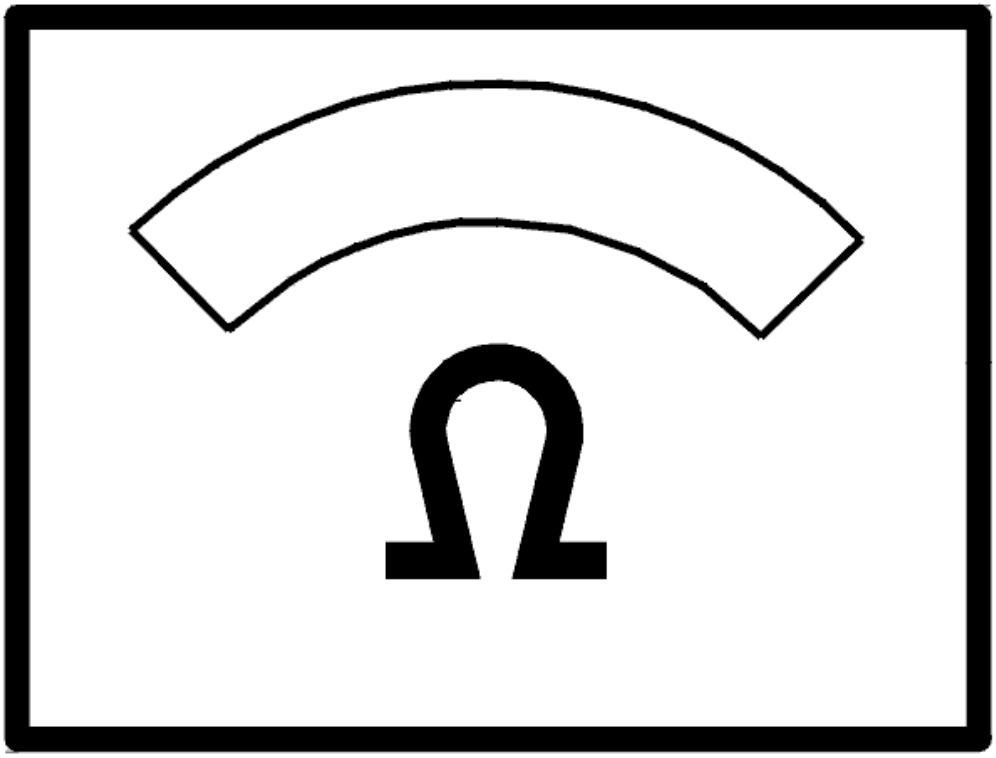

Fig. 25: Identifying Ohms Display
Courtesy of VOLVO CARS CORPORATION

Was the wiring OK?

- **YES**

  FAULT NOT FOUND: Troubleshooting has been completed.

- **NO**

  Refer to **VERIFICATION**

CHECKING THE WIRING AND COMPONENT

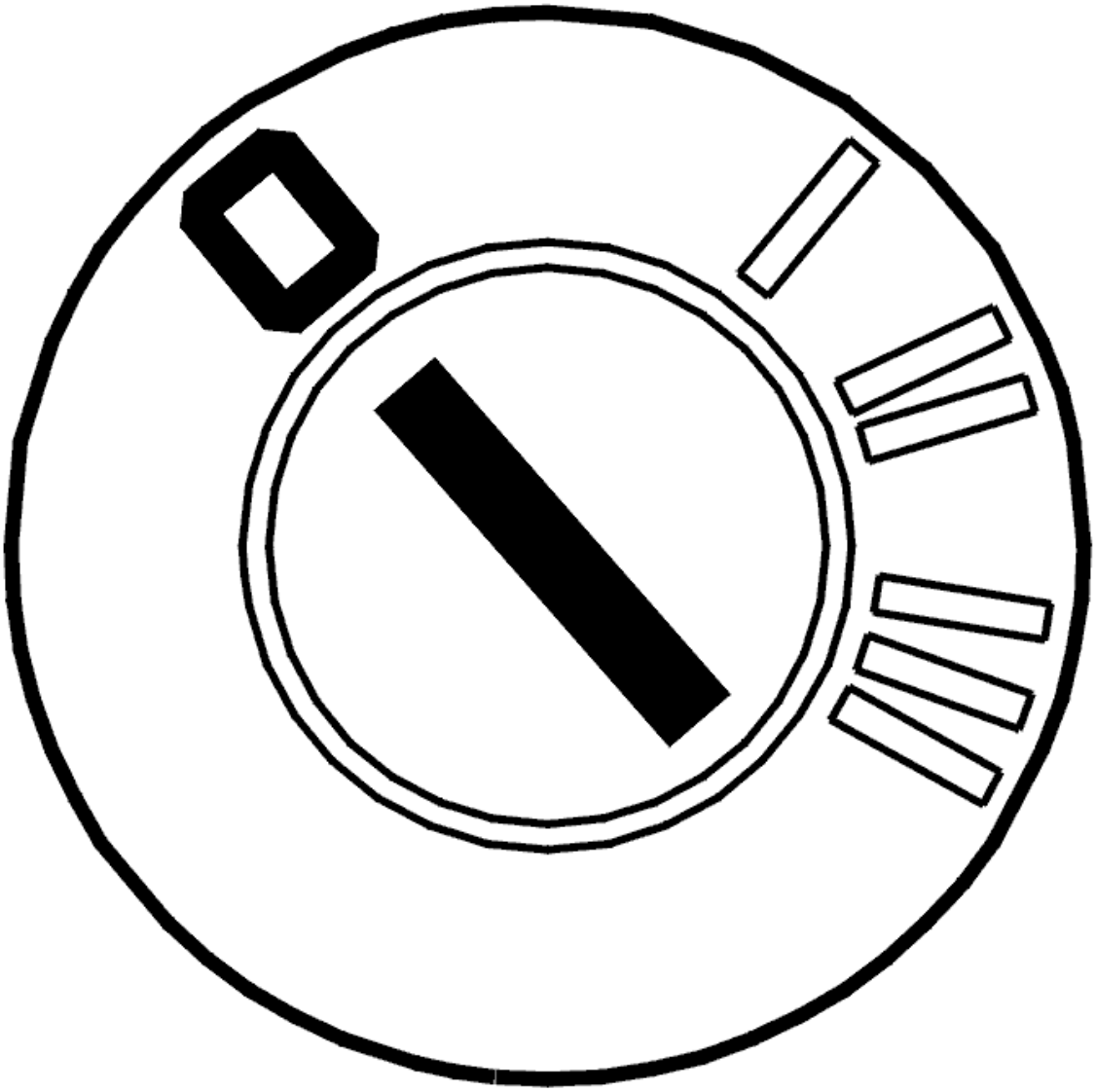

Fig. 26: Identifying Ignition OFF
Courtesy of VOLVO CARS CORPORATION

- Ignition off
- Open the transmission control system.

  Check the cable between transmission terminal #C (#A3) and solenoid STH terminals #A. and #D (#A4) and solenoid STH terminal #B. Check for an open-circuit. See **OPEN-CIRCUIT, PERMANENT FAULTS** .

  HINT: Check solenoid STH by measuring the solenoid STH resistance between terminals A and B. The resistance must be between 3 and 5 ohms.

  Remedy as necessary

  Other information:

- To open the transmission control system, For removal, see **SIDE COVER TRANSMISSION, REMOVING** . To install, see **SIDE COVER TRANSMISSION, INSTALLING**
- To connect the breakout box to the transmission connector, see **CONNECTING THE BREAKOUT BOX, GM AUTOMATIC TRANSMISSIONS**
- To replace solenoid STH, see **SOLENOID LINE PRESSURE, REPLACING**
- To replace the cable harness, see **TEMPERATURE SENSOR FLUID, TRANSAXLE, (TFT)**
- For information about signals, see **SIGNAL SPECIFICATION** .

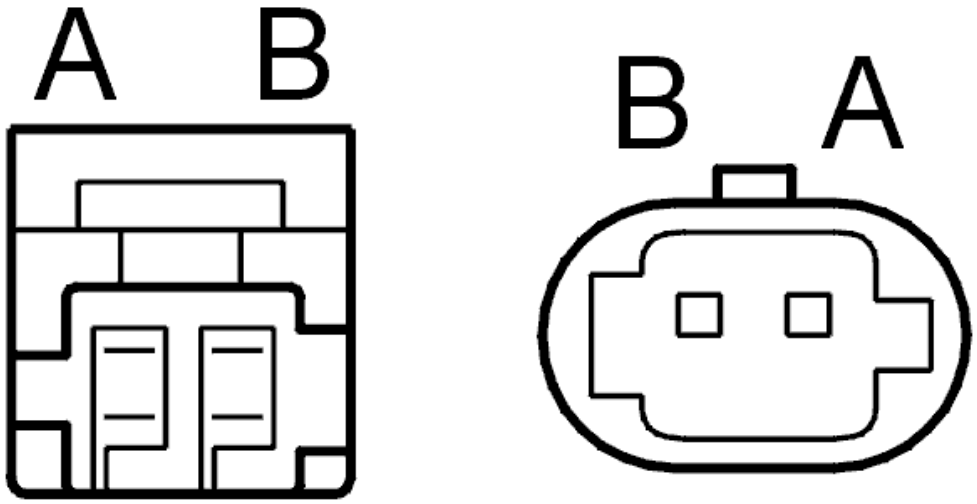

Fig. 27: Identifying Connector Terminals
Courtesy of VOLVO CARS CORPORATION

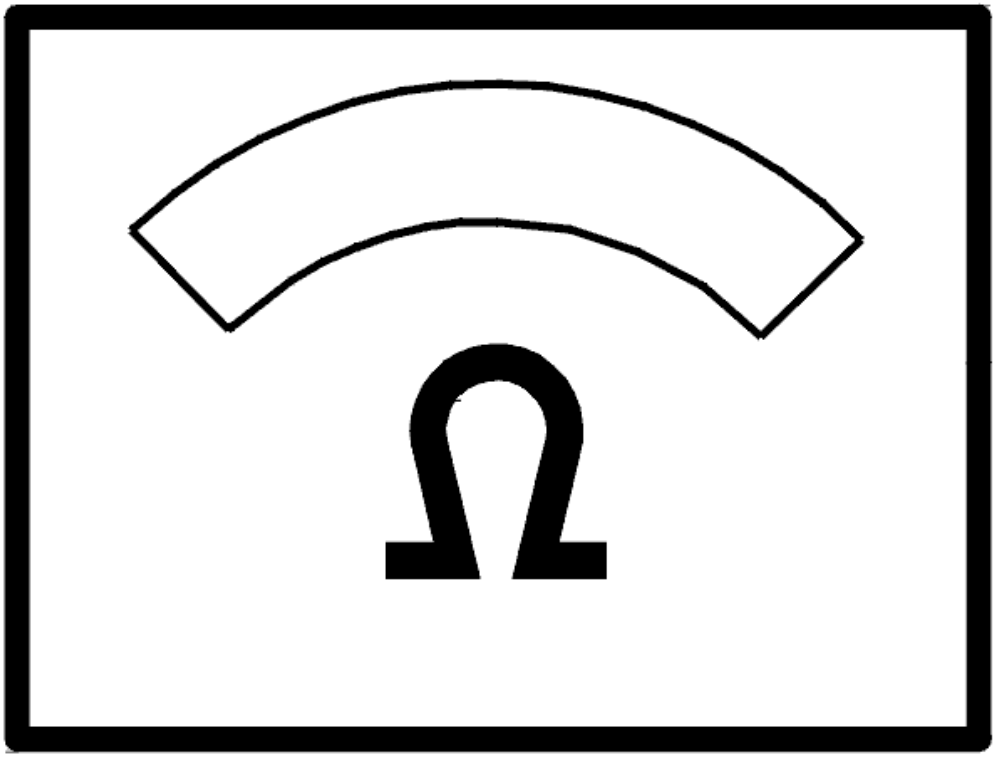

Fig. 28: Identifying Ohms Display
Courtesy of VOLVO CARS CORPORATION

- **Continue**

  Refer to **RESETTING THE ADAPTATION**

RESETTING THE ADAPTATION

RESETTING ADAPTATION AND THE COUNTER FOR "TRANSMISSION OIL CHANGE"

HINT: The transmission has torque controlled adaptive pressure control. Pressure control means that the transmission regulates the pressure itself during each gear shift. This avoids harsh gear shifting. Each gear shift is evaluated by the control module and stored in the memory. This allows for compensation for wear and tear in the transmission and clutch. It is important that the adaptation in the memory is reset after the transmission has been repaired. This is to ensure normal operation. The oil is replaced during

repair; the "Transmission oil change" counter must be reset. If the counter is not reset when the fluid is drained and replaced, there is a risk that a diagnostic trouble code (DTC) will be stored in incorrect circumstances.

NOTE: **This applies only if the transmission or one of the components in the transmission have been replaced.**

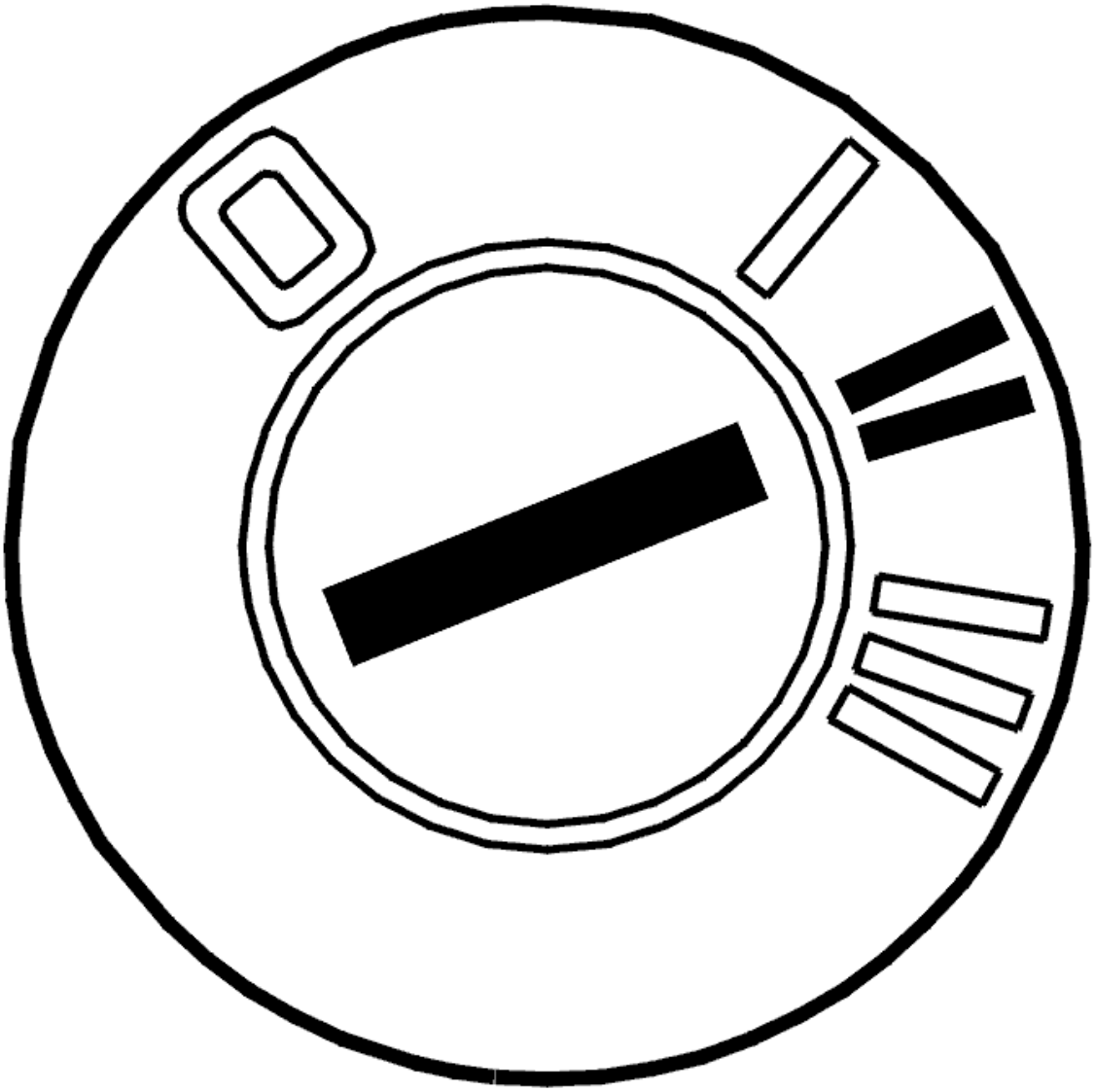

Fig. 29: Identifying Ignition ON
Courtesy of VOLVO CARS CORPORATION

- Ignition on.

  Click on the VCT2000 symbol to reset the adaptation and counter.

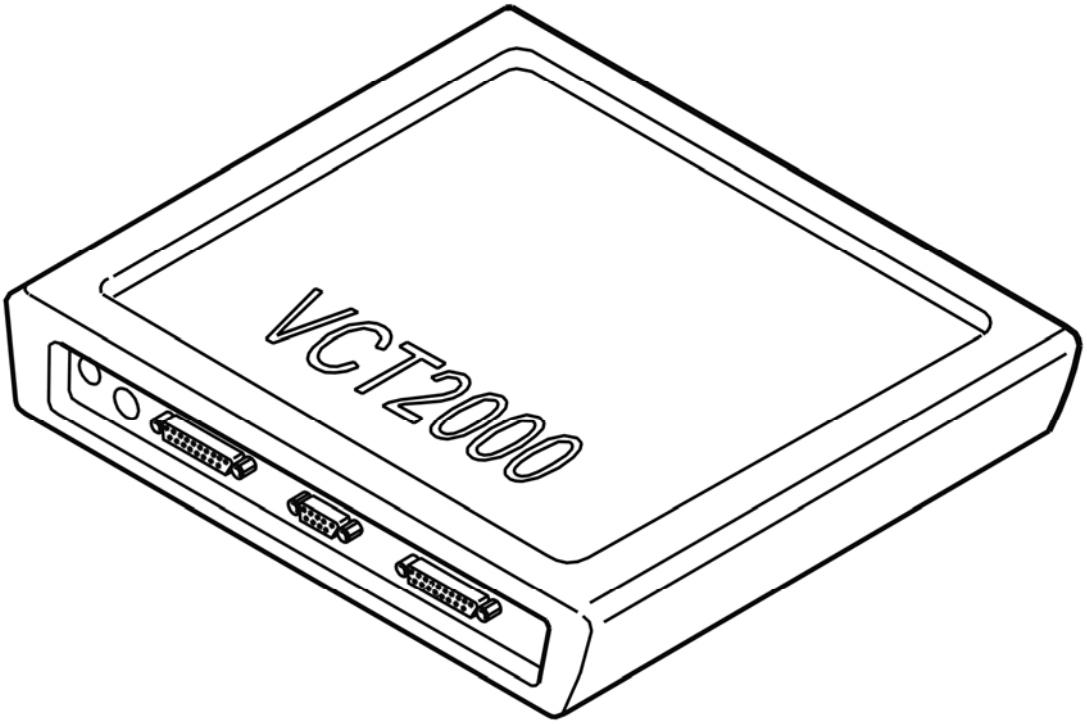

Fig. 30: Identifying VCT2000 Diagnostic Tool Symbol In VIDA
Courtesy of VOLVO CARS CORPORATION

- **Continue**

  Refer to **VERIFICATION**

VERIFICATION

VERIFICATION

HINT: After carrying out the repair, check that the fault has been remedied.

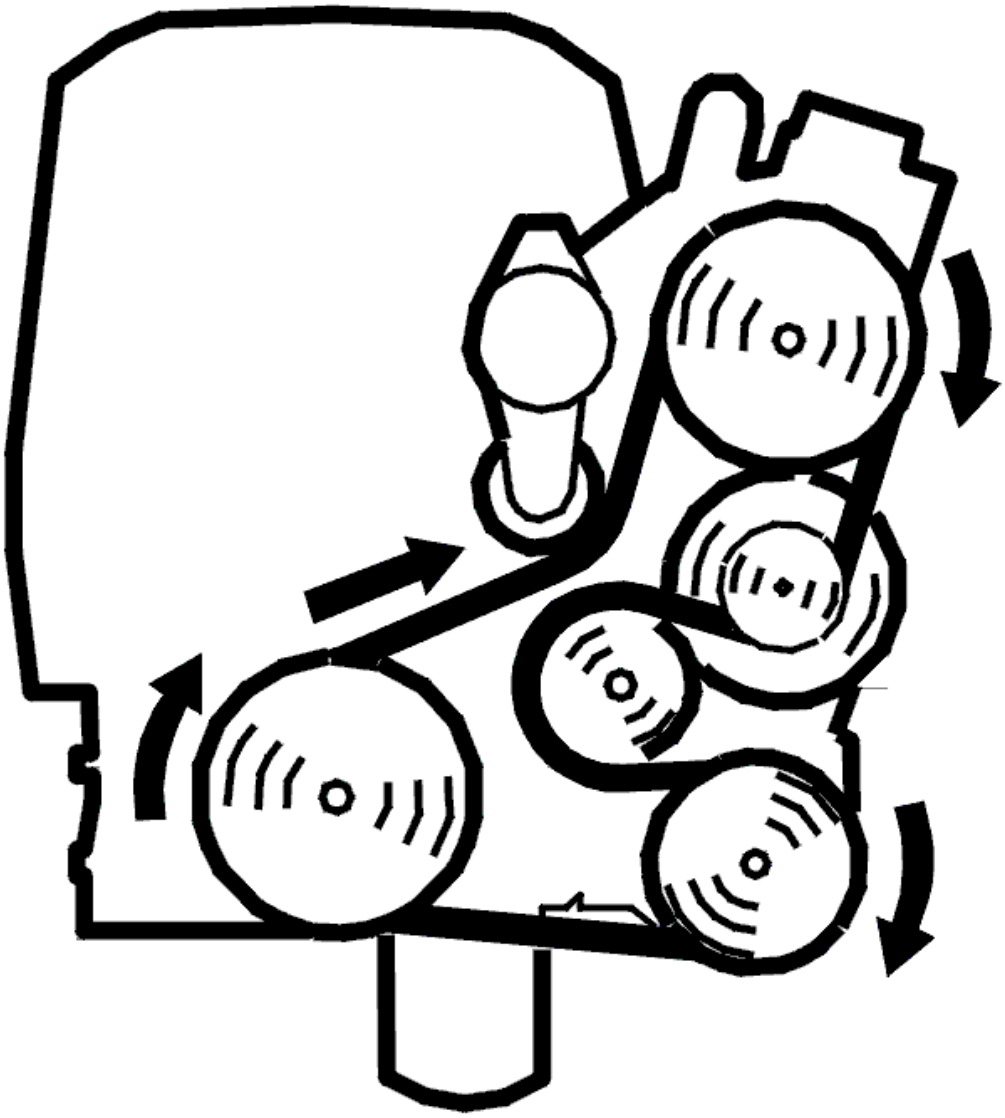

Fig. 31: Identifying Belt Routing
Courtesy of VOLVO CARS CORPORATION

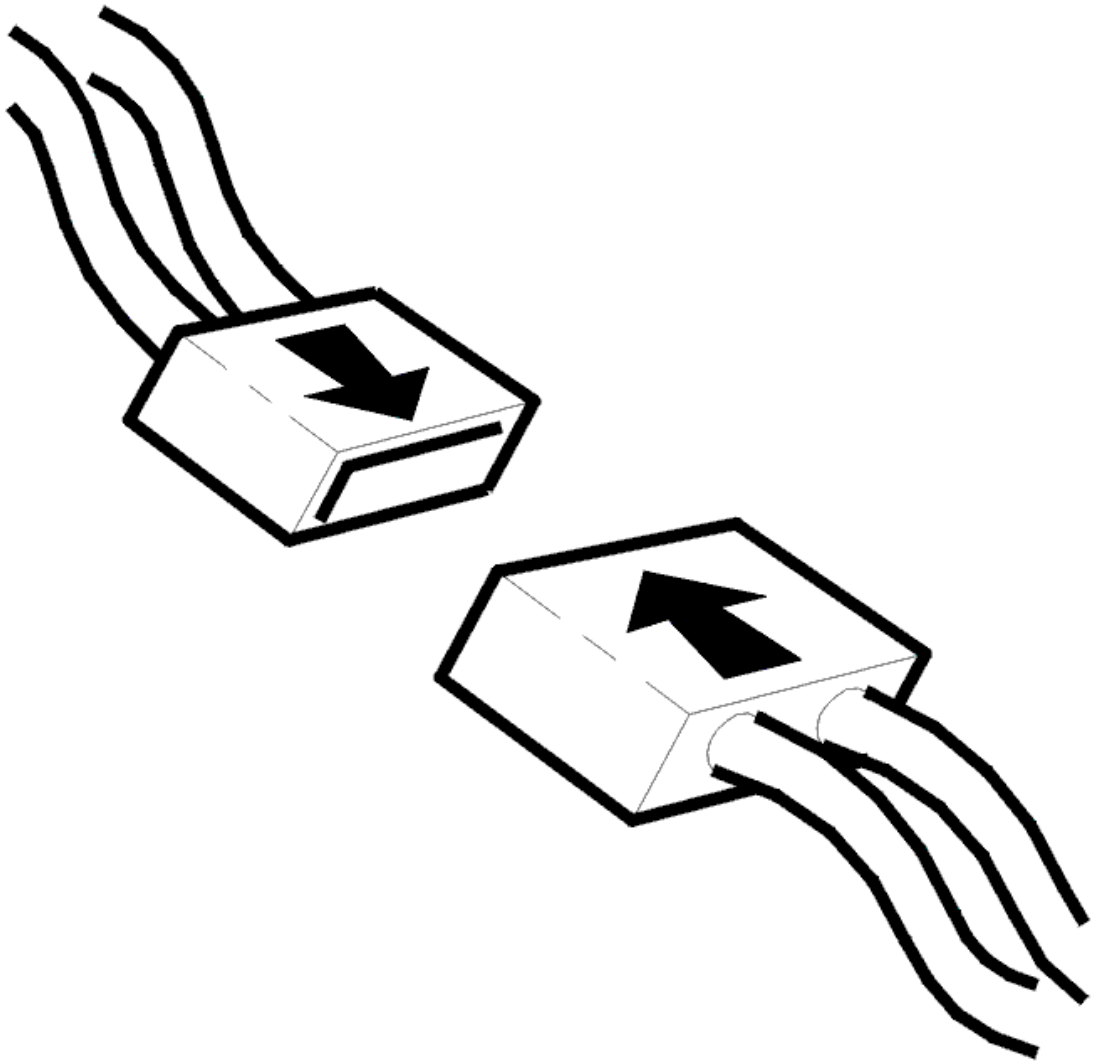

Fig. 32: Identifying Connector(s) Reinstallation
Courtesy of VOLVO CARS CORPORATION

- Ignition off.
- Reconnect the connectors, reinstall components etc.
- Raise the car so that the drive wheels are unimpeded.
- Start the car.
- Read off the current through the solenoid circuit.
- Lock the wheels with the brakes. Shift the gear selector to position D.
- Depress the accelerator pedal (AP) slowly.

  The current should decrease as the accelerator pedal (AP) is depressed.

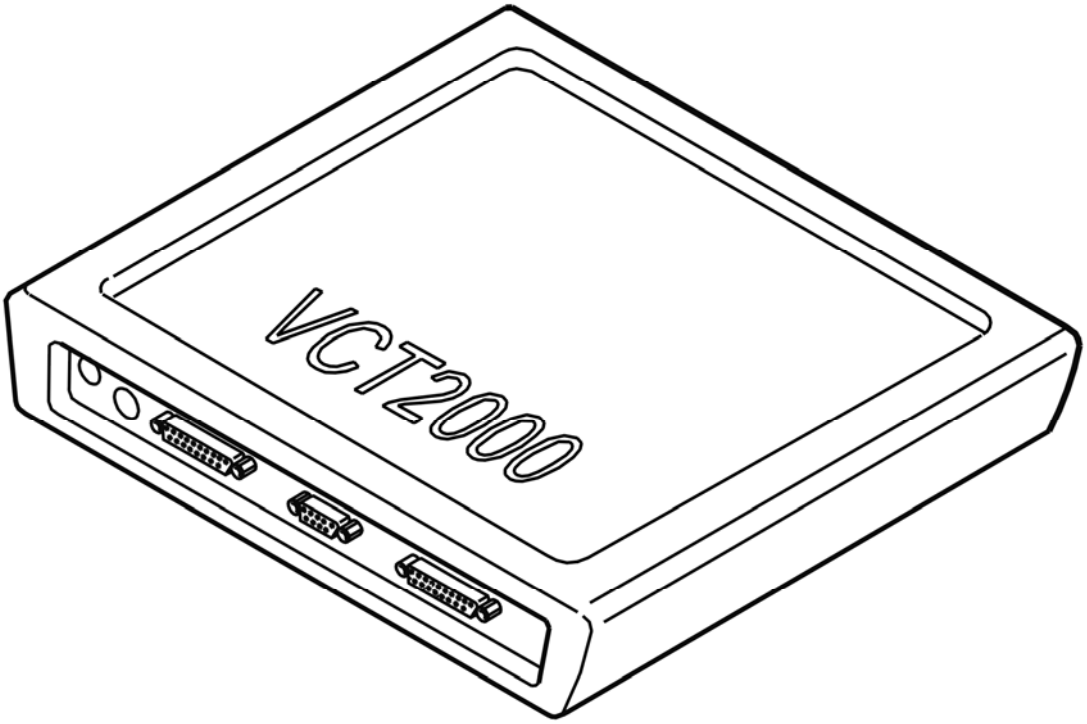

Fig. 33: Identifying VCT2000 Diagnostic Tool Symbol In VIDA
Courtesy of VOLVO CARS CORPORATION

Does the current decrease?

- **YES**

  VERIFIED: Troubleshooting has been completed.

- **NO**

  Refer to **INFORMATION**

INFORMATION

FAULT-TRACING INFORMATION

The fault should have been detected and remedied. As this is not the case fault-tracing has failed.

Exit fault-tracing for this diagnostic trouble code (DTC) or make another attempt.

TCM-0010: LINE PRESSURE SOLENOID STH. SIGNAL TOO LOW. INTERMITTENT FAULT (4T65 AWD; 2003-2006)

DIAGNOSTIC TROUBLE CODE (DTC) INFORMATION

Condition

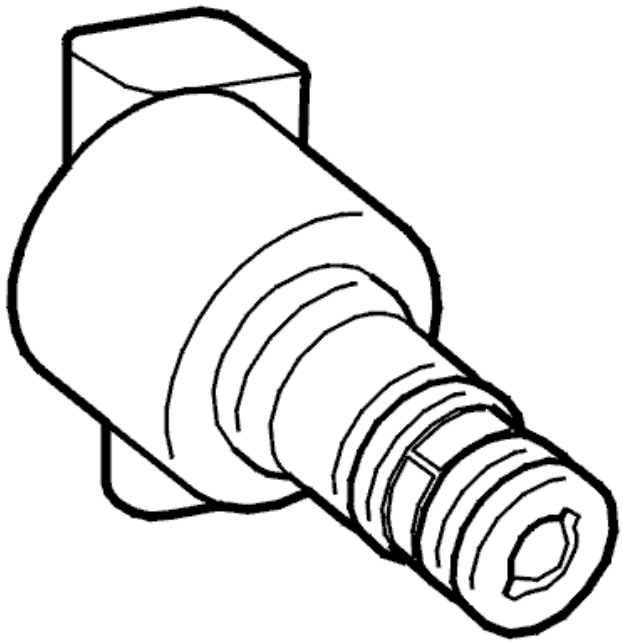

Fig. 34: Identifying Line Pressure Solenoid, STH
Courtesy of VOLVO CARS CORPORATION

Line pressure solenoid STH regulates line pressure in the transmission. The solenoid is controlled by an amplifier in the transmission control module (TCM) output. The transmission control module (TCM) uses the amplifier to control the current to the solenoid. A low amperage gives a high line pressure. A high amperage (approximately 1 A) gives a low line pressure. Amperage is primarily affected by throttle position. Diagnostic trouble code (DTC) TCM-0010 is stored if the control module registers that there is no current in the solenoid STH circuit. Solenoid STH cannot then control line pressure.

Substitute Value

- The control module "Limp Home" program initiated.

Possible Source

- Short-circuit to ground in the control signal cable or signal cable.
- Defective solenoid STH.

Fault symptom[s]

- General orange warning lamp lit.
- Malfunction indicator lamp (MIL) lit.
- No lock-up function.
- Harsh gear shifting.

HINT: Harsh gear shifting can be caused by:

- No adaptation of the gear slippage times at high altitude (High Altitude Compensation).
- No torque limiting request to engine control module (ECM) when shifting.
- No line pressure solenoid STH control. Results in constant maximum line pressure.

SIGNAL TOO LOW. INTERMITTENT FAULT

INTERMITTENT FAULT

Check control module and transmission connectors for contact resistance and oxidation according to **CONTACT RESISTANCE AND OXIDATION**

Check the wiring between control module terminal A52 and transmission connector terminal C (#A3). Check the wiring between control module terminal A70 (#B10) and transmission connector terminal D (#A4) for an intermittent short-circuit to ground according to **SHORT-CIRCUIT TO GROUND, INTERMITTENT FAULTS** .

HINT: With the ignition off, the transmission connector disconnected, and the breakout box connected, the resistance between terminals 3 and 4 should be approximately 3.5 ohms.

Remedy as necessary.

Other information:

- To connect the breakout box, see **CONNECTING THE BREAKOUT BOX** .
- To connect the breakout box to the transmission connector, see **CONNECTING THE BREAKOUT BOX, GM AUTOMATIC TRANSMISSIONS** .
- For information about signals, see **SIGNAL SPECIFICATION** .

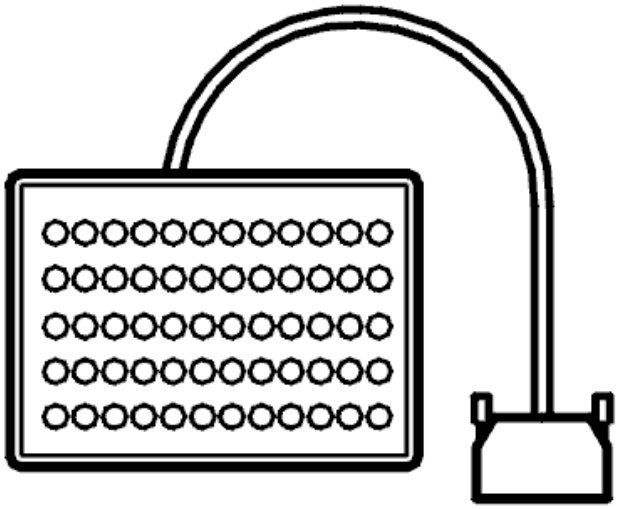

Fig. 35: Identifying Breakout Box
Courtesy of VOLVO CARS CORPORATION

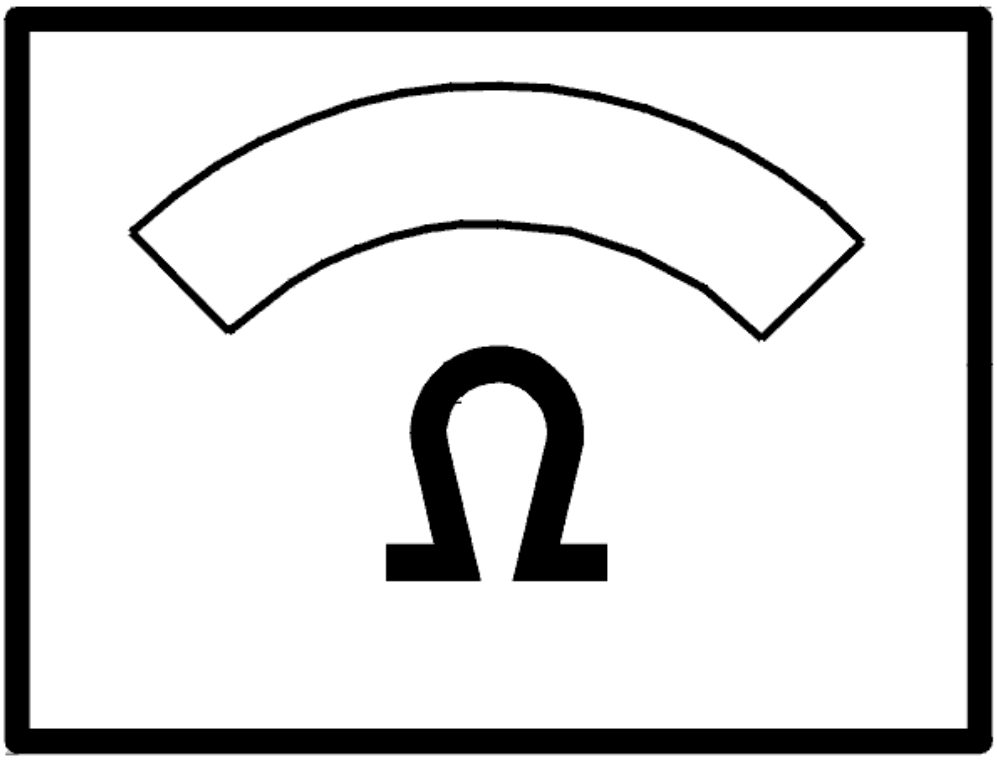

Fig. 36: Identifying Ohms Display
Courtesy of VOLVO CARS CORPORATION

- **Continue**

  Refer to **INFORMATION**

INFORMATION

FAULT-TRACING INFORMATION

If the fault is intermittent, do not verify fault-tracing if the fault does not recur.

It is possible to view the information again, or leave fault-tracing for this diagnostic trouble code (DTC).

TCM-0010: LINE PRESSURE SOLENOID STH. SIGNAL TOO LOW.

PERMANENT FAULT (4T65 AWD; 2003-2006)

DIAGNOSTIC TROUBLE CODE (DTC) INFORMATION

see **DIAGNOSTIC TROUBLE CODE (DTC) INFORMATION**

SIGNAL TOO LOW. PERMANENT FAULT

CHECKS

CHECKING SOLENOID STH

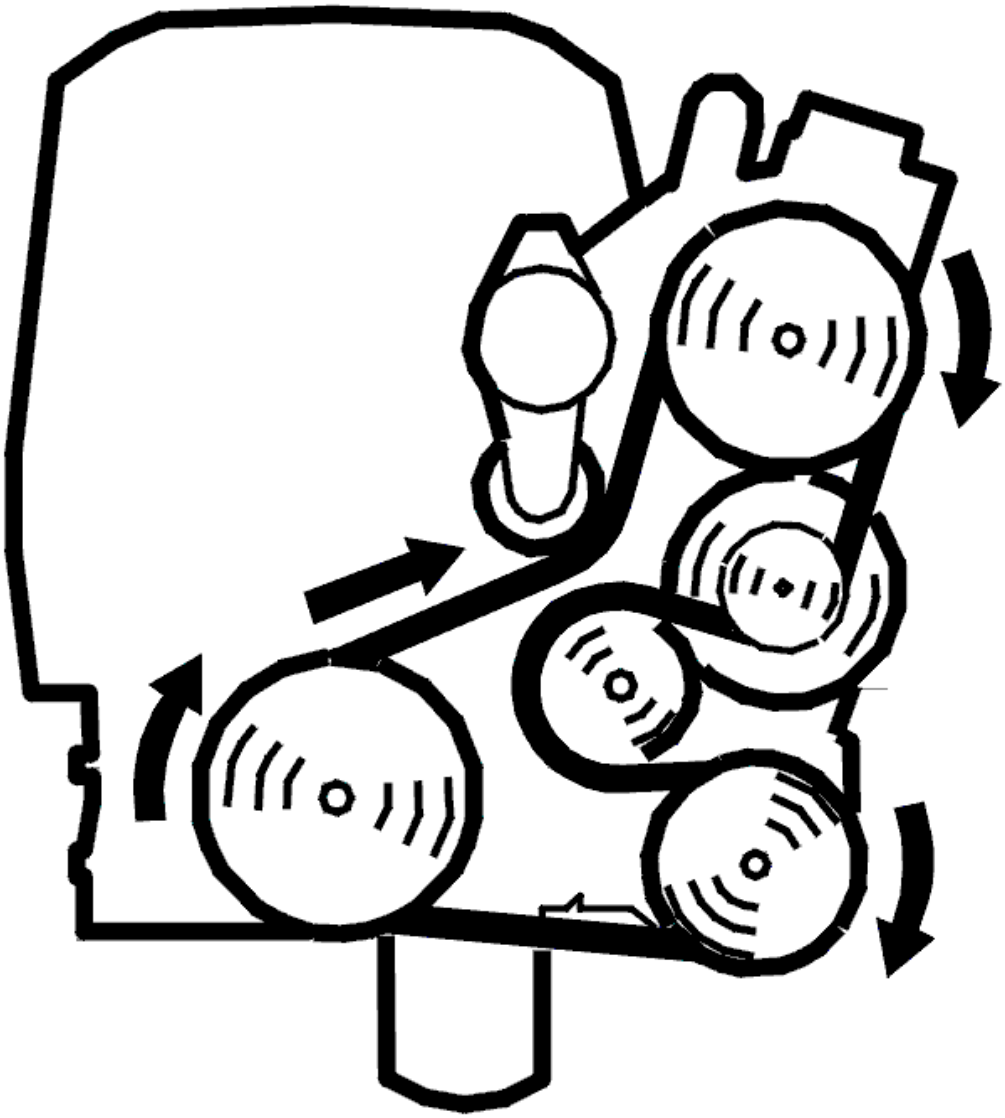

Fig. 37: Identifying Belt Routing
Courtesy of VOLVO CARS CORPORATION

- Ignition off

- Disconnect the automatic transmission and control module connectors
- Check the control module and automatic transmission connectors for contact resistance and oxidation. Remedy if necessary
- Reconnect the control module and automatic transmission connectors
- Start the car
- Gear selector in position P
- Read off the current through the solenoid circuit
- Depress the accelerator pedal (AP) slowly.

The current should decrease as the accelerator pedal (AP) is depressed. The cause of the fault was contact resistance or oxidation if the current reduces as the accelerator pedal (AP) is depressed.

Other information

- To disconnect the control module, see **TRANSMISSION CONTROL MODULE (TCM), REPLACING**
- For information about signals, see **SIGNAL SPECIFICATION**
- see **CHECKING WIRING AND TERMINALS. PERMANENT FAULT**

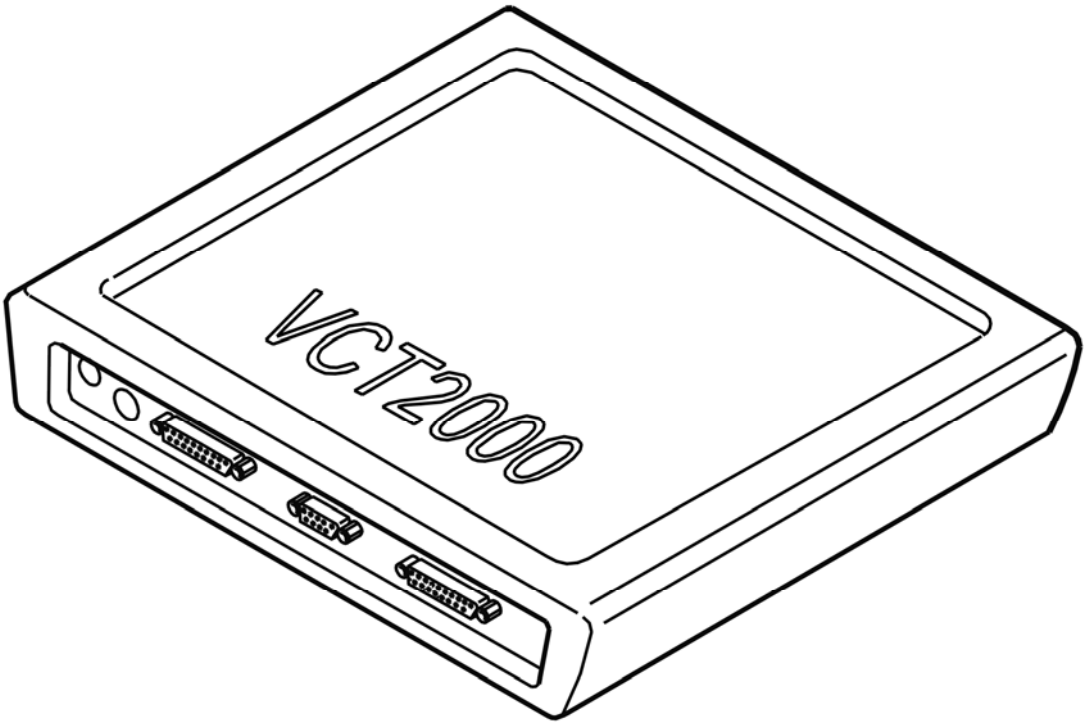

Fig. 38: Identifying VCT2000 Diagnostic Tool Symbol In VIDA
Courtesy of VOLVO CARS CORPORATION

Does the current reduce when the accelerator pedal (AP) is depressed?

- **YES**

  Refer to **CHECK THE QUALITY OF THE TRANSMISSION OIL**

- **NO**

  Refer to **CHECKING SOLENOID STH**

CHECKING SOLENOID STH

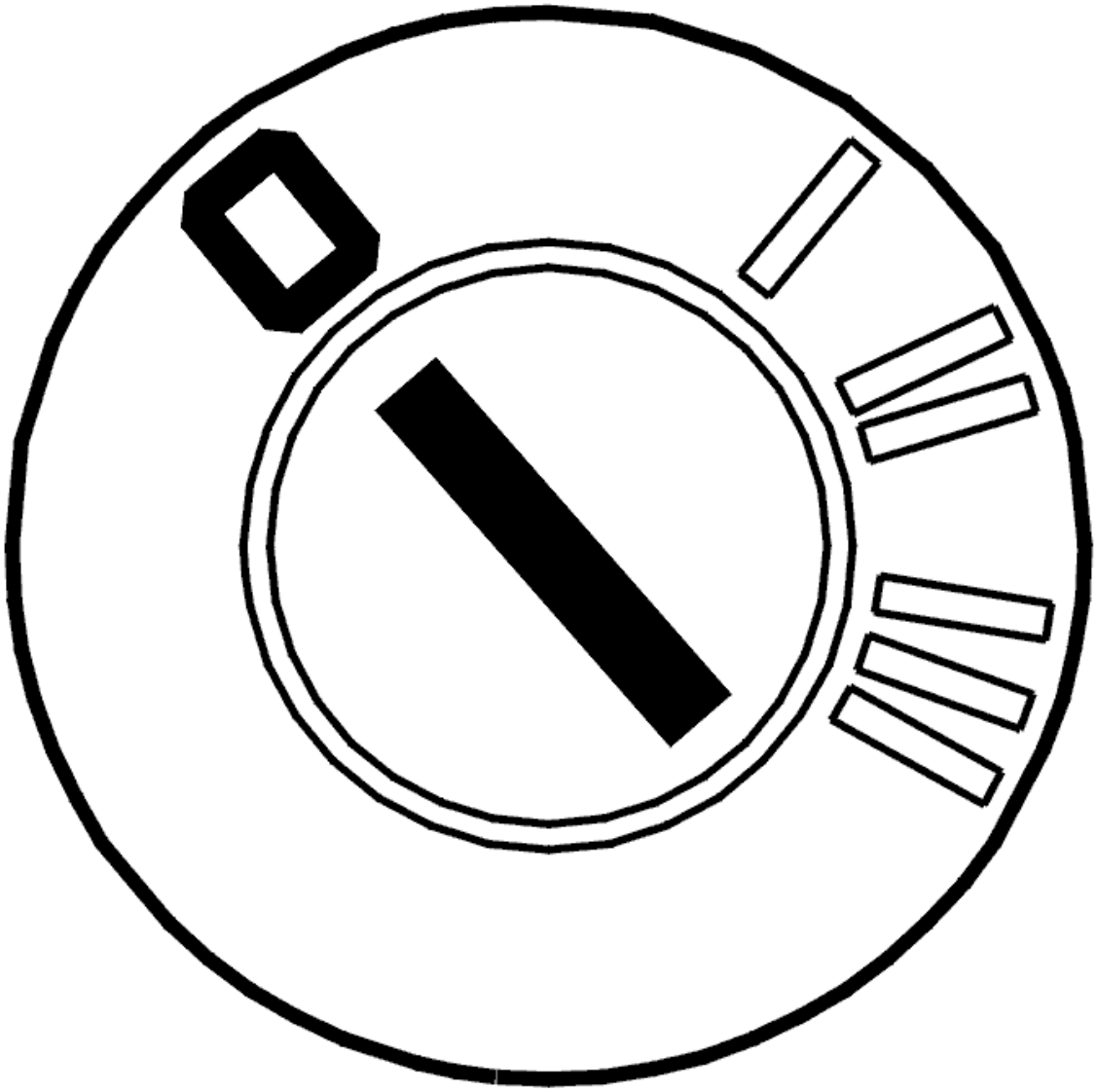

Fig. 39: Identifying Ignition OFF
Courtesy of VOLVO CARS CORPORATION

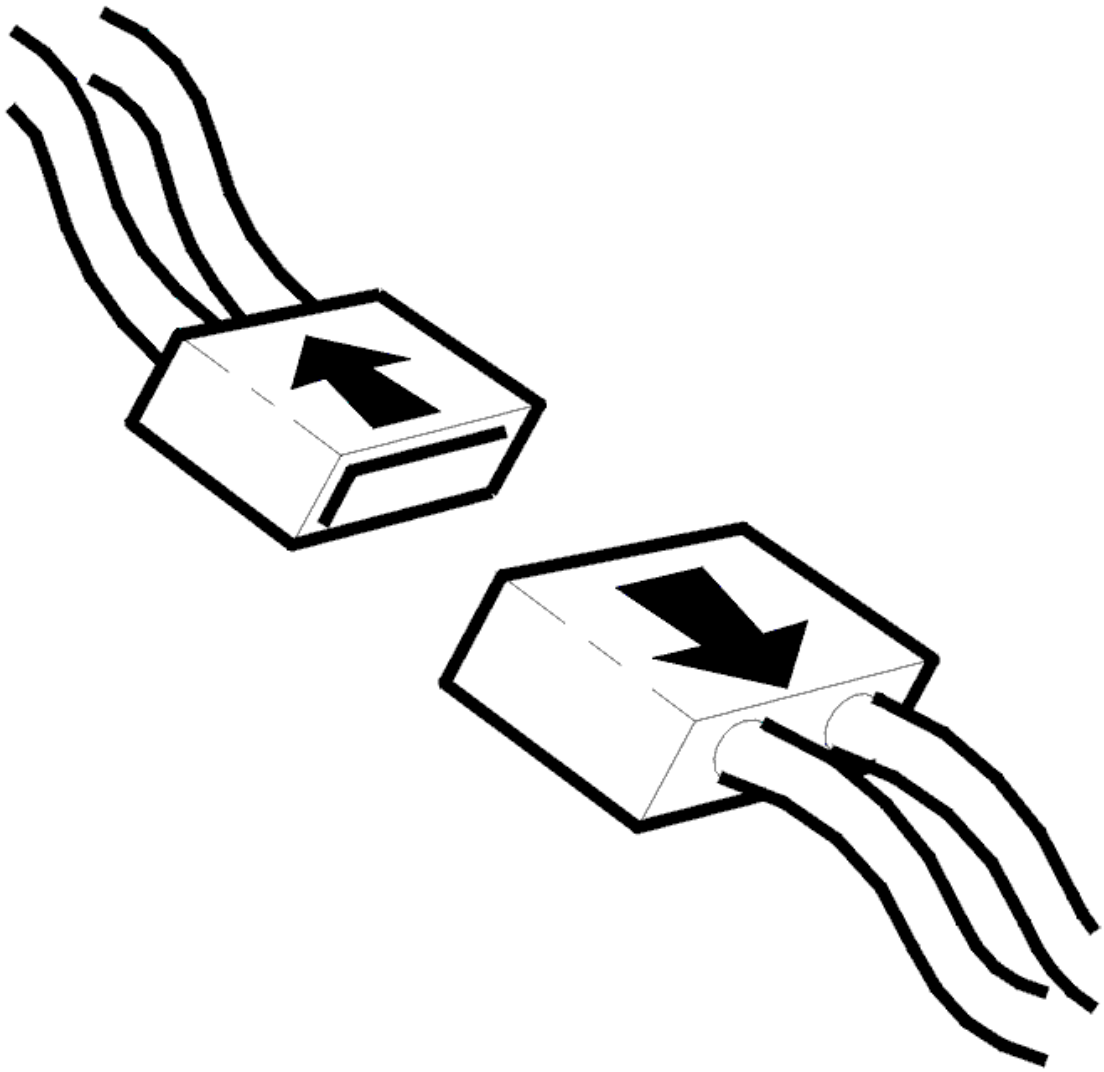

Fig. 40: Identifying Connector(s) Disconnected
Courtesy of VOLVO CARS CORPORATION

- Ignition off
- Disconnect the transmission connector
- Connect adapter see **9511505** and breakout box see **9813190** to the transmission connector (transmission side)
- Connect an ohmmeter between terminals #C (#A3) and #D (#A4) on the breakout box.

  The solenoid STH resistance must be between 3 and 5 ohms at 20°C.

  Other information:

  - To connect the breakout box to the transmission connector, see **CONNECTING THE BREAKOUT BOX, GM AUTOMATIC TRANSMISSIONS**

- For information about signals, see **SIGNAL SPECIFICATION** .

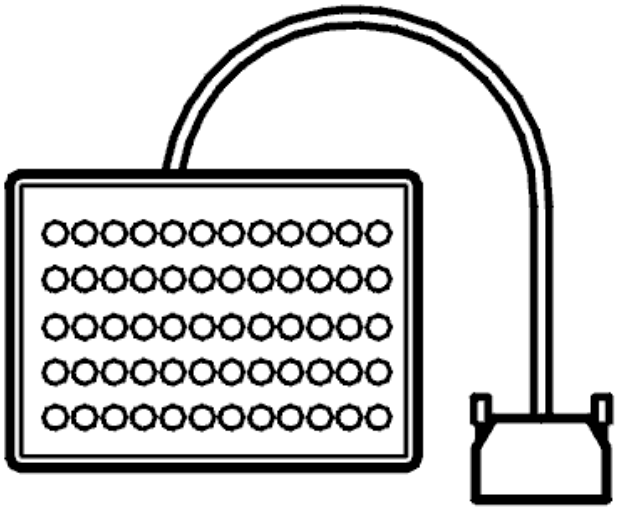

Fig. 41: Identifying Breakout Box
Courtesy of VOLVO CARS CORPORATION

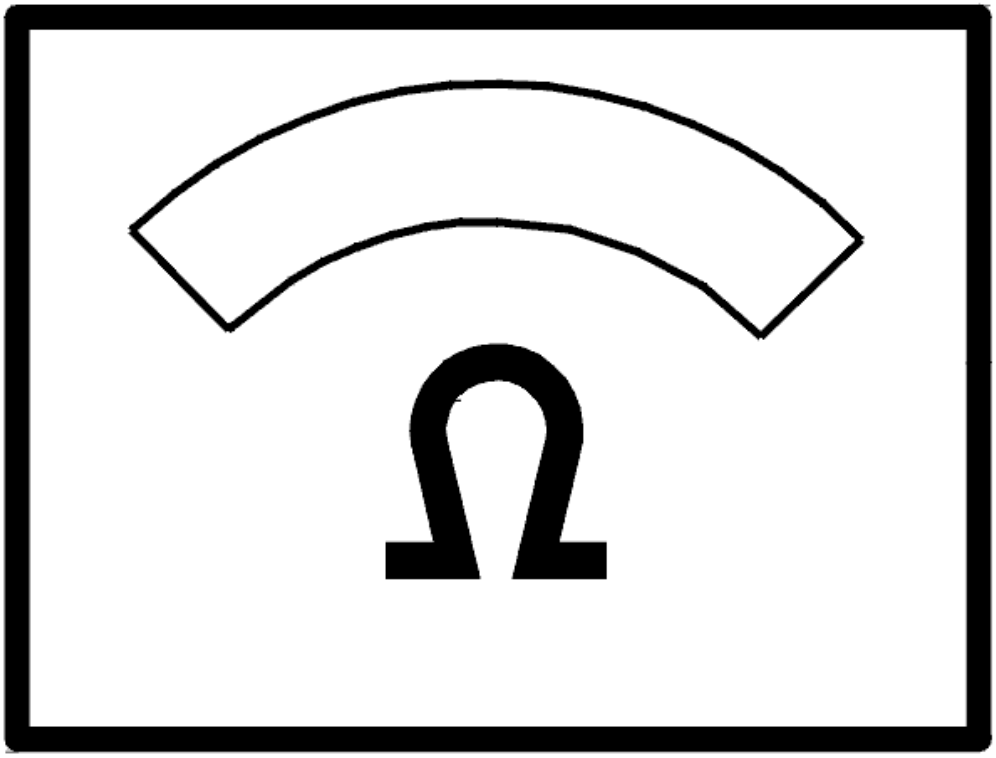

Fig. 42: Identifying Ohms Display
Courtesy of VOLVO CARS CORPORATION

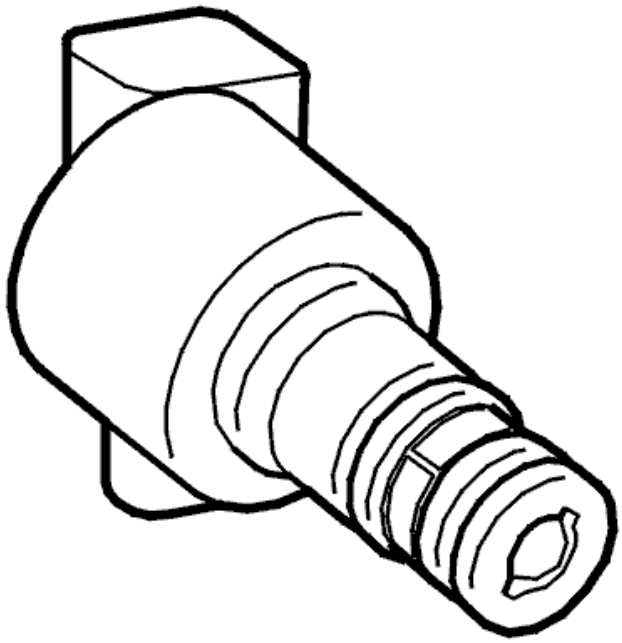

Fig. 43: Identifying Line Pressure Solenoid, STH
Courtesy of VOLVO CARS CORPORATION

Was the resistance OK?

- **YES**

  Refer to **CHECKING THE CABLES IN THE CIRCUIT FOR SOLENOID STH**

- **NO**

  Refer to **CHECKING THE WIRING AND COMPONENT**

CHECKING THE CABLES IN THE CIRCUIT FOR SOLENOID STH

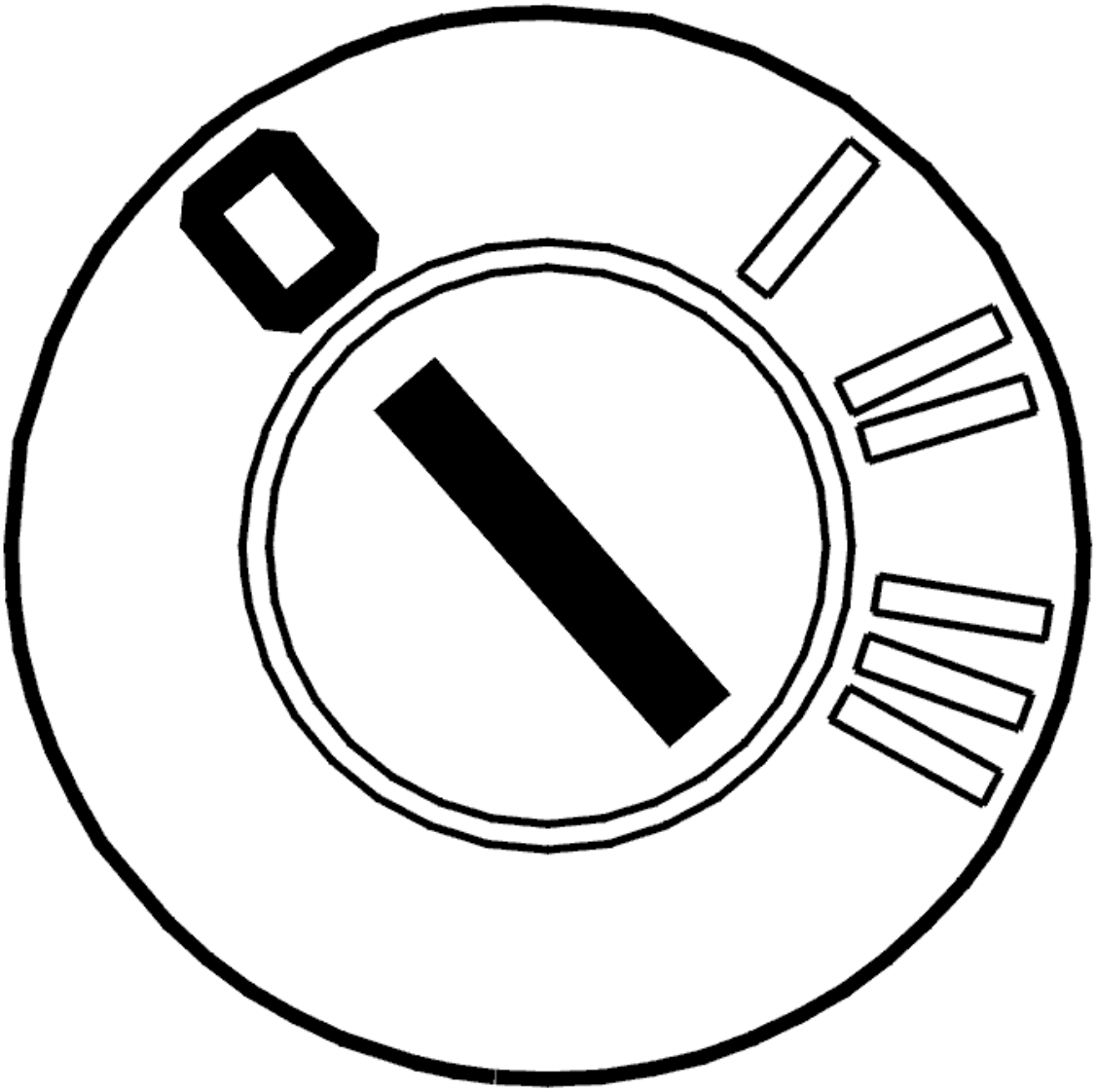

Fig. 44: Identifying Ignition OFF
Courtesy of VOLVO CARS CORPORATION

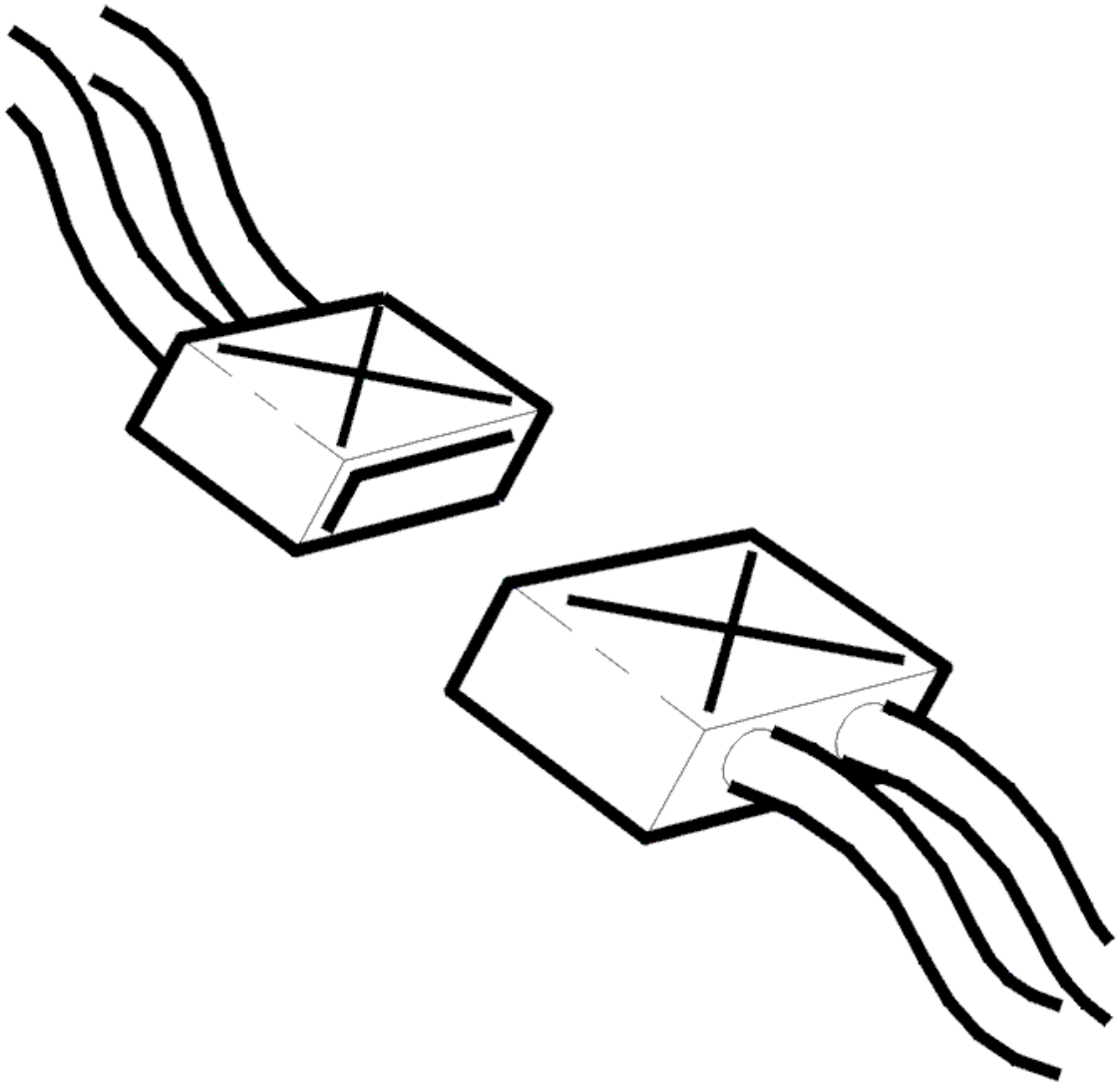

Fig. 45: Identifying Connectors
Courtesy of VOLVO CARS CORPORATION

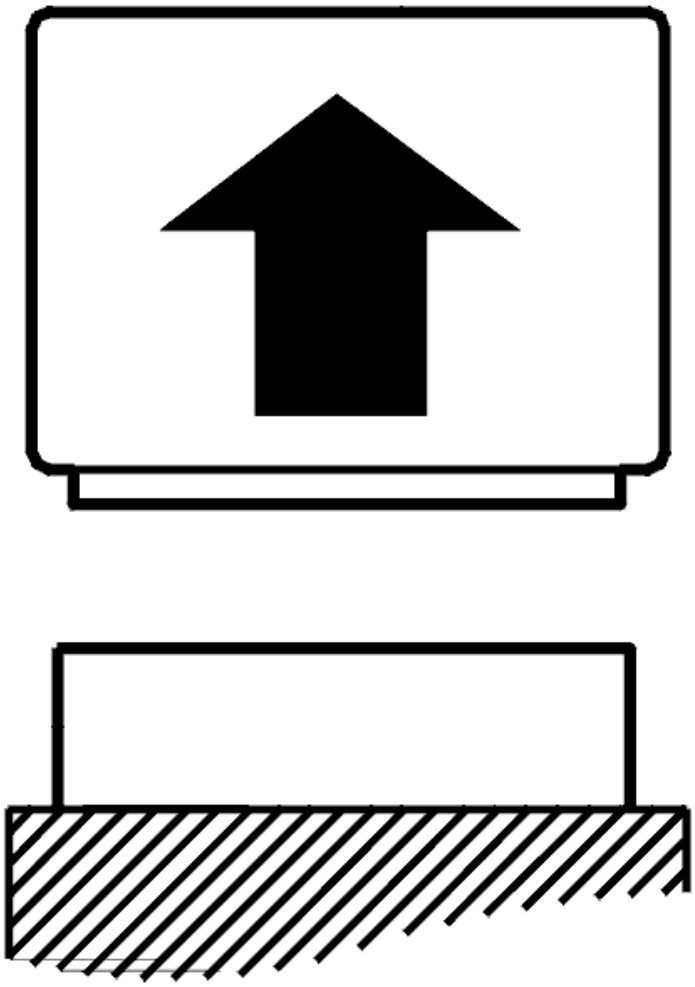

Fig. 46: Identifying Control Module Disconnected
Courtesy of VOLVO CARS CORPORATION

- Ignition off
- Connect the breakout box to the transmission
- Disconnect the control module.
- Disconnect the transmission connector
- Connect adapter see **9511505** and breakout box see **9813190** to the transmission connector (control module side).

  Check the cable between control module terminal #A52 and transmission connector terminal #C (#A3) for a short-circuit to ground.

  Check the cable between control module terminal #A70 (#B10) and transmission connector terminal #D (#A4) for a short-circuit to ground.

Other information:

- To connect the breakout box to the control module, see **CONNECTING THE BREAKOUT BOX**
- To connect the breakout box to the transmission connector, see **CONNECTING THE BREAKOUT BOX, GM AUTOMATIC TRANSMISSIONS**
- For information about signals, see **SIGNAL SPECIFICATION**
- see **CHECKING WIRING AND TERMINALS. PERMANENT FAULT**

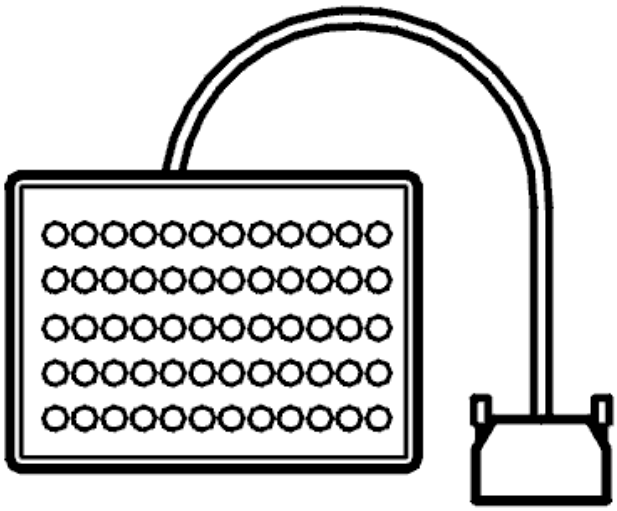

Fig. 47: Identifying Breakout Box
Courtesy of VOLVO CARS CORPORATION

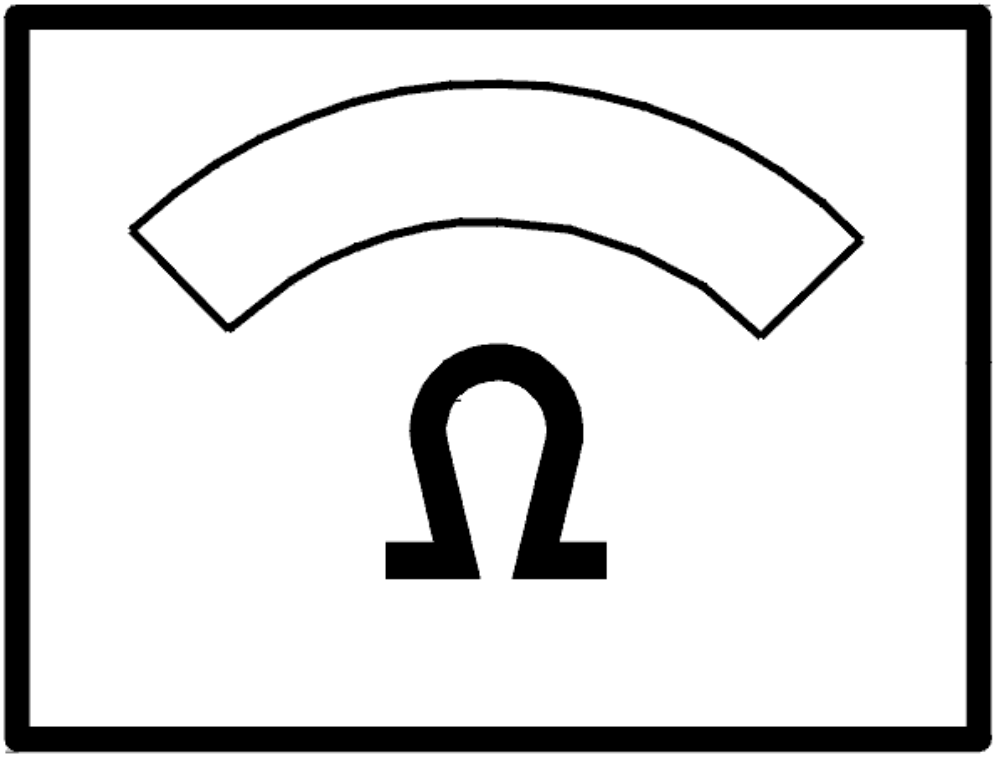

Fig. 48: Identifying Ohms Display
Courtesy of VOLVO CARS CORPORATION

Was the wiring OK?

- **YES**

  Refer to **CHECKING THE WIRING AND COMPONENT**

- **NO**

  Refer to **ERASING DIAGNOSTIC TROUBLE CODE (DTC)**

CHECKING THE WIRING AND COMPONENT

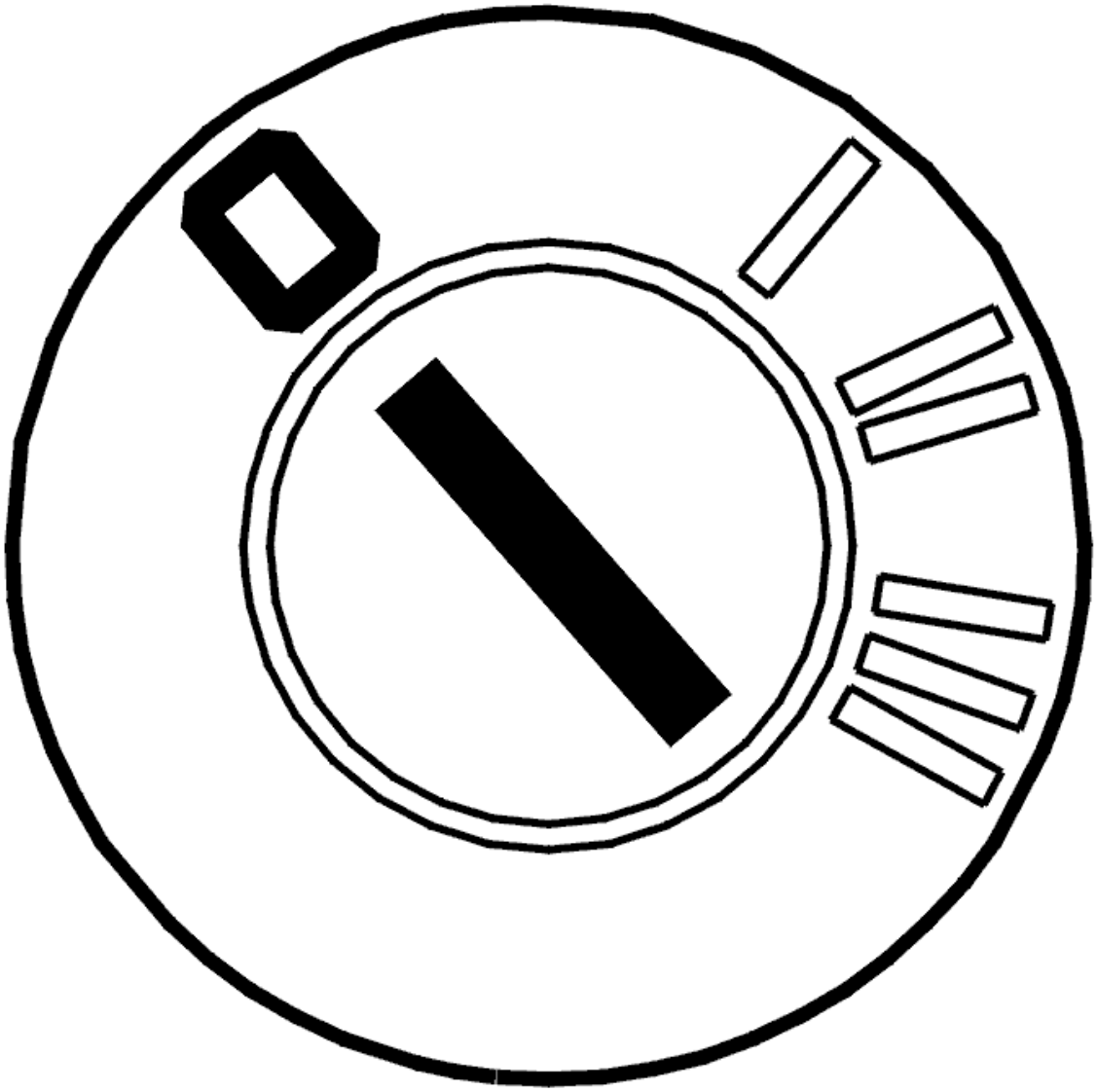

Fig. 49: Identifying Ignition OFF
Courtesy of VOLVO CARS CORPORATION

- Ignition off
- Open the transmission control system.

  Check the cable between transmission terminal #C (#A3) and solenoid STH terminal #A. Check the cable between transmission terminal #D (#A4) and solenoid STH terminal #B. Check these cables for a short-circuit to ground.

  HINT: Check solenoid STH. Measure the solenoid STH resistance between terminals A and B. The resistance should be between 3-5 ohms.

  Replace the cable harness if no fault is found in the solenoid or the terminals.

  Other information:

- To open the transmission control system, For removal, see **SIDE COVER TRANSMISSION, REMOVING** . To install, see **SIDE COVER TRANSMISSION, INSTALLING**
- To connect the breakout box to the transmission connector, see **CONNECTING THE BREAKOUT BOX, GM AUTOMATIC TRANSMISSIONS**
- To replace solenoid STH, see **SOLENOID LINE PRESSURE, REPLACING**
- To replace the cable harness, see **TEMPERATURE SENSOR FLUID, TRANSAXLE, (TFT)**
- For information about signals, see **SIGNAL SPECIFICATION**
- see **CHECKING WIRING AND TERMINALS. PERMANENT FAULT**

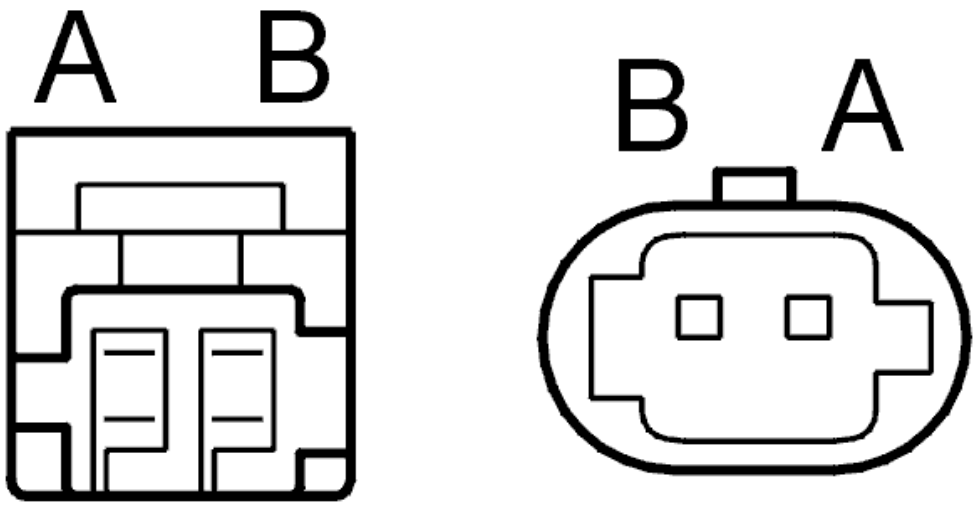

Fig. 50: Identifying Connector Terminals
Courtesy of VOLVO CARS CORPORATION

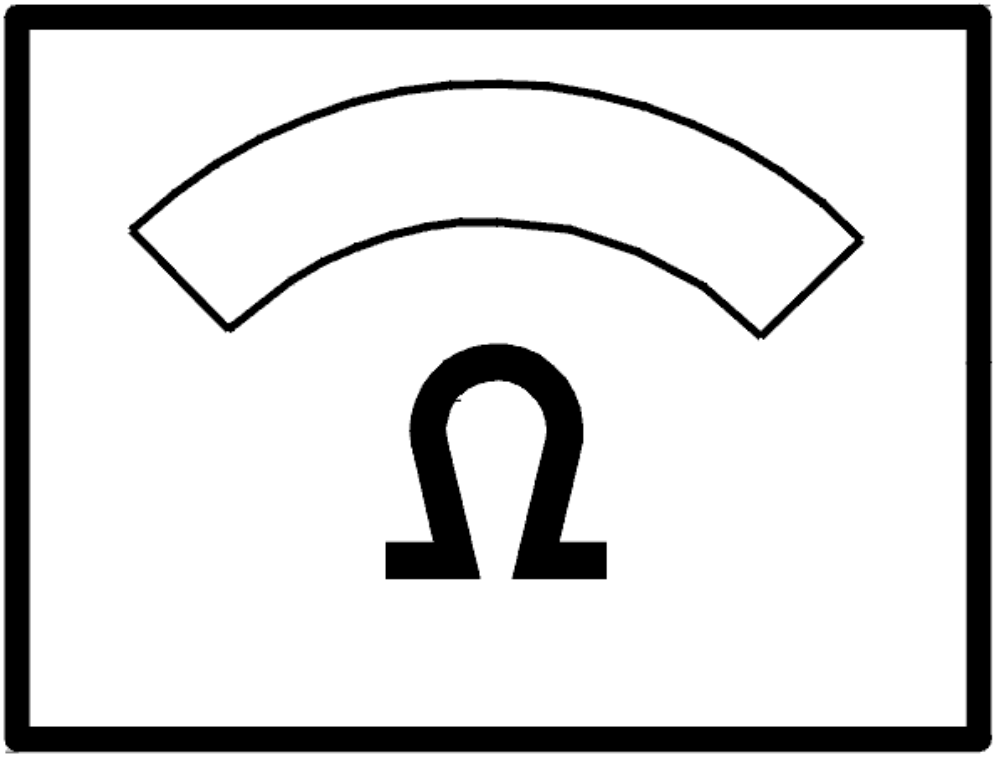

Fig. 51: Identifying Ohms Display
Courtesy of VOLVO CARS CORPORATION

- **Continue**

  Refer to **RESETTING THE ADAPTATION**

REPLACING THE TRANSMISSION

Fault-tracing indicates a mechanical fault in the transmission. Replace the transmission according to **TRANSMISSION, REMOVING** .

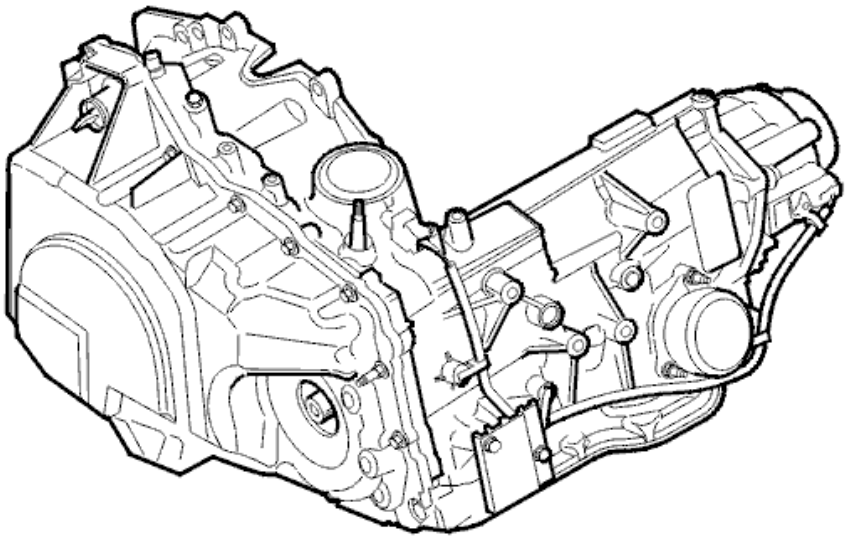

P2X

4301721D © VOLVO

Fig. 52: Identifying Transmission
Courtesy of VOLVO CARS CORPORATION

- **Continue**

  Refer to **RESETTING THE ADAPTATION**

ERASING DIAGNOSTIC TROUBLE CODE (DTC)

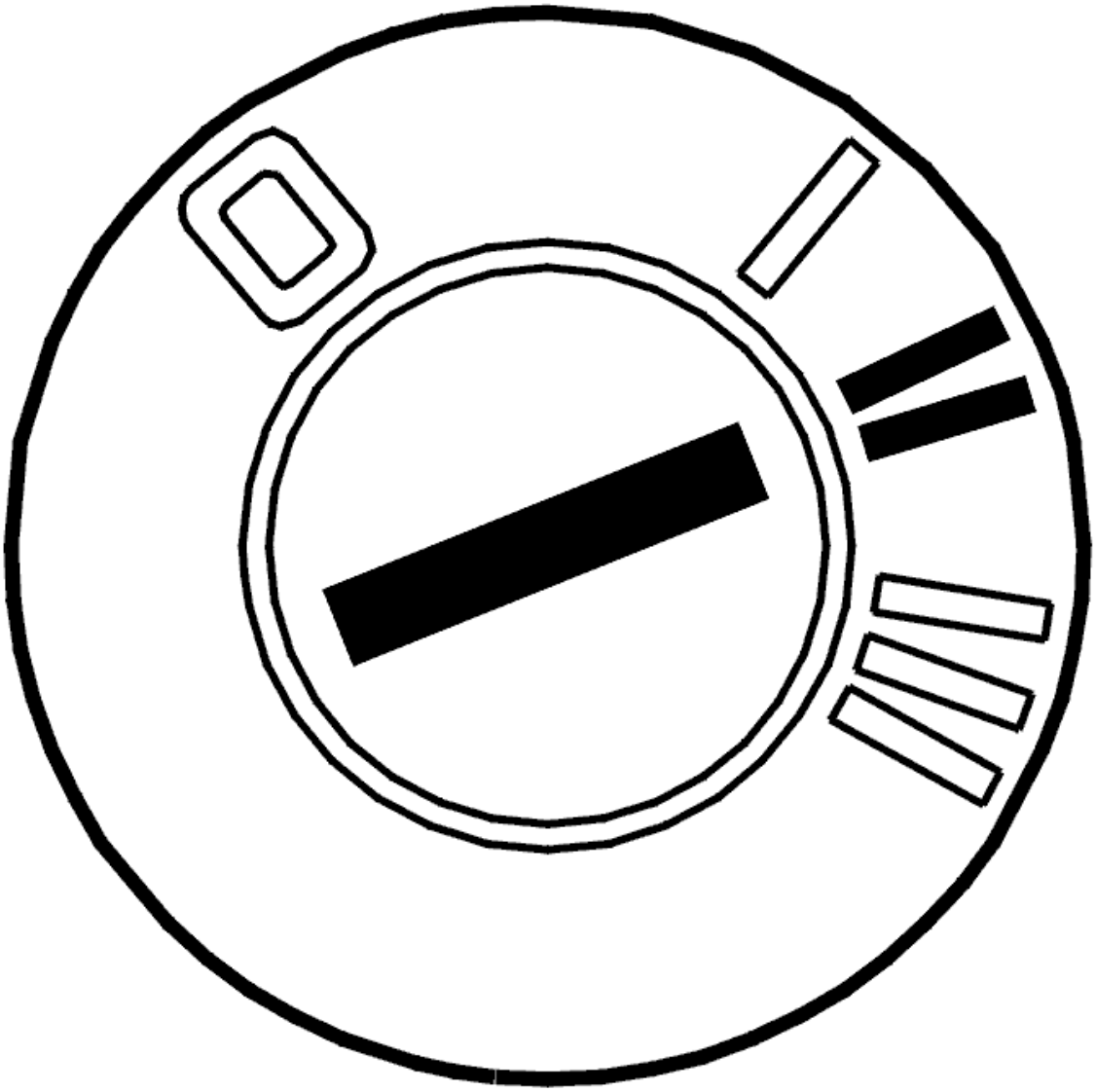

Fig. 53: Identifying Ignition ON
Courtesy of VOLVO CARS CORPORATION

- Ignition on
- Erase diagnostic trouble codes (DTCs)
- Test drive the car. See **TEST DRIVE FORM, DESCRIPTION** .

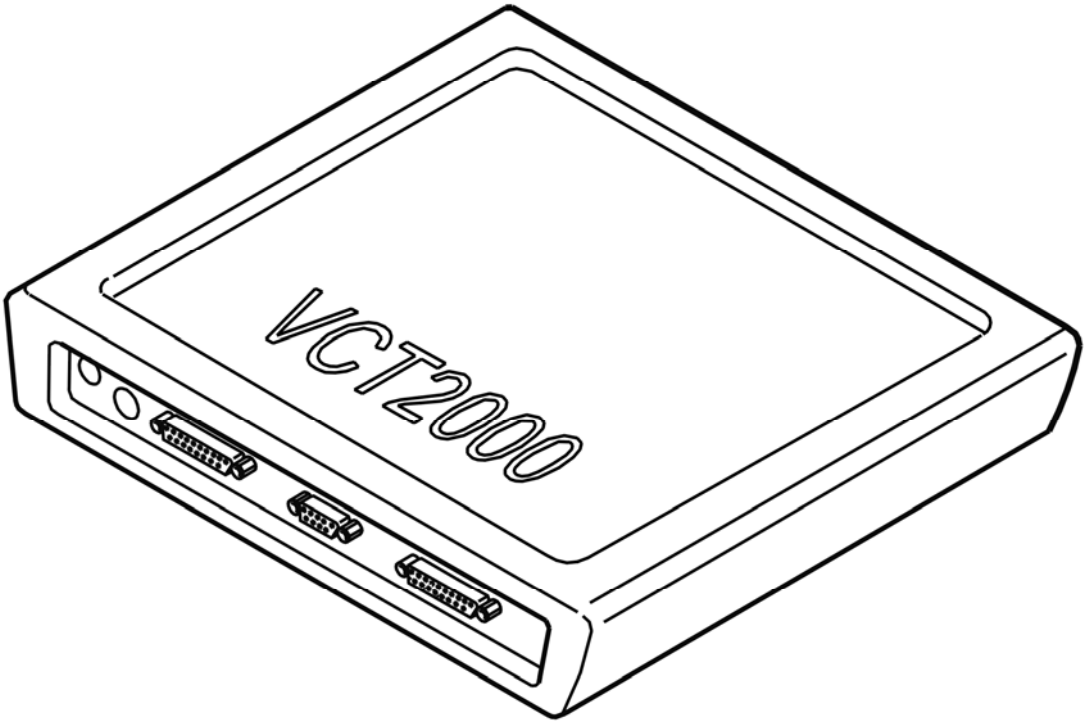

Fig. 54: Identifying VCT2000 Diagnostic Tool Symbol In VIDA
Courtesy of VOLVO CARS CORPORATION

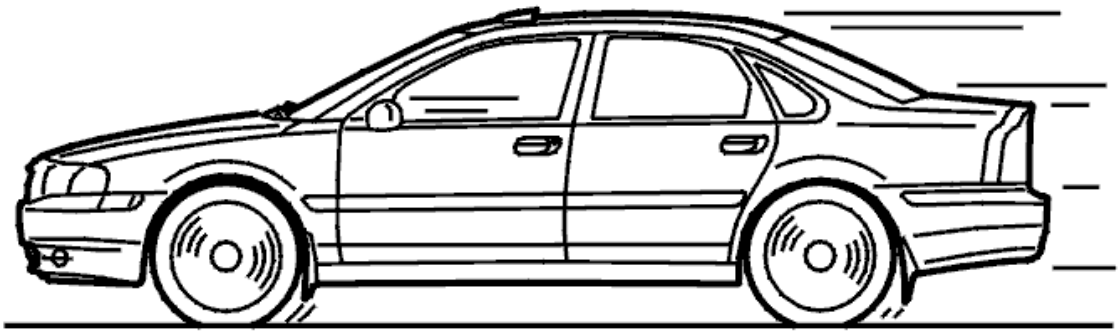

Fig. 55: Identifying Test Drive
Courtesy of VOLVO CARS CORPORATION

- **Continue**

Refer to **READING OFF DIAGNOSTIC TROUBLE CODES (DTC)**

READING OFF DIAGNOSTIC TROUBLE CODES (DTC)

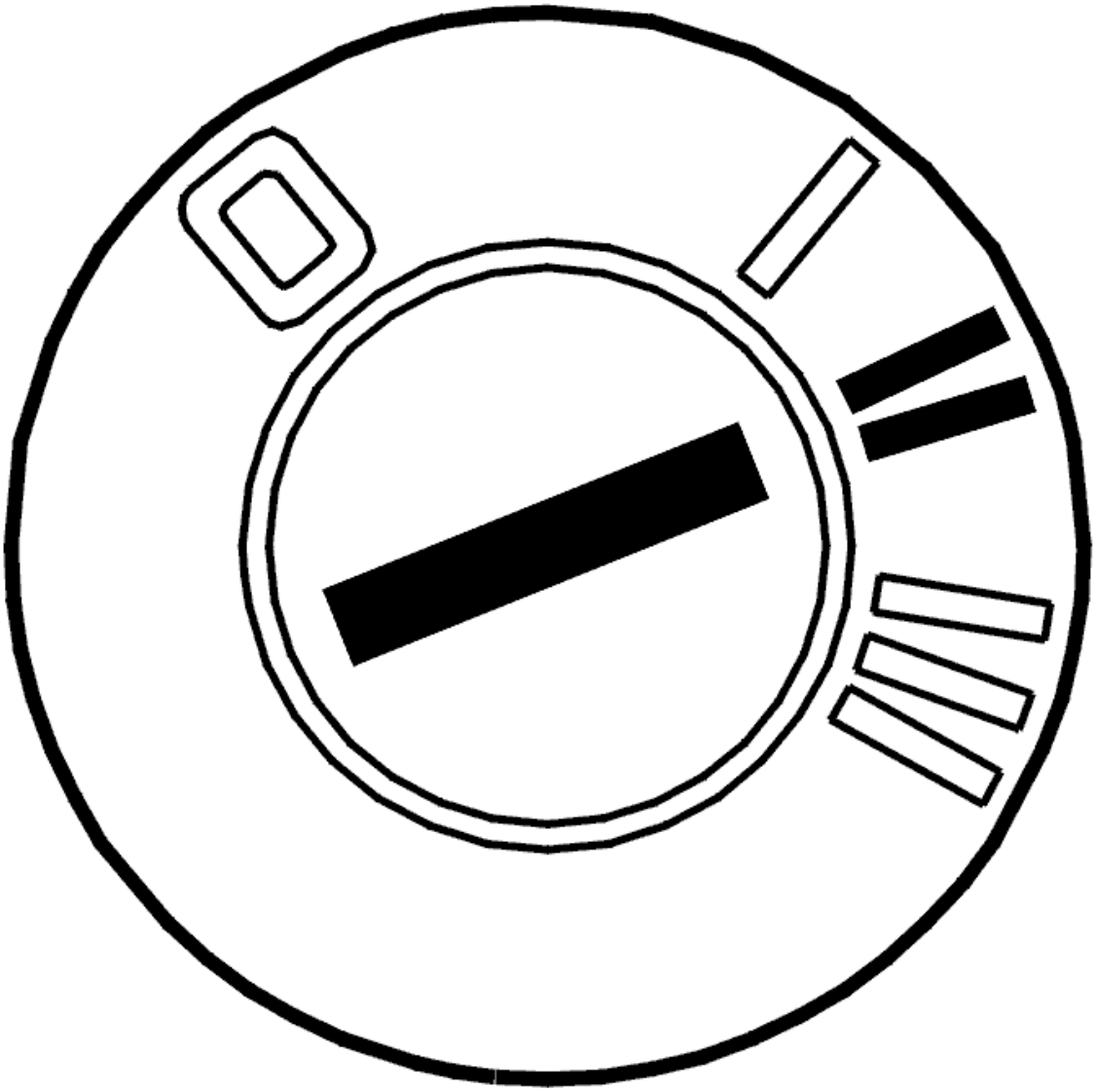

Fig. 56: Identifying Ignition ON
Courtesy of VOLVO CARS CORPORATION

- Ignition on
- Read off diagnostic trouble codes (DTCs).

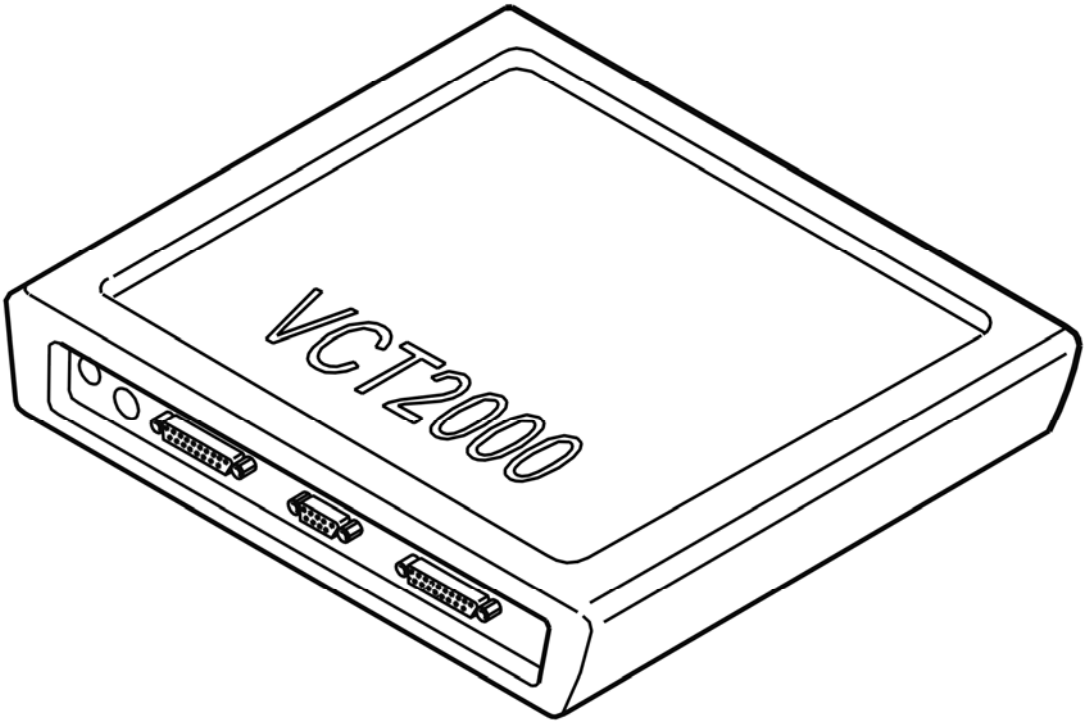

Fig. 57: Identifying VCT2000 Diagnostic Tool Symbol In VIDA
Courtesy of VOLVO CARS CORPORATION

Does diagnostic trouble code (DTC) TCM-0010 recur?

- **YES**

  Refer to **INFORMATION**

- **NO**

  OKAY: Troubleshooting has been completed.

CHECK THE QUALITY OF THE TRANSMISSION OIL

CHECK THE QUALITY OF THE TRANSMISSION OIL

NOTE: **The transmission fluid quality is extremely important for transmission function. Therefore it is imperative that this is correct.**

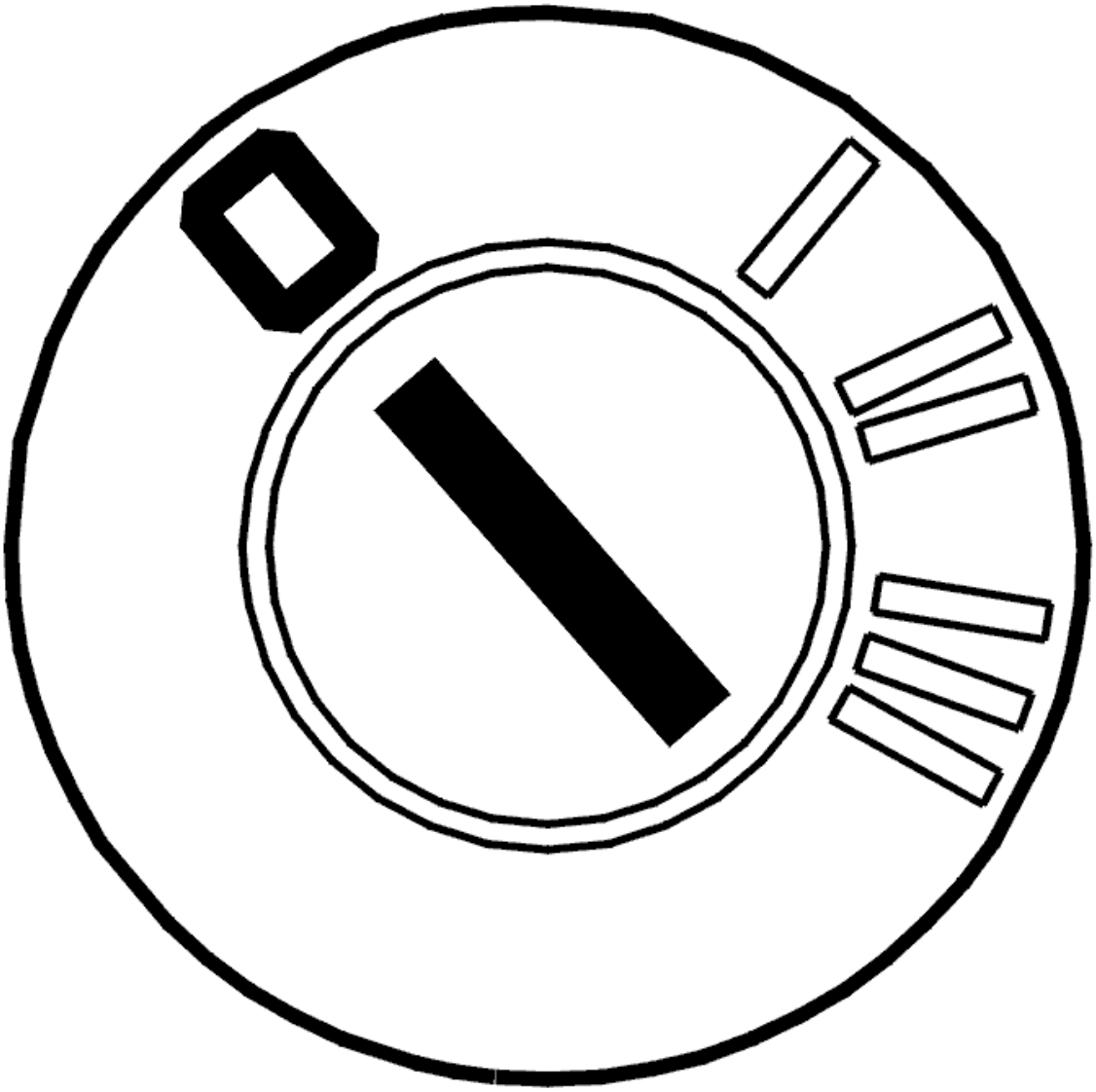

Fig. 58: Identifying Ignition OFF
Courtesy of VOLVO CARS CORPORATION

- Ignition off.

  Check the transmission oil quality. Take a sample using the dip stick.

  - Replace the transmission fluid if it smells burnt
  - Replace the fluid and filter if the transmission fluid contains particles
  - Check if there is oil or an oil film in the expansion tank. Oil in the expansion tank indicates leakage from the transmission oil cooler which is positioned in the cooler unit.

NOTE: **The transmission oil is red and must not be confused with black engine oil.**

- If the transmission fluid is cloudy or pink, it is contaminated with coolant. In such cases the transmission must be replaced. For checking coolant in transmission oil, see **CHECKING FOR COOLANT IN THE OIL**

  When replacing the transmission, the cooler unit, including the additional cooler must be replaced if installed. Replace the hoses between the cooler and the transmission.

Other information:

- To replace the transmission fluid and filter, see **TRANSMISSION OIL / OIL FILTER, REPLACING** .

Select an option:

1. The fluid contains water

   Refer to **REPLACING THE TRANSMISSION**

2. The fluid smells burnt or contains particles

   Refer to **RESETTING TRANSMISSION FLUID CHANGE COUNTER**

3. No fault detected.

   Refer to **CHECKING THE OIL LEVEL IN THE TRANSMISSION**

CHECKING THE OIL LEVEL IN THE TRANSMISSION

CHECK THE TRANSMISSION OIL LEVEL

NOTE: **The transmission fluid level is extremely important for transmission function. Therefore it is imperative that it is correct. In addition the oil level is dependent on oil temperature.**

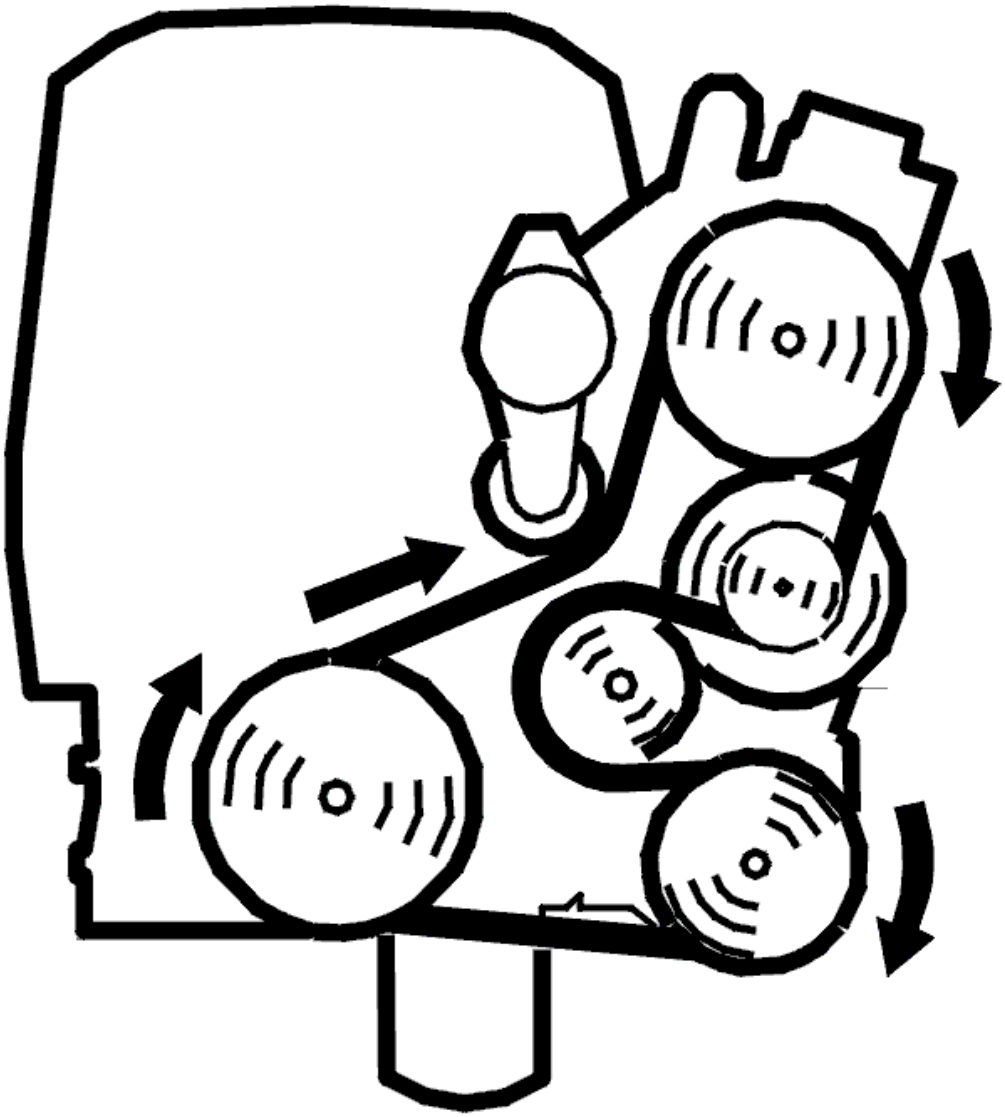

Fig. 59: Identifying Belt Routing
Courtesy of VOLVO CARS CORPORATION

- Start the car
- Read off the oil temperature.

When checking the gearbox oil level the oil temperature **must** be **80 °C - 90 °C** .

At the correct temperature, the oil level should be between "Min hot" and "Max hot".

Oil level

Too high: Drain the transmission fluid to the correct level
Too low: Check the transmission for leakage.

Remedy as necessary.

Other information:

- To check and adjust the oil level, see **OIL LEVEL, CHECKING** .

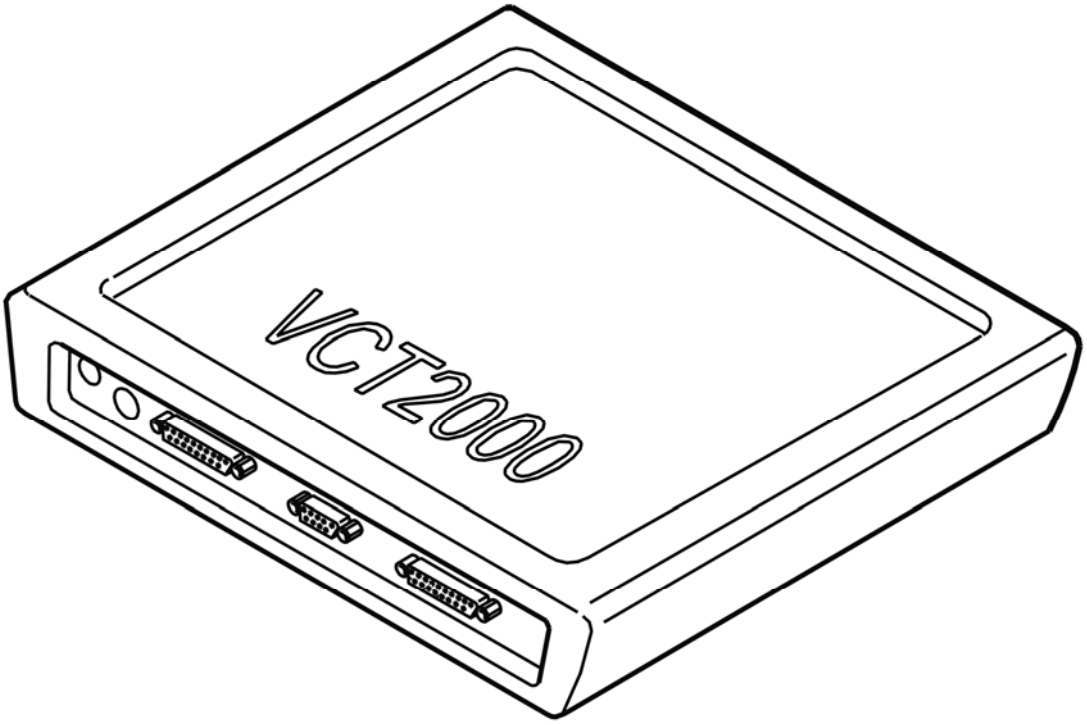

Fig. 60: Identifying VCT2000 Diagnostic Tool Symbol In VIDA
Courtesy of VOLVO CARS CORPORATION

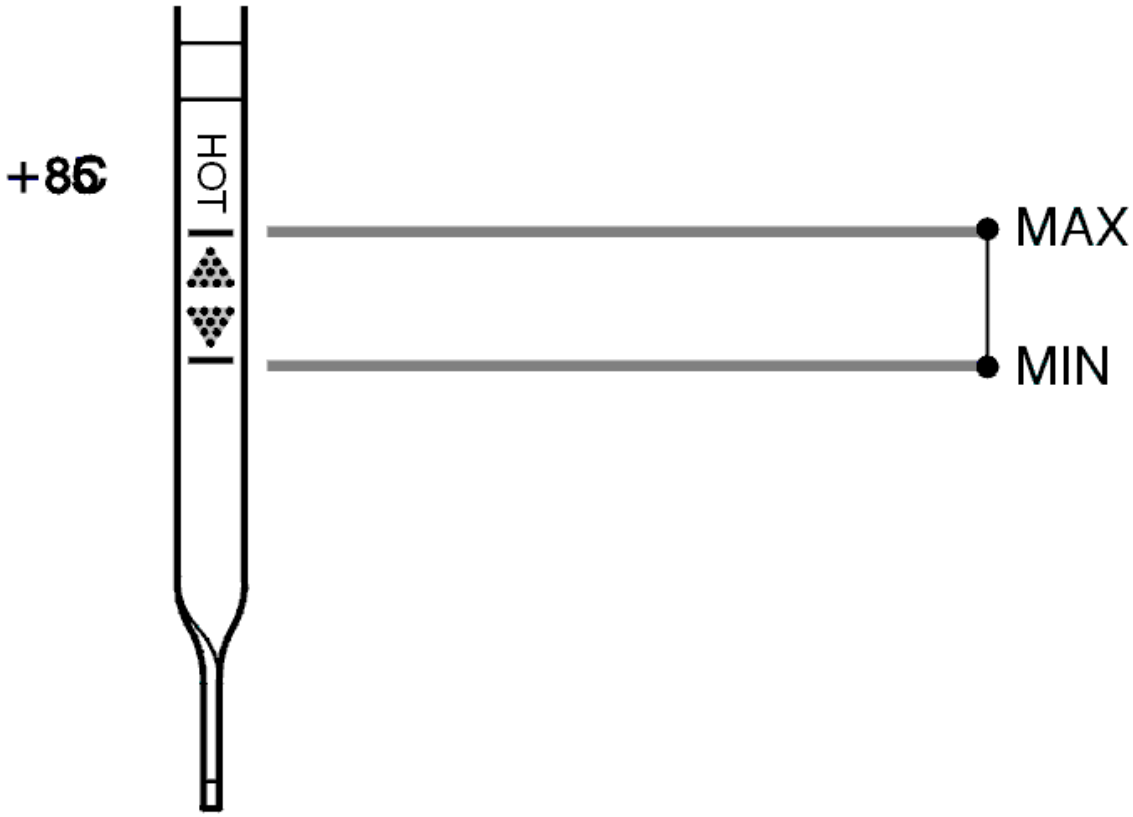

Fig. 61: Identifying Oil Level / Temperature
Courtesy of VOLVO CARS CORPORATION

Was the transmission fluid level correct?

- **YES**

  Refer to **CHECKING SOLENOID STH**

- **NO**

  Refer to **RESETTING TRANSMISSION FLUID CHANGE COUNTER**

RESETTING THE ADAPTATION

RESETTING ADAPTATION AND THE COUNTER FOR "TRANSMISSION OIL CHANGE"

HINT: The transmission has torque controlled adaptive pressure control. Pressure control means that the transmission regulates the pressure itself during each gear shift. This avoids harsh gear shifting. Each gear shift is evaluated by the control module and stored in the memory. This allows for compensation for wear and tear in the transmission and clutch. It is important that the adaptation in the memory is reset after the transmission has been repaired. This is to ensure normal operation. The oil is replaced during repair; the "Transmission oil change" counter must be reset. If the counter is not reset when the fluid is drained and replaced, there is a risk that a diagnostic trouble code (DTC) will be stored in incorrect

circumstances.

NOTE: This applies only if the transmission or one of the components in the transmission have been replaced.

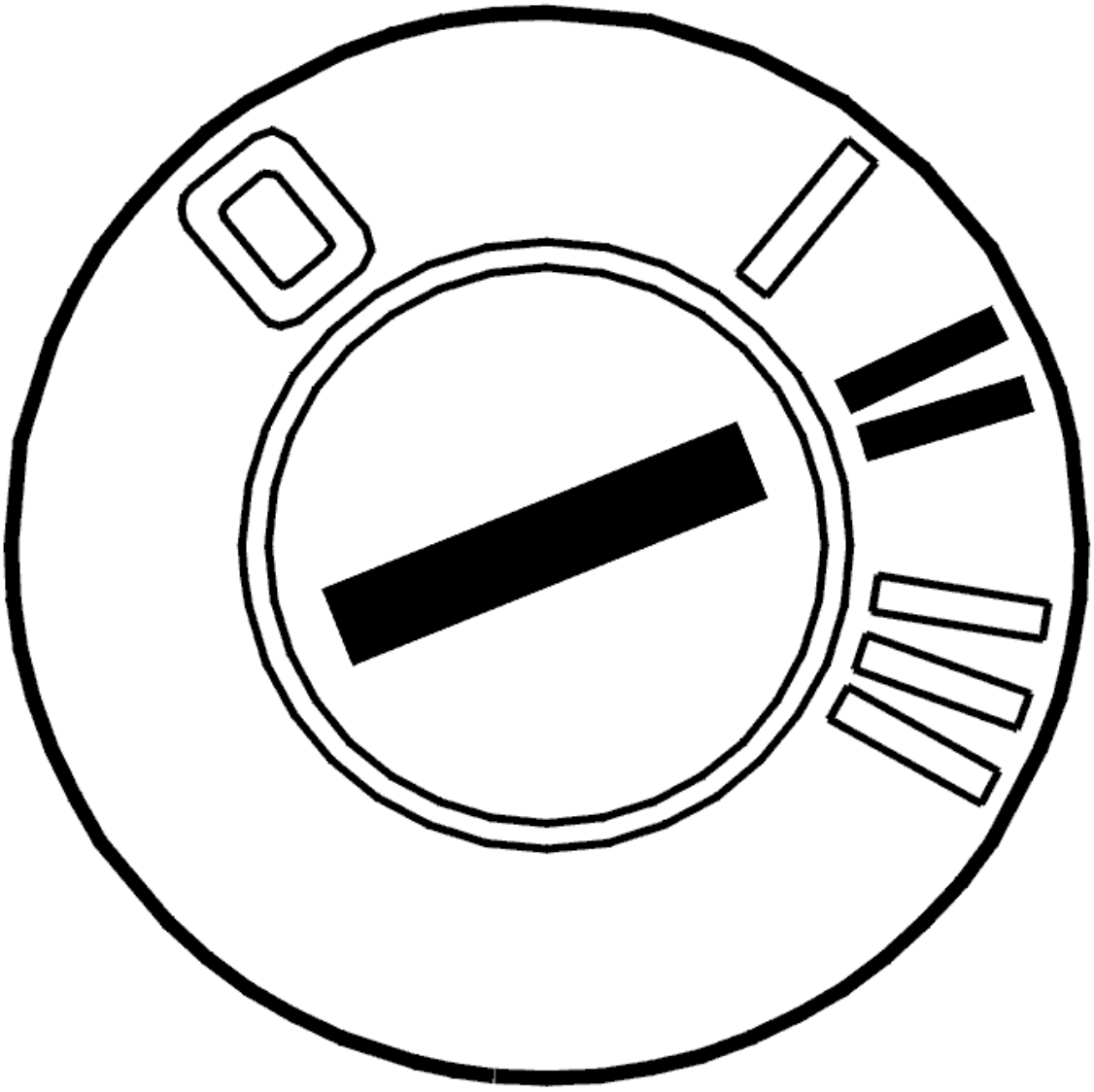

Fig. 62: Identifying Ignition ON
Courtesy of VOLVO CARS CORPORATION

- Ignition on.

  Click on the VCT2000 symbol to reset the adaptation and counter.

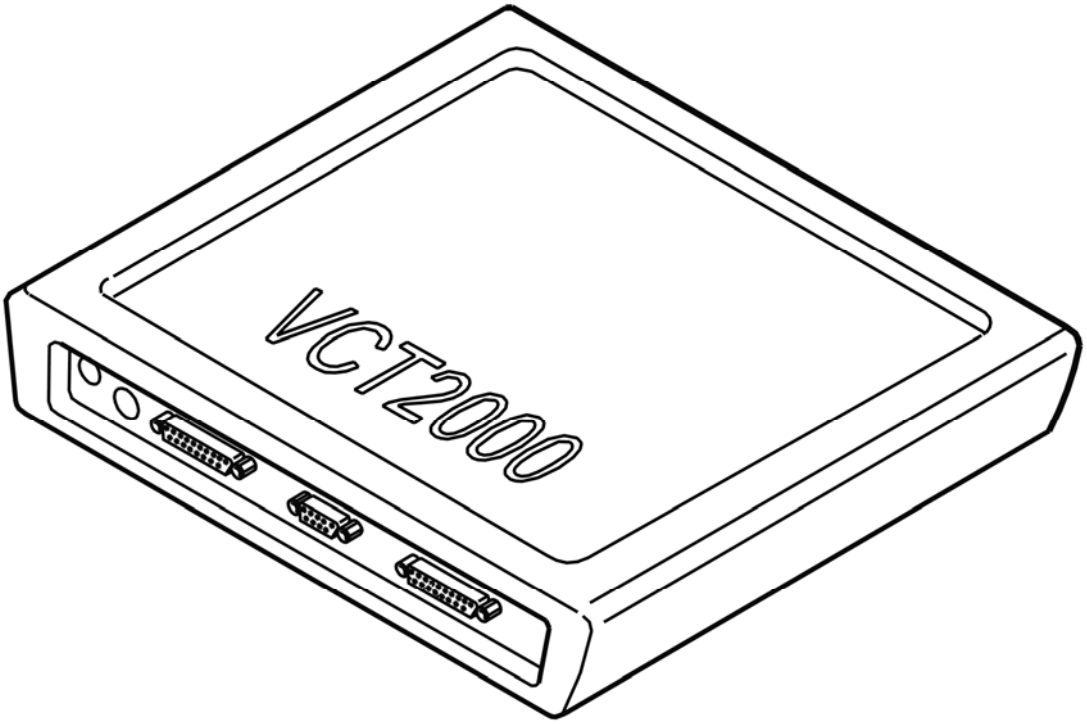

Fig. 63: Identifying VCT2000 Diagnostic Tool Symbol In VIDA
Courtesy of VOLVO CARS CORPORATION

- **Continue**

  Refer to **VERIFICATION**

RESETTING TRANSMISSION FLUID CHANGE COUNTER

RESETTING TRANSMISSION FLUID CHANGE COUNTER

HINT: The transmission control module (TCM) has a counter for the oil quality. The counter counts up if the transmission is exposed to too high a load or an ambient temperature that is too high. If the counter is not reset when the oil is drained or changed, there is a risk that a diagnostic trouble code (DTC) will be stored in faulty circumstances. Therefore it is important that the "Transmission oil change" counter is reset.

NOTE: **This applies only when the transmission fluid is changed and when the fluid is changed when repairs are carried out to the transmission temperature sensor.**

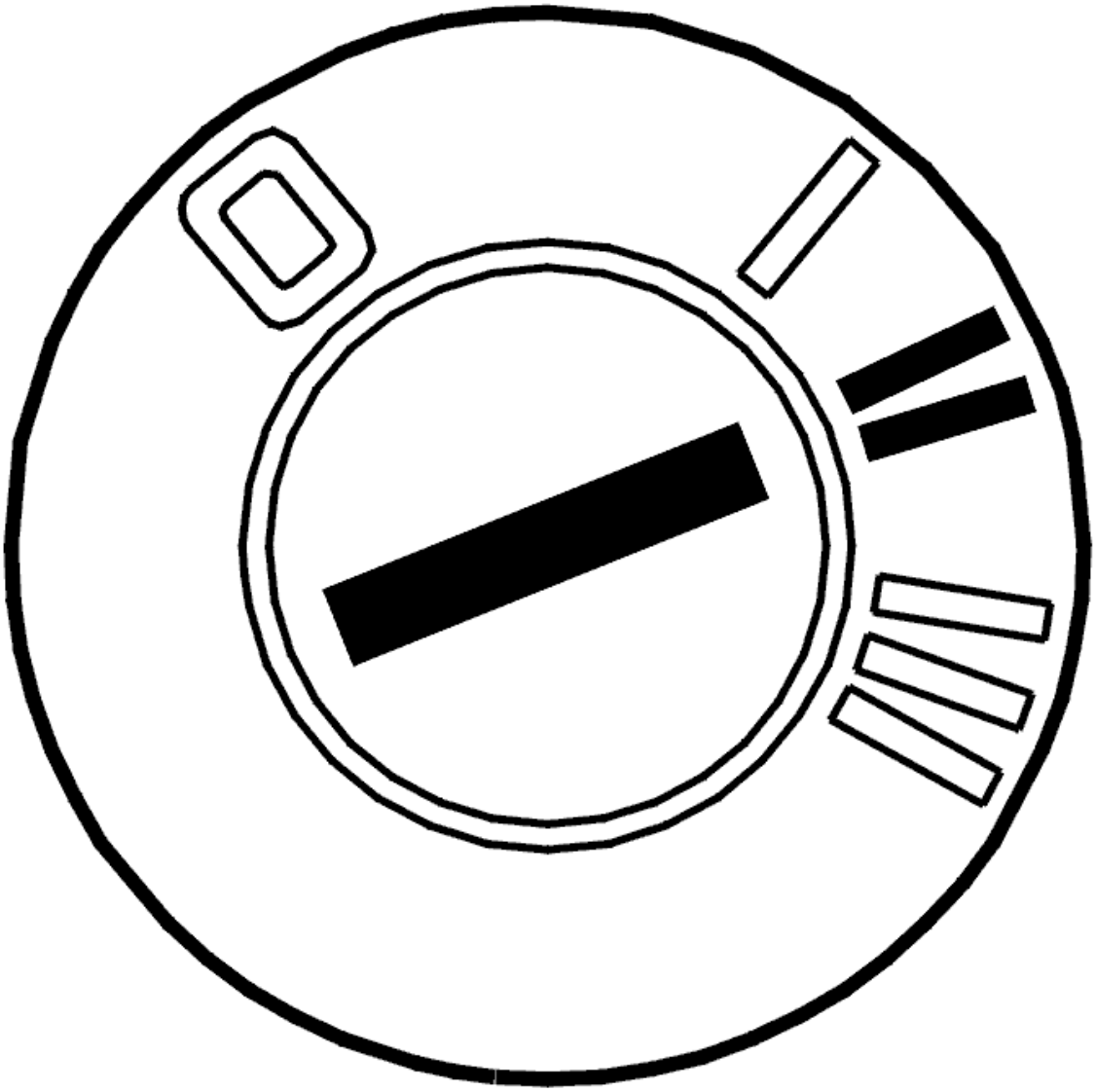

Fig. 64: Identifying Ignition ON
Courtesy of VOLVO CARS CORPORATION

- Ignition on.

  Reset the counter by clicking on the VCT 2000 symbol.

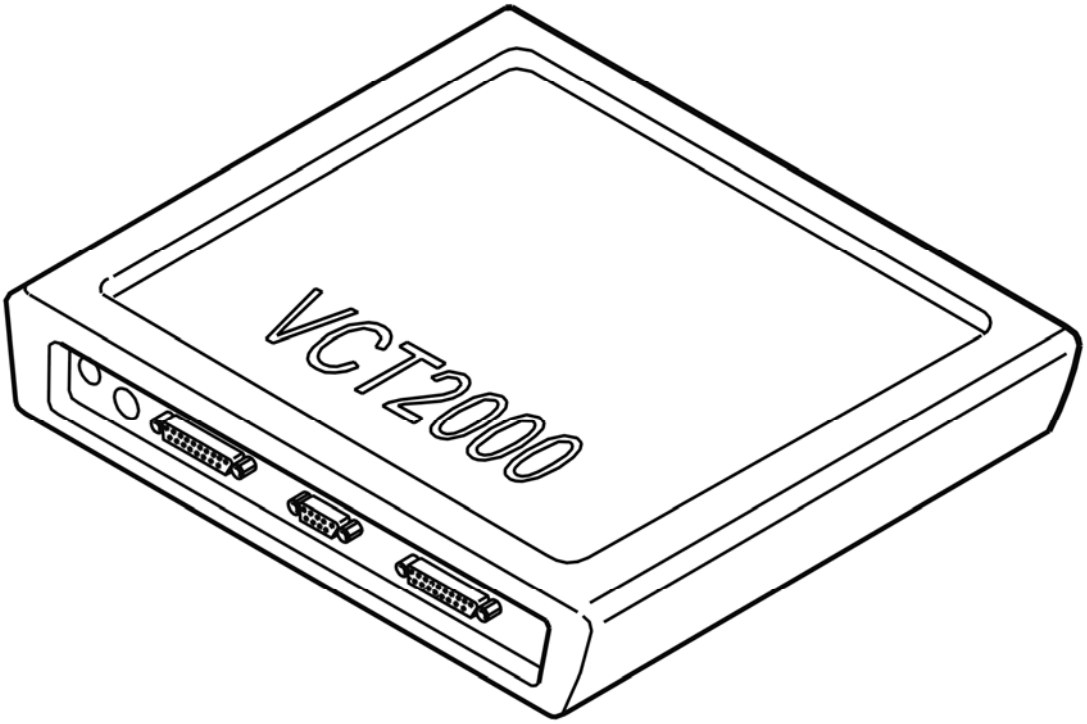

Fig. 65: Identifying VCT2000 Diagnostic Tool Symbol In VIDA
Courtesy of VOLVO CARS CORPORATION

- **Continue**

  Refer to **VERIFICATION**

VERIFICATION

VERIFICATION

HINT: After carrying out the repair, check that the fault has been remedied.

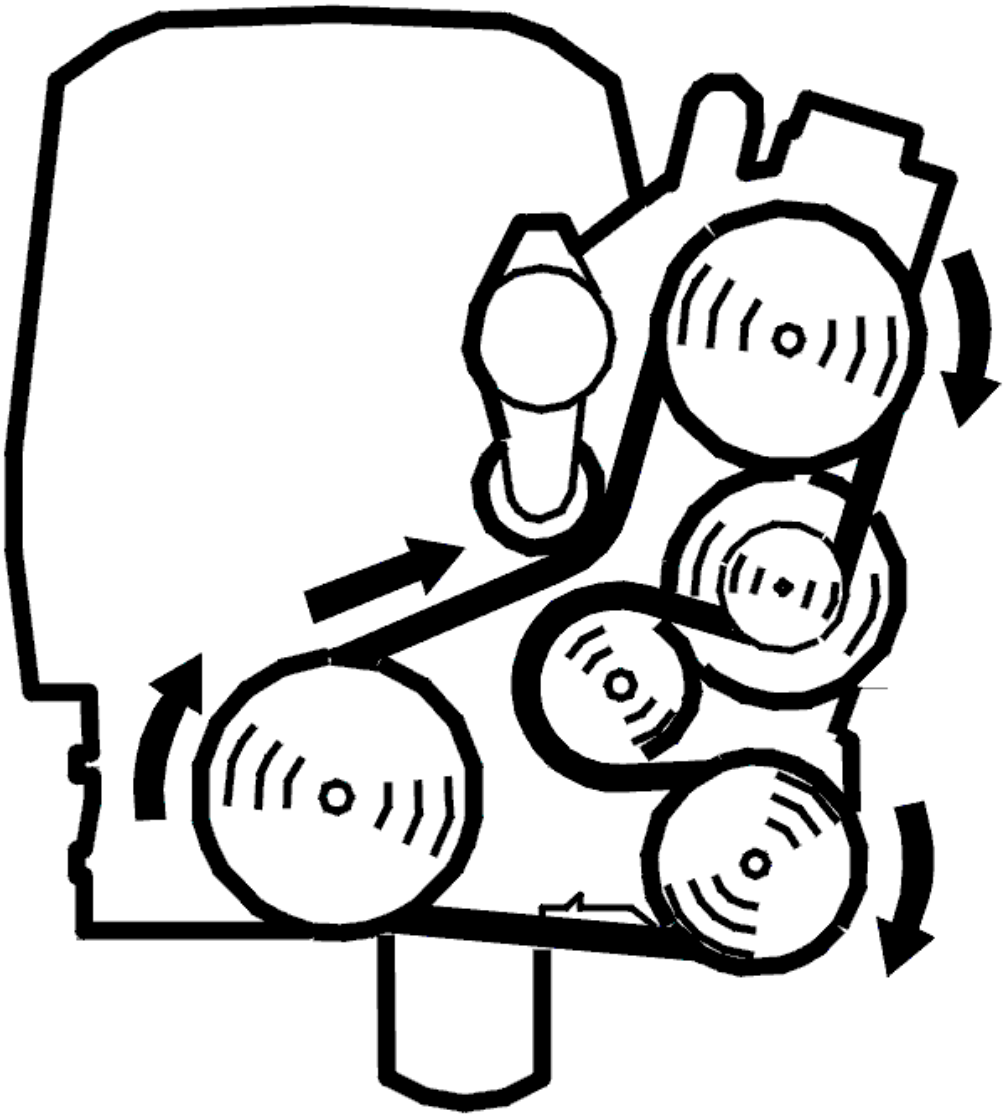

Fig. 66: Identifying Belt Routing
Courtesy of VOLVO CARS CORPORATION

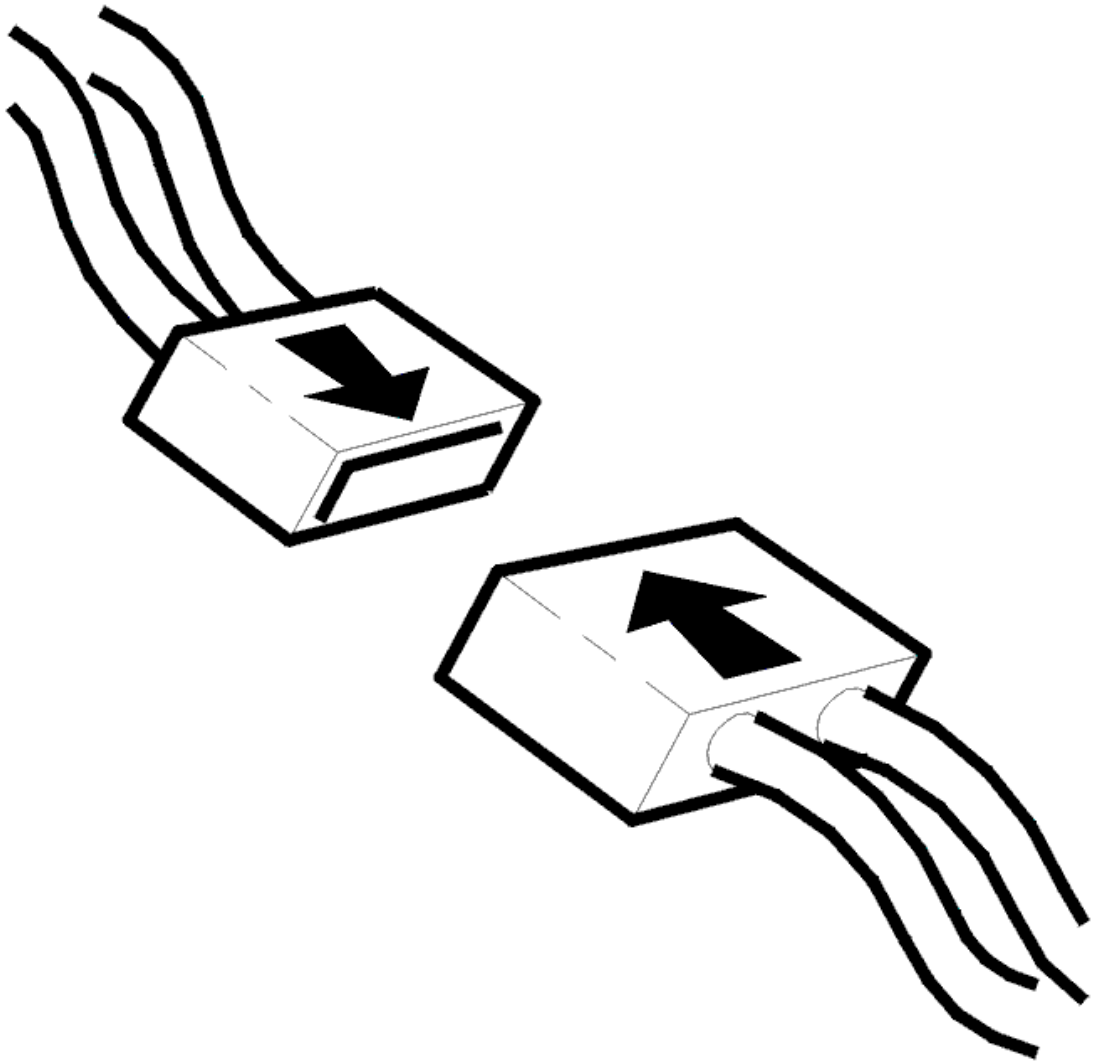

Fig. 67: Identifying Connector(s) Reinstallation
Courtesy of VOLVO CARS CORPORATION

- Ignition off.
- Reconnect the connectors, reinstall components etc.
- Raise the car so that the drive wheels are unimpeded.
- Start the car.
- Read off the current through the solenoid circuit.
- Lock the wheels with the brakes. Shift the gear selector to position D.
- Depress the accelerator pedal (AP) slowly.

  The current should decrease as the accelerator pedal (AP) is depressed.

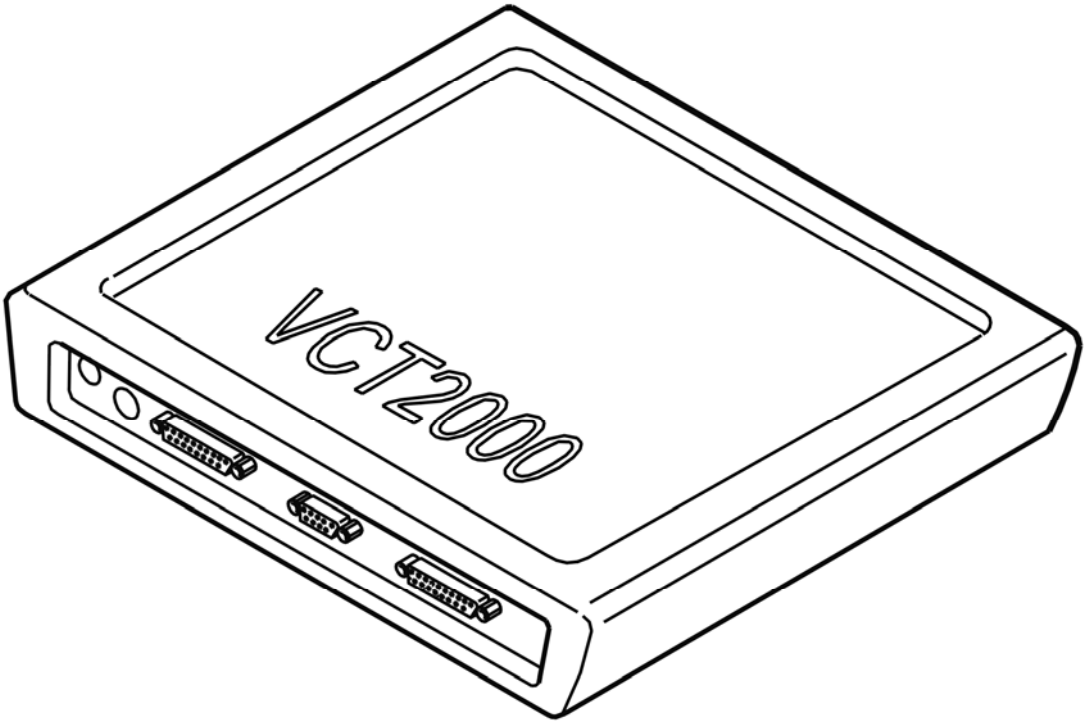

Fig. 68: Identifying VCT2000 Diagnostic Tool Symbol In VIDA
Courtesy of VOLVO CARS CORPORATION

Does the current decrease?

- **YES**

  VERIFIED: Troubleshooting has been completed.

- **NO**

  Refer to **INFORMATION**

INFORMATION

FAULT-TRACING INFORMATION

The fault should have been detected and remedied. As this is not the case fault-tracing has failed.

Exit fault-tracing for this diagnostic trouble code (DTC) or make another attempt.

TCM-0012: LOCK-UP SOLENOID SL. SIGNAL TOO HIGH. INTERMITTENT FAULT (4T65 AWD; 2003-2006)

DIAGNOSTIC TROUBLE CODE (DTC) INFORMATION

Condition

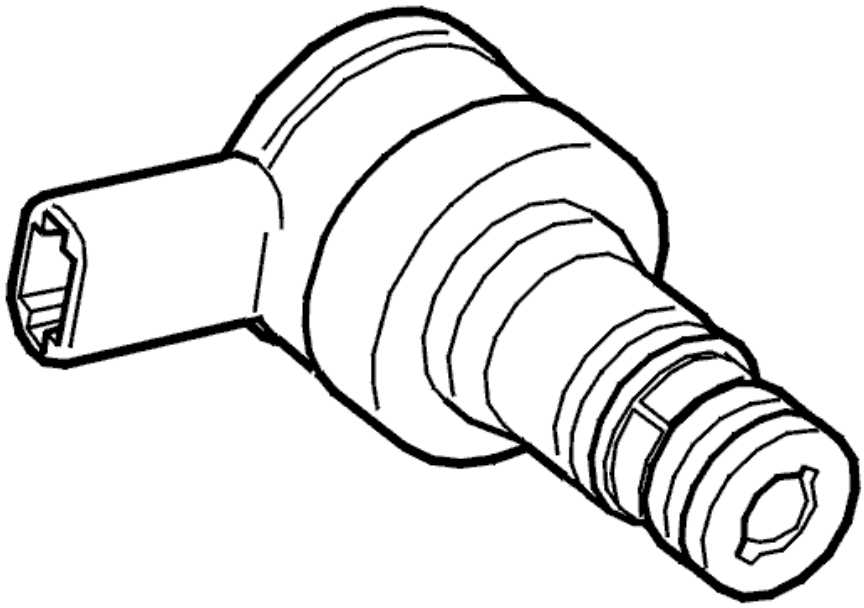

Fig. 69: Identifying Lock-Up Solenoid, SL
Courtesy of VOLVO CARS CORPORATION

Lock-up solenoid SL controls the transmission lock-up function. Solenoid SL operates when it receives voltage from the transmission control module (TCM) and is activated under different driving conditions depending on road speed, throttle position and the driving mode selected. Diagnostic trouble code (DTC) TCM-0012 is stored if the control module registers that the signal is too high in the circuit for solenoid SL when the solenoid should not be activated. Solenoid SL is then probably permanently activated.

Substitute Value

- The control module does not activate the lock-up solenoid.

Possible Source

- Short-circuit to supply voltage in the signal cable.

Fault symptom[s]

- General orange warning lamp lit.

- Malfunction indicator lamp (MIL) lit.
- Harsh gear shifting.
- No shifting.
- Irregular shifting.

HINT: Harsh shifting - because the solenoid is permanently activated, the lock-up function is permanently engaged in 2nd, 3rd and 4th gears. Harsh shifting and engine braking function in 2nd, 3rd and 4th gears.

SIGNAL TOO HIGH. INTERMITTENT FAULT

INTERMITTENT FAULT

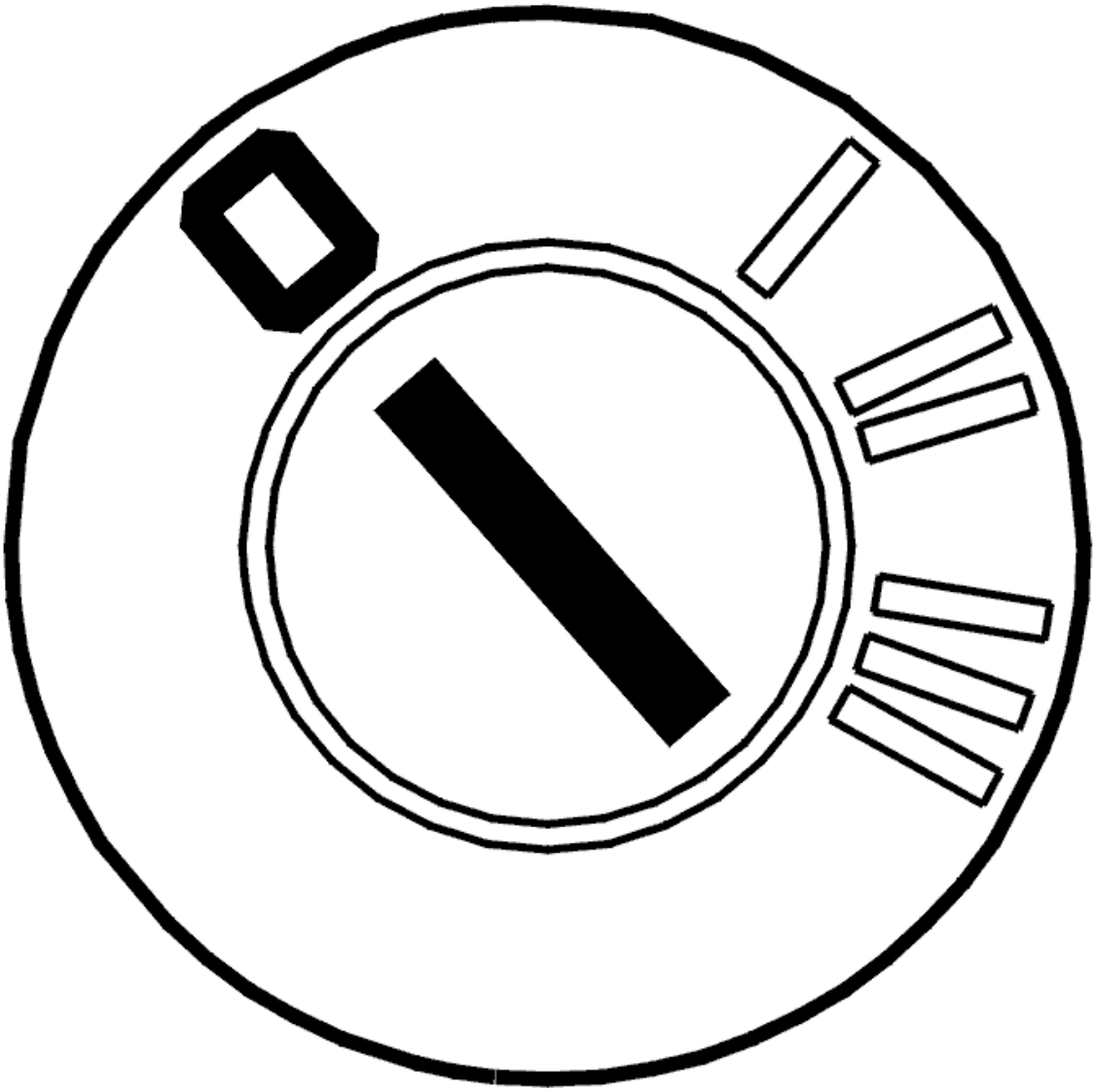

Fig. 70: Identifying Ignition OFF
Courtesy of VOLVO CARS CORPORATION

- Ignition off.

  Check the wiring between control module terminal A51 and transmission connector terminal T (#A17) for an intermittent short-circuit to supply voltage according to **SHORT-CIRCUIT TO SUPPLY VOLTAGE, INTERMITTENT FAULTS** .

  Check the wiring between control module terminal A53 and transmission connector #E (#A5) for an intermittent short-circuit to supply voltage according to **SHORT-CIRCUIT TO SUPPLY VOLTAGE, INTERMITTENT FAULTS** .

  Remedy as necessary.

  Other information:

  - To connect the breakout box, see **CONNECTING THE BREAKOUT BOX** .
  - To connect the breakout box to the transmission connector, see **CONNECTING THE BREAKOUT BOX, GM AUTOMATIC TRANSMISSIONS** .
  - For information about signals, see **SIGNAL SPECIFICATION** .

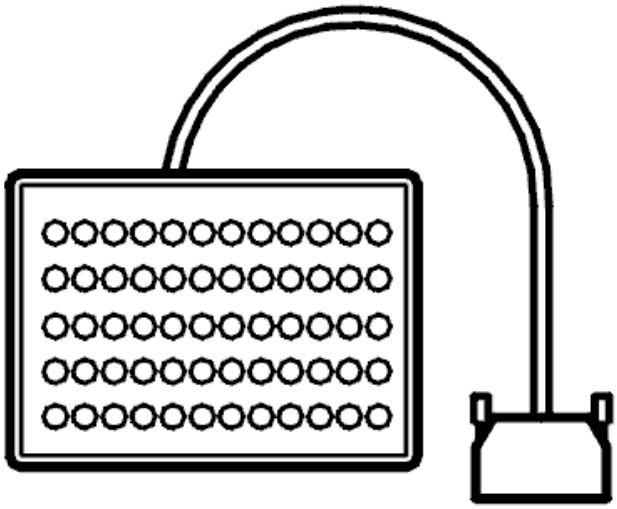

Fig. 71: Identifying Breakout Box
Courtesy of VOLVO CARS CORPORATION

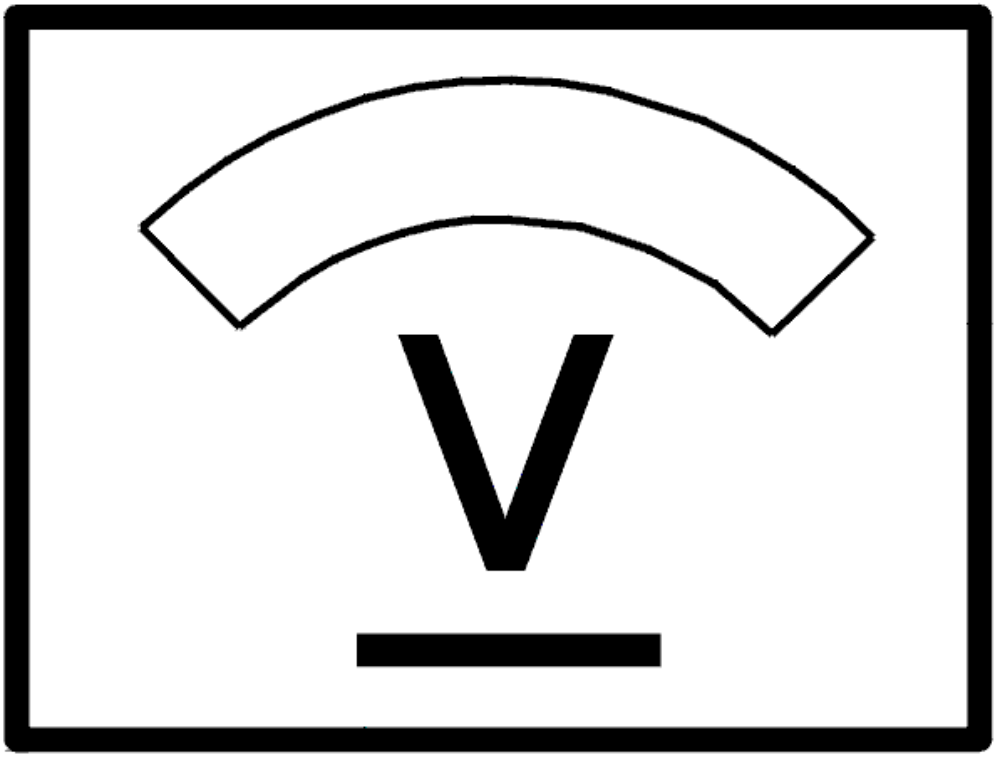

Fig. 72: Identifying Voltage Display
Courtesy of VOLVO CARS CORPORATION

- **Continue**

  Refer to **INFORMATION**

INFORMATION

FAULT-TRACING INFORMATION

If the fault is intermittent, do not verify fault-tracing if the fault does not recur.

It is possible to view the information again, or leave fault-tracing for this diagnostic trouble code (DTC).

TCM-0012: LOCK-UP SOLENOID SL. SIGNAL TOO HIGH. PERMANENT

FAULT (4T65 AWD; 2003-2006)

DIAGNOSTIC TROUBLE CODE (DTC) INFORMATION

see **DIAGNOSTIC TROUBLE CODE (DTC) INFORMATION**

SIGNAL TOO HIGH. PERMANENT FAULT

CHECKS

CHECKING LOCK-UP SOLENOID SL

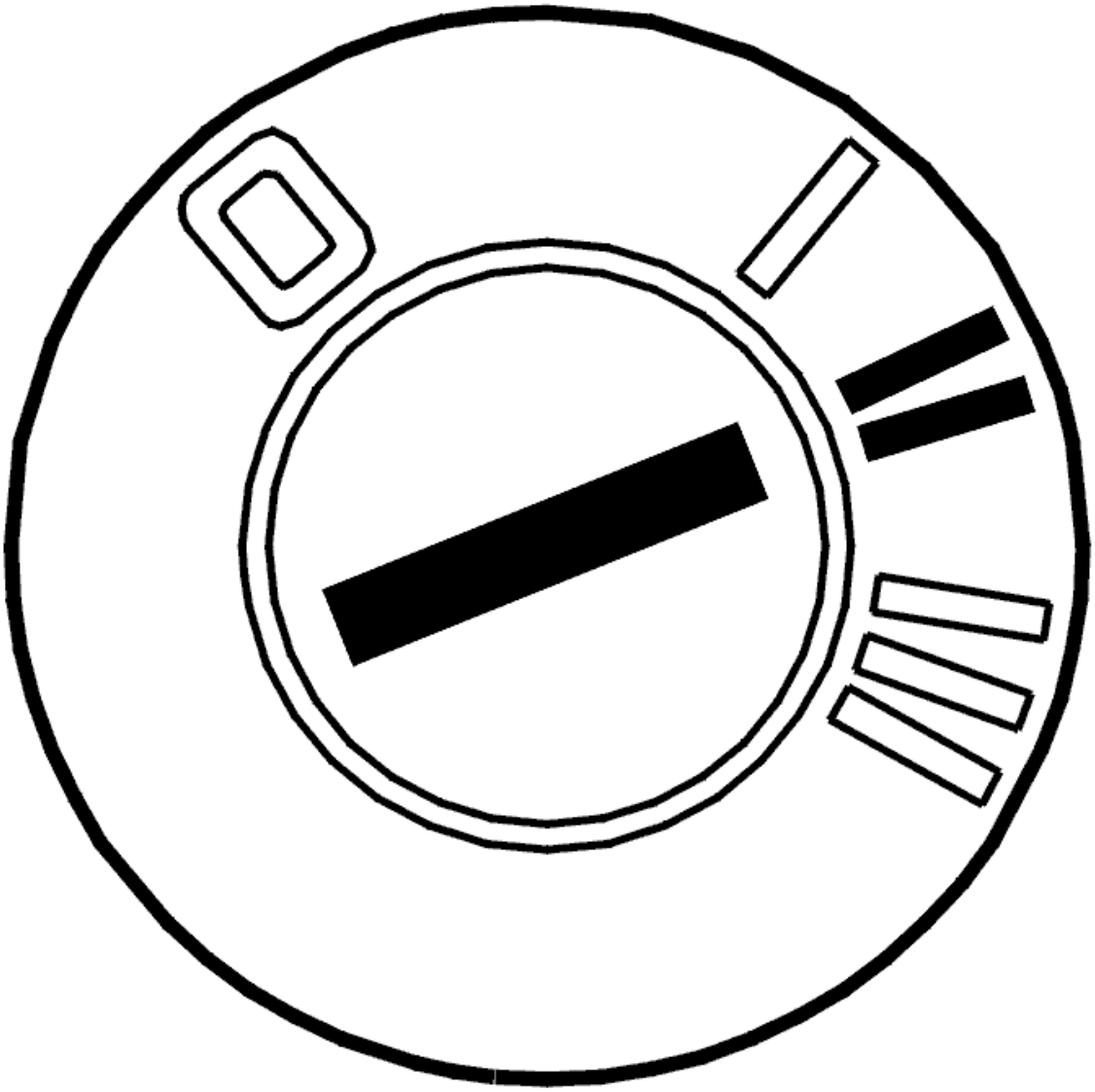

Fig. 73: Identifying Ignition ON
Courtesy of VOLVO CARS CORPORATION

- Ignition on

- Gear selector in position P
- Activate the lock-up solenoid SL.

  The value must change between OFF and ON.

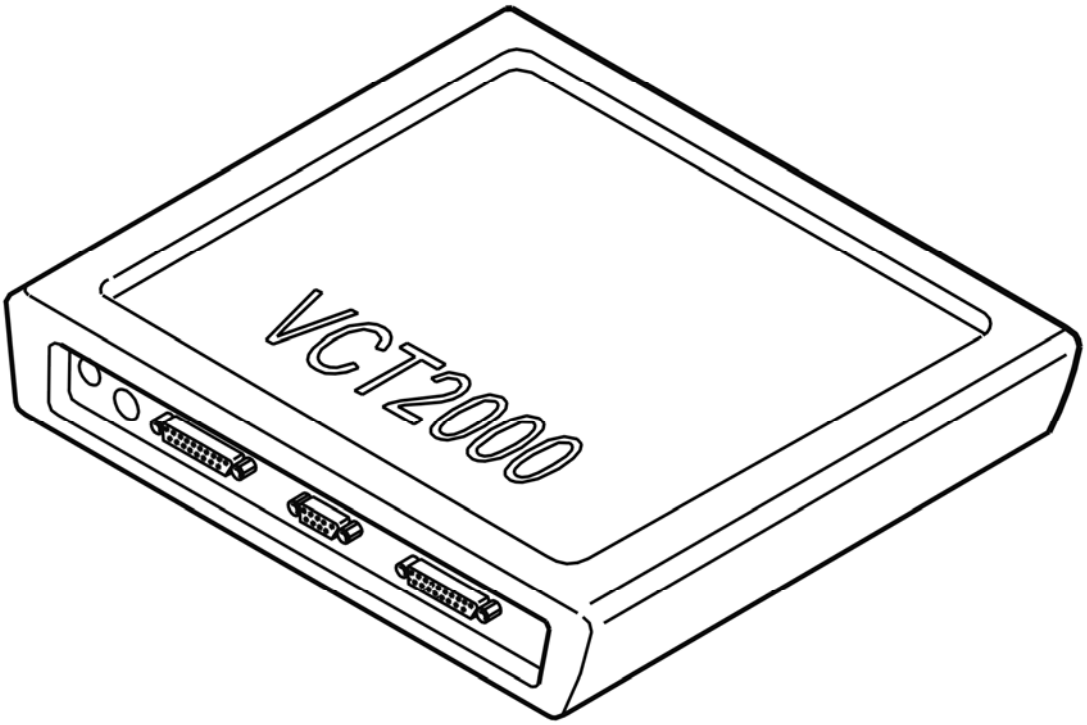

Fig. 74: Identifying VCT2000 Diagnostic Tool Symbol In VIDA
Courtesy of VOLVO CARS CORPORATION

Does the value change?

- **YES**

  FAULT NOT FOUND: Troubleshooting has been completed.

- **NO**

  Refer to **CHECKING THE WIRING**

CHECKING THE WIRING

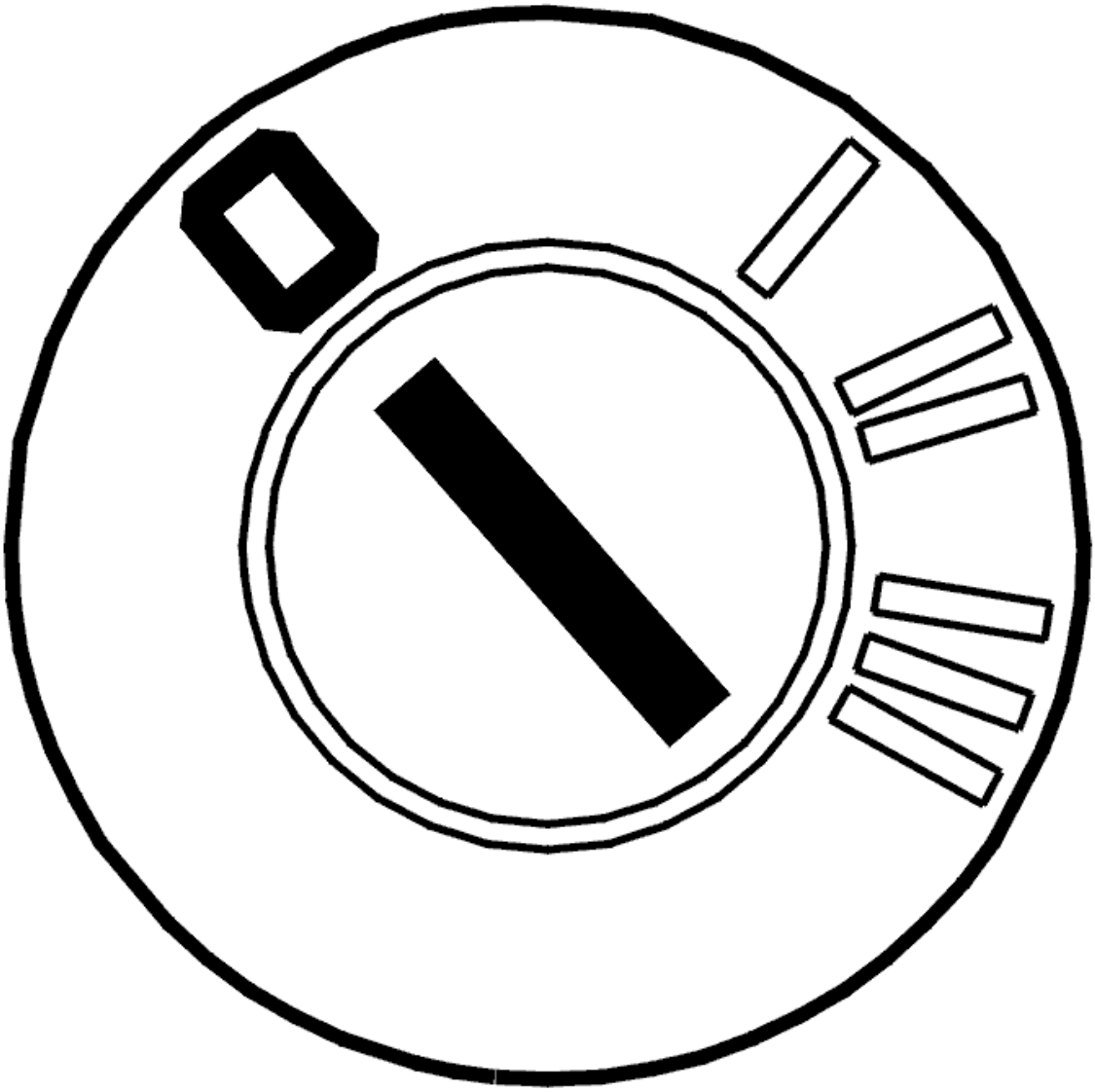

Fig. 75: Identifying Ignition OFF
Courtesy of VOLVO CARS CORPORATION

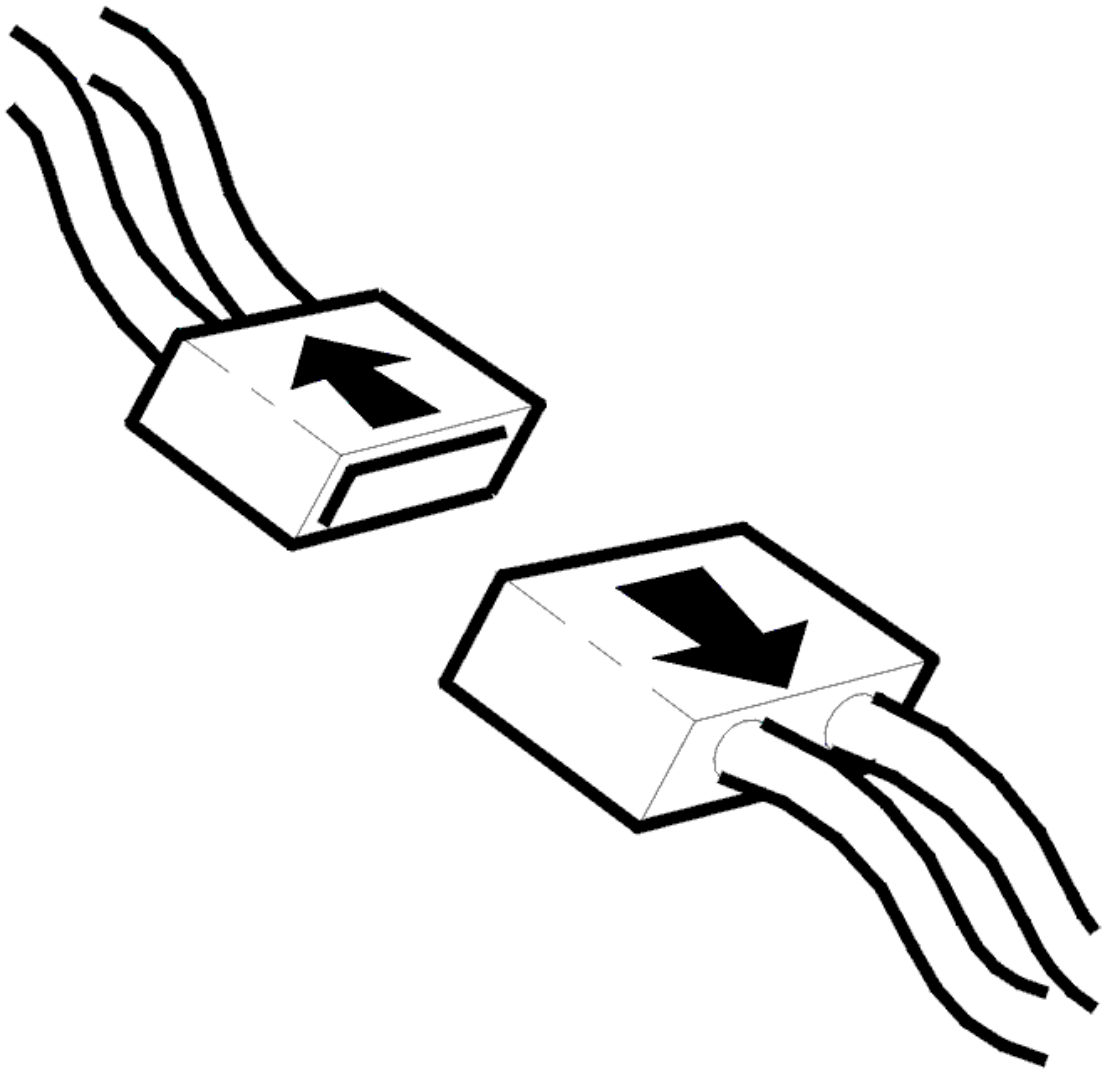

Fig. 76: Identifying Connector(s) Disconnected
Courtesy of VOLVO CARS CORPORATION

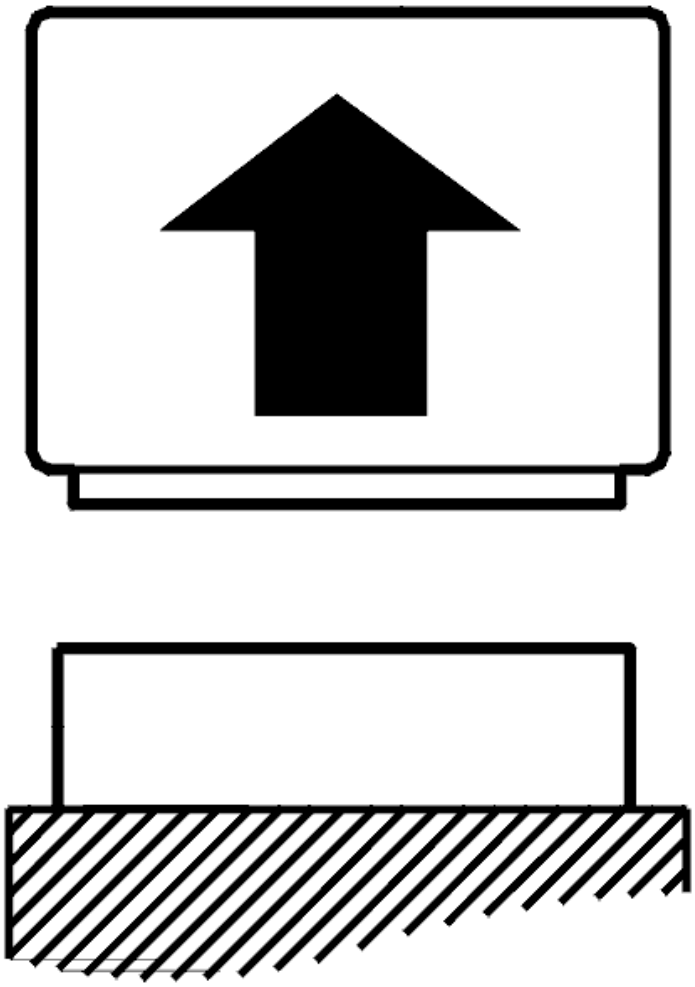

Fig. 77: Identifying Control Module Disconnected
Courtesy of VOLVO CARS CORPORATION

- Ignition off
- Connect the breakout box
- Disconnect the control module.
- Disconnect the transmission connector
- Connect adapter see **9511505** and breakout box see **9813190** to the transmission connector (transmission side).

  Check the cable between control module terminal #51 (#A51) and transmission connector (control module side) terminal #T (#A17) for a short-circuit to supply voltage according to **SHORT-CIRCUIT TO SUPPLY VOLTAGE. PERMANENT FAULTS** .

  Check the cable between control module terminal #53 (#A53) and transmission connector terminal #E

(#A5) (control module side). Check for a short-circuit to supply voltage according to **SHORT-CIRCUIT TO SUPPLY VOLTAGE. PERMANENT FAULTS** .

HINT: Also check all the other power supply cables in the circuit.

Remedy as necessary.

Other information:

- To connect the breakout box, see **CONNECTING THE BREAKOUT BOX**
- To connect the breakout box to the transmission connector, see **CONNECTING THE BREAKOUT BOX, GM AUTOMATIC TRANSMISSIONS**
- For information about signals, see **SIGNAL SPECIFICATION** .

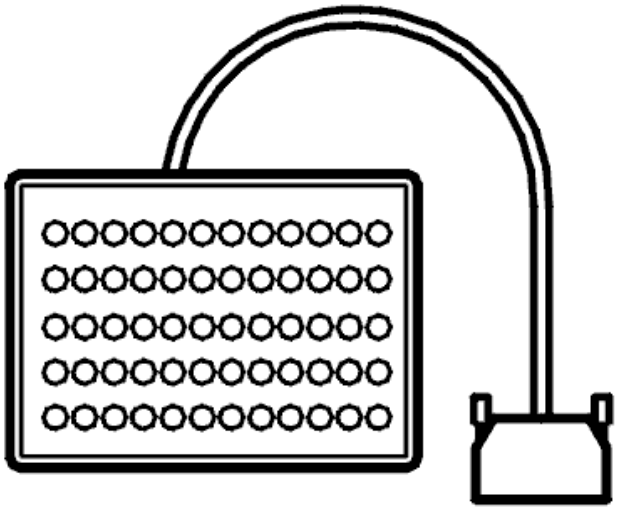

Fig. 78: Identifying Breakout Box
Courtesy of VOLVO CARS CORPORATION

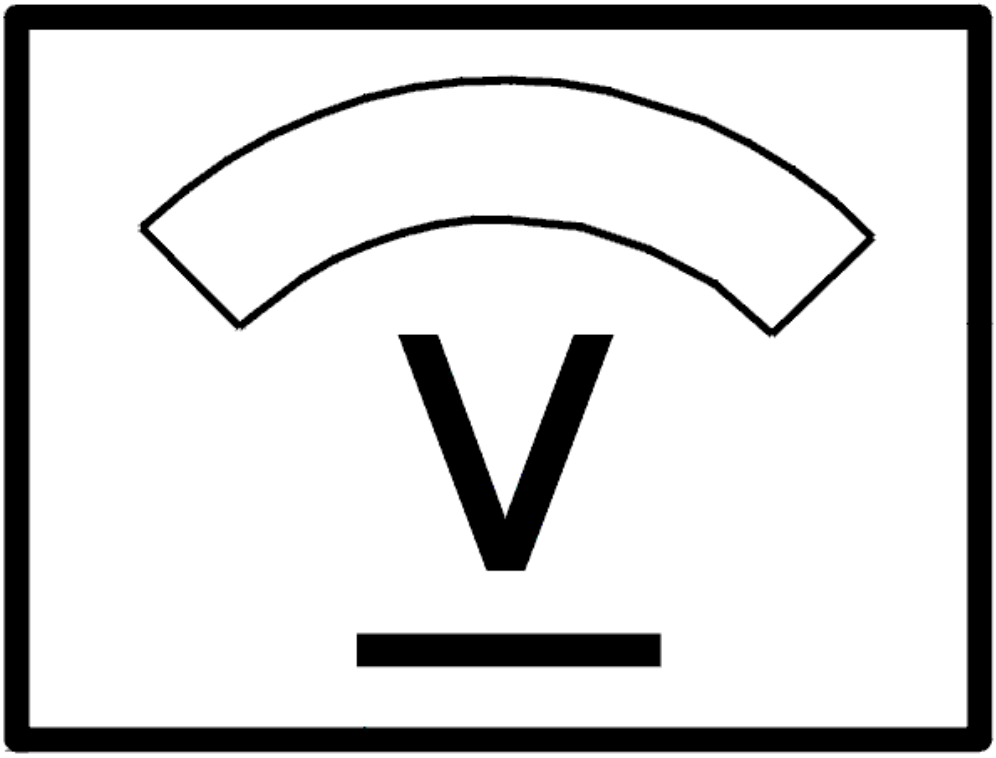

Fig. 79: Identifying Voltage Display
Courtesy of VOLVO CARS CORPORATION

Was a fault detected?

- **YES**

  Refer to **VERIFICATION**

- **NO**

  Refer to **CHECKING THE CONTROL MODULE**

CHECKING THE CONTROL MODULE

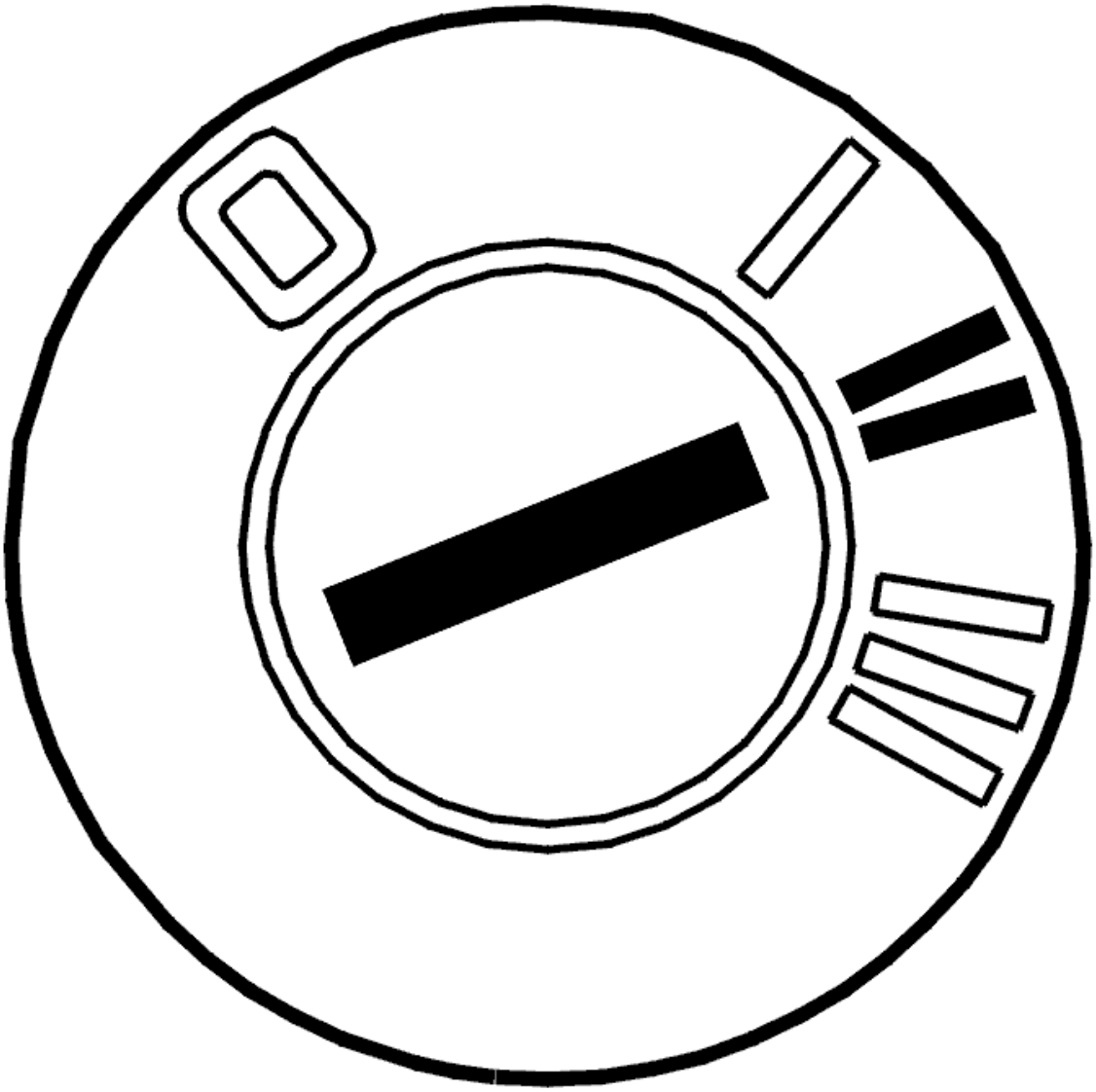

Fig. 80: Identifying Ignition ON
Courtesy of VOLVO CARS CORPORATION

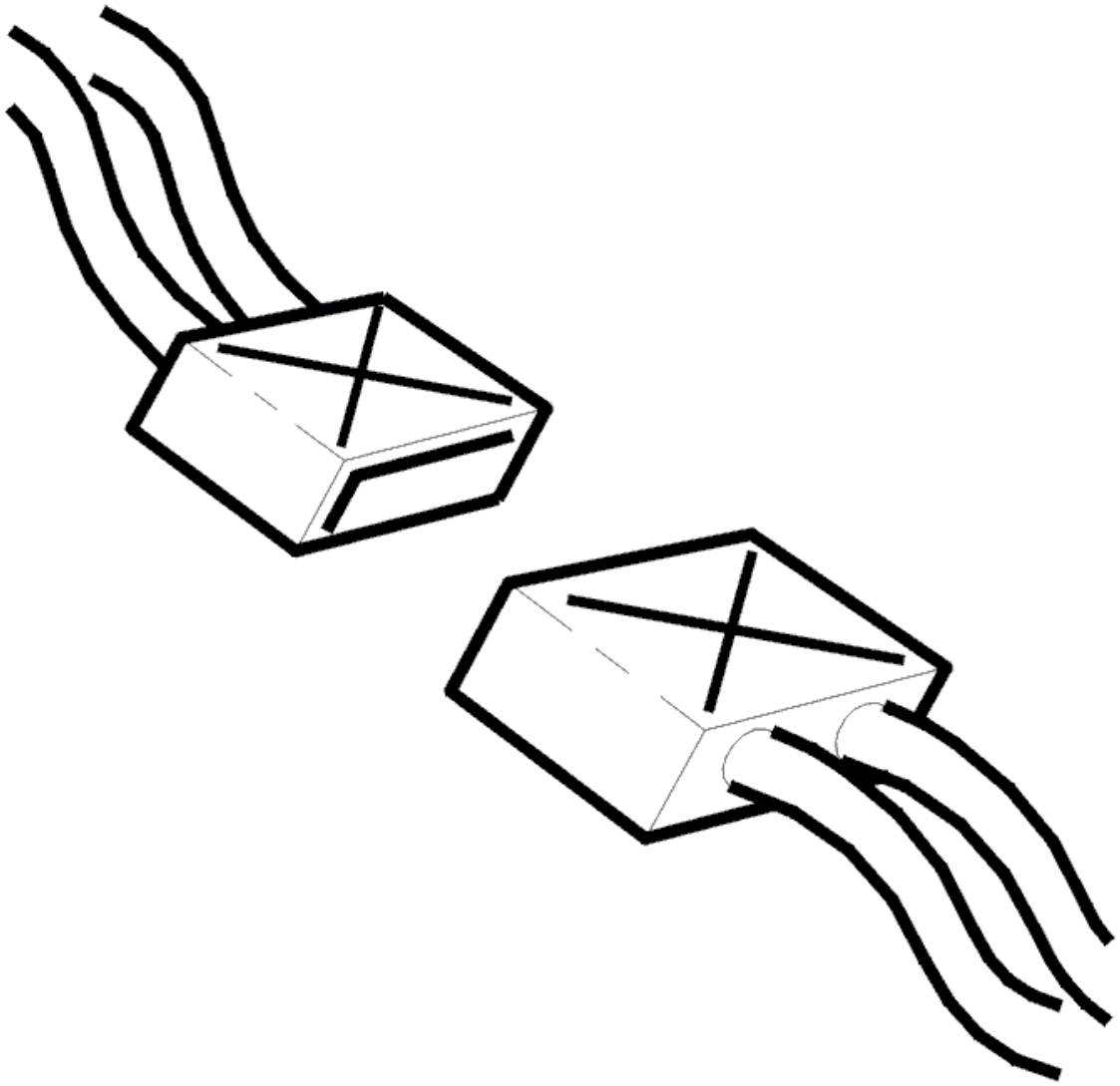

Fig. 81: Identifying Connectors
Courtesy of VOLVO CARS CORPORATION

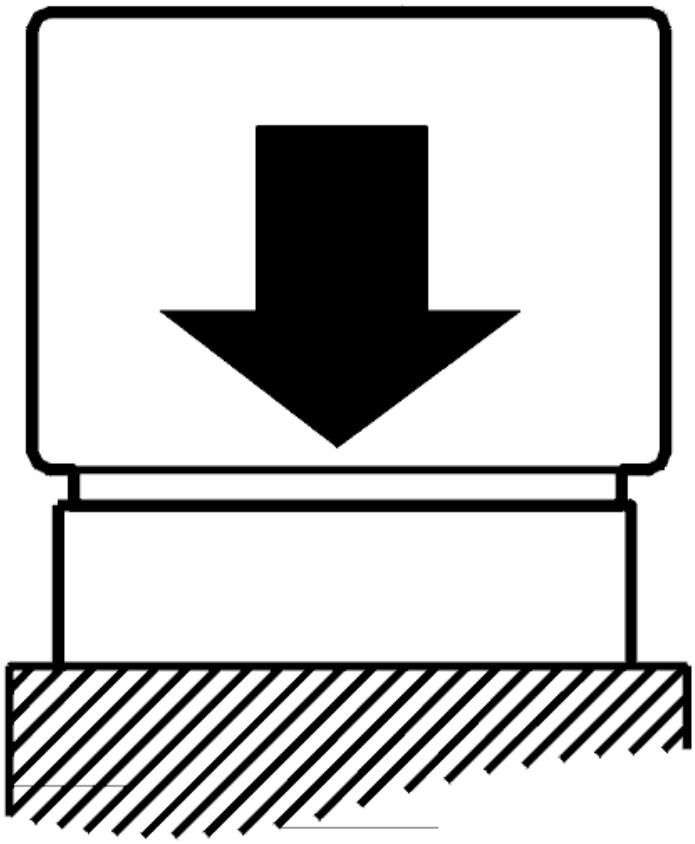

Fig. 82: Identifying Control Module Connected
Courtesy of VOLVO CARS CORPORATION

- Ignition off
- The breakout box connected
- Connect the control module.
- Transmission connector disconnected
- Ignition on
- Gear selector in position P.

Check the transmission control module (TCM). Measure the voltage between terminal #51 (#A51) and terminal #53 (#A53) on the breakout box. The voltage must be approximately 0 V.

Try a new control module if the voltage exceeds 1 V.

NOTE: **When removing the transmission connector, the control module may store diagnostic trouble codes (DTCs) for the gear-shift position sensor, the shift solenoids and the temperature sensor.**

Other information:

- To disconnect the transmission connector, see **CONNECTING THE BREAKOUT BOX, GM AUTOMATIC TRANSMISSIONS**
- To replace the control module, see **TRANSMISSION CONTROL MODULE (TCM), REPLACING**
- For information about signals, see **SIGNAL SPECIFICATION** .

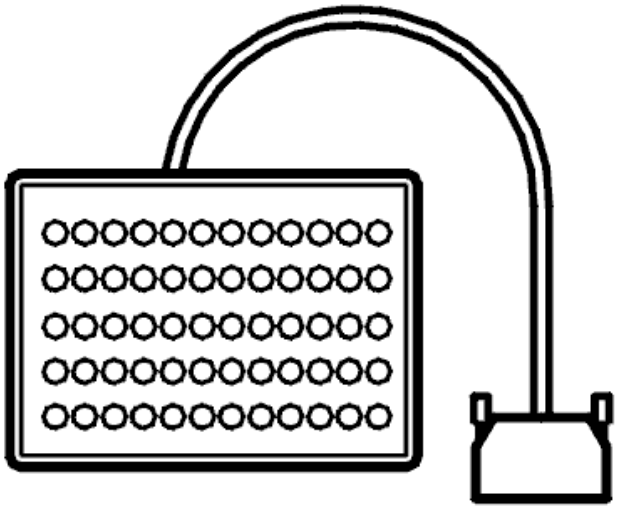

Fig. 83: Identifying Breakout Box
Courtesy of VOLVO CARS CORPORATION

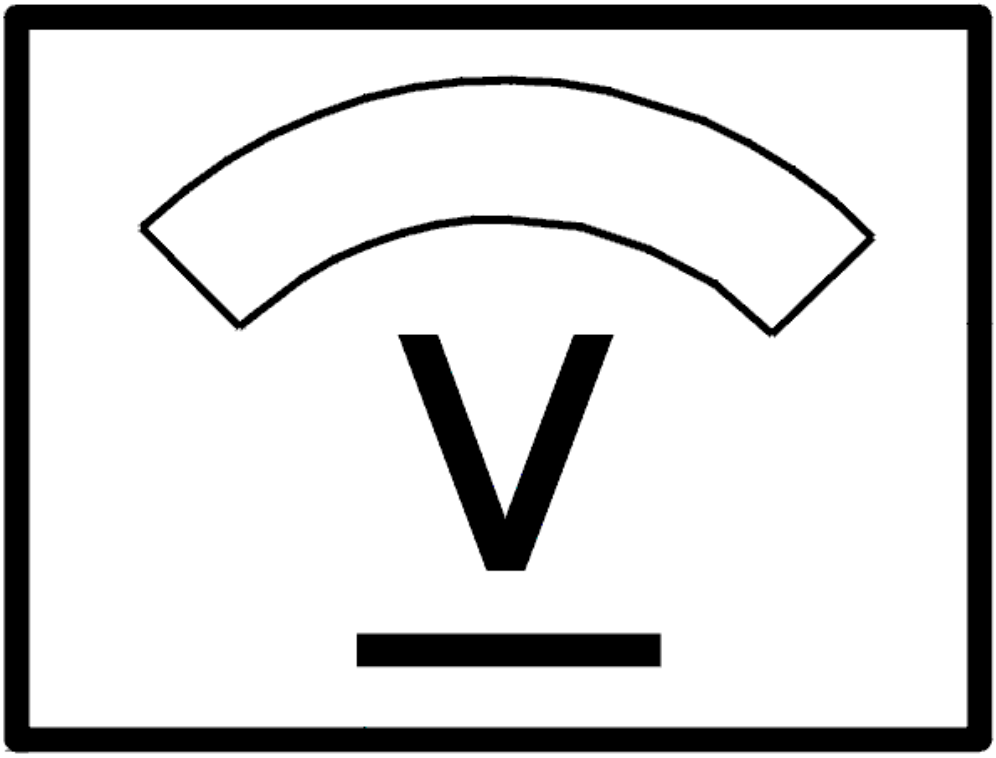

Fig. 84: Identifying Voltage Display
Courtesy of VOLVO CARS CORPORATION

Was the voltage above 1 V?

- **YES**

  Refer to **VERIFICATION**

- **NO**

  Refer to **CHECK THE CIRCUIT FOR THE SOLENOID SL**

CHECK THE CIRCUIT FOR THE SOLENOID SL

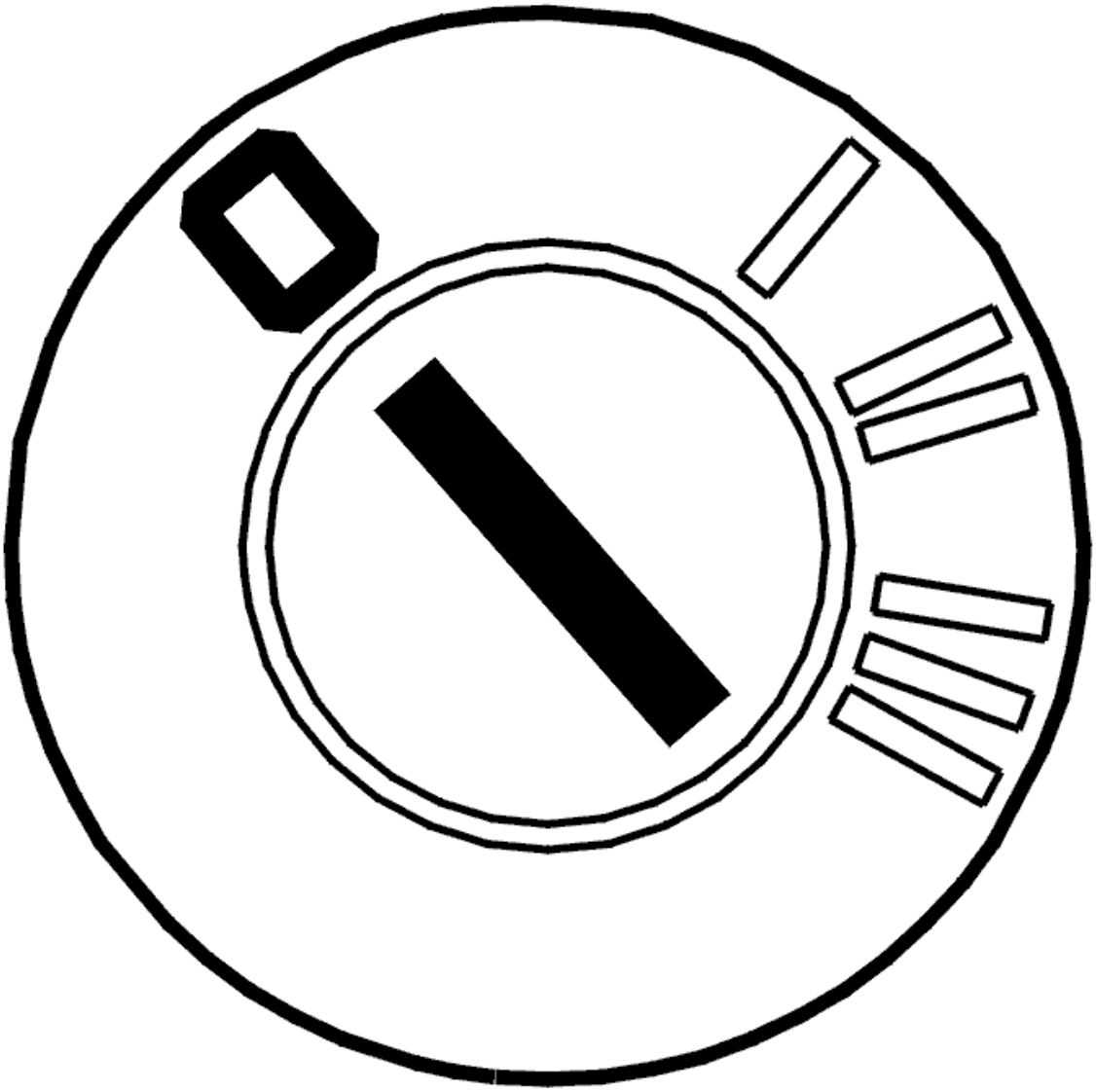

Fig. 85: Identifying Ignition OFF
Courtesy of VOLVO CARS CORPORATION

- Ignition off
- Open the transmission control system.

  Check the cable between transmission connector terminal #T (#A17) and solenoid SL terminal #A. Check the cable between transmission connector terminal #E (#A5) and solenoid SL terminal #B. Check these cables for a short-circuit to supply voltage according to **SHORT-CIRCUIT TO SUPPLY VOLTAGE. PERMANENT FAULTS** .

  Check all the cables in the wiring harness from the transmission connector to the transmission components. Check for a short-circuit to each other.

  HINT: Check solenoid SL. Measure the solenoid resistance between terminals #A and #B. The resistance must be between 10 and 15 ohms.

Remedy as necessary.

Other information:

- To connect the breakout box to the transmission connector, see **CONNECTING THE BREAKOUT BOX, GM AUTOMATIC TRANSMISSIONS**
- To open the transmission control system, For removal, see **SIDE COVER TRANSMISSION, REMOVING** . To install, see **SIDE COVER TRANSMISSION, INSTALLING**
- To replace solenoid SL, see **SOLENOID LOCK-UP FUNCTION, REPLACING**
- To replace the cable harness, see **TEMPERATURE SENSOR FLUID, TRANSAXLE, (TFT)**
- For information about signals, see **SIGNAL SPECIFICATION** .

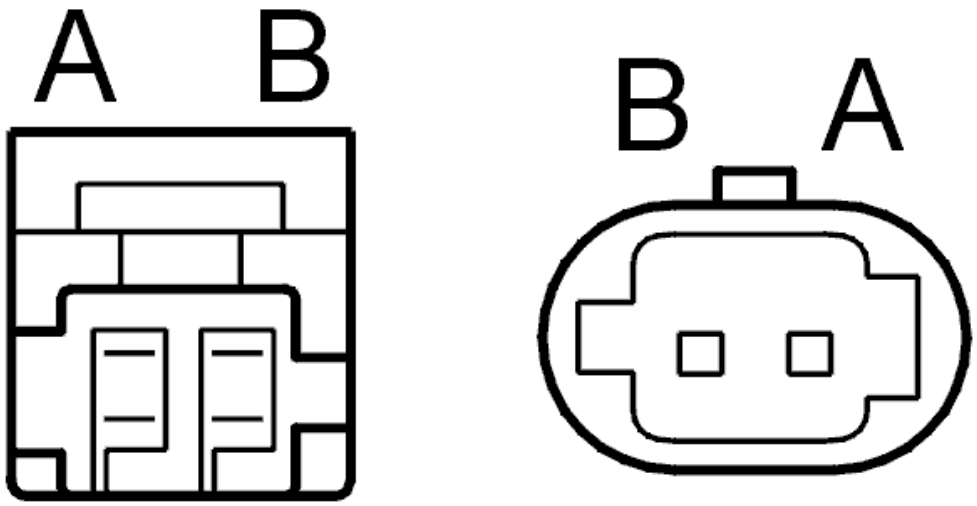

Fig. 86: Identifying Connector Terminals
Courtesy of VOLVO CARS CORPORATION

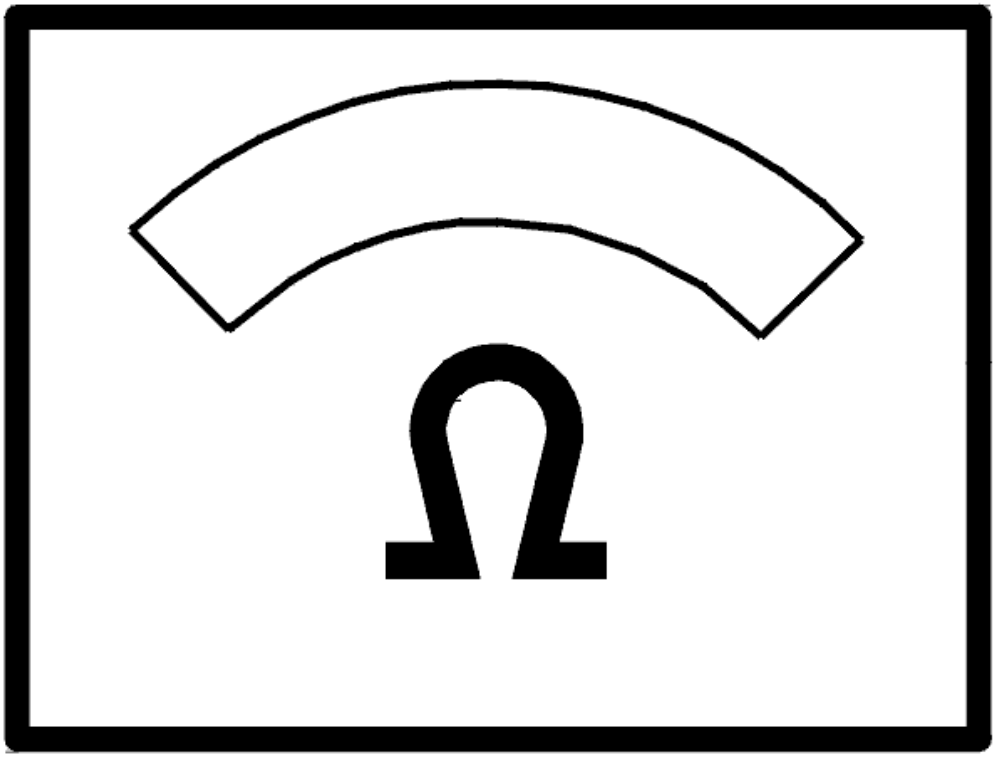

Fig. 87: Identifying Ohms Display
Courtesy of VOLVO CARS CORPORATION

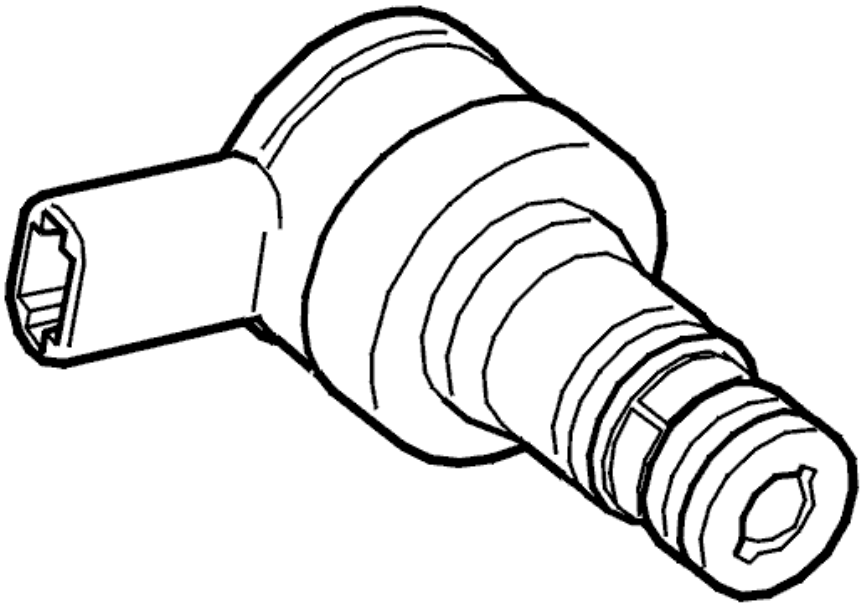

Fig. 88: Identifying Lock-Up Solenoid, SL
Courtesy of VOLVO CARS CORPORATION

- **Continue**

Refer to **RESETTING THE ADAPTATION**

RESETTING THE ADAPTATION

RESETTING ADAPTATION AND THE COUNTER FOR "TRANSMISSION OIL CHANGE"

HINT: The transmission has torque controlled adaptive pressure control. Pressure control means that the transmission regulates the pressure itself during each gear shift. This avoids harsh gear shifting. Each gear shift is evaluated by the control module and stored in the memory. This allows for compensation for wear and tear in the transmission and clutch. It is important that the adaptation in the memory is reset after the transmission has been repaired. This is to ensure normal operation. The oil is replaced during repair; the "Transmission oil change" counter must be reset. If the counter is not reset when the fluid is drained and replaced, there is a risk that a diagnostic trouble code (DTC) will be stored in incorrect circumstances.

NOTE: **This applies only if the transmission or one of the components in the transmission have been replaced.**

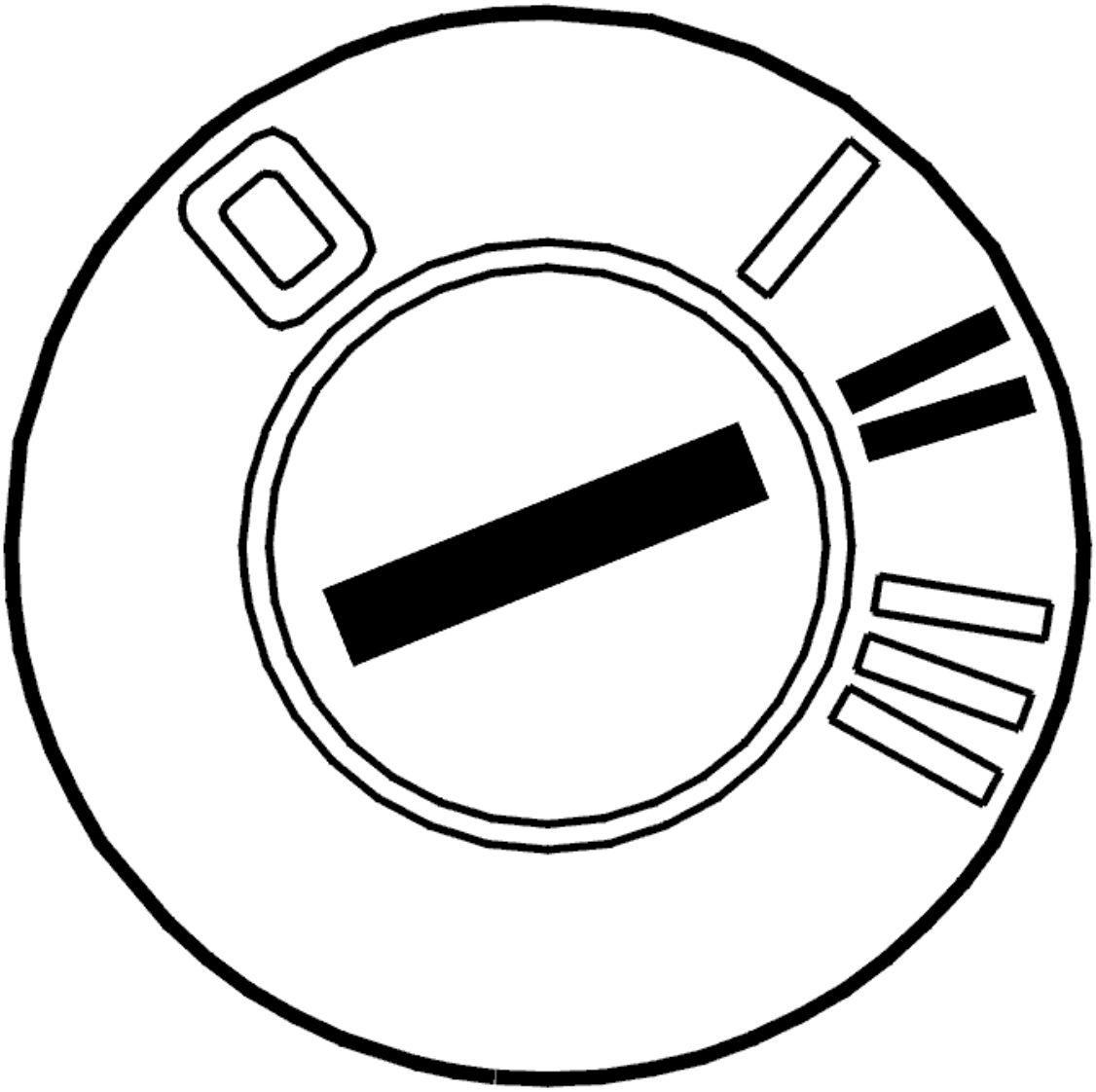

Fig. 89: Identifying Ignition ON
Courtesy of VOLVO CARS CORPORATION

- Ignition on.

  Click on the VCT2000 symbol to reset the adaptation and counter.

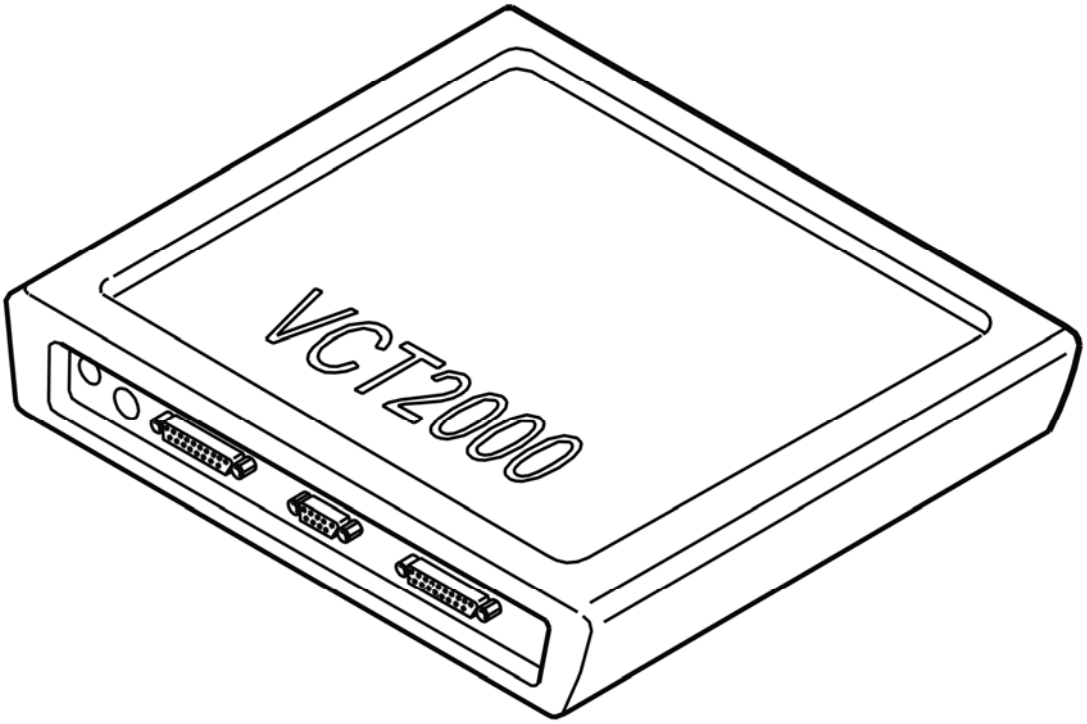

Fig. 90: Identifying VCT2000 Diagnostic Tool Symbol In VIDA
Courtesy of VOLVO CARS CORPORATION

- **Continue**

  Refer to **VERIFICATION**

VERIFICATION

VERIFICATION

HINT: After carrying out the repair, check that the fault has been remedied.

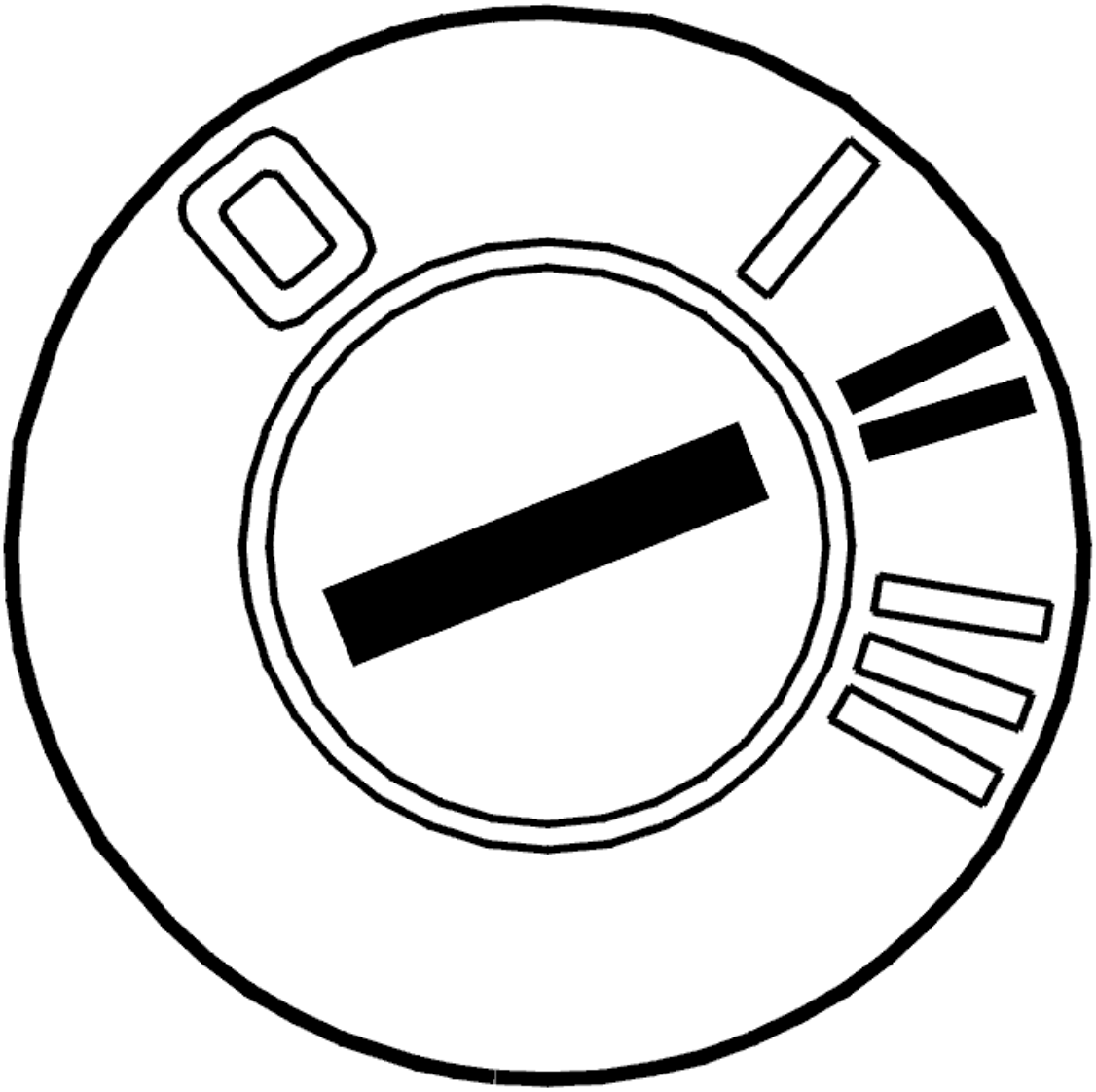

Fig. 91: Identifying Ignition ON
Courtesy of VOLVO CARS CORPORATION

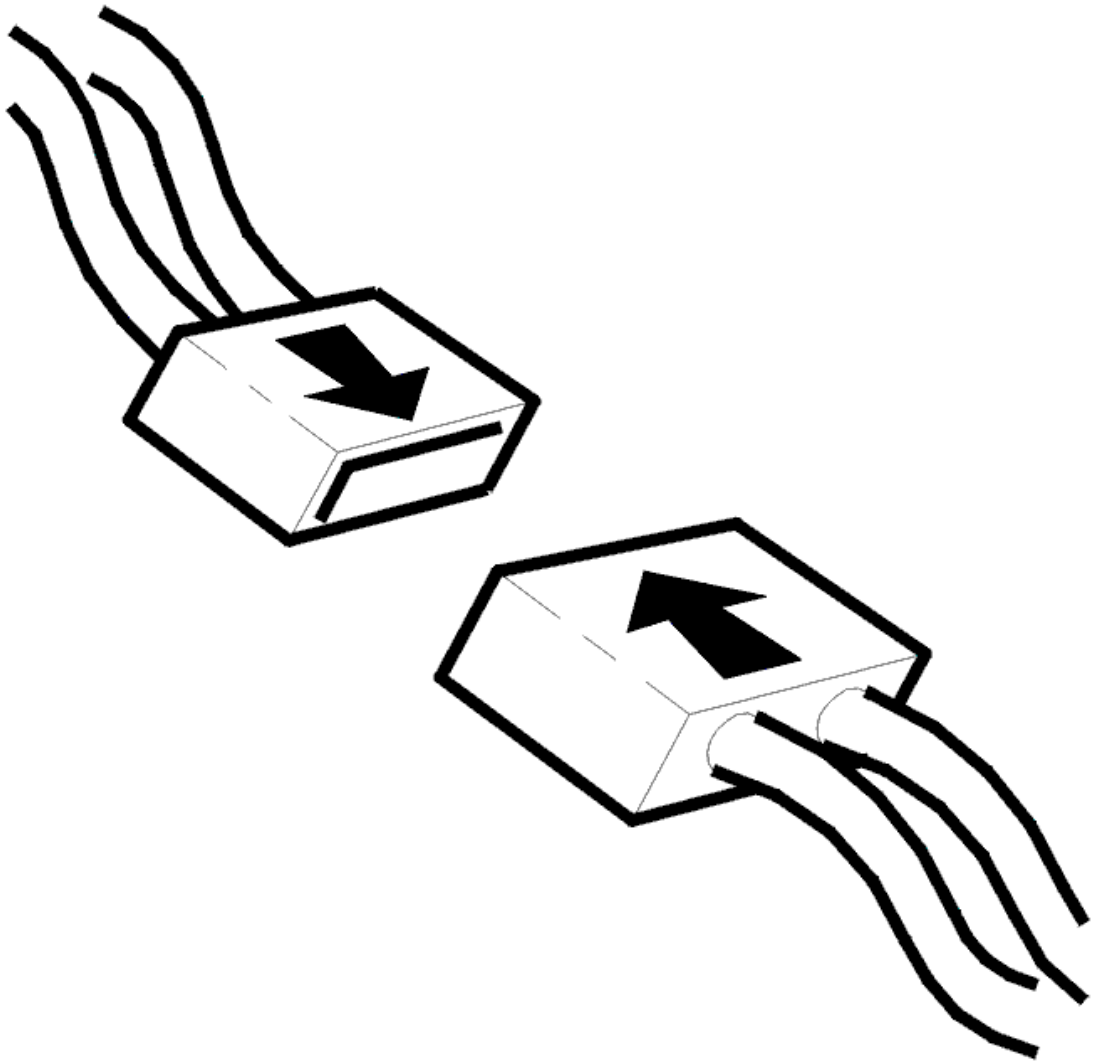

Fig. 92: Identifying Connector(s) Reinstallation
Courtesy of VOLVO CARS CORPORATION

- Ignition off.
- Wait at least 90 seconds.
- Reconnect the connectors, reinstall components etc.
- Ignition on.
- Gear selector in position P.
- Activate solenoid SL.

  The value should change between OFF and ON.

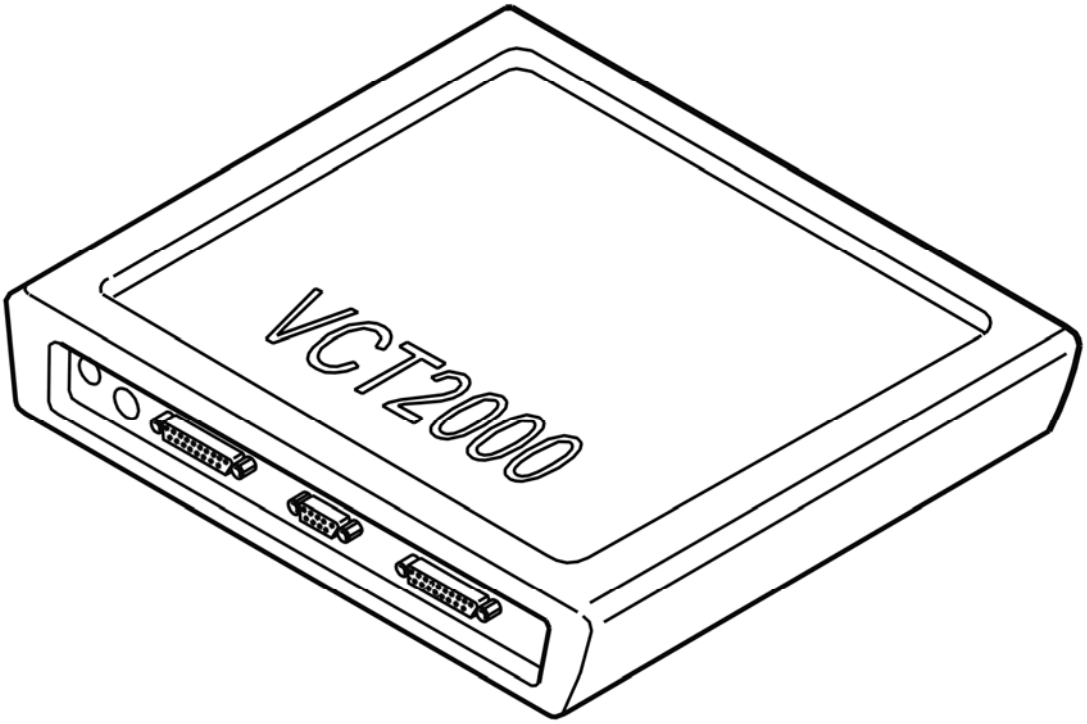

Fig. 93: Identifying VCT2000 Diagnostic Tool Symbol In VIDA
Courtesy of VOLVO CARS CORPORATION

Does the value change?

- **YES**

  VERIFIED: Troubleshooting has been completed.

- **NO**

  Refer to **INFORMATION**

INFORMATION

FAULT-TRACING INFORMATION

The fault should have been detected and remedied. As this is not the case fault-tracing has failed.

Exit fault-tracing for this diagnostic trouble code (DTC) or make another attempt.

TCM-0013: LOCK-UP SOLENOID SL. SIGNAL MISSING. INTERMITTENT FAULT (4T65 AWD; 2003-2006)

DIAGNOSTIC TROUBLE CODE (DTC) INFORMATION

Condition

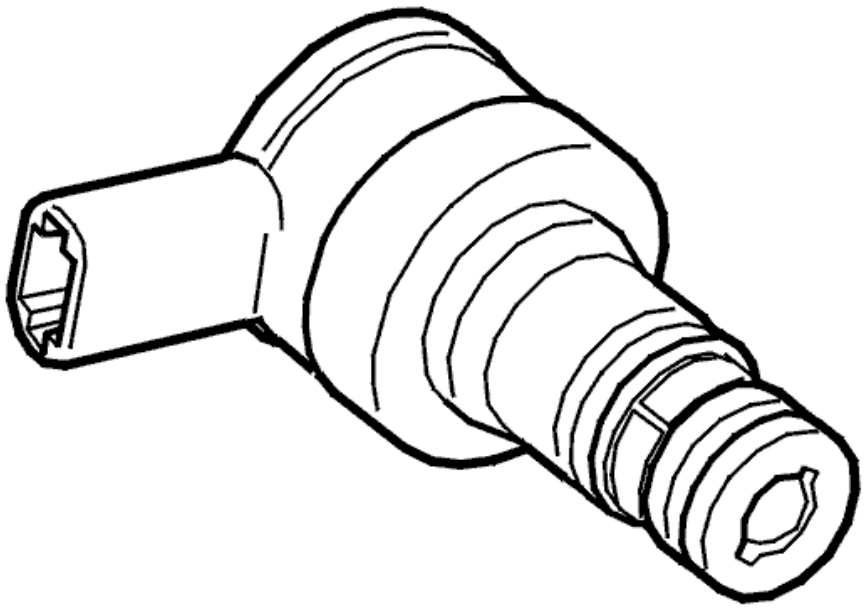

Fig. 94: Identifying Lock-Up Solenoid, SL
Courtesy of VOLVO CARS CORPORATION

The lock-up solenoid SL controls the transmission lock-up function. Solenoid SL operates when it receives voltage from the control module and is activated under different driving conditions depending on road speed, throttle position and the driving mode selected. Diagnostic trouble code (DTC) TCM-0013 is stored if the control module registers that the signal in the solenoid SL circuit is missing when the solenoid should be activated. Solenoid SL cannot then be activated.

Substitute Value

- The control module does not activate the lock-up solenoid.

Possible Source

- Contact resistance in the terminals.
- Open-circuit in the signal cable.
- Defective solenoid.

Fault symptom[s]

- General orange warning lamp lit.
- Malfunction indicator lamp (MIL) lit.
- No lock-up function.
- Harsh gear shifting.

SIGNAL MISSING. INTERMITTENT FAULT

INTERMITTENT FAULT

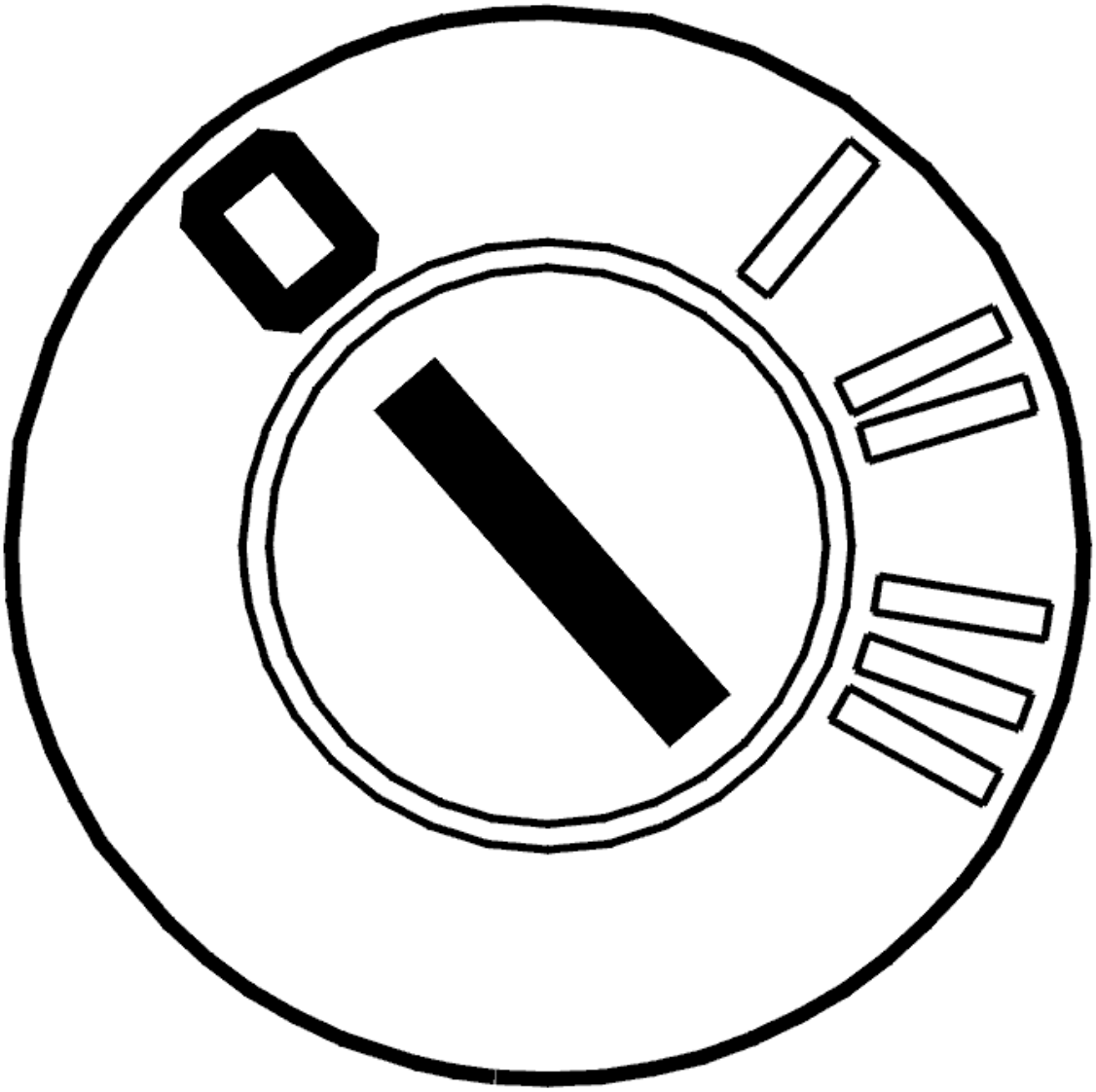

Fig. 95: Identifying Ignition OFF
Courtesy of VOLVO CARS CORPORATION

- Ignition off.

Check the cable between control module terminal 51 (#A51) and transmission connector (control module side) terminal T #A17 for an intermittent open-circuit according to **OPEN-CIRCUIT, INTERMITTENT FAULTS** .

Check the wiring between control module terminal 53 (#A53) and transmission connector #E (#A5) for an intermittent open-circuit according to **OPEN-CIRCUIT, INTERMITTENT FAULTS** .

Remedy as necessary.

Other information:

- To connect the breakout box, see **CONNECTING THE BREAKOUT BOX** .
- To connect the breakout box to the transmission connector, see **CONNECTING THE BREAKOUT BOX, GM AUTOMATIC TRANSMISSIONS** .
- For information about signals, see **SIGNAL SPECIFICATION** .

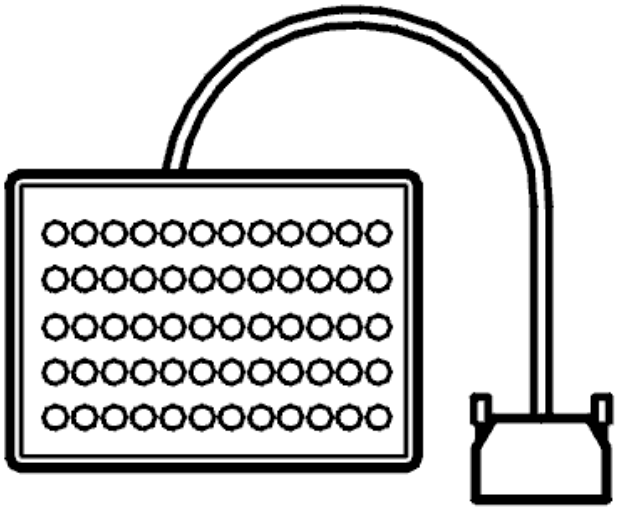

Fig. 96: Identifying Breakout Box
Courtesy of VOLVO CARS CORPORATION

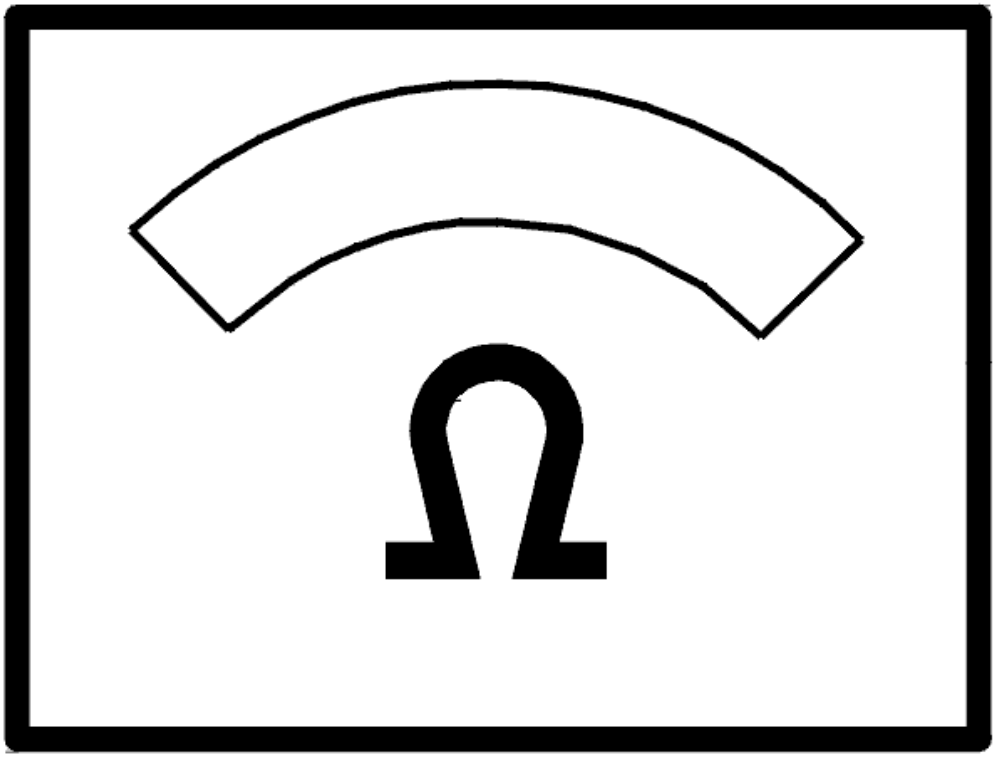

Fig. 97: Identifying Ohms Display
Courtesy of VOLVO CARS CORPORATION

- **Continue**

  Refer to **INFORMATION**

INFORMATION

FAULT-TRACING INFORMATION

If the fault is intermittent, do not verify fault-tracing if the fault does not recur.

It is possible to view the information again, or leave fault-tracing for this diagnostic trouble code (DTC).

TCM-0013: LOCK-UP SOLENOID SL. SIGNAL MISSING. PERMANENT

FAULT (4T65 AWD; 2003-2006)

DIAGNOSTIC TROUBLE CODE (DTC) INFORMATION

see **DIAGNOSTIC TROUBLE CODE (DTC) INFORMATION**

SIGNAL MISSING. PERMANENT FAULT

CHECKS

CHECKING LOCK-UP SOLENOID SL

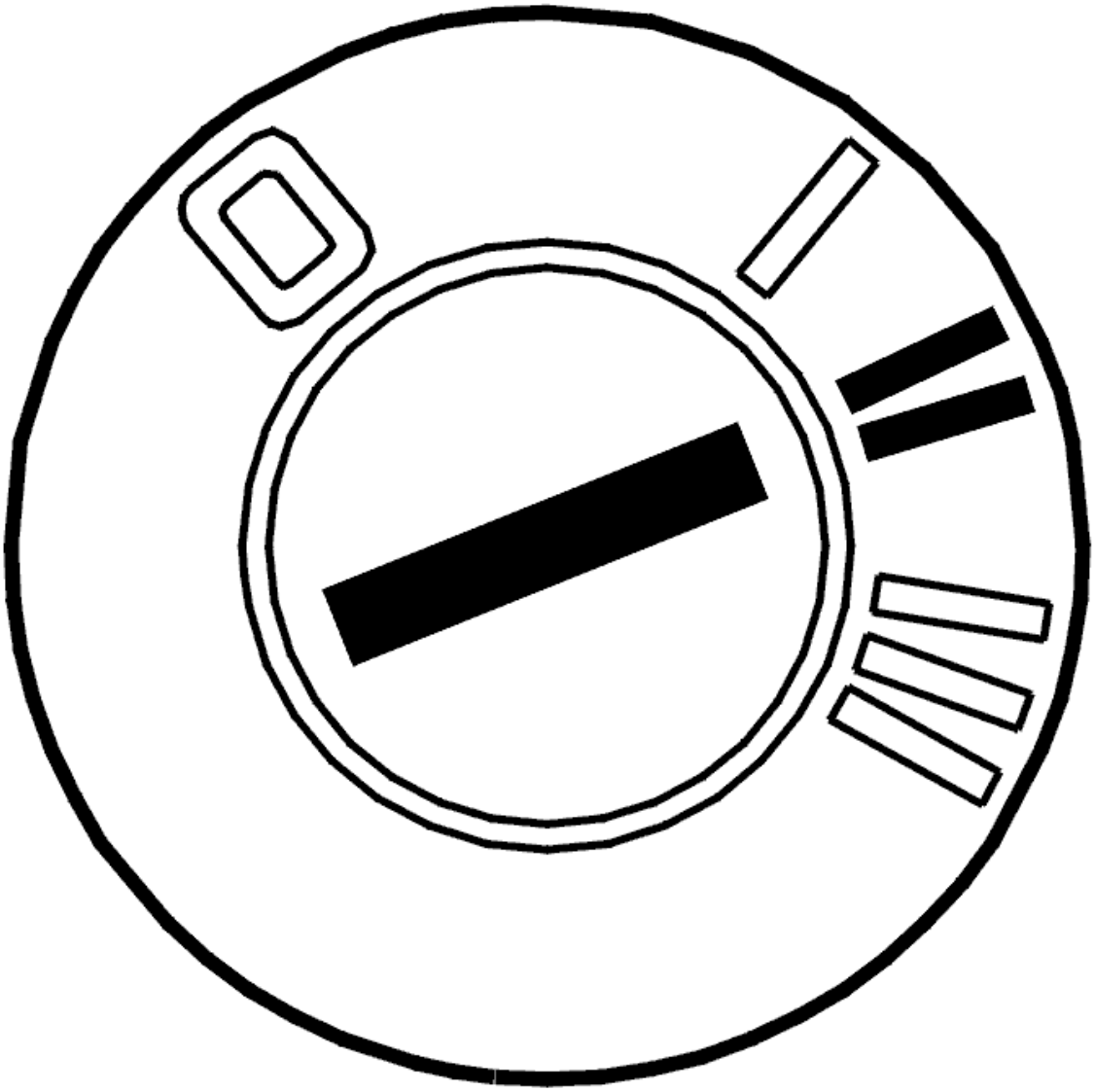

Fig. 98: Identifying Ignition ON
Courtesy of VOLVO CARS CORPORATION

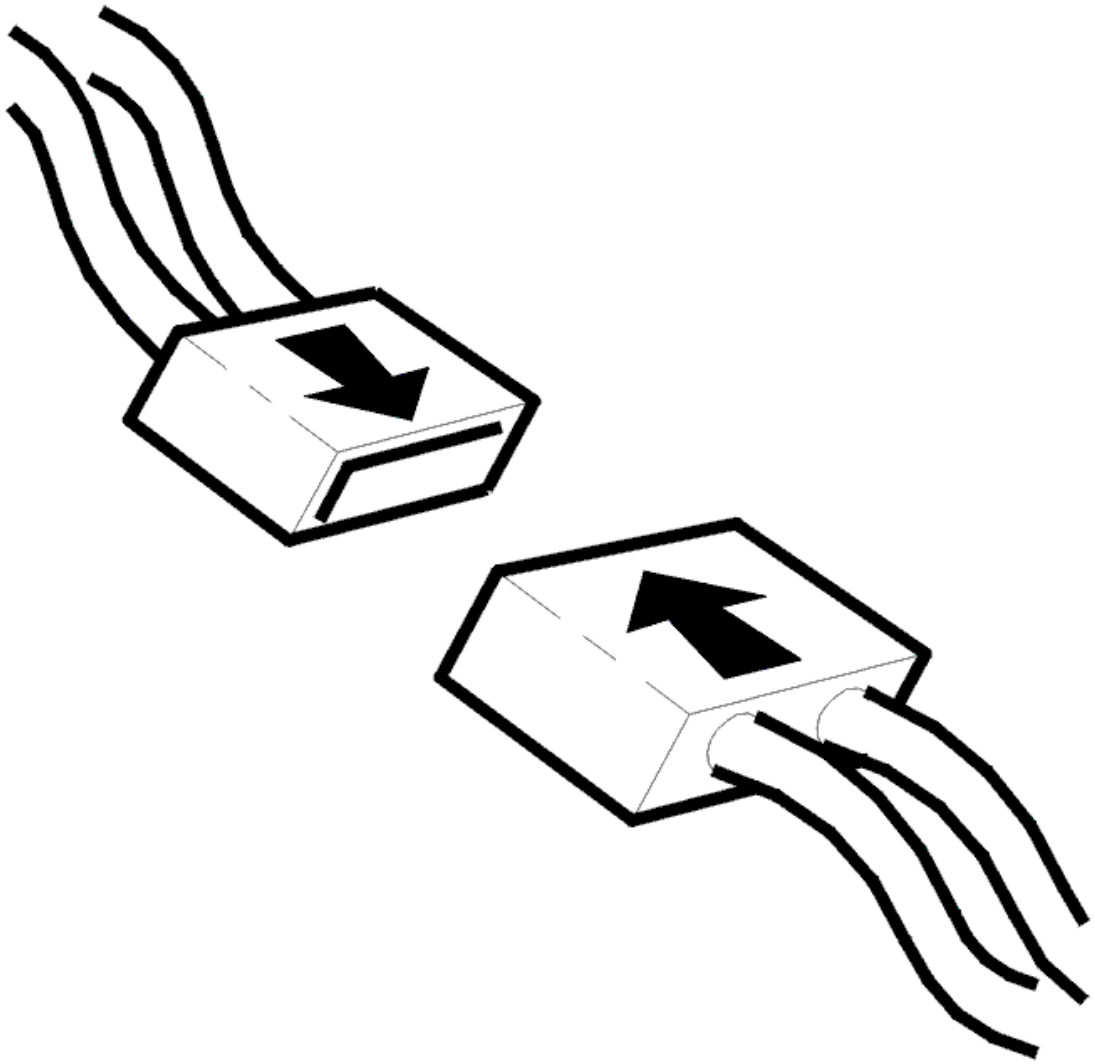

Fig. 99: Identifying Connector(s) Reinstallation
Courtesy of VOLVO CARS CORPORATION

- Ignition off
- Check the control module and automatic transmission connectors for contact resistance and oxidation according to **CONTACT RESISTANCE AND OXIDATION** . Remedy if necessary
- Reinstall the components, reconnect the connectors etc.
- Ignition on
- Gear selector in position P
- Activate the lock-up solenoid SL.

  The current must oscillate between approximately 0 and 1 A.

  If the current oscillates, the problem was caused by contact resistance and oxidation.

Other information:

- To disconnect the control module, see **TRANSMISSION CONTROL MODULE (TCM), REPLACING**
- To disconnect the transmission connector, see **CONNECTING THE BREAKOUT BOX, GM AUTOMATIC TRANSMISSIONS**
- For information about signals, see **SIGNAL SPECIFICATION** .

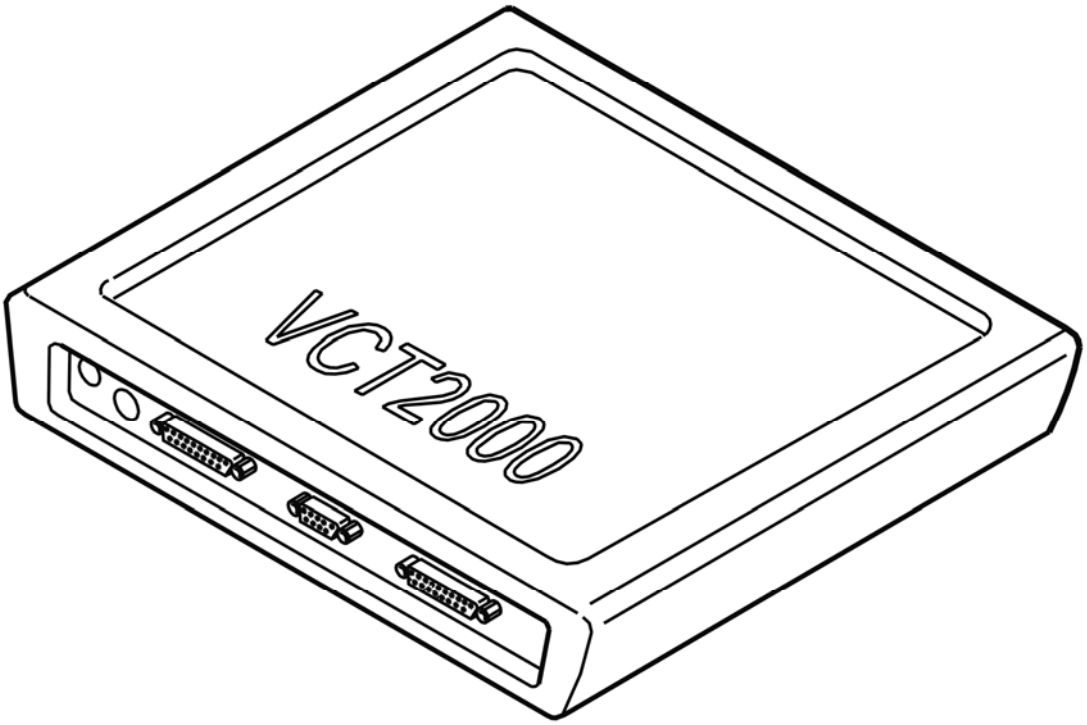

Fig. 100: Identifying VCT2000 Diagnostic Tool Symbol In VIDA
Courtesy of VOLVO CARS CORPORATION

Does the current oscillate?

- **YES**

  OKAY: Troubleshooting has been completed.

- **NO**

  Refer to **CHECKING SOLENOID SL**

CHECKING SOLENOID SL

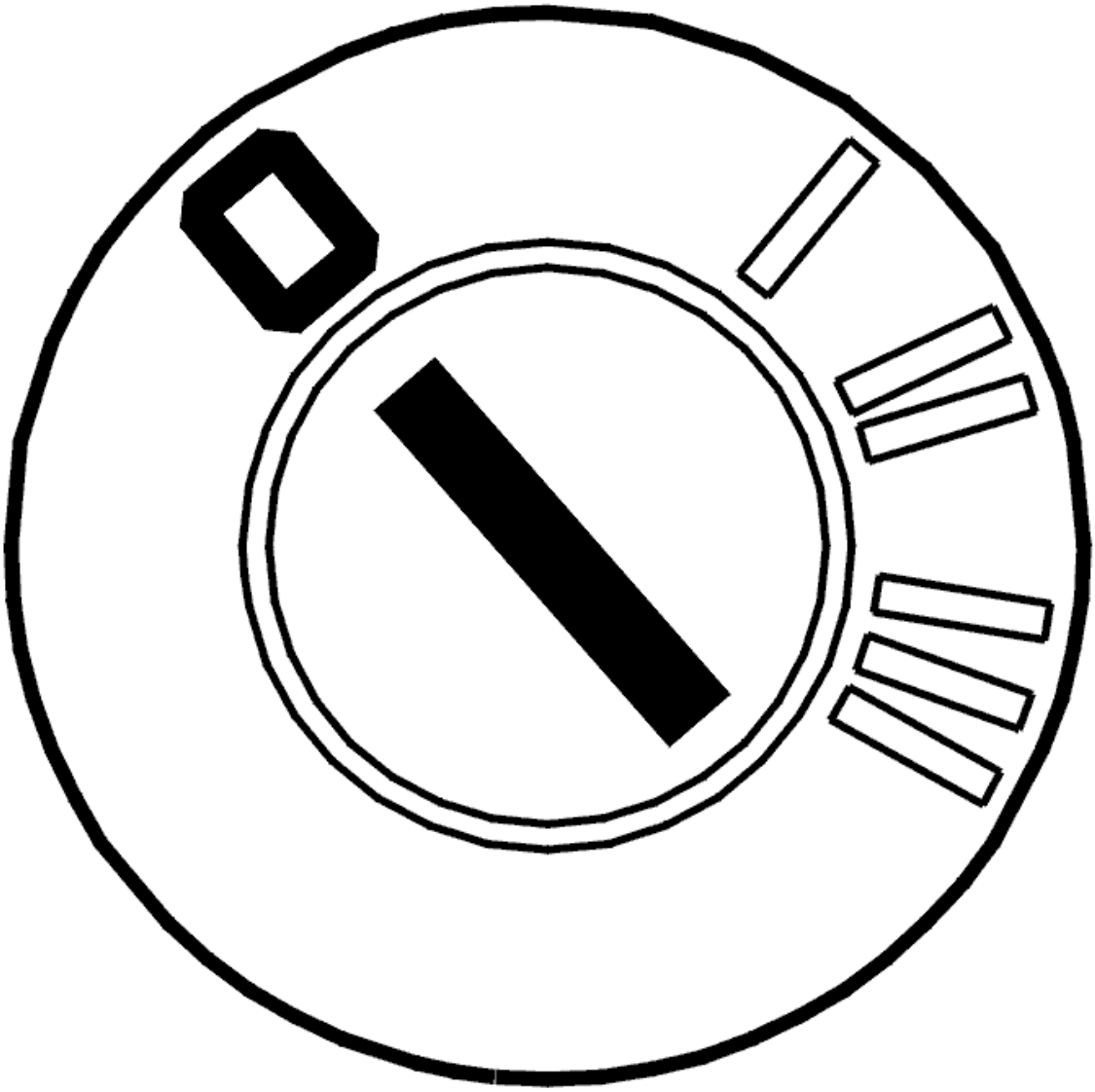

Fig. 101: Identifying Ignition OFF
Courtesy of VOLVO CARS CORPORATION

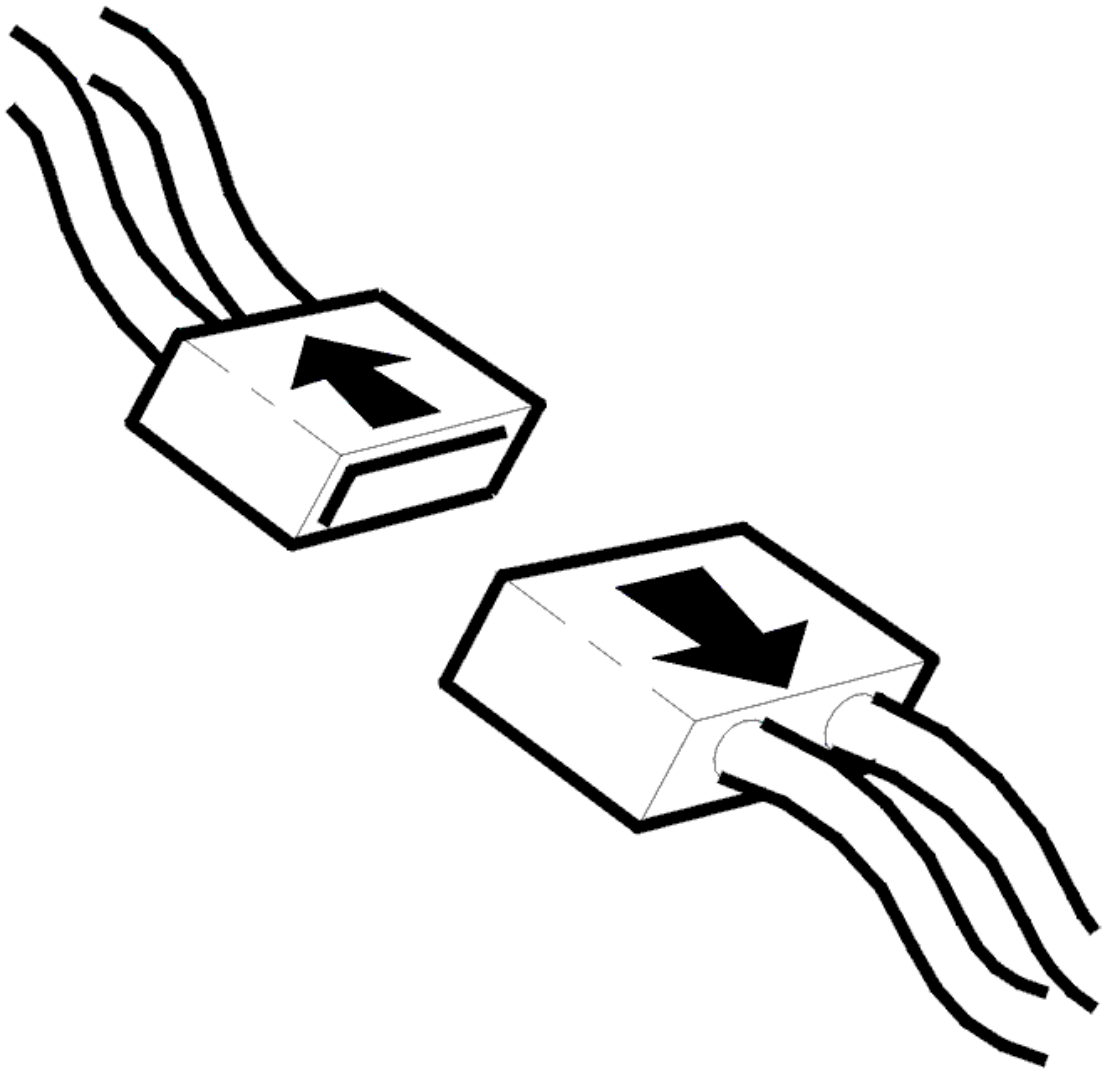

Fig. 102: Identifying Connector(s) Disconnected
Courtesy of VOLVO CARS CORPORATION

- Ignition off
- Disconnect the automatic transmission connector
- Connect adapter see **9511505** and breakout box see **9813190** to the transmission connector (transmission side)
- Connect an ohmmeter between terminals E (#A5) and T (#A17).

  The solenoid SL resistance must be between 10 and 15 ohms.

  Other information:

  - To connect the breakout box to the transmission connector, see **CONNECTING THE BREAKOUT BOX, GM AUTOMATIC TRANSMISSIONS**

- For information about signals, see **SIGNAL SPECIFICATION** .

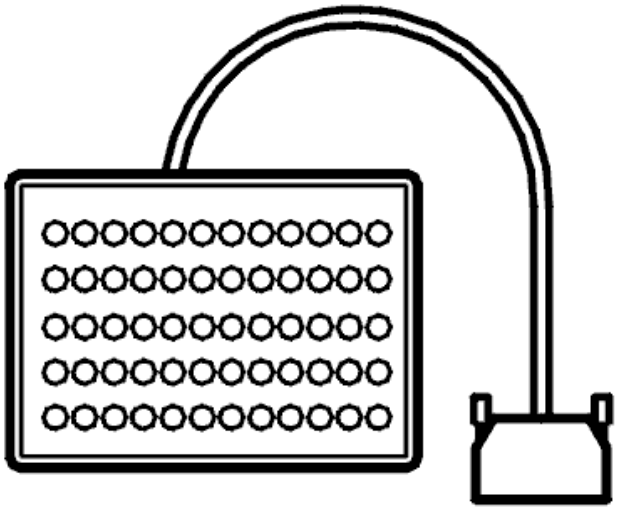

Fig. 103: Identifying Breakout Box
Courtesy of VOLVO CARS CORPORATION

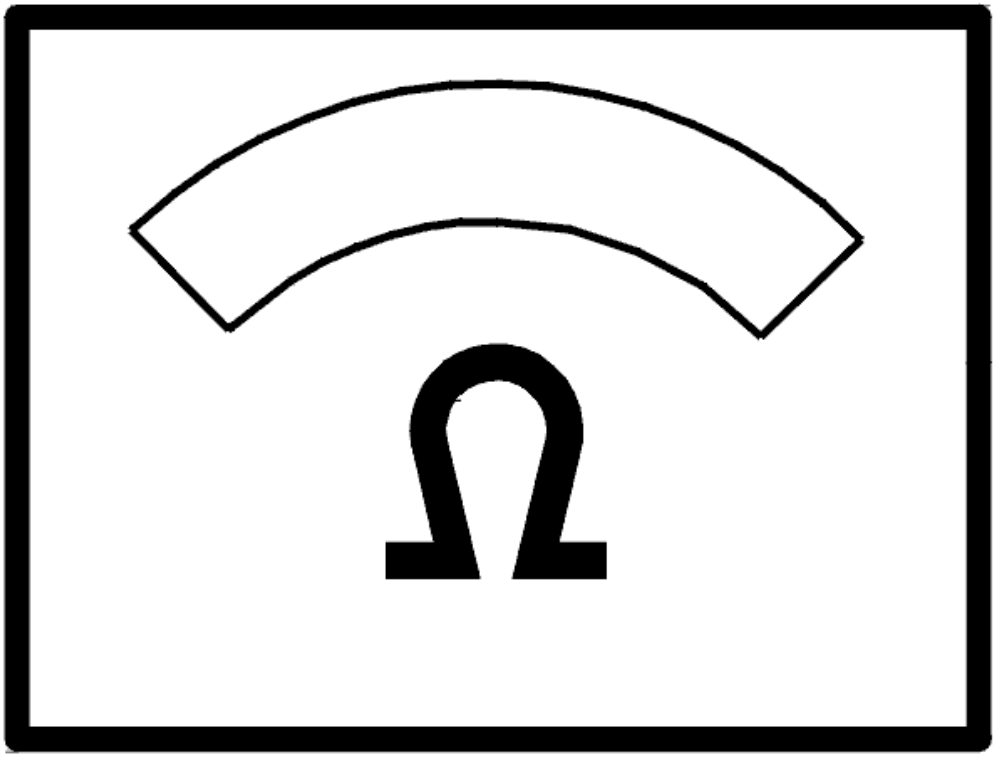

Fig. 104: Identifying Ohms Display
Courtesy of VOLVO CARS CORPORATION

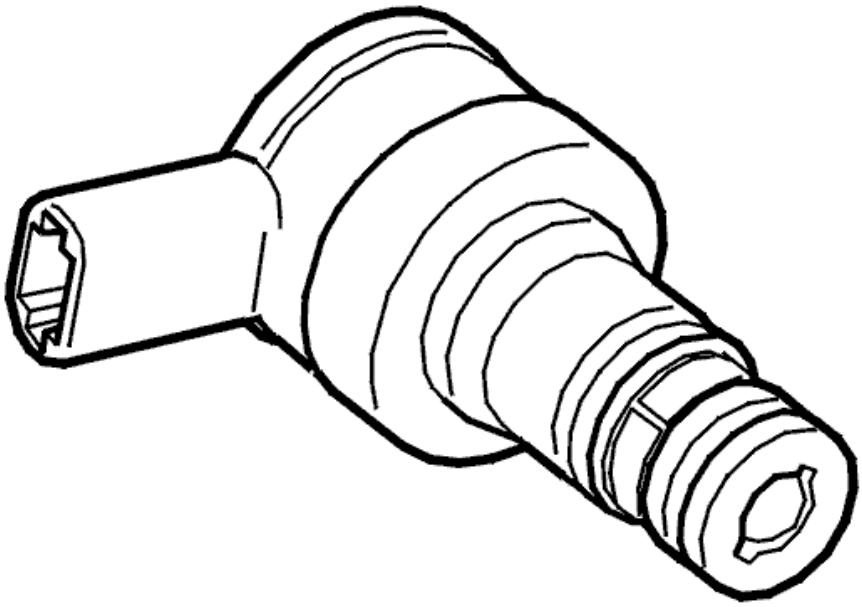

Fig. 105: Identifying Lock-Up Solenoid, SL
Courtesy of VOLVO CARS CORPORATION

Was the resistance OK?

- **YES**

  Refer to **CHECKING THE WIRING**

- **NO**

  Refer to **CHECKING THE WIRING AND COMPONENT**

CHECKING THE CONTROL MODULE

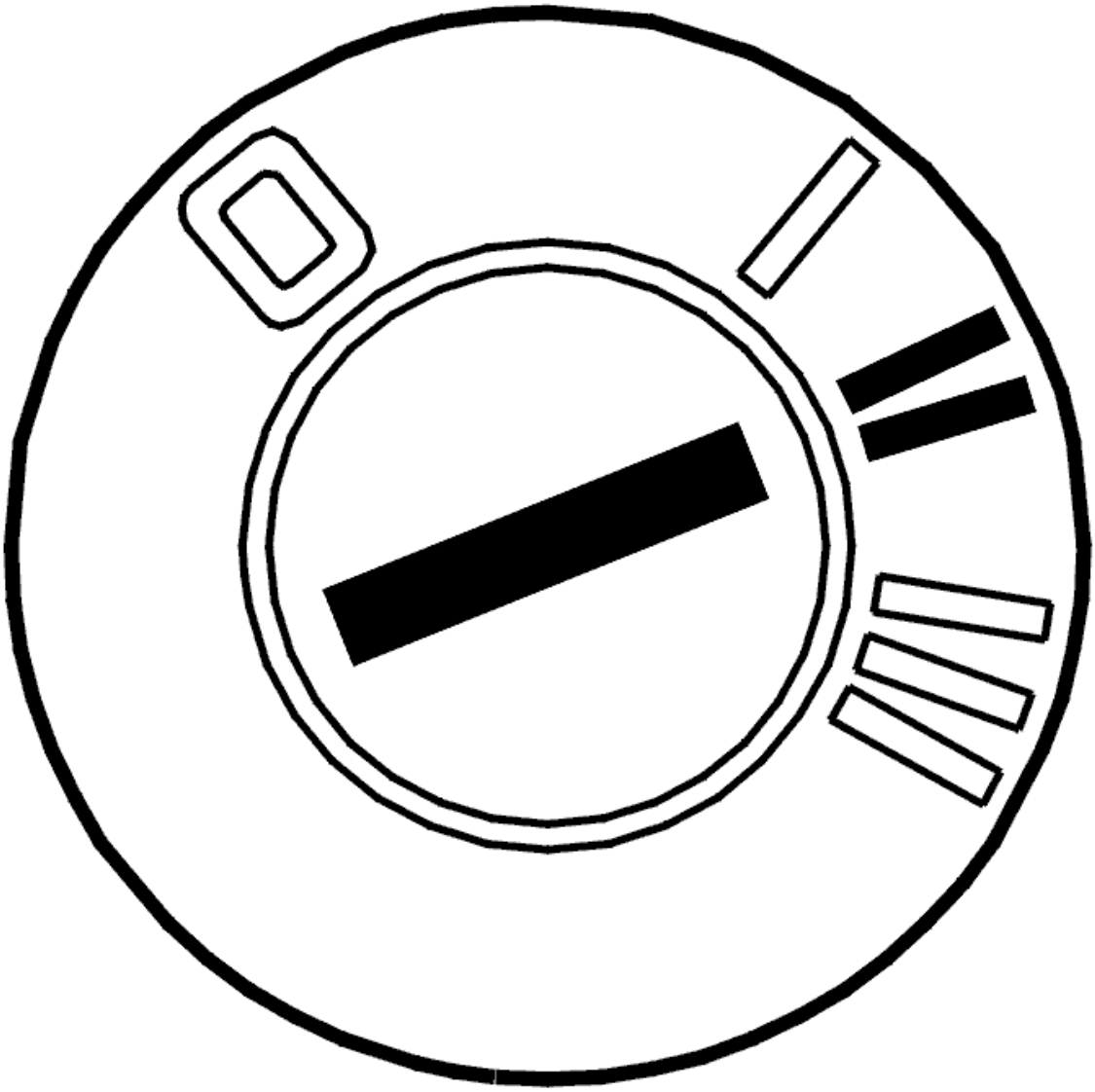

Fig. 106: Identifying Ignition ON
Courtesy of VOLVO CARS CORPORATION

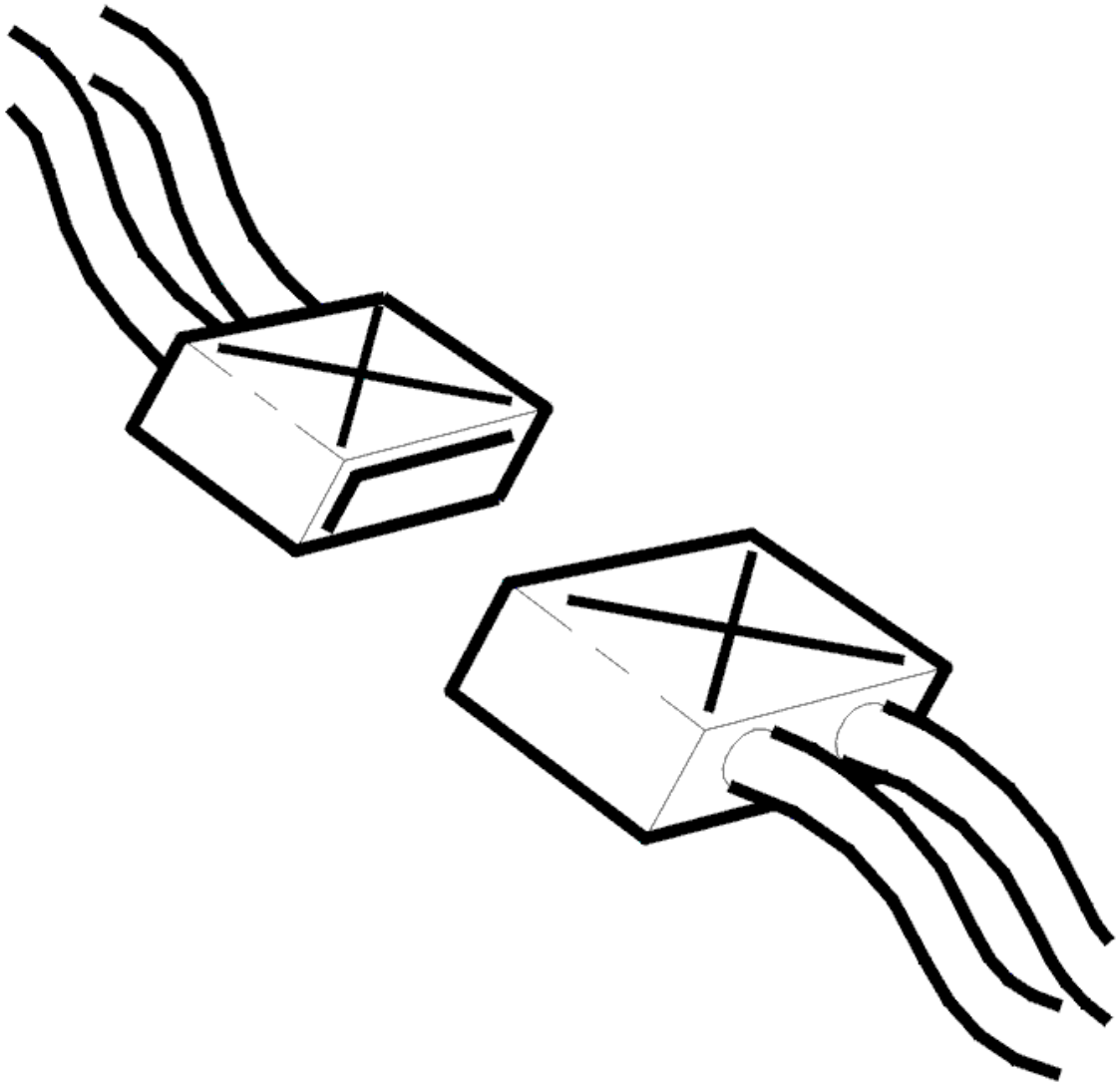

Fig. 107: Identifying Connectors
Courtesy of VOLVO CARS CORPORATION

- Ignition off
- Connect the breakout box to the control module without connecting the breakout box connector to the transmission
- Transmission connector disconnected
- Ignition on
- Gear selector in position P
- Connect a voltmeter between terminals #51 (#A51) and #53 (#A53) on the breakout box
- Activate solenoid SL.

  The voltage must oscillate between approximately 0 and 12 V. If the voltage does not oscillate, replace the control module.

NOTE: **When disconnecting the transmission connector, the control module may store diagnostic trouble codes (DTCs) for the gear-shift position sensor, the shift solenoids and temperature sensor etc.**

Other information:

- To disconnect the transmission connector, see **CONNECTING THE BREAKOUT BOX, GM AUTOMATIC TRANSMISSIONS**
- To replace the control module, see **TRANSMISSION CONTROL MODULE (TCM), REPLACING**
- For information about signals, see **SIGNAL SPECIFICATION** .

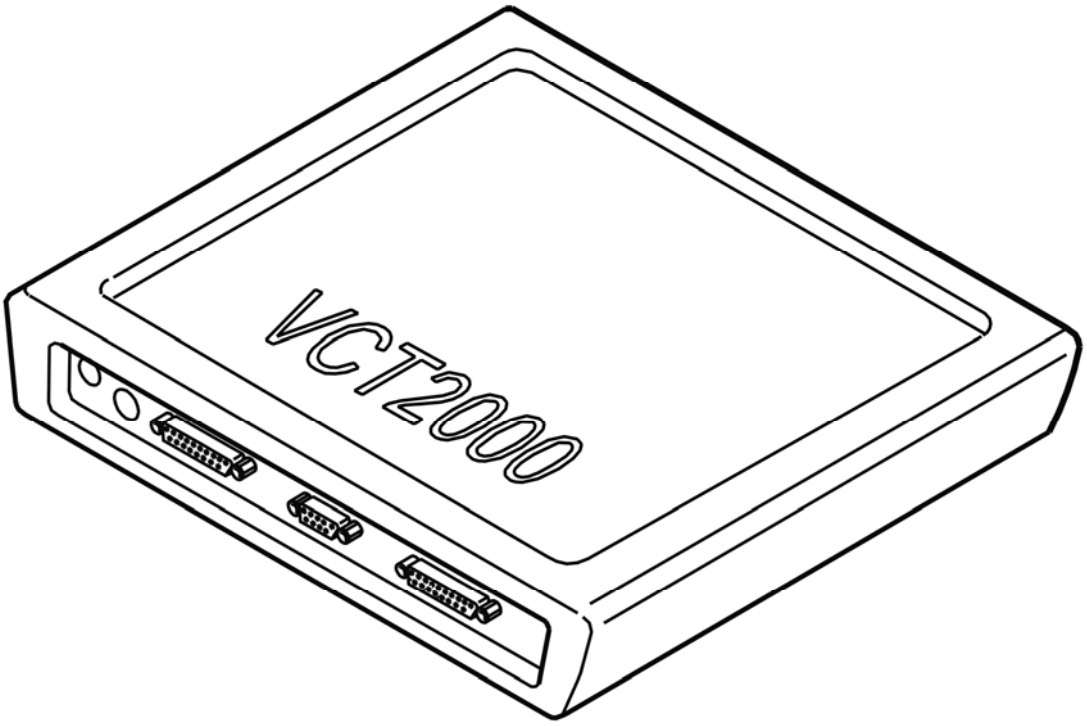

Fig. 108: Identifying VCT2000 Diagnostic Tool Symbol In VIDA
Courtesy of VOLVO CARS CORPORATION

Does the voltage oscillate?

- **YES**

  Refer to **VERIFICATION**

- **NO**

FAULT NOT FOUND: Troubleshooting has been completed.

CHECKING THE WIRING

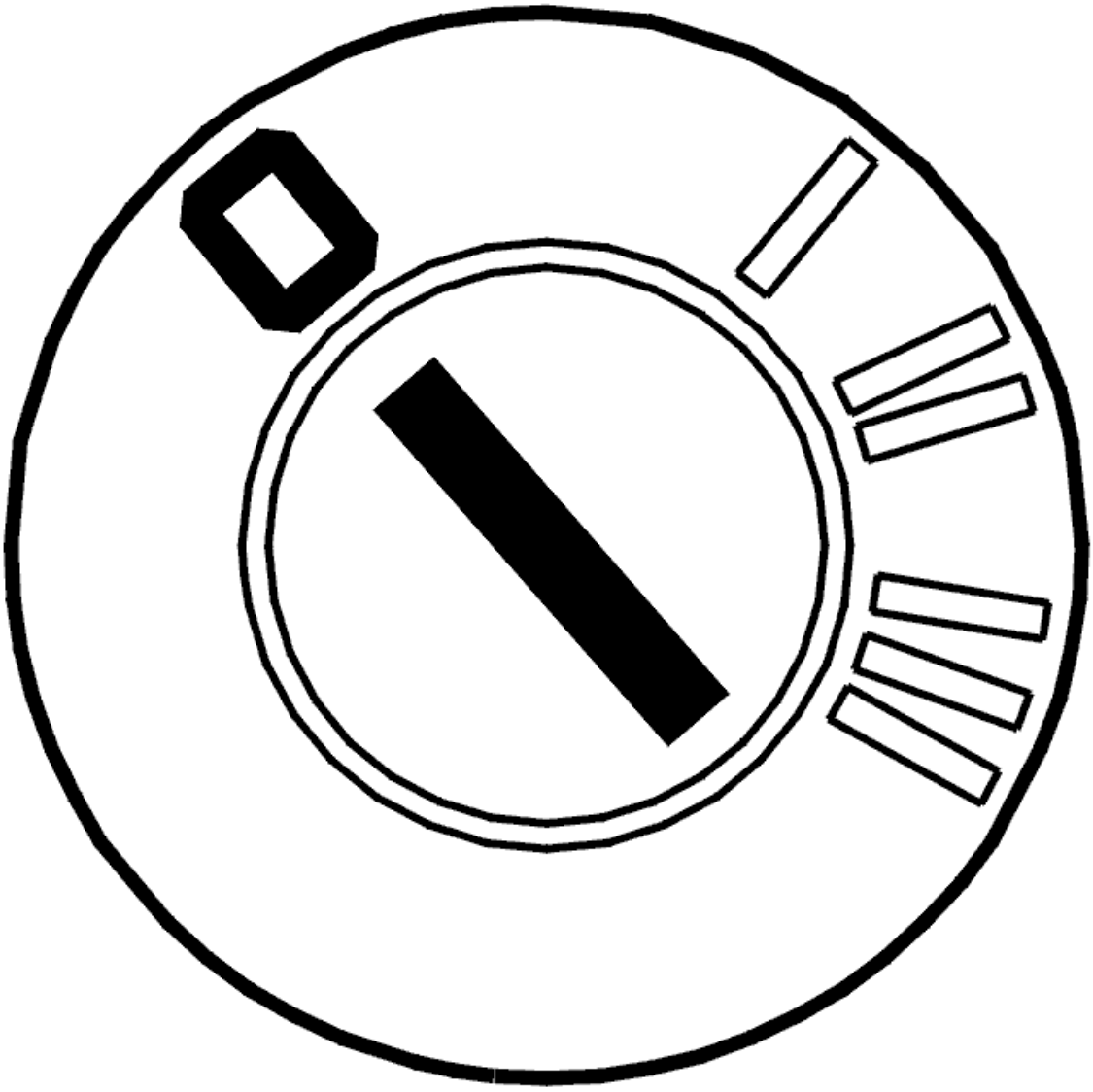

Fig. 109: Identifying Ignition OFF
Courtesy of VOLVO CARS CORPORATION

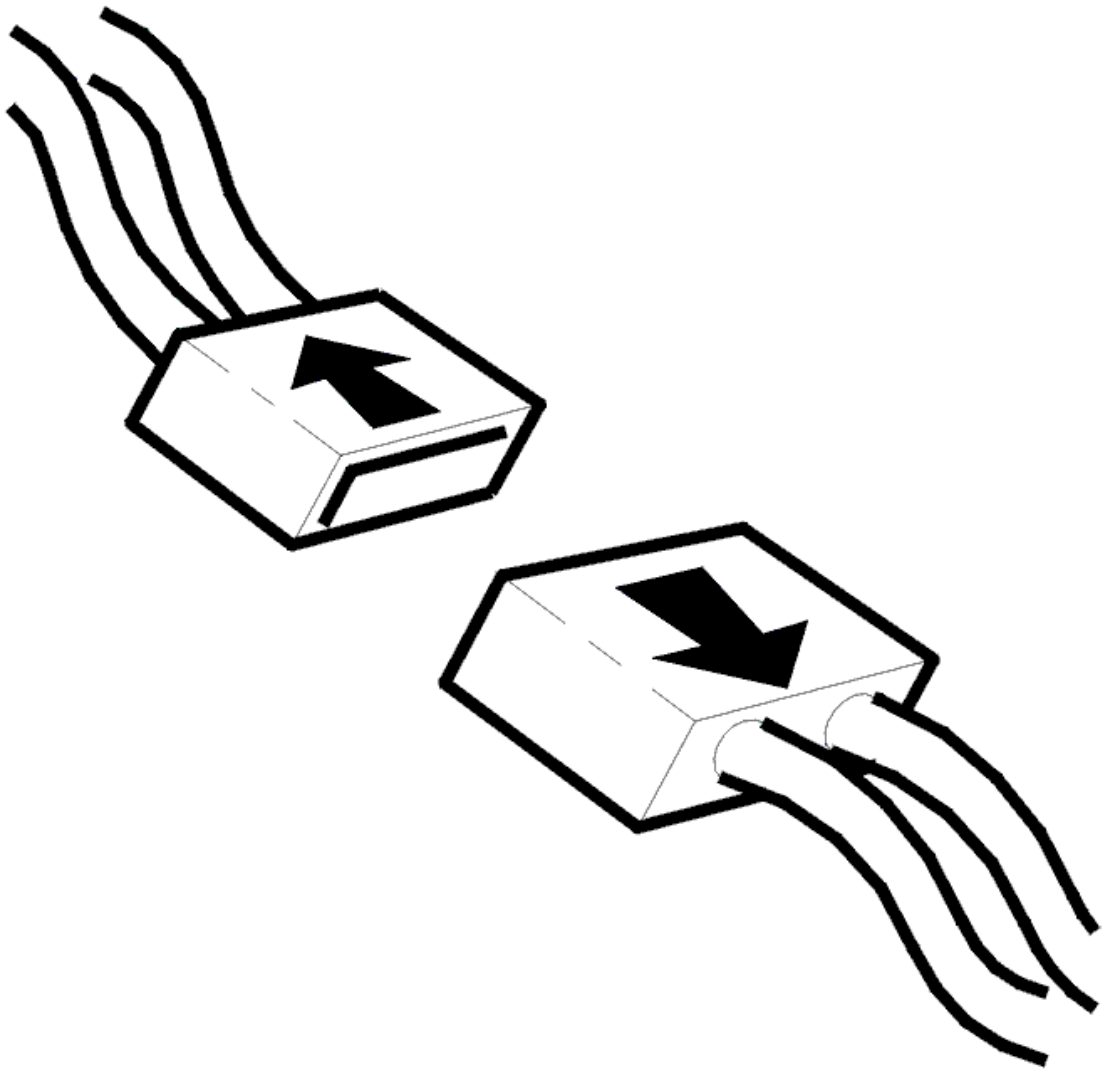

Fig. 110: Identifying Connector(s) Disconnected
Courtesy of VOLVO CARS CORPORATION

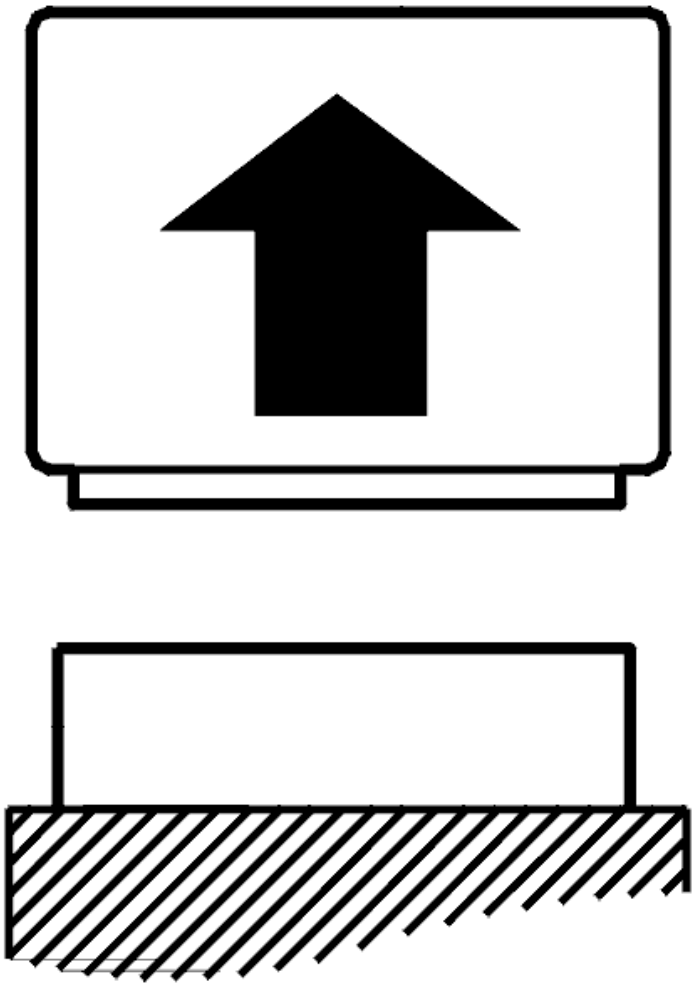

Fig. 111: Identifying Control Module Disconnected
Courtesy of VOLVO CARS CORPORATION

- Ignition off
- Connect the breakout box to the control module
- Disconnect the control module.
- Disconnect the transmission connector
- Connect adapter see **9511505** and breakout box see **9813190** to the transmission connector (control module side).

  Check the cable between control module terminal #51 (#A51) and transmission connector terminal #T (#A17). Check for an open-circuit. See **OPEN-CIRCUIT, PERMANENT FAULTS** .

  Check the cable between control module terminal #53 (#A53) and transmission connector terminal #E (#A5). Check for an open-circuit. See **OPEN-CIRCUIT, PERMANENT FAULTS** .

Remedy as necessary.

Other information:

- To connect the breakout box, see **CONNECTING THE BREAKOUT BOX**
- To connect the breakout box to the transmission connector, see **CONNECTING THE BREAKOUT BOX, GM AUTOMATIC TRANSMISSIONS**
- For information about signals, see **SIGNAL SPECIFICATION** .

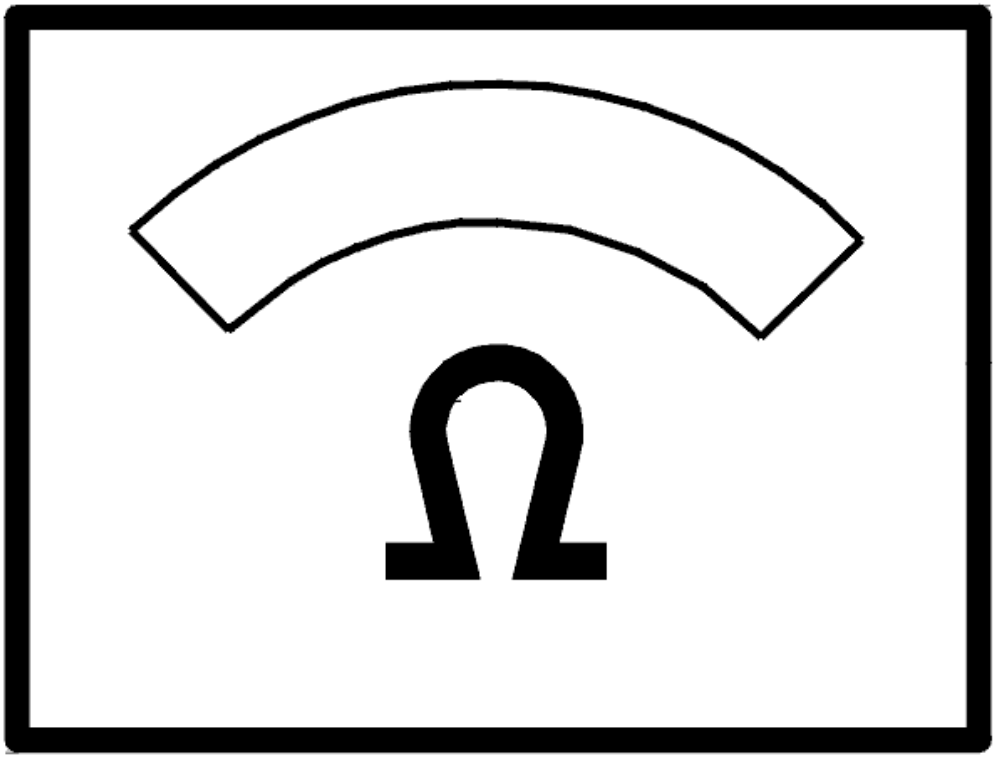

Fig. 112: Identifying Ohms Display
Courtesy of VOLVO CARS CORPORATION

Was a fault detected?

- **YES**

Refer to **VERIFICATION**

- **NO**

  Refer to **CHECKING THE CONTROL MODULE**

CHECKING THE WIRING AND COMPONENT

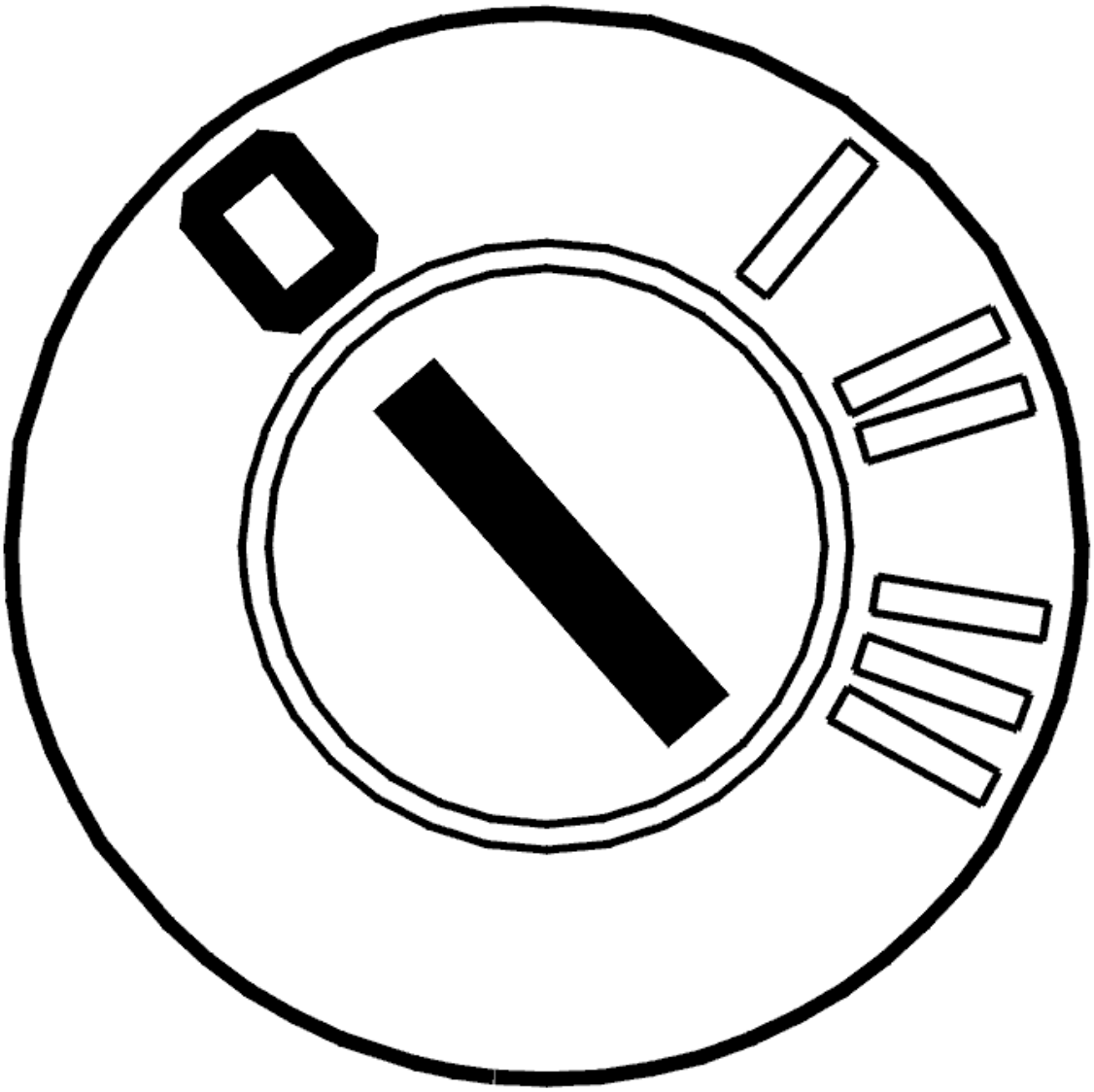

Fig. 113: Identifying Ignition OFF
Courtesy of VOLVO CARS CORPORATION

- Ignition off
- Open the transmission control system.

  Check the cable between transmission connector terminal #T (#A17) and solenoid SL terminal #A and E (#A5) and solenoid SL terminal #B. Check for an open-circuit. See **OPEN-CIRCUIT, PERMANENT**

FAULTS .

HINT: Check solenoid SL by measuring the solenoid SL resistance between terminals #A and #B. The resistance must be between 10 and 15 ohms.

Remedy as necessary.

Other information:

- To open the transmission control system, For removal, see **SIDE COVER TRANSMISSION, REMOVING** . To install, see **SIDE COVER TRANSMISSION, INSTALLING**
- To connect the breakout box to the transmission connector, see **CONNECTING THE BREAKOUT BOX, GM AUTOMATIC TRANSMISSIONS**
- To replace solenoid SL, see **SOLENOID LOCK-UP FUNCTION, REPLACING**
- To replace the cable harness, see **TEMPERATURE SENSOR FLUID, TRANSAXLE, (TFT)**
- For information about signals, see **SIGNAL SPECIFICATION** .

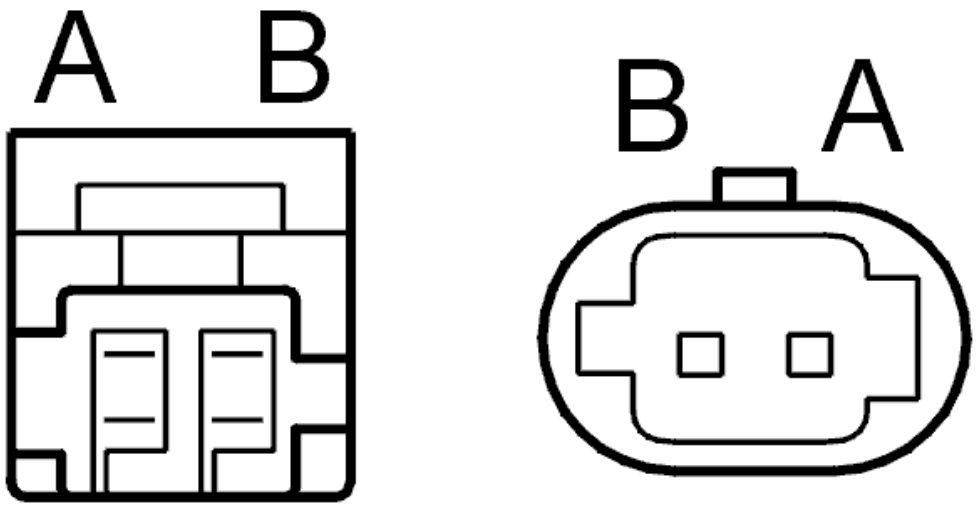

Fig. 114: Identifying Connector Terminals
Courtesy of VOLVO CARS CORPORATION

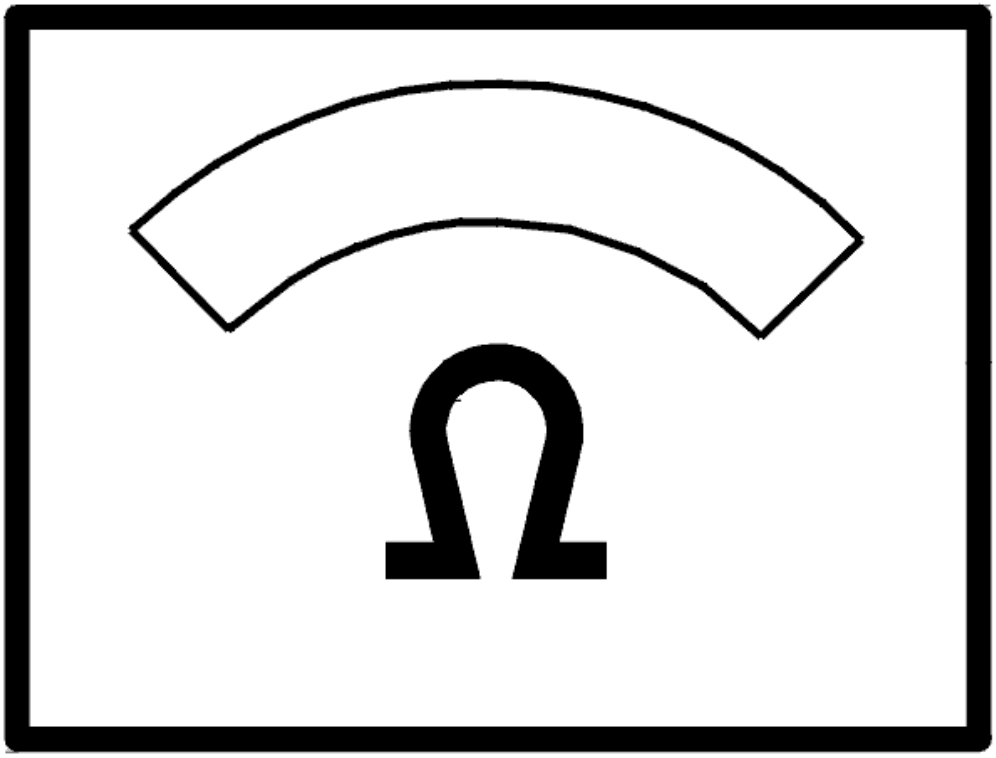

Fig. 115: Identifying Ohms Display
Courtesy of VOLVO CARS CORPORATION

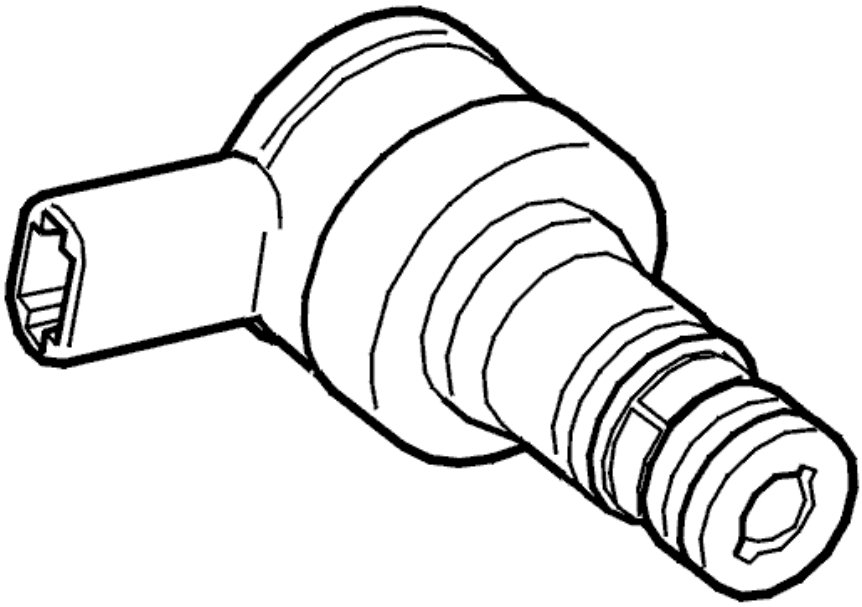

Fig. 116: Identifying Lock-Up Solenoid, SL
Courtesy of VOLVO CARS CORPORATION

- **Continue**

Refer to **RESETTING THE ADAPTATION**

RESETTING THE ADAPTATION

RESETTING ADAPTATION AND THE COUNTER FOR "TRANSMISSION OIL CHANGE"

HINT: The transmission has torque controlled adaptive pressure control. Pressure control means that the transmission regulates the pressure itself during each gear shift. This avoids harsh gear shifting. Each gear shift is evaluated by the control module and stored in the memory. This allows for compensation for wear and tear in the transmission and clutch. It is important that the adaptation in the memory is reset after the transmission has been repaired. This is to ensure normal operation. The oil is replaced during repair; the "Transmission oil change" counter must be reset. If the counter is not reset when the fluid is drained and replaced, there is a risk that a diagnostic trouble code (DTC) will be stored in incorrect circumstances.

NOTE: **This applies only if the transmission or one of the components in the transmission have been replaced.**

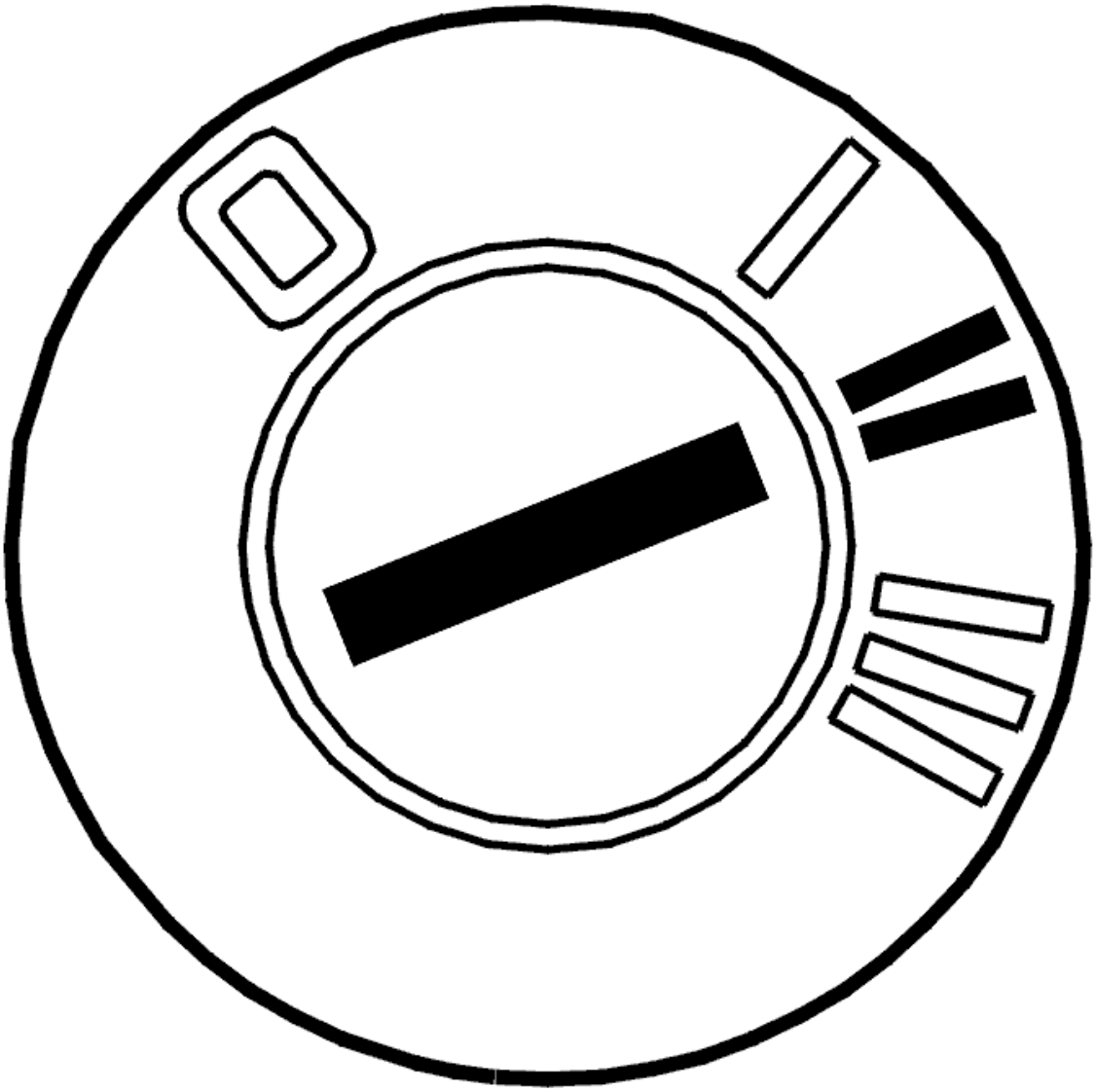

Fig. 117: Identifying Ignition ON
Courtesy of VOLVO CARS CORPORATION

- Ignition on.

  Click on the VCT2000 symbol to reset the adaptation and counter.

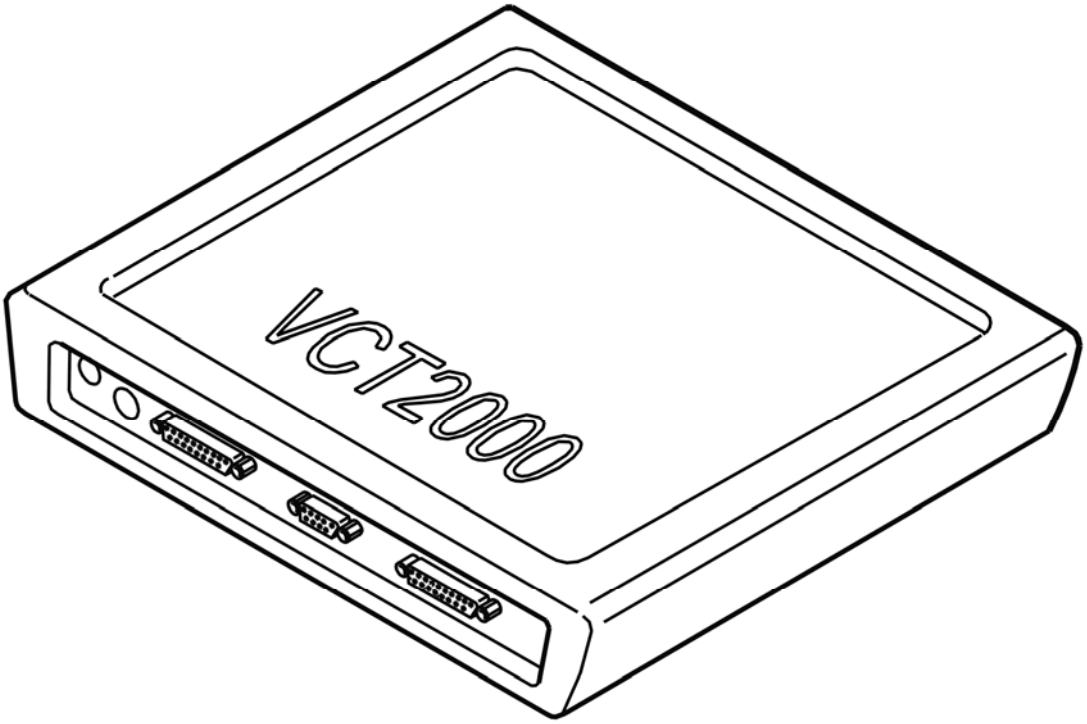

Fig. 118: Identifying VCT2000 Diagnostic Tool Symbol In VIDA
Courtesy of VOLVO CARS CORPORATION

- **Continue**

  Refer to **VERIFICATION**

VERIFICATION

VERIFICATION

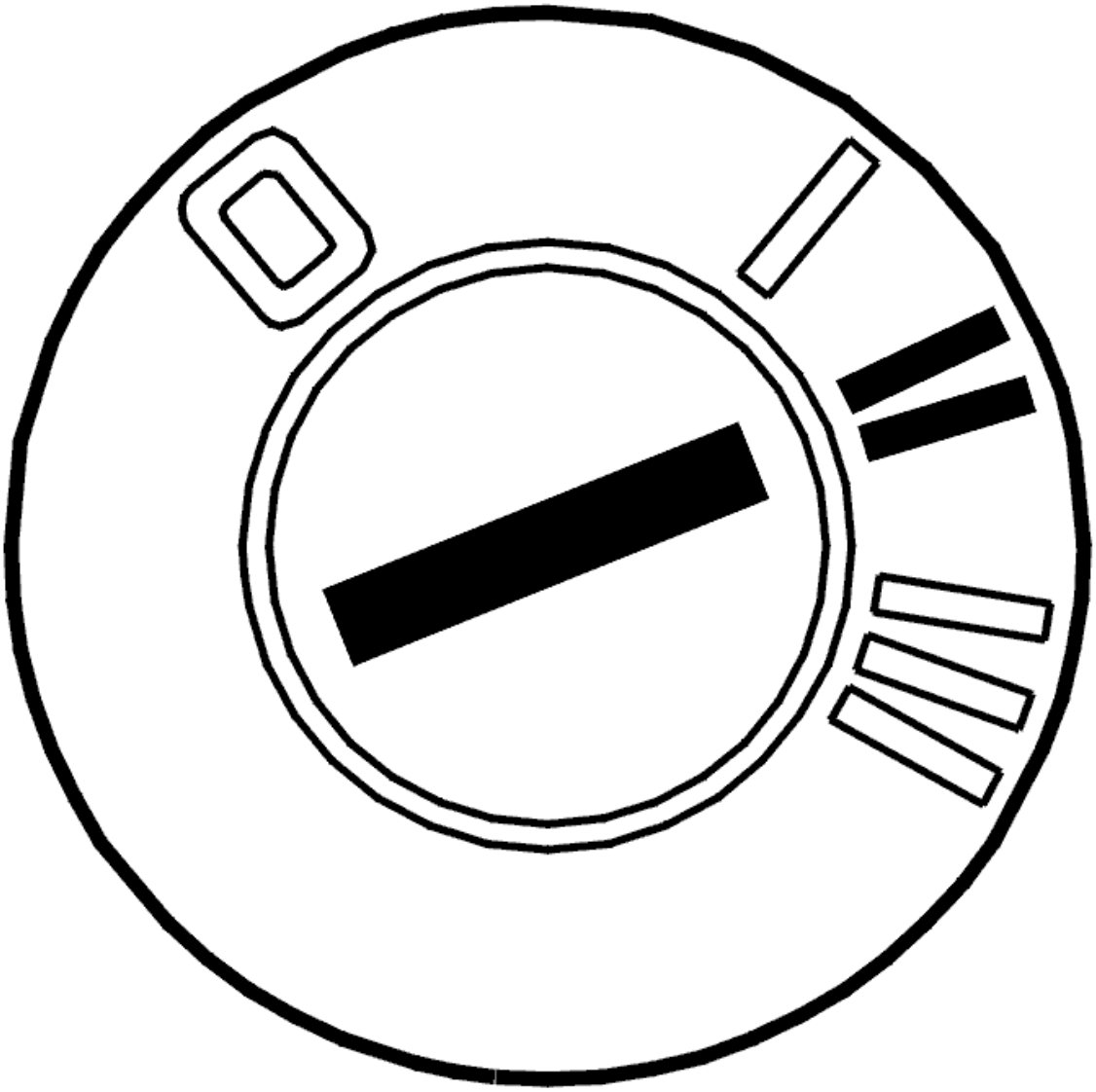

Fig. 119: Identifying Ignition ON
Courtesy of VOLVO CARS CORPORATION

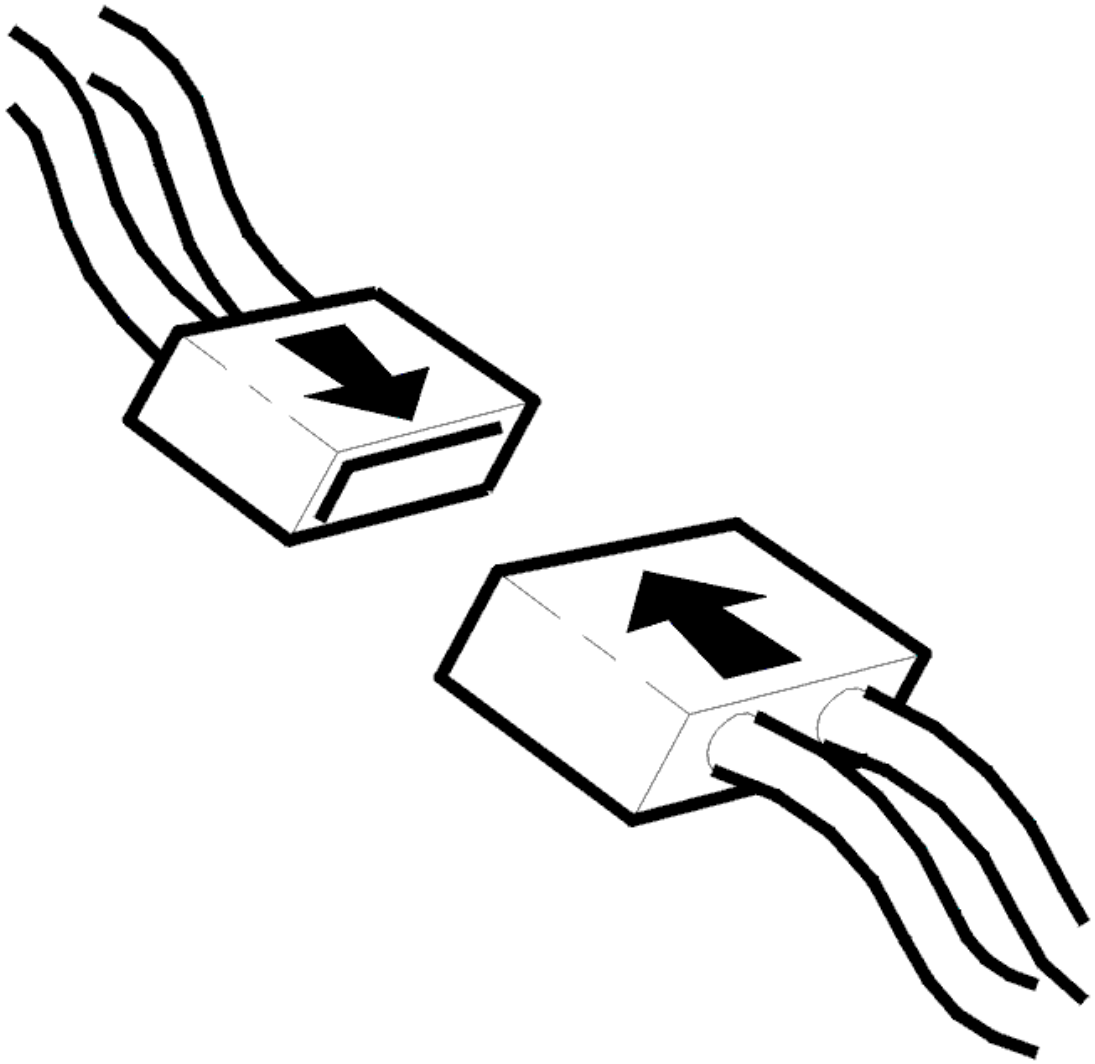

Fig. 120: Identifying Connector(s) Reinstallation
Courtesy of VOLVO CARS CORPORATION

- Ignition off.
- Reinstall the components, reconnect the connectors etc.
- Ignition on.
- Gear selector in position P.
- Activate the lock-up solenoid SL.

  The current should oscillate between approximately 0 and 1 A

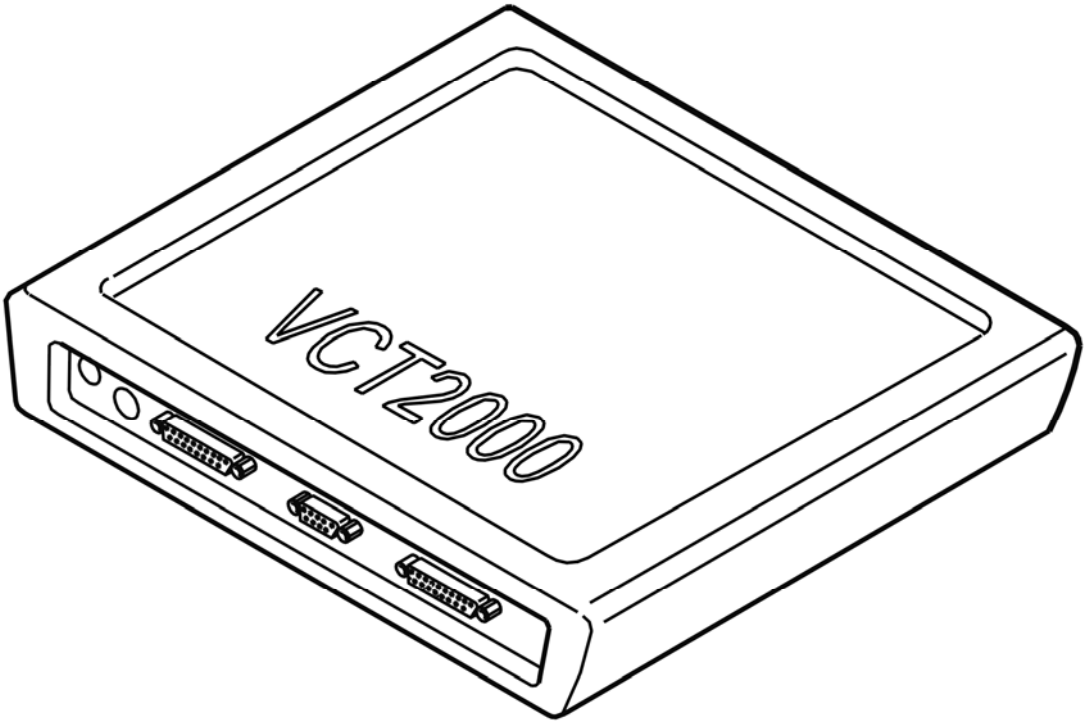

Fig. 121: Identifying VCT2000 Diagnostic Tool Symbol In VIDA
Courtesy of VOLVO CARS CORPORATION

Does the current oscillate?

- **YES**

  VERIFIED: Troubleshooting has been completed.

- **NO**

  Refer to **INFORMATION**

INFORMATION

FAULT-TRACING INFORMATION

The fault should have been detected and remedied. As this is not the case fault-tracing has failed.

Exit fault-tracing for this diagnostic trouble code (DTC) or make another attempt.

TCM-0014: LOCK-UP SOLENOID SL. SIGNAL TOO LOW. INTERMITTENT FAULT (4T65 AWD; 2003-2006)

DIAGNOSTIC TROUBLE CODE (DTC) INFORMATION

Condition

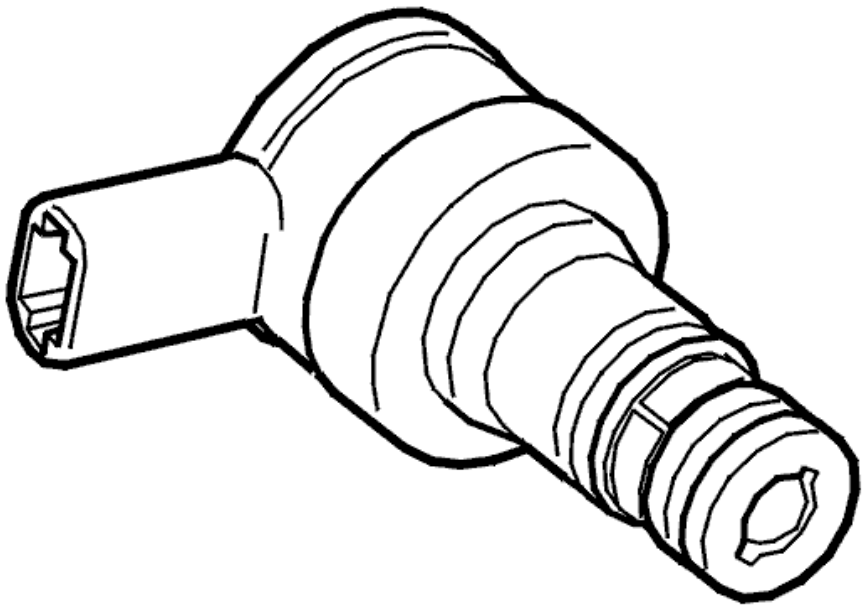

Fig. 122: Identifying Lock-Up Solenoid, SL
Courtesy of VOLVO CARS CORPORATION

The lock-up solenoid SL controls the transmission lock-up function. Solenoid SL operates when it receives voltage from the control module and is activated under different driving conditions depending on road speed, throttle position and the driving mode selected. Diagnostic trouble code (DTC) TCM-0014 is stored if the control module registers a too low signal in the solenoid SL circuit when the solenoid should be activated. Solenoid SL cannot then be activated.

Substitute Value

- The control module does not activate the lock-up solenoid.

Possible Source

- Contact resistance in the terminals.
- Open-circuit in the signal cable.
- Defective solenoid.

Fault symptom[s]

- General orange warning lamp lit.
- Malfunction indicator lamp (MIL) lit.
- No lock-up function.
- Harsh gear shifting.

SIGNAL TOO LOW. INTERMITTENT FAULT

INTERMITTENT FAULT

Check the cable between control module terminal #51 (#A51) and transmission connector #T (#A17) for an intermittent short-circuit to ground according to **SHORT-CIRCUIT TO GROUND, INTERMITTENT FAULTS** .

Check the wiring between control module terminal 53 (#A53) and transmission connector #E (#A5) for an intermittent short-circuit to ground according to **SHORT-CIRCUIT TO GROUND, INTERMITTENT FAULTS** .

HINT: With the ignition off and the control module disconnected, the resistance between control module terminal 51 (#A51) and ground (breakout box #53) should be 11-15 ohms.

Remedy as necessary.

Other information:

- To connect the breakout box, see **CONNECTING THE BREAKOUT BOX** .
- To connect the breakout box to the transmission connector, see **CONNECTING THE BREAKOUT BOX, GM AUTOMATIC TRANSMISSIONS** .
- For information about signals, see **SIGNAL SPECIFICATION** .

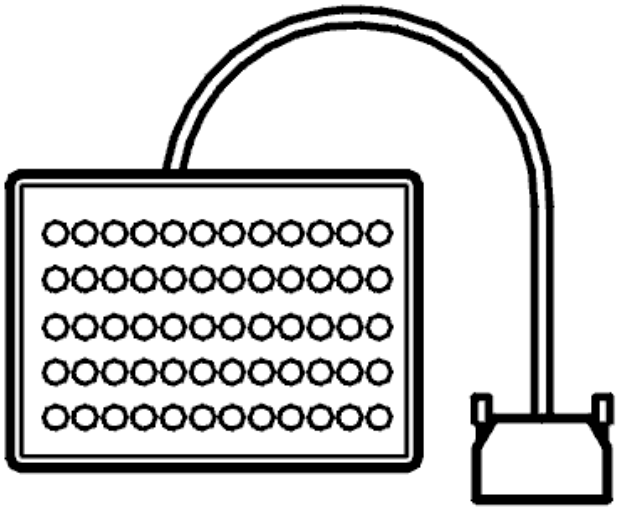

Fig. 123: Identifying Breakout Box

Courtesy of VOLVO CARS CORPORATION

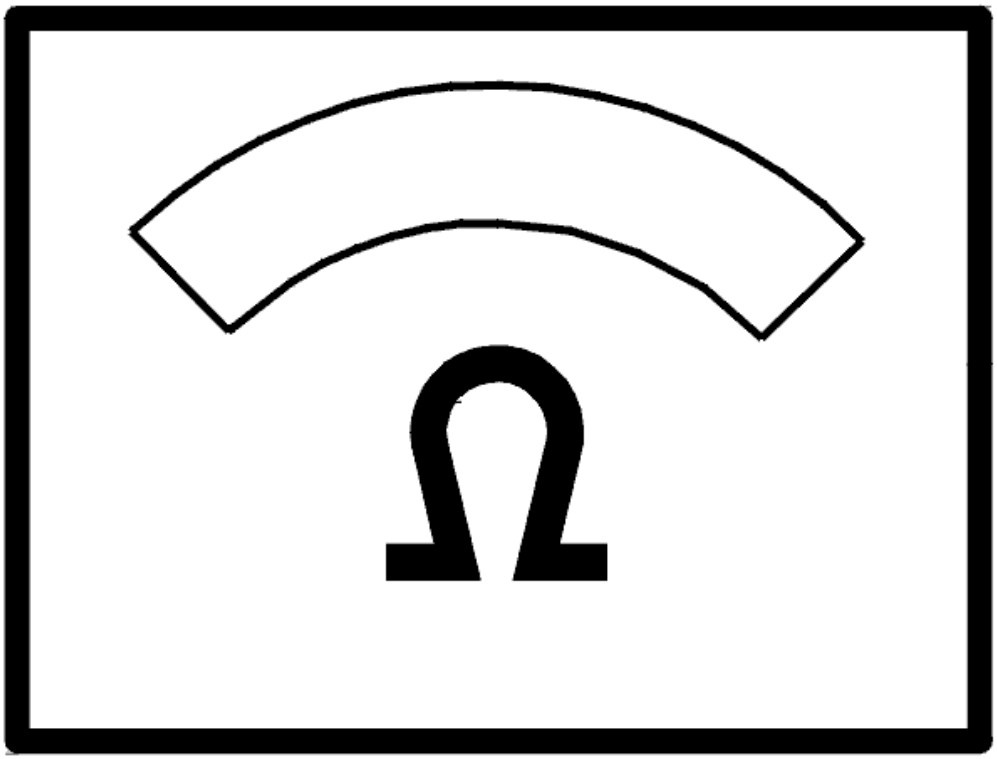

Fig. 124: Identifying Ohms Display
Courtesy of VOLVO CARS CORPORATION

- **Continue**

  Refer to **INFORMATION**

INFORMATION

FAULT-TRACING INFORMATION

If the fault is intermittent, do not verify fault-tracing if the fault does not recur.

It is possible to view the information again, or leave fault-tracing for this diagnostic trouble code (DTC).

TCM-0014: LOCK-UP SOLENOID SL. SIGNAL TOO LOW. PERMANENT FAULT (4T65 AWD; 2003-2006)

DIAGNOSTIC TROUBLE CODE (DTC) INFORMATION

see **DIAGNOSTIC TROUBLE CODE (DTC) INFORMATION**

SIGNAL TOO LOW. PERMANENT FAULT

CHECKS

CHECKING LOCK-UP SOLENOID SL

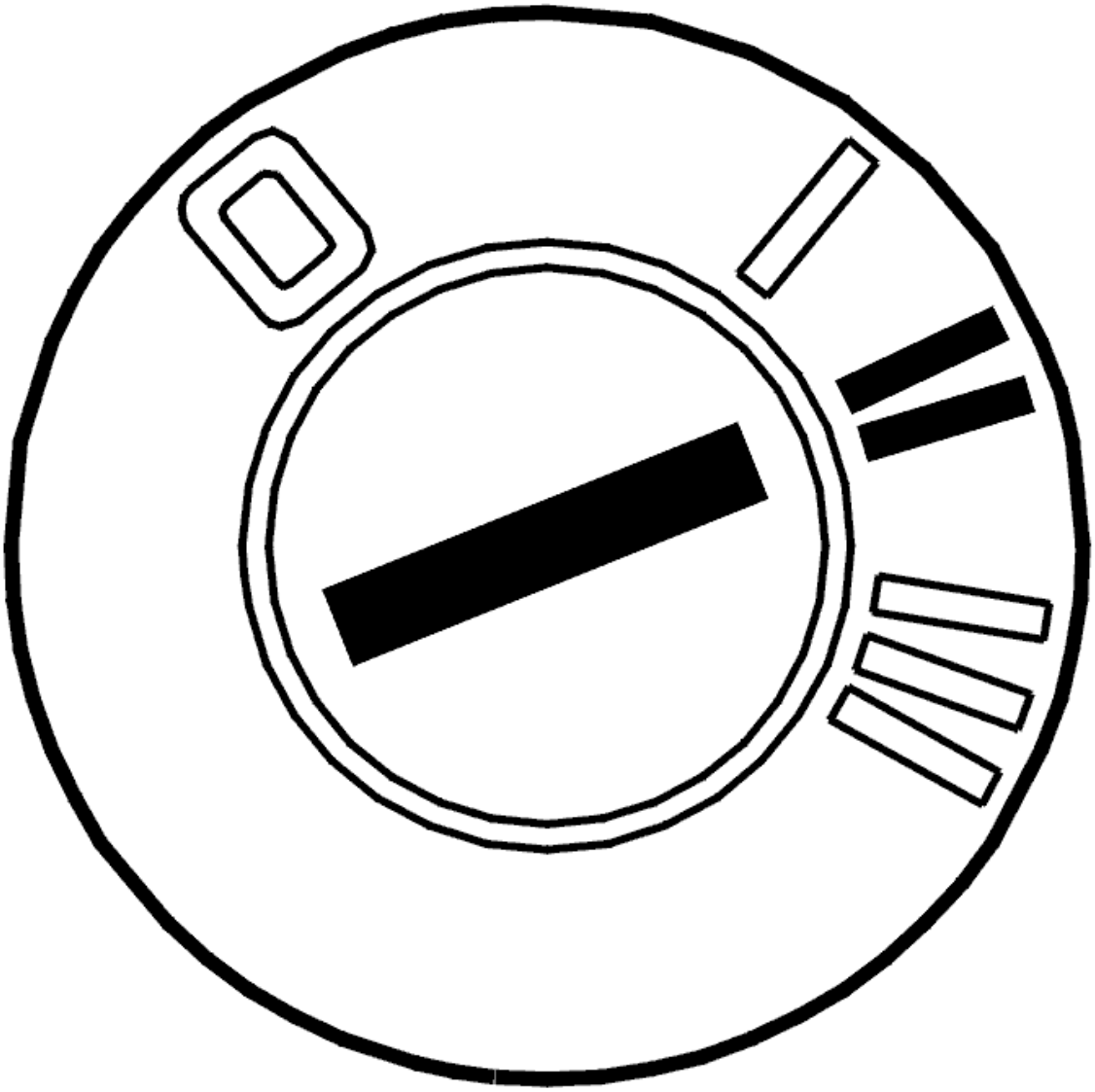

Fig. 125: Identifying Ignition ON
Courtesy of VOLVO CARS CORPORATION

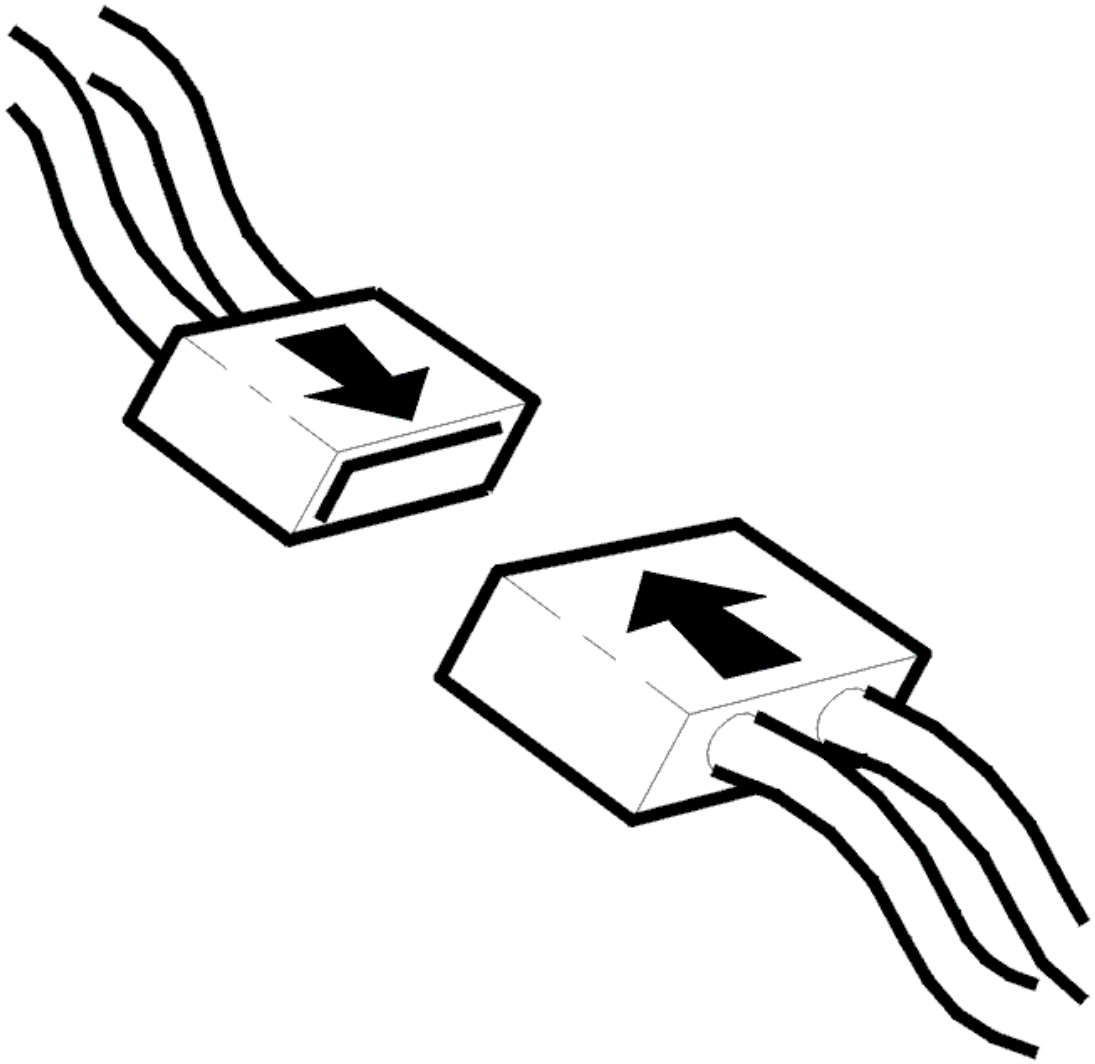

Fig. 126: Identifying Connector(s) Reinstallation
Courtesy of VOLVO CARS CORPORATION

- Ignition off.

  Check the control module and automatic transmission connectors for contact resistance and oxidation according to **CONTACT RESISTANCE AND OXIDATION** . Remedy if necessary

- Ignition on
- Reinstall the components, reconnect the connectors etc.
- Gear selector in position P
- Activate the lock-up solenoid SL.

  The value must change between OFF and ON.

Other information:

- To disconnect the control module, see **TRANSMISSION CONTROL MODULE (TCM), REPLACING**
- To disconnect the transmission connector, see **CONNECTING THE BREAKOUT BOX, GM AUTOMATIC TRANSMISSIONS**
- For information about signals, see **SIGNAL SPECIFICATION** .

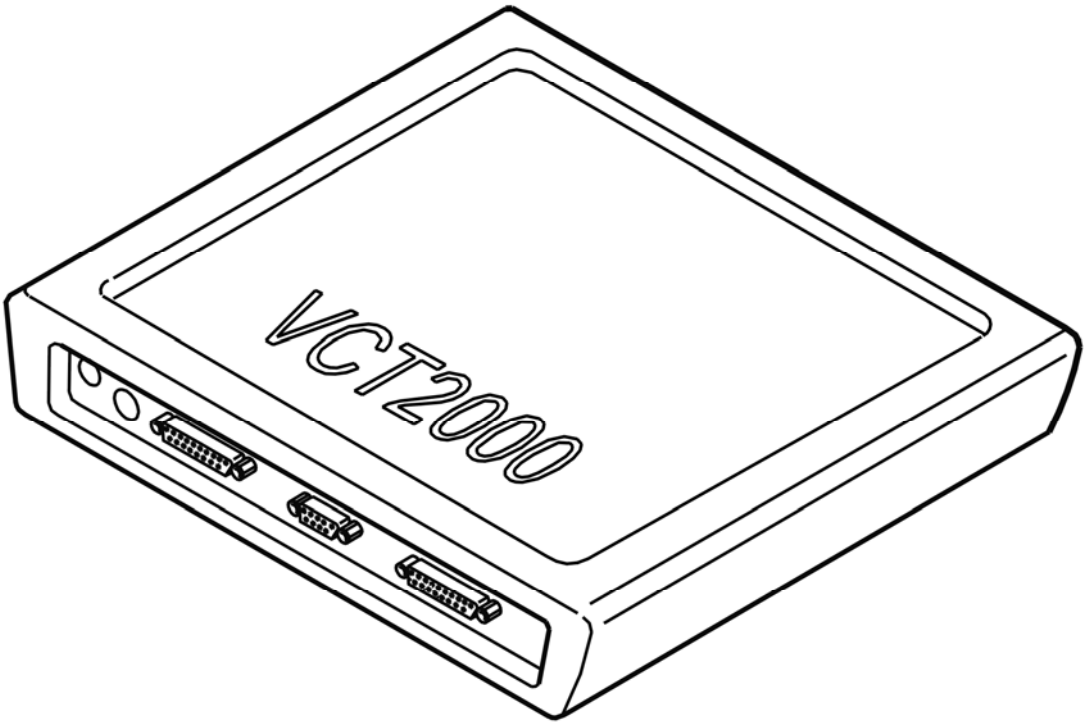

Fig. 127: Identifying VCT2000 Diagnostic Tool Symbol In VIDA
Courtesy of VOLVO CARS CORPORATION

Does the value change?

- **YES**

  OKAY: Troubleshooting has been completed.

- **NO**

  Refer to **CHECKING SOLENOID SL**

CHECKING THE WIRING

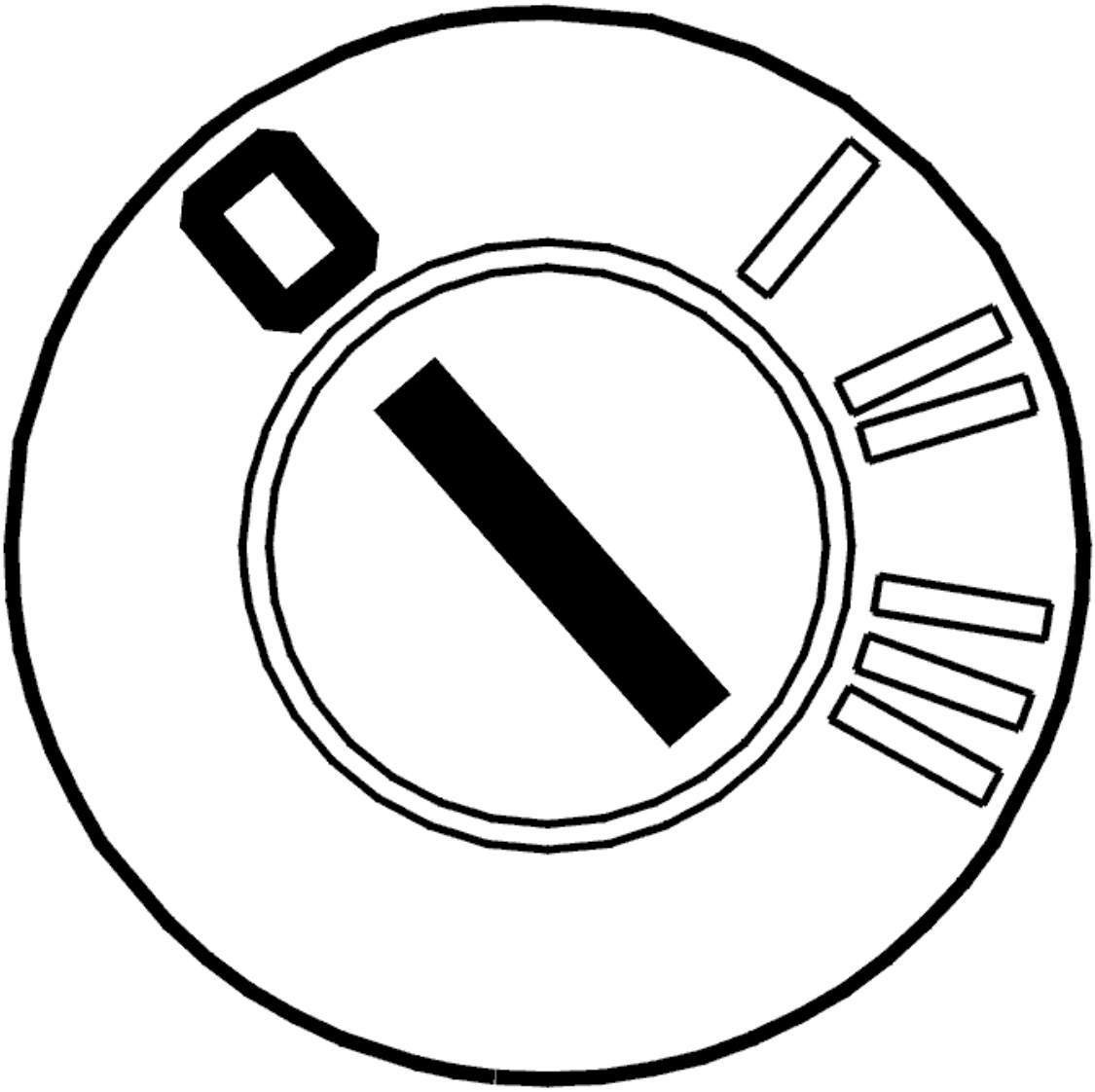

Fig. 128: Identifying Ignition OFF
Courtesy of VOLVO CARS CORPORATION

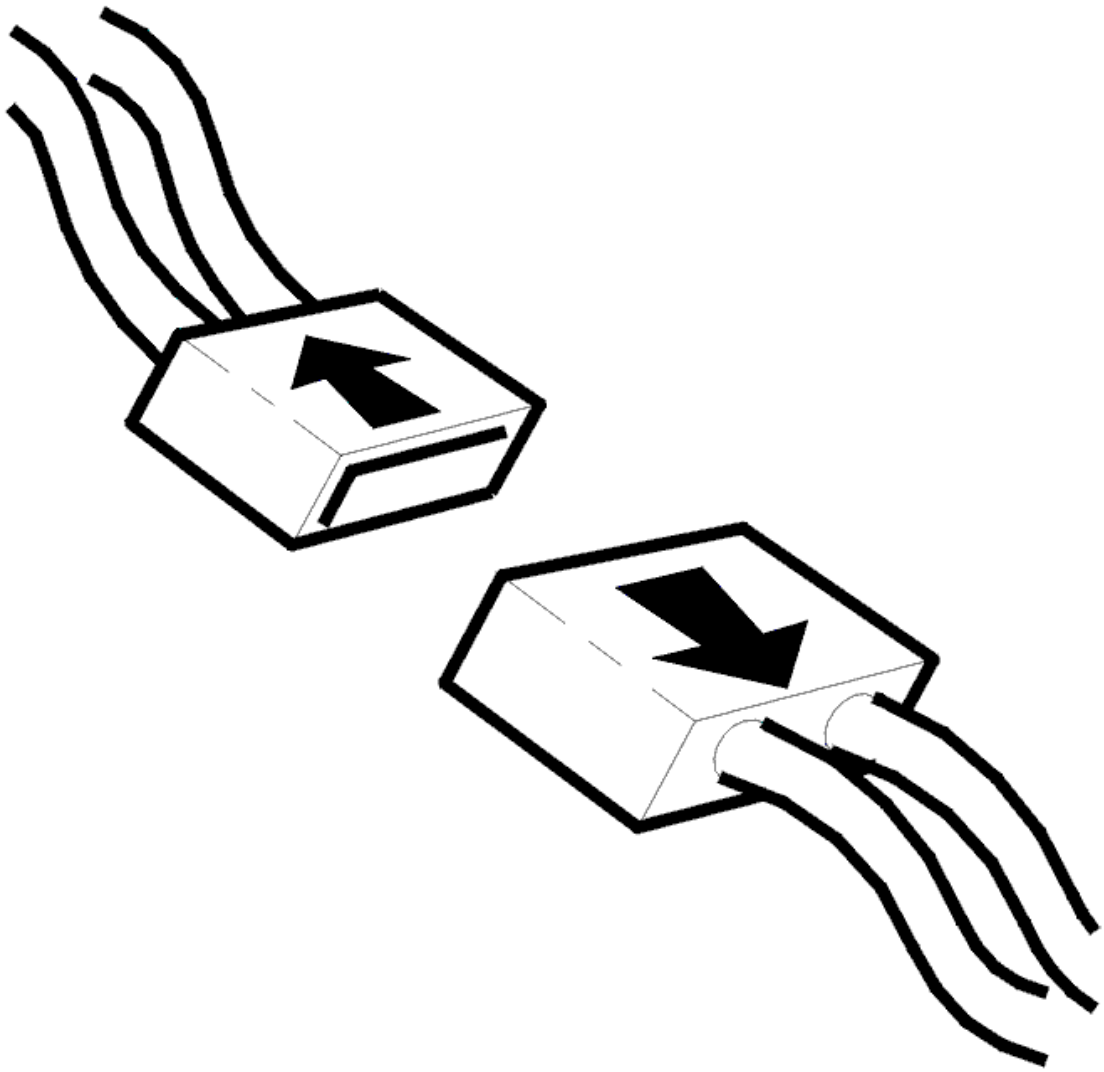

Fig. 129: Identifying Connector(s) Disconnected
Courtesy of VOLVO CARS CORPORATION

- Ignition off
- The transmission connector disconnected.

  Check the cable between control module terminal #51 (#A51) and transmission connector (control module side) terminal #T (#A17). Check for a short-circuit to ground. See **SHORT-CIRCUIT TO GROUND, PERMANENT FAULTS** .

  Check the cable between control module terminal #A53 and transmission connector (control module side) terminal #E (#A5). Check for a short-circuit to ground. See **SHORT-CIRCUIT TO GROUND, PERMANENT FAULTS** .

  Remedy as necessary.

Other information:

- To connect the breakout box, see **CONNECTING THE BREAKOUT BOX**
- To connect the breakout box to the transmission connector, see **CONNECTING THE BREAKOUT BOX, GM AUTOMATIC TRANSMISSIONS**
- For information about signals, see **SIGNAL SPECIFICATION** .

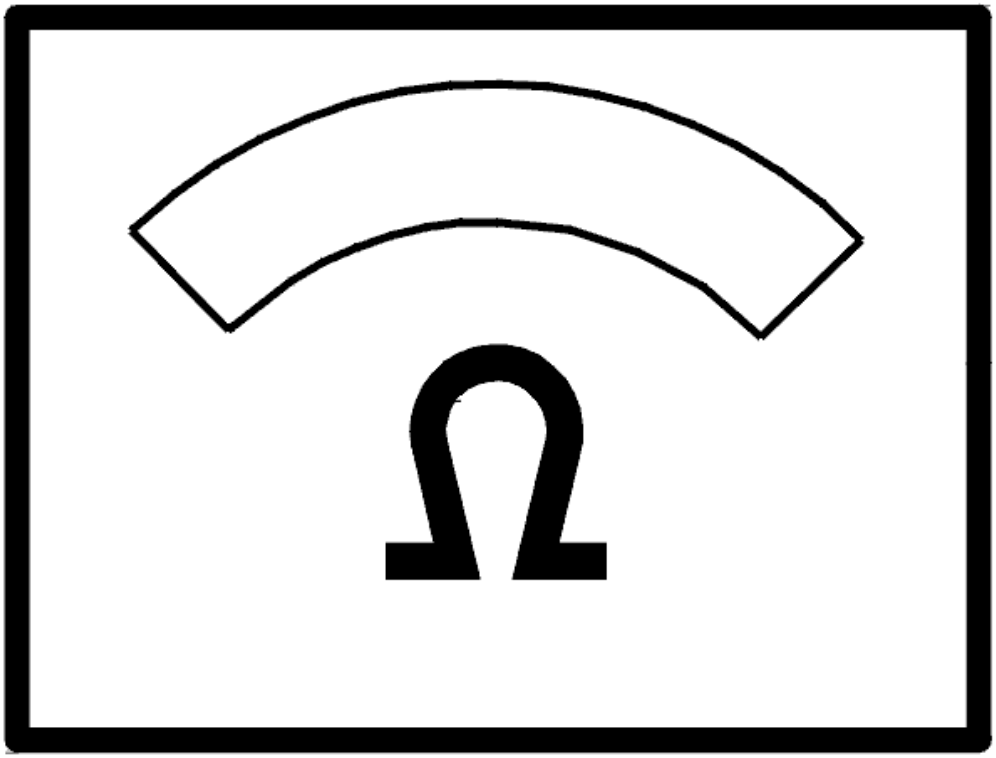

Fig. 130: Identifying Ohms Display
Courtesy of VOLVO CARS CORPORATION

Was a fault detected?

- **YES**

  Refer to **VERIFICATION**

- **NO**

  Refer to **CHECKING THE CONTROL MODULE**

CHECKING SOLENOID SL

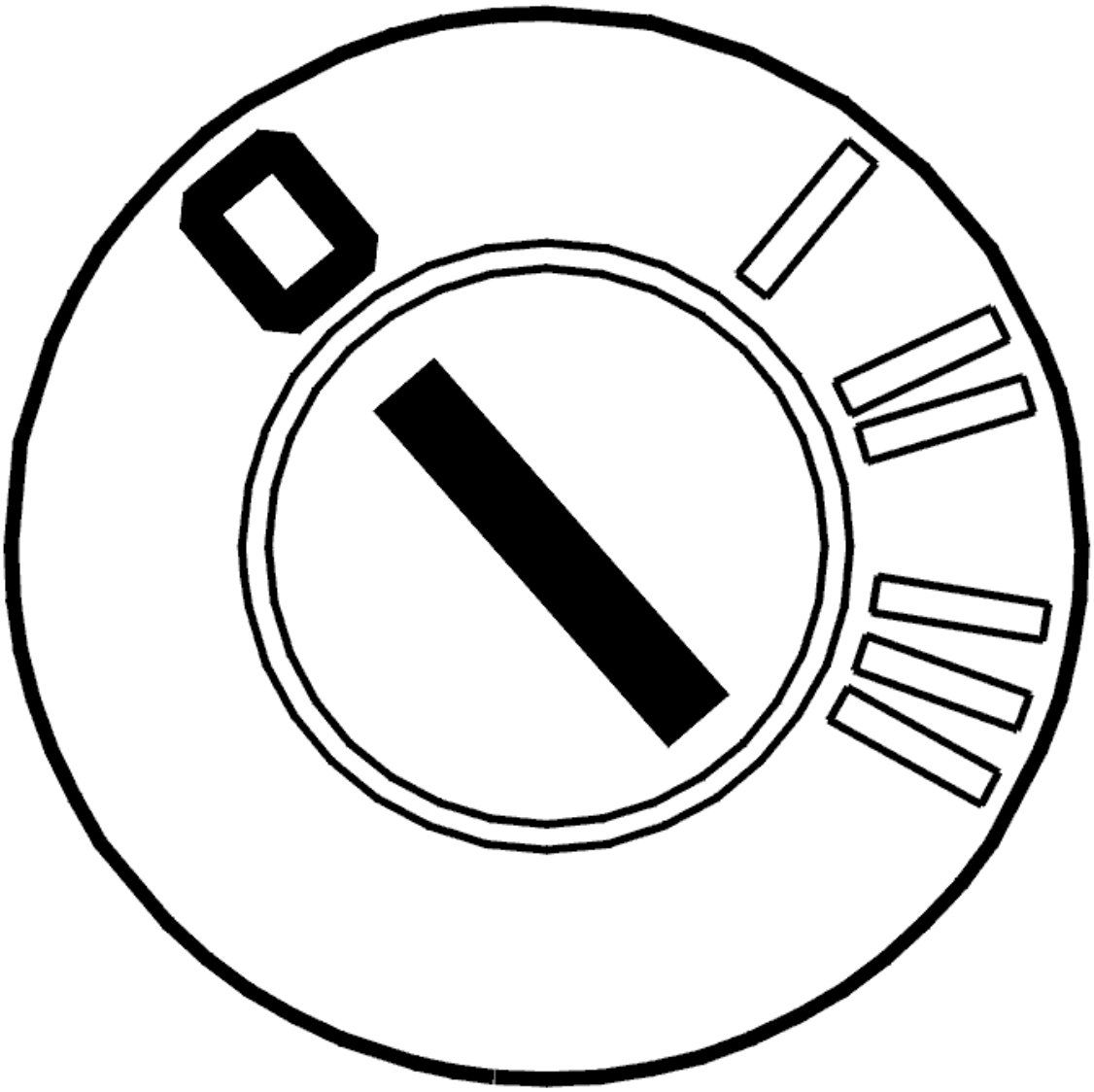

Fig. 131: Identifying Ignition OFF
Courtesy of VOLVO CARS CORPORATION

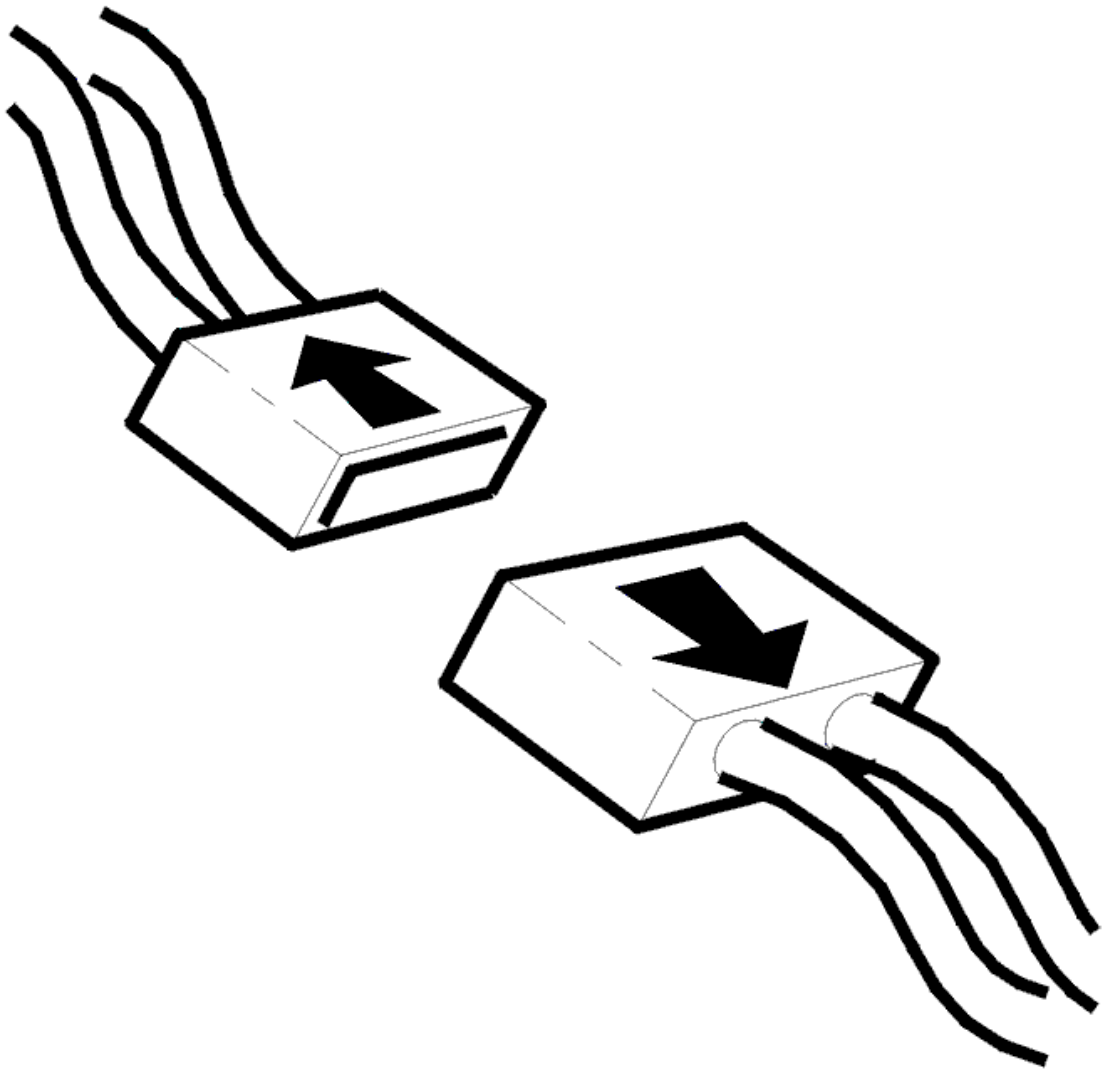

Fig. 132: Identifying Connector(s) Disconnected
Courtesy of VOLVO CARS CORPORATION

- Ignition off
- Disconnect the automatic transmission connector
- Connect adapter see **9511505** and breakout box see **9813190** to the transmission connector (transmission side).

  Connect an ohmmeter between terminals E (#A5) and T (#A17).

  The solenoid SL resistance must be between 11 and 15 ohms.

  Other information:

  - To connect the breakout box, see **CONNECTING THE BREAKOUT BOX**

- To connect the breakout box to the transmission connector, see **CONNECTING THE BREAKOUT BOX, GM AUTOMATIC TRANSMISSIONS**
- For information about signals, see **SIGNAL SPECIFICATION** .

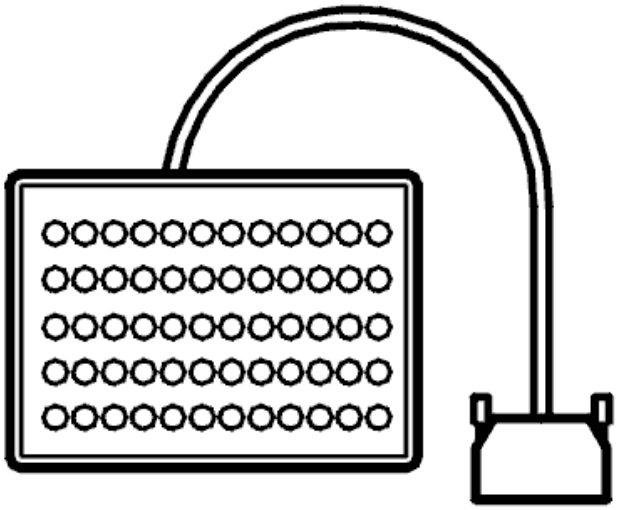

Fig. 133: Identifying Breakout Box
Courtesy of VOLVO CARS CORPORATION

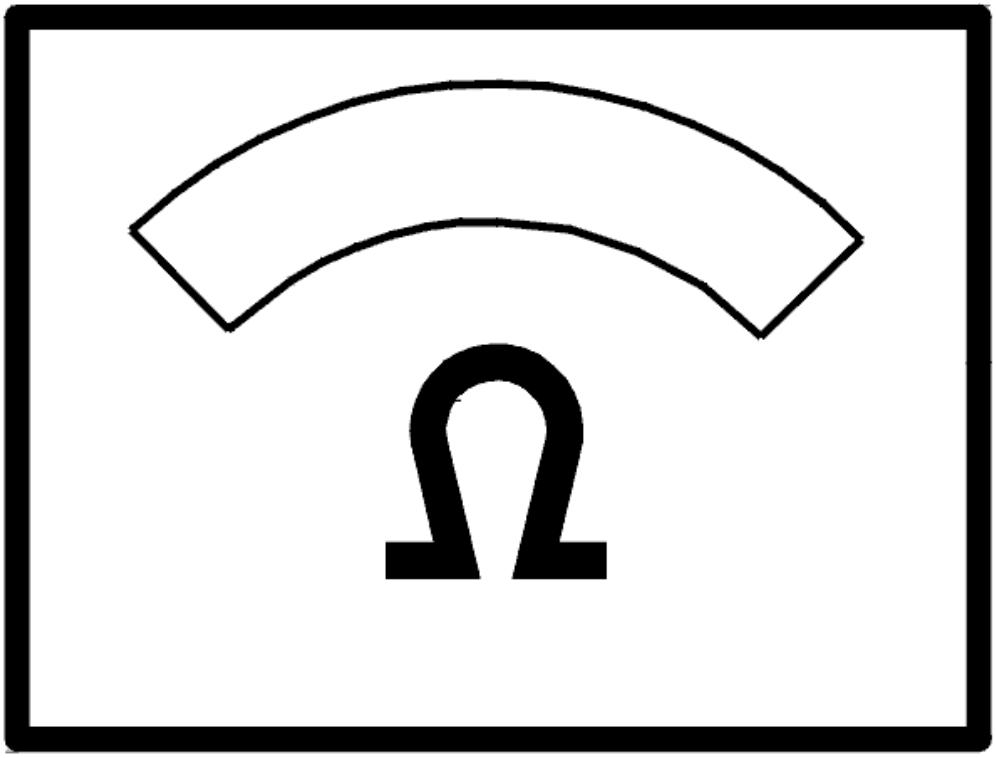

Fig. 134: Identifying Ohms Display
Courtesy of VOLVO CARS CORPORATION

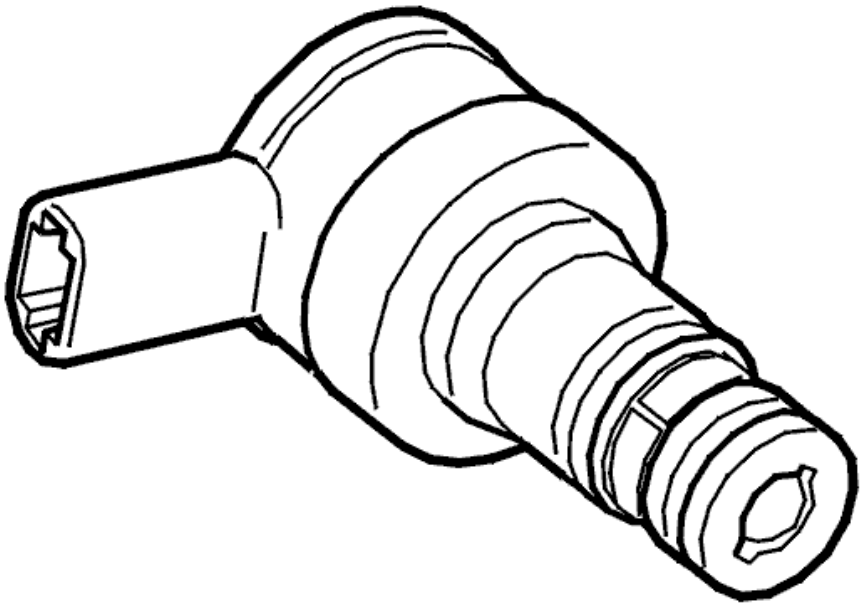

Fig. 135: Identifying Lock-Up Solenoid, SL
Courtesy of VOLVO CARS CORPORATION

Was the resistance OK?

- **YES**

  Refer to **CHECKING THE WIRING**

- **NO**

  Refer to **CHECKING COMPONENTS AND WIRING**

CHECKING THE CONTROL MODULE

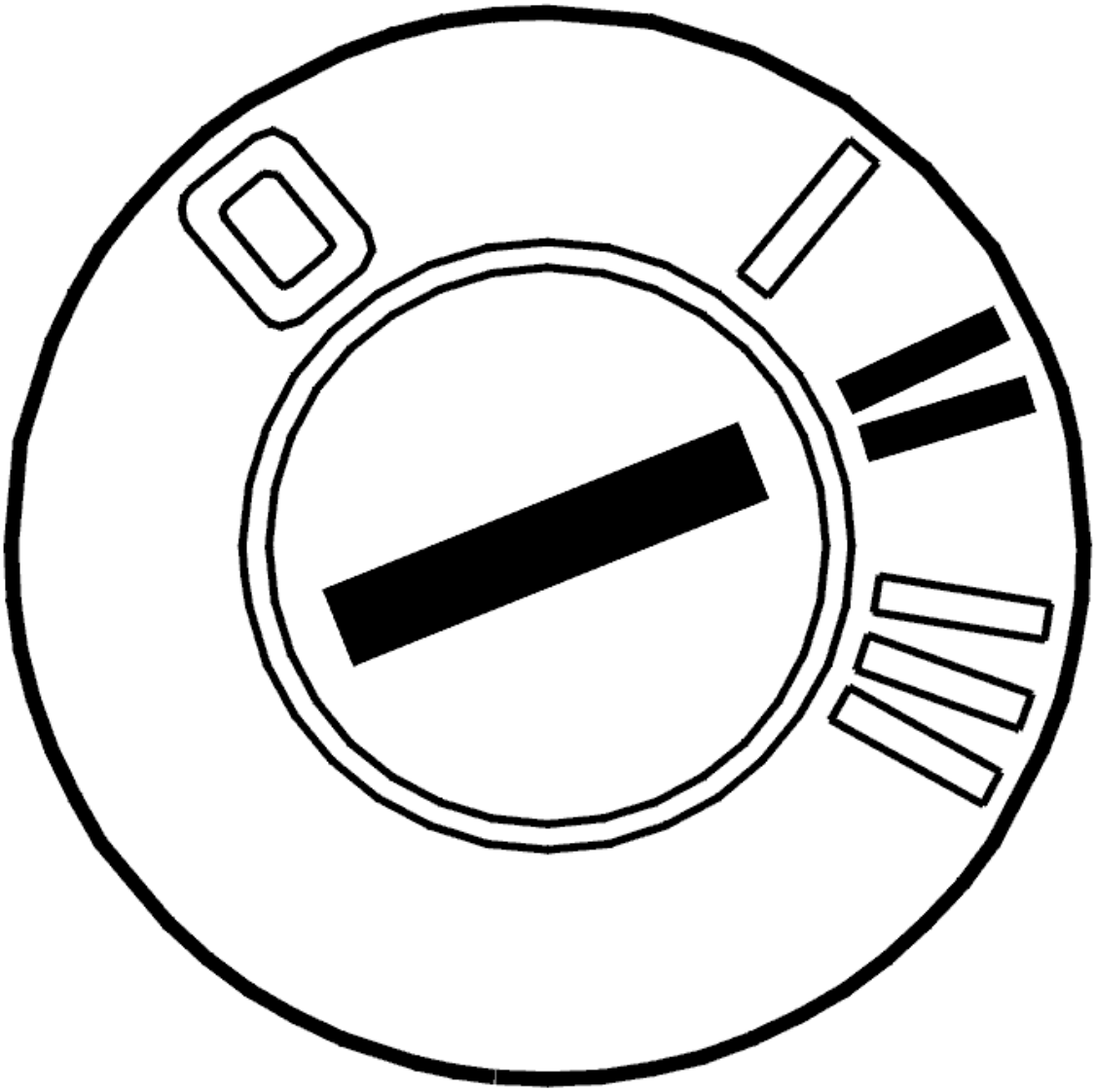

Fig. 136: Identifying Ignition ON
Courtesy of VOLVO CARS CORPORATION

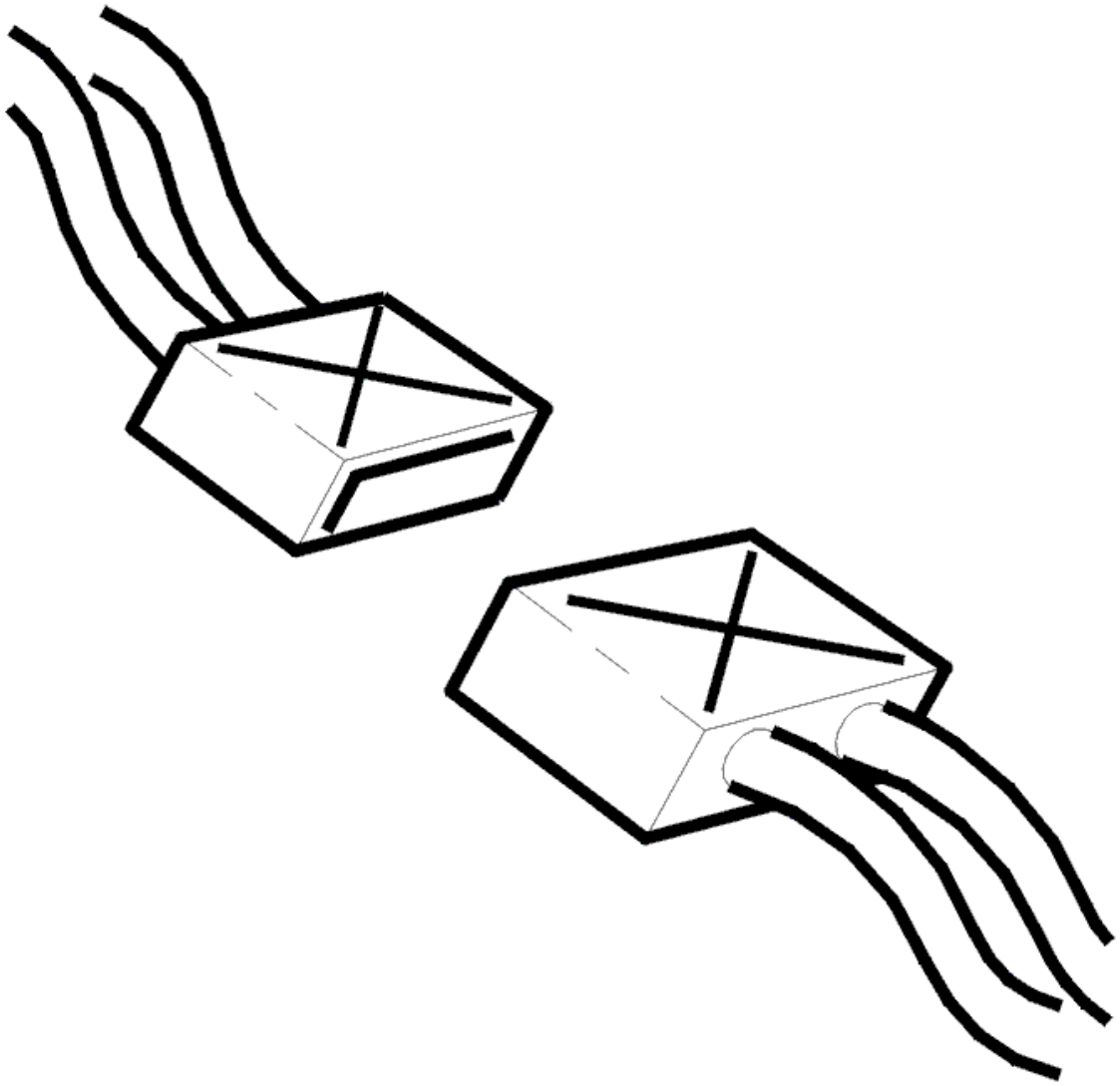

Fig. 137: Identifying Connectors
Courtesy of VOLVO CARS CORPORATION

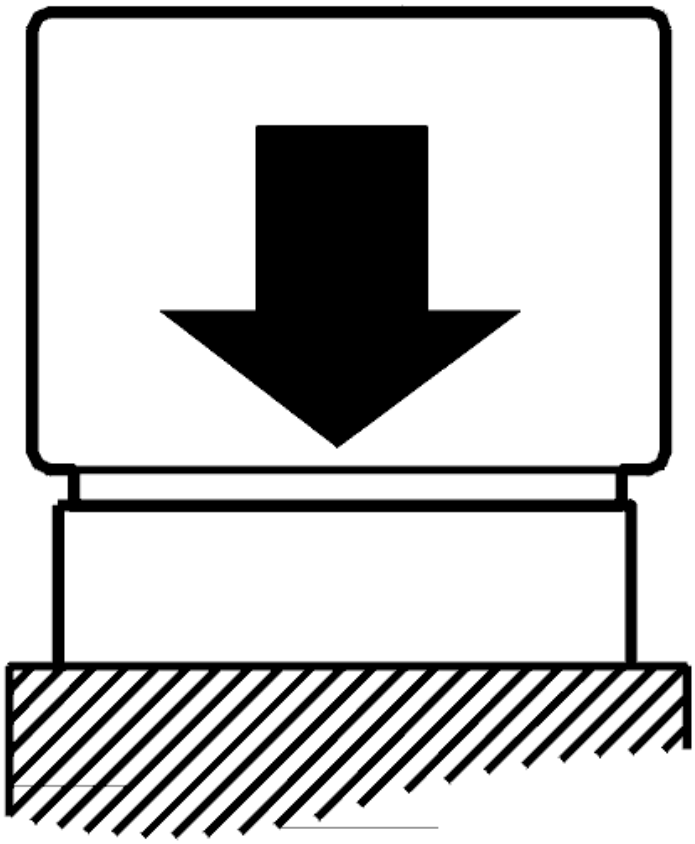

Fig. 138: Identifying Control Module Connected
Courtesy of VOLVO CARS CORPORATION

- Ignition off
- Transmission connector disconnected
- Connect the control module.
- The breakout box connected
- Ignition on
- Gear selector in position P.

Check the transmission control module (TCM). Measure the voltage between terminal #51 (#A51) and terminal #53 (#A53) on the breakout box. The voltage must be approximately 0 V.

NOTE: When removing the transmission connector, the control module may store

diagnostic trouble codes (DTCs) for the gear-shift position sensor, the shift solenoids and the temperature sensor etc.

Try a new control module if the voltage exceeds 1 V.

Other information:

- To disconnect the transmission connector, see **CONNECTING THE BREAKOUT BOX, GM AUTOMATIC TRANSMISSIONS**
- To replace the control module, see **TRANSMISSION CONTROL MODULE (TCM), REPLACING**
- For information about signals, see **SIGNAL SPECIFICATION** .

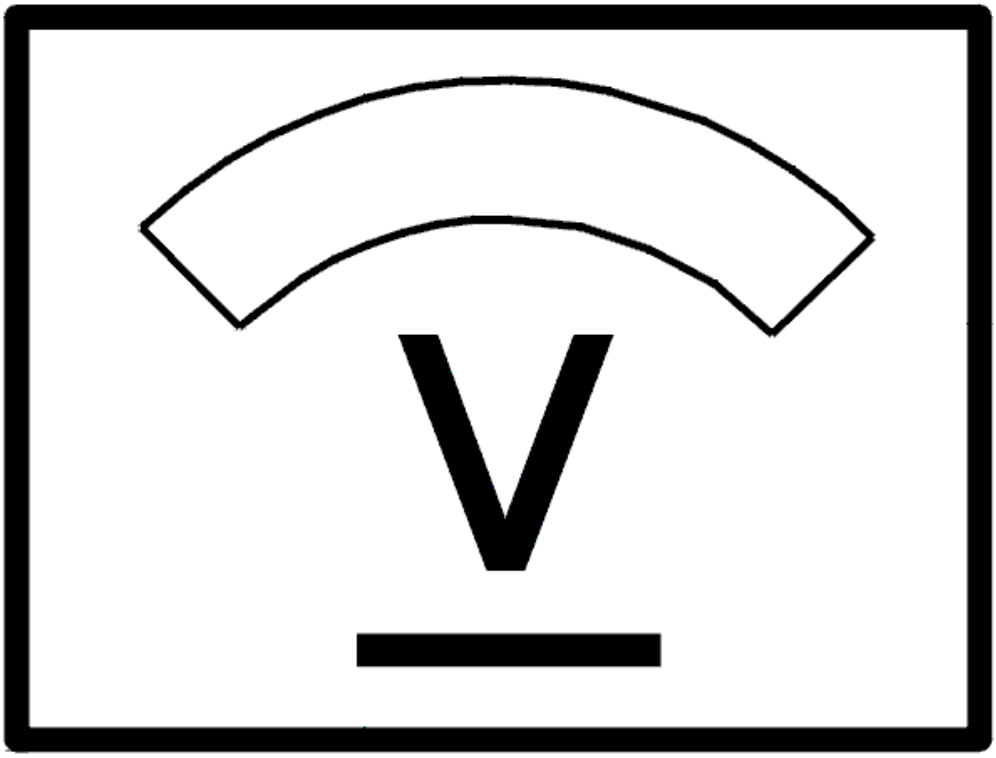

Fig. 139: Identifying Voltage Display
Courtesy of VOLVO CARS CORPORATION

Was the voltage above 1 V?

- **YES**

  Refer to **VERIFICATION**

- **NO**

  FAULT NOT FOUND: Troubleshooting has been completed.

CHECKING COMPONENTS AND WIRING

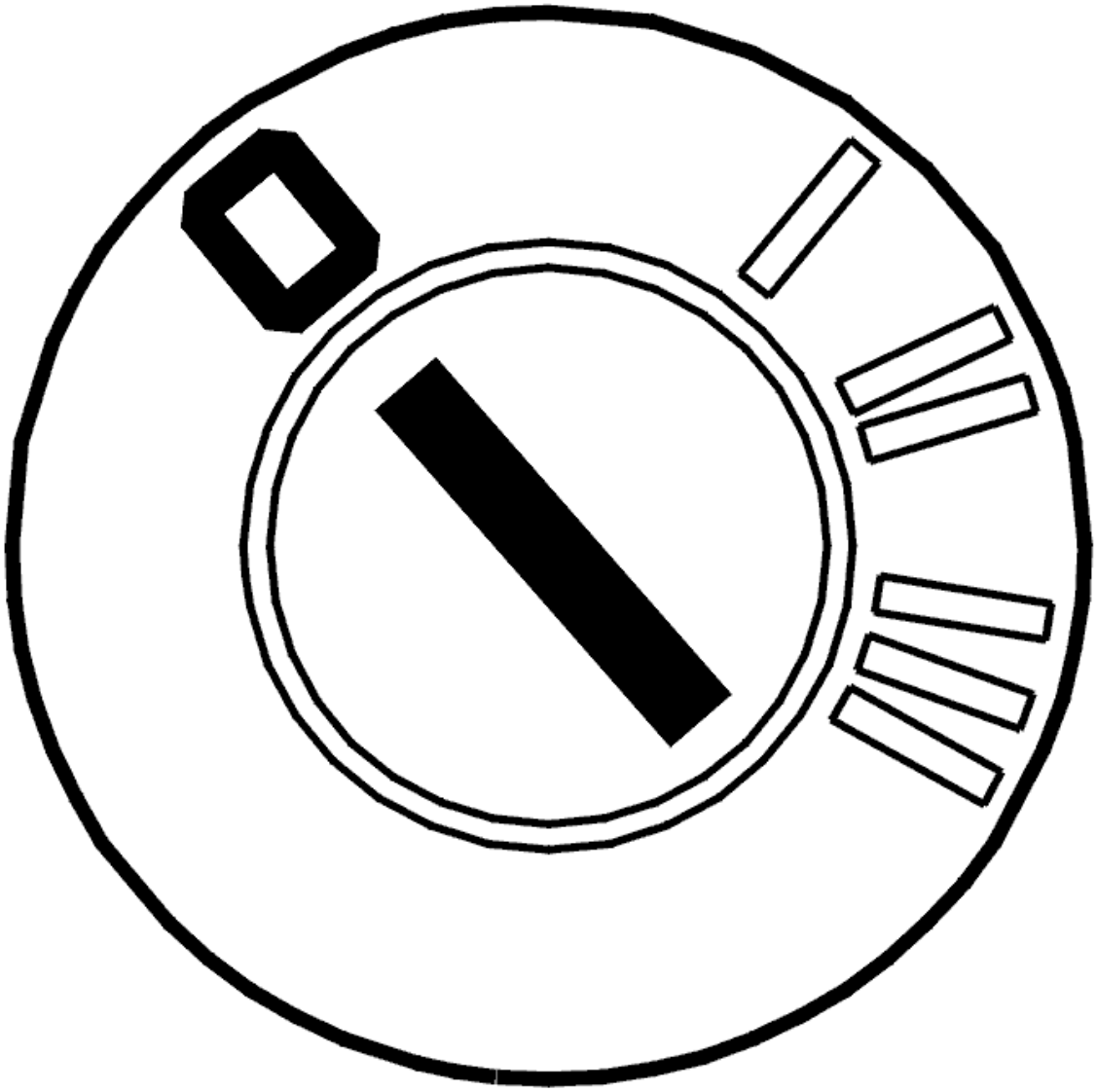

Fig. 140: Identifying Ignition OFF
Courtesy of VOLVO CARS CORPORATION

- Ignition off

- Open the transmission control system.

  Check the cable between transmission connector (transmission side) terminal #C (#A3) and solenoid SL terminal #A. Check the cable between transmission connector terminal #E (#A5) and solenoid SL terminal #B. Check these cables for a short-circuit to ground. See **SHORT-CIRCUIT TO GROUND, PERMANENT FAULTS** . Check all the cables in the wiring harness from the transmission connector to the transmission components. Check for short-circuits to each other.

  HINT: Check solenoid SL. Measure the solenoid resistance between terminals 1 and 2. The resistance must be between 3 and 5 ohms.

  Remedy as necessary.

  Other information:

  - To connect the breakout box to the transmission connector, see **CONNECTING THE BREAKOUT BOX, GM AUTOMATIC TRANSMISSIONS**
  - To open the transmission control system, For removal, see **SIDE COVER TRANSMISSION, REMOVING** . To install, see **SIDE COVER TRANSMISSION, INSTALLING**
  - To replace solenoid S2, see **SOLENOID SHIFTING 2-3, REPLACING**
  - To replace the cable harness, see **TEMPERATURE SENSOR FLUID, TRANSAXLE, (TFT)**
  - For information about signals, see **SIGNAL SPECIFICATION** .

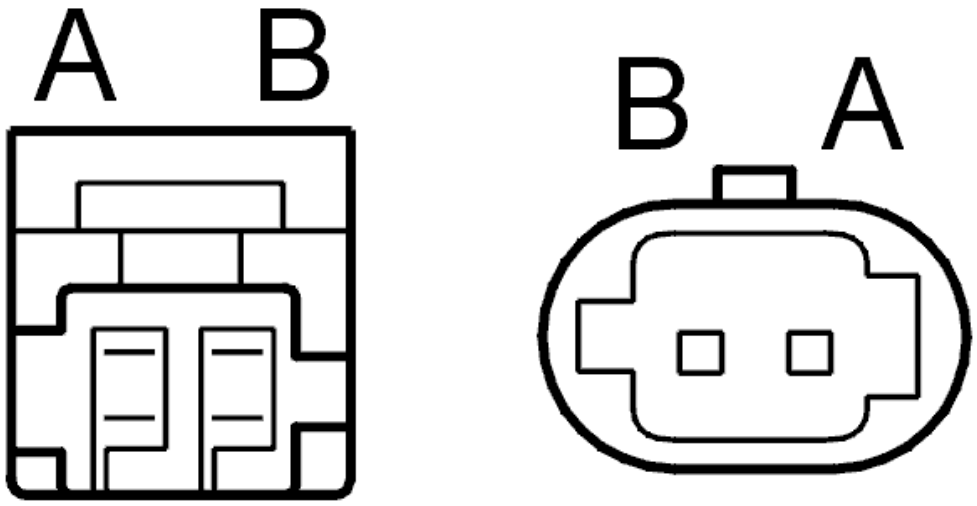

Fig. 141: Identifying Connector Terminals
Courtesy of VOLVO CARS CORPORATION

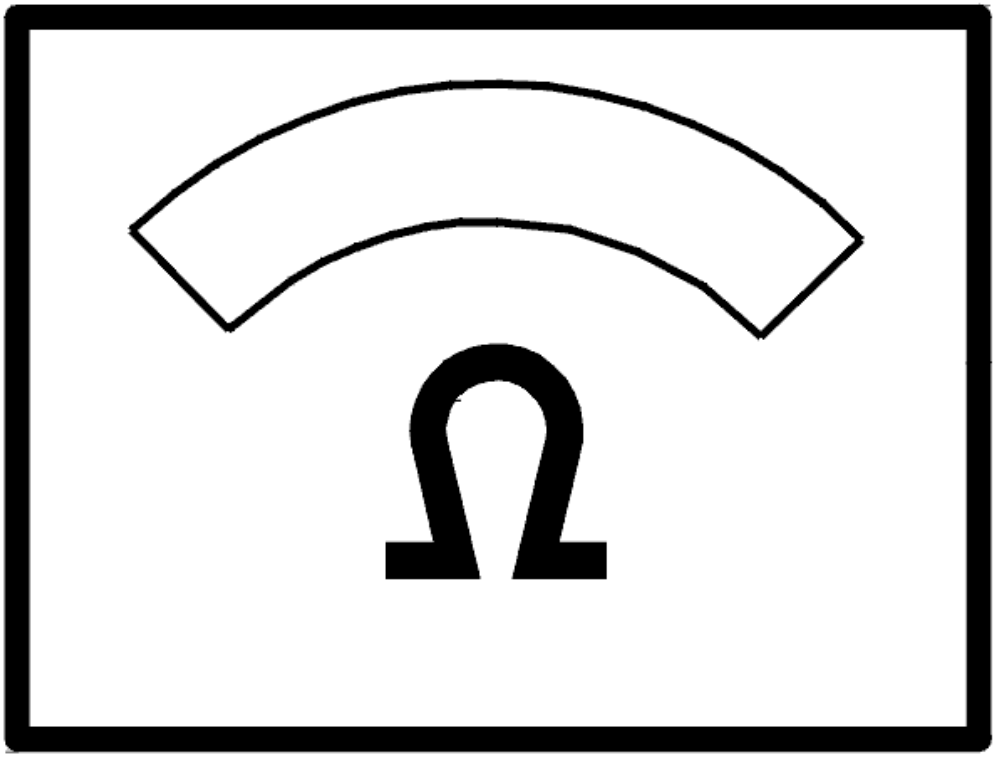

Fig. 142: Identifying Ohms Display
Courtesy of VOLVO CARS CORPORATION

- **Continue**

  Refer to **RESETTING THE ADAPTATION**

RESETTING THE ADAPTATION

RESETTING ADAPTATION AND THE COUNTER FOR "TRANSMISSION OIL CHANGE"

HINT: The transmission has torque controlled adaptive pressure control. Pressure control means that the transmission regulates the pressure itself during each gear shift. This avoids harsh gear shifting. Each gear shift is evaluated by the control module and stored in the memory. This allows for compensation for wear and tear in the transmission and clutch. It is important that the adaptation in the memory is reset after the transmission has been repaired. This is to ensure normal operation. The oil is replaced during

repair; the "Transmission oil change" counter must be reset. If the counter is not reset when the fluid is drained and replaced, there is a risk that a diagnostic trouble code (DTC) will be stored in incorrect circumstances.

NOTE: **This applies only if the transmission or one of the components in the transmission have been replaced.**

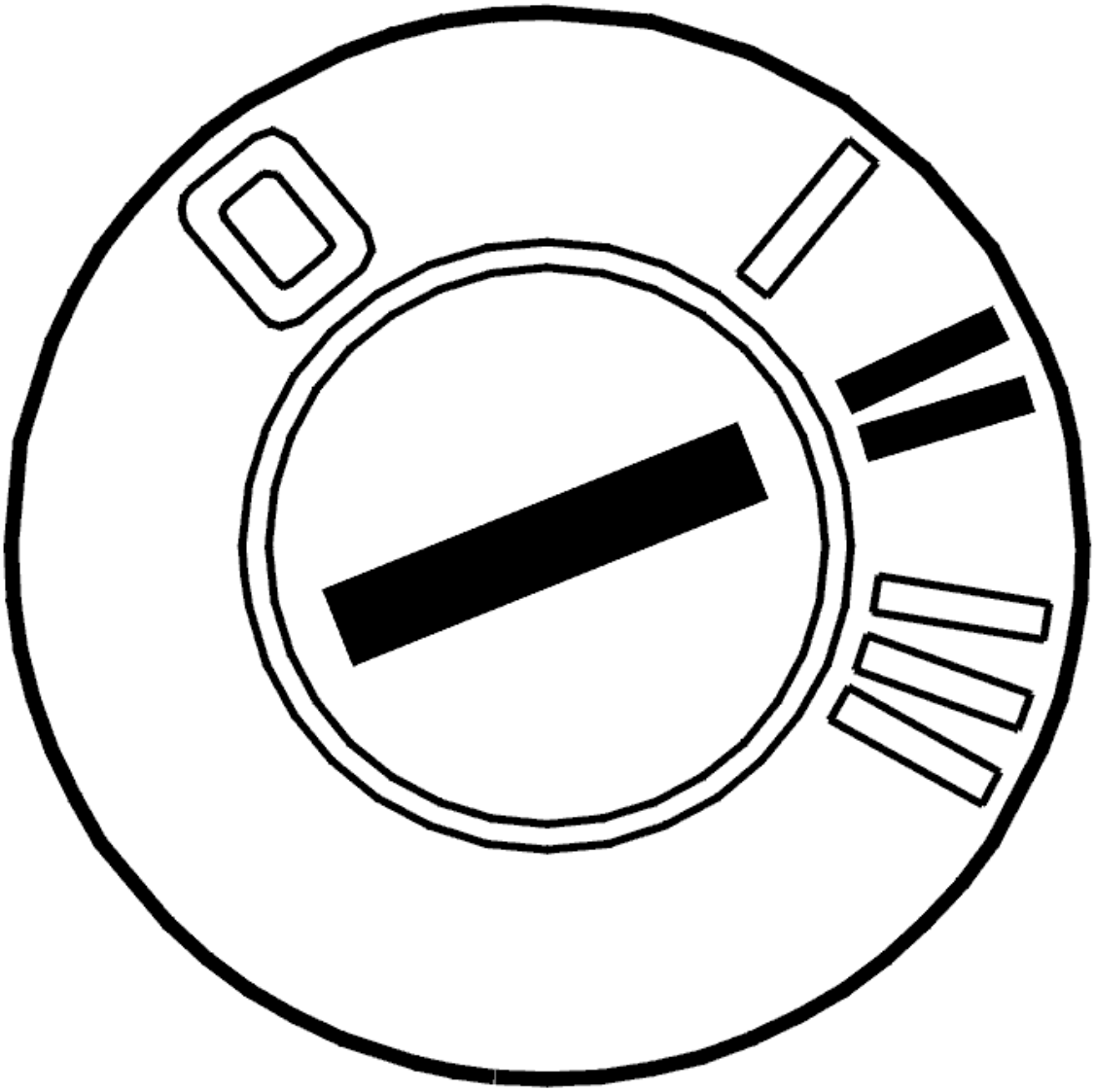

Fig. 143: Identifying Ignition ON
Courtesy of VOLVO CARS CORPORATION

- Ignition on.

  Click on the VCT2000 symbol to reset the adaptation and counter.

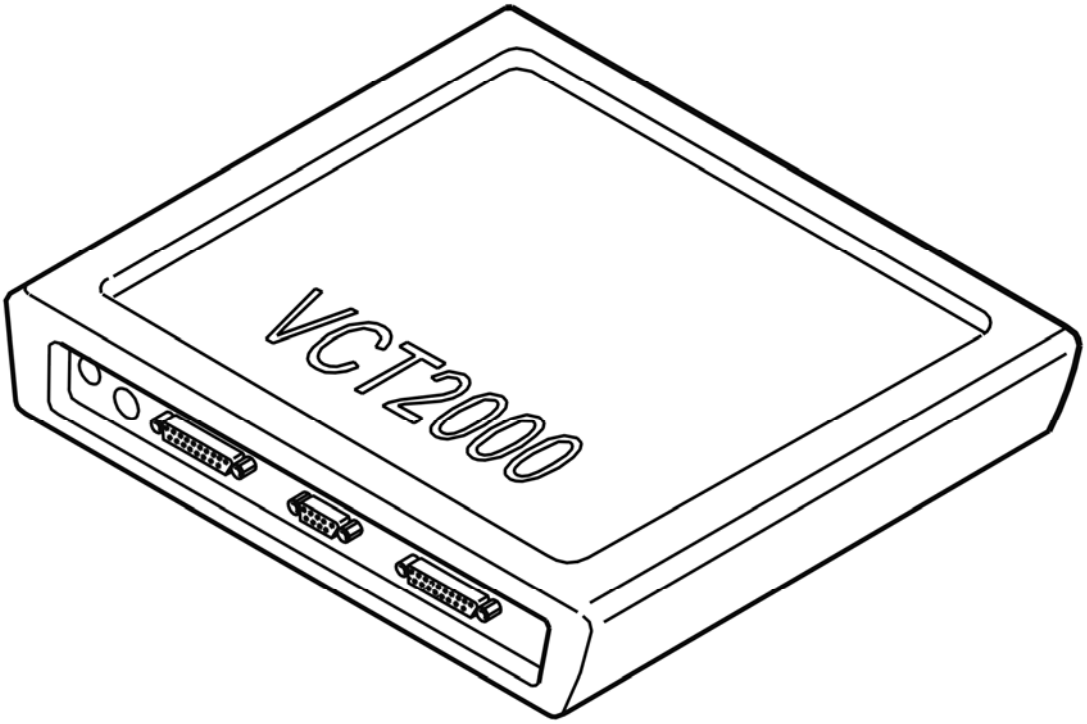

Fig. 144: Identifying VCT2000 Diagnostic Tool Symbol In VIDA
Courtesy of VOLVO CARS CORPORATION

- **Continue**

  Refer to **VERIFICATION**

VERIFICATION

VERIFICATION

HINT: After carrying out the repair, check that the fault has been remedied.

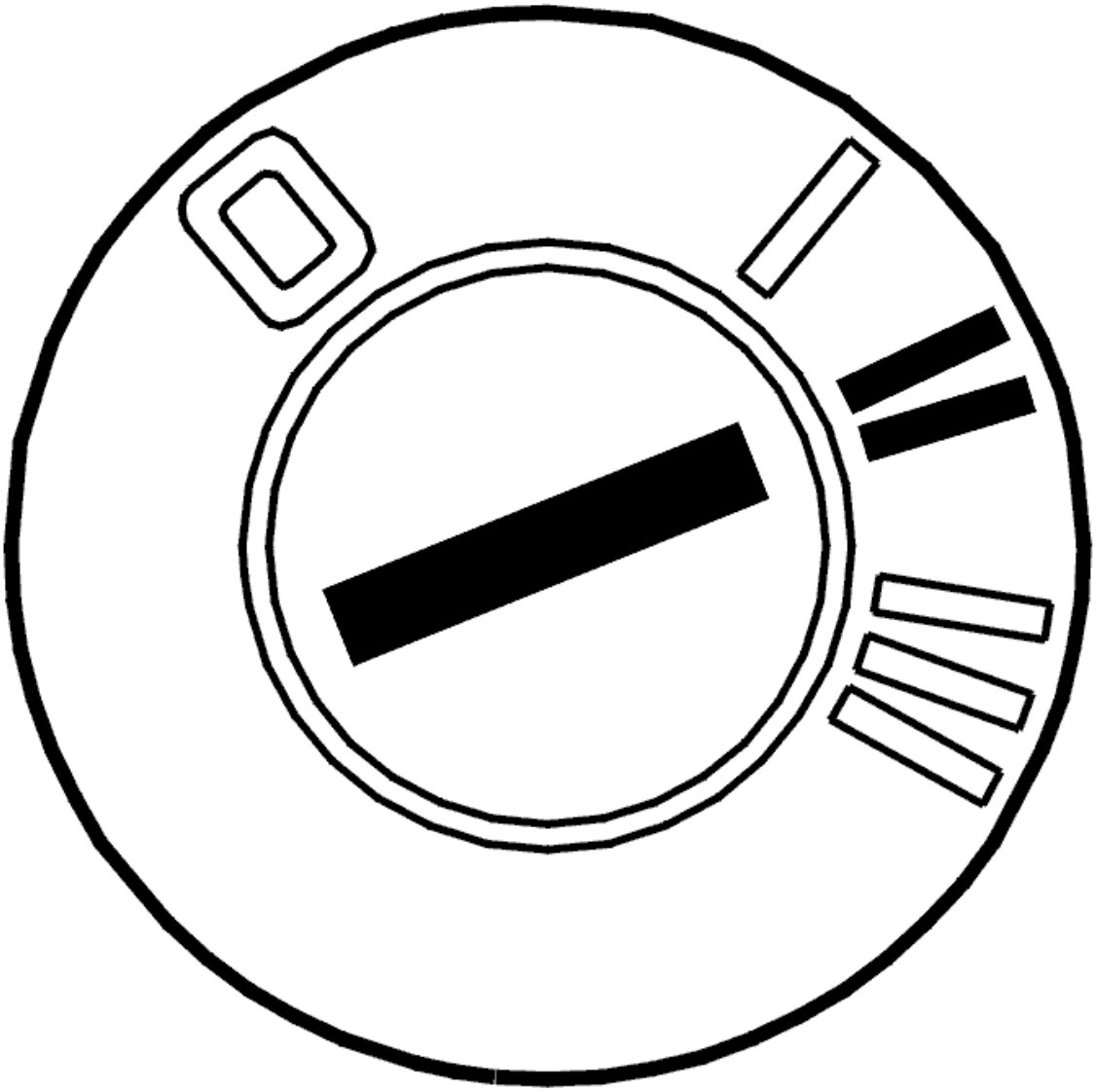

Fig. 145: Identifying Ignition ON
Courtesy of VOLVO CARS CORPORATION

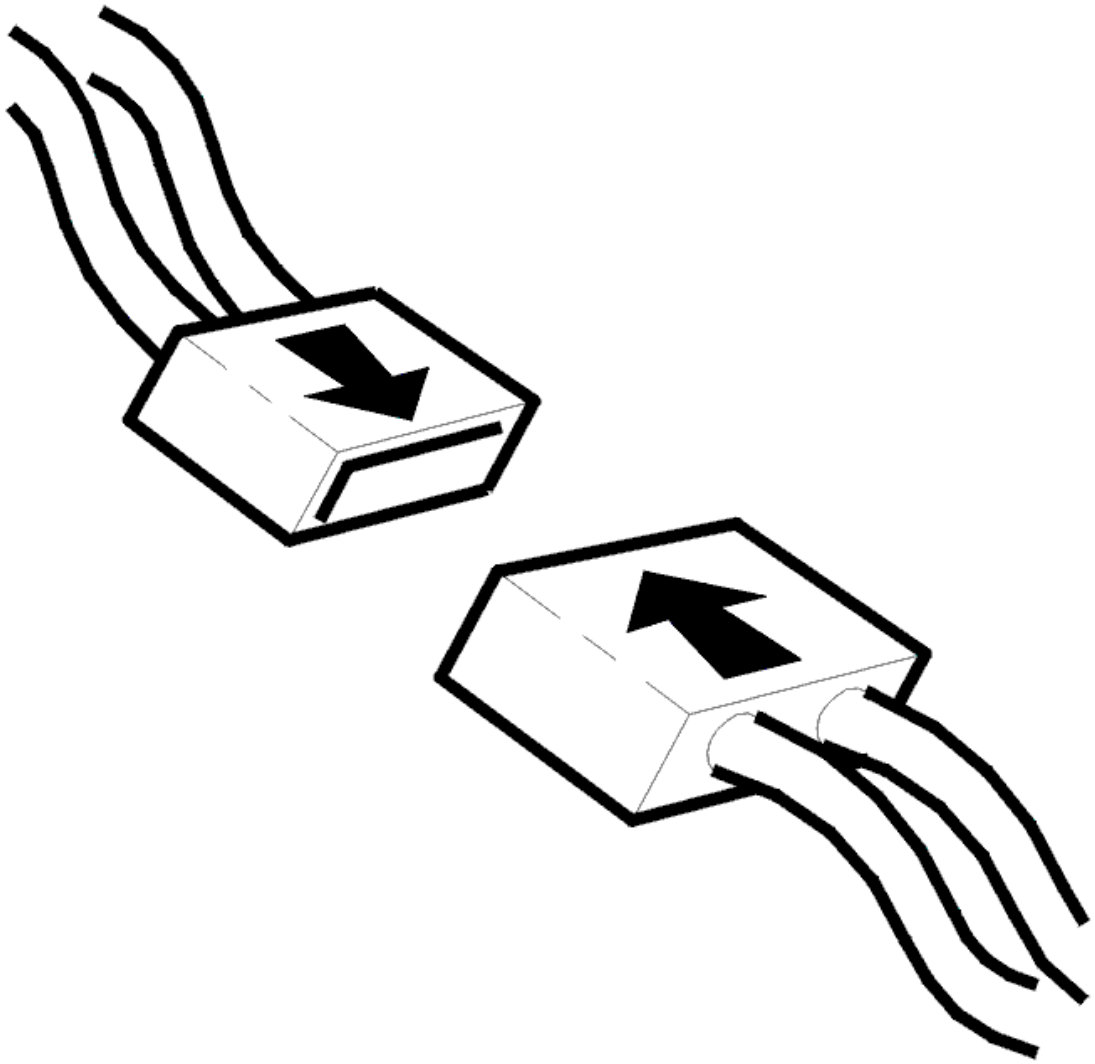

Fig. 146: Identifying Connector(s) Reinstallation
Courtesy of VOLVO CARS CORPORATION

- Ignition off.
- Wait at least 90 seconds.
- Reconnect the connectors, reinstall components etc.
- Ignition on.
- Gear selector in position P.
- Activate solenoid SL.

  The value should change between OFF and ON.

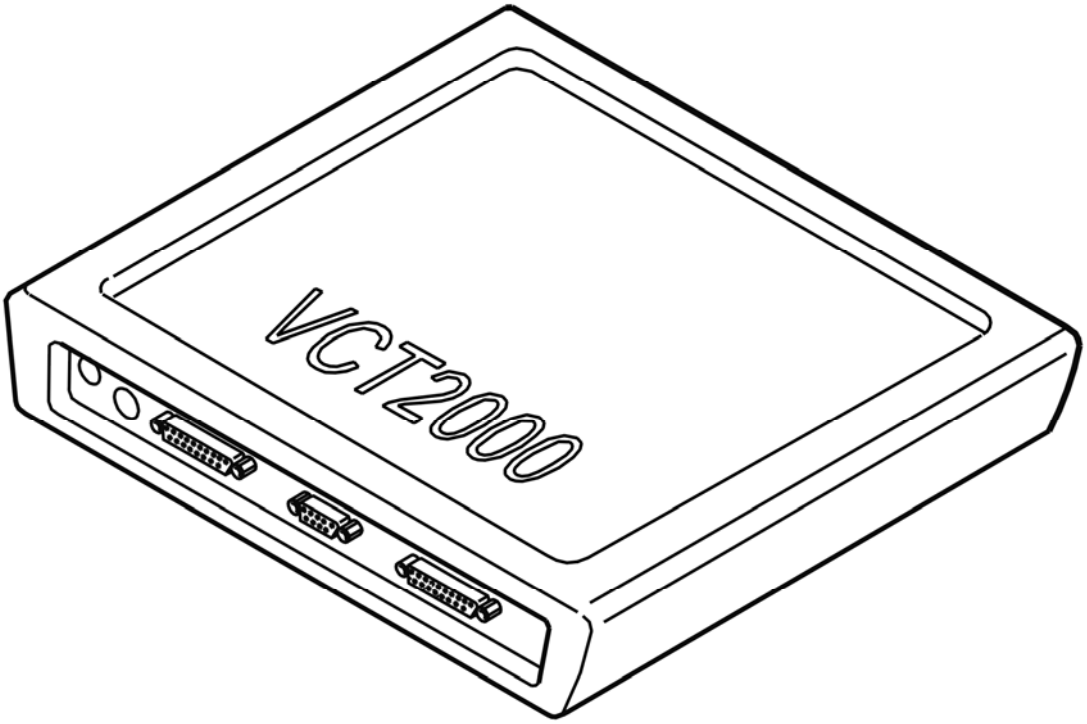

Fig. 147: Identifying VCT2000 Diagnostic Tool Symbol In VIDA
Courtesy of VOLVO CARS CORPORATION

Does the value change?

- **YES**

  VERIFIED: Troubleshooting has been completed.

- **NO**

  Refer to **INFORMATION**

INFORMATION

FAULT-TRACING INFORMATION

The fault should have been detected and remedied. As this is not the case fault-tracing has failed.

Exit fault-tracing for this diagnostic trouble code (DTC) or make another attempt.

TCM-0015: LOCK-UP SOLENOID SL. HYDRAULIC FAULT (4T65 AWD; 2003-2006)

DIAGNOSTIC TROUBLE CODE (DTC) INFORMATION

Condition

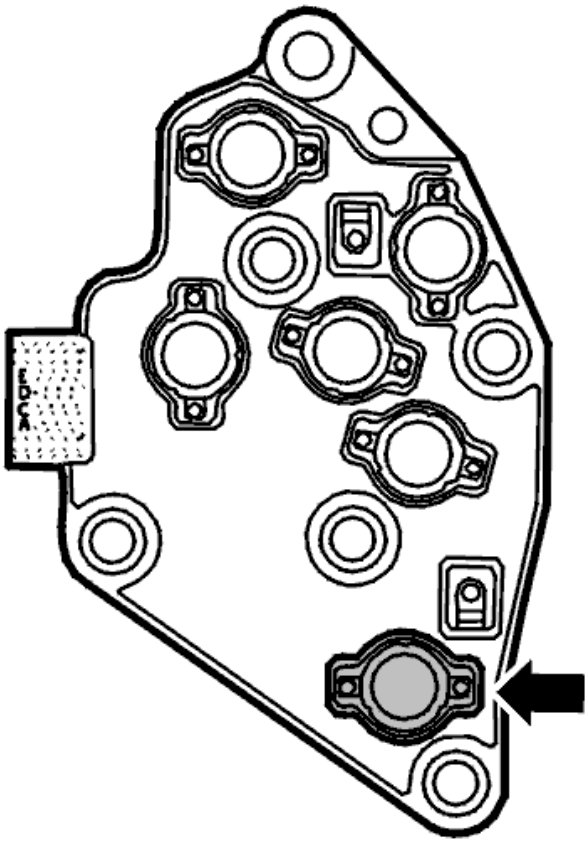

Fig. 148: Identifying Lock-Up Pressure Switch
Courtesy of VOLVO CARS CORPORATION

Lock-up solenoid SL controls the transmission lock-up function. Solenoid SL operates when it receives voltage from the transmission control module (TCM) and is activated under different driving conditions depending on road speed, throttle position and the driving mode selected. The control module checks if lock-up solenoid SL is stuck in open or closed position by comparing the signals from solenoid SL and lock-up pressure sensor PS4. Pressure sensor PS4 detects whether solenoid SL is activated or not. Diagnostic trouble code (DTC) TCM-0015 is stored if the signals do not correspond with each other for 10 seconds.

Substitute Value

- The control module does not activate the lock-up solenoid.

Possible Source

- Lock-up solenoid SL has stuck in open or shut position.
- Defective solenoid SL.

Fault symptom[s]

- Automatic transmission warning lamp flashes.
- No lock-up function.
- Malfunction indicator lamp (MIL) lit.

HYDRAULIC FAULT

CHECKS

CHECKING THE TRANSMISSION FLUID

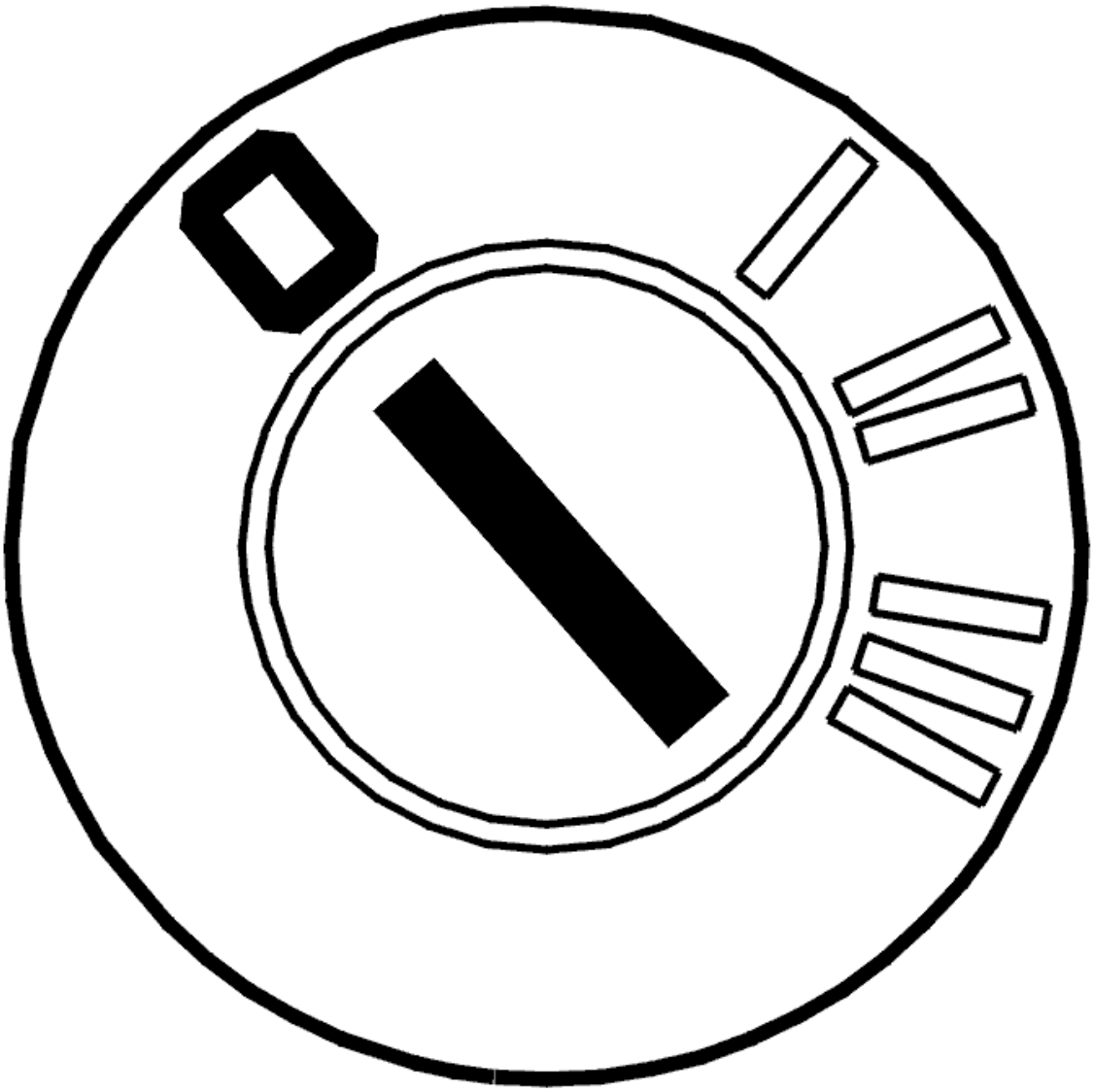

Fig. 149: Identifying Ignition OFF
Courtesy of VOLVO CARS CORPORATION

- Ignition off.

Check that there is no metal shavings in the transmission fluid.

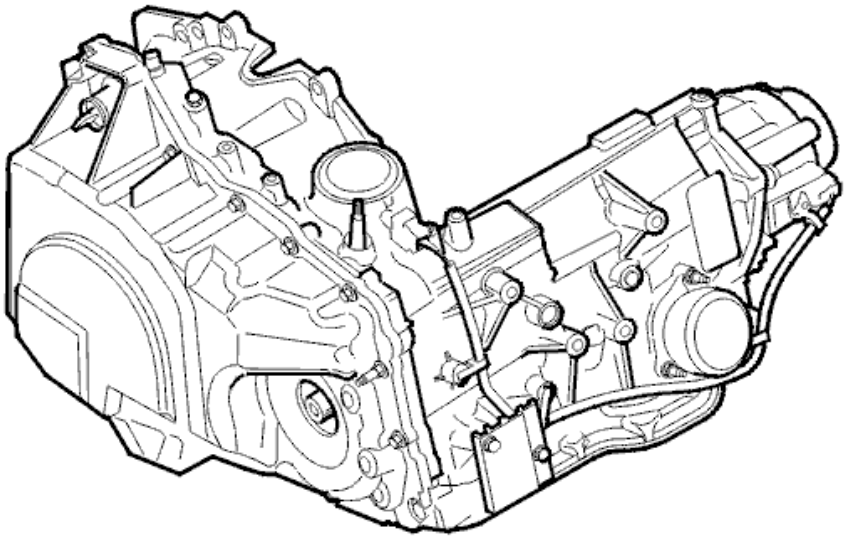

Fig. 150: Identifying Transmission
Courtesy of VOLVO CARS CORPORATION

Was the transmission fluid OK?

- **OK**

  Refer to **CHECKING LOCK-UP SOLENOID SL**

- **NOT OK**

  Refer to **REPLACING THE TRANSMISSION**

CHECKING LOCK-UP SOLENOID SL

NOTE: The transmission must not be colder than room temperature when activated.

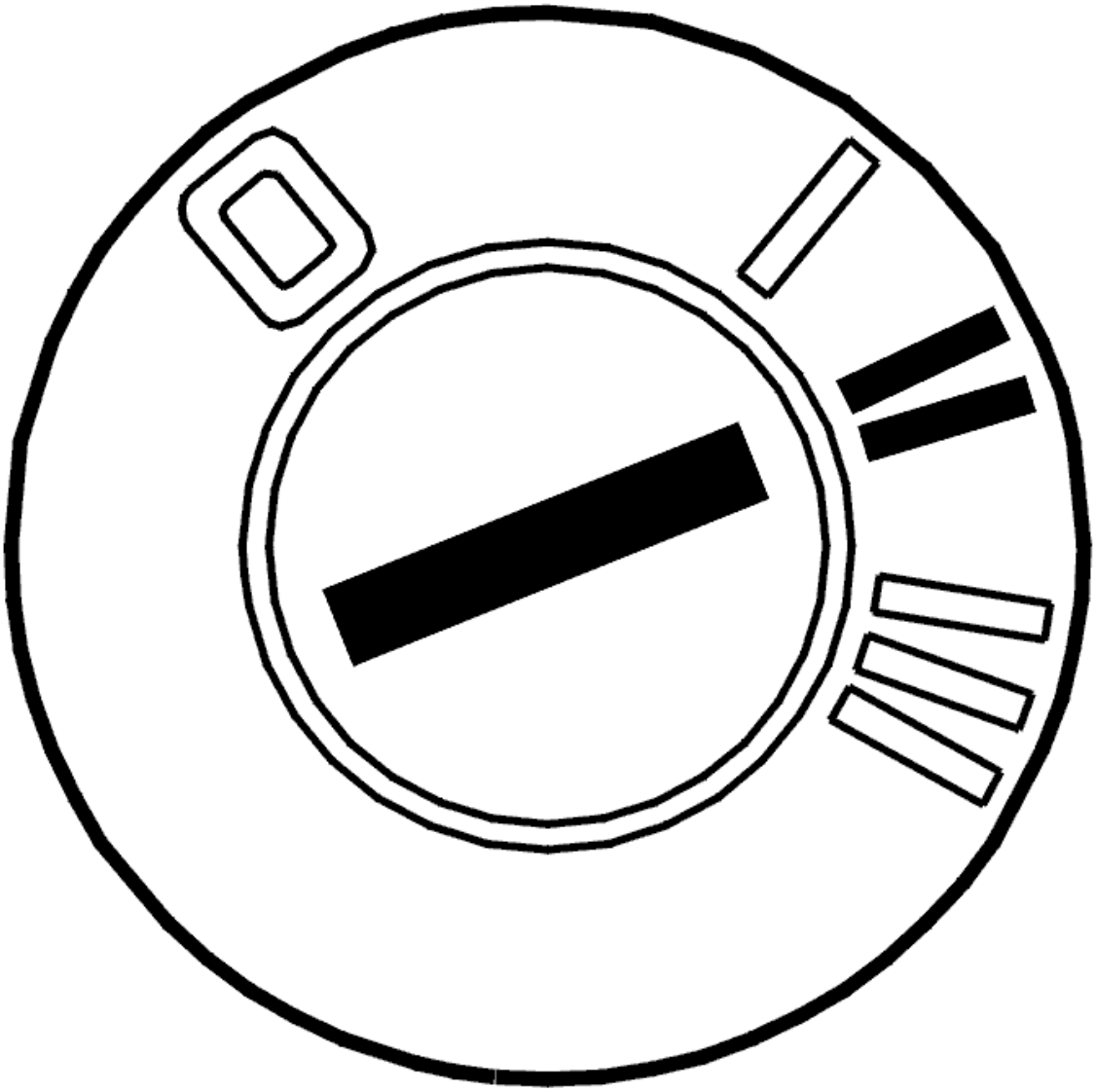

Fig. 151: Identifying Ignition ON
Courtesy of VOLVO CARS CORPORATION

- Ignition on
- Activate the lock-up solenoid SL.

  A "click" should be heard when the solenoid is activated. Use a stethoscope to hear the click more clearly.

  There is a mechanical fault if the solenoid does not click. Try a new lock-up solenoid SL.

  Other information

  - To replace solenoid SL, see **SOLENOID LOCK-UP FUNCTION, REPLACING** .

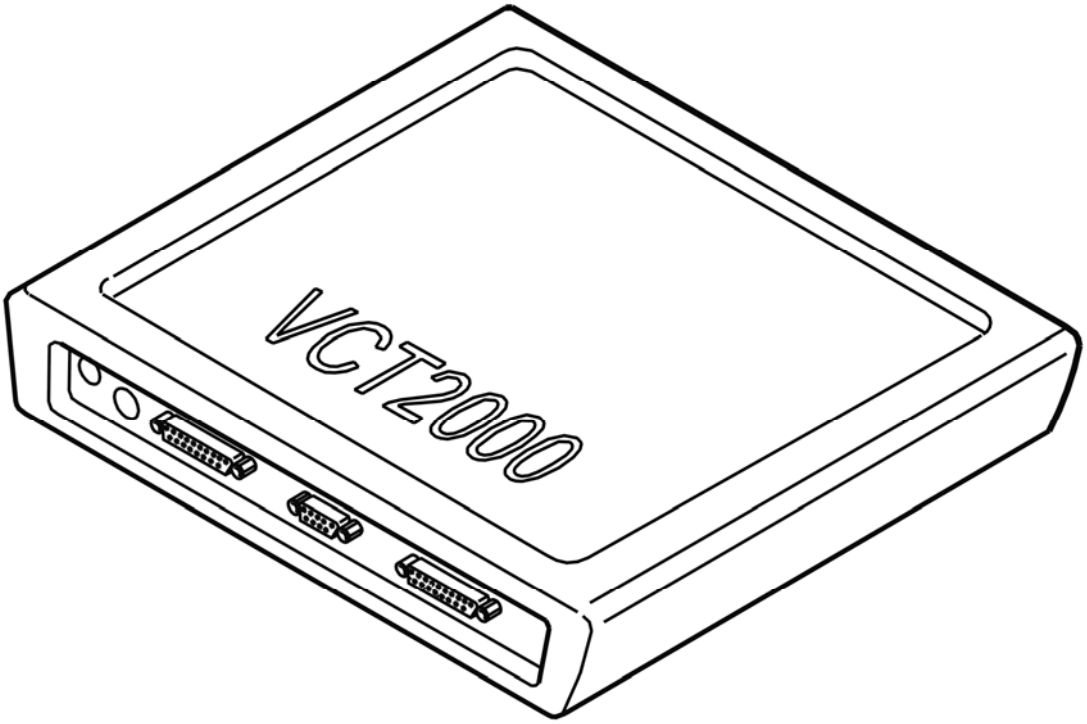

Fig. 152: Identifying VCT2000 Diagnostic Tool Symbol In VIDA
Courtesy of VOLVO CARS CORPORATION

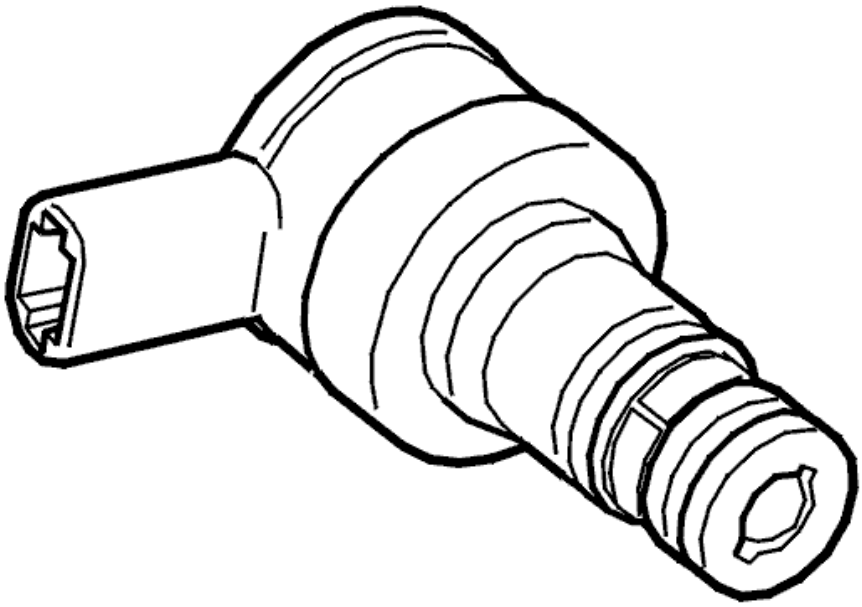

Fig. 153: Identifying Lock-Up Solenoid, SL
Courtesy of VOLVO CARS CORPORATION

Does the lock-up solenoid SL click?

- **YES**

  Refer to **CHECKING FOR CONTACT RESISTANCE AND OXIDATION**

- **NO**

  Refer to **RESETTING THE ADAPTATION**

TEST DRIVING

- Test drive the car. See **TEST DRIVE FORM, DESCRIPTION** .

  Check for any clearly audible noises from the transmission. Check for malfunctions.

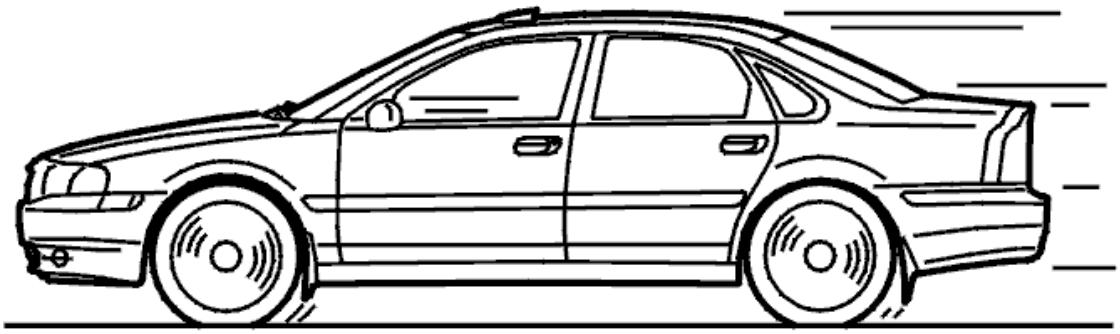

Fig. 154: Identifying Test Drive
Courtesy of VOLVO CARS CORPORATION

Is the function of the transmission OK?

- **OK**

  OKAY: Troubleshooting has been completed.

- **NOT OK**

  Refer to **REPLACING THE TRANSMISSION**

CHECKING FOR CONTACT RESISTANCE AND OXIDATION

Check the transmission and control module connectors for contact resistance and oxidation according to **CONTACT RESISTANCE AND OXIDATION** .

Other information:

- To access the transmission connector, see **CONNECTING THE BREAKOUT BOX, GM AUTOMATIC TRANSMISSIONS**
- To access the control module connector, see **CONNECTING THE BREAKOUT BOX** .

- **Continue**

  Refer to **TEST DRIVING**

REPLACING THE TRANSMISSION

Fault-tracing indicates a mechanical fault in the transmission. Replace the transmission. See **TRANSMISSION, REMOVING** and **TRANSMISSION, INSTALLING (2003, 2004)** or **TRANSMISSION, INSTALLING (2005, 2006)** .

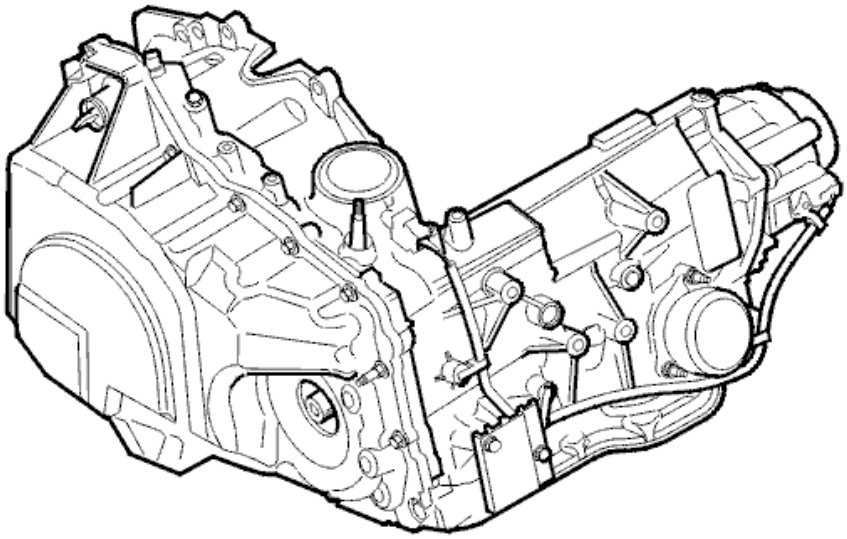

Fig. 155: Identifying Transmission
Courtesy of VOLVO CARS CORPORATION

- **Continue**

  Refer to **RESETTING THE ADAPTATION**

RESETTING THE ADAPTATION

RESETTING ADAPTATION AND THE COUNTER FOR "TRANSMISSION OIL CHANGE"

HINT: The transmission has torque controlled adaptive pressure control. Pressure control means that the transmission regulates the pressure itself during each gear shift. This avoids harsh gear shifting. Each

gear shift is evaluated by the control module and stored in the memory. This allows for compensation for wear and tear in the transmission and clutch. It is important that the adaptation in the memory is reset after the transmission has been repaired. This is to ensure normal operation. The oil is replaced during repair; the "Transmission oil change" counter must be reset. If the counter is not reset when the fluid is drained and replaced, there is a risk that a diagnostic trouble code (DTC) will be stored in incorrect circumstances.

NOTE: **This applies only if the transmission or one of the components in the transmission have been replaced.**

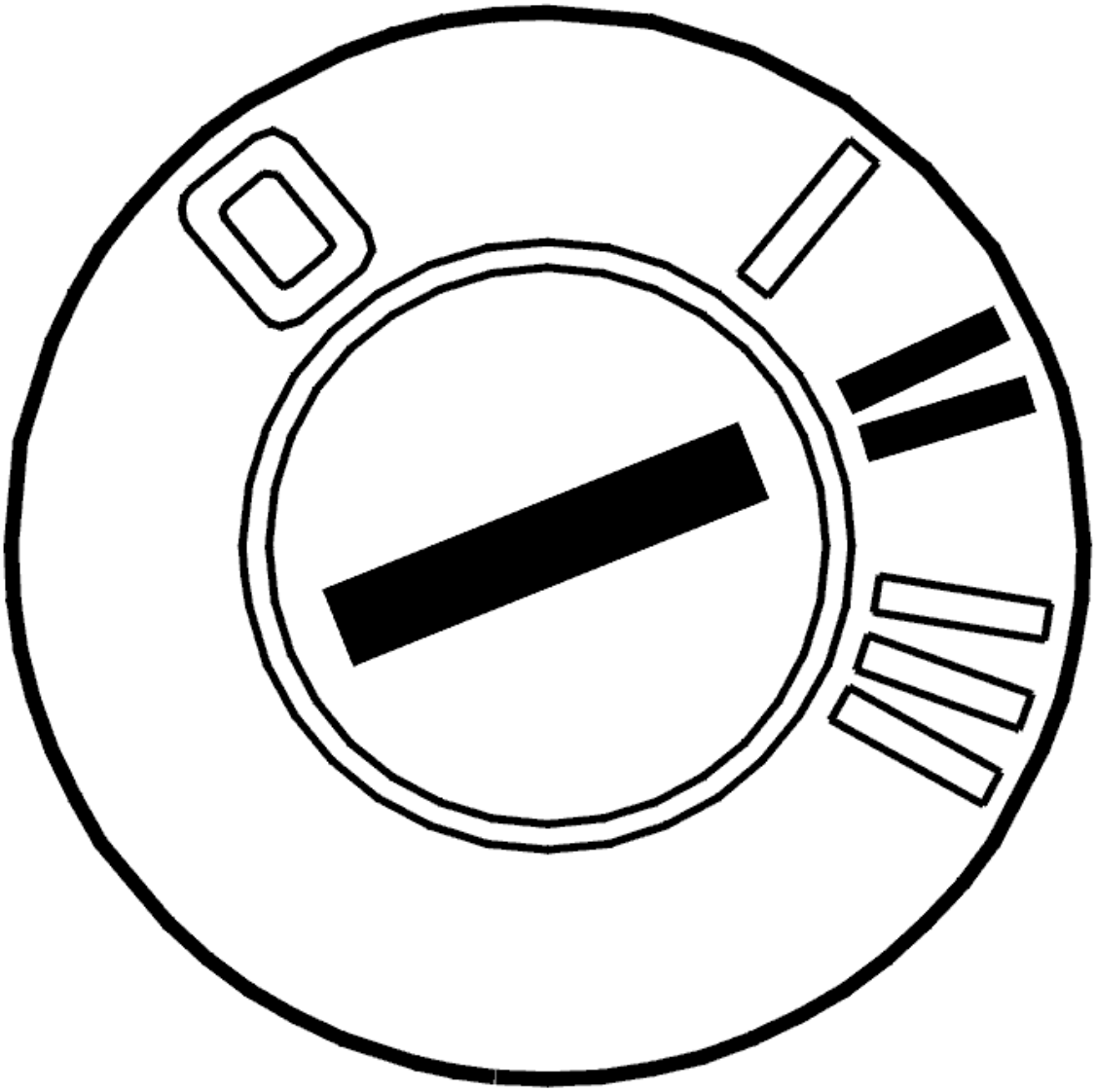

Fig. 156: Identifying Ignition ON
Courtesy of VOLVO CARS CORPORATION

- Ignition on.

  Click on the VCT2000 symbol to reset the adaptation and counter.

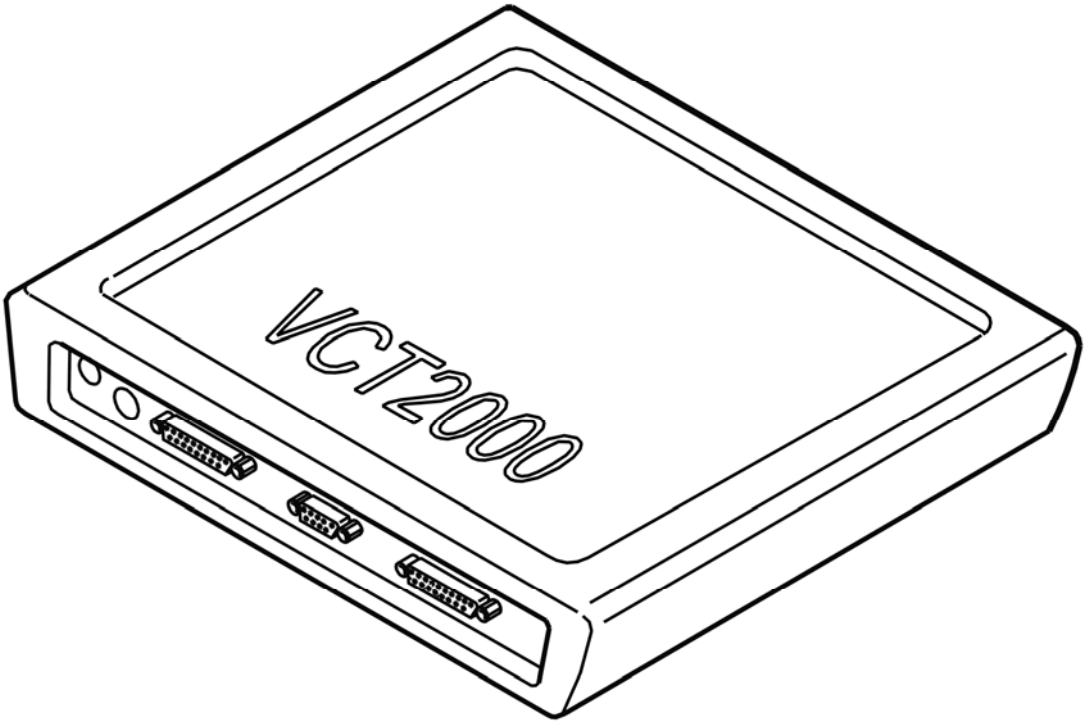

Fig. 157: Identifying VCT2000 Diagnostic Tool Symbol In VIDA
Courtesy of VOLVO CARS CORPORATION

- **Continue**

  Refer to **VERIFICATION**

VERIFICATION

VERIFICATION

HINT: After carrying out the repair, check that the fault has been remedied.

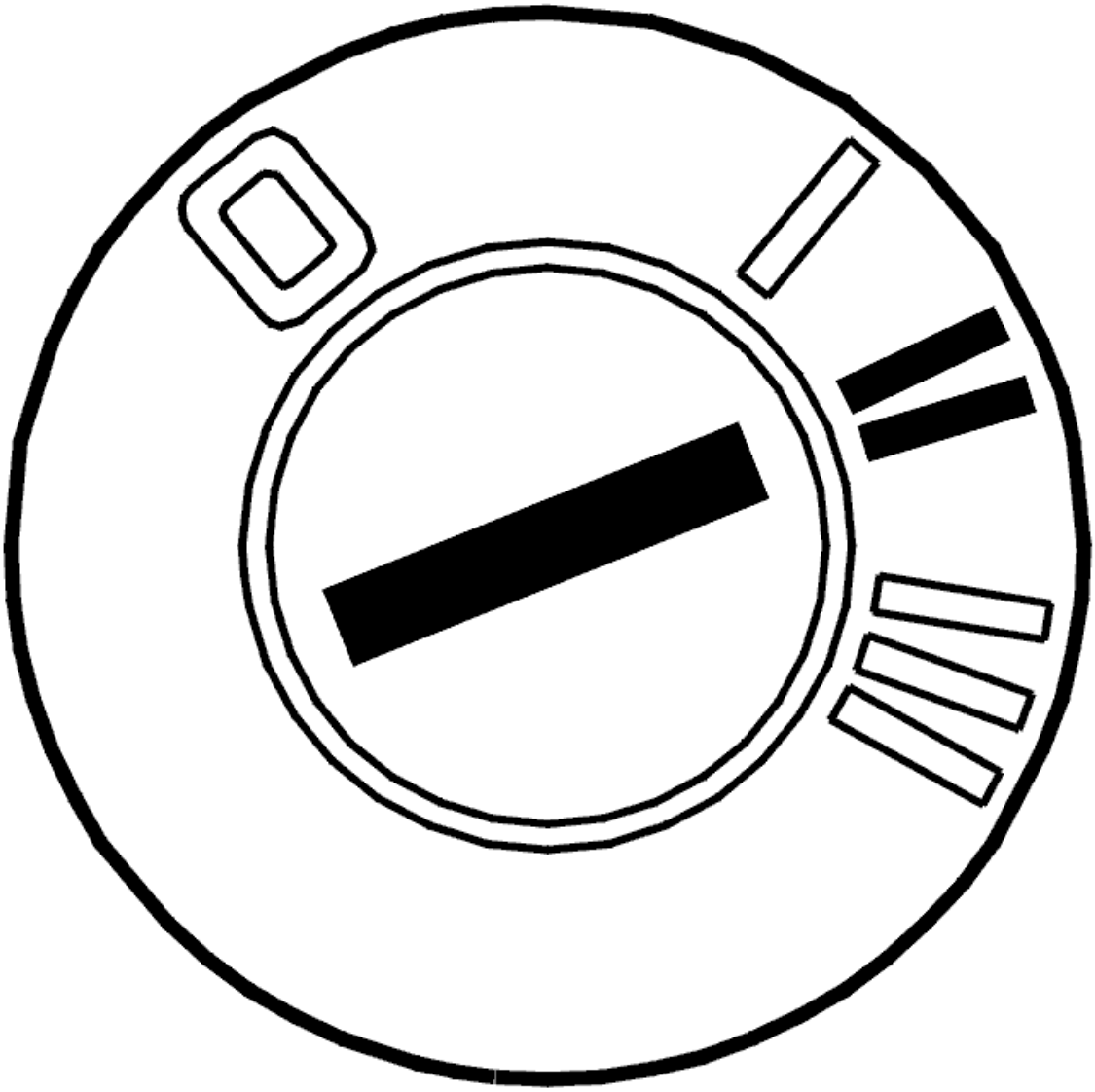

Fig. 158: Identifying Ignition ON
Courtesy of VOLVO CARS CORPORATION

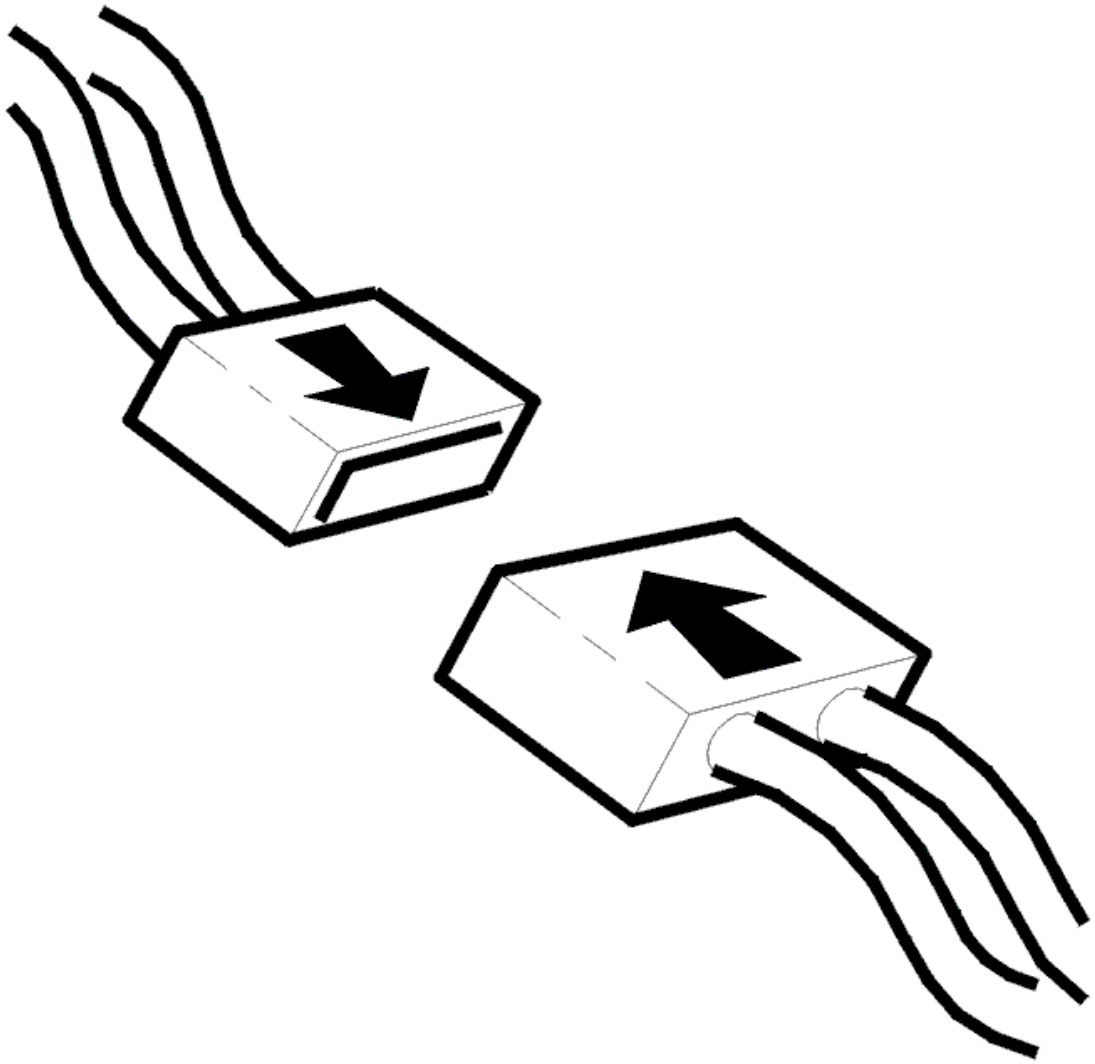

Fig. 159: Identifying Connector(s) Reinstallation
Courtesy of VOLVO CARS CORPORATION

- Ignition off.
- Wait at least 90 seconds.
- Reconnect the connectors, reinstall components etc.
- Ignition on.
- Gear selector in position P.
- Activate solenoid SL.

  The value should change between OFF and ON.

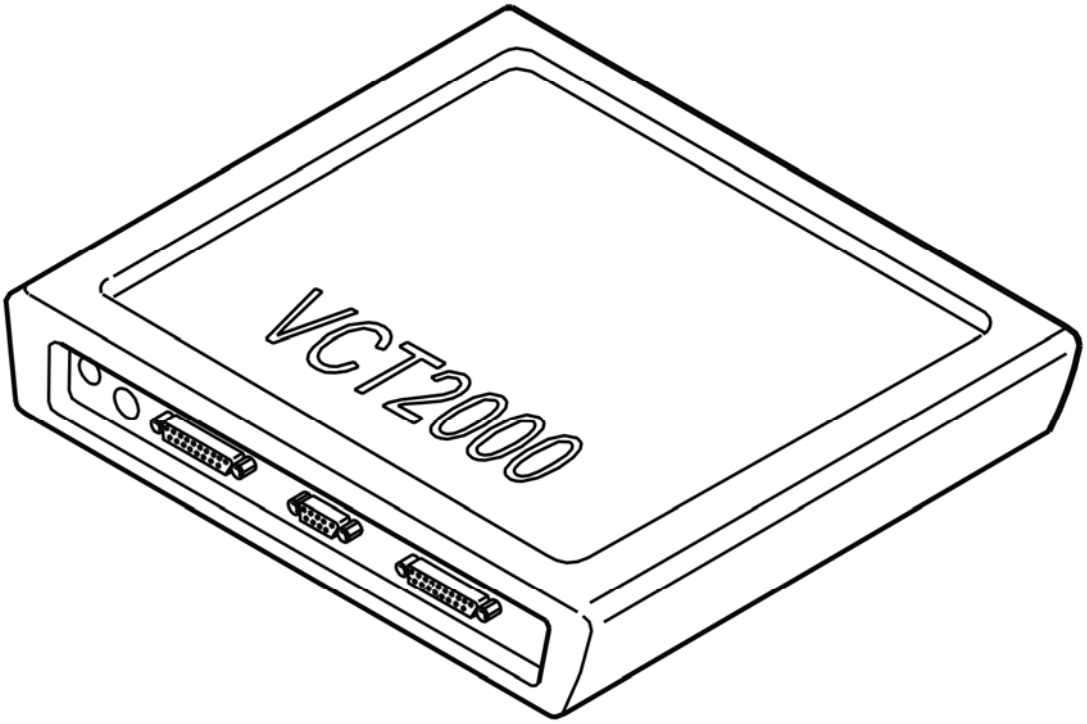

Fig. 160: Identifying VCT2000 Diagnostic Tool Symbol In VIDA
Courtesy of VOLVO CARS CORPORATION

Does the value change?

- **YES**

  VERIFIED: Troubleshooting has been completed.

- **NO**

  Refer to **INFORMATION**

INFORMATION

FAULT-TRACING INFORMATION

The fault should have been detected and remedied. As this is not the case fault-tracing has failed.

Exit fault-tracing for this diagnostic trouble code (DTC) or make another attempt.

TCM-0016: CONTROL MODULE. INTERNAL FAULT. INTERMITTENT FAULT (4T65 AWD; 2003-2006)

DIAGNOSTIC TROUBLE CODE (DTC) INFORMATION

Condition

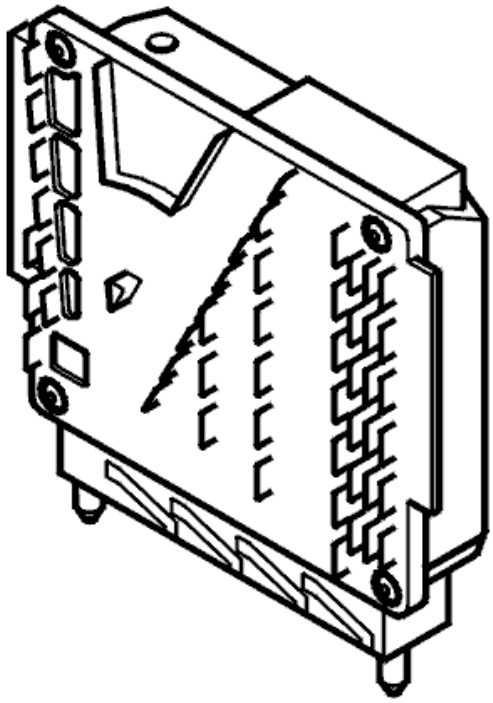

Fig. 161: Identifying Transmission Control Module (TCM)
Courtesy of VOLVO CARS CORPORATION

The solenoids are controlled by amplifiers in the transmission control module (TCM). The transmission control module (TCM) opens the amplifiers to activate the solenoids and sends a voltage through the circuit. Diagnostic trouble code (DTC) TCM-0016 is stored if the control module registers an internal fault in one of the amplifier circuits.

Substitute Value

- The control module "Limp Home" program initiated.

Possible Source

- Defective control module.

Fault symptom[s]

- General orange warning lamp lit.

- Malfunction indicator lamp (MIL) lit.
- No lock-up function.
- Harsh gear shifting.
- No shifting.

HINT: Harsh gear shifting can be caused by:

- No adaptation of the gear slippage times at high altitude (High Altitude Compensation).
- No reduction of line pressure when shifting.
- No torque limiting request to engine control module (ECM) when shifting.

HINT: No shifting - because the transmission control module (TCM) prevents activation of the solenoids. This stops gear-shifting.

CAUTION: There is a danger that this fault will cause line pressure in the transmission to be too low, which will result in wear.

INTERNAL FAULT. INTERMITTENT FAULT

INTERMITTENT FAULT

Control module previously registered a fault. The fault is now no longer present.

- **Continue**

  Refer to **INFORMATION**

INFORMATION

FAULT-TRACING INFORMATION

If the fault is intermittent, do not verify fault-tracing if the fault does not recur.

It is possible to view the information again, or leave fault-tracing for this diagnostic trouble code (DTC).

TCM-0016: CONTROL MODULE. INTERNAL FAULT. PERMANENT FAULT (4T65 AWD; 2003-2006)

DIAGNOSTIC TROUBLE CODE (DTC) INFORMATION

see **DIAGNOSTIC TROUBLE CODE (DTC) INFORMATION**

INTERNAL FAULT. PERMANENT FAULT

CHECKING SHIFT SOLENOIDS S1 AND S2

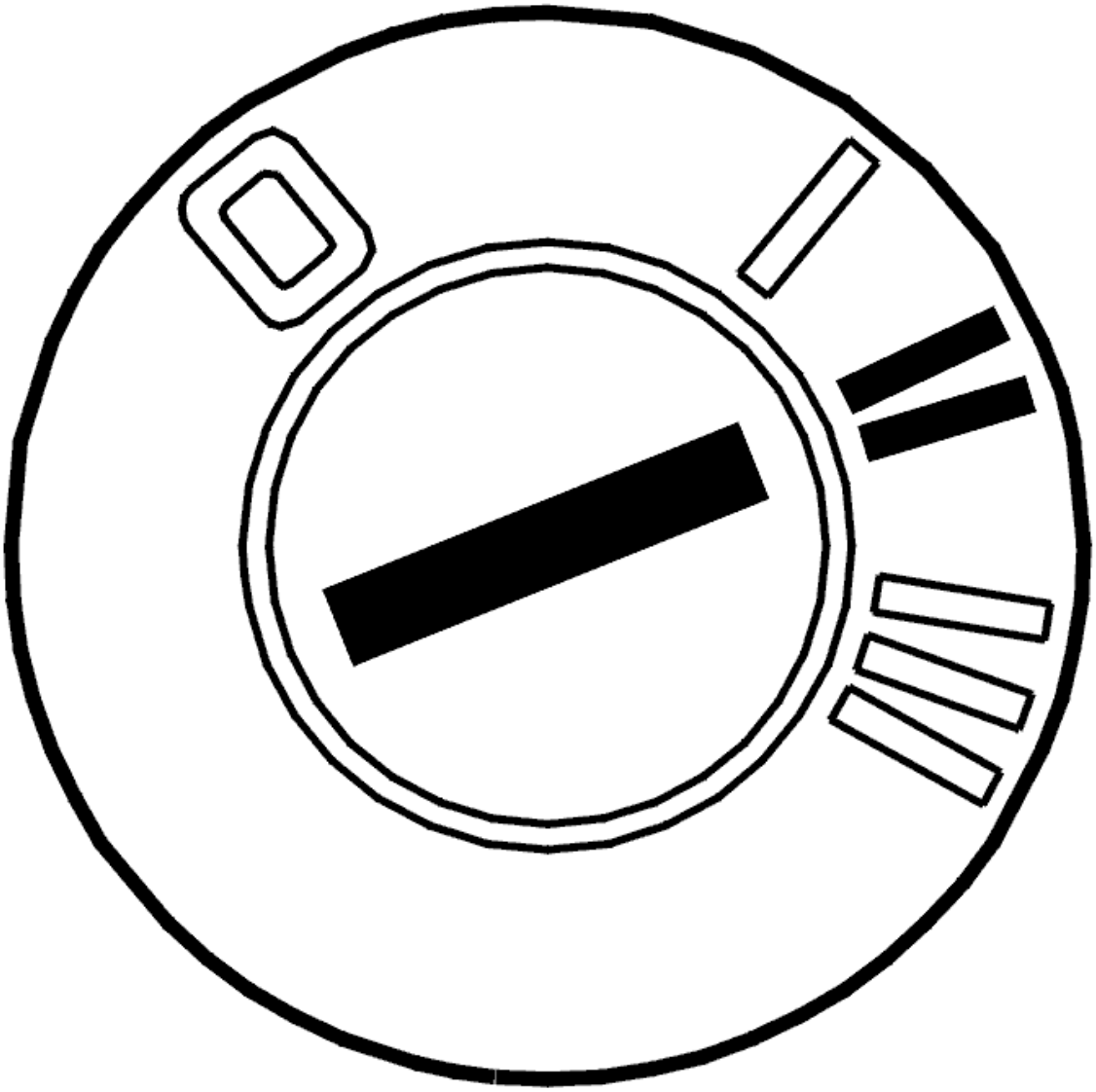

Fig. 162: Identifying Ignition ON
Courtesy of VOLVO CARS CORPORATION

- Ignition on.
- Gear selector in position P.
- Activate solenoids S1 and S2 individually.

  The values should change between OFF and ON.

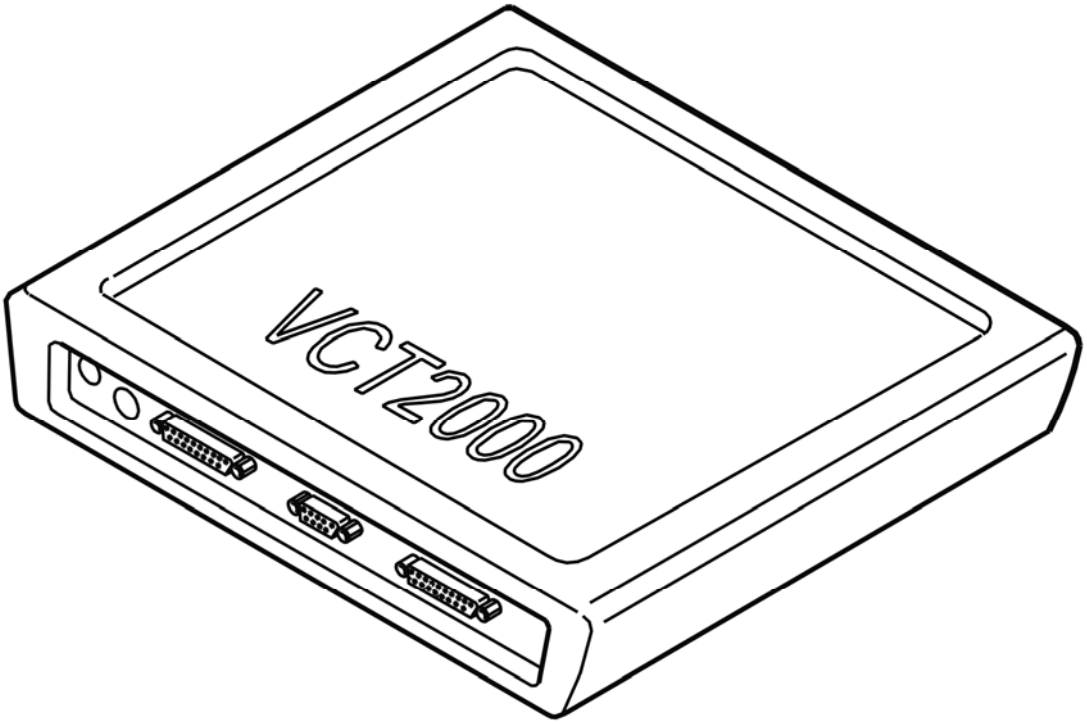

Fig. 163: Identifying VCT2000 Diagnostic Tool Symbol In VIDA
Courtesy of VOLVO CARS CORPORATION

Do the values change?

- **YES**

  FAULT TRACING FAILED: The fault should have been detected and remedied. As this is not the case fault-tracing has failed. Exit fault-tracing for this diagnostic trouble code (DTC) or make another attempt.

- **NO**

  Refer to **REPLACING THE CONTROL MODULE AND PROGRAMMING**

REPLACING THE CONTROL MODULE AND PROGRAMMING

CAUTION: A new control module is delivered without software. The control module must be programmed in order to function after replacement.

For further information about programming and replacing the control module, see **TRANSMISSION CONTROL MODULE (TCM), REPLACING** .

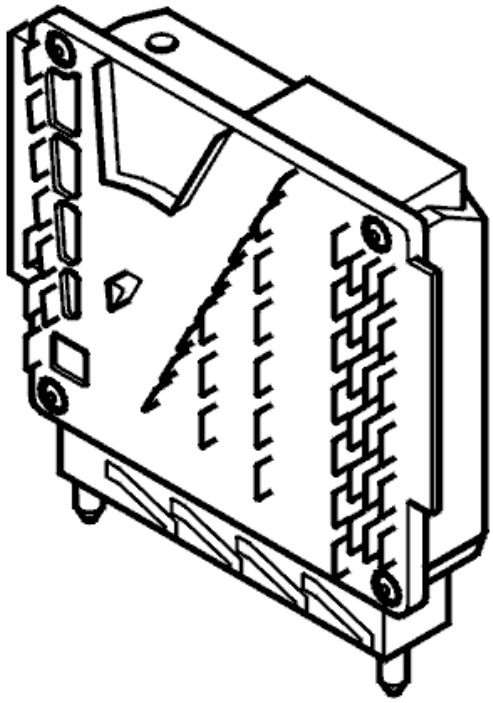

Fig. 164: Identifying Transmission Control Module (TCM)
Courtesy of VOLVO CARS CORPORATION

TCM-001F: VEHICLE SPEED SENSOR (VSS). SIGNAL MISSING. INTERMITTENT FAULT (AW50/51 AWD; AW55-50/51SN; 2003-2007)

DIAGNOSTIC TROUBLE CODE (DTC) INFORMATION

Condition

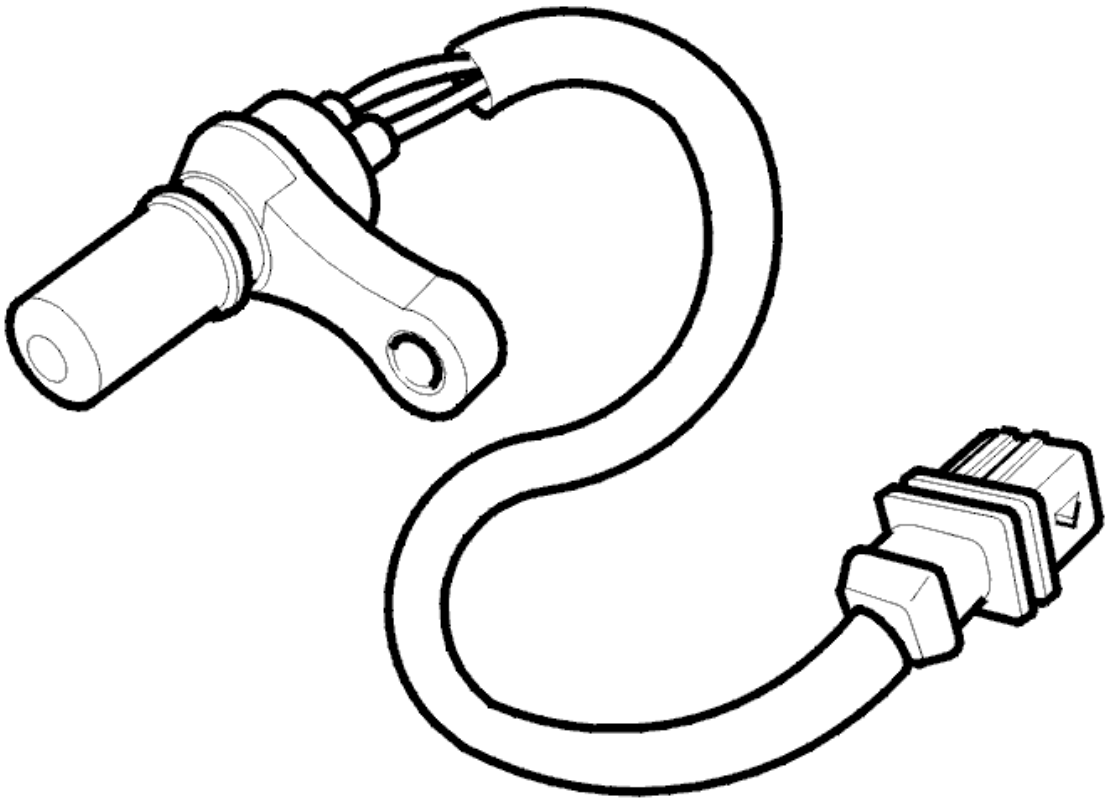

Fig. 165: Identifying Automatic Transmission Control Module (TCM)
Courtesy of VOLVO CARS CORPORATION

Diagnostic trouble code (DTC) TCM-001F is stored if the control module registers that the signal from the speed sensor is missing.

Substitute Value

- None.

Possible Source

- Contact resistance in the terminals.
- Open-circuit in the power supply.
- Open-circuit in the signal cable.
- Defective speed sensor.

Fault symptom[s]

- General orange warning lamp lit.
- Malfunction indicator lamp (MIL) lit.
- No lock-up function.

- Harsh gear shifting.

HINT: Harsh gear shifting can be caused by:

- No reduction of the line pressure when shifting.
- No reduction of the line pressure when moving the gear selector between positions P-R, N-R and N-D.
- No request for torque limiting to the engine control module (ECM) when shifting.

SIGNAL MISSING. INTERMITTENT FAULT

INTERMITTENT FAULT

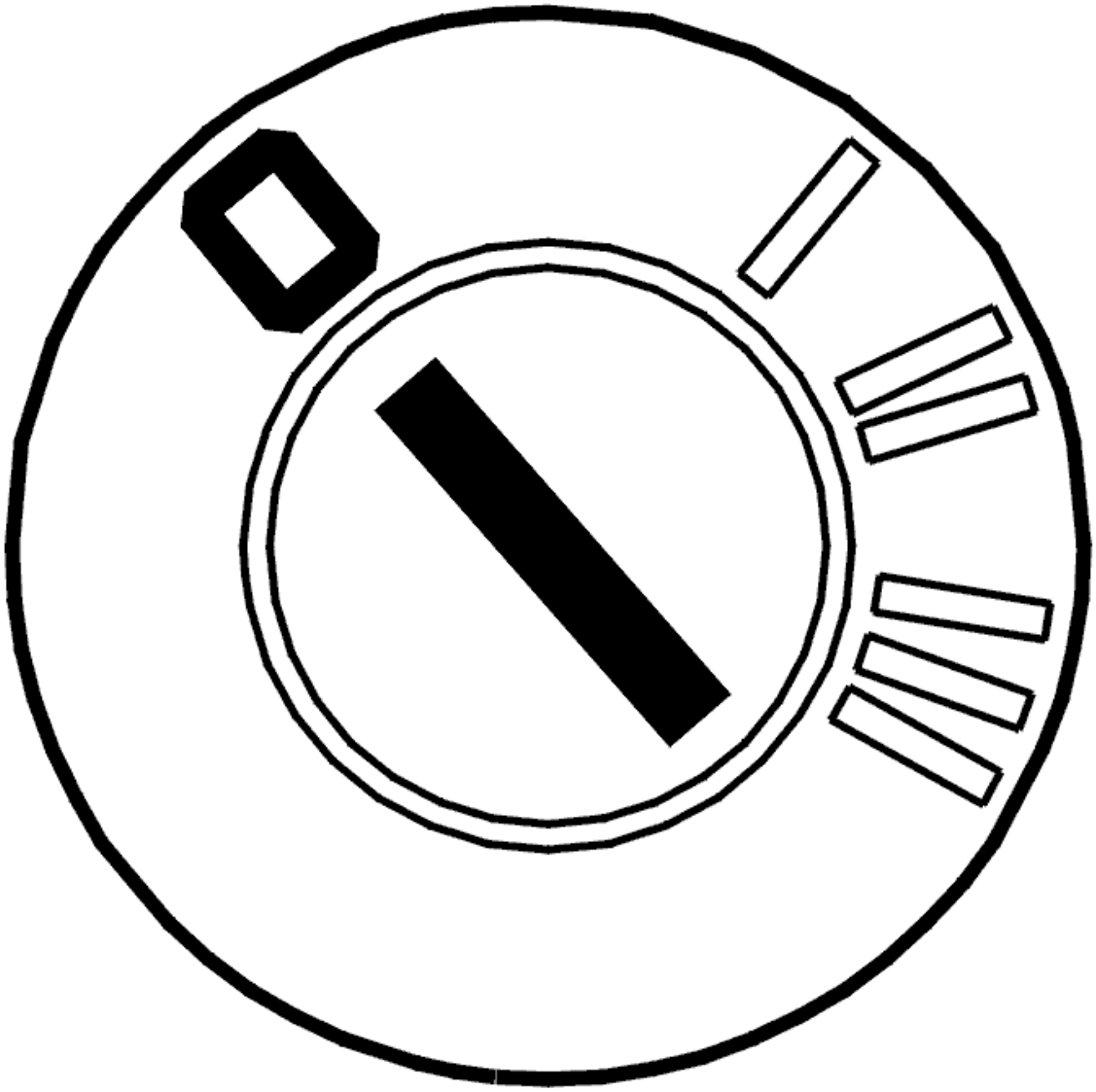

Fig. 166: Identifying Ignition OFF
Courtesy of VOLVO CARS CORPORATION

- Ignition off.

  Check the control module and transmission output speed sensor connectors. Check for contact resistance and oxidation according to **CONTACT RESISTANCE AND OXIDATION** .

  Check the power supply cable between transmission control module (TCM) terminal #57 (#A57) and transmission output speed sensor connector terminal #A4. Check for an intermittent open-circuit according to **OPEN-CIRCUIT, INTERMITTENT FAULTS** .

  Check the signal cable between transmission control module (TCM) terminal #39 (#A39) and transmission output speed sensor connector terminal #A3. Check for an intermittent open-circuit according to **OPEN-CIRCUIT, INTERMITTENT FAULTS** .

  Remedy as necessary.

  Other information:

  - To connect the breakout box, see **CONNECTING THE BREAKOUT BOX**
  - To disconnect the transmission control module (TCM), see **TRANSMISSION CONTROL MODULE (TCM), REPLACING**
  - To disconnect the transmission connectors, see **CONNECTORS, TRANSMISSION, DISCONNECTING / CONNECTING**
  - To check and replace the transmission output speed sensor, see **INPUT SPEED SENSOR/OUTPUT SPEED SENSOR, REPLACING**
  - For information about signals, see **SIGNAL DESCRIPTION. TRANSMISSION CONTROL MODULE (TCM)** .

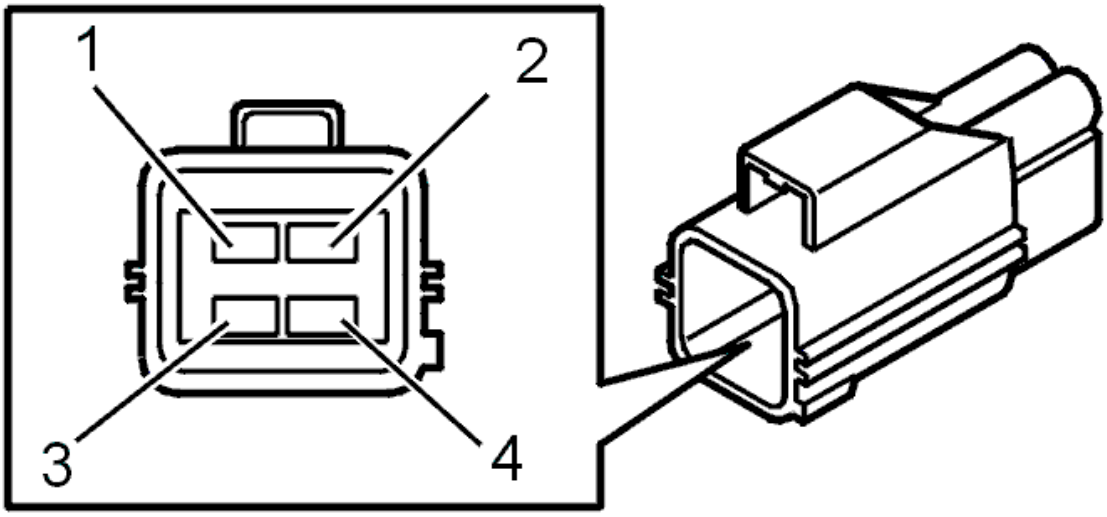

Fig. 167: Identifying Transmission Output Speed Sensor Terminals
Courtesy of VOLVO CARS CORPORATION

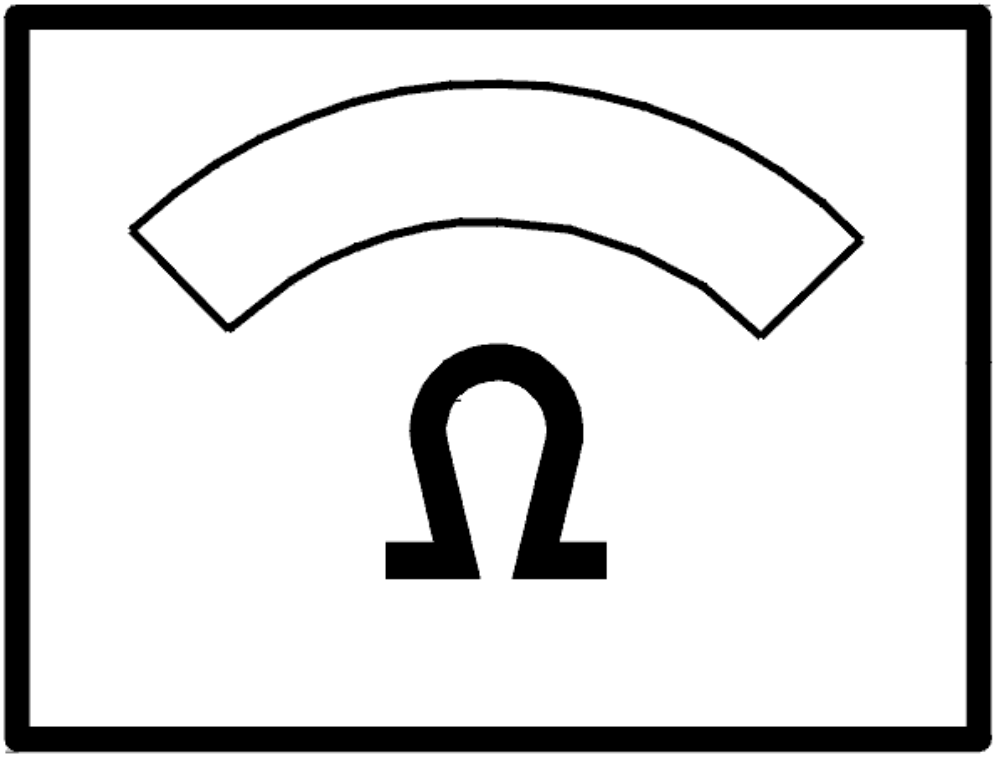

Fig. 168: Identifying Ohms Display
Courtesy of VOLVO CARS CORPORATION

- **Continue**

  Refer to **INFORMATION**

INFORMATION

FAULT-TRACING INFORMATION

If the fault is intermittent, do not verify fault-tracing if the fault does not recur.

It is possible to view the information again, or leave fault-tracing for this diagnostic trouble code (DTC).

TCM-001F: VEHICLE SPEED SENSOR (VSS). SIGNAL MISSING.

PERMANENT FAULT (AW50/51 AWD; AW55-50/51SN; 2003-2007)

DIAGNOSTIC TROUBLE CODE (DTC) INFORMATION

see **DIAGNOSTIC TROUBLE CODE (DTC) INFORMATION**

SIGNAL MISSING. PERMANENT FAULT

CHECKS

CHECKING THE VEHICLE SPEED SENSOR (VSS) SIGNAL

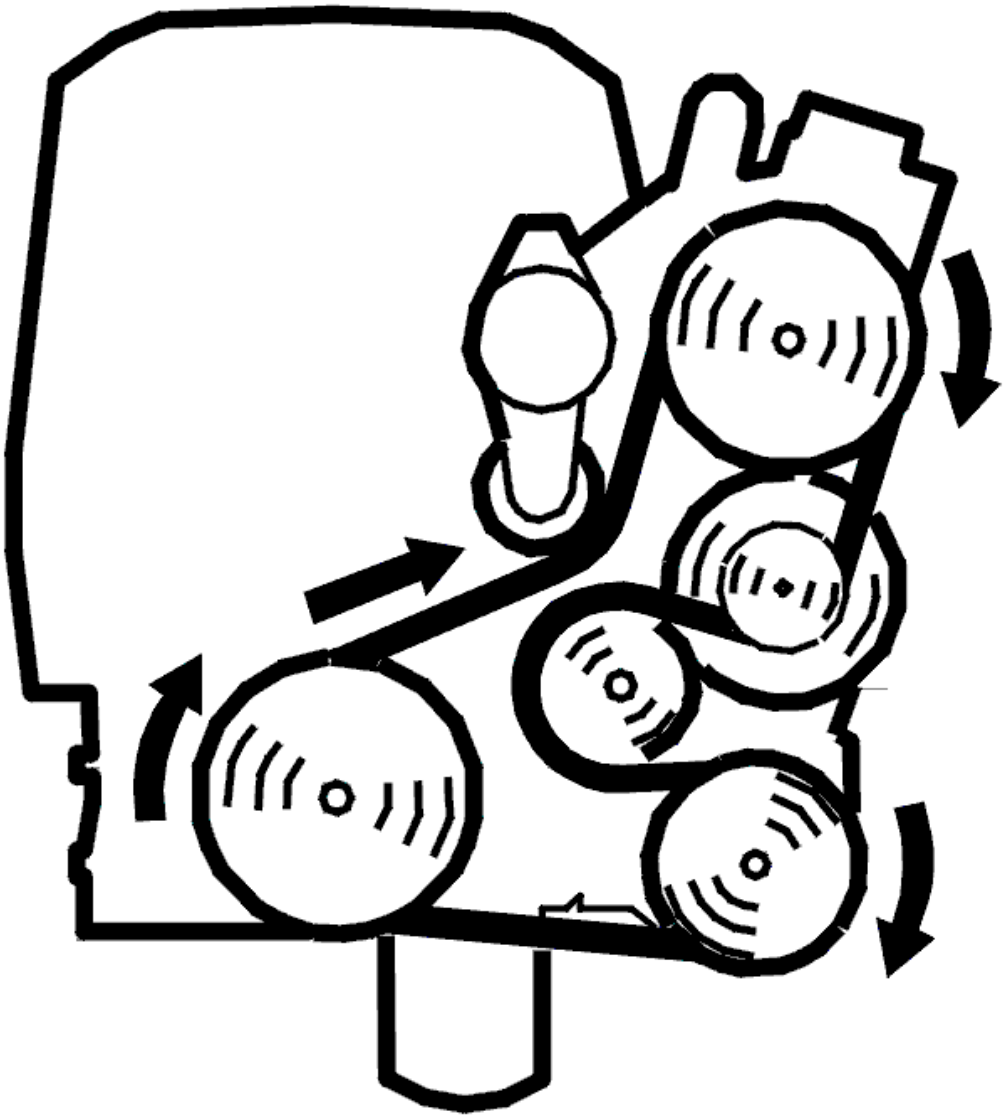

Fig. 169: Identifying Belt Routing
Courtesy of VOLVO CARS CORPORATION

- Ignition off

- Check the transmission control module (TCM) and speed sensor connectors. Check for contact resistance and oxidation according to **CONTACT RESISTANCE AND OXIDATION** . Remedy if necessary
- Raise the car so that the drive wheels are clear of the ground
- Start the engine. Allow the engine to idle
- Move the gear selector to position D so that the drive wheels begin to rotate
- Read off the transmission speed.

Depress the accelerator pedal (AP) and check that the speed is updated.

NOTE: Ensure that the wheels are not rotating when the gear selector is moved.

NOTE: Diagnostic trouble codes (DTCs) may be stored in the ABS system when the rear wheels are stationary and the front wheels rotate. Erase any diagnostic trouble codes (DTCs) stored in the ABS system after fault-tracing.

If the speed is updated, the cause of the fault was probably contact resistance or oxidation in the control module or vehicle speed sensor (VSS) connectors.

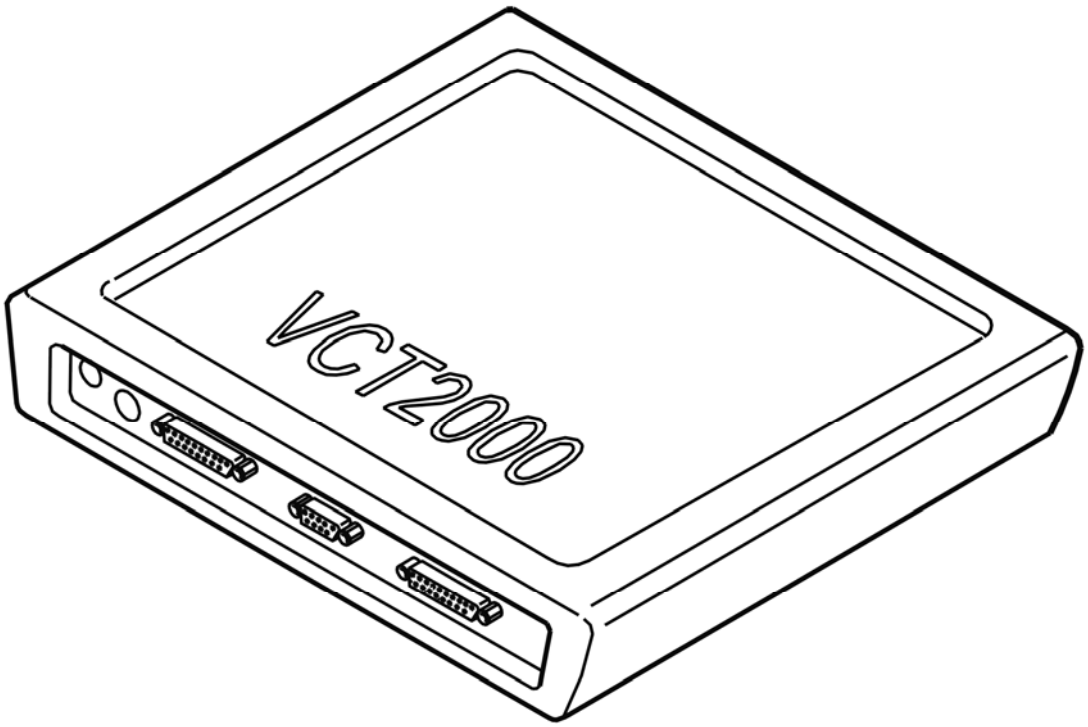

Fig. 170: Identifying VCT2000 Diagnostic Tool Symbol In VIDA
Courtesy of VOLVO CARS CORPORATION

Was the speed updated?

- **YES**

  FAULT NOT FOUND: Troubleshooting has been completed.

- **NO**

  Refer to **CHECKING WIRING AND SENSORS**

CHECKING WIRING AND SENSORS

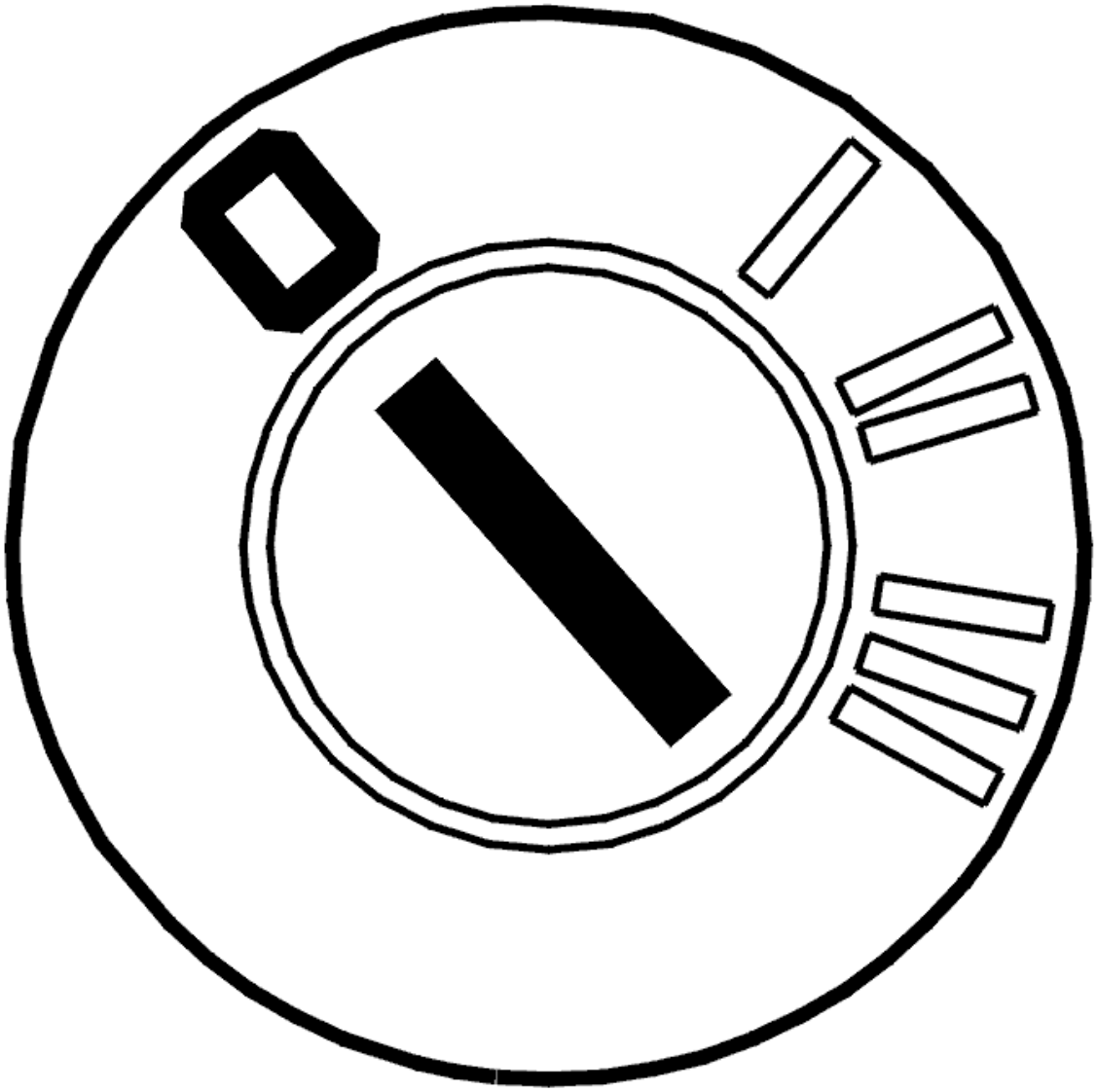

Fig. 171: Identifying Ignition OFF
Courtesy of VOLVO CARS CORPORATION

- Ignition off

- Connect the breakout box.

  Check the power supply cable between transmission control module (TCM) terminal #A57 (#A57) and transmission output speed sensor connector terminal #A4. Check for an open-circuit according to **OPEN-CIRCUIT, PERMANENT FAULTS** .

  Check the signal cable between transmission control module (TCM) terminal #A39 (#A39) and transmission output speed sensor connector terminal #A3. Check for an open-circuit according to **OPEN-CIRCUIT, PERMANENT FAULTS** .

  HINT: With the control module connected, the ignition on and a voltmeter connected between transmission output speed sensor connector terminals #A3 and #A4 (control module side), the voltage must be approximately 1-3 V below Ubat.

  Remedy as necessary.

  Other information:

  - To connect the breakout box, see **CONNECTING THE BREAKOUT BOX**
  - To disconnect the transmission control module (TCM), see **TRANSMISSION CONTROL MODULE (TCM), REPLACING**
  - To check or replace the transmission output speed sensor, see **INPUT SPEED SENSOR/OUTPUT SPEED SENSOR, REPLACING**
  - For information about signals, see **SIGNAL DESCRIPTION. TRANSMISSION CONTROL MODULE (TCM)** .

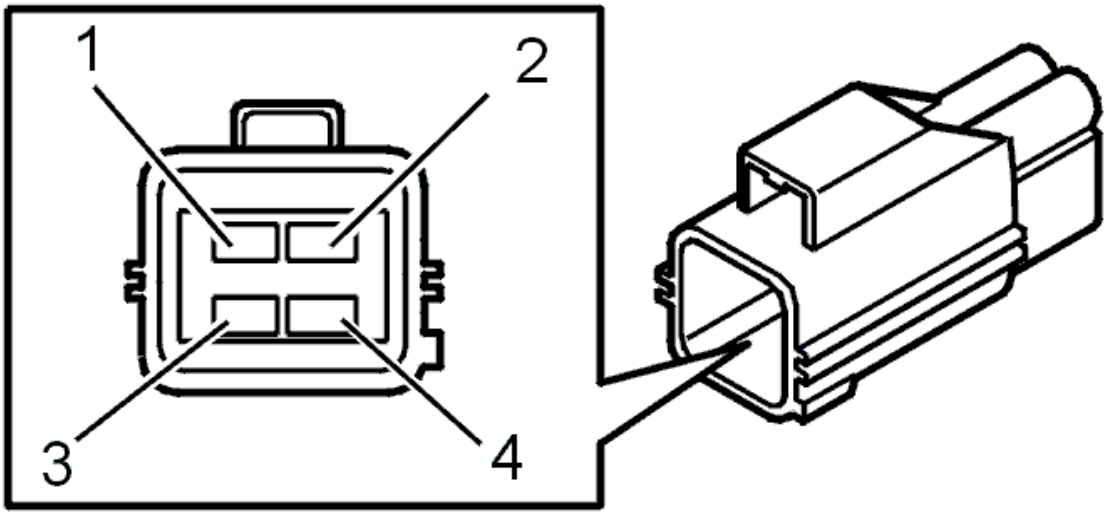

Fig. 172: Identifying Transmission Output Speed Sensor Terminals
Courtesy of VOLVO CARS CORPORATION

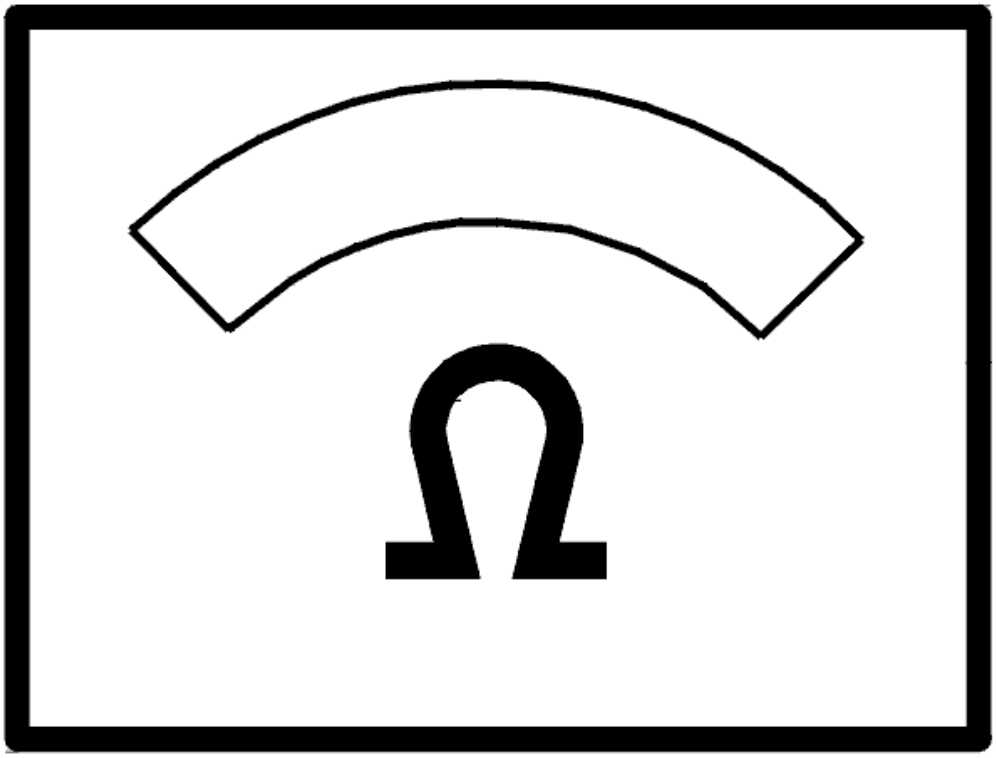

Fig. 173: Identifying Ohms Display
Courtesy of VOLVO CARS CORPORATION

- **Continue**

  Refer to **VERIFICATION**

VERIFICATION

VERIFICATION

HINT: After carrying out the repair, check that the fault has been remedied.

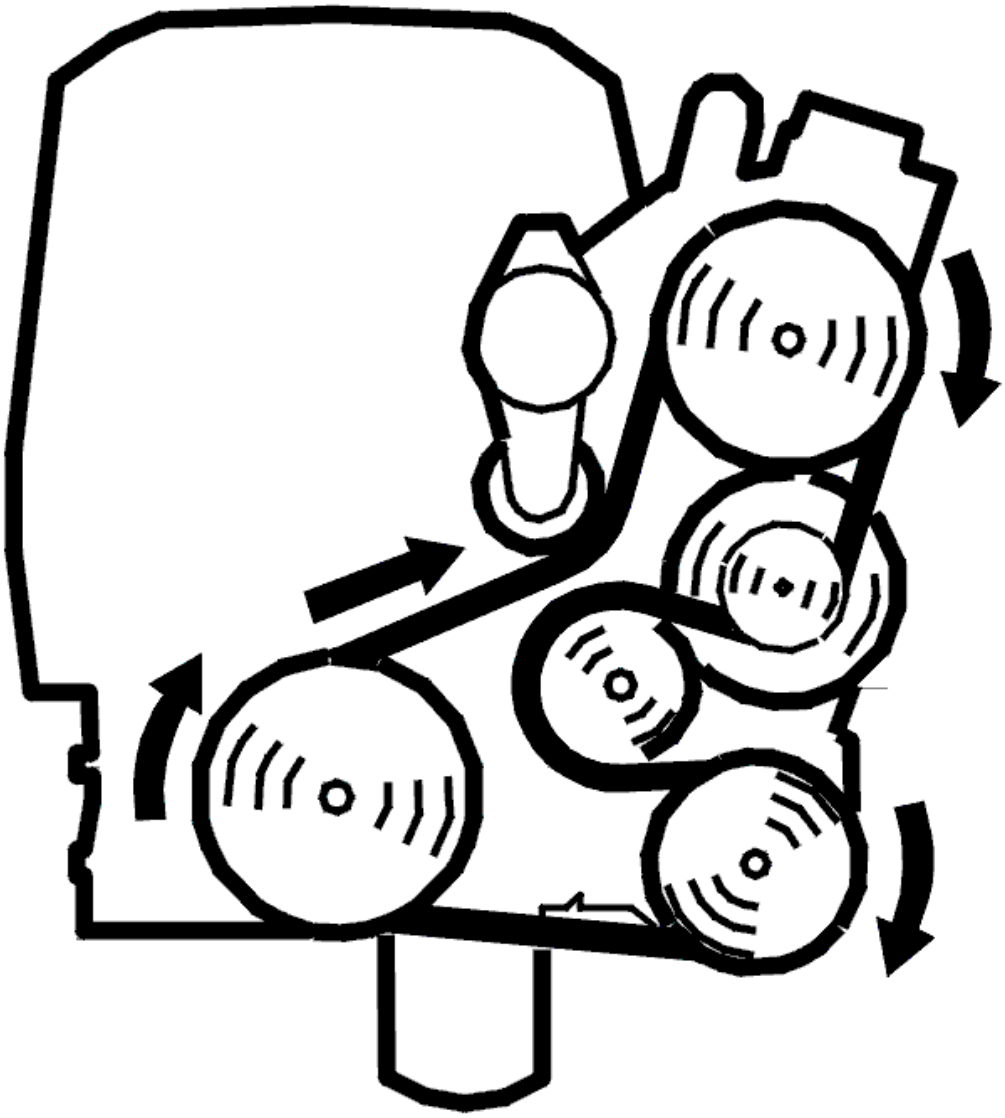

Fig. 174: Identifying Belt Routing
Courtesy of VOLVO CARS CORPORATION

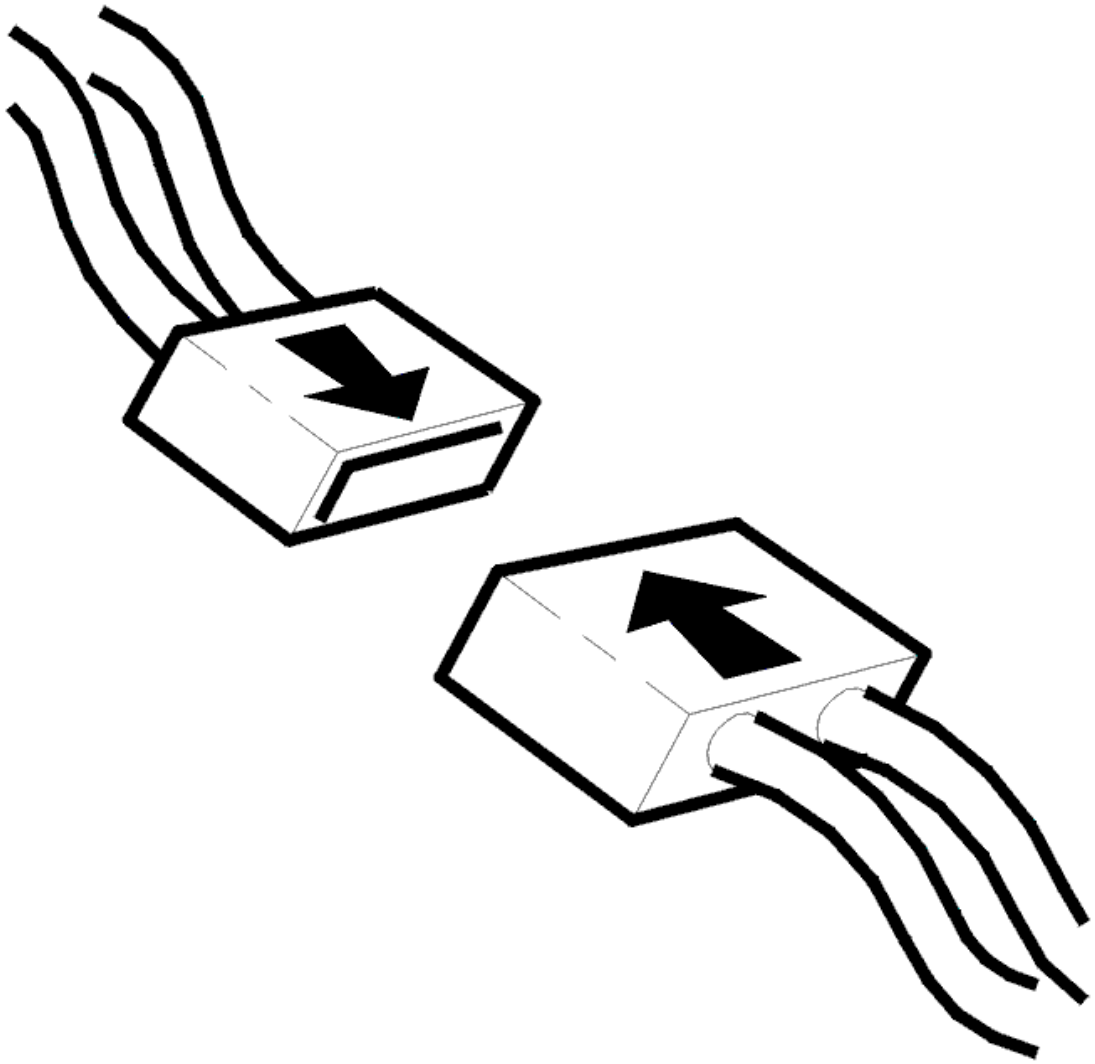

Fig. 175: Identifying Connector(s) Reinstallation
Courtesy of VOLVO CARS CORPORATION

- Ignition off.
- Reinstall connectors, components etc.
- Raise car so that drive wheels are unimpeded.
- Start the engine and let it idle.
- Shift gear selector to position D so that the drive wheels begin to rotate.
- Read off the transmission speed.

Check that speed is updated

NOTE: **When the rear wheels are stationary and the front wheels rotate, diagnostic trouble codes (DTCs) can be stored in the ABS system. Erase**

any diagnostic trouble codes (DTCs) stored in the ABS system after fault-tracing.

NOTE: **Ensure that the wheels are not rotating when the gear selector is moved.**

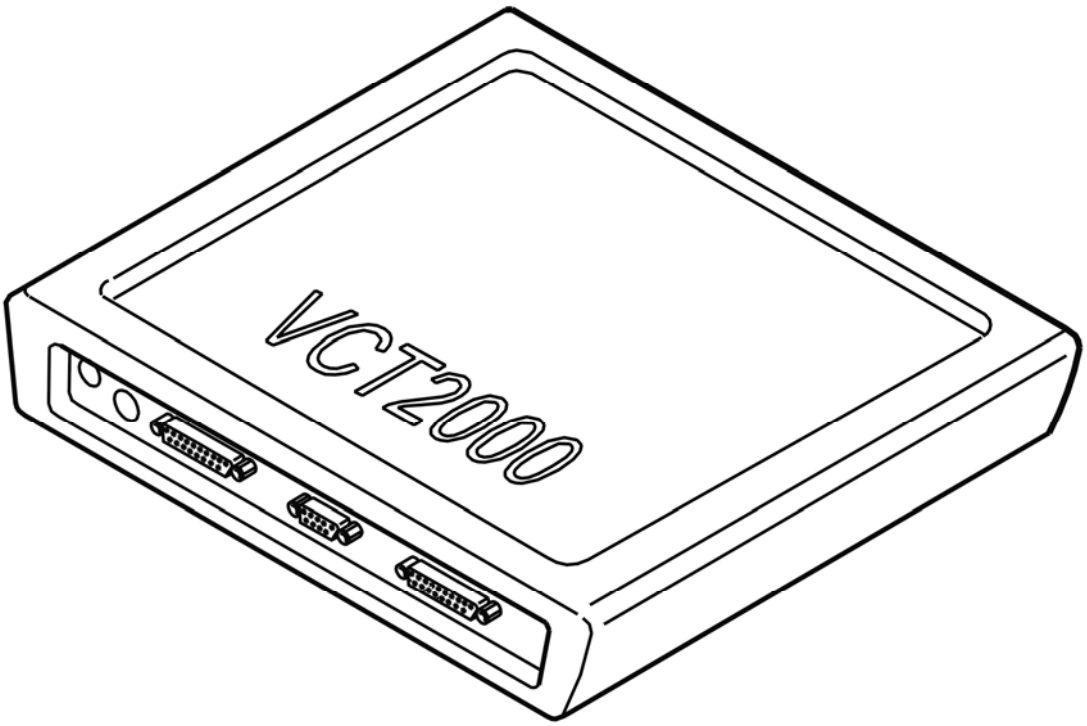

Fig. 176: Identifying VCT2000 Diagnostic Tool Symbol In VIDA
Courtesy of VOLVO CARS CORPORATION

Was speed updated?

- **YES**

  VERIFIED: Troubleshooting has been completed.

- **NO**

  Refer to **INFORMATION**

INFORMATION

FAULT-TRACING INFORMATION

The fault should have been detected and remedied. As this is not the case fault-tracing has failed.

Exit fault-tracing for this diagnostic trouble code (DTC) or make another attempt.

TCM-001F: VEHICLE SPEED SENSOR. SIGNAL MISSING. INTERMITTENT FAULT (4T65 AWD; 2003-2006)

DIAGNOSTIC TROUBLE CODE (DTC) INFORMATION

Condition

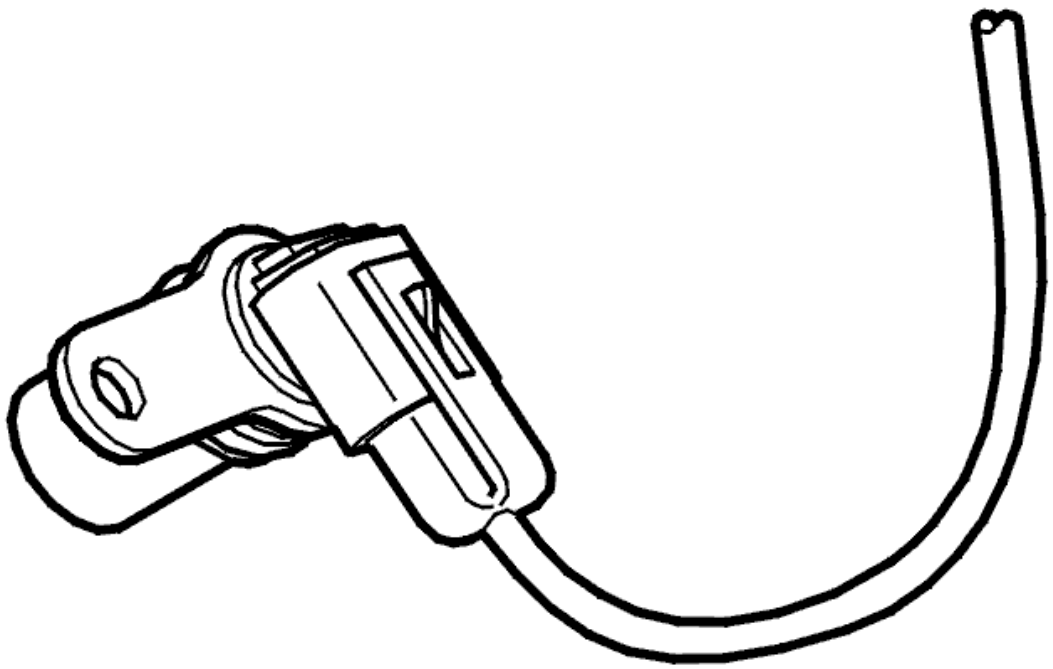

Fig. 177: Identifying Transmission Speed Sensor
Courtesy of VOLVO CARS CORPORATION

The automatic transmission control module (TCM) receives speed signals from the ABS control module and from the transmission speed sensor on the transmission. The transmission control module (TCM) uses the signals to select the correct gear. The control module derives and compares the speed signal from the ABS system with the transmission speed and the engine speed (RPM) at the transmission. Diagnostic trouble code (DTC) TCM-001F is stored if the control module registers that the signal from the speed sensor is missing.

Substitute Value

- None.

Possible Source

- Contact resistance in the terminals.
- Open-circuit on power supply.
- Open-circuit in the signal cable.
- Defective transmission speed sensor.

Fault symptom[s]

- General orange warning lamp lit.
- Malfunction indicator lamp (MIL) lit.
- No lock-up function.
- Harsh gear shifting.

HINT: Harsh gear shifting can be caused by:

- No reduction of line pressure when shifting.
- No reduction of line pressure when moving the gear selector between positions P-R, N-R and N-D.
- No torque limiting request to engine control module (ECM) when shifting.

SIGNAL MISSING. INTERMITTENT FAULT

INTERMITTENT FAULT

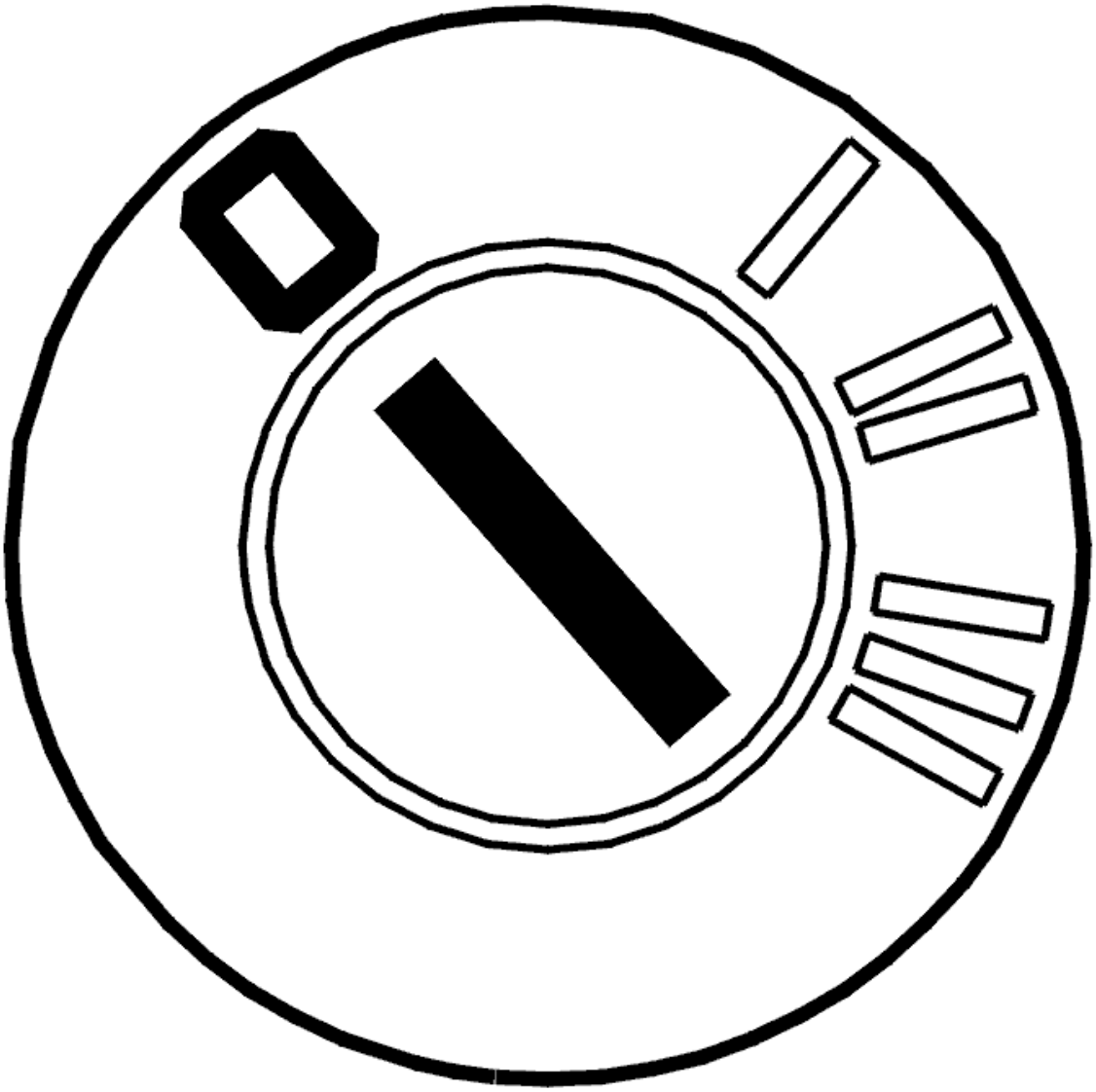

Fig. 178: Identifying Ignition OFF
Courtesy of VOLVO CARS CORPORATION

- Ignition off.

  Check the speed sensor and control module connectors for contact resistance and oxidation according to **CONTACT RESISTANCE AND OXIDATION** .

  Check the power supply cable between transmission control module (TCM) terminal 57A and speed sensor connector terminal 1 for an intermittent open-circuit according to **OPEN-CIRCUIT, INTERMITTENT FAULTS** .

  Check the signal cable between transmission control module (TCM) terminal 39A and speed sensor connector terminal 2 for an intermittent open-circuit according to **OPEN-CIRCUIT, INTERMITTENT FAULTS** .

Remedy as necessary.

Other information:

- To connect the breakout box, see **CONNECTING THE BREAKOUT BOX** .
- To disconnect the transmission control module (TCM), see **TRANSMISSION CONTROL MODULE (TCM), REPLACING** .
- For information about signals, see **SIGNAL SPECIFICATION** .

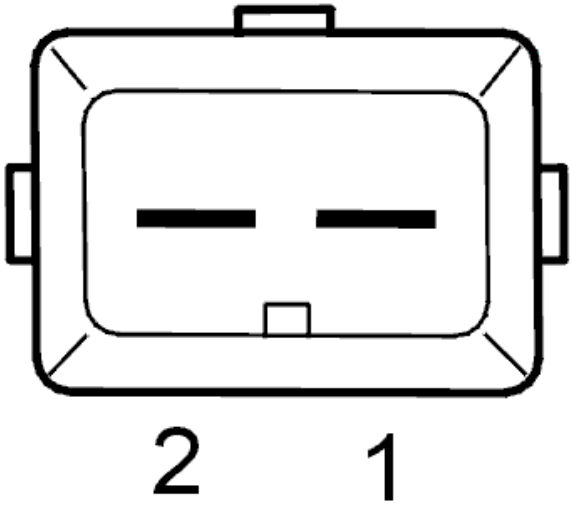

Fig. 179: Identifying Vehicle Speed Sensor (VSS) Connector Terminals
Courtesy of VOLVO CARS CORPORATION

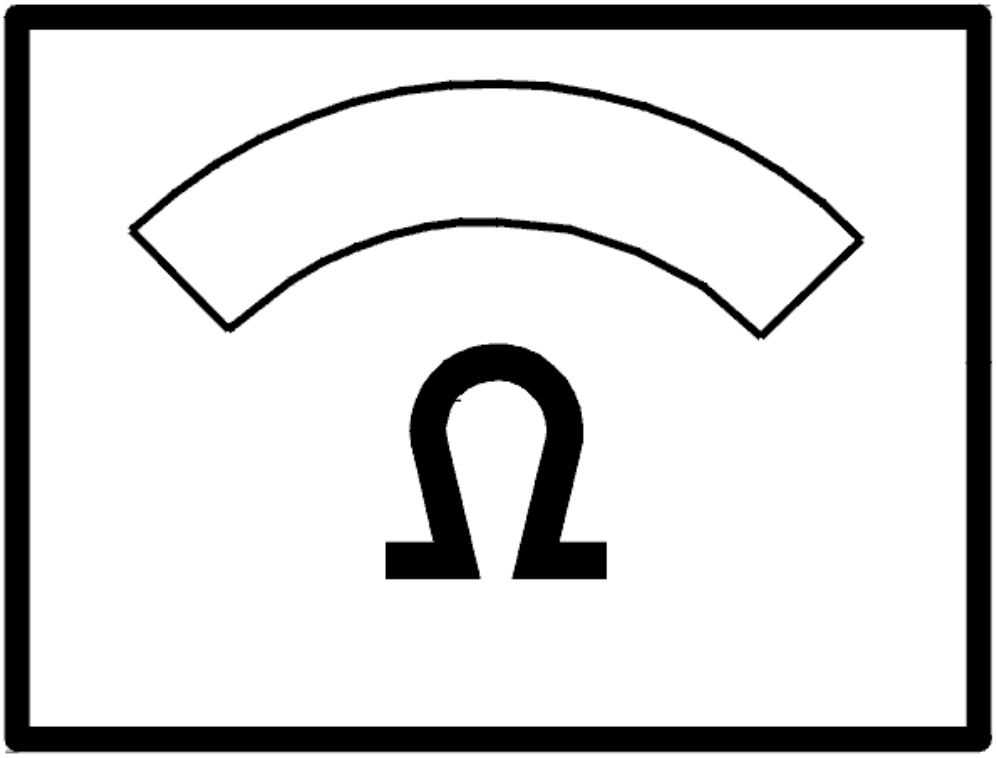

Fig. 180: Identifying Ohms Display
Courtesy of VOLVO CARS CORPORATION

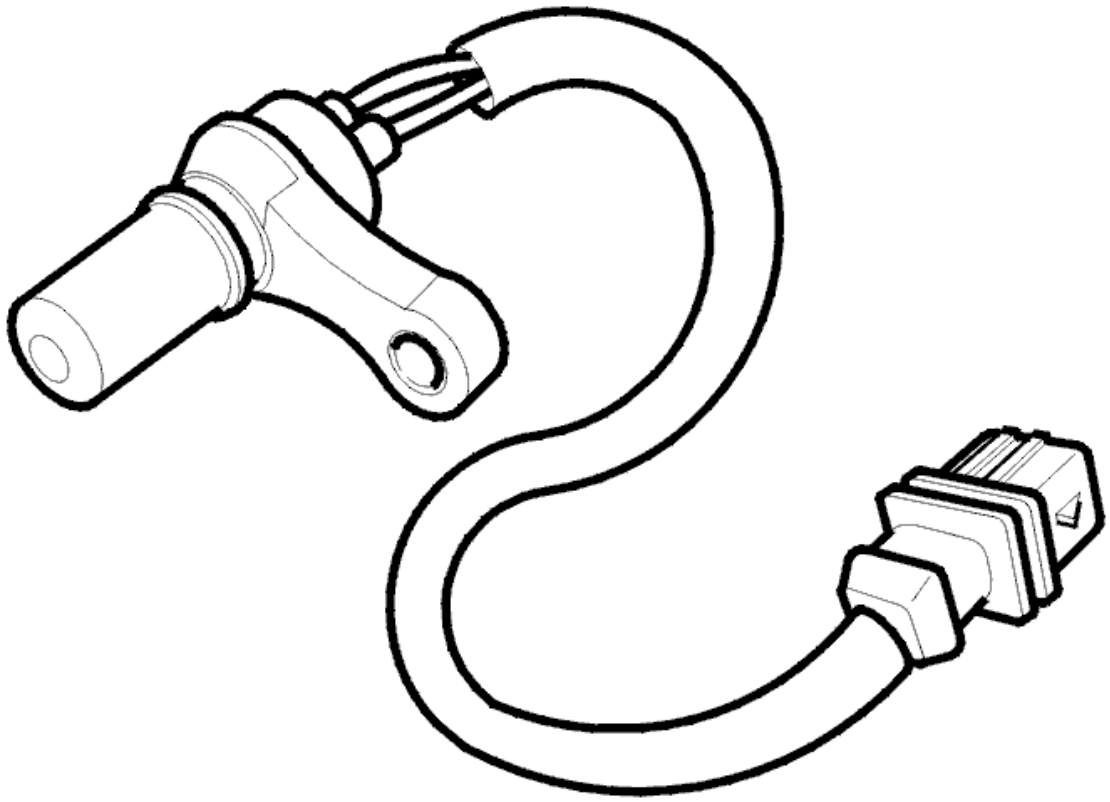

Fig. 181: Identifying Automatic Transmission Control Module (TCM)
Courtesy of VOLVO CARS CORPORATION

- **Continue**

  Refer to **INFORMATION**

INFORMATION

FAULT-TRACING INFORMATION

If the fault is intermittent, do not verify fault-tracing if the fault does not recur.

It is possible to view the information again, or leave fault-tracing for this diagnostic trouble code (DTC).

TCM-001F: VEHICLE SPEED SENSOR. SIGNAL MISSING. PERMANENT FAULT (4T65 AWD; 2003-2006)

DIAGNOSTIC TROUBLE CODE (DTC) INFORMATION

see **DIAGNOSTIC TROUBLE CODE (DTC) INFORMATION**

SIGNAL MISSING. PERMANENT FAULT

CHECKS

CHECKING THE TRANSMISSION OUTPUT SPEED SENSOR SIGNAL

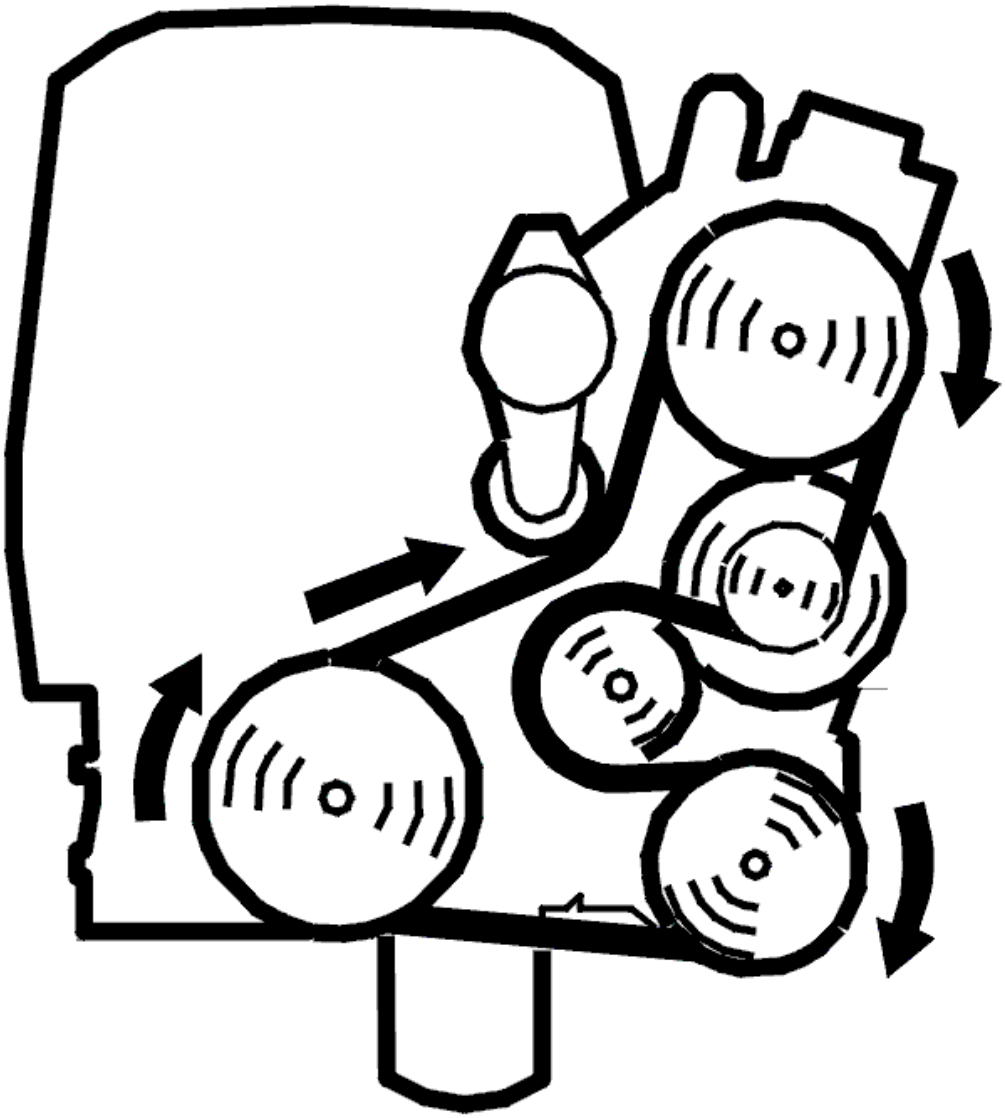

Fig. 182: Identifying Belt Routing
Courtesy of VOLVO CARS CORPORATION

- Ignition off
- Take care of the control module's and the speed sensor's connector with regards to contact resistance and oxidation according to:**CHECKING WIRING AND TERMINALS. PERMANENT FAULT**
- Raise the car so that the drive wheels are clear of the ground
- Start the engine. Allow the engine to idle
- Shift the gear selector to position D so that the drive wheels begin to rotate
- Read off the transmission speed.

Depress the accelerator pedal (AP) and check that the speed is updated.

NOTE: **Ensure that the wheels are not rotating when the gear selector is moved.**

NOTE: **Diagnostic trouble codes (DTCs) may be stored in the ABS system when the rear wheels are stationary and the front wheels rotate. Erase any diagnostic trouble codes (DTCs) stored in the ABS system after fault-tracing.**

Other information:

- To access the control module connector, see **CONNECTING THE BREAKOUT BOX**
- To access the transmission output speed sensor connector, see **OUTPUT SPEED SENSOR TRANSMISSION, REPLACING** .

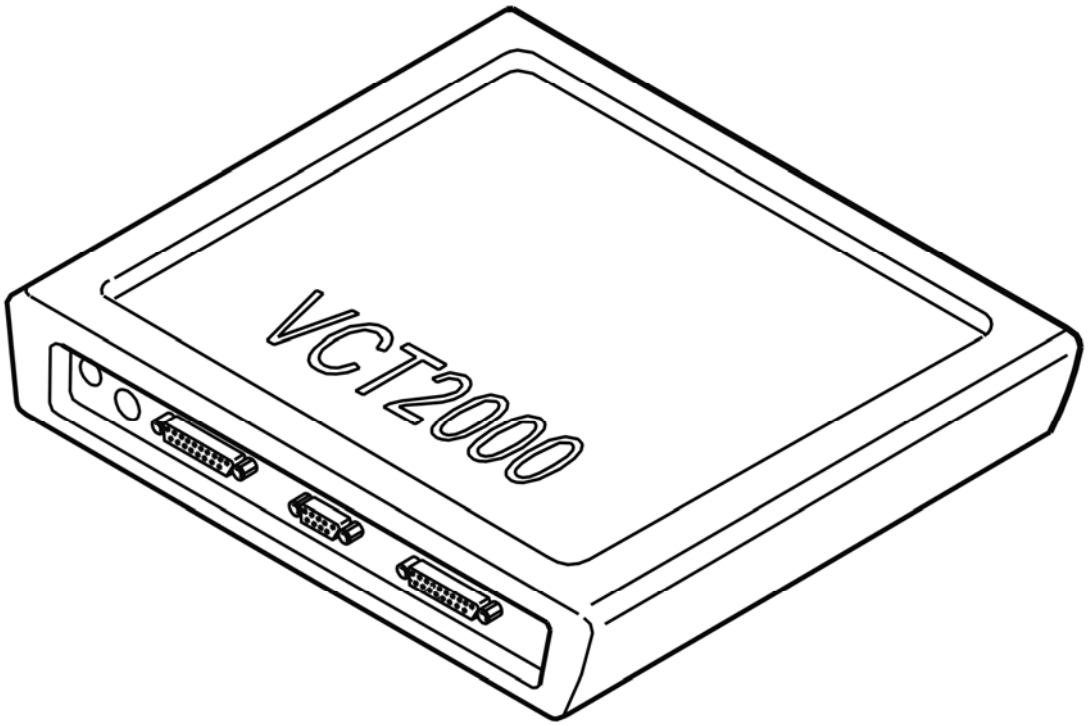

Fig. 183: Identifying VCT2000 Diagnostic Tool Symbol In VIDA
Courtesy of VOLVO CARS CORPORATION

Was the speed updated?

- **YES**

  OKAY: Troubleshooting has been completed.

- **NO**

  Refer to **CHECKING WIRING AND SENSORS**

CHECKING WIRING AND SENSORS

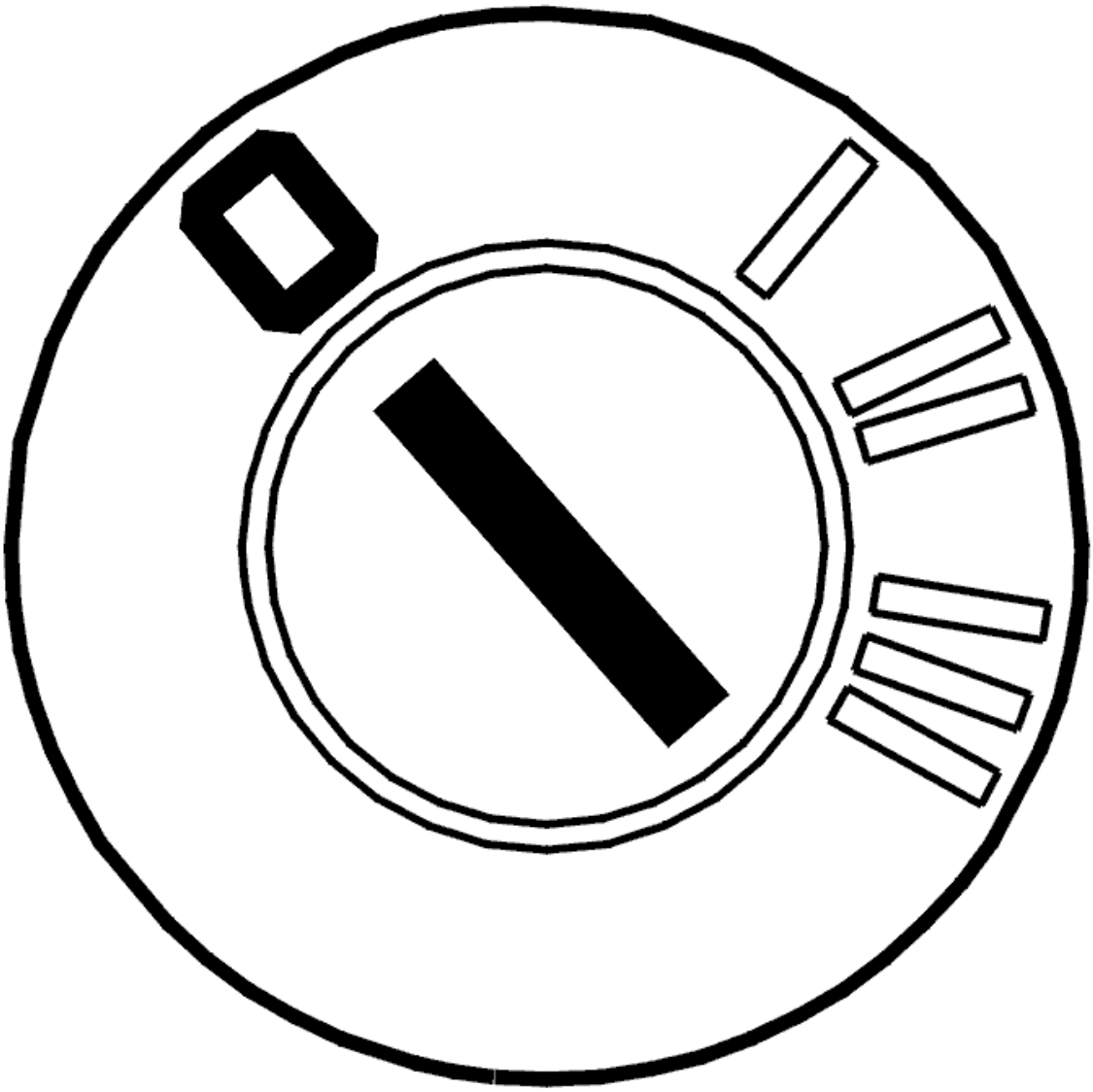

Fig. 184: Identifying Ignition OFF
Courtesy of VOLVO CARS CORPORATION

- Ignition off.

  Check the voltage supply cable between the transmission control module (TCM) #A57 (#A57) and the speed sensor's connector #1 for open circuit. See **CHECKING WIRING AND TERMINALS. PERMANENT FAULT**

  Check the signal cable between the transmission control module (TCM) #39 (#A39) and the speed

sensor's connector #2 for open circuit. See **CHECKING WIRING AND TERMINALS. PERMANENT FAULT**

HINT: With the control module connected, the ignition on and a voltmeter connected between transmission output speed sensor connector terminals #1 and #2 (control module side), the voltage must be approximately 1-3 V below Ubat.

Remedy as necessary.

Other information:

- To connect the breakout box, see **CONNECTING THE BREAKOUT BOX**
- To disconnect the transmission control module (TCM), see **TRANSMISSION CONTROL MODULE (TCM), REPLACING**
- To check or replace the transmission output speed sensor, see **OUTPUT SPEED SENSOR TRANSMISSION, REPLACING**
- For information about signals, see **SIGNAL SPECIFICATION** .

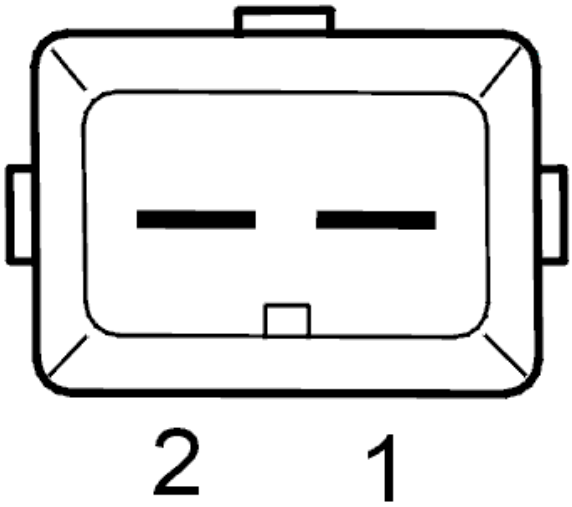

Fig. 185: Identifying Vehicle Speed Sensor (VSS) Connector Terminals
Courtesy of VOLVO CARS CORPORATION

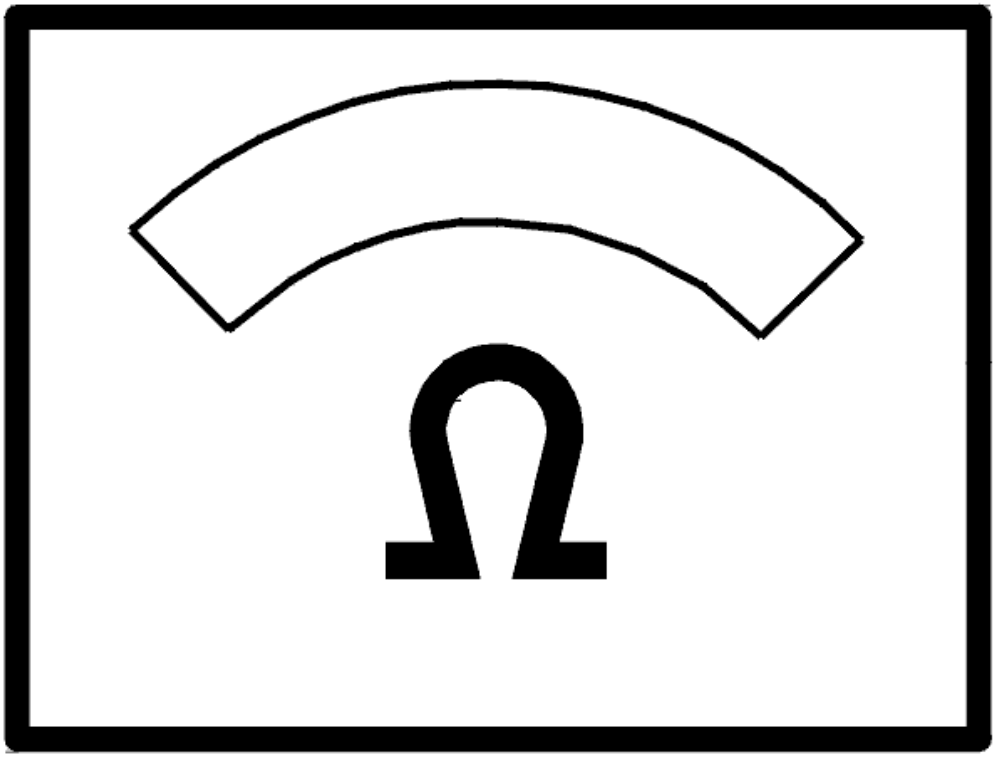

Fig. 186: Identifying Ohms Display
Courtesy of VOLVO CARS CORPORATION

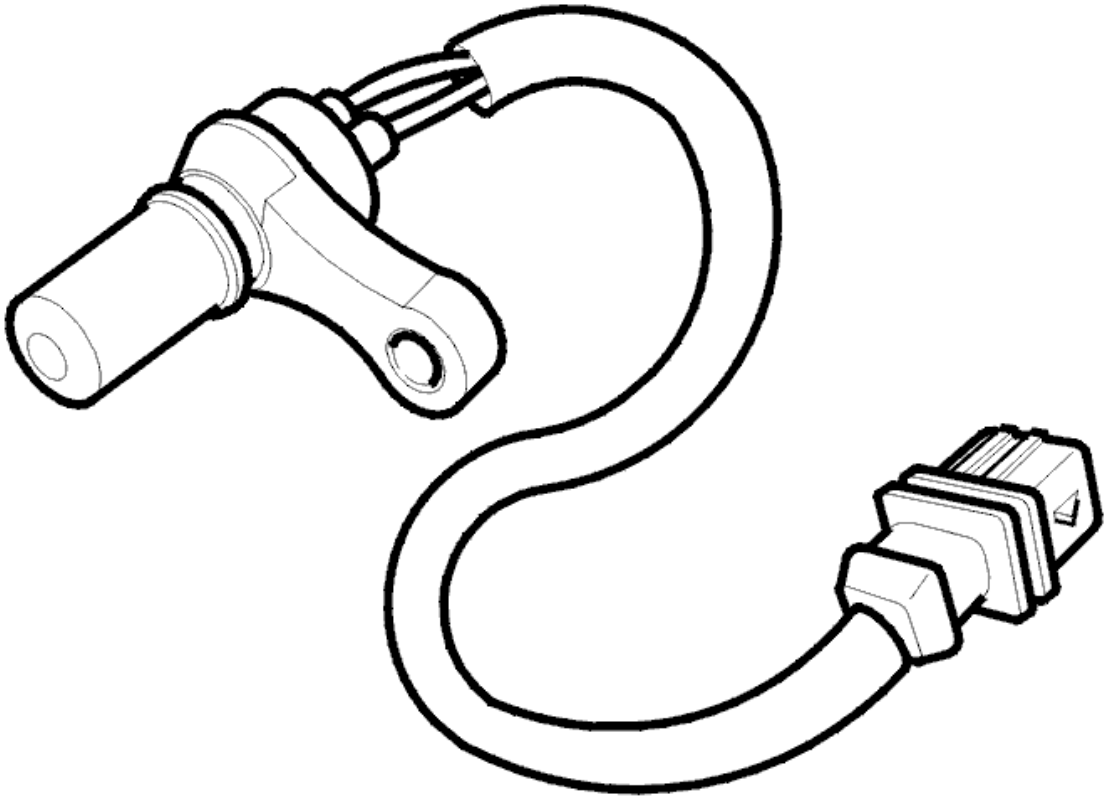

Fig. 187: Identifying Automatic Transmission Control Module (TCM)
Courtesy of VOLVO CARS CORPORATION

- **Continue**

  Refer to **VERIFICATION**

VERIFICATION

VERIFICATION

HINT: After carrying out the repair, check that the fault has been remedied.

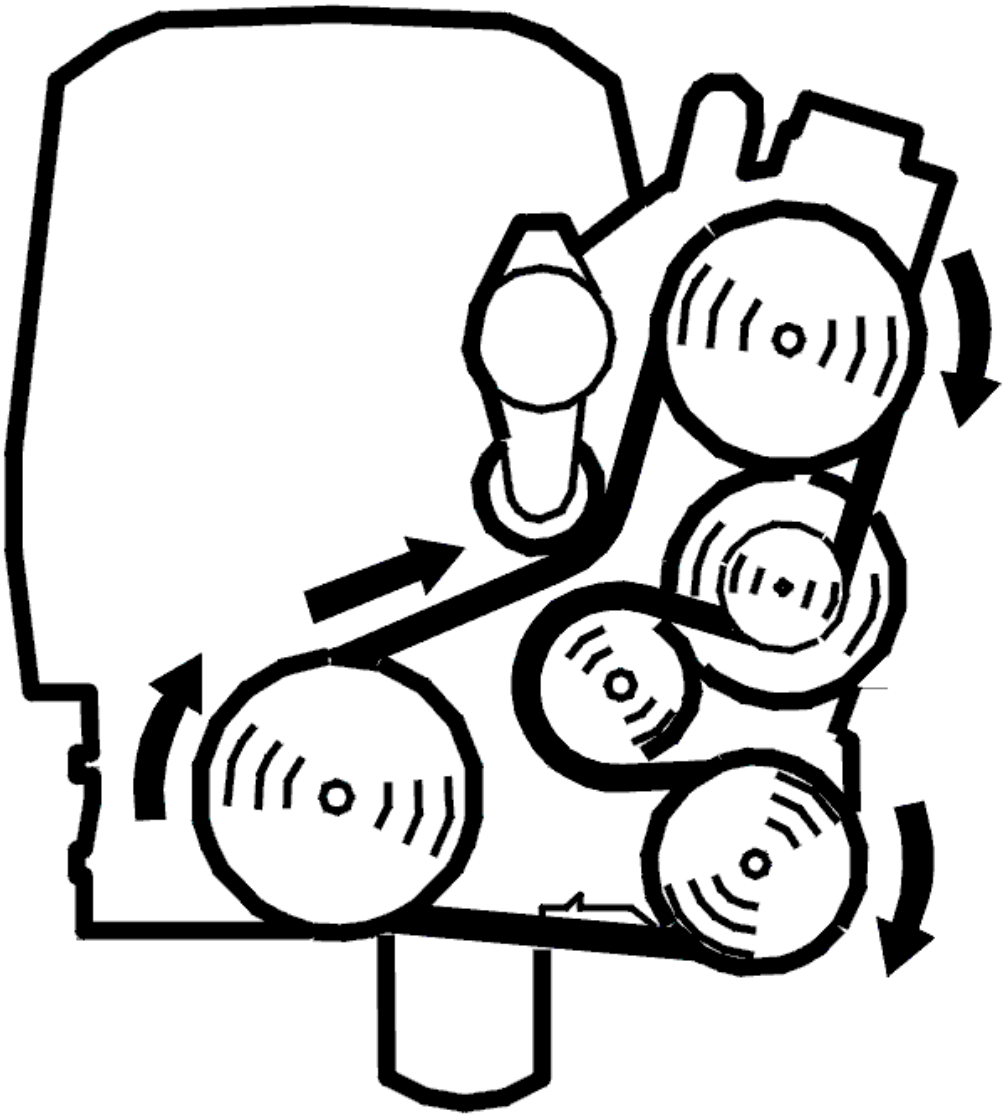

Fig. 188: Identifying Belt Routing
Courtesy of VOLVO CARS CORPORATION

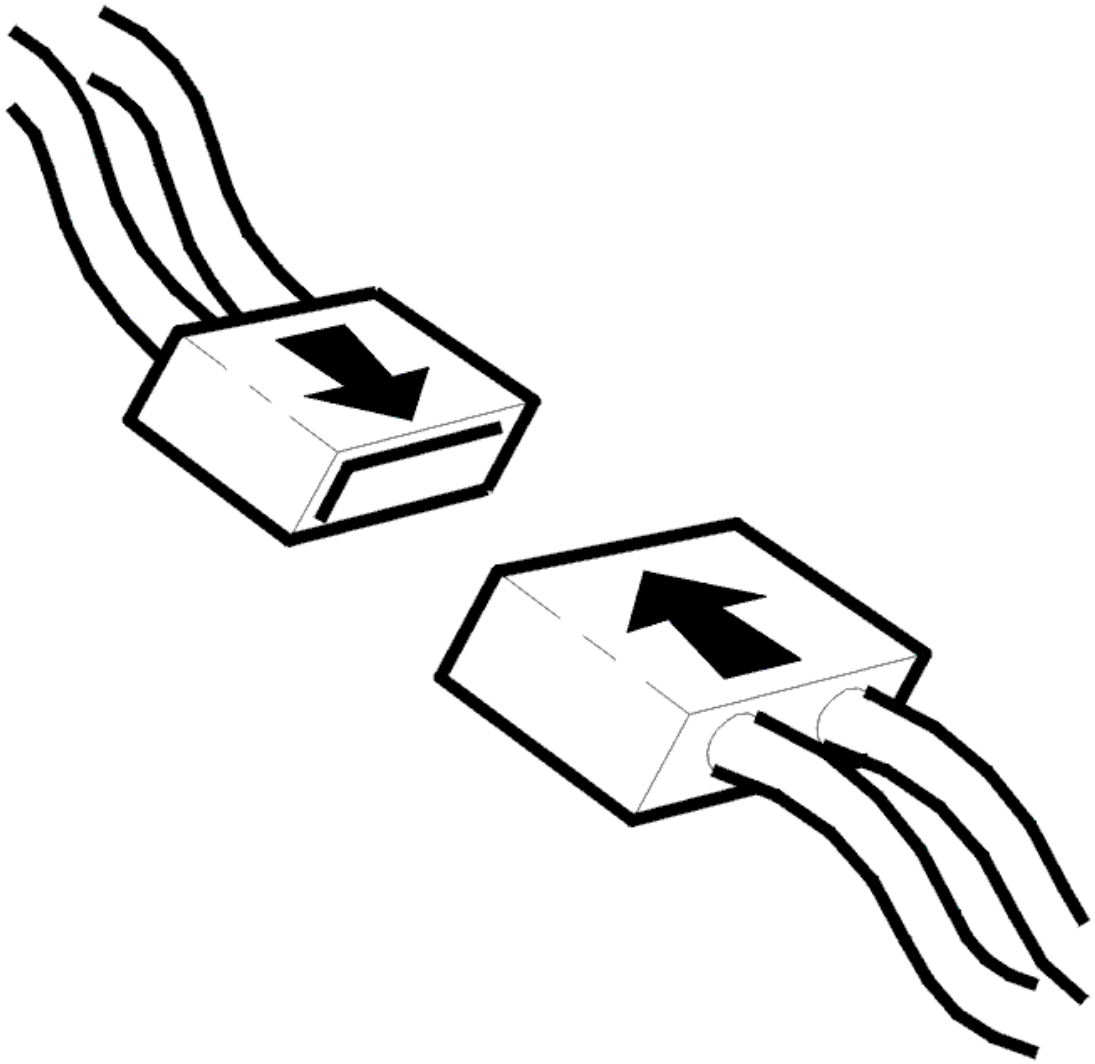

Fig. 189: Identifying Connector(s) Reinstallation
Courtesy of VOLVO CARS CORPORATION

- Ignition off.
- Reinstall connectors, components etc.
- Raise car so that drive wheels are unimpeded.
- Start the engine and let it idle.
- Shift gear selector to position D so that the drive wheels begin to rotate.
- Read off the transmission speed.

Check that speed is updated

NOTE: **When the rear wheels are stationary and the front wheels rotate, diagnostic trouble codes (DTCs) can be stored in the ABS system. Erase**

any diagnostic trouble codes (DTCs) stored in the ABS system after fault-tracing.

NOTE: **Ensure that the wheels are not rotating when the gear selector is moved.**

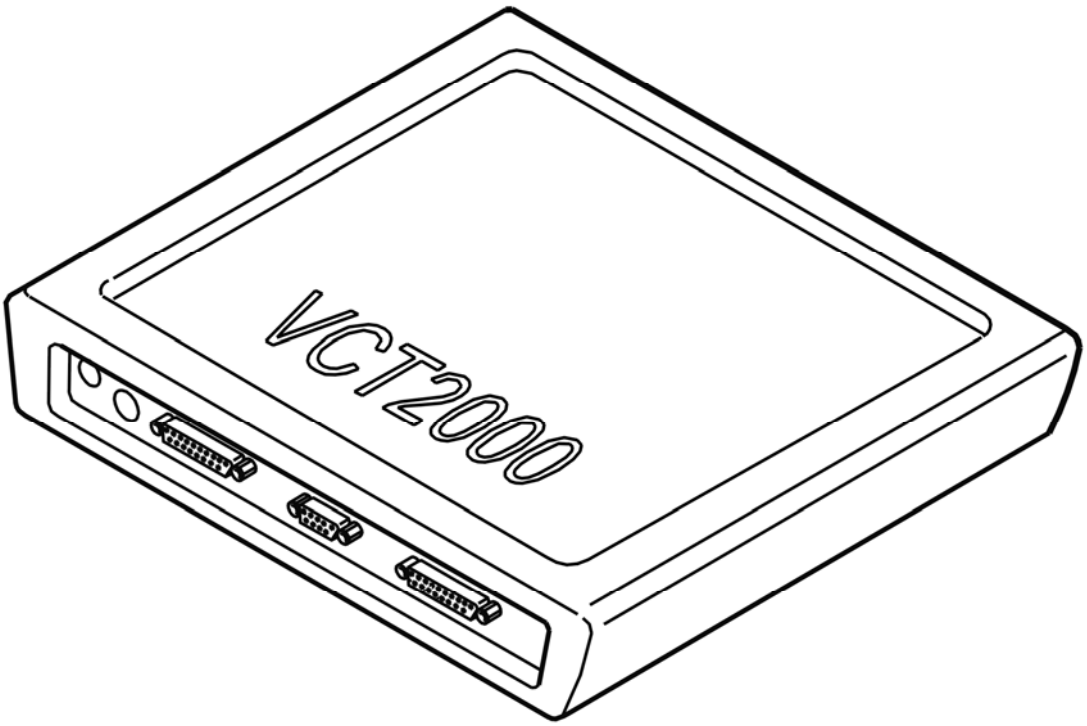

Fig. 190: Identifying VCT2000 Diagnostic Tool Symbol In VIDA
Courtesy of VOLVO CARS CORPORATION

Was speed updated?

- **YES**

  VERIFIED: Troubleshooting has been completed.

- **NO**

  Refer to **INFORMATION**

INFORMATION

FAULT-TRACING INFORMATION

The fault should have been detected and remedied. As this is not the case fault-tracing has failed.

Exit fault-tracing for this diagnostic trouble code (DTC) or make another attempt.

TCM-0020: TRANSMISSION OUTPUT SPEED SENSOR. FAULTY SIGNAL. INTERMITTENT FAULT (AW50/51 AWD; AW55-50/51SN; 2003-2007)

DIAGNOSTIC TROUBLE CODE (DTC) INFORMATION

Condition

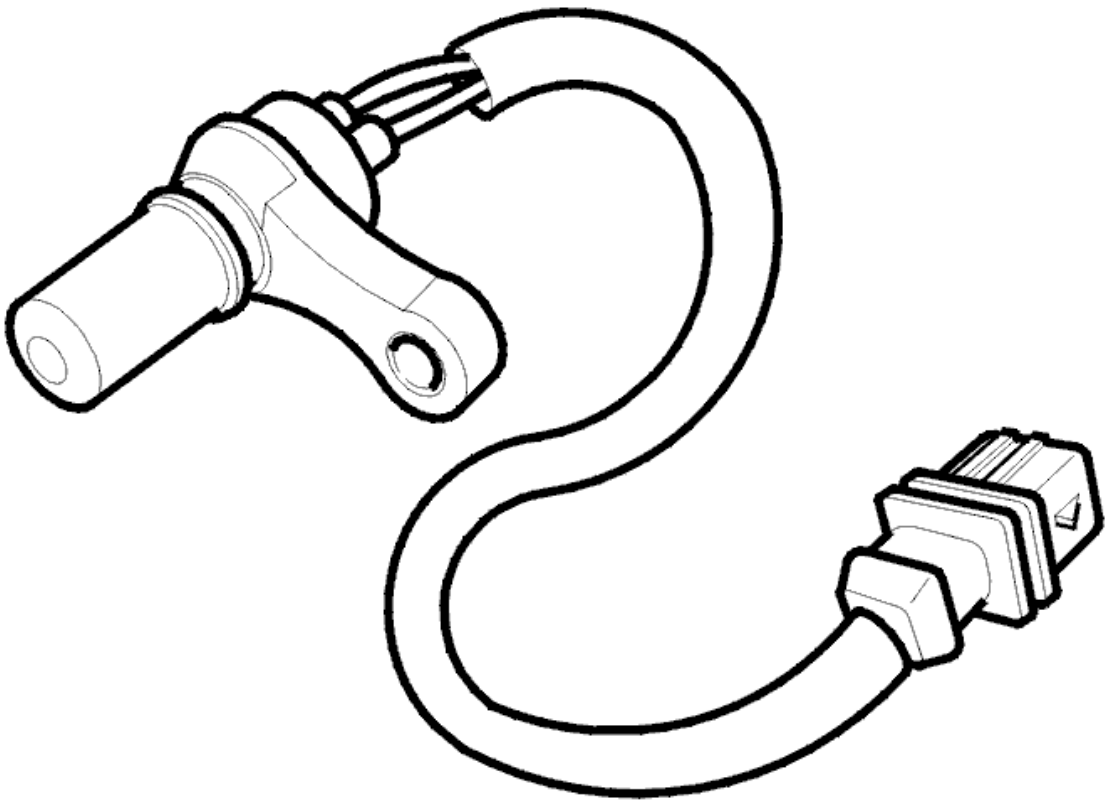

Fig. 191: Identifying Automatic Transmission Control Module (TCM)
Courtesy of VOLVO CARS CORPORATION

The automatic transmission control module (TCM) receives speed signals from the ABS control module and from the speed sensor on the transmission. The transmission control module (TCM) uses the signals to select the correct gear. The control module derives and compares the speed signal from the ABS system with the transmission speed and the engine speed (RPM) at the transmission. Diagnostic trouble code (DTC) TCM-0020 is stored if the control module registers that the speed signal from the ABS system does not correspond with the transmission speed or the engine speed (RPM).

Substitute Value

- None.

Possible Source

- Contact resistance in the terminals.
- Open-circuit, short-circuit to ground or short-circuit to supply voltage in the power supply.
- Open-circuit, short-circuit to ground or short-circuit to supply voltage in the signal cable.
- Defective speed sensor.

Fault symptom[s]

- General orange warning lamp lit.
- Malfunction indicator lamp (MIL) lit.
- No lock-up function.
- Harsh gear shifting.

HINT: Harsh gear shifting can be caused by:

- No reduction of the line pressure when shifting.
- No reduction of the line pressure when moving the gear selector between positions P-R, N-R and N-D.
- No request for torque limiting to the engine control module (ECM) when shifting.

FAULTY SIGNAL. INTERMITTENT FAULT

INTERMITTENT FAULT

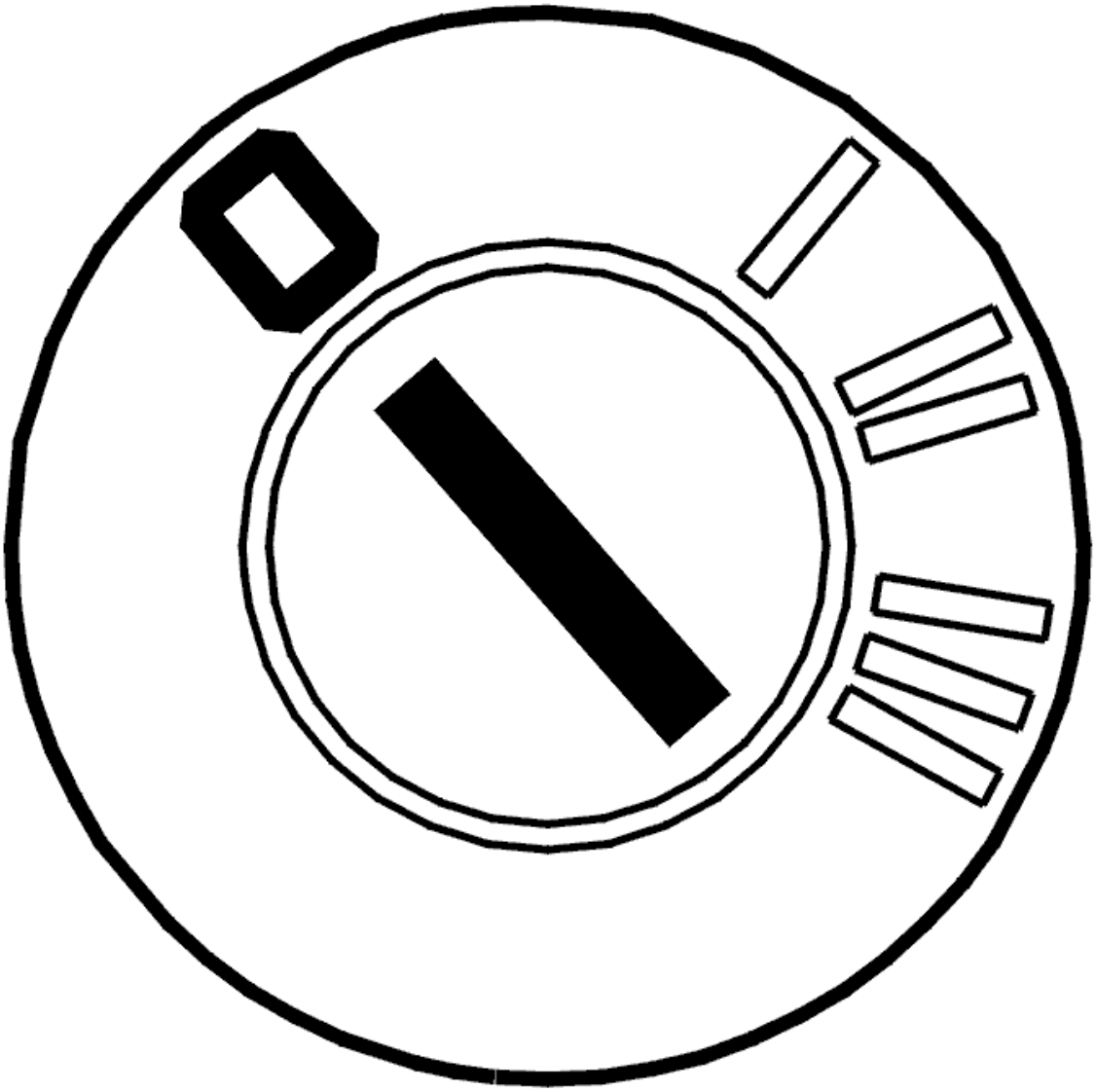

Fig. 192: Identifying Ignition OFF
Courtesy of VOLVO CARS CORPORATION

- Ignition off.

  Check the control module and transmission output speed sensor connectors. Check for contact resistance and oxidation according to **CONTACT RESISTANCE AND OXIDATION** .

  Check the wiring between control module terminal #A57 (#A57) and transmission output speed sensor connector terminal #A4. Check the wiring between control module terminal #A39 (#A39) and transmission output speed sensor connector terminal #A3. Check for an intermittent open-circuit according to **OPEN-CIRCUIT, INTERMITTENT FAULTS** . Check for an intermittent short-circuit to ground according to **SHORT-CIRCUIT TO GROUND, INTERMITTENT FAULTS** . Check for an intermittent short-circuit to supply voltage according to **SHORT-CIRCUIT TO SUPPLY VOLTAGE, INTERMITTENT FAULTS** .

Remedy as necessary.

Other information:

- To connect the breakout box, see **CONNECTING THE BREAKOUT BOX**
- To disconnect the transmission connectors, see **CONNECTORS, TRANSMISSION, DISCONNECTING / CONNECTING**
- To check or replace the transmission output speed sensor, see **INPUT SPEED SENSOR/OUTPUT SPEED SENSOR, REPLACING**
- For information about signals, see **SIGNAL DESCRIPTION. TRANSMISSION CONTROL MODULE (TCM)** .

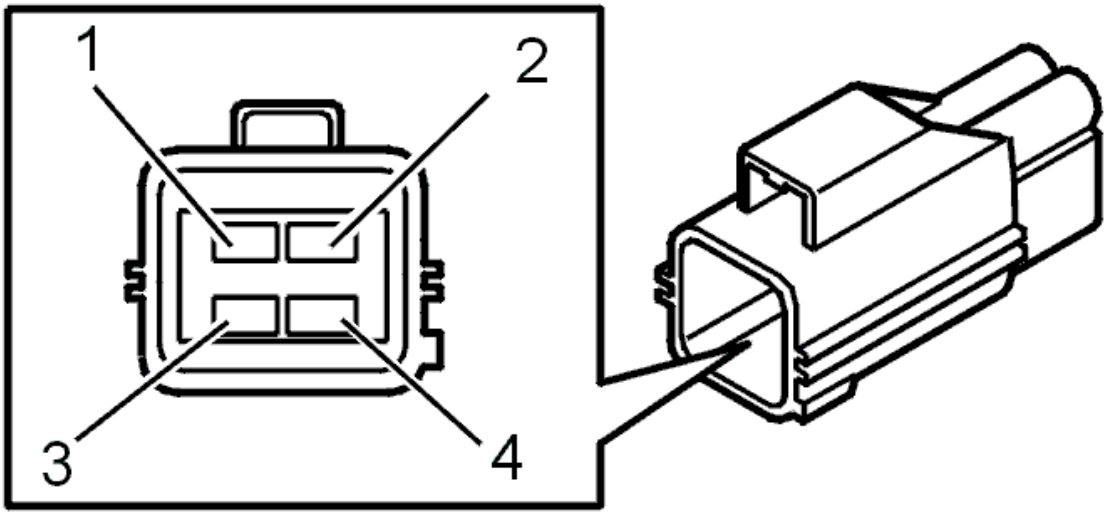

Fig. 193: Identifying Transmission Output Speed Sensor Terminals
Courtesy of VOLVO CARS CORPORATION

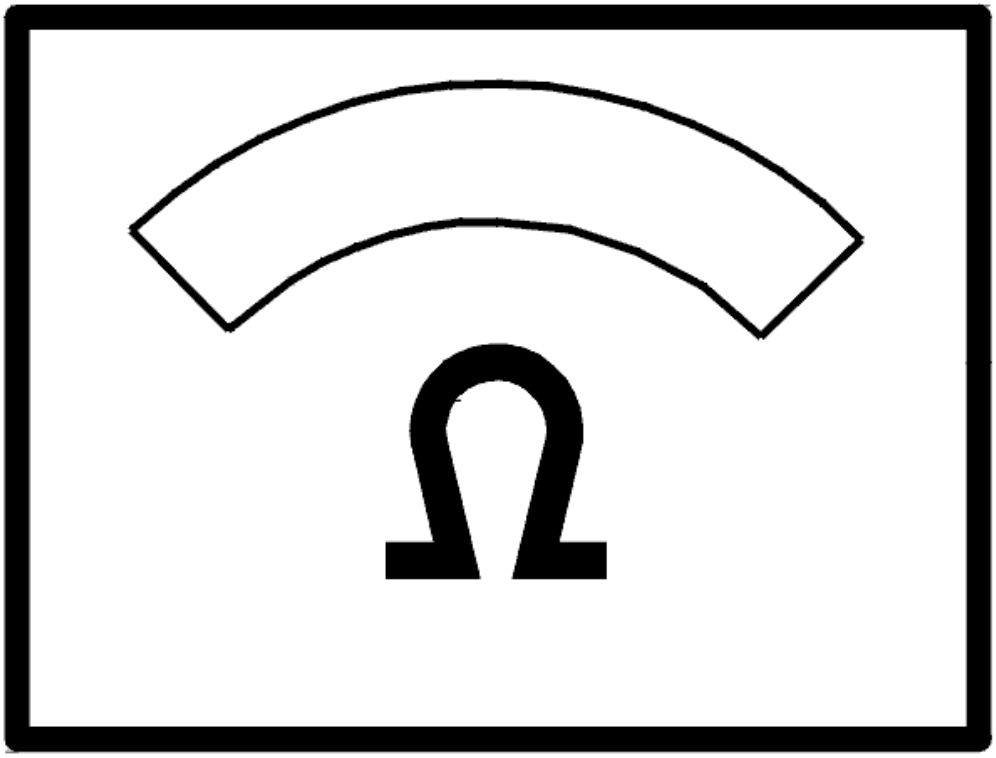

Fig. 194: Identifying Ohms Display
Courtesy of VOLVO CARS CORPORATION

- **Continue**

  Refer to **INFORMATION**

INFORMATION

FAULT-TRACING INFORMATION

If the fault is intermittent, do not verify fault-tracing if the fault does not recur.

It is possible to view the information again, or leave fault-tracing for this diagnostic trouble code (DTC).

TCM-0020: TRANSMISSION OUTPUT SPEED SENSOR. FAULTY SIGNAL.

PERMANENT FAULT (AW50/51 AWD; AW55-50/51SN; 2003-2007)

DIAGNOSTIC TROUBLE CODE (DTC) INFORMATION

see **DIAGNOSTIC TROUBLE CODE (DTC) INFORMATION**

FAULTY SIGNAL. PERMANENT FAULT

CHECKS

CHECKING THE TRANSMISSION OUTPUT SPEED SENSOR SIGNAL

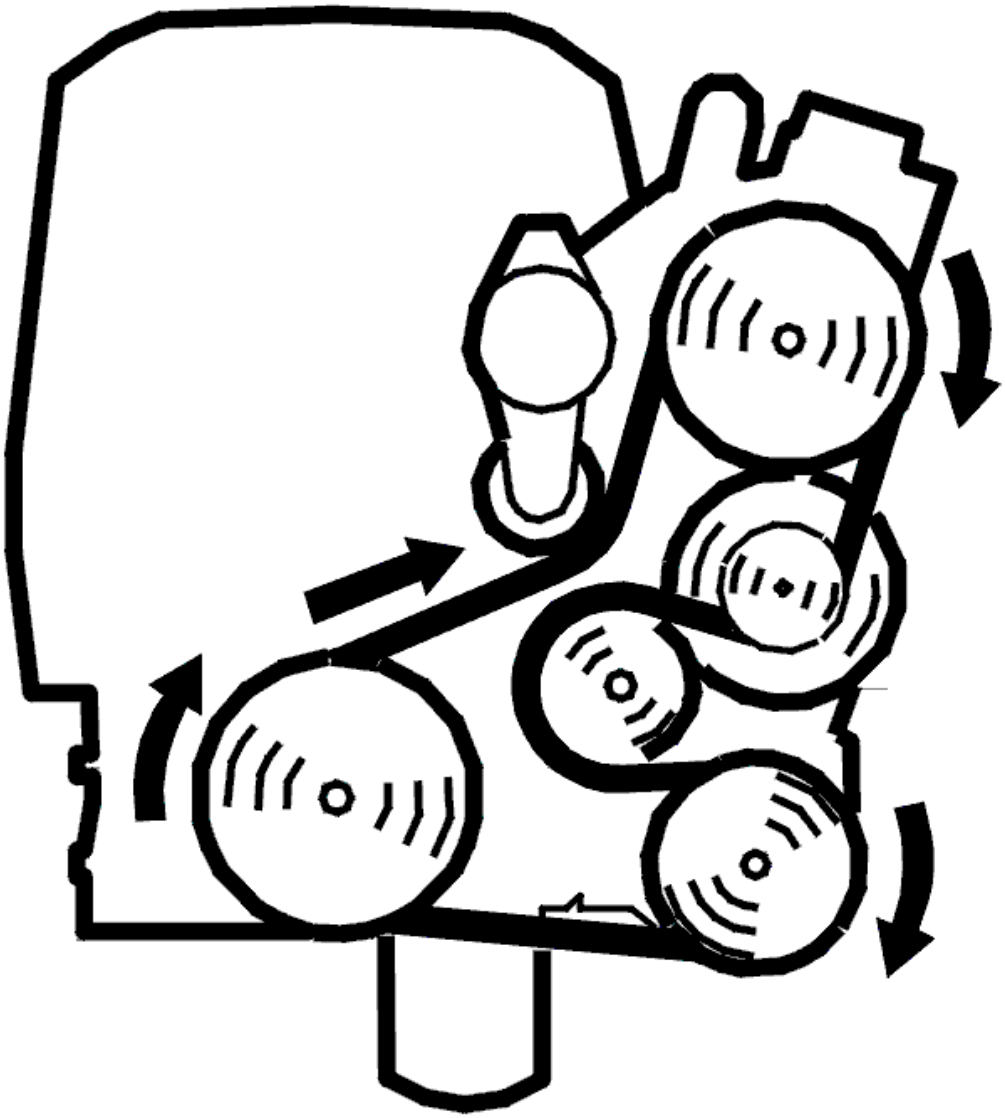

Fig. 195: Identifying Belt Routing
Courtesy of VOLVO CARS CORPORATION

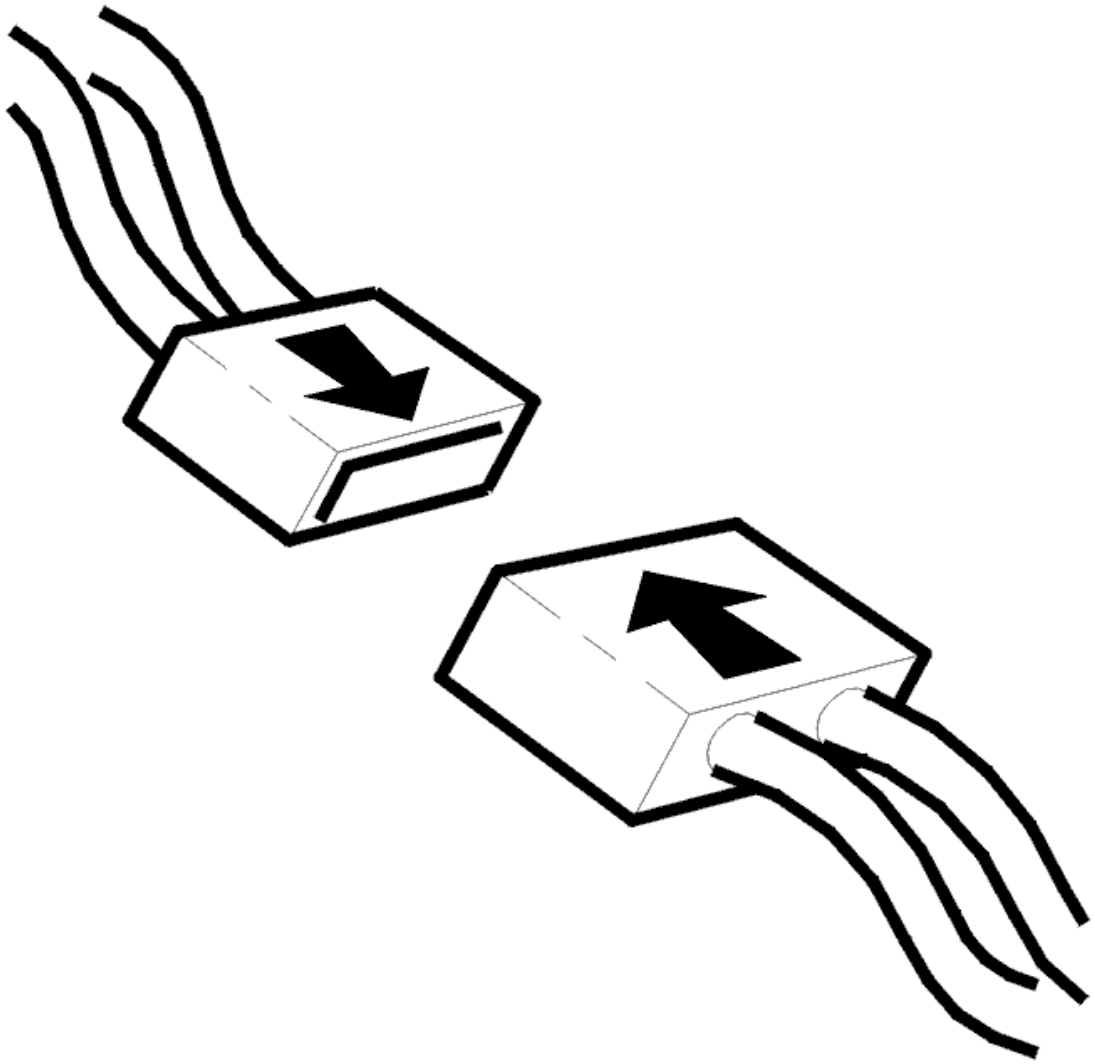

Fig. 196: Identifying Connector(s) Reinstallation
Courtesy of VOLVO CARS CORPORATION

- Ignition off
- Check the control module and transmission output speed sensor connectors. Check for contact resistance and oxidation according to **CONTACT RESISTANCE AND OXIDATION**
- Reinstall the components, reconnect the connectors etc.
- Raise the car so that the drive wheels can rotate freely
- Engine idling
- Gear selector in position D
- Read off the transmission output speed signal.

  Check that the speed increases with engine speed (RPM). If the speed is updated, the cause of the fault was loose connections in the control module or vehicle speed sensor (VSS) connectors.

NOTE: **A diagnostic trouble code (DTC) may be stored in the ABS system when the rear wheels are stationary and the front wheels rotate. Erase any diagnostic trouble codes (DTCs) in the ABS system after completing fault-tracing.**

Other information:

- To disconnect the transmission control module (TCM), see **TRANSMISSION CONTROL MODULE (TCM), REPLACING**
- To disconnect the transmission connectors, see **CONNECTORS, TRANSMISSION, DISCONNECTING / CONNECTING**
- For information about signals, see **SIGNAL DESCRIPTION. TRANSMISSION CONTROL MODULE (TCM)** .

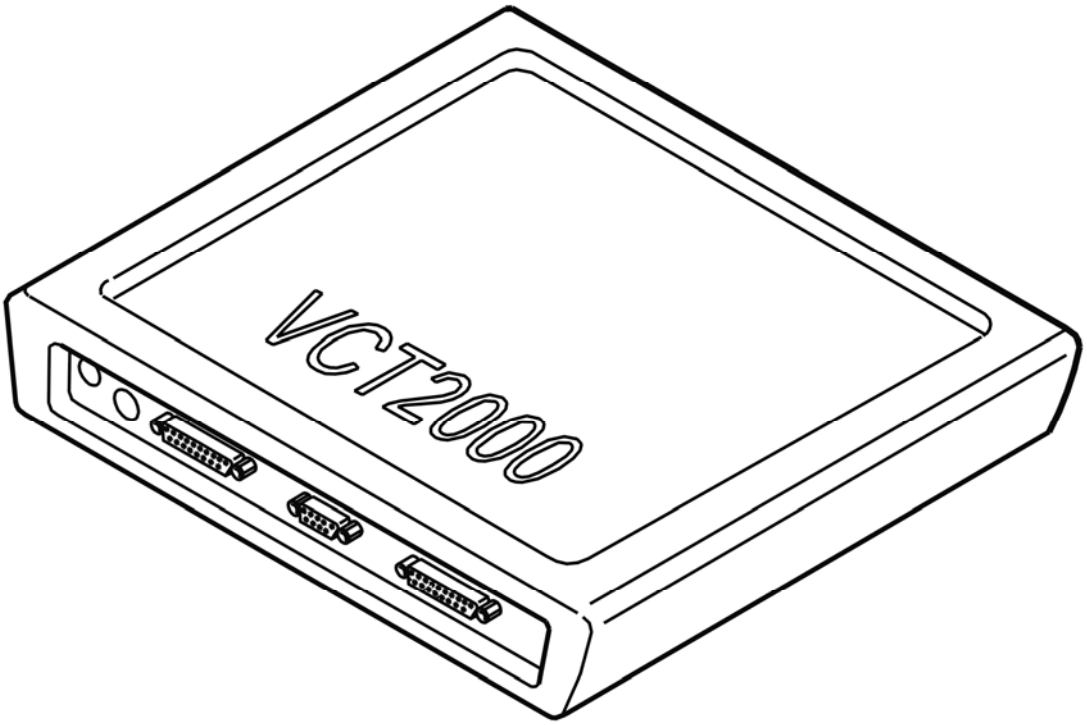

Fig. 197: Identifying VCT2000 Diagnostic Tool Symbol In VIDA
Courtesy of VOLVO CARS CORPORATION

Does the speed increase with engine speed (RPM)?

- **YES**

  OKAY: Troubleshooting has been completed.

- **NO**

  Refer to **CHECKING WIRING AND SENSORS**

CHECKING WIRING AND SENSORS

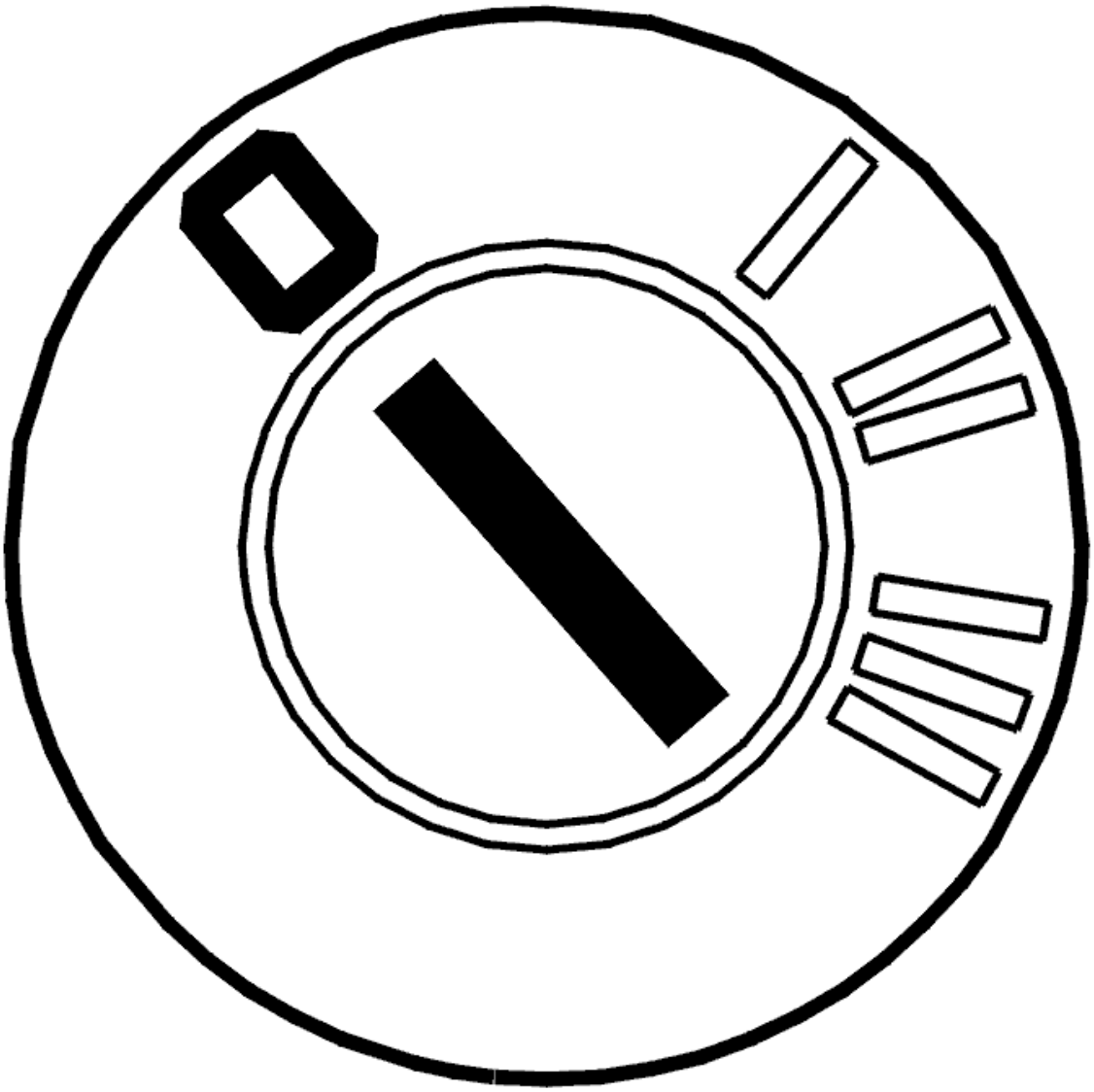

Fig. 198: Identifying Ignition OFF
Courtesy of VOLVO CARS CORPORATION

- Ignition off
- Connect the breakout box.

  Check the power supply cable between transmission output speed sensor connector terminal #A4 (control module side) and control module terminal #57 (#A57). Check for an open-circuit according to **OPEN-CIRCUIT, PERMANENT FAULTS** . Check for a short-circuit to ground according to **SHORT-CIRCUIT TO GROUND, PERMANENT FAULTS** . Check for a short-circuit to supply voltage

according to **SHORT-CIRCUIT TO SUPPLY VOLTAGE. PERMANENT FAULTS** .

Check the signal cable between transmission output speed sensor connector terminal #A3 (control module side) and control module terminal #39 (#A39). Check for an open-circuit according to **OPEN-CIRCUIT, PERMANENT FAULTS** . Check for a short-circuit to ground according to **SHORT-CIRCUIT TO GROUND, PERMANENT FAULTS** . Check for a short-circuit to supply voltage according to **SHORT-CIRCUIT TO SUPPLY VOLTAGE. PERMANENT FAULTS** .

HINT: With the control module connected, the transmission output speed sensor disconnected and the ignition on, the voltage between transmission output speed sensor connector terminals #A3 and #A4 must be approximately 1-3 V below Ubat.

Remedy as necessary.

Other information:

- To connect the breakout box, see **CONNECTING THE BREAKOUT BOX**
- To disconnect the transmission connectors, see **CONNECTORS, TRANSMISSION, DISCONNECTING / CONNECTING**
- To check or replace the transmission output speed sensor, see **INPUT SPEED SENSOR/OUTPUT SPEED SENSOR, REPLACING**
- For information about signals, see **SIGNAL DESCRIPTION. TRANSMISSION CONTROL MODULE (TCM)** .

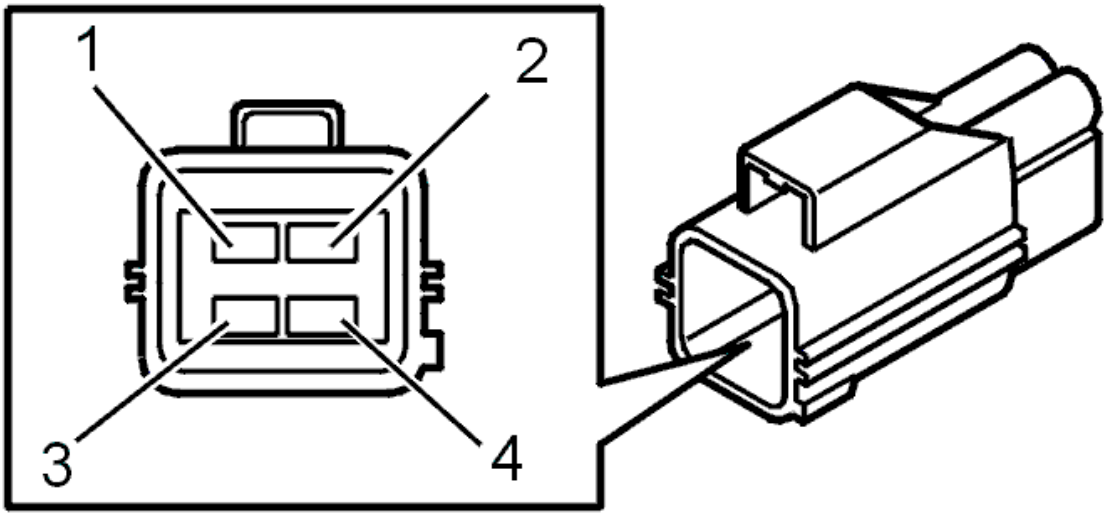

Fig. 199: Identifying Transmission Output Speed Sensor Terminals
Courtesy of VOLVO CARS CORPORATION

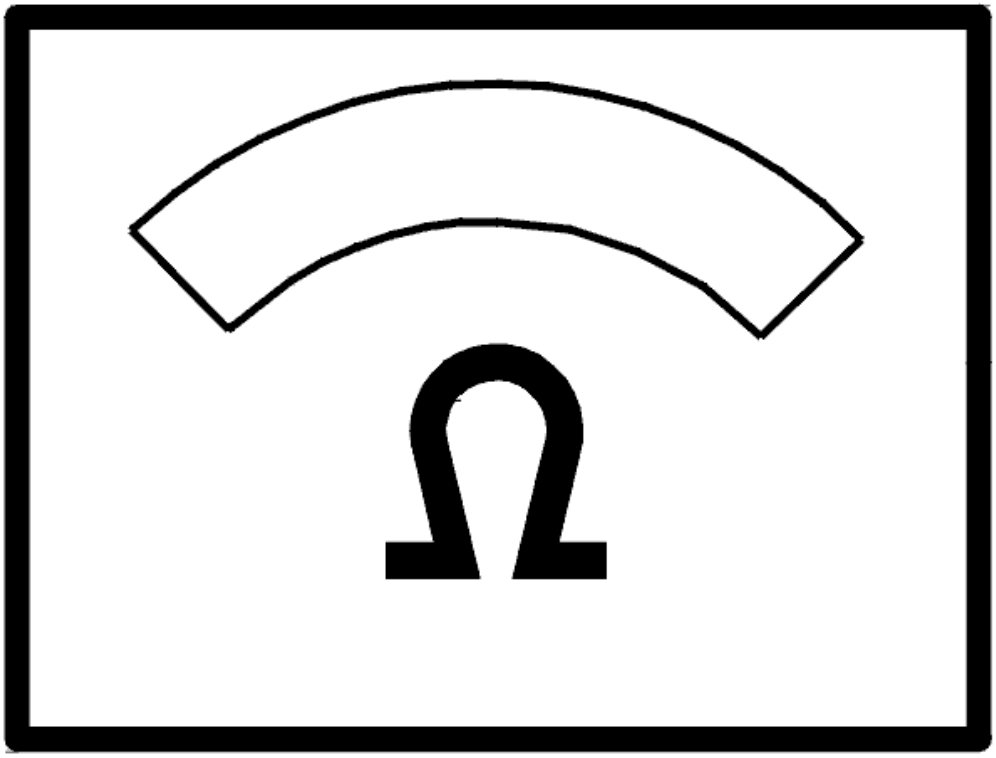

Fig. 200: Identifying Ohms Display
Courtesy of VOLVO CARS CORPORATION

Was a fault detected?

- **YES**

  Refer to **VERIFICATION**

- **NO**

  FAULT NOT FOUND: Troubleshooting has been completed.

VERIFICATION

VERIFICATION

HINT: After carrying out the repair, check that the fault has been remedied.

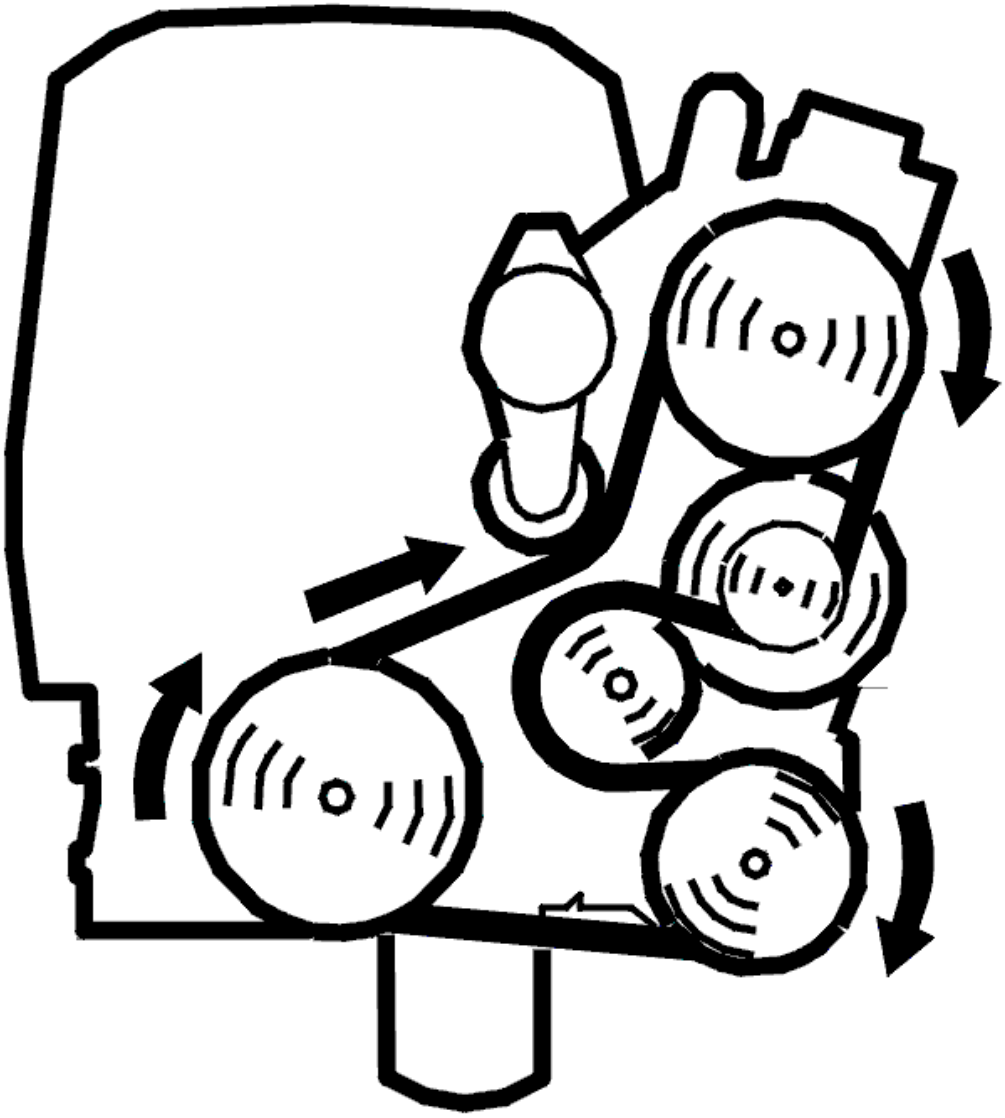

Fig. 201: Identifying Belt Routing
Courtesy of VOLVO CARS CORPORATION

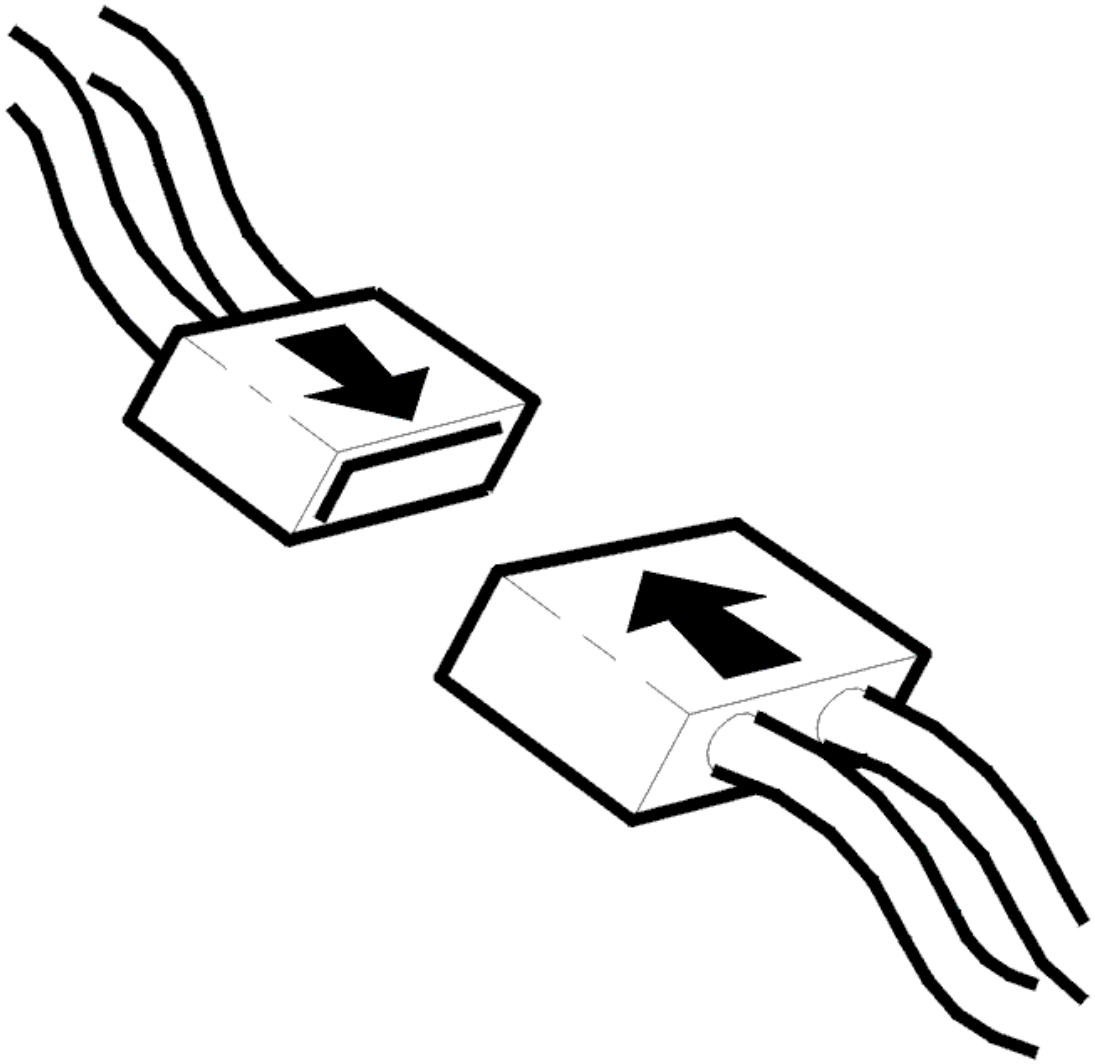

Fig. 202: Identifying Connector(s) Reinstallation
Courtesy of VOLVO CARS CORPORATION

- Ignition off.
- Reinstall connectors, components etc.
- Raise car so that drive wheels are unimpeded.
- Start the engine and let it idle.
- Shift gear selector to position D so that the drive wheels begin to rotate.
- Read off the transmission speed.

Check that speed is updated

NOTE: **When the rear wheels are stationary and the front wheels rotate, diagnostic trouble codes (DTCs) can be stored in the ABS system. Erase**

any diagnostic trouble codes (DTCs) stored in the ABS system after fault-tracing.

NOTE: **Ensure that the wheels are not rotating when the gear selector is moved.**

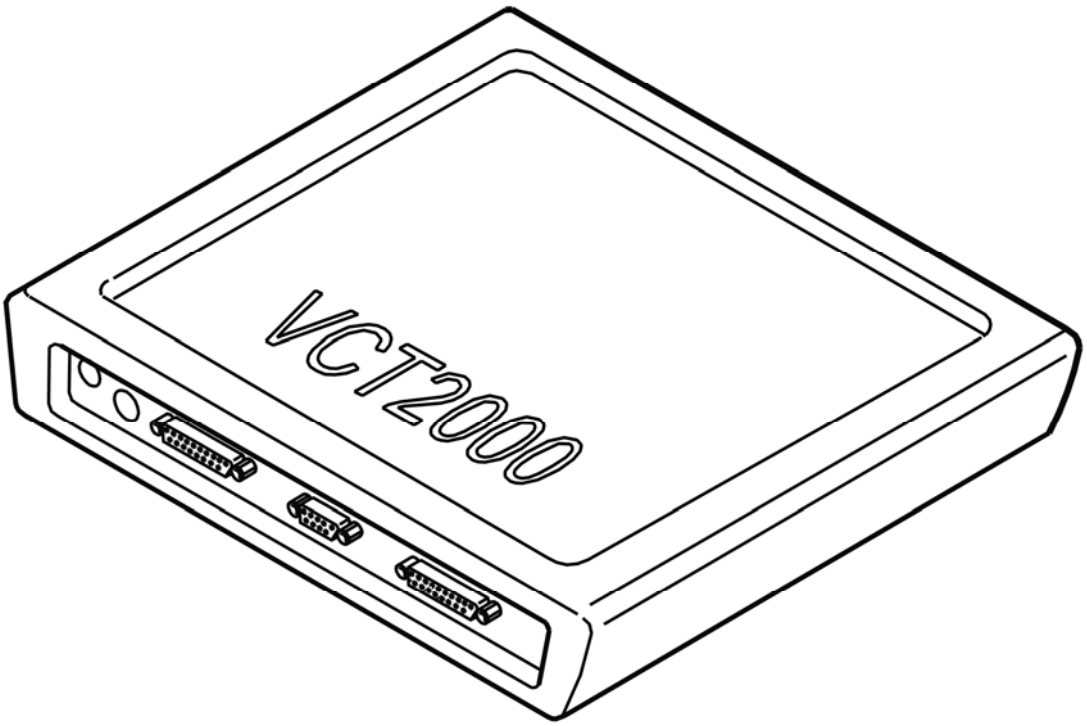

Fig. 203: Identifying VCT2000 Diagnostic Tool Symbol In VIDA
Courtesy of VOLVO CARS CORPORATION

Was speed updated?

- **YES**

  VERIFIED: Troubleshooting has been completed.

- **NO**

  Refer to **INFORMATION**

INFORMATION

FAULT-TRACING INFORMATION

The fault should have been detected and remedied. As this is not the case fault-tracing has failed.

Exit fault-tracing for this diagnostic trouble code (DTC) or make another attempt.

TCM-0020: VEHICLE SPEED SENSOR. FAULTY SIGNAL. INTERMITTENT FAULT (4T65 AWD; 2003-2006)

DIAGNOSTIC TROUBLE CODE (DTC) INFORMATION

Condition

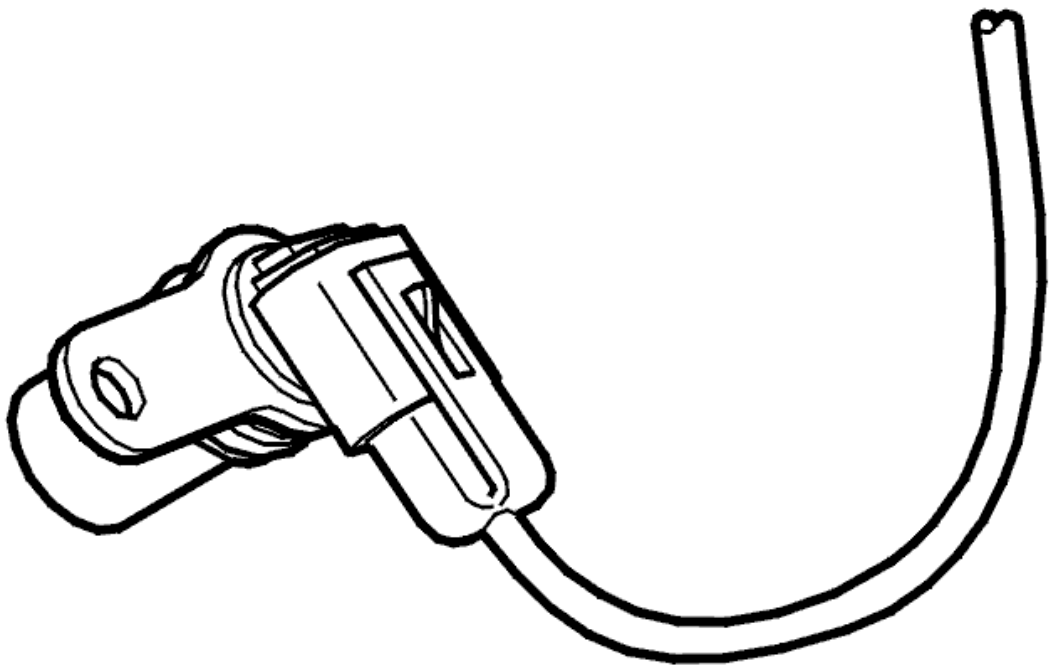

Fig. 204: Identifying Transmission Speed Sensor
Courtesy of VOLVO CARS CORPORATION

The automatic transmission control module (TCM) receives speed signals from the ABS control module and from the transmission speed sensor on the transmission. The transmission control module (TCM) uses the signals to select the correct gear. The control module derives and compares the speed signal from the ABS system with the transmission speed and the engine speed (RPM) at the transmission. Diagnostic trouble code (DTC) TCM- 0020 is stored if the control module registers that the speed signal from the ABS system does not correspond with the transmission speed or the engine speed (RPM).

Substitute Value

- None.

Possible Source

- Contact resistance in the terminals.
- Open-circuit, short-circuit to ground or short-circuit to supply voltage in the power supply.
- Open-circuit, short-circuit to ground or short-circuit to supply voltage in the signal cable.
- Defective transmission speed sensor.

Fault symptom[s]

- General orange warning lamp lit.
- Malfunction indicator lamp (MIL) lit.
- No lock-up function.
- Harsh gear shifting.

HINT: Harsh gear shifting can be caused by:

- No reduction of line pressure when shifting.
- No reduction of line pressure when moving the gear selector between positions P-R, N-R and N-D.
- No torque limiting request to engine control module (ECM) when shifting.

FAULTY SIGNAL. INTERMITTENT FAULT

INTERMITTENT FAULT

Check the control module and vehicle speed sensor (VSS) connectors for contact resistance and oxidation according to **CONTACT RESISTANCE AND OXIDATION** .

Check the wiring between control module terminal #59 (#A59) and transmission connector terminal #S (#A16). Check for an intermittent open-circuit. See **OPEN-CIRCUIT, INTERMITTENT FAULTS** . Check for an intermittent short-circuit to ground. See **SHORT-CIRCUIT TO GROUND, INTERMITTENT FAULTS** . Check for an intermittent short-circuit to supply voltage. See **SHORT-CIRCUIT TO SUPPLY VOLTAGE, INTERMITTENT FAULTS** . Also check the wiring between control module terminal #41 (#A41) and transmission connector terminal #V (#A17). Check for an intermittent open-circuit. See **OPEN-CIRCUIT, INTERMITTENT FAULTS** . Check for an intermittent short-circuit to ground. See **SHORT-CIRCUIT TO GROUND, INTERMITTENT FAULTS** . Check for an intermittent short-circuit to supply voltage. See **SHORT-CIRCUIT TO SUPPLY VOLTAGE, INTERMITTENT FAULTS** .

Remedy as necessary.

Other information:

- To connect the breakout box, see **CONNECTING THE BREAKOUT BOX**
- To check or replace the transmission output speed sensor, see **OUTPUT SPEED SENSOR TRANSMISSION, REPLACING**
- For information about signals, see **SIGNAL SPECIFICATION** .

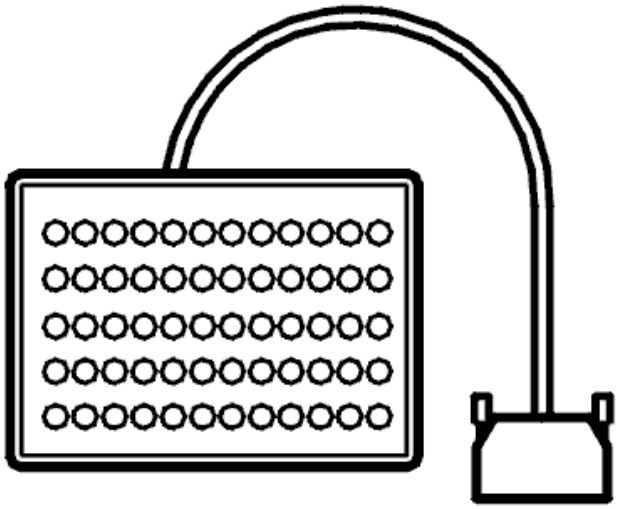

Fig. 205: Identifying Breakout Box
Courtesy of VOLVO CARS CORPORATION

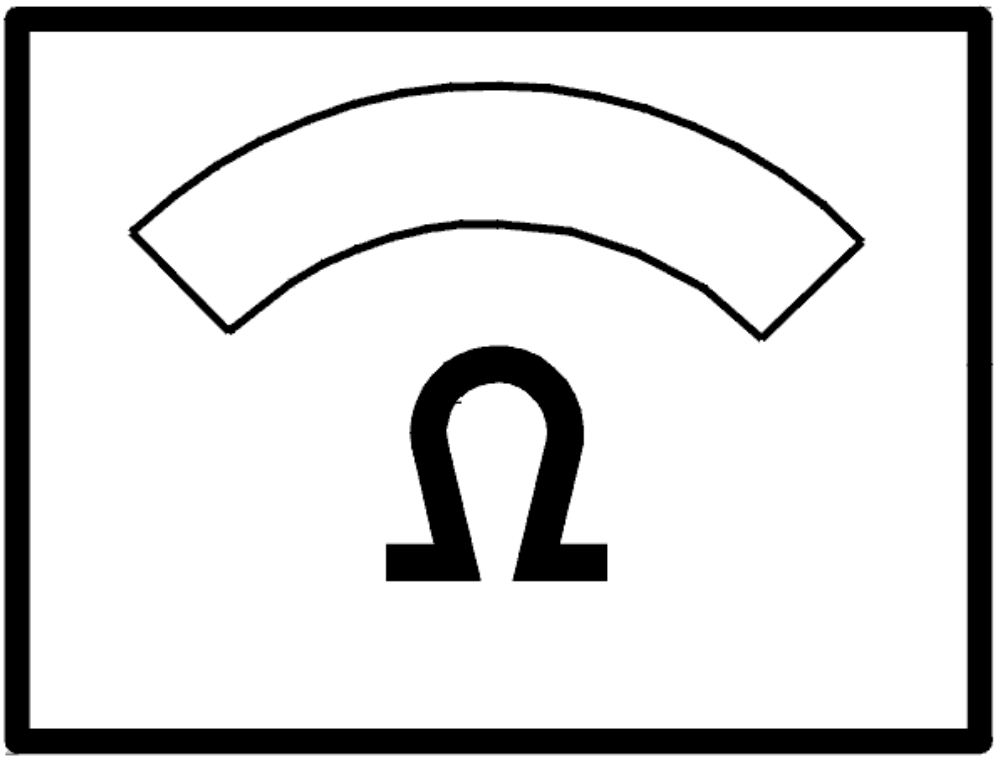

Fig. 206: Identifying Ohms Display
Courtesy of VOLVO CARS CORPORATION

- **Continue**

  Refer to **INFORMATION**

INFORMATION

FAULT-TRACING INFORMATION

If the fault is intermittent, do not verify fault-tracing if the fault does not recur.

It is possible to view the information again, or leave fault-tracing for this diagnostic trouble code (DTC).

TCM-0020: VEHICLE SPEED SENSOR. FAULTY SIGNAL. PERMANENT

FAULT (4T65 AWD; 2003-2006)

DIAGNOSTIC TROUBLE CODE (DTC) INFORMATION

see **DIAGNOSTIC TROUBLE CODE (DTC) INFORMATION**

FAULTY SIGNAL. PERMANENT FAULT

CHECKS

CHECKING THE TRANSMISSION OUTPUT SPEED SENSOR SIGNAL

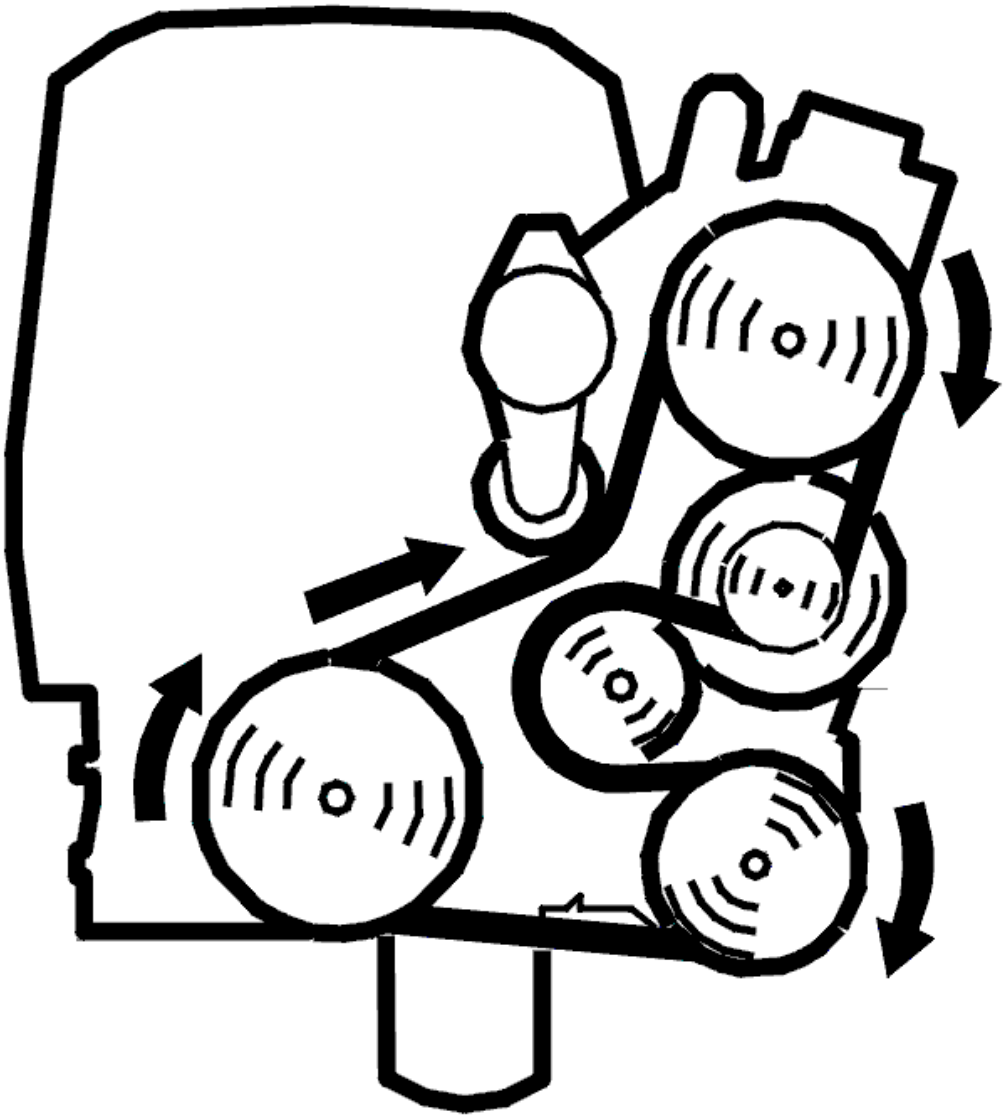

Fig. 207: Identifying Belt Routing
Courtesy of VOLVO CARS CORPORATION

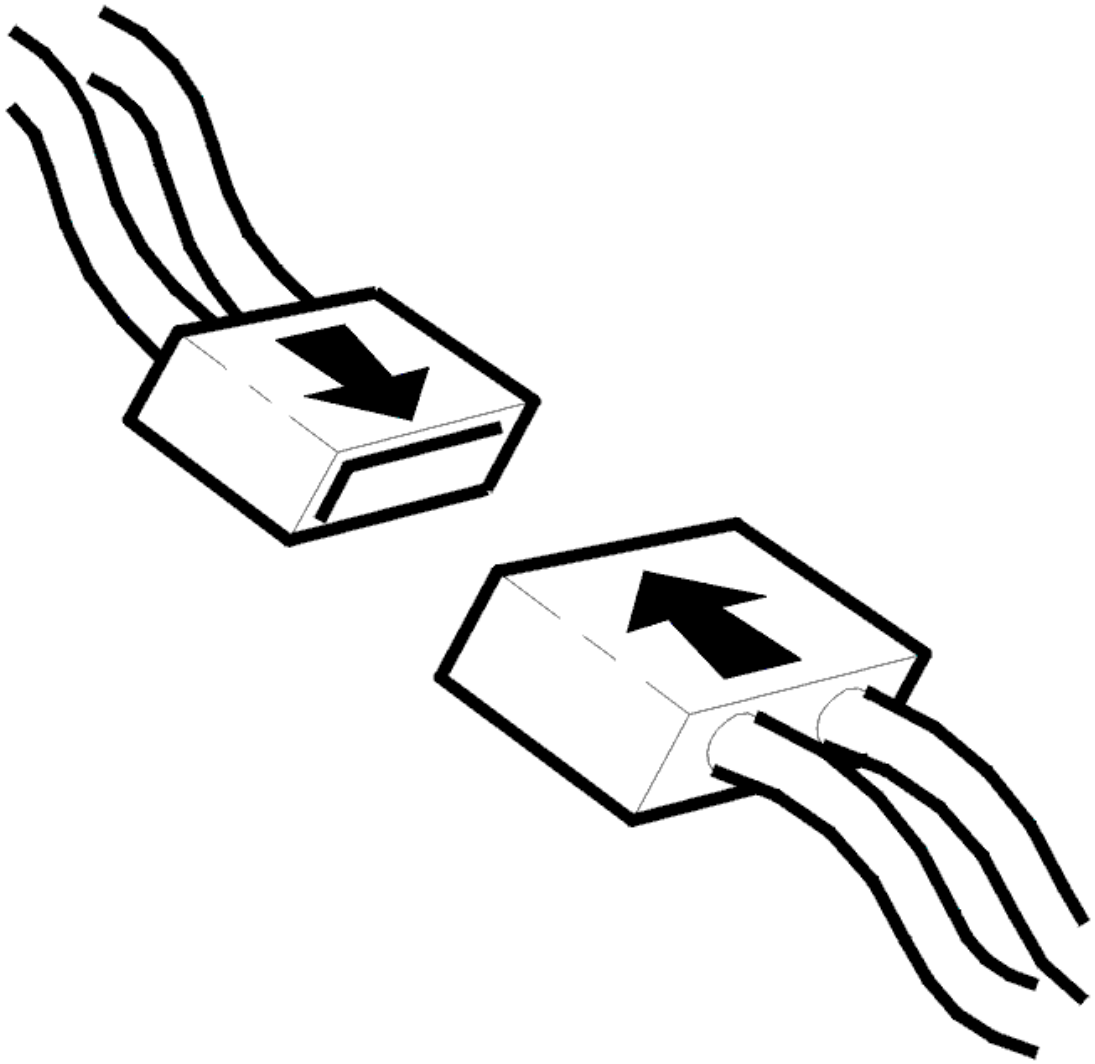

Fig. 208: Identifying Connector(s) Reinstallation
Courtesy of VOLVO CARS CORPORATION

- Ignition off
- Check the control module and transmission output speed sensor connectors. Check for contact resistance and oxidation according to **CONTACT RESISTANCE AND OXIDATION**
- Reinstall the components, reconnect the connectors etc.
- Raise the car so that the drive wheels can rotate freely
- Engine idling
- Gear selector in position D
- Read off the transmission output speed signal.

  Check that the speed increases with engine speed (RPM). If the speed is updated, the cause of the fault was loose connections in the control module or vehicle speed sensor (VSS) connectors.

NOTE: **A diagnostic trouble code (DTC) may be stored in the ABS system when the rear wheels are stationary and the front wheels rotate. Erase any diagnostic trouble codes (DTCs) in the ABS system after completing fault-tracing.**

Other information:

- To access the control module connector, see **CONNECTING THE BREAKOUT BOX**
- To access the transmission connector, see **CONNECTING THE BREAKOUT BOX, GM AUTOMATIC TRANSMISSIONS** .

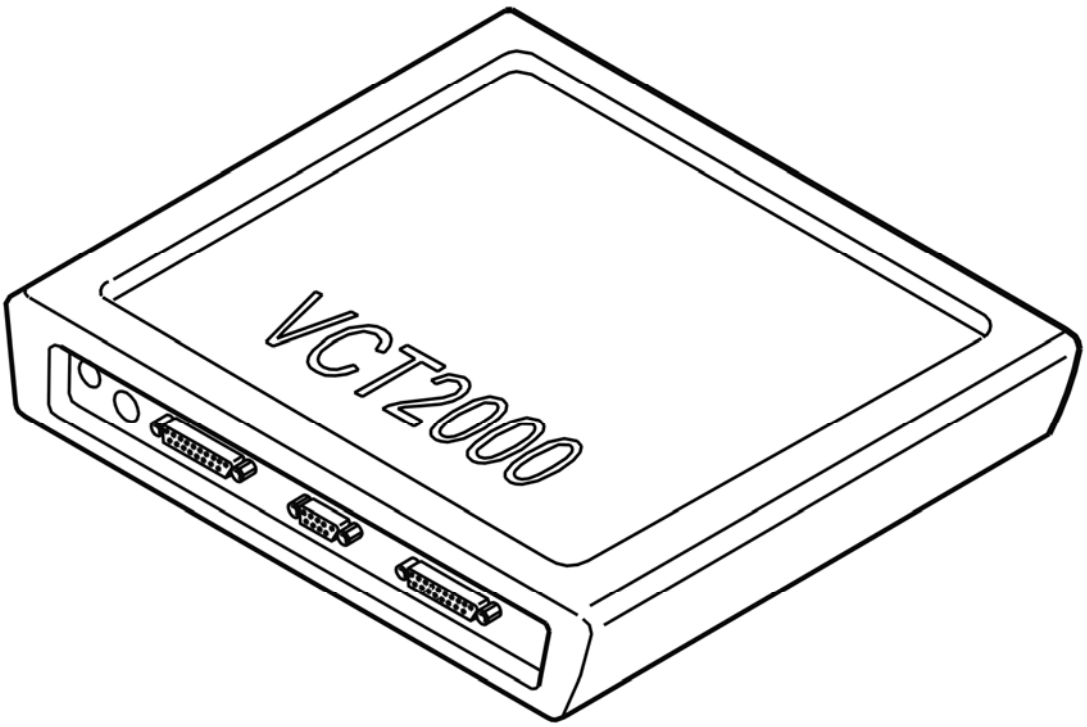

Fig. 209: Identifying VCT2000 Diagnostic Tool Symbol In VIDA
Courtesy of VOLVO CARS CORPORATION

Does the speed increase with engine speed (RPM)?

- **YES**

  OKAY: Troubleshooting has been completed.

- **NO**

  Refer to **CHECKING WIRING AND SENSORS**

CHECKING WIRING AND SENSORS

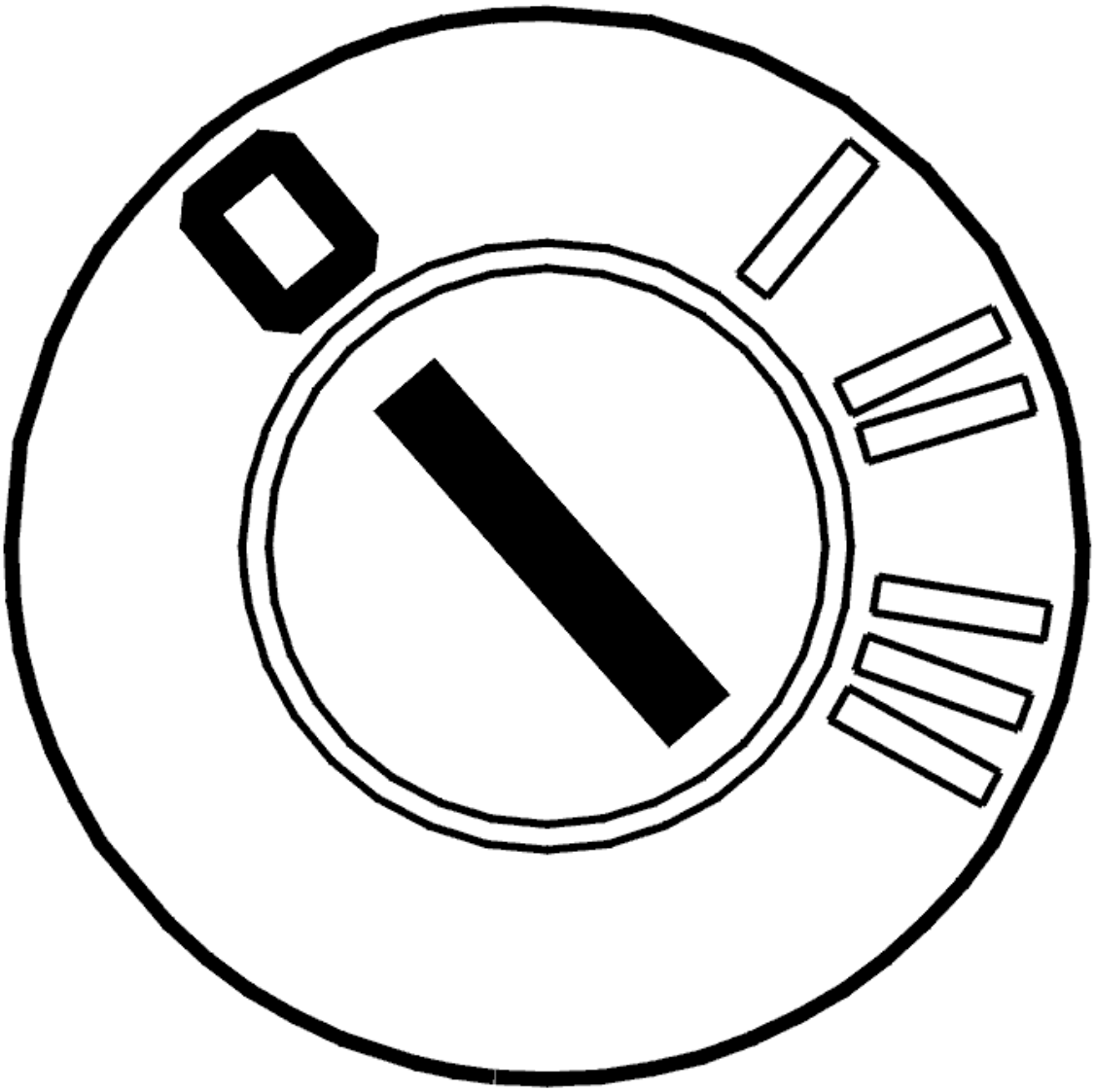

Fig. 210: Identifying Ignition OFF
Courtesy of VOLVO CARS CORPORATION

- Ignition off.

  Check the power supply cable between vehicle speed sensor (VSS) connector terminal #1 (control module side) and control module terminal #57 (#A57). Check for an open-circuit according to **OPEN-CIRCUIT, PERMANENT FAULTS** . Check for a short-circuit to ground according to **SHORT-CIRCUIT TO GROUND, PERMANENT FAULTS** . Check for a short-circuit to supply voltage according to **SHORT-CIRCUIT TO SUPPLY VOLTAGE. PERMANENT FAULTS** .

  HINT: With the control module connected and the ignition on, the voltage between speed sensor connector terminal #1 and ground (breakout box terminal #53) must be approximately 1-3 V below Ubat.

Check the signal cable between speed sensor connector terminal #2 (control module side) and control module terminal #39 (#A39). Check for an open-circuit. See **OPEN-CIRCUIT, PERMANENT FAULTS** . Check for a short-circuit to ground. See **SHORT-CIRCUIT TO GROUND, PERMANENT FAULTS** . Check for a short-circuit to supply voltage. See **SHORT-CIRCUIT TO SUPPLY VOLTAGE. PERMANENT FAULTS** .

Remedy as necessary.

Other information:

- To connect the breakout box, see **CONNECTING THE BREAKOUT BOX**
- To replace the vehicle speed sensor (VSS), see **OUTPUT SPEED SENSOR TRANSMISSION, REPLACING**
- For information about signals, see **SIGNAL SPECIFICATION** .

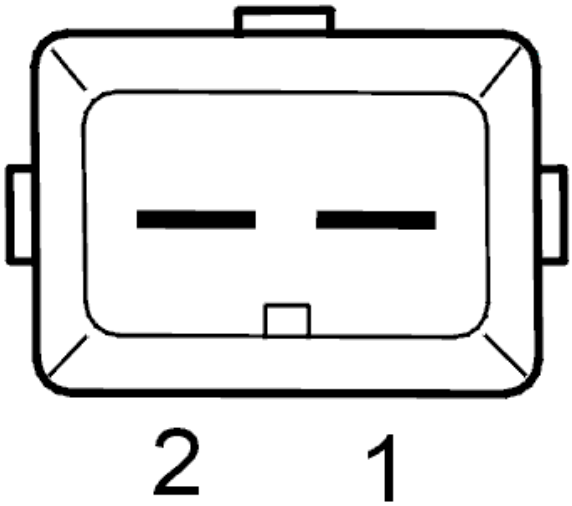

Fig. 211: Identifying Vehicle Speed Sensor (VSS) Connector Terminals
Courtesy of VOLVO CARS CORPORATION

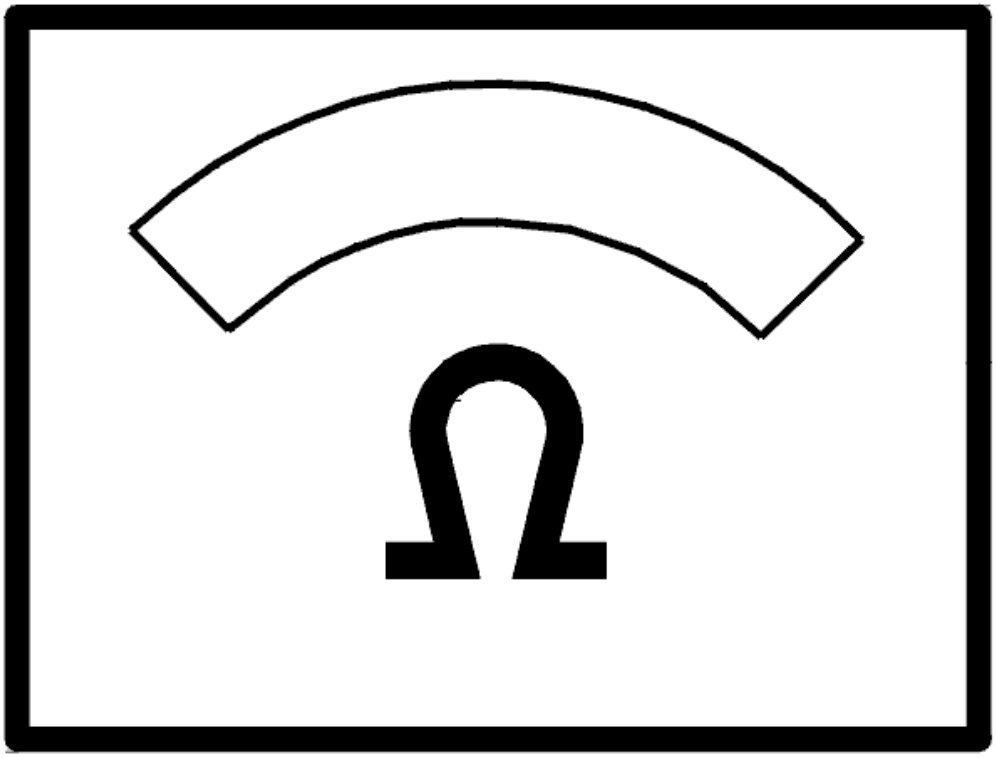

Fig. 212: Identifying Ohms Display
Courtesy of VOLVO CARS CORPORATION

Was a fault detected?

- **YES**

  Refer to **VERIFICATION**

- **NO**

  FAULT NOT FOUND: Troubleshooting has been completed.

VERIFICATION

VERIFICATION

HINT: After carrying out the repair, check that the fault has been remedied.

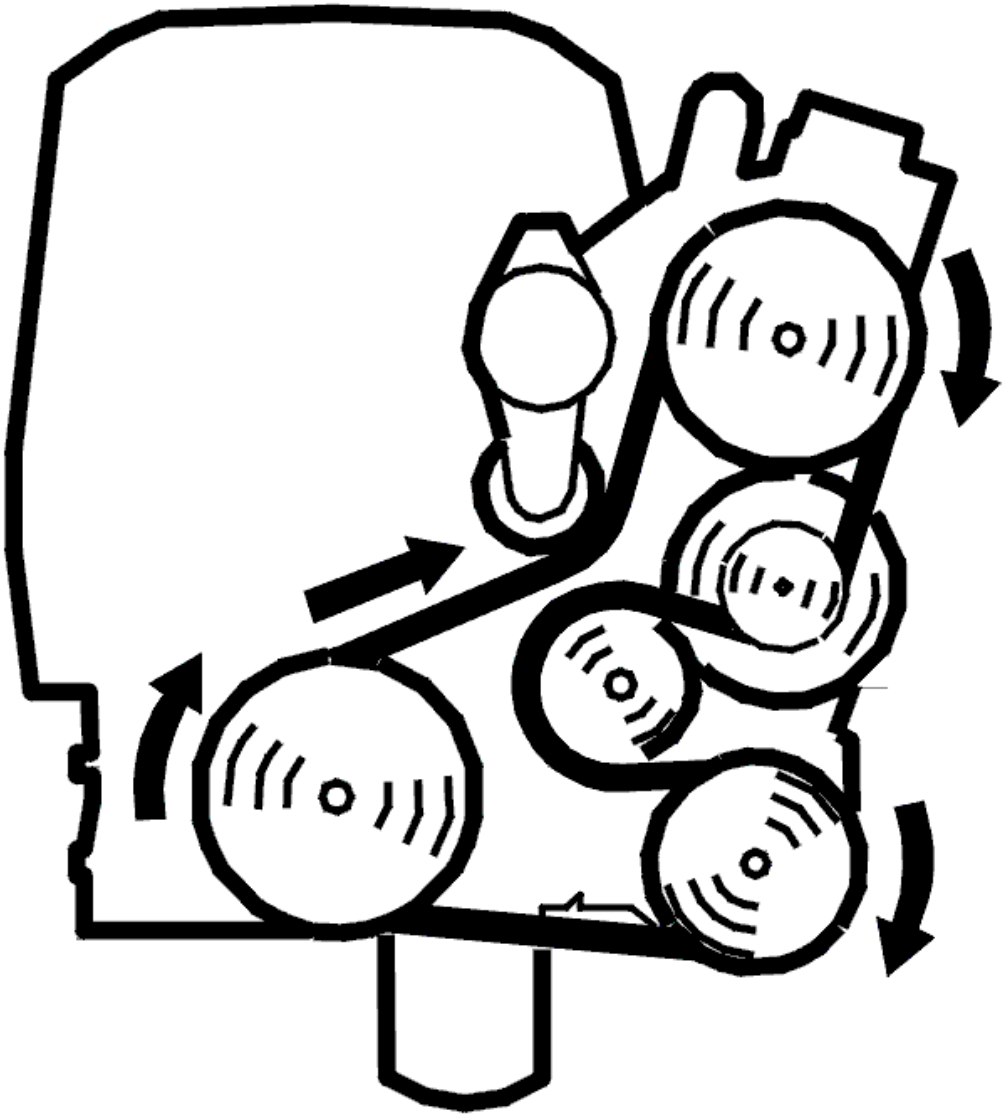

Fig. 213: Identifying Belt Routing
Courtesy of VOLVO CARS CORPORATION

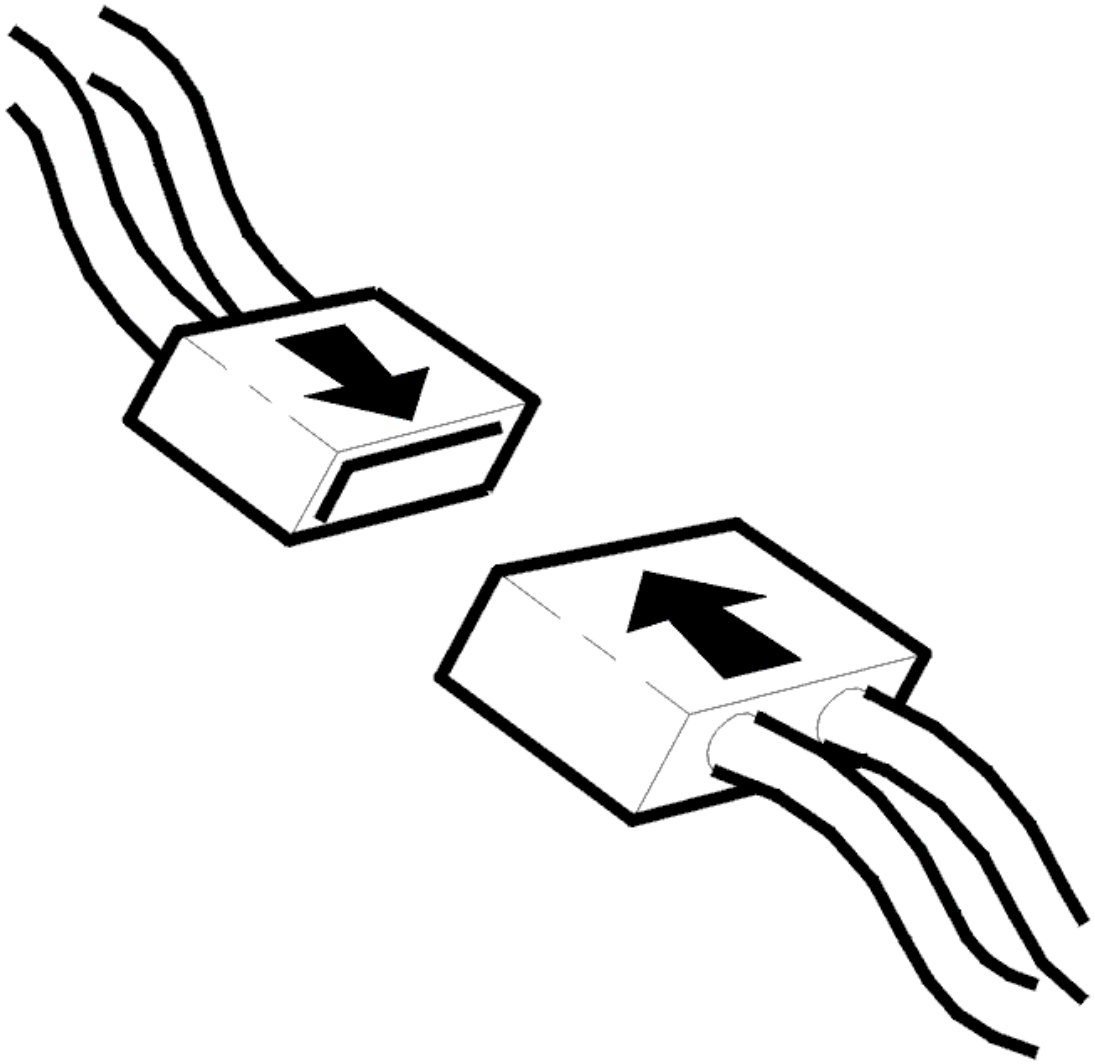

Fig. 214: Identifying Connector(s) Reinstallation
Courtesy of VOLVO CARS CORPORATION

- Ignition off.
- Reinstall connectors, components etc.
- Raise car so that drive wheels are unimpeded.
- Start the engine and let it idle.
- Shift gear selector to position D so that the drive wheels begin to rotate.
- Read off the transmission speed.

Check that speed is updated

NOTE: **When the rear wheels are stationary and the front wheels rotate, diagnostic trouble codes (DTCs) can be stored in the ABS system. Erase**

any diagnostic trouble codes (DTCs) stored in the ABS system after fault-tracing.

NOTE: **Ensure that the wheels are not rotating when the gear selector is moved.**

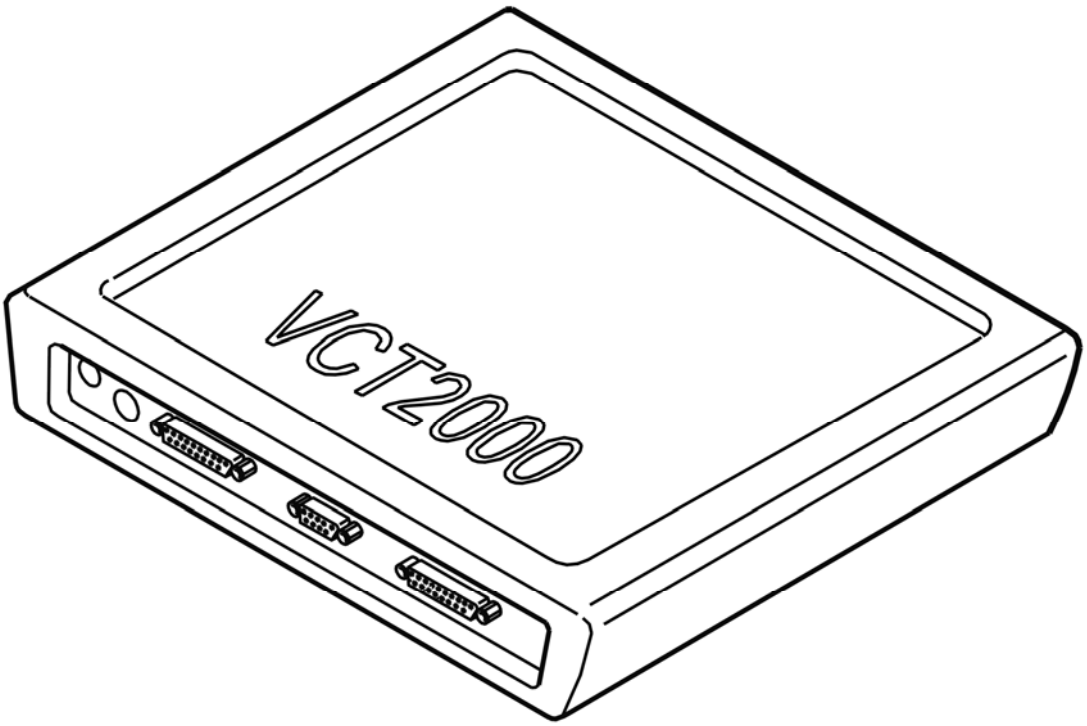

Fig. 215: Identifying VCT2000 Diagnostic Tool Symbol In VIDA
Courtesy of VOLVO CARS CORPORATION

Was speed updated?

- **YES**

  VERIFIED: Troubleshooting has been completed.

- **NO**

  Refer to **INFORMATION**

INFORMATION

FAULT-TRACING INFORMATION

The fault should have been detected and remedied. As this is not the case fault-tracing has failed.

Exit fault-tracing for this diagnostic trouble code (DTC) or make another attempt.

TCM-0023: INPUT SPEED SENSOR. SIGNAL MISSING. INTERMITTENT FAULT (4T65 AWD; 2003-2006)

DIAGNOSTIC TROUBLE CODE (DTC) INFORMATION

Condition

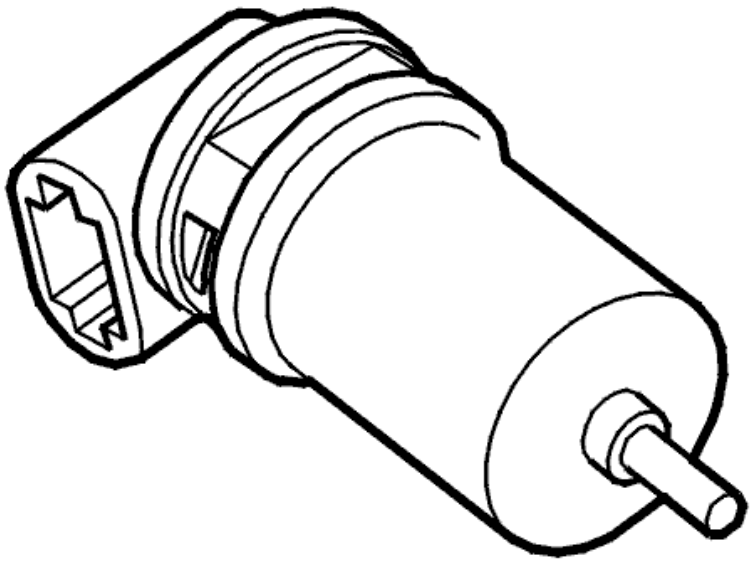

Fig. 216: Identifying Transmission Speed Sensor
Courtesy of VOLVO CARS CORPORATION

The transmission speed signal is transmitted by a sensor on the transmission. The transmission control module (TCM) uses the signal to determine the input shaft speed after the torque converter. This signal is used to compare the transmission speed and vehicle speed. The transmission control module (TCM) uses this comparison to calculate gear-shift timing. Engine speed (RPM) and vehicle speed data affects the adjustment of system pressure, lock-up function control and engine torque reduction. The result is smooth gear-shifting. The control module calculates and compares the transmission speed, engine speed (RPM) and speed at the transmission. Diagnostic trouble code (DTC) TCM-0023 is stored if the control module registers that the engine speed (RPM) signal is missing.

Substitute Value

- No torque reduction
- No lock-up

Possible Source

- Contact resistance in the terminals.
- Open-circuit on power supply.
- Open-circuit in the signal cable.
- Defective input speed sensor.

Fault symptom[s]

- General orange warning lamp lit.
- Malfunction indicator lamp (MIL) lit.
- No lock-up function.
- Harsh gear shifting.

HINT: Harsh gear shifting can be caused by:

- No reduction of line pressure when shifting.
- No reduction of line pressure when moving the gear selector between positions P-R, N-R and N-D.
- No torque limiting request to engine control module (ECM) when shifting.

SIGNAL MISSING. INTERMITTENT FAULT

INTERMITTENT FAULT

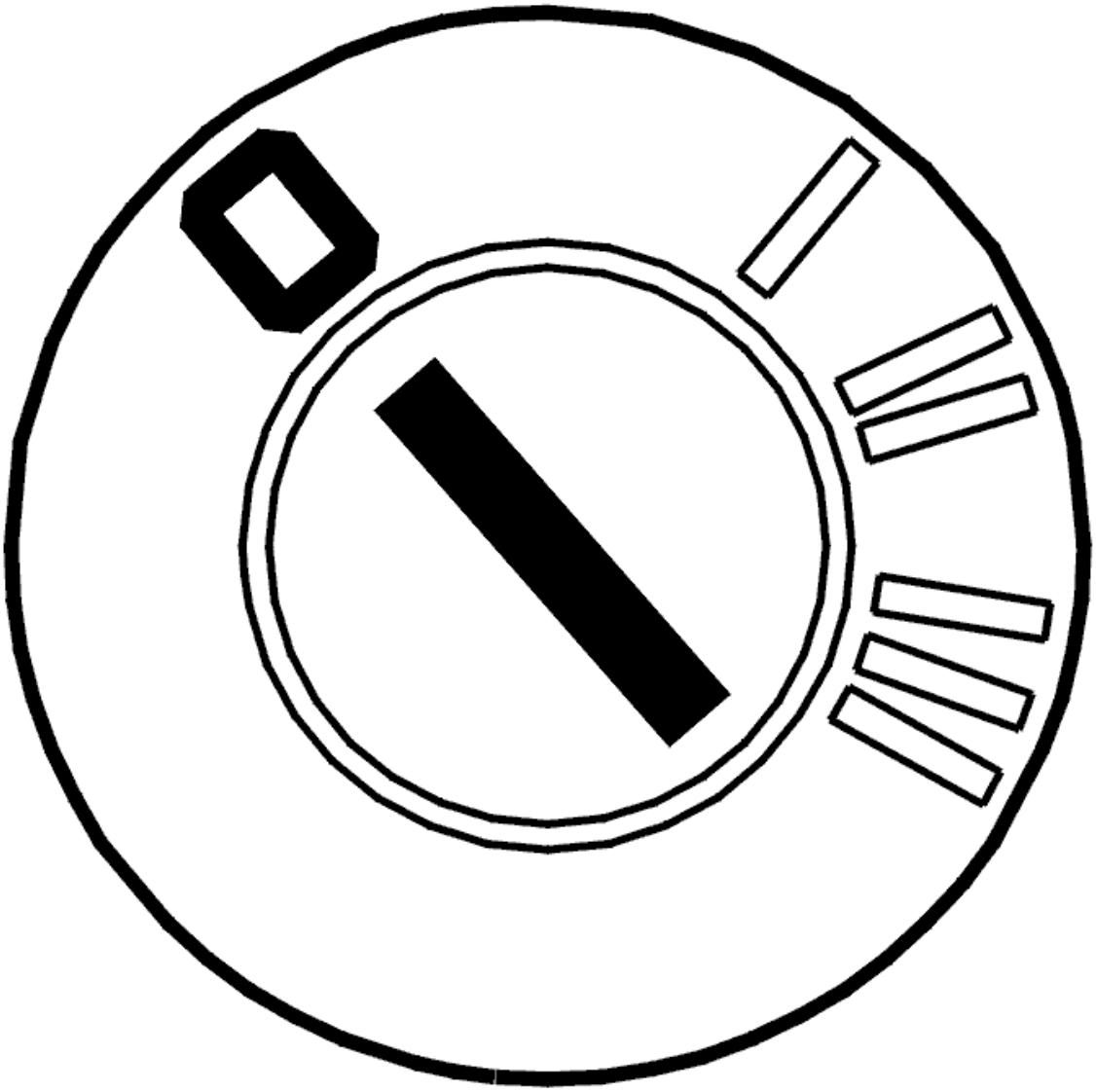

Fig. 217: Identifying Ignition OFF
Courtesy of VOLVO CARS CORPORATION

- Ignition off.

  Check the transmission control module (TCM) and speed sensor connectors for contact resistance and oxidation according to **CONTACT RESISTANCE AND OXIDATION** .

  Check the power supply cable between transmission control module (TCM) terminal A59 and transmission connector terminal 16 for an intermittent open-circuit according to **OPEN-CIRCUIT, INTERMITTENT FAULTS** .

  Check the signal cable between transmission control module (TCM) terminal A41 and transmission connector terminal 19 for an intermittent open-circuit according to **OPEN-CIRCUIT, INTERMITTENT FAULTS** .

Remedy as necessary.

Other information:

- To connect the breakout box, see **CONNECTING THE BREAKOUT BOX** .
- To disconnect the transmission control module (TCM), see **TRANSMISSION CONTROL MODULE (TCM), REPLACING** .
- To disconnect transmission connector, see **CONNECTING THE BREAKOUT BOX, GM AUTOMATIC TRANSMISSIONS** .
- For information about signals, see **SIGNAL SPECIFICATION** .
- For information about signals to the transmission connector, see **SIGNAL DESCRIPTION. CONNECTOR 4T65 EV/EV-GT** .

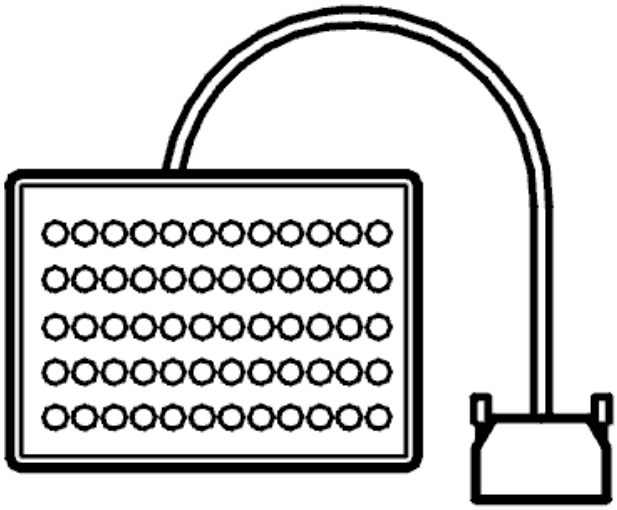

Fig. 218: Identifying Breakout Box
Courtesy of VOLVO CARS CORPORATION

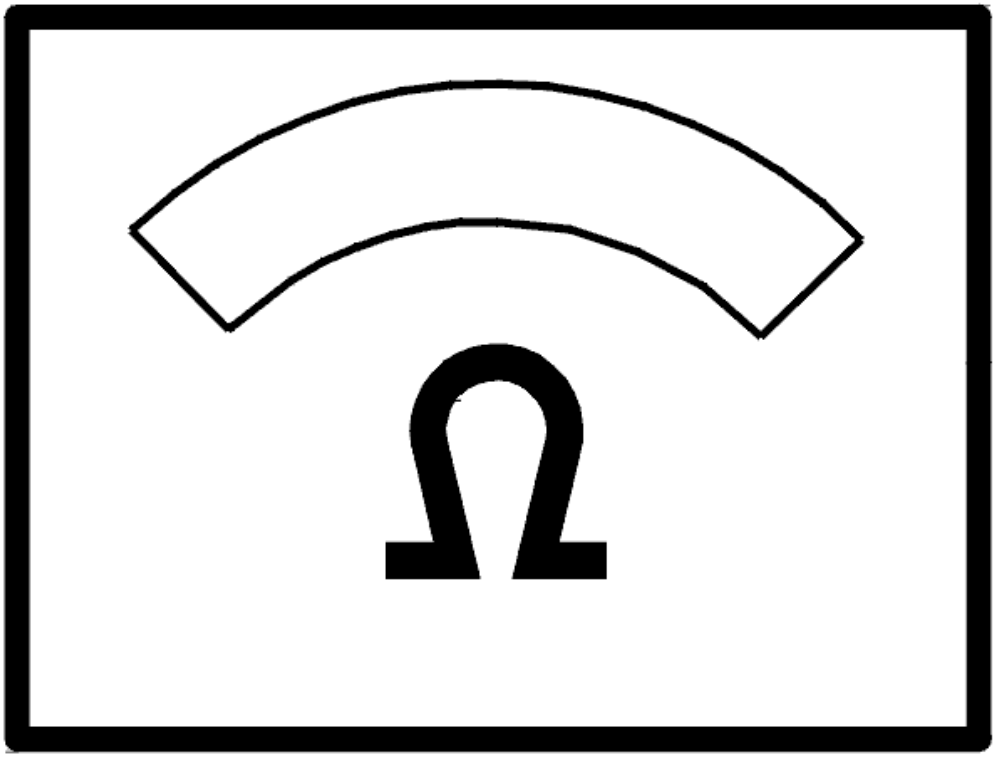

Fig. 219: Identifying Ohms Display
Courtesy of VOLVO CARS CORPORATION

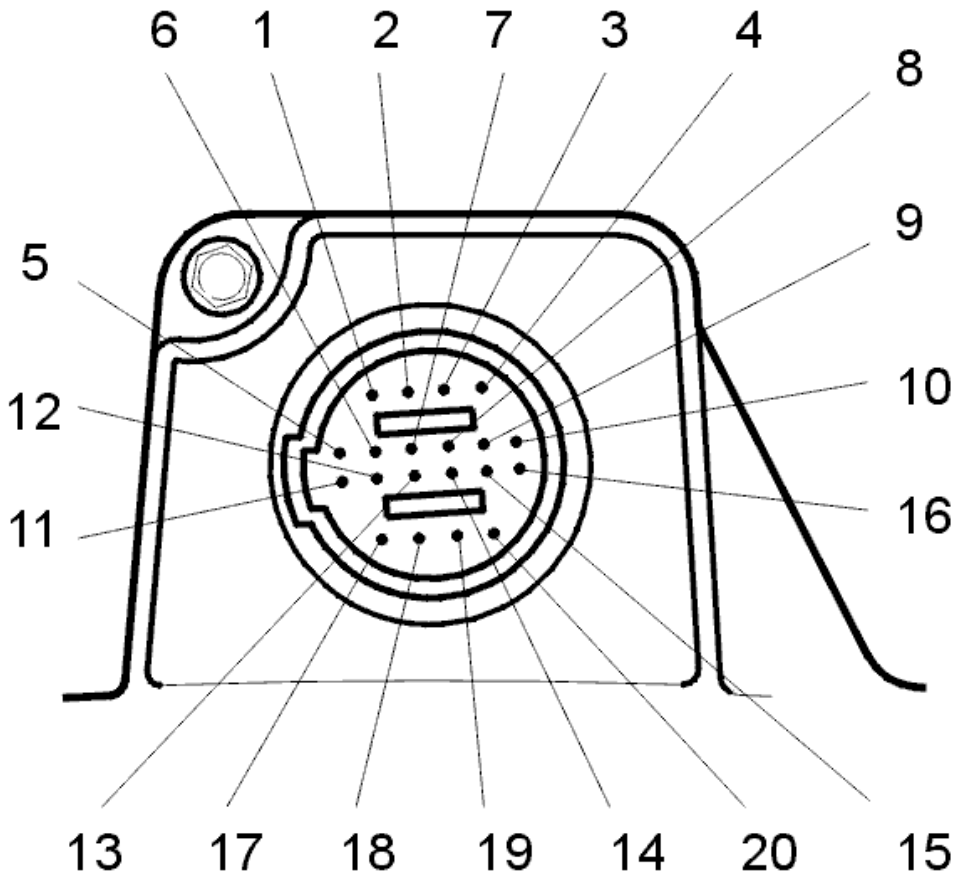

Fig. 220: Identifying Terminals
Courtesy of VOLVO CARS CORPORATION

- **Continue**

  Refer to **INFORMATION**

INFORMATION

FAULT-TRACING INFORMATION

If the fault is intermittent, do not verify fault-tracing if the fault does not recur.

It is possible to view the information again, or leave fault-tracing for this diagnostic trouble code (DTC).

TCM-0023: INPUT SPEED SENSOR. SIGNAL MISSING. PERMANENT FAULT

(4T65 AWD; 2003-2006)

DIAGNOSTIC TROUBLE CODE (DTC) INFORMATION

see **DIAGNOSTIC TROUBLE CODE (DTC) INFORMATION**

SIGNAL MISSING. PERMANENT FAULT

CHECKS

CHECKING THE TRANSMISSION INPUT SPEED SENSOR SIGNAL

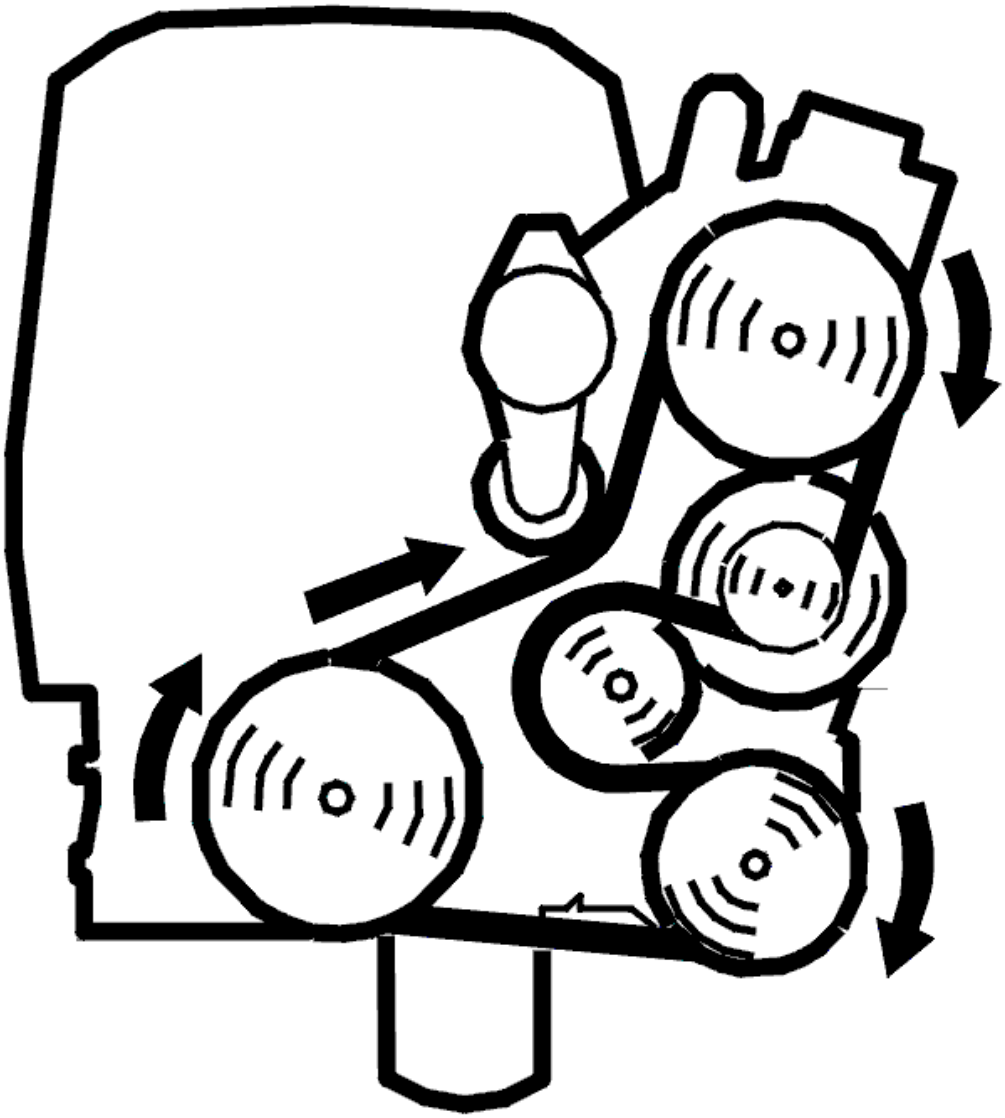

Fig. 221: Identifying Belt Routing
Courtesy of VOLVO CARS CORPORATION

- Ignition off

- Check the control module and transmission output speed sensor connectors. Check for contact resistance and oxidation according to **CONTACT RESISTANCE AND OXIDATION**
- Start the engine. Allow the engine to idle
- Read off the transmission input speed.

  Depress the accelerator pedal (AP) and check that engine speed (RPM) is updated. Compare with the engine speed (RPM).

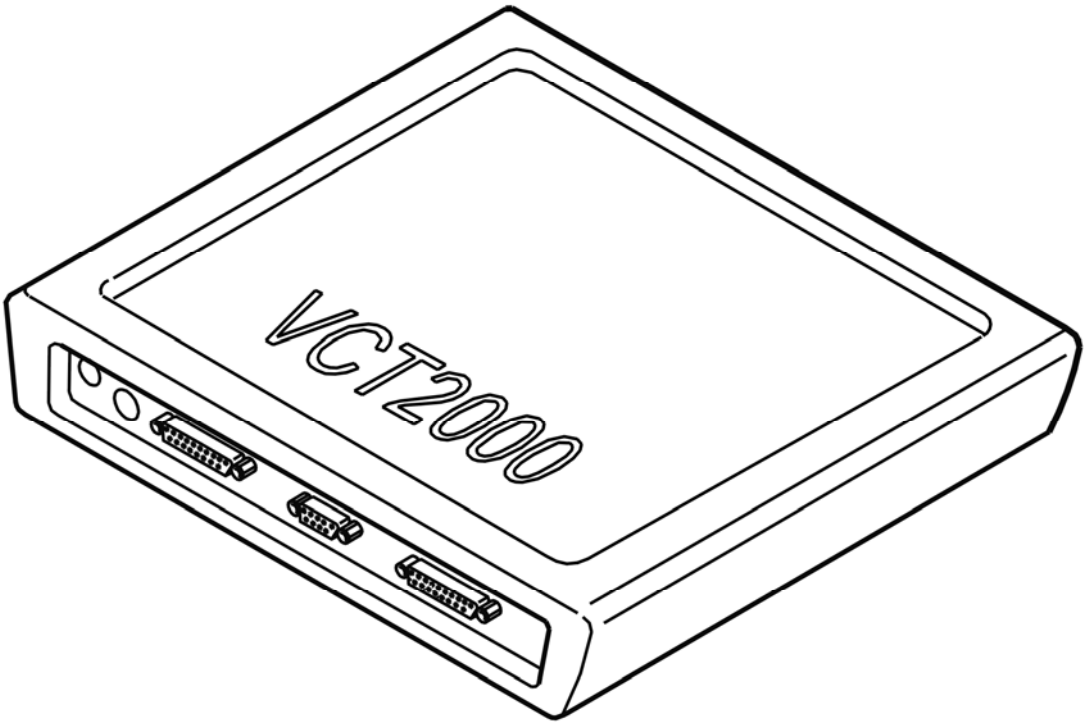

Fig. 222: Identifying VCT2000 Diagnostic Tool Symbol In VIDA
Courtesy of VOLVO CARS CORPORATION

Is the speed updated?

- **YES**

  OKAY: Troubleshooting has been completed.

- **NO**

  Refer to **CHECKING WIRING AND SENSORS**

CHECKING WIRING AND SENSORS

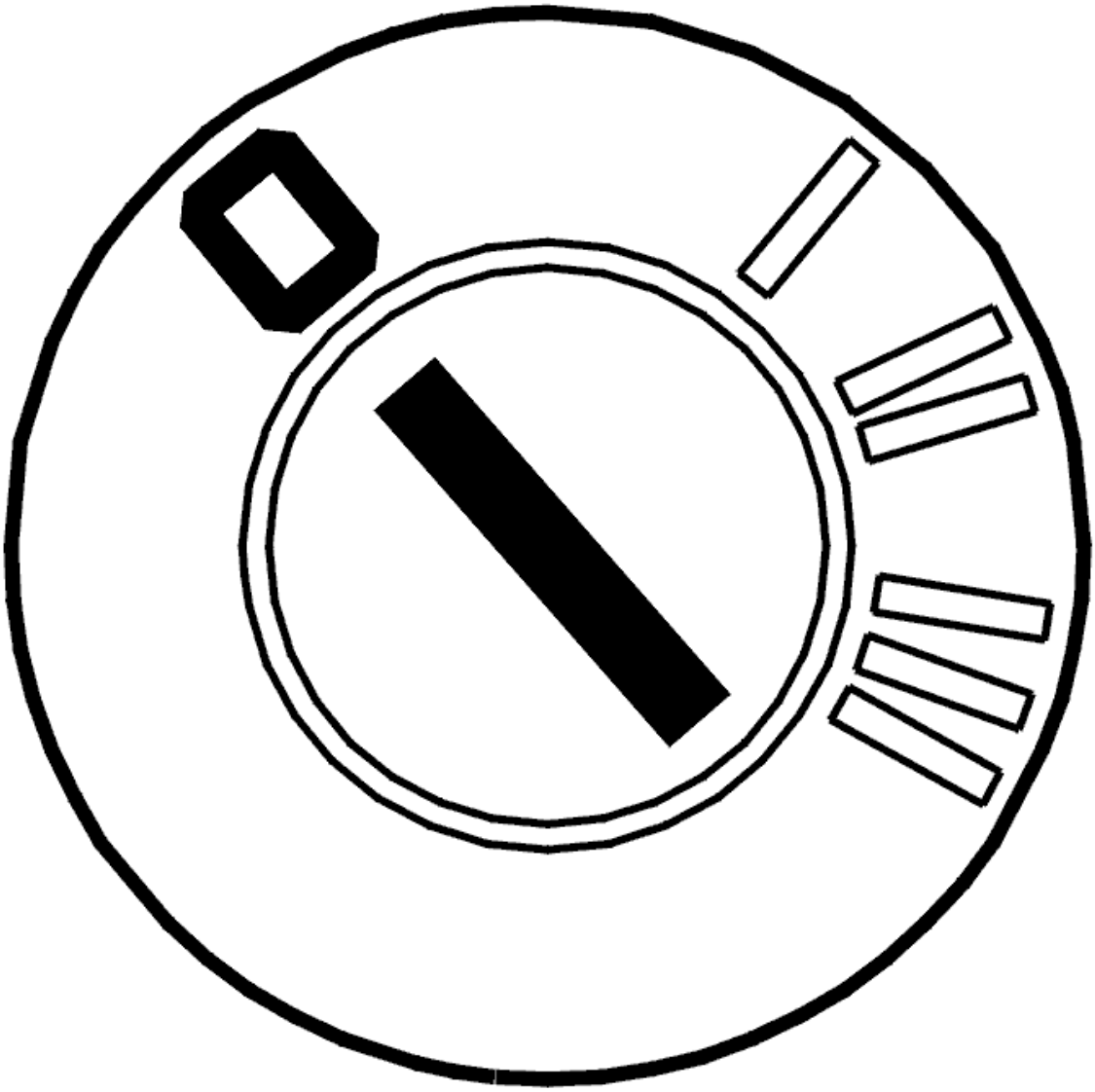

Fig. 223: Identifying Ignition OFF
Courtesy of VOLVO CARS CORPORATION

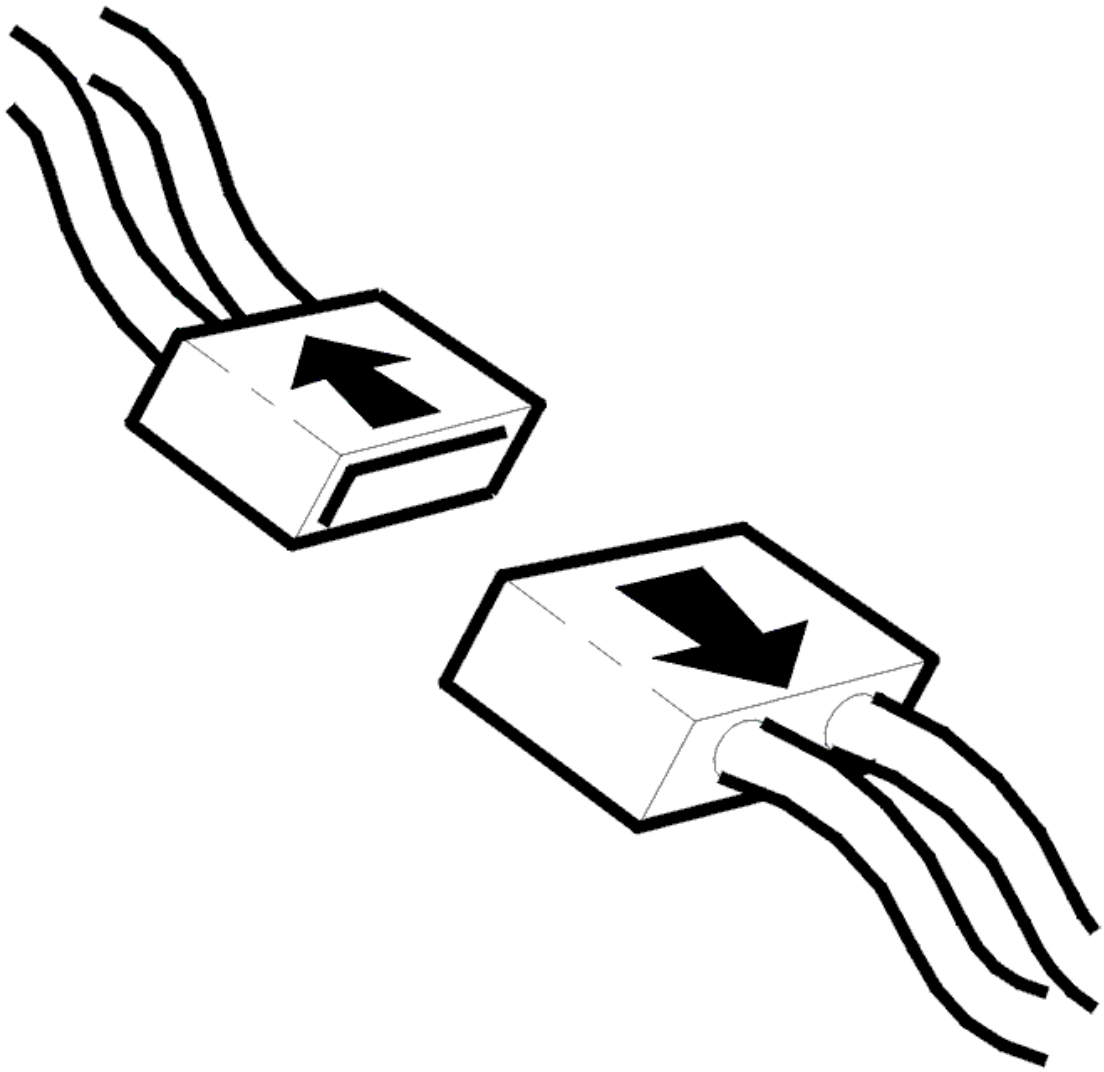

Fig. 224: Identifying Connector(s) Disconnected
Courtesy of VOLVO CARS CORPORATION

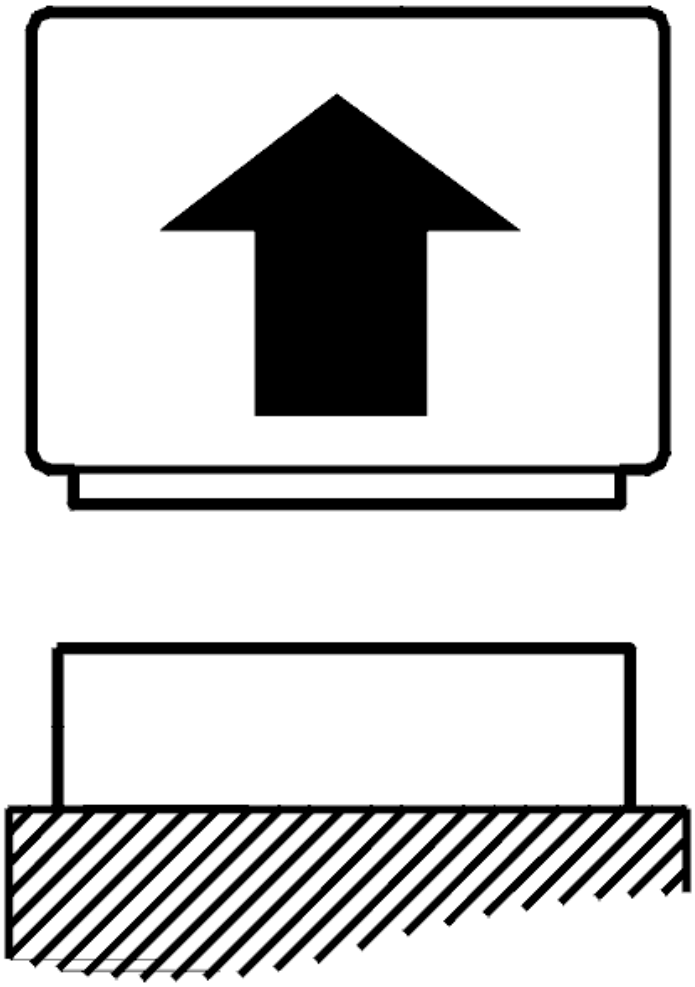

Fig. 225: Identifying Control Module Disconnected
Courtesy of VOLVO CARS CORPORATION

- Ignition off
- Connect the breakout box to the transmission
- Disconnect the control module.
- Disconnect the transmission connector
- Connect adapter see **9511505** and breakout box see **9813190** to the transmission connector (control module side).

  Check the power supply cable between transmission control module (TCM) terminal #59 (#A59) and transmission connector terminal #S (#A16). Check for an open-circuit. See **OPEN-CIRCUIT, PERMANENT FAULTS** .

  Check the signal cable between transmission control module (TCM) terminal #41 (#A41) and

transmission connector terminal #V (#A19). Check for an open-circuit. See **OPEN-CIRCUIT, PERMANENT FAULTS** .

HINT: With the transmission control module (TCM) connected, the ignition on and a voltmeter connected between transmission connector terminals #S (#A16) and #V (#A19) (control module side), the voltage must be approximately 1-3 V below Ubat.

Remedy as necessary.

Other information:

- To connect the breakout box, see **CONNECTING THE BREAKOUT BOX**
- To disconnect the transmission control module (TCM), see **TRANSMISSION CONTROL MODULE (TCM), REPLACING**
- To disconnect the transmission connector, see **CONNECTING THE BREAKOUT BOX, GM AUTOMATIC TRANSMISSIONS**
- For information about signals, see **SIGNAL SPECIFICATION**
- For information about signals to the transmission connector, see **SIGNAL DESCRIPTION. CONNECTOR 4T65 EV/EV-GT** .

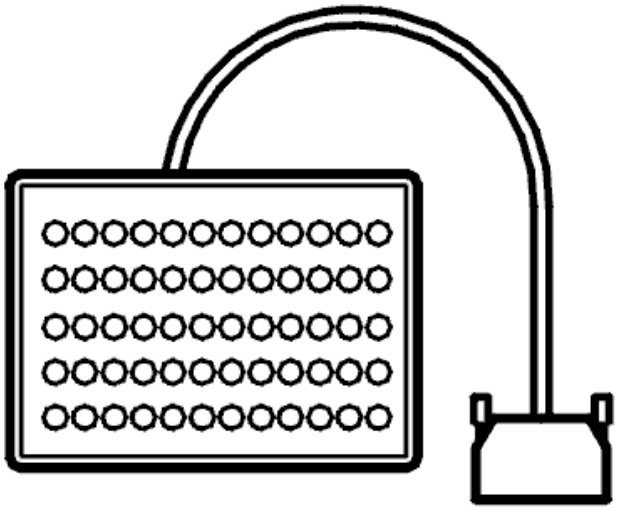

Fig. 226: Identifying Breakout Box
Courtesy of VOLVO CARS CORPORATION

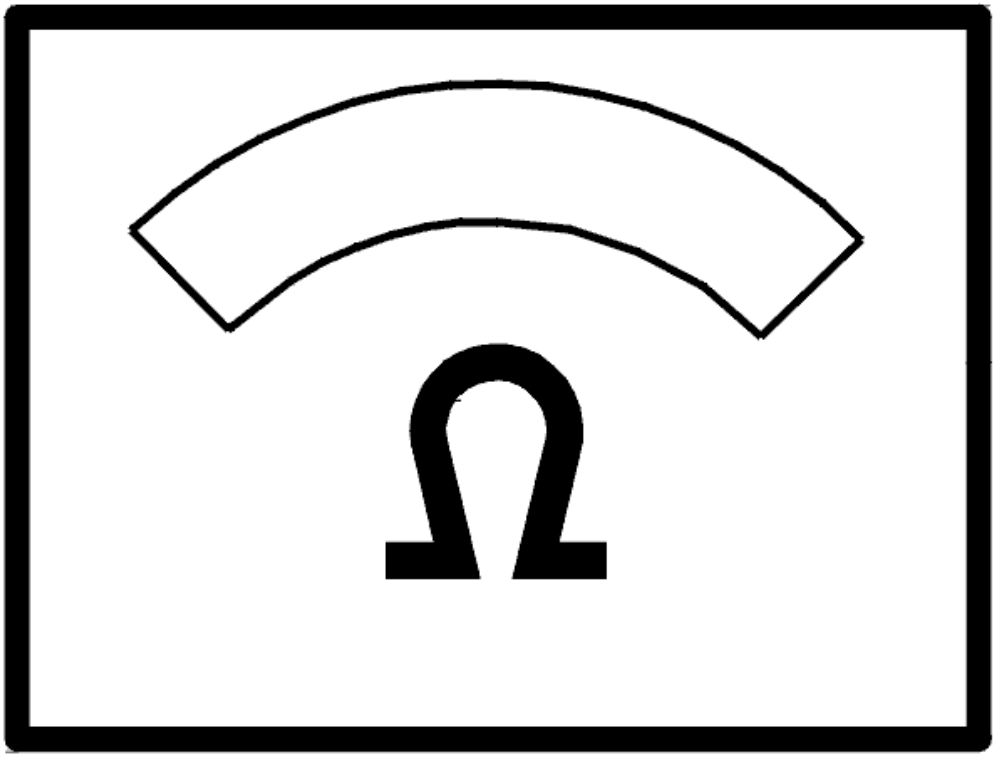

Fig. 227: Identifying Ohms Display
Courtesy of VOLVO CARS CORPORATION

Was a fault detected?

- **YES**

  Refer to **VERIFICATION**

- **NO**

  Refer to **CHECKING THE WIRING AND COMPONENT**

CHECKING THE WIRING AND COMPONENT

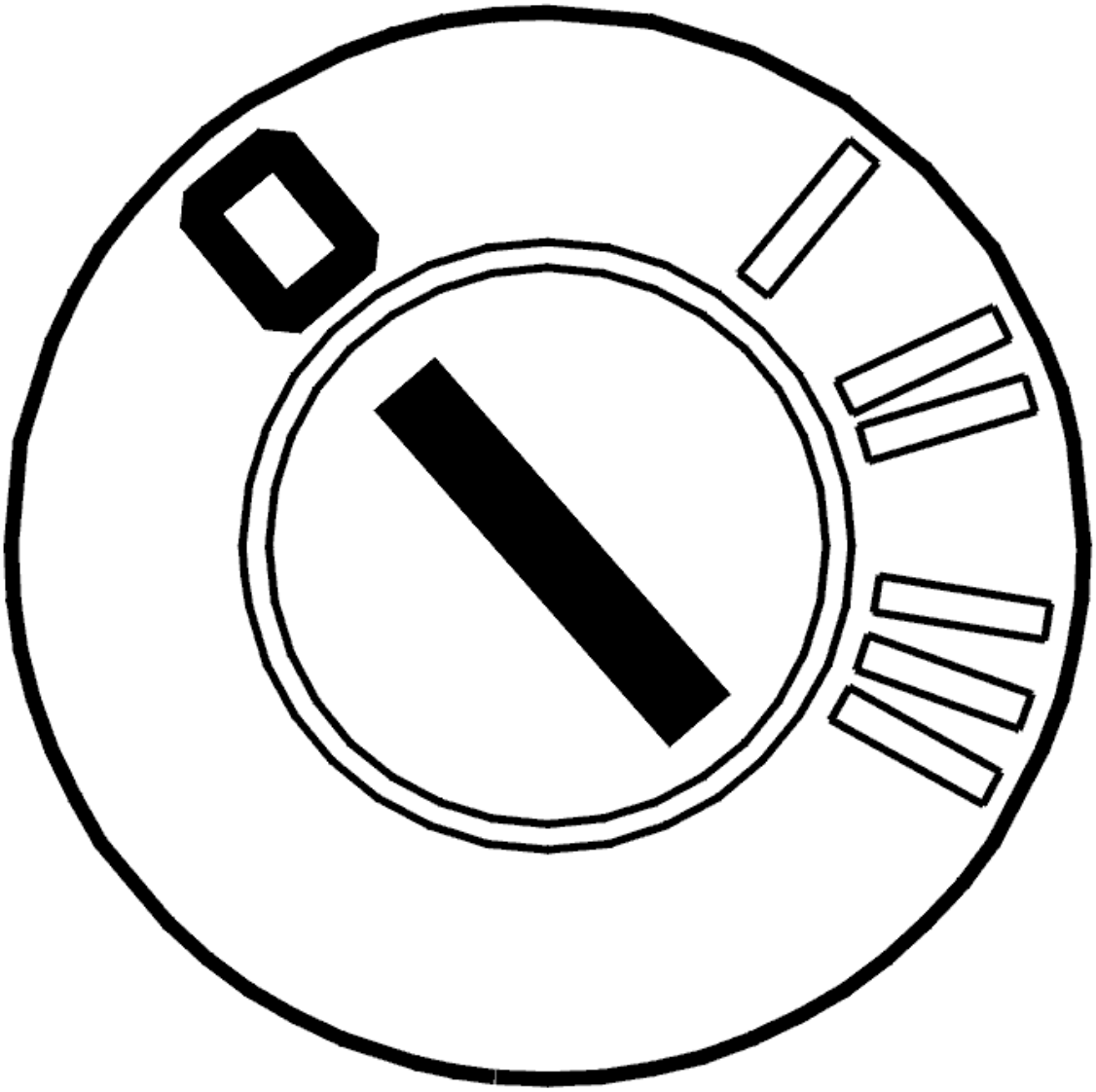

Fig. 228: Identifying Ignition OFF
Courtesy of VOLVO CARS CORPORATION

- Ignition off
- Open the transmission control system.

  Check the cable for power supply between transmission connector terminal #S (#A16) and transmission input speed sensor connector terminal #A. Check for an open-circuit. See **OPEN-CIRCUIT, PERMANENT FAULTS** .

  Check the signal cable between transmission connector terminal #V (#A19) and transmission input speed sensor connector terminal #B. Check for an open-circuit. See **OPEN-CIRCUIT, PERMANENT FAULTS** .

  Remedy as necessary.

Other information:

- To open the transmission control system, For removal, see **SIDE COVER TRANSMISSION, REMOVING** . To install, see **SIDE COVER TRANSMISSION, INSTALLING**
- To connect the breakout box to the transmission connector, see **CONNECTING THE BREAKOUT BOX, GM AUTOMATIC TRANSMISSIONS**
- To replace the transmission speed sensor, see **INPUT SPEED SENSOR TRANSMISSION, REPLACING**
- To replace the cable harness, see **TEMPERATURE SENSOR FLUID, TRANSAXLE, (TFT)**
- For information about signals, see **SIGNAL SPECIFICATION** .

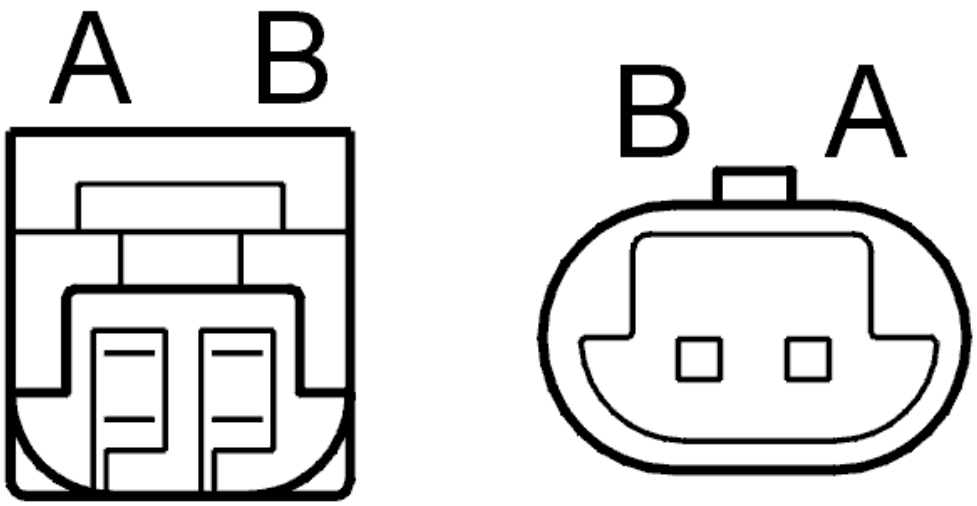

Fig. 229: Identifying Connector Terminals
Courtesy of VOLVO CARS CORPORATION

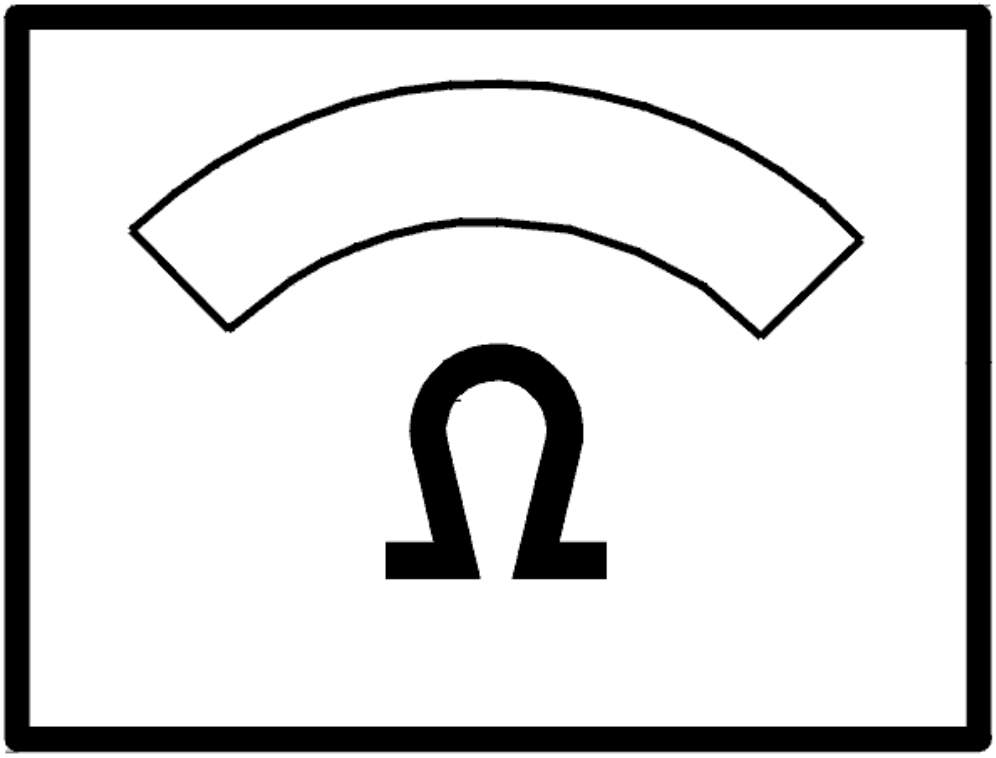

Fig. 230: Identifying Ohms Display
Courtesy of VOLVO CARS CORPORATION

- **Continue**

  Refer to **RESETTING THE ADAPTATION**

RESETTING THE ADAPTATION

RESETTING ADAPTATION AND THE COUNTER FOR "TRANSMISSION OIL CHANGE"

HINT: The transmission has torque controlled adaptive pressure control. Pressure control means that the transmission regulates the pressure itself during each gear shift. This avoids harsh gear shifting. Each gear shift is evaluated by the control module and stored in the memory. This allows for compensation for wear and tear in the transmission and clutch. It is important that the adaptation in the memory is reset after the transmission has been repaired. This is to ensure normal operation. The oil is replaced during

repair; the "Transmission oil change" counter must be reset. If the counter is not reset when the fluid is drained and replaced, there is a risk that a diagnostic trouble code (DTC) will be stored in incorrect circumstances.

NOTE: This applies only if the transmission or one of the components in the transmission have been replaced.

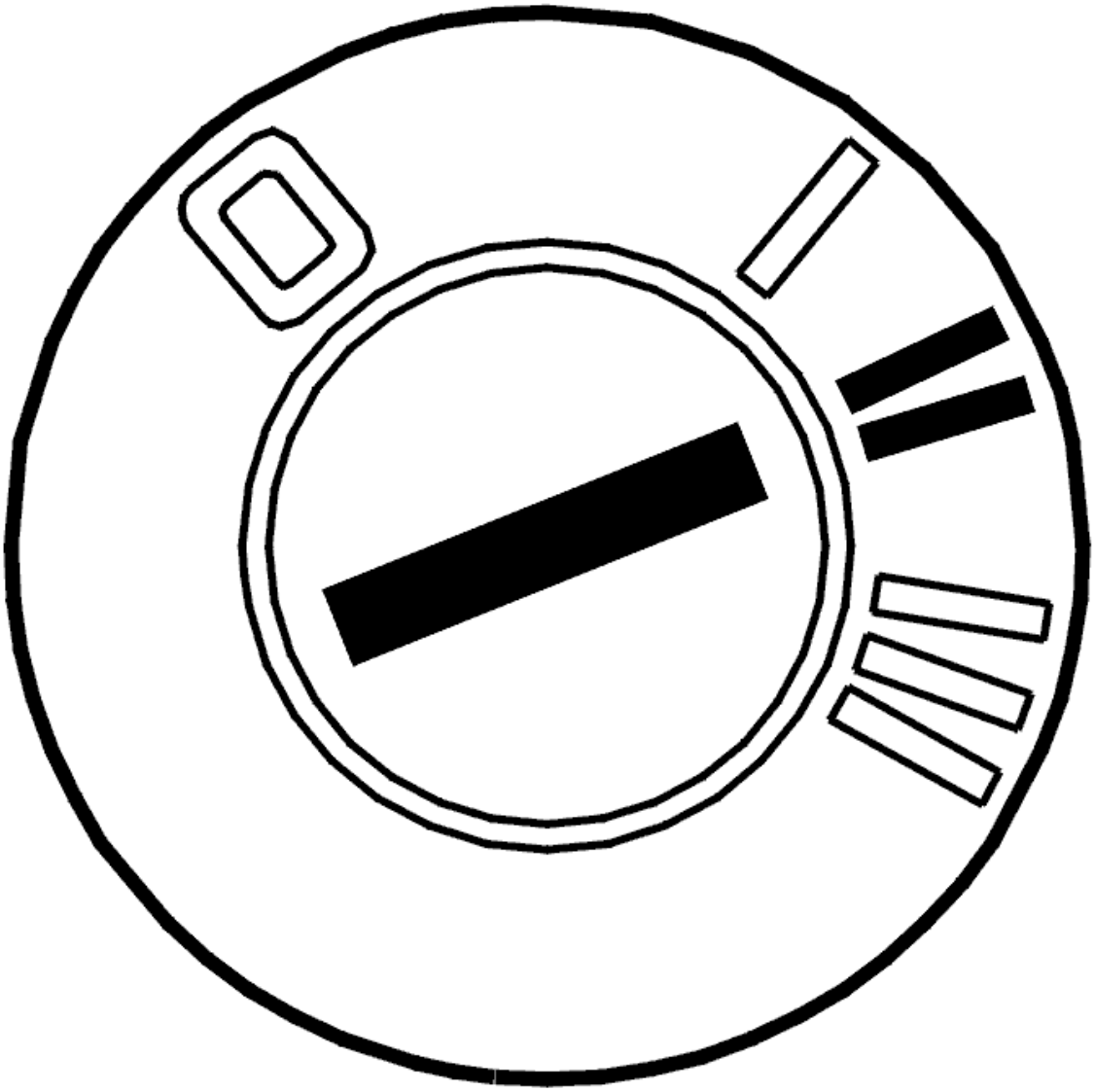

Fig. 231: Identifying Ignition ON
Courtesy of VOLVO CARS CORPORATION

- Ignition on.

  Click on the VCT2000 symbol to reset the adaptation and counter.

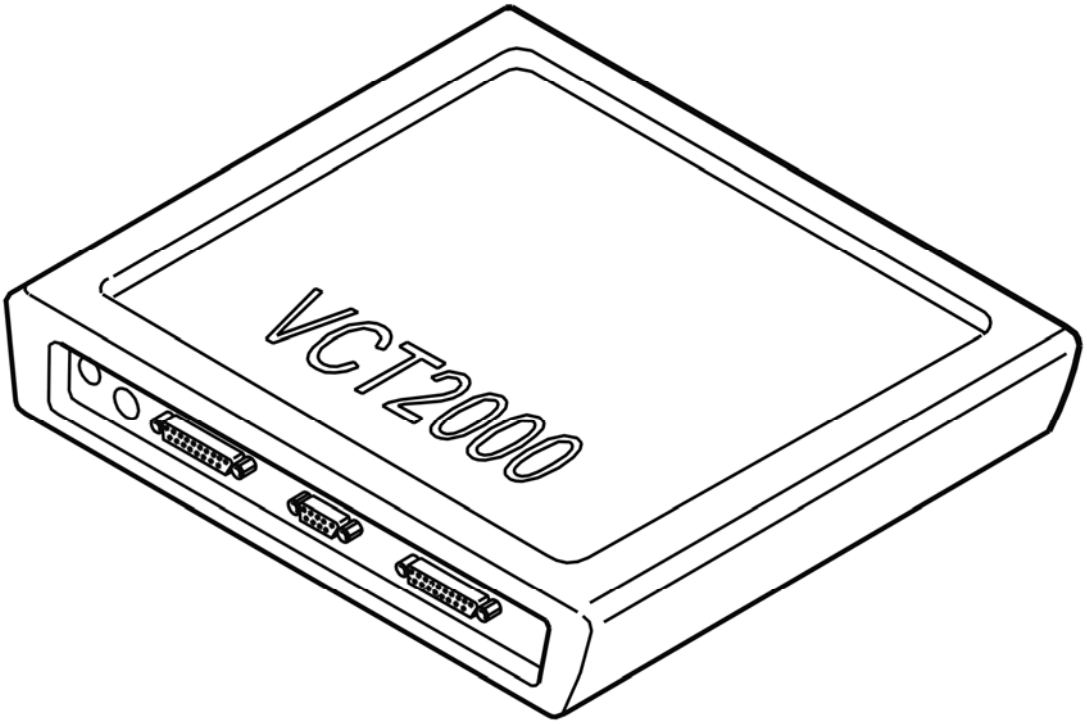

Fig. 232: Identifying VCT2000 Diagnostic Tool Symbol In VIDA
Courtesy of VOLVO CARS CORPORATION

- **Continue**

  Refer to **VERIFICATION**

VERIFICATION

VERIFICATION

HINT: After carrying out the repair, check that the fault has been remedied.

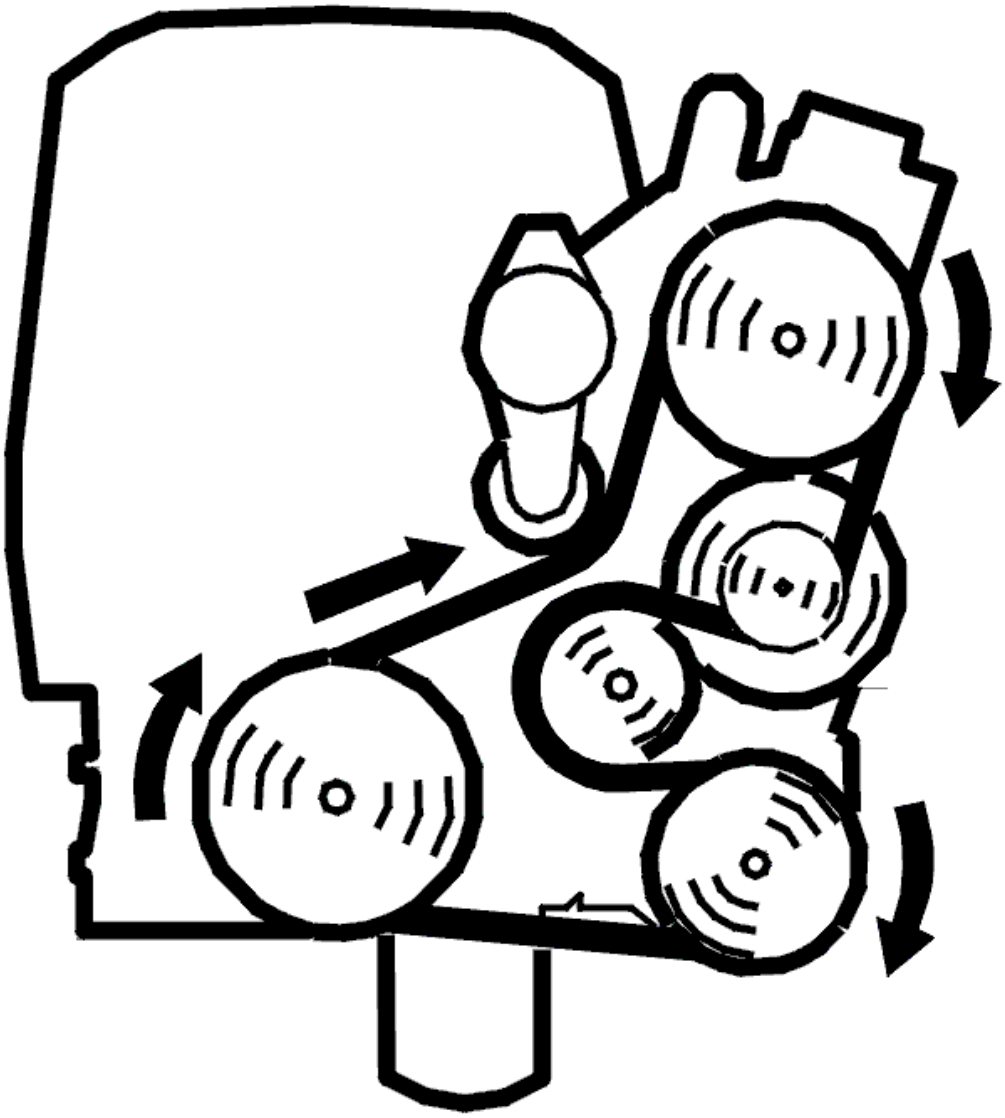

Fig. 233: Identifying Belt Routing
Courtesy of VOLVO CARS CORPORATION

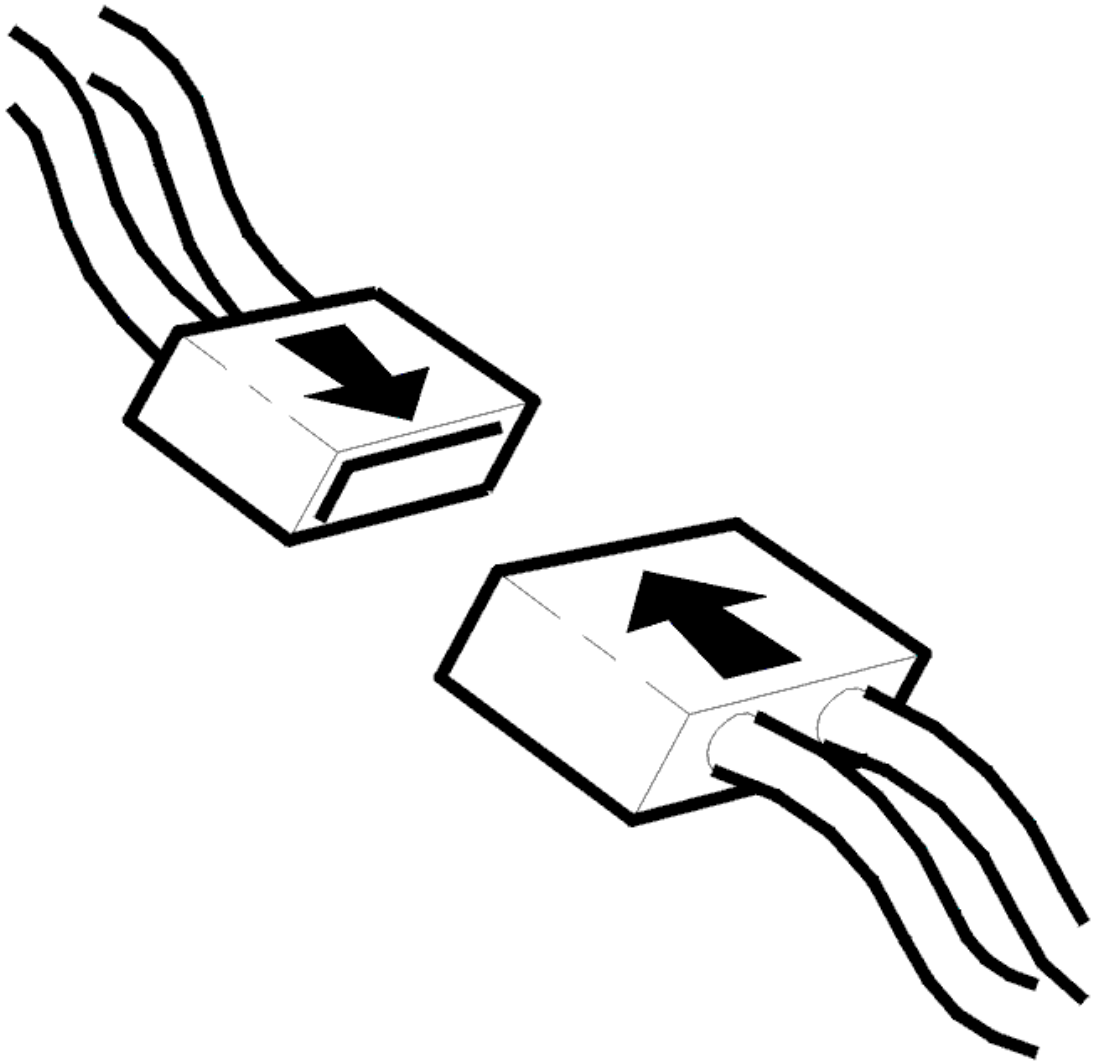

Fig. 234: Identifying Connector(s) Reinstallation
Courtesy of VOLVO CARS CORPORATION

- Ignition off.
- Reinstall the connectors, components etc.
- Start the engine and let it idle.
- Read off the transmission speed.

  Depress the accelerator pedal (AP) and check that engine speed (RPM) is updated. Compare with the engine speed (RPM).

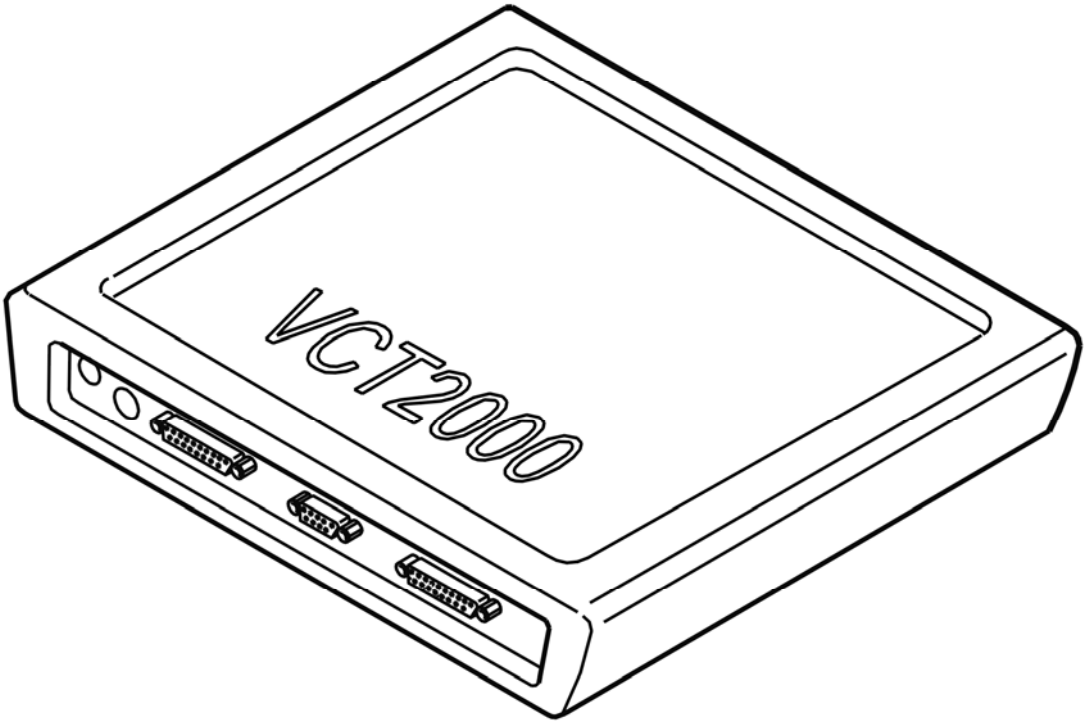

Fig. 235: Identifying VCT2000 Diagnostic Tool Symbol In VIDA
Courtesy of VOLVO CARS CORPORATION

Is the speed updated?

- **YES**

  VERIFIED: Troubleshooting has been completed.

- **NO**

  Refer to **INFORMATION**

INFORMATION

FAULT-TRACING INFORMATION

The fault should have been detected and remedied. As this is not the case fault-tracing has failed.

Exit fault-tracing for this diagnostic trouble code (DTC) or make another attempt.

TCM-0023: TRANSMISSION INPUT SPEED SENSOR. SIGNAL MISSING. INTERMITTENT FAULT (AW50/51 AWD; AW55-50/51SN; 2003-2007)

DIAGNOSTIC TROUBLE CODE (DTC) INFORMATION

Condition

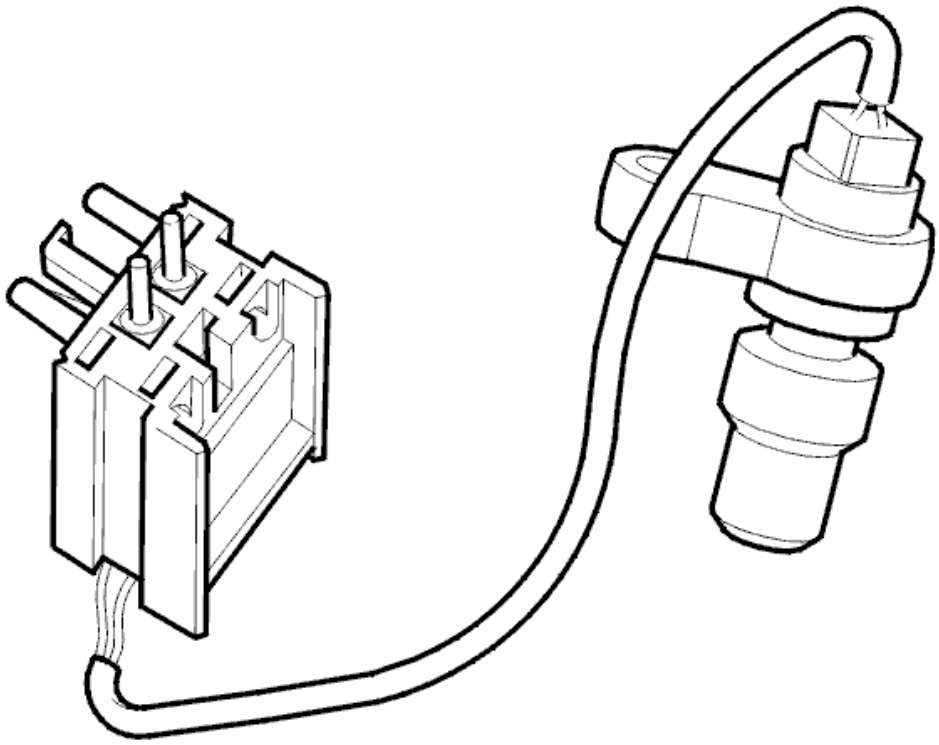

Fig. 236: Identifying Speed Sensor
Courtesy of VOLVO CARS CORPORATION

The transmission speed signal is transmitted by a sensor on the transmission. The transmission control module (TCM) uses the signal to determine the input shaft speed after the torque converter. This signal is used to compare the transmission speed and vehicle speed. The transmission control module (TCM) uses this comparison to calculate gear-shift timing. Engine speed (RPM) and vehicle speed data affects the adjustment of system pressure, lock-up function control and engine torque reduction. The result is smooth gear-shifting. The control module calculates and compares the transmission speed, engine speed (RPM) and speed at the transmission. Diagnostic trouble code (DTC) TCM-0023 is stored if the control module registers that the speed (RPM) signal is missing.

Substitute Value

- The transmission control module (TCM) "Emergency mode I" program has been initiated.

Possible Source

- Contact resistance in the terminals.
- Open-circuit on power supply.

- Open-circuit in signal cable.
- Defective input speed sensor.

Fault symptom[s]

- General orange warning lamp lit.
- Malfunction indicator lamp (MIL) lit.
- No lock-up function.
- Harsh gear shifting.

HINT: Harsh gear shifting can be caused by:

- No reduction of line pressure when shifting.
- No reduction of line pressure when moving the gear selector between positions P-R, N-R and N-D.
- No torque limiting request to engine control module (ECM) when shifting.

SIGNAL MISSING. INTERMITTENT FAULT

INTERMITTENT FAULT

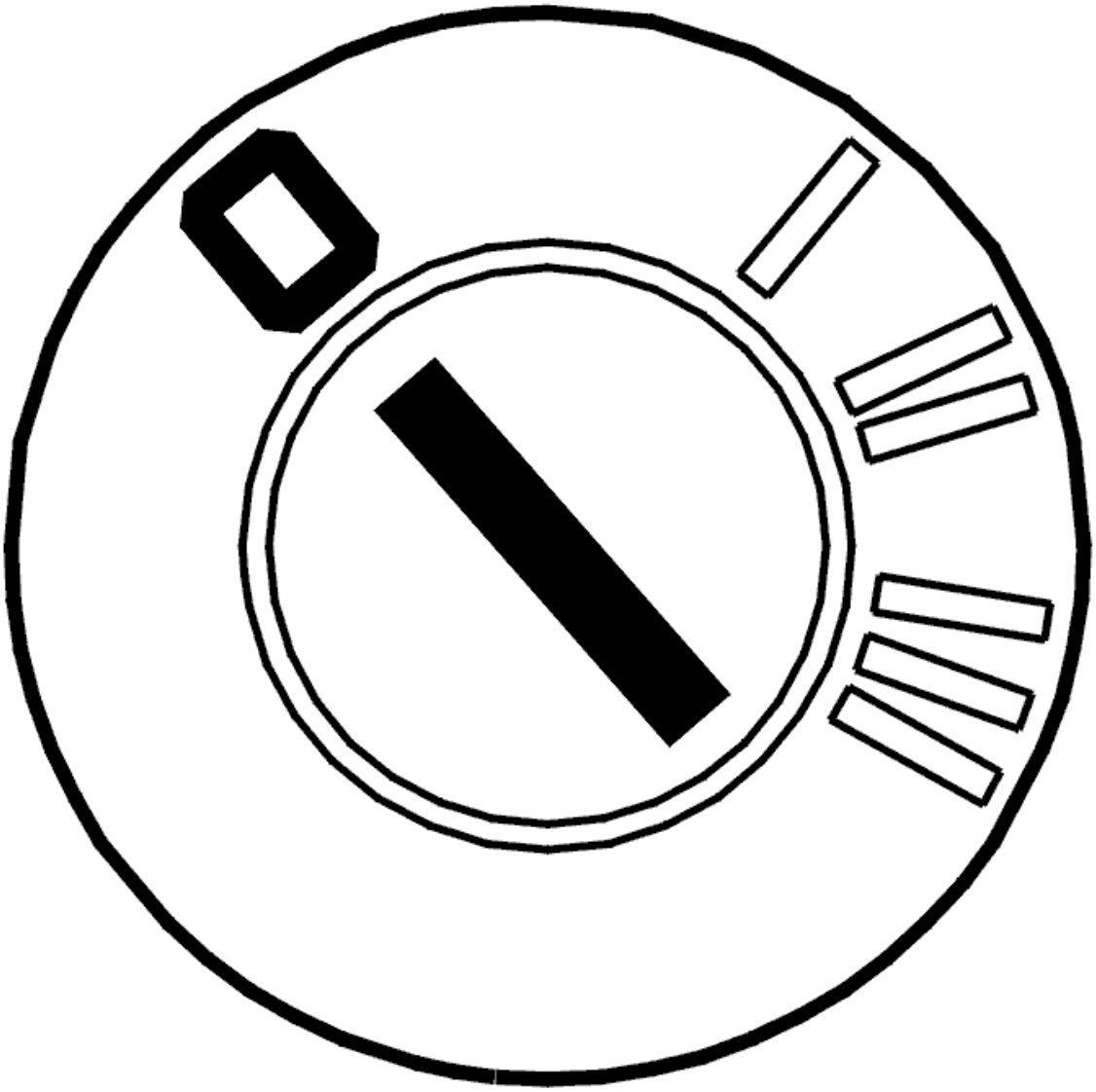

Fig. 237: Identifying Ignition OFF
Courtesy of VOLVO CARS CORPORATION

- Ignition off.

  Check the transmission connector. Check for contact resistance and oxidation. See **CONTACT RESISTANCE AND OXIDATION** .

  Check the power supply cable between transmission control module (TCM) terminal #A59 (#A59) and transmission connector terminal #A2. Check for an intermittent open-circuit according to **OPEN-CIRCUIT, INTERMITTENT FAULTS** .

  Check the signal cable between transmission control module (TCM) terminal #A41 (#A41) and transmission connector terminal #A1. Check for an open-circuit according to **OPEN-CIRCUIT, INTERMITTENT FAULTS** .

Remedy as necessary.

Other information:

- To connect the breakout box, see **CONNECTING THE BREAKOUT BOX**
- To disconnect the transmission control module (TCM), see **TRANSMISSION CONTROL MODULE (TCM), REPLACING**
- To disconnect the transmission connectors, see **CONNECTORS, TRANSMISSION, DISCONNECTING / CONNECTING**
- For information about signals, see **SIGNAL DESCRIPTION. TRANSMISSION CONTROL MODULE (TCM)** .

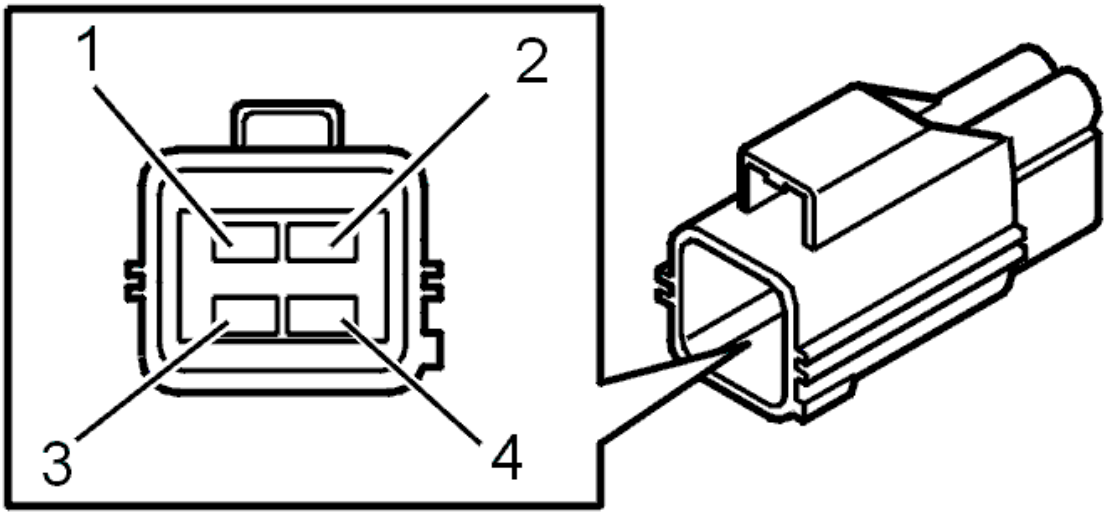

Fig. 238: Identifying Transmission Output Speed Sensor Terminals
Courtesy of VOLVO CARS CORPORATION

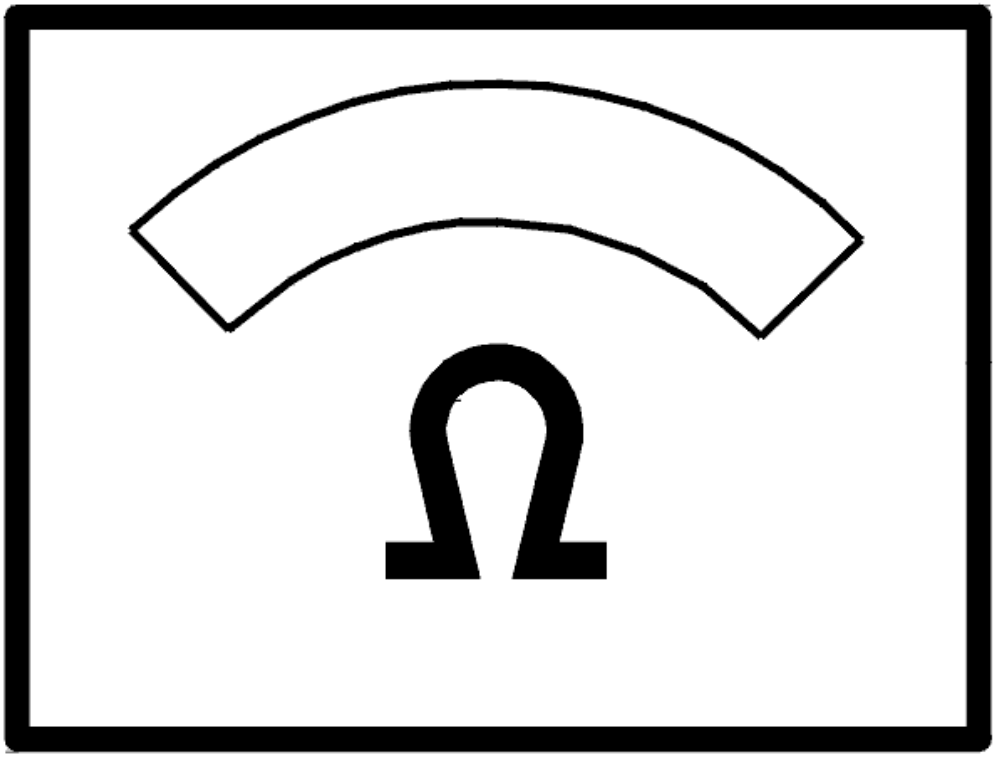

Fig. 239: Identifying Ohms Display
Courtesy of VOLVO CARS CORPORATION

- **Continue**

  Refer to **INFORMATION**

INFORMATION

FAULT-TRACING INFORMATION

If the fault is intermittent, do not verify fault-tracing if the fault does not recur.

It is possible to view the information again, or leave fault-tracing for this diagnostic trouble code (DTC).

TCM-0023: TRANSMISSION INPUT SPEED SENSOR. SIGNAL MISSING.

PERMANENT FAULT (AW50/51 AWD; AW55-50/51SN; 2003-2007)

DIAGNOSTIC TROUBLE CODE (DTC) INFORMATION

see **DIAGNOSTIC TROUBLE CODE (DTC) INFORMATION**

SIGNAL MISSING. PERMANENT FAULT

CHECKS

CHECKING THE TRANSMISSION INPUT SPEED SENSOR SIGNAL

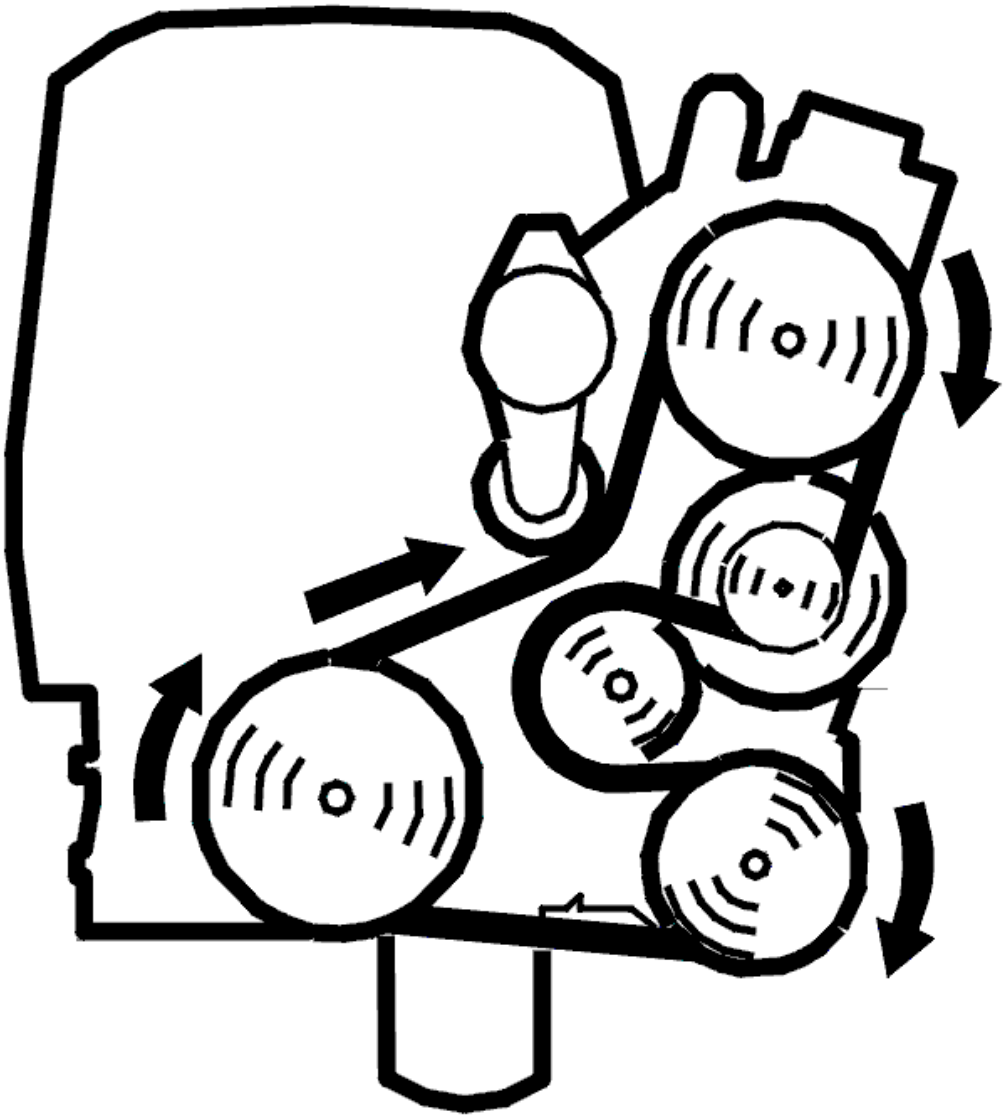

Fig. 240: Identifying Belt Routing
Courtesy of VOLVO CARS CORPORATION

- Gear selector in position P

- Start the engine. Allow the engine to idle
- Read off the transmission input speed.

  Check that the transmission speed is updated.

  Compare with the engine speed (RPM).

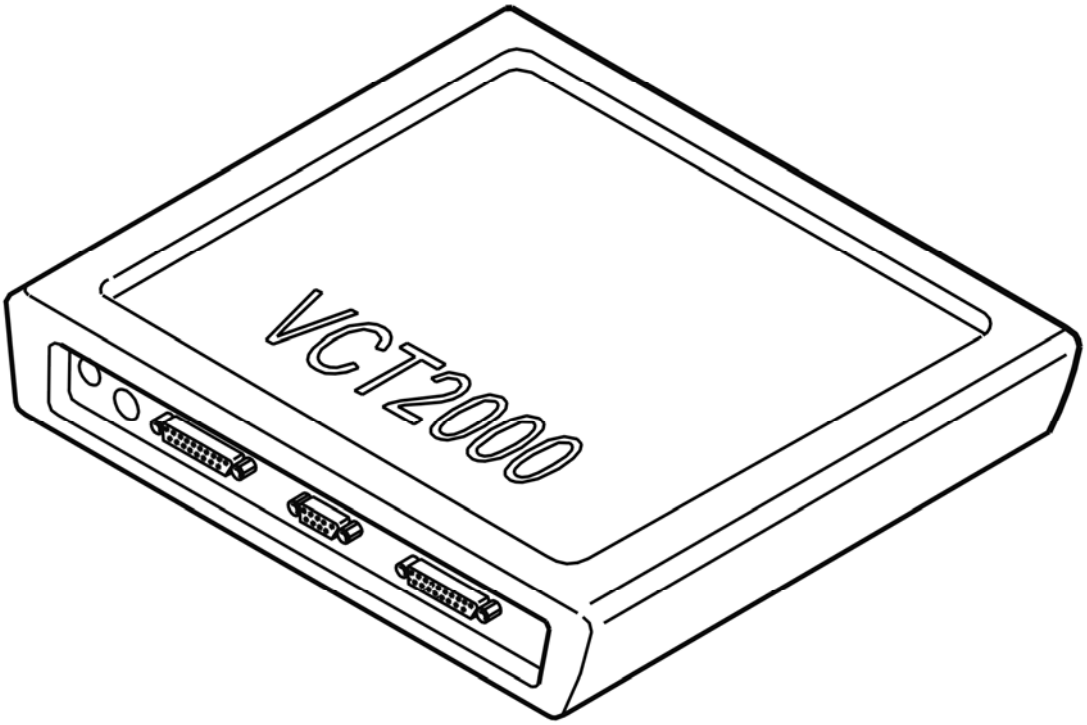

Fig. 241: Identifying VCT2000 Diagnostic Tool Symbol In VIDA
Courtesy of VOLVO CARS CORPORATION

Is the speed updated?

- **YES**

  FAULT NOT FOUND: Troubleshooting has been completed.

- **NO**

  Refer to **CHECKING WIRING AND SENSORS**

CHECKING WIRING AND SENSORS

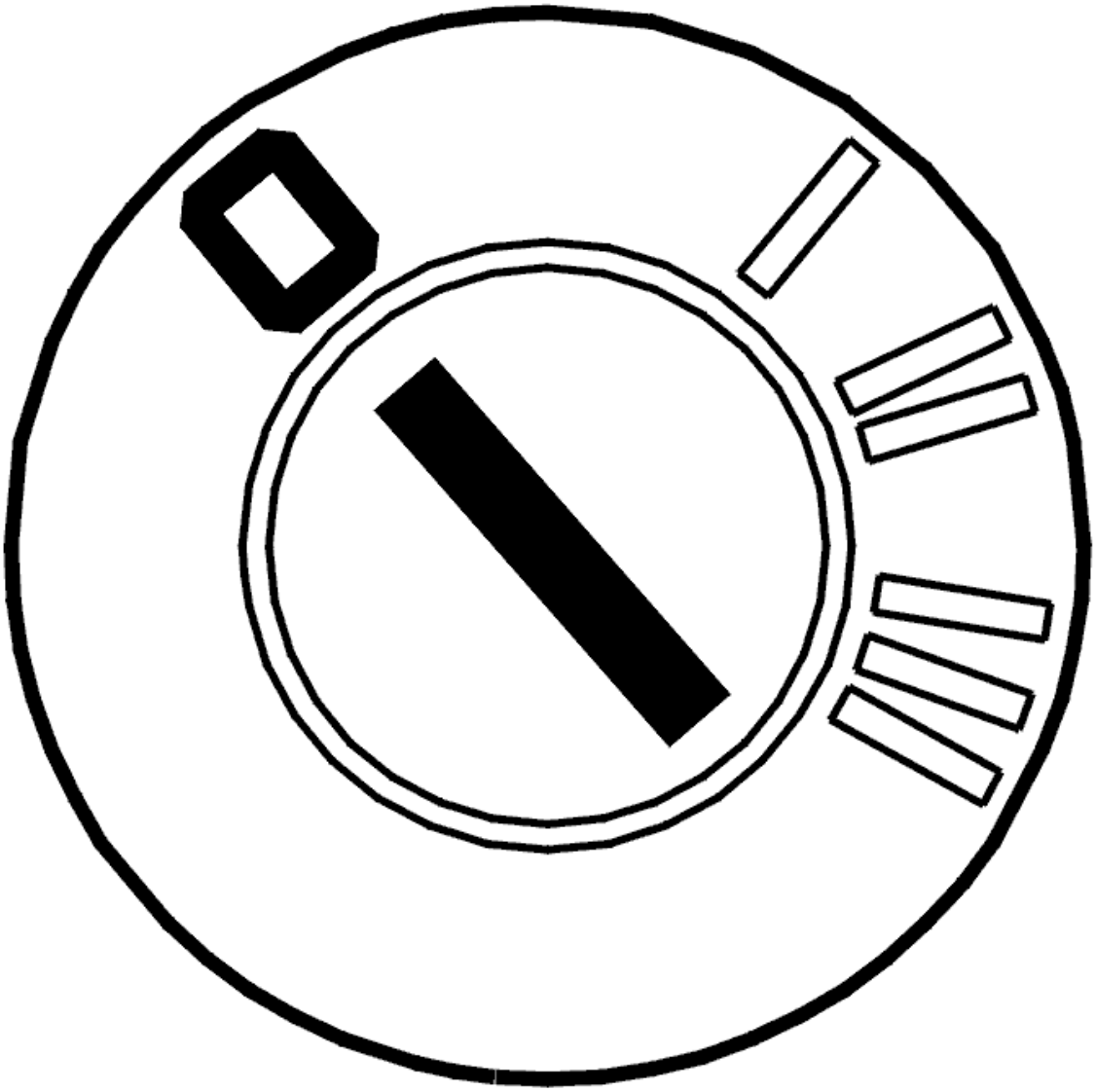

Fig. 242: Identifying Ignition OFF
Courtesy of VOLVO CARS CORPORATION

- Ignition off.

  Check the transmission connector. Check for contact resistance and oxidation. See **CONTACT RESISTANCE AND OXIDATION** .

  Check the power supply cable between transmission control module (TCM) terminal #A59 (#A59) and transmission connector terminal #A2. Check for an open-circuit according to **OPEN-CIRCUIT, PERMANENT FAULTS** .

  Check the signal cable between transmission control module (TCM) terminal #A41 (#A41) and transmission connector terminal #A1. Check for an open-circuit according to **OPEN-CIRCUIT, PERMANENT FAULTS** .

HINT: With the control module connected, the ignition on and a voltmeter connected between transmission connector terminals #A1 and #A2 (control module side), the voltage must be 1-3 V below Ubat.

Remedy as necessary.

Other information:

- To connect the breakout box, see **CONNECTING THE BREAKOUT BOX**
- To disconnect the transmission control module (TCM), see **TRANSMISSION CONTROL MODULE (TCM), REPLACING**
- To disconnect the transmission connectors, see **CONNECTORS, TRANSMISSION, DISCONNECTING / CONNECTING**
- To replace the transmission speed sensor, see **INPUT SPEED SENSOR/OUTPUT SPEED SENSOR, REPLACING**
- For information about signals, see **SIGNAL DESCRIPTION. TRANSMISSION CONTROL MODULE (TCM)** .

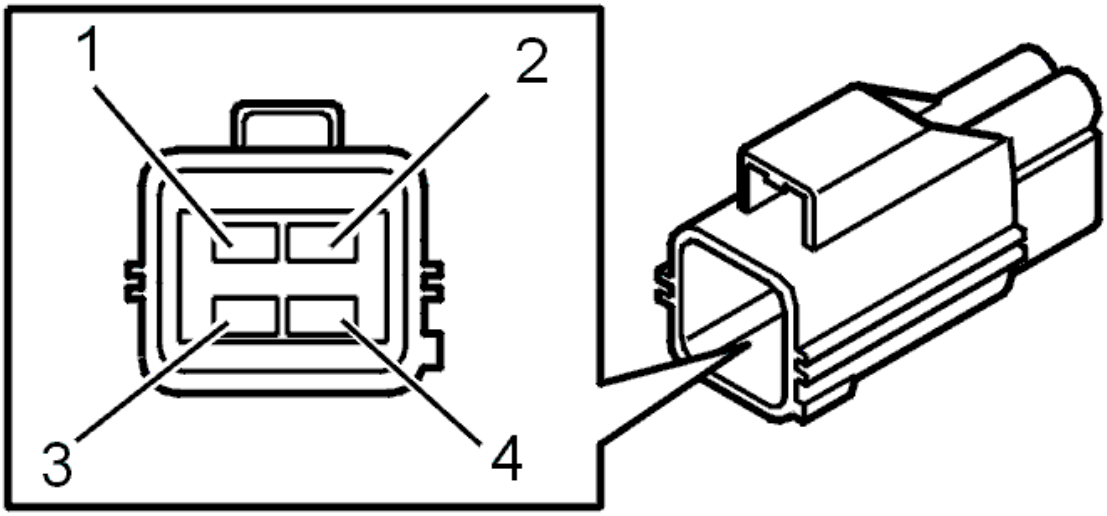

Fig. 243: Identifying Transmission Output Speed Sensor Terminals
Courtesy of VOLVO CARS CORPORATION

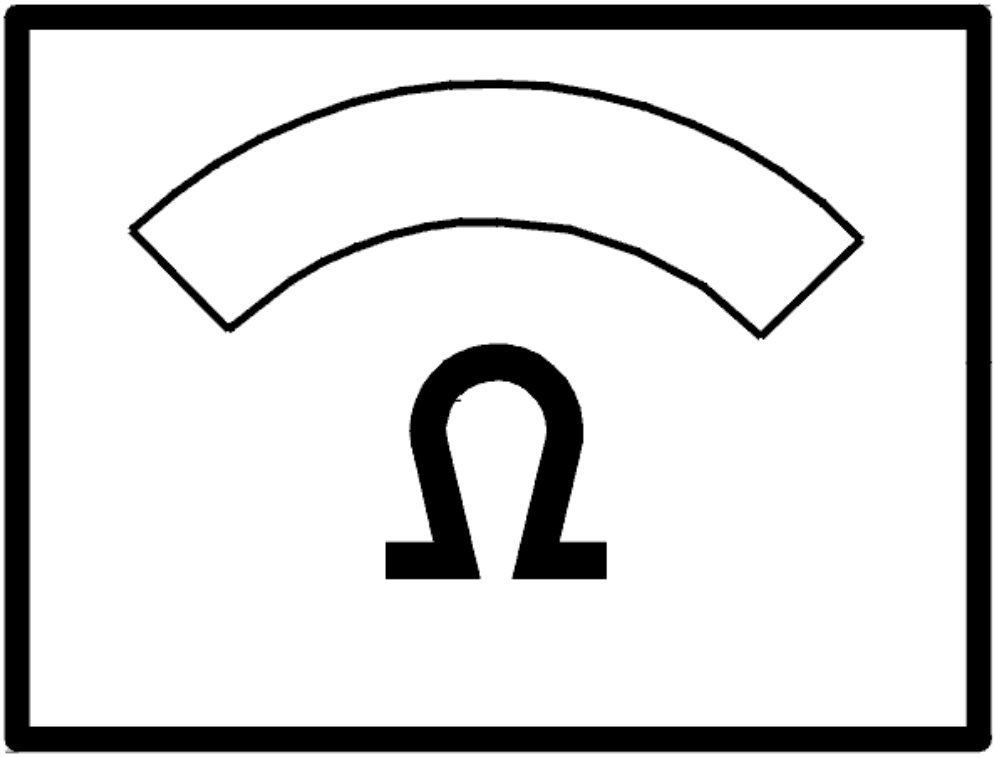

Fig. 244: Identifying Ohms Display
Courtesy of VOLVO CARS CORPORATION

- **Continue**

  Refer to **VERIFICATION**

VERIFICATION

VERIFICATION

HINT: After carrying out the repair, check that the fault has been remedied.

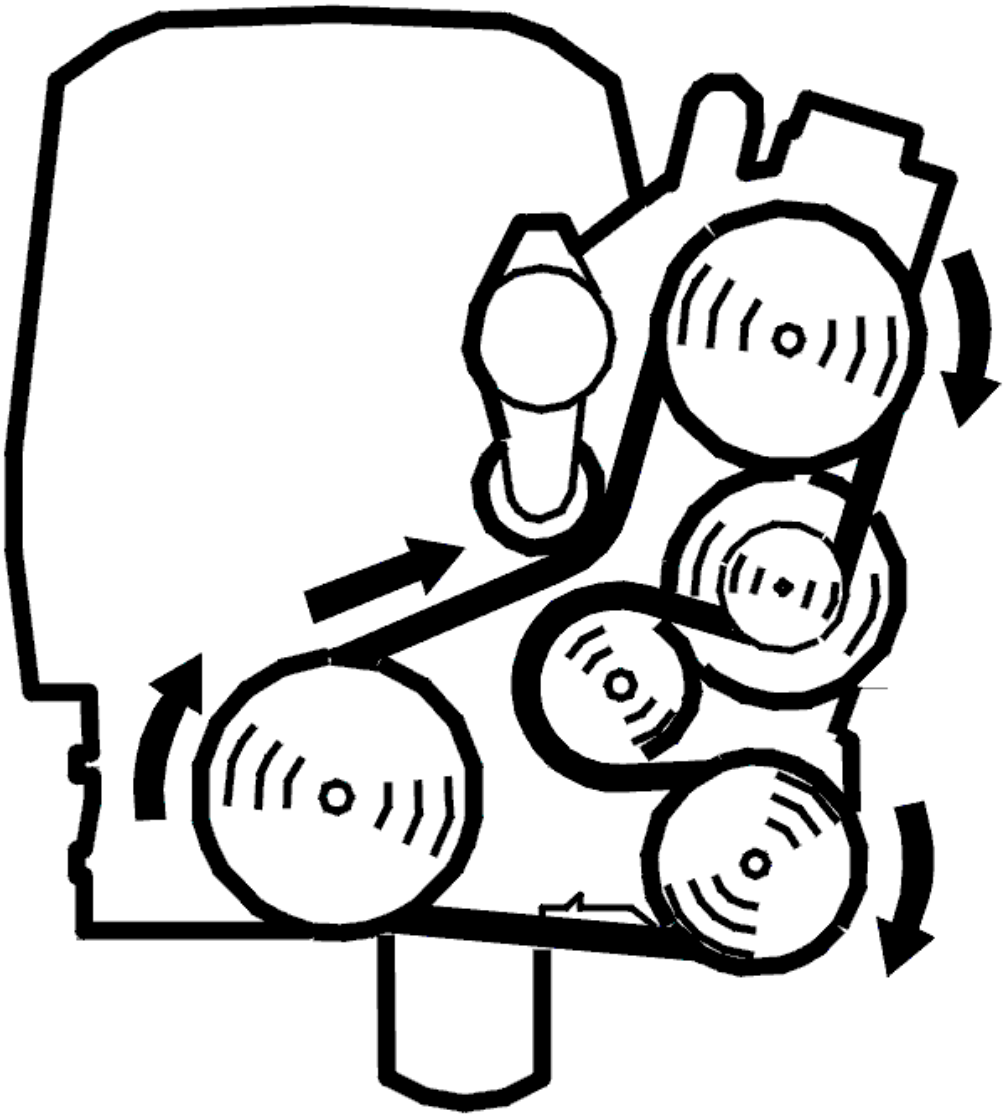

Fig. 245: Identifying Belt Routing
Courtesy of VOLVO CARS CORPORATION

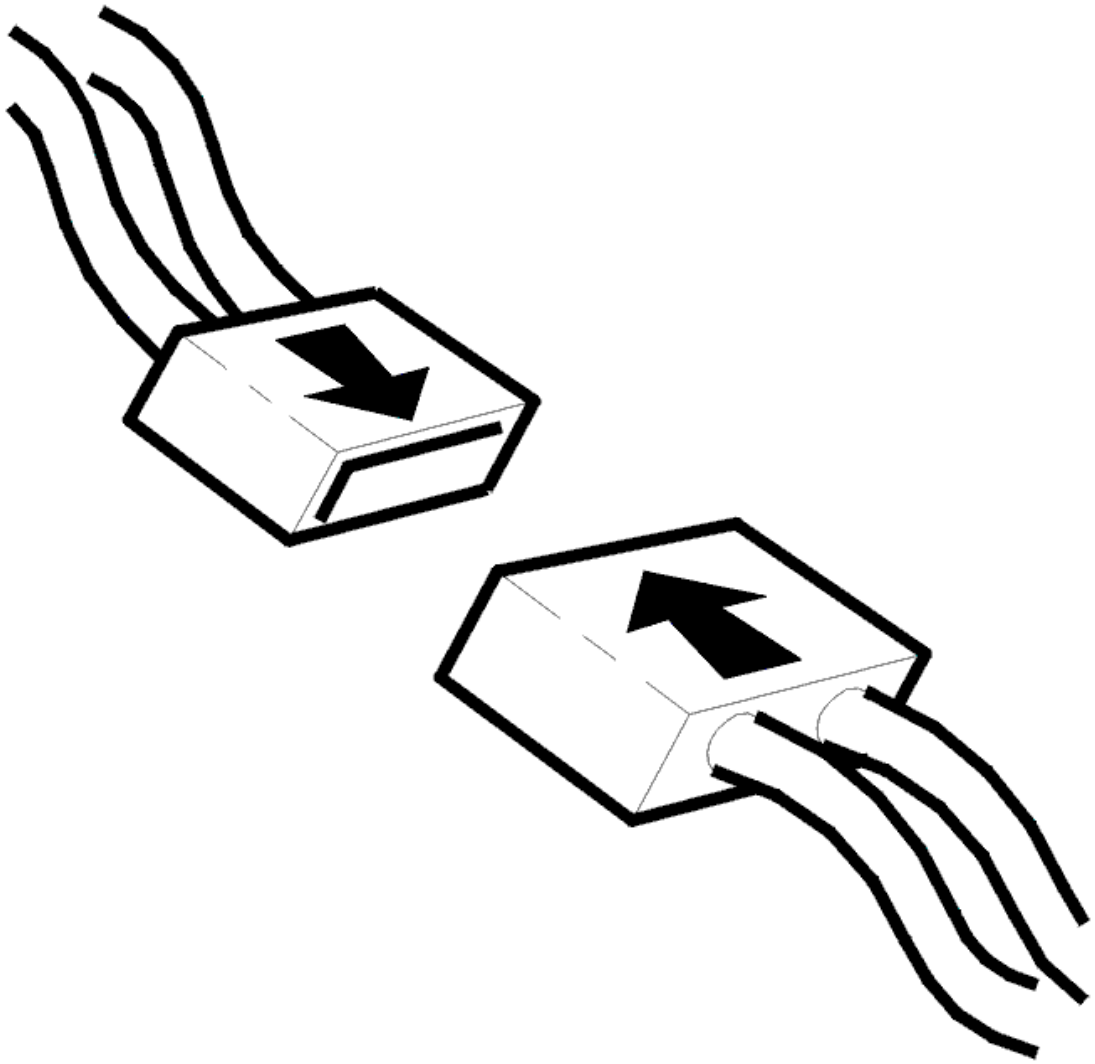

Fig. 246: Identifying Connector(s) Reinstallation
Courtesy of VOLVO CARS CORPORATION

- Ignition off.
- Reinstall the connectors, components etc.
- Start the engine and let it idle.
- Gear selector in position P.
- Read off the transmission speed.

  Depress the accelerator pedal (AP) and check that engine speed (RPM) is updated.

  Compare with the engine speed (RPM).

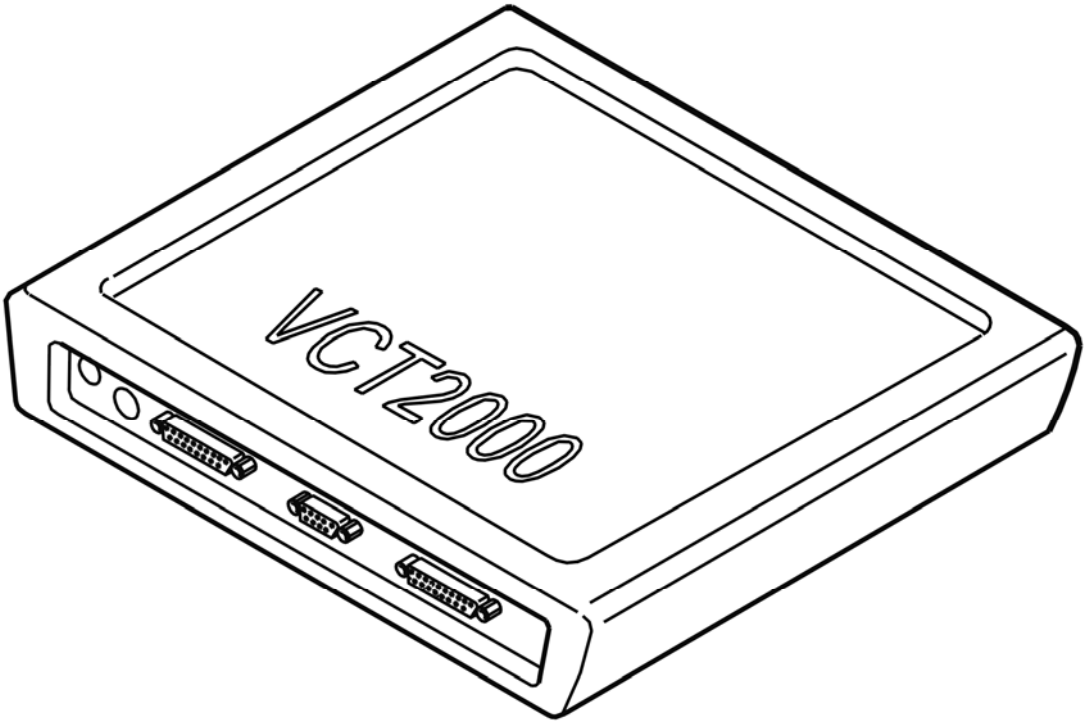

Fig. 247: Identifying VCT2000 Diagnostic Tool Symbol In VIDA
Courtesy of VOLVO CARS CORPORATION

Is the speed updated?

- **YES**

  VERIFIED: Troubleshooting has been completed.

- **NO**

  Refer to **INFORMATION**

INFORMATION

FAULT-TRACING INFORMATION

The fault should have been detected and remedied. As this is not the case fault-tracing has failed.

Exit fault-tracing for this diagnostic trouble code (DTC) or make another attempt.

TCM-0024: INPUT SPEED SENSOR. FAULTY SIGNAL. INTERMITTENT FAULT (4T65 AWD; 2003-2006)

DIAGNOSTIC TROUBLE CODE (DTC) INFORMATION

Condition

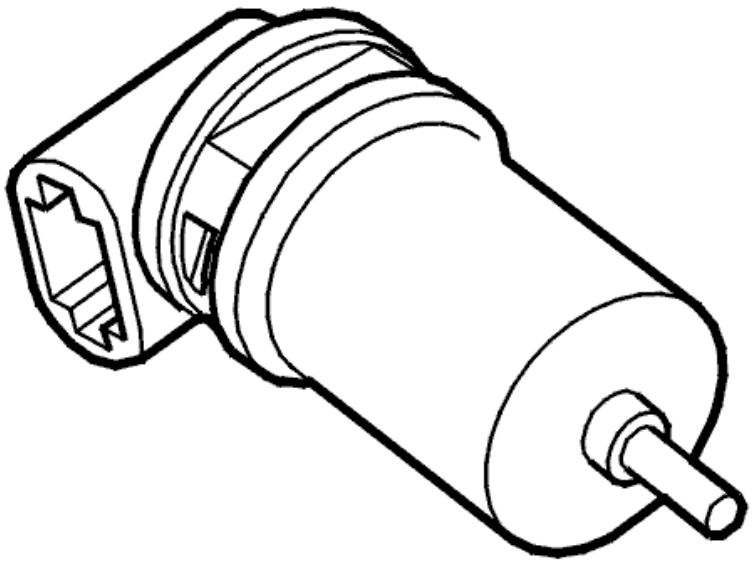

Fig. 248: Identifying Transmission Speed Sensor
Courtesy of VOLVO CARS CORPORATION

The transmission speed signal is transmitted by a sensor on the transmission. The transmission control module (TCM) uses the signal to determine the input shaft speed after the torque converter. This signal is used to compare the transmission speed and the vehicle speed. The transmission control module (TCM) uses this comparison to calculate the gear-shift timing. Engine speed (RPM) and vehicle speed data affects the adjustment of the system pressure, lock-up function control and engine torque reduction. The result is smooth gear-shifting. The control module calculates and compares the transmission speed, the engine speed (RPM) and the speed at the transmission. Diagnostic trouble code (DTC) TCM-0024 is stored if the control module registers that the signal is faulty when vehicle speed is above approximately 25 km/h.

Substitute Value

- No torque reduction
- No lock-up.

Possible Source

- Contact resistance in the terminals

- Open-circuit, short-circuit to ground or short-circuit to supply voltage in the power supply
- Open-circuit, short-circuit to ground or short-circuit to supply voltage in the signal cable
- Defective transmission input speed sensor
- Incorrect transmission installed if the transmission has been replaced.

Fault symptom[s]

- General orange warning lamp lit
- Malfunction indicator lamp (MIL) lit
- No lock-up function
- Harsh gear shifting.

HINT: Harsh gear shifting can be caused by:

- No reduction of the line pressure when shifting
- No reduction of line pressure when moving the gear selector between positions P-R, N-R and N-D
- No request for torque limiting to the engine control module (ECM) when shifting.

FAULTY SIGNAL. INTERMITTENT FAULT

INTERMITTENT FAULT

Check the wiring between control module terminal A59 (#A59) and transmission connector #S (#A16) for an intermittent open-circuit according to **OPEN-CIRCUIT, INTERMITTENT FAULTS** , an intermittent short-circuit to ground according to **SHORT-CIRCUIT TO GROUND, INTERMITTENT FAULTS** , and an intermittent short-circuit to supply voltage according to **SHORT-CIRCUIT TO SUPPLY VOLTAGE, INTERMITTENT FAULTS** and contact resistance and oxidation according to **CONTACT RESISTANCE AND OXIDATION** .

Also check the wiring between control module terminal 41 (#A41) and transmission connector #V (#A17) for an intermittent open-circuit according to **OPEN-CIRCUIT, INTERMITTENT FAULTS** , an intermittent short-circuit to ground according to **SHORT-CIRCUIT TO GROUND, INTERMITTENT FAULTS** , and an intermittent short-circuit to supply voltage according to **SHORT-CIRCUIT TO SUPPLY VOLTAGE, INTERMITTENT FAULTS** and contact resistance and oxidation according to **CONTACT RESISTANCE AND OXIDATION** .

Remedy as necessary.

Other information:

- To connect the breakout box, see **CONNECTING THE BREAKOUT BOX** .
- To connect the breakout box to the transmission connector, see **CONNECTING THE BREAKOUT BOX, GM AUTOMATIC TRANSMISSIONS** .
- For information about signals, see **SIGNAL SPECIFICATION** .

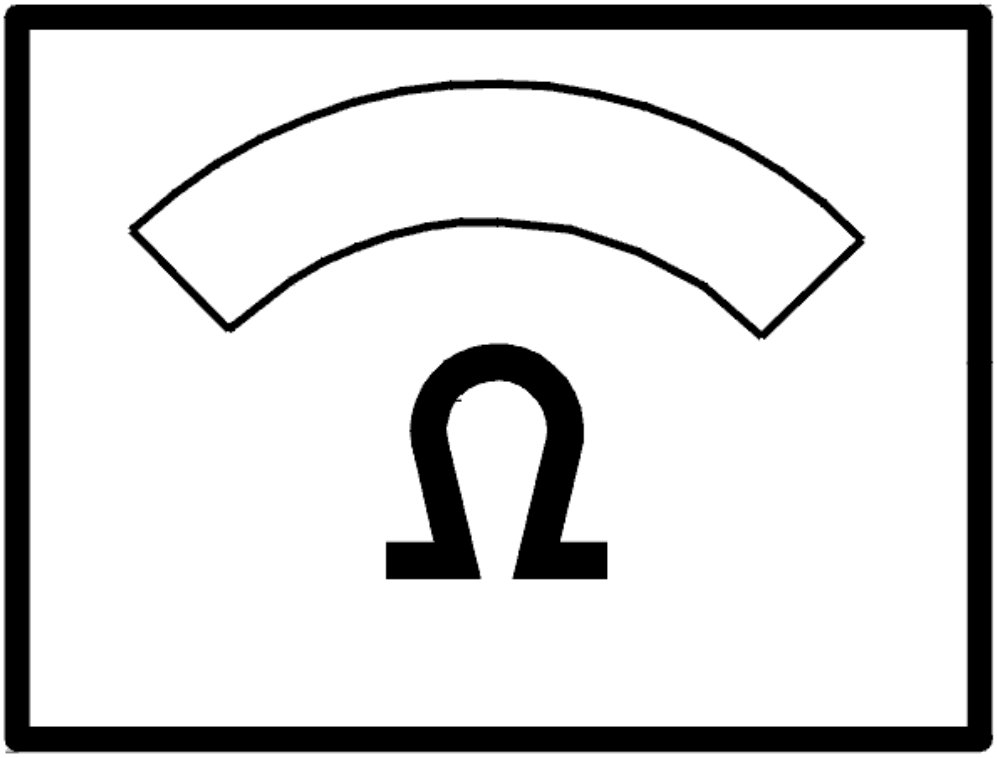

Fig. 249: Identifying Ohms Display
Courtesy of VOLVO CARS CORPORATION

- **Continue**

  Refer to **INFORMATION**

INFORMATION

FAULT-TRACING INFORMATION

If the fault is intermittent, do not verify fault-tracing if the fault does not recur.

It is possible to view the information again, or leave fault-tracing for this diagnostic trouble code (DTC).

TCM-0024: INPUT SPEED SENSOR. FAULTY SIGNAL. PERMANENT FAULT

(4T65 AWD; 2003-2006)

DIAGNOSTIC TROUBLE CODE (DTC) INFORMATION

see **DIAGNOSTIC TROUBLE CODE (DTC) INFORMATION**

FAULTY SIGNAL. PERMANENT FAULT

CHECKS

CHECKING THE TRANSMISSION INPUT SPEED SENSOR SIGNAL

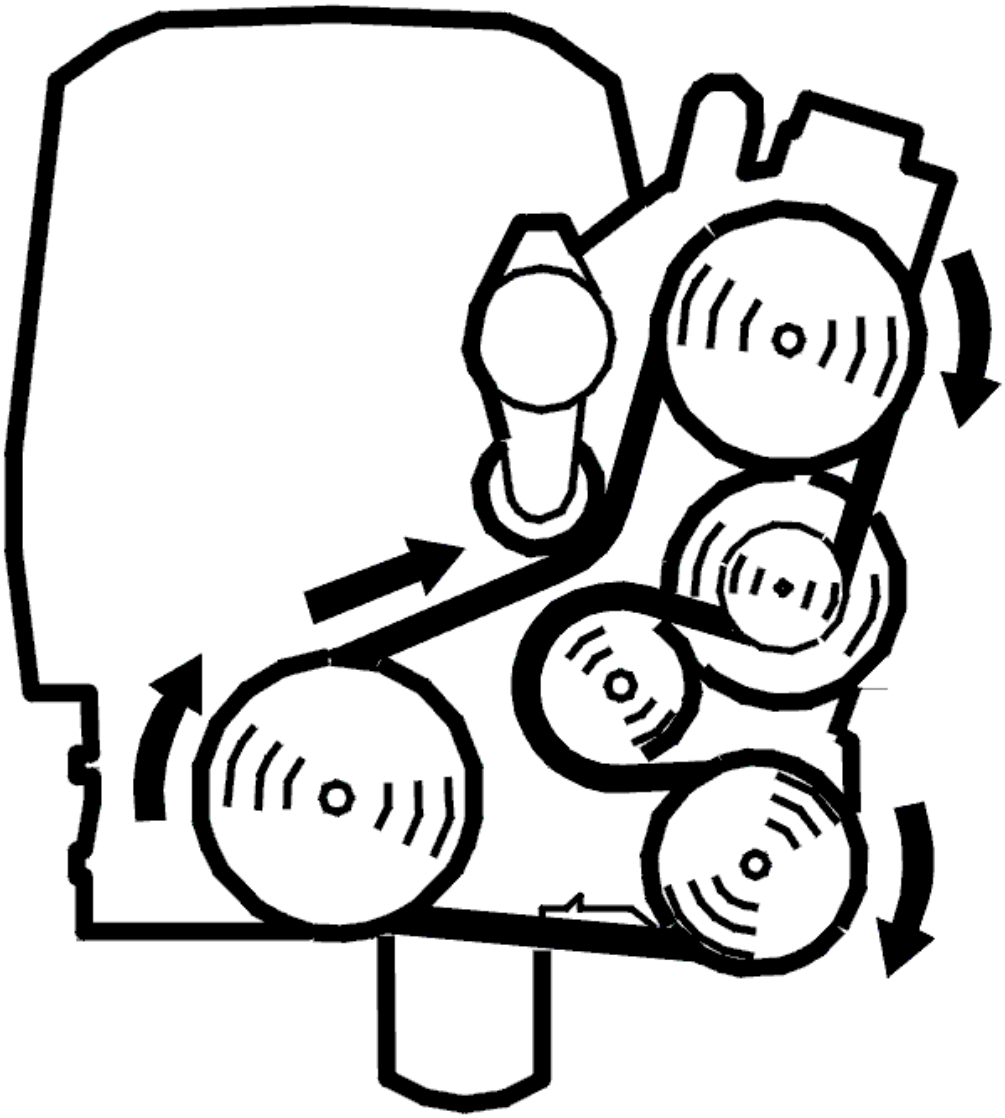

Fig. 250: Identifying Belt Routing
Courtesy of VOLVO CARS CORPORATION

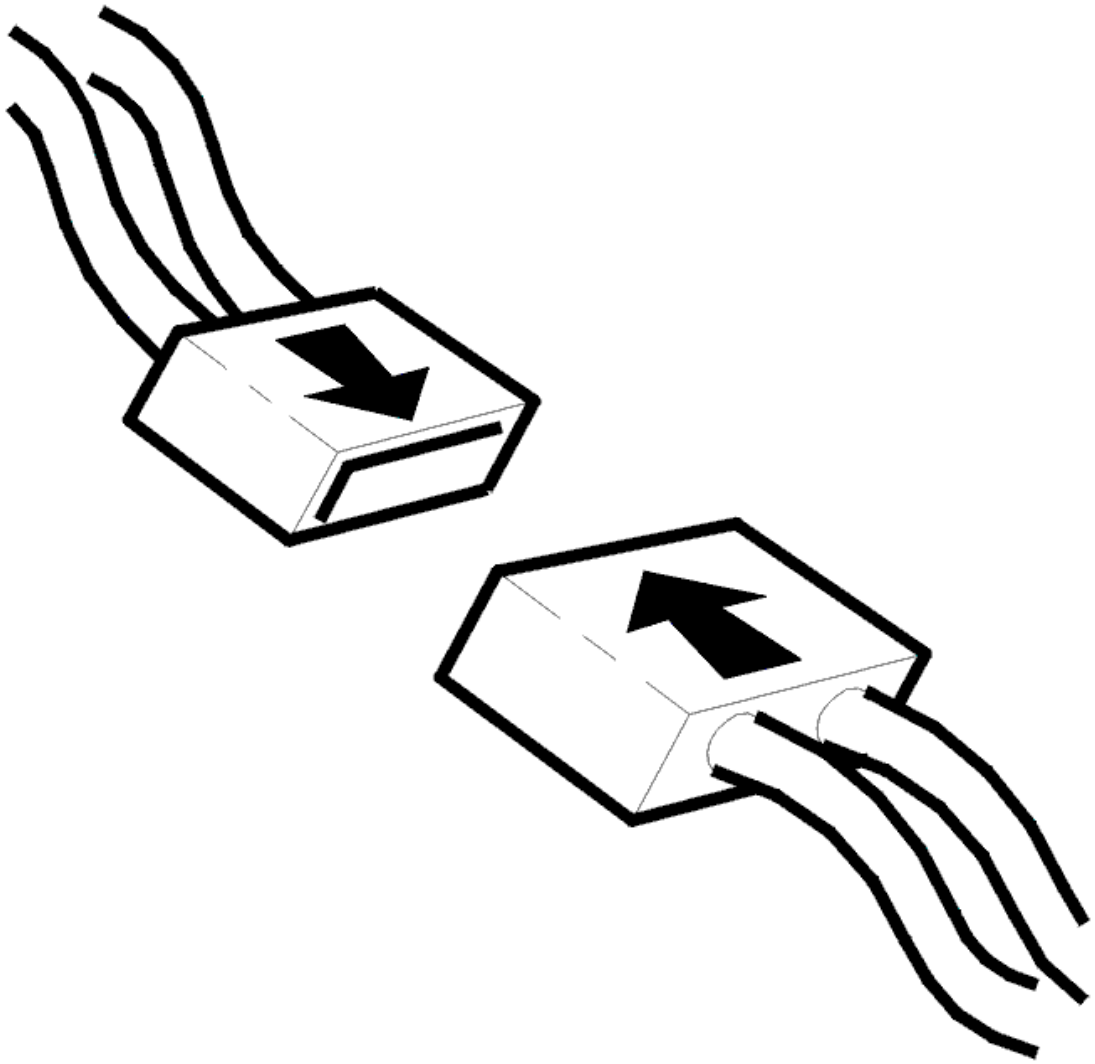

Fig. 251: Identifying Connector(s) Reinstallation
Courtesy of VOLVO CARS CORPORATION

- Ignition off
- Check the control module and transmission input speed sensor connectors. Check for contact resistance and oxidation. See **CONTACT RESISTANCE AND OXIDATION** . Remedy if necessary
- Reinstall the components, reconnect the connectors etc.
- Start the engine
- Read off the transmission input speed.

  Depress the accelerator pedal (AP). Check that the transmission speed increases with engine speed (RPM).

  Other information:

- To access the transmission connector, see **CONNECTING THE BREAKOUT BOX, GM AUTOMATIC TRANSMISSIONS**
- To access the control module connector, see **CONNECTING THE BREAKOUT BOX** .

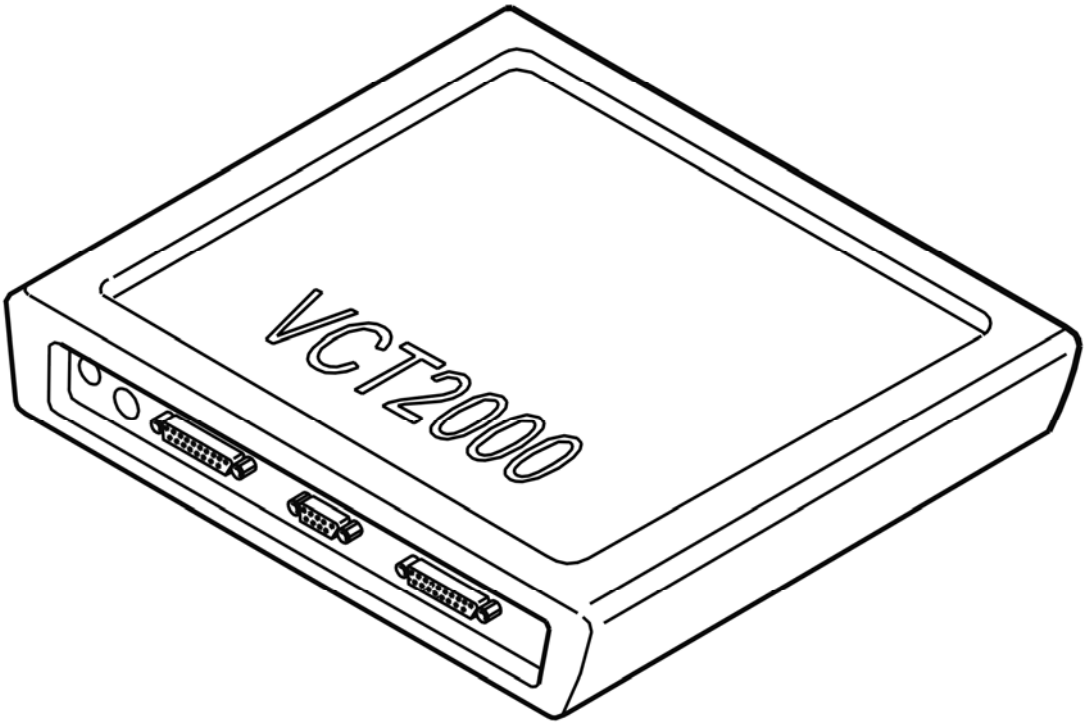

Fig. 252: Identifying VCT2000 Diagnostic Tool Symbol In VIDA
Courtesy of VOLVO CARS CORPORATION

Does the transmission input speed increase with engine speed (RPM)?

- **YES**

  OKAY: Troubleshooting has been completed.

- **NO**

  Refer to **CHECKING WIRING AND SENSORS**

CHECKING WIRING AND SENSORS

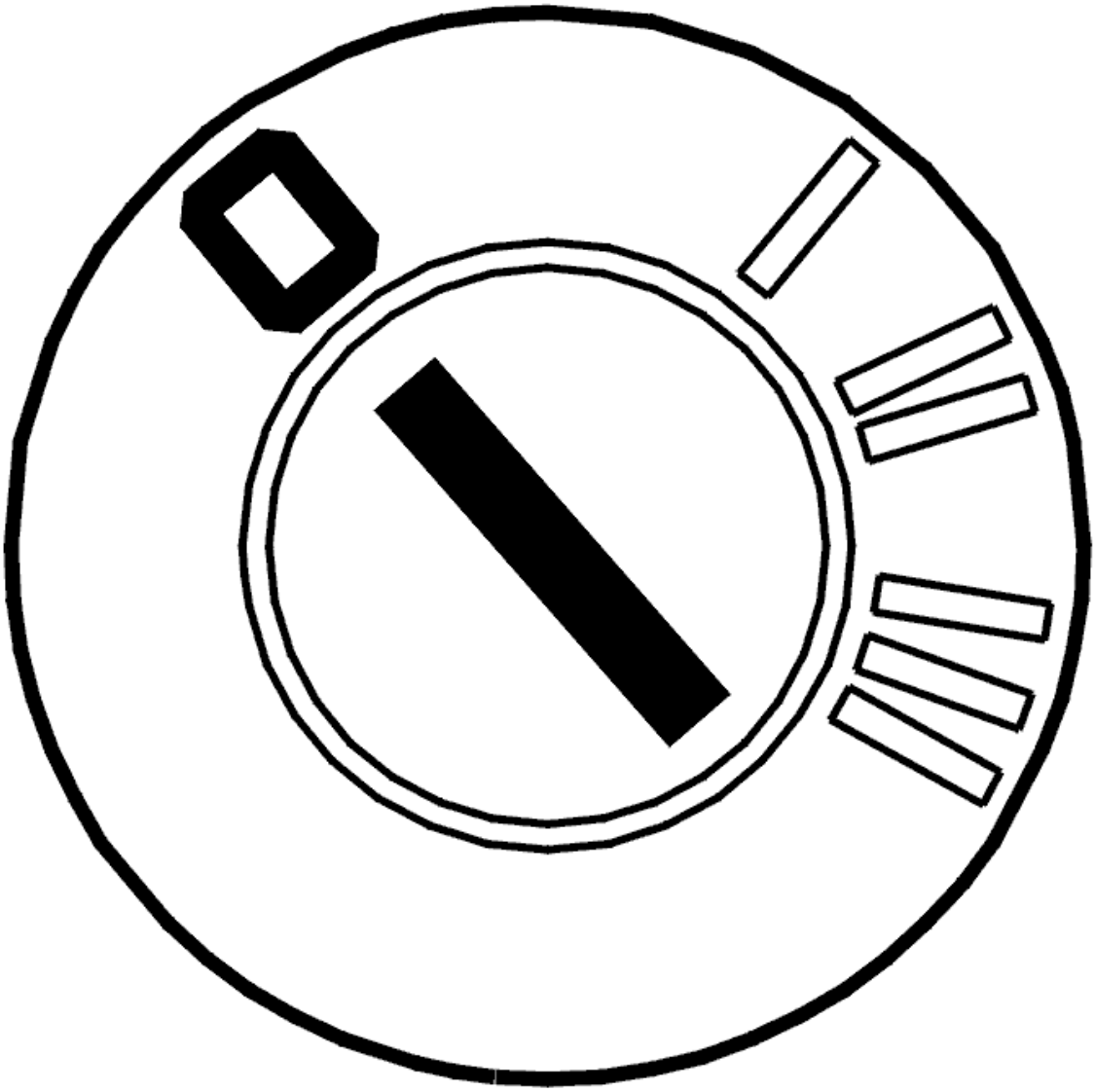

Fig. 253: Identifying Ignition OFF
Courtesy of VOLVO CARS CORPORATION

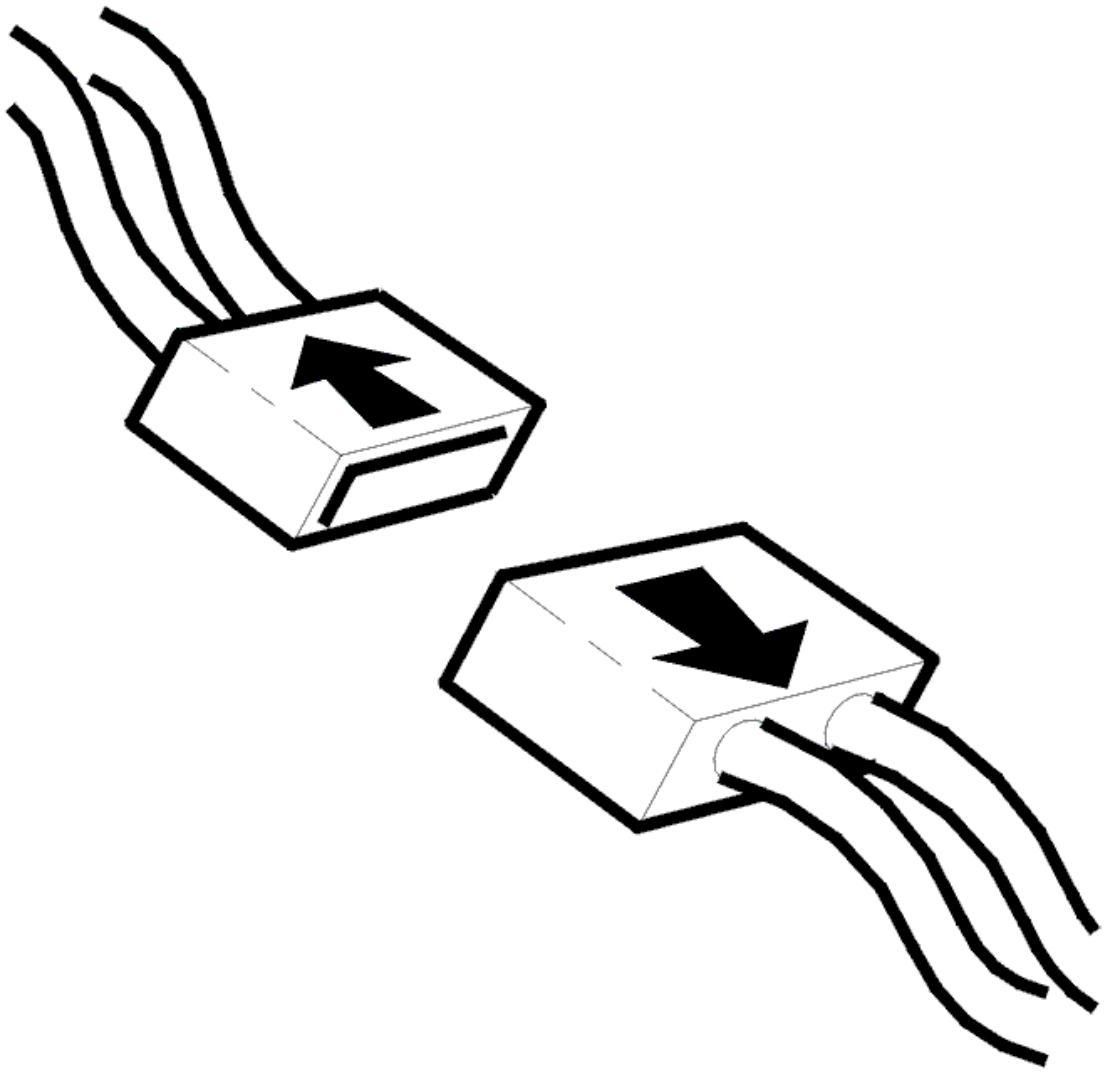

Fig. 254: Identifying Connector(s) Disconnected
Courtesy of VOLVO CARS CORPORATION

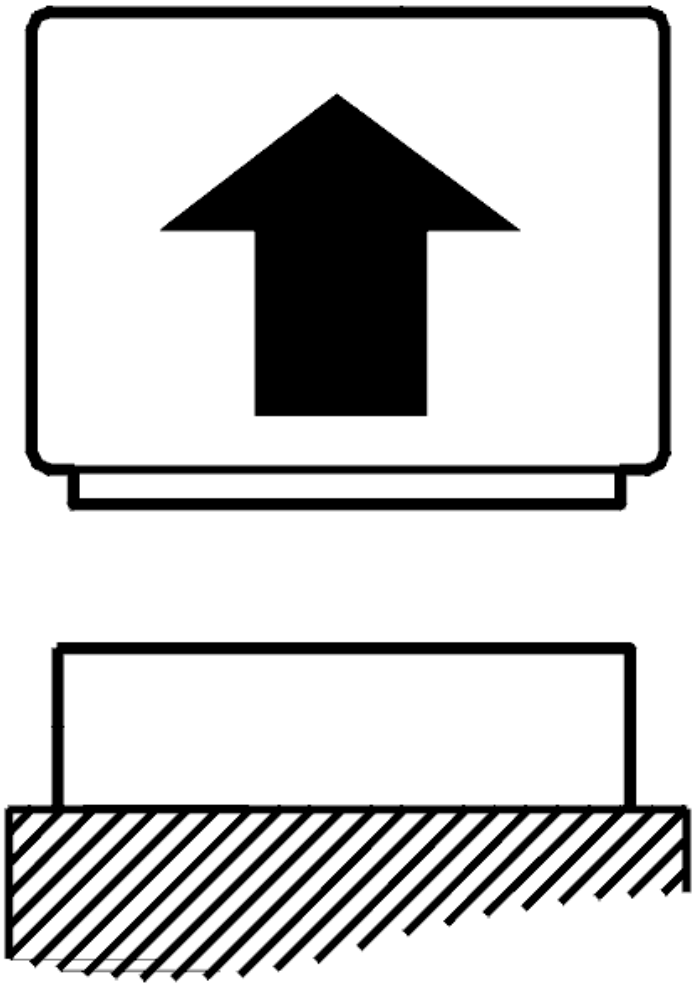

Fig. 255: Identifying Control Module Disconnected
Courtesy of VOLVO CARS CORPORATION

- Ignition off
- Disconnect the transmission connector
- Connect the breakout box to the transmission connector (control module side)
- Disconnect the control module.
- Connect the breakout box to the control module connector (transmission side).

  Check the transmission input speed sensor cable for power supply between control module terminal #59 (#A59) and transmission connector terminal #S (#A16). Check for an open-circuit. See **OPEN-CIRCUIT, PERMANENT FAULTS** . Check for a short-circuit to ground. See **SHORT-CIRCUIT TO GROUND, PERMANENT FAULTS** . Check for a short-circuit to supply voltage. See **SHORT-CIRCUIT TO SUPPLY VOLTAGE. PERMANENT FAULTS** .

Check the signal cable between control module terminal #41 (#A41) and transmission connector terminal #V (#A19). Check for an open-circuit. See **OPEN-CIRCUIT, PERMANENT FAULTS** . Check for a short-circuit to ground. See **SHORT-CIRCUIT TO GROUND, PERMANENT FAULTS** . Check for a short-circuit to supply voltage. See **SHORT-CIRCUIT TO SUPPLY VOLTAGE. PERMANENT FAULTS** .

Remedy as necessary.

HINT: With the control module connected and the ignition on, the voltage between transmission connector terminal #16 and ground (breakout box terminal #53) must be approximately 1-3 V below Ubat.

Other information:

- To disconnect the control module, see **TRANSMISSION CONTROL MODULE (TCM), REPLACING**
- To connect the breakout box, see **CONNECTING THE BREAKOUT BOX**
- To connect the breakout box to the transmission connector, see **CONNECTING THE BREAKOUT BOX, GM AUTOMATIC TRANSMISSIONS**
- For information about signals, see **SIGNAL SPECIFICATION** .

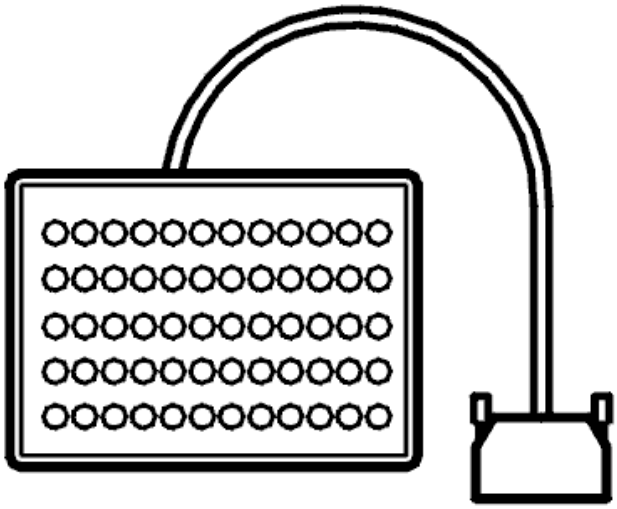

Fig. 256: Identifying Breakout Box
Courtesy of VOLVO CARS CORPORATION

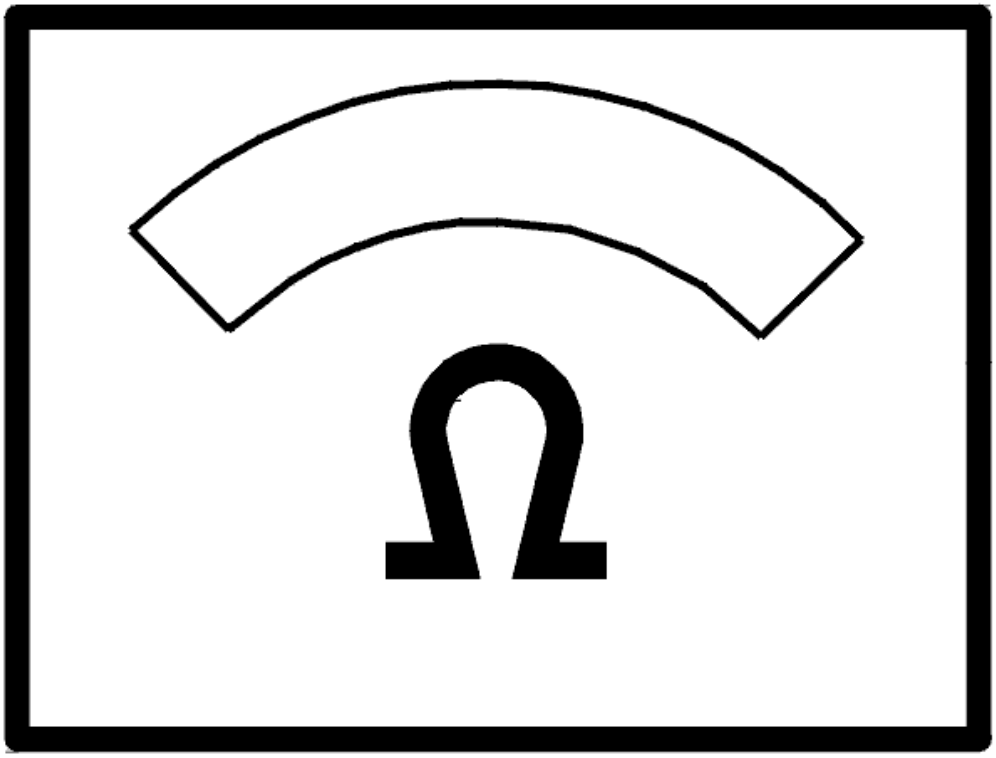

Fig. 257: Identifying Ohms Display
Courtesy of VOLVO CARS CORPORATION

Was a fault detected?

- **YES**

  Refer to **VERIFICATION**

- **NO**

  Refer to **CHECKING THE WIRING AND COMPONENT**

CHECKING THE WIRING AND COMPONENT

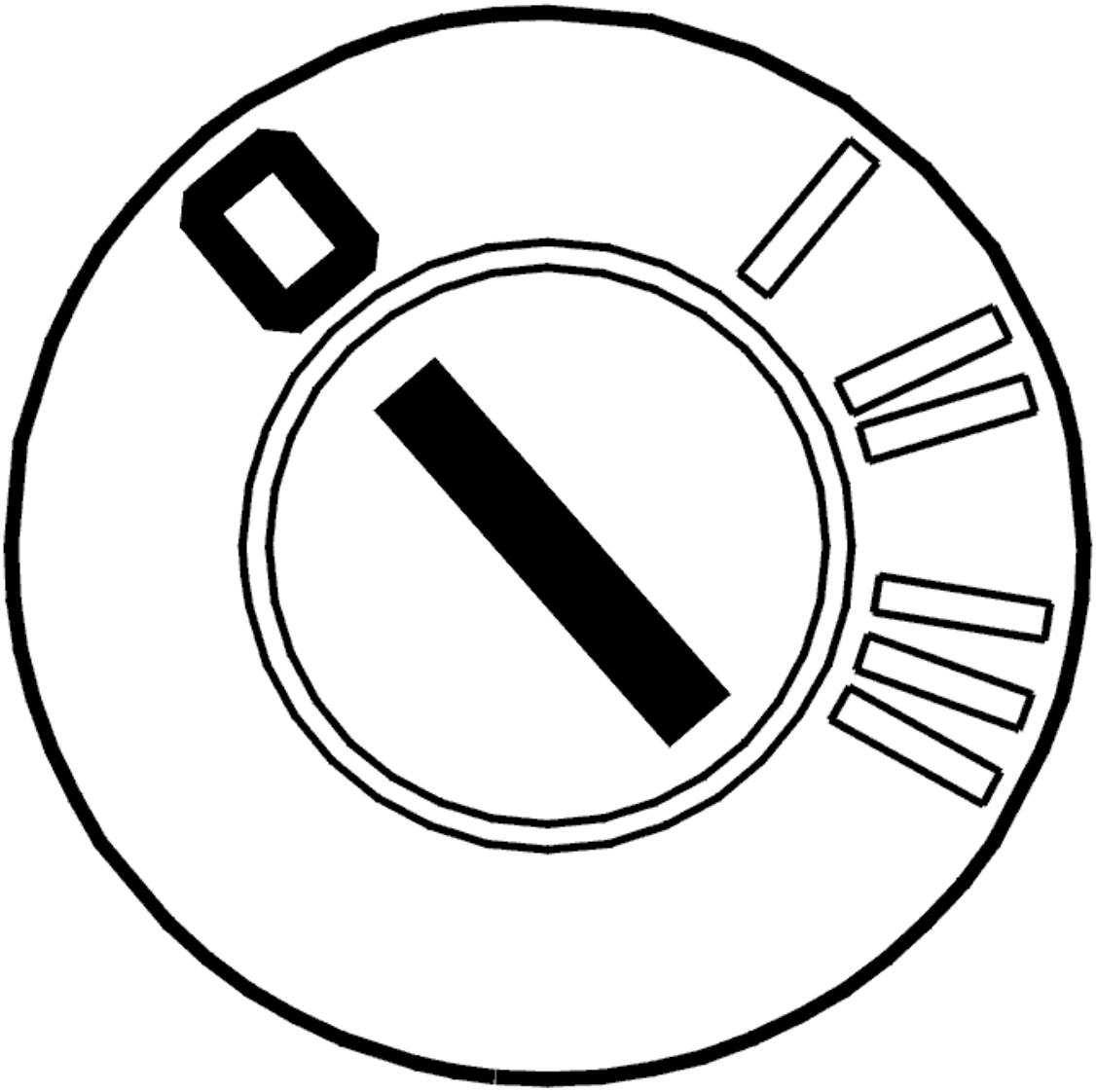

Fig. 258: Identifying Ignition OFF
Courtesy of VOLVO CARS CORPORATION

- Ignition off
- Open the transmission control system.

  Check the cable for power supply between transmission connector terminal #S (#A16) and transmission input speed sensor connector terminal #A. Check for an open-circuit. See **OPEN-CIRCUIT, PERMANENT FAULTS** . Check for a short-circuit to ground. See **SHORT-CIRCUIT TO GROUND, PERMANENT FAULTS** . Check for a short-circuit to supply voltage. See **SHORT-CIRCUIT TO SUPPLY VOLTAGE. PERMANENT FAULTS** .

  Check the signal cable between transmission connector terminal #V (#A19) and transmission input speed sensor connector terminal #B. Check for an open-circuit according to **OPEN-CIRCUIT, PERMANENT FAULTS** . Check for a short-circuit to ground according to **SHORT-CIRCUIT TO GROUND, PERMANENT FAULTS** . Check for a short-circuit to supply voltage according to **SHORT-CIRCUIT**

TO SUPPLY VOLTAGE. PERMANENT FAULTS .

Remedy as necessary.

Other information:

- To open the transmission control system, For removal, see **SIDE COVER TRANSMISSION, REMOVING** To install, see **SIDE COVER TRANSMISSION, INSTALLING**
- To connect the breakout box to the transmission connector, see **CONNECTING THE BREAKOUT BOX, GM AUTOMATIC TRANSMISSIONS**
- To replace the transmission speed sensor, see **INPUT SPEED SENSOR TRANSMISSION, REPLACING**
- To replace the cable harness, see **TEMPERATURE SENSOR FLUID, TRANSAXLE, (TFT)**
- For information about signals, see **SIGNAL SPECIFICATION** .

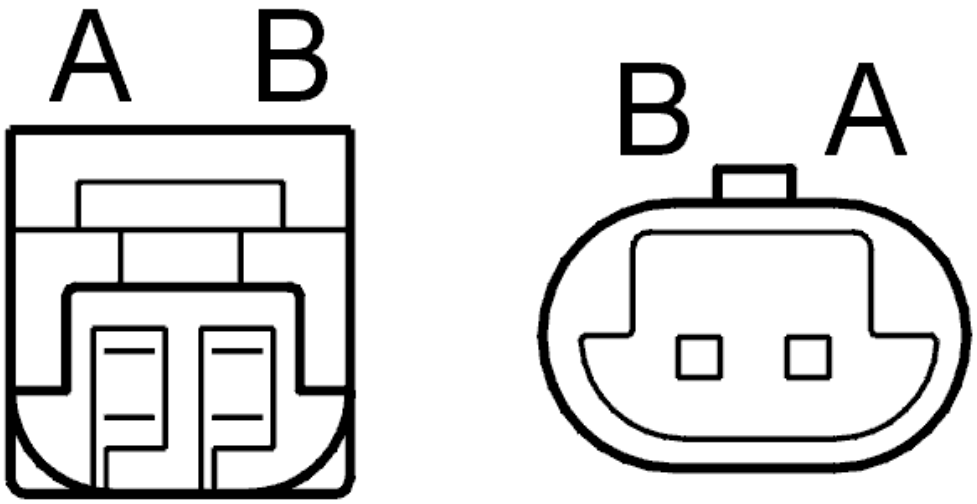

Fig. 259: Identifying Connector Terminals
Courtesy of VOLVO CARS CORPORATION

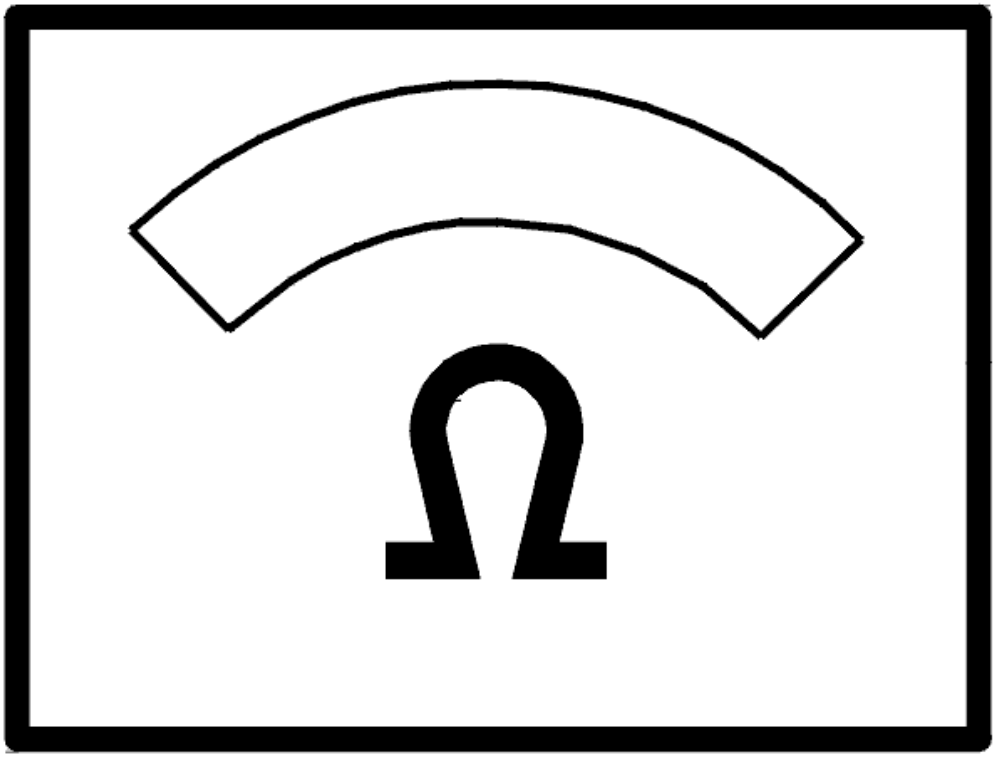

Fig. 260: Identifying Ohms Display
Courtesy of VOLVO CARS CORPORATION

- **Continue**

  Refer to **RESETTING THE ADAPTATION**

RESETTING THE ADAPTATION

RESETTING ADAPTATION AND THE COUNTER FOR "TRANSMISSION OIL CHANGE"

HINT: The transmission has torque controlled adaptive pressure control. Pressure control means that the transmission regulates the pressure itself during each gear shift. This avoids harsh gear shifting. Each gear shift is evaluated by the control module and stored in the memory. This allows for compensation for wear and tear in the transmission and clutch. It is important that the adaptation in the memory is reset after the transmission has been repaired. This is to ensure normal operation. The oil is replaced during

repair; the "Transmission oil change" counter must be reset. If the counter is not reset when the fluid is drained and replaced, there is a risk that a diagnostic trouble code (DTC) will be stored in incorrect circumstances.

NOTE: This applies only if the transmission or one of the components in the transmission have been replaced.

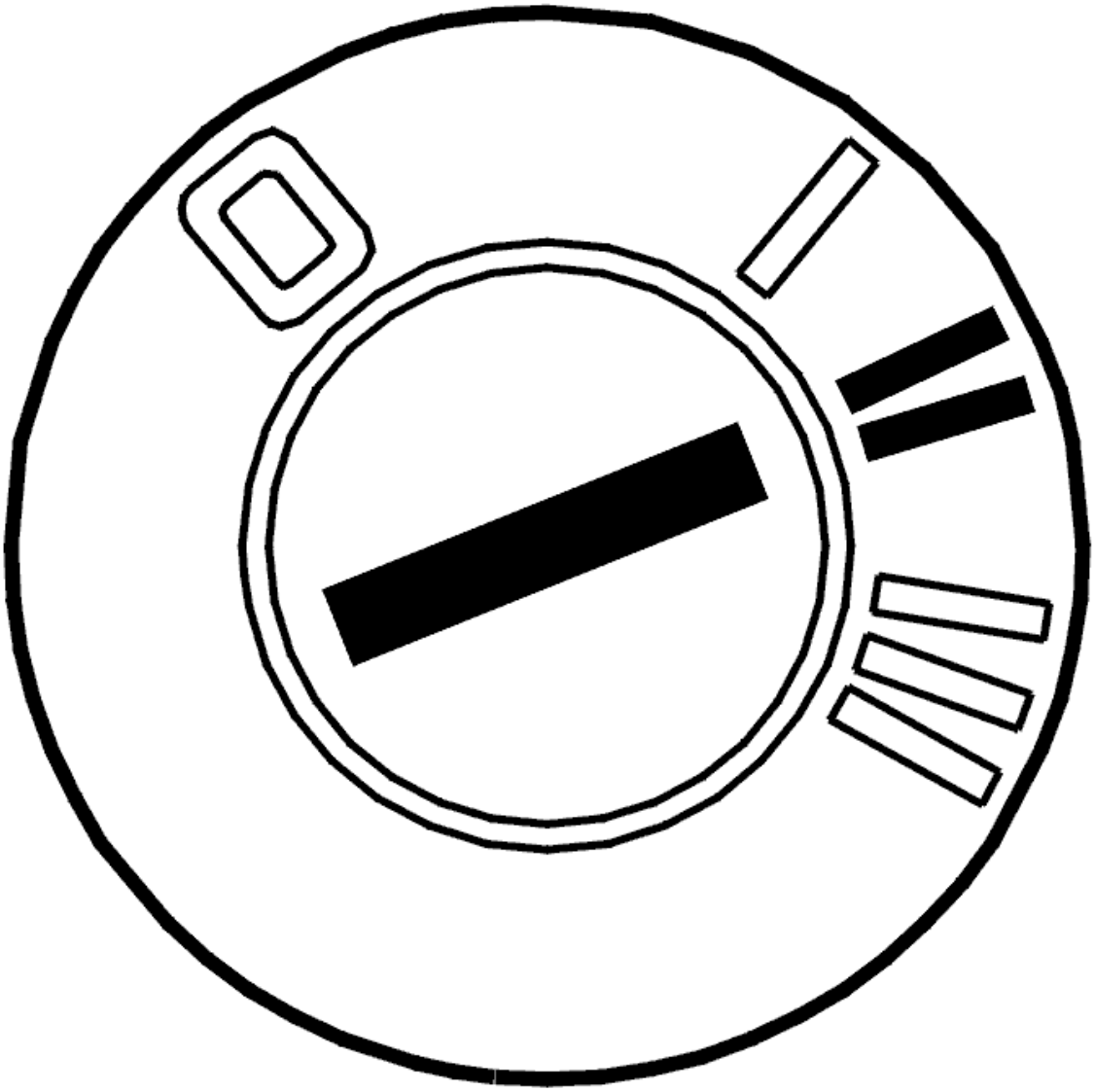

Fig. 261: Identifying Ignition ON
Courtesy of VOLVO CARS CORPORATION

- Ignition on.

  Click on the VCT2000 symbol to reset the adaptation and counter.

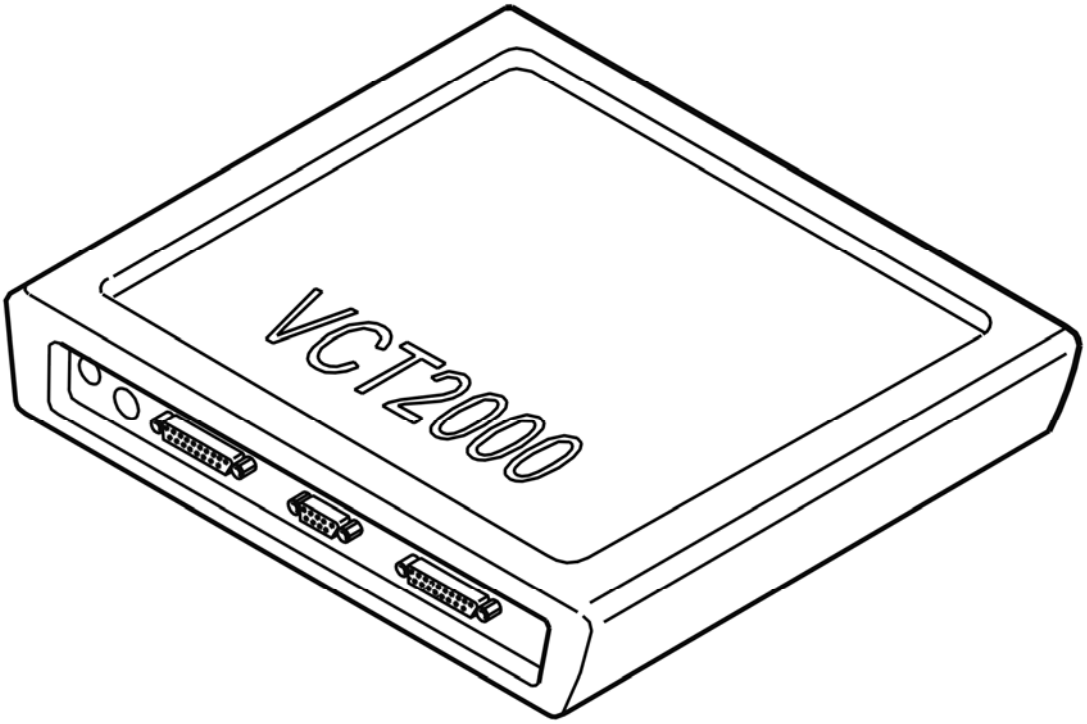

Fig. 262: Identifying VCT2000 Diagnostic Tool Symbol In VIDA
Courtesy of VOLVO CARS CORPORATION

- **Continue**

  Refer to **VERIFICATION**

VERIFICATION

VERIFICATION

HINT: After carrying out the repair, check that the fault has been remedied.

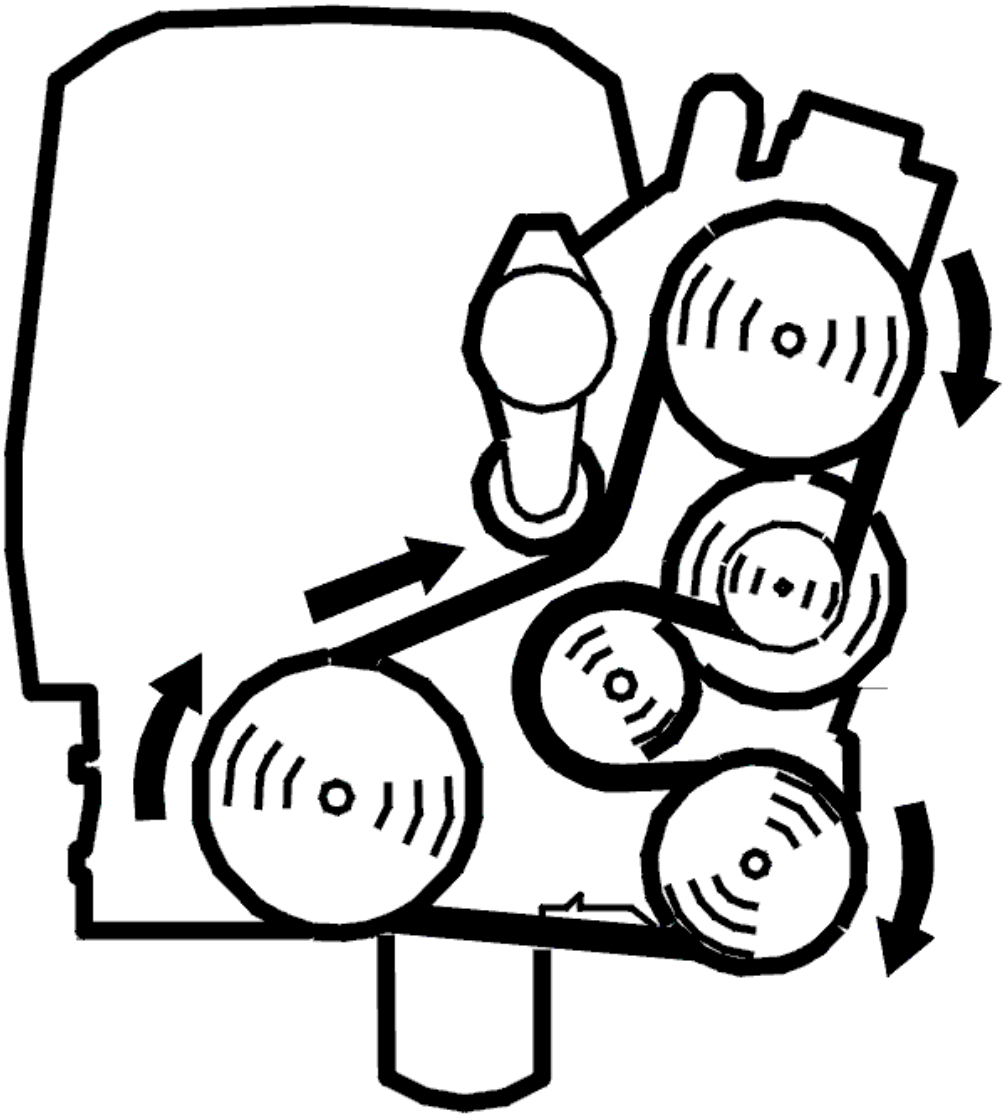

Fig. 263: Identifying Belt Routing
Courtesy of VOLVO CARS CORPORATION

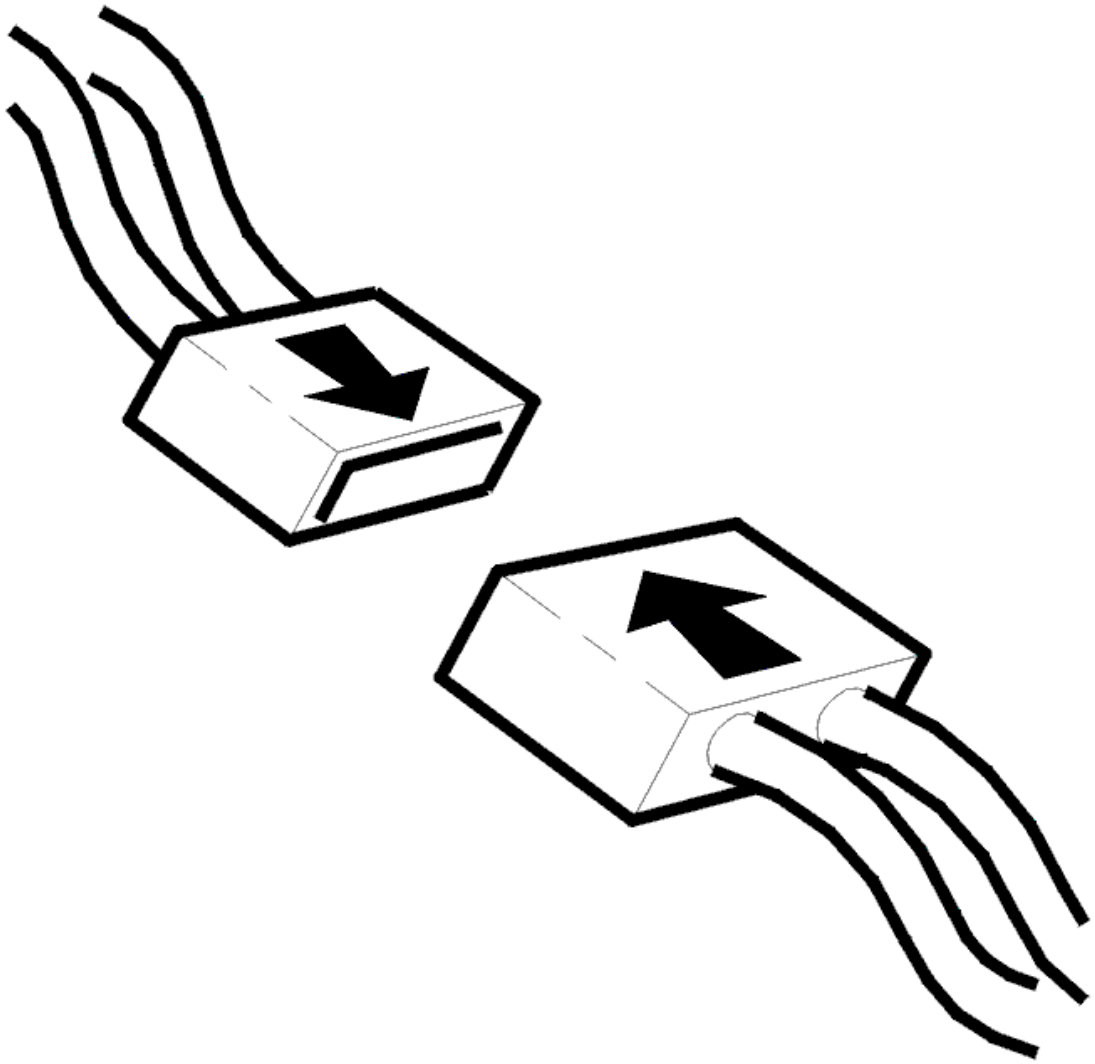

Fig. 264: Identifying Connector(s) Reinstallation
Courtesy of VOLVO CARS CORPORATION

- Ignition off.
- Reinstall the connectors, components etc.
- Start the engine and let it idle.
- Read off the transmission speed.

  Depress the accelerator pedal (AP) and check that engine speed (RPM) is updated. Compare with the engine speed (RPM).

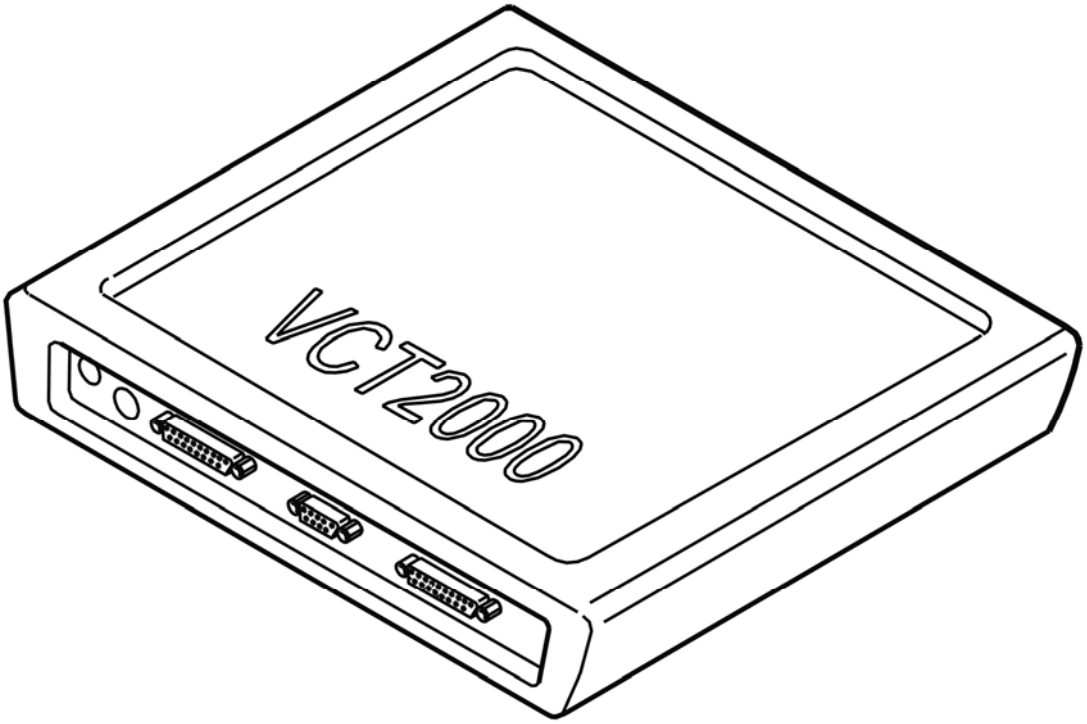

Fig. 265: Identifying VCT2000 Diagnostic Tool Symbol In VIDA
Courtesy of VOLVO CARS CORPORATION

Is the speed updated?

- **YES**

  VERIFIED: Troubleshooting has been completed.

- **NO**

  Refer to **INFORMATION**

INFORMATION

FAULT-TRACING INFORMATION

The fault should have been detected and remedied. As this is not the case fault-tracing has failed.

Exit fault-tracing for this diagnostic trouble code (DTC) or make another attempt.

TCM-0024: TRANSMISSION INPUT SPEED SENSOR. FAULTY SIGNAL. INTERMITTENT FAULT (AW50/51 AWD; AW55-50/51SN; 2003-2007)

DIAGNOSTIC TROUBLE CODE (DTC) INFORMATION

Condition

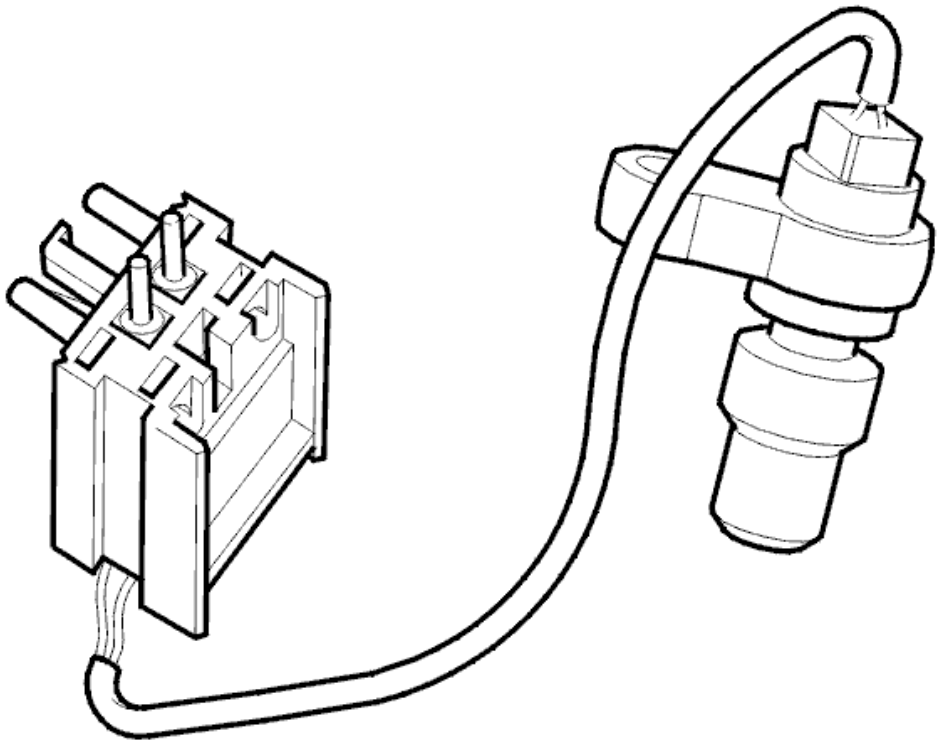

Fig. 266: Identifying Speed Sensor
Courtesy of VOLVO CARS CORPORATION

The transmission speed signal is transmitted by a sensor on the transmission. The transmission control module (TCM) uses the signal to determine the input shaft speed after the torque converter. This signal is used to compare the transmission speed and the vehicle speed. The transmission control module (TCM) uses this comparison to calculate the gear-shift timing. Engine speed (RPM) and vehicle speed data affects the adjustment of the system pressure, lock-up function control and engine torque reduction. The result is smooth gear-shifting. The control module calculates and compares the transmission speed, the engine speed (RPM) and the speed at the transmission. Diagnostic trouble code (DTC) TCM-0024 is stored if the control module registers a faulty signal when vehicle speed is above approximately 25 km/h.

Substitute Value

- The transmission control module (TCM) "Emergency mode I" program has been initiated.

Possible Source

- Contact resistance in the terminals.
- Open-circuit, short-circuit to ground or short-circuit to supply voltage in the power supply.

- Open-circuit, short-circuit to ground or short-circuit to supply voltage in the signal cable.
- Defective engine speed (RPM) sensor.

Fault symptom[s]

- General orange warning lamp lit.
- Malfunction indicator lamp (MIL) lit.
- No lock-up function.
- Harsh gear shifting.

HINT: Harsh gear shifting can be caused by:

- No reduction of the line pressure when shifting.
- No reduction of the line pressure when moving the gear selector between positions P-R, N-R and N-D.
- No request for torque limiting to the engine control module (ECM) when shifting.

FAULTY SIGNAL. INTERMITTENT FAULT

INTERMITTENT FAULT

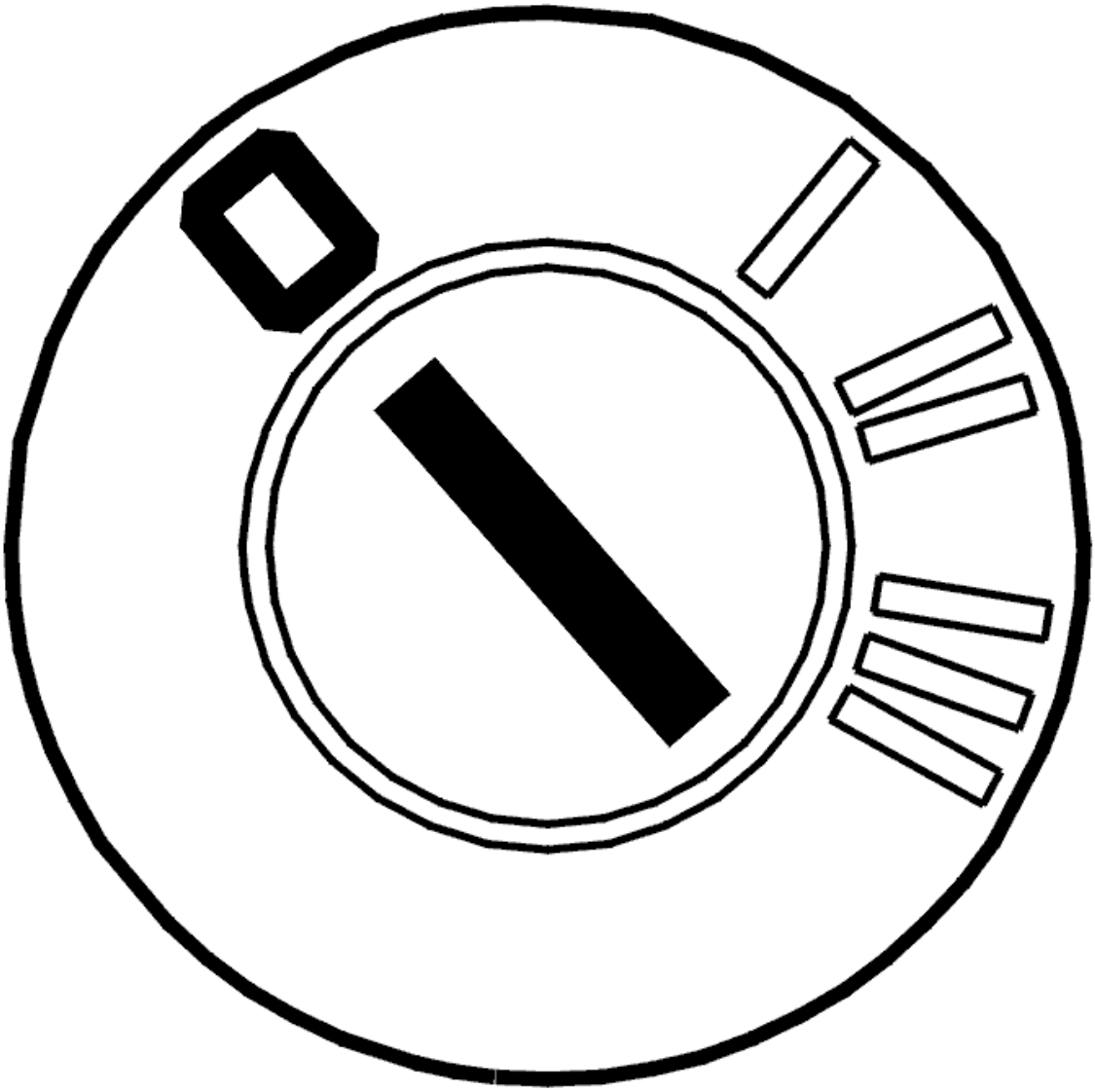

Fig. 267: Identifying Ignition OFF
Courtesy of VOLVO CARS CORPORATION

- Ignition off.

  Check the transmission control module (TCM) and transmission connectors. Check for contact resistance and oxidation according to **CONTACT RESISTANCE AND OXIDATION** .

  Check the wiring between transmission control module (TCM) terminal #A41 (#A41) and transmission connector terminal #A1. Check the wiring between control module terminal #A59 (#A59) and transmission connector terminal #A2. Check for an intermittent open-circuit according to **OPEN-CIRCUIT, INTERMITTENT FAULTS** . Check for an intermittent short-circuit to ground according to **SHORT-CIRCUIT TO GROUND, INTERMITTENT FAULTS** . Check for an intermittent short-circuit to supply voltage according to **SHORT-CIRCUIT TO SUPPLY VOLTAGE, INTERMITTENT FAULTS** .

Remedy as necessary.

Other information:

- To connect the breakout box, see **CONNECTING THE BREAKOUT BOX**
- To disconnect the transmission control module (TCM), see **TRANSMISSION CONTROL MODULE (TCM), REPLACING**
- To disconnect the automatic transmission connectors, see **CONNECTORS, TRANSMISSION, DISCONNECTING / CONNECTING**
- To check or replace the transmission speed sensor, see **INPUT SPEED SENSOR/OUTPUT SPEED SENSOR, REPLACING**
- For information about signals, see **SIGNAL DESCRIPTION. TRANSMISSION CONTROL MODULE (TCM)** .

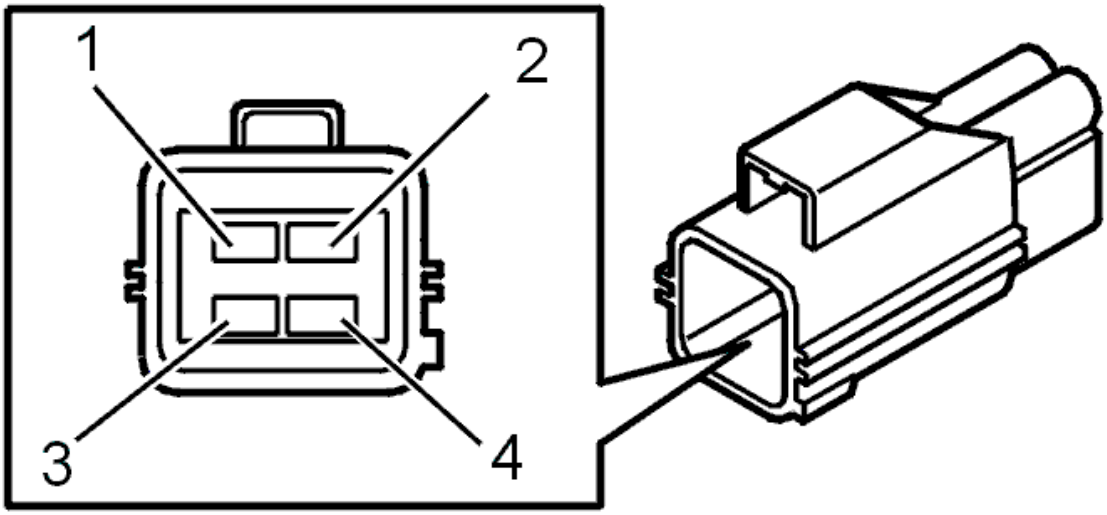

Fig. 268: Identifying Transmission Output Speed Sensor Terminals
Courtesy of VOLVO CARS CORPORATION

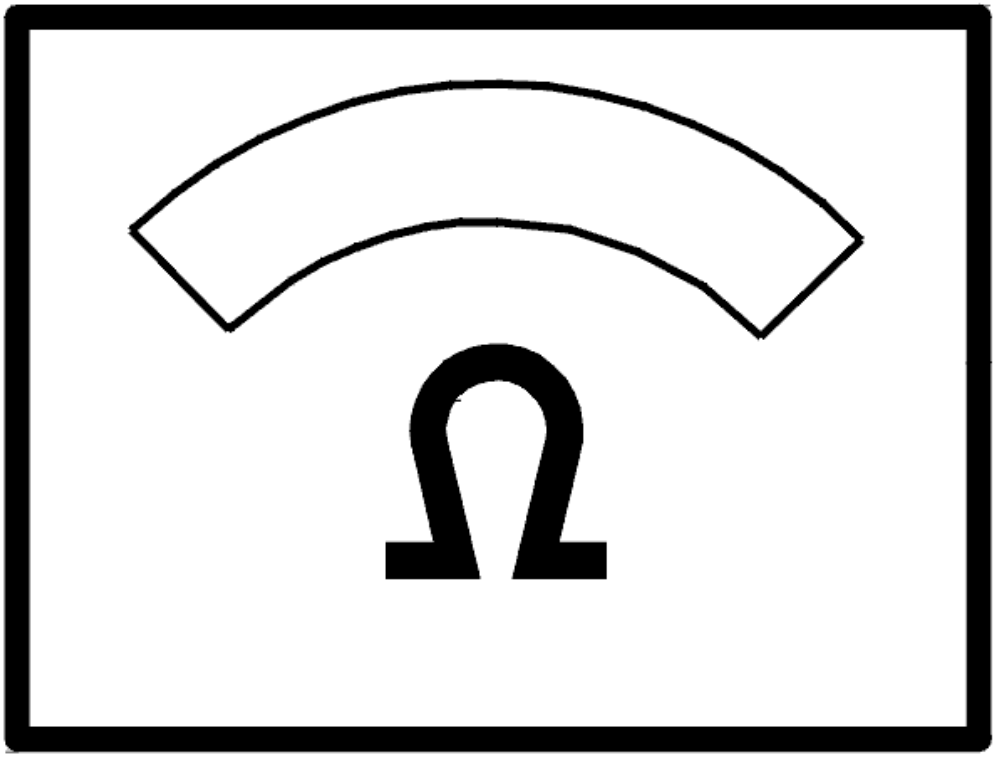

Fig. 269: Identifying Ohms Display
Courtesy of VOLVO CARS CORPORATION

- **Continue**

  Refer to **INFORMATION**

INFORMATION

FAULT-TRACING INFORMATION

If the fault is intermittent, do not verify fault-tracing if the fault does not recur.

It is possible to view the information again, or leave fault-tracing for this diagnostic trouble code (DTC).

TCM-0024: TRANSMISSION INPUT SPEED SENSOR. FAULTY SIGNAL.

PERMANENT FAULT (AW50/51 AWD; AW55-50/51SN; 2003-2007)

DIAGNOSTIC TROUBLE CODE (DTC) INFORMATION

see **DIAGNOSTIC TROUBLE CODE (DTC) INFORMATION**

FAULTY SIGNAL. PERMANENT FAULT

CHECKS

CHECKING THE TRANSMISSION INPUT SPEED SENSOR SIGNAL

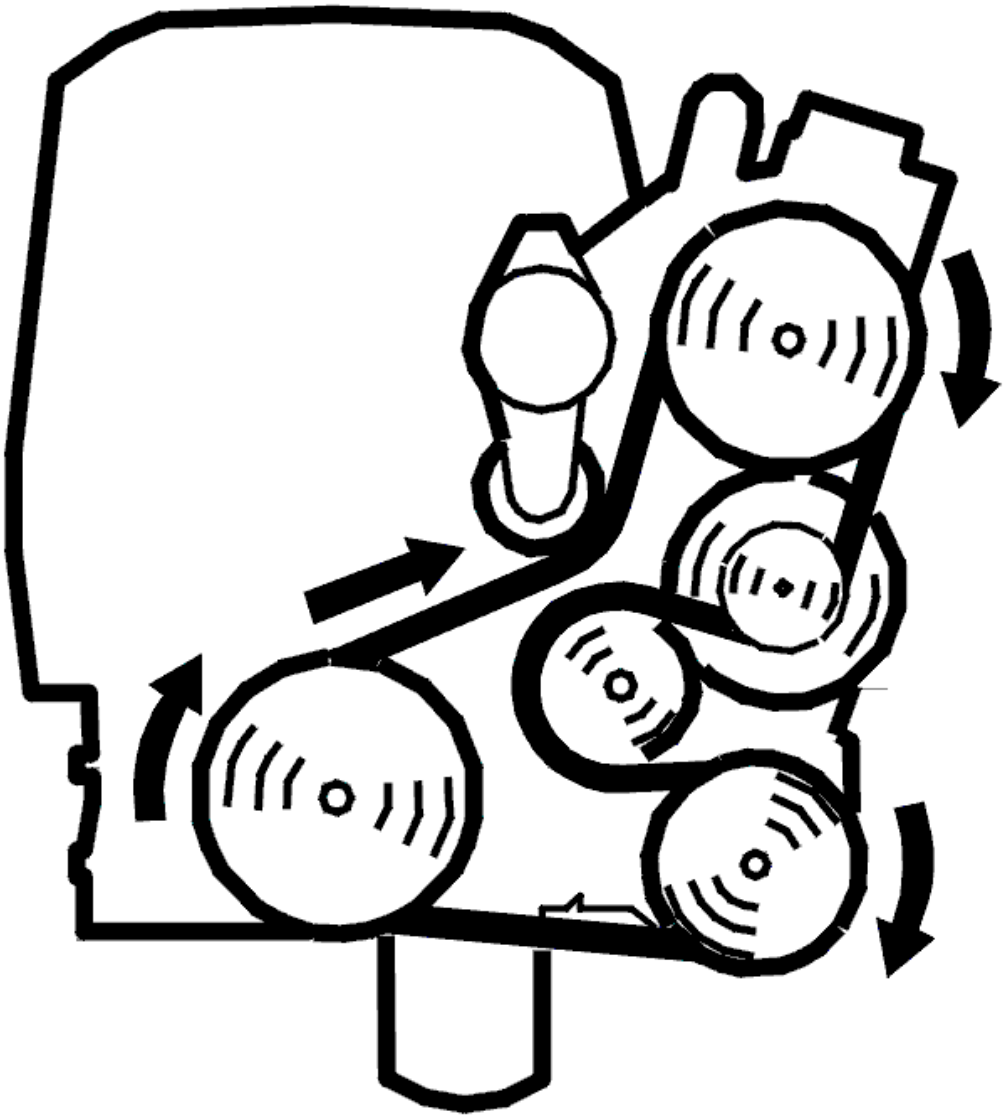

Fig. 270: Identifying Belt Routing
Courtesy of VOLVO CARS CORPORATION

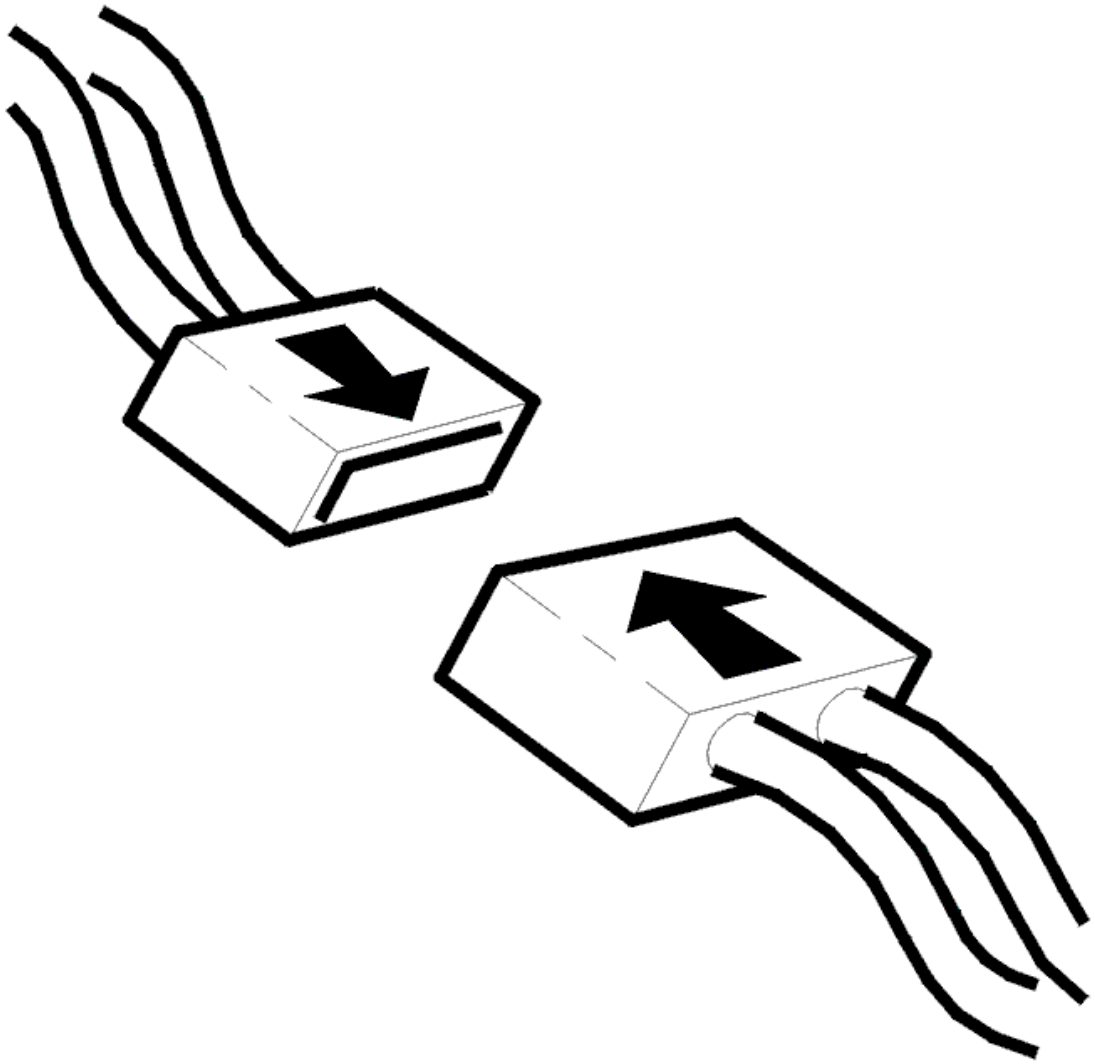

Fig. 271: Identifying Connector(s) Reinstallation
Courtesy of VOLVO CARS CORPORATION

- Ignition off
- Check the transmission control module (TCM) and transmission connectors. Check for contact resistance and oxidation according to **CONTACT RESISTANCE AND OXIDATION** . Remedy if necessary
- Reinstall the components, reconnect the connectors etc.
- Gear selector in position P
- Start the engine. Allow the engine to idle
- Read off the transmission input speed.

  Check that the transmission input speed is updated.

  Compare with the engine speed (RPM).

If the transmission speed increases, the cause of the fault was loose connections in the control module or transmission speed sensor connectors.

Other information:

- To disconnect the transmission control module (TCM), see **TRANSMISSION CONTROL MODULE (TCM), REPLACING**
- To disconnect the automatic transmission connectors, see **CONNECTORS, TRANSMISSION, DISCONNECTING / CONNECTING**
- For information about signals, see **SIGNAL DESCRIPTION. TRANSMISSION CONTROL MODULE (TCM)** .

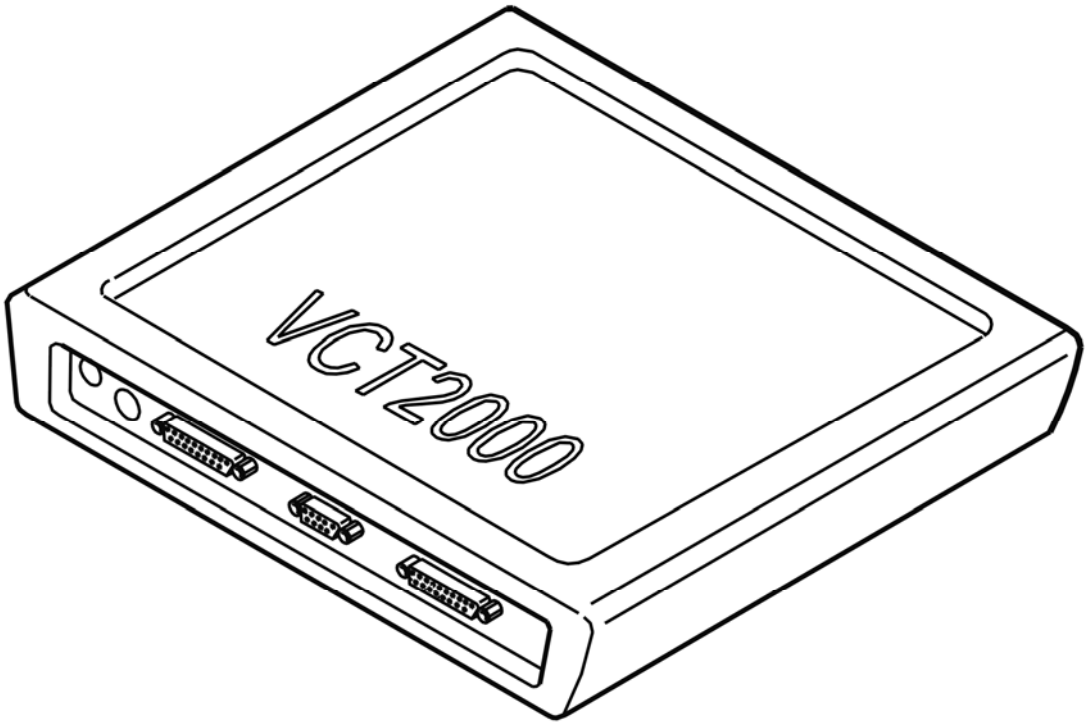

Fig. 272: Identifying VCT2000 Diagnostic Tool Symbol In VIDA
Courtesy of VOLVO CARS CORPORATION

Does the transmission input speed increase with engine speed (RPM)?

- **YES**

  OKAY: Troubleshooting has been completed.

- **NO**

Refer to **CHECKING WIRING AND SENSORS**

CHECKING WIRING AND SENSORS

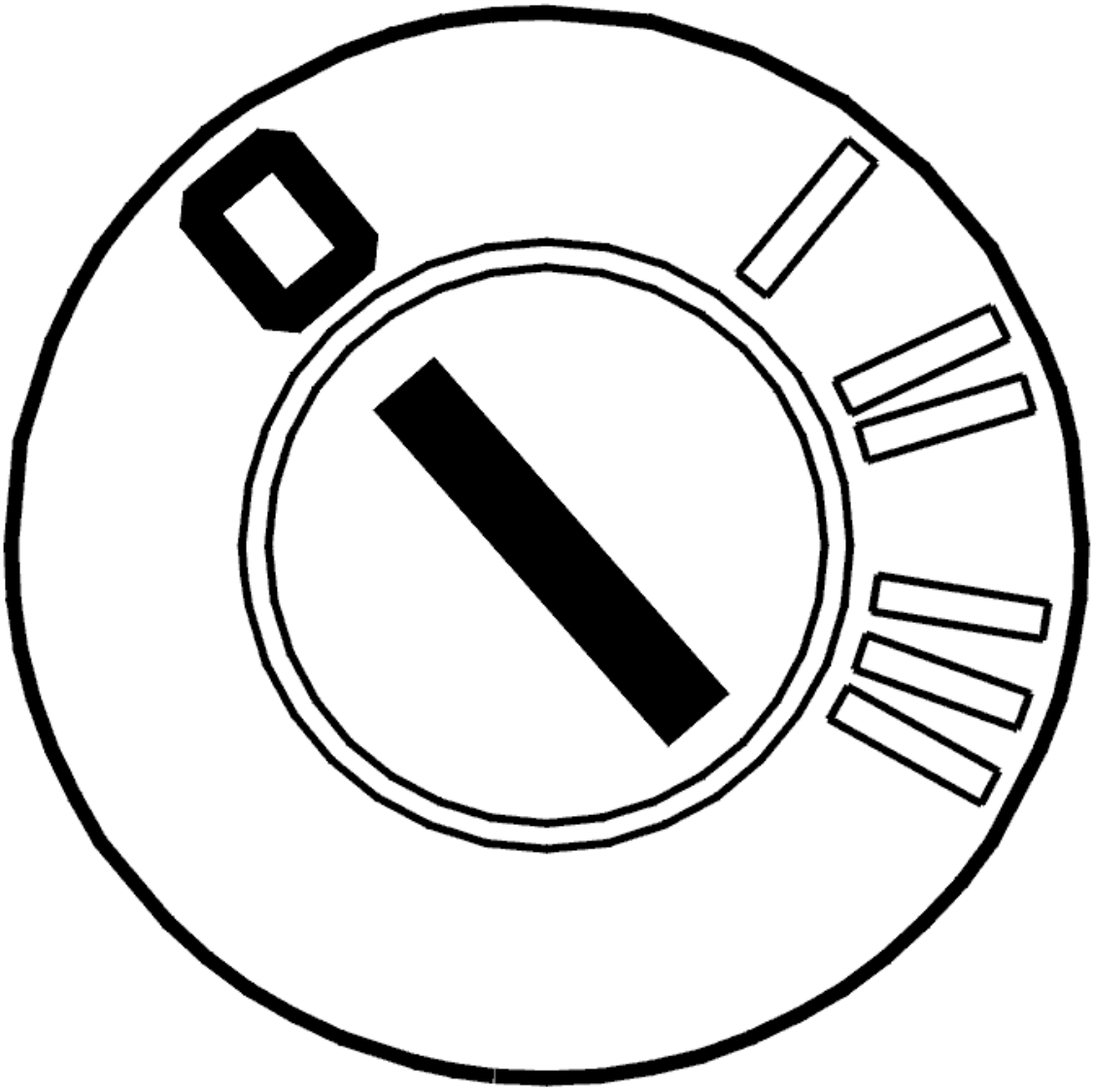

Fig. 273: Identifying Ignition OFF
Courtesy of VOLVO CARS CORPORATION

- Ignition off
- Connect the breakout box.

Check the power supply cable for the transmission input speed sensor between control module terminal #A59 (#A59) and transmission connector terminal #A2. Check for an open-circuit. See **OPEN-CIRCUIT, PERMANENT FAULTS** . Check for a short-circuit to ground. See **SHORT-CIRCUIT TO GROUND, PERMANENT FAULTS** . Check for a short-circuit to supply voltage. See **SHORT-CIRCUIT TO SUPPLY VOLTAGE. PERMANENT FAULTS** .

Check the signal cable between control module terminal #A41 (#A41) and transmission connector terminal #A1. Check for an open-circuit. See **OPEN-CIRCUIT, PERMANENT FAULTS** . Check for a short-circuit to ground. See **SHORT-CIRCUIT TO GROUND, PERMANENT FAULTS** . Check for a short-circuit to supply voltage. See **SHORT-CIRCUIT TO SUPPLY VOLTAGE. PERMANENT FAULTS** .

HINT: With the control module connected and the ignition on, the voltage between transmission output speed sensor connector terminals #A1 and #A2 must be approximately 1-3 V below Ubat.

Remedy as necessary.

Other information:

- To connect the breakout box, see **CONNECTING THE BREAKOUT BOX**
- To disconnect the automatic transmission connectors, see **CONNECTORS, TRANSMISSION, DISCONNECTING / CONNECTING**
- To replace the transmission input speed sensor, see **INPUT SPEED SENSOR/OUTPUT SPEED SENSOR, REPLACING**
- For information about signals, see **SIGNAL DESCRIPTION. TRANSMISSION CONTROL MODULE (TCM)** .

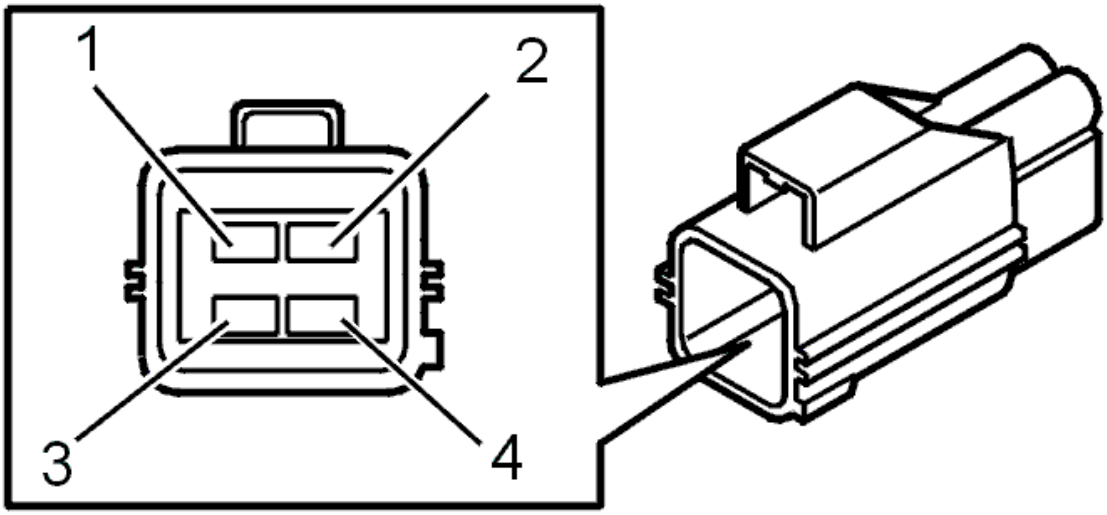

Fig. 274: Identifying Transmission Output Speed Sensor Terminals
Courtesy of VOLVO CARS CORPORATION

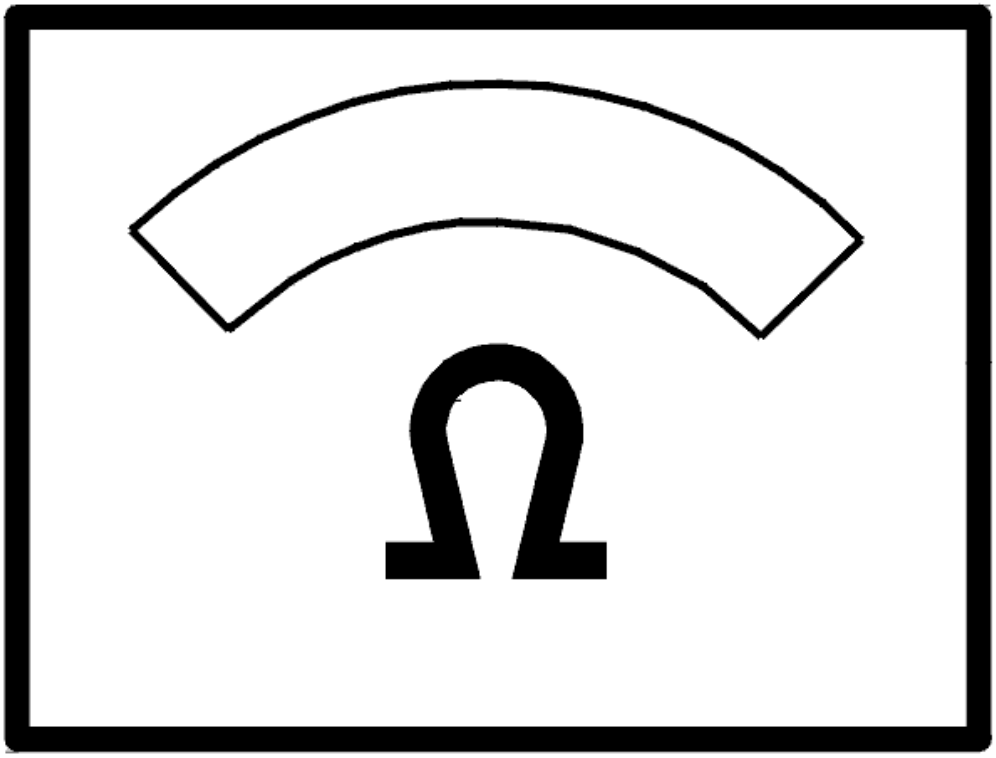

Fig. 275: Identifying Ohms Display
Courtesy of VOLVO CARS CORPORATION

Was a fault detected?

- **YES**

  Refer to **VERIFICATION**

- **NO**

  FAULT NOT FOUND: Troubleshooting has been completed.

VERIFICATION

VERIFICATION

HINT: After carrying out the repair, check that the fault has been remedied.

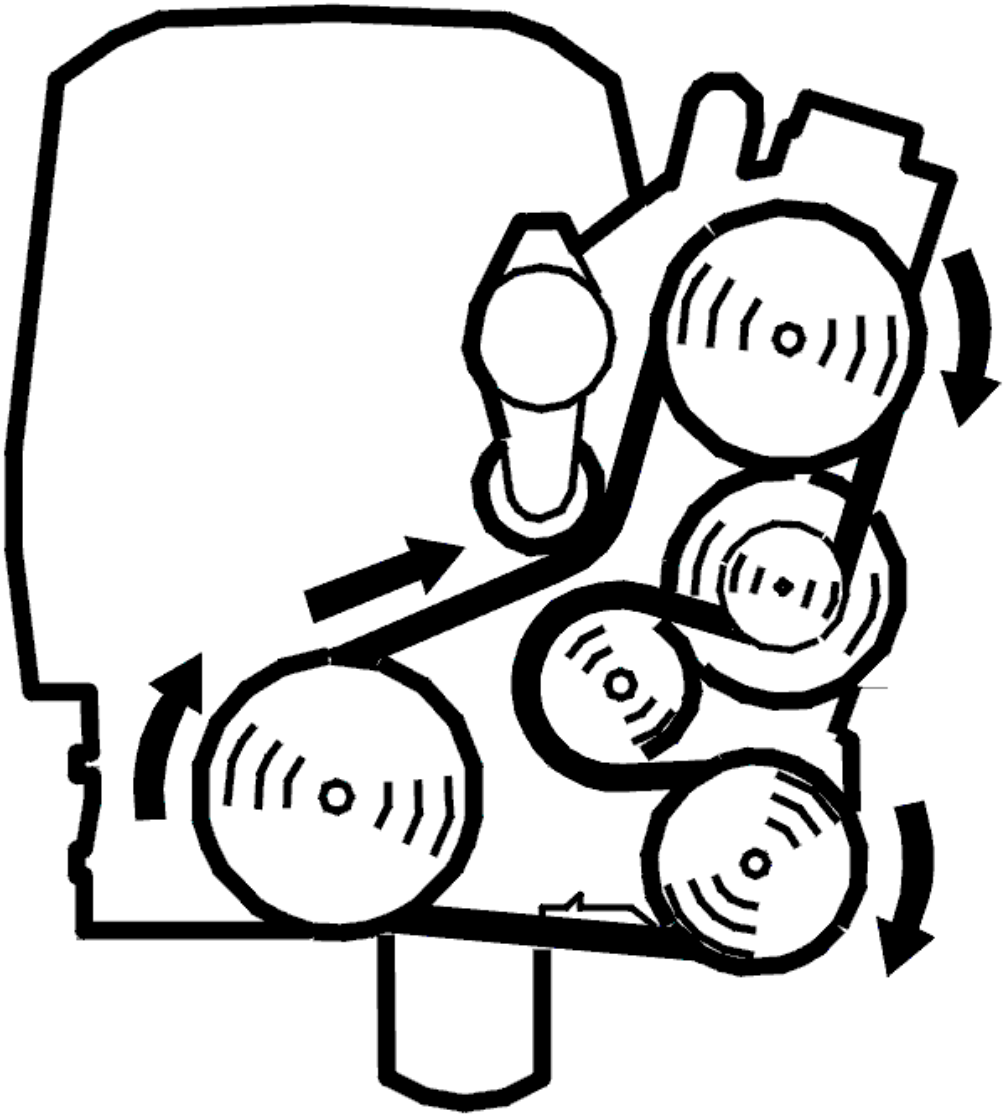

Fig. 276: Identifying Belt Routing
Courtesy of VOLVO CARS CORPORATION

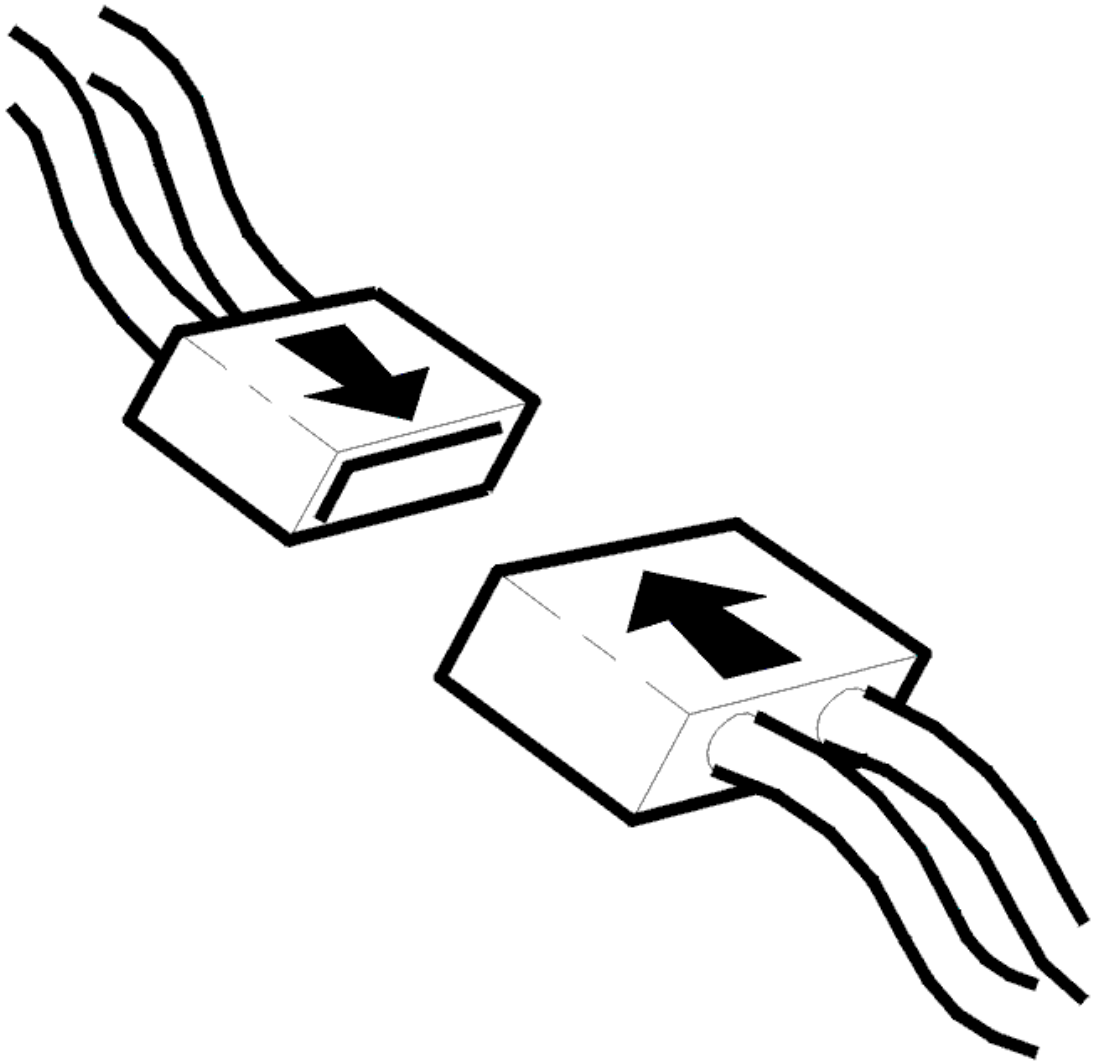

Fig. 277: Identifying Connector(s) Reinstallation
Courtesy of VOLVO CARS CORPORATION

- Ignition off.
- Reinstall the connectors, components etc.
- Start the engine and let it idle.
- Gear selector in position P.
- Read off the transmission speed.

  Depress the accelerator pedal (AP) and check that engine speed (RPM) is updated.

  Compare with the engine speed (RPM).

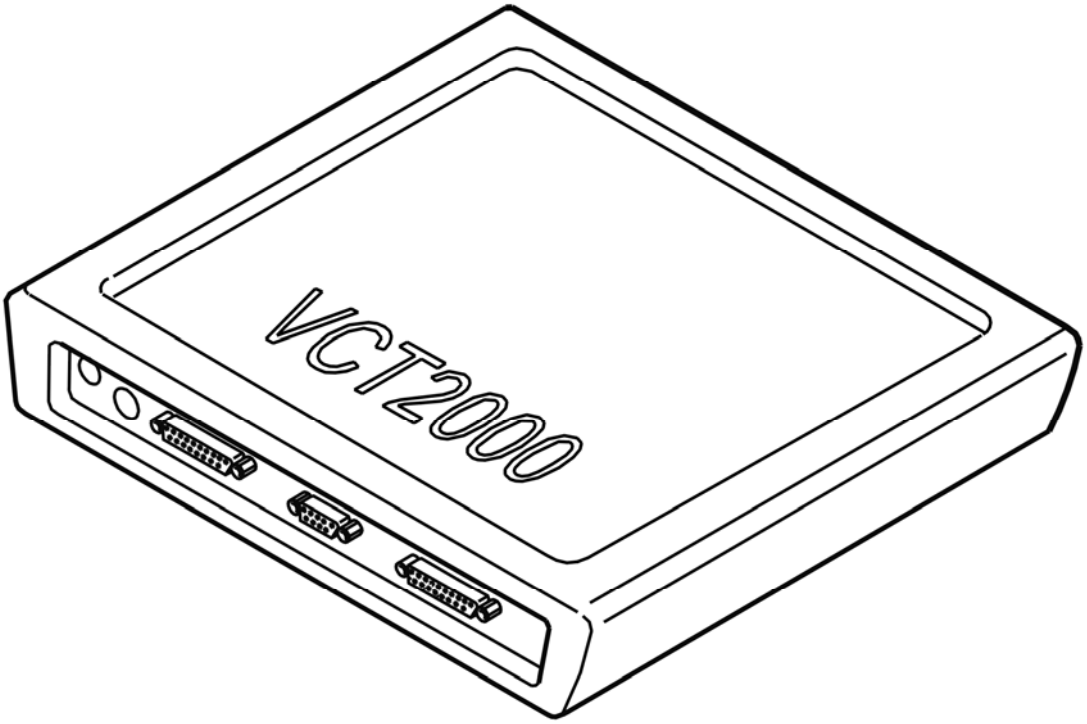

Fig. 278: Identifying VCT2000 Diagnostic Tool Symbol In VIDA
Courtesy of VOLVO CARS CORPORATION

Is the speed updated?

- **YES**

  VERIFIED: Troubleshooting has been completed.

- **NO**

  Refer to **INFORMATION**

INFORMATION

FAULT-TRACING INFORMATION

The fault should have been detected and remedied. As this is not the case fault-tracing has failed.

Exit fault-tracing for this diagnostic trouble code (DTC) or make another attempt.

TCM-0027: BACK-UP (REVERSE) GEAR. INCORRECT GEAR RATIO (4T65 AWD; 2003-2006)

DIAGNOSTIC TROUBLE CODE (DTC) INFORMATION

Condition

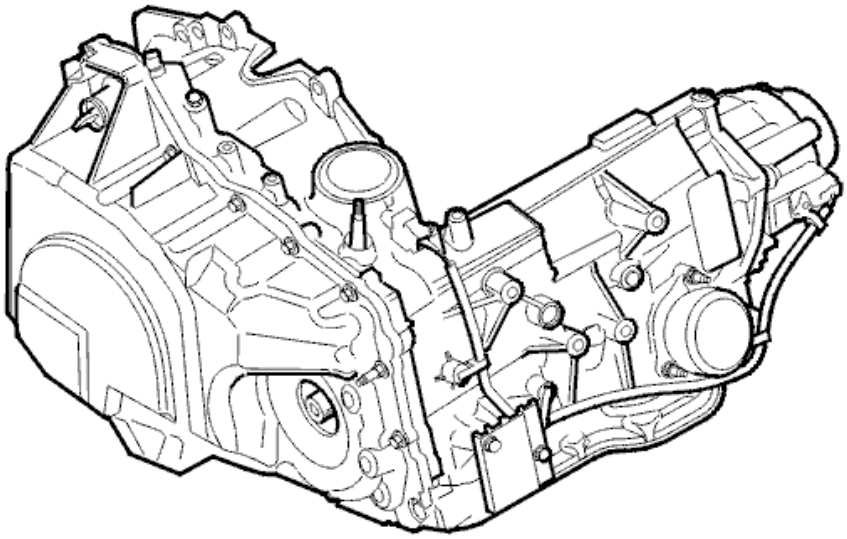

Fig. 279: Identifying Transmission
Courtesy of VOLVO CARS CORPORATION

The transmission control module (TCM) calculates the ratio between the transmission input speed and the vehicle speed. There is a specific ratio for each gear. Diagnostic trouble code (DTC) TCM-0027 is stored if the control module registers that the ratio deviates by more than 10% when oil temperature is above +20°C and throttle opening exceeds 3%.

Substitute Value

- The control module "Limp Home" program initiated.

Possible Source

- Contact resistance in the Solenoid S1 and S2 circuits.
- Interference with or faulty transmission speed sensor signal.
- Interference with or faulty speed signal from transmission speed sensor.
- Gear-shift position sensor incorrectly adjusted.

- Transmission oil level too low.
- Mechanical fault in the transmission. Worn components in the transmission causing slippage or too low line pressure.
- Defective power ground.
- Short-circuited to ground in transmission speed sensor signal cable.

Fault symptom[s]

- General orange warning lamp lit.
- Malfunction indicator lamp (MIL) lit.
- No lock-up function.
- No shifting.
- Harsh gear shifting.

HINT: Harsh shifting - due to disabled line pressure solenoid STH control. This results in constant maximum line pressure.

HINT: No shifting - because the transmission control module (TCM) prevents activation of the solenoids. This stops gear-shifting.

INCORRECT GEAR RATIO

CHECKS

CHECKING SOFTWARE

HINT: This may be due to old software in Engine control module (ECM). The fault can be rectified by updating the software in the Transmission Control Module (TCM).

Fig. 280: Identifying Transmission Control Module (TCM)
Courtesy of VOLVO CARS CORPORATION

It is possible to download new software to the Transmission Control Module (TCM). When ordering software, the vehicle's software and hardware are compared with Volvo's central database. If the comparison corresponds, the software is downloaded to the control module.

Check and download the latest software for the Transmission Control Module (TCM) if available and resume this fault tracing.

- **Continue**

  Refer to **CHECK THE QUALITY OF THE TRANSMISSION OIL**

CHECK THE QUALITY OF THE TRANSMISSION OIL

NOTE: **Transmission fluid quality and level are extremely important for the function of the transmission. Therefore it is imperative that these are correct.**

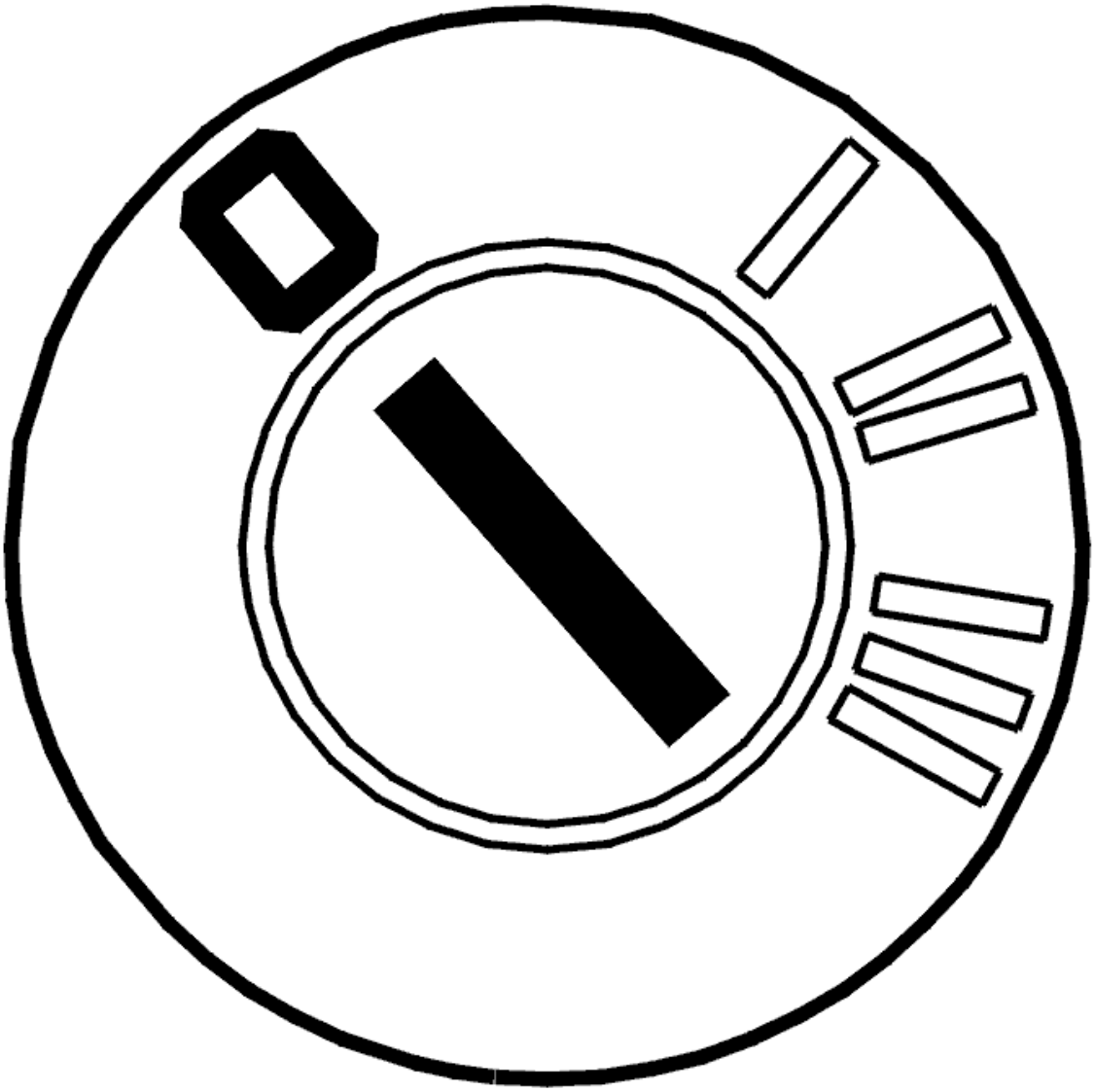

Fig. 281: Identifying Ignition OFF
Courtesy of VOLVO CARS CORPORATION

- Ignition off.

  Check the transmission oil quality. Take a sample using the dip stick. See **CHECKING FOR**

COOLANT IN THE OIL

Select an alternative

1. Glycol in the transmission fluid.

   Refer to **REPLACING THE TRANSMISSION**

2. No fault detected.

   Refer to **CHECKING THE OIL LEVEL IN THE TRANSMISSION**

CHECKING DIAGNOSTIC TROUBLE CODES (DTCS)

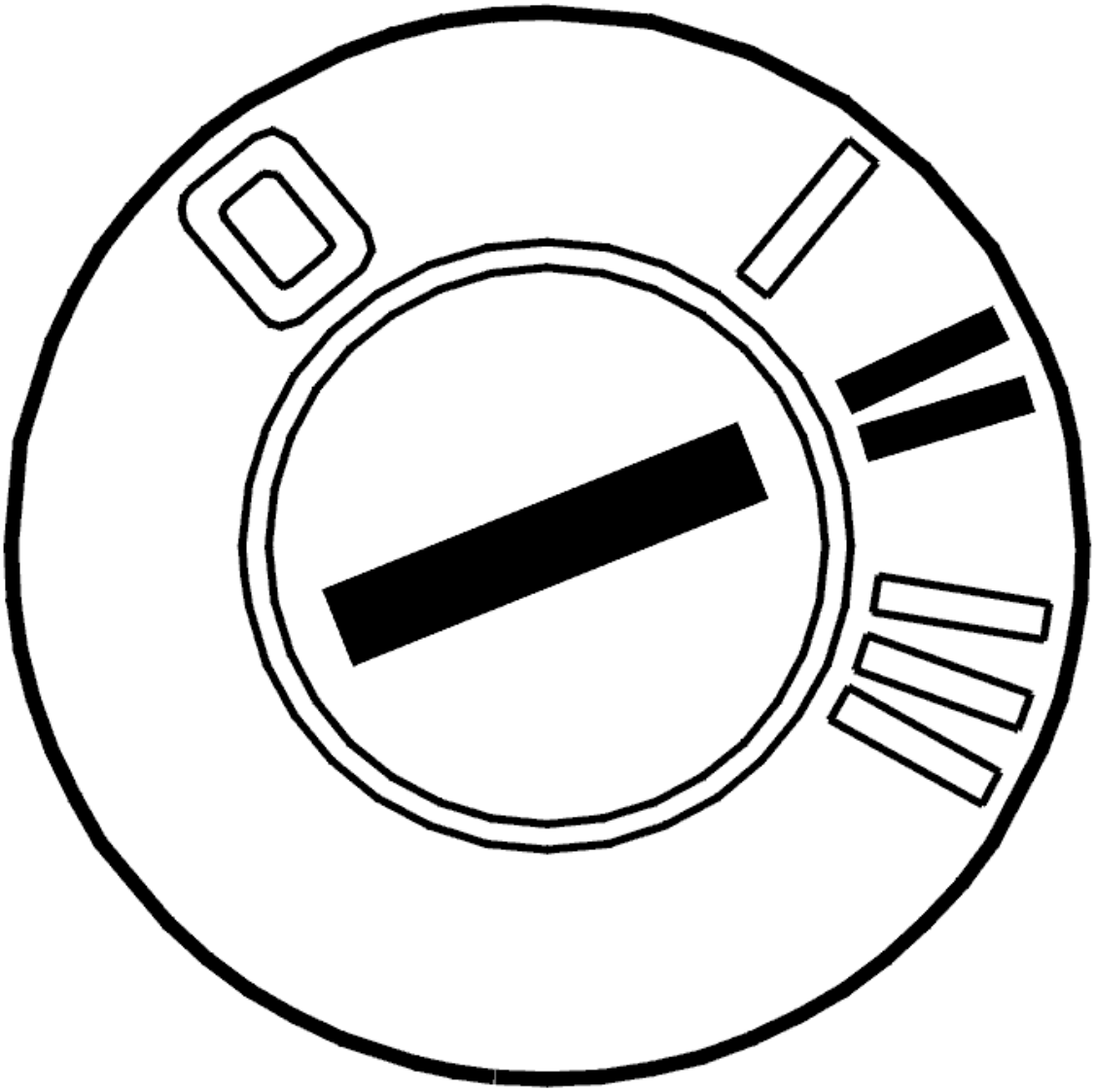

Fig. 282: Identifying Ignition ON
Courtesy of VOLVO CARS CORPORATION

- Ignition on
- Read off diagnostic trouble codes (DTCs).

  If any other diagnostic trouble codes (DTCs) than TCM-0027, TCM-0028, TCM-0029, TCM-002A or TCM-002B are stored, these must be fault-traced after this fault-tracing is completed.

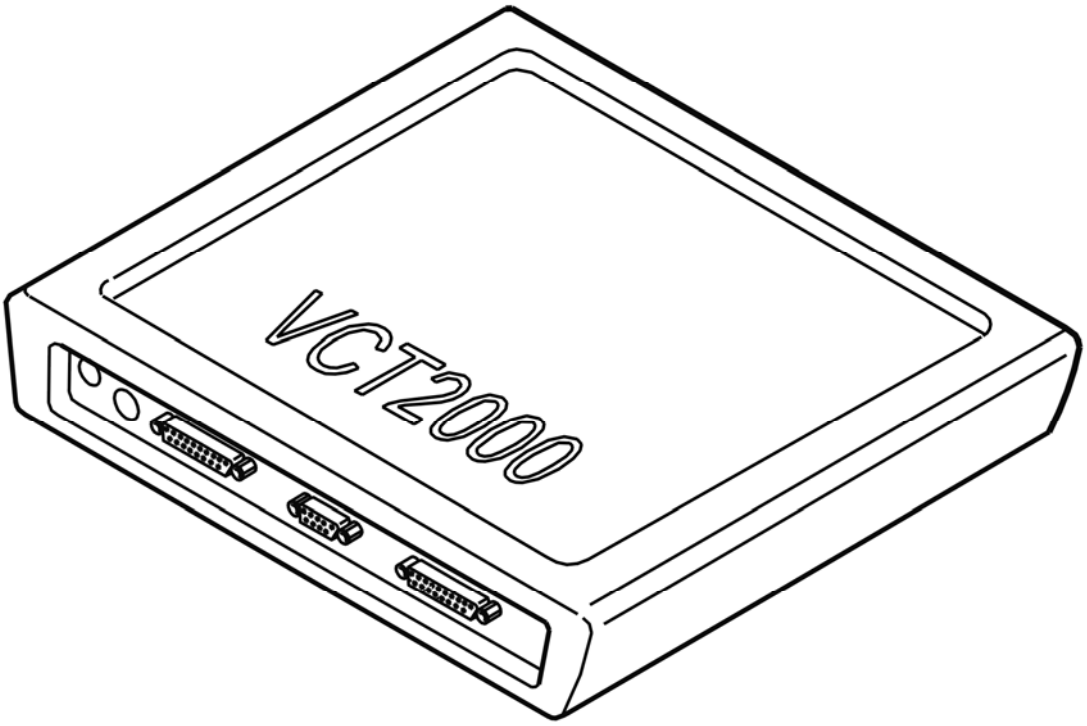

Fig. 283: Identifying VCT2000 Diagnostic Tool Symbol In VIDA
Courtesy of VOLVO CARS CORPORATION

- **Continue**

  Refer to **CHECKING SENSORS AND RATIOS**

CHECKING THE WIRING AND COMPONENT

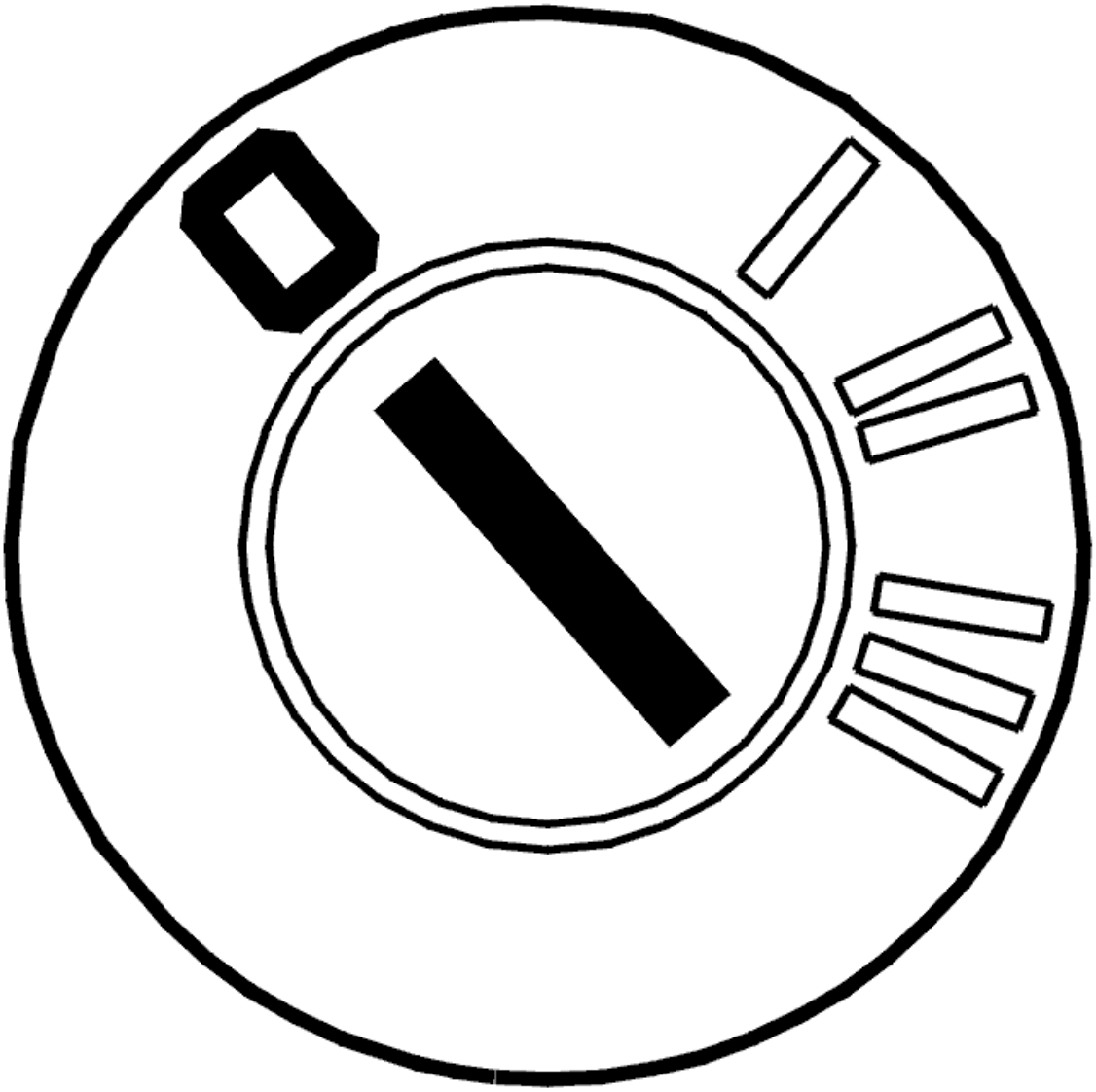

Fig. 284: Identifying Ignition OFF
Courtesy of VOLVO CARS CORPORATION

- Ignition off.

  Check the power supply cable between the transmission control module (TCM) terminal #A57 (#A57) and transmission output speed sensor terminal #1. Check for an open-circuit according to **OPEN-CIRCUIT, PERMANENT FAULTS** . Check for a short-circuit to ground according to **SHORT-CIRCUIT TO GROUND, PERMANENT FAULTS** . Check for a short-circuit to supply voltage according to **SHORT-CIRCUIT TO SUPPLY VOLTAGE. PERMANENT FAULTS** .

  Check the signal cable transmission control module (TCM) terminal #A39 (#A39) and transmission output speed sensor terminal #2. Check for an open-circuit, a short-circuit to ground and for a short-circuit to supply voltage.

  HINT: With the control module connected, the ignition on and a voltmeter connected between

transmission output speed sensor terminals #1 and #2 (control module side), the voltage must be approximately 1-3 V below Ubat.

Remedy as necessary.

Other information:

- To connect the breakout box, see **CONNECTING THE BREAKOUT BOX**
- To disconnect the transmission control module (TCM), see **TRANSMISSION CONTROL MODULE (TCM), REPLACING**
- To check or replace the transmission output speed sensor, see **OUTPUT SPEED SENSOR TRANSMISSION, REPLACING**
- For information about signals, see **SIGNAL SPECIFICATION**
- see **CHECKING WIRING AND TERMINALS. PERMANENT FAULT**

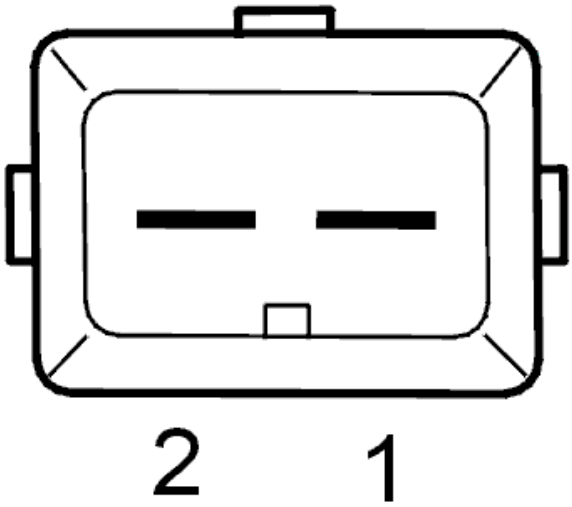

Fig. 285: Identifying Vehicle Speed Sensor (VSS) Connector Terminals
Courtesy of VOLVO CARS CORPORATION

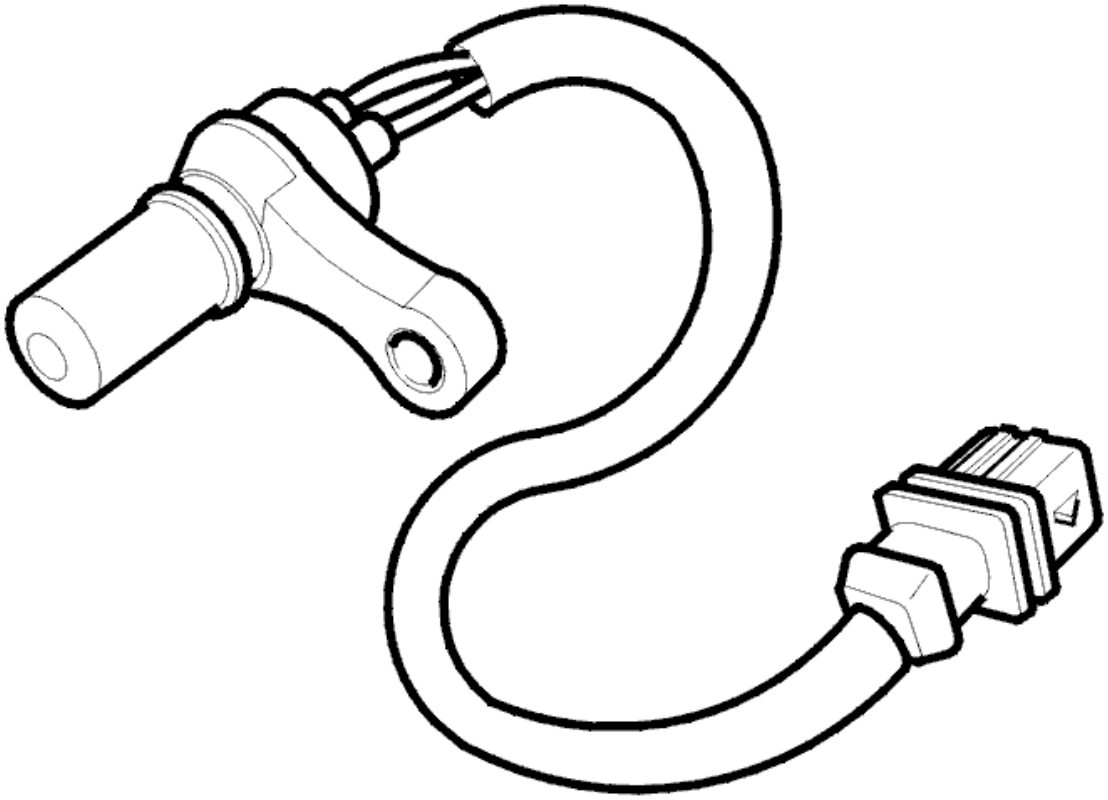

Fig. 286: Identifying Automatic Transmission Control Module (TCM)
Courtesy of VOLVO CARS CORPORATION

Was a fault detected?

- **YES**

  Refer to **CHECKING DIAGNOSTIC TROUBLE CODES (DTCS)**

- **NO**

  Refer to **CHECKING THE WIRING AND COMPONENT**

CHECKING WIRING AND SENSORS

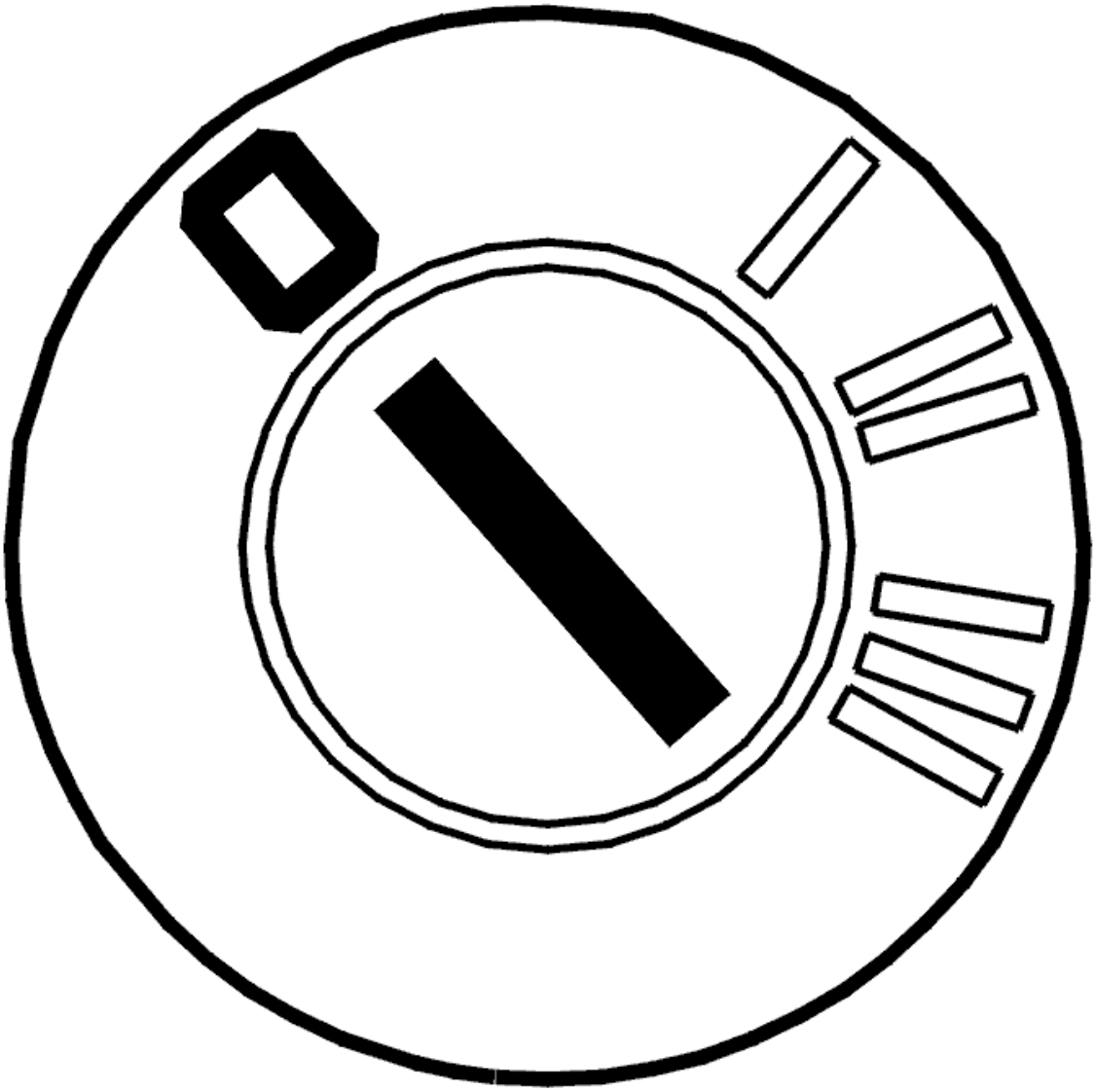

Fig. 287: Identifying Ignition OFF
Courtesy of VOLVO CARS CORPORATION

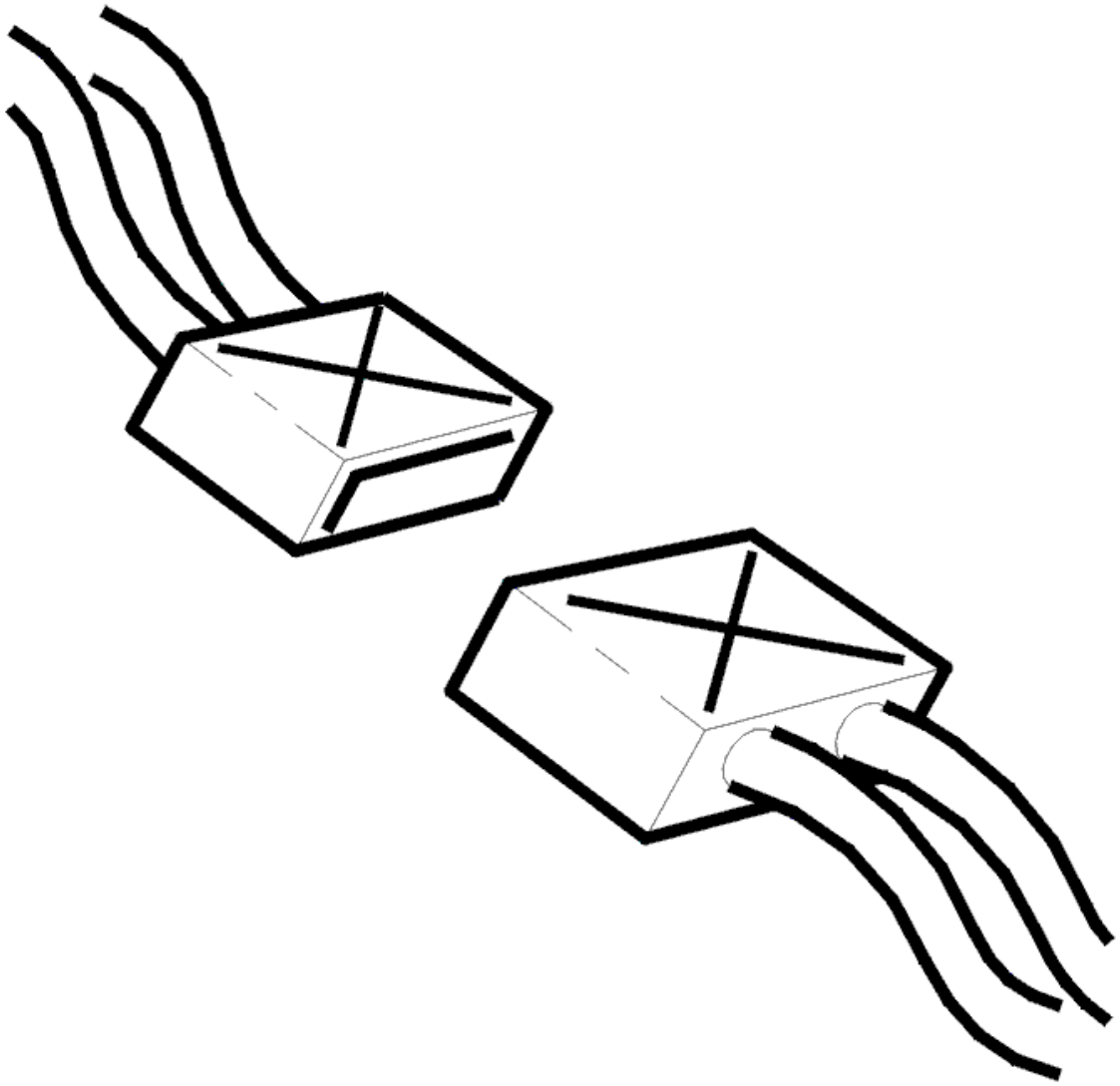

Fig. 288: Identifying Connectors
Courtesy of VOLVO CARS CORPORATION

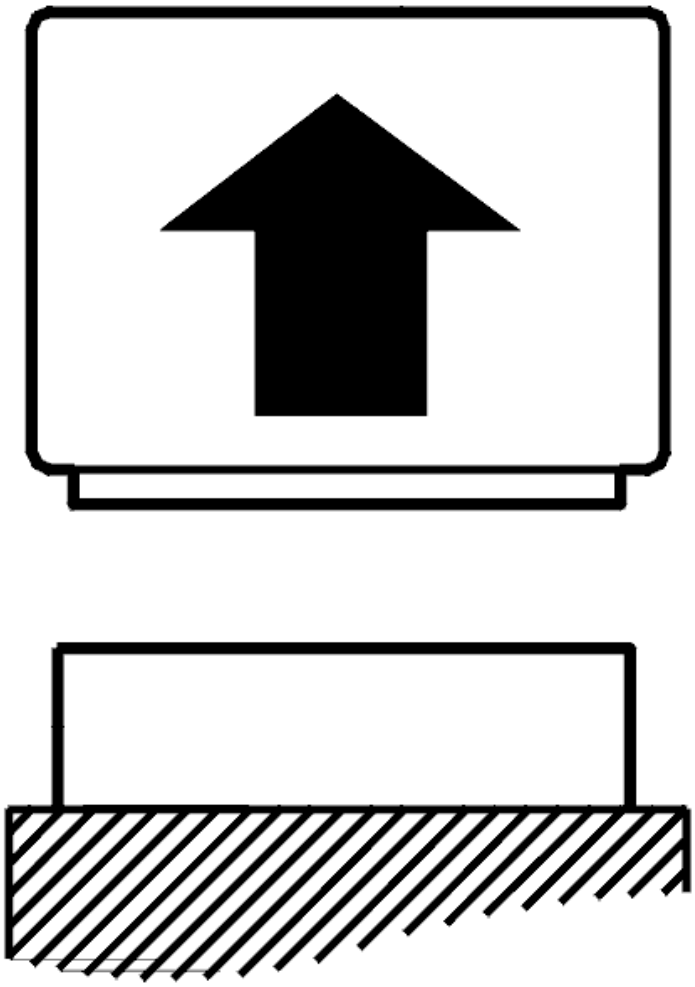

Fig. 289: Identifying Control Module Disconnected
Courtesy of VOLVO CARS CORPORATION

- Ignition off
- Connect the breakout box to the transmission
- Disconnect the control module
- Disconnect the transmission connector
- Connect adapter see **9511505** and breakout box see **9511428** to the transmission connector (control module side).

  Check the power supply cable between the transmission control module (TCM) terminal #A59 (#A59) and transmission connector terminal #S (#A16). Check for an open-circuit, a short-circuit to ground and for a short-circuit to supply voltage.

  Check the signal cable between transmission control module (TCM) terminal #A41 (#A41) and

transmission connector terminal #V (#A19). Check for an open-circuit, a short-circuit to ground and for a short-circuit to supply voltage.

HINT: With the transmission control module (TCM) connected, the ignition on and a voltmeter connected between transmission connector terminals #S (#A16) and #V (#A19) (control module side), the voltage must be approximately 1-3 V below Ubat.

Remedy as necessary.

Other information:

- To connect the breakout box, see **CONNECTING THE BREAKOUT BOX**
- To disconnect the transmission control module (TCM), see **TRANSMISSION CONTROL MODULE (TCM), REPLACING**
- To disconnect the transmission connector, see **CONNECTING THE BREAKOUT BOX, GM AUTOMATIC TRANSMISSIONS**
- For information about signals, see **SIGNAL SPECIFICATION**
- For information about signals to the transmission connector, see **SIGNAL DESCRIPTION. CONNECTOR 4T65 EV/EV-GT**
- see **CHECKING WIRING AND TERMINALS. PERMANENT FAULT**

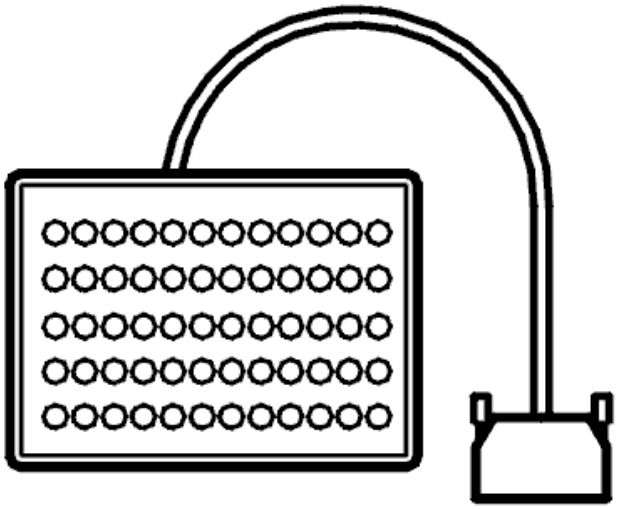

Fig. 290: Identifying Breakout Box
Courtesy of VOLVO CARS CORPORATION

Was a fault detected?

- **YES**

  Refer to **CHECKING DIAGNOSTIC TROUBLE CODES (DTCS)**

- **NO**

Refer to **CHECKING THE WIRING AND COMPONENT**

CHECKING THE WIRING AND COMPONENT

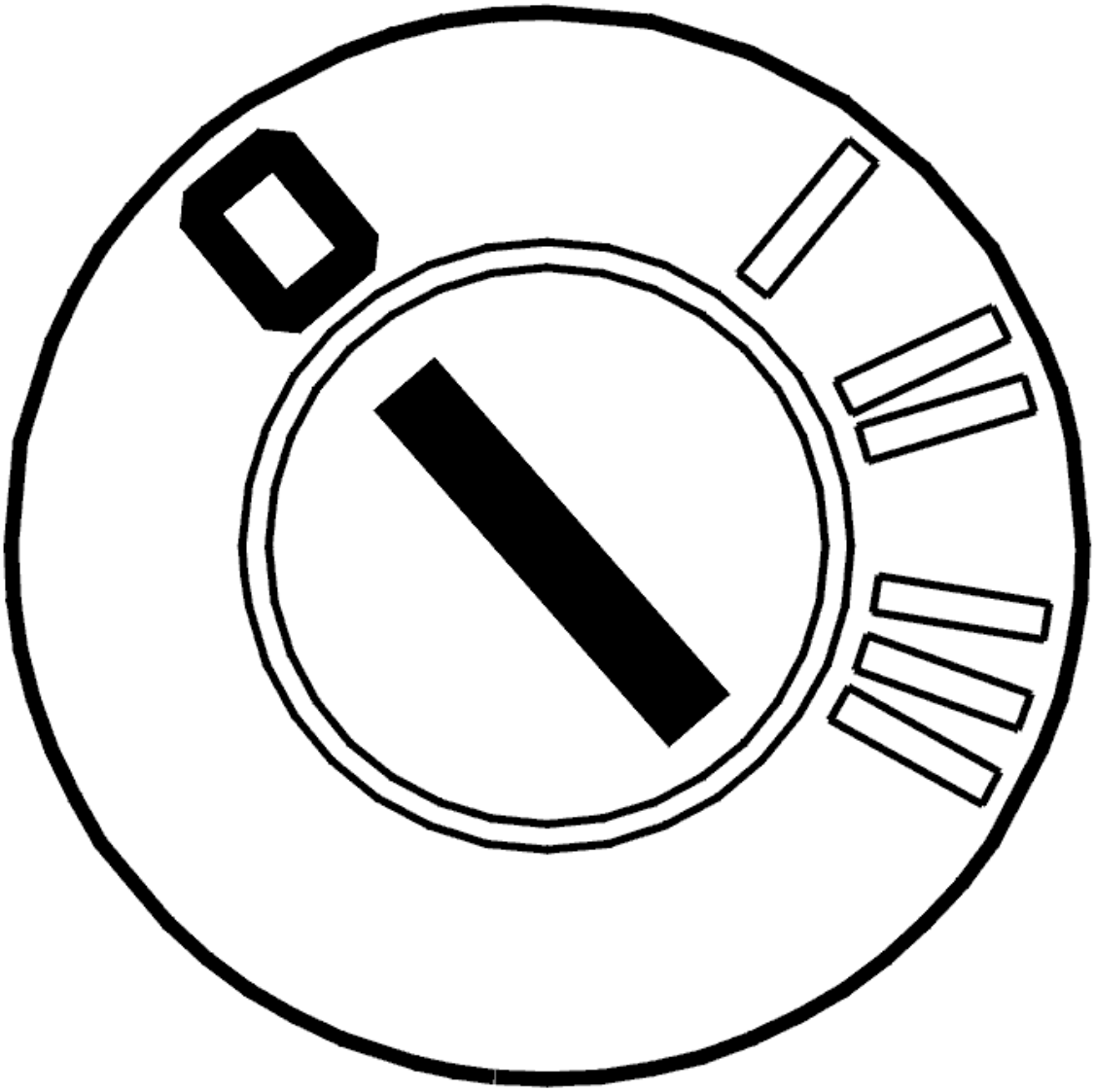

Fig. 291: Identifying Ignition OFF
Courtesy of VOLVO CARS CORPORATION

- Ignition off
- Open the transmission control system.

Check the cable for power supply between transmission connector terminal #S (#A16) and transmission input speed sensor connector terminal #A. Check for an open-circuit, a short-circuit to ground and for a short-circuit to supply voltage.

Check the signal cable between transmission connector terminal #V (terminal #A19) and transmission input speed sensor connector terminal #B. Check for an open-circuit, a short-circuit to ground and a short-

circuit to supply voltage.

Remedy as necessary.

Other information:

- To open the transmission control system, For removal, see **SIDE COVER TRANSMISSION, REMOVING** . To install, see **SIDE COVER TRANSMISSION, INSTALLING**
- To connect the breakout box to the transmission connector, see **CONNECTING THE BREAKOUT BOX, GM AUTOMATIC TRANSMISSIONS**
- To replace the transmission speed sensor, see **INPUT SPEED SENSOR TRANSMISSION, REPLACING**
- To replace the cable harness, see **TEMPERATURE SENSOR FLUID, TRANSAXLE, (TFT)**
- For information about signals, see **SIGNAL SPECIFICATION**
- see **CHECKING WIRING AND TERMINALS. PERMANENT FAULT**

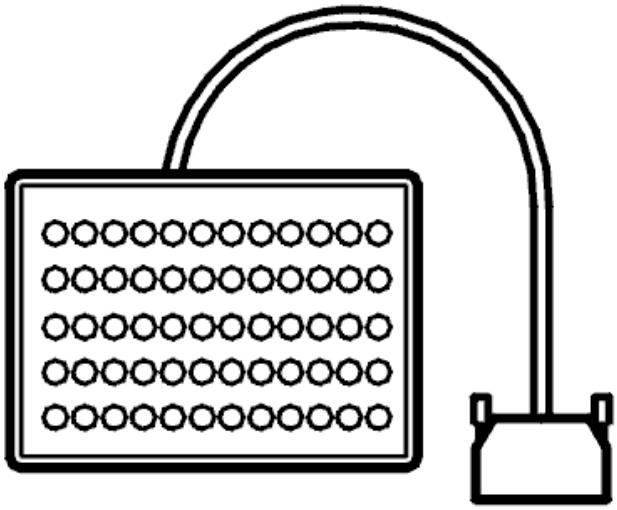

Fig. 292: Identifying Breakout Box
Courtesy of VOLVO CARS CORPORATION

Was a fault detected?

- **YES**

  Refer to **RESETTING THE ADAPTATION**

- **NO**

  Refer to **FAULT-TRACING INFORMATION**

REPLACING THE TRANSMISSION

Fault-tracing indicates a fault in the transmission. Replace the transmission.

If coolant is detected in the transaxle oil, the transaxle, radiator and hoses between the radiator and transaxle must be replaced.

When replacing the transmission, the cooler unit, including the additional cooler must be replaced if applicable.

Other information:

- To remove the transmission, see **TRANSMISSION, REMOVING** and
- To install the transmission, see **TRANSMISSION, INSTALLING (2003, 2004)** or **TRANSMISSION, INSTALLING (2005, 2006)** .

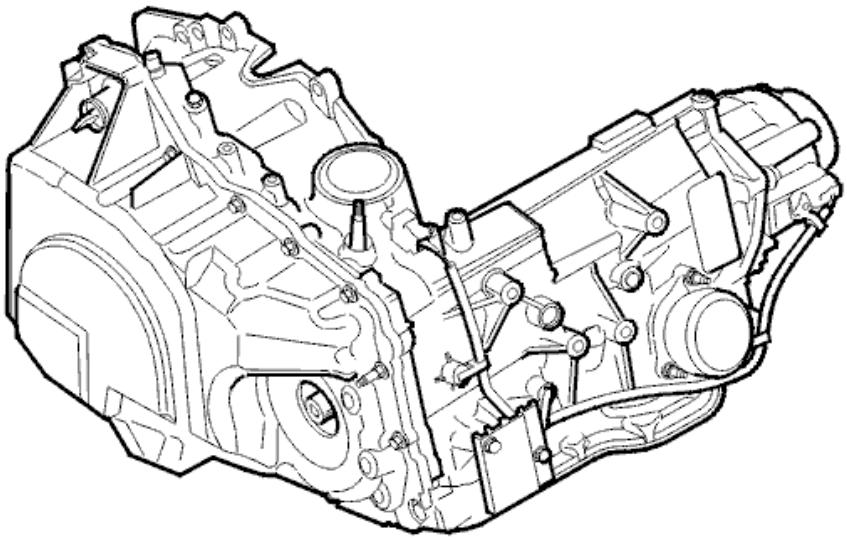

Fig. 293: Identifying Transmission
Courtesy of VOLVO CARS CORPORATION

- **Continue**

  Refer to **RESETTING THE ADAPTATION**

FAULT-TRACING INFORMATION

The fault-tracing indicates that the control module has previously detected a fault but that the fault is no longer active.

CHECKING SENSORS AND RATIOS

- Ignition off.
- Check the control module and transmission input speed sensor connectors. Check for contact resistance and oxidation. Remedy if necessary
- Check the control module and speed sensor connectors. Check for contact resistance and oxidation. Remedy if necessary
- Raise the car so that the drive wheels are clear of the ground
- Start the engine. Allow the engine to idle
- If the car has STC or DSTC, these functions must be disengaged. Press in the STC/DSTC button on the center console. Hold the button in for at least two seconds
- Click the symbol for VCT2000 in order to start the test sequence.

NOTE: Diagnostic trouble codes (DTCs) may be stored in the ABS system when the rear wheels are stationary and the front wheels rotate. Erase any diagnostic trouble codes (DTCs) stored in the ABS system after fault-tracing.

- To access the control module connector, see **CONNECTING THE BREAKOUT BOX**
- To access the speed sensor connector, see **OUTPUT SPEED SENSOR TRANSMISSION, REPLACING**
- To access the engine speed sensor connector, see **INPUT SPEED SENSOR TRANSMISSION, REPLACING**
- see **CHECKING WIRING AND TERMINALS. PERMANENT FAULT**
- see **TABLES - RATIOS AND SHIFT PATTERNS.**

Select one of the following options

1. One of the engine speed sensors has not been updated.

   Refer to **CHECKING WIRING AND SENSORS**

2. Previously stored DTCs have been detected.

   Refer to **REPLACING THE TRANSMISSION**

3. No fault detected.

   Refer to **CHECKING DIAGNOSTIC TROUBLE CODES (DTCS)**

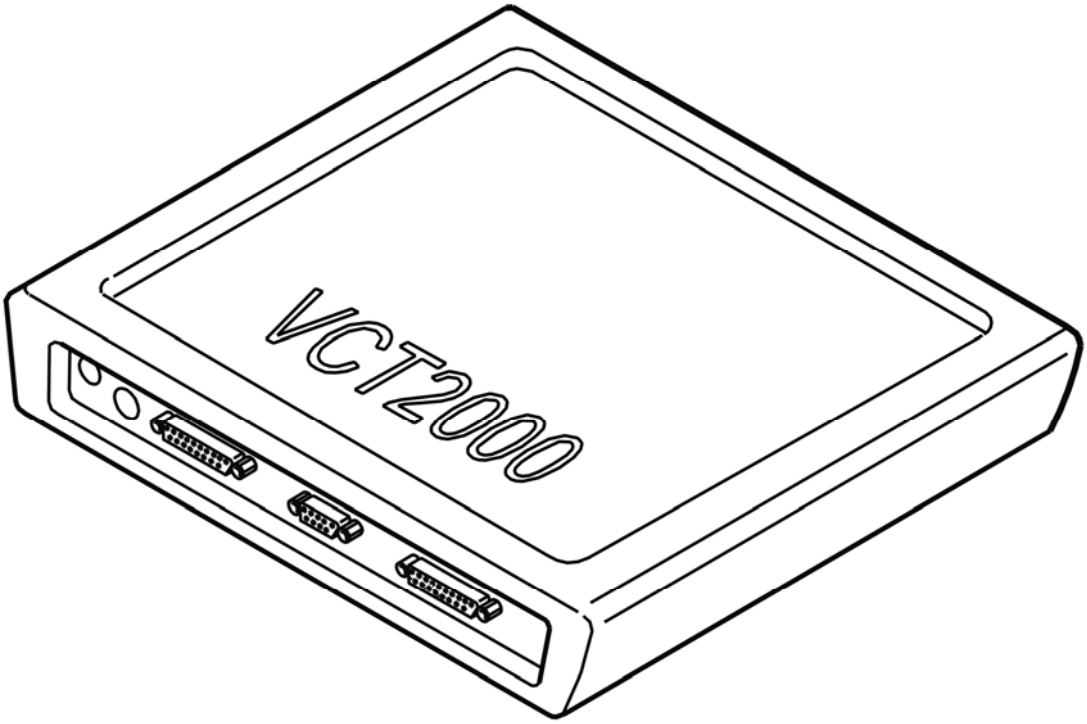

Fig. 294: Identifying VCT2000 Diagnostic Tool Symbol In VIDA
Courtesy of VOLVO CARS CORPORATION

FAULT-TRACING INFORMATION

The fault must now be detected and remedied. As this is not the case, the fault-tracing has failed.

This fault can also be caused by an internal fault in the Transmission Control Module (TCM) or its component parts. Fault trace the Transmission Control Module (TCM) and rectify as necessary.

CHECKING THE OIL LEVEL IN THE TRANSMISSION

CHECK THE TRANSMISSION OIL LEVEL

NOTE: **The transmission fluid level is extremely important for transmission function. Therefore it is imperative that it is correct. In addition the oil level is dependent on oil temperature.**

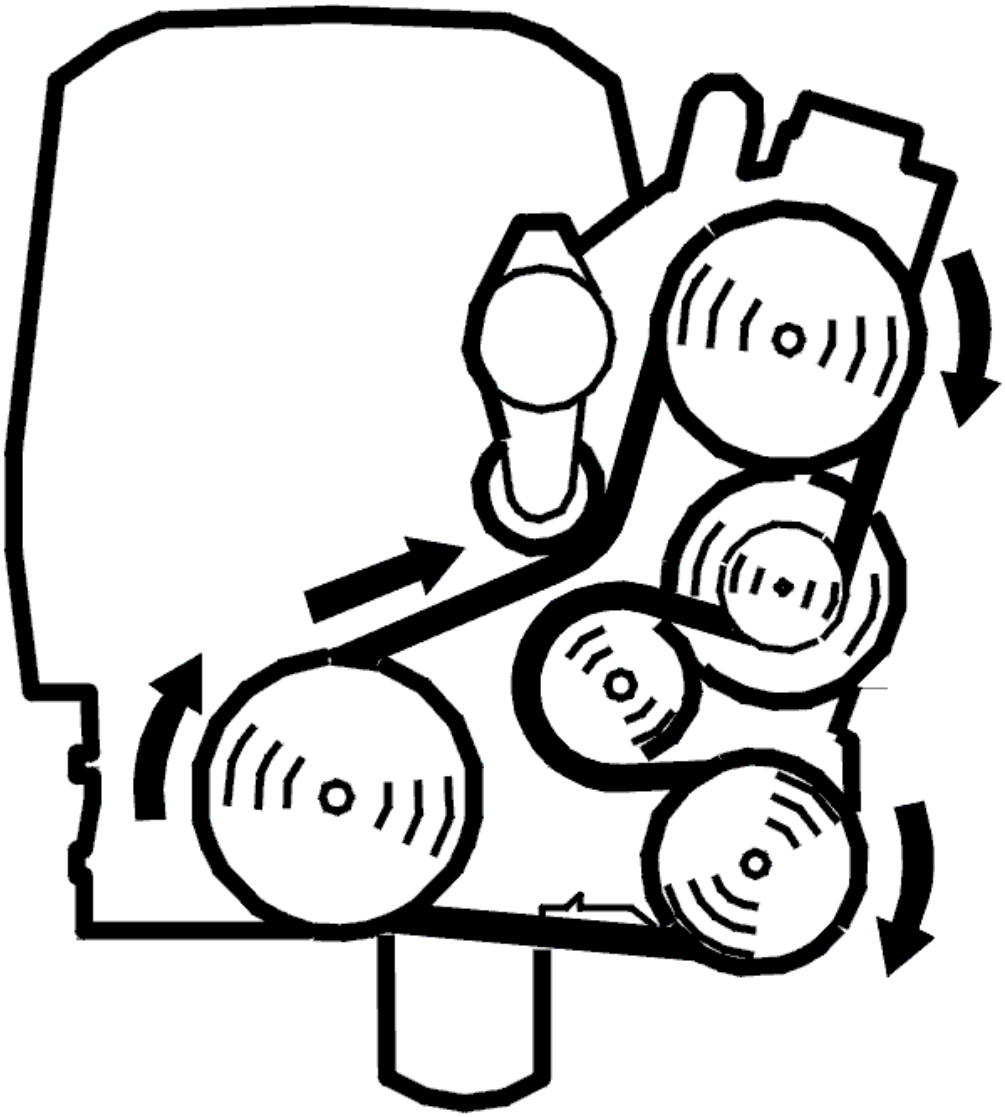

Fig. 295: Identifying Belt Routing
Courtesy of VOLVO CARS CORPORATION

- Start the car
- Read off the oil temperature.

When checking the gearbox oil level the oil temperature **must** be **80 °C - 90 °C** .

At the correct temperature, the oil level should be between "Min hot" and "Max hot".

Oil level

Too high: Drain the transmission fluid to the correct level
Too low: Check the transmission for leakage.

Remedy as necessary.

Other information:

- To check and adjust the oil level, see **OIL LEVEL, CHECKING** .

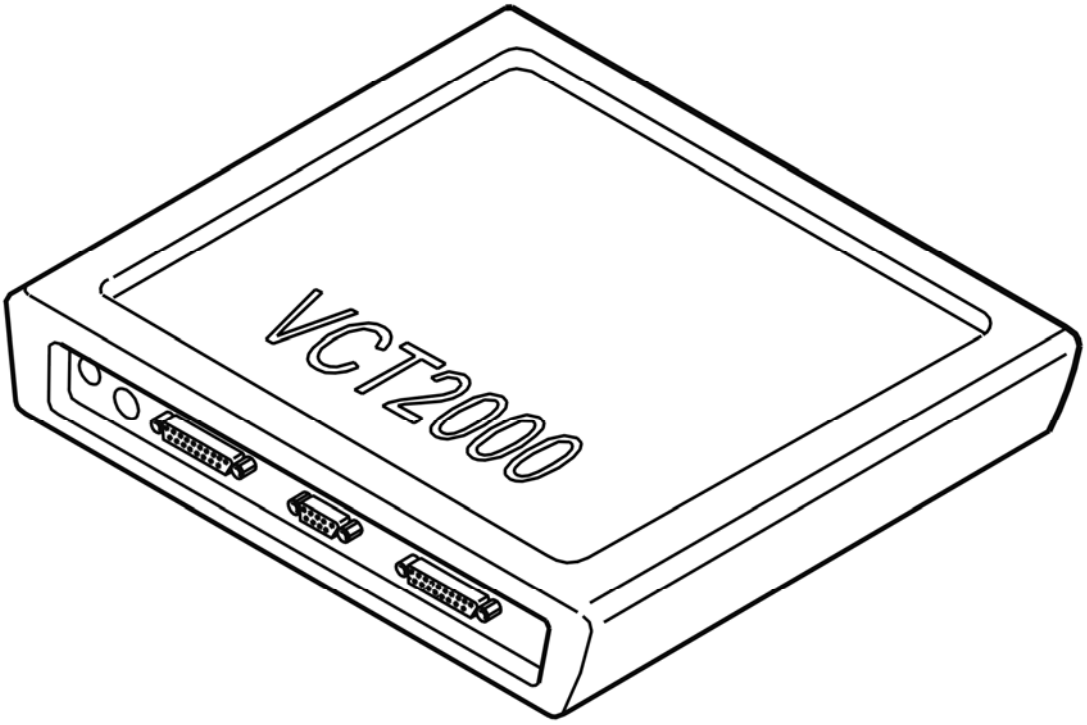

Fig. 296: Identifying VCT2000 Diagnostic Tool Symbol In VIDA
Courtesy of VOLVO CARS CORPORATION

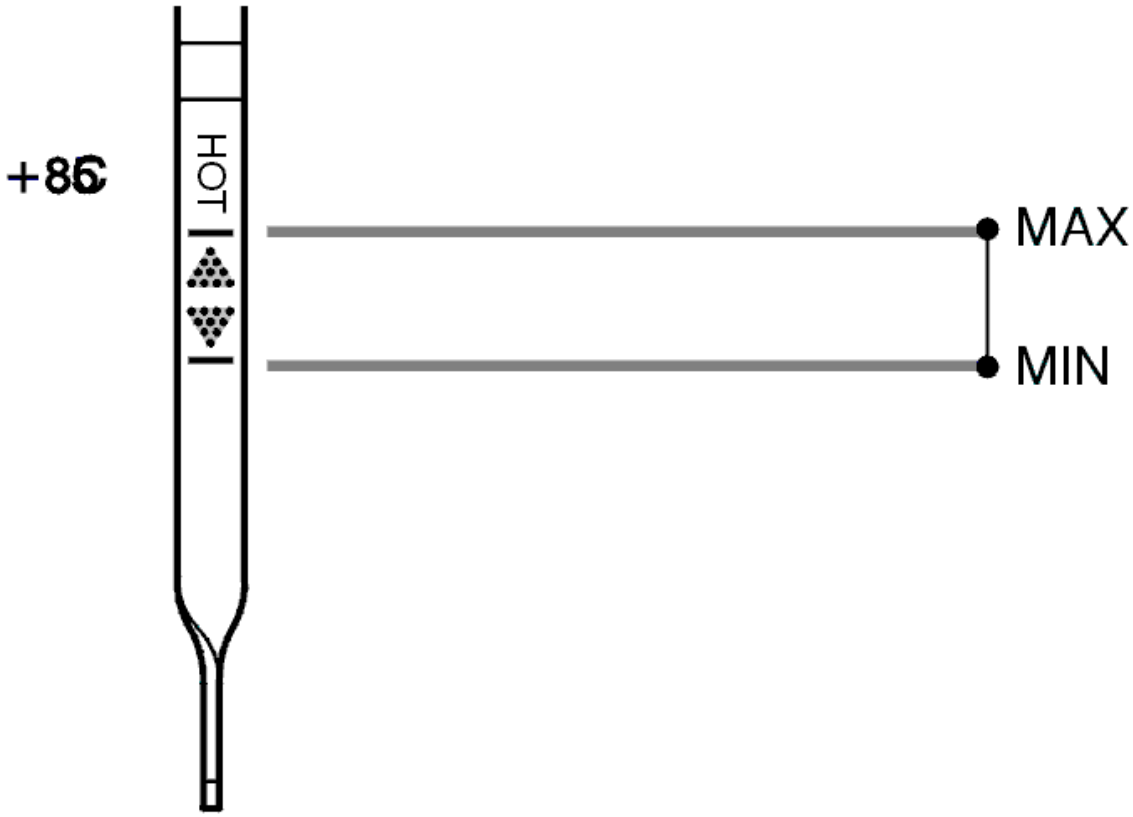

Fig. 297: Identifying Oil Level / Temperature
Courtesy of VOLVO CARS CORPORATION

Was the transmission fluid level correct?

- **YES**

  Refer to **CHECKING DIAGNOSTIC TROUBLE CODES (DTCS)**

- **NO**

  Refer to **CHECKING DIAGNOSTIC TROUBLE CODES (DTCS)**

RESETTING THE ADAPTATION

RESETTING ADAPTATION AND THE COUNTER FOR "TRANSMISSION OIL CHANGE"

HINT: The transmission has torque controlled adaptive pressure control. Pressure control means that the transmission regulates the pressure itself during each gear shift. This avoids harsh gear shifting. Each gear shift is evaluated by the control module and stored in the memory. This allows for compensation for wear and tear in the transmission and clutch. It is important that the adaptation in the memory is reset after the transmission has been repaired. This is to ensure normal operation. The oil is replaced during repair; the "Transmission oil change" counter must be reset. If the counter is not reset when the fluid is drained and replaced, there is a risk that a diagnostic trouble code (DTC) will be stored in incorrect

circumstances.

NOTE: This applies only if the transmission or one of the components in the transmission have been replaced.

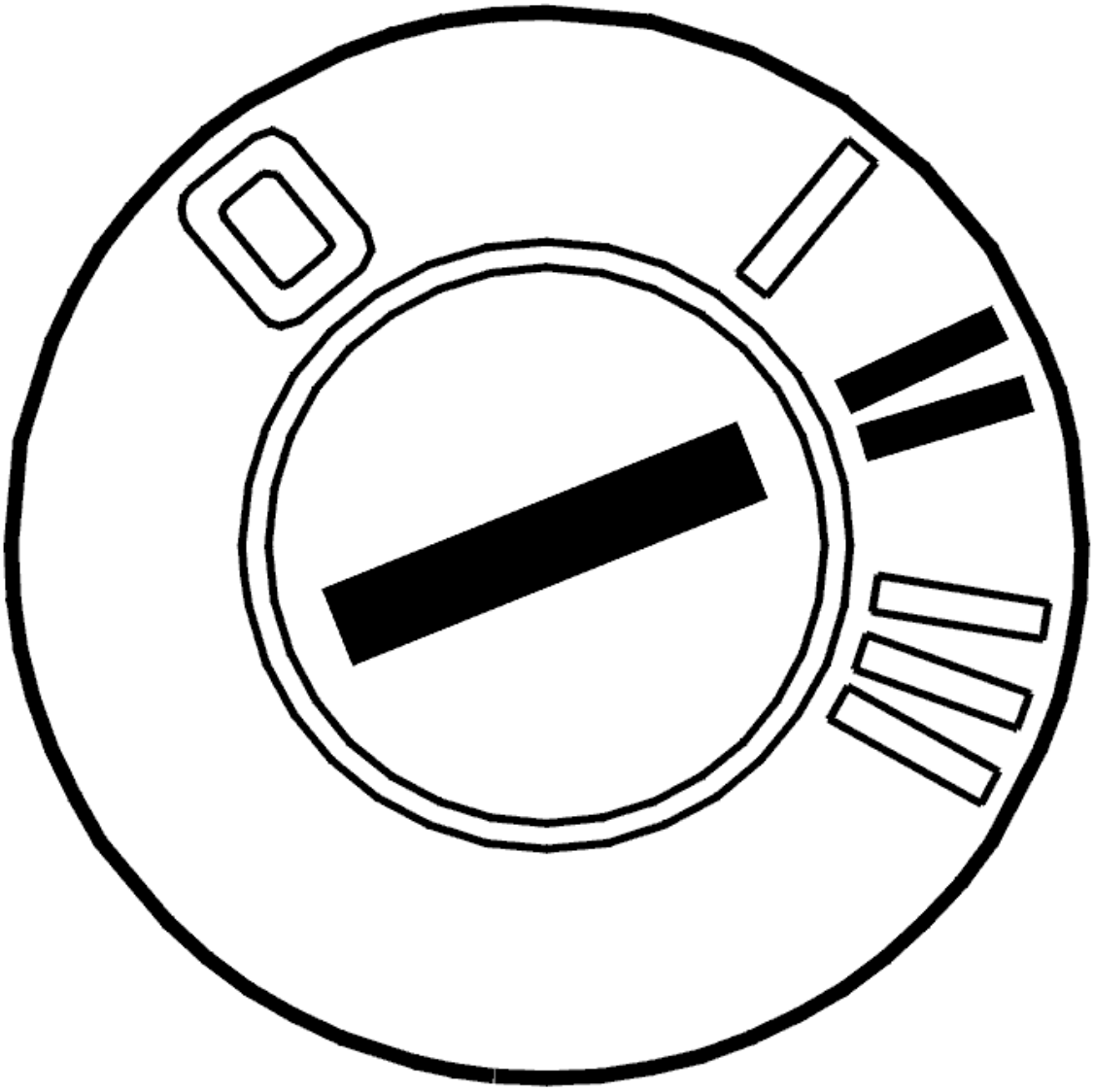

Fig. 298: Identifying Ignition ON
Courtesy of VOLVO CARS CORPORATION

- Ignition on.

  Click on the VCT2000 symbol to reset the adaptation and counter.

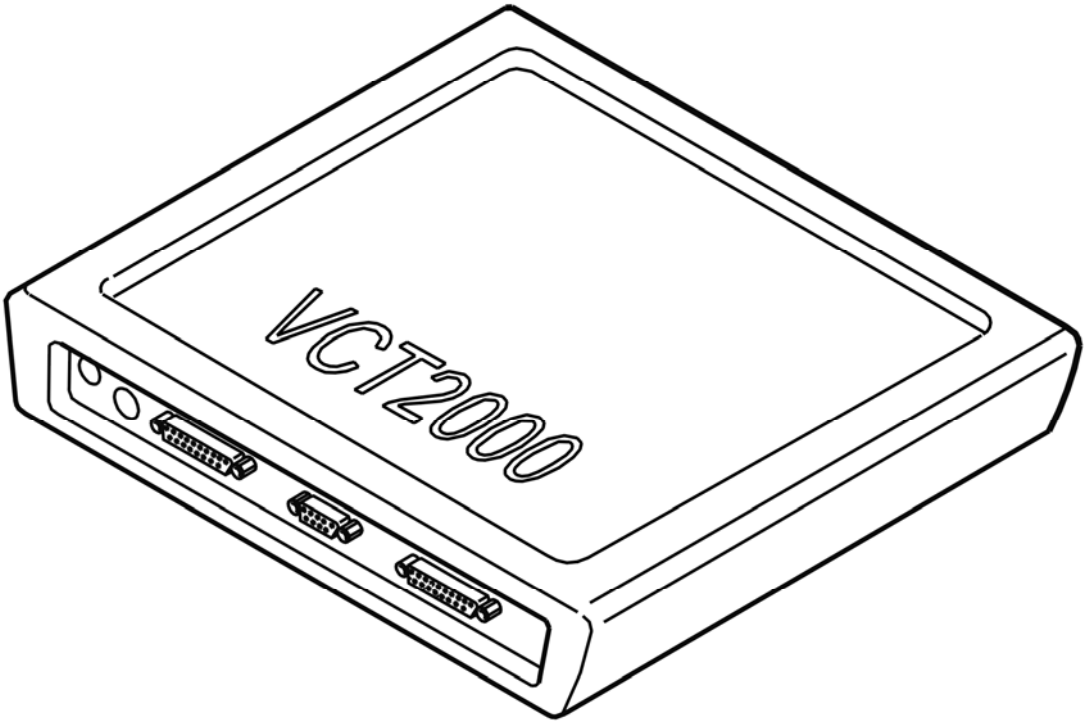

Fig. 299: Identifying VCT2000 Diagnostic Tool Symbol In VIDA
Courtesy of VOLVO CARS CORPORATION

- **Continue**

Refer to **CHECKING DIAGNOSTIC TROUBLE CODES (DTCS)**

CHECKING DIAGNOSTIC TROUBLE CODES (DTCS)

ERASING DIAGNOSTIC TROUBLE CODES (DTCS)

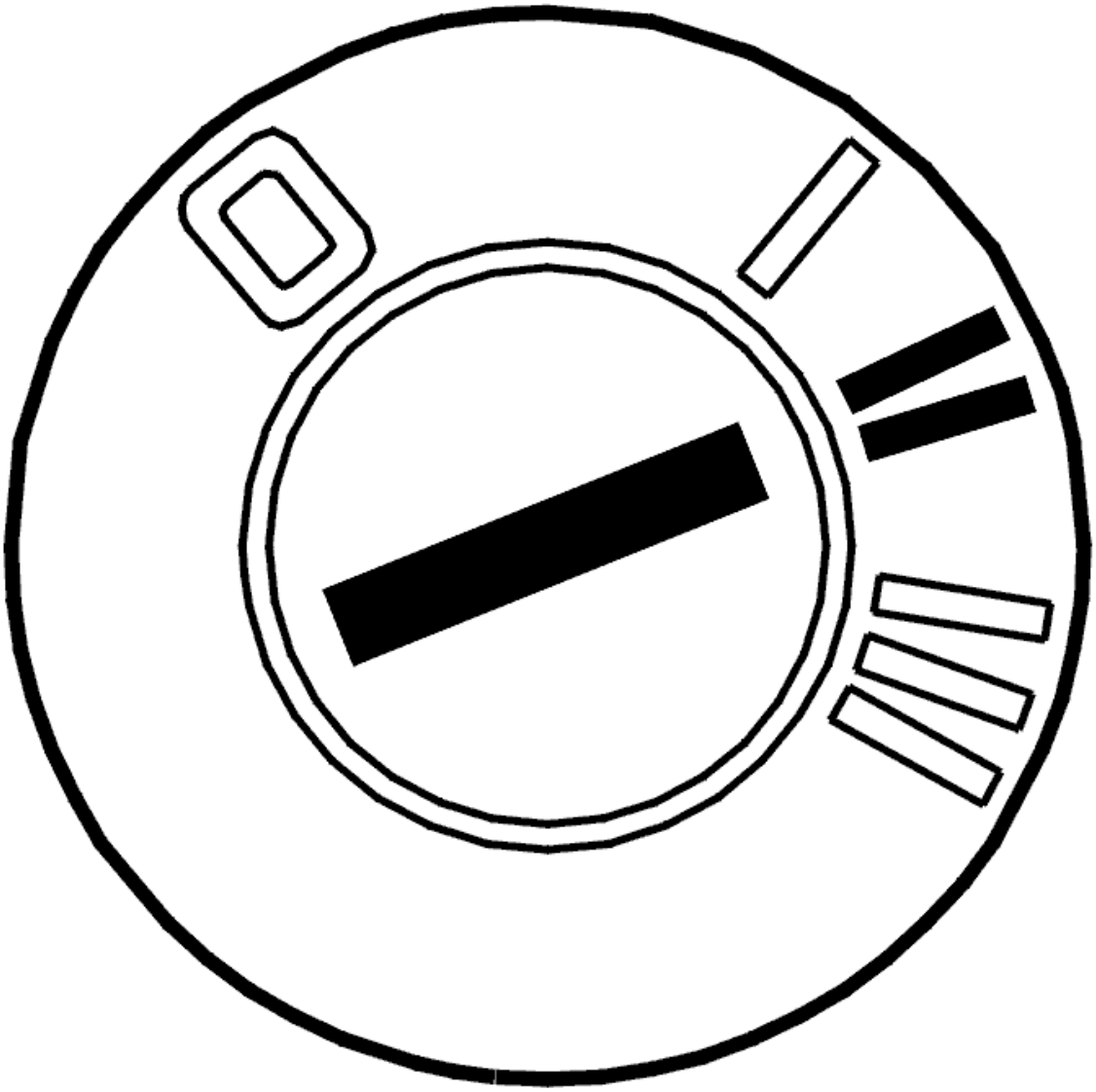

Fig. 300: Identifying Ignition ON
Courtesy of VOLVO CARS CORPORATION

- Ignition off
- Wait for two minutes to allow time for the diagnostic trouble codes (DTCs) to be stored in the control module memory
- Ignition on
- Erase diagnostic trouble codes (DTCs).

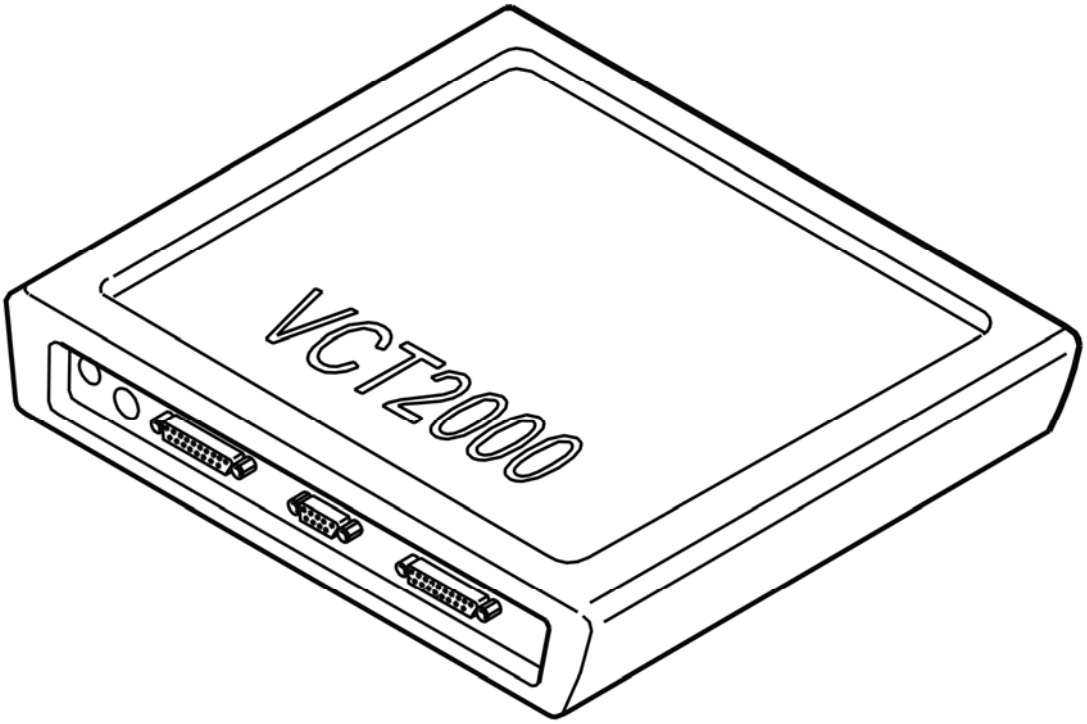

Fig. 301: Identifying VCT2000 Diagnostic Tool Symbol In VIDA
Courtesy of VOLVO CARS CORPORATION

- **Continue**

  Refer to **TEST DRIVING**

TEST DRIVING

NOTE: **Test drive the car according to the driving schedule below to check whether the fault is still active. The test drive is compiled in order to create the conditions in which the diagnostic trouble code (DTC) will be stored again if the fault is active.**

The TEST MODE function can be used to provoke any diagnostic trouble codes (DTC). The function reduces the conditions for how quickly diagnostic trouble codes (DTCs) are stored in the control module and the test drive becomes easier.

- Engine running.
- Activate TEST MODE
- Test drive the car according to the driving schedule below.

HINT: Test drive the car and try to regenerate the fault.

Move the gear selector during the test drive to the gear position indicated in the table for each diagnostic trouble code (DTC) and transmission. Follow the criteria below.

Diagnostic Trouble Code (DTC)	Gear shift position	
	4T65EV	4T65EV-GT
TCM-0027	R	R
TCM-0028	1	1
TCM-0029	2	2
TCM-002A	3	3
TCM-002B	D	4

Criteria for diagnostic trouble code (DTC):

- No shifting (automatic or manual) must take place for approximately 20 seconds
- The gear selector must not be moved out of position
- Speed must be in excess of 30 km/h
- Positive engine torque (no engine braking)
- Transmission fluid temperature above than 20°C.

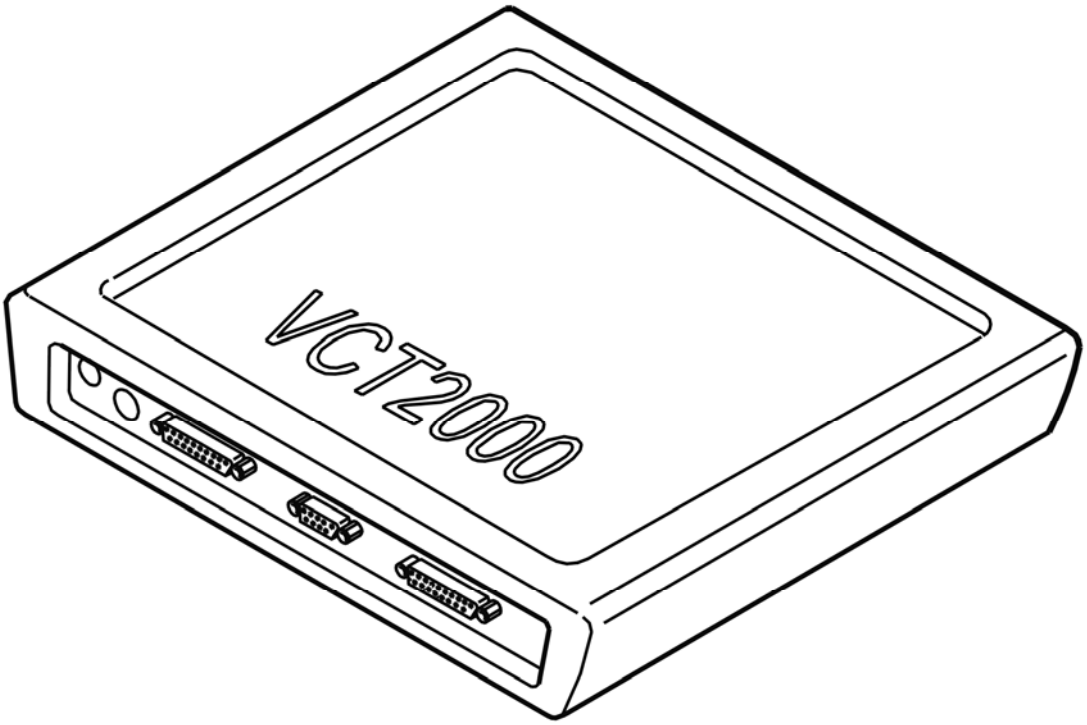

Fig. 302: Identifying VCT2000 Diagnostic Tool Symbol In VIDA
Courtesy of VOLVO CARS CORPORATION

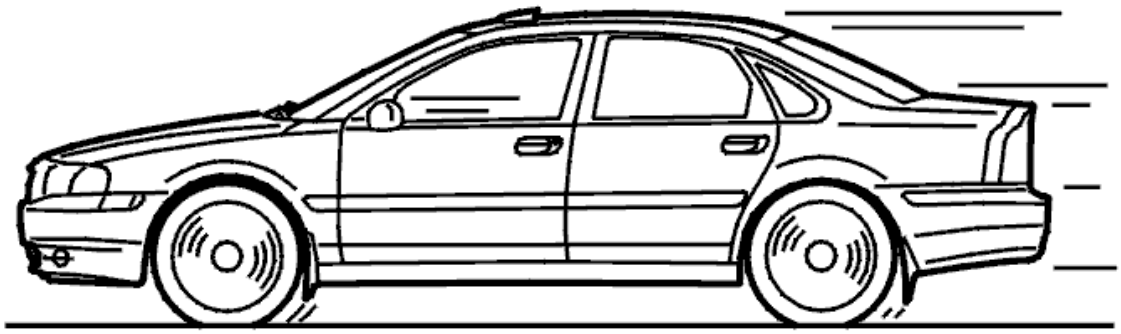

Fig. 303: Identifying Test Drive
Courtesy of VOLVO CARS CORPORATION

- **Continue**

Refer to **CHECKING DIAGNOSTIC TROUBLE CODES (DTCS)**

CHECKING DIAGNOSTIC TROUBLE CODES (DTCS)

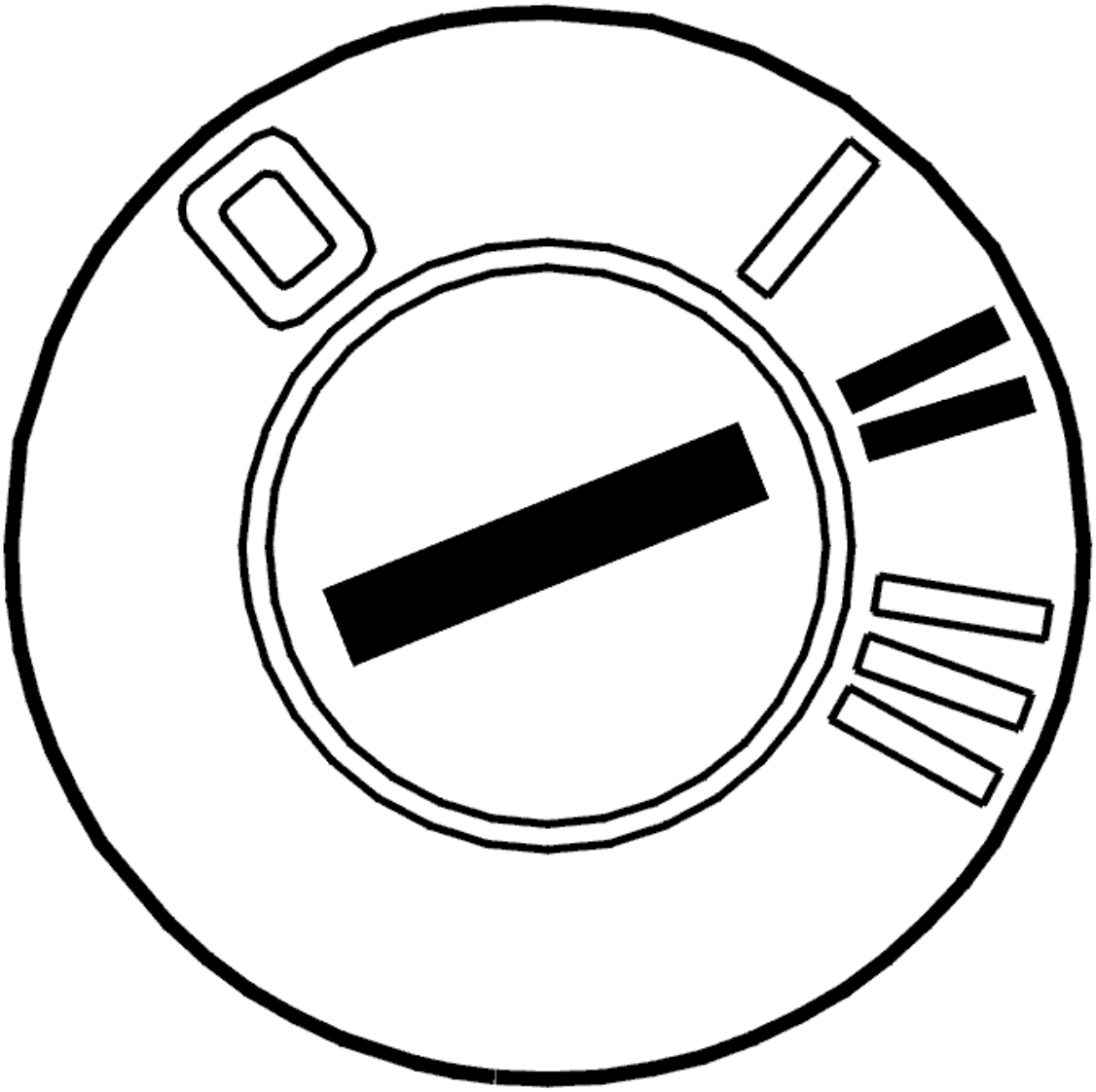

Fig. 304: Identifying Ignition ON
Courtesy of VOLVO CARS CORPORATION

- Ignition on
- Read off diagnostic trouble codes (DTCs).

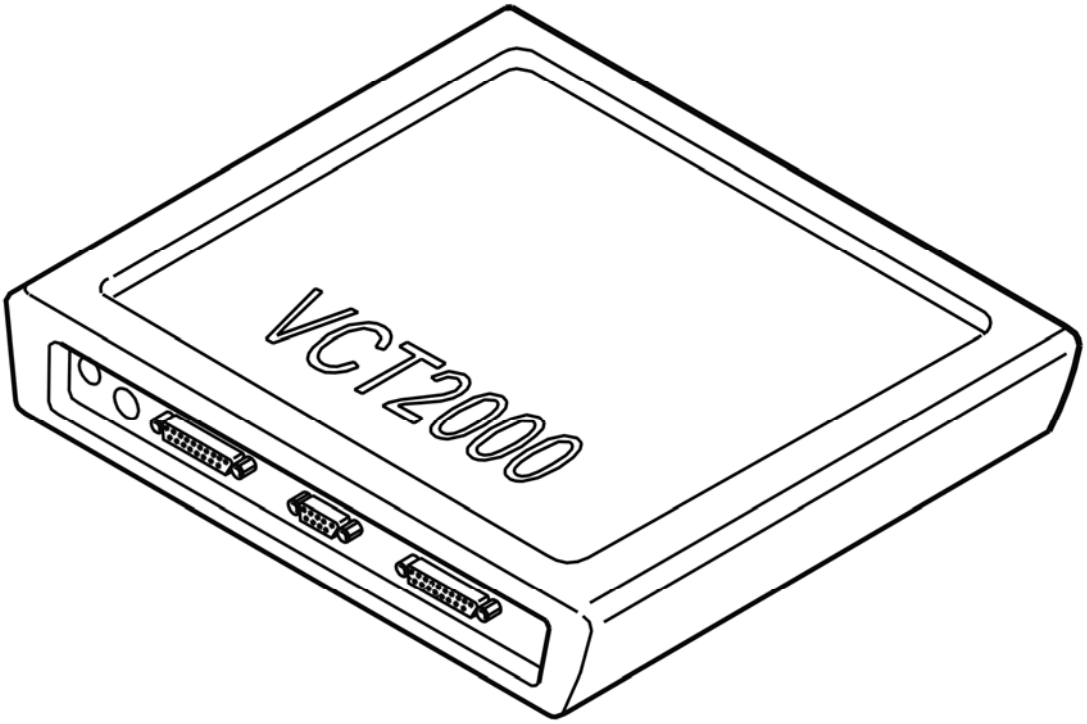

Fig. 305: Identifying VCT2000 Diagnostic Tool Symbol In VIDA
Courtesy of VOLVO CARS CORPORATION

Were any of the diagnostic trouble codes (DTCs) TCM-0027, 0028, 0029, 002A, 002B stored?

- **YES**

  Refer to **INFORMATION**

- **NO**

  NO DTC

INFORMATION

FAULT-TRACING INFORMATION

The fault should have been detected and remedied. As this is not the case fault-tracing has failed.

Exit fault-tracing for this diagnostic trouble code (DTC) or make another attempt.

CHECKING DIAGNOSTIC TROUBLE CODES (DTCS)

ERASING DIAGNOSTIC TROUBLE CODES (DTCS)

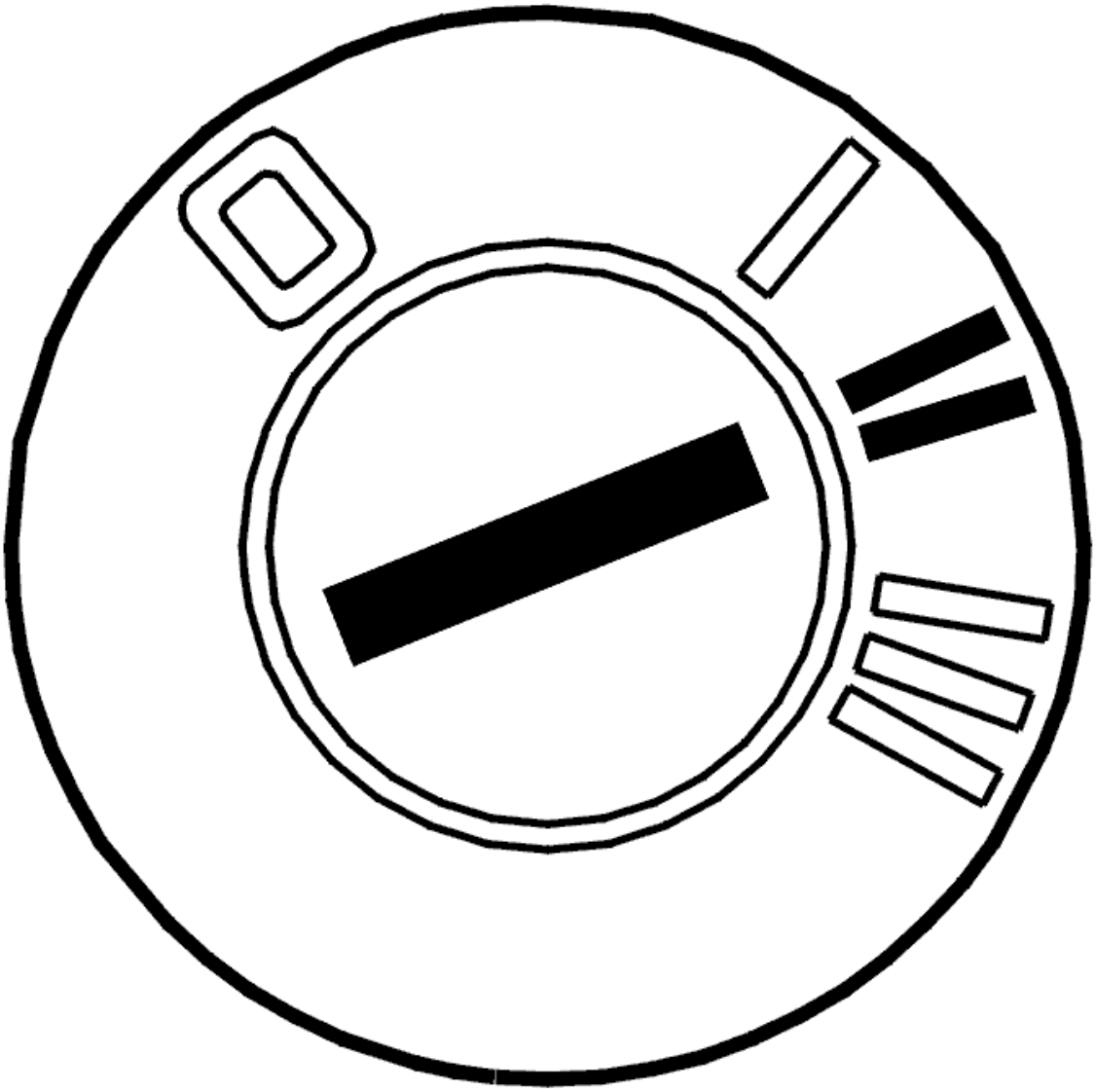

Fig. 306: Identifying Ignition ON
Courtesy of VOLVO CARS CORPORATION

- Ignition off
- Wait for two minutes to allow time for the diagnostic trouble codes (DTCs) to be stored in the control module memory
- Ignition on
- Erase diagnostic trouble codes (DTCs).

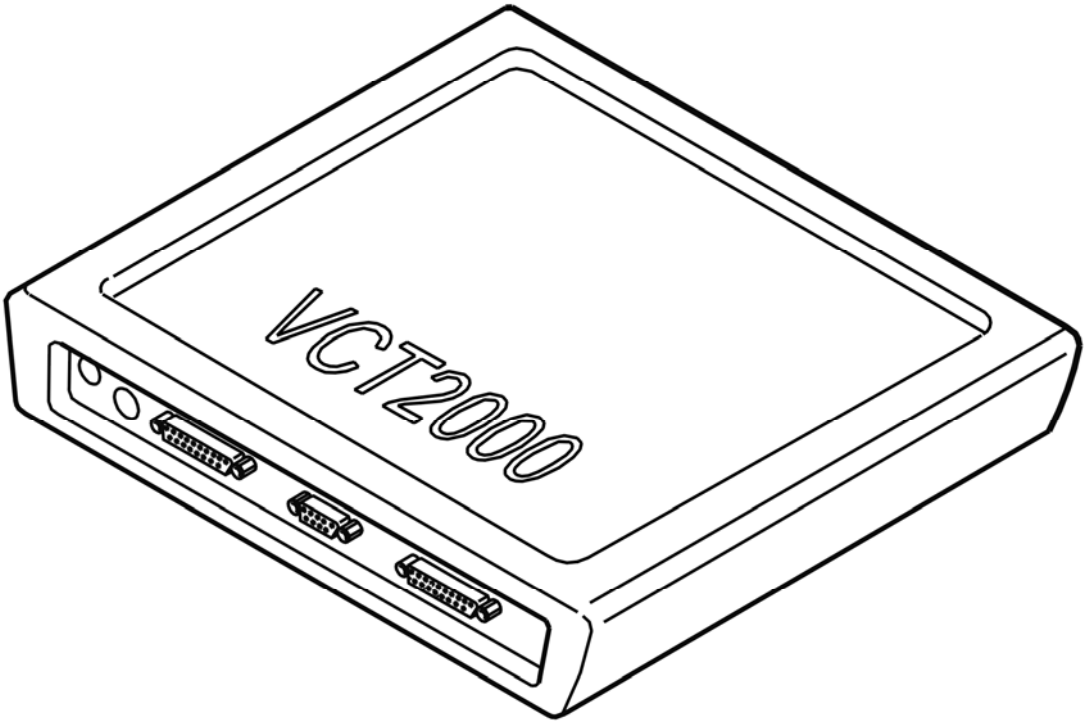

Fig. 307: Identifying VCT2000 Diagnostic Tool Symbol In VIDA
Courtesy of VOLVO CARS CORPORATION

- **Continue**

  Refer to **TEST DRIVING**

TEST DRIVING

NOTE: **Test drive the car according to the driving schedule below to check whether the fault is still active. The test drive is compiled in order to create the conditions in which the diagnostic trouble code (DTC) will be stored again if the fault is active.**

The TEST MODE function can be used to provoke any diagnostic trouble codes (DTC). The function reduces the conditions for how quickly diagnostic trouble codes (DTCs) are stored in the control module and the test drive becomes easier.

- Engine running.
- Activate TEST MODE
- Test drive the car according to the driving schedule below.

HINT: Test drive the car and try to regenerate the fault.

Move the gear selector during the test drive to the gear position indicated in the table for each diagnostic trouble code (DTC) and transmission. Follow the criteria below.

Diagnostic Trouble Code (DTC)	Gear shift position	
	4T65EV	4T65EV-GT
TCM-0027	R	R
TCM-0028	1	1
TCM-0029	2	2
TCM-002A	3	3
TCM-002B	D	4

Criteria for diagnostic trouble code (DTC):

- No shifting (automatic or manual) must take place for approximately 20 seconds
- The gear selector must not be moved out of position
- Speed must be in excess of 30 km/h
- Positive engine torque (no engine braking)
- Transmission fluid temperature above than 20°C.

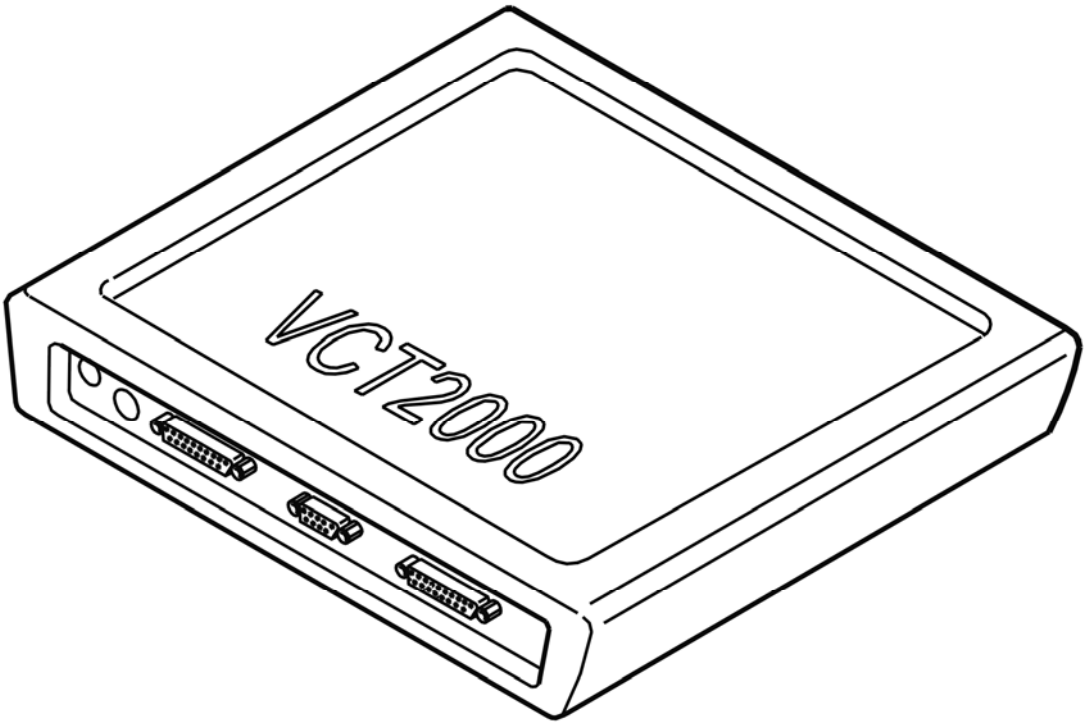

Fig. 308: Identifying VCT2000 Diagnostic Tool Symbol In VIDA
Courtesy of VOLVO CARS CORPORATION

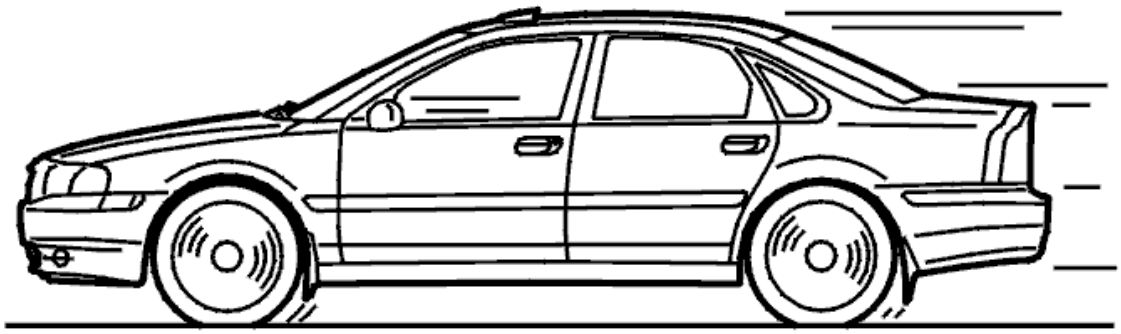

Fig. 309: Identifying Test Drive
Courtesy of VOLVO CARS CORPORATION

- **Continue**

Refer to **CHECKING DIAGNOSTIC TROUBLE CODES (DTCS)**

CHECKING DIAGNOSTIC TROUBLE CODES (DTCS)

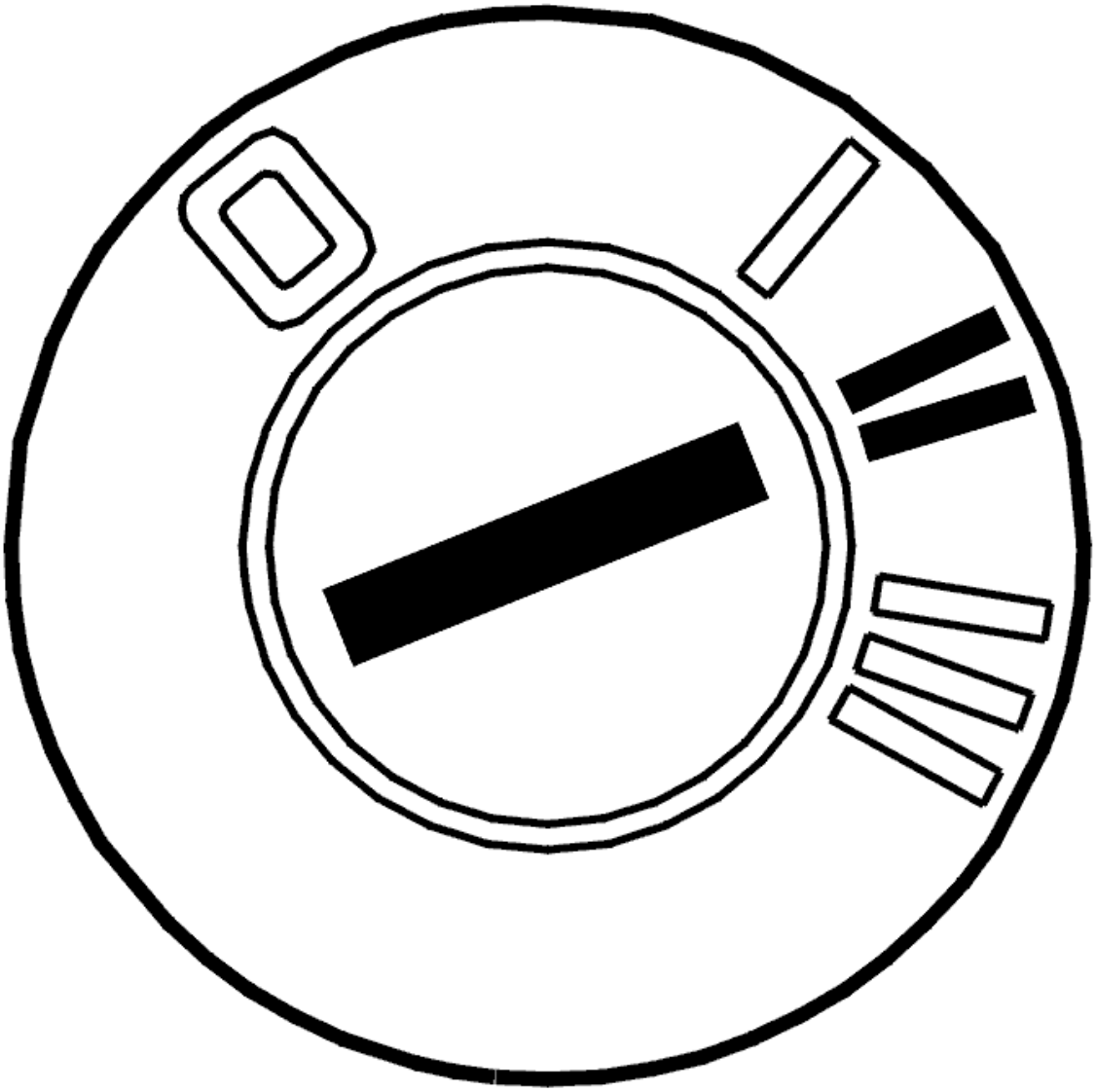

Fig. 310: Identifying Ignition ON
Courtesy of VOLVO CARS CORPORATION

- Ignition on
- Read off diagnostic trouble codes (DTCs).

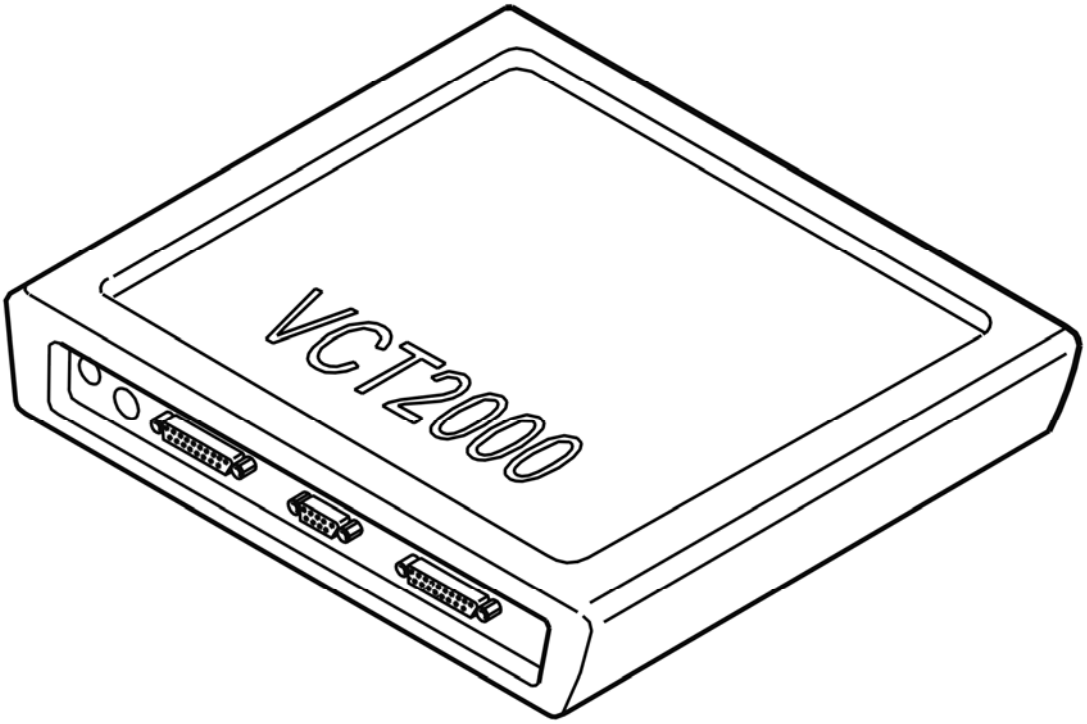

Fig. 311: Identifying VCT2000 Diagnostic Tool Symbol In VIDA
Courtesy of VOLVO CARS CORPORATION

Were any of the diagnostic trouble codes (DTCs) TCM-0027, 0028, 0029, 002A, 002B stored?

- **YES**

  Refer to **INFORMATION**

- **NO**

  Refer to **FAULT-TRACING INFORMATION**

TCM-0027: BACK-UP (REVERSE) GEAR. INCORRECT GEAR RATIO (AW50/51 AWD; AW55-50/51SN; 2003-2007)

DIAGNOSTIC TROUBLE CODE (DTC) INFORMATION

Condition

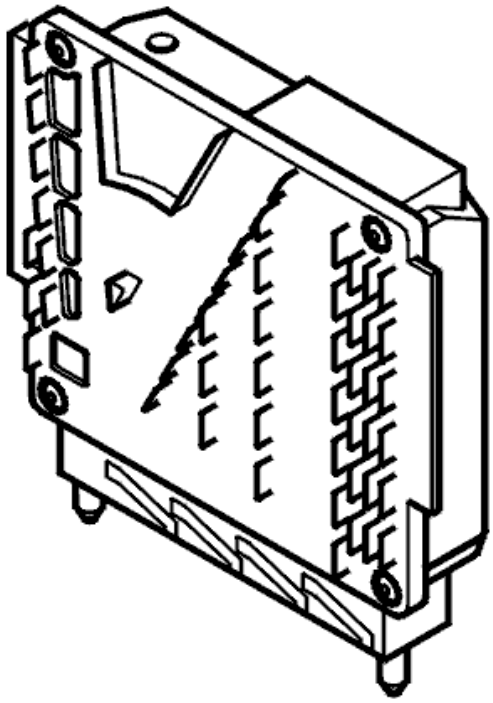

Fig. 312: Identifying Transmission Control Module (TCM)
Courtesy of VOLVO CARS CORPORATION

The transmission control module (TCM) calculates the ratio between the transmission input speed and the vehicle speed. There is a specific ratio for each gear. Diagnostic trouble code (DTC) TCM-0027 is stored if the control module registers that the ratio deviates by more than 10 % when the oil temperature is above +20°C and throttle opening exceeds 3 %.

Substitute Value

- The transmission control module (TCM) "Emergency mode I" program has been initiated.

Possible Source

- Contact resistance in the circuit for solenoids S1, S2, S3, S4, S5 and SLS.
- Solenoid S4 has jammed in the ON position.
- Mechanical fault in the transmission. Worn components in the transmission causing slippage or too low line pressure.

Fault symptom[s]

- General orange warning lamp lit.
- Malfunction indicator lamp (MIL) lit.

- No lock-up function.
- No shifting.
- Harsh gear shifting.

INCORRECT GEAR RATIO

CHECKS

CHECKING FOR CONTACT RESISTANCE AND OXIDATION

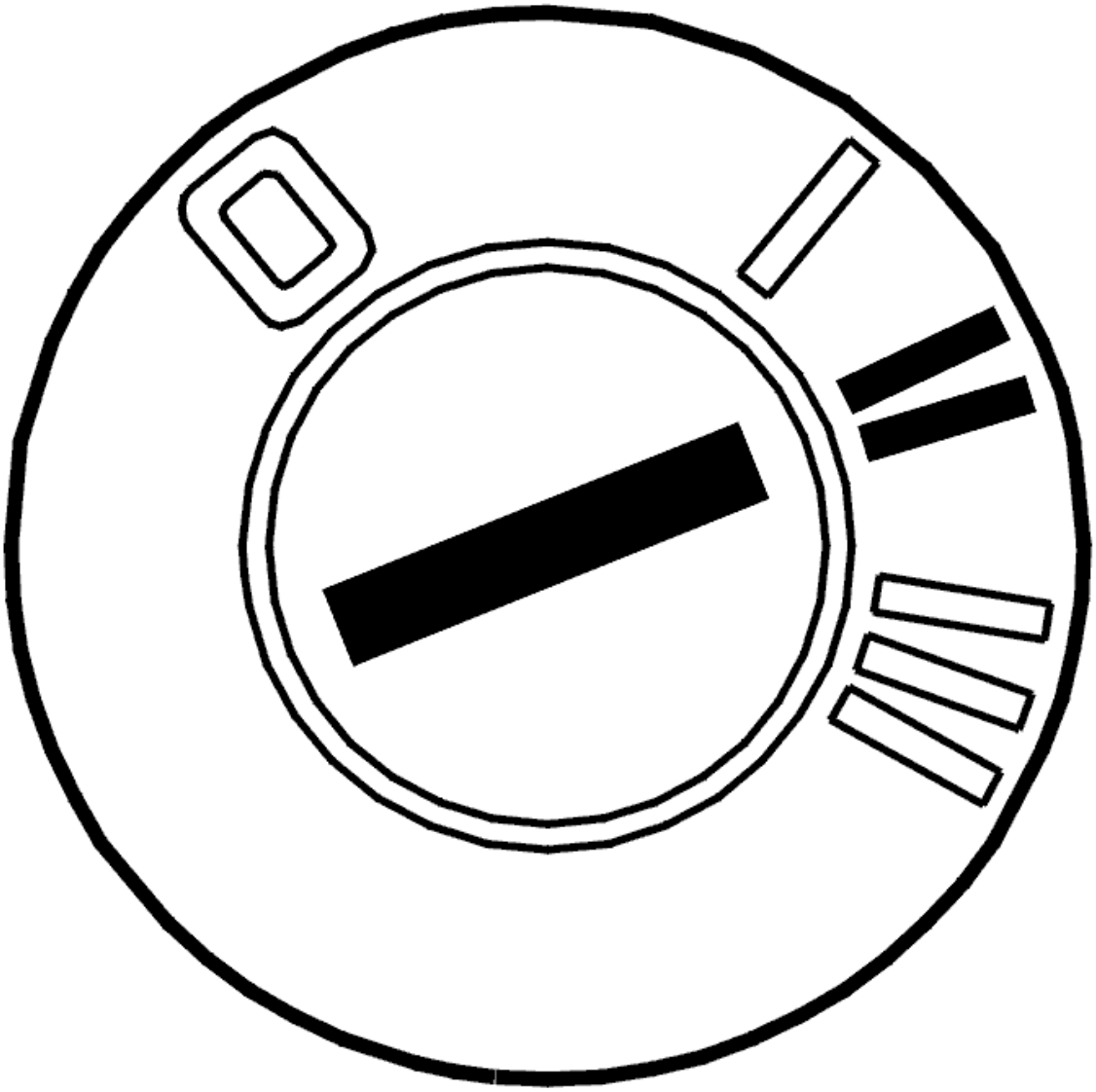

Fig. 313: Identifying Ignition ON
Courtesy of VOLVO CARS CORPORATION

- Ignition off
- Check the transmission control module (TCM), transmission output speed sensor and transmission

connectors. Check for contact resistance and oxidation. See **CONTACT RESISTANCE AND OXIDATION** .

Test drive the car. See **TEST DRIVE SCHEDULE, DESCRIPTION** .

When test driving, the oil temperature must be above 20°C. Check for transmission malfunction. Listen for mechanical noise from the transmission.

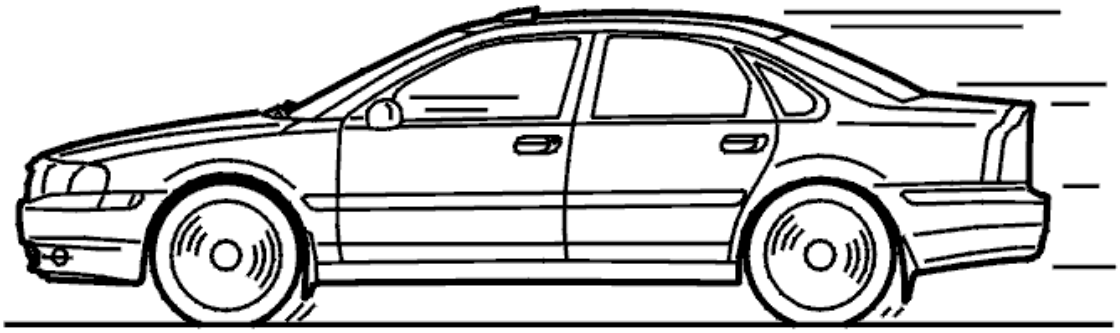

Fig. 314: Identifying Test Drive
Courtesy of VOLVO CARS CORPORATION

Is the function of the transmission OK?

- **YES**

  Refer to **CHECKING THE OIL QUALITY AND THE OIL LEVEL IN THE TRANSMISSION**

- **NO**

  Refer to **REPLACING THE TRANSMISSION**

CHECKING THE OIL QUALITY AND THE OIL LEVEL IN THE TRANSMISSION

NOTE: **Transmission fluid quality and level are extremely important for transmission function. Therefore it is imperative that these are correct. In addition the oil level is dependent on oil temperature.**

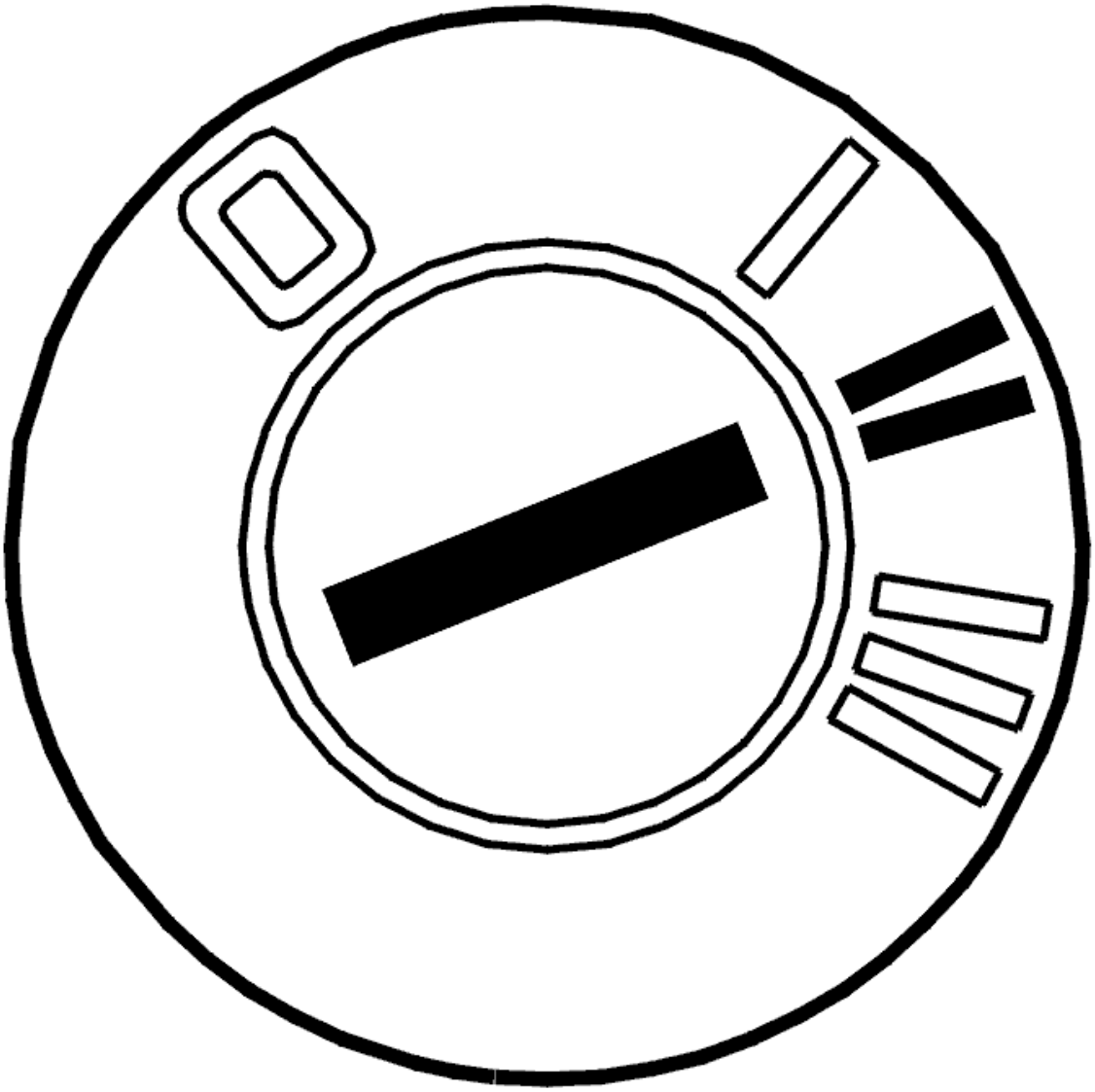

Fig. 315: Identifying Ignition ON
Courtesy of VOLVO CARS CORPORATION

- Ignition on
- Read off the oil temperature.

  Check the oil level. If the oil level is low check for leakage. Top up with oil.

  Check the quality of the oil.

  Replace the transmission fluid if the fluid smells burnt.

Check the transmission fluid for metal shavings. Take a sample using the dip stick.

Replace the transmission if the transmission fluid contains metal shavings.

Other information:

- To replace the transmission fluid, see **TRANSMISSION FLUID, REPLACING**
- To check the level, see **OIL LEVEL, CHECKING**
- To check the quality of the transmission fluid, see **OIL GRADE, CHECKING** .

Select an alternative below:

1. No fault detected

   Refer to **CHECKING THE ADJUSTMENT OF THE GEAR-SHIFT POSITION SENSOR**

2. Transmission fluid replaced, the level was low or quality was poor

   Refer to **RESETTING TRANSMISSION FLUID CHANGE COUNTER**

3. The transmission fluid contains metal shavings.

   Refer to **REPLACING THE TRANSMISSION**

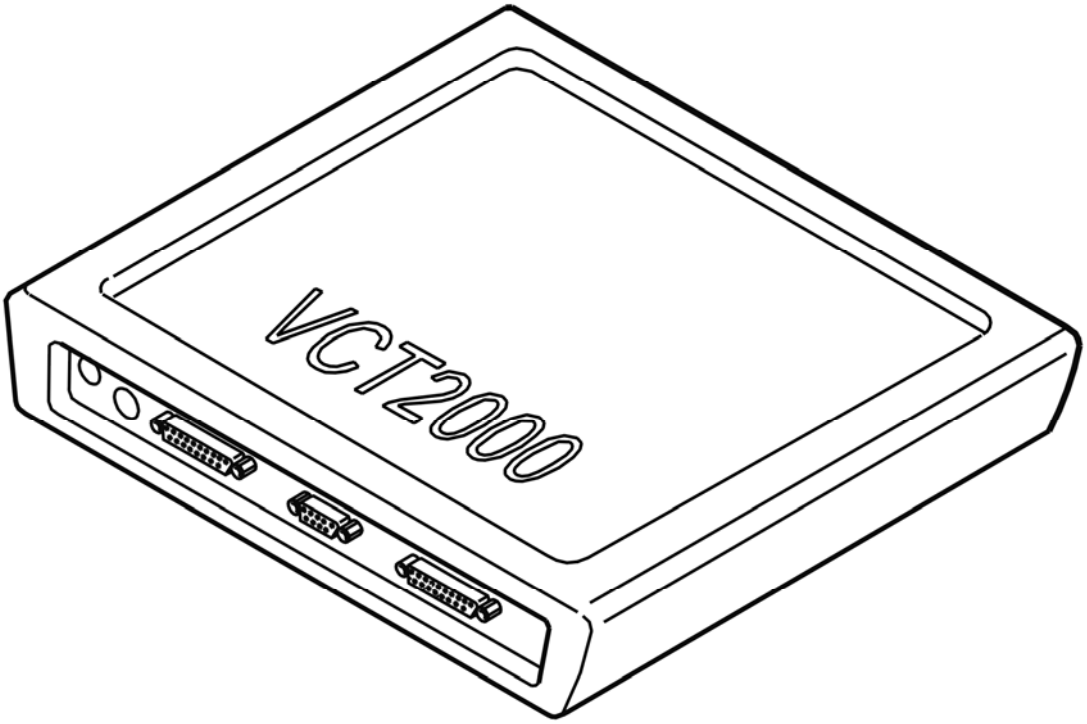

Fig. 316: Identifying VCT2000 Diagnostic Tool Symbol In VIDA
Courtesy of VOLVO CARS CORPORATION

CHECKING THE ADJUSTMENT OF THE GEAR-SHIFT POSITION SENSOR

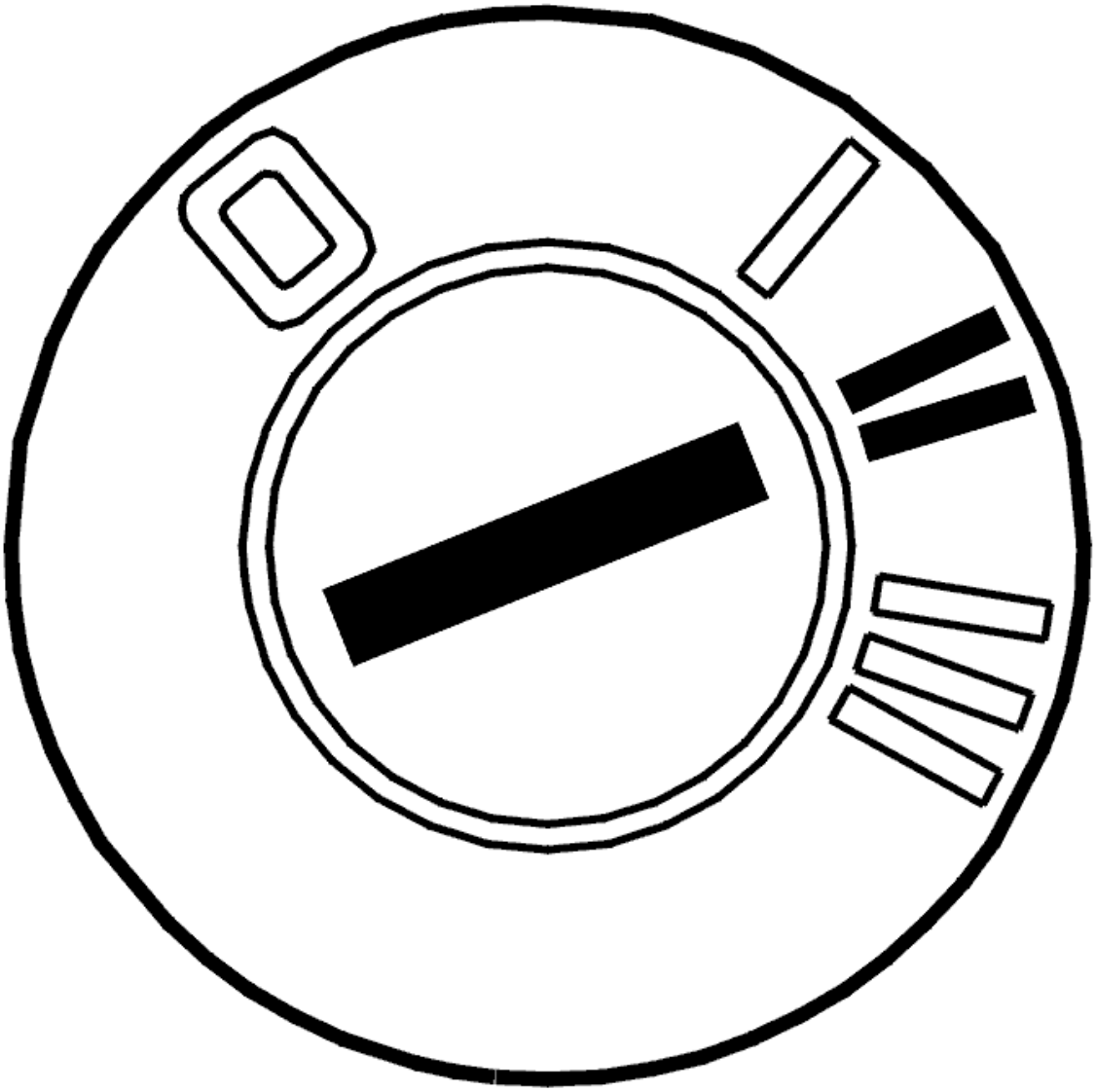

Fig. 317: Identifying Ignition ON
Courtesy of VOLVO CARS CORPORATION

- Ignition on
- Read off the position of the gear-shift position sensor.

  Move the gear selector around the different gear positions a number of times. Check that the gear position is updated. The selected position must be the same as that displayed in VIDA (Volvo scan tool). If the display shows an undefined position (OR for example) the transmission cable needs adjusting.

  NOTE: An undefined position may be displayed between the fixed gear positions. This is not a fault.

  Remedy as necessary.

Other information

- To adjust the mechanical transmission cable, see **GEAR-SHIFT POSITION SENSOR, CHECKING/ADJUSTING** .

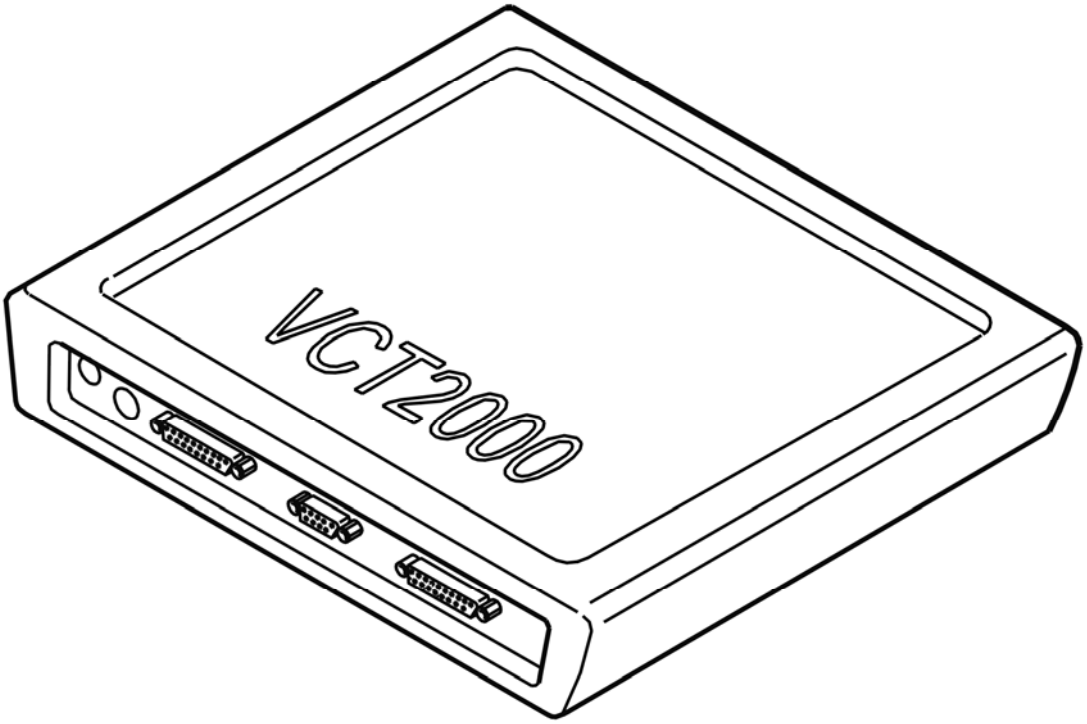

Fig. 318: Identifying VCT2000 Diagnostic Tool Symbol In VIDA
Courtesy of VOLVO CARS CORPORATION

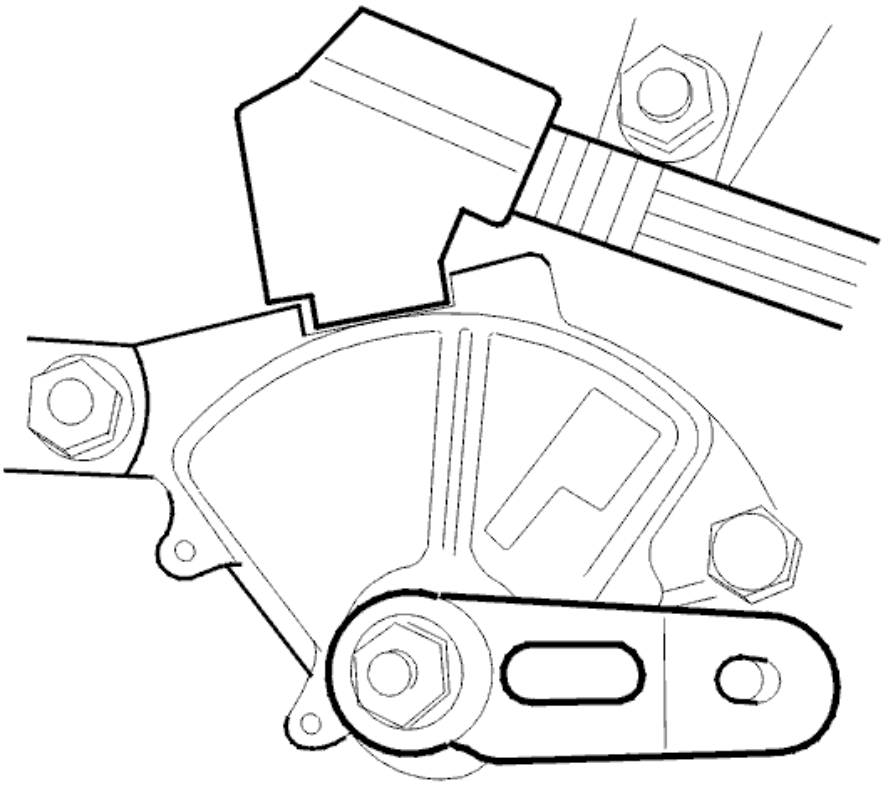

Fig. 319: Identifying Gear-Shift Position Sensor
Courtesy of VOLVO CARS CORPORATION

Is the gear-shift position sensor incorrectly adjusted?

- **YES**

  Refer to **VERIFICATION**

- **NO**

  Refer to **CHECKING THE TRANSMISSION OUTPUT SPEED SENSOR SIGNAL**

CHECKING THE TRANSMISSION OUTPUT SPEED SENSOR SIGNAL

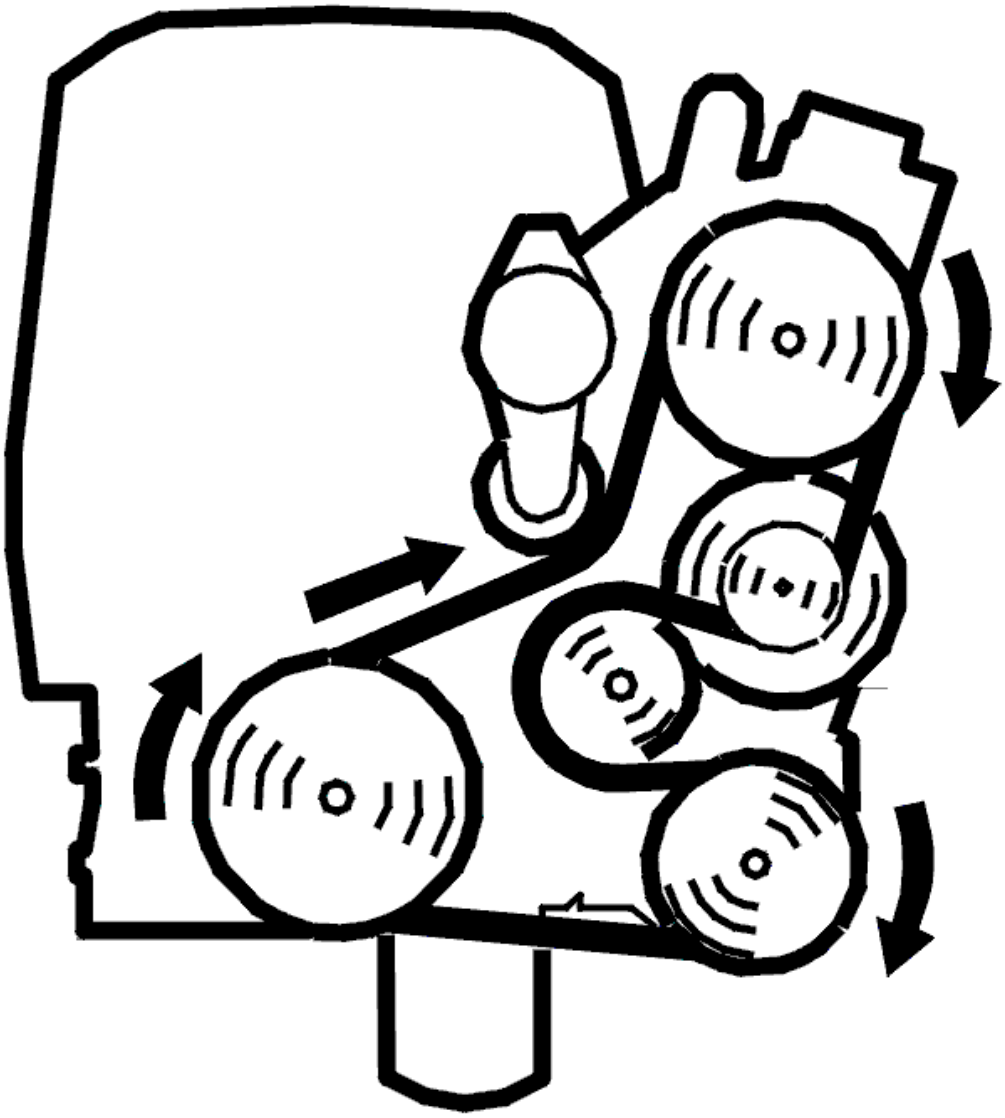

Fig. 320: Identifying Belt Routing
Courtesy of VOLVO CARS CORPORATION

- Ignition off
- Raise the car so that the drive wheels can rotate freely
- Start the engine and let it run at idle speed
- Gear selector in position D
- Read off the transmission output speed signal.

Check that the speed increases with engine speed (RPM).

NOTE: **A diagnostic trouble code (DTC) may be stored in the ABS system when the rear wheels are stationary and the front wheels rotate. Erase any diagnostic trouble codes (DTCs) in the ABS system after completing fault-tracing.**

Other information:

- To disconnect the transmission control module (TCM), see **TRANSMISSION CONTROL MODULE (TCM), REPLACING**
- To disconnect the transmission connectors, see **CONNECTORS, TRANSMISSION, DISCONNECTING / CONNECTING**
- For information about signals, see **SIGNAL DESCRIPTION. TRANSMISSION CONTROL MODULE (TCM)** .

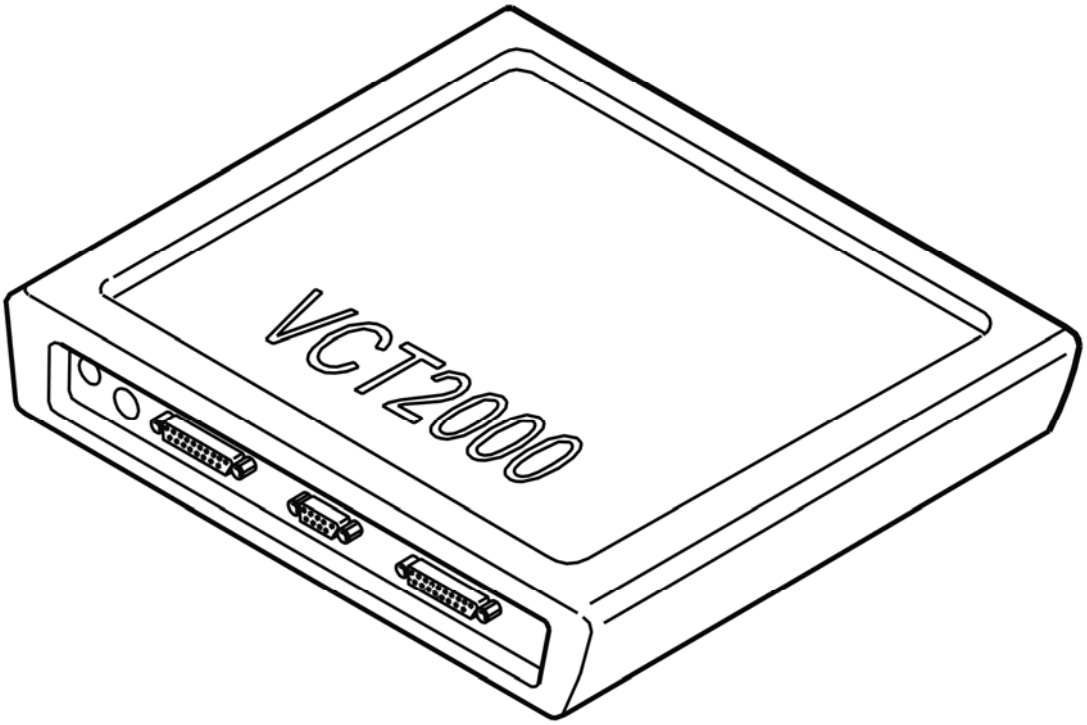

Fig. 321: Identifying VCT2000 Diagnostic Tool Symbol In VIDA
Courtesy of VOLVO CARS CORPORATION

Does the speed increase with engine speed (RPM)?

- **YES**

  Refer to **CHECKING THE TRANSMISSION INPUT SPEED SENSOR SIGNAL**

- **NO**

  Refer to **CHECKING WIRING AND SENSORS**

CHECKING WIRING AND SENSORS

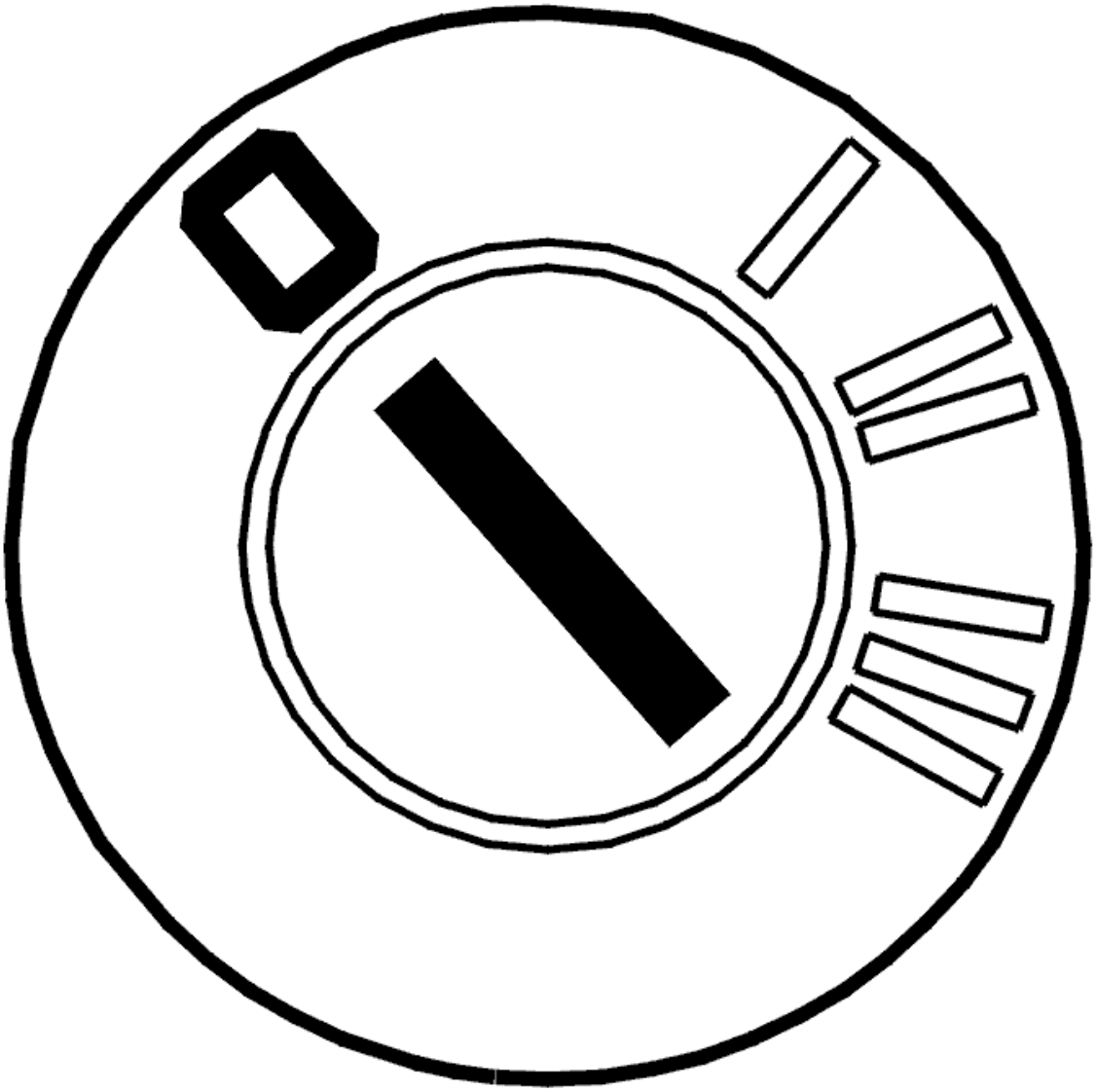

Fig. 322: Identifying Ignition OFF
Courtesy of VOLVO CARS CORPORATION

- Ignition off
- Connect the breakout box.

  Check the power supply cable between transmission output speed sensor connector terminal #A4 (control module side) and control module terminal #A57 (#A57). Check for an open-circuit. See **OPEN-CIRCUIT, PERMANENT FAULTS** . Check for a short-circuit to ground. See **SHORT-CIRCUIT TO GROUND, PERMANENT FAULTS** . Check for a short-circuit to supply voltage. See **SHORT-CIRCUIT TO SUPPLY VOLTAGE. PERMANENT FAULTS** .

  Check the signal cable between transmission output speed sensor connector terminal #A3 (control module side) and control module terminal #A39 (#A39). Check for an open-circuit. See **OPEN-CIRCUIT, PERMANENT FAULTS** . Check for a short-circuit to ground. See **SHORT-CIRCUIT TO GROUND, PERMANENT FAULTS** . Check for a short-circuit to supply voltage. See **SHORT-CIRCUIT TO**

SUPPLY VOLTAGE. PERMANENT FAULTS .

HINT: With the control module connected, the transmission output speed sensor disconnected and the ignition on, the voltage between transmission output speed sensor connector terminals #A3 and #A4 must be approximately 1-3 V below Ubat.

Remedy as necessary.

Other information:

- To connect the breakout box, see **CONNECTING THE BREAKOUT BOX**
- To disconnect the transmission connectors, see **CONNECTORS, TRANSMISSION, DISCONNECTING / CONNECTING**
- To check or replace the transmission output speed sensor, see **REPLACING THE TRANSMISSION INPUT SPEED SENSOR AND THE TRANSMISSION OUTPUT SPEED SENSOR**
- For information about signals, see **SIGNAL DESCRIPTION. TRANSMISSION CONTROL MODULE (TCM)** .

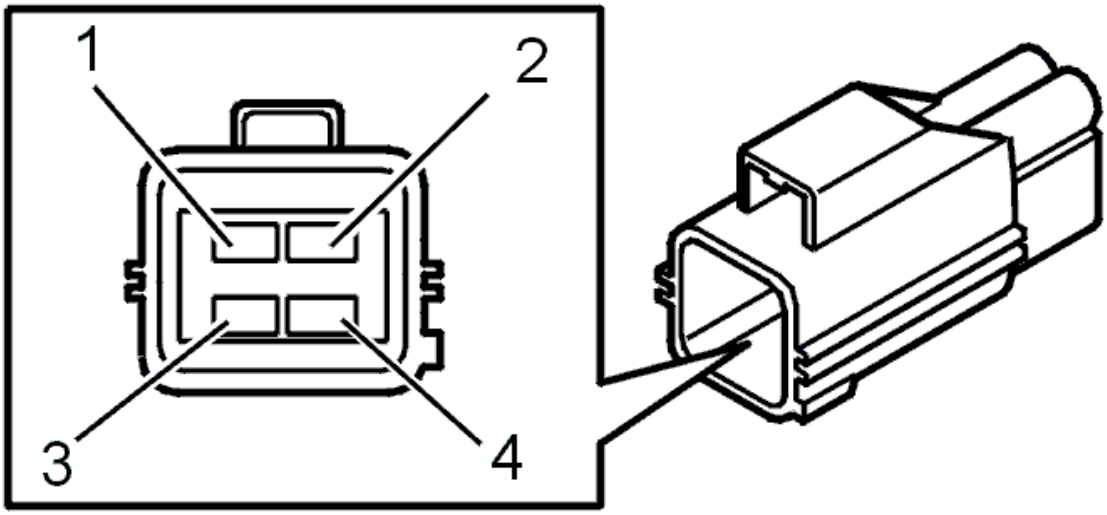

Fig. 323: Identifying Transmission Output Speed Sensor Terminals
Courtesy of VOLVO CARS CORPORATION

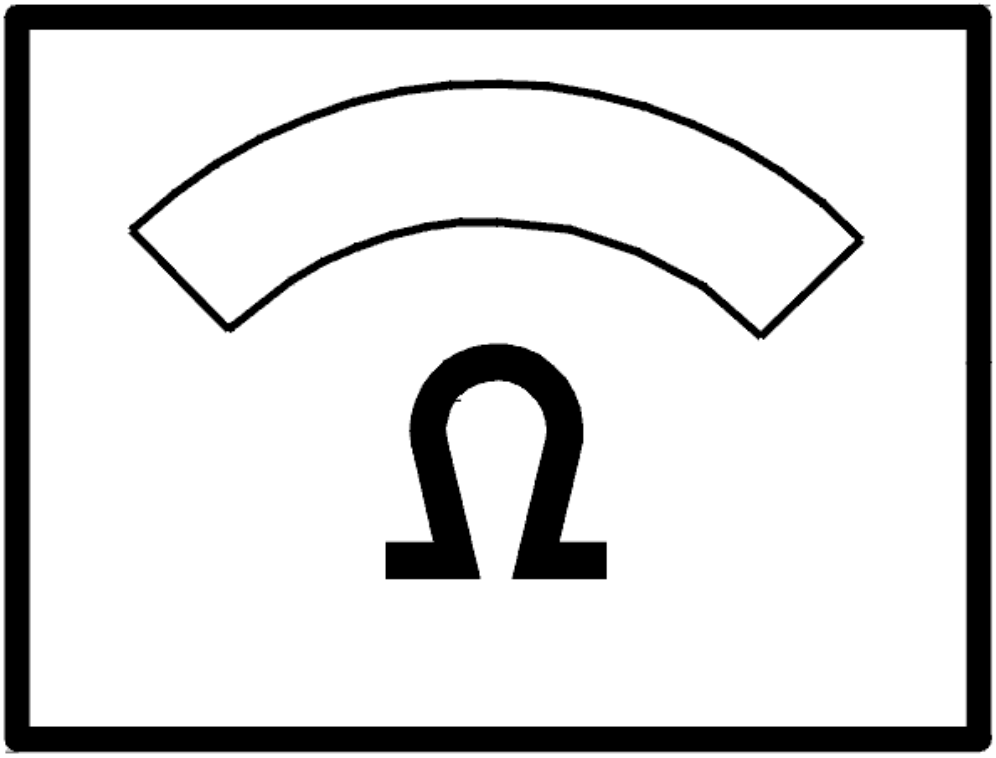

Fig. 324: Identifying Ohms Display
Courtesy of VOLVO CARS CORPORATION

- **Continue**

  Refer to **VERIFICATION**

CHECKING THE TRANSMISSION INPUT SPEED SENSOR SIGNAL

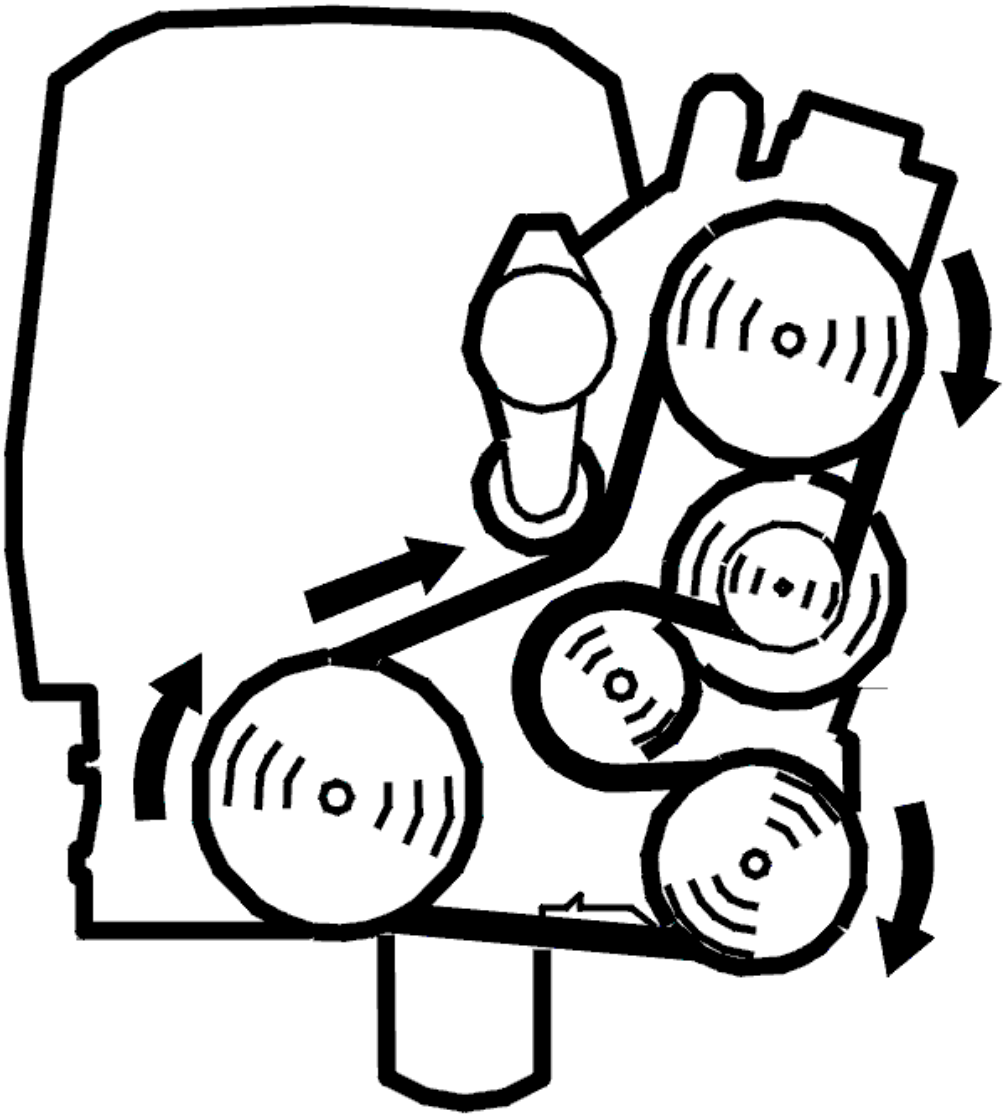

Fig. 325: Identifying Belt Routing
Courtesy of VOLVO CARS CORPORATION

- Ignition off
- Gear selector in position P
- Start the engine and let it run at idle speed
- Read off the transmission input speed.

  Check that the transmission input speed is updated.

  Compare with the engine speed (RPM).

  Other information:

  - To disconnect the transmission control module (TCM), see **TRANSMISSION CONTROL**

MODULE (TCM), REPLACING

- To disconnect the automatic transmission connectors, see **CONNECTORS, TRANSMISSION, DISCONNECTING / CONNECTING**
- For information about signals, see **SIGNAL DESCRIPTION. TRANSMISSION CONTROL MODULE (TCM)** .

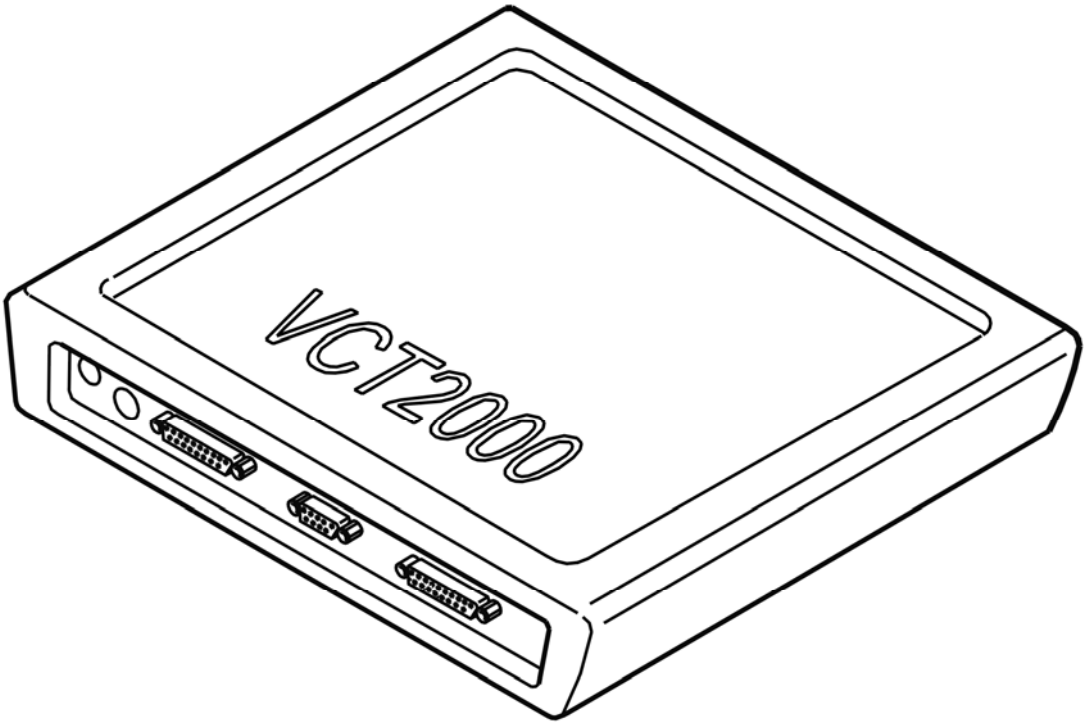

Fig. 326: Identifying VCT2000 Diagnostic Tool Symbol In VIDA
Courtesy of VOLVO CARS CORPORATION

Does the transmission input speed increase with engine speed (RPM)?

- **YES**

  Refer to **TEST DRIVING THE TRANSMISSION**

- **NO**

  Refer to **CHECKING WIRING AND SENSORS**

CHECKING WIRING AND SENSORS

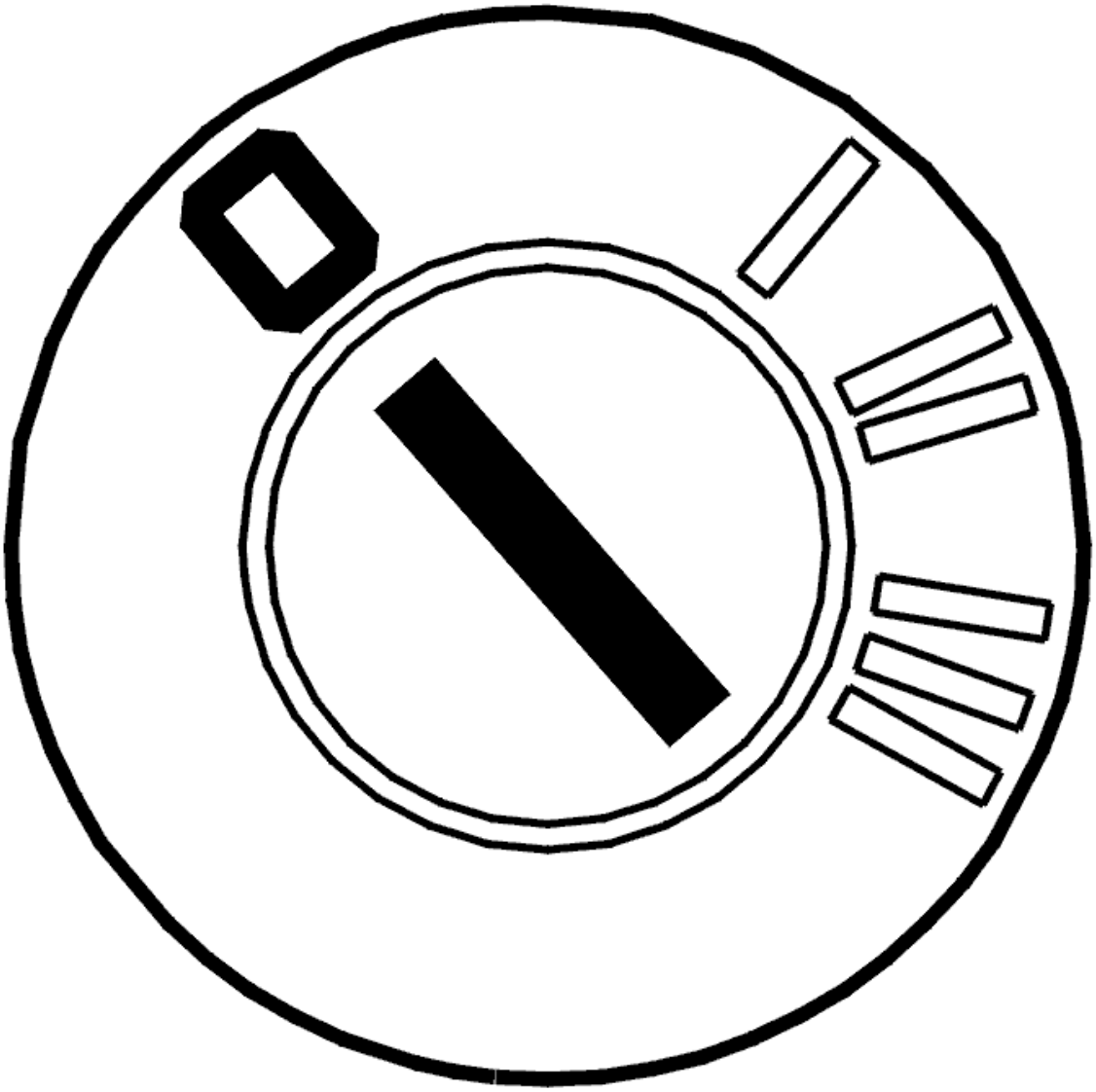

Fig. 327: Identifying Ignition OFF
Courtesy of VOLVO CARS CORPORATION

- Ignition off
- Connect the breakout box.

Check the power supply cable for the transmission input speed sensor between control module terminal #A59 (#A59) and transmission connector terminal #A2. Check for an open-circuit. See **OPEN-CIRCUIT, PERMANENT FAULTS** . Check for a short-circuit to ground. See **SHORT-CIRCUIT TO GROUND, PERMANENT FAULTS** . Check for a short-circuit to supply voltage. See **SHORT-CIRCUIT TO SUPPLY VOLTAGE. PERMANENT FAULTS** .

Check the signal cable between control module terminal #A41 (#A41) and transmission connector terminal #A1. Check for an open-circuit. See **OPEN-CIRCUIT, PERMANENT FAULTS** . Check for a short-circuit to ground. See **SHORT-CIRCUIT TO GROUND, PERMANENT FAULTS** . Check for a short-circuit to supply voltage. See **SHORT-CIRCUIT TO SUPPLY VOLTAGE. PERMANENT**

FAULTS .

HINT: With the control module connected and the ignition on, the voltage between transmission output speed sensor connector terminals #A1 and #A2 must be between 1-3 V below Ubat.

Remedy as necessary.

Other information:

- To connect the breakout box, see **CONNECTING THE BREAKOUT BOX**
- To disconnect the automatic transmission connectors, see **CONNECTORS, TRANSMISSION, DISCONNECTING / CONNECTING**
- To replace the transmission input speed sensor, see **REPLACING THE TRANSMISSION INPUT SPEED SENSOR AND THE TRANSMISSION OUTPUT SPEED SENSOR**
- For information about signals, see **SIGNAL DESCRIPTION. TRANSMISSION CONTROL MODULE (TCM)** .

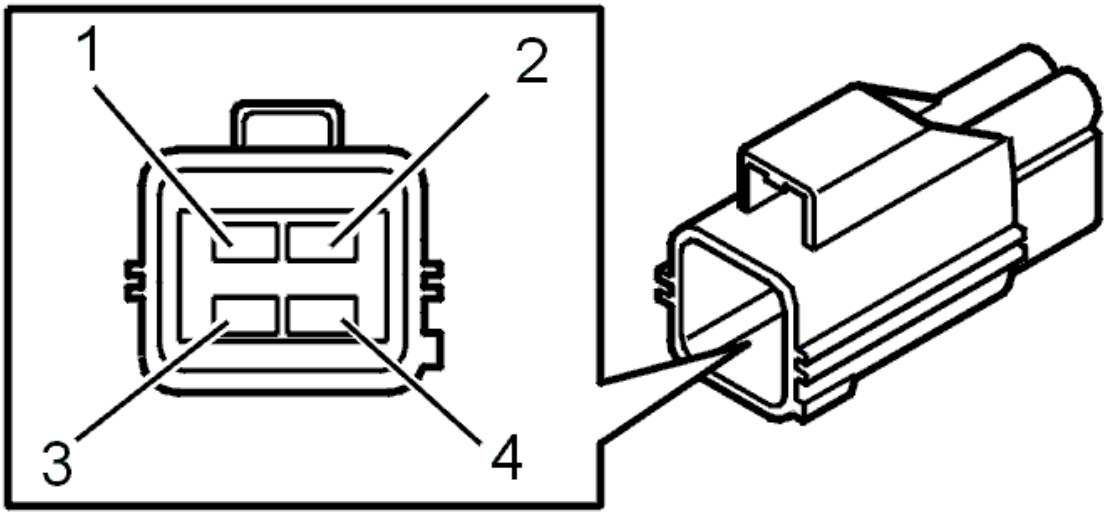

Fig. 328: Identifying Transmission Output Speed Sensor Terminals
Courtesy of VOLVO CARS CORPORATION

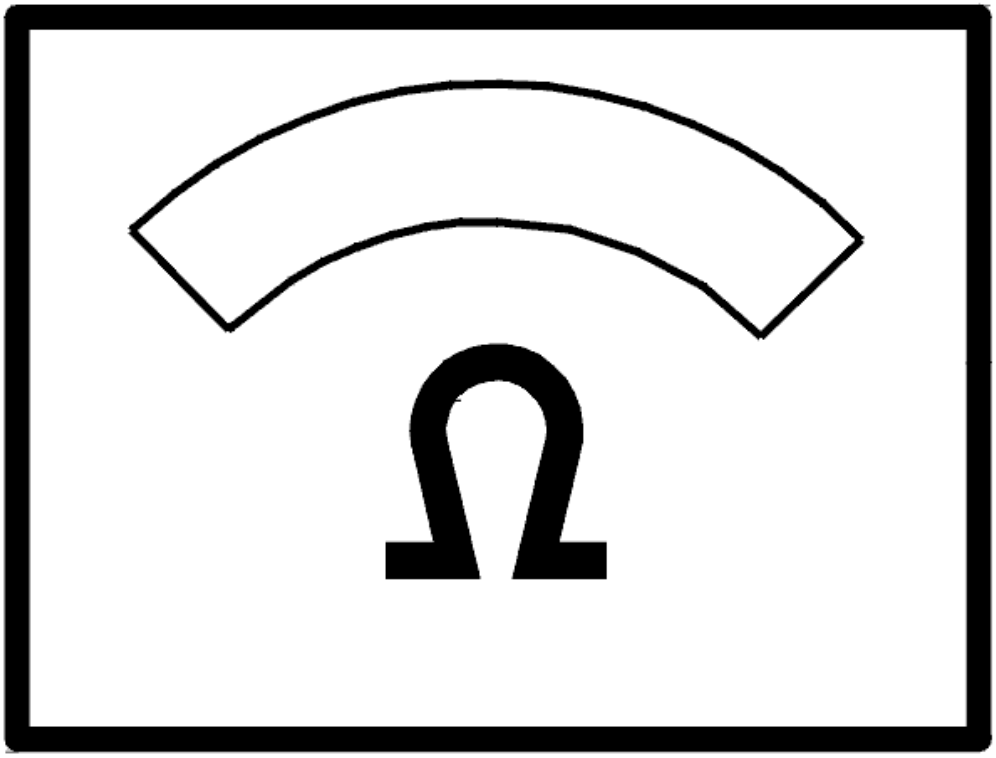

Fig. 329: Identifying Ohms Display
Courtesy of VOLVO CARS CORPORATION

- **Continue**

  Refer to **VERIFICATION**

REPLACING THE TRANSMISSION

- Fault-tracing indicates an internal fault in the transmission. Replace the transmission. See **TRANSMISSION - REMOVAL, REPLACEMENT AND INSTALLATION** .

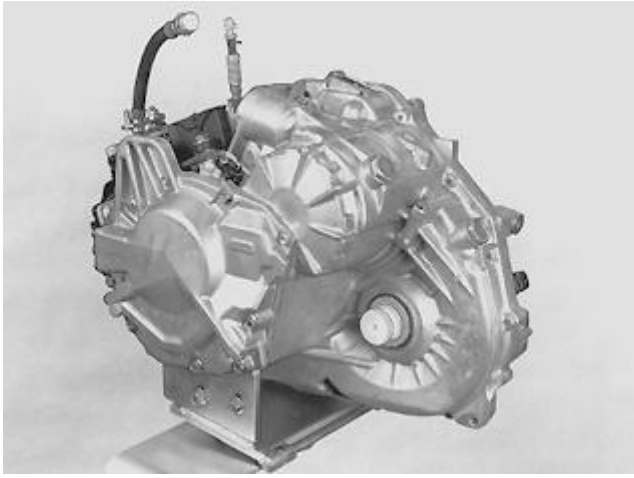

Fig. 330: Identifying Transmission
Courtesy of VOLVO CARS CORPORATION

- **Continue**

  Refer to **VERIFICATION**

TEST DRIVING THE TRANSMISSION

Test drive the car. See **TEST DRIVE SCHEDULE, DESCRIPTION** . When test driving, the oil temperature must be above 20°C.

Look out for any transmission malfunction.

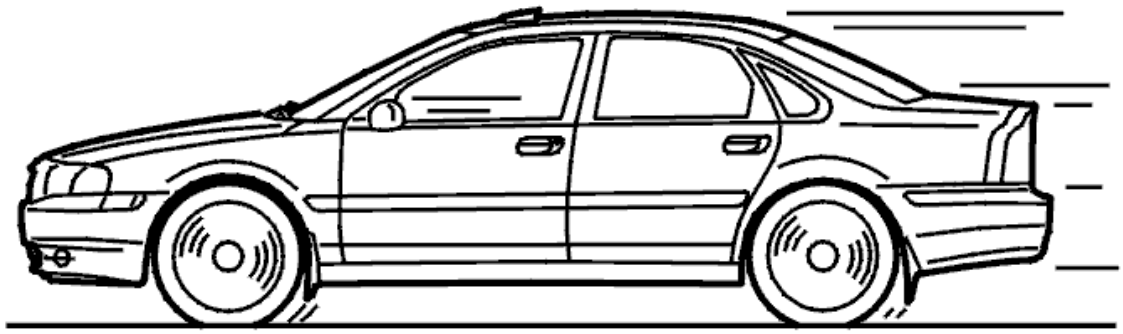

Fig. 331: Identifying Test Drive
Courtesy of VOLVO CARS CORPORATION

Is the transmission operating correctly?

- **YES**

  Refer to **FAULT-TRACING INFORMATION**

- **NO**

  Refer to **REPLACING THE TRANSMISSION CONTROL SYSTEM**

REPLACING THE TRANSMISSION CONTROL SYSTEM

The previous tests indicate that there is a fault in the transmission control system.

Try a new control system. See **TRANSMISSION - REMOVAL, REPLACEMENT AND INSTALLATION** .

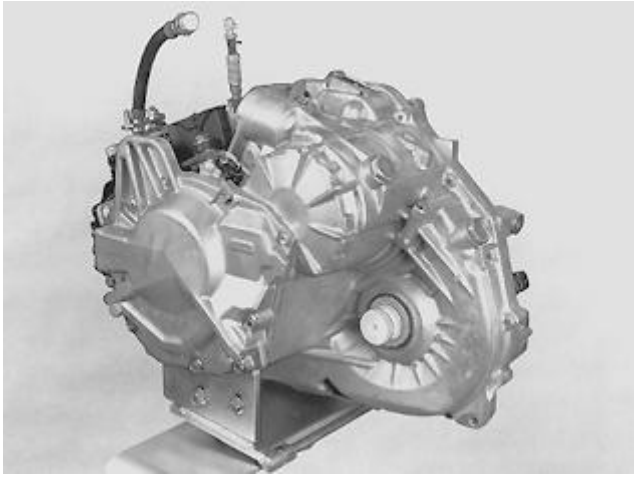

Fig. 332: Identifying Transmission
Courtesy of VOLVO CARS CORPORATION

- **Continue**

  Refer to **RESETTING THE ADAPTATION**

FAULT-TRACING INFORMATION

The control module has previously registered a fault. The fault is now no longer present. A test of the transmission function indicates that everything is now OK.

RESETTING TRANSMISSION FLUID CHANGE COUNTER

RESETTING TRANSMISSION FLUID CHANGE COUNTER

HINT: The transmission control module (TCM) has a counter for the oil quality. The counter counts up if the transmission is exposed to too high a load or an ambient temperature that is too high. If the counter is not reset when the oil is drained or changed, there is a risk that a diagnostic trouble code (DTC) will be stored in faulty circumstances. Therefore it is important that the "Transmission oil change" counter is reset.

NOTE: **This applies only when the transmission fluid is changed and when the fluid is changed when repairs are carried out to the transmission temperature sensor.**

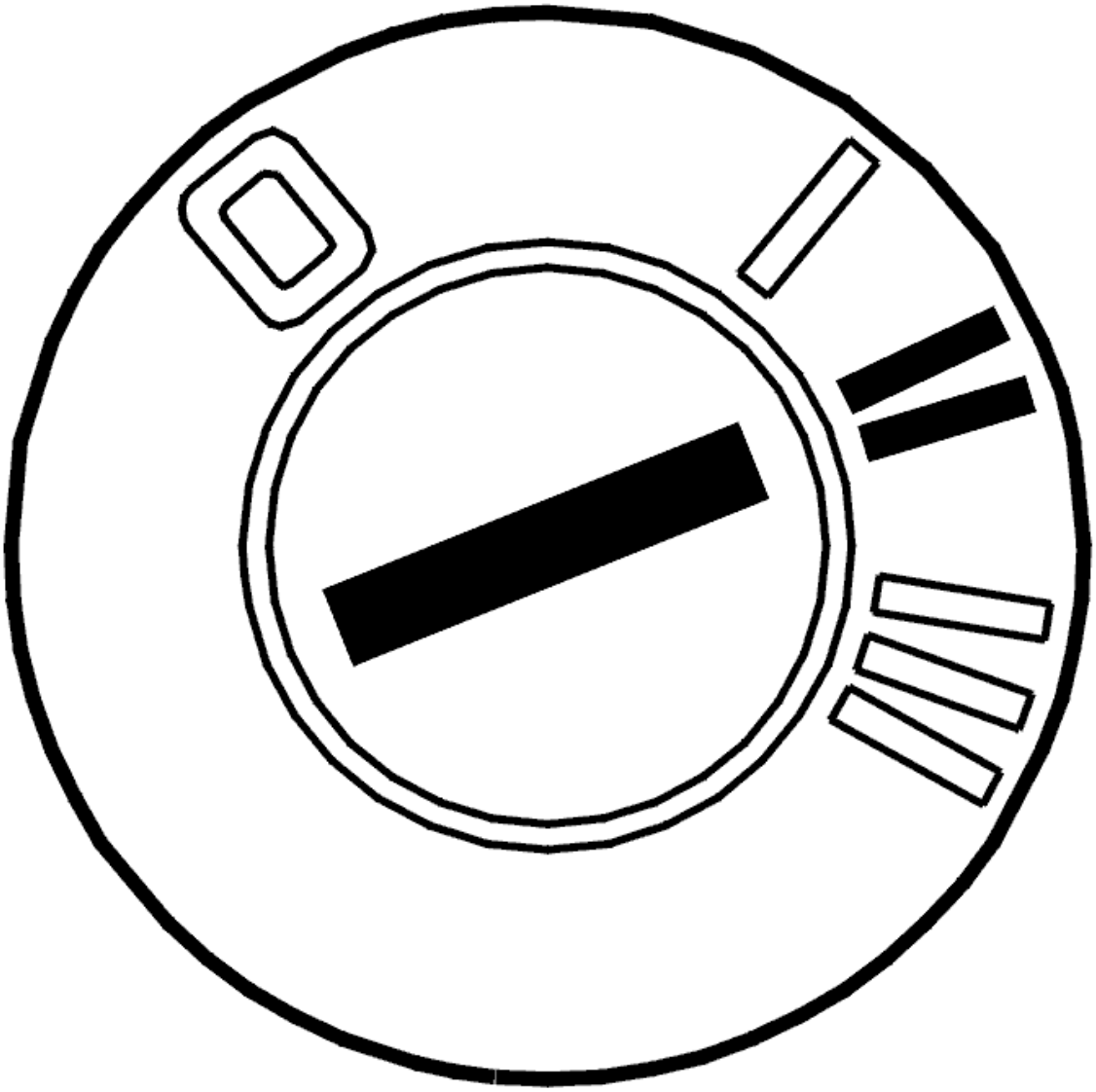

Fig. 333: Identifying Ignition ON
Courtesy of VOLVO CARS CORPORATION

- Ignition on.

  Reset the counter by clicking on the VCT 2000 symbol.

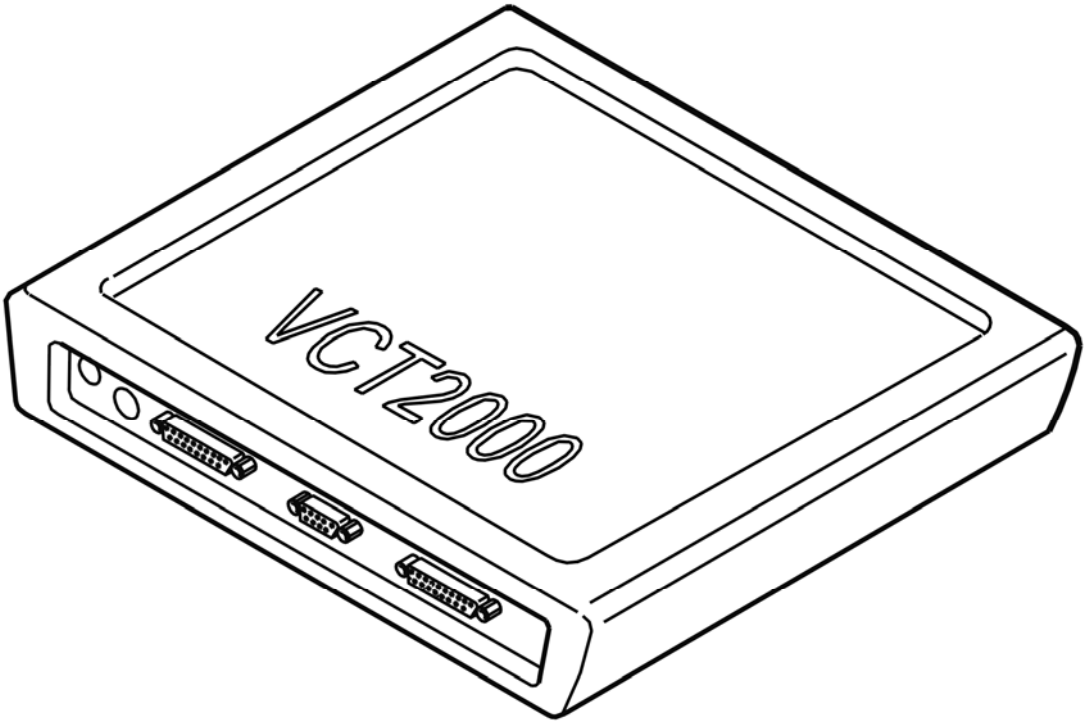

Fig. 334: Identifying VCT2000 Diagnostic Tool Symbol In VIDA
Courtesy of VOLVO CARS CORPORATION

- **Continue**

  Refer to **VERIFICATION**

RESETTING THE ADAPTATION

RESETTING ADAPTATION AND THE COUNTER FOR "TRANSMISSION OIL CHANGE"

HINT: The transmission has torque controlled adaptive pressure control. Pressure control means that the transmission regulates the pressure itself during each gear shift. This avoids harsh gear shifting. Each gear shift is evaluated by the control module and stored in the memory. This allows for compensation for wear and tear in the transmission and clutch. It is important that the adaptation in the memory is reset after the transmission has been repaired. This is to ensure normal operation. The oil is replaced during repair; the "Transmission oil change" counter must be reset. If the counter is not reset when the fluid is drained and replaced, there is a risk that a diagnostic trouble code (DTC) will be stored in incorrect circumstances.

NOTE: **This applies only if the transmission or one of the components in the transmission have been replaced.**

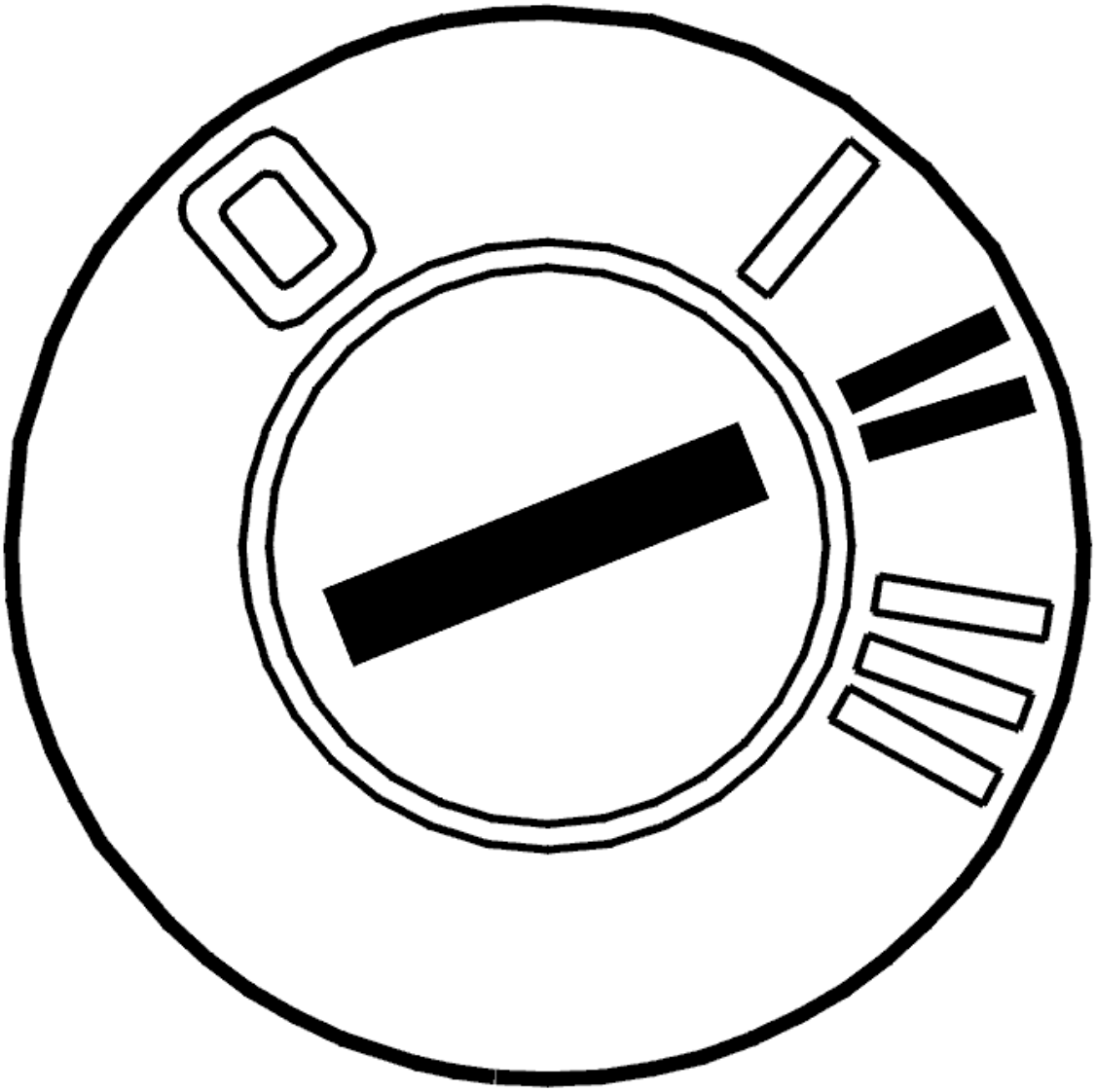

Fig. 335: Identifying Ignition ON
Courtesy of VOLVO CARS CORPORATION

- Ignition on.

  Click on the VCT2000 symbol to reset the adaptation and counter.

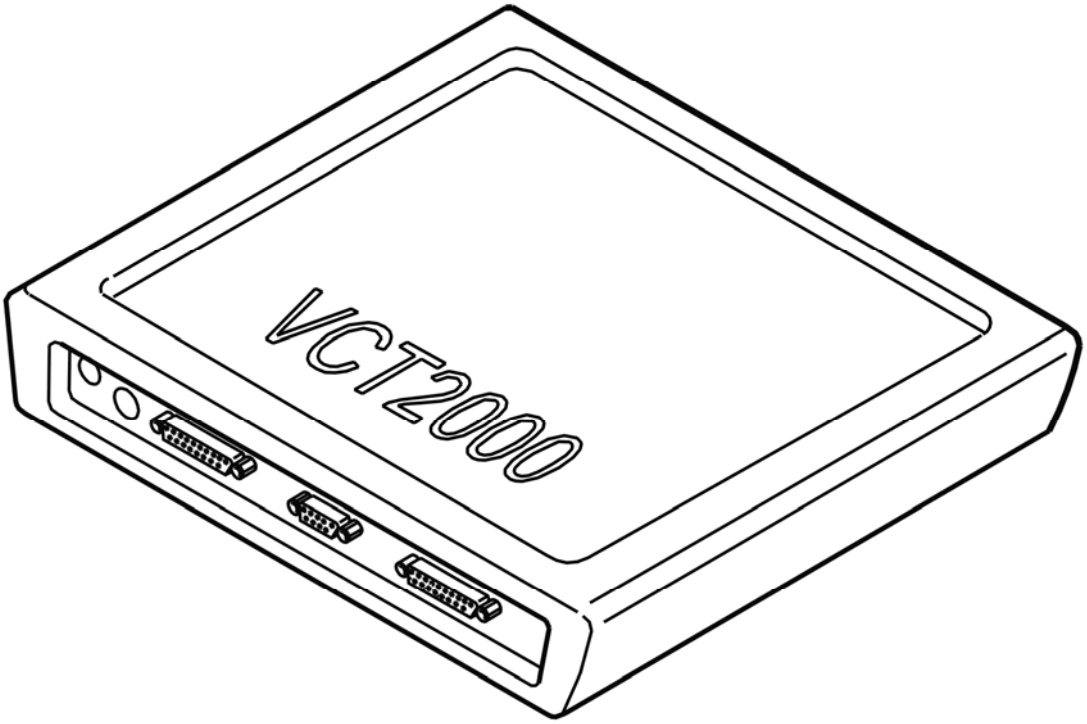

Fig. 336: Identifying VCT2000 Diagnostic Tool Symbol In VIDA
Courtesy of VOLVO CARS CORPORATION

- **Continue**

  Refer to **VERIFICATION**

VERIFICATION

VERIFICATION

HINT: After carrying out the repair, check that the fault has been remedied.

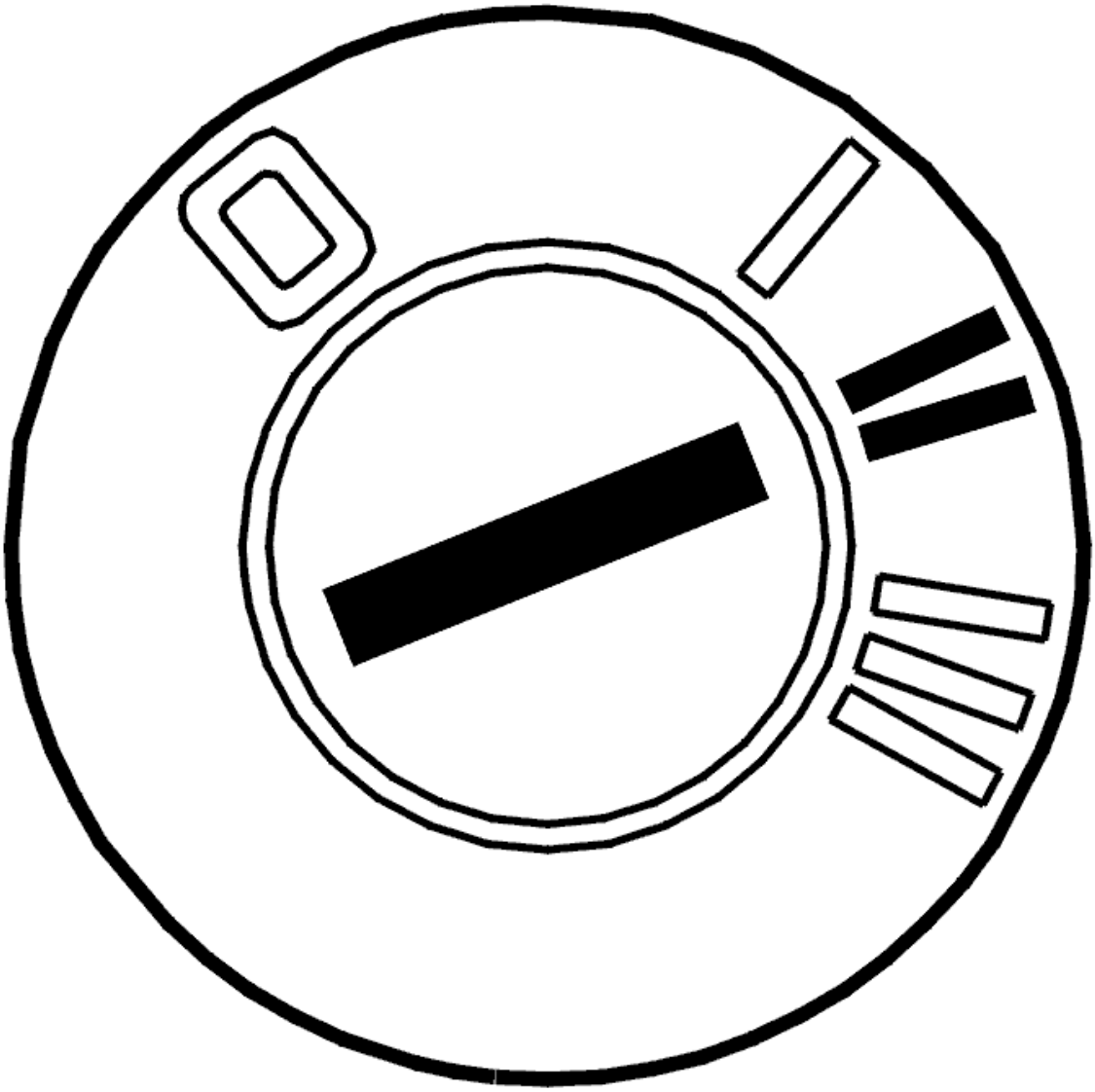

Fig. 337: Identifying Ignition ON
Courtesy of VOLVO CARS CORPORATION

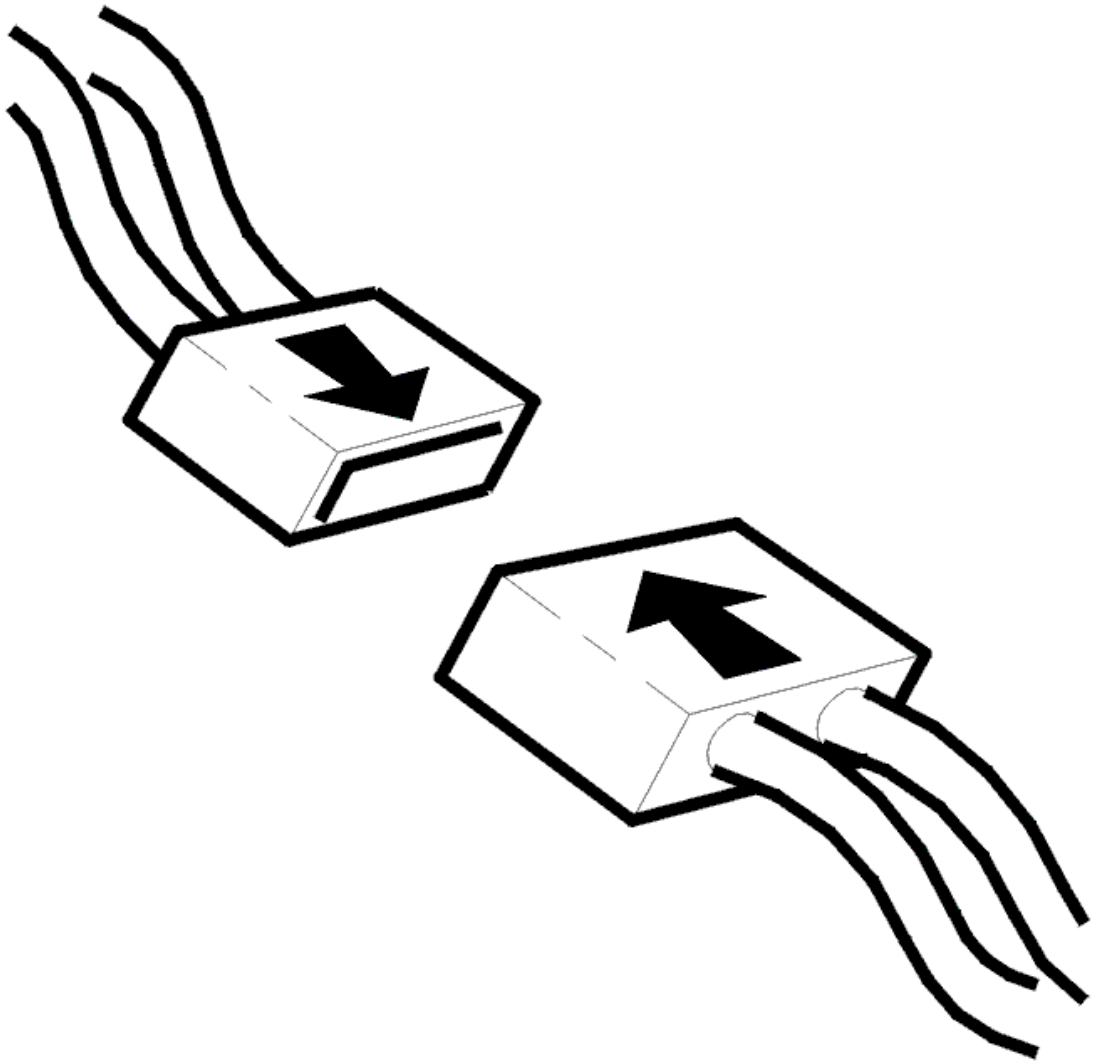

Fig. 338: Identifying Connector(s) Reinstallation
Courtesy of VOLVO CARS CORPORATION

- Ignition off
- Reconnect the connectors, components, etc.
- Ignition on

  Test drive the vehicle following:**TEST DRIVE SCHEDULE, DESCRIPTION**

  During the test drive, oil temperature should be over 20 °C.

  Note any deviations in transmission function.

Does the transmission function flawlessly?

- **YES**

  VERIFIED: Troubleshooting has been completed.

- **NO**

  VERIFICATION FAILED: The fault should have been detected and remedied. As this is not the case fault-tracing has failed. Exit fault-tracing for this diagnostic trouble code (DTC) or make another attempt.

REPLACING THE TRANSMISSION INPUT SPEED SENSOR AND THE TRANSMISSION OUTPUT SPEED SENSOR

NOTE: **As the illustrations in this service information are used for different model years and / or models, some variation may occur. However, the essential information is always correct.**

REMOVAL

PREPARATIONS

Switch off the ignition.

REMOVING THE AIR CLEANER (ACL) HOUSING

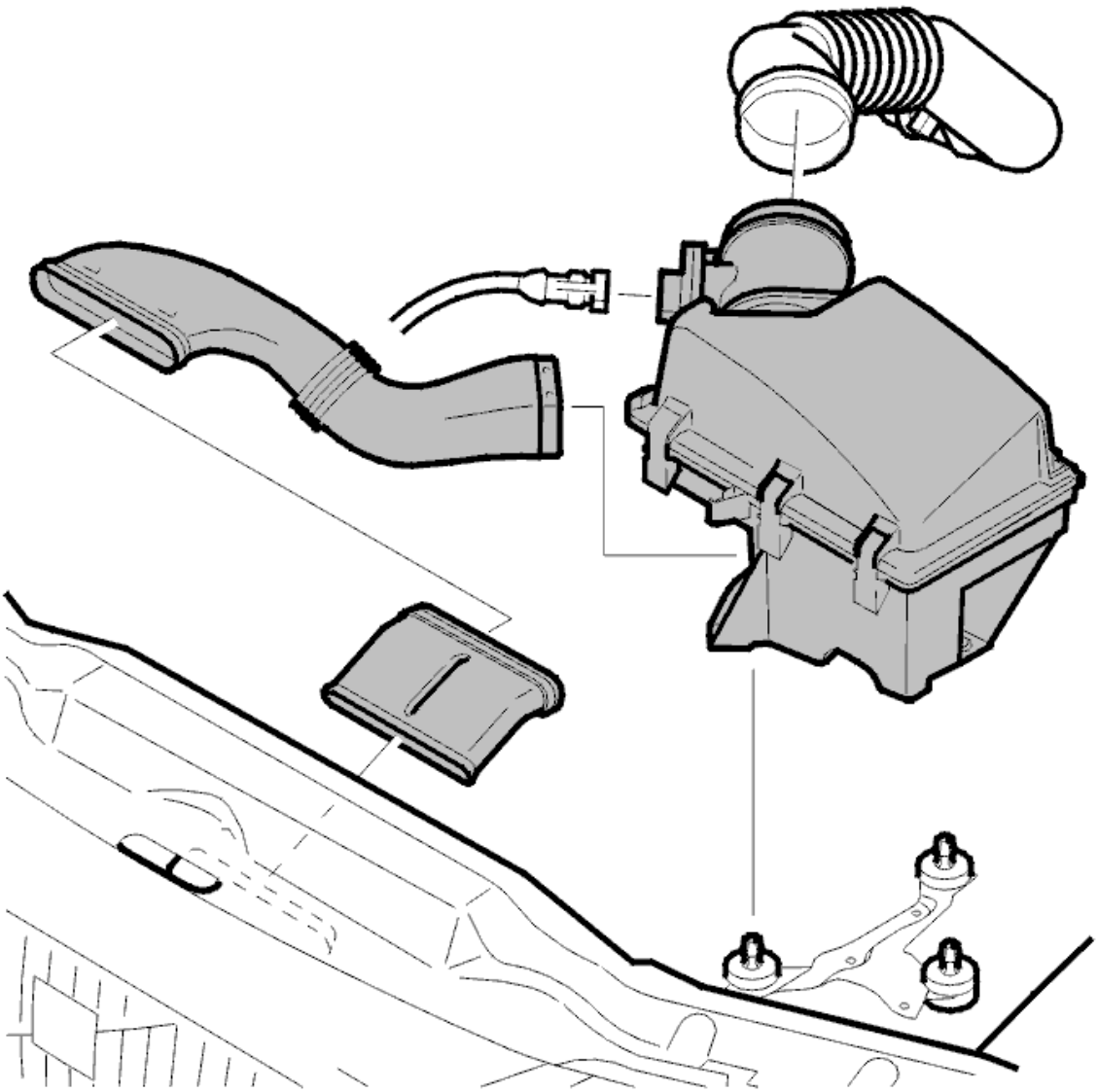

Fig. 339: Identifying Air Cleaner Housing Assembly And Intake Pipe
Courtesy of VOLVO CARS CORPORATION

The air cleaner housing ACL assembly with the intake pipe.

REMOVING THE CABLE HARNESS

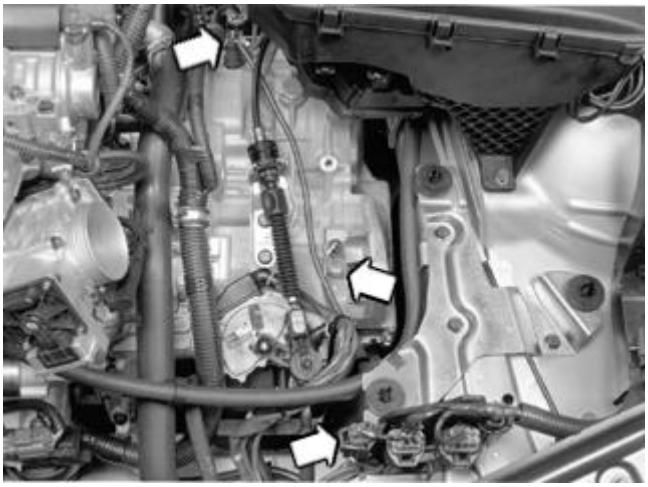

Fig. 340: Identifying Air Cleaner (ACL) Housing Cable Harness
Courtesy of VOLVO CARS CORPORATION

Remove the mounting for the cable harness from the cover for the control system.

Unhook the mounting with the connectors for the cable harness from the bracket for the air cleaner (ACL) housing.

Remove the tie straps from the cable harness.

Separate the connectors for the transmission output speed sensor and the transmission input speed sensor.

Unhook the connectors from the mounting.

Clean thoroughly around the sensors.

Remove the sensors and the cable harness.

INSTALLATION

INSTALLING THE SENSOR

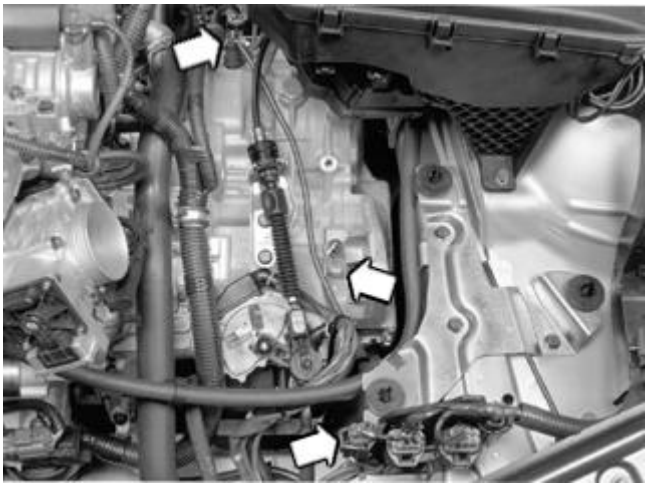

Fig. 341: Identifying Air Cleaner (ACL) Housing Cable Harness
Courtesy of VOLVO CARS CORPORATION

Install the new sensors.

Apply a little petroleum jelly to the O-rings for the sensors. Tighten to **5.5 Nm** .

- Install the connectors for the sensors on the mounting. Assemble the connectors
- Install the tie straps for the cable harness
- Hook the mounting for the connectors on to the bracket for the air cleaner (ACL) housing
- Secure the cable harness mounting in the control system cover.

INSTALLING THE AIR CLEANER (ACL) HOUSING

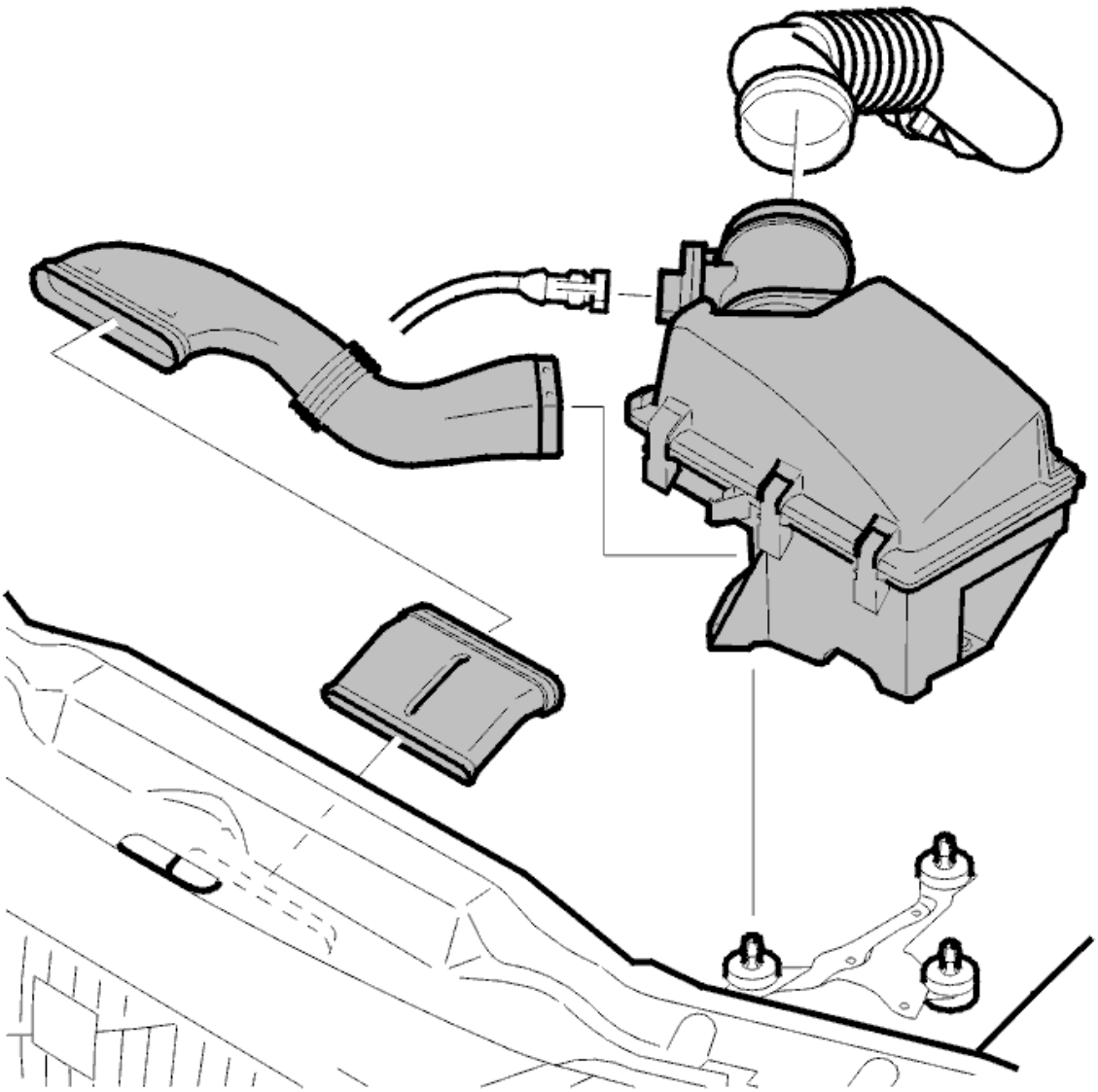

Fig. 342: Identifying Air Cleaner Housing Assembly And Intake Pipe
Courtesy of VOLVO CARS CORPORATION

Install the air cleaner housing (ACL) assembly with the intake pipe and connector.

Check and erase any diagnostic trouble codes (DTCs).

TCM-0028: 1ST GEAR. INCORRECT GEAR RATIO (4T65 AWD; 2003-2006)

DIAGNOSTIC TROUBLE CODE (DTC) INFORMATION

Condition

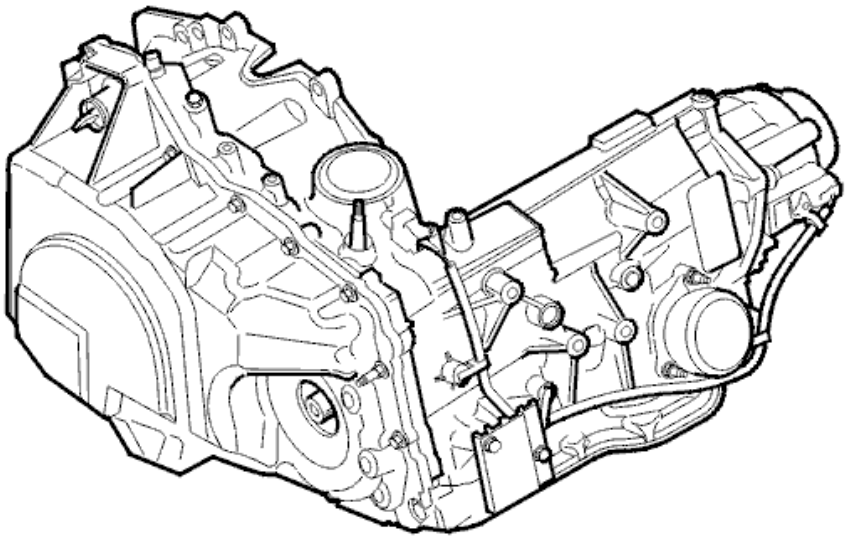

P2X

4301721D ©VOLVO

Fig. 343: Identifying Transmission
Courtesy of VOLVO CARS CORPORATION

The transmission control module (TCM) calculates the ratio between the transmission input speed and the vehicle speed. There is a specific ratio for each gear. Diagnostic trouble codes (DTC) TCM-0028, TCM-0029, TCM-002A or TCM-002B are stored (depending on the gear selected) if the control module, when the oil temperature is above +20°C and throttle opening exceeds 3%, registers that the ratio deviates by more than 10%.

Substitute Value

- The control module "Limp Home" program has been initiated.

Possible Source

- Glycol in the transmission fluid.
- Contact resistance in the solenoid S1 and S2 circuits.
- Interference with or faulty transmission speed sensor signal.
- Interference with or faulty speed signal from the transmission speed sensor.
- Short-circuit to ground in the engine speed (RPM) sensor signal cable (-).
- Incorrectly adjusted gear-shift position sensor.

- The transmission oil level is too low.
- Mechanical fault in the transmission. Worn components in the transmission causing slippage or too low line pressure.
- Defective power ground.

Fault symptom[s]

- General orange warning lamp lit.
- Malfunction indicator lamp (MIL) lit.
- No lock-up function.
- Harsh gear shifting.
- No shifting.

HINT: Harsh shifting -may be due to no line pressure solenoid STH control. This results in constant maximum line pressure.

HINT: No shifting -because the transmission control module (TCM) prevents activation of the solenoids. This stops gear-shifting. The transmission only operates in 3rd gear in positions 1 and 2, in 4th gear in positions D and 3, and in reverse gear in position R. Shifting can only be carried out manually between 3rd, 4th and reverse gears.

INCORRECT GEAR RATIO

see **INCORRECT GEAR RATIO**

TCM-0028: 1ST GEAR. INCORRECT GEAR RATIO (AW50/51 AWD; AW55-50/51SN; 2003-2007)

DIAGNOSTIC TROUBLE CODE (DTC) INFORMATION

Condition

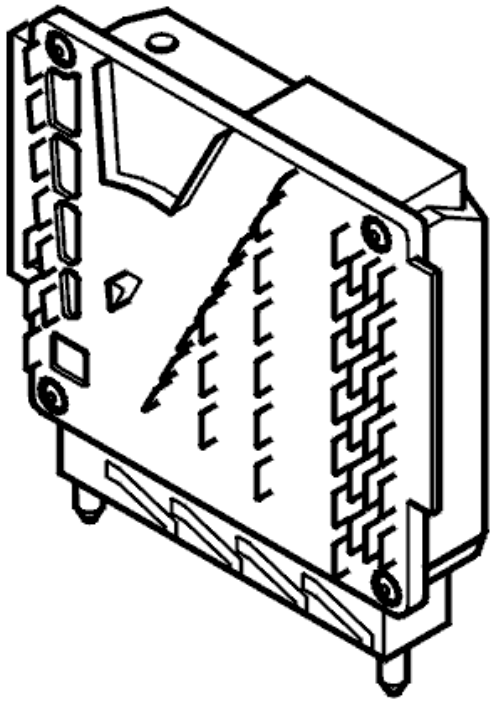

Fig. 344: Identifying Transmission Control Module (TCM)
Courtesy of VOLVO CARS CORPORATION

The transmission control module (TCM) calculates the ratio between the transmission input speed and the vehicle speed. There is a specific ratio for each gear. Diagnostic trouble code (DTC) TCM-0028 is stored if the control module registers that the ratio deviates by more than 10 % when the oil temperature is above +20°C (68 °F) and throttle opening exceeds 3 %.

Substitute Value

- The transmission control module (TCM) "Emergency mode I" program has been initiated.

Possible Source

- Contact resistance in the circuit for solenoids S1, S2, S3, S4, S5 and SLS.
- Solenoid S1 has jammed in the OFF position.
- Mechanical fault in the transmission. Worn components in the transmission causing slippage or too low line pressure.

Fault symptom[s]

- General orange warning lamp lit.
- Malfunction indicator lamp (MIL) lit.

- No lock-up function.
- Harsh gear shifting.
- No shifting.

INCORRECT GEAR RATIO

CHECKS

CHECKING THE ADJUSTMENT OF THE GEAR-SHIFT POSITION SENSOR

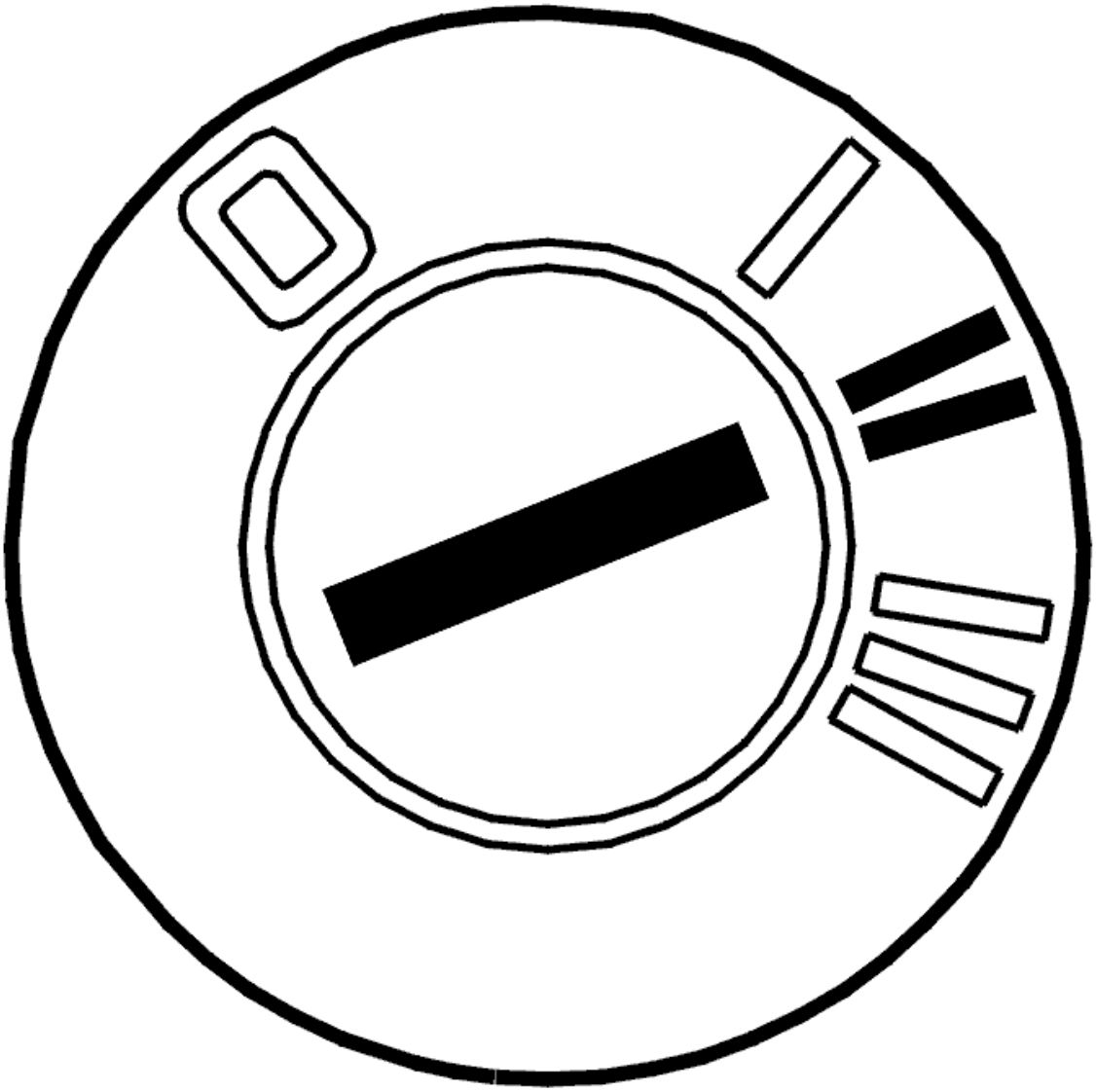

Fig. 345: Identifying Ignition ON
Courtesy of VOLVO CARS CORPORATION

- Ignition on
- Read off the position of the gear selector.

Move the gear selector into all positions. Check that the gear-shift positions are updated.

NOTE: Select the correct gear lever carrier from the list.

HINT: If the display shows an undefined position (O2 for example) the gear position sensor is incorrectly adjusted.

Remedy as necessary

Other information:

- see **GEAR-SHIFT POSITION SENSOR, CHECKING/ADJUSTING**

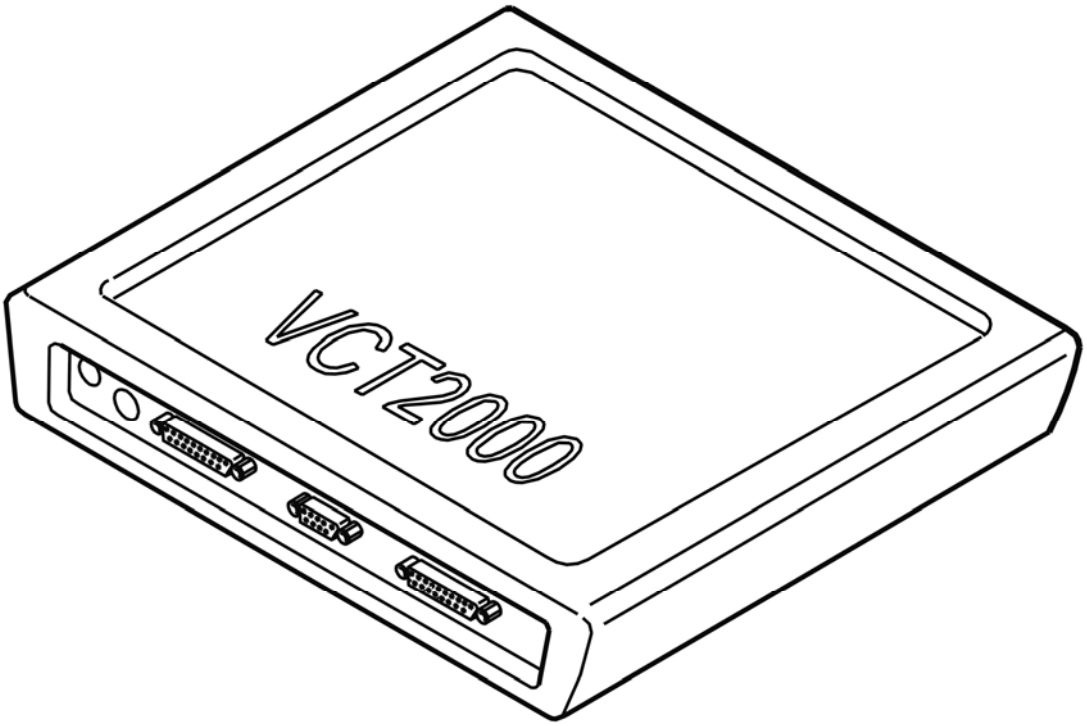

Fig. 346: Identifying VCT2000 Diagnostic Tool Symbol In VIDA
Courtesy of VOLVO CARS CORPORATION

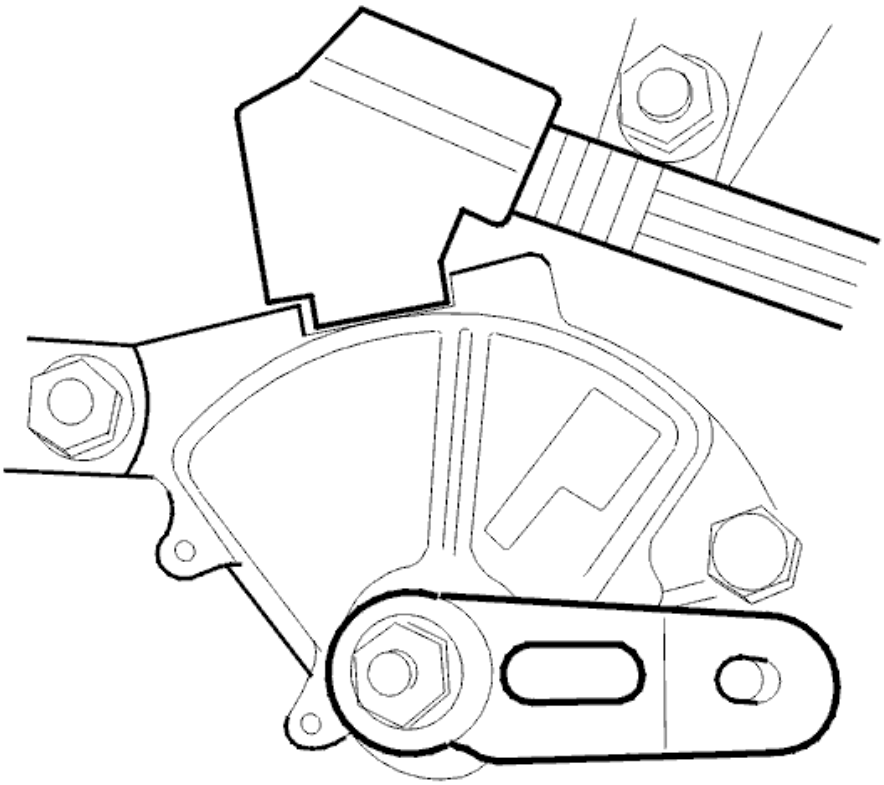

Fig. 347: Identifying Gear-Shift Position Sensor
Courtesy of VOLVO CARS CORPORATION

Is the gear-shift position sensor incorrectly adjusted?

- **YES**

  Refer to **VERIFICATION**

- **NO**

  Refer to **CHECKING THE QUALITY AND LEVEL OF TRANSMISSION FLUID**

CHECKING THE QUALITY AND LEVEL OF TRANSMISSION FLUID

NOTE: **The quality and level of transmission fluid is vital to transmission function. It is therefore important that these are correct. Fluid level is also affected by its temperature.**

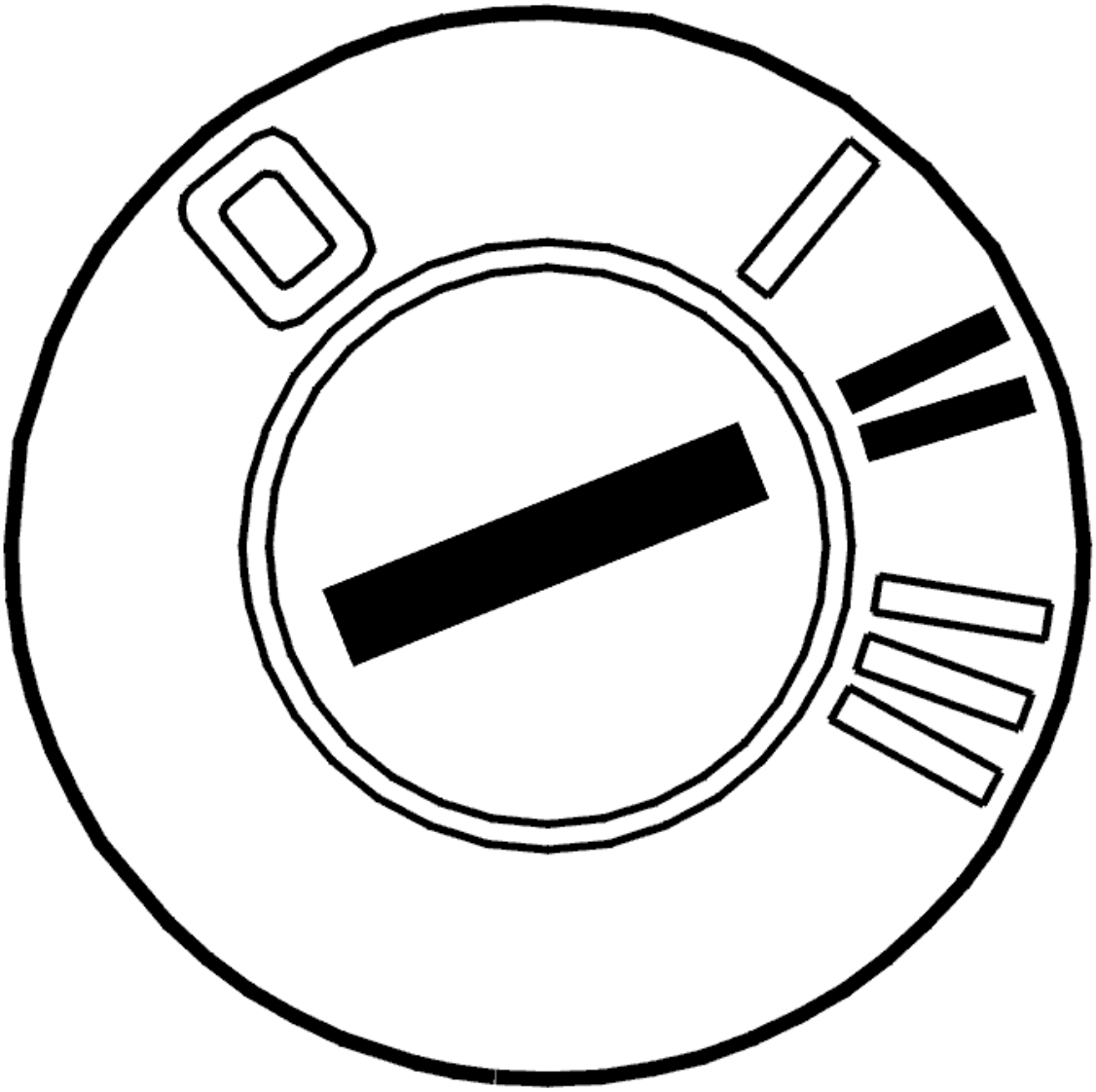

Fig. 348: Identifying Ignition ON
Courtesy of VOLVO CARS CORPORATION

- Ignition on
- Read the fluid temperature.

  Check the transmission fluid level. If it is low, check the transmission for leaks and then top off the fluid.

  Check the fluid quality.

  If the fluid smells burnt, change the transmission fluid.

  In addition, check the transmission fluid for an **abnormal** amount of particles by taking a sample with the dipstick.

  If the transmission fluid contains an **abnormal** amount of particles, replace the transmission.

Other information

- see **OIL LEVEL, CHECKING**
- see **OIL GRADE, CHECKING**
- see **TRANSMISSION OIL / OIL FILTER, REPLACING**

Select an alternative below

1. No fault found.

   Refer to **CHECKING FOR CONTACT RESISTANCE AND OXIDATION**

2. Transmission fluid changed, level low or quality poor.

   Refer to **RESETTING THE ADAPTATION**

3. The transmission fluid contains an **abnormal** amount of particles.

   Refer to **REPLACING THE GEARBOX**

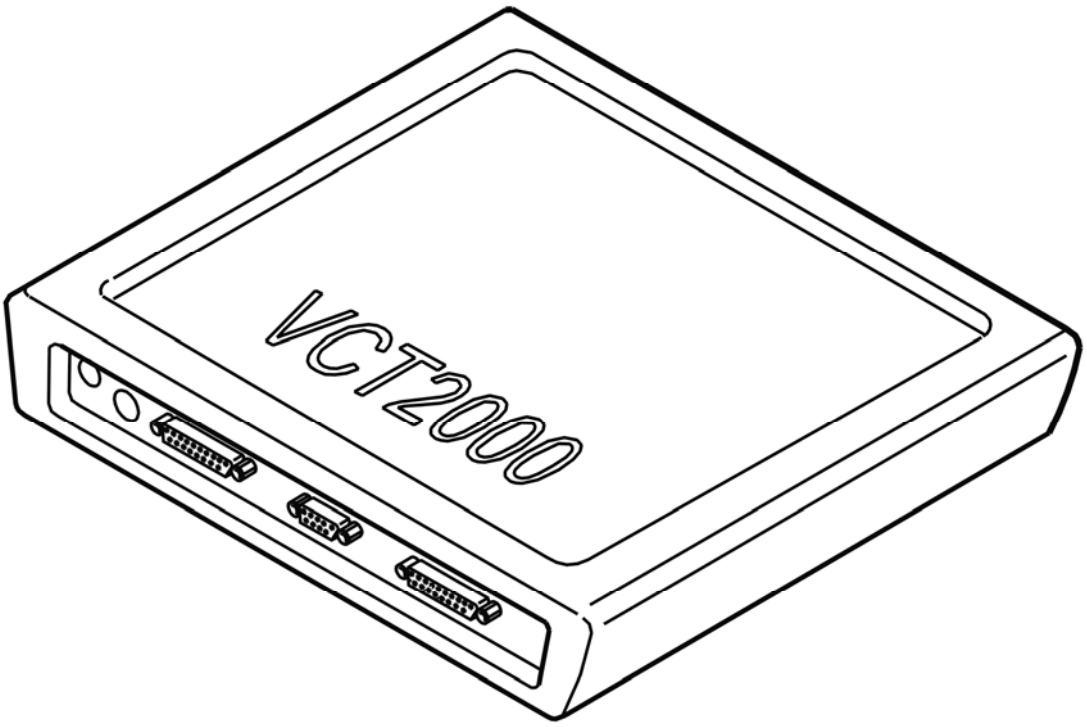

Fig. 349: Identifying VCT2000 Diagnostic Tool Symbol In VIDA
Courtesy of VOLVO CARS CORPORATION

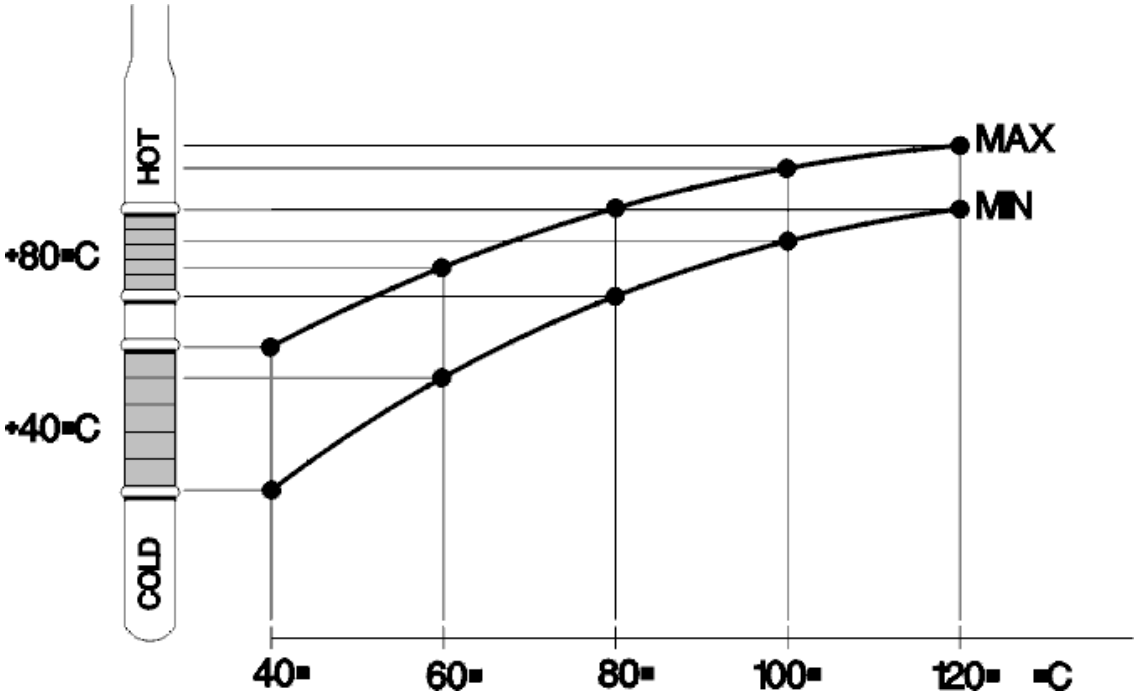

Fig. 350: Identifying Oil Level Temperature Graph
Courtesy of VOLVO CARS CORPORATION

CHECKING FOR CONTACT RESISTANCE AND OXIDATION

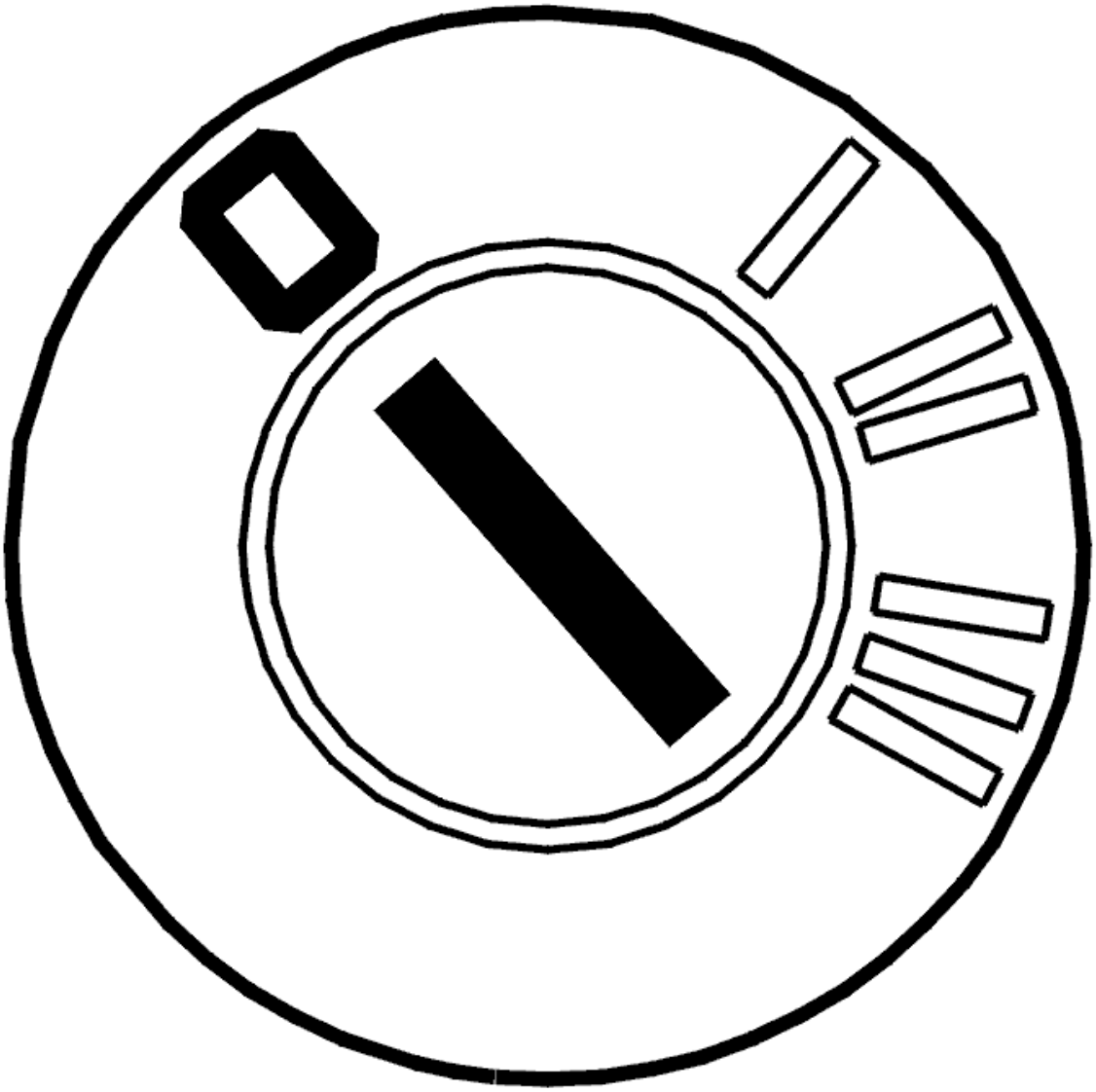

Fig. 351: Identifying Ignition OFF
Courtesy of VOLVO CARS CORPORATION

- Ignition off

  Check the transmission connectors and the control module connector for contact resistance and oxidation.

  Other information:

  - To access transmission connectors: **CONNECTORS, TRANSMISSION, DISCONNECTING / CONNECTING**
  - see **CONTACT RESISTANCE AND OXIDATION**

- **Continue**

  Refer to **CHECKING NOISE IN THE GEARBOX**

CHECKING NOISE IN THE GEARBOX

- Test drive the vehicle following: **TEST DRIVE SCHEDULE, DESCRIPTION**
- Check for any clearly audible noises from the gearbox. Check for malfunctions.

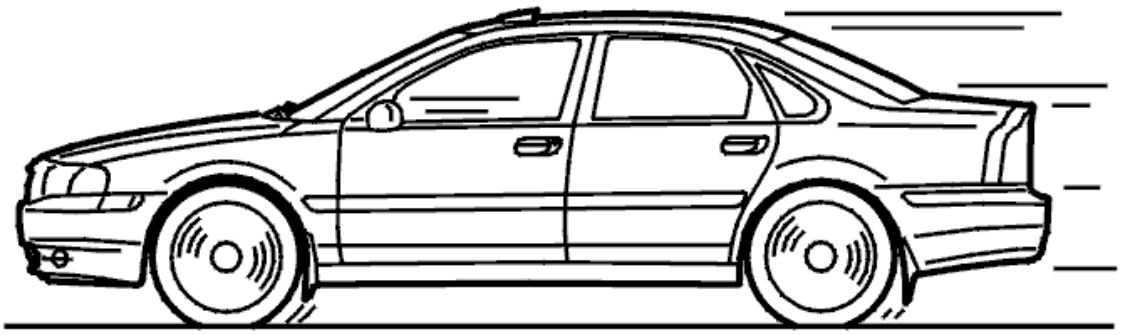

Fig. 352: Identifying Test Drive
Courtesy of VOLVO CARS CORPORATION

Does the transmission exhibit any noises or function problems?

- **YES**

  Refer to **REPLACING THE GEARBOX**

- **NO**

  Refer to **REPLACING THE CONTROL SYSTEM/TRANSMISSION**

REPLACING THE CONTROL SYSTEM/TRANSMISSION

Test with a new control system following: **TRANSMISSION - REMOVAL, REPLACEMENT AND INSTALLATION** .

If this does not help, Replace the transmission. For AW50AWD 2003- see **TRANSMISSION, REMOVING**

or for AW55-50 2004- see **TRANSMISSION, REMOVING** and for AW50AWD 2003- see **TRANSMISSION, INSTALLING** or for AW55-50 2004- see **TRANSMISSION, INSTALLING** .

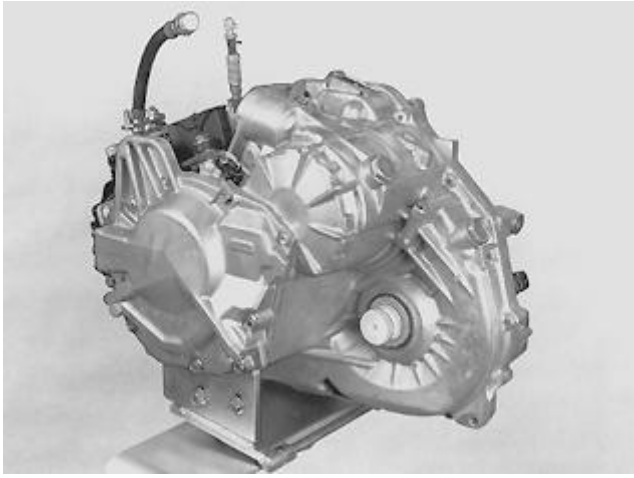

Fig. 353: Identifying Transmission
Courtesy of VOLVO CARS CORPORATION

- **Continue**

  Refer to **RESETTING THE ADAPTATION**

REPLACING THE GEARBOX

Replace the transmission. For AW50AWD 2003- see **TRANSMISSION, REMOVING** or For AW55-50 2004- see **TRANSMISSION, REMOVING** and For AW50AWD 2003- see **TRANSMISSION, INSTALLING** or For AW55-50 2004- see **TRANSMISSION, INSTALLING** .

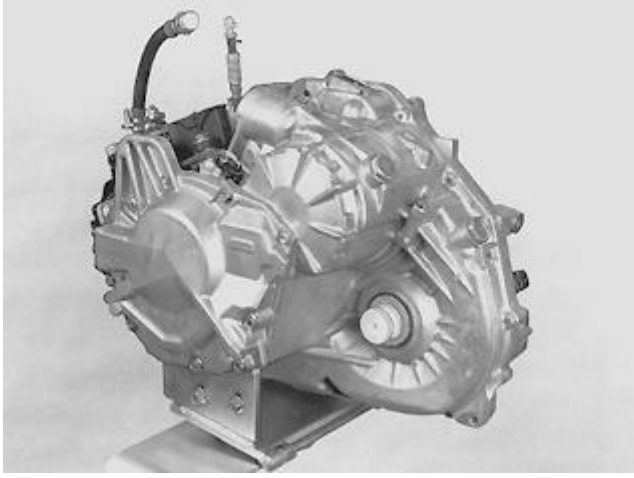

Fig. 354: Identifying Transmission
Courtesy of VOLVO CARS CORPORATION

- **Continue**

Refer to **RESETTING THE ADAPTATION**

RESETTING THE ADAPTATION

RESETTING ADAPTATION AND THE COUNTER FOR "TRANSMISSION OIL CHANGE"

HINT: The transmission has torque controlled adaptive pressure control. Pressure control means that the transmission regulates the pressure itself during each gear shift. This avoids harsh gear shifting. Each gear shift is evaluated by the control module and stored in the memory. This allows for compensation for wear and tear in the transmission and clutch. It is important that the adaptation in the memory is reset after the transmission has been repaired. This is to ensure normal operation. The oil is replaced during repair; the "Transmission oil change" counter must be reset. If the counter is not reset when the fluid is drained and replaced, there is a risk that a diagnostic trouble code (DTC) will be stored in incorrect circumstances.

NOTE: This applies only if the transmission or one of the components in the transmission have been replaced.

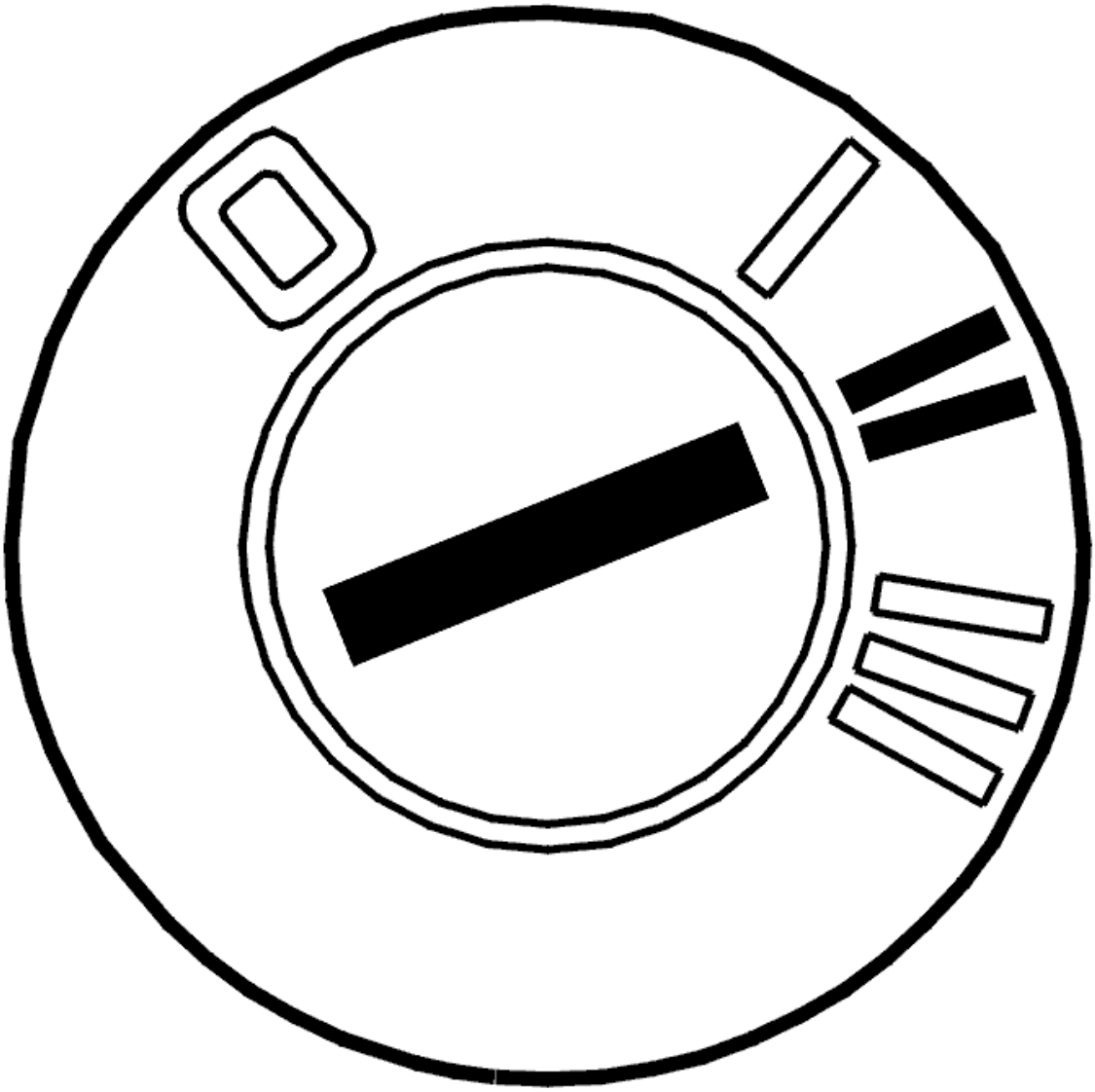

Fig. 355: Identifying Ignition ON
Courtesy of VOLVO CARS CORPORATION

- Ignition on.

  Click on the VCT2000 symbol to reset the adaptation and counter.

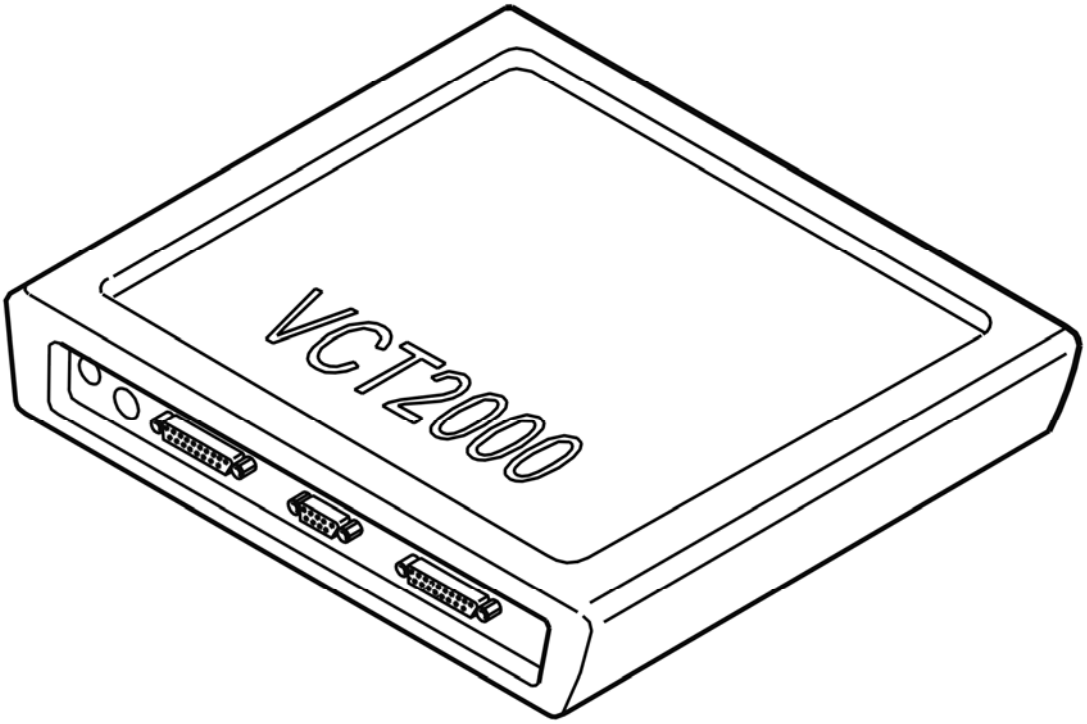

Fig. 356: Identifying VCT2000 Diagnostic Tool Symbol In VIDA
Courtesy of VOLVO CARS CORPORATION

- **Continue**

  Refer to **VERIFICATION**

VERIFICATION

VERIFICATION

HINT: After carrying out the repair, check that the fault has been remedied.

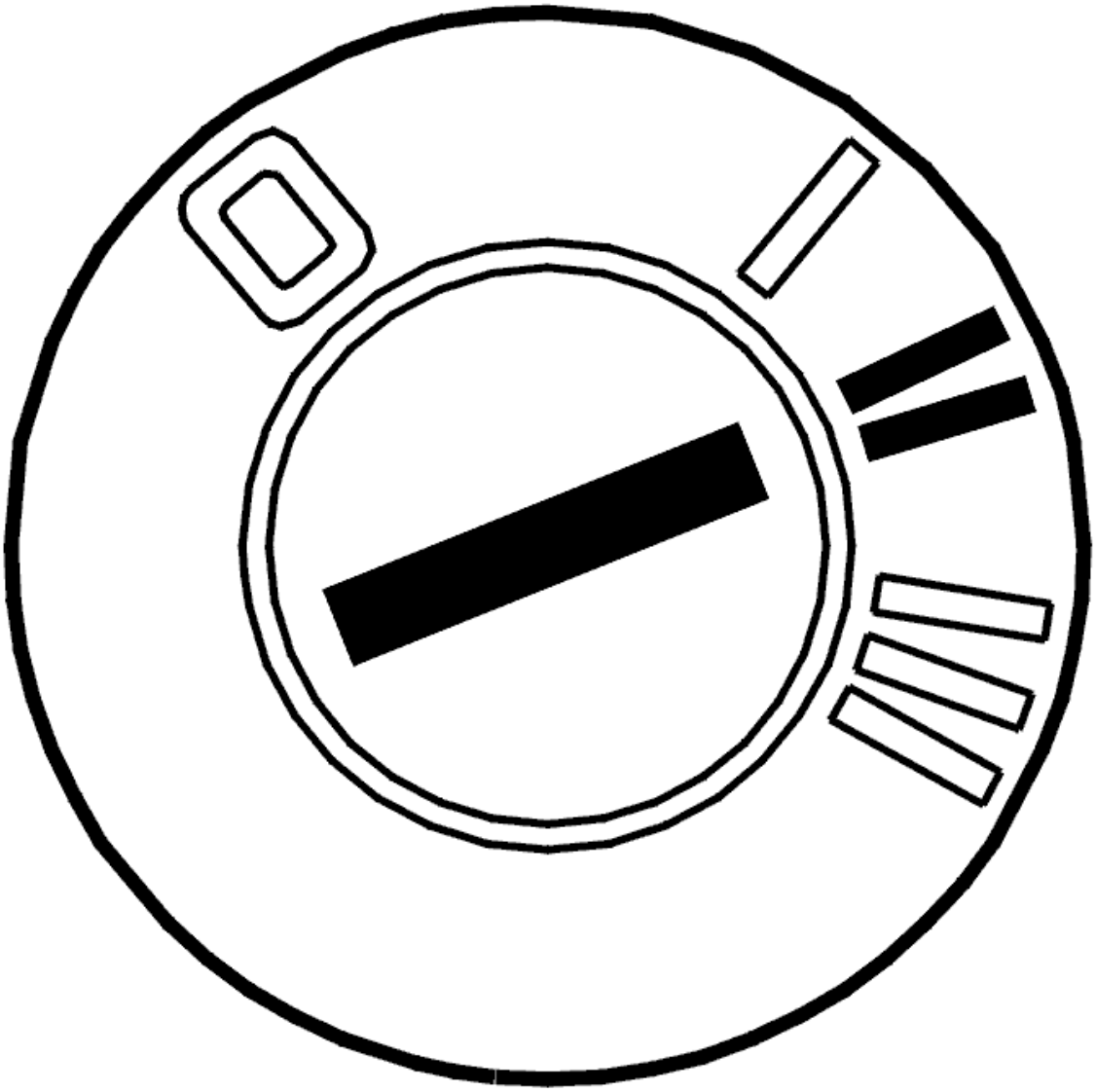

Fig. 357: Identifying Ignition ON
Courtesy of VOLVO CARS CORPORATION

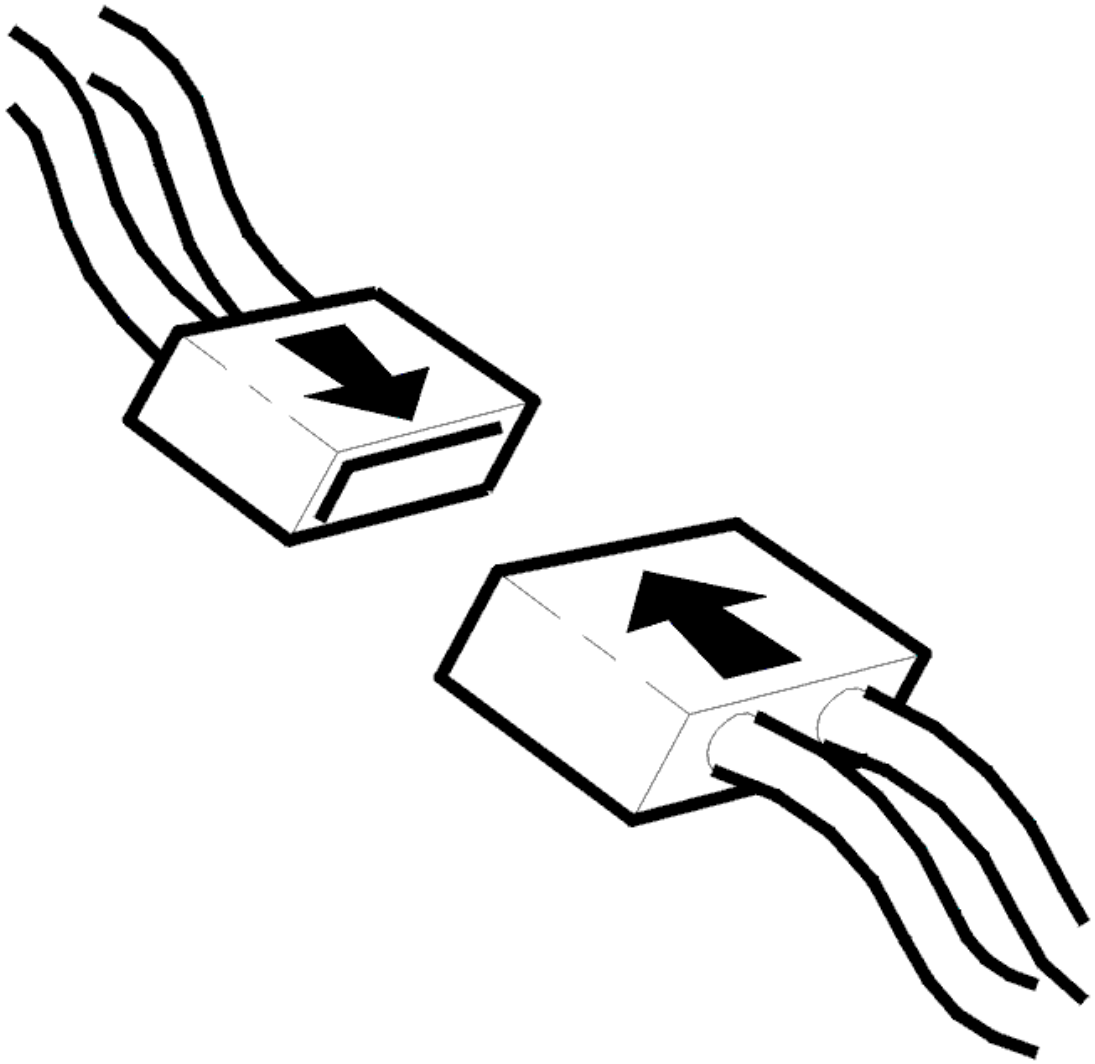

Fig. 358: Identifying Connector(s) Reinstallation
Courtesy of VOLVO CARS CORPORATION

- Ignition off
- Reconnect the connectors, components, etc.
- Ignition on

  Test drive the vehicle following:**TEST DRIVE SCHEDULE, DESCRIPTION**

  During the test drive, oil temperature should be over 20 °C.

  Note any deviations in transmission function.

Does the transmission function flawlessly?

- **YES**

  VERIFIED: Troubleshooting has been completed.

- **NO**

  Refer to **INFORMATION**

INFORMATION

FAULT-TRACING INFORMATION

The fault should have been detected and remedied. As this is not the case fault-tracing has failed.

Exit fault-tracing for this diagnostic trouble code (DTC) or make another attempt.

TEST DRIVE FORM, DESCRIPTION

This schedule is intended to provide guidelines for test driving a car to evaluate complaints about the 4T65EV, 4T65EV-GT and 4T65AWD automatic transmissions.

Please observe speed limits .

Before the test drive

- Check the oil level in the transmission **before** test driving. See **OIL LEVEL, CHECKING**
- Check that the gear selector cannot be moved with the ignition **off**
- Check that the gear selector cannot be moved with the ignition **on** and the brake pedal unaffected.

Check the operation of the park / neutral position (PNP) switch

Check that the car can be started with the gear selector in positions **N** and **P** .

It must not be possible to start the car with the gear selector in any other position than **P** and **N** .

Check the gear selector positions

Check that the selector engages in each position, and that it does not try to " jump" out of the selected position.

Check that the gear selector cannot be moved to position **P** or **N** at a speed above 12 km/h.

Check the back-up gear

Back up the car in the normal way. Check that the back-up light comes on.

Check the engagement of back-up (reverse) gear. The gear should normally engage within 1.5 seconds. The engagement must be soft.

Look out for delayed or notchy engagements. If the conditions are abnormal, check if these symptoms disappear when the transmission is hot or cold.

Test driving

Warm up the transmission by driving at variable speeds for 10 to 20 minutes. Start and stop the engine a few times to warm up the engine more quickly.

NOTE: Never warm up the transmission by braking the transmission. This may cause localized overheating and uneven temperature distribution.

Listen for mechanical noises

Start the car with the gear selector in position **D** . Drive the car so that the transmission shifts up and down. Listen for abnormal noises from the transmission. If any abnormal noises are audible at normal speeds, during engine braking, in different gear selector positions, at different oil temperatures, different accelerator pedal (AP) positions or different speeds, stop the test drive and return to the workshop.

Fault-trace the relevant symptoms in the symptom manager.

Check the function of the transmission while driving

Economy program (E) Sports program (S)

The software for the transmission is intended to provide the best combination of comfort, performance and economy.

The software will gradually adapt the shift pressure to ensure optimal smooth gear shifts.

If the transmission has Geartronic, slightly harsher shifting will be noticeable in Geartronic mode.

The transmission control module (TCM) also receives information about acceleration and speed. The control module will adapt the shift points for better performance (Sports mode (S) if the driver has an aggressive driving style. The shifting points are affected by the speed at which the driver depresses the accelerator pedal (AP). When the accelerator pedal (AP) is released, the software in the transmission will return to the standard economy (E) mode. The gear shifts must be smooth, irrespective of the shifting conditions.

Start the car with the gear selector in position **D** . Check the shifting speeds using the lowest possible acceleration. Note any tendency to stick or slip during shifting.

Checking the kickdown function

The transmission receives a signal for activation from the accelerator pedal (AP). The kickdown function is activated when the accelerator pedal (AP) is pressed approximately 85%. The kickdown function is blocked in Geartronic mode.

Start the car with the gear selector in position **D** . Check the kickdown function by driving at variable speeds

and fully depressing the accelerator pedal (AP) to the kickdown position (100% throttle opening). After the shift from 1st to 2nd, reduce the throttle opening to just below the kickdown threshold (85% throttle opening). Note whether the shifts slip or are harsh.

Check the kickdown function by driving at variable speeds (60 - 90 km/h) and fully pressing the accelerator pedal (AP) to the kickdown position. At lower speeds, the transmission will shift down when the kickdown function is engaged. The function is OK if the transmission downshifts on activation.

Start the car with the gear selector in position **D** . Depress the accelerator pedal (AP) to the kickdown position at different speeds. Check the **HIGHEST** speed at which the kickdown downshift occurs.

Keep the car stationary on a flat road with the gear selector in **N position** . Release the brake and accelerate a little. Does the car move forward?

Start in position 3. Drive until 3rd gear engages. Release the accelerator pedal. Check that there is engine braking in 1st gear. Select **L** position at high speed. Let the car slow down.

Check the shifting points as the car slows.

Start in position **L** . Increase speed. Check that there is engine braking.

Stop the car on a slope. Shift the gear selector to position **P** . Release the brake. Does the car move?

Winter (W)

Start the car with the gear selector in position **D** . Press the button for winter mode (W). The transmission should start in 2nd gear and give a smooth take-up from standstill.

Checking the lock-up function

Start by driving the car for 5-10 minutes. This is to get the oil temperature to operating temperature.

Then move the gear selector to 3rd gear. Drive the car for at least 2 minutes at an engine speed (RPM) of approximately 2500 RPM or higher. Move the gear selector to position **D** .

Drive the car for 3-4 minutes at speed in excess of 70 km/h.

Accelerate until the lock-up function is activated (at approximately 80 km/h). If the brake pedal is pressed when the engine speed (RPM) is below 2000 RPM, the lock-up function will be disengaged.

Adapting the shift pressure

If the transmission control module (TCM) has been replaced or if the adaptation has been erased, the shift patterns and lock-up mode will revert to default.

The following driving schedule must be followed in order to adapt the pressure to a correct level:

- Before beginning adaptation, the transmission must be at normal operating temperature (approximately 70°C)
- To adapt the shift pressure, start by accelerating 5 to 10 times with the accelerator pedal (AP) in each position, 25, 50, 75 and 100%. Hold the accelerator pedal (AP) in a set position during each acceleration and through shifts 1-2, 2-3 and 3-4
- Drive at 90 km/h for approximately 3 minutes to adapt the pressure.

TCM-0029: 2ND GEAR. INCORRECT GEAR RATIO (AW50/51 AWD; AW55-50/51SN; 2003-2007)

DIAGNOSTIC TROUBLE CODE (DTC) INFORMATION

Condition

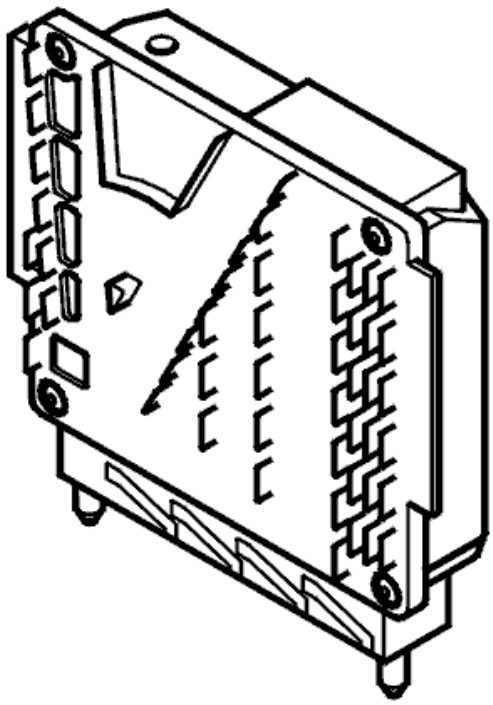

Fig. 359: Identifying Transmission Control Module (TCM)
Courtesy of VOLVO CARS CORPORATION

The transmission control module (TCM) calculates the ratio between the transmission input speed and the vehicle speed. There is a specific ratio for each gear. Diagnostic trouble code (DTC) TCM-0029 is stored if the control module registers that the ratio deviates by more than 10% when the oil temperature is above +20°C (68 °F) and throttle opening exceeds 3%.

Substitute Value

- The transmission control module (TCM) "Emergency mode I" program has been initiated.

Possible Source

- Contact resistance in the circuit for solenoids S1, S2, S3, S4, S5 and SLS.
- Solenoid S2 has jammed in the ON position.
- Solenoid S3 has jammed in the OFF position.
- Solenoid S4 has jammed in the ON position.
- Mechanical fault in the transmission. Worn components in the transmission causing slippage or too low line pressure.

Fault symptom[s]

- General orange warning lamp lit.
- Malfunction indicator lamp (MIL) lit.
- No lock-up function.
- Harsh gear shifting.
- No shifting.

INCORRECT GEAR RATIO

CHECKS

CHECKING THE ADJUSTMENT OF THE GEAR-SHIFT POSITION SENSOR

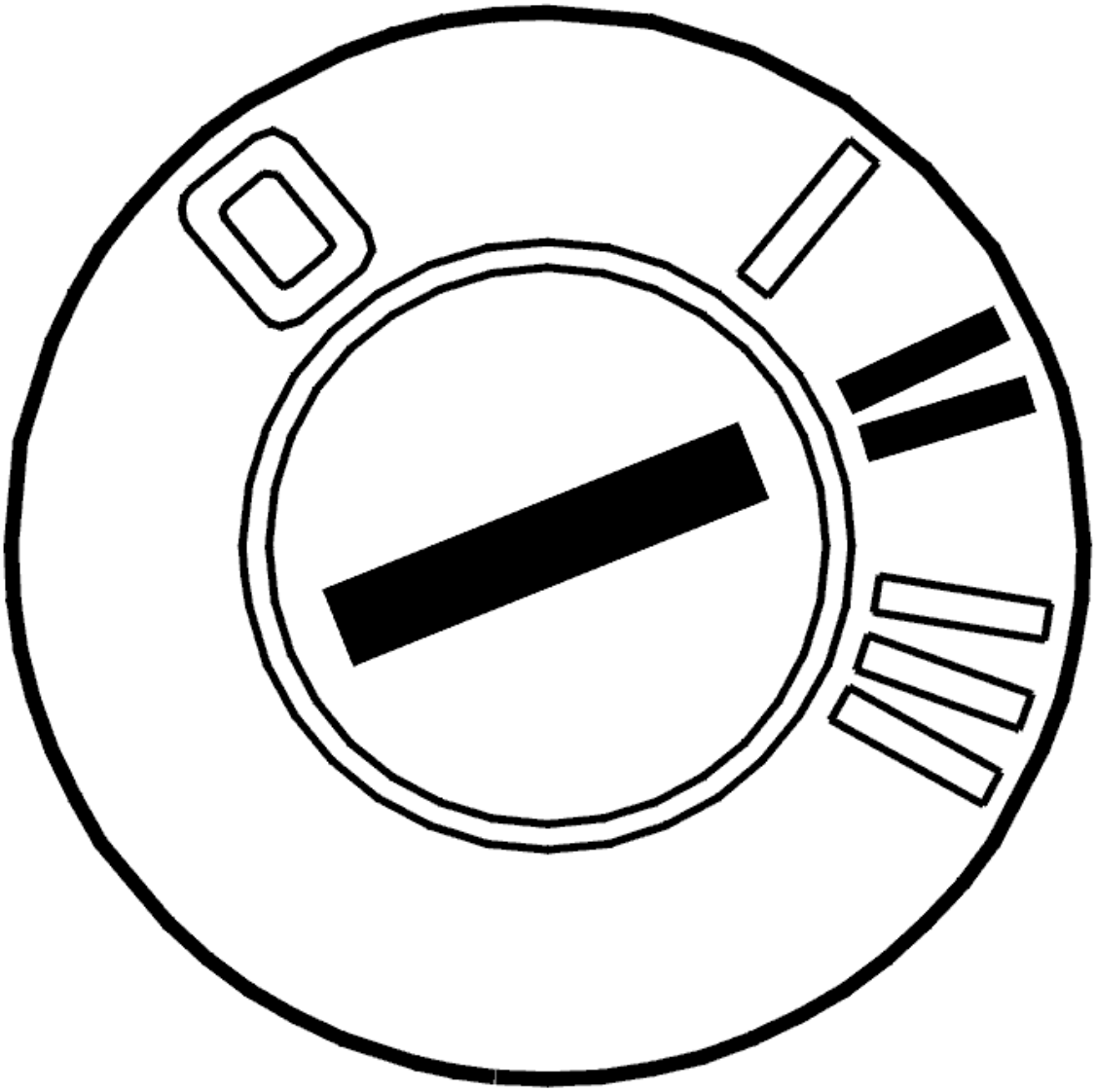

Fig. 360: Identifying Ignition ON
Courtesy of VOLVO CARS CORPORATION

- Ignition on
- Read off the position of the gear selector.

  Move the gear selector into all positions. Check that the gear-shift positions are updated.

  HINT: If the display shows an undefined position (O2 for example) the gear position sensor is incorrectly adjusted.

  Remedy as necessary

  Other information:

  - To adjust the gear-shift position sensor, see **GEAR-SHIFT POSITION SENSOR,**

CHECKING/ADJUSTING .

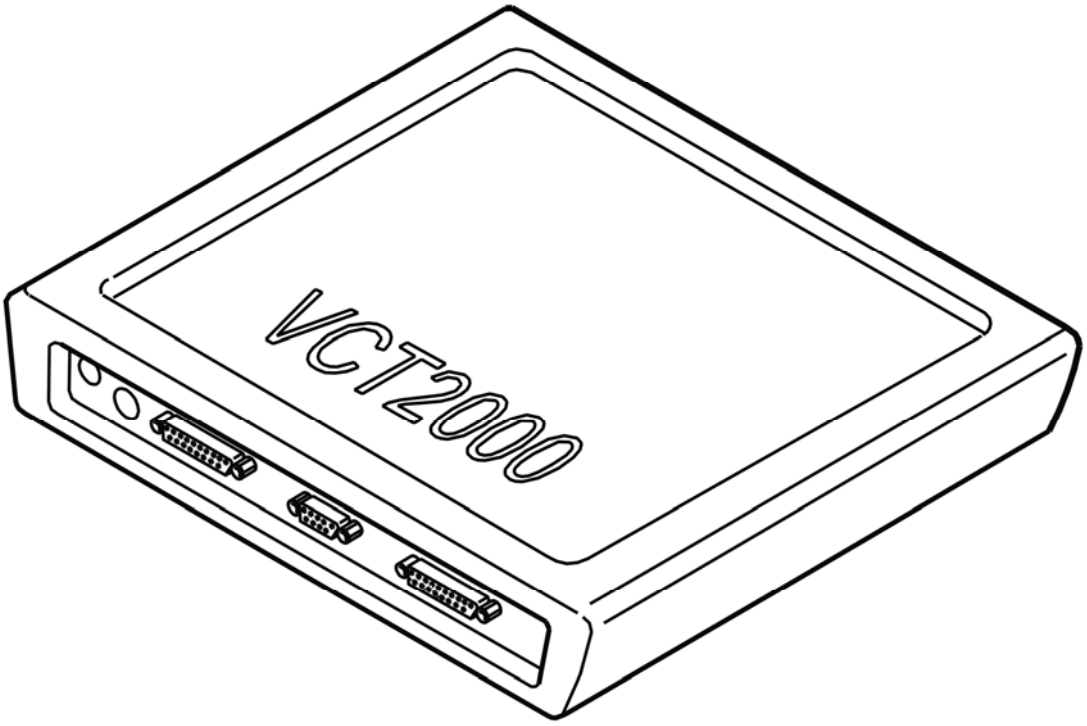

Fig. 361: Identifying VCT2000 Diagnostic Tool Symbol In VIDA
Courtesy of VOLVO CARS CORPORATION

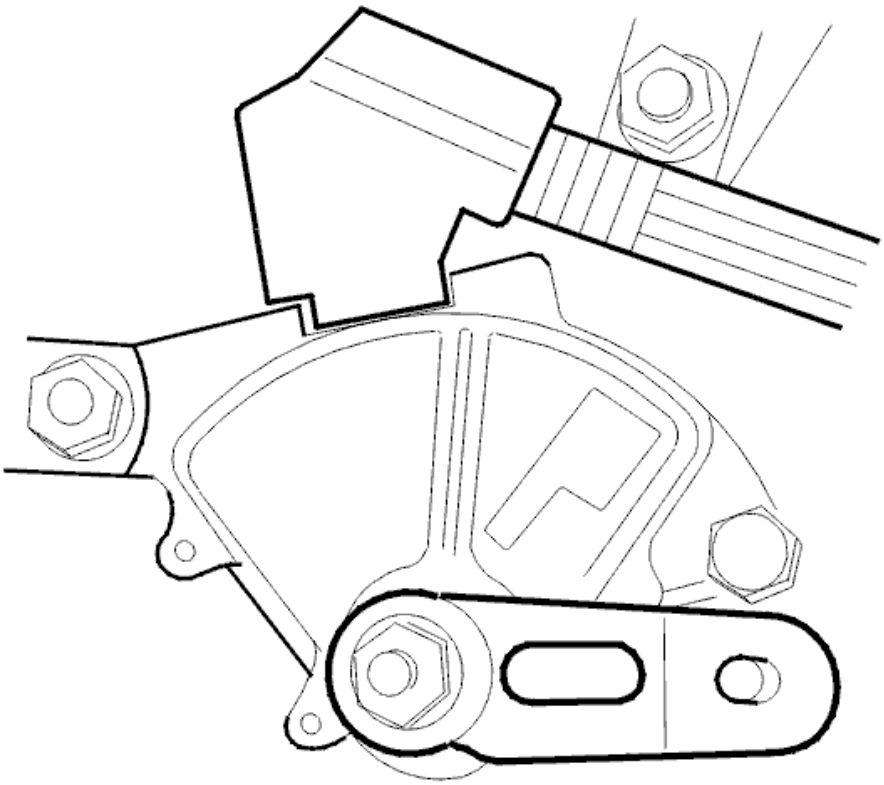

Fig. 362: Identifying Gear-Shift Position Sensor
Courtesy of VOLVO CARS CORPORATION

Is the gear-shift position sensor incorrectly adjusted?

- **YES**

  Refer to **VERIFICATION**

- **NO**

  Refer to **CHECKING FOR CONTACT RESISTANCE AND OXIDATION**

CHECKING NOISE IN THE TRANSMISSION

- Test drive the car. See **TEST DRIVE FORM, DESCRIPTION**
- Check for any clearly audible noises from the transmission. Check for malfunctions.

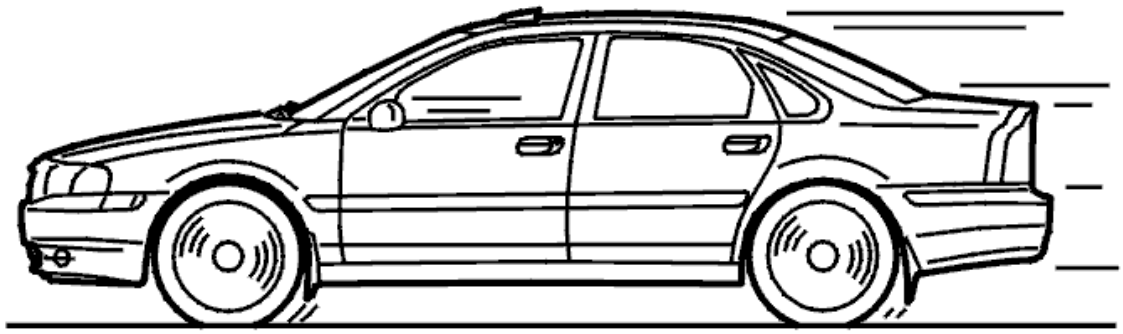

Fig. 363: Identifying Test Drive
Courtesy of VOLVO CARS CORPORATION

Is the transmission making a noise?

- **YES**

  Refer to **REPLACING THE TRANSMISSION**

- **NO**

  OKAY: Troubleshooting has been completed.

CHECKING FOR CONTACT RESISTANCE AND OXIDATION

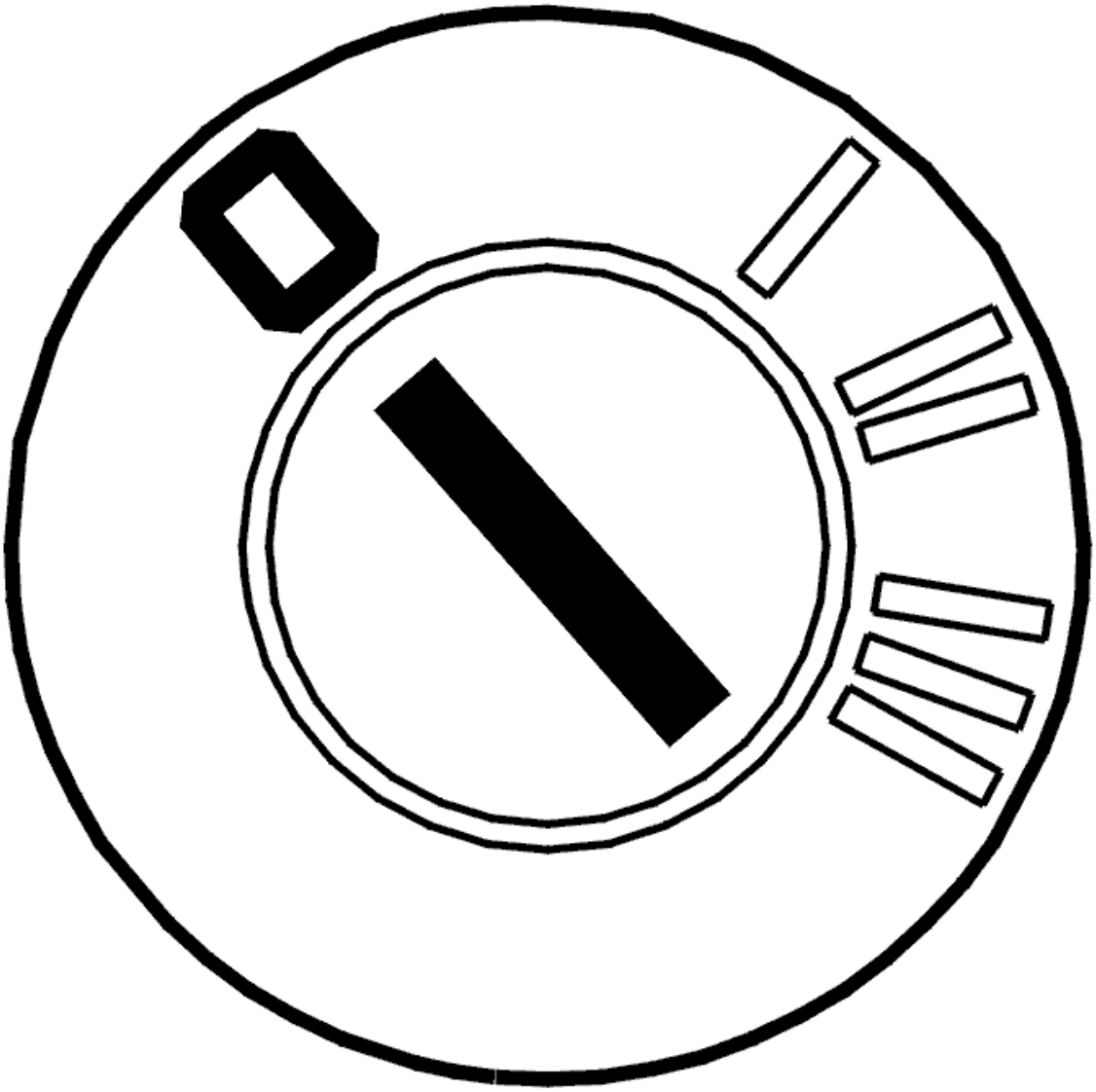

Fig. 364: Identifying Ignition OFF
Courtesy of VOLVO CARS CORPORATION

- Ignition off.

  Check the transmission connectors and the control module connector. Check for contact resistance and oxidation. See **CONTACT RESISTANCE AND OXIDATION**

  Other information:

  - To access the transmission connectors, see **CONNECTORS, TRANSMISSION, DISCONNECTING / CONNECTING** .

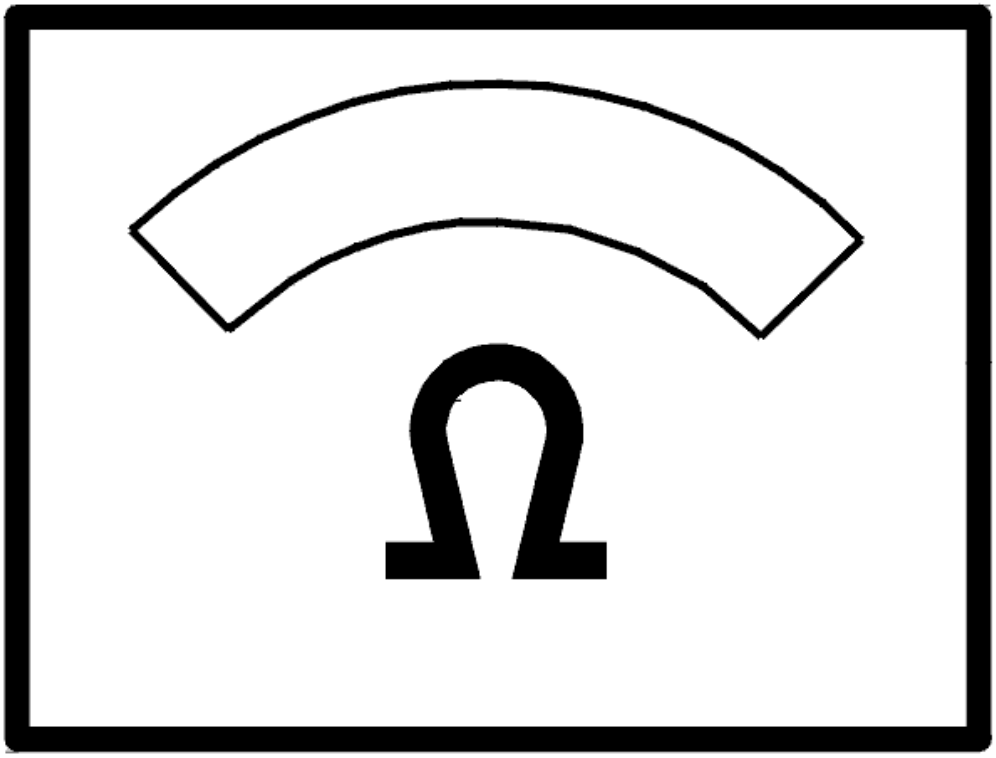

Fig. 365: Identifying Ohms Display
Courtesy of VOLVO CARS CORPORATION

- **Continue**

  Refer to **CHECKING NOISE IN THE TRANSMISSION**

REPLACING THE TRANSMISSION

NOTE: In the event of faults during the first year on the market, replace transmission AW55-50SN.

Replace the transmission. For AW50AWD 2003- see **TRANSMISSION, REMOVING** or For AW55-50 2004- see **TRANSMISSION, REMOVING** and For AW50AWD 2003- see **TRANSMISSION, INSTALLING** or For AW55-50 2004- see **TRANSMISSION, INSTALLING** .

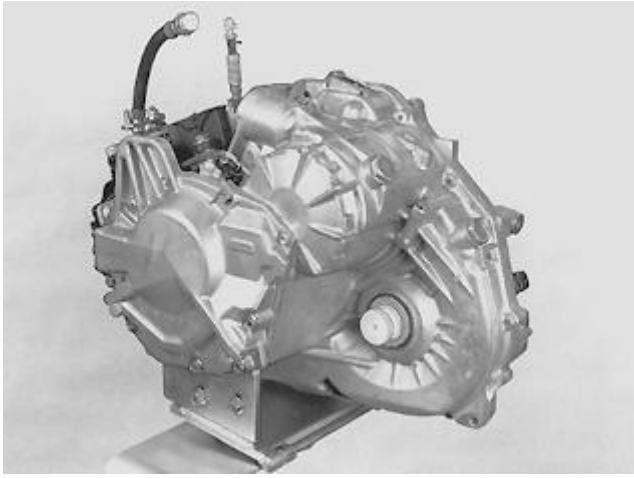

Fig. 366: Identifying Transmission
Courtesy of VOLVO CARS CORPORATION

- **Continue**

  Refer to **VERIFICATION**

VERIFICATION

VERIFICATION

HINT: After carrying out the repair, check that the fault has been remedied.

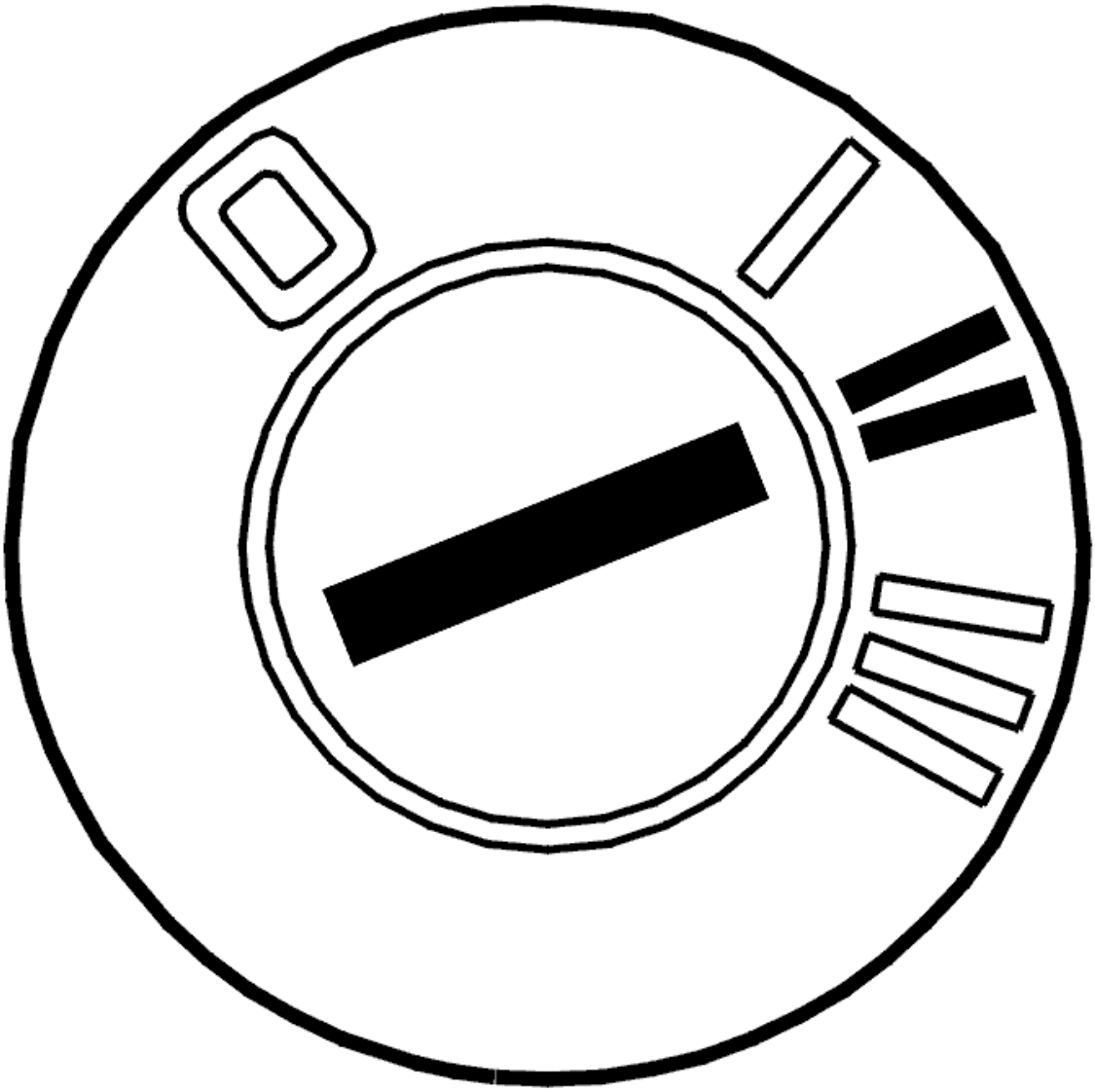

Fig. 367: Identifying Ignition ON
Courtesy of VOLVO CARS CORPORATION

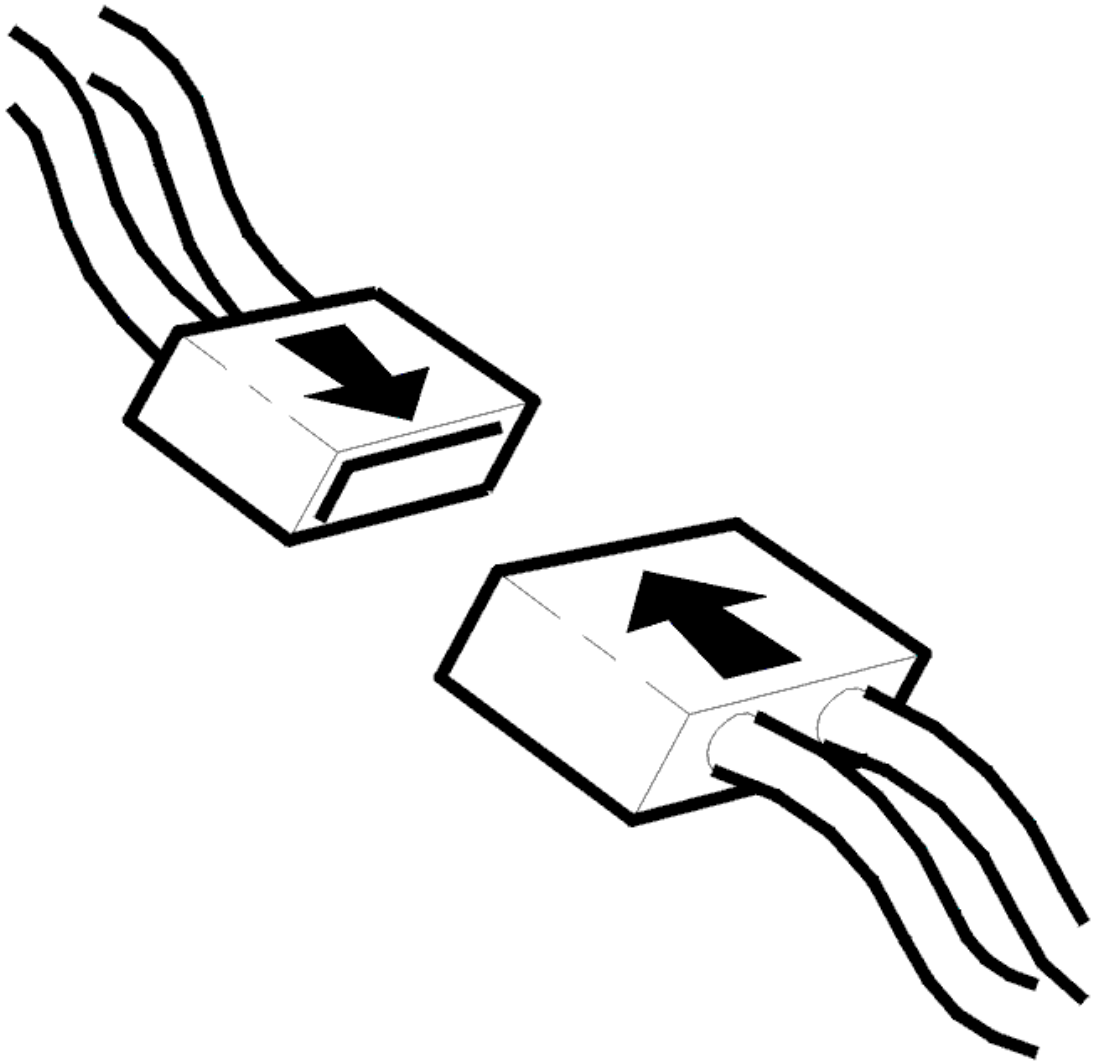

Fig. 368: Identifying Connector(s) Reinstallation
Courtesy of VOLVO CARS CORPORATION

- Ignition off
- Reconnect the connectors, components, etc.
- Ignition on

  Test drive the vehicle following: **TEST DRIVE FORM, DESCRIPTION**

  During the test drive, oil temperature should be over 20 °C.

  Note any deviations in transmission function.

Does the transmission function flawlessly?

- **YES**

  VERIFIED: Troubleshooting has been completed.

- **NO**

  Refer to **INFORMATION**

INFORMATION

FAULT-TRACING INFORMATION

The fault should have been detected and remedied. As this is not the case fault-tracing has failed.

Exit fault-tracing for this diagnostic trouble code (DTC) or make another attempt.

TCM-002A: 3RD GEAR. INCORRECT GEAR RATIO (AW50/51 AWD; AW55-50/51SN; 2003-2007)

DIAGNOSTIC TROUBLE CODE (DTC) INFORMATION

Condition

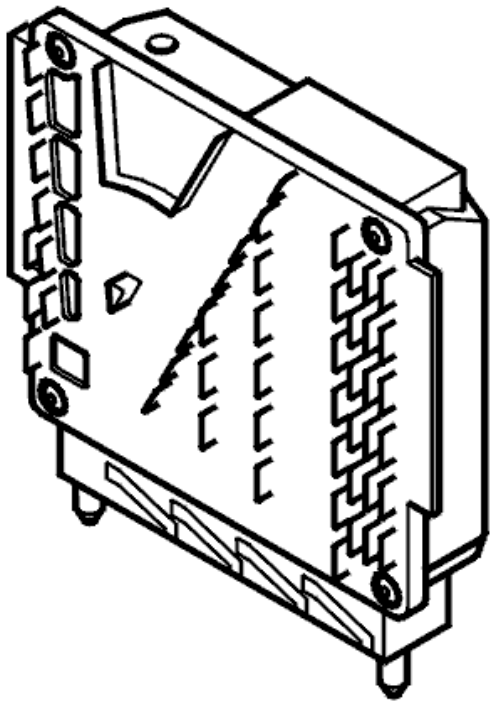

Fig. 369: Identifying Transmission Control Module (TCM)
Courtesy of VOLVO CARS CORPORATION

The transmission control module (TCM) calculates the ratio between the transmission input speed and the vehicle speed. There is a specific ratio for each gear. Diagnostic trouble code (DTC) TCM-002A is stored if the control module registers that the ratio deviates by more than 10% when the oil temperature is above +20°C (68 °F) and throttle opening exceeds 3%.

Substitute Value

- The transmission control module (TCM) "Emergency mode I" program has been initiated.

Possible Source

- Contact resistance in the circuit for solenoids S1, S2, S3, S4, S5 and SLS.
- Solenoid S1 jammed in the ON position.
- Solenoid S2 has jammed in the ON position.
- Solenoid S3 has jammed in the OFF position.
- Solenoid S4 has jammed in the OFF position.
- Mechanical fault in the transmission. Worn components in the transmission causing slippage or too low line pressure.

Fault symptom[s]

- General orange warning lamp lit.
- Malfunction indicator lamp (MIL) lit.
- No lock-up function.
- Harsh gear shifting.
- No shifting.

INCORRECT GEAR RATIO

CHECKS

CHECKING THE ADJUSTMENT OF THE GEAR-SHIFT POSITION SENSOR

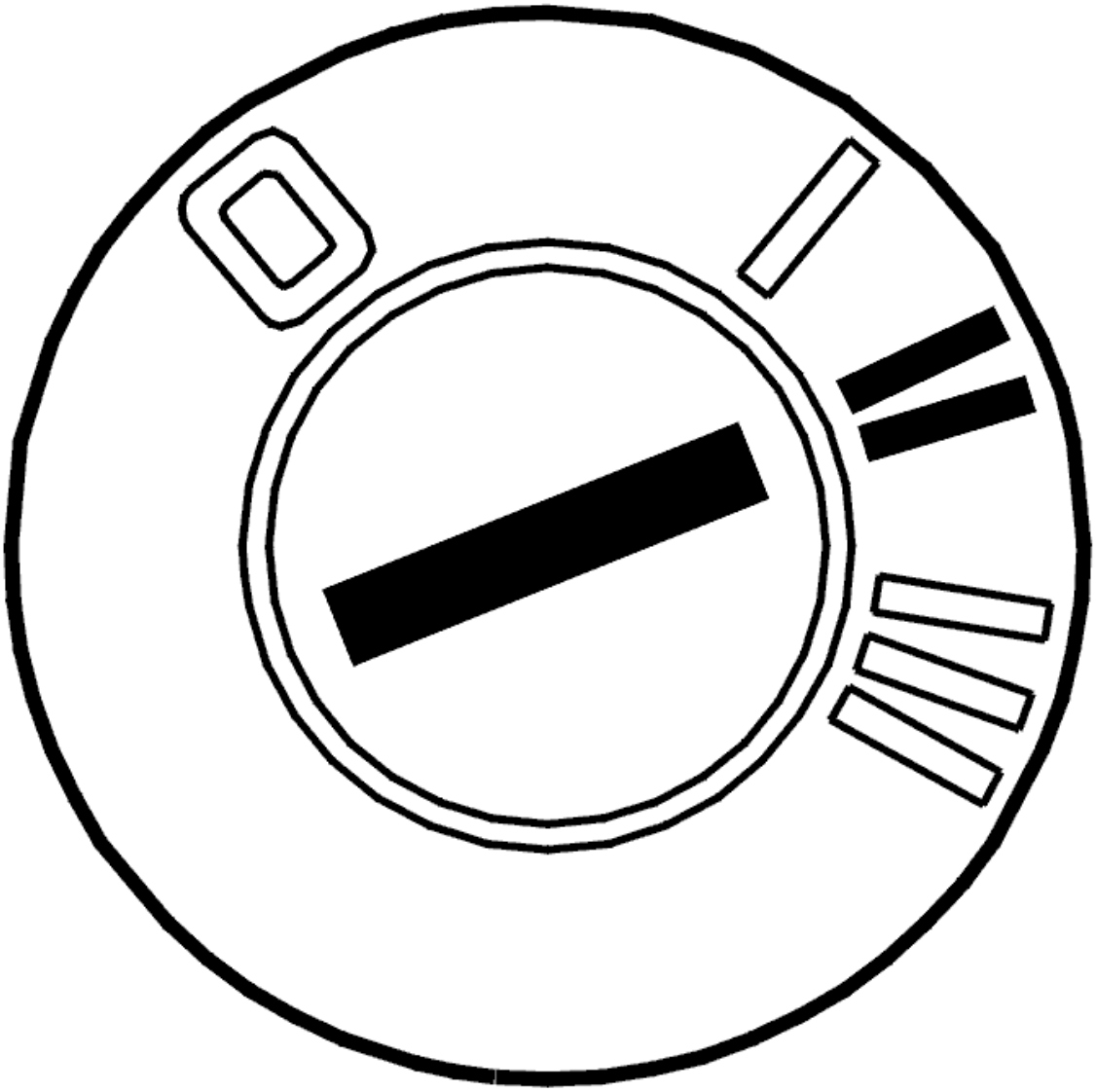

Fig. 370: Identifying Ignition ON
Courtesy of VOLVO CARS CORPORATION

- Ignition on
- Read off the position of the gear selector.

  Move the gear selector into all positions. Check that the gear-shift positions are updated.

  HINT: If the display shows an undefined position (O2 for example) the gear position sensor is incorrectly adjusted.

  Remedy as necessary

  Other information:

  - To adjust the gear-shift position sensor, see **GEAR-SHIFT POSITION SENSOR,**

CHECKING/ADJUSTING .

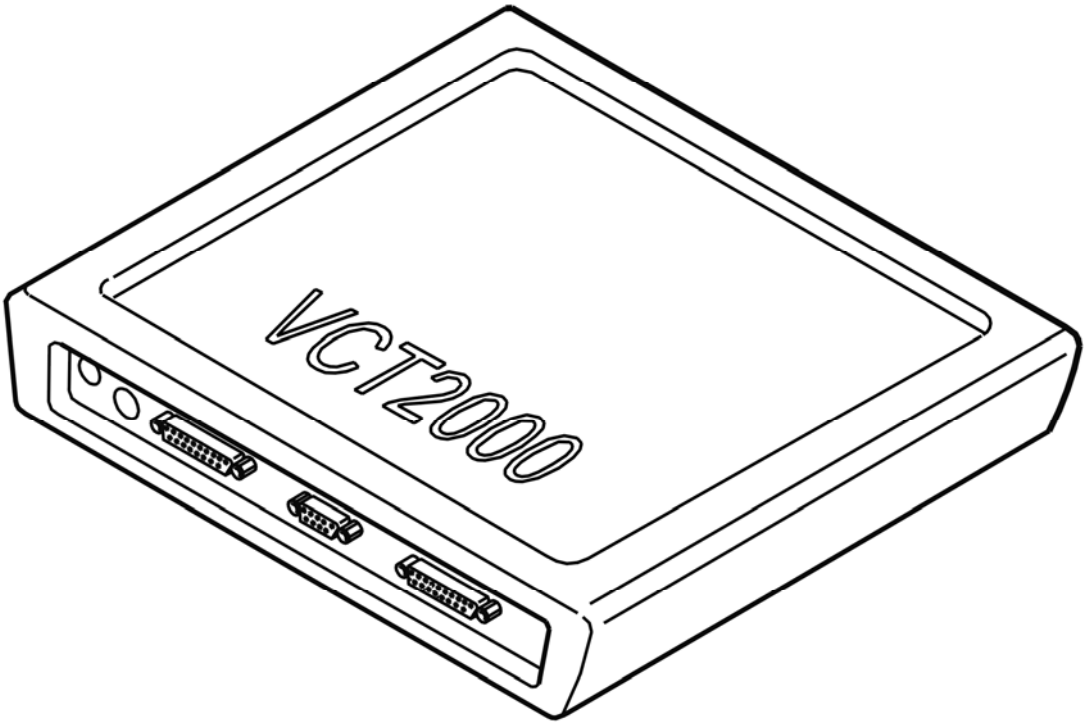

Fig. 371: Identifying VCT2000 Diagnostic Tool Symbol In VIDA
Courtesy of VOLVO CARS CORPORATION

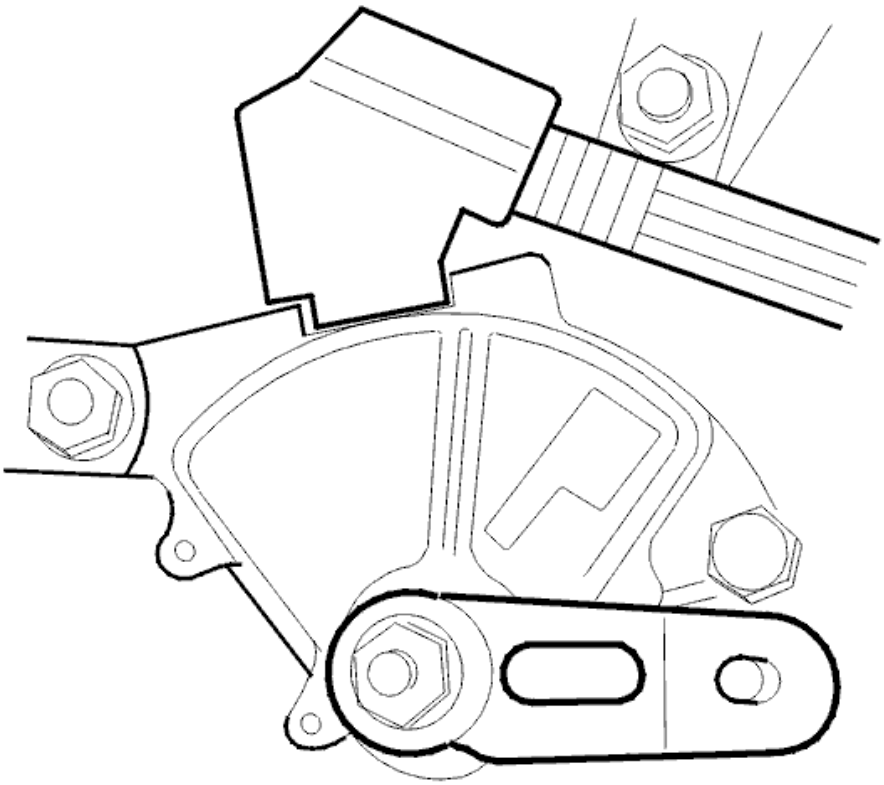

Fig. 372: Identifying Gear-Shift Position Sensor
Courtesy of VOLVO CARS CORPORATION

Is the gear-shift position sensor incorrectly adjusted?

- **YES**

  Refer to **VERIFICATION**

- **NO**

  Refer to **CHECKING FOR CONTACT RESISTANCE AND OXIDATION**

CHECKING NOISE IN THE TRANSMISSION

- Test drive the car. See **TEST DRIVE FORM, DESCRIPTION**
- Check for any clearly audible noises from the transmission. Check for malfunctions.

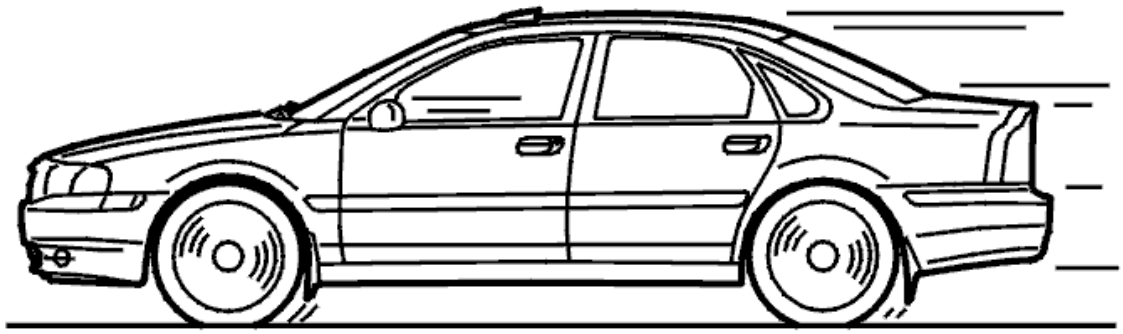

Fig. 373: Identifying Test Drive
Courtesy of VOLVO CARS CORPORATION

Is the transmission making a noise?

- **YES**

  Refer to **REPLACING THE TRANSMISSION**

- **NO**

  OKAY: Troubleshooting has been completed.

CHECKING FOR CONTACT RESISTANCE AND OXIDATION

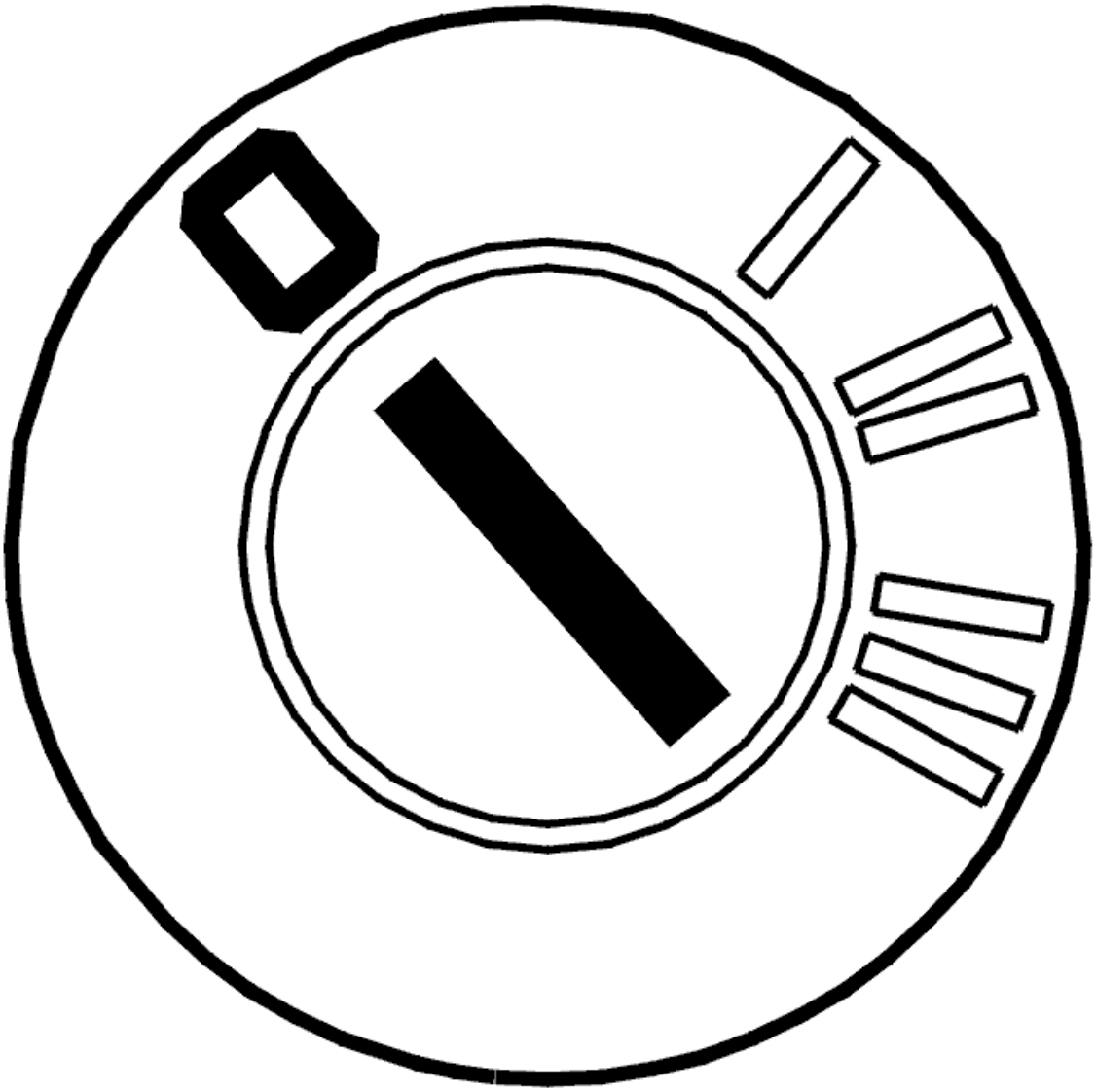

Fig. 374: Identifying Ignition OFF
Courtesy of VOLVO CARS CORPORATION

- Ignition off.

  Check the transmission connectors and the control module connector. Check for contact resistance and oxidation. See **CONTACT RESISTANCE AND OXIDATION**

  Other information:

  - To access the transmission connectors, see **CONNECTORS, TRANSMISSION, DISCONNECTING / CONNECTING** .

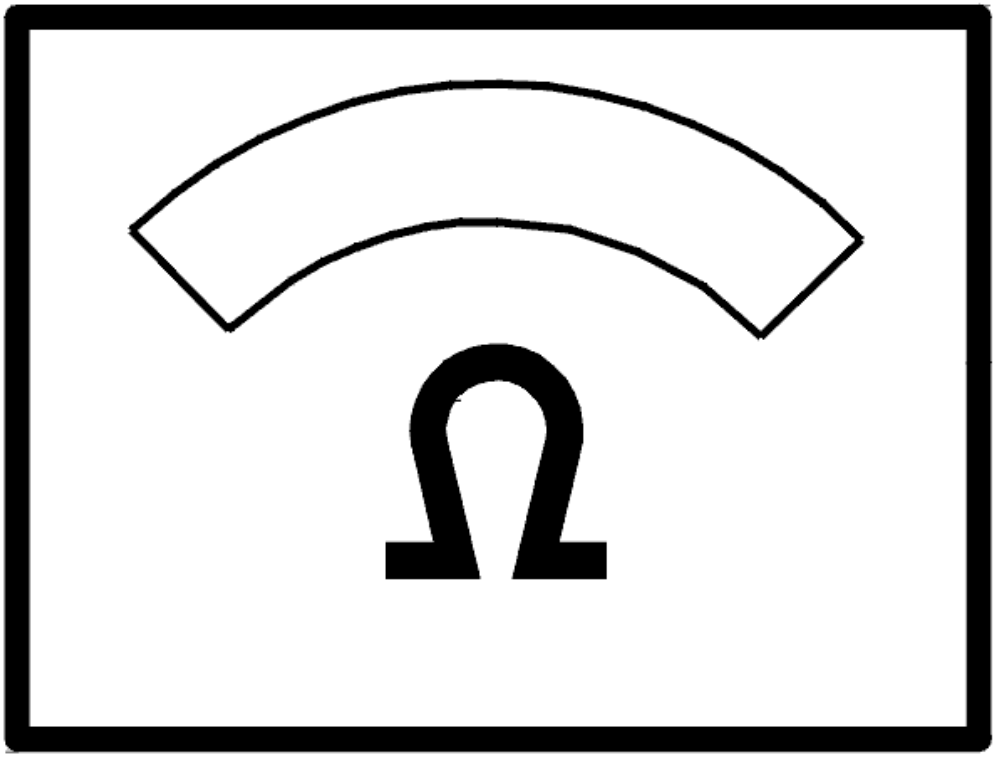

Fig. 375: Identifying Ohms Display
Courtesy of VOLVO CARS CORPORATION

- **Continue**

  Refer to **CHECKING NOISE IN THE TRANSMISSION**

REPLACING THE TRANSMISSION

NOTE: In the event of faults during the first year on the market, replace transmission AW55-50SN.

Replace the transmission. For AW50AWD 2003- see **TRANSMISSION, REMOVING** or For AW55-50 2004- see **TRANSMISSION, REMOVING** and For AW50AWD 2003- see **TRANSMISSION, INSTALLING** or For AW55-50 2004- see **TRANSMISSION, INSTALLING** .

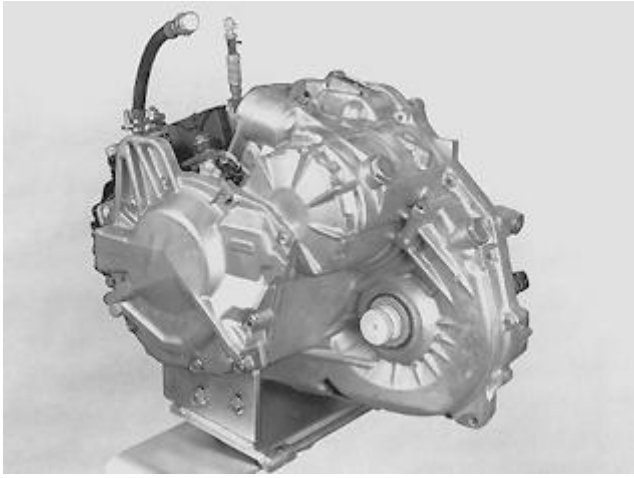

Fig. 376: Identifying Transmission
Courtesy of VOLVO CARS CORPORATION

- **Continue**

  Refer to **VERIFICATION**

VERIFICATION

VERIFICATION

HINT: After carrying out the repair, check that the fault has been remedied.

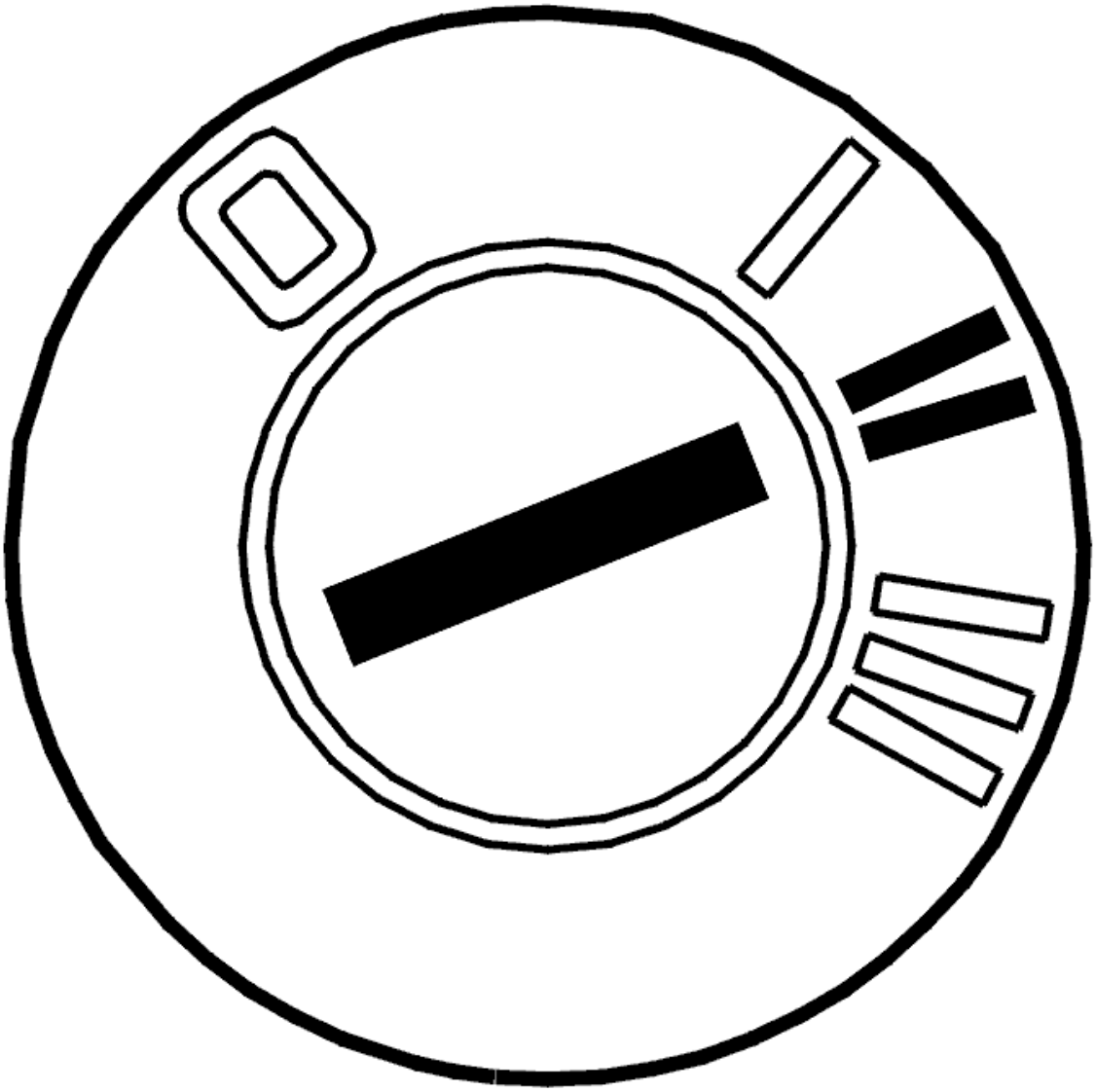

Fig. 377: Identifying Ignition ON
Courtesy of VOLVO CARS CORPORATION

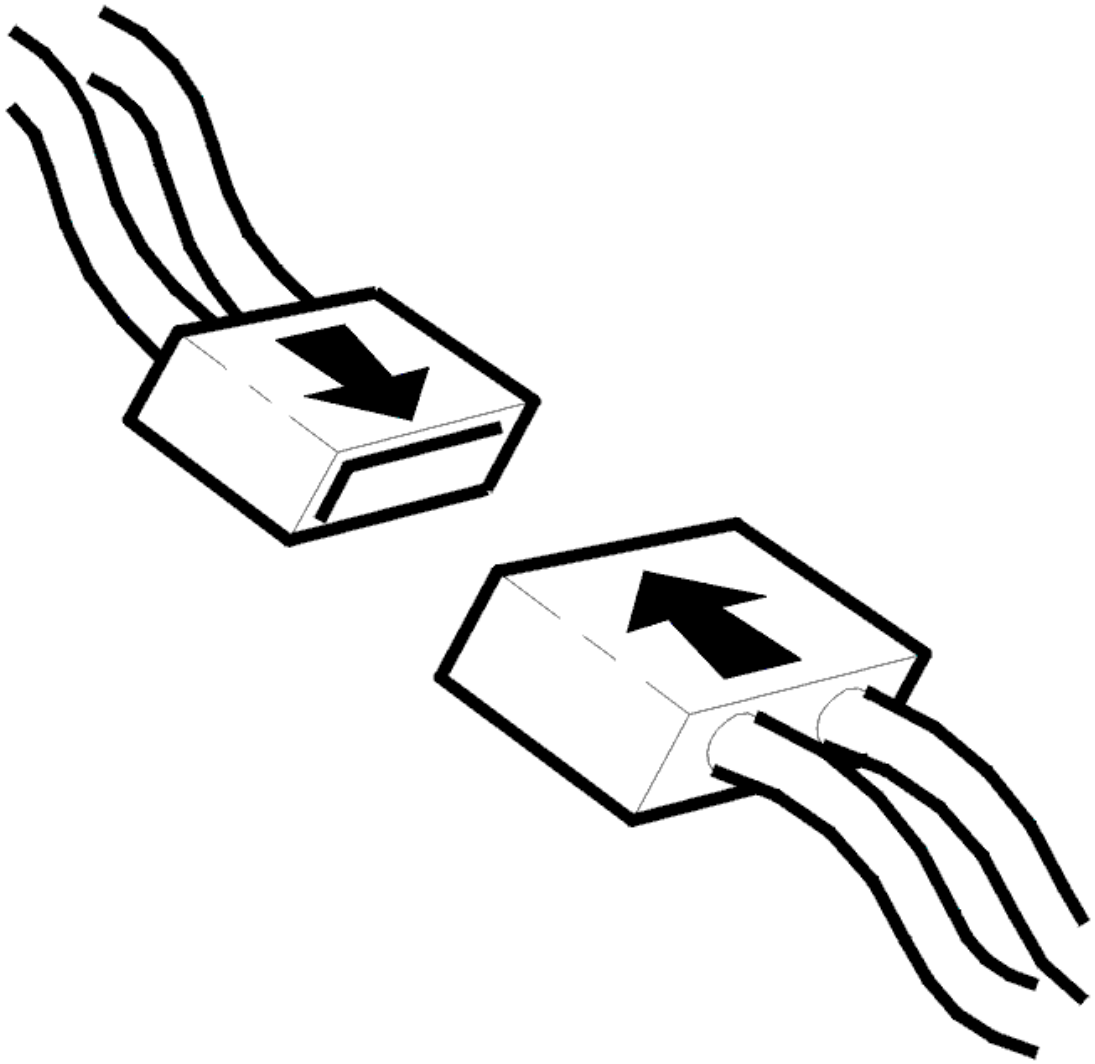

Fig. 378: Identifying Connector(s) Reinstallation
Courtesy of VOLVO CARS CORPORATION

- Ignition off
- Reconnect the connectors, components, etc.
- Ignition on

  Test drive the vehicle following: **TEST DRIVE FORM, DESCRIPTION**

  During the test drive, oil temperature should be over 20 °C.

  Note any deviations in transmission function.

Does the transmission function flawlessly?

- **YES**

  VERIFIED: Troubleshooting has been completed.

- **NO**

  Refer to **INFORMATION**

INFORMATION

FAULT-TRACING INFORMATION

The fault should have been detected and remedied. As this is not the case fault-tracing has failed.

Exit fault-tracing for this diagnostic trouble code (DTC) or make another attempt.

TCM-002B: 4TH GEAR. INCORRECT GEAR RATIO (AW50/51 AWD; AW55-50/51SN; 2003-2007)

DIAGNOSTIC TROUBLE CODE (DTC) INFORMATION

Condition

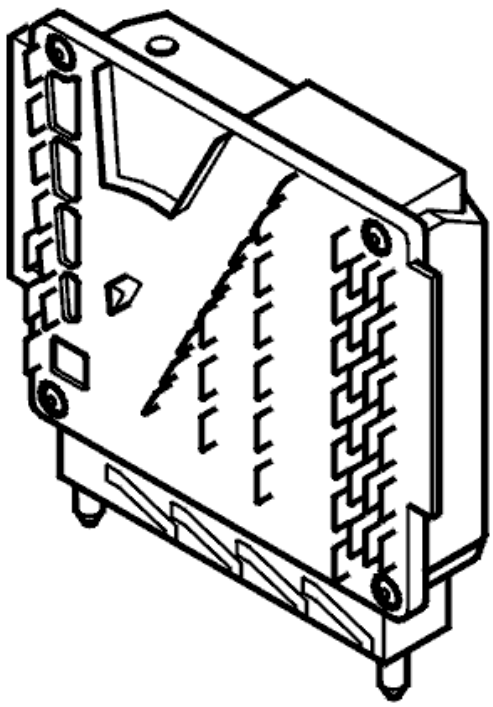

Fig. 379: Identifying Transmission Control Module (TCM)
Courtesy of VOLVO CARS CORPORATION

The transmission control module (TCM) calculates the ratio between the transmission input speed and the vehicle speed. There is a specific ratio for each gear. Diagnostic trouble code (DTC) TCM-002B is stored if the control module registers that the ratio deviates by more than 10 % when the oil temperature is above +20°C (68 °F) and throttle opening exceeds 3 %.

Substitute Value

- The transmission control module (TCM) "Emergency mode I" program has been initiated.

Possible Source

- Contact resistance in the circuit for solenoids S1, S2, S3, S4, S5 and SLS.
- Solenoid S2 has jammed in the ON position.
- Mechanical fault in the transmission. Worn components in the transmission causing slippage or too low line pressure.

Fault symptom[s]

- General orange warning lamp lit.
- Malfunction indicator lamp (MIL) lit.
- No lock-up function.
- Harsh gear shifting.
- No shifting.

INCORRECT GEAR RATIO

CHECKS

CHECKING THE ADJUSTMENT OF THE GEAR-SHIFT POSITION SENSOR

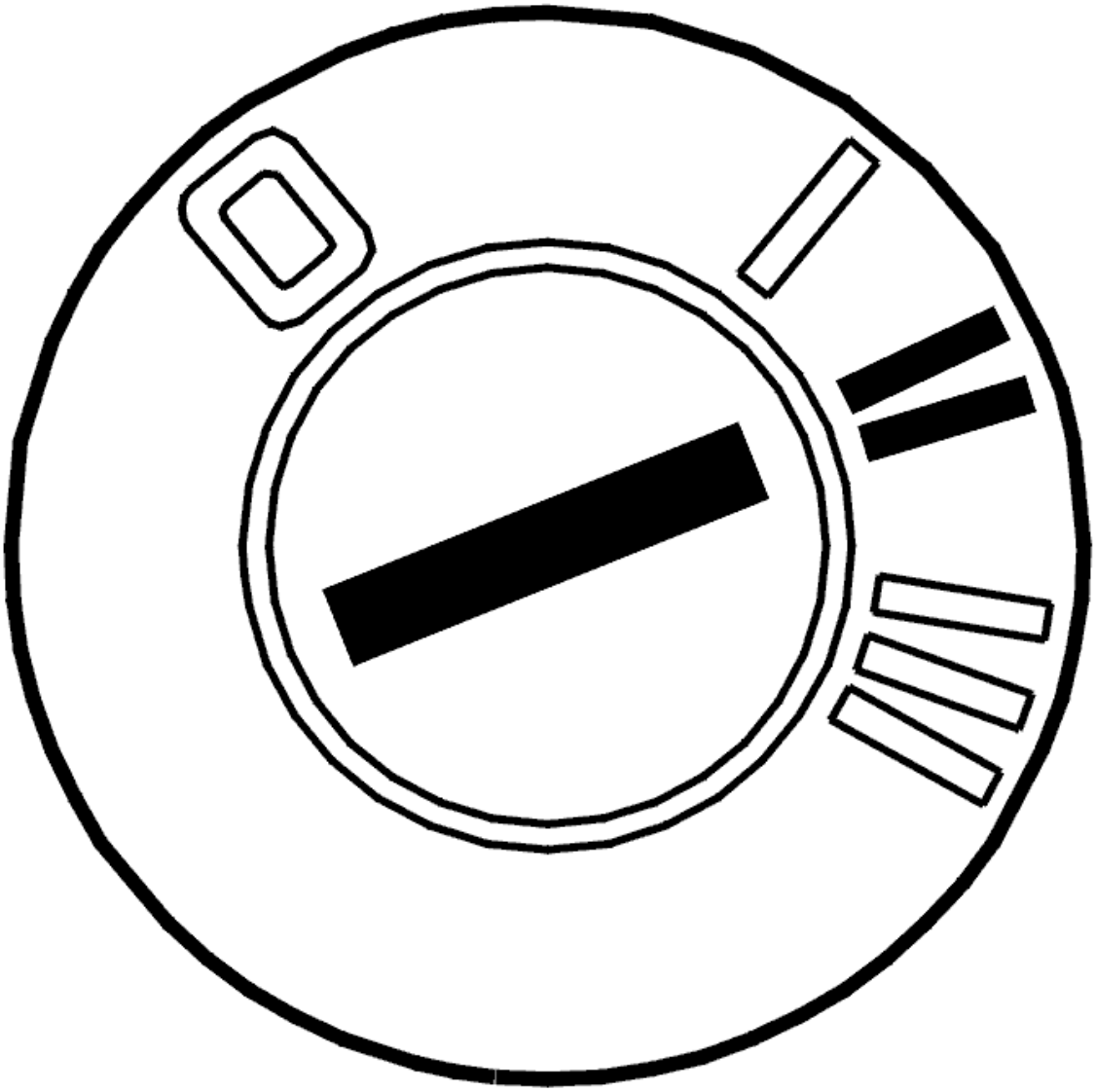

Fig. 380: Identifying Ignition ON
Courtesy of VOLVO CARS CORPORATION

- Ignition on
- Read off the position of the gear selector.

  Move the gear selector into all positions. Check that the gear-shift positions are updated.

  HINT: If the display shows an undefined position (O2 for example) the gear position sensor is incorrectly adjusted.

  Remedy as necessary

  Other information:

  - To adjust the gear-shift position sensor, see **GEAR-SHIFT POSITION SENSOR,**

CHECKING/ADJUSTING .

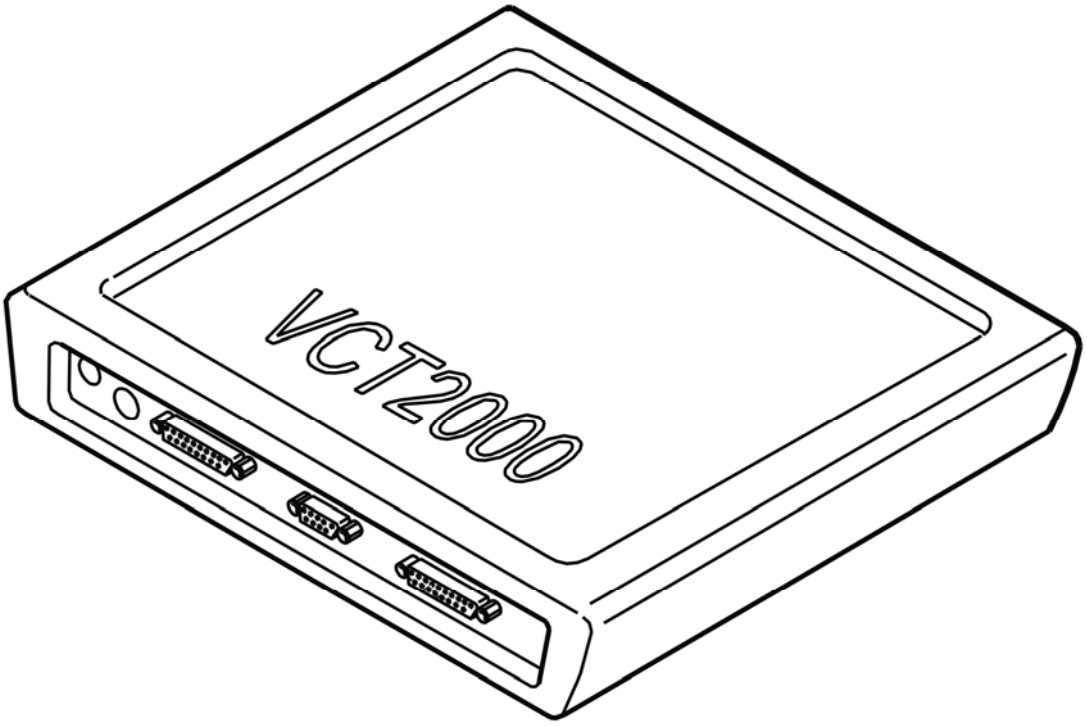

Fig. 381: Identifying VCT2000 Diagnostic Tool Symbol In VIDA
Courtesy of VOLVO CARS CORPORATION

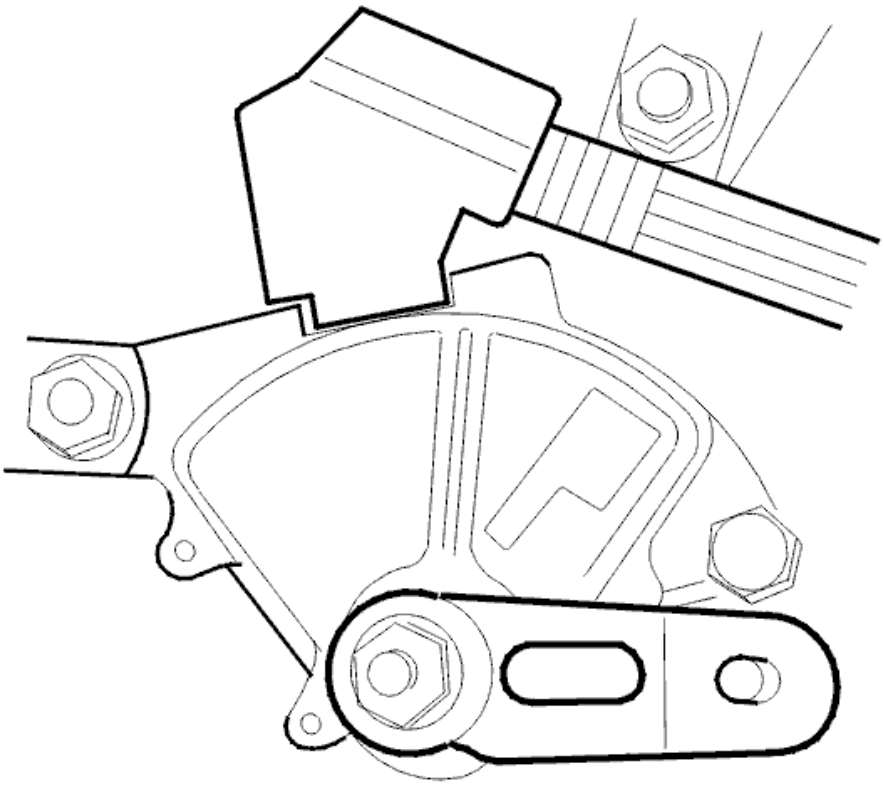

Fig. 382: Identifying Gear-Shift Position Sensor
Courtesy of VOLVO CARS CORPORATION

Is the gear-shift position sensor incorrectly adjusted?

- **YES**

  Refer to **VERIFICATION**

- **NO**

  Refer to **CHECKING FOR CONTACT RESISTANCE AND OXIDATION**

CHECKING NOISE IN THE TRANSMISSION

- Test drive the car. See **TEST DRIVE FORM, DESCRIPTION**
- Check for any clearly audible noises from the transmission. Check for malfunctions.

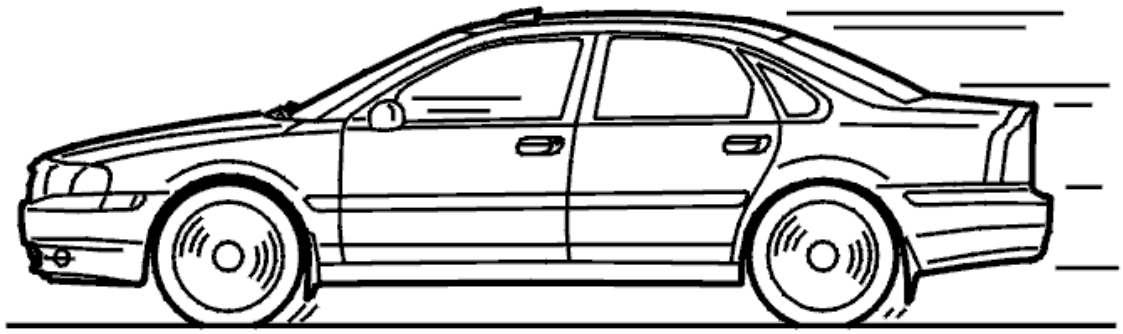

Fig. 383: Identifying Test Drive
Courtesy of VOLVO CARS CORPORATION

Is the transmission making a noise?

- **YES**

  Refer to **REPLACING THE TRANSMISSION**

- **NO**

  OKAY: Troubleshooting has been completed.

CHECKING FOR CONTACT RESISTANCE AND OXIDATION

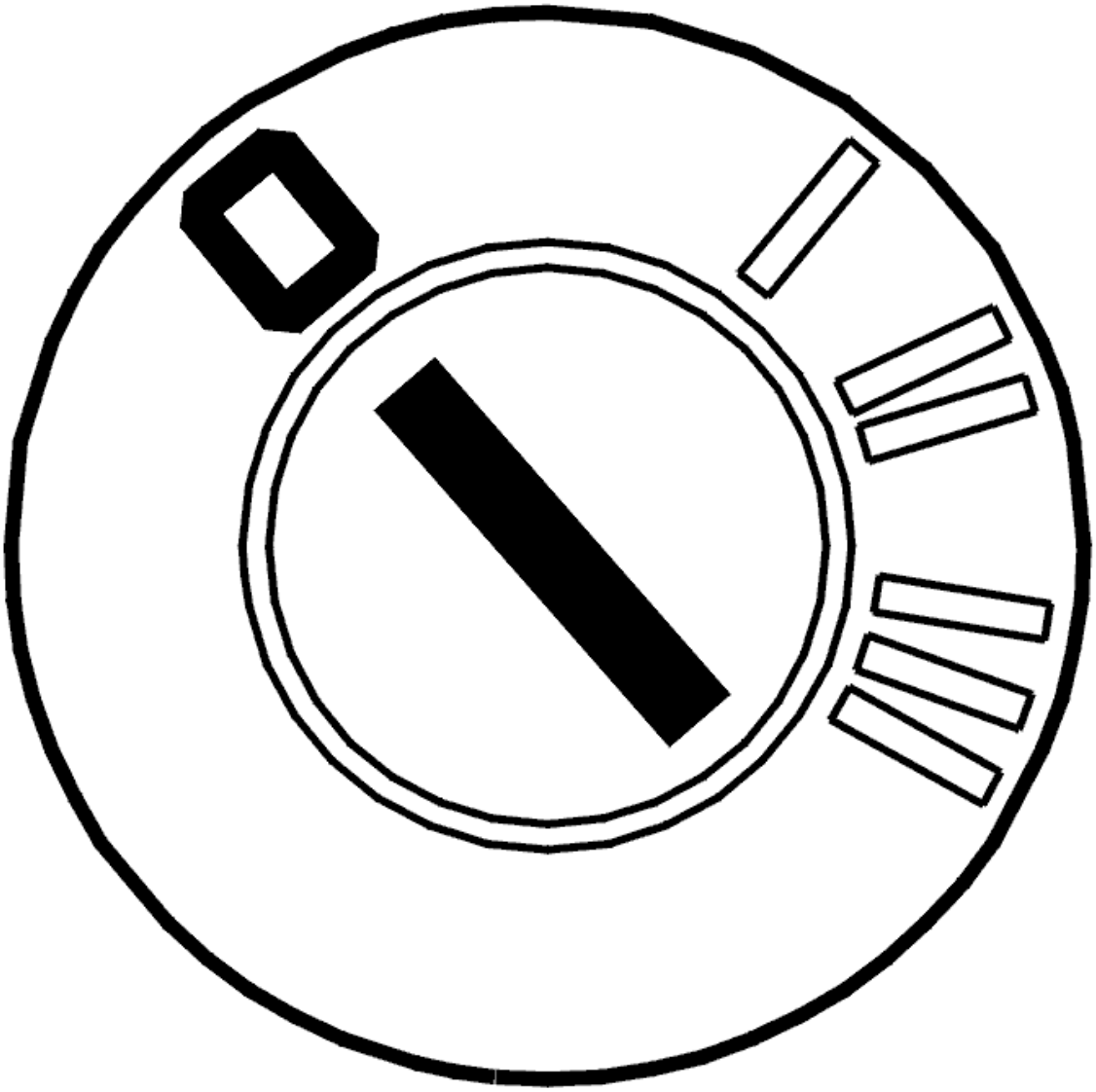

Fig. 384: Identifying Ignition OFF
Courtesy of VOLVO CARS CORPORATION

- Ignition off.

  Check the transmission connectors and the control module connector. Check for contact resistance and oxidation. See **CONTACT RESISTANCE AND OXIDATION**

  Other information:

  - To access the transmission connectors, see **CONNECTORS, TRANSMISSION, DISCONNECTING / CONNECTING** .

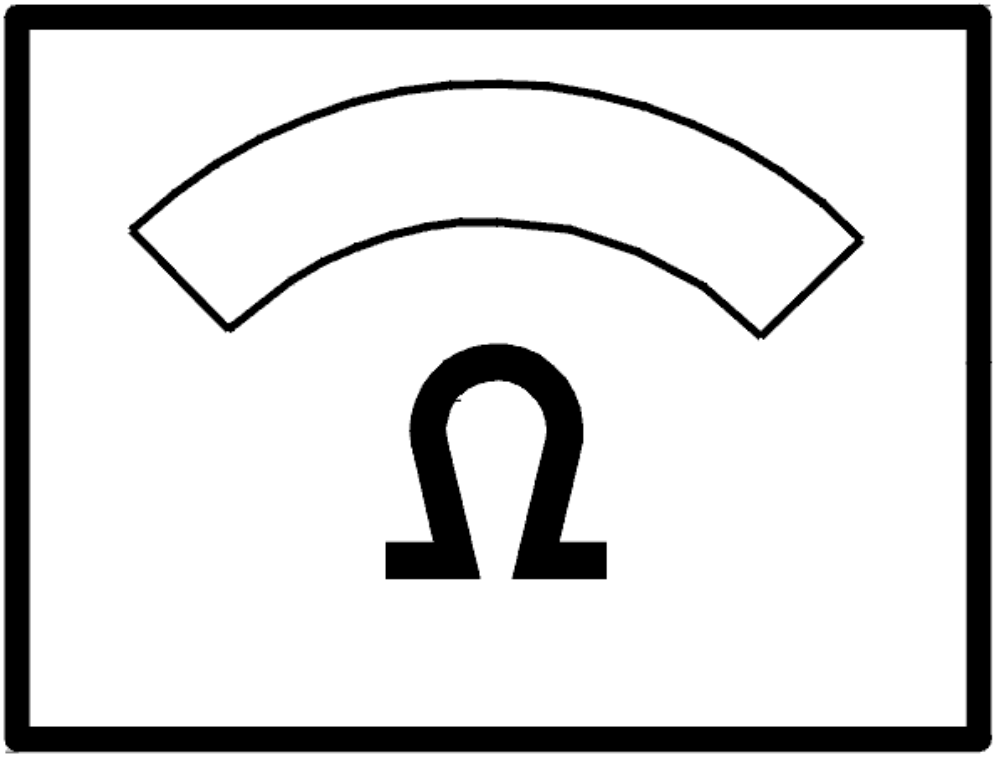

Fig. 385: Identifying Ohms Display
Courtesy of VOLVO CARS CORPORATION

- **Continue**

  Refer to **CHECKING NOISE IN THE TRANSMISSION**

REPLACING THE TRANSMISSION

NOTE: In the event of faults during the first year on the market, replace transmission AW55-50SN.

Replace the transmission. For AW50AWD 2003- see **TRANSMISSION, REMOVING** or For AW55-50 2004- see **TRANSMISSION, REMOVING** and For AW50AWD 2003- see **TRANSMISSION, INSTALLING** or For AW55-50 2004- see **TRANSMISSION, INSTALLING** .

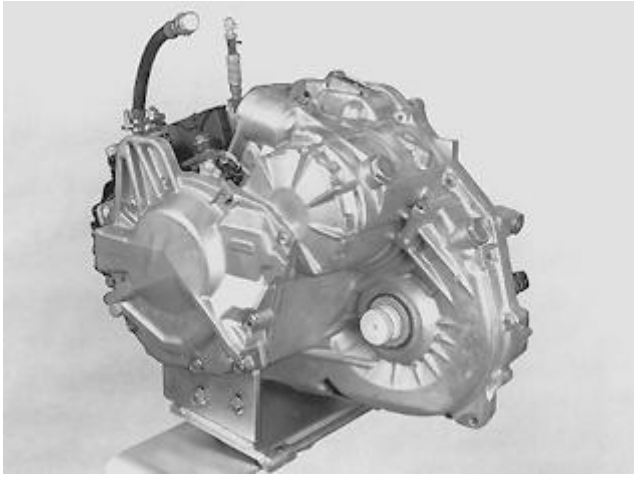

Fig. 386: Identifying Transmission
Courtesy of VOLVO CARS CORPORATION

- **Continue**

  Refer to **VERIFICATION**

VERIFICATION

VERIFICATION

HINT: After carrying out the repair, check that the fault has been remedied.

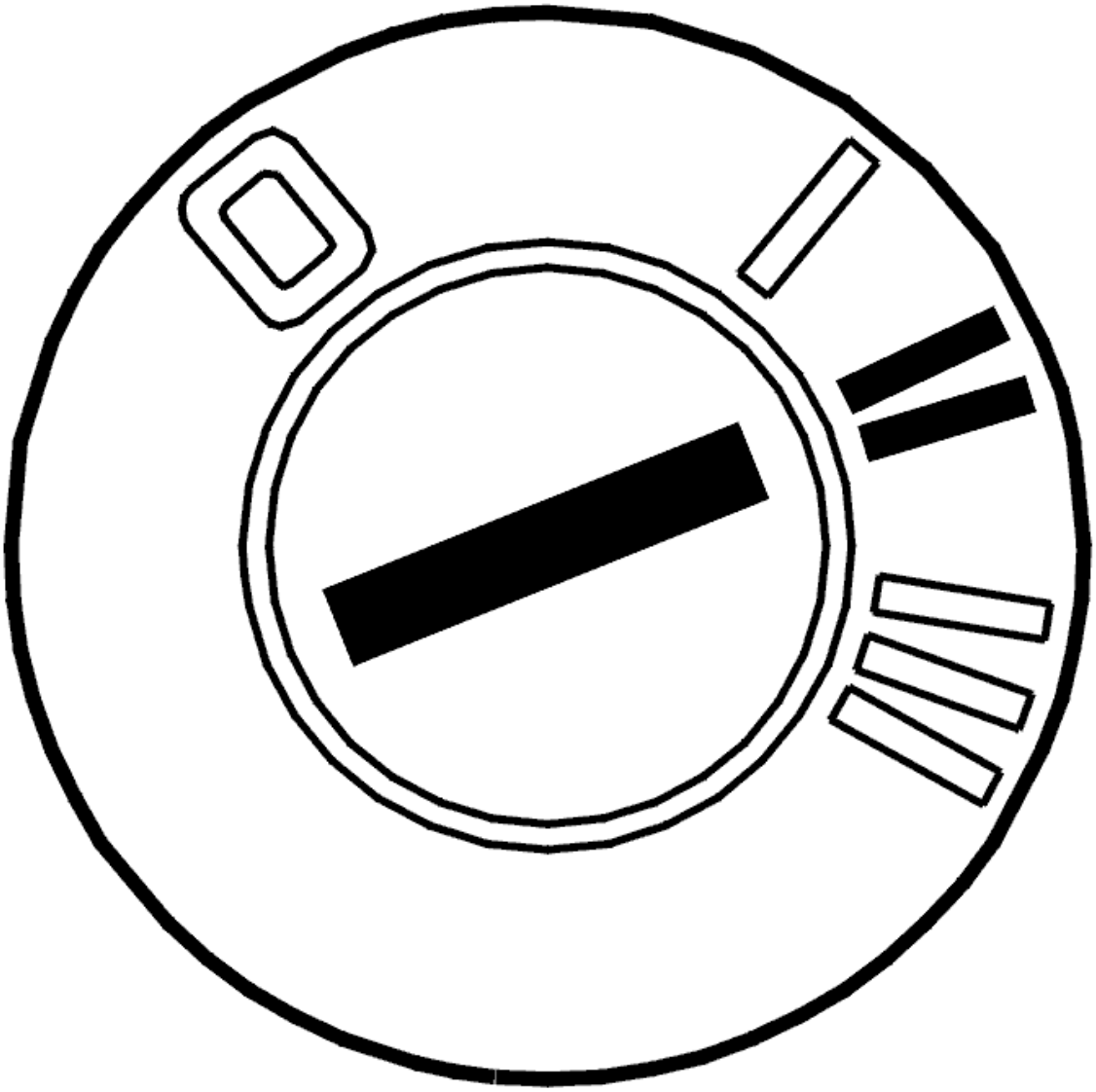

Fig. 387: Identifying Ignition ON
Courtesy of VOLVO CARS CORPORATION

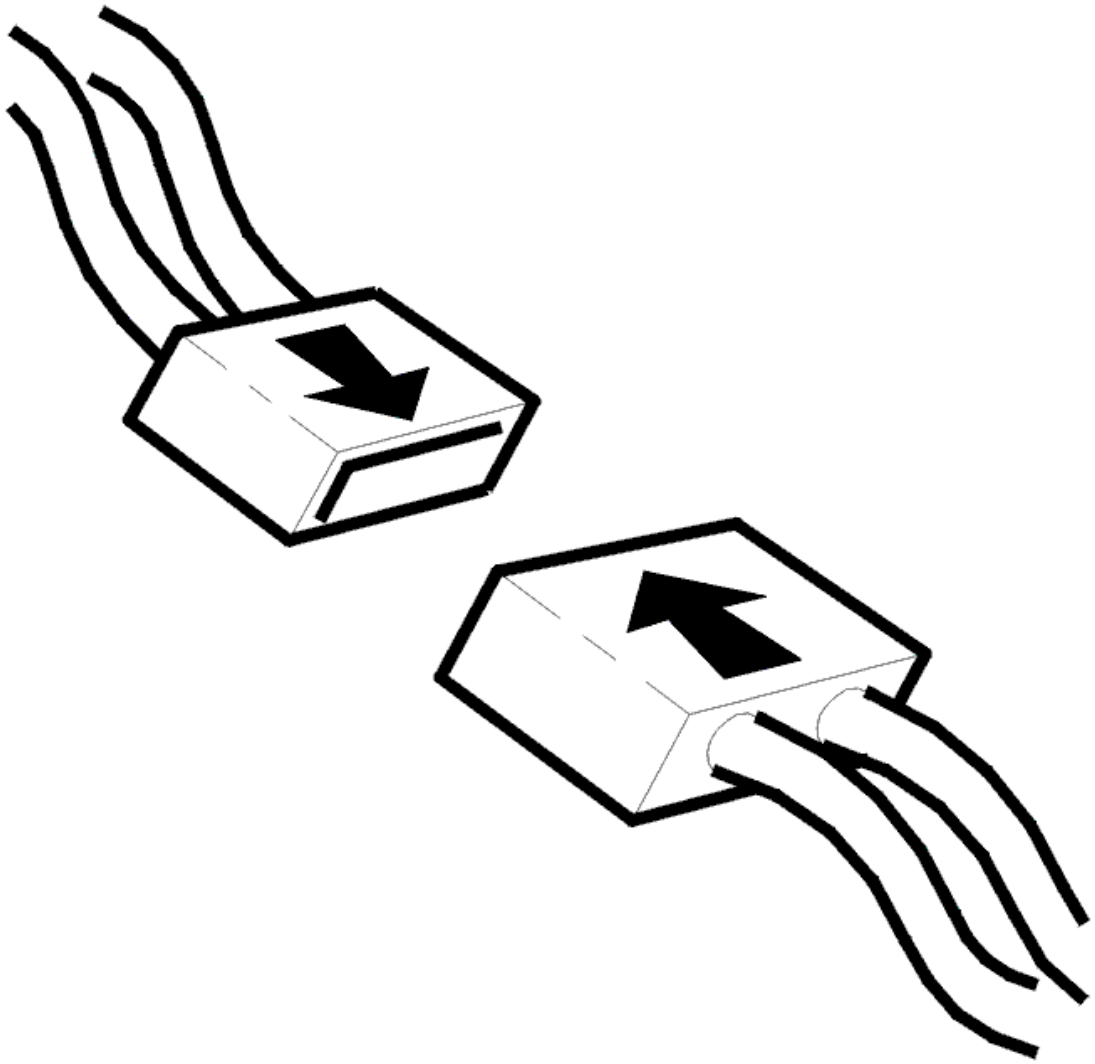

Fig. 388: Identifying Connector(s) Reinstallation
Courtesy of VOLVO CARS CORPORATION

- Ignition off
- Reconnect the connectors, components, etc.
- Ignition on

  Test drive the vehicle following: **TEST DRIVE FORM, DESCRIPTION**

  During the test drive, oil temperature should be over 20 °C.

  Note any deviations in transmission function.

Does the transmission function flawlessly?

- **YES**

  VERIFIED: Troubleshooting has been completed.

- **NO**

  Refer to **INFORMATION**

INFORMATION

FAULT-TRACING INFORMATION

The fault should have been detected and remedied. As this is not the case fault-tracing has failed.

Exit fault-tracing for this diagnostic trouble code (DTC) or make another attempt.

TCM-002C: 5TH GEAR. INCORRECT GEAR RATIO (AW50/51 AWD; AW55-50/51SN; 2003-2007)

DIAGNOSTIC TROUBLE CODE (DTC) INFORMATION

Condition

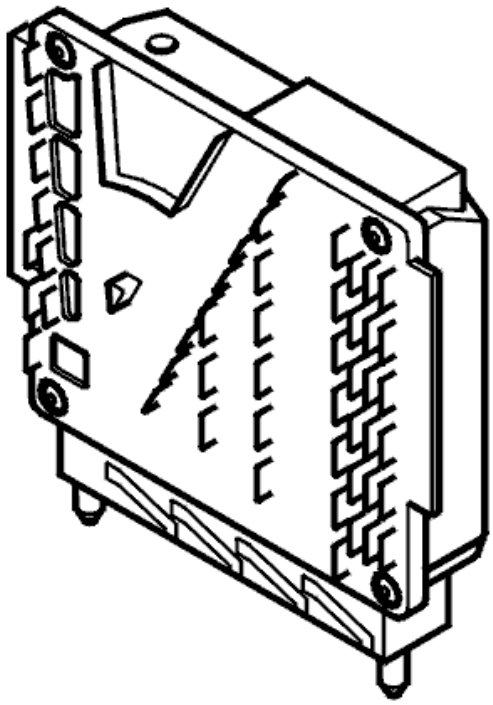

Fig. 389: Identifying Transmission Control Module (TCM)
Courtesy of VOLVO CARS CORPORATION

The transmission control module (TCM) calculates the ratio between the transmission input speed and the vehicle speed. There is a specific ratio for each gear. Diagnostic trouble code (DTC) TCM-002C is stored, depending on the gear, if the control module registers that the ratio deviates by more than 10 % when the oil temperature is above +20°C (68 °F) and throttle opening exceeds 3 %.

Substitute Value

- The transmission control module (TCM) "Emergency mode I" program has been initiated.

Possible Source

- Contact resistance in the circuit for solenoids S1, S2, S3, S4, S5 and SLS.
- Solenoid S2 has jammed in the OFF position.
- Solenoid S3 has jammed in the ON position.
- Solenoid SLS jammed in the ON position.
- Mechanical fault in the transmission. Worn components in the transmission causing slippage or too low line pressure.

Fault symptom[s]

- General orange warning lamp lit.
- Malfunction indicator lamp (MIL) lit.
- No lock-up function.
- Harsh gear shifting.
- No shifting.

INCORRECT GEAR RATIO

CHECKS

CHECKING THE ADJUSTMENT OF THE GEAR-SHIFT POSITION SENSOR

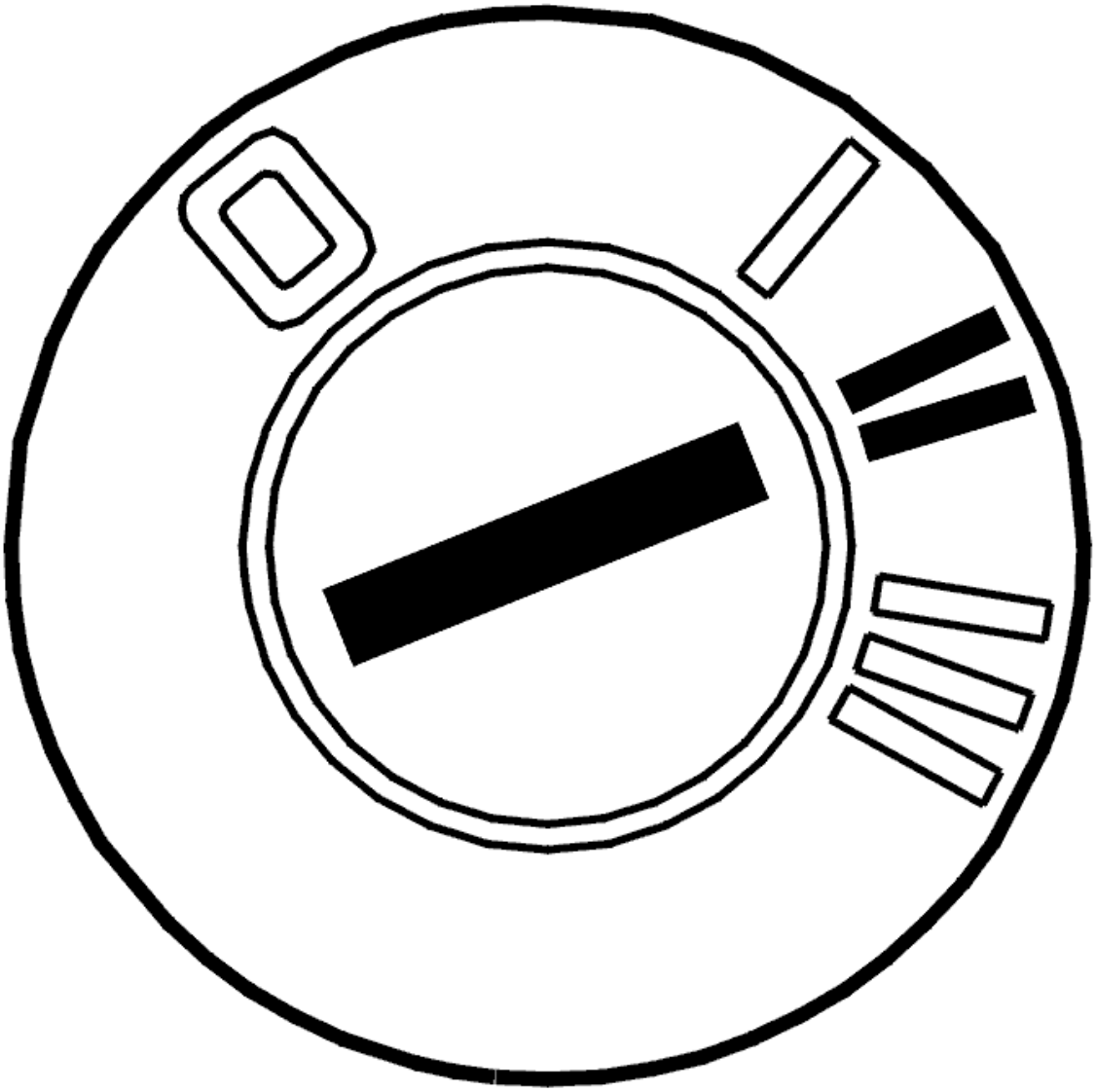

Fig. 390: Identifying Ignition ON
Courtesy of VOLVO CARS CORPORATION

- Ignition on
- Read off the position of the gear selector.

  Move the gear selector into all positions. Check that the gear-shift positions are updated.

  HINT: If the display shows an undefined position (O2 for example) the gear position sensor is incorrectly adjusted.

  Remedy as necessary

  Other information:

  - To adjust the gear-shift position sensor, see **GEAR-SHIFT POSITION SENSOR,**

CHECKING/ADJUSTING .

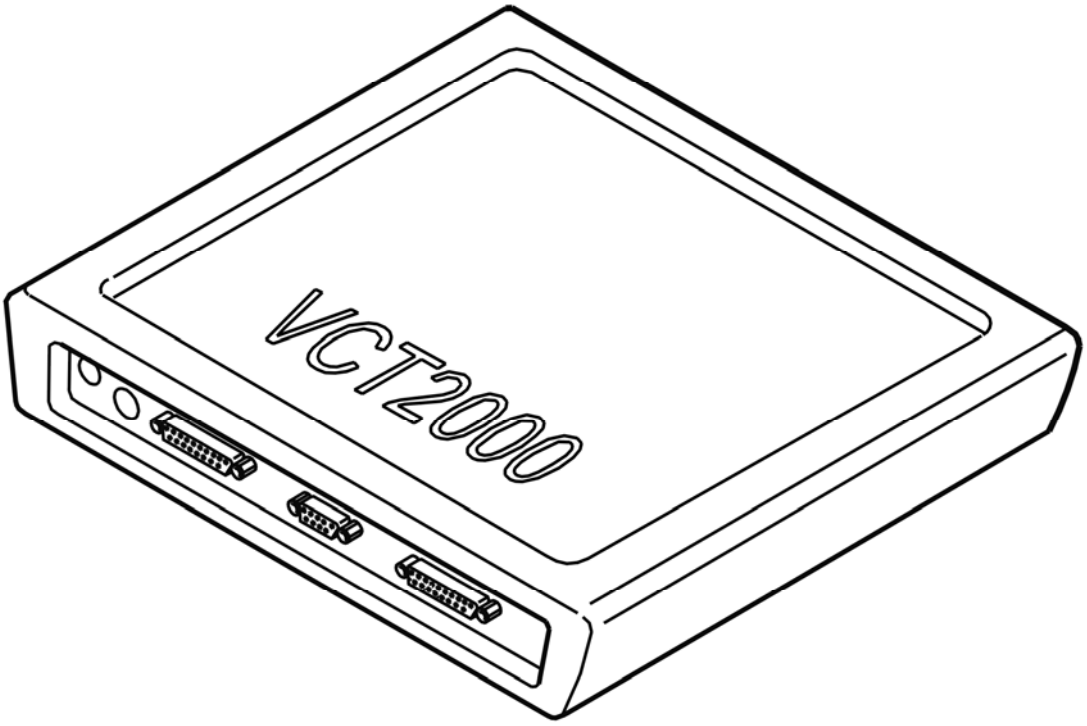

Fig. 391: Identifying VCT2000 Diagnostic Tool Symbol In VIDA
Courtesy of VOLVO CARS CORPORATION

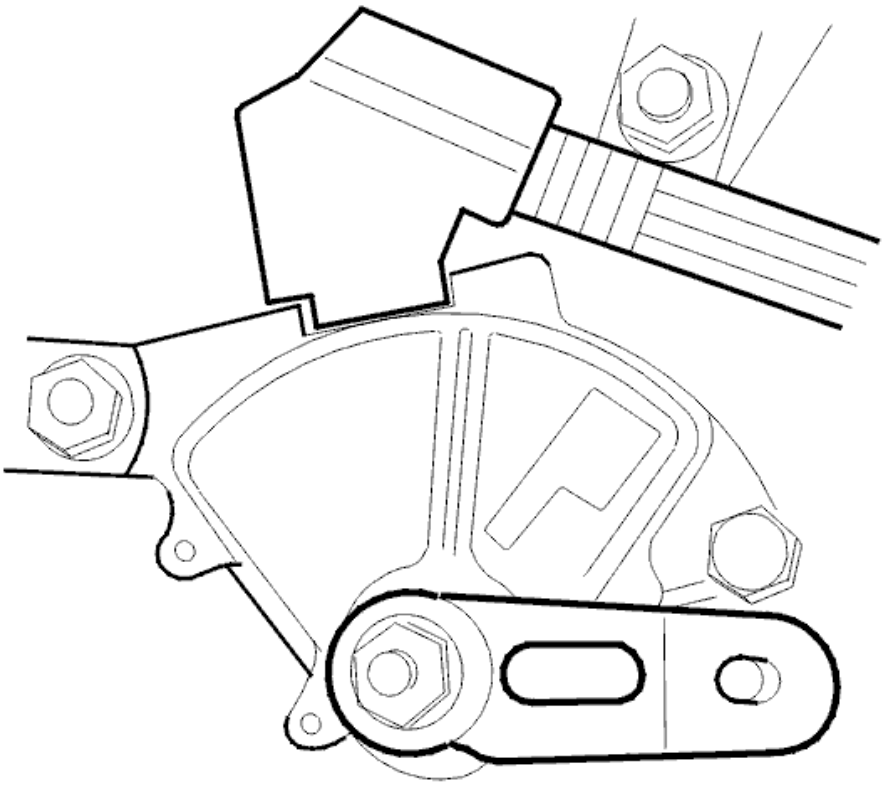

Fig. 392: Identifying Gear-Shift Position Sensor
Courtesy of VOLVO CARS CORPORATION

Is the gear-shift position sensor incorrectly adjusted?

- **YES**

  Refer to **VERIFICATION**

- **NO**

  Refer to **CHECKING FOR CONTACT RESISTANCE AND OXIDATION**

CHECKING NOISE IN THE TRANSMISSION

- Test drive the car. See **TEST DRIVE FORM, DESCRIPTION**
- Check for any clearly audible noises from the transmission. Check for malfunctions.

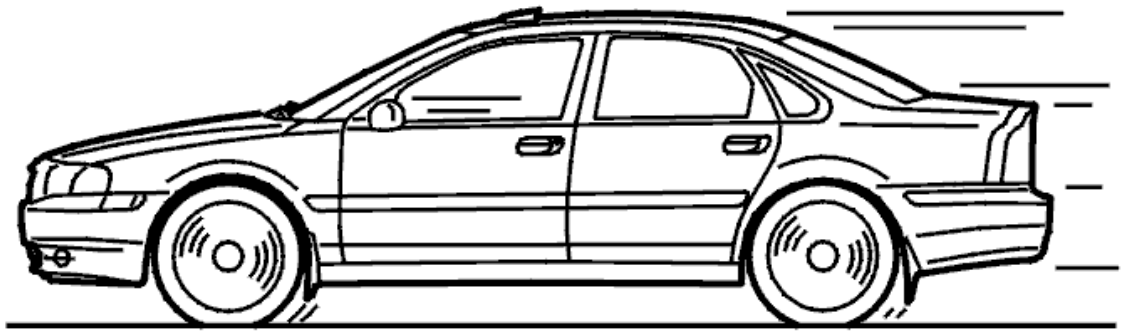

Fig. 393: Identifying Test Drive
Courtesy of VOLVO CARS CORPORATION

Is the transmission making a noise?

- **YES**

  Refer to **REPLACING THE TRANSMISSION**

- **NO**

  OKAY: Troubleshooting has been completed.

CHECKING FOR CONTACT RESISTANCE AND OXIDATION

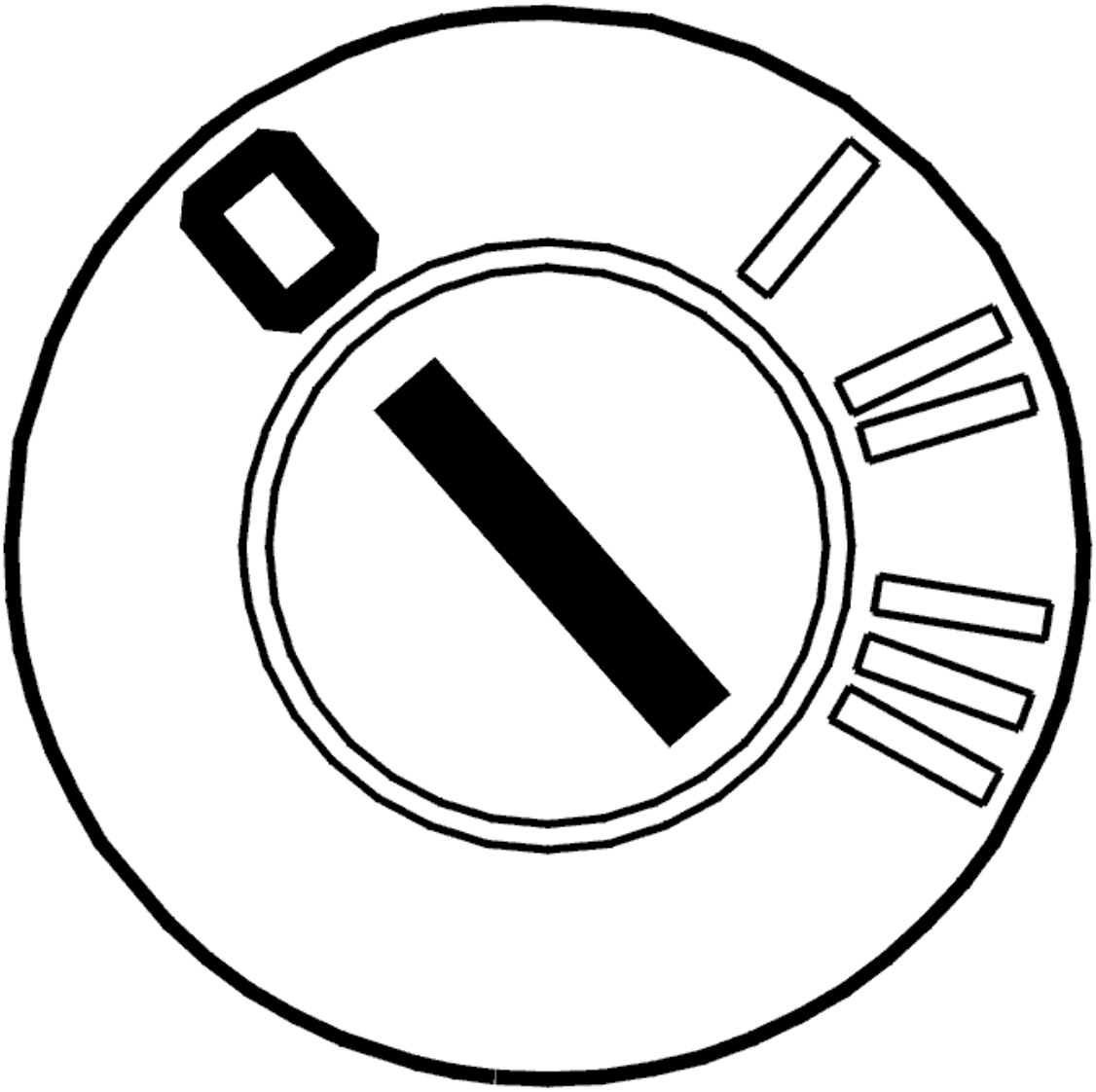

Fig. 394: Identifying Ignition OFF
Courtesy of VOLVO CARS CORPORATION

- Ignition off.

  Check the transmission connectors and the control module connector. Check for contact resistance and oxidation. See **CONTACT RESISTANCE AND OXIDATION**

  Other information:

  - To access the transmission connectors, see **CONNECTORS, TRANSMISSION, DISCONNECTING / CONNECTING** .

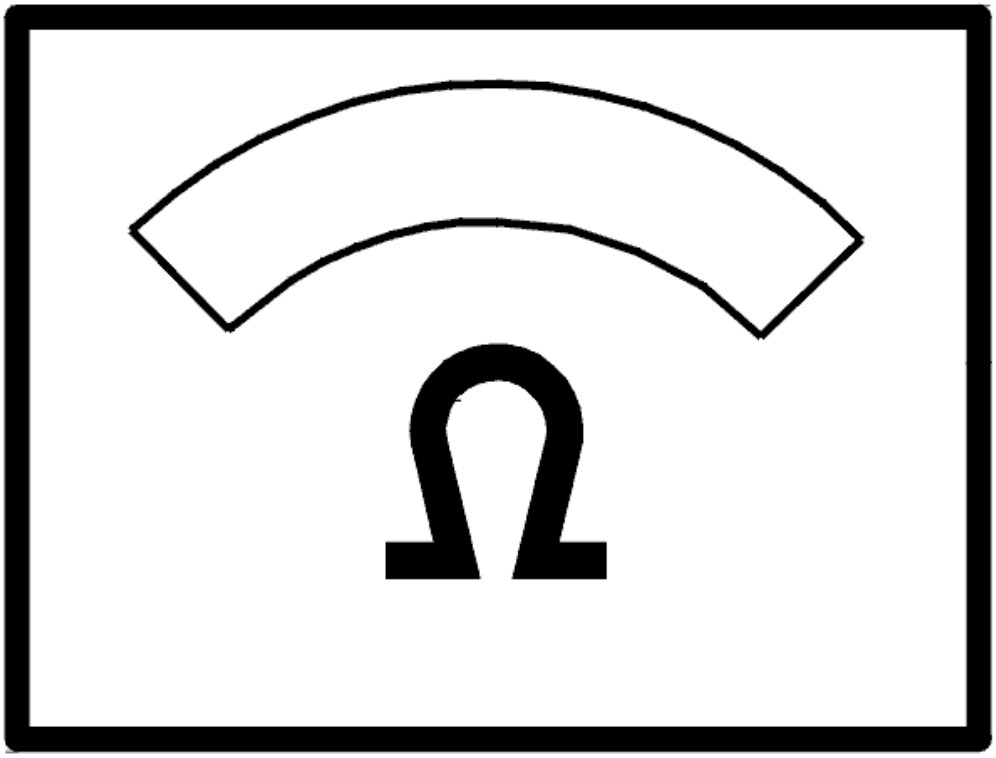

Fig. 395: Identifying Ohms Display
Courtesy of VOLVO CARS CORPORATION

- **Continue**

  Refer to **CHECKING NOISE IN THE TRANSMISSION**

REPLACING THE TRANSMISSION

NOTE: In the event of faults during the first year on the market, replace transmission AW55-50SN.

Replace the transmission. For AW50AWD 2003- see **TRANSMISSION, REMOVING** or For AW55-50 2004- see **TRANSMISSION, REMOVING** and For AW50AWD 2003- see **TRANSMISSION, INSTALLING** or For AW55-50 2004- see **TRANSMISSION, INSTALLING** .

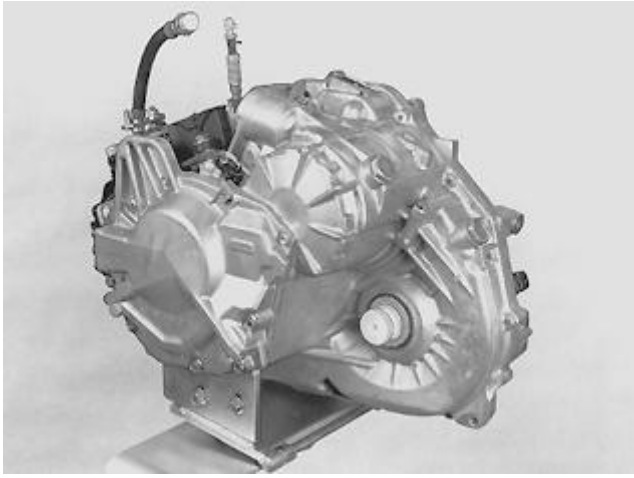

Fig. 396: Identifying Transmission
Courtesy of VOLVO CARS CORPORATION

- **Continue**

  Refer to **VERIFICATION**

VERIFICATION

VERIFICATION

HINT: After carrying out the repair, check that the fault has been remedied.

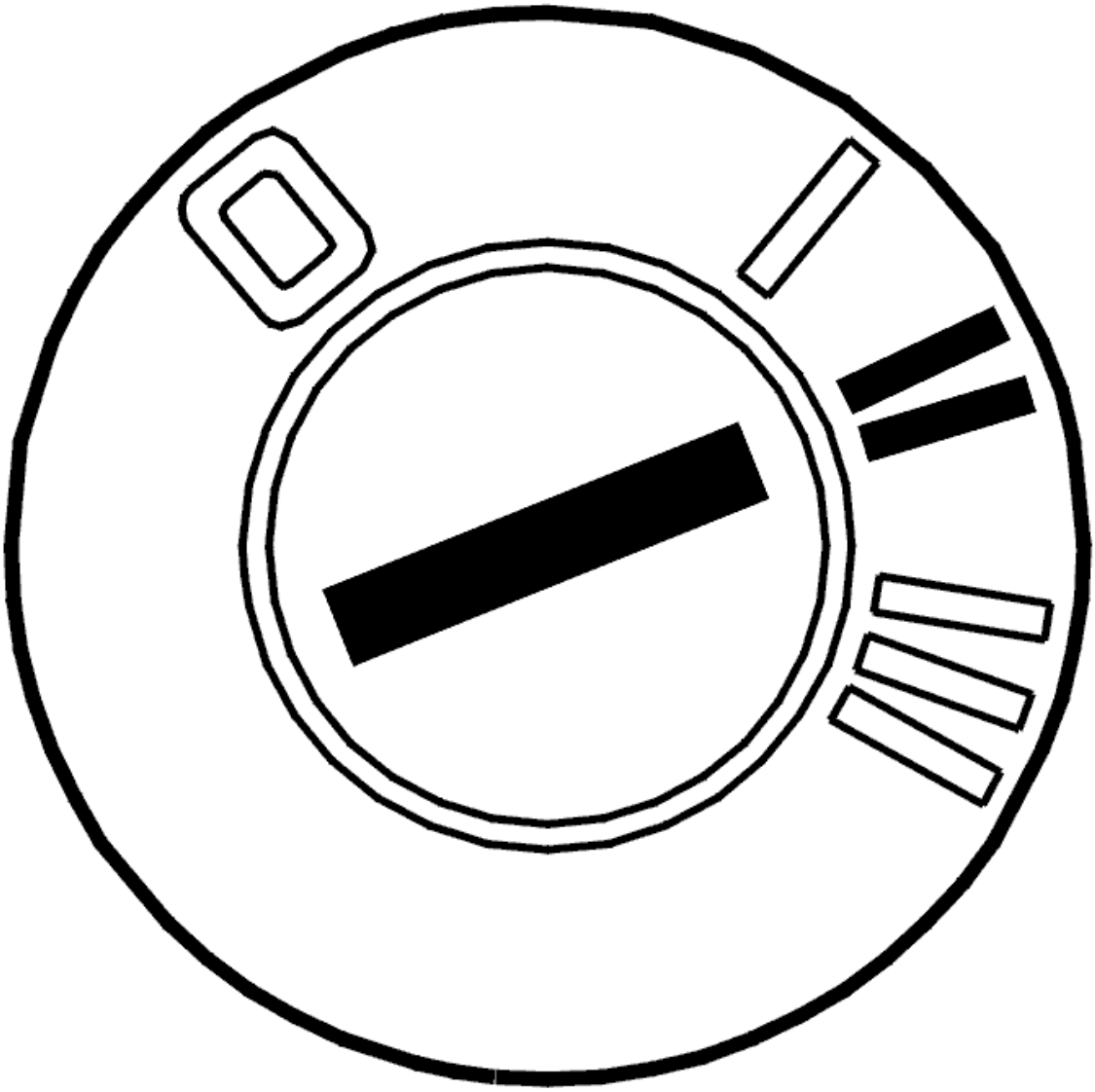

Fig. 397: Identifying Ignition ON
Courtesy of VOLVO CARS CORPORATION

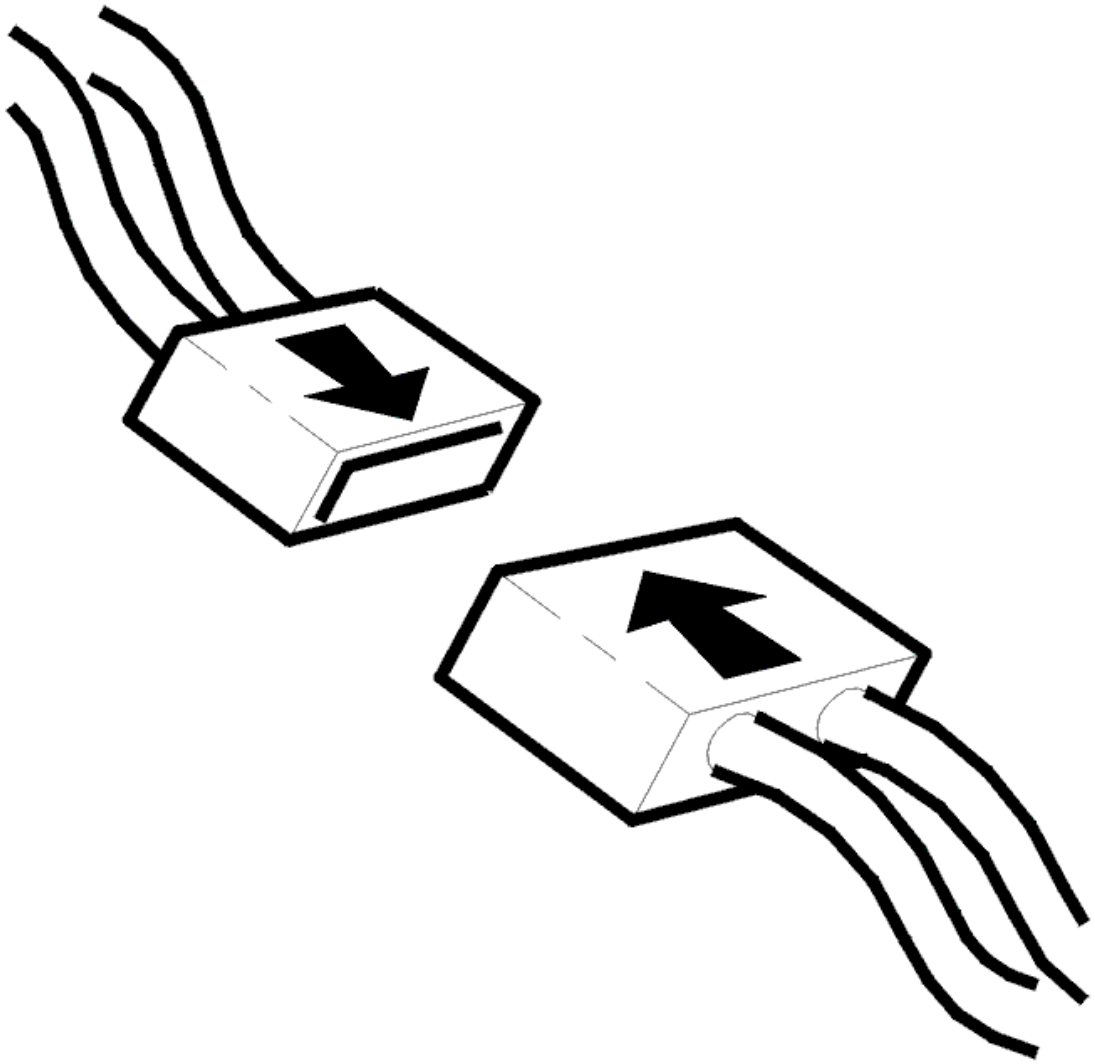

Fig. 398: Identifying Connector(s) Reinstallation
Courtesy of VOLVO CARS CORPORATION

- Ignition off
- Reconnect the connectors, components, etc.
- Ignition on

  Test drive the vehicle following:**TEST DRIVE FORM, DESCRIPTION**

  During the test drive, oil temperature should be over 20 °C.

  Note any deviations in transmission function.

Does the transmission function flawlessly?

- **YES**

  VERIFIED: Troubleshooting has been completed.

- **NO**

  Refer to **INFORMATION**

INFORMATION

FAULT-TRACING INFORMATION

The fault should have been detected and remedied. As this is not the case fault-tracing has failed.

Exit fault-tracing for this diagnostic trouble code (DTC) or make another attempt.

TCM-002E: LOCK-UP. THE TRANSMISSION JERKS WHEN LOCK-UP ENGAGES (AW50/51 AWD; 2003-2007)

DIAGNOSTIC TROUBLE CODE (DTC) INFORMATION

Condition

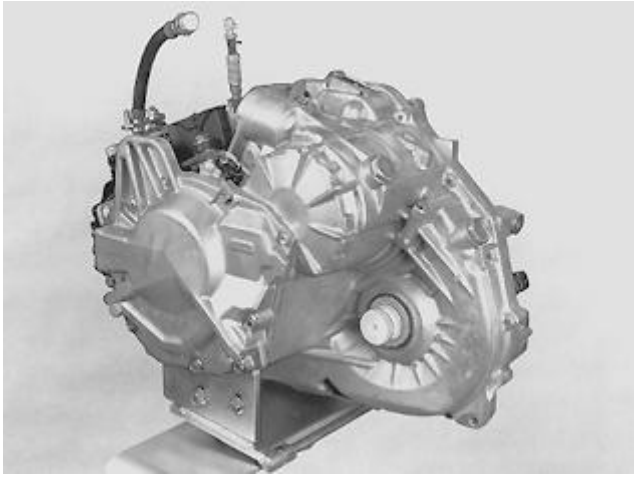

Fig. 399: Identifying Transmission
Courtesy of VOLVO CARS CORPORATION

The diagnostic trouble code (DTC) is stored if the control module repeatedly registers vibrations from slipping lock-up during a number of cycles.

Substitute Value

- Slipping lock-up shuts off temporarily.

Possible Source

- Poor quality transmission fluid.
- Glycol in the transmission fluid.
- Worn torque converter.
- Mechanical fault in the transmission.

Fault symptom[s]

- Cooling fluid consumption; High
- Vibrations
- Rough gear shift

THE-GEARBOX: JERKS WHEN LOCK-UP ENGAGES

CHECKS

CHECKING FOR THE FAULT

Has the customer complained of vibrations?

- **YES**

  Refer to **CHECKING OIL QUALITY AND OIL LEVEL IN TRANSMISSION**

- **NO**

  Refer to **FAULT-TRACING WITHOUT RESULT**

CHECKING OIL QUALITY AND OIL LEVEL IN TRANSMISSION

NOTE: **Transmission fluid quality and level are extremely important for the function of the transmission. Therefore it is imperative that these are correct. In addition the oil level is dependent on oil temperature.**

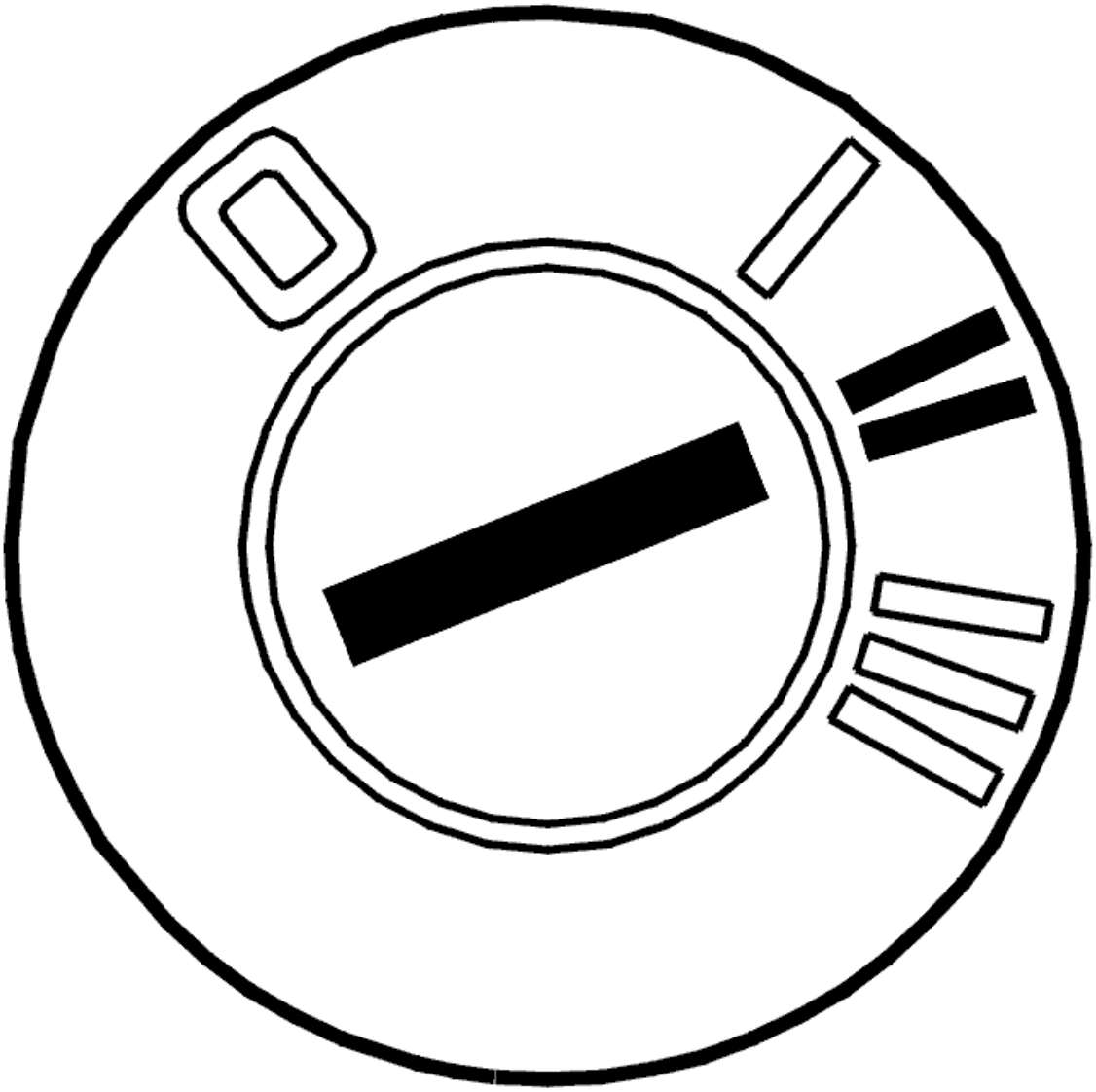

Fig. 400: Identifying Ignition ON
Courtesy of VOLVO CARS CORPORATION

- Ignition on.
- Read off the oil temperature.

  Check the oil level. If the oil level is low, check the transmission for leakage, then top up with oil.

  Check the oil's quality.

  If the oil smells burnt, change transmission oil.

  Check the transmission fluid for metal shavings. Take a sample using the dip stick.

  Replace the transmission if the transmission fluid contains metal shavings.

Other information:

- see **TRANSMISSION OIL / OIL FILTER, REPLACING**
- see **OIL LEVEL, CHECKING**
- see **OIL GRADE, CHECKING**

Select an alternative below:

1. No defect found.

   Refer to **CHECKING THE COOLING SYSTEM**

2. Transmission oil changed, level low or quality poor.

   Refer to **RESETTING TRANSMISSION FLUID CHANGE COUNTER**

3. The transmission fluid contains metal shavings.

   Refer to **REPLACING THE GEARBOX**

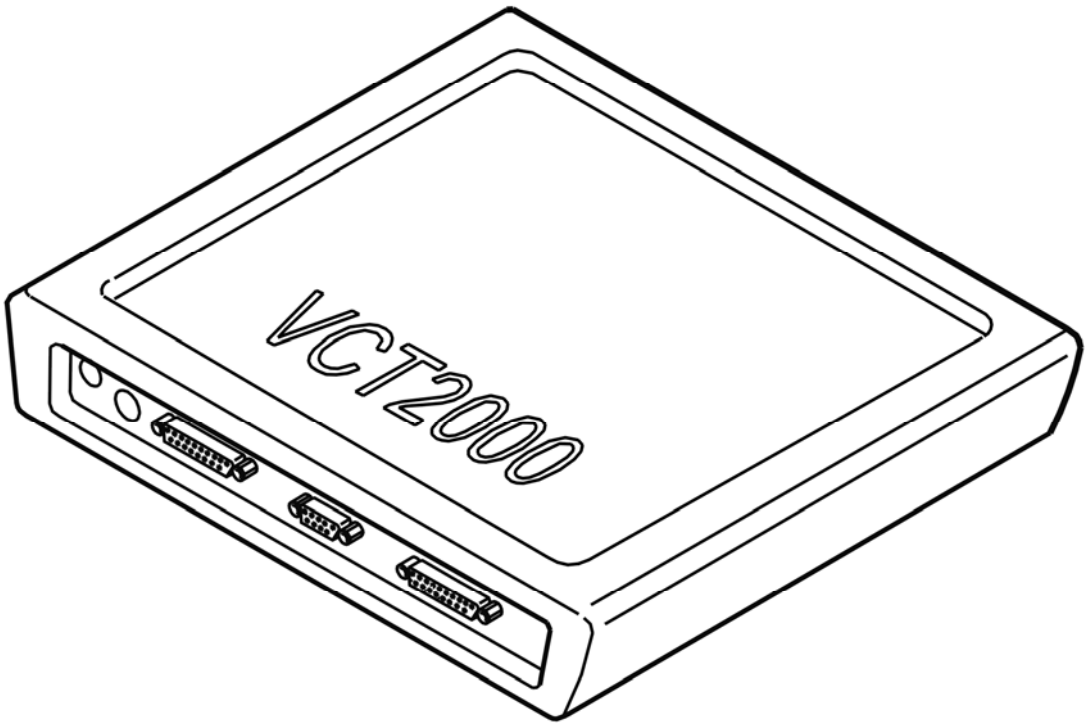

Fig. 401: Identifying VCT2000 Diagnostic Tool Symbol In VIDA
Courtesy of VOLVO CARS CORPORATION

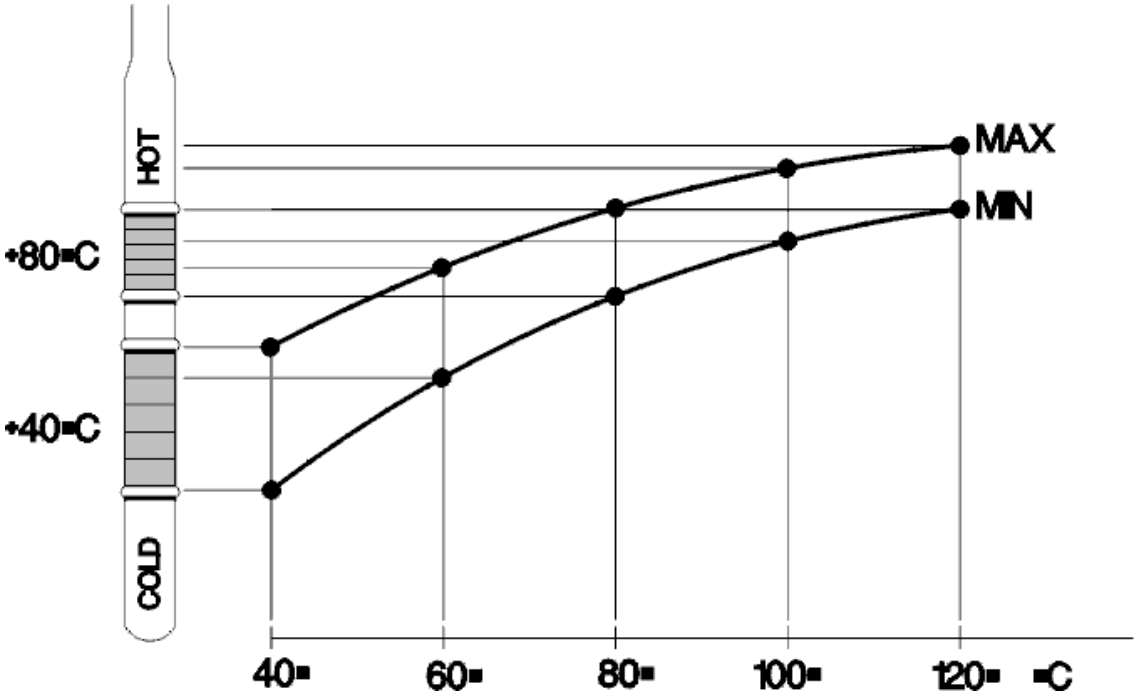

Fig. 402: Identifying Oil Level Temperature Graph
Courtesy of VOLVO CARS CORPORATION

CHECKING THE COOLING SYSTEM

- Perform the following check.

  see **TEST PRESSURIZATION**

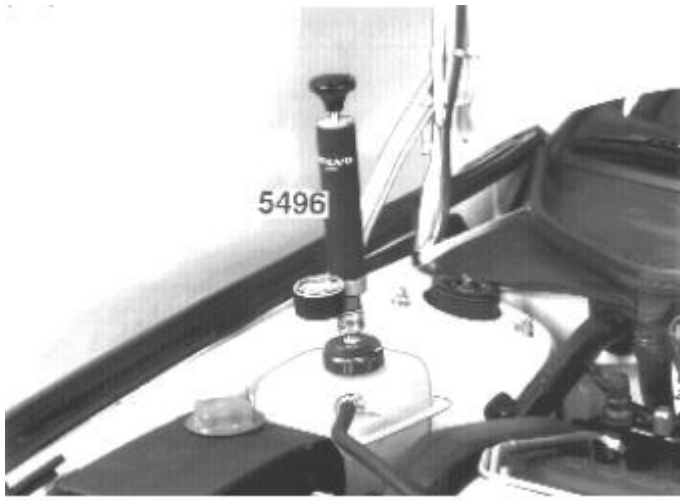

Fig. 403: Identifying Engine Coolant System Pressure Tester
Courtesy of VOLVO CARS CORPORATION

Does the pressure drop?

- **YES**

  Refer to **CHECKING THE COOLING SYSTEM**

- **NO**

  Refer to **CHECKING SOFTWARE**

REPLACING THE GEARBOX

Earlier tests indicate that there is a fault in the transmission.

Replace the transmission. For AW50AWD 2003- see **TRANSMISSION, REMOVING** or For AW55-50 2004- see **TRANSMISSION, REMOVING** and For AW50AWD 2003- see **TRANSMISSION, INSTALLING** or For AW55-50 2004- see **TRANSMISSION, INSTALLING** .

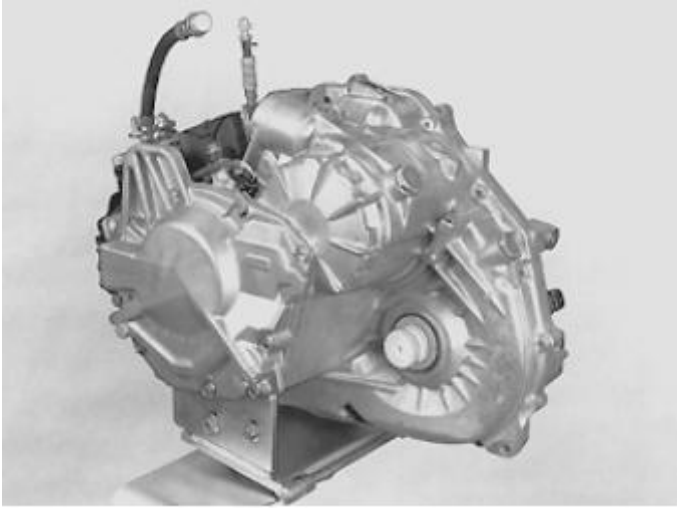

Fig. 404: Identifying Transmission
Courtesy of VOLVO CARS CORPORATION

- **Continue**

  Refer to **RESETTING THE ADAPTATION**

CHECKING SOFTWARE

Check that the control module has the latest version of the relevant software.

- If new software is available, download to the control module and then select Continue.
- If the control module already has the latest software select Continue.

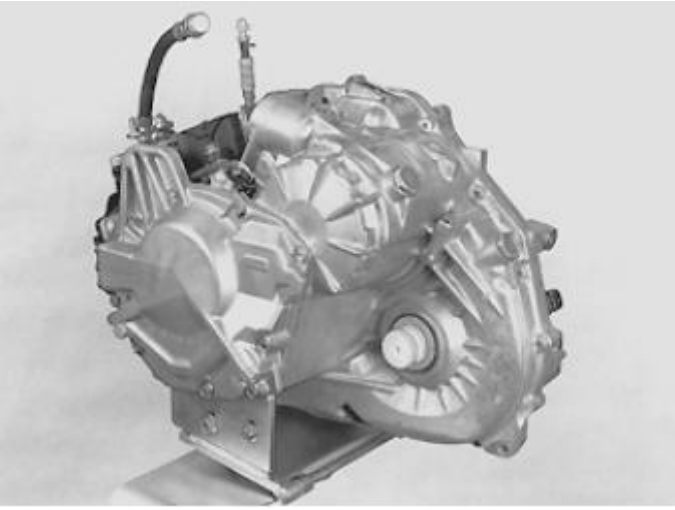

Fig. 405: Identifying Transmission
Courtesy of VOLVO CARS CORPORATION

- **Continue**

  Refer to **TEST DRIVING THE TRANSMISSION**

FAULT-TRACING WITHOUT RESULT

The diagnostic trouble code (DTC) indicates that a fault occurred previously but that the fault is no longer present.

No further corrective action is required if the diagnostic trouble code (DTC) is intermittent and does not recur.

CHECKING THE COOLING SYSTEM

Ensure that the leak is the cause of the coolant coming in contact with the transmission oil by checking the quality of the oil.

If the quality of the transmission fluid had deteriorated due to leakage from the cooling system, replace the transmission, radiator, hoses and expansion tank as below.

Other information:

- see **OIL GRADE, CHECKING (AW50/51 AWD; AW55-50/51SN)**
- see **TRANSMISSION - REMOVAL, REPLACEMENT AND INSTALLATION**
- see **RADIATOR / CHARGE AIR COOLER (CAC), REPLACEMENT**

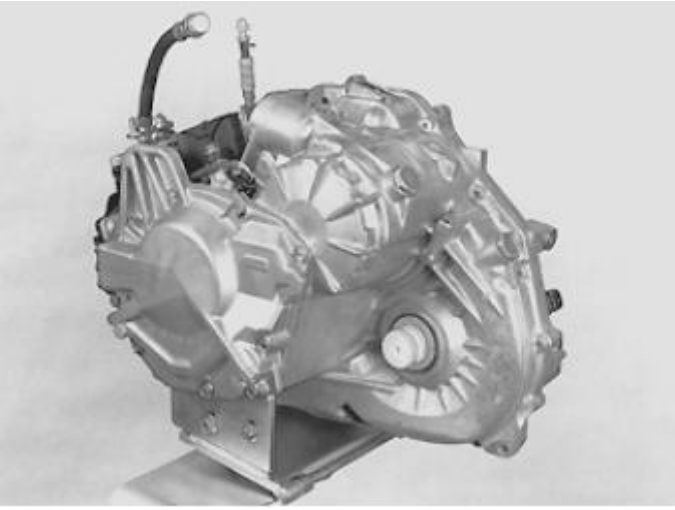

Fig. 406: Identifying Transmission
Courtesy of VOLVO CARS CORPORATION

- **Continue**

  Refer to **RESETTING THE ADAPTATION**

REPLACING THE TORQUE CONVERTER

- Ignition off.

  Replace the torque converter.

  Remedy as necessary.

  Other information

  - see **REPLACING THE SEALING RING FOR THE OIL PUMP**

TEST DRIVING THE TRANSMISSION

see **TEST DRIVE SCHEDULE, DESCRIPTION**

Was any corrective action taken?

- **YES**

  OKAY: Troubleshooting has been completed.

- **NO**

  Refer to **REPLACING THE TORQUE CONVERTER**

RESETTING TRANSMISSION FLUID CHANGE COUNTER

RESETTING TRANSMISSION FLUID CHANGE COUNTER

HINT: The transmission control module (TCM) has a counter for the oil quality. The counter counts up if the transmission is exposed to too high a load or an ambient temperature that is too high. If the counter is not reset when the oil is drained or changed, there is a risk that a diagnostic trouble code (DTC) will be stored in faulty circumstances. Therefore it is important that the "Transmission oil change" counter is reset.

NOTE: **This applies only when the transmission fluid is changed and when the fluid is changed when repairs are carried out to the transmission temperature sensor.**

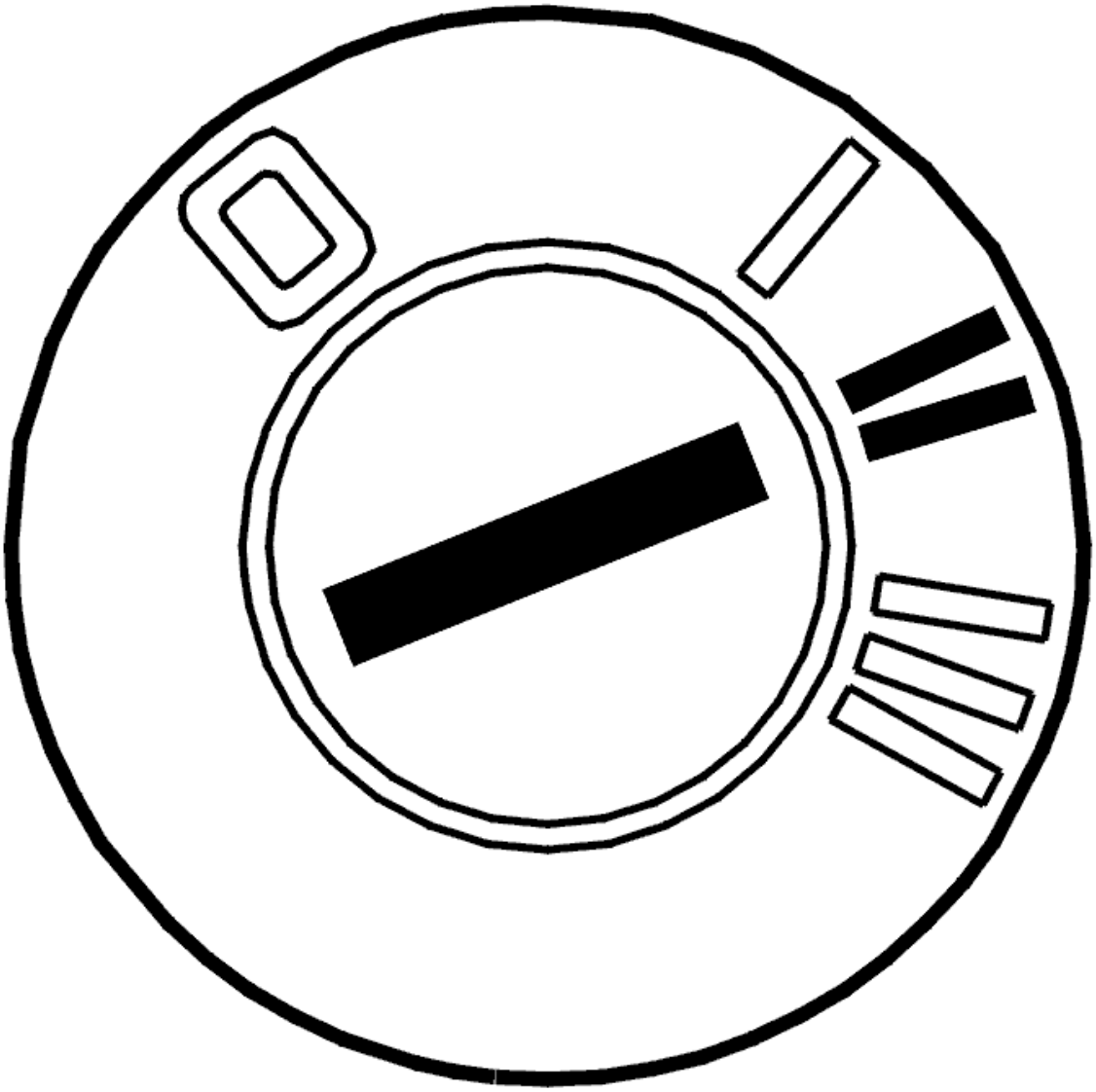

Fig. 407: Identifying Ignition ON
Courtesy of VOLVO CARS CORPORATION

- Ignition on.

  Reset the counter by clicking on the VCT 2000 symbol.

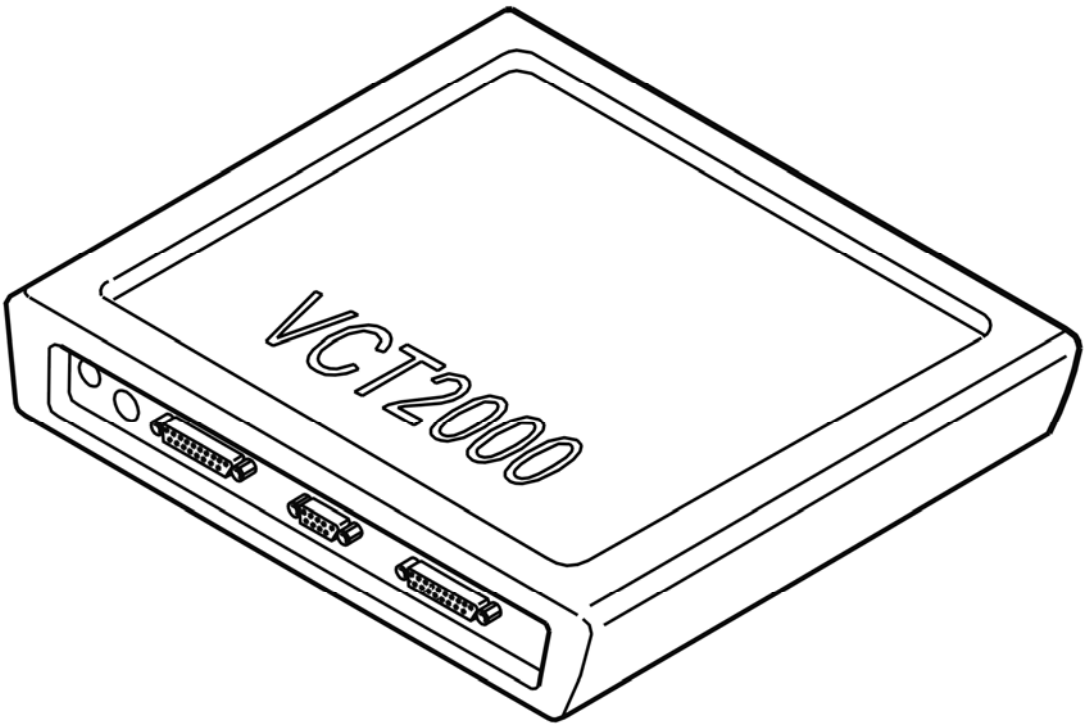

Fig. 408: Identifying VCT2000 Diagnostic Tool Symbol In VIDA
Courtesy of VOLVO CARS CORPORATION

- **Continue**

  Refer to **VERIFICATION**

RESETTING THE ADAPTATION

RESETTING ADAPTATION AND THE COUNTER FOR "TRANSMISSION OIL CHANGE"

HINT: The transmission has torque controlled adaptive pressure control. Pressure control means that the transmission regulates the pressure itself during each gear shift. This avoids harsh gear shifting. Each gear shift is evaluated by the control module and stored in the memory. This allows for compensation for wear and tear in the transmission and clutch. It is important that the adaptation in the memory is reset after the transmission has been repaired. This is to ensure normal operation. The oil is replaced during repair; the "Transmission oil change" counter must be reset. If the counter is not reset when the fluid is drained and replaced, there is a risk that a diagnostic trouble code (DTC) will be stored in incorrect circumstances.

NOTE: **This applies only if the transmission or one of the components in the transmission have been replaced.**

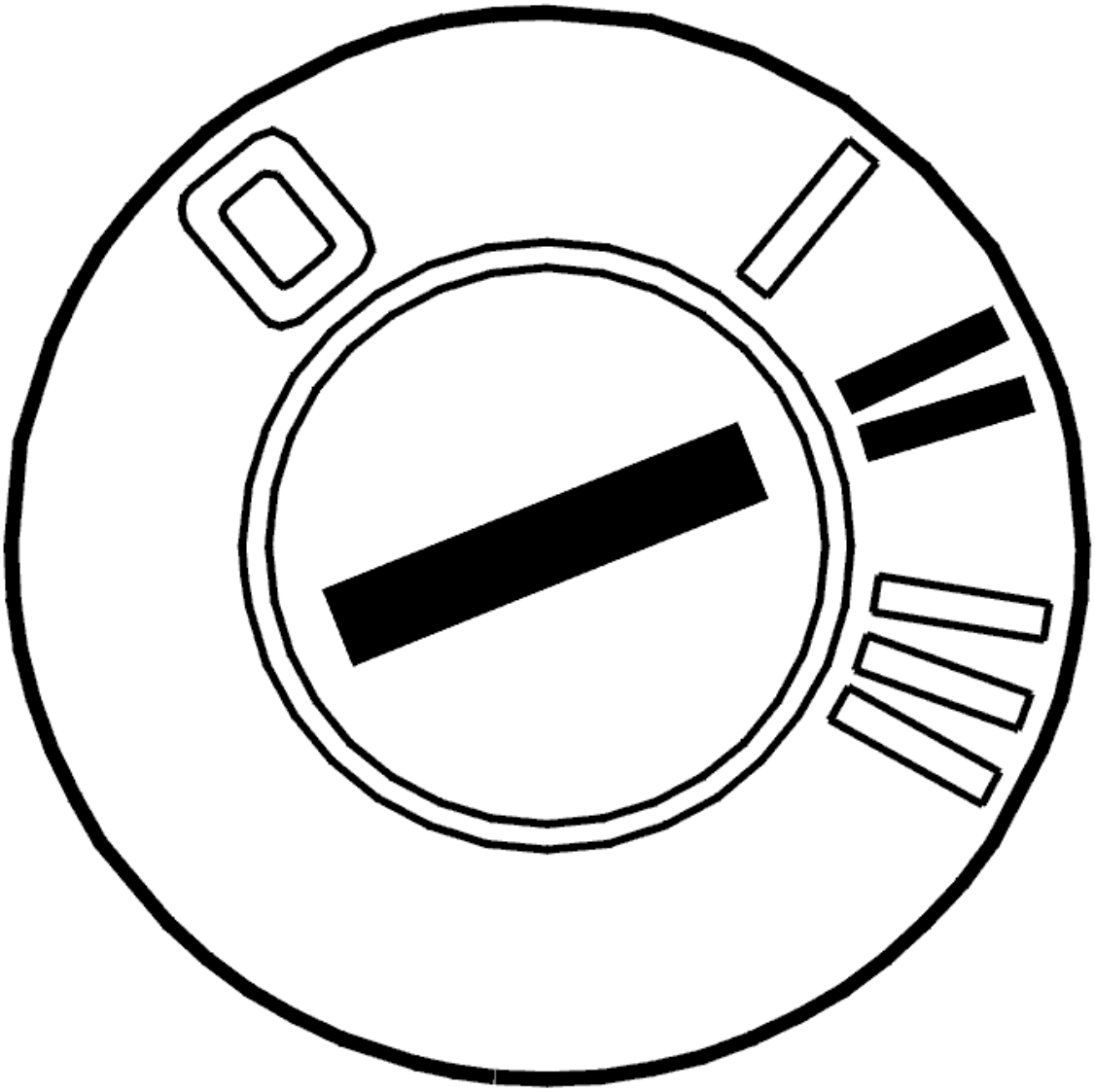

Fig. 409: Identifying Ignition ON
Courtesy of VOLVO CARS CORPORATION

- Ignition on.

  Click on the VCT2000 symbol to reset the adaptation and counter.

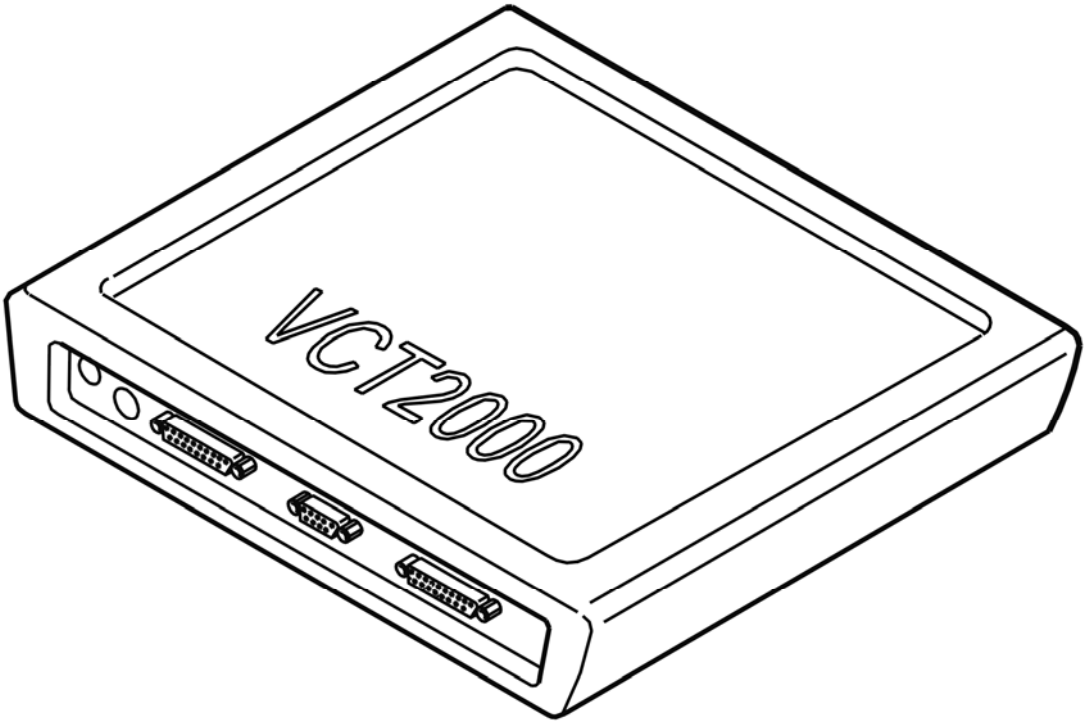

Fig. 410: Identifying VCT2000 Diagnostic Tool Symbol In VIDA
Courtesy of VOLVO CARS CORPORATION

- **Continue**

  Refer to **VERIFICATION**

VERIFICATION

VERIFICATION

HINT: After carrying out the repair, check that the fault has been remedied.

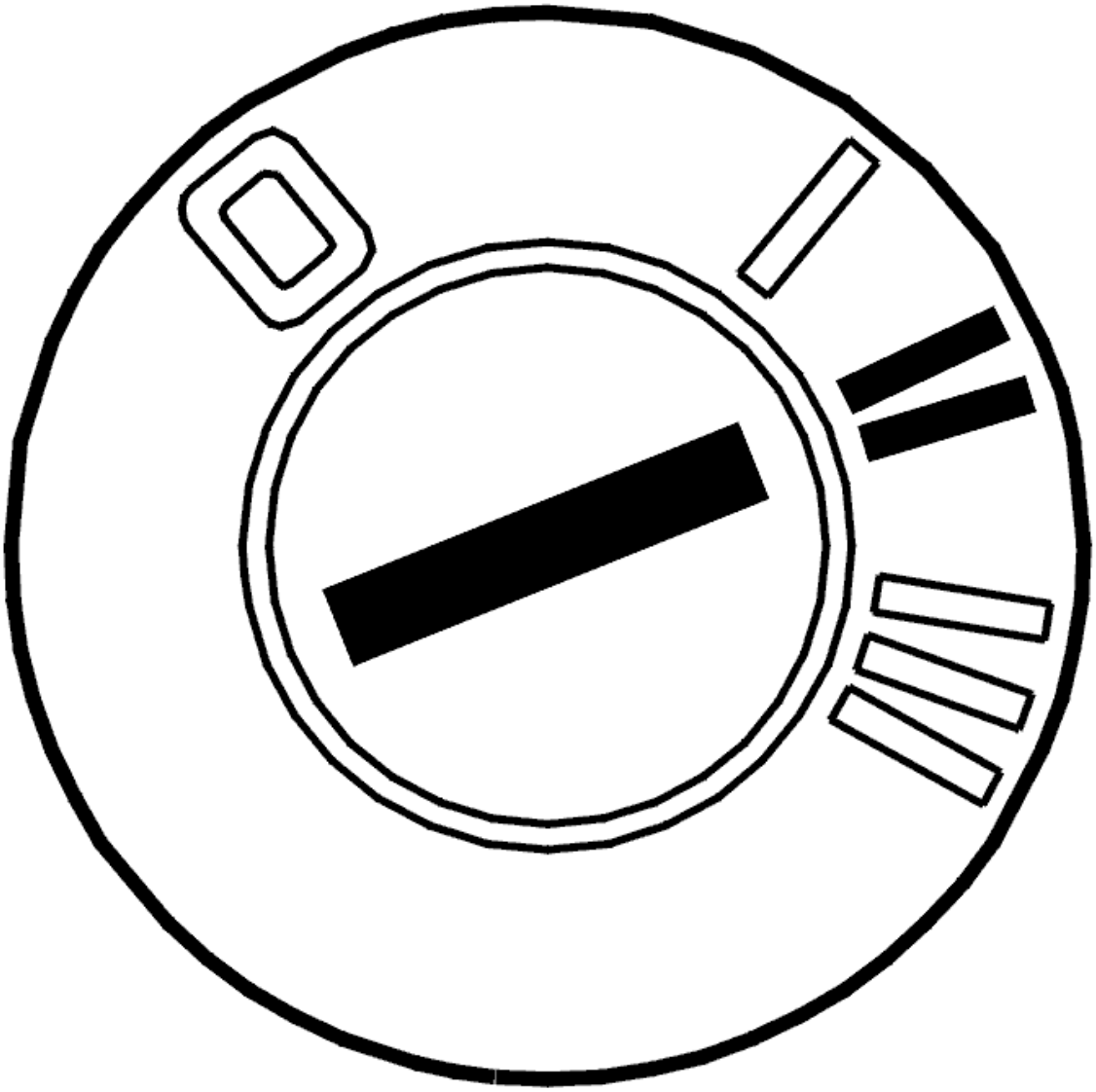

Fig. 411: Identifying Ignition ON
Courtesy of VOLVO CARS CORPORATION

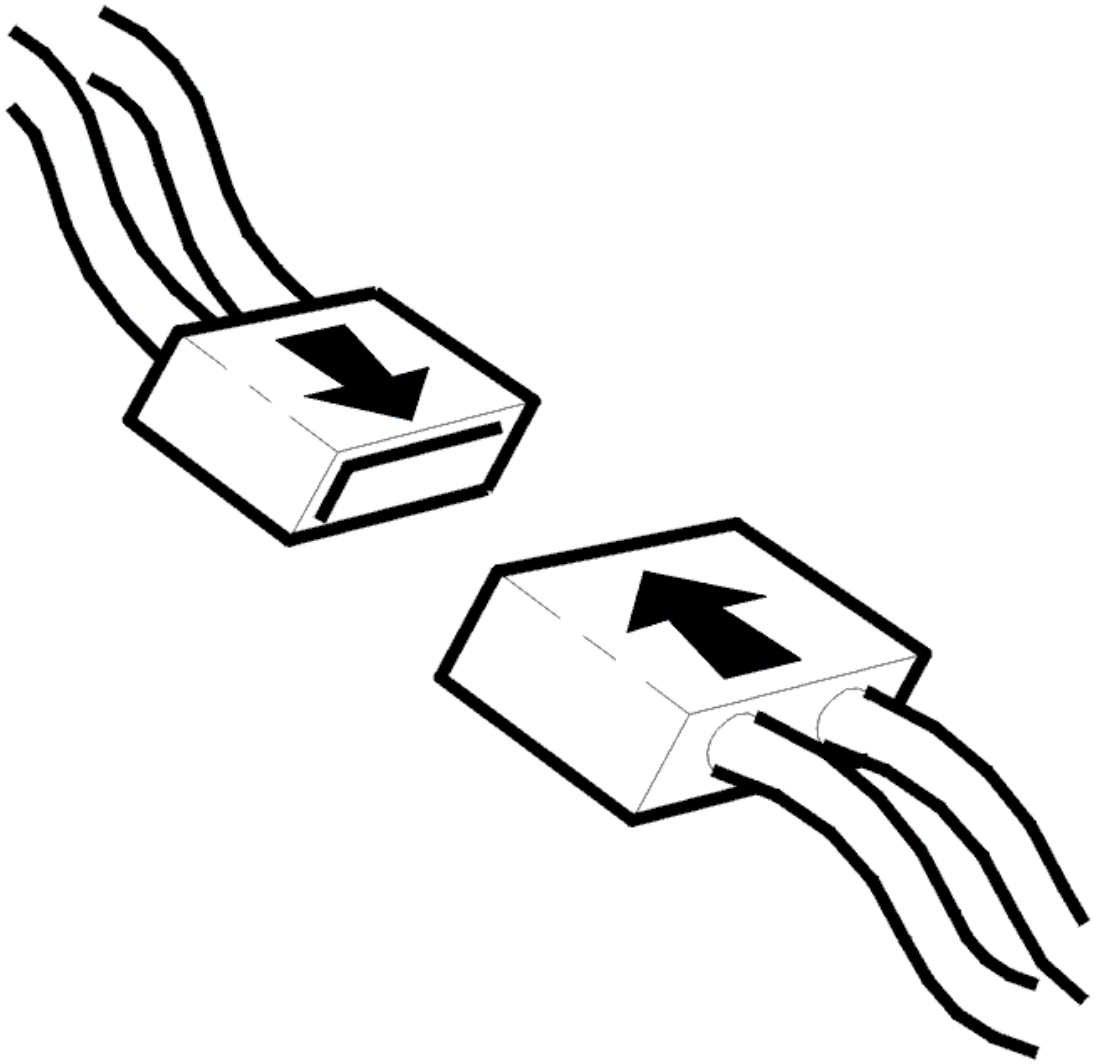

Fig. 412: Identifying Connector(s) Reinstallation
Courtesy of VOLVO CARS CORPORATION

- Ignition off.
- Reconnect the connectors, reinstall components etc.
- Ignition on.

Test drive the vehicle following:

see **TEST-DRIVE SCHEDULE TCM-002E AW55-50/51SN**

During the test drive the oil temperature must be above 20°C.

Look out for any irregularities in the function of the transmission.

Is the transmission operating correctly?

- **YES**

  VERIFIED: Troubleshooting has been completed.

- **NO**

  Refer to **INFORMATION**

INFORMATION

FAULT-TRACING INFORMATION

The fault should have been detected and remedied. As this is not the case fault-tracing has failed.

Exit fault-tracing for this diagnostic trouble code (DTC) or make another attempt.

TCM-002E: LOCK-UP. THE TRANSMISSION JERKS WHEN LOCK-UP ENGAGES (AW55-50/51SN; 2003-2007)

DIAGNOSTIC TROUBLE CODE (DTC) INFORMATION

see **DIAGNOSTIC TROUBLE CODE (DTC) INFORMATION**

THE-GEARBOX: JERKS WHEN LOCK-UP ENGAGES

see **THE GEARBOX JERKS WHEN LOCK-UP ENGAGES**

TCM-002F: LOCK-UP FUNCTION. SLIPPING OR NOT ENGAGED (4T65 AWD; 2003-2006)

DIAGNOSTIC TROUBLE CODE (DTC) INFORMATION

Condition

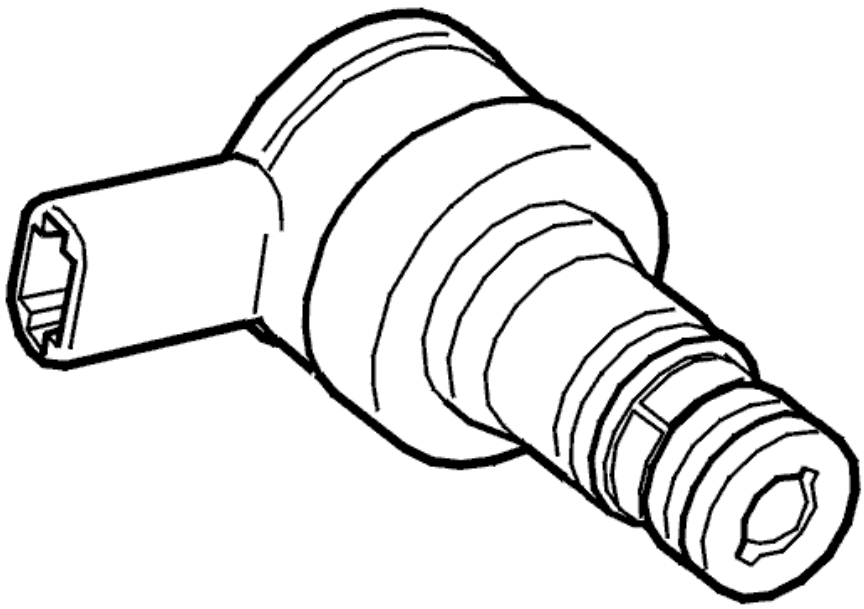

Fig. 413: Identifying Lock-Up Solenoid, SL
Courtesy of VOLVO CARS CORPORATION

The automatic transmission checks whether the lock-up solenoid is disengaged or slipping by comparing the speed signal from the transmission output speed sensor with the actual transmission speed (RPM) at the transmission. The signals should "show"the same calculated speed (RPM). The control module also compares the transmission speed signal with the engine speed (RPM). The speed should then be greater or less than the transmission speed depending on the gear selected. Diagnostic trouble code (DTC) TCM-002F is stored if the control module detects that vehicle speed and transmission speed signals do not correspond with the estimated values. This means that the lock-up solenoid SL is slipping or is not engaged.

Substitute Value

- The transmission control module (TCM) "Emergency mode I"program has been initiated.

Possible Source

- Glycol in the transmission fluid.
- Contact resistance in the terminals
- Mechanical fault in the transmission control system
- Electrical fault in lock-up solenoid SL
- Mechanical fault in the transmission.

Fault symptom[s]

- General orange warning lamp lit
- Malfunction indicator lamp (MIL) lit
- No lock-up function
- Harsh gear shifting.

SLIPPING OR NOT ENGAGED

CHECKS

CHECKING THE DIAGNOSTIC TROUBLE CODES (DTCS)

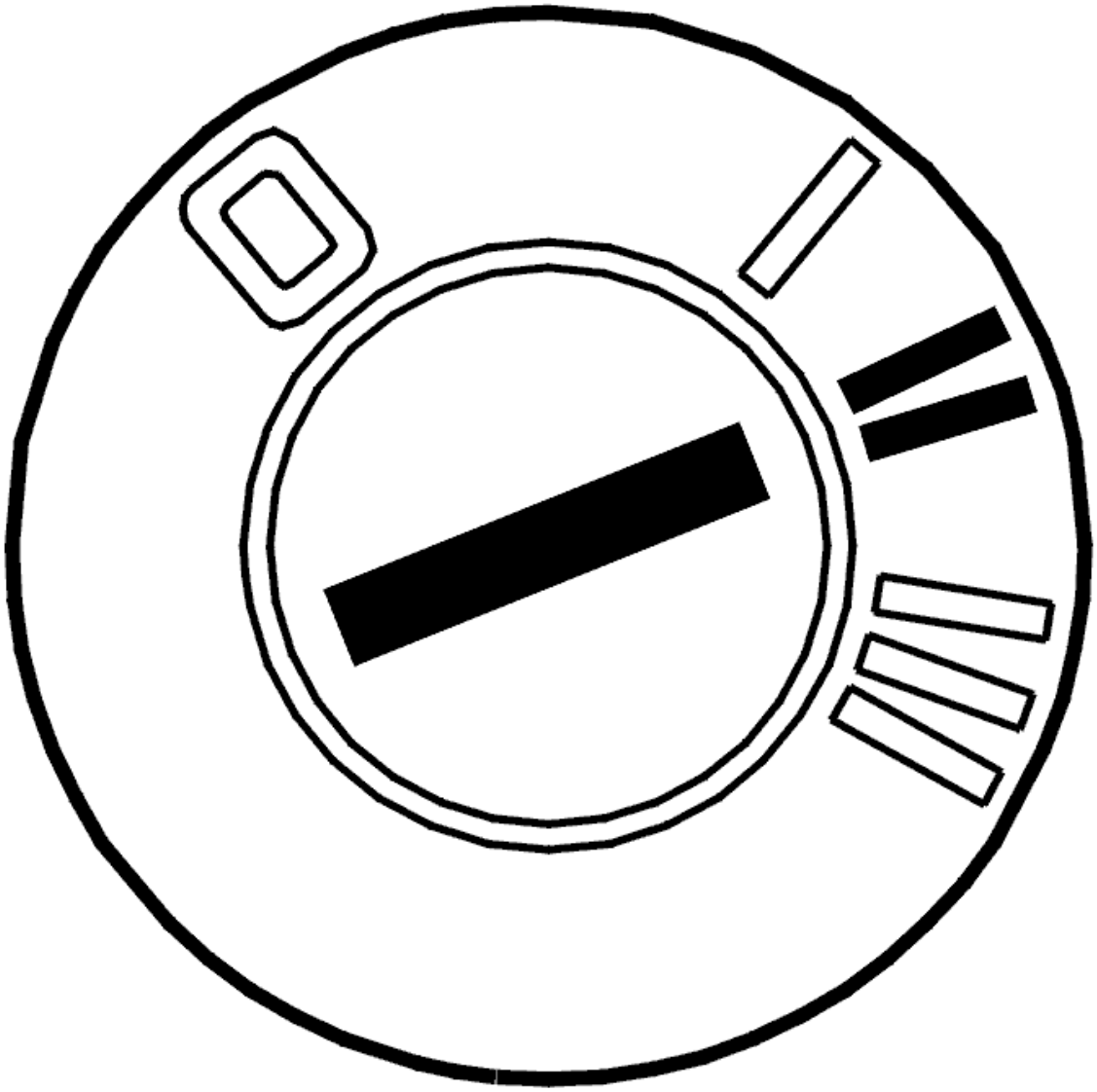

Fig. 414: Identifying Ignition ON
Courtesy of VOLVO CARS CORPORATION

- Ignition on
- Read off diagnostic trouble codes (DTCs).

  If any other diagnostic trouble codes (DTCs) than TCM-002F are stored, these must be fault-traced and remedied after this fault-tracing is completed.

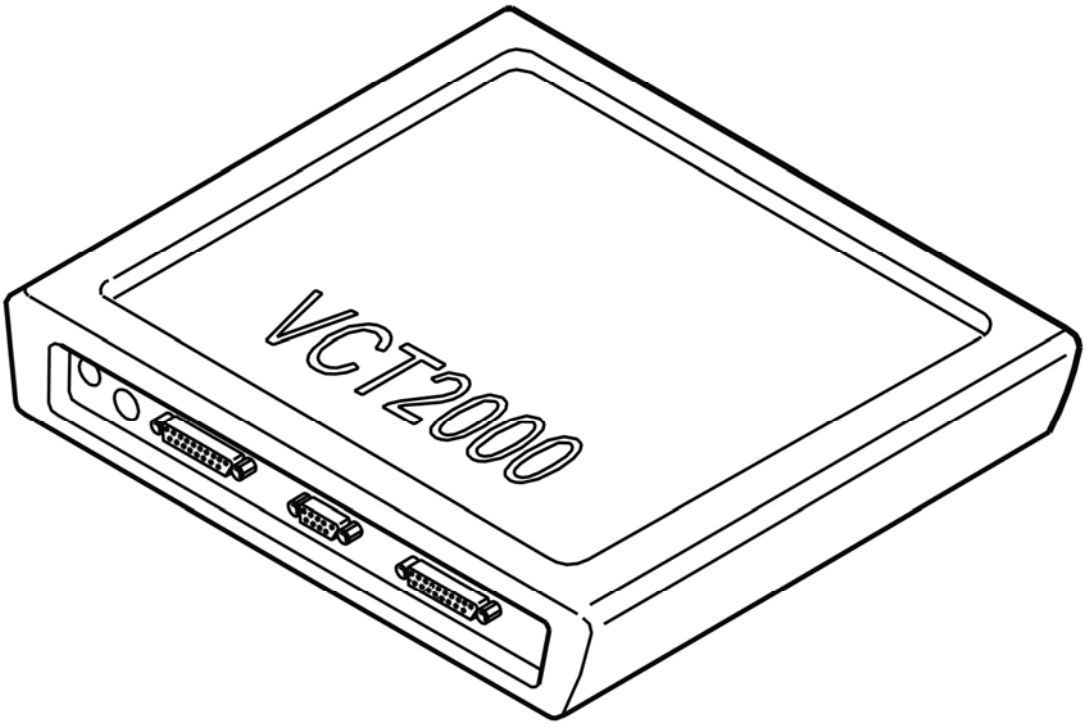

Fig. 415: Identifying VCT2000 Diagnostic Tool Symbol In VIDA
Courtesy of VOLVO CARS CORPORATION

- **Continue**

  Refer to **CHECK THE QUALITY OF THE TRANSMISSION OIL**

ERASING DIAGNOSTIC TROUBLE CODES (DTCS)

HINT: When diagnostic trouble codes (DTCs) are erased, the information stored at the same time as the DTC is also erased. Therefore it is suggested that the extended diagnostic trouble code (DTC) information (frozen values) is read off before the DTCs are erased. To read off extended fault-tracing information: save a bookmark, select cancel and go to VIDA vehicle communication.

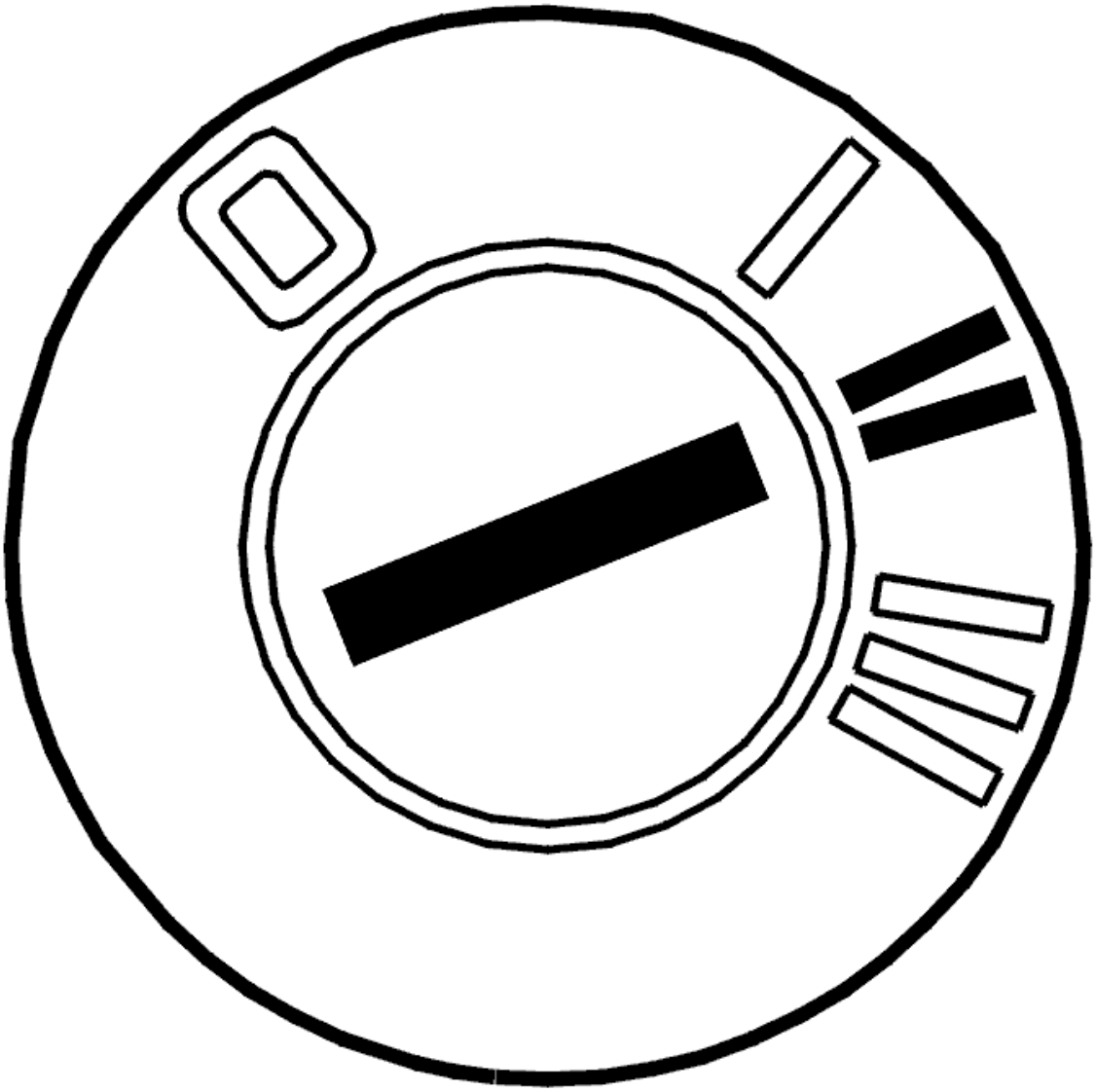

Fig. 416: Identifying Ignition ON
Courtesy of VOLVO CARS CORPORATION

- Ignition off
- Wait for two minutes to allow time for the diagnostic trouble codes (DTCs) to be stored in the control module memory
- Ignition on
- Erase diagnostic trouble codes (DTCs).

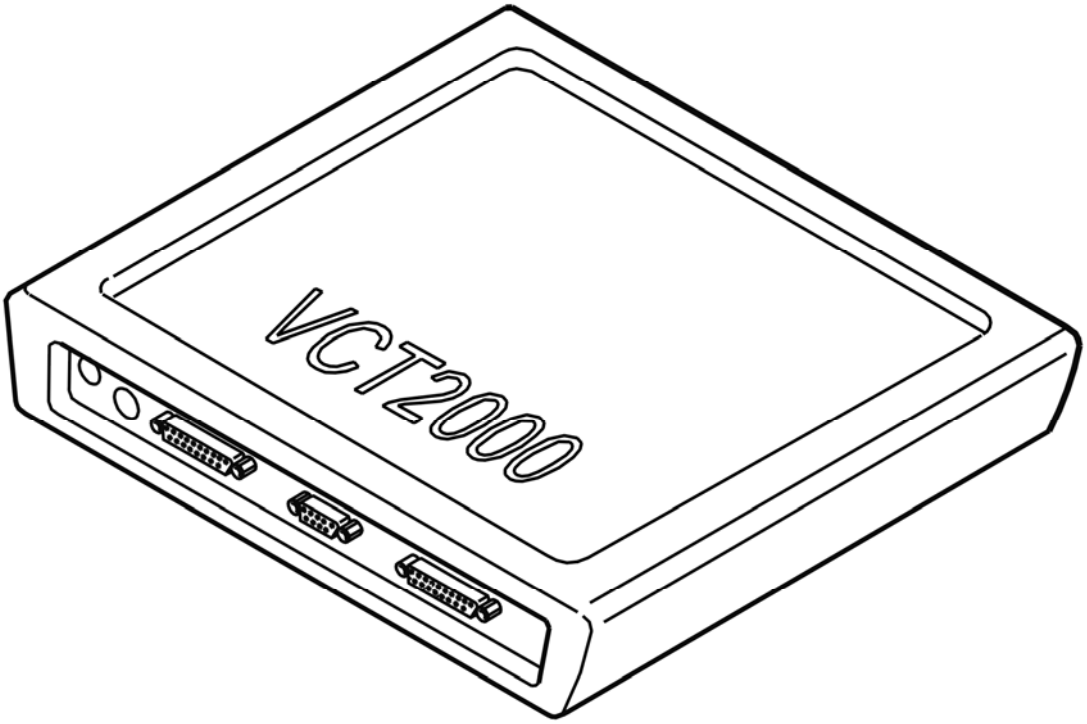

Fig. 417: Identifying VCT2000 Diagnostic Tool Symbol In VIDA
Courtesy of VOLVO CARS CORPORATION

- **Continue**

  Refer to **CHECKING THE SOFTWARE**

CONNECTING THE T PIPE

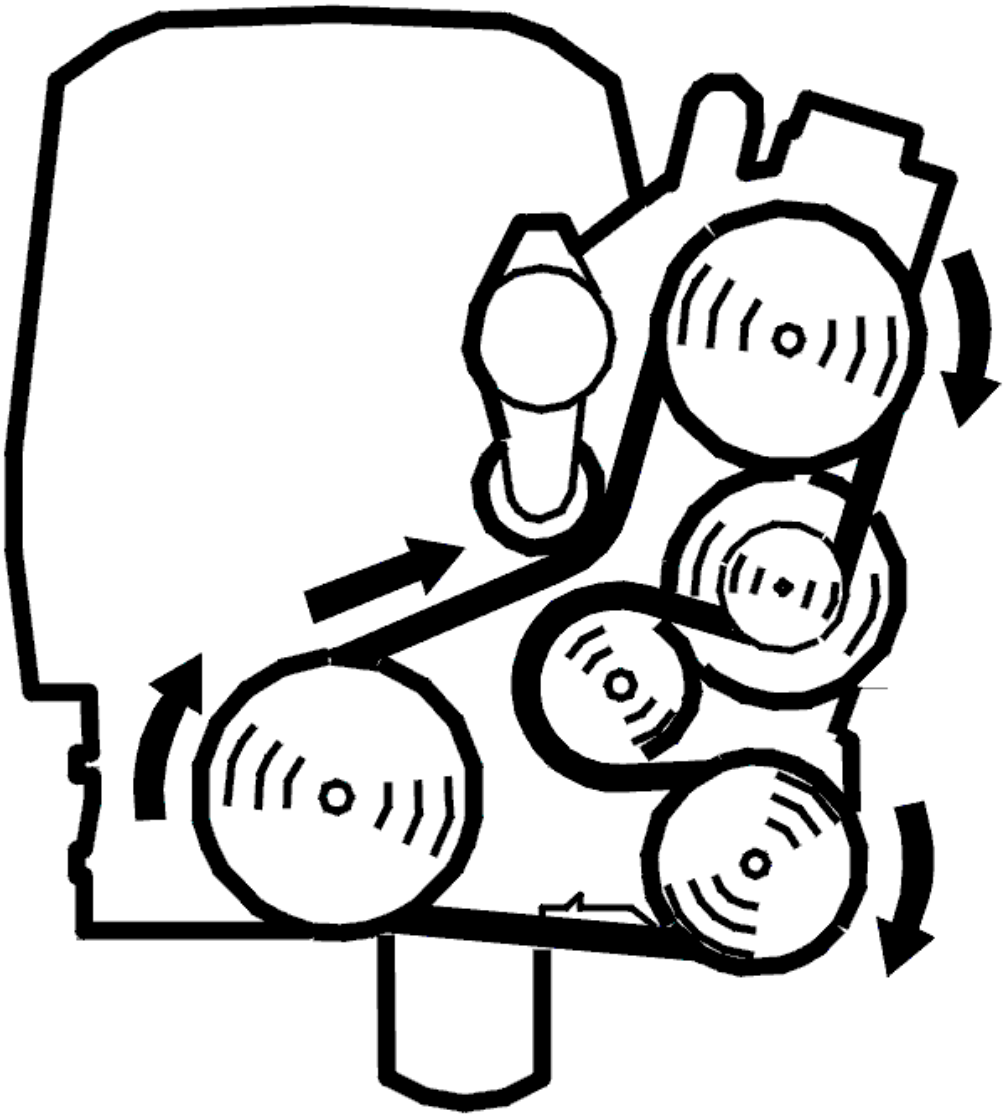

Fig. 418: Identifying Belt Routing
Courtesy of VOLVO CARS CORPORATION

- Deactivate the function for STC/DSTC by pressing the button for STC/DSTC for approximately 2 seconds
- Ignition off
- Connect T-pipe see **9997002** with oil pressure gauge see **9995114** to the coolant hose from the transmission for the oil cooler
- Raise the car so that the drive wheels are clear of the ground.

WARNING: **Ensure that the car safely raised. Ensure that there are no objects caught in the front wheels.**

- Start the engine

- Gear selector in position P
- Activate the function "Block automatic shifting".

Other information

- To connect the T-pipe to the oil cooler for the transmission. See **T-PIPE, CONNECTING TO OIL COOLER**.

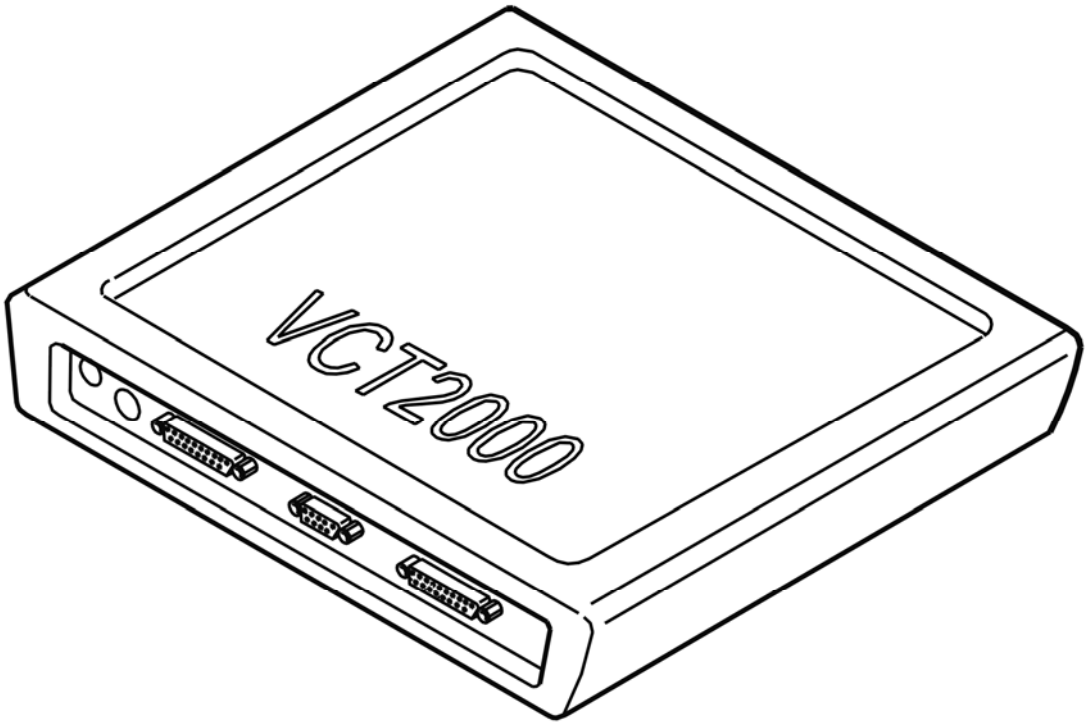

Fig. 419: Identifying VCT2000 Diagnostic Tool Symbol In VIDA
Courtesy of VOLVO CARS CORPORATION

Allow the engine to run.

- **Continue**

Refer to **CHECKING LOCK-UP SOLENOID SL**

CHECKING LOCK-UP SOLENOID SL

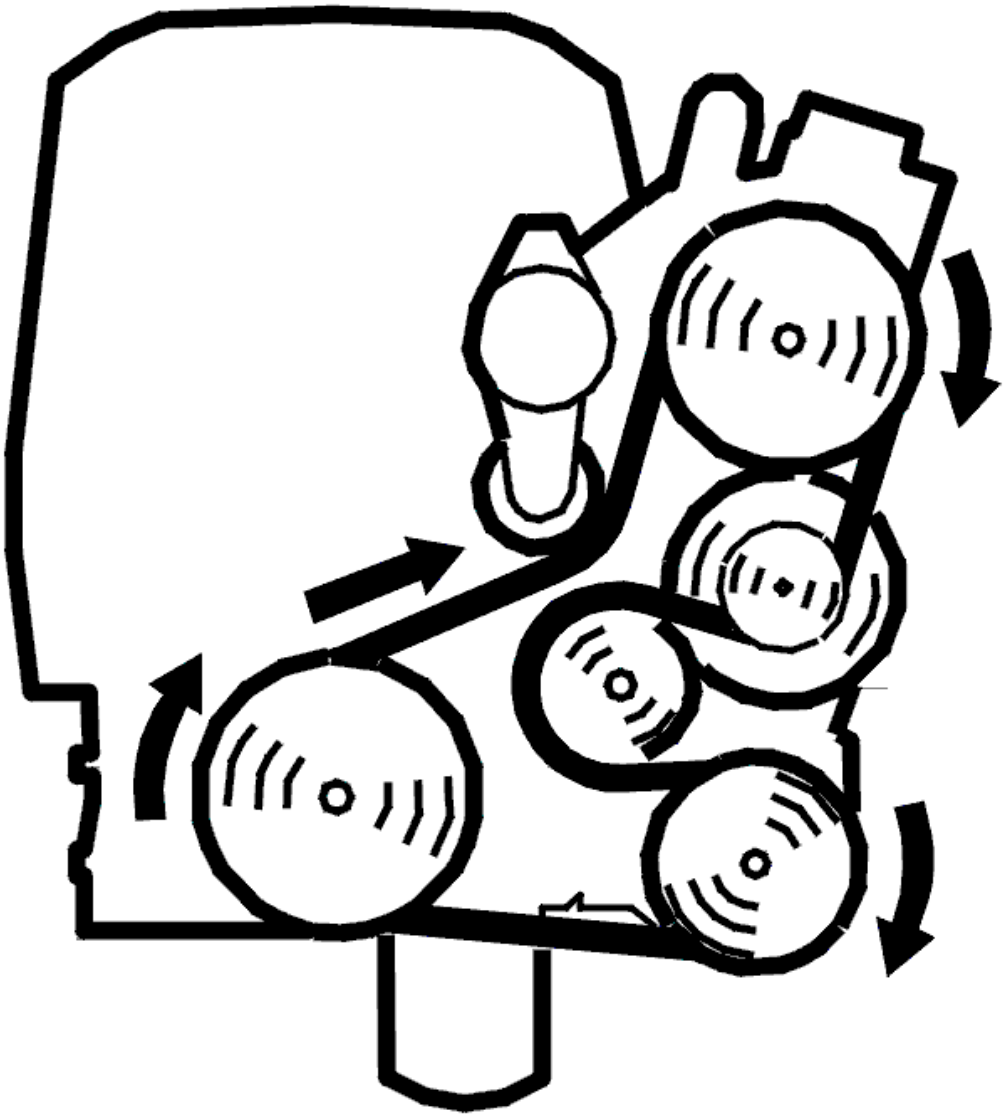

Fig. 420: Identifying Belt Routing
Courtesy of VOLVO CARS CORPORATION

- Engine running
- Move the gear selector to position D
- Activate the solenoid for gear 2 and then the lock-up function
- Check the pressure change on the oil pressure gauge. A considerable change in pressure should be observed
- Deactivate the lock-up function. Check the pressure change.

  Repeat the activation and deactivation of the lock-up function a few times to ensure accurate results.

  HINT: Unchanged pressure means that the control system is defective.

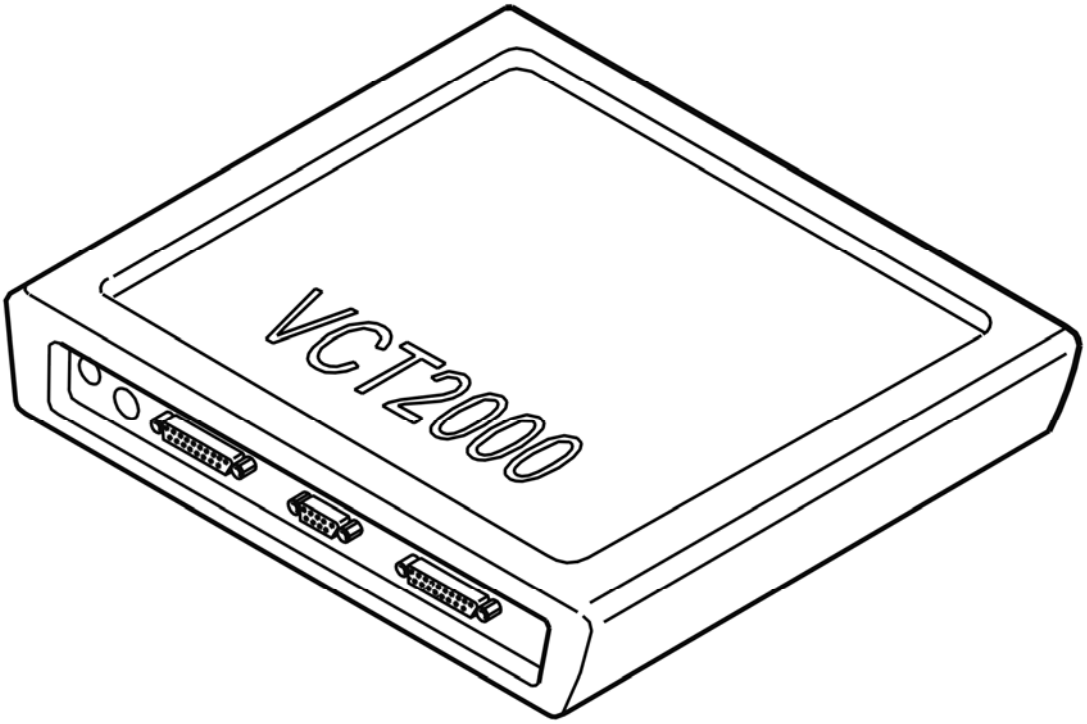

Fig. 421: Identifying VCT2000 Diagnostic Tool Symbol In VIDA
Courtesy of VOLVO CARS CORPORATION

Did the pressure change?

- **YES**

  Refer to **CHECKING THE LOCK-UP FUNCTION**

- **NO**

  Refer to **REPLACING TRANSMISSION CONTROL SYSTEM**

CHECKING THE LOCK-UP FUNCTION

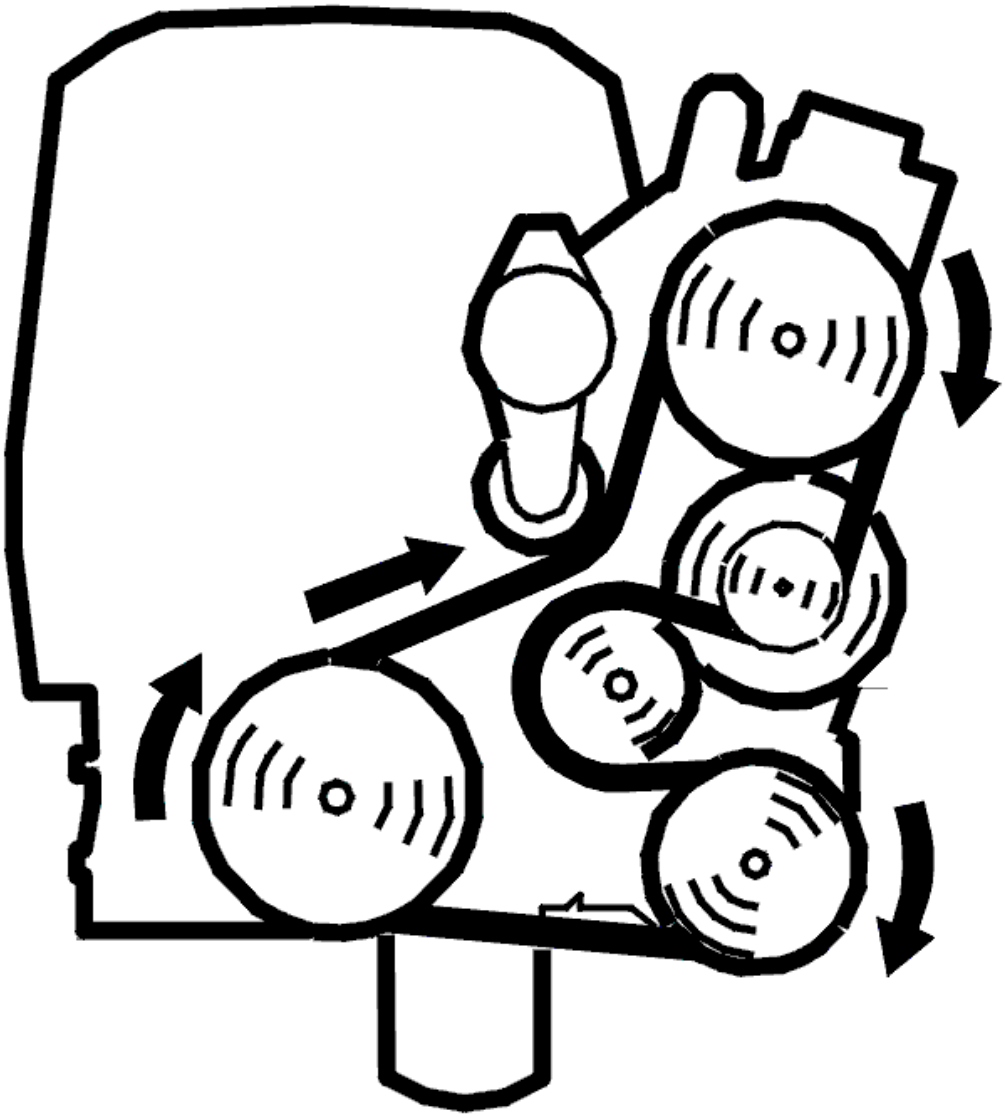

Fig. 422: Identifying Belt Routing
Courtesy of VOLVO CARS CORPORATION

- Engine running
- Raise the car so that the wheels can rotate freely
- Move the gear selector to position D
- Rev the engine to 2000 RPM
- Activate the solenoid for gear 2 and then the lock-up function
- Read off the input transmission speed and the engine speed.

  Press the accelerator pedal (AP). Check the lock-up function by comparing the input speed of the transmission and the engine speed (RPM). The speeds should follow each other and be approximately the same. If the difference in speed is greater than 100 RPM the lock-up function is not functioning.

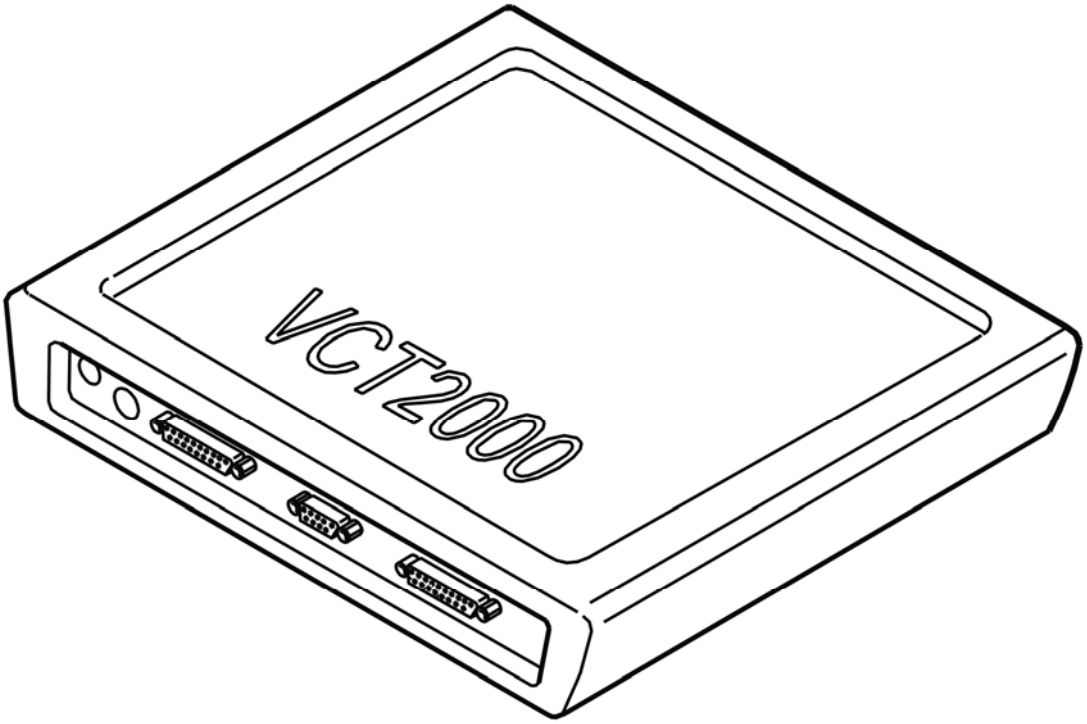

Fig. 423: Identifying VCT2000 Diagnostic Tool Symbol In VIDA
Courtesy of VOLVO CARS CORPORATION

Is the difference in speed (RPM) greater than 100 RPM?

- **YES**

  Refer to **REPLACING A FAULTY TRANSMISSION**

- **NO**

  Refer to **CHECKING THE RESISTANCE OF SOLENOID SL**

CHECKING THE RESISTANCE OF SOLENOID SL

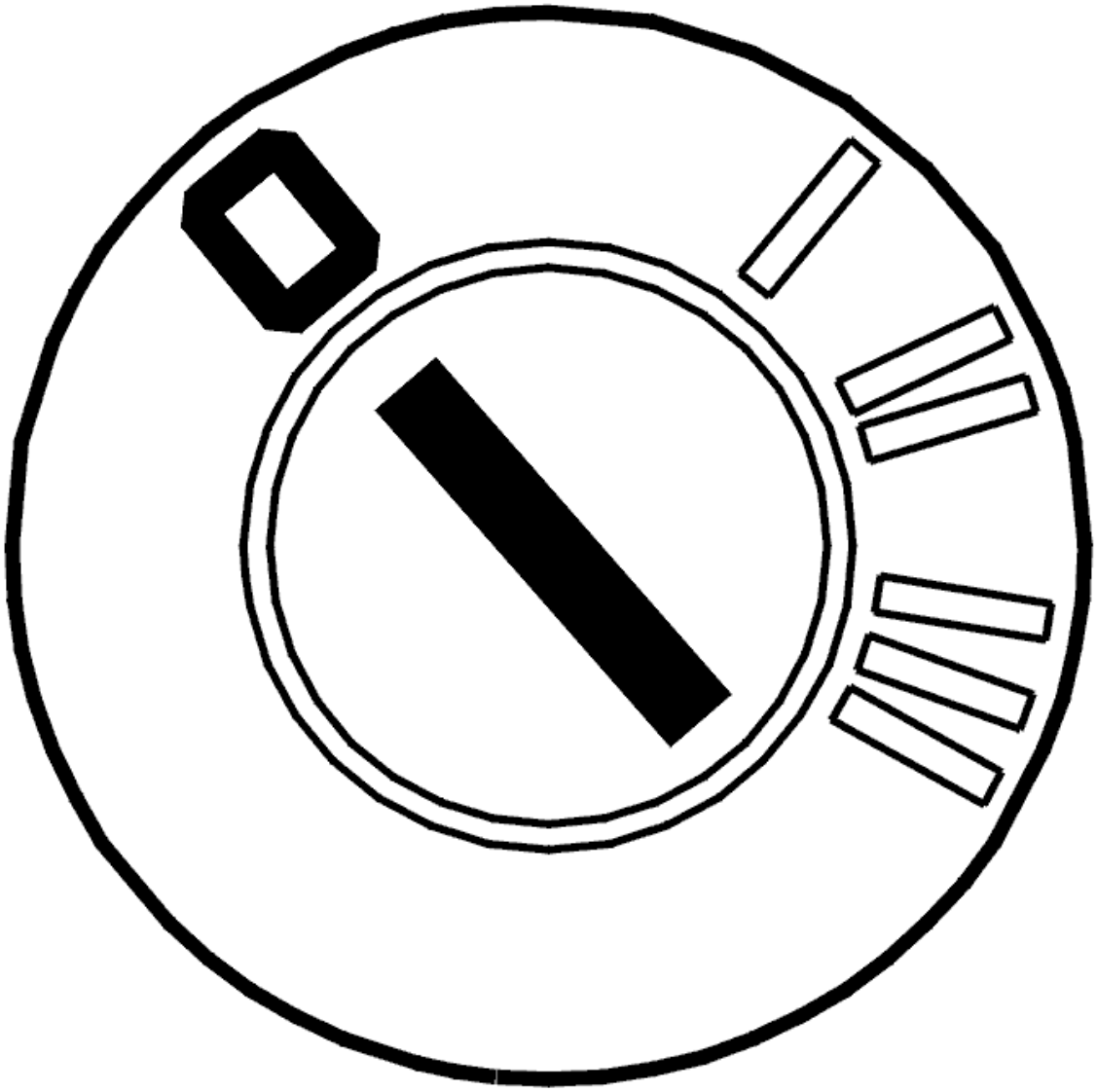

Fig. 424: Identifying Ignition OFF
Courtesy of VOLVO CARS CORPORATION

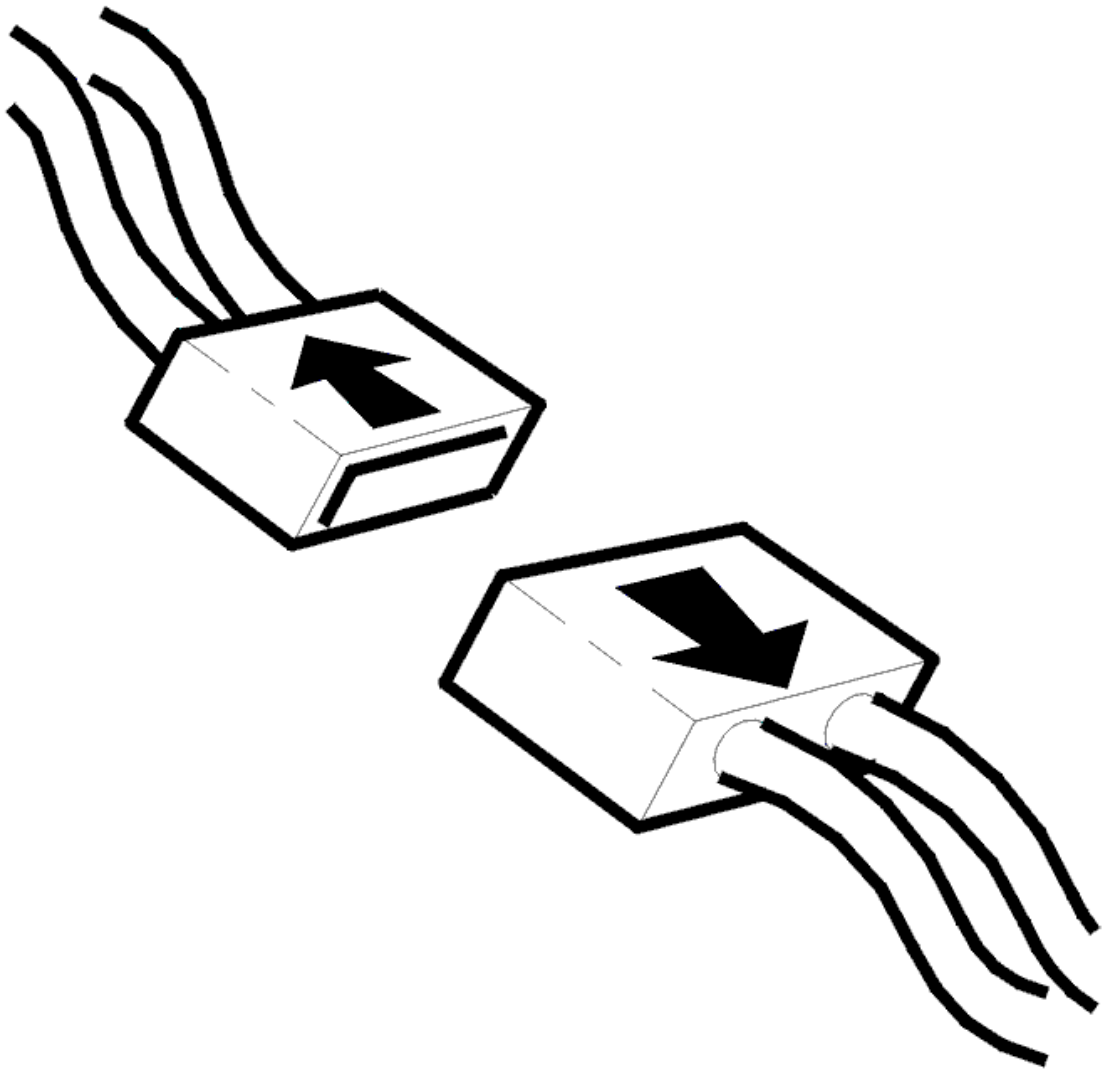

Fig. 425: Identifying Connector(s) Disconnected
Courtesy of VOLVO CARS CORPORATION

- Ignition off
- Connect the breakout box
- Connect adapter see **9511505** and breakout box see **9813190** to the transmission connector (transmission side).

  Connect an ohmmeter between terminals E (#A5) and T (#A17).

  The solenoid SL resistance must be between 11 and 15 ohms.

  Other information:

  - To connect the breakout box, see **CONNECTING THE BREAKOUT BOX**

- To connect the breakout box to the transmission connector, see **CONNECTING THE BREAKOUT BOX, GM AUTOMATIC TRANSMISSIONS**
- For information about signals, see **SIGNAL SPECIFICATION**
- see **CHECKING WIRING AND TERMINALS**

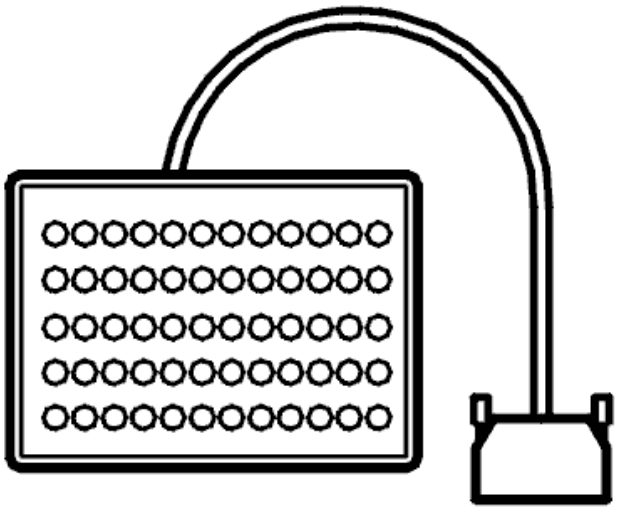

Fig. 426: Identifying Breakout Box
Courtesy of VOLVO CARS CORPORATION

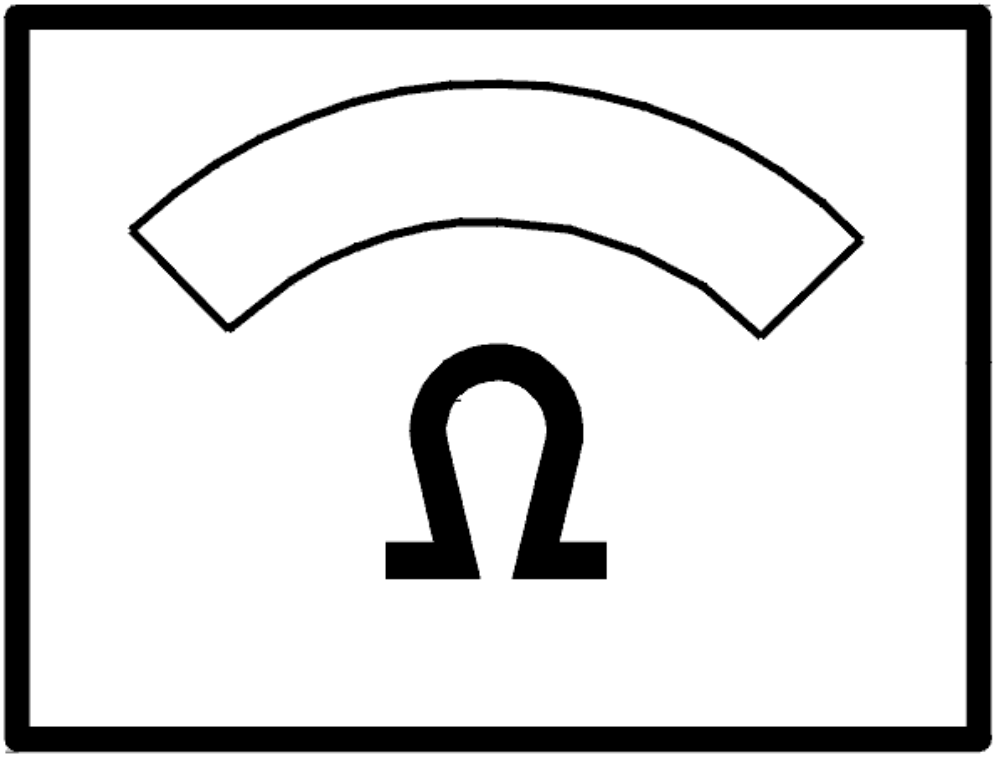

Fig. 427: Identifying Ohms Display
Courtesy of VOLVO CARS CORPORATION

Was the resistance OK?

- **YES**

  Refer to **TEST DRIVING**

- **NO**

  Refer to **CHECKING THE WIRING**

TEST DRIVING

NOTE: Test drive the car according to the driving schedule below to check whether the

fault is still active. The test drive is compiled in order to create the conditions in which the diagnostic trouble code (DTC) will be stored again if the fault is active.

The TEST MODE function can be used to provoke any diagnostic trouble codes (DTC). The function reduces the conditions for how quickly diagnostic trouble codes (DTCs) are stored in the control module and the test drive becomes easier.

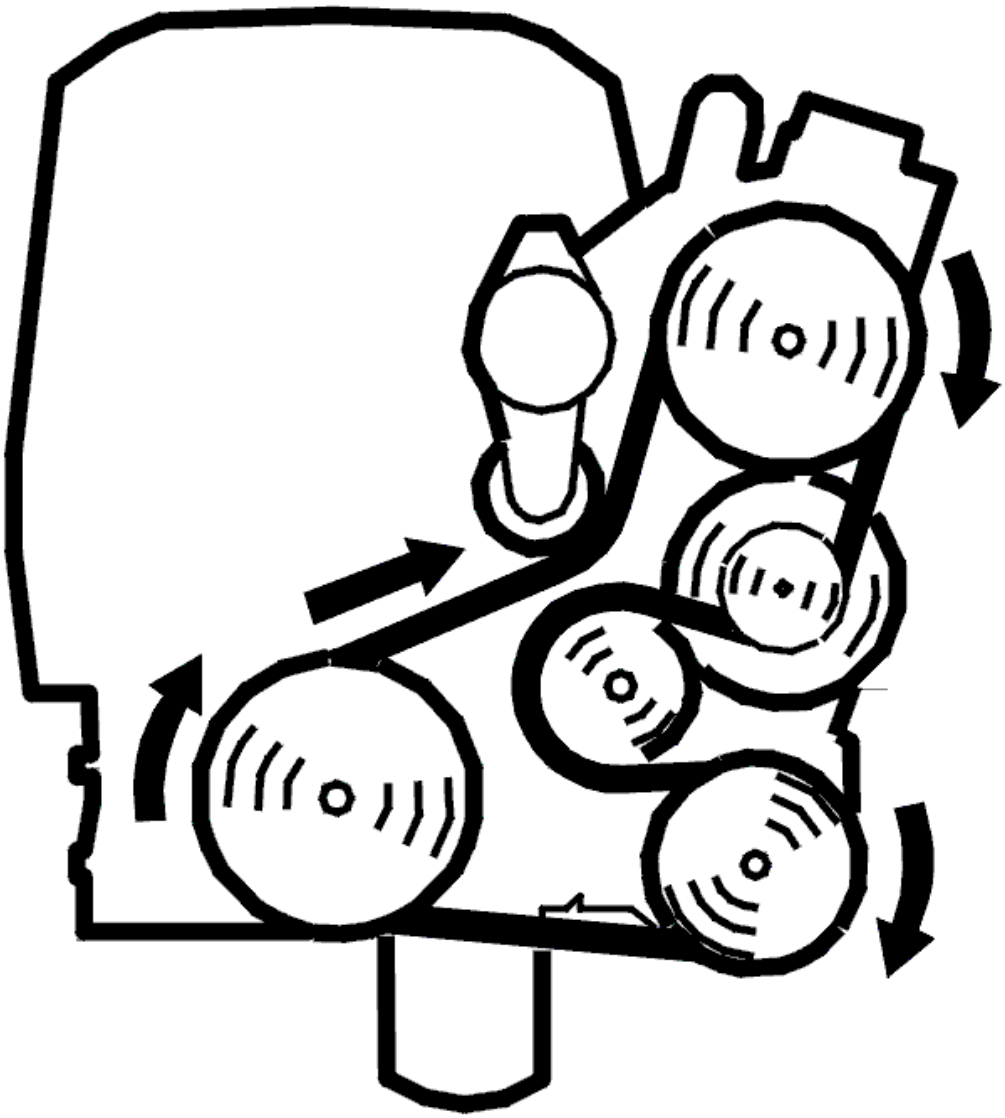

Fig. 428: Identifying Belt Routing
Courtesy of VOLVO CARS CORPORATION

- Start the engine
- Activate TEST MODE.

NOTE: Do not switch off the engine

- Disconnect the VIDA station. Test drive the car as described below.

WARNING: Please observe traffic regulations.

NOTE: Before test driving, the transmission should be at operating temperature, approximately 80-90 °C.

Shift the gear selector to position 3 (third gear with Geartronic). Carefully accelerate to 85 km/h. Maintain the same speed for a few seconds. Carefully accelerate for approximately 30 seconds to increase the engine torque.

HINT: The car must be driven at an engine speed where the lock-up function is normally fully activated and not slipping. The following gear positions and speeds are also possible:

- 120 km/h gear position D
- 85 km/h gear position 3.

Criteria for diagnostic trouble code (DTC):

- The transmission fluid temperature must exceed 30 °C
- No shifting during the evaluation period
- Positive engine torque (no engine braking)
- Gear selector in position D, 3 or 2 (4T65EV).

  Gear selector in Geartronic position and gears 4, 3 or 2 (4T65EV-GT)

- Speed 85 km/h for at least 30 seconds.

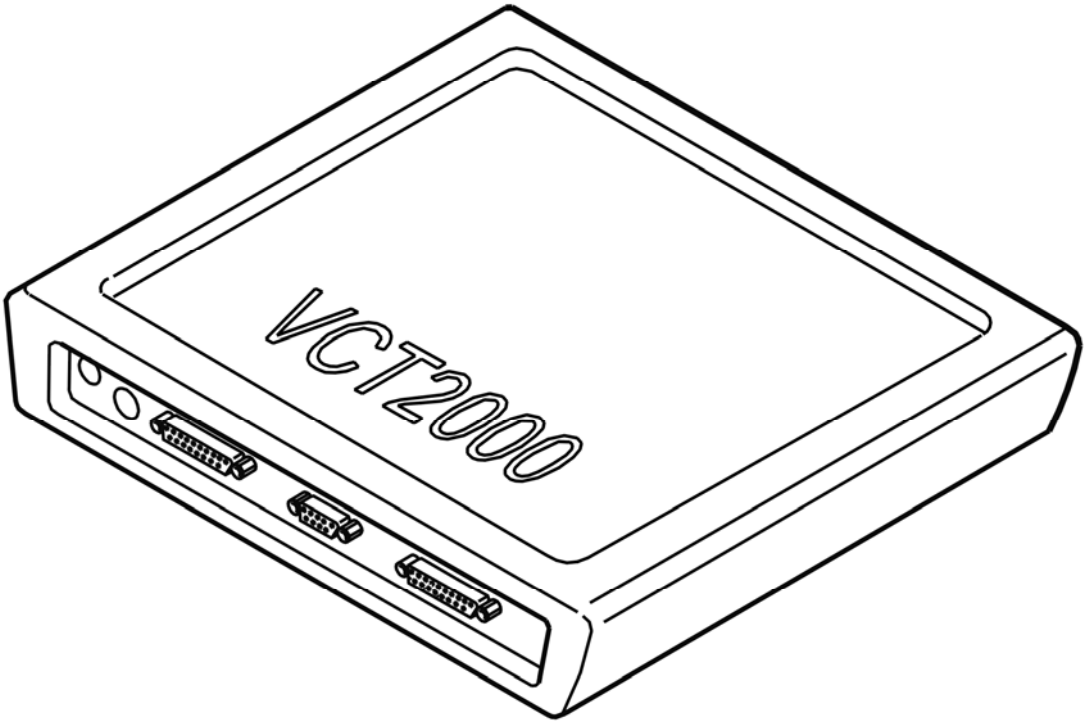

Fig. 429: Identifying VCT2000 Diagnostic Tool Symbol In VIDA
Courtesy of VOLVO CARS CORPORATION

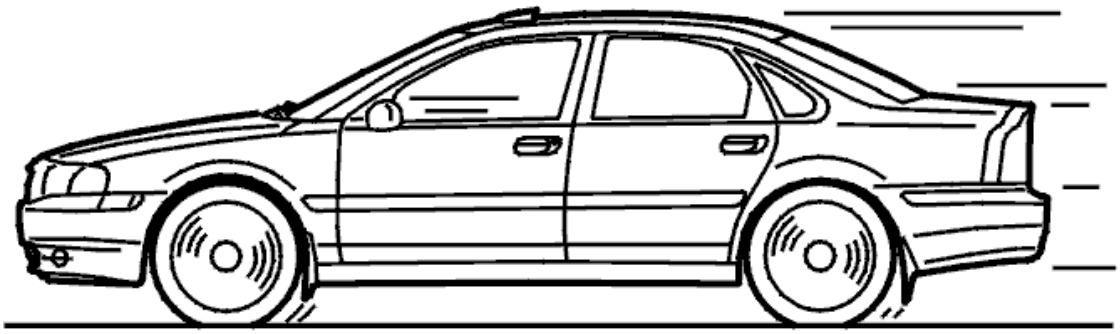

Fig. 430: Identifying Test Drive
Courtesy of VOLVO CARS CORPORATION

- **Continue**

Refer to **CHECKING THE DIAGNOSTIC TROUBLE CODES (DTCS)**

CHECKING THE DIAGNOSTIC TROUBLE CODES (DTCS)

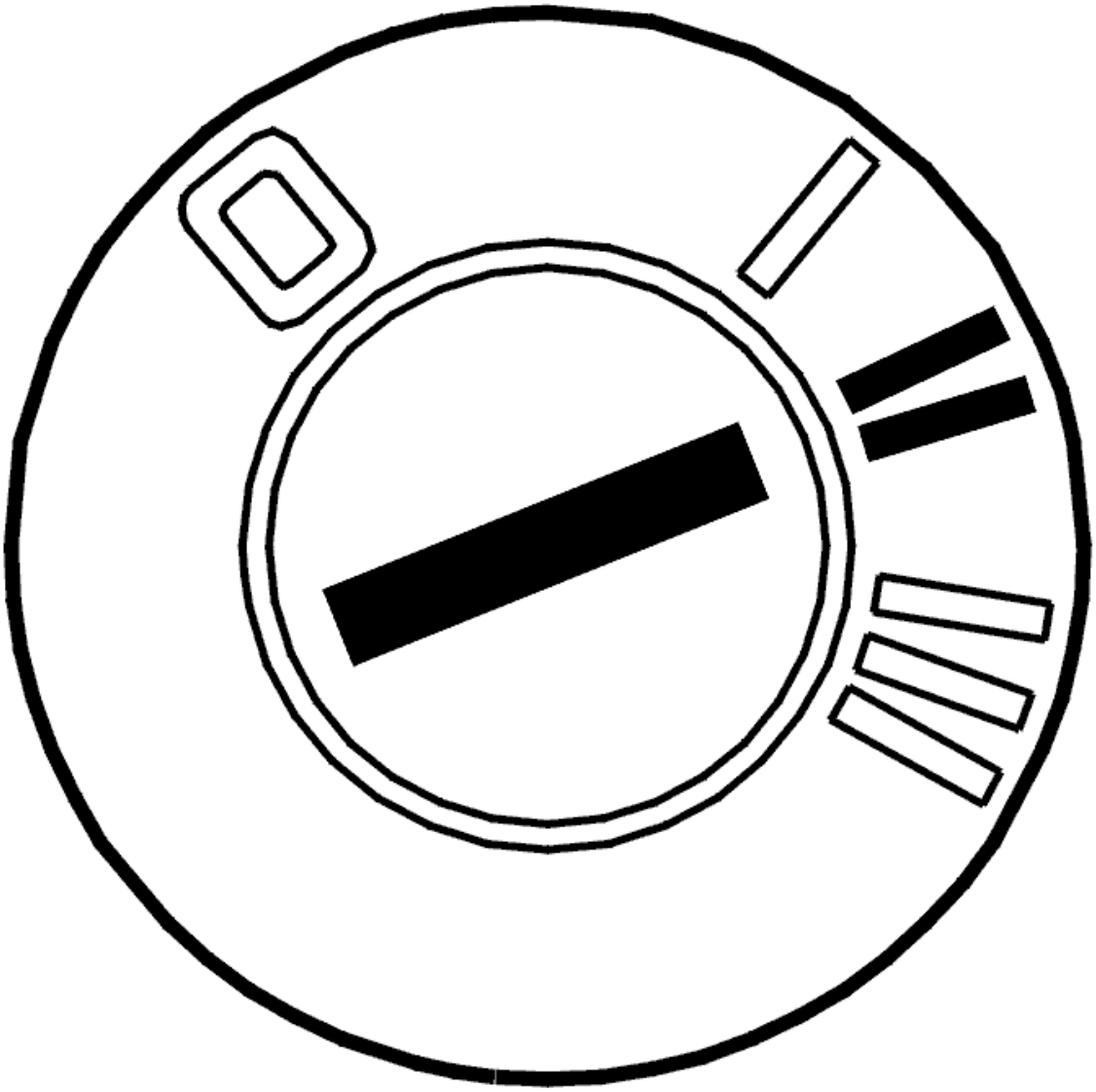

Fig. 431: Identifying Ignition ON
Courtesy of VOLVO CARS CORPORATION

- Ignition on
- Read off diagnostic trouble codes (DTCs).

  If any other diagnostic trouble codes (DTCs) than TCM-002F are stored, these must be fault-traced and remedied after this fault-tracing is completed.

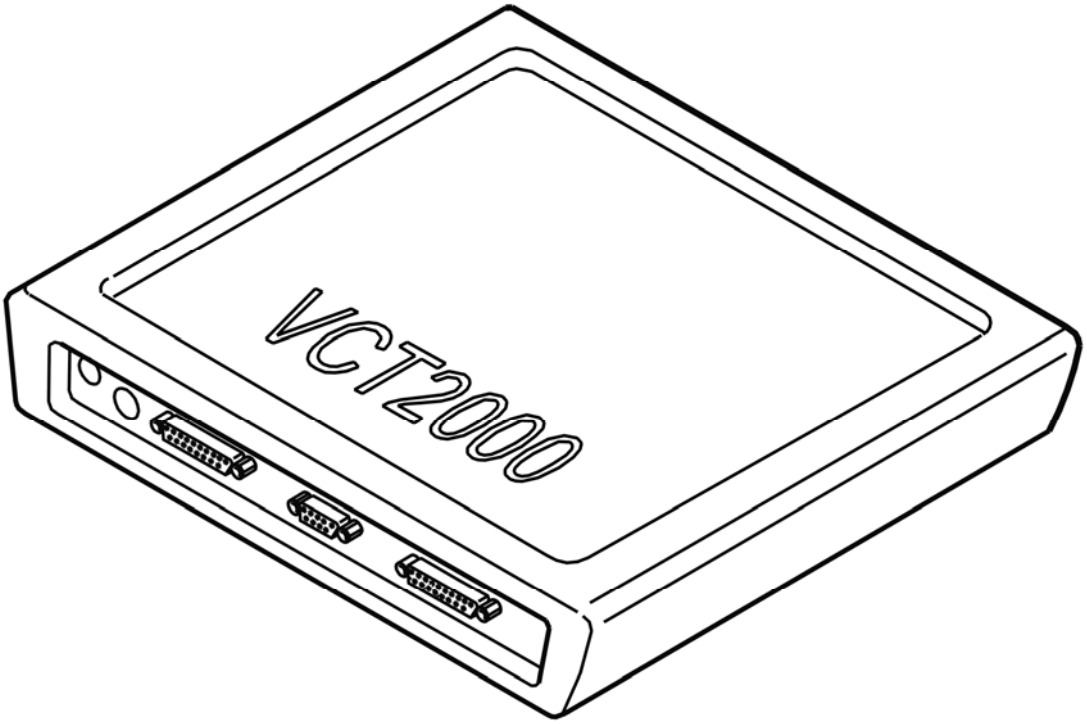

Fig. 432: Identifying VCT2000 Diagnostic Tool Symbol In VIDA
Courtesy of VOLVO CARS CORPORATION

Was diagnostic trouble code (DTC) TCM-002F stored?

- **YES**

  Refer to **REPLACING A FAULTY TRANSMISSION**

- **NO**

  OKAY: Troubleshooting has been completed.

REPLACING TRANSMISSION CONTROL SYSTEM

Replace the transmission control system:

- For removal, see **CONTROL SYSTEM/VALVE HOUSING, REMOVING**
- To install, see **CONTROL SYSTEM / VALVE HOUSING, INSTALLING** .

- **Continue**

  Refer to **RESETTING THE ADAPTATION**

CHECKING THE WIRING

HINT: 2 breakout boxes can be used to make fault-tracing easier.

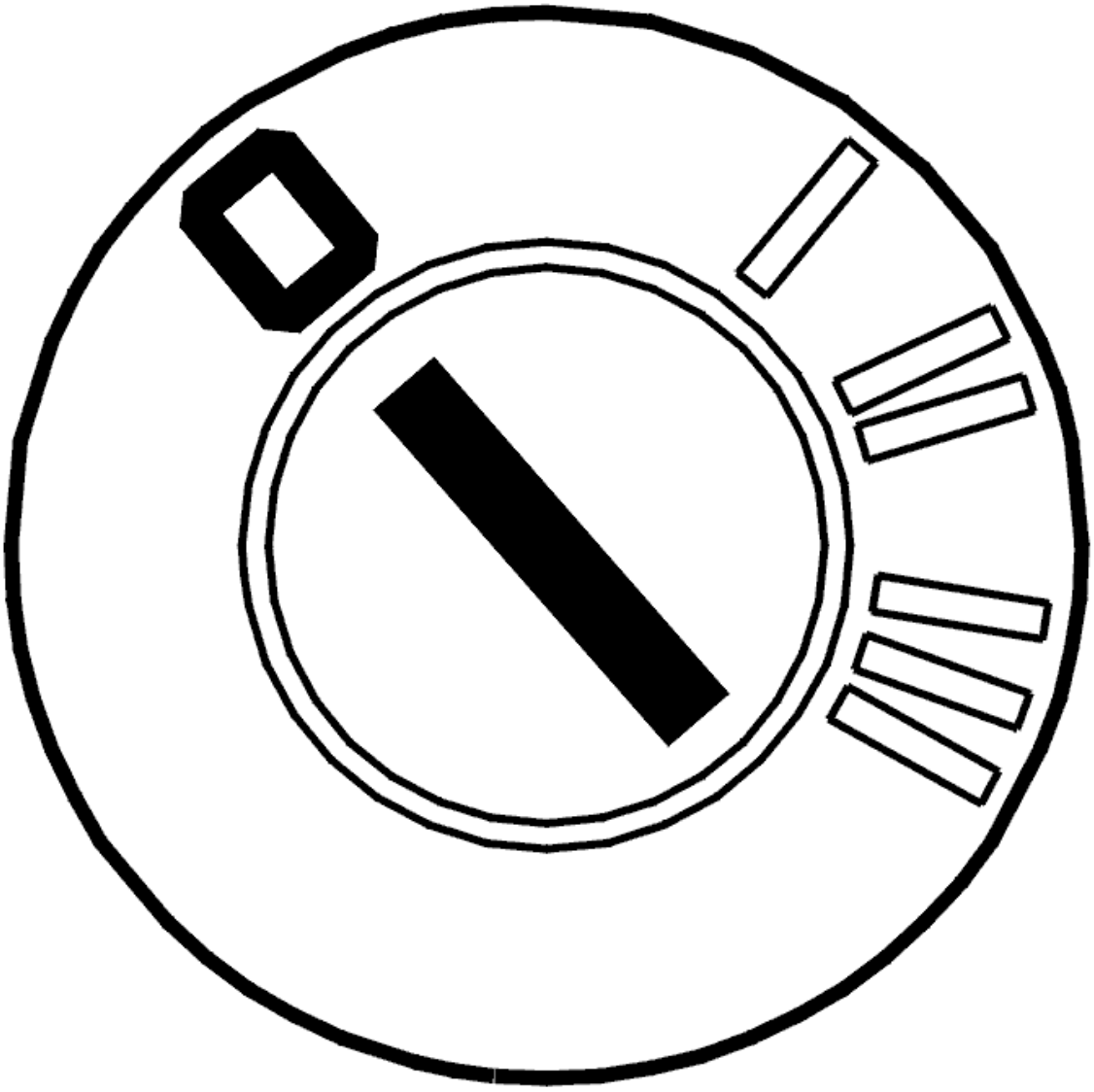

Fig. 433: Identifying Ignition OFF
Courtesy of VOLVO CARS CORPORATION

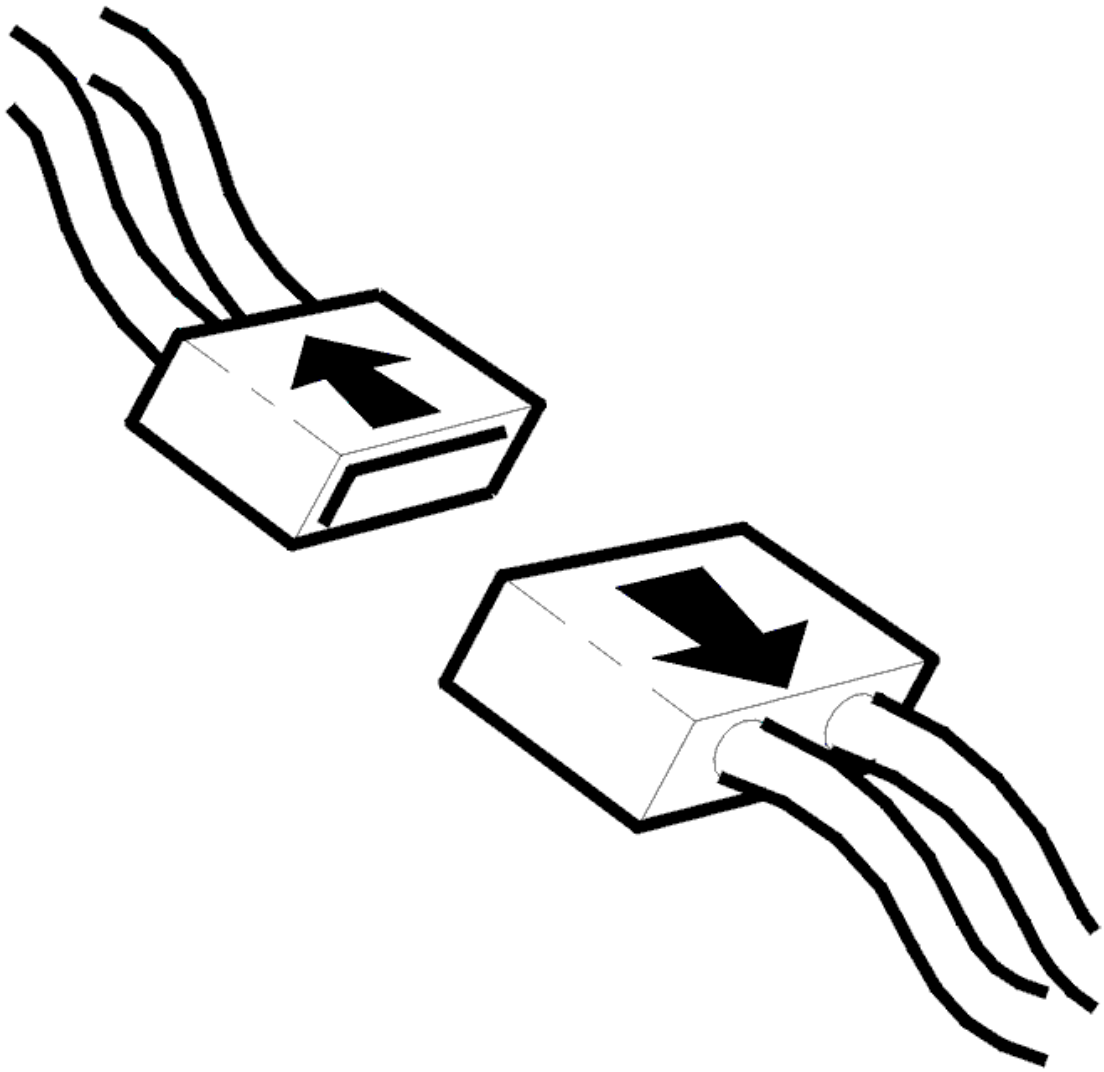

Fig. 434: Identifying Connector(s) Disconnected
Courtesy of VOLVO CARS CORPORATION

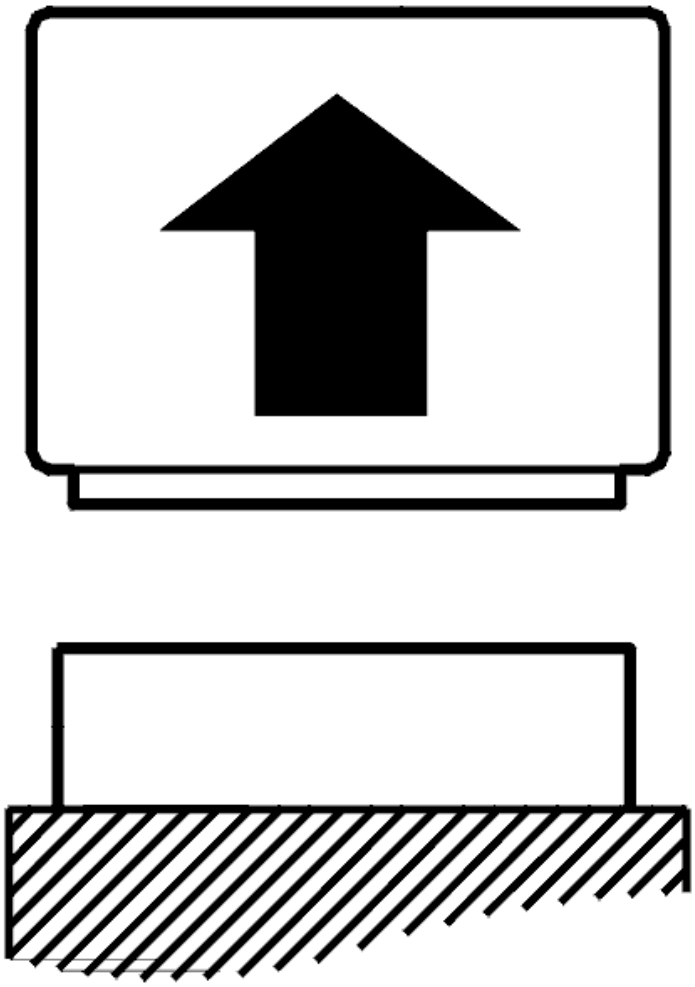

Fig. 435: Identifying Control Module Disconnected
Courtesy of VOLVO CARS CORPORATION

- Ignition off
- Connect the breakout box
- Disconnect the control module.
- Disconnect the transmission connector
- Connect adapter see **9511505** and breakout box see **9813190** to the transmission connector (transmission side).

  Check the cable between control module terminal #51 (#A51) and transmission connector (control module side) terminal #T (#A17). Check for an open-circuit. Check for a short-circuit to ground. Check for a short-circuit to supply voltage.

  Check the cable between control module terminal #53 (#A53) and transmission connector (control

module side) terminal #E (#A5). Check for an open-circuit. Check for a short-circuit to ground. Check for a short-circuit to supply voltage.

HINT: Also check all the other power supply cables in the circuit.

Remedy as necessary.

Other information:

- To connect the breakout box, see **CONNECTING THE BREAKOUT BOX**
- To connect the breakout box to the transmission connector, see **CONNECTING THE BREAKOUT BOX, GM AUTOMATIC TRANSMISSIONS**
- For information about signals, see **SIGNAL SPECIFICATION**
- see **CHECKING WIRING AND TERMINALS**

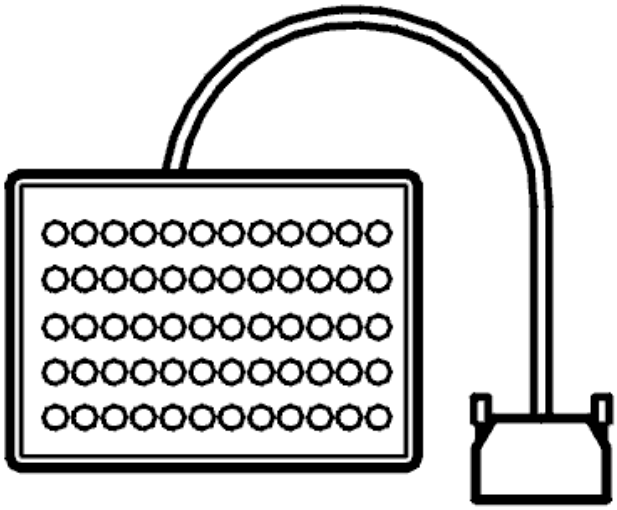

Fig. 436: Identifying Breakout Box
Courtesy of VOLVO CARS CORPORATION

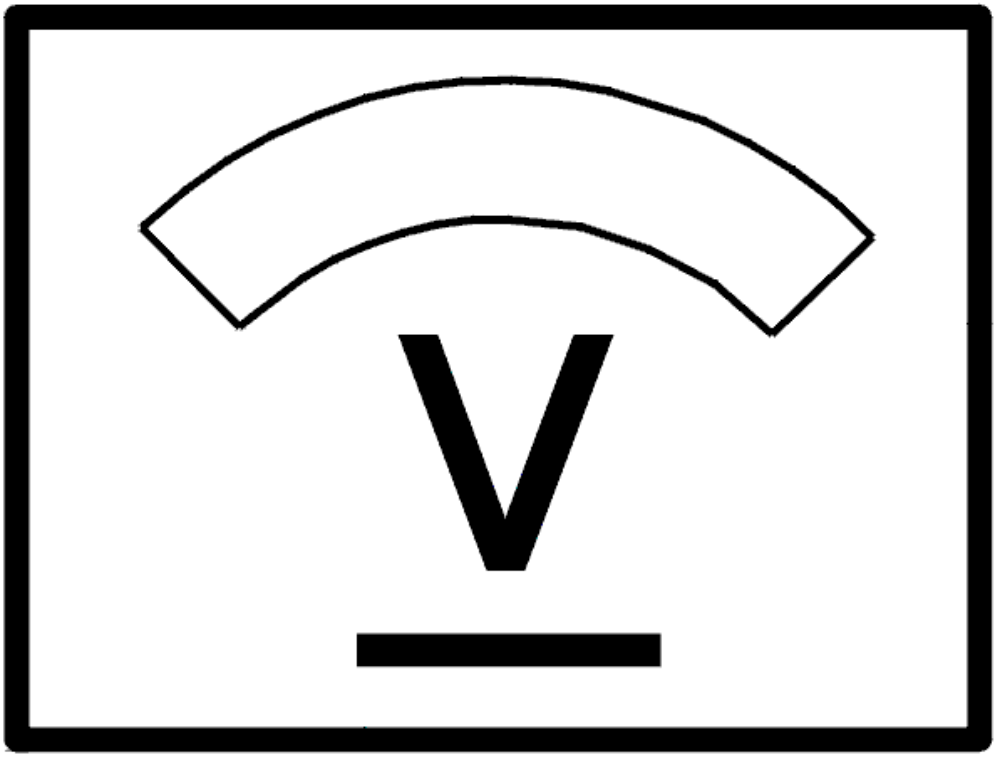

Fig. 437: Identifying Voltage Display
Courtesy of VOLVO CARS CORPORATION

Was a fault detected?

- **YES**

  Refer to **CHECKING DIAGNOSTIC TROUBLE CODES (DTCS)**

- **NO**

  Refer to **CHECKING THE CIRCUIT FOR SOLENOID SL**

CHECKING THE CIRCUIT FOR SOLENOID SL

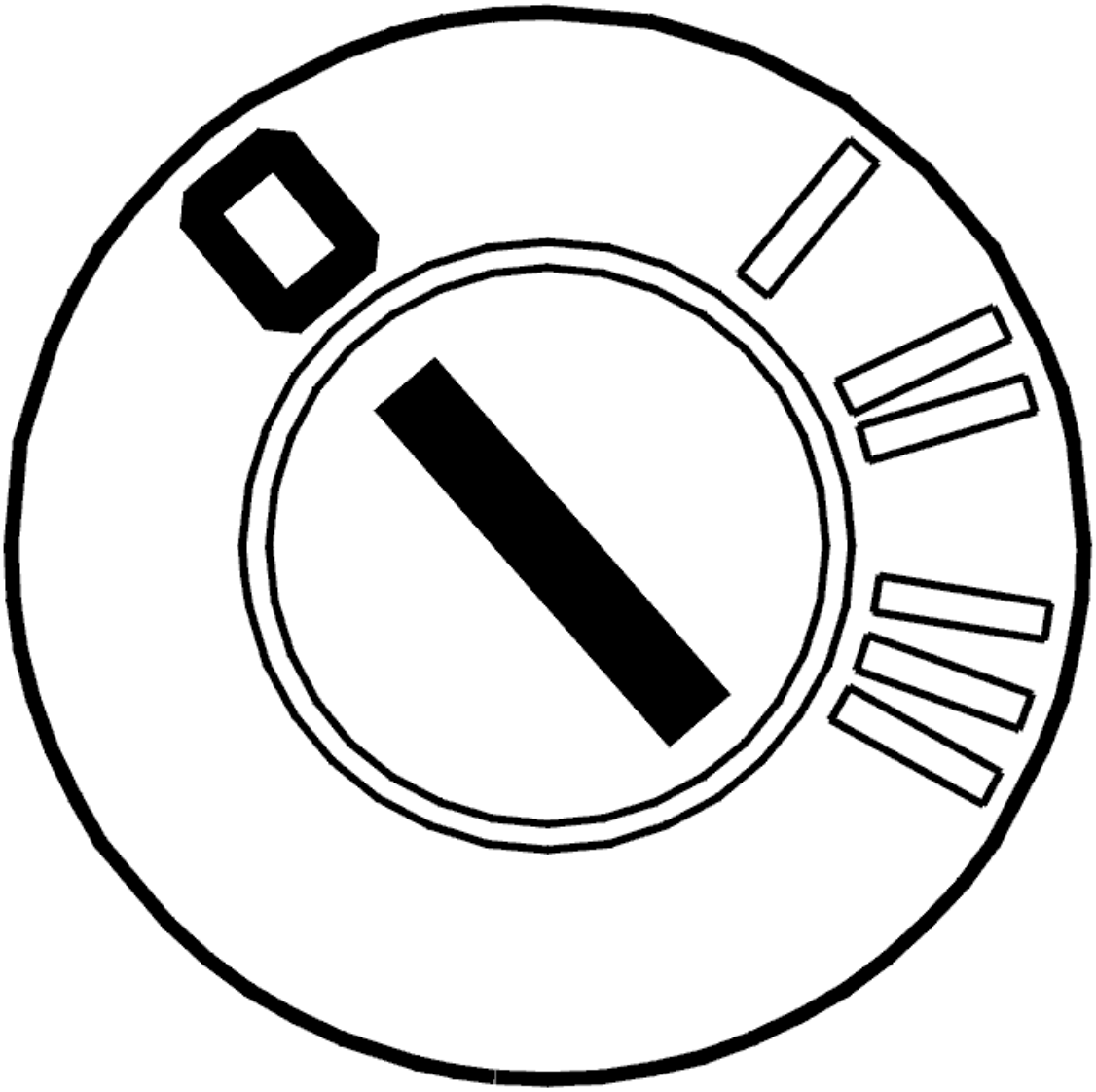

Fig. 438: Identifying Ignition OFF
Courtesy of VOLVO CARS CORPORATION

- Ignition off
- Open the transmission control system.

  Check the cable between transmission connector terminal #T (#A17) and solenoid SL terminals #A and #E (#A5) and solenoid SL terminal #B. Check for a short-circuit to supply voltage.

  Check all the cables in the wiring harness from the transmission connector to the transmission components. Check for a short-circuit to each other.

  HINT: Check solenoid SL. Measure the solenoid resistance between terminals #A and #B. The resistance must be between 10 and 15 ohms.

  Remedy as necessary.

Other information:

- To connect the breakout box to the transmission connector, see **CONNECTING THE BREAKOUT BOX, GM AUTOMATIC TRANSMISSIONS**
- To open the transmission control system, For removal, see **SIDE COVER TRANSMISSION, REMOVING** . To install, see **SIDE COVER TRANSMISSION, INSTALLING**
- To replace solenoid SL, see **SOLENOID LOCK-UP FUNCTION, REPLACING**
- To replace the cable harness, see **TEMPERATURE SENSOR FLUID, TRANSAXLE, (TFT)**
- For information about signals, see **SIGNAL SPECIFICATION**
- see **CHECKING WIRING AND TERMINALS**

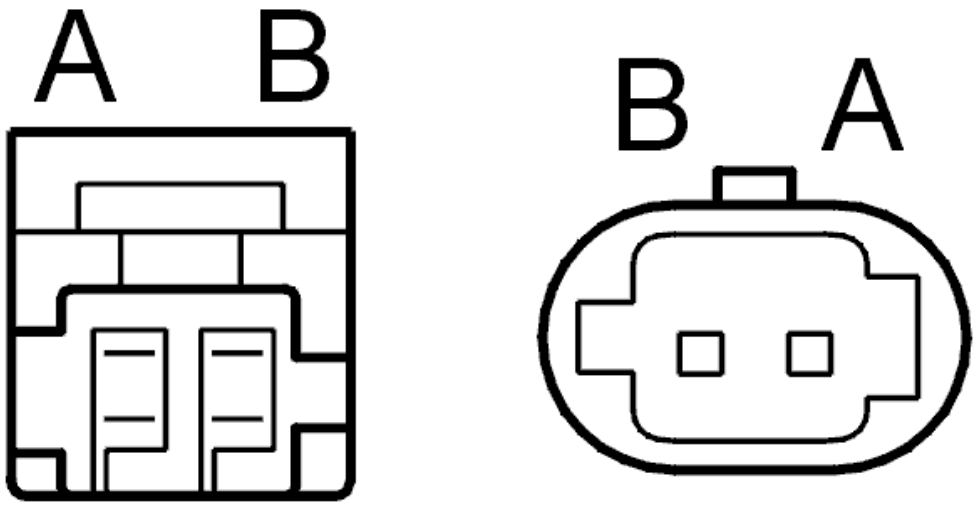

Fig. 439: Identifying Connector Terminals
Courtesy of VOLVO CARS CORPORATION

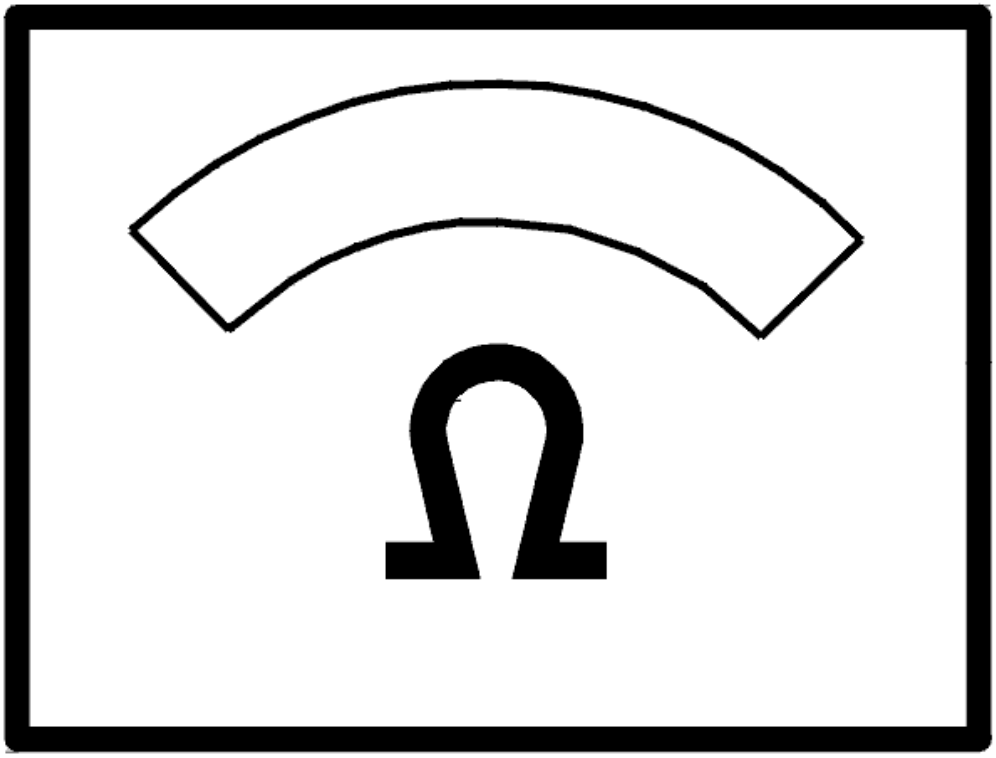

Fig. 440: Identifying Ohms Display
Courtesy of VOLVO CARS CORPORATION

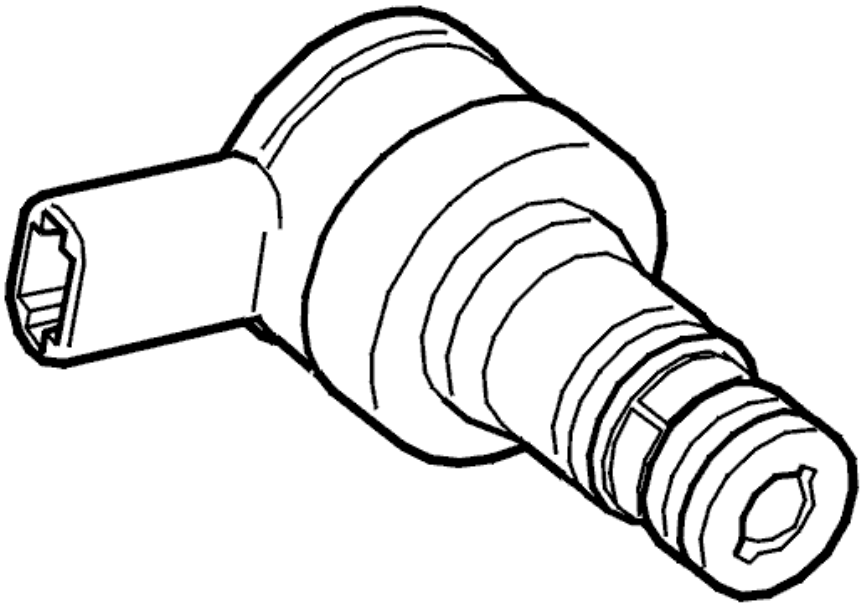

Fig. 441: Identifying Lock-Up Solenoid, SL
Courtesy of VOLVO CARS CORPORATION

- **Continue**

Refer to **RESETTING THE ADAPTATION**

CHECK THE QUALITY OF THE TRANSMISSION OIL

CHECK THE QUALITY OF THE TRANSMISSION OIL

NOTE: **The transmission fluid quality is extremely important for transmission function. Therefore it is imperative that this is correct.**

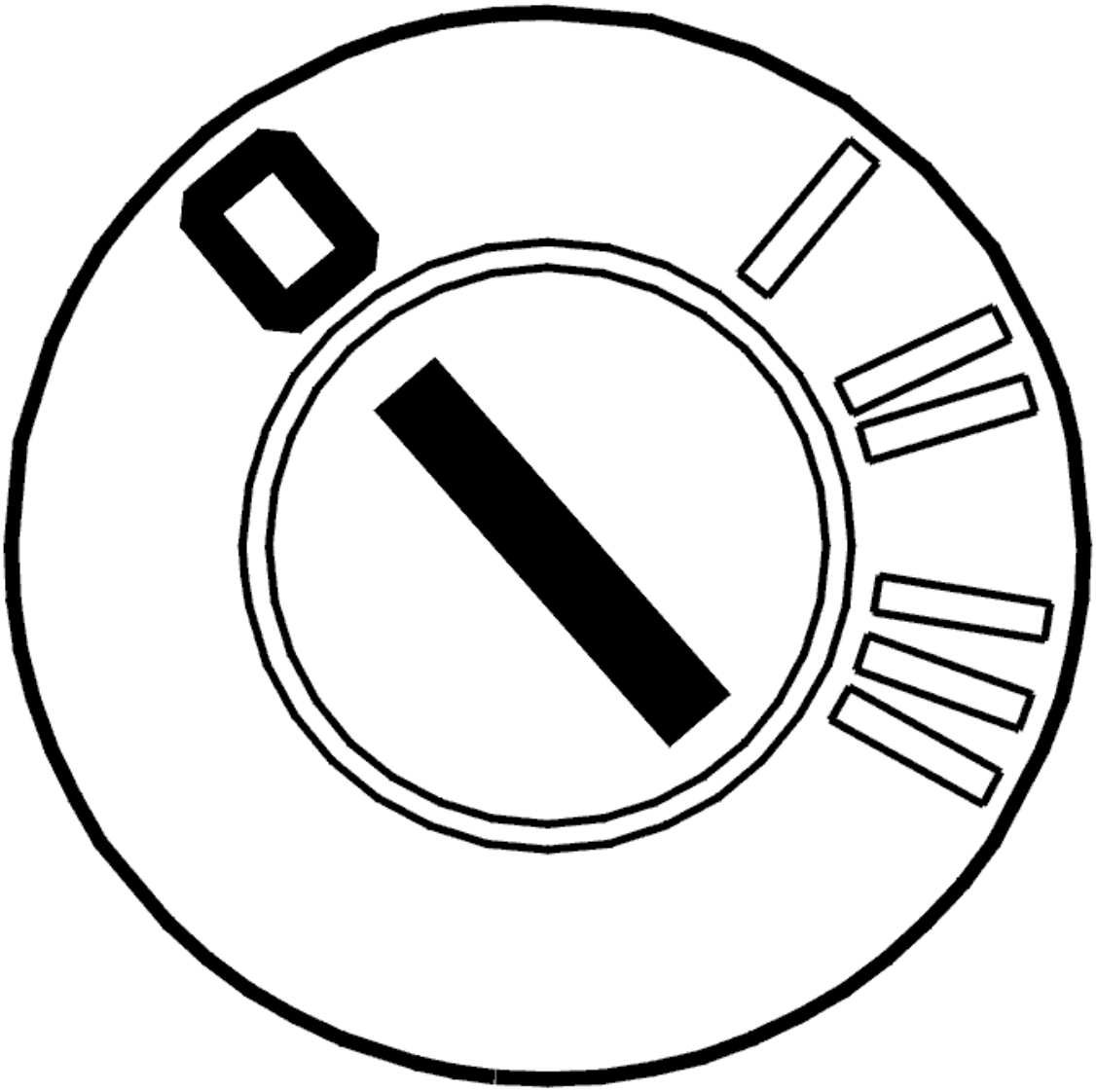

Fig. 442: Identifying Ignition OFF
Courtesy of VOLVO CARS CORPORATION

- Ignition off.

  Check the transmission oil quality. Take a sample using the dip stick.

  - Replace the transmission fluid if it smells burnt
  - Replace the fluid and filter if the transmission fluid contains particles
  - Check if there is oil or an oil film in the expansion tank. Oil in the expansion tank indicates leakage from the transmission oil cooler which is positioned in the cooler unit.

NOTE: **The transmission oil is red and must not be confused with black engine oil.**

- If the transmission fluid is cloudy or pink, it is contaminated with coolant. In such cases the transmission must be replaced. For checking coolant in transmission oil, see **CHECKING FOR COOLANT IN THE OIL**

  When replacing the transmission, the cooler unit, including the additional cooler must be replaced if installed. Replace the hoses between the cooler and the transmission.

Other information:

- To replace the transmission fluid and filter, see **TRANSMISSION OIL / OIL FILTER, REPLACING** .

Select an option:

1. The fluid contains water

   Refer to **REPLACING A FAULTY TRANSMISSION**

2. The fluid smells burnt or contains particles

   Refer to **REPLACING A FAULTY TRANSMISSION**

3. No fault detected.

   Refer to **CHECKING THE OIL LEVEL IN THE TRANSMISSION**

CHECKING THE OIL LEVEL IN THE TRANSMISSION

CHECK THE TRANSMISSION OIL LEVEL

NOTE: **The transmission fluid level is extremely important for transmission function. Therefore it is imperative that it is correct. In addition the oil level is dependent on oil temperature.**

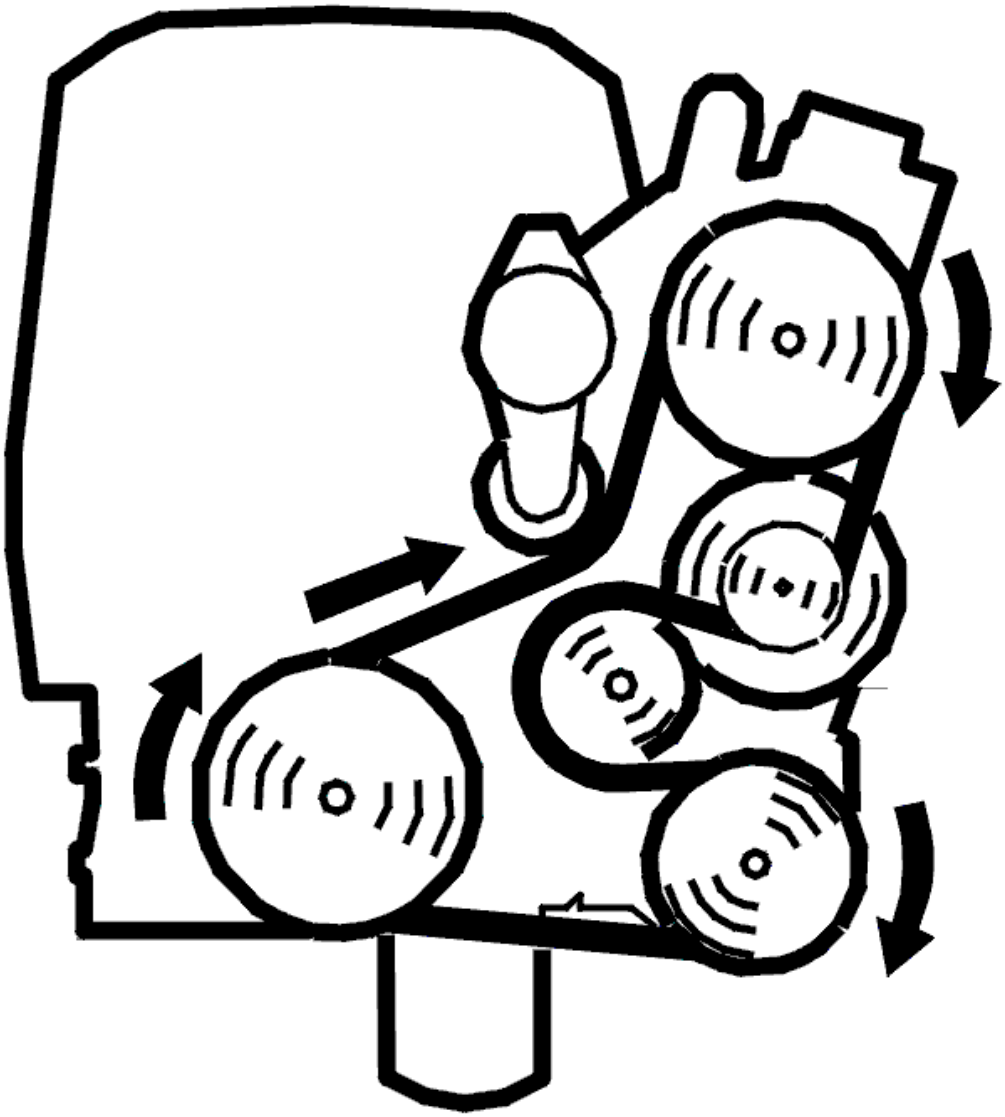

Fig. 443: Identifying Belt Routing
Courtesy of VOLVO CARS CORPORATION

- Start the car
- Read off the oil temperature.

When checking the gearbox oil level the oil temperature **must** be **80 °C - 90 °C** .

At the correct temperature, the oil level should be between "Min hot" and "Max hot".

Oil level

Too high: Drain the transmission fluid to the correct level
Too low: Check the transmission for leakage.

Remedy as necessary.

Other information:

- To check and adjust the oil level, see **OIL LEVEL, CHECKING** .

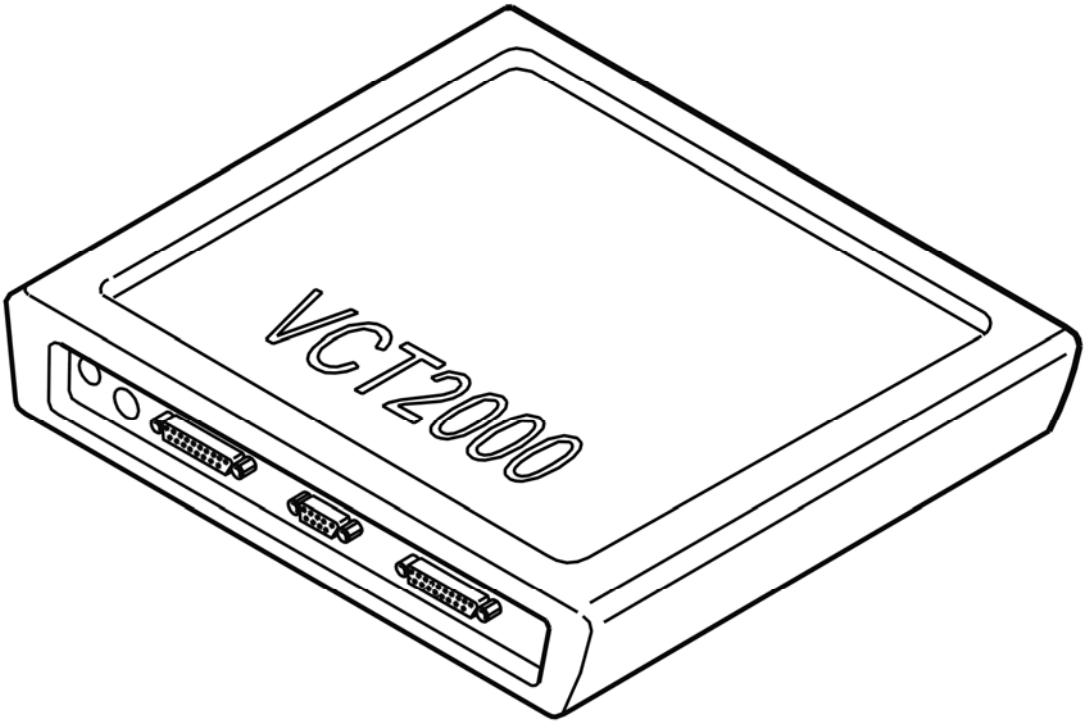

Fig. 444: Identifying VCT2000 Diagnostic Tool Symbol In VIDA
Courtesy of VOLVO CARS CORPORATION

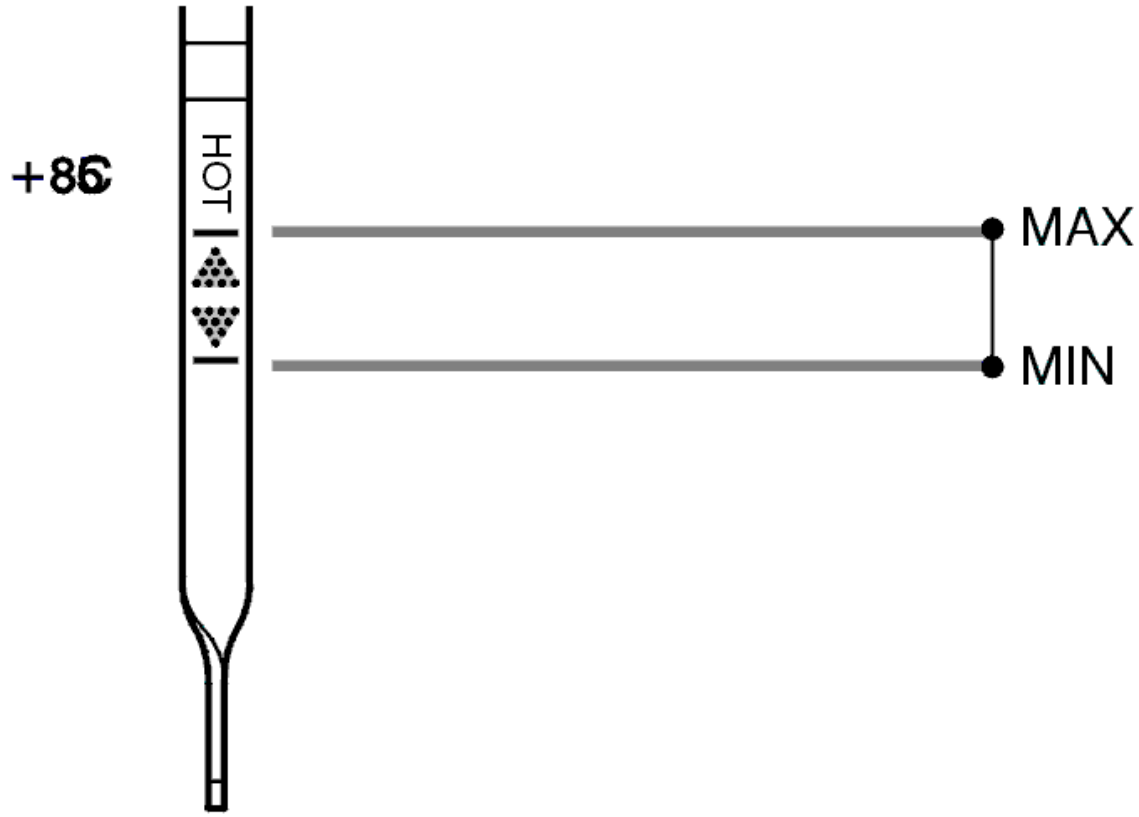

Fig. 445: Identifying Oil Level / Temperature
Courtesy of VOLVO CARS CORPORATION

Was the transmission fluid level correct?

- **YES**

  Refer to **ERASING DIAGNOSTIC TROUBLE CODES (DTCS)**

- **NO**

  Refer to **RESETTING TRANSMISSION FLUID CHANGE COUNTER**

RESETTING TRANSMISSION FLUID CHANGE COUNTER

RESETTING TRANSMISSION FLUID CHANGE COUNTER

HINT: The transmission control module (TCM) has a counter for the oil quality. The counter counts up if the transmission is exposed to too high a load or an ambient temperature that is too high. If the counter is not reset when the oil is drained or changed, there is a risk that a diagnostic trouble code (DTC) will be stored in faulty circumstances. Therefore it is important that the "Transmission oil change" counter is reset.

NOTE: This applies only when the transmission fluid is changed and when the fluid is

changed when repairs are carried out to the transmission temperature sensor.

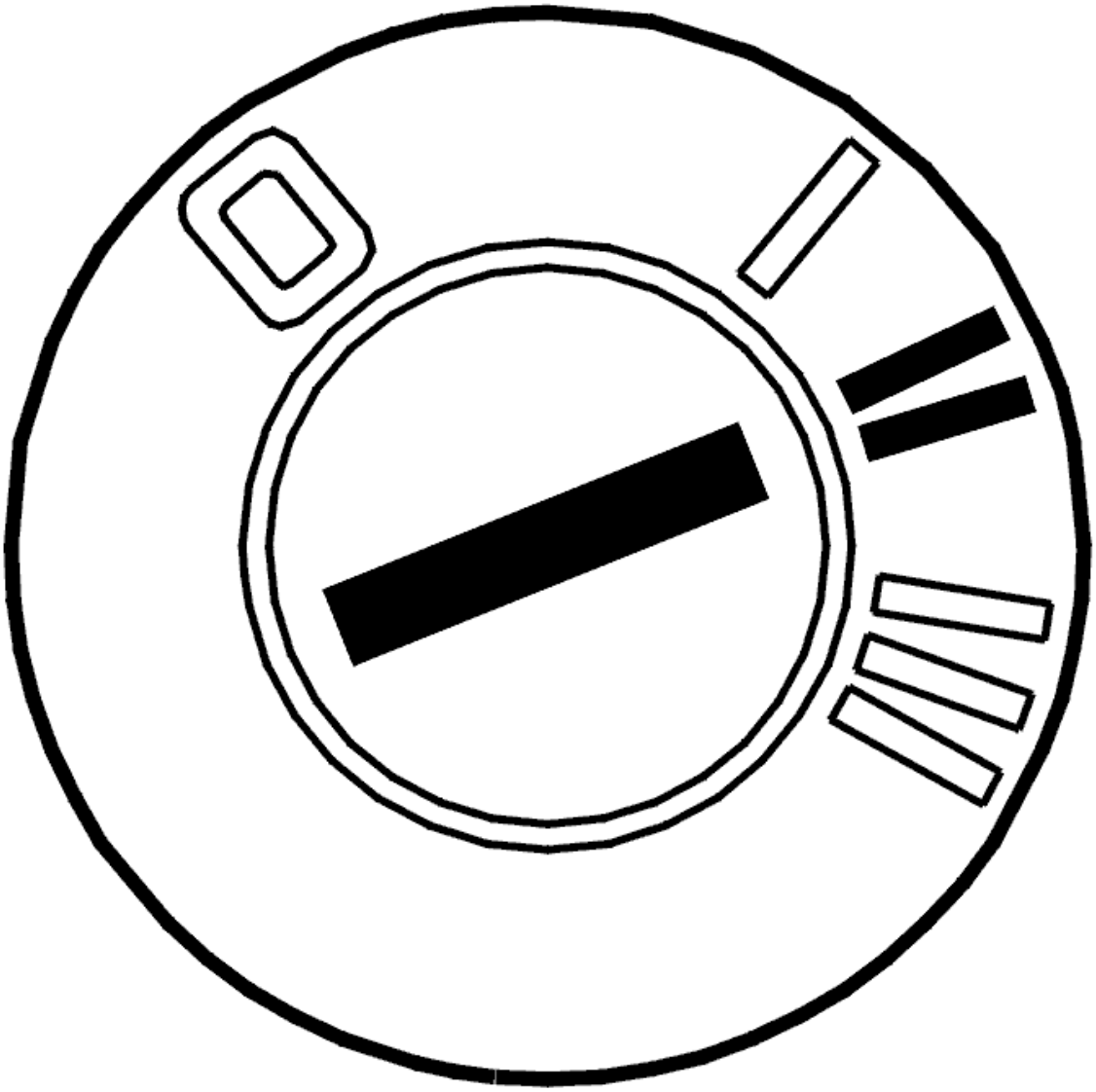

Fig. 446: Identifying Ignition ON
Courtesy of VOLVO CARS CORPORATION

- Ignition on.

  Reset the counter by clicking on the VCT 2000 symbol.

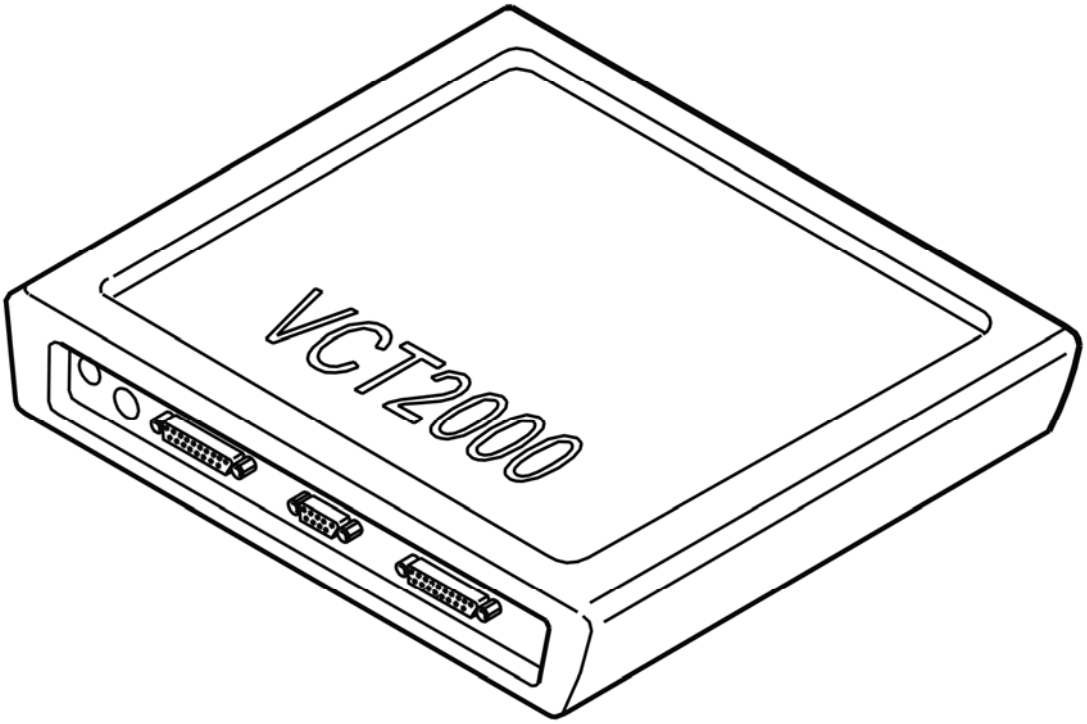

Fig. 447: Identifying VCT2000 Diagnostic Tool Symbol In VIDA
Courtesy of VOLVO CARS CORPORATION

- **Continue**

Refer to **ERASING DIAGNOSTIC TROUBLE CODES (DTCS)**

CHECKING THE SOFTWARE

CHECKING THE SOFTWARE

NOTE: **To carry out fault-tracing, the transmission control module (TCM) must be programmed with specific software.**

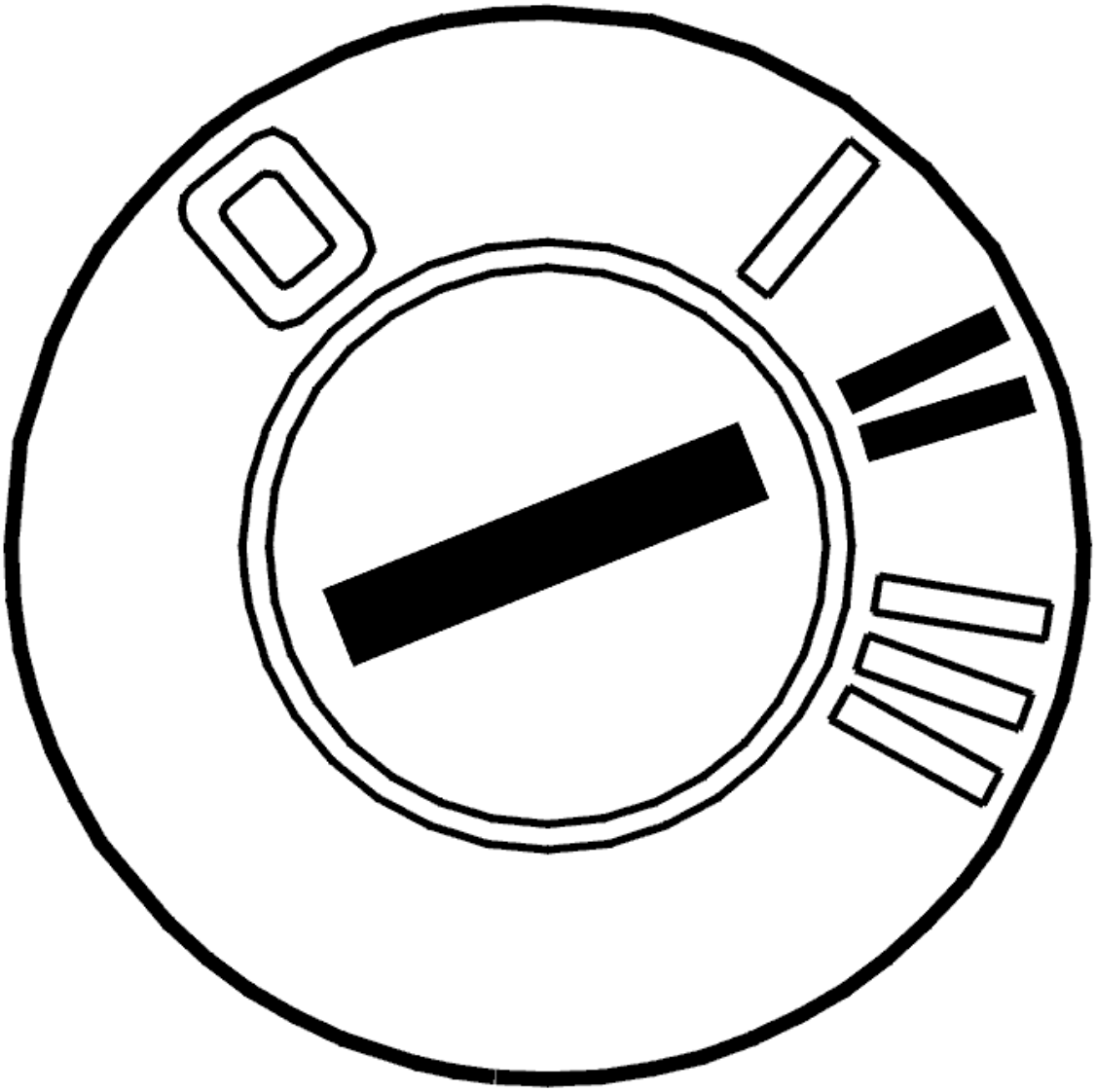

Fig. 448: Identifying Ignition ON
Courtesy of VOLVO CARS CORPORATION

- Ignition on
- Read off the control module diagnostic number.

  Check the read off diagnostic number against the diagnostic numbers given in the center table.

  If the diagnostic number is included in the table, the control module must be programmed with the latest software.

  See the technical journal for information about the most recent software.

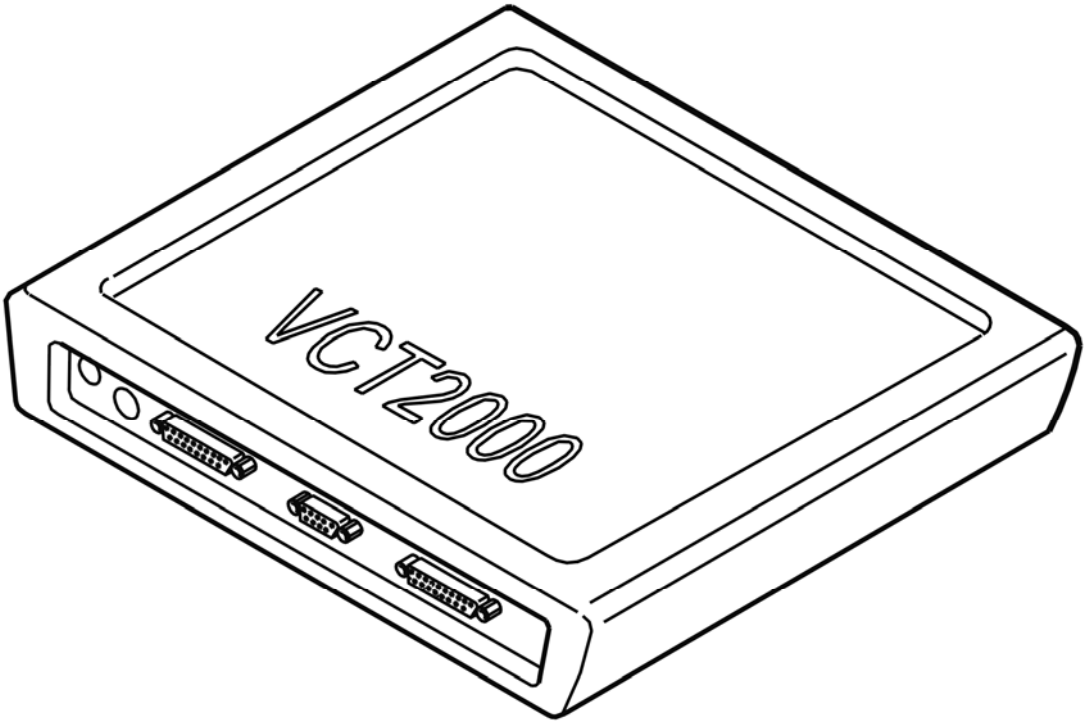

Fig. 449: Identifying VCT2000 Diagnostic Tool Symbol In VIDA
Courtesy of VOLVO CARS CORPORATION

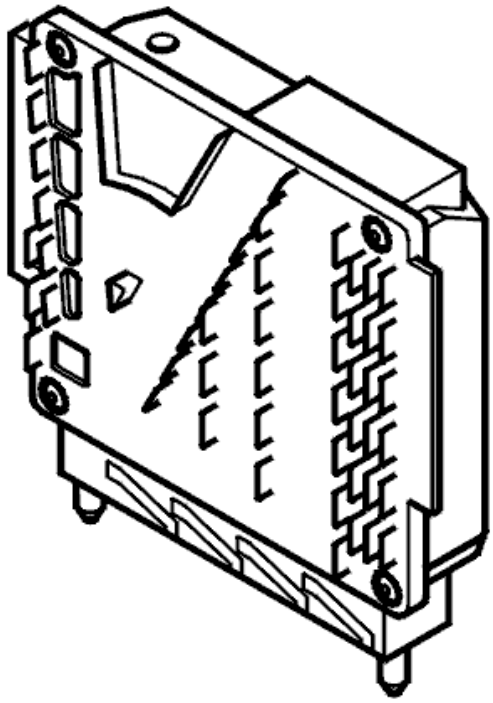

Fig. 450: Identifying Transmission Control Module (TCM)
Courtesy of VOLVO CARS CORPORATION

- **Continue**

  Refer to **CONNECTING THE T PIPE**

REPLACING A FAULTY TRANSMISSION

REPLACING A FAULTY TRANSMISSION

Replace the transmission. For AW50AWD 2003- see **TRANSMISSION, REMOVING** or For AW55-50 2004- see **TRANSMISSION, REMOVING** and For AW50AWD 2003- see **TRANSMISSION, INSTALLING** or For AW55-50 2004- see **TRANSMISSION, INSTALLING** .

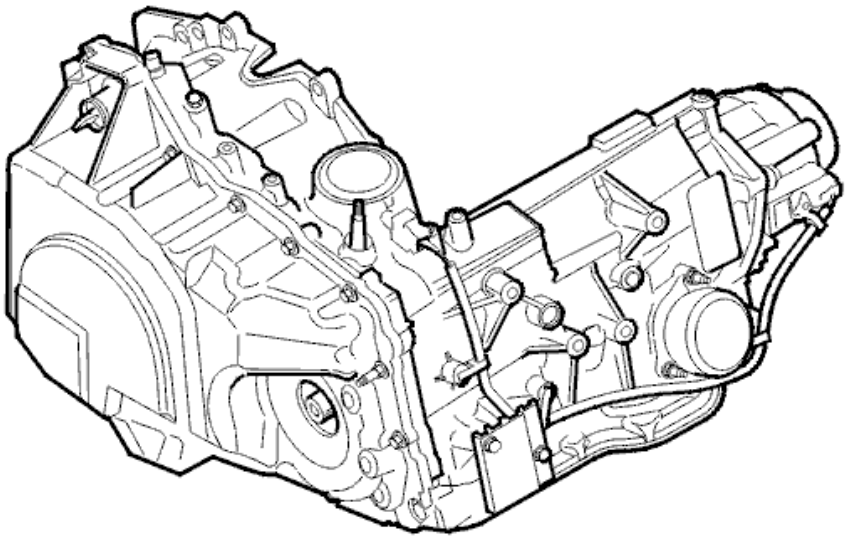

P2X

4301721D ©VOLVO

Fig. 451: Identifying Transmission
Courtesy of VOLVO CARS CORPORATION

- **Continue**

  Refer to **RESETTING THE ADAPTATION**

RESETTING THE ADAPTATION

RESETTING ADAPTATION AND THE COUNTER FOR "TRANSMISSION OIL CHANGE"

HINT: The transmission has torque controlled adaptive pressure control. Pressure control means that the transmission regulates the pressure itself during each gear shift. This avoids harsh gear shifting. Each gear shift is evaluated by the control module and stored in the memory. This allows for compensation for wear and tear in the transmission and clutch. It is important that the adaptation in the memory is reset after the transmission has been repaired. This is to ensure normal operation. The oil is replaced during repair; the "Transmission oil change" counter must be reset. If the counter is not reset when the fluid is drained and replaced, there is a risk that a diagnostic trouble code (DTC) will be stored in incorrect circumstances.

NOTE: This applies only if the transmission or one of the components in the transmission have been replaced.

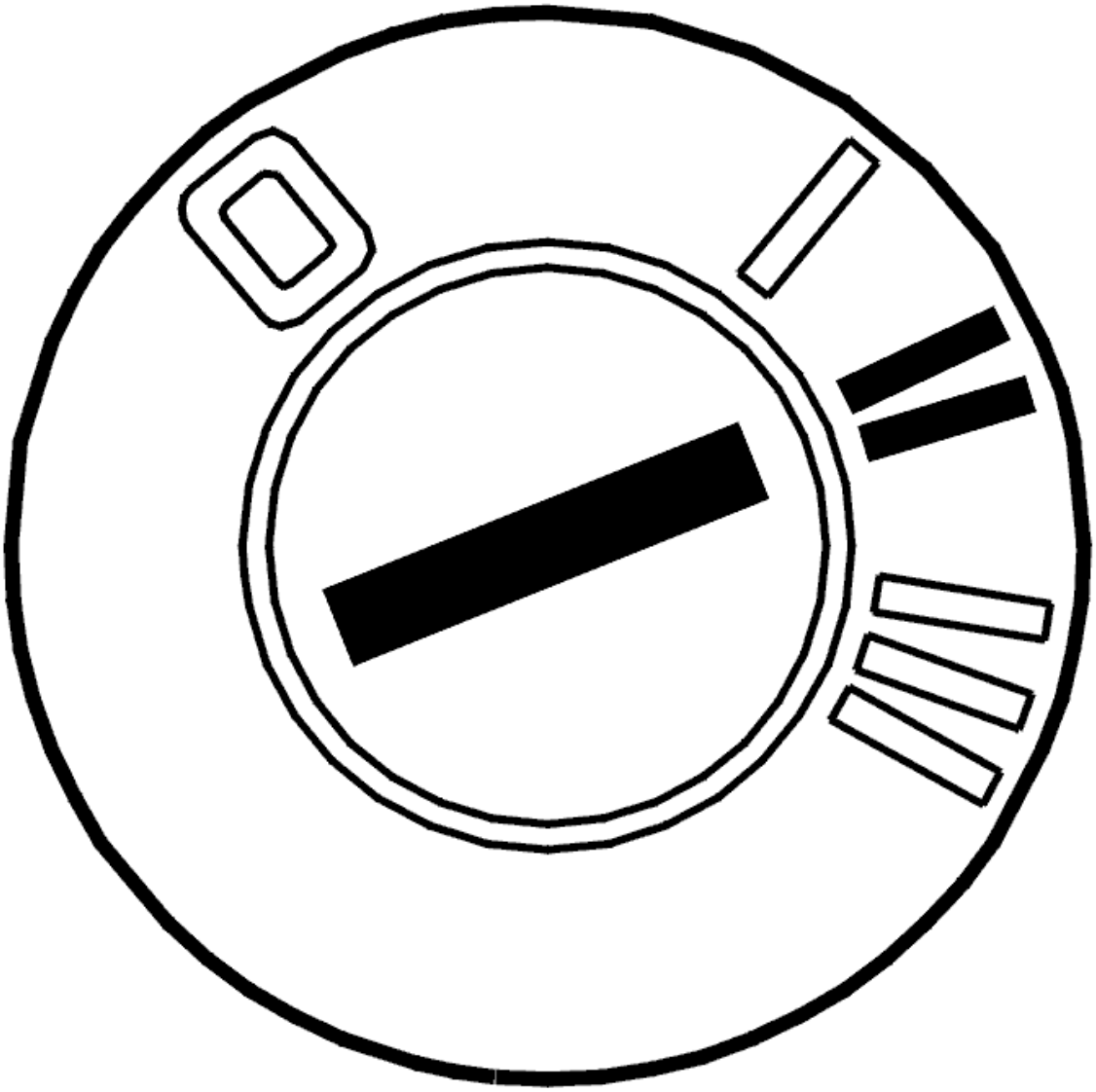

Fig. 452: Identifying Ignition ON
Courtesy of VOLVO CARS CORPORATION

- Ignition on.

  Click on the VCT2000 symbol to reset the adaptation and counter.

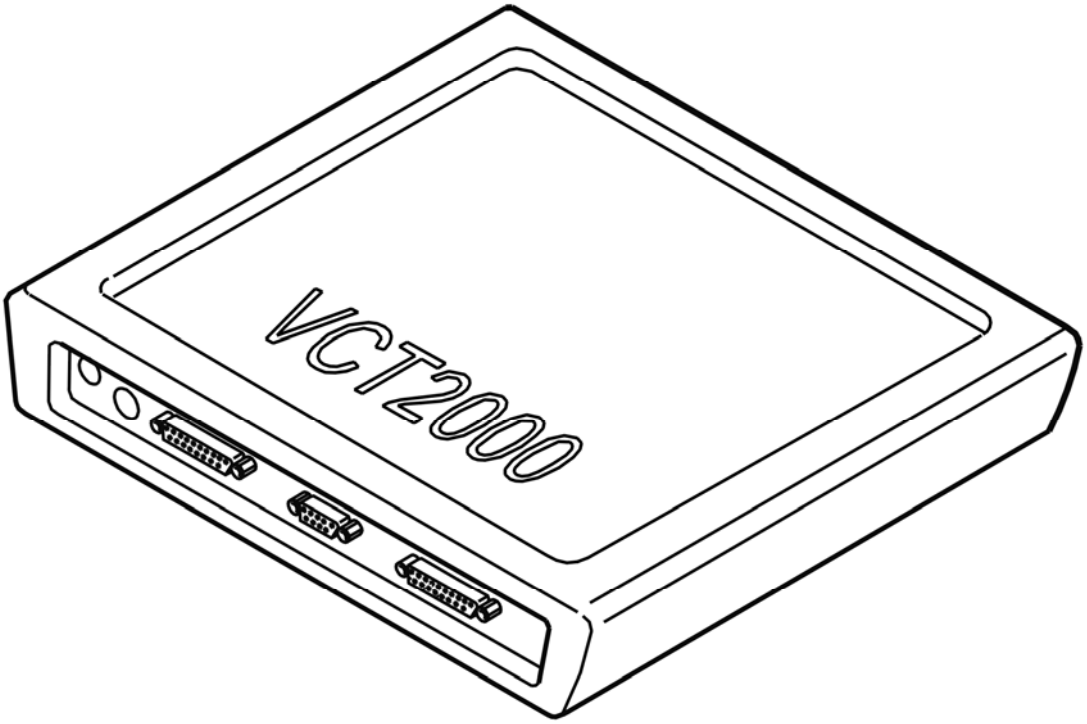

Fig. 453: Identifying VCT2000 Diagnostic Tool Symbol In VIDA
Courtesy of VOLVO CARS CORPORATION

- **Continue**

Refer to **CHECKING DIAGNOSTIC TROUBLE CODES (DTCS)**

CHECKING DIAGNOSTIC TROUBLE CODES (DTCS)

CHECKING DIAGNOSTIC TROUBLE CODES (DTCS)

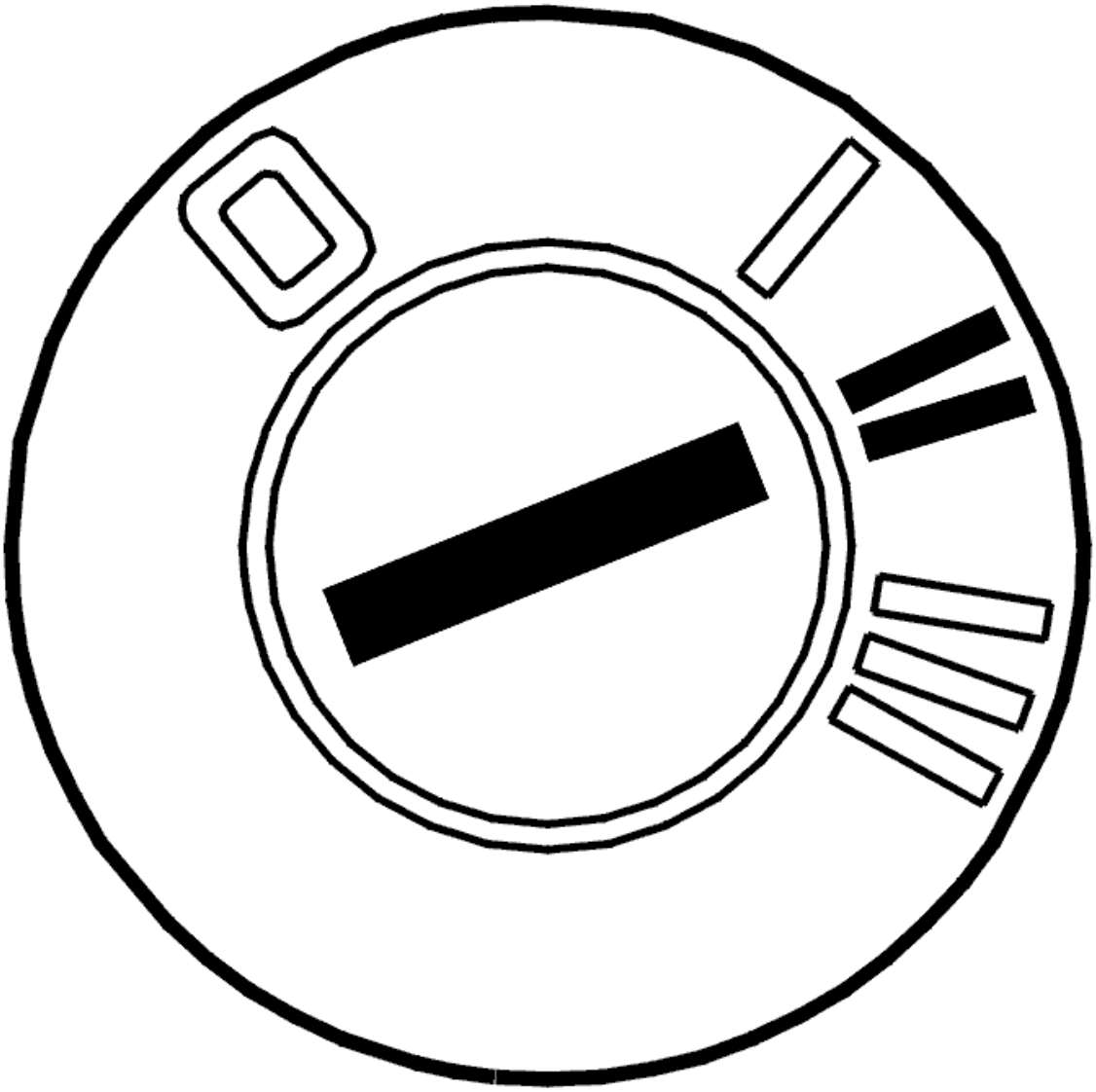

Fig. 454: Identifying Ignition ON
Courtesy of VOLVO CARS CORPORATION

- Ignition on
- Read off diagnostic trouble codes (DTCs).

  If any other diagnostic trouble codes (DTCs) than TCM-002F are stored, these must be fault-traced and remedied after this fault-tracing is completed.

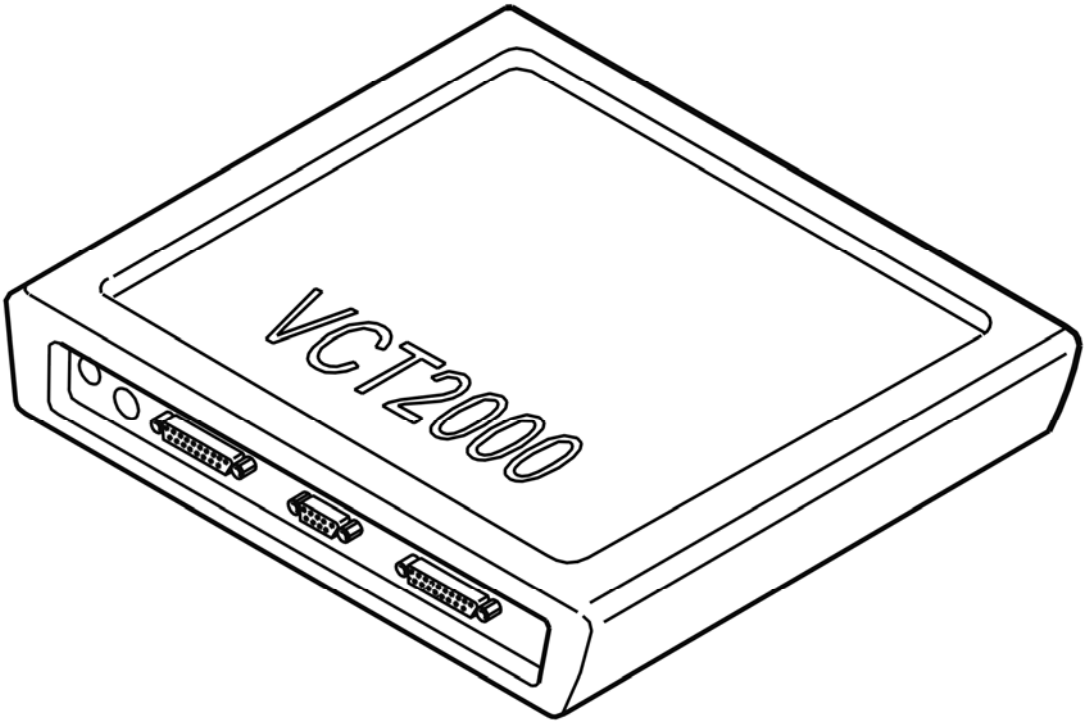

Fig. 455: Identifying VCT2000 Diagnostic Tool Symbol In VIDA
Courtesy of VOLVO CARS CORPORATION

- **Continue**

Refer to **ERASING DIAGNOSTIC TROUBLE CODES (DTCS)**

ERASING DIAGNOSTIC TROUBLE CODES (DTCS)

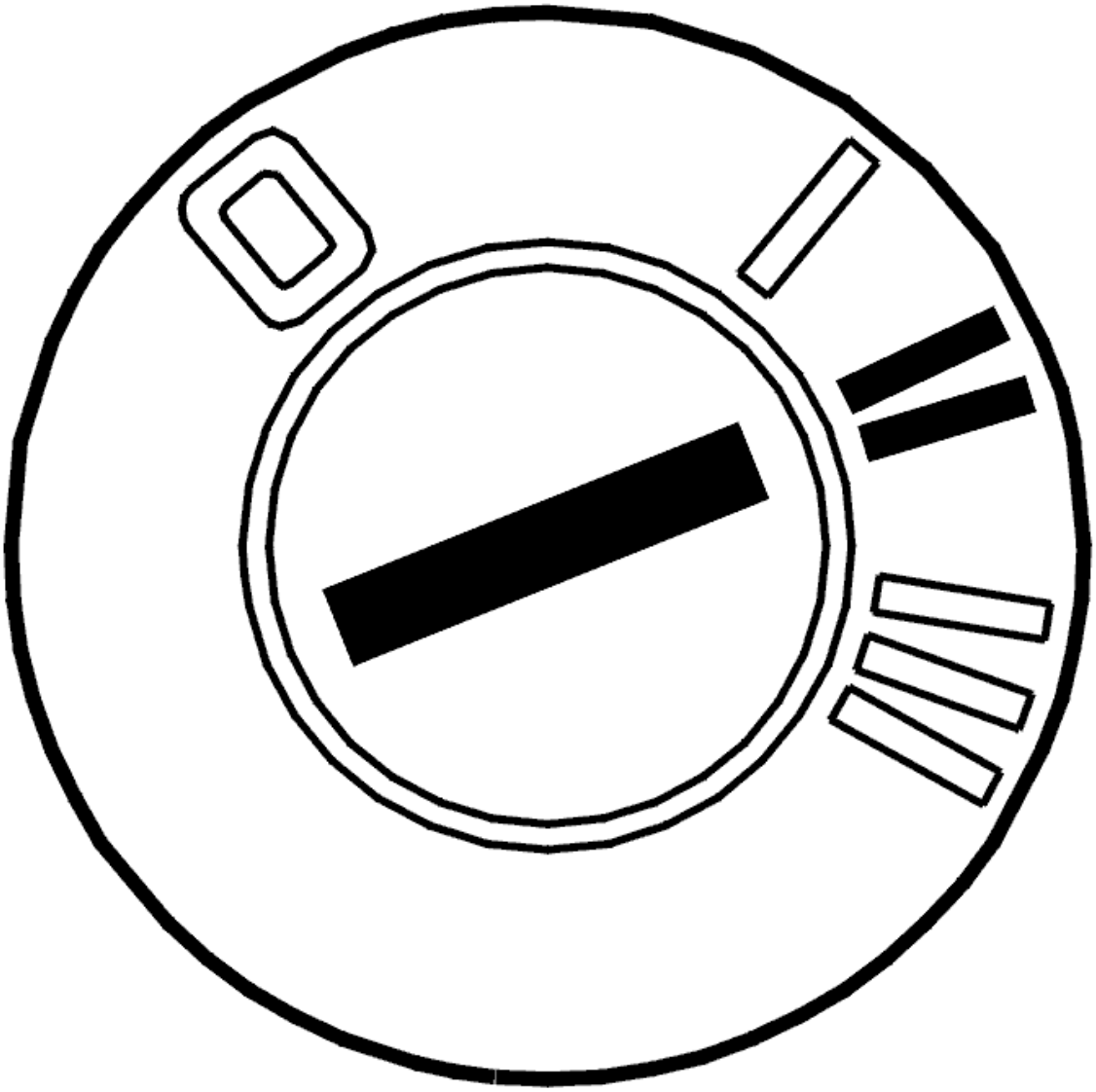

Fig. 456: Identifying Ignition ON
Courtesy of VOLVO CARS CORPORATION

- Ignition off
- Wait for two minutes to allow time for the diagnostic trouble codes (DTCs) to be stored in the control module memory
- Ignition on
- Erase diagnostic trouble codes (DTCs).

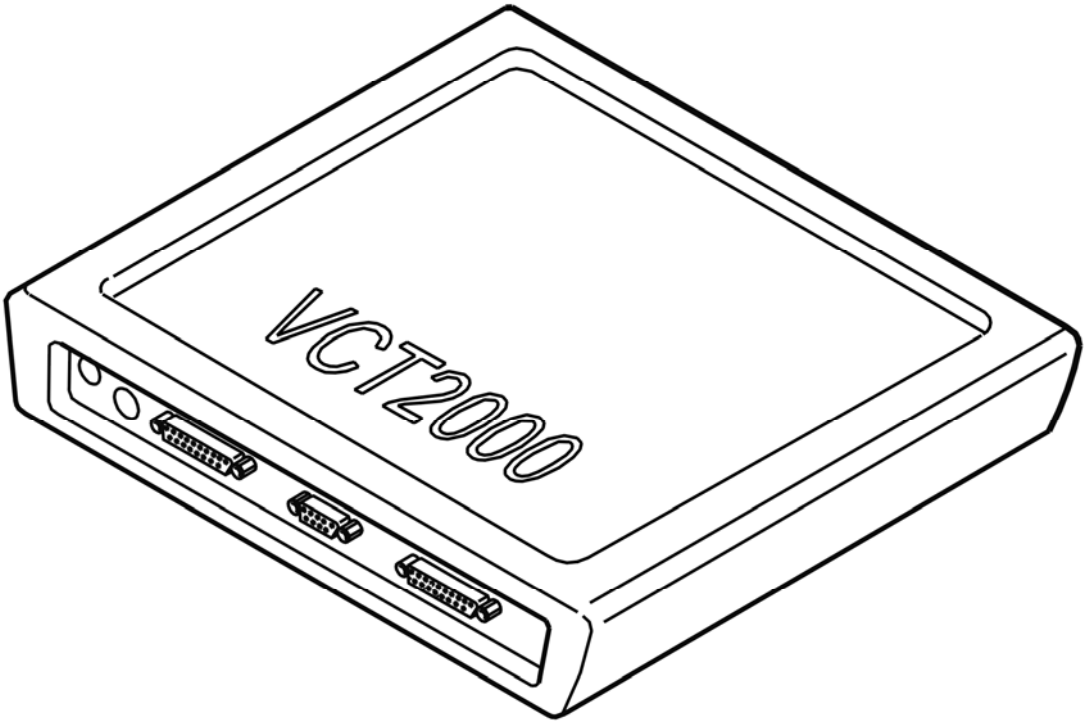

Fig. 457: Identifying VCT2000 Diagnostic Tool Symbol In VIDA
Courtesy of VOLVO CARS CORPORATION

- **Continue**

Refer to **CHECKING THE SOFTWARE**

TEST DRIVING

NOTE: **Test drive the car according to the driving schedule below to check whether the fault is still active. The test drive is compiled in order to create the conditions in which the diagnostic trouble code (DTC) will be stored again if the fault is active.**

The TEST MODE function can be used to provoke any diagnostic trouble codes (DTC). The function reduces the conditions for how quickly diagnostic trouble codes (DTCs) are stored in the control module and the test drive becomes easier.

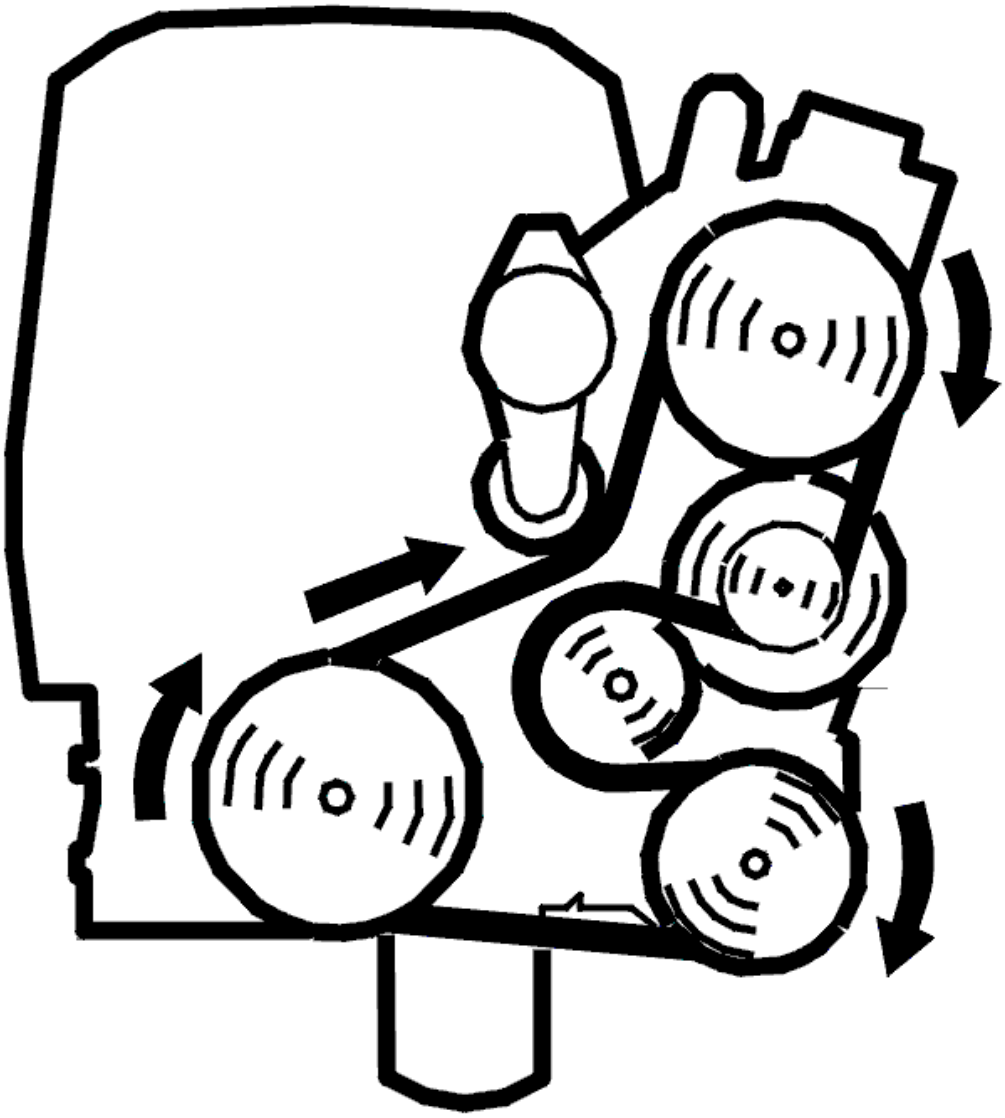

Fig. 458: Identifying Belt Routing
Courtesy of VOLVO CARS CORPORATION

- Start the engine
- Activate TEST MODE.

NOTE: Do not switch off the engine

- Disconnect the VIDA station. Test drive the car as described below.

WARNING: Please observe traffic regulations.

NOTE: Before test driving, the transmission should be at operating temperature,

approximately 80-90°C.

Shift the gear selector to position 3 (third gear with geartronic). Carefully accelerate to 85 km/h. Maintain the same speed for a few seconds. Carefully accelerate for approximately 30 seconds to increase the engine torque.

HINT: The car must be driven at an engine speed where the lock-up function is normally fully activated and not slipping. The following gear positions and speeds are also possible:

- 120 km/h gear position D
- 85 km/h gear position 3.

Criteria for diagnostic trouble code (DTC):

- The transmission fluid temperature must exceed 30°C
- No shifting during the evaluation period
- Positive engine torque (no engine braking)
- Gear selector in position D, 3 or 2 (4T65EV).

  Gear selector in Geartronic position and gears 4, 3 or 2 (4T65EV-GT)

- Speed 85 km/h for at least 30 seconds.

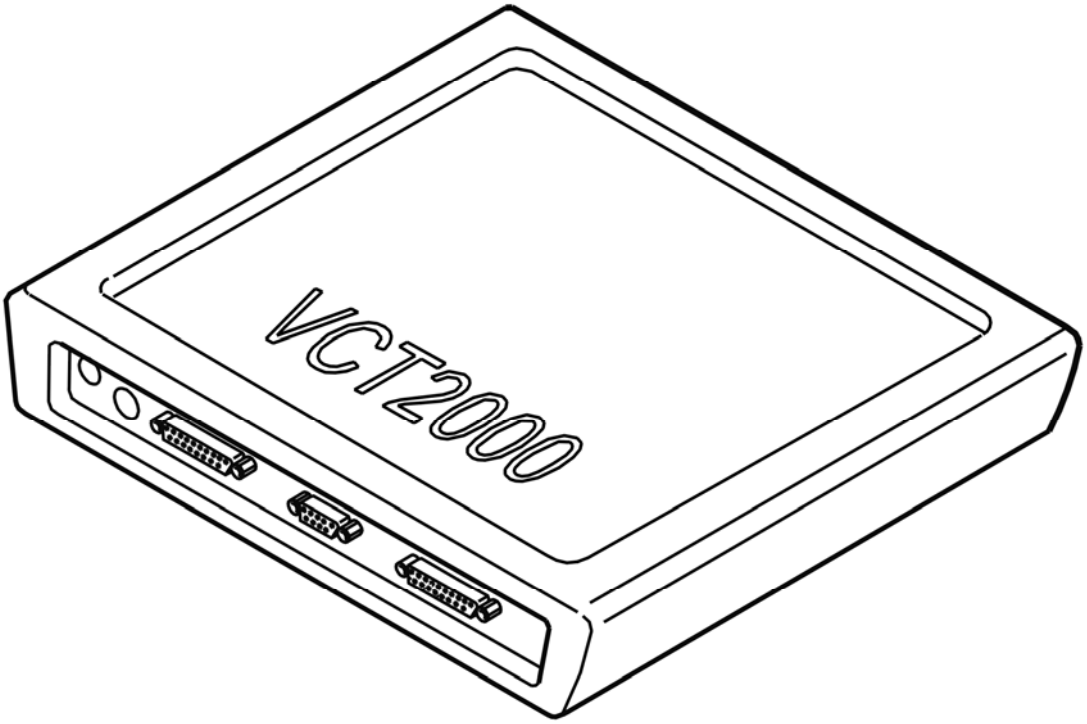

Fig. 459: Identifying VCT2000 Diagnostic Tool Symbol In VIDA
Courtesy of VOLVO CARS CORPORATION

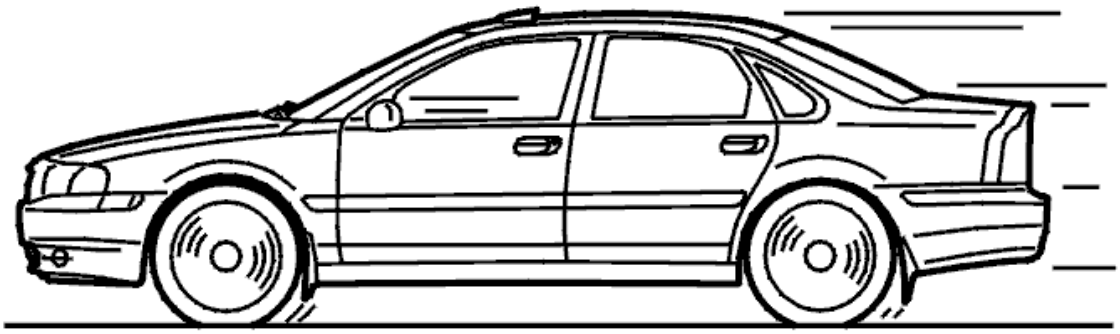

Fig. 460: Identifying Test Drive
Courtesy of VOLVO CARS CORPORATION

- **Continue**

Refer to **CHECKING DIAGNOSTIC TROUBLE CODES (DTCS)**

CHECKING DIAGNOSTIC TROUBLE CODES (DTCS)

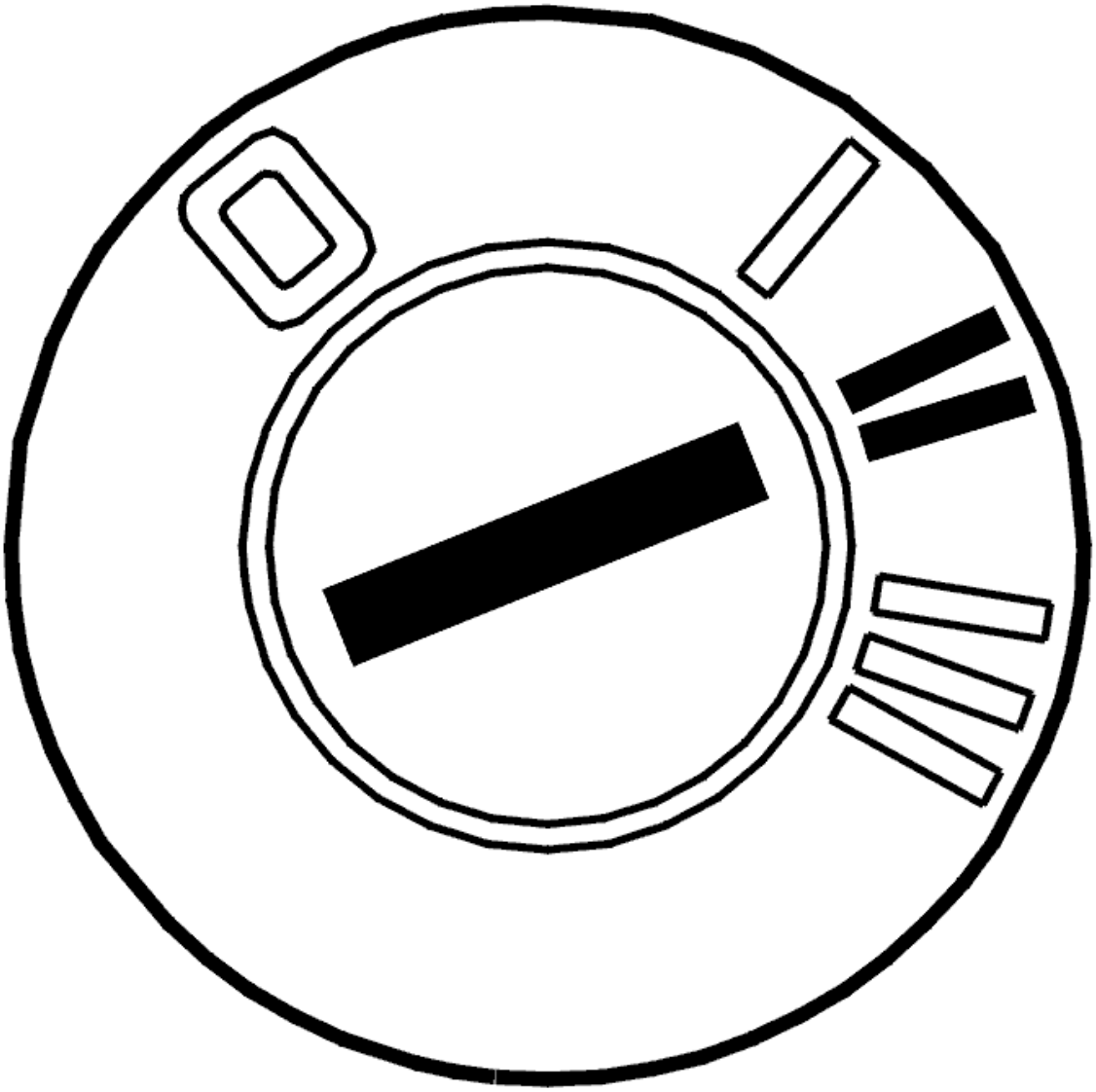

Fig. 461: Identifying Ignition ON
Courtesy of VOLVO CARS CORPORATION

- Ignition on
- Read off diagnostic trouble codes (DTCs).

  If any other diagnostic trouble codes (DTCs) than TCM-002F are stored, these must be fault-traced and remedied after this fault-tracing is completed.

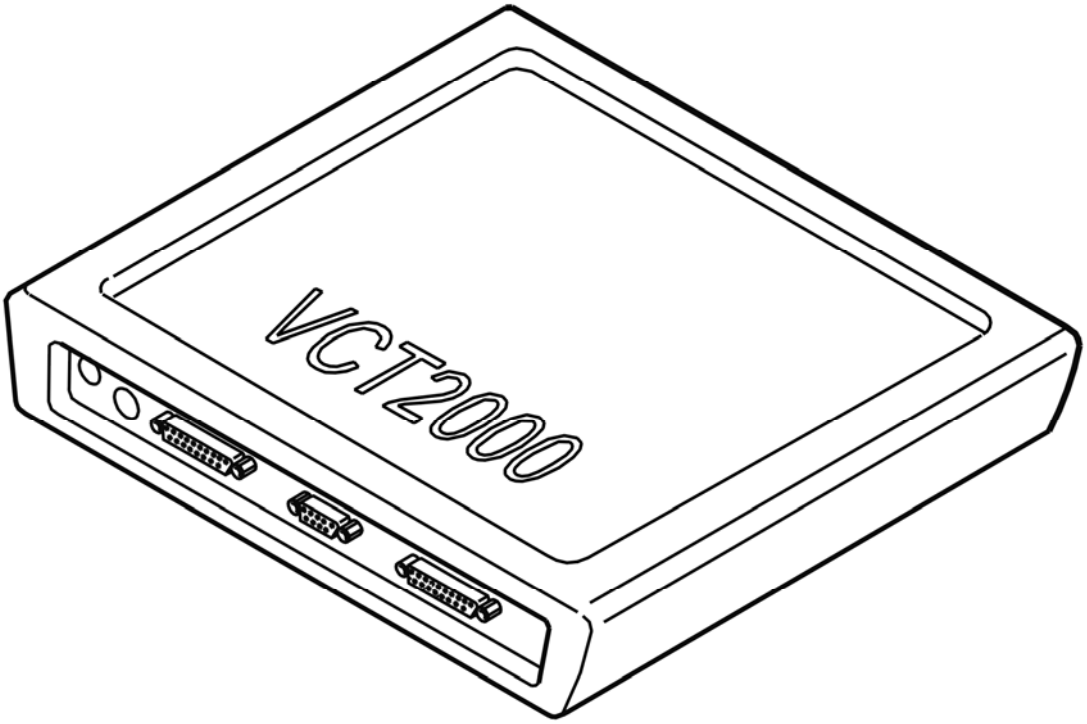

Fig. 462: Identifying VCT2000 Diagnostic Tool Symbol In VIDA
Courtesy of VOLVO CARS CORPORATION

Was diagnostic trouble code (DTC) TCM-002F stored?

- **YES**

  Refer to **INFORMATION**

- **NO**

  NO DTC

INFORMATION

FAULT-TRACING INFORMATION

The fault should have been detected and remedied. As this is not the case fault-tracing has failed.

Exit fault-tracing for this diagnostic trouble code (DTC) or make another attempt.

CHECKING THE SOFTWARE

CHECKING THE SOFTWARE

NOTE: **To carry out fault-tracing, the transmission control module (TCM) must be programmed with specific software.**

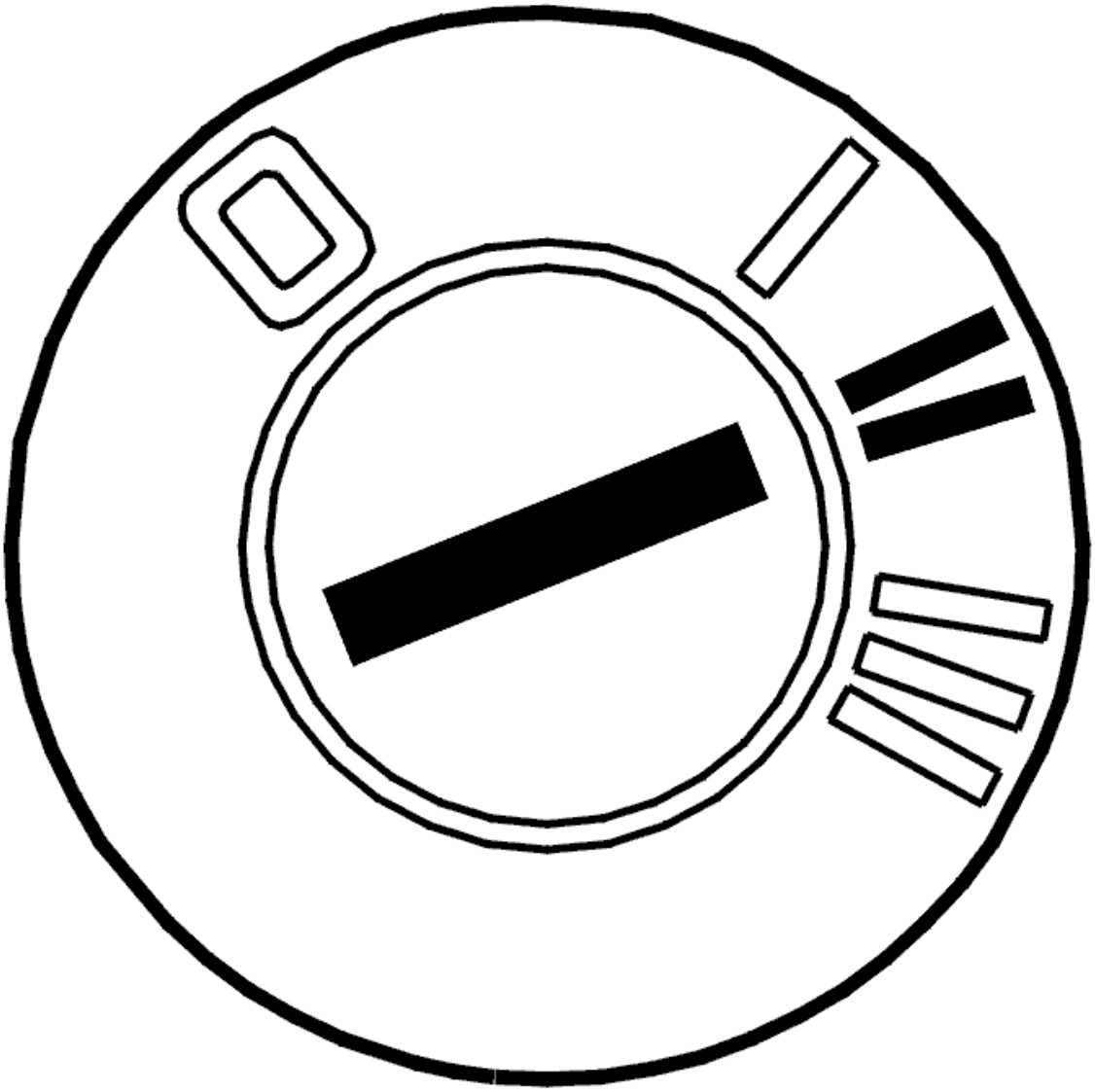

Fig. 463: Identifying Ignition ON
Courtesy of VOLVO CARS CORPORATION

- Ignition on
- Read off the control module diagnostic number.

  Check the read off diagnostic number against the diagnostic numbers given in the center table.

  If the diagnostic number is included in the table, the control module must be programmed with the latest software.

  See the technical journal for information about the most recent software.

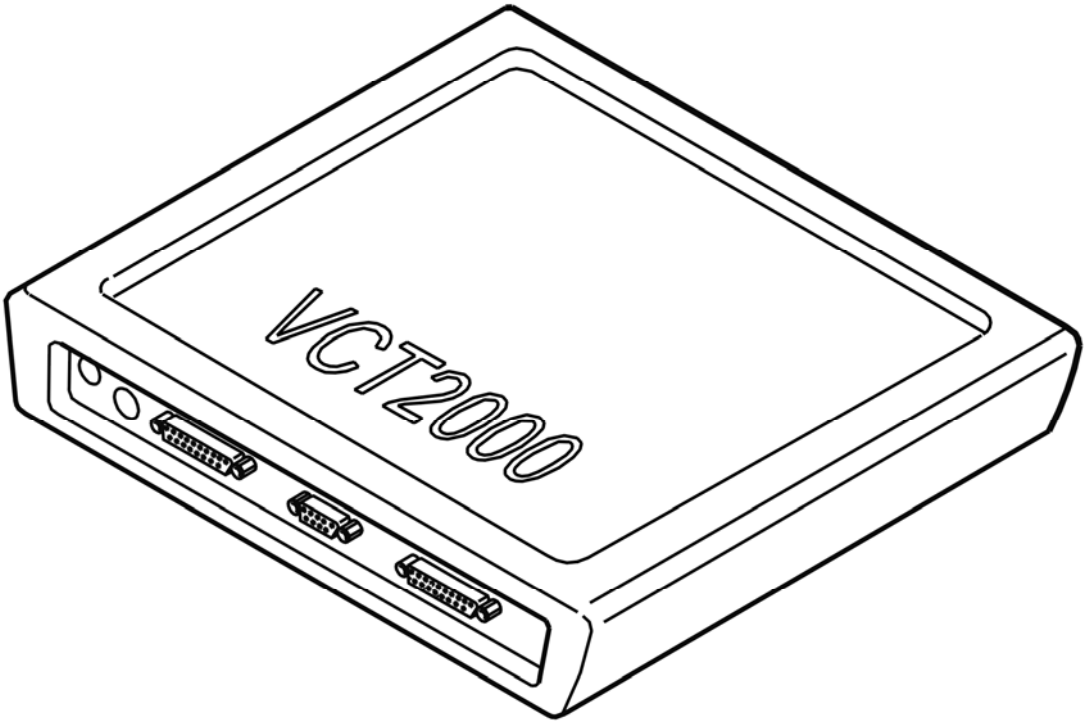

Fig. 464: Identifying VCT2000 Diagnostic Tool Symbol In VIDA
Courtesy of VOLVO CARS CORPORATION

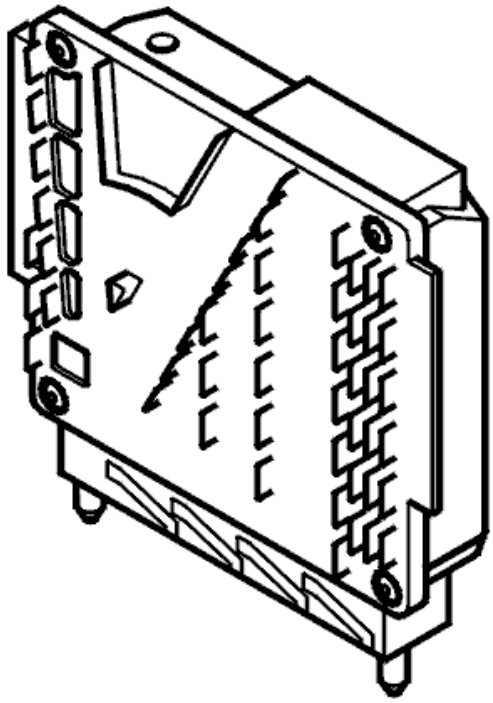

Fig. 465: Identifying Transmission Control Module (TCM)
Courtesy of VOLVO CARS CORPORATION

- **Continue**

  Refer to **TEST DRIVING**

T-PIPE, CONNECTING TO OIL COOLER

Special tools:

see **9992531**

see **9997002**

DIAGNOSTIC TESTING OF THE LOCK-UP FUNCTION IN THE CONTROL SYSTEM

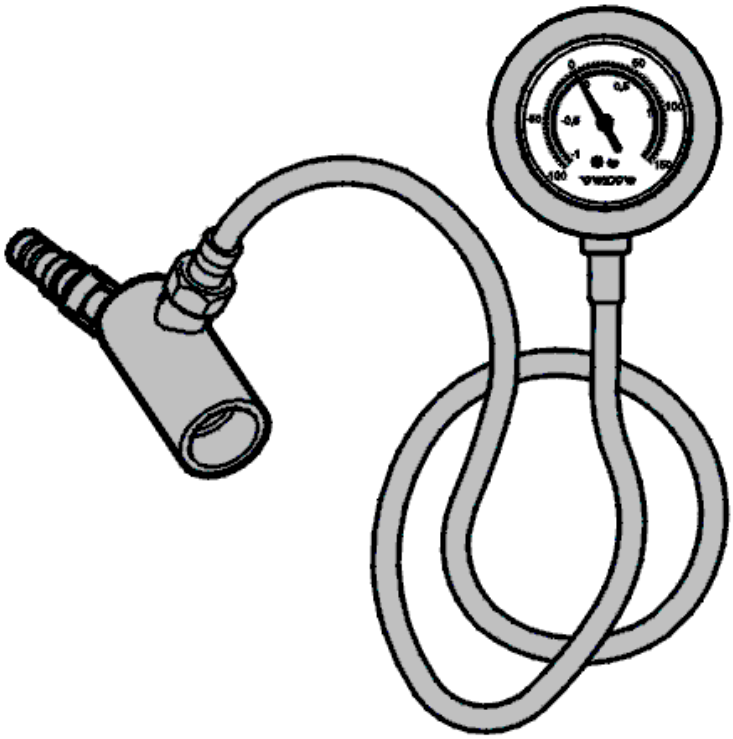

Fig. 466: Identifying T Piece Between Oil Cooler And Return Hose
Courtesy of VOLVO CARS CORPORATION

Measure the pressure by connecting the T piece between the oil cooler and the return hose.

Tools:

Oil pressure gauge see **9992531**

T pipe (adapter) see **9997002**

Preparations

For transmission temperature, see VIDA vehicle communication.

Connect the pressure gauge hose to the T piece.

Tighten the screw. Tighten to 25 Nm.

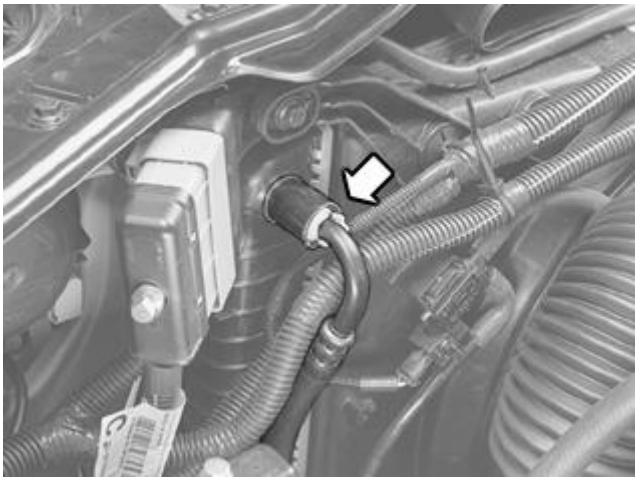

Fig. 467: Identifying Oil Cooler Upper Hose Connector
Courtesy of VOLVO CARS CORPORATION

Disconnect the oil pipe from the oil cooler.

Collect any oil that flows out.

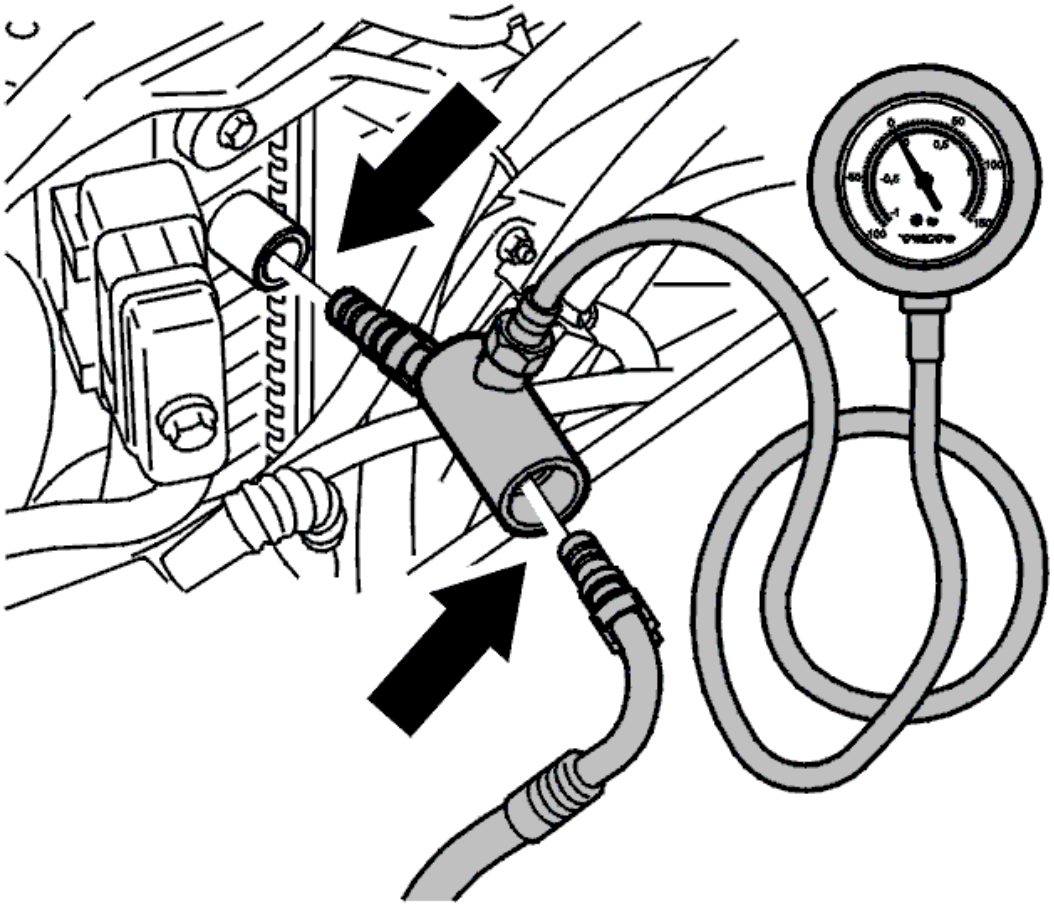

Fig. 468: Identifying Connecting T Piece To Oil Cooler And Oil Hose

Courtesy of VOLVO CARS CORPORATION

Connect the T piece to the oil cooler (push it into place).

Connect the oil hose to the T piece.

TCM-002F: LOCK-UP FUNCTION. SLIPPING OR NOT ENGAGED (AW50/51 AWD; 2003-2007)

DIAGNOSTIC TROUBLE CODE INFORMATION

Condition

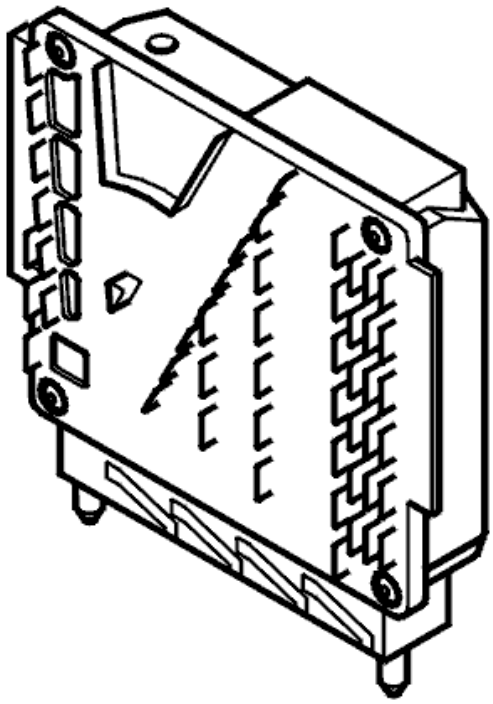

Fig. 1: Identifying Transmission Control Module (TCM)
Courtesy of VOLVO CARS CORPORATION

The automatic transmission checks that lock-up is not engaged or slips by comparing the rpm signal from the transmission speed (rpm) sensor to the engine speed. The signals must then show the same calculated speed (rpm). If the control module detects that the engine speed (RPM) signals do not correspond with the programmed values, it means that lock-up is slipping or does not engage in the locked position. The diagnostic trouble code (DTC) is stored.

Substitute Value

- Control unit help program "Emergency mode I" has started to work.

Possible Source

- Poor quality transmission fluid.

- Water in the oil.
- Contact resistance in the connectors.
- Gear shift solenoid S4 is jammed in OFF position.
- Gear shift solenoid SLU is jammed in OFF position.
- Mechanical fault in the gearbox.

Fault symptom[s]

- Orange general warning lamp is on.
- Malfunction indicator light (MIL) is on.
- No lock up function.
- Rough gear shifts.

SLIPPING OR NOT ENGAGED

CHECKING THE OIL QUALITY AND THE OIL LEVEL IN THE TRANSMISSION

NOTE: **Transmission fluid quality and level are extremely important for transmission function. Therefore it is imperative that these are correct. In addition the oil level is dependent on oil temperature.**

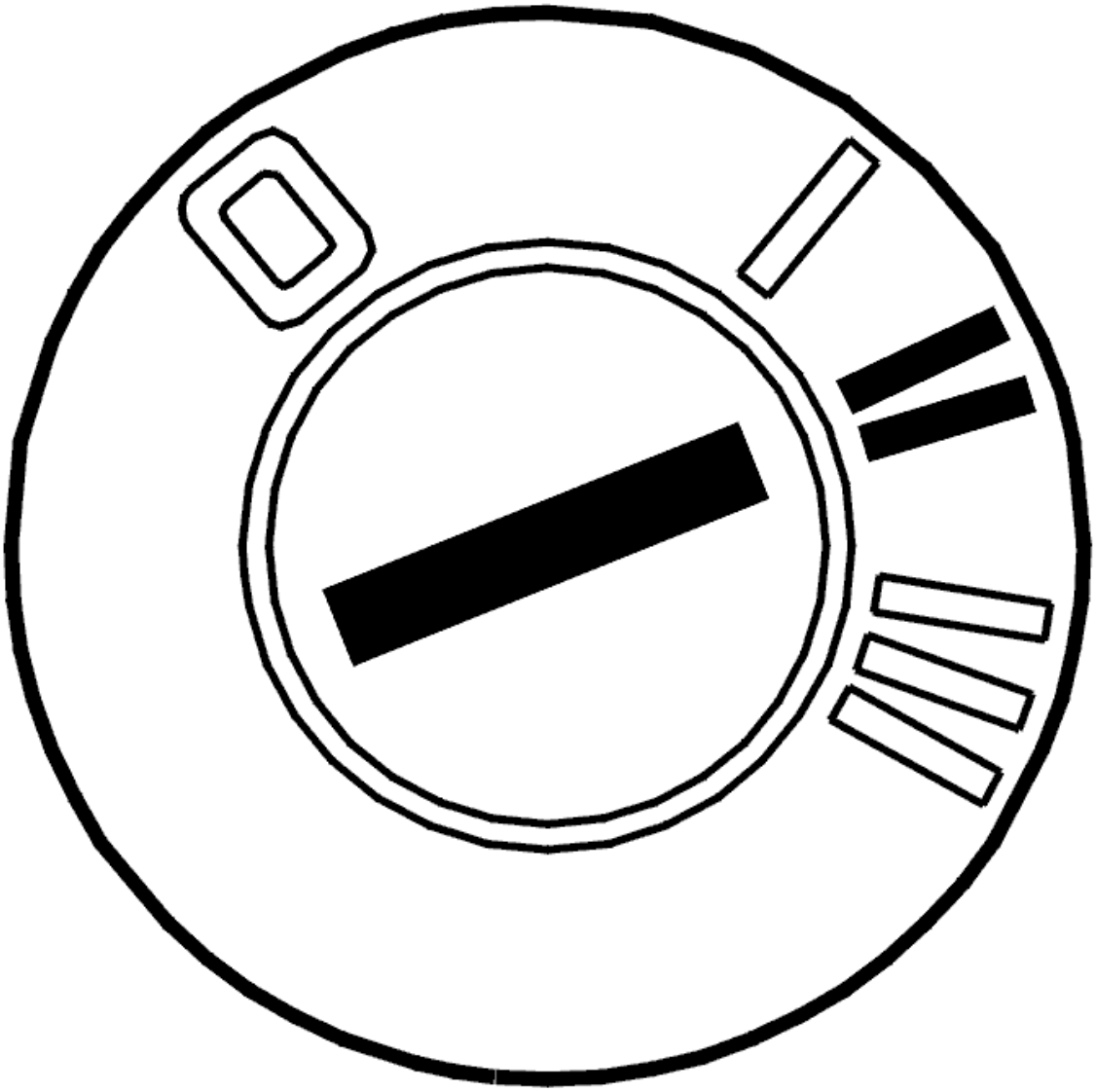

Fig. 2: Identifying Ignition ON
Courtesy of VOLVO CARS CORPORATION

- Ignition on
- Read off the oil temperature.

  Check the oil level. Check the transmission for leakage if the fluid level is low. Then top up with oil.

  Check the quality of the oil.

  Check the transmission fluid for metal shavings. Take a sample using the dip stick.

  - Replace the transmission if the transmission fluid contains metal shavings
  - Replace the transmission fluid if the fluid smells burnt.

Other information:

- see **TRANSMISSION FLUID, REPLACING**
- see **OIL LEVEL, CHECKING**
- see **OIL GRADE, CHECKING**

Select an alternative below:

1. No fault detected

   Refer to **REPLACING THE TRANSMISSION CONTROL SYSTEM**

2. Transmission fluid replaced, the level was low or quality was poor

   Refer to **RESETTING TRANSMISSION FLUID CHANGE COUNTER**

3. The transmission fluid contains metal shavings.

   Refer to **REPLACING THE TRANSMISSION**

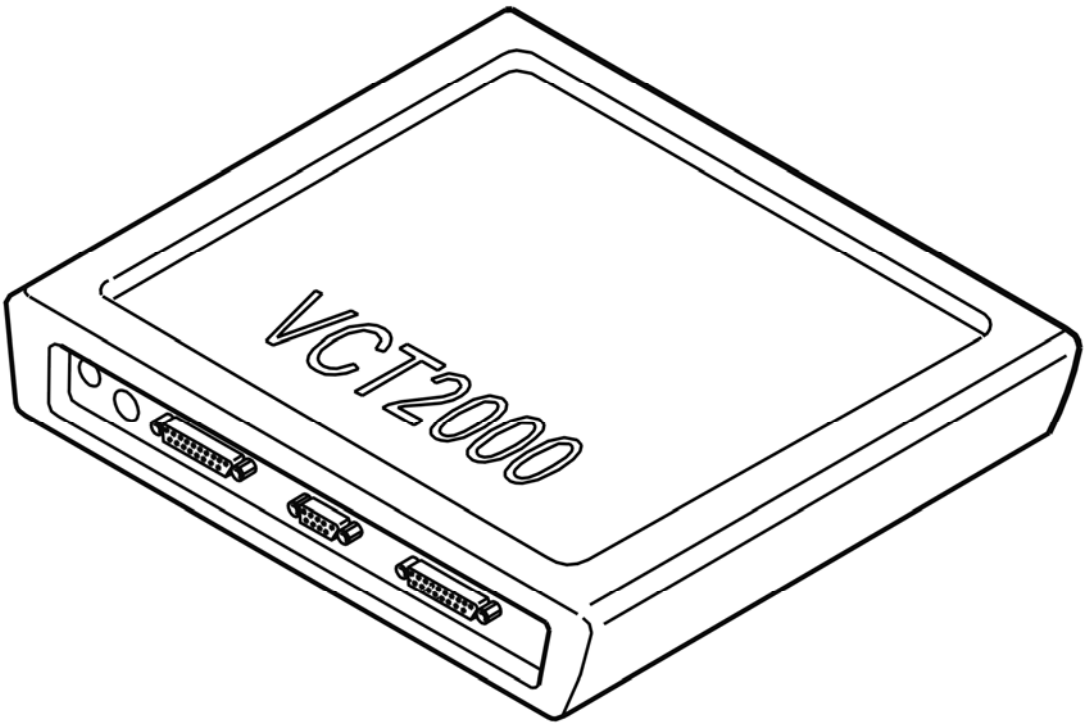

Fig. 3: Identifying VCT2000 Diagnostic Tool Symbol In VIDA
Courtesy of VOLVO CARS CORPORATION

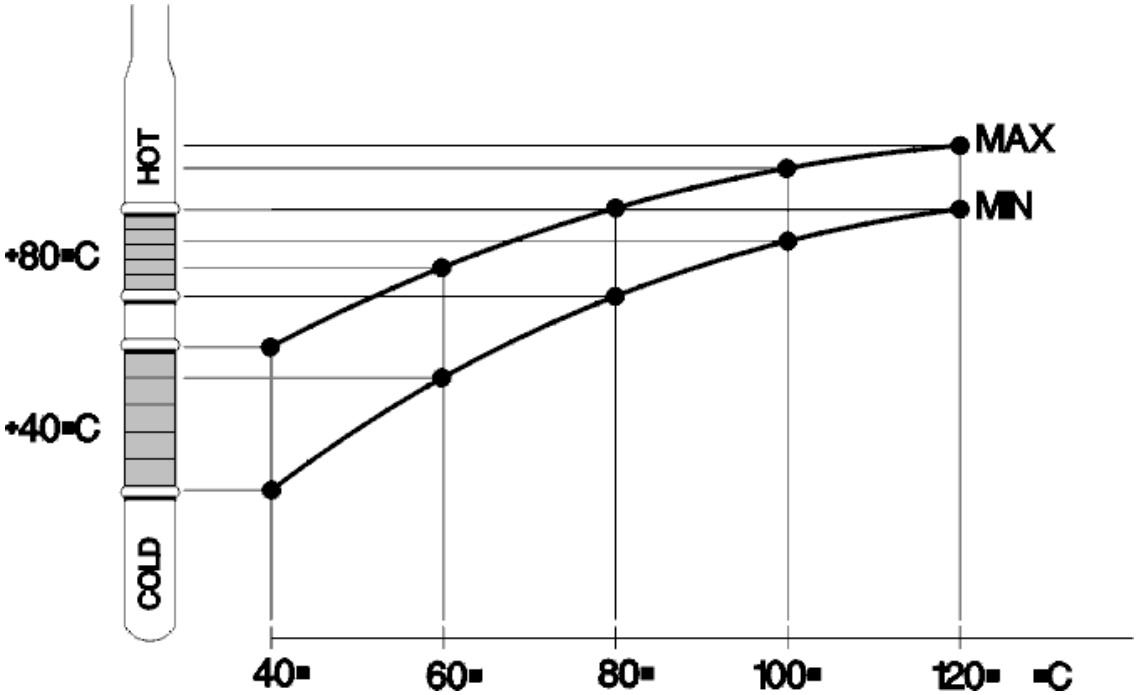

Fig. 4: Identifying Oil Level Temperature Graph
Courtesy of VOLVO CARS CORPORATION

CHECKING FOR CONTACT RESISTANCE AND OXIDATION

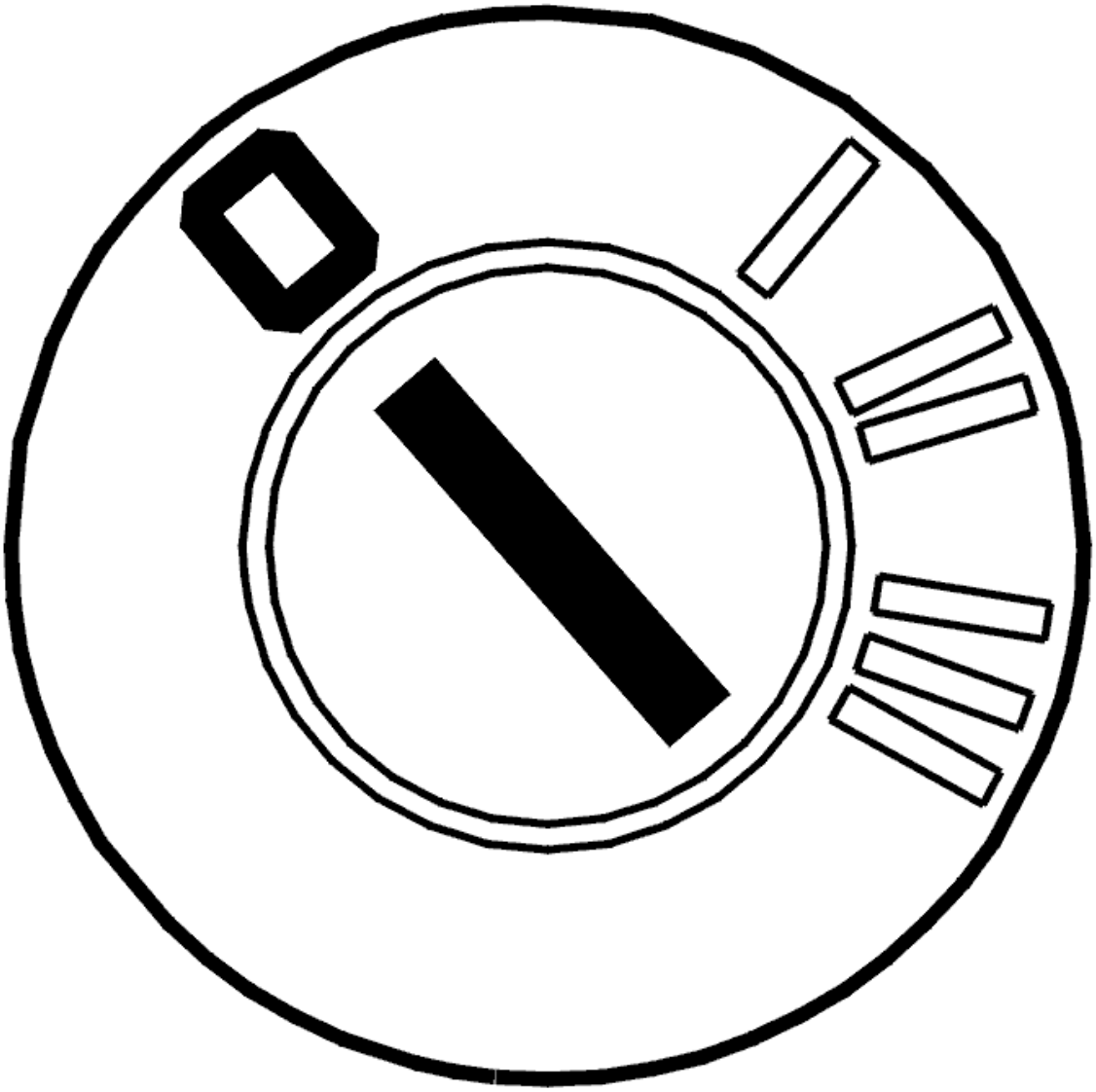

Fig. 5: Identifying Ignition OFF
Courtesy of VOLVO CARS CORPORATION

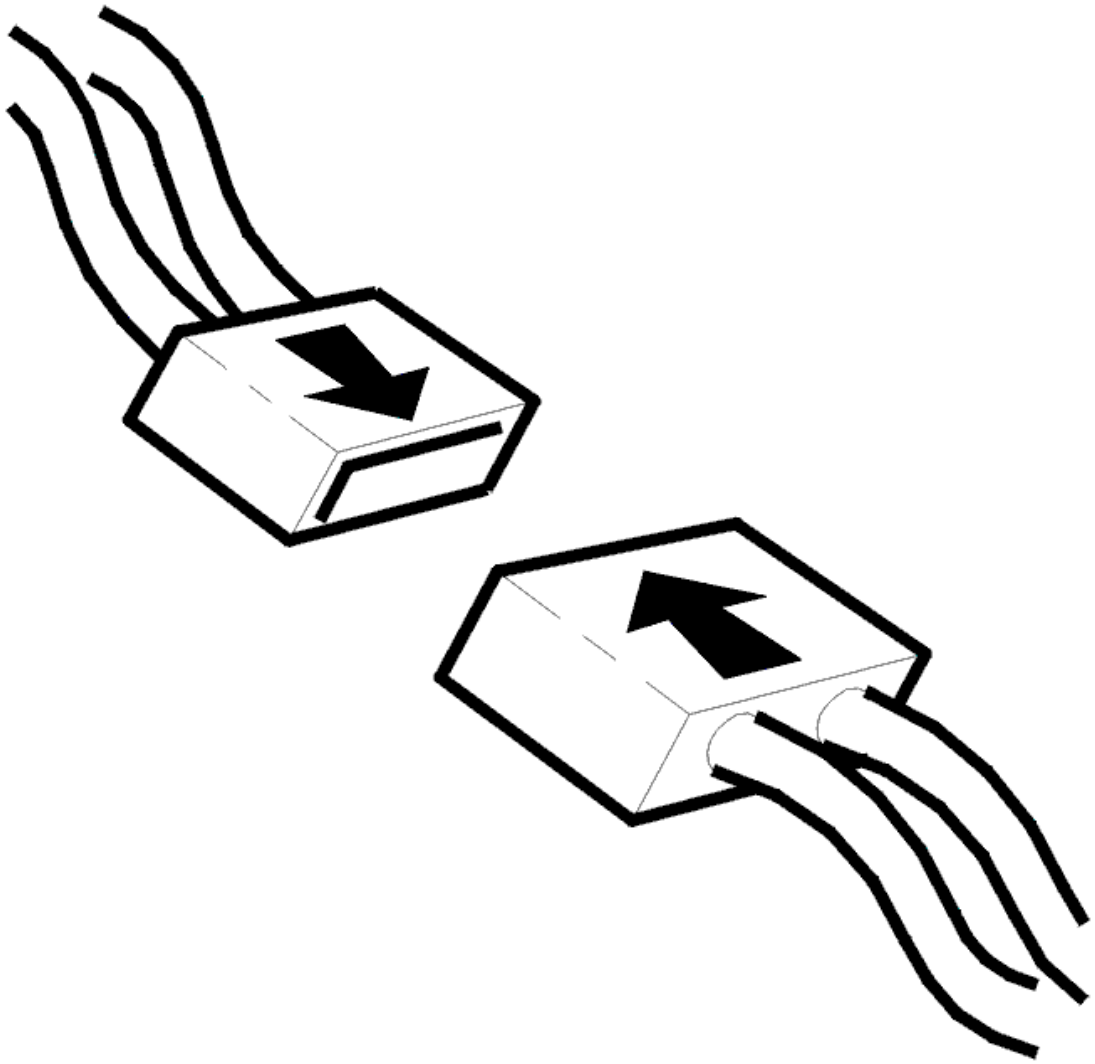

Fig. 6: Identifying Connector(s) Reinstallation
Courtesy of VOLVO CARS CORPORATION

- Ignition off
- Check connectors and connections for contact resistance or oxidation.

  Measure the resistance on the terminals for solenoid SLU. Check for an open-circuit. Check for a short-circuit to ground.

  Remedy as necessary.

  Other information

  - see **CHECKING WIRING AND TERMINALS. PERMANENT FAULT**
  - To access transmission connectors,

see **CONNECTORS, TRANSMISSION, DISCONNECTING / CONNECTING**

- To access the control module connector,

  see **TRANSMISSION CONTROL MODULE (TCM), REPLACING**

- see **TRANSMISSION - REMOVAL, REPLACEMENT AND INSTALLATION**

- **Continue**

  Refer to **TEST DRIVING THE TRANSMISSION**

REPLACING THE TRANSMISSION

The previous tests indicate an internal fault in the transmission.

Replace the transmission.

Other information:

- see **TRANSMISSION, REMOVING**
- see **TRANSMISSION, INSTALLING**

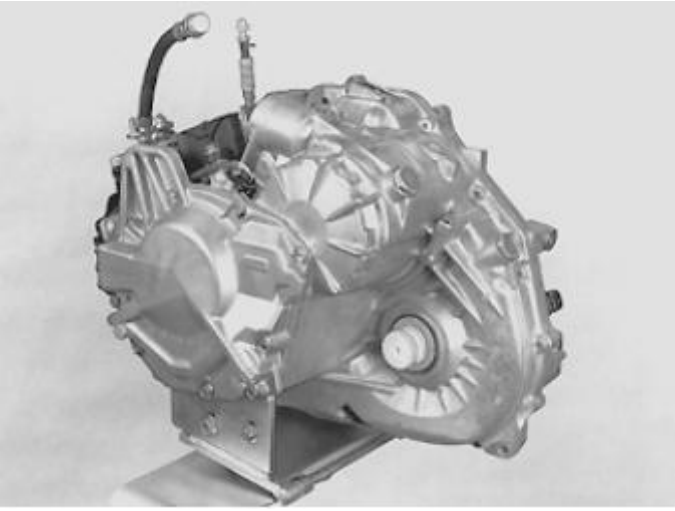

Fig. 7: Identifying Transmission
Courtesy of VOLVO CARS CORPORATION

- **Continue**

  Refer to **RESETTING THE ADAPTATION**

REPLACING THE TRANSMISSION CONTROL SYSTEM

- Perform the following check.

see **TEST PRESSURIZATION**

- Check the cooling system's pipes and connections to the automatic transmission. Check for leakage.

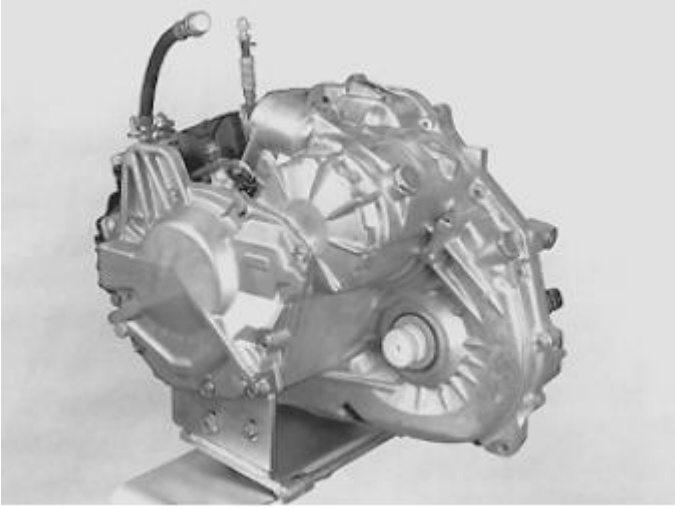

Fig. 8: Identifying Transmission
Courtesy of VOLVO CARS CORPORATION

Does the pressure drop?

- **YES**

  Refer to **CHECKING THE COOLING SYSTEM**

- **NO**

  Refer to **CHECKING SOFTWARE**

CHECKING THE COOLING SYSTEM

Ensure that the leak is the cause of the coolant coming in contact with the transmission oil by checking the quality of the oil.

If the quality of the transmission fluid had deteriorated due to leakage from the cooling system, replace the transmission, radiator, hoses and expansion tank as below.

Other information:

- see **OIL GRADE, CHECKING (AW50/51 AWD; AW55-50/51SN)**
- see **TRANSMISSION, REMOVING**
- see **TRANSMISSION, INSTALLING**
- see **RADIATOR / CHARGE AIR COOLER (CAC), REPLACEMENT**

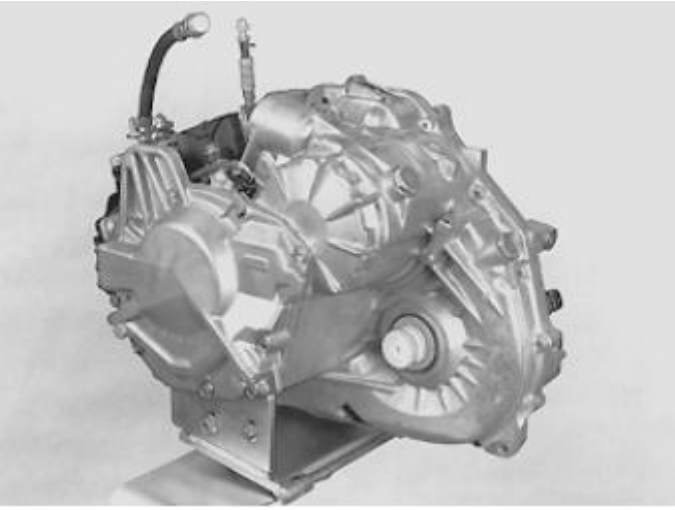

Fig. 9: Identifying Transmission
Courtesy of VOLVO CARS CORPORATION

- **Continue**

  Refer to **RESETTING THE ADAPTATION**

CHECKING SOFTWARE

- Check that the control module has the latest version of the relevant software.

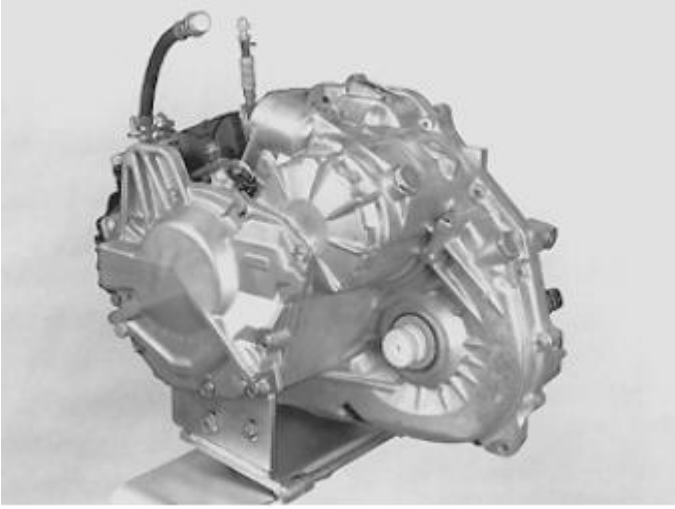

Fig. 10: Identifying Transmission
Courtesy of VOLVO CARS CORPORATION

- **Continue**

  Refer to **TEST DRIVING THE TRANSMISSION**

REPLACING AUTOMATIC TRANSMISSIONS

Replace the transmission.

Other information:

- see **TRANSMISSION, REMOVING**
- see **TRANSMISSION, INSTALLING**

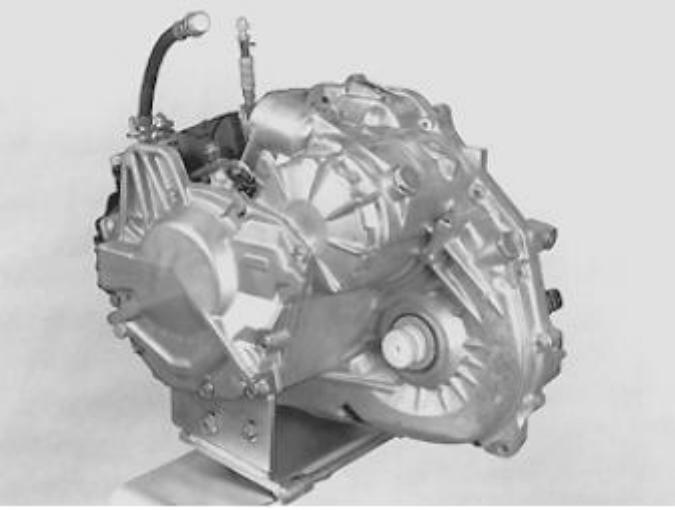

Fig. 11: Identifying Transmission
Courtesy of VOLVO CARS CORPORATION

- **Continue**

  REPAIRED

TEST DRIVING THE TRANSMISSION

- Perform the following check.

  Other information:

  - see **TEST DRIVE SCHEDULE, DESCRIPTION**

Does the problem persist?

- **YES**

  Refer to **CHECKING FOR CONTACT RESISTANCE AND OXIDATION**

- **NO**

  OKAY: Troubleshooting has been completed.

TEST DRIVING THE TRANSMISSION

- Perform the following check.

  Other information:

  - see **TEST DRIVE SCHEDULE, DESCRIPTION**

Does the problem persist?

- **YES**

  Refer to **REPLACING AUTOMATIC TRANSMISSIONS**

- **NO**

  OKAY: Troubleshooting has been completed.

RESETTING TRANSMISSION FLUID CHANGE COUNTER

RESETTING TRANSMISSION FLUID CHANGE COUNTER

HINT: The transmission control module (TCM) has a counter for the oil quality. The counter counts up if the transmission is exposed to too high a load or an ambient temperature that is too high. If the counter is not reset when the oil is drained or changed, there is a risk that a diagnostic trouble code (DTC) will be stored in faulty circumstances. Therefore it is important that the "Transmission oil change" counter is reset.

NOTE: **This applies only when the transmission fluid is changed and when the fluid is changed when repairs are carried out to the transmission temperature sensor.**

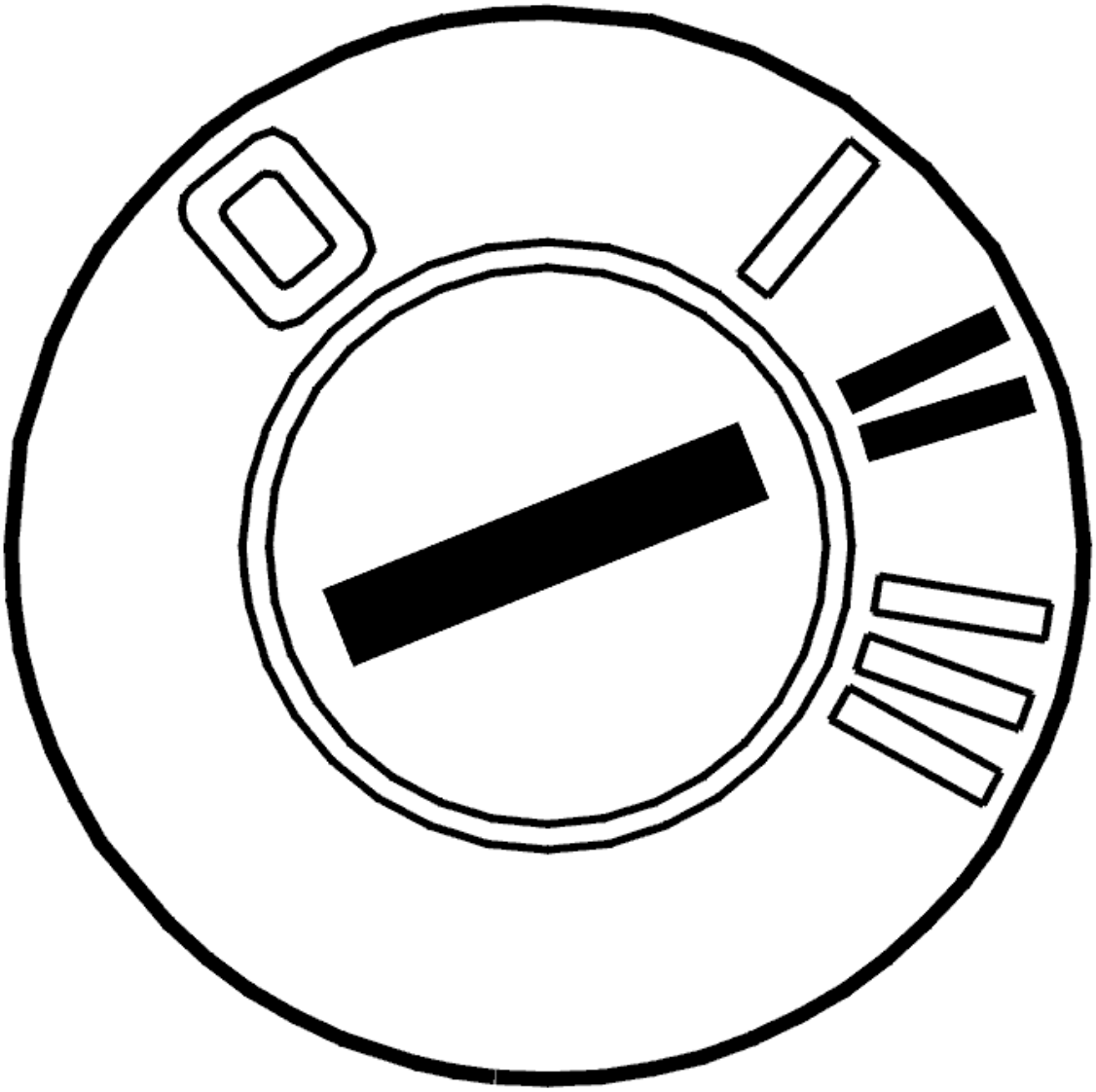

Fig. 12: Identifying Ignition ON
Courtesy of VOLVO CARS CORPORATION

- Ignition on.

  Reset the counter by clicking on the VCT 2000 symbol.

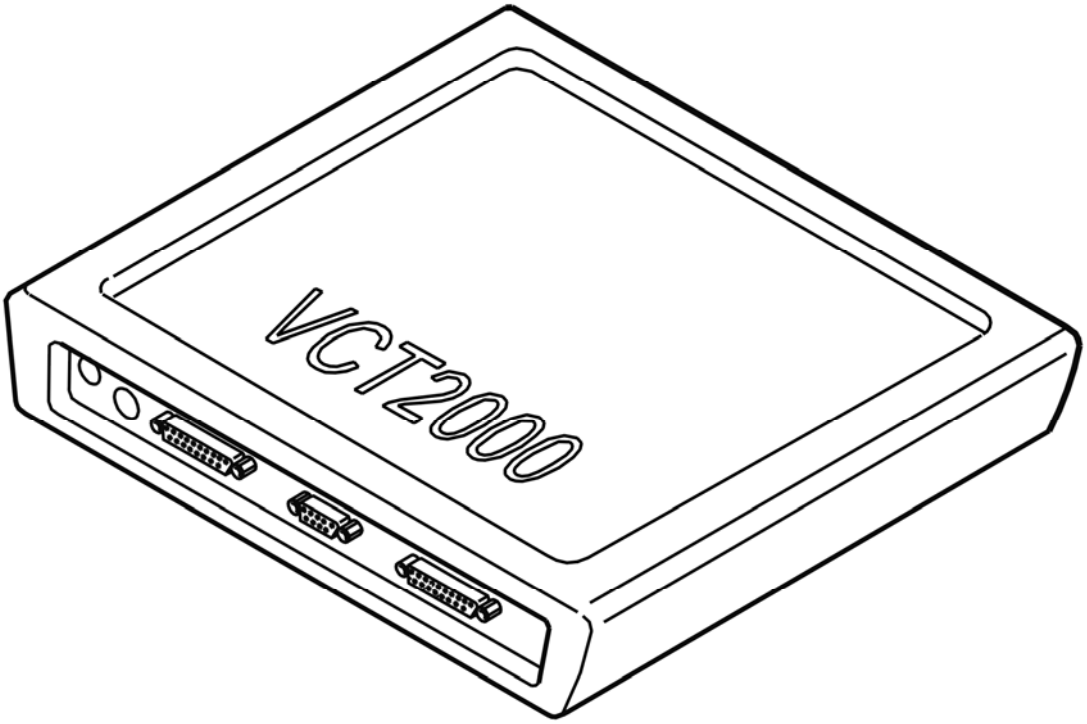

Fig. 13: Identifying VCT2000 Diagnostic Tool Symbol In VIDA
Courtesy of VOLVO CARS CORPORATION

- **Continue**

  Refer to **VERIFICATION**

RESETTING THE ADAPTATION

RESETTING ADAPTATION AND THE COUNTER FOR "TRANSMISSION OIL CHANGE"

HINT: The transmission has torque controlled adaptive pressure control. Pressure control means that the transmission regulates the pressure itself during each gear shift. This avoids harsh gear shifting. Each gear shift is evaluated by the control module and stored in the memory. This allows for compensation for wear and tear in the transmission and clutch. It is important that the adaptation in the memory is reset after the transmission has been repaired. This is to ensure normal operation. The oil is replaced during repair; the "Transmission oil change" counter must be reset. If the counter is not reset when the fluid is drained and replaced, there is a risk that a diagnostic trouble code (DTC) will be stored in incorrect circumstances.

NOTE: **This applies only if the transmission or one of the components in the transmission have been replaced.**

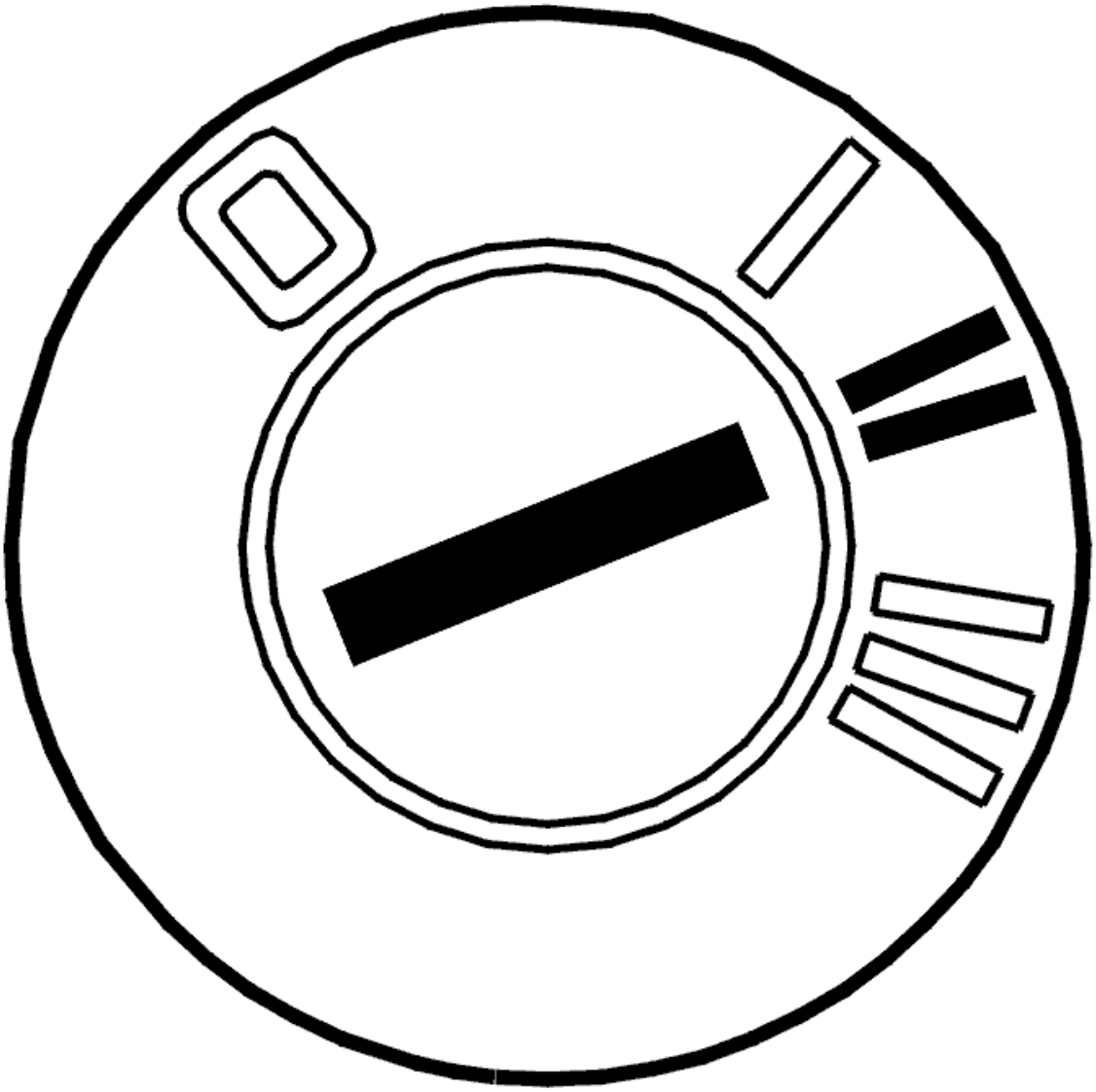

Fig. 14: Identifying Ignition ON
Courtesy of VOLVO CARS CORPORATION

- Ignition on.

  Click on the VCT2000 symbol to reset the adaptation and counter.

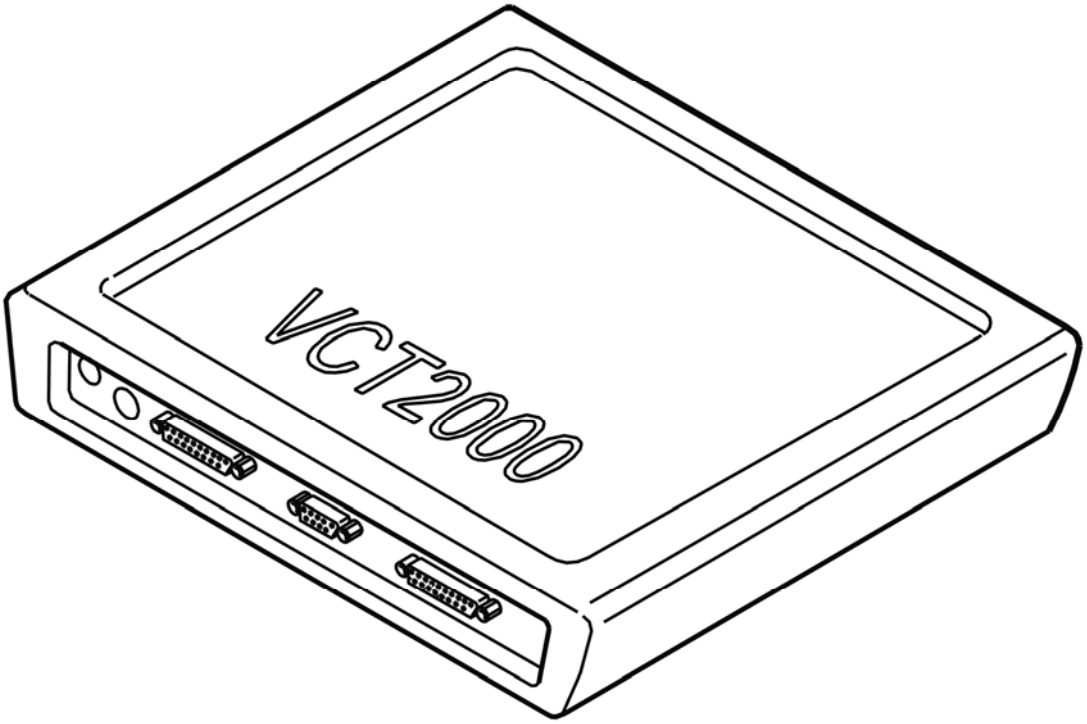

Fig. 15: Identifying VCT2000 Diagnostic Tool Symbol In VIDA
Courtesy of VOLVO CARS CORPORATION

- **Continue**

  Refer to **VERIFICATION**

VERIFICATION

VERIFICATION

HINT: After carrying out the repair, check that the fault has been remedied.

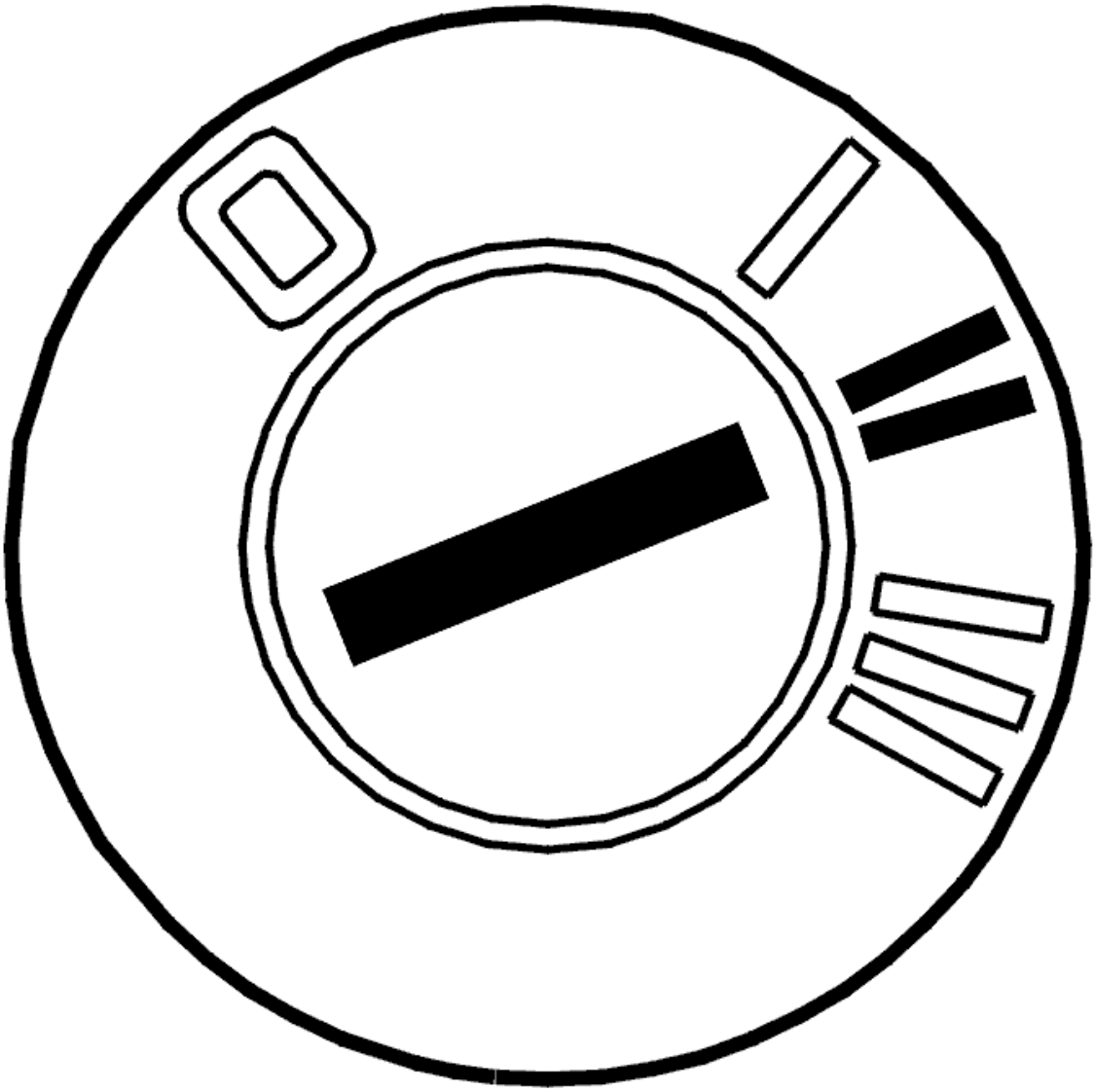

Fig. 16: Identifying Ignition ON
Courtesy of VOLVO CARS CORPORATION

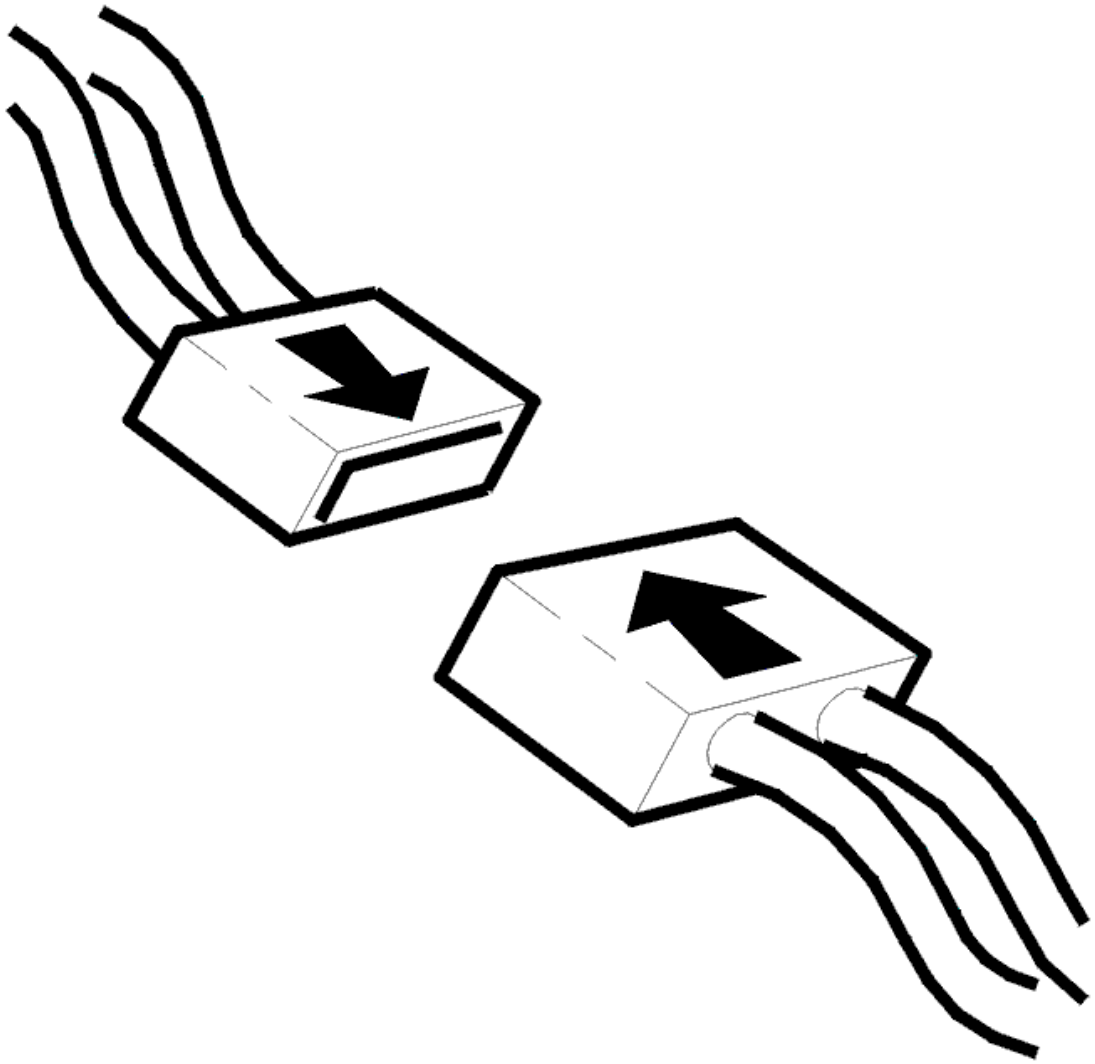

Fig. 17: Identifying Connector(s) Reinstallation
Courtesy of VOLVO CARS CORPORATION

- Ignition off
- Reconnect the connectors, components, etc.
- Ignition on

  Test drive the vehicle following:**TEST DRIVE SCHEDULE, DESCRIPTION**

  During the test drive, oil temperature should be over 20 °C.

  Note any deviations in transmission function.

Does the transmission function flawlessly?

- **YES**

  VERIFIED: Troubleshooting has been completed.

- **NO**

  Refer to **INFORMATION**

INFORMATION

FAULT-TRACING INFORMATION

The fault should have been detected and remedied. As this is not the case fault-tracing has failed.

Exit fault-tracing for this diagnostic trouble code (DTC) or make another attempt.

TCM-002F: LOCK-UP FUNCTION. SLIPPING OR NOT ENGAGED (AW55-50/51SN; 2003-2007)

DIAGNOSTIC TROUBLE CODE INFORMATION

see **DIAGNOSTIC TROUBLE CODE INFORMATION**

SLIPPING OR NOT ENGAGED

see **SLIPPING OR NOT ENGAGED**

SLIPPING OR NOT ENGAGED (2004, 2005)

CHECKING THE OIL QUALITY AND THE OIL LEVEL IN THE TRANSMISSION

NOTE: **Transmission fluid quality and level are extremely important for transmission function. Therefore it is imperative that these are correct. In addition the oil level is dependent on oil temperature.**

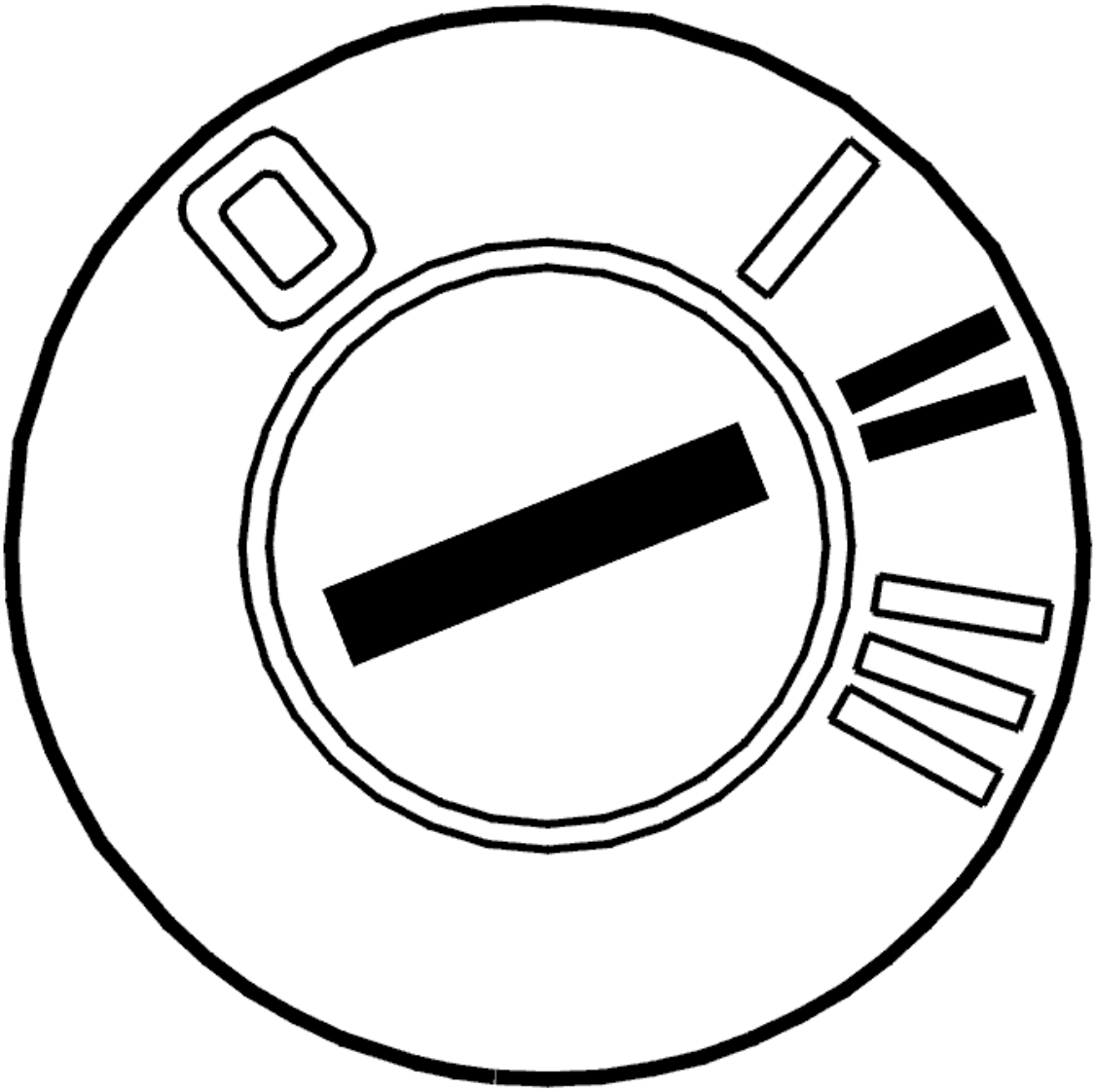

Fig. 18: Identifying Ignition ON
Courtesy of VOLVO CARS CORPORATION

- Ignition on
- Read off the oil temperature.

  Check the oil level. Check the transmission for leakage if the fluid level is low. Then top up with oil.

  Check the quality of the oil.

  Check the transmission fluid for metal shavings. Take a sample using the dip stick.

  - Replace the transmission if the transmission fluid contains metal shavings
  - Replace the transmission fluid if the fluid smells burnt.

Other information:

- see **TRANSMISSION FLUID, REPLACING**
- see **OIL LEVEL, CHECKING**
- see **OIL GRADE, CHECKING**

Select an alternative below:

1. No fault detected

   Refer to **REPLACING THE TRANSMISSION CONTROL SYSTEM**

2. Transmission fluid replaced, the level was low or quality was poor

   Refer to **RESETTING TRANSMISSION FLUID CHANGE COUNTER**

3. The transmission fluid contains metal shavings.

   Refer to **REPLACING THE TRANSMISSION**

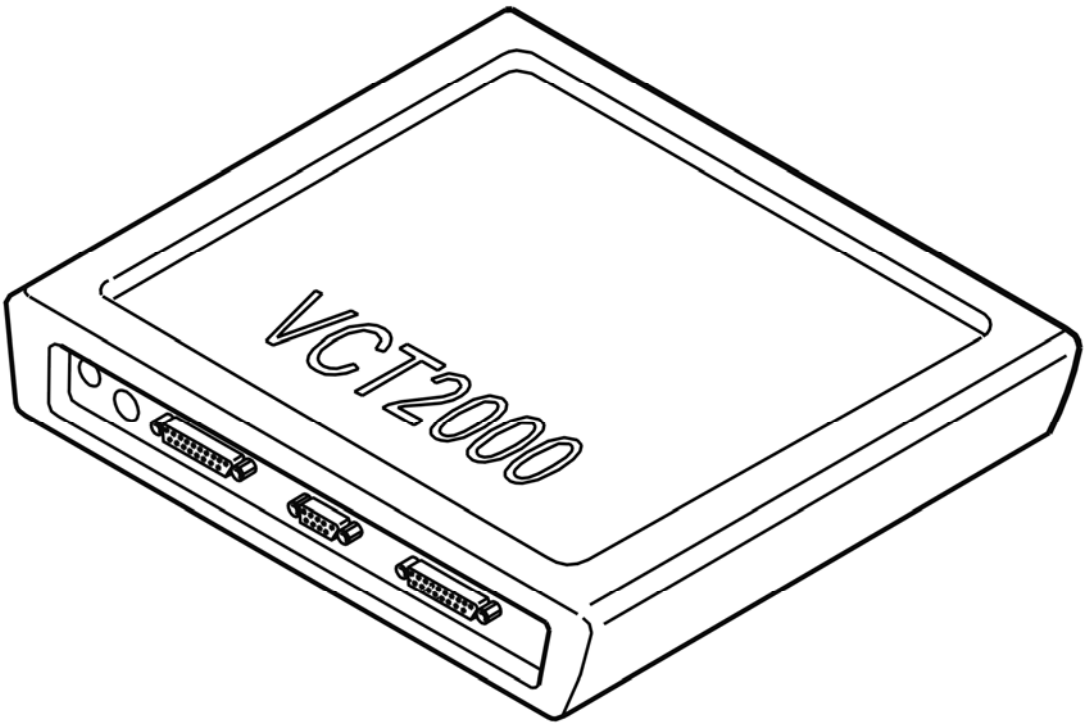

Fig. 19: Identifying VCT2000 Diagnostic Tool Symbol In VIDA
Courtesy of VOLVO CARS CORPORATION

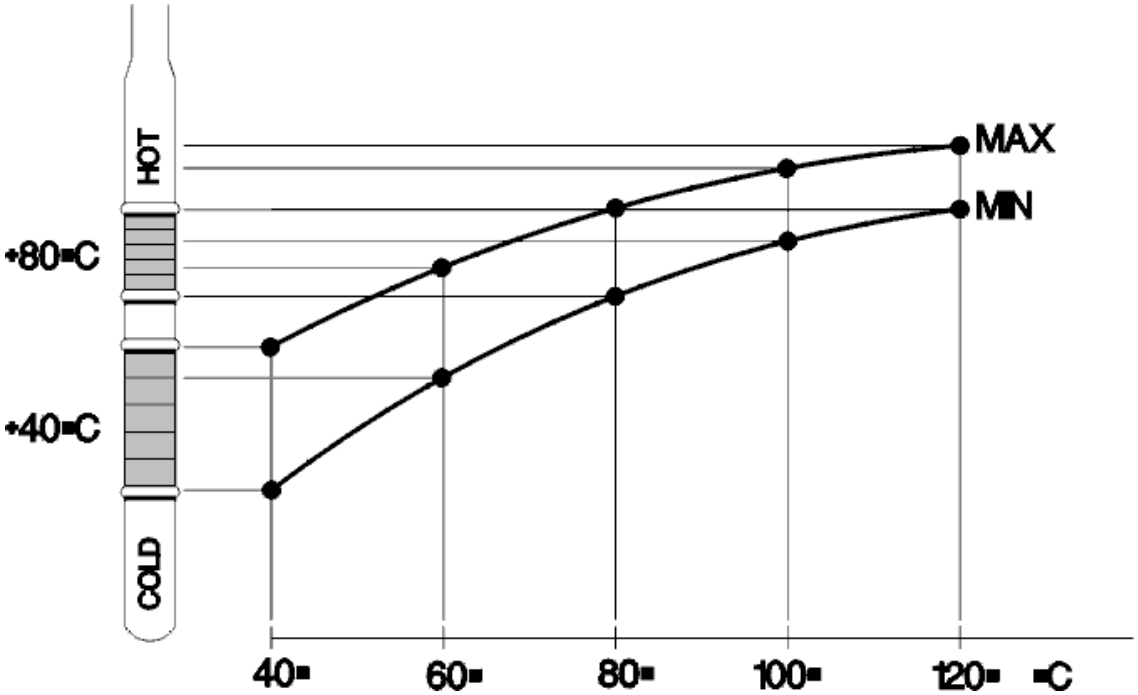

Fig. 20: Identifying Oil Level Temperature Graph
Courtesy of VOLVO CARS CORPORATION

CHECKING FOR CONTACT RESISTANCE AND OXIDATION

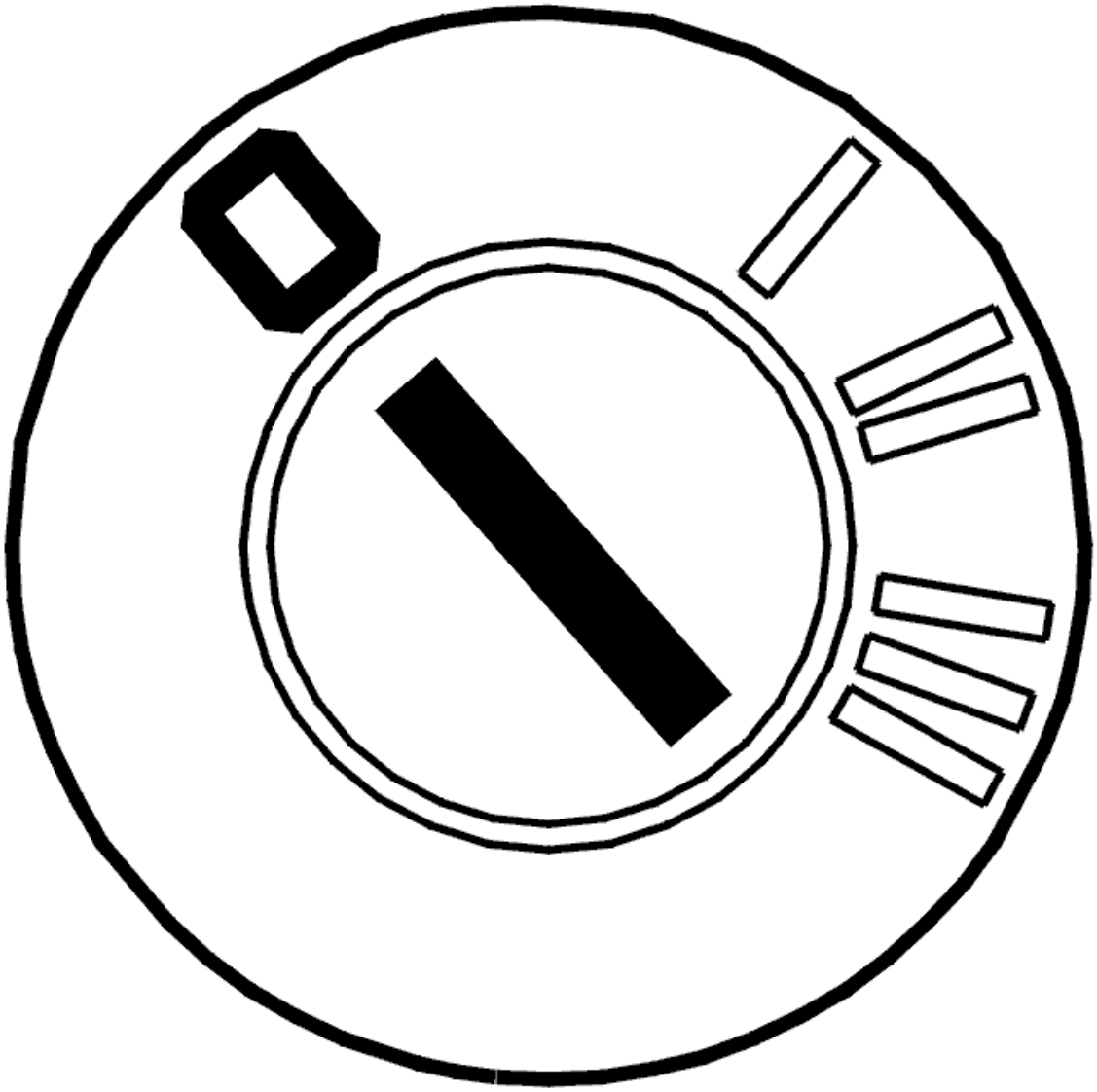

Fig. 21: Identifying Ignition OFF
Courtesy of VOLVO CARS CORPORATION

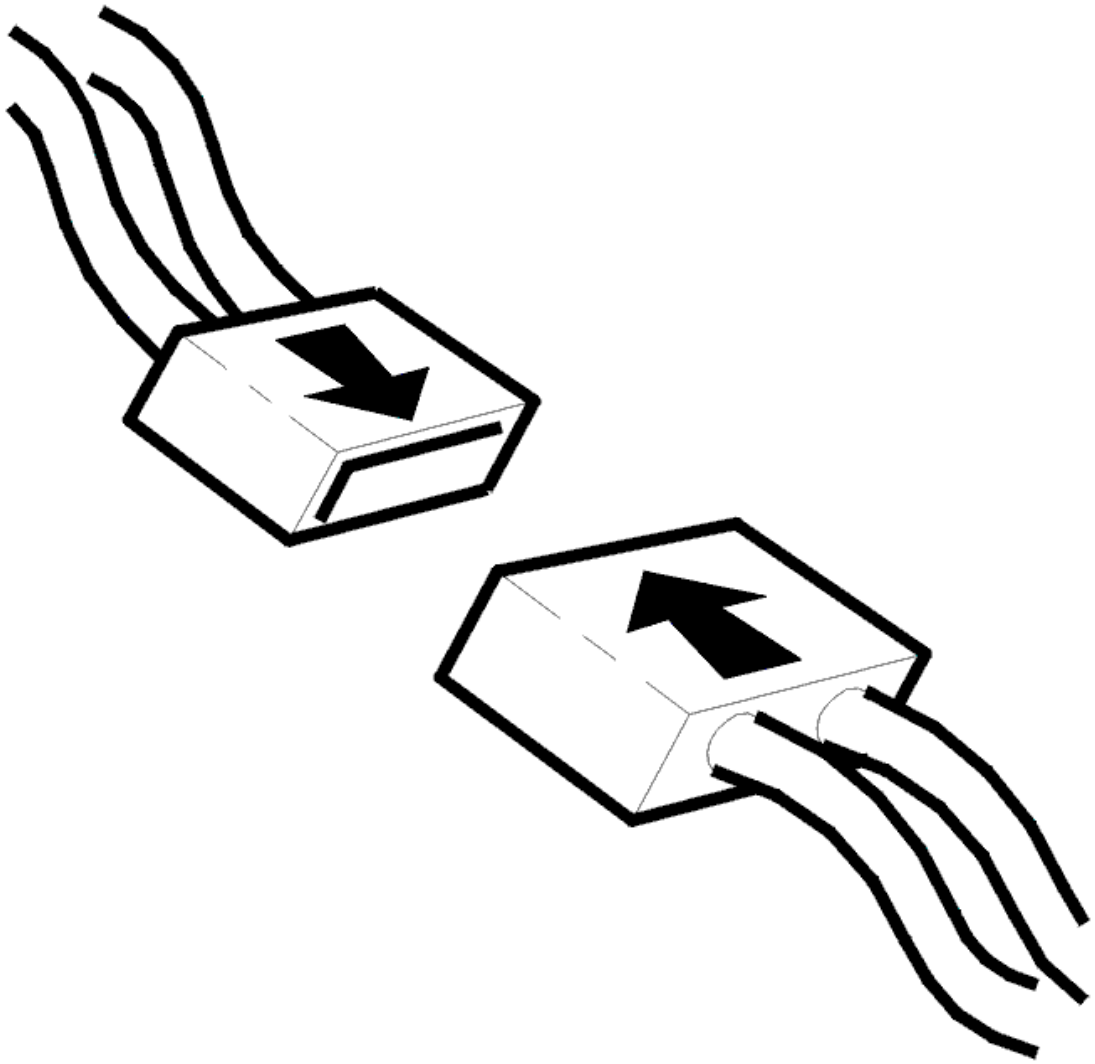

Fig. 22: Identifying Connector(s) Reinstallation
Courtesy of VOLVO CARS CORPORATION

- Ignition off
- Check connectors and connections for contact resistance or oxidation.

  Measure the resistance on the terminals for solenoid SLU. Check for an open-circuit. Check for a short-circuit to ground.

  Remedy as necessary.

  Other information

  - see **CHECKING WIRING AND TERMINALS. PERMANENT FAULT**
  - To access transmission connectors, see

see **CONNECTORS, TRANSMISSION, DISCONNECTING / CONNECTING**

- To access the control module connector, see

  see **TRANSMISSION CONTROL MODULE (TCM), REPLACING**

- see **TRANSMISSION - REMOVAL, REPLACEMENT AND INSTALLATION**

- **Continue**

  Refer to **TEST DRIVING THE TRANSMISSION**

REPLACING THE TRANSMISSION

The previous tests indicate an internal fault in the transmission.

Replace the transmission.

Other information:

- see **TRANSMISSION, REMOVING**
- see **TRANSMISSION, INSTALLING**

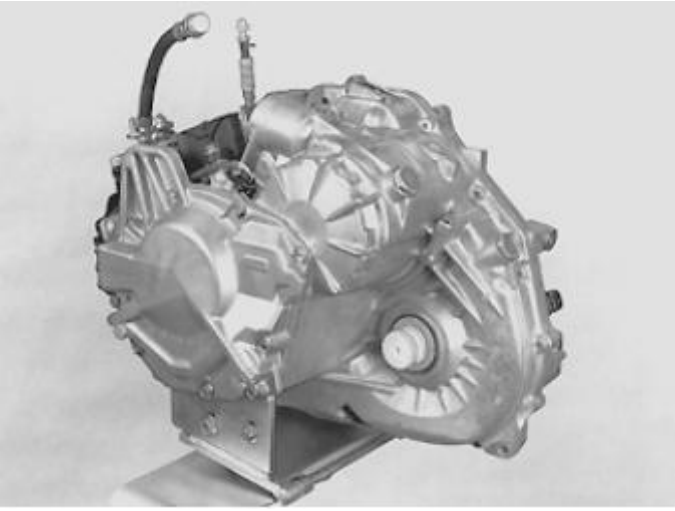

Fig. 23: Identifying Transmission
Courtesy of VOLVO CARS CORPORATION

- **Continue**

  Refer to **RESETTING THE ADAPTATION**

REPLACING THE TRANSMISSION CONTROL SYSTEM

- Perform the following check.

see **TEST PRESSURIZATION**

- Check the cooling system's pipes and connections to the automatic transmission. Check for leakage.

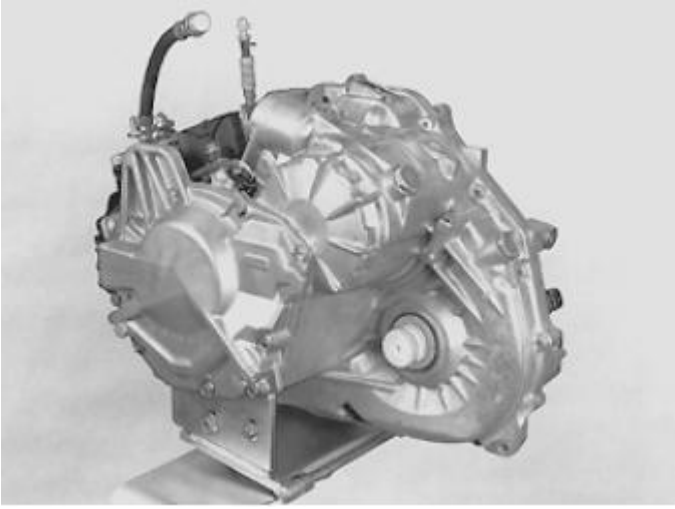

Fig. 24: Identifying Transmission
Courtesy of VOLVO CARS CORPORATION

Does the pressure drop?

- **YES**

  Refer to **CHECKING THE COOLING SYSTEM**

- **NO**

  Refer to **CHECKING SOFTWARE**

CHECKING THE COOLING SYSTEM

Ensure that the leak is the cause of the coolant coming in contact with the transmission oil by checking the quality of the oil.

If the quality of the transmission fluid had deteriorated due to leakage from the cooling system, replace the transmission, radiator, hoses and expansion tank as below.

Other information:

- see **OIL GRADE, CHECKING (AW50/51 AWD; AW55-50/51SN)**
- see **TRANSMISSION, REMOVING**
- see **TRANSMISSION, INSTALLING**
- see **RADIATOR / CHARGE AIR COOLER (CAC), REPLACEMENT**

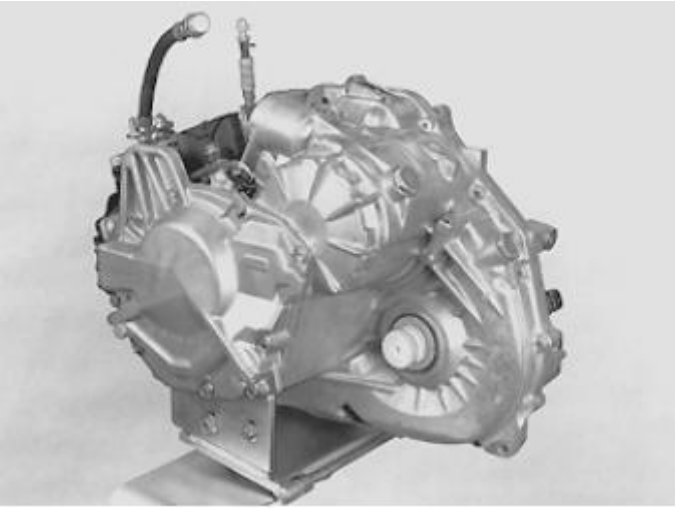

Fig. 25: Identifying Transmission
Courtesy of VOLVO CARS CORPORATION

- **Continue**

  Refer to **RESETTING THE ADAPTATION**

CHECKING SOFTWARE

- Check that the control module has the latest version of the relevant software.

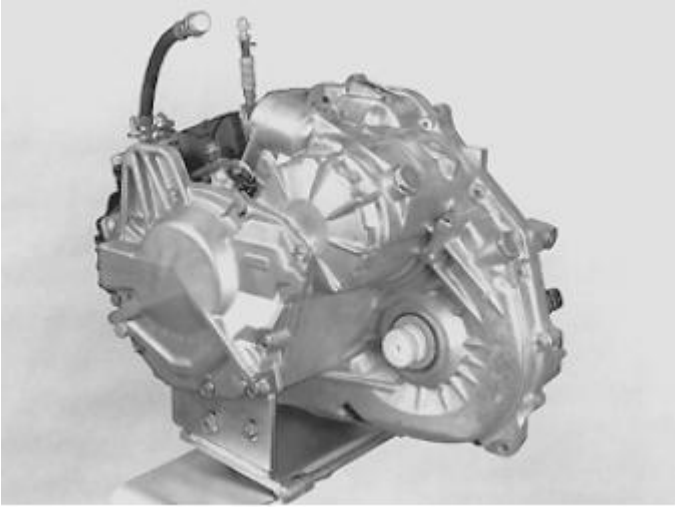

Fig. 26: Identifying Transmission
Courtesy of VOLVO CARS CORPORATION

- **Continue**

  Refer to **TEST DRIVING THE TRANSMISSION**

REPLACING AUTOMATIC TRANSMISSIONS

Replace the transmission.

Other information:

- see **TRANSMISSION, REMOVING**
- see **TRANSMISSION, INSTALLING**

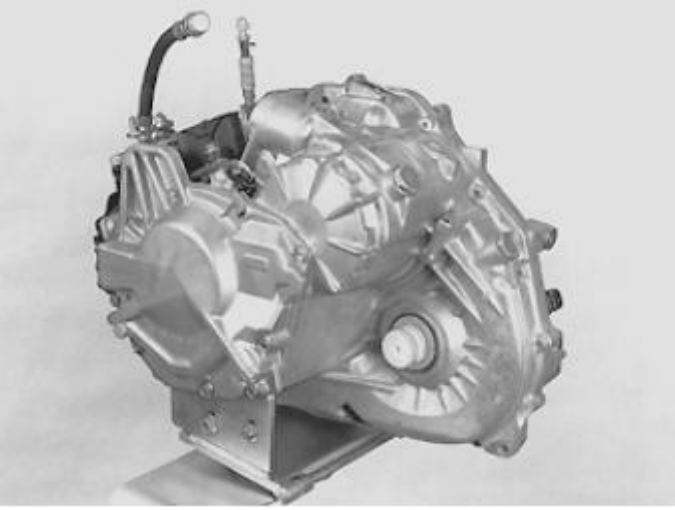

Fig. 27: Identifying Transmission
Courtesy of VOLVO CARS CORPORATION

- **Continue**

  REPAIRED

TEST DRIVING THE TRANSMISSION

- Perform the following check.

  Other information:

  - see **TEST DRIVE SCHEDULE, DESCRIPTION**

Does the problem persist?

- **YES**

  Refer to **CHECKING FOR CONTACT RESISTANCE AND OXIDATION**

- **NO**

  OKAY: Troubleshooting has been completed.

TEST DRIVING THE TRANSMISSION

- Perform the following check.

  Other information:

  - see **TEST-DRIVE SCHEDULE TCM-002F AW55-50/51SN**

Does the problem persist?

- **YES**

  Refer to **REPLACING AUTOMATIC TRANSMISSIONS**

- **NO**

  OKAY: Troubleshooting has been completed.

RESETTING TRANSMISSION FLUID CHANGE COUNTER

RESETTING TRANSMISSION FLUID CHANGE COUNTER

HINT: The transmission control module (TCM) has a counter for the oil quality. The counter counts up if the transmission is exposed to too high a load or an ambient temperature that is too high. If the counter is not reset when the oil is drained or changed, there is a risk that a diagnostic trouble code (DTC) will be stored in faulty circumstances. Therefore it is important that the "Transmission oil change" counter is reset.

NOTE: **This applies only when the transmission fluid is changed and when the fluid is changed when repairs are carried out to the transmission temperature sensor.**

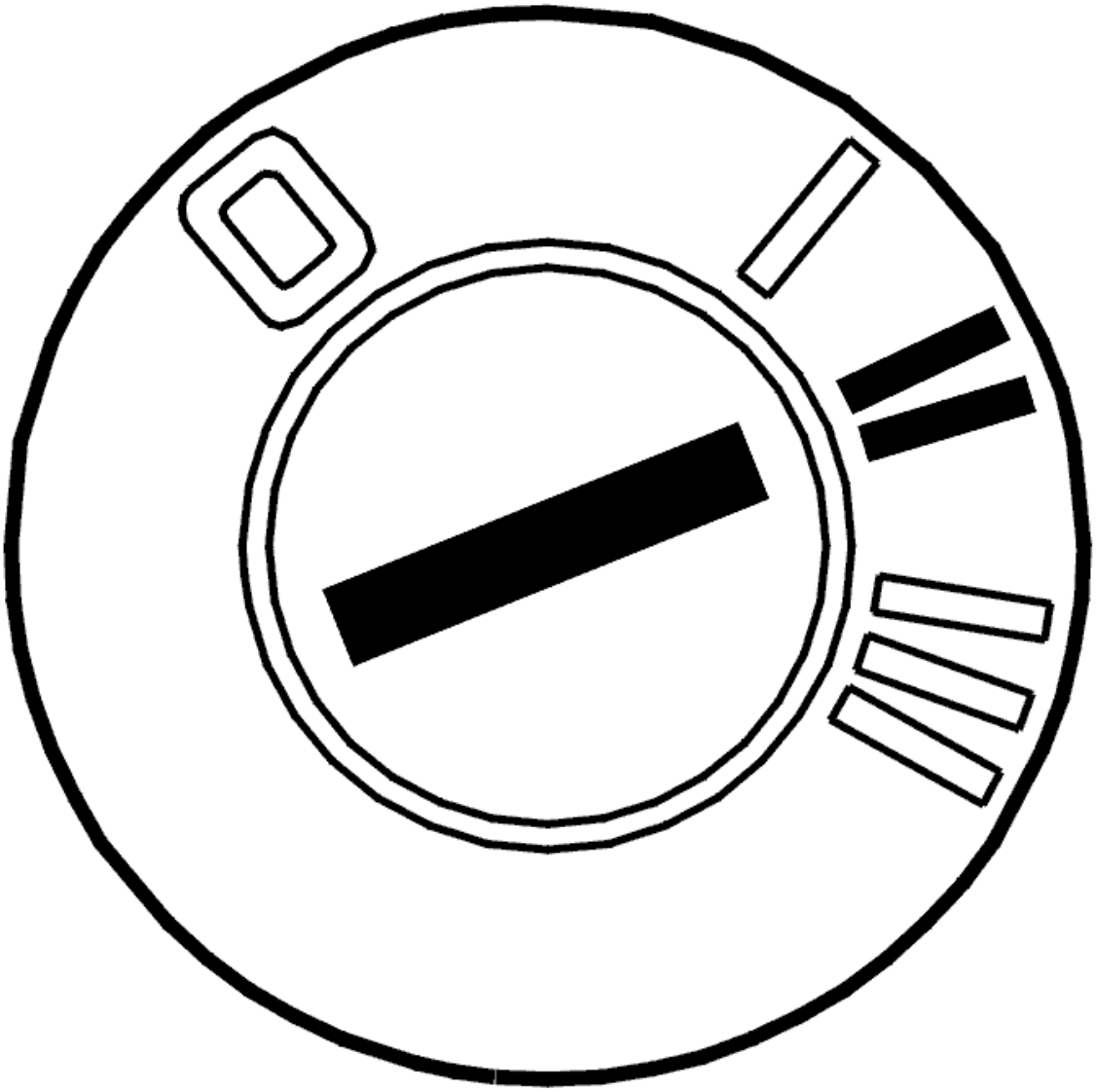

Fig. 28: Identifying Ignition ON
Courtesy of VOLVO CARS CORPORATION

- Ignition on.

  Reset the counter by clicking on the VCT 2000 symbol.

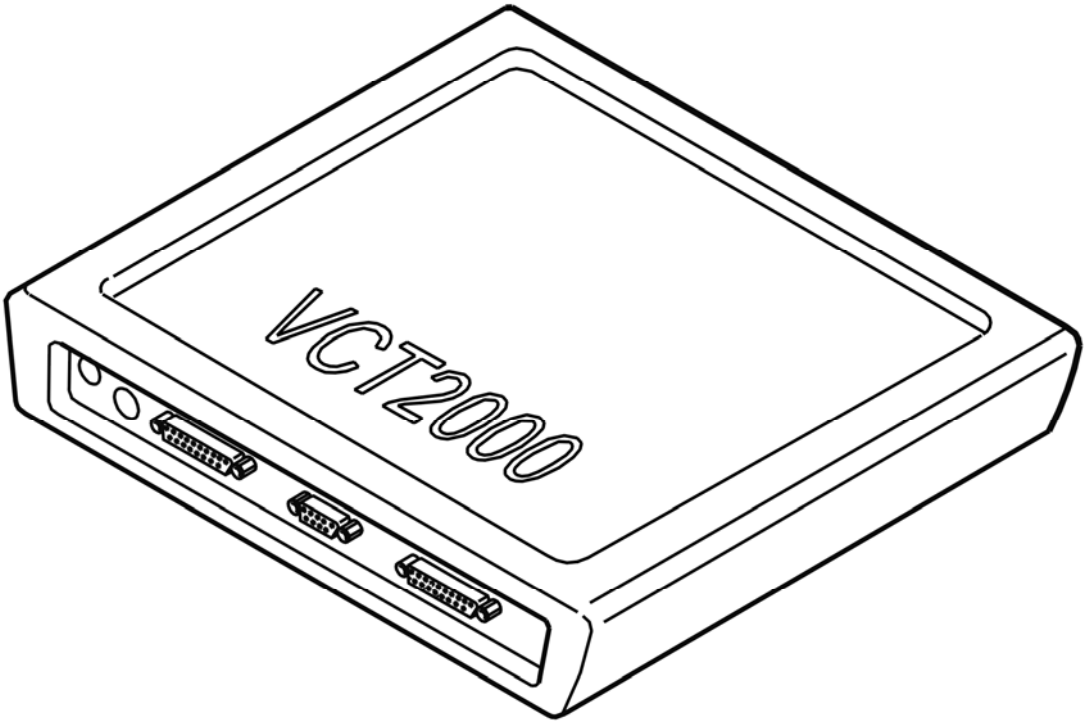

Fig. 29: Identifying VCT2000 Diagnostic Tool Symbol In VIDA
Courtesy of VOLVO CARS CORPORATION

- **Continue**

  Refer to **VERIFICATION**

RESETTING THE ADAPTATION

RESETTING ADAPTATION AND THE COUNTER FOR "TRANSMISSION OIL CHANGE"

HINT: The transmission has torque controlled adaptive pressure control. Pressure control means that the transmission regulates the pressure itself during each gear shift. This avoids harsh gear shifting. Each gear shift is evaluated by the control module and stored in the memory. This allows for compensation for wear and tear in the transmission and clutch. It is important that the adaptation in the memory is reset after the transmission has been repaired. This is to ensure normal operation. The oil is replaced during repair; the "Transmission oil change" counter must be reset. If the counter is not reset when the fluid is drained and replaced, there is a risk that a diagnostic trouble code (DTC) will be stored in incorrect circumstances.

NOTE: **This applies only if the transmission or one of the components in the transmission have been replaced.**

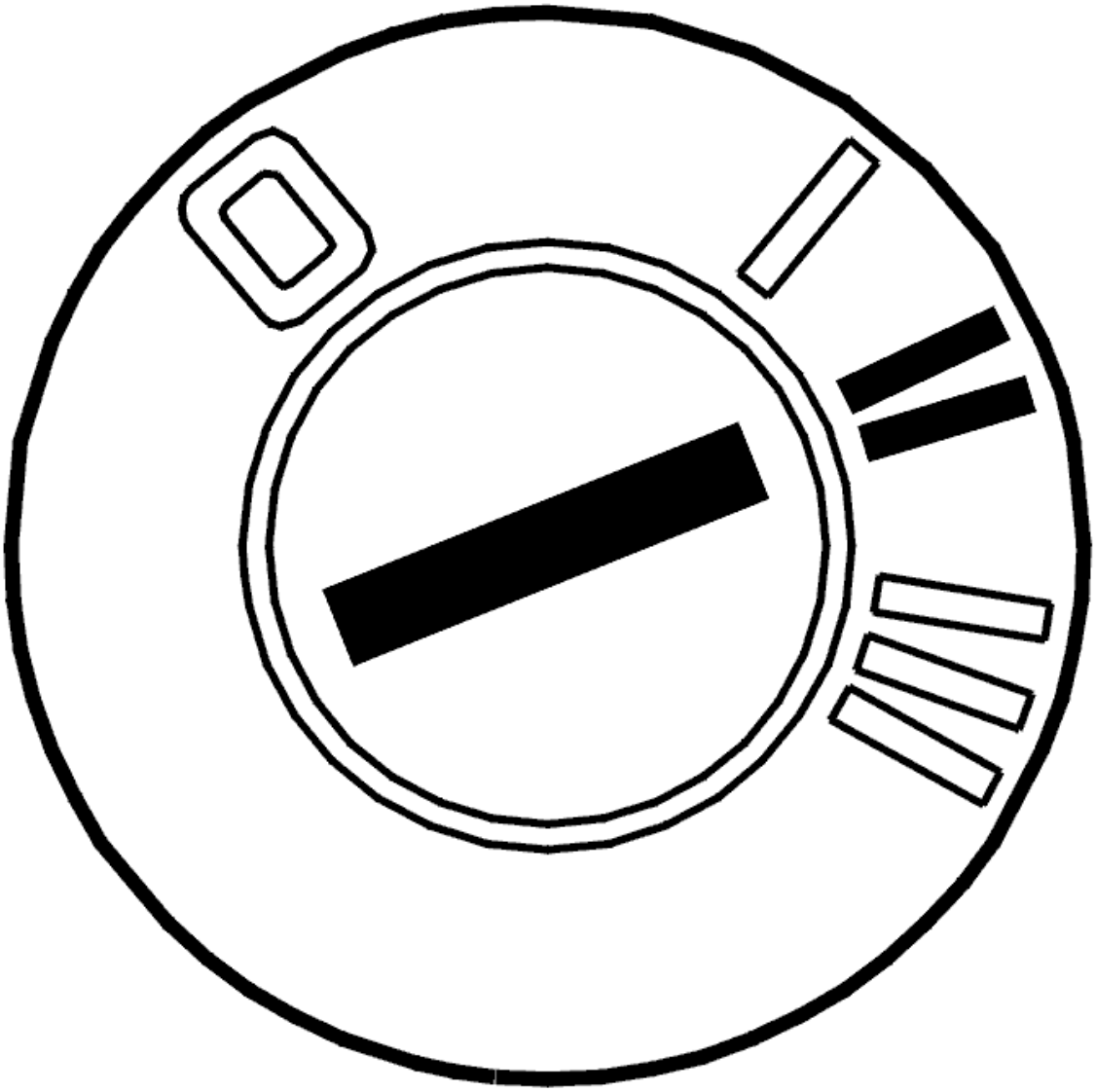

Fig. 30: Identifying Ignition ON
Courtesy of VOLVO CARS CORPORATION

- Ignition on.

  Click on the VCT2000 symbol to reset the adaptation and counter.

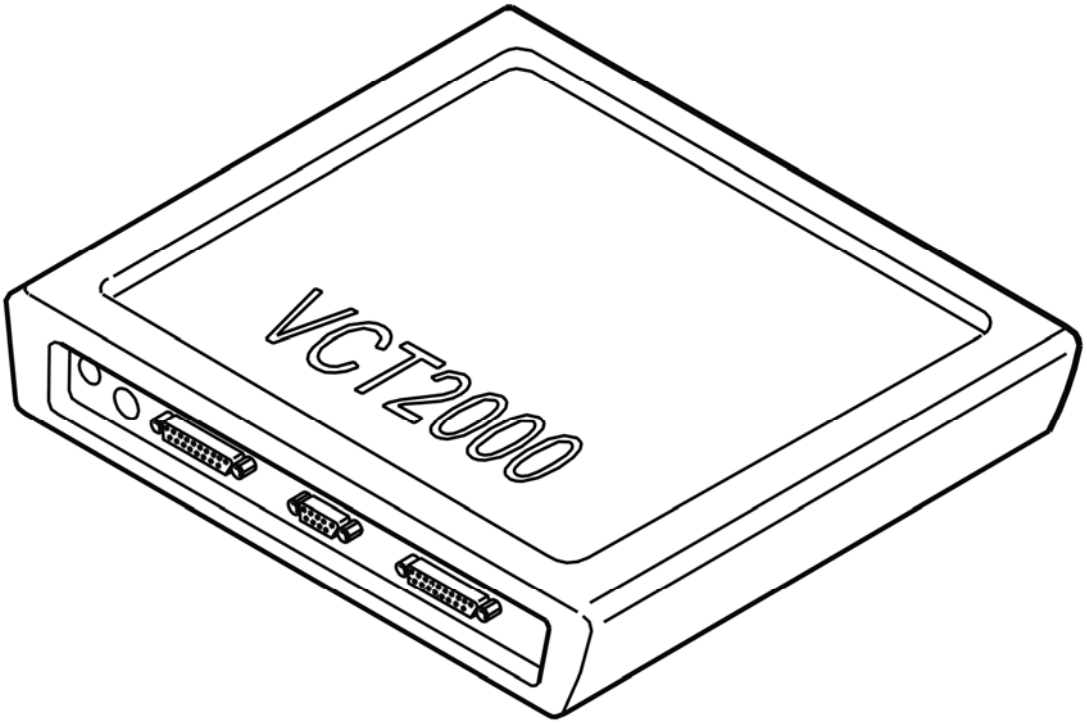

Fig. 31: Identifying VCT2000 Diagnostic Tool Symbol In VIDA
Courtesy of VOLVO CARS CORPORATION

- **Continue**

  Refer to **VERIFICATION**

VERIFICATION

VERIFICATION

HINT: After carrying out the repair, check that the fault has been remedied.

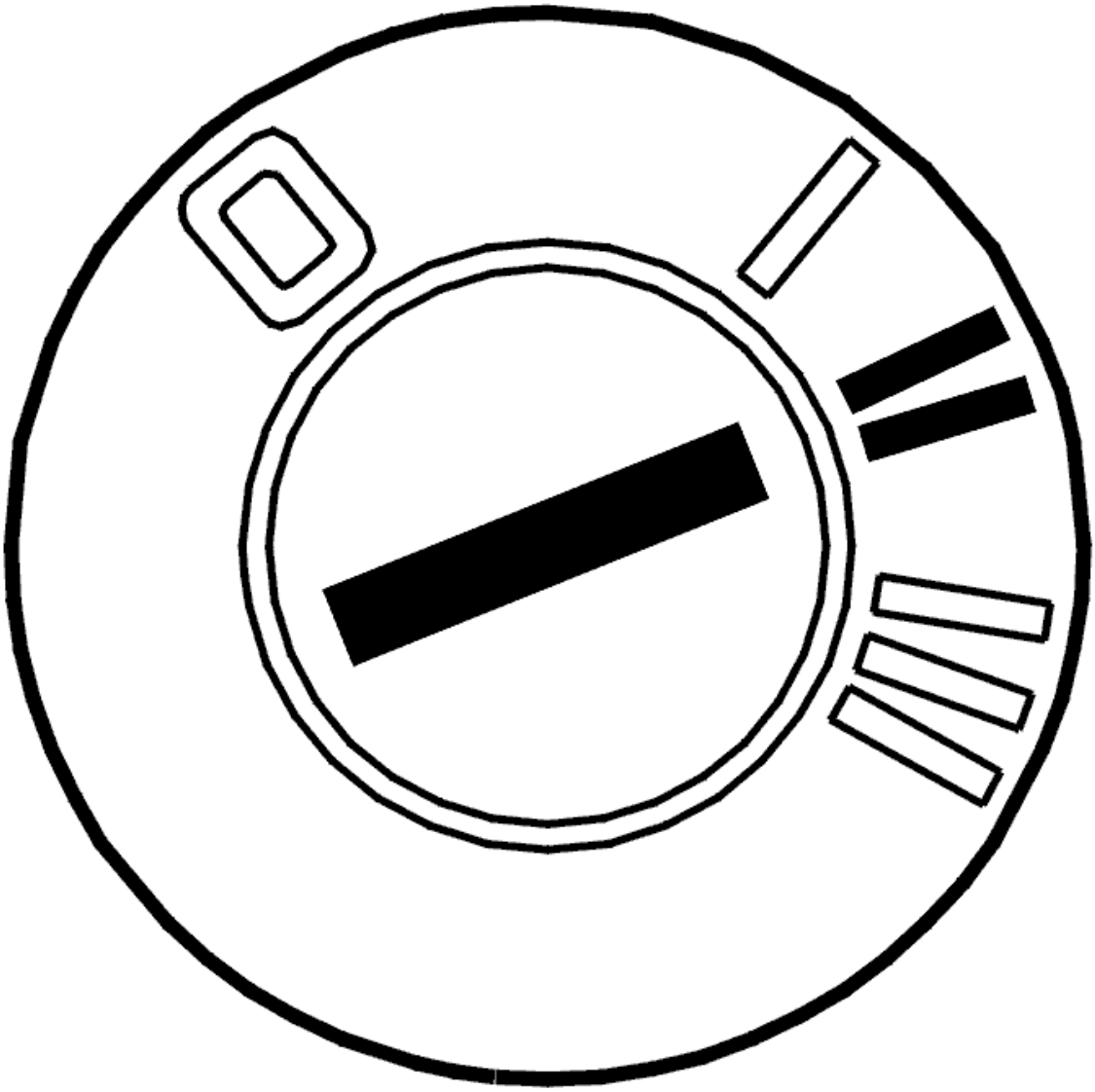

Fig. 32: Identifying Ignition ON
Courtesy of VOLVO CARS CORPORATION

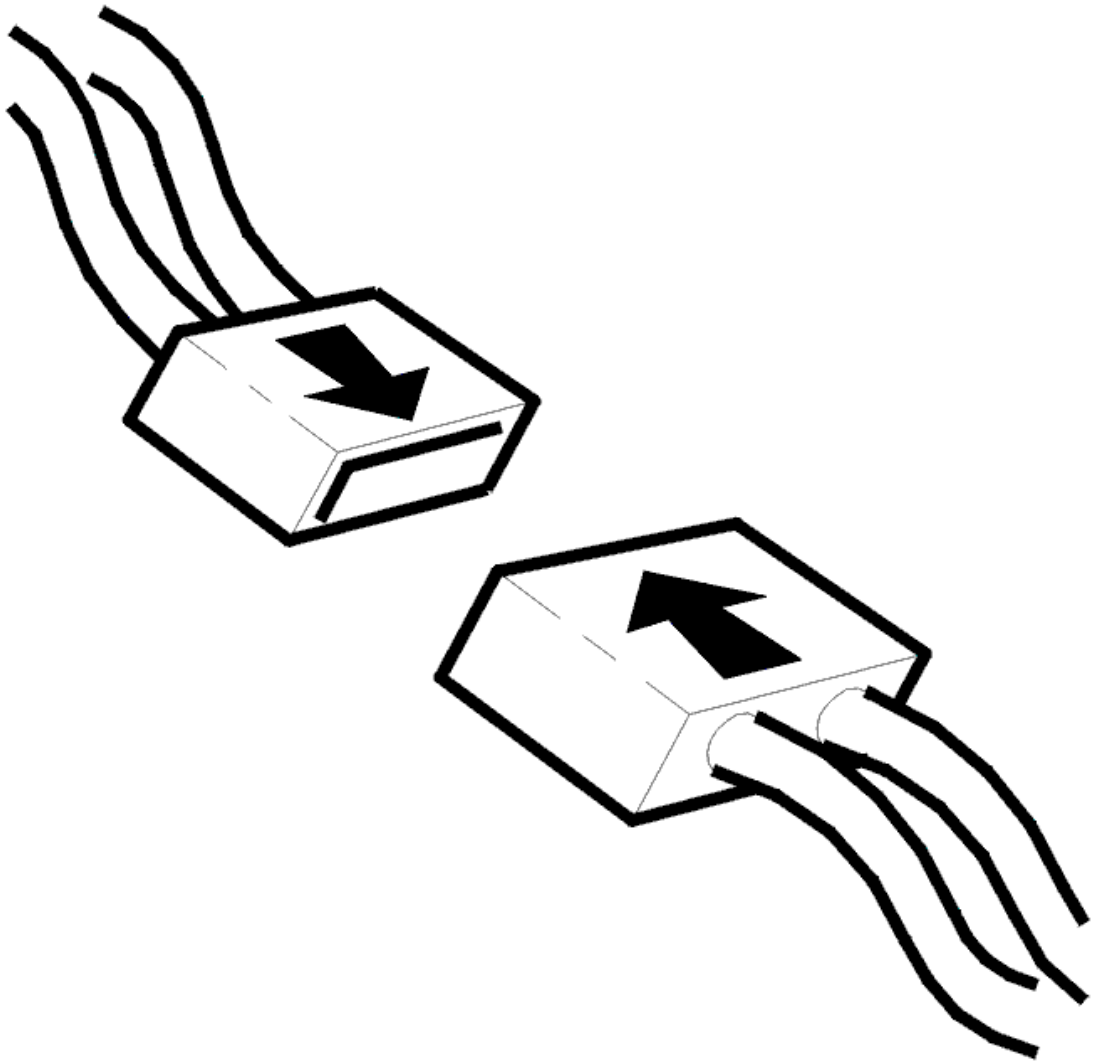

Fig. 33: Identifying Connector(s) Reinstallation
Courtesy of VOLVO CARS CORPORATION

- Ignition off
- Reconnect the connectors, components, etc.
- Ignition on

  Test drive the vehicle following:**TEST DRIVE SCHEDULE, DESCRIPTION**

  During the test drive, oil temperature should be over 20 °C.

  Note any deviations in transmission function.

Does the transmission function flawlessly?

- **YES**

  VERIFIED: Troubleshooting has been completed.

- **NO**

  Refer to **INFORMATION**

INFORMATION

FAULT-TRACING INFORMATION

The fault should have been detected and remedied. As this is not the case fault-tracing has failed.

Exit fault-tracing for this diagnostic trouble code (DTC) or make another attempt.

TEST-DRIVE SCHEDULE TCM-002F AW55-50/51SN

NOTE: Read through the whole test-drive schedule before starting to test-drive.

1. Check the oil temperature in the transmission. Suitable temperature range is approx. 40-100 °C.
2. Start Activation of gear indication.

   NOTE: The function is only active during the driving cycle in question.

3. Activate tools to measure the rpm difference between the transmission's rpm sensor and the engine speed.
4. Drive the vehicle at approx. 60 km/h (37 mph) with the gear selector in lever position 3, alternatively manually selected position 3 if the vehicle is equipped with lever carrier with GearTronic. Check that the lock-up locks (indicated by steady glow from IND-light).
5. Press down the accelerator pedal and check if the difference in rpm between engine and transmission is greater than 100 rpm.
6. Perform the above check at other speeds and with other lever positions.

NOTE: Diagnostic trouble code is stored after approx. 20 sec. with an rpm difference that is greater than 100 rpm.

TCM-0039: GEAR-SHIFT POSITION SENSOR. FAULTY SIGNAL (4T65 AWD; 2003-2006)

DIAGNOSTIC TROUBLE CODE (DTC) INFORMATION

Condition

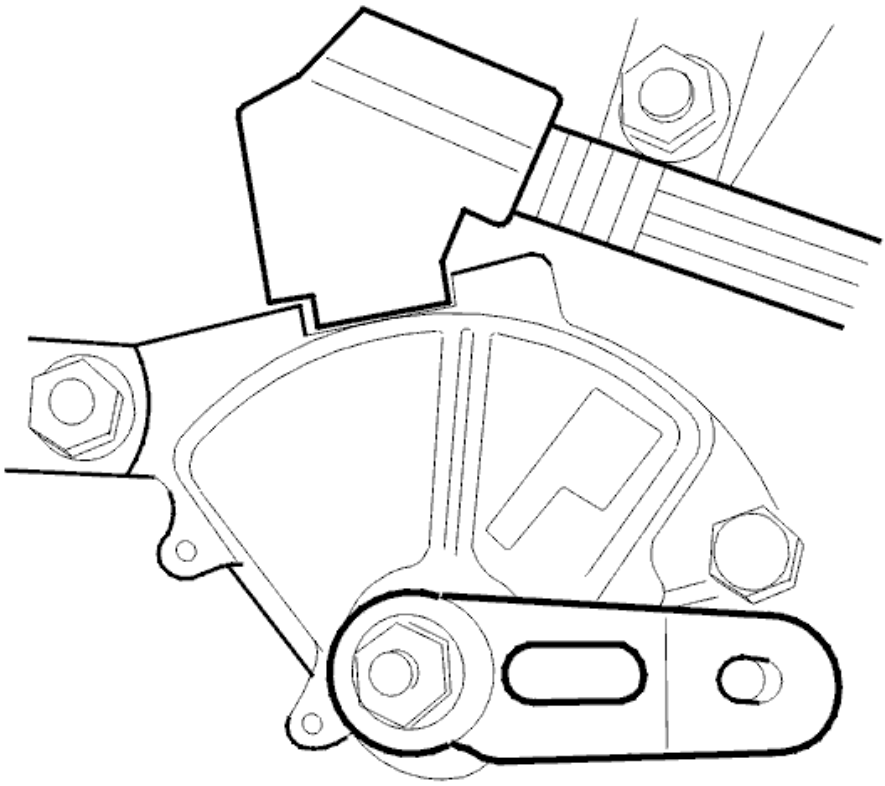

Fig. 34: Identifying Gear-Shift Position Sensor
Courtesy of VOLVO CARS CORPORATION

The gear-shift position sensor signals provide the transmission control module (TCM) with data on the gear selector position. This is done by grounding a combination of signals A, B, C and PA inside the gear position sensor. Diagnostic trouble code (DTC) TCM-0039 is stored if the control module registers an unacceptable combination of A, B, C and PA for a period of approximately 10 seconds as shown below (depending on the transmission).

AW 6 position gear selector assembly				
A	**B**	**C**	**PA**	
o	o	o	•	Diagnostic Trouble Code (DTC)
o	o	•	o	Diagnostic Trouble Code (DTC)
o	o	•	•	Diagnostic Trouble Code (DTC)
•	o	o	o	Diagnostic Trouble Code (DTC)
•	•	•	o	Diagnostic Trouble Code (DTC)
AW 7 position gear selector assembly				

A	B	C	PA	
o	o	o	•	Diagnostic Trouble Code (DTC)
o	o	•	o	Diagnostic Trouble Code (DTC)
•	•	•	•	Diagnostic Trouble Code (DTC)
•	o	o	o	Diagnostic Trouble Code (DTC)
GM4T65GT Geartronic				
A	**B**	**C**	**PA**	
o	o	o	•	Diagnostic Trouble Code (DTC)
o	o	•	o	Diagnostic Trouble Code (DTC)
o	o	•	•	Diagnostic Trouble Code (DTC)
•	o	o	o	Diagnostic Trouble Code (DTC)
•	o	•	o	Diagnostic Trouble Code (DTC)
•	•	•	o	Diagnostic Trouble Code (DTC)
•	o	•	•	Diagnostic Trouble Code (DTC)
GM4T65GT 7 position gear selector assembly				
A	**B**	**C**	**PA**	
o	o	o	•	Diagnostic Trouble Code (DTC)
•	o	o	o	Diagnostic Trouble Code (DTC)

• = 0-2 V below battery voltage

o = ground

Substitute Value

- The control module "Limp Home" program has been initiated.

Possible Source

- Contact resistance in the terminals.
- Short-circuit to supply voltage or ground in the signal cable.

- Open-circuit in the signal cable.
- Incorrectly adjusted gear-shift position sensor.
- Defective gear-shift position sensor.

Fault symptom[s]

- General orange warning lamp lit.
- Malfunction indicator lamp (MIL) lit.
- No lock-up function.
- Harsh gear shifting.
- No shifting.

CAUTION: The gear-shift position sensor will malfunction if there is a short-circuit to supply voltage.

HINT: Harsh shifting - due to disabled line pressure solenoid STH control. This results in constant maximum line pressure and leads to harsher shifting and gear engagement.

HINT: No shifting -because the transmission control module (TCM) prevents activation of the solenoids. This stops gear-shifting.

FAULTY SIGNAL

CHECKING THE GEAR-SHIFT POSITION SENSOR

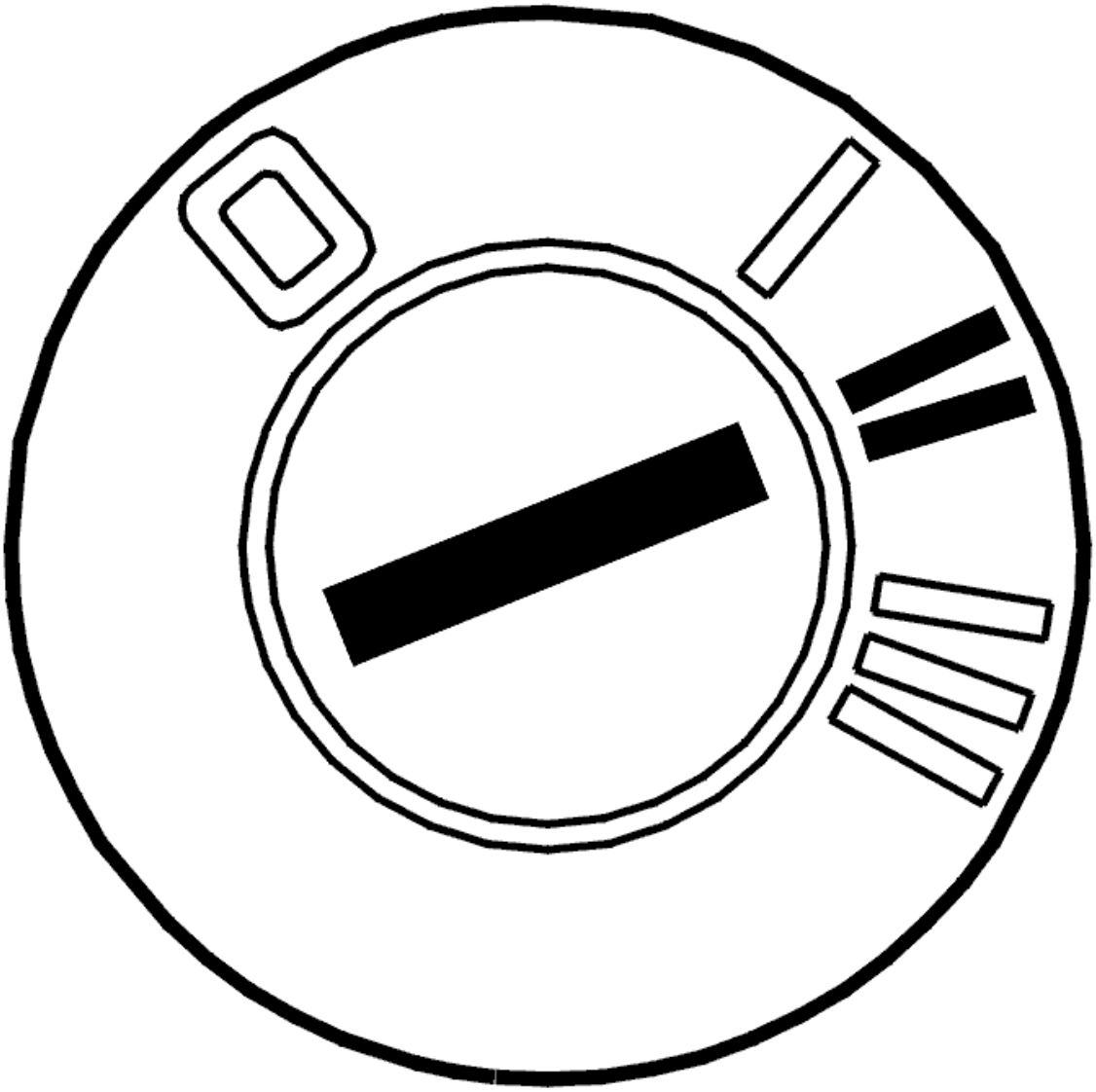

Fig. 35: Identifying Ignition ON
Courtesy of VOLVO CARS CORPORATION

- Ignition on
- Select the correct type of gear selector assembly. Read off the position of the gear-shift position sensor.

  Shift the gear selector to all gear positions several times. Check that the gear positions are updated. The gear position sensor is incorrectly adjusted if the display shows an undefined position (OR for example).

  Adjust the gear-shift position sensor if necessary. Then re-check the gear-shift position sensor.

  Other information:

  - To adjust the gear-shift position sensor, For B5xx4T2, see **GEAR SELECTOR CABLES, ADJUSTING** or For B6xx4T, see **GEAR SELECTOR CABLE, ADJUSTING**

- To access the transmission connector, see **CONNECTING THE BREAKOUT BOX, GM AUTOMATIC TRANSMISSIONS**
- To access the control module connector, see **CONNECTING THE BREAKOUT BOX** .

Select an option:

1. The gear positions are updated correctly

   Refer to **INTERMITTENT FAULT**

2. The gear positions are not updated correctly

   Refer to **CHECKING THE WIRING**

3. The gear-shift position sensor has been adjusted.

   Refer to **VERIFICATION**

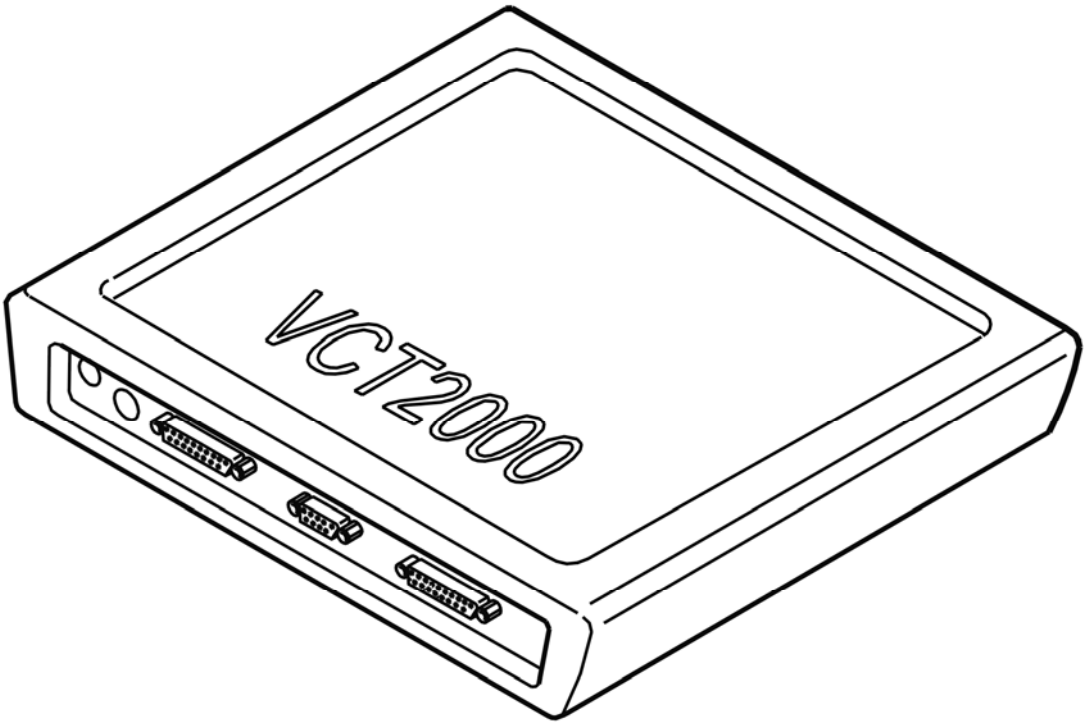

Fig. 36: Identifying VCT2000 Diagnostic Tool Symbol In VIDA
Courtesy of VOLVO CARS CORPORATION

CHECKING THE WIRING

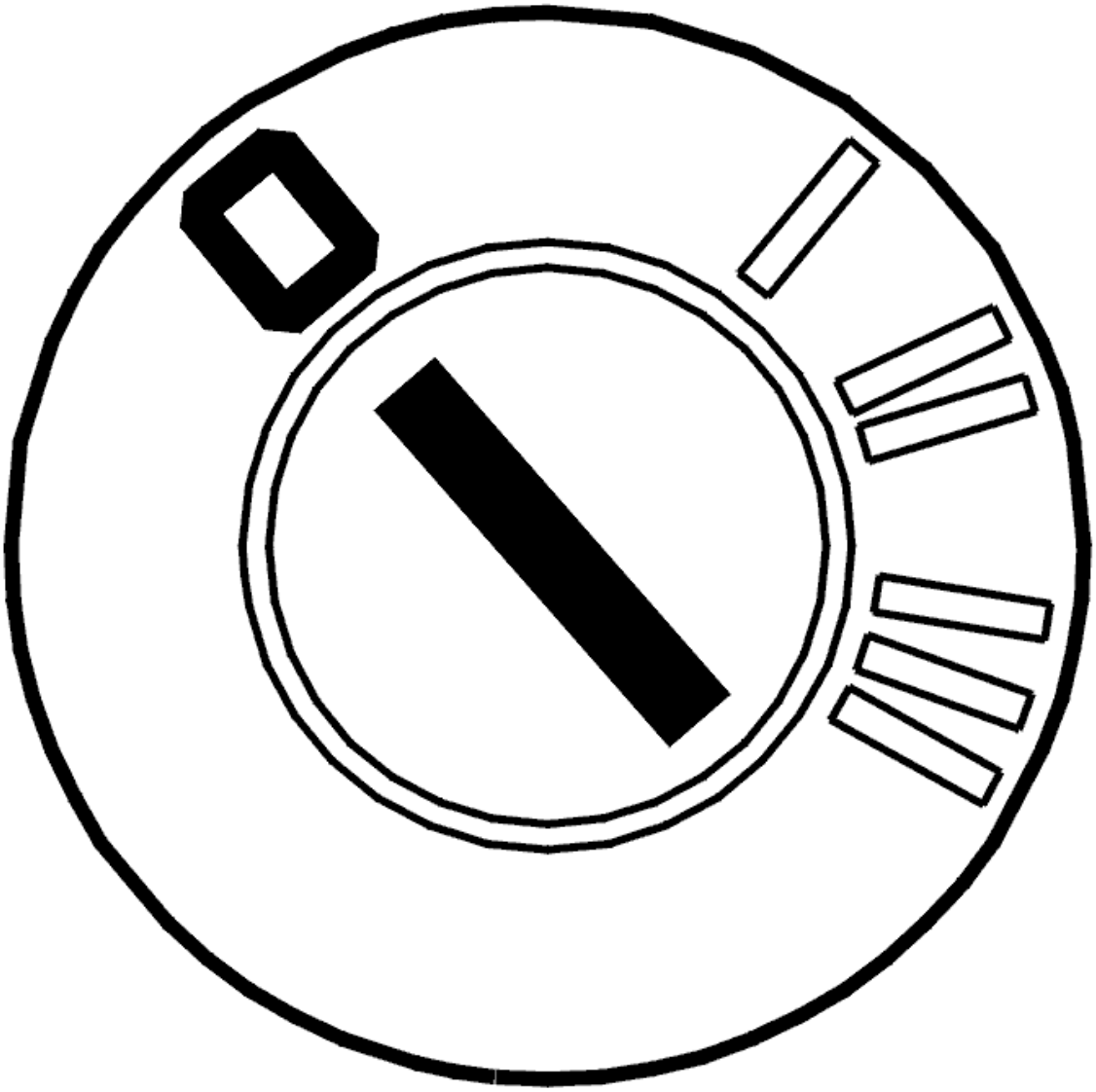

Fig. 37: Identifying Ignition OFF
Courtesy of VOLVO CARS CORPORATION

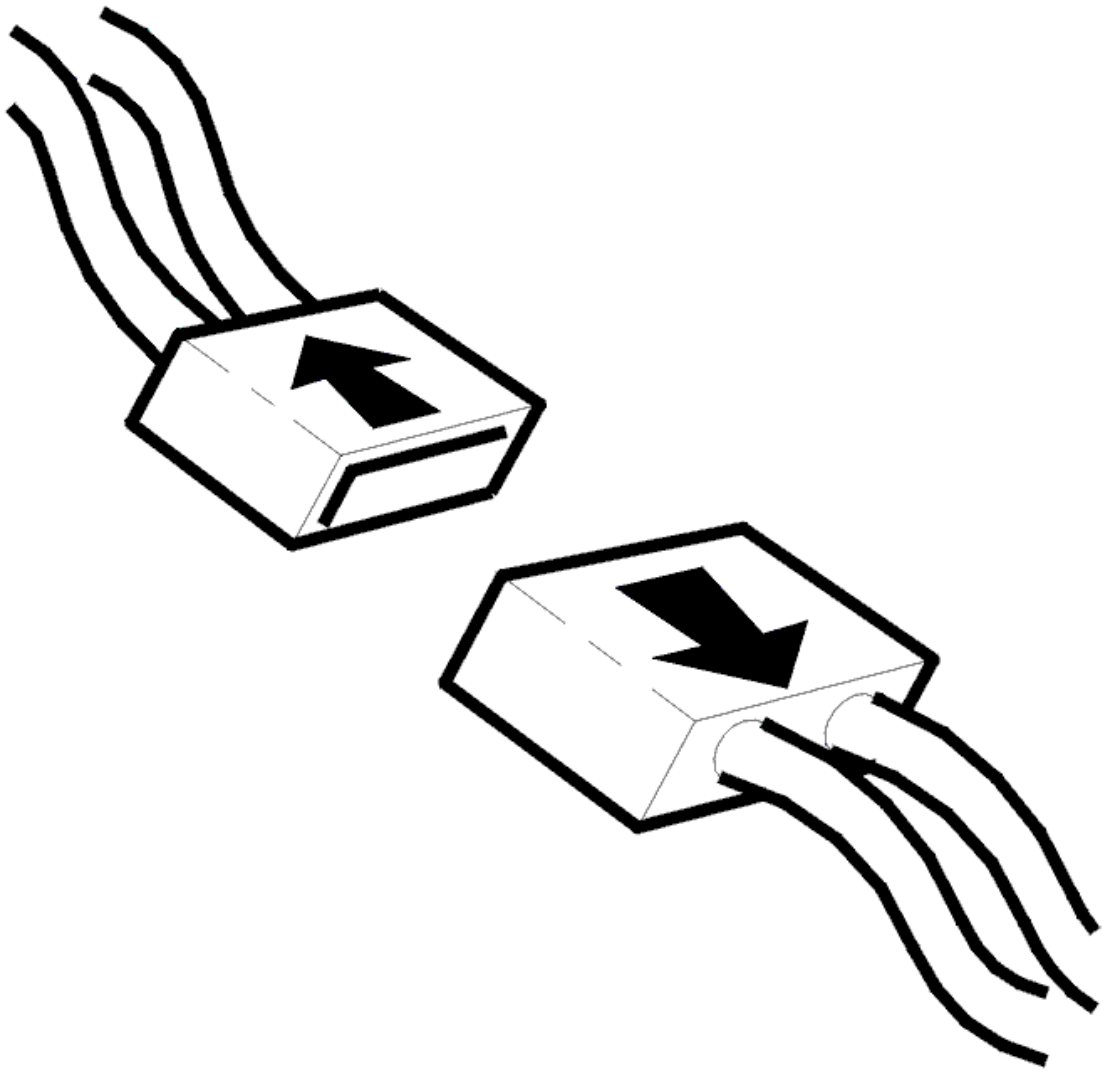

Fig. 38: Identifying Connector(s) Disconnected
Courtesy of VOLVO CARS CORPORATION

- Ignition off
- Connect the breakout box
- Disconnect the transmission connector
- Connect adapter see **9511505** and breakout box see **9813190** to the transmission connector (control module side).

  Check the wiring between the transmission connector (control module side) :

  - terminal #F (#A6) and control module terminal #A46 (#A46) "A"
  - terminal #G (#A7) and control module terminal #A64 (#B4) "B"
  - terminal #H (#A8) and control module terminal #A45 (#A45) "C"

- terminal #J (#A9) and control module terminal #A63 (#B3) "PA".

check for an open-circuit. Check for a short-circuit to ground. Check for a short-circuit to supply voltage.

Other information:

- To connect the breakout box to the control module, see **CONNECTING THE BREAKOUT BOX**
- To connect the breakout box to the transmission connector, see **CONNECTING THE BREAKOUT BOX, GM AUTOMATIC TRANSMISSIONS**
- For information about signals, see **SIGNAL SPECIFICATION**
- see **CHECKING WIRING AND TERMINALS**

Select an option:

1. No fault detected

   Refer to **CHECKING THE CONTROL MODULE**

2. Open-circuit in the wiring or a short-circuit to ground

   Refer to **VERIFICATION**

3. Short-circuit to supply voltage in the wiring.

   Refer to **CHECKING THE GEAR-SHIFT POSITION SENSOR**

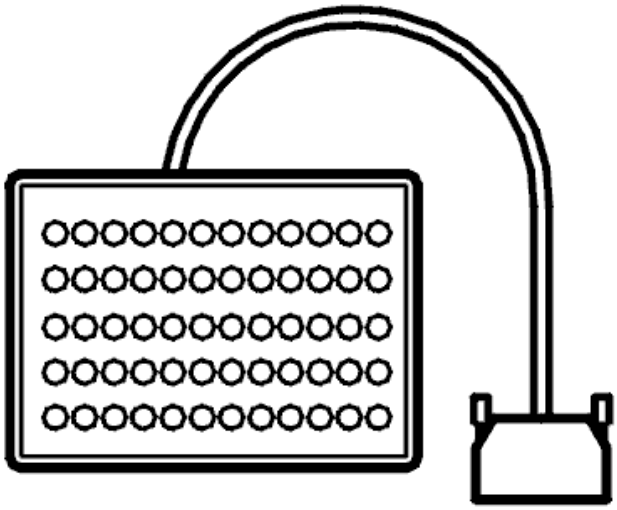

Fig. 39: Identifying Breakout Box
Courtesy of VOLVO CARS CORPORATION

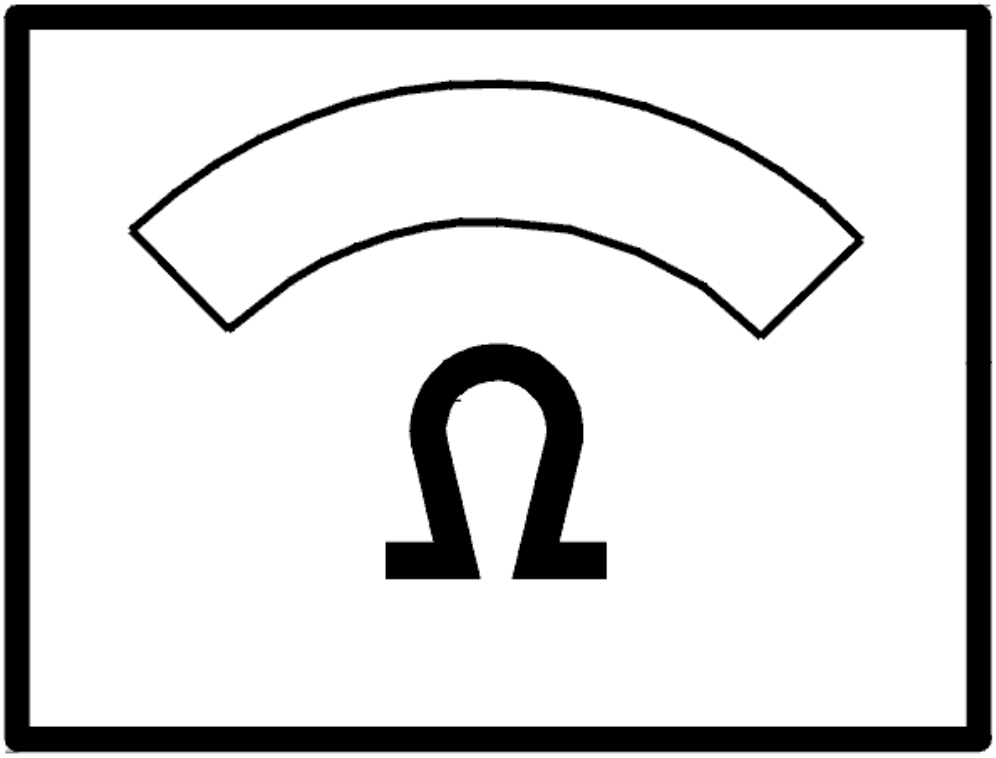

Fig. 40: Identifying Ohms Display
Courtesy of VOLVO CARS CORPORATION

CHECKING THE CONTROL MODULE

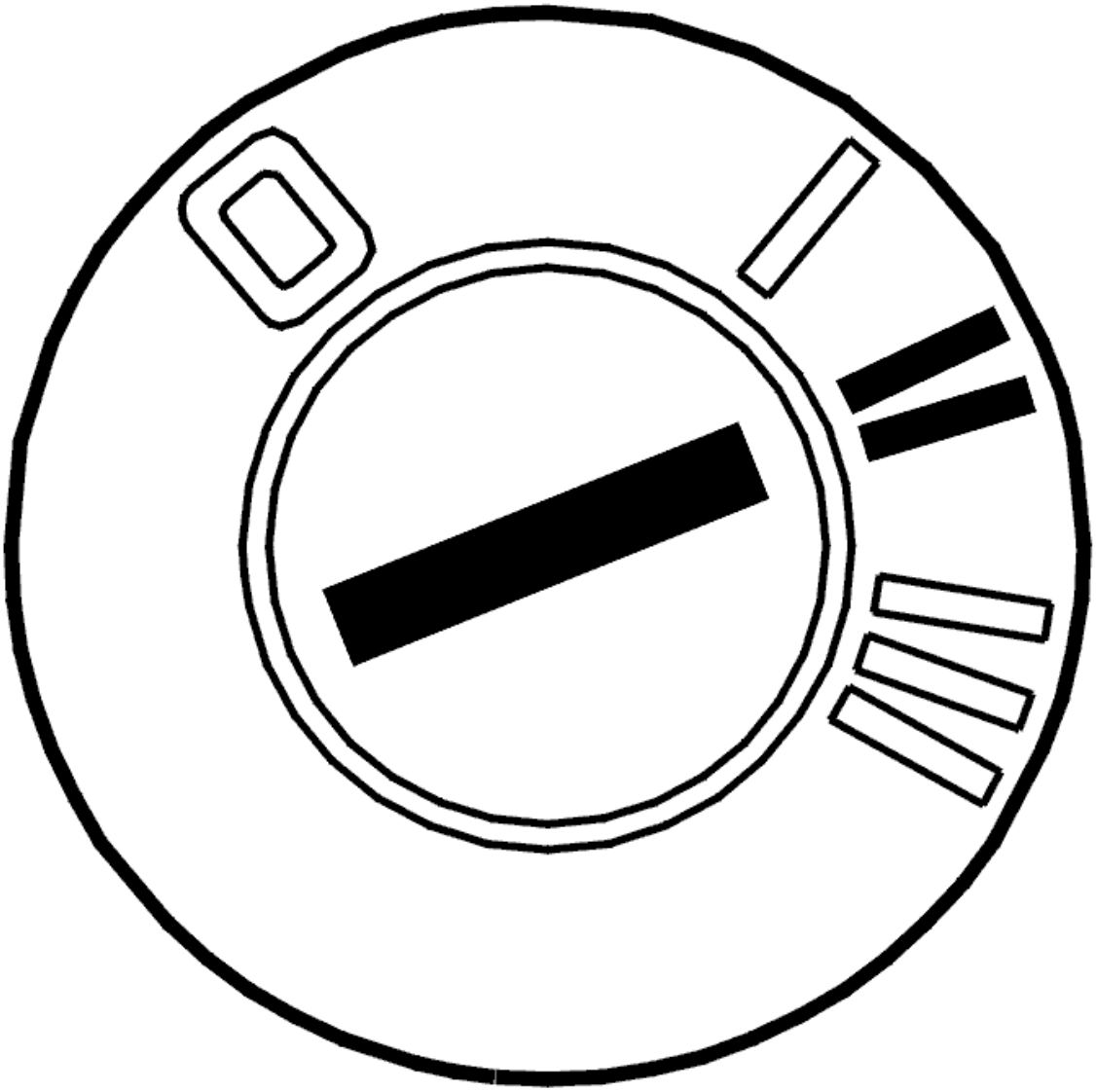

Fig. 41: Identifying Ignition ON
Courtesy of VOLVO CARS CORPORATION

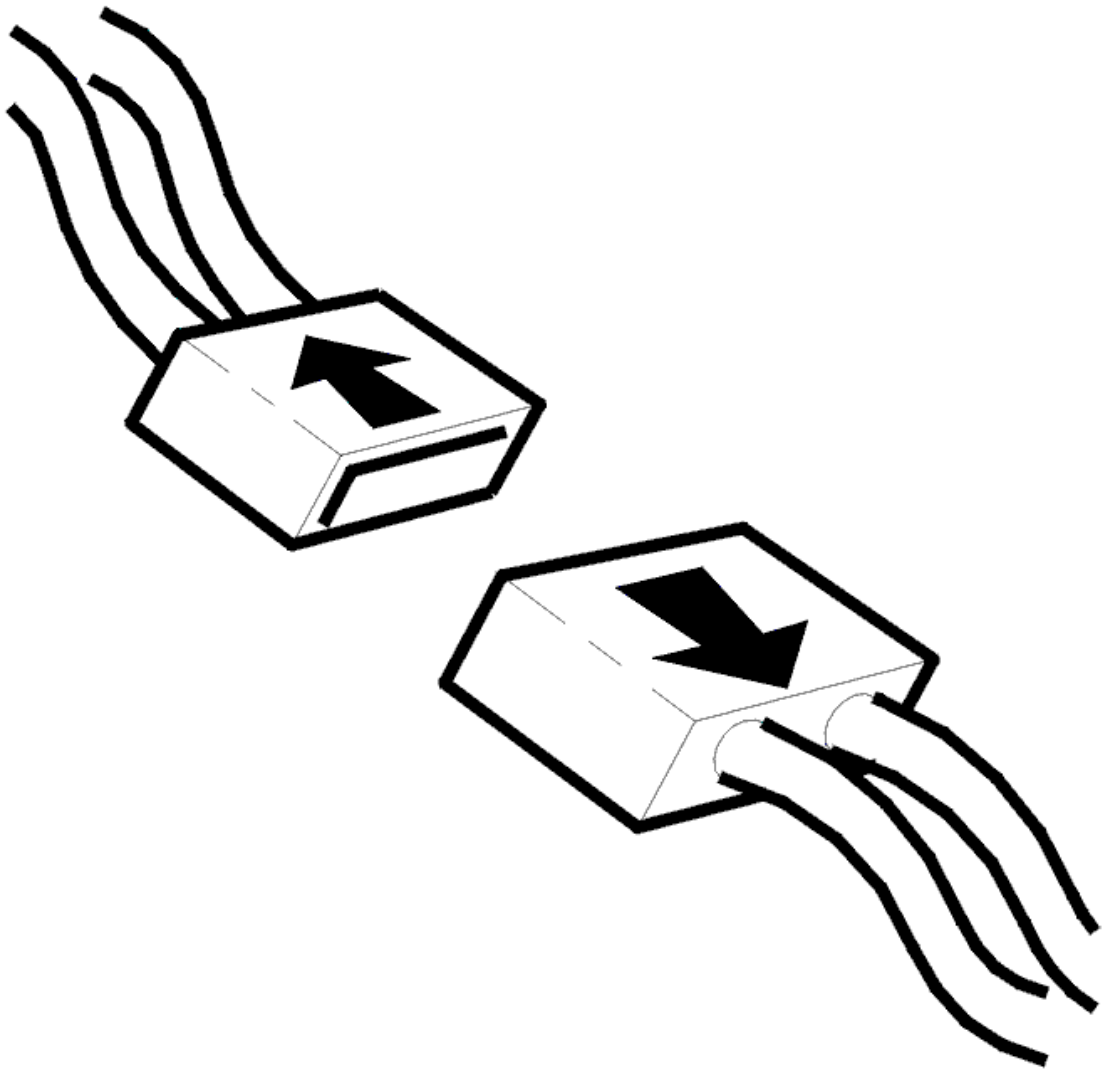

Fig. 42: Identifying Connector(s) Disconnected
Courtesy of VOLVO CARS CORPORATION

- Ignition off
- Breakout box connected to the control module
- Transmission connector disconnected
- Connect adapter see **9511505** and breakout box see **9813190** to the transmission connector (transmission side)
- Ignition on
- Read off the status for the inputs to the gear-shift position sensor (A, B, C, PA).

  Check that the status is HIGH for all inputs to the gear-shift position sensor (A, B, C, PA).

  Ignition off.

Temporarily connect a cable between the connector for the transmission (transmission side) terminal #A53 (#A53) and the transmission connector (control module side), see terminals according to the table.

Input	Control module connection
A	#A46 (#A46)
B	#A64 (#B4)
C	#A45 (#A45)
PA	#A63 (#B3)

CAUTION: Carefully check that the correct terminals are connected.

Also check that there is no risk of short-circuits.

Ignition on.

Check that the status of the inputs for the gear-shift position sensor change to LOW when reading off the status.

Read off the status after every new connection.

The control module is defective if the status does not change. If this is the case replace the control module.

Other information

- To connect the breakout box to the control module, see **CONNECTING THE BREAKOUT BOX**
- To connect the breakout box to the transmission connector, see **CONNECTING THE BREAKOUT BOX, GM AUTOMATIC TRANSMISSIONS**
- For information about signals, see **SIGNAL SPECIFICATION**
- To access or replace the control module, see **TRANSMISSION CONTROL MODULE (TCM), REPLACING** .

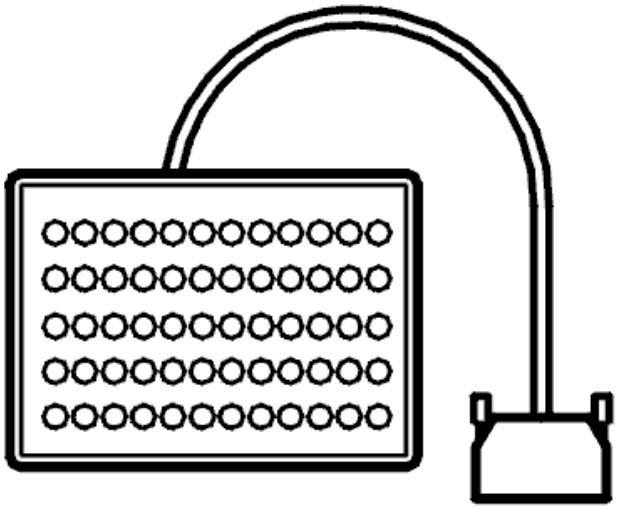

Fig. 43: Identifying Breakout Box
Courtesy of VOLVO CARS CORPORATION

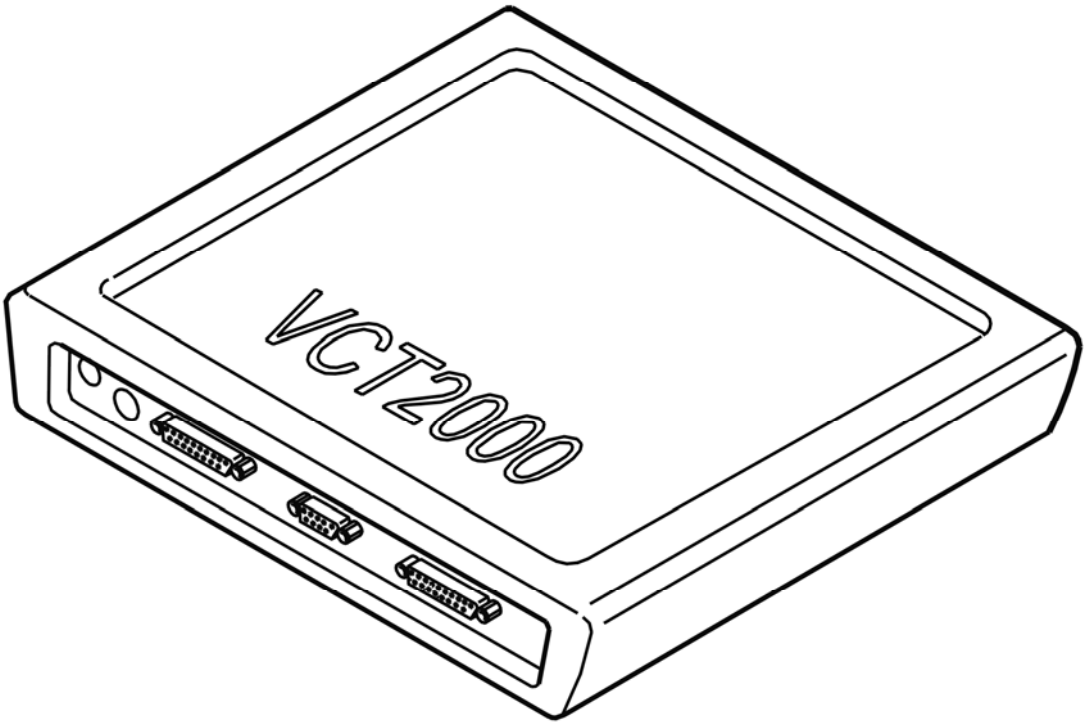

Fig. 44: Identifying VCT2000 Diagnostic Tool Symbol In VIDA
Courtesy of VOLVO CARS CORPORATION

Was the control module defective?

- **YES**

Refer to **VERIFICATION**

- **NO**

  Refer to **CHECKING THE WIRING AND COMPONENT**

CHECKING THE WIRING AND COMPONENT

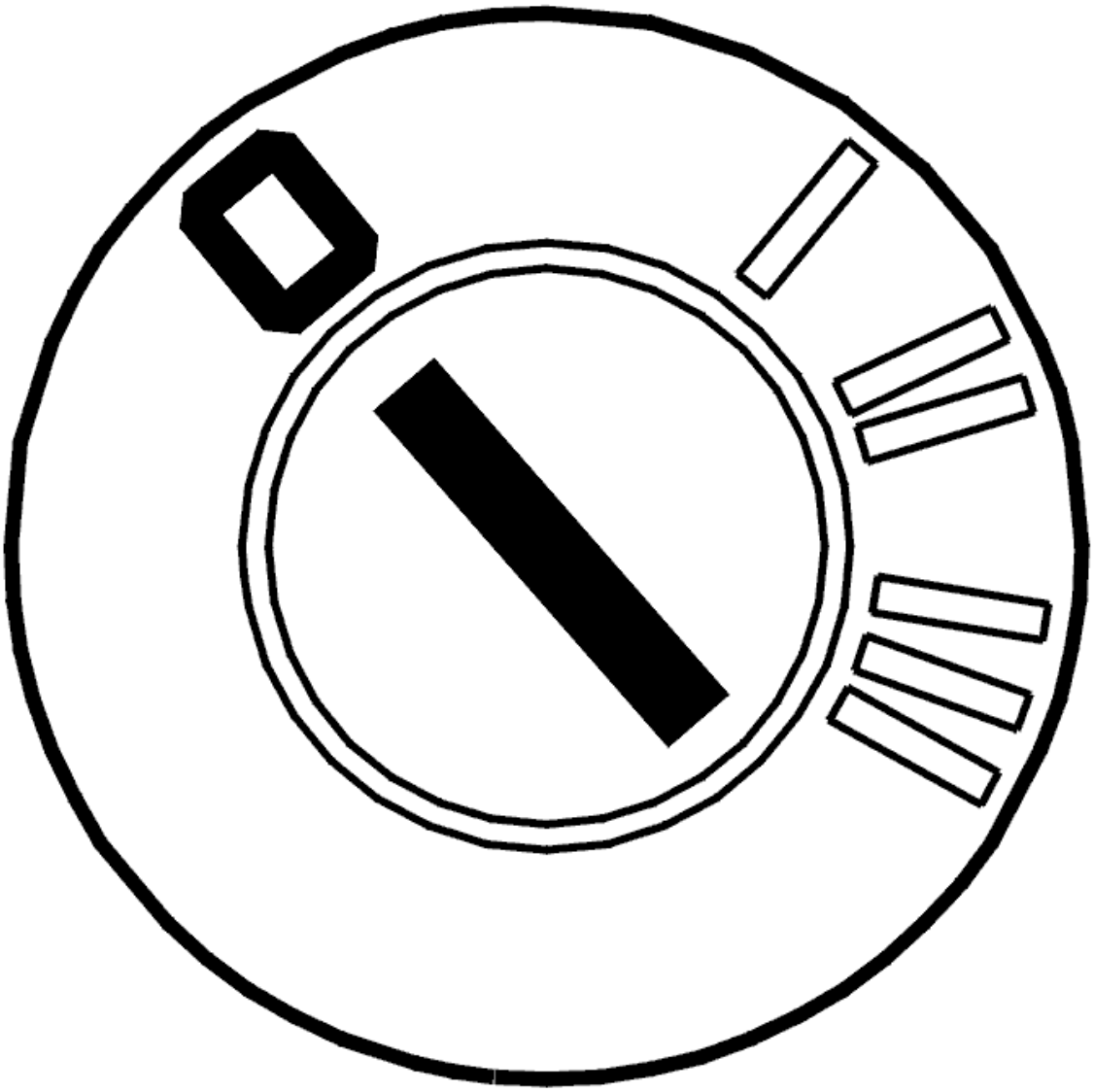

Fig. 45: Identifying Ignition OFF
Courtesy of VOLVO CARS CORPORATION

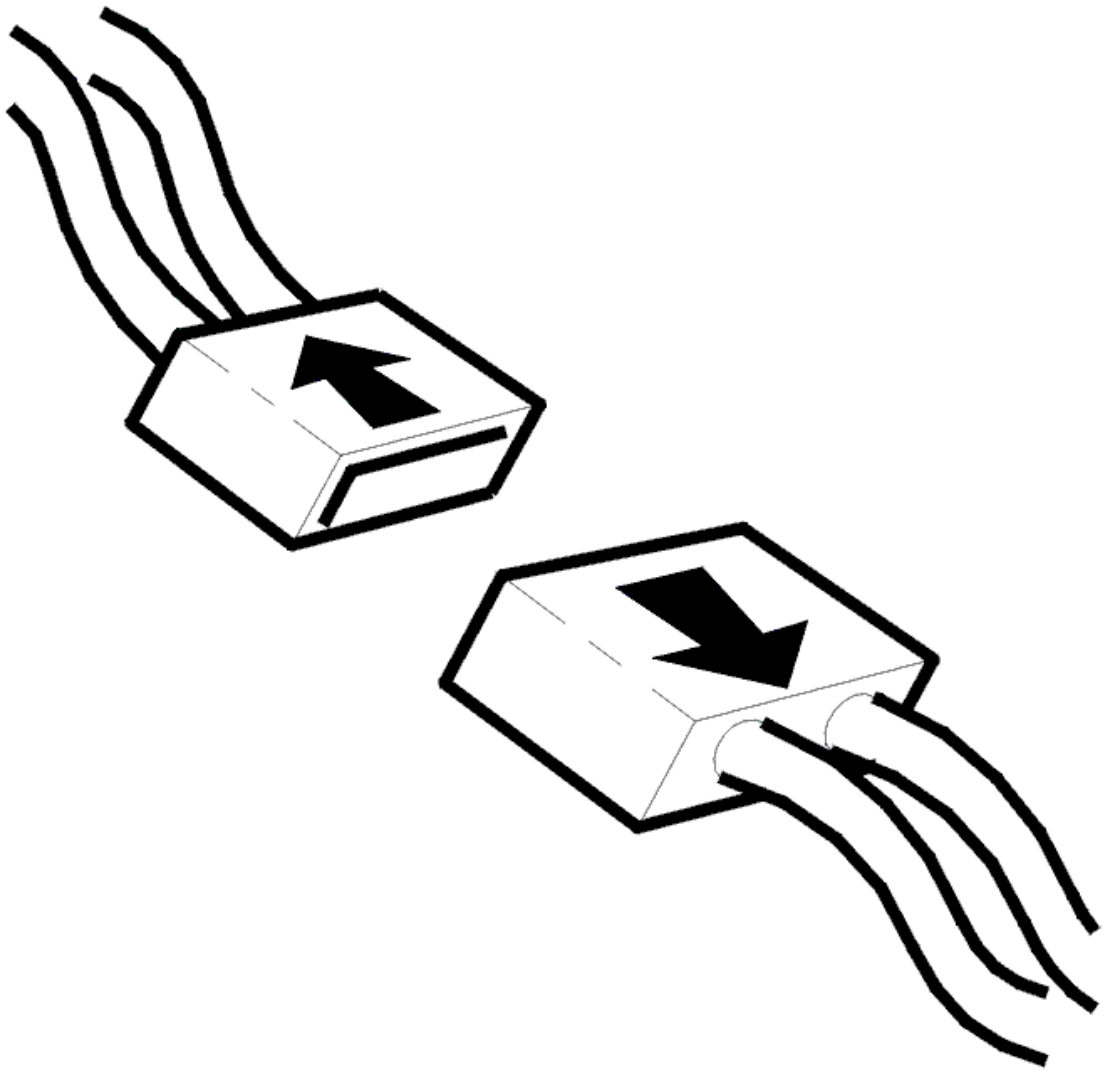

Fig. 46: Identifying Connector(s) Disconnected
Courtesy of VOLVO CARS CORPORATION

- Ignition off
- Breakout box connected to the control module
- Open the transmission control system
- Connect adapter see **9511505** and breakout box see **9813190** to the transmission connector (transmission side).

  Check the wiring between the transmission connector and:

  - terminal #F (#A6) and gear-shift position sensor terminal #E
  - terminal #G (#A7) and gear-shift position sensor terminal #D
  - terminal #H (#A8) and gear-shift position sensor terminal #C

- terminal #J (#A9) and gear-shift position sensor terminal #B
- terminal #K (#A10) and gear-shift position sensor terminal #F.

check for an open-circuit, a short-circuit to ground and a short-circuit to supply voltage.

Other information:

- To open the transmission control system, For removal, see **SIDE COVER TRANSMISSION, REMOVING** and To install, see **SIDE COVER TRANSMISSION, INSTALLING** .
- To connect the breakout box to the control module, see **CONNECTING THE BREAKOUT BOX**
- To connect the breakout box to the transmission connector, see **CONNECTING THE BREAKOUT BOX, GM AUTOMATIC TRANSMISSIONS**
- For information about signals, see **SIGNAL SPECIFICATION**
- see **CHECKING WIRING AND TERMINALS**

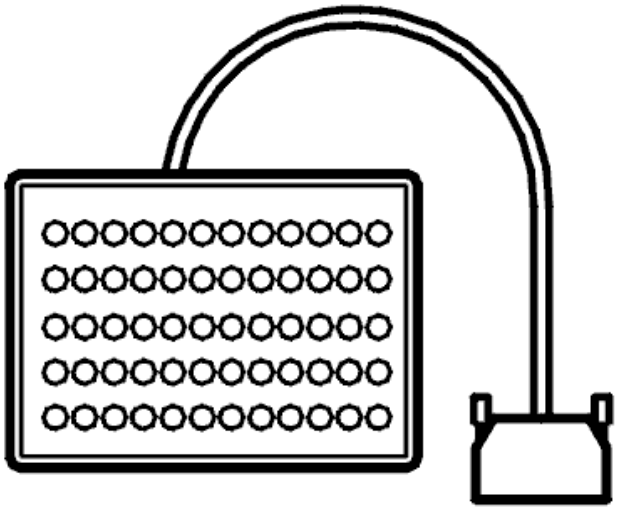

Fig. 47: Identifying Breakout Box
Courtesy of VOLVO CARS CORPORATION

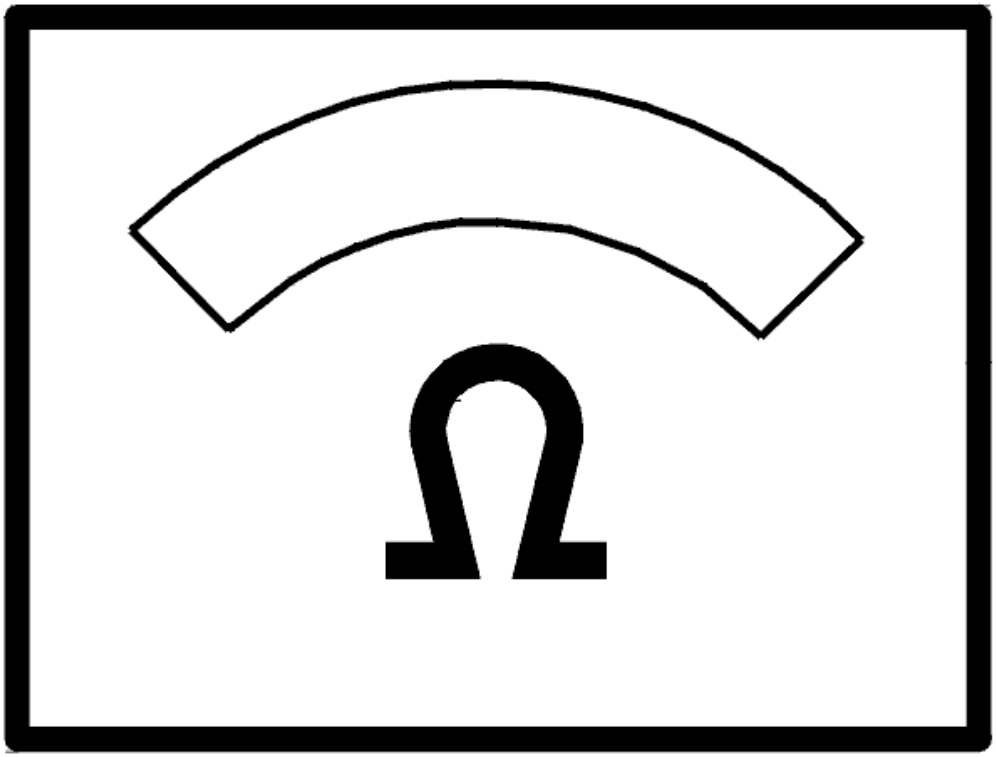

Fig. 48: Identifying Ohms Display
Courtesy of VOLVO CARS CORPORATION

Were any faults found in the cable?

- **YES**

  Refer to **RESETTING THE ADAPTATION**

- **NO**

  Refer to **REPLACING THE COMPONENT**

REPLACING THE COMPONENT

The gear-shift position sensor is not available a replacement component. Replace the transmission. See

TRANSMISSION, REMOVING and **TRANSMISSION, INSTALLING (2003, 2004)** or **TRANSMISSION, INSTALLING (2005, 2006)**

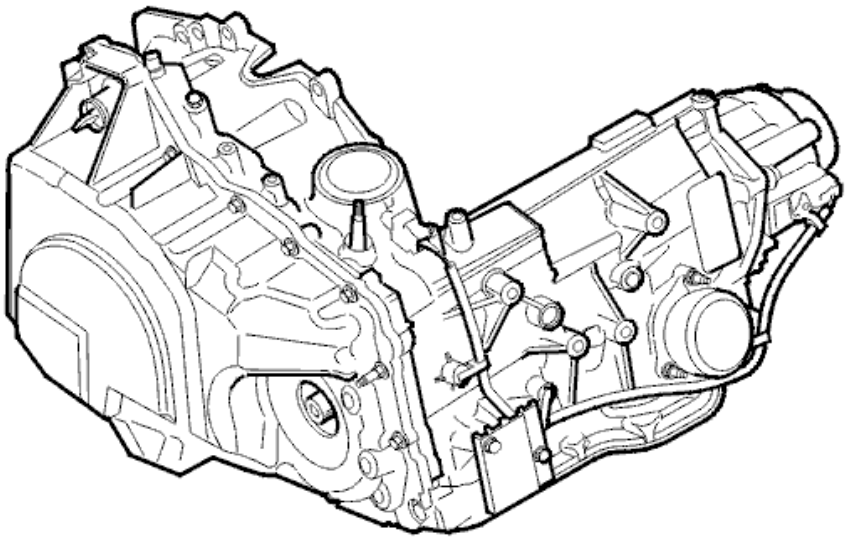

Fig. 49: Identifying Transmission
Courtesy of VOLVO CARS CORPORATION

- **Continue**

  Refer to **RESETTING THE ADAPTATION**

CHECKING THE GEAR-SHIFT POSITION SENSOR

HINT: The gear-shift position sensor may malfunction if there has been a short-circuit to supply voltage in the signal cable. Check the gear-shift position sensor as follows:

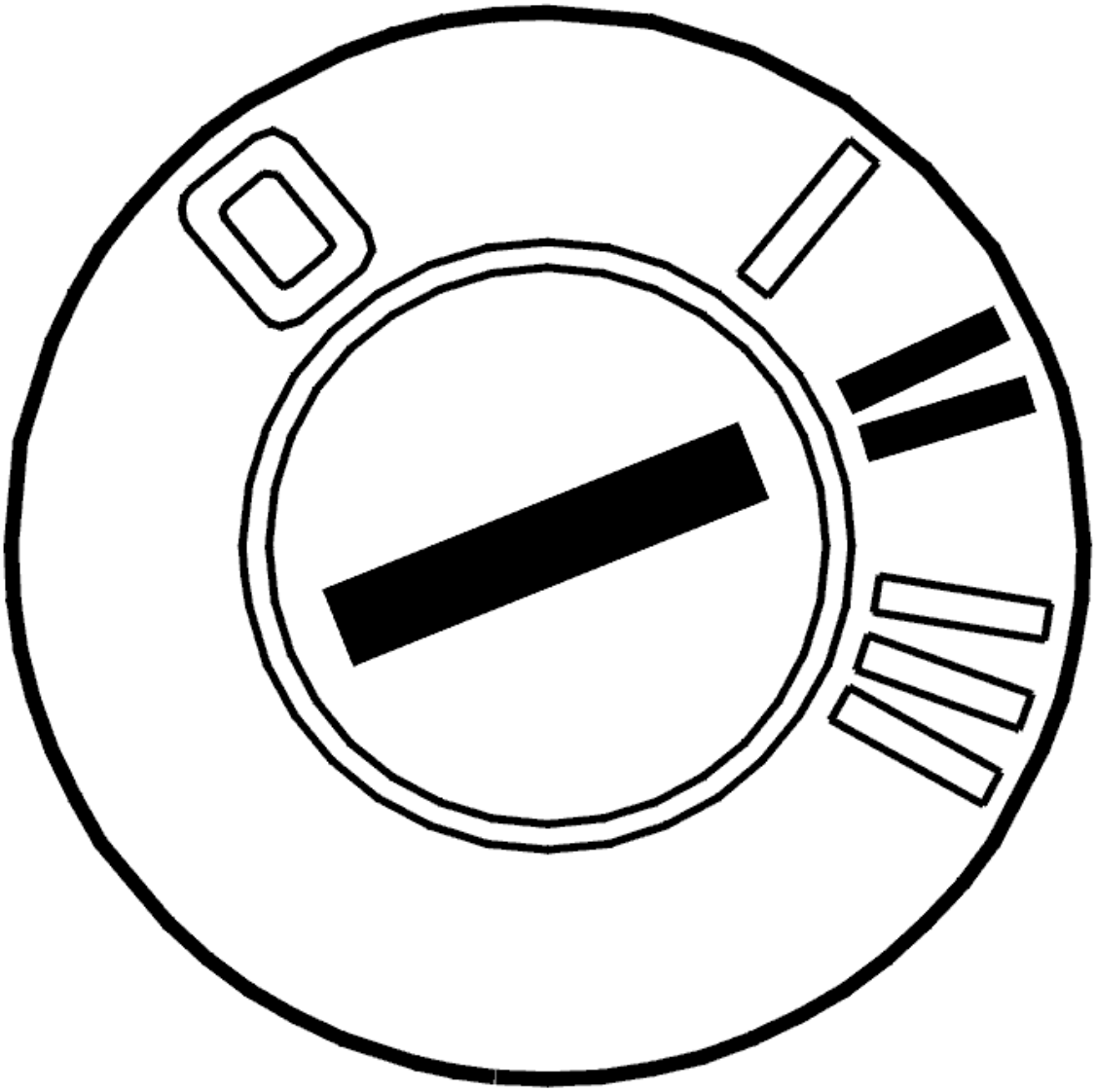

Fig. 50: Identifying Ignition ON
Courtesy of VOLVO CARS CORPORATION

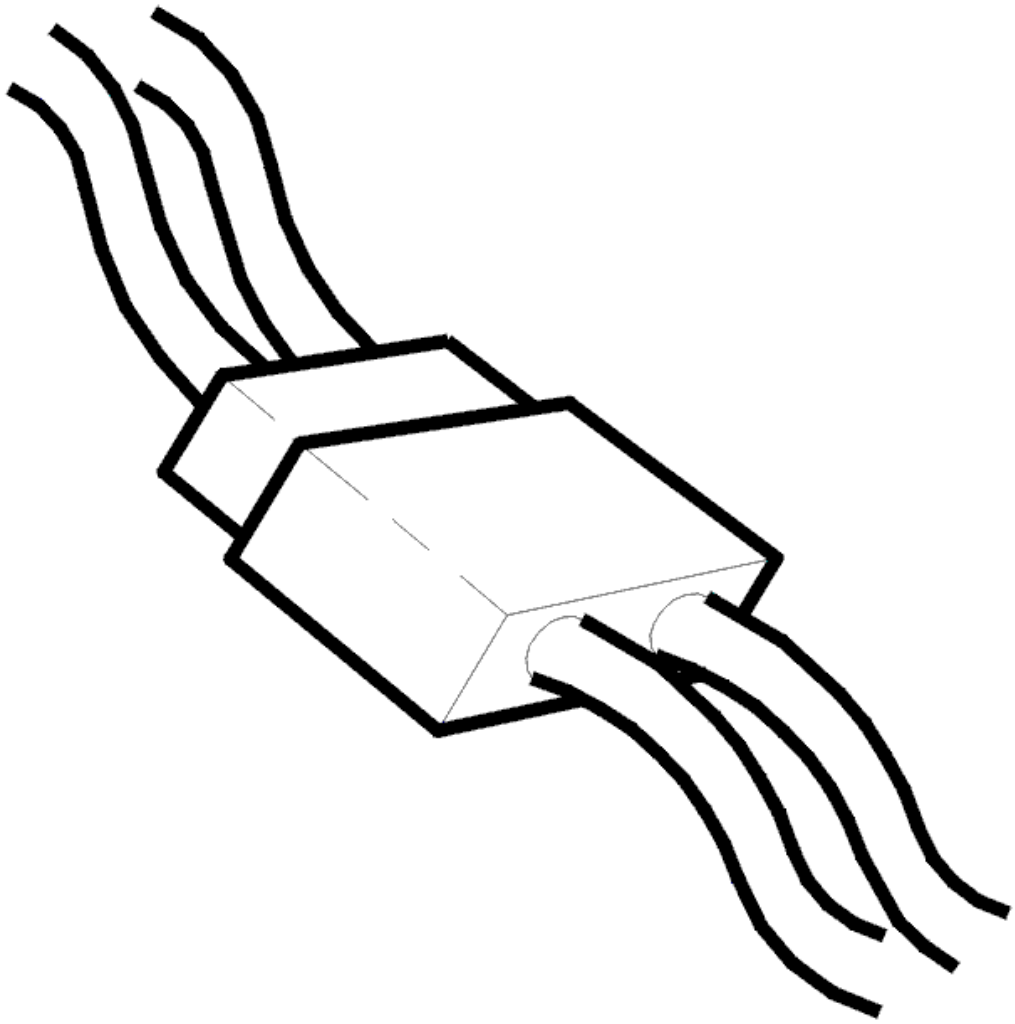

Fig. 51: Identifying Connector
Courtesy of VOLVO CARS CORPORATION

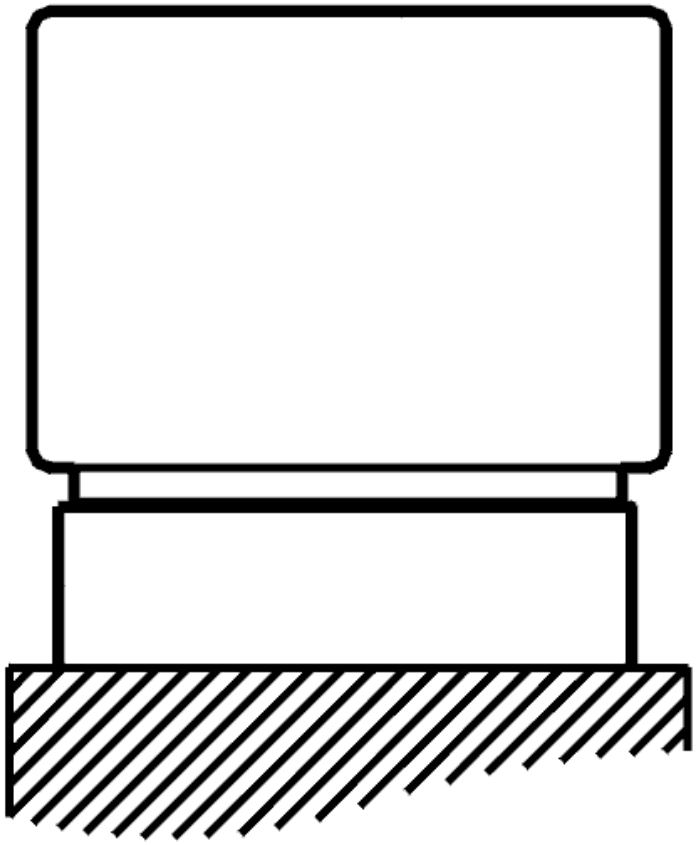

Fig. 52: Identifying Control Unit Connected
Courtesy of VOLVO CARS CORPORATION

- Ignition off
- Transmission connector connected
- Control module connected.
- Ignition on
- Select the correct type of gear selector assembly. Read off the position of the gear-shift position sensor.

  Move the gear selector to all shift positions a number of times. Repeatedly select the same position to check the operation of the gear-shift position sensor.

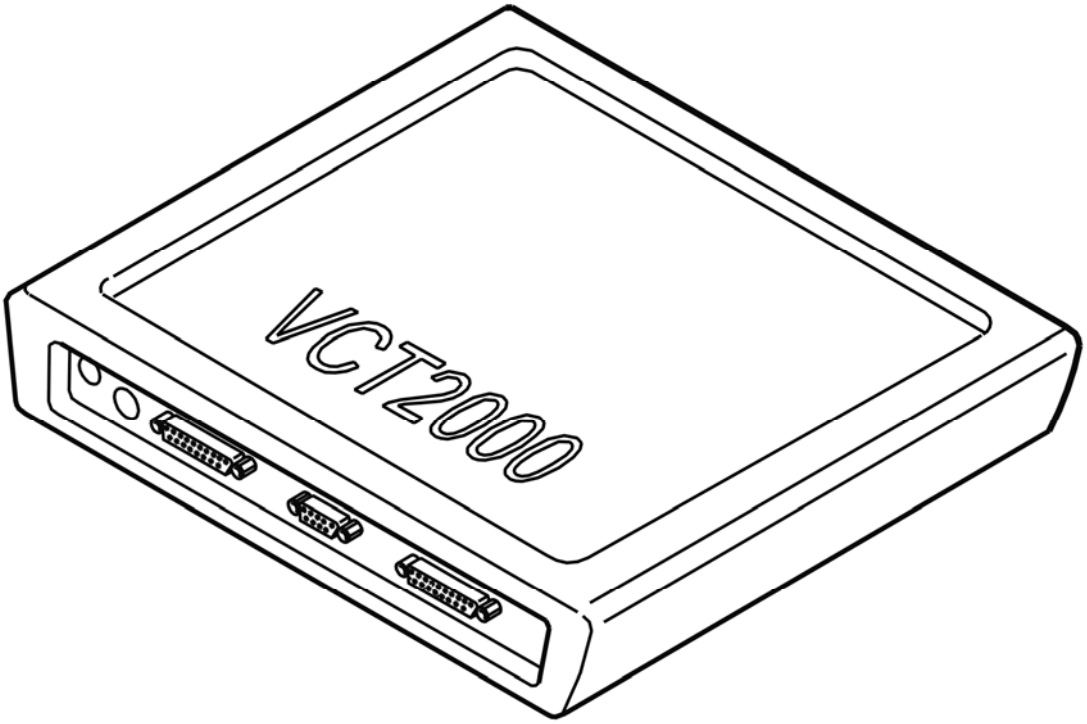

Fig. 53: Identifying VCT2000 Diagnostic Tool Symbol In VIDA
Courtesy of VOLVO CARS CORPORATION

Are all positions OK?

- **YES**

  Refer to **VERIFICATION**

- **NO**

  Refer to **REPLACING THE COMPONENT**

INTERMITTENT FAULT

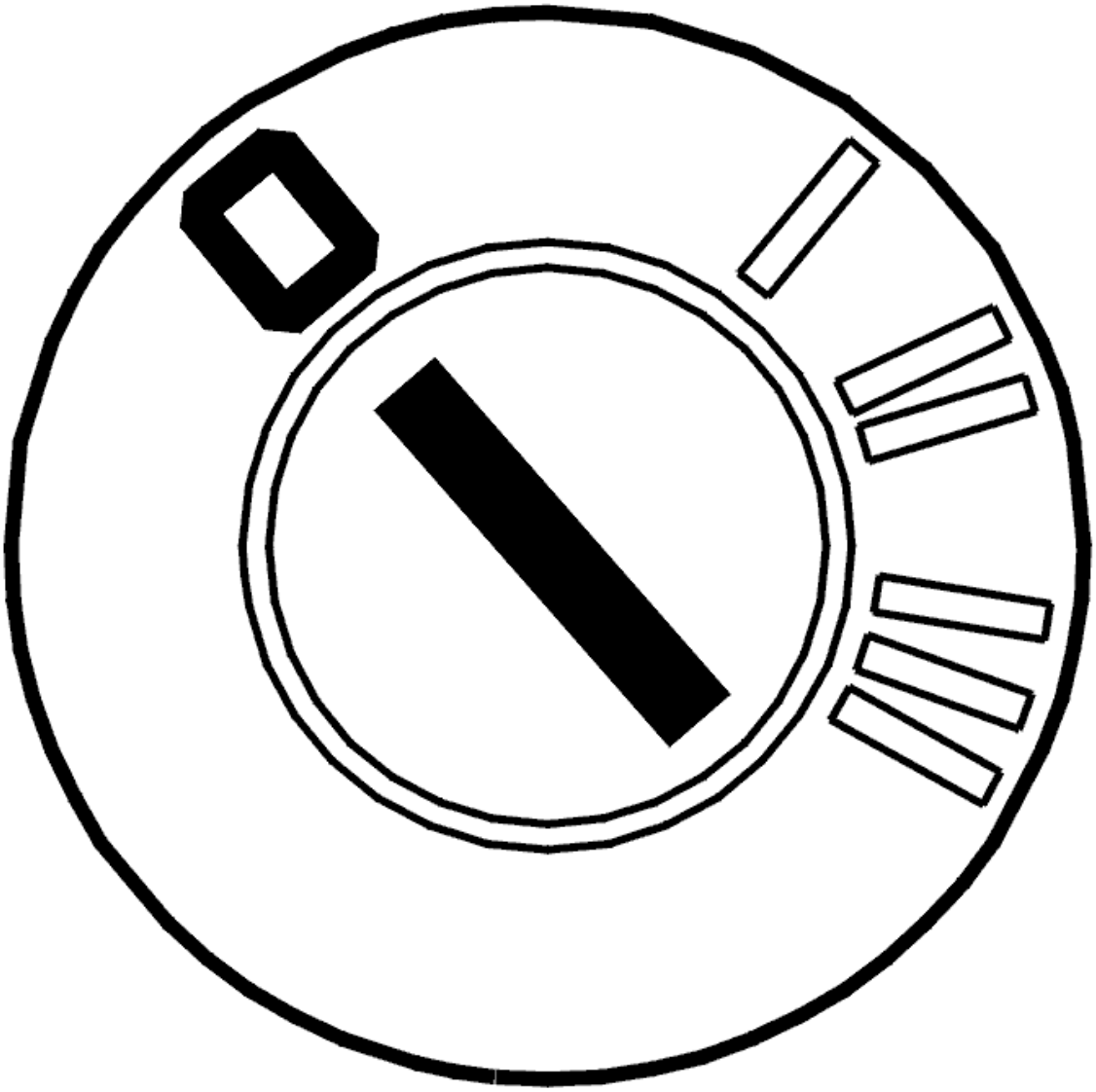

Fig. 54: Identifying Ignition OFF
Courtesy of VOLVO CARS CORPORATION

- Ignition off.

  Check the control module and transmission connectors. Check the ground terminal for the gear position sensor. Check for intermittent loose connections (terminals). Check for contact resistance and oxidation.

  Check the wiring between the transmission connector (control module side):

  - terminal #F (#A6) and control module terminal #A46 (#A46) "A"
  - terminal #G (#A7) and control module terminal #A64 (#B4) "B"
  - terminal #H (#A8) and control module terminal #A45 (#A45) "C"
  - terminal #J (#A9) and control module terminal #A63 (#B3) "PA".

check for an intermittent open-circuit. Check for an intermittent short-circuit to ground. Check for an intermittent short-circuit to supply voltage.

Remedy as necessary.

Other information:

- To connect the breakout box to the control module, see **CONNECTING THE BREAKOUT BOX**
- To connect the breakout box to the transmission connector, see **CONNECTING THE BREAKOUT BOX, GM AUTOMATIC TRANSMISSIONS**
- For information about signals, see **SIGNAL SPECIFICATION**
- see **CHECKING WIRING AND TERMINALS**

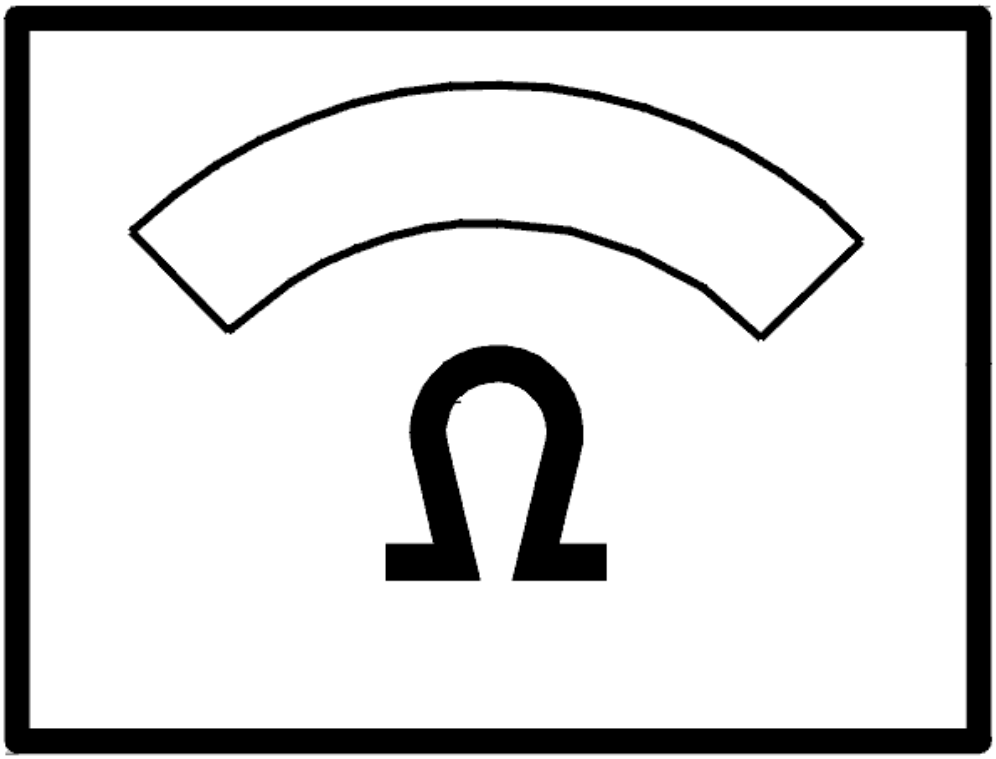

Fig. 55: Identifying Ohms Display
Courtesy of VOLVO CARS CORPORATION

- **Continue**

  Refer to **INFORMATION**

RESETTING THE ADAPTATION

RESETTING ADAPTATION AND THE COUNTER FOR "TRANSMISSION OIL CHANGE"

HINT: The transmission has torque controlled adaptive pressure control. Pressure control means that the transmission regulates the pressure itself during each gear shift. This avoids harsh gear shifting. Each gear shift is evaluated by the control module and stored in the memory. This allows for compensation for wear and tear in the transmission and clutch. It is important that the adaptation in the memory is reset after the transmission has been repaired. This is to ensure normal operation. The oil is replaced during repair; the "Transmission oil change" counter must be reset. If the counter is not reset when the fluid is drained and replaced, there is a risk that a diagnostic trouble code (DTC) will be stored in incorrect circumstances.

NOTE: This applies only if the transmission or one of the components in the transmission have been replaced.

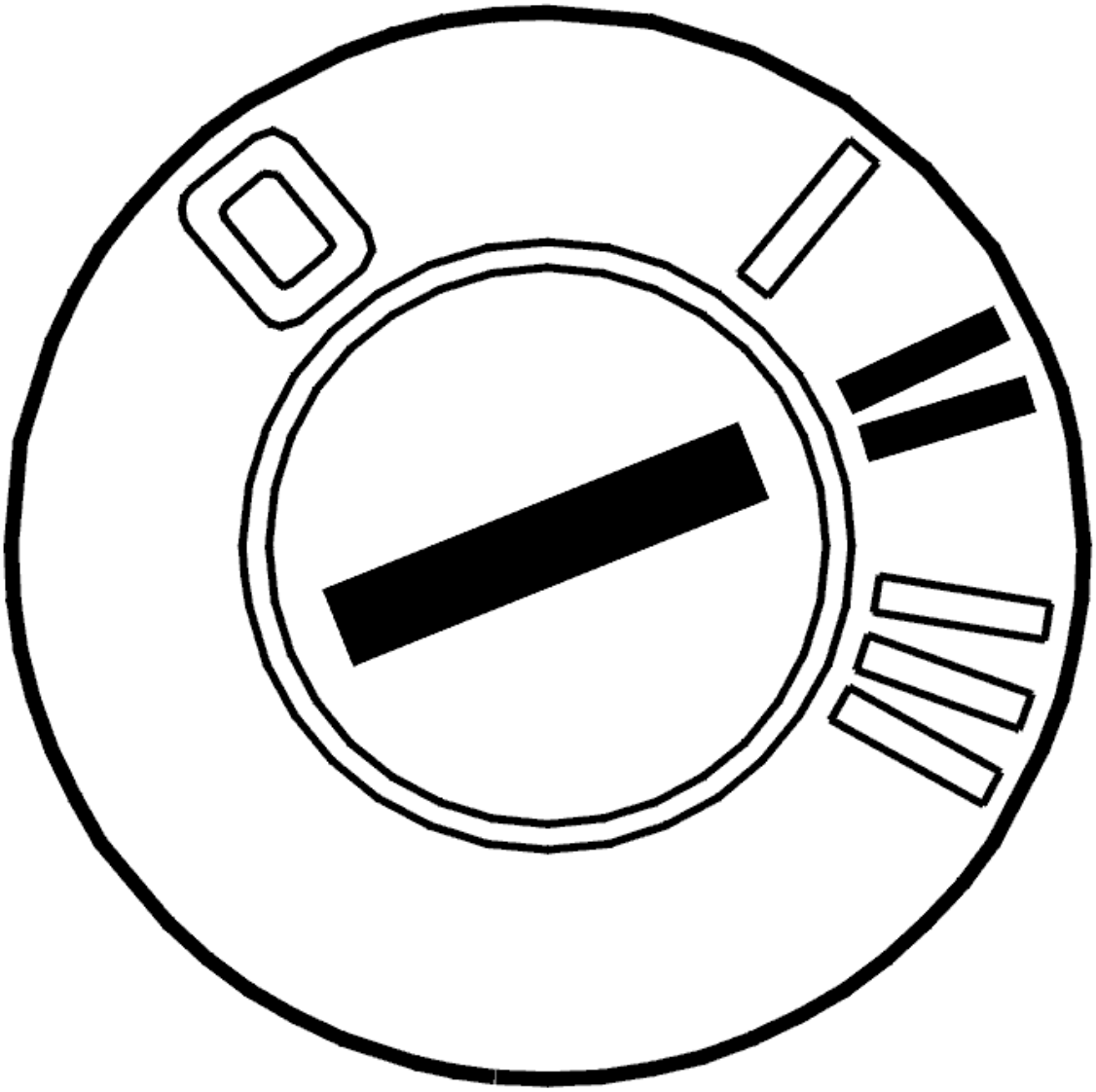

Fig. 56: Identifying Ignition ON
Courtesy of VOLVO CARS CORPORATION

- Ignition on.

  Click on the VCT2000 symbol to reset the adaptation and counter.

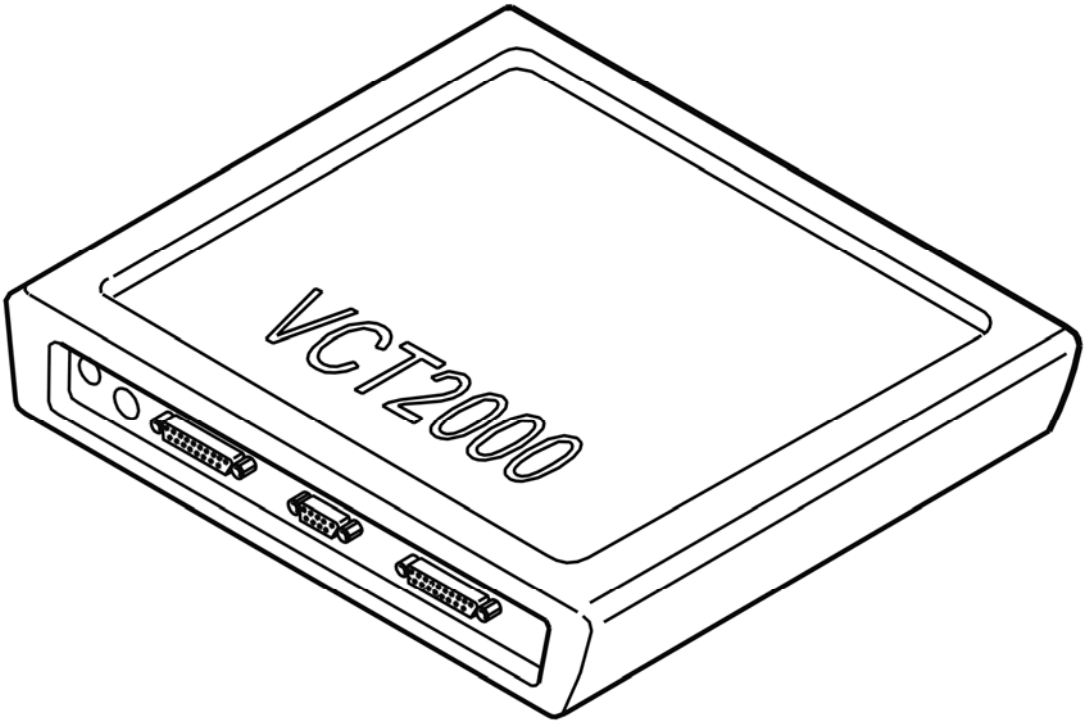

Fig. 57: Identifying VCT2000 Diagnostic Tool Symbol In VIDA
Courtesy of VOLVO CARS CORPORATION

- **Continue**

  Refer to **VERIFICATION**

VERIFICATION

VERIFICATION

HINT: After carrying out the repair check that the fault has been remedied.

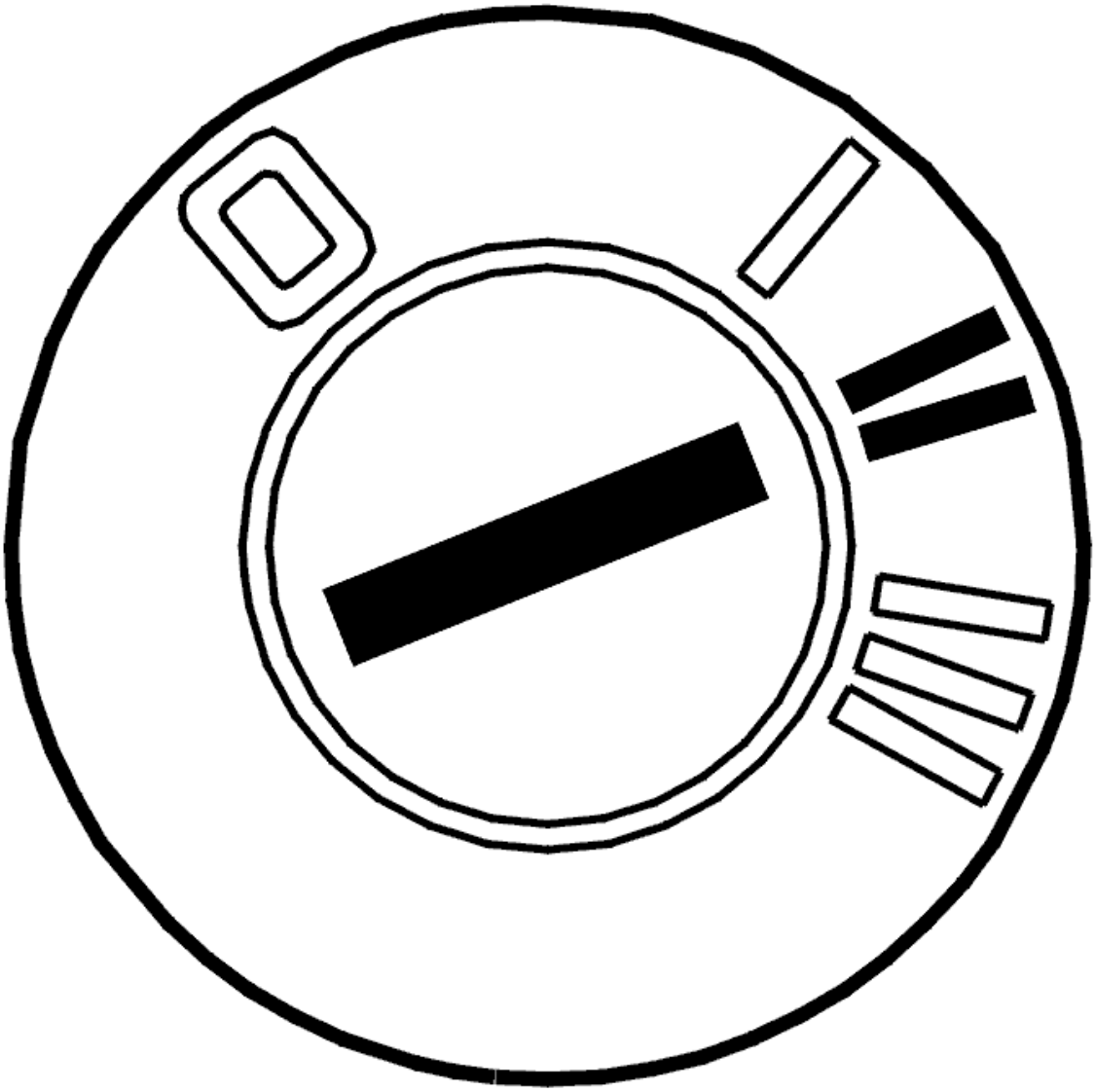

Fig. 58: Identifying Ignition ON
Courtesy of VOLVO CARS CORPORATION

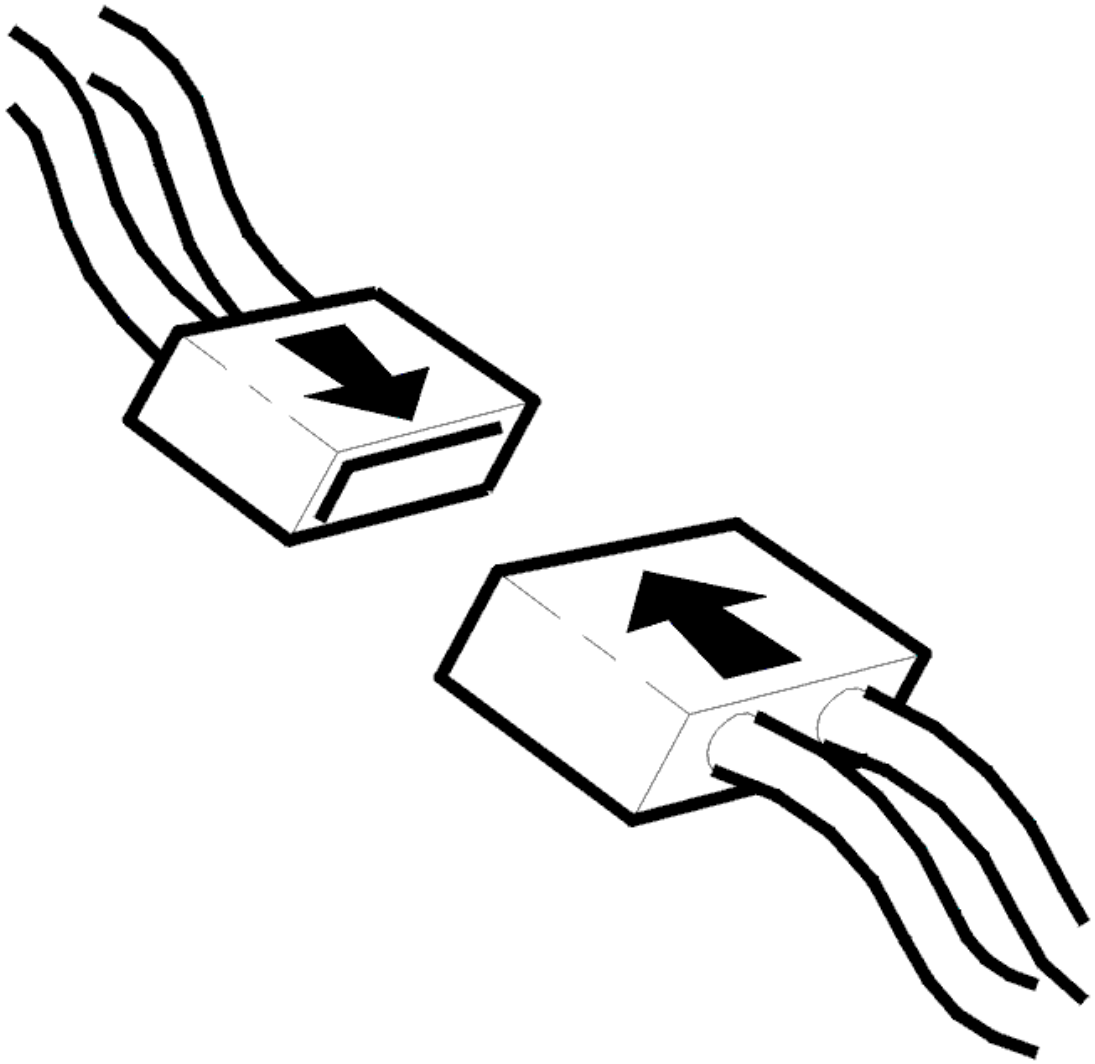

Fig. 59: Identifying Connector(s) Reinstallation
Courtesy of VOLVO CARS CORPORATION

- Ignition off.
- Reconnect components, connectors etc.
- Ignition on.
- Read off gear-shift position sensor position.

  Move the gear selector to all shift positions a number of times, and repeatedly select the same position to check the operation of the gear-shift position sensor. If the gear-shift position sensor function is OK the cause of the fault was contact resistance or oxidation.

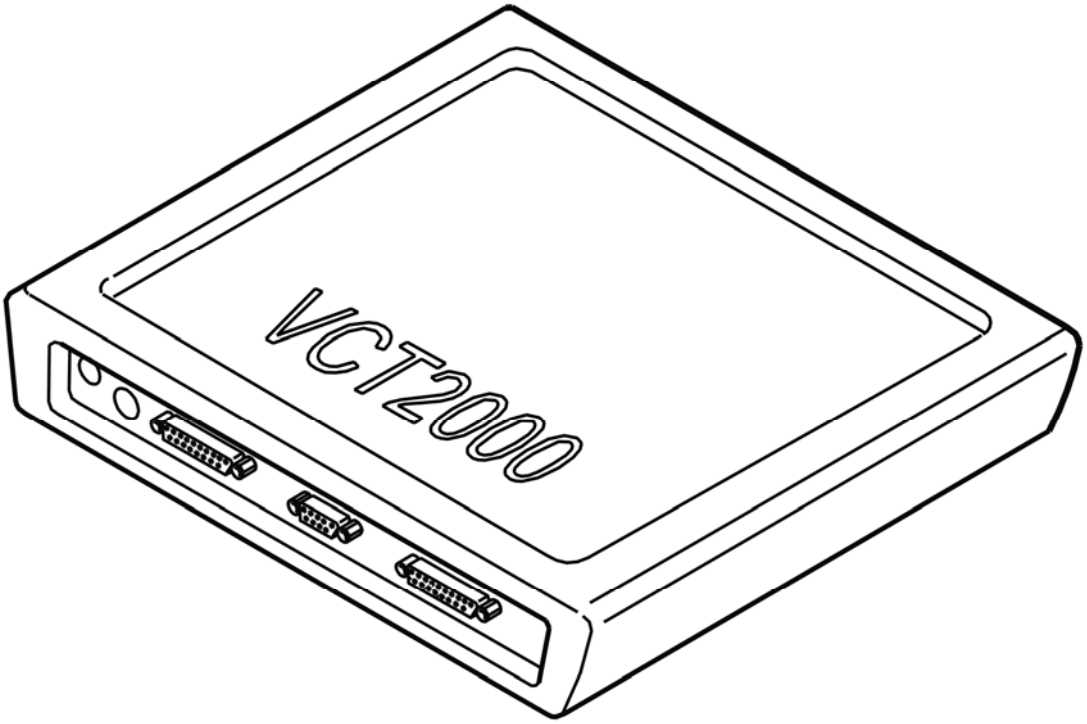

Fig. 60: Identifying VCT2000 Diagnostic Tool Symbol In VIDA
Courtesy of VOLVO CARS CORPORATION

Are all values OK?

- **YES**

  VERIFIED: Troubleshooting has been completed.

- **NO**

  Refer to **INFORMATION**

INFORMATION

FAULT-TRACING INFORMATION

The fault should have been detected and remedied. As this is not the case fault-tracing has failed.

Exit fault-tracing for this diagnostic trouble code (DTC) or make another attempt.

INFORMATION

FAULT-TRACING INFORMATION

In case of this defect, troubleshooting is not followed by verification.

The information can be displayed again or the fault-tracing for this fault can be interrupted.

TCM-0039: GEAR-SHIFT POSITION SENSOR. FAULTY SIGNAL (AW50/51 AWD; AW55-50/51SN; 2003-2007)

DIAGNOSTIC TROUBLE CODE (DTC) INFORMATION

Condition

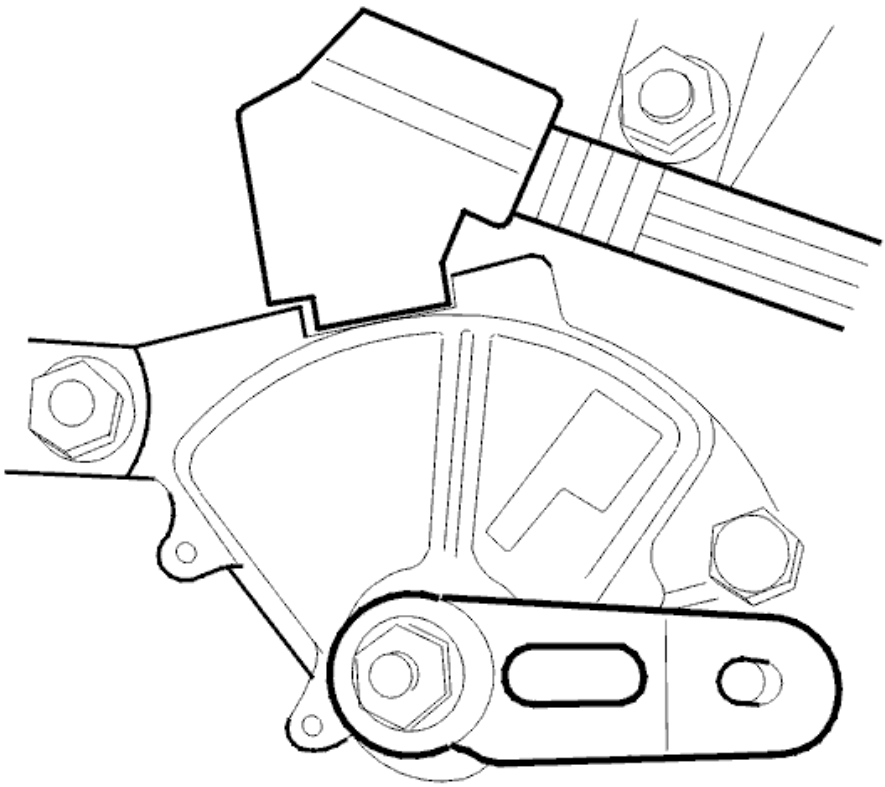

Fig. 61: Identifying Gear-Shift Position Sensor
Courtesy of VOLVO CARS CORPORATION

The gear-shift position sensor signals provide the transmission control module (TCM) with data on the gear selector position. This is done by grounding a combination of signals A, B, C and PA inside the gear position sensor. Diagnostic trouble code (DTC) TCM-0039 is stored if the transmission control module (TCM) registers an unacceptable combination of A, B, C and PA for a period of 10 seconds as shown below.

A	B	C	PA	
•	•	o	o	Diagnostic Trouble Code (DTC)
•	•	•	•	Diagnostic Trouble Code

				(DTC)
•	•	•	o	Diagnostic Trouble Code (DTC)
o	•	•	•	Diagnostic Trouble Code (DTC)
•	•	o	•	Diagnostic Trouble Code (DTC)
o	o	o	•	Diagnostic Trouble Code (DTC)

• = 0-2 V below battery voltage

o = ground

Substitute Value

- The control module "Limp Home" program has been initiated.

Possible Source

- Contact resistance in terminals.
- Short-circuit to supply voltage or ground in the signal cable.
- Open-circuit in the signal cable.
- Incorrectly adjusted gear-shift position sensor.
- Defective gear-shift position sensor.

Fault symptom[s]

- General orange warning lamp lit.
- Malfunction indicator lamp (MIL) lit.
- No lock-up function.
- Harsh gear shifting.
- No shifting.

CAUTION: The gear-shift position sensor will malfunction if there is a short-circuit to supply voltage.

FAULTY SIGNAL

CHECKING THE ADJUSTMENT OF THE GEAR-SHIFT POSITION SENSOR

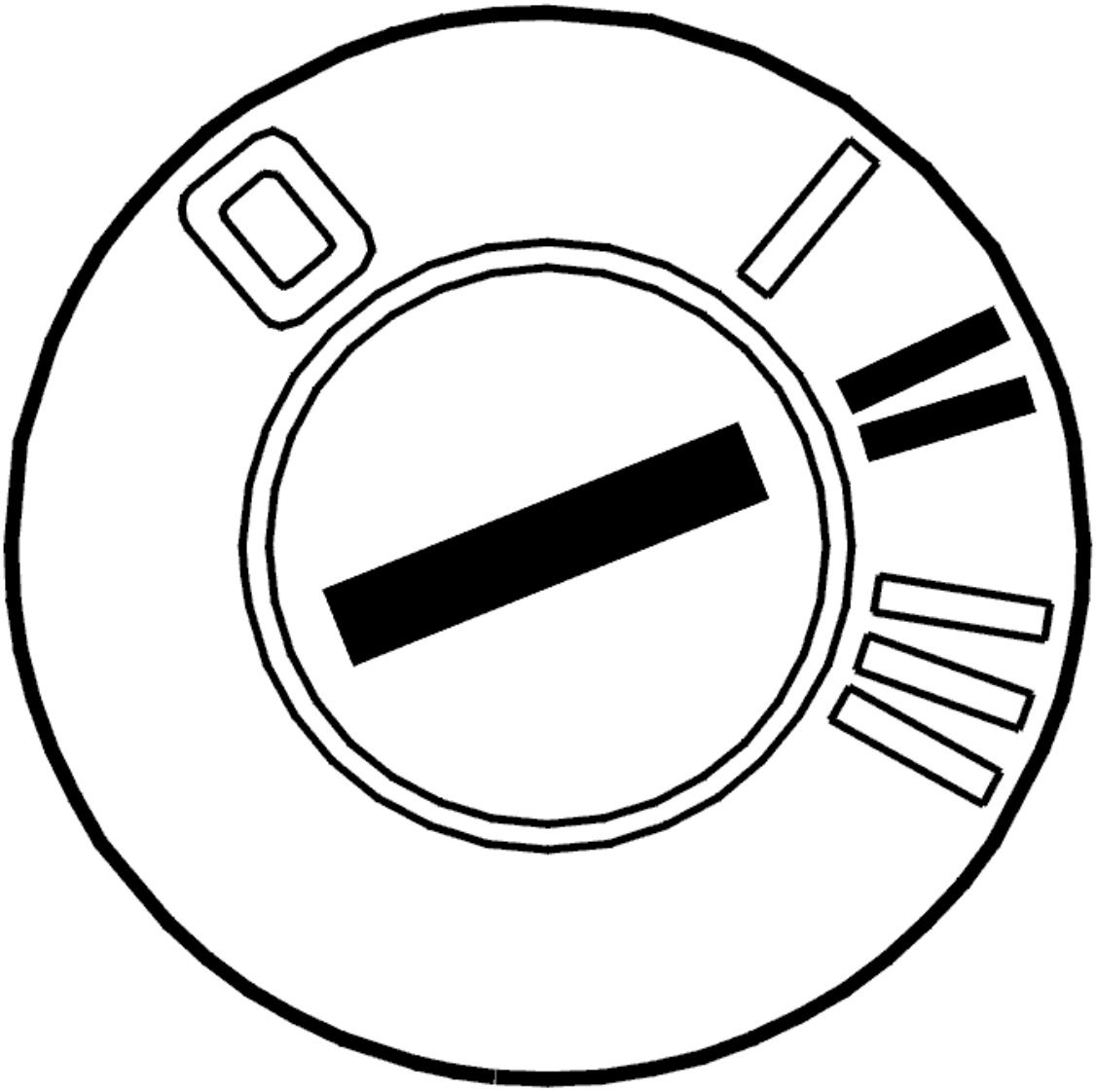

Fig. 62: Identifying Ignition ON
Courtesy of VOLVO CARS CORPORATION

- Ignition on
- Read off the position of the gear selector.

NOTE: Select the correct gear selector assembly from the list.

Shift the gear selector to all gear positions several times. This is to check the function of the gear selector sensor.

The selected position must be the same as that displayed in VIDA (Volvo scan tool). If the display shows an undefined position (OR for example) when a specific gear is selected, the transmission cable needs adjusting.

NOTE: **An undefined position may be displayed between the fixed gear positions. This is not a fault.**

Adjust the gear-shift position sensor if necessary according to **GEAR-SHIFT POSITION SENSOR, CHECKING/ADJUSTING** .

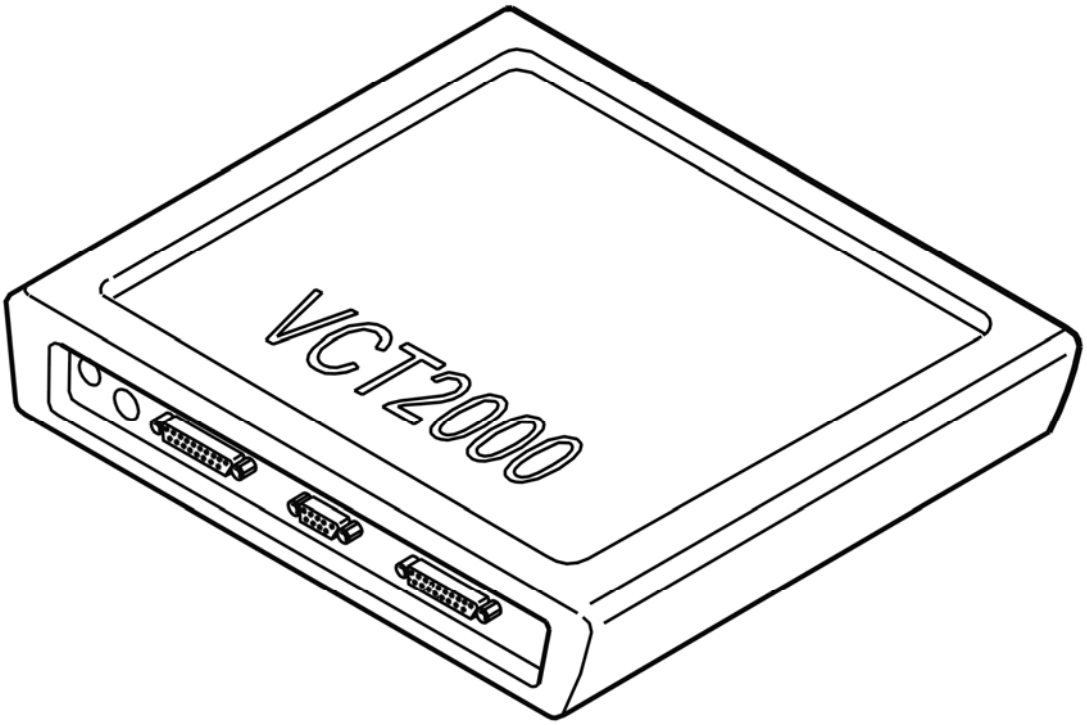

Fig. 63: Identifying VCT2000 Diagnostic Tool Symbol In VIDA
Courtesy of VOLVO CARS CORPORATION

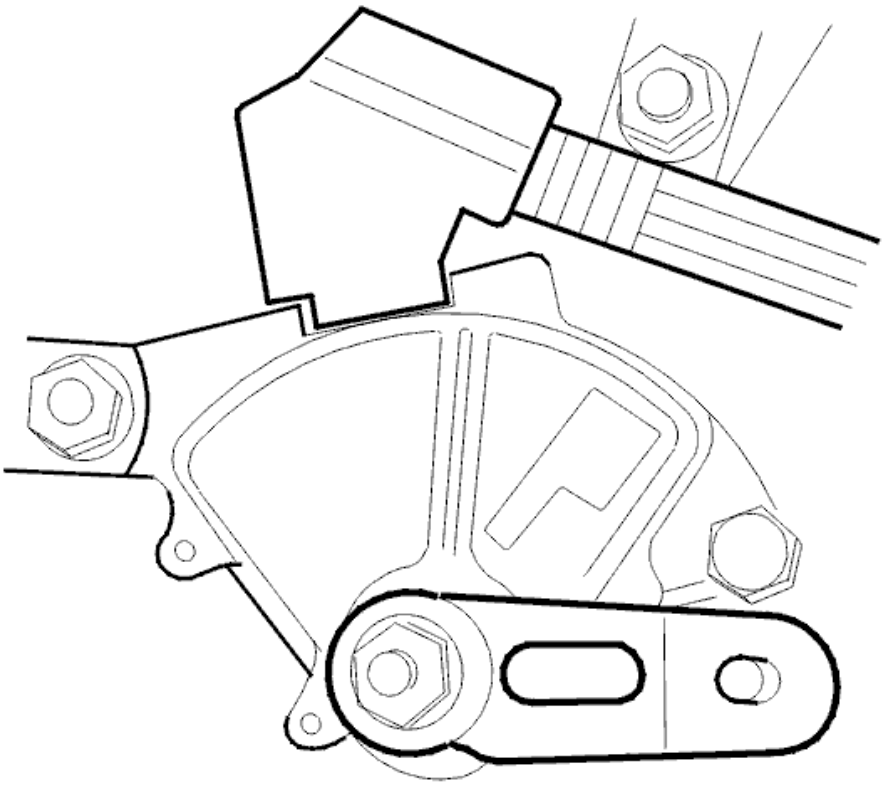

Fig. 64: Identifying Gear-Shift Position Sensor
Courtesy of VOLVO CARS CORPORATION

Is the gear-shift position sensor incorrectly adjusted?

- **YES**

  Refer to **VERIFICATION**

- **NO**

  Refer to **CHECKING THE WIRING**

CHECKING THE WIRING

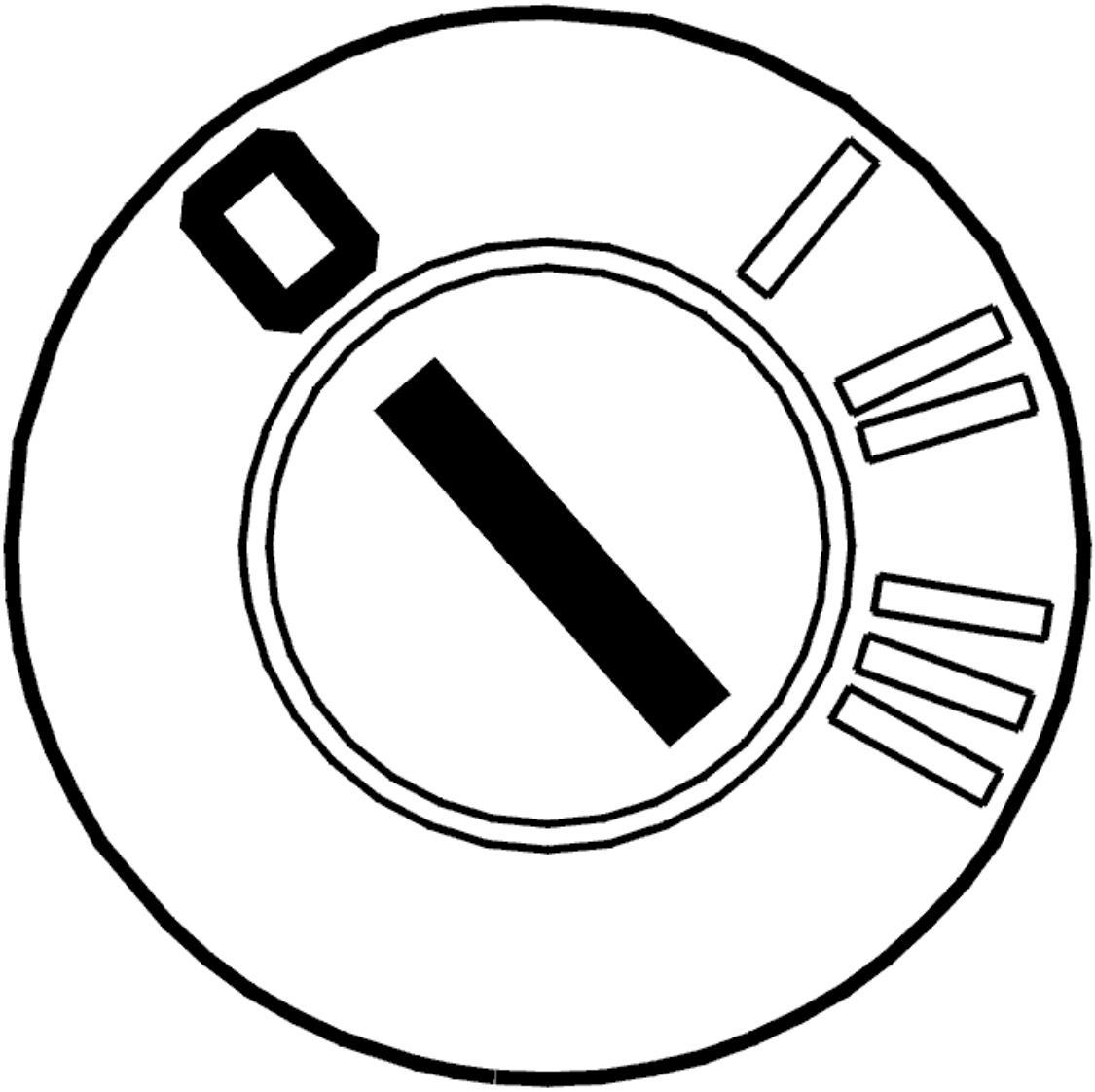

Fig. 65: Identifying Ignition OFF
Courtesy of VOLVO CARS CORPORATION

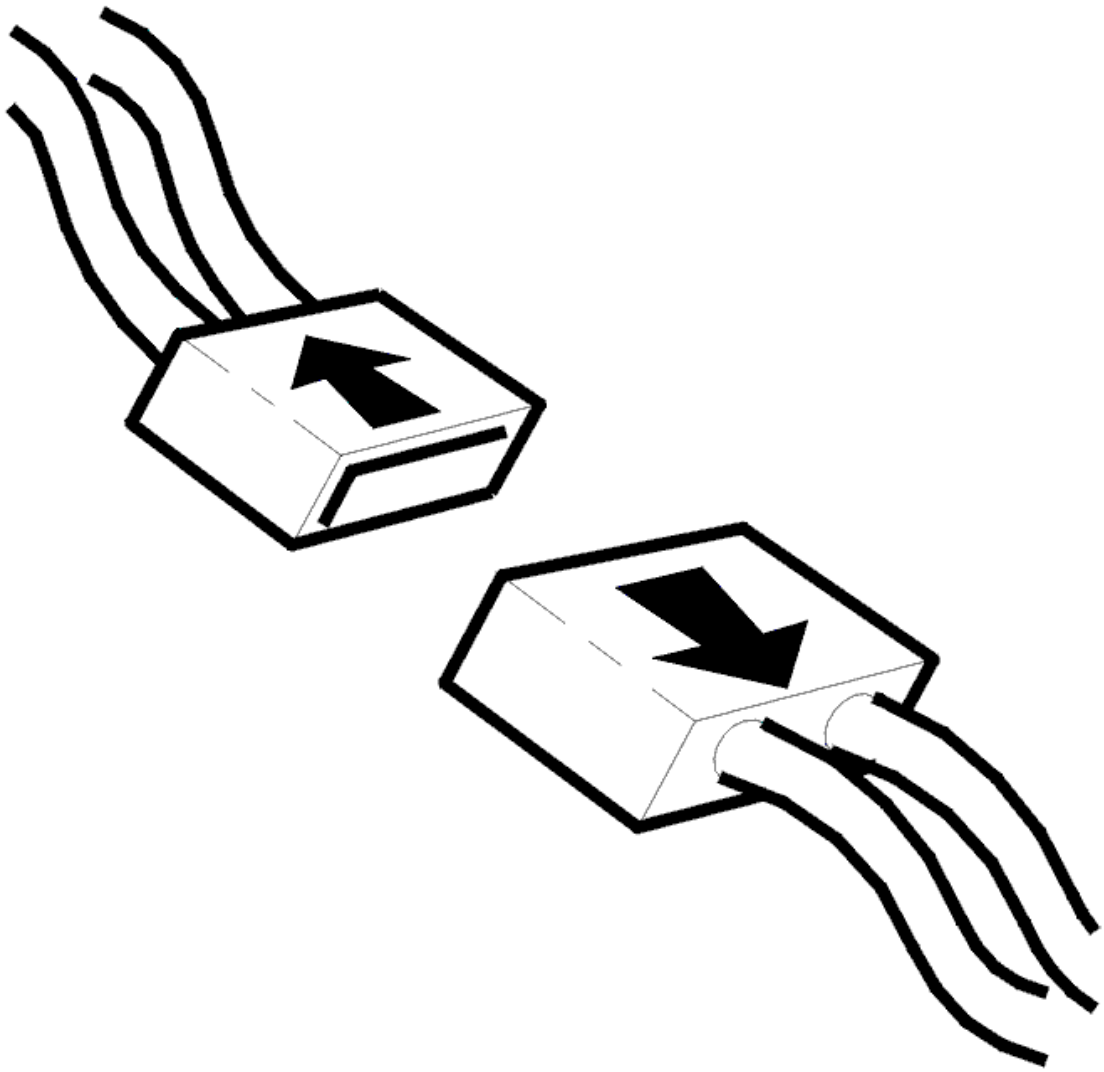

Fig. 66: Identifying Connector(s) Disconnected
Courtesy of VOLVO CARS CORPORATION

- Ignition off
- Disconnect the transmission connector
- Connect the breakout box.

  Check the wiring between the transmission connector (control module side):

  - terminal #B5 and control module terminal #A46 (#A46) "A"
  - terminal #B6 and control module terminal #B4 (#A64) "B"
  - terminal #B7 and control module terminal #A45 (#A45) "C"
  - terminal #B8 and control module terminal #B3 (#A63) "PA".

  check for an open-circuit according to **OPEN-CIRCUIT, PERMANENT FAULTS** . Check for a short-

circuit to ground according to **SHORT-CIRCUIT TO GROUND, PERMANENT FAULTS** . Check for a short-circuit to supply voltage according to **SHORT-CIRCUIT TO SUPPLY VOLTAGE. PERMANENT FAULTS** .

Other information:

- To connect the breakout box, see **CONNECTING THE BREAKOUT BOX**
- To disconnect the transmission connectors, see **CONNECTORS, TRANSMISSION, DISCONNECTING / CONNECTING**
- For information about signals, see **SIGNAL DESCRIPTION. TRANSMISSION CONTROL MODULE (TCM)** .

Was a fault detected? Select an option according to the following:

1. No fault detected

   Refer to **REPLACING THE COMPONENT**

2. Open-circuit in the wiring or a short-circuit to ground

   Refer to **VERIFICATION**

3. Short-circuit to supply voltage in the wiring.

   Refer to **CHECKING THE GEAR-SHIFT POSITION SENSOR**

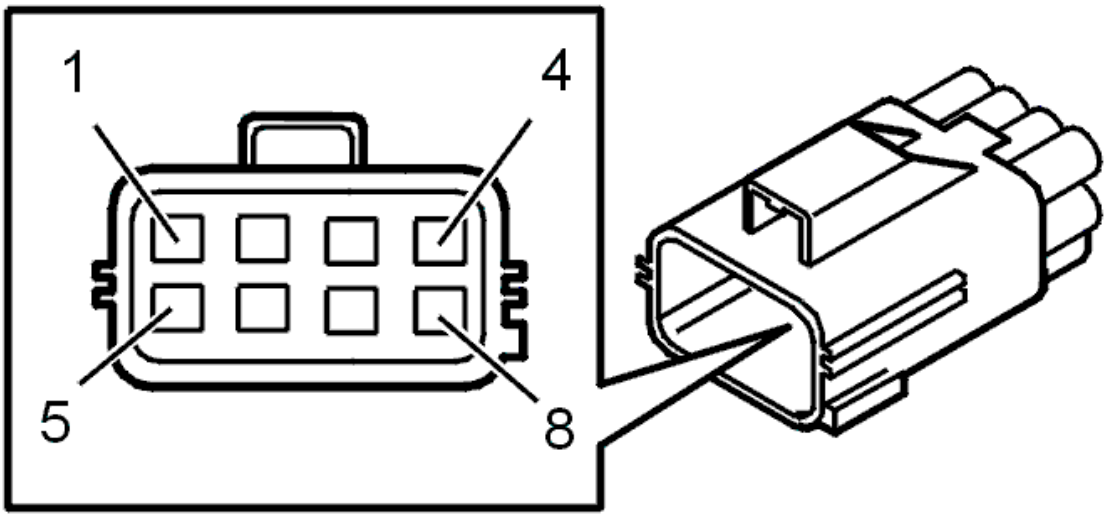

Fig. 67: Identifying Transmission Connector (Control Module Side) Terminals
Courtesy of VOLVO CARS CORPORATION

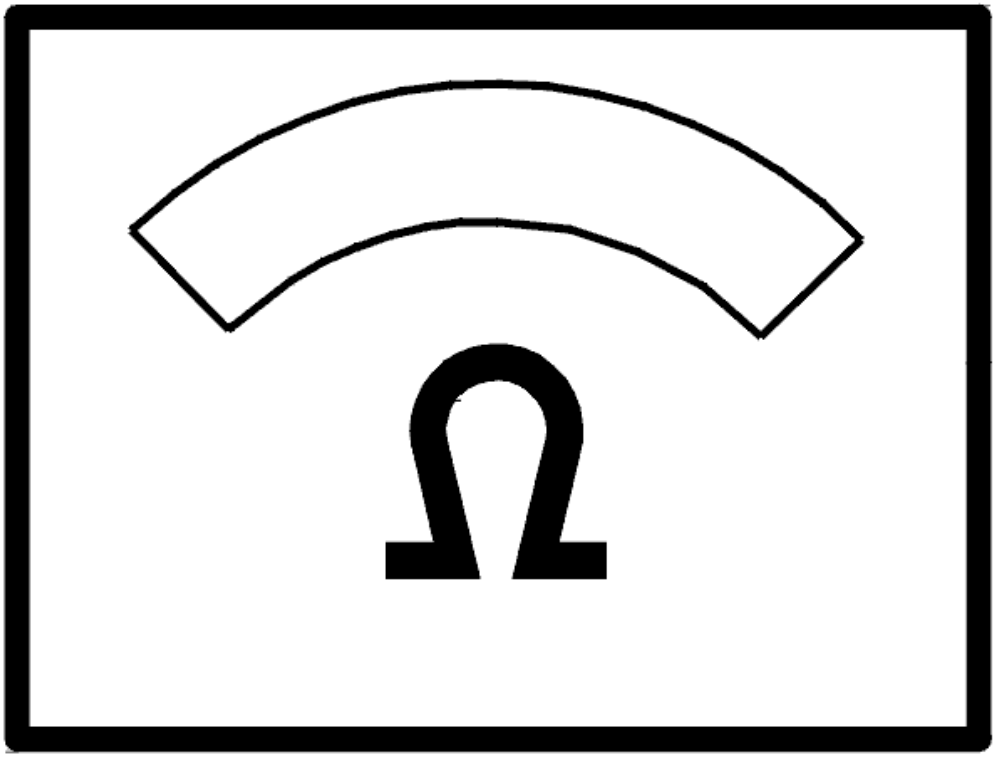

Fig. 68: Identifying Ohms Display
Courtesy of VOLVO CARS CORPORATION

REPLACING THE COMPONENT

Try a new gear-shift position sensor according to **GEAR-SHIFT POSITION SENSOR, POSITION** .

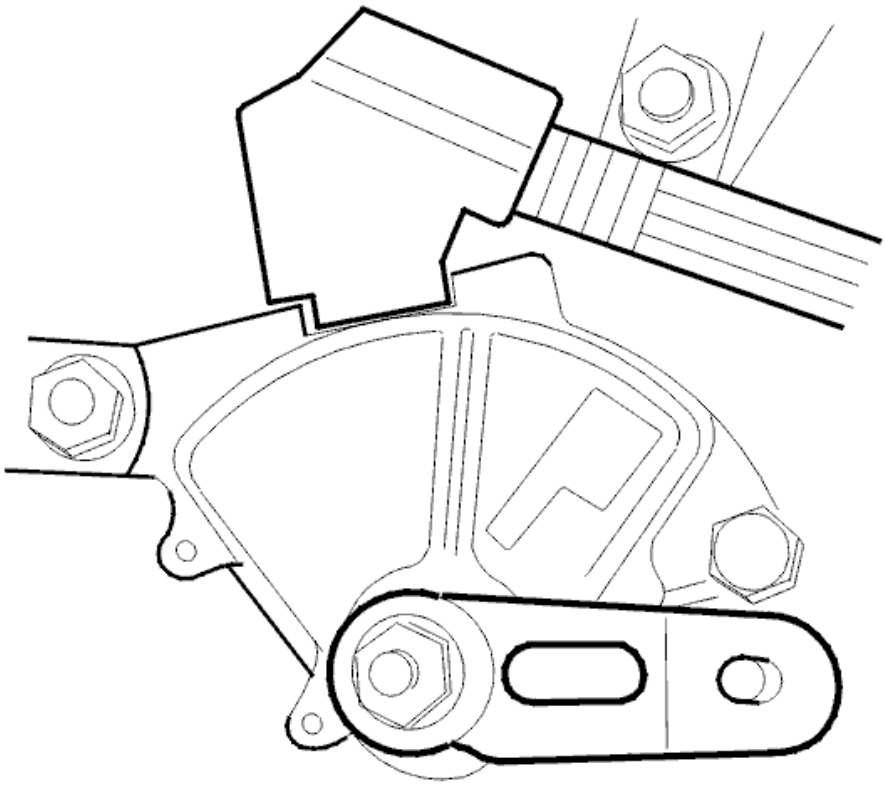

Fig. 69: Identifying Gear-Shift Position Sensor
Courtesy of VOLVO CARS CORPORATION

- **Continue**

  Refer to **VERIFICATION**

CHECKING THE GEAR-SHIFT POSITION SENSOR

HINT: The gear-shift position sensor may malfunction if there has been a short-circuit to supply voltage in the signal cable. Check the gear-shift position sensor as follows:

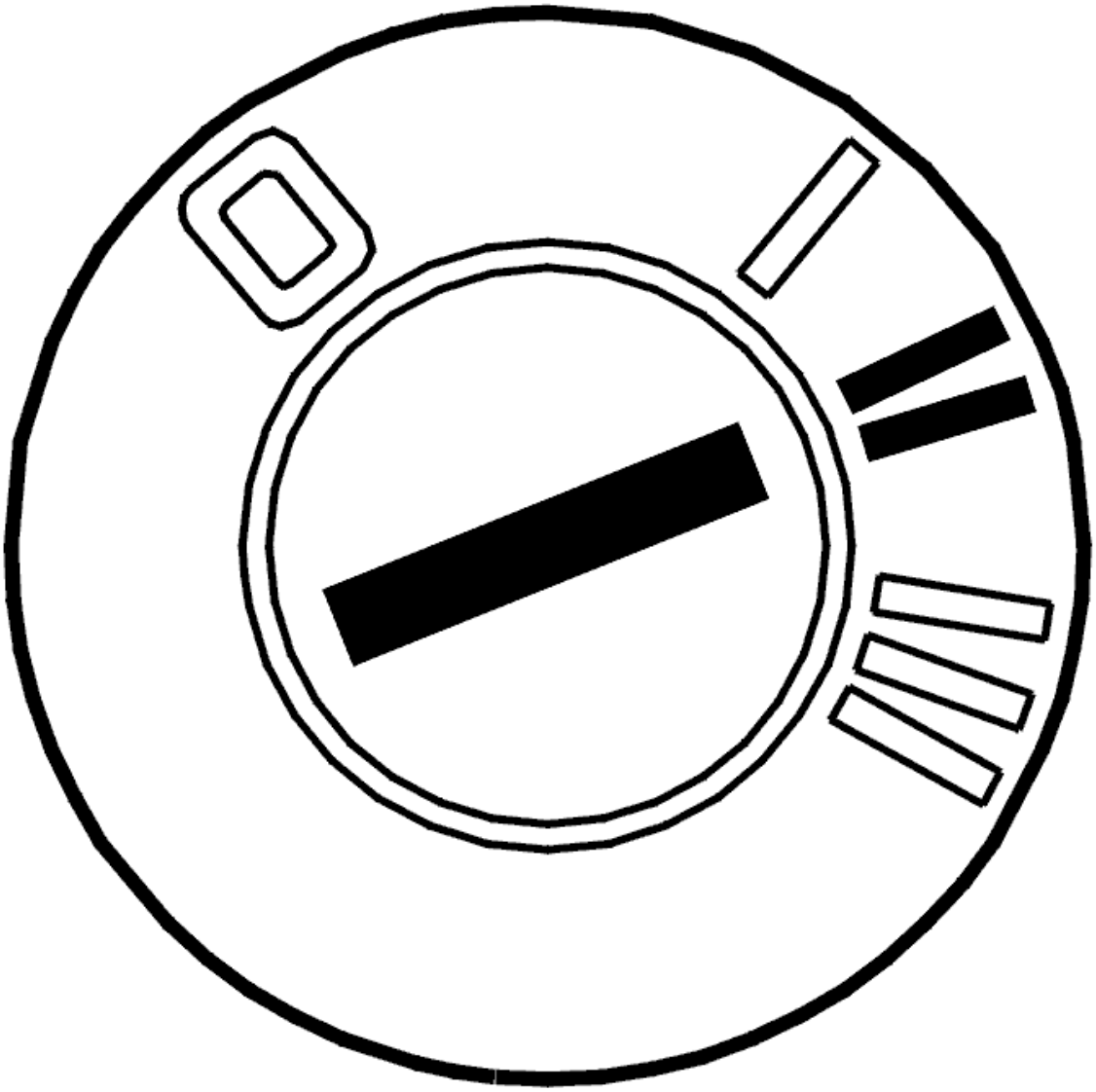

Fig. 70: Identifying Ignition ON
Courtesy of VOLVO CARS CORPORATION

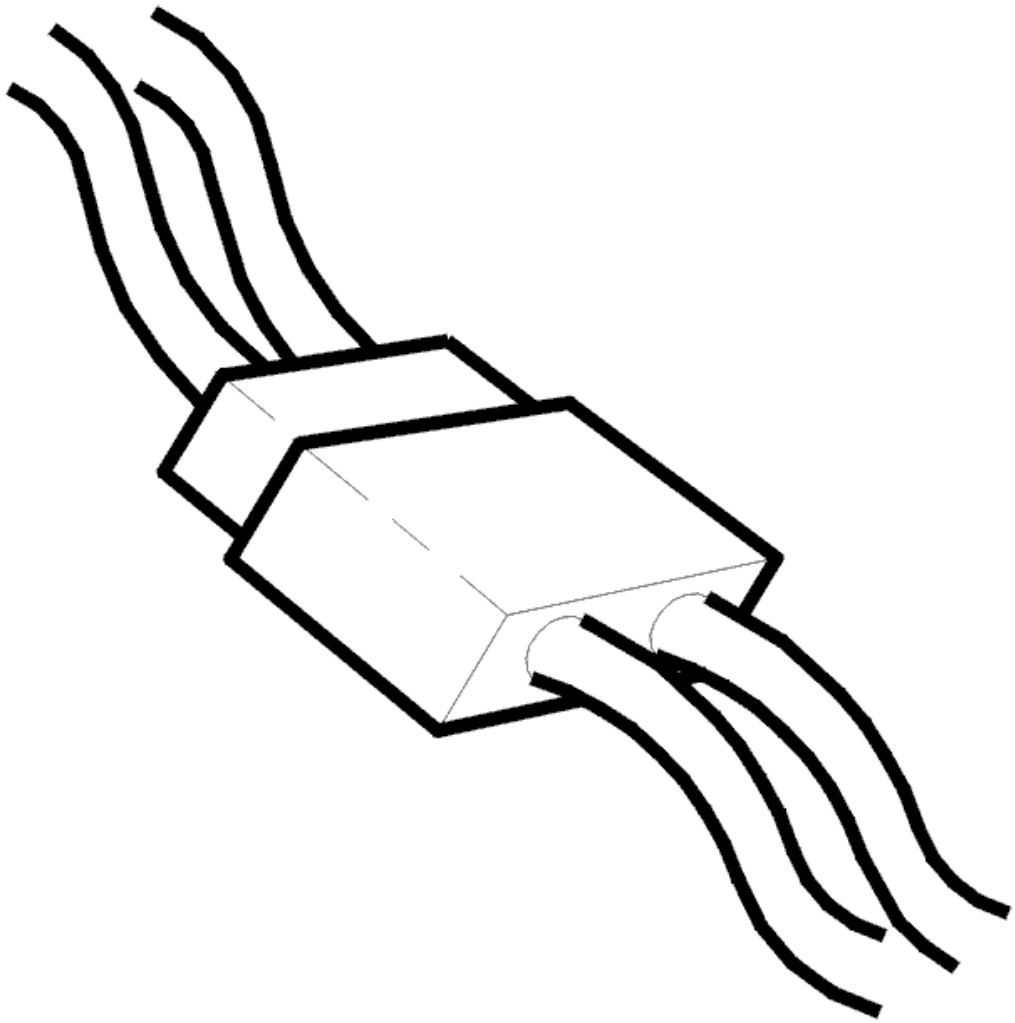

Fig. 71: Identifying Connector
Courtesy of VOLVO CARS CORPORATION

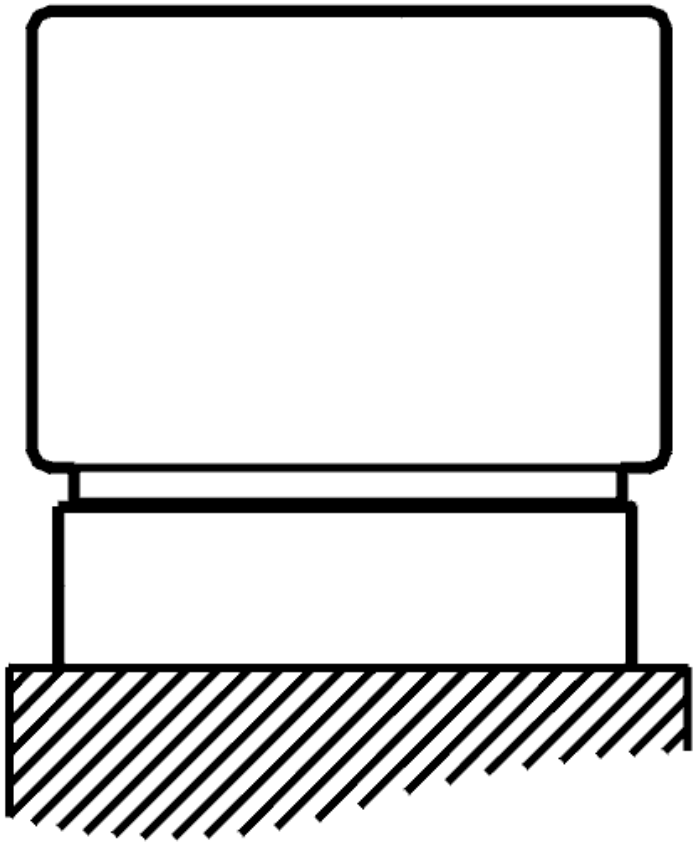

Fig. 72: Identifying Control Unit Connected
Courtesy of VOLVO CARS CORPORATION

- Ignition off
- Transmission connector connected
- Control module connected.
- Ignition on
- Read off the position of the gear-shift position sensor

NOTE: **Select the correct gear selector assembly from the list.**

NOTE: **An undefined position may be displayed between the fixed gear positions. This is not a fault.**

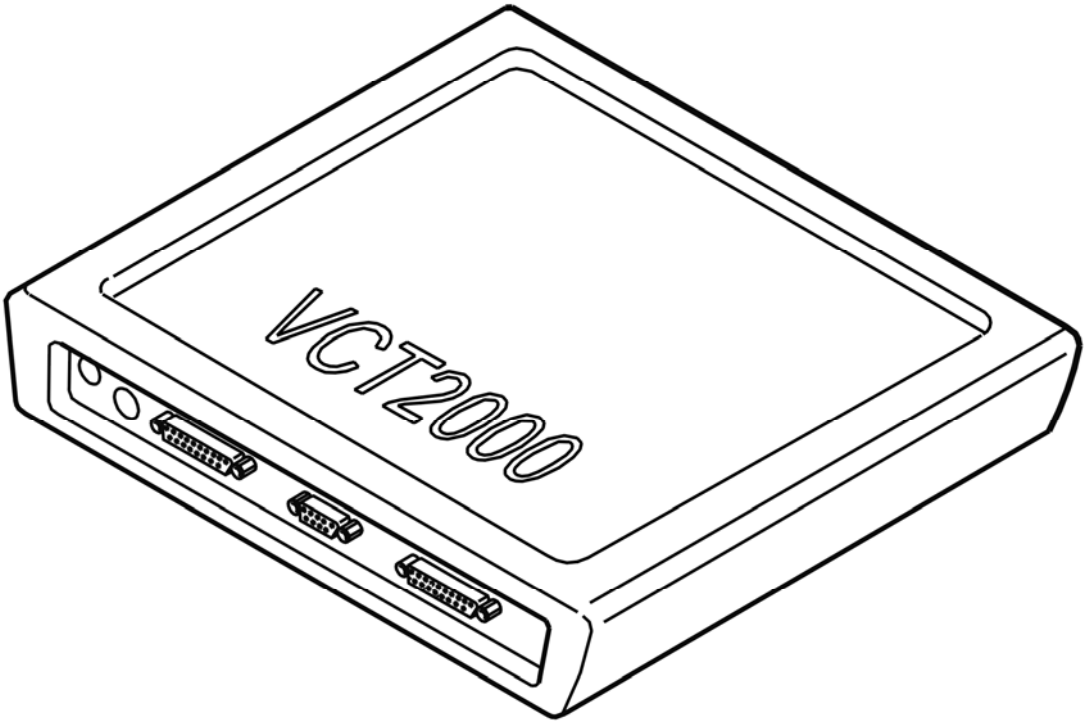

Fig. 73: Identifying VCT2000 Diagnostic Tool Symbol In VIDA
Courtesy of VOLVO CARS CORPORATION

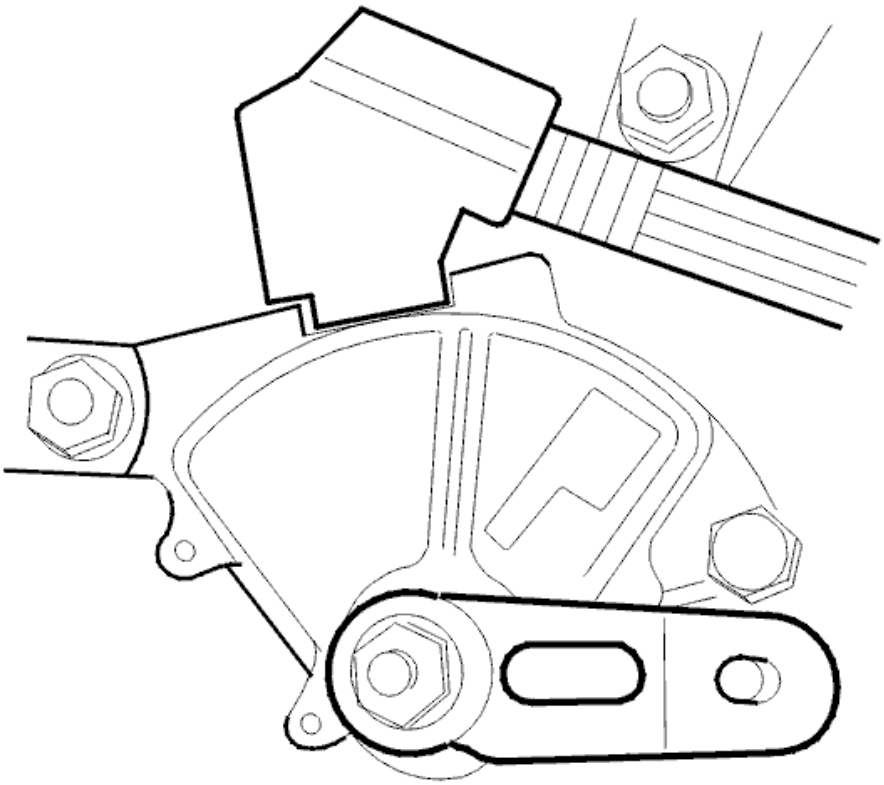

Fig. 74: Identifying Gear-Shift Position Sensor
Courtesy of VOLVO CARS CORPORATION

- Move the gear selector to the different gear positions a number of times. Check the gear-shift position sensor function. If the gear-shift position sensor function is OK the cause of the fault was contact resistance and oxidation.

Are all positions OK?

- **YES**

  OKAY: Troubleshooting has been completed.

- **NO**

  Refer to **REPLACING THE COMPONENT**

VERIFICATION

VERIFICATION

HINT: After carrying out the repair check that the fault has been remedied.

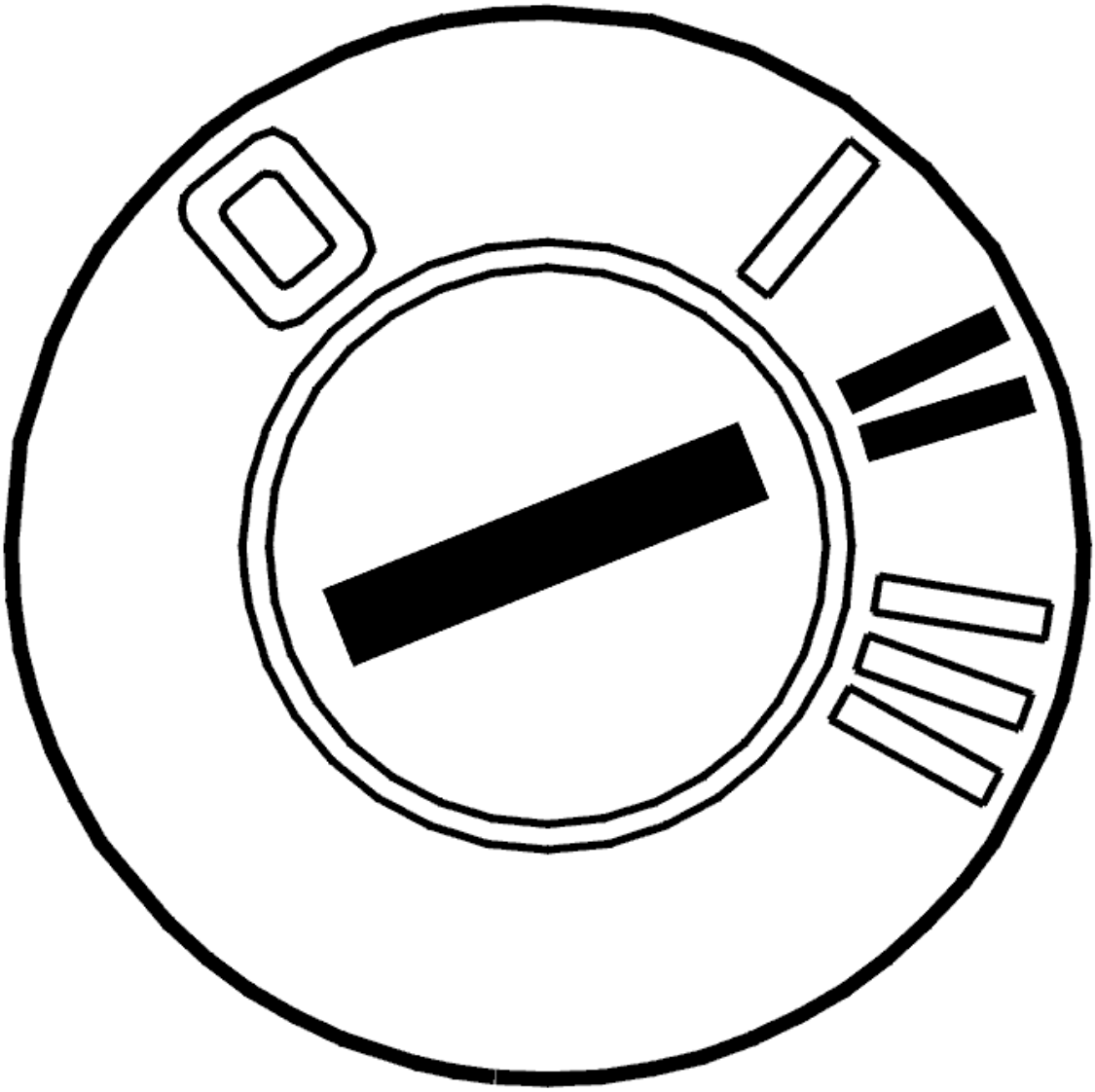

Fig. 75: Identifying Ignition ON
Courtesy of VOLVO CARS CORPORATION

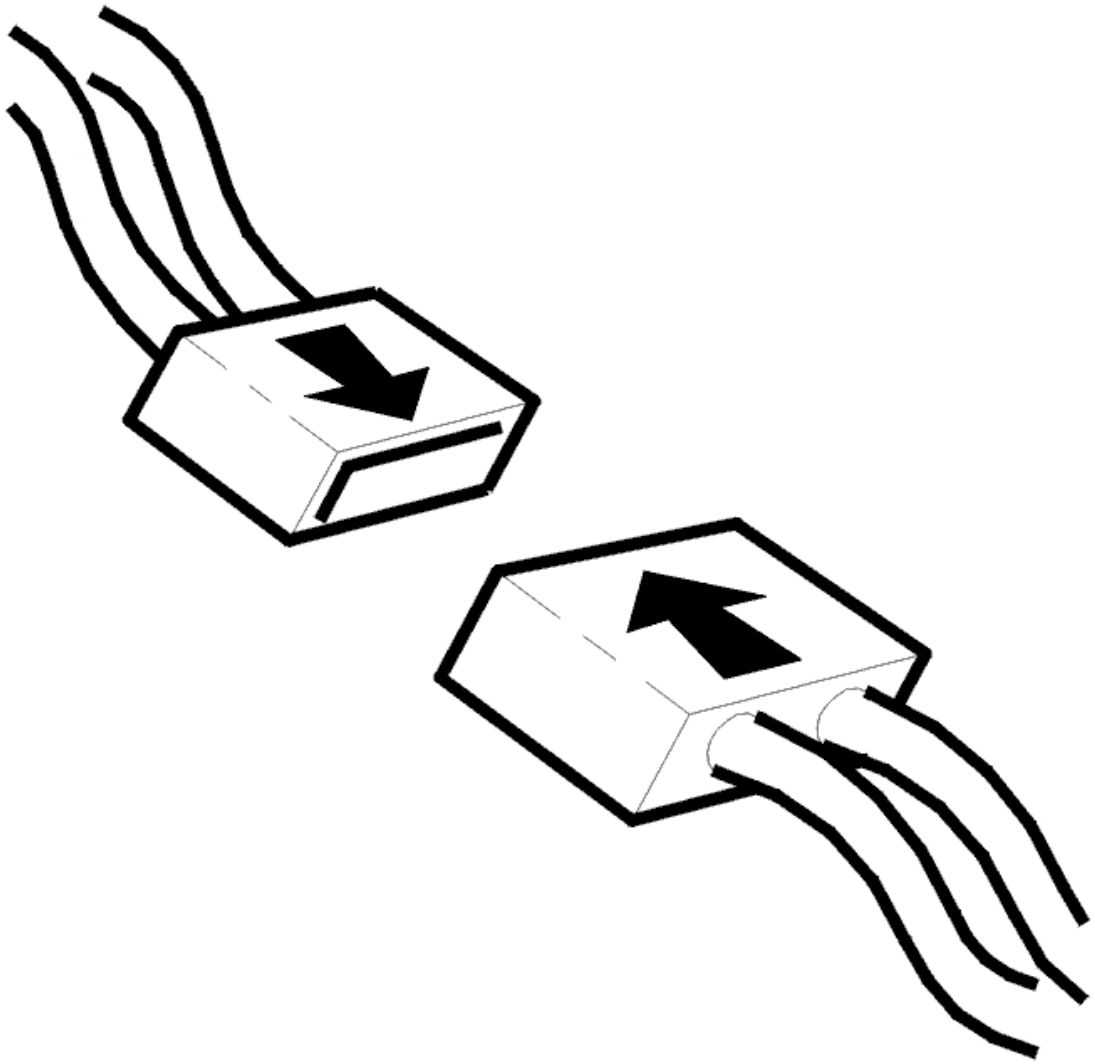

Fig. 76: Identifying Connector(s) Reinstallation
Courtesy of VOLVO CARS CORPORATION

- Ignition off.
- Reconnect components, connectors etc.
- Ignition on.
- Read off gear-shift position sensor position.

  Move the gear selector to all shift positions a number of times, and repeatedly select the same position to check the operation of the gear-shift position sensor.

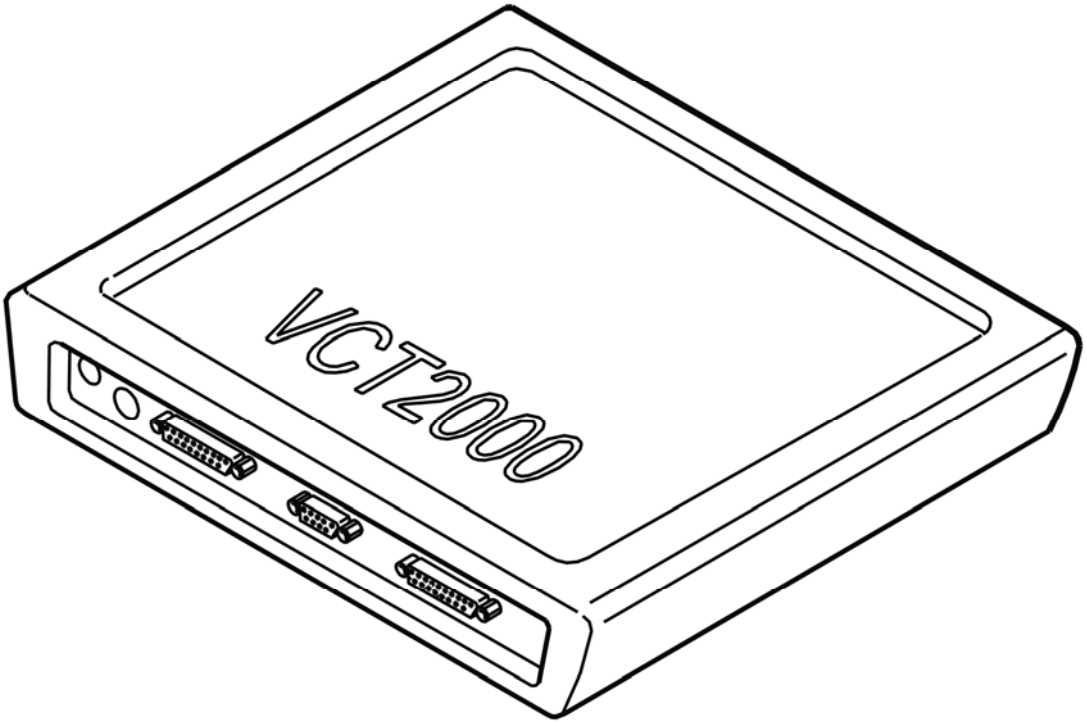

Fig. 77: Identifying VCT2000 Diagnostic Tool Symbol In VIDA
Courtesy of VOLVO CARS CORPORATION

Are all values OK?

- **YES**

  VERIFIED: Troubleshooting has been completed.

- **NO**

  Refer to **INFORMATION**

INFORMATION

FAULT-TRACING INFORMATION

The fault should have been detected and remedied. As this is not the case fault-tracing has failed.

Exit fault-tracing for this diagnostic trouble code (DTC) or make another attempt.

INFORMATION

FAULT-TRACING INFORMATION

In case of this defect, troubleshooting is not followed by verification.

The information can be displayed again or the fault-tracing for this fault can be interrupted.

TCM-0042: OIL TEMPERATURE. TEMPERATURE TOO HIGH (4T65 AWD; 2003-2006)

DIAGNOSTIC TROUBLE CODE (DTC) INFORMATION

Condition

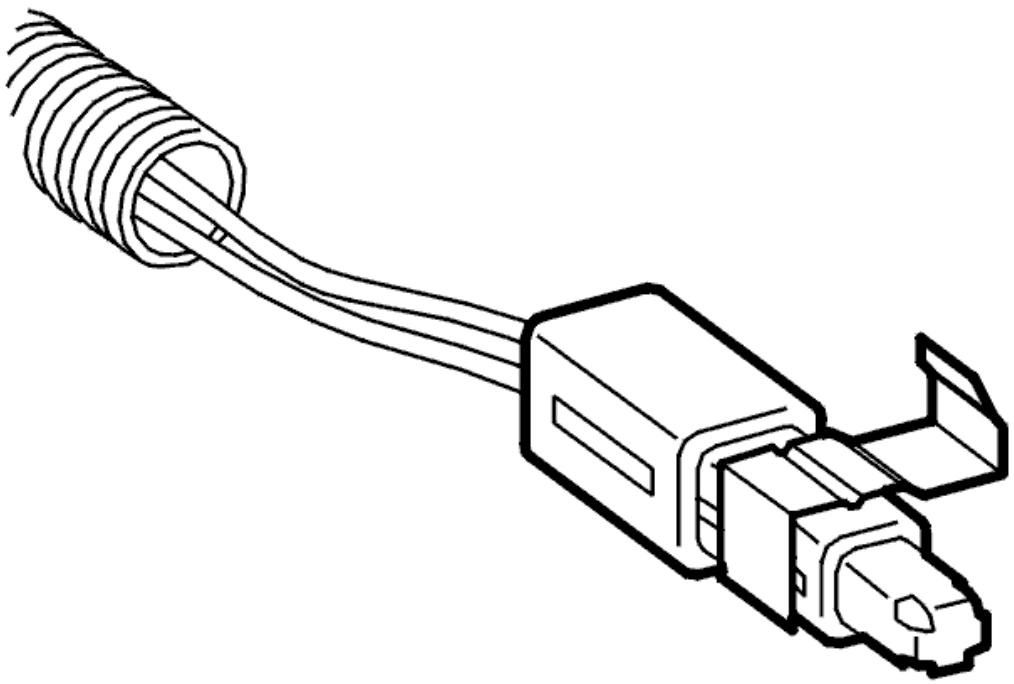

Fig. 78: Identifying Temperature Sensor
Courtesy of VOLVO CARS CORPORATION

The function of the transmission is dependent on the quality of the transmission oil. The quality of the oil diminishes if the transmission fluid is excessively hot over a long period of time. The oil temperature controls the time it takes before TCM-0042 is stored.

Temperature area / time before the diagnostic trouble code (DTC) is stored

- 100-110°C for 9600 hours
- 110-120°C for 4800 hours
- 120-130°C for 1067 hours

- 130-140°C for 480 hours
- 140-150°C for 240 hours
- more than 150°C for 120 hours.

Substitute Value

- No substitute values.

Possible Source

- Contact resistance in the terminals
- Short-circuit to ground in the signal cable
- Defective oil temperature sensor
- Mechanical fault in the transmission
- The transmission has been exposed to extreme load and high ambient temperature.

Fault symptom[s]

- General orange warning lamp lit.

TEMPERATURE TOO HIGH

CHECKING THE WIRING AND COMPONENT

The diagnostic trouble code (DTC) was caused by the transmission being subjected to high loads and high temperatures. It is therefore important to change transmission fluid and to check the function of the transmission.

Replace the oil according to **TRANSMISSION OIL / OIL FILTER, REPLACING** .

- **Continue**

  Refer to **RESETTING TRANSMISSION FLUID CHANGE COUNTER**

TEST DRIVING

Test drive the car according to **TEST DRIVE FORM, DESCRIPTION** . Check the transmission for mechanical faults or noise.

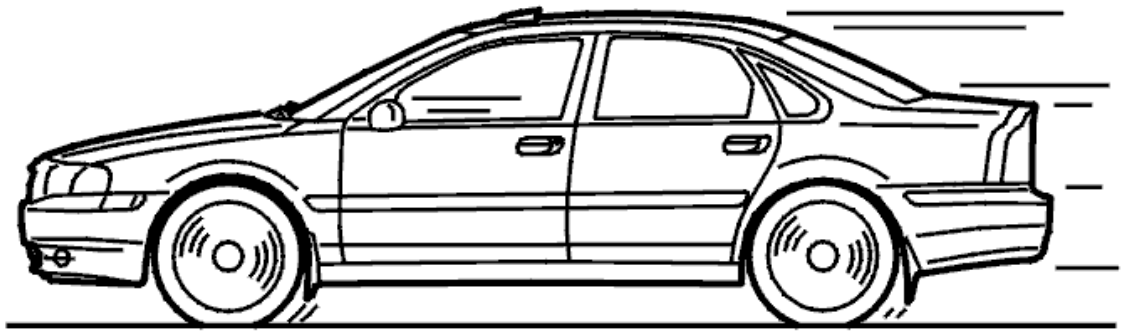

Fig. 79: Identifying Test Drive
Courtesy of VOLVO CARS CORPORATION

Is the transmission exhibiting any mechanical malfunctions or making a noise?

- **YES**

  Refer to **FAULT-TRACING INFORMATION**

- **NO**

  OKAY: Troubleshooting has been completed.

FAULT-TRACING INFORMATION

Exit the current fault-tracing. Add mechanical symptoms to the symptoms list. Fault-trace the symptoms.

RESETTING TRANSMISSION FLUID CHANGE COUNTER

RESETTING TRANSMISSION FLUID CHANGE COUNTER

HINT: The transmission control module (TCM) has a counter for the oil quality. The counter counts up if the transmission is exposed to too high a load or an ambient temperature that is too high. If the counter is not reset when the oil is drained or changed, there is a risk that a diagnostic trouble code (DTC) will be

stored in faulty circumstances. Therefore it is important that the "Transmission oil change" counter is reset.

NOTE: **This applies only when the transmission fluid is changed and when the fluid is changed when repairs are carried out to the transmission temperature sensor.**

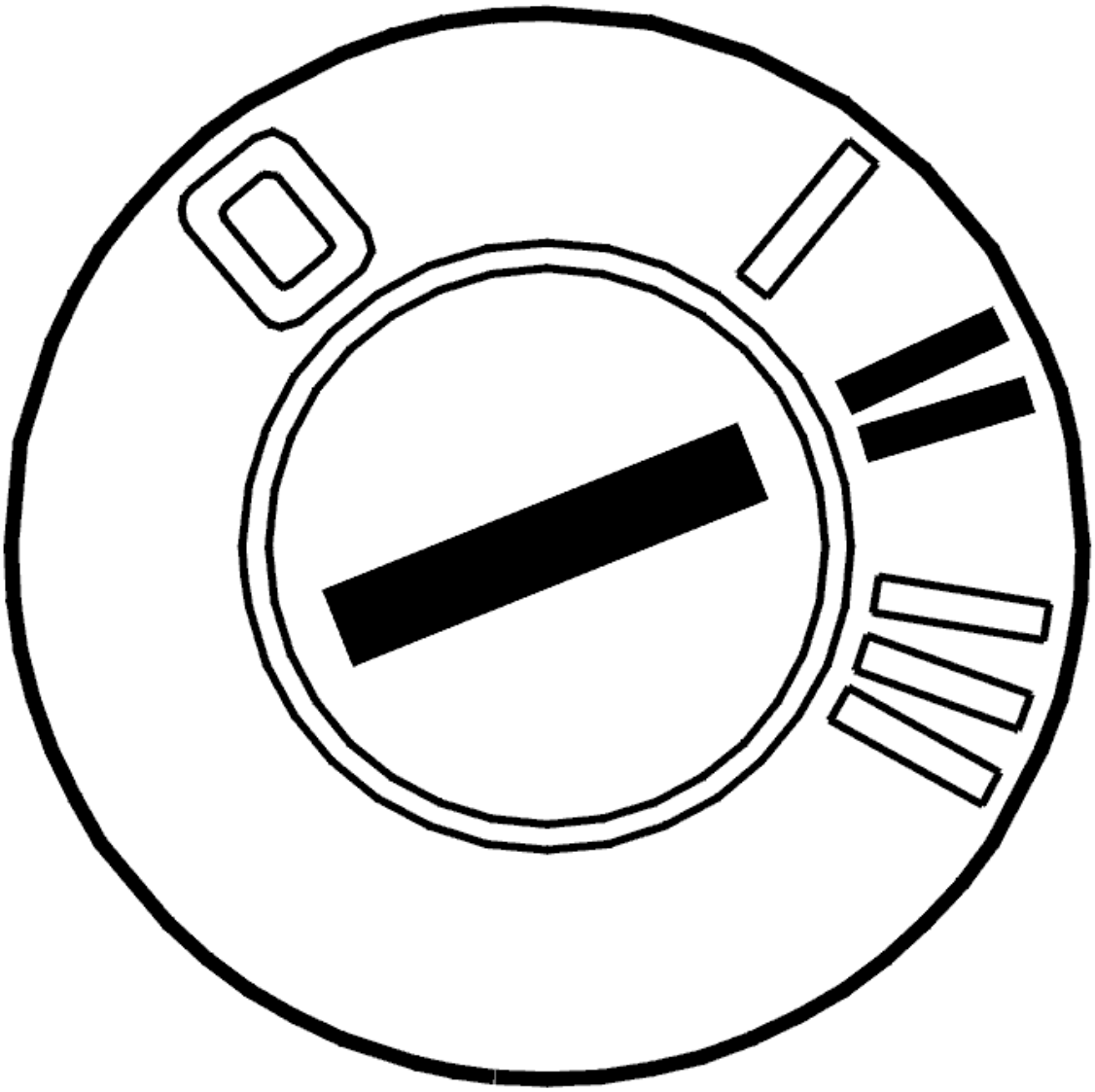

Fig. 80: Identifying Ignition ON
Courtesy of VOLVO CARS CORPORATION

- Ignition on.

  Reset the counter by clicking on the VCT 2000 symbol.

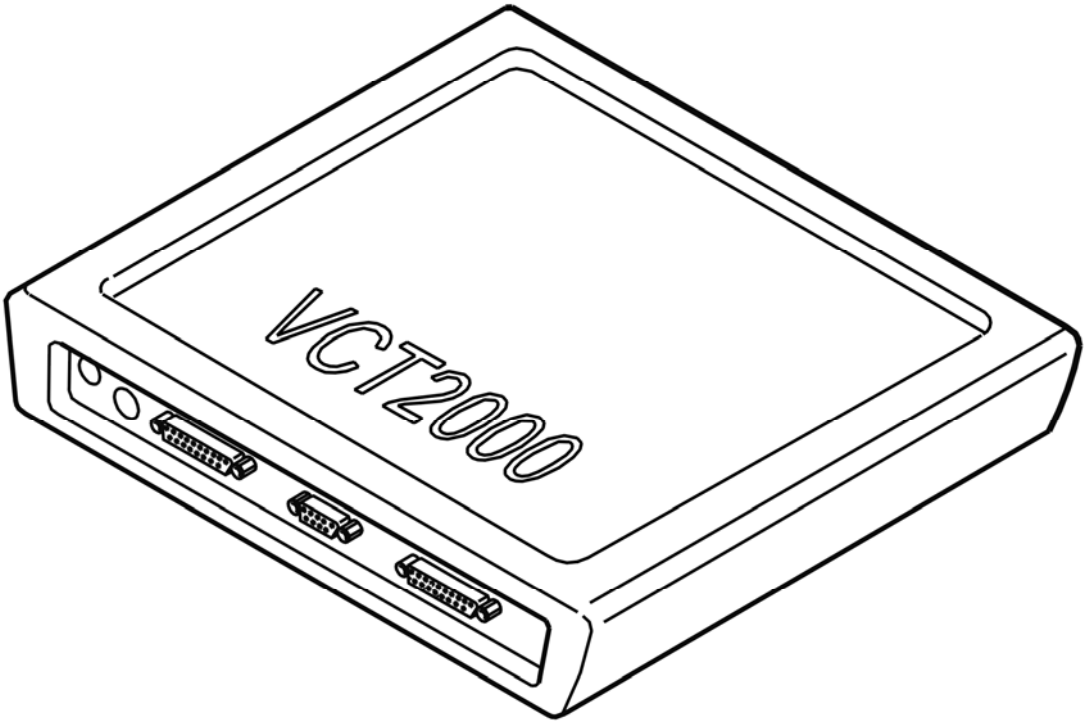

Fig. 81: Identifying VCT2000 Diagnostic Tool Symbol In VIDA
Courtesy of VOLVO CARS CORPORATION

- **Continue**

  Refer to **TEST DRIVING**

TCM-0042: OIL TEMPERATURE. TEMPERATURE TOO HIGH (AW50/51 AWD; AW55-50/51SN; 2003-2007)

DIAGNOSTIC TROUBLE CODE (DTC) INFORMATION

Condition

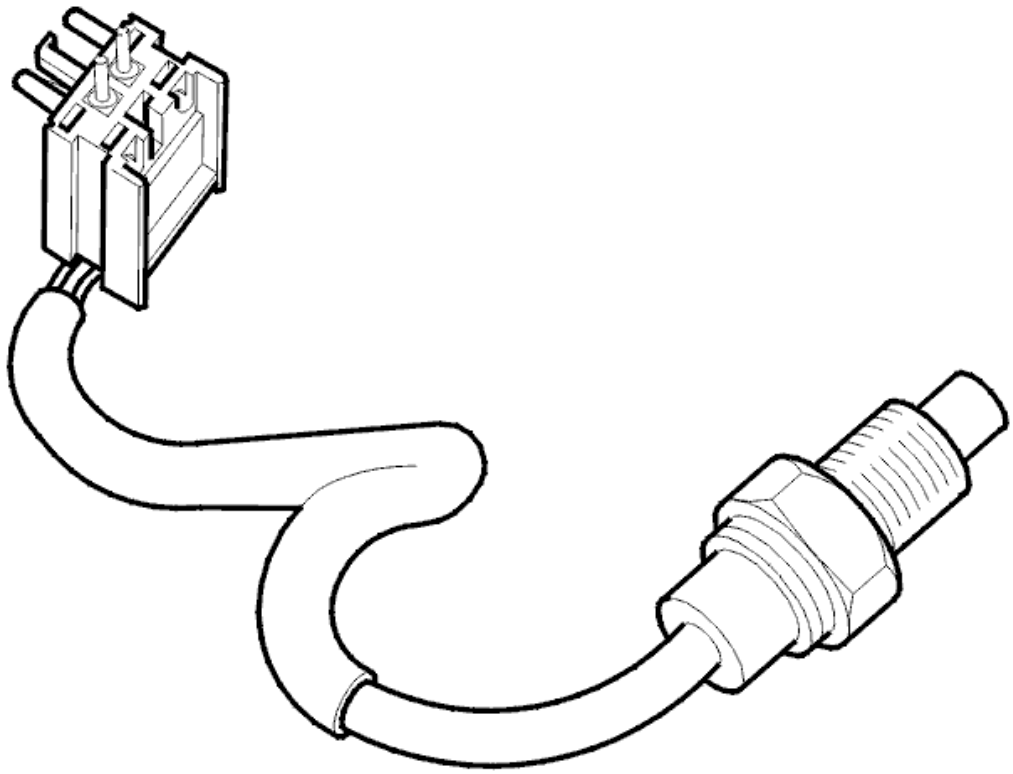

Fig. 82: Identifying Oil Temperature Sensor
Courtesy of VOLVO CARS CORPORATION

The oil temperature sensor sends a signal to the transmission control module (TCM) which is used for functions such as temperature controlled lockup and initiating high-temperature programs. The sensor has an NTC (negative temperature coefficient) resistor. The signal (voltage) decreases with increasing oil temperature. Diagnostic trouble code (DTC) TCM-0042 is stored if the transmission control module (TCM) receives a signal from the oil temperature sensor corresponding to a temperature above approximately +150°C for approximately 2 minutes.

Substitute Value

- No substitute values.

Possible Source

- Contact resistance in terminals.
- Short-circuit to ground in signal cable.
- Defective oil temperature sensor.
- Mechanical fault in the transmission.
- The transmission has been exposed to extreme load and high ambient temperature.

Fault symptom[s]

- General orange warning lamp lit.

TEMPERATURE TOO HIGH

CHECKING THE WIRING AND COMPONENT

The diagnostic trouble code (DTC) was caused by the transmission being subjected to high loads and high temperatures. It is therefore important to change transmission fluid and to check the function of the transmission.

Replace the oil according to **TRANSMISSION OIL / OIL FILTER, REPLACING** .

- **Continue**

  Refer to **RESETTING TRANSMISSION FLUID CHANGE COUNTER**

TEST DRIVING

Test drive the car. See **TEST DRIVE SCHEDULE, DESCRIPTION** .

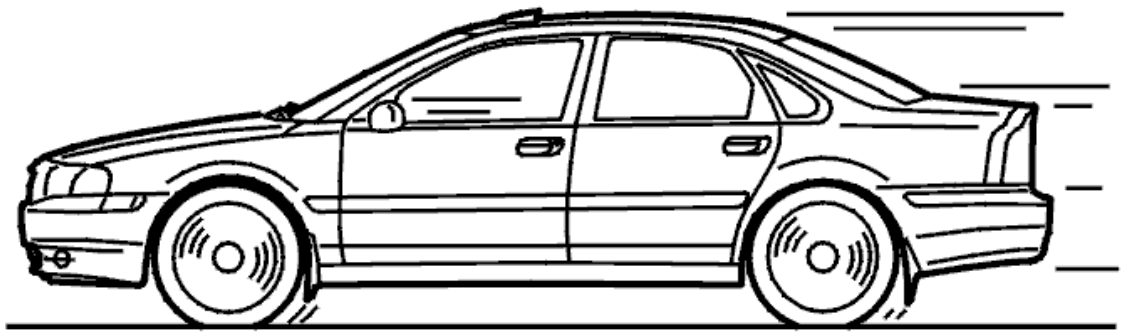

Fig. 83: Identifying Test Drive
Courtesy of VOLVO CARS CORPORATION

Does the transmission have any mechanical faults?

- **YES**

  Refer to **FAULT-TRACING INFORMATION**

- **NO**

  OKAY: Troubleshooting has been completed.

FAULT-TRACING INFORMATION

Exit the current fault-tracing. Add mechanical symptoms to the symptoms list. Fault-trace the symptoms.

RESETTING TRANSMISSION FLUID CHANGE COUNTER

RESETTING TRANSMISSION FLUID CHANGE COUNTER

HINT: The transmission control module (TCM) has a counter for the oil quality. The counter counts up if the transmission is exposed to too high a load or an ambient temperature that is too high. If the counter is not reset when the oil is drained or changed, there is a risk that a diagnostic trouble code (DTC) will be stored in faulty circumstances. Therefore it is important that the "Transmission oil change" counter is reset.

NOTE: **This applies only when the transmission fluid is changed and when the fluid is changed when repairs are carried out to the transmission temperature sensor.**

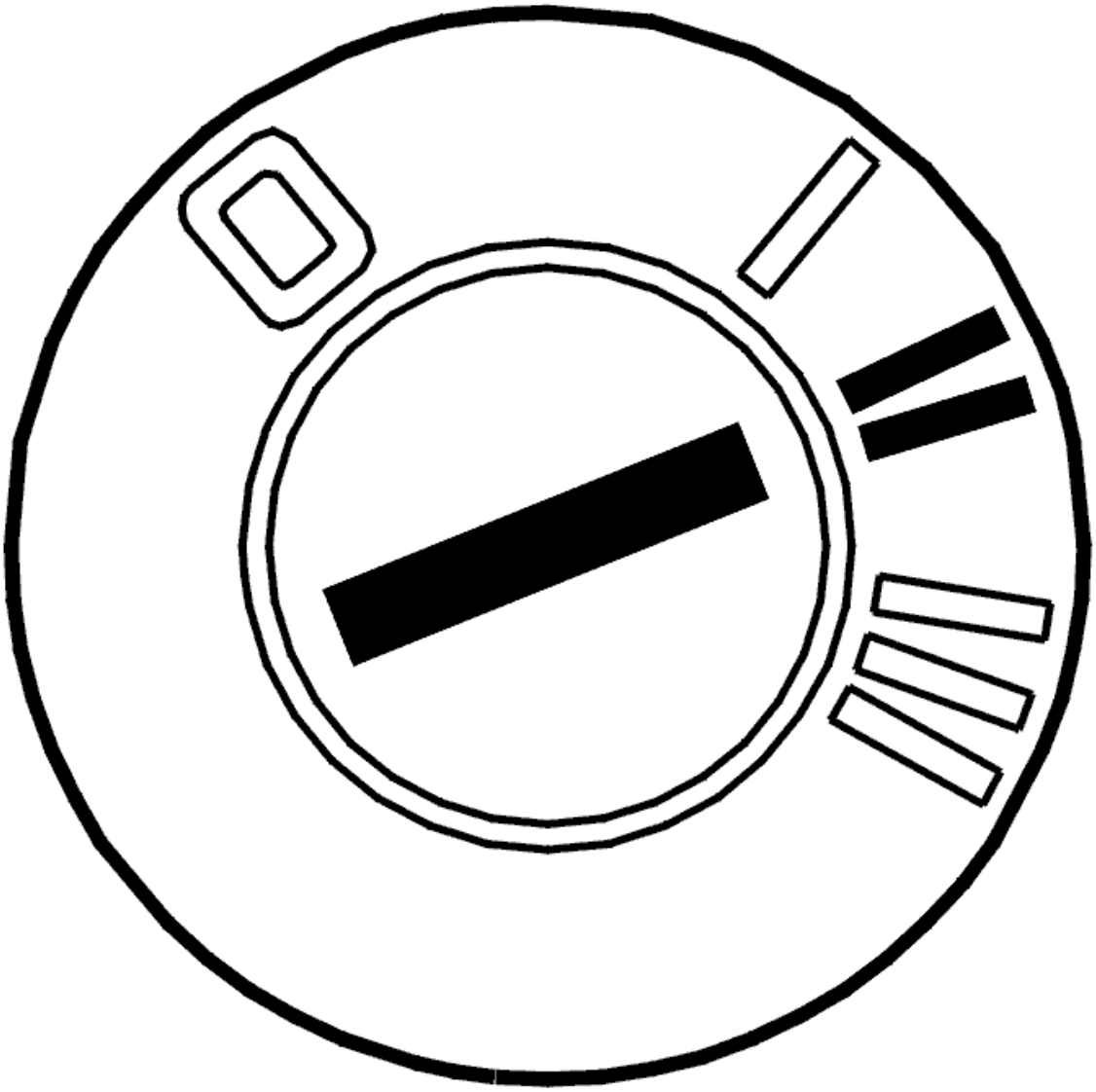

Fig. 84: Identifying Ignition ON
Courtesy of VOLVO CARS CORPORATION

- Ignition on.

  Reset the counter by clicking on the VCT 2000 symbol.

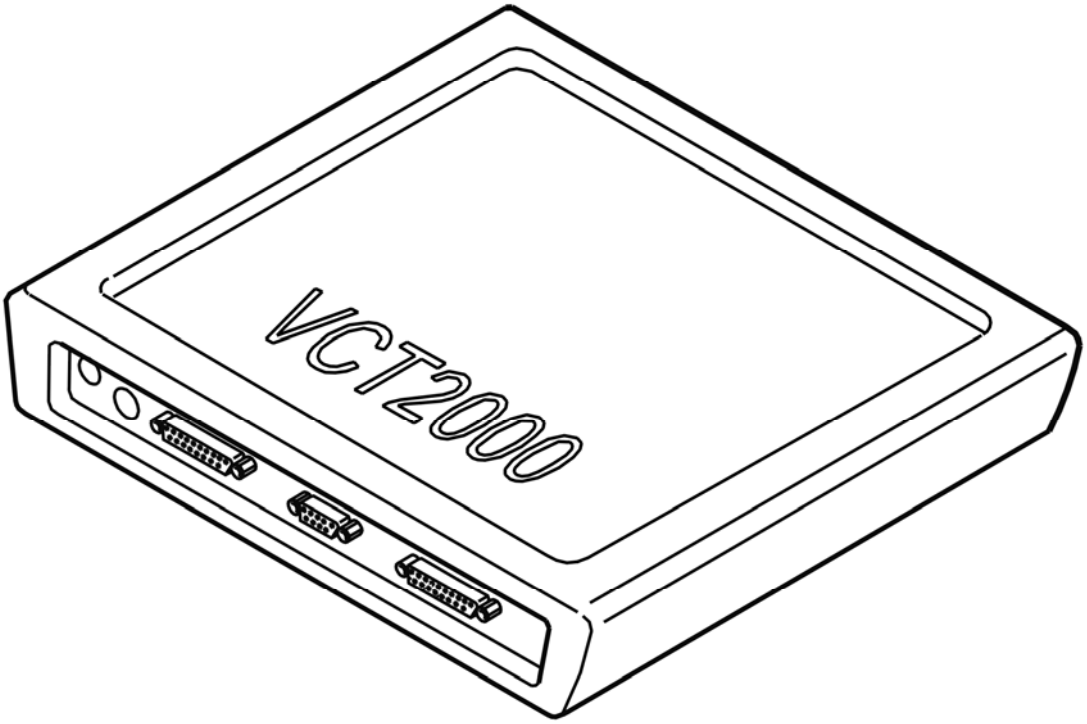

Fig. 85: Identifying VCT2000 Diagnostic Tool Symbol In VIDA
Courtesy of VOLVO CARS CORPORATION

- **Continue**

  Refer to **TEST DRIVING**

TCM-0043: OIL TEMPERATURE SENSOR. SIGNAL TOO LOW (4T65 AWD; 2003-2006)

DIAGNOSTIC TROUBLE CODE (DTC) INFORMATION

Condition

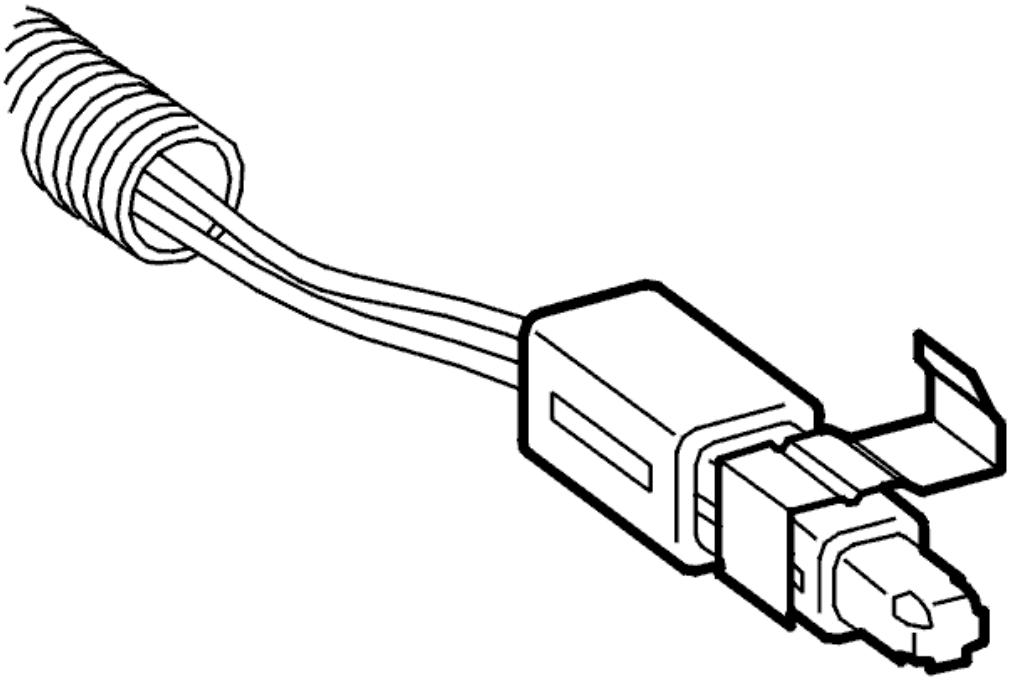

Fig. 86: Identifying Temperature Sensor
Courtesy of VOLVO CARS CORPORATION

The oil temperature sensor transmits a signal to the control module. This signal is used for functions such as temperature controlled lock-up and the engagement of high-temperature programs. The sensor has an NTC (negative temperature coefficient) resistor. The signal (voltage) decreases with increasing oil temperature. Diagnostic trouble code (DTC) TCM-0043 is stored if the control module receives too low a signal from the oil temperature sensor for approximately 20 seconds.

Substitute Value

- No substitute values.

Possible Source

- The power supply and signal cables are short-circuited to each other.
- Short-circuit to ground in the signal cable.
- Defective oil temperature sensor.

Fault symptom[s]

- General orange warning lamp lit.
- No lock-up function.

- Harsh gear shifting.

HINT: Harsh gear shifting can be caused by:

- No reduction of line pressure when shifting.
- No reduction of line pressure when moving the gear selector between positions P-R, N-R and N-D.
- No torque limiting request to engine control module (ECM) when shifting.

SIGNAL TOO LOW

CHECKING THE FUNCTION OF THE OIL TEMPERATURE SENSOR

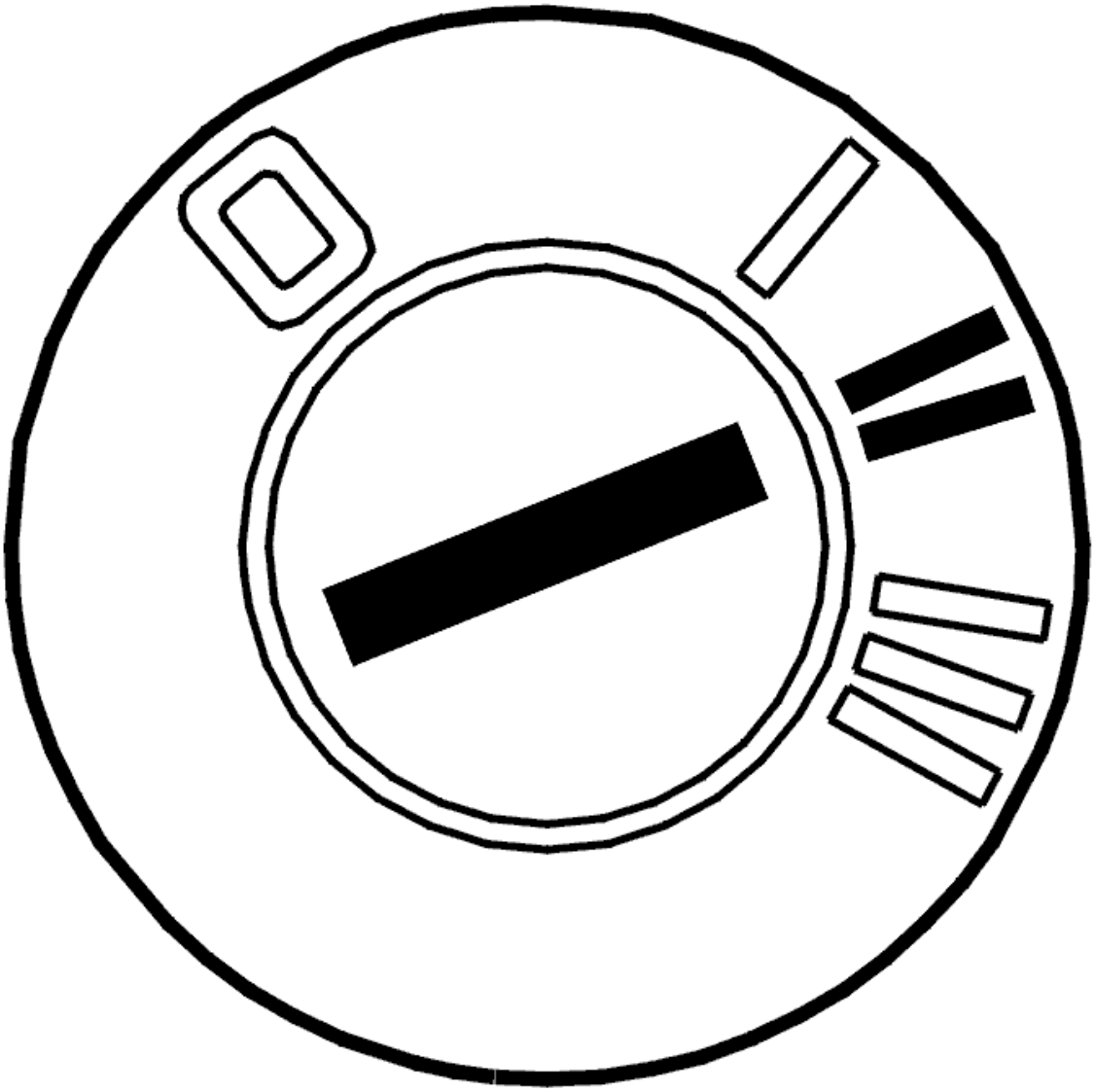

Fig. 87: Identifying Ignition ON
Courtesy of VOLVO CARS CORPORATION

- Ignition on
- Read off the oil temperature.

  Check that the temperature is within its permitted range.

  Compare with the transmission temperature.

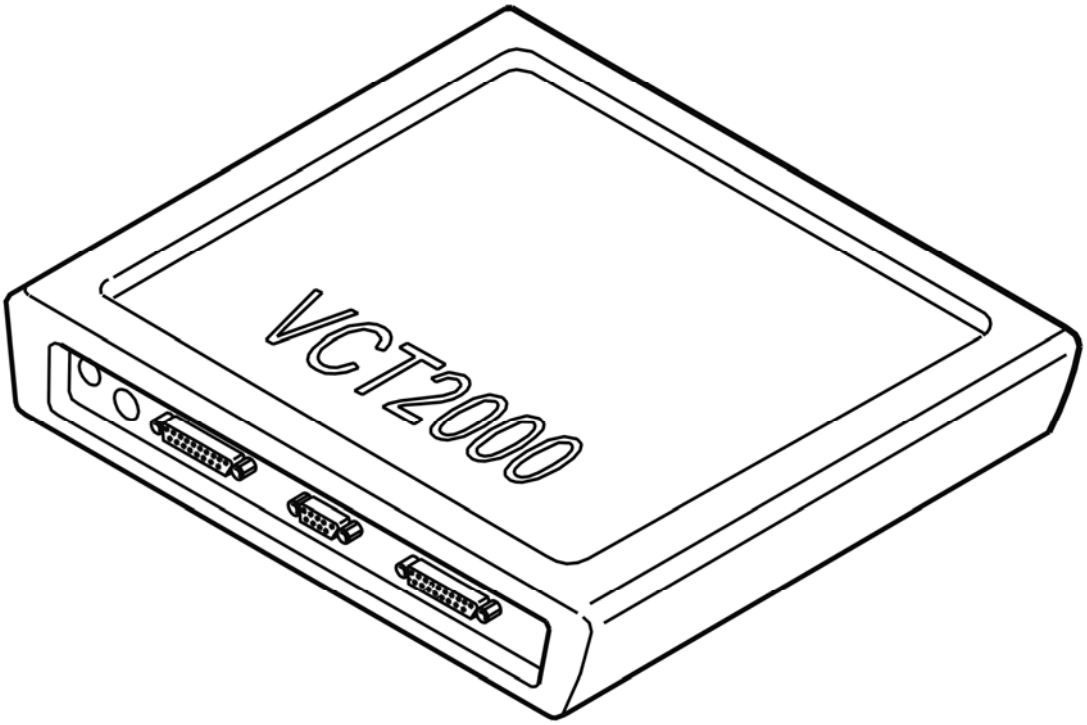

Fig. 88: Identifying VCT2000 Diagnostic Tool Symbol In VIDA
Courtesy of VOLVO CARS CORPORATION

Is the transmission temperature within its permitted range?

- **YES**

  Refer to **INTERMITTENT FAULT**

- **NO**

  Refer to **CHECKING TRANSMISSION FLUID TEMPERATURE SENSOR**

CHECKING TRANSMISSION FLUID TEMPERATURE SENSOR

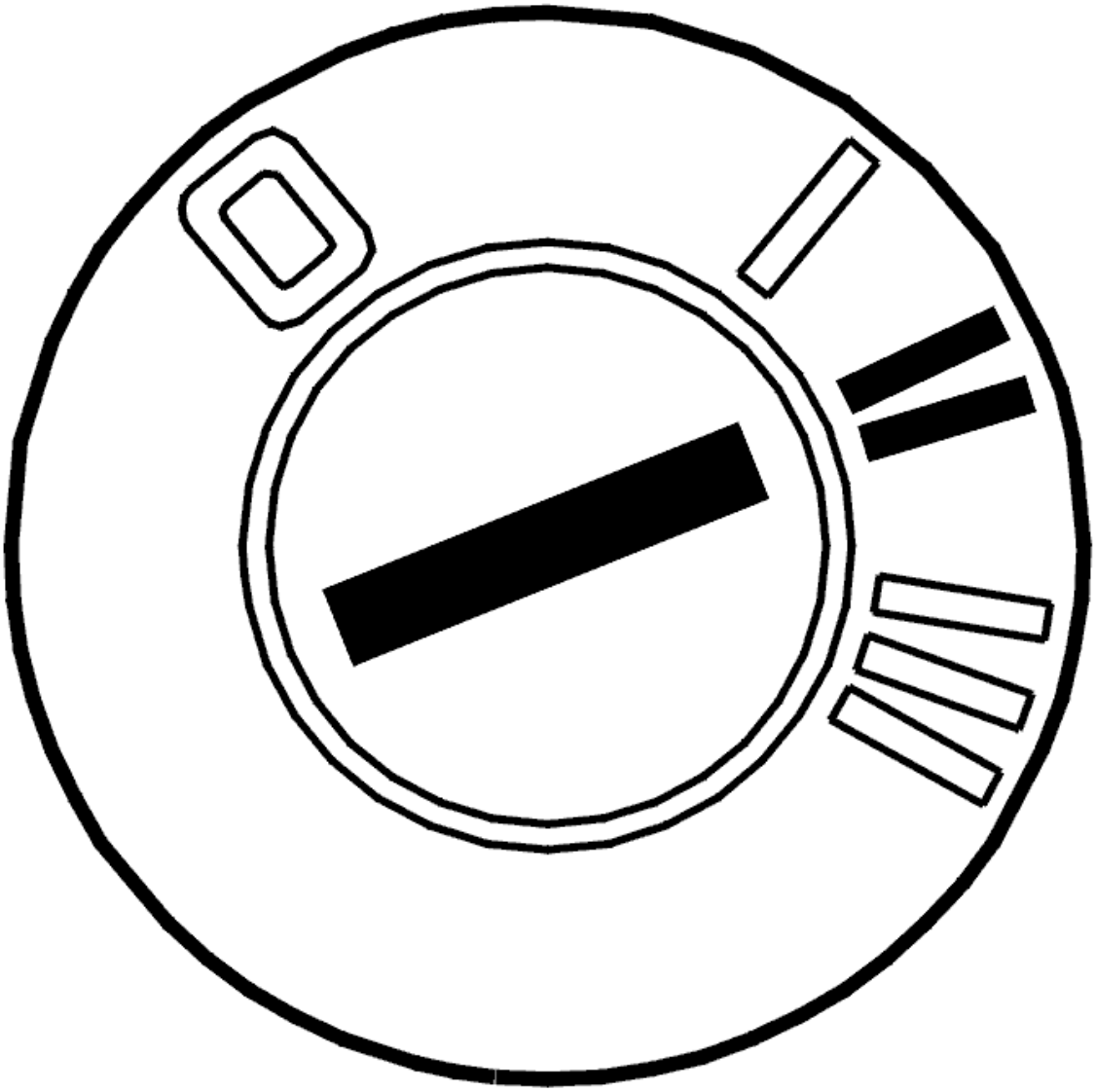

Fig. 89: Identifying Ignition ON
Courtesy of VOLVO CARS CORPORATION

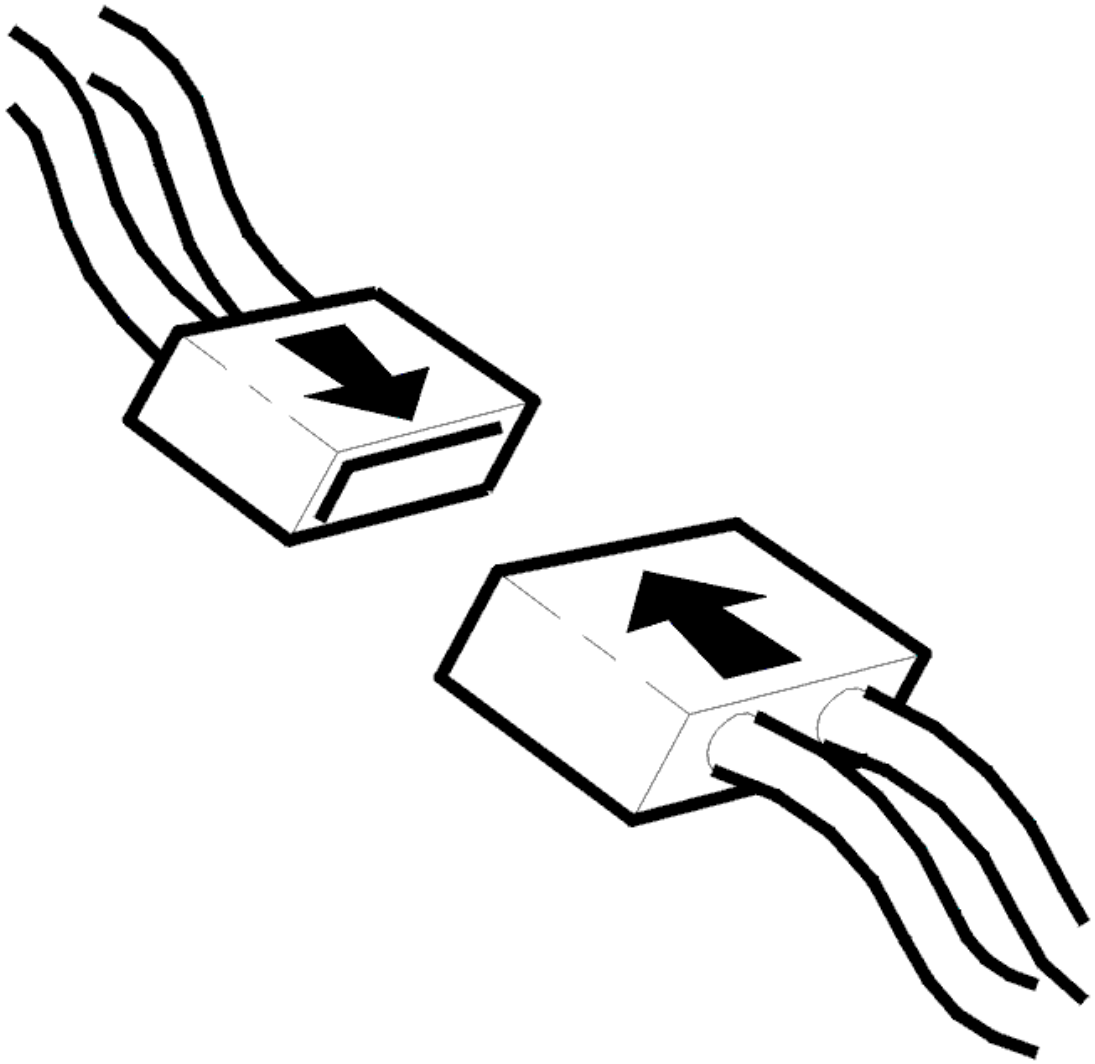

Fig. 90: Identifying Connector(s) Reinstallation
Courtesy of VOLVO CARS CORPORATION

- Ignition off
- Check the control module and transmission connectors. Check for contact resistance and oxidation according to **CONTACT RESISTANCE AND OXIDATION** . Remedy if necessary
- Reconnect the control module and transmission connectors
- Ignition on
- Read off the oil temperature.

  Check that the temperature is within its permitted range.

  Compare with the transmission temperature.

  If the transmission temperature is within its permitted range, the cause of the fault was contact resistance

or oxidation in the control module or transmission connector.

Other information:

- To disconnect the control module, see **TRANSMISSION CONTROL MODULE (TCM), REPLACING**
- To connect the breakout box to the transmission connector, see **CONNECTING THE BREAKOUT BOX, GM AUTOMATIC TRANSMISSIONS**
- For information about the resistance values, see **COMPONENT RESISTANCE VALUES** .

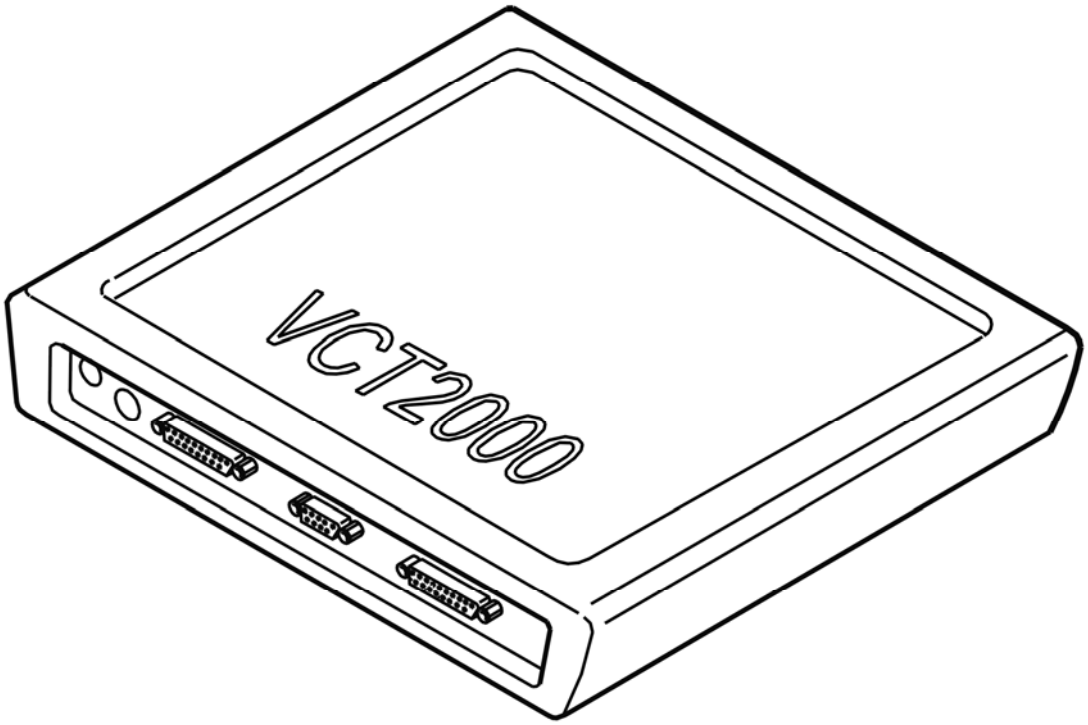

Fig. 91: Identifying VCT2000 Diagnostic Tool Symbol In VIDA
Courtesy of VOLVO CARS CORPORATION

Was the transmission temperature within its permitted range?

- **YES**

  OKAY: Troubleshooting has been completed.

- **NO**

  Refer to **CHECKING THE TEMPERATURE SENSOR**

CHECKING THE TEMPERATURE SENSOR

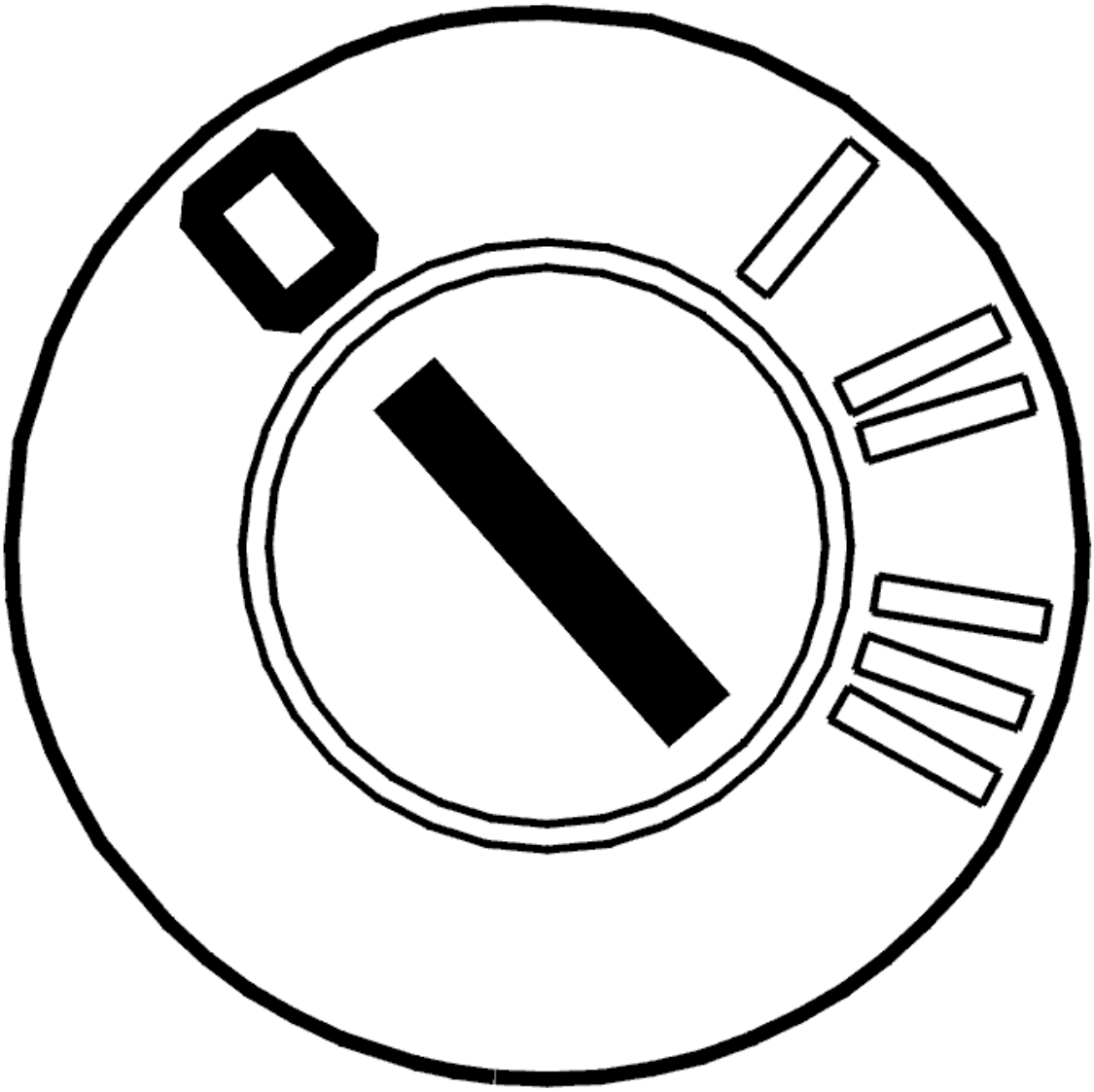

Fig. 92: Identifying Ignition OFF
Courtesy of VOLVO CARS CORPORATION

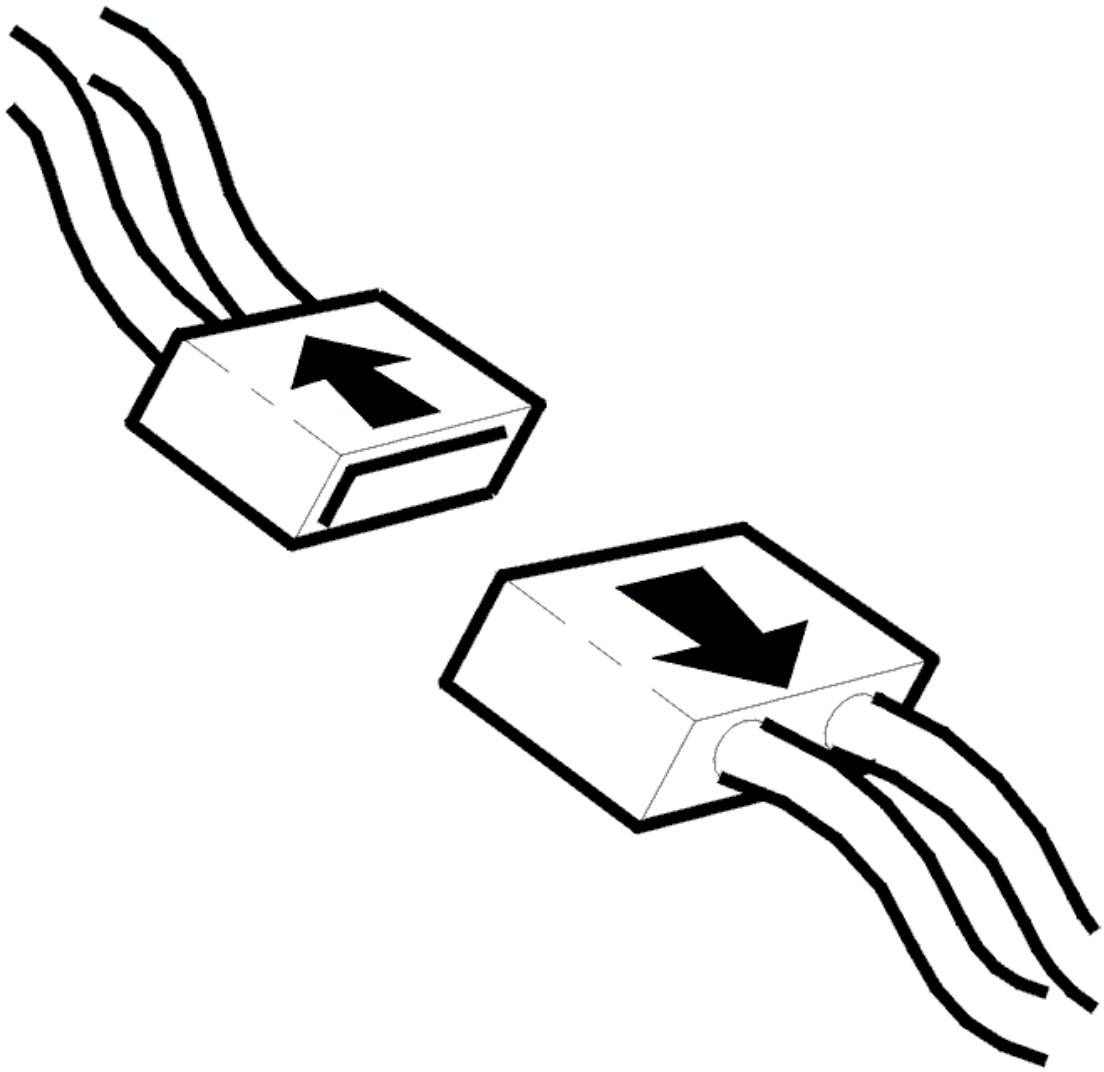

Fig. 93: Identifying Connector(s) Disconnected
Courtesy of VOLVO CARS CORPORATION

- Ignition off
- Disconnect the transmission connector
- Connect adapter see **9511505** and see **9813190** to the transmission connector (transmission side)
- Connect an ohmmeter between terminals #L (terminal #A11) and #M (terminal #A12).

  The resistance must be 3.5-3.6 kohms at 20° C.

  Remedy as necessary.

  Other information:

  - To connect the breakout box, see **CONNECTING THE BREAKOUT BOX**

- To connect the breakout box to the transmission connector, see **CONNECTING THE BREAKOUT BOX, GM AUTOMATIC TRANSMISSIONS**
- For information about signals, see **SIGNAL SPECIFICATION** .

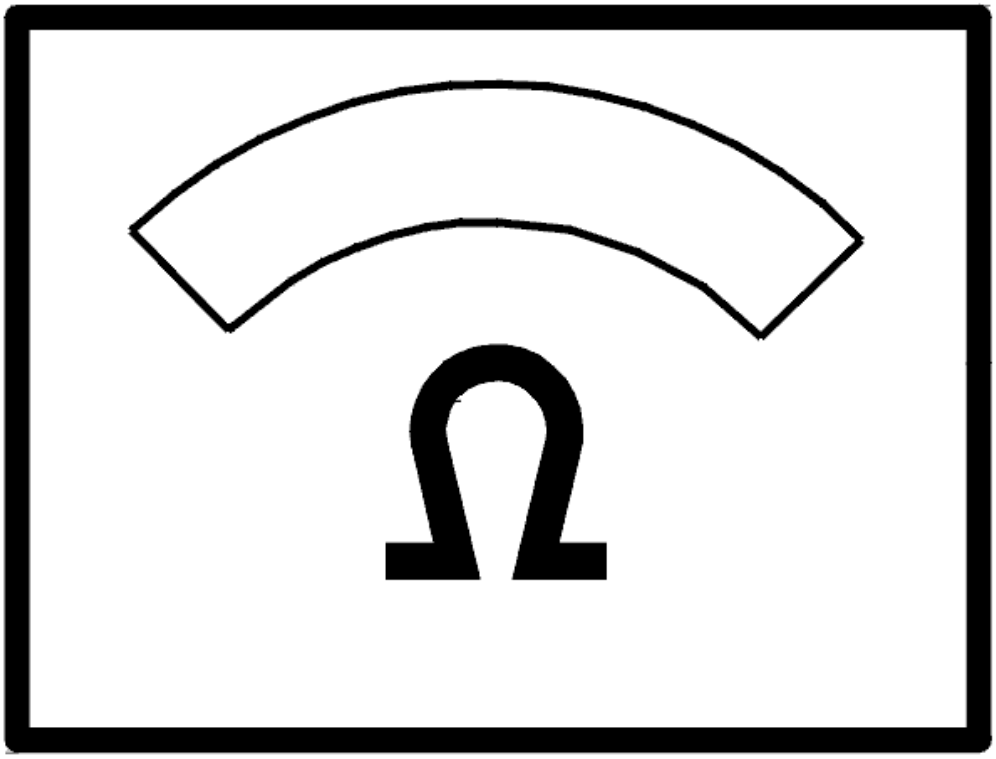

Fig. 94: Identifying Ohms Display
Courtesy of VOLVO CARS CORPORATION

Was the resistance OK?

- **OK**

  Refer to **CHECKING THE WIRING**

- **NOT OK**

Refer to **CHECKING THE WIRING AND COMPONENT**

CHECKING THE WIRING

- Breakout box connected to the control module
- Breakout box connected to the transmission connector.

Check the cable between control module terminal #37 (#A37) and transmission connector (control module side) terminal #L (terminal #A11). Check for a short-circuit to ground. See **SHORT-CIRCUIT TO GROUND, PERMANENT FAULTS** .

Check the cable between control module terminal #55 (#A55) and transmission connector (control module side) terminal #M (#A12). Check for a short-circuit to ground. See **SHORT-CIRCUIT TO GROUND, PERMANENT FAULTS** .

Remedy as necessary.

Other information:

- To connect the breakout box, see **CONNECTING THE BREAKOUT BOX**
- To connect the breakout box to the transmission connector, see **CONNECTING THE BREAKOUT BOX, GM AUTOMATIC TRANSMISSIONS**
- For information about signals, see **SIGNAL SPECIFICATION** .

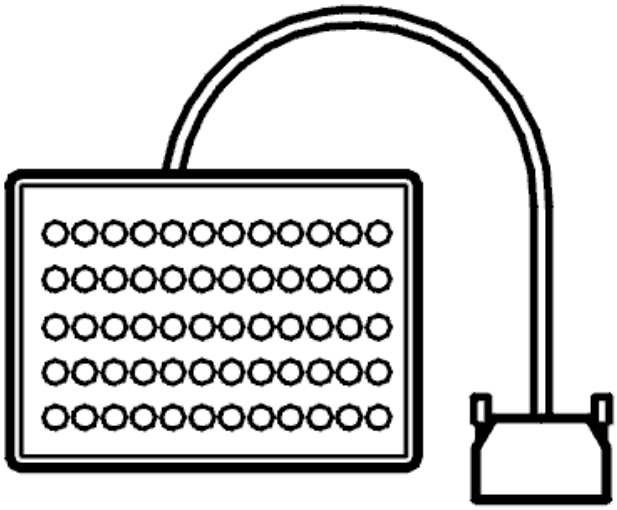

Fig. 95: Identifying Breakout Box
Courtesy of VOLVO CARS CORPORATION

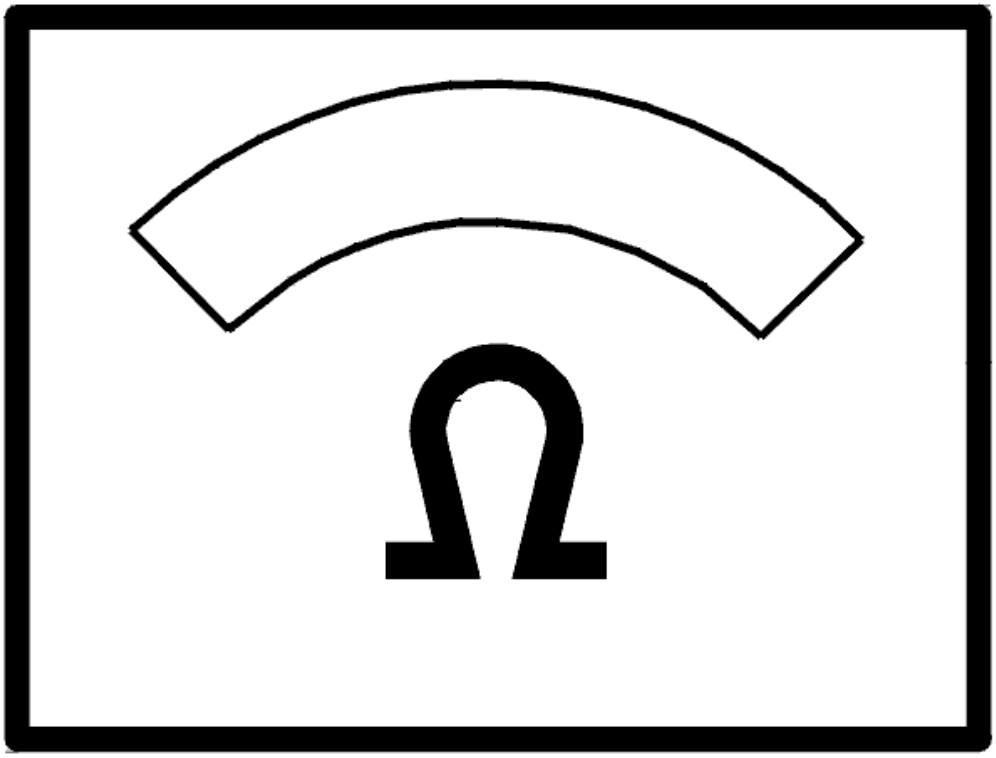

Fig. 96: Identifying Ohms Display
Courtesy of VOLVO CARS CORPORATION

Was a fault detected?

- **YES**

  Refer to **VERIFICATION**

- **NO**

  Refer to **CHECKING THE WIRING AND COMPONENT**

CHECKING THE WIRING AND COMPONENT

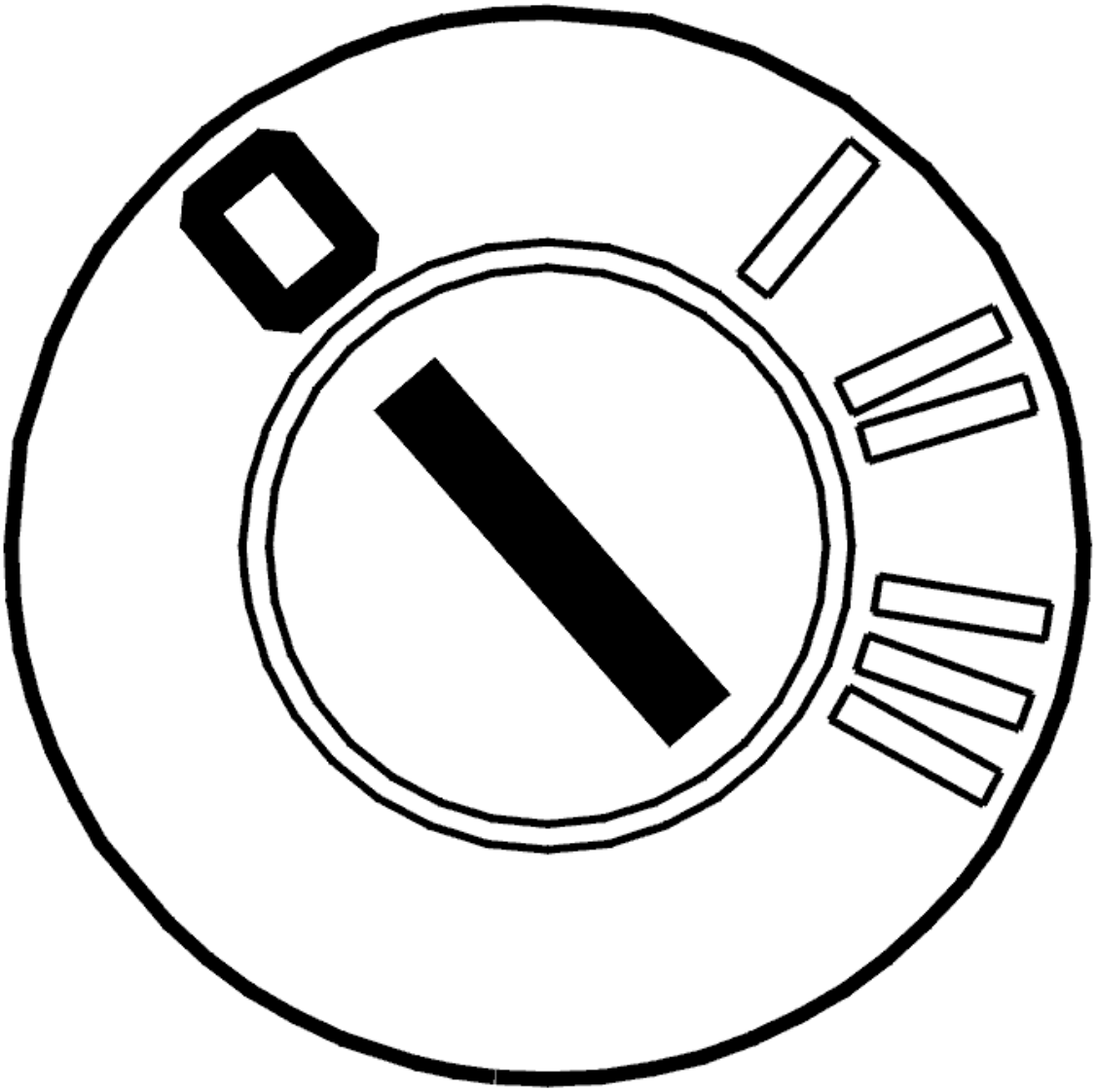

Fig. 97: Identifying Ignition OFF
Courtesy of VOLVO CARS CORPORATION

- Ignition off
- Open the transmission control system.

  Check the cable between transmission terminal #L (#A11) and temperature sensor terminal #A. Check for a short-circuit to ground. See **SHORT-CIRCUIT TO GROUND, PERMANENT FAULTS** .

  Check the cable between transmission terminal #M (#A12) and temperature sensor terminal #B. Check for a short-circuit to ground. See **SHORT-CIRCUIT TO GROUND, PERMANENT FAULTS** .

  HINT: Check the temperature sensor by measuring the resistance between temperature sensor connector terminals #A and #B. The resistance must be 3.5-3.6 kohms at 20° C.

  Remedy as necessary.

Other information:

- To connect the breakout box, see **CONNECTING THE BREAKOUT BOX**
- To connect the breakout box to the transmission connector, see **CONNECTING THE BREAKOUT BOX, GM AUTOMATIC TRANSMISSIONS**
- To replace the cable harness, see **TEMPERATURE SENSOR FLUID, TRANSAXLE, (TFT)**
- To replace the temperature sensor, see **TEMPERATURE SENSOR FLUID TRANSMISSION, REPLACING**
- For information about signals, see **SIGNAL SPECIFICATION**
- For information about the resistance values, see **COMPONENT RESISTANCE VALUES** .

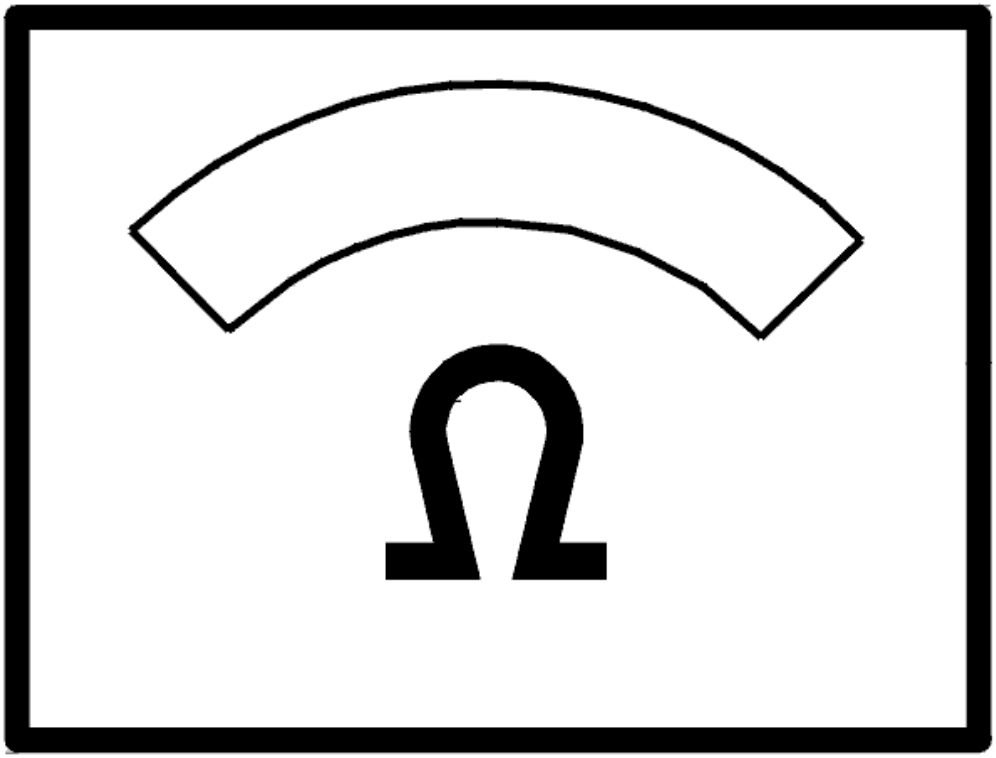

Fig. 98: Identifying Ohms Display
Courtesy of VOLVO CARS CORPORATION

- **Continue**

Refer to **RESETTING THE ADAPTATION**

INTERMITTENT FAULT

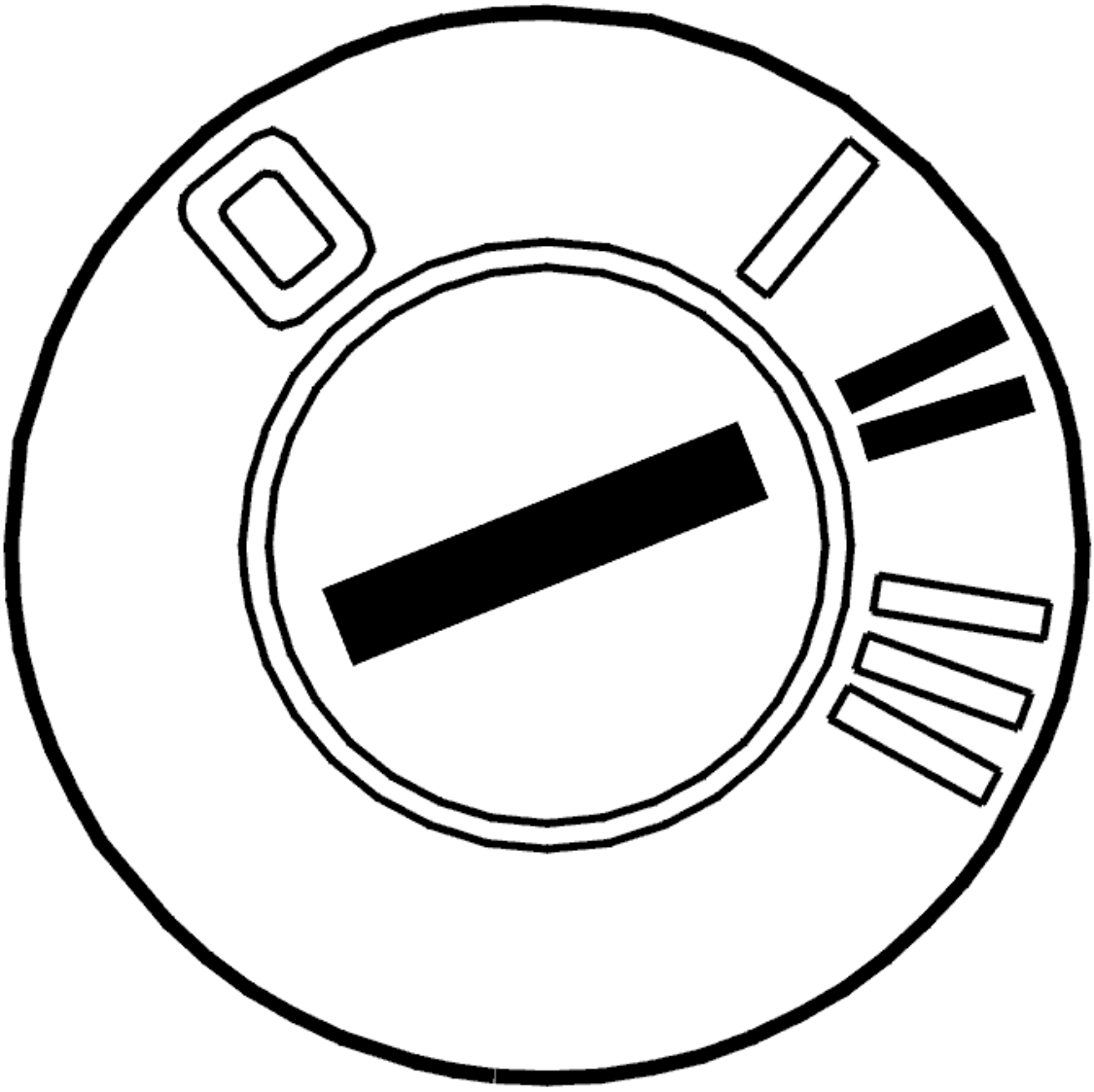

Fig. 99: Identifying Ignition ON
Courtesy of VOLVO CARS CORPORATION

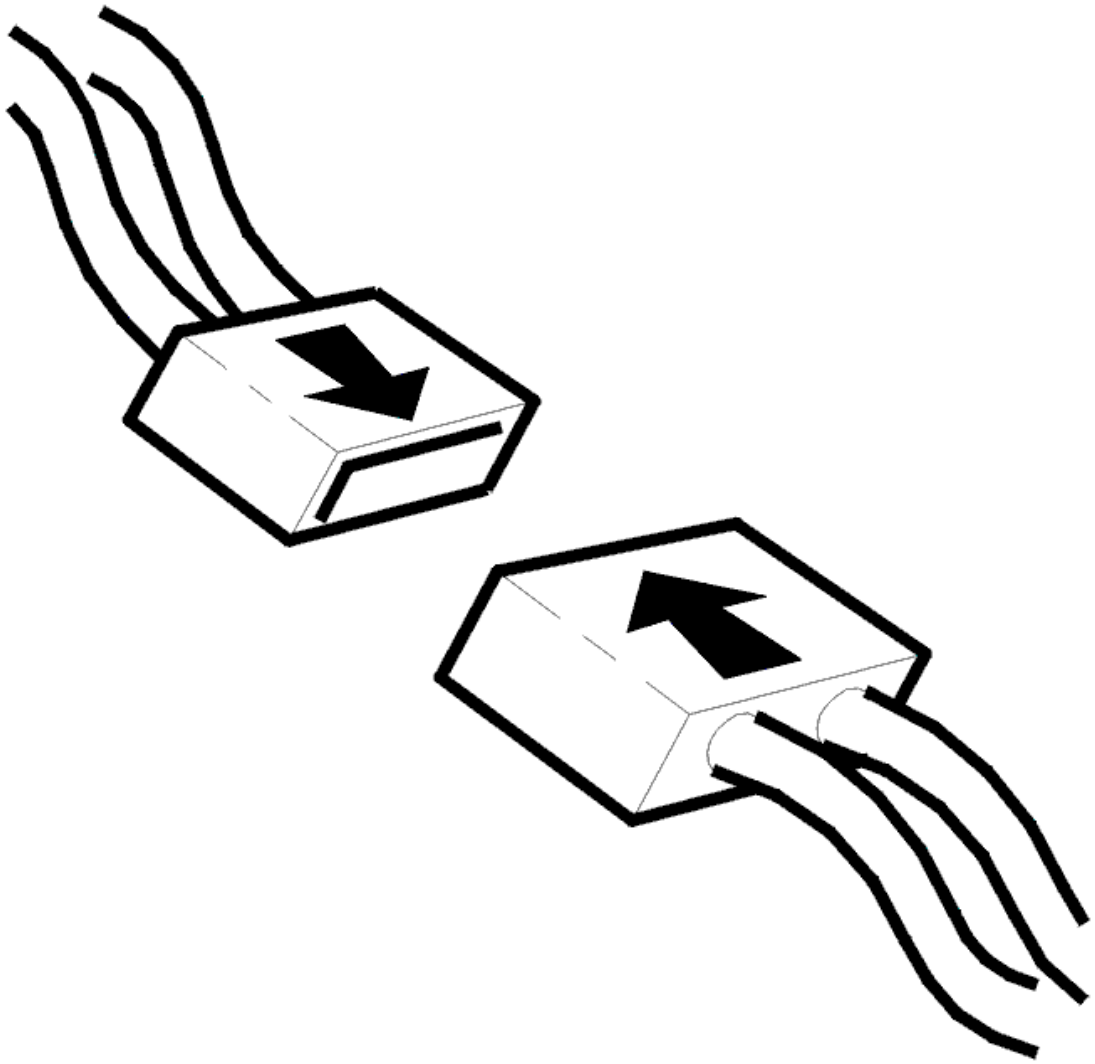

Fig. 100: Identifying Connector(s) Reinstallation
Courtesy of VOLVO CARS CORPORATION

Remedy contact resistance and oxidation in the control module and automatic transmission connectors. See **CONTACT RESISTANCE AND OXIDATION**

Check the cable between control module terminal #37 (#A37) and transmission connector (control module side) terminal #L (#A11). Check for an intermittent short-circuit to ground. See **SHORT-CIRCUIT TO GROUND, INTERMITTENT FAULTS** .

Check the cable between control module terminal #55 (#A55) and transmission connector (control module side) terminal #M (#A12). Check for an intermittent short-circuit to ground. See **SHORT-CIRCUIT TO GROUND, INTERMITTENT FAULTS** .

Remedy as necessary.

Other information:

- To connect the breakout box, see **CONNECTING THE BREAKOUT BOX**
- To connect the breakout box to the transmission connector, see **CONNECTING THE BREAKOUT BOX, GM AUTOMATIC TRANSMISSIONS**
- For information about signals, see **SIGNAL SPECIFICATION** .

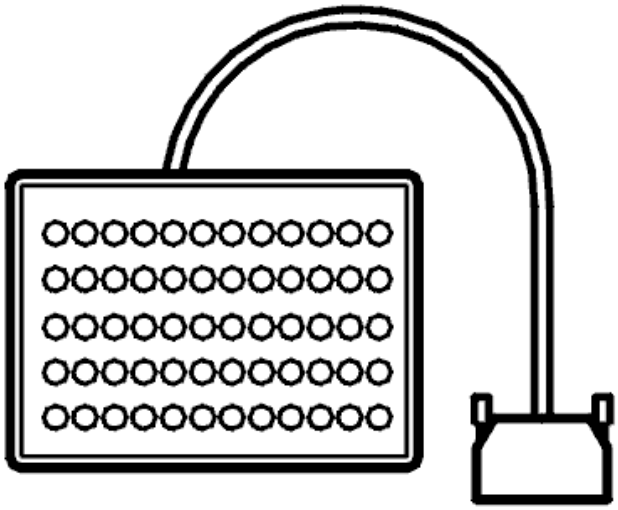

Fig. 101: Identifying Breakout Box
Courtesy of VOLVO CARS CORPORATION

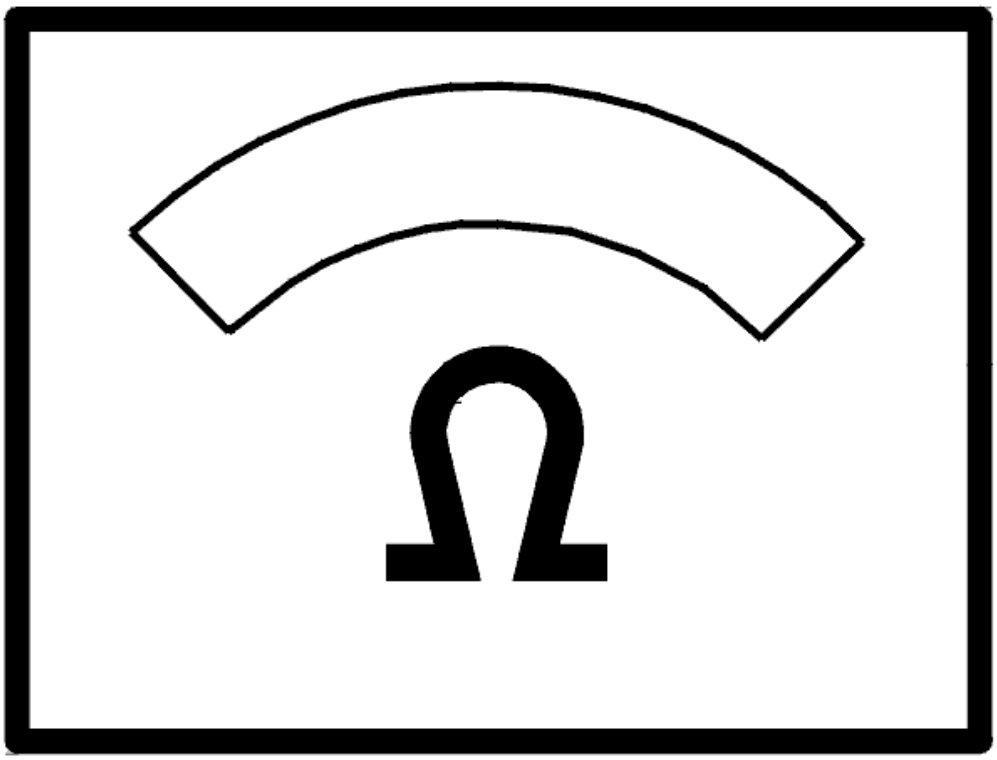

Fig. 102: Identifying Ohms Display
Courtesy of VOLVO CARS CORPORATION

- **Continue**

  Refer to **INFORMATION**

RESETTING THE ADAPTATION

RESETTING ADAPTATION AND THE COUNTER FOR "TRANSMISSION OIL CHANGE"

HINT: The transmission has torque controlled adaptive pressure control. Pressure control means that the transmission regulates the pressure itself during each gear shift. This avoids harsh gear shifting. Each gear shift is evaluated by the control module and stored in the memory. This allows for compensation for wear and tear in the transmission and clutch. It is important that the adaptation in the memory is reset after the transmission has been repaired. This is to ensure normal operation. The oil is replaced during

repair; the "Transmission oil change" counter must be reset. If the counter is not reset when the fluid is drained and replaced, there is a risk that a diagnostic trouble code (DTC) will be stored in incorrect circumstances.

NOTE: **This applies only if the transmission or one of the components in the transmission have been replaced.**

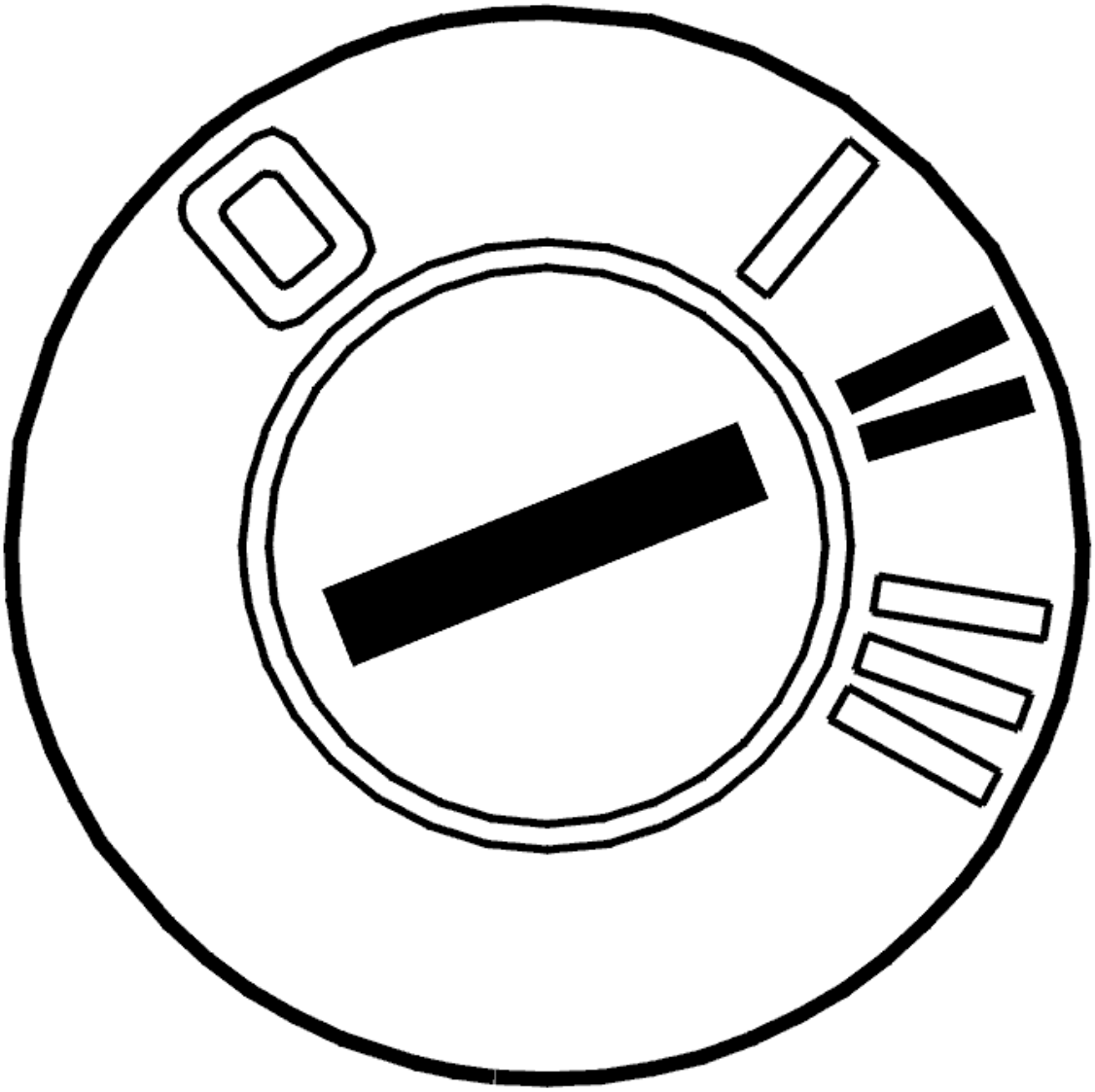

Fig. 103: Identifying Ignition ON
Courtesy of VOLVO CARS CORPORATION

- Ignition on.

  Click on the VCT2000 symbol to reset the adaptation and counter.

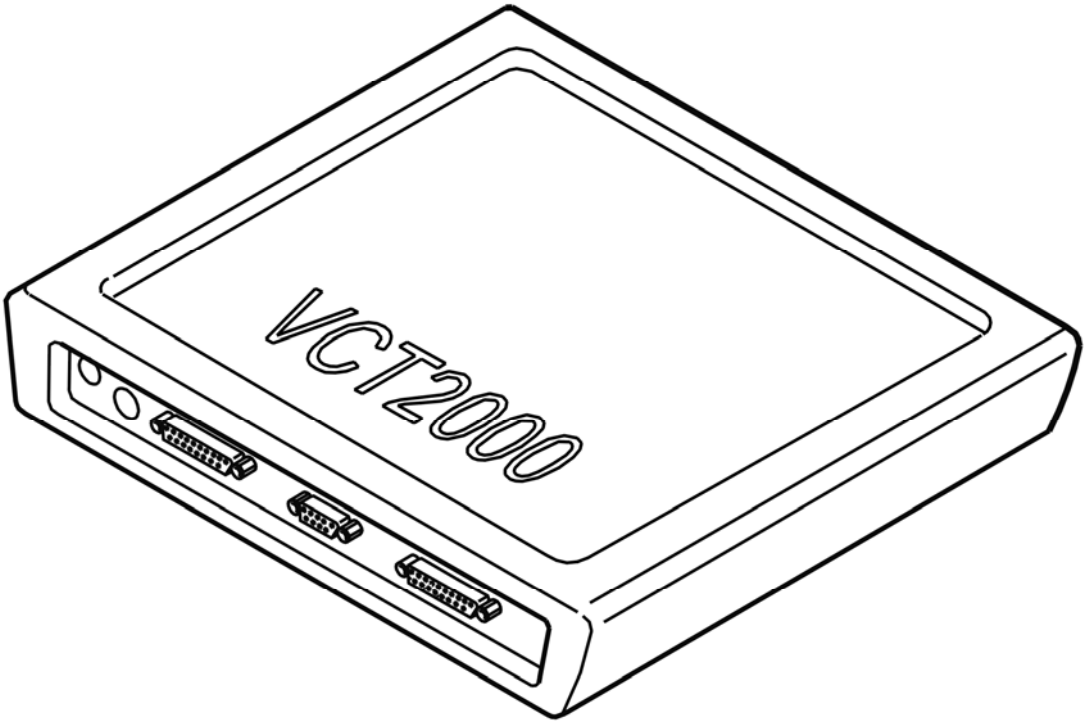

Fig. 104: Identifying VCT2000 Diagnostic Tool Symbol In VIDA
Courtesy of VOLVO CARS CORPORATION

- **Continue**

  Refer to **VERIFICATION**

VERIFICATION

VERIFICATION

HINT: After carrying out the repair check that the fault has been remedied.

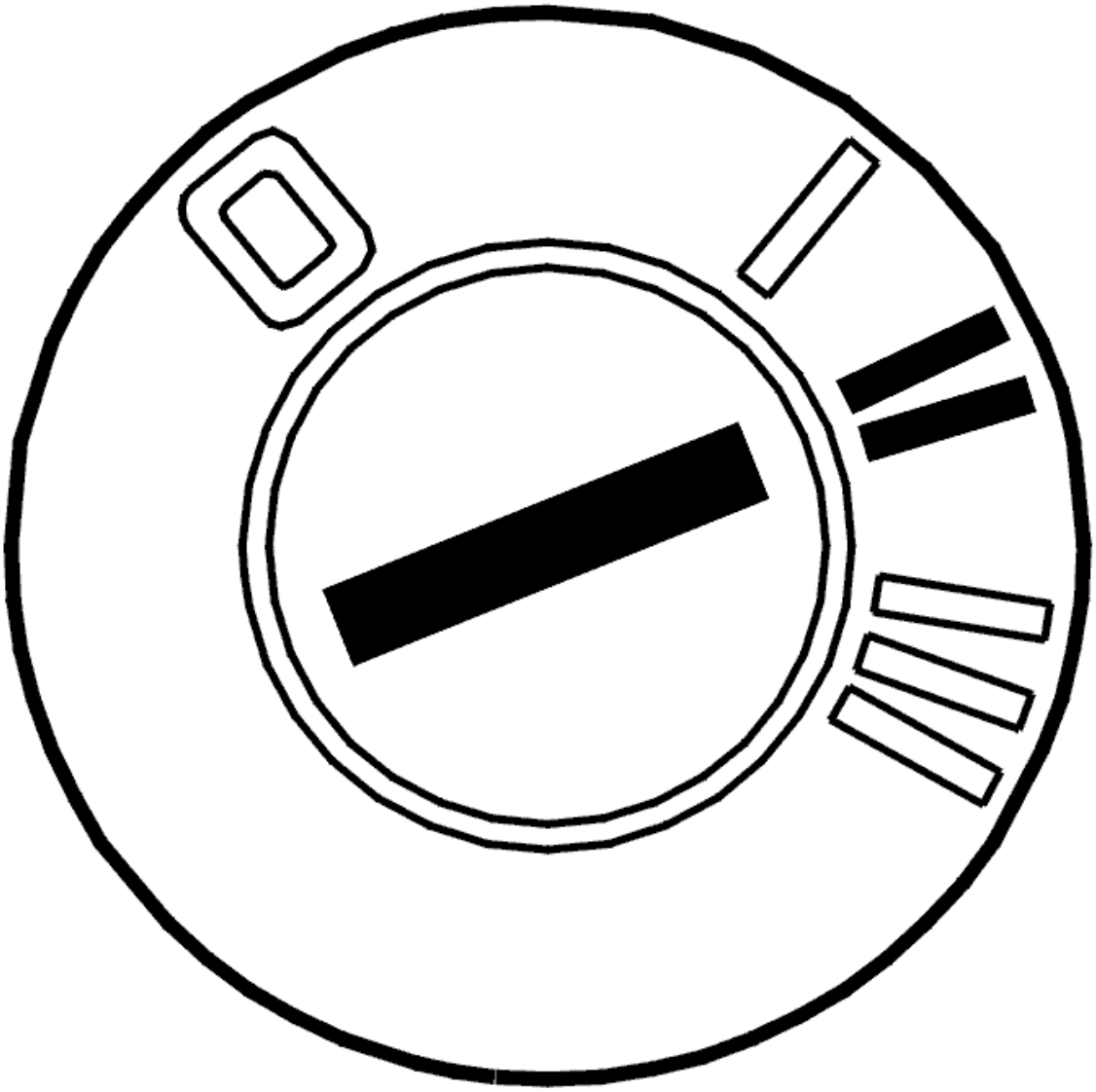

Fig. 105: Identifying Ignition ON
Courtesy of VOLVO CARS CORPORATION

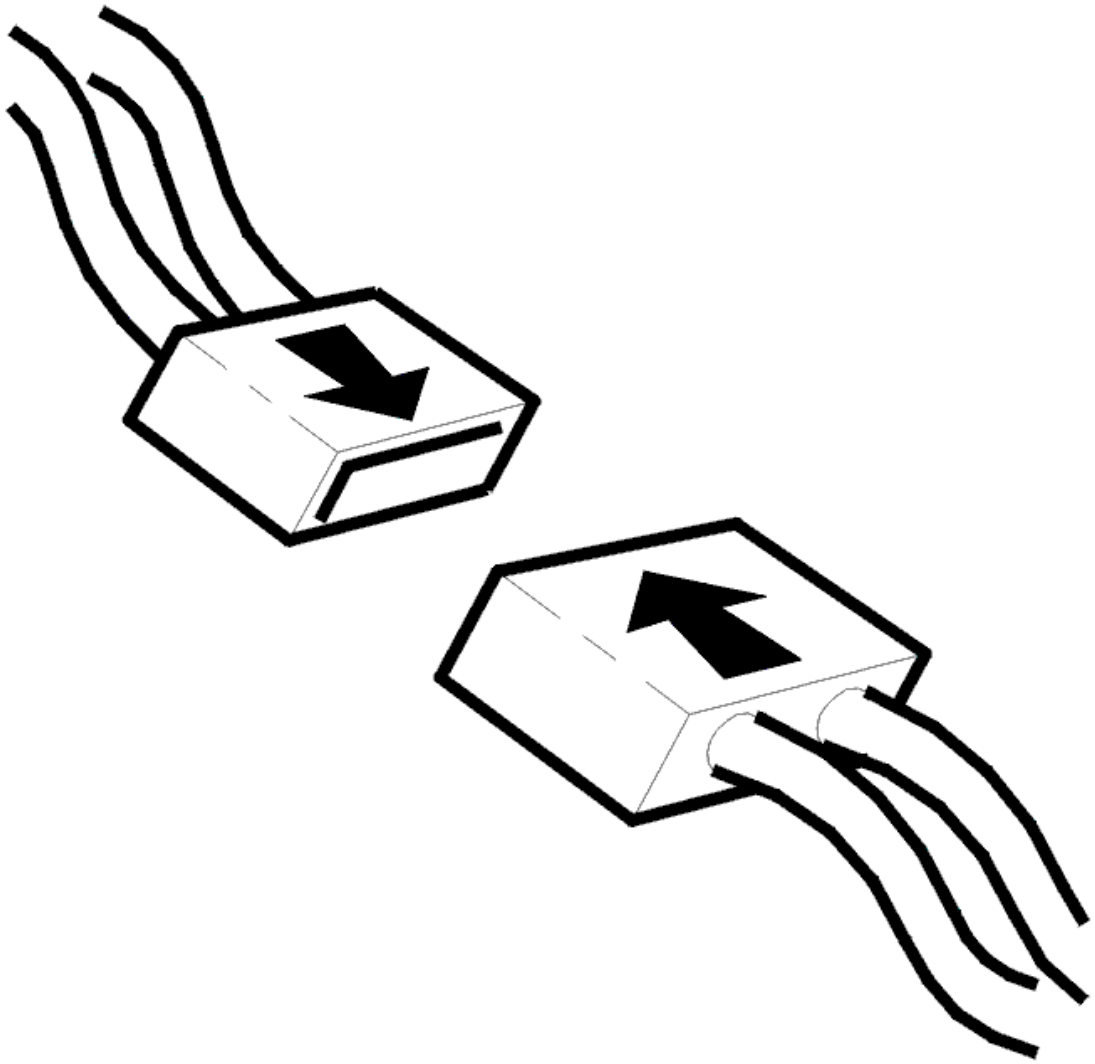

Fig. 106: Identifying Connector(s) Reinstallation
Courtesy of VOLVO CARS CORPORATION

- Ignition off.
- Reinstall connectors, components etc.
- Ignition on.
- Read off oil temperature.

  Check that the transmission oil temperature is within its permitted range. Compare with the transmission temperature.

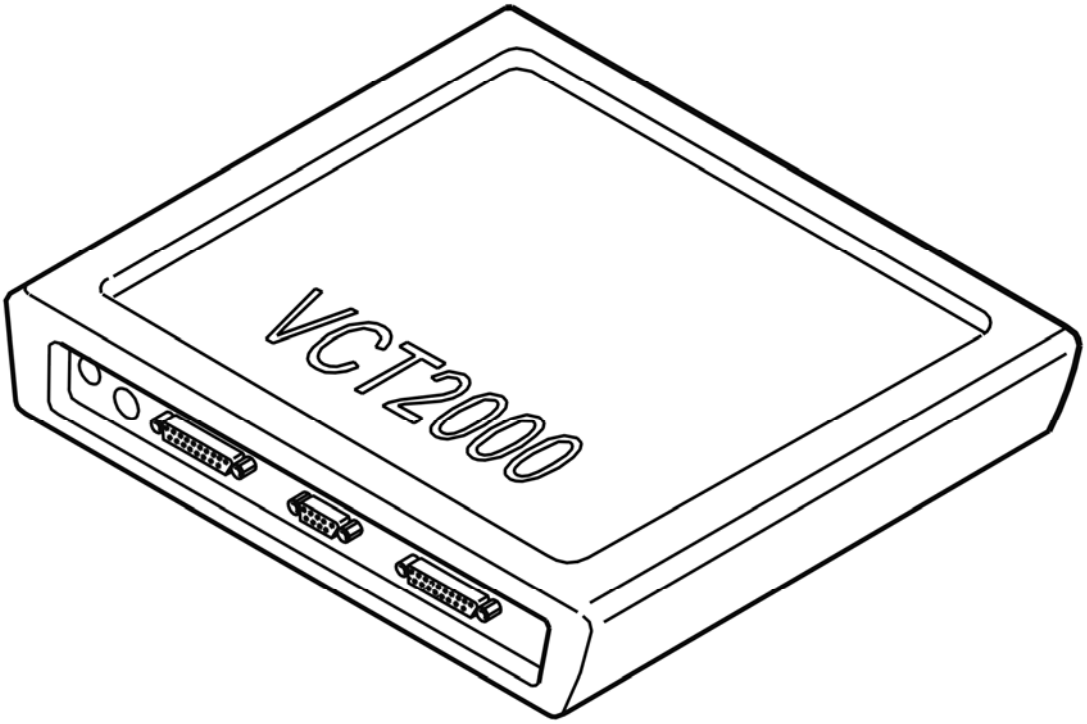

Fig. 107: Identifying VCT2000 Diagnostic Tool Symbol In VIDA
Courtesy of VOLVO CARS CORPORATION

Is the oil temperature within its permitted range?

- **YES**

  VERIFIED: Troubleshooting has been completed.

- **NO**

  Refer to **INFORMATION**

INFORMATION

FAULT-TRACING INFORMATION

The fault should have been detected and remedied. As this is not the case fault-tracing has failed.

Exit fault-tracing for this diagnostic trouble code (DTC) or make another attempt.

INFORMATION

FAULT-TRACING INFORMATION

If the fault is intermittent, do not verify fault-tracing if the fault does not recur.

It is possible to view the information again, or leave fault-tracing for this diagnostic trouble code (DTC).

TCM-0043: OIL TEMPERATURE SENSOR. SIGNAL TOO LOW (AW50/51 AWD; AW55-50/51SN; 2003-2007)

DIAGNOSTIC TROUBLE CODE (DTC) INFORMATION

Condition

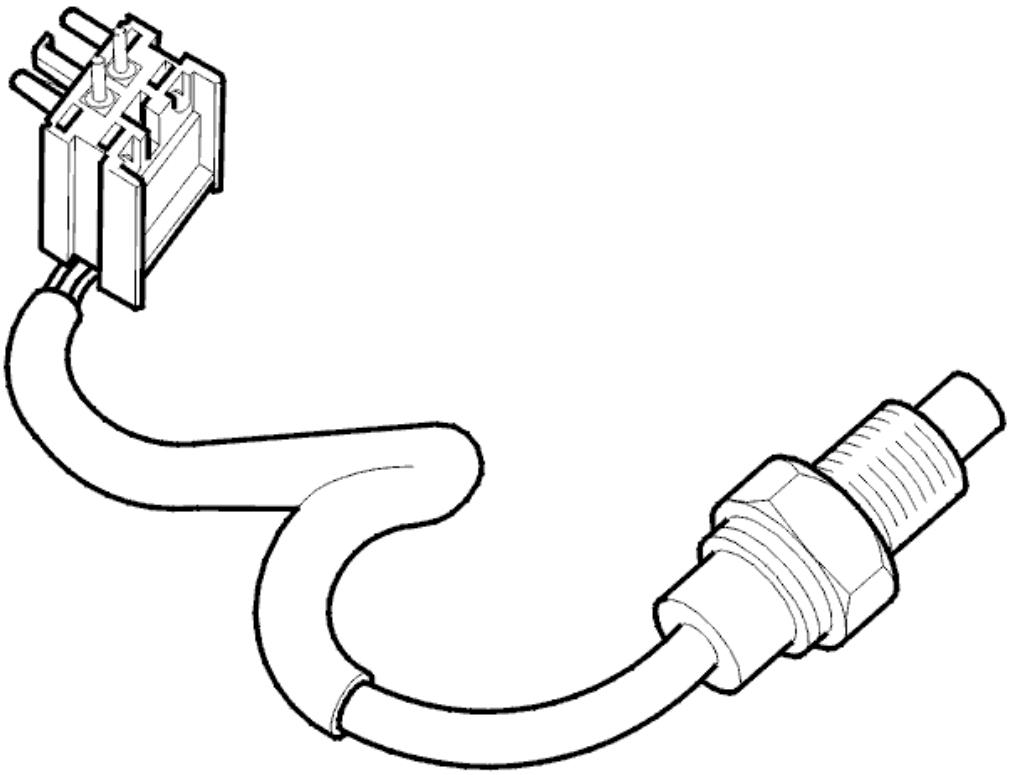

Fig. 108: Identifying Oil Temperature Sensor
Courtesy of VOLVO CARS CORPORATION

The oil temperature sensor transmits a signal to the control module. This signal is used for functions such as temperature controlled lock-up and the engagement of high-temperature programs. The sensor has an NTC (negative temperature coefficient) resistor. The signal (voltage) decreases with increasing oil temperature. Diagnostic trouble code (DTC) TCM-0043 is stored if the control module receives too low a signal from the oil temperature sensor for approximately 20 seconds.

Substitute Value

- No substitute values.

Possible Source

- The power supply and signal cables are short-circuited to each other.
- Short-circuit to ground in the signal cable.
- Defective oil temperature sensor.

Fault symptom[s]

- General orange warning lamp lit.
- No lock-up function.
- Harsh gear shifting.

HINT: Harsh gear shifting can be caused by:

- No reduction of the line pressure when shifting.
- No reduction of the line pressure when moving the gear selector between positions P-R, N-R and N-D.
- No request for torque limiting to the engine control module (ECM) when shifting.

SIGNAL TOO LOW

CHECKING THE FUNCTION OF THE OIL TEMPERATURE SENSOR

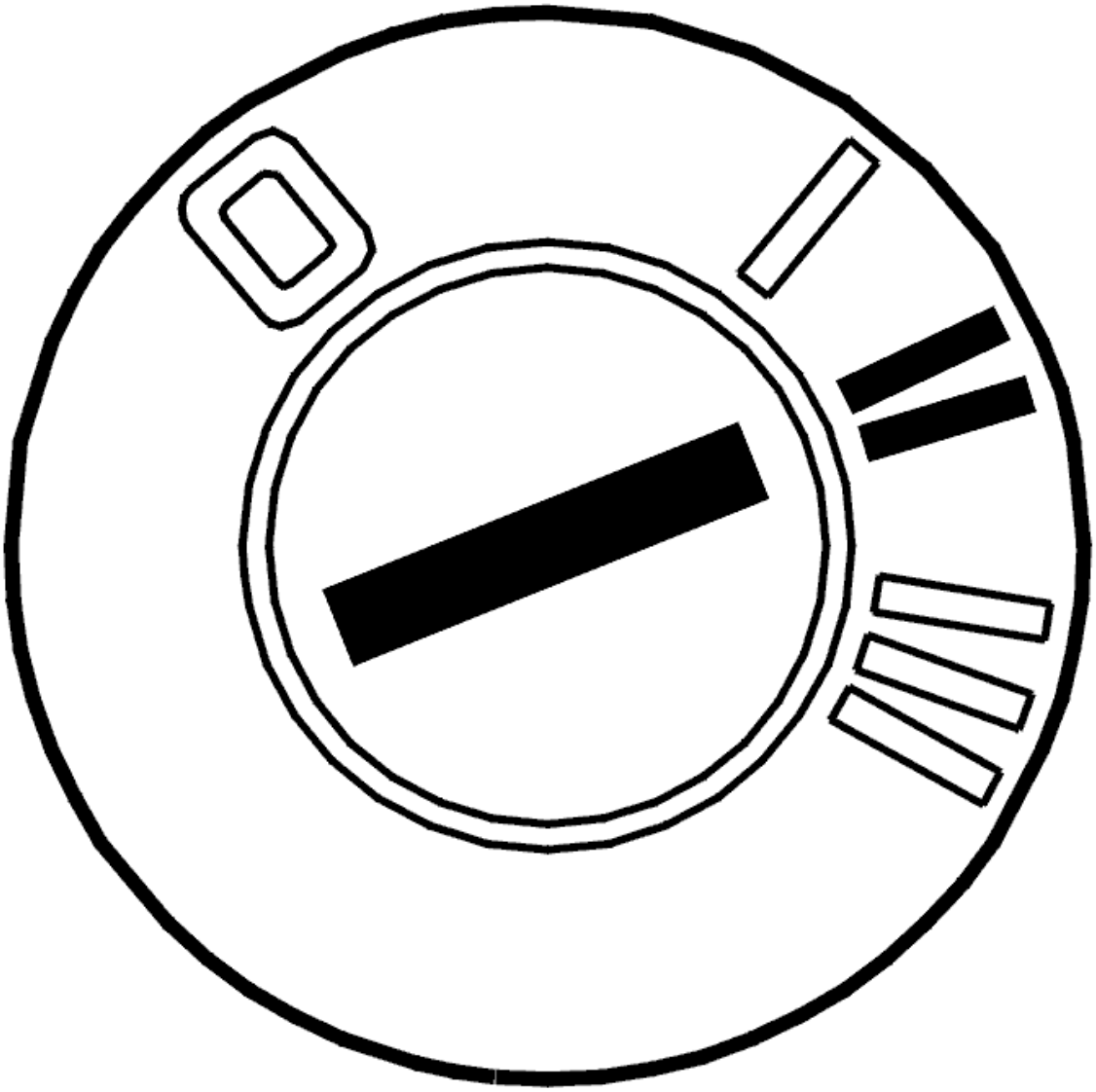

Fig. 109: Identifying Ignition ON
Courtesy of VOLVO CARS CORPORATION

- Ignition on
- Read off the oil temperature.

  Check that the temperature is within its permitted range.

  Compare with the transmission temperature.

NOTE: **The transmission temperature sensor is located inside the control system and may be affected by the heat given off by the solenoids.**

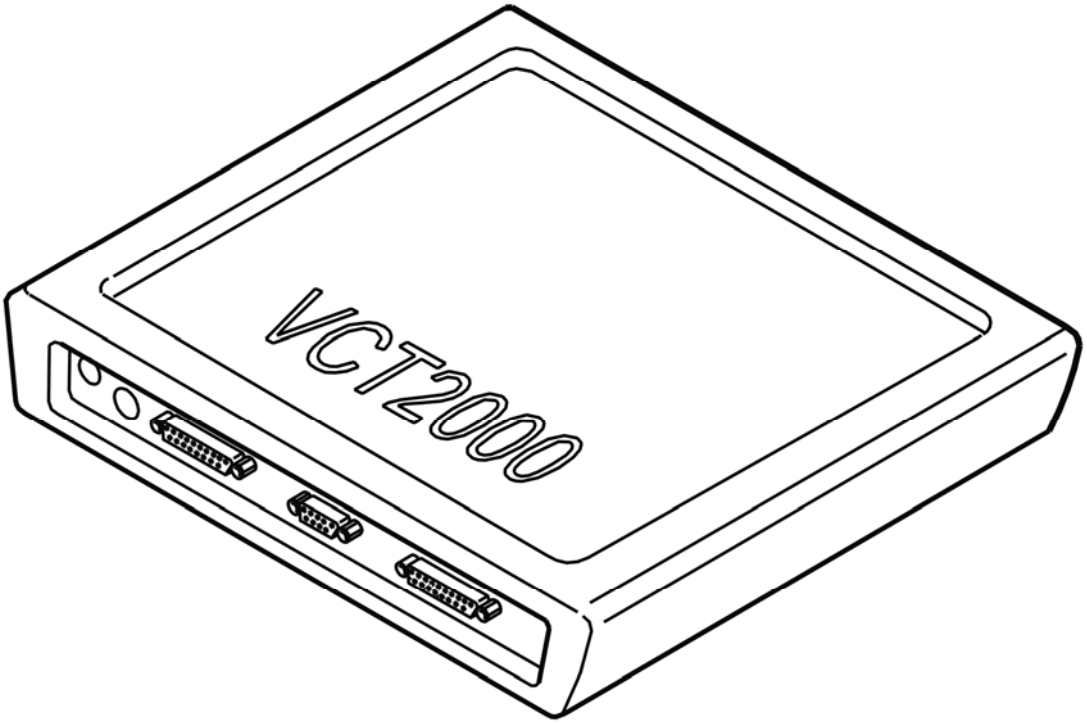

Fig. 110: Identifying VCT2000 Diagnostic Tool Symbol In VIDA
Courtesy of VOLVO CARS CORPORATION

Was the transmission temperature within its permitted range?

- **YES**

  Refer to **INTERMITTENT FAULT**

- **NO**

  Refer to **CHECKING TRANSMISSION FLUID TEMPERATURE SENSOR**

CHECKING TRANSMISSION FLUID TEMPERATURE SENSOR

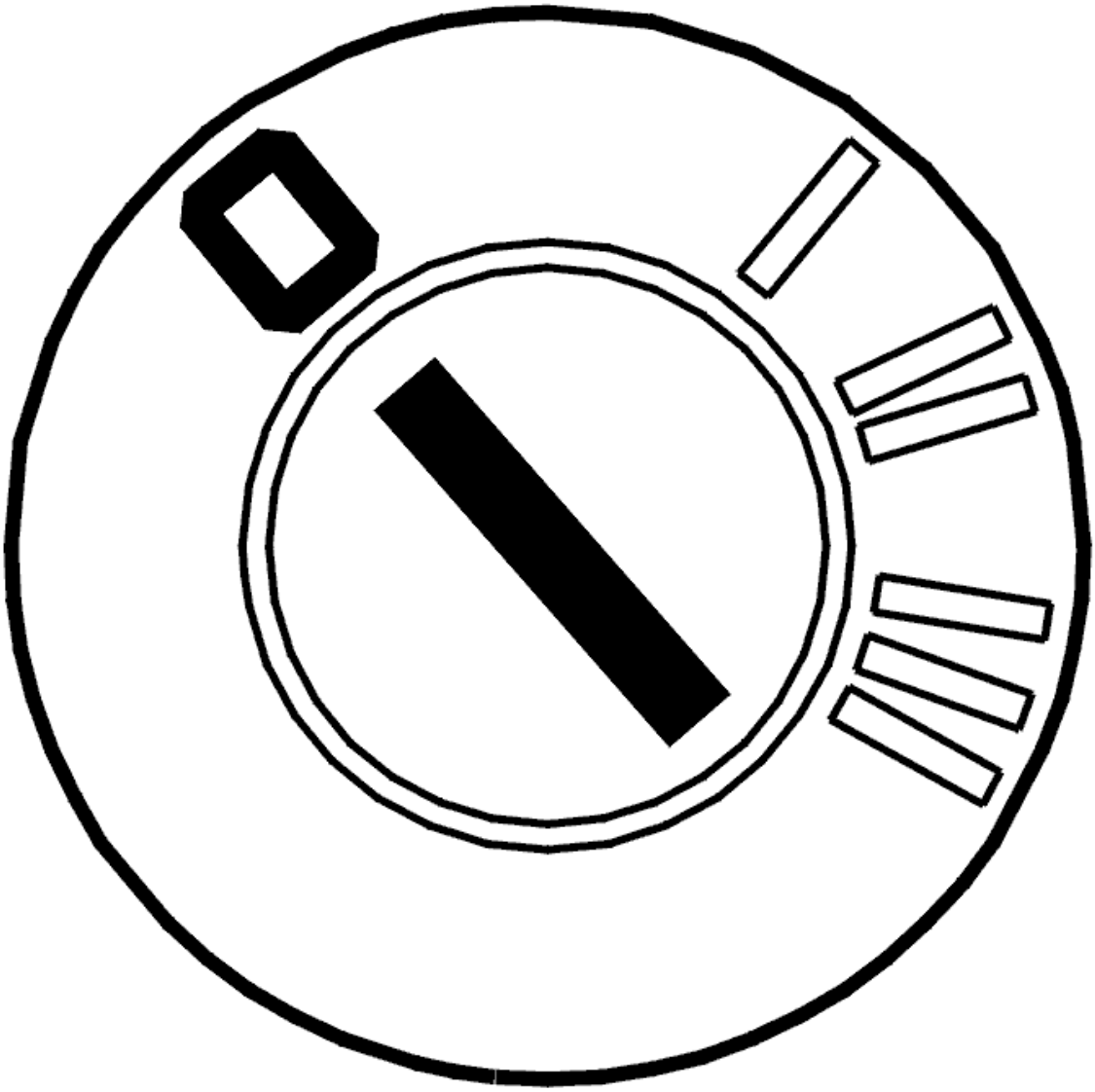

Fig. 111: Identifying Ignition OFF
Courtesy of VOLVO CARS CORPORATION

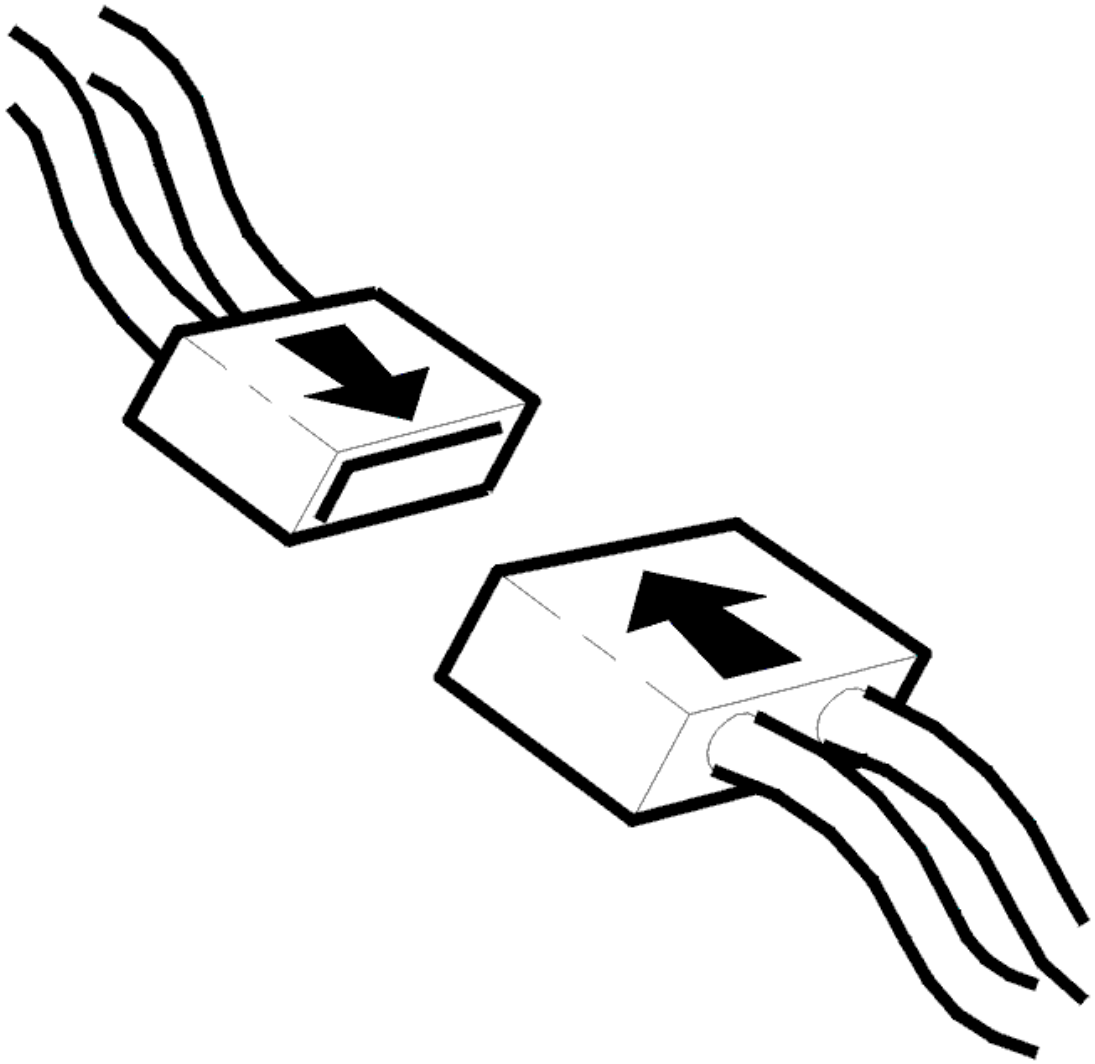

Fig. 112: Identifying Connector(s) Reinstallation
Courtesy of VOLVO CARS CORPORATION

- Ignition off
- Transmission connector D disconnected.

  Check the temperature sensor. Measure the resistance between transmission connector D terminals #D7 and #D8.

  The resistance must be 4.5-6 kohms at 20°C.

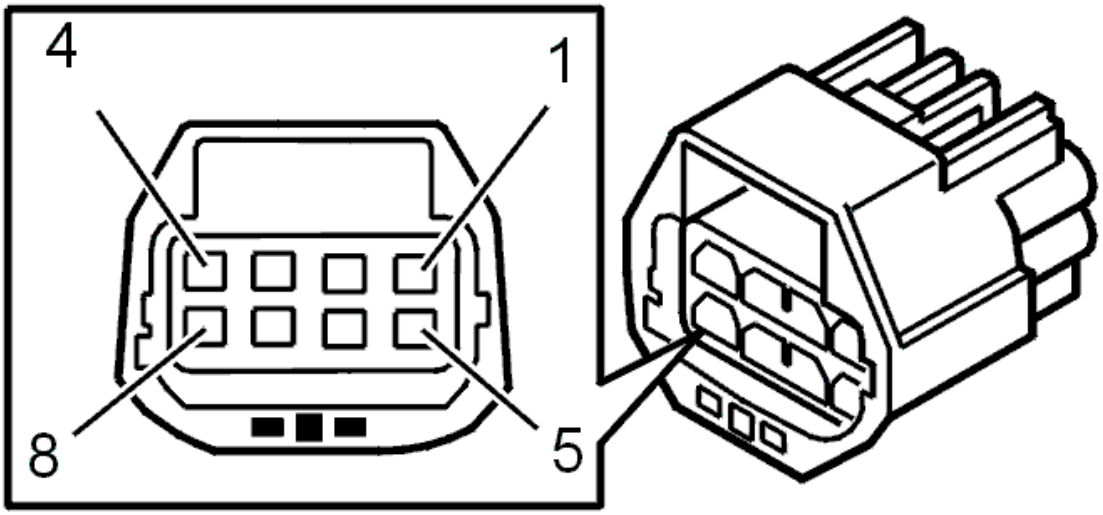

Fig. 113: Identifying 8-Pin Transmission Connector Terminals
Courtesy of VOLVO CARS CORPORATION

Was the resistance OK?

- **YES**

  Refer to **CHECKING THE WIRING AND COMPONENT**

- **NO**

  Refer to **CHECKING THE CABLE AND COMPONENT**

CHECKING THE WIRING AND COMPONENT

Check the cable between transmission control module (TCM) terminal #A37 (#A37) and transmission connector terminal #D7 (control module side). Check for a short-circuit to ground. See **SHORT-CIRCUIT TO GROUND, PERMANENT FAULTS** .

Remedy as necessary.

Other information:

- To connect the breakout box, see **CONNECTING THE BREAKOUT BOX**
- To disconnect the transmission connectors, see **CONNECTORS, TRANSMISSION, DISCONNECTING / CONNECTING**
- For information about signals, see **SIGNAL DESCRIPTION. TRANSMISSION CONTROL MODULE (TCM)** .

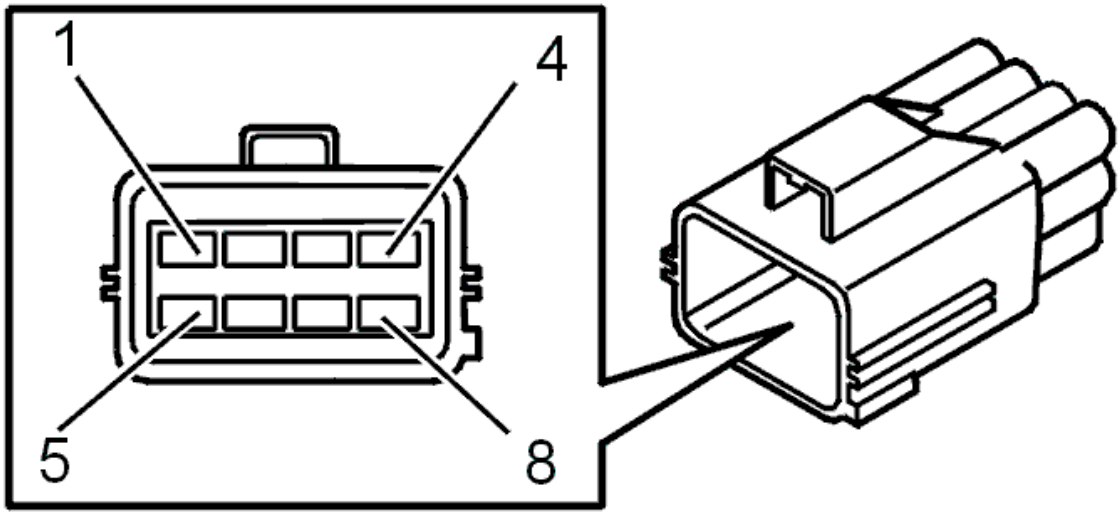

Fig. 114: Identifying Transmission Connector Terminals
Courtesy of VOLVO CARS CORPORATION

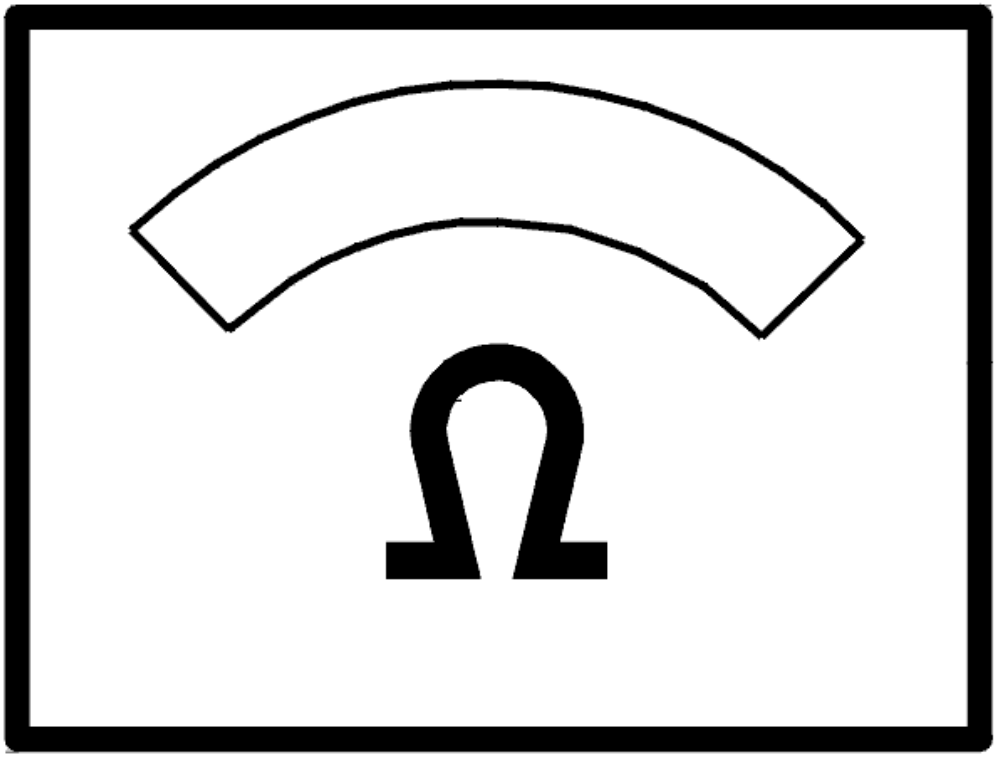

Fig. 115: Identifying Ohms Display
Courtesy of VOLVO CARS CORPORATION

Was a fault detected?

- **YES**

  Refer to **VERIFICATION**

- **NO**

  Refer to **CHECKING THE CABLE AND COMPONENT**

CHECKING THE CABLE AND COMPONENT

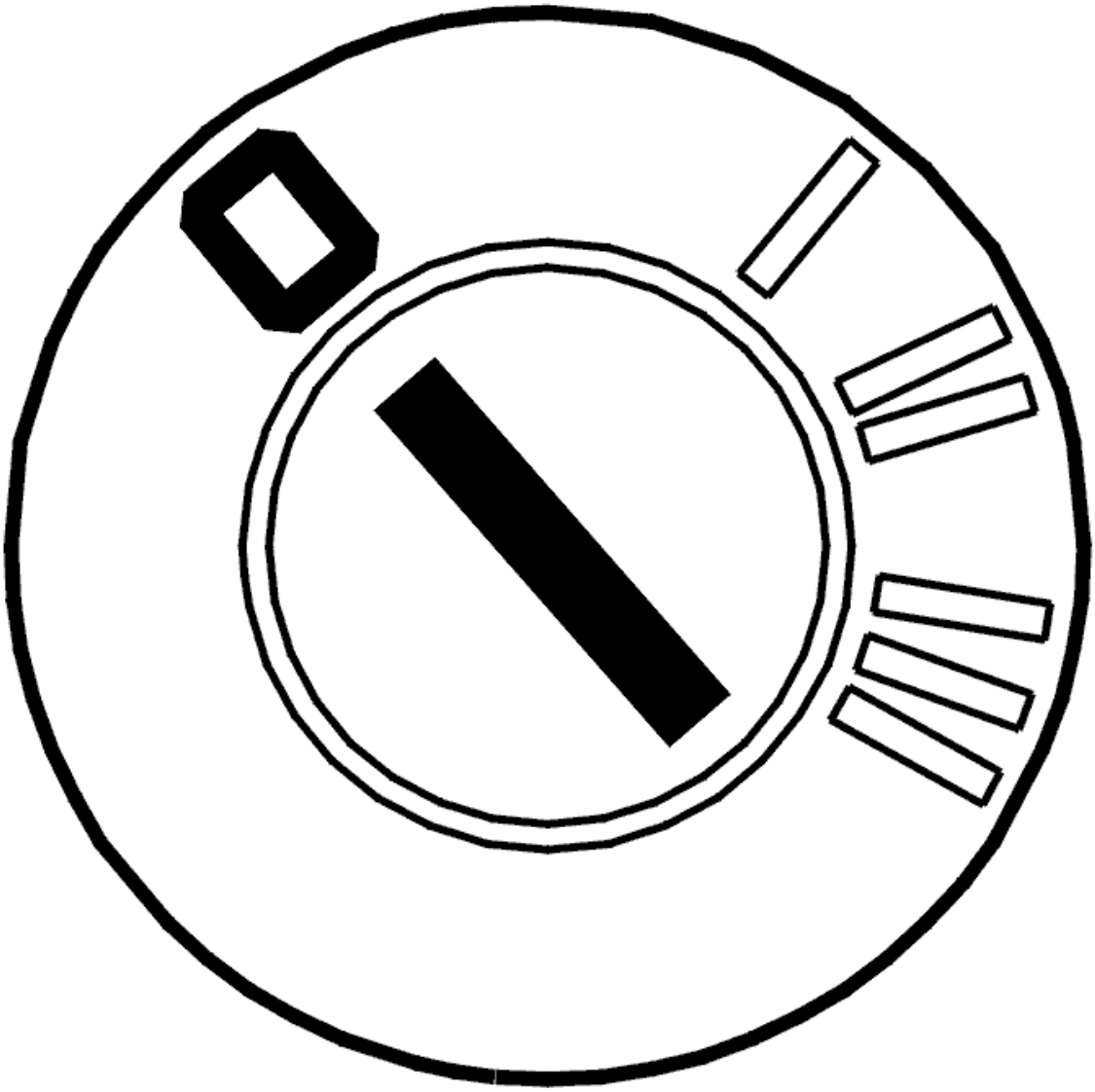

Fig. 116: Identifying Ignition OFF
Courtesy of VOLVO CARS CORPORATION

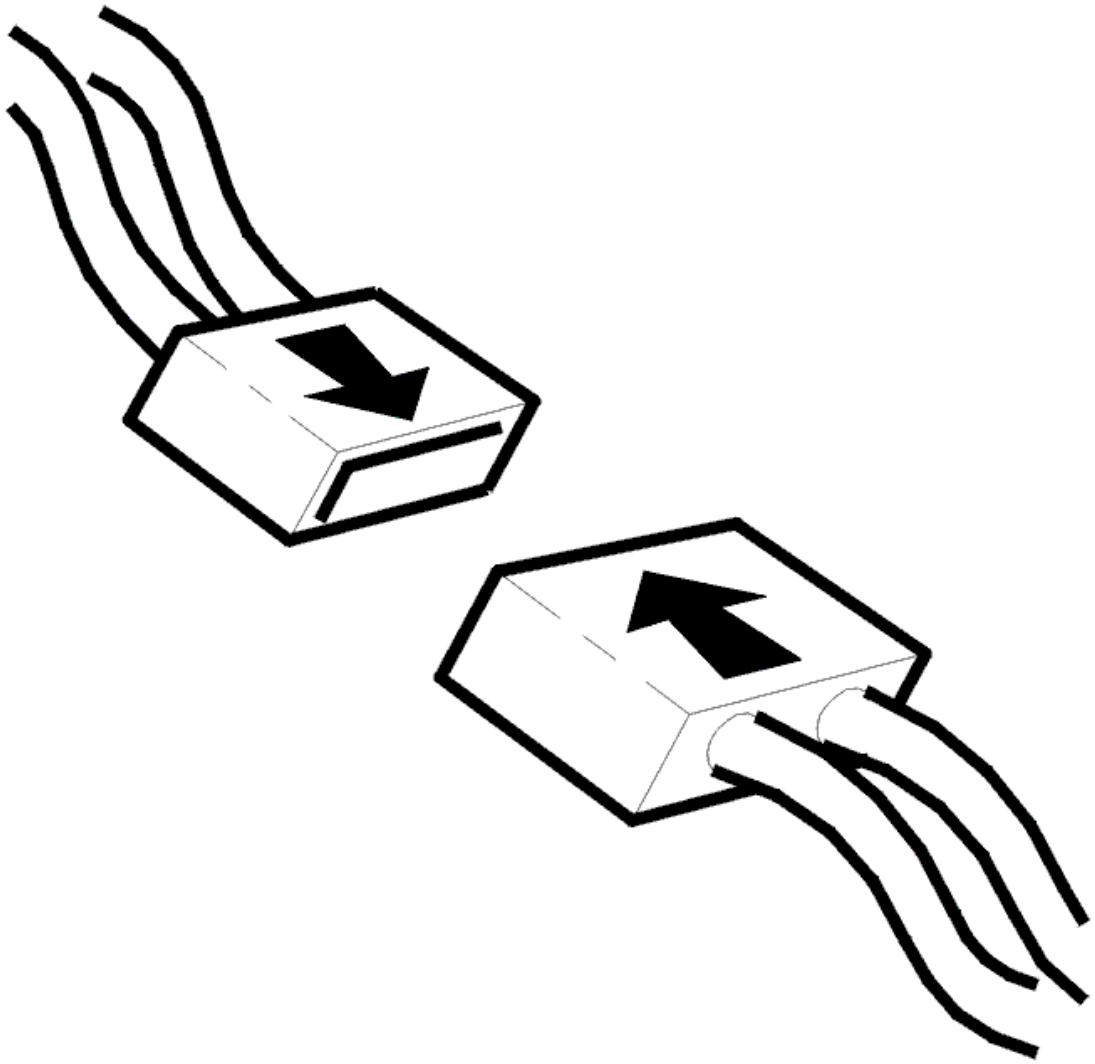

Fig. 117: Identifying Connector(s) Reinstallation
Courtesy of VOLVO CARS CORPORATION

- Ignition off
- Open the transmission control system.

  Check the cable between transmission connector terminal #D7 and temperature sensor terminal #1. Check the cable between transmission connector terminal #D8 and temperature sensor terminal #2. Check for a short-circuit to ground. See **SHORT-CIRCUIT TO GROUND, PERMANENT FAULTS** . Also check the cables for a short-circuit to each other.

  HINT: Check the temperature sensor. With the ignition off and transmission connector D disconnected, measure the resistance between transmission connector D terminals #D7 and #D8. The resistance must be 4.5-6 kohms at 20°C.

  Remedy as necessary

Other information:

- To connect the breakout box, see **CONNECTING THE BREAKOUT BOX**
- To disconnect the transmission connectors, see **CONNECTORS, TRANSMISSION, DISCONNECTING / CONNECTING**
- To open the transmission control system, see **SOLENOID CONTROL SYSTEM, REPLACING**
- To check and replace the temperature sensor, see **TEMPERATURE SENSOR FLUID, TRANSAXLE, (TFT)**
- To replace the cable harness for the control system, see **TEMPERATURE SENSOR FLUID, TRANSAXLE, (TFT)**
- For information about signals, see **SIGNAL DESCRIPTION. TRANSMISSION CONTROL MODULE (TCM)** .

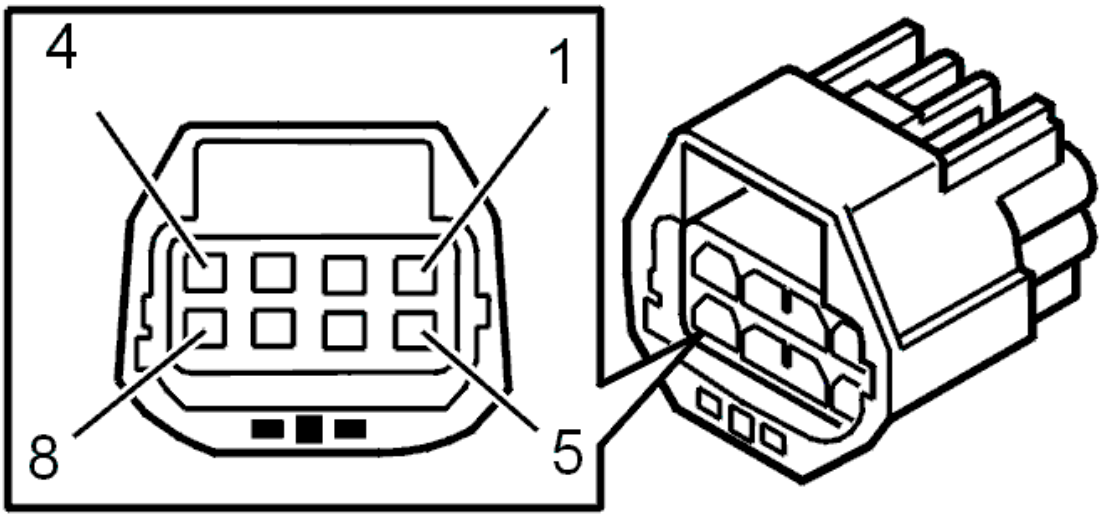

Fig. 118: Identifying 8-Pin Transmission Connector Terminals
Courtesy of VOLVO CARS CORPORATION

- **Continue**

  Refer to **RESETTING TRANSMISSION FLUID CHANGE COUNTER**

INTERMITTENT FAULT

Check the cable between transmission control module (TCM) terminal #A37 (#A37) and transmission connector terminal #D7 (control module side). Check for an intermittent short-circuit to ground. See **SHORT-CIRCUIT TO GROUND, INTERMITTENT FAULTS** . Also check the cables for a short-circuit to each other.

Remedy as necessary.

Other information:

- To connect the breakout box, see **CONNECTING THE BREAKOUT BOX**

- To disconnect the transmission connectors, see **CONNECTORS, TRANSMISSION, DISCONNECTING / CONNECTING**
- For information about signals, see **SIGNAL DESCRIPTION. TRANSMISSION CONTROL MODULE (TCM)** .

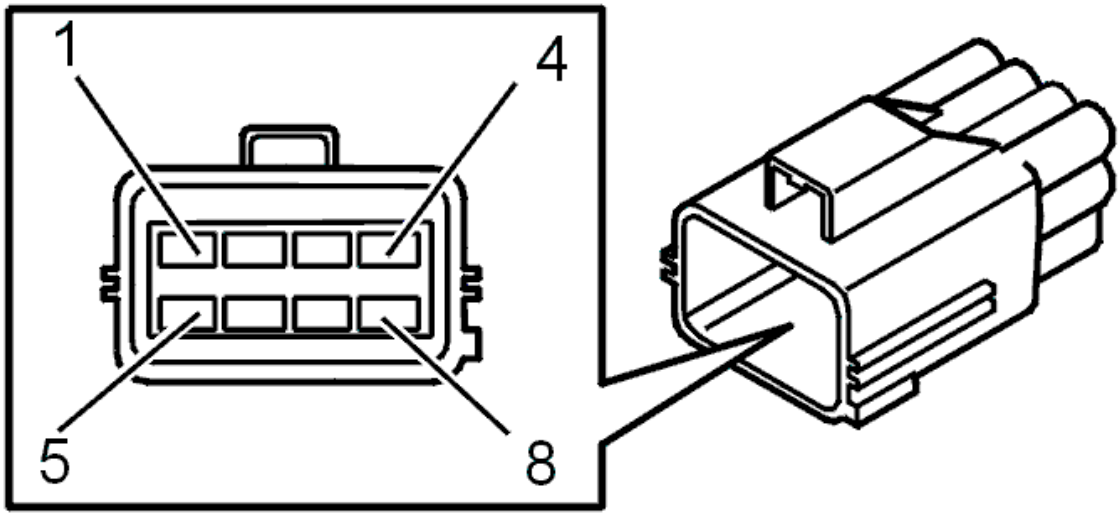

Fig. 119: Identifying Transmission Connector Terminals
Courtesy of VOLVO CARS CORPORATION

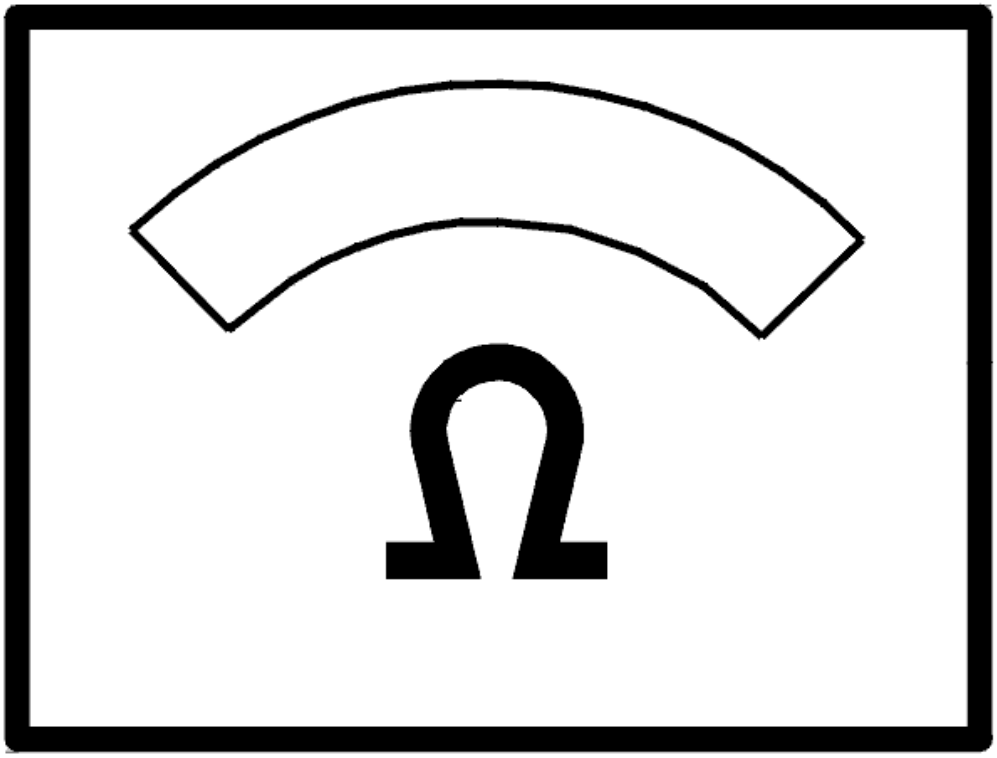

Fig. 120: Identifying Ohms Display
Courtesy of VOLVO CARS CORPORATION

- **Continue**

  Refer to **INFORMATION**

RESETTING TRANSMISSION FLUID CHANGE COUNTER

RESETTING TRANSMISSION FLUID CHANGE COUNTER

HINT: The transmission control module (TCM) has a counter for the oil quality. The counter counts up if the transmission is exposed to too high a load or an ambient temperature that is too high. If the counter is not reset when the oil is drained or changed, there is a risk that a diagnostic trouble code (DTC) will be stored in faulty circumstances. Therefore it is important that the "Transmission oil change" counter is reset.

NOTE: **This applies only when the transmission fluid is changed and when the fluid is changed when repairs are carried out to the transmission temperature sensor.**

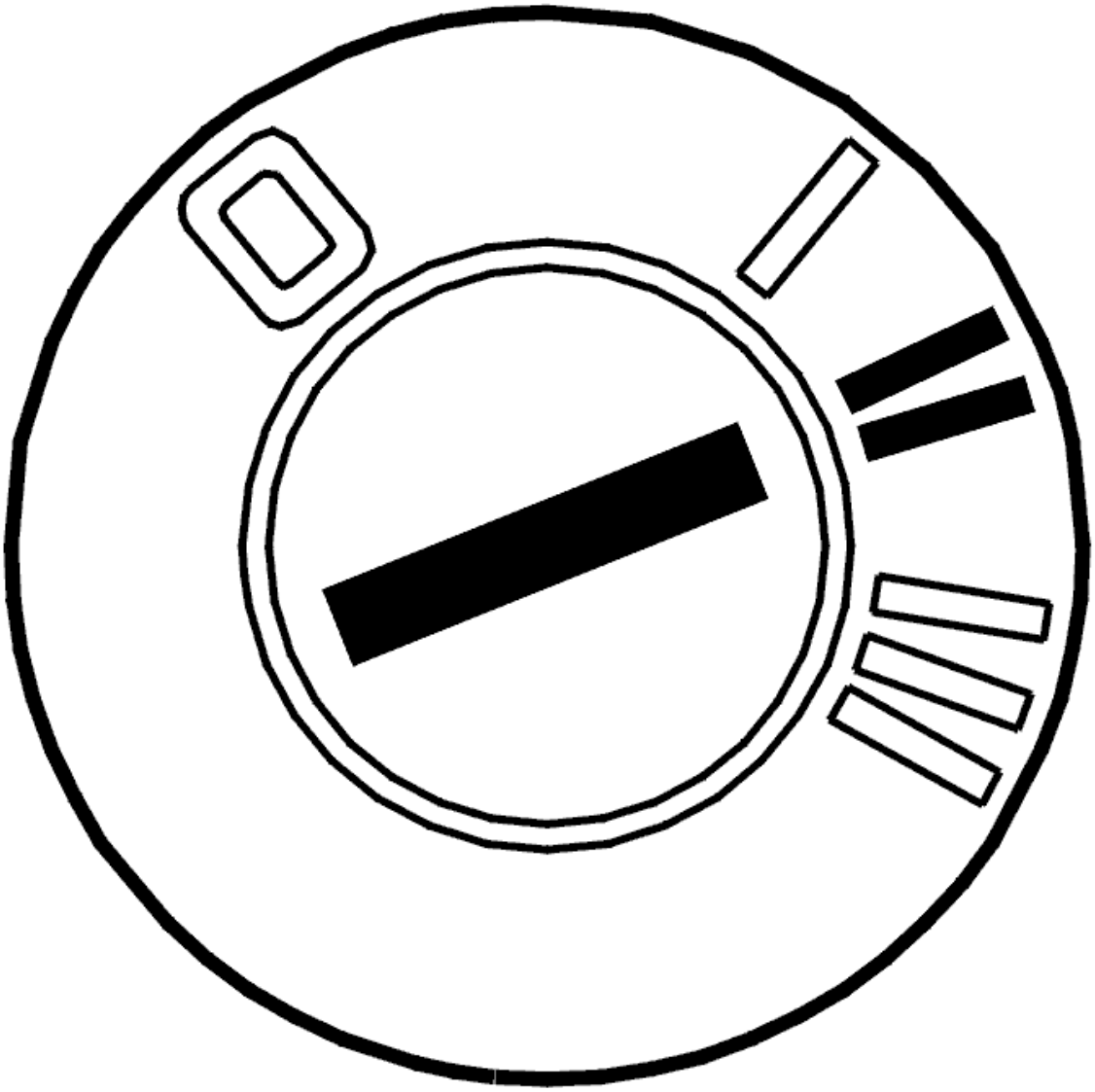

Fig. 121: Identifying Ignition ON
Courtesy of VOLVO CARS CORPORATION

- Ignition on.

  Reset the counter by clicking on the VCT 2000 symbol.

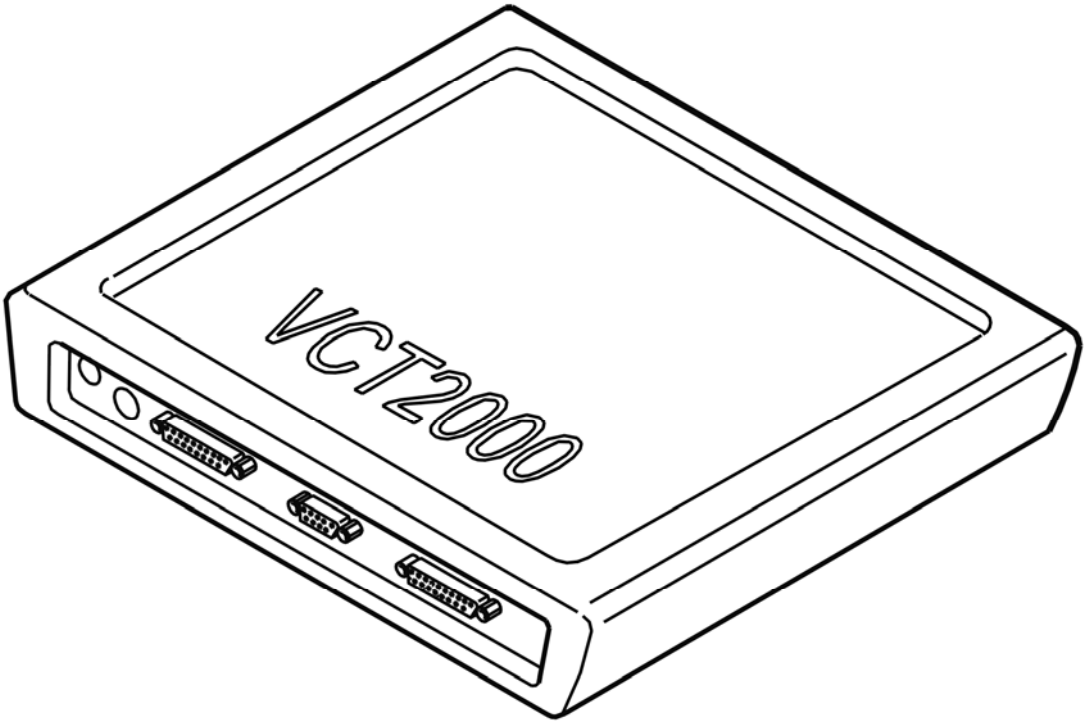

Fig. 122: Identifying VCT2000 Diagnostic Tool Symbol In VIDA
Courtesy of VOLVO CARS CORPORATION

- **Continue**

  Refer to **VERIFICATION**

VERIFICATION

VERIFICATION

HINT: After carrying out the repair, check that the fault has been remedied.

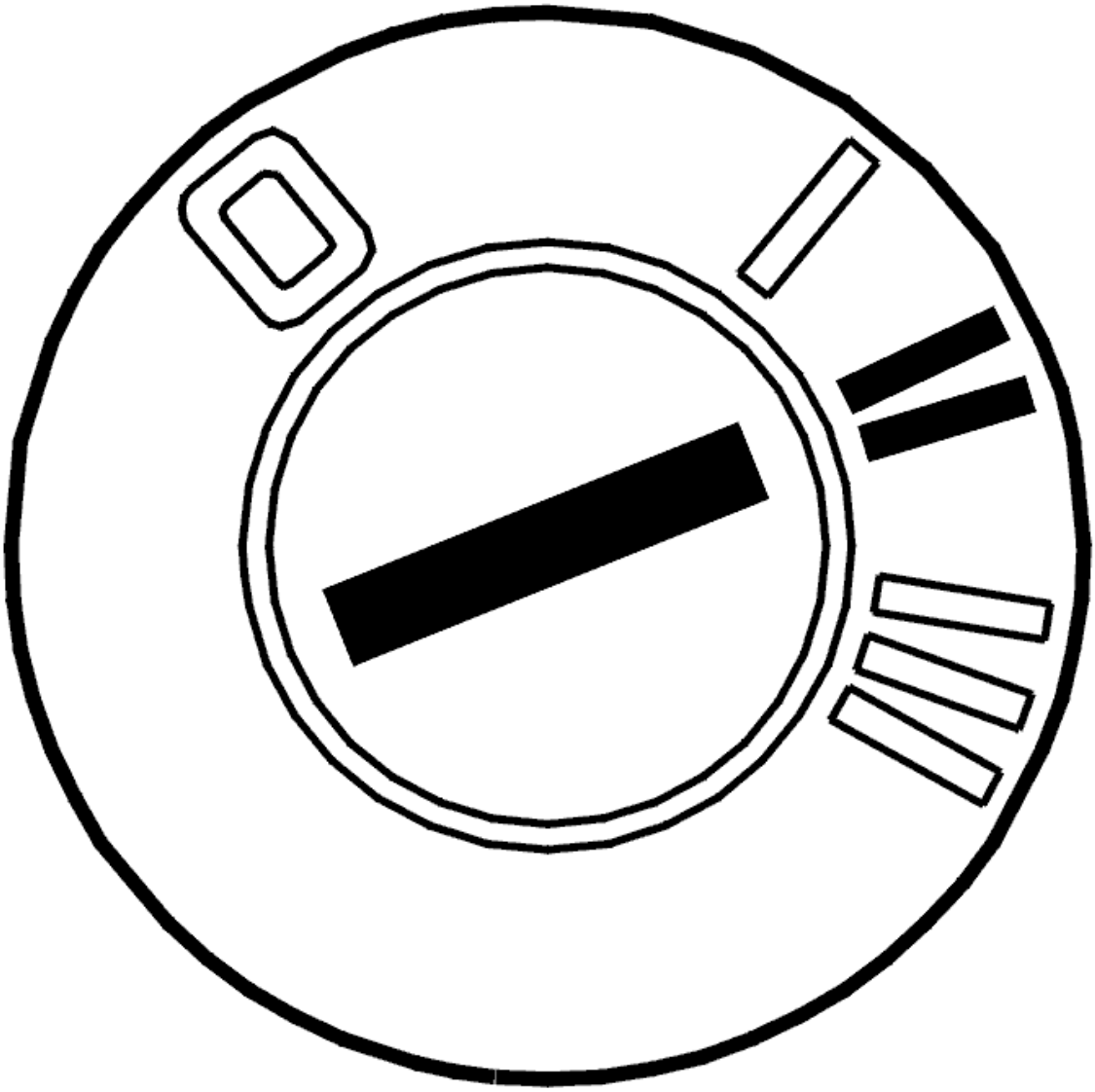

Fig. 123: Identifying Ignition ON
Courtesy of VOLVO CARS CORPORATION

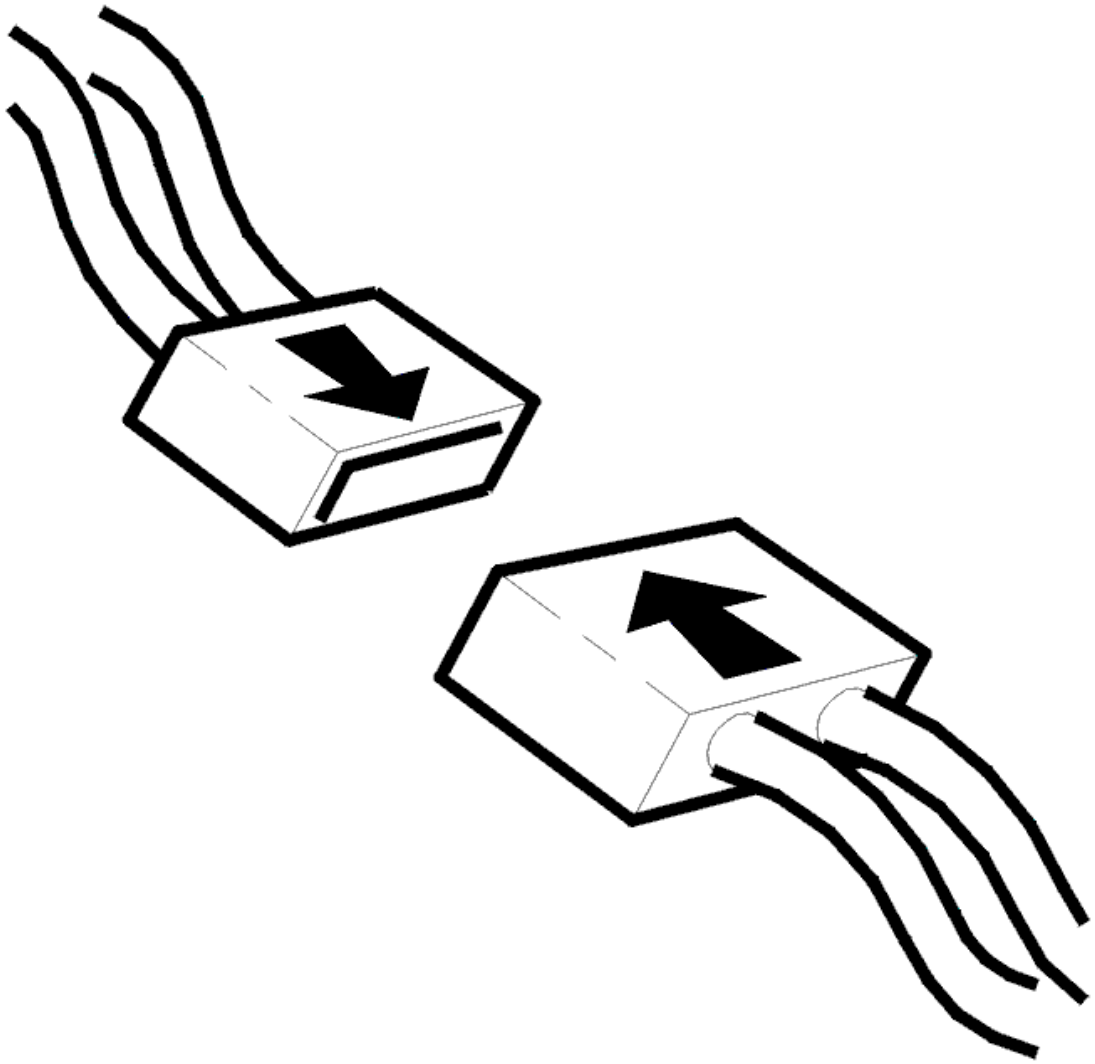

Fig. 124: Identifying Connector(s) Reinstallation
Courtesy of VOLVO CARS CORPORATION

- Ignition off.
- Reinstall the connectors, components etc.
- Ignition on.
- Read off the oil temperature.

Check that the transmission oil temperature is within its permitted range.

Compare with the transmission temperature.

NOTE: **The transmission temperature sensor is located inside the control unit and can be affected by the heat given off by the solenoids.**

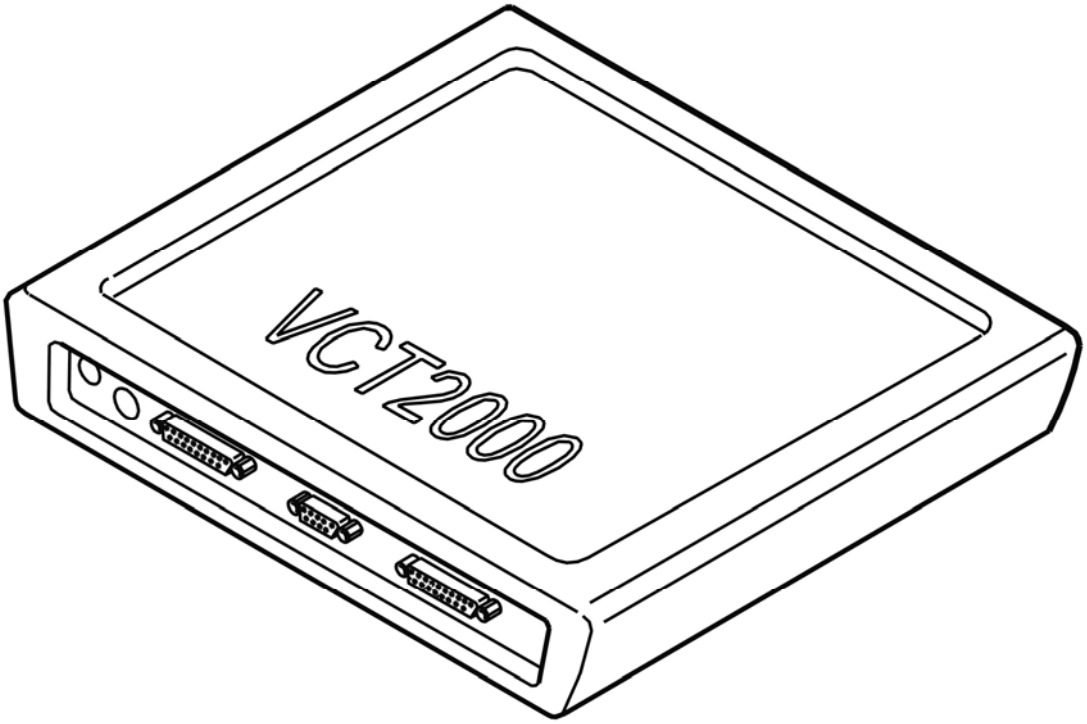

Fig. 125: Identifying VCT2000 Diagnostic Tool Symbol In VIDA
Courtesy of VOLVO CARS CORPORATION

Is the oil temperature within its permitted range?

- **YES**

  VERIFIED: Troubleshooting has been completed.

- **NO**

  Refer to **INFORMATION**

INFORMATION

FAULT-TRACING INFORMATION

The fault should have been detected and remedied. As this is not the case fault-tracing has failed.

Exit fault-tracing for this diagnostic trouble code (DTC) or make another attempt.

INFORMATION

FAULT-TRACING INFORMATION

If the fault is intermittent, do not verify fault-tracing if the fault does not recur.

It is possible to view the information again, or leave fault-tracing for this diagnostic trouble code (DTC).

TCM-0044: OIL TEMPERATURE SENSOR. SIGNAL TOO HIGH (4T65 AWD; 2003-2006)

DIAGNOSTIC TROUBLE CODE (DTC) INFORMATION

Condition

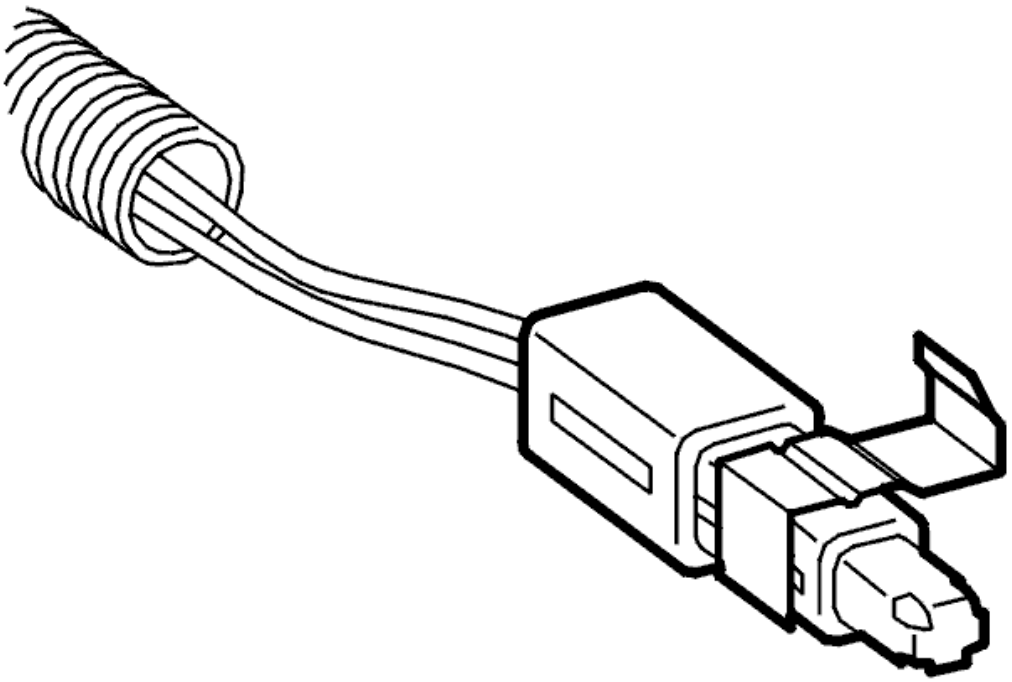

Fig. 126: Identifying Temperature Sensor
Courtesy of VOLVO CARS CORPORATION

The oil temperature sensor transmits a signal to the control module. This signal is used for functions such as temperature controlled lock-up and the engagement of high-temperature programs. The sensor has an NTC (negative temperature coefficient) resistor. The signal (voltage) decreases with increasing oil temperature. Diagnostic trouble code (DTC) TCM-0044 is stored if the control module receives a signal from the oil temperature sensor corresponding to a temperature below approximately -10°C when the engine is started, and the signal has not changed after the engine has been running for approximately 10 seconds.

Substitute Value

- No substitute values.

Possible Source

- Contact resistance in the terminals.
- Open-circuit in the signal cable or in the ground lead.
- Short-circuit to supply voltage in the signal cable.
- Defective oil temperature sensor.

Fault symptom[s]

- General orange warning lamp lit.
- Harsh gear shifting.

HINT: Harsh gear shifting can be caused by:

- No reduction of line pressure when shifting.
- No reduction of line pressure when moving the gear selector between positions P-R, N-R and N-D.
- No torque limiting request to engine control module (ECM) when shifting.

SIGNAL TOO HIGH

CHECKING THE FUNCTION OF THE OIL TEMPERATURE SENSOR

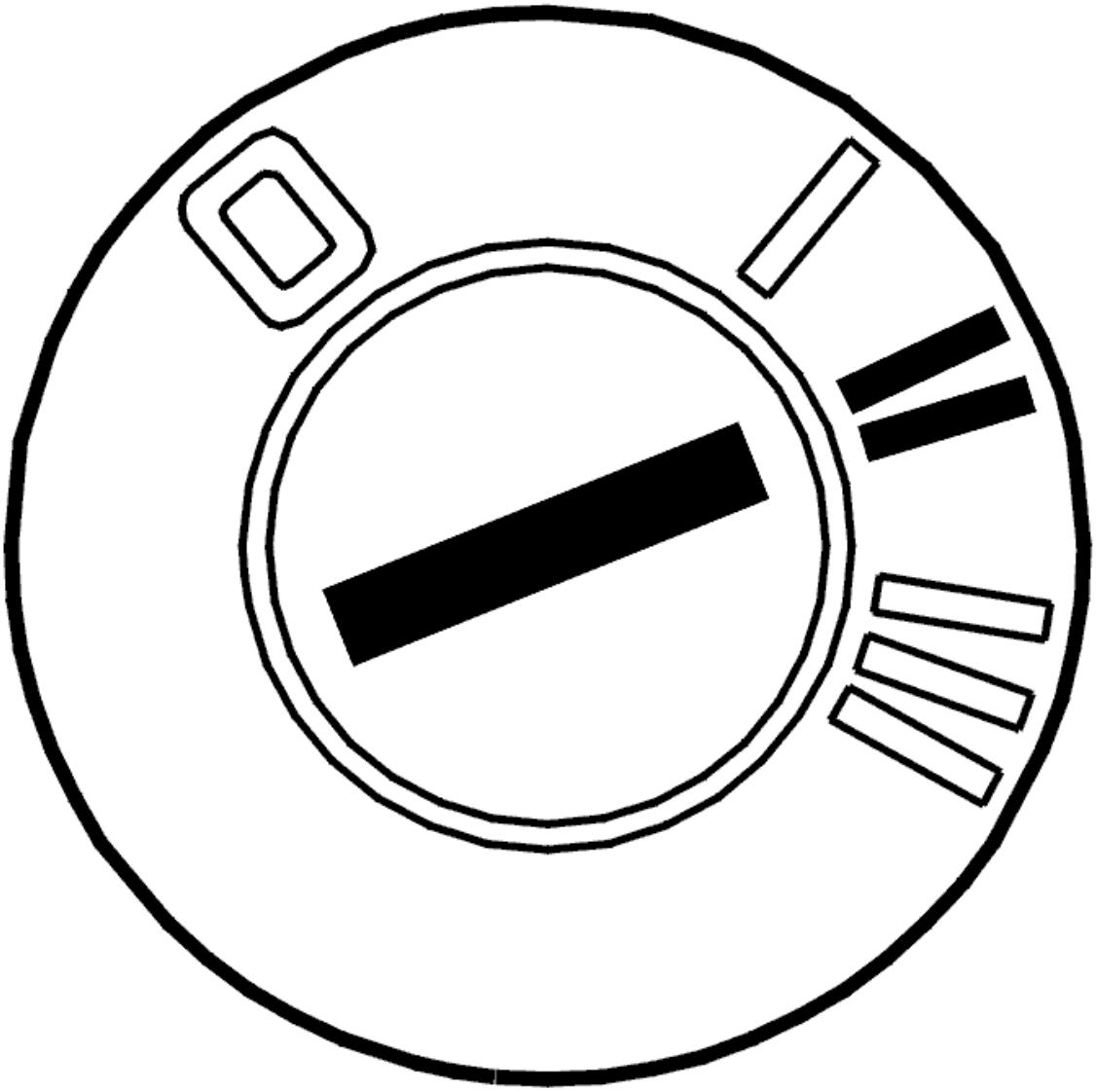

Fig. 127: Identifying Ignition ON
Courtesy of VOLVO CARS CORPORATION

- Ignition on
- Read off the oil temperature.

  Check that the temperature is within its permitted range.

  Compare with the transmission temperature.

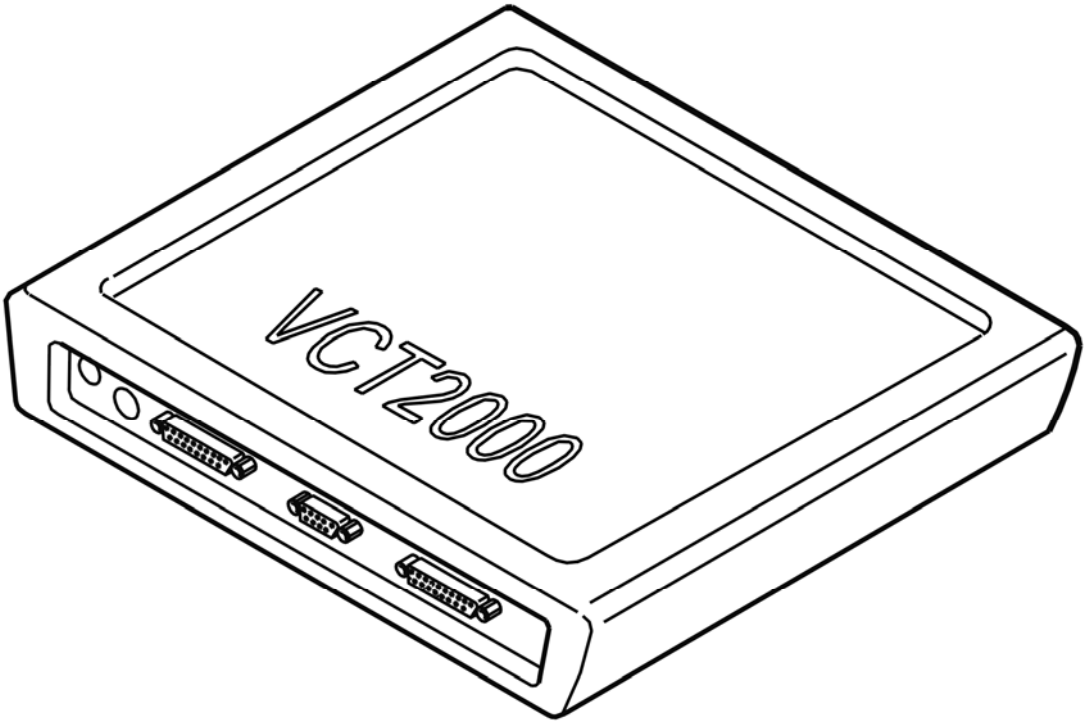

Fig. 128: Identifying VCT2000 Diagnostic Tool Symbol In VIDA
Courtesy of VOLVO CARS CORPORATION

Is the transmission temperature within its permitted range?

- **YES**

  Refer to **INTERMITTENT FAULT**

- **NO**

  Refer to **CHECKING TRANSMISSION FLUID TEMPERATURE SENSOR**

CHECKING TRANSMISSION FLUID TEMPERATURE SENSOR

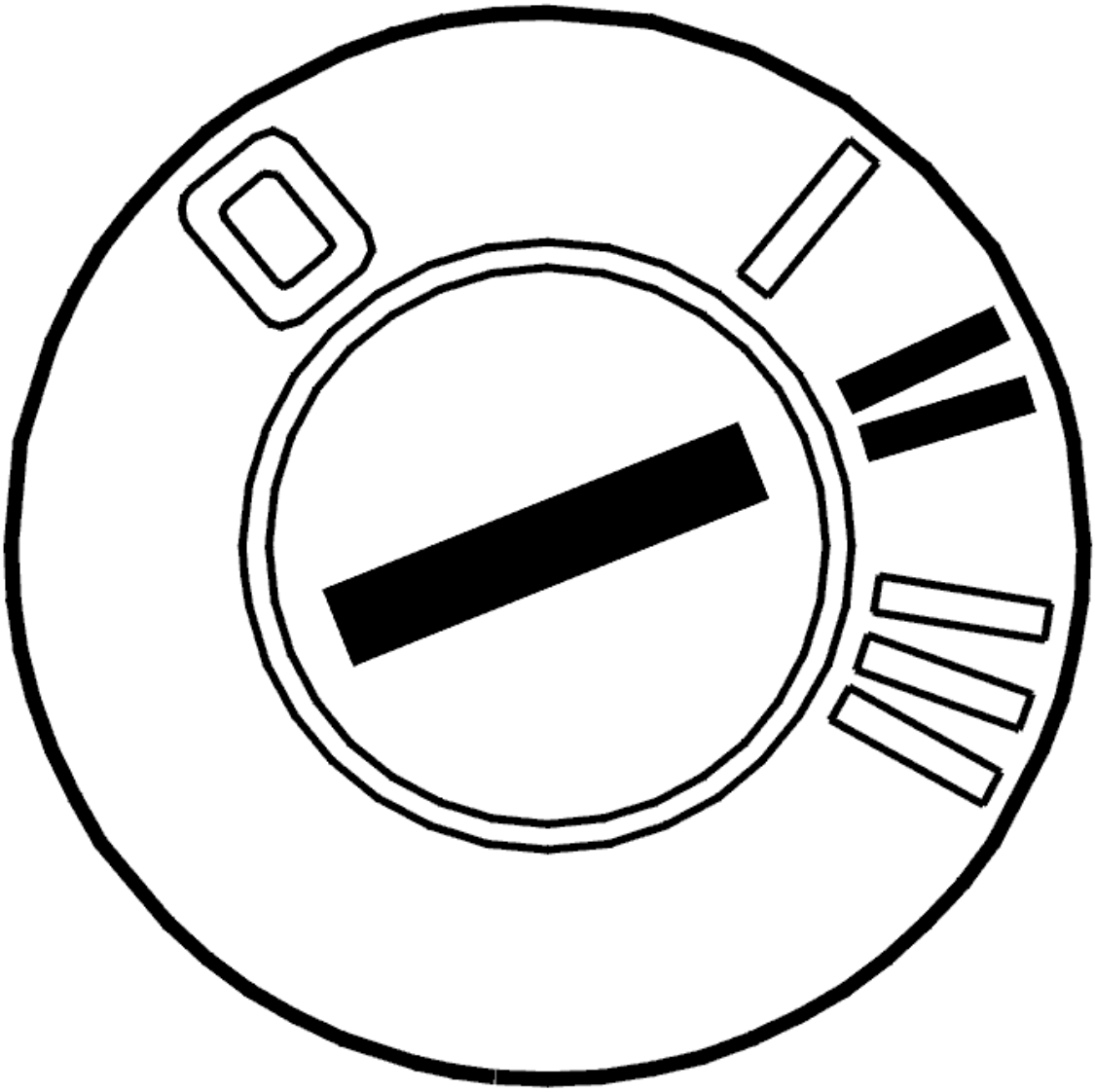

Fig. 129: Identifying Ignition ON
Courtesy of VOLVO CARS CORPORATION

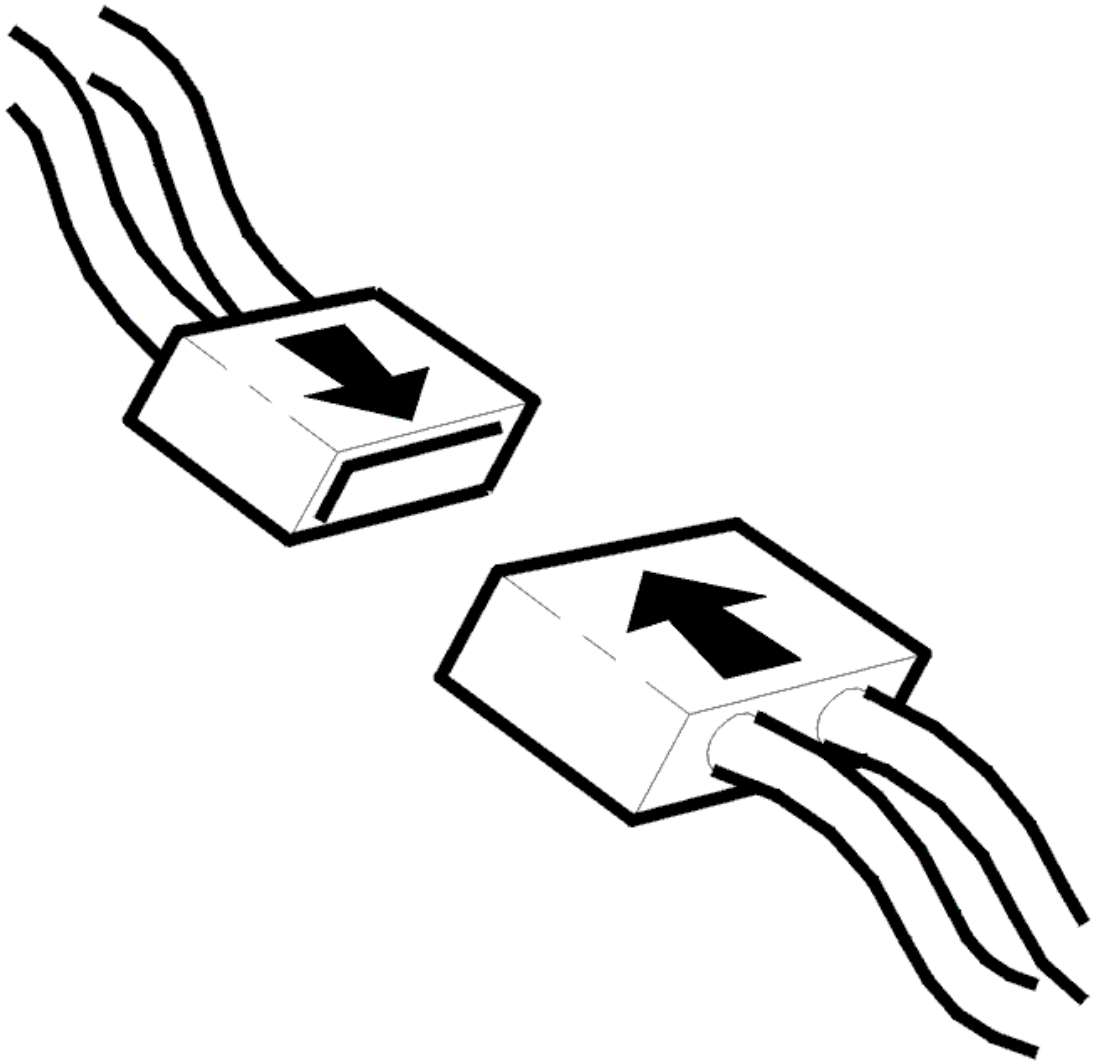

Fig. 130: Identifying Connector(s) Reinstallation
Courtesy of VOLVO CARS CORPORATION

- Ignition off
- Check the control module and transmission connectors. Check for contact resistance and oxidation
- Reconnect the control module and transmission connectors
- Ignition on
- Read off the oil temperature.

  Check that the temperature is within its permitted range.

  Compare with the transmission temperature.

  If the transmission temperature is within its permitted range, the cause of the fault was contact resistance or oxidation in the control module or transmission connector.

Other information

- To disconnect the control module, see **TRANSMISSION CONTROL MODULE (TCM), REPLACING**
- To connect the breakout box to the transmission connector, see **CONNECTING THE BREAKOUT BOX, GM AUTOMATIC TRANSMISSIONS**
- see **CHECKING WIRING AND TERMINALS**

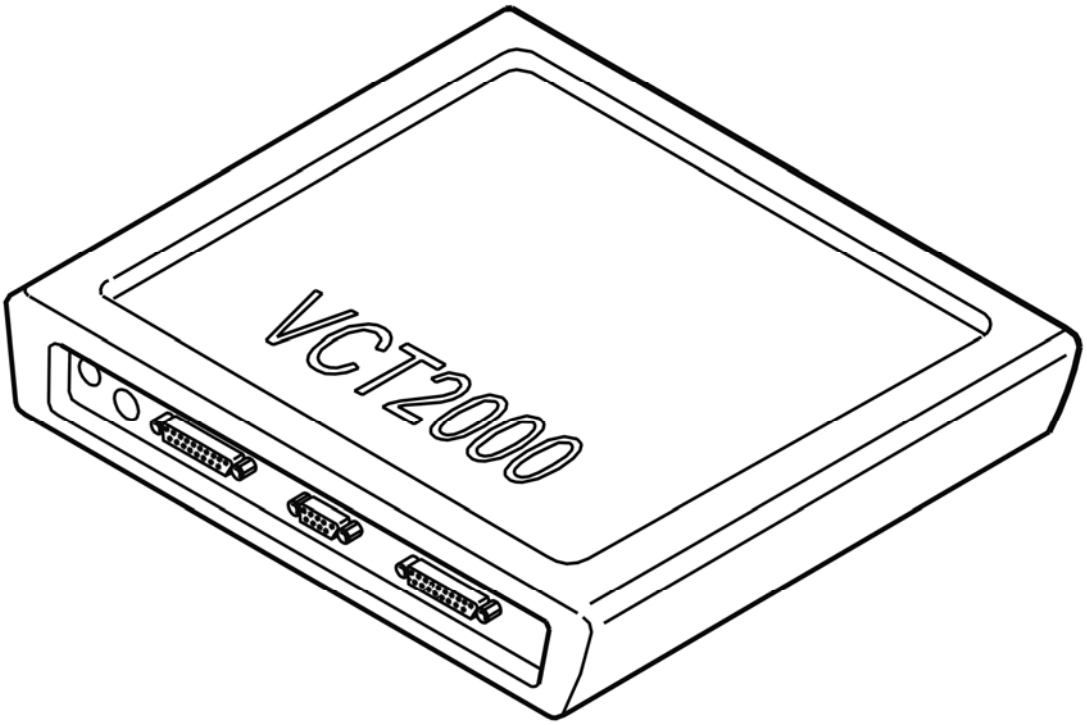

Fig. 131: Identifying VCT2000 Diagnostic Tool Symbol In VIDA
Courtesy of VOLVO CARS CORPORATION

Was the transmission temperature within its permitted range?

- **YES**

  OKAY: Troubleshooting has been completed.

- **NO**

  Refer to **CHECKING THE TEMPERATURE SENSOR**

CHECKING THE TEMPERATURE SENSOR

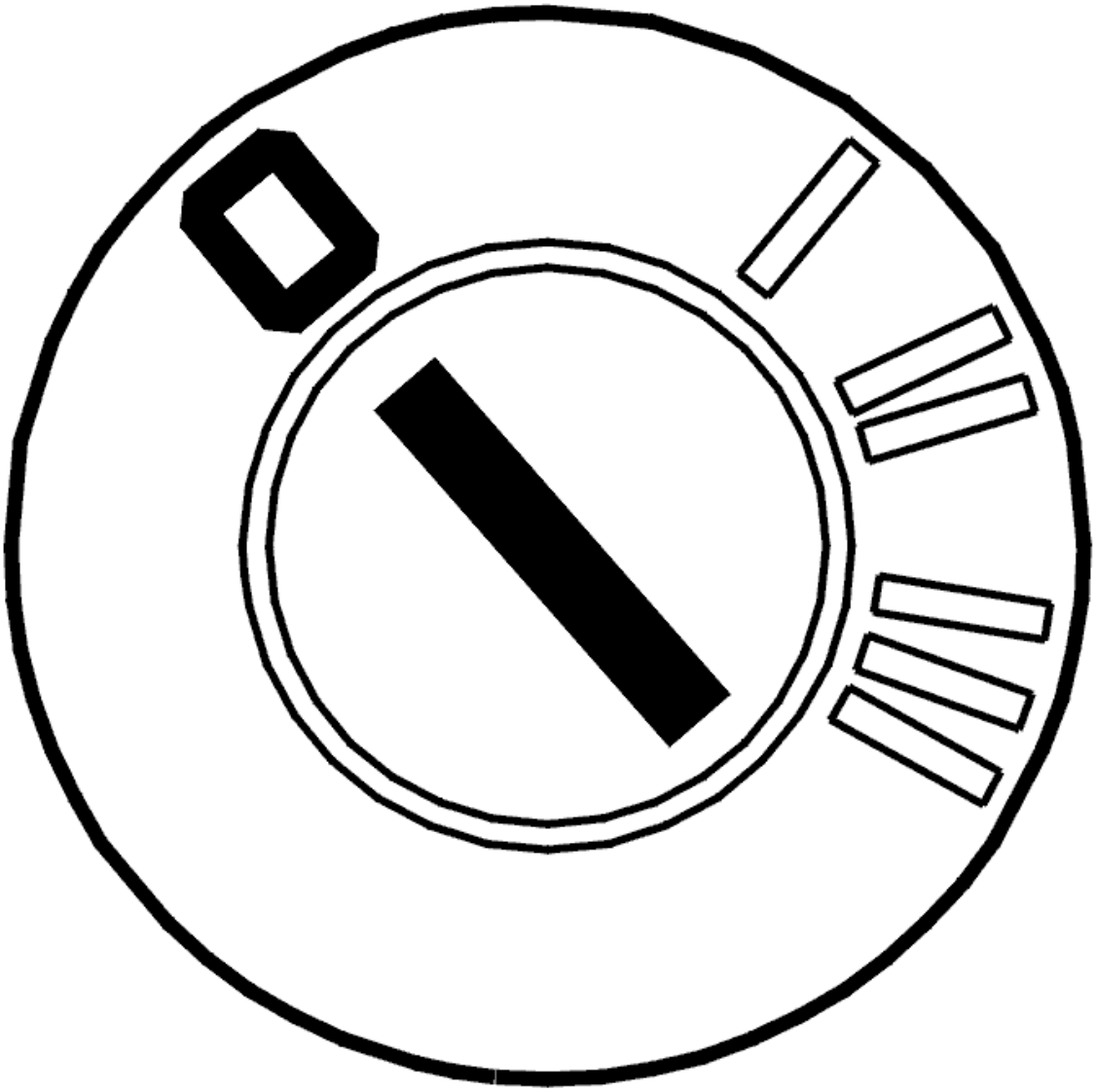

Fig. 132: Identifying Ignition OFF
Courtesy of VOLVO CARS CORPORATION

- Ignition off
- Disconnect the transmission connector
- Connect adapter see **9511505** and see **9813190** to the transmission connector (transmission side)
- Connect an ohmmeter between terminals #L (terminal #A11) and #M (terminal #A12).

  The resistance must be 3.4-3.6 kohms at 20 °C.

  Other information

  - To connect the breakout box to the transmission connector, see **CONNECTING THE BREAKOUT BOX, GM AUTOMATIC TRANSMISSIONS**
  - For information about signals, see **SIGNAL SPECIFICATION**

- For information about the resistance values, see **COMPONENT RESISTANCE VALUES**
- For information about the resistance values, see **COMPONENT RESISTANCE VALUES** .

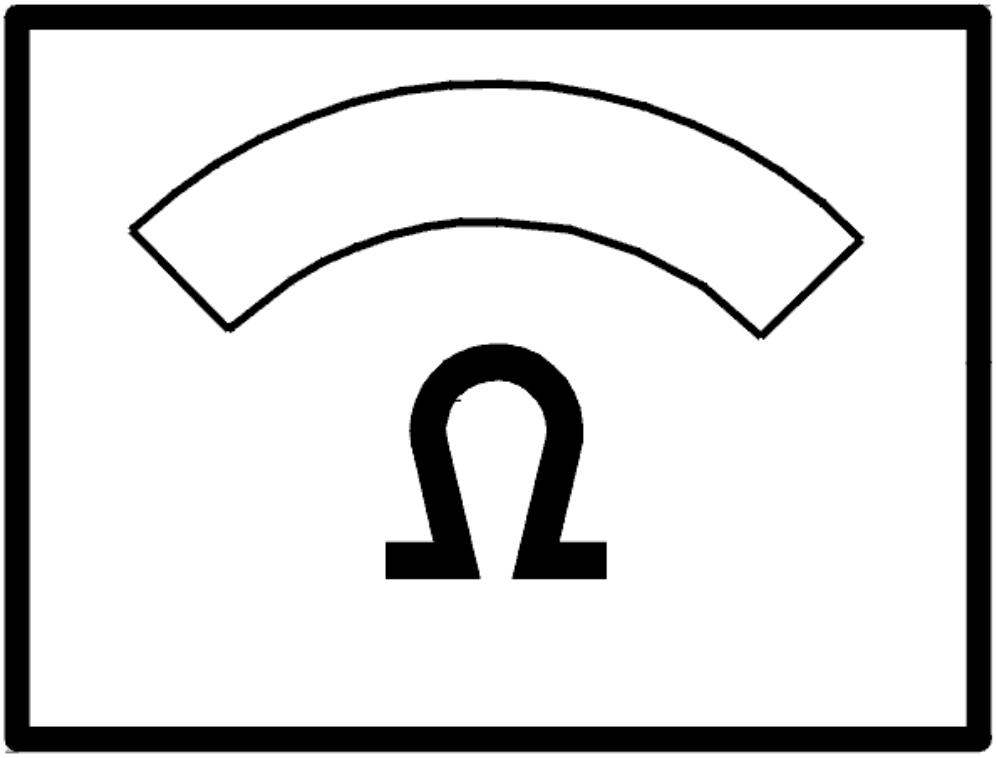

Fig. 133: Identifying Ohms Display
Courtesy of VOLVO CARS CORPORATION

Was the resistance OK?

- **YES**

  Refer to **CHECKING THE WIRING**

- **NO**

  Refer to **CHECKING THE WIRING AND COMPONENT**

CHECKING THE WIRING

- Breakout box connected to the control module
- Breakout box connected to the transmission connector.

Check the cable between control module terminal #37 (#A37) and transmission connector (control module side) terminal #L (#A11). Check for an open-circuit. Check for a short-circuit to supply voltage.

Check the cable between control module terminal #55 (#A55) and transmission connector (control module side) terminal #M (#A12). Check for an open-circuit. Check for a short-circuit to supply voltage.

Remedy as necessary.

Other information

- To connect the breakout box, see **CONNECTING THE BREAKOUT BOX**
- To connect the breakout box to the transmission connector, see **CONNECTING THE BREAKOUT BOX, GM AUTOMATIC TRANSMISSIONS**
- For information about signals, see **SIGNAL SPECIFICATION**
- see **CHECKING WIRING AND TERMINALS**

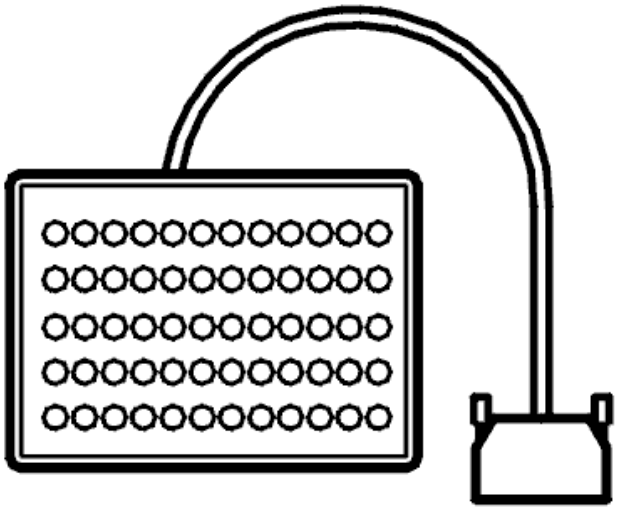

Fig. 134: Identifying Breakout Box
Courtesy of VOLVO CARS CORPORATION

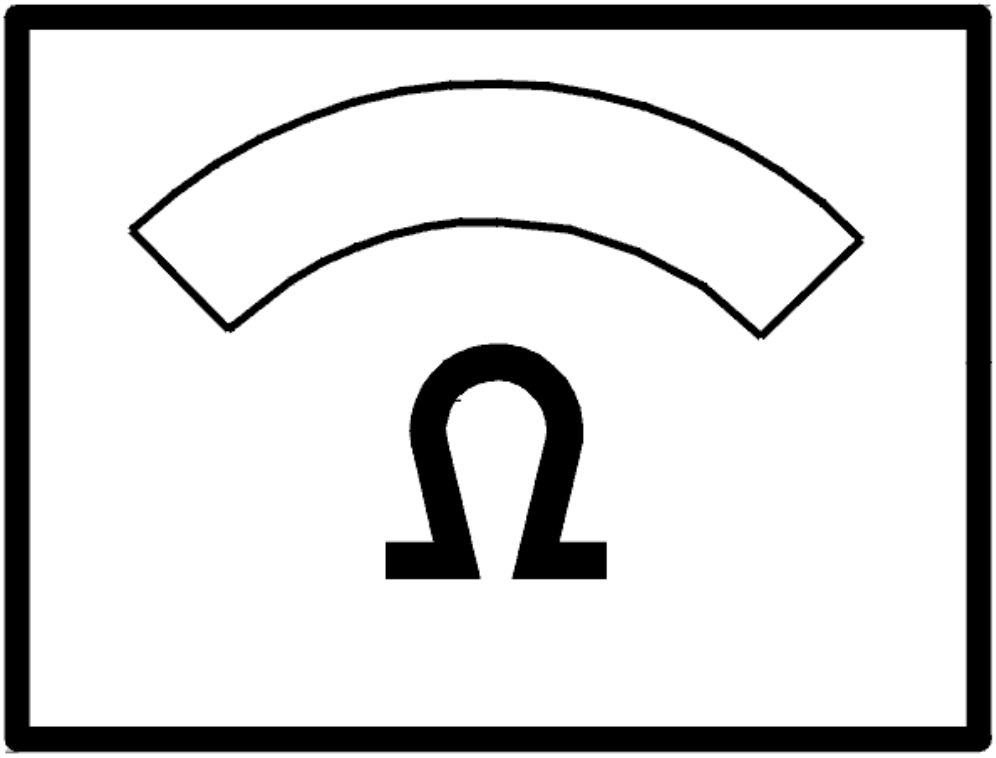

Fig. 135: Identifying Ohms Display
Courtesy of VOLVO CARS CORPORATION

Was a fault detected?

- **YES**

  Refer to **VERIFICATION**

- **NO**

  Refer to **CHECKING THE WIRING AND COMPONENT**

CHECKING THE WIRING AND COMPONENT

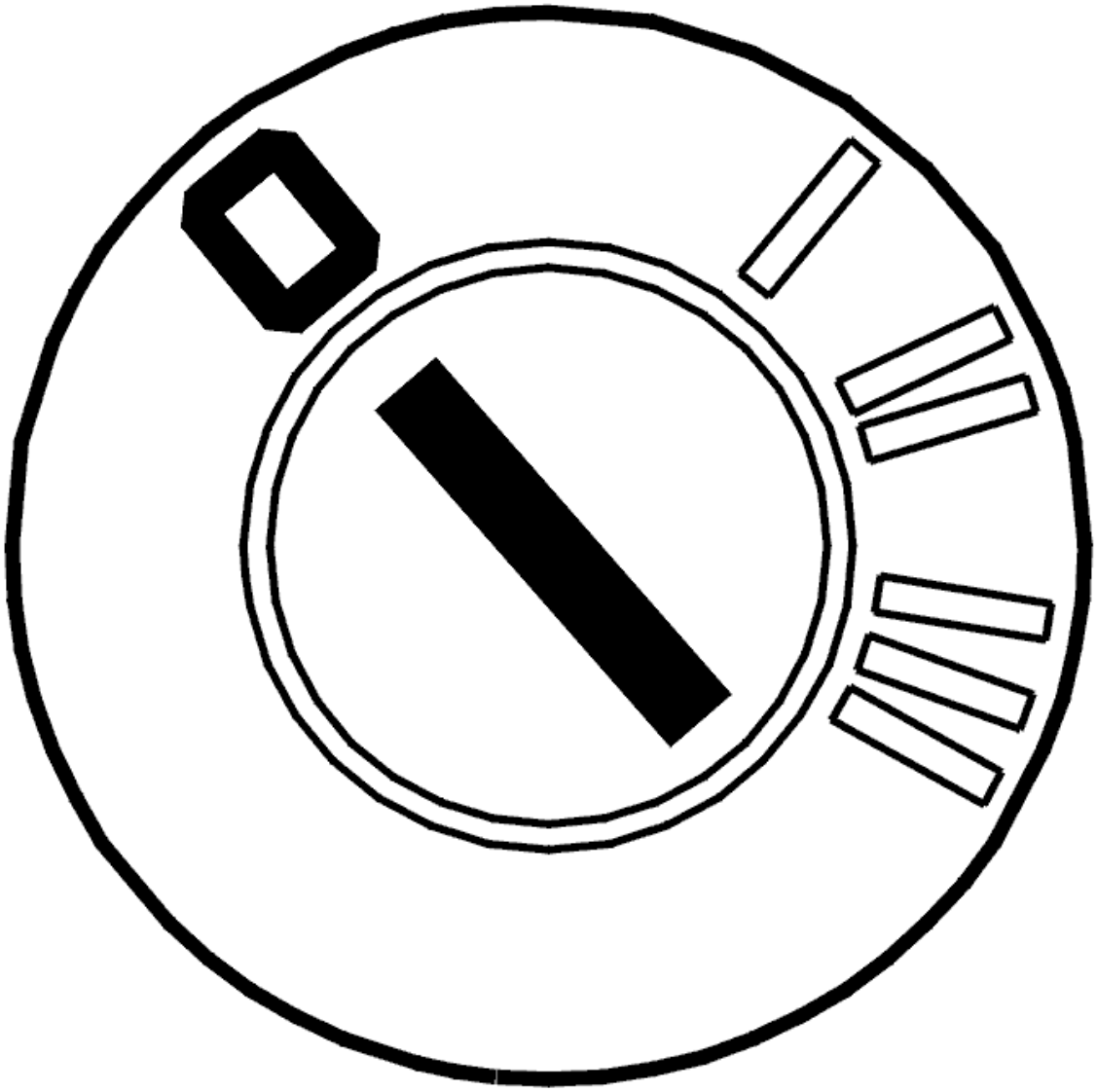

Fig. 136: Identifying Ignition OFF
Courtesy of VOLVO CARS CORPORATION

- Ignition off
- Open the transmission control system.

  Check the cable between transmission terminal #L (#A11) and temperature sensor terminal #A. Check for an open-circuit. Check for a short-circuit to supply voltage.

  Check the cable between transmission terminal #M (#A12) and temperature sensor terminal #B. Check for an open-circuit. Check for a short-circuit to supply voltage.

  HINT: Check the temperature sensor by measuring the resistance between temperature sensor connector terminals #A and #B. The resistance must be between 3.5-3.6 kohms at 20° C.

  Remedy as necessary.

Other information:

- To connect the breakout box, see **CONNECTING THE BREAKOUT BOX**
- To connect the breakout box to the transmission connector, see **CONNECTING THE BREAKOUT BOX, GM AUTOMATIC TRANSMISSIONS**
- To replace the cable harness, see **TEMPERATURE SENSOR FLUID, TRANSAXLE, (TFT)**
- To replace the temperature sensor, see **TEMPERATURE SENSOR FLUID TRANSMISSION, REPLACING**
- For information about signals, see **SIGNAL SPECIFICATION**
- For information about the resistance values, see **COMPONENT RESISTANCE VALUES**
- see **CHECKING WIRING AND TERMINALS**

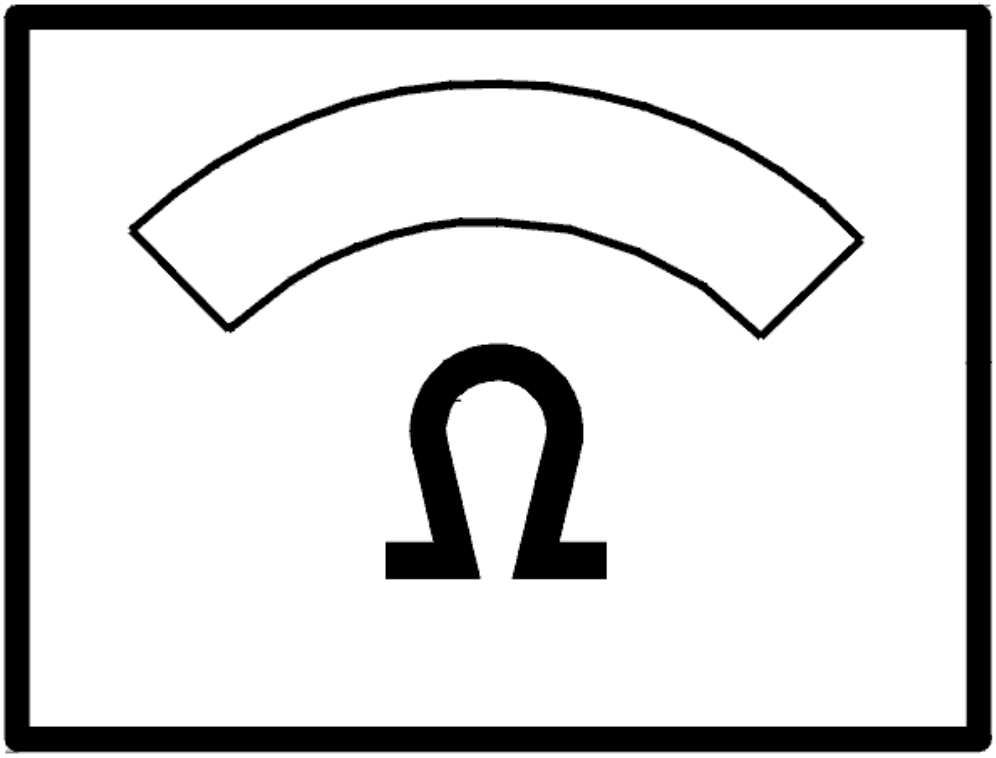

Fig. 137: Identifying Ohms Display
Courtesy of VOLVO CARS CORPORATION

- **Continue**

  Refer to **RESETTING TRANSMISSION FLUID CHANGE COUNTER**

INTERMITTENT FAULT

Check the control module and automatic transmission connector. Check for contact resistance and oxidation. Remedy if necessary.

Check the cable between control module terminal #A37 (#A37) and transmission connector (control module side) terminal #11. Check for an intermittent open-circuit. Check for an intermittent short-circuit to supply voltage.

Check the cable between control module terminal #A55 (#A55) and transmission connector (control module side) terminal #12. Check for an intermittent open-circuit. Check for an intermittent short-circuit to supply voltage.

Remedy as necessary.

Other information

- To connect the breakout box, see **CONNECTING THE BREAKOUT BOX**
- To connect the breakout box to the transmission connector, see **CONNECTING THE BREAKOUT BOX, GM AUTOMATIC TRANSMISSIONS**
- For information about signals, see **SIGNAL SPECIFICATION**
- see **CHECKING WIRING AND TERMINALS**

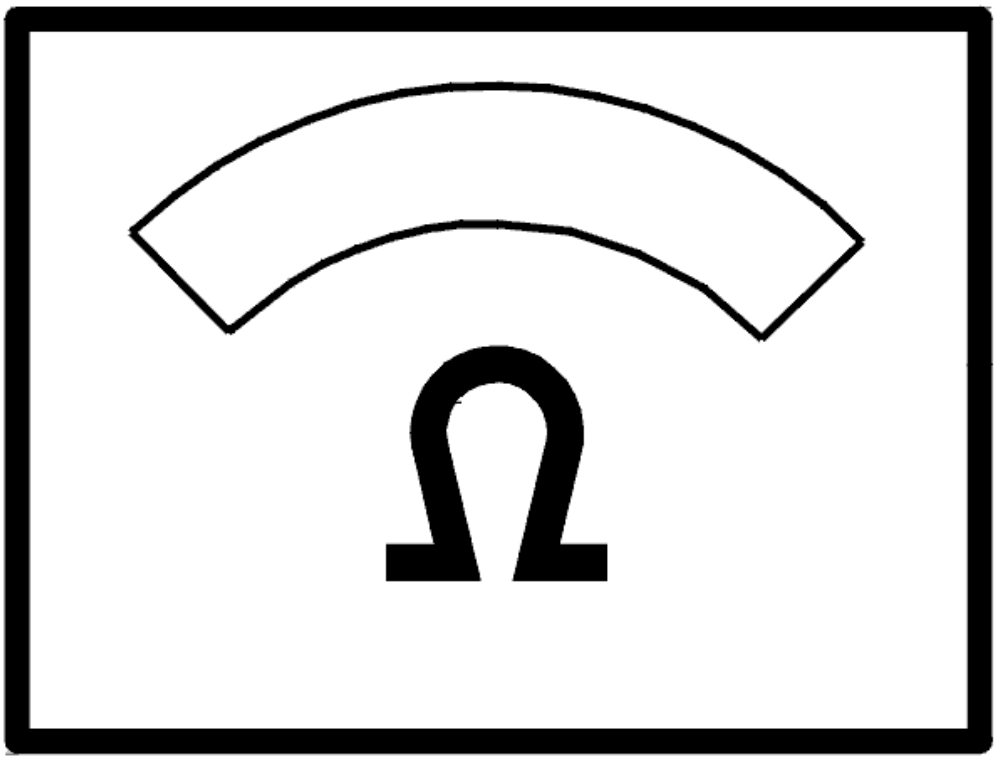

Fig. 138: Identifying Ohms Display
Courtesy of VOLVO CARS CORPORATION

- **Continue**

  Refer to **INFORMATION**

RESETTING TRANSMISSION FLUID CHANGE COUNTER

RESETTING TRANSMISSION FLUID CHANGE COUNTER

HINT: The transmission control module (TCM) has a counter for the oil quality. The counter counts up if the transmission is exposed to too high a load or an ambient temperature that is too high. If the counter is not reset when the oil is drained or changed, there is a risk that a diagnostic trouble code (DTC) will be stored in faulty circumstances. Therefore it is important that the "Transmission oil change" counter is reset.

NOTE: **This applies only when the transmission fluid is changed and when the fluid is changed when repairs are carried out to the transmission temperature sensor.**

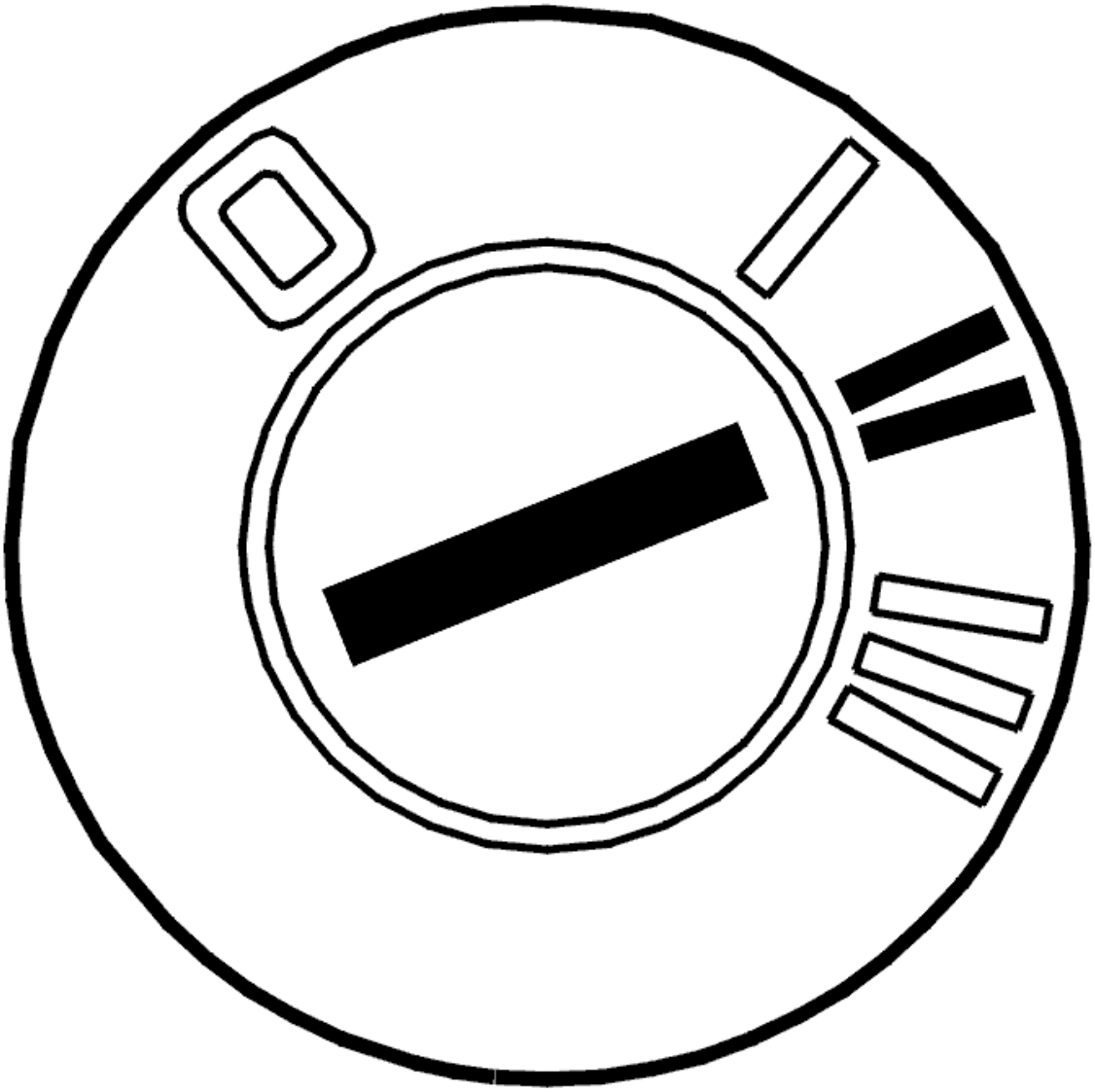

Fig. 139: Identifying Ignition ON
Courtesy of VOLVO CARS CORPORATION

- Ignition on.

  Reset the counter by clicking on the VCT 2000 symbol.

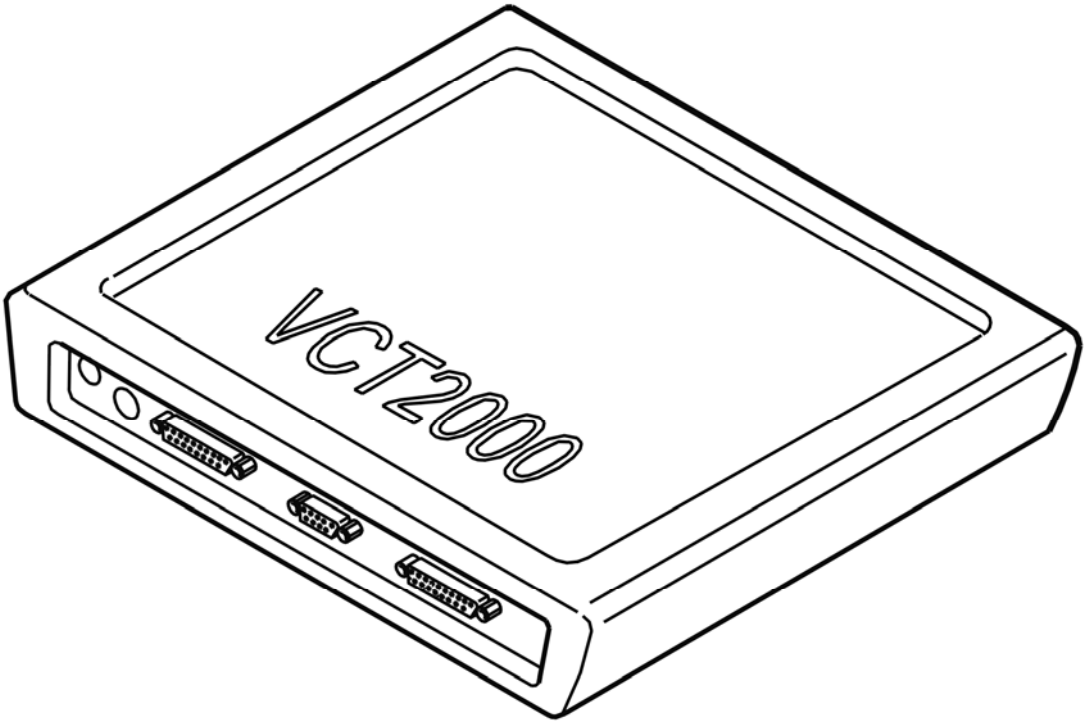

Fig. 140: Identifying VCT2000 Diagnostic Tool Symbol In VIDA
Courtesy of VOLVO CARS CORPORATION

- **Continue**

  Refer to **VERIFICATION**

VERIFICATION

VERIFICATION

HINT: After carrying out the repair check that the fault has been remedied.

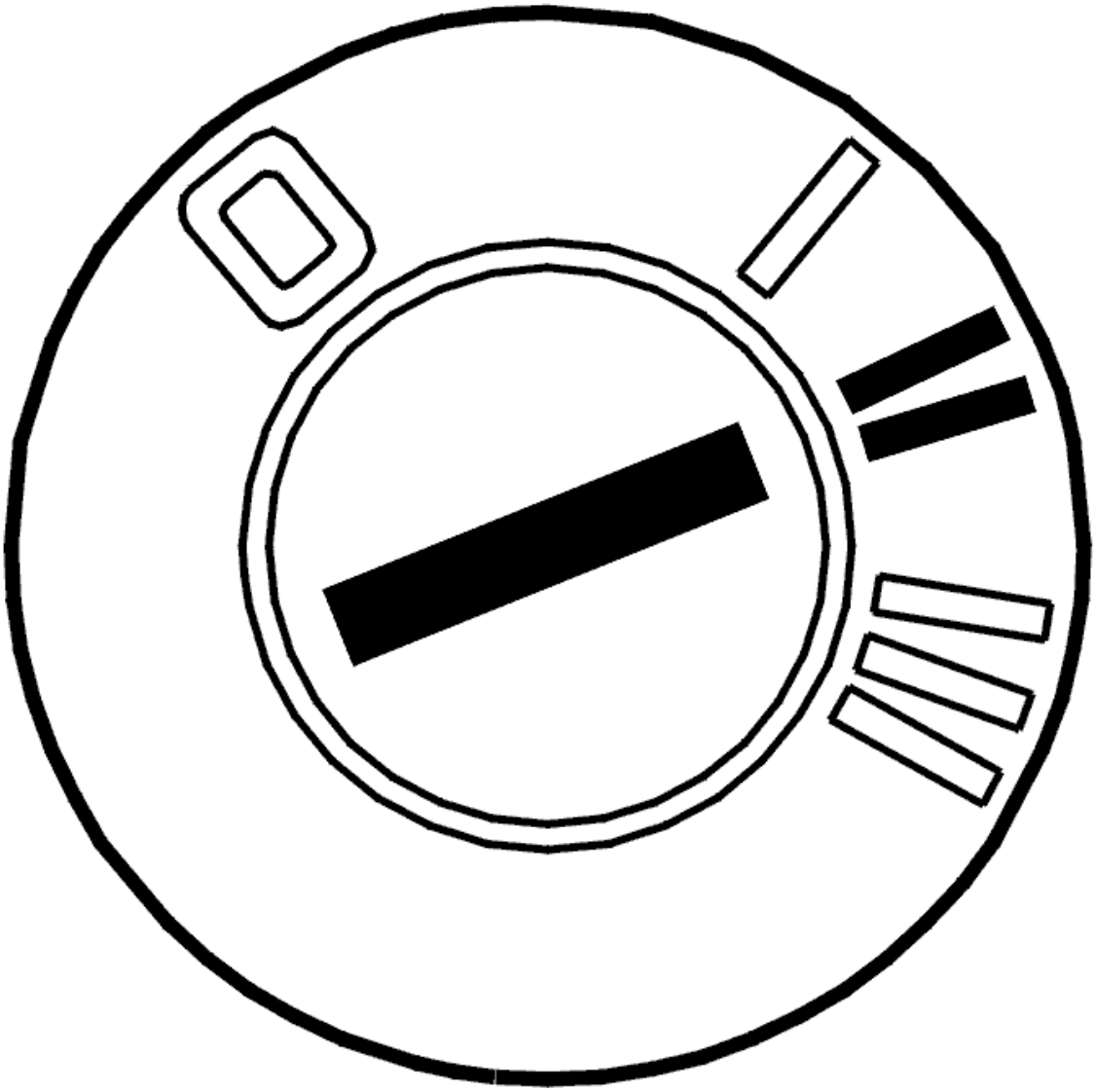

Fig. 141: Identifying Ignition ON
Courtesy of VOLVO CARS CORPORATION

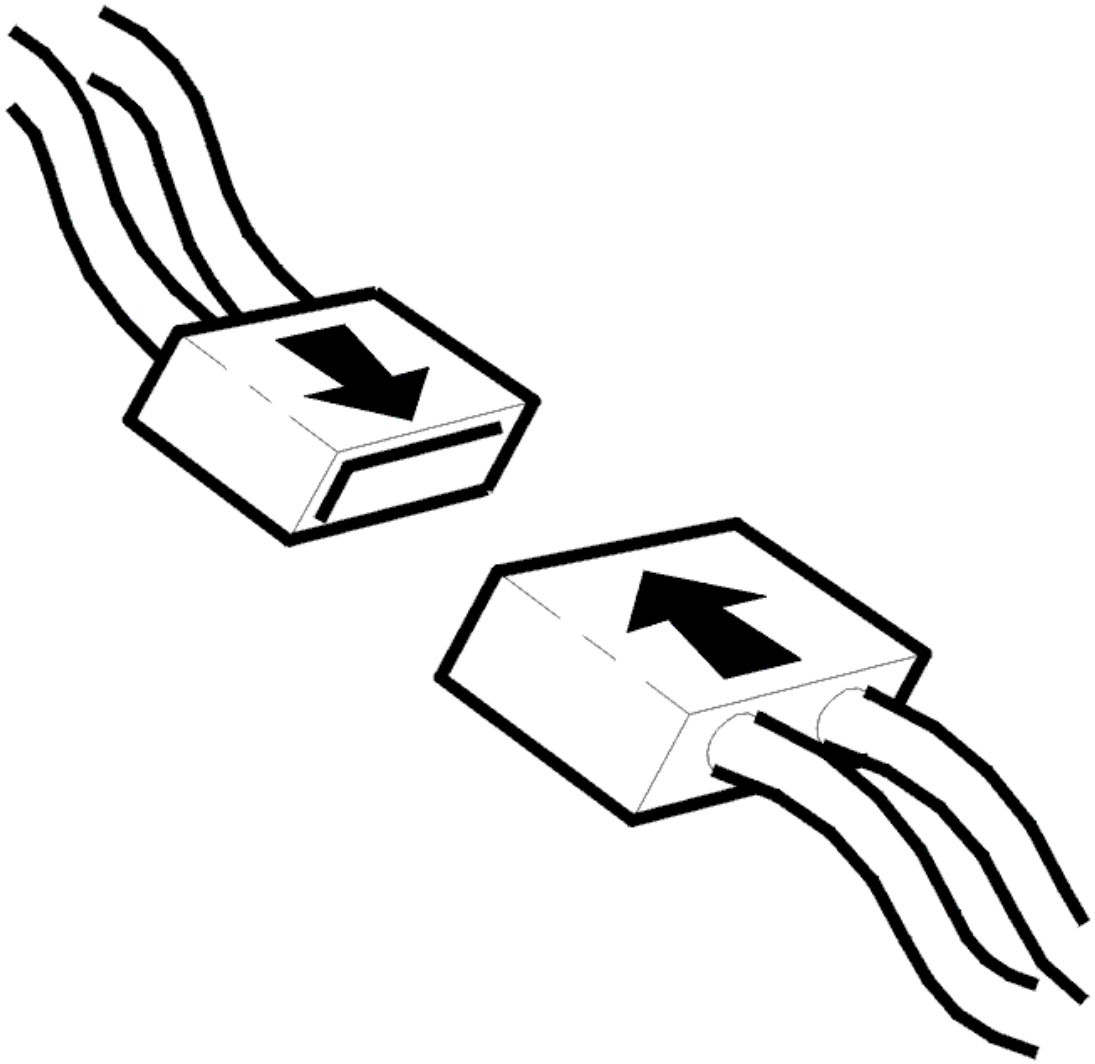

Fig. 142: Identifying Connector(s) Reinstallation
Courtesy of VOLVO CARS CORPORATION

- Ignition off.
- Reinstall connectors, components etc.
- Ignition on.
- Read off oil temperature.

  Check that the transmission oil temperature is within its permitted range. Compare with the transmission temperature.

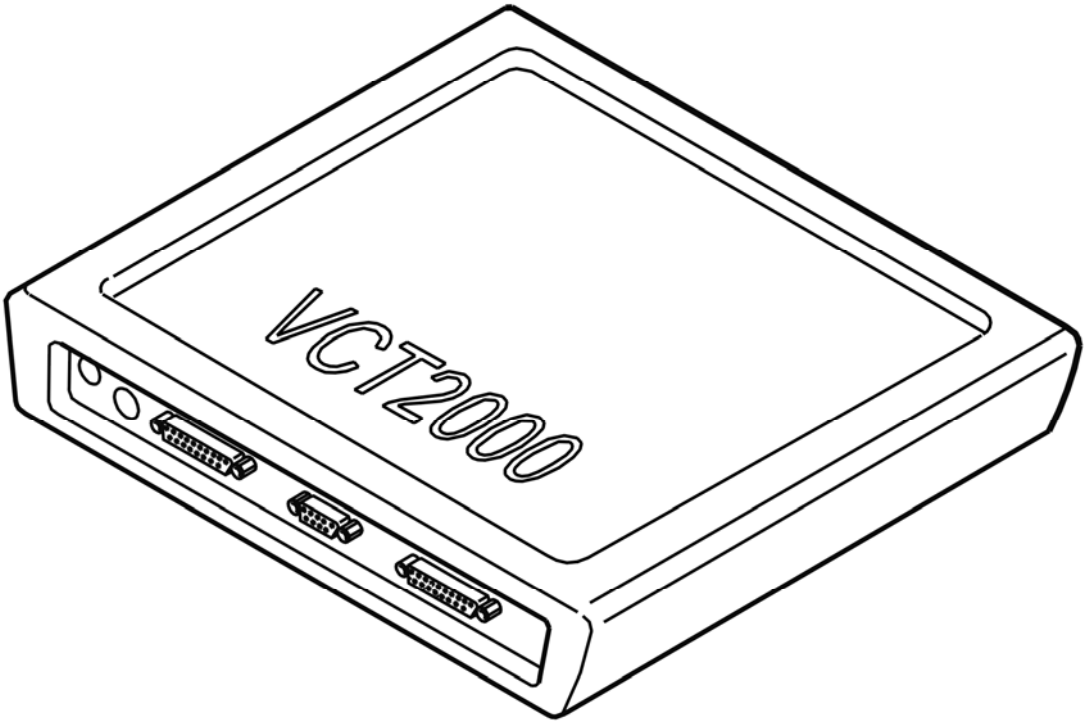

Fig. 143: Identifying VCT2000 Diagnostic Tool Symbol In VIDA
Courtesy of VOLVO CARS CORPORATION

Is the oil temperature within its permitted range?

- **YES**

  VERIFIED: Troubleshooting has been completed.

- **NO**

  Refer to **INFORMATION**

INFORMATION

FAULT-TRACING INFORMATION

The fault should have been detected and remedied. As this is not the case fault-tracing has failed.

Exit fault-tracing for this diagnostic trouble code (DTC) or make another attempt.

INFORMATION

FAULT-TRACING INFORMATION

If the fault is intermittent, do not verify fault-tracing if the fault does not recur.

It is possible to view the information again, or leave fault-tracing for this diagnostic trouble code (DTC).

TCM-0044: OIL TEMPERATURE SENSOR. SIGNAL TOO HIGH (AW50/51 AWD; AW55-50/51SN; 2003-2007)

DIAGNOSTIC TROUBLE CODE (DTC) INFORMATION

Condition

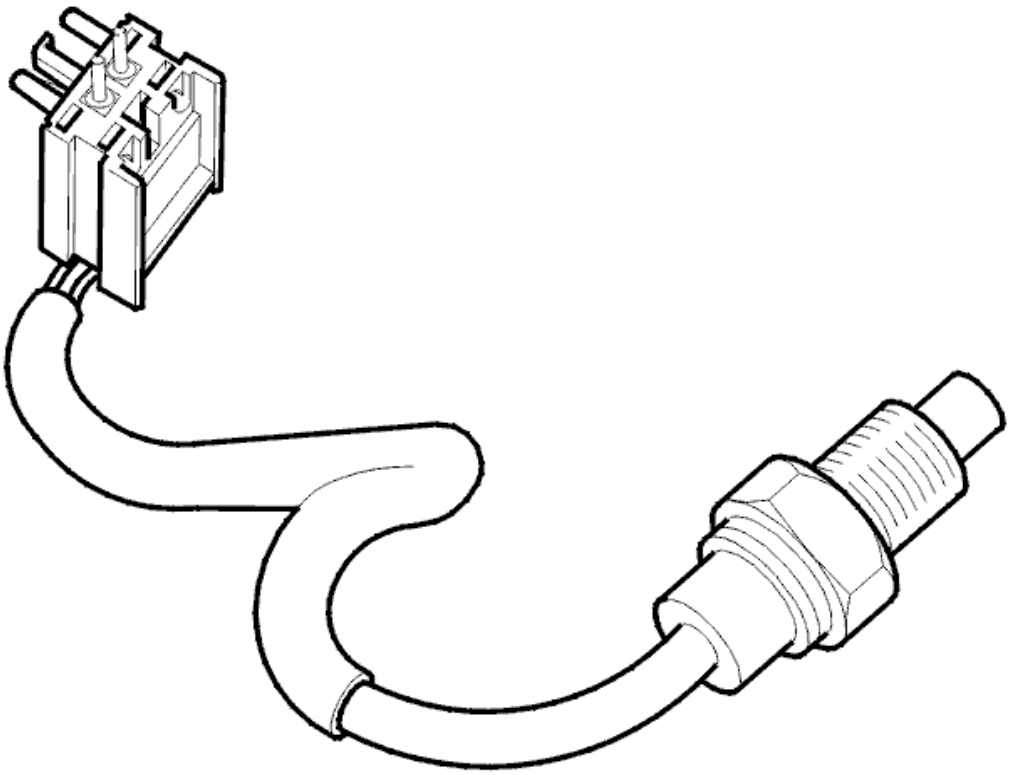

Fig. 144: Identifying Oil Temperature Sensor
Courtesy of VOLVO CARS CORPORATION

The oil temperature sensor transmits a signal to the control module. This signal is used for functions such as temperature controlled lock-up and the engagement of high-temperature programs. The sensor has an NTC (negative temperature coefficient) resistor. The signal (voltage) decreases with increasing oil temperature. Diagnostic trouble code (DTC) TCM-0044 is stored if the control module receives a signal from the oil temperature sensor corresponding to a temperature below approximately -10°C when the engine is started, and the signal has not changed after the engine has been running for approximately 10 minutes.

Substitute Value

- No substitute values.

Possible Source

- Contact resistance in the terminals.
- Open-circuit in the signal cable or in the ground lead.
- Short-circuit to supply voltage in the signal cable.
- Defective oil temperature sensor.

Fault symptom[s]

- General orange warning lamp lit.
- Harsh gear shifting.

HINT: Harsh gear shifting can be caused by:

- No reduction of the line pressure when shifting.
- No reduction of the line pressure when moving the gear selector between positions P-R, N-R and N-D.
- No request for torque limiting to the engine control module (ECM) when shifting.

SIGNAL TOO HIGH

CHECKING TRANSMISSION FLUID TEMPERATURE SENSOR

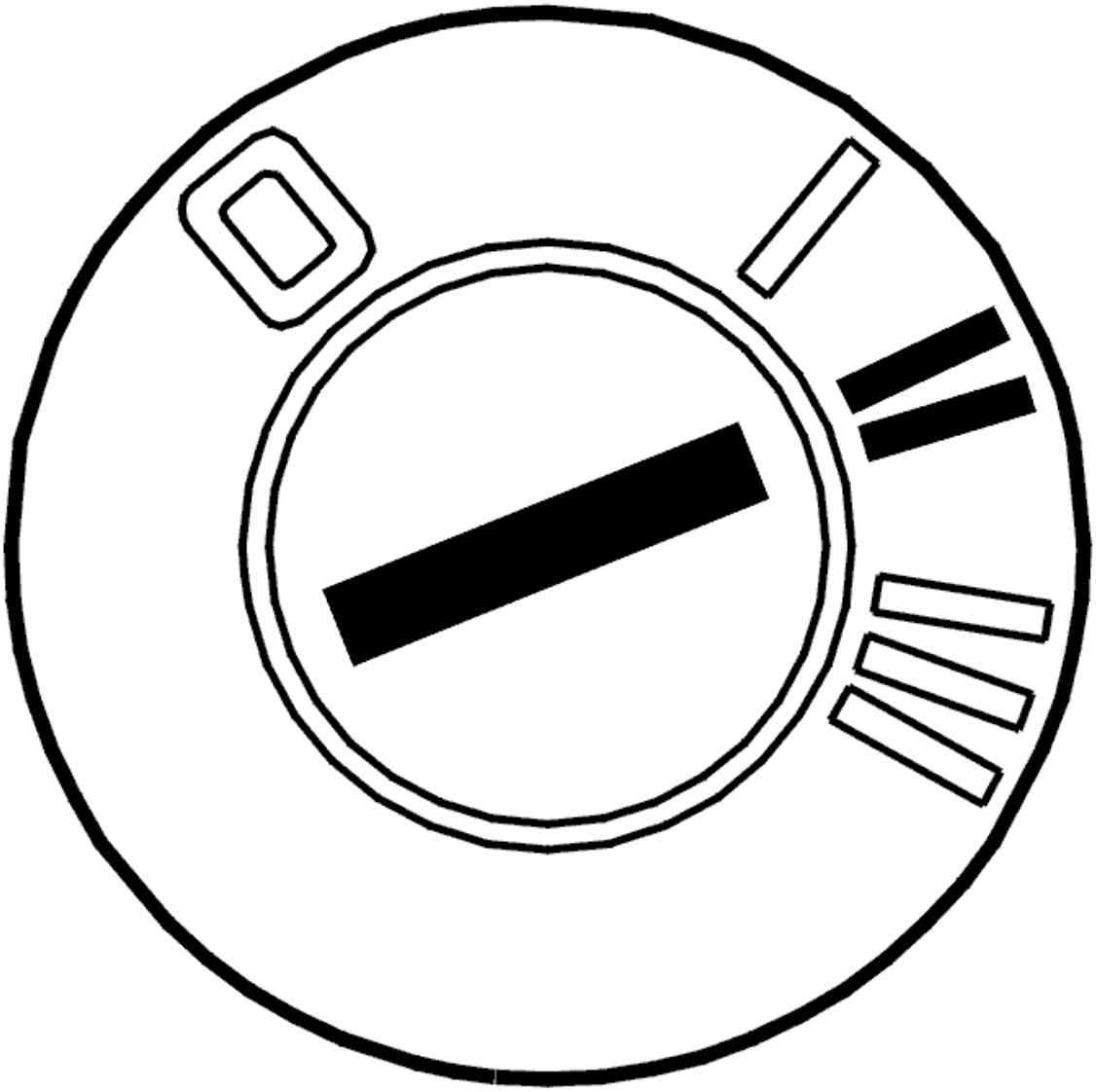

Fig. 145: Identifying Ignition ON
Courtesy of VOLVO CARS CORPORATION

- Ignition off
- Check the control module connector and transmission connector D. Check for contact resistance and oxidation according to **CONTACT RESISTANCE AND OXIDATION** . Remedy if necessary
- Reconnect the control module and transmission connectors
- Ignition on
- Read off the oil temperature.

  Check that the temperature is within its permitted range.

  Compare with the transmission temperature.

  If the transmission temperature is within its permitted range, the cause of the fault was contact resistance

or oxidation in the control module or transmission connector.

Other information:

- To disconnect the control module, see **TRANSMISSION CONTROL MODULE (TCM), REPLACING**
- To disconnect the transmission connectors, see **CONNECTORS, TRANSMISSION, DISCONNECTING / CONNECTING** .

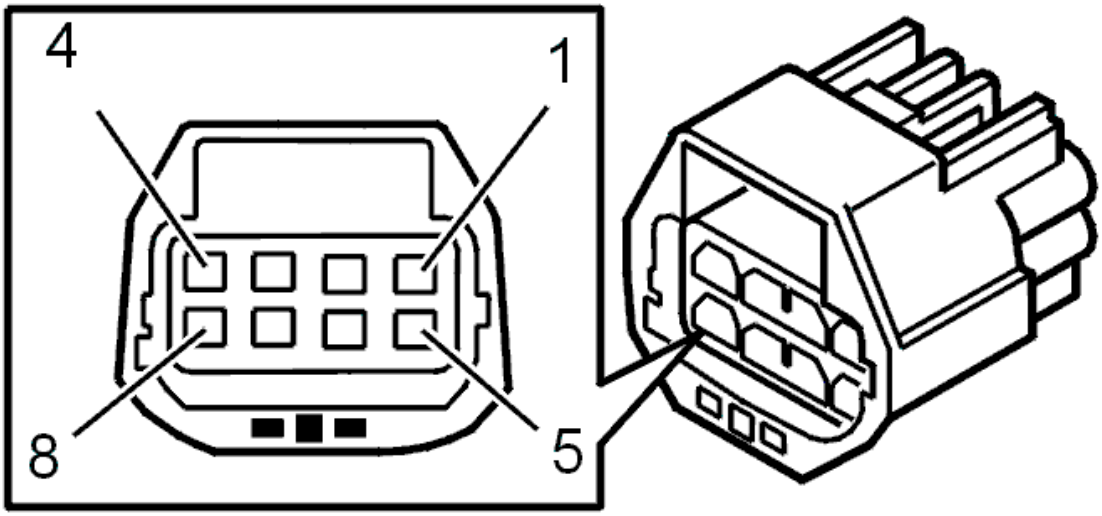

Fig. 146: Identifying 8-Pin Transmission Connector Terminals
Courtesy of VOLVO CARS CORPORATION

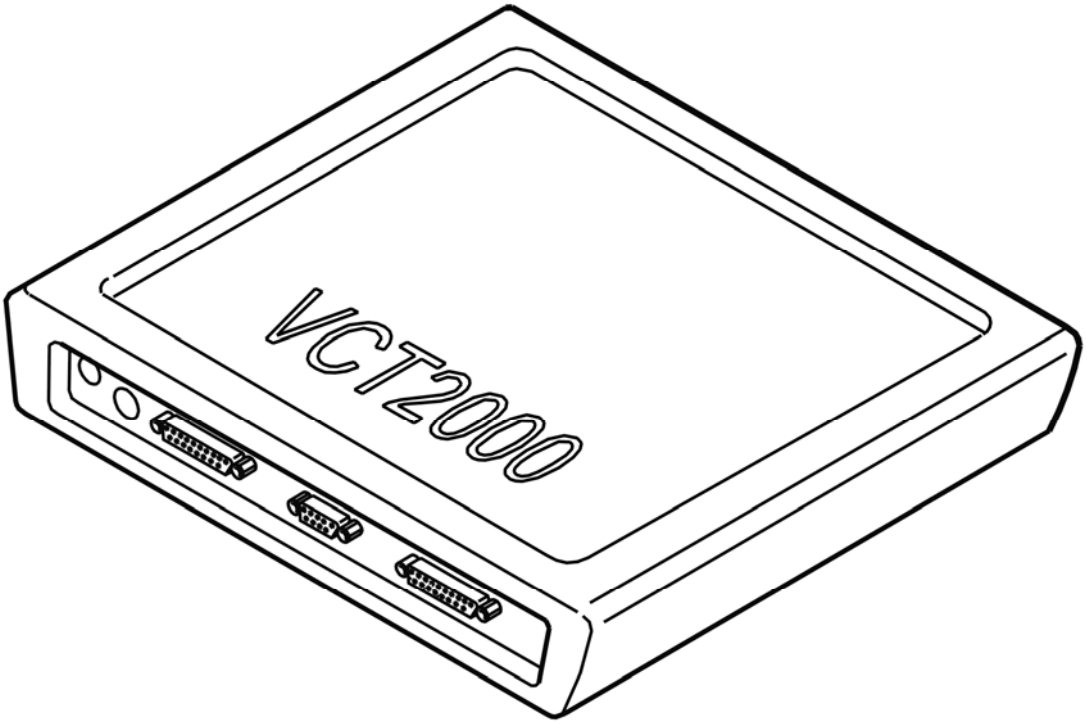

Fig. 147: Identifying VCT2000 Diagnostic Tool Symbol In VIDA
Courtesy of VOLVO CARS CORPORATION

Was the transmission temperature within its permitted range?

- **YES**

  OKAY: Troubleshooting has been completed.

- **NO**

  Refer to **CHECKING TRANSMISSION FLUID TEMPERATURE SENSOR**

CHECKING TRANSMISSION FLUID TEMPERATURE SENSOR

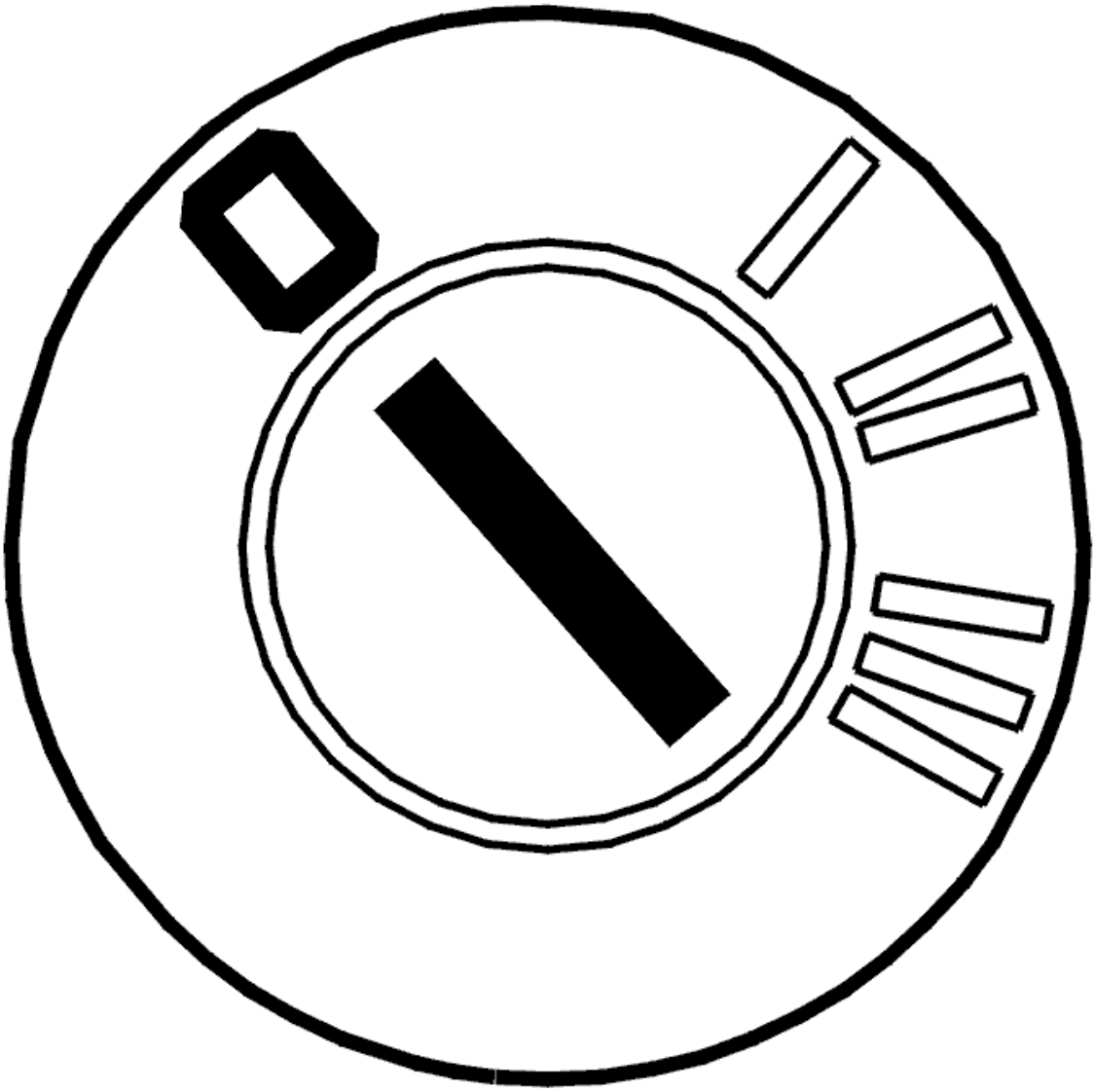

Fig. 148: Identifying Ignition OFF
Courtesy of VOLVO CARS CORPORATION

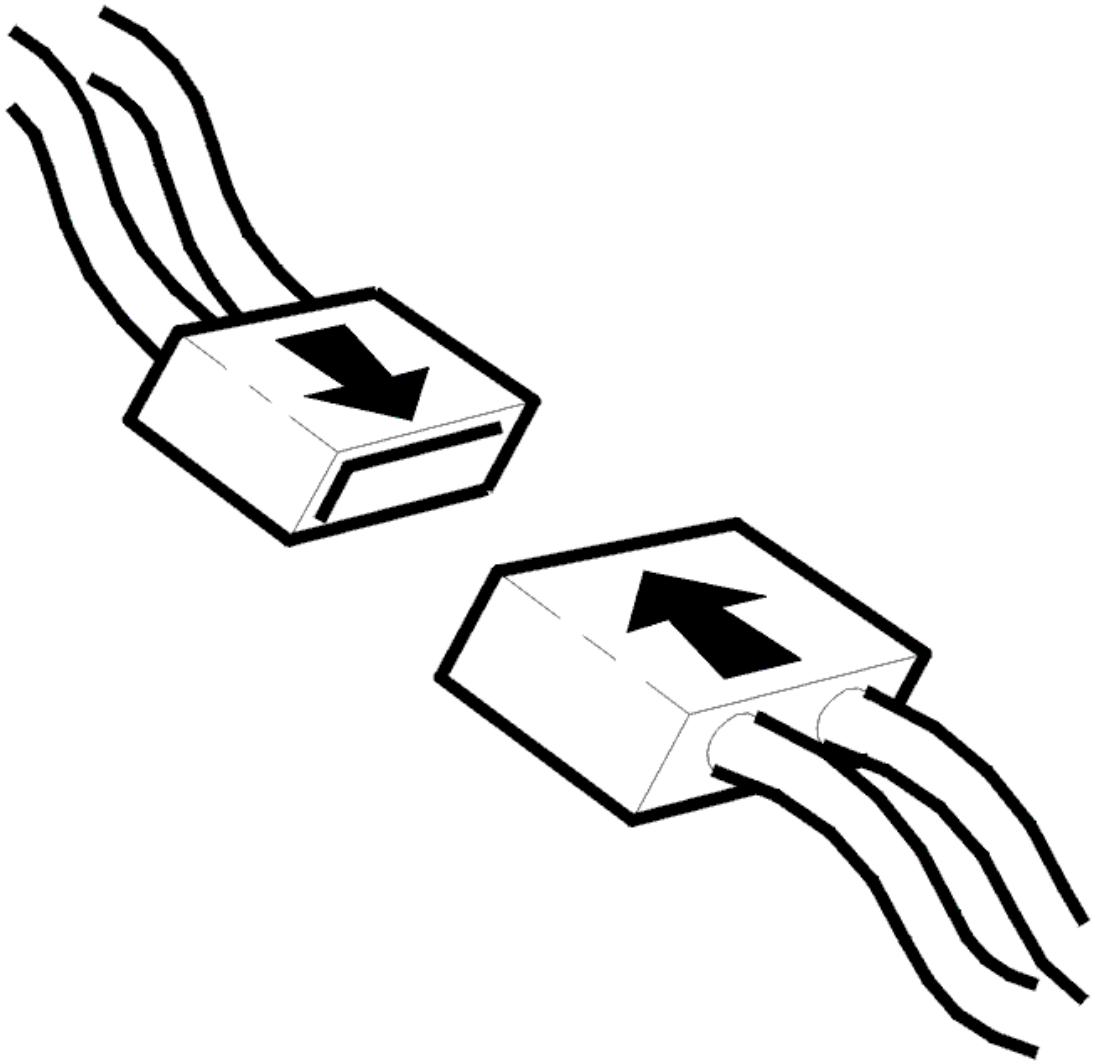

Fig. 149: Identifying Connector(s) Reinstallation
Courtesy of VOLVO CARS CORPORATION

- Ignition off
- Transmission connector D disconnected.

  Check the temperature sensor. Measure the resistance between transmission connector D terminals #D7 and #D8.

  The resistance must be 4.5-6 kohms at 20°C.

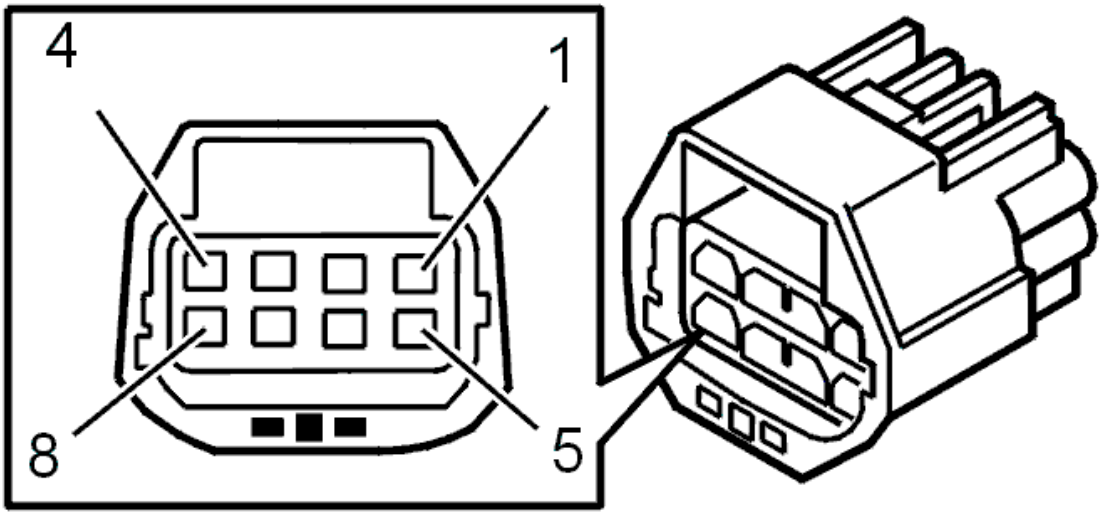

Fig. 150: Identifying 8-Pin Transmission Connector Terminals
Courtesy of VOLVO CARS CORPORATION

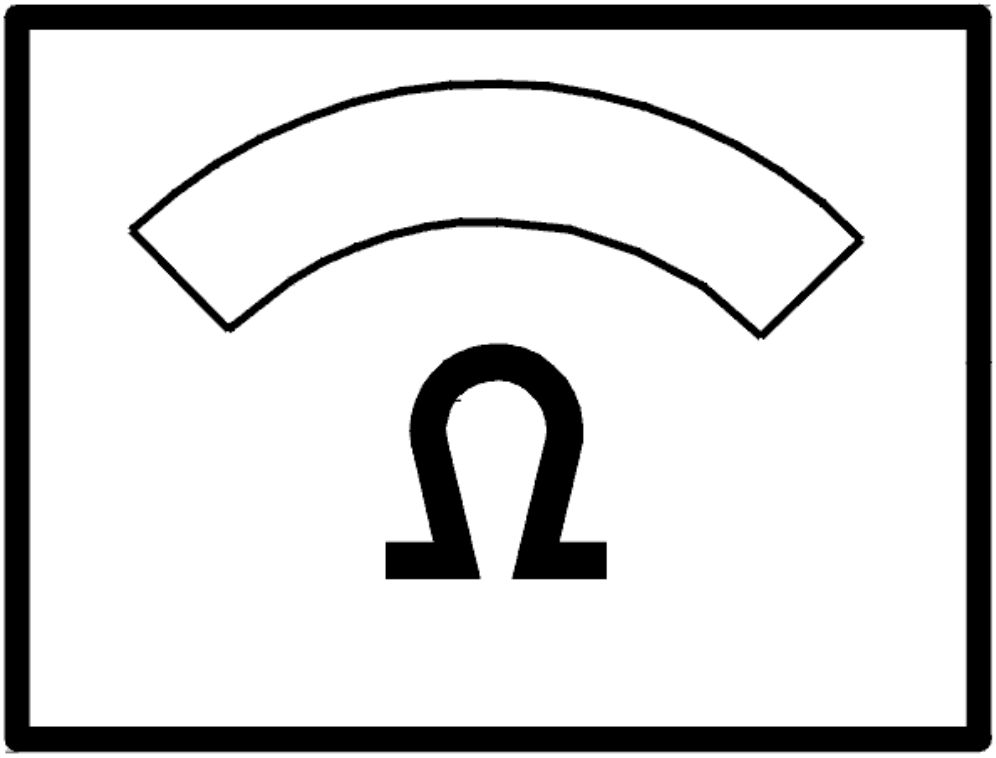

Fig. 151: Identifying Ohms Display
Courtesy of VOLVO CARS CORPORATION

Was the resistance OK?

- **YES**

  Refer to **CHECKING THE WIRING AND COMPONENT**

- **NO**

  Refer to **CHECKING THE CABLE AND COMPONENT**

CHECKING THE WIRING AND COMPONENT

Check the cable between control module terminal #A37 (#A37) and transmission connector terminal #D7

(control module side). Check for an open-circuit according to **OPEN-CIRCUIT, PERMANENT FAULTS** . Check for a short-circuit to supply voltage according to **SHORT-CIRCUIT TO SUPPLY VOLTAGE. PERMANENT FAULTS** .

Check the cable between control module terminal #A55 (#A55) and transmission connector terminal #D8 (control module side). Check for an open-circuit according to **OPEN-CIRCUIT, PERMANENT FAULTS** . Check for a short-circuit to supply voltage according to **SHORT-CIRCUIT TO SUPPLY VOLTAGE. PERMANENT FAULTS** .

Remedy as necessary.

Other information:

- To connect the breakout box, see **CONNECTING THE BREAKOUT BOX**
- To disconnect the transmission connectors, see **CONNECTORS, TRANSMISSION, DISCONNECTING / CONNECTING**
- For information about signals, see **SIGNAL DESCRIPTION. TRANSMISSION CONTROL MODULE (TCM)** .

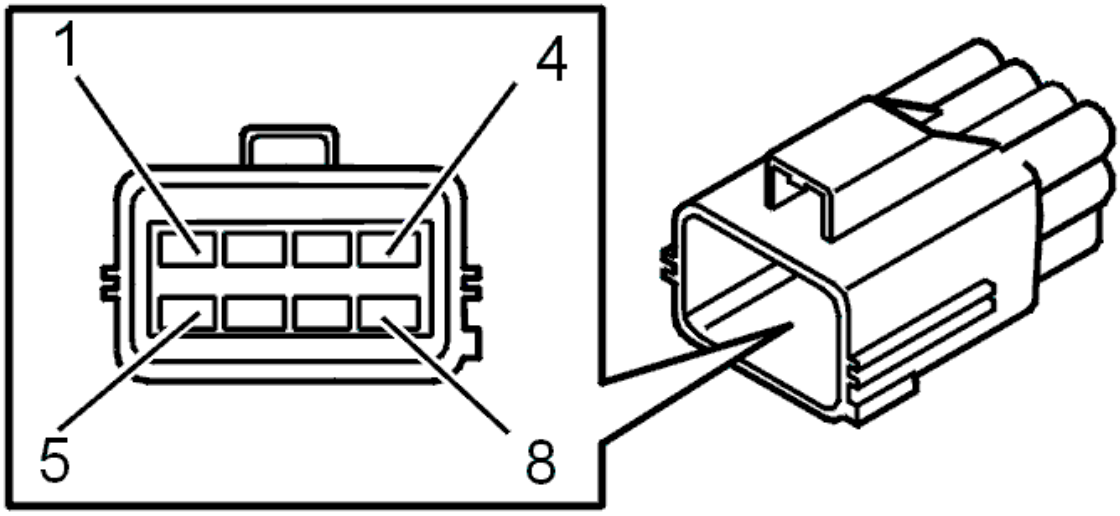

Fig. 152: Identifying Transmission Connector Terminals
Courtesy of VOLVO CARS CORPORATION

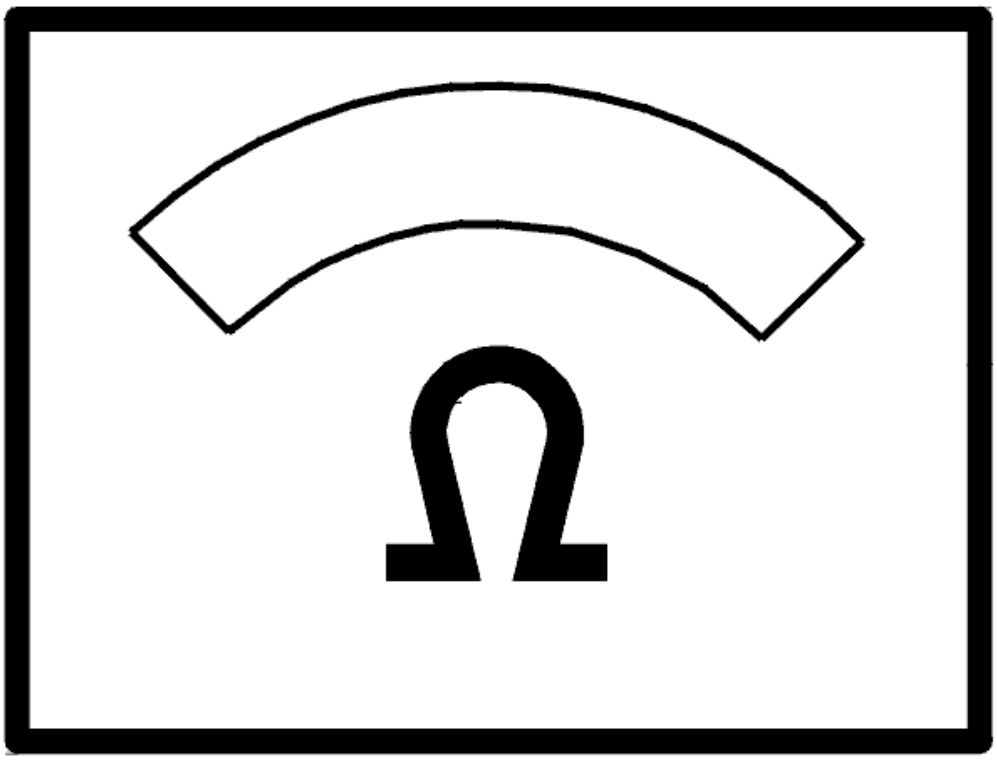

Fig. 153: Identifying Ohms Display
Courtesy of VOLVO CARS CORPORATION

Was a fault detected?

- **YES**

  Refer to **VERIFICATION**

- **NO**

  Refer to **CHECKING THE CABLE AND COMPONENT**

CHECKING THE CABLE AND COMPONENT

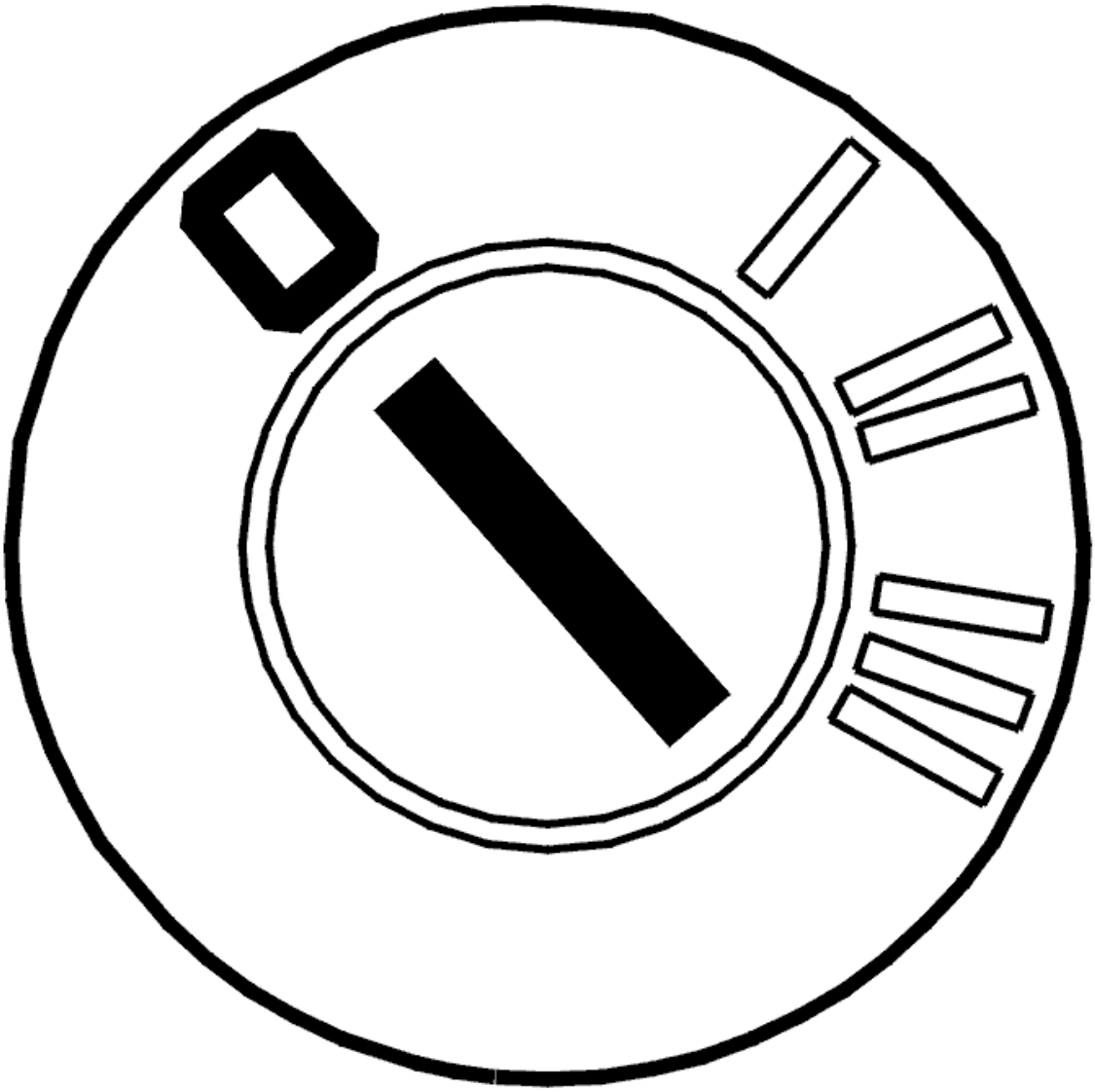

Fig. 154: Identifying Ignition OFF
Courtesy of VOLVO CARS CORPORATION

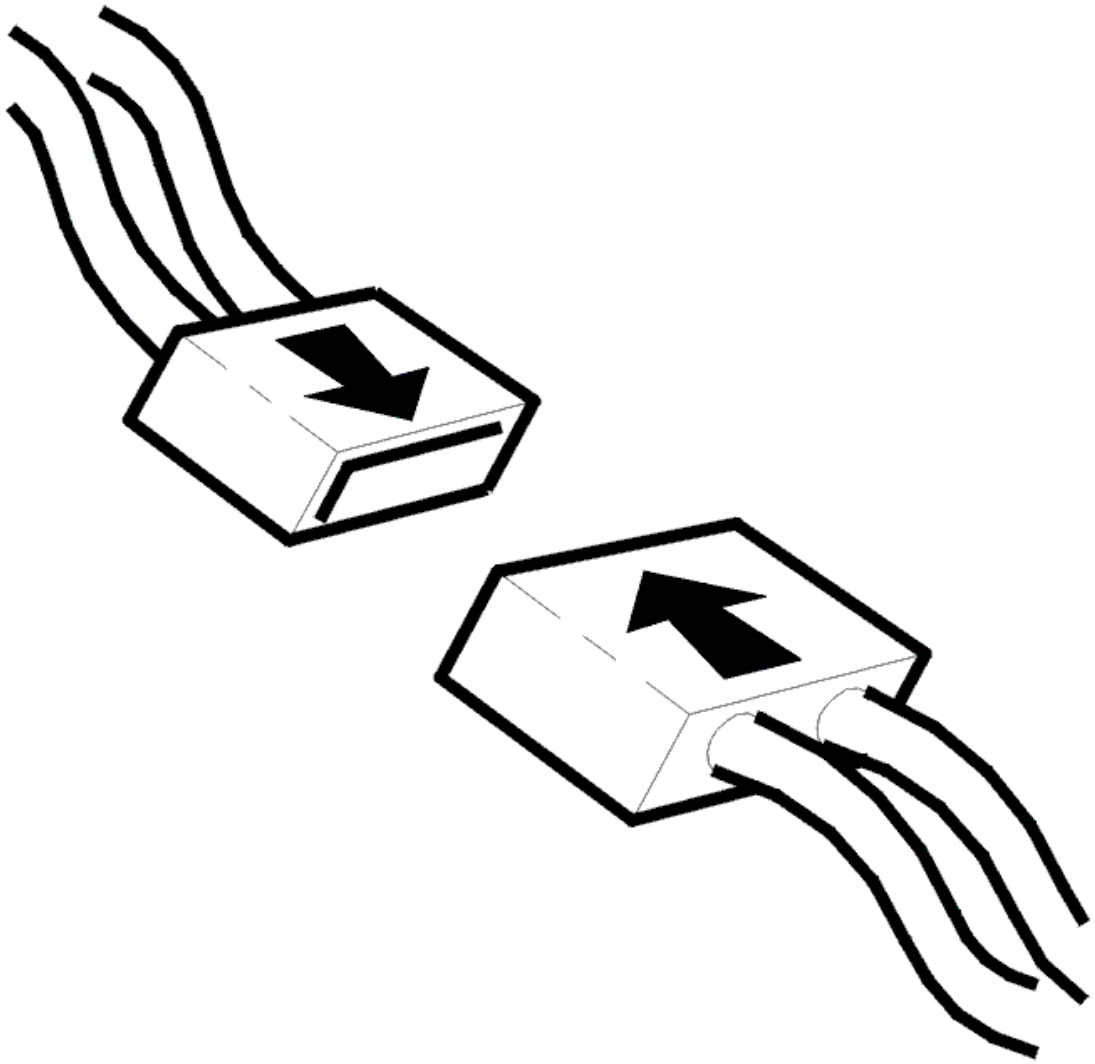

Fig. 155: Identifying Connector(s) Reinstallation
Courtesy of VOLVO CARS CORPORATION

- Ignition off
- Open the transmission control system.

  Check the cable between transmission connector terminal #D7 and temperature sensor terminal #1. Check the cable between transmission connector #D8 and temperature sensor terminal #2. Check for an open-circuit according to **OPEN-CIRCUIT, PERMANENT FAULTS** . Check for a short-circuit to supply voltage according to **SHORT-CIRCUIT TO SUPPLY VOLTAGE. PERMANENT FAULTS** . Also check the cables for a short-circuit to each other.

  HINT: Check the temperature sensor. With the ignition off and transmission connector D disconnected, measure the resistance between transmission connector D terminals #D7 and #D8. The resistance must be 4.5-6 kohms at 20°C.

Remedy as necessary.

Other information:

- To connect the breakout box, see **CONNECTING THE BREAKOUT BOX**
- To disconnect the transmission connectors, see **CONNECTORS, TRANSMISSION, DISCONNECTING / CONNECTING**
- To open the transmission control system and to check or replace the temperature sensor, see **SOLENOID CONTROL SYSTEM, REPLACING**
- For information about signals, see **SIGNAL DESCRIPTION. TRANSMISSION CONTROL MODULE (TCM)** .

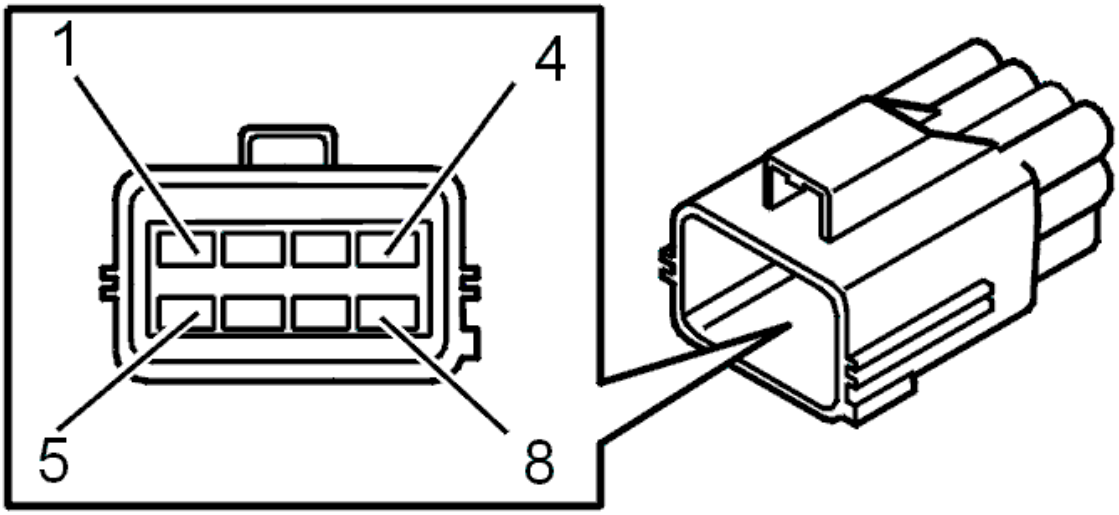

Fig. 156: Identifying Transmission Connector Terminals
Courtesy of VOLVO CARS CORPORATION

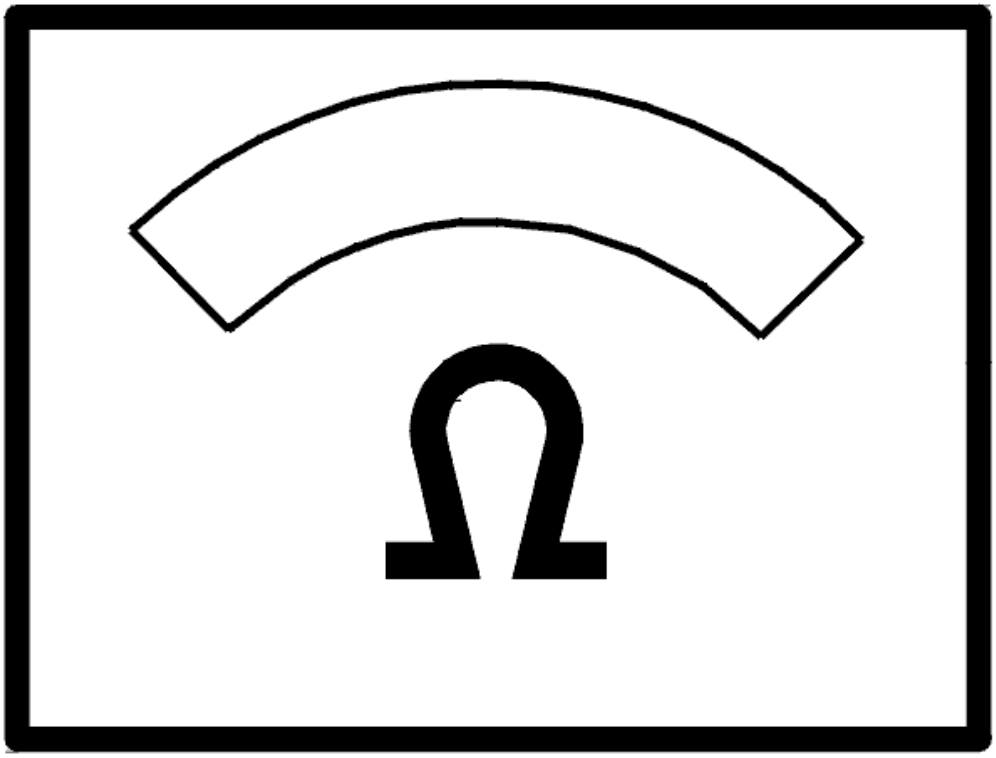

Fig. 157: Identifying Ohms Display
Courtesy of VOLVO CARS CORPORATION

- **Continue**

  Refer to **RESETTING TRANSMISSION FLUID CHANGE COUNTER**

INTERMITTENT FAULT

Check the wiring between transmission control module (TCM) terminals #A37 (#A37) and #A55 (#A55) and transmission connector terminals #D7 and #D8. Check for an intermittent short-circuit to each other.

Check the cables between control module terminal #A37 (#A37) and transmission connector terminal #D7 (control module side). Check for an intermittent short-circuit to supply voltage according to **SHORT-CIRCUIT TO SUPPLY VOLTAGE, INTERMITTENT FAULTS** .

Check the cable between control module terminal #A55 (#A55) and transmission connector terminal #D8 (control module side). Check for an intermittent short-circuit to supply voltage according to **SHORT-CIRCUIT TO SUPPLY VOLTAGE, INTERMITTENT FAULTS** .

Remedy as necessary.

Other information:

- To connect the breakout box, see **CONNECTING THE BREAKOUT BOX**
- To disconnect the transmission connectors, see **CONNECTORS, TRANSMISSION, DISCONNECTING / CONNECTING**
- For information about signals, see **SIGNAL DESCRIPTION. TRANSMISSION CONTROL MODULE (TCM)** .

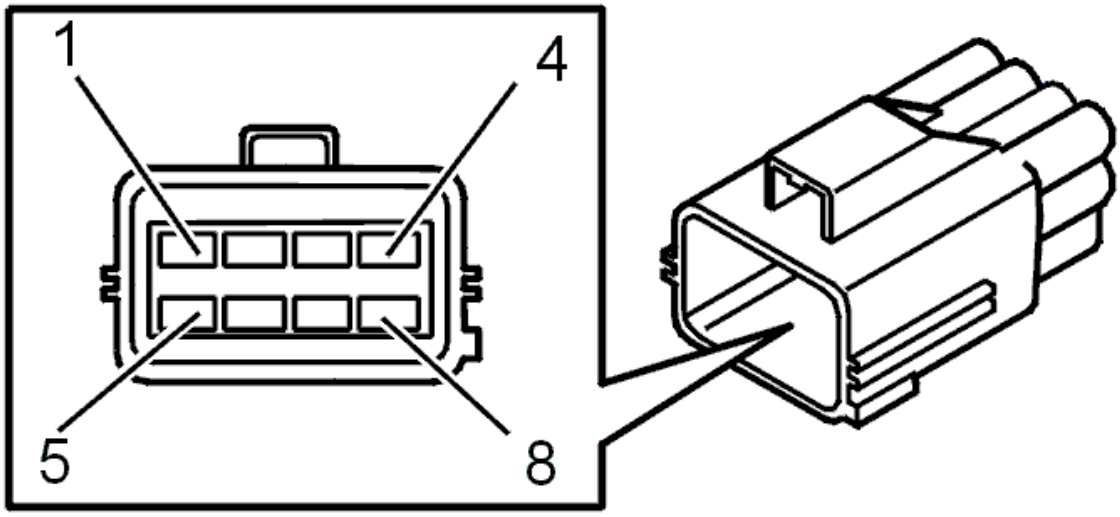

Fig. 158: Identifying Transmission Connector Terminals
Courtesy of VOLVO CARS CORPORATION

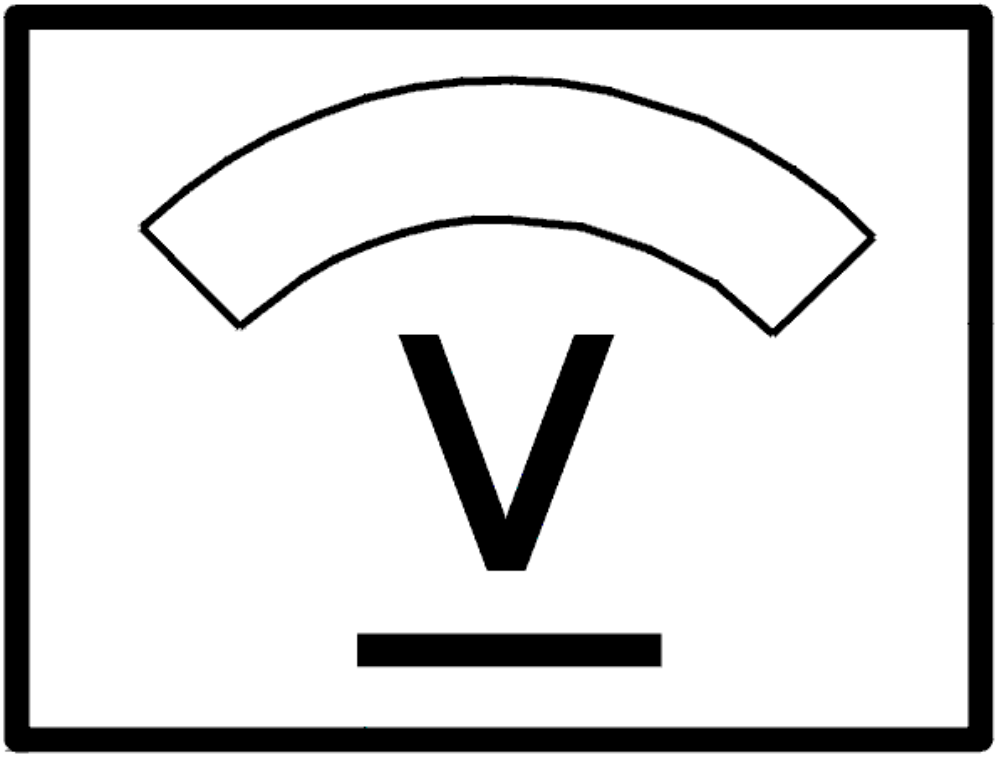

Fig. 159: Identifying Voltage Display
Courtesy of VOLVO CARS CORPORATION

- **Continue**

  Refer to **INFORMATION**

RESETTING TRANSMISSION FLUID CHANGE COUNTER

RESETTING TRANSMISSION FLUID CHANGE COUNTER

HINT: The transmission control module (TCM) has a counter for the oil quality. The counter counts up if the transmission is exposed to too high a load or an ambient temperature that is too high. If the counter is not reset when the oil is drained or changed, there is a risk that a diagnostic trouble code (DTC) will be stored in faulty circumstances. Therefore it is important that the "Transmission oil change" counter is reset.

NOTE: **This applies only when the transmission fluid is changed and when the fluid is changed when repairs are carried out to the transmission temperature sensor.**

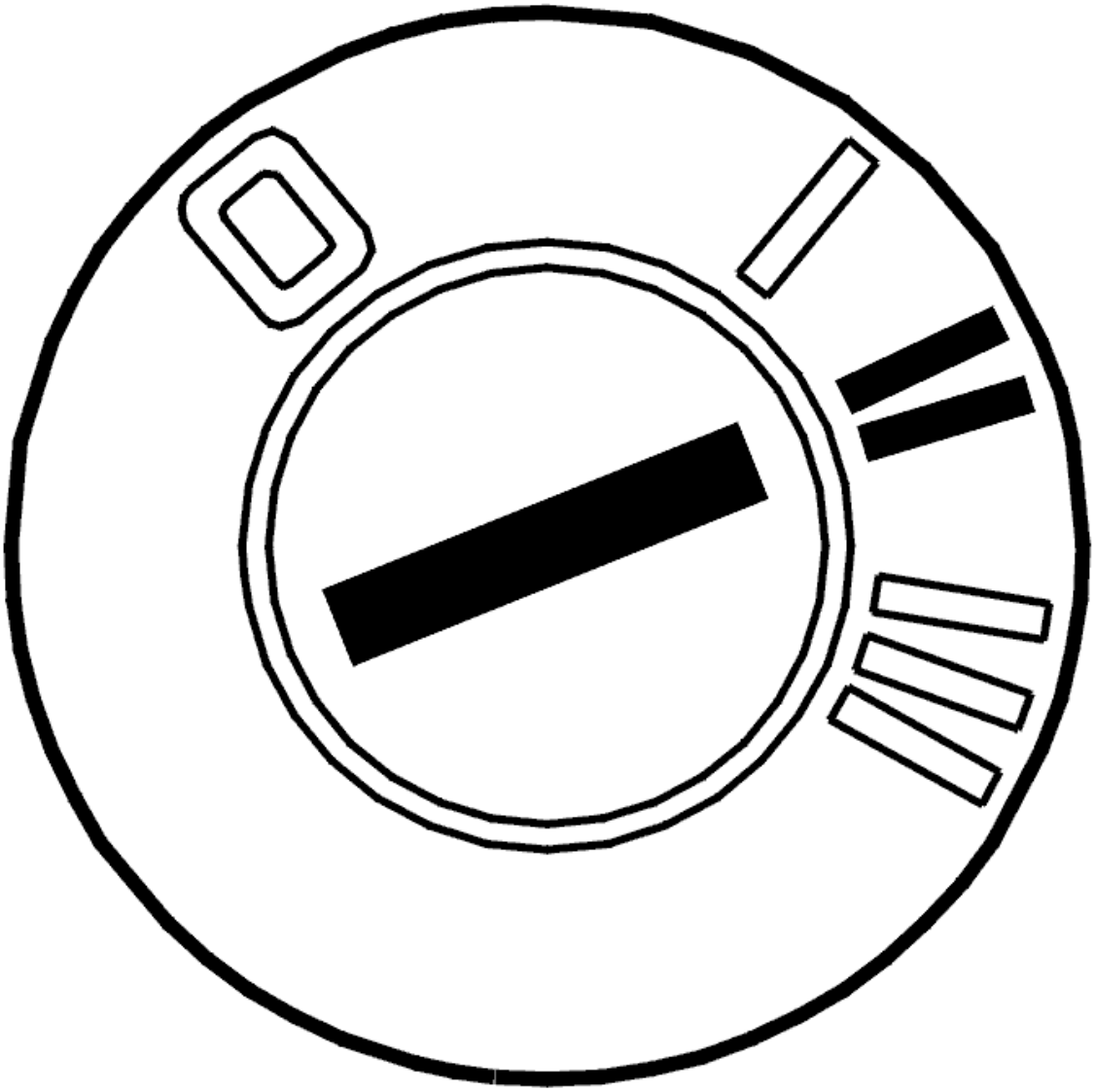

Fig. 160: Identifying Ignition ON
Courtesy of VOLVO CARS CORPORATION

- Ignition on.

  Reset the counter by clicking on the VCT 2000 symbol.

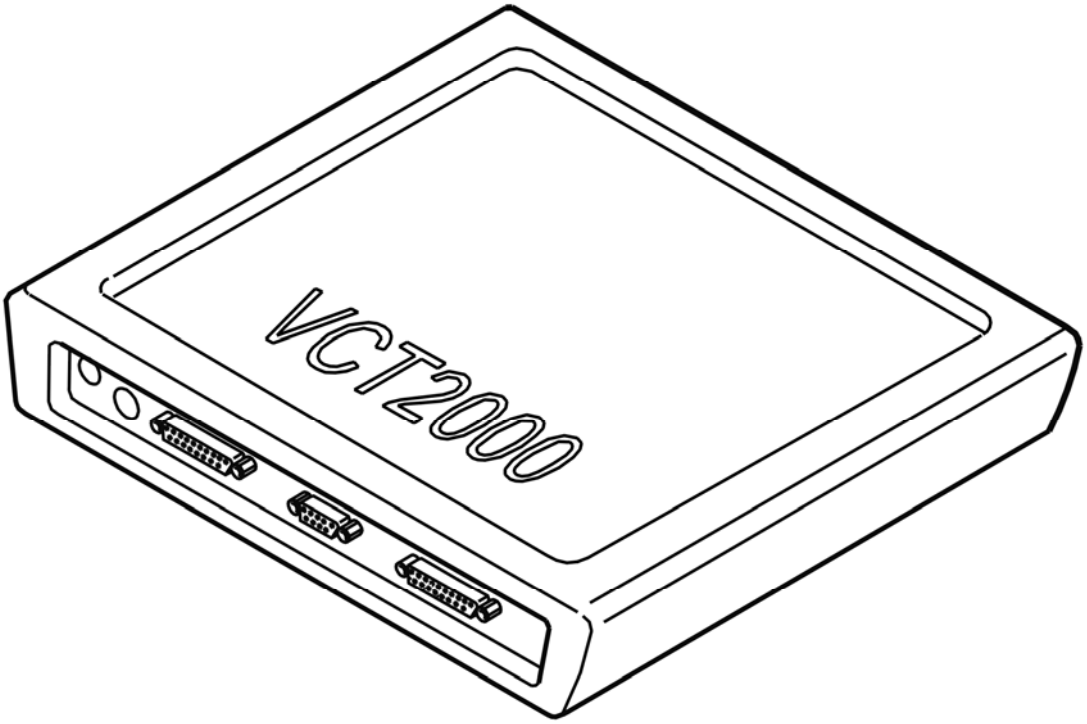

Fig. 161: Identifying VCT2000 Diagnostic Tool Symbol In VIDA
Courtesy of VOLVO CARS CORPORATION

- **Continue**

  Refer to **VERIFICATION**

VERIFICATION

VERIFICATION

HINT: After carrying out the repair, check that the fault has been remedied.

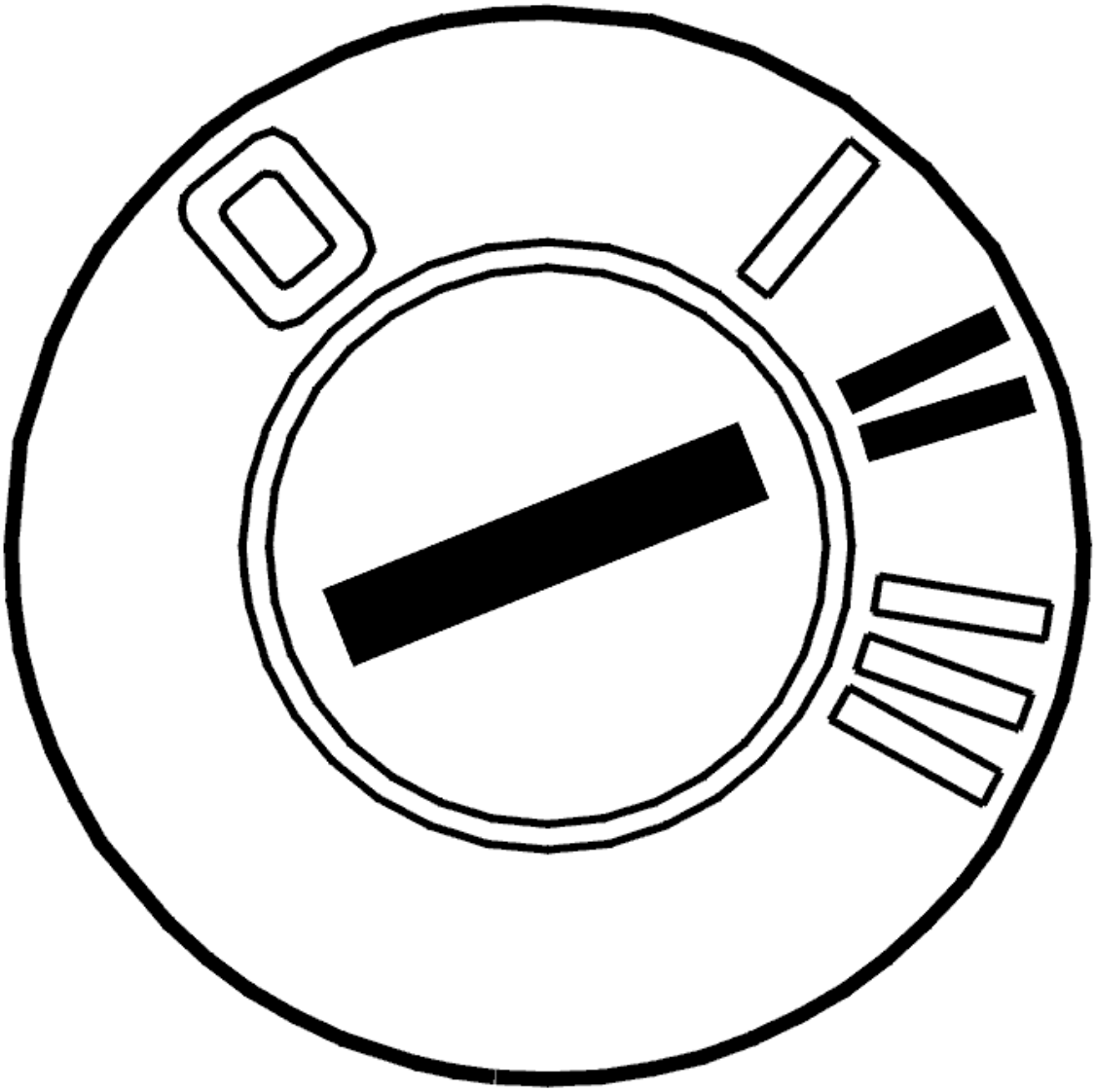

Fig. 162: Identifying Ignition ON
Courtesy of VOLVO CARS CORPORATION

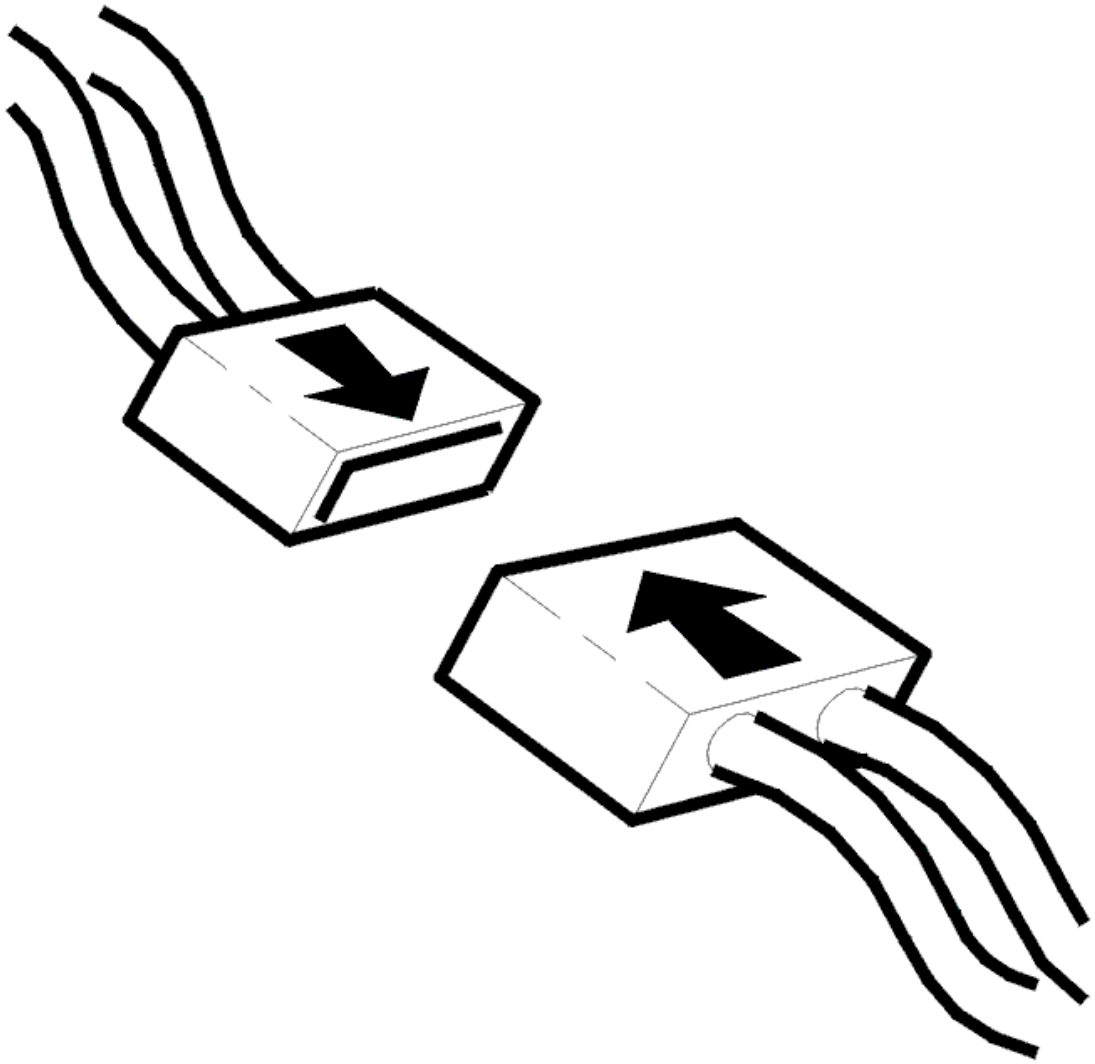

Fig. 163: Identifying Connector(s) Reinstallation
Courtesy of VOLVO CARS CORPORATION

- Ignition off.
- Reinstall the connectors, components etc.
- Ignition on.
- Read off the oil temperature.

Check that the transmission oil temperature is within its permitted range.

Compare with the transmission temperature.

NOTE: **The transmission temperature sensor is located inside the control unit and can be affected by the heat given off by the solenoids.**

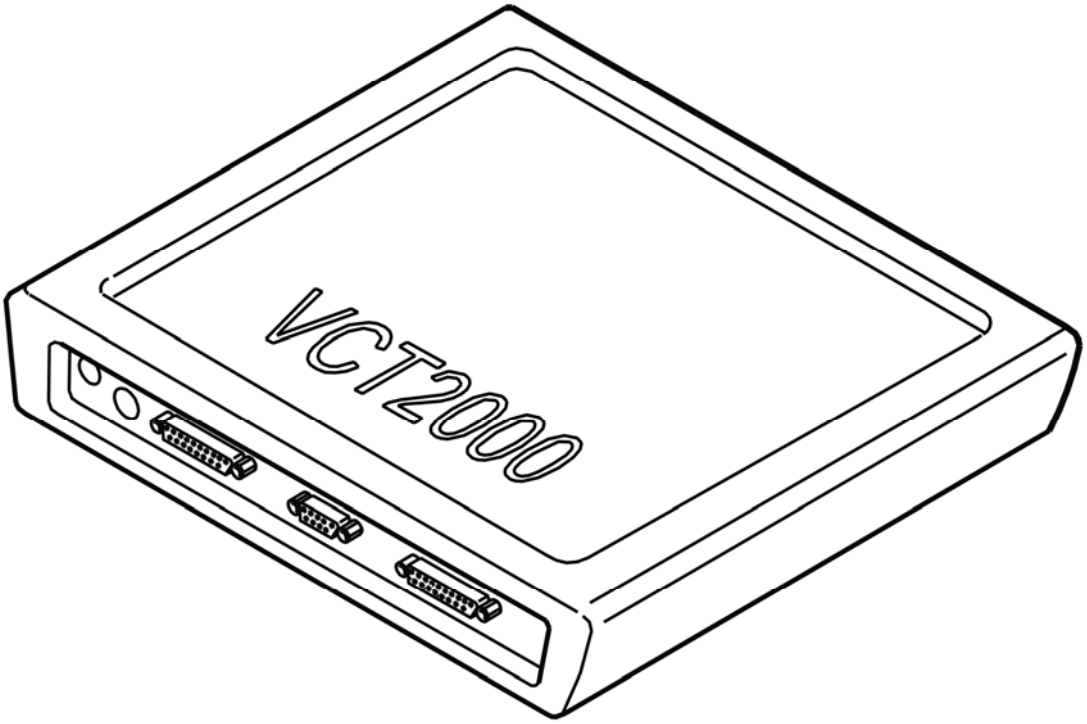

Fig. 164: Identifying VCT2000 Diagnostic Tool Symbol In VIDA
Courtesy of VOLVO CARS CORPORATION

Is the oil temperature within its permitted range?

- **YES**

  VERIFIED: Troubleshooting has been completed.

- **NO**

  Refer to **INFORMATION**

INFORMATION

FAULT-TRACING INFORMATION

The fault should have been detected and remedied. As this is not the case fault-tracing has failed.

Exit fault-tracing for this diagnostic trouble code (DTC) or make another attempt.

INFORMATION

FAULT-TRACING INFORMATION

If the fault is intermittent, do not verify fault-tracing if the fault does not recur.

It is possible to view the information again, or leave fault-tracing for this diagnostic trouble code (DTC).

TCM-0045: OIL TEMPERATURE SENSOR. FAULTY SIGNAL (4T65 AWD; 2003-2006)

DIAGNOSTIC TROUBLE CODE (DTC) INFORMATION

Condition

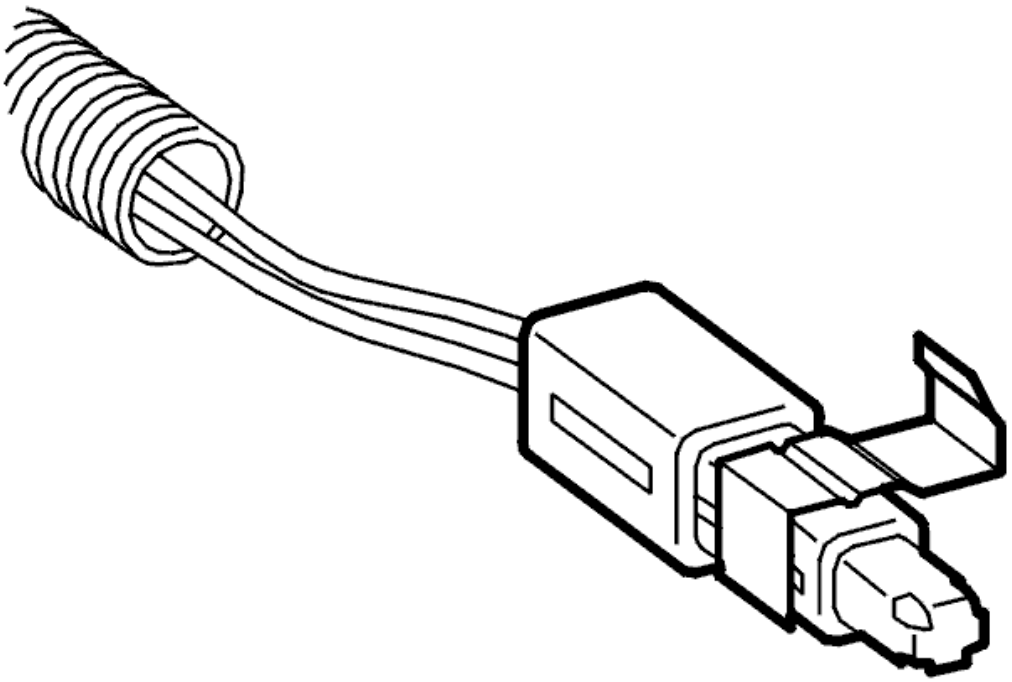

Fig. 165: Identifying Temperature Sensor
Courtesy of VOLVO CARS CORPORATION

The oil temperature sensor sends a signal to the transmission control module (TCM) which is used for functions such as temperature controlled lockup and initiating high-temperature programs. The sensor has an NTC (negative temperature coefficient) resistor. The signal (voltage) decreases with increasing oil temperature. Diagnostic trouble code (DTC) TCM-0045 is stored if the transmission control module (TCM) receives a signal from the oil temperature sensor which has not changed after the engine has run for 10 minutes.

Substitute Value

- No substitute values.

Possible Source

- Contact resistance in terminals.
- Open-circuit in signal cable or ground lead.
- Short-circuit to supply voltage in the signal cable.
- Defective oil temperature sensor.

Fault symptom[s]

- General orange warning lamp lit.

FAULTY SIGNAL

CHECKING TRANSMISSION FLUID TEMPERATURE SENSOR

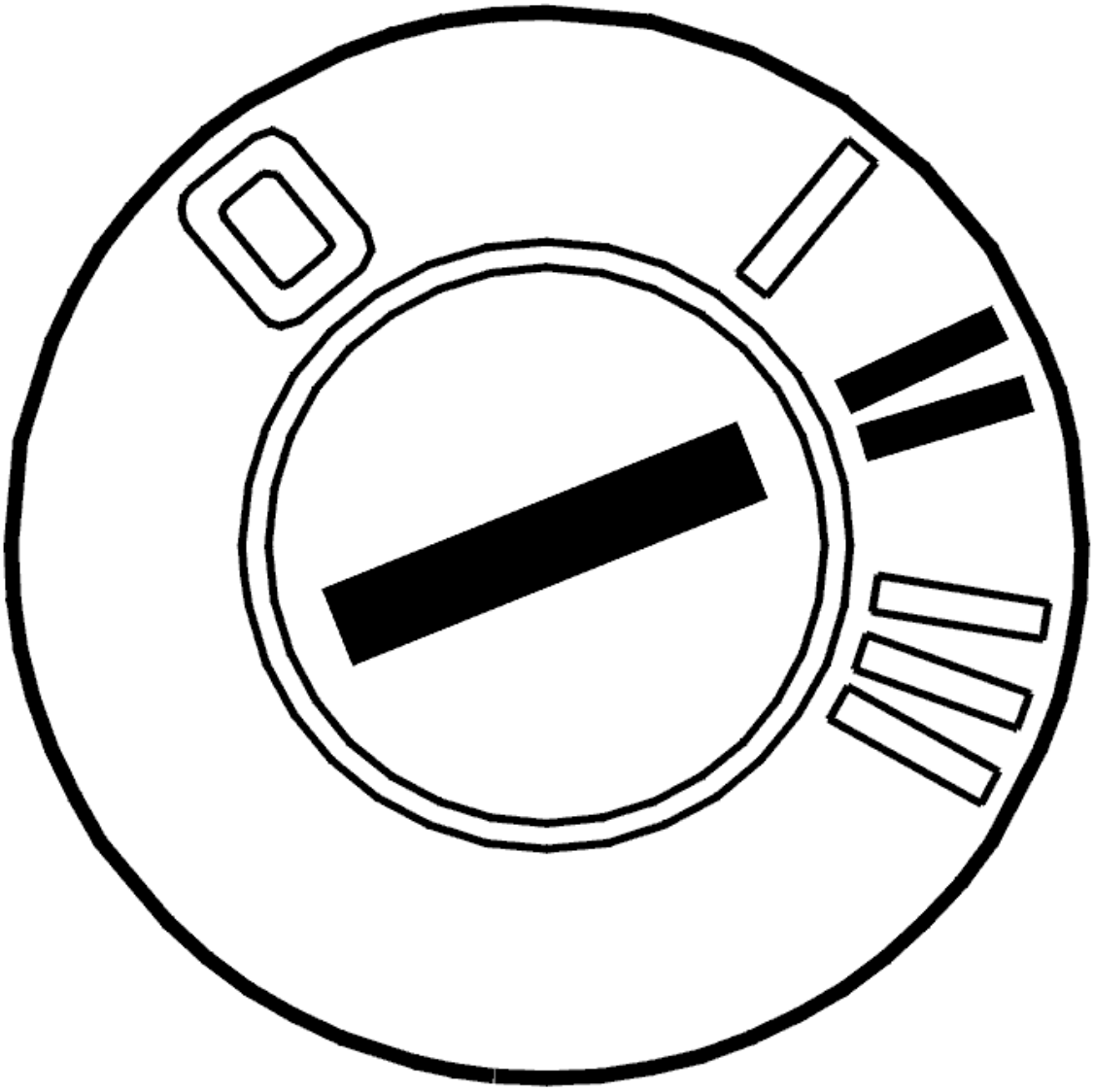

Fig. 166: Identifying Ignition ON
Courtesy of VOLVO CARS CORPORATION

- Ignition on
- Read off the oil temperature.

  Check that the temperature is within its permitted range.

  Compare with the transmission temperature.

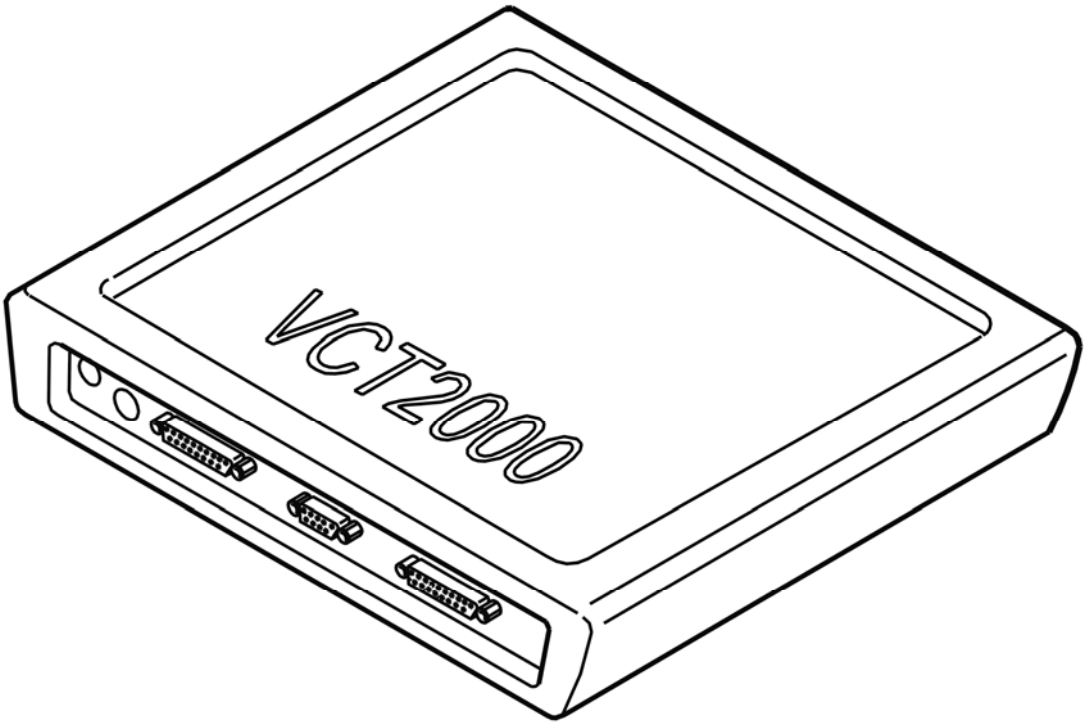

Fig. 167: Identifying VCT2000 Diagnostic Tool Symbol In VIDA
Courtesy of VOLVO CARS CORPORATION

Is the transmission temperature within its permitted range?

- **YES**

  Refer to **INTERMITTENT FAULT**

- **NO**

  Refer to **CHECKING TRANSMISSION FLUID TEMPERATURE SENSOR**

CHECKING TRANSMISSION FLUID TEMPERATURE SENSOR

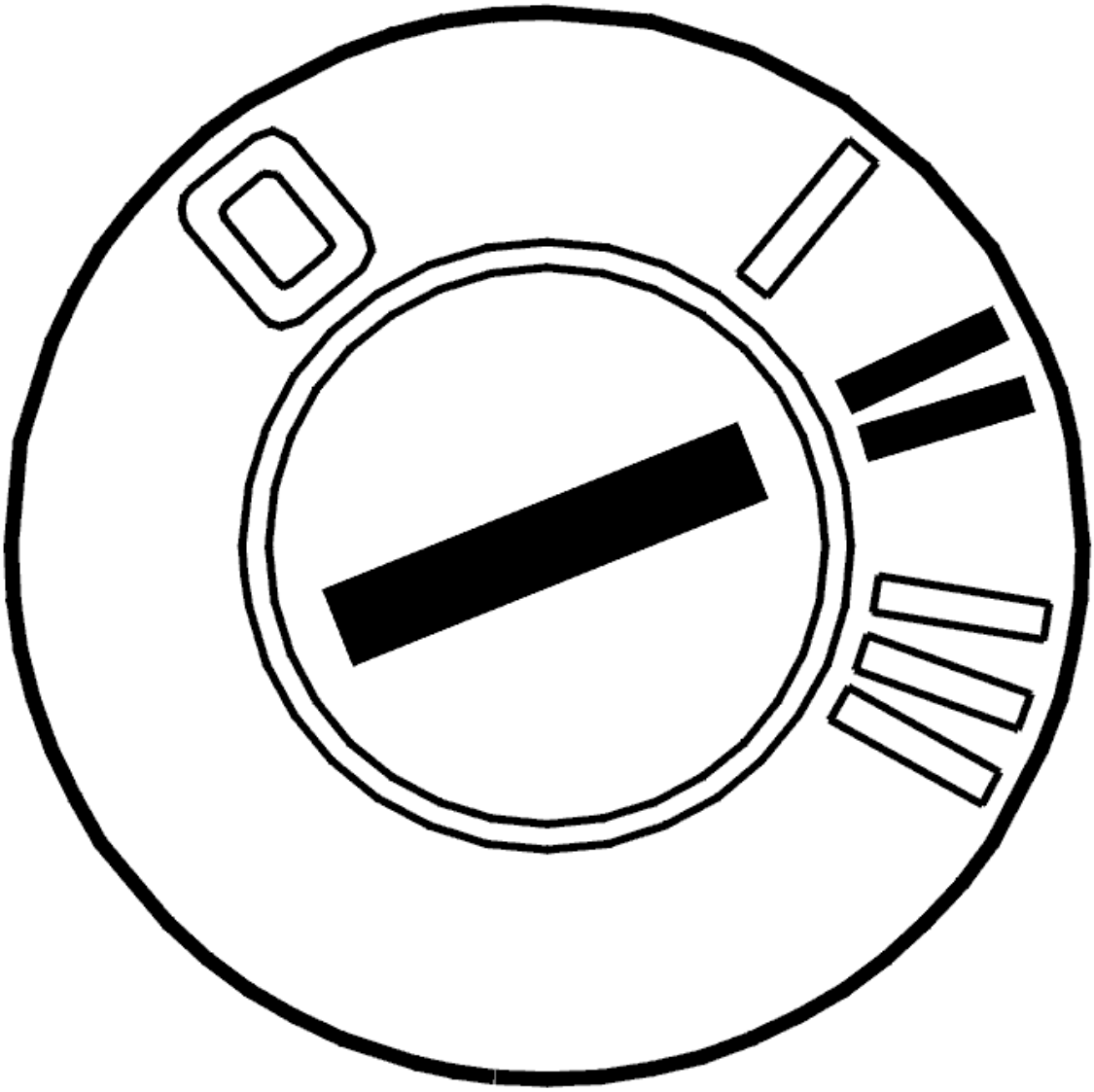

Fig. 168: Identifying Ignition ON
Courtesy of VOLVO CARS CORPORATION

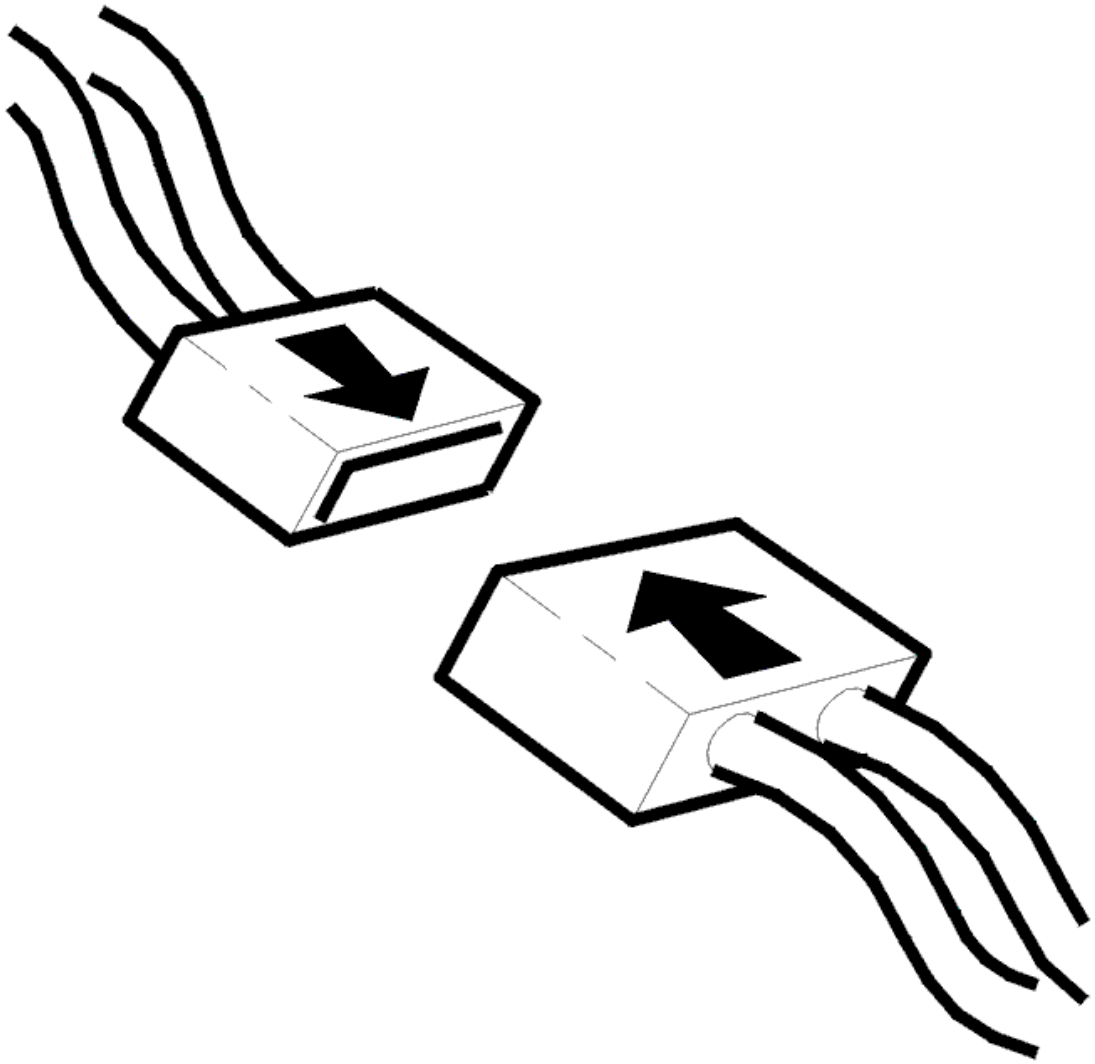

Fig. 169: Identifying Connector(s) Reinstallation
Courtesy of VOLVO CARS CORPORATION

- Ignition off
- Check the control module and transmission connectors. Check for contact resistance and oxidation
- Reconnect control module and transmission connector
- Ignition on
- Read off the oil temperature.

  Check that the temperature is within its permitted range.

  Compare with the transmission temperature.

  If the transmission temperature is within its permitted range, the cause of the diagnostic trouble code (DTC) was contact resistance or oxidation in the control module or transmission connector.

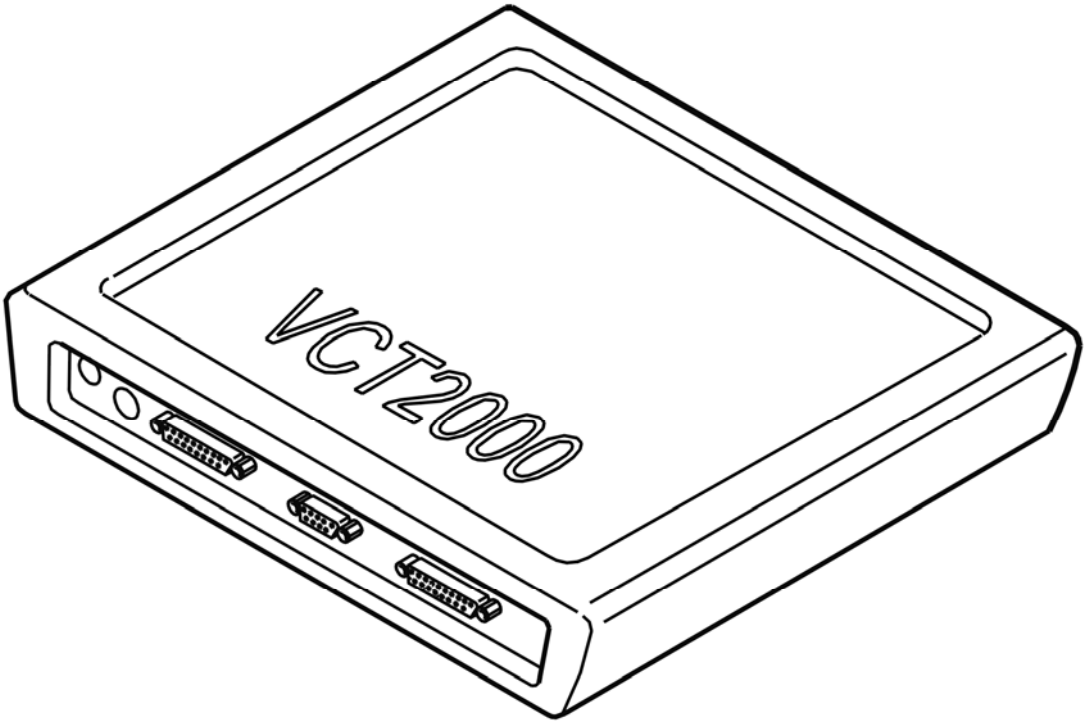

Fig. 170: Identifying VCT2000 Diagnostic Tool Symbol In VIDA
Courtesy of VOLVO CARS CORPORATION

Was the transmission temperature within its permitted range?

- **YES**

  OKAY: Troubleshooting has been completed.

- **NO**

  Refer to **CHECKING THE TEMPERATURE SENSOR**

CHECKING THE TEMPERATURE SENSOR

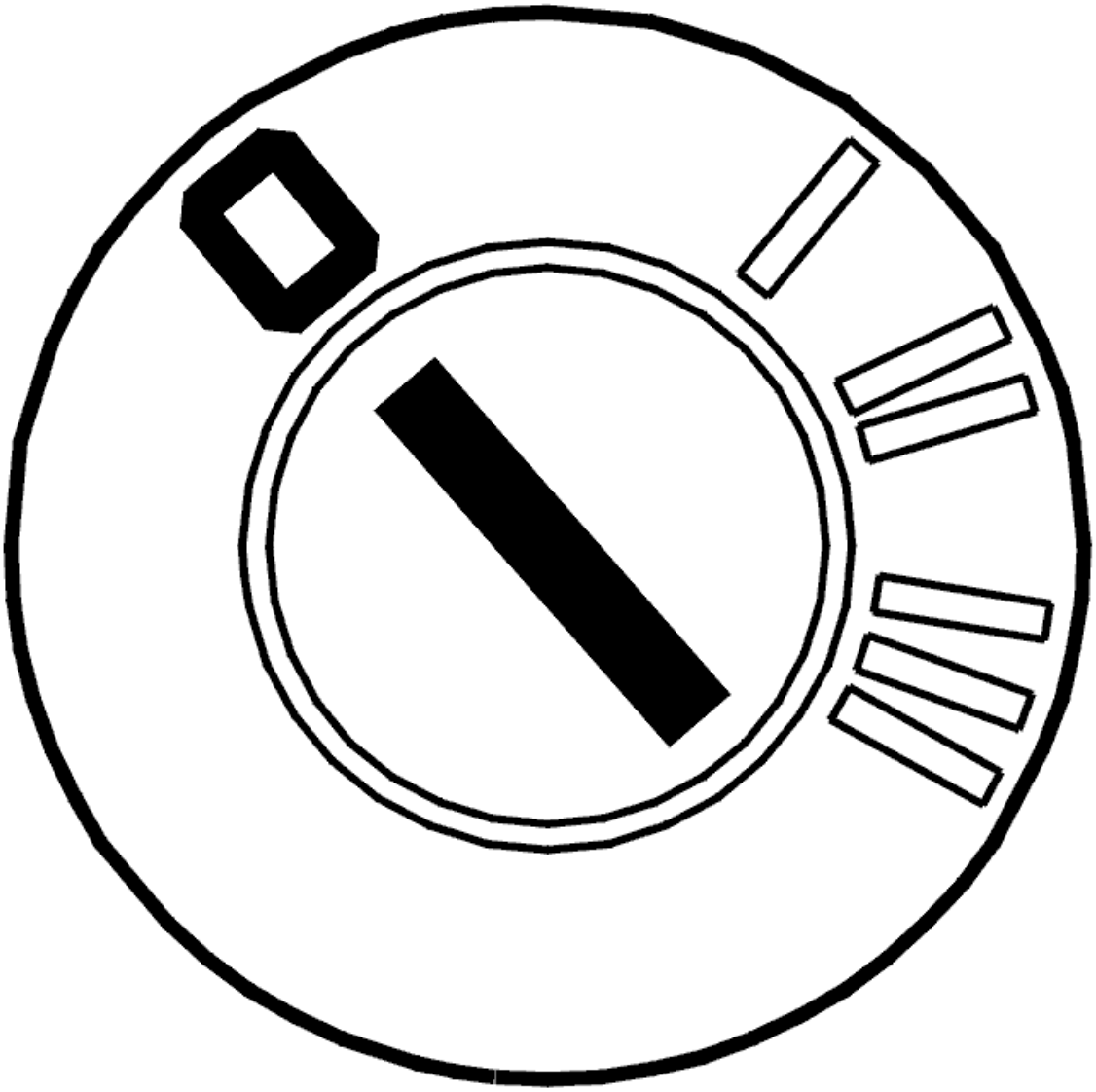

Fig. 171: Identifying Ignition OFF
Courtesy of VOLVO CARS CORPORATION

- Ignition off
- Disconnect the transmission connector
- Connect adapter see **9511505** and see **9813190** to the transmission connector (transmission side)
- Connect an ohmmeter between terminals #L (terminal #A11) and #M (terminal #A12).

  The resistance must be 3.5-3.6 kohms at 20 °C.

  Other information

  - To connect the breakout box to the transmission connector, see **CONNECTING THE BREAKOUT BOX, GM AUTOMATIC TRANSMISSIONS**
  - For information about signals, see **SIGNAL SPECIFICATION**

- For information about the resistance values, see **COMPONENT RESISTANCE VALUES** .

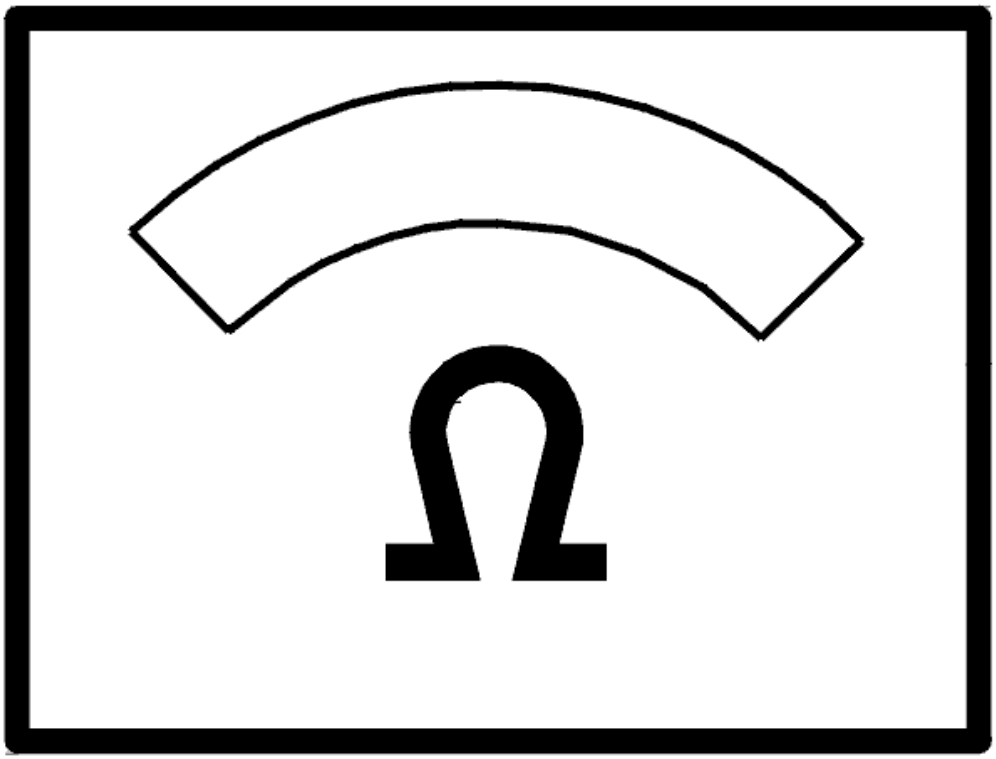

Fig. 172: Identifying Ohms Display
Courtesy of VOLVO CARS CORPORATION

Was the resistance OK?

- **YES**

  Refer to **CHECKING THE SIGNAL CABLE**

- **NO**

  Refer to **CHECKING THE WIRING AND COMPONENT**

CHECKING THE SIGNAL CABLE

Check the cable between control module terminal #37 (#A37) and transmission connector (control module side) terminal #L (#11). Check for a short-circuit to ground. Check for a short-circuit to supply voltage.

HINT: With the ignition on, the transmission connector disconnected and a voltmeter connected between terminal #L (#A11) and the ground terminal, the voltage must be 5 V.

NOTE: Diagnostic trouble codes (DTCs) for the gear-shift position sensor and the solenoids may be stored when disconnecting the transmission connector.

Remedy as necessary.

Other information

- To connect the breakout box, see **CONNECTING THE BREAKOUT BOX**
- To connect the breakout box to the transmission connector, see **CONNECTING THE BREAKOUT BOX, GM AUTOMATIC TRANSMISSIONS**
- For information about signals, see **SIGNAL SPECIFICATION**
- see **CHECKING WIRING AND TERMINALS**

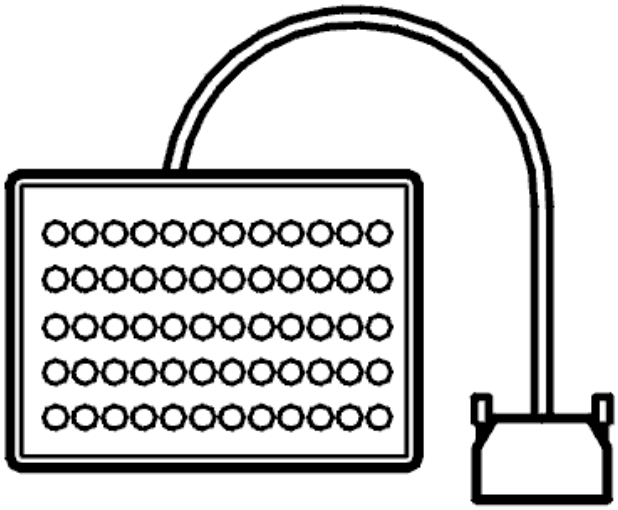

Fig. 173: Identifying Breakout Box
Courtesy of VOLVO CARS CORPORATION

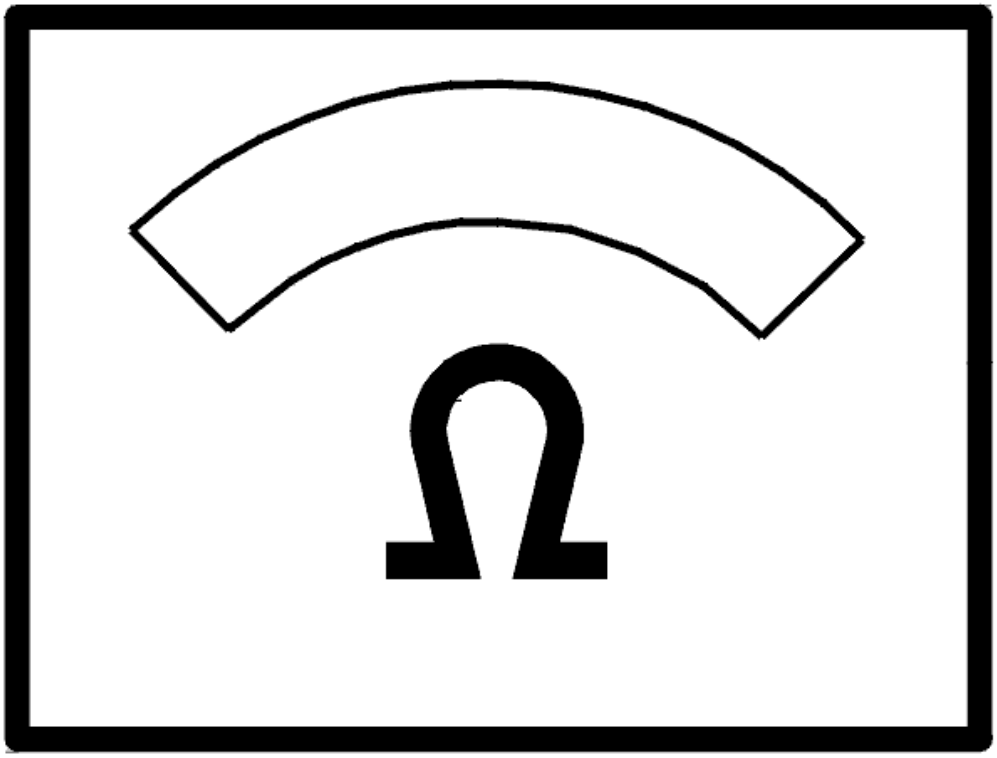

Fig. 174: Identifying Ohms Display
Courtesy of VOLVO CARS CORPORATION

Was a fault detected?

- **YES**

  Refer to **VERIFICATION**

- **NO**

  Refer to **CHECKING THE WIRING AND COMPONENT**

CHECKING THE WIRING AND COMPONENT

- Ignition off

- Open the transmission control system.

  Check the cable between transmission terminal #L (#A11) and temperature sensor terminal #A. Check for a short-circuit to ground. Check for a short-circuit to supply voltage.

  HINT: Check the temperature sensor: Measure the resistance between temperature sensor connector terminals #A and #B. The resistance should be between 3.5-3.6 kohms at 20 °C.

  Remedy as necessary.

  Other information:

  - To connect the breakout box, see **CONNECTING THE BREAKOUT BOX**
  - To connect the breakout box to the transmission connector, see **CONNECTING THE BREAKOUT BOX, GM AUTOMATIC TRANSMISSIONS**
  - To replace the cable harness, see **TEMPERATURE SENSOR FLUID, TRANSAXLE, (TFT)**
  - To replace the temperature sensor, see **TEMPERATURE SENSOR FLUID TRANSMISSION, REPLACING**
  - For information about signals, see **SIGNAL SPECIFICATION**
  - For information about the resistance values, see **COMPONENT RESISTANCE VALUES**
  - see **CHECKING WIRING AND TERMINALS**

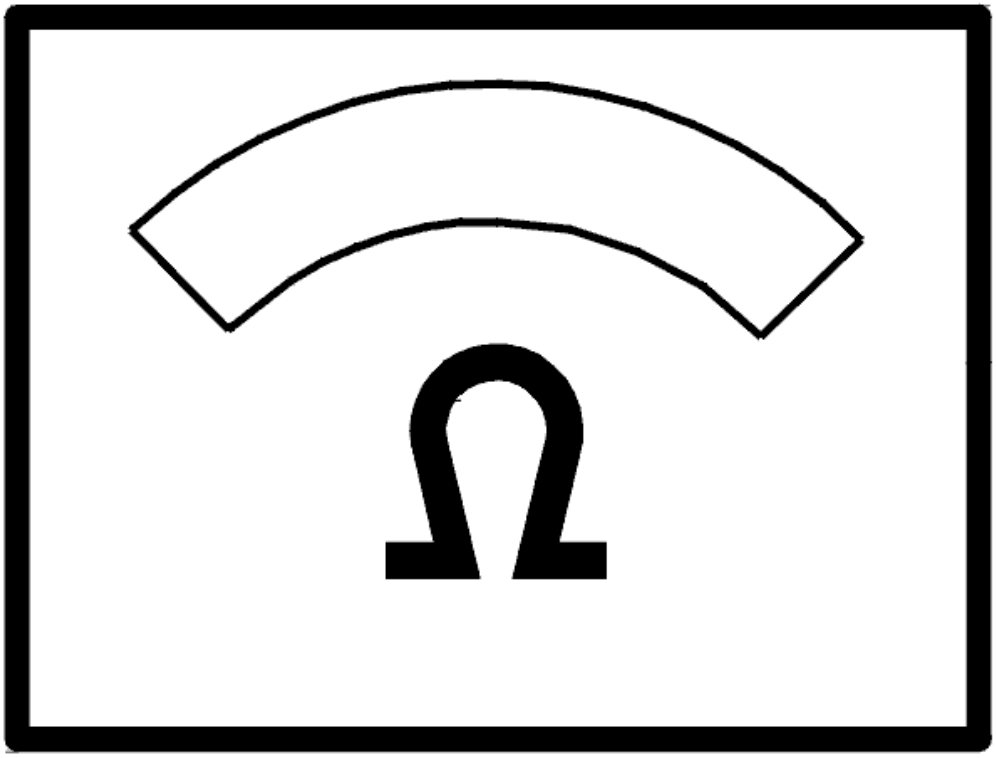

Fig. 175: Identifying Ohms Display
Courtesy of VOLVO CARS CORPORATION

- **Continue**

  Refer to **RESETTING THE ADAPTATION**

INTERMITTENT FAULT

Check the control module and transmission connectors. Check for contact resistance and oxidation.

Check the cable between control module terminal #37 (#A37) and transmission connector (control module side) terminal #11. Check for an intermittent short-circuit to ground. Check for a short-circuit to supply voltage.

Check the cable between control module terminal #55 (#A55) and transmission connector (control module side) terminal #12. Check for an intermittent short-circuit to ground. Check for a short-circuit to supply voltage.

Remedy as necessary.

Other information

- To connect the breakout box, see **CONNECTING THE BREAKOUT BOX**
- To connect the breakout box to the transmission connector, see **CONNECTING THE BREAKOUT BOX, GM AUTOMATIC TRANSMISSIONS**
- For information about signals, see **SIGNAL SPECIFICATION**
- For information about the resistance values, see **COMPONENT RESISTANCE VALUES**
- see **CHECKING WIRING AND TERMINALS**

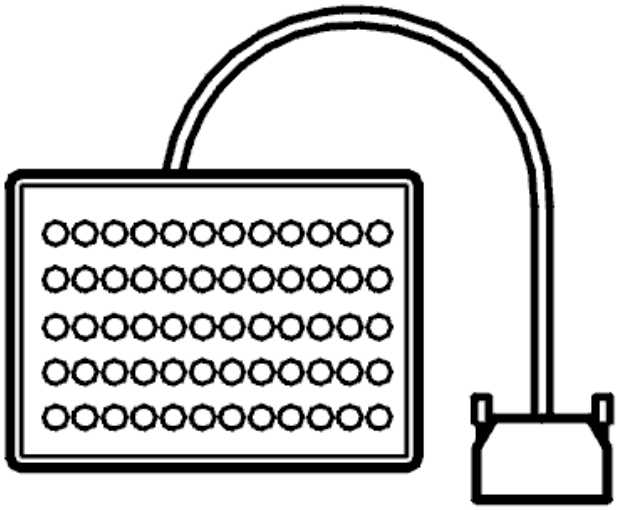

Fig. 176: Identifying Breakout Box
Courtesy of VOLVO CARS CORPORATION

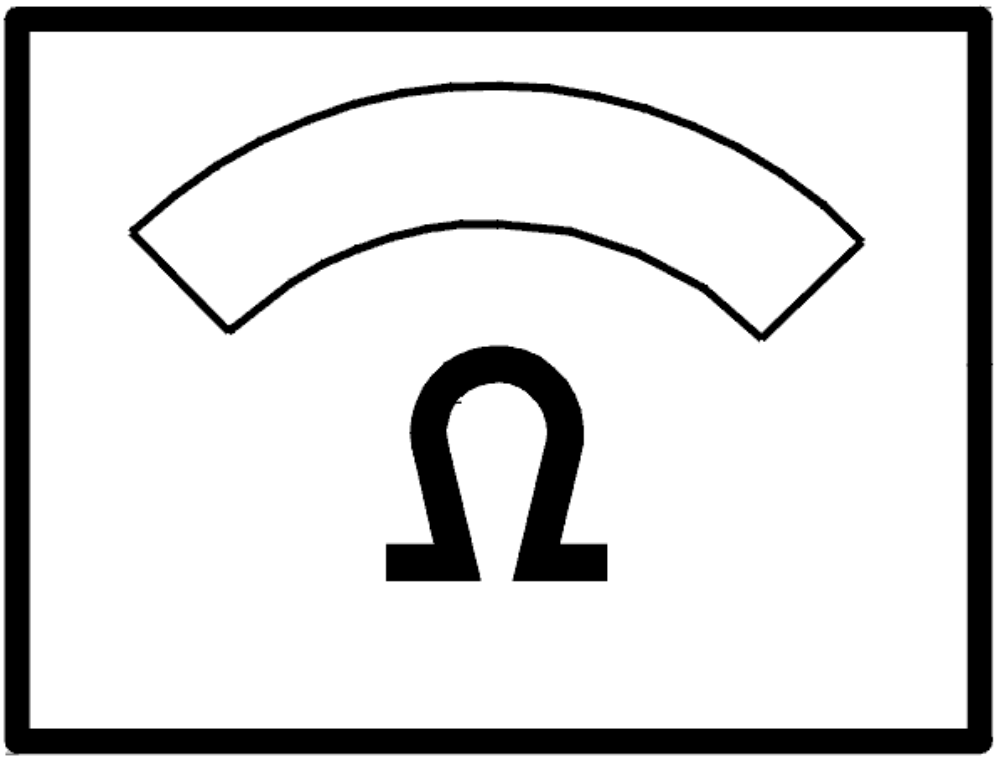

Fig. 177: Identifying Ohms Display
Courtesy of VOLVO CARS CORPORATION

- **Continue**

  Refer to **INFORMATION**

RESETTING THE ADAPTATION

RESETTING ADAPTATION AND THE COUNTER FOR "TRANSMISSION OIL CHANGE"

HINT: The transmission has torque controlled adaptive pressure control. Pressure control means that the transmission regulates the pressure itself during each gear shift. This avoids harsh gear shifting. Each gear shift is evaluated by the control module and stored in the memory. This allows for compensation for wear and tear in the transmission and clutch. It is important that the adaptation in the memory is reset after the transmission has been repaired. This is to ensure normal operation. The oil is replaced during

repair; the "Transmission oil change" counter must be reset. If the counter is not reset when the fluid is drained and replaced, there is a risk that a diagnostic trouble code (DTC) will be stored in incorrect circumstances.

NOTE: **This applies only if the transmission or one of the components in the transmission have been replaced.**

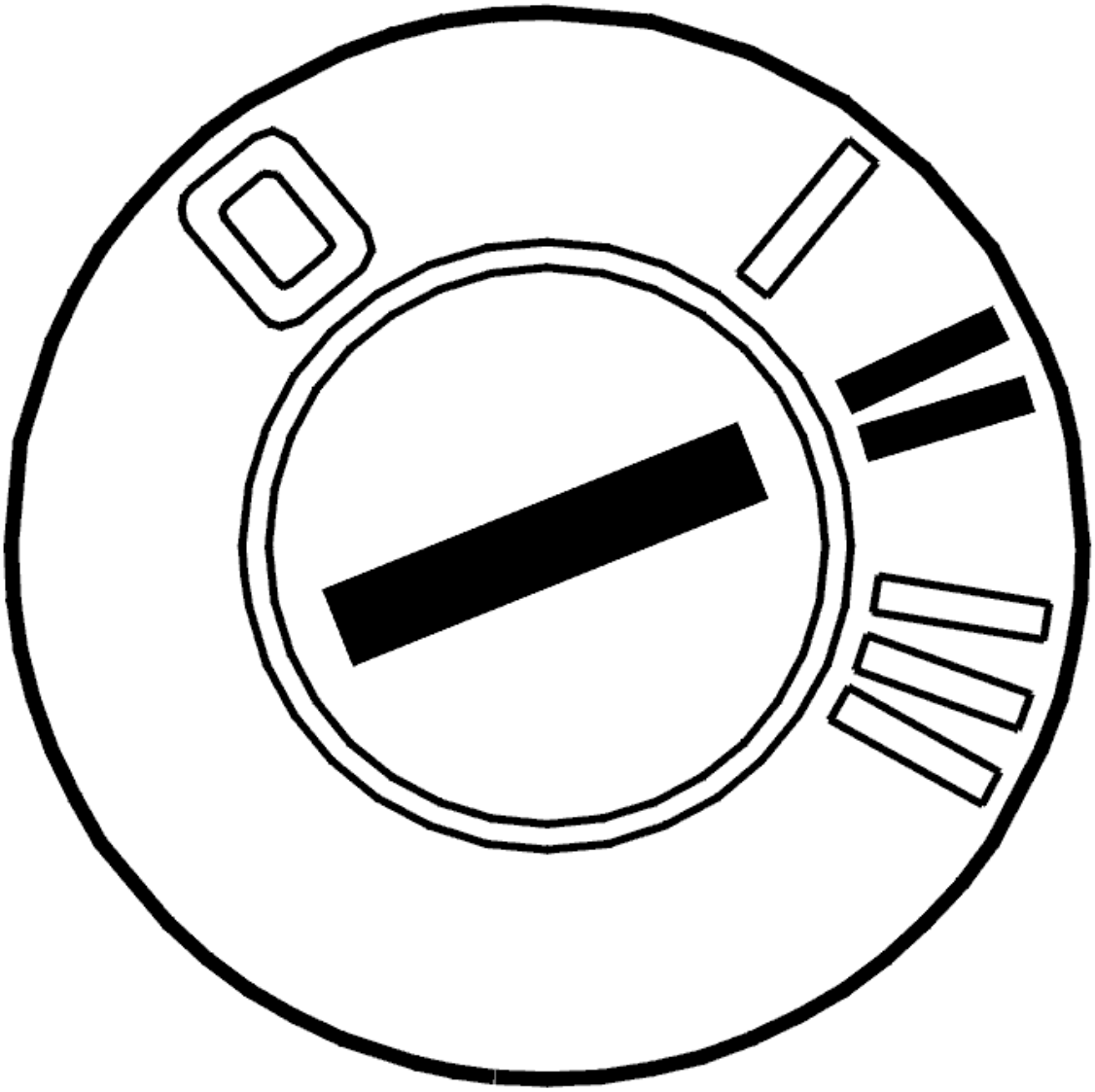

Fig. 178: Identifying Ignition ON
Courtesy of VOLVO CARS CORPORATION

- Ignition on.

  Click on the VCT2000 symbol to reset the adaptation and counter.

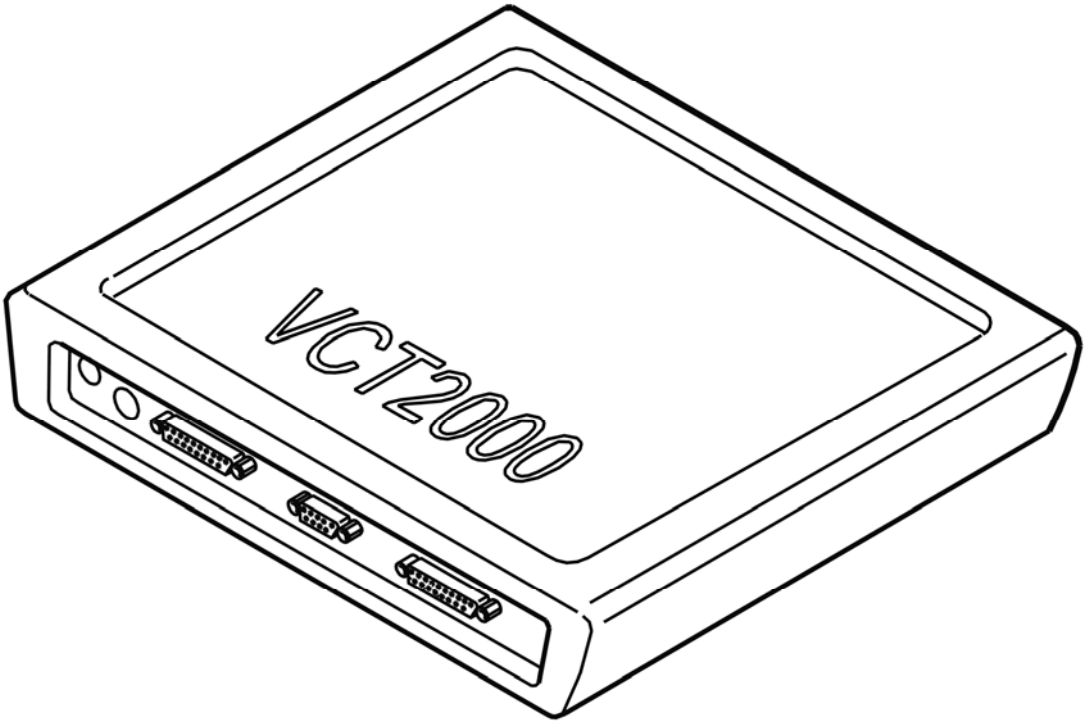

Fig. 179: Identifying VCT2000 Diagnostic Tool Symbol In VIDA
Courtesy of VOLVO CARS CORPORATION

- **Continue**

  Refer to **VERIFICATION**

VERIFICATION

VERIFICATION

HINT: After carrying out the repair check that the fault has been remedied.

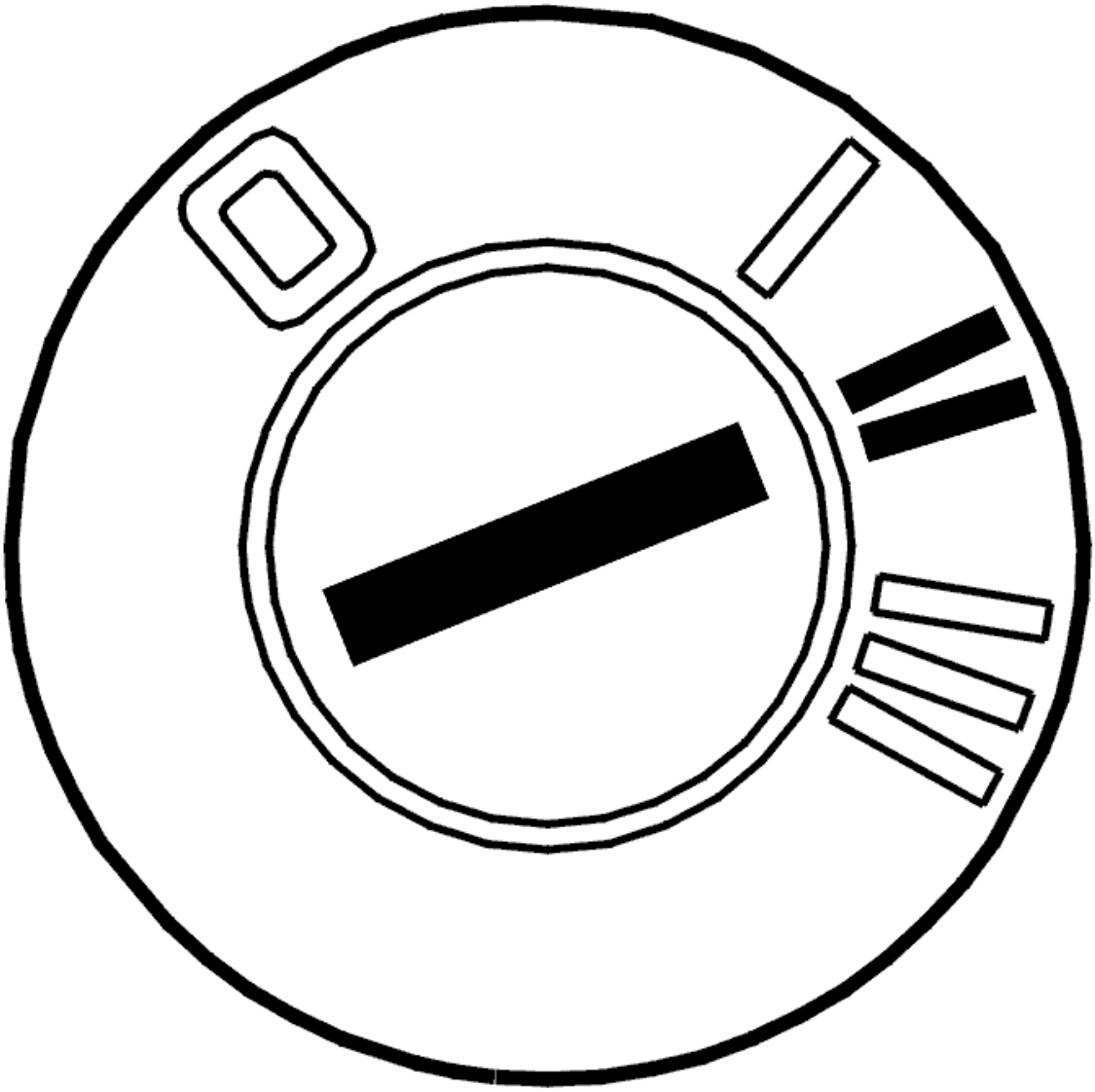

Fig. 180: Identifying Ignition ON
Courtesy of VOLVO CARS CORPORATION

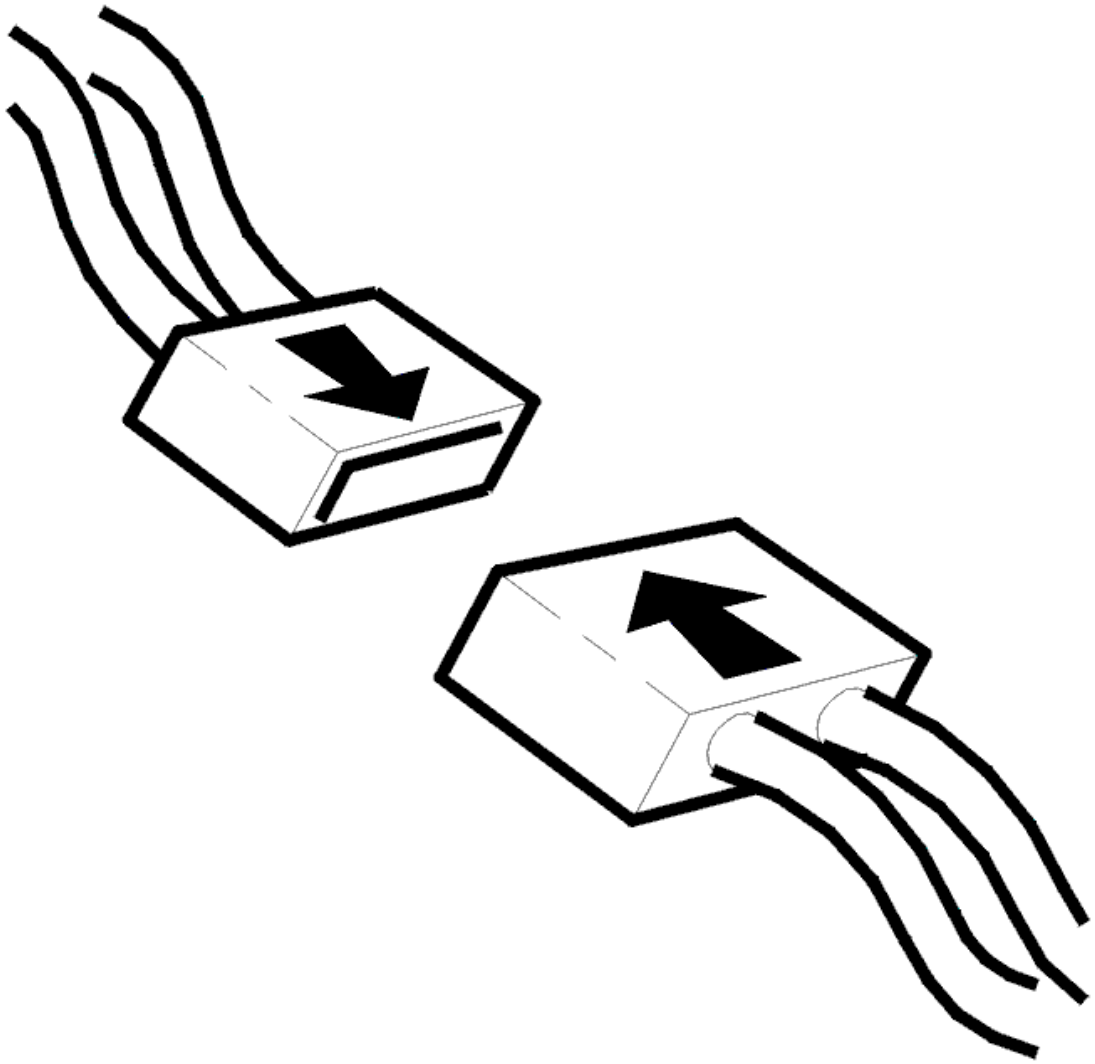

Fig. 181: Identifying Connector(s) Reinstallation
Courtesy of VOLVO CARS CORPORATION

- Ignition off.
- Reinstall connectors, components etc.
- Ignition on.
- Read off oil temperature.

  Check that the transmission oil temperature is within its permitted range. Compare with the transmission temperature.

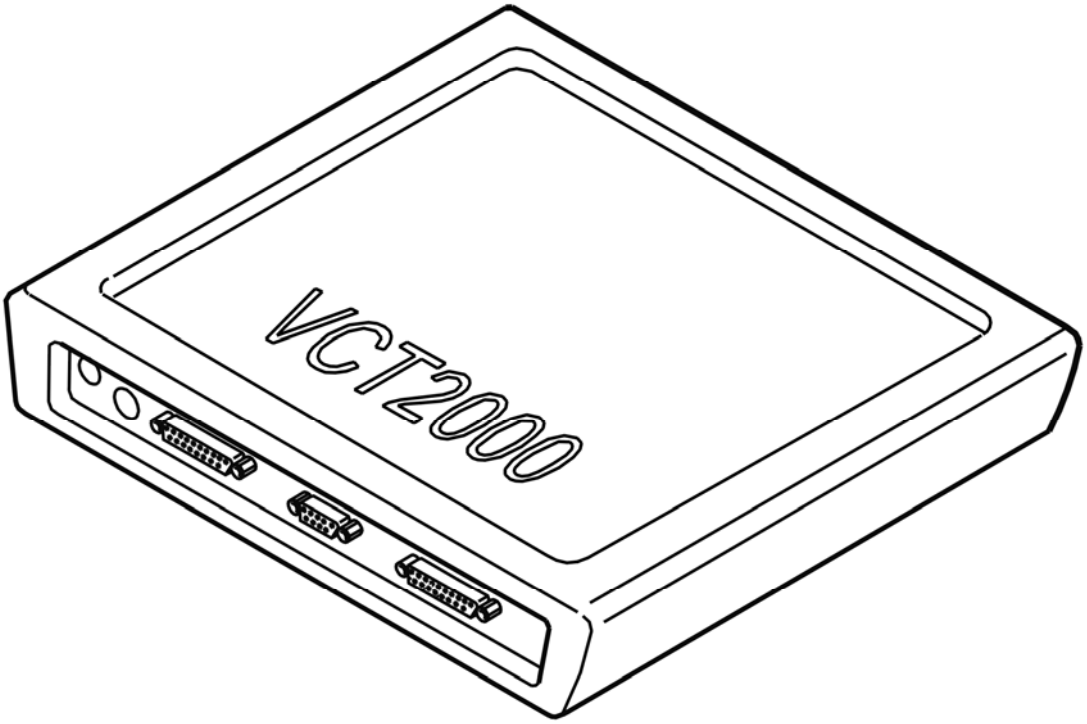

Fig. 182: Identifying VCT2000 Diagnostic Tool Symbol In VIDA
Courtesy of VOLVO CARS CORPORATION

Is the oil temperature within its permitted range?

- **YES**

  VERIFIED: Troubleshooting has been completed.

- **NO**

  Refer to **INFORMATION**

INFORMATION

FAULT-TRACING INFORMATION

The fault should have been detected and remedied. As this is not the case fault-tracing has failed.

Exit fault-tracing for this diagnostic trouble code (DTC) or make another attempt.

INFORMATION

FAULT-TRACING INFORMATION

If the fault is intermittent, do not verify fault-tracing if the fault does not recur.

It is possible to view the information again, or leave fault-tracing for this diagnostic trouble code (DTC).

TCM-0045: OIL TEMPERATURE SENSOR. FAULTY SIGNAL (AW50/51 AWD; AW55-50/51SN; 2003-2007)

DIAGNOSTIC TROUBLE CODE (DTC) INFORMATION

Condition

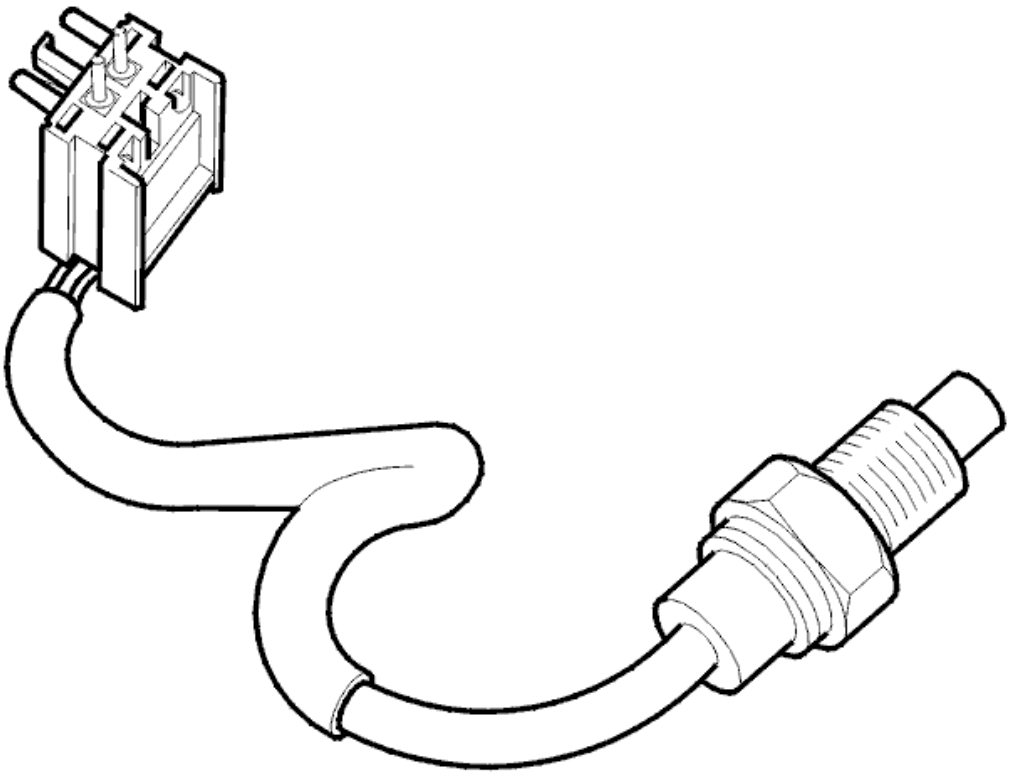

Fig. 183: Identifying Oil Temperature Sensor
Courtesy of VOLVO CARS CORPORATION

The oil temperature sensor sends a signal to the transmission control module (TCM) which is used for functions such as temperature controlled lockup and initiating high-temperature programs. The sensor has an NTC (negative temperature coefficient) resistor. The signal (voltage) decreases with increasing oil temperature. Diagnostic trouble code (DTC) TCM-0045 is stored if the transmission control module (TCM) receives a signal from the oil temperature sensor which has not changed after the engine has run for 10 minutes.

Substitute Value

- No substitute values.

Possible Source

- Contact resistance in terminals.
- Open-circuit in signal cable or ground lead.
- Short-circuit to supply voltage in the signal cable.
- Defective oil temperature sensor.

Fault symptom[s]

- General orange warning lamp lit.

FAULTY SIGNAL

CHECKING TRANSMISSION FLUID TEMPERATURE SENSOR

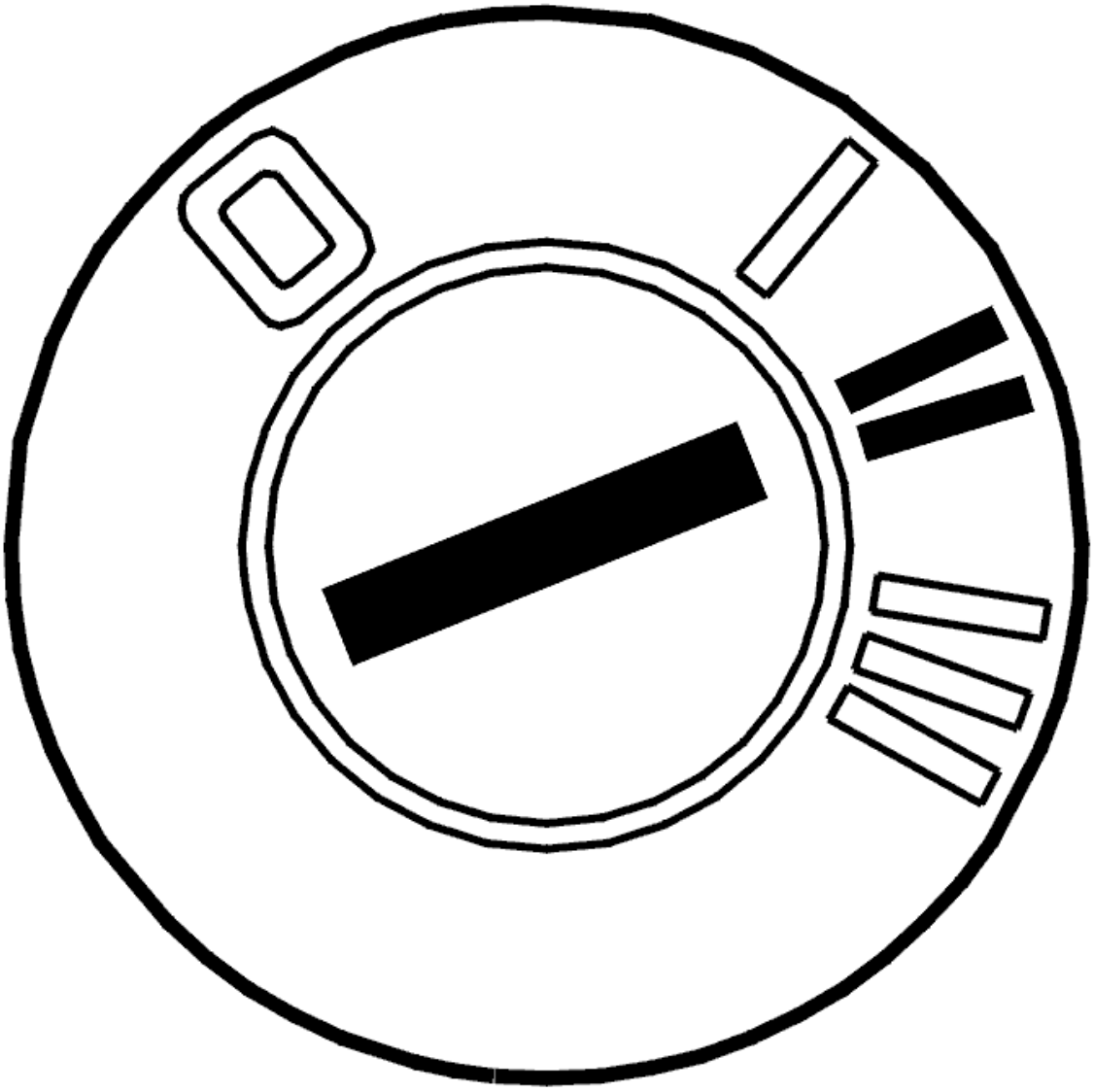

Fig. 184: Identifying Ignition ON
Courtesy of VOLVO CARS CORPORATION

- Ignition on
- Read off the oil temperature.

  Check that the temperature is within its permitted range.

  Compare with the transmission temperature.

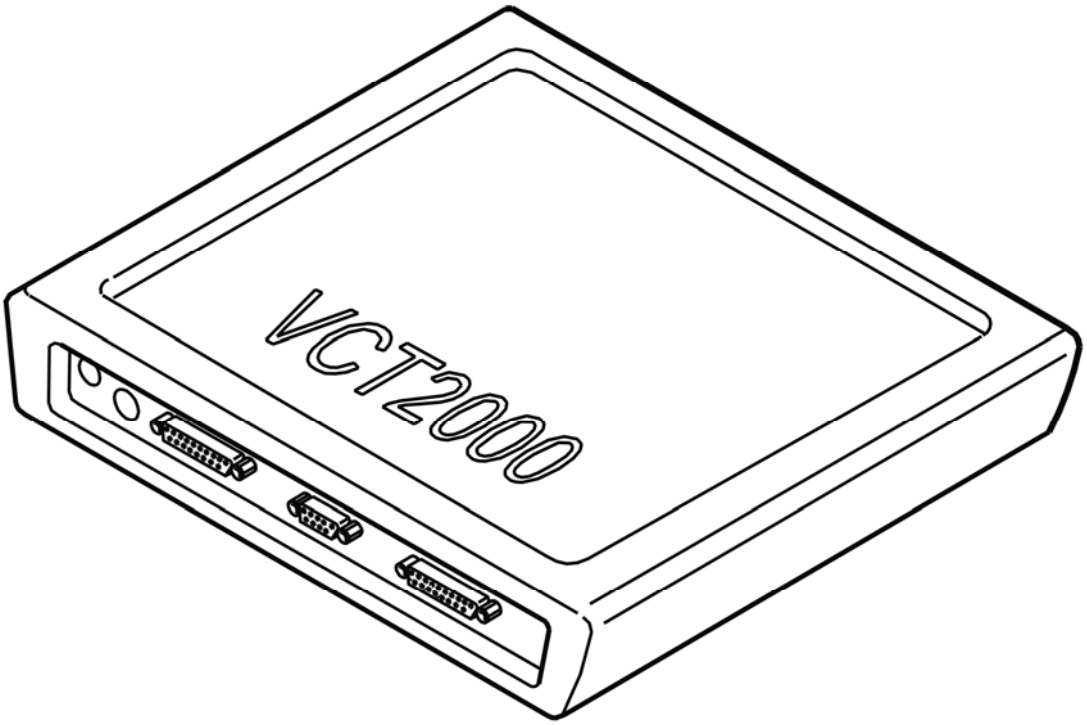

Fig. 185: Identifying VCT2000 Diagnostic Tool Symbol In VIDA
Courtesy of VOLVO CARS CORPORATION

Was the transmission temperature within its permitted range?

- **YES**

  Refer to **INTERMITTENT FAULT**

- **NO**

  Refer to **CHECKING TRANSMISSION FLUID TEMPERATURE SENSOR**

CHECKING TRANSMISSION FLUID TEMPERATURE SENSOR

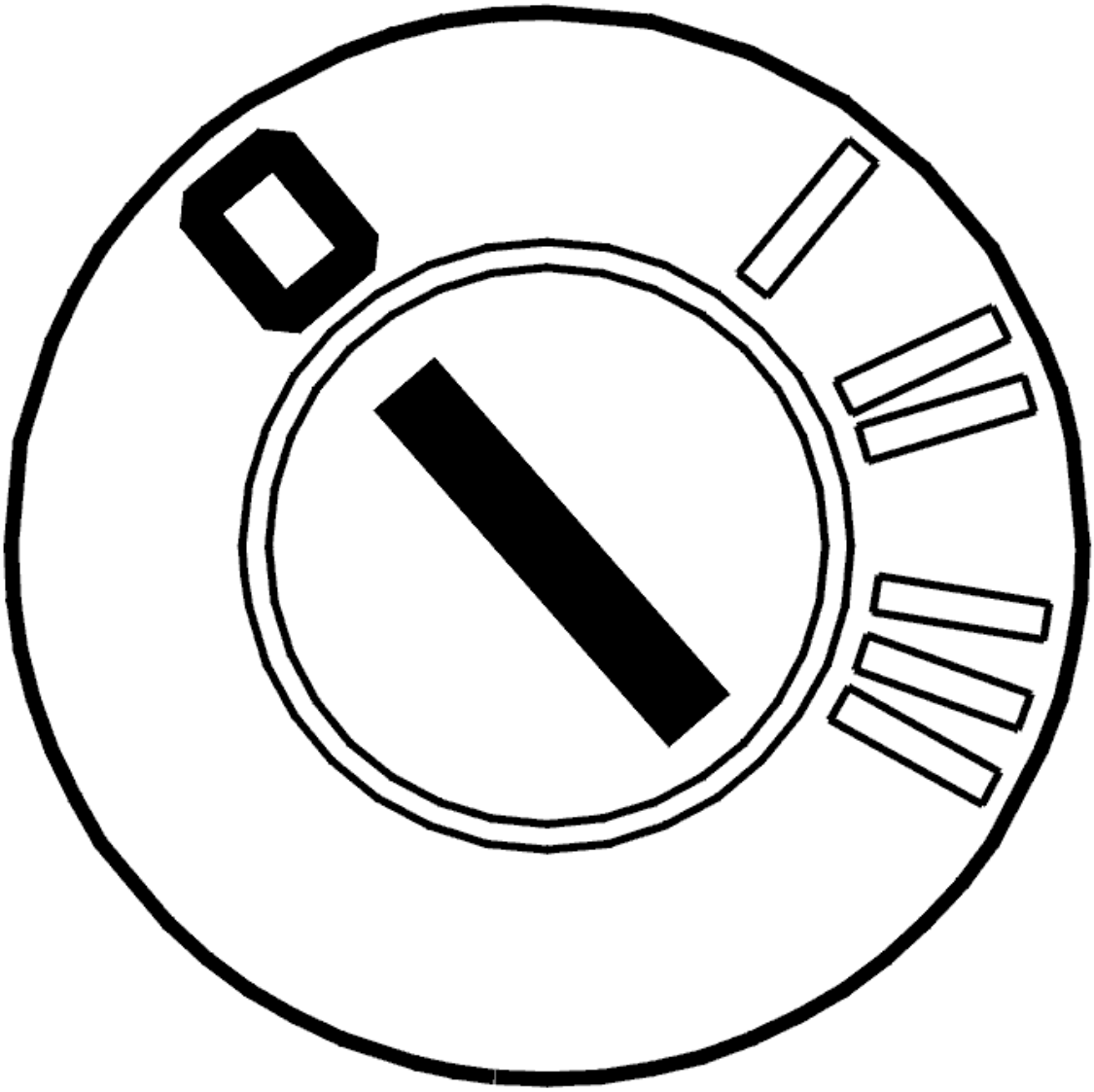

Fig. 186: Identifying Ignition OFF
Courtesy of VOLVO CARS CORPORATION

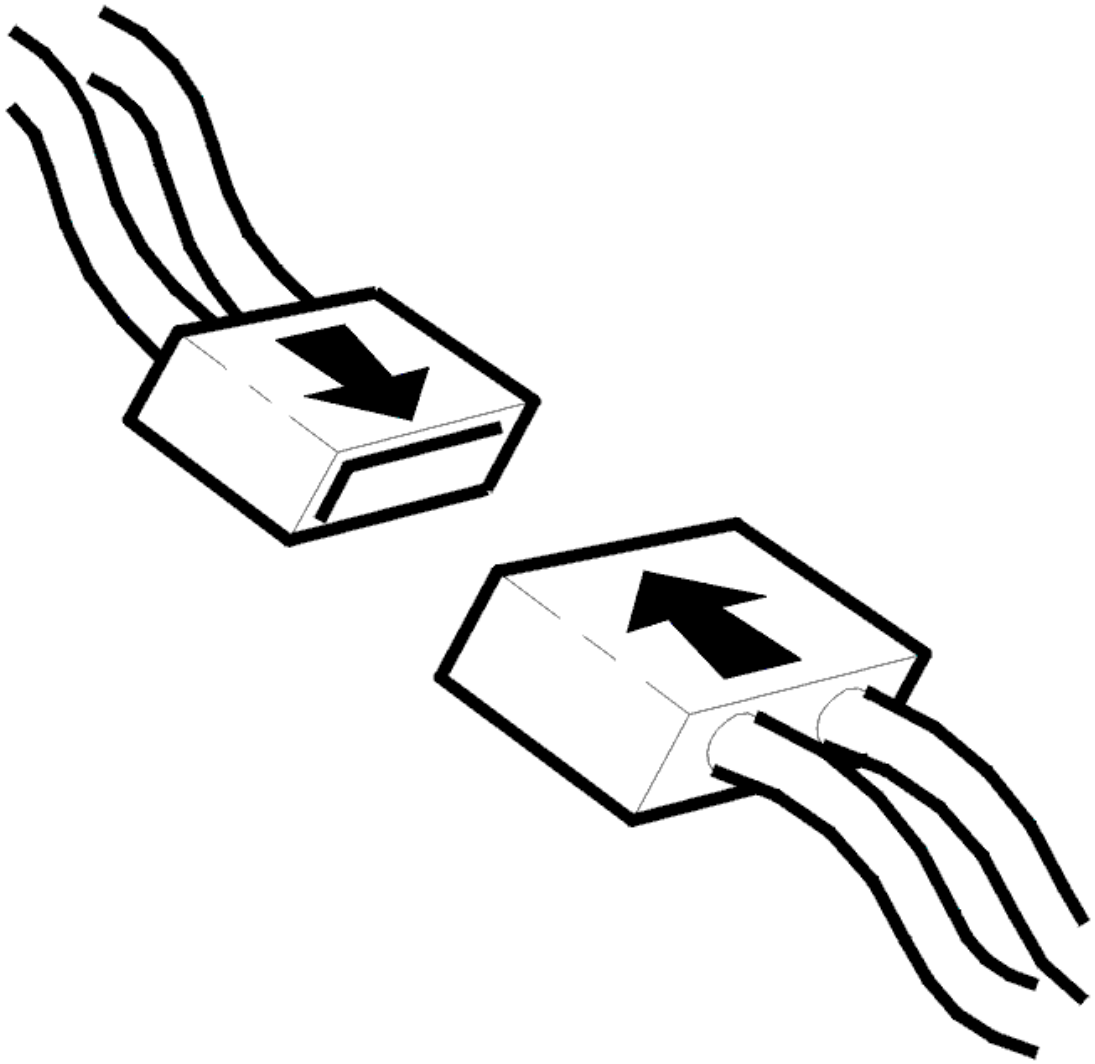

Fig. 187: Identifying Connector(s) Reinstallation
Courtesy of VOLVO CARS CORPORATION

- Ignition off
- Transmission connector D disconnected.

  Check the temperature sensor. Measure the resistance between transmission connector D terminals #D7 and #D8.

  The resistance must be 4.5-6 kohms at 20°C.

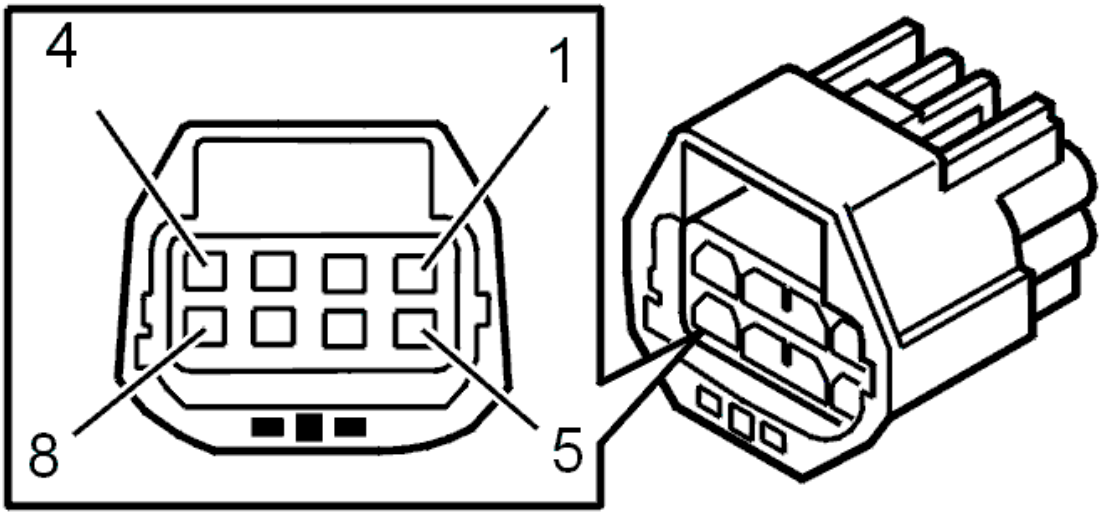

Fig. 188: Identifying 8-Pin Transmission Connector Terminals
Courtesy of VOLVO CARS CORPORATION

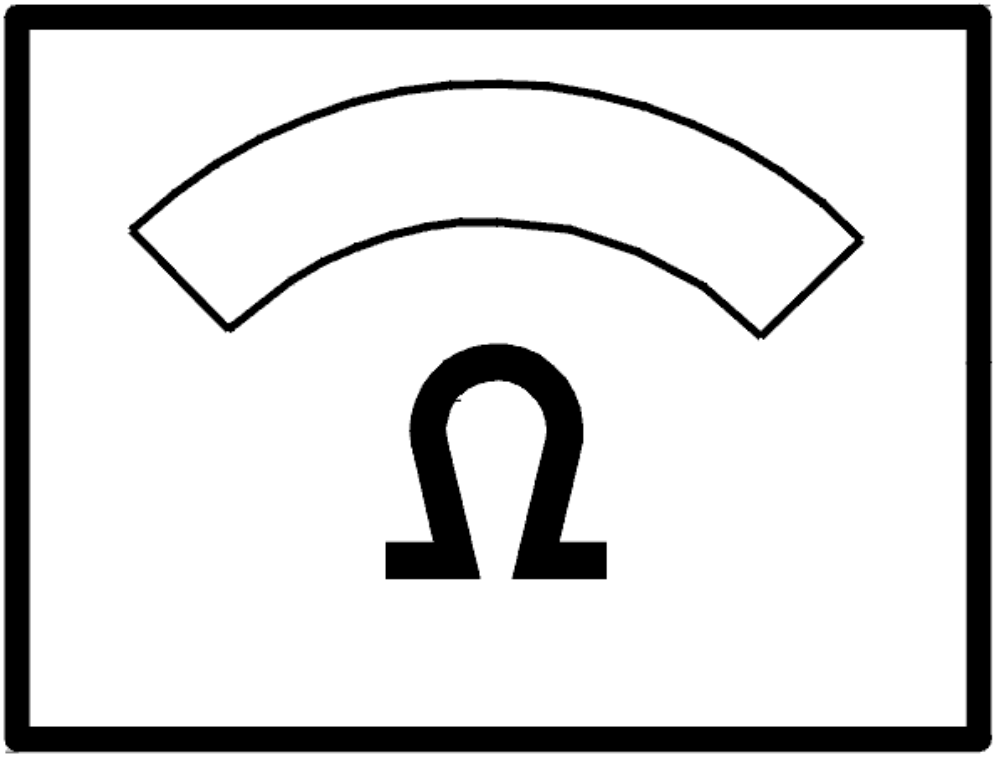

Fig. 189: Identifying Ohms Display
Courtesy of VOLVO CARS CORPORATION

Was the resistance OK?

- **YES**

  Refer to **CHECKING TRANSMISSION FLUID TEMPERATURE SENSOR**

- **NO**

  Refer to **CHECKING THE CABLE AND COMPONENT**

CHECKING TRANSMISSION FLUID TEMPERATURE SENSOR

Check the cable between control module terminal #A37 (#A37) and transmission connector terminal #D7

(control module side). Check for an open-circuit according to **OPEN-CIRCUIT, PERMANENT FAULTS** .

Check the cable between control module terminal #A55 (#A55)and transmission connector terminal #D8 (control module side). Check for an open-circuit according to **OPEN-CIRCUIT, PERMANENT FAULTS** .

Remedy as necessary.

Other information:

- To connect the breakout box, see **CONNECTING THE BREAKOUT BOX**
- To disconnect the transmission connectors, see **CONNECTORS, TRANSMISSION, DISCONNECTING / CONNECTING**
- For information about signals, see **SIGNAL DESCRIPTION. TRANSMISSION CONTROL MODULE (TCM)** .

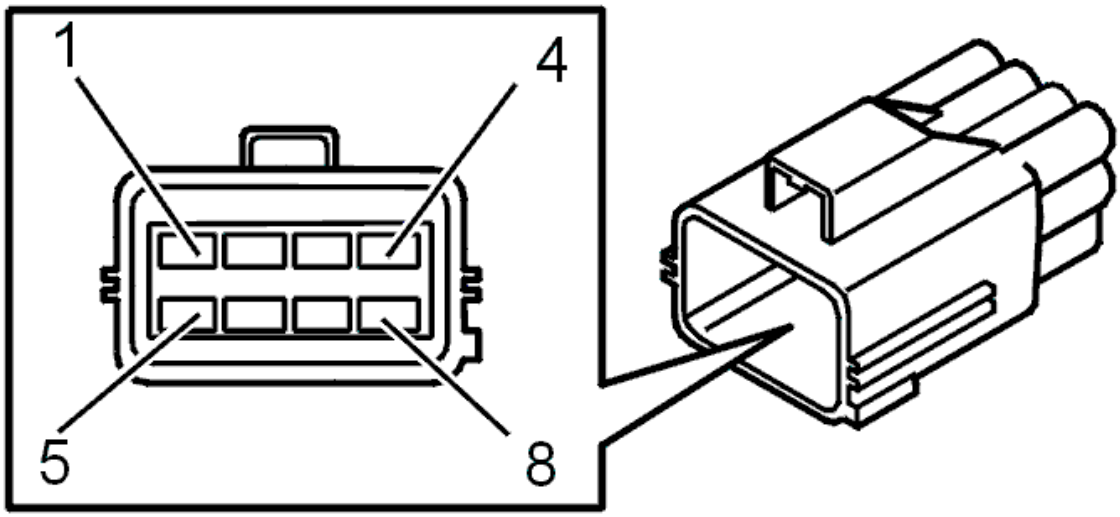

Fig. 190: Identifying Transmission Connector Terminals
Courtesy of VOLVO CARS CORPORATION

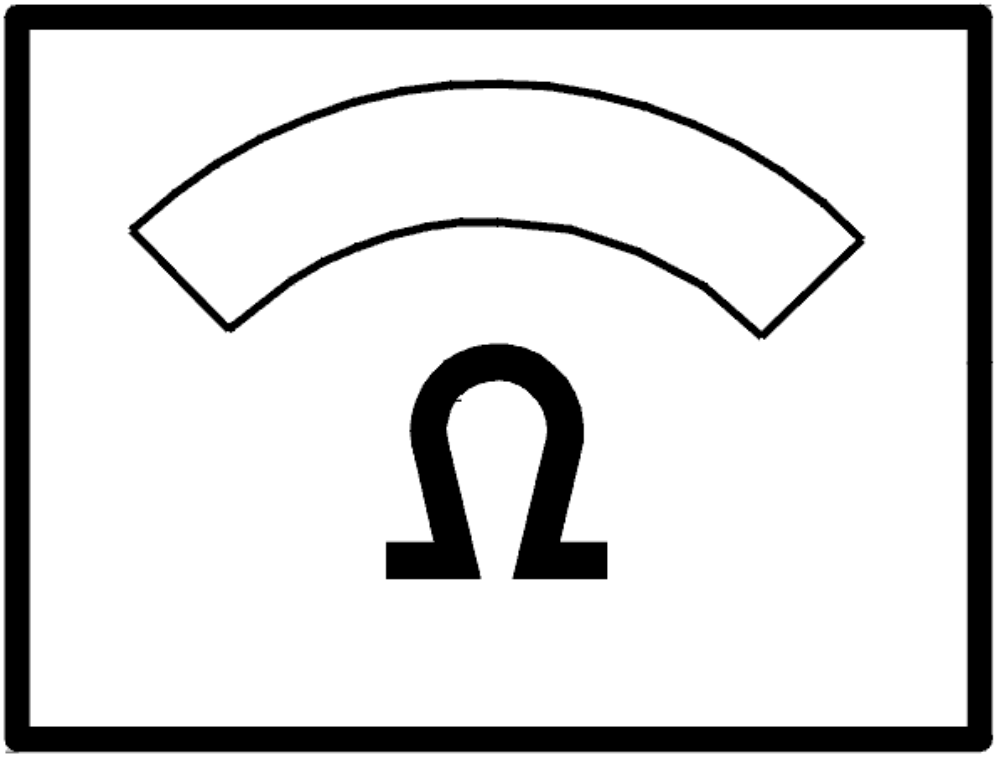

Fig. 191: Identifying Ohms Display
Courtesy of VOLVO CARS CORPORATION

Was a fault detected?

- **YES**

  Refer to **VERIFICATION**

- **NO**

  Refer to **CHECKING THE CABLE AND COMPONENT**

CHECKING THE CABLE AND COMPONENT

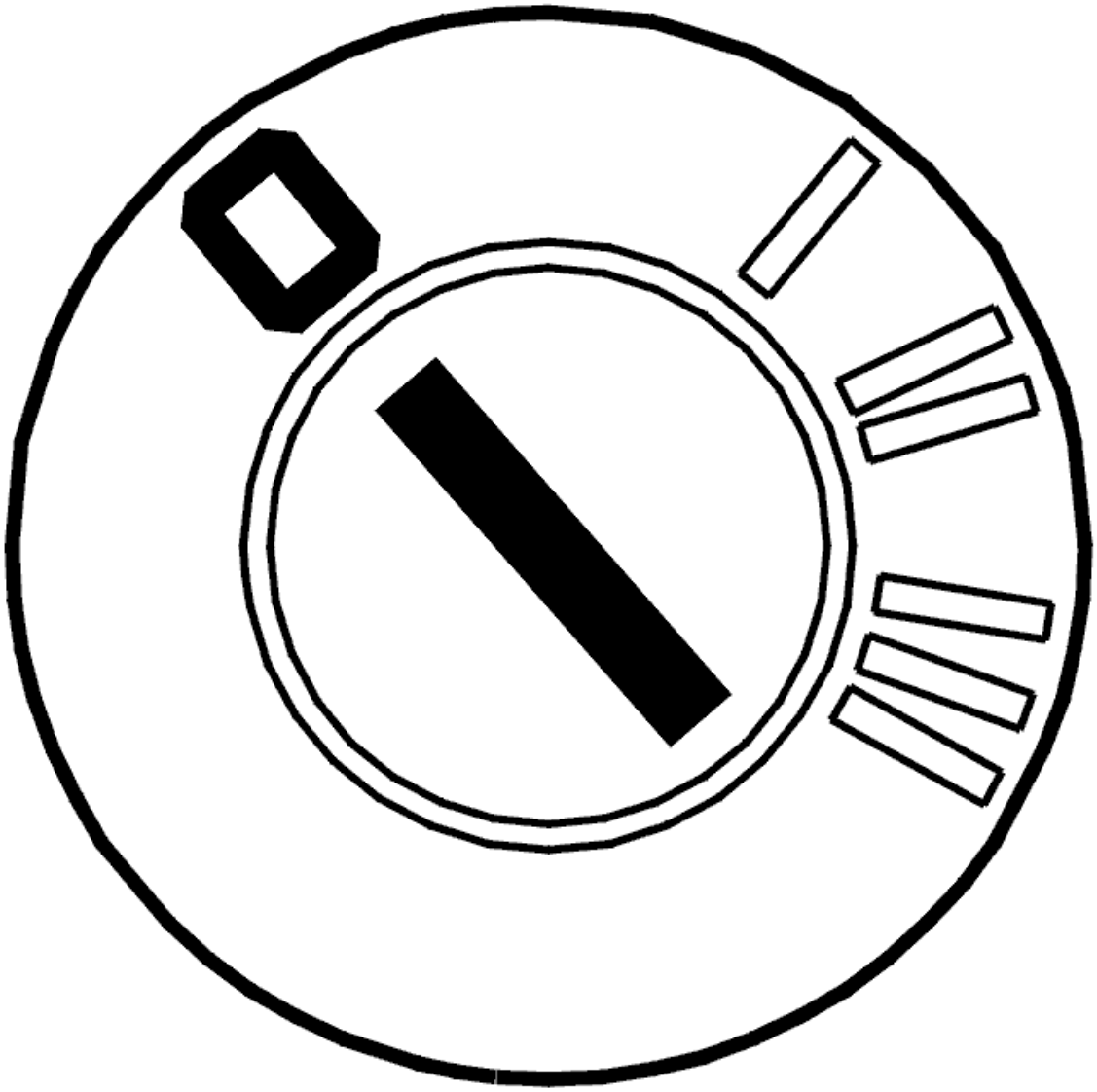

Fig. 192: Identifying Ignition OFF
Courtesy of VOLVO CARS CORPORATION

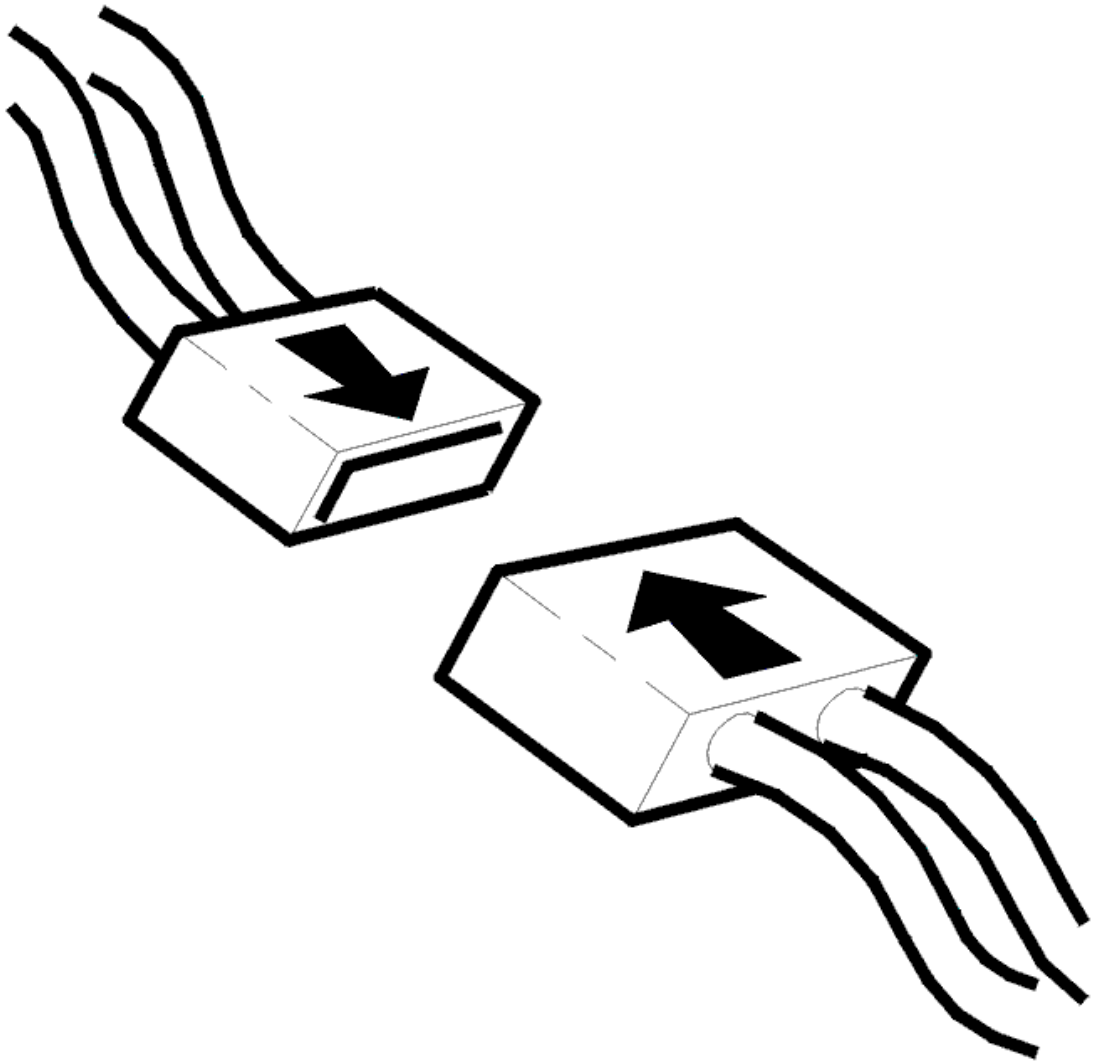

Fig. 193: Identifying Connector(s) Reinstallation
Courtesy of VOLVO CARS CORPORATION

- Ignition off
- Open the transmission control system.

  Check the cable between transmission connector terminal #D7 and temperature sensor terminal #1. Check the cable between transmission connector #D8 and temperature sensor terminal #2. Check for an open-circuit according to **OPEN-CIRCUIT, PERMANENT FAULTS** .

  Also check the cables for a short-circuit to each other.

  HINT: Check the temperature sensor. With the ignition off and transmission connector D disconnected, measure the resistance between transmission connector D terminals #D7 and #D8. The resistance must be 4.5-6 kohms at 20 °C.

Remedy as necessary.

Other information:

- To connect the breakout box, see **CONNECTING THE BREAKOUT BOX**
- To disconnect the transmission connectors, see **CONNECTORS, TRANSMISSION, DISCONNECTING / CONNECTING**
- To open the transmission control system and to check or replace the temperature sensor, see **SOLENOID CONTROL SYSTEM, REPLACING**
- For information about signals, see **SIGNAL DESCRIPTION. TRANSMISSION CONTROL MODULE (TCM)** .

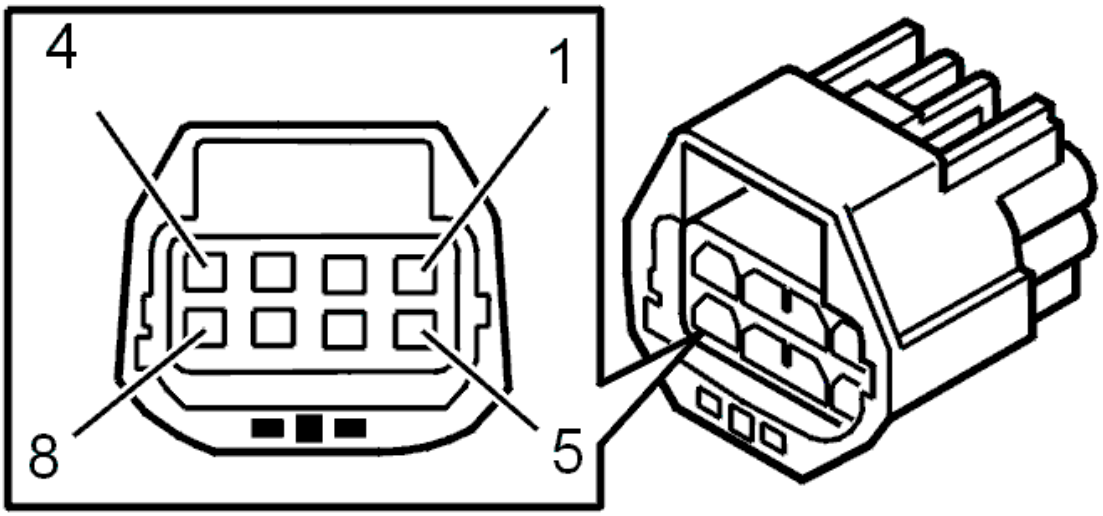

Fig. 194: Identifying 8-Pin Transmission Connector Terminals
Courtesy of VOLVO CARS CORPORATION

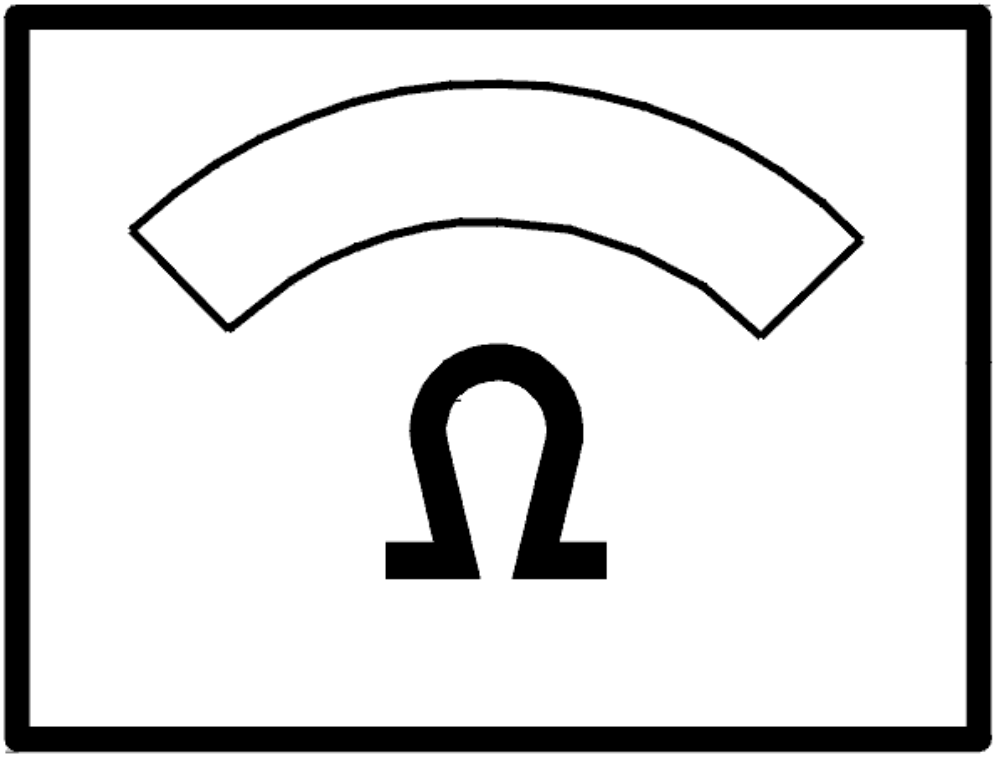

Fig. 195: Identifying Ohms Display
Courtesy of VOLVO CARS CORPORATION

- **Continue**

  Refer to **RESETTING TRANSMISSION FLUID CHANGE COUNTER**

INTERMITTENT FAULT

Check the transmission control module (TCM) and transmission connector D. Check for contact resistance and oxidation according to **CONTACT RESISTANCE AND OXIDATION** .

Check the cable between transmission control module (TCM) terminal #A37 (#A37) and transmission connector terminal #D7 (control module side). Check for an intermittent open-circuit according to **OPEN-CIRCUIT, INTERMITTENT FAULTS** .

Check the cable between control module terminal #A55 (#A55)and transmission connector terminal #D8 (control module side). Check for an intermittent open-circuit according to **OPEN-CIRCUIT, INTERMITTENT FAULTS** .

Remedy as necessary.

Other information:

- To connect the breakout box, see **CONNECTING THE BREAKOUT BOX**
- To disconnect the transmission connectors, see **CONNECTORS, TRANSMISSION, DISCONNECTING / CONNECTING**
- For information about signals, see **SIGNAL DESCRIPTION. TRANSMISSION CONTROL MODULE (TCM)** .

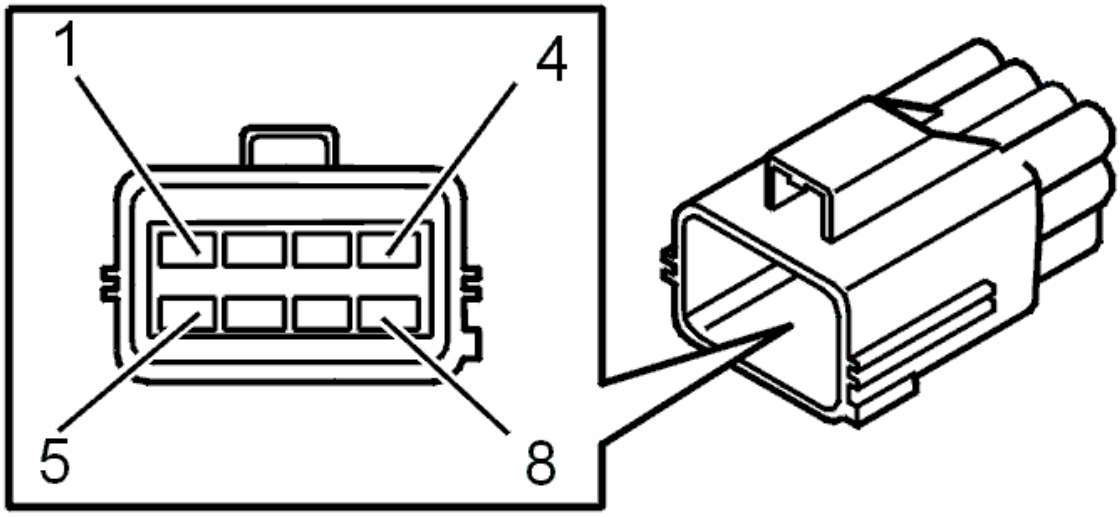

Fig. 196: Identifying Transmission Connector Terminals
Courtesy of VOLVO CARS CORPORATION

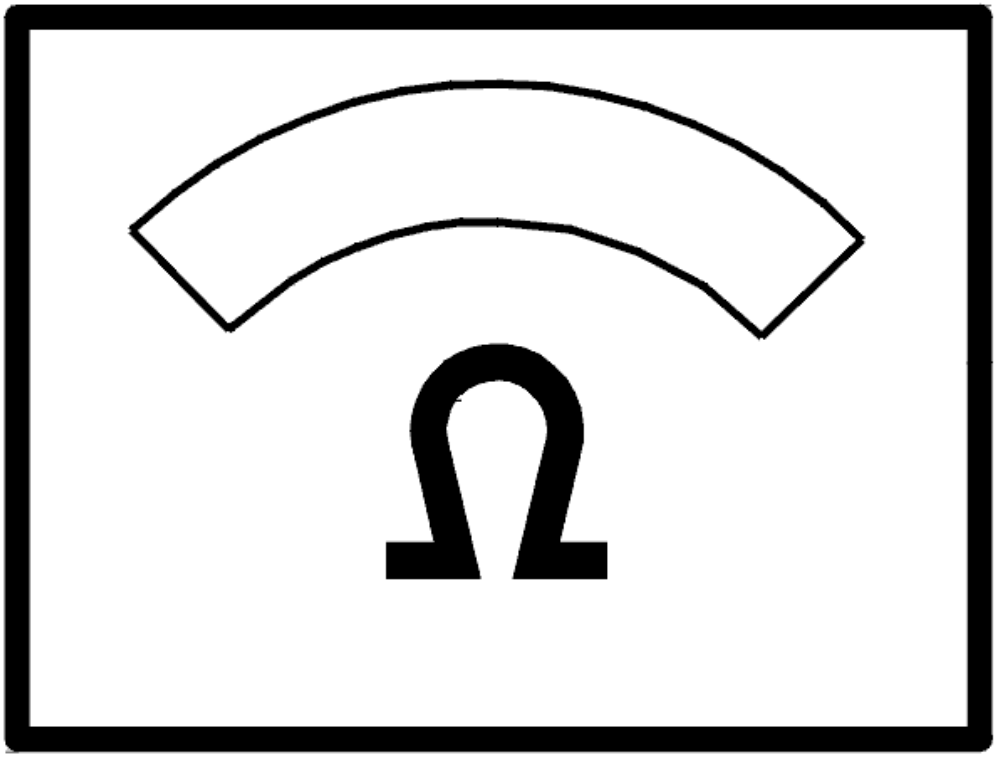

Fig. 197: Identifying Ohms Display
Courtesy of VOLVO CARS CORPORATION

- **Continue**

  Refer to **INFORMATION**

RESETTING TRANSMISSION FLUID CHANGE COUNTER

RESETTING TRANSMISSION FLUID CHANGE COUNTER

HINT: The transmission control module (TCM) has a counter for the oil quality. The counter counts up if the transmission is exposed to too high a load or an ambient temperature that is too high. If the counter is not reset when the oil is drained or changed, there is a risk that a diagnostic trouble code (DTC) will be stored in faulty circumstances. Therefore it is important that the "Transmission oil change" counter is reset.

NOTE: **This applies only when the transmission fluid is changed and when the fluid is changed when repairs are carried out to the transmission temperature sensor.**

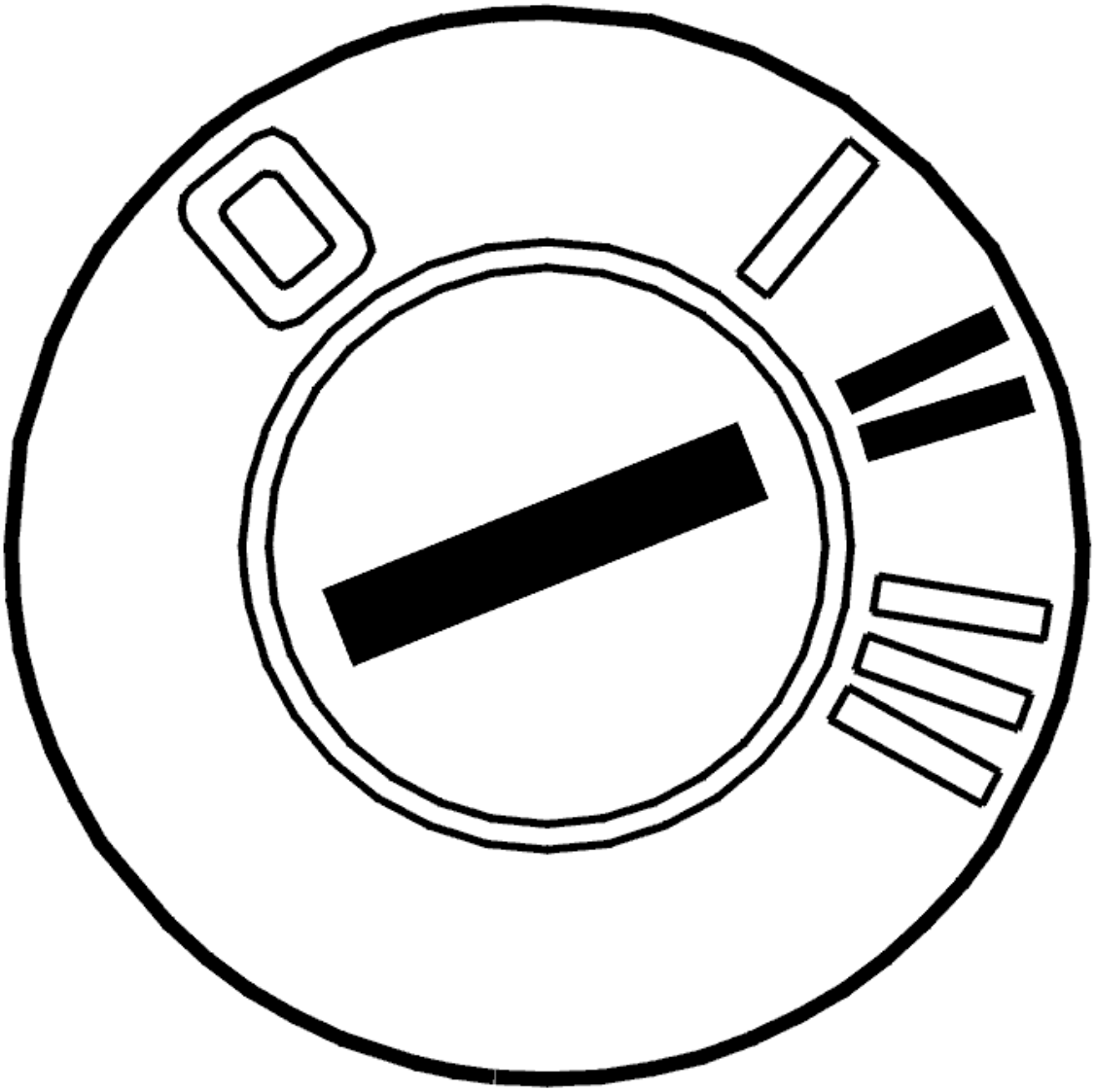

Fig. 198: Identifying Ignition ON
Courtesy of VOLVO CARS CORPORATION

- Ignition on.

  Reset the counter by clicking on the VCT 2000 symbol.

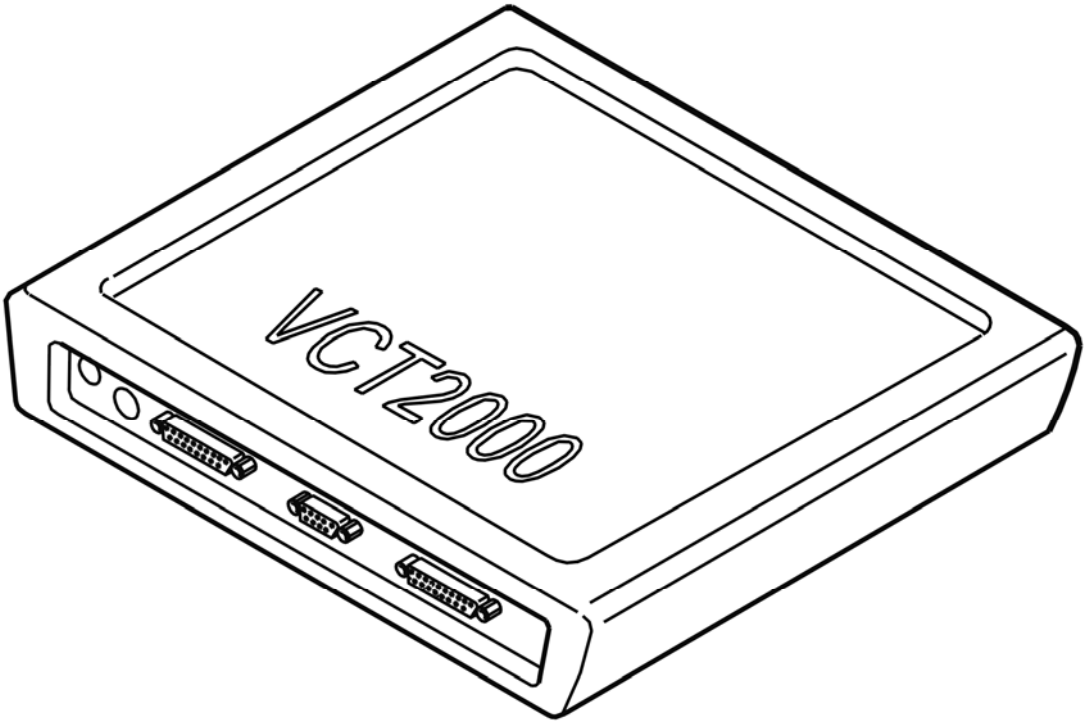

Fig. 199: Identifying VCT2000 Diagnostic Tool Symbol In VIDA
Courtesy of VOLVO CARS CORPORATION

- **Continue**

  Refer to **VERIFICATION**

VERIFICATION

VERIFICATION

HINT: After carrying out the repair, check that the fault has been remedied.

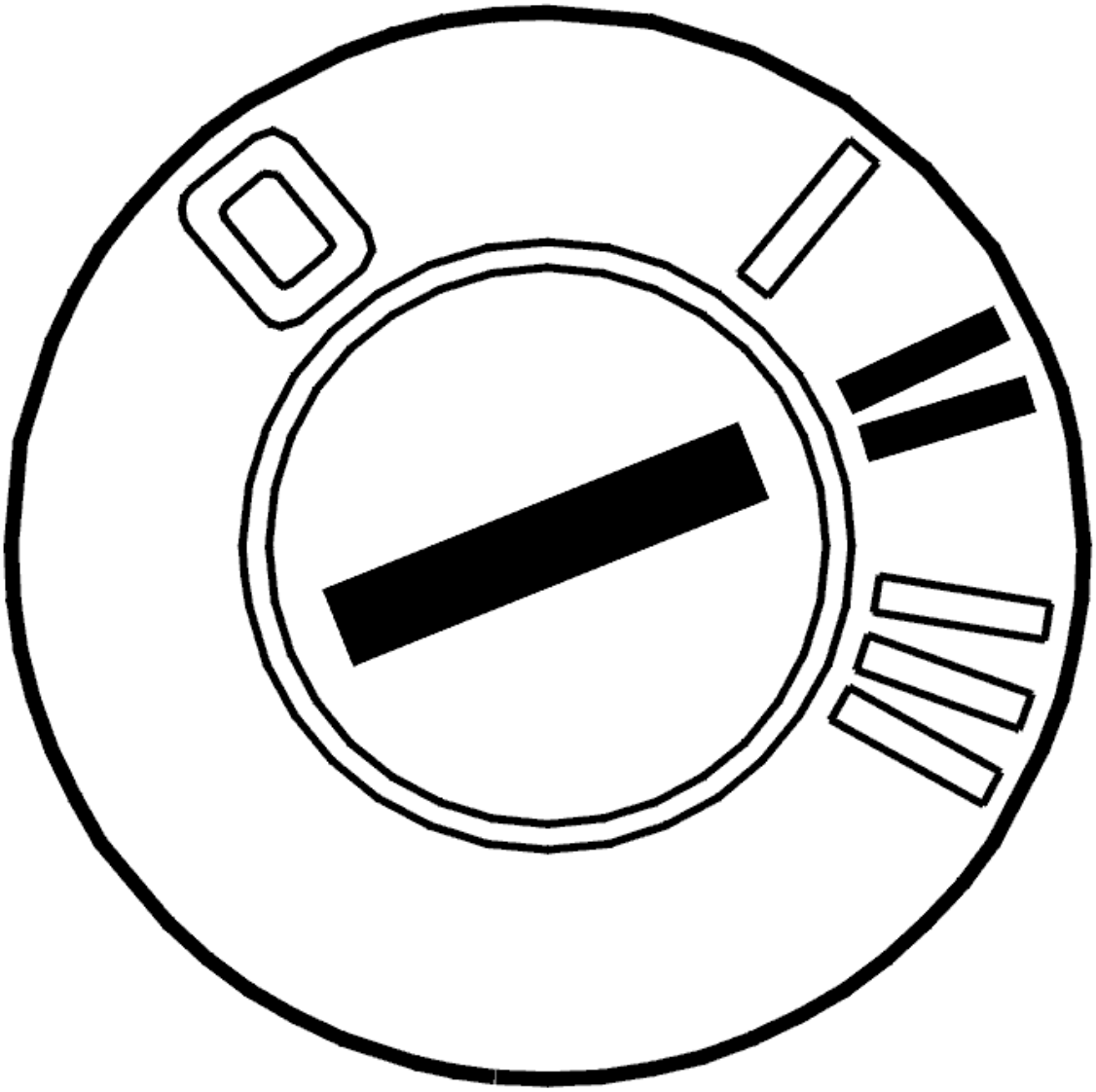

Fig. 200: Identifying Ignition ON
Courtesy of VOLVO CARS CORPORATION

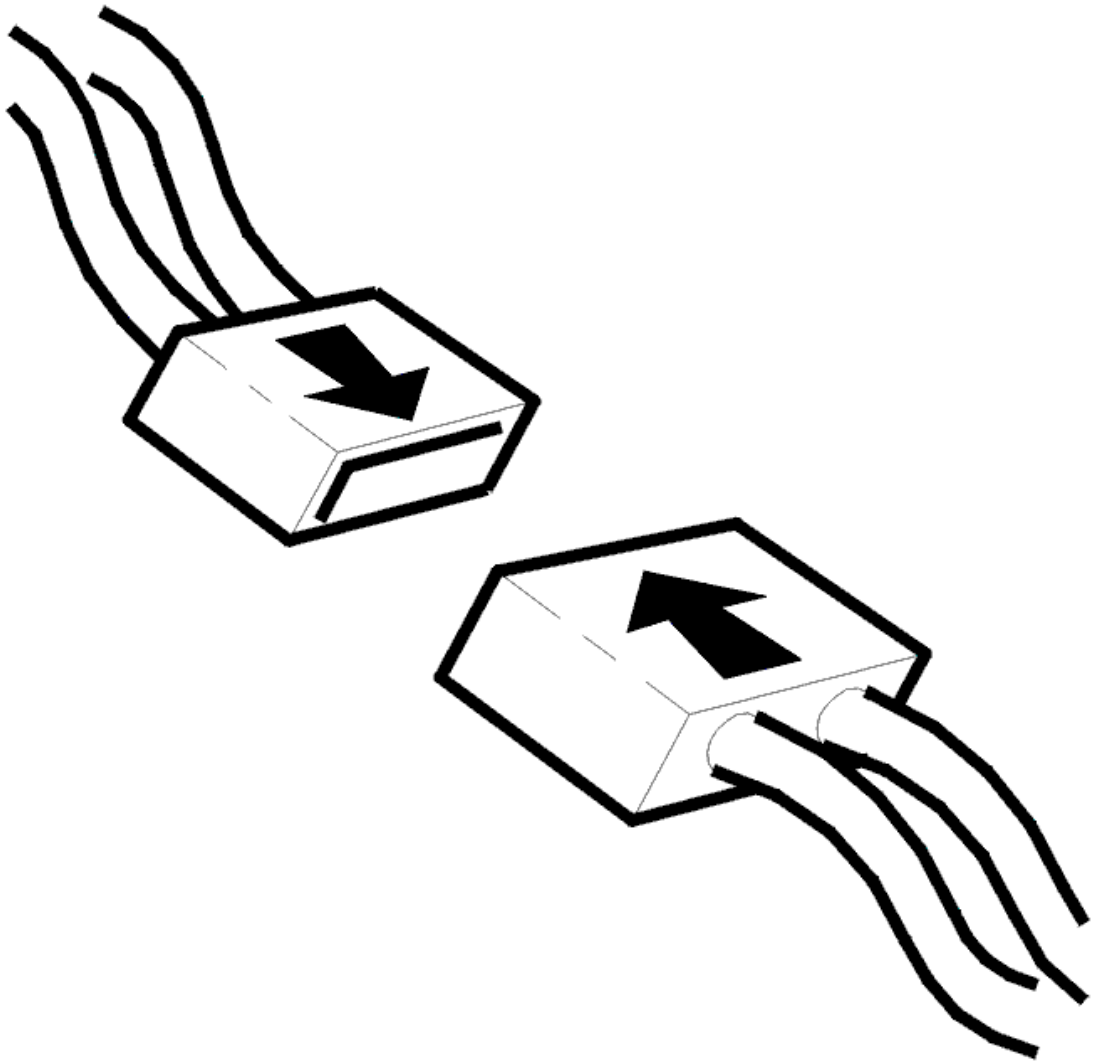

Fig. 201: Identifying Connector(s) Reinstallation
Courtesy of VOLVO CARS CORPORATION

- Ignition off.
- Reinstall the connectors, components etc.
- Ignition on.
- Read off the oil temperature.

Check that the transmission oil temperature is within its permitted range.

Compare with the transmission temperature.

NOTE: **The transmission temperature sensor is located inside the control unit and can be affected by the heat given off by the solenoids.**

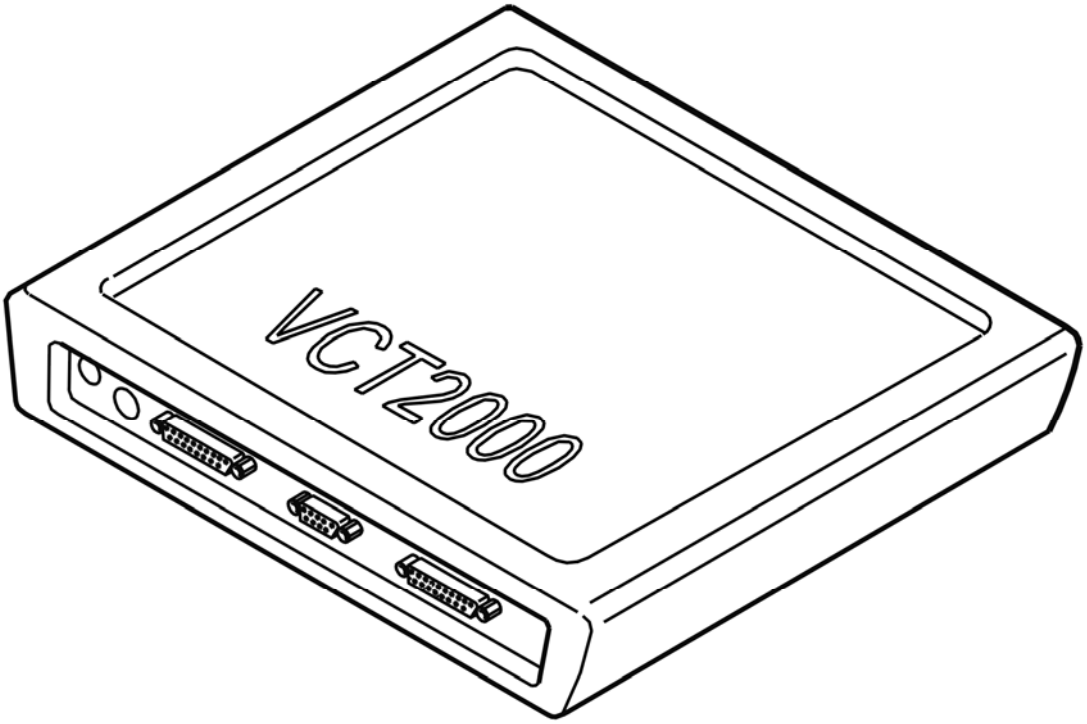

Fig. 202: Identifying VCT2000 Diagnostic Tool Symbol In VIDA
Courtesy of VOLVO CARS CORPORATION

Is the oil temperature within its permitted range?

- **YES**

  VERIFIED: Troubleshooting has been completed.

- **NO**

  Refer to **INFORMATION**

INFORMATION

FAULT-TRACING INFORMATION

The fault should have been detected and remedied. As this is not the case fault-tracing has failed.

Exit fault-tracing for this diagnostic trouble code (DTC) or make another attempt.

INFORMATION

FAULT-TRACING INFORMATION

If the fault is intermittent, do not verify fault-tracing if the fault does not recur.

It is possible to view the information again, or leave fault-tracing for this diagnostic trouble code (DTC).

TCM-0046: OIL TEMPERATURE. OIL TEMPERATURE TOO HIGH (4T65 AWD; 2003-2006)

DIAGNOSTIC TROUBLE CODE (DTC) INFORMATION

Condition

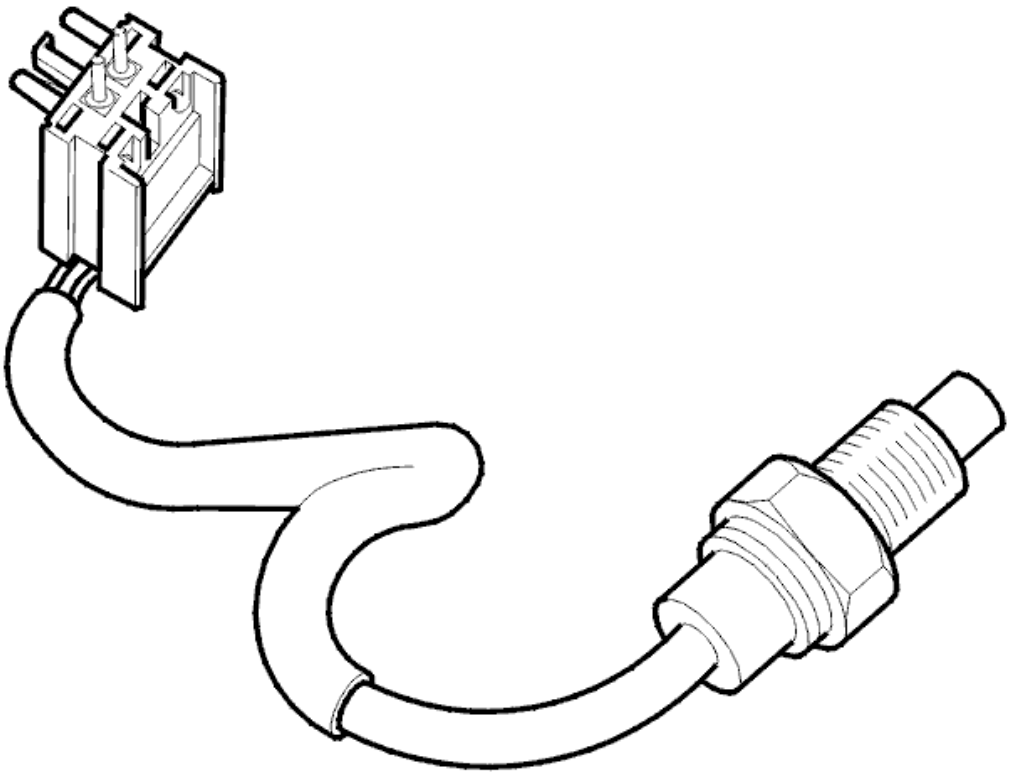

Fig. 203: Identifying Oil Temperature Sensor
Courtesy of VOLVO CARS CORPORATION

The oil temperature sensor sends a signal to the control module which is used for functions such as temperature controlled lock-up and the engagement of high-temperature programs. The sensor has an NTC (negative temperature coefficient) resistor. The signal (voltage) decreases with increasing oil temperature. Diagnostic trouble code (DTC) TCM-0046 is stored if the control module receives a signal from the oil temperature sensor corresponding to a temperature above approximately +150°C for approximately 2 minutes

Substitute Value

- None.

Possible Source

- Poor oil cooling.
- Mechanical fault in the transmission.
- The transmission has been exposed to extreme load and high ambient temperature.

Fault symptom[s]

- General orange warning lamp lit.

TEMPERATURE TOO HIGH

CHECKING THE OIL COOLER AND HOSES

The cause of the diagnostic trouble code (DTC) was insufficient oil cooling in the transmission. Check the oil cooler and hoses for signs of damage and blockage. Then replace the oil.

Other information:

- To replace the oil, see **TRANSMISSION OIL / OIL FILTER, REPLACING** .
- **Continue**

  Refer to **RESETTING THE ADAPTATION**

RESETTING THE ADAPTATION

RESETTING ADAPTATION AND THE COUNTER FOR "TRANSMISSION OIL CHANGE"

HINT: The transmission has torque controlled adaptive pressure control. Pressure control means that the transmission regulates the pressure itself during each gear shift. This avoids harsh gear shifting. Each gear shift is evaluated by the control module and stored in the memory. This allows for compensation for wear and tear in the transmission and clutch. It is important that the adaptation in the memory is reset after the transmission has been repaired. This is to ensure normal operation. The oil is replaced during repair; the "Transmission oil change" counter must be reset. If the counter is not reset when the fluid is drained and replaced, there is a risk that a diagnostic trouble code (DTC) will be stored in incorrect circumstances.

NOTE: This applies only if the transmission or one of the components in the transmission have been replaced.

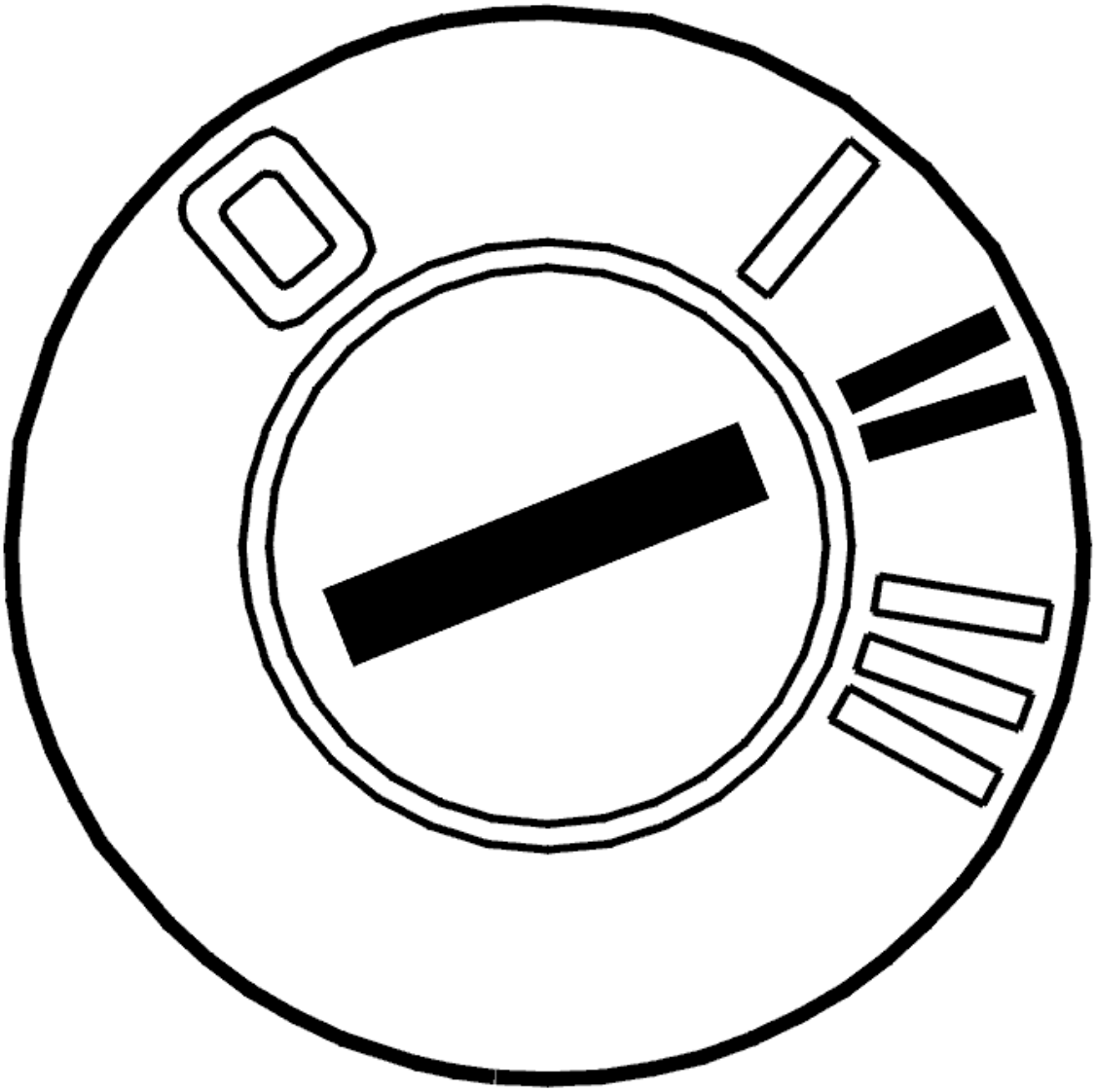

Fig. 204: Identifying Ignition ON
Courtesy of VOLVO CARS CORPORATION

- Ignition on.

  Click on the VCT2000 symbol to reset the adaptation and counter.

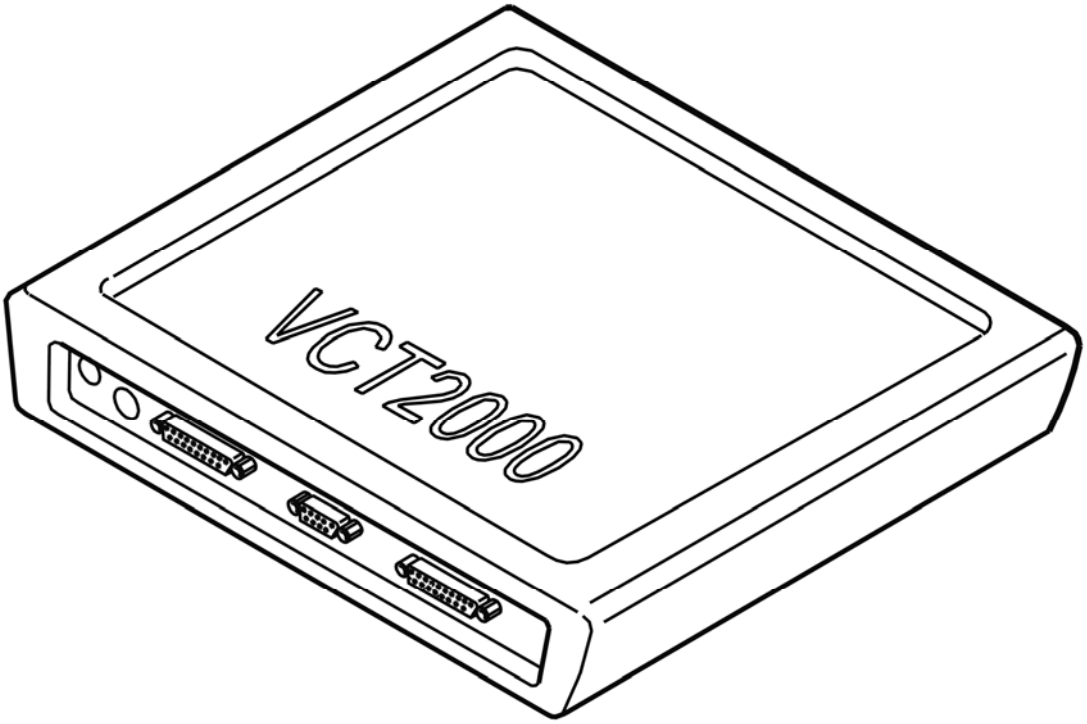

Fig. 205: Identifying VCT2000 Diagnostic Tool Symbol In VIDA
Courtesy of VOLVO CARS CORPORATION

- **Continue**

  Refer to **VERIFICATION**

VERIFICATION

VERIFICATION

HINT: After carrying out the repair, check that the fault has been remedied.

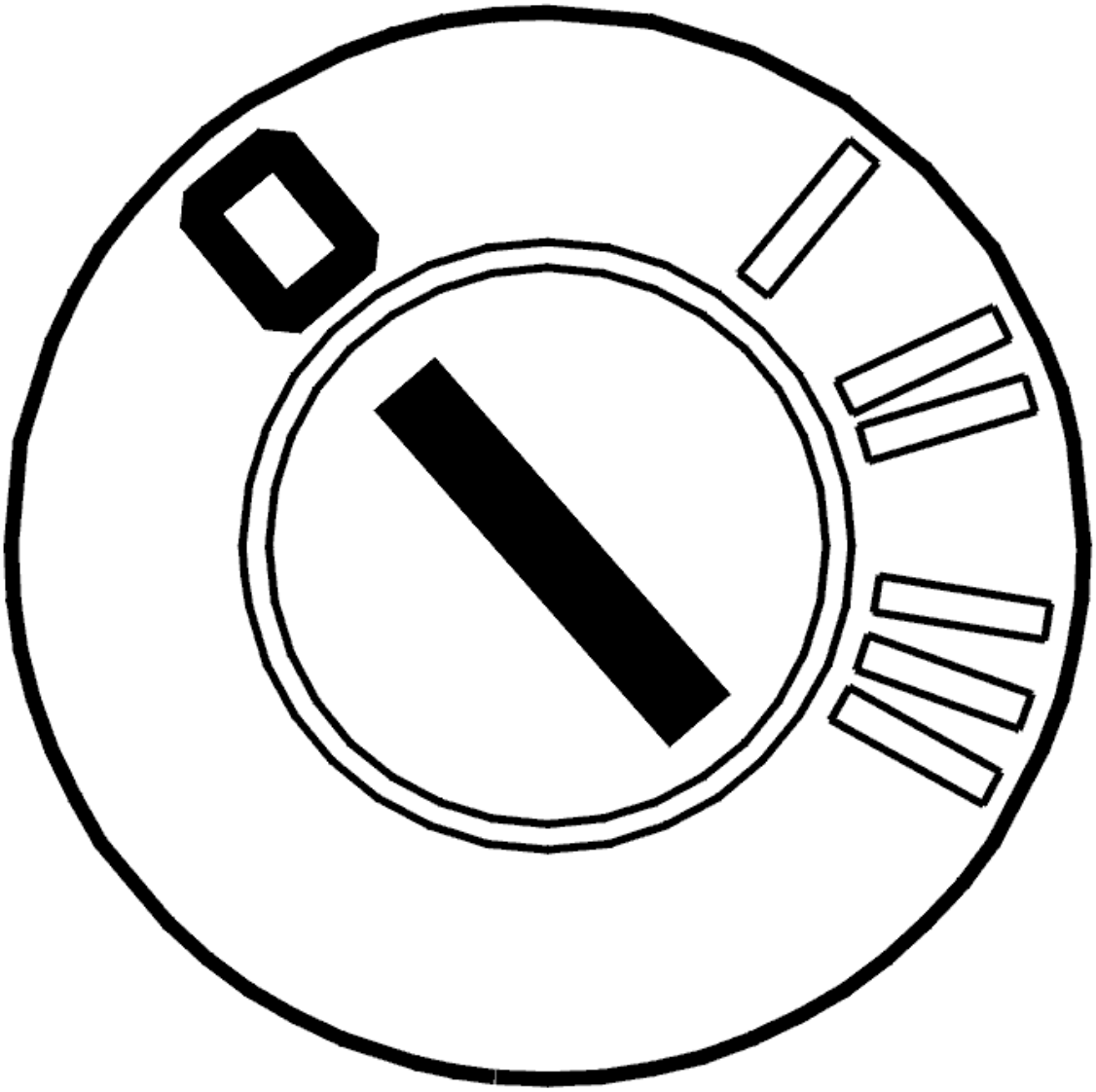

Fig. 206: Identifying Ignition OFF
Courtesy of VOLVO CARS CORPORATION

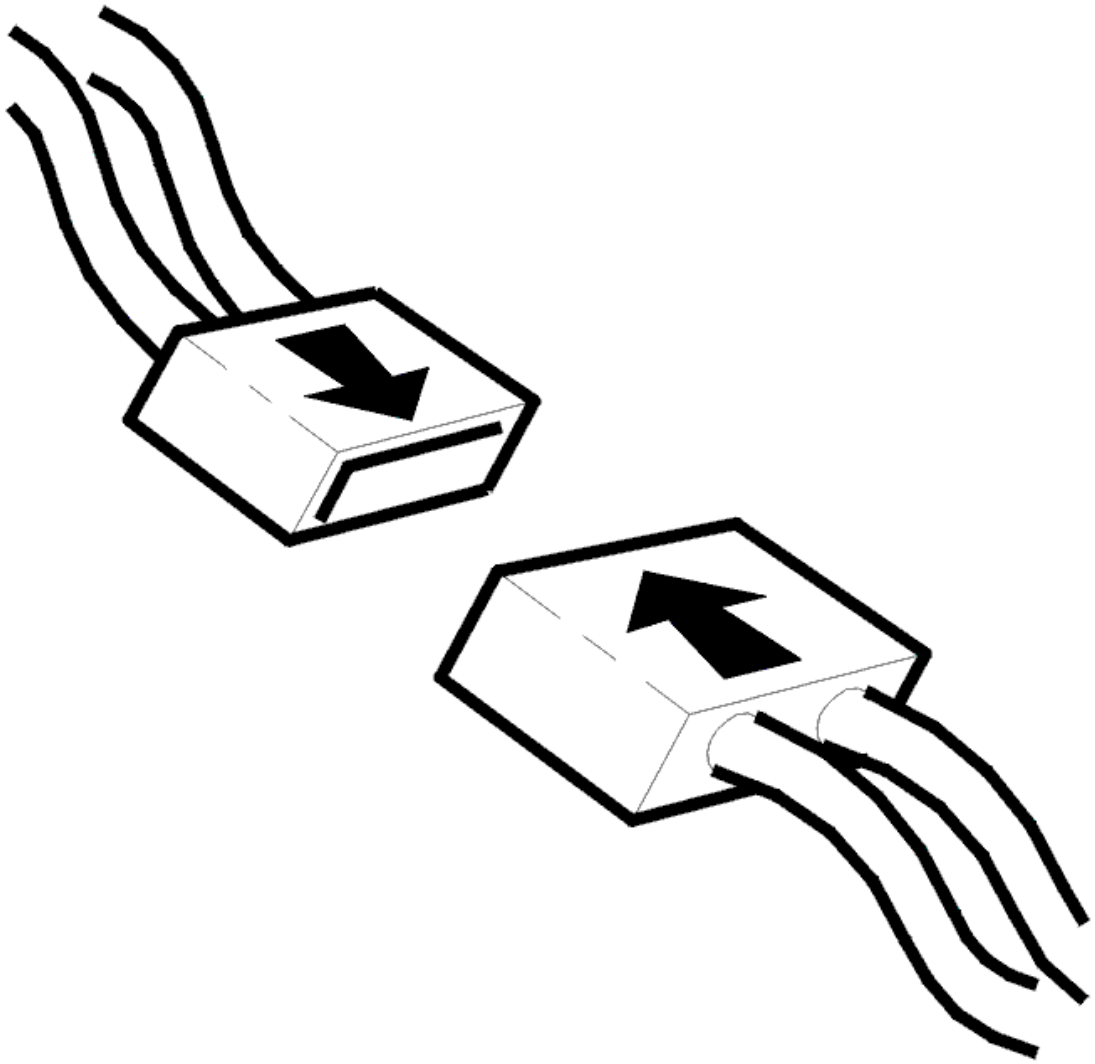

Fig. 207: Identifying Connector(s) Reinstallation
Courtesy of VOLVO CARS CORPORATION

- Ignition off.
- Reconnect the connectors. Reinstall the components.
- Test drive the car according to **TEST DRIVE SCHEDULE, DESCRIPTION** .

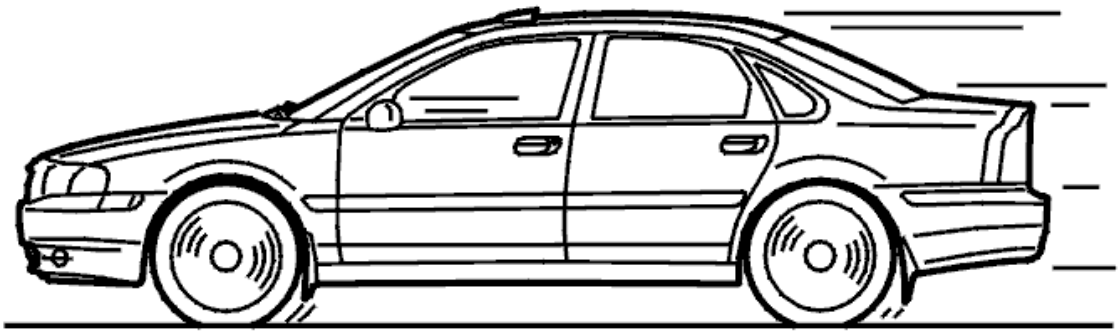

Fig. 208: Identifying Test Drive
Courtesy of VOLVO CARS CORPORATION

Is the function of the transmission OK?

- **YES**

  VERIFIED: Troubleshooting has been completed.

- **NO**

  Refer to **INFORMATION**

INFORMATION

FAULT-TRACING INFORMATION

The fault should have been detected and remedied. As this is not the case fault-tracing has failed.

Exit fault-tracing for this diagnostic trouble code (DTC) or make another attempt.

TCM-0046: OIL TEMPERATURE. OIL TEMPERATURE TOO HIGH (AW50/51 AWD; AW55-50/51SN; 2003-2007)

DIAGNOSTIC TROUBLE CODE (DTC) INFORMATION

Condition

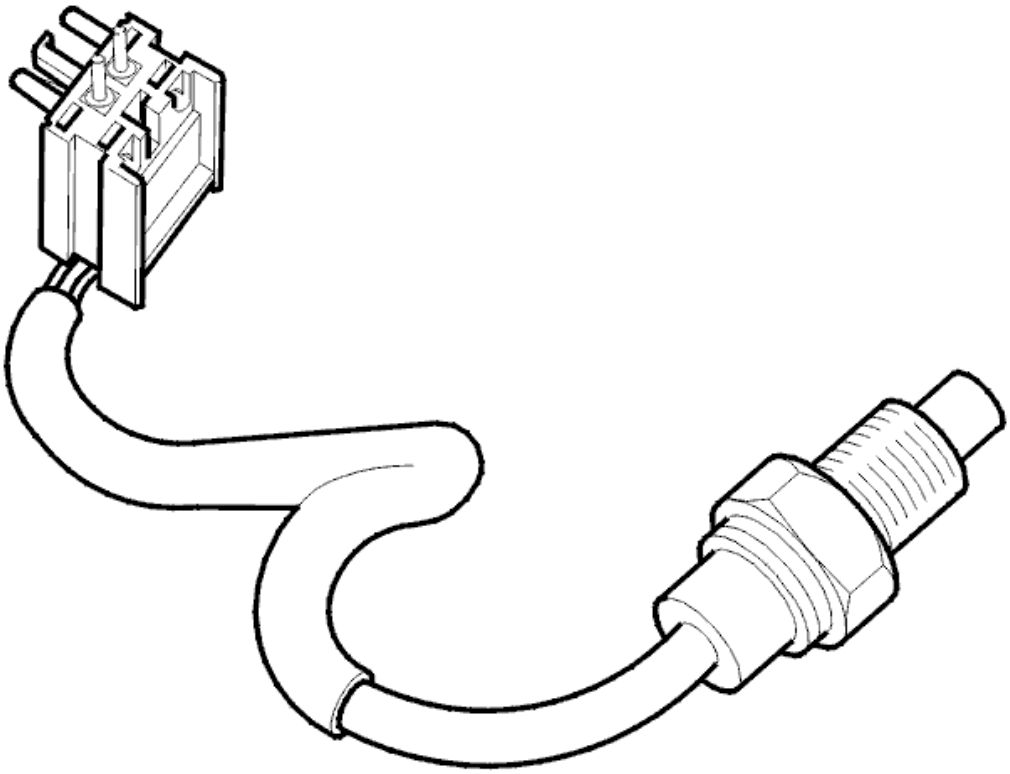

Fig. 209: Identifying Oil Temperature Sensor
Courtesy of VOLVO CARS CORPORATION

The oil temperature sensor sends a signal to the control module which is used for functions such as temperature controlled lock-up and the engagement of high-temperature programs. The sensor has an NTC (negative temperature coefficient) resistor. The signal (voltage) decreases with increasing oil temperature. Diagnostic trouble code (DTC) TCM-0046 is stored if the control module receives a signal from the oil temperature sensor corresponding to a temperature above approximately +160°C (320 °F) for approximately 2 minutes.

Substitute Value

- None.

Possible Source

- Poor oil cooling.
- Mechanical fault in the transmission.
- The transmission has been exposed to extreme load and high ambient temperature.

Fault symptom[s]

- General orange warning lamp lit.

TEMPERATURE TOO HIGH

CHECKING THE OIL COOLER AND HOSES

The cause of the diagnostic trouble code (DTC) was insufficient oil cooling in the transmission. Check the oil cooler and hoses for signs of damage and blockage. Then replace the oil.

Other information:

- To replace the oil, see **TRANSMISSION FLUID, REPLACING** .
- **Continue**

  Refer to **RESETTING TRANSMISSION FLUID CHANGE COUNTER**

RESETTING TRANSMISSION FLUID CHANGE COUNTER

RESETTING TRANSMISSION FLUID CHANGE COUNTER

HINT: The transmission control module (TCM) has a counter for the oil quality. The counter counts up if the transmission is exposed to too high a load or an ambient temperature that is too high. If the counter is not reset when the oil is drained or changed, there is a risk that a diagnostic trouble code (DTC) will be stored in faulty circumstances. Therefore it is important that the "Transmission oil change" counter is reset.

NOTE: This applies only when the transmission fluid is changed and when the fluid is changed when repairs are carried out to the transmission temperature sensor.

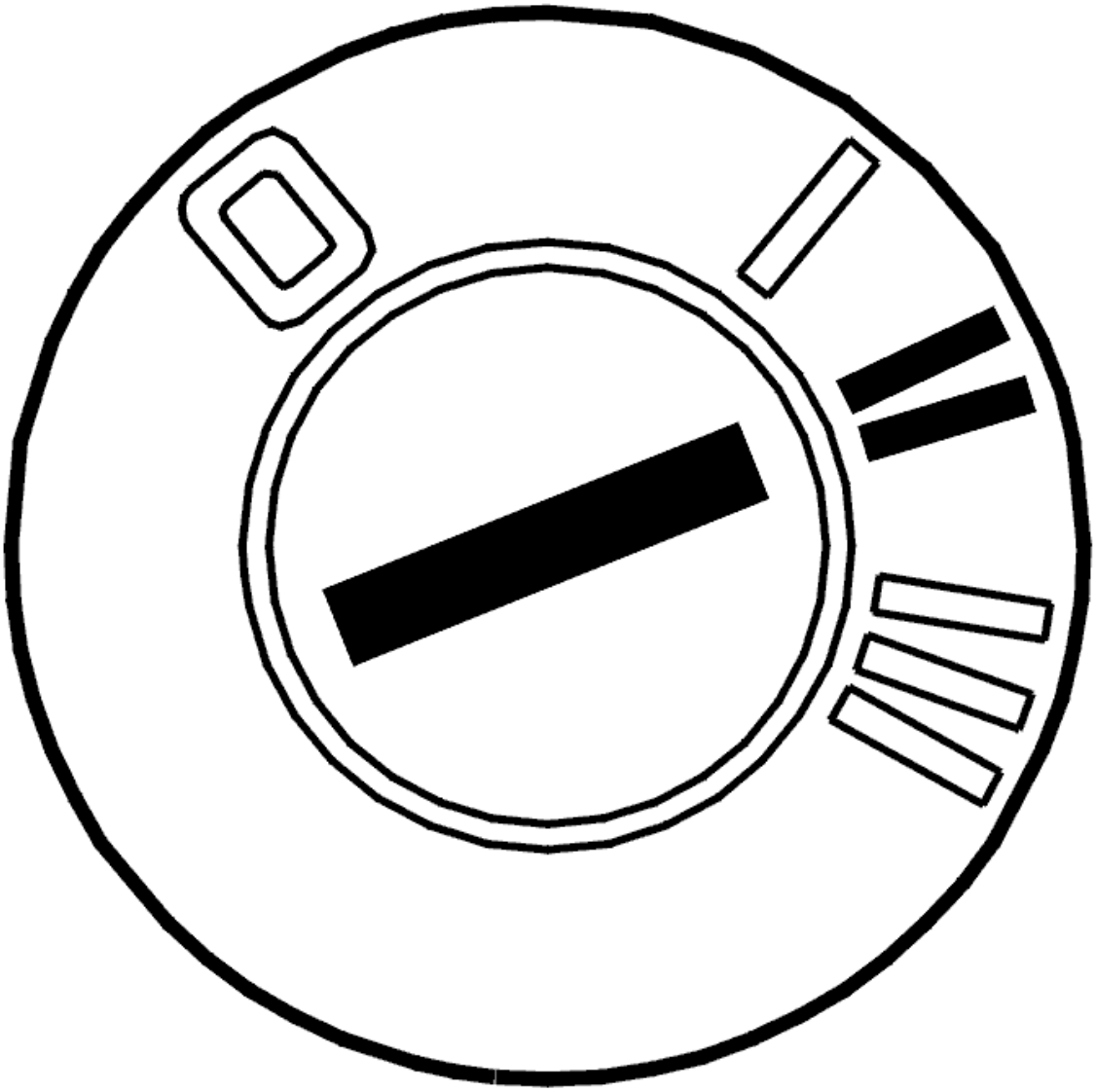

Fig. 210: Identifying Ignition ON
Courtesy of VOLVO CARS CORPORATION

- Ignition on.

  Reset the counter by clicking on the VCT 2000 symbol.

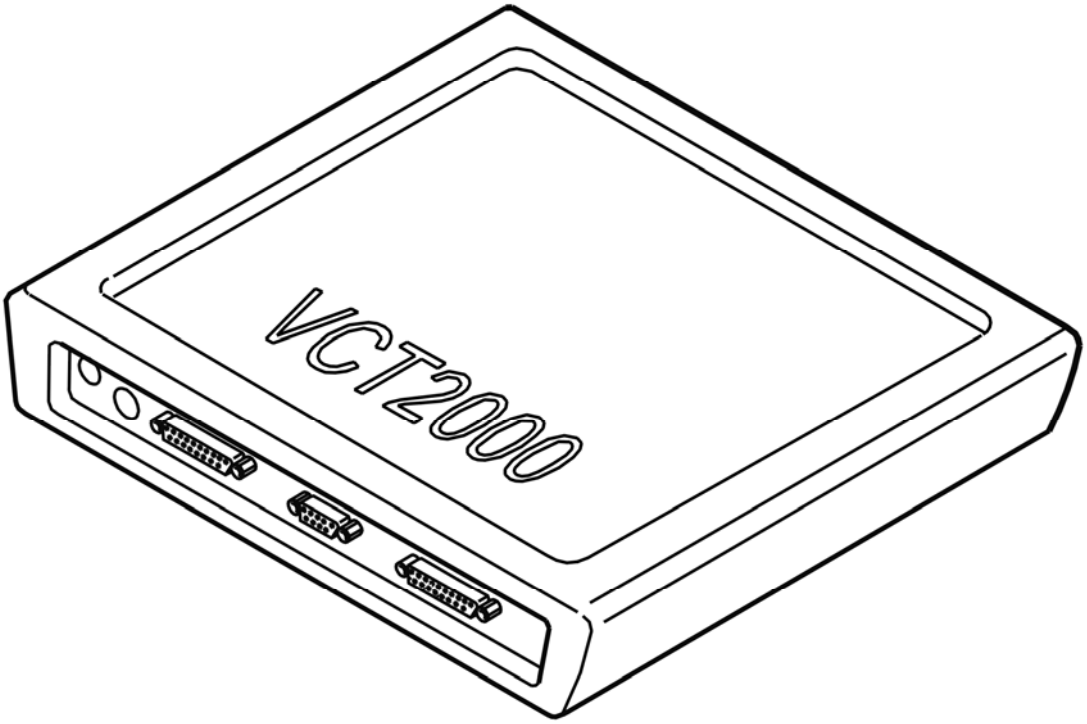

Fig. 211: Identifying VCT2000 Diagnostic Tool Symbol In VIDA
Courtesy of VOLVO CARS CORPORATION

- **Continue**

  Refer to **VERIFICATION**

VERIFICATION

VERIFICATION

HINT: After carrying out the repair, check that the fault has been remedied.

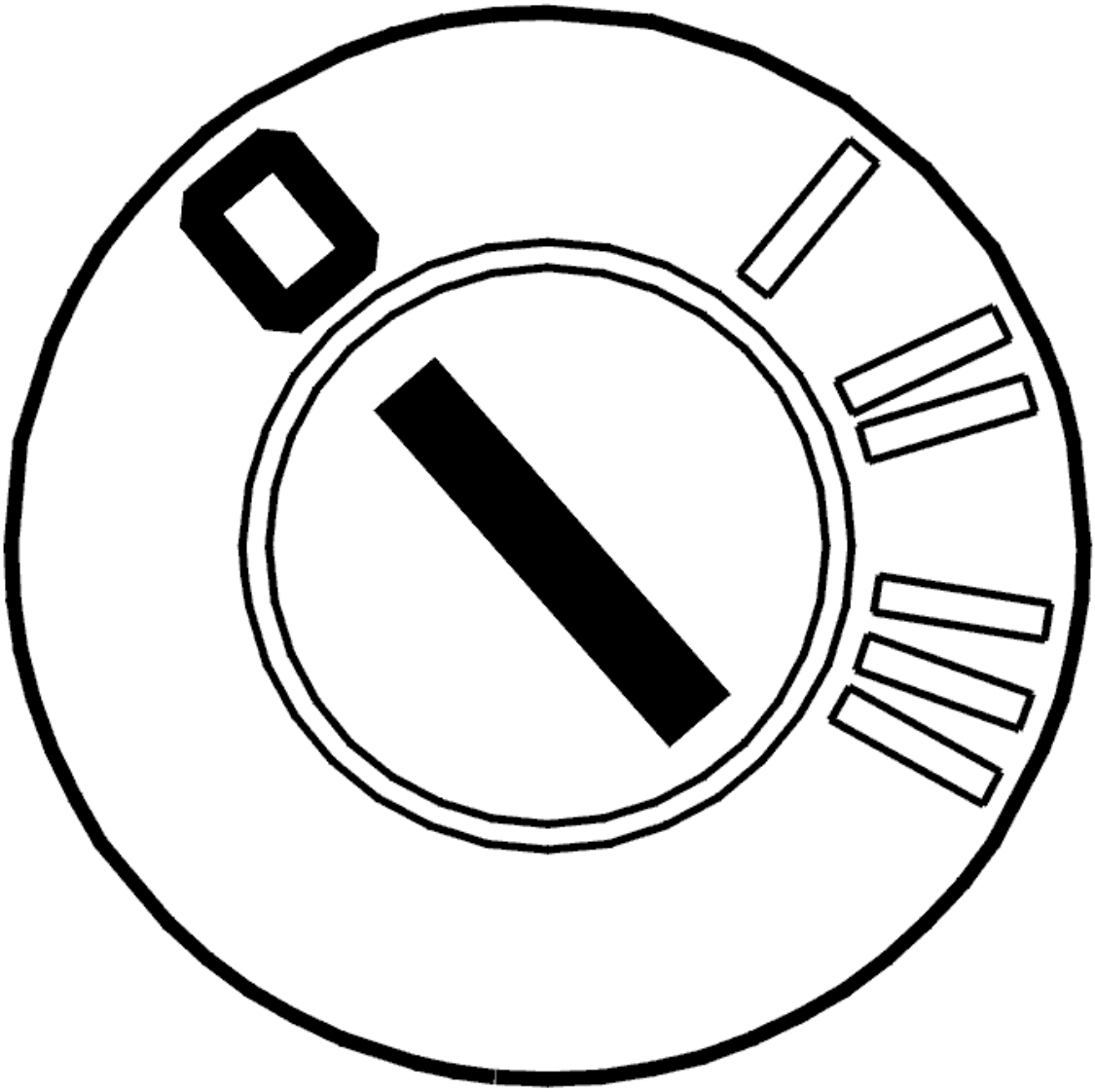

Fig. 212: Identifying Ignition OFF
Courtesy of VOLVO CARS CORPORATION

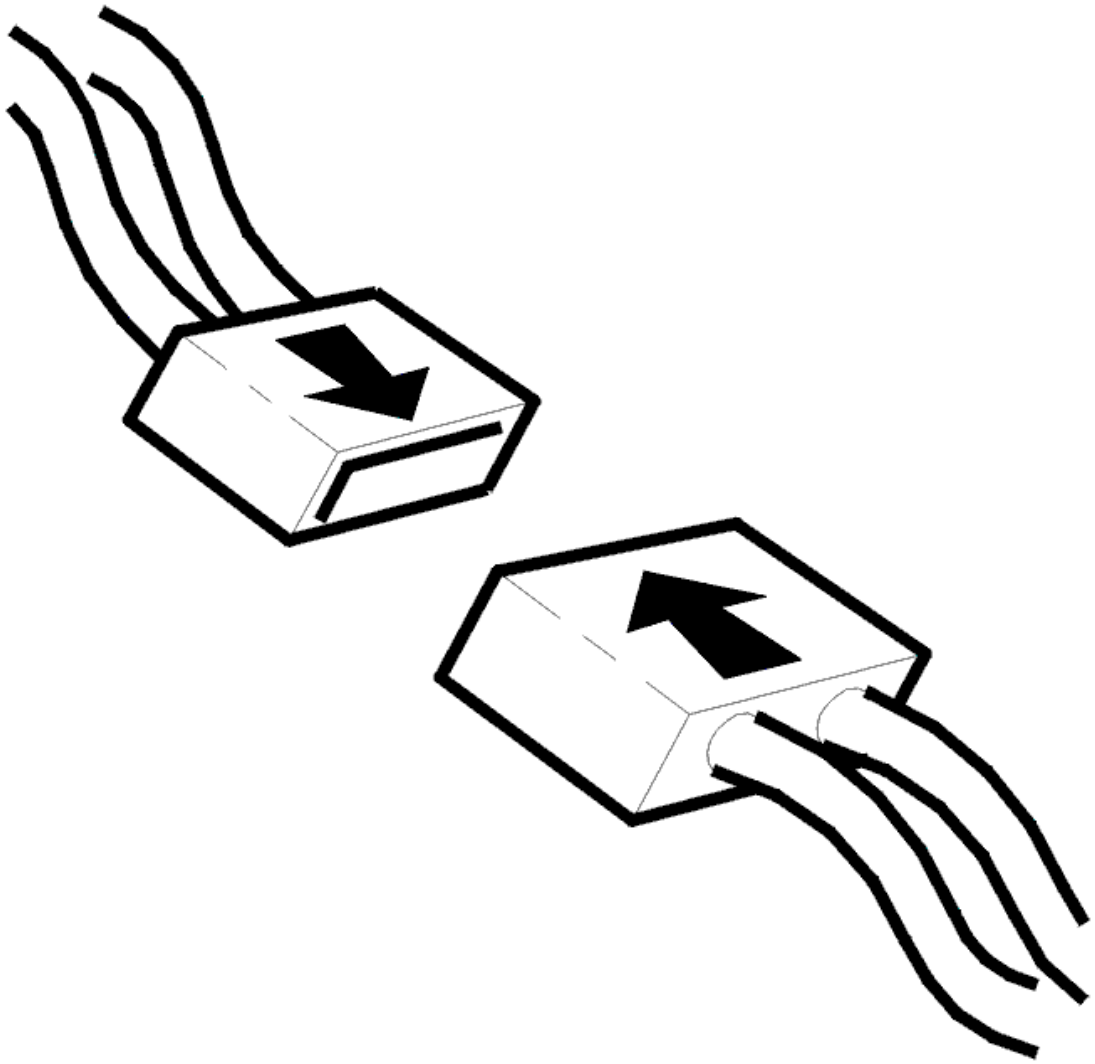

Fig. 213: Identifying Connector(s) Reinstallation
Courtesy of VOLVO CARS CORPORATION

- Ignition off.
- Reconnect the connectors. Reinstall the components.
- Test drive the car according to **TEST DRIVE SCHEDULE, DESCRIPTION** .

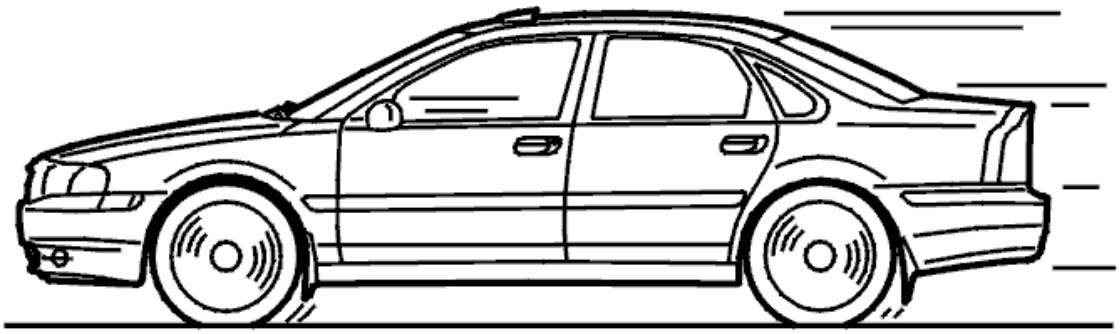

Fig. 214: Identifying Test Drive
Courtesy of VOLVO CARS CORPORATION

Is the function of the transmission OK?

- **YES**

  VERIFIED: Troubleshooting has been completed.

- **NO**

  Refer to **INFORMATION**

INFORMATION

FAULT-TRACING INFORMATION

The fault should have been detected and remedied. As this is not the case fault-tracing has failed.

Exit fault-tracing for this diagnostic trouble code (DTC) or make another attempt.

TCM-0048: CONTROL MODULE. FAULTY SOFTWARE (4T65 AWD; 2003-2006)

DIAGNOSTIC TROUBLE CODE (DTC) INFORMATION

Condition

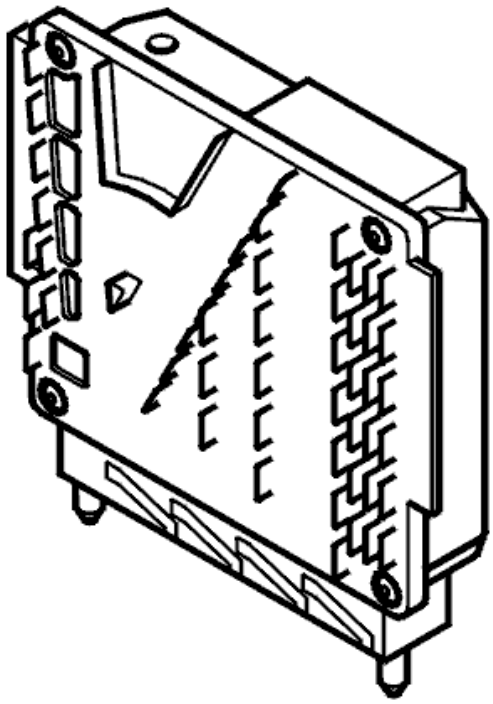

Fig. 215: Identifying Transmission Control Module (TCM)
Courtesy of VOLVO CARS CORPORATION

The control module software is adapted to the engine and transmission of the car. The control module must contain the correct software version in order for the transmission to function satisfactorily. Diagnostic trouble code (DTC) TCM-0048 is stored if the control module registers that the engine, transmission and software are not compatible.

Substitute Value

- The control module "Limp Home" program has been initiated.

Possible Source

- Faulty software in the transmission control module (TCM).
- Faulty transmission (installed when the transmission was replaced for example).

Fault symptom[s]

- General orange warning lamp lit.
- The malfunction indicator lamp (MIL) flashes.

FAULTY SOFTWARE

ORDERING SOFTWARE

The control module has registered an internal fault in the software. The control module can be programmed with new software. The software must be replaced to remedy the fault.

Order software according to the table below.

XC90	9438291

- **Continue**

  Refer to **PROGRAMMING THE CONTROL MODULE**

PROGRAMMING THE CONTROL MODULE

Programming can be carried out when the software has been delivered.

Program the control module according to the table below.

XC90	8691289

TCM-0048: CONTROL MODULE. FAULTY SOFTWARE (AW50/51 AWD; AW55-50/51SN; 2003-2007)

DIAGNOSTIC TROUBLE CODE (DTC) INFORMATION

see **DIAGNOSTIC TROUBLE CODE (DTC) INFORMATION**

FAULTY SOFTWARE

see **FAULTY SOFTWARE**

TCM-0049: CONTROL MODULE. INTERNAL FAULT. INTERMITTENT FAULT (4T65 AWD; 2003-2006)

DIAGNOSTIC TROUBLE CODE (DTC) INFORMATION

Condition

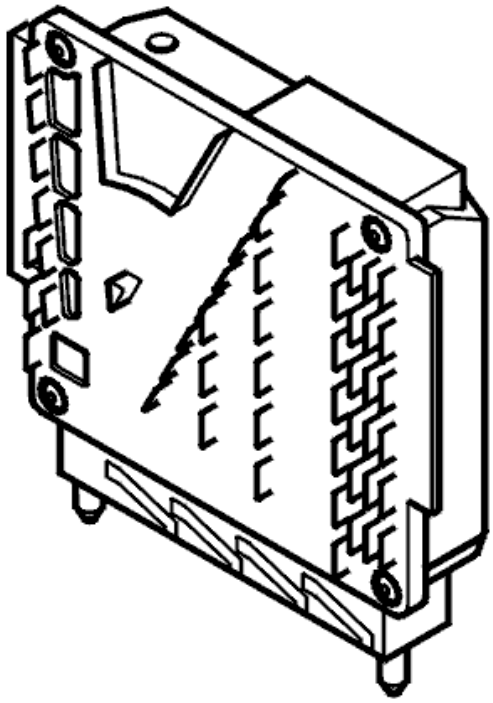

Fig. 216: Identifying Transmission Control Module (TCM)
Courtesy of VOLVO CARS CORPORATION

Diagnostic trouble code (DTC) TCM-0049 is stored if the control module detects a fault in the control module EEPROM memory.

Substitute Value

- The transmission control module (TCM) "Emergency mode I" program has been initiated.

Possible Source

- Faulty software in control module.
- Internal fault in control module.

Fault symptom[s]

- No fault symptoms.

INTERNAL FAULT. INTERMITTENT FAULT

INFORMATION

The control module previously registered a fault. The fault is now no longer present.

- **Continue**

  Refer to **INFORMATION**

INFORMATION

FAULT-TRACING INFORMATION

If the fault is intermittent, do not verify fault-tracing if the fault does not recur.

It is possible to view the information again, or leave fault-tracing for this diagnostic trouble code (DTC).

TCM-0049: CONTROL MODULE. INTERNAL FAULT. INTERMITTENT FAULT (AW50/51 AWD; AW55-50/51SN; 2003-2007)

DIAGNOSTIC TROUBLE CODE (DTC) INFORMATION

see **DIAGNOSTIC TROUBLE CODE (DTC) INFORMATION**

INTERNAL FAULT. INTERMITTENT FAULT

see **INTERNAL FAULT. INTERMITTENT FAULT**

TCM-0049: CONTROL MODULE. INTERNAL FAULT. PERMANENT FAULT (4T65 AWD; 2003-2006)

DIAGNOSTIC TROUBLE CODE (DTC) INFORMATION

see **DIAGNOSTIC TROUBLE CODE (DTC) INFORMATION**

INTERNAL FAULT. PERMANENT FAULT

REPLACING THE CONTROL MODULE AND PROGRAMMING

The control module has registered an internal fault.

CAUTION: A new control module is delivered without software. The control module must be programmed in order to function after replacement.

For further information about programming and replacing the control module, see **TRANSMISSION CONTROL MODULE (TCM), REPLACING** .

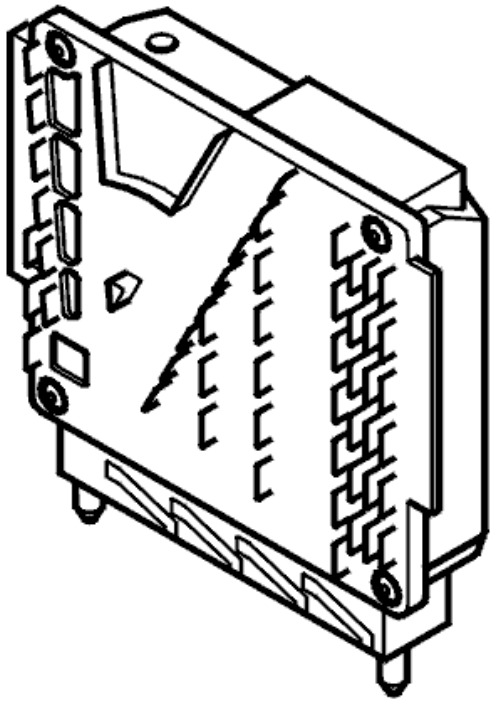

Fig. 217: Identifying Transmission Control Module (TCM)
Courtesy of VOLVO CARS CORPORATION

CHECKING THE CONTROL MODULE

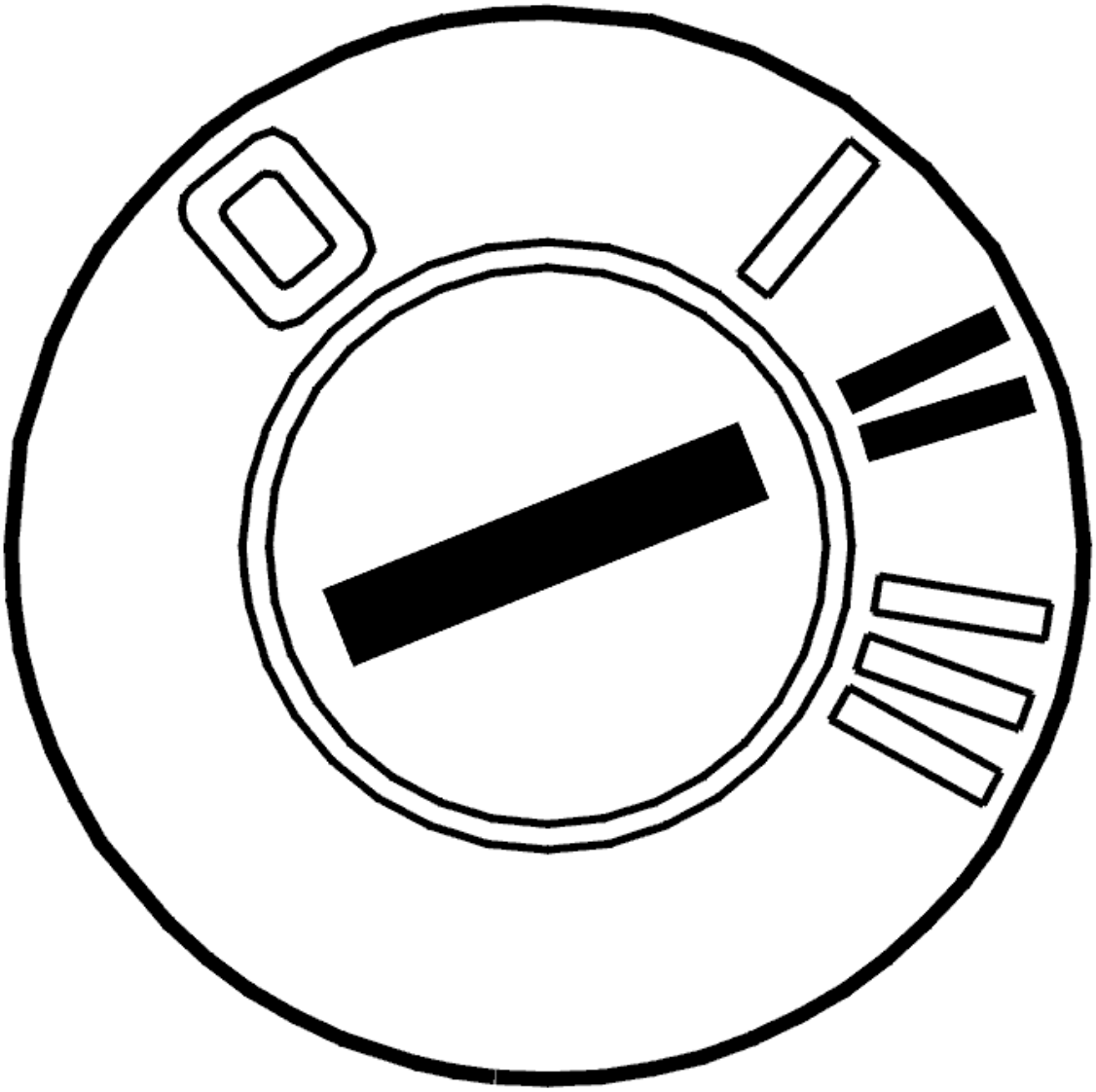

Fig. 218: Identifying Ignition ON
Courtesy of VOLVO CARS CORPORATION

- Ignition on
- Read off the check sum and calculated check sum.

  Check that the check sums correspond.

  If they do not correspond this indicates an internal fault in the control module.

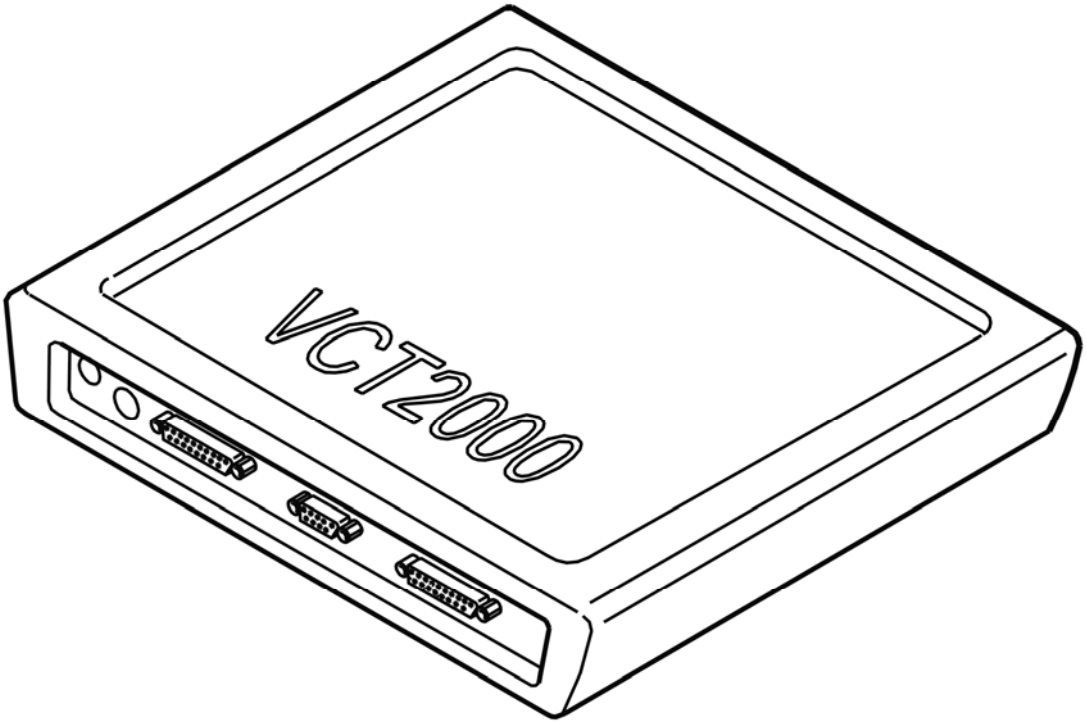

Fig. 219: Identifying VCT2000 Diagnostic Tool Symbol In VIDA
Courtesy of VOLVO CARS CORPORATION

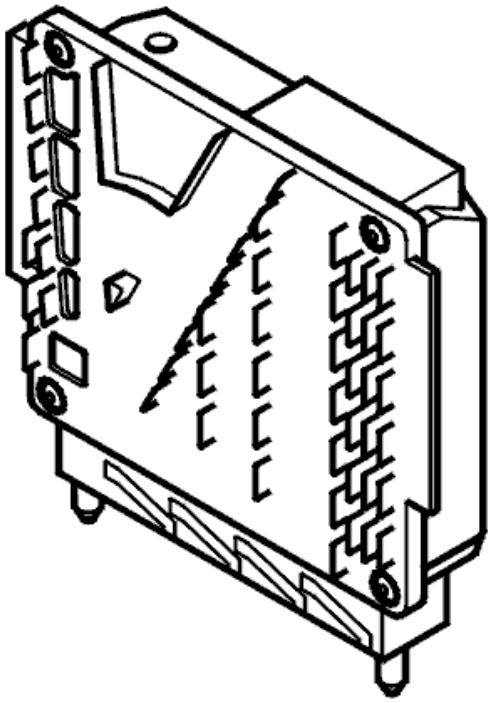

Fig. 220: Identifying Transmission Control Module (TCM)
Courtesy of VOLVO CARS CORPORATION

Are the values correct?

- **YES**

  FAULT NOT FOUND: Troubleshooting has been completed.

- **NO**

  Refer to **REPLACING THE CONTROL MODULE AND PROGRAMMING**

TCM-0049: CONTROL MODULE. INTERNAL FAULT. PERMANENT FAULT (AW50/51 AWD; AW55-50/51SN; 2003-2007)

DIAGNOSTIC TROUBLE CODE (DTC) INFORMATION

see **DIAGNOSTIC TROUBLE CODE (DTC) INFORMATION**

INTERNAL FAULT. PERMANENT FAULT

see **INTERNAL FAULT. PERMANENT FAULT**

TCM-0050: SOLENOID SL. JAMMED (4T65 AWD; 2003-2006)

DIAGNOSTIC TROUBLE CODE (DTC) INFORMATION

Condition

The control module checks if lock-up solenoid SL is stuck in the open or closed position by comparing the signals from solenoid SL and lock-up pressure sensor PS4. Pressure sensor PS4 detects whether solenoid SL is activated or not. Diagnostic trouble code (DTC) TCM-0050 is stored if the control module registers that solenoid SL has jammed in the open position.

Substitute Value

- The control module does not activate the lock-up solenoid.

Possible Source

- Lock-up solenoid SL has stuck in the open position
- Mechanical fault in the transmission control system
- Defective solenoid SL.

Fault symptom[s]

- General orange warning lamp lit
- No lock-up function.

STUCK

CHECKING THE FUNCTION OF THE TRANSMISSION

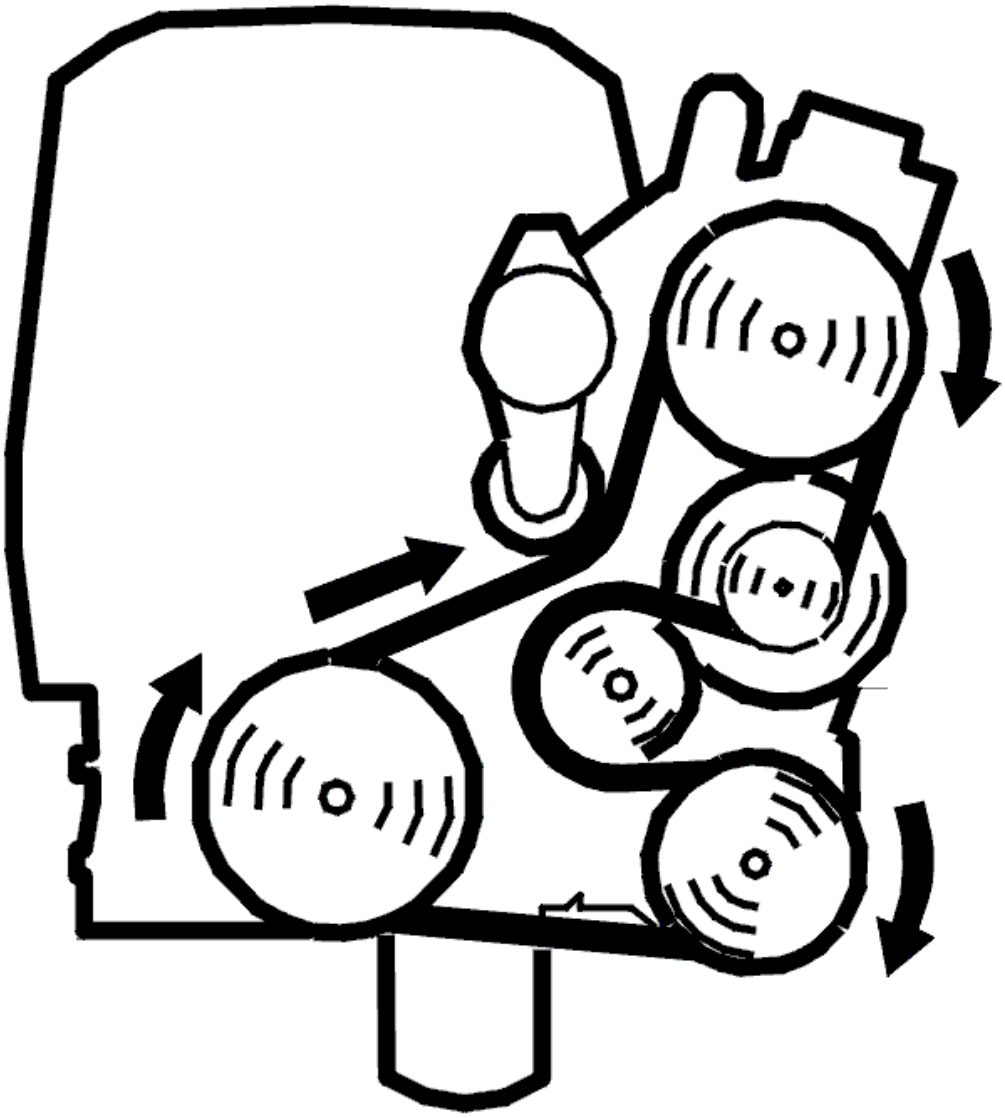

Fig. 221: Identifying Belt Routing
Courtesy of VOLVO CARS CORPORATION

- Start the engine
- Ensure that the car is fully braked
- Move the gear selector to position D
- Press the "Winter" mode button.

  HINT: The "Winter" mode activates second gear.

  Check that the engine speed (RPM) drops considerably when "Winter" mode is engaged.

  HINT: If the engine speed (RPM) drops considerably, the lock-up function is engaged.

Did the engine speed (RPM) drop dramatically?

- **YES**

  Refer to **REPLACING THE CONTROL SYSTEM**

- **NO**

  Refer to **CHECKING DIAGNOSTIC TROUBLE CODES (DTCS)**

CHECKING SOLENOID SL

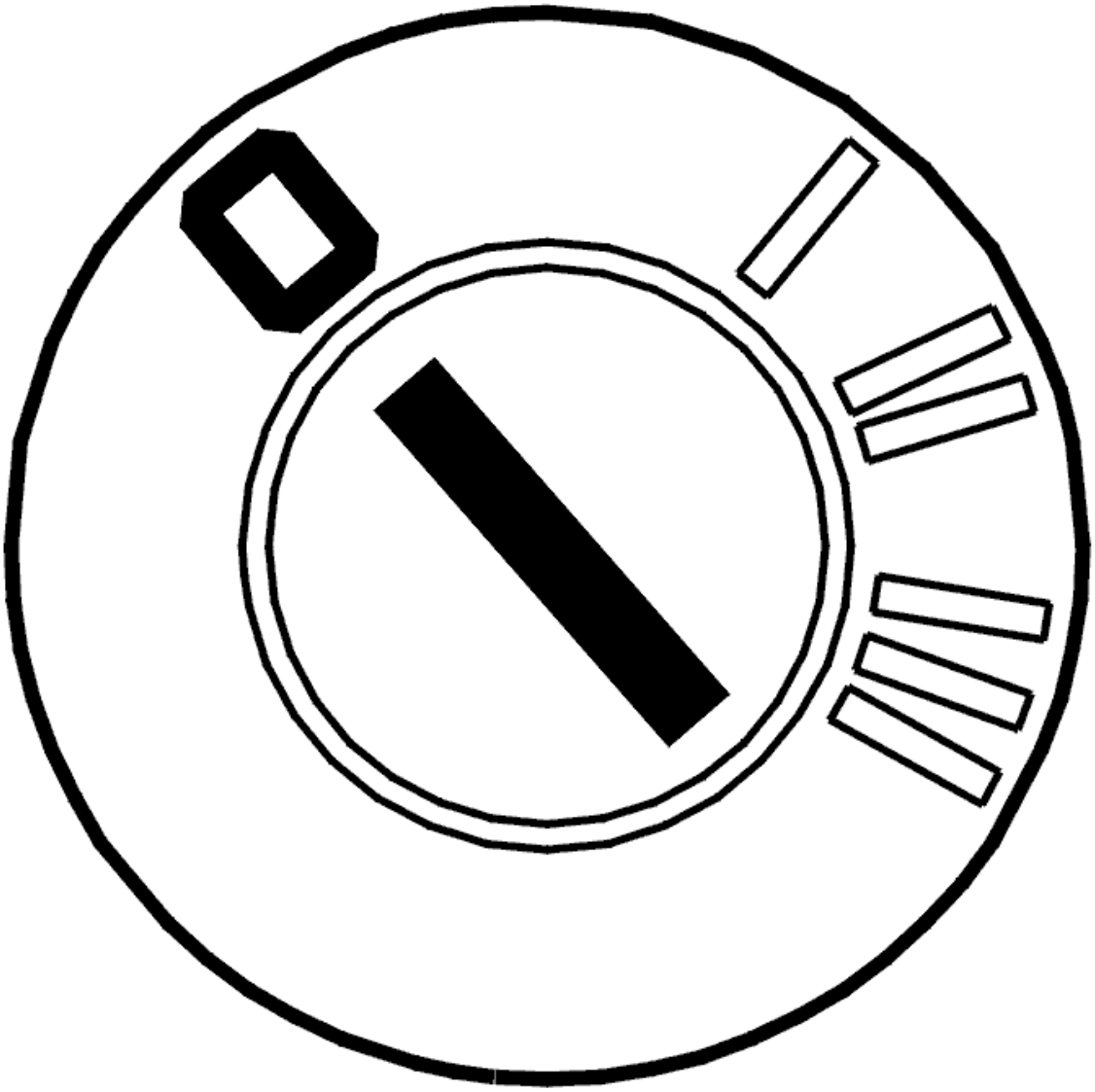

Fig. 222: Identifying Ignition OFF
Courtesy of VOLVO CARS CORPORATION

- Ignition off
- Connect the breakout box to the control module connector (transmission side).

Check solenoid SL by measuring the resistance between terminals #A51 (#A51) and #A53 (#A53).

When the transmission is cold (20°C), the resistance must be 10-11 ohms. When the transmission is at operating temperature (150°C), the resistance must not exceed 16 ohms.

Other information:

- To connect the breakout box, see **CONNECTING THE BREAKOUT BOX**
- For information about signals, see **SIGNAL SPECIFICATION** .

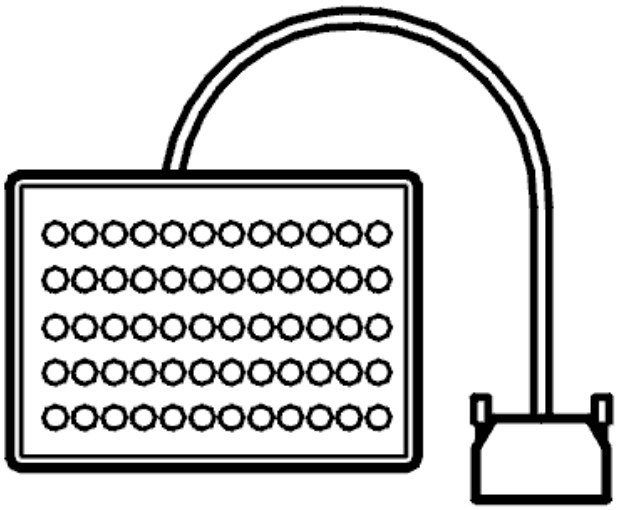

Fig. 223: Identifying Breakout Box
Courtesy of VOLVO CARS CORPORATION

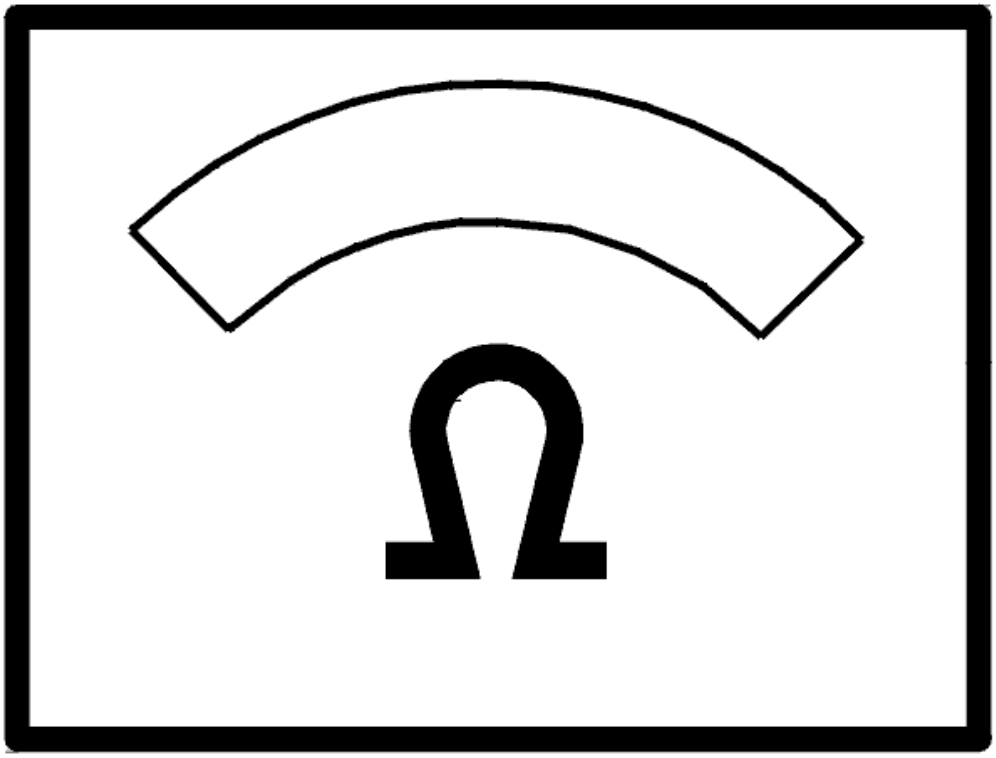

Fig. 224: Identifying Ohms Display
Courtesy of VOLVO CARS CORPORATION

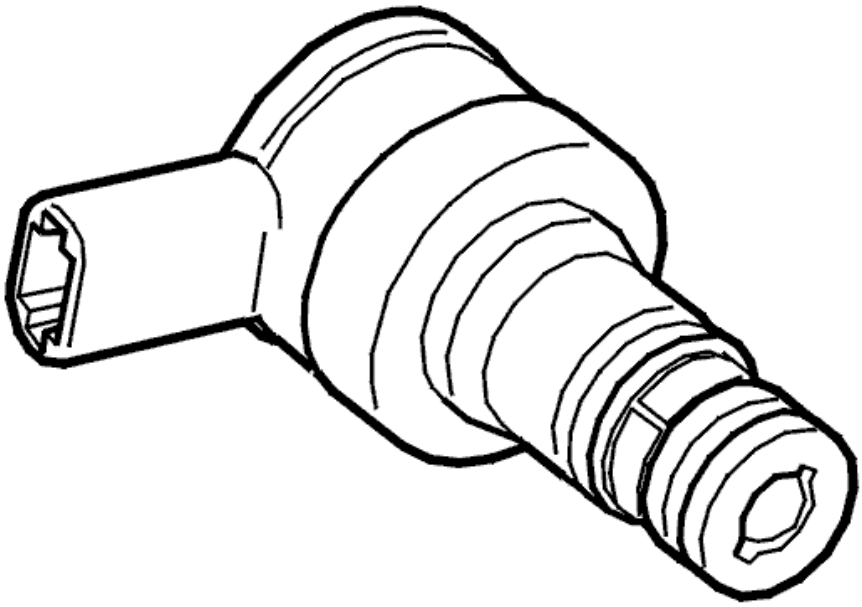

Fig. 225: Identifying Lock-Up Solenoid, SL
Courtesy of VOLVO CARS CORPORATION

Was the resistance OK?

- **YES**

  Refer to **CHECKING THE TRANSMISSION FLUID**

- **NO**

  Refer to **CHECKING THE WIRING**

CHECKING THE TRANSMISSION FLUID

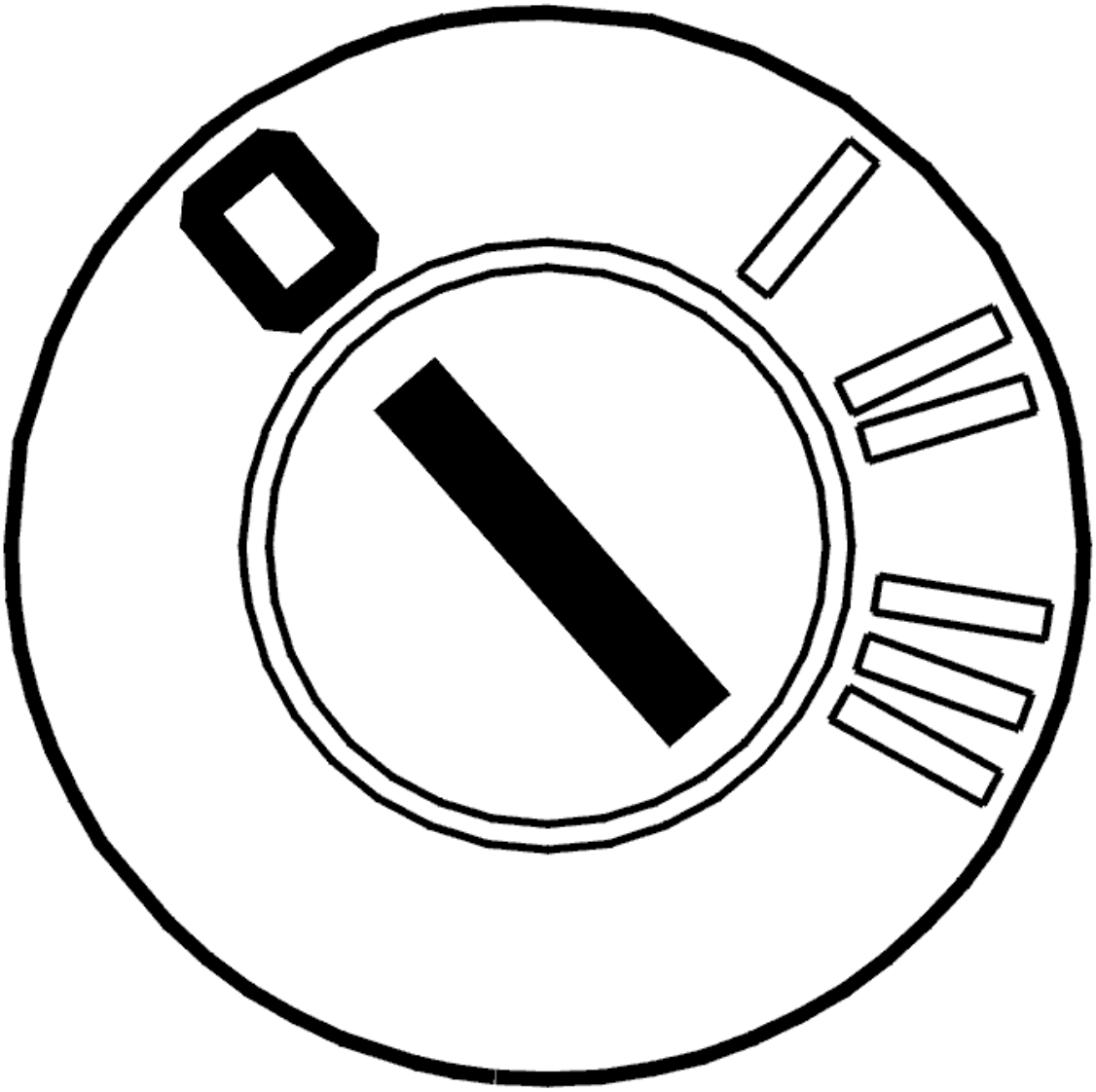

Fig. 226: Identifying Ignition OFF
Courtesy of VOLVO CARS CORPORATION

- Ignition off.

  Remove the transmission oil trough according to **TRANSMISSION OIL / OIL FILTER, REPLACING** . Check the transmission oil and filter. Check for **abnormal** amounts of particles in the oil.

  Large amounts of particles in the oil trough and filter indicate that there is an internal fault in the transmission and that the transmission must be replaced. If there are small amounts of particles in the oil trough and filter, the transmission control system should be replaced.

  Select an alternative

  1. Large amounts particles in the oil trough and filter

Refer to **REPLACING THE TRANSMISSION**

2. Small amounts particles in the oil trough and filter.

   Refer to **REPLACING THE CONTROL SYSTEM**

CHECKING THE WIRING

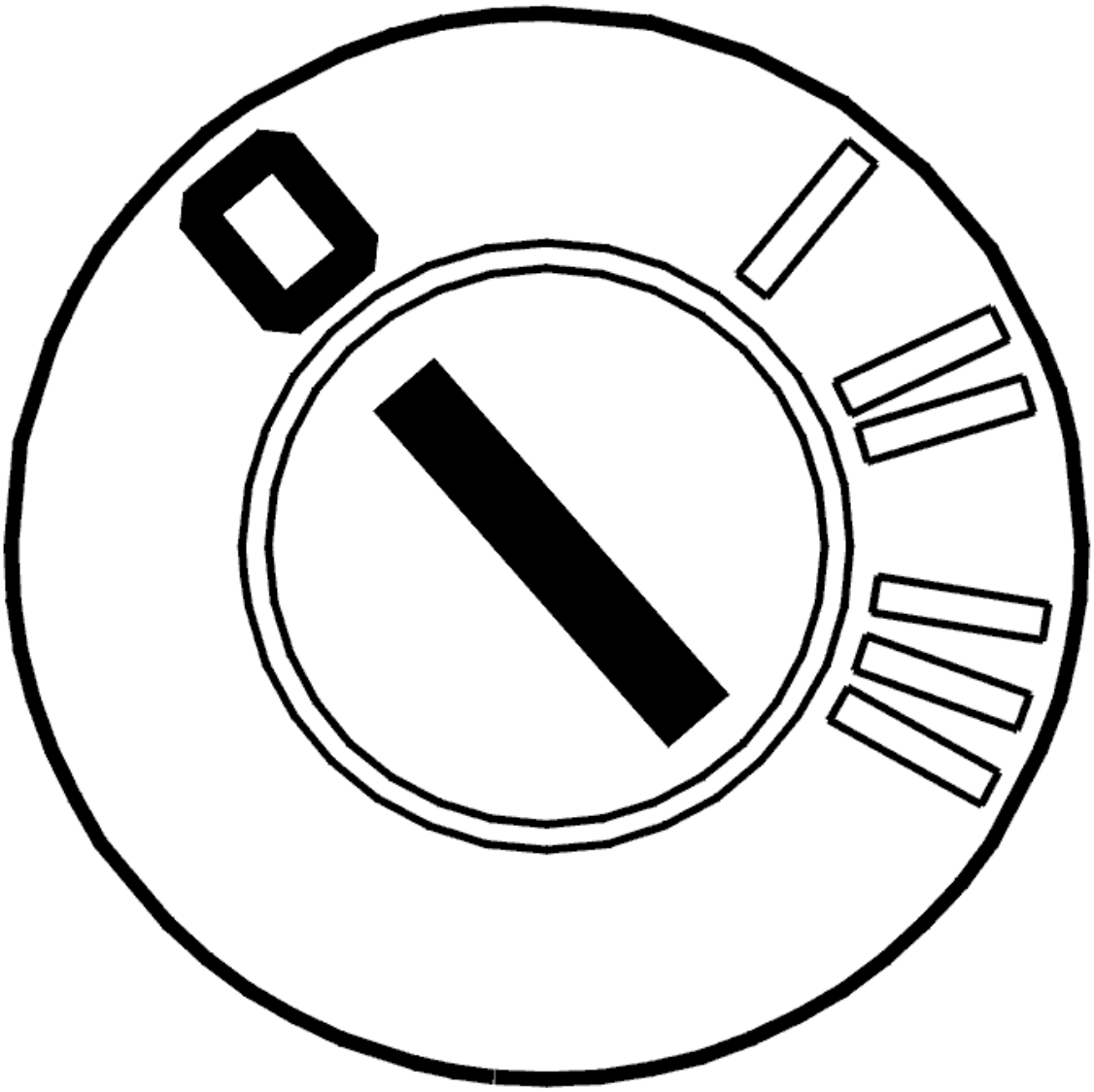

Fig. 227: Identifying Ignition OFF
Courtesy of VOLVO CARS CORPORATION

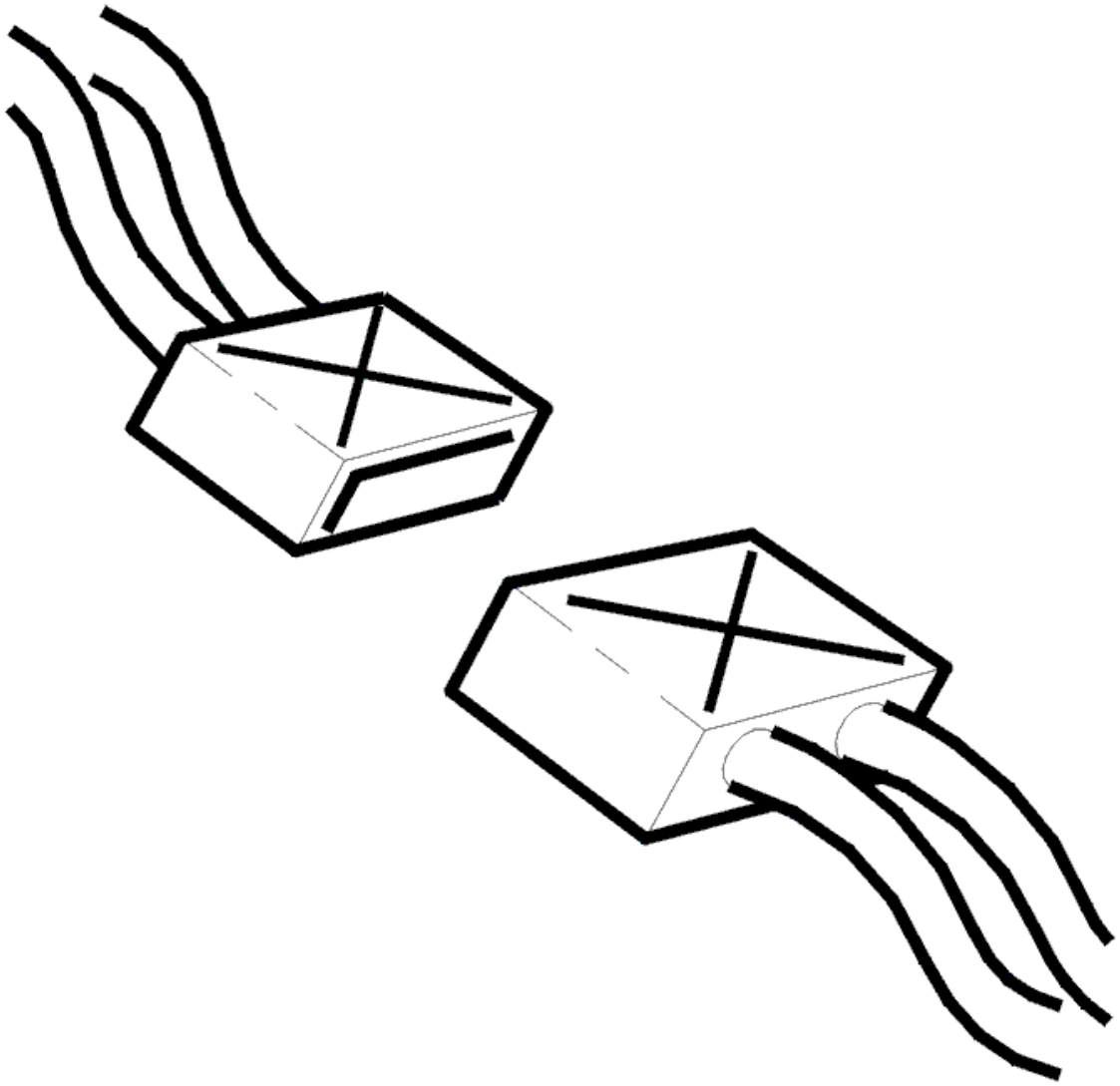

Fig. 228: Identifying Connectors
Courtesy of VOLVO CARS CORPORATION

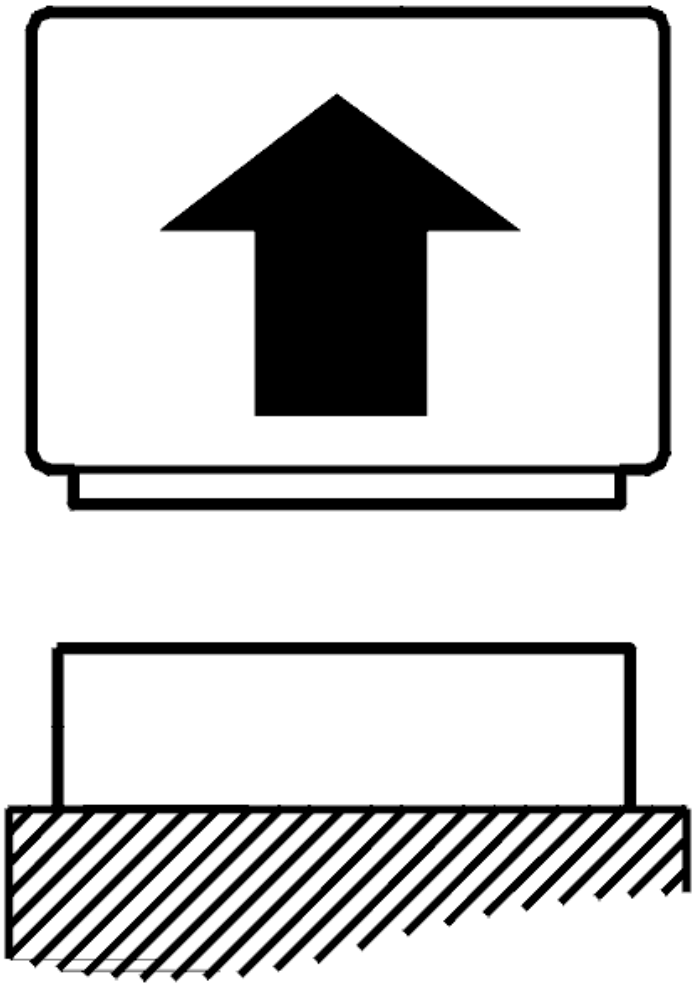

Fig. 229: Identifying Control Module Disconnected
Courtesy of VOLVO CARS CORPORATION

- Ignition off
- Control module disconnected
- Connect the breakout box to the control module connector (transmission side)
- Disconnect the transmission connector
- Adapter see **9511505** and breakout box see **9511428** connected to the transmission connector (control module side).

  Check the wiring between control module terminal #A51 (#A51) and transmission connector terminal #T (#A17). Check for an open-circuit. Check for a short-circuit to ground. Check for a short-circuit to supply voltage.

  Check the wiring between control module terminal #A53 (#A53) and transmission connector terminal #E

(#A5). Check for an open-circuit. Check for a short-circuit to ground. Check for a short-circuit to supply voltage.

Remedy as necessary.

Other information:

- To connect the breakout box, see **CONNECTING THE BREAKOUT BOX**
- To connect the breakout box to the transmission connector, see **CONNECTING THE BREAKOUT BOX, GM AUTOMATIC TRANSMISSIONS**
- For information about signals, see **SIGNAL SPECIFICATION**
- see **CHECKING WIRING AND TERMINALS. PERMANENT FAULT**

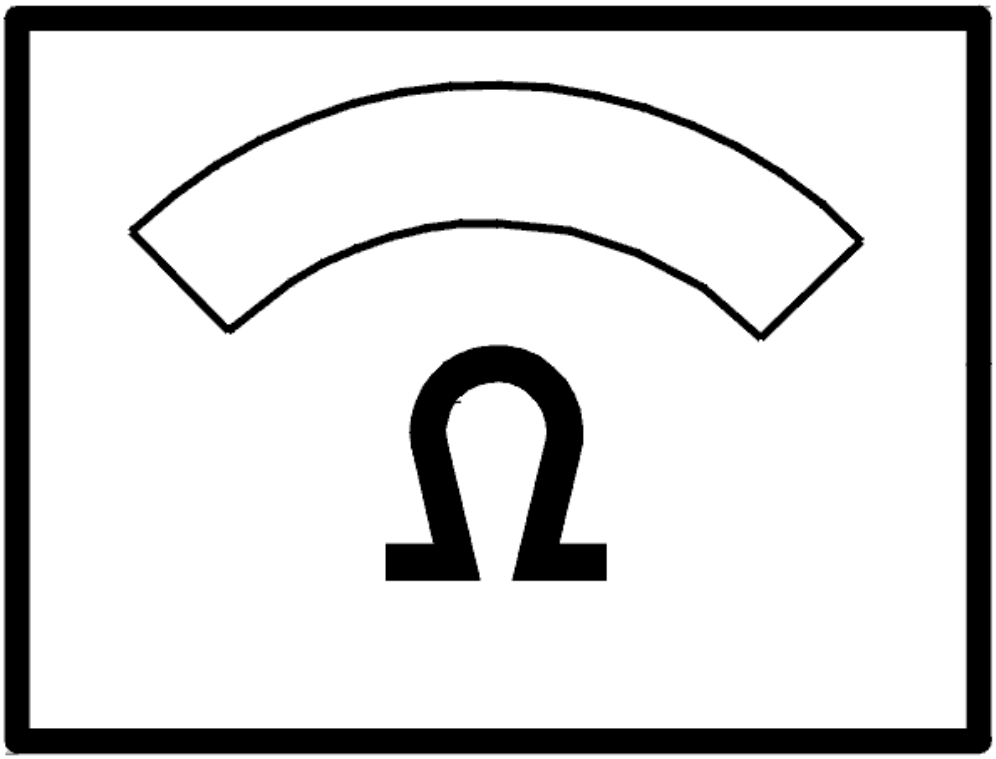

Fig. 230: Identifying Ohms Display
Courtesy of VOLVO CARS CORPORATION

Was a fault detected?

- **YES**

  Refer to **CHECKING DIAGNOSTIC TROUBLE CODES (DTCS)**

- **NO**

  Refer to **CHECKING THE WIRING AND COMPONENT**

CHECKING THE WIRING AND COMPONENT

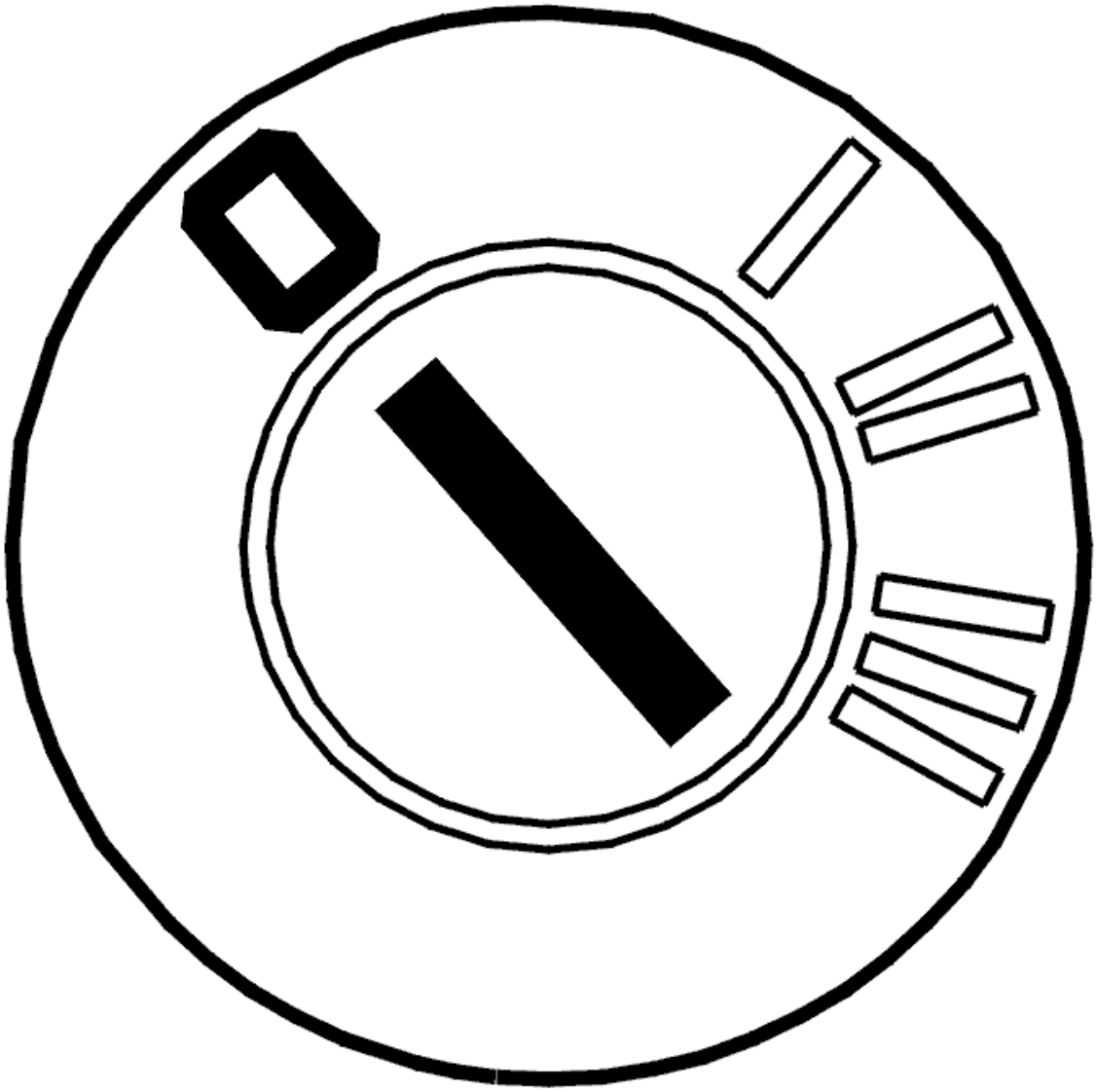

Fig. 231: Identifying Ignition OFF
Courtesy of VOLVO CARS CORPORATION

- Ignition off

- Open the transmission control system
- Connect adapter see **9511505** and breakout box see **9511428** to the transmission connector (transmission side).

  Check the cable between transmission connector terminal #T (#A17) and solenoid SL terminal #A. Check the cable between transmission connector terminal #E (#A5) and solenoid SL terminal #B. Check these cables for an open-circuit.

  HINT: Check solenoid SL by measuring the resistance between solenoid SL terminals #A and #B. When the transmission is cold (approximately 20°C), the resistance must be 10-11 ohms.

  Remedy as necessary.

  Other information:

  - To open the transmission control system, For removal, see **SIDE COVER TRANSMISSION, REMOVING** or To install, see **SIDE COVER TRANSMISSION, INSTALLING**
  - To connect the breakout box to the transmission connector, see **CONNECTING THE BREAKOUT BOX, GM AUTOMATIC TRANSMISSIONS**
  - To replace solenoid SL, see **SOLENOID LOCK-UP FUNCTION, REPLACING**
  - To replace the cable harness, see **TEMPERATURE SENSOR FLUID, TRANSAXLE, (TFT)**
  - For information about signals, see **SIGNAL SPECIFICATION**
  - see **CHECKING WIRING AND TERMINALS. PERMANENT FAULT**

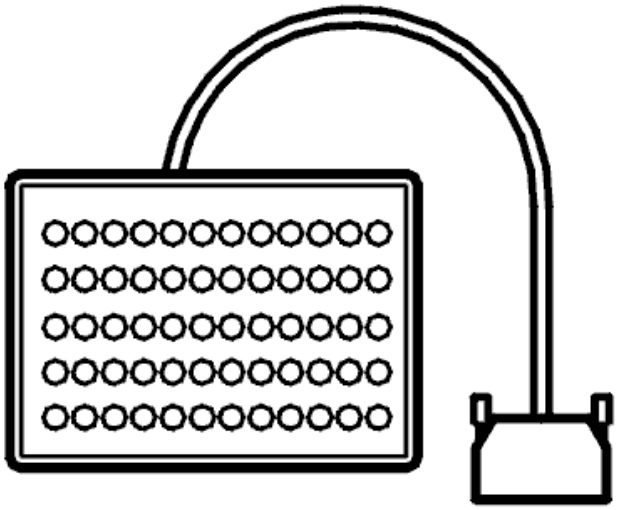

Fig. 232: Identifying Breakout Box
Courtesy of VOLVO CARS CORPORATION

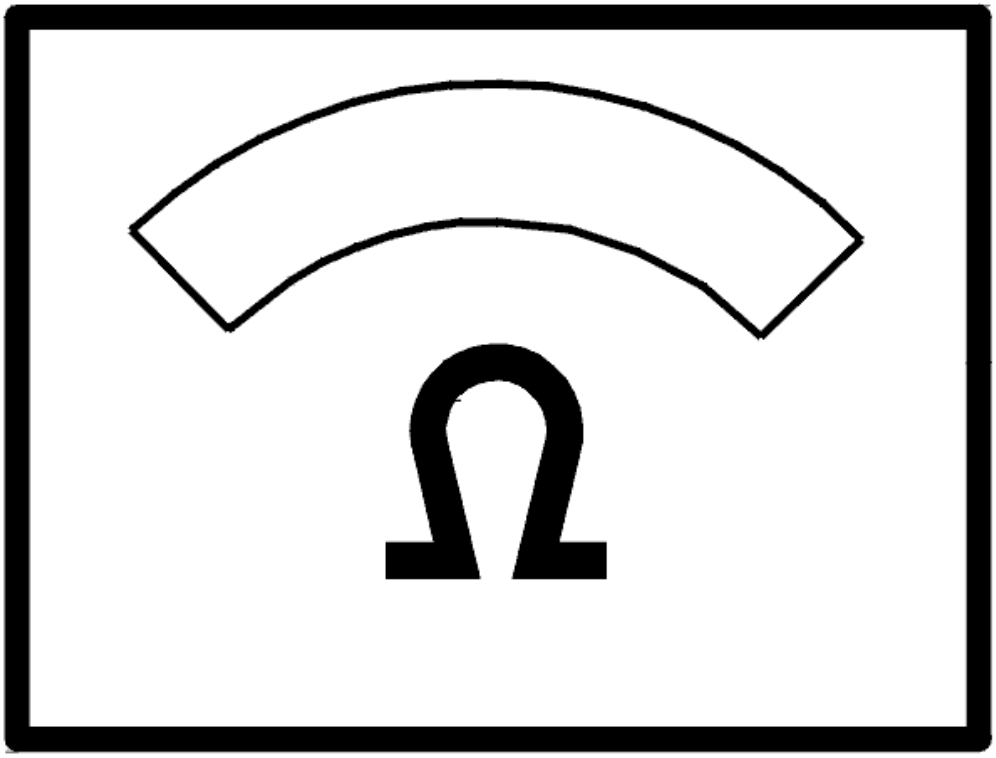

Fig. 233: Identifying Ohms Display
Courtesy of VOLVO CARS CORPORATION

- **Continue**

  Refer to **RESETTING THE ADAPTATION**

REPLACING THE TRANSMISSION

Fault-tracing indicates a fault in the transmission. Replace the transmission.

Other information:

- To remove the transmission, see **TRANSMISSION, REMOVING**
- To install the transmission, see **TRANSMISSION, INSTALLING (2003, 2004)** or **TRANSMISSION, INSTALLING (2005, 2006)** .

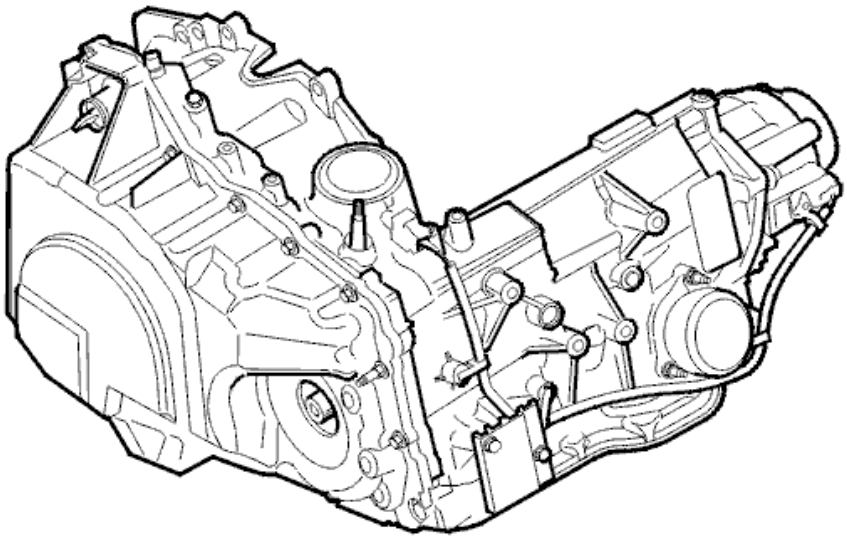

P2X

4301721D ©VOLVO

Fig. 234: Identifying Transmission
Courtesy of VOLVO CARS CORPORATION

- **Continue**

  Refer to **RESETTING THE ADAPTATION**

FAULT-TRACING INFORMATION

The fault-tracing indicates that the control module has previously detected a fault but that the fault is no longer active.

REPLACING THE CONTROL SYSTEM

Fault-tracing indicates a fault in the transmission control system. Replace the control system.

Other information:

- To replace the control system, For removal, see **CONTROL SYSTEM/VALVE HOUSING, REMOVING** and To install, see **CONTROL SYSTEM / VALVE HOUSING, INSTALLING** .

- **Continue**

Refer to **RESETTING THE ADAPTATION**

CHECKING DIAGNOSTIC TROUBLE CODES (DTCS)

CHECKING DIAGNOSTIC TROUBLE CODES (DTCS)

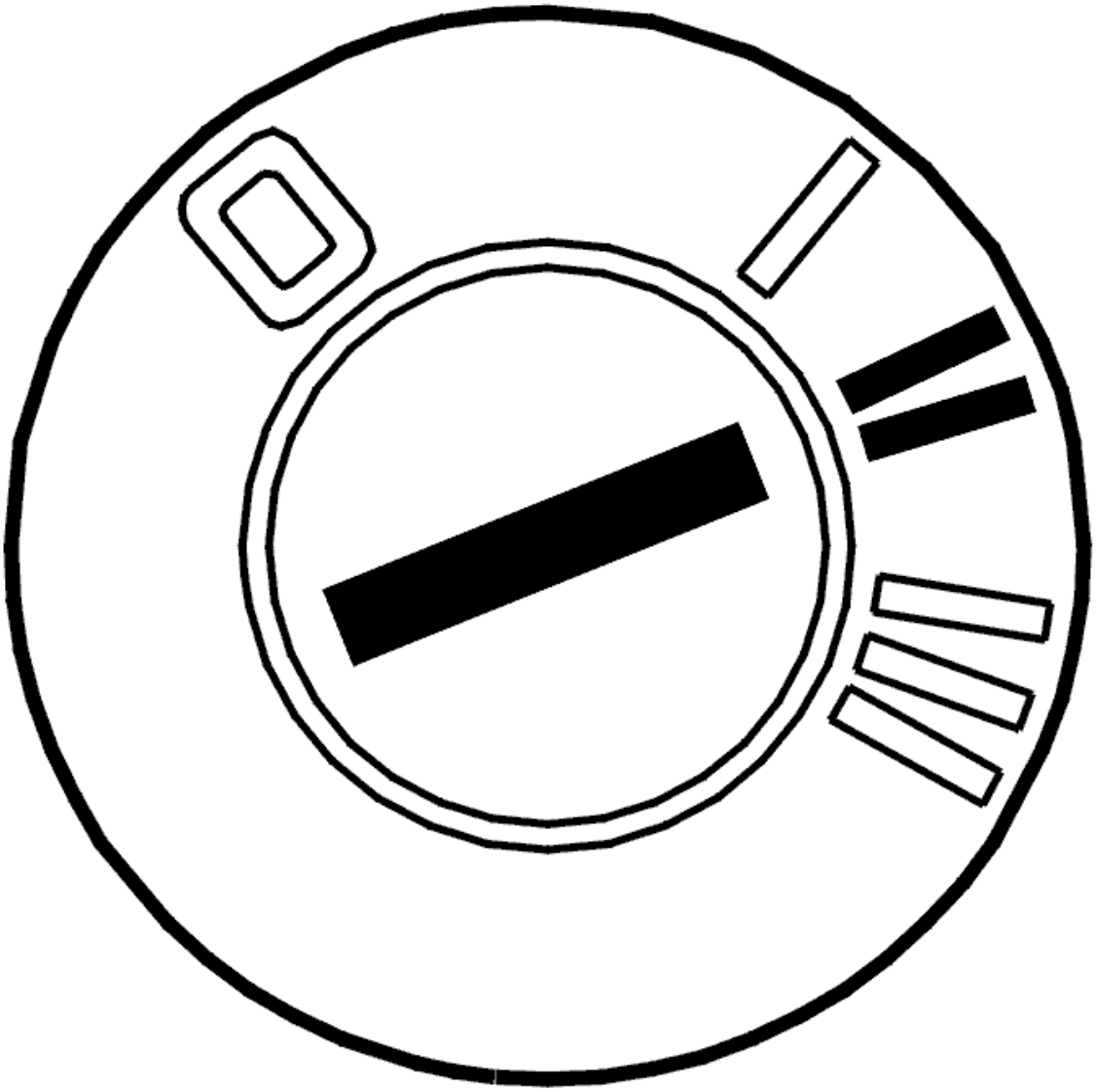

Fig. 235: Identifying Ignition ON
Courtesy of VOLVO CARS CORPORATION

- Ignition on
- Read off diagnostic trouble codes (DTCs).

  If any other diagnostic trouble codes (DTCs) than TCM-0050 are stored, these must be fault-traced and remedied after this fault-tracing is completed.

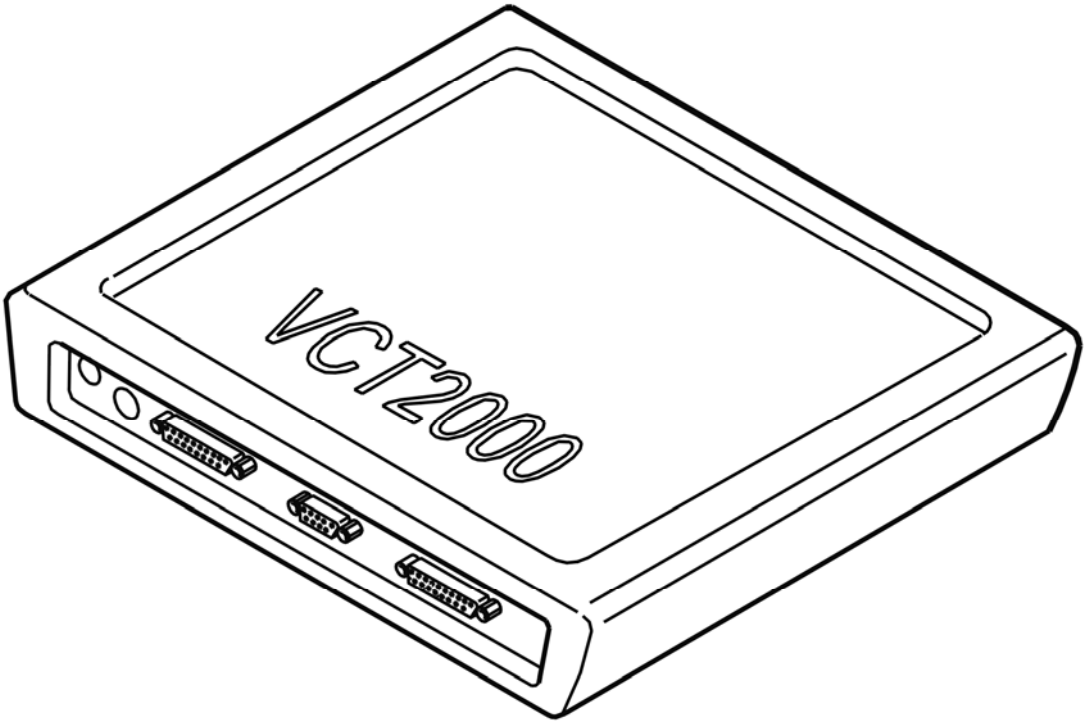

Fig. 236: Identifying VCT2000 Diagnostic Tool Symbol In VIDA
Courtesy of VOLVO CARS CORPORATION

- **Continue**

Refer to **ERASING DIAGNOSTIC TROUBLE CODES (DTCS)**

ERASING DIAGNOSTIC TROUBLE CODES (DTCS)

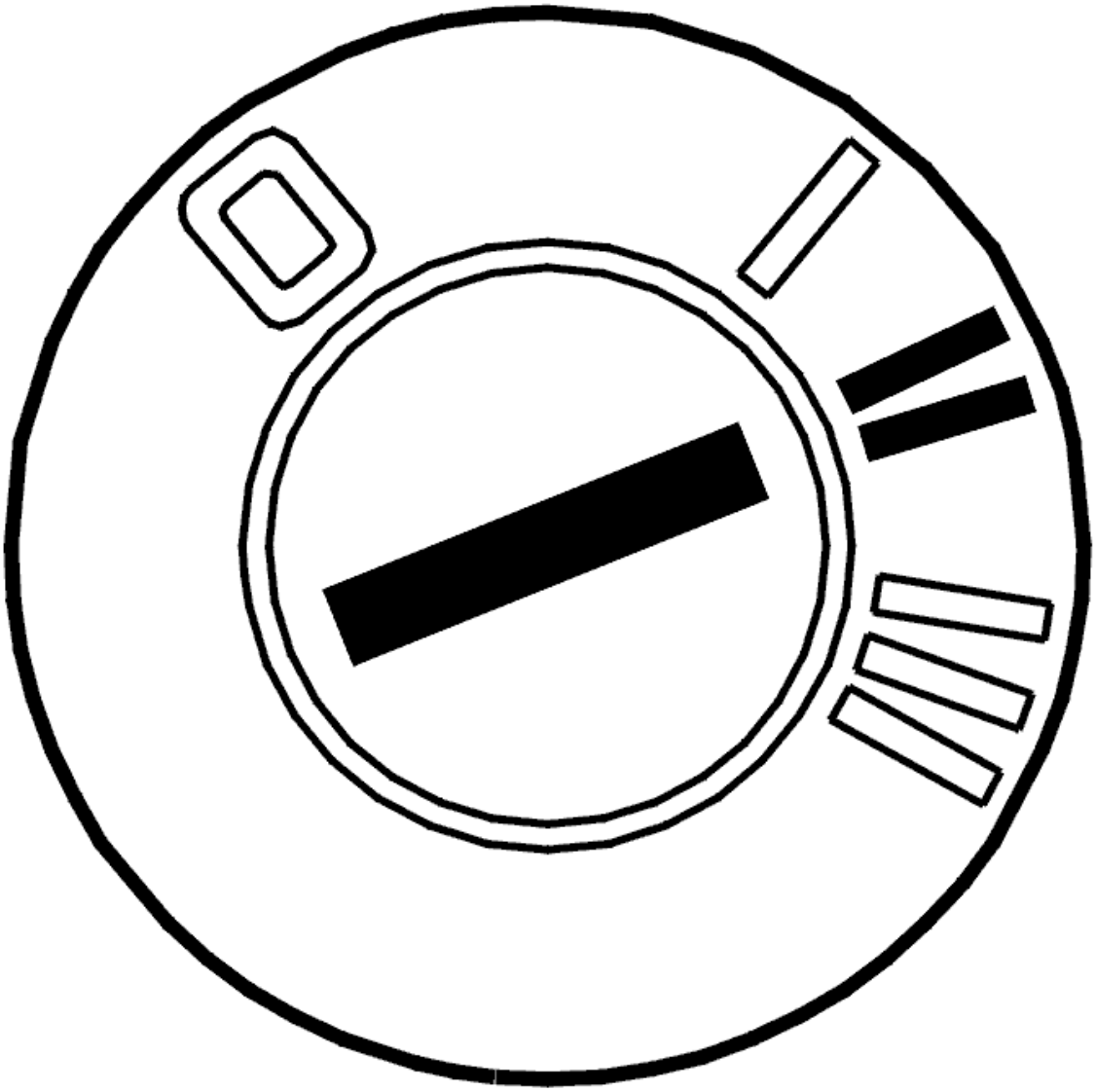

Fig. 237: Identifying Ignition ON
Courtesy of VOLVO CARS CORPORATION

- Ignition off
- Wait for two minutes to allow time for the diagnostic trouble codes (DTCs) to be stored in the control module memory
- Ignition on
- Erase diagnostic trouble codes (DTCs).

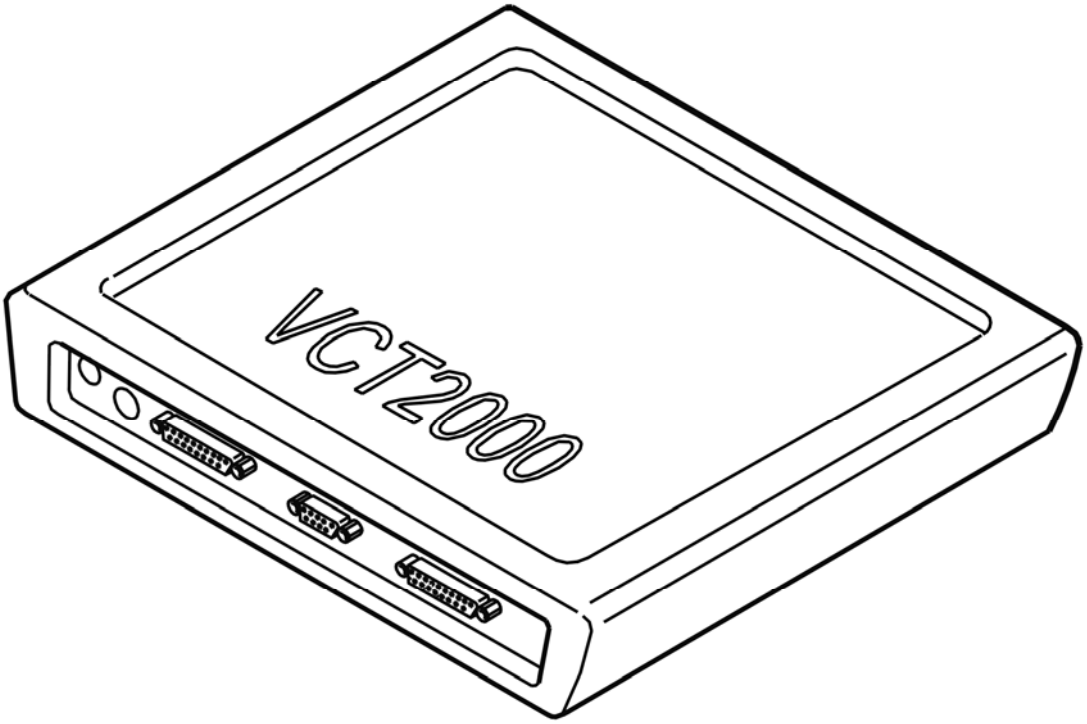

Fig. 238: Identifying VCT2000 Diagnostic Tool Symbol In VIDA
Courtesy of VOLVO CARS CORPORATION

- **Continue**

Refer to **CHECKING THE SOFTWARE**

TEST DRIVING

NOTE: **Test drive the car according to the driving schedule below to check whether the fault is still active. The test drive is compiled in order to create the conditions in which the diagnostic trouble code (DTC) will be stored again if the fault is active.**

The TEST MODE function can be used to provoke any diagnostic trouble codes (DTC). The function reduces the conditions for how quickly diagnostic trouble codes (DTCs) are stored in the control module and the test drive becomes easier.

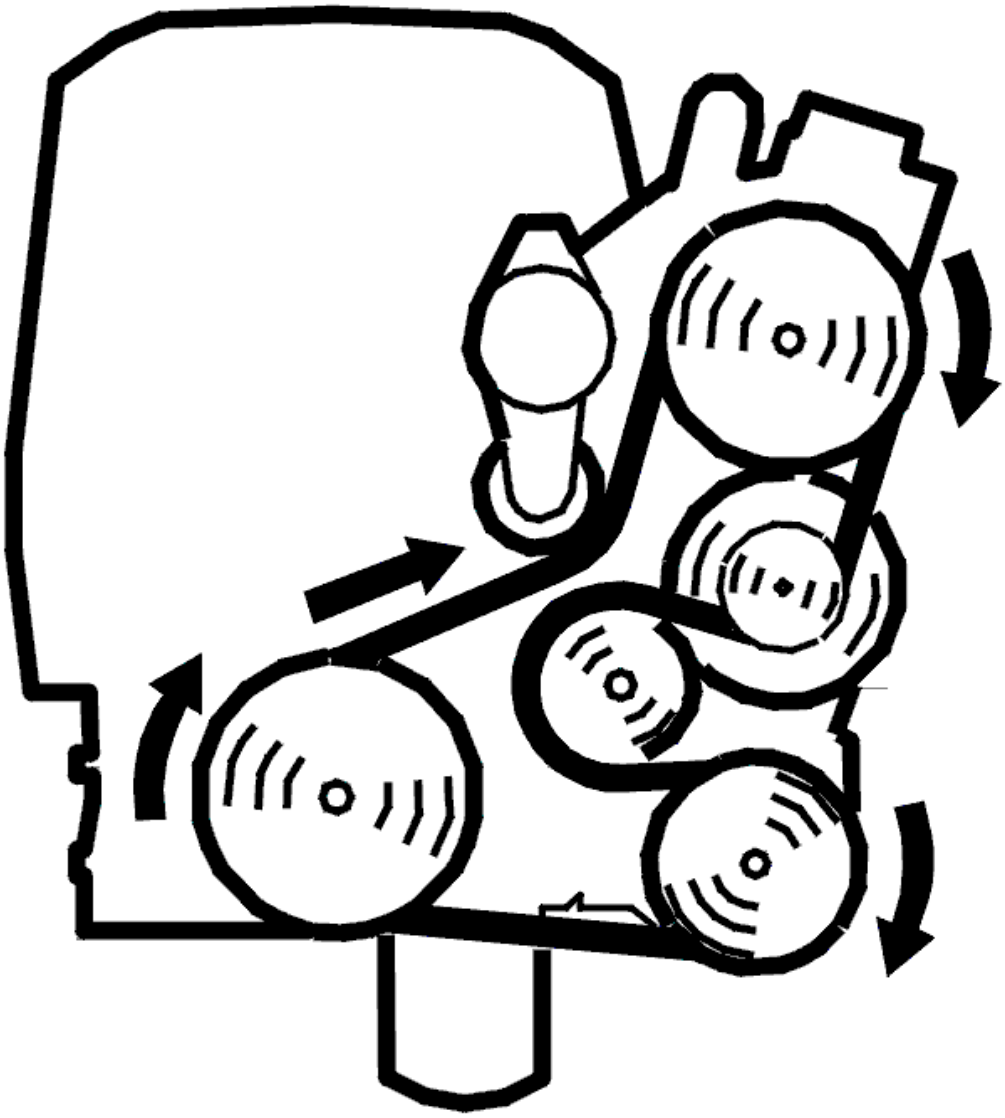

Fig. 239: Identifying Belt Routing
Courtesy of VOLVO CARS CORPORATION

- Start the engine
- Activate TEST MODE.

NOTE: Do not switch off the engine

- Disconnect the VIDA station. Test drive the car as described below.

WARNING: Please observe traffic regulations.

NOTE: Before test driving, the transmission fluid should be at operating

temperature, approximately 80-90°C.

Shift the gear selector to position D. Carefully accelerate to 50-65 km/h. Maintain the same speed for more than 20 seconds.

Criteria for diagnostic trouble code (DTC):

- The transmission fluid temperature must exceed 30°C
- The engine must be running for at least 20 seconds
- Gear selector in position D, 3 or 2 (4T65EV).

  Gear selector in Geartronic position and gears 4, 3 or 2 (4T65EV-GT)

- Speed 50-65 km/h for at least 5 seconds.

  HINT: The car must be driven at an engine speed where the lock-up function is not normally activated.

- At least 5 seconds since the last gear shift
- Positive engine torque (no engine braking).

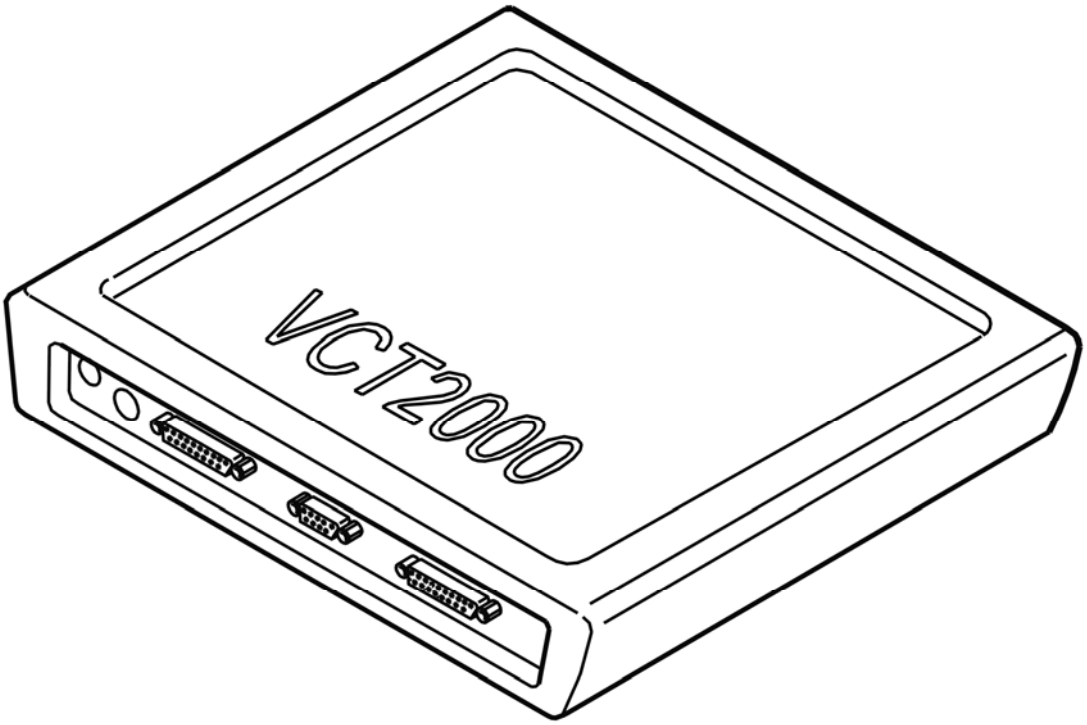

Fig. 240: Identifying VCT2000 Diagnostic Tool Symbol In VIDA
Courtesy of VOLVO CARS CORPORATION

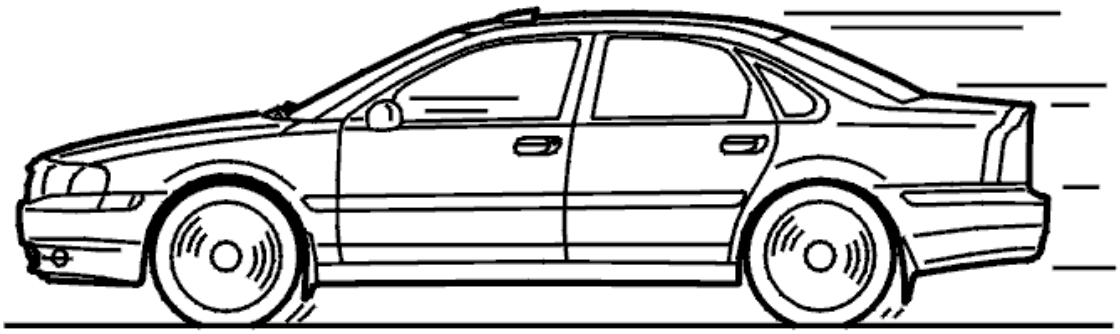

Fig. 241: Identifying Test Drive
Courtesy of VOLVO CARS CORPORATION

- **Continue**

Refer to **CHECKING DIAGNOSTIC TROUBLE CODES (DTCS)**

CHECKING DIAGNOSTIC TROUBLE CODES (DTCS)

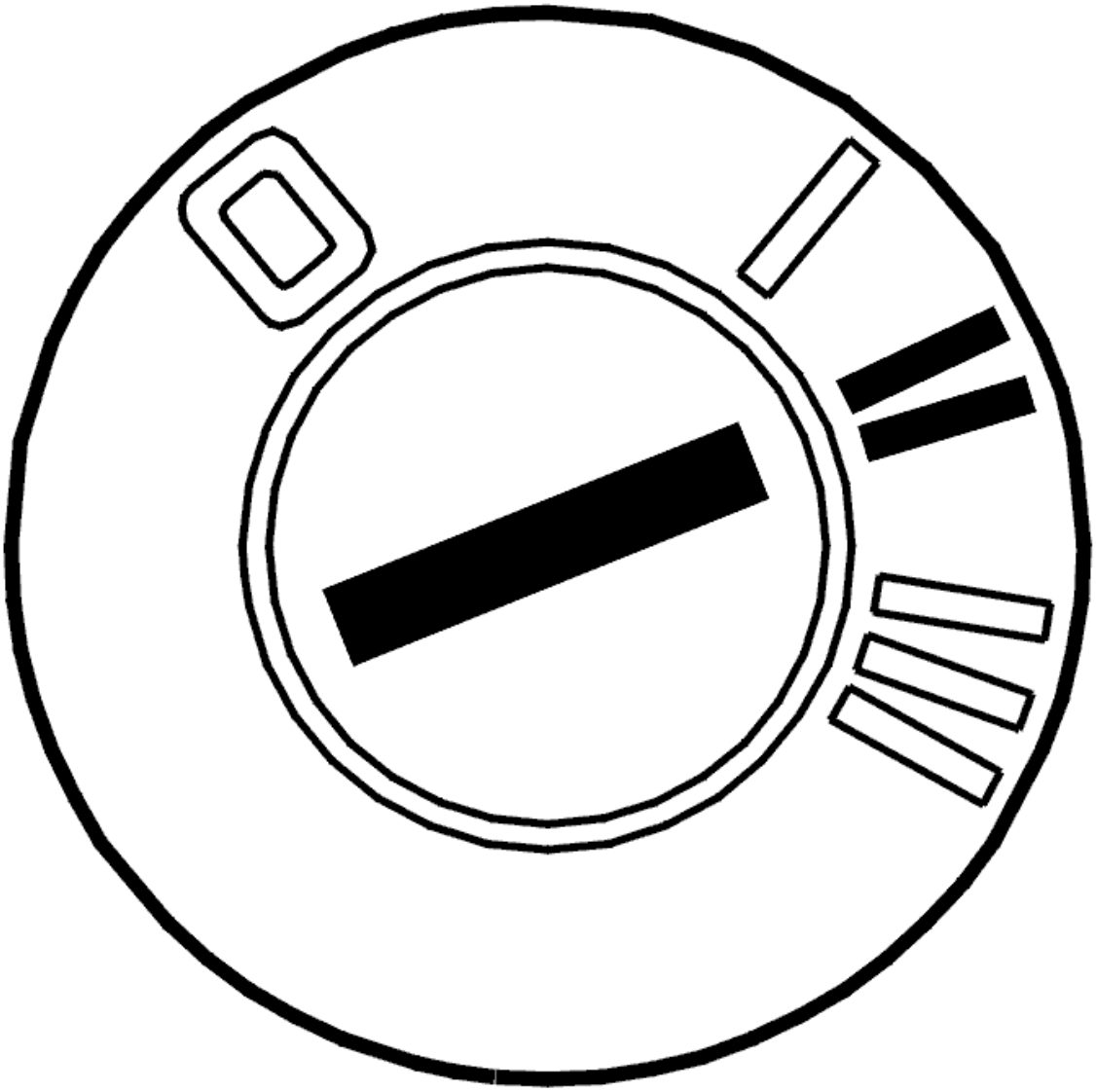

Fig. 242: Identifying Ignition ON
Courtesy of VOLVO CARS CORPORATION

- Ignition on
- Read off diagnostic trouble codes (DTCs).

  If any other diagnostic trouble codes (DTCs) than TCM-0050 are stored, these must be fault-traced and remedied after this fault-tracing is completed.

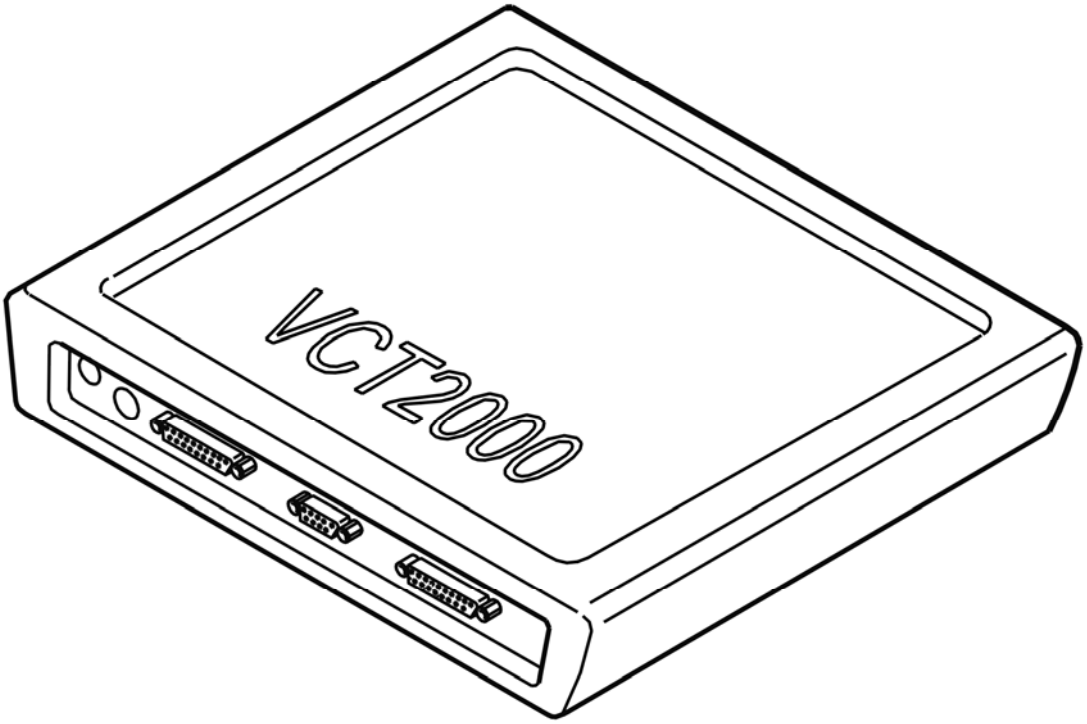

Fig. 243: Identifying VCT2000 Diagnostic Tool Symbol In VIDA
Courtesy of VOLVO CARS CORPORATION

Was diagnostic trouble code (DTC) TCM-0050 stored?

- **YES**

  Refer to **CHECKING SOLENOID SL**

- **NO**

  Refer to **FAULT-TRACING INFORMATION**

CHECKING THE SOFTWARE

CHECKING THE SOFTWARE

NOTE: **To carry out fault-tracing, the transmission control module (TCM) must be programmed with specific software.**

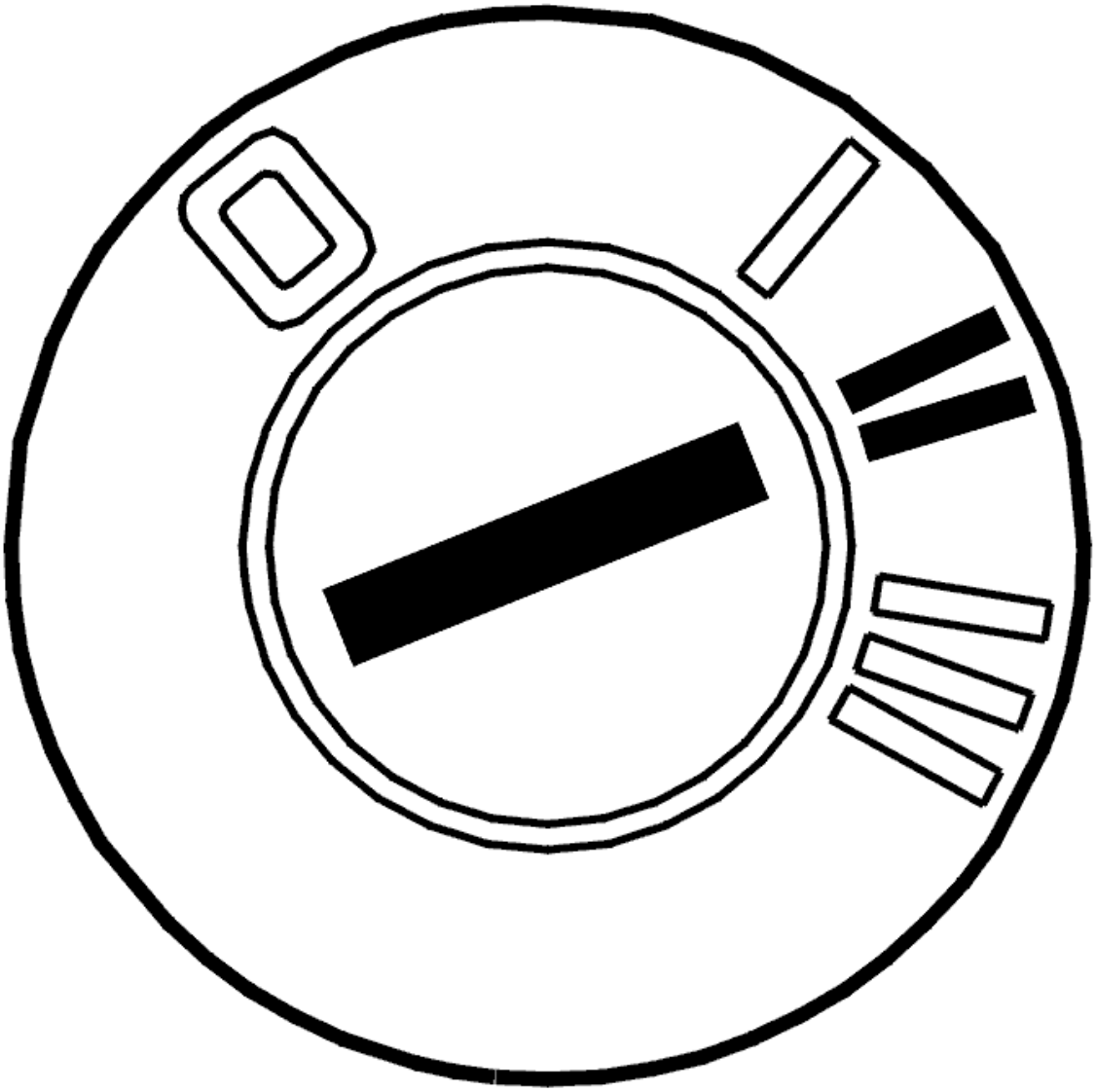

Fig. 244: Identifying Ignition ON
Courtesy of VOLVO CARS CORPORATION

- Ignition on
- Read off the control module diagnostic number.

  Check the read off diagnostic number against the diagnostic numbers given in the center table.

  If the diagnostic number is included in the table, the control module must be programmed with the latest software.

  See the technical journal for information about the most recent software.

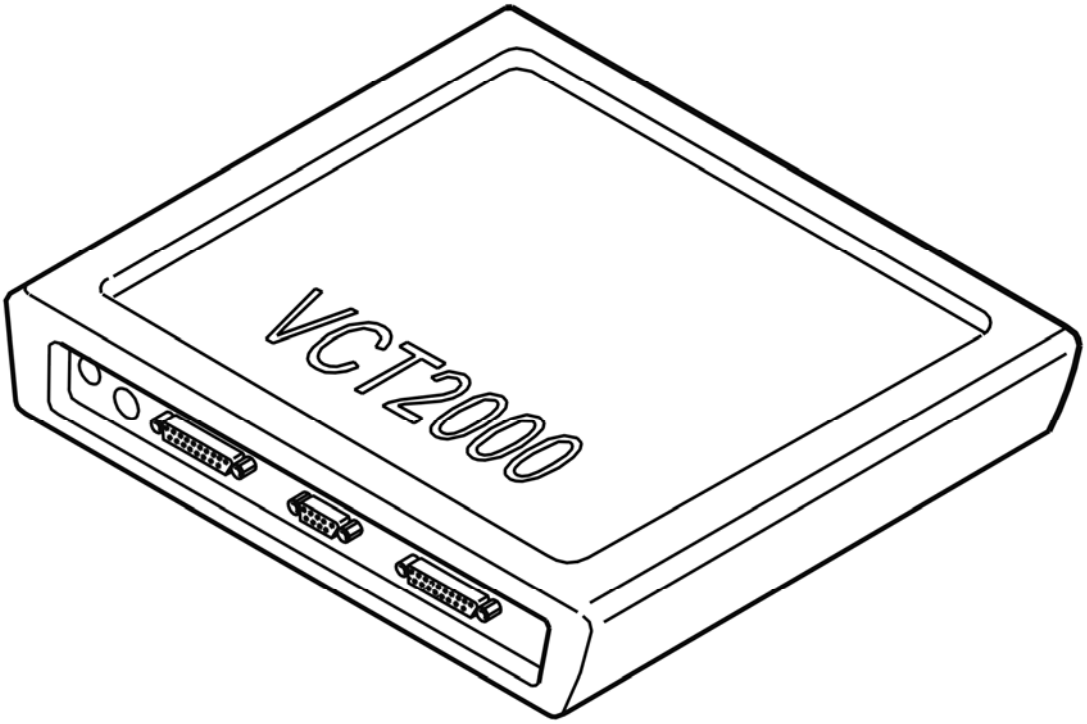

Fig. 245: Identifying VCT2000 Diagnostic Tool Symbol In VIDA
Courtesy of VOLVO CARS CORPORATION

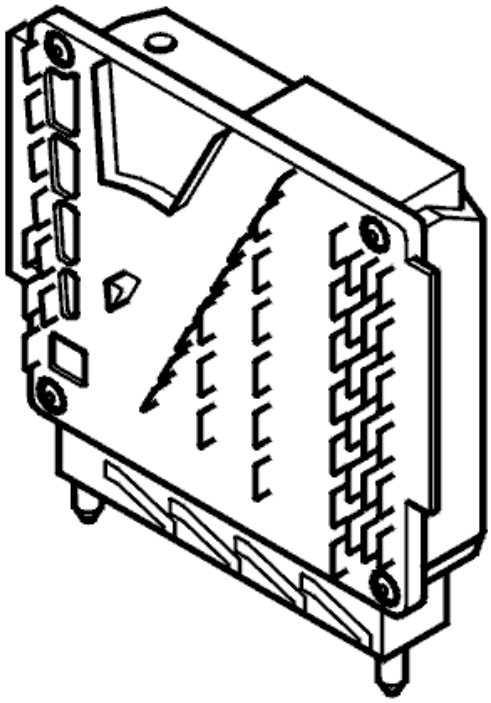

Fig. 246: Identifying Transmission Control Module (TCM)
Courtesy of VOLVO CARS CORPORATION

- **Continue**

  Refer to **TEST DRIVING**

RESETTING THE ADAPTATION

RESETTING ADAPTATION AND THE COUNTER FOR "TRANSMISSION OIL CHANGE"

HINT: The transmission has torque controlled adaptive pressure control. Pressure control means that the transmission regulates the pressure itself during each gear shift. This avoids harsh gear shifting. Each gear shift is evaluated by the control module and stored in the memory. This allows for compensation for wear and tear in the transmission and clutch. It is important that the adaptation in the memory is reset after the transmission has been repaired. This is to ensure normal operation. The oil is replaced during repair; the "Transmission oil change" counter must be reset. If the counter is not reset when the fluid is drained and replaced, there is a risk that a diagnostic trouble code (DTC) will be stored in incorrect circumstances.

NOTE: This applies only if the transmission or one of the components in the transmission have been replaced.

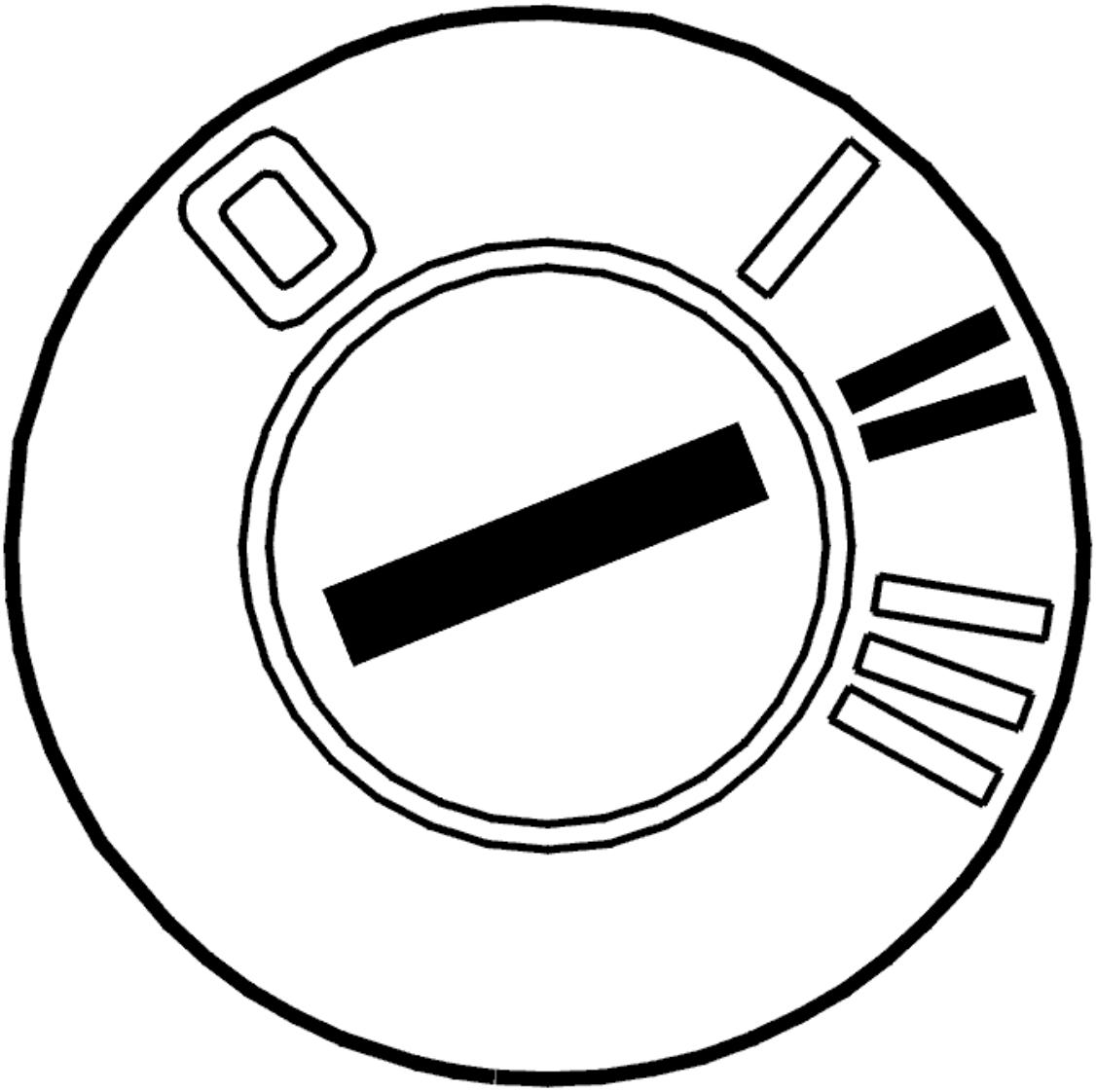

Fig. 247: Identifying Ignition ON
Courtesy of VOLVO CARS CORPORATION

- Ignition on.

  Click on the VCT2000 symbol to reset the adaptation and counter.

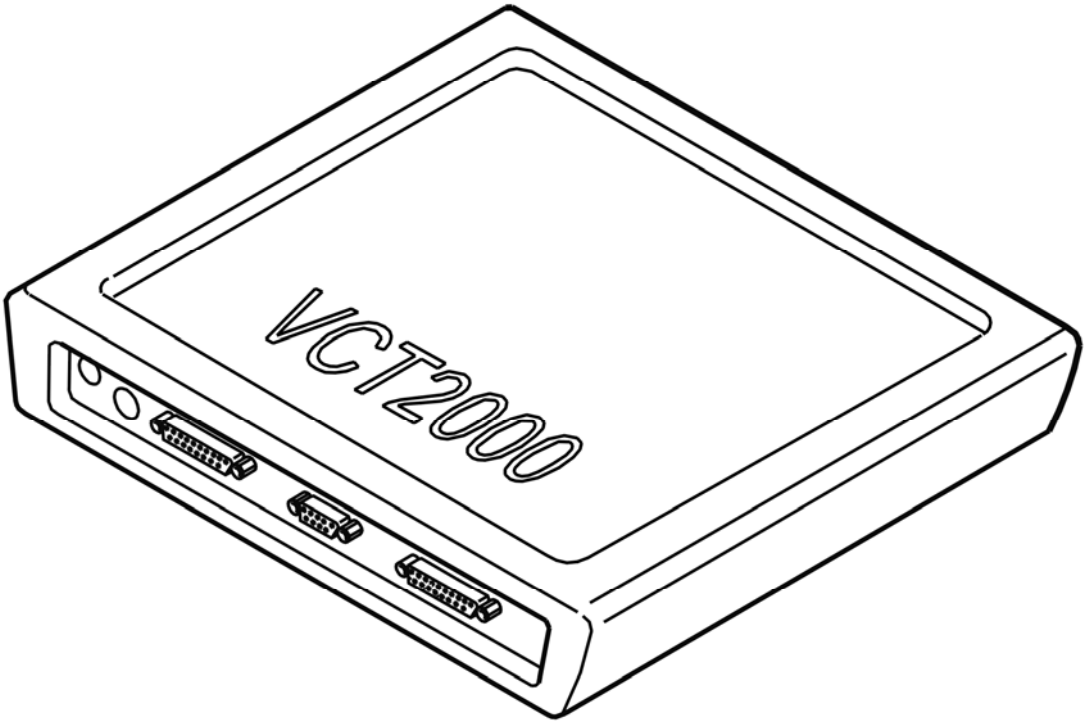

Fig. 248: Identifying VCT2000 Diagnostic Tool Symbol In VIDA
Courtesy of VOLVO CARS CORPORATION

- **Continue**

  Refer to **CHECKING DIAGNOSTIC TROUBLE CODES (DTCS)**

INFORMATION

FAULT-TRACING INFORMATION

The fault should have been detected and remedied. As this is not the case fault-tracing has failed.

Exit fault-tracing for this diagnostic trouble code (DTC) or make another attempt.

CHECKING DIAGNOSTIC TROUBLE CODES (DTCS)

CHECKING DIAGNOSTIC TROUBLE CODES (DTCS)

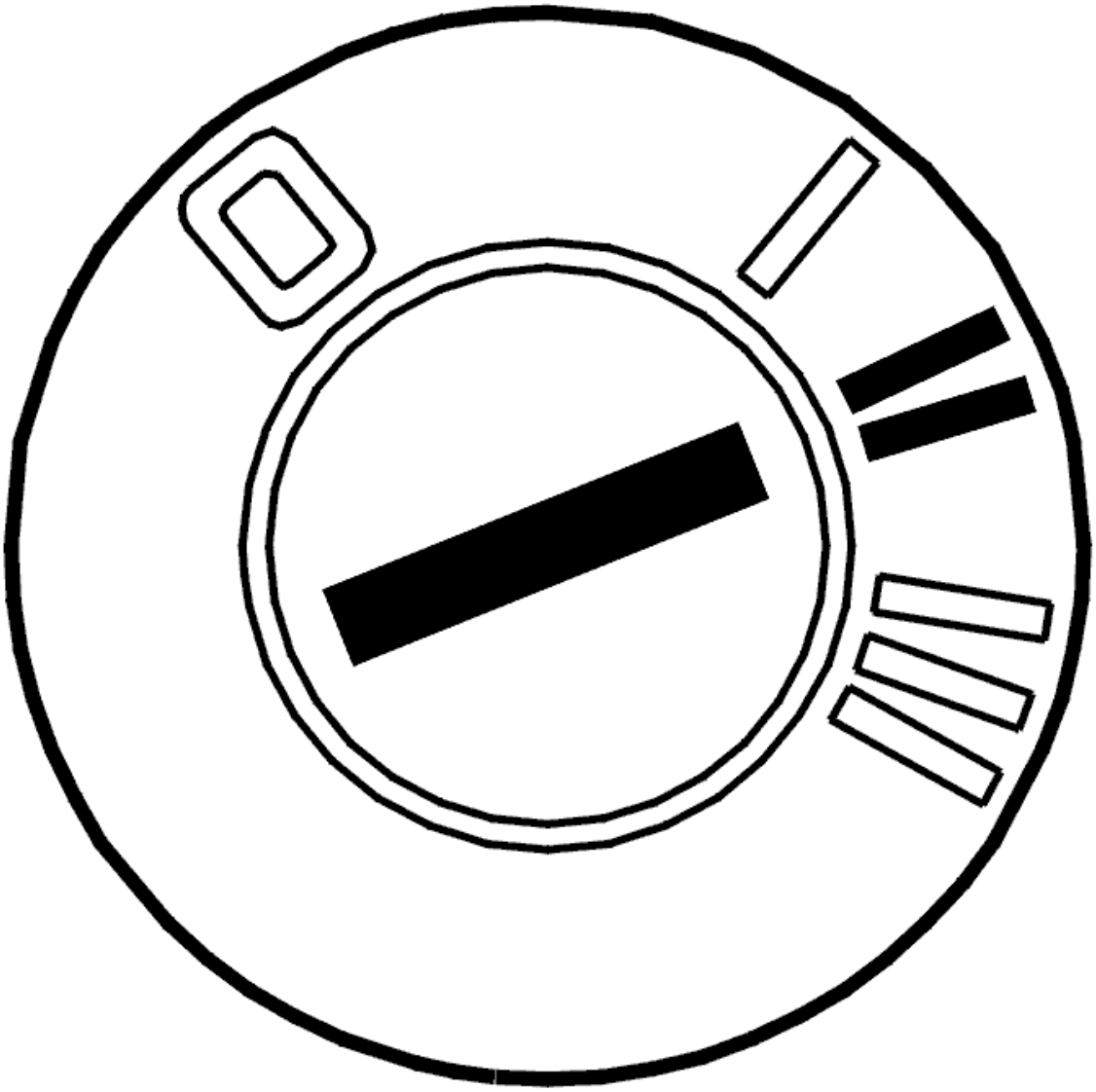

Fig. 249: Identifying Ignition ON
Courtesy of VOLVO CARS CORPORATION

- Ignition on
- Read off diagnostic trouble codes (DTCs).

  If any other diagnostic trouble codes (DTCs) than TCM-0050 are stored, these must be fault-traced and remedied after this fault-tracing is completed.

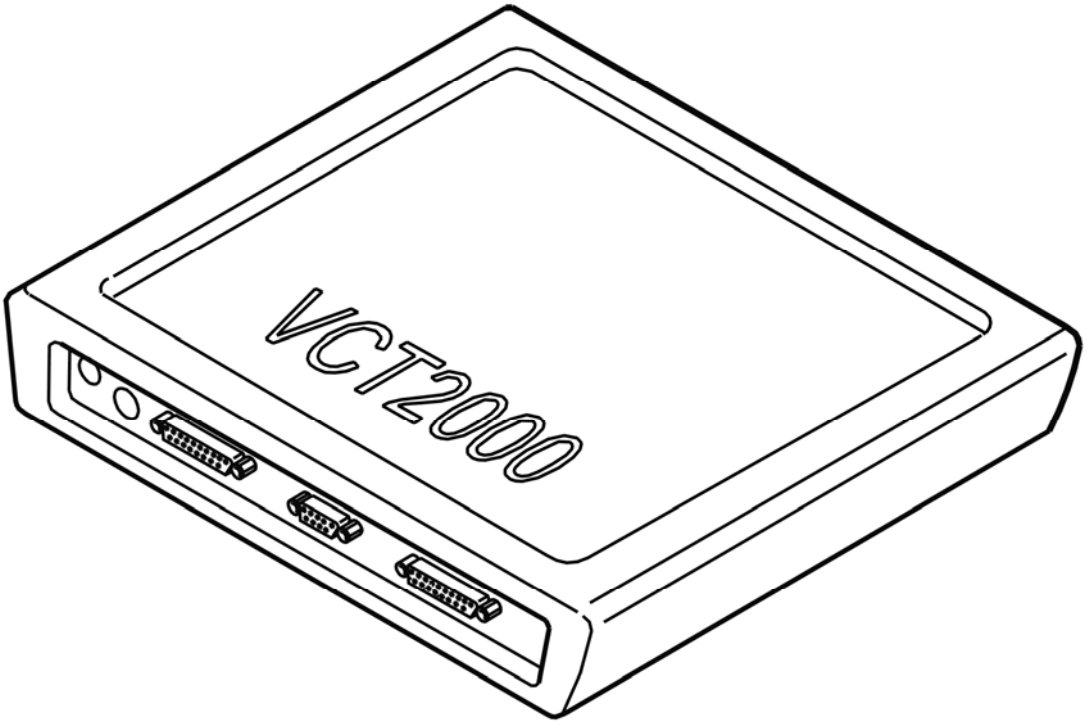

Fig. 250: Identifying VCT2000 Diagnostic Tool Symbol In VIDA
Courtesy of VOLVO CARS CORPORATION

- **Continue**

Refer to **ERASING DIAGNOSTIC TROUBLE CODES (DTCS)**

ERASING DIAGNOSTIC TROUBLE CODES (DTCS)

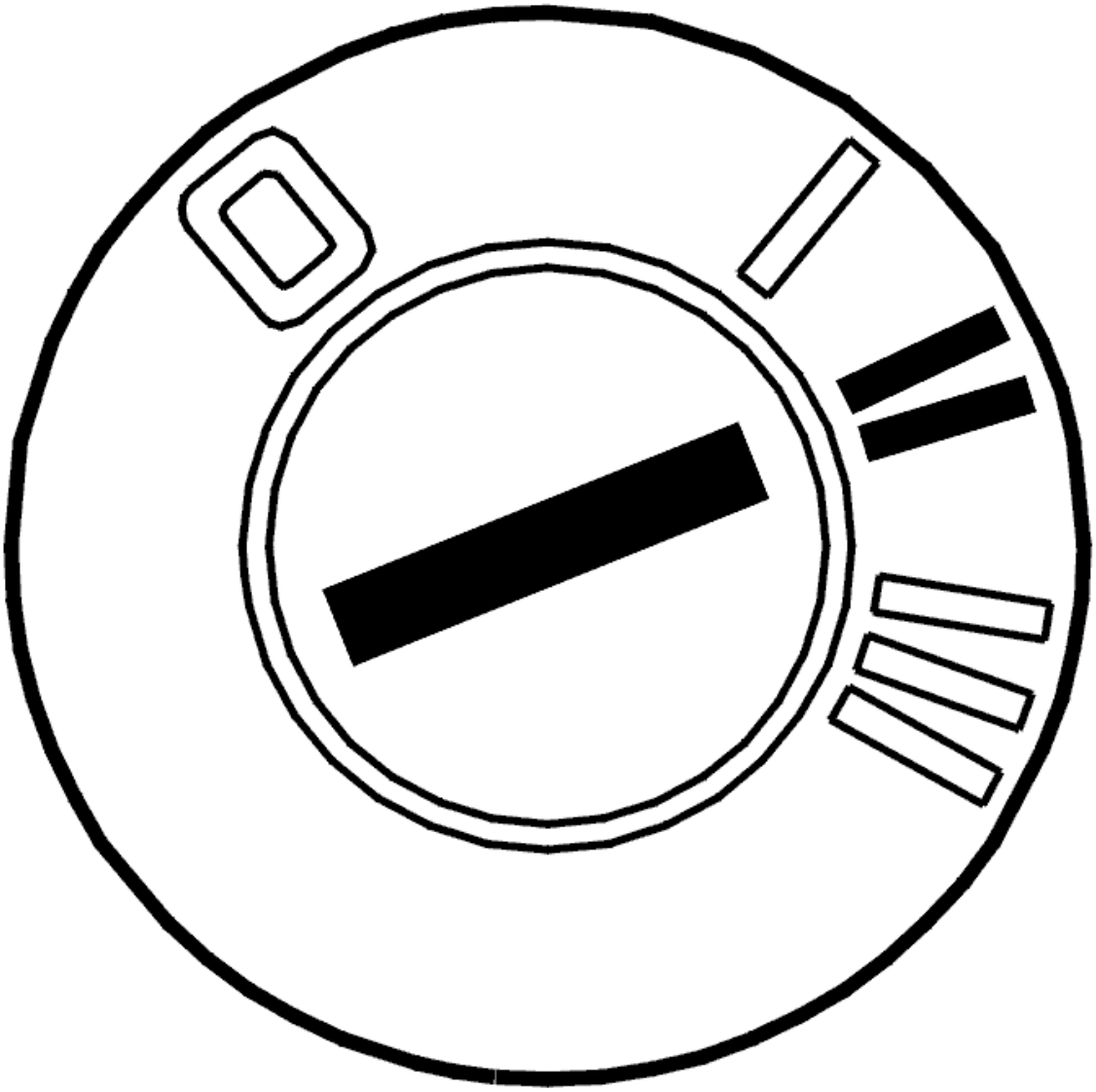

Fig. 251: Identifying Ignition ON
Courtesy of VOLVO CARS CORPORATION

- Ignition off
- Wait for two minutes to allow time for the diagnostic trouble codes (DTCs) to be stored in the control module memory
- Ignition on
- Erase diagnostic trouble codes (DTCs).

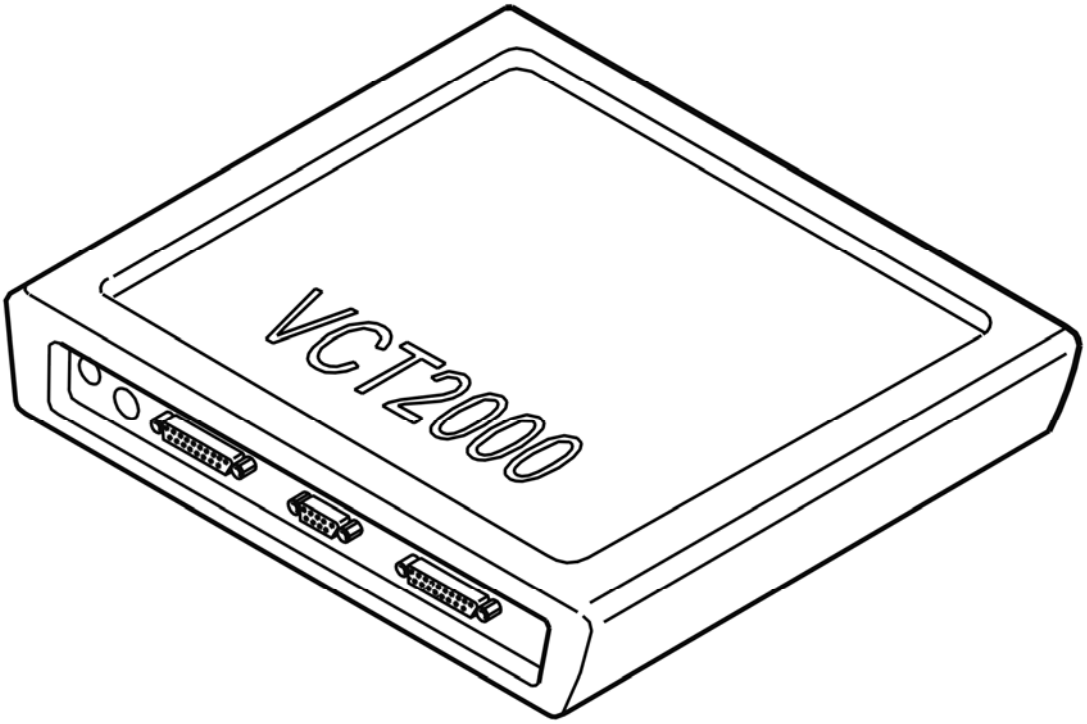

Fig. 252: Identifying VCT2000 Diagnostic Tool Symbol In VIDA
Courtesy of VOLVO CARS CORPORATION

- **Continue**

Refer to **CHECKING THE SOFTWARE**

TEST DRIVING

NOTE: **Test drive the car according to the driving schedule below to check whether the fault is still active. The test drive is compiled in order to create the conditions in which the diagnostic trouble code (DTC) will be stored again if the fault is active.**

The TEST MODE function can be used to provoke any diagnostic trouble codes (DTC). The function reduces the conditions for how quickly diagnostic trouble codes (DTCs) are stored in the control module and the test drive becomes easier.

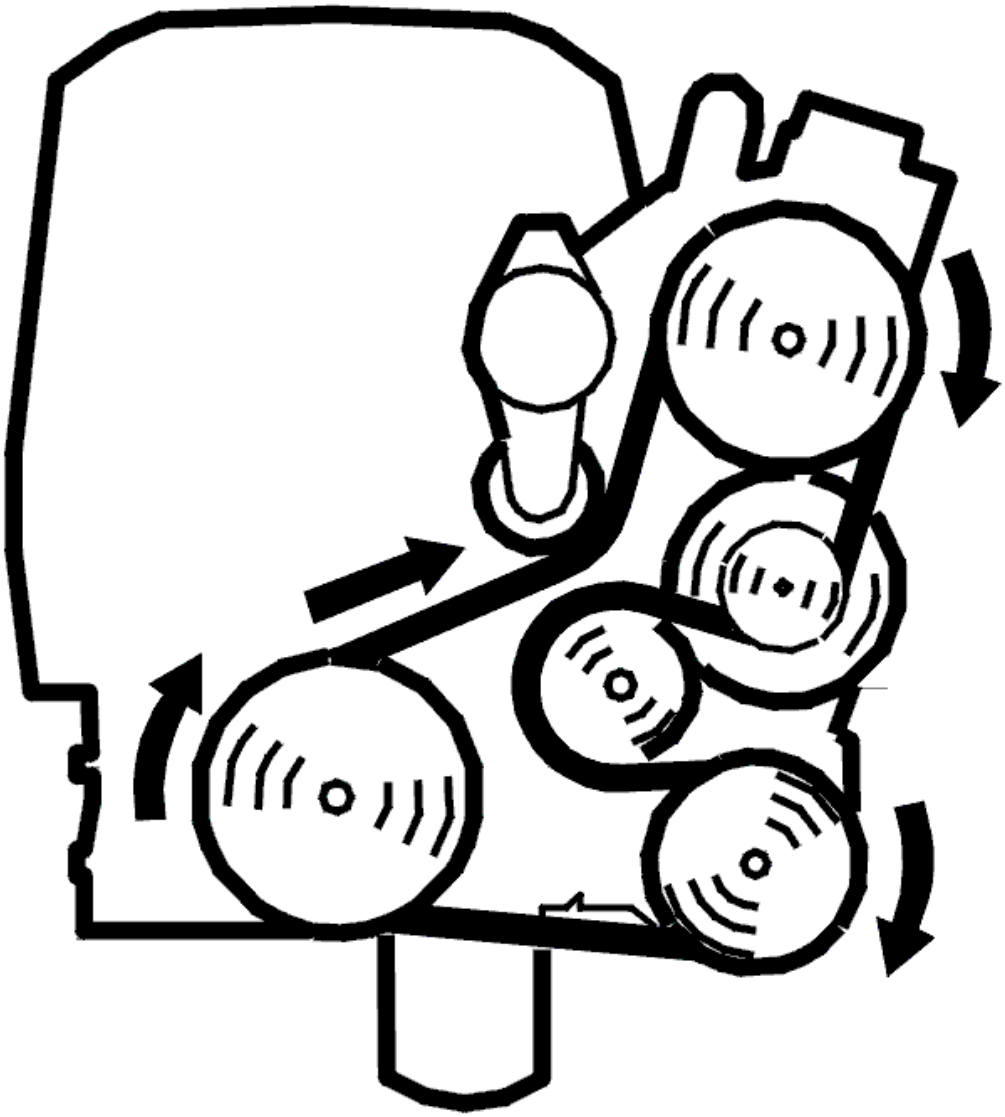

Fig. 253: Identifying Belt Routing
Courtesy of VOLVO CARS CORPORATION

- Start the engine
- Activate TEST MODE.

NOTE: Do not switch off the engine

- Disconnect the VIDA station. Test drive the car as described below.

WARNING: Please observe traffic regulations.

NOTE: Before test driving, the transmission fluid should be at operating

temperature, approximately 80-90°C.

Shift the gear selector to position D. Carefully accelerate to 50-65 km/h. Maintain the same speed for more than 20 seconds.

Criteria for diagnostic trouble code (DTC):

- The transmission fluid temperature must exceed 30°C
- The engine must be running for at least 20 seconds
- Gear selector in position D, 3 or 2 (4T65EV).

  Gear selector in Geartronic position and gears 4, 3 or 2 (4T65EV-GT)

- Speed 50-65 km/h for at least 5 seconds.

  HINT: The car must be driven at an engine speed where the lock-up function is not normally activated.

- At least 5 seconds since the last gear shift
- Positive engine torque (no engine braking).

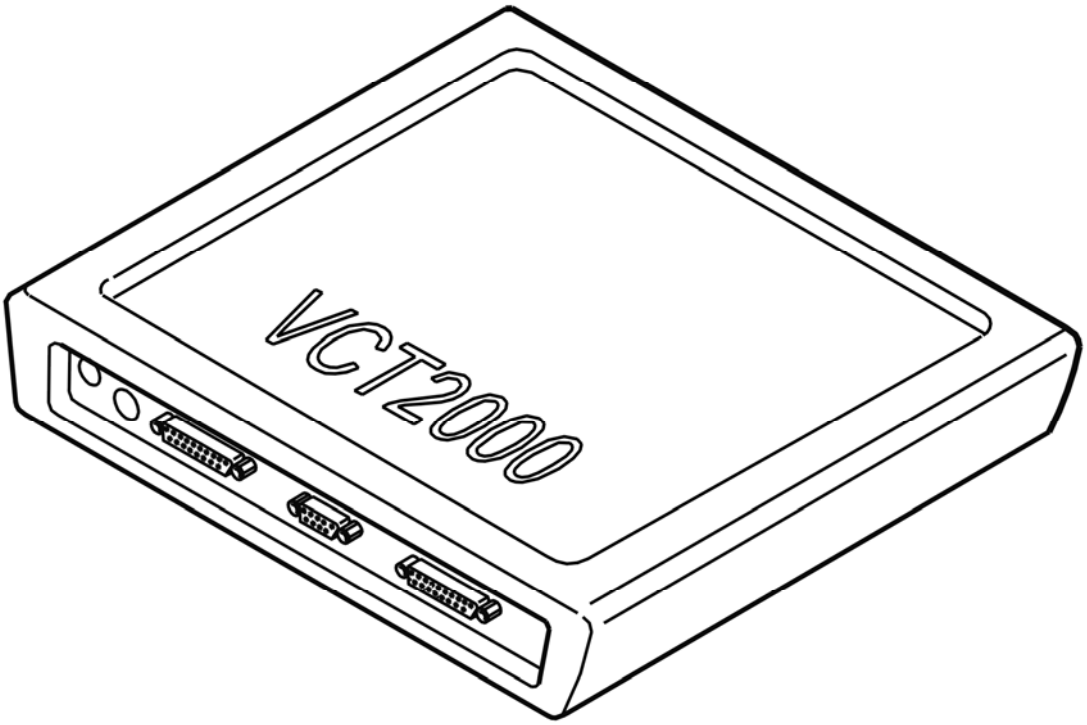

Fig. 254: Identifying VCT2000 Diagnostic Tool Symbol In VIDA
Courtesy of VOLVO CARS CORPORATION

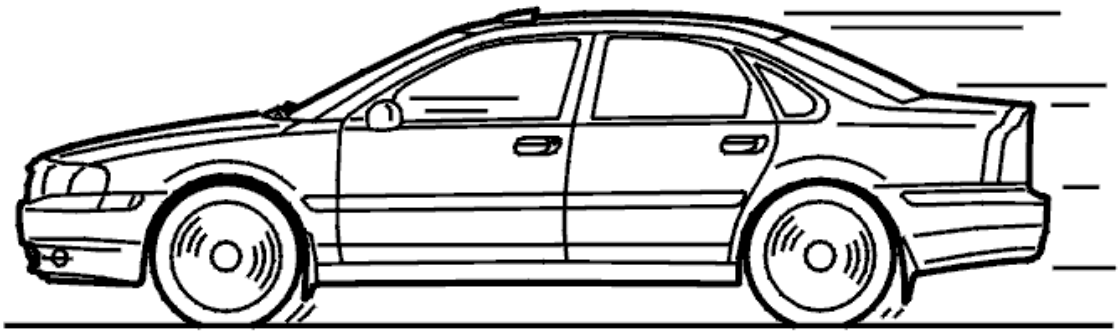

Fig. 255: Identifying Test Drive
Courtesy of VOLVO CARS CORPORATION

- **Continue**

Refer to **CHECKING DIAGNOSTIC TROUBLE CODES (DTCS)**

CHECKING DIAGNOSTIC TROUBLE CODES (DTCS)

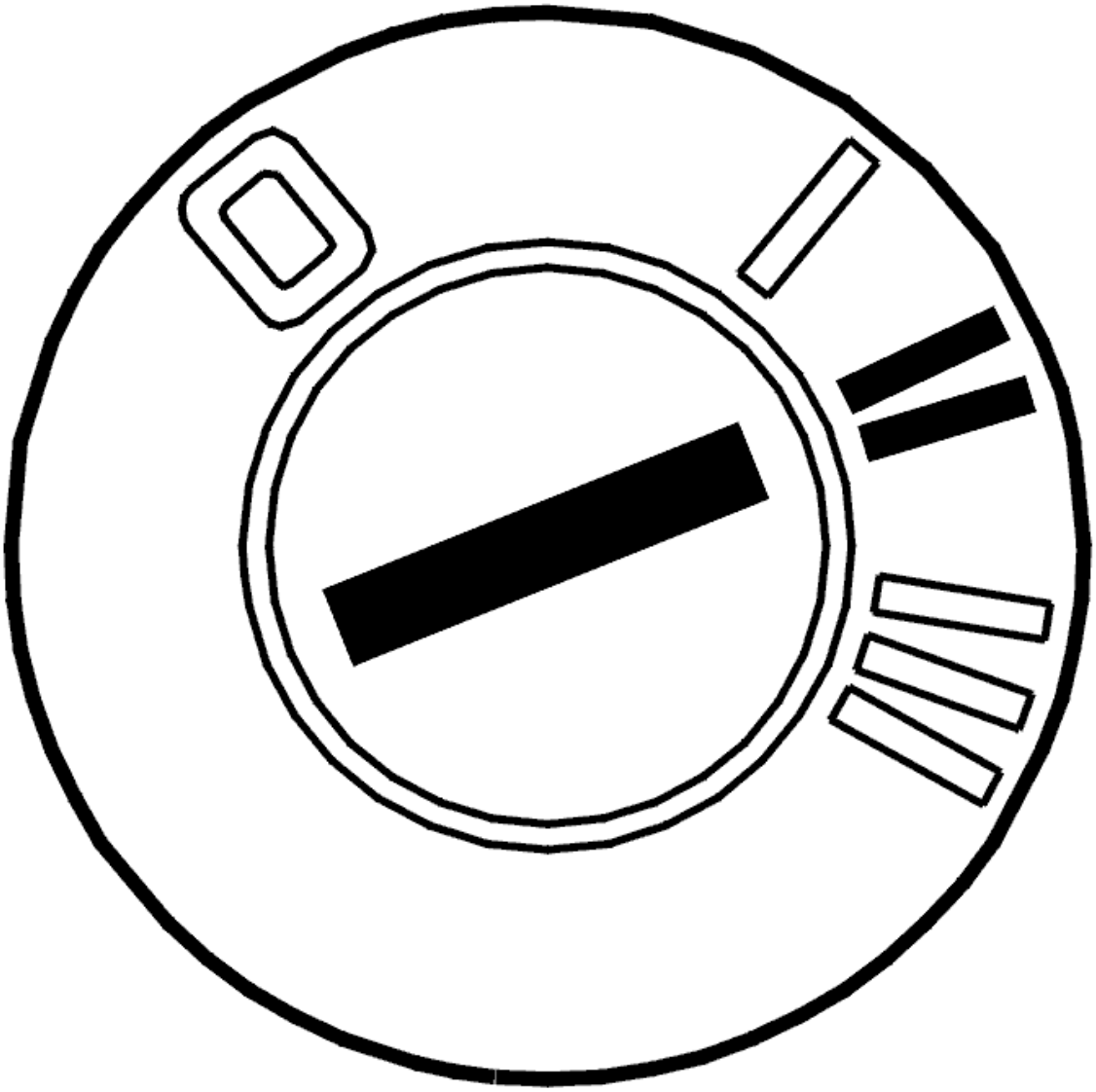

Fig. 256: Identifying Ignition ON
Courtesy of VOLVO CARS CORPORATION

- Ignition on
- Read off diagnostic trouble codes (DTCs).

  If any other diagnostic trouble codes (DTCs) than TCM-0050 are stored, these must be fault-traced and remedied after this fault-tracing is completed.

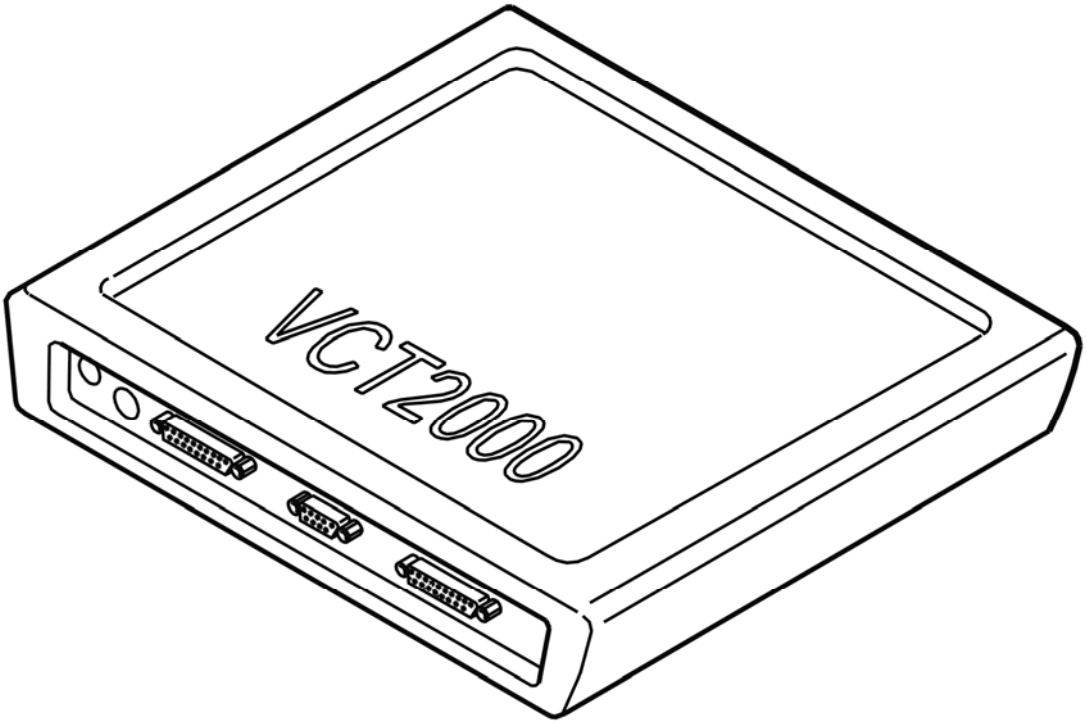

Fig. 257: Identifying VCT2000 Diagnostic Tool Symbol In VIDA
Courtesy of VOLVO CARS CORPORATION

Was diagnostic trouble code (DTC) TCM-0050 stored?

- **YES**

  Refer to **INFORMATION**

- **NO**

  NO DTC

CHECKING THE SOFTWARE

CHECKING THE SOFTWARE

NOTE: **To carry out fault-tracing, the transmission control module (TCM) must be programmed with specific software.**

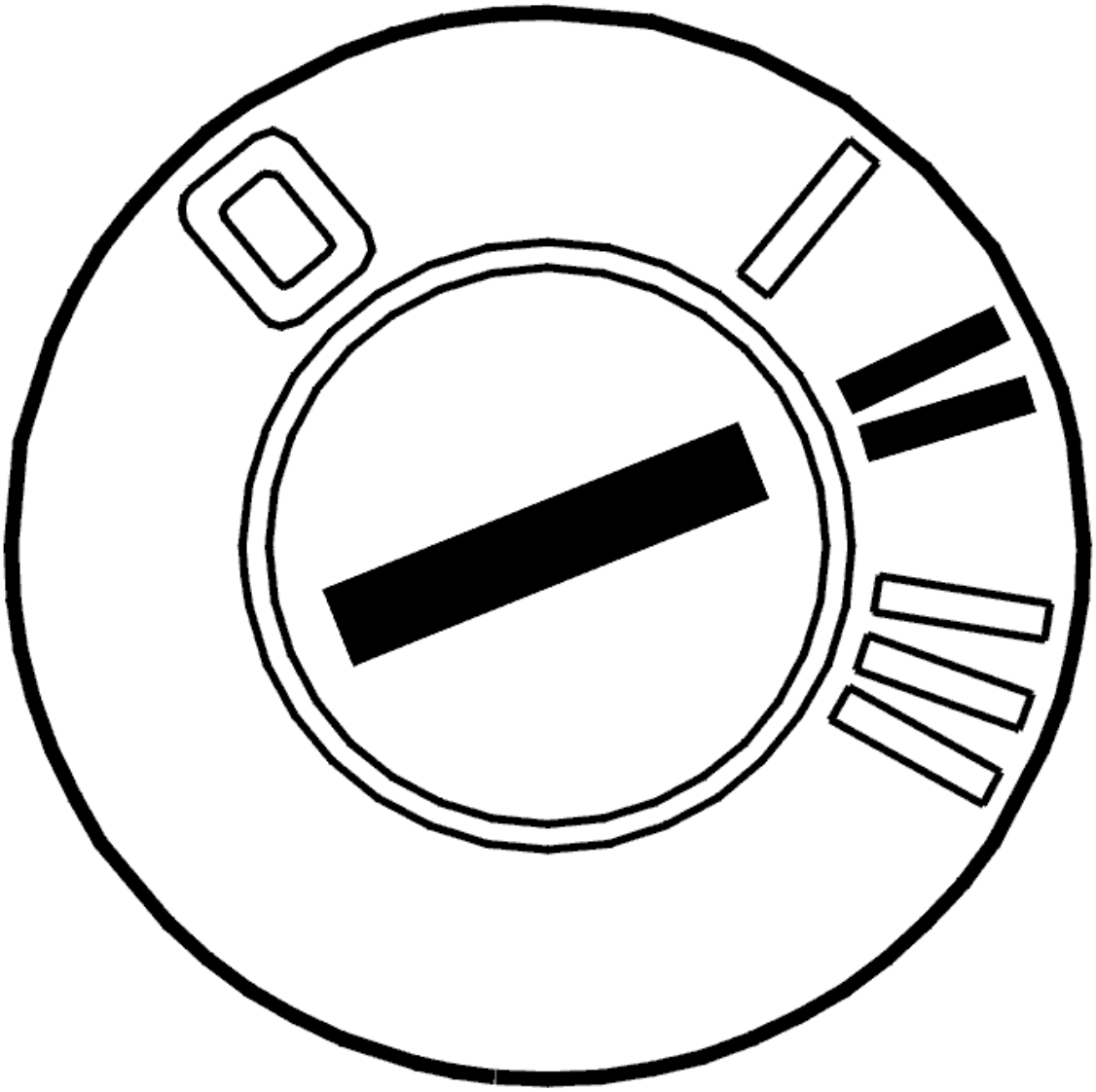

Fig. 258: Identifying Ignition ON
Courtesy of VOLVO CARS CORPORATION

- Ignition on
- Read off the control module diagnostic number.

  Check the read off diagnostic number against the diagnostic numbers given in the center table.

  If the diagnostic number is included in the table, the control module must be programmed with the latest software.

  See the technical journal for information about the most recent software.

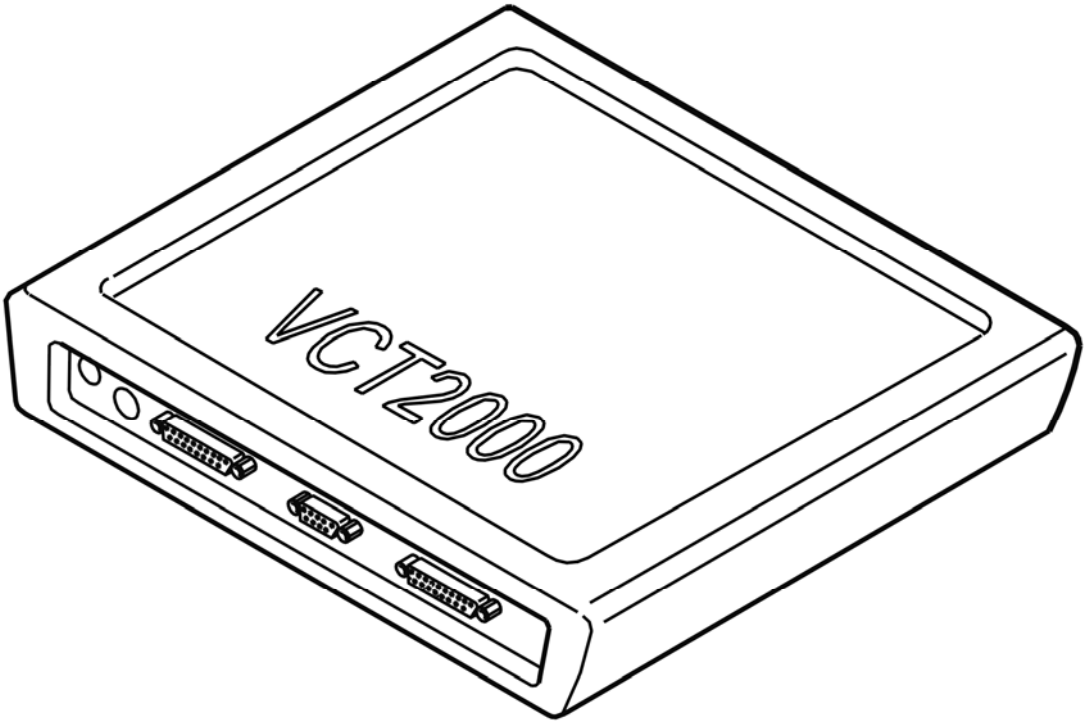

Fig. 259: Identifying VCT2000 Diagnostic Tool Symbol In VIDA
Courtesy of VOLVO CARS CORPORATION

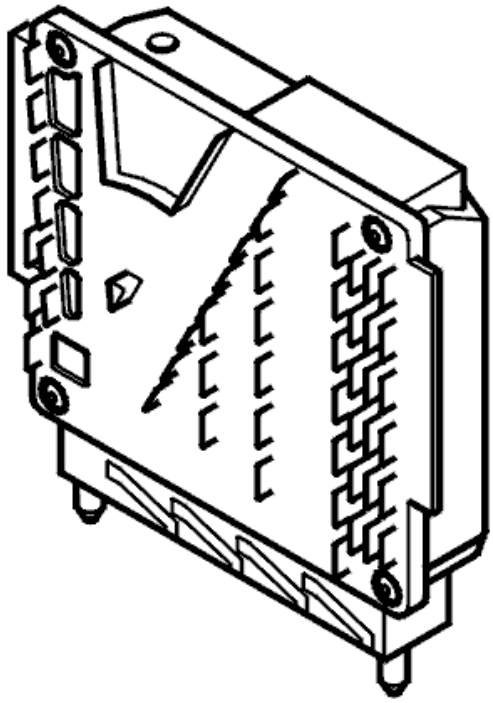

Fig. 260: Identifying Transmission Control Module (TCM)
Courtesy of VOLVO CARS CORPORATION

- **Continue**

  Refer to **TEST DRIVING**

TCM-0051: SOLENOID SL. STUCK (4T65 AWD; 2003-2006)

DIAGNOSTIC TROUBLE CODE (DTC) INFORMATION

Condition

The control module checks if lock-up solenoid SL is stuck in the open or closed position by comparing the signals from solenoid SL and lock-up pressure sensor PS4. Pressure sensor PS4 detects whether solenoid SL is activated or not. Diagnostic trouble code (DTC) TCM-0051 is stored if the control module registers that solenoid SL has jammed in the open position.

Substitute Value

- The control module does not activate the lock-up solenoid.

Possible Source

- Lock-up solenoid SL has jammed in the closed position
- Mechanical fault in the transmission control system
- Defective solenoid SL.

Fault symptom[s]

- General orange warning lamp lit
- No lock-up function.

STUCK

CHECKING THE SOFTWARE

CHECKING THE SOFTWARE

NOTE: **To carry out fault-tracing, the transmission control module (TCM) must be programmed with specific software.**

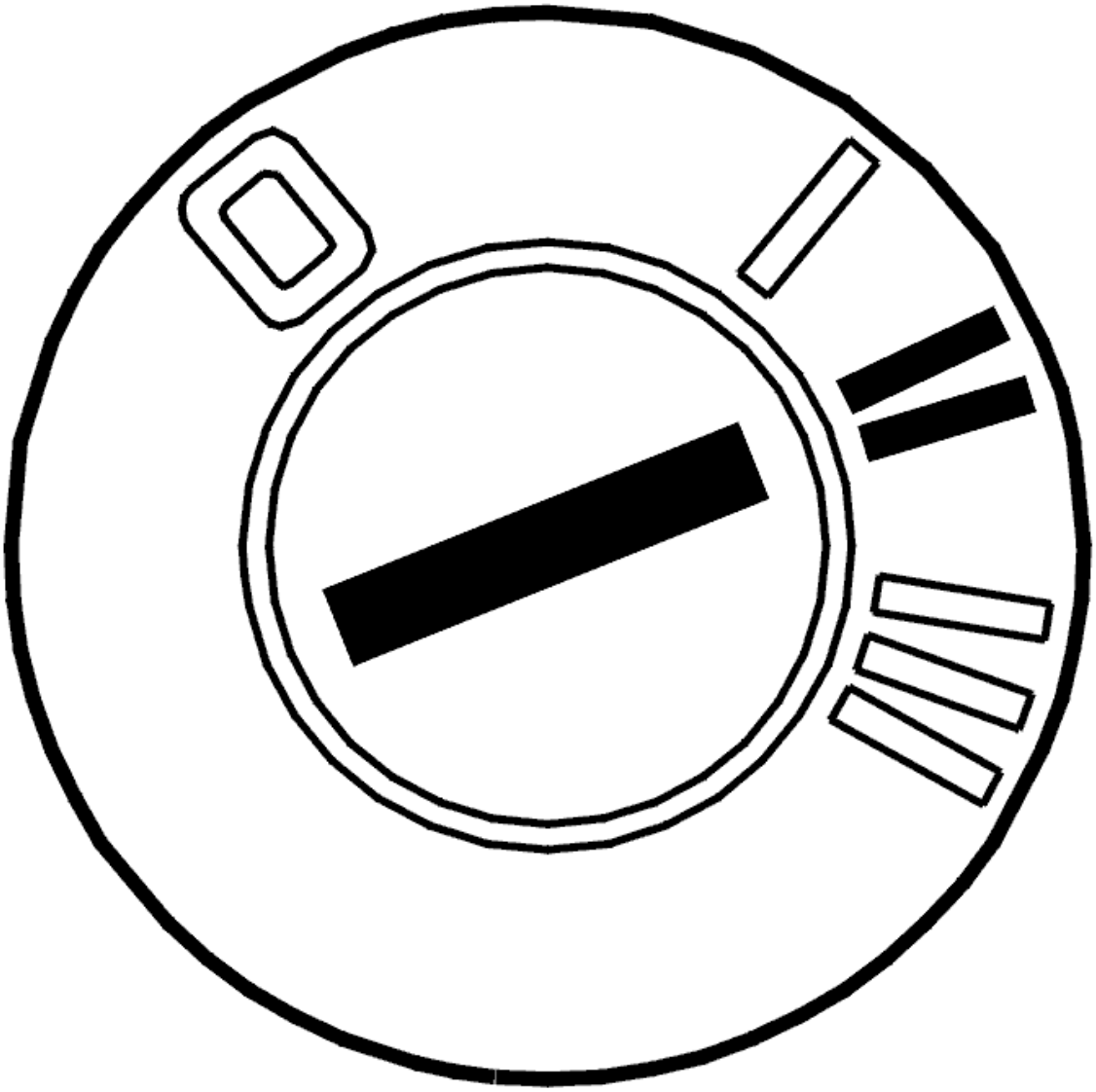

Fig. 261: Identifying Ignition ON
Courtesy of VOLVO CARS CORPORATION

- Ignition on
- Read off the control module diagnostic number.

  Check the read off diagnostic number against the diagnostic numbers given in the center table.

  If the diagnostic number is included in the table, the control module must be programmed with the latest software.

  See the technical journal for information about the most recent software.

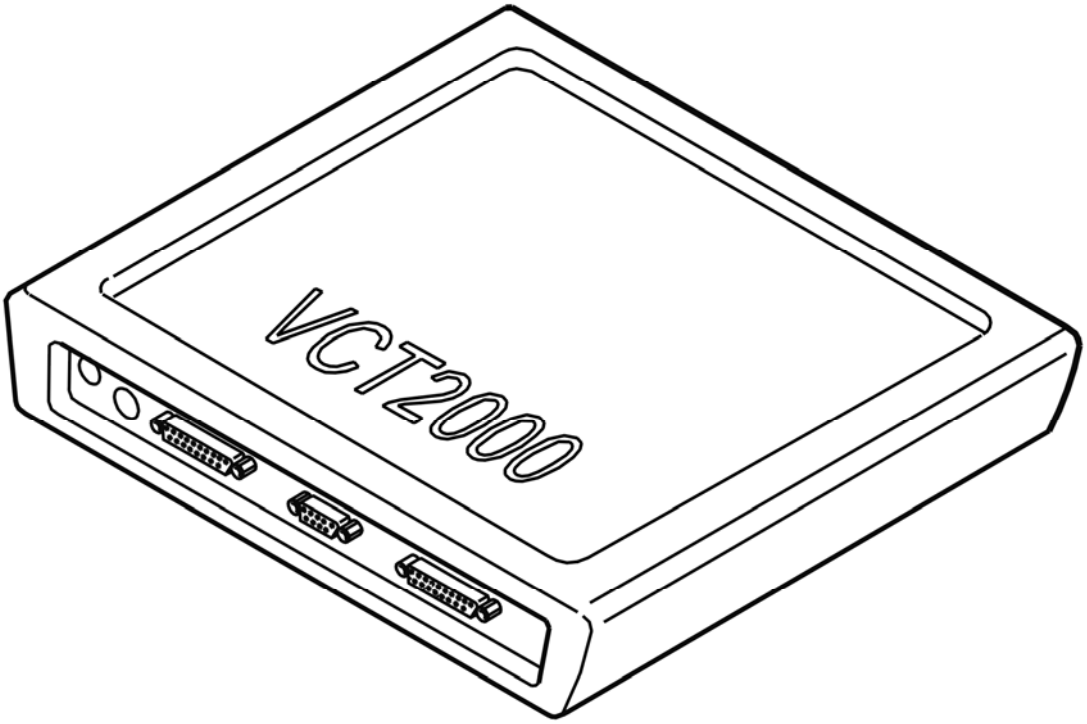

Fig. 262: Identifying VCT2000 Diagnostic Tool Symbol In VIDA
Courtesy of VOLVO CARS CORPORATION

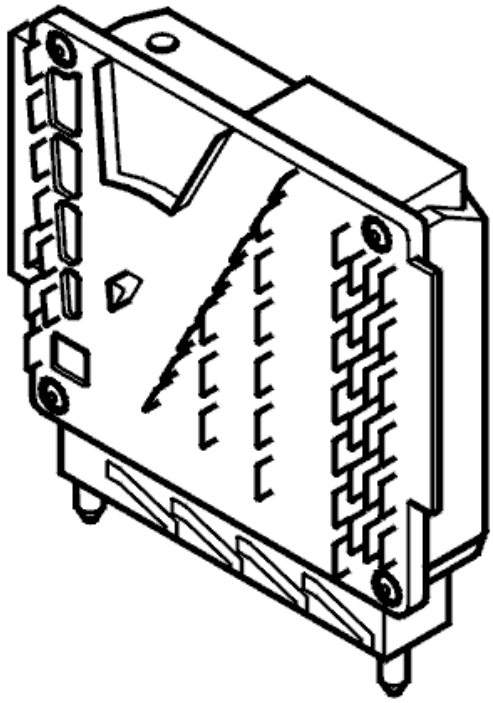

Fig. 263: Identifying Transmission Control Module (TCM)
Courtesy of VOLVO CARS CORPORATION

- **Continue**

  Refer to **CHECKING DIAGNOSTIC TROUBLE CODES (DTCS)**

CHECKING SOLENOID SL

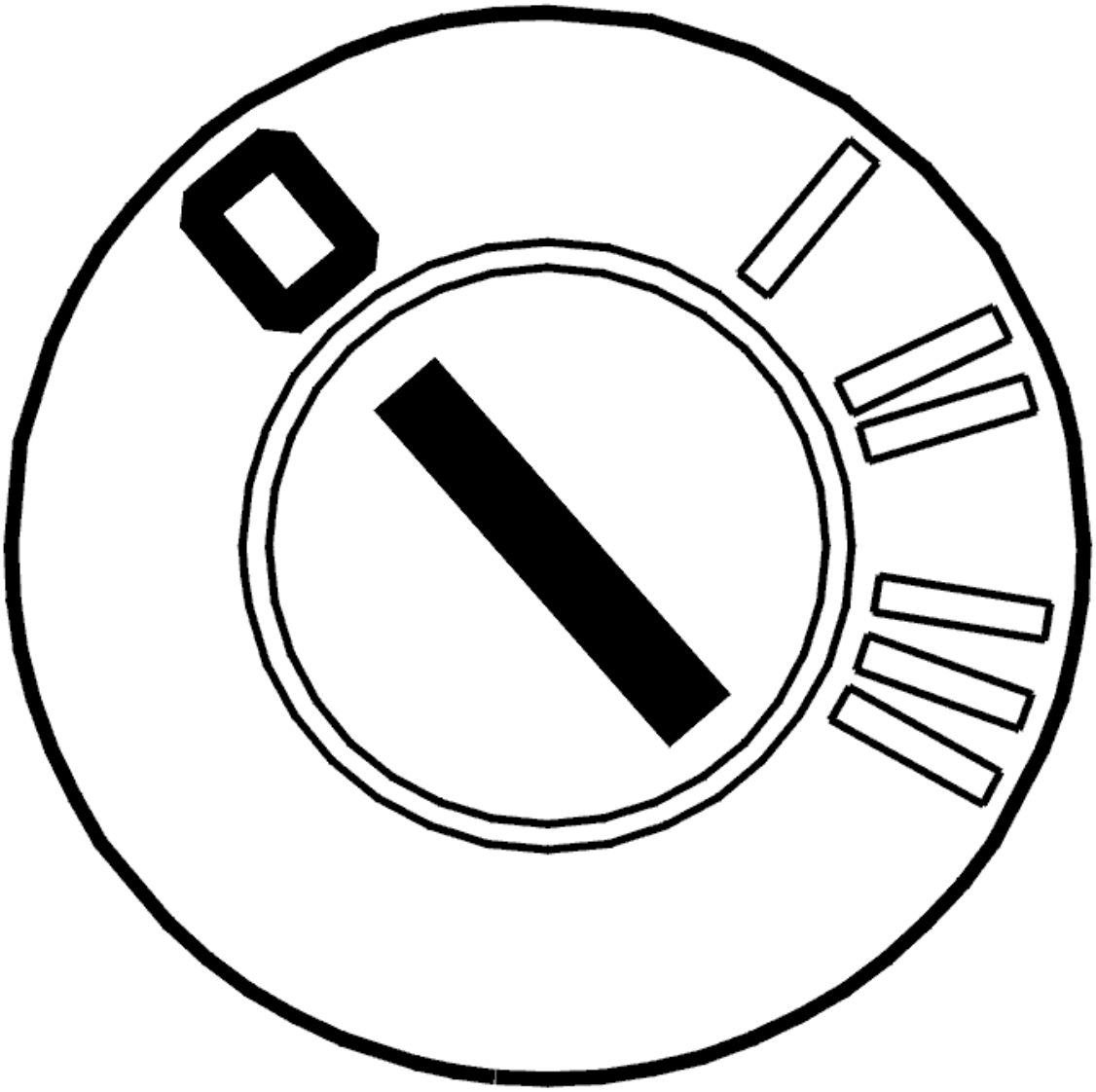

Fig. 264: Identifying Ignition OFF
Courtesy of VOLVO CARS CORPORATION

- Ignition off
- Connect the breakout box to the control module connector (transmission side).

  Check solenoid SL by measuring the resistance between terminals #A51 (#A51) and #A53 (#A53).

  When the transmission is cold (20°C), the resistance must be 10-11 ohms. When the transmission is at operating temperature (150°C), the resistance must not exceed 16 ohms.

  Other information:

  - To connect the breakout box, see **CONNECTING THE BREAKOUT BOX**
  - For information about signals, see **SIGNAL SPECIFICATION** .

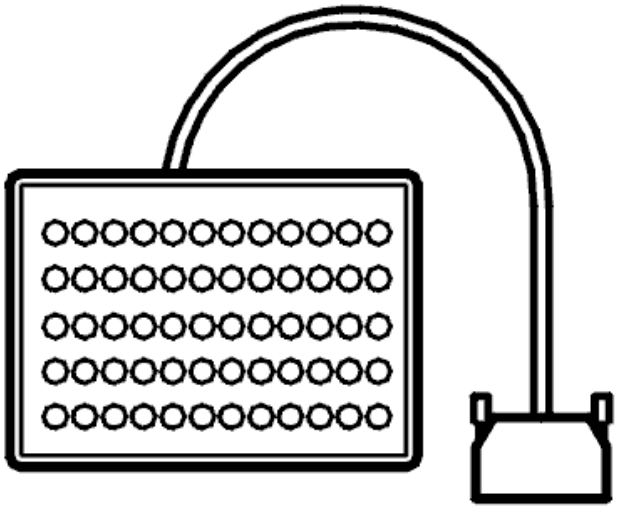

Fig. 265: Identifying Breakout Box
Courtesy of VOLVO CARS CORPORATION

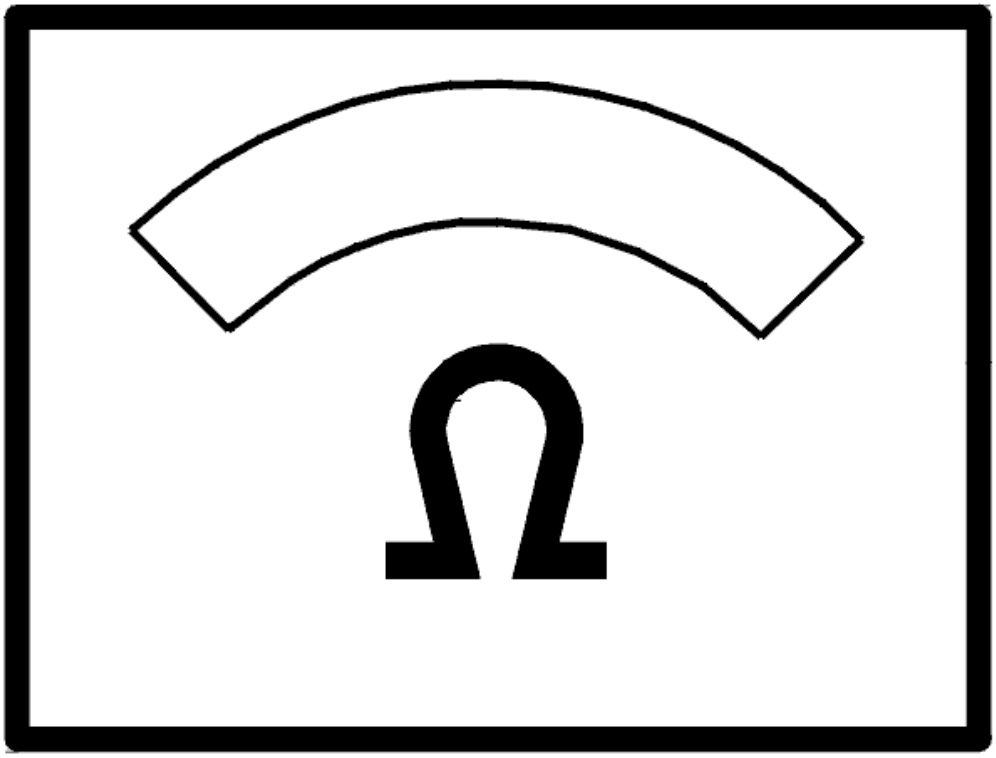

Fig. 266: Identifying Ohms Display
Courtesy of VOLVO CARS CORPORATION

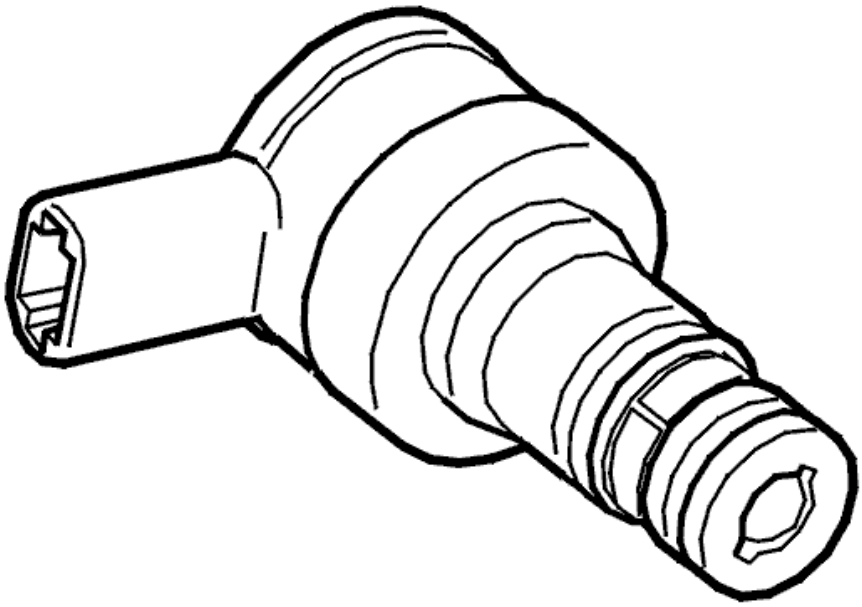

Fig. 267: Identifying Lock-Up Solenoid, SL
Courtesy of VOLVO CARS CORPORATION

Was the resistance OK?

- **YES**

  Refer to **CONNECTING THE T PIPE**

- **NO**

  Refer to **CHECKING THE WIRING**

CONNECTING THE T PIPE

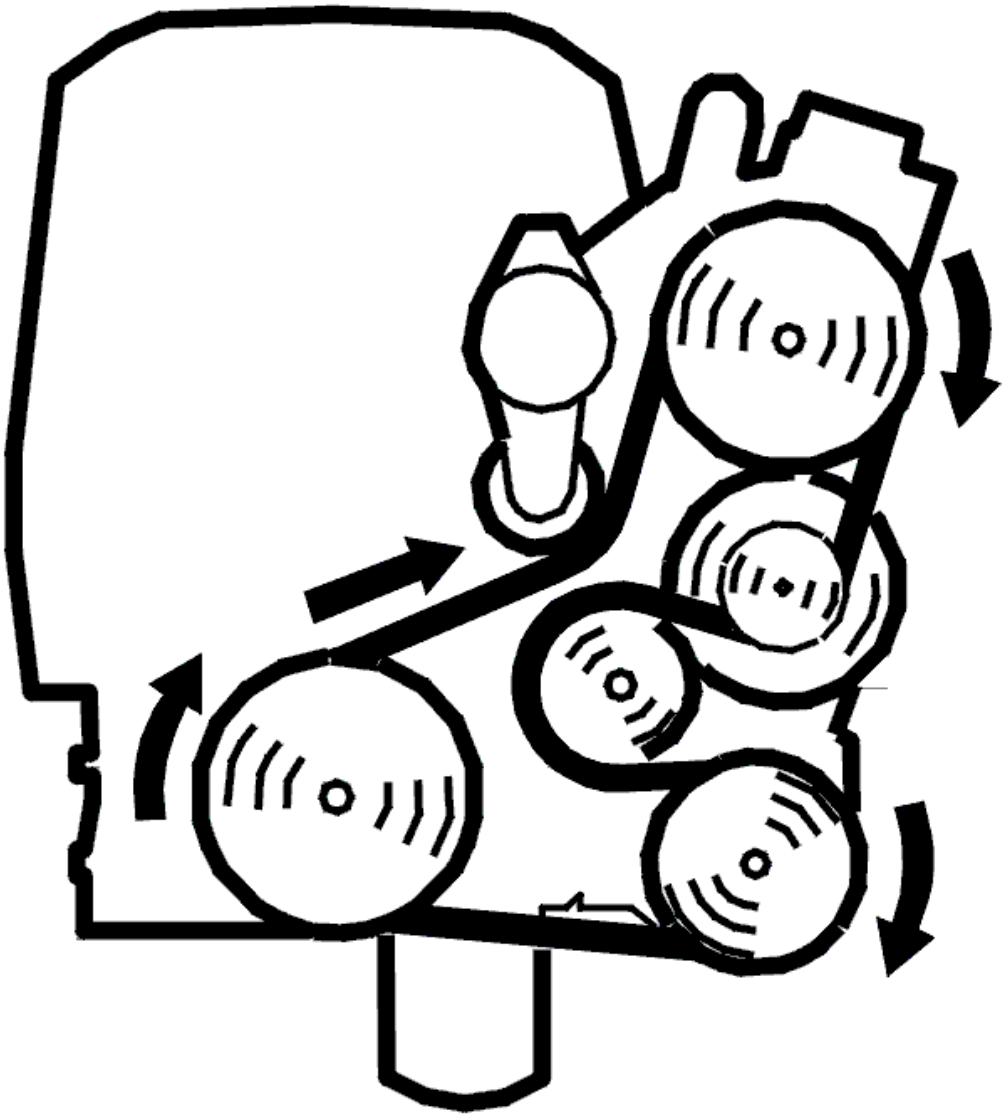

Fig. 268: Identifying Belt Routing
Courtesy of VOLVO CARS CORPORATION

- Deactivate the function for STC/DSTC by pressing in the button for STC/DSTC for approximately 2 seconds
- Ignition off
- Connect T-pipe see **9997002** with oil pressure gauge see **9995114** to the coolant hose from the transmission for the oil cooler
- Raise the car so that the drive wheels are clear of the ground.

WARNING: **Ensure that the car safely raised. Ensure that there are no objects caught in the front wheels.**

- Start the engine

- Gear selector in position P
- Activate the function "Block automatic shifting".

Other information

- To connect the T-pipe to the oil cooler for the transmission. See **T-PIPE, CONNECTION TO OIL COOLER** .

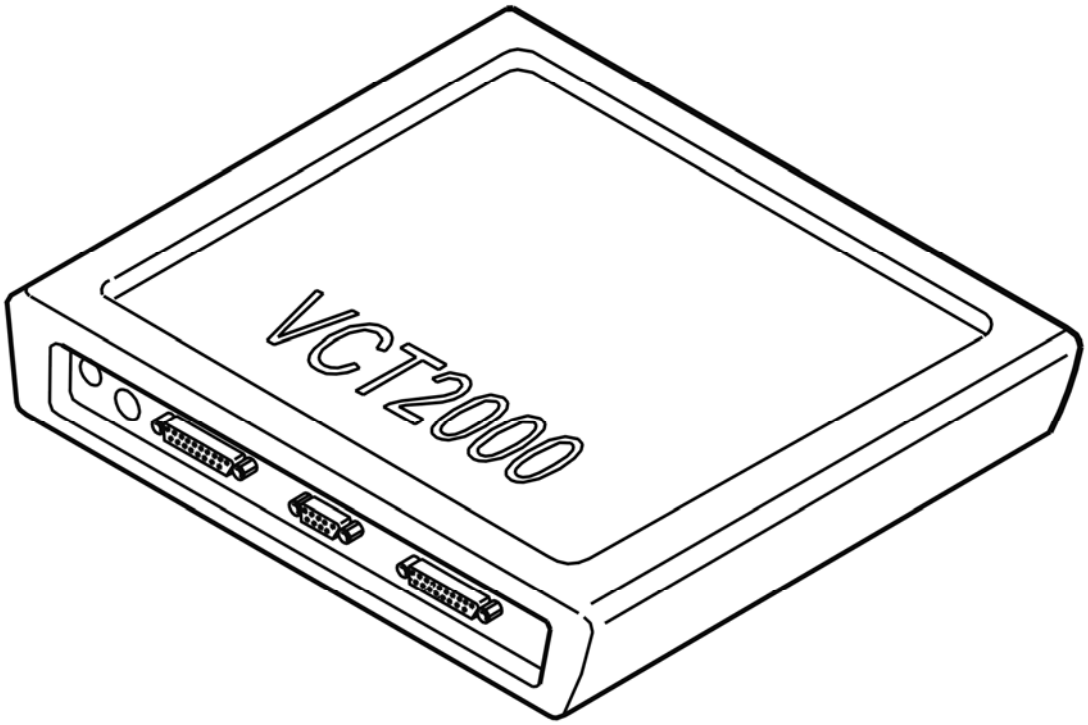

Fig. 269: Identifying VCT2000 Diagnostic Tool Symbol In VIDA
Courtesy of VOLVO CARS CORPORATION

Allow the engine to run.

- **Continue**

Refer to **CHECKING SOLENOID SL**

CHECKING SOLENOID SL

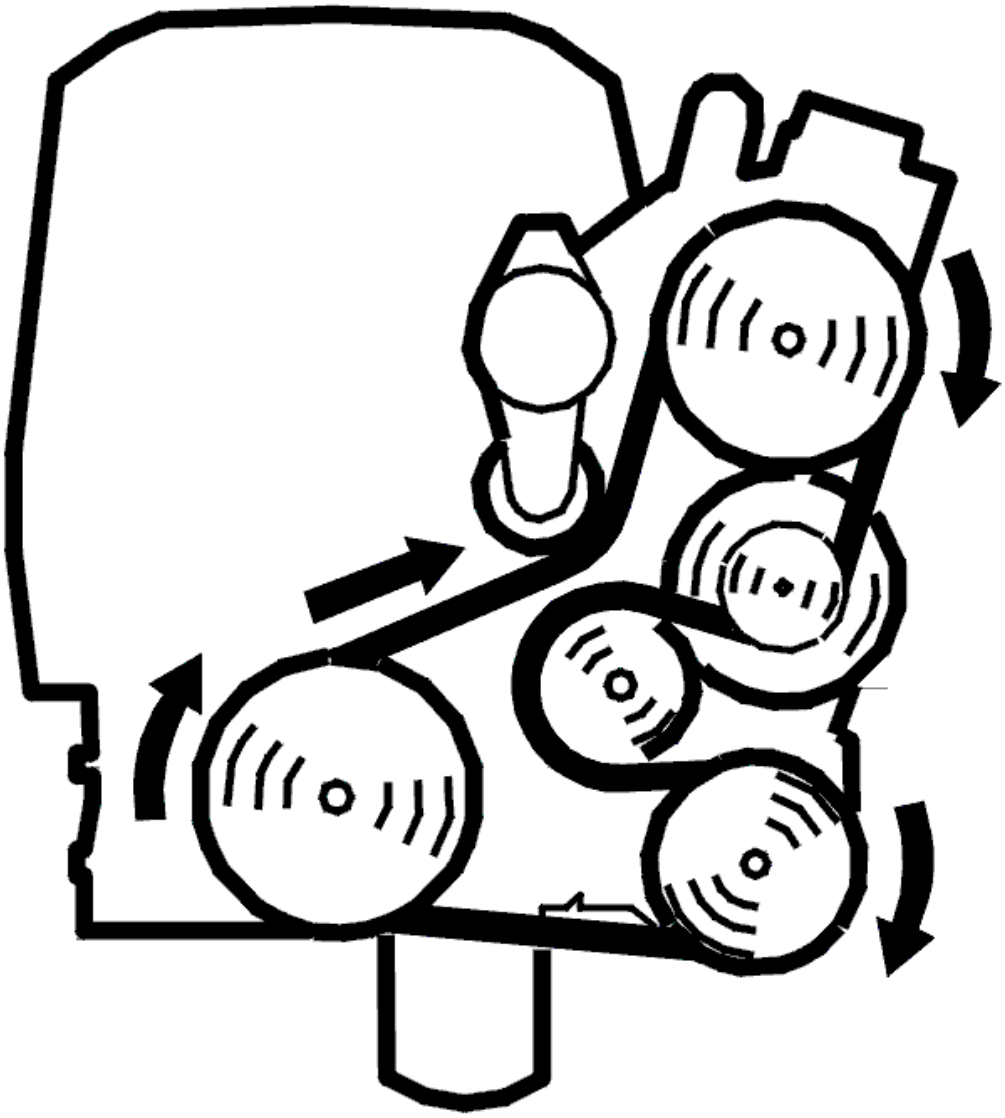

Fig. 270: Identifying Belt Routing
Courtesy of VOLVO CARS CORPORATION

- Engine running
- Move the gear selector to position D
- Activate the solenoid for gear 2 and then the lock-up function
- Check the pressure change on the oil pressure gauge. A considerable change in pressure should be observed
- Deactivate the lock-up function. Check the pressure change.

  Repeat the activation and deactivation of the lock-up function a few times to ensure accurate results.

  HINT: Unchanged pressure means that the control system is defective.

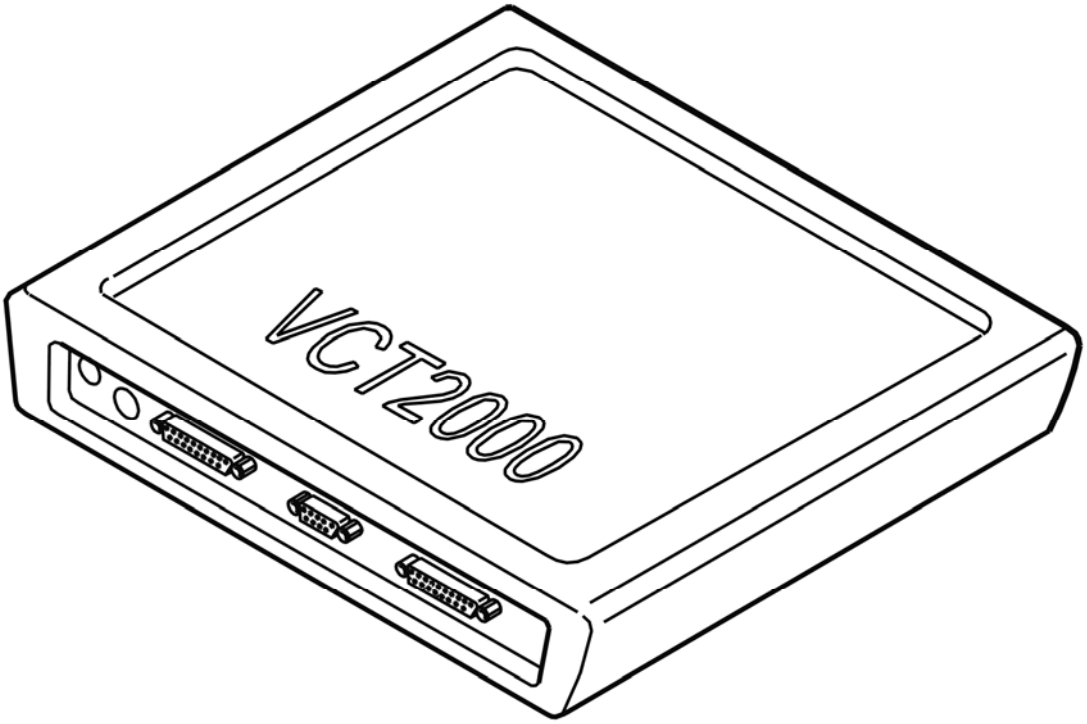

Fig. 271: Identifying VCT2000 Diagnostic Tool Symbol In VIDA
Courtesy of VOLVO CARS CORPORATION

Did the pressure change?

- **YES**

  Refer to **REPLACING THE TRANSMISSION**

- **NO**

  Refer to **REPLACING THE CONTROL SYSTEM**

REPLACING THE CONTROL SYSTEM

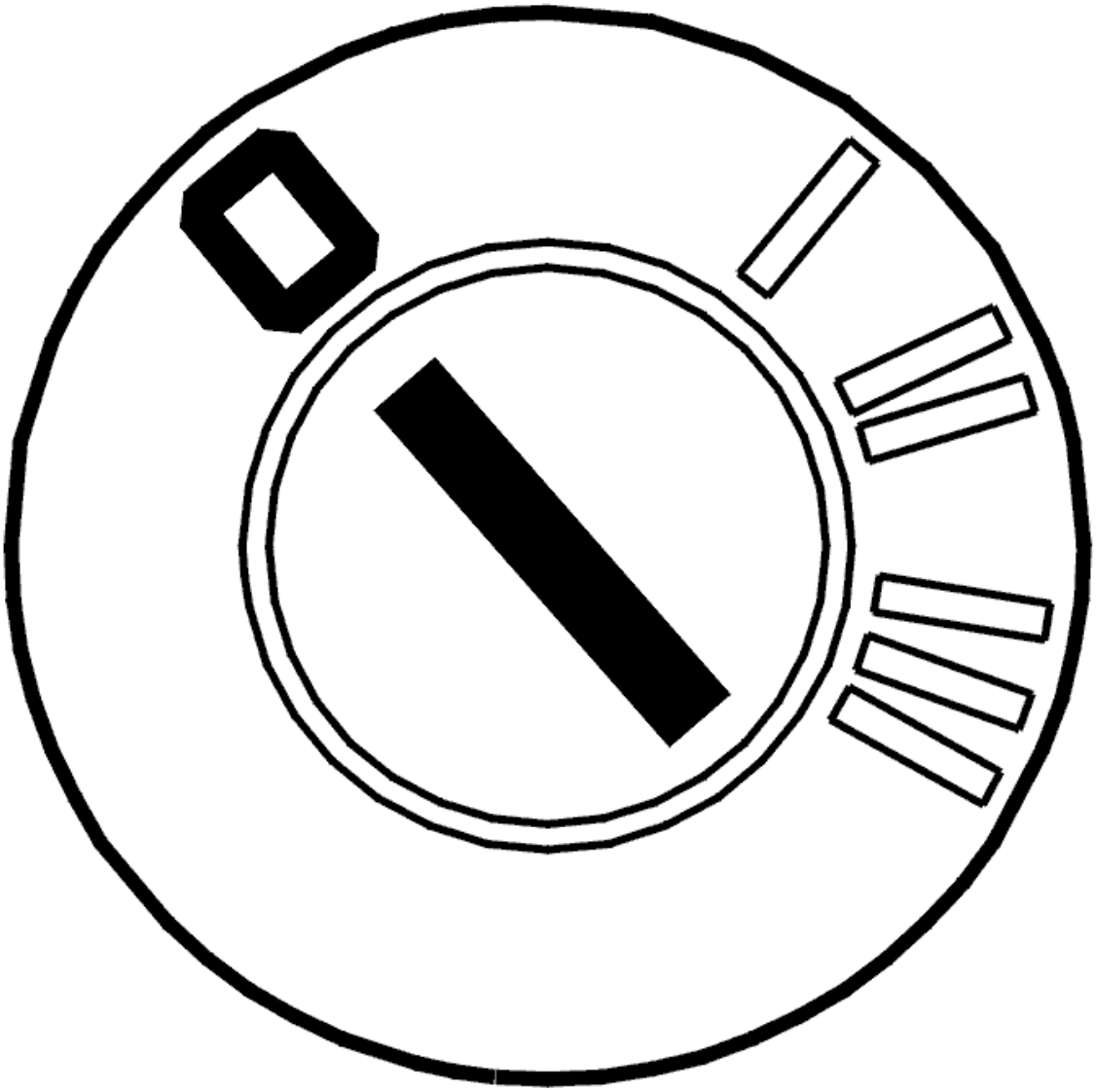

Fig. 272: Identifying Ignition OFF
Courtesy of VOLVO CARS CORPORATION

- Ignition off.

  Fault-tracing indicates a fault in the transmission control system. Replace the control system.

  Other information

  - To replace the control system, For removal, see **CONTROL SYSTEM/VALVE HOUSING, REMOVING** and To install, see **CONTROL SYSTEM / VALVE HOUSING, INSTALLING** .

- **Continue**

  Refer to **RESETTING THE ADAPTATION**

CHECKING THE WIRING

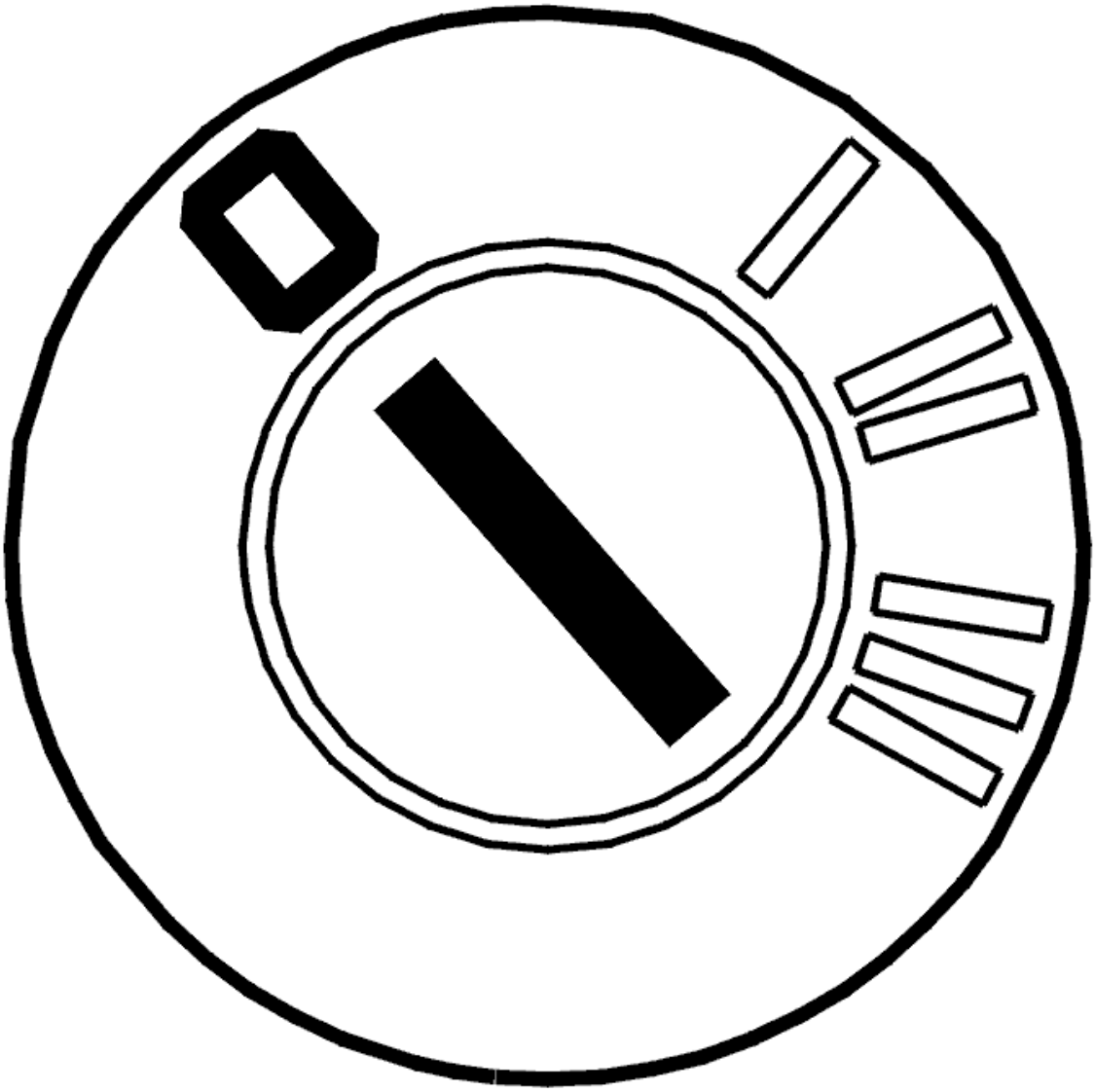

Fig. 273: Identifying Ignition OFF
Courtesy of VOLVO CARS CORPORATION

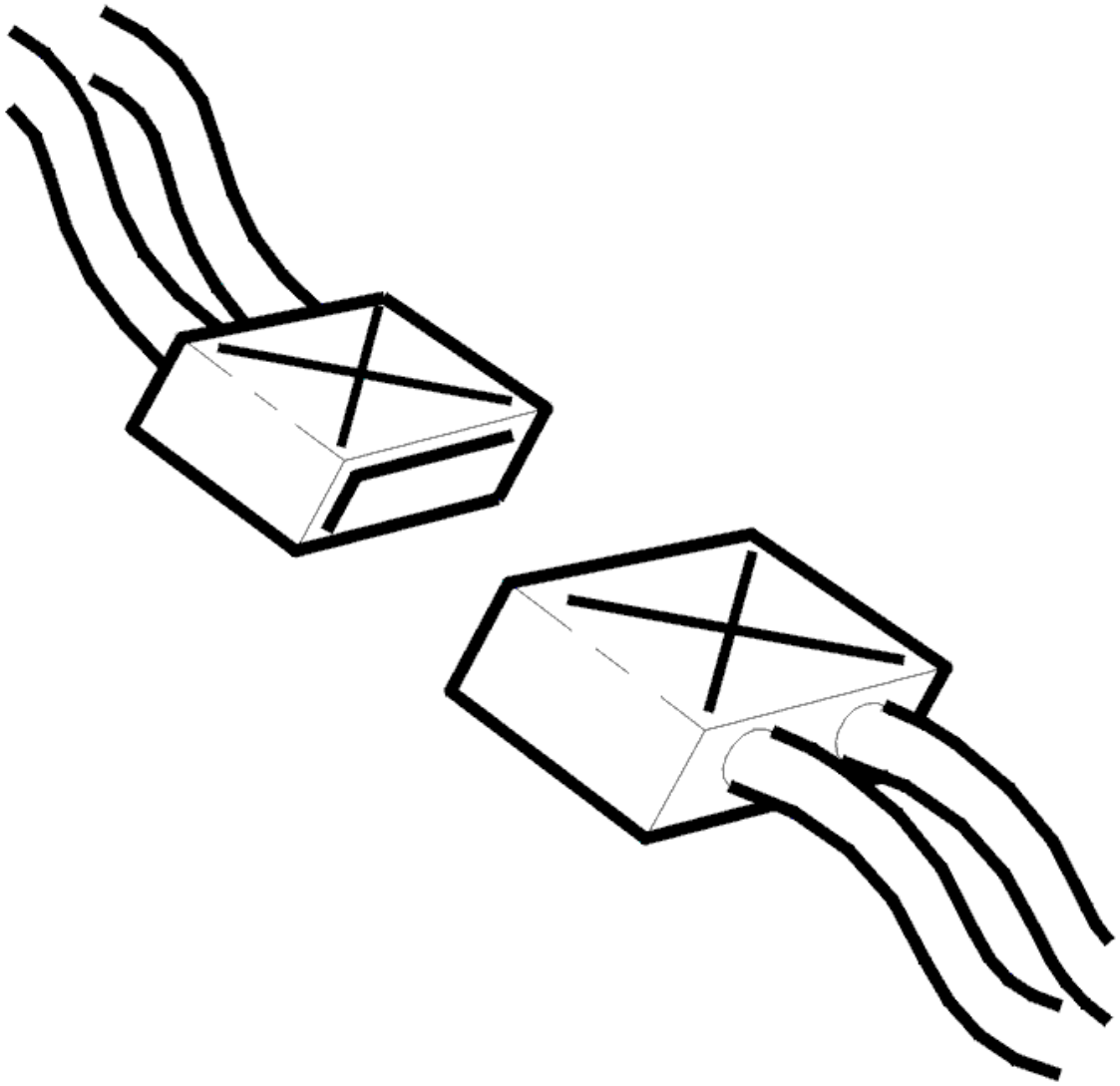

Fig. 274: Identifying Connectors
Courtesy of VOLVO CARS CORPORATION

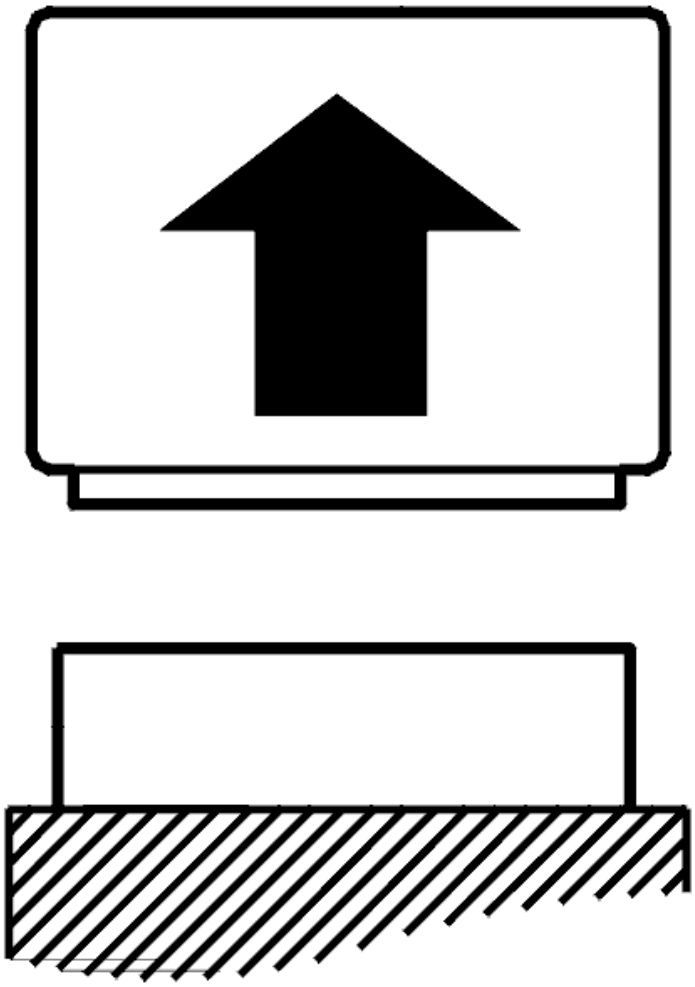

Fig. 275: Identifying Control Module Disconnected
Courtesy of VOLVO CARS CORPORATION

- Ignition off
- Control module disconnected
- Connect the breakout box to the control module connector (transmission side)
- Disconnect the transmission connector
- Adapter see **9511505** and breakout box see **9511428** connected to the transmission connector (control module side).

  Check the wiring between control module terminal #A51 (#A51) and transmission connector terminal #T (#A17). Check for an open-circuit. Check for a short-circuit to ground. Check for a short-circuit to supply voltage.

  Check the wiring between control module terminal #A53 (#A53) and transmission connector terminal #E

(#A5). Check for an open-circuit. Check for a short-circuit to ground. Check for a short-circuit to supply voltage.

Remedy as necessary.

Other information:

- To connect the breakout box, see **CONNECTING THE BREAKOUT BOX**
- To connect the breakout box to the transmission connector, see **CONNECTING THE BREAKOUT BOX, GM AUTOMATIC TRANSMISSIONS**
- For information about signals, see **SIGNAL SPECIFICATION**
- see **CHECKING WIRING AND TERMINALS. PERMANENT FAULT**

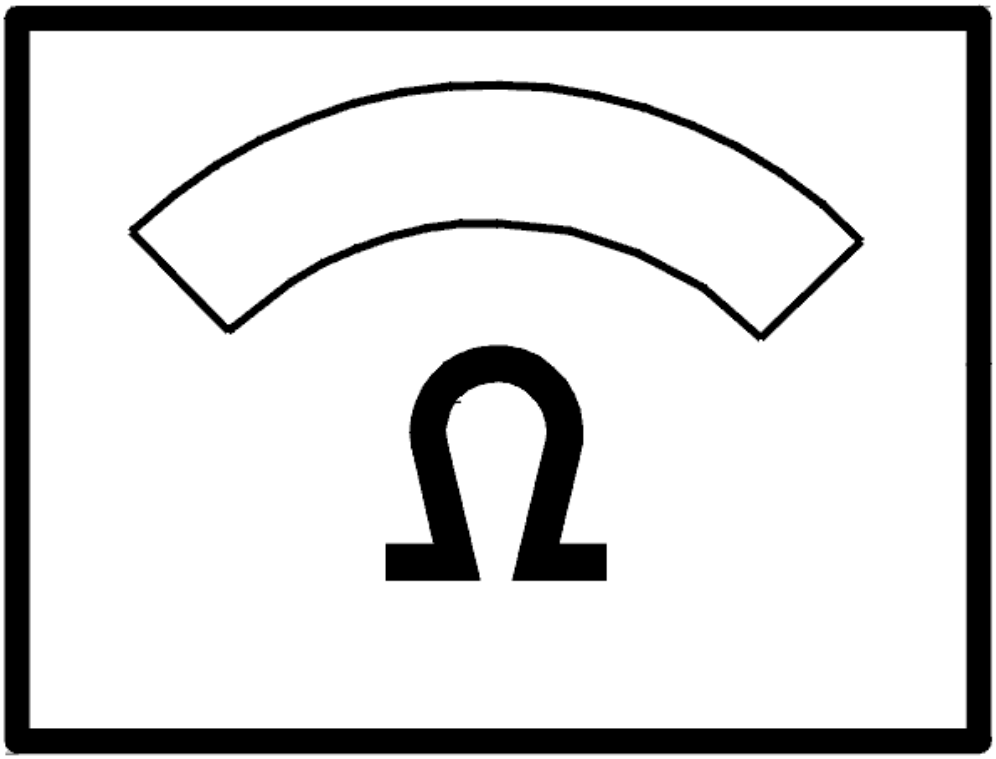

Fig. 276: Identifying Ohms Display
Courtesy of VOLVO CARS CORPORATION

Was a fault detected?

- **YES**

  Refer to **CHECKING DIAGNOSTIC TROUBLE CODES (DTCS)**

- **NO**

  Refer to **CHECKING THE WIRING AND COMPONENT**

CHECKING THE WIRING AND COMPONENT

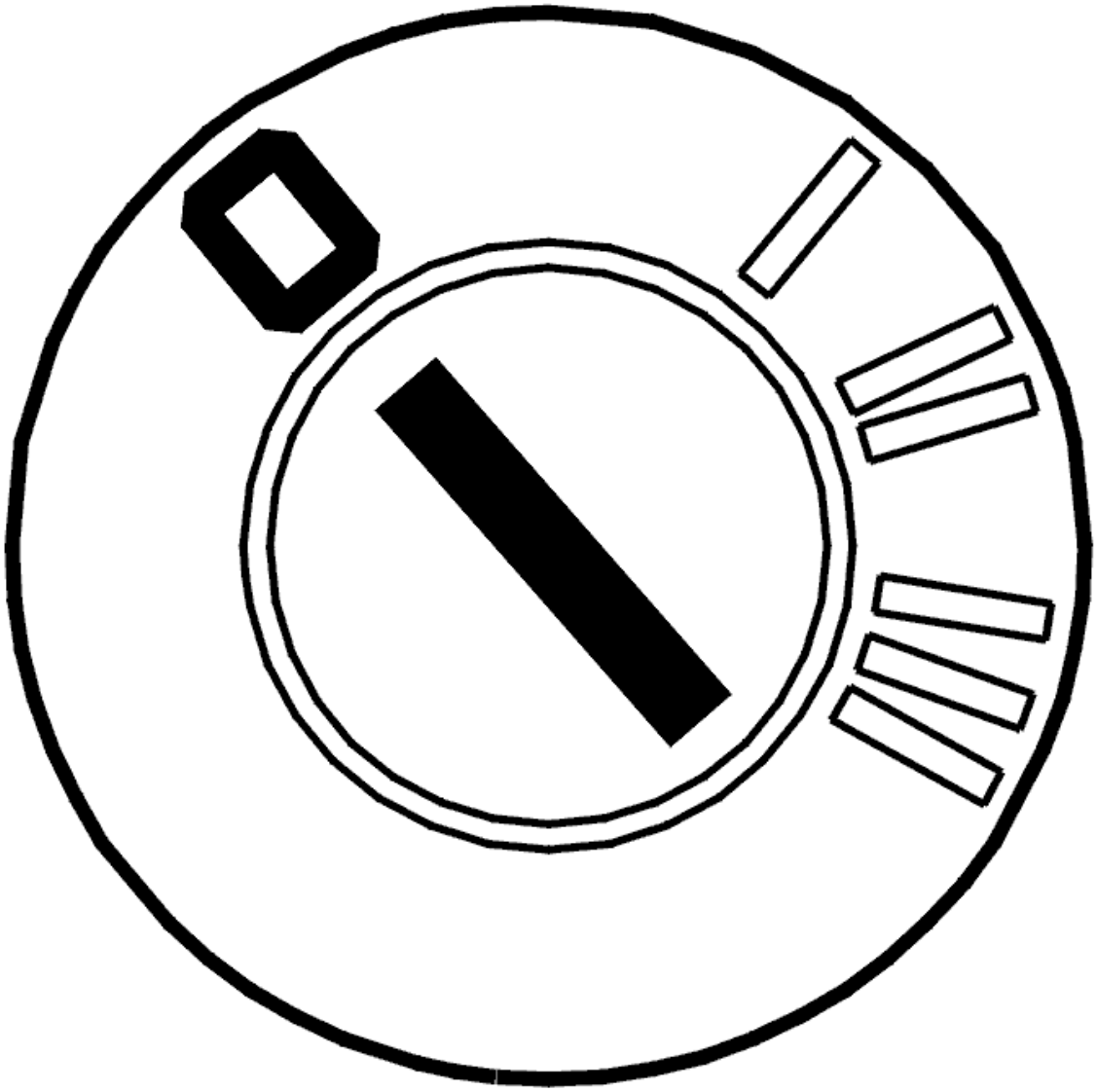

Fig. 277: Identifying Ignition OFF
Courtesy of VOLVO CARS CORPORATION

- Ignition off

- Open the transmission control system
- Connect adapter see **9511505** and breakout box see **9511428** to the transmission connector (transmission side).

  Check the cable between transmission connector terminal #T (#A17) and solenoid SL terminal #A. Check the cable between transmission connector terminal #E (#A5) and solenoid SL terminal #B. Check these cables for an open-circuit.

  HINT: Check solenoid SL by measuring the resistance between solenoid SL terminals #A and #B. When the transmission is cold (approximately 20°C), the resistance must be 10-11 ohms.

  Remedy as necessary.

  Other information:

  - To open the transmission control system, For removal, see **SIDE COVER TRANSMISSION, REMOVING** or To install, see **SIDE COVER TRANSMISSION, INSTALLING**
  - To connect the breakout box to the transmission connector, see **CONNECTING THE BREAKOUT BOX, GM AUTOMATIC TRANSMISSIONS**
  - To replace solenoid SL, see **SOLENOID LOCK-UP FUNCTION, REPLACING**
  - To replace the cable harness, see **TEMPERATURE SENSOR FLUID, TRANSAXLE, (TFT)**
  - For information about signals, see **SIGNAL SPECIFICATION**
  - see **CHECKING WIRING AND TERMINALS. PERMANENT FAULT**

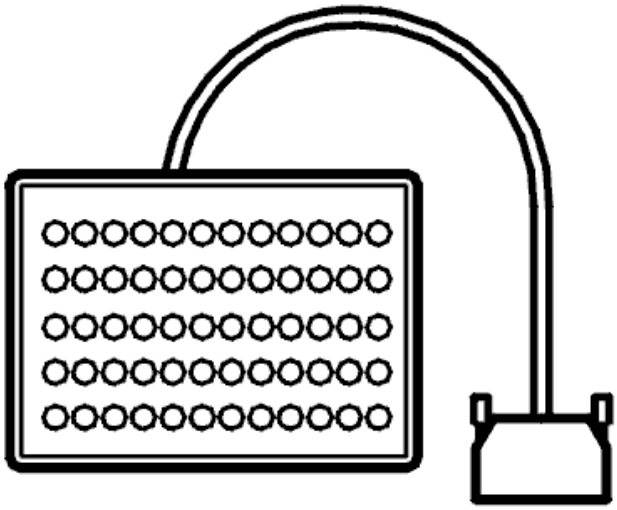

Fig. 278: Identifying Breakout Box
Courtesy of VOLVO CARS CORPORATION

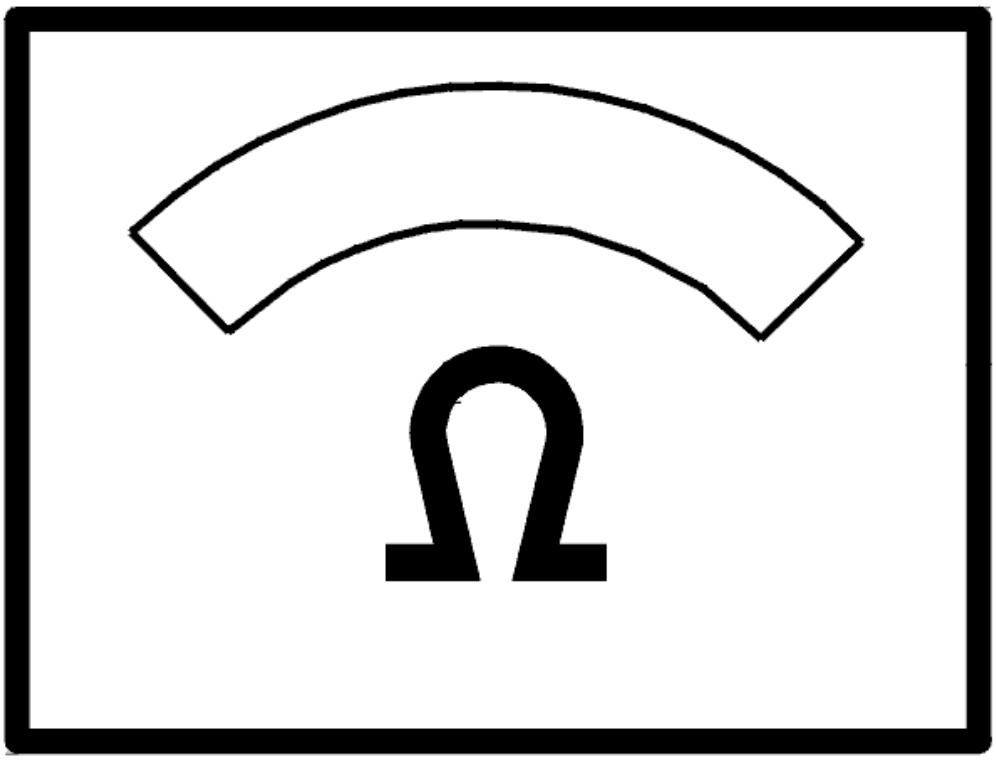

Fig. 279: Identifying Ohms Display
Courtesy of VOLVO CARS CORPORATION

- **Continue**

  Refer to **RESETTING THE ADAPTATION**

REPLACING THE TRANSMISSION

Fault-tracing indicates a fault in the transmission. Replace the transmission.

Other information:

- To remove the transmission, see **TRANSMISSION, REMOVING**
- To install the transmission, see **TRANSMISSION, INSTALLING (2003, 2004)** or **TRANSMISSION, INSTALLING (2005, 2006)** .

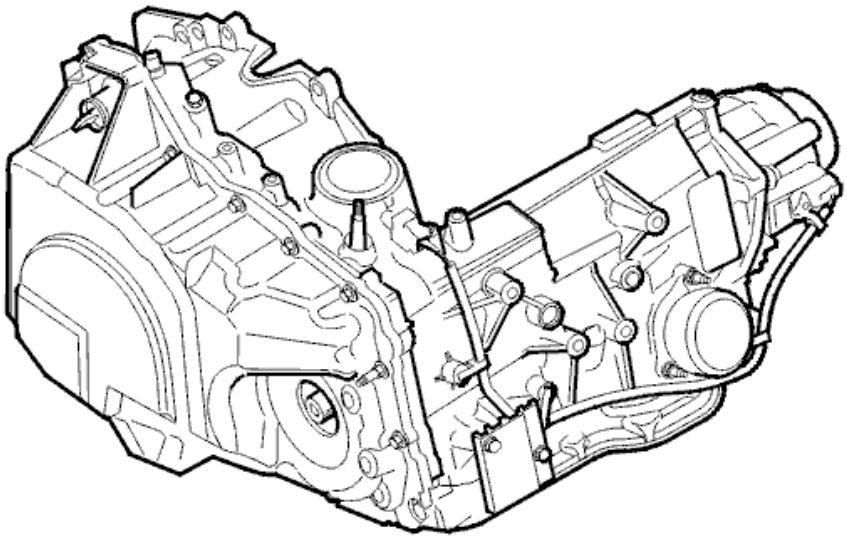

P2X

4301721D © VOLVO

Fig. 280: Identifying Transmission
Courtesy of VOLVO CARS CORPORATION

- **Continue**

  Refer to **RESETTING THE ADAPTATION**

FAULT-TRACING INFORMATION

The fault-tracing indicates that the control module has previously detected a fault but that the fault is no longer active.

CHECKING DIAGNOSTIC TROUBLE CODES (DTCS)

CHECKING DIAGNOSTIC TROUBLE CODES (DTCS)

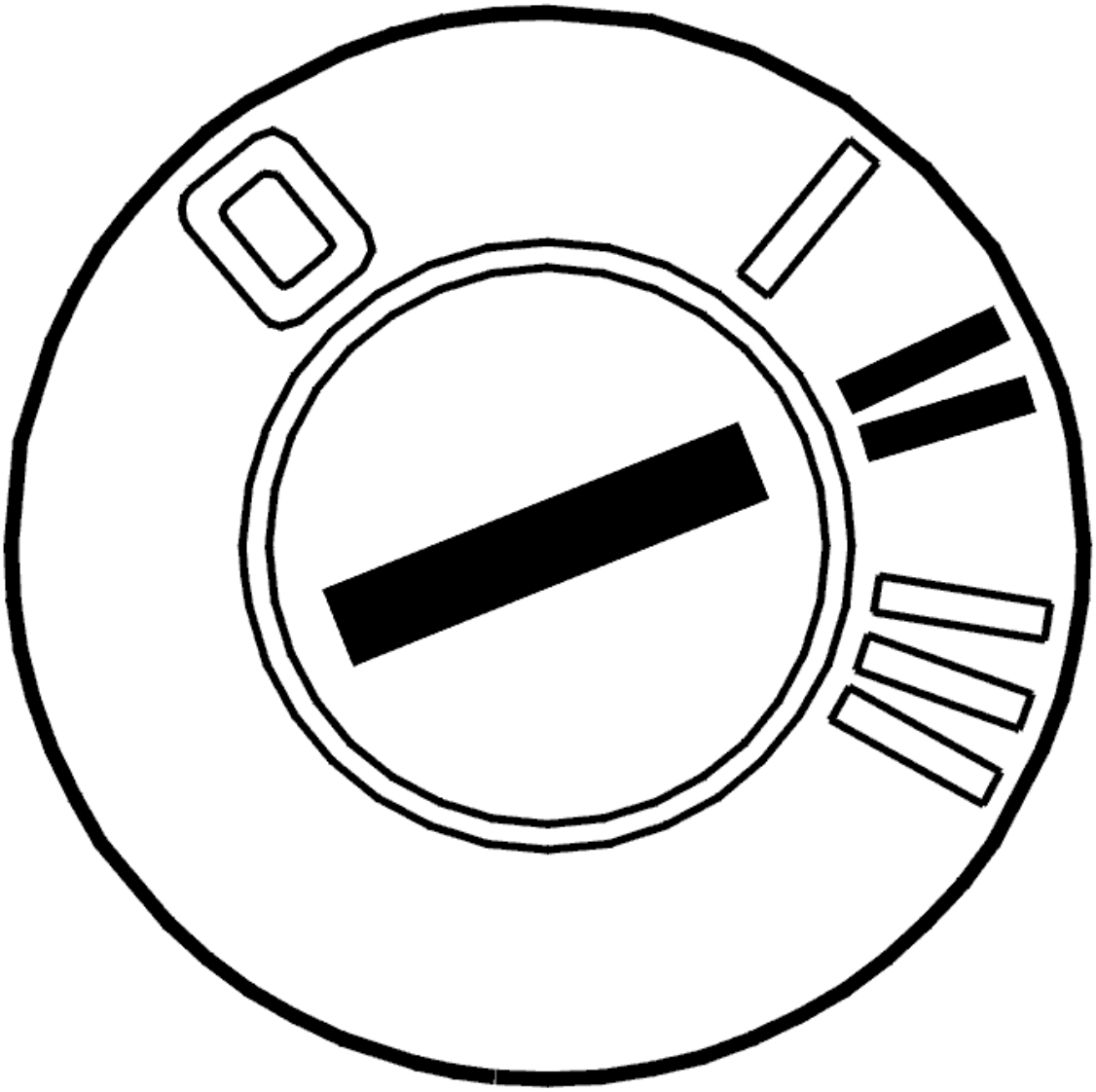

Fig. 281: Identifying Ignition ON
Courtesy of VOLVO CARS CORPORATION

- Ignition on
- Read off diagnostic trouble codes (DTCs).

  If any other diagnostic trouble codes (DTCs) than TCM-0051 are stored, these must be fault-traced and remedied after this fault-tracing is completed.

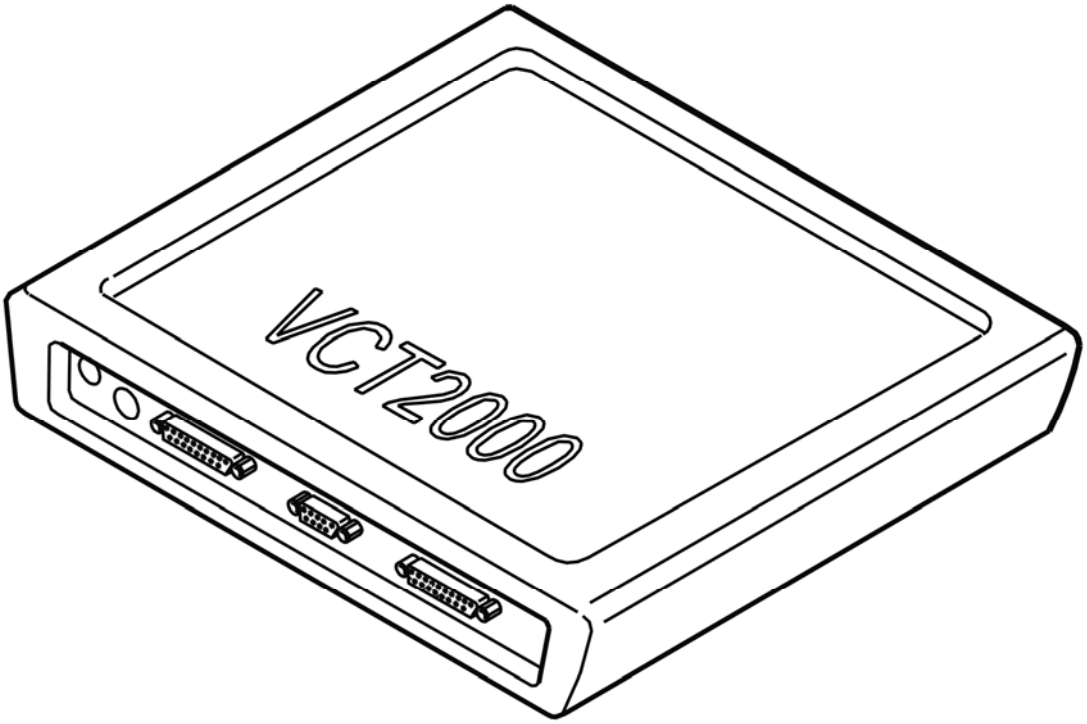

Fig. 282: Identifying VCT2000 Diagnostic Tool Symbol In VIDA
Courtesy of VOLVO CARS CORPORATION

- **Continue**

Refer to **ERASING DIAGNOSTIC TROUBLE CODES (DTCS)**

ERASING DIAGNOSTIC TROUBLE CODES (DTCS)

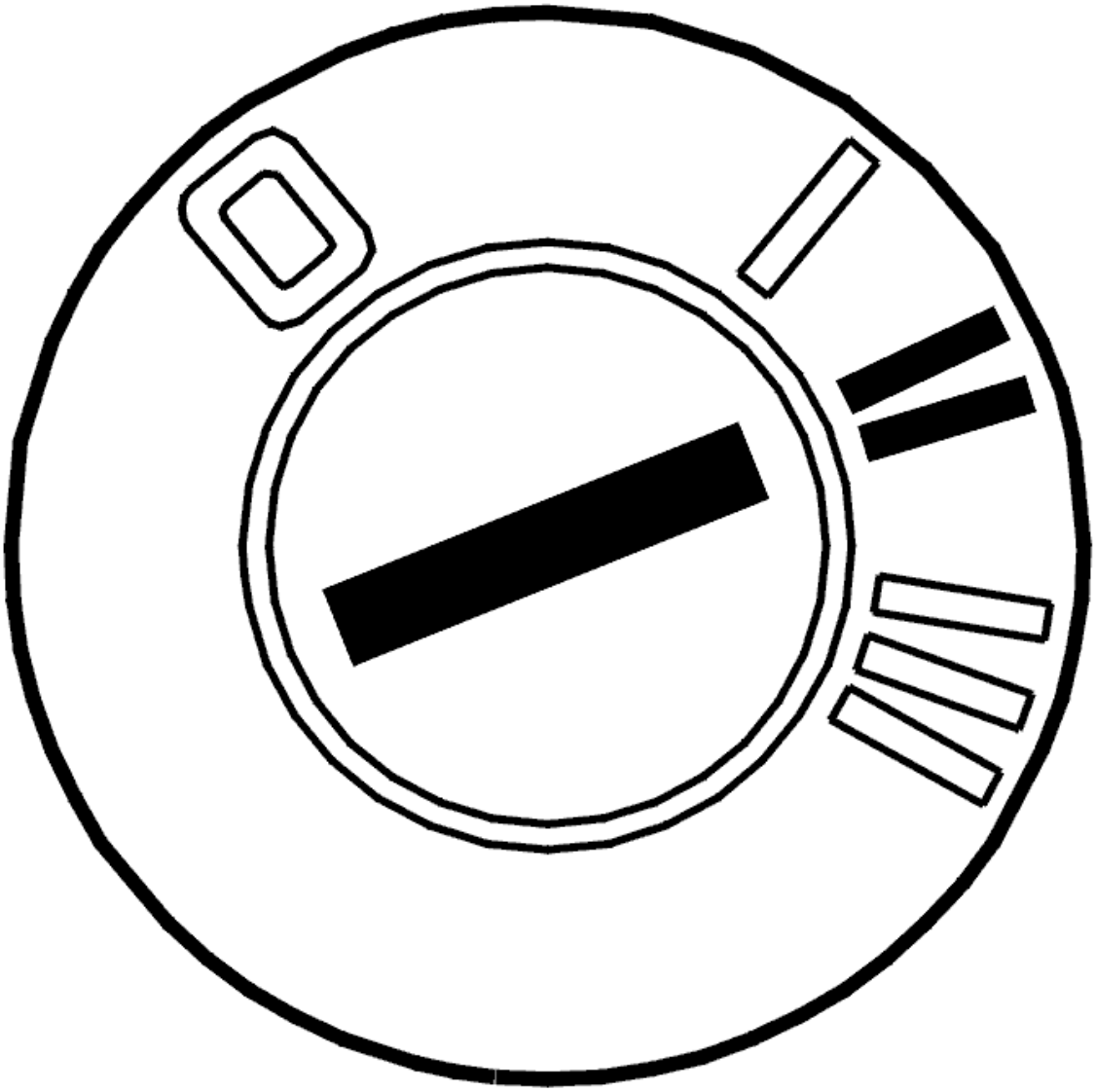

Fig. 283: Identifying Ignition ON
Courtesy of VOLVO CARS CORPORATION

- Ignition off
- Wait for two minutes to allow time for the diagnostic trouble codes (DTCs) to be stored in the control module memory
- Ignition on
- Erase diagnostic trouble codes (DTCs).

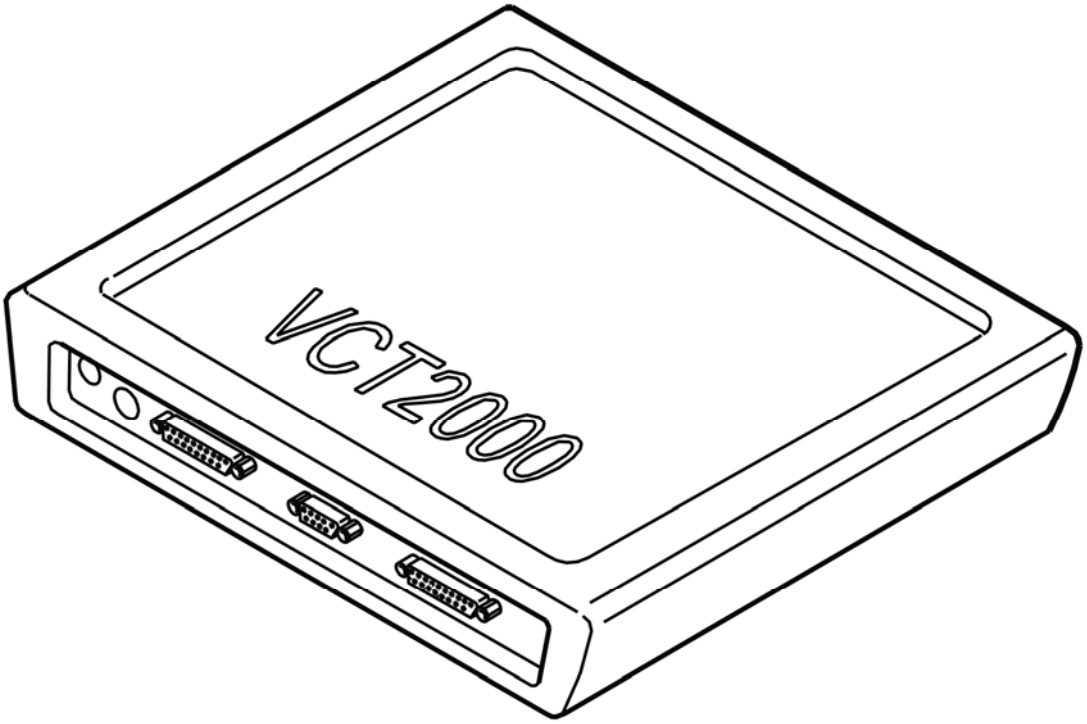

Fig. 284: Identifying VCT2000 Diagnostic Tool Symbol In VIDA
Courtesy of VOLVO CARS CORPORATION

- **Continue**

  Refer to **TEST DRIVING**

TEST DRIVING

NOTE: **Test drive the car according to the driving schedule below to check whether the fault is still active. The test drive is compiled in order to create the conditions in which the diagnostic trouble code (DTC) will be stored again if the fault is active.**

The TEST MODE function can be used to provoke any diagnostic trouble codes (DTC). The function reduces the conditions for how quickly diagnostic trouble codes (DTCs) are stored in the control module and the test drive becomes easier.

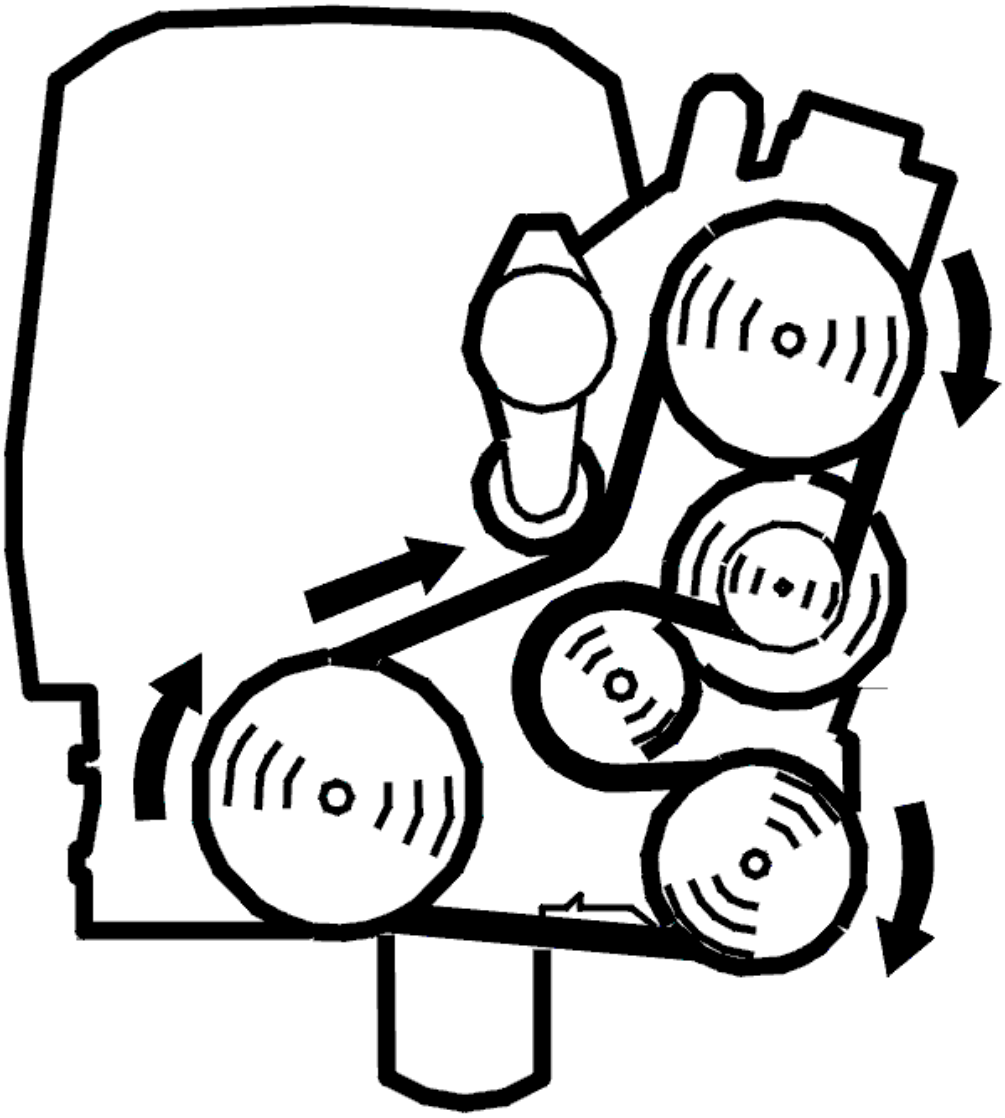

Fig. 285: Identifying Belt Routing
Courtesy of VOLVO CARS CORPORATION

- Start the engine
- Activate TEST MODE.

NOTE: Do not switch off the engine

- Disconnect the VIDA station. Test drive the car as described below.

WARNING: Please observe traffic regulations.

NOTE: Before test driving, the transmission fluid should be at operating

temperature, approximately 80-90°C.

Shift the gear selector to position D (fourth gear for geartronic). Carefully accelerate to 80 km/h. Maintain the same speed for at least 60 seconds.

Criteria for diagnostic trouble code (DTC):

- The transmission fluid temperature must exceed 30°C
- The engine must be running for at least 20 seconds
- Gear selector in position D, 3 or 2 (4T65EV).

  Gear selector in Geartronic position and gears 4, 3 or 2 (4T65EV-GT)

- Speed 80 km/h for at least 20 seconds.

  HINT: The car must be driven at an engine speed where the lock-up function is normally activated.

- At least 5 seconds since the last gear shift
- Positive engine torque (no engine braking).

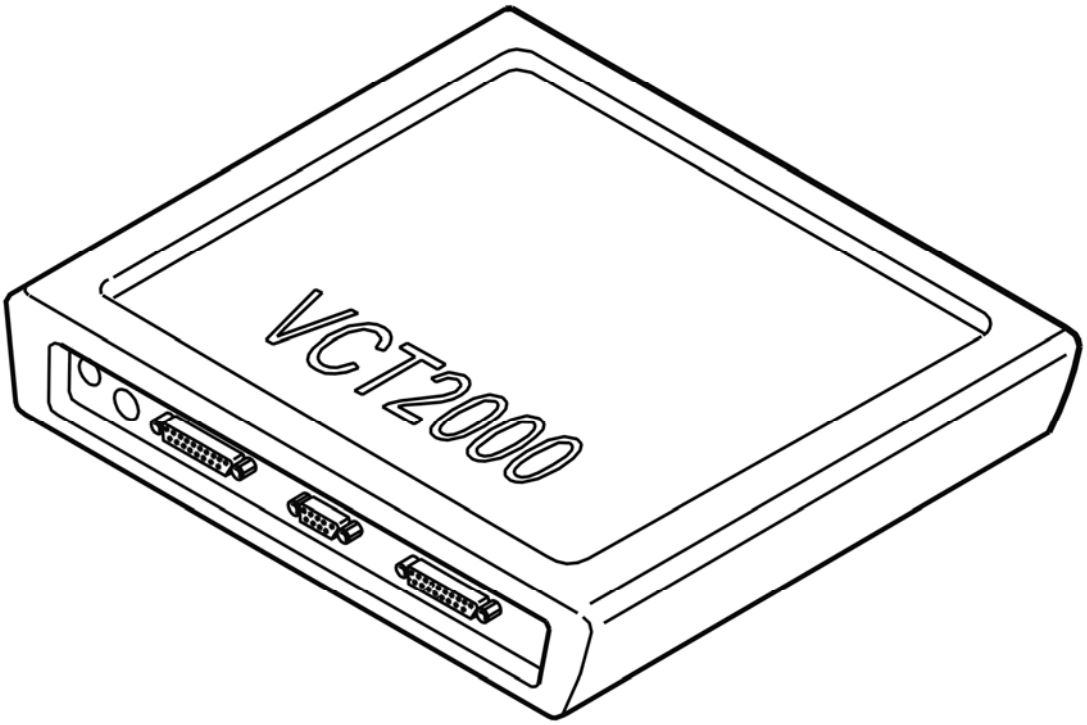

Fig. 286: Identifying VCT2000 Diagnostic Tool Symbol In VIDA
Courtesy of VOLVO CARS CORPORATION

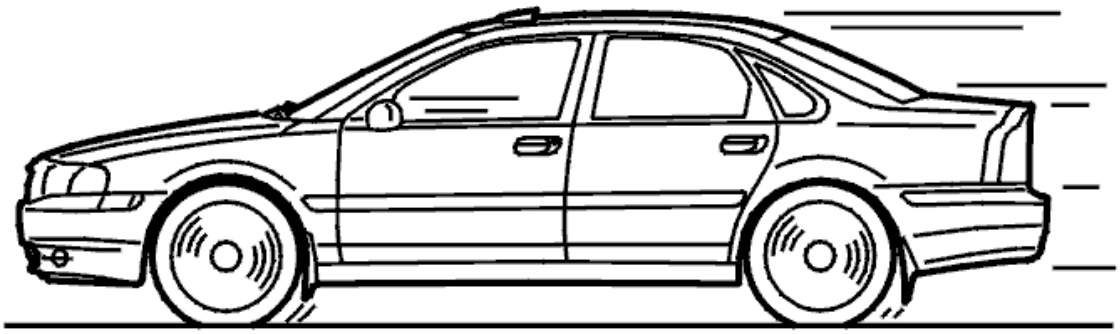

Fig. 287: Identifying Test Drive
Courtesy of VOLVO CARS CORPORATION

- **Continue**

Refer to **CHECKING DIAGNOSTIC TROUBLE CODES (DTCS)**

CHECKING DIAGNOSTIC TROUBLE CODES (DTCS)

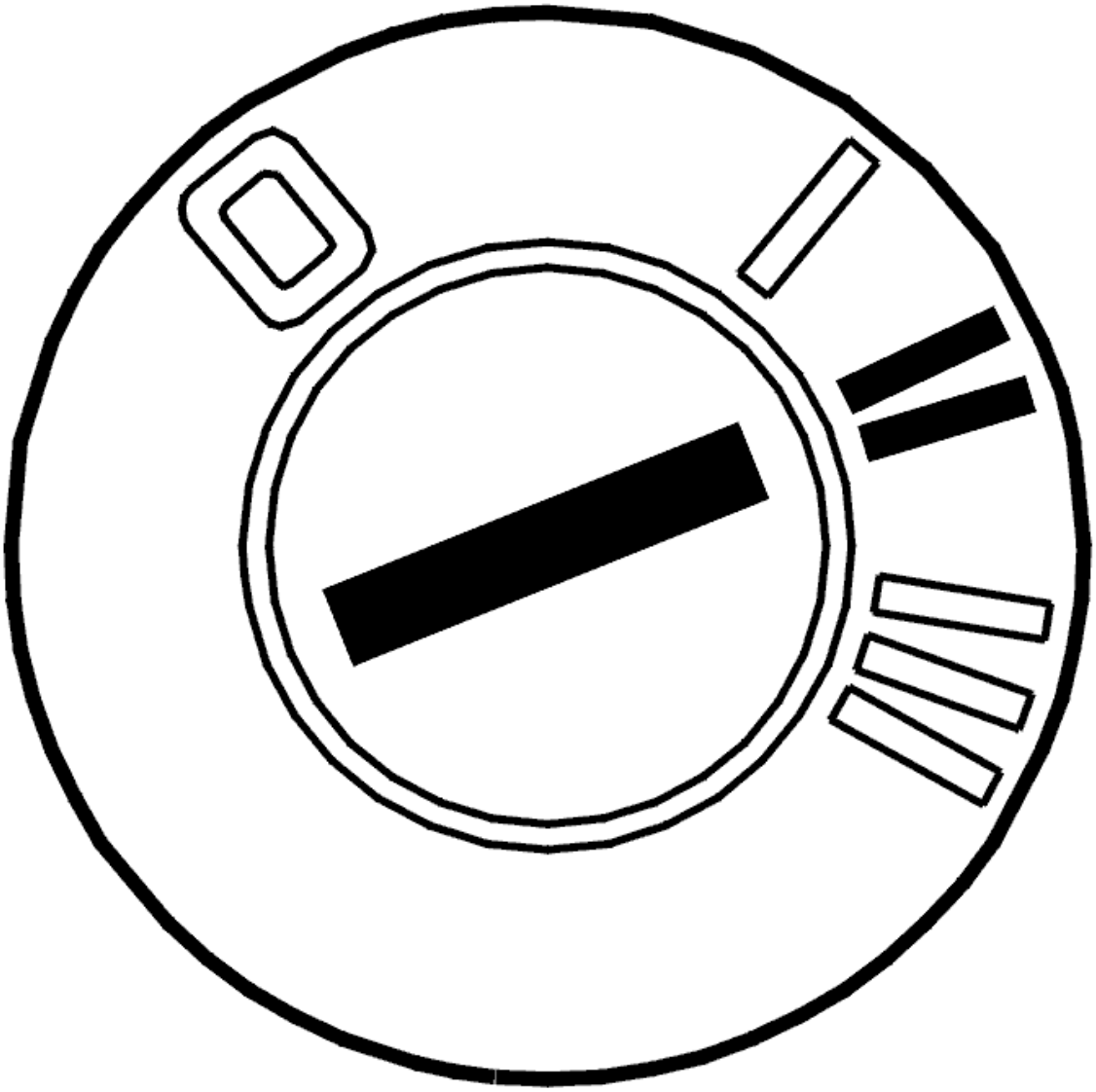

Fig. 288: Identifying Ignition ON
Courtesy of VOLVO CARS CORPORATION

- Ignition on
- Read off diagnostic trouble codes (DTCs).

  If any other diagnostic trouble codes (DTCs) than TCM-0051 are stored, these must be fault-traced and remedied after this fault-tracing is completed.

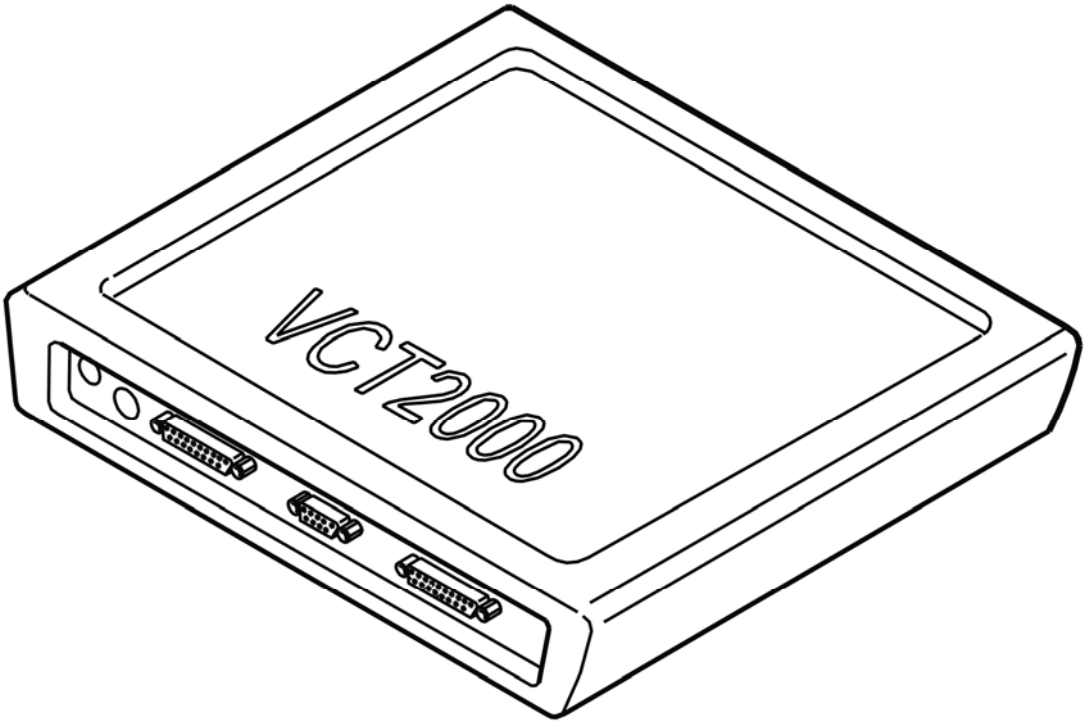

Fig. 289: Identifying VCT2000 Diagnostic Tool Symbol In VIDA
Courtesy of VOLVO CARS CORPORATION

Was diagnostic trouble code (DTC) TCM-0051 stored?

- **YES**

  Refer to **CHECKING SOLENOID SL**

- **NO**

  Refer to **FAULT-TRACING INFORMATION**

RESETTING THE ADAPTATION

RESETTING ADAPTATION AND THE COUNTER FOR "TRANSMISSION OIL CHANGE"

HINT: The transmission has torque controlled adaptive pressure control. Pressure control means that the transmission regulates the pressure itself during each gear shift. This avoids harsh gear shifting. Each gear shift is evaluated by the control module and stored in the memory. This allows for compensation for wear and tear in the transmission and clutch. It is important that the adaptation in the memory is reset after the transmission has been repaired. This is to ensure normal operation. The oil is replaced during repair; the "Transmission oil change" counter must be reset. If the counter is not reset when the fluid is drained and replaced, there is a risk that a diagnostic trouble code (DTC) will be stored in incorrect

circumstances.

NOTE: This applies only if the transmission or one of the components in the transmission have been replaced.

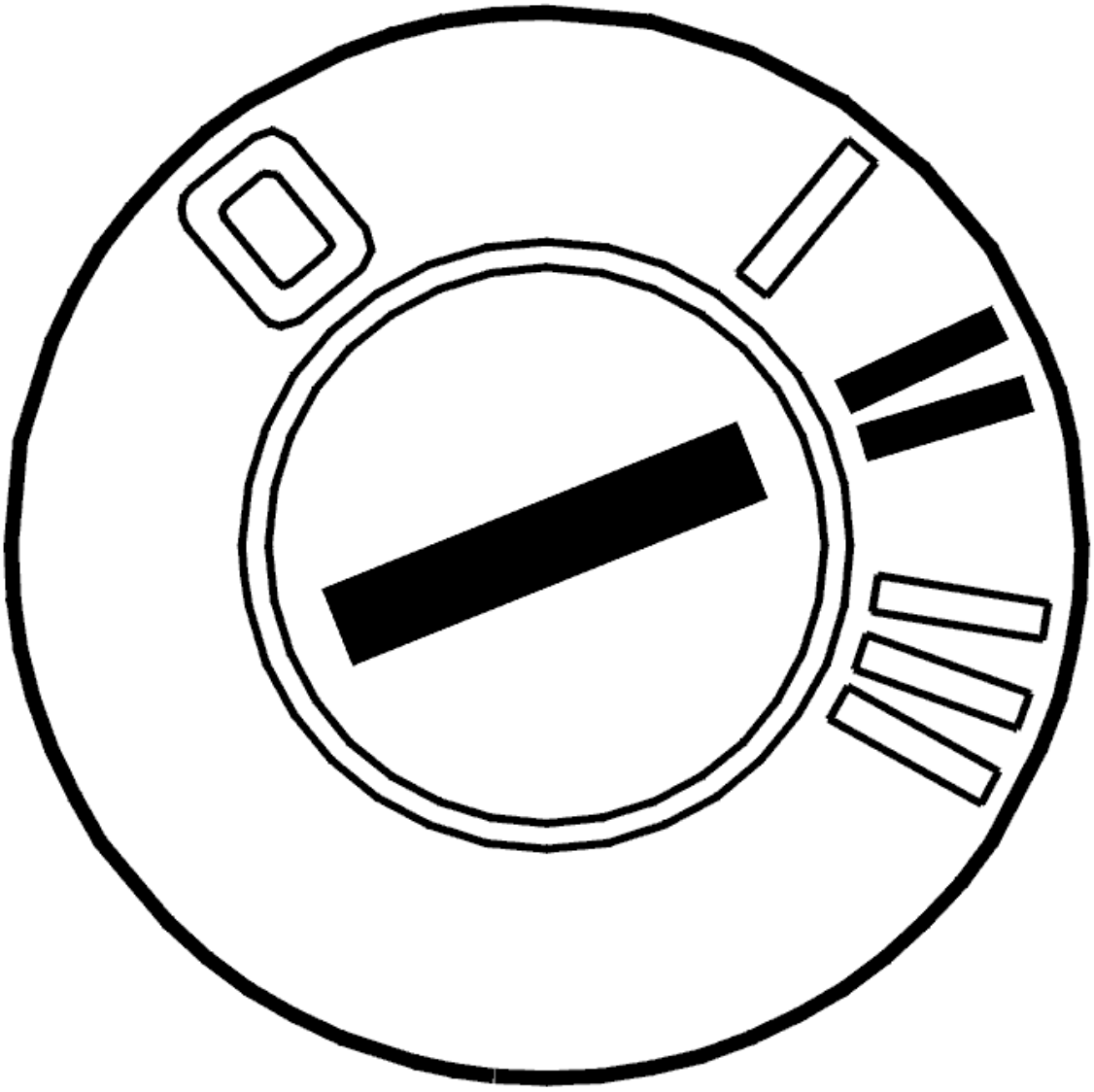

Fig. 290: Identifying Ignition ON
Courtesy of VOLVO CARS CORPORATION

- Ignition on.

  Click on the VCT2000 symbol to reset the adaptation and counter.

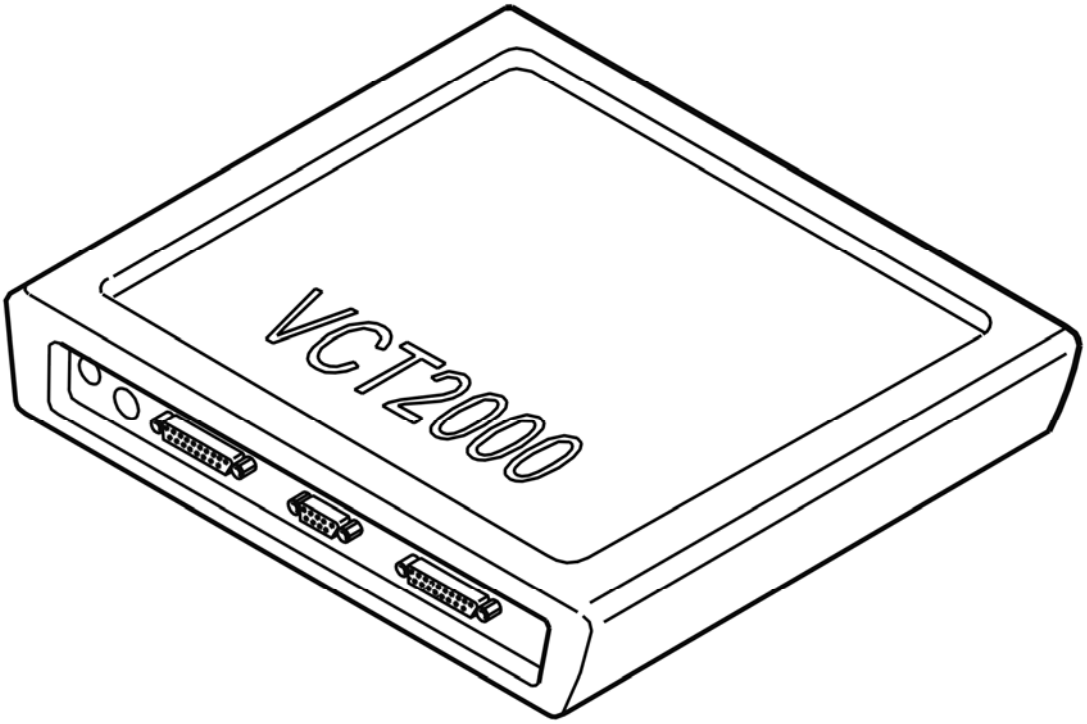

Fig. 291: Identifying VCT2000 Diagnostic Tool Symbol In VIDA
Courtesy of VOLVO CARS CORPORATION

- **Continue**

  Refer to **CHECKING DIAGNOSTIC TROUBLE CODES (DTCS)**

INFORMATION

FAULT-TRACING INFORMATION

The fault should have been detected and remedied. As this is not the case fault-tracing has failed.

Exit fault-tracing for this diagnostic trouble code (DTC) or make another attempt.

CHECKING DIAGNOSTIC TROUBLE CODES (DTCS)

CHECKING DIAGNOSTIC TROUBLE CODES (DTCS)

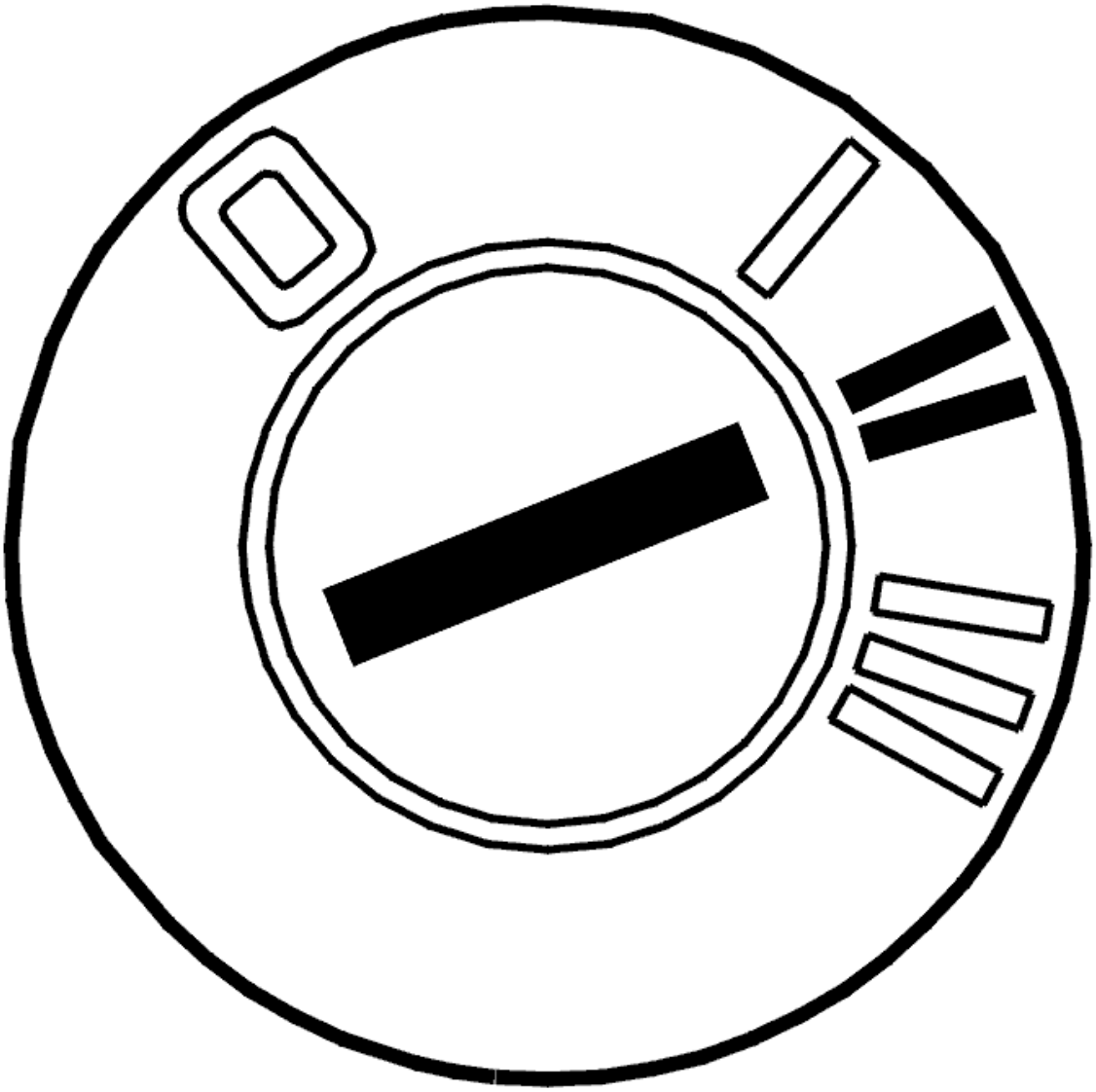

Fig. 292: Identifying Ignition ON
Courtesy of VOLVO CARS CORPORATION

- Ignition on
- Read off diagnostic trouble codes (DTCs).

  If any other diagnostic trouble codes (DTCs) than TCM-0051 are stored, these must be fault-traced and remedied after this fault-tracing is completed.

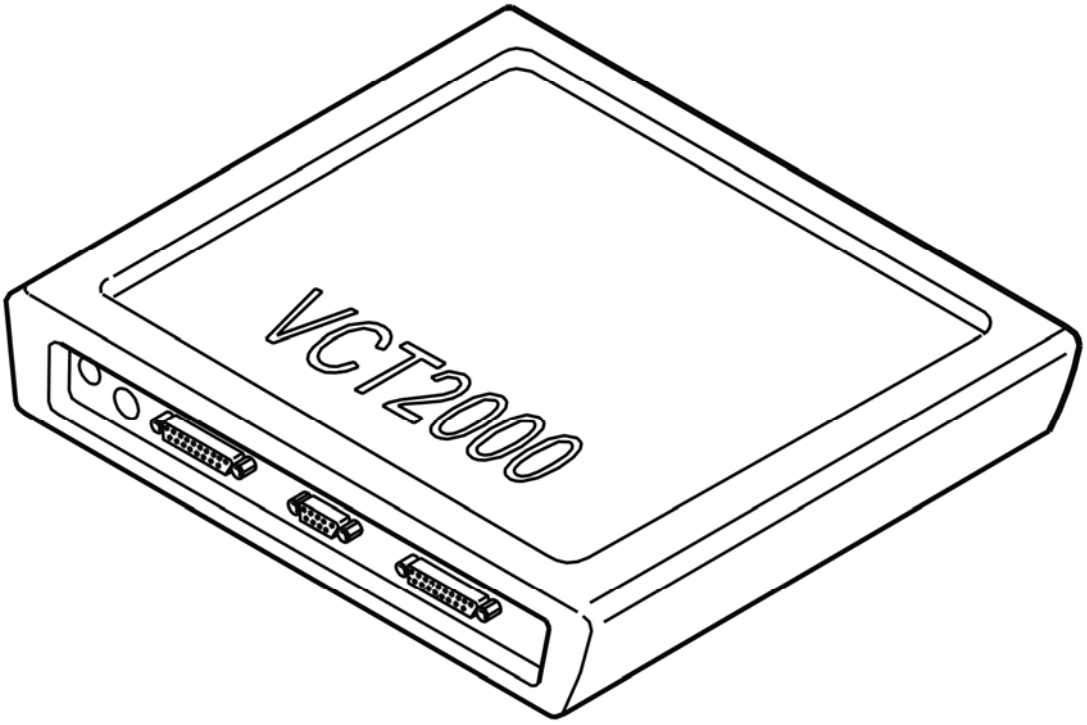

Fig. 293: Identifying VCT2000 Diagnostic Tool Symbol In VIDA
Courtesy of VOLVO CARS CORPORATION

- **Continue**

Refer to **ERASING DIAGNOSTIC TROUBLE CODES (DTCS)**

ERASING DIAGNOSTIC TROUBLE CODES (DTCS)

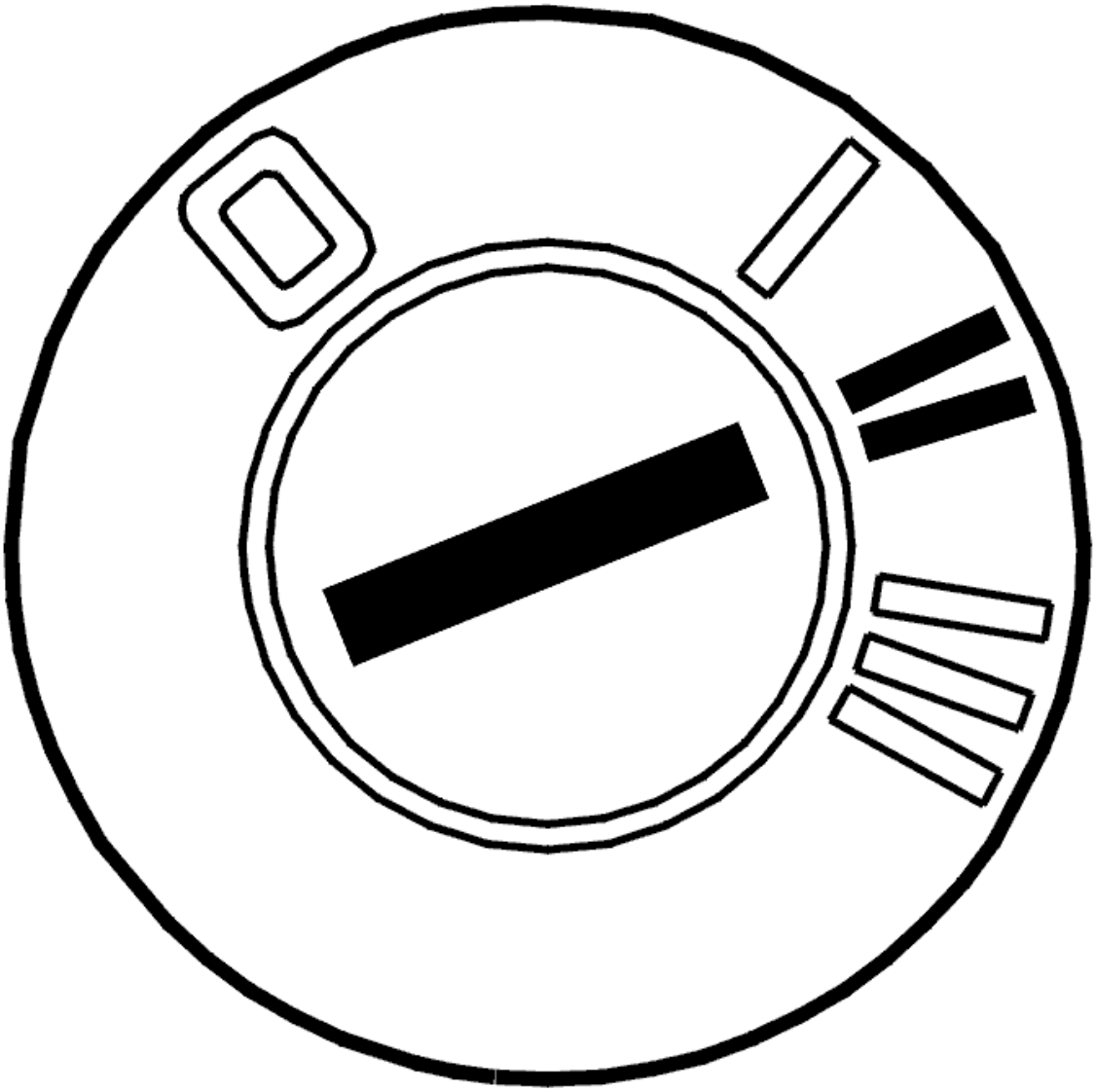

Fig. 294: Identifying Ignition ON
Courtesy of VOLVO CARS CORPORATION

- Ignition off
- Wait for two minutes to allow time for the diagnostic trouble codes (DTCs) to be stored in the control module memory
- Ignition on
- Erase diagnostic trouble codes (DTCs).

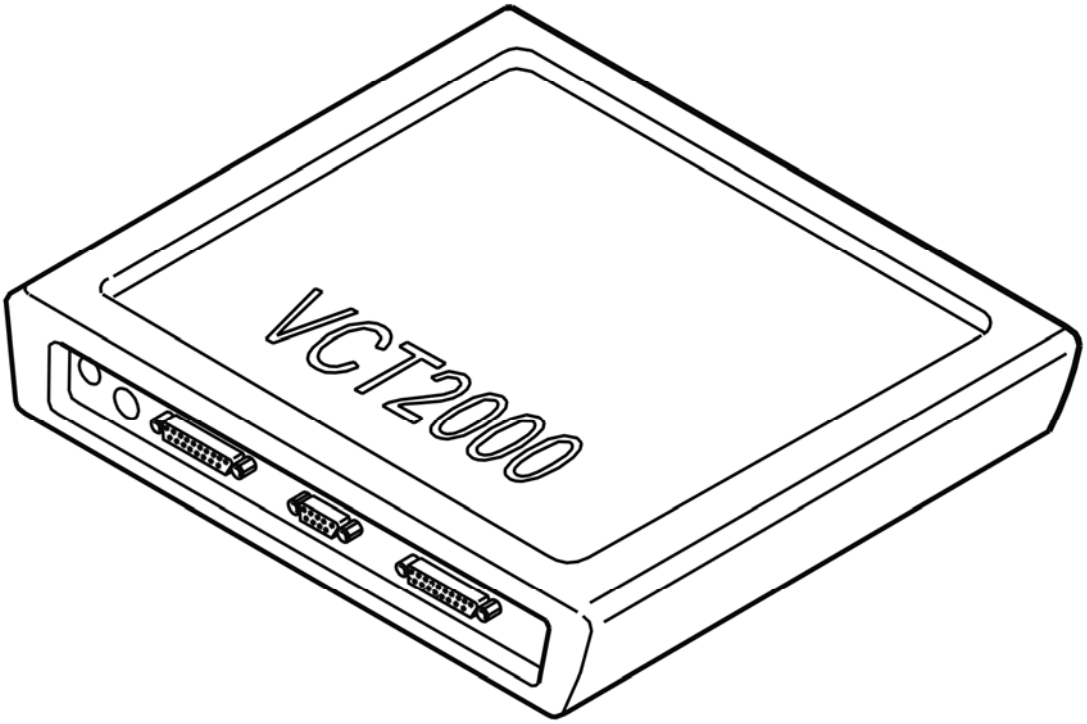

Fig. 295: Identifying VCT2000 Diagnostic Tool Symbol In VIDA
Courtesy of VOLVO CARS CORPORATION

- **Continue**

  Refer to **TEST DRIVING**

TEST DRIVING

NOTE: **Test drive the car according to the driving schedule below to check whether the fault is still active. The test drive is compiled in order to create the conditions in which the diagnostic trouble code (DTC) will be stored again if the fault is active.**

The TEST MODE function can be used to provoke any diagnostic trouble codes (DTC). The function reduces the conditions for how quickly diagnostic trouble codes (DTCs) are stored in the control module and the test drive becomes easier.

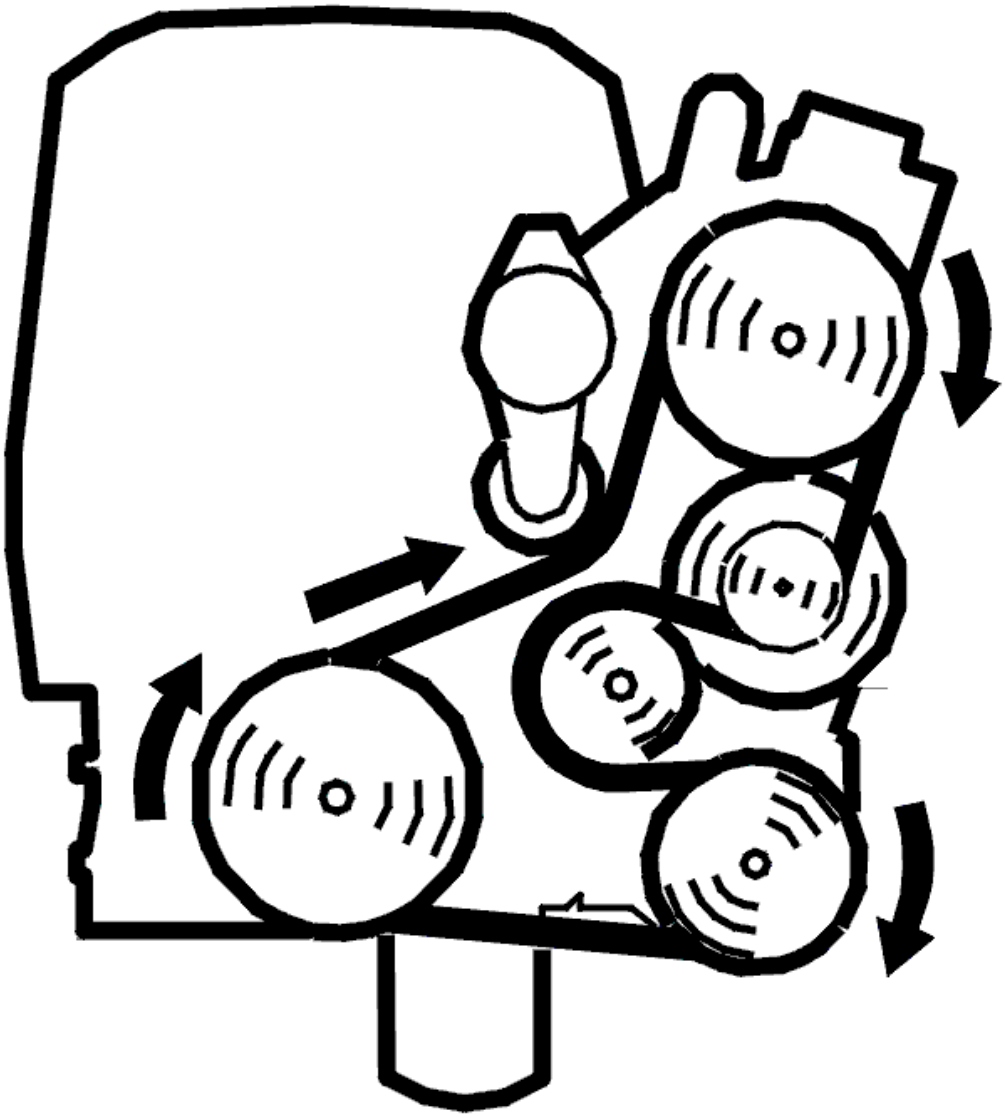

Fig. 296: Identifying Belt Routing
Courtesy of VOLVO CARS CORPORATION

- Start the engine
- Activate TEST MODE.

NOTE: Do not switch off the engine

- Disconnect the VIDA station. Test drive the car as described below.

WARNING: Please observe traffic regulations.

NOTE: Before test driving, the transmission fluid should be at operating

temperature, approximately 80-90°C.

Shift the gear selector to position D (fourth gear for geartronic). Carefully accelerate to 80 km/h. Maintain the same speed for at least 60 seconds.

Criteria for diagnostic trouble code (DTC):

- The transmission fluid temperature must exceed 30°C
- The engine must be running for at least 20 seconds
- Gear selector in position D, 3 or 2 (4T65EV).

  Gear selector in Geartronic position and gears 4, 3 or 2 (4T65EV-GT)

- Speed 80 km/h for at least 20 seconds.

  HINT: The car must be driven at an engine speed where the lock-up function is normally activated.

- At least 5 seconds since the last gear shift
- Positive engine torque (no engine braking).

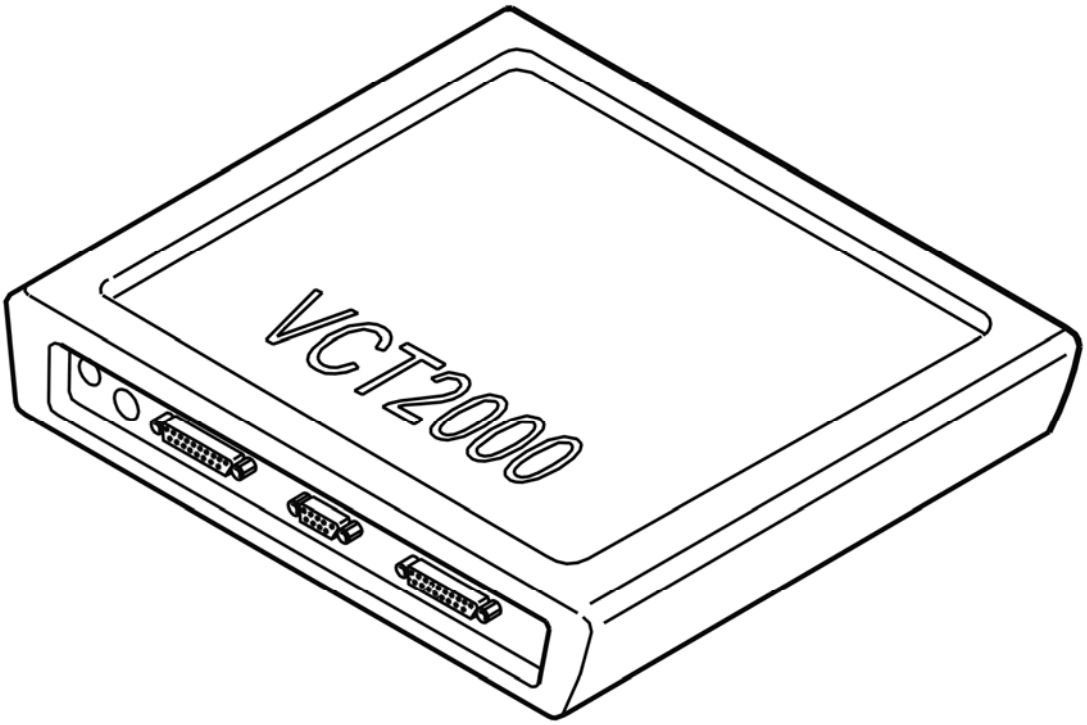

Fig. 297: Identifying VCT2000 Diagnostic Tool Symbol In VIDA
Courtesy of VOLVO CARS CORPORATION

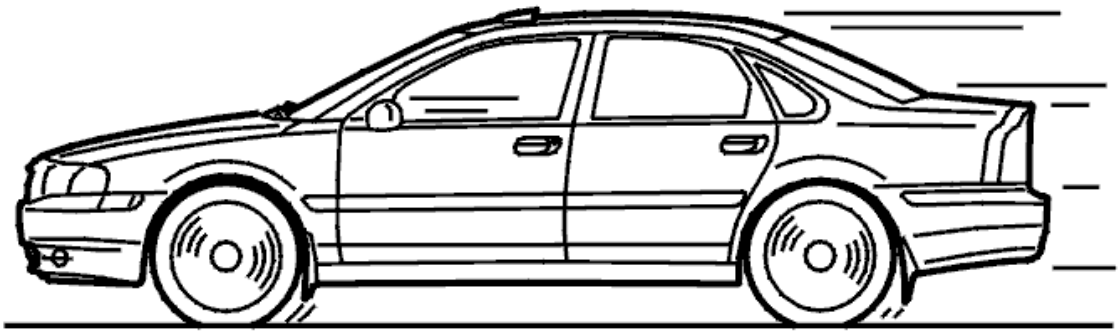

Fig. 298: Identifying Test Drive
Courtesy of VOLVO CARS CORPORATION

- **Continue**

Refer to **CHECKING DIAGNOSTIC TROUBLE CODES (DTCS)**

CHECKING DIAGNOSTIC TROUBLE CODES (DTCS)

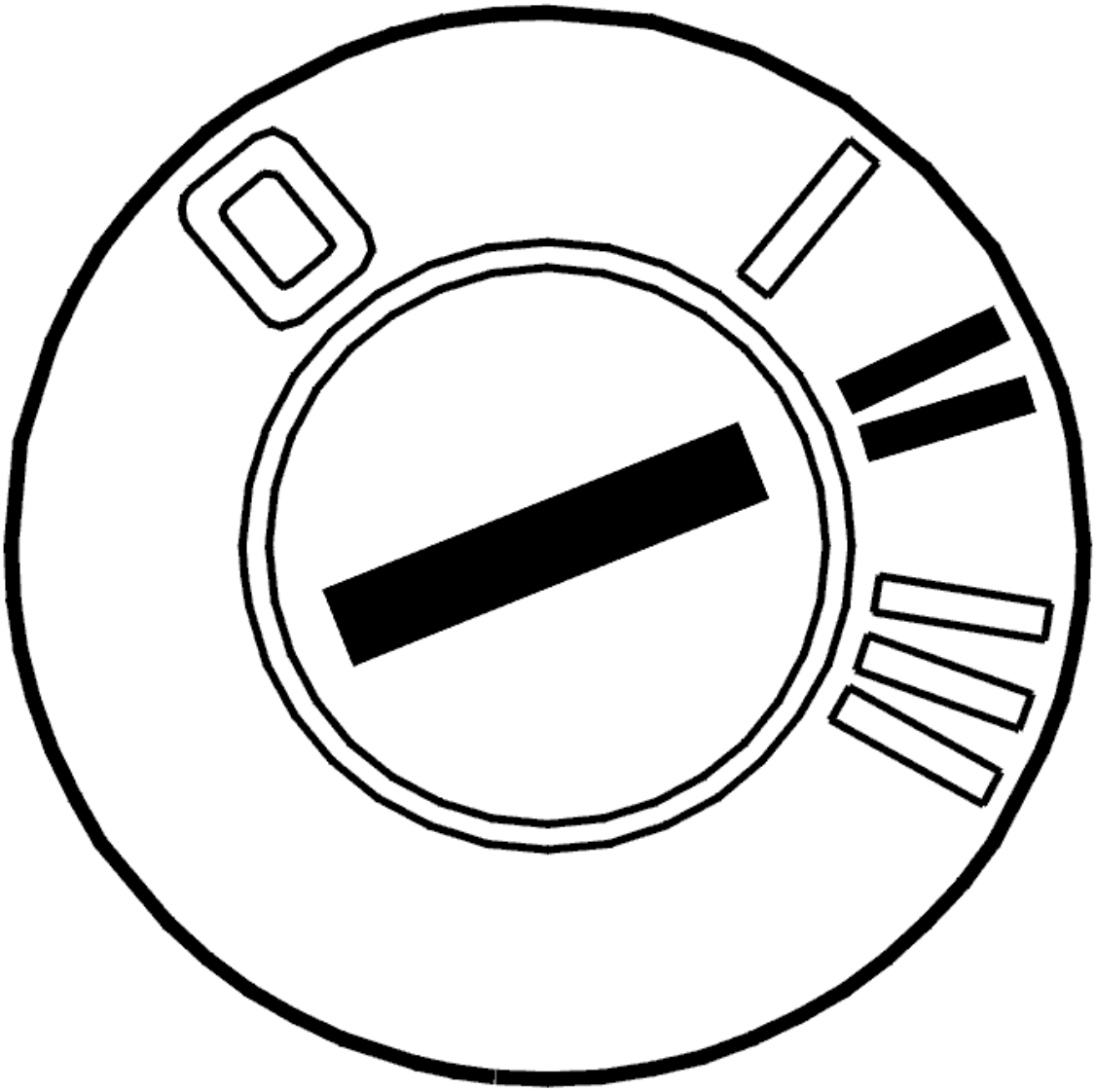

Fig. 299: Identifying Ignition ON
Courtesy of VOLVO CARS CORPORATION

- Ignition on
- Read off diagnostic trouble codes (DTCs).

  If any other diagnostic trouble codes (DTCs) than TCM-0051 are stored, these must be fault-traced and remedied after this fault-tracing is completed.

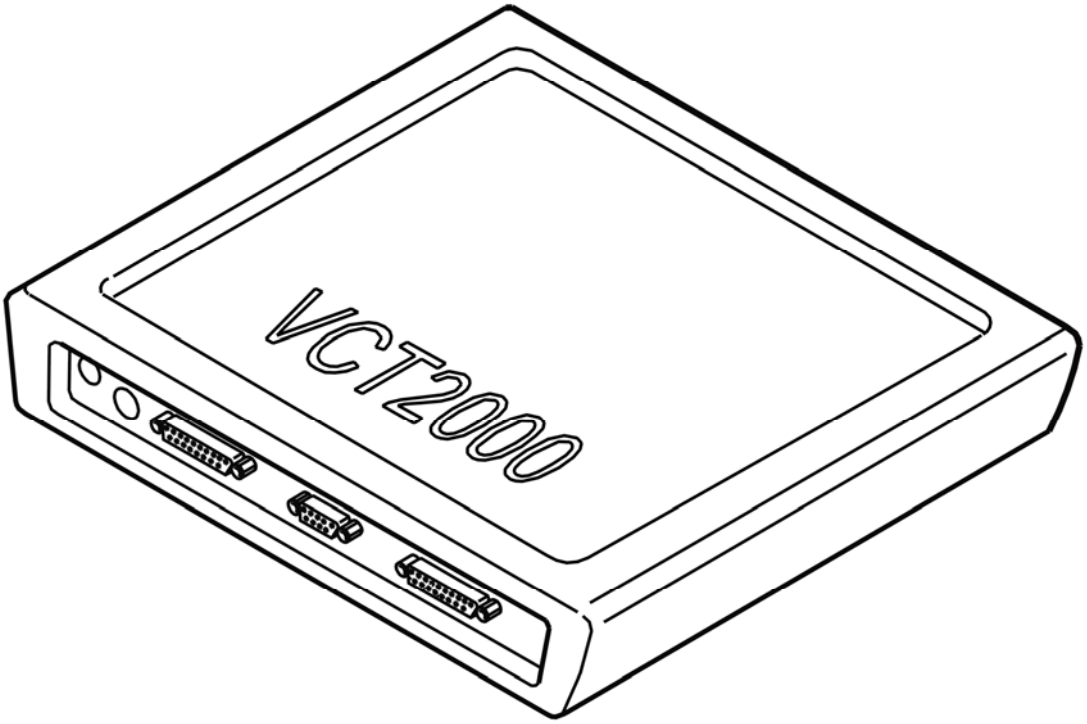

Fig. 300: Identifying VCT2000 Diagnostic Tool Symbol In VIDA
Courtesy of VOLVO CARS CORPORATION

Was diagnostic trouble code (DTC) TCM-0051 stored?

- **YES**

  Refer to **INFORMATION**

- **NO**

  NO DTC

TCM-0052: SOLENOID SL. STUCK (4T65 AWD; 2003-2006)

DIAGNOSTIC TROUBLE CODE (DTC) INFORMATION

Condition

The control module checks if lock-up solenoid SL is stuck in the open or closed position by comparing the signals from solenoid SL and lock-up pressure sensor PS4. Pressure sensor PS4 detects whether solenoid SL is activated or not. Diagnostic trouble code (DTC) TCM-0052 is stored if the control module registers that solenoid SL has jammed between the open and closed positions.

Substitute Value

- The control module does not activate the lock-up solenoid.

Possible Source

- Lock-up solenoid SL has jammed
- Mechanical fault in the transmission control system
- Defective solenoid SL.

Fault symptom[s]

- General orange warning lamp lit
- No lock-up function.

STUCK

CHECKING DIAGNOSTIC TROUBLE CODES (DTCS)

CHECKING DIAGNOSTIC TROUBLE CODES (DTCS)

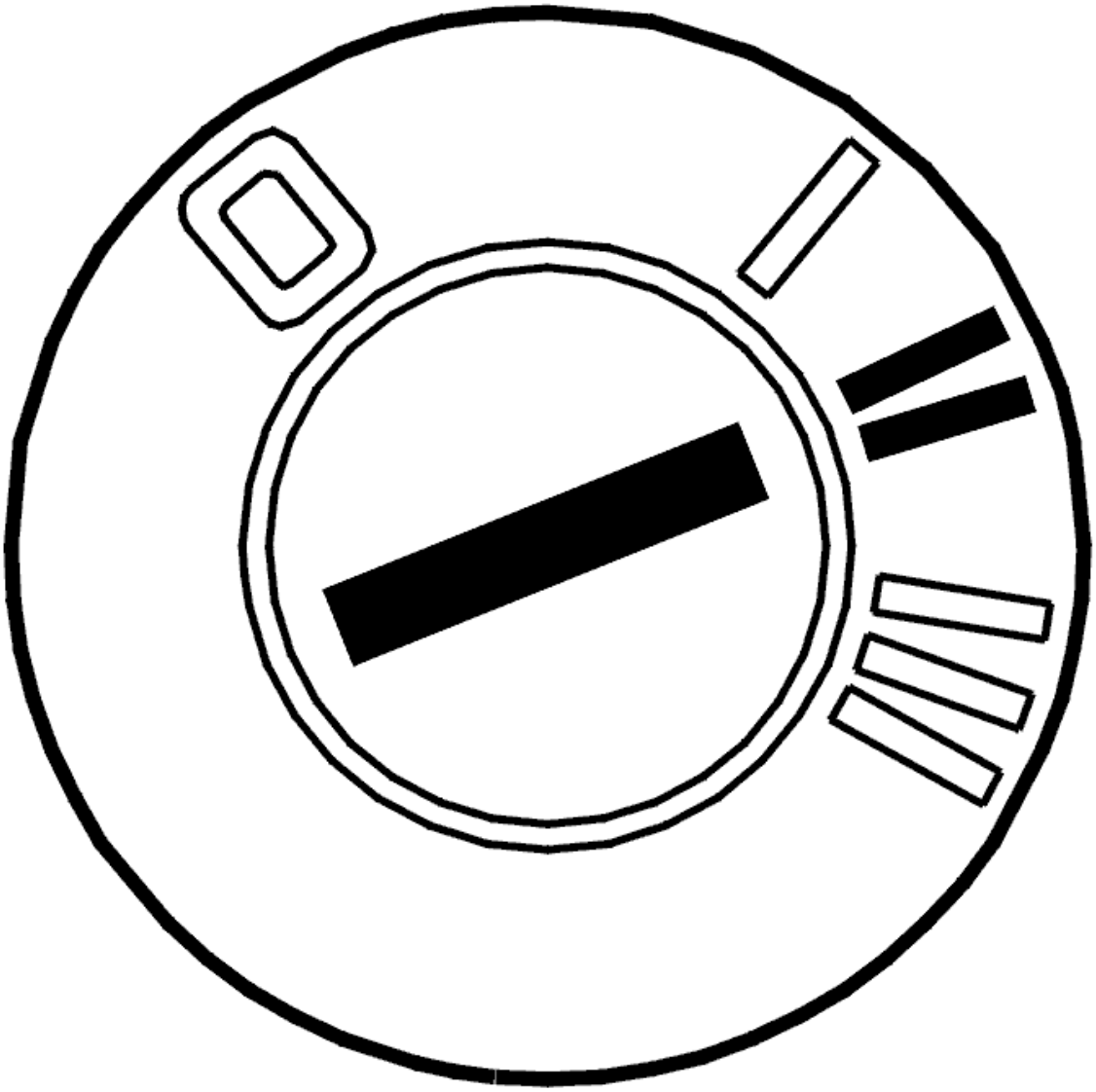

Fig. 301: Identifying Ignition ON
Courtesy of VOLVO CARS CORPORATION

- Ignition on
- Read off diagnostic trouble codes (DTCs).

  Any diagnostic trouble codes (DTCs) other than TCM-0050, TCM-0051 and TCM-0052 that are stored must be fault-traced after this fault-tracing is completed.

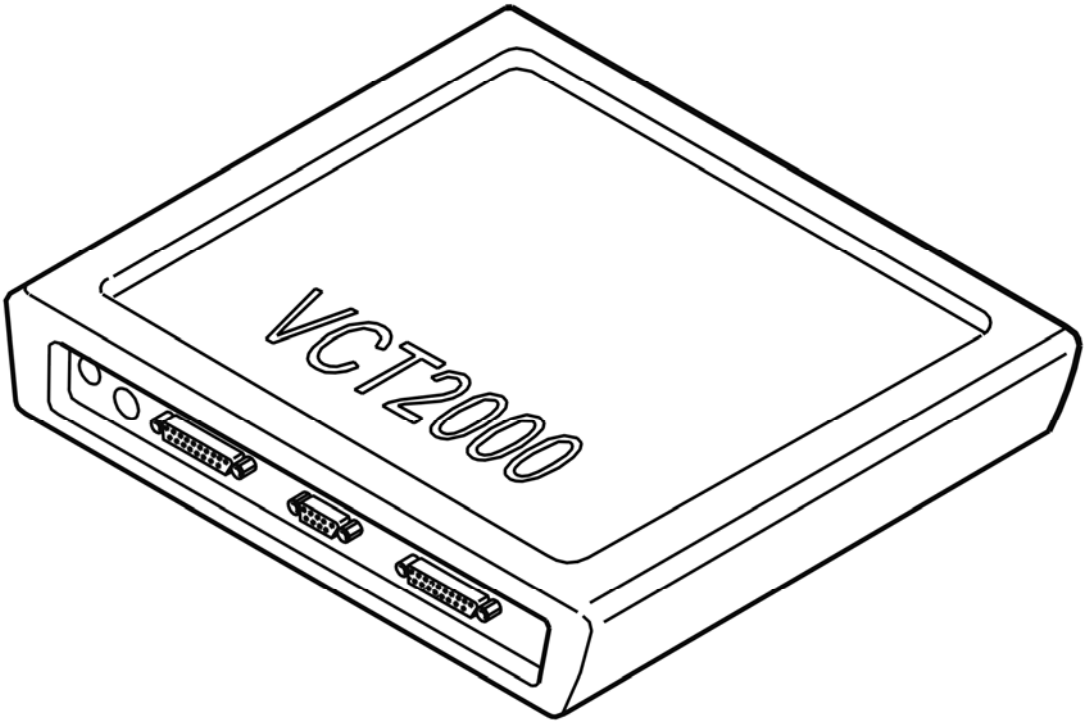

Fig. 302: Identifying VCT2000 Diagnostic Tool Symbol In VIDA
Courtesy of VOLVO CARS CORPORATION

- **Continue**

Refer to **ERASING DIAGNOSTIC TROUBLE CODES (DTCS)**

ERASING DIAGNOSTIC TROUBLE CODES (DTCS)

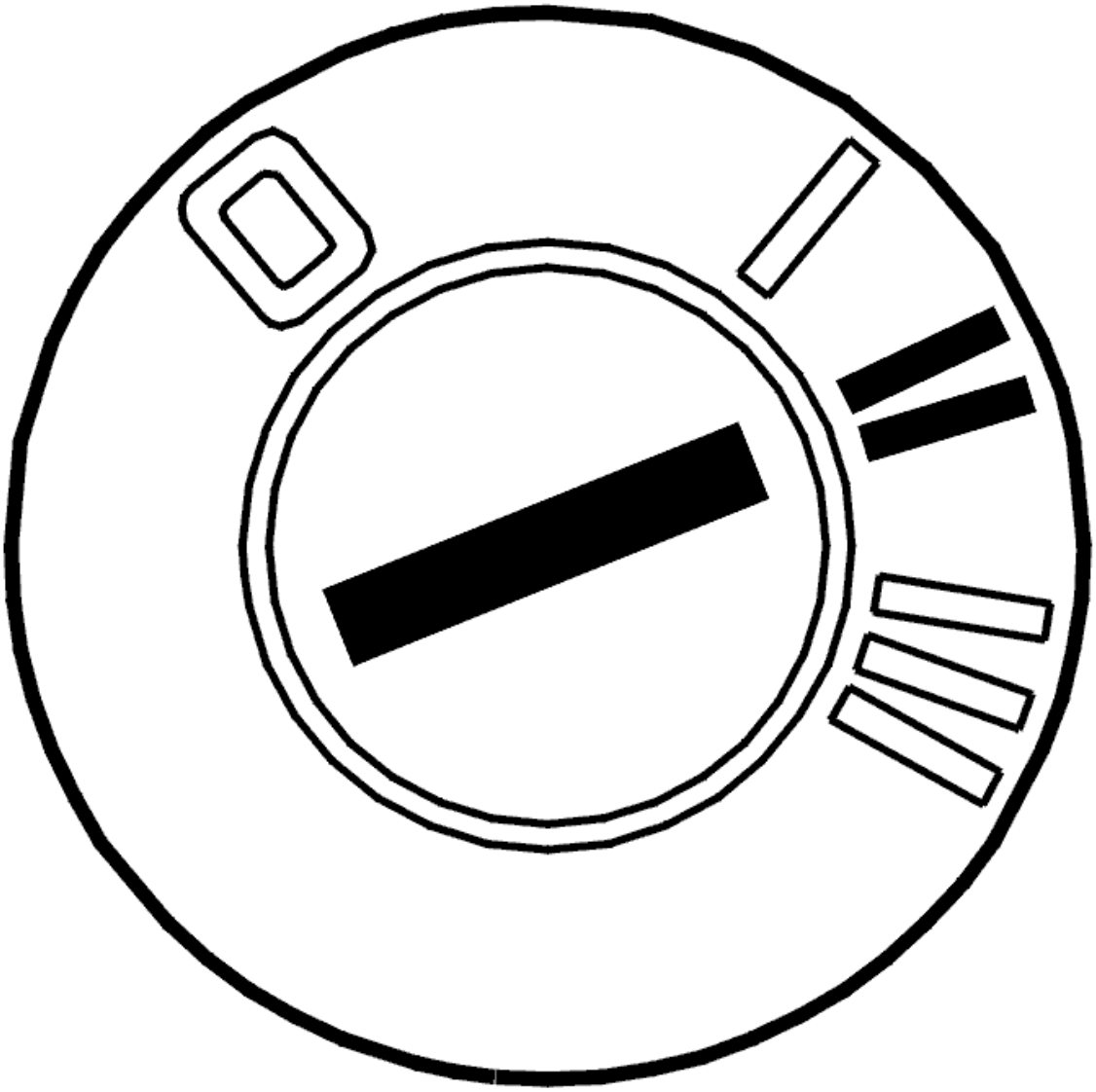

Fig. 303: Identifying Ignition ON
Courtesy of VOLVO CARS CORPORATION

- Ignition off
- Wait for two minutes to allow time for the diagnostic trouble codes (DTCs) to be stored in the control module memory
- Ignition on
- Erase diagnostic trouble codes (DTCs).

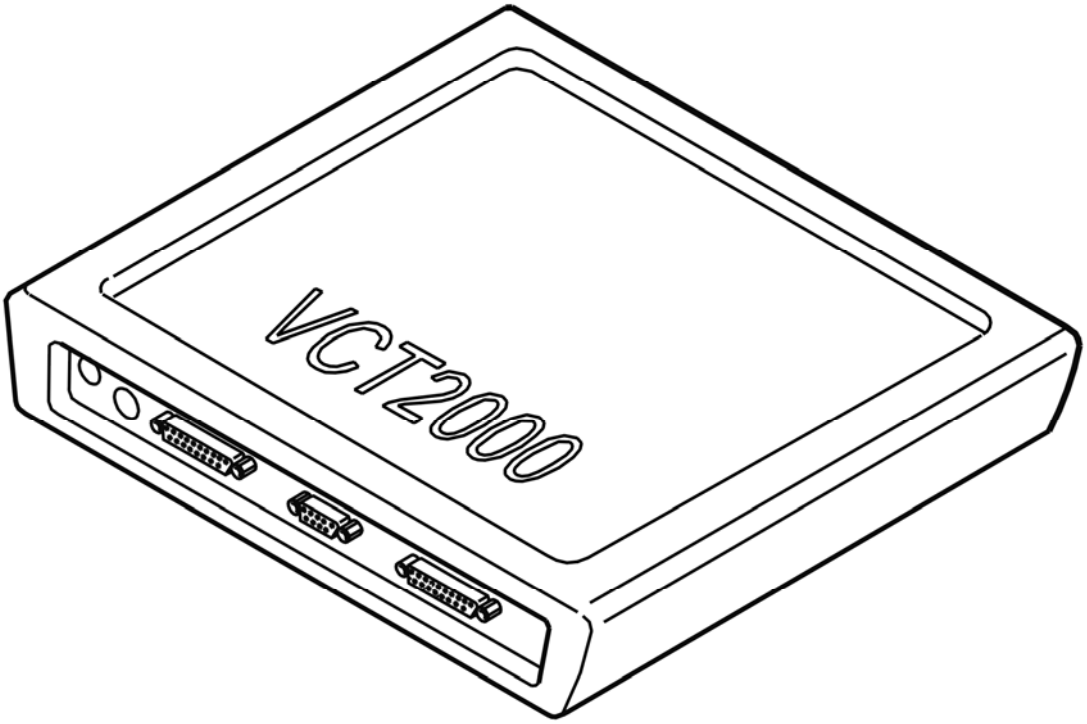

Fig. 304: Identifying VCT2000 Diagnostic Tool Symbol In VIDA
Courtesy of VOLVO CARS CORPORATION

- **Continue**

Refer to **CHECKING THE SOFTWARE**

TEST DRIVING

NOTE: **Test drive the car according to the driving schedule below to check whether the fault is still active. The test drive is compiled in order to create the conditions in which the diagnostic trouble code (DTC) will be stored again if the fault is active.**

The TEST MODE function can be used to provoke any diagnostic trouble codes (DTC). The function reduces the conditions for how quickly diagnostic trouble codes (DTCs) are stored in the control module and the test drive becomes easier.

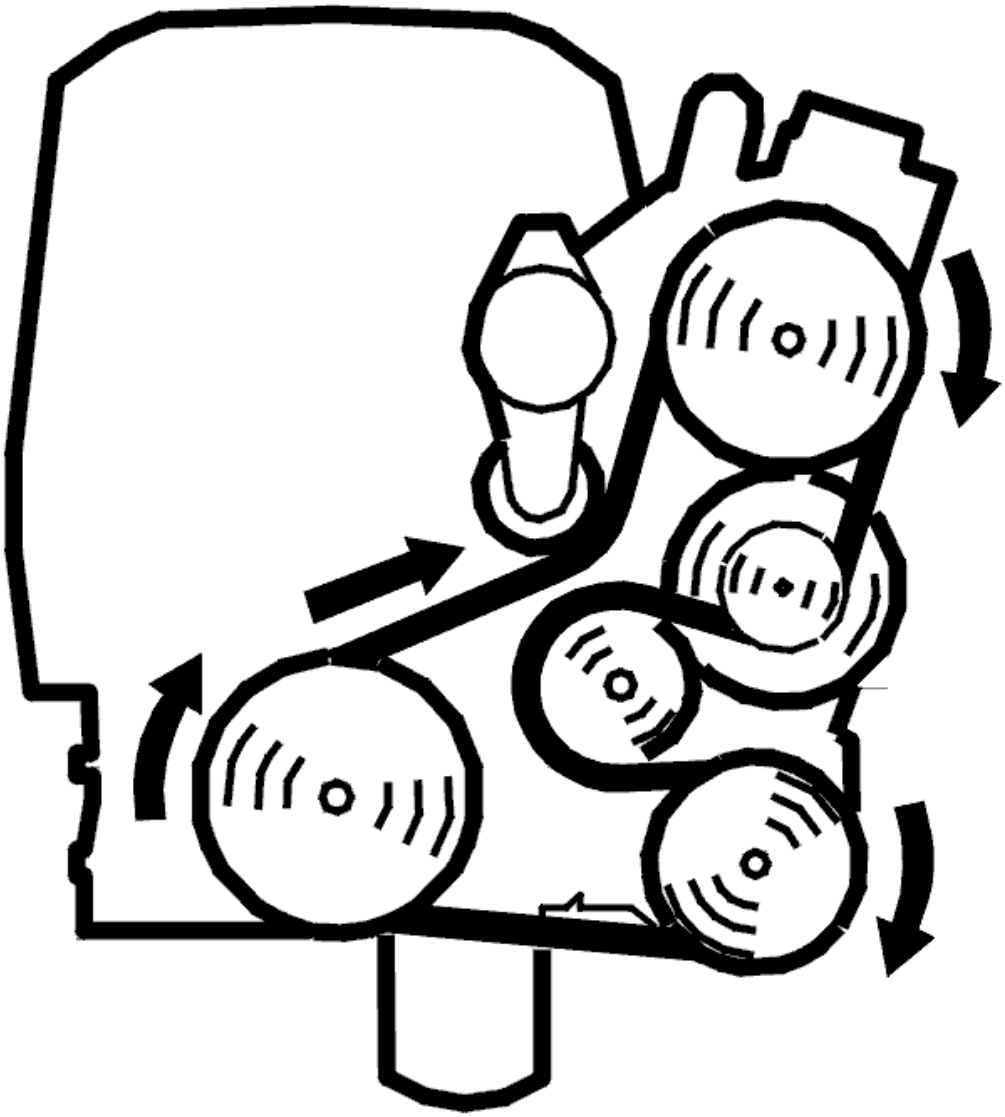

Fig. 305: Identifying Belt Routing
Courtesy of VOLVO CARS CORPORATION

- Start the engine
- Activate TEST MODE.

NOTE: Do not switch off the engine

- Disconnect the VIDA station. Test drive the car as described below.

WARNING: Please observe traffic regulations.

NOTE: Before test driving, the transmission fluid should be at operating

temperature, approximately 80-90°C.

Shift the gear selector to position D (fourth gear with geartronic). Carefully accelerate to 80 km/h (65 km/h for geartronic). Maintain the same speed for at least 20 seconds.

Accelerate further for approximately 20 seconds to increase the torque.

Criteria for diagnostic trouble code (DTC):

- The transmission fluid temperature must exceed 30°C
- The engine must be running for at least 20 seconds
- Gear selector in position D, 3 or 2 (4T65EV).

  Gear selector in Geartronic position and gears 4, 3 or 2 (4T65EV-GT)

- Speed 80 km/h for at least 5 seconds.

  HINT: The car must be driven at an engine speed where the lock-up function is normally activated.

- At least 5 seconds since the last gear shift
- Positive engine torque (no engine braking).

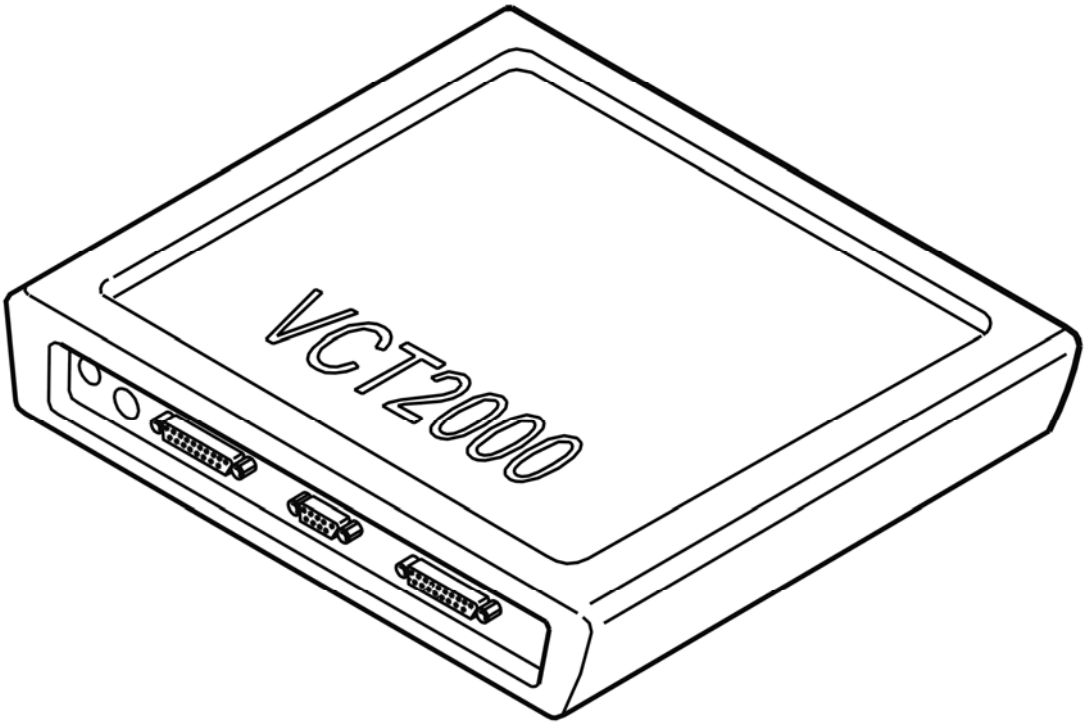

Fig. 306: Identifying VCT2000 Diagnostic Tool Symbol In VIDA
Courtesy of VOLVO CARS CORPORATION

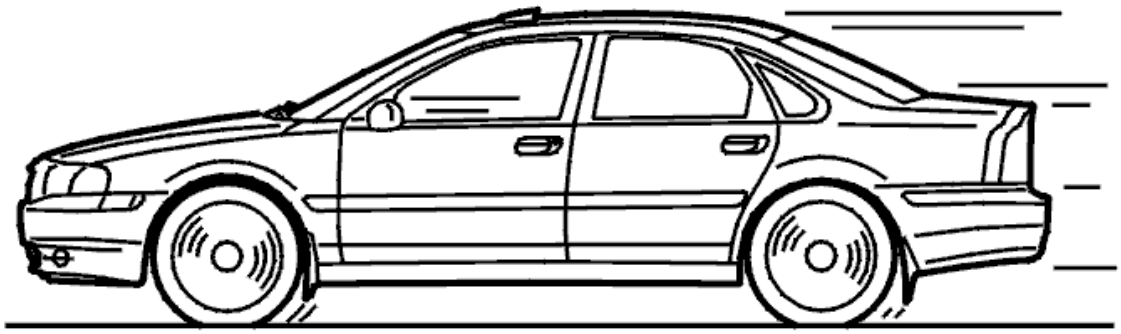

Fig. 307: Identifying Test Drive
Courtesy of VOLVO CARS CORPORATION

- **Continue**

Refer to **CHECKING DIAGNOSTIC TROUBLE CODES (DTCS)**

CHECKING DIAGNOSTIC TROUBLE CODES (DTCS)

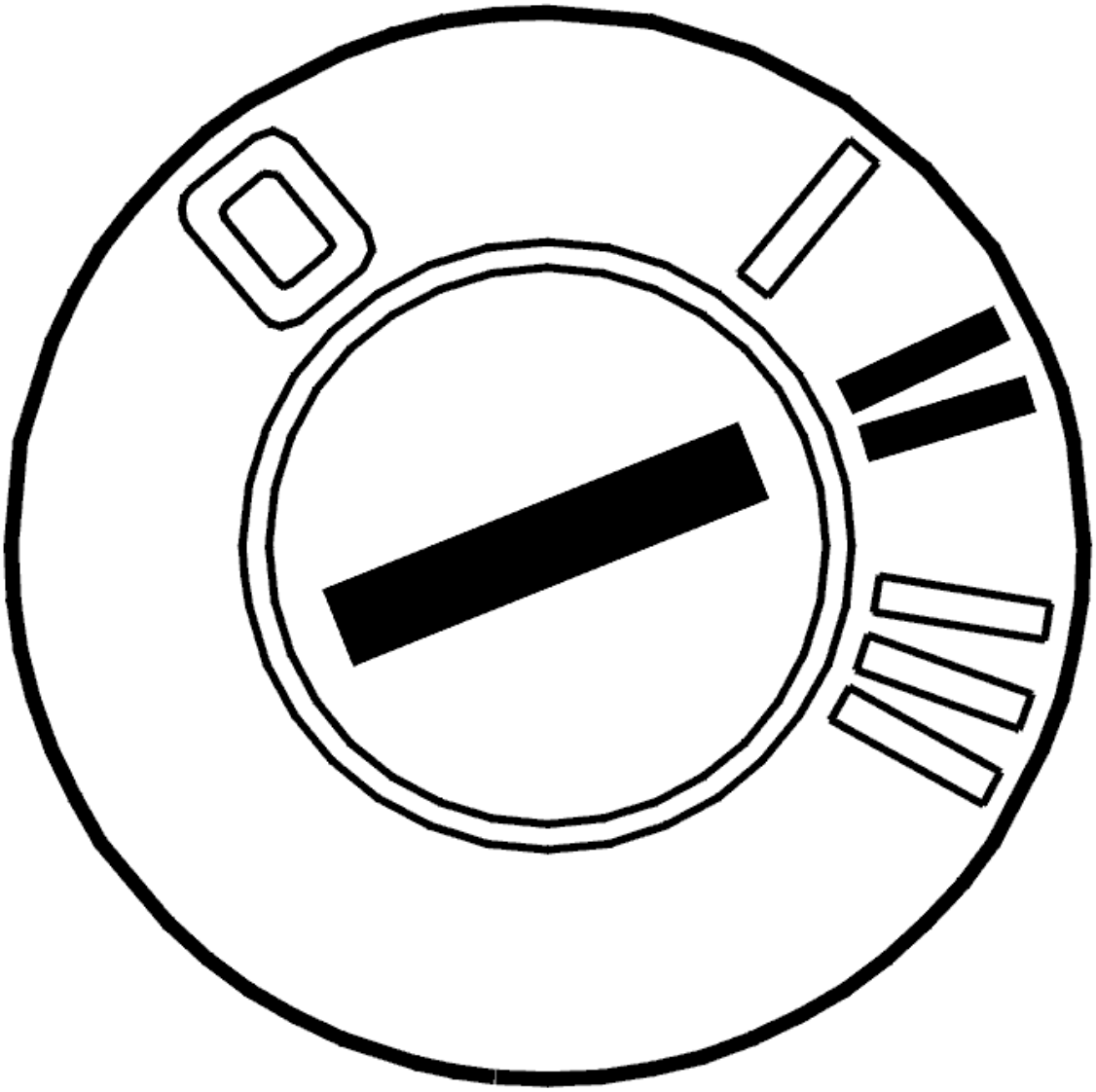

Fig. 308: Identifying Ignition ON
Courtesy of VOLVO CARS CORPORATION

- Ignition on
- Read off diagnostic trouble codes (DTCs).

  Any diagnostic trouble codes (DTCs) other than TCM-0050, TCM-0051 and TCM-0052 that are stored must be fault-traced after this fault-tracing is completed.

  Select an option:

  1. Diagnostic trouble codes (DTCs) TCM-0050 and TCM-0052 were stored

     Refer to **REPLACING THE CONTROL SYSTEM**

  2. Only TCM-0052 or both TCM-0051 and TCM-0052 were stored

Refer to **CHECK THE QUALITY OF THE TRANSMISSION OIL**

3. No diagnostic trouble codes (DTCs) other than TCM-0050, TCM-0051 or TCM-0052 were stored.

   Refer to **FAULT-TRACING INFORMATION**

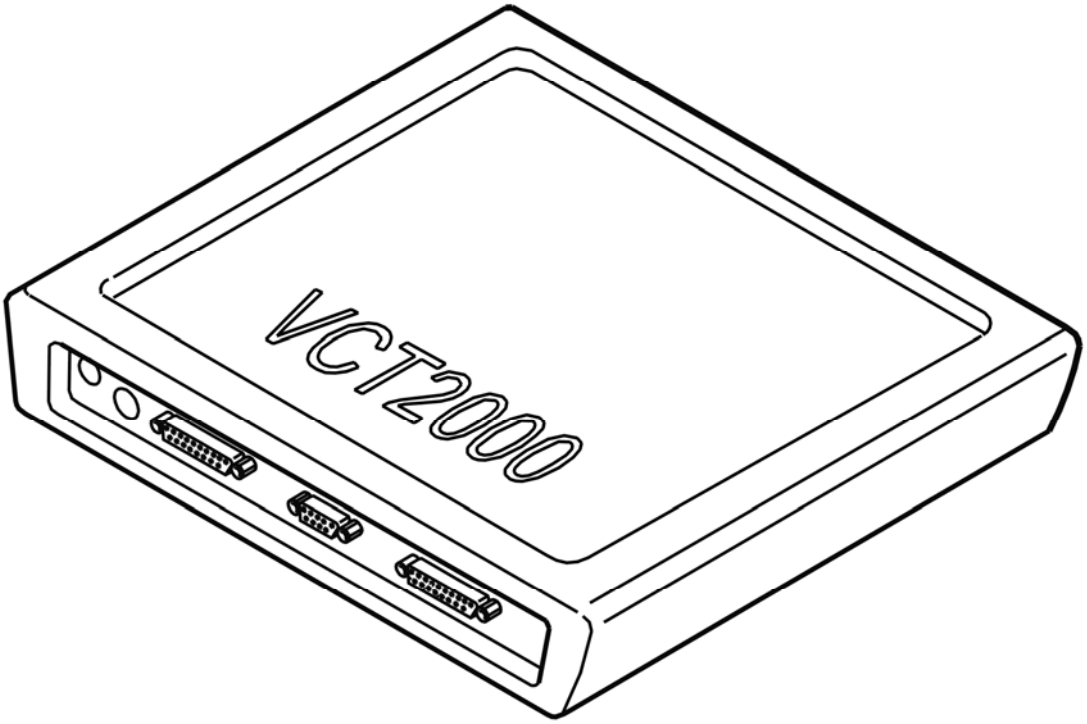

Fig. 309: Identifying VCT2000 Diagnostic Tool Symbol In VIDA
Courtesy of VOLVO CARS CORPORATION

CHECKING SOLENOID SL

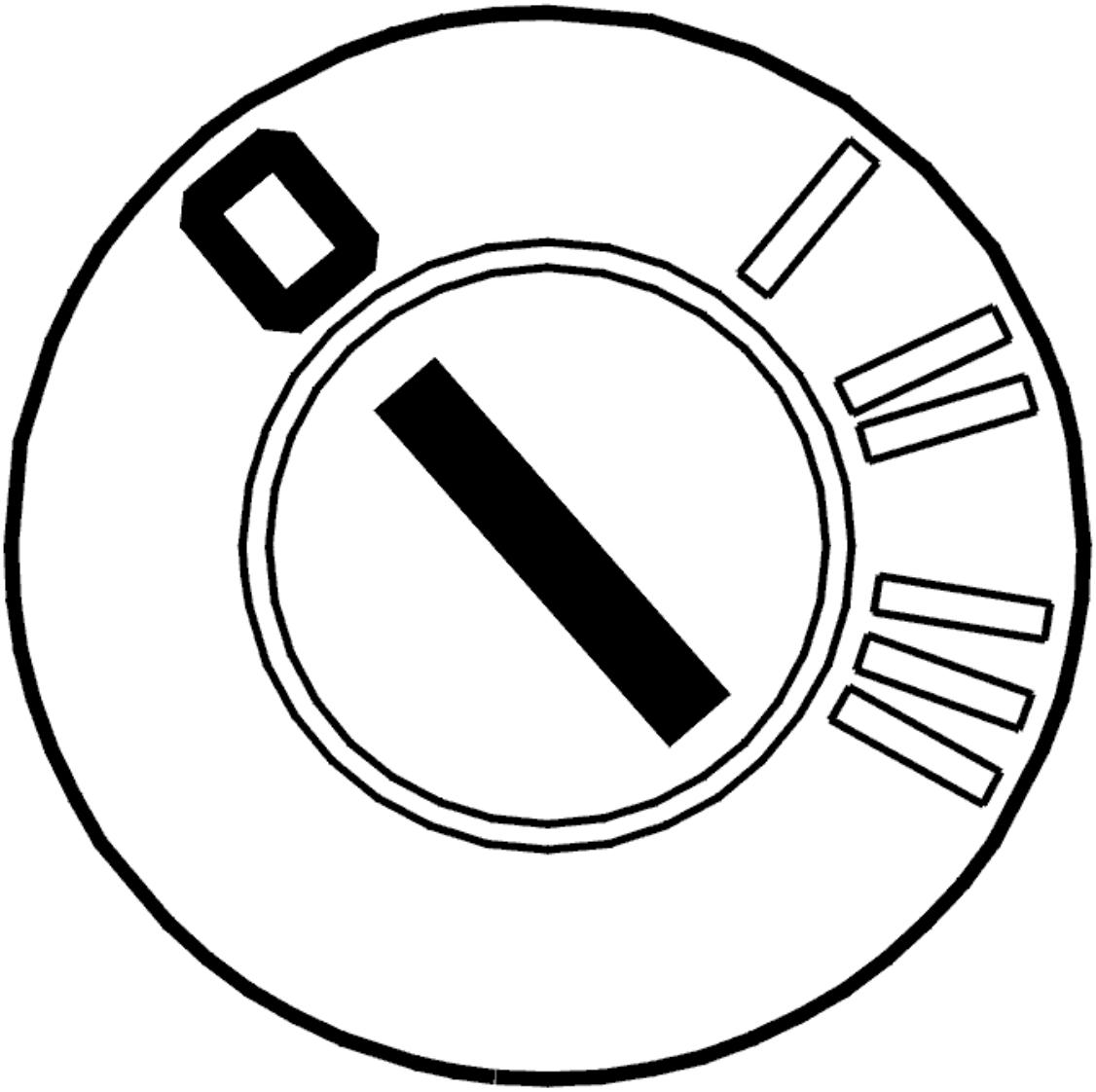

Fig. 310: Identifying Ignition OFF
Courtesy of VOLVO CARS CORPORATION

- Ignition off
- Connect the breakout box to the control module connector (transmission side).

  Check solenoid SL by measuring the resistance between terminals #A51 (#A51) and #A53 (#A53).

  When the transmission is cold (20°C), the resistance must be 10-11 ohms. When the transmission is at operating temperature (150°C), the resistance must not exceed 16 ohms.

  Other information:

  - To connect the breakout box, see **CONNECTING THE BREAKOUT BOX**
  - For information about signals, see **SIGNAL SPECIFICATION** .

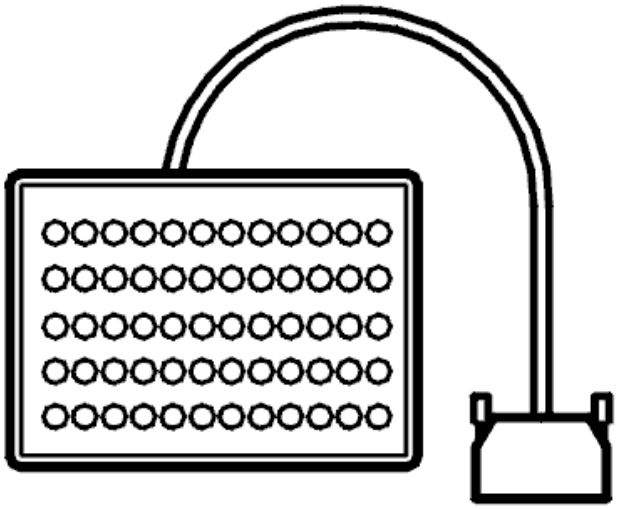

Fig. 311: Identifying Breakout Box
Courtesy of VOLVO CARS CORPORATION

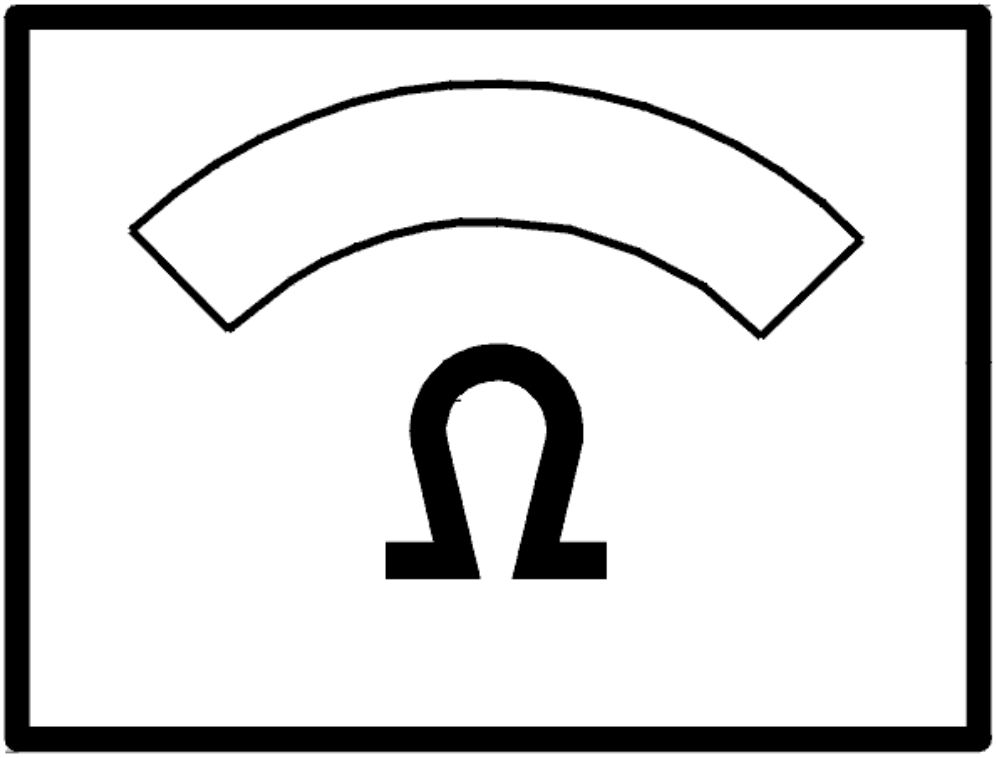

Fig. 312: Identifying Ohms Display
Courtesy of VOLVO CARS CORPORATION

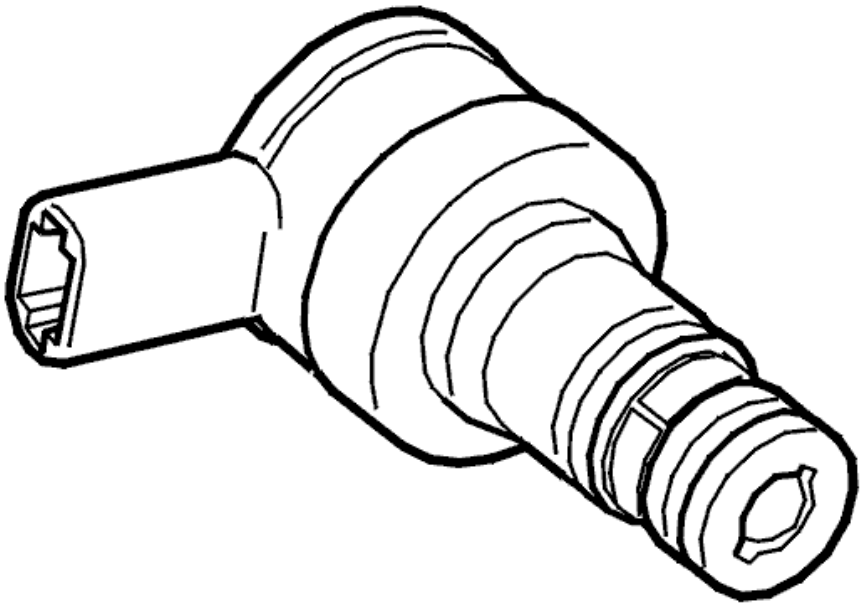

Fig. 313: Identifying Lock-Up Solenoid, SL
Courtesy of VOLVO CARS CORPORATION

Was the resistance OK?

- **YES**

  Refer to **CHECKING DIAGNOSTIC TROUBLE CODES (DTCS)**

- **NO**

  Refer to **CHECKING THE WIRING**

CHECKING THE WIRING

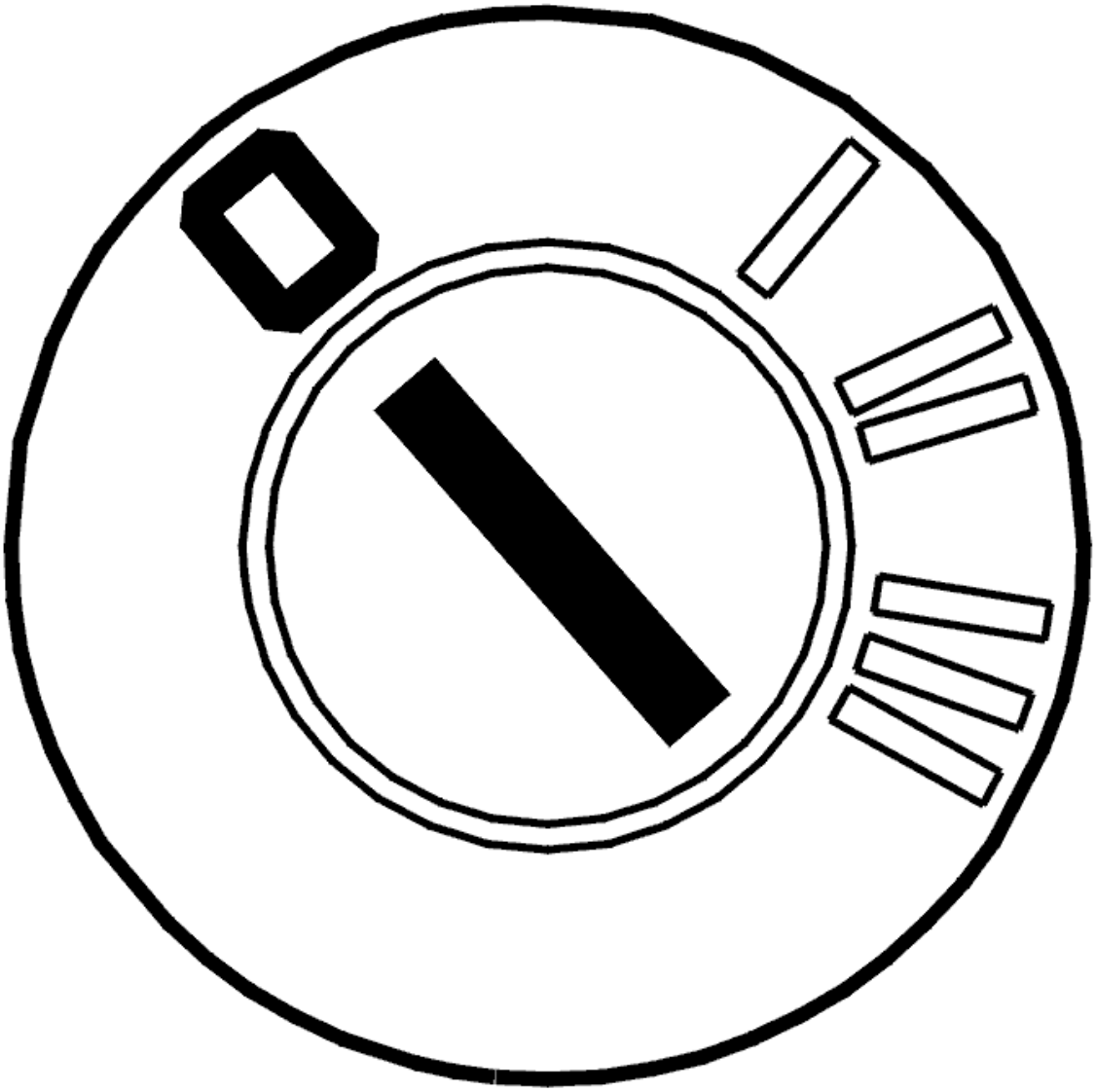

Fig. 314: Identifying Ignition OFF
Courtesy of VOLVO CARS CORPORATION

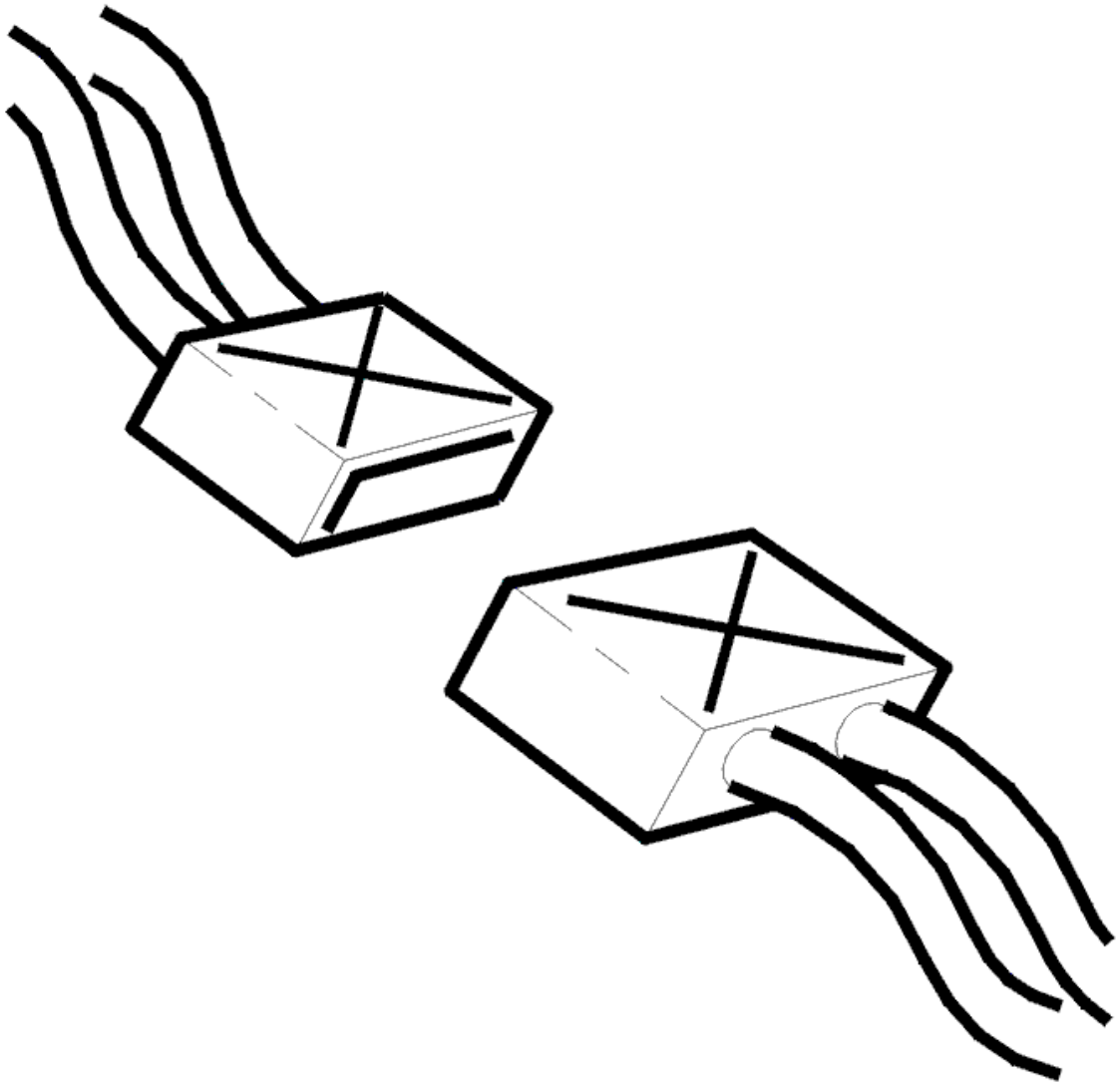

Fig. 315: Identifying Connectors
Courtesy of VOLVO CARS CORPORATION

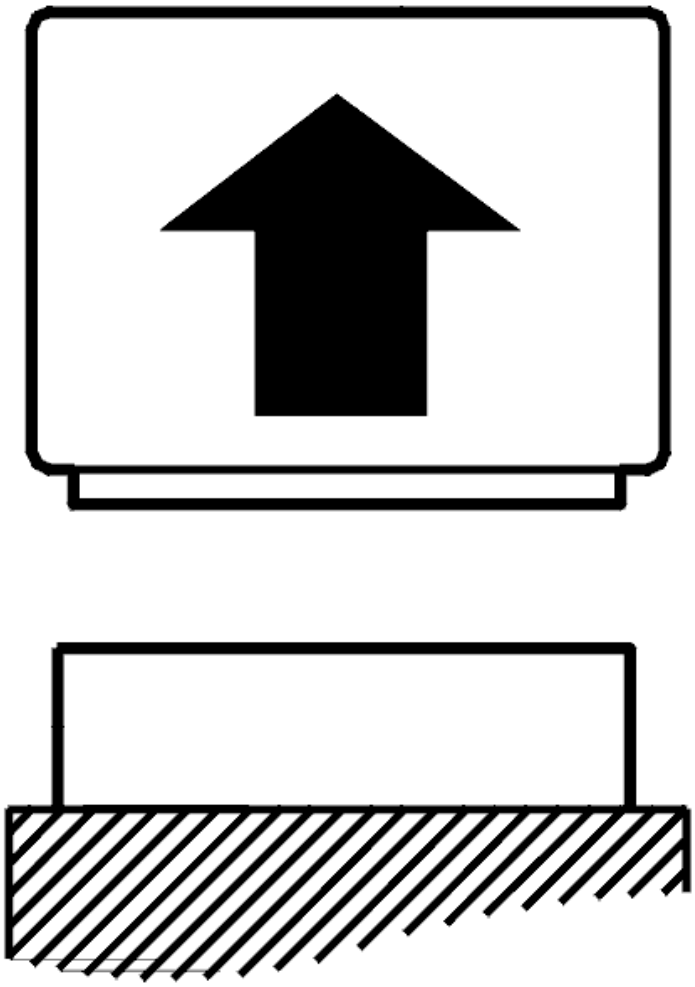

Fig. 316: Identifying Control Module Disconnected
Courtesy of VOLVO CARS CORPORATION

- Ignition off
- Control module disconnected
- Connect the breakout box to the control module connector (transmission side)
- Disconnect the transmission connector
- Adapter see **9511505** and breakout box see **9511428** connected to the transmission connector (control module side).

  Check the wiring between control module terminal #A51 (#A51) and transmission connector terminal #T (#A17). Check for an open-circuit. Check for a short-circuit to ground. Check for a short-circuit to supply voltage.

  Check the wiring between control module terminal #A53 (#A53) and transmission connector terminal #E

(#A5). Check for an open-circuit. Check for a short-circuit to ground. Check for a short-circuit to supply voltage.

Remedy as necessary.

Other information:

- To connect the breakout box, see **CONNECTING THE BREAKOUT BOX**
- To connect the breakout box to the transmission connector, see **CONNECTING THE BREAKOUT BOX, GM AUTOMATIC TRANSMISSIONS**
- For information about signals, see **SIGNAL SPECIFICATION**
- see **CHECKING WIRING AND TERMINALS. PERMANENT FAULT**

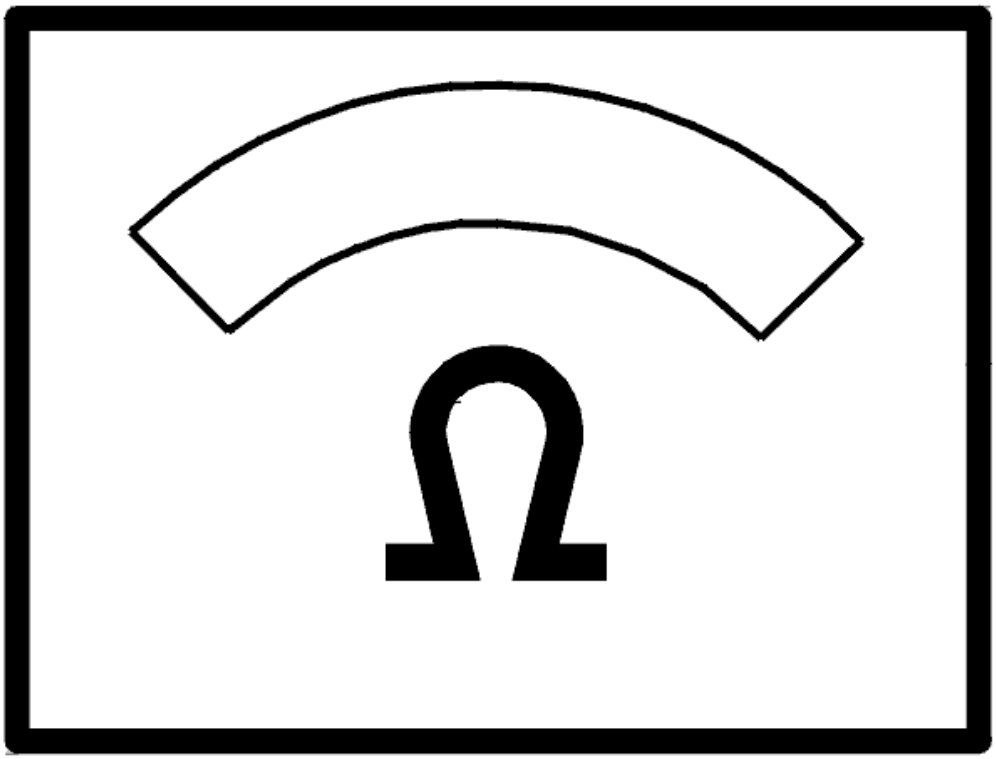

Fig. 317: Identifying Ohms Display
Courtesy of VOLVO CARS CORPORATION

Was a fault detected?

- **YES**

  Refer to **CHECKING DIAGNOSTIC TROUBLE CODES (DTCS)**

- **NO**

  Refer to **CHECKING THE WIRING AND COMPONENT**

CHECKING THE WIRING AND COMPONENT

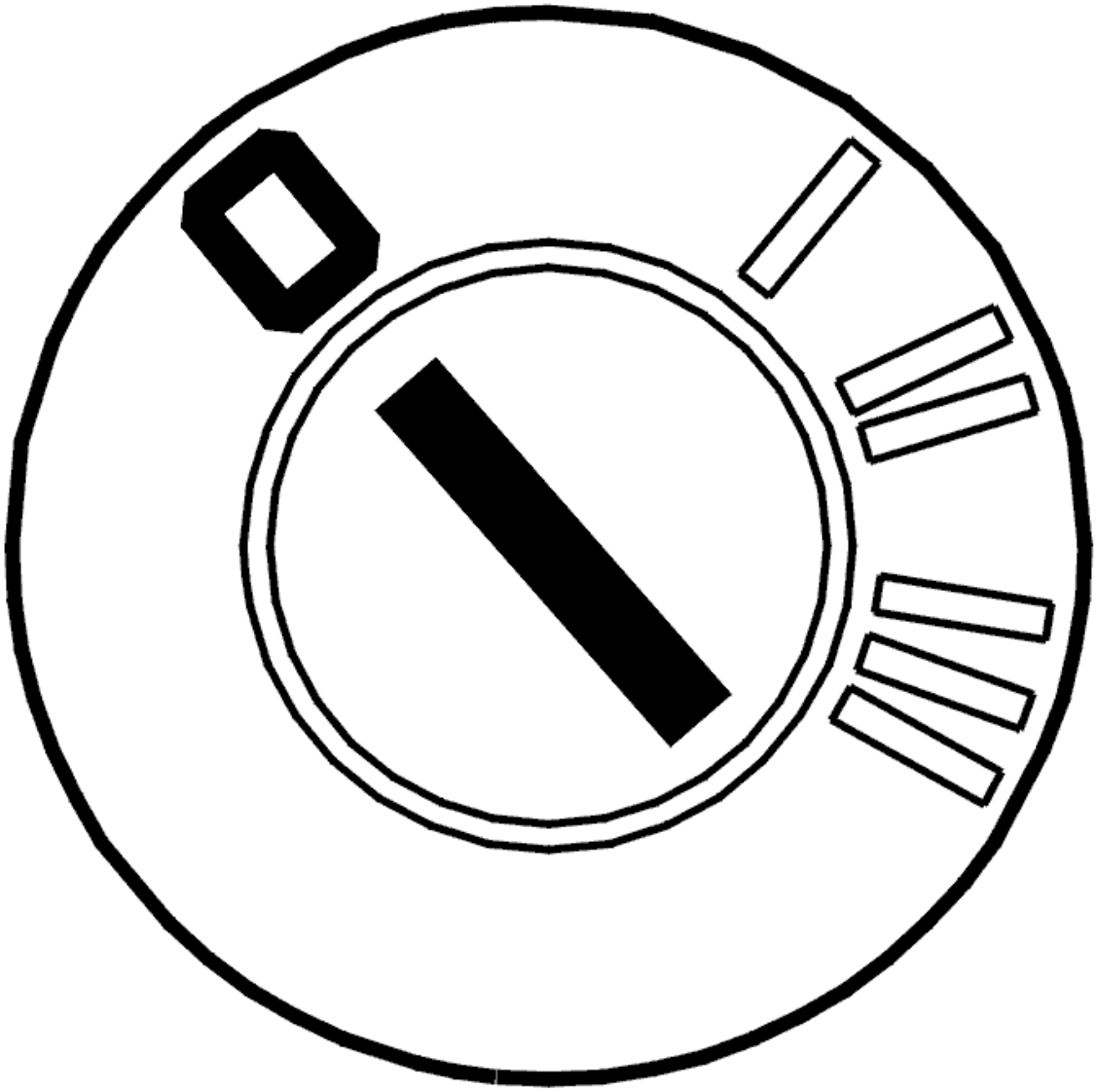

Fig. 318: Identifying Ignition OFF
Courtesy of VOLVO CARS CORPORATION

- Ignition off

- Open the transmission control system
- Connect adapter see **9511505** and breakout box see **9511428** to the transmission connector (transmission side).

  Check the cable between transmission connector terminal #T (#A17) and solenoid SL terminal #A. Check the cable between transmission connector terminal #E (#A5) and solenoid SL terminal #B. Check these cables for an open-circuit.

  HINT: Check solenoid SL by measuring the resistance between solenoid SL terminals #A and #B. When the transmission is cold (approximately 20°C), the resistance must be 10-11 ohms.

  Remedy as necessary.

  Other information:

  - To open the transmission control system, For removal, see **SIDE COVER TRANSMISSION, REMOVING** or To install, see **SIDE COVER TRANSMISSION, INSTALLING**
  - To connect the breakout box to the transmission connector, see **CONNECTING THE BREAKOUT BOX, GM AUTOMATIC TRANSMISSIONS**
  - To replace solenoid SL, see **SOLENOID LOCK-UP FUNCTION, REPLACING**
  - To replace the cable harness, see **TEMPERATURE SENSOR FLUID, TRANSAXLE, (TFT)**
  - For information about signals, see **SIGNAL SPECIFICATION**
  - see **CHECKING WIRING AND TERMINALS. PERMANENT FAULT**

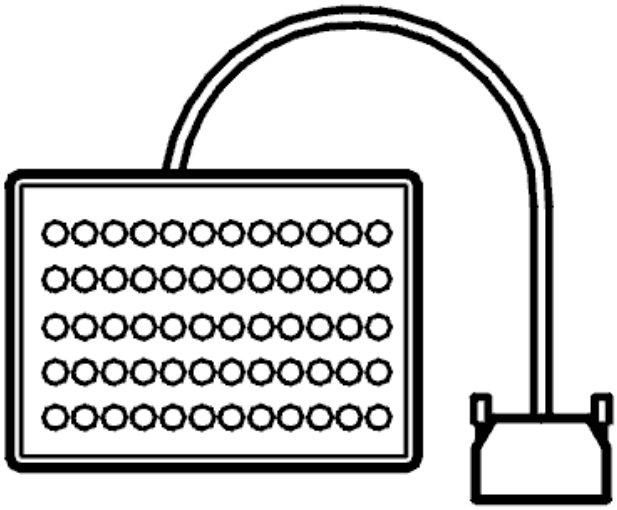

Fig. 319: Identifying Breakout Box
Courtesy of VOLVO CARS CORPORATION

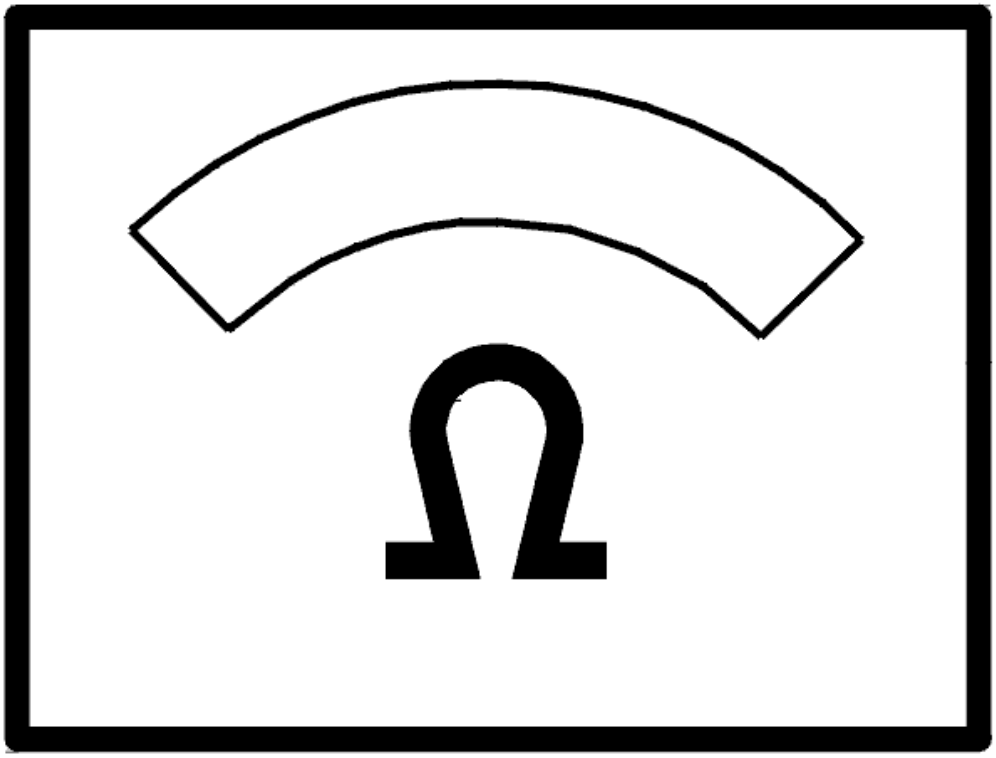

Fig. 320: Identifying Ohms Display
Courtesy of VOLVO CARS CORPORATION

- **Continue**

  Refer to **RESETTING THE ADAPTATION**

REPLACING THE CONTROL SYSTEM

Fault-tracing indicates a fault in the transmission control system. Replace the control system.

Other information

- To replace the control system, For removal, see **CONTROL SYSTEM/VALVE HOUSING, REMOVING** and To install, see **CONTROL SYSTEM / VALVE HOUSING, INSTALLING** .

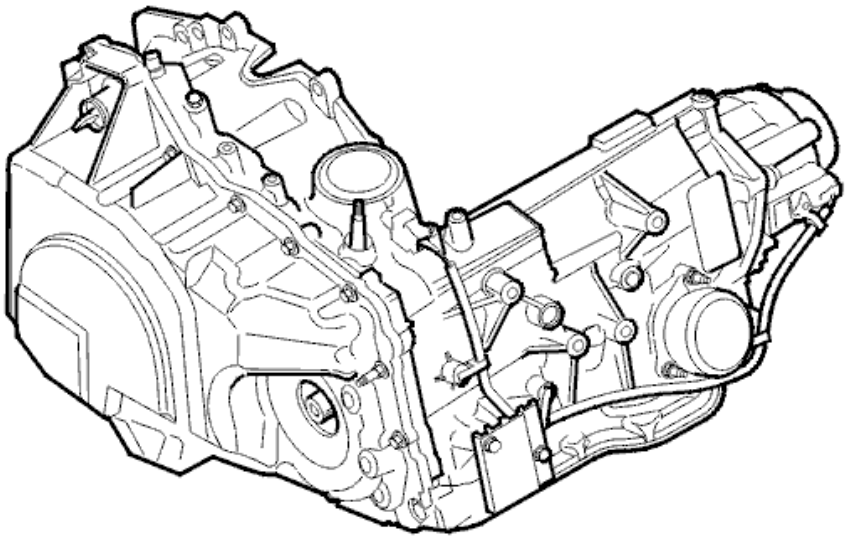

P2X

4301721D ©VOLVO

Fig. 321: Identifying Transmission
Courtesy of VOLVO CARS CORPORATION

- **Continue**

  Refer to **RESETTING THE ADAPTATION**

REPLACING THE TRANSMISSION

Fault-tracing indicates a fault in the transmission. Replace the transmission.

NOTE: **If there is water in the transmission fluid, the oil cooler unit, including the additional cooler, must be replaced if installed. Replace the hoses between the cooler and the transmission.**

Other information:

- To remove the transmission, see **TRANSMISSION, REMOVING**
- To install the transmission, see **TRANSMISSION, INSTALLING (2003, 2004)** or **TRANSMISSION, INSTALLING (2005, 2006)** .

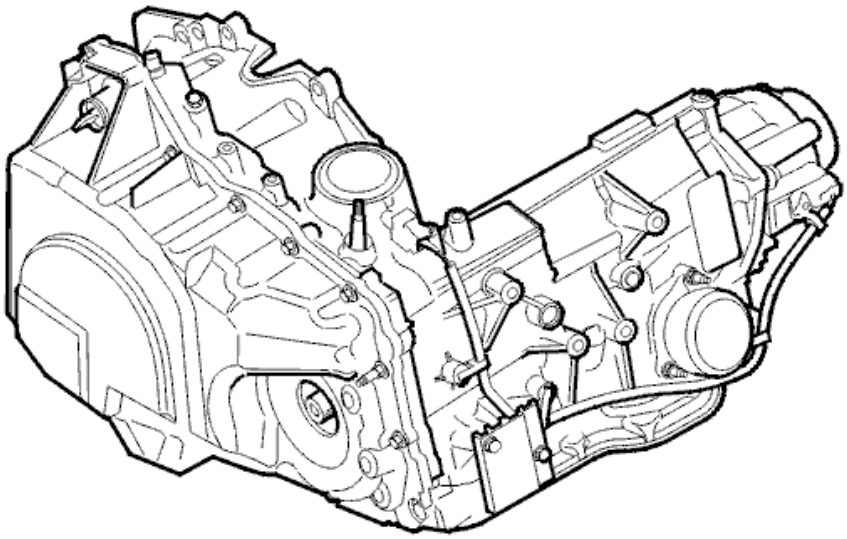

P2X

4301721D ©VOLVO

Fig. 322: Identifying Transmission
Courtesy of VOLVO CARS CORPORATION

- **Continue**

  Refer to **RESETTING THE ADAPTATION**

FAULT-TRACING INFORMATION

The fault-tracing indicates that the control module has previously detected a fault but that the fault is no longer active.

CHECKING THE SOFTWARE

CHECKING THE SOFTWARE

NOTE: **To carry out fault-tracing, the transmission control module (TCM) must be programmed with specific software.**

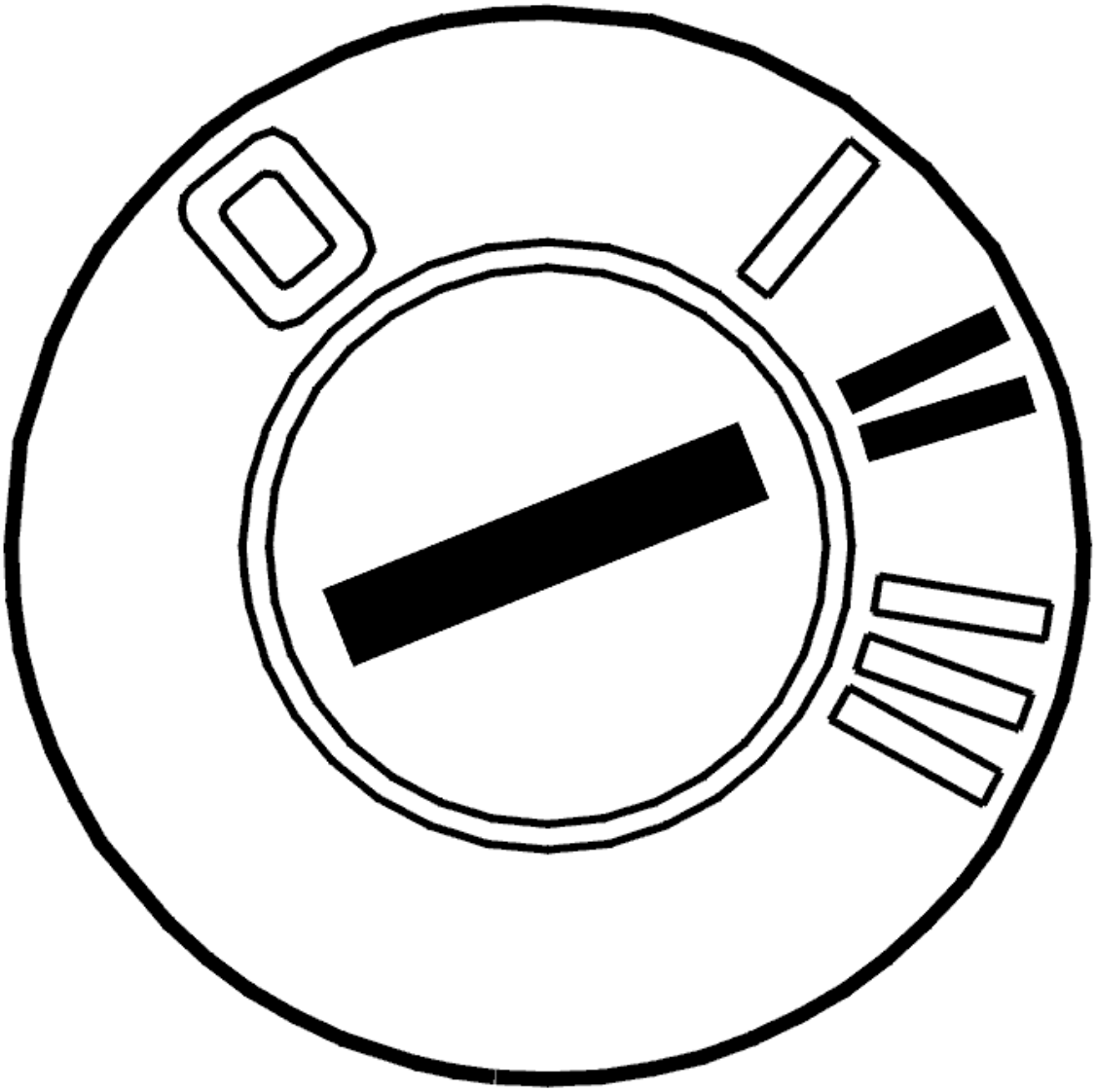

Fig. 323: Identifying Ignition ON
Courtesy of VOLVO CARS CORPORATION

- Ignition on
- Read off the control module diagnostic number.

  Check the read off diagnostic number against the diagnostic numbers given in the center table.

  If the diagnostic number is included in the table, the control module must be programmed with the latest software.

  See the technical journal for information about the most recent software.

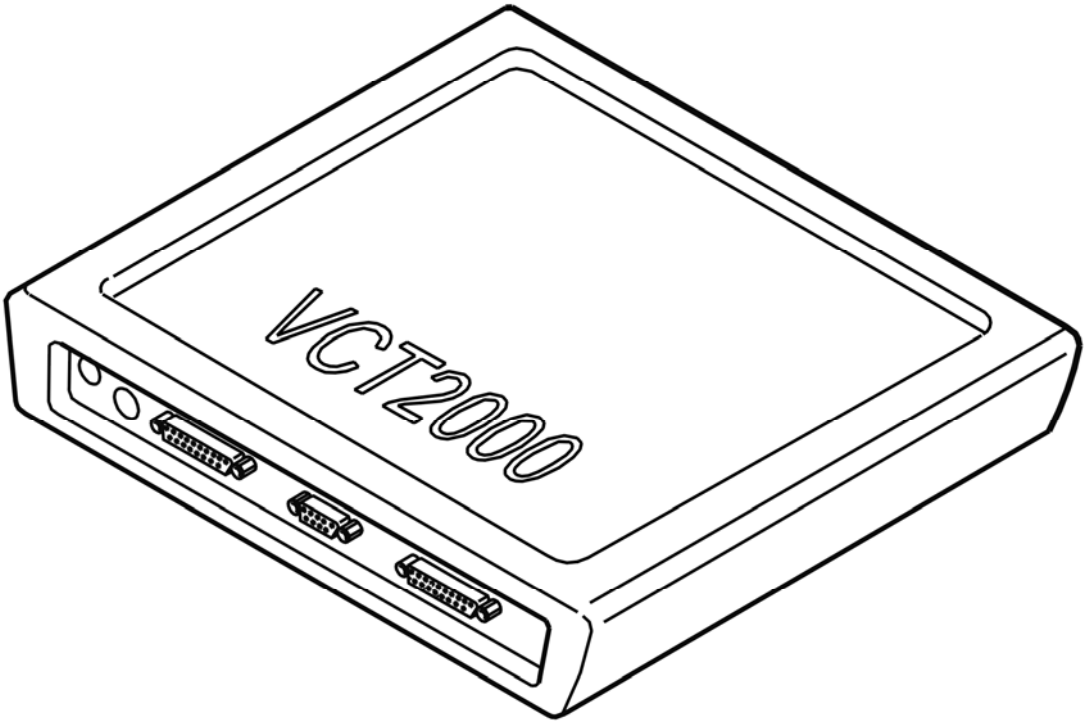

Fig. 324: Identifying VCT2000 Diagnostic Tool Symbol In VIDA
Courtesy of VOLVO CARS CORPORATION

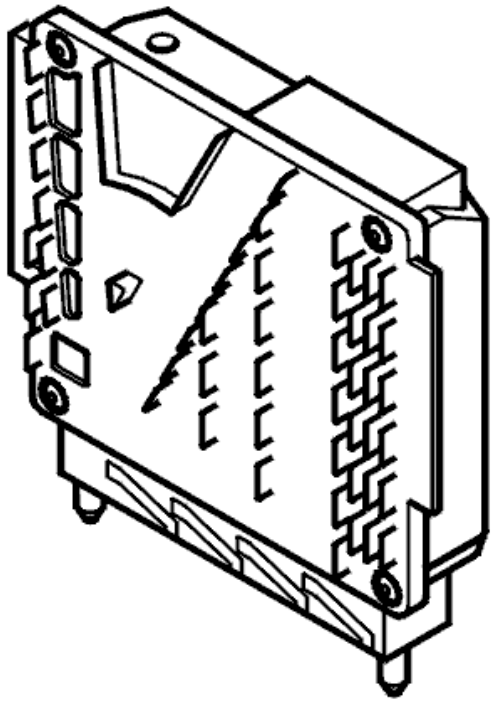

Fig. 325: Identifying Transmission Control Module (TCM)
Courtesy of VOLVO CARS CORPORATION

- **Continue**

Refer to **TEST DRIVING**

CHECK THE QUALITY OF THE TRANSMISSION OIL

CHECK THE QUALITY OF THE TRANSMISSION OIL

NOTE: **The transmission fluid quality is extremely important for transmission function. Therefore it is imperative that this is correct.**

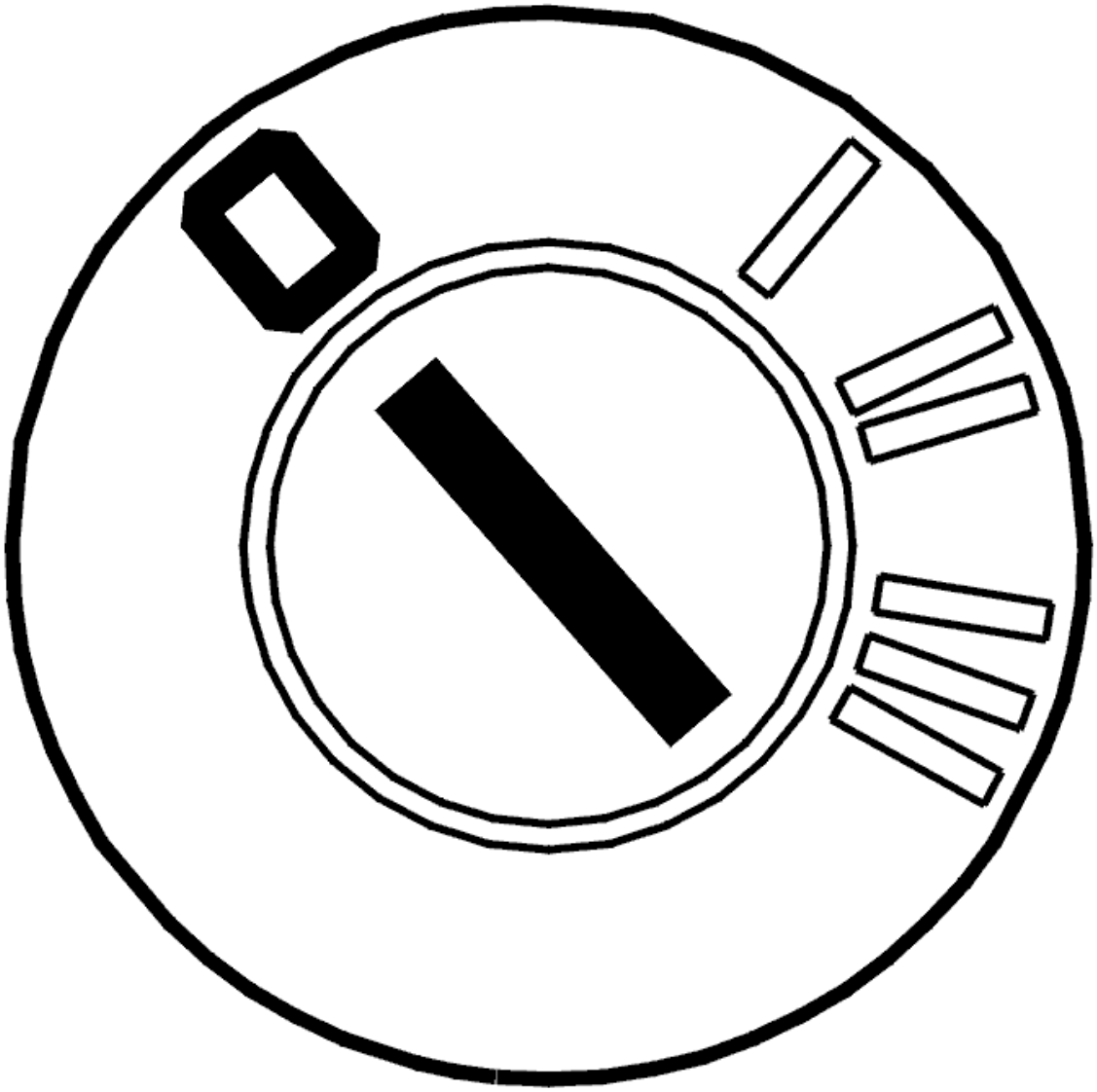

Fig. 326: Identifying Ignition OFF
Courtesy of VOLVO CARS CORPORATION

- Ignition off.

  Check the transmission oil quality. Take a sample using the dip stick.

  - Replace the transmission fluid if it smells burnt
  - Replace the fluid and filter if the transmission fluid contains particles
  - Check if there is oil or an oil film in the expansion tank. Oil in the expansion tank indicates leakage from the transmission oil cooler which is positioned in the cooler unit.

NOTE: **The transmission oil is red and must not be confused with black engine oil.**

- If the transmission fluid is cloudy or pink, it is contaminated with coolant. In such cases the transmission must be replaced. For checking coolant in transmission oil, see **CHECKING FOR COOLANT IN THE OIL**

  When replacing the transmission, the cooler unit, including the additional cooler must be replaced if installed. Replace the hoses between the cooler and the transmission.

Other information:

- To replace the transmission fluid and filter, see **TRANSMISSION OIL / OIL FILTER, REPLACING** .

Select an option:

1. The fluid contains water

   Refer to **REPLACING THE TRANSMISSION**

2. The fluid smells burnt or contains particles

   Refer to **CHECKING SOLENOID SL**

3. No fault detected.

   Refer to **CHECKING THE OIL LEVEL IN THE TRANSMISSION**

CHECKING THE OIL LEVEL IN THE TRANSMISSION

CHECK THE TRANSMISSION OIL LEVEL

NOTE: **The transmission fluid level is extremely important for transmission function. Therefore it is imperative that it is correct. In addition the oil level is dependent on oil temperature.**

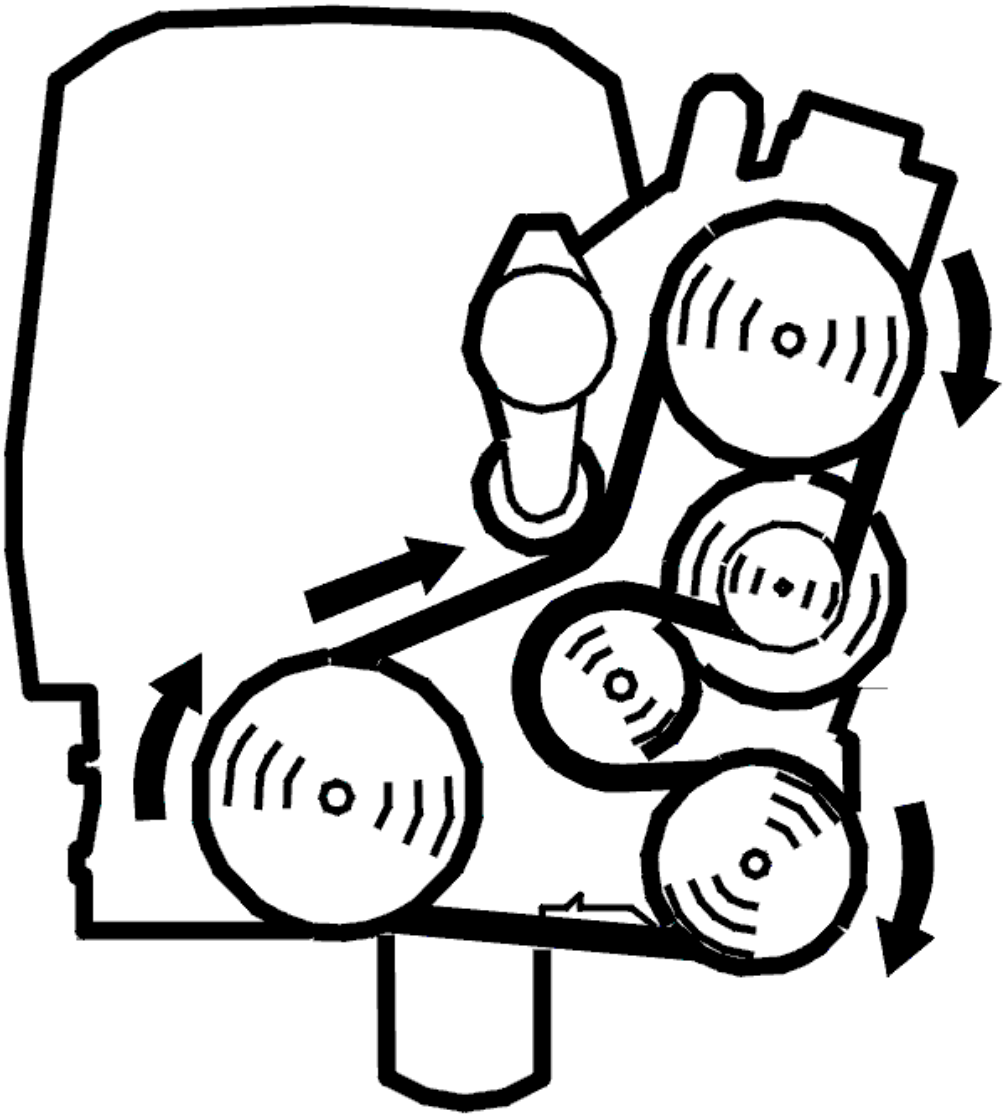

Fig. 327: Identifying Belt Routing
Courtesy of VOLVO CARS CORPORATION

- Start the car
- Read off the oil temperature.

When checking the gearbox oil level the oil temperature **must** be **80 °C - 90 °C** .

At the correct temperature, the oil level should be between "Min hot" and "Max hot".

Oil level

Too high: Drain the transmission fluid to the correct level
Too low: Check the transmission for leakage.

Remedy as necessary.

Other information:

- To check and adjust the oil level, see **OIL LEVEL, CHECKING** .

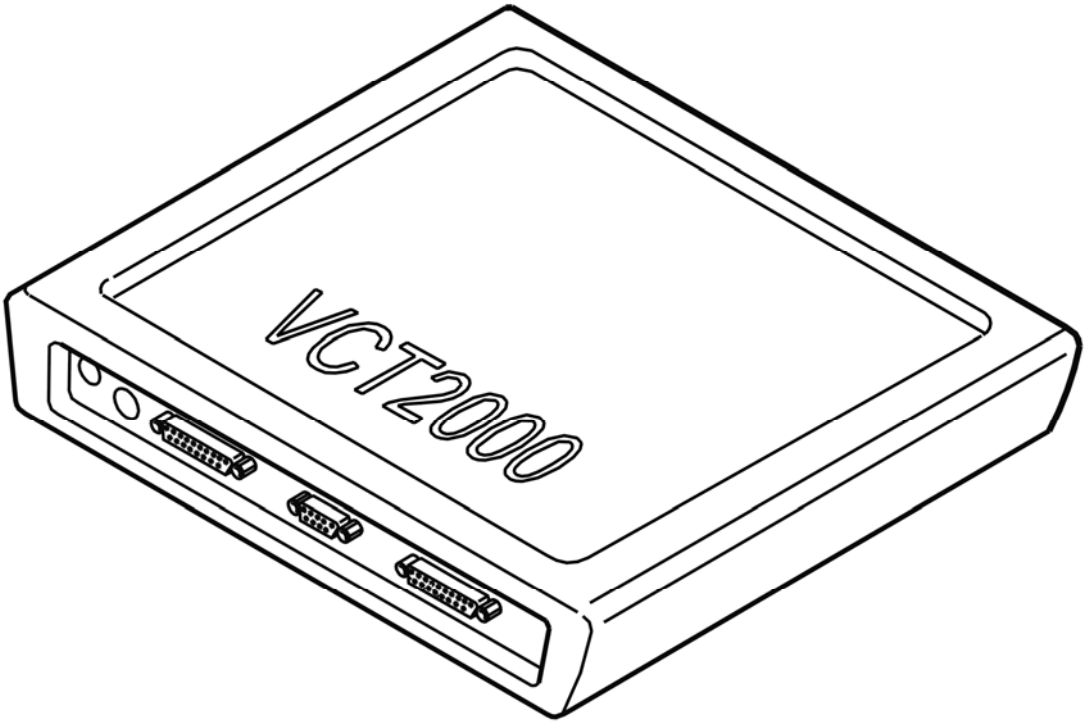

Fig. 328: Identifying VCT2000 Diagnostic Tool Symbol In VIDA
Courtesy of VOLVO CARS CORPORATION

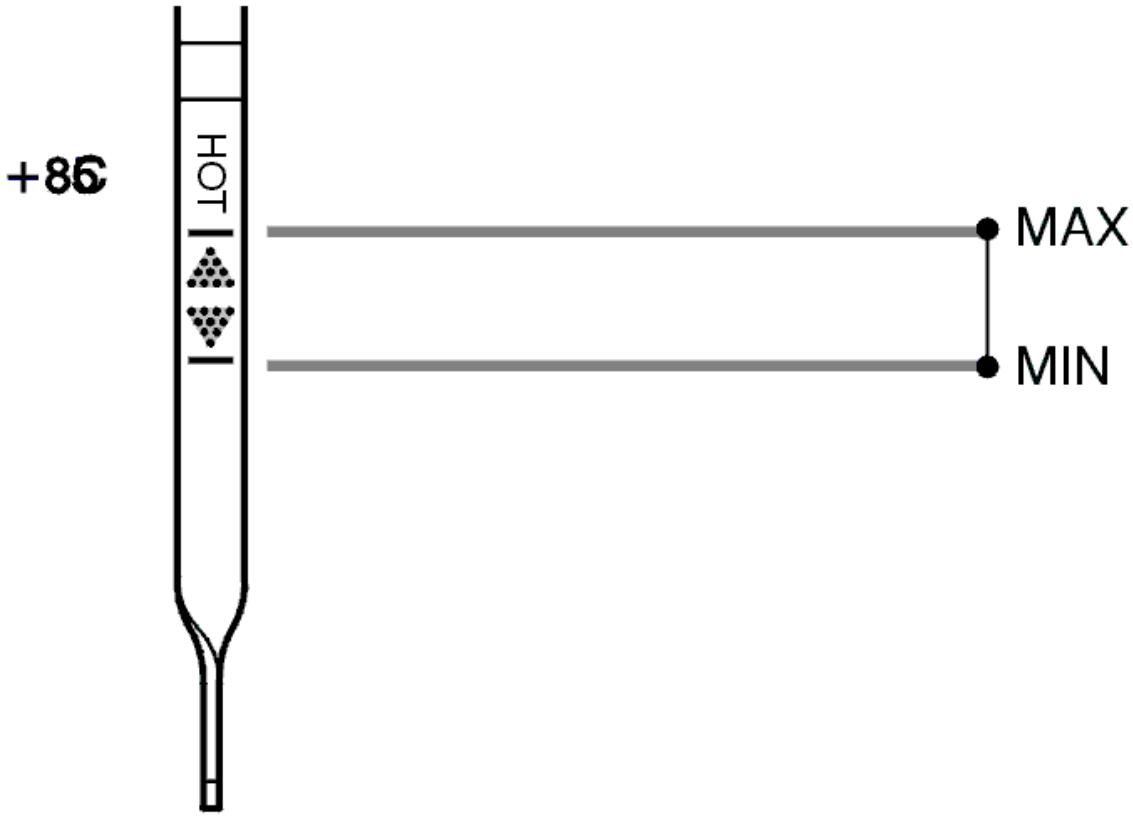

Fig. 329: Identifying Oil Level / Temperature
Courtesy of VOLVO CARS CORPORATION

Was the transmission fluid level correct?

- **YES**

  Refer to **CHECKING SOLENOID SL**

- **NO**

  Refer to **CHECKING SOLENOID SL**

RESETTING THE ADAPTATION

RESETTING ADAPTATION AND THE COUNTER FOR "TRANSMISSION OIL CHANGE"

HINT: The transmission has torque controlled adaptive pressure control. Pressure control means that the transmission regulates the pressure itself during each gear shift. This avoids harsh gear shifting. Each gear shift is evaluated by the control module and stored in the memory. This allows for compensation for wear and tear in the transmission and clutch. It is important that the adaptation in the memory is reset after the transmission has been repaired. This is to ensure normal operation. The oil is replaced during repair; the "Transmission oil change" counter must be reset. If the counter is not reset when the fluid is drained and replaced, there is a risk that a diagnostic trouble code (DTC) will be stored in incorrect

circumstances.

NOTE: This applies only if the transmission or one of the components in the transmission have been replaced.

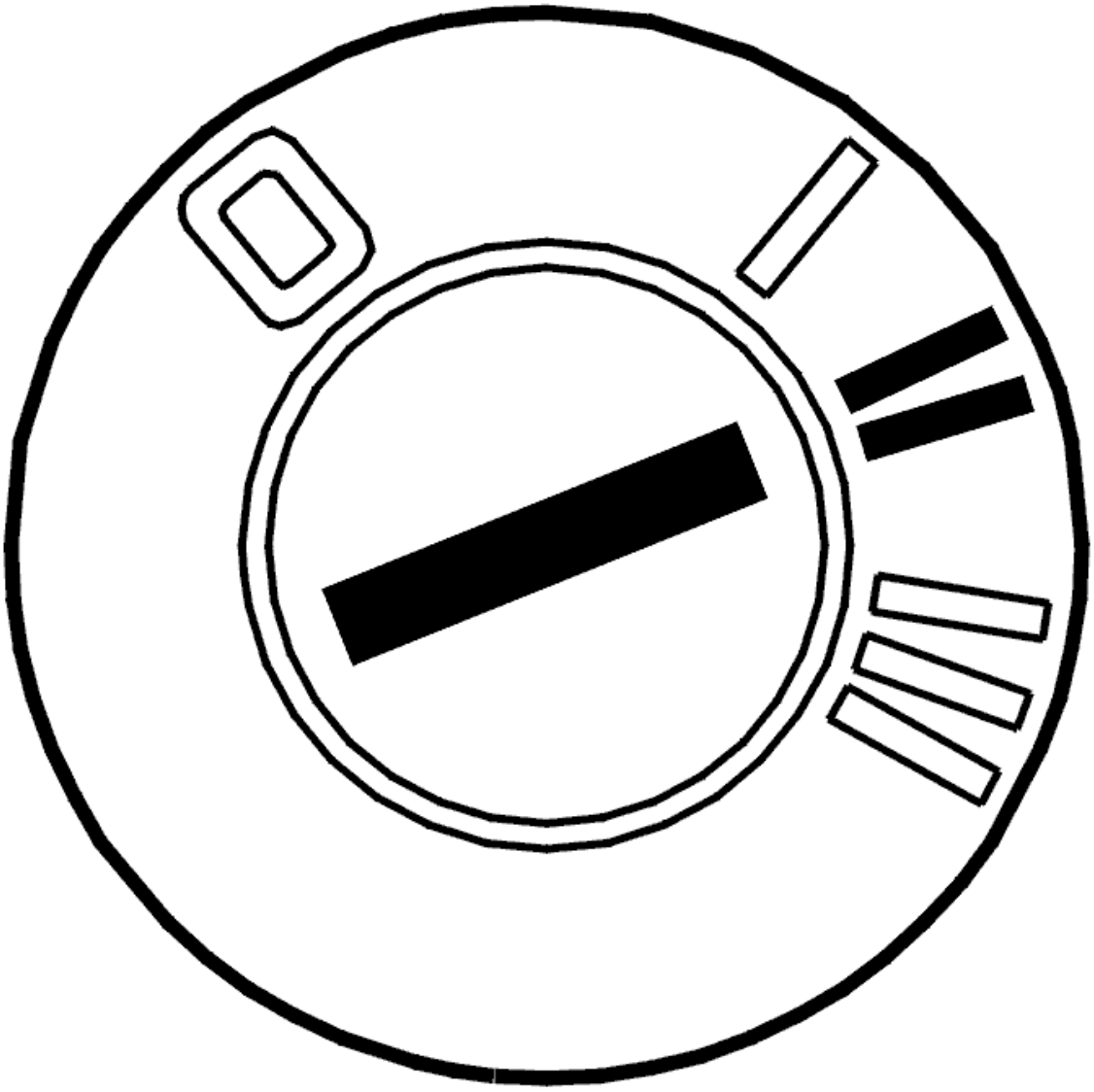

Fig. 330: Identifying Ignition ON
Courtesy of VOLVO CARS CORPORATION

- Ignition on.

  Click on the VCT2000 symbol to reset the adaptation and counter.

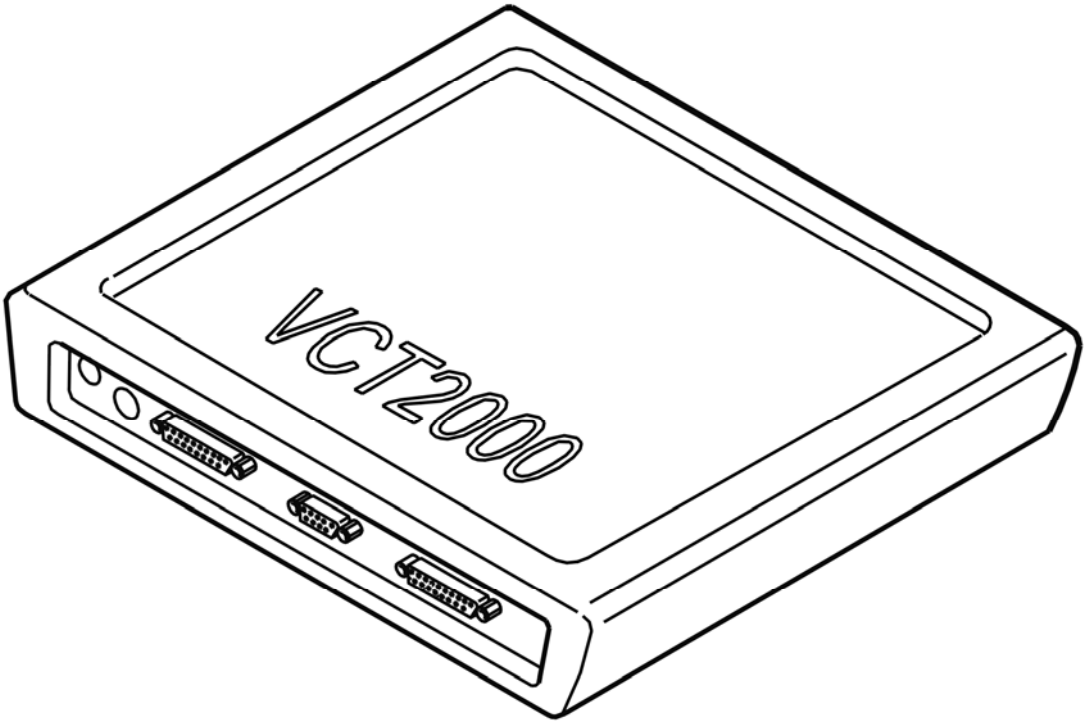

Fig. 331: Identifying VCT2000 Diagnostic Tool Symbol In VIDA
Courtesy of VOLVO CARS CORPORATION

- **Continue**

  Refer to **CHECKING DIAGNOSTIC TROUBLE CODES (DTCS)**

INFORMATION

FAULT-TRACING INFORMATION

The fault should have been detected and remedied. As this is not the case fault-tracing has failed.

Exit fault-tracing for this diagnostic trouble code (DTC) or make another attempt.

CHECKING DIAGNOSTIC TROUBLE CODES (DTCS)

CHECKING DIAGNOSTIC TROUBLE CODES (DTCS)

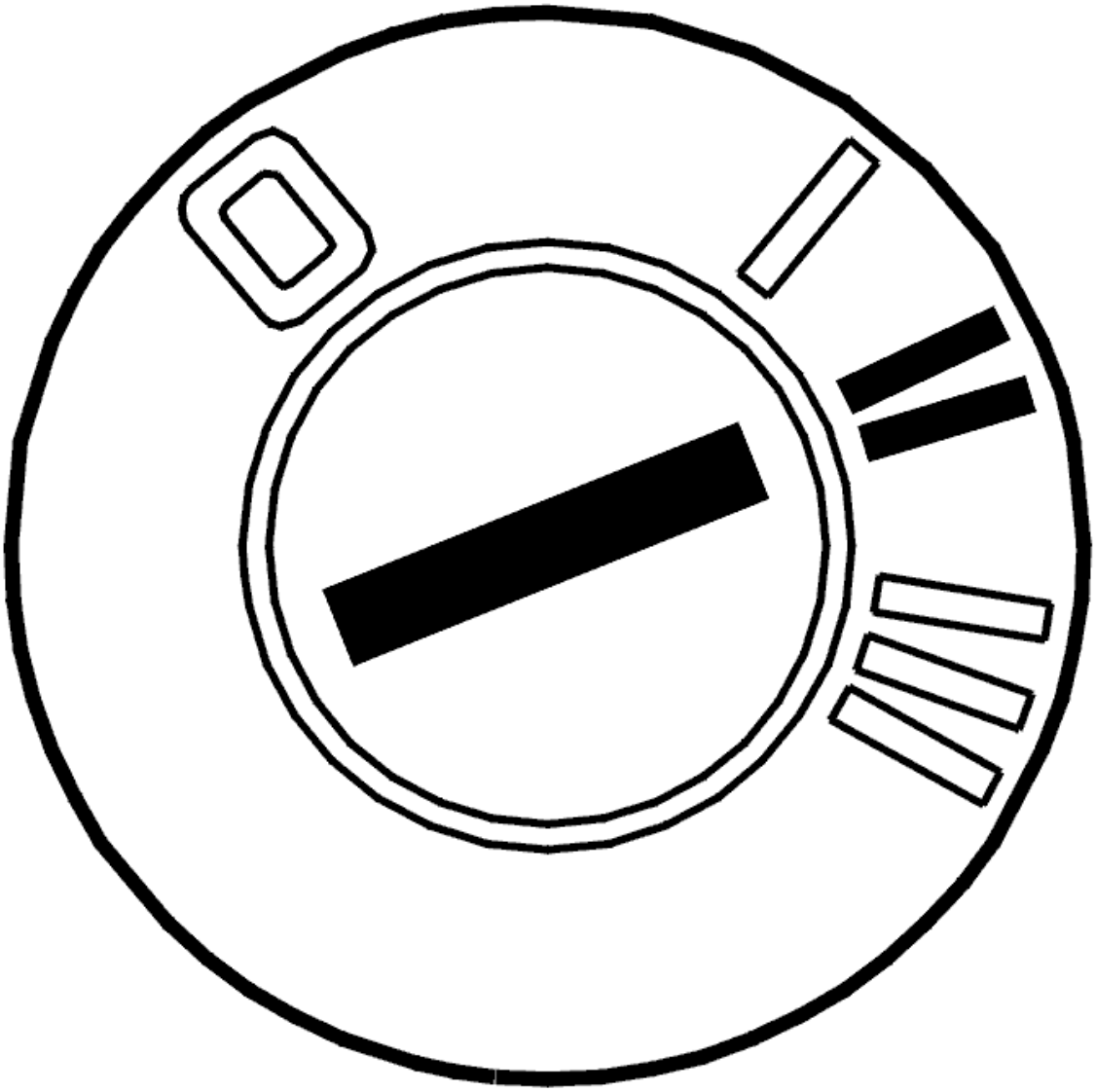

Fig. 332: Identifying Ignition ON
Courtesy of VOLVO CARS CORPORATION

- Ignition on
- Read off diagnostic trouble codes (DTCs).

  Any diagnostic trouble codes (DTCs) other than TCM-0050, TCM-0051 and TCM-0052 that are stored must be fault-traced after this fault-tracing is completed.

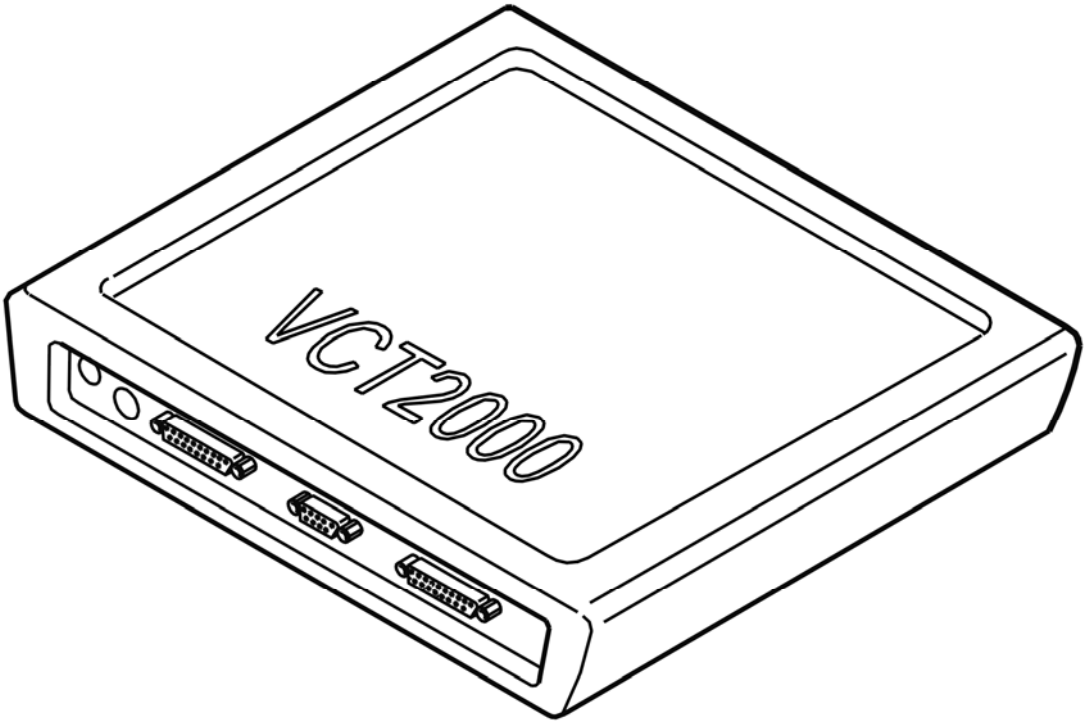

Fig. 333: Identifying VCT2000 Diagnostic Tool Symbol In VIDA
Courtesy of VOLVO CARS CORPORATION

- **Continue**

Refer to **ERASING DIAGNOSTIC TROUBLE CODES (DTCS)**

ERASING DIAGNOSTIC TROUBLE CODES (DTCS)

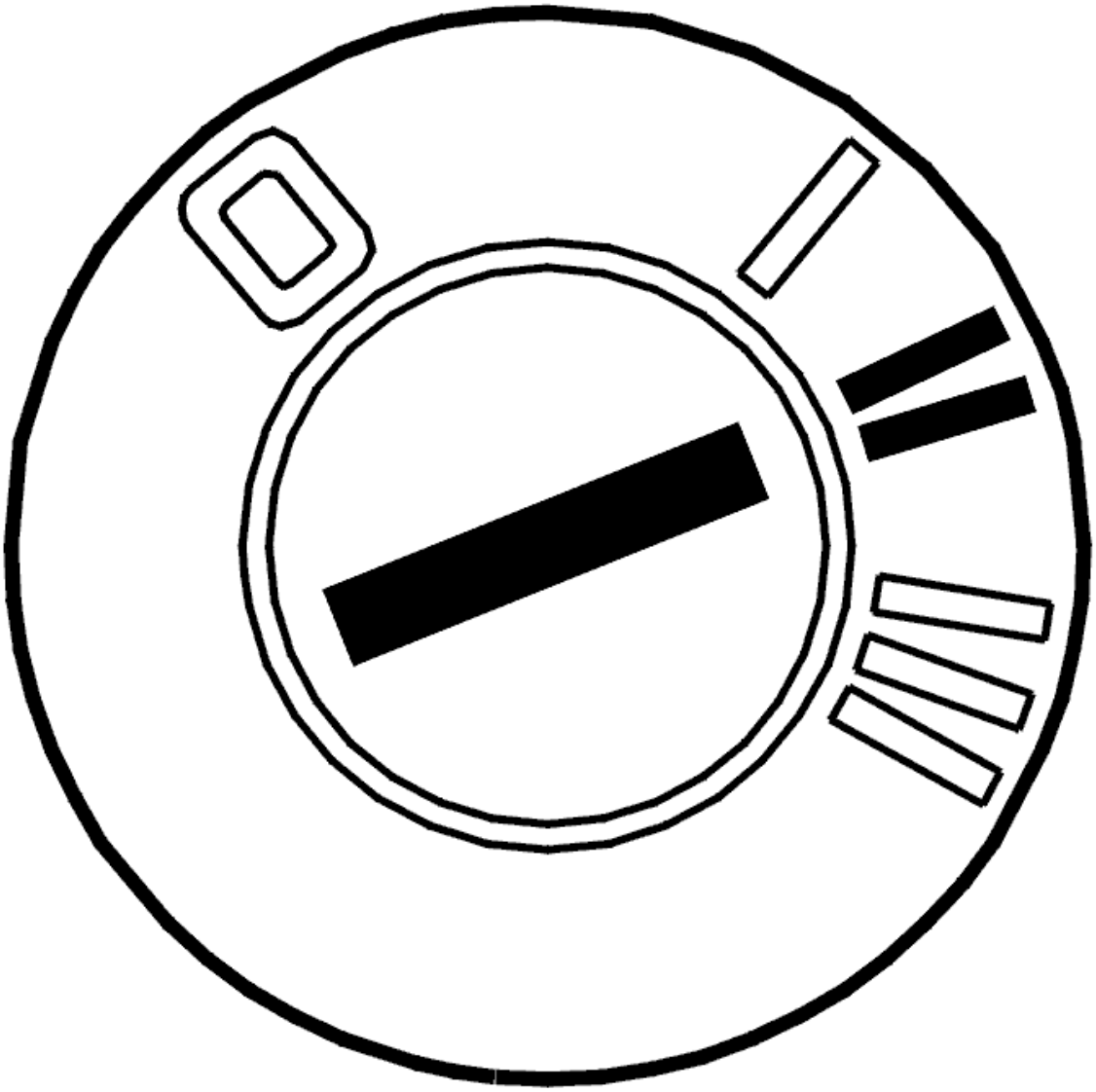

Fig. 334: Identifying Ignition ON
Courtesy of VOLVO CARS CORPORATION

- Ignition off
- Wait for two minutes to allow time for the diagnostic trouble codes (DTCs) to be stored in the control module memory
- Ignition on
- Erase diagnostic trouble codes (DTCs).

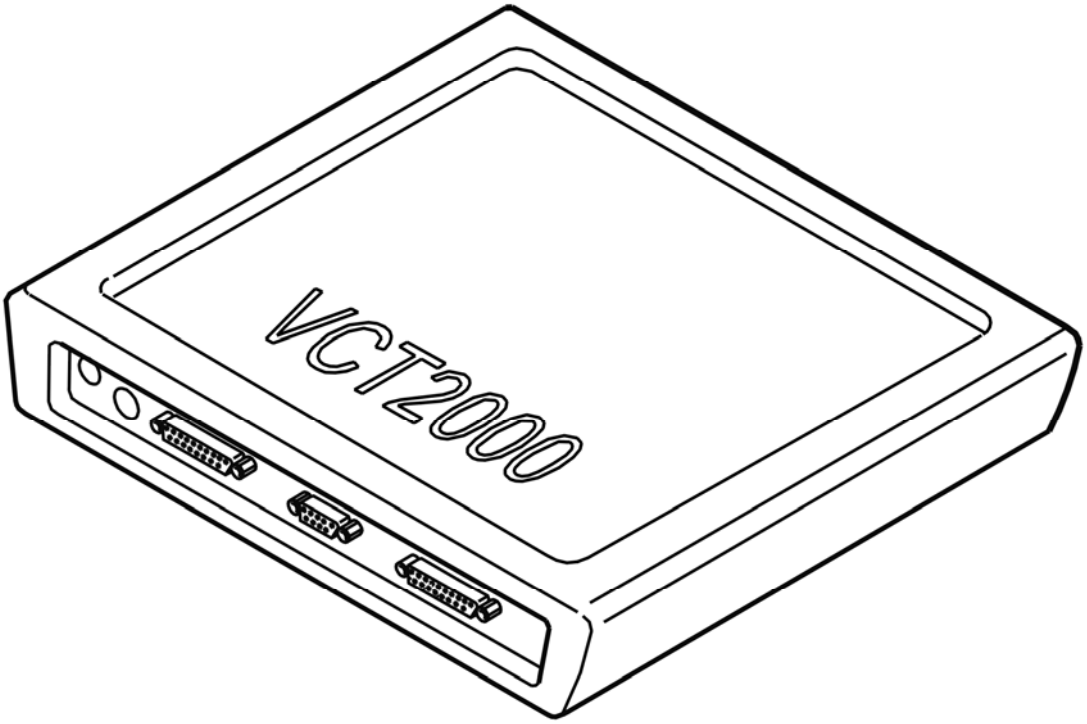

Fig. 335: Identifying VCT2000 Diagnostic Tool Symbol In VIDA
Courtesy of VOLVO CARS CORPORATION

- **Continue**

Refer to **CHECKING THE SOFTWARE**

TEST DRIVING

NOTE: **Test drive the car according to the driving schedule below to check whether the fault is still active. The test drive is compiled in order to create the conditions in which the diagnostic trouble code (DTC) will be stored again if the fault is active.**

The TEST MODE function can be used to provoke any diagnostic trouble codes (DTC). The function reduces the conditions for how quickly diagnostic trouble codes (DTCs) are stored in the control module and the test drive becomes easier.

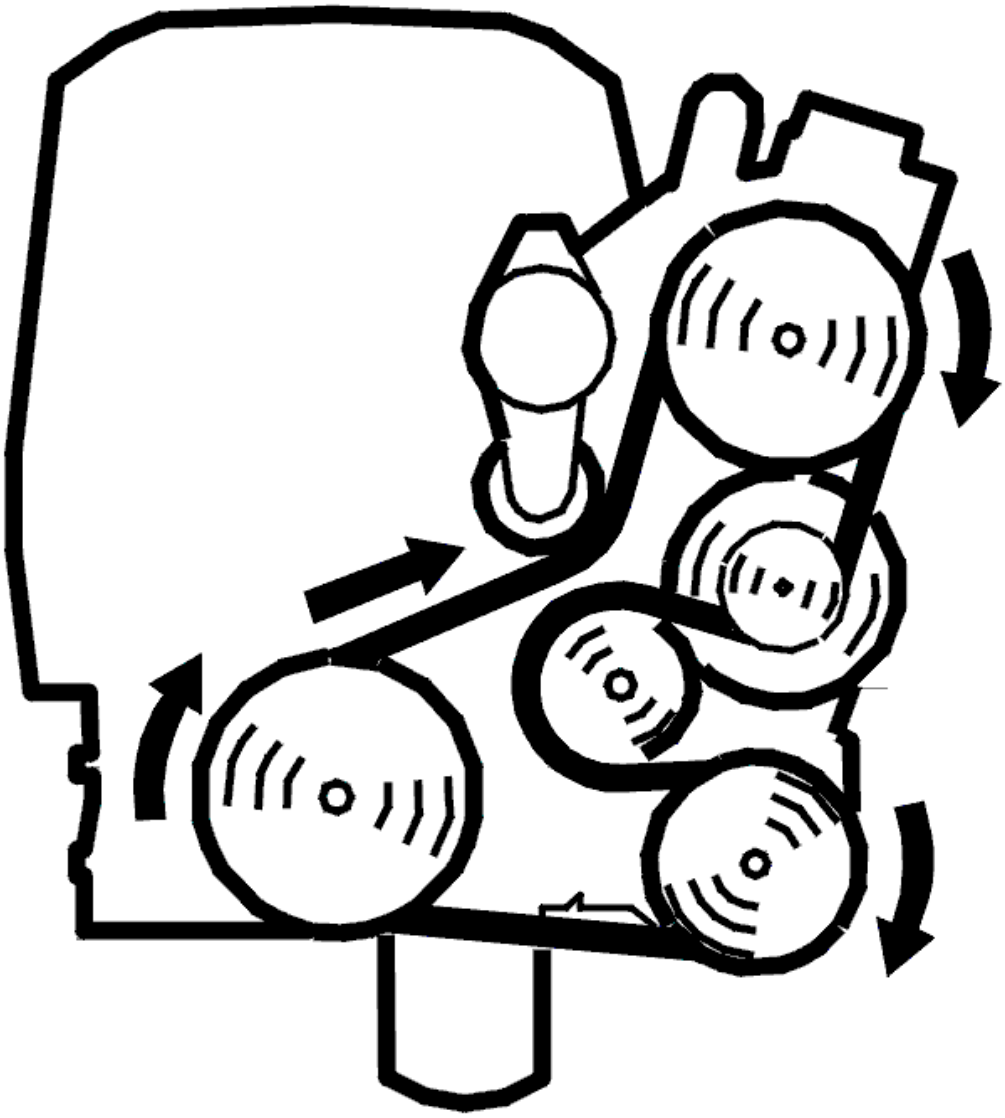

Fig. 336: Identifying Belt Routing
Courtesy of VOLVO CARS CORPORATION

- Start the engine
- Activate TEST MODE.

NOTE: Do not switch off the engine

- Disconnect the VIDA station. Test drive the car as described below.

WARNING: Please observe traffic regulations.

NOTE: Before test driving, the transmission fluid should be at operating

temperature, approximately 80-90°C.

Shift the gear selector to position D (fourth gear with geartronic). Carefully accelerate to 80 km/h (65 km/h for geartronic). Maintain the same speed for at least 20 seconds.

Accelerate further for approximately 20 seconds to increase the torque.

Criteria for diagnostic trouble code (DTC):

- The transmission fluid temperature must exceed 30°C
- The engine must be running for at least 20 seconds
- Gear selector in position D, 3 or 2 (4T65EV).

  Gear selector in Geartronic position and gears 4, 3 or 2 (4T65EV-GT)

- Speed 80 km/h for at least 5 seconds.

  HINT: The car must be driven at an engine speed where the lock-up function is normally activated.

- At least 5 seconds since the last gear shift
- Positive engine torque (no engine braking).

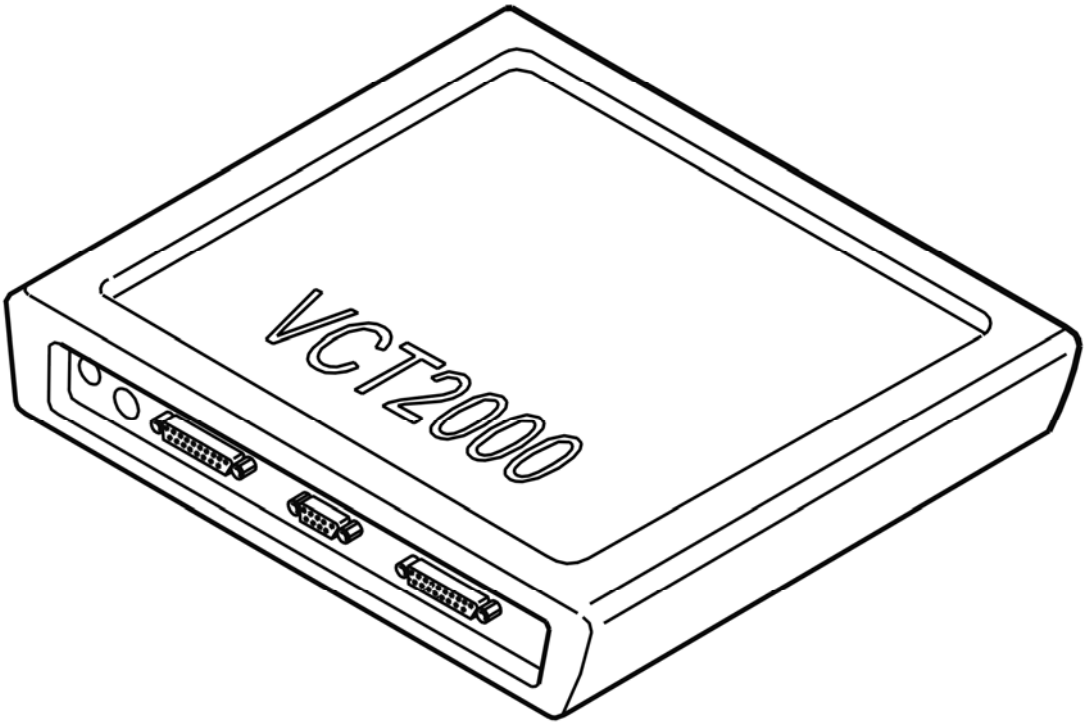

Fig. 337: Identifying VCT2000 Diagnostic Tool Symbol In VIDA
Courtesy of VOLVO CARS CORPORATION

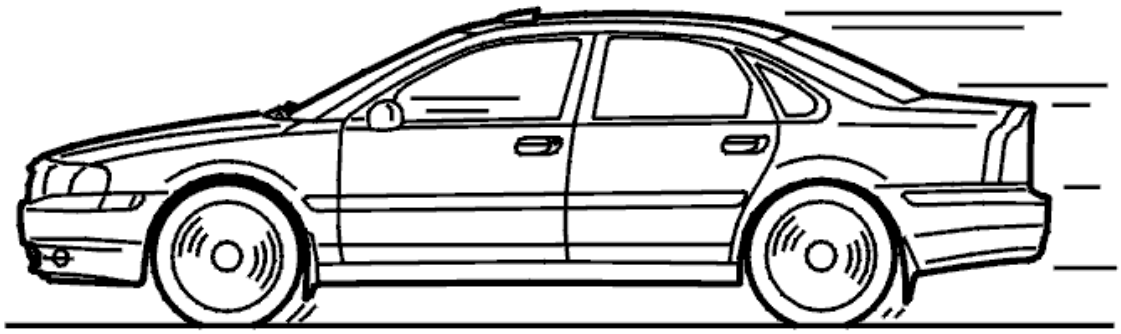

Fig. 338: Identifying Test Drive
Courtesy of VOLVO CARS CORPORATION

- **Continue**

Refer to **CHECKING DIAGNOSTIC TROUBLE CODES (DTCS)**

CHECKING DIAGNOSTIC TROUBLE CODES (DTCS)

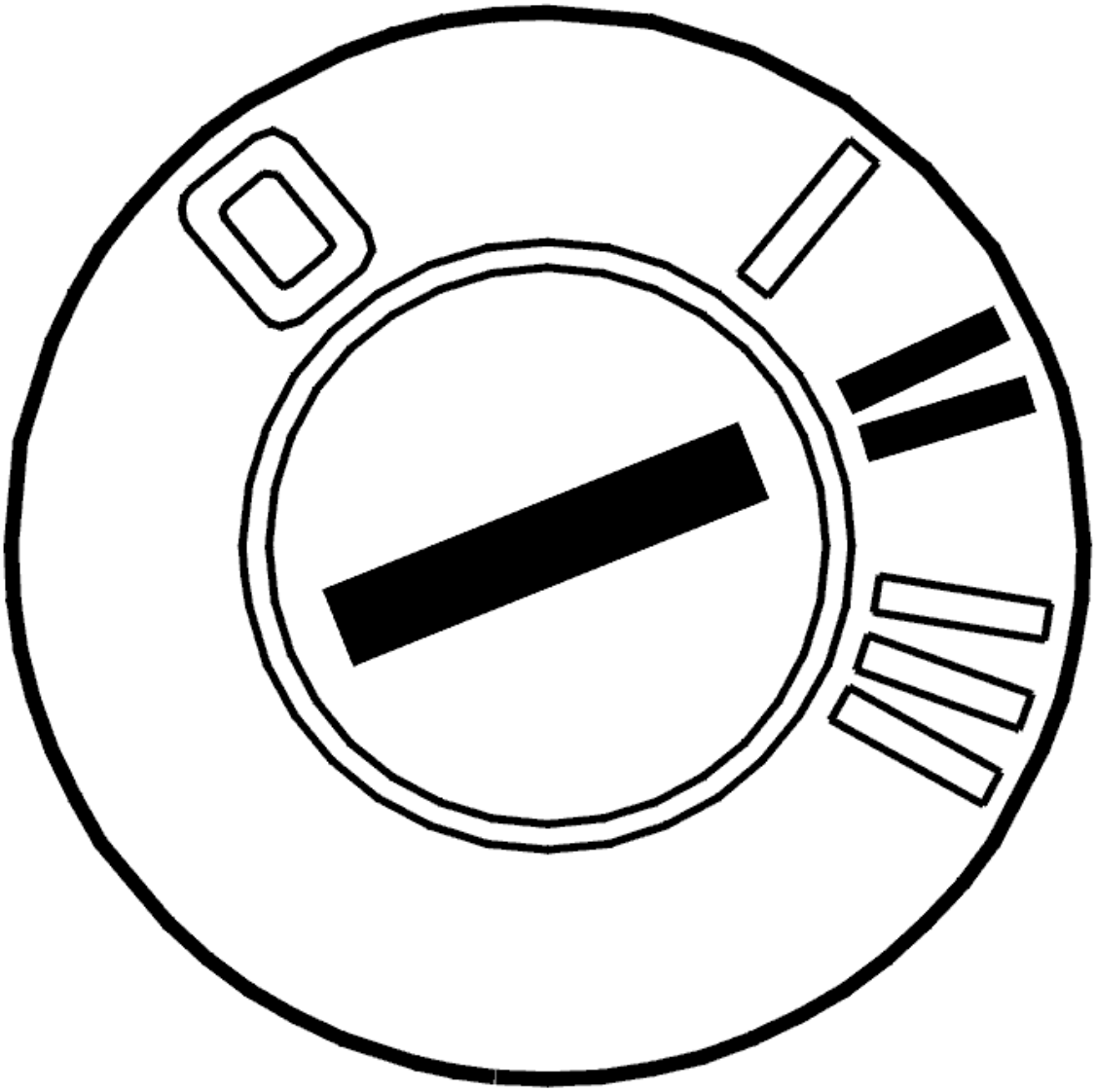

Fig. 339: Identifying Ignition ON
Courtesy of VOLVO CARS CORPORATION

- Ignition on
- Read off diagnostic trouble codes (DTCs).

  Any diagnostic trouble codes (DTCs) other than TCM-0050, TCM-0051 and TCM-0052 that are stored must be fault-traced after this fault-tracing is completed.

  Select an option:

  1. Diagnostic trouble codes (DTCs) TCM-0050 and TCM-0052 were stored

     Refer to **REPLACING THE CONTROL SYSTEM**

  2. Only TCM-0052 or both TCM-0051 and TCM-0052 were stored

Refer to **REPLACING THE CONTROL SYSTEM**

3. No diagnostic trouble codes (DTCs) other than TCM-0050, TCM-0051 or TCM-0052 were stored.

   NO DTC

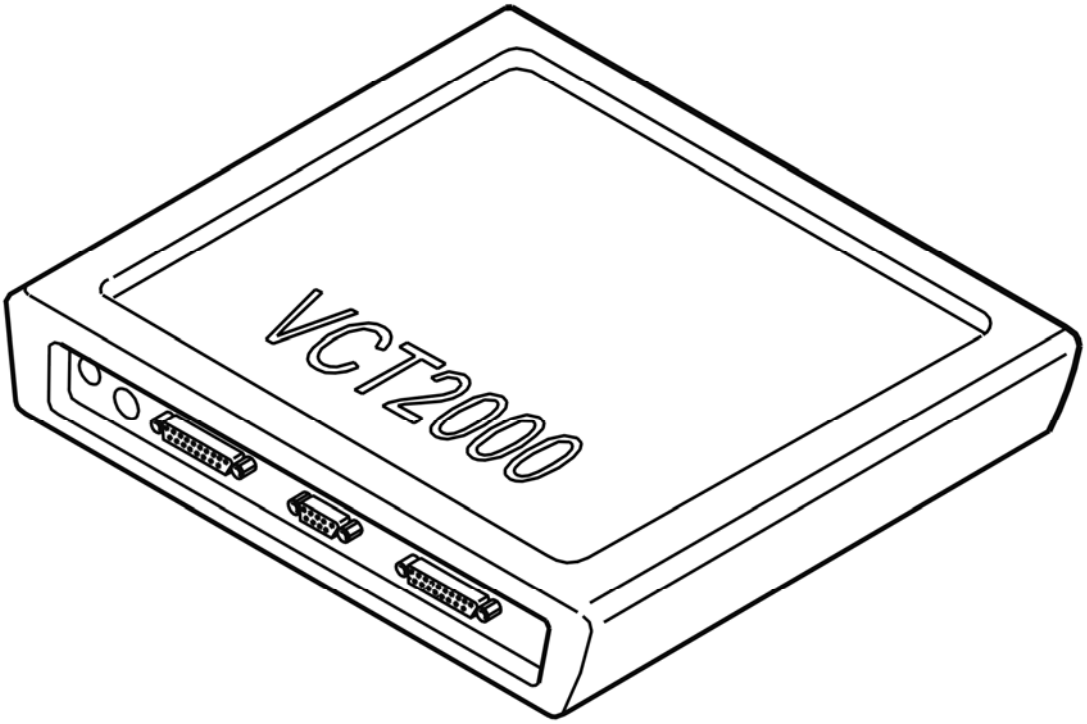

Fig. 340: Identifying VCT2000 Diagnostic Tool Symbol In VIDA
Courtesy of VOLVO CARS CORPORATION

CHECKING THE SOFTWARE

CHECKING THE SOFTWARE

NOTE: **To carry out fault-tracing, the transmission control module (TCM) must be programmed with specific software.**

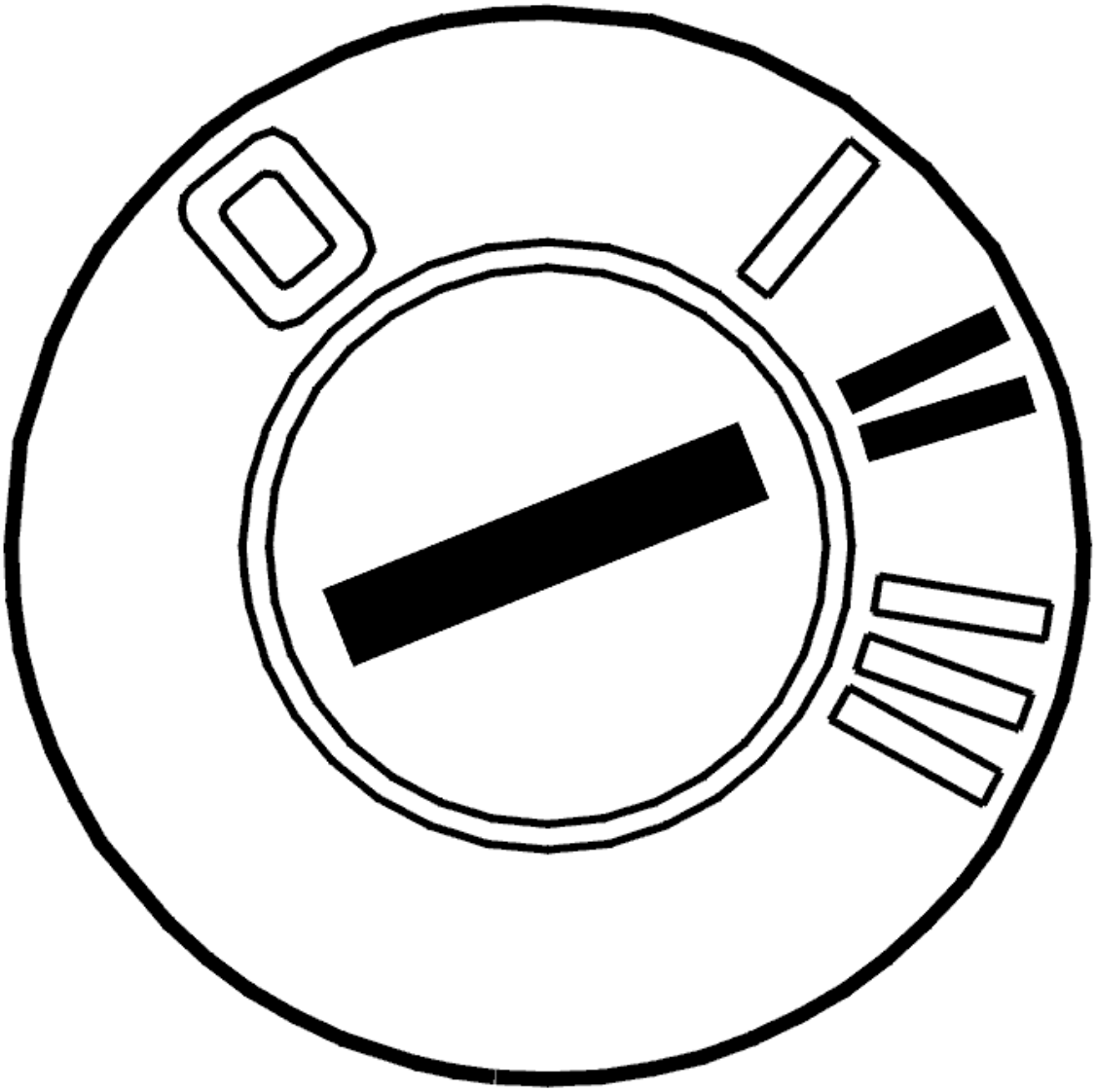

Fig. 341: Identifying Ignition ON
Courtesy of VOLVO CARS CORPORATION

- Ignition on
- Read off the control module diagnostic number.

  Check the read off diagnostic number against the diagnostic numbers given in the center table.

  If the diagnostic number is included in the table, the control module must be programmed with the latest software.

  See the technical journal for information about the most recent software.

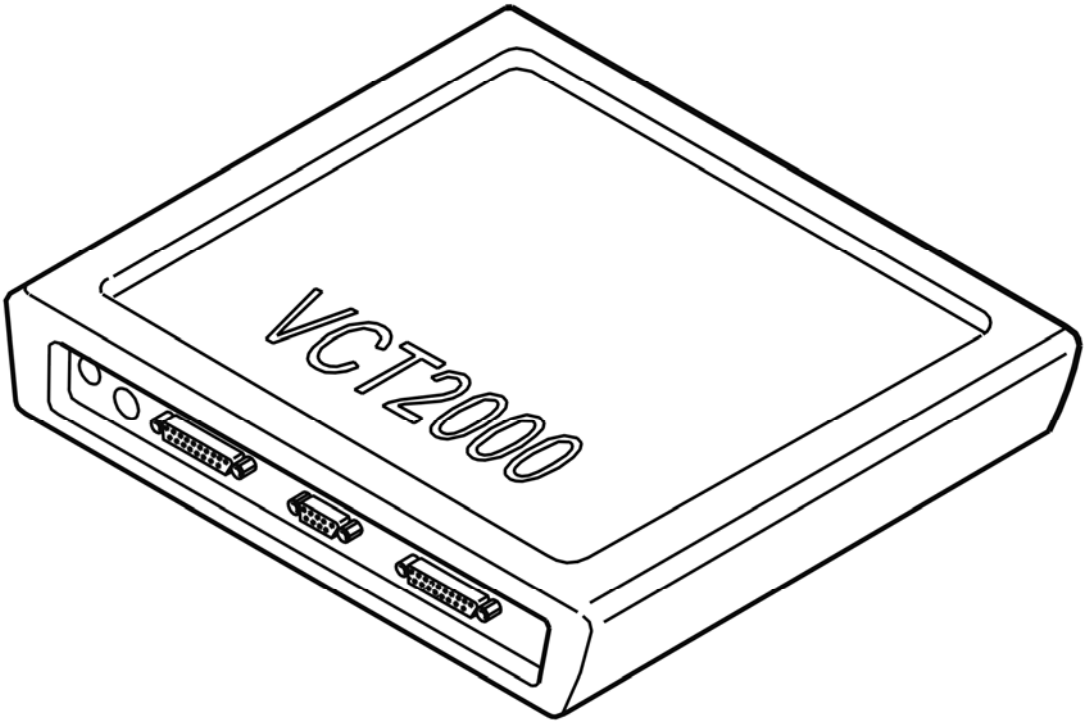

Fig. 342: Identifying VCT2000 Diagnostic Tool Symbol In VIDA
Courtesy of VOLVO CARS CORPORATION

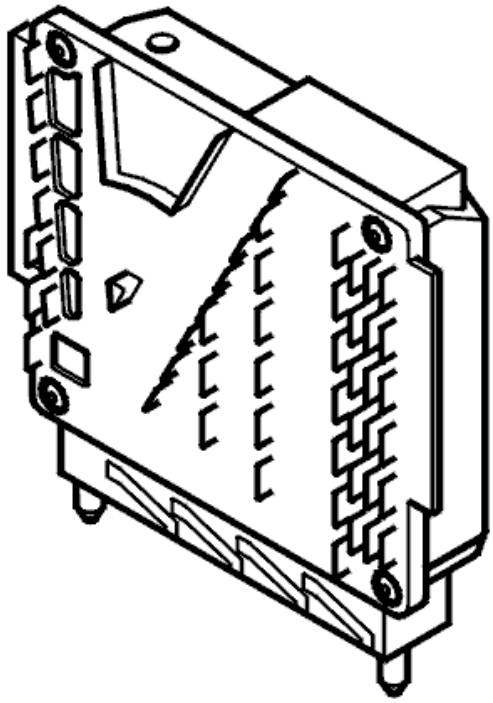

Fig. 343: Identifying Transmission Control Module (TCM)
Courtesy of VOLVO CARS CORPORATION

- **Continue**

  Refer to **TEST DRIVING**

CHECKING DIAGNOSTIC TROUBLE CODES (DTCS)

CHECKING DIAGNOSTIC TROUBLE CODES (DTCS)

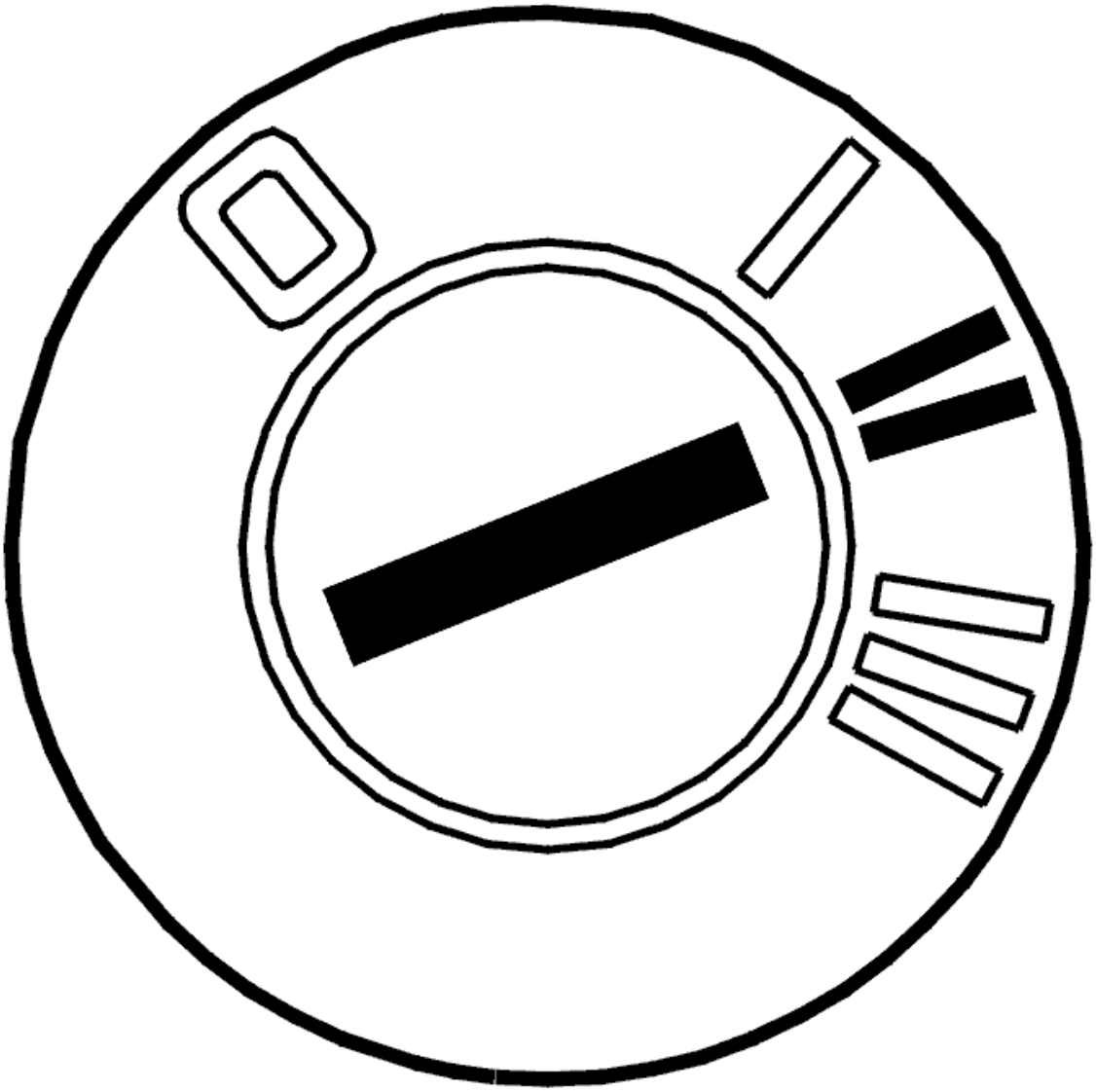

Fig. 344: Identifying Ignition ON
Courtesy of VOLVO CARS CORPORATION

- Ignition on
- Read off diagnostic trouble codes (DTCs).

  Any diagnostic trouble codes (DTCs) other than TCM-0050, TCM-0051 and TCM-0052 that are stored must be fault-traced after this fault-tracing is completed.

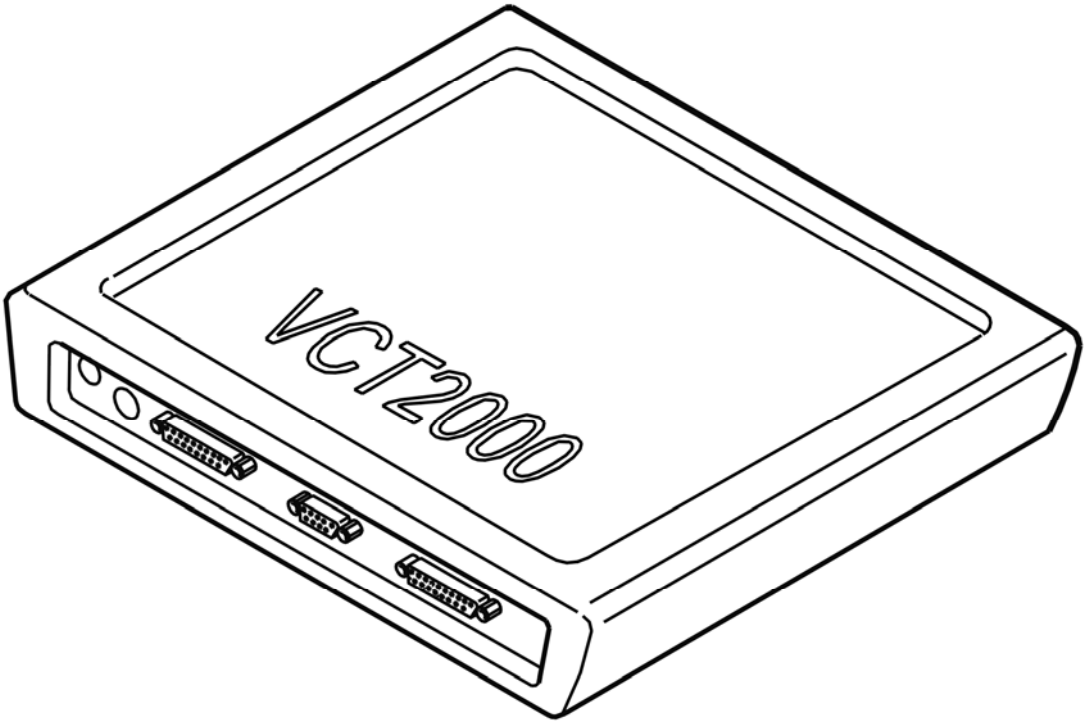

Fig. 345: Identifying VCT2000 Diagnostic Tool Symbol In VIDA
Courtesy of VOLVO CARS CORPORATION

- **Continue**

Refer to **ERASING DIAGNOSTIC TROUBLE CODES (DTCS)**

ERASING DIAGNOSTIC TROUBLE CODES (DTCS)

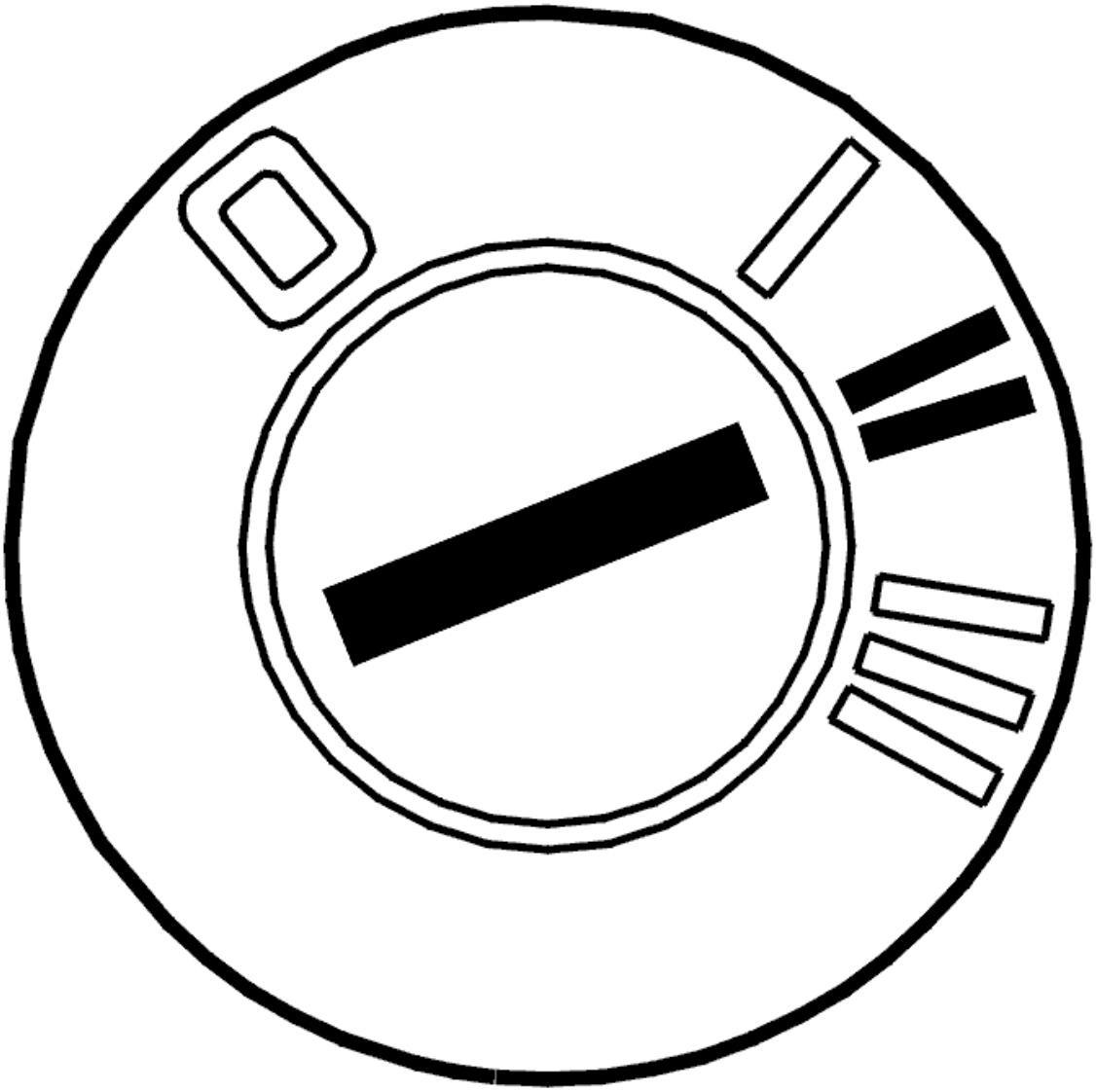

Fig. 346: Identifying Ignition ON
Courtesy of VOLVO CARS CORPORATION

- Ignition off
- Wait for two minutes to allow time for the diagnostic trouble codes (DTCs) to be stored in the control module memory
- Ignition on
- Erase diagnostic trouble codes (DTCs).

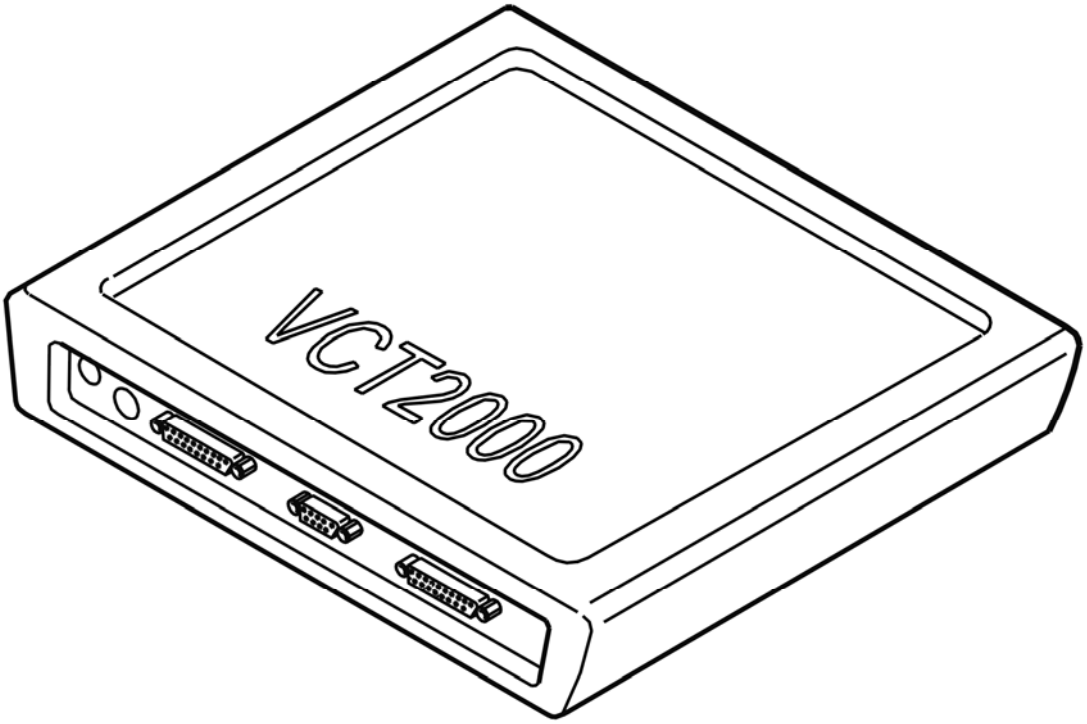

Fig. 347: Identifying VCT2000 Diagnostic Tool Symbol In VIDA
Courtesy of VOLVO CARS CORPORATION

- **Continue**

Refer to **CHECKING THE SOFTWARE**

TEST DRIVING

NOTE: **Test drive the car according to the driving schedule below to check whether the fault is still active. The test drive is compiled in order to create the conditions in which the diagnostic trouble code (DTC) will be stored again if the fault is active.**

The TEST MODE function can be used to provoke any diagnostic trouble codes (DTC). The function reduces the conditions for how quickly diagnostic trouble codes (DTCs) are stored in the control module and the test drive becomes easier.

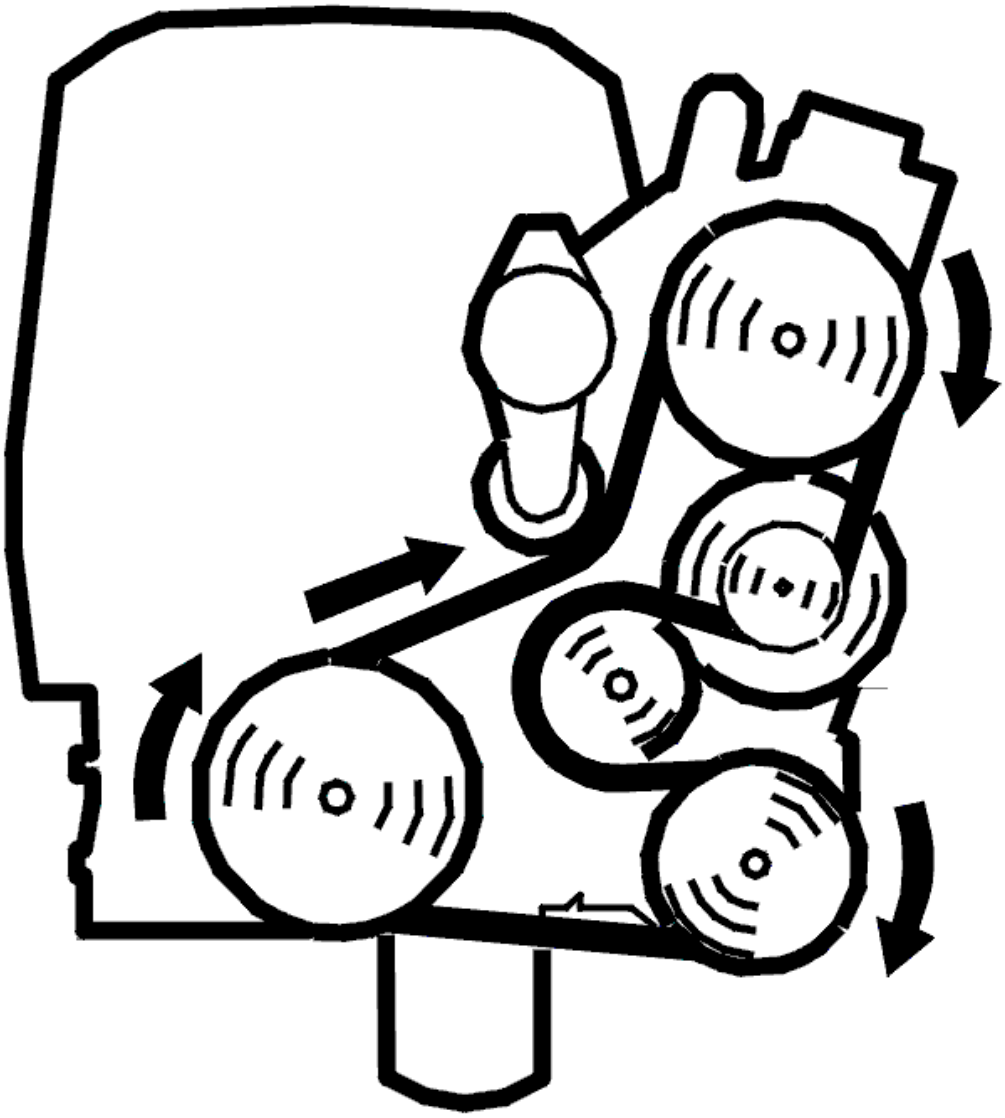

Fig. 348: Identifying Belt Routing
Courtesy of VOLVO CARS CORPORATION

- Start the engine
- Activate TEST MODE.

NOTE: Do not switch off the engine

- Disconnect the VIDA station. Test drive the car as described below.

WARNING: Please observe traffic regulations.

NOTE: Before test driving, the transmission fluid should be at operating

temperature, approximately 80-90°C.

Shift the gear selector to position D (fourth gear with geartronic). Carefully accelerate to 80 km/h (65 km/h for geartronic). Maintain the same speed for at least 20 seconds.

Accelerate further for approximately 20 seconds to increase the torque.

Criteria for diagnostic trouble code (DTC):

- The transmission fluid temperature must exceed 30°C
- The engine must be running for at least 20 seconds
- Gear selector in position D, 3 or 2 (4T65EV).

  Gear selector in Geartronic position and gears 4, 3 or 2 (4T65EV-GT)

- Speed 80 km/h for at least 5 seconds.

  HINT: The car must be driven at an engine speed where the lock-up function is normally activated.

- At least 5 seconds since the last gear shift
- Positive engine torque (no engine braking).

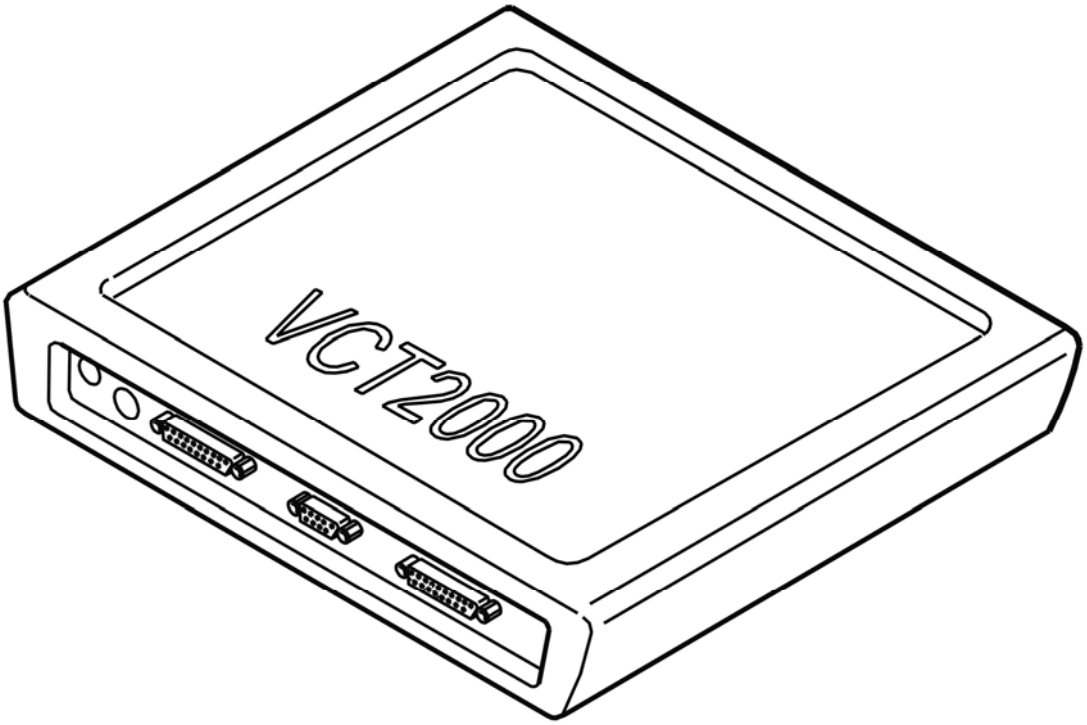

Fig. 349: Identifying VCT2000 Diagnostic Tool Symbol In VIDA
Courtesy of VOLVO CARS CORPORATION

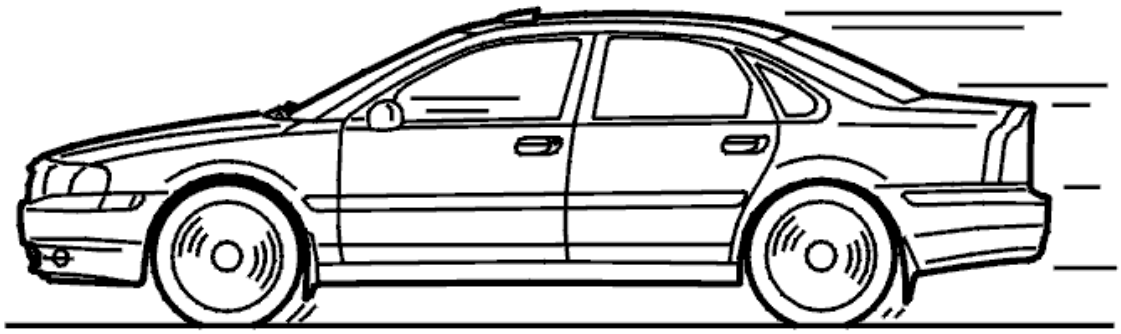

Fig. 350: Identifying Test Drive
Courtesy of VOLVO CARS CORPORATION

- **Continue**

Refer to **CHECKING DIAGNOSTIC TROUBLE CODES (DTCS)**

CHECKING DIAGNOSTIC TROUBLE CODES (DTCS)

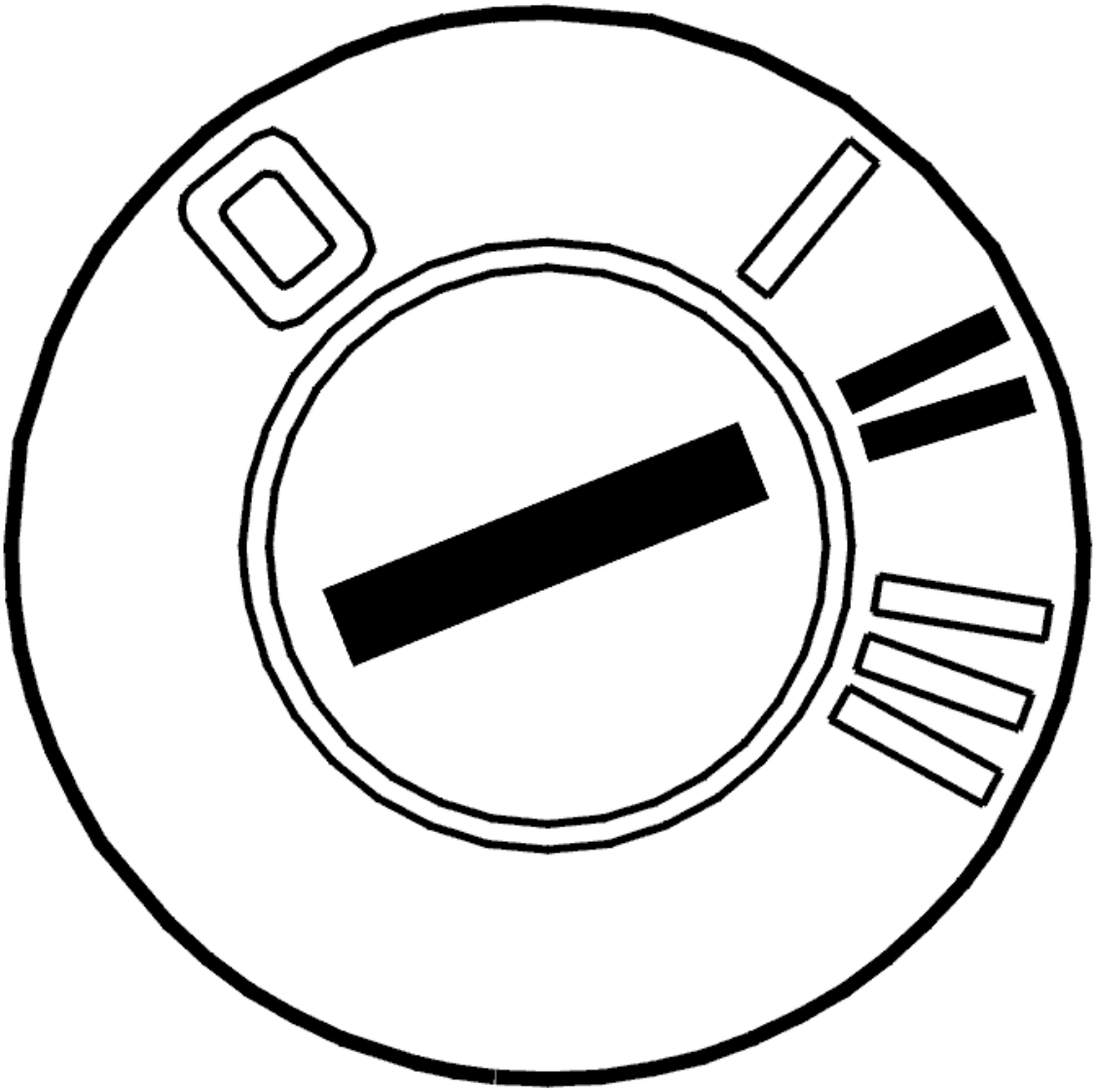

Fig. 351: Identifying Ignition ON
Courtesy of VOLVO CARS CORPORATION

- Ignition on
- Read off diagnostic trouble codes (DTCs).

  Any diagnostic trouble codes (DTCs) other than TCM-0050, TCM-0051 and TCM-0052 that are stored must be fault-traced after this fault-tracing is completed.

  Select an option:

  1. Diagnostic trouble codes (DTCs) TCM-0050 and TCM-0052 were stored

     Refer to **INFORMATION**

  2. Only TCM-0052 or both TCM-0051 and TCM-0052 were stored

Refer to **INFORMATION**

3. No diagnostic trouble codes (DTCs) other than TCM-0050, TCM-0051 or TCM-0052 were stored.

   NO DTC

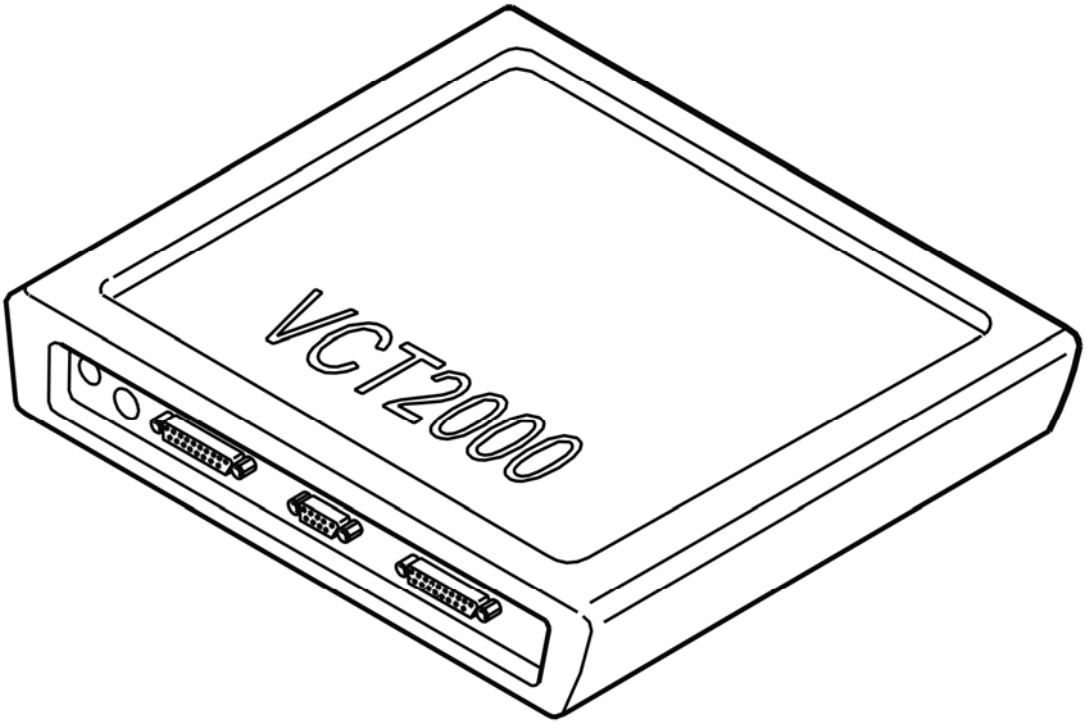

Fig. 352: Identifying VCT2000 Diagnostic Tool Symbol In VIDA
Courtesy of VOLVO CARS CORPORATION

CHECKING THE SOFTWARE

CHECKING THE SOFTWARE

NOTE: **To carry out fault-tracing, the transmission control module (TCM) must be programmed with specific software.**

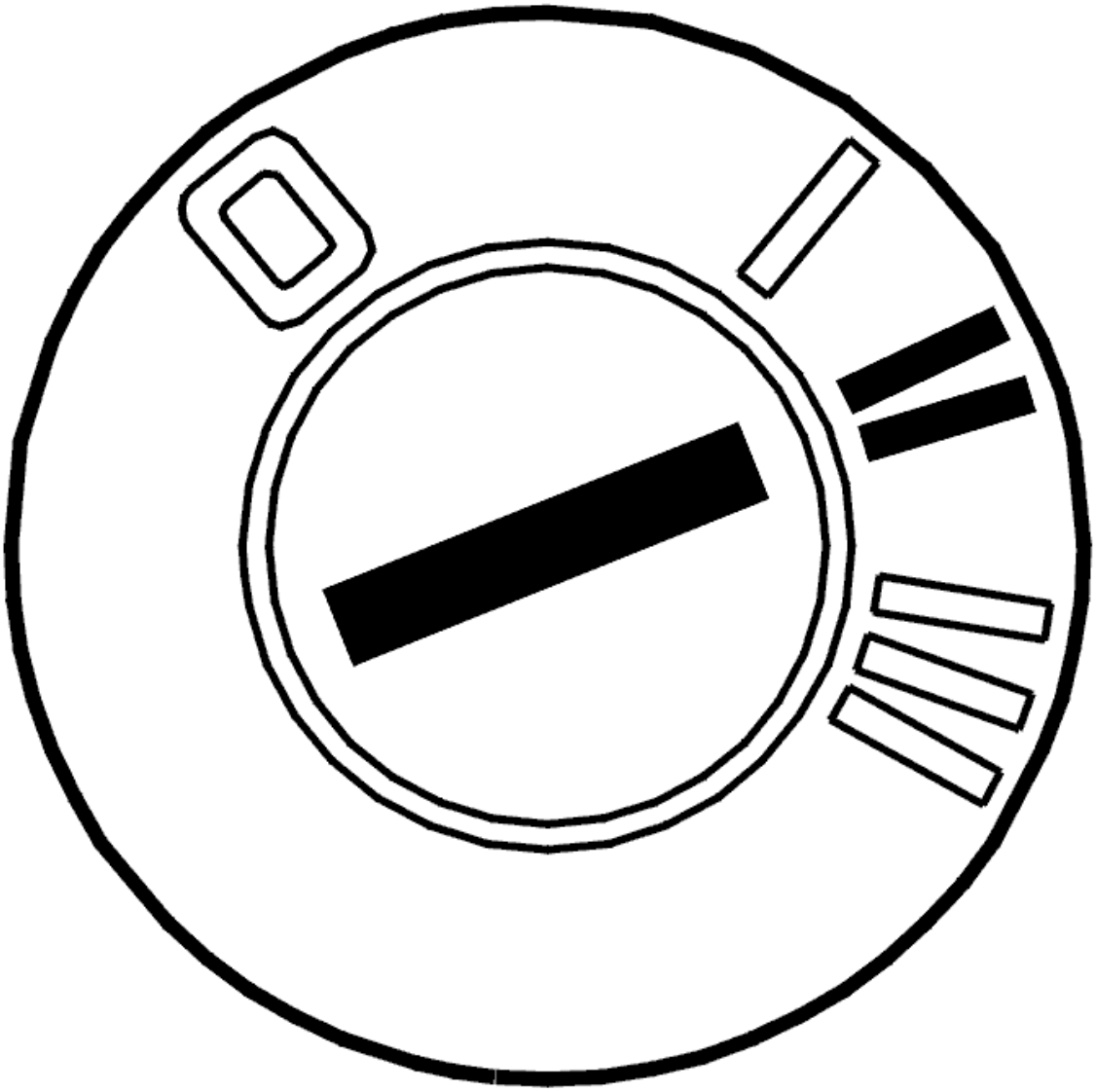

Fig. 353: Identifying Ignition ON
Courtesy of VOLVO CARS CORPORATION

- Ignition on
- Read off the control module diagnostic number.

  Check the read off diagnostic number against the diagnostic numbers given in the center table.

  If the diagnostic number is included in the table, the control module must be programmed with the latest software.

  See the technical journal for information about the most recent software.

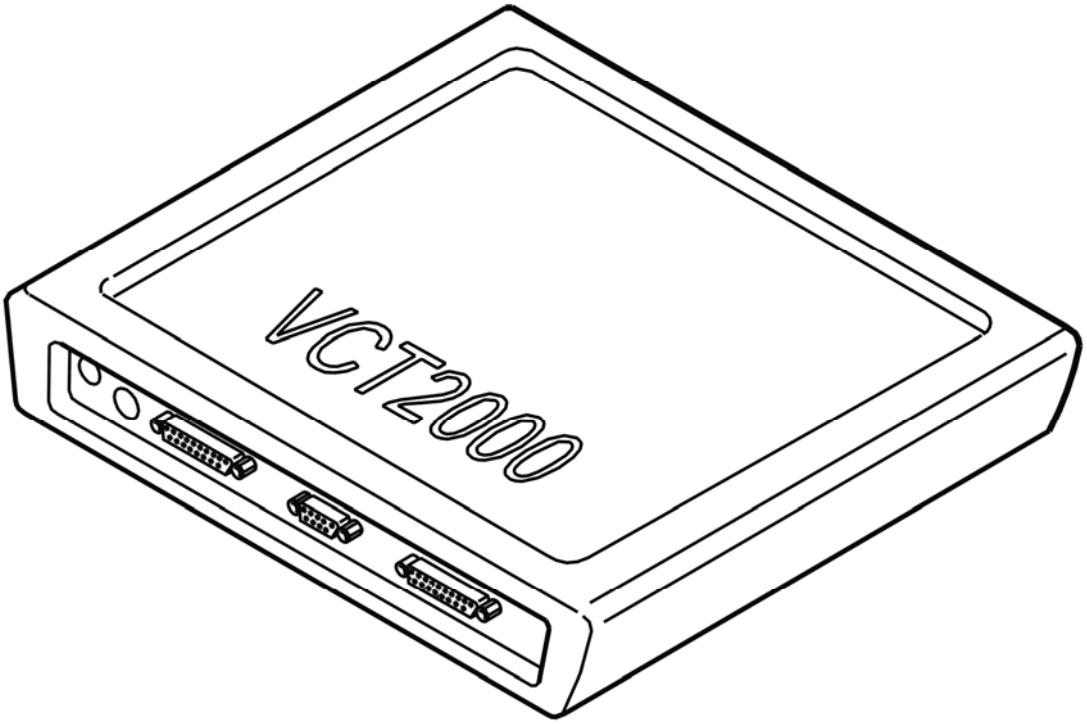

Fig. 354: Identifying VCT2000 Diagnostic Tool Symbol In VIDA
Courtesy of VOLVO CARS CORPORATION

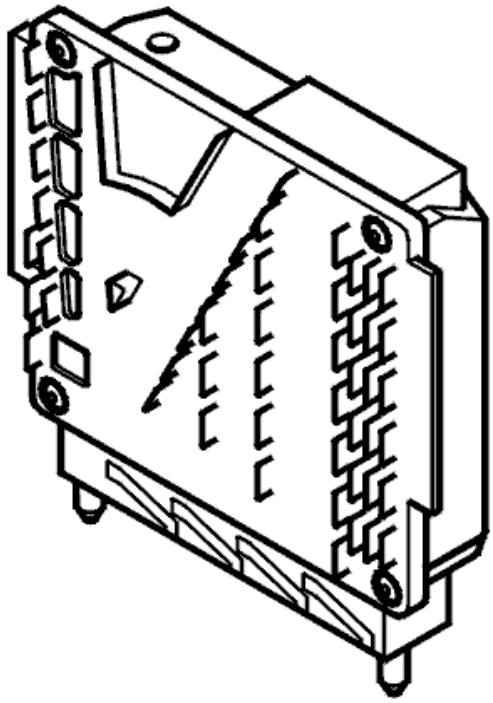

Fig. 355: Identifying Transmission Control Module (TCM)
Courtesy of VOLVO CARS CORPORATION

- **Continue**

  Refer to **TEST DRIVING**

TCM-0053: LOCK-UP PRESSURE SWITCH. JAMMED (4T65 AWD; 2003-2006)

DIAGNOSTIC TROUBLE CODE (DTC) INFORMATION

Condition

The automatic transmission control module (TCM) receives a signal from the pressure switch for lock-up PS4 to check the lock-up valve position. Diagnostic trouble code (DTC) TCM-0053 is stored if the lock-up solenoid has stuck in the open position.

Substitute Value

- The control module (TCM) "Emergency mode II" program has been initiated.

Possible Source

- The pressure switch for lock-up is jammed
- Contact resistance in the terminals
- The transmission oil level is too high
- Mechanical fault in the transmission control system
- There is an electrical fault in the pressure sensor circuit.

Fault symptom[s]

- General orange warning lamp lit
- No lock-up function
- Harsh gear shifting.

HINT: Harsh gear shifting can be caused by:

- no reduction of line pressure when shifting
- no reduction of line pressure when moving the gear selector between positions P-R, N-R and N-D
- no torque limiting request to the engine control module (ECM) when shifting.

STUCK

CHECKING THE SOFTWARE

CHECKING THE SOFTWARE

NOTE: To carry out fault-tracing, the transmission control module (TCM) must be programmed with specific software.

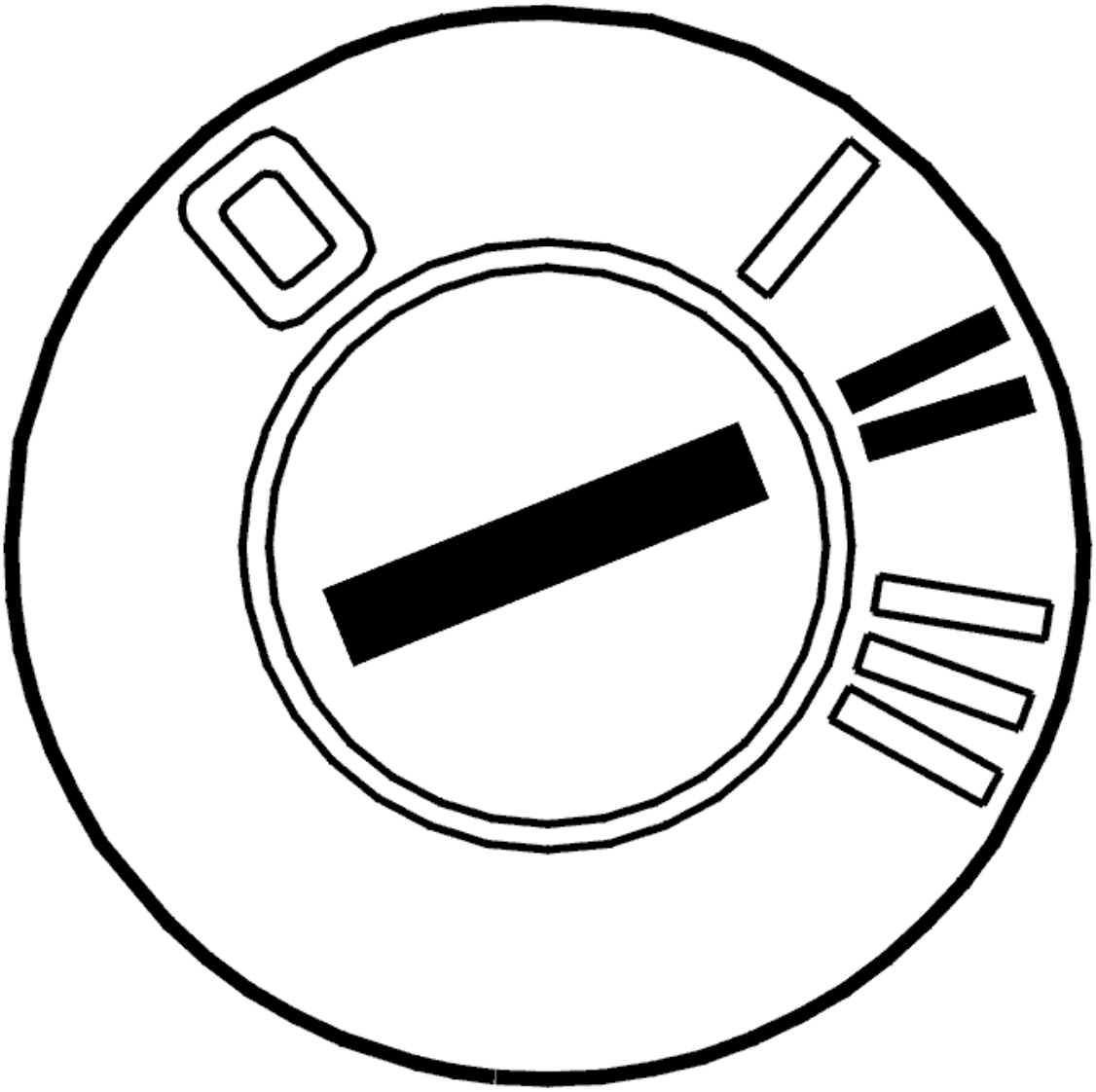

Fig. 356: Identifying Ignition ON
Courtesy of VOLVO CARS CORPORATION

- Ignition on
- Read off the control module diagnostic number.

  Check the read off diagnostic number against the diagnostic numbers given in the center table.

  If the diagnostic number is included in the table, the control module must be programmed with the latest software.

  See the technical journal for information about the most recent software.

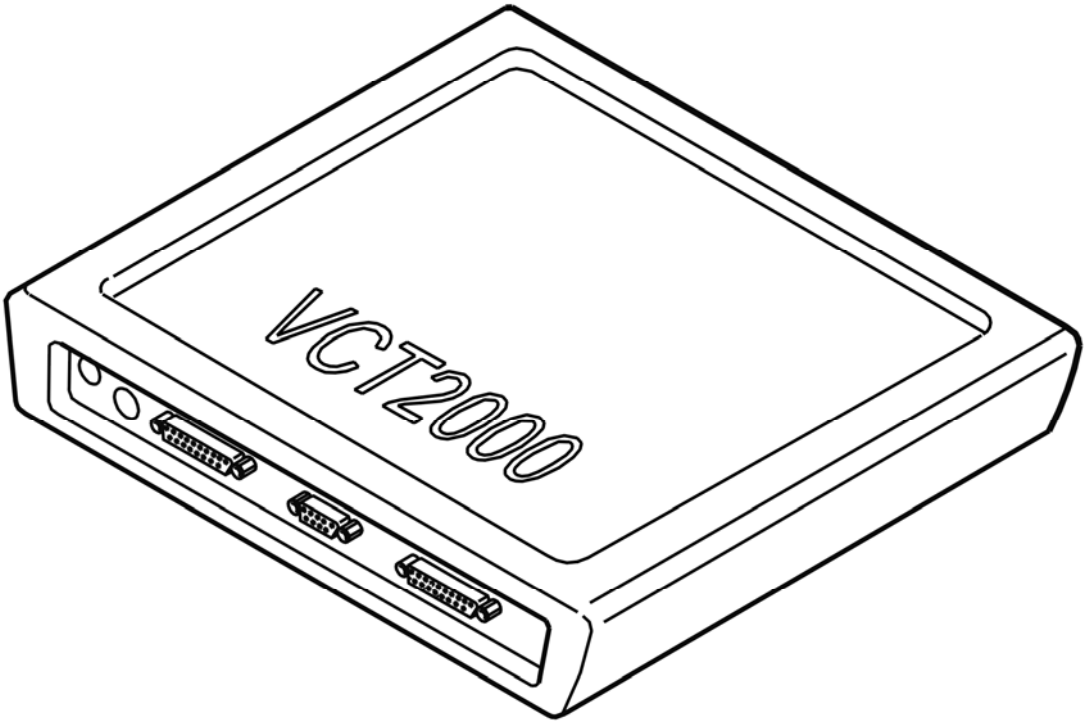

Fig. 357: Identifying VCT2000 Diagnostic Tool Symbol In VIDA
Courtesy of VOLVO CARS CORPORATION

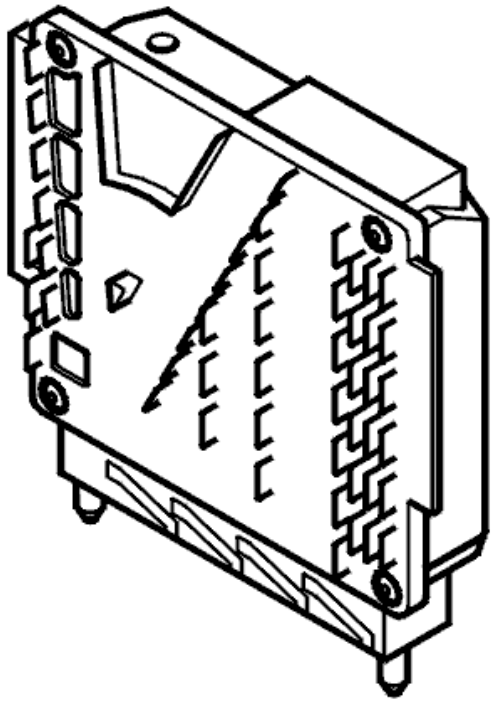

Fig. 358: Identifying Transmission Control Module (TCM)
Courtesy of VOLVO CARS CORPORATION

- **Continue**

Refer to **CHECKING THE DIAGNOSTIC TROUBLE CODES (DTCS)**

CHECKING THE DIAGNOSTIC TROUBLE CODES (DTCS)

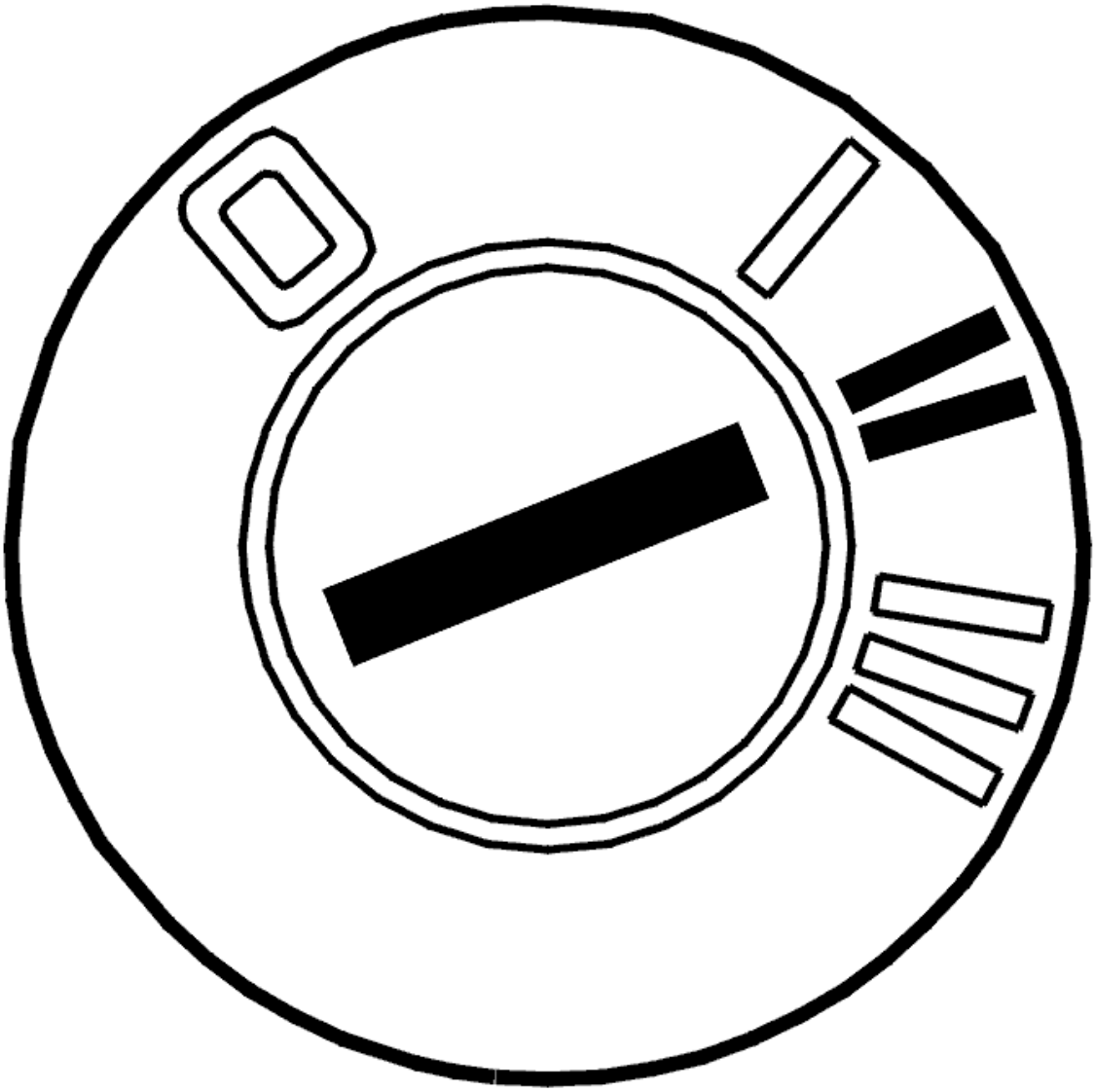

Fig. 359: Identifying Ignition ON
Courtesy of VOLVO CARS CORPORATION

- Ignition on
- Read off diagnostic trouble codes (DTCs).

  If any other diagnostic trouble codes (DTCs) than TCM-0053 are stored, these must be fault-traced and remedied after this fault-tracing is completed.

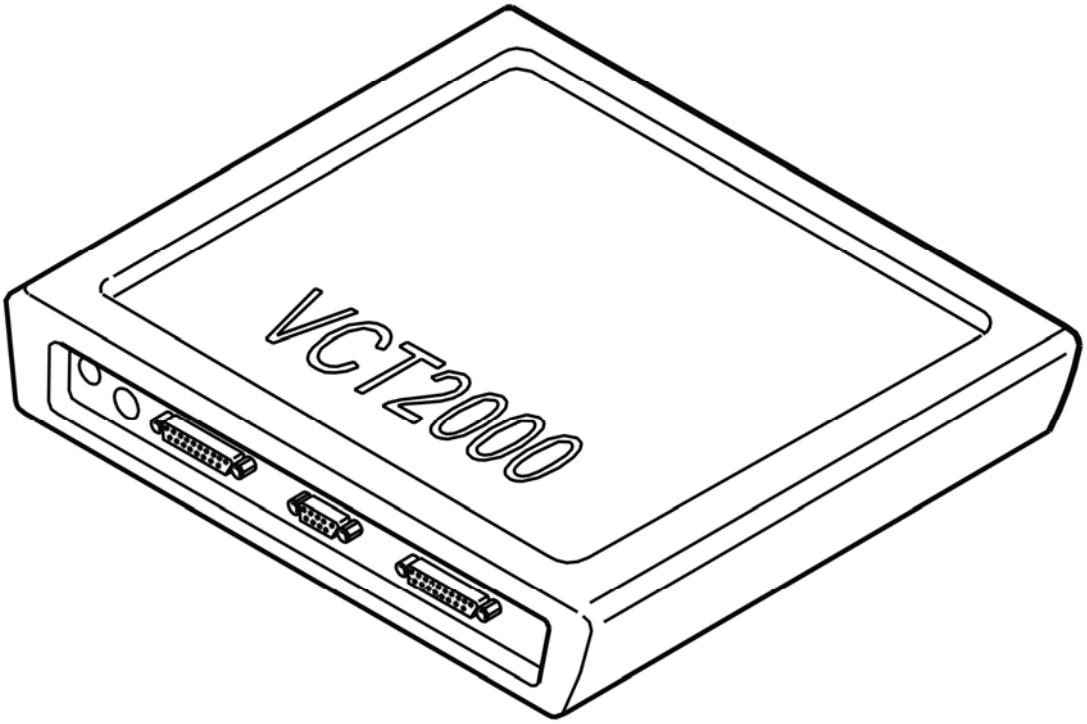

Fig. 360: Identifying VCT2000 Diagnostic Tool Symbol In VIDA
Courtesy of VOLVO CARS CORPORATION

- **Continue**

  Refer to **CHECKING DIAGNOSTIC TROUBLE CODES (DTCS)**

CHECKING THE WIRING

HINT: This step requires 2 breakout boxes.

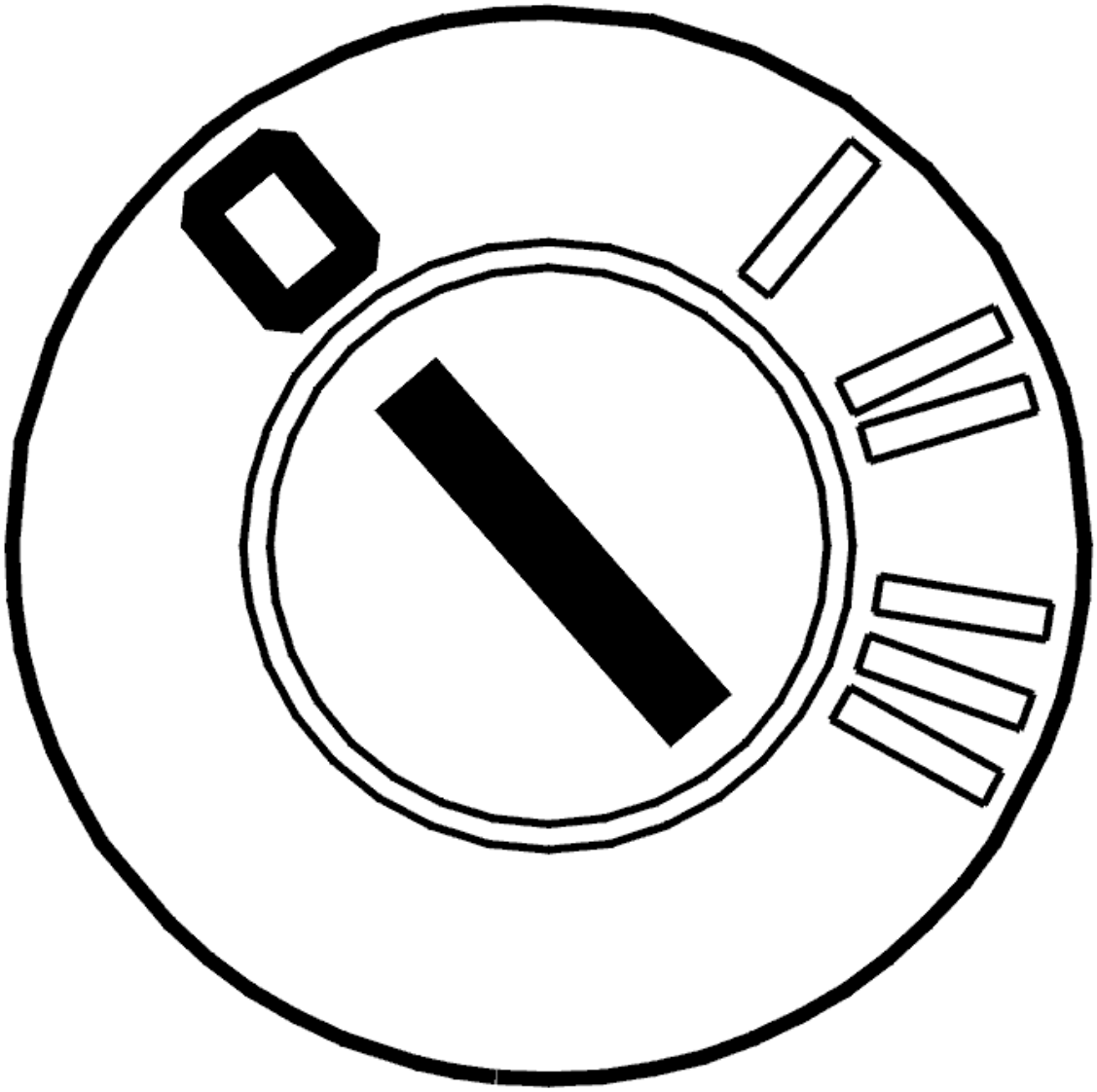

Fig. 361: Identifying Ignition OFF
Courtesy of VOLVO CARS CORPORATION

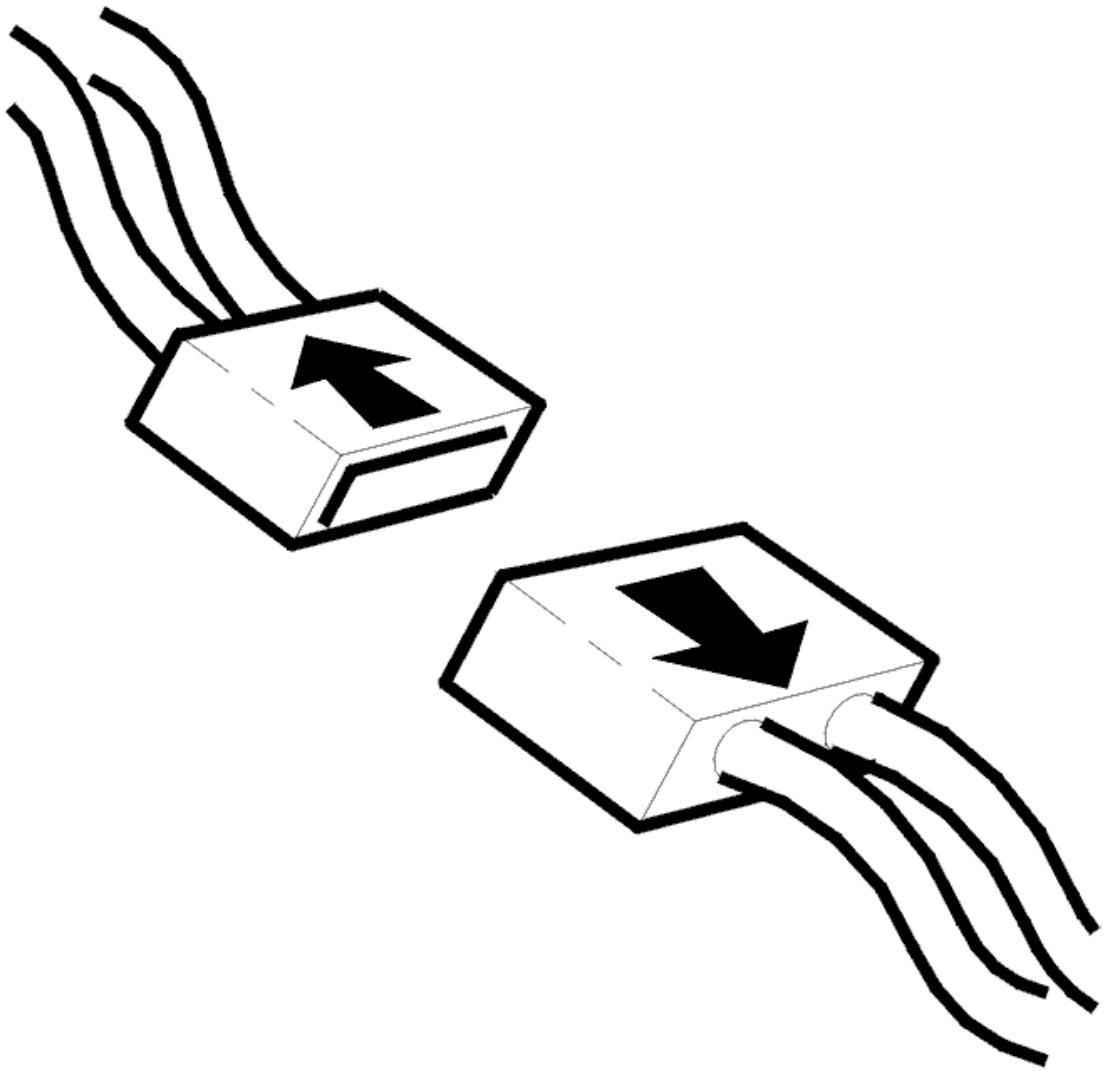

Fig. 362: Identifying Connector(s) Disconnected
Courtesy of VOLVO CARS CORPORATION

- Ignition off
- Disconnect the transmission control module (TCM).
- Connect adapter see **9511505** and breakout box see **9511428** to the transmission control module (TCM) connector (transmission side).
- Disconnect the gearbox connector
- Connect adapter see **9511505** and breakout box see **9511428** to the transmission connector (transmission control module (TCM) side).
- Connector to the transmission unplugged.

  Check the cable between transmission control module (TCM) #A51 (#A51) and transmission #U (#A18) for open-circuit and short-circuit to either voltage or ground.

Check the cable between transmission control module (TCM) #A53 (#A53) and transmission #E (#A5) for open-circuit and short-circuit to supply voltage or ground.

Other information:

- Connecting a breakout box to the transmission control module (TCM): **CONNECTING THE BREAKOUT BOX**
- see **CONNECTING THE BREAKOUT BOX, GM AUTOMATIC TRANSMISSIONS**
- see **SIGNAL DESCRIPTION. CONNECTOR 4T65 EV/EV-GT**
- For information on signals on the transmission control module (TCM): **SIGNAL SPECIFICATION**
- see **CHECKING WIRING AND TERMINALS. PERMANENT FAULT**

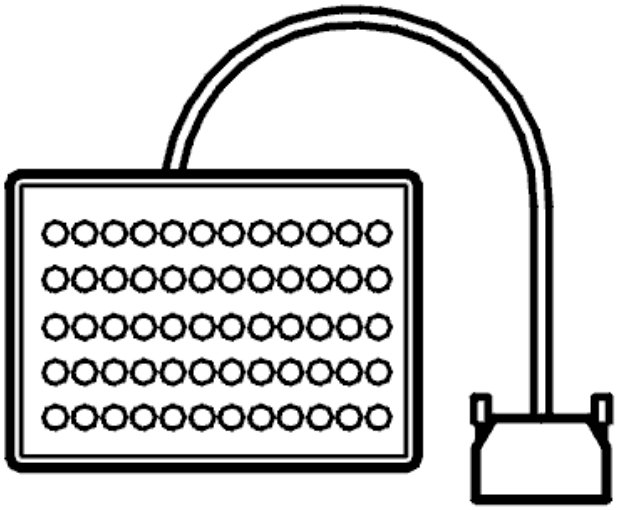

Fig. 363: Identifying Breakout Box
Courtesy of VOLVO CARS CORPORATION

Was a fault detected?

- **YES**

  Refer to **CHECKING DIAGNOSTIC TROUBLE CODES (DTCS)**

- **NO**

  Refer to **CHECKING THE COMPONENT**

CHECKING THE COMPONENT

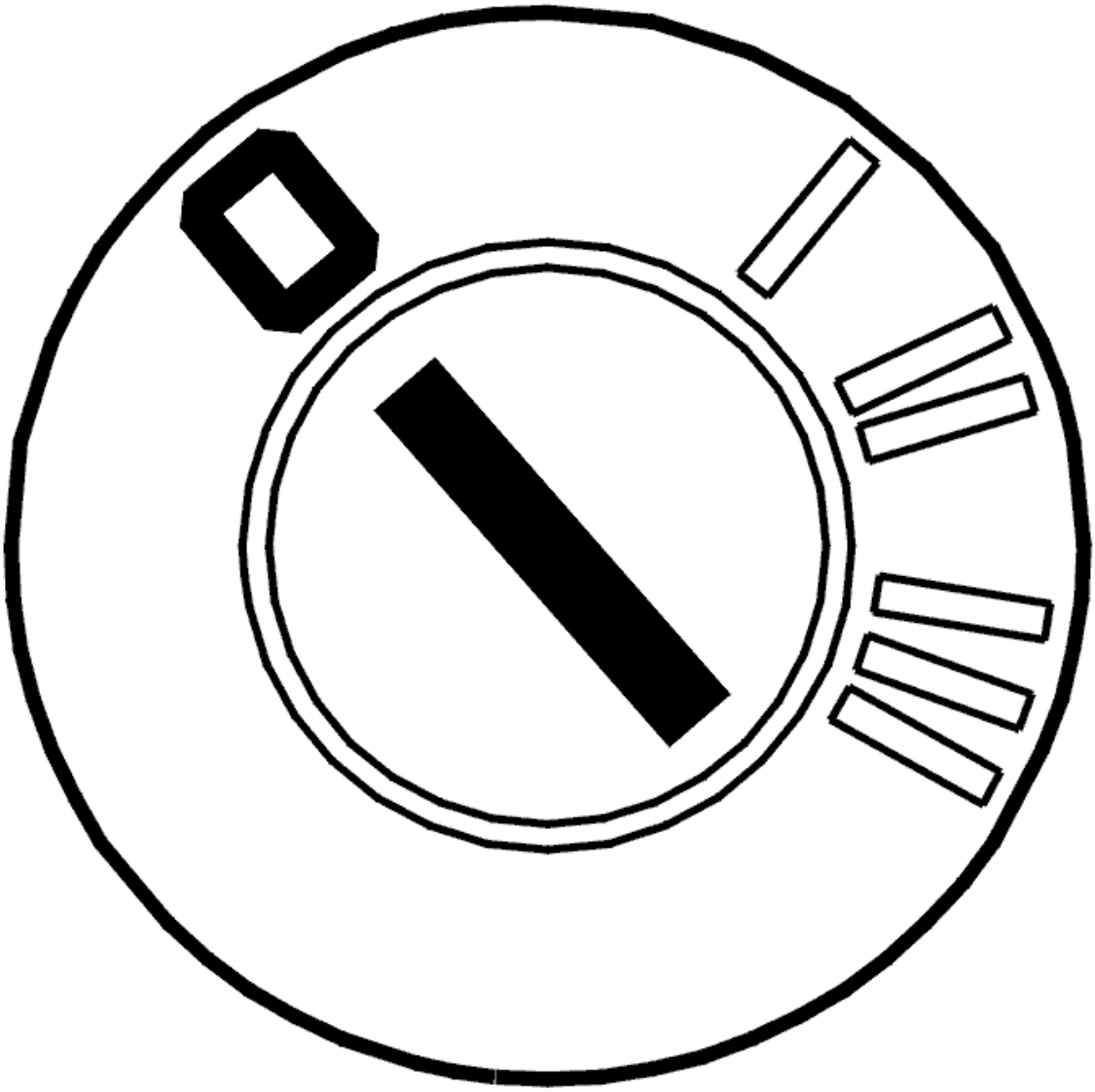

Fig. 364: Identifying Ignition OFF
Courtesy of VOLVO CARS CORPORATION

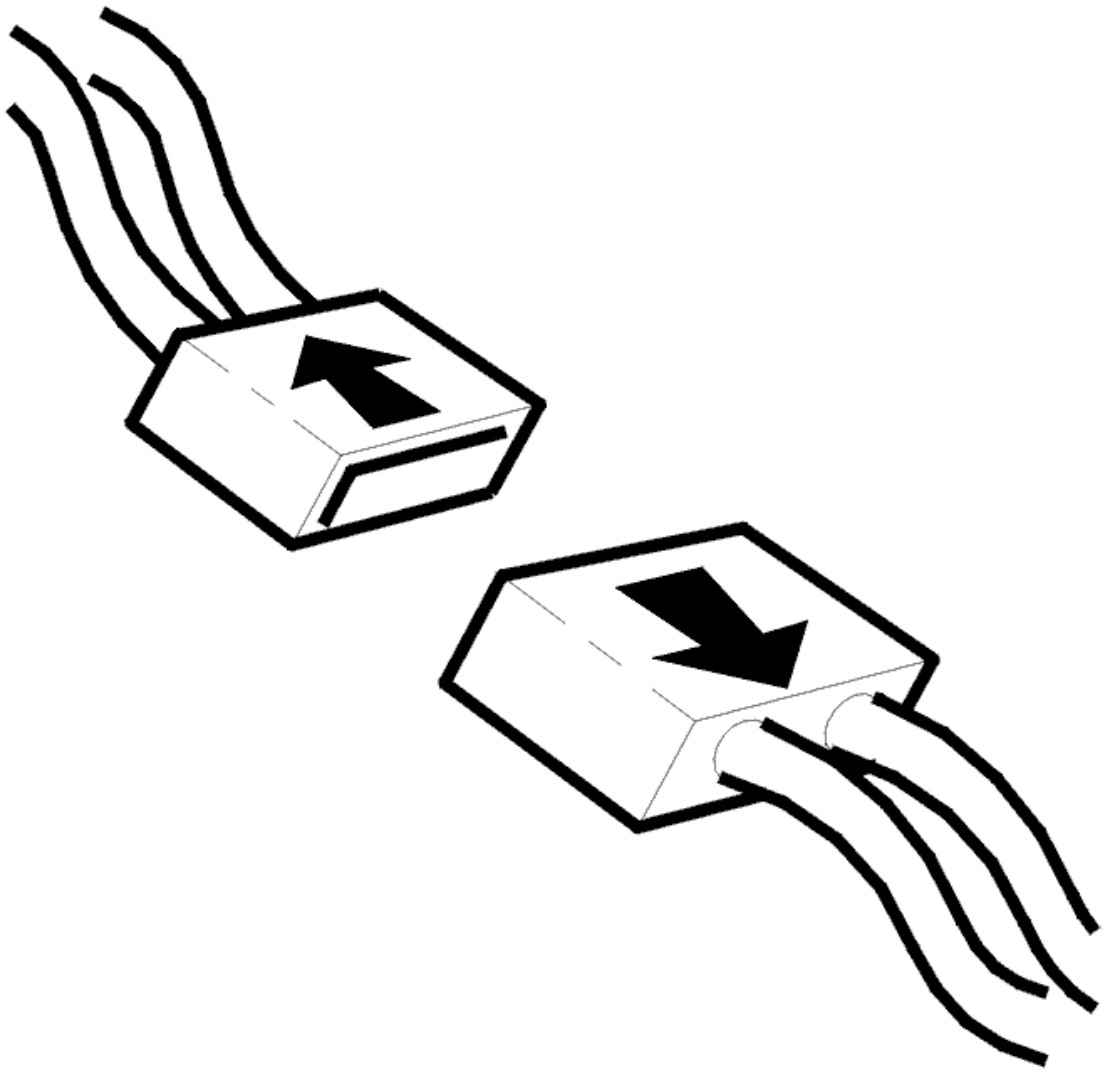

Fig. 365: Identifying Connector(s) Disconnected
Courtesy of VOLVO CARS CORPORATION

- Ignition off
- Disconnect the gearbox connector
- Connect adapter see **9511505** and breakout box see **9511428** to the gearbox connector (gearbox side)
- Unplug the transmission connector (transmission control module (TCM) side).

  Check that the resistance between the gearbox housing and the gearbox connector terminal #U (#A18) is 0-50 ohms.

  Other information:

  - see **CONNECTING THE BREAKOUT BOX, GM AUTOMATIC TRANSMISSIONS**
  - see **SIGNAL DESCRIPTION. CONNECTOR 4T65 EV/EV-GT**

- For information on signals on the transmission control module (TCM): **SIGNAL SPECIFICATION**
- see **CHECKING WIRING AND TERMINALS. PERMANENT FAULT**

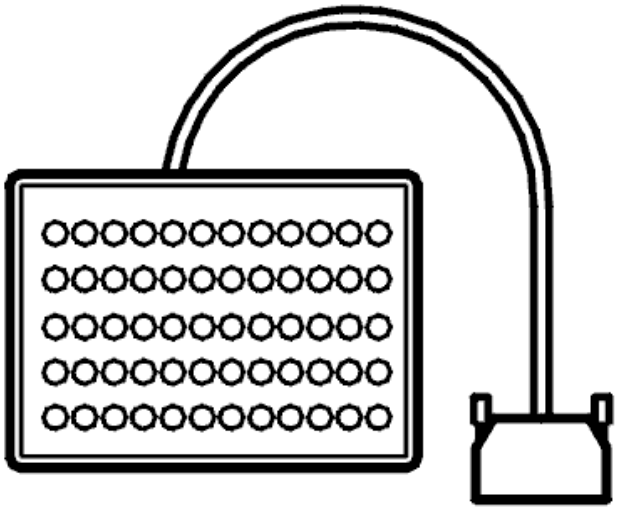

Fig. 366: Identifying Breakout Box
Courtesy of VOLVO CARS CORPORATION

Was the resistance OK?

- **YES**

  Refer to **CHECKING THE COMPONENT**

- **NO**

  Refer to **CHECKING THE WIRING AND COMPONENT**

CHECKING THE COMPONENT

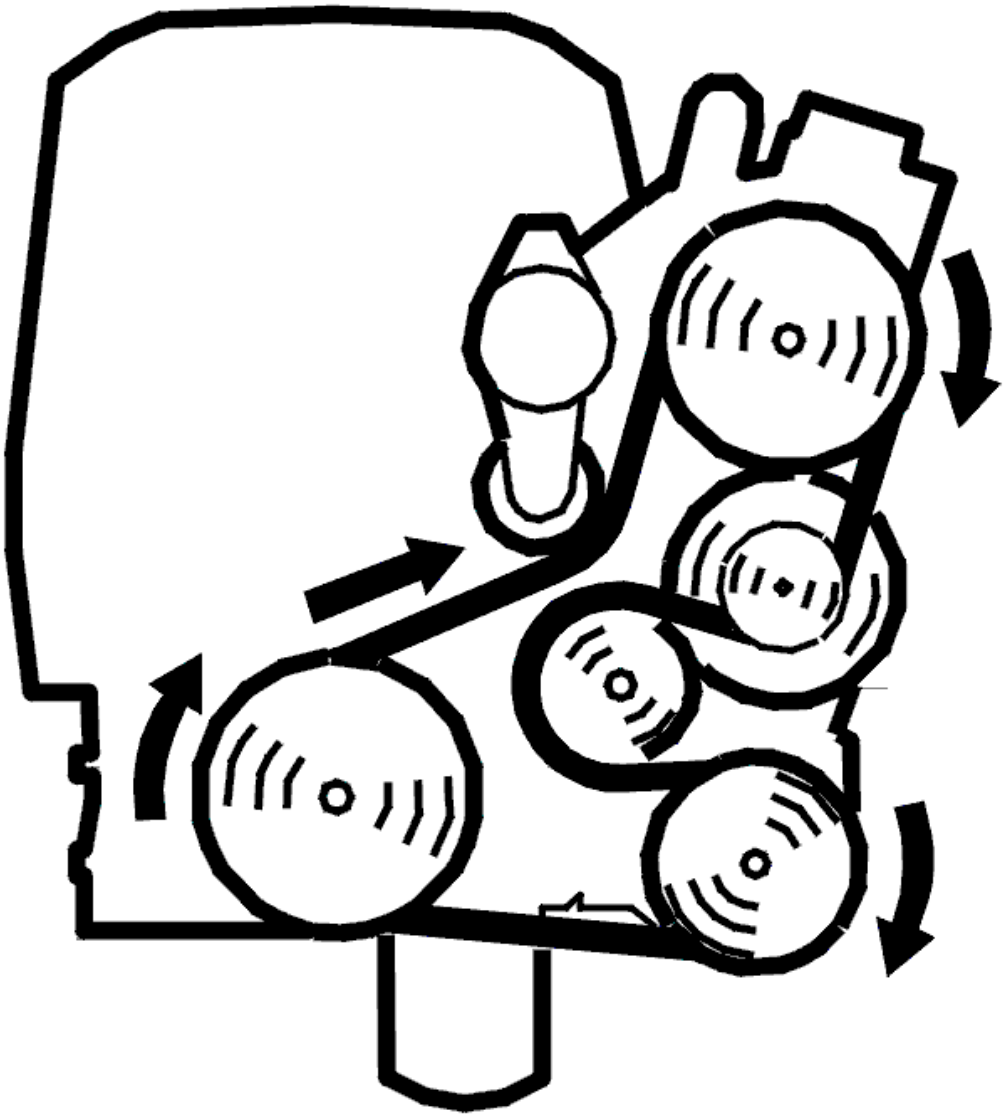

Fig. 367: Identifying Belt Routing
Courtesy of VOLVO CARS CORPORATION

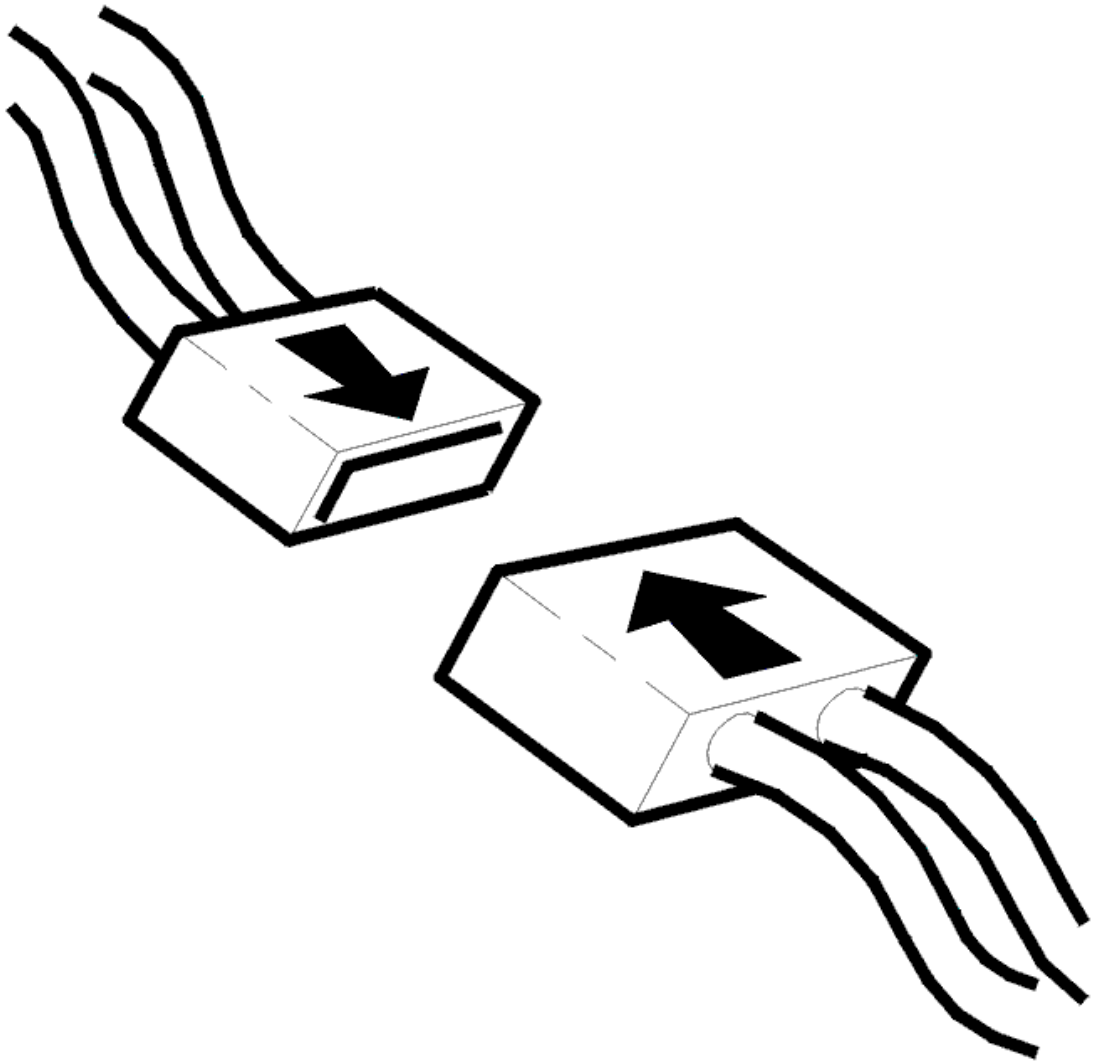

Fig. 368: Identifying Connector(s) Reinstallation
Courtesy of VOLVO CARS CORPORATION

- Ignition off
- Adapter see **9511505** and breakout box see **9511428** connected to the gearbox connector (transmission control module (TCM) side and transmission side).
- Start the engine.

  Check that the voltage between the gearbox housing and the gearbox connector terminal #U (#A18) is battery voltage.

  Other information:

  - see **CONNECTING THE BREAKOUT BOX, GM AUTOMATIC TRANSMISSIONS**
  - see **SIGNAL DESCRIPTION. CONNECTOR 4T65 EV/EV-GT**

- For information on signals on the transmission control module (TCM): **SIGNAL SPECIFICATION**
- see **CHECKING WIRING AND TERMINALS. PERMANENT FAULT**

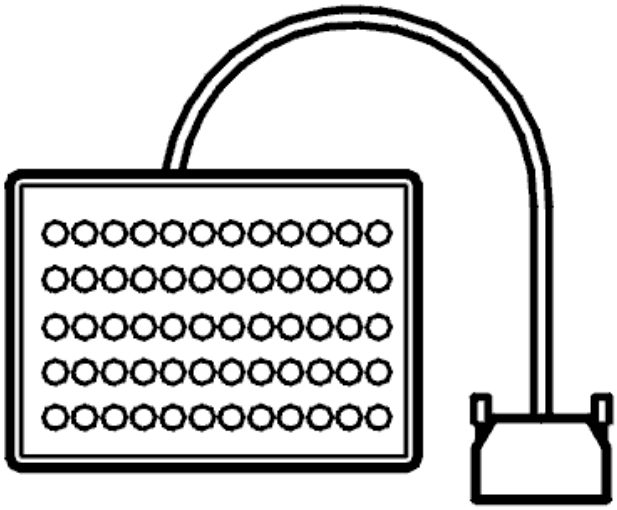

Fig. 369: Identifying Breakout Box
Courtesy of VOLVO CARS CORPORATION

Was the voltage OK?

- **YES**

  Refer to **CHECKING SOLENOID SL**

- **NO**

  Refer to **CHECKING THE COMPONENT**

CHECKING THE COMPONENT

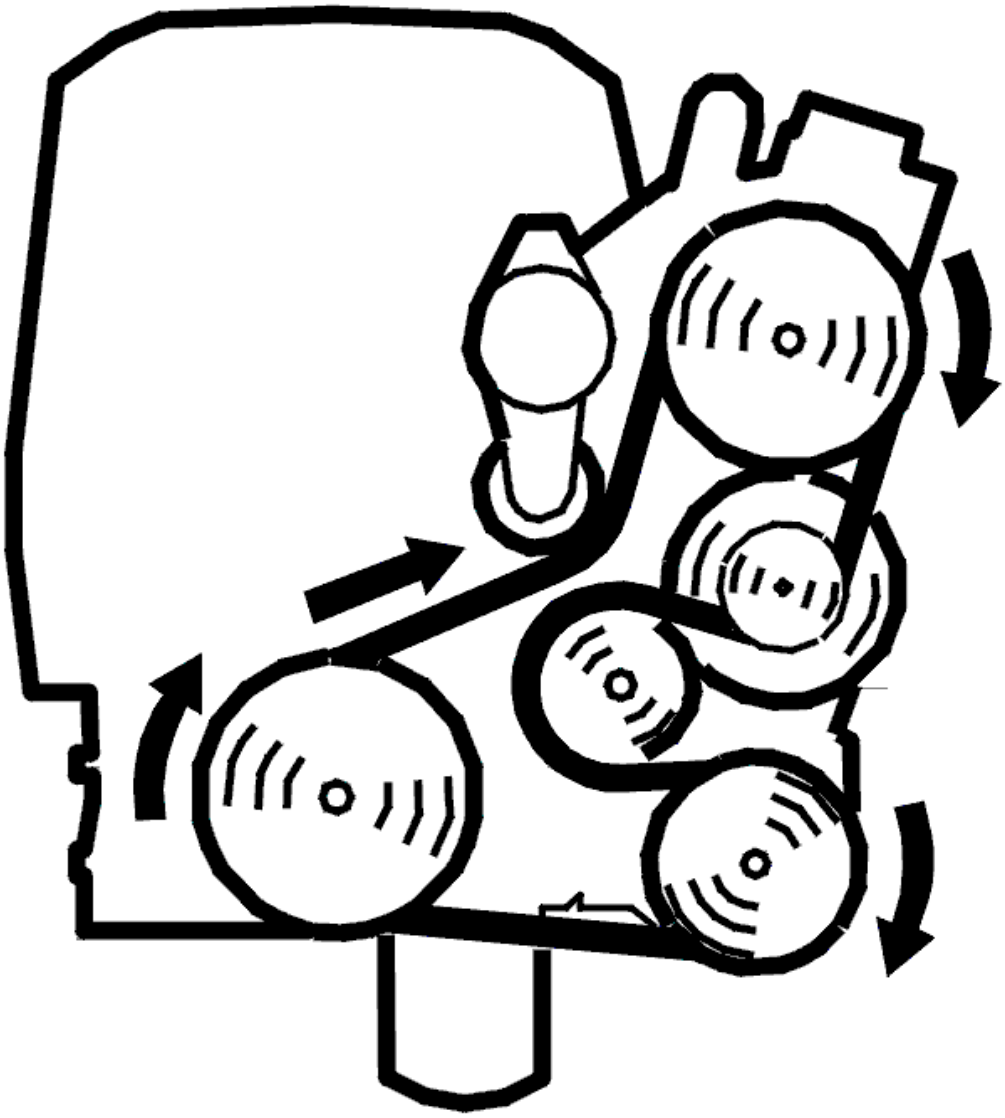

Fig. 370: Identifying Belt Routing
Courtesy of VOLVO CARS CORPORATION

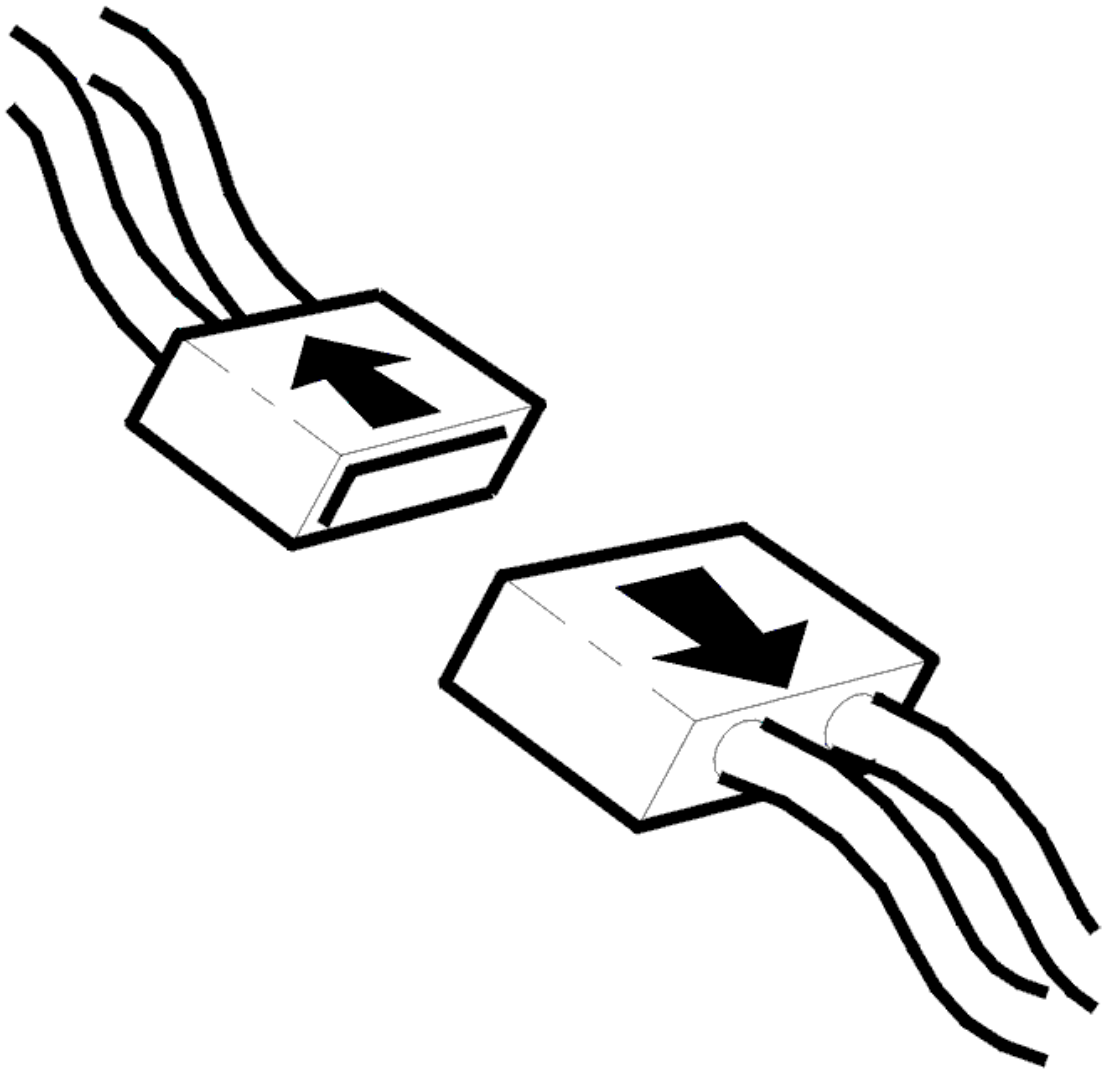

Fig. 371: Identifying Connector(s) Disconnected
Courtesy of VOLVO CARS CORPORATION

- Engine idling
- Adapter see **9511505** and breakout box see **9511428** connected to the transmission connector (transmission control module (TCM) side).
- Gearbox connector disconnected.

NOTE: When the transmission connector is unplugged, the transmission control module (TCM) will generate diagnostic trouble codes (DTCs) for solenoids and the gear shift position sensor. These do not require fault tracing after completion of this fault tracing.

Check that the voltage between any ground terminal and terminal #U (#A18) is battery voltage.

Other information:

- see **CONNECTING THE BREAKOUT BOX, GM AUTOMATIC TRANSMISSIONS**
- For information on signals on the transmission control module (TCM): **SIGNAL SPECIFICATION**

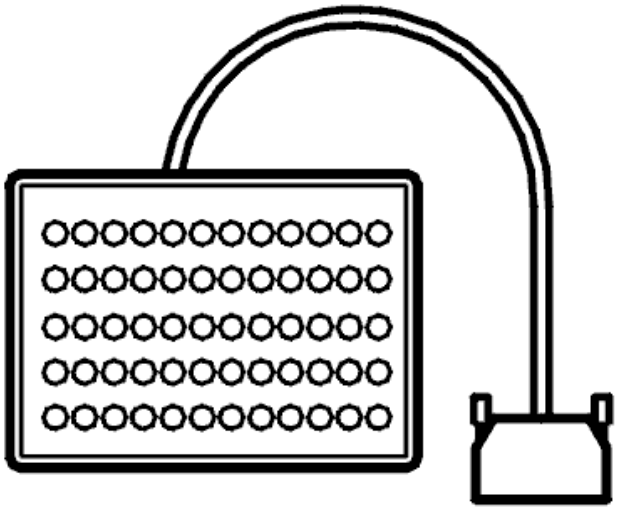

Fig. 372: Identifying Breakout Box
Courtesy of VOLVO CARS CORPORATION

Was the voltage OK?

- **YES**

  Refer to **CHECKING THE WIRING AND COMPONENT**

- **NO**

  Refer to **CHECKING THE WIRING AND COMPONENT**

CHECKING THE WIRING AND COMPONENT

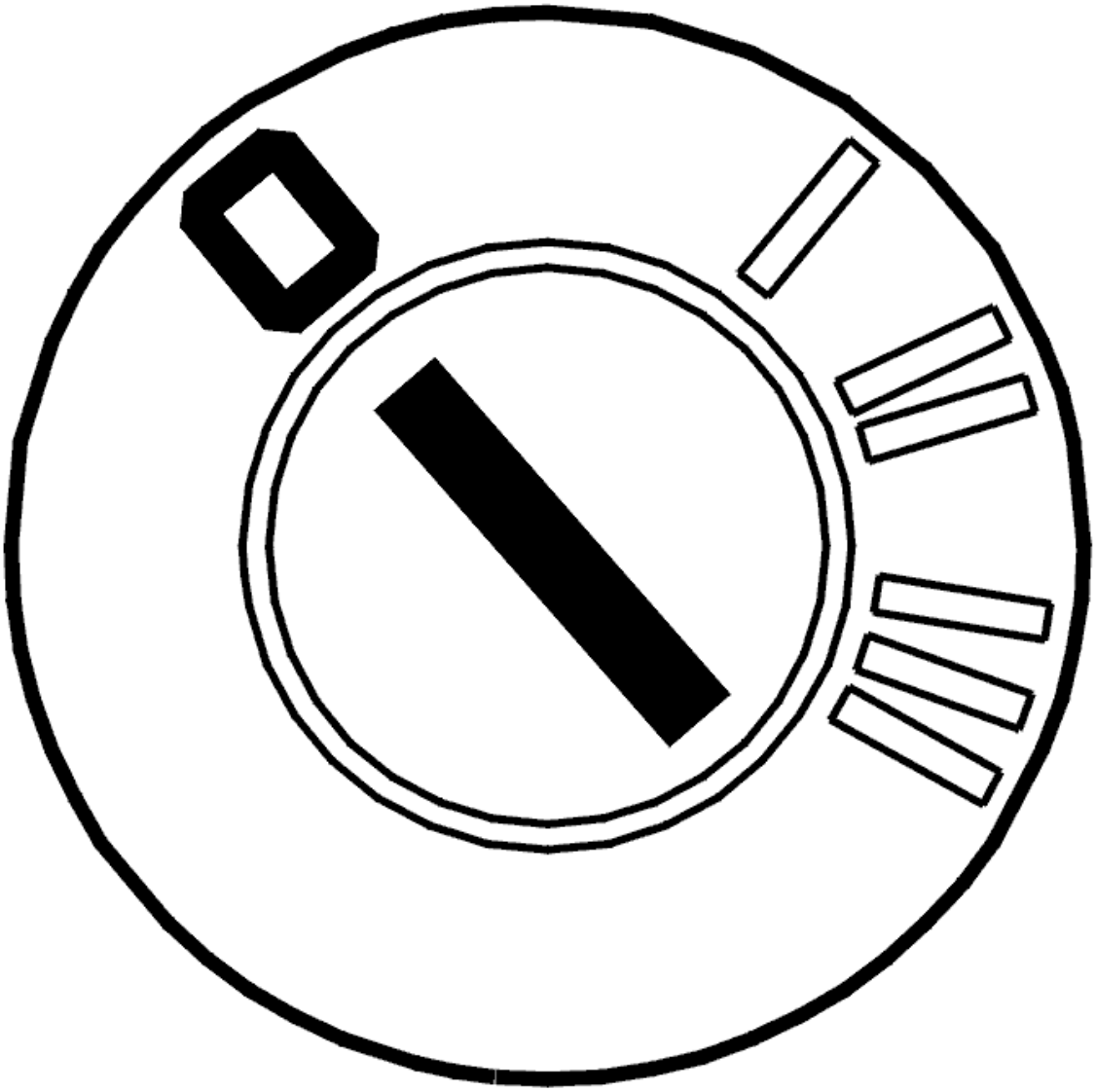

Fig. 373: Identifying Ignition OFF
Courtesy of VOLVO CARS CORPORATION

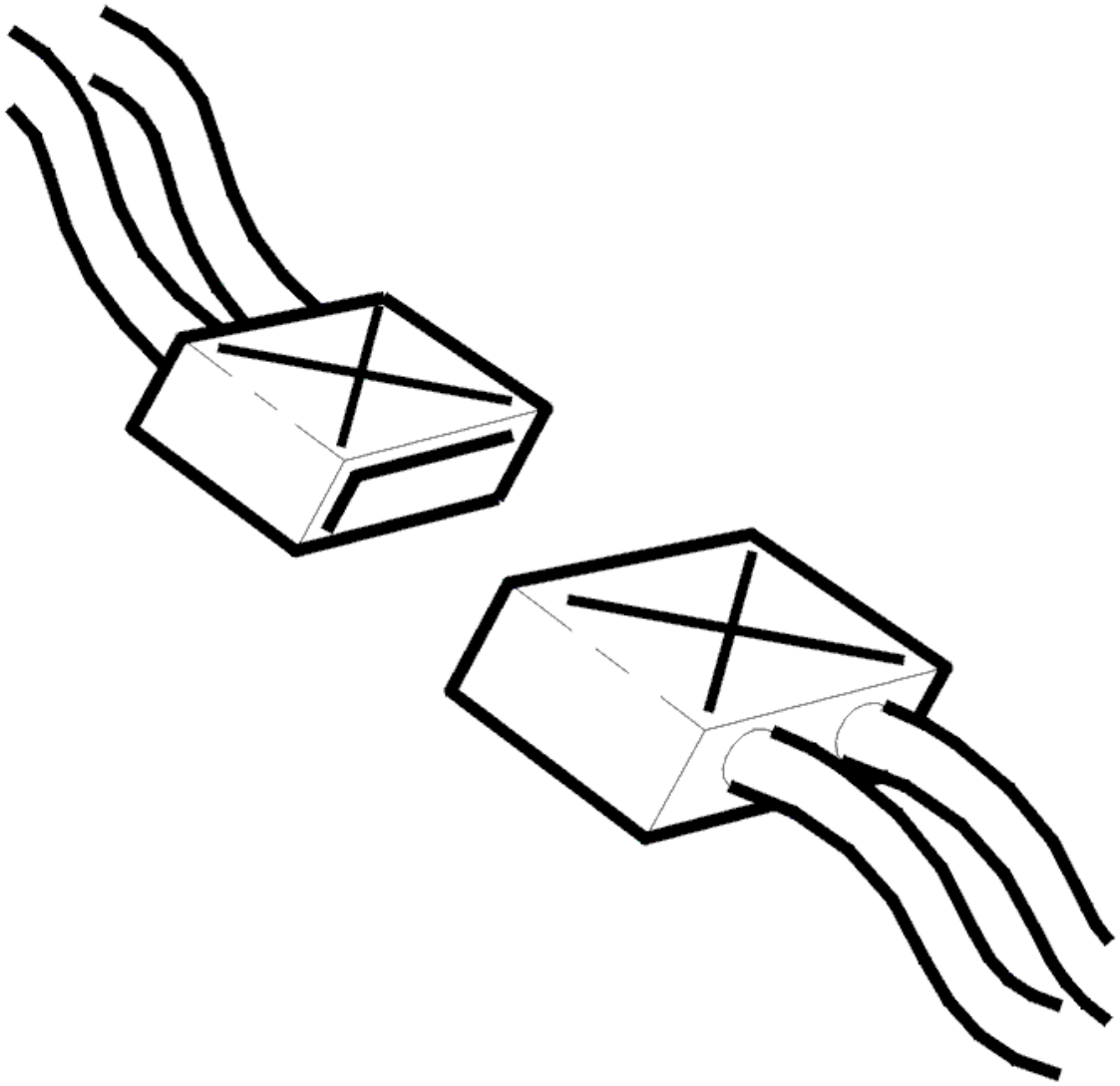

Fig. 374: Identifying Connectors
Courtesy of VOLVO CARS CORPORATION

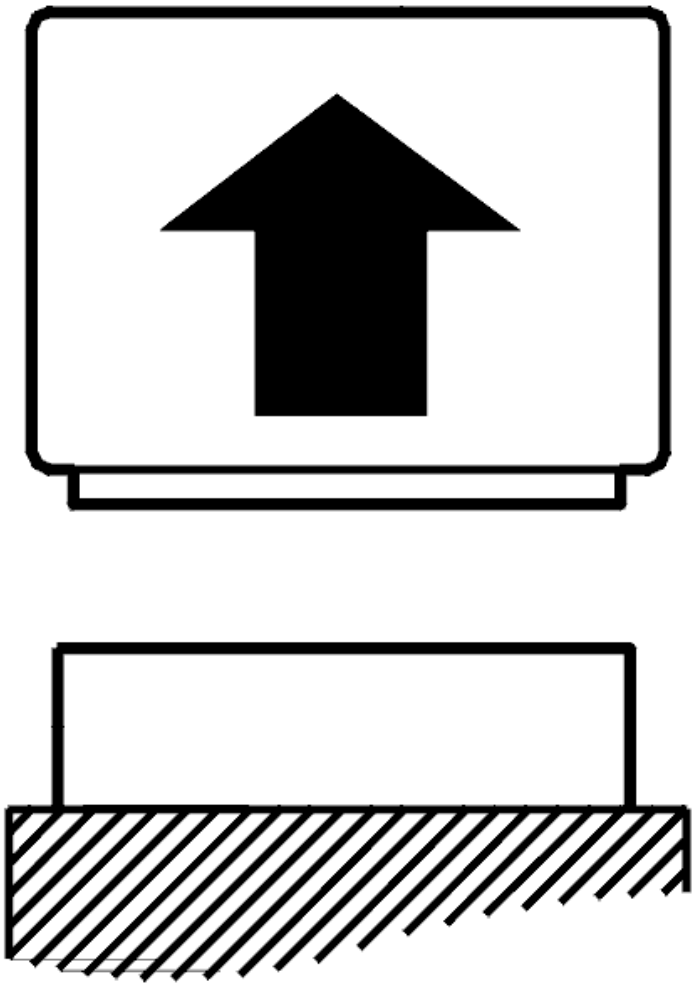

Fig. 375: Identifying Control Module Disconnected
Courtesy of VOLVO CARS CORPORATION

- Ignition off
- Disconnect the transmission control module (TCM).
- Connect a breakout box to the transmission control module (TCM) connector (transmission side).
- Connect adapter see **9511505** and breakout box see **9511428** to the transmission connector (transmission control module (TCM) side).
- Disconnect the gearbox connector

  Check the connectors of the transmission control module (TCM) and the transmission for contact resistance and oxidation.

  Check the cable between transmission control module (TCM) terminal #A65 (#B5) and gearbox connector terminal #U (#A18) (control module side). Check for an open-circuit. Check for a short-circuit

to ground. Check for a short-circuit to supply voltage.

Replace the transmission control module (TCM) if no fault was detected in the wiring or terminals.

Other information:

- Connecting a breakout box to the transmission control module (TCM): **CONNECTING THE BREAKOUT BOX**
- see **CONNECTING THE BREAKOUT BOX, GM AUTOMATIC TRANSMISSIONS**
- For information on signals on the transmission control module (TCM): **SIGNAL SPECIFICATION**
- see **CHECKING WIRING AND TERMINALS. PERMANENT FAULT**

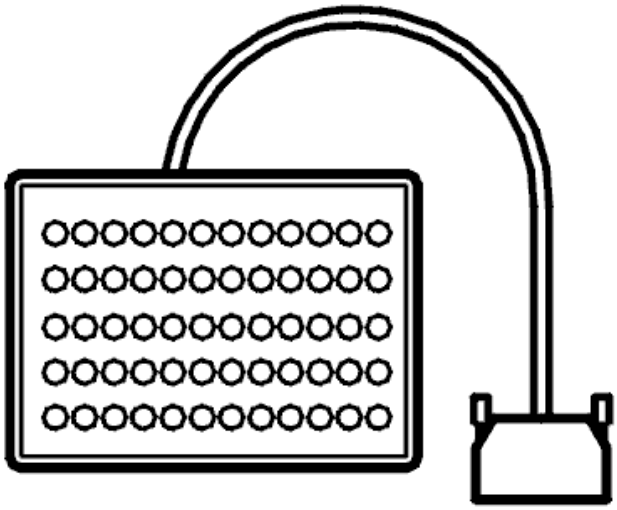

Fig. 376: Identifying Breakout Box
Courtesy of VOLVO CARS CORPORATION

Was a fault detected in the cables or terminals?

- **YES**

  Refer to **CHECKING DIAGNOSTIC TROUBLE CODES (DTCS)**

- **NO**

  Refer to **CHECKING THE WIRING AND COMPONENT**

CHECKING THE WIRING AND COMPONENT

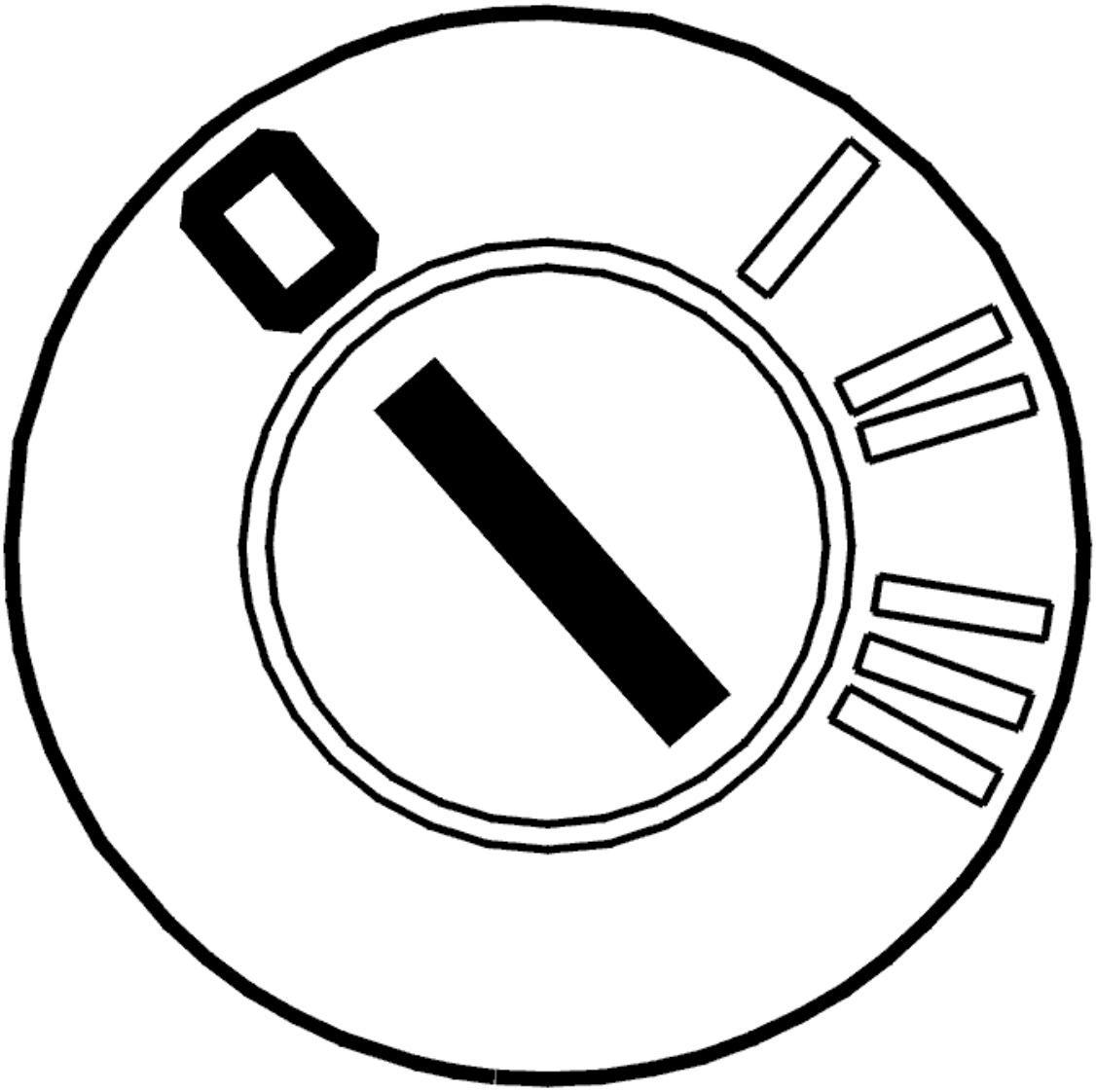

Fig. 377: Identifying Ignition OFF
Courtesy of VOLVO CARS CORPORATION

- Ignition off
- Open the gearbox control system
- Connect adapter see **9511505** and breakout box see **9511428** to the gearbox connector (gearbox side).

  Check the gearbox and pressure switch module connectors. Check for contact resistance and oxidation.

  Check the cable between control module terminal #U (terminal #A18) and pressure switch module connector terminal #B. Check for an open-circuit. Check for a short-circuit to ground. Check for a short-circuit to supply voltage.

  Check the gearbox oil filter. Check for **abnormal** amounts of particles in the oil.

Replace the oil filter if necessary.

Replace the pressure switch module if no particles were found in the oil filter or there was no fault in the wiring.

Other information:

- Connecting a breakout box to the control module: **CONNECTING THE BREAKOUT BOX**
- see **CONNECTING THE BREAKOUT BOX, GM AUTOMATIC TRANSMISSIONS**
- Opening the transmission control system: **TEMPERATURE SENSOR FLUID, TRANSAXLE, (TFT)**
- For information on signals on the transmission control module (TCM): **SIGNAL SPECIFICATION**
- see **TEMPERATURE SENSOR FLUID, TRANSAXLE, (TFT)**
- Replacing the oil filter: **TRANSMISSION OIL / OIL FILTER, REPLACING**
- Replacing the pressure switch module: **PRESSURE SENSOR, REPLACING**
- see **CHECKING WIRING AND TERMINALS. PERMANENT FAULT**

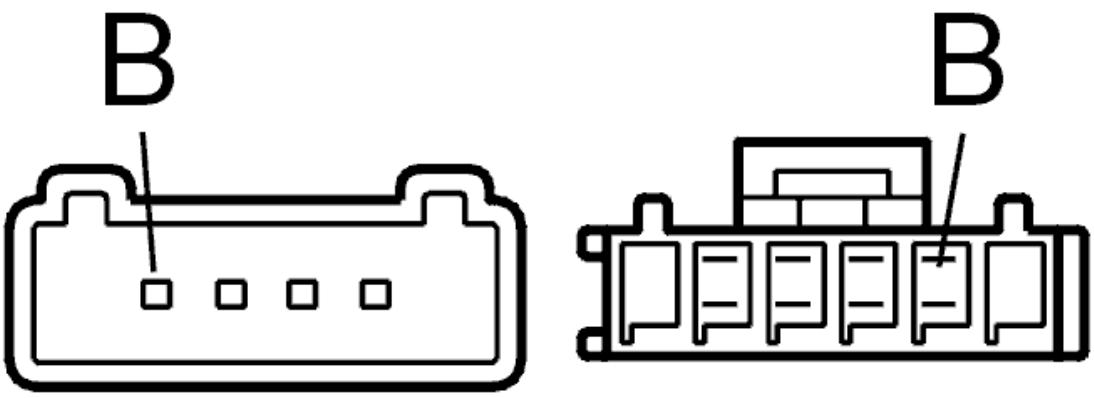

Fig. 378: Identifying Pressure Switch Module Connector Terminal #B
Courtesy of VOLVO CARS CORPORATION

Was an abnormal quantity of particles found in the gearbox oil trough and oil filter?

- **YES**

  Refer to **REPLACING THE GEARBOX**

- **NO**

  Refer to **RESETTING THE ADAPTATION**

CHECKING SOLENOID SL

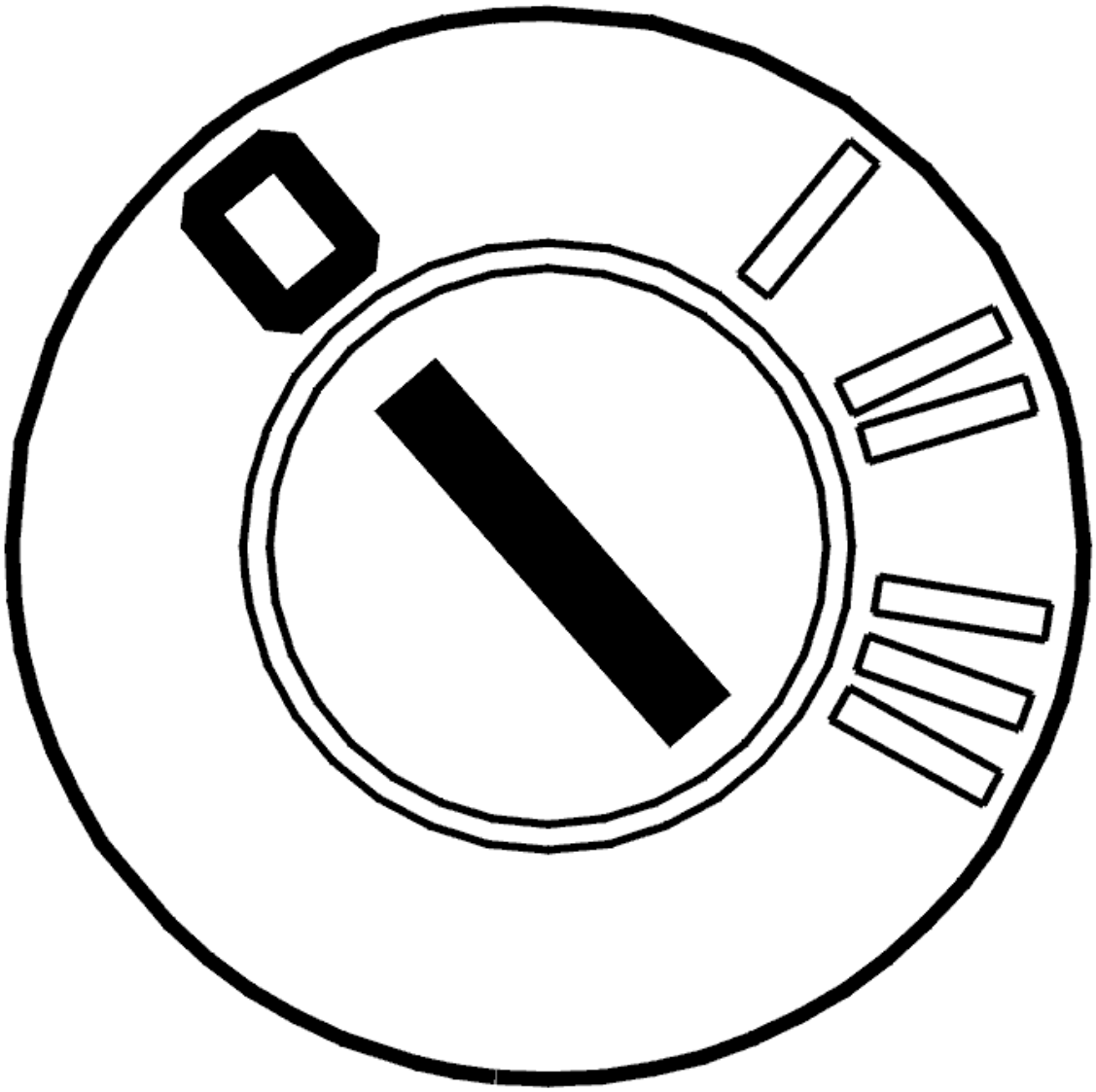

Fig. 379: Identifying Ignition OFF
Courtesy of VOLVO CARS CORPORATION

- Ignition off
- Breakout box connected to the transmission control module (TCM) connector (transmission side).

  Check solenoid SL by measuring the resistance between transmission control module (TCM) #A51 (#A51) and #A53 (#A53).

  When the gearbox is cold (20°C), the resistance must be 10-11 ohms. When the gearbox is at operating temperature (150°C), the resistance must not exceed 16 ohms.

  Other information:

- Connecting a breakout box to the transmission control module (TCM): **CONNECTING THE BREAKOUT BOX**
- For information on signals on the transmission control module (TCM): **SIGNAL SPECIFICATION**

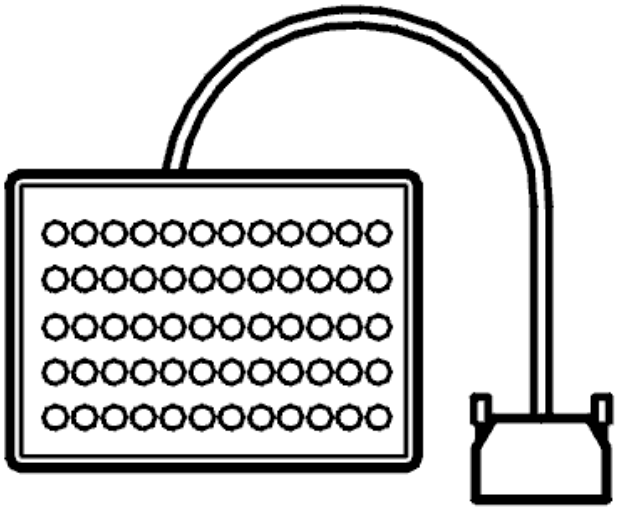

Fig. 380: Identifying Breakout Box
Courtesy of VOLVO CARS CORPORATION

Was the resistance OK?

- **YES**

  Refer to **CONNECTING THE T PIPE**

- **NO**

  Refer to **CHECKING THE WIRING**

CONNECTING THE T PIPE

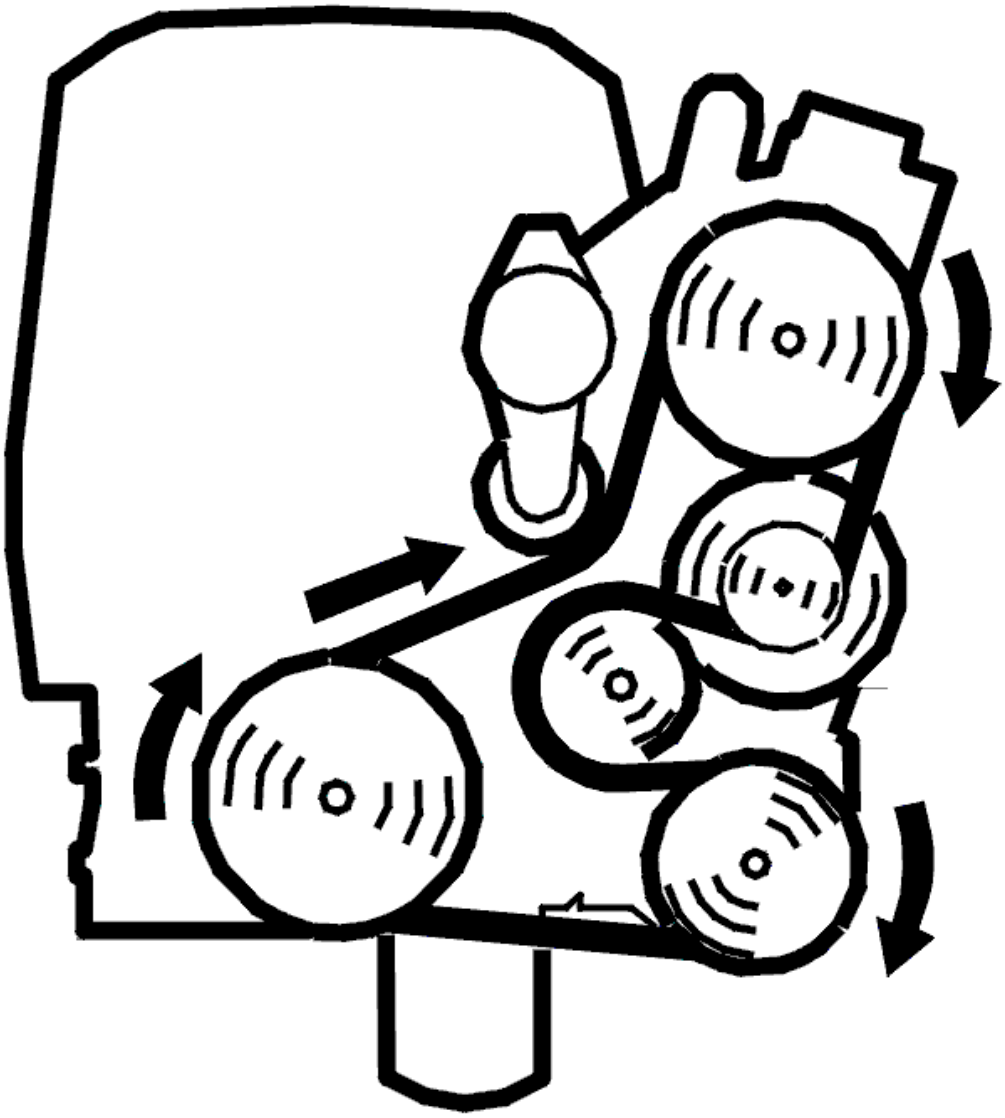

Fig. 381: Identifying Belt Routing
Courtesy of VOLVO CARS CORPORATION

- Deactivate the function for STC/DSTC by pressing in the button for STC/DSTC for approximately 2 seconds
- Ignition off
- Connect T-pipe see **9997002** with oil pressure gauge see **9995114** to the coolant hose from the gearbox for the oil cooler
- Raise the vehicle so that the drive wheels hang freely.

WARNING: **Ensure that the vehicle is safely raised and that there are no objects caught in the front wheels.**

- Start the engine.

- Gear selector in position P
- Activate the function "Block automatic shifting".

Other information

- see **T-PIPE, CONNECTION TO OIL COOLER**

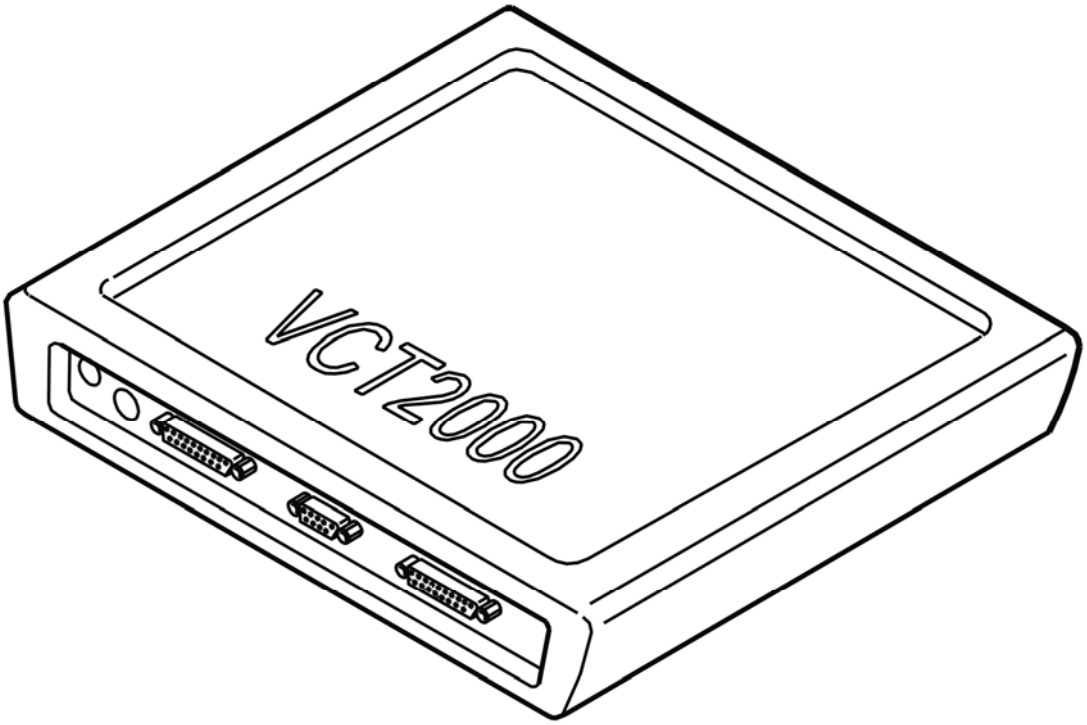

Fig. 382: Identifying VCT2000 Diagnostic Tool Symbol In VIDA
Courtesy of VOLVO CARS CORPORATION

Allow the engine to run

- **Continue**

Refer to **CHECKING SOLENOID SL**

CHECKING SOLENOID SL

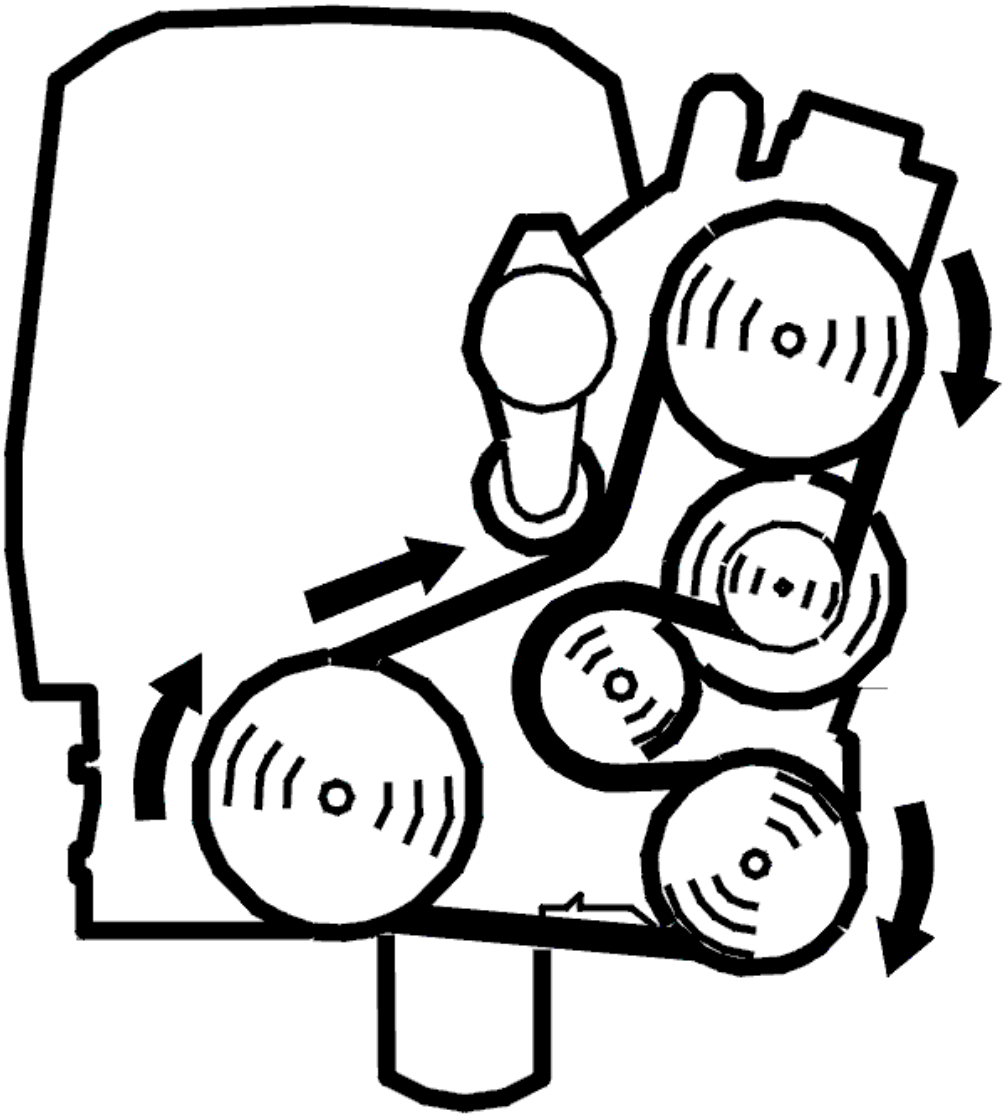

Fig. 383: Identifying Belt Routing
Courtesy of VOLVO CARS CORPORATION

- Engine running
- Move the gear selector to position D
- Activate the solenoid for gear 2 and then the lock-up function
- Check the pressure change on the oil pressure gauge. A considerable change in pressure should be observed
- Deactivate the lock-up function. Check the pressure change.

  Repeat the activation and deactivation of the lock-up function a few times to ensure accurate results.

  HINT: Unchanged pressure indicates that the control system is damaged.

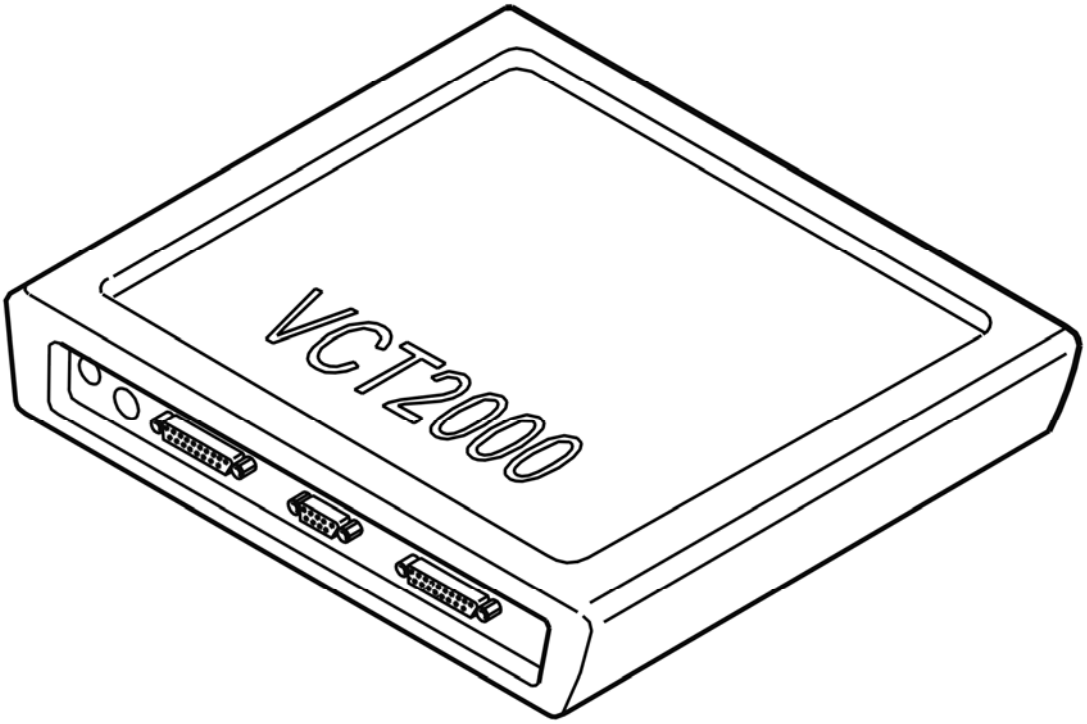

Fig. 384: Identifying VCT2000 Diagnostic Tool Symbol In VIDA
Courtesy of VOLVO CARS CORPORATION

Did the pressure change?

- **YES**

  Refer to **REPLACING THE GEARBOX**

- **NO**

  Refer to **REPLACING THE CONTROL SYSTEM**

REPLACING THE CONTROL SYSTEM

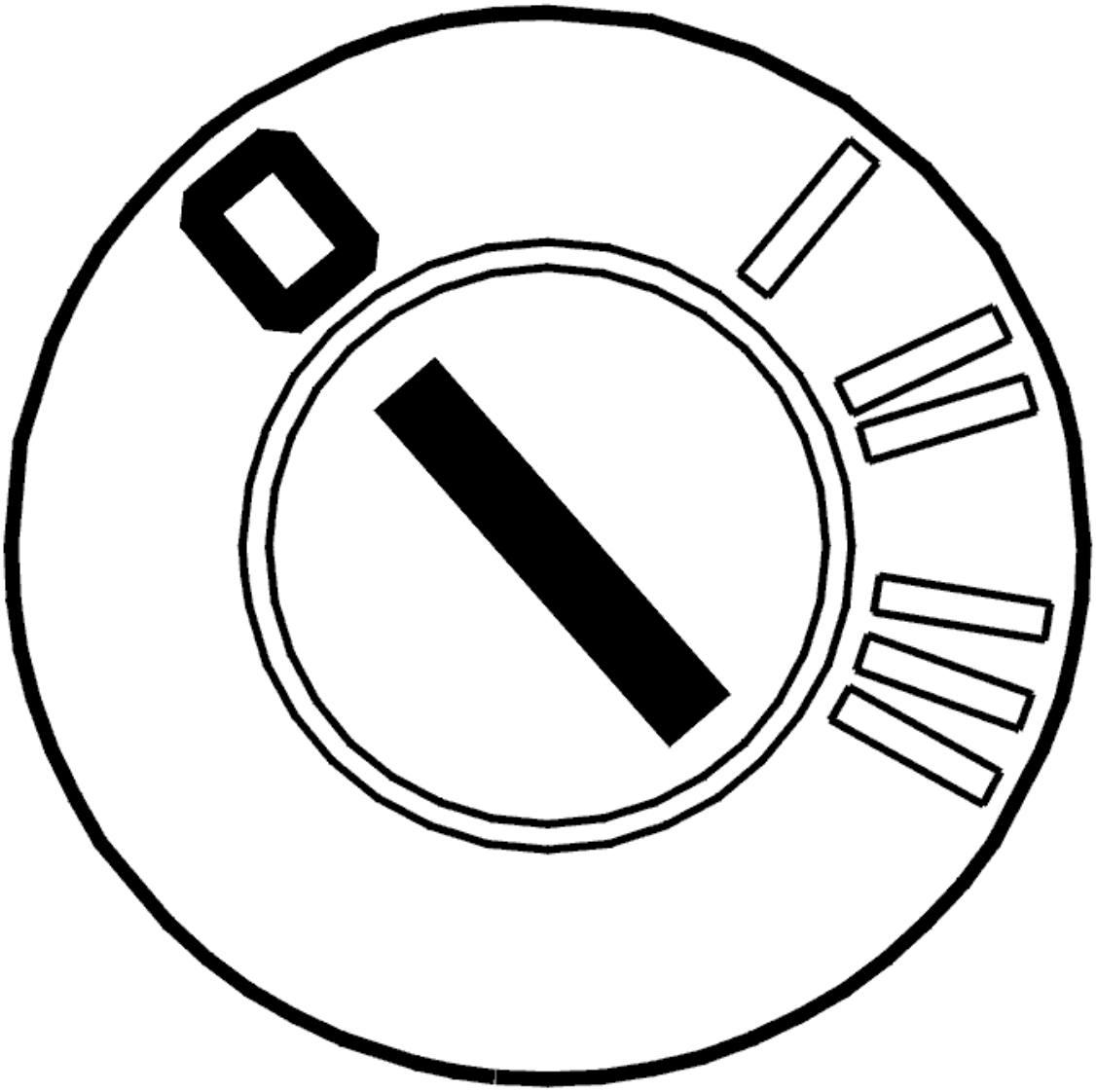

Fig. 385: Identifying Ignition OFF
Courtesy of VOLVO CARS CORPORATION

- Ignition off

  Fault-tracing indicates a fault in the gearbox control system. Replace the control system.

  Other information

  - To replace the control system, For removal, see **CONTROL SYSTEM/VALVE HOUSING, REMOVING** and To install, see **CONTROL SYSTEM / VALVE HOUSING, INSTALLING** .

- **Continue**

  Refer to **RESETTING THE ADAPTATION**

CHECKING THE WIRING

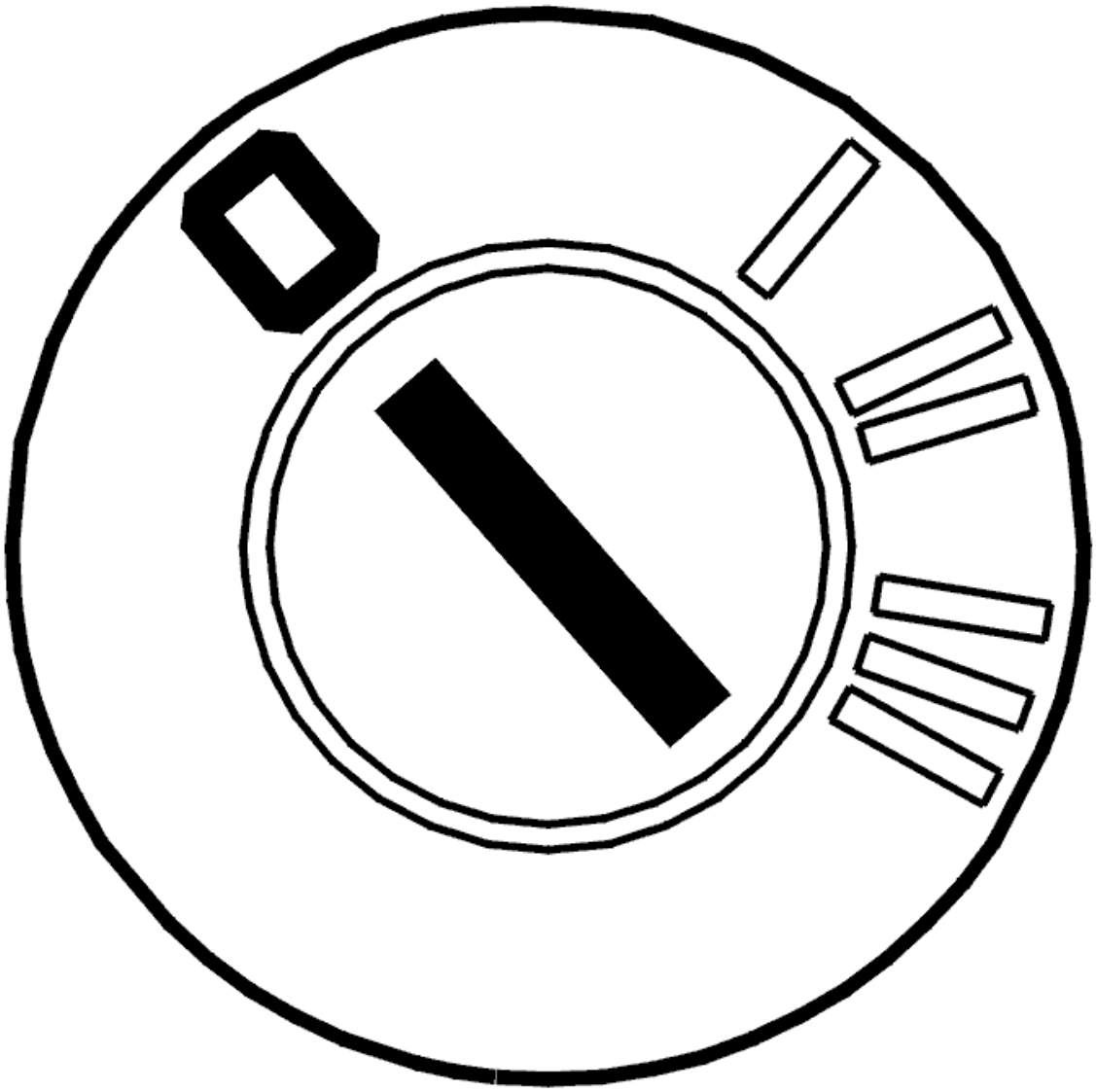

Fig. 386: Identifying Ignition OFF
Courtesy of VOLVO CARS CORPORATION

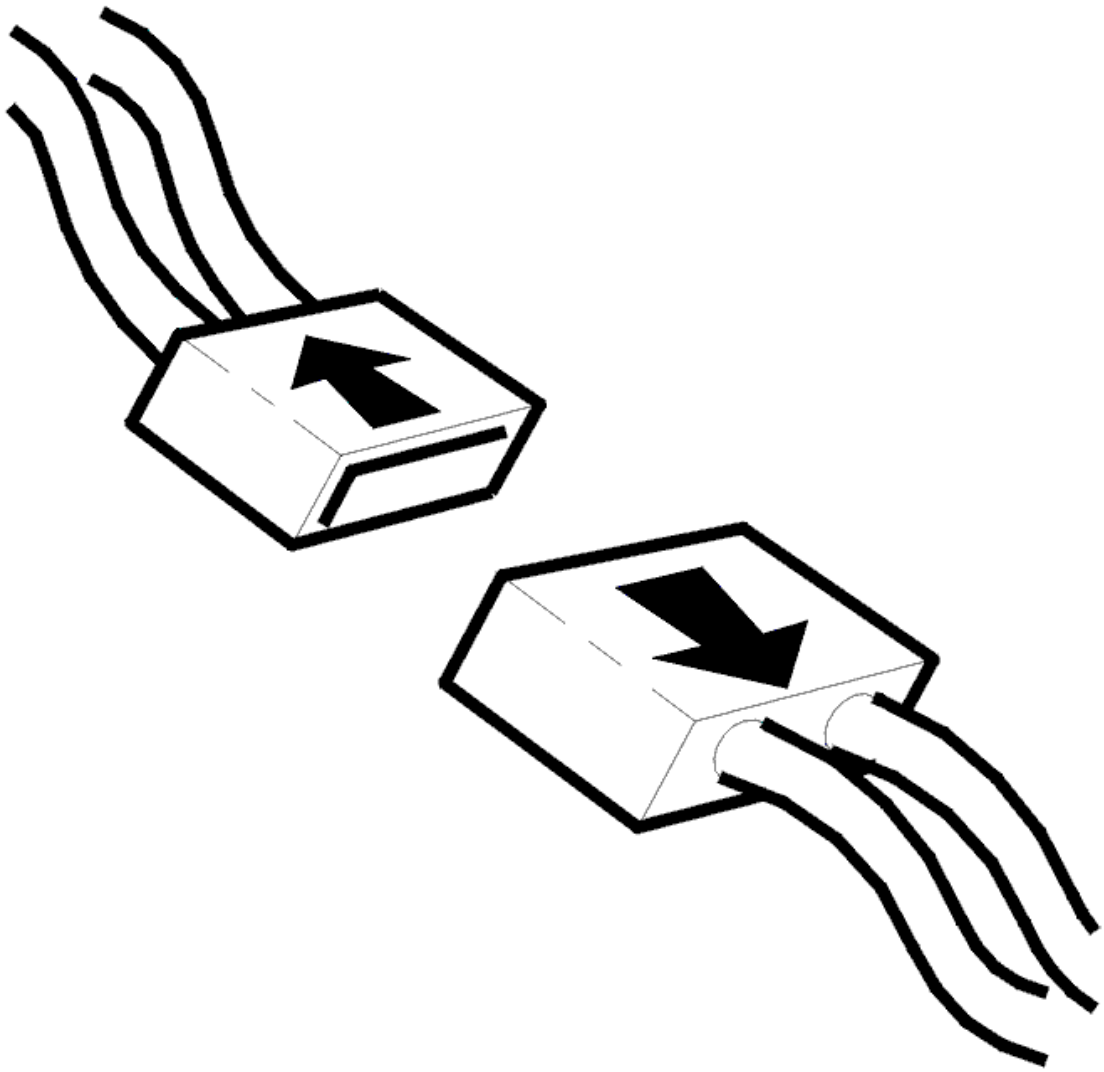

Fig. 387: Identifying Connector(s) Disconnected
Courtesy of VOLVO CARS CORPORATION

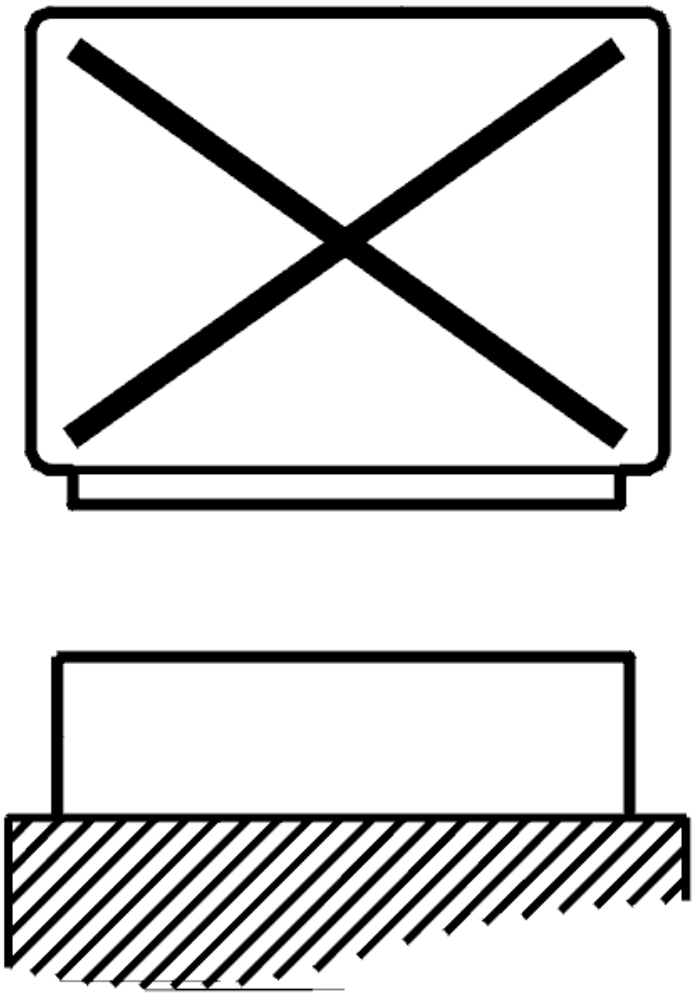

Fig. 388: Identifying Control Module Disconnected
Courtesy of VOLVO CARS CORPORATION

- Ignition off
- Transmission control module (TCM) disconnected.
- Breakout box connected to the transmission control module (TCM) connector (transmission side).
- Disconnect the gearbox connector
- Adapter see **9511505** and breakout box see **9511428** connected to the transmission connector (transmission control module (TCM) side).

  Check the cable between transmission control module (TCM) #A51 (#A51) and transmission connector #T (#A17) for open-circuit and short-circuit to ground or voltage.

  Check the wiring between control module terminal #A53 (#A53) and gearbox connector terminal #E (#A5). Check for an open-circuit. Check for a short-circuit to ground. Check for a short-circuit to supply

voltage.

Remedy as necessary.

Other information:

- Connecting a breakout box to the transmission control module (TCM): **CONNECTING THE BREAKOUT BOX**
- see **CONNECTING THE BREAKOUT BOX, GM AUTOMATIC TRANSMISSIONS**
- For information on signals on the transmission control module (TCM): **SIGNAL SPECIFICATION**
- see **CHECKING WIRING AND TERMINALS. PERMANENT FAULT**

Was a fault detected?

- **YES**

  Refer to **CHECKING DIAGNOSTIC TROUBLE CODES (DTCS)**

- **NO**

  Refer to **CHECKING THE WIRING AND COMPONENT**

CHECKING THE WIRING AND COMPONENT

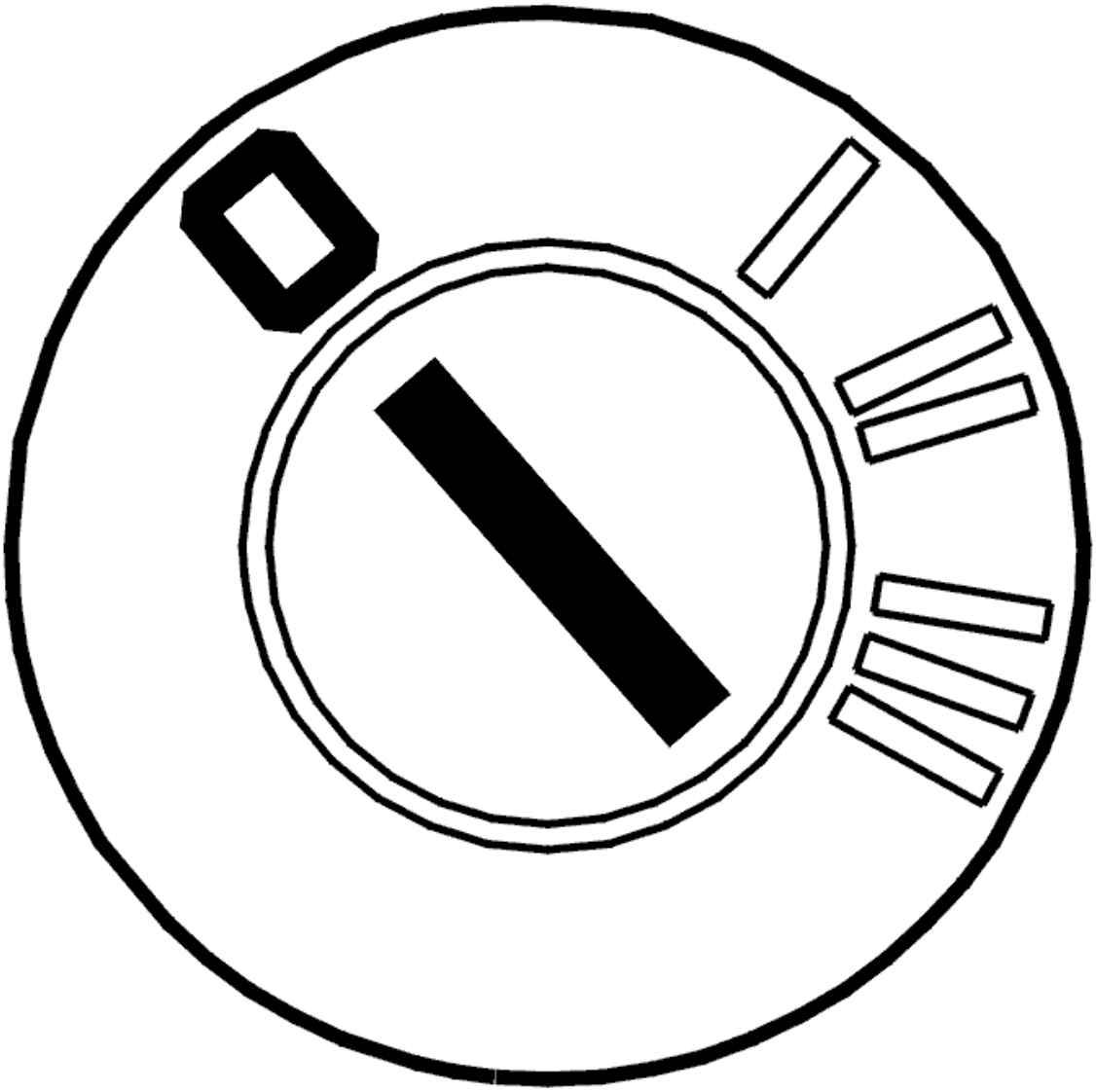

Fig. 389: Identifying Ignition OFF
Courtesy of VOLVO CARS CORPORATION

- Ignition off
- Open the gearbox control system
- Connect adapter see **9511505** and breakout box see **9511428** to the gearbox connector (gearbox side).

  Check the cable between gearbox connector terminal #T (#A17) and solenoid SL terminal #A. Check the cable between gearbox connector terminal #E (#A5) and solenoid SL terminal #B. Check these cables for an open-circuit.

  HINT: Check solenoid SL by measuring the resistance between solenoid SL terminals #A and #B. When the gearbox is cold (approximately 20°C), the resistance must be 10-11 ohms.

  Remedy as necessary.

Other information:

- see **CONNECTING THE BREAKOUT BOX, GM AUTOMATIC TRANSMISSIONS**
- For information on signals on the transmission control module (TCM): **SIGNAL SPECIFICATION**
- To open the transmission control system, For removal, see **SIDE COVER TRANSMISSION, REMOVING** or To install, see **SIDE COVER TRANSMISSION, INSTALLING**
- see **SOLENOID LOCK-UP FUNCTION, REPLACING**
- see **TEMPERATURE SENSOR FLUID, TRANSAXLE, (TFT)**
- see **CHECKING WIRING AND TERMINALS. PERMANENT FAULT**

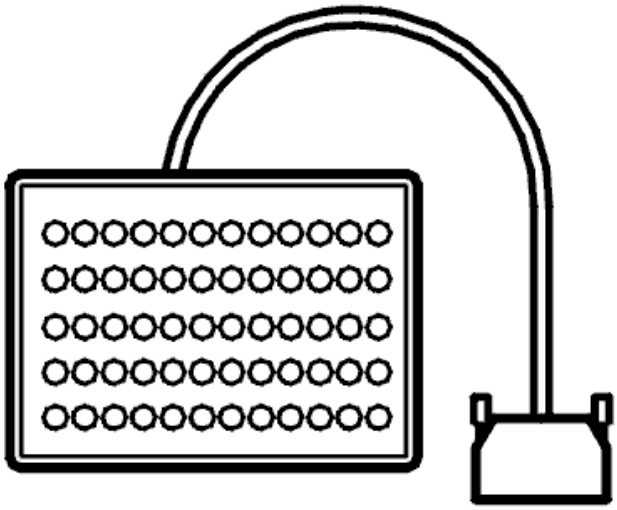

Fig. 390: Identifying Breakout Box
Courtesy of VOLVO CARS CORPORATION

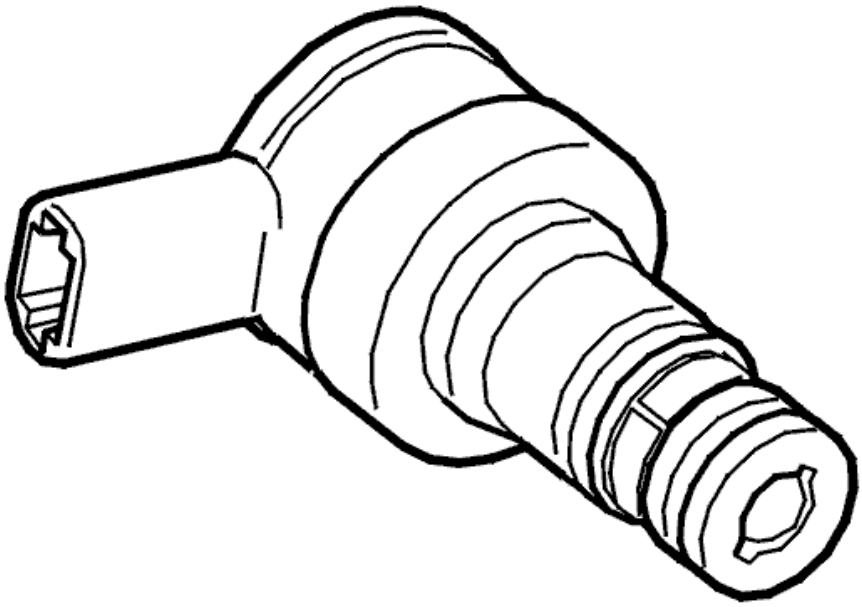

Fig. 391: Identifying Lock-Up Solenoid, SL
Courtesy of VOLVO CARS CORPORATION

- **Continue**

  Refer to **RESETTING THE ADAPTATION**

REPLACING THE GEARBOX

Fault-tracing indicates a fault in the gearbox. Replace the gearbox.

Other information:

- see **TRANSMISSION, REMOVING**
- see **TRANSMISSION, INSTALLING (2003, 2004)** or **TRANSMISSION, INSTALLING (2005, 2006)**

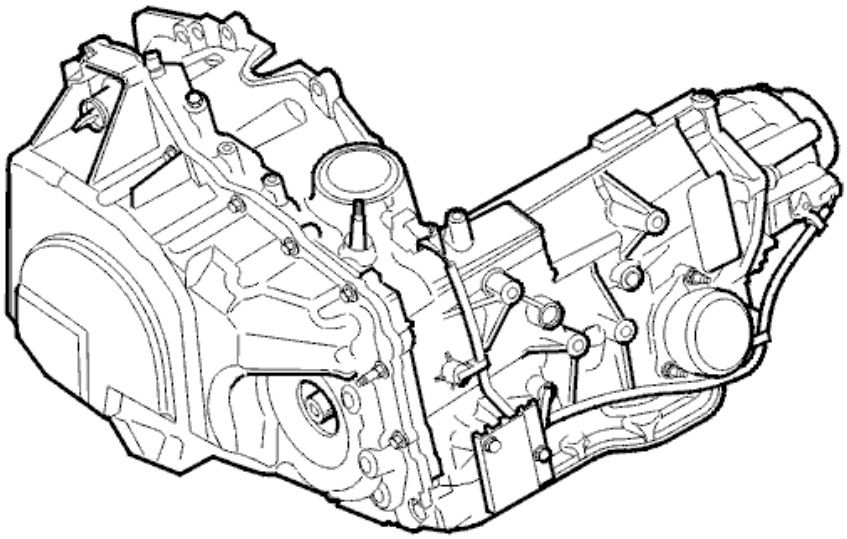

P2X

4301721D ©VOLVO

Fig. 392: Identifying Transmission
Courtesy of VOLVO CARS CORPORATION

- **Continue**

  Refer to **RESETTING THE ADAPTATION**

FAULT-TRACING INFORMATION

If the transmission control module (TCM) has been programmed with new software, the fault is probably remedied.

If new software has not been loaded, fault tracing indicates that the transmission control module (TCM) detected a fault earlier, but it is no longer active.

CHECKING DIAGNOSTIC TROUBLE CODES (DTCS)

ERASING DIAGNOSTIC TROUBLE CODES (DTCS)

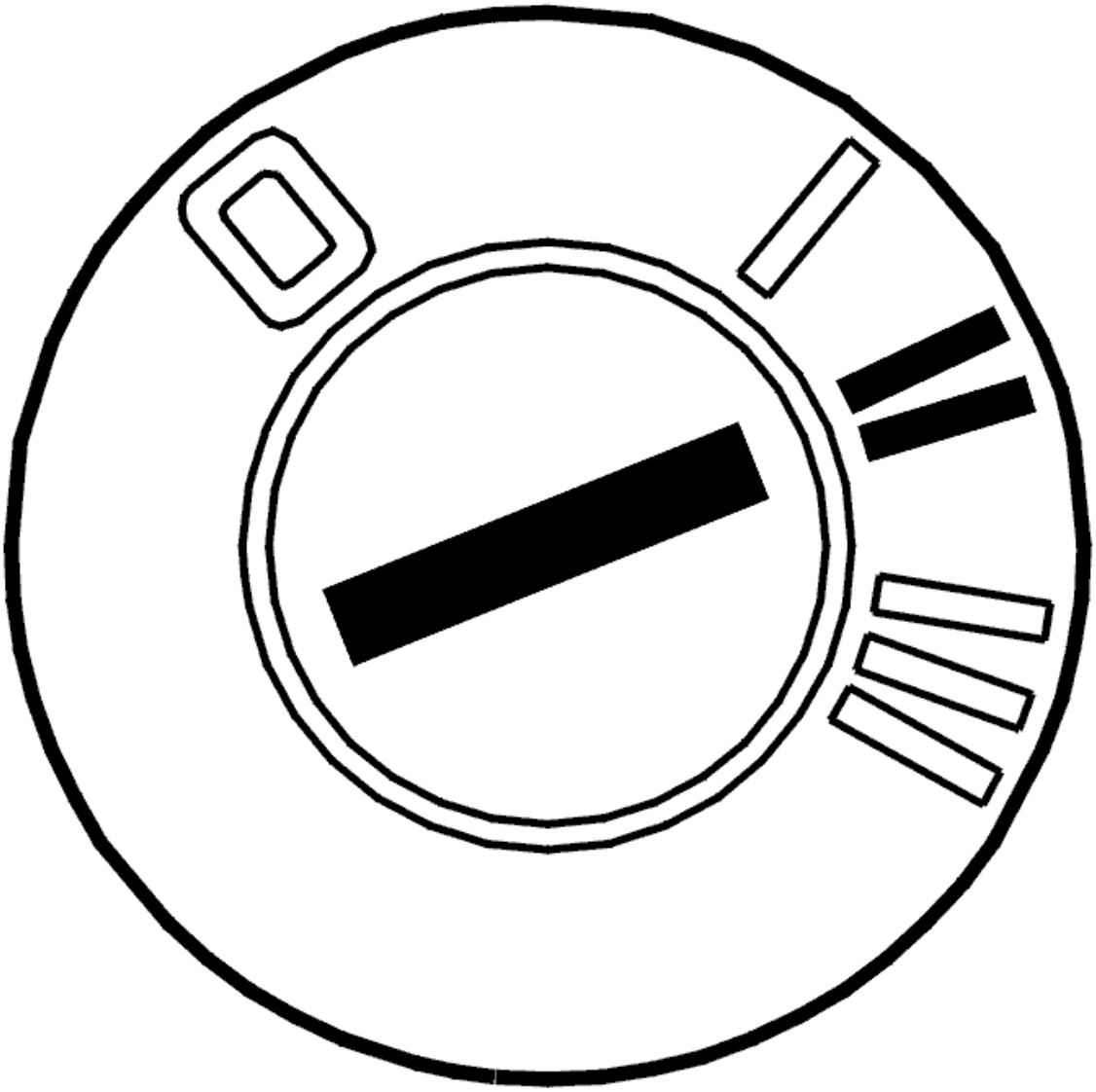

Fig. 393: Identifying Ignition ON
Courtesy of VOLVO CARS CORPORATION

- Ignition off
- Wait for two minutes to allow time for the diagnostic trouble codes (DTCs) to be stored in the control module memory
- Ignition on
- Erase diagnostic trouble codes (DTCs).

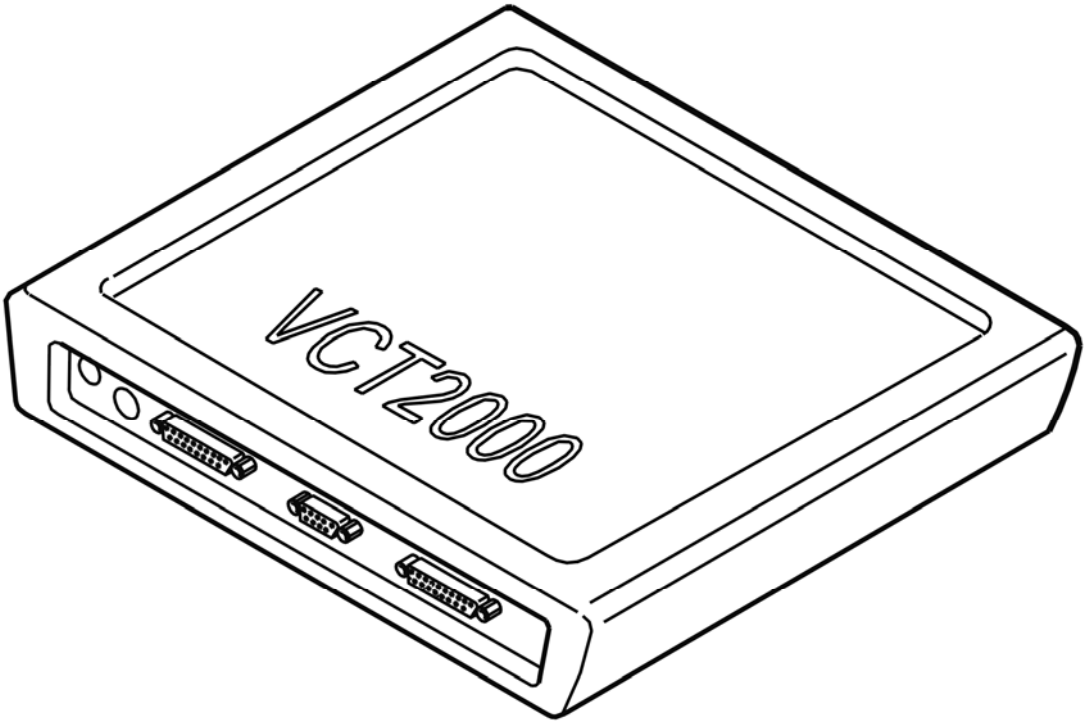

Fig. 394: Identifying VCT2000 Diagnostic Tool Symbol In VIDA
Courtesy of VOLVO CARS CORPORATION

- **Continue**

  Refer to **TEST DRIVING**

TEST DRIVING

NOTE: **Test drive the car according to the driving schedule below to check whether the fault is still active. The test drive is compiled in order to create the conditions in which the diagnostic trouble code (DTC) will be stored again if the fault is active.**

The TEST MODE function can be used to provoke any diagnostic trouble codes (DTC). The function reduces the conditions for how quickly diagnostic trouble codes (DTCs) are stored in the control module and the test drive becomes easier.

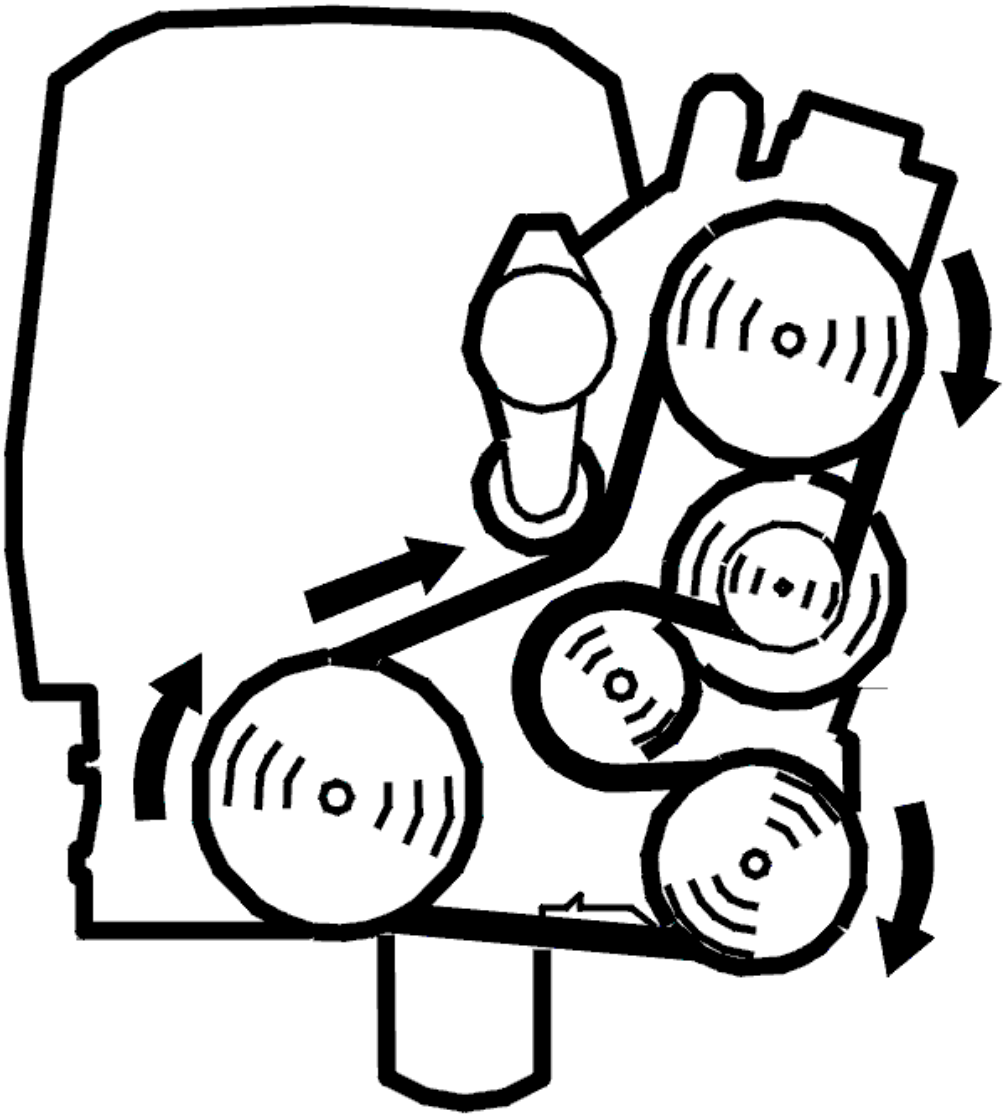

Fig. 395: Identifying Belt Routing
Courtesy of VOLVO CARS CORPORATION

- Start the engine
- Activate TEST MODE.

NOTE: **Do not switch off the engine**

- Disconnect the VIDA station. Test drive the car as described below.

WARNING: **Please observe traffic regulations.**

NOTE: **Before test driving, the transmission should be at operating temperature,**

approximately 80-90°C.

Shift the gear selector to position D (third gear with geartronic). Carefully accelerate to 50-65 km/h. Maintain the same speed for at least 20 seconds.

HINT: The car must be driven at an engine speed where the lock-up function is not normally activated.

Criteria for diagnostic trouble code (DTC):

- The transmission fluid temperature must exceed 30°C
- The engine must be running for at least 20 seconds
- Gear selector in position D, 3 or 2 (4T65EV).

  Gear selector in Geartronic position and gears 4, 3 or 2 (4T65EV-GT)

- Speed 50-65 km/h for at least 5 seconds
- At least 5 seconds since the last gear shift
- Positive engine torque (no engine braking).

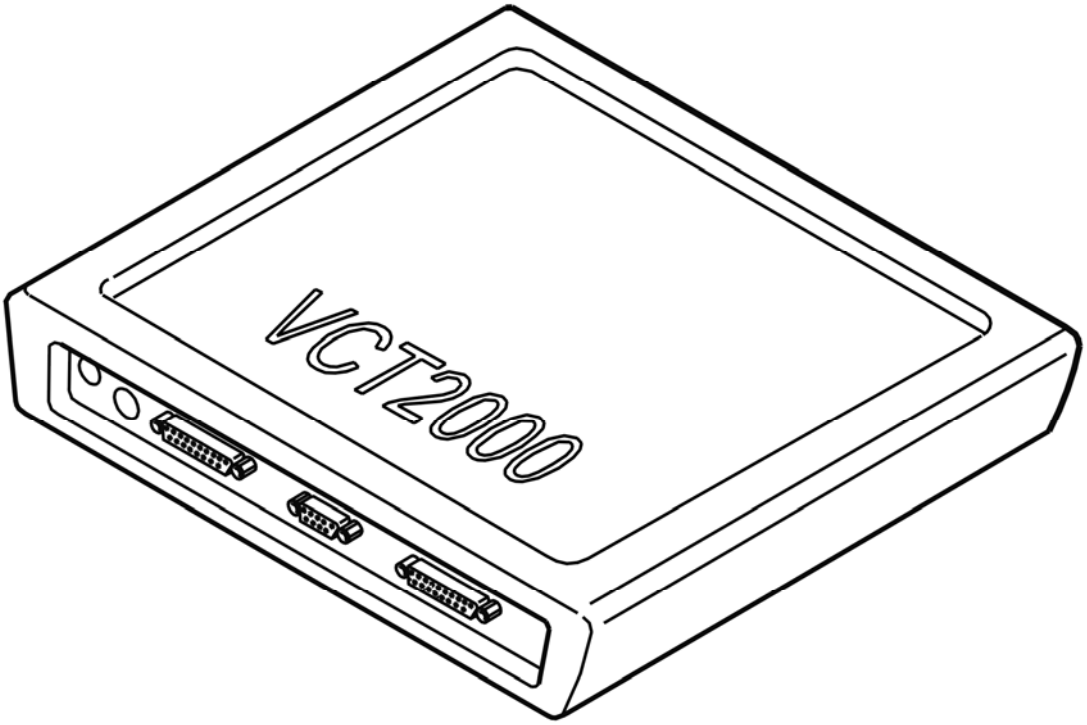

Fig. 396: Identifying VCT2000 Diagnostic Tool Symbol In VIDA
Courtesy of VOLVO CARS CORPORATION

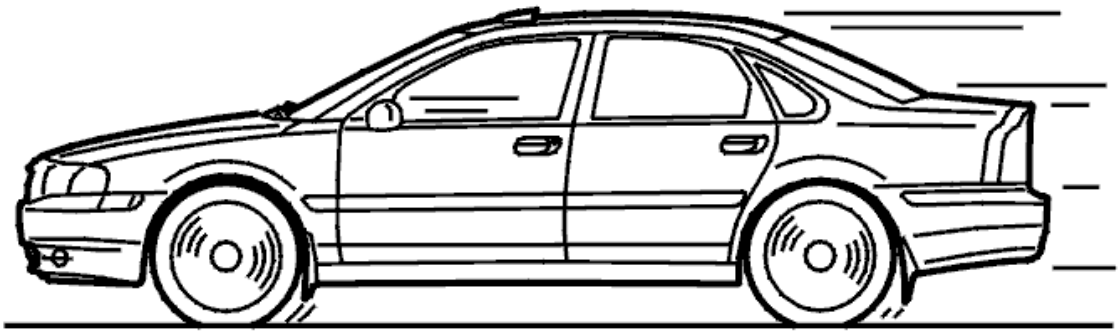

Fig. 397: Identifying Test Drive
Courtesy of VOLVO CARS CORPORATION

- **Continue**

Refer to **CHECKING DIAGNOSTIC TROUBLE CODES (DTCS)**

CHECKING DIAGNOSTIC TROUBLE CODES (DTCS)

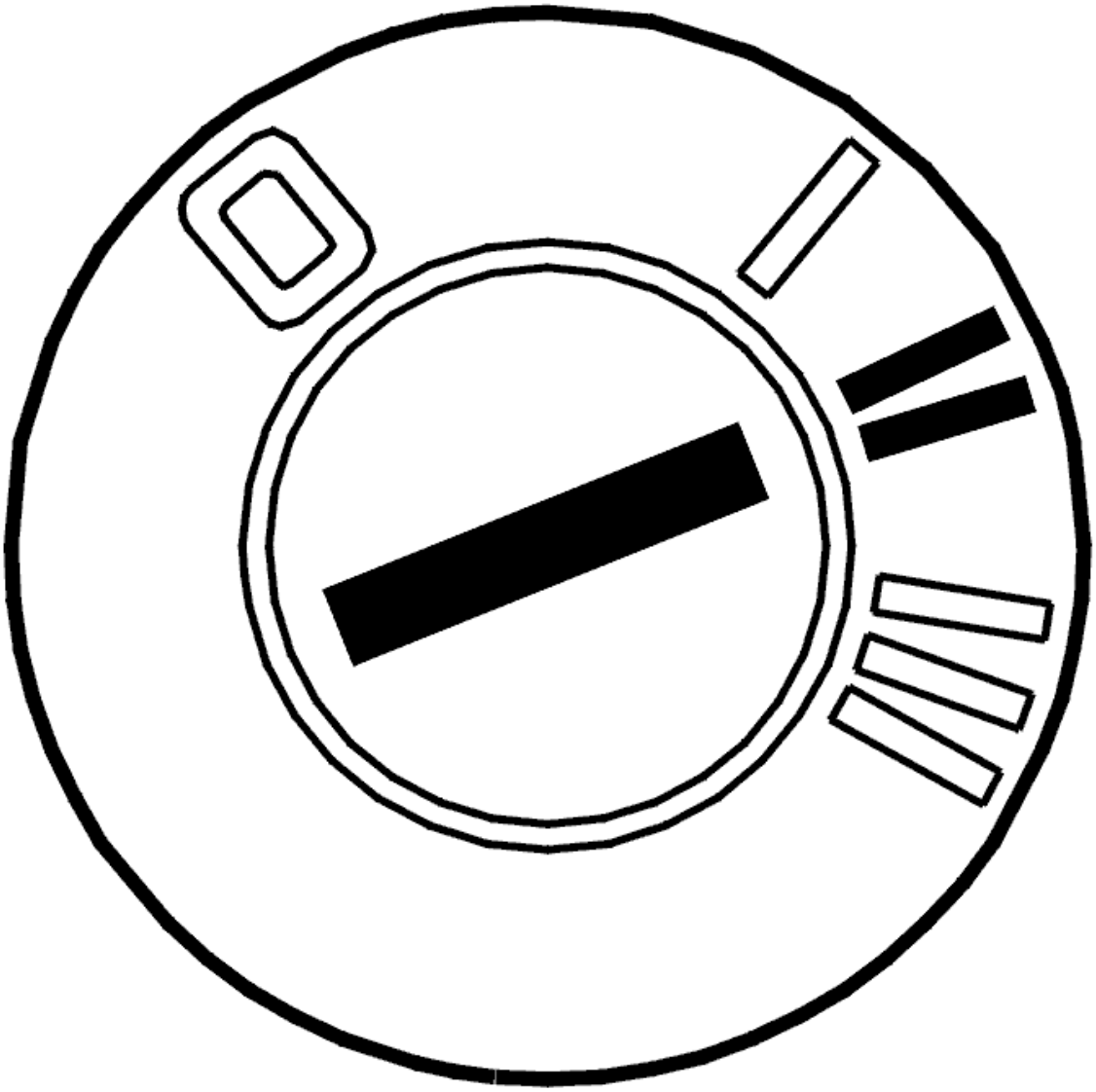

Fig. 398: Identifying Ignition ON
Courtesy of VOLVO CARS CORPORATION

- Ignition on
- Read off diagnostic trouble codes (DTCs).

  If any other diagnostic trouble codes (DTCs) than TCM-0053 are stored, these must be fault-traced and remedied after this fault-tracing is completed.

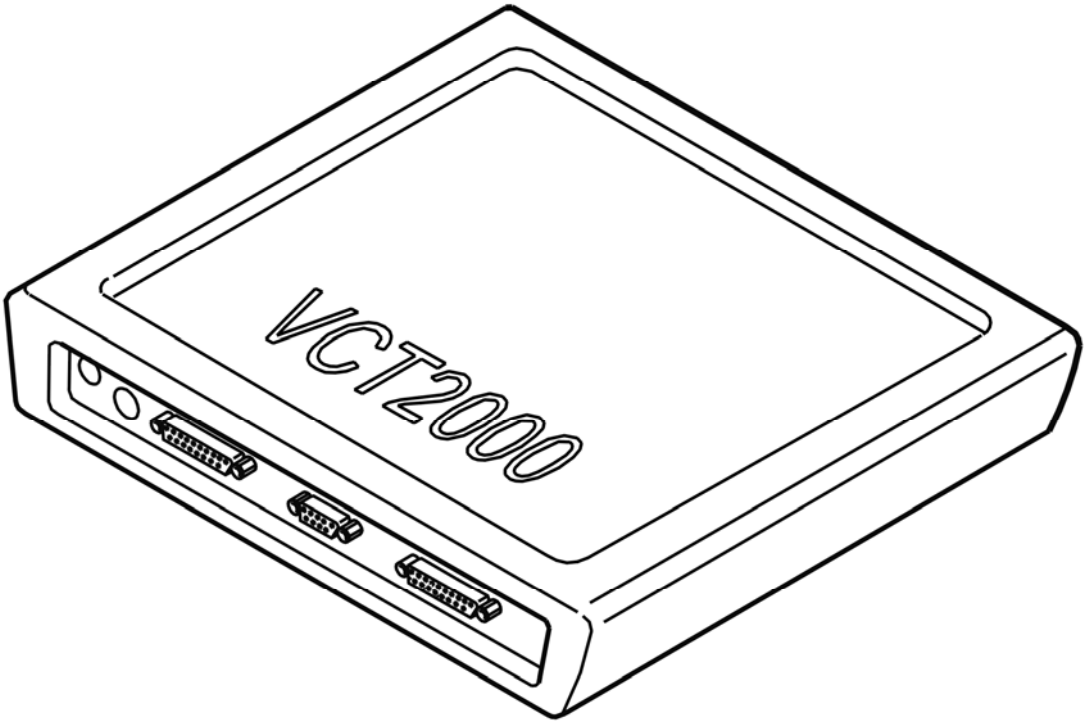

Fig. 399: Identifying VCT2000 Diagnostic Tool Symbol In VIDA
Courtesy of VOLVO CARS CORPORATION

Was diagnostic trouble code (DTC) TCM-0053 stored?

- **YES**

  Refer to **CHECKING THE WIRING**

- **NO**

  Refer to **FAULT-TRACING INFORMATION**

RESETTING THE ADAPTATION

RESETTING ADAPTATION AND THE COUNTER FOR "TRANSMISSION OIL CHANGE"

HINT: The transmission has torque controlled adaptive pressure control. Pressure control means that the transmission regulates the pressure itself during each gear shift. This avoids harsh gear shifting. Each gear shift is evaluated by the control module and stored in the memory. This allows for compensation for wear and tear in the transmission and clutch. It is important that the adaptation in the memory is reset after the transmission has been repaired. This is to ensure normal operation. The oil is replaced during repair; the "Transmission oil change" counter must be reset. If the counter is not reset when the fluid is drained and replaced, there is a risk that a diagnostic trouble code (DTC) will be stored in incorrect

circumstances.

NOTE: This applies only if the transmission or one of the components in the transmission have been replaced.

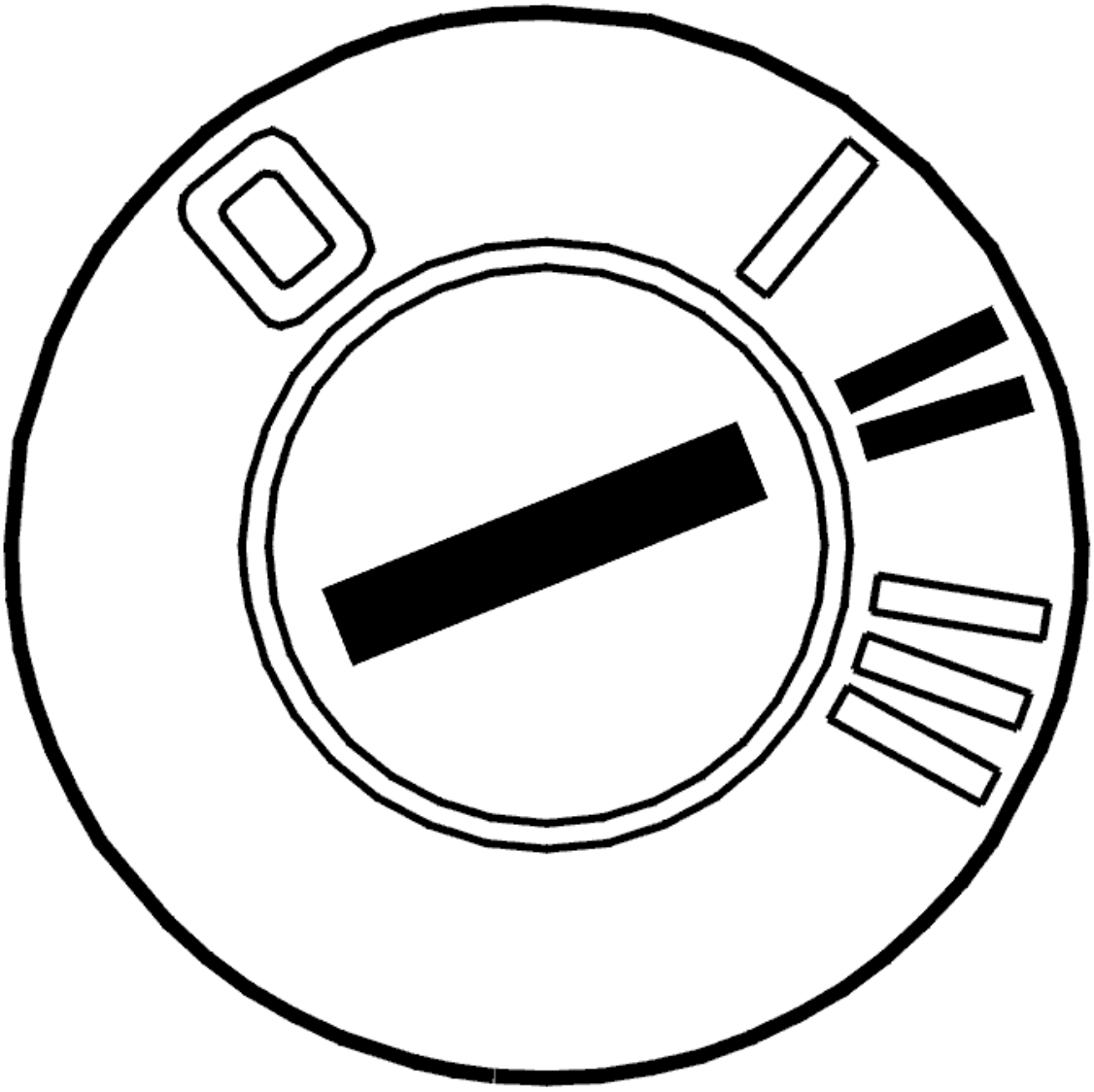

Fig. 400: Identifying Ignition ON
Courtesy of VOLVO CARS CORPORATION

- Ignition on.

  Click on the VCT2000 symbol to reset the adaptation and counter.

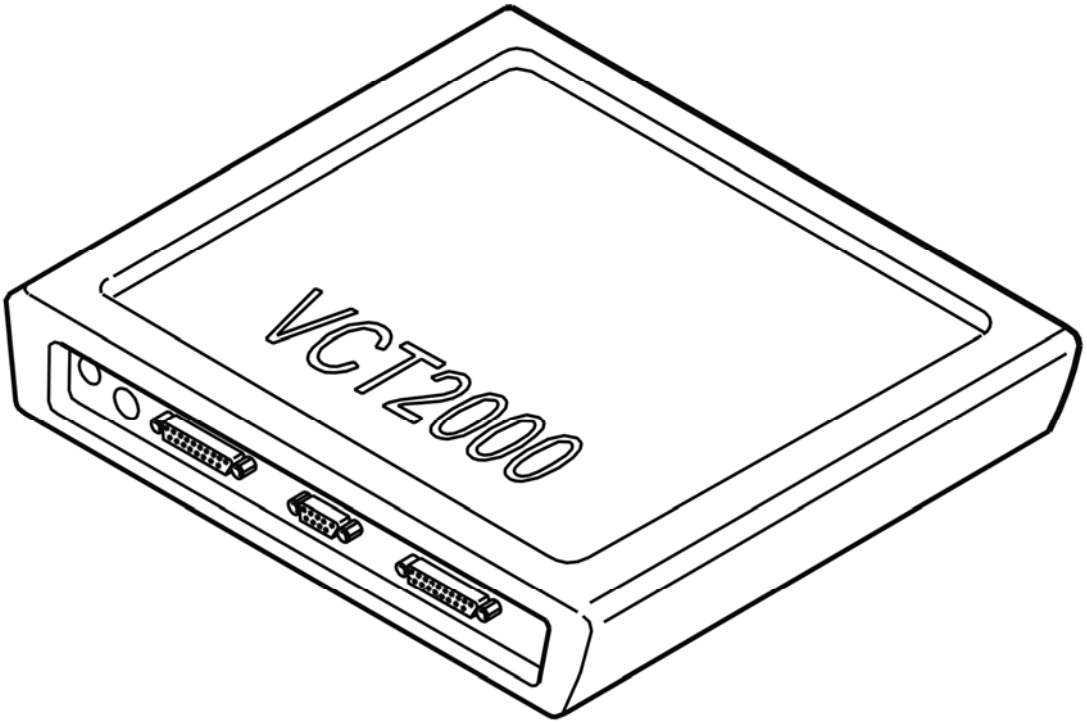

Fig. 401: Identifying VCT2000 Diagnostic Tool Symbol In VIDA
Courtesy of VOLVO CARS CORPORATION

- **Continue**

  Refer to **CHECKING DIAGNOSTIC TROUBLE CODES (DTCS)**

INFORMATION

FAULT-TRACING INFORMATION

The fault should have been detected and remedied. As this is not the case fault-tracing has failed.

Exit fault-tracing for this diagnostic trouble code (DTC) or make another attempt.

CHECKING DIAGNOSTIC TROUBLE CODES (DTCS)

ERASING DIAGNOSTIC TROUBLE CODES (DTCS)

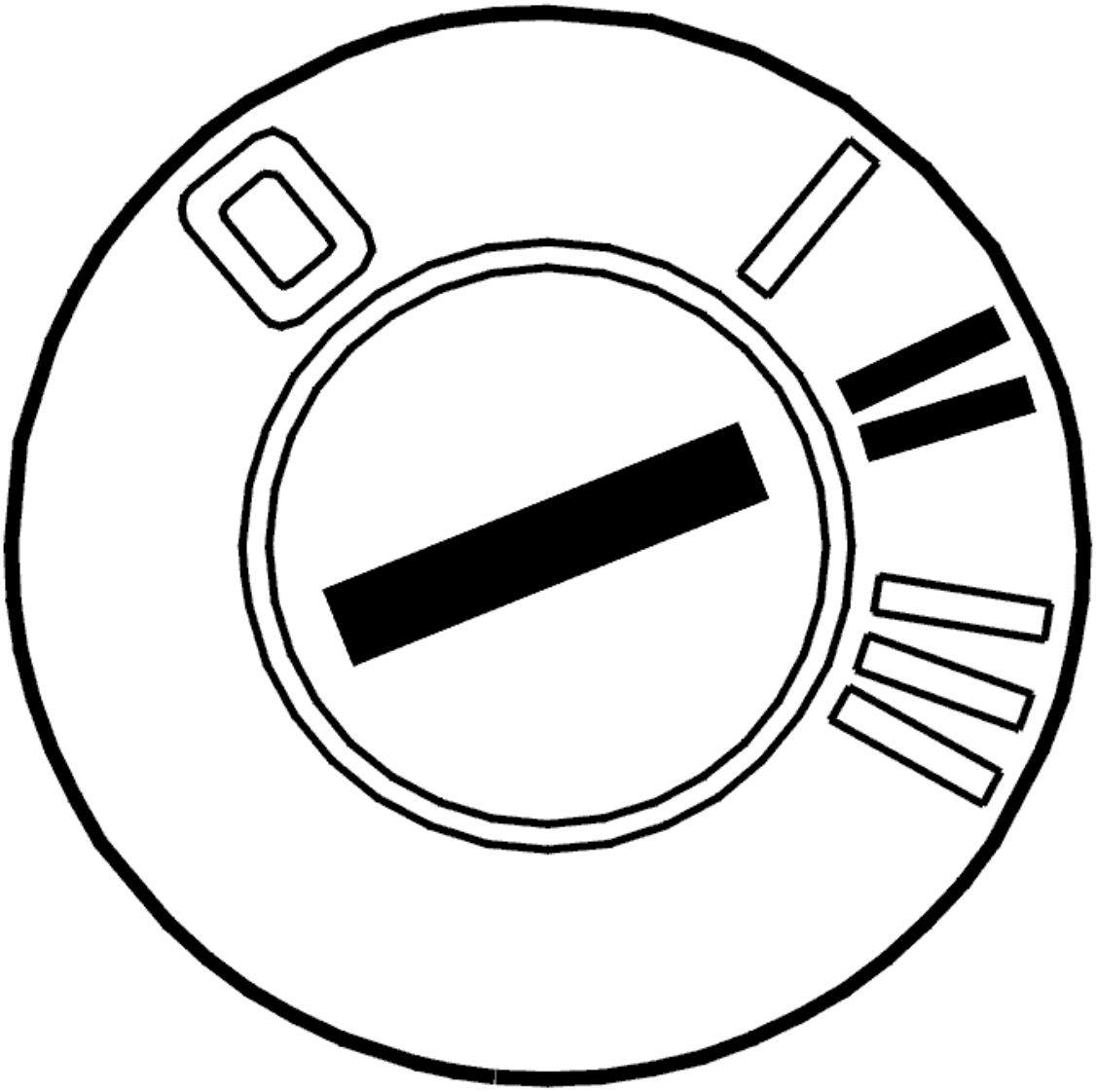

Fig. 402: Identifying Ignition ON
Courtesy of VOLVO CARS CORPORATION

- Ignition off
- Wait for two minutes to allow time for the diagnostic trouble codes (DTCs) to be stored in the control module memory
- Ignition on
- Erase diagnostic trouble codes (DTCs).

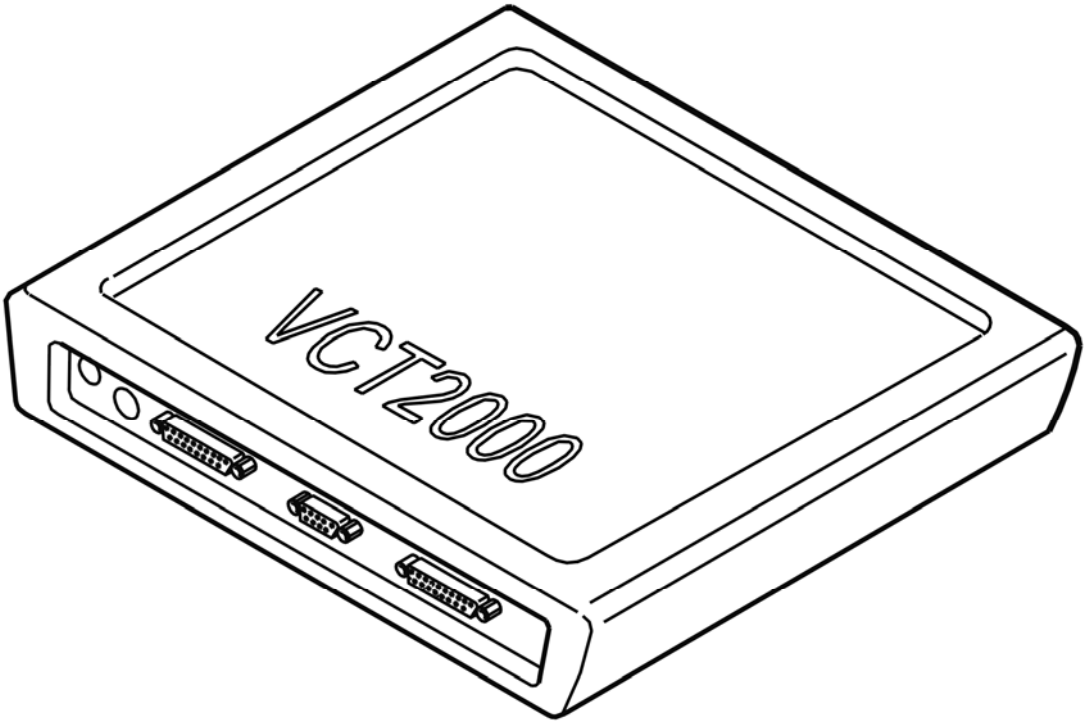

Fig. 403: Identifying VCT2000 Diagnostic Tool Symbol In VIDA
Courtesy of VOLVO CARS CORPORATION

- **Continue**

  Refer to **TEST DRIVING**

TEST DRIVING

NOTE: **Test drive the car according to the driving schedule below to check whether the fault is still active. The test drive is compiled in order to create the conditions in which the diagnostic trouble code (DTC) will be stored again if the fault is active.**

The TEST MODE function can be used to provoke any diagnostic trouble codes (DTC). The function reduces the conditions for how quickly diagnostic trouble codes (DTCs) are stored in the control module and the test drive becomes easier.

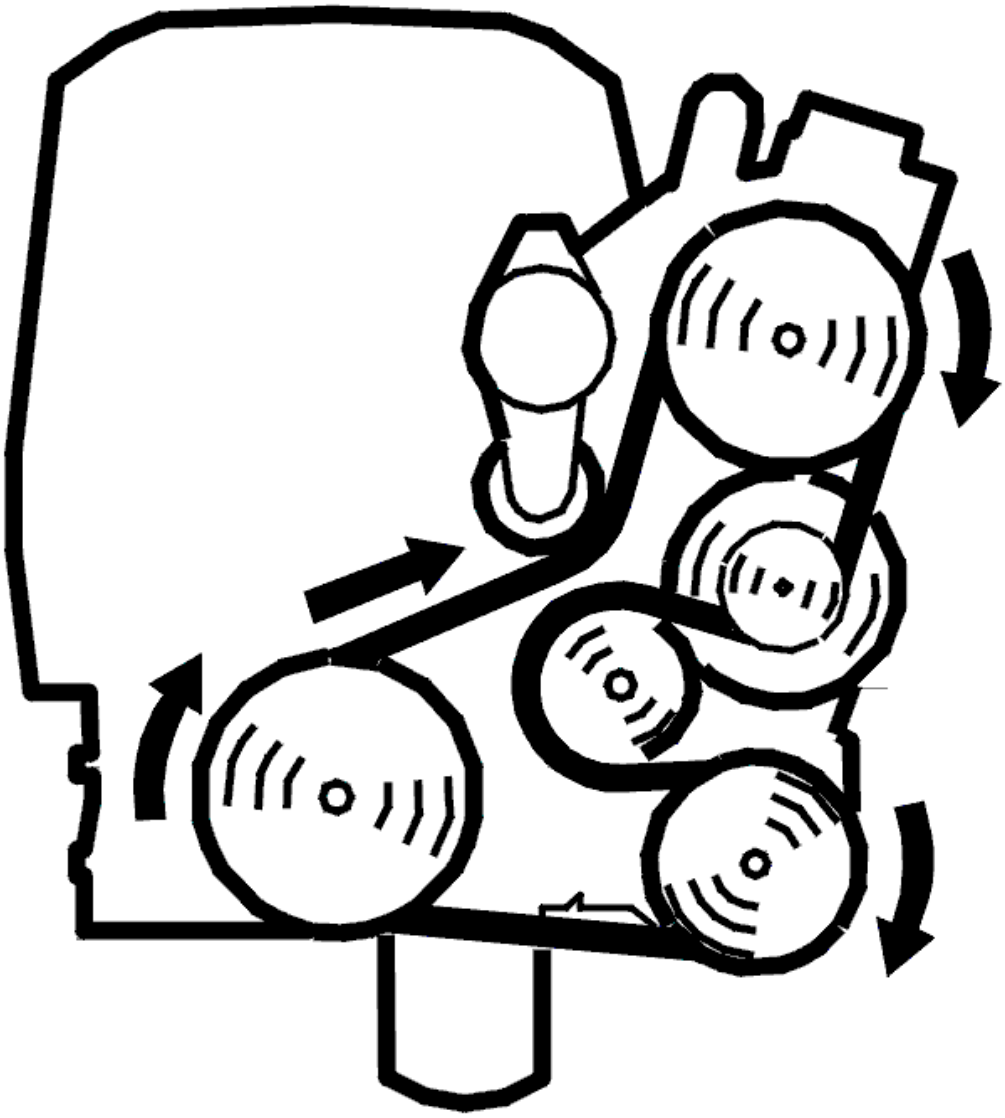

Fig. 404: Identifying Belt Routing
Courtesy of VOLVO CARS CORPORATION

- Start the engine
- Activate TEST MODE.

NOTE: Do not switch off the engine

- Disconnect the VIDA station. Test drive the car as described below.

WARNING: Please observe traffic regulations.

NOTE: Before test driving, the transmission should be at operating temperature,

approximately 80-90°C.

Shift the gear selector to position D (third gear with geartronic). Carefully accelerate to 50-65 km/h. Maintain the same speed for at least 20 seconds.

HINT: The car must be driven at an engine speed where the lock-up function is not normally activated.

Criteria for diagnostic trouble code (DTC):

- The transmission fluid temperature must exceed 30°C
- The engine must be running for at least 20 seconds
- Gear selector in position D, 3 or 2 (4T65EV).

  Gear selector in Geartronic position and gears 4, 3 or 2 (4T65EV-GT)

- Speed 50-65 km/h for at least 5 seconds
- At least 5 seconds since the last gear shift
- Positive engine torque (no engine braking).

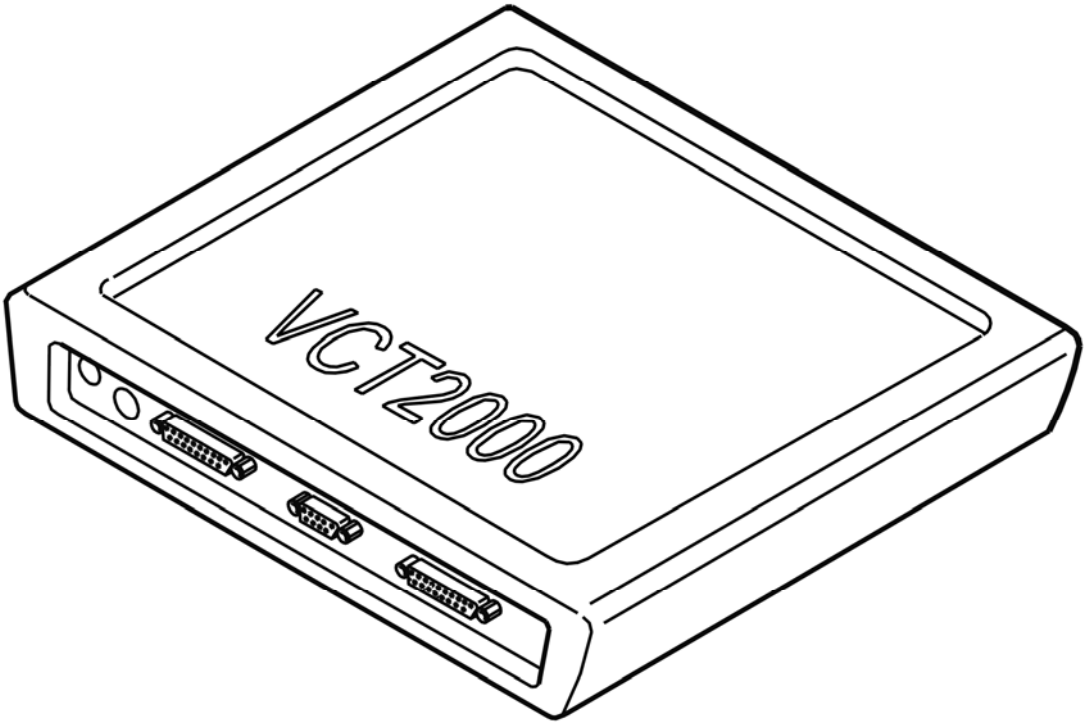

Fig. 405: Identifying VCT2000 Diagnostic Tool Symbol In VIDA
Courtesy of VOLVO CARS CORPORATION

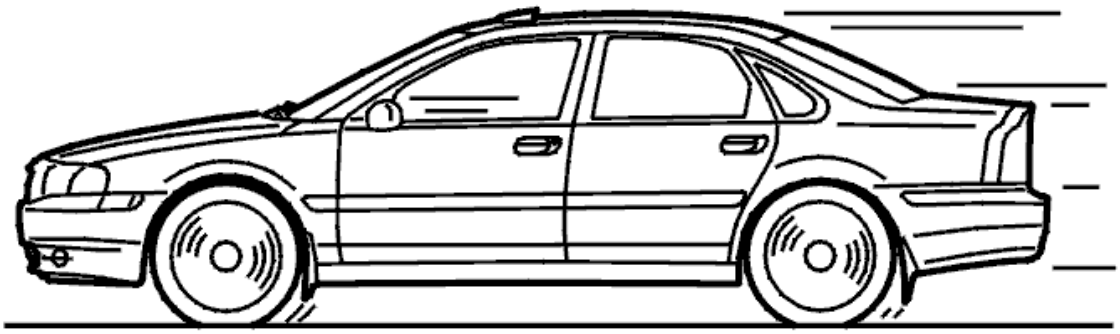

Fig. 406: Identifying Test Drive
Courtesy of VOLVO CARS CORPORATION

- **Continue**

Refer to **CHECKING DIAGNOSTIC TROUBLE CODES (DTCS)**

CHECKING DIAGNOSTIC TROUBLE CODES (DTCS)

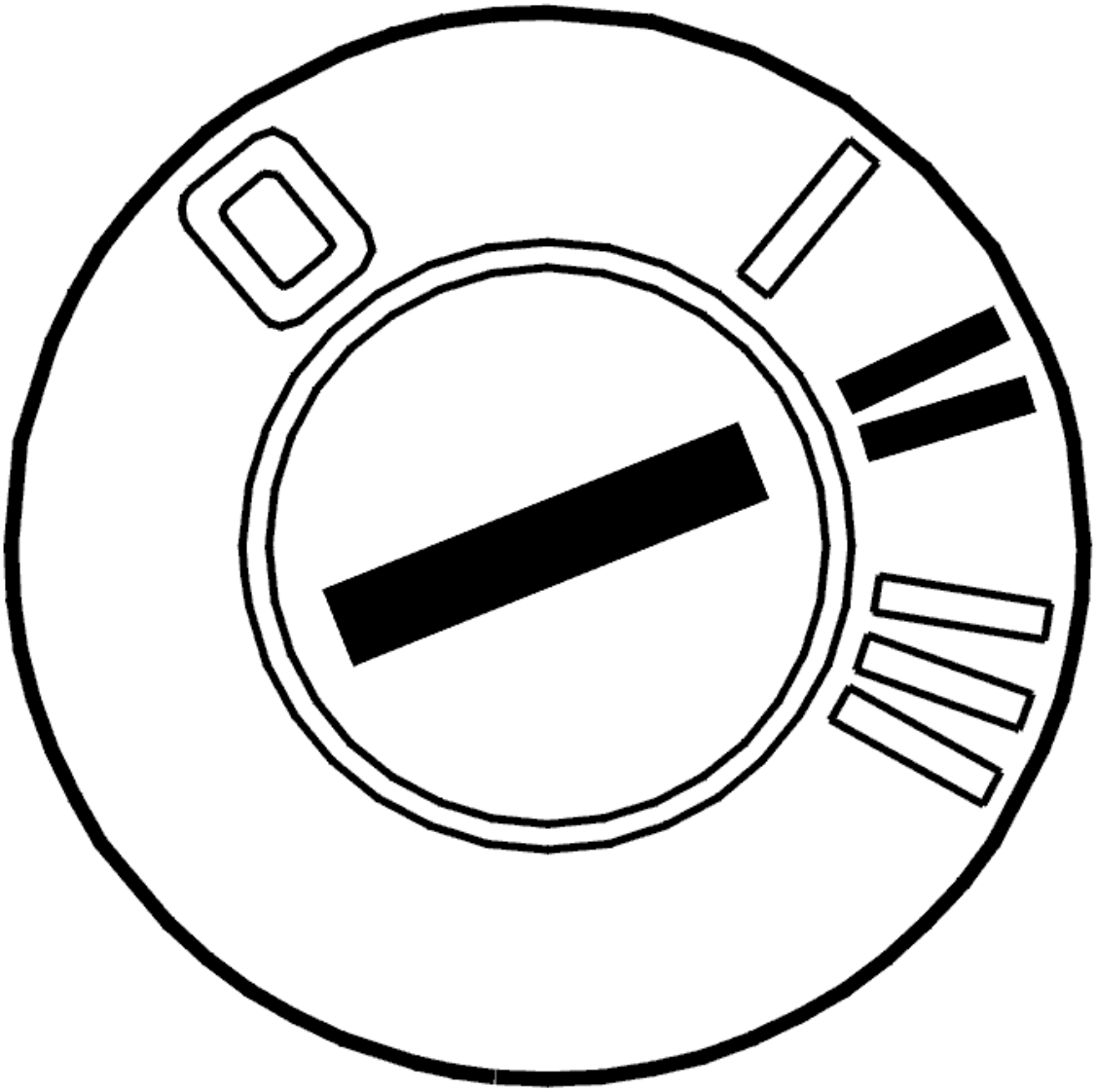

Fig. 407: Identifying Ignition ON
Courtesy of VOLVO CARS CORPORATION

- Ignition on
- Read off diagnostic trouble codes (DTCs).

  If any other diagnostic trouble codes (DTCs) than TCM-0053 are stored, these must be fault-traced and remedied after this fault-tracing is completed.

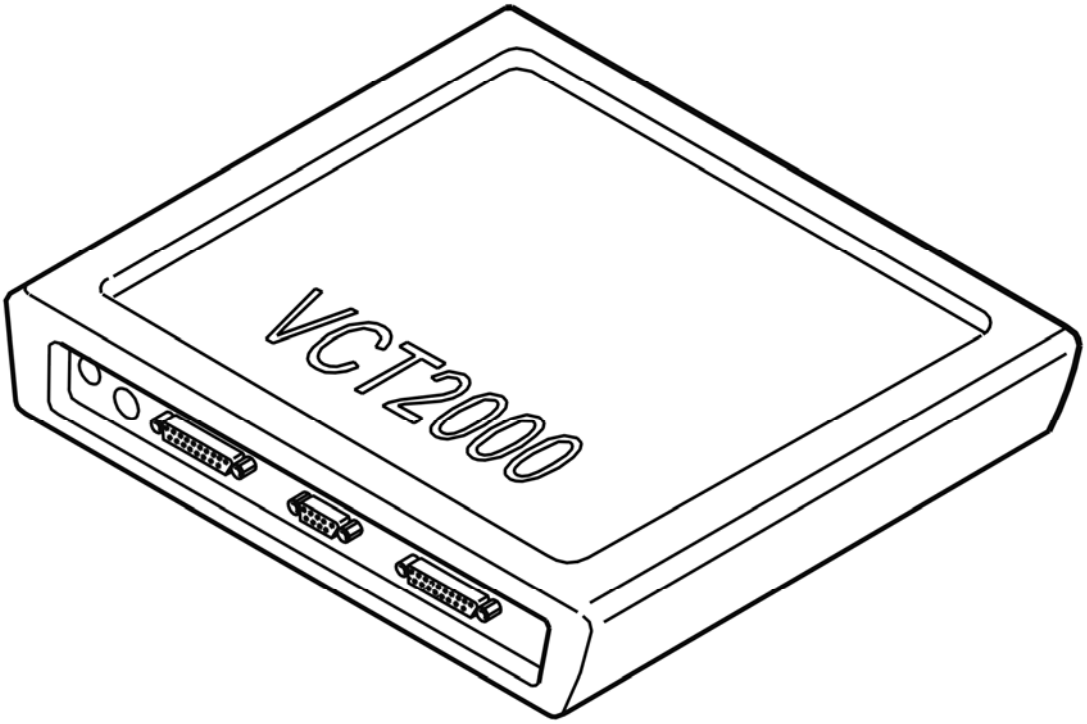

Fig. 408: Identifying VCT2000 Diagnostic Tool Symbol In VIDA
Courtesy of VOLVO CARS CORPORATION

Was diagnostic trouble code (DTC) TCM-0053 stored?

- **YES**

  Refer to **INFORMATION**

- **NO**

  NO DTC

TCM-0054: LOCK-UP PRESSURE SWITCH. STUCK (4T65 AWD; 2003-2006)

DIAGNOSTIC TROUBLE CODE (DTC) INFORMATION

Condition

The automatic transmission control module (TCM) receives a signal from the pressure switch for lock-up PS4 to check the lock-up valve position. Diagnostic trouble code (DTC) TCM-0054 is stored if the lock-up solenoid has stuck in the closed position.

Substitute Value

- The control module (TCM) "Emergency mode II" program has been initiated.

Possible Source

- The pressure switch for lock-up is jammed
- Contact resistance in the terminals
- Mechanical fault in the transmission control system
- The transmission oil level is too high.

Fault symptom[s]

- General orange warning lamp lit
- No lock-up function
- Harsh gear shifting.

HINT: Harsh gear shifting can be caused by:

- no reduction of line pressure when shifting
- no reduction of line pressure when moving the gear selector between positions P-R, N-R and N-D
- no torque limiting request to the engine control module (ECM) when shifting.

STUCK

CHECKING THE SOFTWARE

CHECKING THE SOFTWARE

NOTE: **To carry out fault-tracing, the transmission control module (TCM) must be programmed with specific software.**

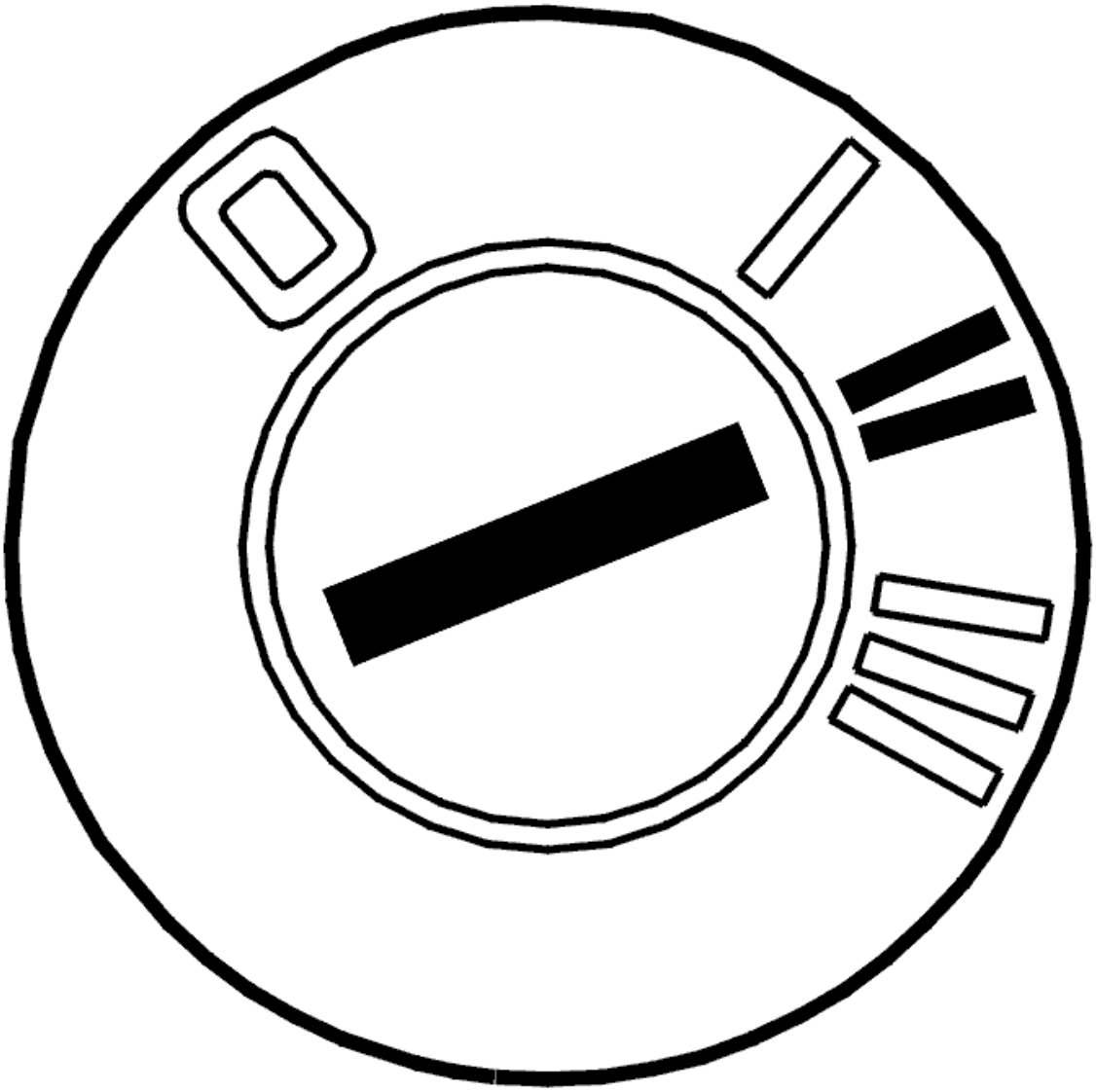

Fig. 409: Identifying Ignition ON
Courtesy of VOLVO CARS CORPORATION

- Ignition on
- Read off the control module diagnostic number.

  Check the read off diagnostic number against the diagnostic numbers given in the center table.

  If the diagnostic number is included in the table, the control module must be programmed with the latest software.

  See the technical journal for information about the most recent software.

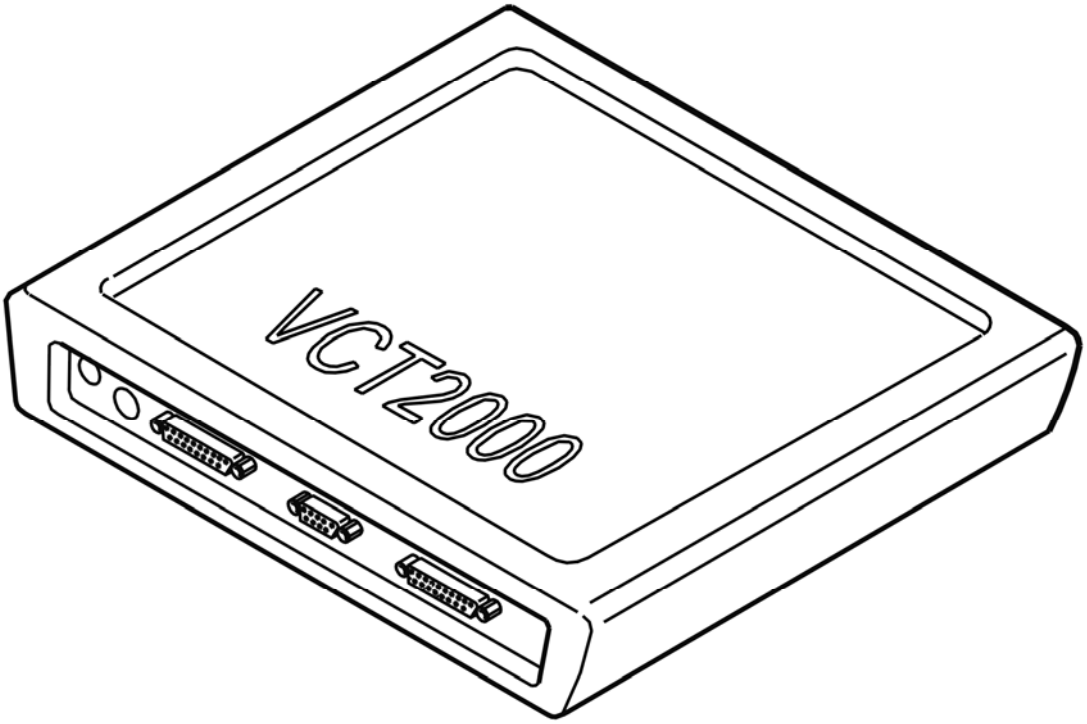

Fig. 410: Identifying VCT2000 Diagnostic Tool Symbol In VIDA
Courtesy of VOLVO CARS CORPORATION

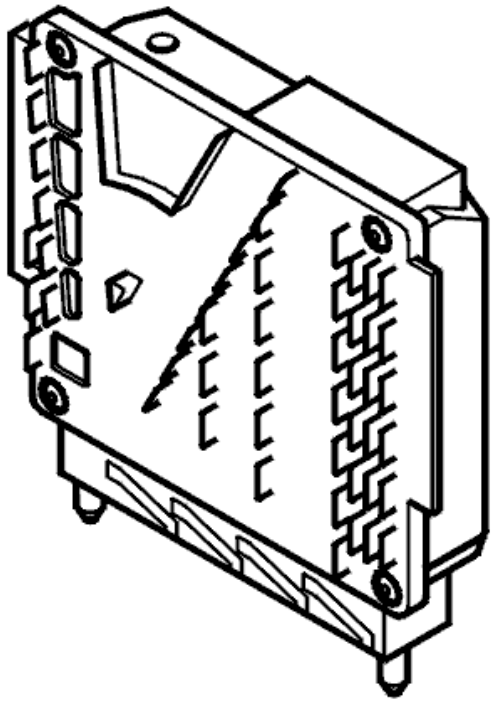

Fig. 411: Identifying Transmission Control Module (TCM)
Courtesy of VOLVO CARS CORPORATION

- **Continue**

  Refer to **CHECKING DIAGNOSTIC TROUBLE CODES (DTCS)**

CHECKING DIAGNOSTIC TROUBLE CODES (DTCS)

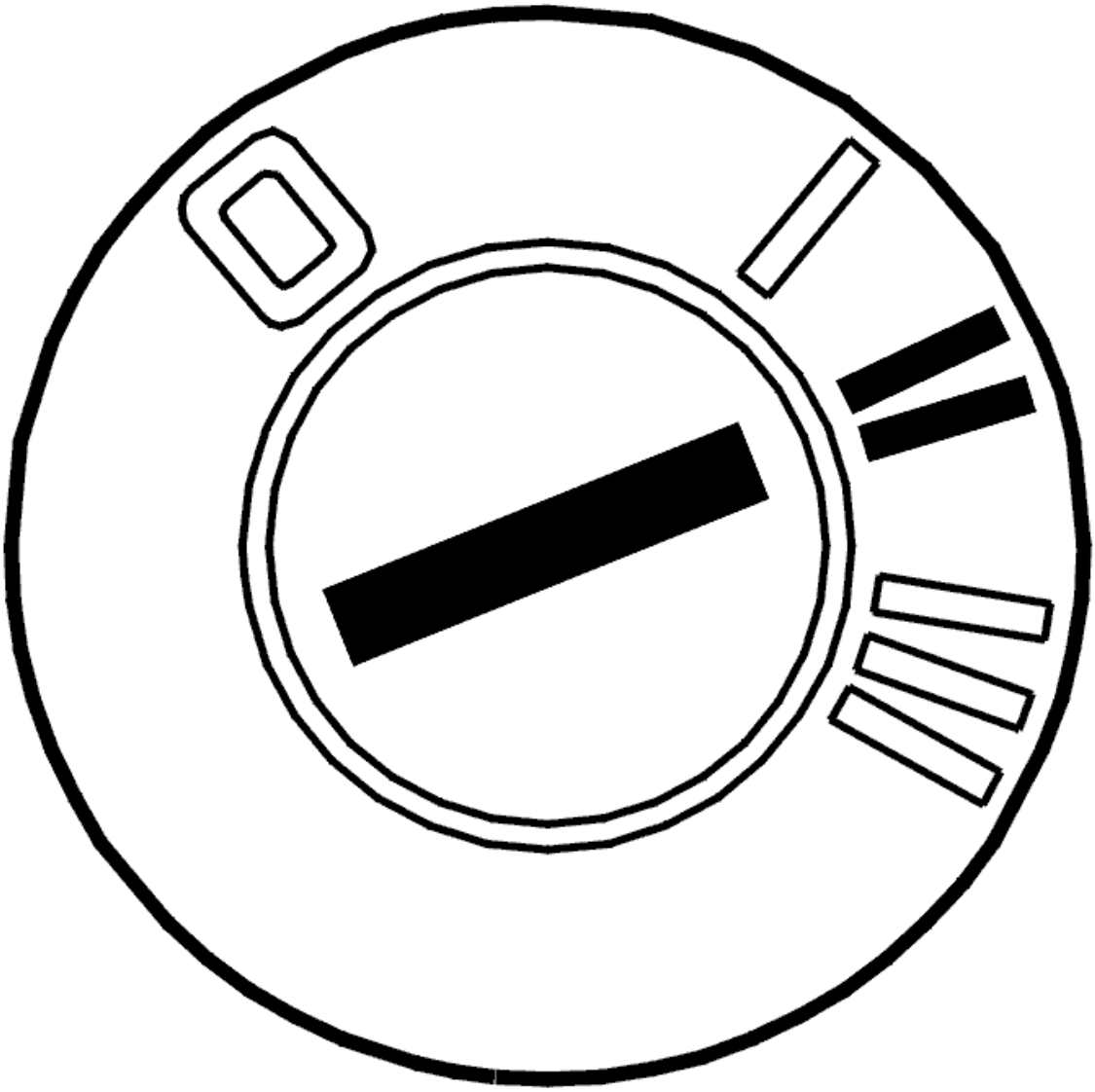

Fig. 412: Identifying Ignition ON
Courtesy of VOLVO CARS CORPORATION

- Ignition on
- Read off diagnostic trouble codes (DTCs).

  If any other diagnostic trouble codes (DTCs) than TCM-0054 are stored, these must be fault-traced after this fault-tracing is completed.

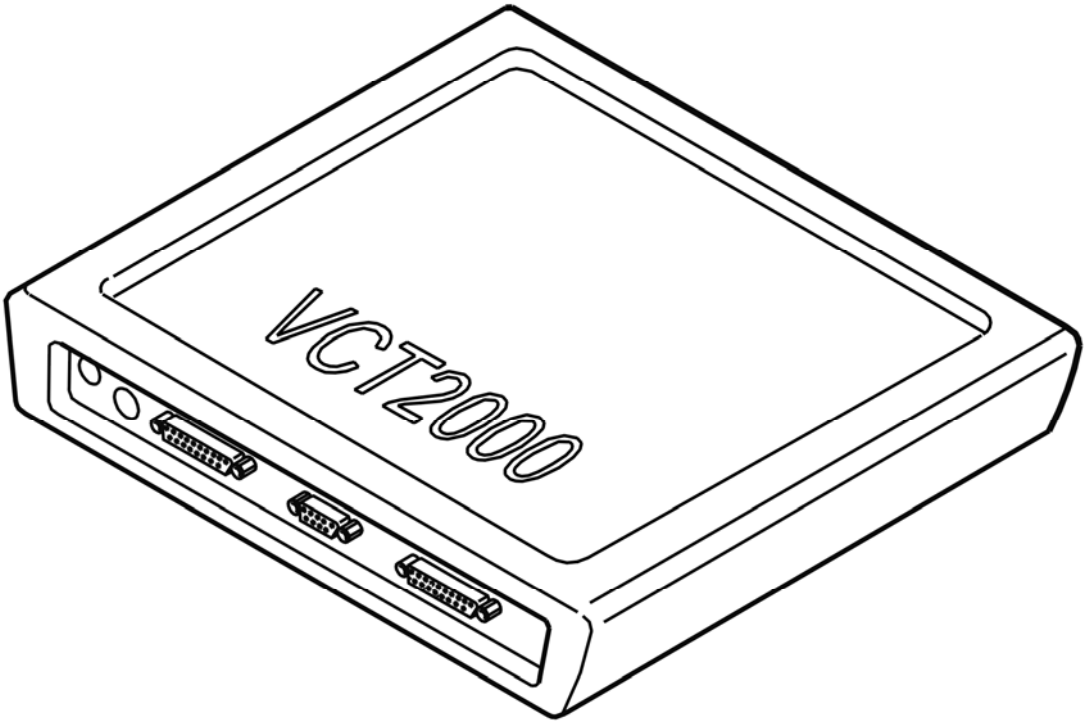

Fig. 413: Identifying VCT2000 Diagnostic Tool Symbol In VIDA
Courtesy of VOLVO CARS CORPORATION

- **Continue**

  Refer to **CHECKING DIAGNOSTIC TROUBLE CODES (DTCS)**

CHECKING THE COMPONENT

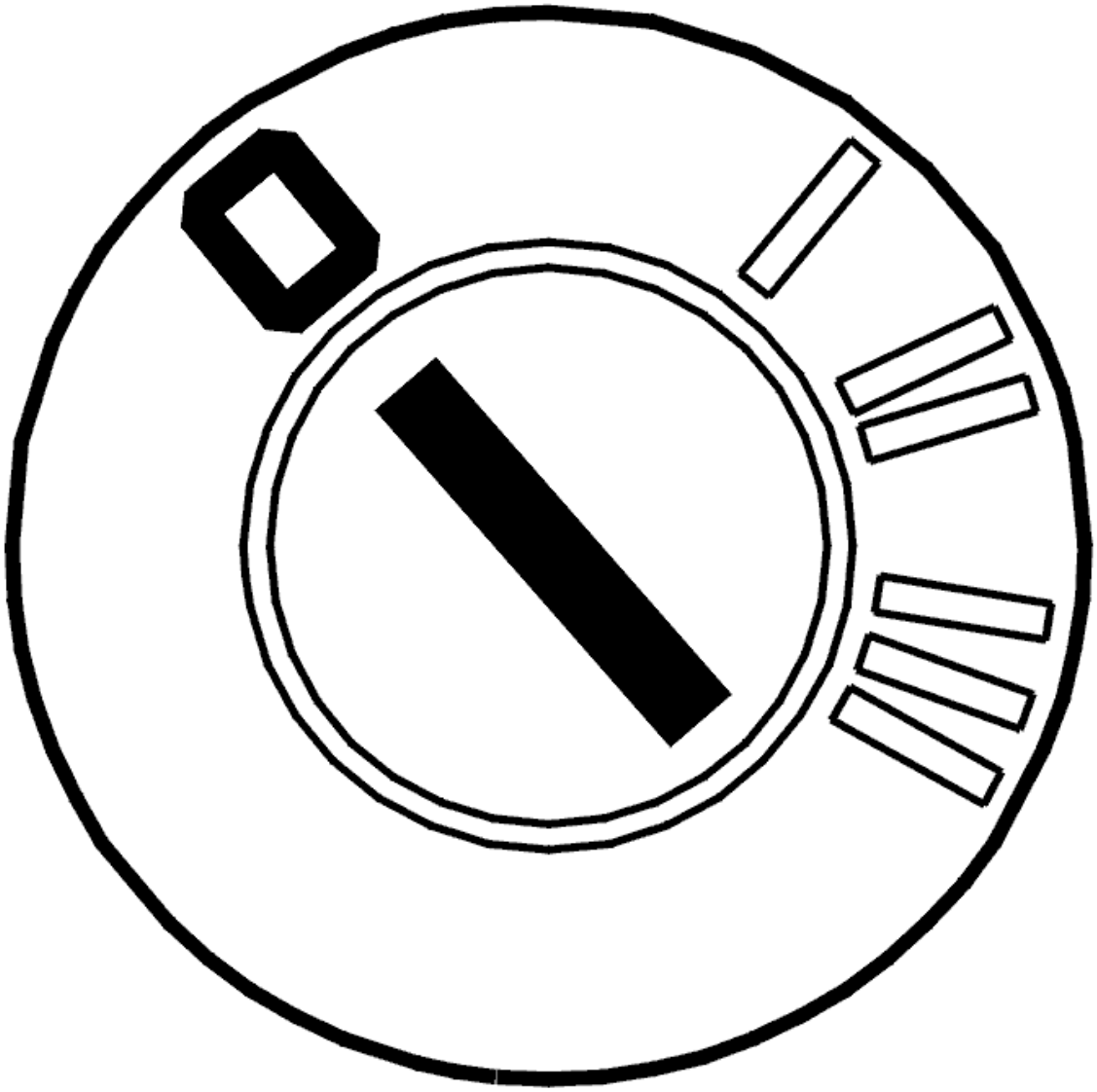

Fig. 414: Identifying Ignition OFF
Courtesy of VOLVO CARS CORPORATION

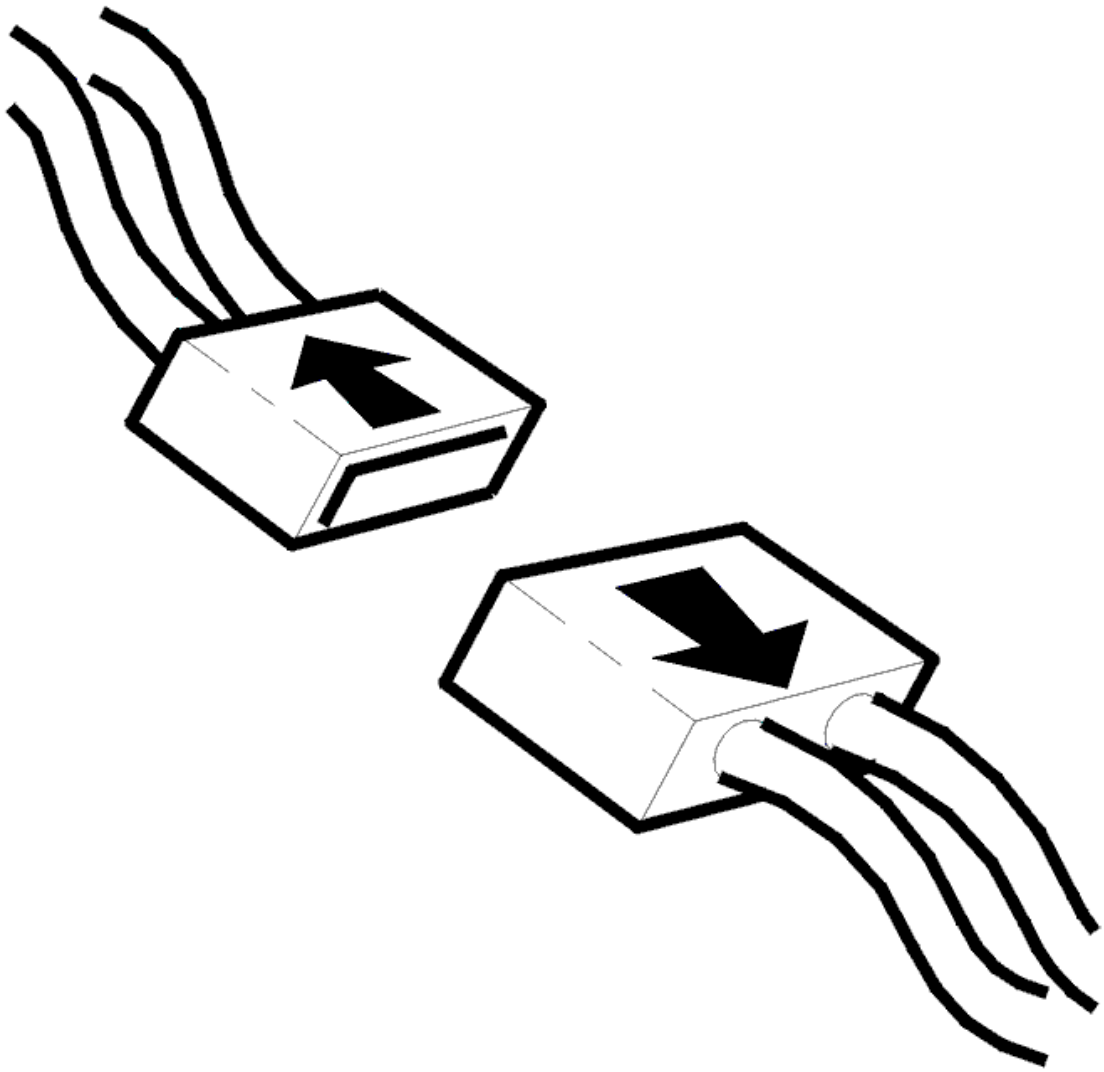

Fig. 415: Identifying Connector(s) Disconnected
Courtesy of VOLVO CARS CORPORATION

- Ignition off
- Disconnect the transmission connector
- Connect adapter see **9511505** and breakout box see **9511428** to the transmission connector (transmission side)
- Disconnect the transmission connector (control module side).

  Check that the resistance between the transmission housing and connector terminal #U (#A18) is 0-50 ohms.

  Other information:

  - To connect the breakout box to the transmission connector, see **CONNECTING THE**

BREAKOUT BOX, GM AUTOMATIC TRANSMISSIONS

- For information about signals, see **SIGNAL SPECIFICATION** .

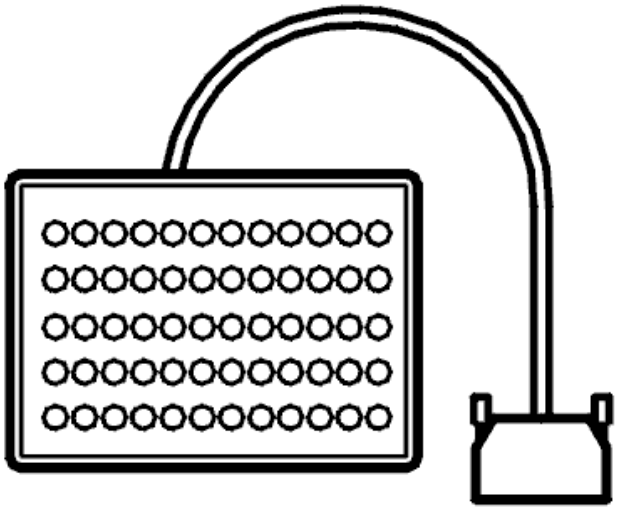

Fig. 416: Identifying Breakout Box
Courtesy of VOLVO CARS CORPORATION

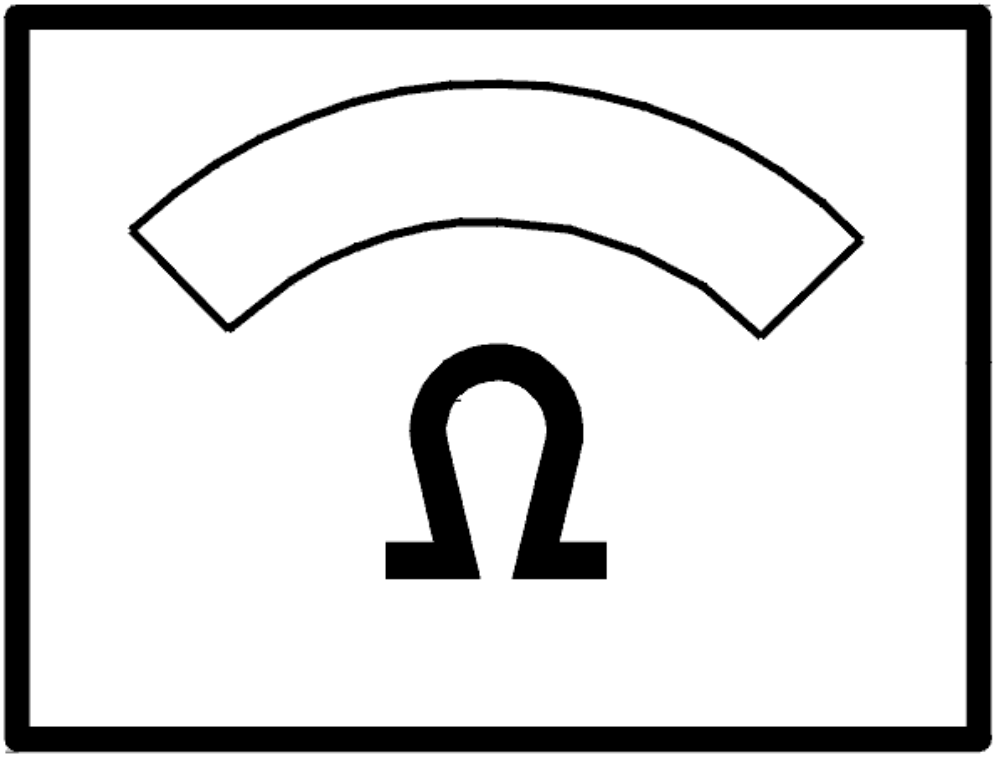

Fig. 417: Identifying Ohms Display
Courtesy of VOLVO CARS CORPORATION

Was the resistance OK?

- **YES**

  Refer to **CHECKING THE COMPONENT**

- **NO**

  Refer to **CHECKING THE WIRING AND COMPONENT**

CHECKING THE COMPONENT

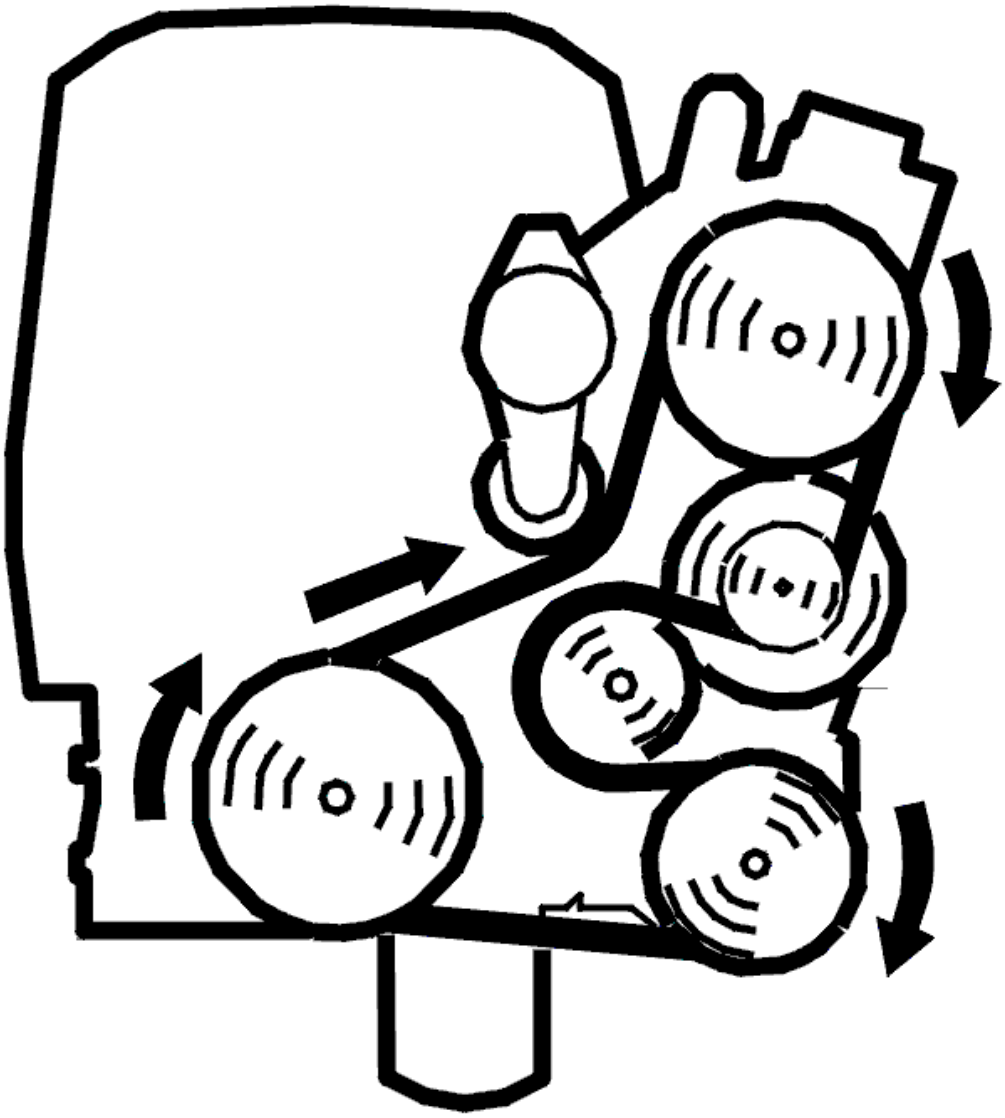

Fig. 418: Identifying Belt Routing
Courtesy of VOLVO CARS CORPORATION

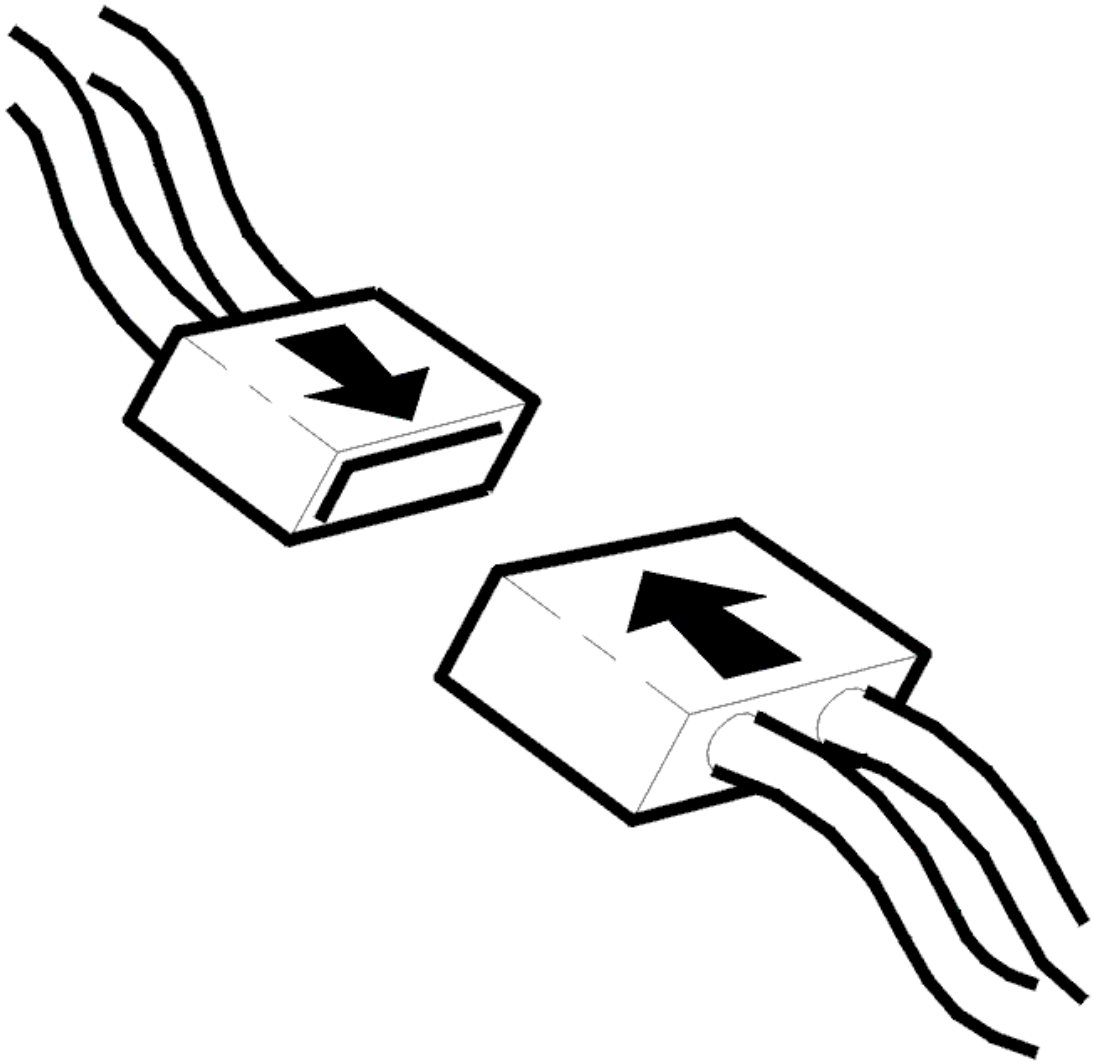

Fig. 419: Identifying Connector(s) Reinstallation
Courtesy of VOLVO CARS CORPORATION

- Ignition off
- Connect adapter see **9511505** and breakout box see **9511428** to the transmission connector (transmission and control module side)
- Start the engine.

  Check that the voltage between the transmission housing and connector terminal #U (#A18) is battery voltage.

  Other information:

  - To connect the breakout box to the transmission connector, see **CONNECTING THE BREAKOUT BOX, GM AUTOMATIC TRANSMISSIONS**

- For information about signals, see **SIGNAL SPECIFICATION** .

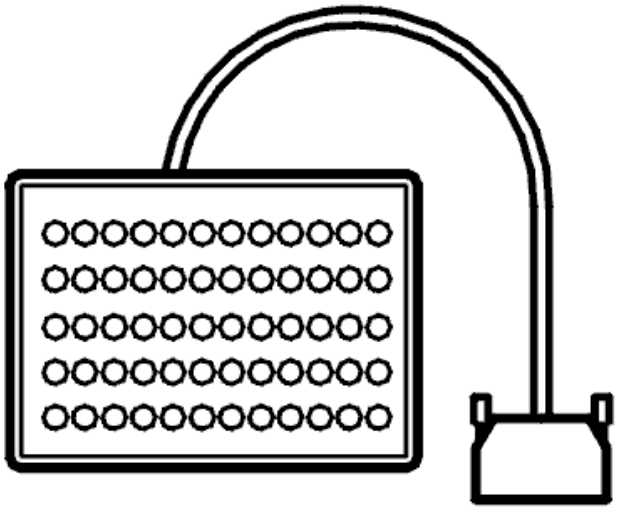

Fig. 420: Identifying Breakout Box
Courtesy of VOLVO CARS CORPORATION

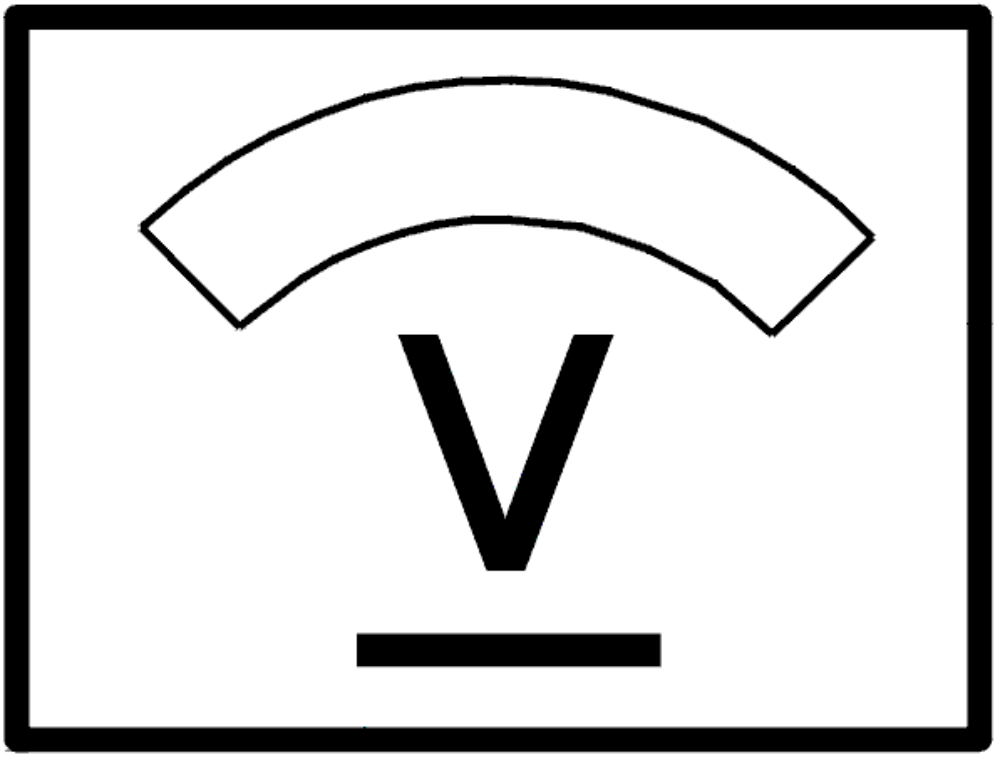

Fig. 421: Identifying Voltage Display
Courtesy of VOLVO CARS CORPORATION

Is the voltage OK?

- **YES**

  Refer to **CHECKING SOLENOID SL**

- **NO**

  Refer to **CHECKING THE COMPONENT**

CHECKING THE COMPONENT

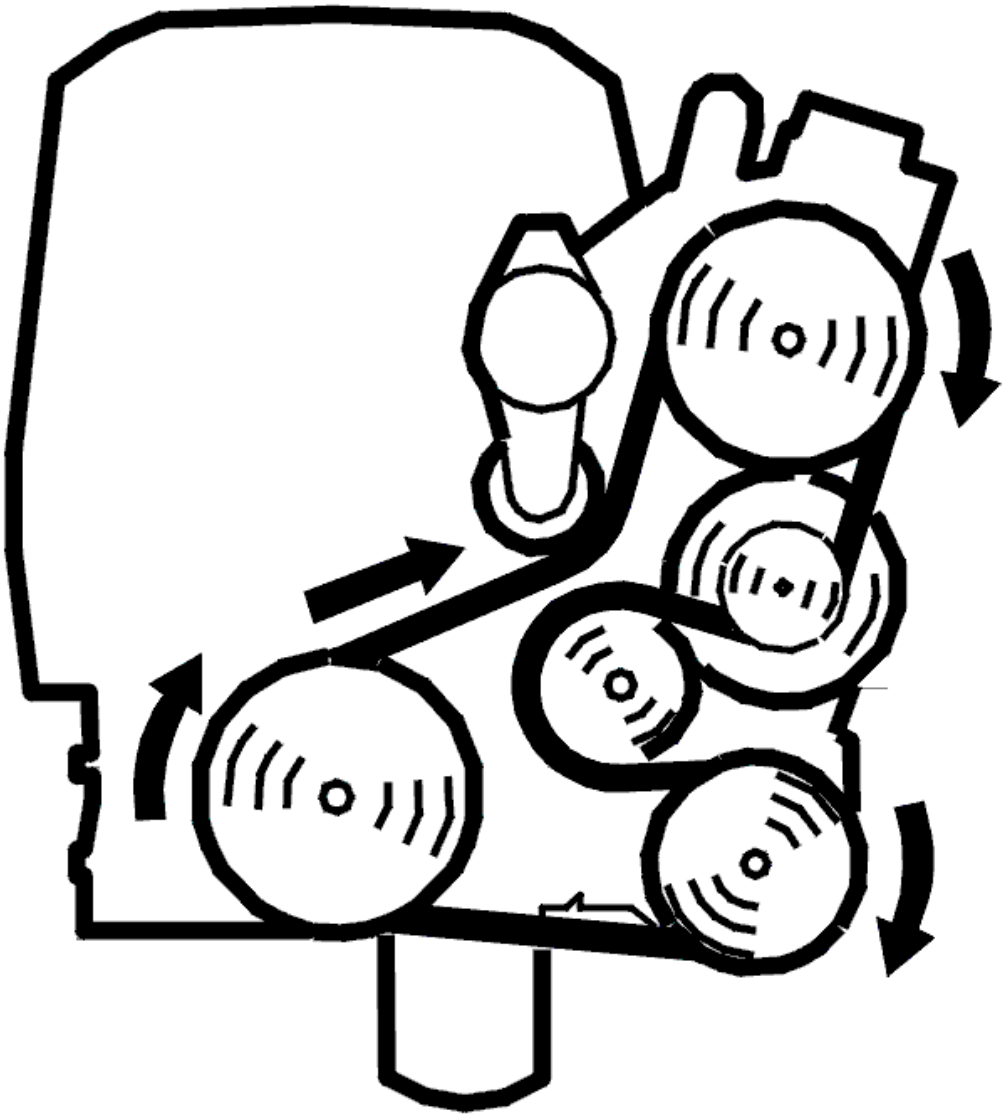

Fig. 422: Identifying Belt Routing
Courtesy of VOLVO CARS CORPORATION

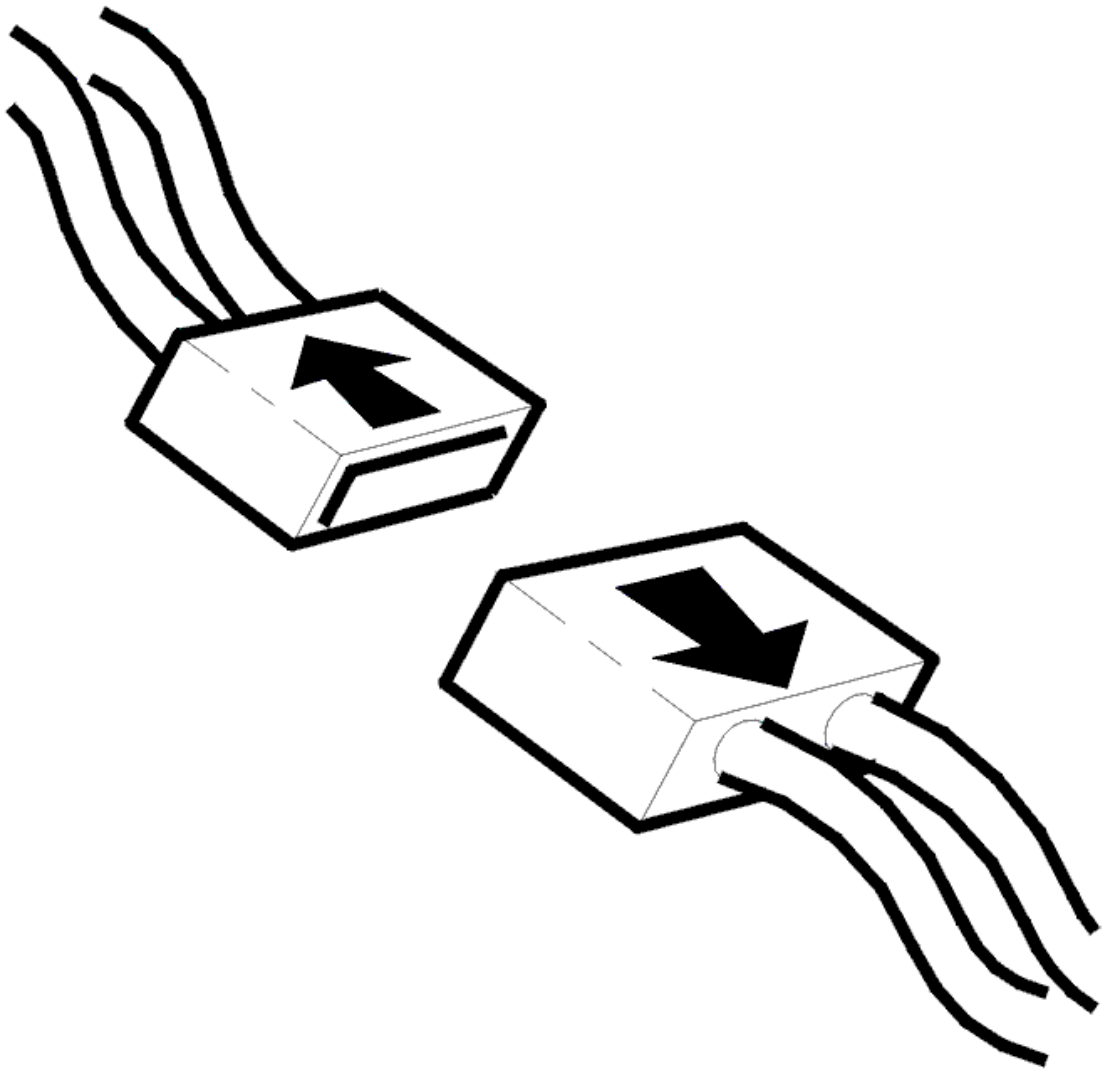

Fig. 423: Identifying Connector(s) Disconnected
Courtesy of VOLVO CARS CORPORATION

- Engine idling
- Connect adapter see **9511505** and breakout box see **9511428** to the transmission connector (control module side)
- The transmission connector disconnected.

NOTE: **Diagnostic trouble codes (DTCs) for the gear-shift position sensor and the solenoids may be stored in the transmission control module (TCM) when disconnecting the transmission connector. These do not need to be fault traced when this fault tracing is complete.**

Check that the voltage between any ground terminal and terminal #A18 (#U) is battery voltage.

Other information:

- To connect the breakout box to the transmission connector, see **CONNECTING THE BREAKOUT BOX, GM AUTOMATIC TRANSMISSIONS**
- For information about signals, see **SIGNAL SPECIFICATION** .

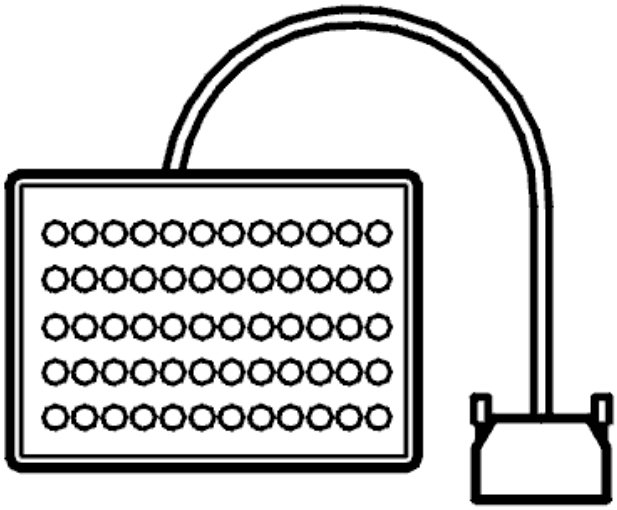

Fig. 424: Identifying Breakout Box
Courtesy of VOLVO CARS CORPORATION

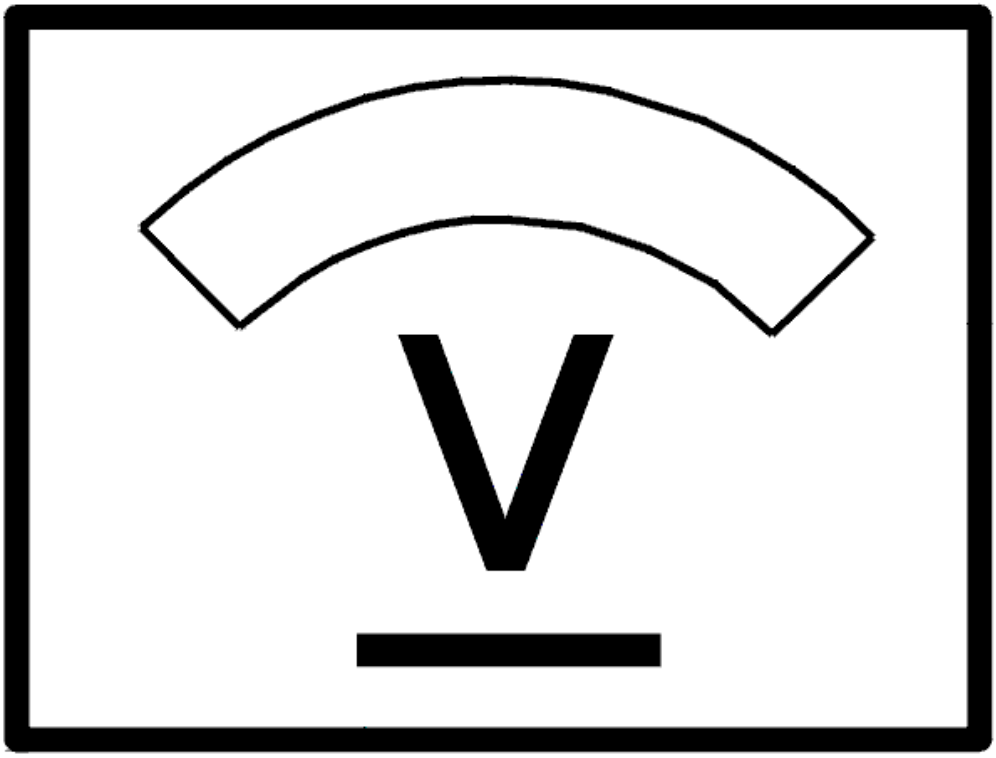

Fig. 425: Identifying Voltage Display
Courtesy of VOLVO CARS CORPORATION

Was the voltage OK?

- **YES**

  Refer to **CHECKING THE WIRING AND COMPONENT**

- **NO**

  Refer to **CHECKING THE WIRING AND COMPONENT**

CHECKING THE WIRING AND COMPONENT

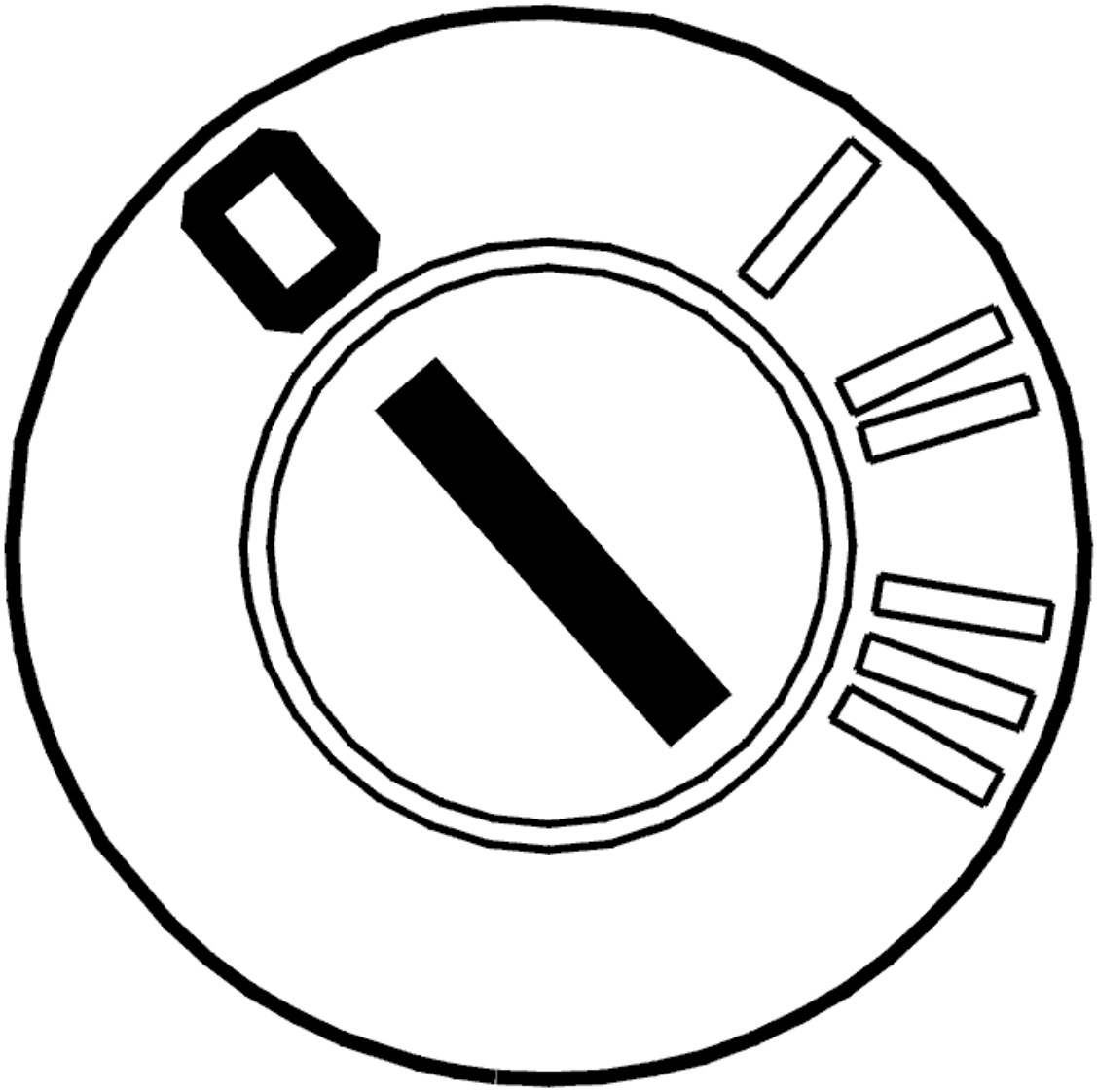

Fig. 426: Identifying Ignition OFF
Courtesy of VOLVO CARS CORPORATION

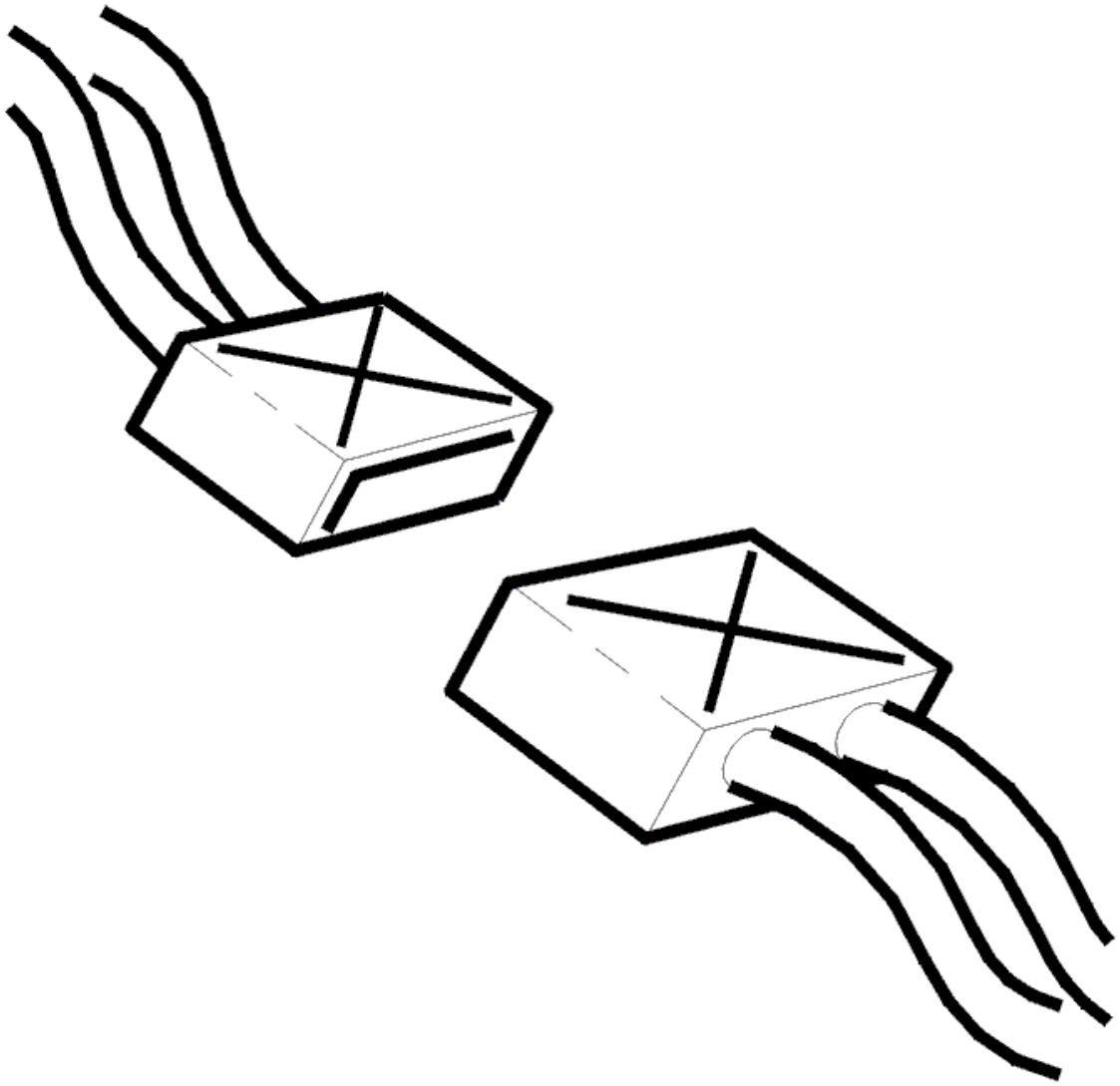

Fig. 427: Identifying Connectors
Courtesy of VOLVO CARS CORPORATION

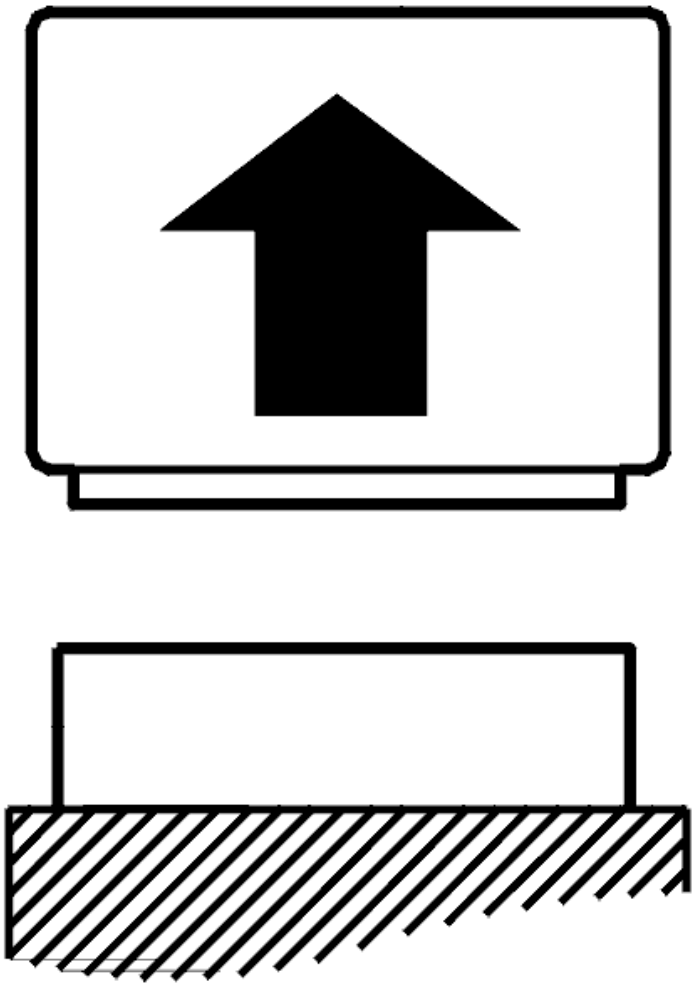

Fig. 428: Identifying Control Module Disconnected
Courtesy of VOLVO CARS CORPORATION

- Ignition off
- Disconnect the control module.
- Connect the breakout box to the control module connector (transmission side)
- Disconnect the transmission connector
- Connect adapter see **9511505** and breakout box see **9511428** to the transmission connector (control module side).

  Check the control module and transmission connectors. Check for contact resistance and oxidation.

  Check the cable between control module terminal #A65 (#B5) and transmission connector terminal #U (#A18) (control module side). Check for an open-circuit. Check for a short-circuit to ground. Check for a short-circuit to supply voltage.

If a fault was not detected in the wiring or terminals replace the control module.

Other information:

- To connect the breakout box to the control module, see **CONNECTING THE BREAKOUT BOX**
- To connect the breakout box to the transmission connector, see **CONNECTING THE BREAKOUT BOX, GM AUTOMATIC TRANSMISSIONS**
- For information about signals, see **SIGNAL SPECIFICATION**
- see **CHECKING WIRING AND TERMINALS. PERMANENT FAULT**

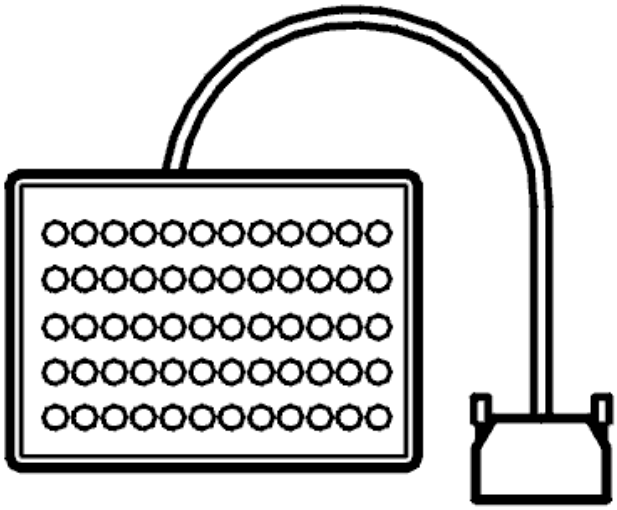

Fig. 429: Identifying Breakout Box
Courtesy of VOLVO CARS CORPORATION

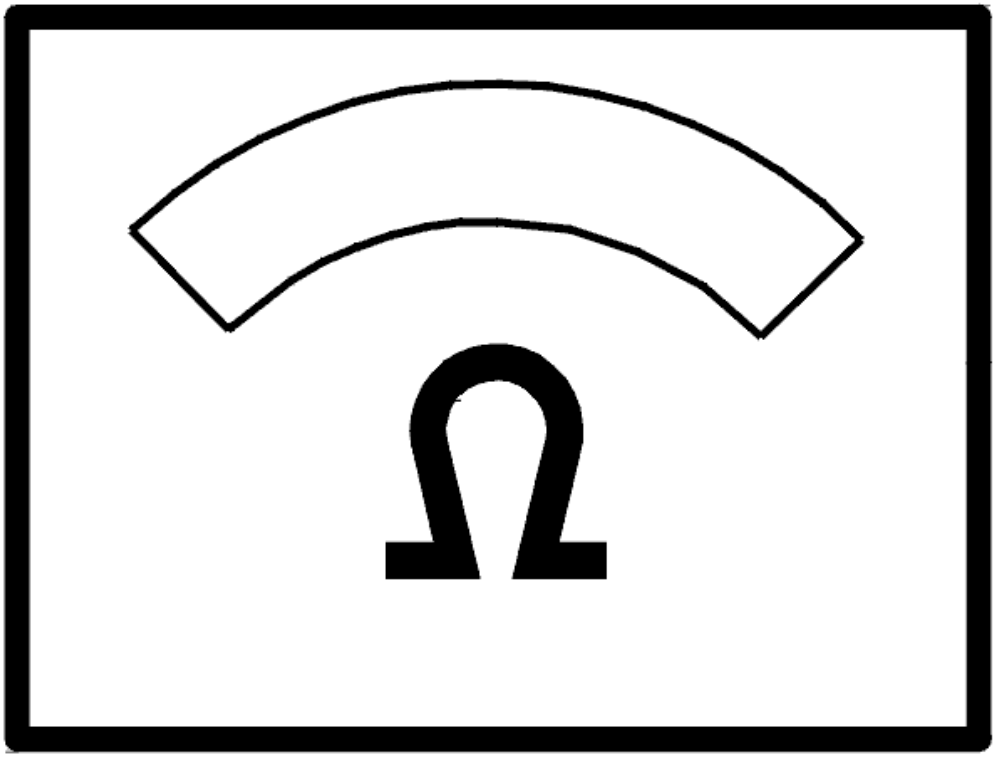

Fig. 430: Identifying Ohms Display
Courtesy of VOLVO CARS CORPORATION

Was a fault detected in the cables or terminals?

- **YES**

  Refer to **CHECKING DIAGNOSTIC TROUBLE CODES (DTCS)**

- **NO**

  Refer to **CHECKING THE WIRING AND COMPONENT**

CHECKING THE WIRING AND COMPONENT

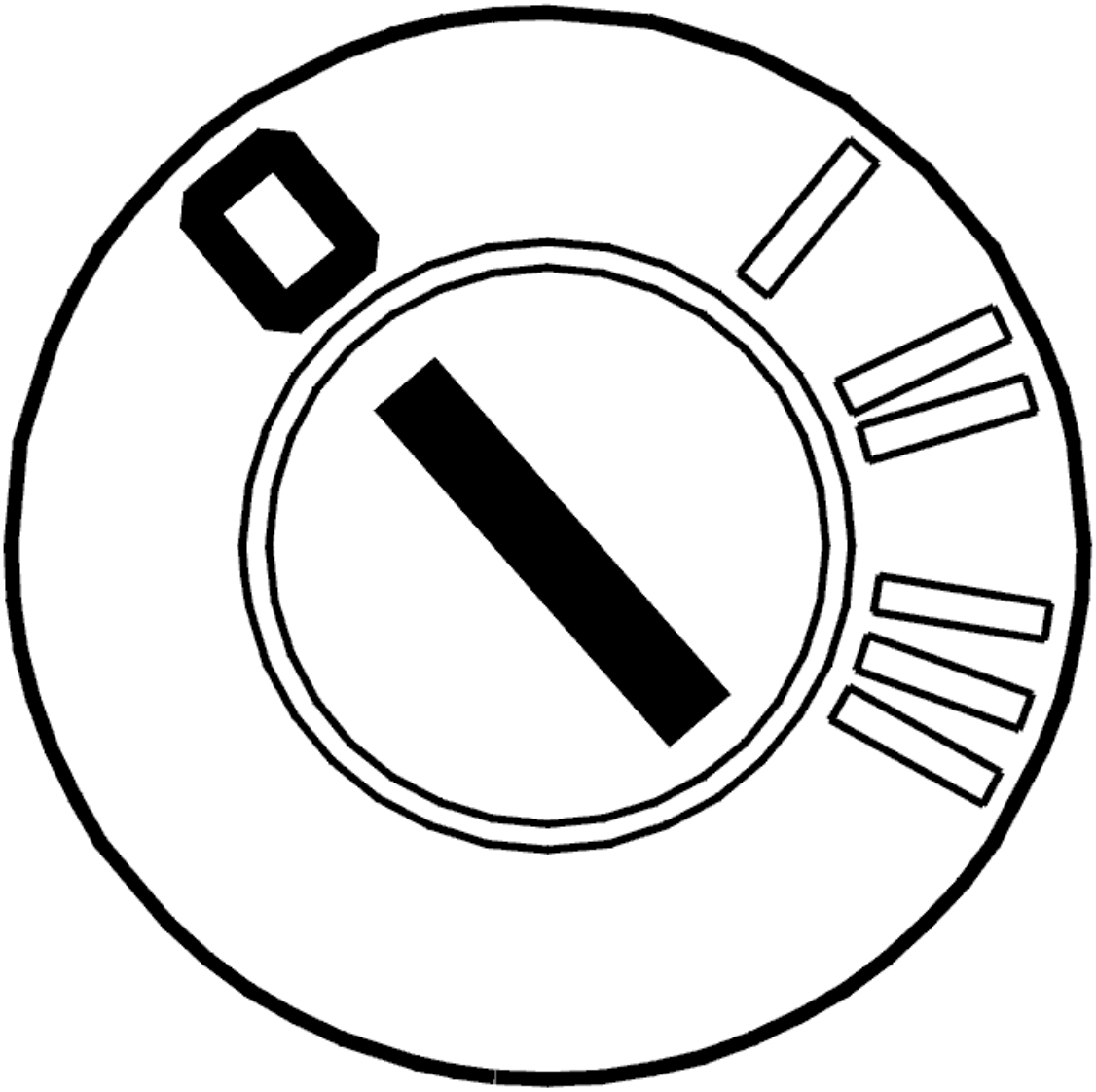

Fig. 431: Identifying Ignition OFF
Courtesy of VOLVO CARS CORPORATION

- Ignition off
- Open the transmission control system
- Connect adapter see **9511505** and breakout box see **9511428** to the transmission connector (transmission side).

  Check that the pins in the pressure switch module connector are not loose or bent. Check that the connector is correctly connected.

  Check the transmission and pressure switch module connectors. Check for contact resistance and oxidation.

  Check the cable between control module terminal #U (terminal #A18) and pressure switch module

connector terminal #B. Check for an open-circuit. Check for a short-circuit to ground. Check for a short-circuit to supply voltage.

Check the transmission oil filter. Check for **abnormal** amounts of particles in the oil.

Replace the oil filter if necessary.

Replace the pressure switch module if no abnormal amount of particles were found in the oil filter or there was no fault in the wiring.

Other information:

- To open the transmission control system, see **TEMPERATURE SENSOR FLUID, TRANSAXLE, (TFT)**
- To connect the breakout box to the control module, see **CONNECTING THE BREAKOUT BOX**
- To connect the breakout box to the transmission connector, see **CONNECTING THE BREAKOUT BOX, GM AUTOMATIC TRANSMISSIONS**
- To replace the cable harness, see **TEMPERATURE SENSOR FLUID, TRANSAXLE, (TFT)**
- To replace the oil filter, see **TRANSMISSION OIL / OIL FILTER, REPLACING**
- To replace the pressure switch module, see **PRESSURE SENSOR, REPLACING**
- For information about signals, see **SIGNAL SPECIFICATION**
- see **CHECKING WIRING AND TERMINALS. PERMANENT FAULT**

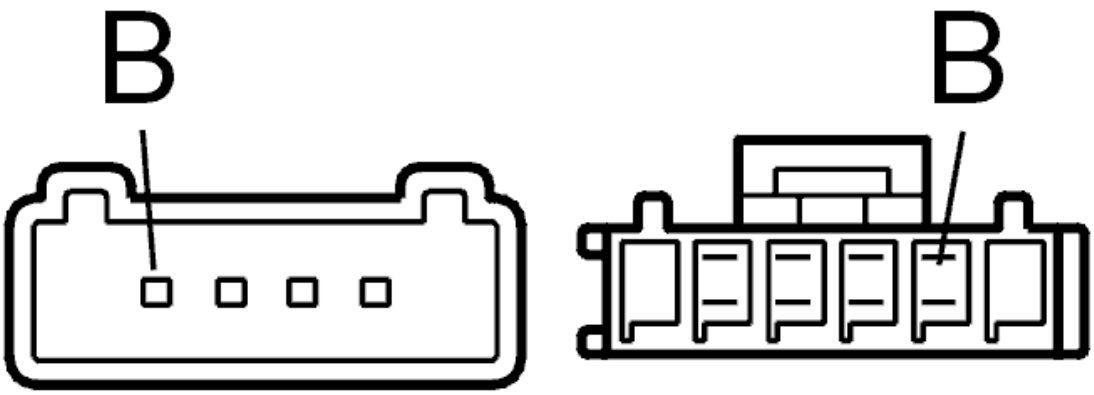

Fig. 432: Identifying Pressure Switch Module Connector Terminal #B
Courtesy of VOLVO CARS CORPORATION

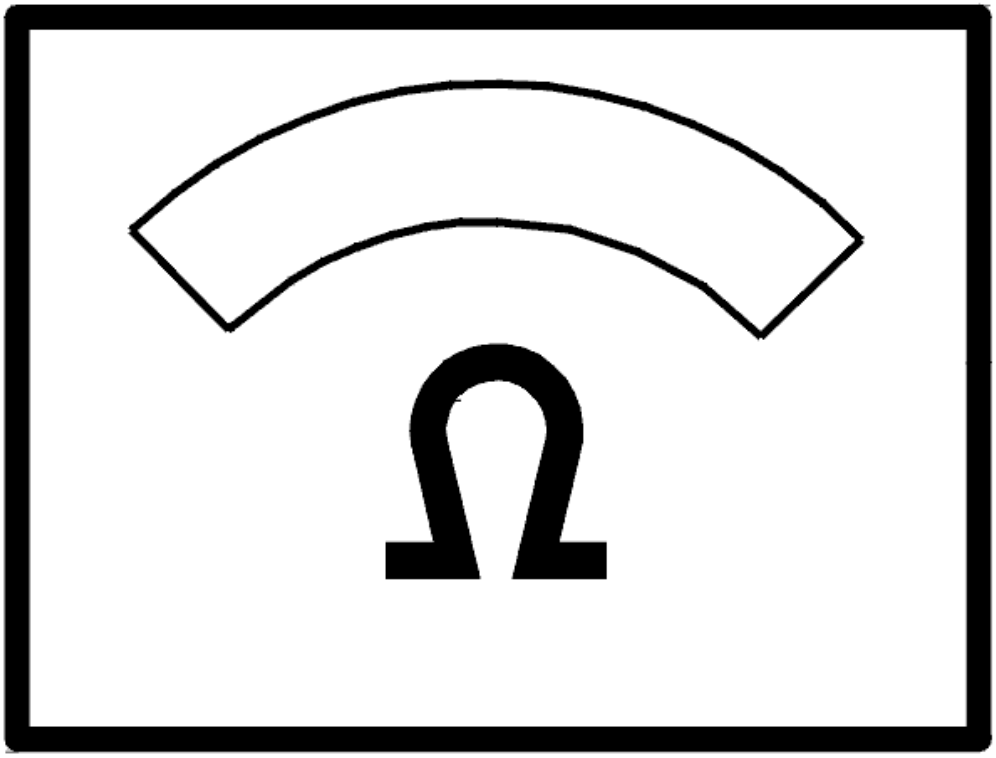

Fig. 433: Identifying Ohms Display
Courtesy of VOLVO CARS CORPORATION

- **Continue**

  Refer to **RESETTING THE ADAPTATION**

CHECKING SOLENOID SL

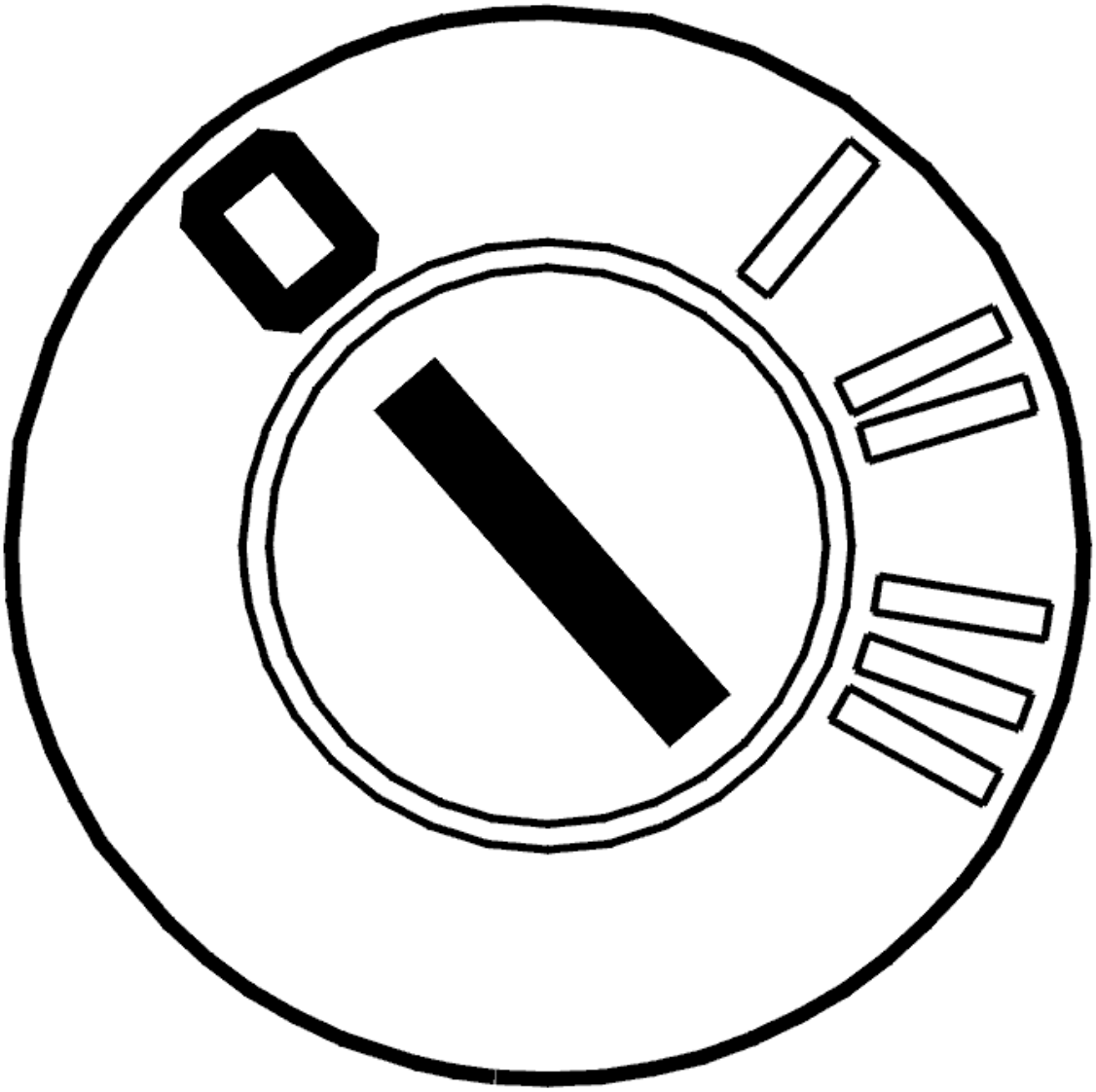

Fig. 434: Identifying Ignition OFF
Courtesy of VOLVO CARS CORPORATION

- Ignition off
- Connect the breakout box to the control module connector (transmission side).

  Check solenoid SL by measuring the resistance between terminals #A51 (#A51) and #A53 (#A53).

  When the transmission is cold (20°C), the resistance must be 10-11 ohms. When the transmission is at operating temperature (150°C), the resistance must not exceed 16 ohms.

  Other information:

  - To connect the breakout box, see **CONNECTING THE BREAKOUT BOX**
  - For information about signals, see **SIGNAL SPECIFICATION** .

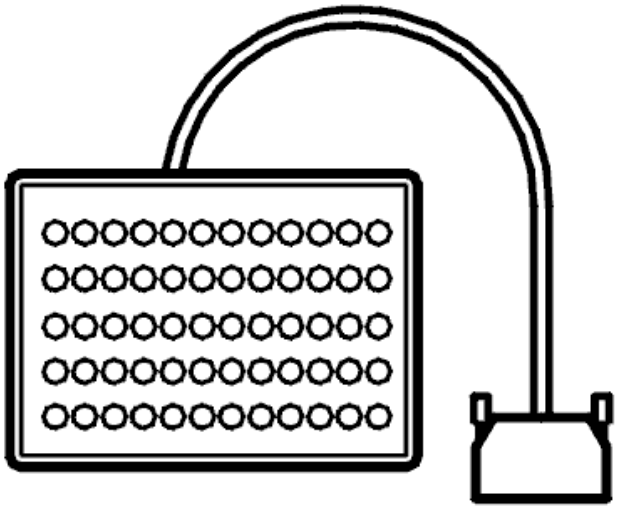

Fig. 435: Identifying Breakout Box
Courtesy of VOLVO CARS CORPORATION

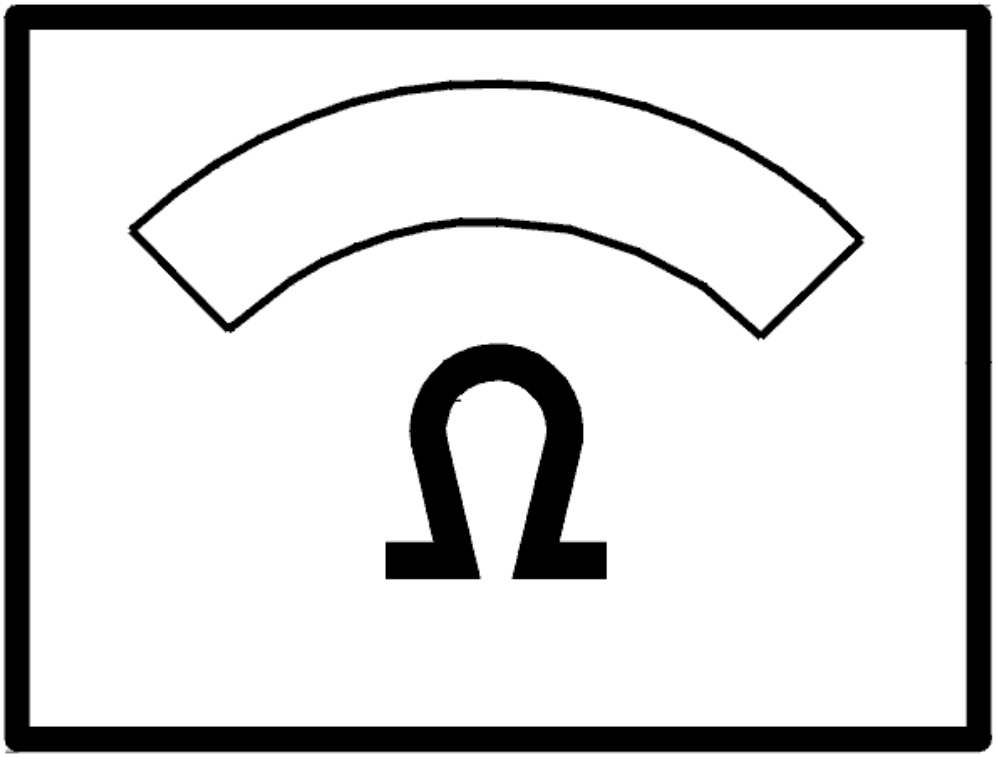

Fig. 436: Identifying Ohms Display
Courtesy of VOLVO CARS CORPORATION

Was the resistance OK?

- **YES**

  Refer to **CONNECTING THE T PIPE**

- **NO**

  Refer to **CHECKING THE WIRING**

CONNECTING THE T PIPE

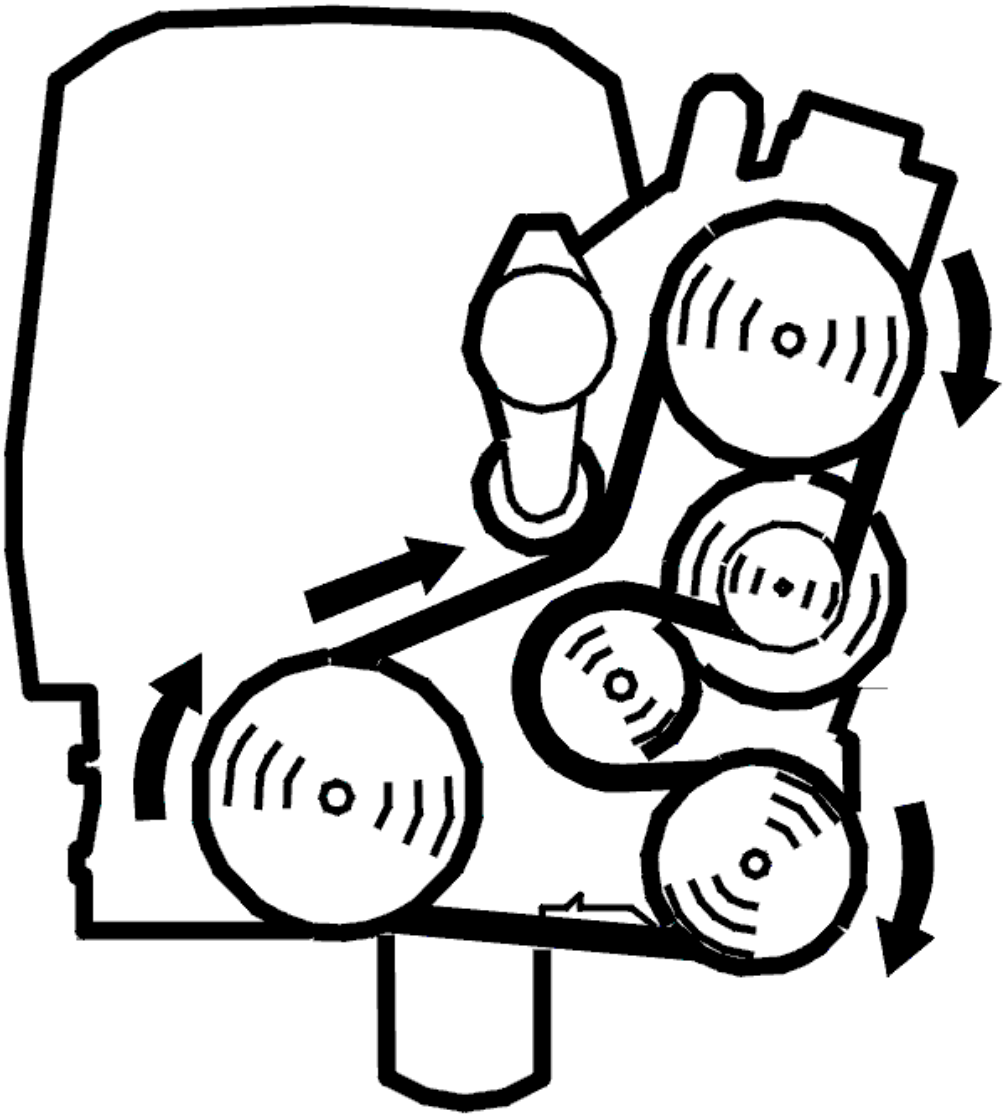

Fig. 437: Identifying Belt Routing
Courtesy of VOLVO CARS CORPORATION

- Deactivate the function for STC/DSTC by pressing in the button for STC/DSTC for approximately 2 seconds
- Ignition off
- Connect T-pipe see **9997002** with oil pressure gauge see **9995114** to the coolant hose from the transmission for the oil cooler
- Raise the car so that the drive wheels are clear of the ground.

WARNING: **Ensure that the car safely raised. Ensure that there are no objects caught in the front wheels.**

- Start the engine

- Gear selector in position P
- Activate the function "Block automatic shifting".

Other information

- To connect the T-pipe to the oil cooler for the transmission. See **T-PIPE, CONNECTION TO OIL COOLER** .

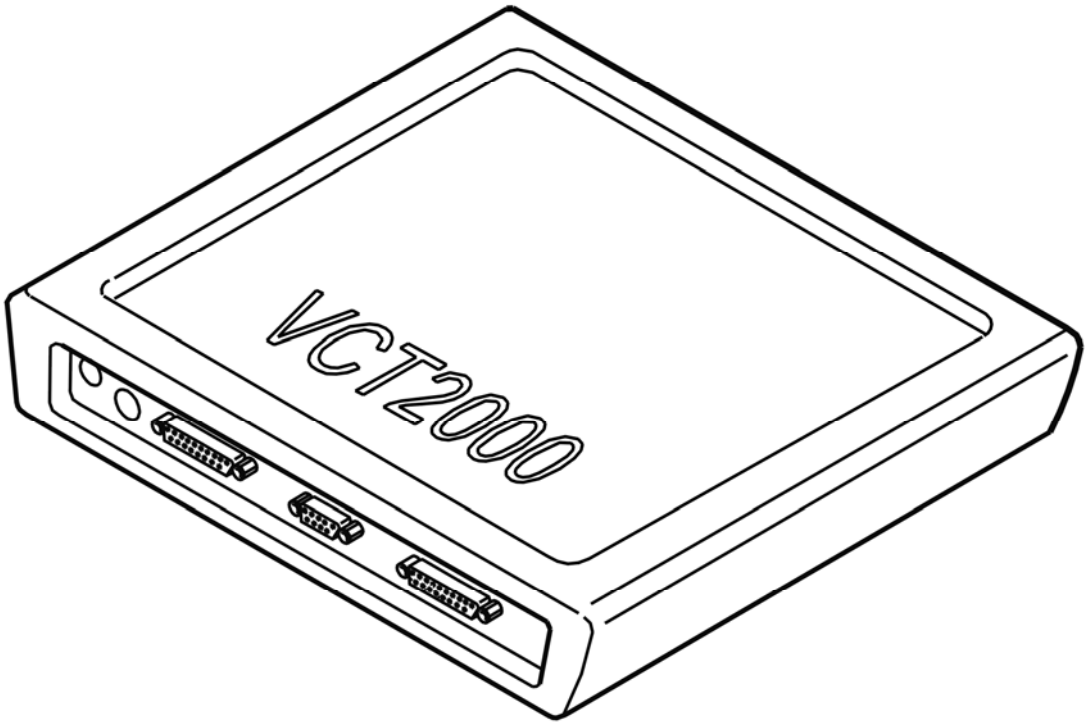

Fig. 438: Identifying VCT2000 Diagnostic Tool Symbol In VIDA
Courtesy of VOLVO CARS CORPORATION

Allow the engine to run.

- **Continue**

Refer to **CHECKING SOLENOID SL**

CHECKING SOLENOID SL

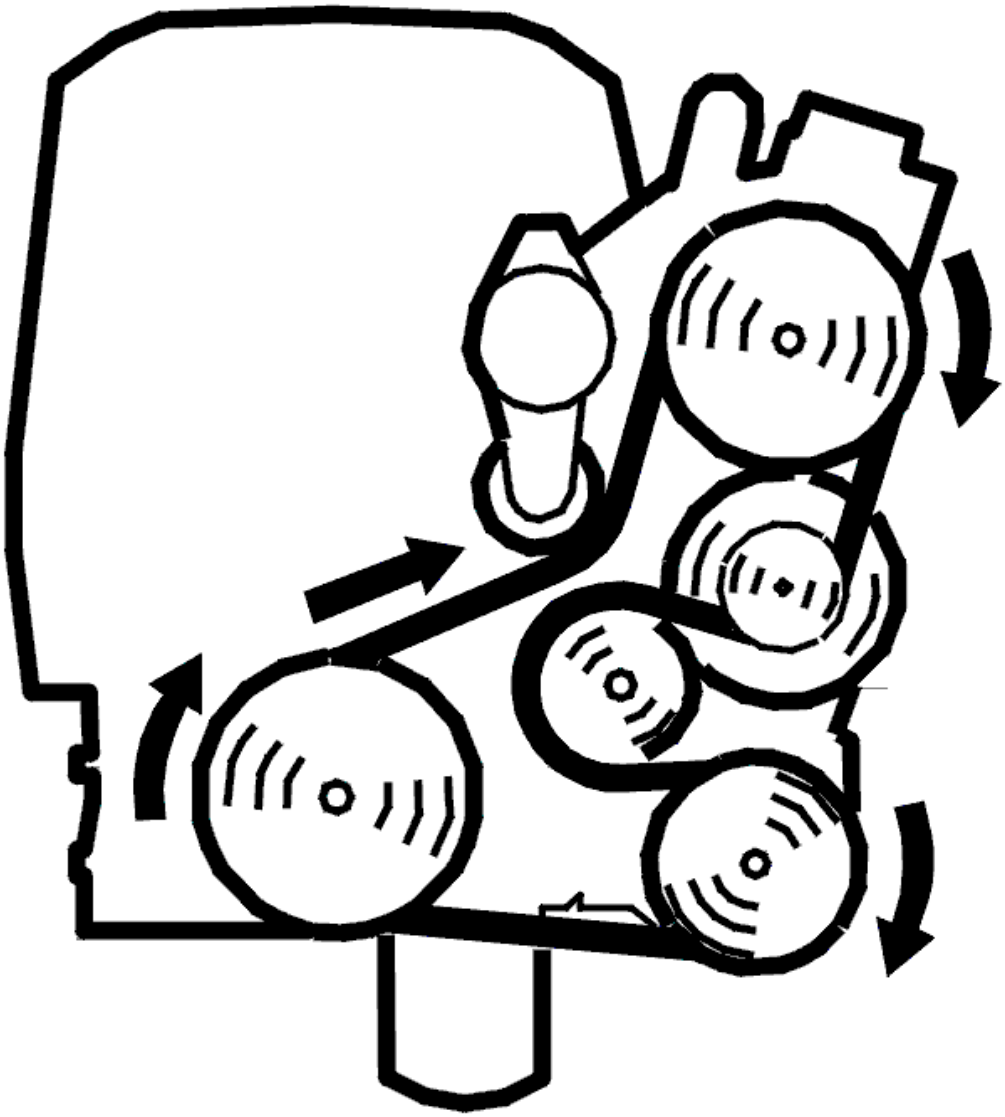

Fig. 439: Identifying Belt Routing
Courtesy of VOLVO CARS CORPORATION

- Engine running
- Move the gear selector to position D
- Activate the solenoid for gear 2 and then the lock-up function
- Check the pressure change on the oil pressure gauge. A considerable change in pressure should be observed
- Deactivate the lock-up function. Check the pressure change.

  Repeat the activation and deactivation of the lock-up function a few times to ensure accurate results.

  HINT: Unchanged pressure means that the control system is defective.

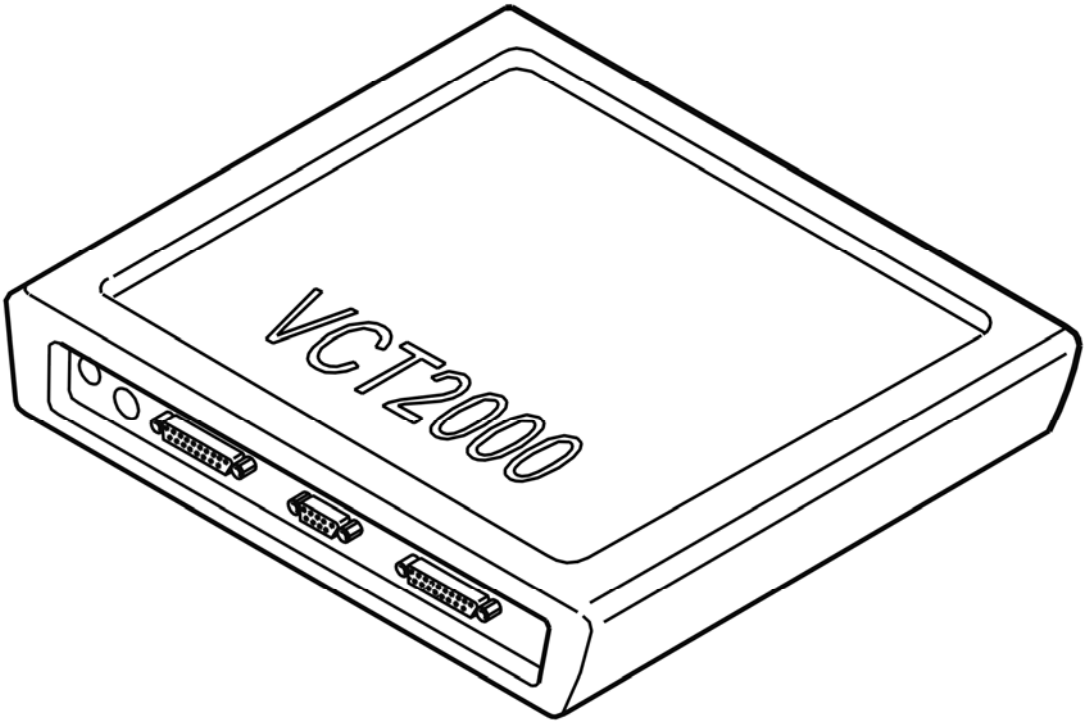

Fig. 440: Identifying VCT2000 Diagnostic Tool Symbol In VIDA
Courtesy of VOLVO CARS CORPORATION

Did the pressure change?

- **YES**

  Refer to **REPLACING THE TRANSMISSION**

- **NO**

  Refer to **REPLACING THE CONTROL SYSTEM**

REPLACING THE CONTROL SYSTEM

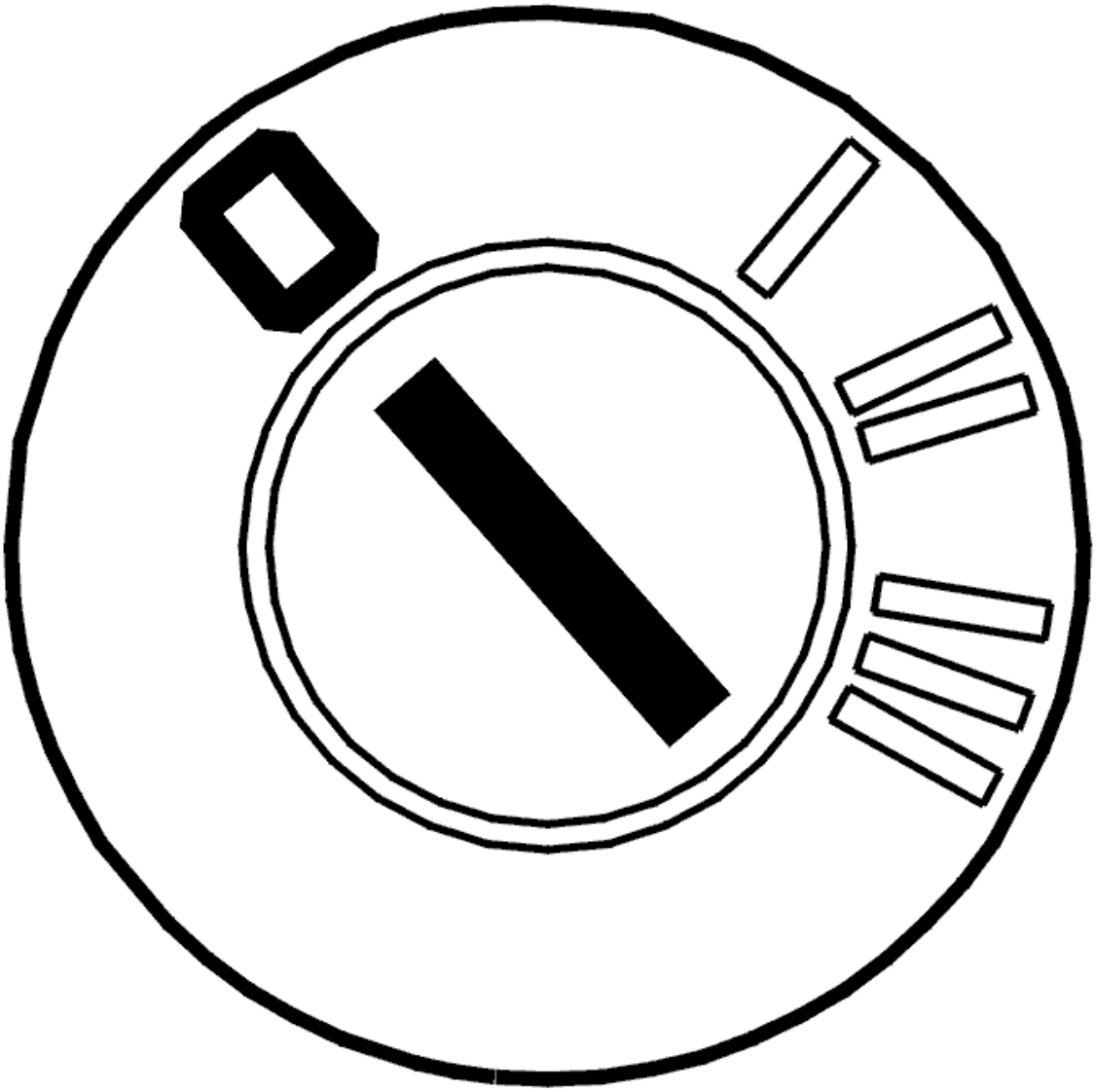

Fig. 441: Identifying Ignition OFF
Courtesy of VOLVO CARS CORPORATION

- Ignition off.

  Fault-tracing indicates a fault in the transmission control system. Replace the control system.

  Other information

  - To replace the control system, For removal, see **CONTROL SYSTEM/VALVE HOUSING, REMOVING** and To install, see **CONTROL SYSTEM / VALVE HOUSING, INSTALLING** .

- **Continue**

  Refer to **RESETTING THE ADAPTATION**

CHECKING THE WIRING

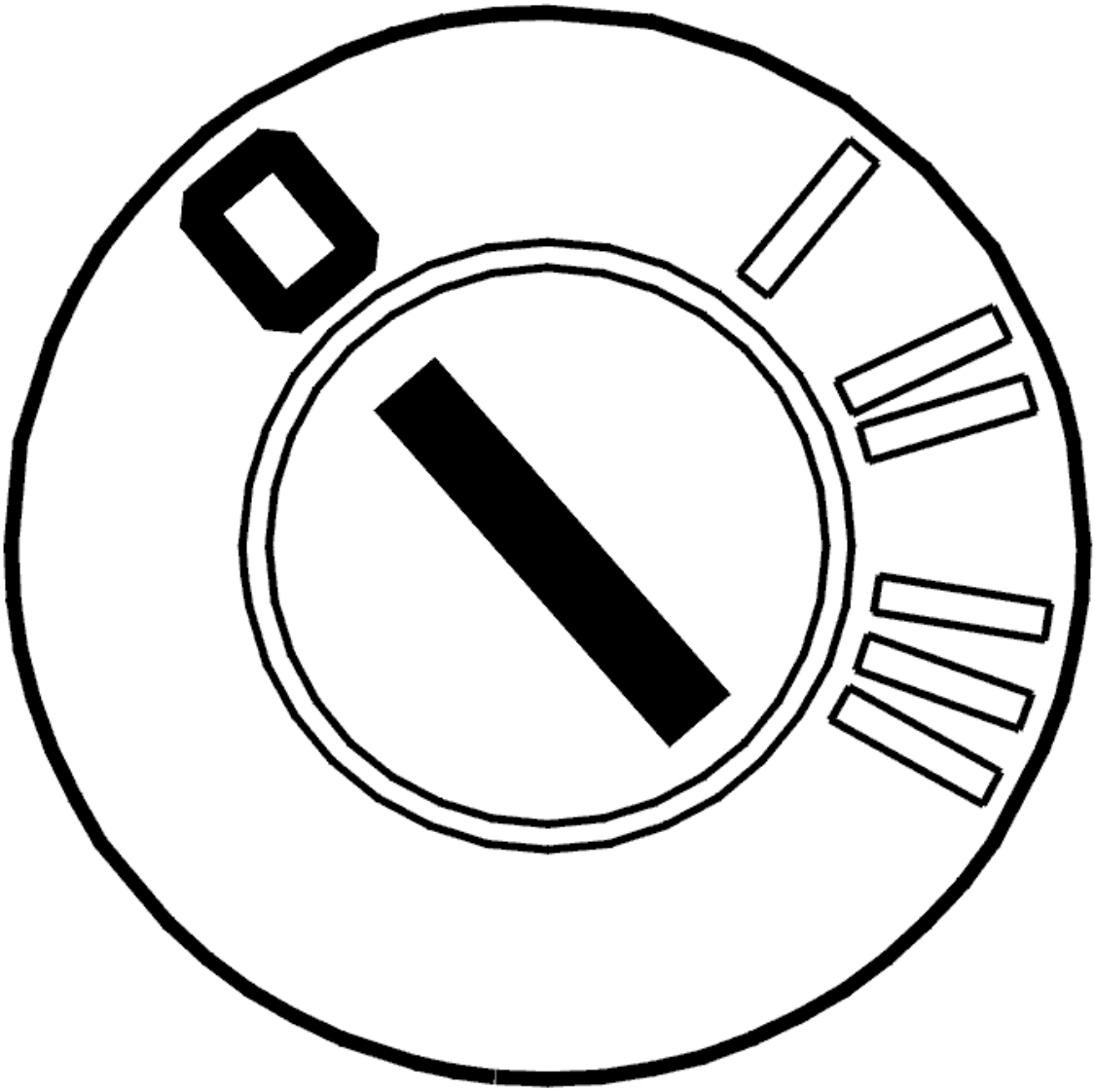

Fig. 442: Identifying Ignition OFF
Courtesy of VOLVO CARS CORPORATION

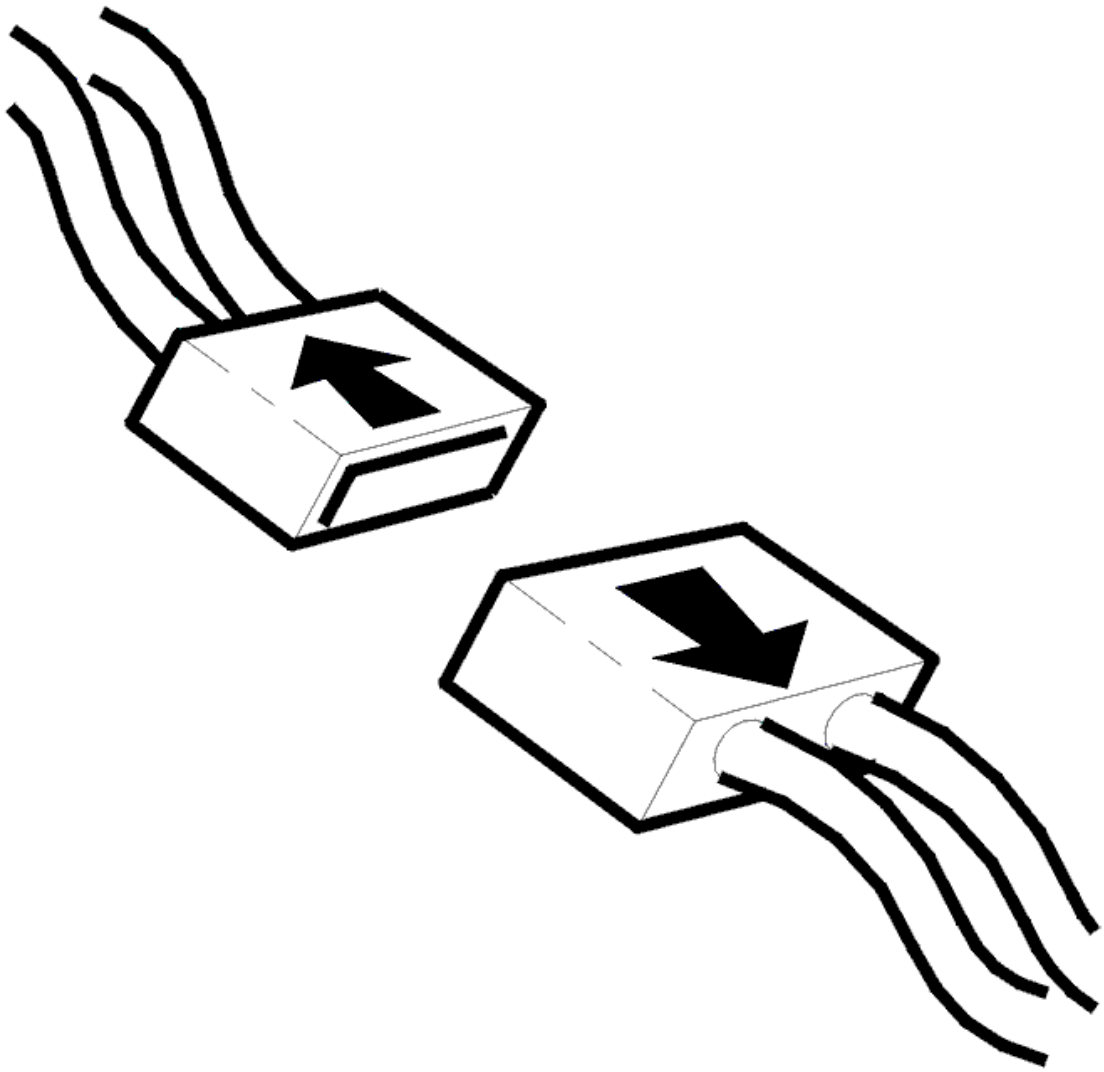

Fig. 443: Identifying Connector(s) Disconnected
Courtesy of VOLVO CARS CORPORATION

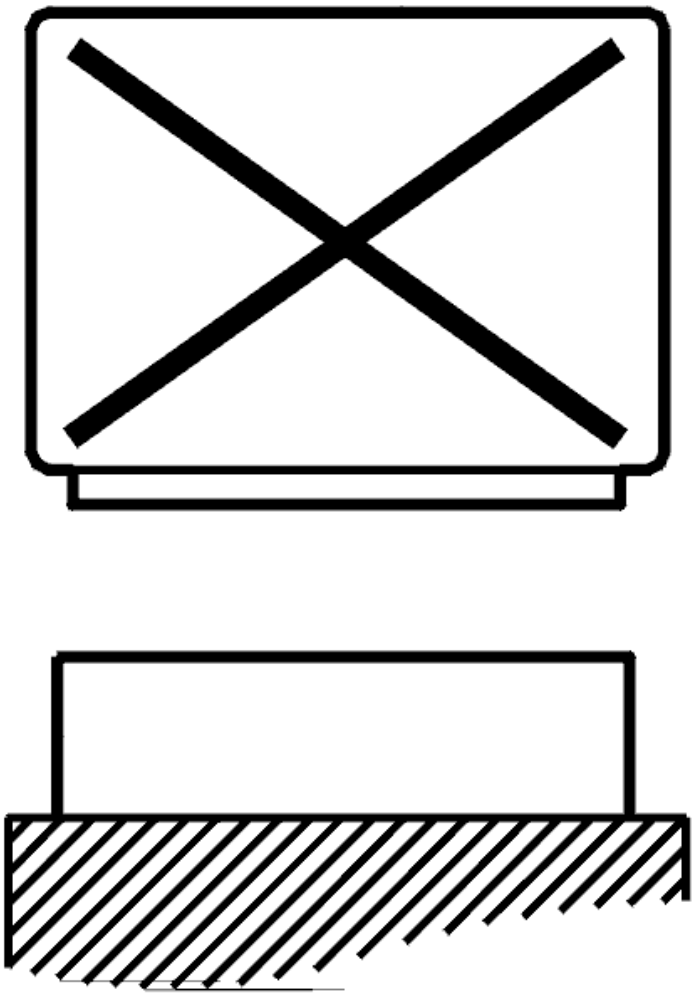

Fig. 444: Identifying Control Module Disconnected
Courtesy of VOLVO CARS CORPORATION

- Ignition off
- Control module disconnected
- Connect the breakout box to the control module connector (transmission side)
- Disconnect the transmission connector
- Adapter see **9511505** and breakout box see **9511428** connected to the transmission connector (control module side).

  Check the wiring between control module terminal #A51 (#A51) and transmission connector terminal #T (#A17). Check for an open-circuit. Check for a short-circuit to ground. Check for a short-circuit to supply voltage.

  Check the wiring between control module terminal #A53 (#A53) and transmission connector terminal #E

(#A5). Check for an open-circuit. Check for a short-circuit to ground. Check for a short-circuit to supply voltage.

Remedy as necessary.

Other information:

- To connect the breakout box to the control module, see **CONNECTING THE BREAKOUT BOX**
- To connect the breakout box to the transmission connector, see **CONNECTING THE BREAKOUT BOX, GM AUTOMATIC TRANSMISSIONS**
- For information about signals, see **SIGNAL SPECIFICATION**
- see **CHECKING WIRING AND TERMINALS. PERMANENT FAULT**

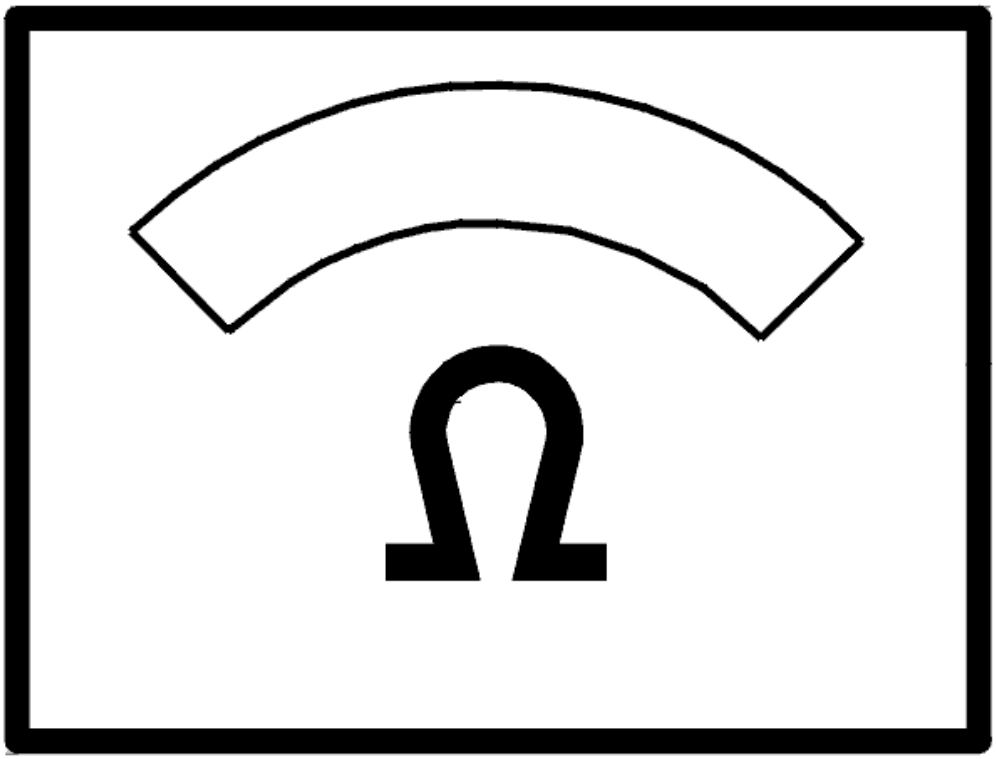

Fig. 445: Identifying Ohms Display
Courtesy of VOLVO CARS CORPORATION

Was a fault detected?

- **YES**

  Refer to **CHECKING DIAGNOSTIC TROUBLE CODES (DTCS)**

- **NO**

  Refer to **CHECKING THE WIRING AND COMPONENT**

CHECKING THE WIRING AND COMPONENT

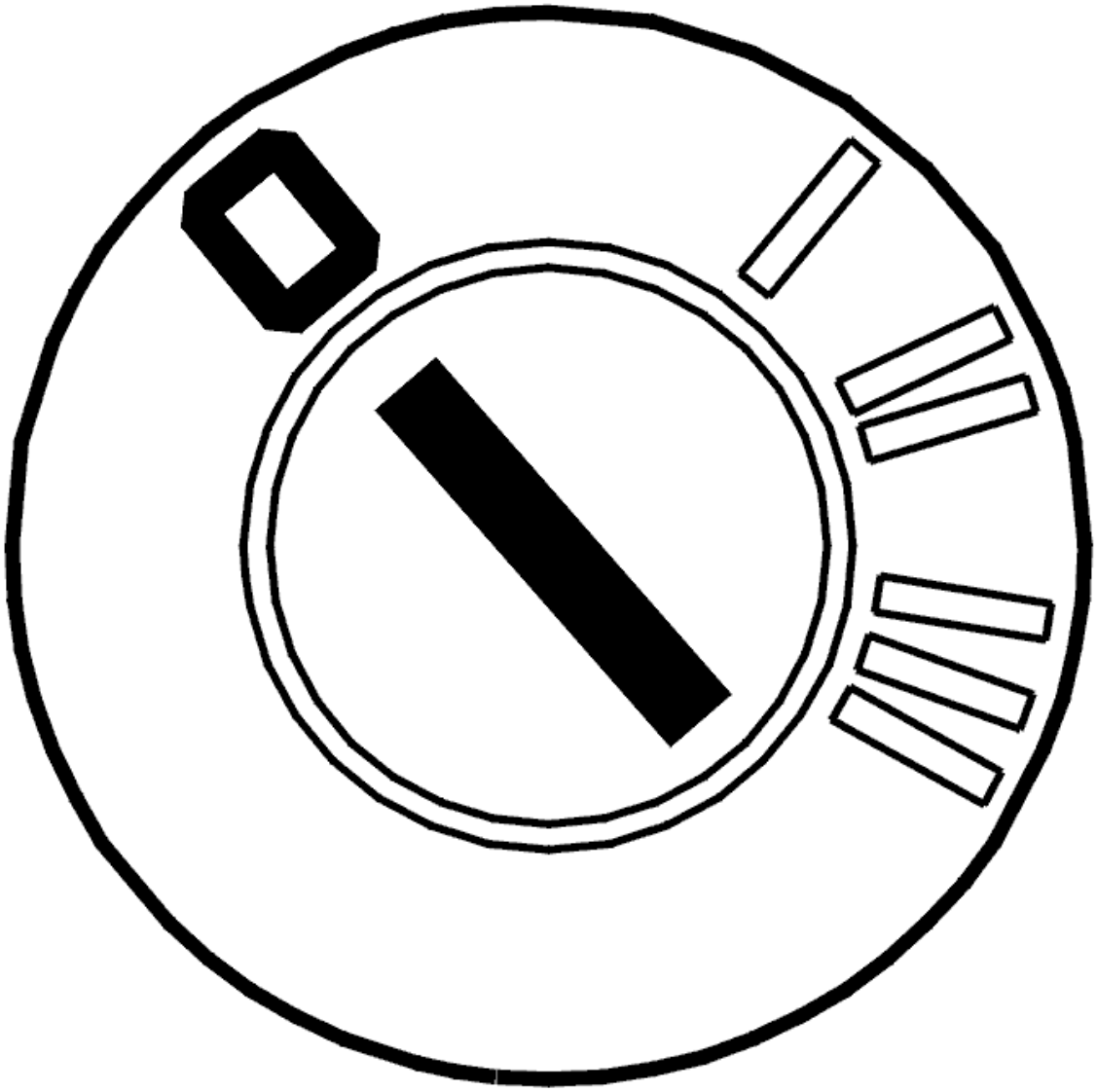

Fig. 446: Identifying Ignition OFF
Courtesy of VOLVO CARS CORPORATION

- Ignition off

- Open the transmission control system
- Connect adapter see **9511505** and breakout box see **9511428** to the transmission connector (transmission side).

  Check the cable between transmission connector terminal #T (#A17) and solenoid SL terminal #A. Check the cable between transmission connector terminal #E (#A5) and solenoid SL terminal #B. Check these cables for an open-circuit.

  HINT: Check solenoid SL by measuring the resistance between solenoid SL terminals #A and #B. When the transmission is cold (approximately 20°C), the resistance must be 10-11 ohms.

  Remedy as necessary.

  Other information:

  - To open the transmission control system, For removal, see **SIDE COVER TRANSMISSION, REMOVING** or To install, see **SIDE COVER TRANSMISSION, INSTALLING**
  - To connect the breakout box to the transmission connector, see **CONNECTING THE BREAKOUT BOX, GM AUTOMATIC TRANSMISSIONS**
  - To replace solenoid SL, see **SOLENOID LOCK-UP FUNCTION, REPLACING**
  - To replace the cable harness, see **TEMPERATURE SENSOR FLUID, TRANSAXLE, (TFT)**
  - For information about signals, see **SIGNAL SPECIFICATION**
  - see **CHECKING WIRING AND TERMINALS. PERMANENT FAULT**

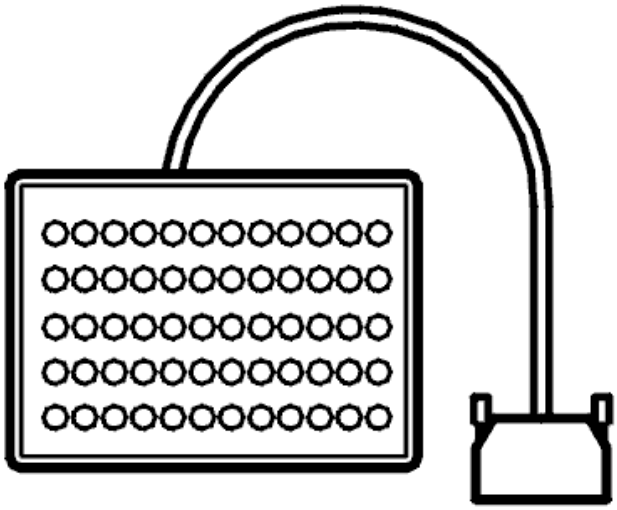

Fig. 447: Identifying Breakout Box
Courtesy of VOLVO CARS CORPORATION

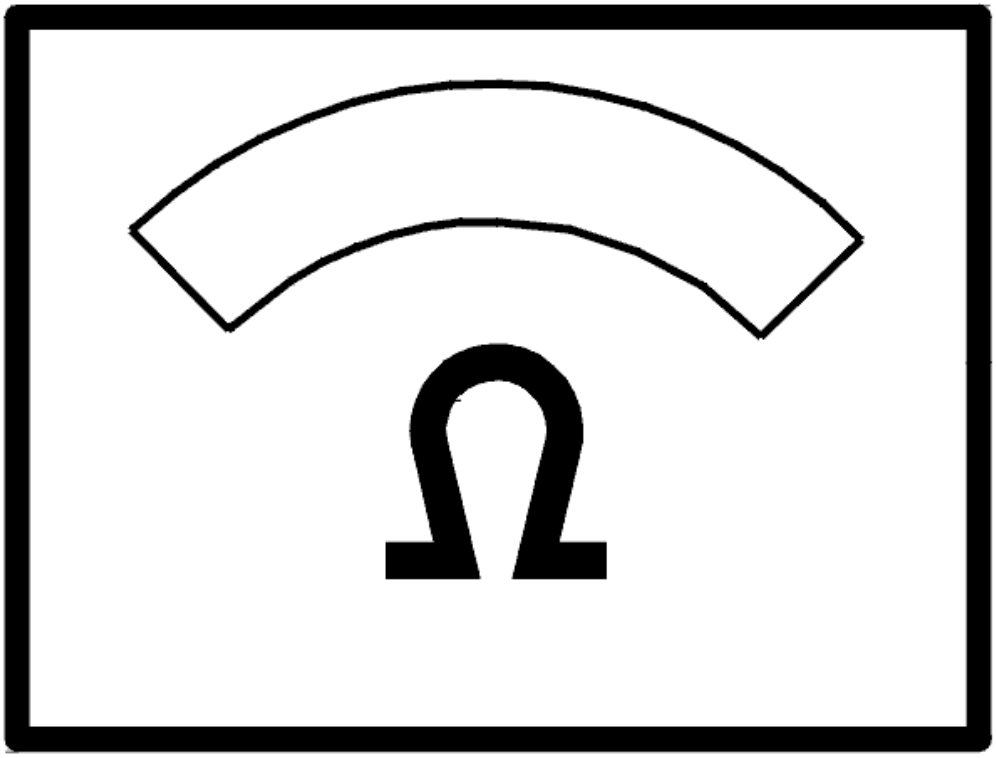

Fig. 448: Identifying Ohms Display
Courtesy of VOLVO CARS CORPORATION

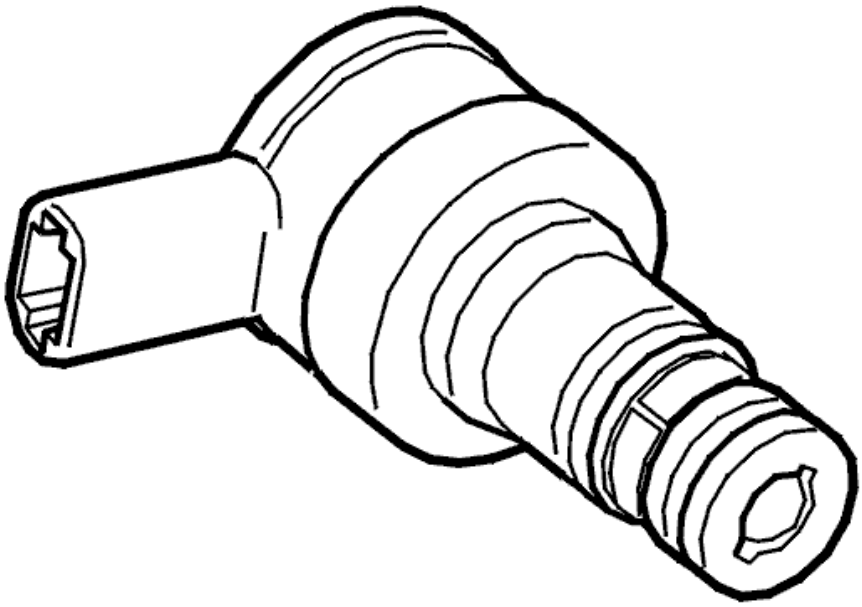

Fig. 449: Identifying Lock-Up Solenoid, SL
Courtesy of VOLVO CARS CORPORATION

- **Continue**

  Refer to **RESETTING THE ADAPTATION**

REPLACING THE TRANSMISSION

Fault-tracing indicates a fault in the transmission. Replace the transmission.

Other information:

- To remove the transmission, see **TRANSMISSION, REMOVING**
- To install the transmission, see **TRANSMISSION, INSTALLING (2003, 2004)** or **TRANSMISSION, INSTALLING (2005, 2006)** .

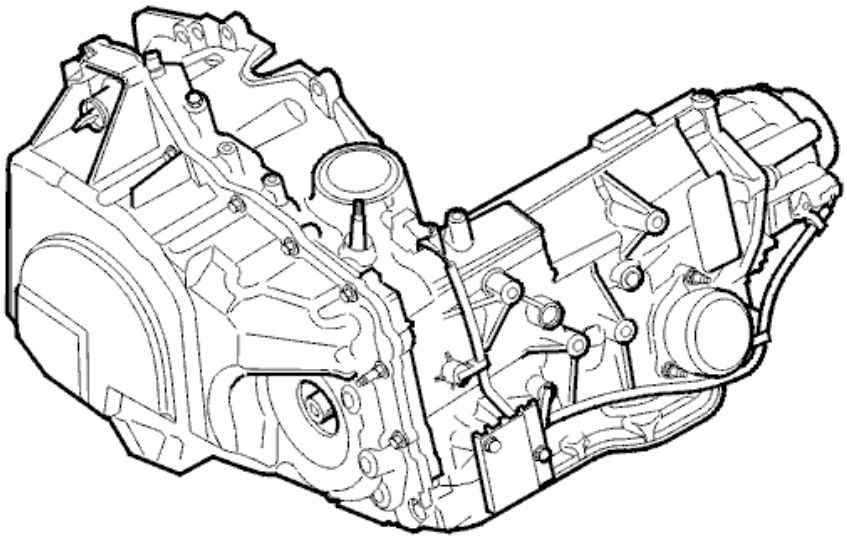

P2X

4301721D ©VOLVO

Fig. 450: Identifying Transmission
Courtesy of VOLVO CARS CORPORATION

- **Continue**

  Refer to **RESETTING THE ADAPTATION**

FAULT-TRACING INFORMATION

The fault has probably been remedied if the control module has been programmed with new software.

If new software has not been downloaded, the fault-tracing indicates that the control module has previously detected a fault but the fault is no longer active.

CHECKING DIAGNOSTIC TROUBLE CODES (DTCS)

ERASING DIAGNOSTIC TROUBLE CODES (DTCS)

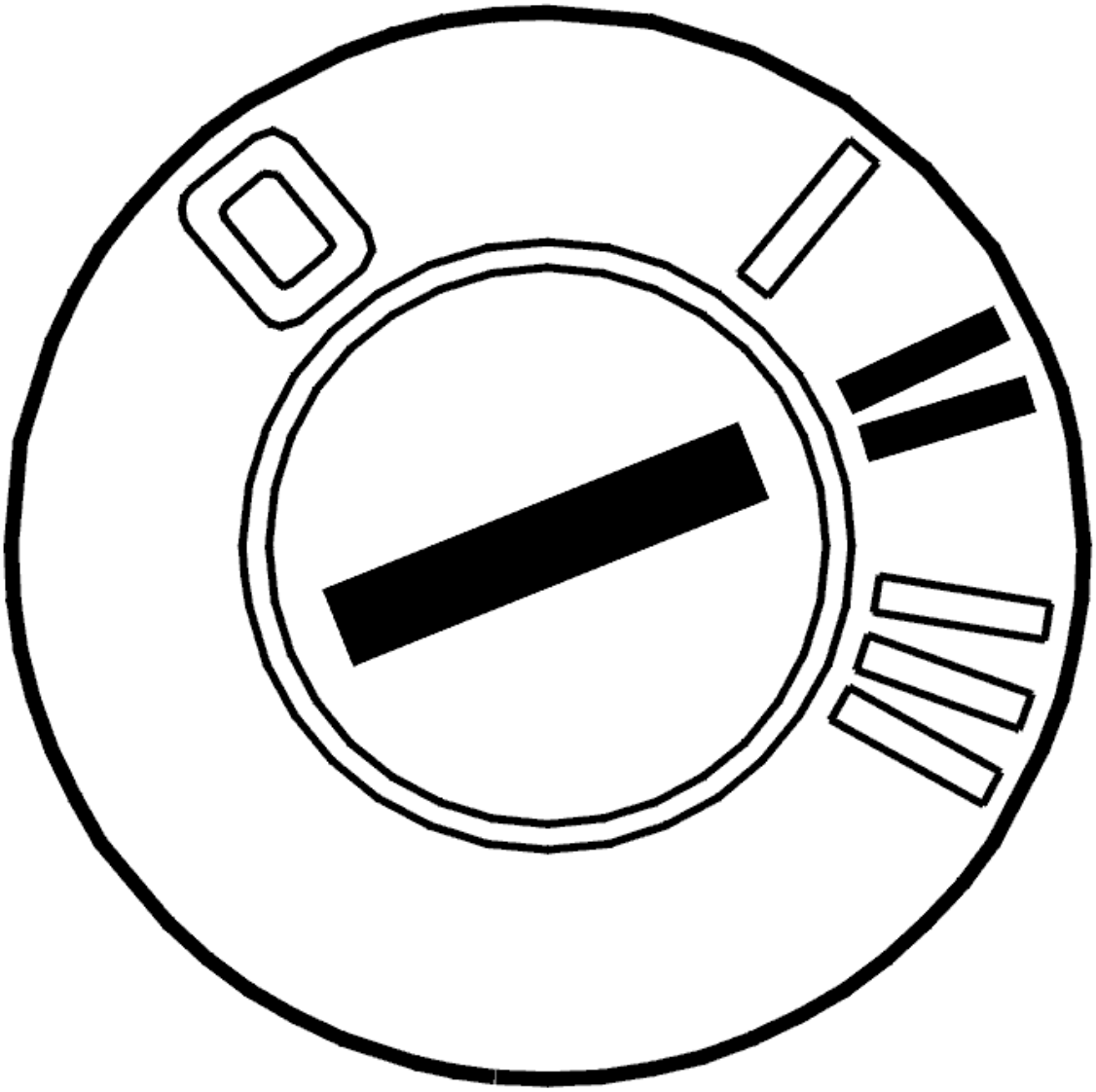

Fig. 451: Identifying Ignition ON
Courtesy of VOLVO CARS CORPORATION

- Ignition off
- Wait for two minutes to allow time for the diagnostic trouble codes (DTCs) to be stored in the control module memory
- Ignition on
- Erase diagnostic trouble codes (DTCs).

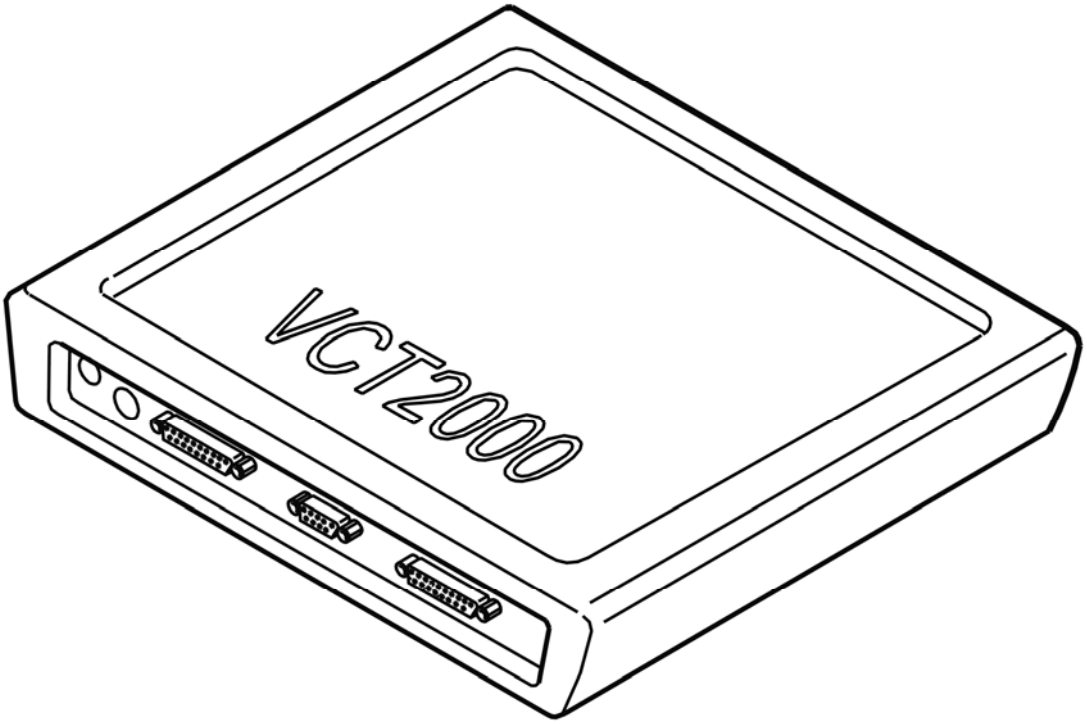

Fig. 452: Identifying VCT2000 Diagnostic Tool Symbol In VIDA
Courtesy of VOLVO CARS CORPORATION

- **Continue**

  Refer to **TEST DRIVING**

TEST DRIVING

NOTE: **Test drive the car according to the driving schedule below to check whether the fault is still active. The test drive is compiled in order to create the conditions in which the diagnostic trouble code (DTC) will be stored again if the fault is active.**

The TEST MODE function can be used to provoke any diagnostic trouble codes (DTC). The function reduces the conditions for how quickly diagnostic trouble codes (DTCs) are stored in the control module and the test drive becomes easier.

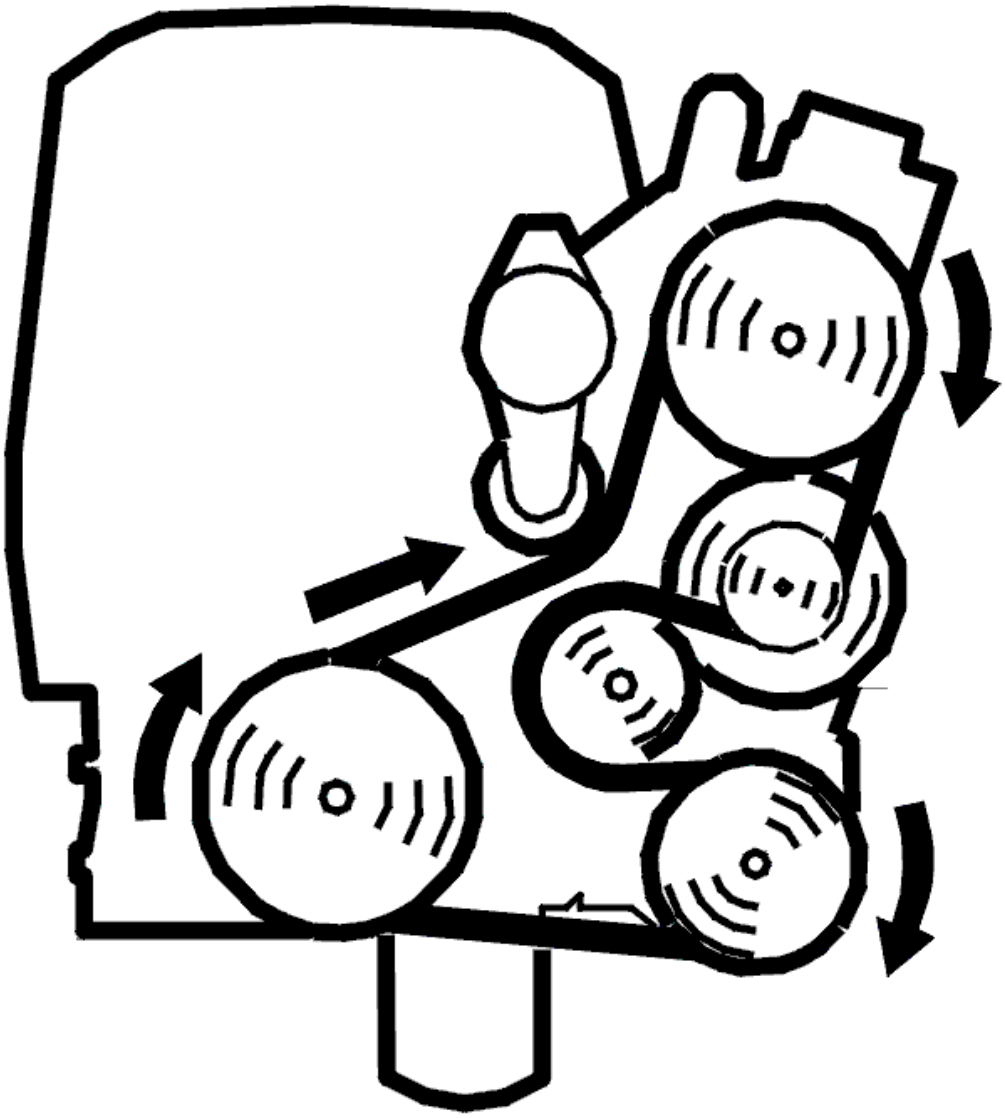

Fig. 453: Identifying Belt Routing
Courtesy of VOLVO CARS CORPORATION

- Start the engine
- Activate TEST MODE.

NOTE: Do not switch off the engine

- Disconnect the VIDA station. Test drive the car as described below.

WARNING: Please observe traffic regulations.

NOTE: Before test driving, the transmission should be at operating temperature,

approximately 80-90°C.

Shift the gear selector to position D (for Geartronic transmissions, shift as usual up to third gear). Carefully accelerate to a speed slightly higher than 75 km/h. Maintain the same speed for at least 30 seconds.

HINT: The car must be driven at an engine speed where the lock-up function is normally activated.

Criteria for diagnostic trouble code (DTC):

- The transmission fluid temperature must exceed 30°C
- The engine must be running for at least 20 seconds
- Gear selector in position D, 3 or 2 (4T65EV).

  Gear selector in Geartronic position and gears 4, 3 or 2 (4T65EV-GT)

- Speed above 75 km/h for at least 5 seconds
- At least 5 seconds since the last gear shift
- Positive engine torque (no engine braking).

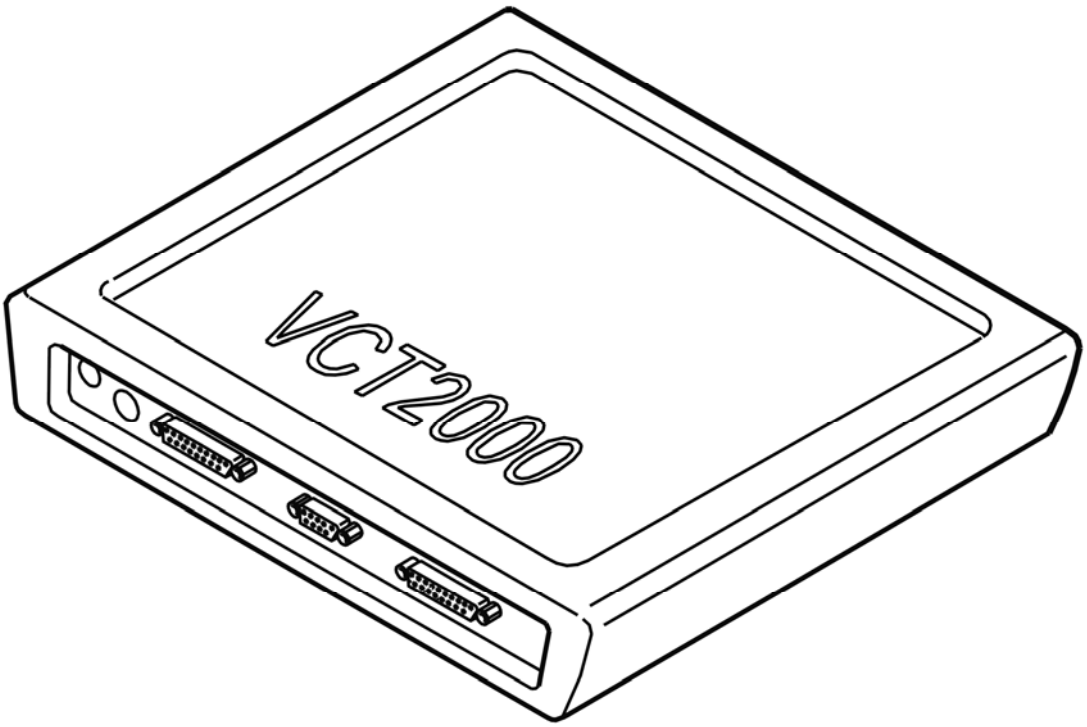

Fig. 454: Identifying VCT2000 Diagnostic Tool Symbol In VIDA
Courtesy of VOLVO CARS CORPORATION

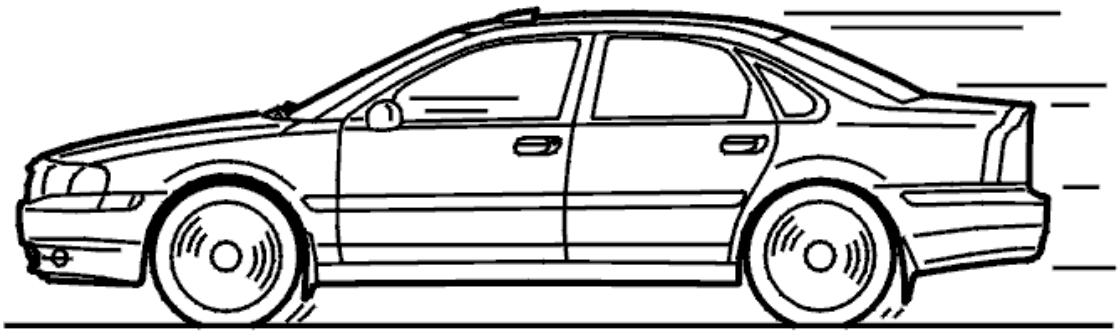

Fig. 455: Identifying Test Drive
Courtesy of VOLVO CARS CORPORATION

- **Continue**

Refer to **CHECKING DIAGNOSTIC TROUBLE CODES (DTCS)**

CHECKING DIAGNOSTIC TROUBLE CODES (DTCS)

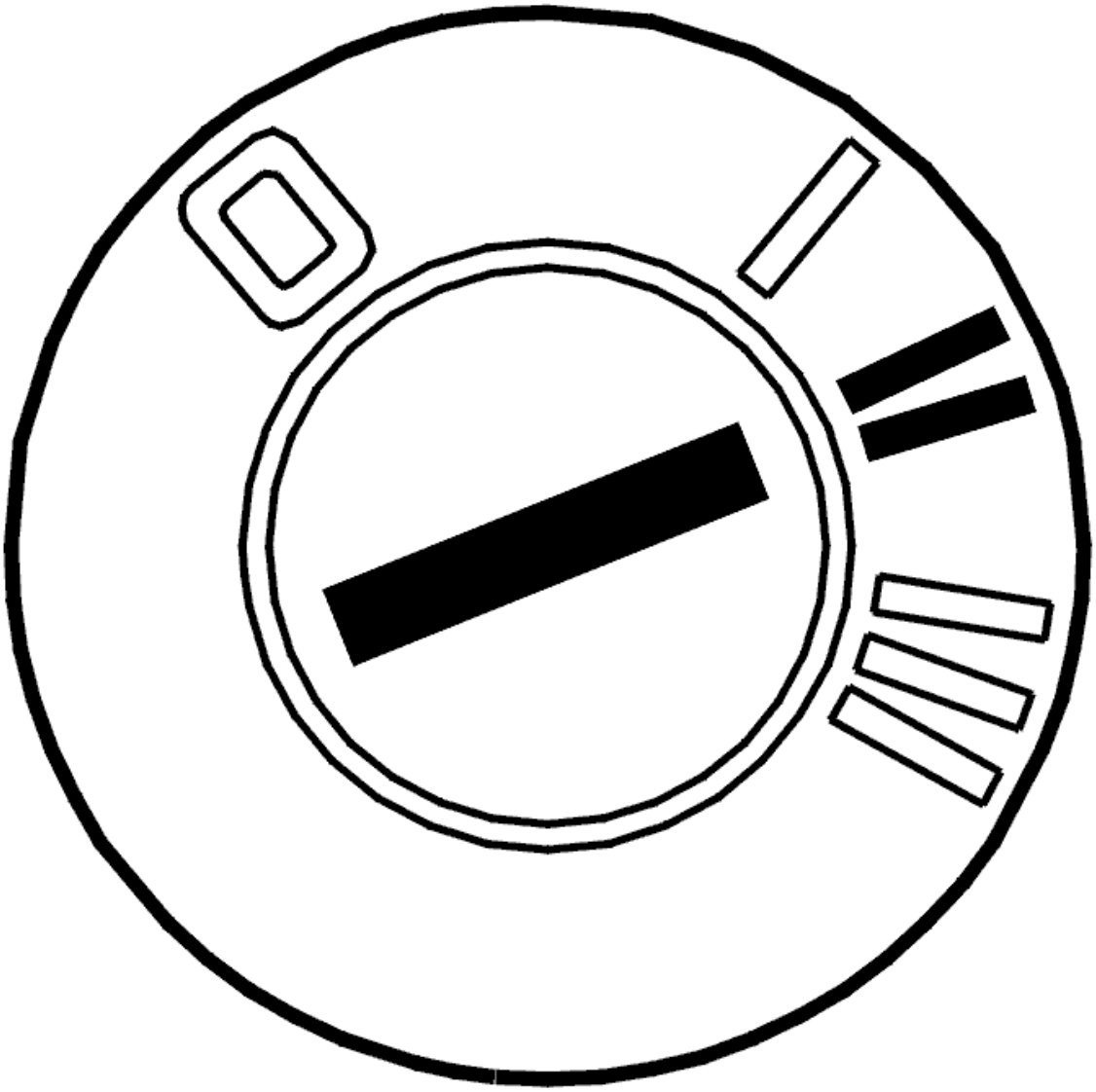

Fig. 456: Identifying Ignition ON
Courtesy of VOLVO CARS CORPORATION

- Ignition on
- Read off diagnostic trouble codes (DTCs).

  If any other diagnostic trouble codes (DTCs) than TCM-0054 are stored, these must be fault-traced after this fault-tracing is completed.

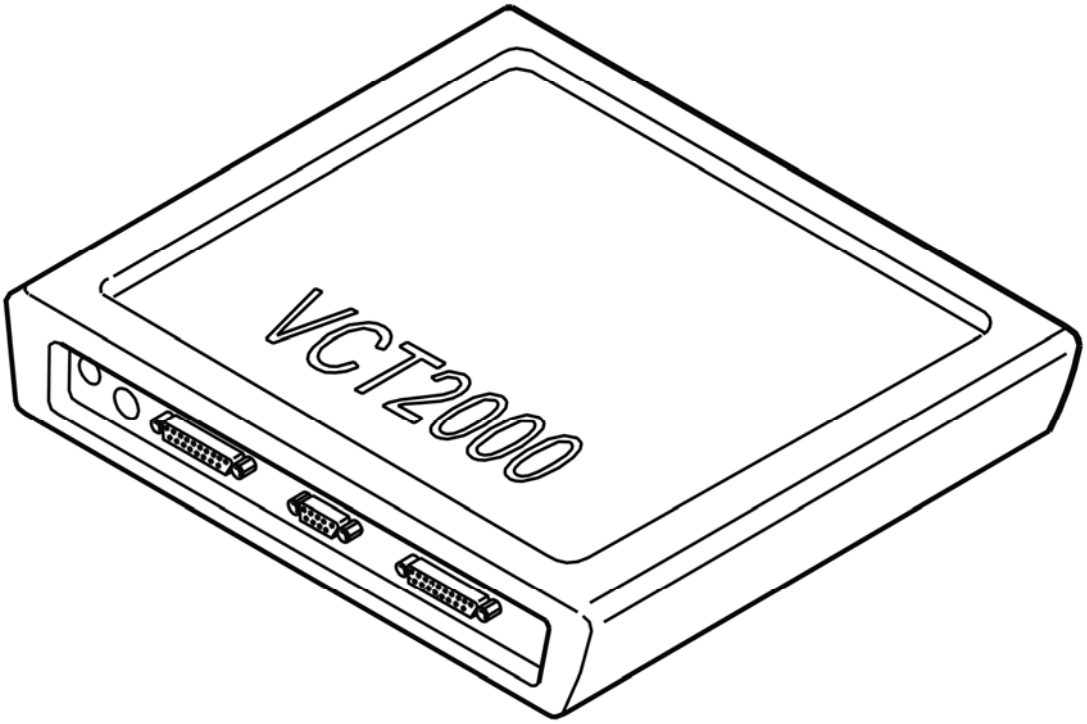

Fig. 457: Identifying VCT2000 Diagnostic Tool Symbol In VIDA
Courtesy of VOLVO CARS CORPORATION

Was diagnostic trouble code (DTC) TCM-0054 stored?

- **YES**

  Refer to **CHECKING THE COMPONENT**

- **NO**

  Refer to **FAULT-TRACING INFORMATION**

RESETTING THE ADAPTATION

RESETTING ADAPTATION AND THE COUNTER FOR "TRANSMISSION OIL CHANGE"

HINT: The transmission has torque controlled adaptive pressure control. Pressure control means that the transmission regulates the pressure itself during each gear shift. This avoids harsh gear shifting. Each gear shift is evaluated by the control module and stored in the memory. This allows for compensation for wear and tear in the transmission and clutch. It is important that the adaptation in the memory is reset after the transmission has been repaired. This is to ensure normal operation. The oil is replaced during repair; the "Transmission oil change" counter must be reset. If the counter is not reset when the fluid is drained and replaced, there is a risk that a diagnostic trouble code (DTC) will be stored in incorrect

circumstances.

NOTE: This applies only if the transmission or one of the components in the transmission have been replaced.

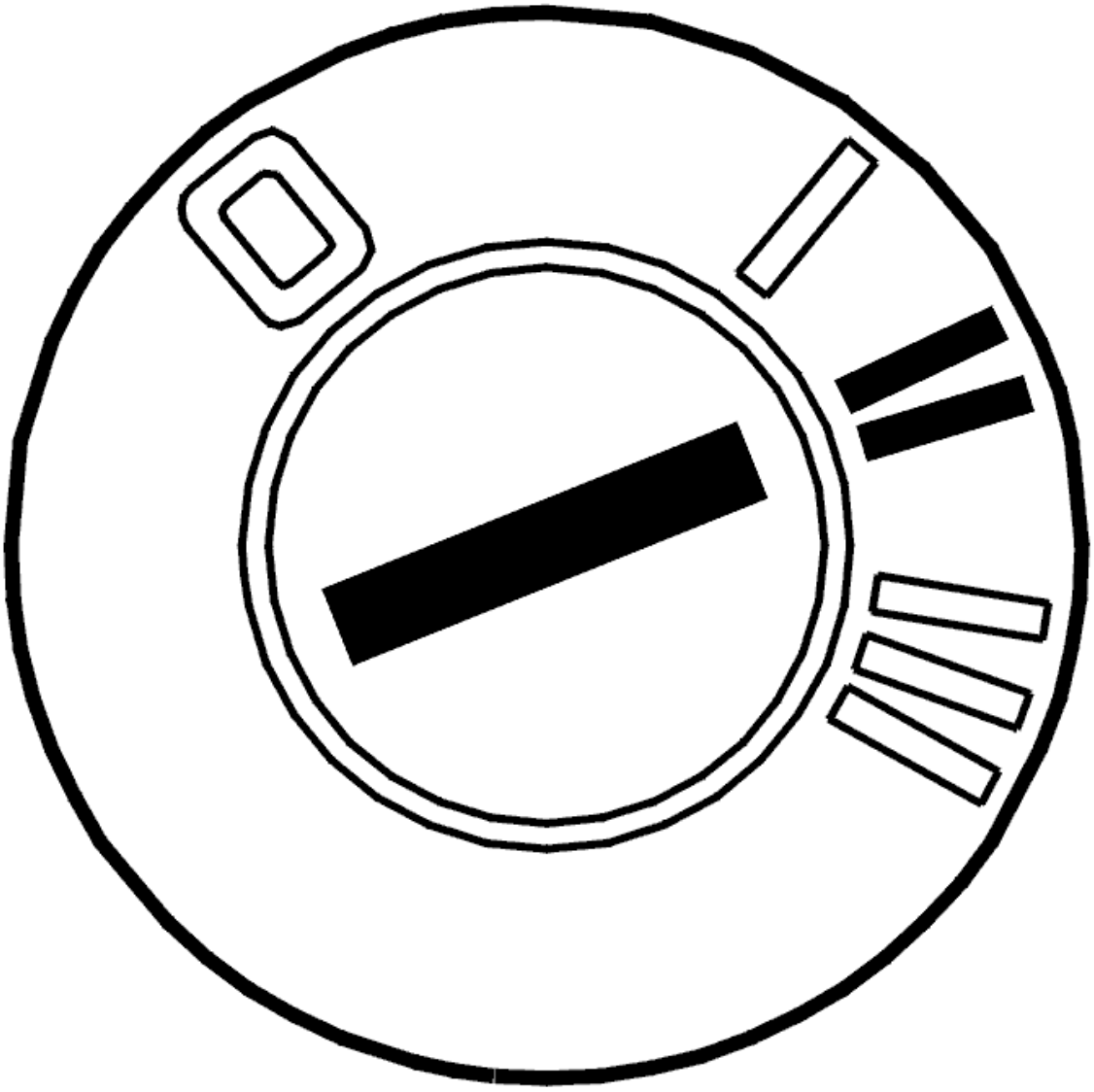

Fig. 458: Identifying Ignition ON
Courtesy of VOLVO CARS CORPORATION

- Ignition on.

  Click on the VCT2000 symbol to reset the adaptation and counter.

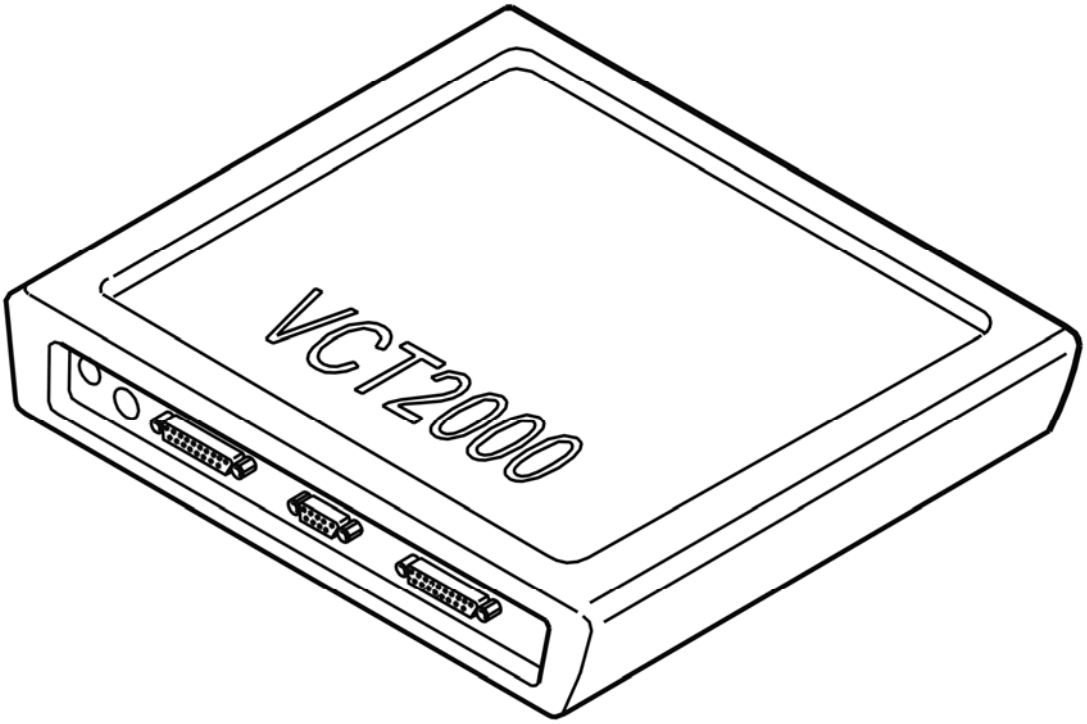

Fig. 459: Identifying VCT2000 Diagnostic Tool Symbol In VIDA
Courtesy of VOLVO CARS CORPORATION

- **Continue**

  Refer to **CHECKING DIAGNOSTIC TROUBLE CODES (DTCS)**

INFORMATION

FAULT-TRACING INFORMATION

The fault should have been detected and remedied. As this is not the case fault-tracing has failed.

Exit fault-tracing for this diagnostic trouble code (DTC) or make another attempt.

CHECKING DIAGNOSTIC TROUBLE CODES (DTCS)

ERASING DIAGNOSTIC TROUBLE CODES (DTCS)

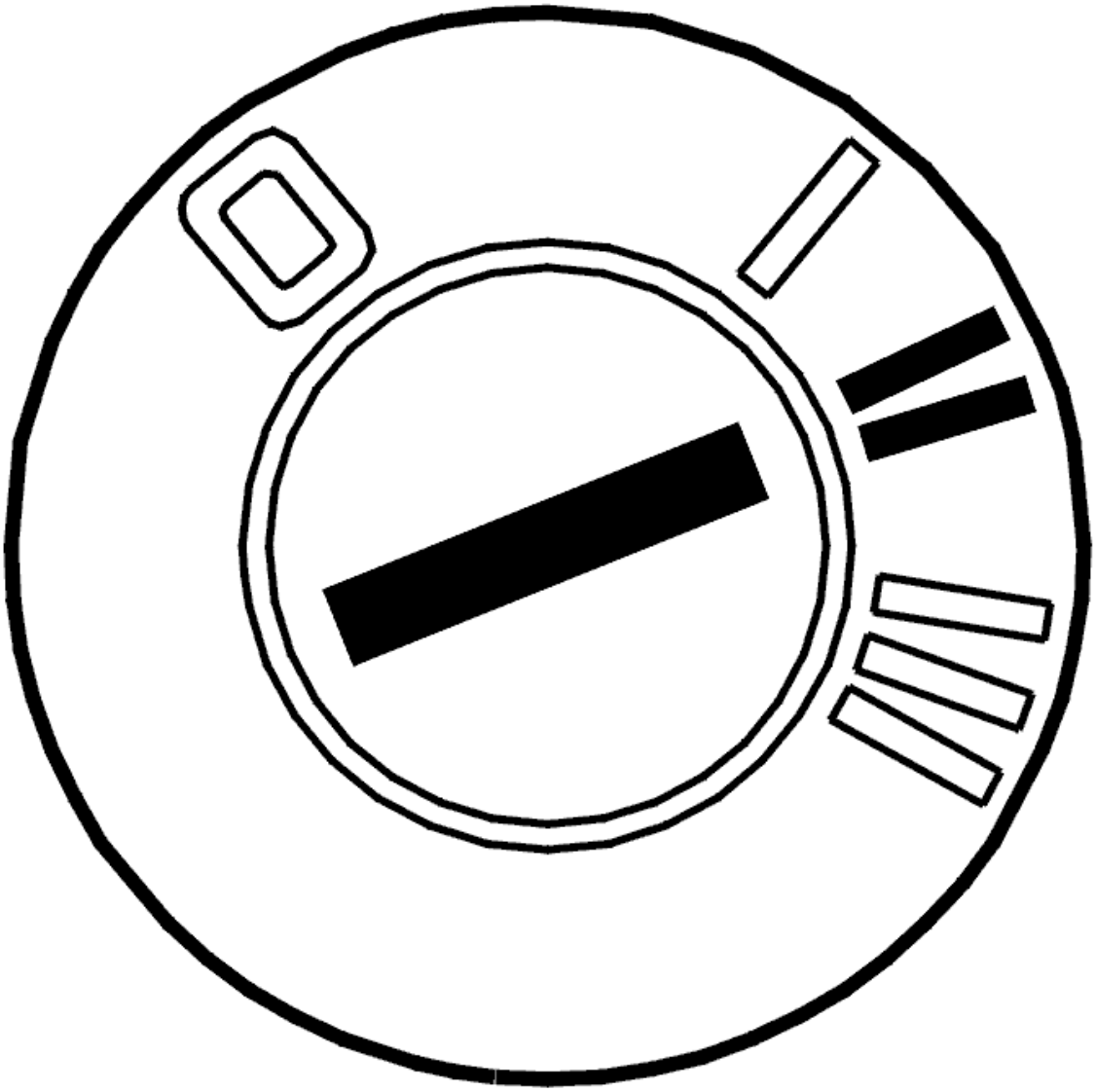

Fig. 460: Identifying Ignition ON
Courtesy of VOLVO CARS CORPORATION

- Ignition off
- Wait for two minutes to allow time for the diagnostic trouble codes (DTCs) to be stored in the control module memory
- Ignition on
- Erase diagnostic trouble codes (DTCs).

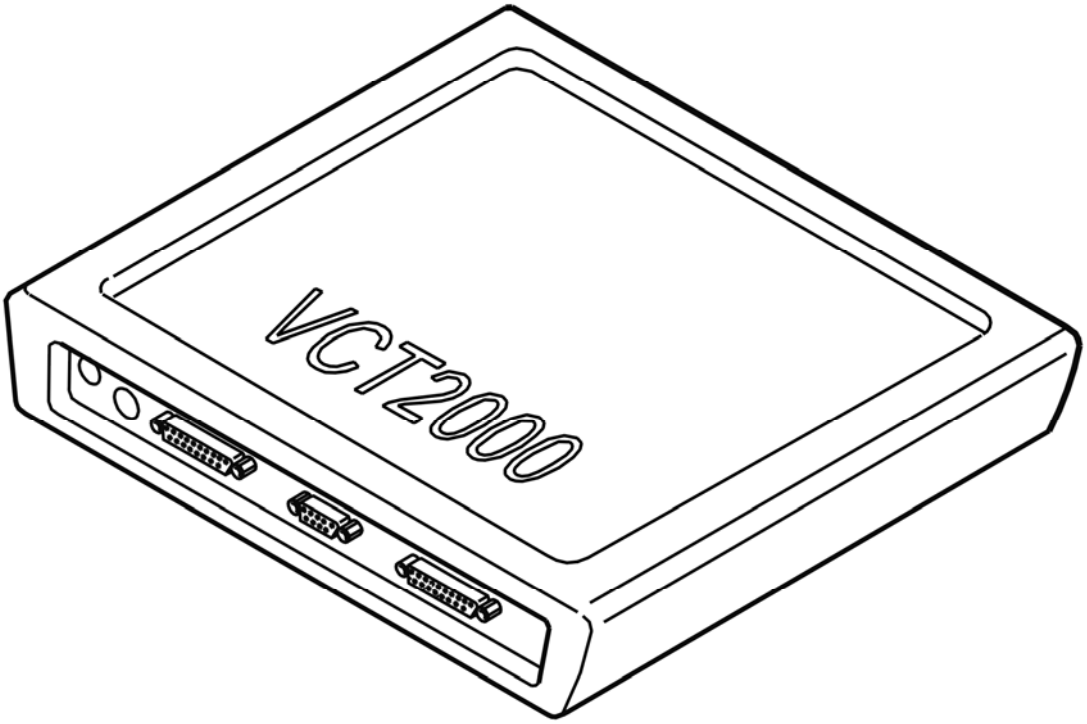

Fig. 461: Identifying VCT2000 Diagnostic Tool Symbol In VIDA
Courtesy of VOLVO CARS CORPORATION

- **Continue**

  Refer to **TEST DRIVING**

TEST DRIVING

NOTE: **Test drive the car according to the driving schedule below to check whether the fault is still active. The test drive is compiled in order to create the conditions in which the diagnostic trouble code (DTC) will be stored again if the fault is active.**

The TEST MODE function can be used to provoke any diagnostic trouble codes (DTC). The function reduces the conditions for how quickly diagnostic trouble codes (DTCs) are stored in the control module and the test drive becomes easier.

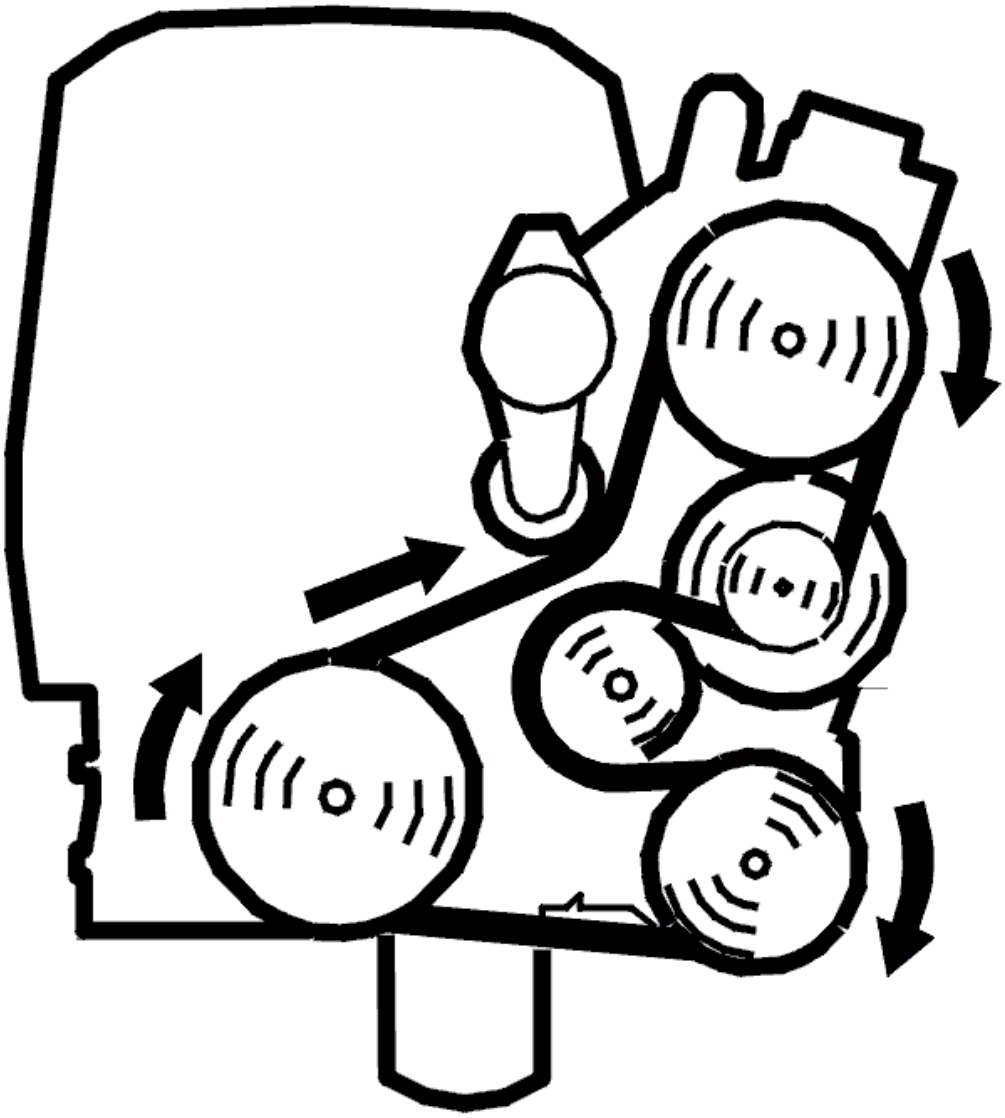

Fig. 462: Identifying Belt Routing
Courtesy of VOLVO CARS CORPORATION

- Start the engine
- Activate TEST MODE.

NOTE: Do not switch off the engine

- Disconnect the VIDA station. Test drive the car as described below.

WARNING: Please observe traffic regulations.

NOTE: Before test driving, the transmission should be at operating temperature,

approximately 80-90°C.

Shift the gear selector to position D (for Geartronic transmissions, shift as usual up to third gear). Carefully accelerate to a speed slightly higher than 75 km/h. Maintain the same speed for at least 30 seconds.

HINT: The car must be driven at an engine speed where the lock-up function is normally activated.

Criteria for diagnostic trouble code (DTC):

- The transmission fluid temperature must exceed 30°C
- The engine must be running for at least 20 seconds
- Gear selector in position D, 3 or 2 (4T65EV).

  Gear selector in Geartronic position and gears 4, 3 or 2 (4T65EV-GT)

- Speed above 75 km/h for at least 5 seconds
- At least 5 seconds since the last gear shift
- Positive engine torque (no engine braking).

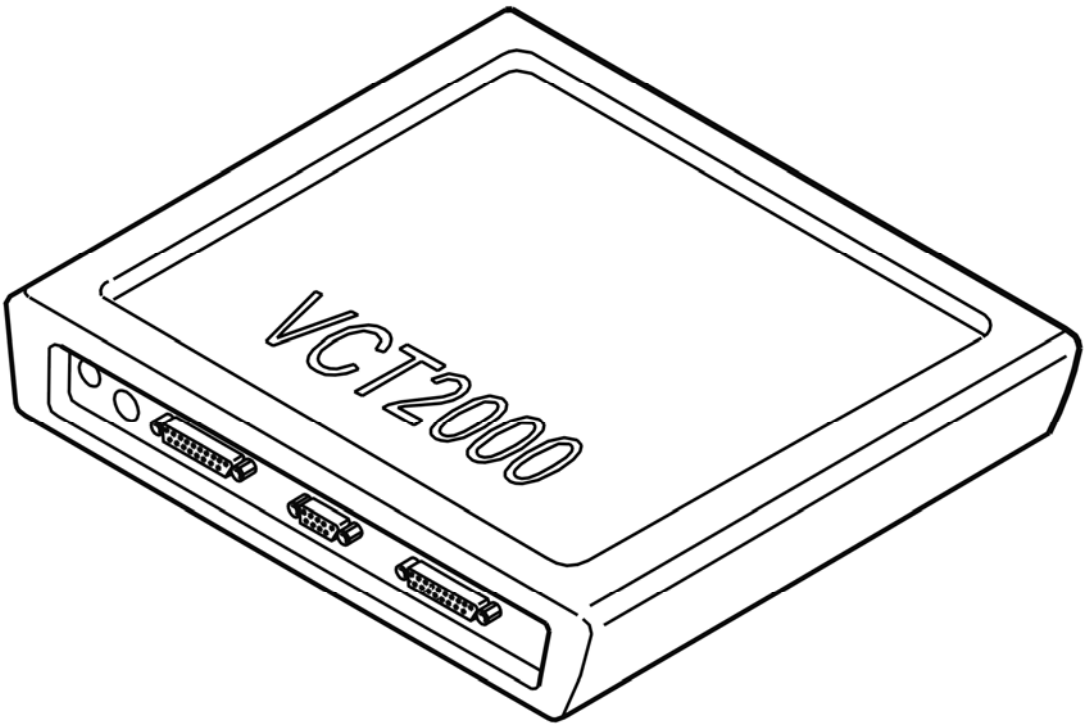

Fig. 463: Identifying VCT2000 Diagnostic Tool Symbol In VIDA
Courtesy of VOLVO CARS CORPORATION

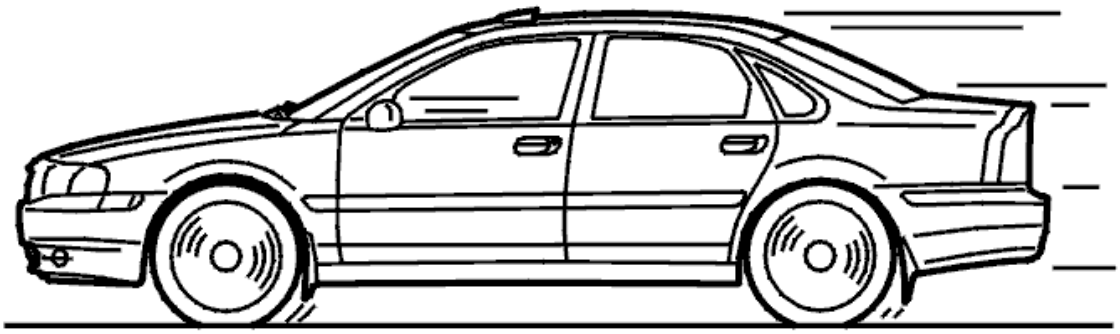

Fig. 464: Identifying Test Drive
Courtesy of VOLVO CARS CORPORATION

- **Continue**

Refer to **CHECKING DIAGNOSTIC TROUBLE CODES (DTCS)**

CHECKING DIAGNOSTIC TROUBLE CODES (DTCS)

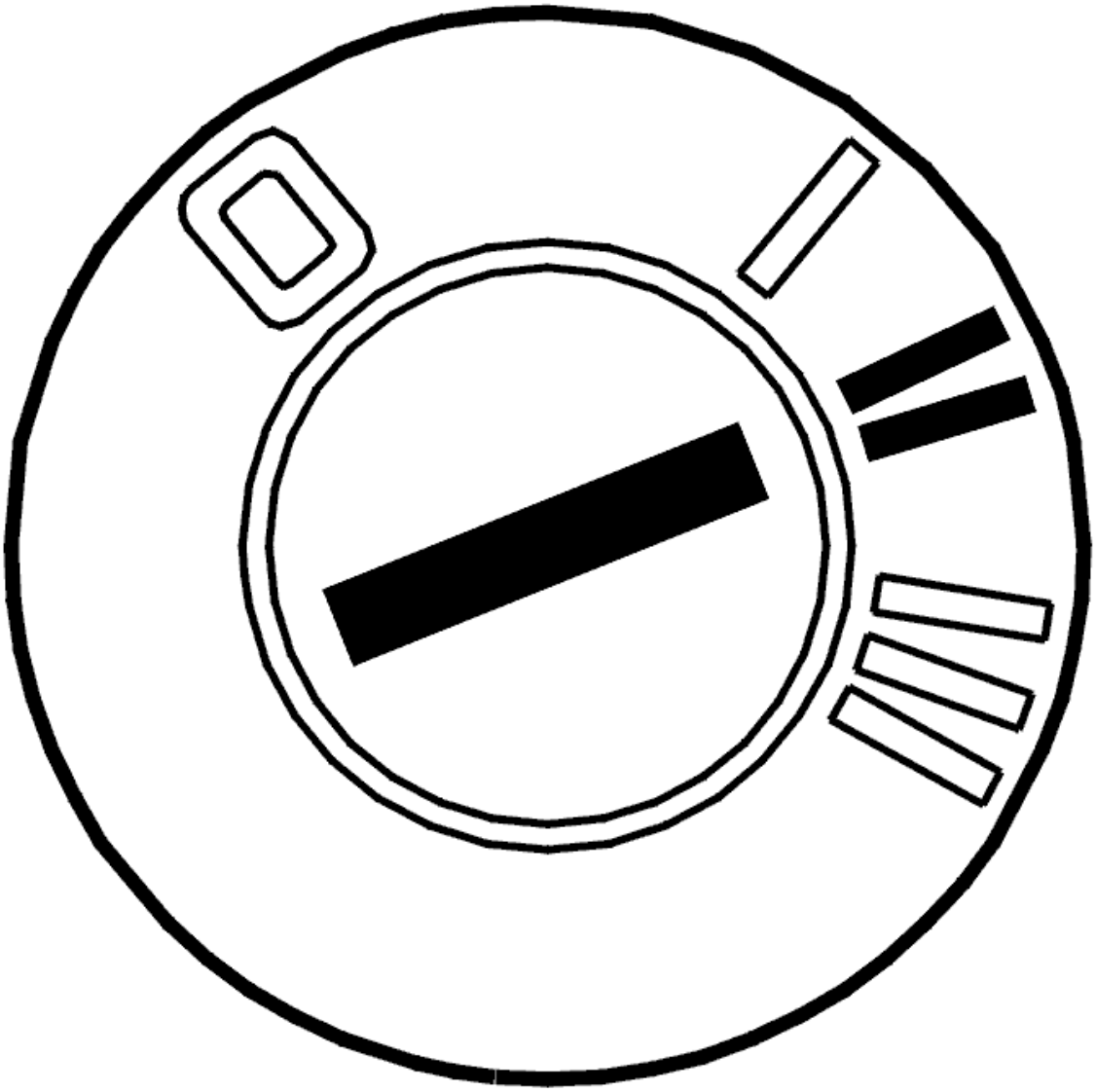

Fig. 465: Identifying Ignition ON
Courtesy of VOLVO CARS CORPORATION

- Ignition on
- Read off diagnostic trouble codes (DTCs).

  If any other diagnostic trouble codes (DTCs) than TCM-0054 are stored, these must be fault-traced after this fault-tracing is completed.

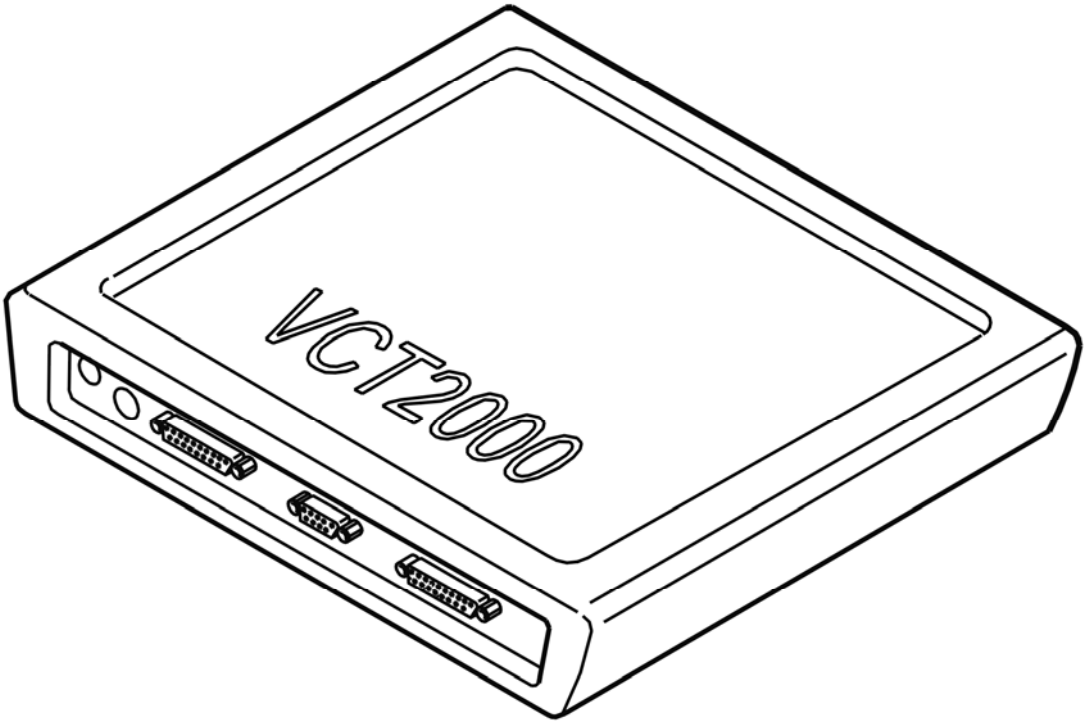

Fig. 466: Identifying VCT2000 Diagnostic Tool Symbol In VIDA
Courtesy of VOLVO CARS CORPORATION

Was diagnostic trouble code (DTC) TCM-0054 stored?

- **YES**

  Refer to **INFORMATION**

- **NO**

  NO DTC

TCM-0060: CONTROL UNIT. INTERNAL FAULT (4T65 AWD; 2003-2006)

DIAGNOSTIC TROUBLE CODE (DTC) INFORMATION

Condition

The solenoids are controlled by power stages in the transmission control module (TCM). The transmission control module (TCM) opens the power stages to activate the solenoids and sends a voltage through the circuit. Diagnostic trouble code (DTC) TCM-0060 is stored if the control module registers an internal fault in the power stage circuit for solenoids S1, S2, S3, S4 or S5.

Substitute Value

- The transmission control module (TCM) Emergency mode III program has been initiated.

Possible Source

- Internal fault in the control module.

Fault symptom[s]

- General orange warning lamp lit.
- Malfunction indicator lamp (MIL) lit.
- No lock-up function.
- Harsh gear shifting.
- No shifting.

HINT: Harsh gear shifting can be caused by:

- no reduction of line pressure when shifting
- no reduction of line pressure when moving the gear selector between positions P-R, N-R and N-D
- no torque limiting request to engine control module (ECM) when shifting

HINT:

HINT: No shifting - because the transmission control module (TCM) prevents activation of the solenoids. This stops gear-shifting.

INTERNAL FAULT

CHECKING SHIFT SOLENOIDS

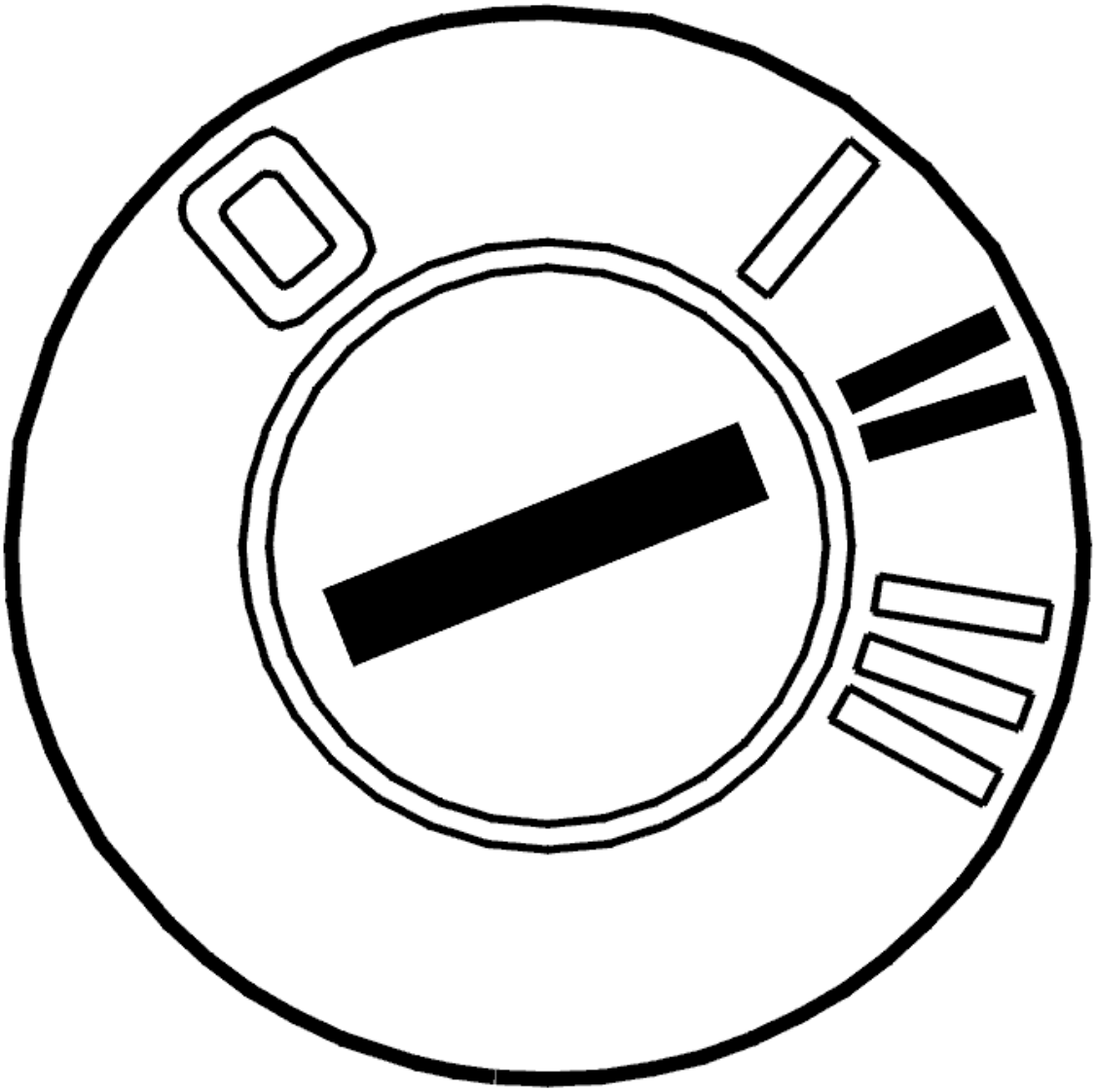

Fig. 467: Identifying Ignition ON
Courtesy of VOLVO CARS CORPORATION

- Ignition on
- Gear selector in position P.
- Activate shift solenoids S1 and S2 individually.

  The status should switch between OFF and ON.

  If the status does not change, it indicates that there is an internal fault in the transmission control module (TCM).

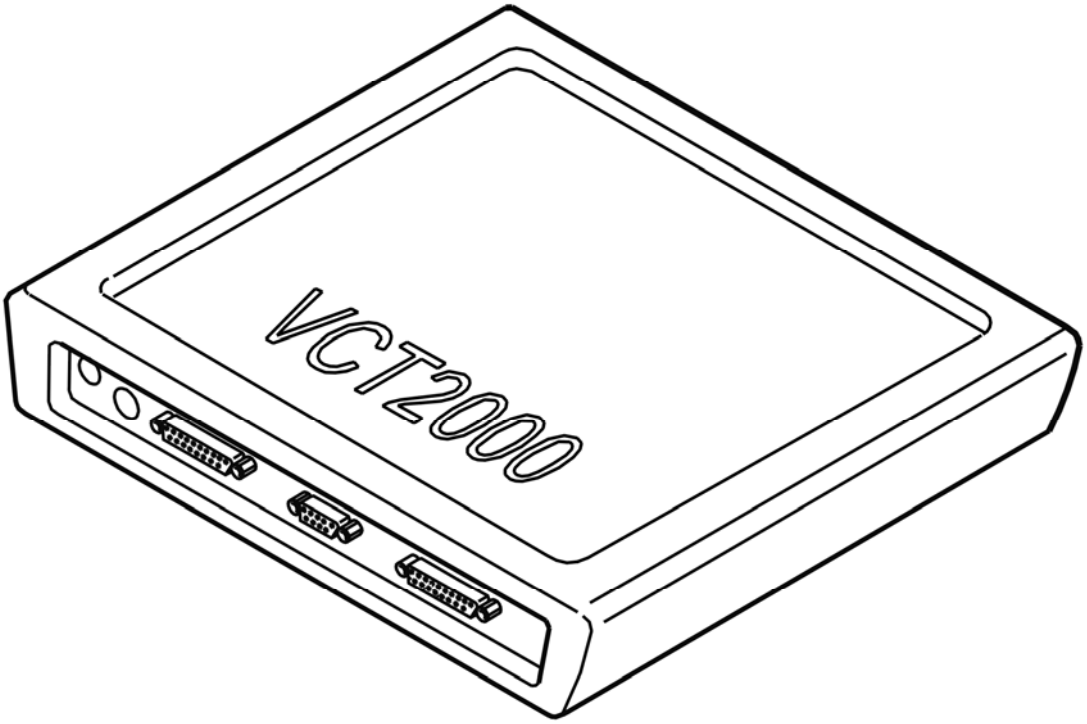

Fig. 468: Identifying VCT2000 Diagnostic Tool Symbol In VIDA
Courtesy of VOLVO CARS CORPORATION

Does solenoid status switch?

- **YES**

  FAULT NOT FOUND: Troubleshooting has been completed.

- **NO**

  Refer to **TRANSMISSION CONTROL MODULE (TCM) REPLACEMENT AND PROGRAMMING**

TRANSMISSION CONTROL MODULE (TCM) REPLACEMENT AND PROGRAMMING

The control module has registered an internal fault.

CAUTION: A new control module is delivered without software. The control module must be programmed in order to function after replacement.

Other information:

- see **TRANSMISSION CONTROL MODULE (TCM), REPLACING**

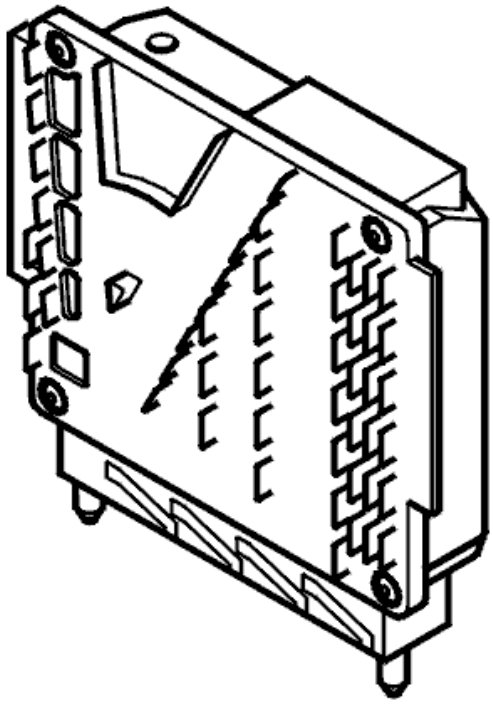

Fig. 469: Identifying Transmission Control Module (TCM)
Courtesy of VOLVO CARS CORPORATION

- **Continue**

  Refer to **INFORMATION**

INFORMATION

FAULT-TRACING INFORMATION

In case of this defect, troubleshooting is not followed by verification.

The information can be displayed again or the fault-tracing for this fault can be interrupted.

TCM-0060: CONTROL UNIT. INTERNAL FAULT (AW50/51 AWD; AW55-50/51SN; 2003-2007)

DIAGNOSTIC TROUBLE CODE (DTC) INFORMATION

see **DIAGNOSTIC TROUBLE CODE (DTC) INFORMATION**

INTERNAL FAULT

CHECKING SHIFT SOLENOIDS

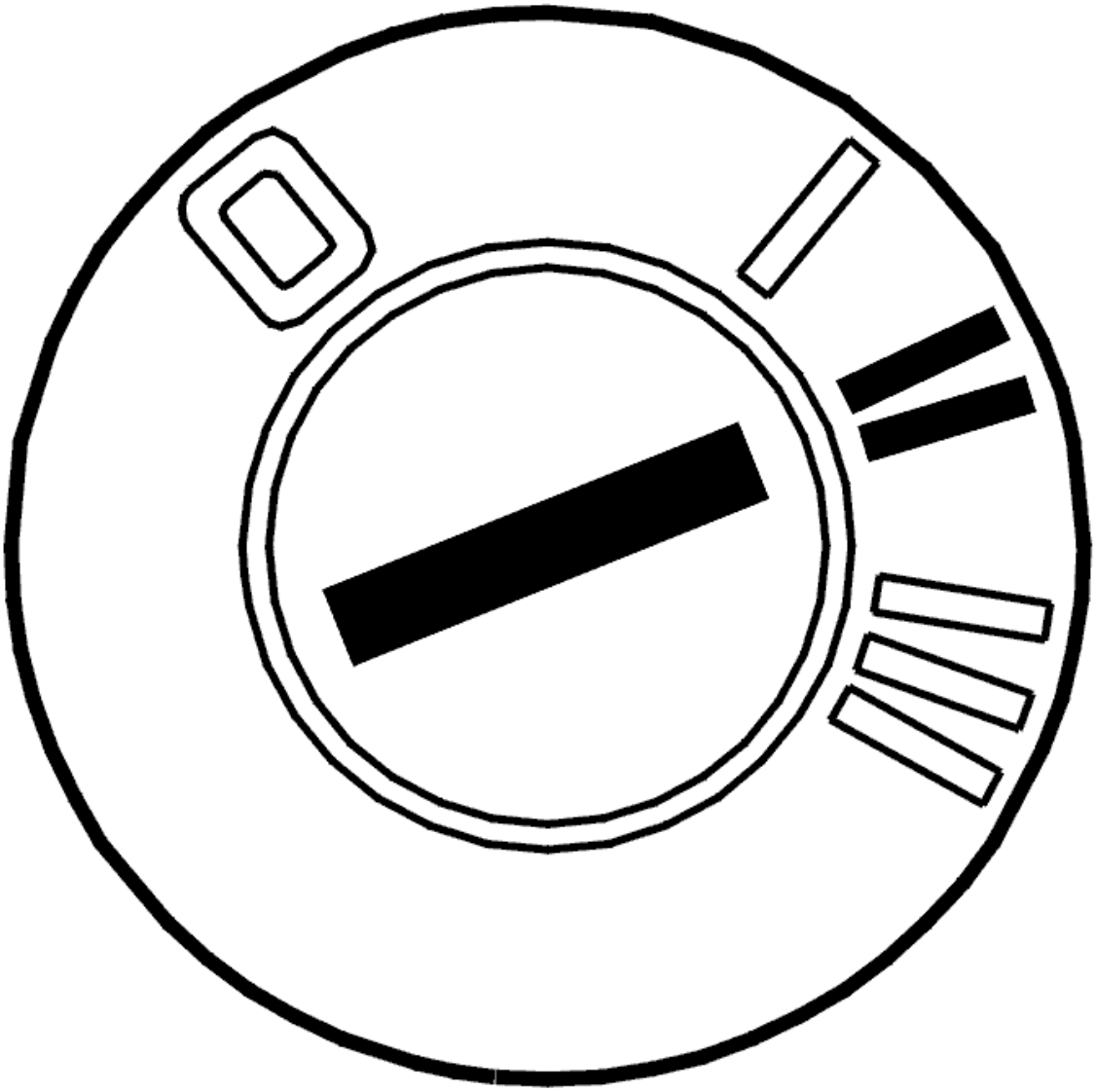

Fig. 470: Identifying Ignition ON
Courtesy of VOLVO CARS CORPORATION

- Ignition on
- Gear selector in position P.
- Activate shift solenoids S1, S2, S3, S4 and S5 individually.

  The status should switch between OFF and ON.

  If the status does not change, it indicates that there is an internal fault in the transmission control module (TCM).

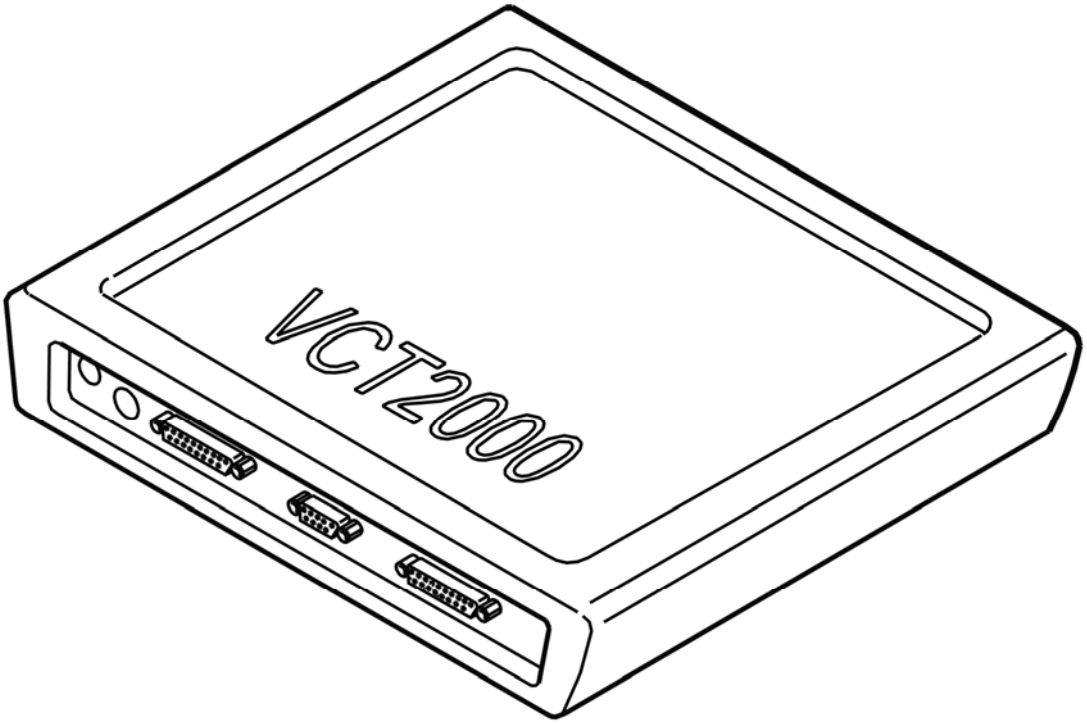

Fig. 471: Identifying VCT2000 Diagnostic Tool Symbol In VIDA
Courtesy of VOLVO CARS CORPORATION

Does solenoid status switch?

- **YES**

  FAULT NOT FOUND: Troubleshooting has been completed.

- **NO**

  Refer to **TRANSMISSION CONTROL MODULE (TCM) REPLACEMENT AND PROGRAMMING**

TRANSMISSION CONTROL MODULE (TCM) REPLACEMENT AND PROGRAMMING

The control module has registered an internal fault.

CAUTION: A new control module is delivered without software. The control module must be programmed in order to function after replacement.

Other information:

- see **TRANSMISSION CONTROL MODULE (TCM), REPLACING**

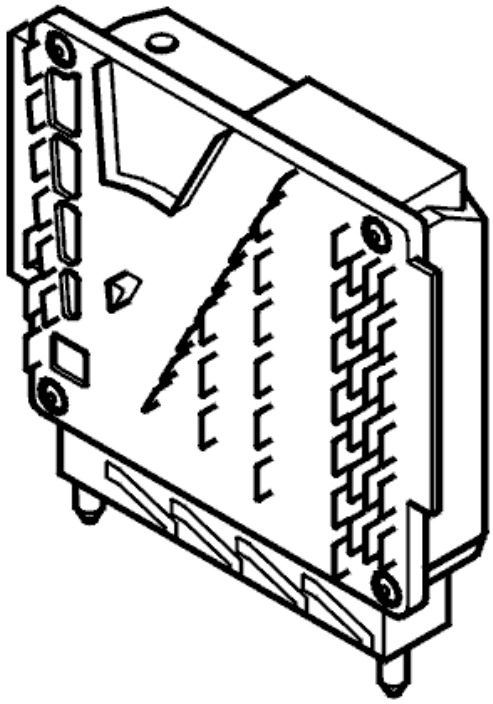

Fig. 472: Identifying Transmission Control Module (TCM)
Courtesy of VOLVO CARS CORPORATION

- **Continue**

  Refer to **INFORMATION**

INFORMATION

FAULT-TRACING INFORMATION

In case of this defect, troubleshooting is not followed by verification.

The information can be displayed again or the fault-tracing for this fault can be interrupted.

TCM-0061: CONTROL UNIT. INTERNAL FAULT (4T65 AWD; 2003-2006)

DIAGNOSTIC TROUBLE CODE (DTC) INFORMATION

Condition

The solenoids are controlled by power stages in the transmission control module (TCM). The transmission control module (TCM) opens the power stages to activate the solenoids and sends a voltage through the circuit. Diagnostic trouble code (DTC) TCM-0061 is stored if the control module registers an internal fault in the power stage circuit for solenoid STH.

Substitute Value

- Transmission control module (TCM) "Limp Home" program initiated.

Possible Source

- Internal fault in the control module.

Fault symptom[s]

- General orange warning lamp lit.
- Malfunction indicator lamp (MIL) lit.
- No lock-up function.
- Harsh gear shifting.
- No shifting.

HINT: Harsh gear shifting can be caused by:

- no reduction of line pressure when shifting
- no reduction of line pressure when moving the gear selector between positions P-R, N-R and N-D
- no torque limiting request to engine control module (ECM) when shifting

HINT:

HINT: No shifting - because the transmission control module (TCM) prevents activation of the solenoids. This stops gear-shifting.

INTERNAL FAULT

CHECKING SHIFT SOLENOIDS

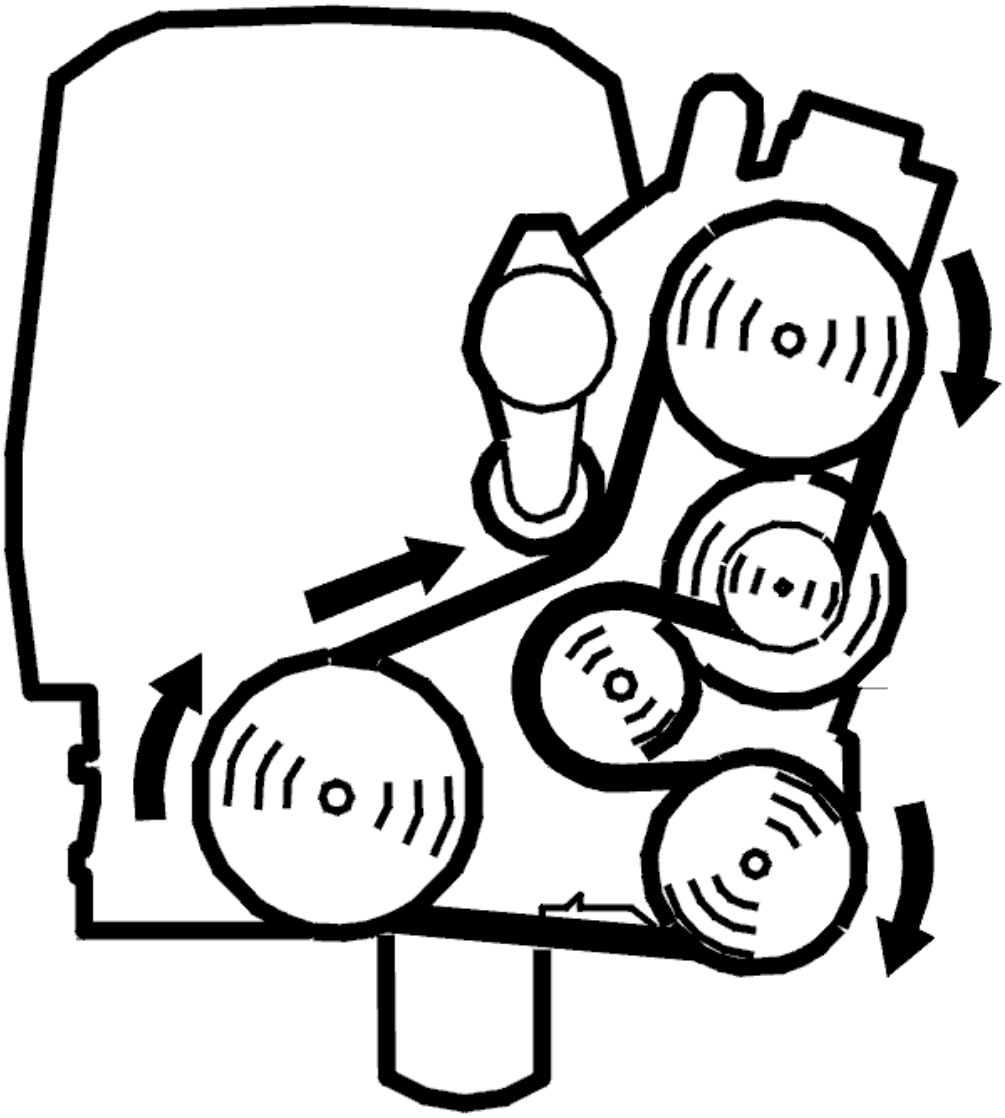

Fig. 473: Identifying Belt Routing
Courtesy of VOLVO CARS CORPORATION

- Start the engine.
- Gear selector in position P.
- Read off the current through the line pressure solenoid STH.
- Depress the accelerator pedal (AP) slowly.

  The current should decrease as the accelerator pedal (AP) is depressed.

  If current does not decrease, it indicates that there is an internal fault in the transmission control module (TCM).

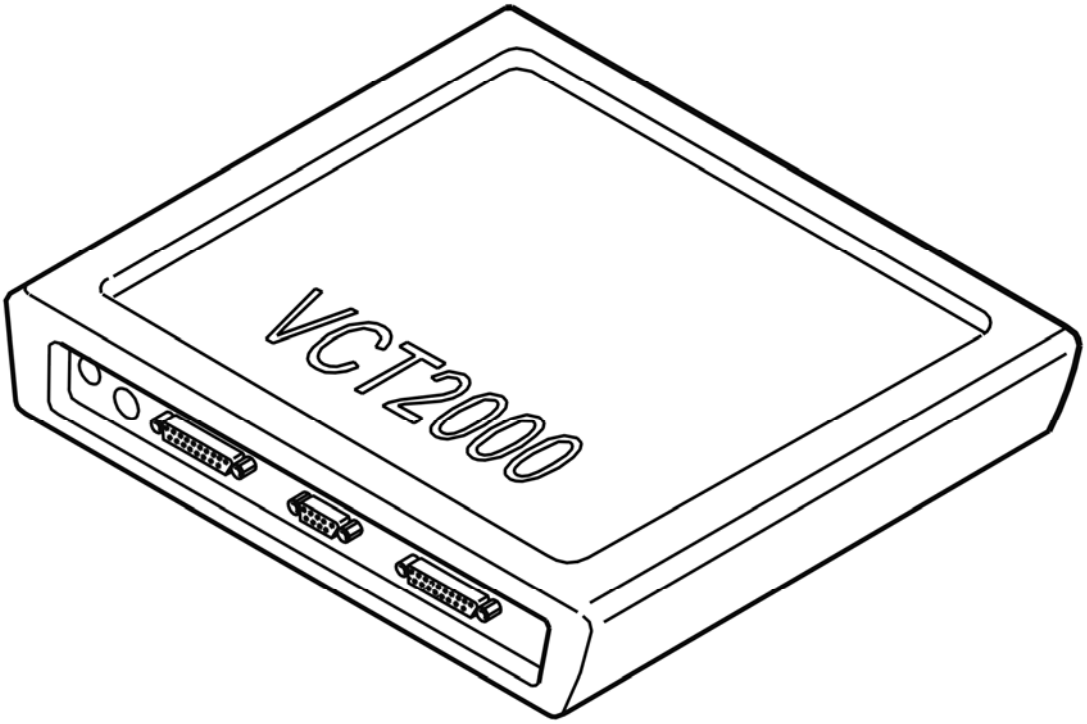

Fig. 474: Identifying VCT2000 Diagnostic Tool Symbol In VIDA
Courtesy of VOLVO CARS CORPORATION

Does the current decrease?

- **YES**

  FAULT NOT FOUND: Troubleshooting has been completed.

- **NO**

  Refer to **TRANSMISSION CONTROL MODULE (TCM) REPLACEMENT AND PROGRAMMING**

TRANSMISSION CONTROL MODULE (TCM) REPLACEMENT AND PROGRAMMING

The control module has registered an internal fault.

CAUTION: A new control module is delivered without software. The control module must be programmed in order to function after replacement.

Other information:

- see **TRANSMISSION CONTROL MODULE (TCM), REPLACING**

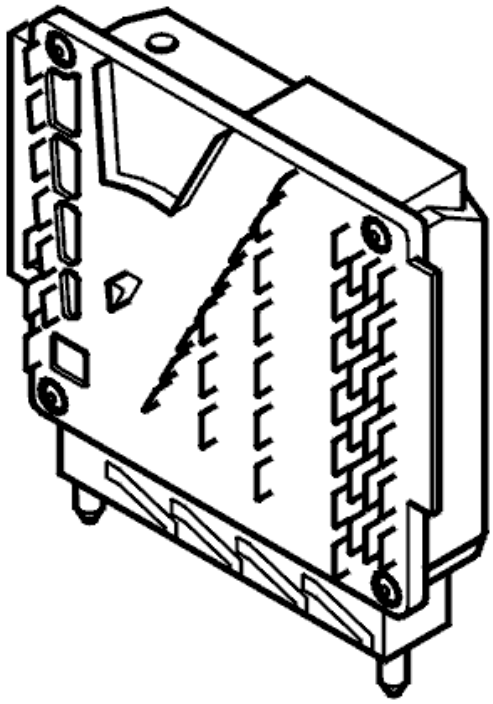

Fig. 475: Identifying Transmission Control Module (TCM)
Courtesy of VOLVO CARS CORPORATION

- **Continue**

  Refer to **INFORMATION**

INFORMATION

FAULT-TRACING INFORMATION

In case of this defect, troubleshooting is not followed by verification.

The information can be displayed again or the fault-tracing for this fault can be interrupted.

TCM-0062: CONTROL UNIT. INTERNAL FAULT (4T65 AWD; 2003-2006)

DIAGNOSTIC TROUBLE CODE (DTC) INFORMATION

Condition

The solenoids are controlled by power stages in the transmission control module (TCM). The transmission control module (TCM) opens the power stages to activate the solenoids and sends a voltage through the circuit. Diagnostic trouble code (DTC) TCM-0062 is stored if the control module registers an internal fault in the power stage circuit for solenoid SL.

Substitute Value

- Transmission control module (TCM) "Limp Home" program initiated.

Possible Source

- Internal fault in the control module.

Fault symptom[s]

- General orange warning lamp lit.
- Malfunction indicator lamp (MIL) lit.
- No lock-up function.
- Harsh gear shifting.
- No shifting.

HINT: Harsh gear shifting can be caused by:

- no reduction of line pressure when shifting
- no reduction of line pressure when moving the gear selector between positions P-R, N-R and N-D
- no torque limiting request to engine control module (ECM) when shifting

HINT:

HINT: No shifting - because the transmission control module (TCM) prevents activation of the solenoids. This stops gear-shifting.

INTERNAL FAULT

CHECKING LOCK-UP SOLENOID SL

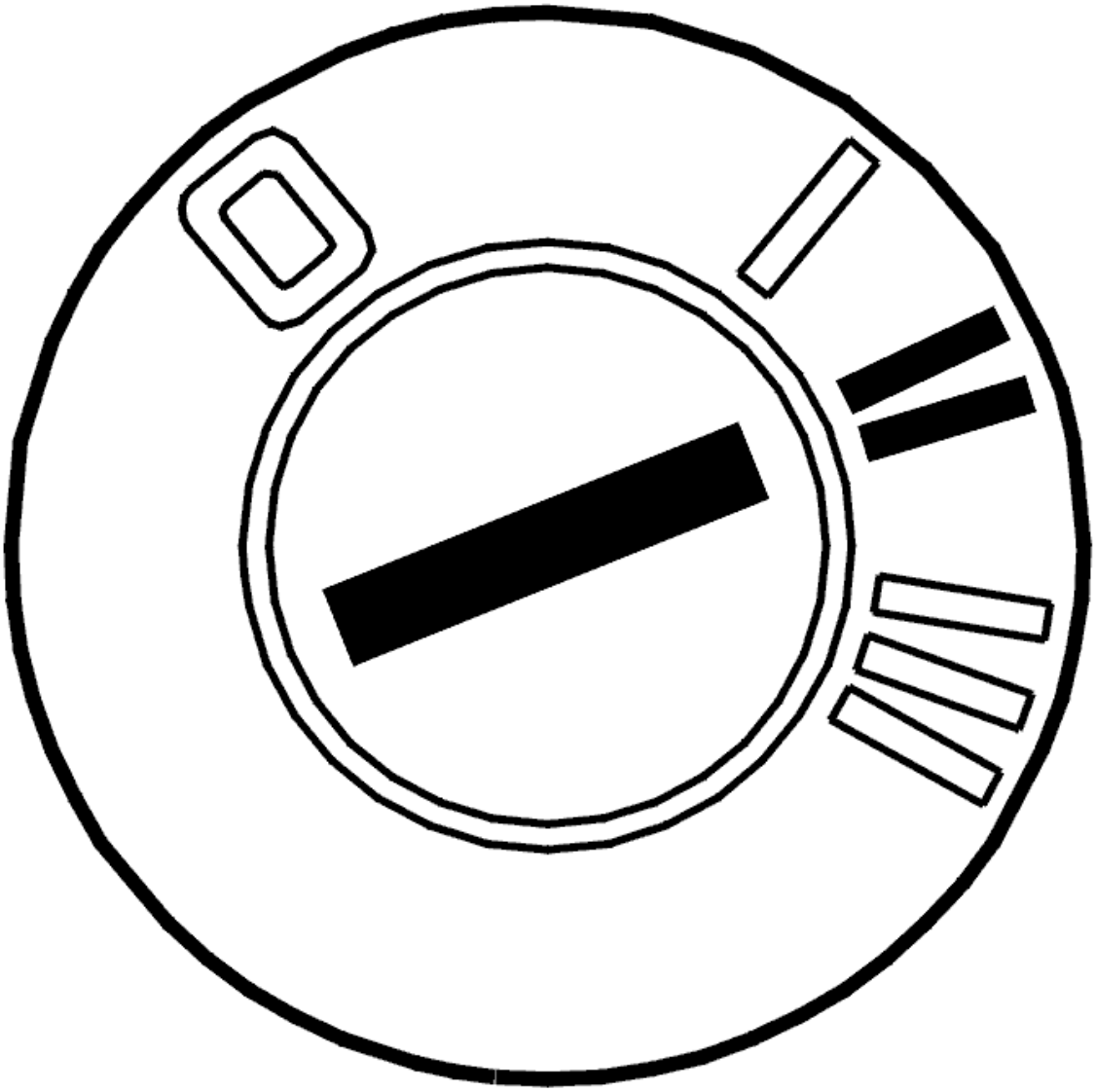

Fig. 476: Identifying Ignition ON
Courtesy of VOLVO CARS CORPORATION

- Ignition on
- Gear selector in position P.
- Activate the lock-up solenoid SL.

  The status should switch between OFF and ON.

  If the status does not change, it indicates that there is an internal fault in the transmission control module (TCM).

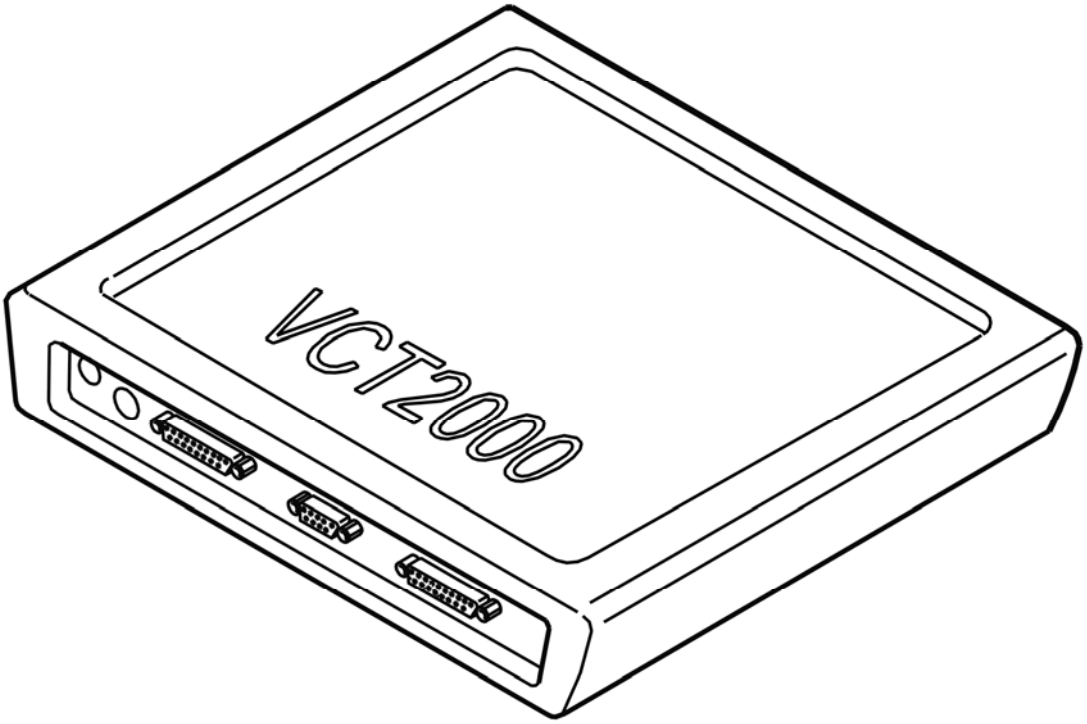

Fig. 477: Identifying VCT2000 Diagnostic Tool Symbol In VIDA
Courtesy of VOLVO CARS CORPORATION

Does the status change?

- **YES**

  FAULT NOT FOUND: Troubleshooting has been completed.

- **NO**

  Refer to **TRANSMISSION CONTROL MODULE (TCM) REPLACEMENT AND PROGRAMMING**

TRANSMISSION CONTROL MODULE (TCM) REPLACEMENT AND PROGRAMMING

The control module has registered an internal fault.

CAUTION: A new control module is delivered without software. The control module must be programmed in order to function after replacement.

Other information:

- see **TRANSMISSION CONTROL MODULE (TCM), REPLACING**

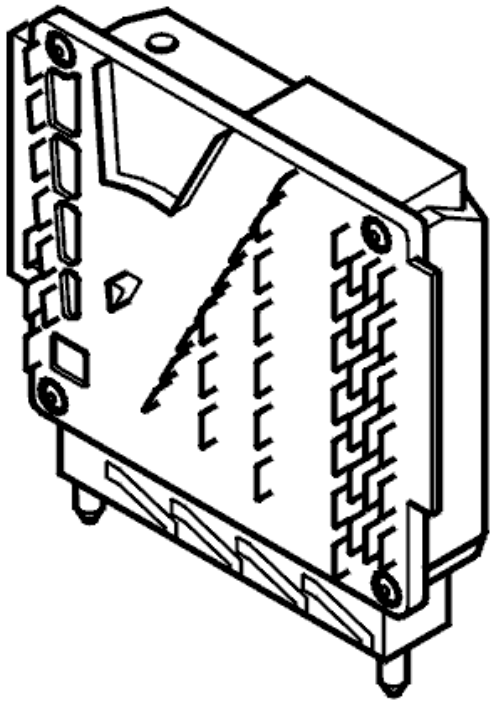

Fig. 478: Identifying Transmission Control Module (TCM)
Courtesy of VOLVO CARS CORPORATION

- **Continue**

  Refer to **INFORMATION**

INFORMATION

FAULT-TRACING INFORMATION

In case of this defect, troubleshooting is not followed by verification.

The information can be displayed again or the fault-tracing for this fault can be interrupted.

TCM-0081: TRANSMISSION OUTPUT SPEED SENSOR. SIGNAL TOO HIGH (AW50/51 AWD; AW55-50/51SN; 2003-2007)

DIAGNOSTIC TROUBLE CODE (DTC) INFORMATION

Condition

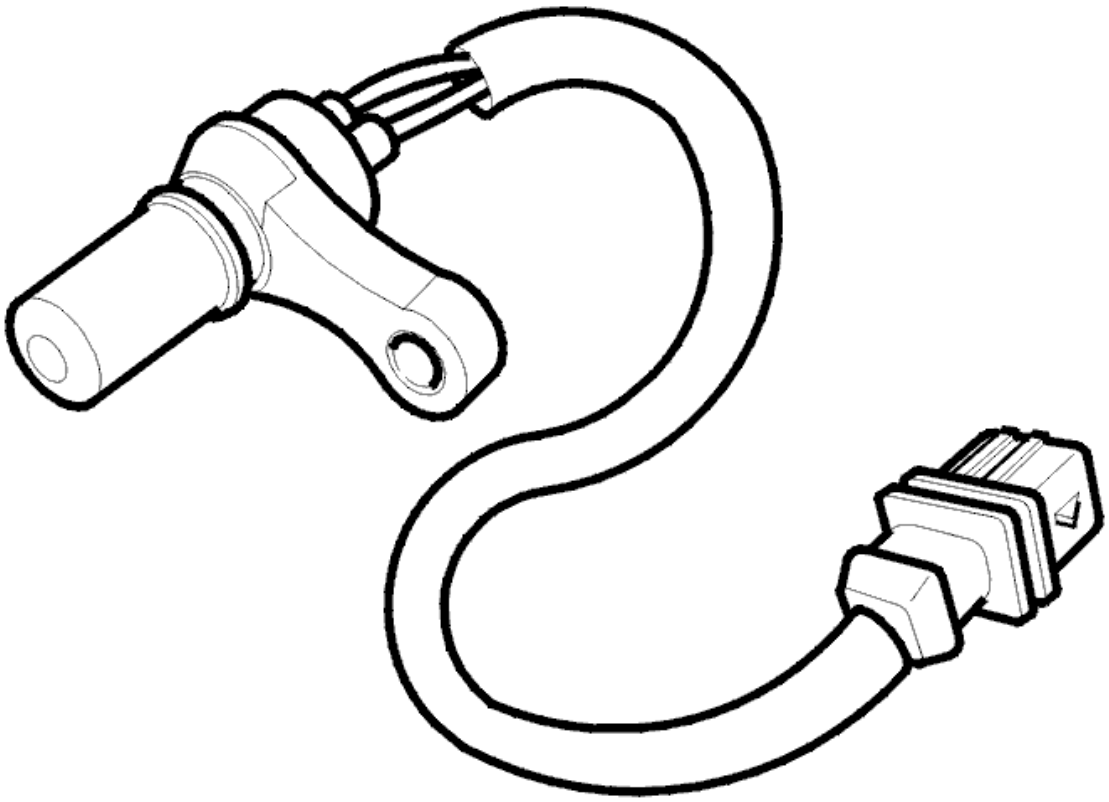

Fig. 479: Identifying Automatic Transmission Control Module (TCM)
Courtesy of VOLVO CARS CORPORATION

The automatic transmission control module (TCM) receives speed signals from the transmission speed sensor on the transmission. The transmission control module (TCM) uses the signals to select the correct gear. The control module derives and compares the transmission speed with engine speed (RPM) at the transmission. Diagnostic trouble code (DTC) TCM-0081 is stored if the control module registers that transmission speed signal is too high.

Substitute Value

- None.

Possible Source

- Short-circuit to supply voltage in the power supply or signal cable.
- Defective transmission speed sensor.

Fault symptom[s]

- General orange warning lamp lit.
- No lock-up function.
- Harsh gear shifting.

HINT: Harsh gear shifting can be caused by:

- No reduction of line pressure when shifting.
- No reduction of line pressure when moving the gear selector between positions P-R, N-R and N-D.
- No torque limiting request to engine control module (ECM) when shifting.

SIGNAL TOO HIGH

CHECKING THE TRANSMISSION OUTPUT SPEED SENSOR SIGNAL

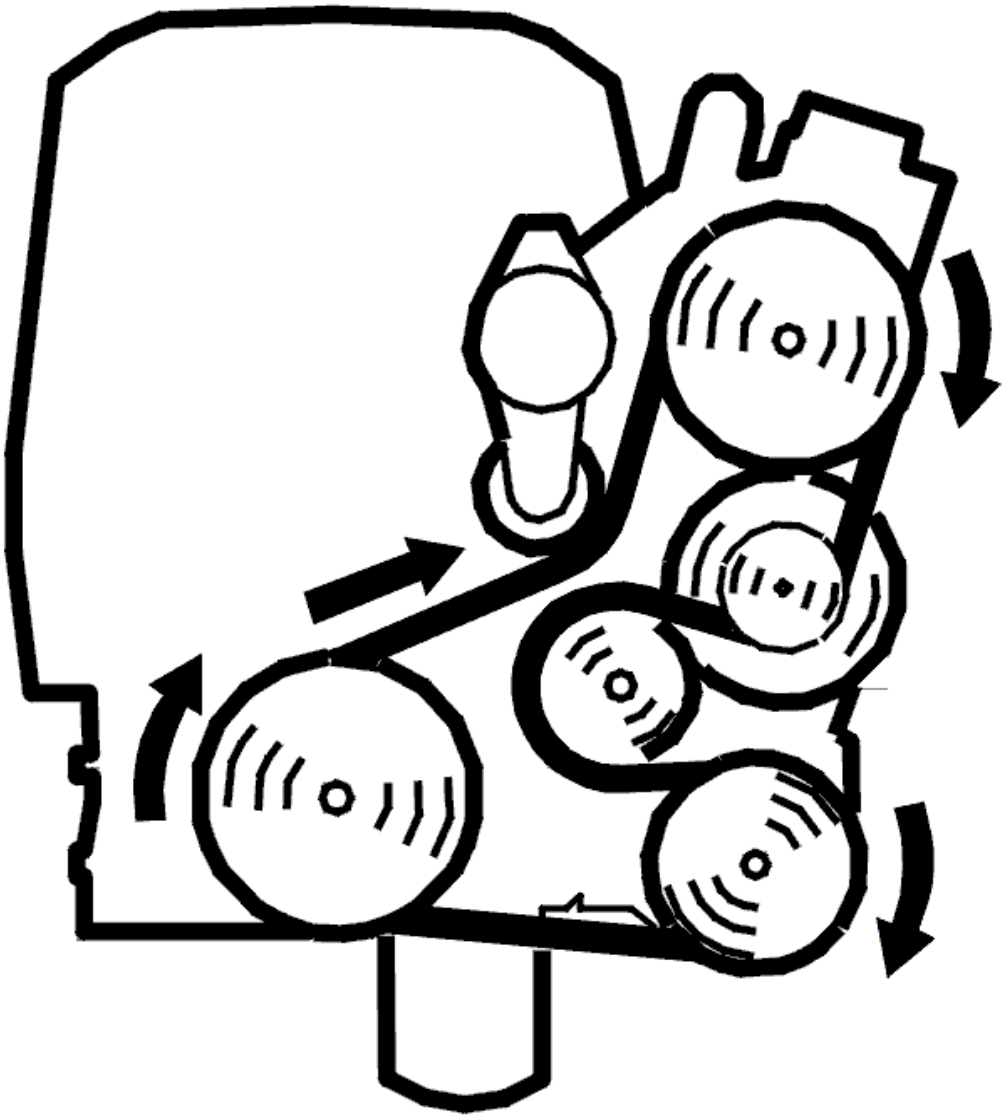

Fig. 480: Identifying Belt Routing
Courtesy of VOLVO CARS CORPORATION

- Ignition off
- Raise the car so that the drive wheels are clear of the ground

- Start the engine. Allow the engine to idle
- Shift gear selector to position D so that the drive wheels begin to rotate
- Read off the transmission speed.

Depress the accelerator pedal (AP) and check that the speed is updated.

NOTE: Ensure that the wheels are not rotating when the gear selector is moved.

NOTE: Diagnostic trouble codes (DTCs) may be stored in the ABS system when the rear wheels are stationary and the front wheels rotate. Erase any diagnostic trouble codes (DTCs) stored in the ABS system after fault-tracing.

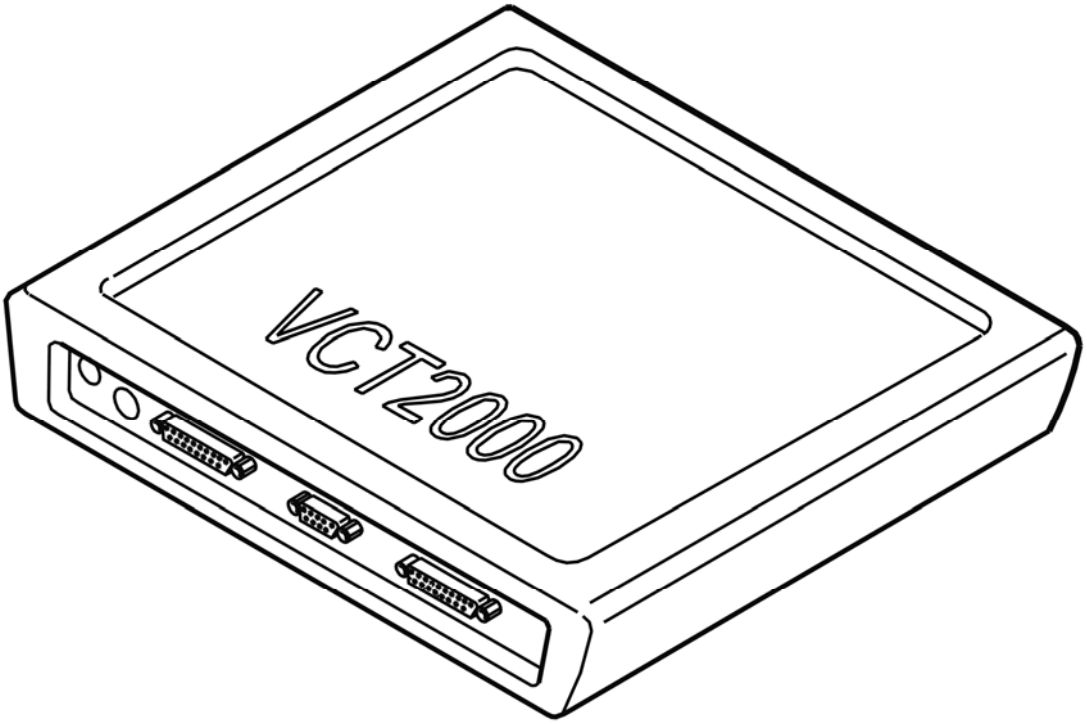

Fig. 481: Identifying VCT2000 Diagnostic Tool Symbol In VIDA
Courtesy of VOLVO CARS CORPORATION

Was the speed updated?

- **YES**

Refer to **INTERMITTENT FAULT**

- **NO**

  Refer to **CHECKING WIRING AND SENSORS**

CHECKING WIRING AND SENSORS

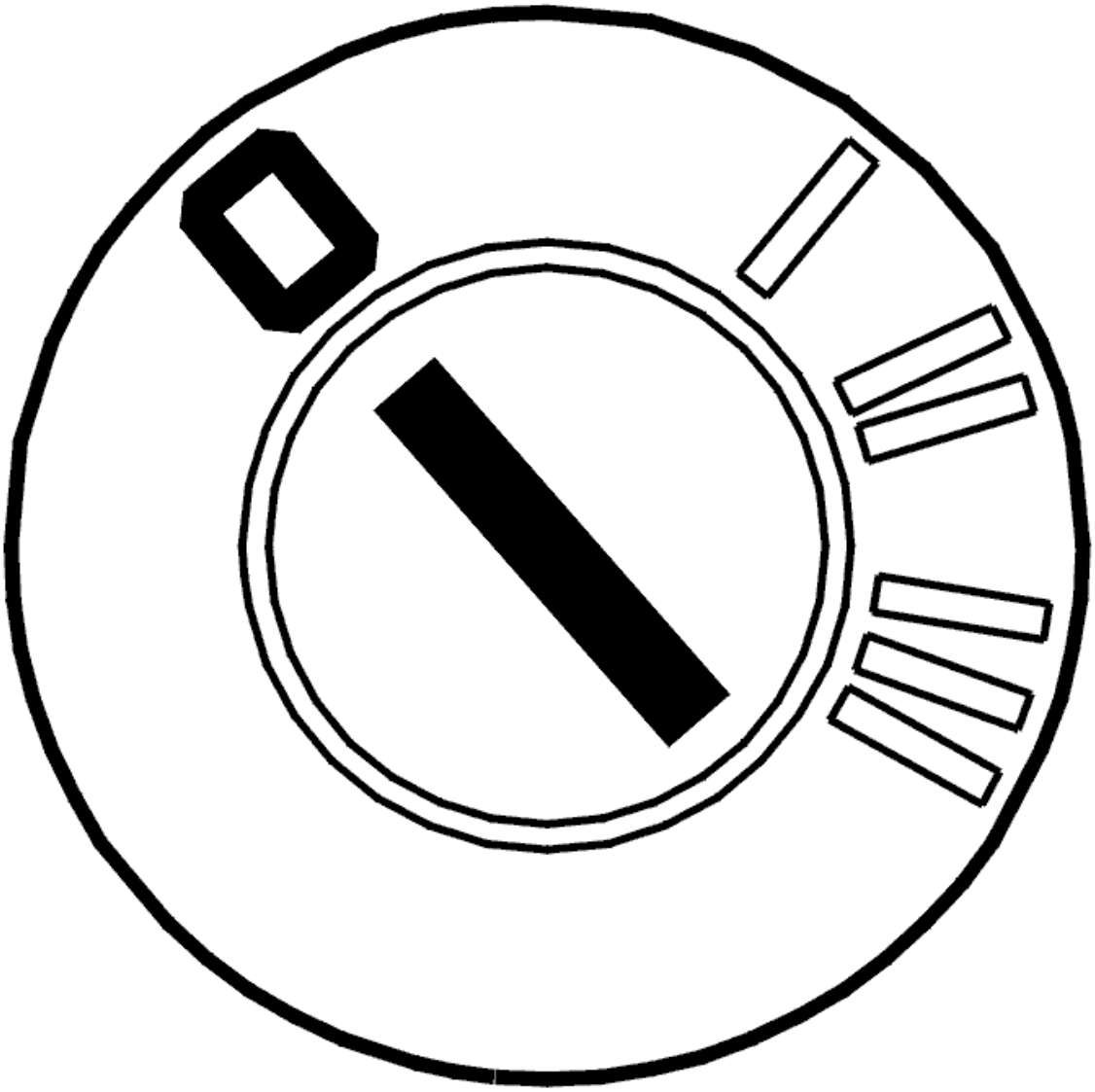

Fig. 482: Identifying Ignition OFF
Courtesy of VOLVO CARS CORPORATION

- Ignition off
- Connect the breakout box.

  Check the cables between control module terminals #A57 (#A57) and #A39 (#A39) and transmission output speed sensor terminals #A3 and #A4. Check for a short-circuit to each other.

Check the power supply cable between control module terminal #A57 (#A57) and transmission output speed sensor terminal #A4. Check for a short-circuit to supply voltage according to **SHORT-CIRCUIT TO SUPPLY VOLTAGE. PERMANENT FAULTS** .

Check the signal cable between control module terminal #A39 (#A39) and transmission output speed sensor terminal #A3. Check for a short-circuit to supply voltage according to **SHORT-CIRCUIT TO SUPPLY VOLTAGE. PERMANENT FAULTS** .

HINT: With the control module connected, the ignition on and a voltmeter connected between transmission connector terminals #A4 and #A3 (control module side), the voltage must be 1-3 V below Ubat.

Remedy as necessary.

Other information:

- To connect the breakout box, see **CONNECTING THE BREAKOUT BOX**
- To disconnect the control module, see **TRANSMISSION CONTROL MODULE (TCM), REPLACING**
- To disconnect the transmission connectors, see **CONNECTORS, TRANSMISSION, DISCONNECTING / CONNECTING**
- To check or replace the transmission output speed sensor, see **INPUT SPEED SENSOR/OUTPUT SPEED SENSOR, REPLACING**
- For information about signals, see **SIGNAL DESCRIPTION. TRANSMISSION CONTROL MODULE (TCM)** .

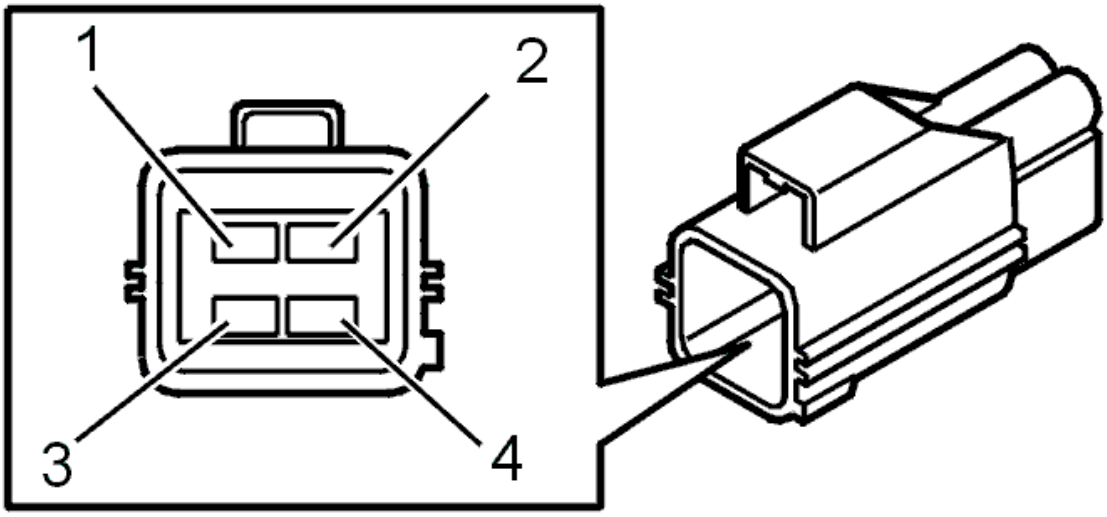

Fig. 483: Identifying Transmission Output Speed Sensor Terminals
Courtesy of VOLVO CARS CORPORATION

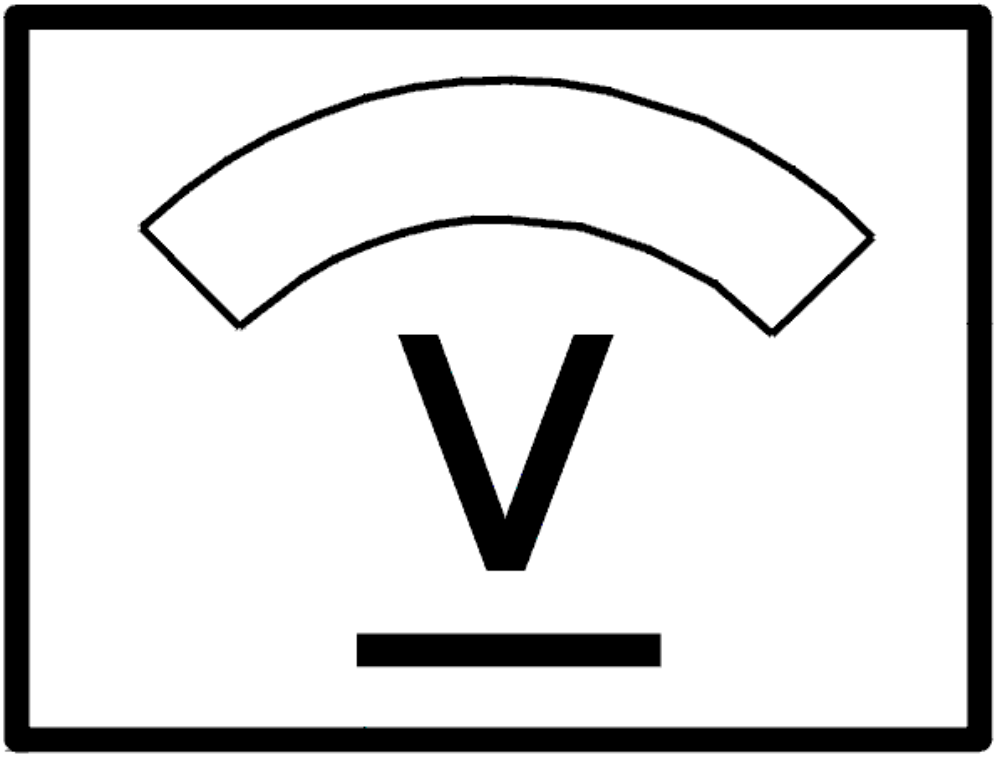

Fig. 484: Identifying Voltage Display
Courtesy of VOLVO CARS CORPORATION

- **Continue**

  Refer to **VERIFICATION**

INTERMITTENT FAULT

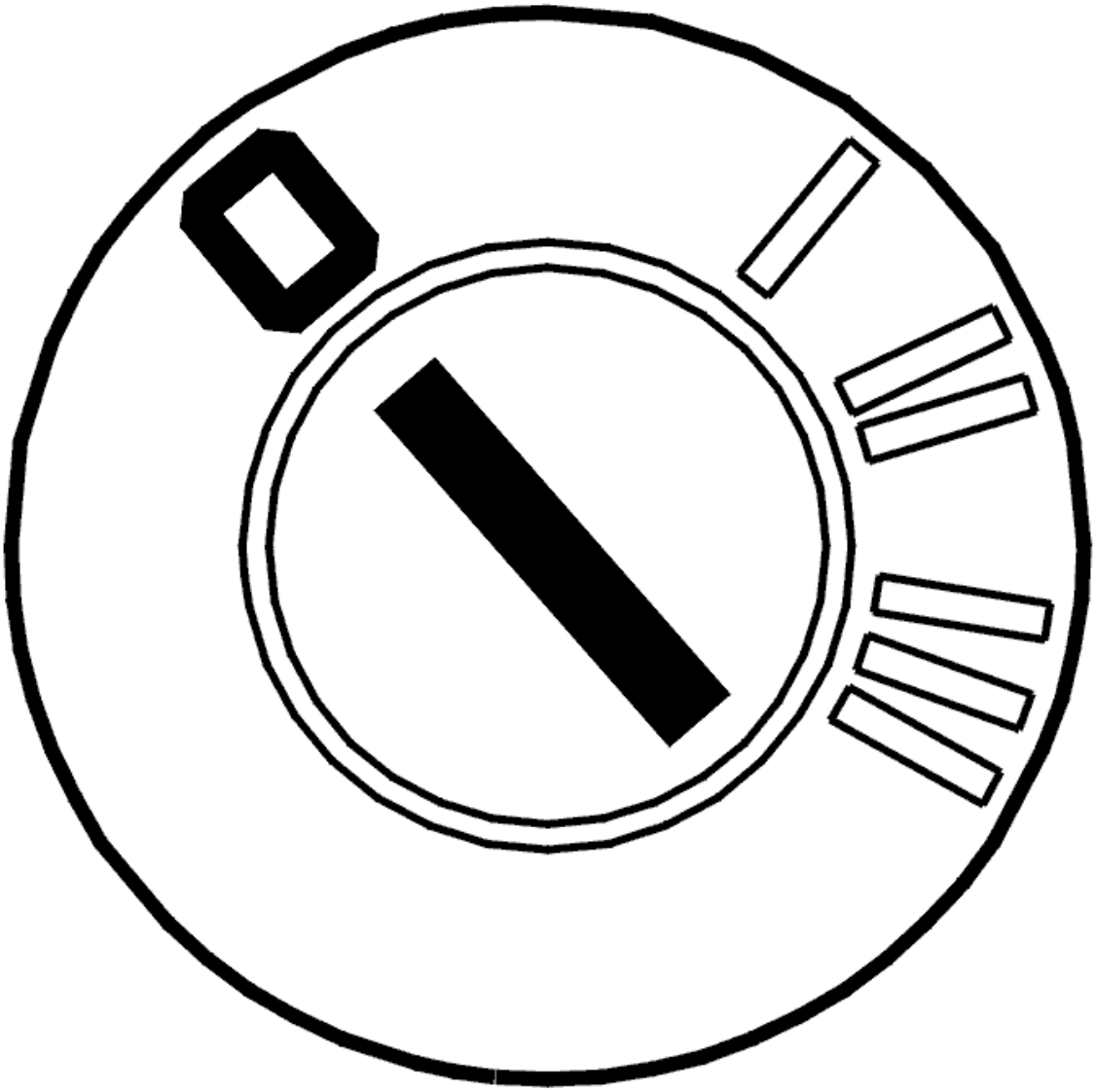

Fig. 485: Identifying Ignition OFF
Courtesy of VOLVO CARS CORPORATION

- Ignition off.

  Check the control module and transmission connectors. Check for contact resistance and oxidation and remedy according to **CONTACT RESISTANCE AND OXIDATION** .

  Check the power supply cable between control module terminal #A57 (#A57) and transmission output speed sensor terminal #A4. Check for an intermittent short-circuit to supply voltage according to **SHORT-CIRCUIT TO SUPPLY VOLTAGE, INTERMITTENT FAULTS** .

  Check the signal cable between control module terminal #A39 (#A39) and transmission output speed sensor terminal #A3. Check for an intermittent short-circuit to supply voltage according to **SHORT-CIRCUIT TO SUPPLY VOLTAGE, INTERMITTENT FAULTS** .

Remedy as necessary.

Other information:

- To connect the breakout box, see **CONNECTING THE BREAKOUT BOX**
- To disconnect the control module, see **TRANSMISSION CONTROL MODULE (TCM), REPLACING**
- To disconnect the transmission connectors, see **CONNECTORS, TRANSMISSION, DISCONNECTING / CONNECTING**
- For information about signals, see **SIGNAL DESCRIPTION. TRANSMISSION CONTROL MODULE (TCM)** .

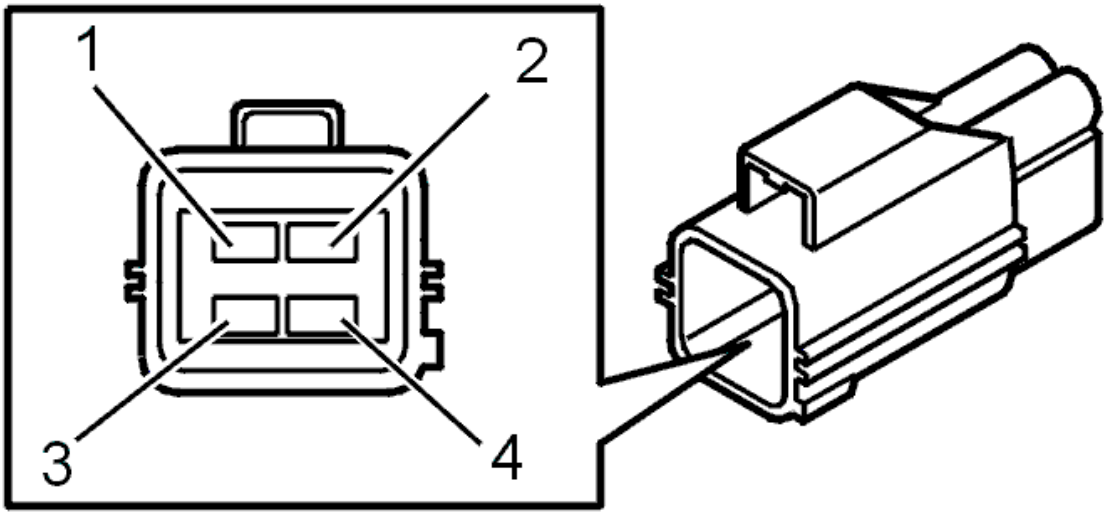

Fig. 486: Identifying Transmission Output Speed Sensor Terminals
Courtesy of VOLVO CARS CORPORATION

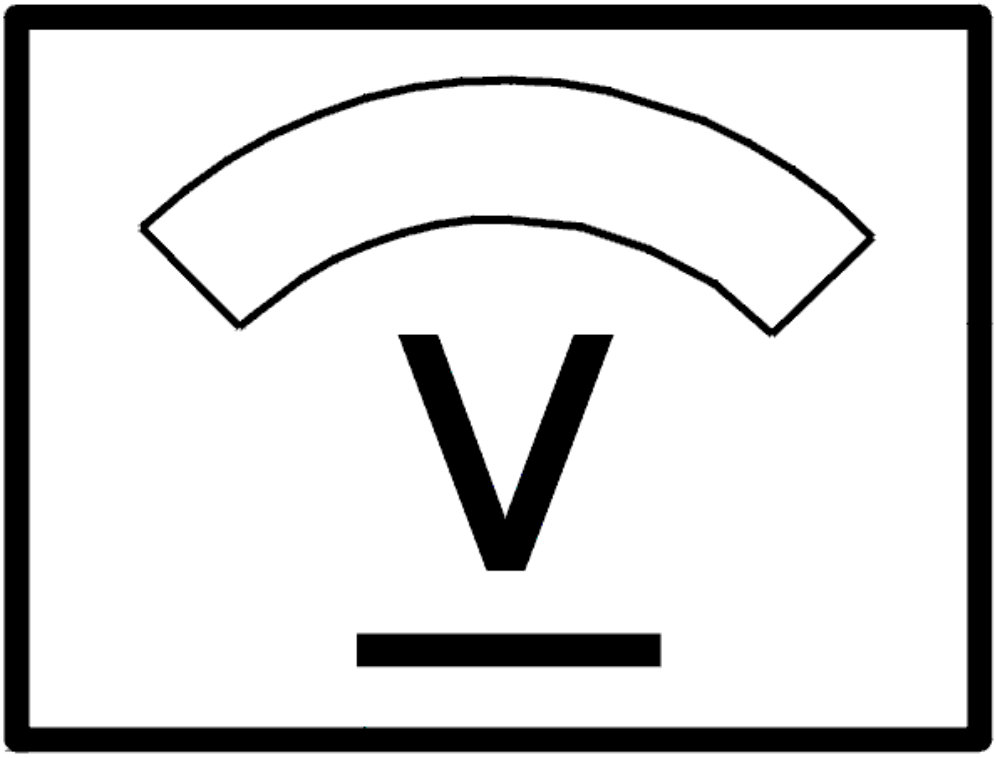

Fig. 487: Identifying Voltage Display
Courtesy of VOLVO CARS CORPORATION

- **Continue**

  Refer to **INFORMATION**

VERIFICATION

VERIFICATION

HINT: After carrying out the repair, check that the fault has been remedied.

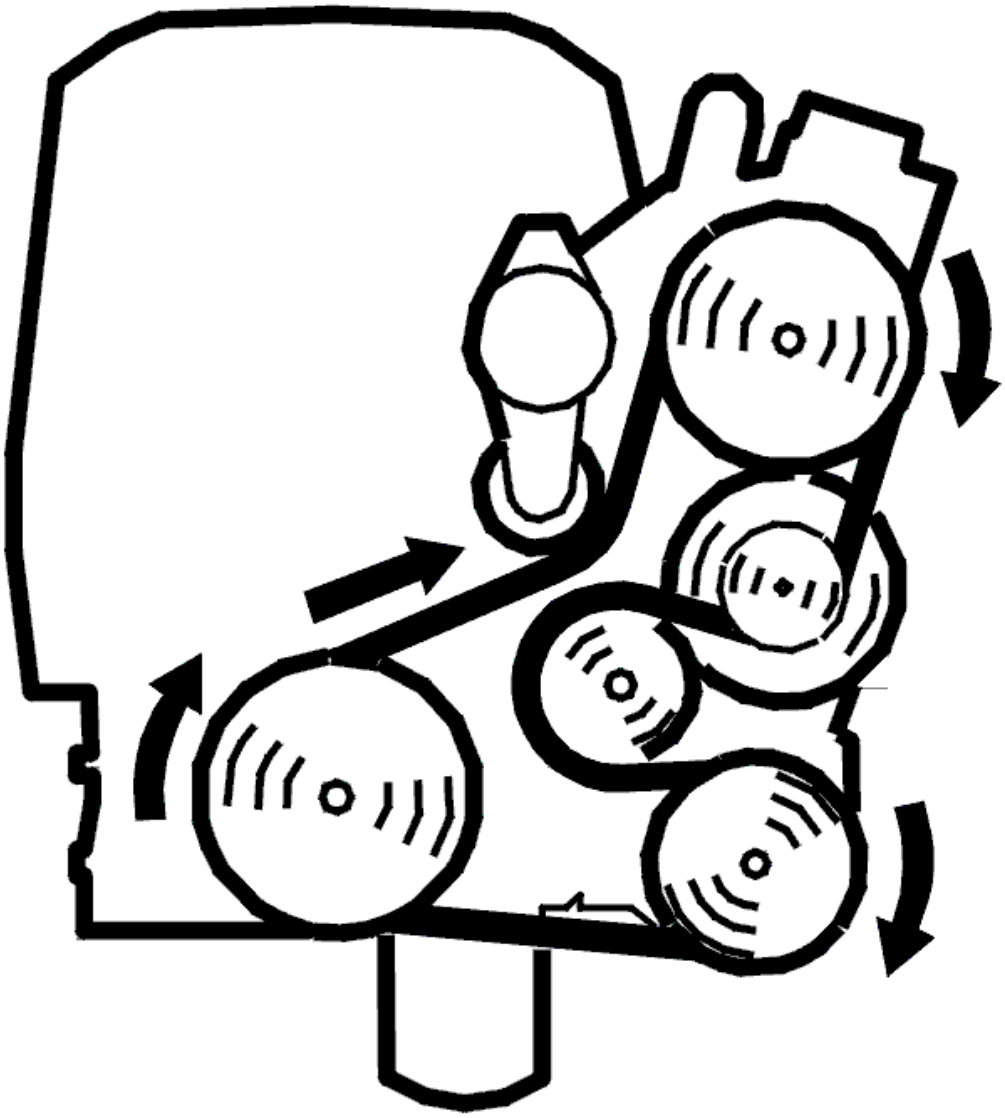

Fig. 488: Identifying Belt Routing
Courtesy of VOLVO CARS CORPORATION

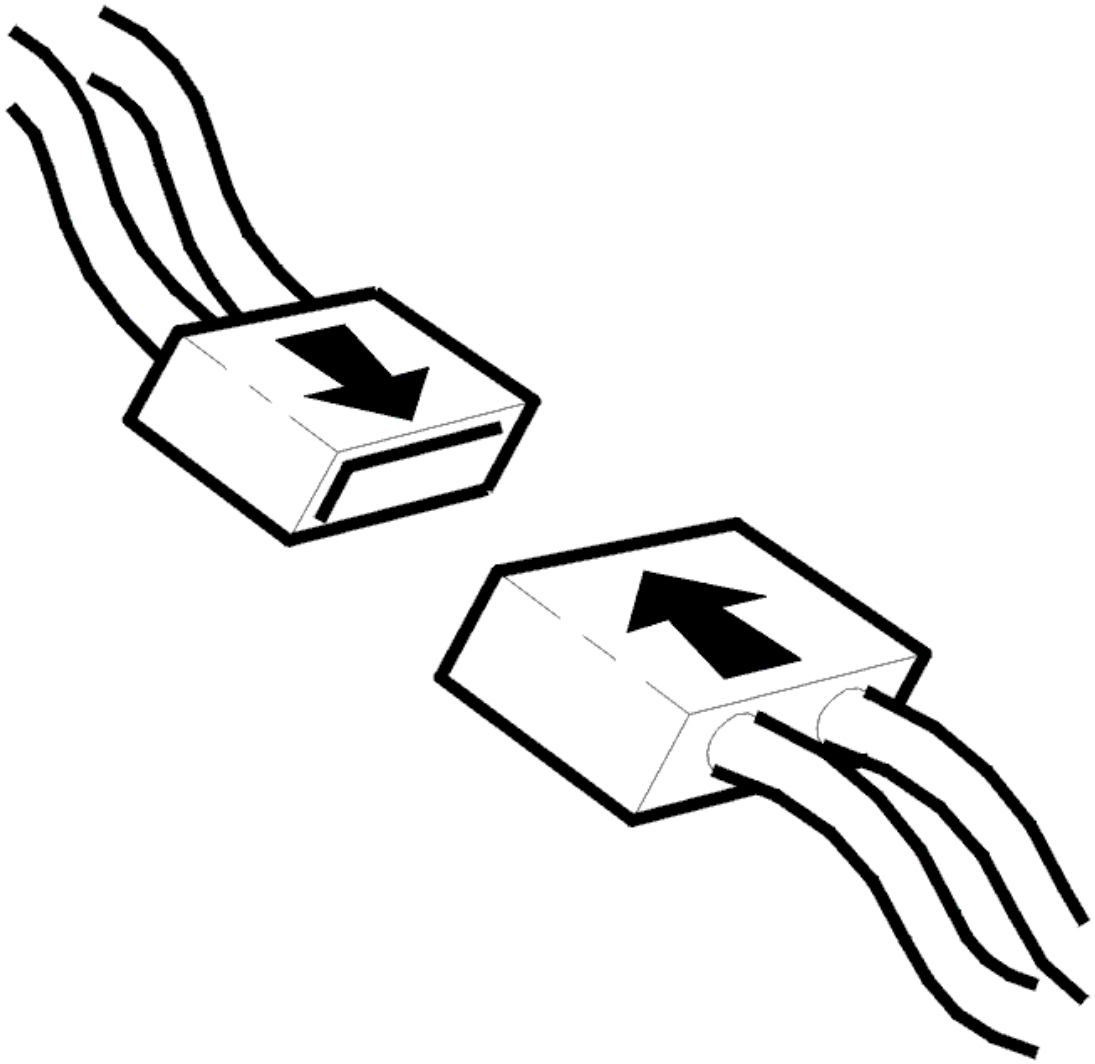

Fig. 489: Identifying Connector(s) Reinstallation
Courtesy of VOLVO CARS CORPORATION

- Ignition off.
- Reinstall connectors, components etc.
- Raise car so that drive wheels are unimpeded.
- Start the engine and let it idle.
- Shift gear selector to position D so that the drive wheels begin to rotate.
- Read off the transmission speed.

Check that speed is updated

NOTE: **When the rear wheels are stationary and the front wheels rotate, diagnostic trouble codes (DTCs) can be stored in the ABS system. Erase**

any diagnostic trouble codes (DTCs) stored in the ABS system after fault-tracing.

NOTE: **Ensure that the wheels are not rotating when the gear selector is moved.**

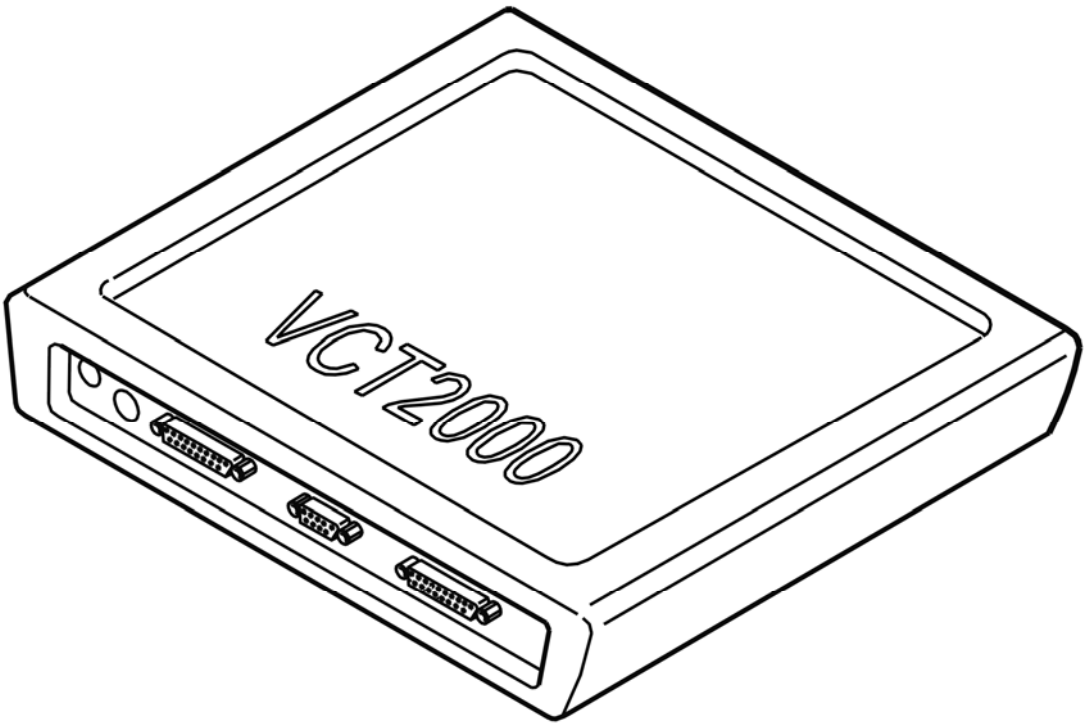

Fig. 490: Identifying VCT2000 Diagnostic Tool Symbol In VIDA
Courtesy of VOLVO CARS CORPORATION

Was speed updated?

- **YES**

  VERIFIED: Troubleshooting has been completed.

- **NO**

  Refer to **INFORMATION**

INFORMATION

FAULT-TRACING INFORMATION

The fault should have been detected and remedied. As this is not the case fault-tracing has failed.

Exit fault-tracing for this diagnostic trouble code (DTC) or make another attempt.

INFORMATION

FAULT-TRACING INFORMATION

If the fault is intermittent, do not verify fault-tracing if the fault does not recur.

It is possible to view the information again, or leave fault-tracing for this diagnostic trouble code (DTC).

TCM-0081: VEHICLE SPEED SENSOR. SIGNAL TOO HIGH (4T65 AWD; 2003-2006)

DIAGNOSTIC TROUBLE CODE (DTC) INFORMATION

Condition

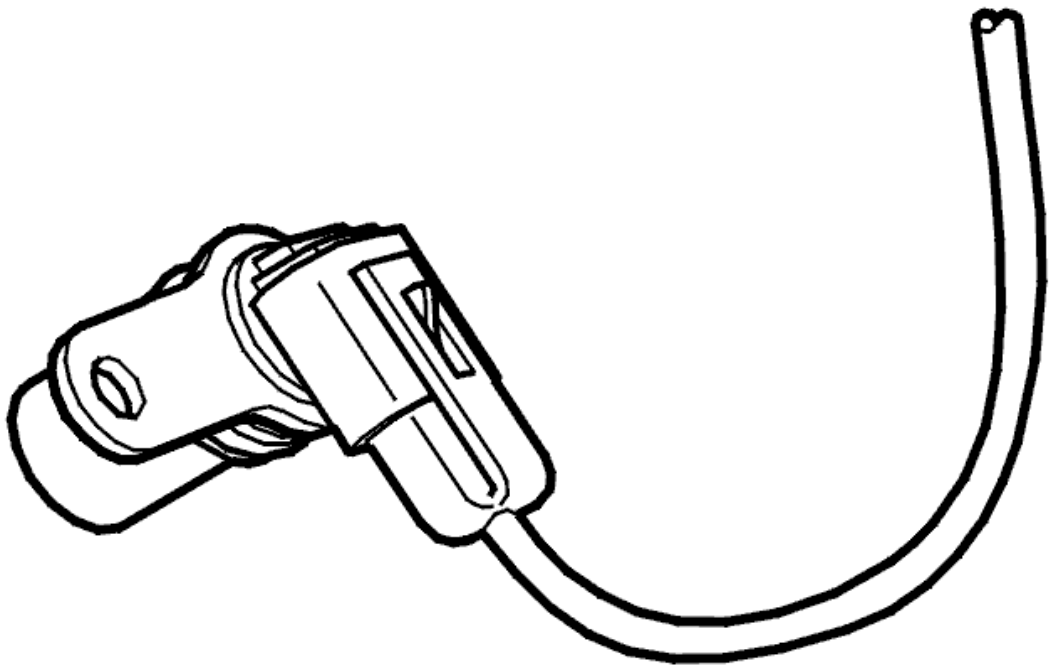

Fig. 1: Identifying Transmission Speed Sensor
Courtesy of VOLVO CARS CORPORATION

The automatic transmission control module (TCM) receives speed signals from the transmission speed sensor on the transmission. The transmission control module (TCM) uses the signals to select the correct gear. The control module derives and compares the transmission speed with engine speed (RPM) at the transmission. Diagnostic trouble code (DTC) TCM-0081 is stored if the control module registers that the transmission speed signal is too high.

Substitute Value

- TBD

Possible Source

- Short-circuit to supply voltage in the power supply or signal cable.

- Defective transmission speed sensor.

Fault symptom[s]

- General orange warning lamp lit.
- No lock-up function.
- Harsh gear shifting.

HINT: Harsh gear shifting can be caused by:

- No reduction of line pressure when shifting.
- No reduction of line pressure when moving the gear selector between positions P-R, N-R and N-D.
- No torque limiting request to engine control module (ECM) when shifting.

SIGNAL TOO HIGH

CHECKS

CHECKING THE TRANSMISSION OUTPUT SPEED SENSOR SIGNAL

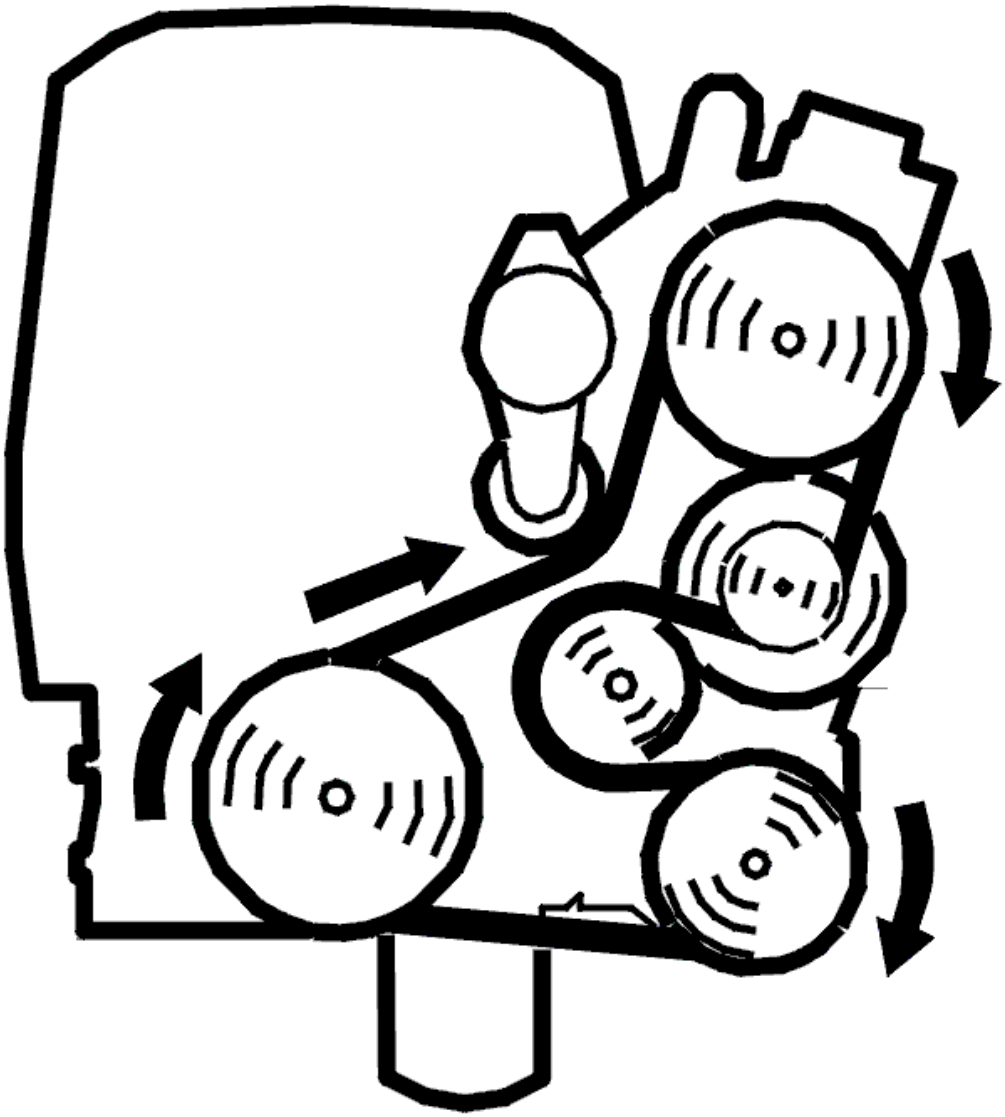

Fig. 2: Identifying Belt Routing
Courtesy of VOLVO CARS CORPORATION

- Ignition off
- Raise the car so that the drive wheels are clear of the ground
- Start the engine. Allow the engine to idle
- Shift gear selector to position D so that the drive wheels begin to rotate
- Read off the transmission speed.

Depress the accelerator pedal (AP) and check that speed is updated

NOTE: Ensure that the wheels are not rotating when the gear selector is moved.

NOTE: Diagnostic trouble codes (DTCs) may be stored in the ABS system when

the rear wheels are stationary and the front wheels rotate. Erase any diagnostic trouble codes (DTCs) stored in the ABS system after fault-tracing.

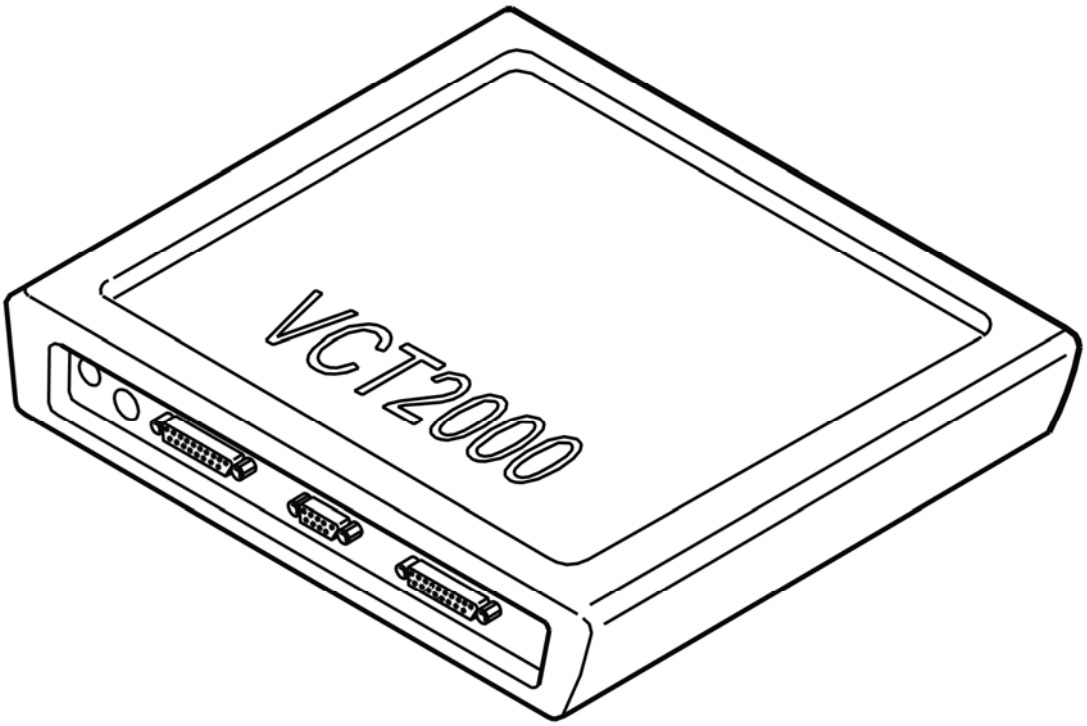

Fig. 3: Identifying VCT2000 Diagnostic Tool Symbol In VIDA
Courtesy of VOLVO CARS CORPORATION

Was the speed updated?

- **YES**

  Refer to **INTERMITTENT FAULT**

- **NO**

  Refer to **CHECKING THE WIRING**

CHECKING THE WIRING

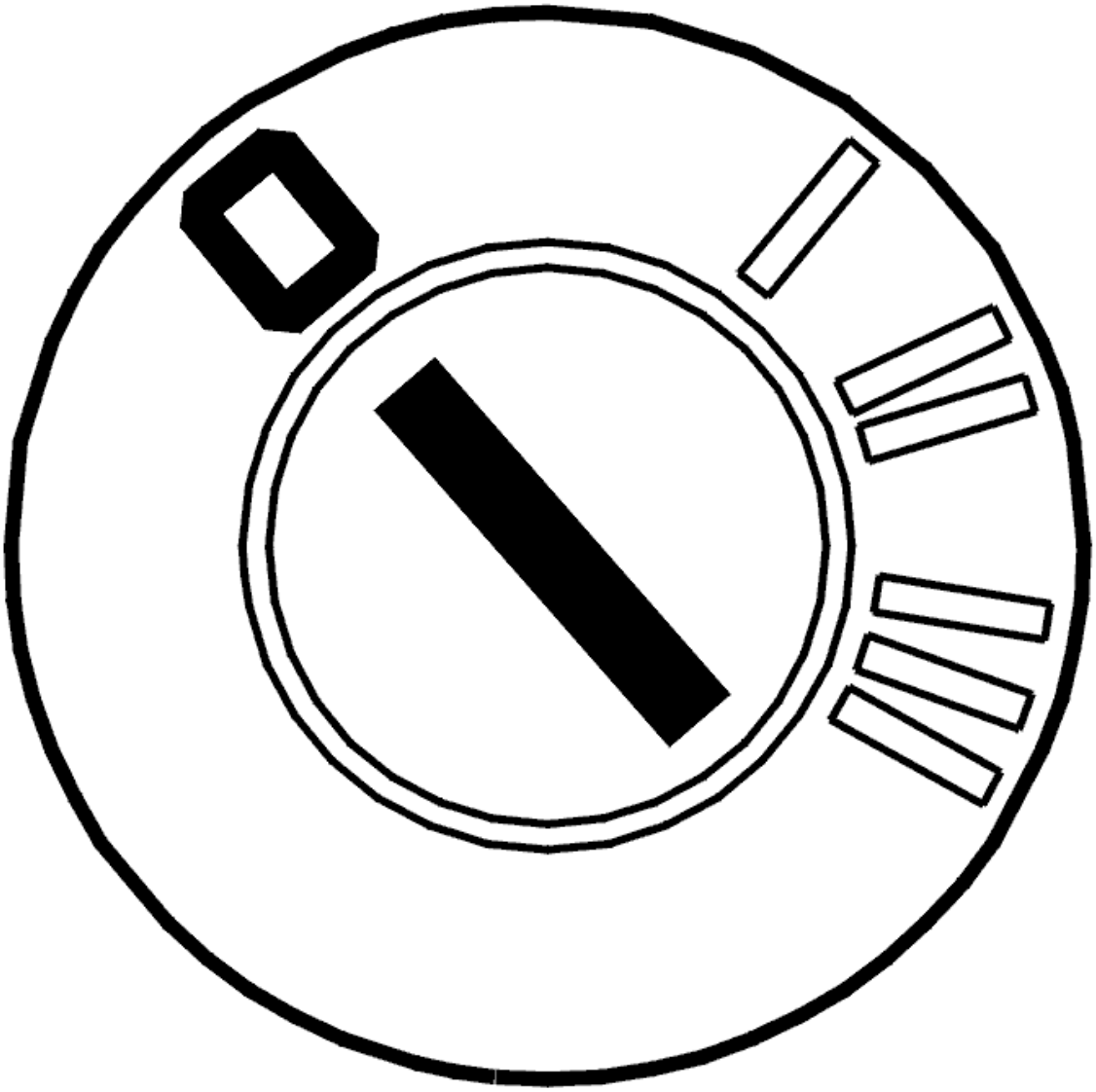

Fig. 4: Identifying Ignition OFF
Courtesy of VOLVO CARS CORPORATION

- Ignition off.

  Check the wiring between control module terminals #A57 and #A39 and speed sensor connector terminals #1 and #2. Check for a short-circuit to each other.

  Check the power supply cable between control module terminal #A57 and speed sensor connector terminal #1. Check for a short-circuit to supply voltage.

  Check the signal cable between control module terminal #A39 and speed sensor connector terminal #2. Check for a short-circuit to supply voltage.

  Remedy as necessary.

Other information

- To connect the breakout box, see **CONNECTING THE BREAKOUT BOX**
- To connect the breakout box to the transmission connector, see **CONNECTING THE BREAKOUT BOX, GM AUTOMATIC TRANSMISSIONS**
- To check or replace the transmission output speed sensor, see **OUTPUT SPEED SENSOR TRANSMISSION, REPLACING**
- For information about signals, see **SIGNAL SPECIFICATION**
- see **CHECKING WIRING AND TERMINALS**

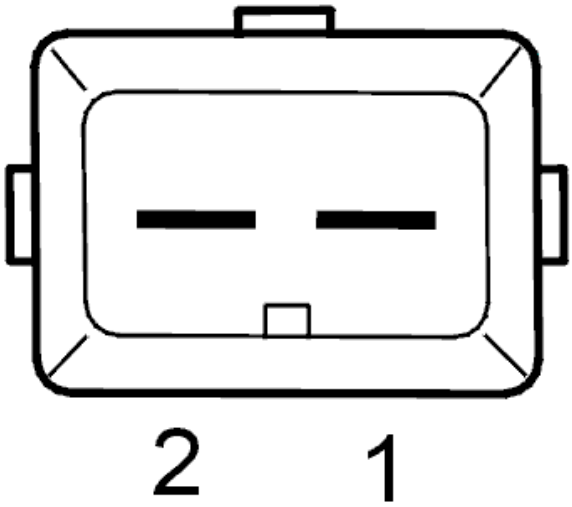

Fig. 5: Identifying Vehicle Speed Sensor (VSS) Connector Terminals
Courtesy of VOLVO CARS CORPORATION

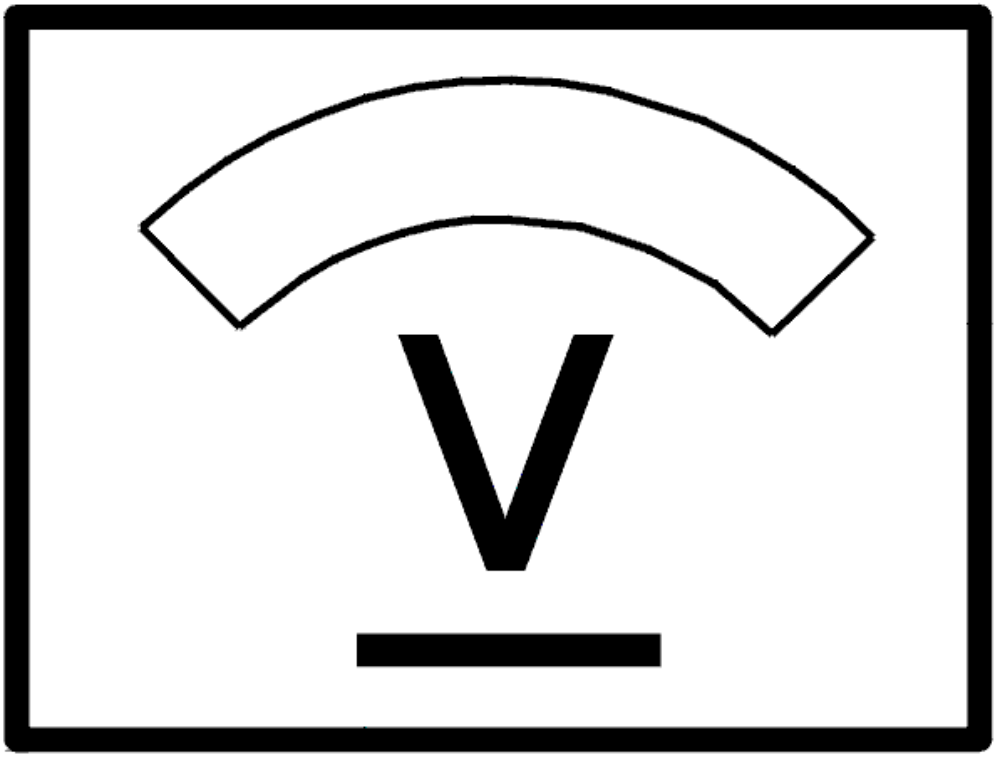

Fig. 6: Identifying Voltage Display
Courtesy of VOLVO CARS CORPORATION

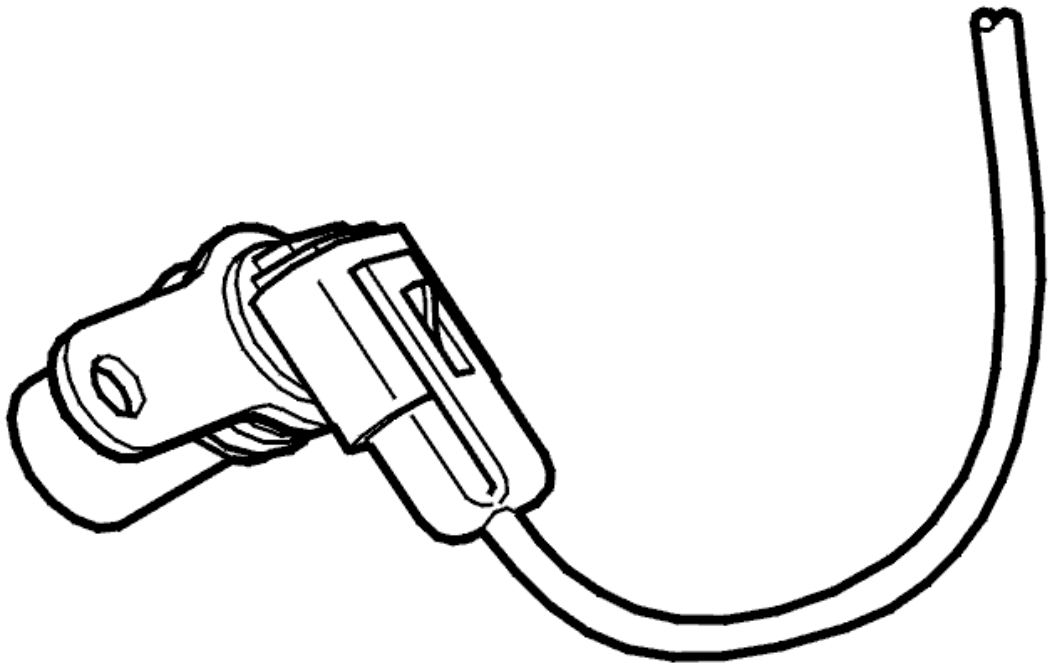

Fig. 7: Identifying Transmission Speed Sensor
Courtesy of VOLVO CARS CORPORATION

Was a fault detected?

- **YES**

  Refer to **VERIFICATION**

- **NO**

  Refer to **CHECKING THE CONTROL MODULE**

CHECKING THE CONTROL MODULE

HINT: It is possible to determine whether the control module is faulty by disconnecting the speed sensor connector and connecting a temporary cable and short-circuiting the connections with the control module.

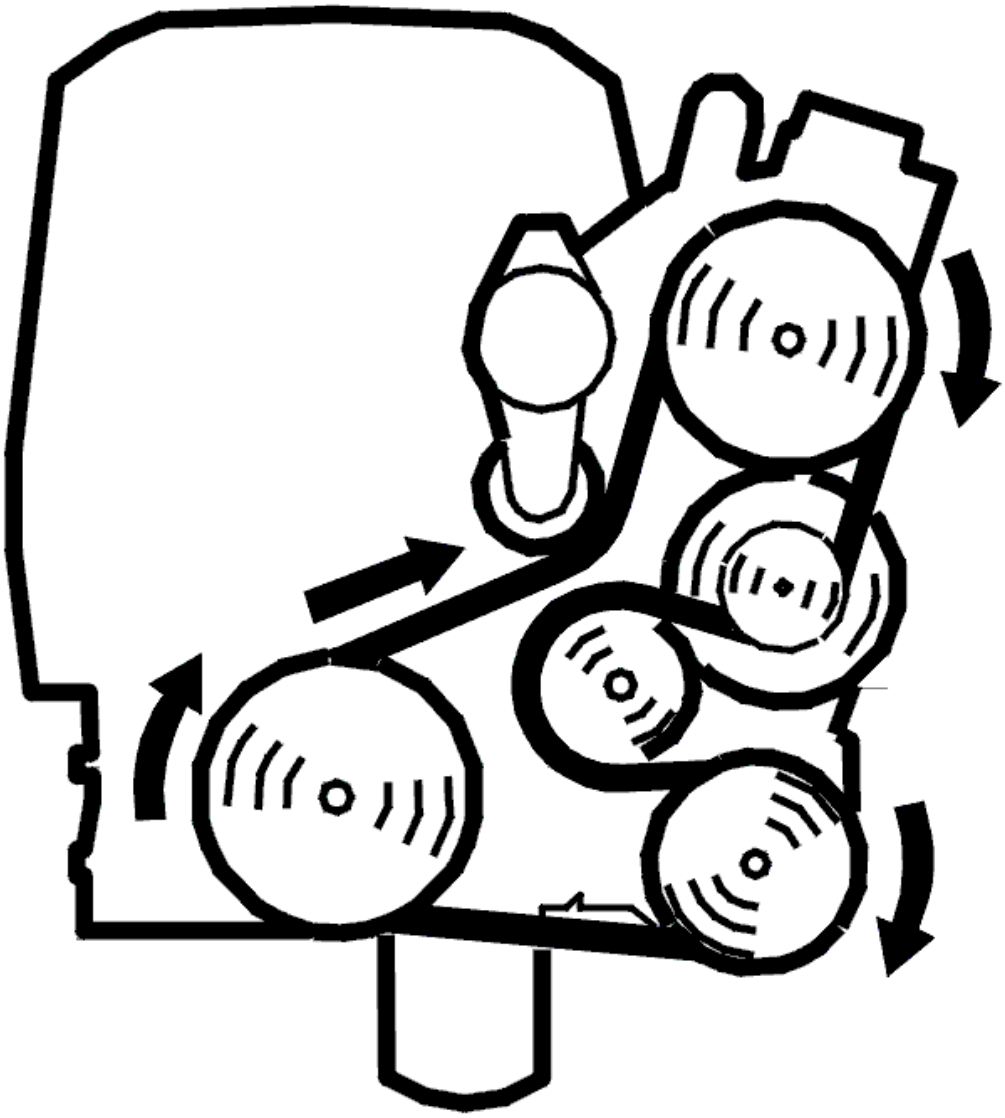

Fig. 8: Identifying Belt Routing
Courtesy of VOLVO CARS CORPORATION

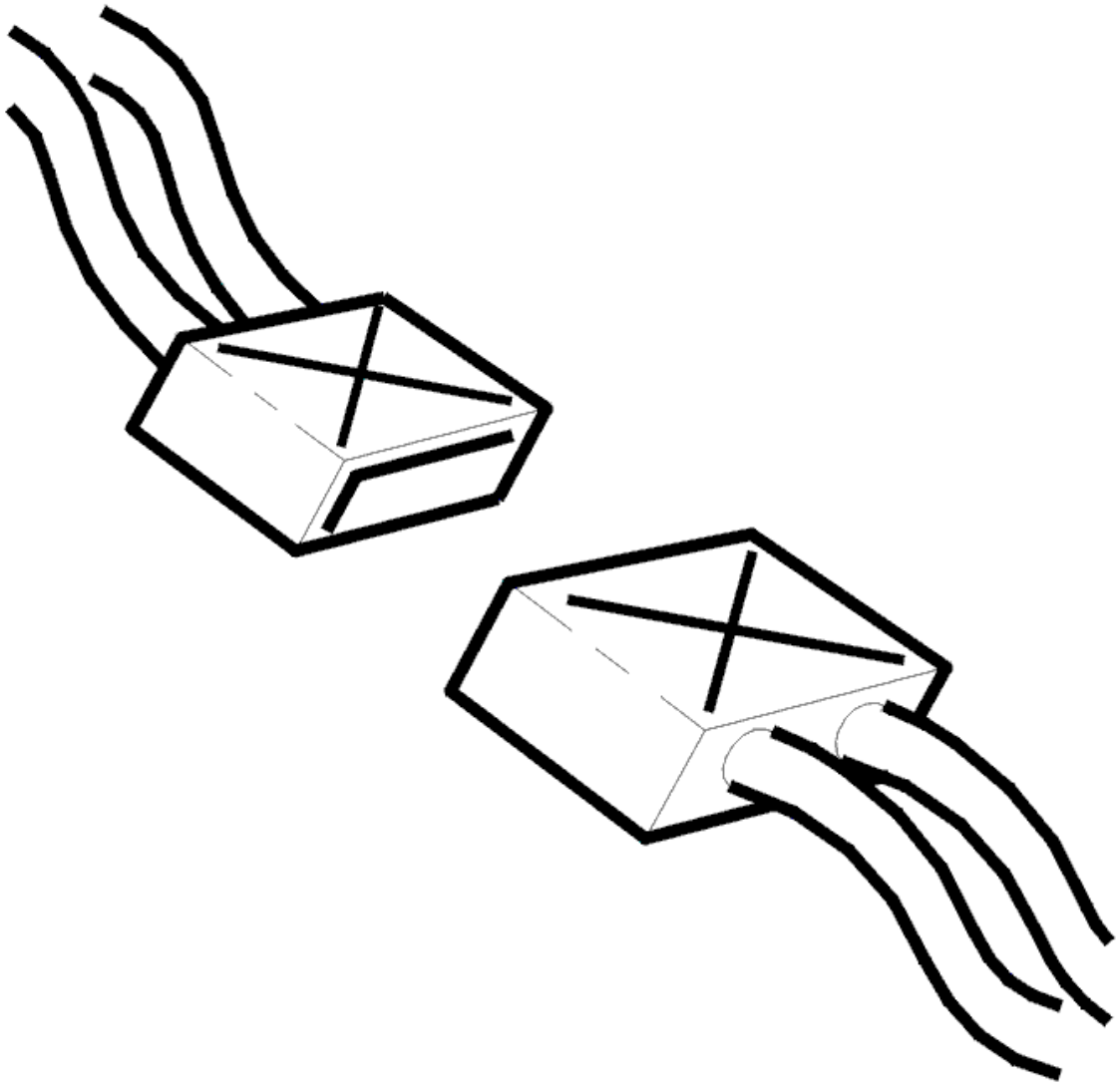

Fig. 9: Identifying Connectors
Courtesy of VOLVO CARS CORPORATION

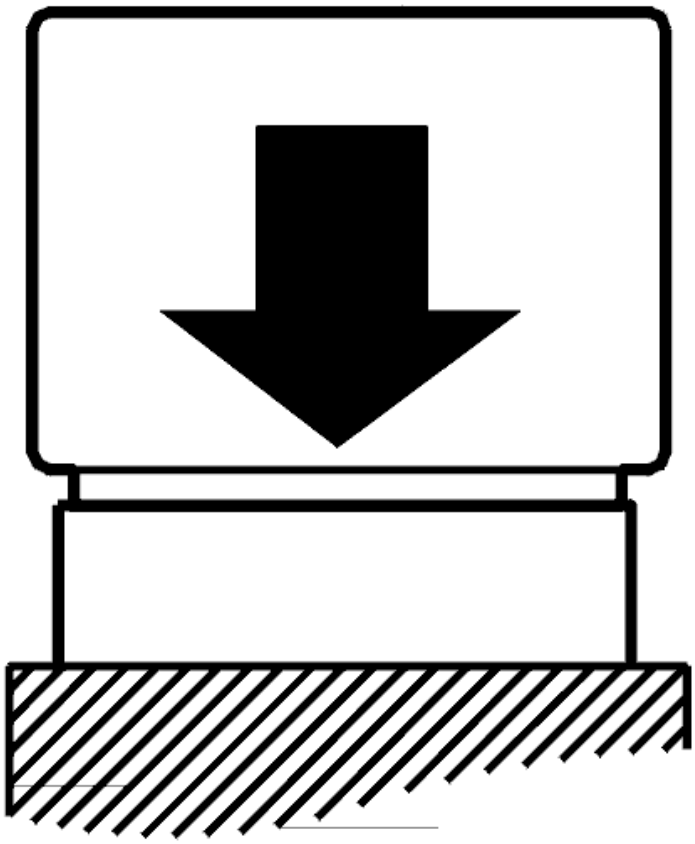

Fig. 10: Identifying Control Module Connected
Courtesy of VOLVO CARS CORPORATION

- Ignition off
- Transmission control module (TCM) connected
- The breakout box connected
- Disconnected connector for the transmission speed sensor
- Connect a temporary cable between terminals #A35 and #A57 on the breakout box

CAUTION: Check that the temporary cable is connected to the correct terminals. Also check that there is no risk of unintentional short-circuits.

-
- Ignition on

- Read off the status.

  Check that the status is "1" when the temporary cable is connected to the terminals above.

  Disconnect the cable end that is connected to terminal #A35 and move the cable to terminal #A53.

  NOTE: Leave the cable end connected to terminal #A57 in place.

  Check that the status changes to "0" when the temporary cable has been moved to terminal #A53.

  The transmission speed sensor is defective if the status has changed between "1" and "0" as above and no errors have been detected on the cables or terminals in the preceding checks. Replace the transmission speed sensor if this is the case.

  The transmission control module (TCM) is defective if the status has not changed between "1" and "0" as above and no errors have been detected on the cables or terminals in the preceding checks. If this is the case replace the control module.

  Other information

  - To connect the breakout box, see **CONNECTING THE BREAKOUT BOX**
  - To connect the breakout box to the transmission connector, see **CONNECTING THE BREAKOUT BOX, GM AUTOMATIC TRANSMISSIONS**
  - To check or replace the transmission output speed sensor, see **OUTPUT SPEED SENSOR TRANSMISSION, REPLACING**
  - To replace the transmission control module (TCM), see **TRANSMISSION CONTROL MODULE (TCM), REPLACING**
  - For information about signals, see **SIGNAL SPECIFICATION** .

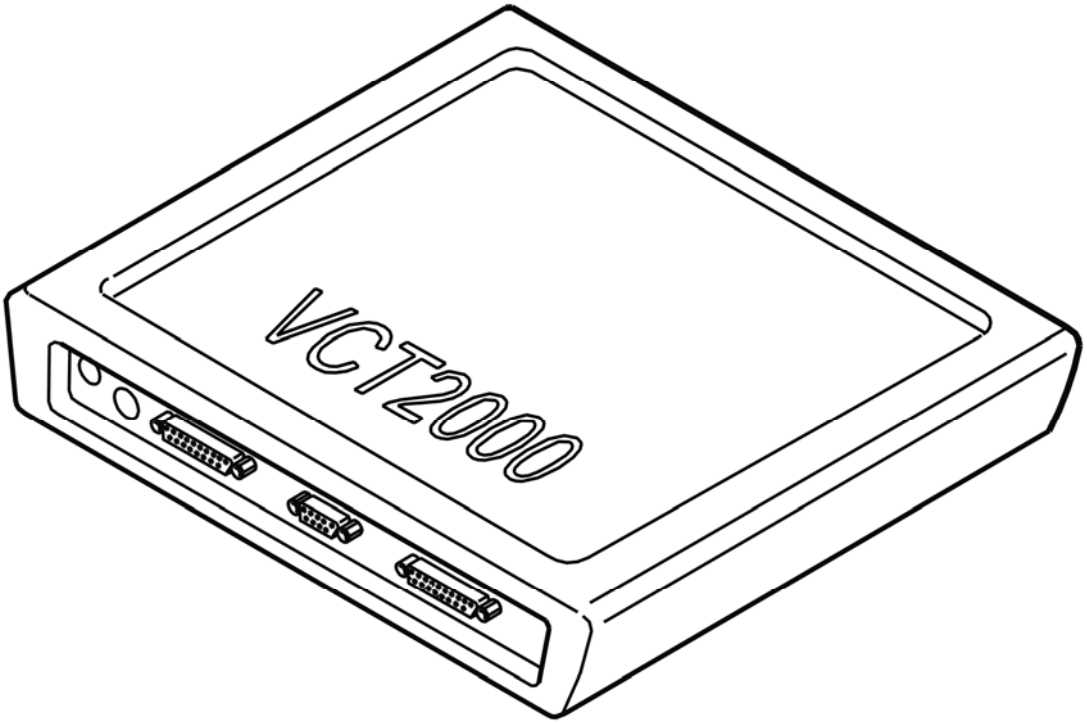

Fig. 11: Identifying VCT2000 Diagnostic Tool Symbol In VIDA
Courtesy of VOLVO CARS CORPORATION

- **Continue**

  Refer to **VERIFICATION**

INTERMITTENT FAULT

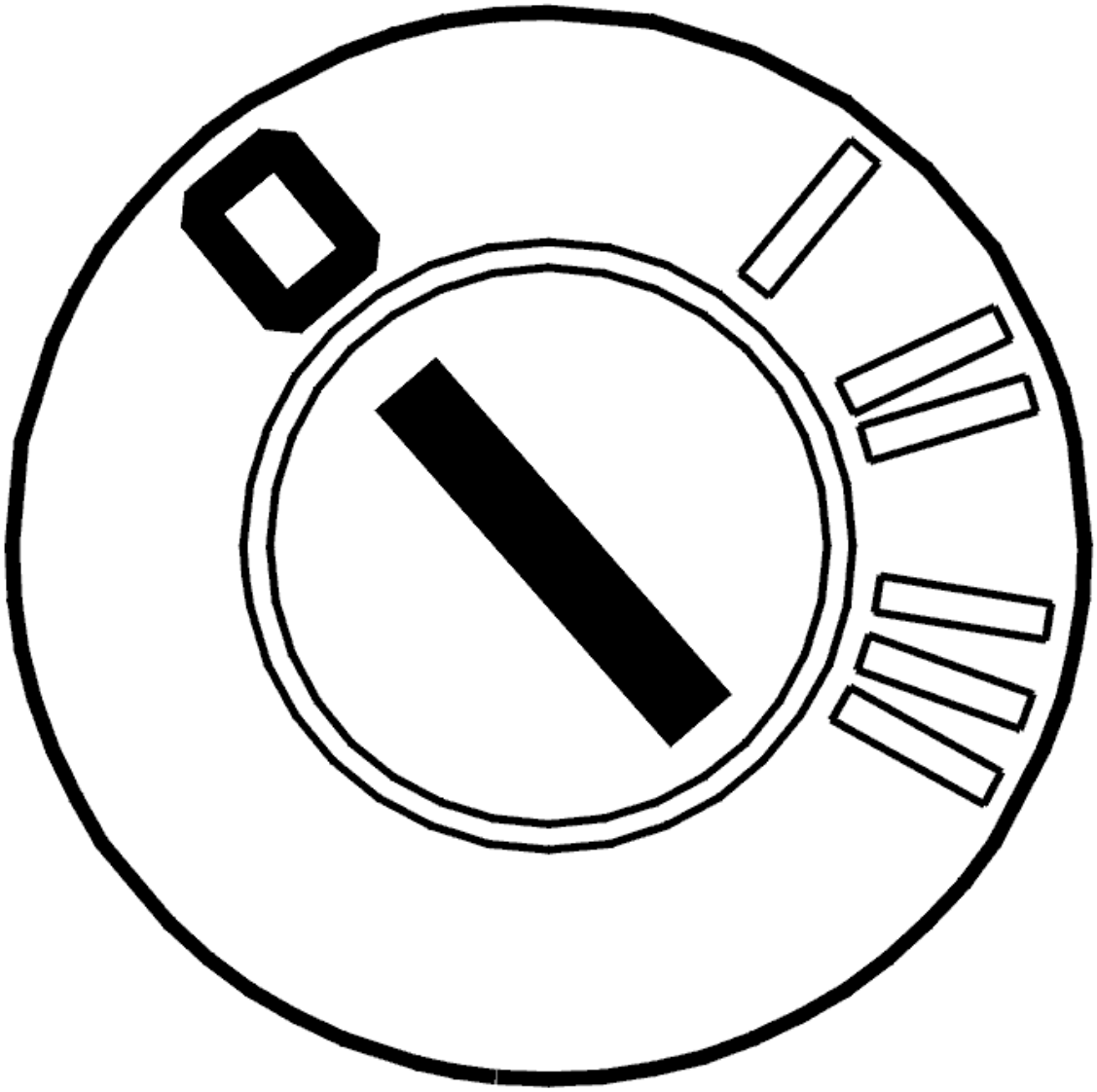

Fig. 12: Identifying Ignition OFF
Courtesy of VOLVO CARS CORPORATION

- Ignition off.

  Check the control module and transmission connectors. Check for contact resistance and oxidation.

  Check the power supply cable between control module terminal #A57 and speed sensor connector terminal #1. Check for an intermittent short-circuit to supply voltage.

  Check the signal cable between control module terminal #A39 and speed sensor connector terminal #2. Check for an intermittent short-circuit to supply voltage.

  Remedy as necessary.

  Other information:

- To connect the breakout box, see **CONNECTING THE BREAKOUT BOX**
- To disconnect the control module, see **TRANSMISSION CONTROL MODULE (TCM), REPLACING**
- For information about signals, see **SIGNAL SPECIFICATION**
- see **CHECKING WIRING AND TERMINALS**

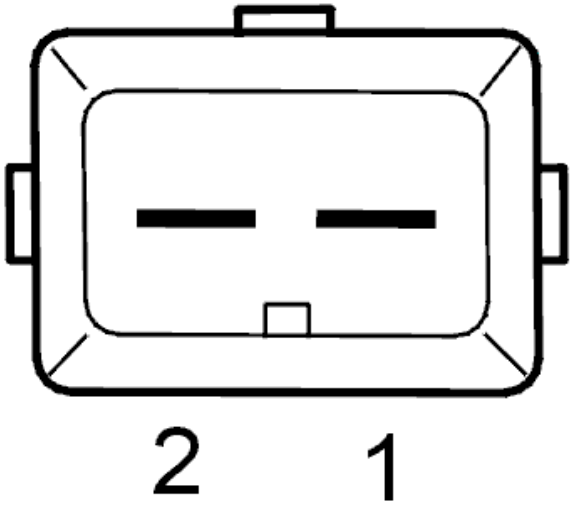

Fig. 13: Identifying Vehicle Speed Sensor (VSS) Connector Terminals
Courtesy of VOLVO CARS CORPORATION

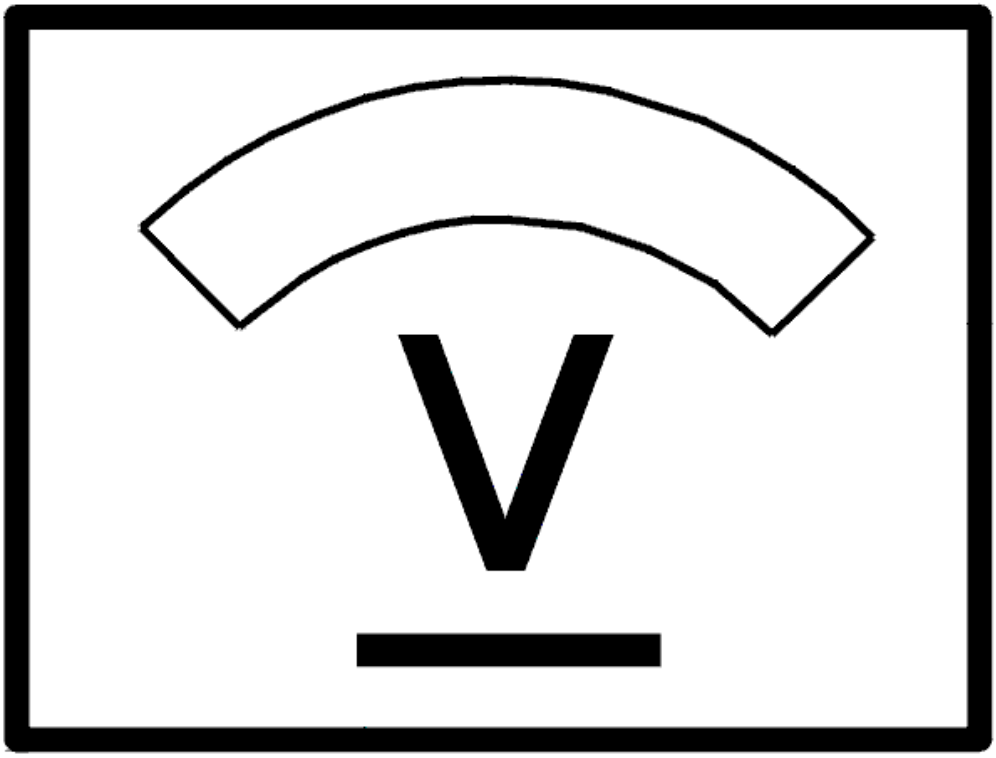

Fig. 14: Identifying Voltage Display
Courtesy of VOLVO CARS CORPORATION

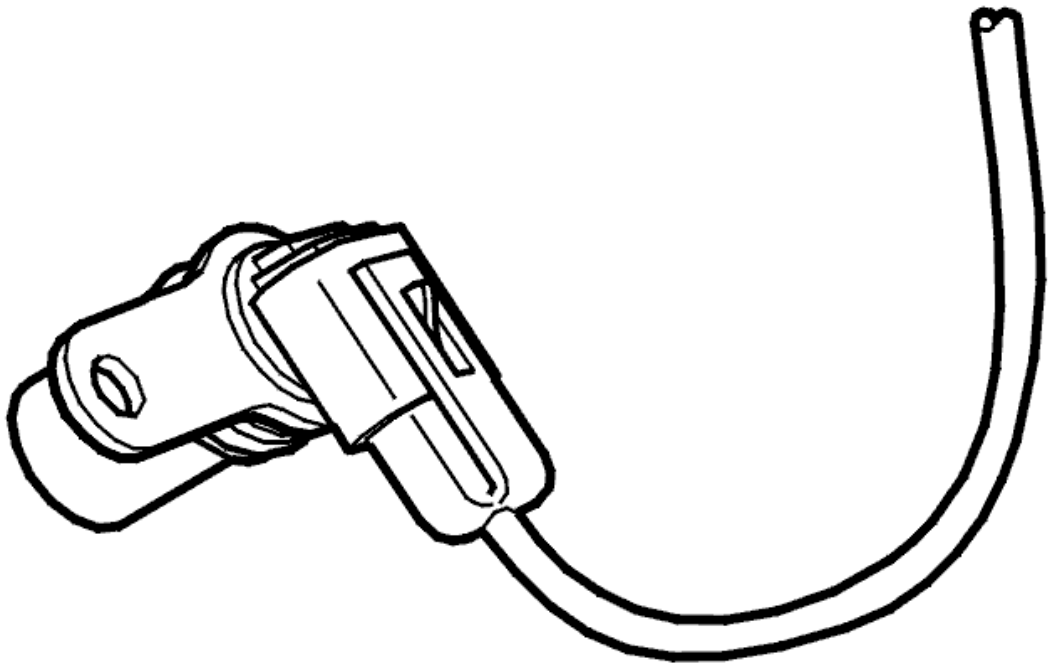

Fig. 15: Identifying Transmission Speed Sensor
Courtesy of VOLVO CARS CORPORATION

- **Continue**

  Refer to **INFORMATION**

VERIFICATION

VERIFICATION

HINT: After carrying out the repair, check that the fault has been remedied.

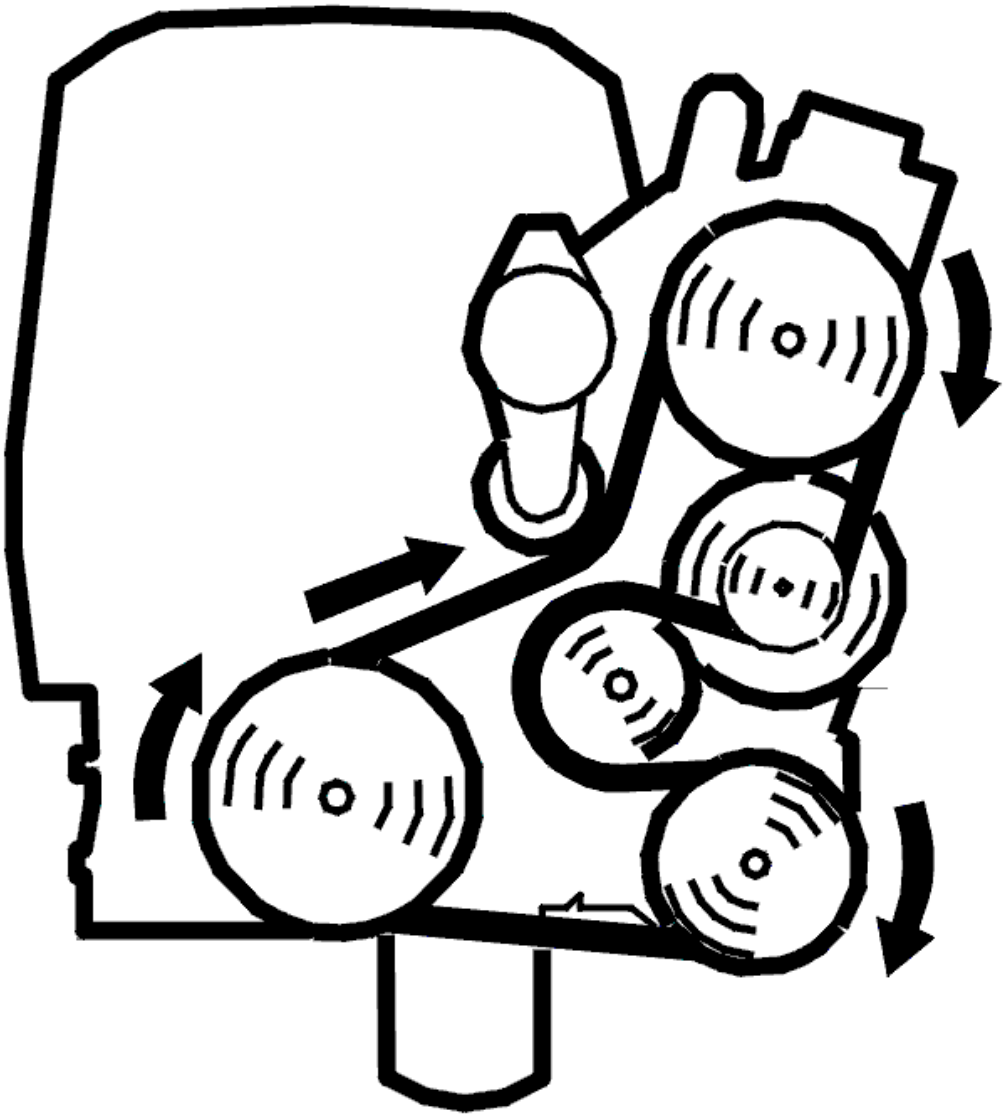

Fig. 16: Identifying Belt Routing
Courtesy of VOLVO CARS CORPORATION

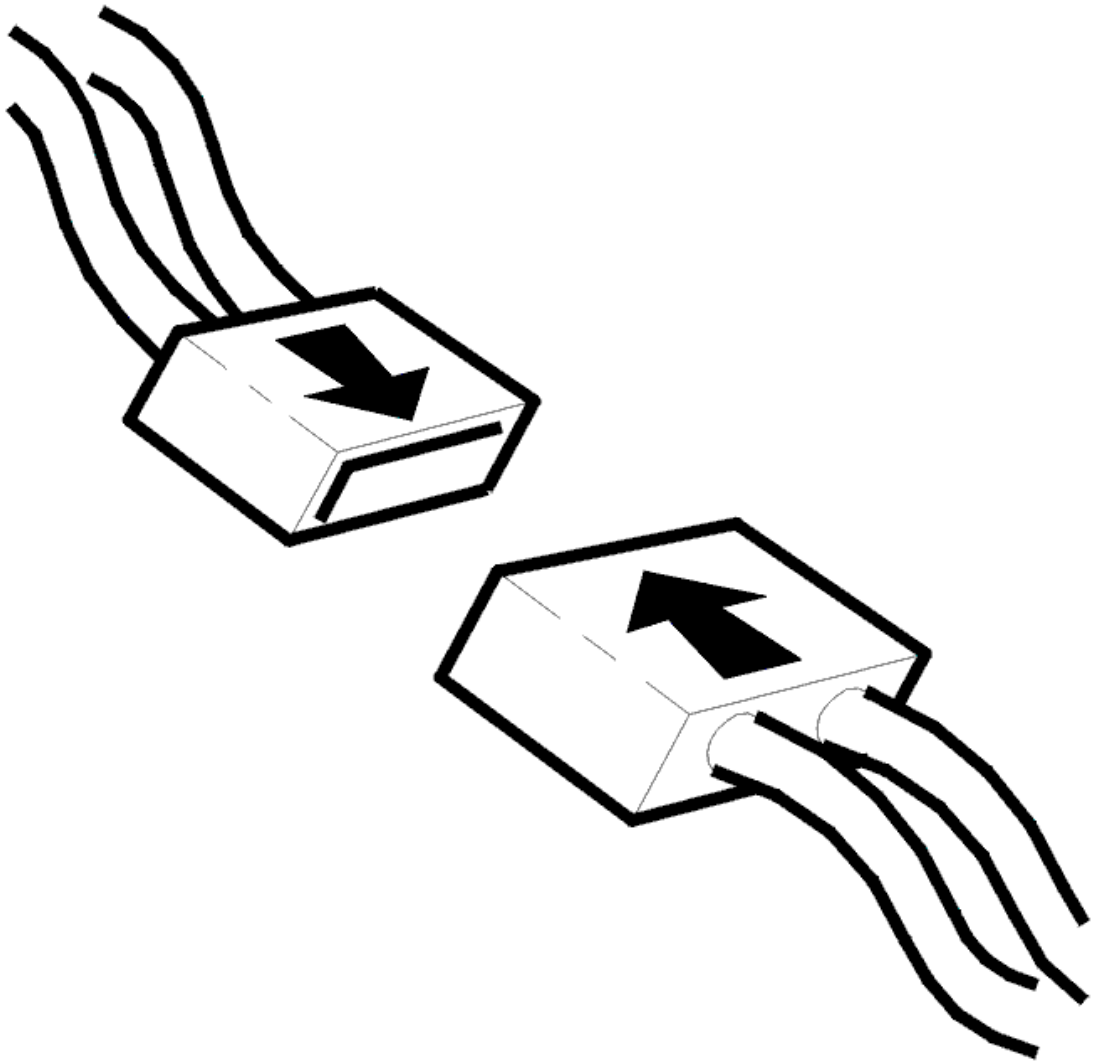

Fig. 17: Identifying Connector(s) Reinstallation
Courtesy of VOLVO CARS CORPORATION

- Ignition off.
- Reinstall connectors, components etc.
- Raise car so that drive wheels are unimpeded.
- Start the engine and let it idle.
- Shift gear selector to position D so that the drive wheels begin to rotate.
- Read off the transmission speed.

Check that speed is updated

NOTE: **When the rear wheels are stationary and the front wheels rotate, diagnostic trouble codes (DTCs) can be stored in the ABS system. Erase**

any diagnostic trouble codes (DTCs) stored in the ABS system after fault-tracing.

NOTE: **Ensure that the wheels are not rotating when the gear selector is moved.**

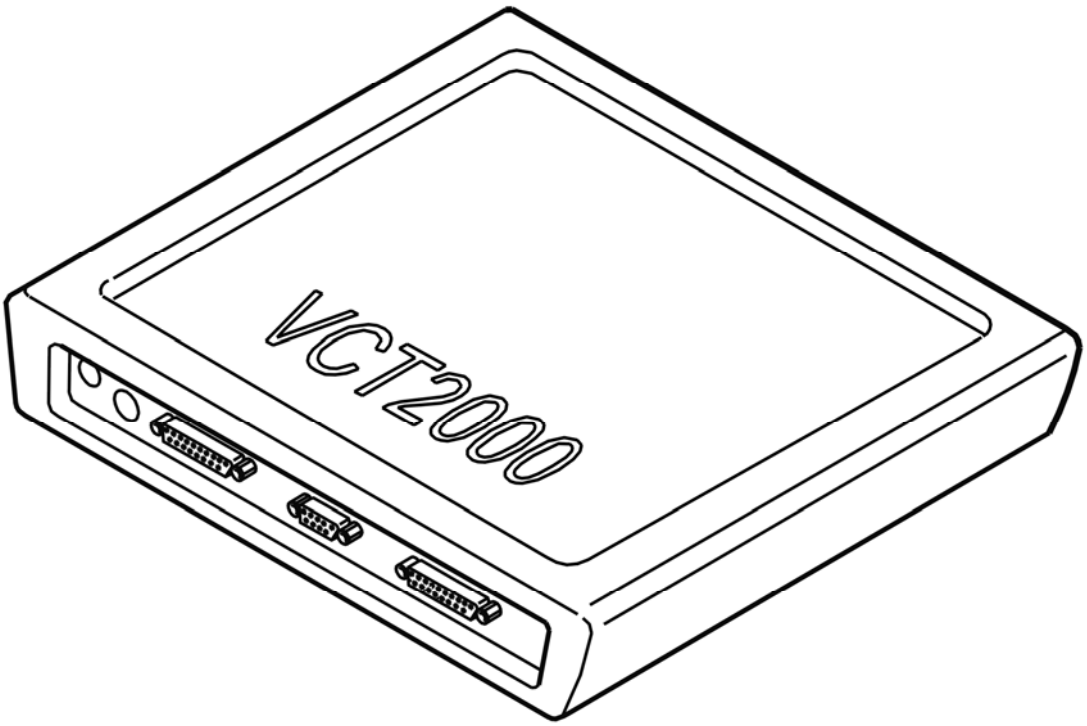

Fig. 18: Identifying VCT2000 Diagnostic Tool Symbol In VIDA
Courtesy of VOLVO CARS CORPORATION

Was speed updated?

- **YES**

  VERIFIED: Troubleshooting has been completed.

- **NO**

  Refer to **INFORMATION**

INFORMATION

FAULT-TRACING INFORMATION

The fault should have been detected and remedied. As this is not the case fault-tracing has failed.

Exit fault-tracing for this diagnostic trouble code (DTC) or make another attempt.

INFORMATION

FAULT-TRACING INFORMATION

If the fault is intermittent, do not verify fault-tracing if the fault does not recur.

It is possible to view the information again, or leave fault-tracing for this diagnostic trouble code (DTC).

TCM-0083: TRANSMISSION OUTPUT SPEED SENSOR. SIGNAL TOO LOW (AW50/51 AWD; AW55-50/51SN; 2003-2007)

DIAGNOSTIC TROUBLE CODE (DTC) INFORMATION

Condition

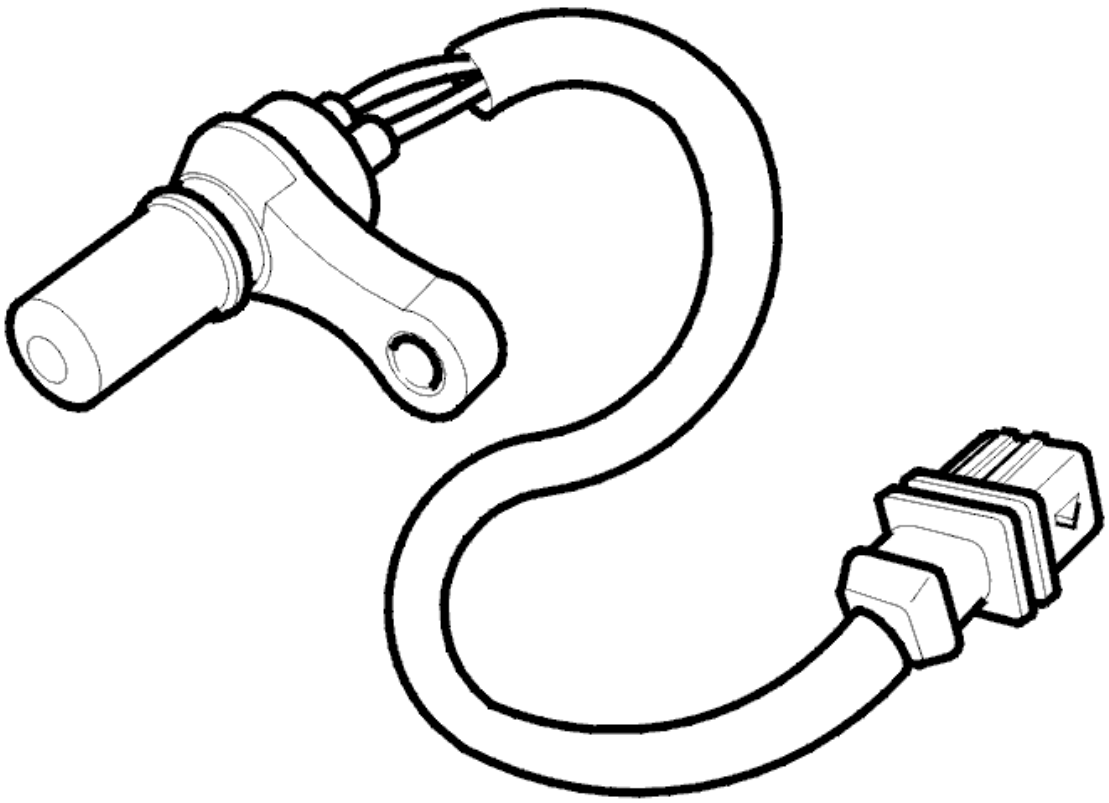

Fig. 19: Identifying Transmission Output Speed Sensor
Courtesy of VOLVO CARS CORPORATION

The speed signal comes from a sensor on the transmission. The transmission control module (TCM) uses the signal to select the correct gear. The control module also uses the engine speed sensor signal to determine the speed. Diagnostic trouble code (DTC) TCM-0083 is stored if the transmission control module (TCM) registers

that the speed signal is to low.

Substitute Value

- None.

Possible Source

- Contact resistance in the terminals.
- Signal cable (+) or signal cable (-) short-circuited to ground, to supply voltage or to each other.
- Defective speed sensor.

Fault symptom[s]

- General orange warning lamp lit.
- No lock-up function.
- Harsh gear shifting.

HINT: Harsh gear shifting can be caused by:

- No reduction of the line pressure when shifting.
- No reduction of the line pressure when moving the gear selector between positions P-R, N-R and N-D.
- No request for torque limiting to the engine control module (ECM) when shifting.

SIGNAL TOO LOW

CHECKS

CHECKING THE TRANSMISSION OUTPUT SPEED SENSOR SIGNAL

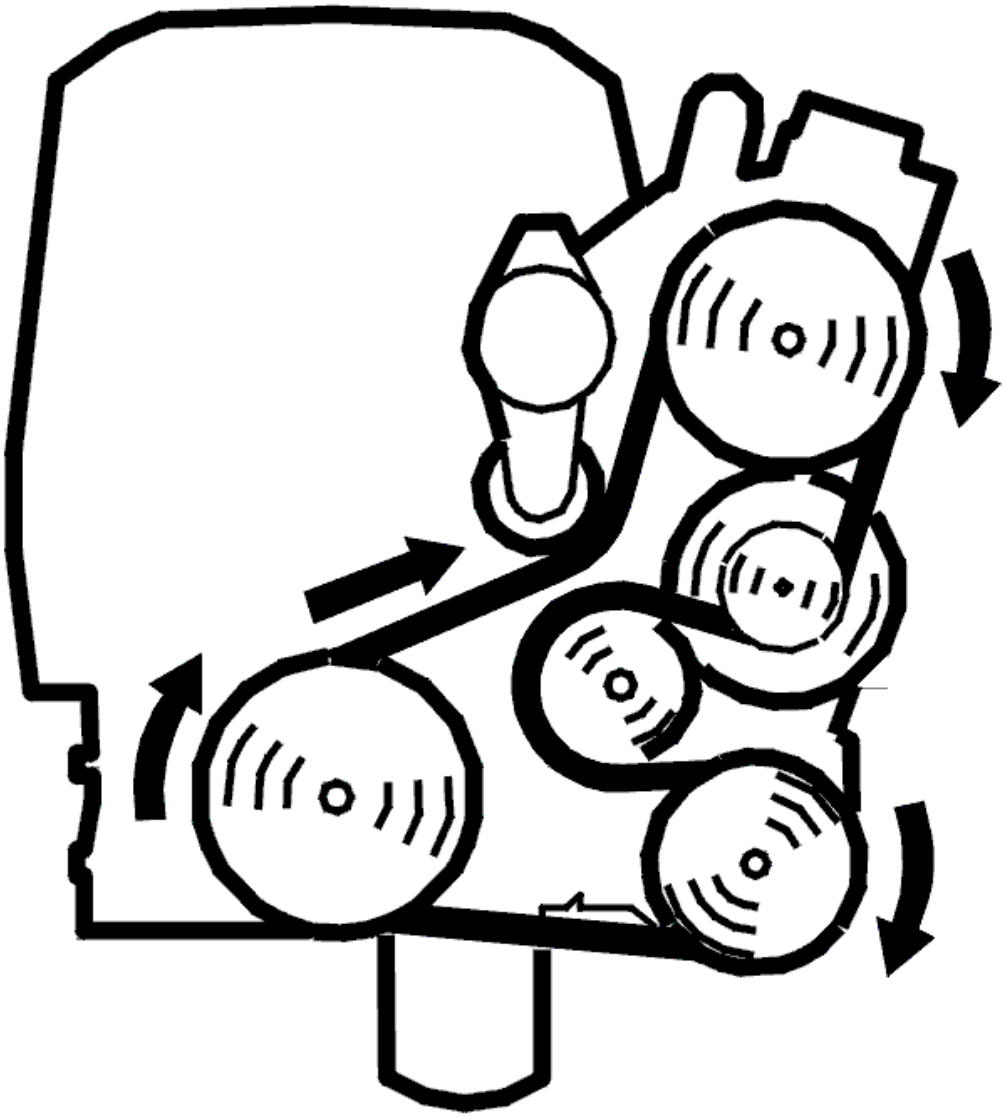

Fig. 20: Identifying Belt Routing
Courtesy of VOLVO CARS CORPORATION

- Ignition off
- Raise the car so that the drive wheels are clear of the ground
- Start the engine. Allow the engine to idle
- Shift gear selector to position D so that the drive wheels begin to rotate
- Read off the transmission speed.

Depress the accelerator pedal (AP) and check that the speed is updated.

NOTE: Ensure that the wheels are not rotating when the gear selector is moved.

NOTE: Diagnostic trouble codes (DTCs) may be stored in the ABS system when

the rear wheels are stationary and the front wheels rotate. Erase any diagnostic trouble codes (DTCs) stored in the ABS system after fault-tracing.

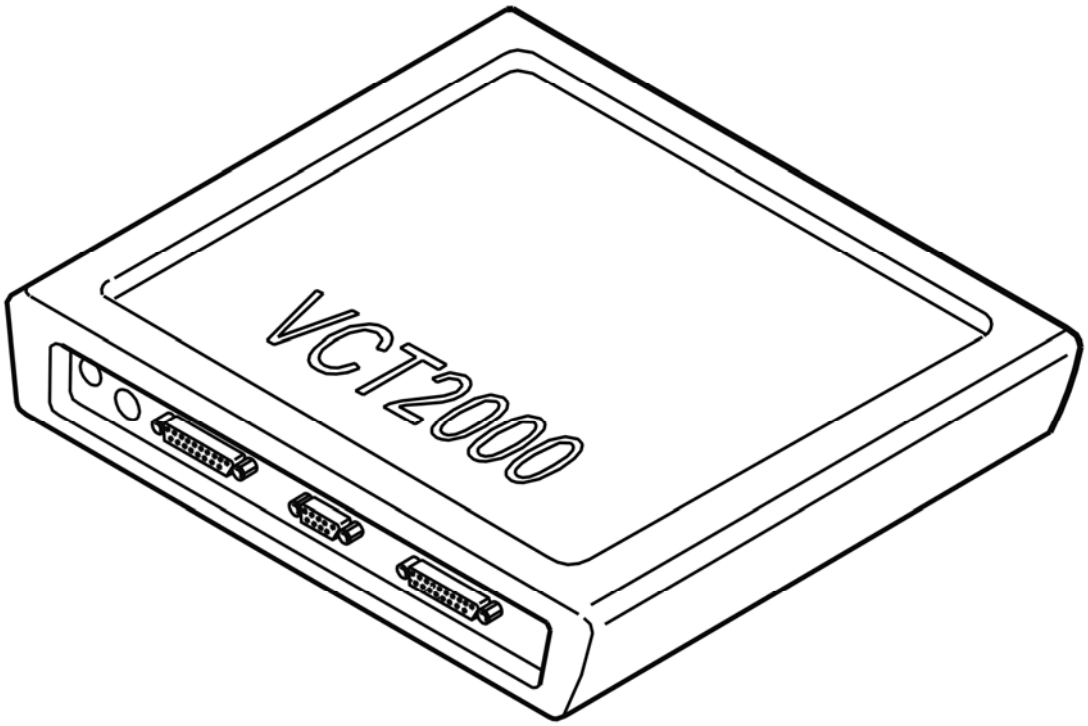

Fig. 21: Identifying VCT2000 Diagnostic Tool Symbol In VIDA
Courtesy of VOLVO CARS CORPORATION

Was the speed updated?

- **YES**

  Refer to **INTERMITTENT FAULT**

- **NO**

  Refer to **CHECKING WIRING AND SENSORS**

CHECKING WIRING AND SENSORS

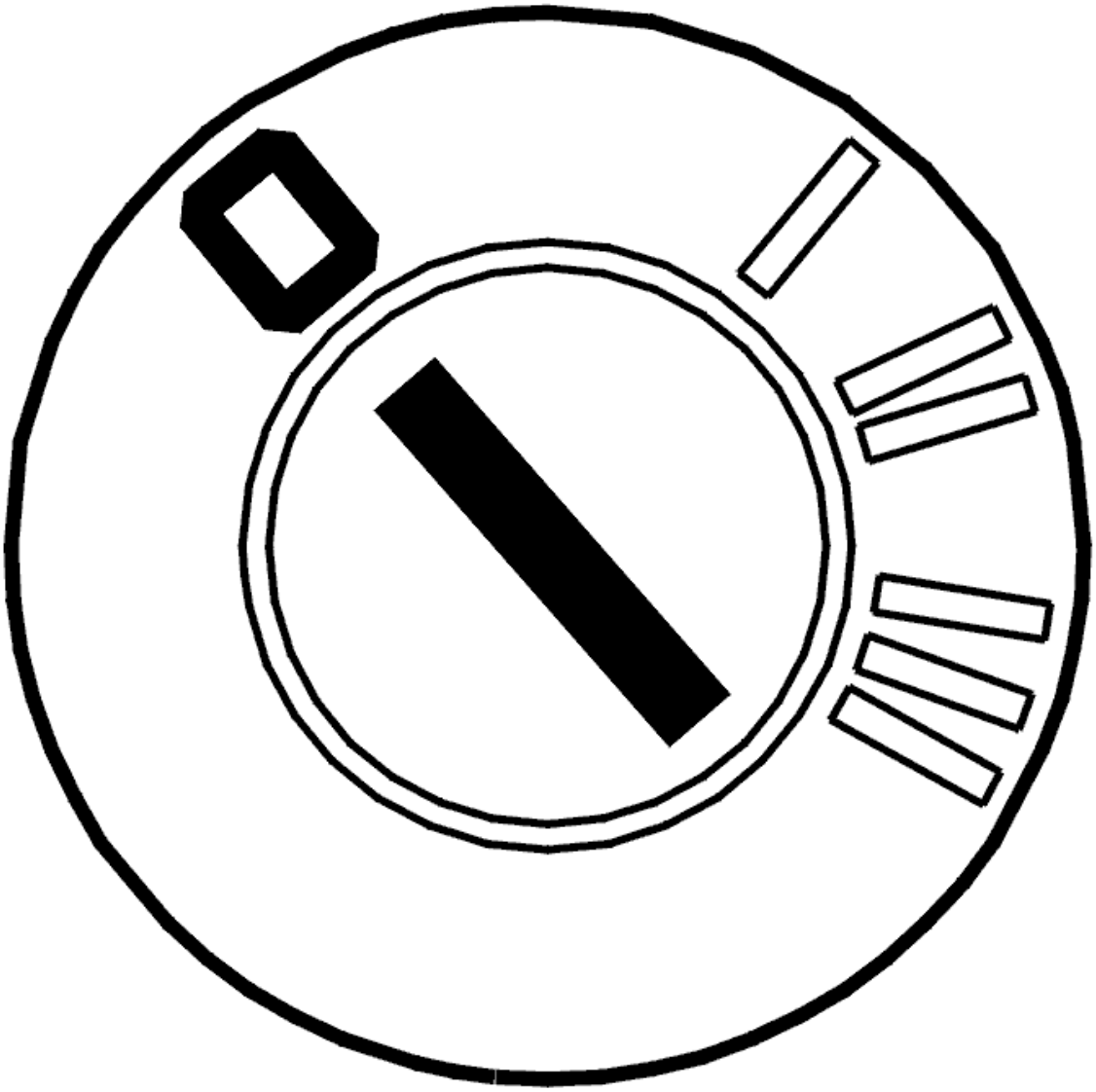

Fig. 22: Identifying Ignition OFF
Courtesy of VOLVO CARS CORPORATION

- Ignition off
- Connect the breakout box.

  Check the power supply cable between transmission control module (TCM) terminal #A57 (#A57) and transmission output speed sensor terminal #A4. Check for an open-circuit according to **OPEN-CIRCUIT, PERMANENT FAULTS** . Check for a short-circuit to ground according to **SHORT-CIRCUIT TO GROUND, PERMANENT FAULTS** .

  Check the signal cable between control module terminal #A39 (#A39) and transmission output speed sensor terminal #A3. Check for an open-circuit according to **OPEN-CIRCUIT, PERMANENT FAULTS** . Check for a short-circuit to ground according to **SHORT-CIRCUIT TO GROUND, PERMANENT FAULTS** .

HINT: With the control module connected, the ignition on and a voltmeter connected between transmission output speed sensor terminals #A4 and #A3 (control module side), the voltage must be approximately 1-3 V below Ubat.

Remedy as necessary.

Other information:

- To connect the breakout box, see **CONNECTING THE BREAKOUT BOX**
- To disconnect the control module, see **TRANSMISSION CONTROL MODULE (TCM), REPLACING**
- To disconnect the transmission connectors, see **CONNECTORS, TRANSMISSION, DISCONNECTING / CONNECTING**
- To check or replace the transmission output speed sensor, see **INPUT SPEED SENSOR/OUTPUT SPEED SENSOR, REPLACING**
- For information about signals, see **SIGNAL DESCRIPTION. TRANSMISSION CONTROL MODULE (TCM)** .

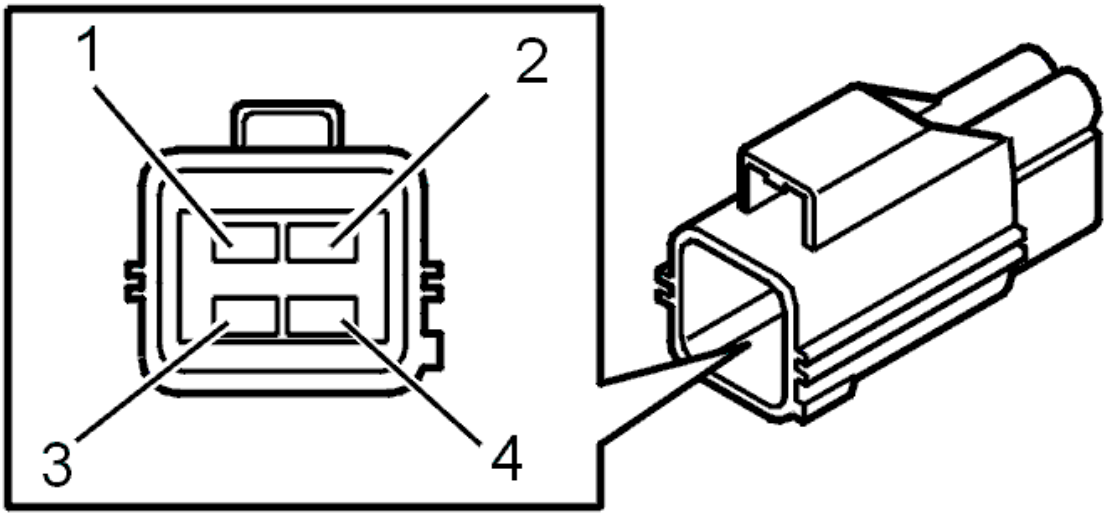

Fig. 23: Identifying Transmission Speed Sensor Terminals
Courtesy of VOLVO CARS CORPORATION

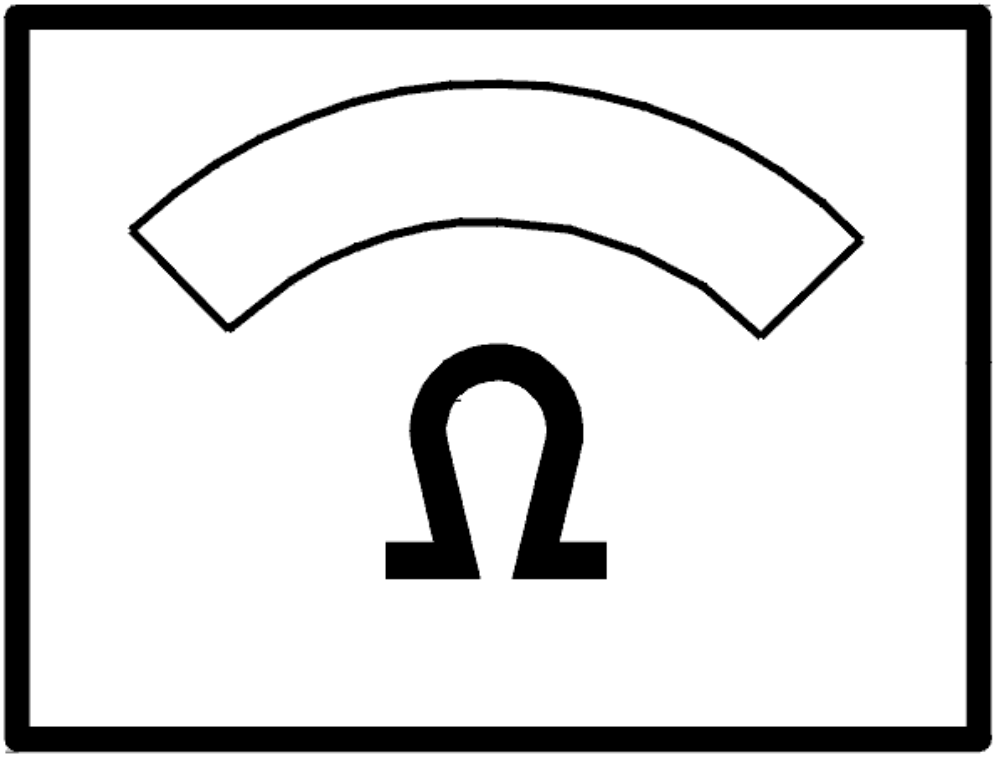

Fig. 24: Identifying Ohms Display
Courtesy of VOLVO CARS CORPORATION

- **Continue**

  Refer to **VERIFICATION**

INTERMITTENT FAULT

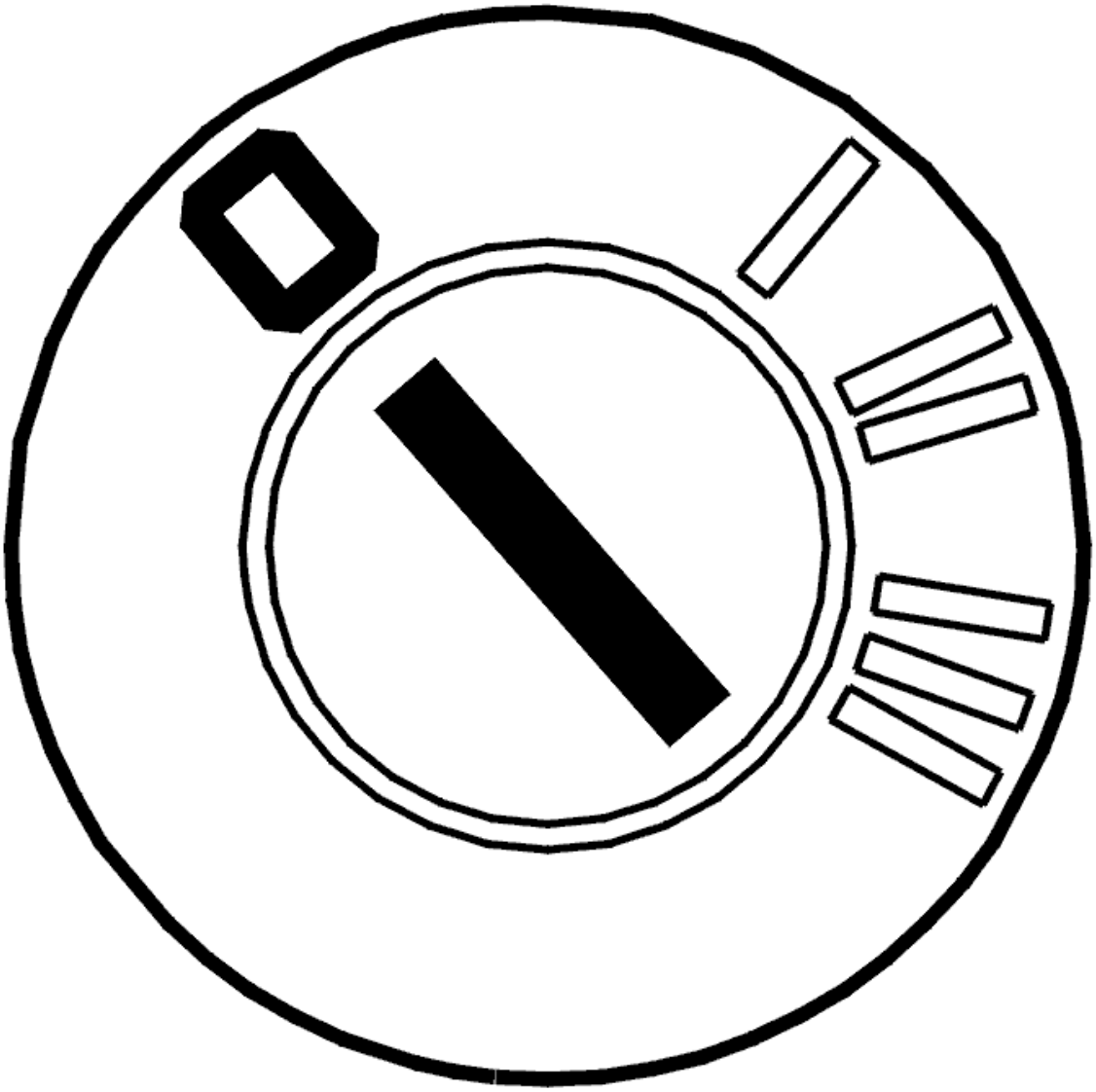

Fig. 25: Identifying Ignition OFF
Courtesy of VOLVO CARS CORPORATION

- Ignition off.

  Check the power supply cable between control module terminal #A57 (#A57) and transmission output sensor terminal #A4. Check for an intermittent open-circuit according to **OPEN-CIRCUIT, INTERMITTENT FAULTS** . Check for an intermittent short-circuit to ground according to **SHORT-CIRCUIT TO GROUND, INTERMITTENT FAULTS** .

  Check the signal cable between control module terminal #A39 (#A39) and transmission output speed sensor terminal #A3. Check for an intermittent open-circuit according to **OPEN-CIRCUIT, INTERMITTENT FAULTS** . Check for an intermittent short-circuit to ground according to **SHORT-CIRCUIT TO GROUND, INTERMITTENT FAULTS** .

  Remedy as necessary.

Other information:

- To connect the breakout box, see **CONNECTING THE BREAKOUT BOX**
- To disconnect the control module, see **TRANSMISSION CONTROL MODULE (TCM), REPLACING**
- To disconnect the transmission connectors, see **CONNECTORS, TRANSMISSION, DISCONNECTING / CONNECTING**
- For information about signals, see **SIGNAL DESCRIPTION. TRANSMISSION CONTROL MODULE (TCM)** .

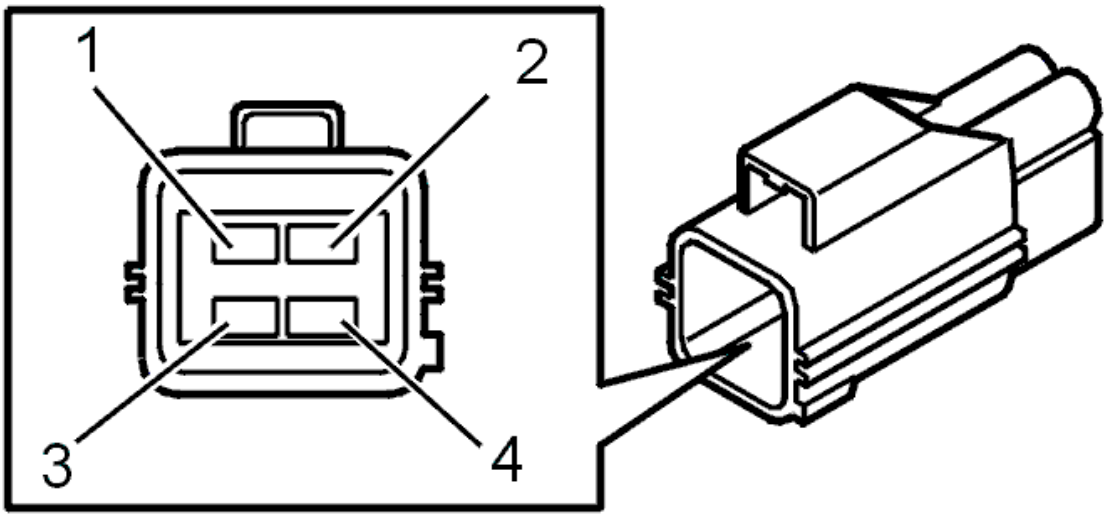

Fig. 26: Identifying Transmission Speed Sensor Terminals
Courtesy of VOLVO CARS CORPORATION

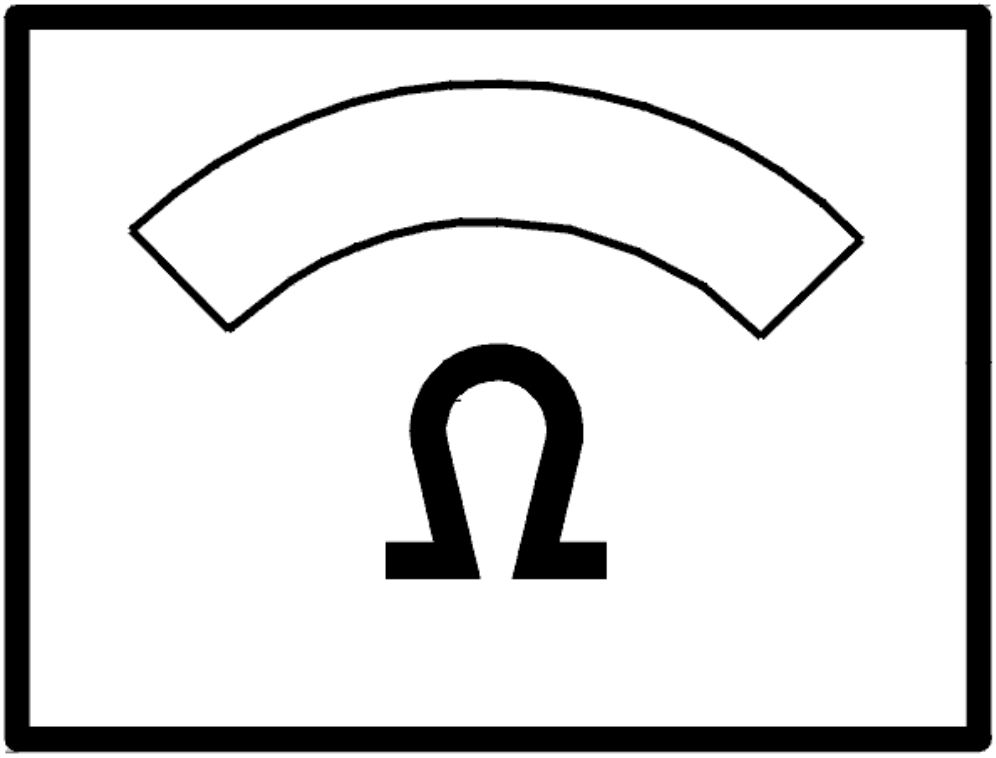

Fig. 27: Identifying Ohms Display
Courtesy of VOLVO CARS CORPORATION

- **Continue**

  Refer to **INFORMATION**

VERIFICATION

VERIFICATION

HINT: After carrying out the repair, check that the fault has been remedied.

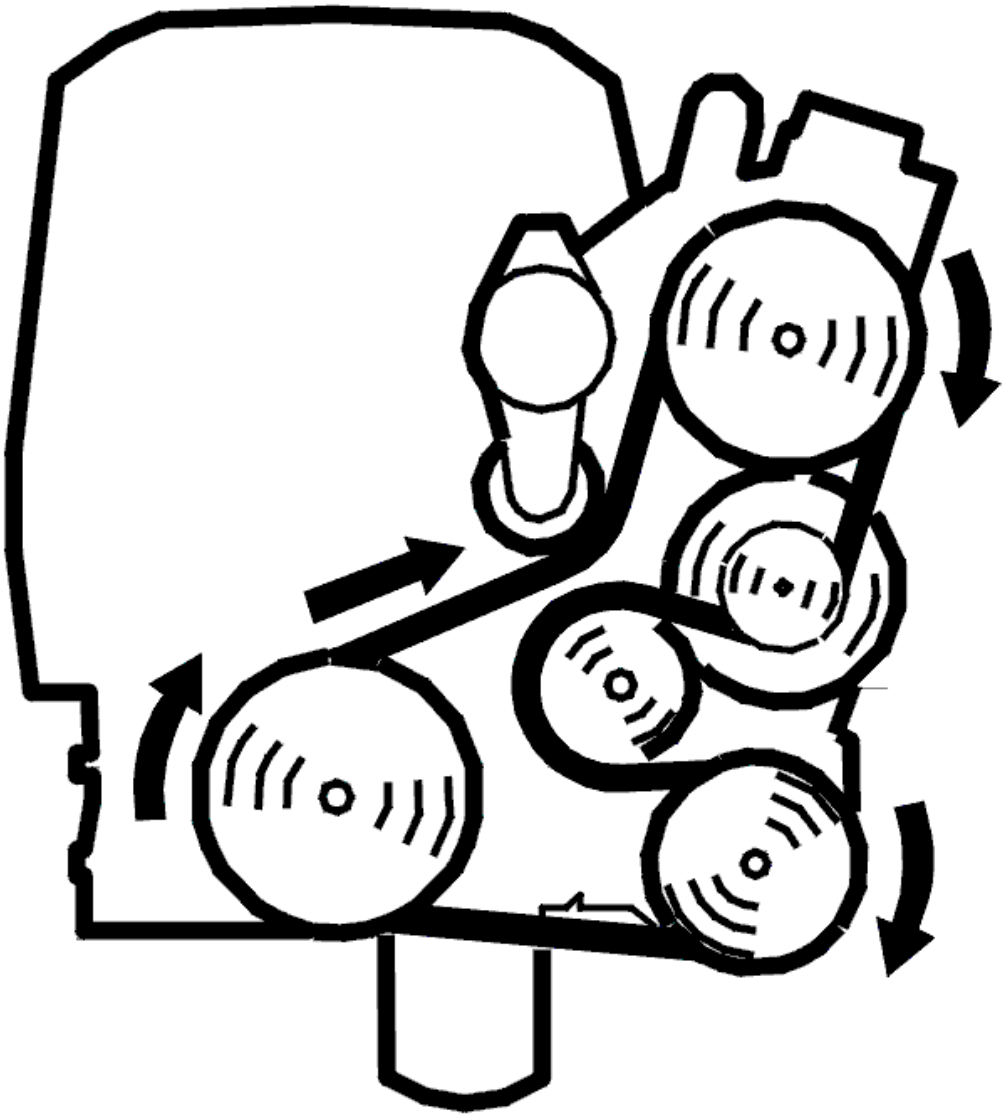

Fig. 28: Identifying Belt Routing
Courtesy of VOLVO CARS CORPORATION

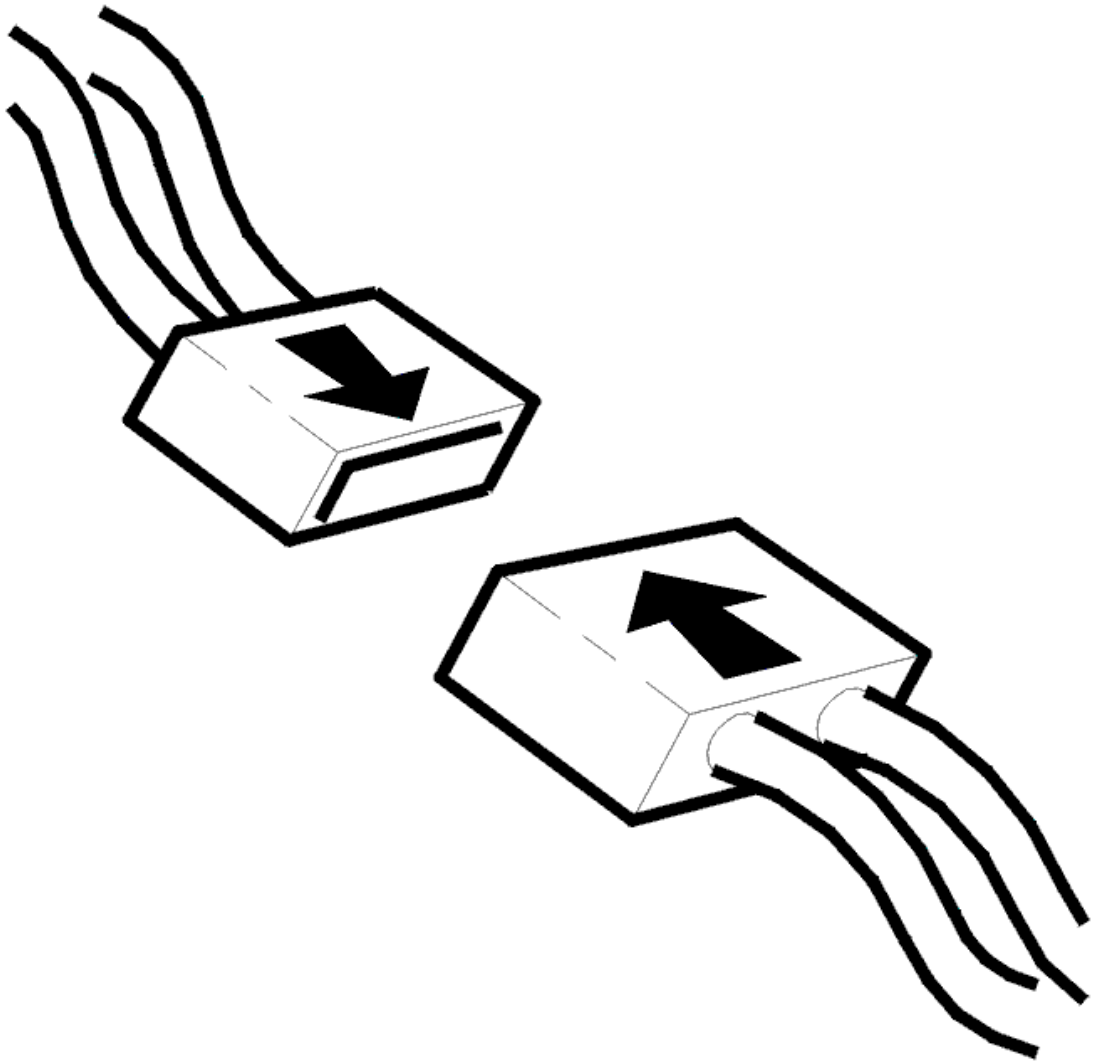

Fig. 29: Identifying Connector(s) Reinstallation
Courtesy of VOLVO CARS CORPORATION

- Ignition off.
- Reinstall connectors, components etc.
- Raise car so that drive wheels are unimpeded.
- Start the engine and let it idle.
- Shift gear selector to position D so that the drive wheels begin to rotate.
- Read off the transmission speed.

Check that speed is updated

NOTE: **When the rear wheels are stationary and the front wheels rotate, diagnostic trouble codes (DTCs) can be stored in the ABS system. Erase**

any diagnostic trouble codes (DTCs) stored in the ABS system after fault-tracing.

NOTE: **Ensure that the wheels are not rotating when the gear selector is moved.**

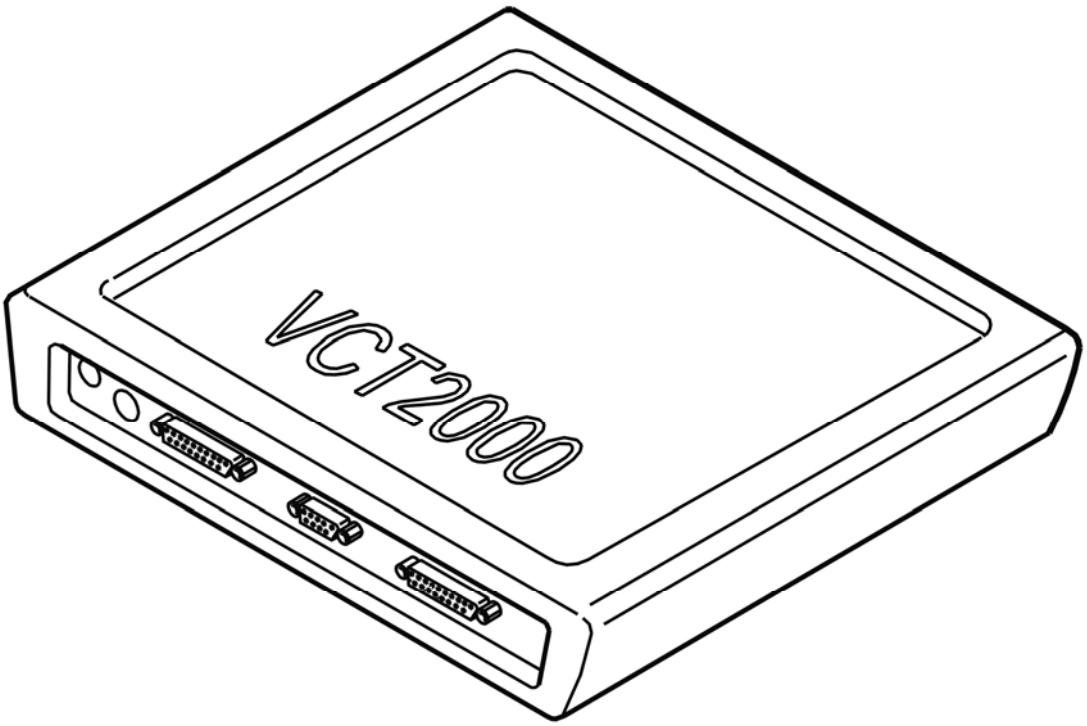

Fig. 30: Identifying VCT2000 Diagnostic Tool Symbol In VIDA
Courtesy of VOLVO CARS CORPORATION

Was speed updated?

- **YES**

  VERIFIED: Troubleshooting has been completed.

- **NO**

  Refer to **INFORMATION**

INFORMATION

FAULT-TRACING INFORMATION

The fault should have been detected and remedied. As this is not the case fault-tracing has failed.

Exit fault-tracing for this diagnostic trouble code (DTC) or make another attempt.

INFORMATION

FAULT-TRACING INFORMATION

If the fault is intermittent, do not verify fault-tracing if the fault does not recur.

It is possible to view the information again, or leave fault-tracing for this diagnostic trouble code (DTC).

TCM-0083: VEHICLE SPEED SENSOR. SIGNAL TOO LOW (4T65 AWD; 2003-2006)

DIAGNOSTIC TROUBLE CODE (DTC) INFORMATION

Condition

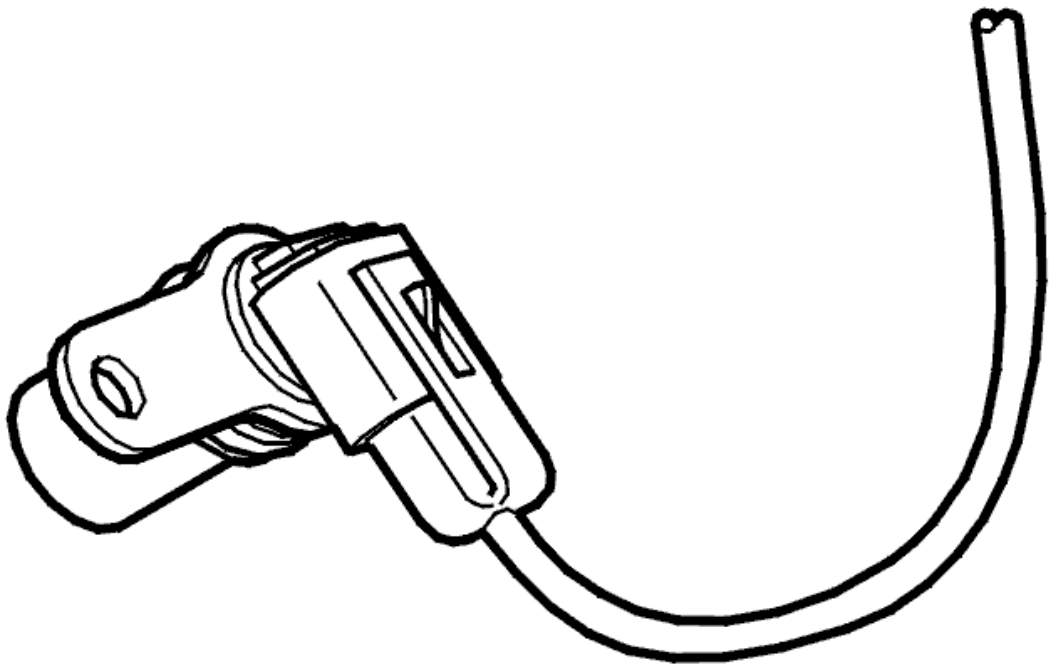

Fig. 31: Identifying Transmission Speed Sensor
Courtesy of VOLVO CARS CORPORATION

The speed signal comes from a sensor on the transmission. The transmission control module (TCM) uses the signal to select the correct gear. The control module also uses the engine speed sensor (RPM) signal to determine the speed. Diagnostic trouble code (DTC) TCM-0083 is stored if the control module registers that the

speed signal is incorrect.

Substitute Value

- TBD

Possible Source

- Contact resistance in the terminals.
- Signal cable (+) or signal cable (-) short-circuited to ground, to supply voltage or to each other.
- Defective transmission speed sensor.

Fault symptom[s]

- General orange warning lamp lit.
- No lock-up function.
- Harsh gear shifting.

HINT: Harsh gear shifting can be caused by:

- No reduction of line pressure when shifting.
- No reduction of line pressure when moving the gear selector between positions P-R, N-R and N-D.
- No torque limiting request to engine control module (ECM) when shifting.

SIGNAL TOO LOW

CHECKS

CHECKING THE TRANSMISSION OUTPUT SPEED SENSOR SIGNAL

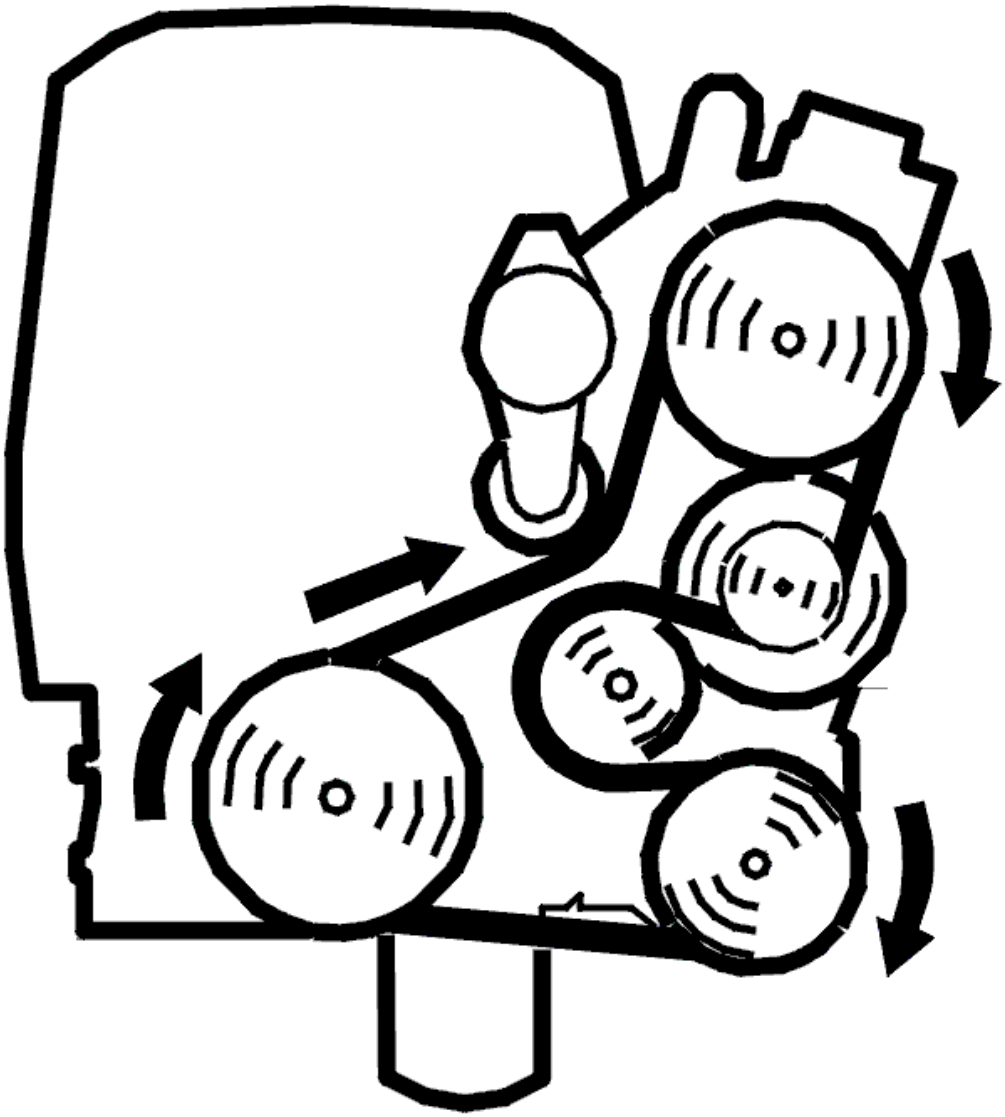

Fig. 32: Identifying Belt Routing
Courtesy of VOLVO CARS CORPORATION

- Ignition off
- Raise the car so that the drive wheels are clear of the ground
- Start the engine. Allow the engine to idle
- Shift gear selector to position D so that the drive wheels begin to rotate
- Read off the transmission speed.

Depress the accelerator pedal (AP) and check that the speed is updated.

NOTE: Ensure that the wheels are not rotating when the gear selector is moved.

NOTE: Diagnostic trouble codes (DTCs) may be stored in the ABS system when

the rear wheels are stationary and the front wheels rotate. Erase any diagnostic trouble codes (DTCs) stored in the ABS system after fault-tracing.

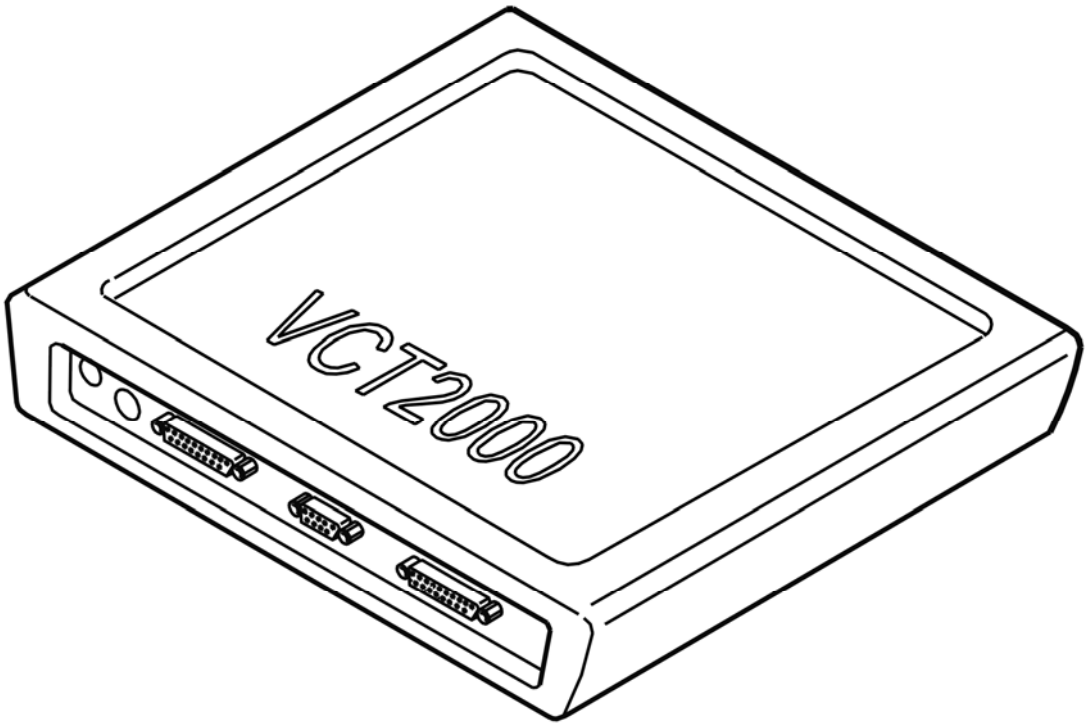

Fig. 33: Identifying VCT2000 Diagnostic Tool Symbol In VIDA
Courtesy of VOLVO CARS CORPORATION

Was the speed updated?

- **YES**

  Refer to **INTERMITTENT FAULT**

- **NO**

  Refer to **CHECKING THE WIRING**

CHECKING THE WIRING

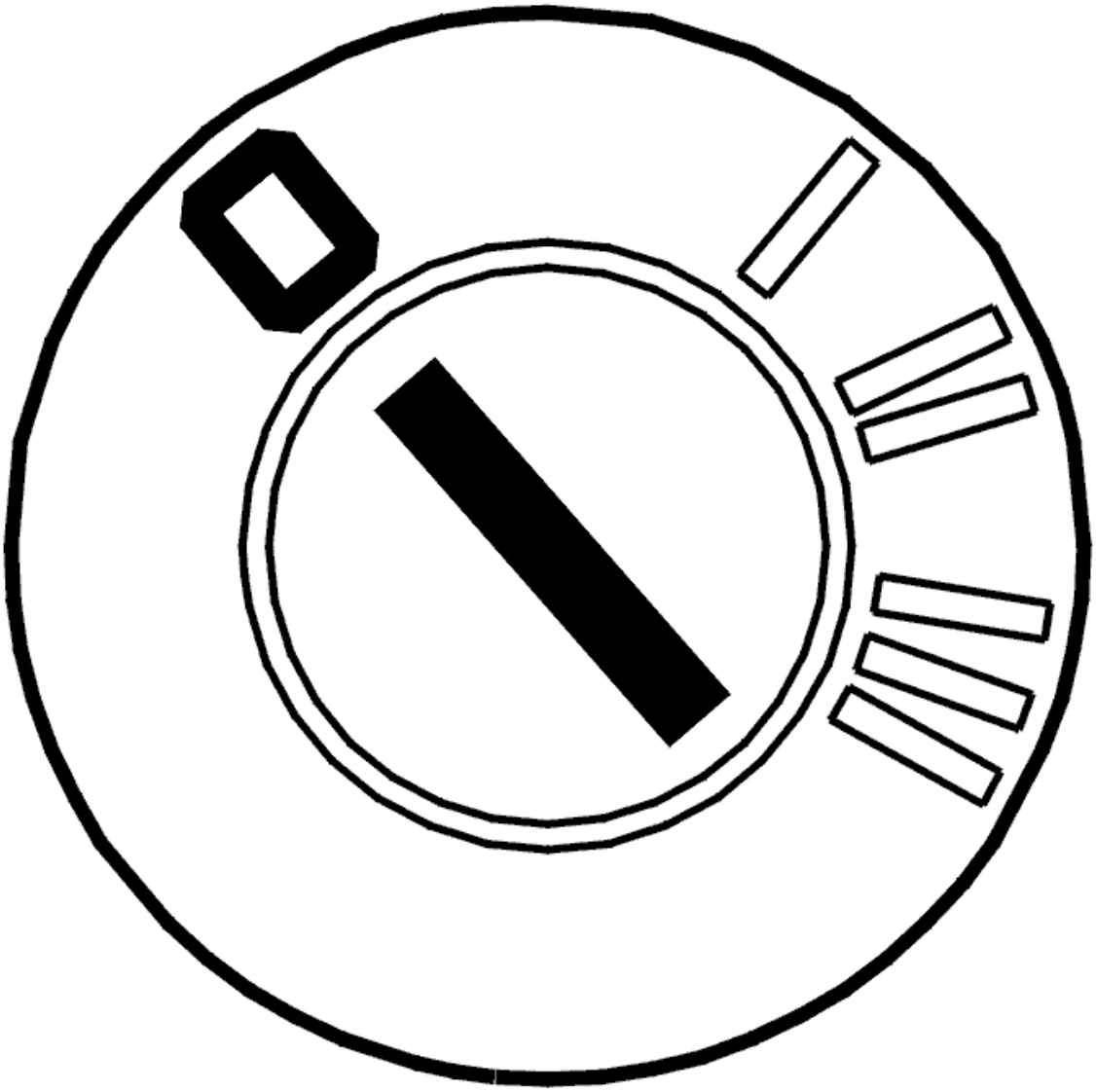

Fig. 34: Identifying Ignition OFF
Courtesy of VOLVO CARS CORPORATION

- Ignition off.

  Check the power supply cable between control module terminal #57 (#A57) and speed sensor connector terminal #1. Check for an open-circuit. Check for a short-circuit to ground.

  Check the signal cable between control module terminal #39 (#A39) and speed sensor connector terminal #2. Check for an open-circuit. Check for a short-circuit to ground.

  Remedy as necessary.

  Other information

  - To connect the breakout box, see **CONNECTING THE BREAKOUT BOX**

- To check or replace the transmission output speed sensor, see **OUTPUT SPEED SENSOR TRANSMISSION, REPLACING**
- For information about signals, see **SIGNAL SPECIFICATION**
- see **CHECKING WIRING AND TERMINALS**

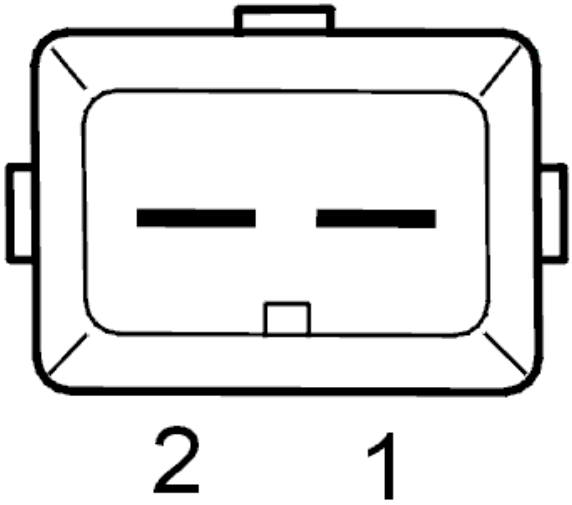

Fig. 35: Identifying Vehicle Speed Sensor (VSS) Connector Terminals
Courtesy of VOLVO CARS CORPORATION

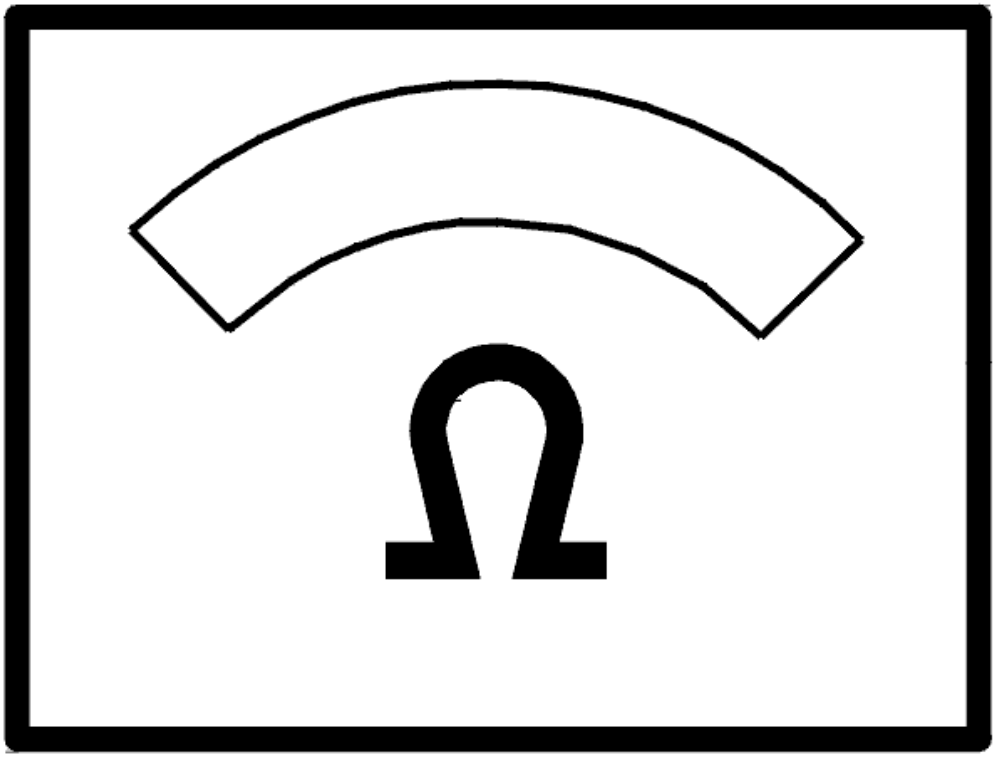

Fig. 36: Identifying Ohms Display
Courtesy of VOLVO CARS CORPORATION

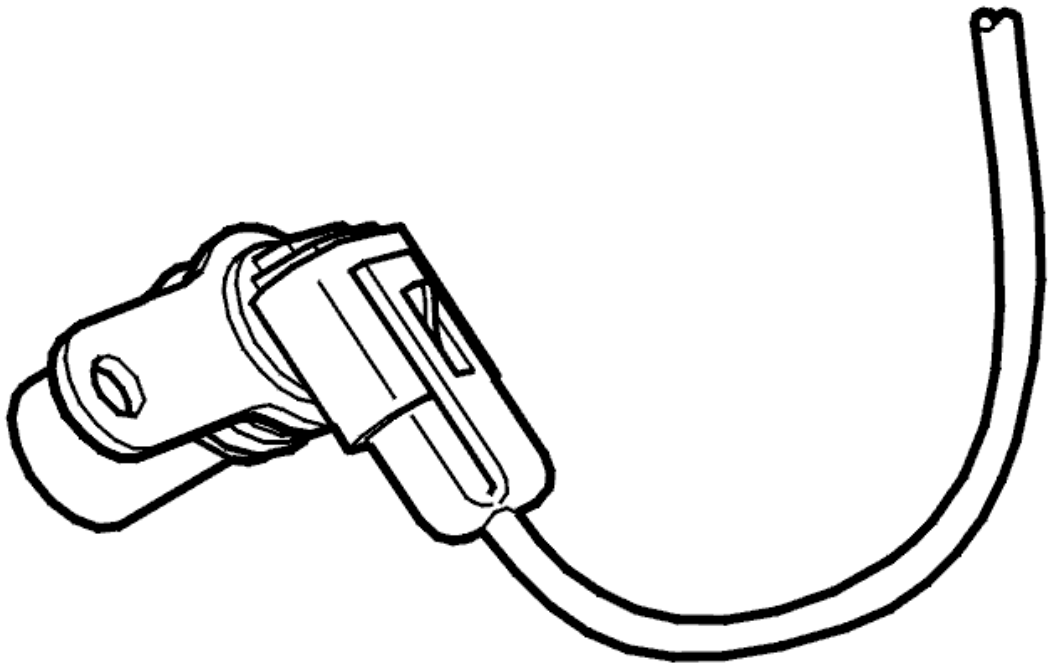

Fig. 37: Identifying Transmission Speed Sensor
Courtesy of VOLVO CARS CORPORATION

Was a fault detected?

- **YES**

  Refer to **VERIFICATION**

- **NO**

  Refer to **CHECKING THE CONTROL MODULE**

CHECKING THE CONTROL MODULE

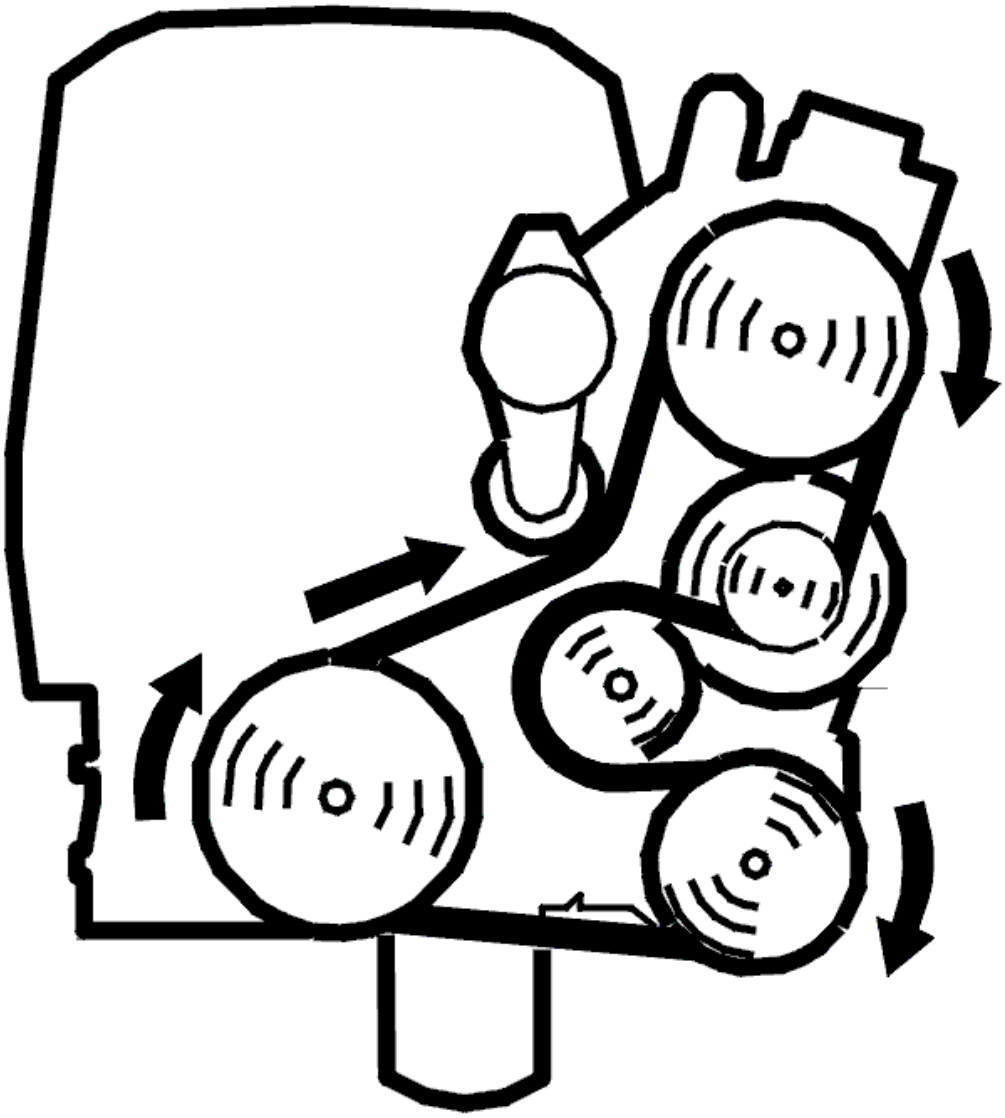

Fig. 38: Identifying Belt Routing
Courtesy of VOLVO CARS CORPORATION

- Ignition off
- Connect the breakout box to the control module
- Disconnect the connector for the speed sensor
- Connect a temporary cable between terminals #A35 and #A57 on the breakout box

CAUTION: Check that the temporary cable is connected to the correct terminals. Also check that there is no risk of unintentional short-circuits.

-
- Ignition on
- Read off the status.

Check that the status is "1" when the temporary cable is connected to the terminals above.

Disconnect the cable end that is connected to terminal #A35 and move the cable to terminal #A53.

NOTE: Leave the cable end connected to terminal #A57 (#A57) in place.

Check that the status changes to "0" when the temporary cable has been moved to terminal #A53.

The transmission speed sensor is defective if the status has changed between "1" and "0" as above and no errors have been detected on the cables or terminals in the preceding checks. Replace the transmission speed sensor if this is the case.

The transmission control module (TCM) is defective if the status has not changed between "1" and "0" as above and no errors have been detected on the cables or terminals in the preceding checks. If this is the case replace the control module.

Other information

- To connect the breakout box, see **CONNECTING THE BREAKOUT BOX**
- To connect the breakout box to the transmission connector, see **CONNECTING THE BREAKOUT BOX, GM AUTOMATIC TRANSMISSIONS**
- To check or replace the transmission output speed sensor, see **OUTPUT SPEED SENSOR TRANSMISSION, REPLACING**
- To replace the transmission control module (TCM), see **TRANSMISSION CONTROL MODULE (TCM), REPLACING**
- For information about signals, see **SIGNAL SPECIFICATION** .

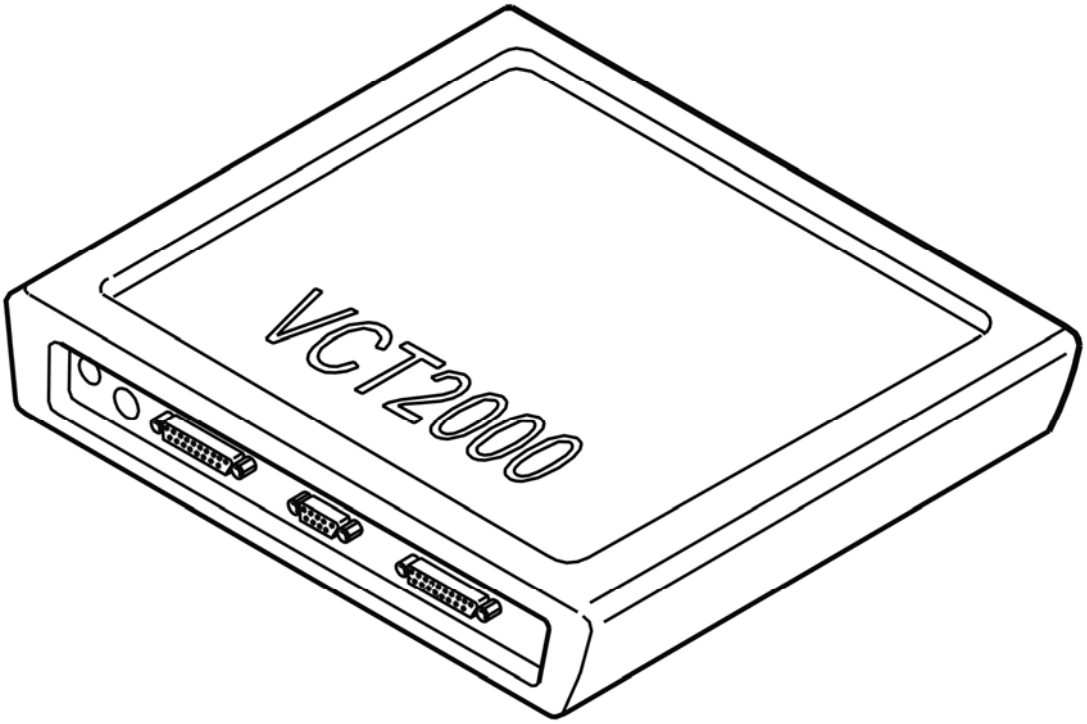

Fig. 39: Identifying VCT2000 Diagnostic Tool Symbol In VIDA
Courtesy of VOLVO CARS CORPORATION

- **Continue**

  Refer to **VERIFICATION**

INTERMITTENT FAULT

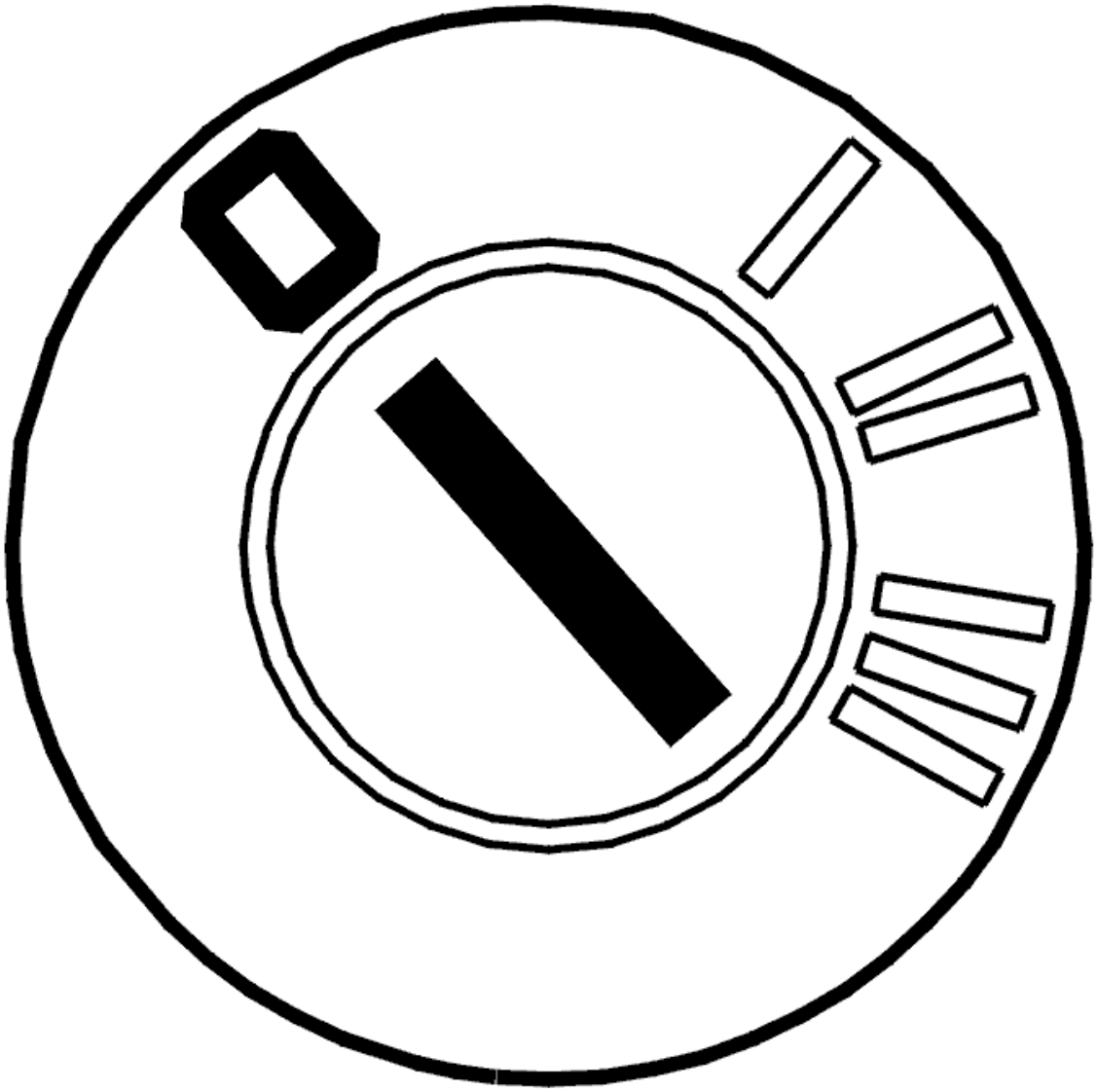

Fig. 40: Identifying Ignition OFF
Courtesy of VOLVO CARS CORPORATION

- Ignition off.

  Check the control module and transmission output speed sensor connectors. Check for contact resistance and oxidation.

  Check the power supply cable between control module terminal #57 (terminal #A57) and speed sensor connector terminal #1. Check for an intermittent open-circuit. Check for an intermittent short-circuit to ground.

  Check the signal cable between control module terminal #39 (terminal #A39) and speed sensor connector terminal #2. Check for an intermittent open-circuit. Check for an intermittent short-circuit to ground.

  HINT: With the control module connected, the ignition on and a voltmeter connected between

speed sensor connector terminals #1 and #2 (control module side), the voltage should be approximately 1-3 V below Ubat.

Remedy as necessary.

Other information

- To connect the breakout box, see **CONNECTING THE BREAKOUT BOX**
- To disconnect the control module, see **TRANSMISSION CONTROL MODULE (TCM), REPLACING**
- For information about signals, see **SIGNAL SPECIFICATION**
- see **CHECKING WIRING AND TERMINALS**

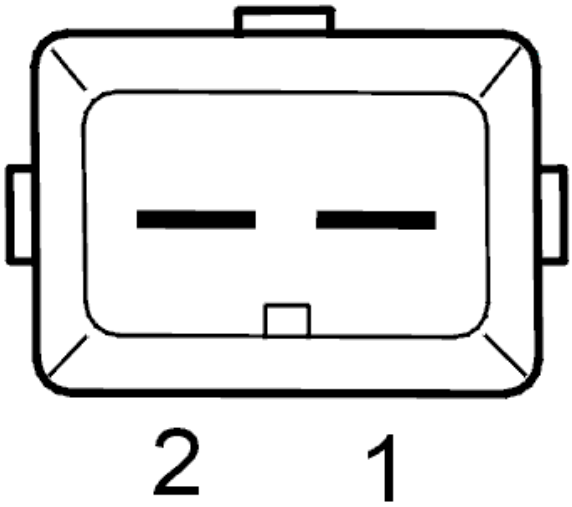

Fig. 41: Identifying Vehicle Speed Sensor (VSS) Connector Terminals
Courtesy of VOLVO CARS CORPORATION

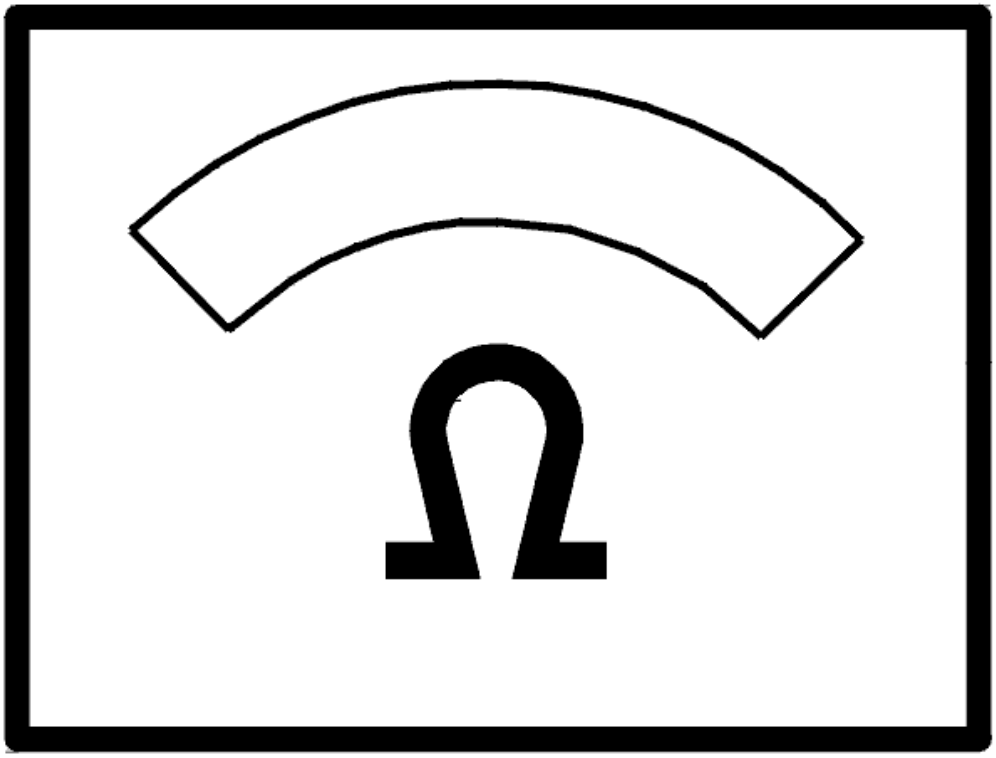

Fig. 42: Identifying Ohms Display
Courtesy of VOLVO CARS CORPORATION

- **Continue**

  Refer to **INFORMATION**

VERIFICATION

VERIFICATION

HINT: After carrying out the repair, check that the fault has been remedied.

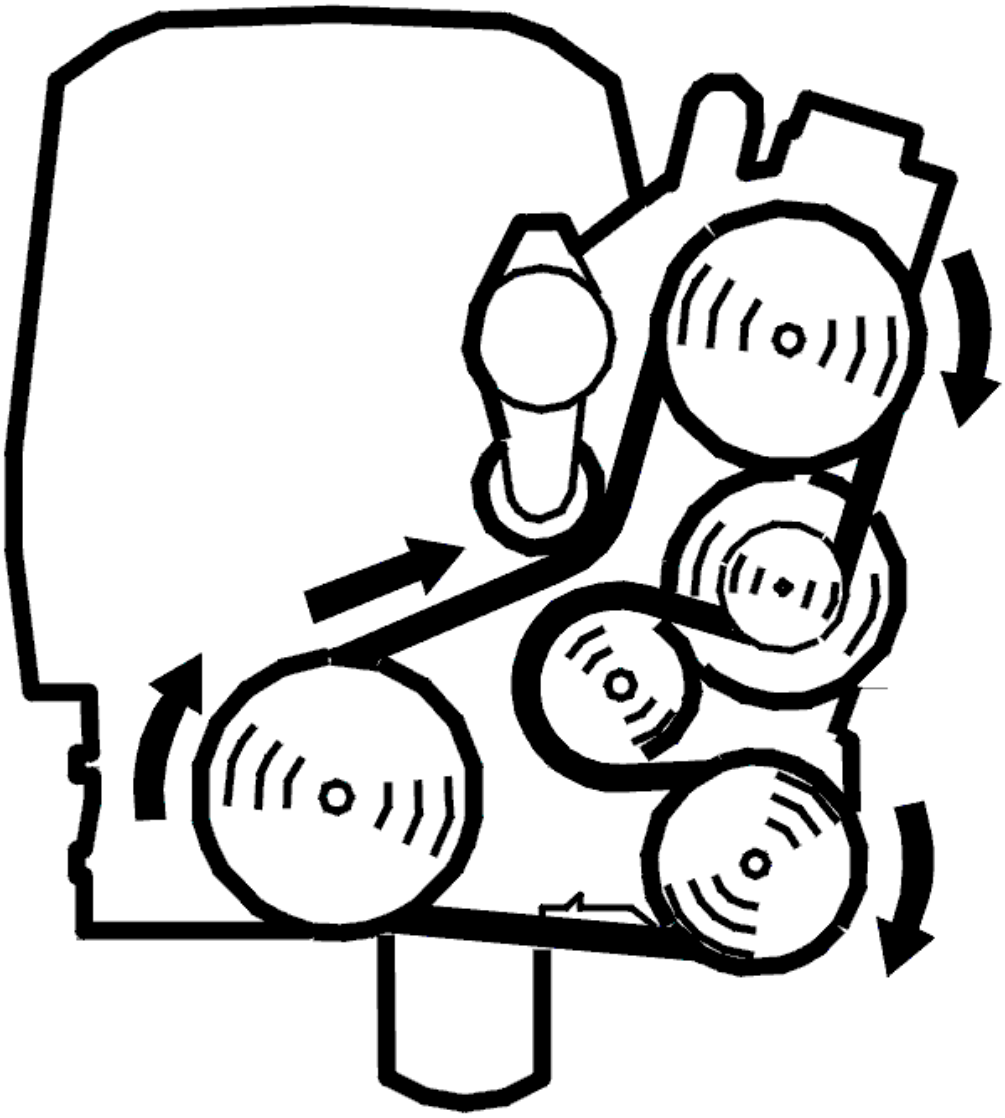

Fig. 43: Identifying Belt Routing
Courtesy of VOLVO CARS CORPORATION

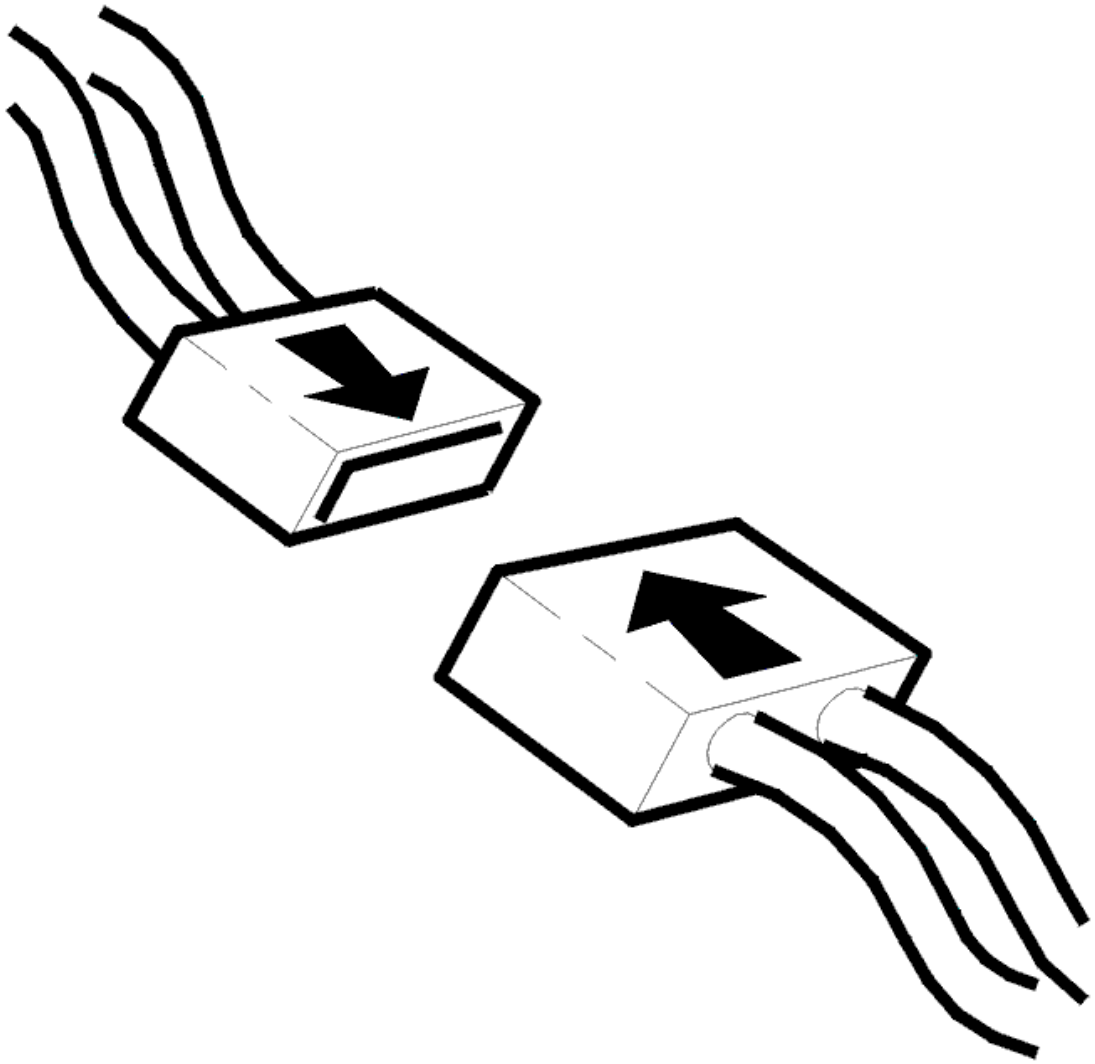

Fig. 44: Identifying Connector(s) Reinstallation
Courtesy of VOLVO CARS CORPORATION

- Ignition off.
- Reinstall connectors, components etc.
- Raise car so that drive wheels are unimpeded.
- Start the engine and let it idle.
- Shift gear selector to position D so that the drive wheels begin to rotate.
- Read off the transmission speed.

Check that speed is updated

NOTE: **When the rear wheels are stationary and the front wheels rotate, diagnostic trouble codes (DTCs) can be stored in the ABS system. Erase**

any diagnostic trouble codes (DTCs) stored in the ABS system after fault-tracing.

NOTE: **Ensure that the wheels are not rotating when the gear selector is moved.**

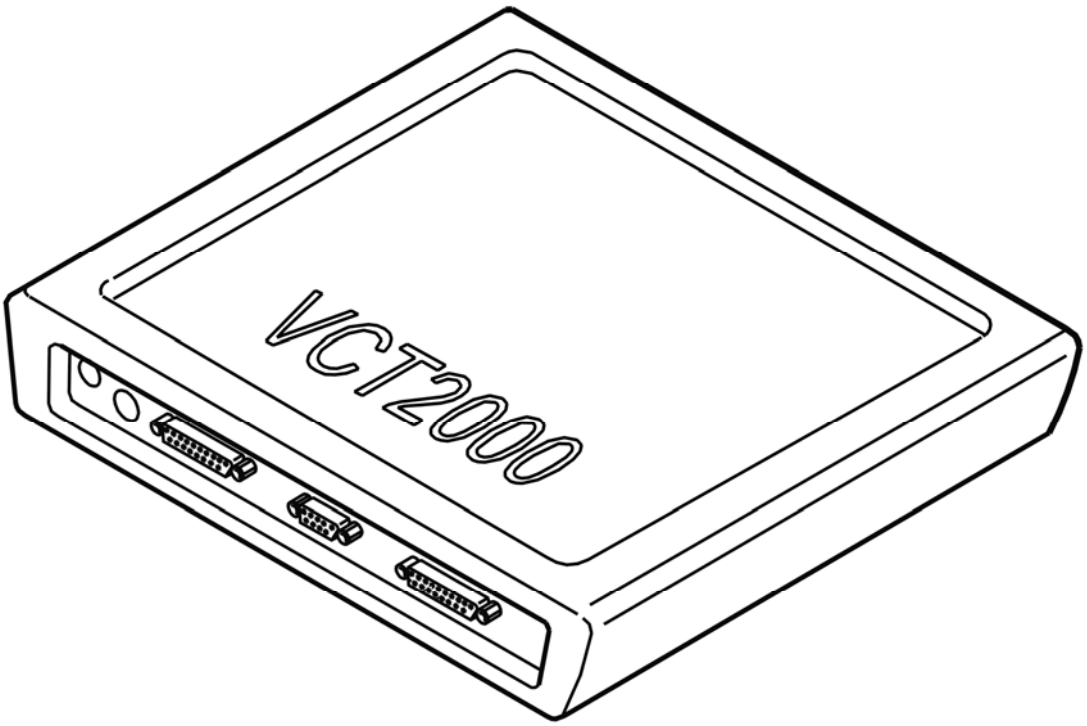

Fig. 45: Identifying VCT2000 Diagnostic Tool Symbol In VIDA
Courtesy of VOLVO CARS CORPORATION

Was speed updated?

- **YES**

  VERIFIED: Troubleshooting has been completed.

- **NO**

  Refer to **INFORMATION**

INFORMATION

FAULT-TRACING INFORMATION

The fault should have been detected and remedied. As this is not the case fault-tracing has failed.

Exit fault-tracing for this diagnostic trouble code (DTC) or make another attempt.

INFORMATION

FAULT-TRACING INFORMATION

If the fault is intermittent, do not verify fault-tracing if the fault does not recur.

It is possible to view the information again, or leave fault-tracing for this diagnostic trouble code (DTC).

TCM-0087: INPUT SPEED SENSOR. SIGNAL TOO HIGH (4T65 AWD; 2003-2006)

DIAGNOSTIC TROUBLE CODE (DTC) INFORMATION

Condition

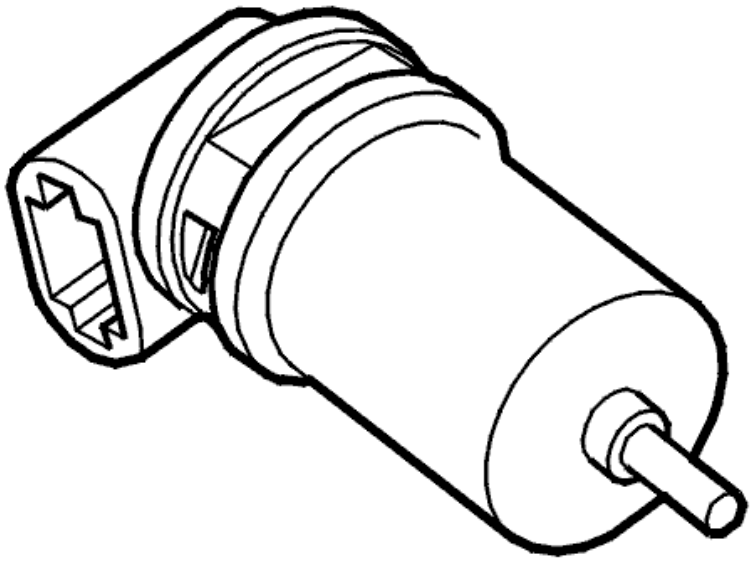

Fig. 46: Identifying Transmission Speed Sensor
Courtesy of VOLVO CARS CORPORATION

The transmission speed signal is transmitted by a sensor on the transmission. The transmission control module (TCM) uses the signal to determine the input shaft speed after the torque converter. This signal is used to compare the transmission speed with vehicle speed. The transmission control module (TCM) uses this

comparison to calculate gear-shift timing. Engine speed (RPM) and vehicle speed data affects the adjustment of system pressure, lock-up function control and engine torque reduction. The result is smooth gear-shifting. Diagnostic trouble code (DTC) TCM-0087 is stored if the control module registers, when comparing with the transmission speed signal, that the engine speed (RPM) signal is too high when the vehicle speed is above approximately 25 km/h.

Substitute Value

- TBD

Possible Source

- Power supply (-) short-circuited to supply voltage.
- Defective input speed sensor.

Fault symptom[s]

- General orange warning lamp lit.
- No lock-up function.
- Harsh gear shifting.

HINT: Harsh gear shifting can be caused by:

- No reduction of line pressure when shifting.
- No reduction of line pressure when moving the gear selector between positions P-R, N-R and N-D.
- No torque limiting request to engine control module (ECM) when shifting.

SIGNAL TOO HIGH

CHECKS

CHECKING THE TRANSMISSION INPUT SPEED SENSOR SIGNAL

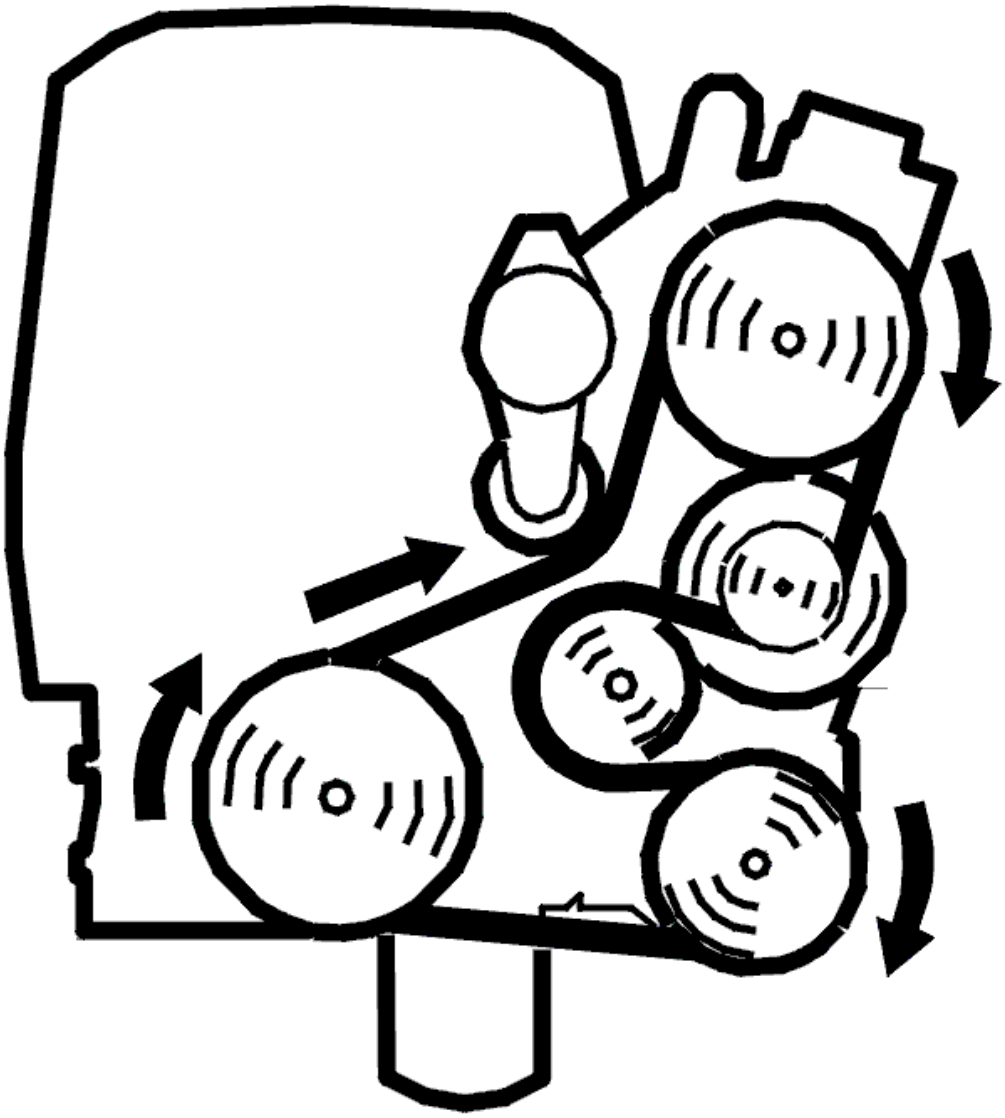

Fig. 47: Identifying Belt Routing
Courtesy of VOLVO CARS CORPORATION

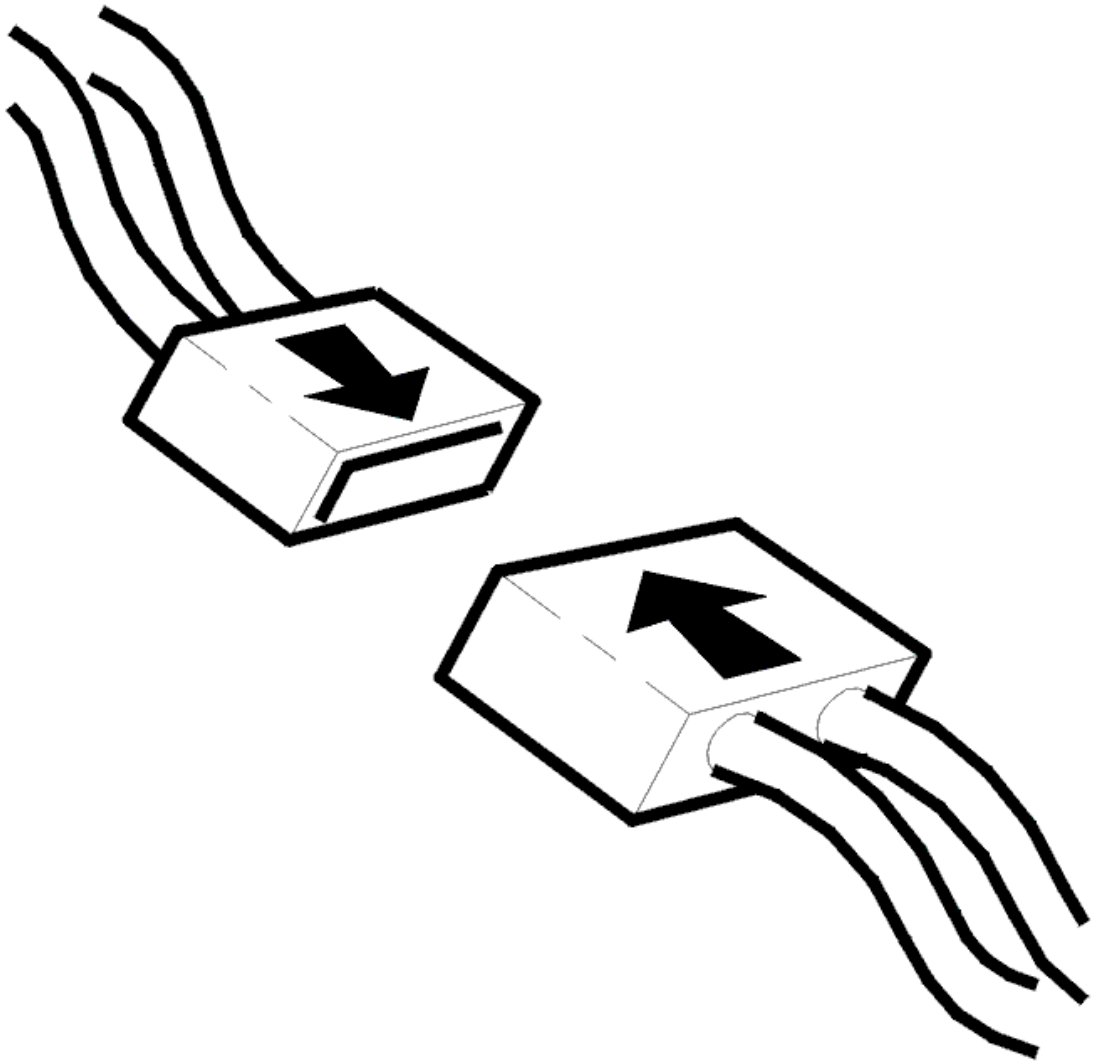

Fig. 48: Identifying Connector(s) Reinstallation
Courtesy of VOLVO CARS CORPORATION

- Ignition off
- Start the engine
- Read off the transmission input speed.

  Depress the accelerator pedal (AP) and check that engine speed (RPM) is updated. Compare with the engine speed (RPM).

  Other information

  - To access the transmission connector, see **CONNECTING THE BREAKOUT BOX, GM AUTOMATIC TRANSMISSIONS**
  - To access the control module connector, see **CONNECTING THE BREAKOUT BOX** .

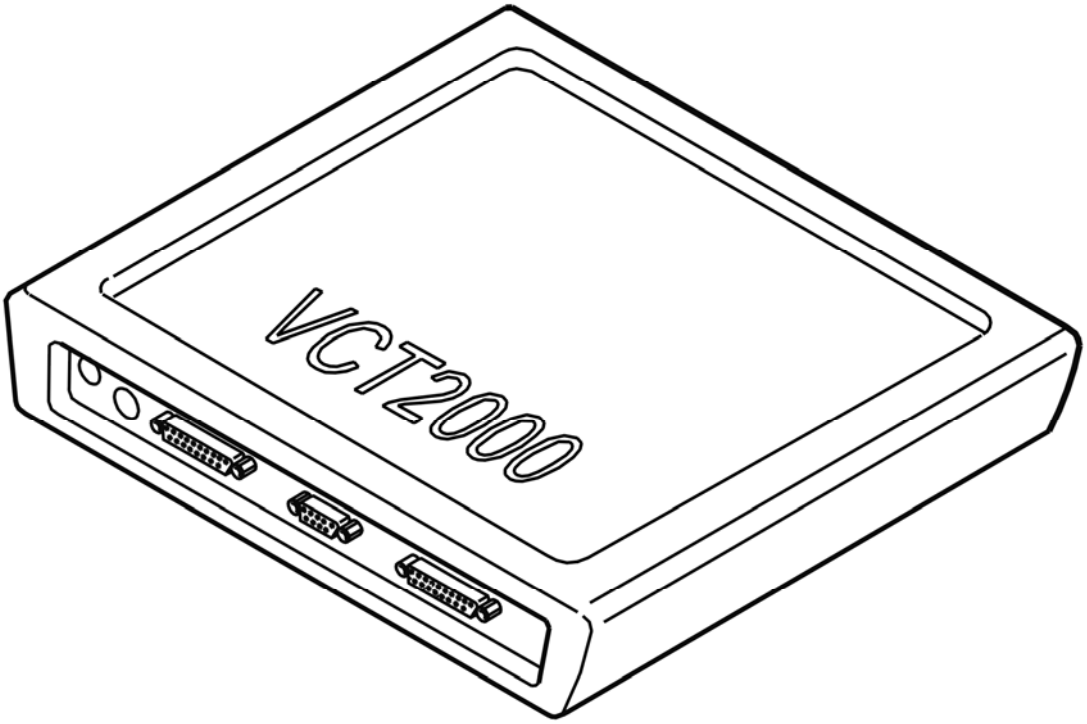

Fig. 49: Identifying VCT2000 Diagnostic Tool Symbol In VIDA
Courtesy of VOLVO CARS CORPORATION

Is the speed updated?

- **YES**

  Refer to **INTERMITTENT FAULT**

- **NO**

  Refer to **CHECKING WIRING AND SENSORS**

CHECKING WIRING AND SENSORS

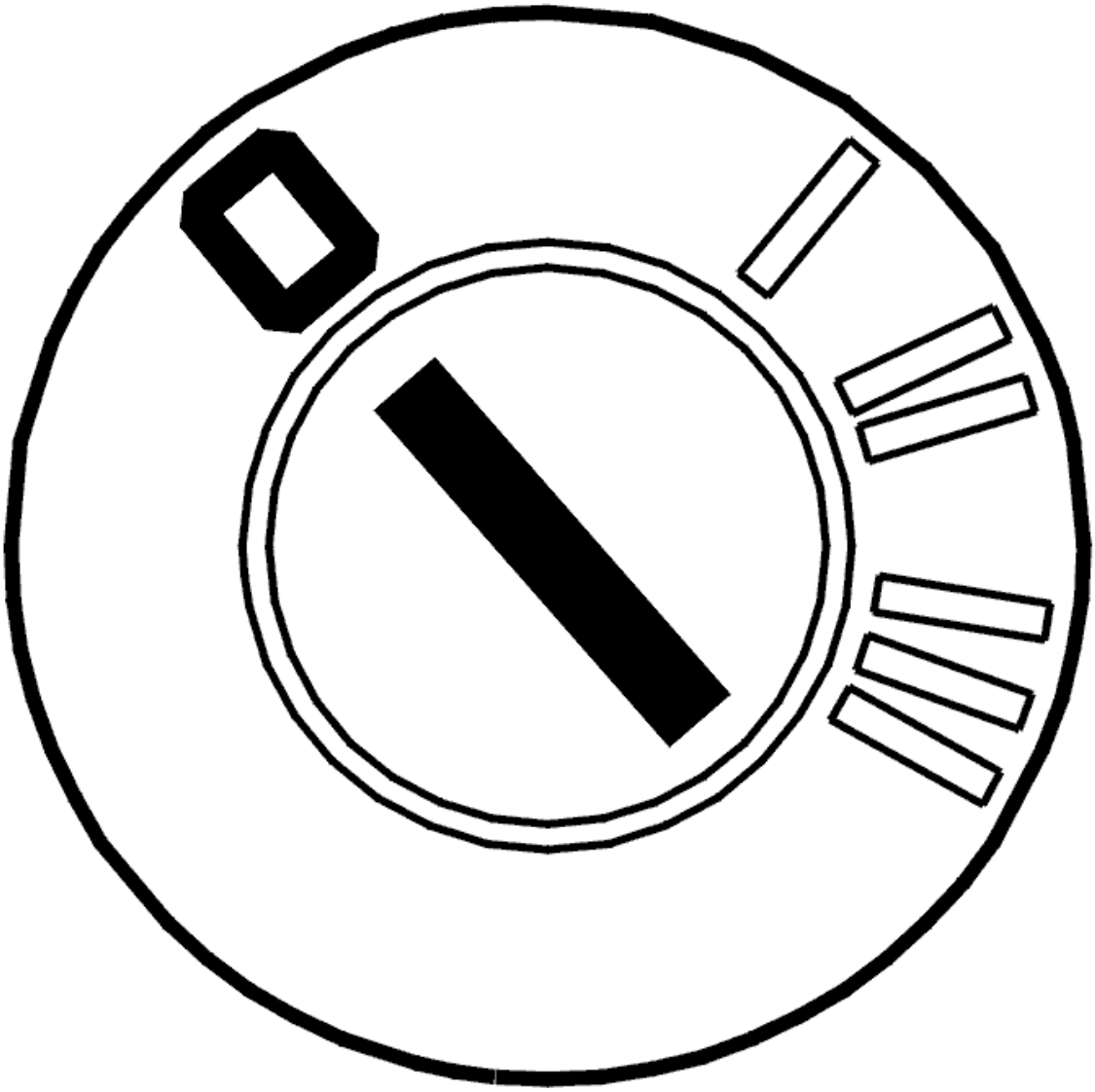

Fig. 50: Identifying Ignition OFF
Courtesy of VOLVO CARS CORPORATION

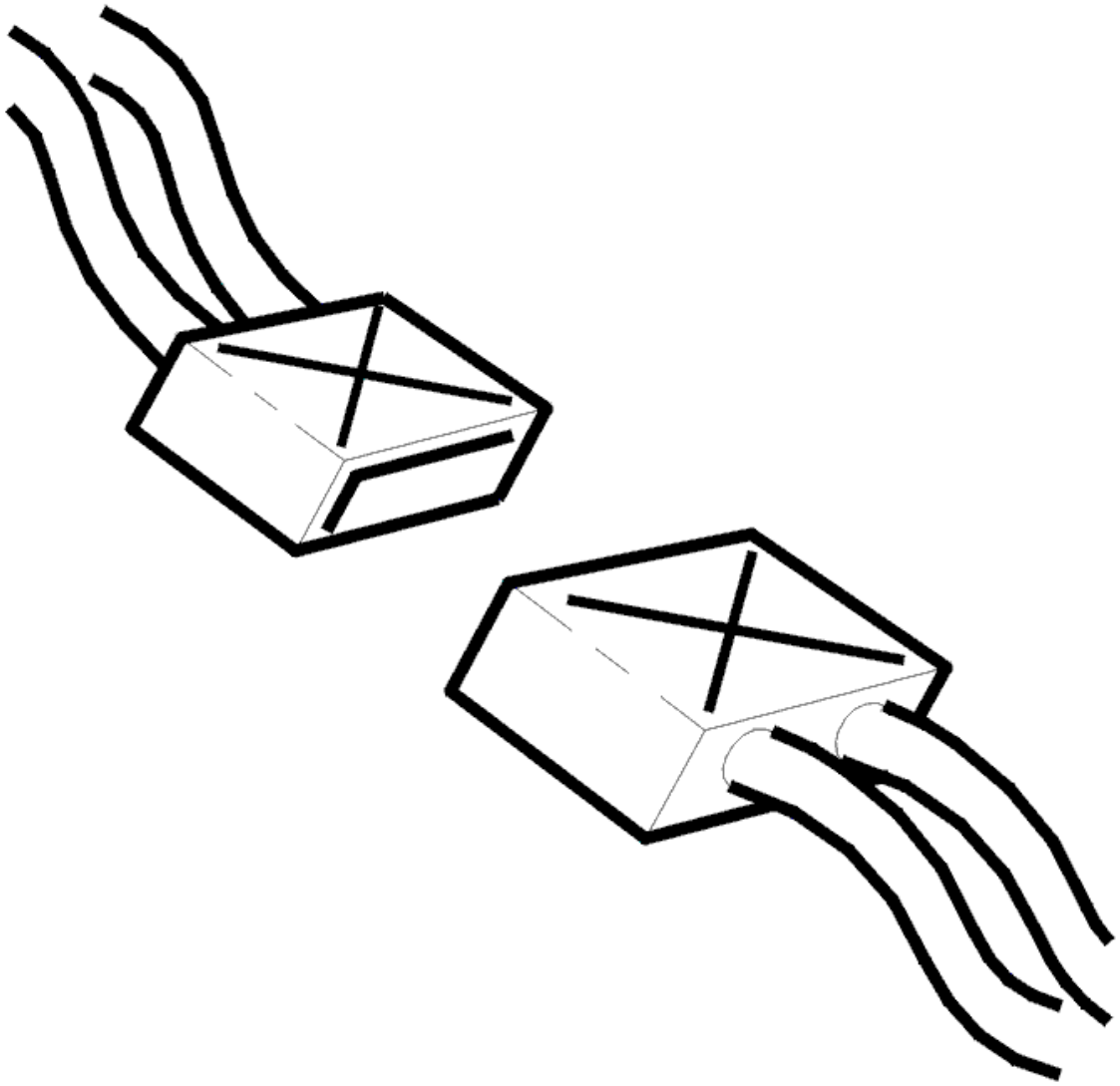

Fig. 51: Identifying Connectors
Courtesy of VOLVO CARS CORPORATION

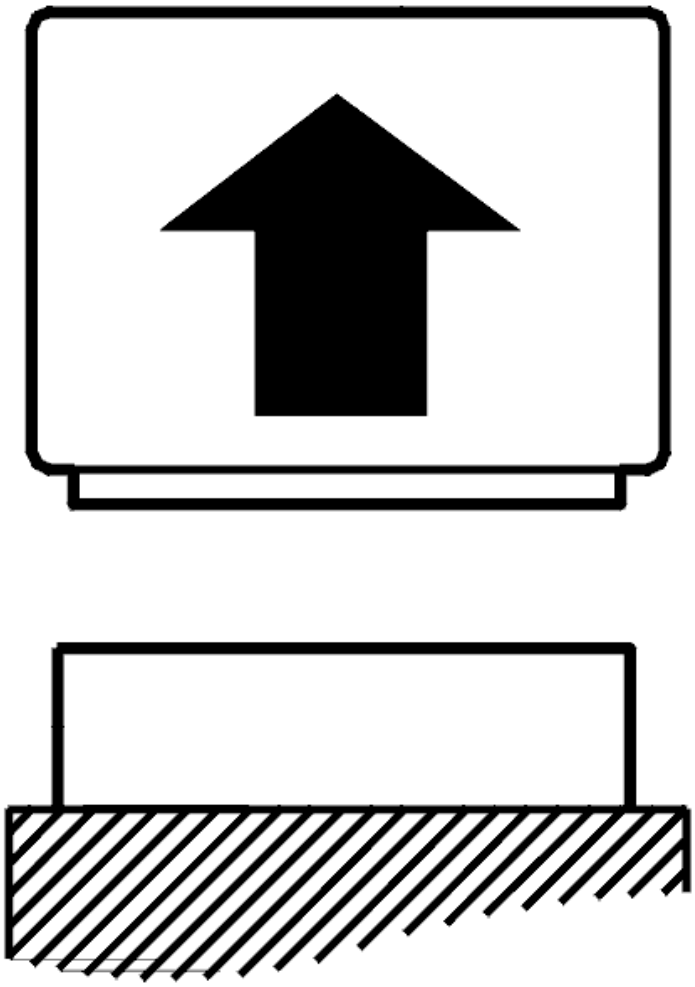

Fig. 52: Disconnecting Connector
Courtesy of VOLVO CARS CORPORATION

- Ignition off
- Connect the breakout box to the transmission
- Disconnect the control module
- Disconnect the transmission connector
- Connect adapter see **9511505** and breakout box see **9813190** to the transmission connector (control module side).

  Check the wiring between control module terminals #59 (#A59) and #41 (#A41) and transmission connector terminals #S (#A16) and #V (#A19). Check for a short-circuit to each other.

  Check the power supply cable between control module terminal #59 (#A59) and transmission connector terminal #S (#A16). Check for a short-circuit to supply voltage.

Check the signal cable between control module terminal #41 (#A41) and transmission connector terminal #V (#A19). Check for a short-circuit to supply voltage.

Remedy as necessary.

Other information

- To connect the breakout box, see **CONNECTING THE BREAKOUT BOX**
- To disconnect the transmission control module (TCM), see **TRANSMISSION CONTROL MODULE (TCM), REPLACING**
- To connect the breakout box to the transmission connector, see **CONNECTING THE BREAKOUT BOX, GM AUTOMATIC TRANSMISSIONS**
- For information about signals, see **SIGNAL SPECIFICATION**
- For information about signals to the transmission connector, see **SIGNAL DESCRIPTION. CONNECTOR 4T65 EV/EV-GT**
- see **CHECKING WIRING AND TERMINALS**

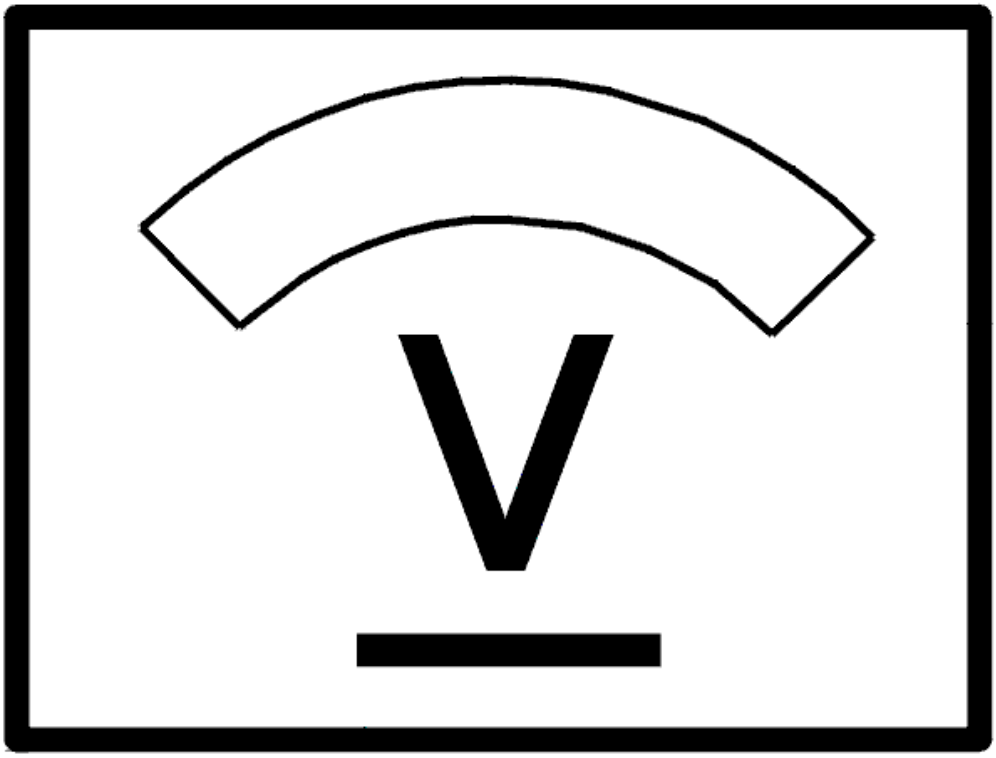

Fig. 53: Identifying Voltage Display
Courtesy of VOLVO CARS CORPORATION

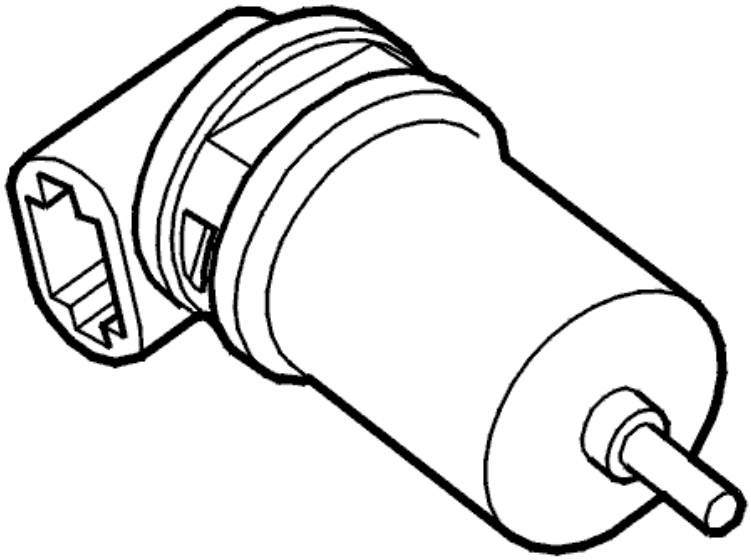

Fig. 54: Identifying Transmission Speed Sensor
Courtesy of VOLVO CARS CORPORATION

Was a fault detected in the cables or terminals?

- **YES**

  Refer to **VERIFICATION**

- **NO**

  Refer to **CHECKING THE CONTROL MODULE**

CHECKING THE CONTROL MODULE

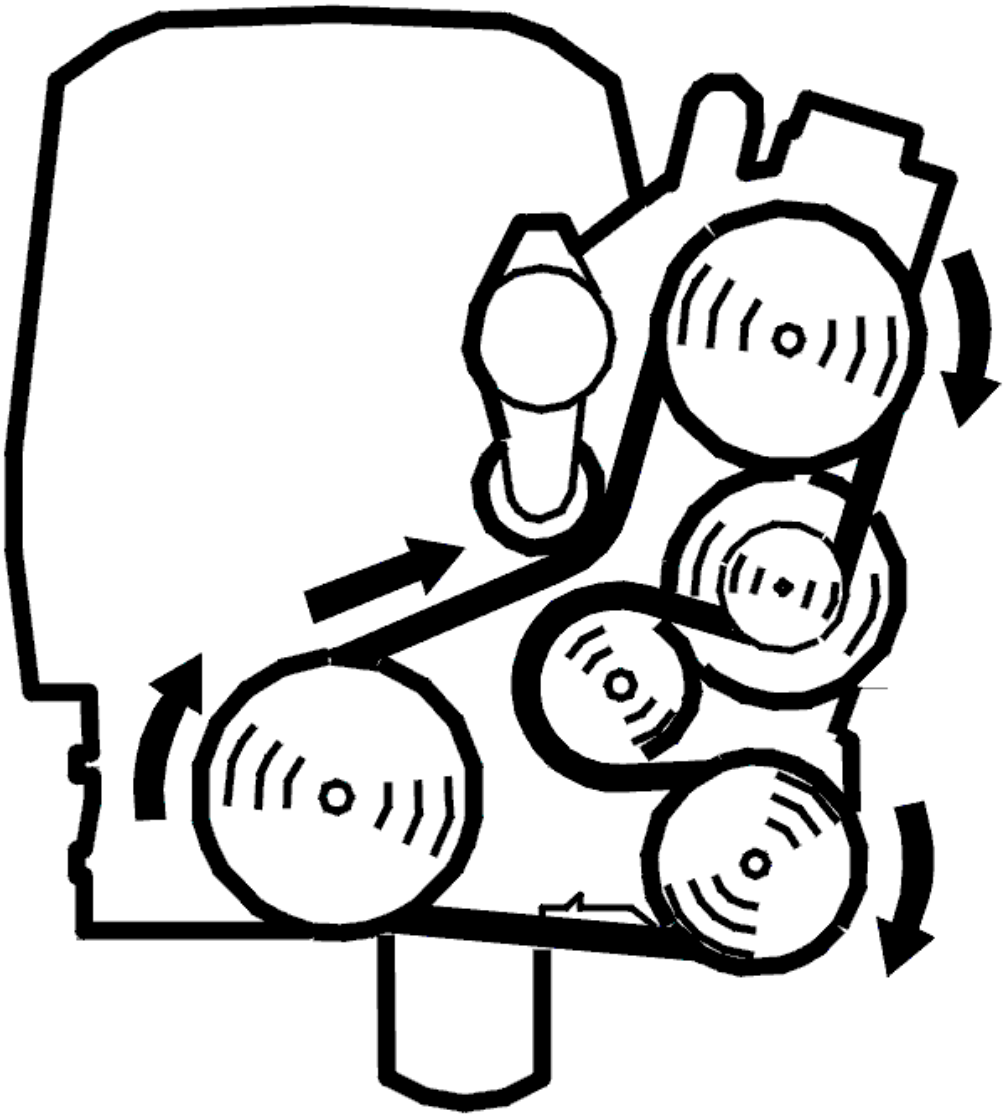

Fig. 55: Identifying Belt Routing
Courtesy of VOLVO CARS CORPORATION

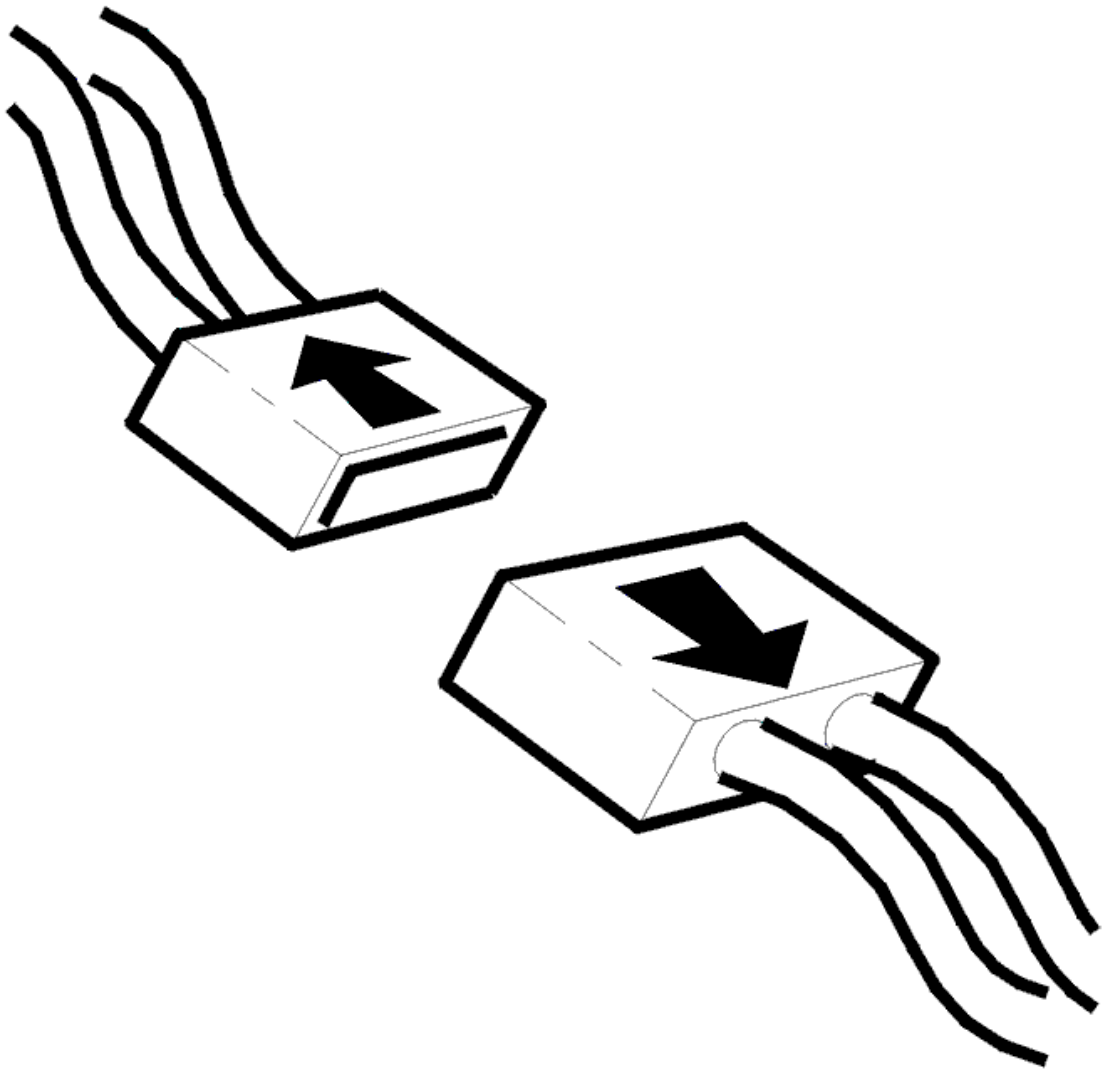

Fig. 56: Identifying Connector(s) Disconnected
Courtesy of VOLVO CARS CORPORATION

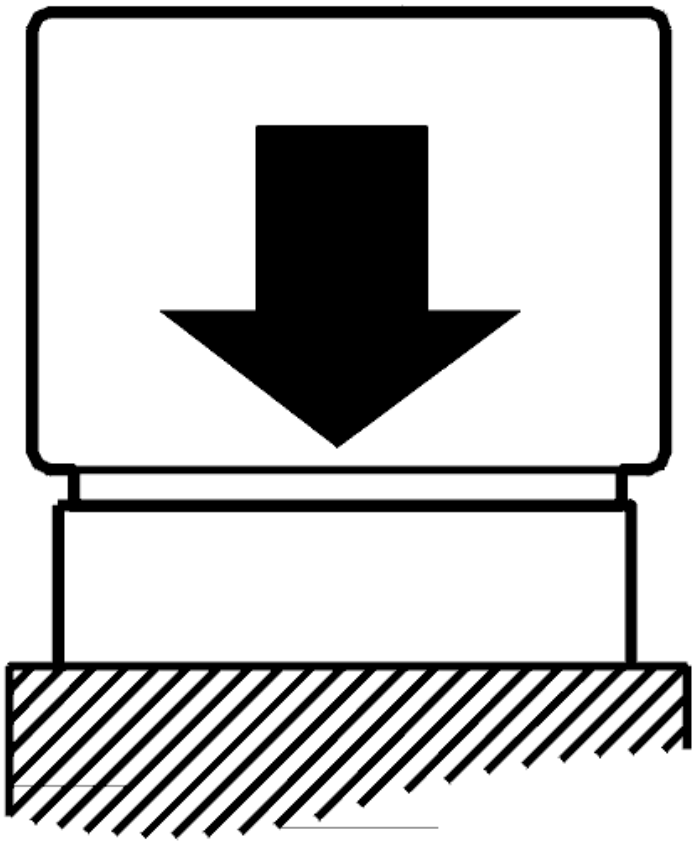

Fig. 57: Identifying Control Module Connected
Courtesy of VOLVO CARS CORPORATION

- Ignition off
- Transmission control module (TCM) connected
- The breakout box connected
- Transmission connector disconnected
- Connect a temporary cable between terminals #A35 and #A59 on the breakout box

CAUTION: Check that the temporary cable is connected to the correct terminals. Also check that there is no risk of unintentional short-circuits.

-
- Ignition on

- Read off the status.

  Check that the status is "1" when the temporary cable is connected to the terminals above.

  Disconnect the cable end that is connected to terminal #A35 and move the cable to terminal #A53.

  NOTE: Leave the cable end connected to terminal #A59 in place.

  Check that the status changes to "0" when the temporary cable has been moved to terminal #A53.

  The transmission output speed sensor is defective if the status has changed between "1" and "0" as above and no errors have been detected on the cables or terminals in the preceding checks. Replace the transmission output speed sensor.

  The transmission control module (TCM) is defective if the status has not changed between "1" and "0" as above and no errors have been detected on the cables or terminals in the preceding checks. If this is the case replace the control module.

  Remedy as necessary.

  Other information

  - To connect the breakout box, see **CONNECTING THE BREAKOUT BOX**
  - To disconnect the transmission connector, see **CONNECTING THE BREAKOUT BOX, GM AUTOMATIC TRANSMISSIONS**
  - To check or replace the transmission output speed sensor, see **OUTPUT SPEED SENSOR TRANSMISSION, REPLACING**
  - To replace the transmission control module (TCM), see **TRANSMISSION CONTROL MODULE (TCM), REPLACING**
  - For information about signals, see **SIGNAL SPECIFICATION** .

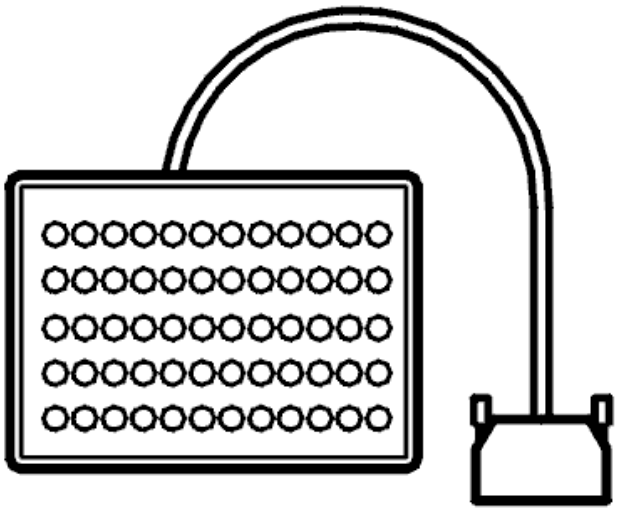

Fig. 58: Identifying Breakout Box
Courtesy of VOLVO CARS CORPORATION

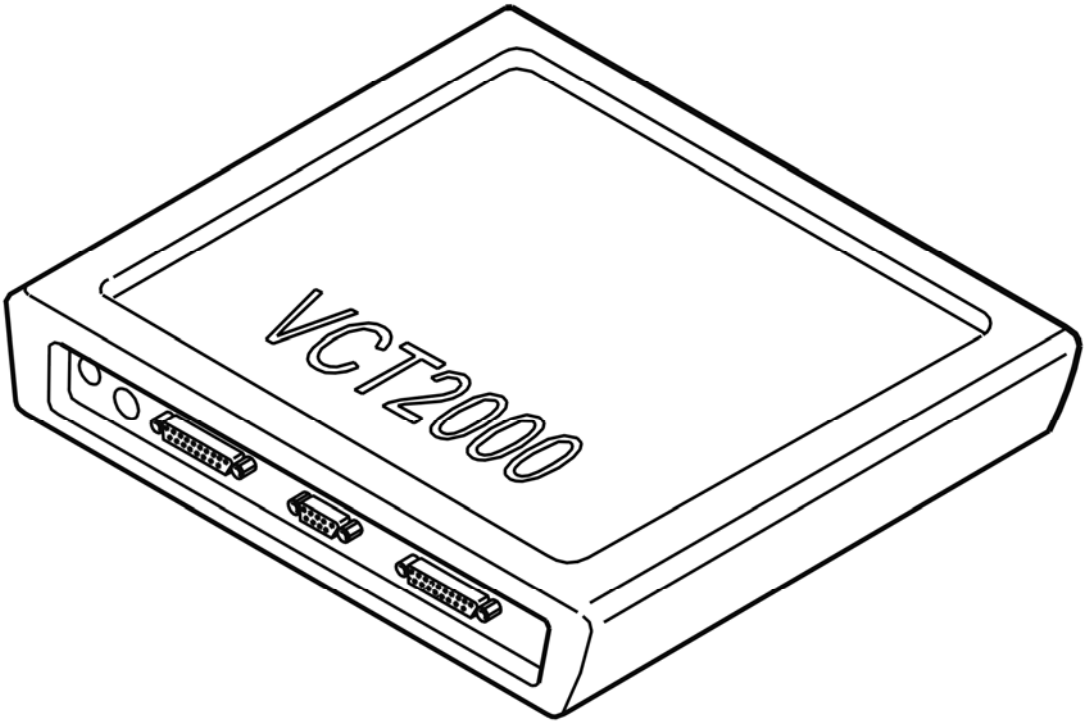

Fig. 59: Identifying VCT2000 Diagnostic Tool Symbol In VIDA
Courtesy of VOLVO CARS CORPORATION

Was a fault detected?

- **YES**

  Refer to **VERIFICATION**

- **NO**

  Refer to **CHECKING THE WIRING AND COMPONENT**

CHECKING THE WIRING AND COMPONENT

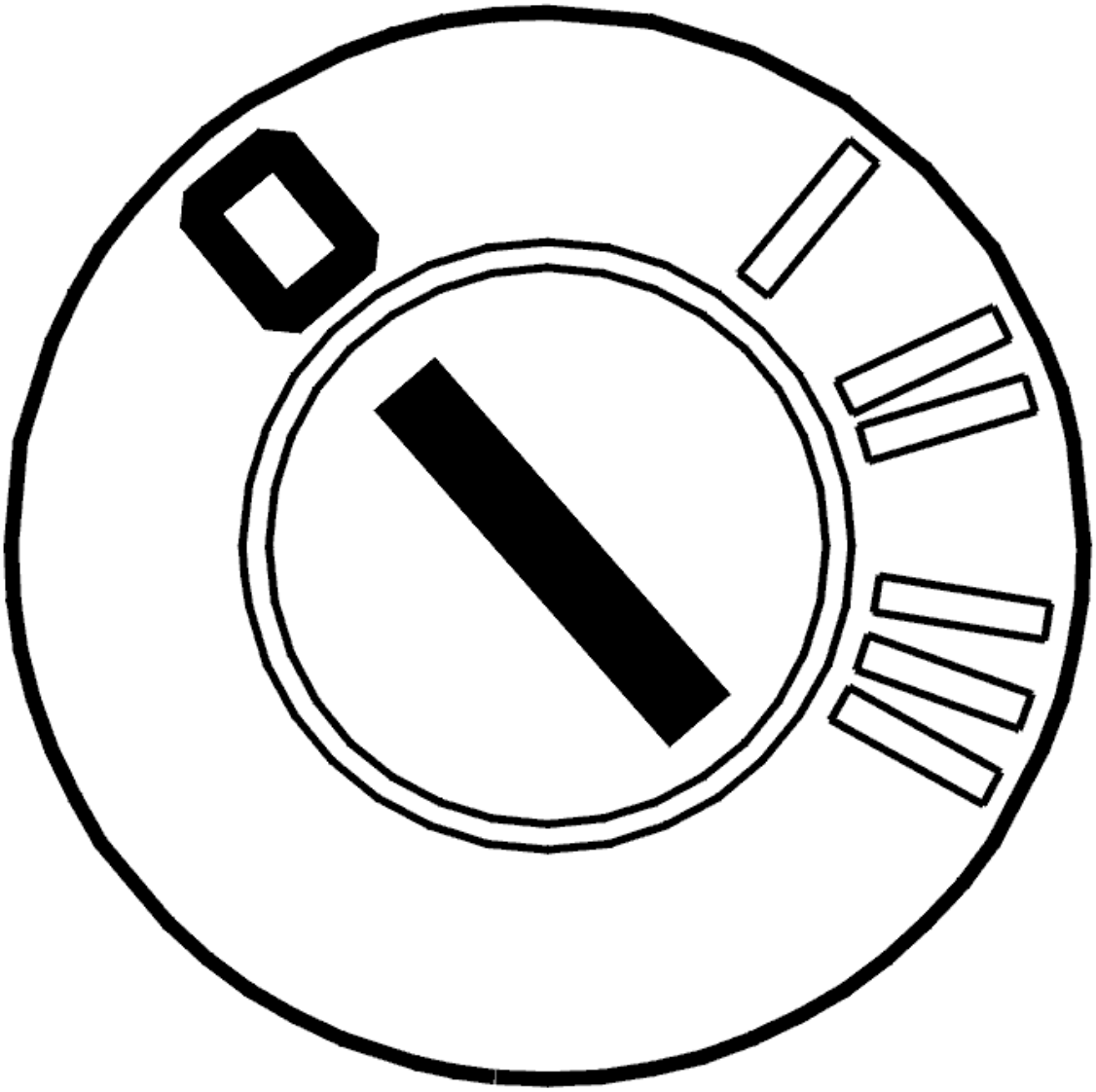

Fig. 60: Identifying Ignition OFF
Courtesy of VOLVO CARS CORPORATION

- Ignition off
- Open the transmission control system.

  Check the cable for power supply between transmission connector terminal #S (#A16) and transmission input speed sensor connector terminal #A. Check for a short-circuit to supply voltage.

  Check the signal cable between transmission connector terminal #V (#A19) and transmission input speed sensor connector terminal #B. Check for a short-circuit to supply voltage.

  Remedy as necessary.

  Other information:

- To open the transmission control system, For removal, see **SIDE COVER TRANSMISSION, REMOVING** and To install, see **SIDE COVER TRANSMISSION, INSTALLING**
- To connect the breakout box to the transmission connector, see **CONNECTING THE BREAKOUT BOX, GM AUTOMATIC TRANSMISSIONS**
- To replace the transmission speed sensor, see **INPUT SPEED SENSOR TRANSMISSION, REPLACING**
- To replace the cable harness, see **TEMPERATURE SENSOR FLUID, TRANSAXLE, (TFT)**
- For information about signals, see **SIGNAL SPECIFICATION**
- see **CHECKING WIRING AND TERMINALS**

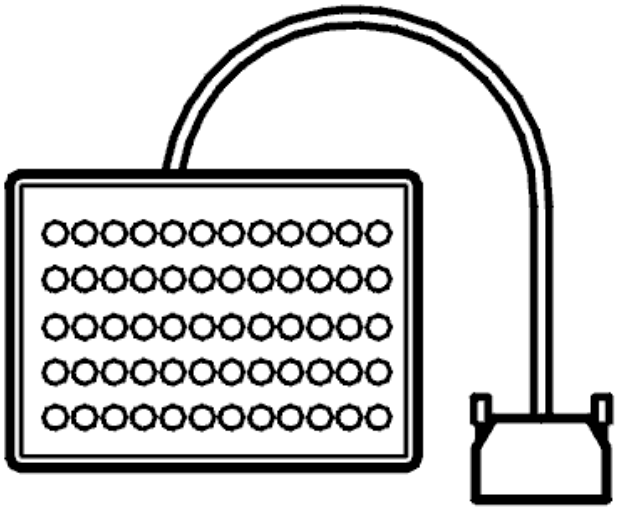

Fig. 61: Identifying Breakout Box
Courtesy of VOLVO CARS CORPORATION

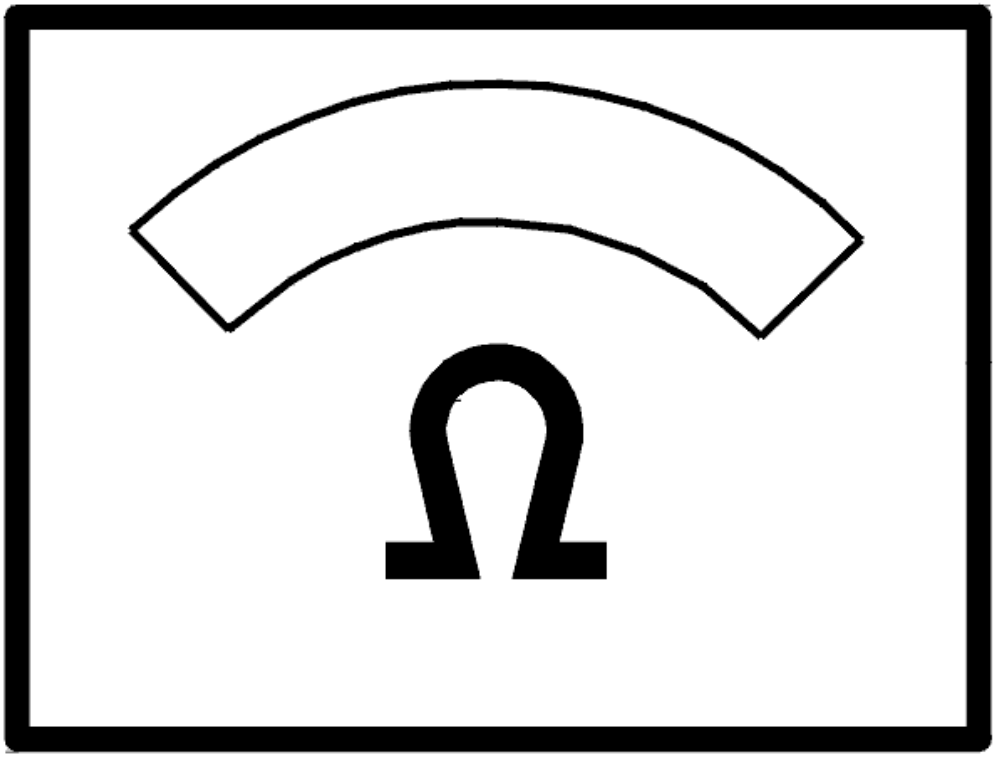

Fig. 62: Identifying Ohms Display
Courtesy of VOLVO CARS CORPORATION

- **Continue**

  Refer to **RESETTING THE ADAPTATION**

INTERMITTENT FAULT

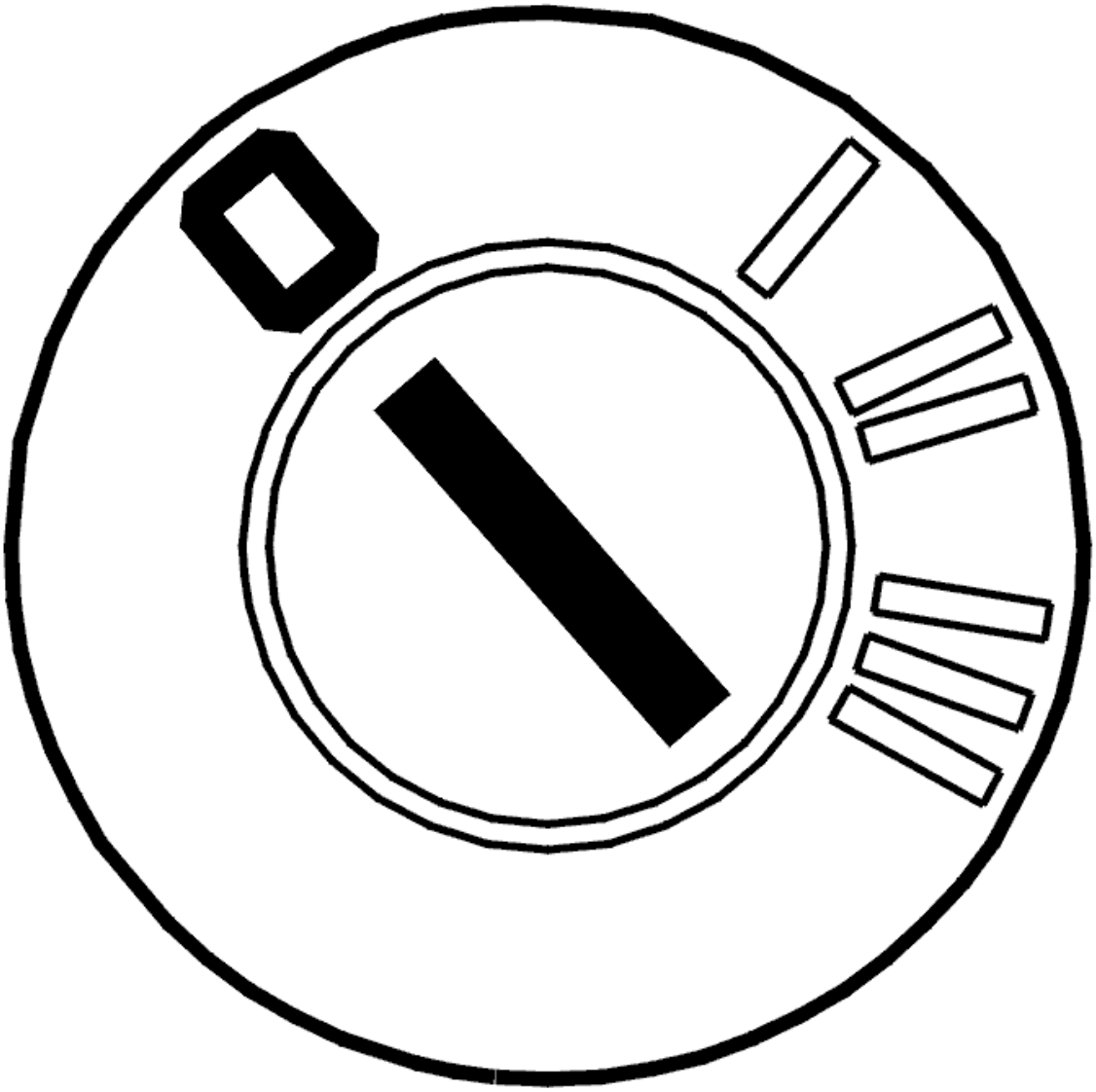

Fig. 63: Identifying Ignition OFF
Courtesy of VOLVO CARS CORPORATION

- Ignition off.

  Check the power supply cable between control module terminal #59 (#A59) and transmission connector terminal #S (#A16). Check for an intermittent short-circuit to supply voltage.

  Check the signal cable between control module terminal #41 (#A41) and transmission connector terminal #V (#A19). Check for an intermittent short-circuit to supply voltage.

  Remedy as necessary.

  Other information

  - To connect the breakout box, see **CONNECTING THE BREAKOUT BOX**

- To disconnect the control module, see **TRANSMISSION CONTROL MODULE (TCM), REPLACING**
- To connect the breakout box to the transmission connector, see **CONNECTING THE BREAKOUT BOX, GM AUTOMATIC TRANSMISSIONS**
- For information about signals, see **SIGNAL SPECIFICATION**
- see **CHECKING WIRING AND TERMINALS**

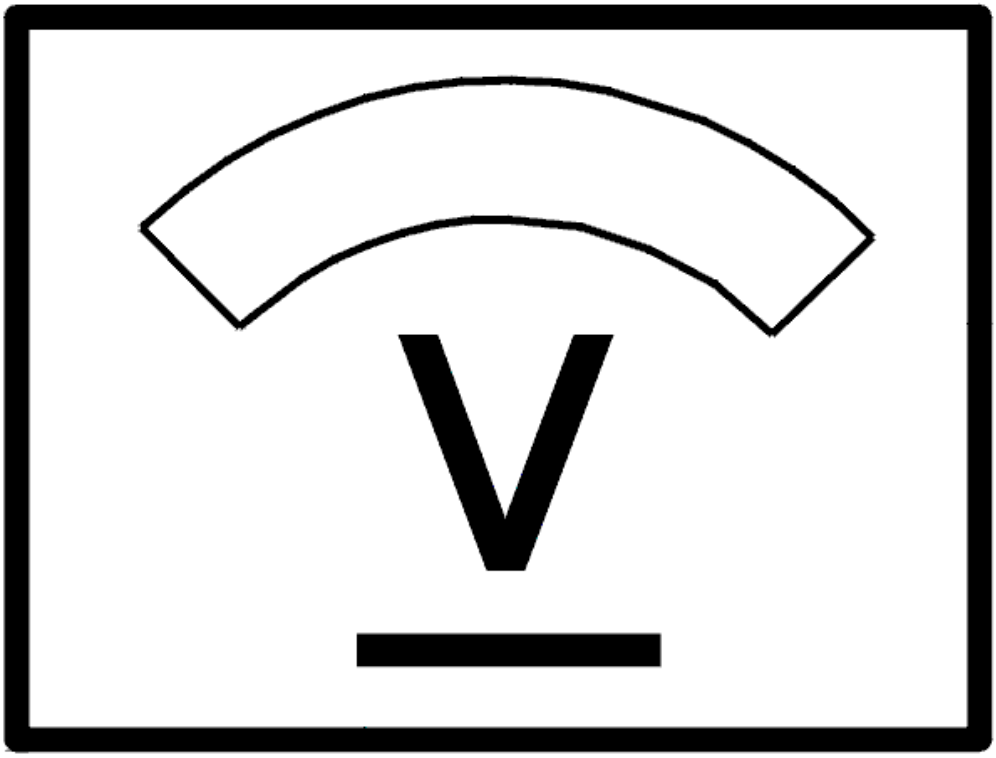

Fig. 64: Identifying Voltage Display
Courtesy of VOLVO CARS CORPORATION

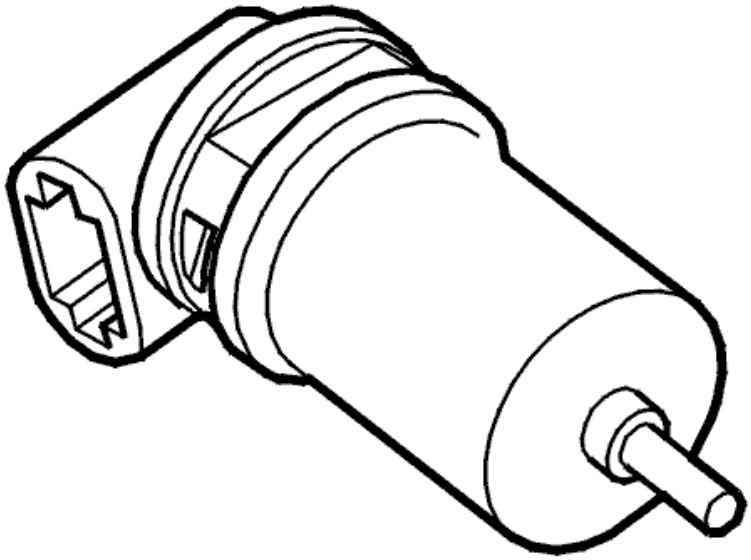

Fig. 65: Identifying Transmission Speed Sensor
Courtesy of VOLVO CARS CORPORATION

- **Continue**

  Refer to **INFORMATION**

RESETTING THE ADAPTATION

RESETTING ADAPTATION AND THE COUNTER FOR "TRANSMISSION OIL CHANGE"

HINT: The transmission has torque controlled adaptive pressure control. Pressure control means that the transmission regulates the pressure itself during each gear shift. This avoids harsh gear shifting. Each gear shift is evaluated by the control module and stored in the memory. This allows for compensation for wear and tear in the transmission and clutch. It is important that the adaptation in the memory is reset after the transmission has been repaired. This is to ensure normal operation. The oil is replaced during repair; the "Transmission oil change" counter must be reset. If the counter is not reset when the fluid is drained and replaced, there is a risk that a diagnostic trouble code (DTC) will be stored in incorrect circumstances.

NOTE: **This applies only if the transmission or one of the components in the transmission have been replaced.**

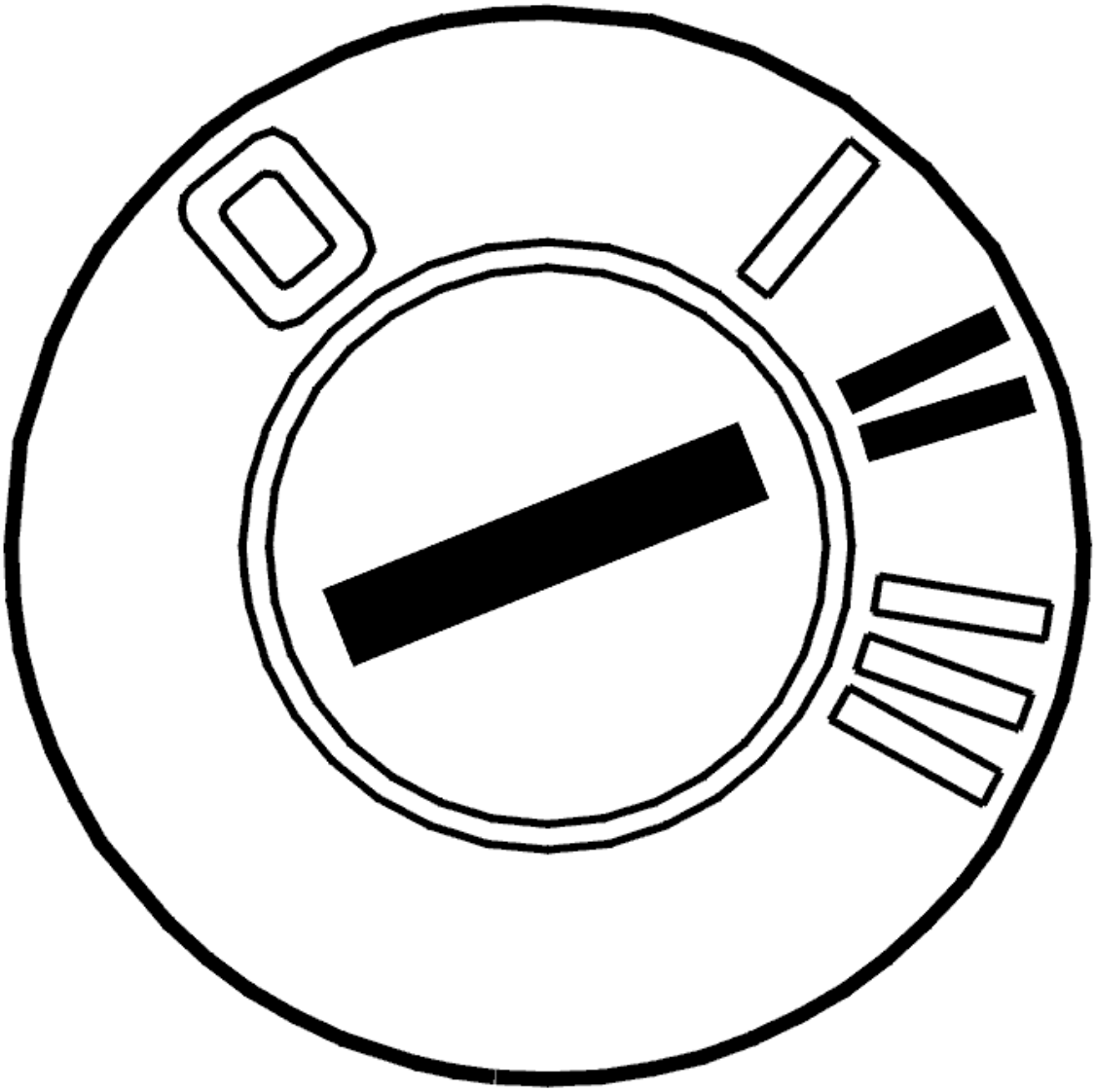

Fig. 66: Identifying Ignition ON
Courtesy of VOLVO CARS CORPORATION

- Ignition on.

  Use the VCT2000 (or appropriate scan tool) to reset the adaptation and counter.

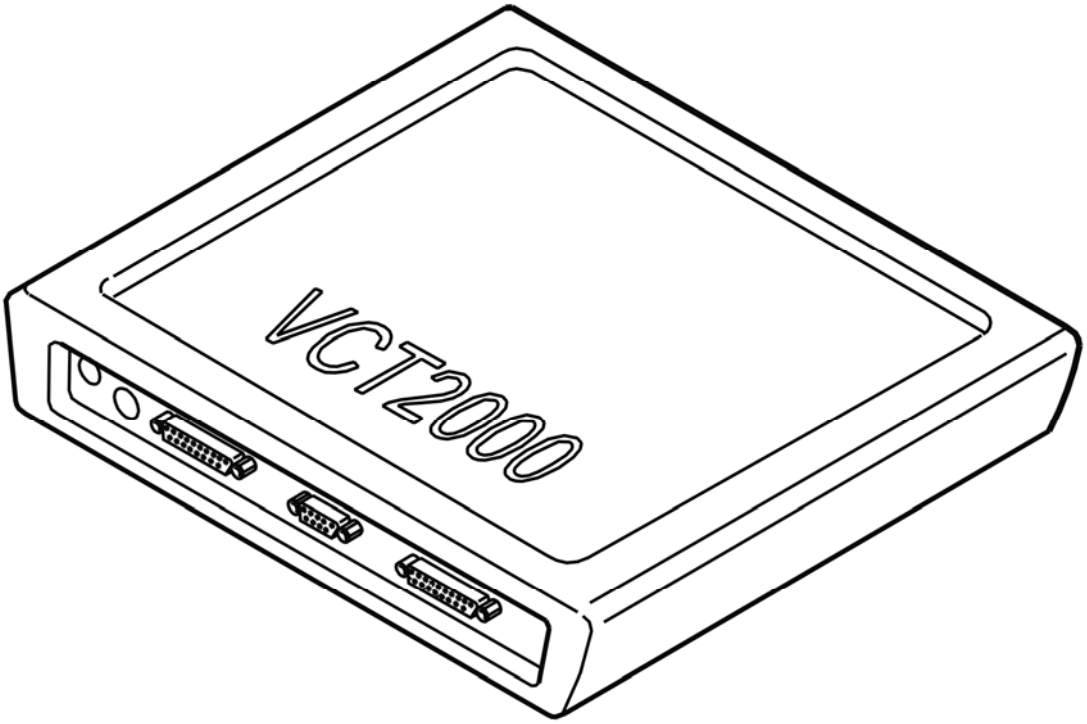

Fig. 67: Identifying VCT2000 Diagnostic Tool Symbol In VIDA
Courtesy of VOLVO CARS CORPORATION

- **Continue**

  Refer to **VERIFICATION**

VERIFICATION

VERIFICATION

HINT: After carrying out the repair, check that the fault has been remedied.

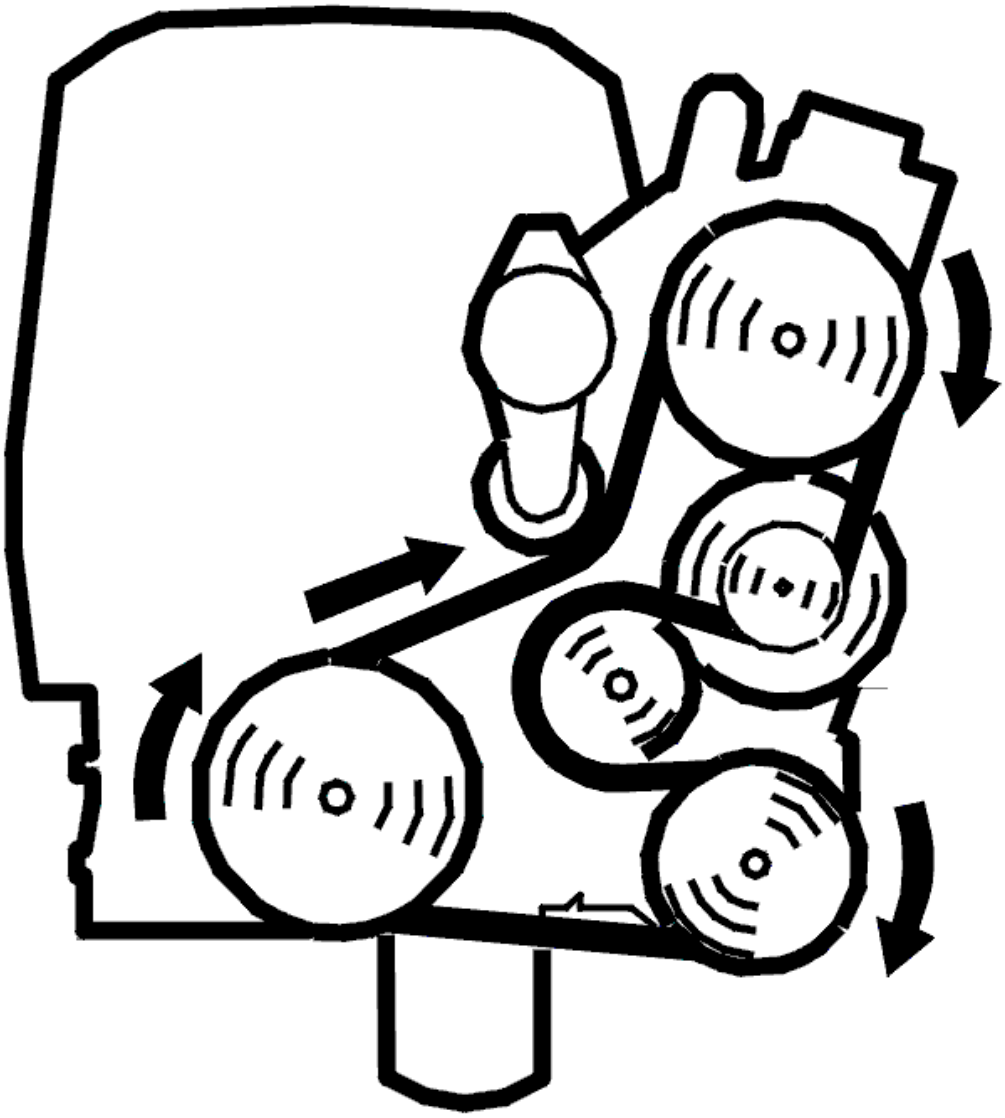

Fig. 68: Identifying Belt Routing
Courtesy of VOLVO CARS CORPORATION

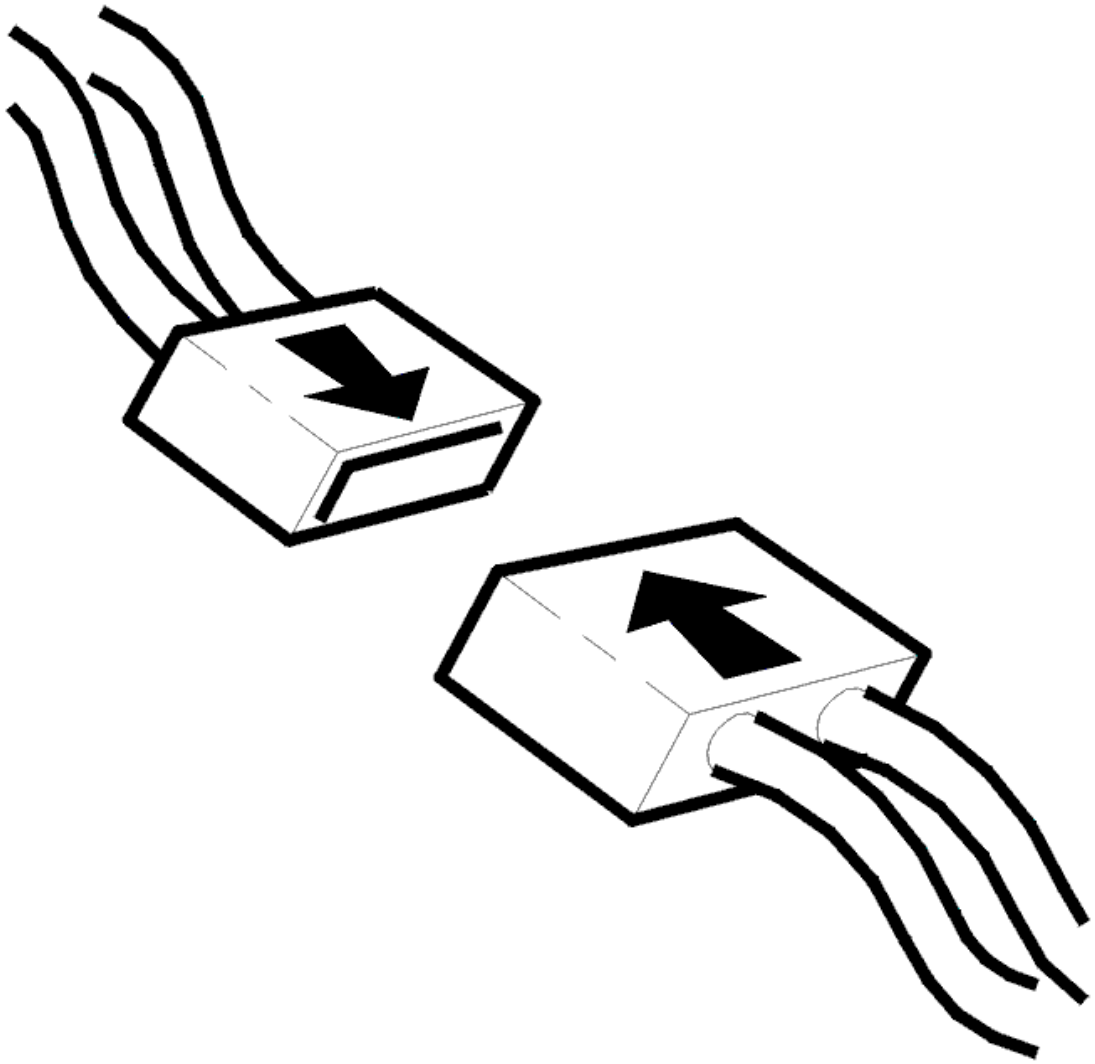

Fig. 69: Identifying Connector(s) Reinstallation
Courtesy of VOLVO CARS CORPORATION

- Ignition off.
- Reinstall the connectors, components etc.
- Start the engine and let it idle.
- Read off the transmission speed.

  Depress the accelerator pedal (AP) and check that engine speed (RPM) is updated. Compare with the engine speed (RPM).

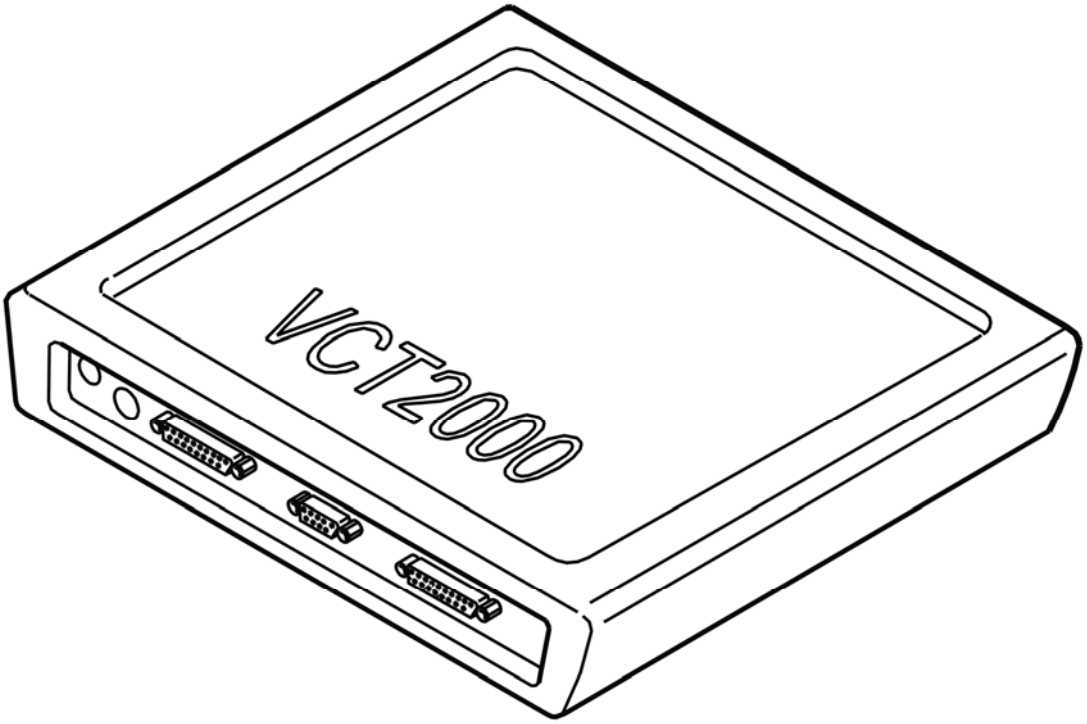

Fig. 70: Identifying VCT2000 Diagnostic Tool Symbol In VIDA
Courtesy of VOLVO CARS CORPORATION

Is the speed updated?

- **YES**

  VERIFIED: Troubleshooting has been completed.

- **NO**

  Refer to **INFORMATION**

INFORMATION

FAULT-TRACING INFORMATION

The fault should have been detected and remedied. As this is not the case fault-tracing has failed.

Exit fault-tracing for this diagnostic trouble code (DTC) or make another attempt.

INFORMATION

FAULT-TRACING INFORMATION

If the fault is intermittent, do not verify fault-tracing if the fault does not recur.

It is possible to view the information again, or leave fault-tracing for this diagnostic trouble code (DTC).

TCM-0087: TRANSMISSION INPUT SPEED SENSOR. SIGNAL TOO HIGH (AW50/51 AWD; AW55-50/51SN; 2003-2007)

DIAGNOSTIC TROUBLE CODE (DTC) INFORMATION

Condition

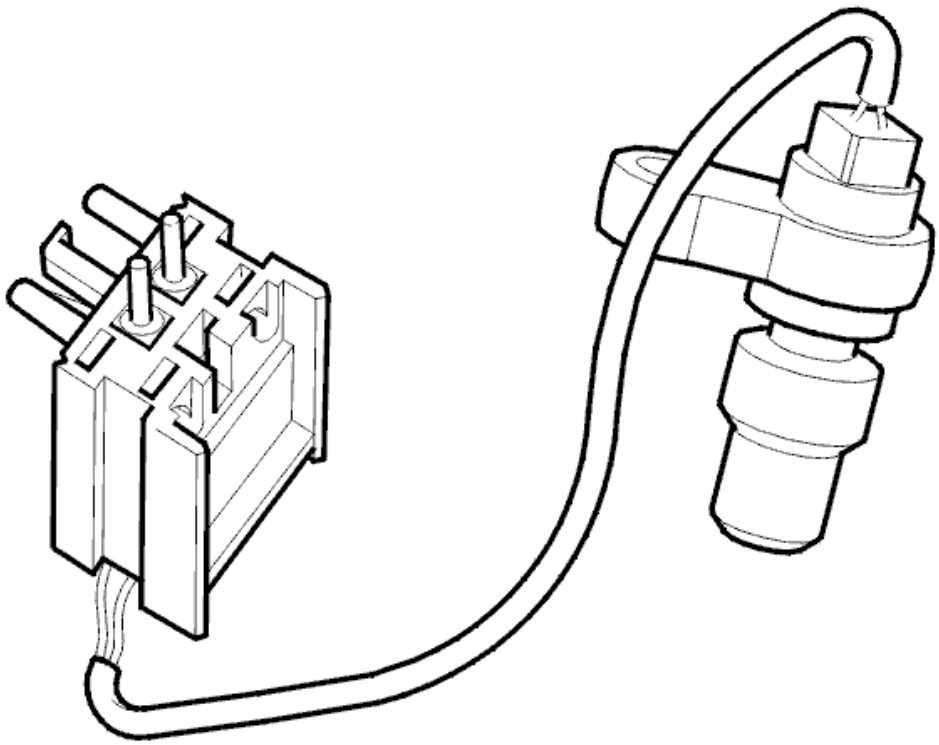

Fig. 71: Identifying Transmission Input Speed Sensor
Courtesy of VOLVO CARS CORPORATION

The transmission speed signal is transmitted by a sensor on the transmission. The transmission control module (TCM) uses the signal to determine the input shaft speed after the torque converter. This signal is used to compare the transmission speed with vehicle speed. The transmission control module (TCM) uses this comparison to calculate the gear-shift timing. Engine speed and vehicle speed data affects the adjustment of the system pressure, lock-up function control and engine torque reduction. The result is smooth gear-shifting. Diagnostic trouble code (DTC) TCM-0087 is stored if the control module registers, when comparing with the transmission speed signal, that the engine speed (RPM) signal is too high when the vehicle speed is above approximately 25 km/h.

Substitute Value

- The transmission control module (TCM) "Emergency mode I" program has been initiated.

Possible Source

- Power supply (-) short-circuited to supply voltage.
- Defective engine speed (RPM) sensor.

Fault symptom[s]

- General orange warning lamp lit.
- No lock-up function.
- Harsh gear shifting.

HINT: Harsh gear shifting can be caused by:

- No reduction of the line pressure when shifting.
- No reduction of the line pressure when moving the gear selector between positions P-R, N-R and N-D.
- No request for torque limiting to the engine control module (ECM) when shifting.

SIGNAL TOO HIGH

CHECKS

CHECKING THE TRANSMISSION INPUT SPEED SENSOR SIGNAL

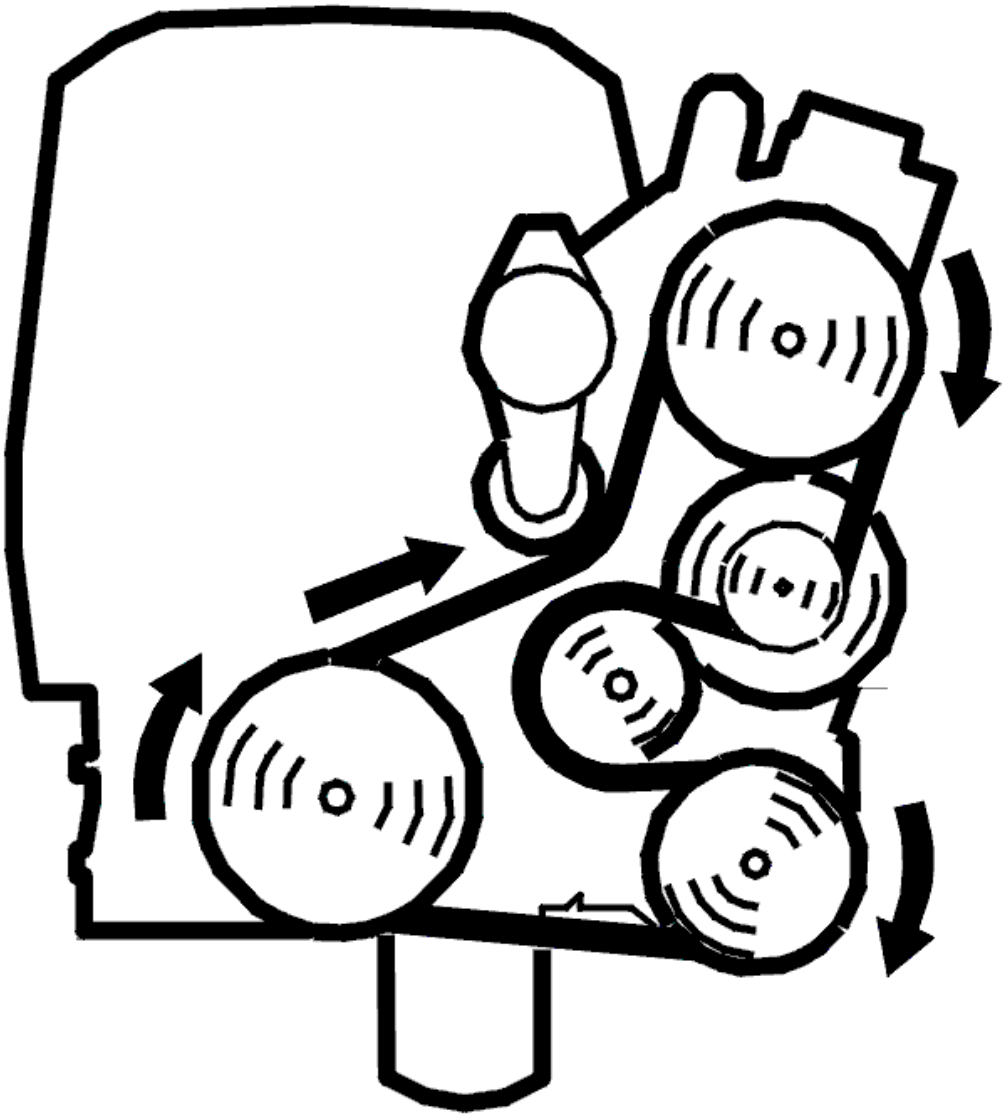

Fig. 72: Identifying Belt Routing
Courtesy of VOLVO CARS CORPORATION

- Gear selector in position P
- Start the engine. Allow the engine to idle
- Read off the transmission input speed.

Depress the accelerator pedal (AP) and check that engine speed (RPM) is updated.

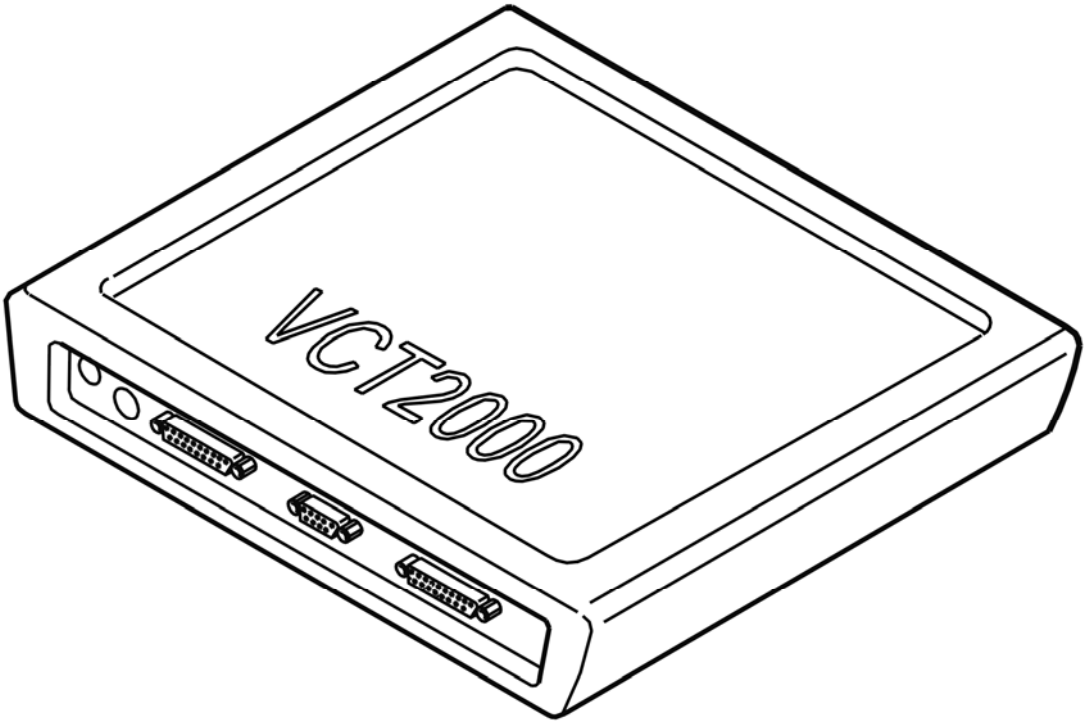

Fig. 73: Identifying VCT2000 Diagnostic Tool Symbol In VIDA
Courtesy of VOLVO CARS CORPORATION

Is the speed updated?

- **YES**

  Refer to **INTERMITTENT FAULT**

- **NO**

  Refer to **CHECKING WIRING AND SENSORS**

CHECKING WIRING AND SENSORS

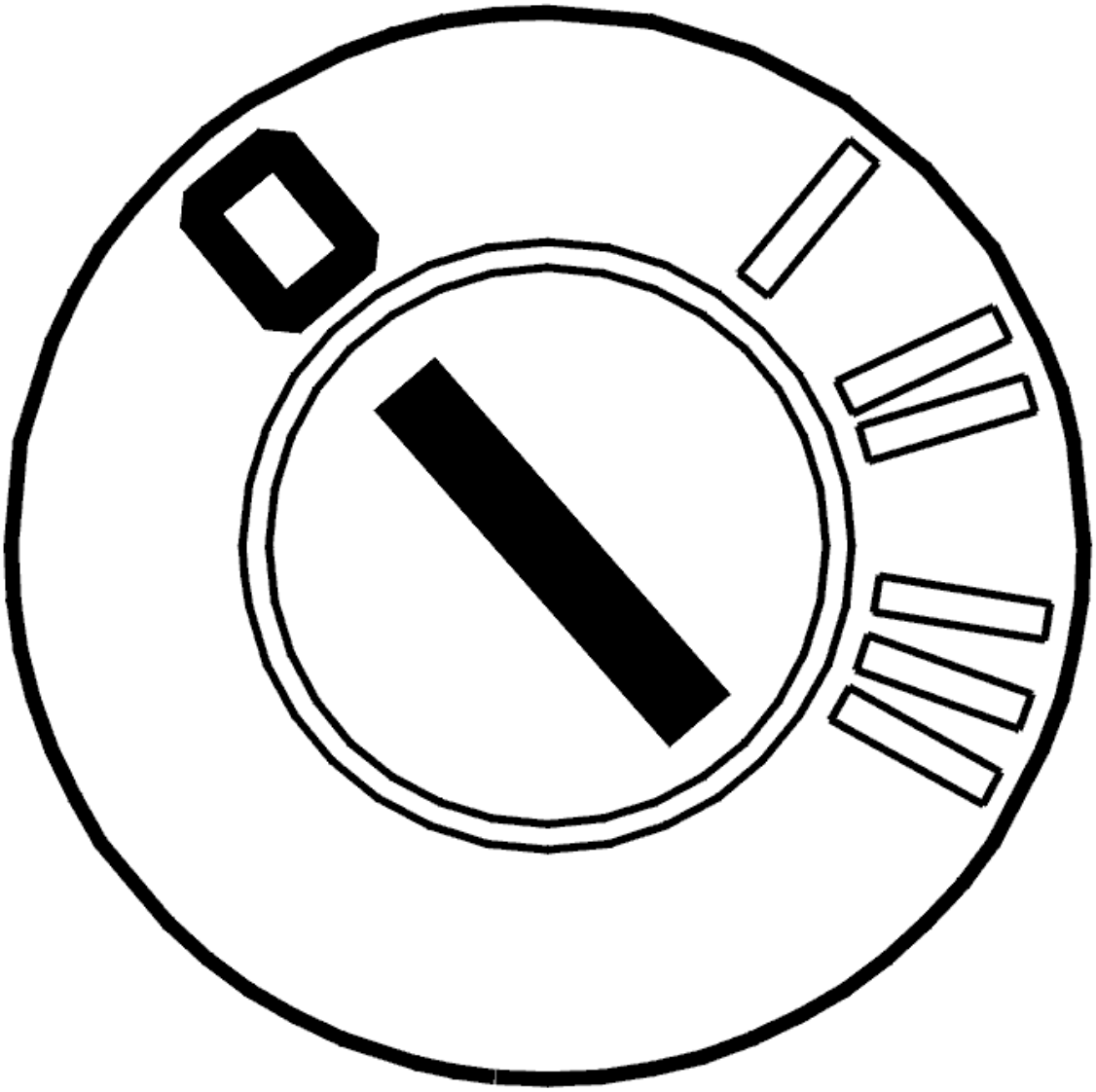

Fig. 74: Identifying Ignition OFF
Courtesy of VOLVO CARS CORPORATION

- Ignition off.

  Check the cables between transmission control module (TCM) terminals #A59 (#A59) and #A41 (#A41) and transmission connector terminals #A2 and #A1. Check for a short-circuit to each other.

  Check the power supply cable between control module terminal #A59 (#A59) and transmission connector terminal #A2. Check for a short-circuit to supply voltage according to **SHORT-CIRCUIT TO SUPPLY VOLTAGE. PERMANENT FAULTS** .

  Check the signal cable between control module terminal #A41 (#A41) and transmission connector terminal #A1. Check for an open-circuit or a short-circuit to supply voltage according to **SHORT-CIRCUIT TO SUPPLY VOLTAGE. PERMANENT FAULTS** .

HINT: With the control module connected, the ignition on and a voltmeter connected between transmission connector terminals #A2 and #A1 (control module side), the voltage must be 1-3 V below Ubat.

Remedy as necessary.

Other information:

- To connect the breakout box, see **CONNECTING THE BREAKOUT BOX**
- To disconnect the control module, see **TRANSMISSION CONTROL MODULE (TCM), REPLACING**
- To disconnect the transmission connectors, see **CONNECTORS, TRANSMISSION, DISCONNECTING / CONNECTING**
- To check or replace the transmission speed sensor, see **INPUT SPEED SENSOR/OUTPUT SPEED SENSOR, REPLACING**
- For information about signals, see **SIGNAL DESCRIPTION. TRANSMISSION CONTROL MODULE (TCM)** .

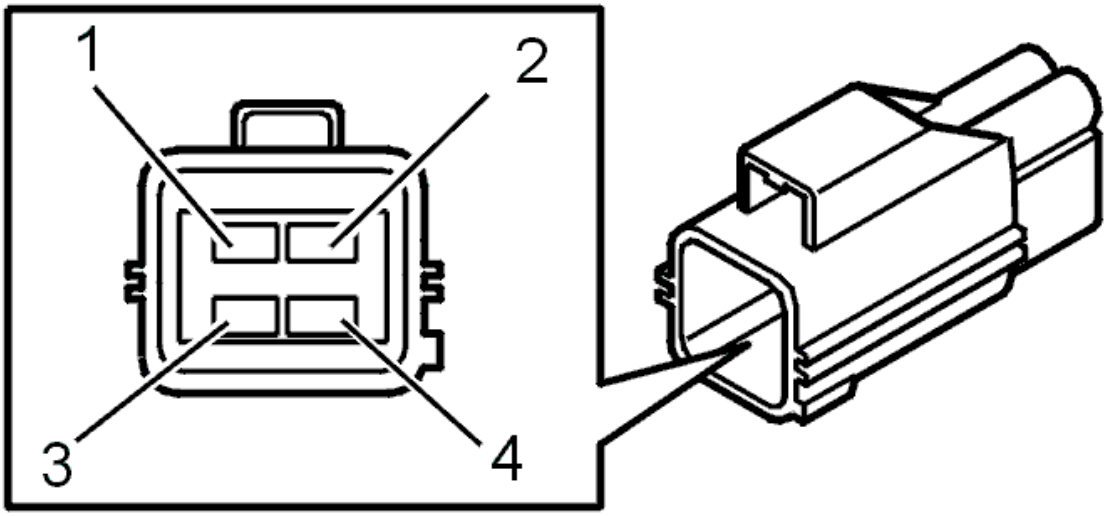

Fig. 75: Identifying Transmission Speed Sensor Terminals
Courtesy of VOLVO CARS CORPORATION

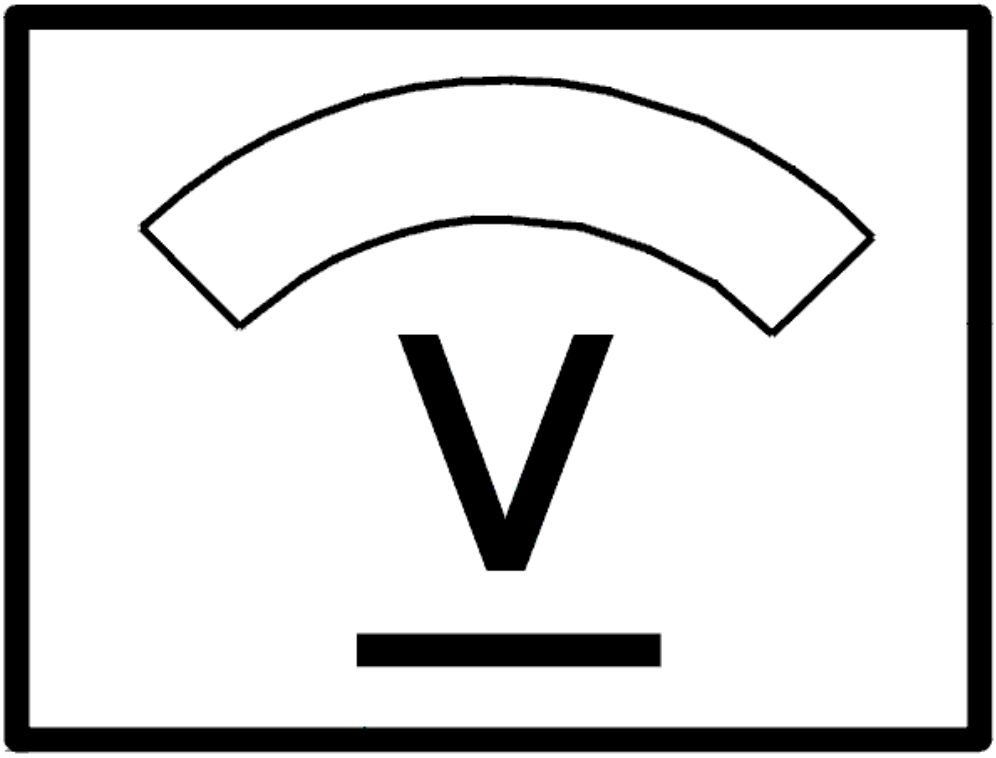

Fig. 76: Identifying Voltage Display
Courtesy of VOLVO CARS CORPORATION

- **Continue**

  Refer to **VERIFICATION**

INTERMITTENT FAULT

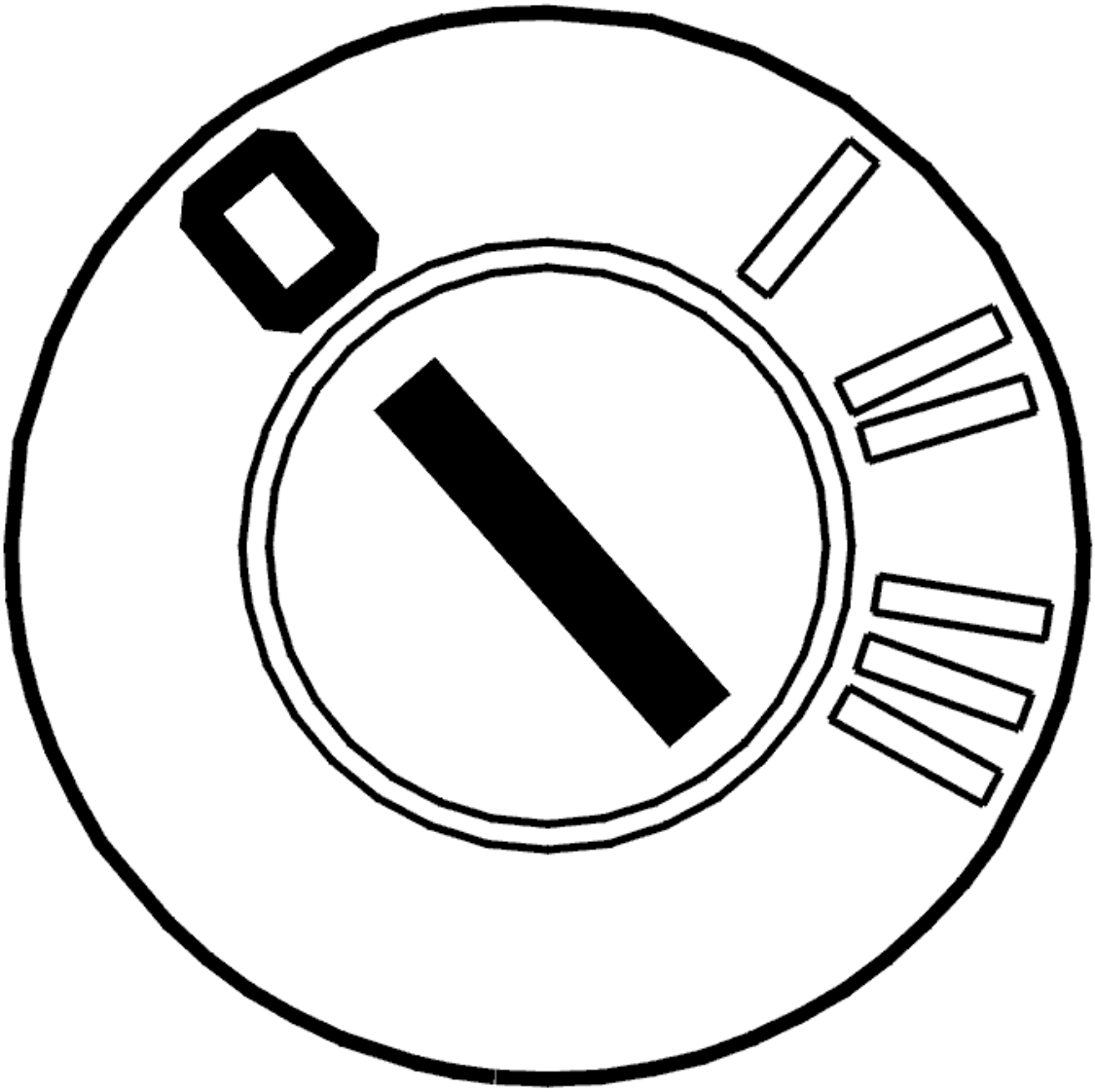

Fig. 77: Identifying Ignition OFF
Courtesy of VOLVO CARS CORPORATION

- Ignition off.

  Check the transmission control module (TCM) and transmission connectors. Check for contact resistance and oxidation according to **CONTACT RESISTANCE AND OXIDATION** .

  Check the power supply cable between control module terminal #A59 (#A59) and transmission connector terminal #A2. Check for an intermittent short-circuit to supply voltage according to **SHORT-CIRCUIT TO SUPPLY VOLTAGE, INTERMITTENT FAULTS** .

  Check the signal cable between control module terminal #A41 (#A41) and transmission connector terminal #A1. Check for an intermittent short-circuit to supply voltage according to **SHORT-CIRCUIT TO SUPPLY VOLTAGE, INTERMITTENT FAULTS** .

Remedy as necessary.

Other information:

- To connect the breakout box, see **CONNECTING THE BREAKOUT BOX**
- To disconnect the control module, see **TRANSMISSION CONTROL MODULE (TCM), REPLACING**
- To disconnect the transmission connectors, see **CONNECTORS, TRANSMISSION, DISCONNECTING / CONNECTING**
- To check or replace the speed sensor, see **INPUT SPEED SENSOR/OUTPUT SPEED SENSOR, REPLACING**
- For information about signals, see **SIGNAL DESCRIPTION. TRANSMISSION CONTROL MODULE (TCM)** .

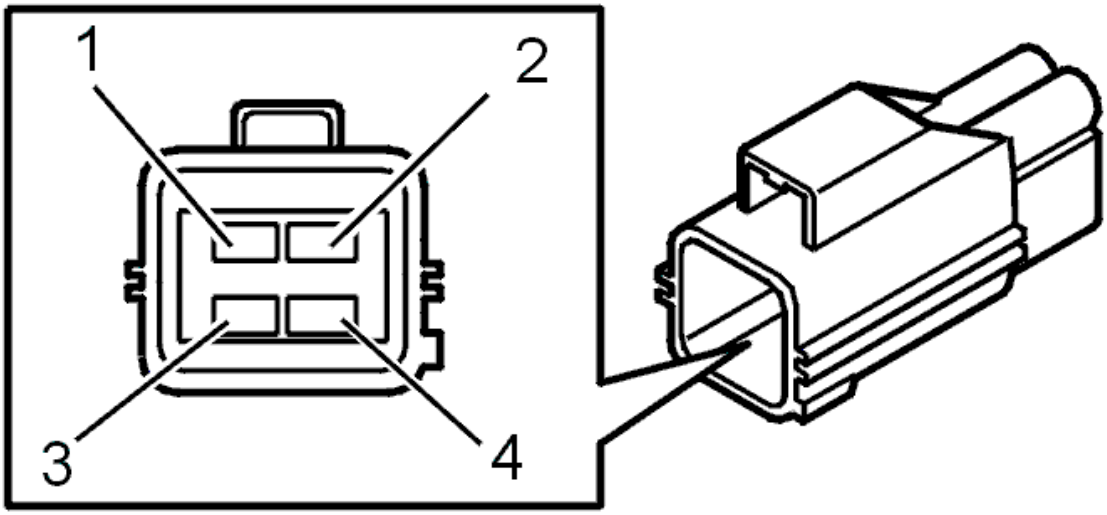

Fig. 78: Identifying Transmission Speed Sensor Terminals
Courtesy of VOLVO CARS CORPORATION

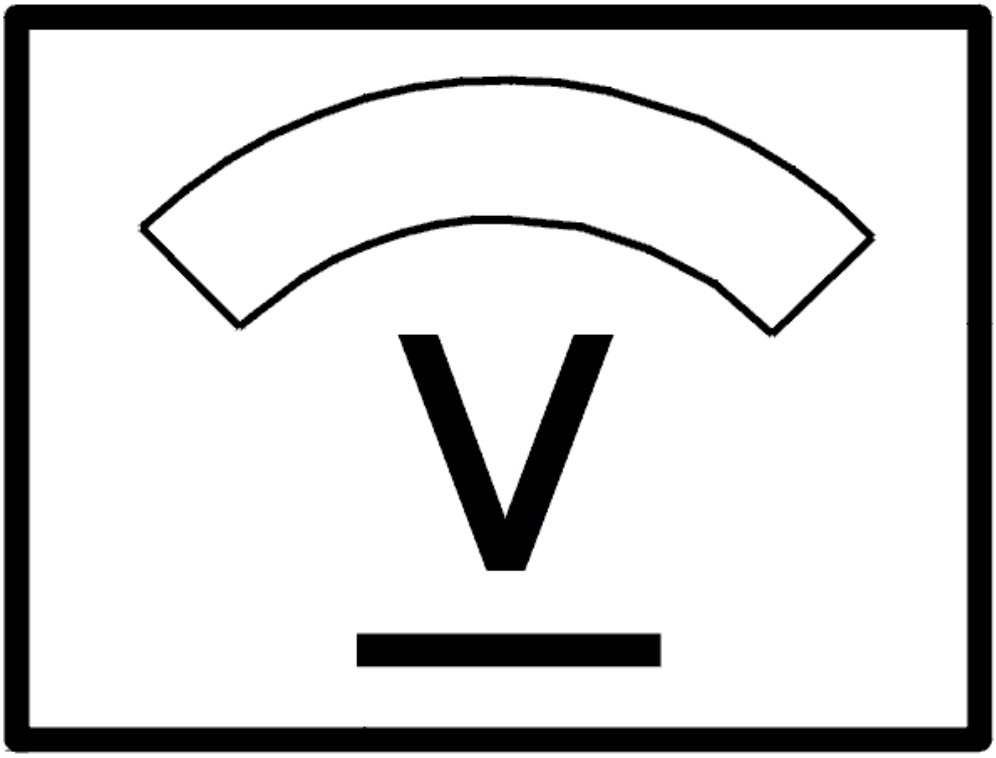

Fig. 79: Identifying Voltage Display
Courtesy of VOLVO CARS CORPORATION

- **Continue**

  Refer to **INFORMATION**

VERIFICATION

VERIFICATION

HINT: After carrying out the repair, check that the fault has been remedied.

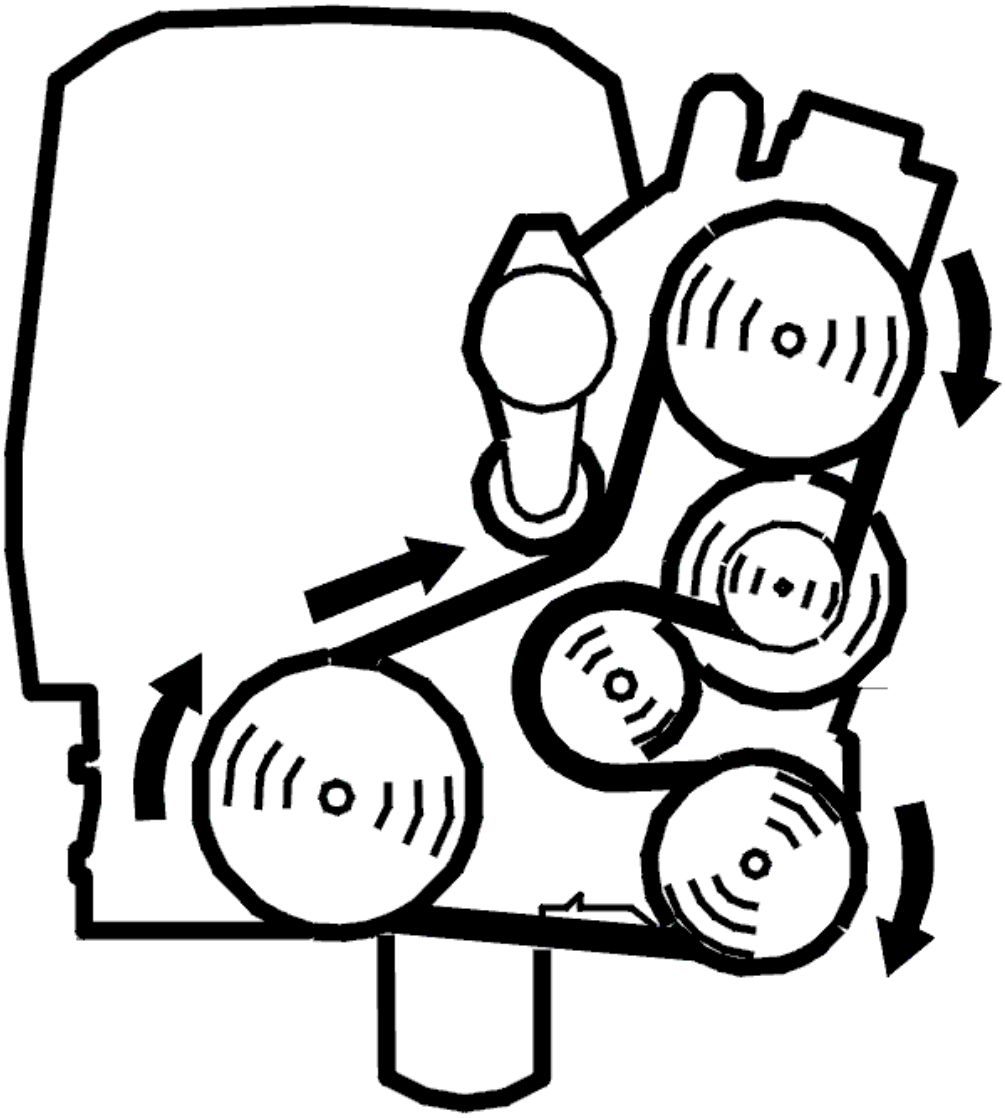

Fig. 80: Identifying Belt Routing
Courtesy of VOLVO CARS CORPORATION

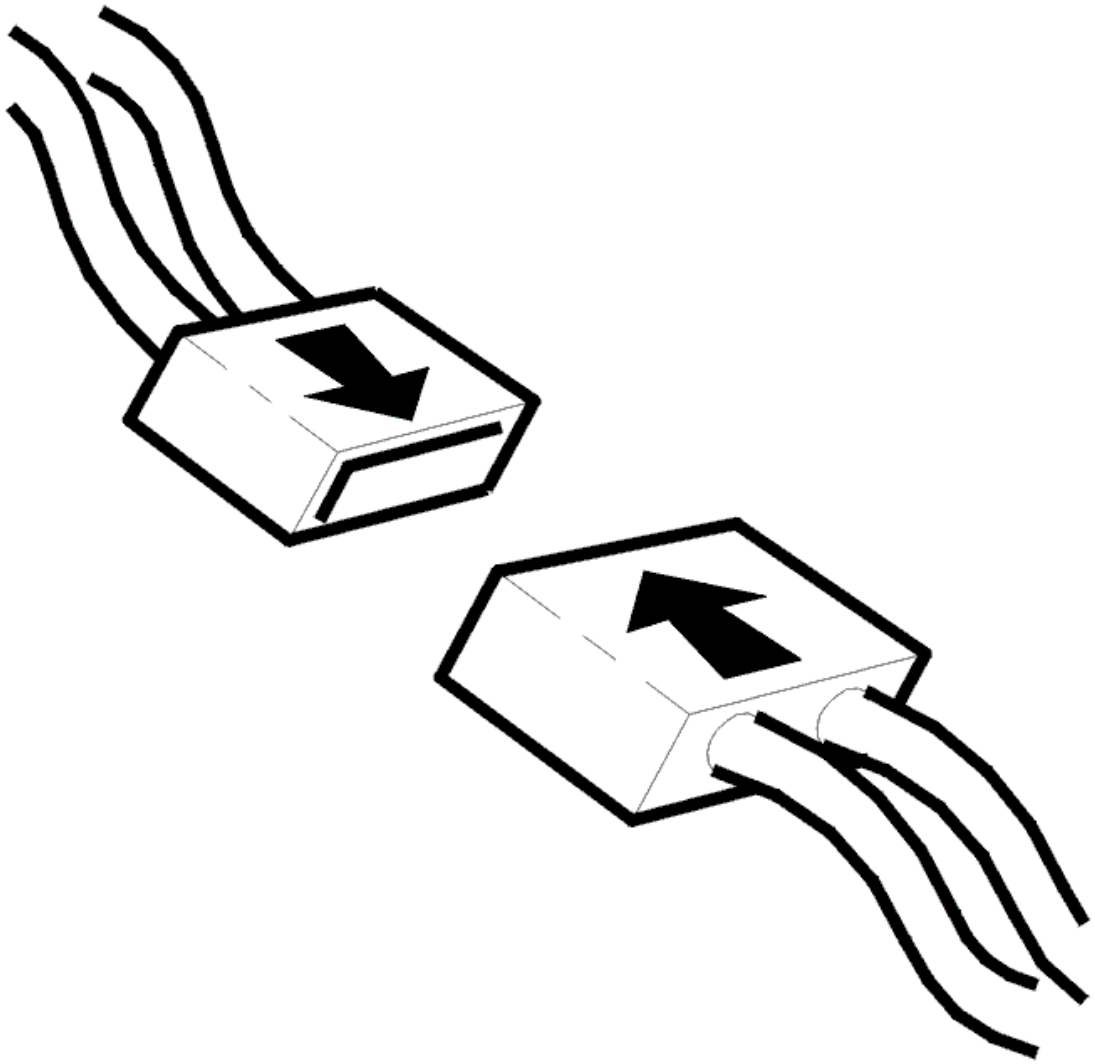

Fig. 81: Identifying Connector(s) Reinstallation
Courtesy of VOLVO CARS CORPORATION

- Ignition off.
- Reinstall the connectors, components etc.
- Start the engine and let it idle.
- Gear selector in position P.
- Read off the transmission speed.

  Depress the accelerator pedal (AP) and check that engine speed (RPM) is updated.

  Compare with the engine speed (RPM).

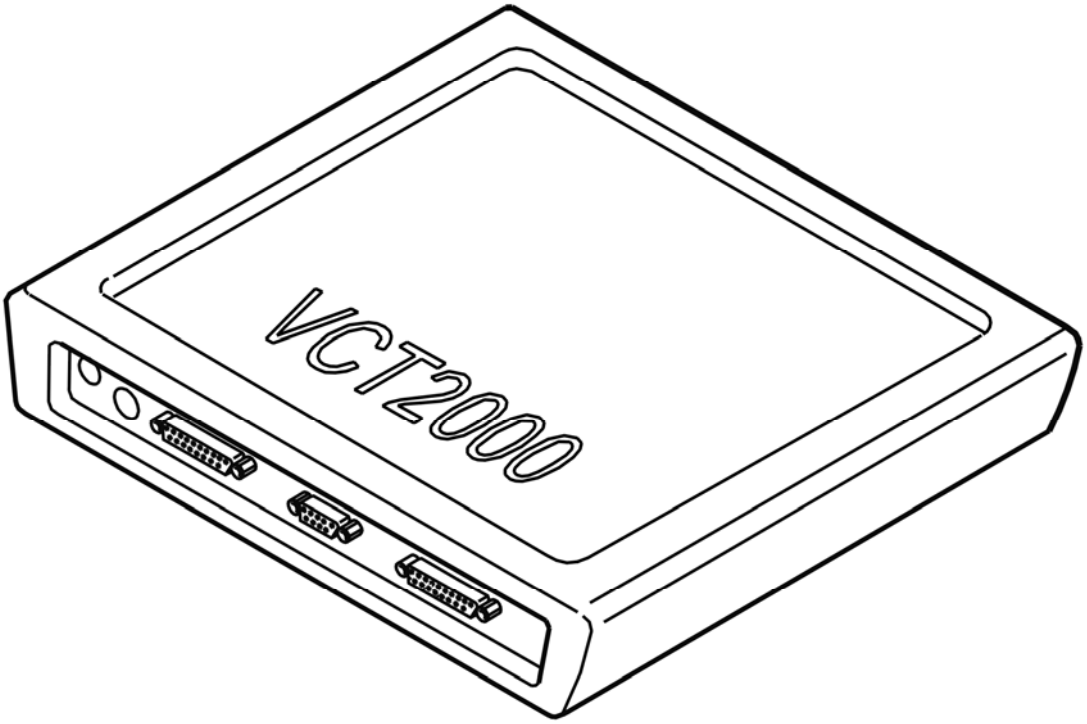

Fig. 82: Identifying VCT2000 Diagnostic Tool Symbol In VIDA
Courtesy of VOLVO CARS CORPORATION

Is the speed updated?

- **YES**

  VERIFIED: Troubleshooting has been completed.

- **NO**

  Refer to **INFORMATION**

INFORMATION

FAULT-TRACING INFORMATION

The fault should have been detected and remedied. As this is not the case fault-tracing has failed.

Exit fault-tracing for this diagnostic trouble code (DTC) or make another attempt.

INFORMATION

FAULT-TRACING INFORMATION

If the fault is intermittent, do not verify fault-tracing if the fault does not recur.

It is possible to view the information again, or leave fault-tracing for this diagnostic trouble code (DTC).

TCM-0089: INPUT SPEED SENSOR. SIGNAL TOO LOW (4T65 AWD; 2003-2006)

DIAGNOSTIC TROUBLE CODE (DTC) INFORMATION

Condition

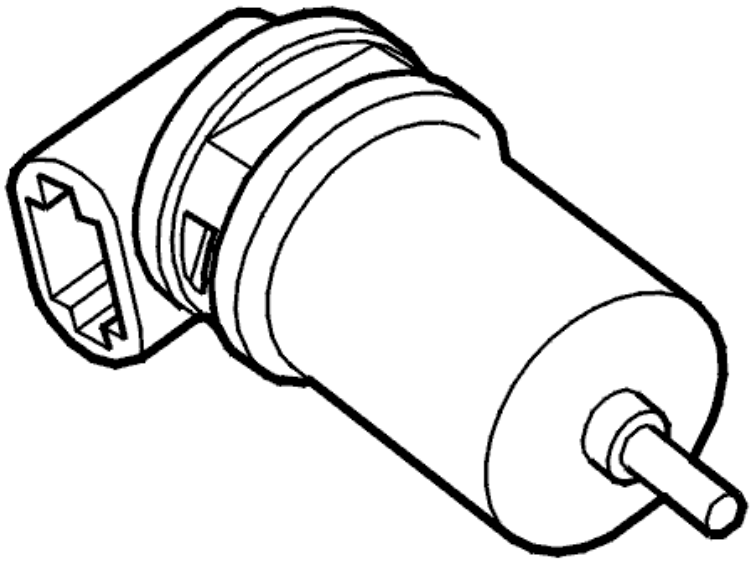

Fig. 83: Identifying Transmission Speed Sensor
Courtesy of VOLVO CARS CORPORATION

The transmission speed signal is transmitted by a sensor on the transmission. The transmission control module (TCM) uses the signal to determine the input shaft speed after the torque converter. This signal is used to compare the transmission speed with vehicle speed. The transmission control module (TCM) uses this comparison to calculate gear-shift timing. Engine speed (RPM) and vehicle speed data affects the adjustment of system pressure, lock-up function control and engine torque reduction. The result is smooth gear-shifting. Diagnostic trouble code (DTC) TCM-0089 is stored if the control module registers that the signal is too low when vehicle speed is above approximately 25 km/h.

Substitute Value

- TBD

Possible Source

- Contact resistance in the terminals.
- Short-circuit to ground in the signal cable.
- Defective input speed sensor.

Fault symptom[s]

- General orange warning lamp lit.
- No lock-up function.
- Harsh gear shifting.

HINT: Harsh gear shifting can be caused by:

- No reduction of line pressure when shifting.
- No reduction of line pressure when moving the gear selector between positions P-R, N-R and N-D.
- No torque limiting request to engine control module (ECM) when shifting.

SIGNAL TOO LOW

CHECKS

CHECKING THE TRANSMISSION INPUT SPEED SENSOR SIGNAL

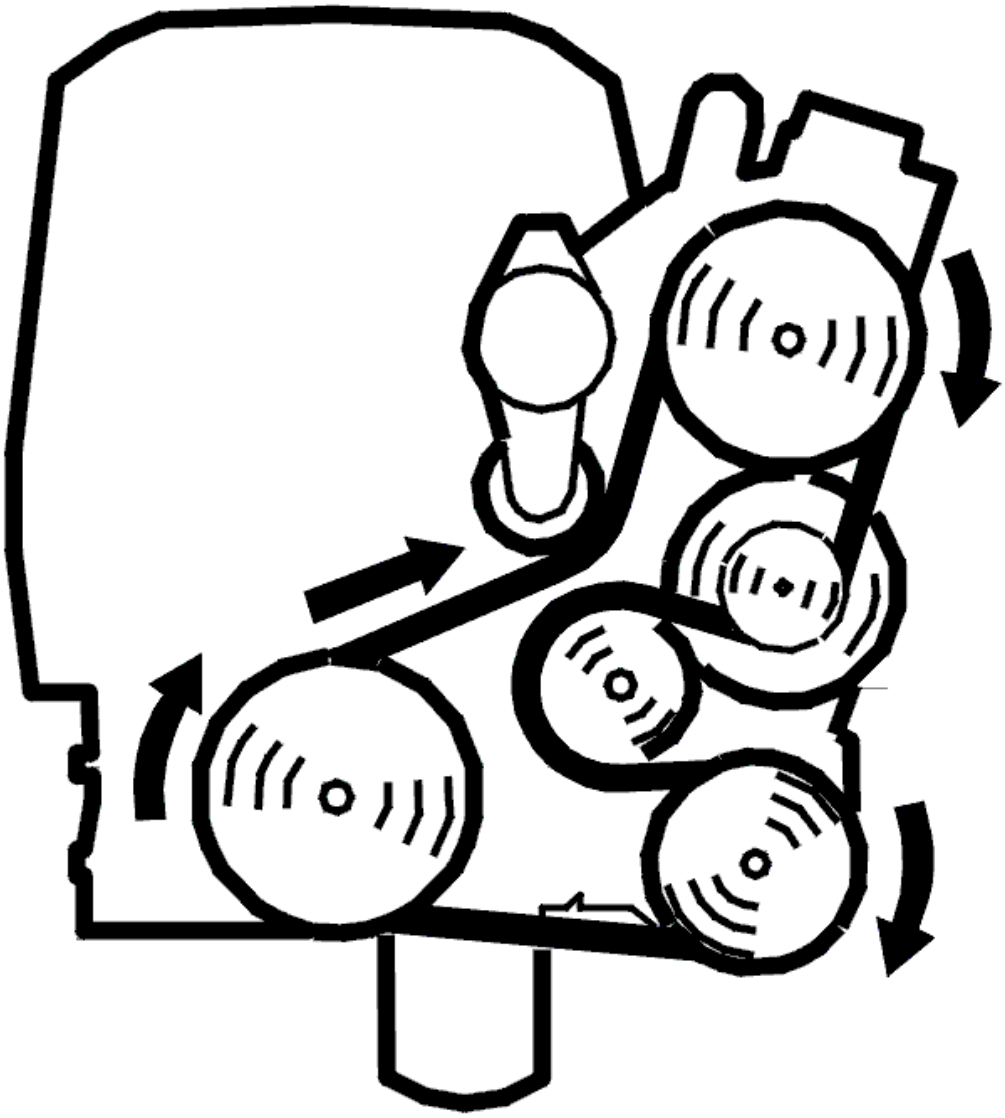

Fig. 84: Identifying Belt Routing
Courtesy of VOLVO CARS CORPORATION

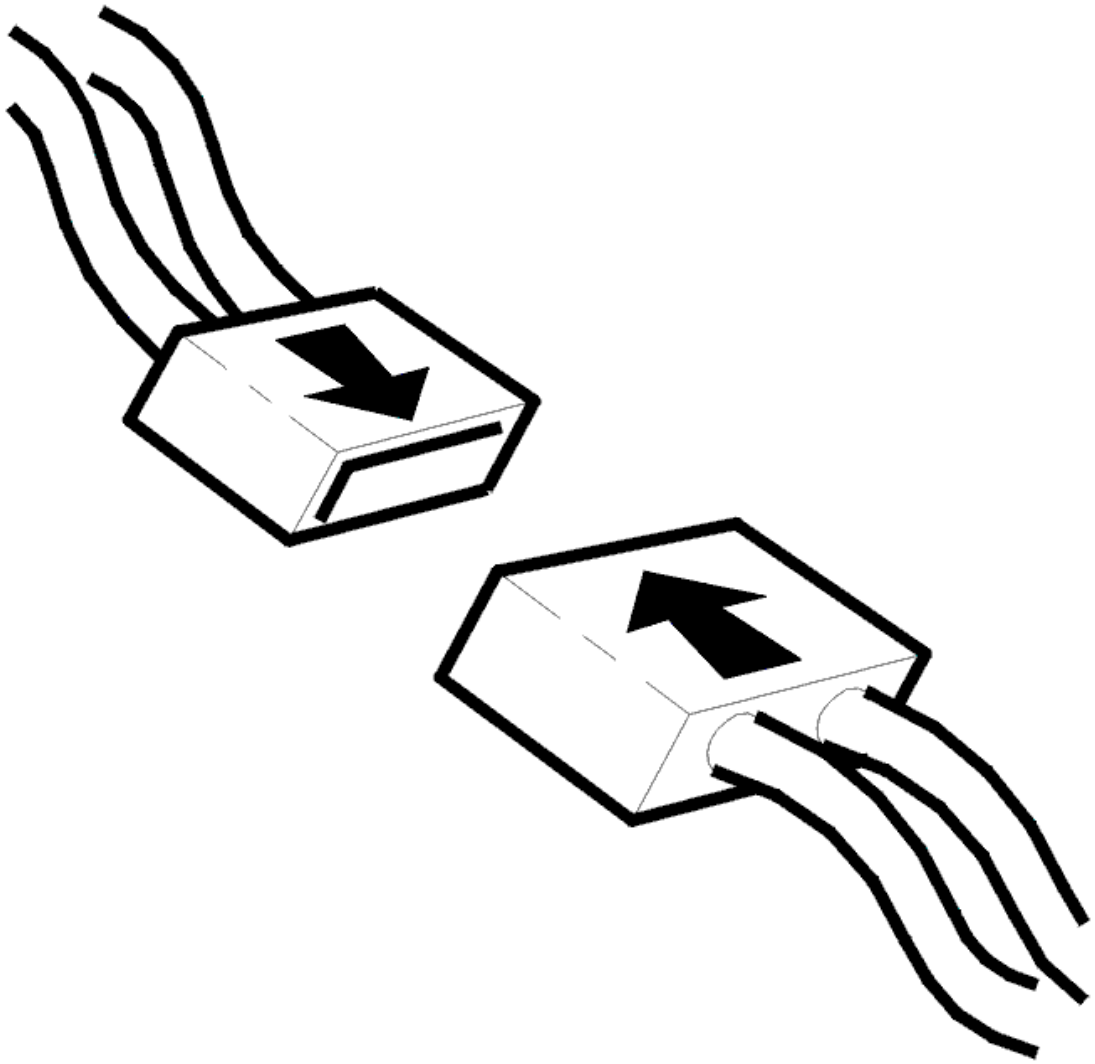

Fig. 85: Identifying Connector(s) Reinstallation
Courtesy of VOLVO CARS CORPORATION

- Ignition off
- Check the control module and transmission input speed sensor connectors. Check for contact resistance and oxidation. Remedy if necessary
- Reinstall the components, reconnect the connectors etc.
- Start the engine
- Read off the transmission input speed.

  Depress the accelerator pedal (AP) and check that engine speed (RPM) is updated. Compare with the engine speed (RPM).

  Other information

- To access the transmission connector, see **CONNECTING THE BREAKOUT BOX, GM AUTOMATIC TRANSMISSIONS**
- To access the control module connector, see **CONNECTING THE BREAKOUT BOX**
- see **CHECKING WIRING AND TERMINALS**

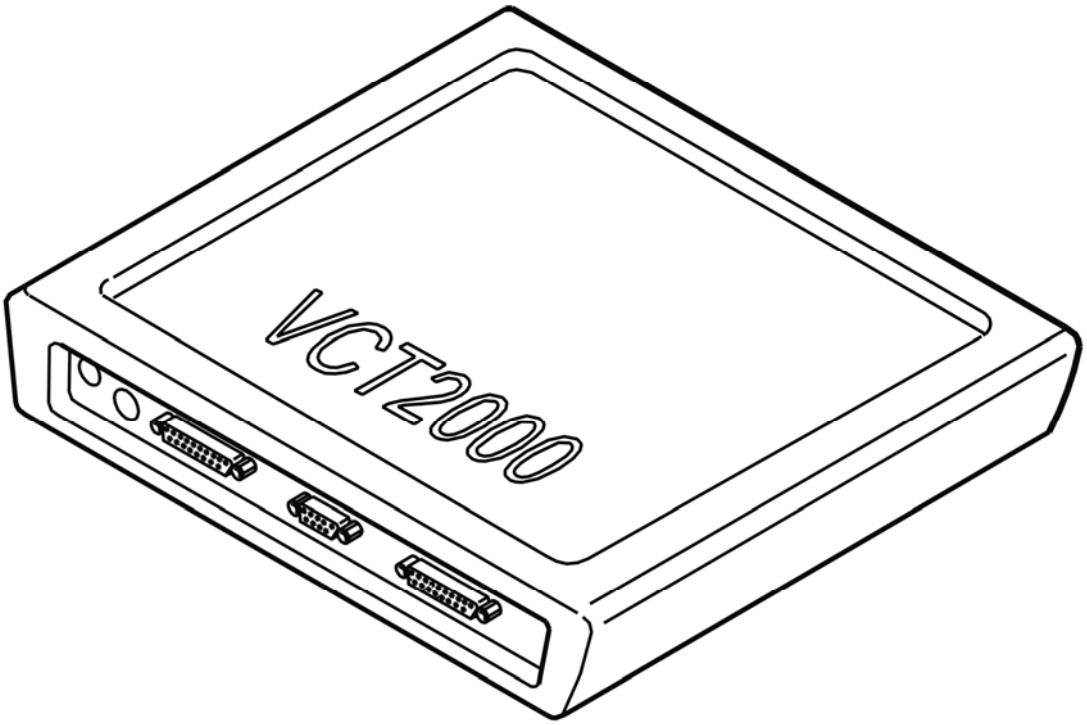

Fig. 86: Identifying VCT2000 Diagnostic Tool Symbol In VIDA
Courtesy of VOLVO CARS CORPORATION

Is the speed updated?

- **YES**

  Refer to **INTERMITTENT FAULT**

- **NO**

  Refer to **CHECKING WIRING AND SENSORS**

CHECKING WIRING AND SENSORS

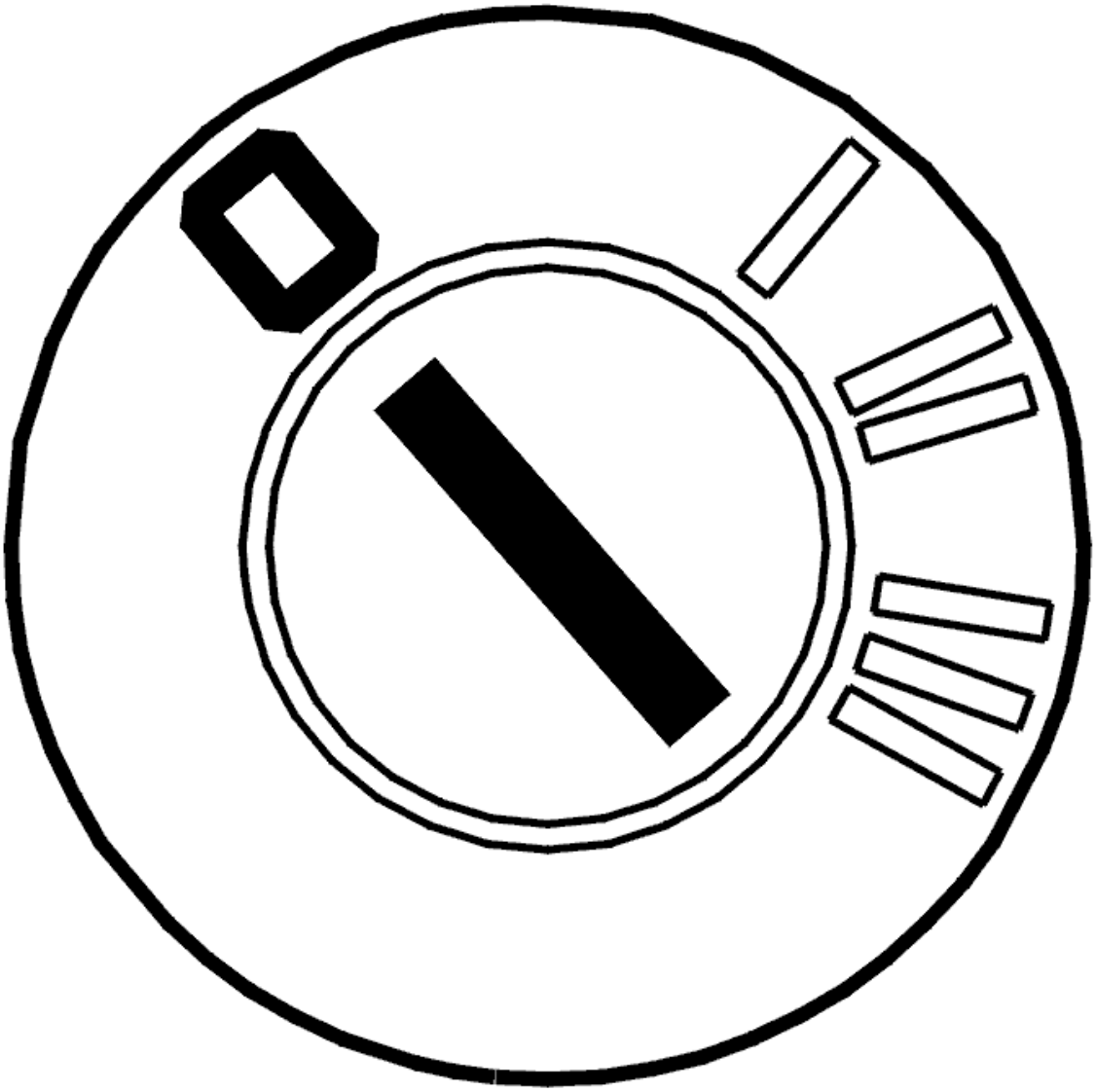

Fig. 87: Identifying Ignition OFF
Courtesy of VOLVO CARS CORPORATION

- Ignition off.

  Check the control module and transmission input speed sensor connectors. Check for contact resistance and oxidation.

  Check the power supply cable between control module terminal #59 (#A59) and transmission connector terminal #S (#A16). Check for an open-circuit. Check for a short-circuit to ground.

  Check the signal cable between control module terminal #41 (#A41) and transmission connector terminal #V (#A19). Check for an open-circuit. Check for a short-circuit to ground.

  Remedy as necessary.

Other information:

- To connect the breakout box, see **CONNECTING THE BREAKOUT BOX**
- To connect the breakout box to the transmission connector, see **CONNECTING THE BREAKOUT BOX, GM AUTOMATIC TRANSMISSIONS**
- For information about signals, see **SIGNAL SPECIFICATION**
- see **CHECKING WIRING AND TERMINALS**

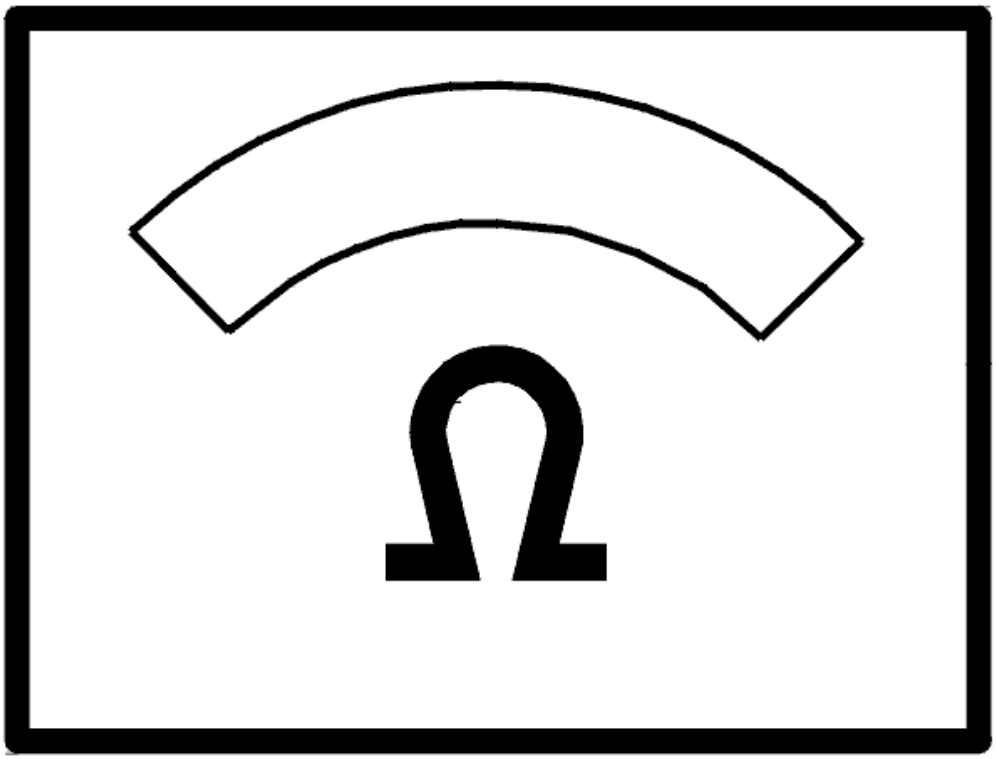

Fig. 88: Identifying Ohms Display
Courtesy of VOLVO CARS CORPORATION

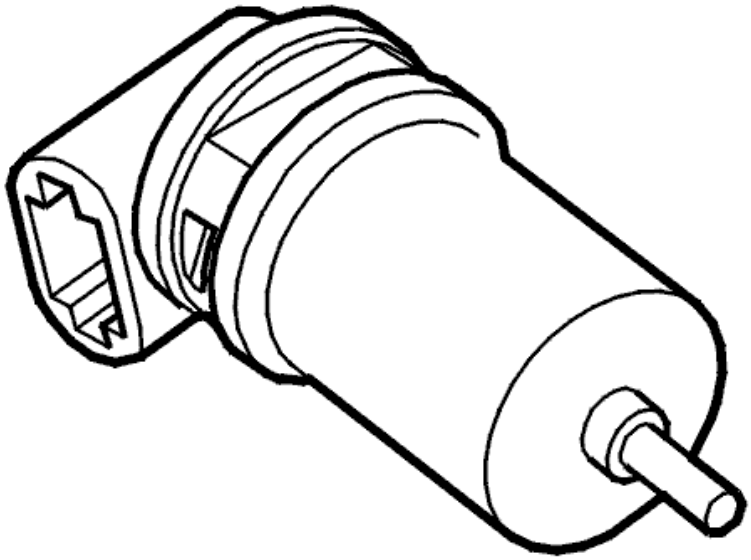

Fig. 89: Identifying Transmission Speed Sensor
Courtesy of VOLVO CARS CORPORATION

Was a fault detected in the cables or terminals?

- **YES**

  Refer to **VERIFICATION**

- **NO**

  Refer to **CHECKING THE CONTROL MODULE**

CHECKING THE CONTROL MODULE

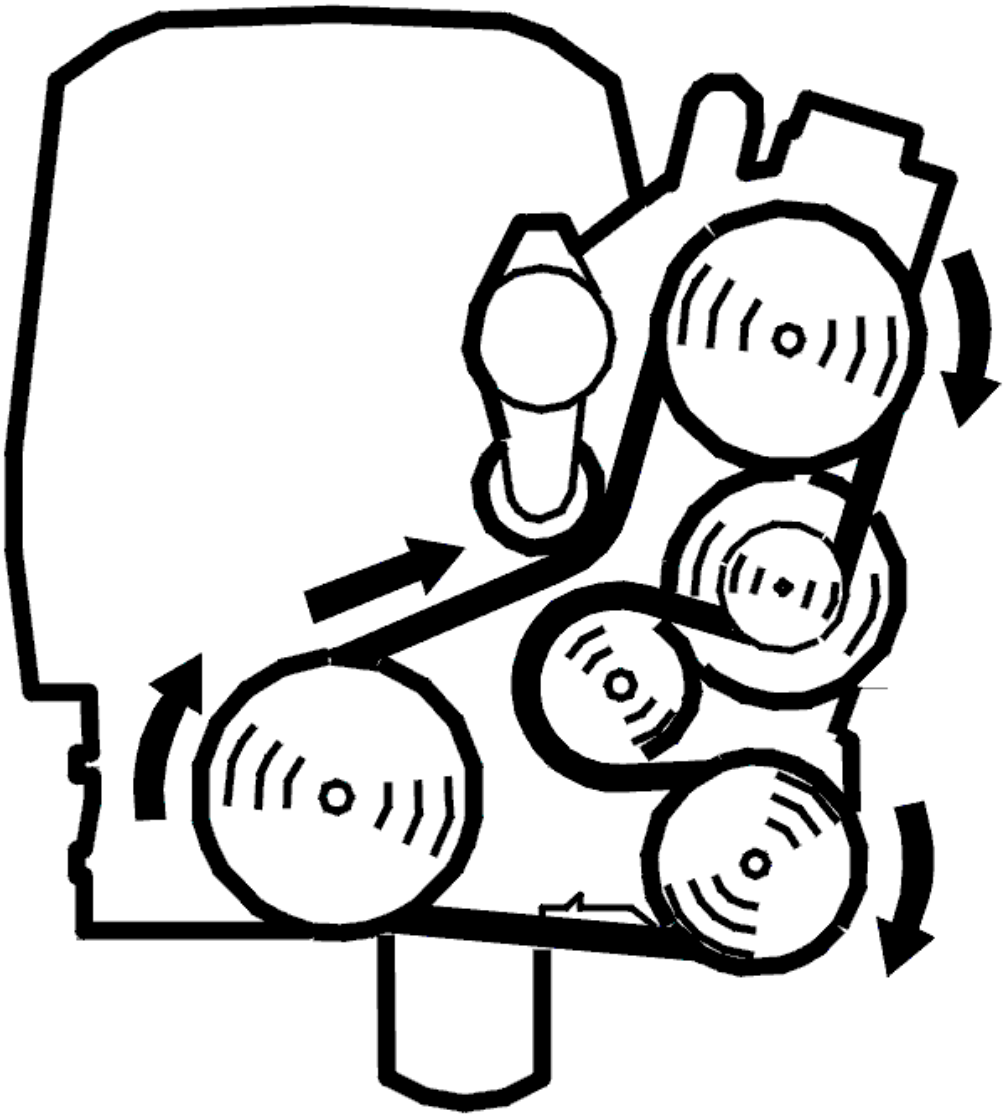

Fig. 90: Identifying Belt Routing
Courtesy of VOLVO CARS CORPORATION

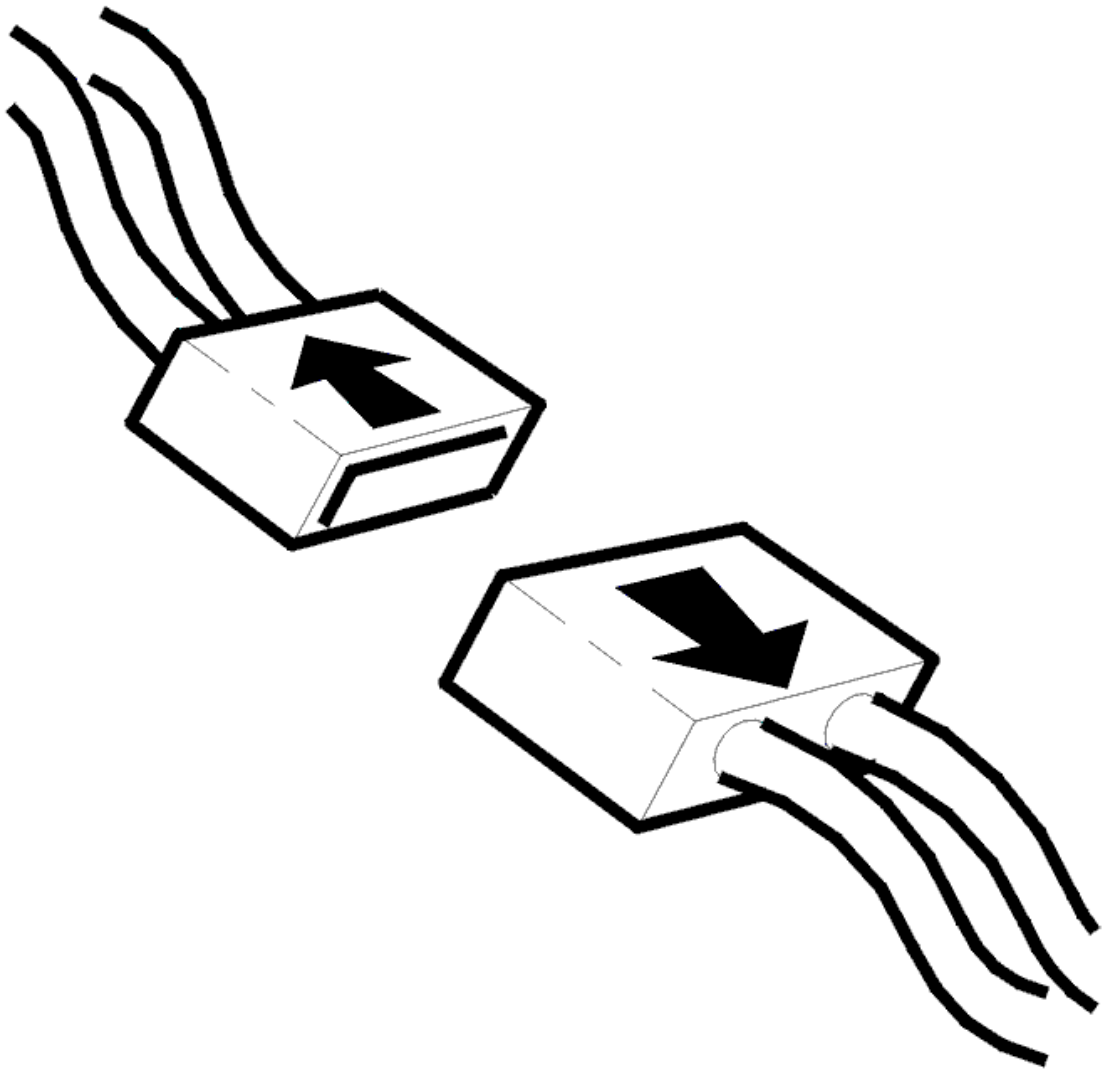

Fig. 91: Identifying Connector(s) Disconnected
Courtesy of VOLVO CARS CORPORATION

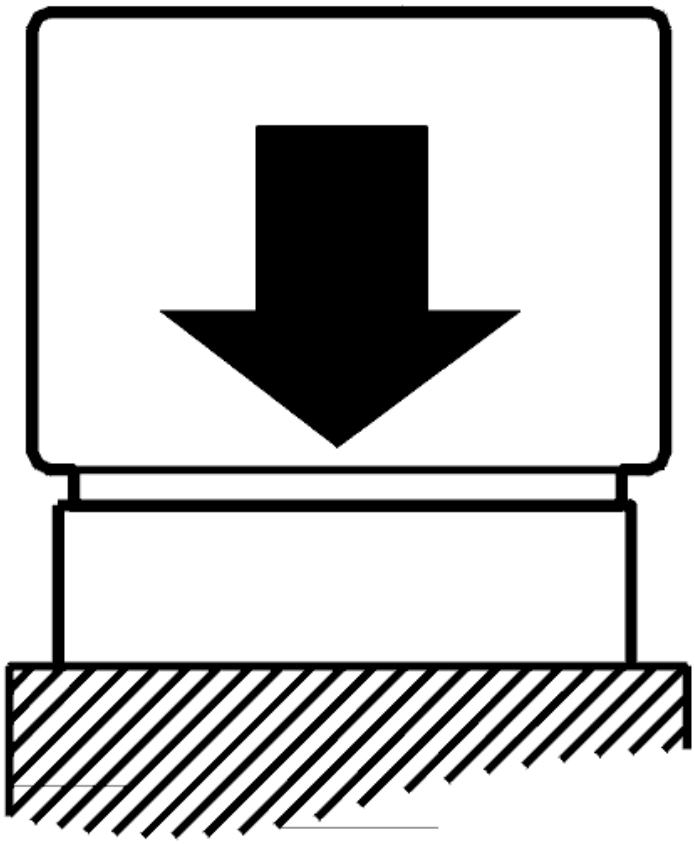

Fig. 92: Identifying Control Module Connected
Courtesy of VOLVO CARS CORPORATION

- Ignition off
- Transmission control module (TCM) connected
- The breakout box connected
- Transmission connector disconnected
- Connect a temporary cable between terminals #A35 and #A59 on the breakout box

CAUTION: Check that the temporary cable is connected to the correct terminals. Also check that there is no risk of unintentional short-circuits.

-
- Ignition on

- Read off the status.

  Check that the status is "1" when the temporary cable is connected to the terminals above.

  Disconnect the cable end that is connected to terminal #A35 and move the cable to terminal #A53.

  NOTE: Leave the cable end connected to terminal #A59 in place.

  Check that the status changes to "0" when the temporary cable has been moved to terminal #A53.

  The transmission output speed sensor is defective if the status has changed between "1" and "0" as above and no errors have been detected on the cables or terminals in the preceding checks. Replace the transmission output speed sensor.

  The transmission control module (TCM) is defective if the status has not changed between "1" and "0" as above and no errors have been detected on the cables or terminals in the preceding checks. If this is the case replace the control module.

  Remedy as necessary.

  Other information

  - To connect the breakout box, see **CONNECTING THE BREAKOUT BOX**
  - To disconnect the transmission connector, see **CONNECTING THE BREAKOUT BOX, GM AUTOMATIC TRANSMISSIONS**
  - To check or replace the transmission output speed sensor, see **OUTPUT SPEED SENSOR TRANSMISSION, REPLACING**
  - To replace the transmission control module (TCM), see **TRANSMISSION CONTROL MODULE (TCM), REPLACING**
  - For information about signals, see **SIGNAL SPECIFICATION** .

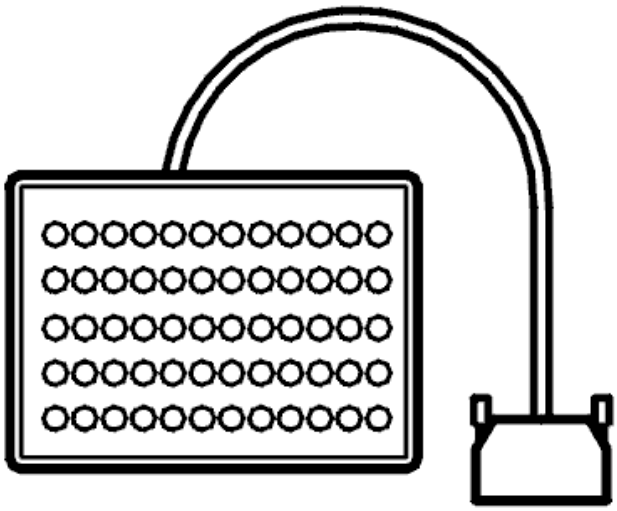

Fig. 93: Identifying Breakout Box
Courtesy of VOLVO CARS CORPORATION

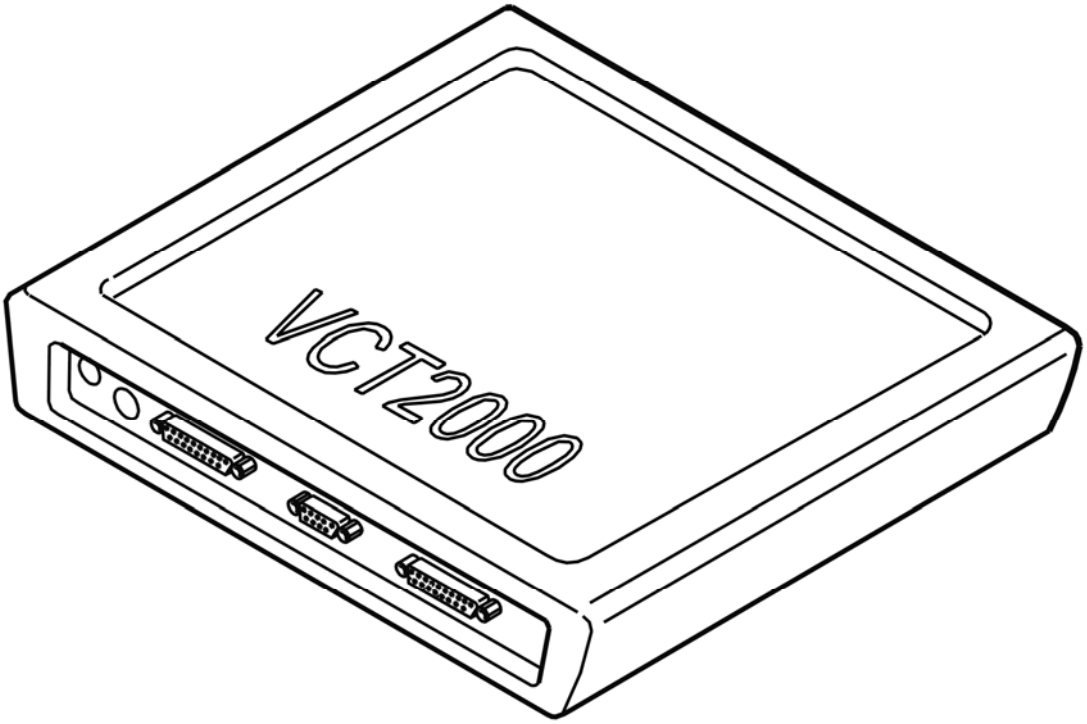

Fig. 94: Identifying VCT2000 Diagnostic Tool Symbol In VIDA
Courtesy of VOLVO CARS CORPORATION

Was a fault detected?

- **YES**

  Refer to **VERIFICATION**

- **NO**

  Refer to **CHECKING THE WIRING AND COMPONENT**

CHECKING THE WIRING AND COMPONENT

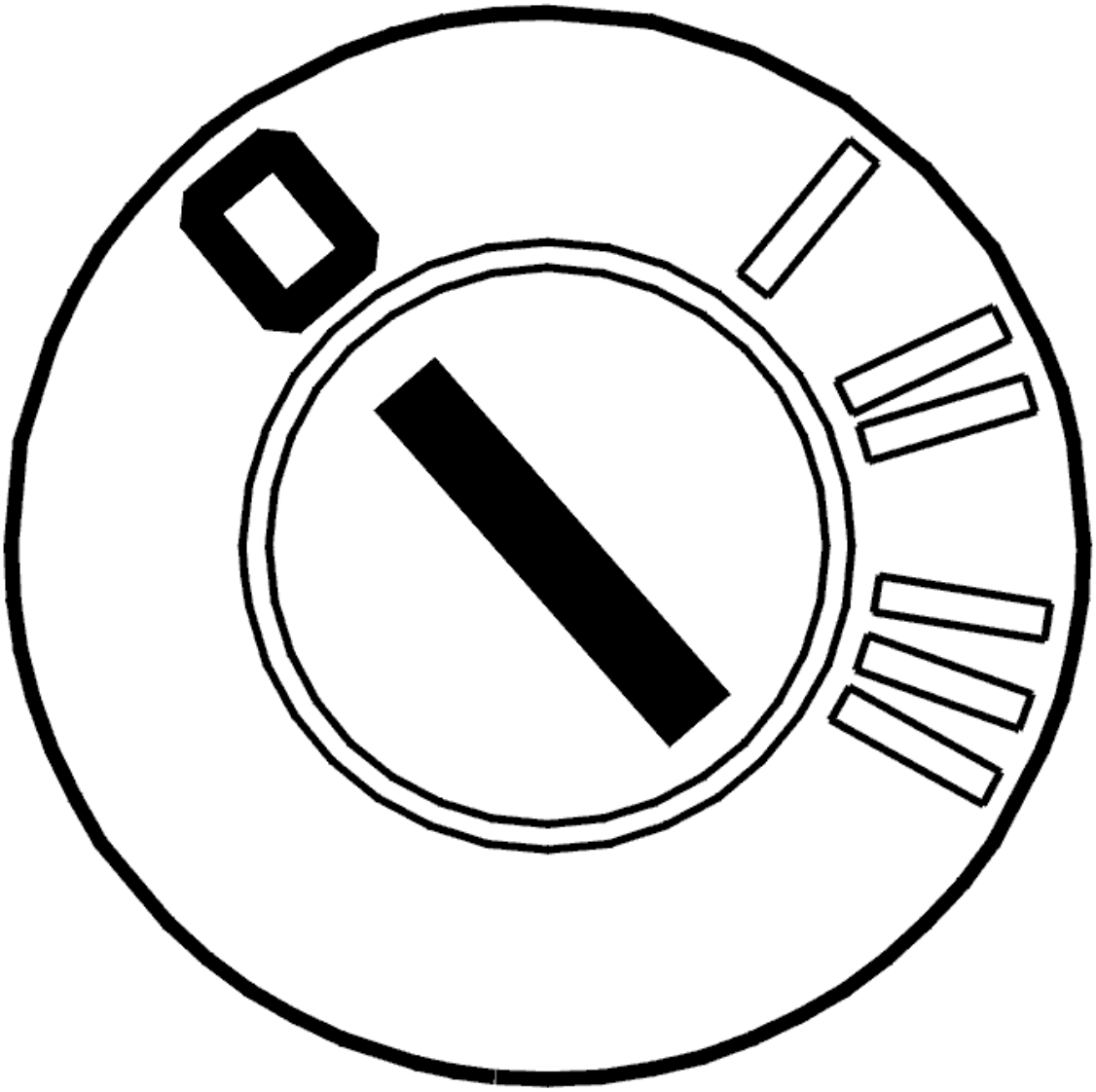

Fig. 95: Identifying Ignition OFF
Courtesy of VOLVO CARS CORPORATION

- Ignition off
- Open the transmission control system.

  Check the cable for power supply between transmission connector terminal #S (#A16) and speed sensor connector terminal #A. Check for an open-circuit. Check for a short-circuit to ground.

  Check the signal cable between transmission connector terminal #V (#A19) and speed sensor connector terminal #B. Check for an open-circuit. Check for a short-circuit to ground.

  Remedy as necessary.

  Other information

- To open the transmission control system, For removal, see **SIDE COVER TRANSMISSION, REMOVING** and To install, see **SIDE COVER TRANSMISSION, INSTALLING**
- To connect the breakout box to the transmission connector, see **CONNECTING THE BREAKOUT BOX, GM AUTOMATIC TRANSMISSIONS**
- To replace the transmission speed sensor, see **INPUT SPEED SENSOR TRANSMISSION, REPLACING**
- To replace the cable harness, see **TEMPERATURE SENSOR FLUID, TRANSAXLE, (TFT)**
- For information about signals, see **SIGNAL SPECIFICATION**
- see **CHECKING WIRING AND TERMINALS**

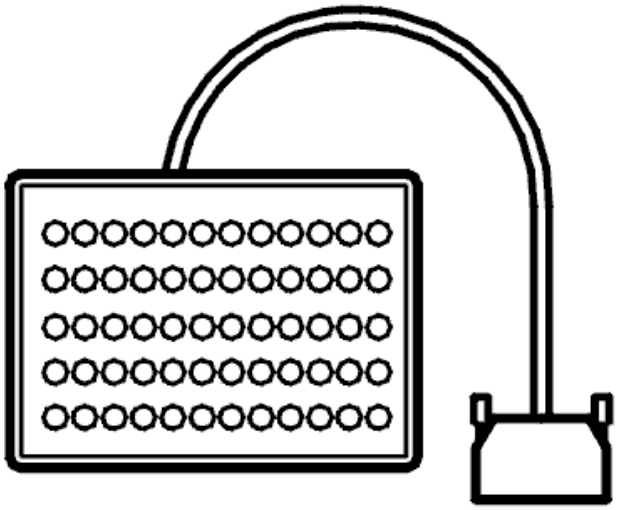

Fig. 96: Identifying Breakout Box
Courtesy of VOLVO CARS CORPORATION

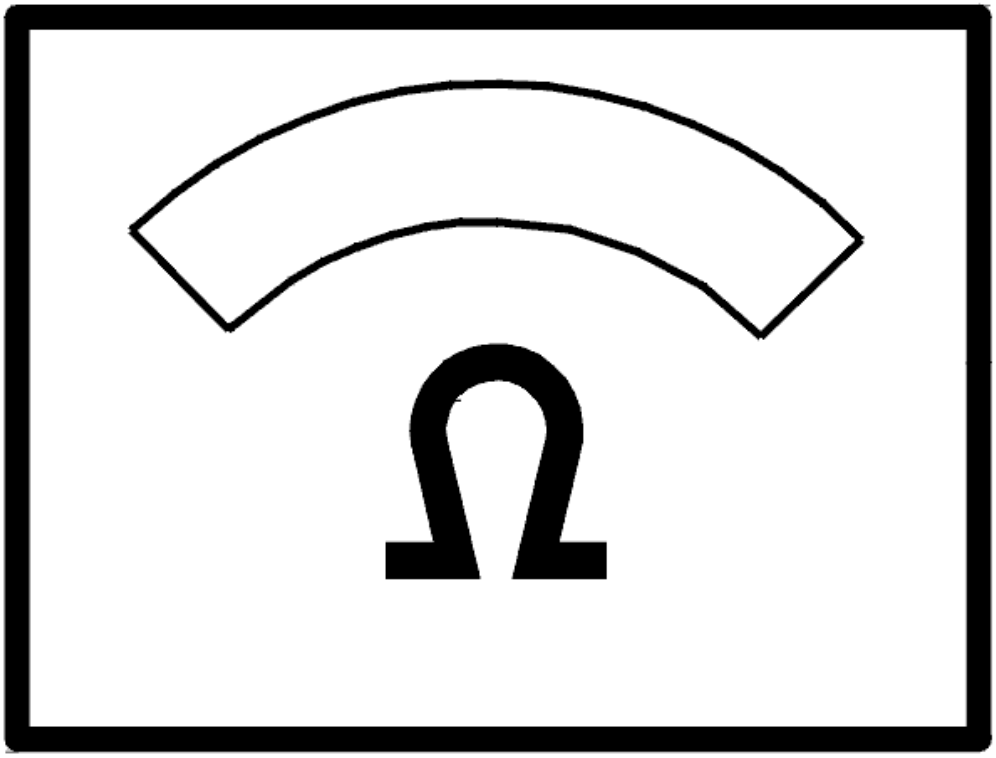

Fig. 97: Identifying Ohms Display
Courtesy of VOLVO CARS CORPORATION

- **Continue**

  Refer to **RESETTING THE ADAPTATION**

INTERMITTENT FAULT

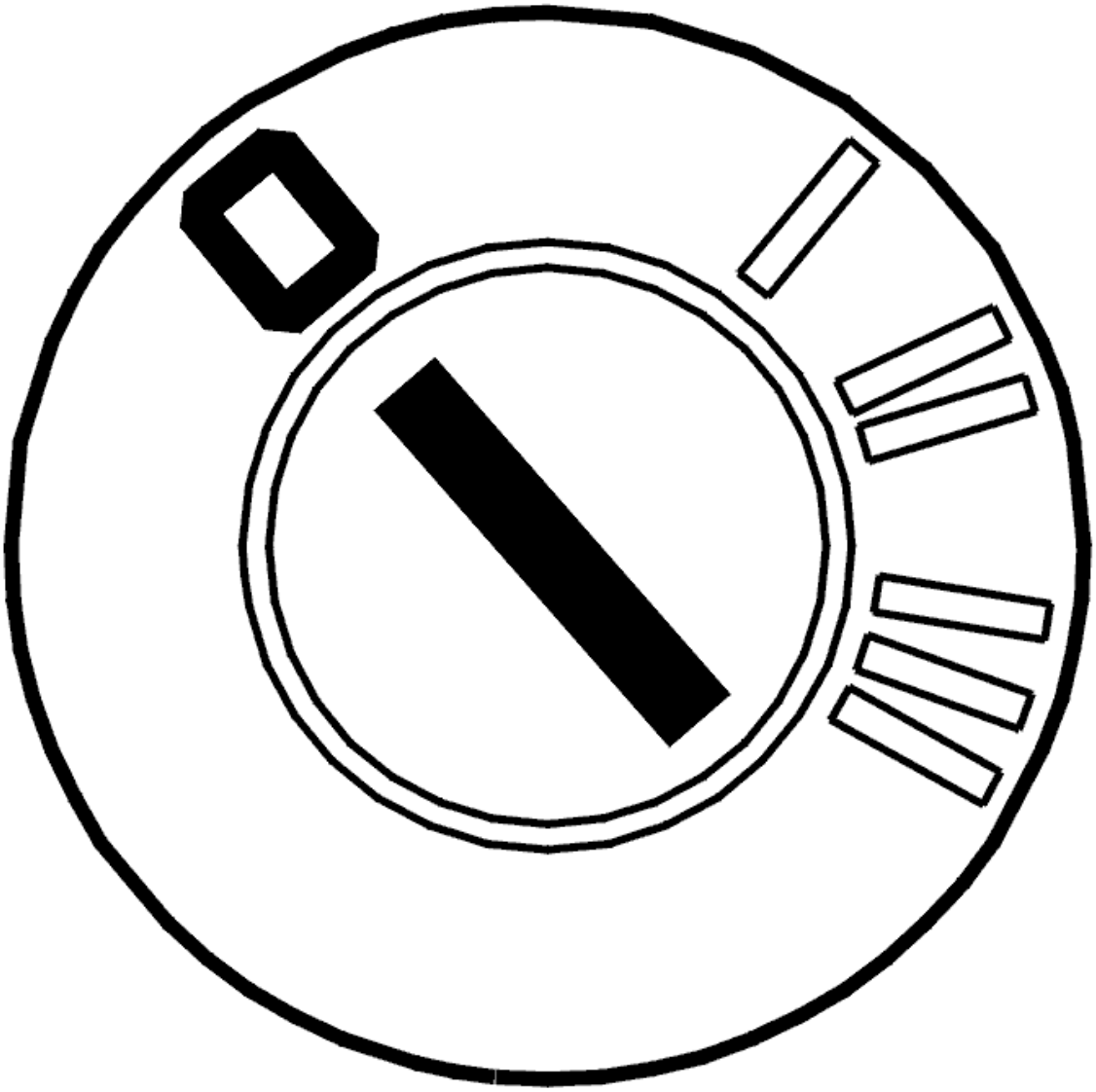

Fig. 98: Identifying Ignition OFF
Courtesy of VOLVO CARS CORPORATION

- Ignition off.

  Check the control module and transmission connectors. Check for contact resistance and oxidation.

  Check the power supply cable between control module terminal #59 (#A59) and transmission connector terminal #S (#A16). Check for an intermittent open-circuit. Check for an intermittent short-circuit to ground.

  Check the signal cable between control module terminal #41 (#A41) and transmission connector terminal #V (#A19). Check for an intermittent open-circuit. Check for an intermittent short-circuit to ground.

  Remedy as necessary.

Other information

- To connect the breakout box, see **CONNECTING THE BREAKOUT BOX**
- To disconnect the control module, see **TRANSMISSION CONTROL MODULE (TCM), REPLACING**
- To connect the breakout box to the transmission connector, see **CONNECTING THE BREAKOUT BOX, GM AUTOMATIC TRANSMISSIONS**
- For information about signals, see **SIGNAL SPECIFICATION**
- see **CHECKING WIRING AND TERMINALS**

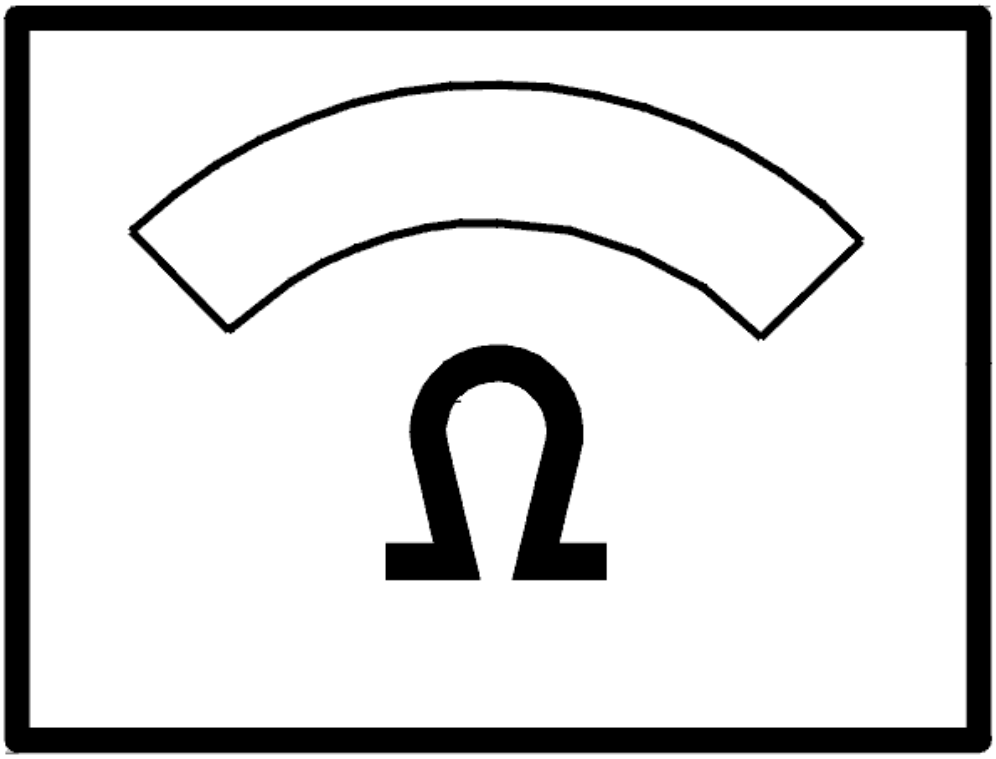

Fig. 99: Identifying Ohms Display
Courtesy of VOLVO CARS CORPORATION

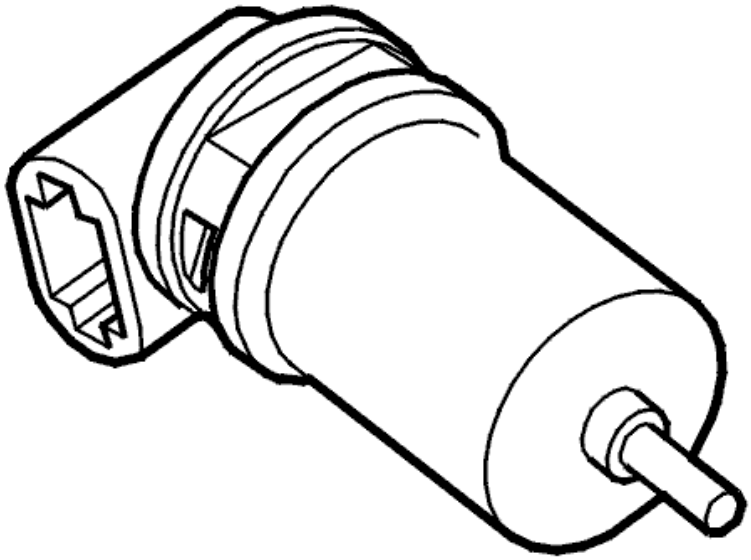

Fig. 100: Identifying Transmission Speed Sensor
Courtesy of VOLVO CARS CORPORATION

- **Continue**

  Refer to **INFORMATION**

RESETTING THE ADAPTATION

RESETTING ADAPTATION AND THE COUNTER FOR "TRANSMISSION OIL CHANGE"

HINT: The transmission has torque controlled adaptive pressure control. Pressure control means that the transmission regulates the pressure itself during each gear shift. This avoids harsh gear shifting. Each gear shift is evaluated by the control module and stored in the memory. This allows for compensation for wear and tear in the transmission and clutch. It is important that the adaptation in the memory is reset after the transmission has been repaired. This is to ensure normal operation. The oil is replaced during repair; the "Transmission oil change" counter must be reset. If the counter is not reset when the fluid is drained and replaced, there is a risk that a diagnostic trouble code (DTC) will be stored in incorrect circumstances.

NOTE: **This applies only if the transmission or one of the components in the transmission have been replaced.**

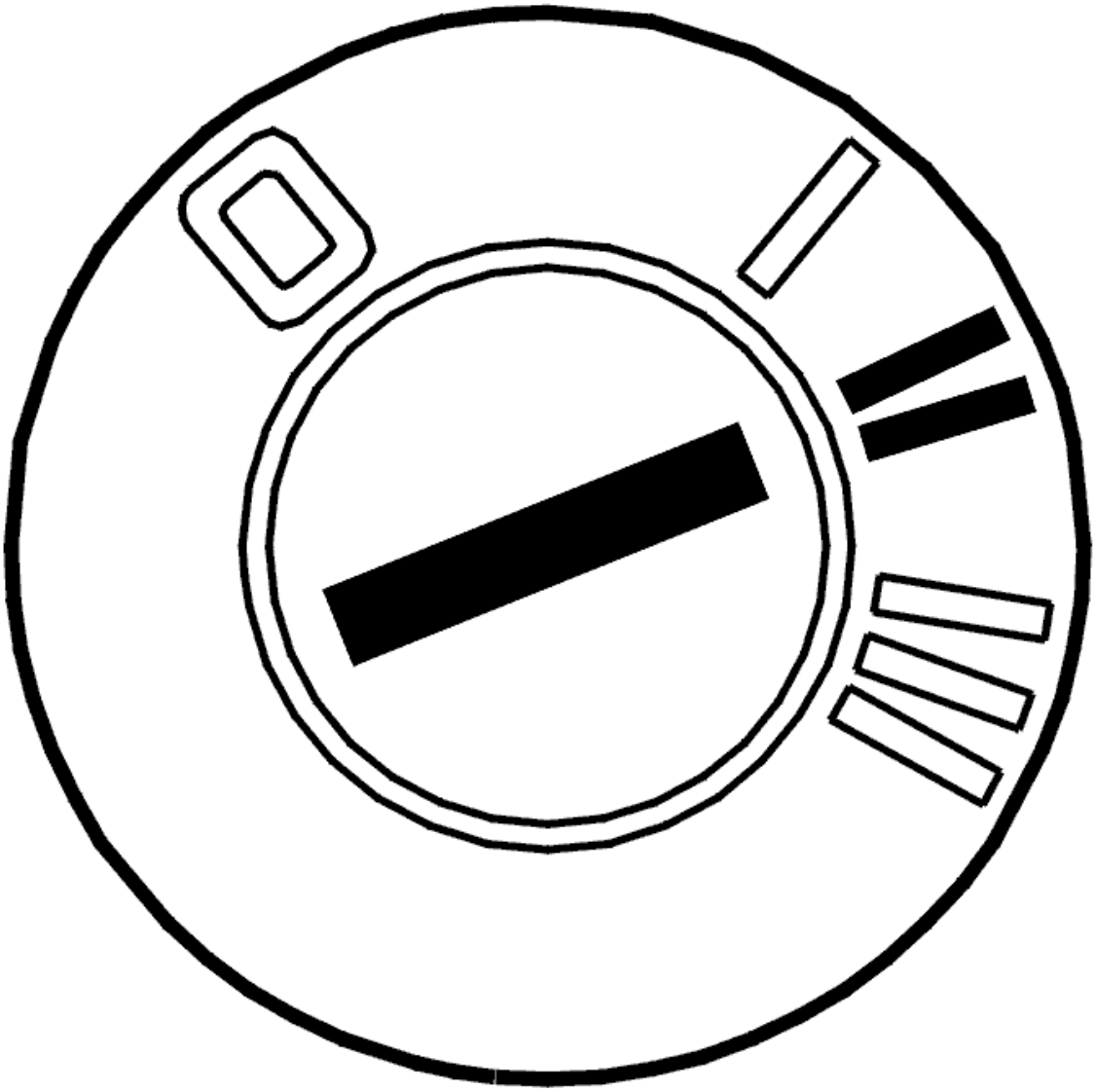

Fig. 101: Identifying Ignition ON
Courtesy of VOLVO CARS CORPORATION

- Ignition on.

  Use the VCT2000 (or appropriate scan tool) to reset the adaptation and counter.

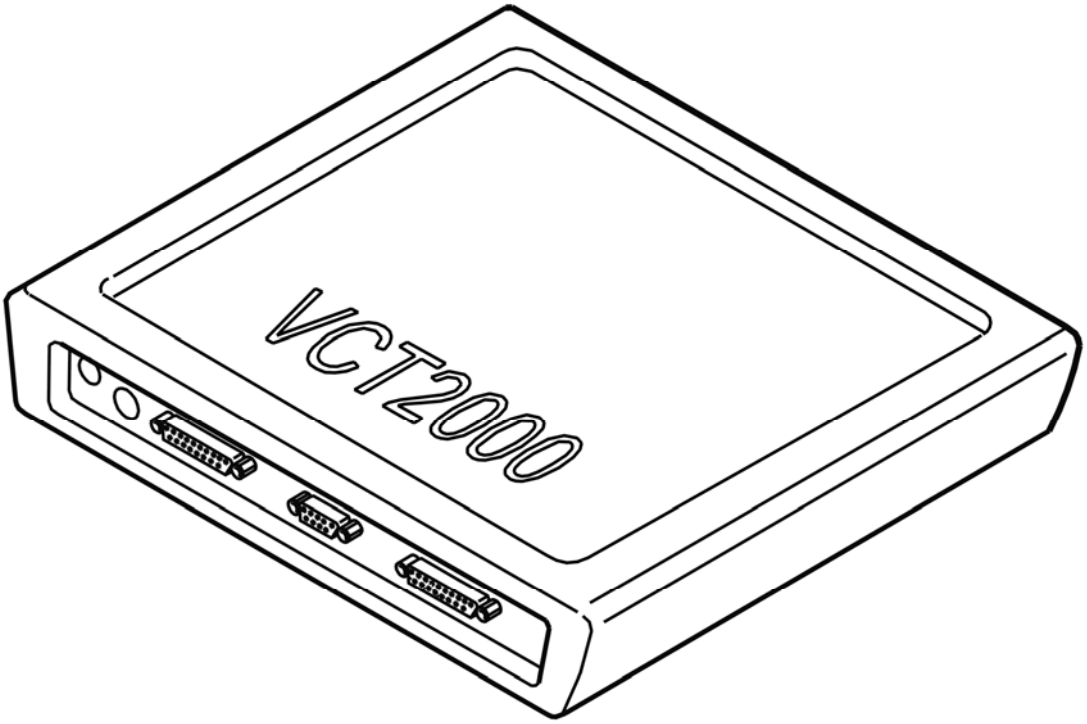

Fig. 102: Identifying VCT2000 Diagnostic Tool Symbol In VIDA
Courtesy of VOLVO CARS CORPORATION

- **Continue**

  Refer to **VERIFICATION**

VERIFICATION

VERIFICATION

HINT: After carrying out the repair, check that the fault has been remedied.

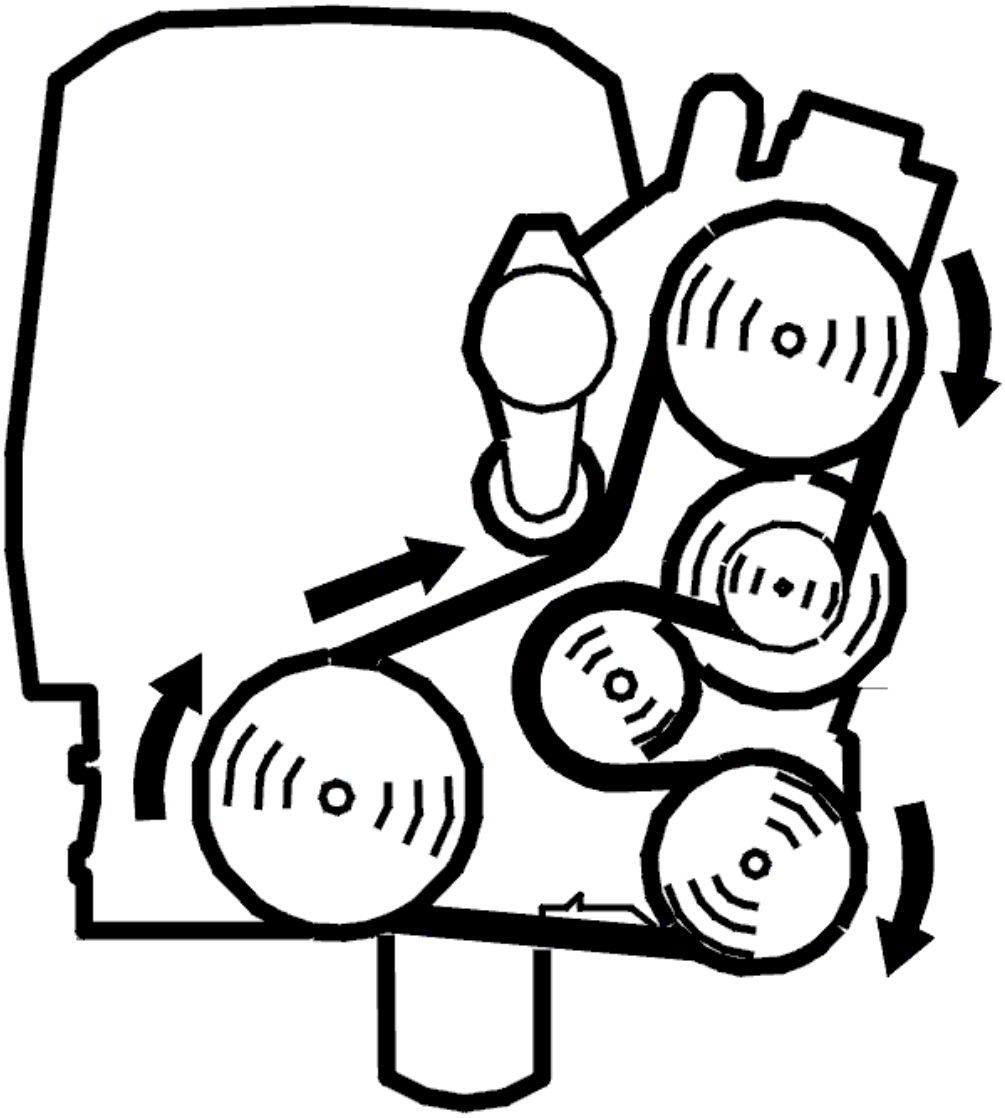

Fig. 103: Identifying Belt Routing
Courtesy of VOLVO CARS CORPORATION

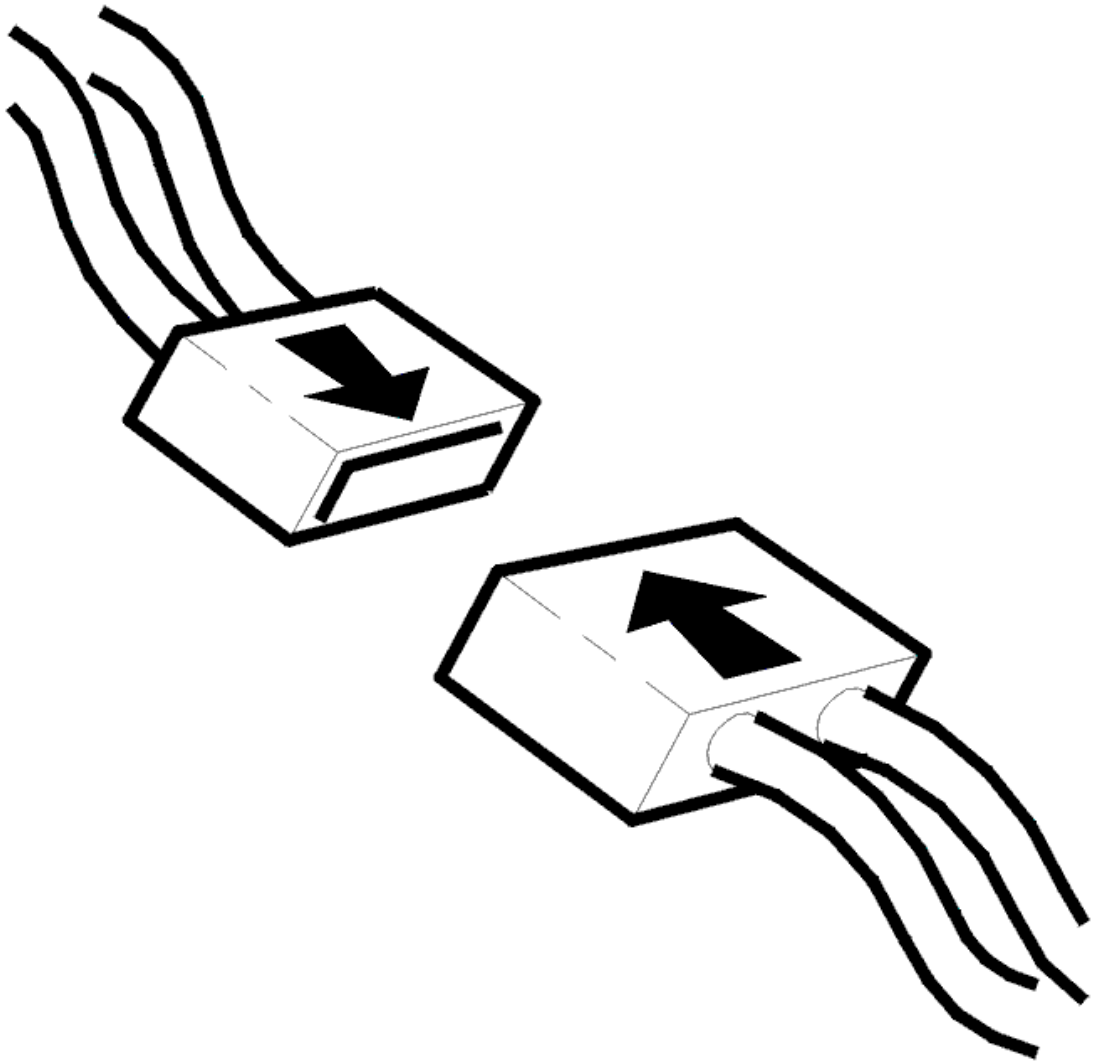

Fig. 104: Identifying Connector(s) Reinstallation
Courtesy of VOLVO CARS CORPORATION

- Ignition off.
- Reinstall the connectors, components etc.
- Start the engine and let it idle.
- Read off the transmission speed.

  Depress the accelerator pedal (AP) and check that engine speed (RPM) is updated. Compare with the engine speed (RPM).

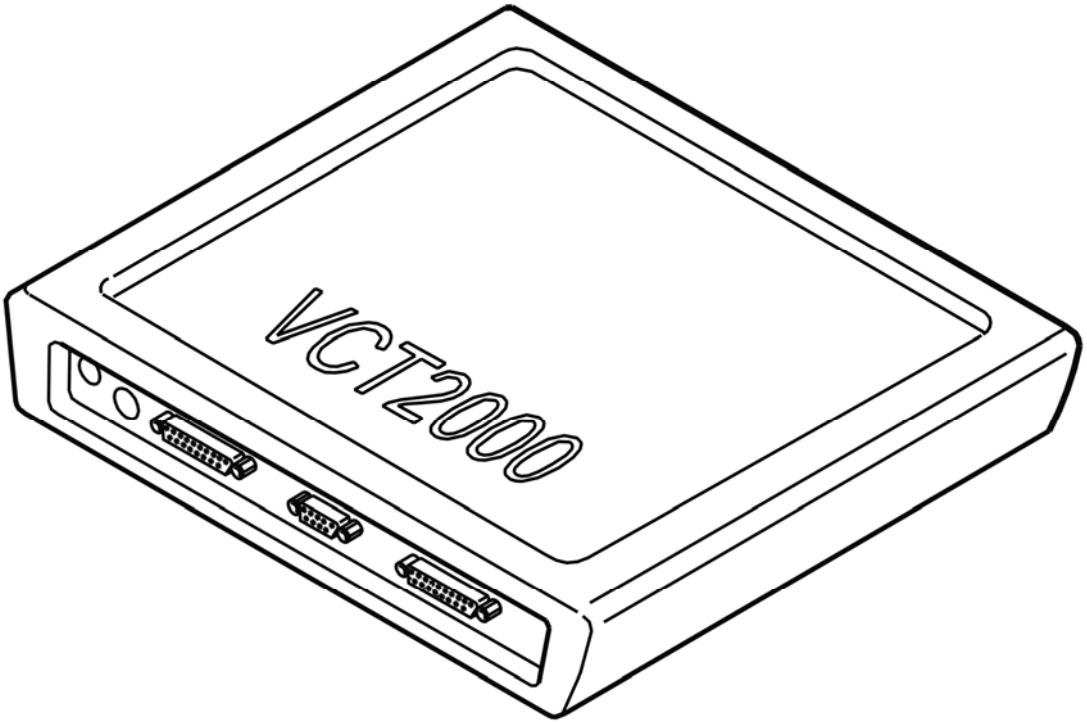

Fig. 105: Identifying VCT2000 Diagnostic Tool Symbol In VIDA
Courtesy of VOLVO CARS CORPORATION

Is the speed updated?

- **YES**

  VERIFIED: Troubleshooting has been completed.

- **NO**

  Refer to **INFORMATION**

INFORMATION

FAULT-TRACING INFORMATION

The fault should have been detected and remedied. As this is not the case fault-tracing has failed.

Exit fault-tracing for this diagnostic trouble code (DTC) or make another attempt.

INFORMATION

FAULT-TRACING INFORMATION

If the fault is intermittent, do not verify fault-tracing if the fault does not recur.

It is possible to view the information again, or leave fault-tracing for this diagnostic trouble code (DTC).

TCM-0089: TRANSMISSION INPUT SPEED SENSOR. SIGNAL TOO LOW (AW50/51 AWD; AW55-50/51SN; 2003-2007)

DIAGNOSTIC TROUBLE CODE (DTC) INFORMATION

Condition

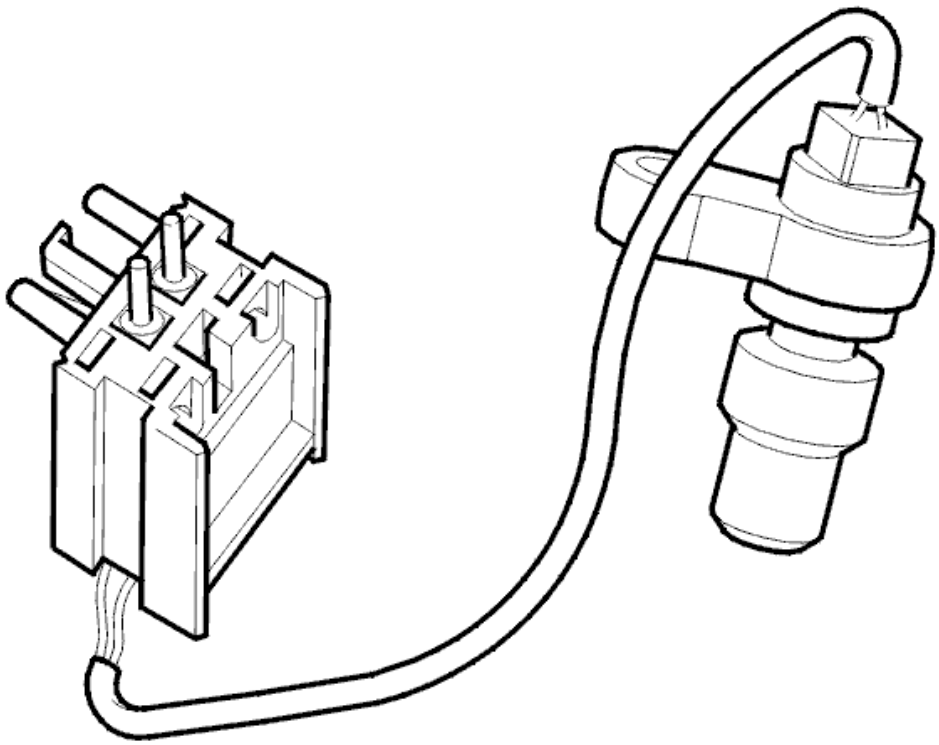

Fig. 106: Identifying Transmission Input Speed Sensor
Courtesy of VOLVO CARS CORPORATION

The transmission speed signal is transmitted by a sensor on the transmission. The transmission control module (TCM) uses the signal to determine the input shaft speed after the torque converter. This signal is used to compare the transmission speed with vehicle speed. The transmission control module (TCM) uses this comparison to calculate gear-shift timing. Engine speed (RPM) and vehicle speed data affects the adjustment of system pressure, lock-up function control and engine torque reduction. The result is smooth gear-shifting. Diagnostic trouble code (DTC) TCM-0089 is stored if the control module registers that the signal is too low when vehicle speed is over approximately 25 km/h.

Substitute Value

- The transmission control module (TCM) "Emergency mode I" program has been initiated.

Possible Source

- Contact resistance in the terminals.
- Short-circuit to ground in the signal cable.
- Defective input speed sensor.

Fault symptom[s]

- General orange warning lamp lit.
- No lock-up function.
- Harsh gear shifting.

HINT: Harsh gear shifting can be caused by:

- No reduction of line pressure when shifting.
- No reduction of line pressure when moving the gear selector between positions P-R, N-R and N-D.
- No torque limiting request to engine control module (ECM) when shifting.

SIGNAL TOO LOW

CHECKS

CHECKING THE TRANSMISSION INPUT SPEED SENSOR SIGNAL

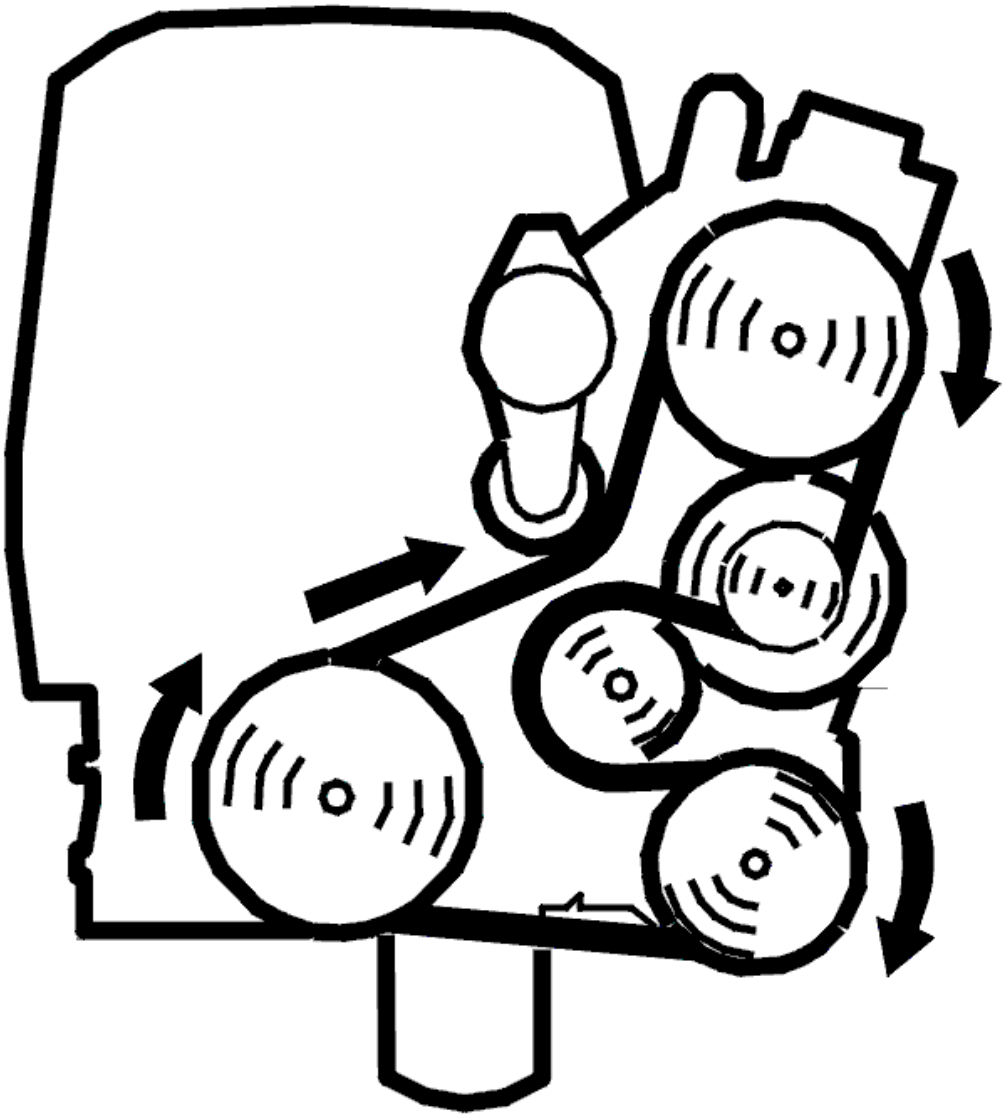

Fig. 107: Identifying Belt Routing
Courtesy of VOLVO CARS CORPORATION

- Start the engine. Allow the engine to idle
- Gear selector in position P
- Read off the transmission input speed.

  Check that the transmission speed is updated.

  Compare with the engine speed (RPM).

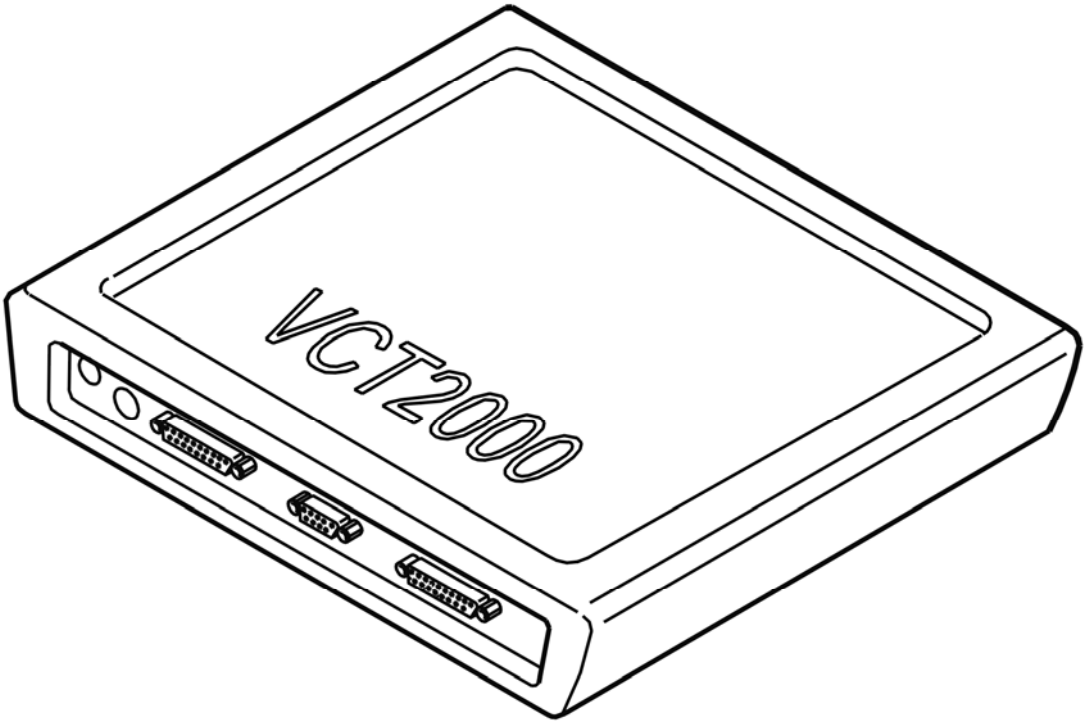

Fig. 108: Identifying VCT2000 Diagnostic Tool Symbol In VIDA
Courtesy of VOLVO CARS CORPORATION

Is the speed updated?

- **YES**

  Refer to **INTERMITTENT FAULT**

- **NO**

  Refer to **CHECKING WIRING AND SENSORS**

CHECKING WIRING AND SENSORS

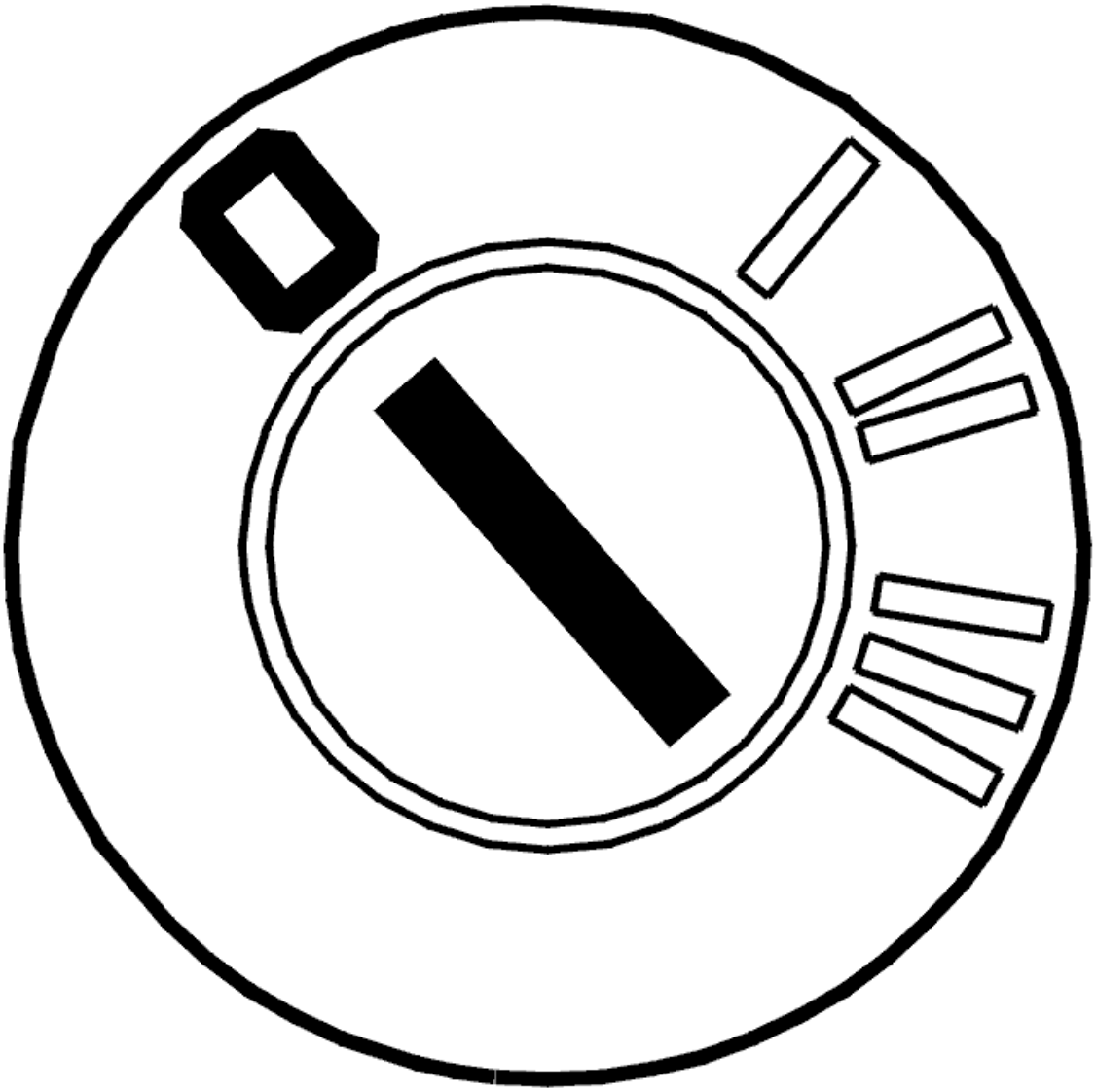

Fig. 109: Identifying Ignition OFF
Courtesy of VOLVO CARS CORPORATION

- Ignition off.

  Check the transmission control module (TCM) and transmission input speed sensor connectors. Check for contact resistance and oxidation according to **CONTACT RESISTANCE AND OXIDATION** .

  Check the power supply cable between control module terminal #A59 (#A59) and transmission connector terminal #A2. Check for an open-circuit according to **OPEN-CIRCUIT, PERMANENT FAULTS** . Check for a short-circuit to ground according to **SHORT-CIRCUIT TO GROUND, PERMANENT FAULTS** .

  Check the signal cable between control module terminal #A41 (#A41) and transmission connector terminal #A1. Check for an open-circuit according to **OPEN-CIRCUIT, PERMANENT FAULTS** . Check for a short-circuit to ground according to **SHORT-CIRCUIT TO GROUND, PERMANENT**

FAULTS .

HINT: With the control module connected, the ignition on and a voltmeter connected between transmission connector terminals #A2 and #A1 (control module side), the voltage must be 1-3 V below Ubat.

Remedy as necessary.

Other information:

- To connect the breakout box, see **CONNECTING THE BREAKOUT BOX**
- To disconnect the control module, see **TRANSMISSION CONTROL MODULE (TCM), REPLACING**
- To disconnect the transmission connectors, see **CONNECTORS, TRANSMISSION, DISCONNECTING / CONNECTING**
- To check and replace the transmission speed sensor, see **INPUT SPEED SENSOR/OUTPUT SPEED SENSOR, REPLACING**
- For information about signals, see **SIGNAL DESCRIPTION. TRANSMISSION CONTROL MODULE (TCM)** .

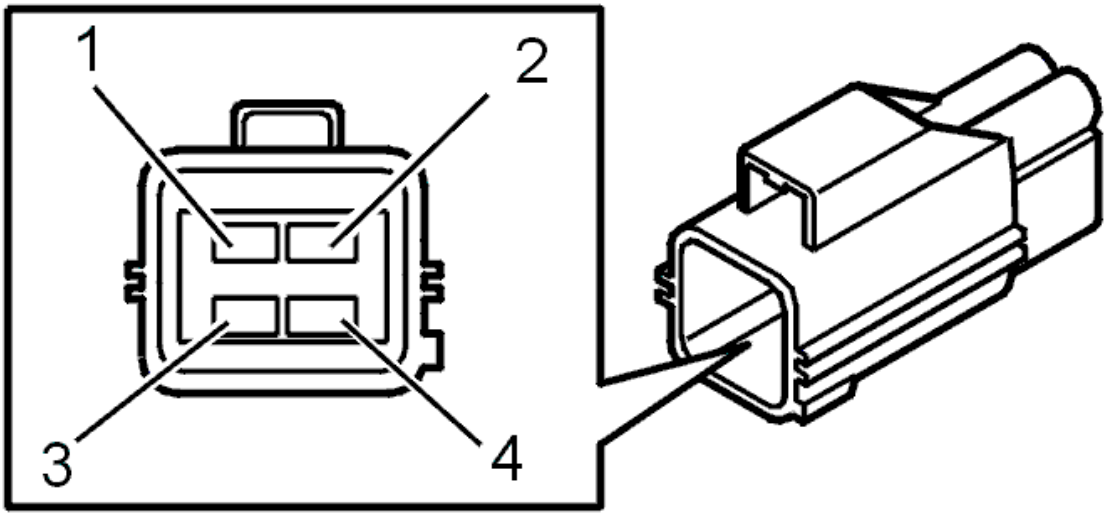

Fig. 110: Identifying Transmission Speed Sensor Terminals
Courtesy of VOLVO CARS CORPORATION

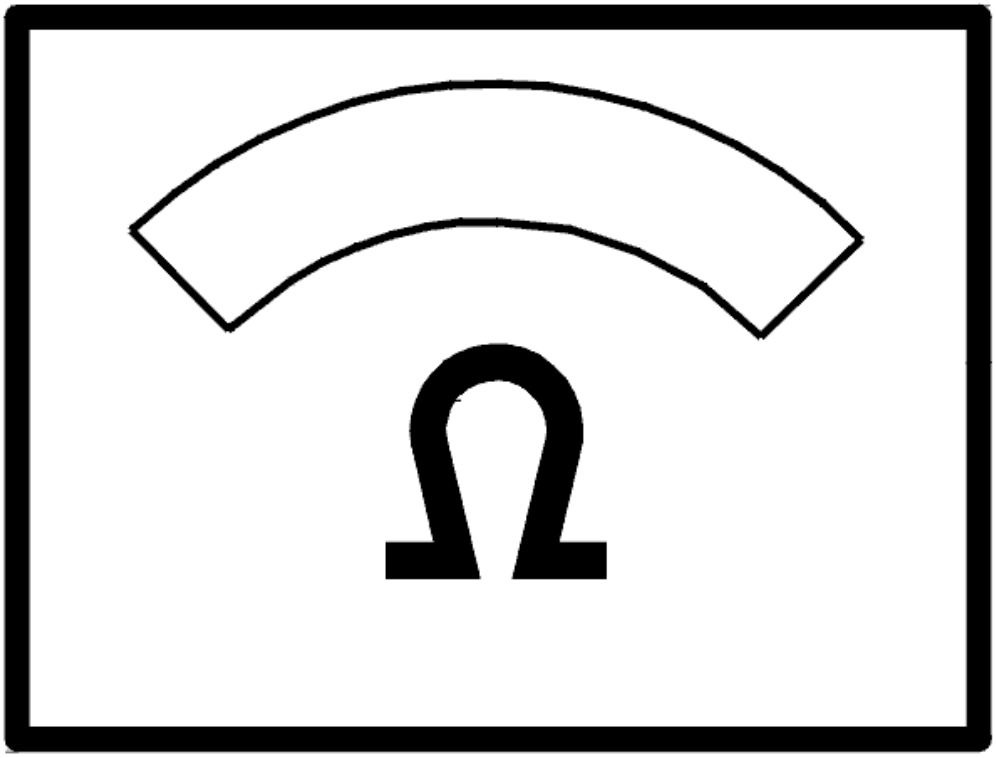

Fig. 111: Identifying Ohms Display
Courtesy of VOLVO CARS CORPORATION

- **Continue**

  Refer to **VERIFICATION**

INTERMITTENT FAULT

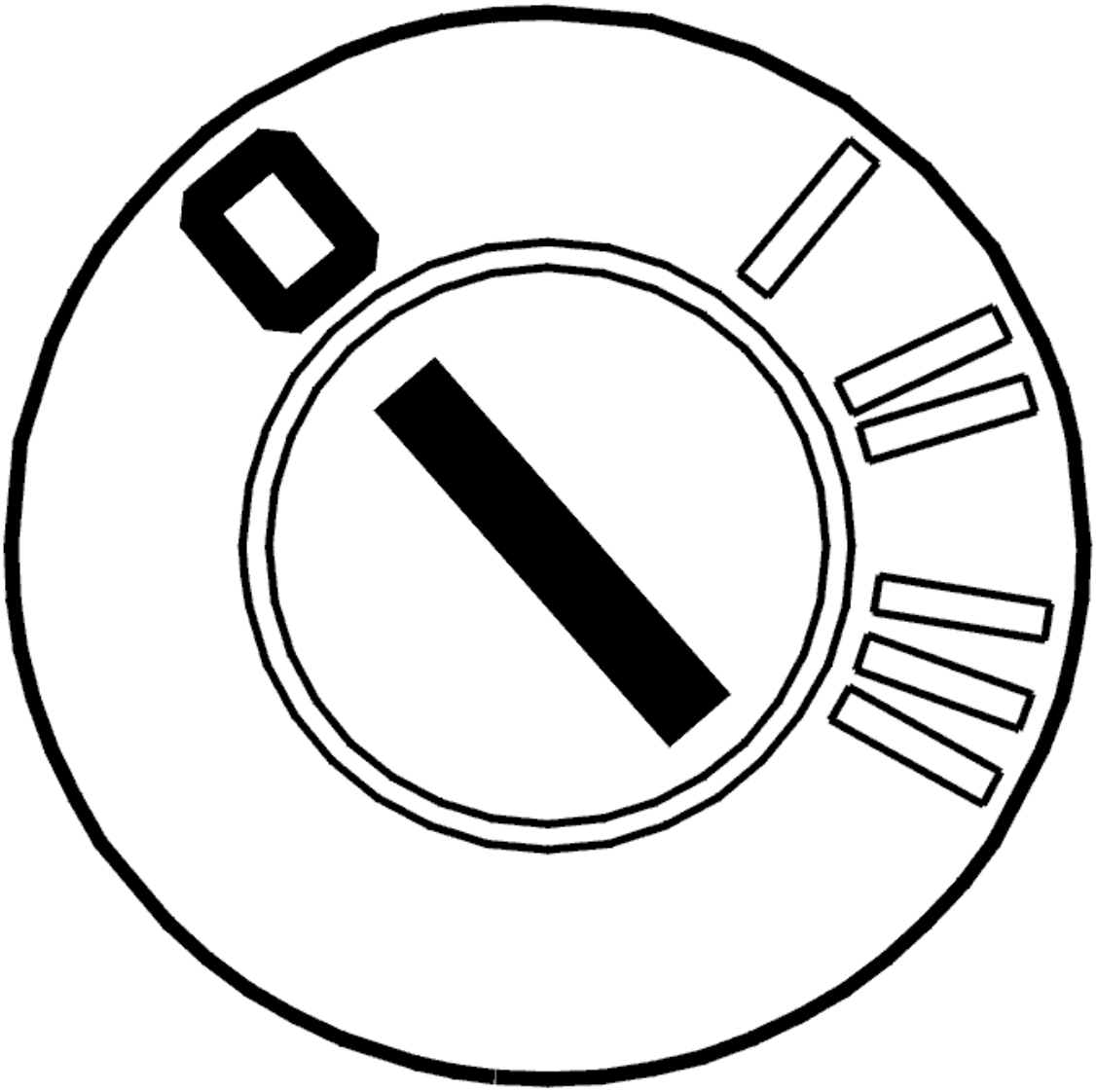

Fig. 112: Identifying Ignition OFF
Courtesy of VOLVO CARS CORPORATION

- Ignition off.

  Check the control module and transmission input speed sensor connectors. Check for contact resistance and oxidation according to **CONTACT RESISTANCE AND OXIDATION** .

  Check the power supply cable between control module terminal #A59 (#A59) and transmission connector terminal #A2. Check for an intermittent open-circuit according to **OPEN-CIRCUIT, INTERMITTENT FAULTS** . Check for an intermittent short-circuit to ground according to **SHORT-CIRCUIT TO GROUND, INTERMITTENT FAULTS** .

  Check the signal cable between control module terminal #A41 (#A41) and transmission connector terminal #A1. Check for an intermittent open-circuit according to **OPEN-CIRCUIT, INTERMITTENT FAULTS** . Check for an intermittent short-circuit to ground according to **SHORT-CIRCUIT TO**

GROUND, INTERMITTENT FAULTS .

Remedy as necessary.

Other information:

- To connect the breakout box, see **CONNECTING THE BREAKOUT BOX**
- To disconnect the control module, see **TRANSMISSION CONTROL MODULE (TCM), REPLACING**
- To disconnect the transmission connectors, see **CONNECTORS, TRANSMISSION, DISCONNECTING / CONNECTING**
- For information about signals, see **SIGNAL DESCRIPTION. TRANSMISSION CONTROL MODULE (TCM)** .

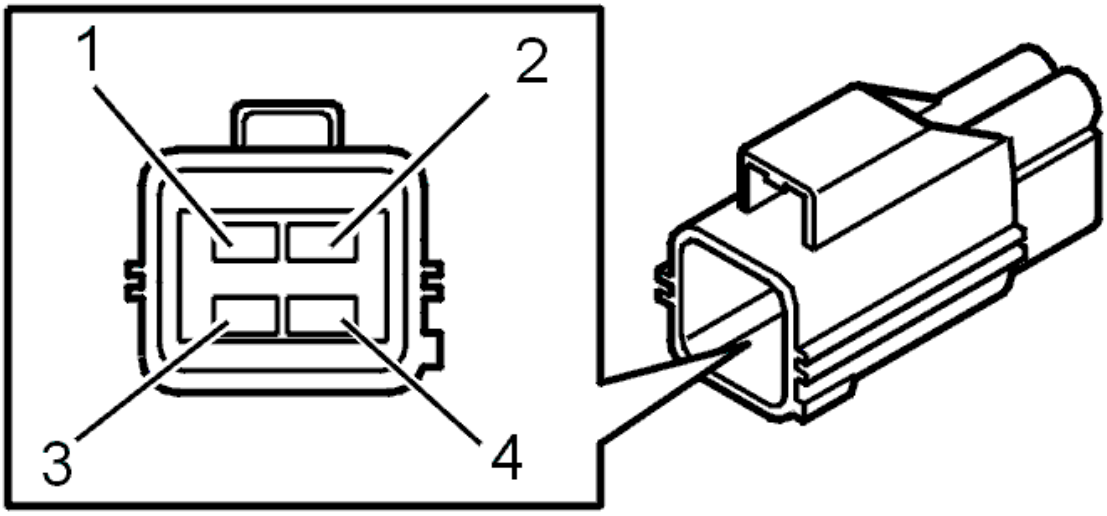

Fig. 113: Identifying Transmission Speed Sensor Terminals
Courtesy of VOLVO CARS CORPORATION

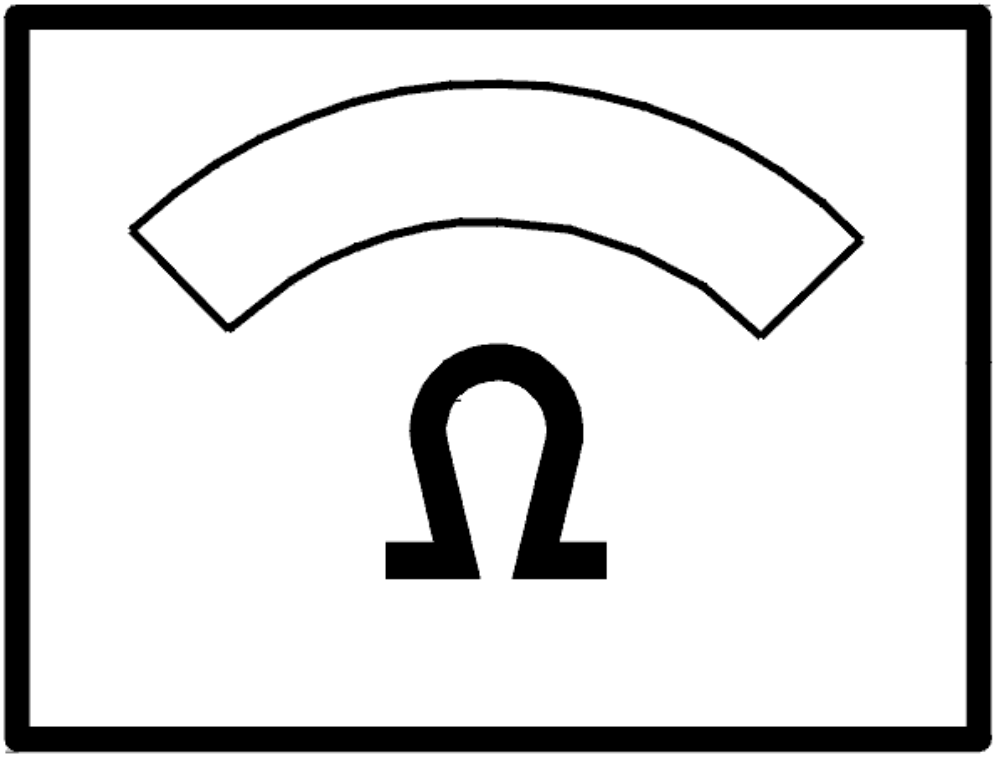

Fig. 114: Identifying Ohms Display
Courtesy of VOLVO CARS CORPORATION

- **Continue**

  Refer to **INFORMATION**

VERIFICATION

VERIFICATION

HINT: After carrying out the repair, check that the fault has been remedied.

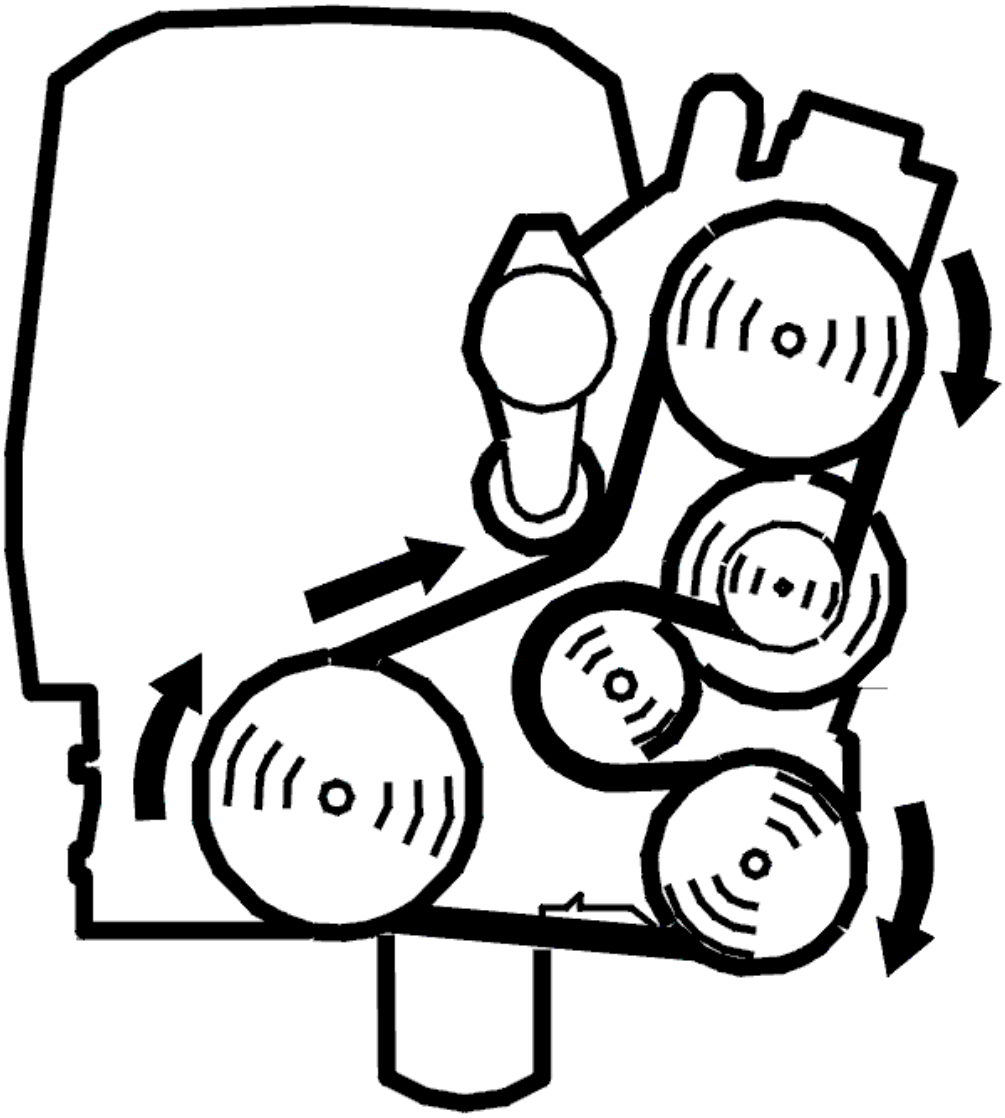

Fig. 115: Identifying Belt Routing
Courtesy of VOLVO CARS CORPORATION

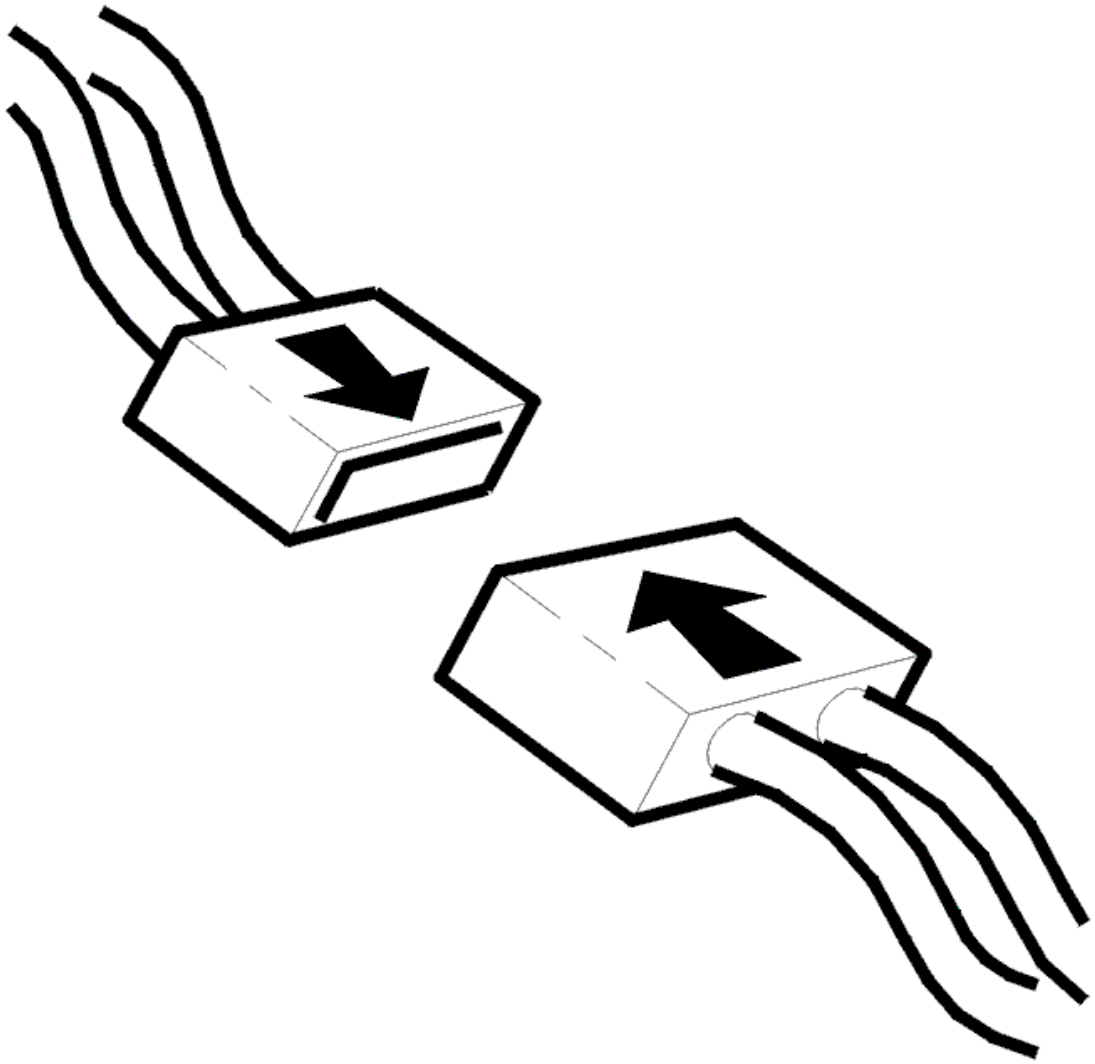

Fig. 116: Identifying Connector(s) Reinstallation
Courtesy of VOLVO CARS CORPORATION

- Ignition off.
- Reinstall the connectors, components etc.
- Start the engine and let it idle.
- Gear selector in position P.
- Read off the transmission speed.

  Depress the accelerator pedal (AP) and check that engine speed (RPM) is updated.

  Compare with the engine speed (RPM).

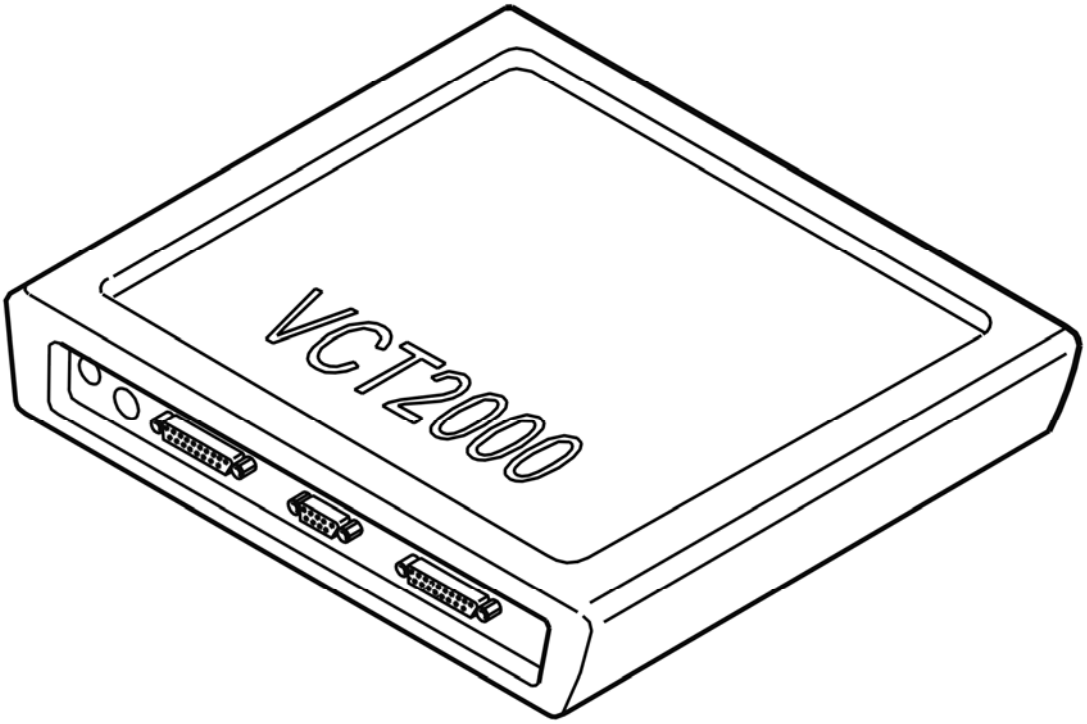

Fig. 117: Identifying VCT2000 Diagnostic Tool Symbol In VIDA
Courtesy of VOLVO CARS CORPORATION

Is the speed updated?

- **YES**

  VERIFIED: Troubleshooting has been completed.

- **NO**

  Refer to **INFORMATION**

INFORMATION

FAULT-TRACING INFORMATION

The fault should have been detected and remedied. As this is not the case fault-tracing has failed.

Exit fault-tracing for this diagnostic trouble code (DTC) or make another attempt.

INFORMATION

FAULT-TRACING INFORMATION

If the fault is intermittent, do not verify fault-tracing if the fault does not recur.

It is possible to view the information again, or leave fault-tracing for this diagnostic trouble code (DTC).

TCM-008D: LOCK-UP PRESSURE SWITCH. FAULTY SIGNAL (4T65 AWD; 2003-2006)

DIAGNOSTIC TROUBLE CODE (DTC) INFORMATION

Condition

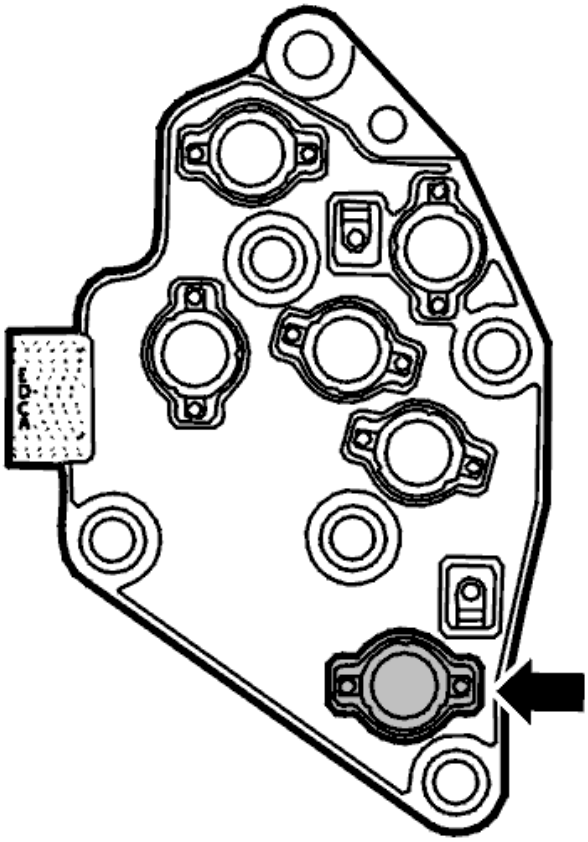

Fig. 118: Identifying Lock-Up Pressure Switch
Courtesy of VOLVO CARS CORPORATION

The automatic transmission control module (TCM) receives a signal from the pressure switch for lock up PS4 to control the lock-up valve position. Diagnostic trouble code (DTC) TCM-008D is stored if the lock-up solenoid has stuck in the open or closed position, transmitting a faulty signal to the control module.

Substitute Value

- TBD

Possible Source

- The pressure switch for lock-up is jammed.
- Contact resistance in the terminals.

Fault symptom[s]

- The automatic transmission warning lamp flashes.
- No lock-up function.
- Harsh gear shifting.

HINT: Harsh gear shifting can be caused by:

- No reduction of line pressure when shifting.
- No reduction of line pressure when moving the gear selector between positions P-R, N-R and N-D.
- No torque limiting request to engine control module (ECM) when shifting.

FAULTY SIGNAL

ORDERING AND PROGRAMMING SOFTWARE

The control module needs to be programmed with updated software. See the technical journal for information about the present software.

NOTE: **After the software has been updated, diagnostic trouble code (DTC) TCM-008D is replaced with diagnostic trouble codes (DTCs) TCM-0053 and TCM-0054. Fault-trace according to the relevant information.**

- **Continue**

  Refer to **TEST DRIVING**

TEST DRIVING

NOTE: **Test drive the car according to the driving schedule below to check whether the fault is still active. The test drive is compiled in order to create the conditions in which the diagnostic trouble code (DTC) will be stored again if the fault is active.**

The TEST MODE function can be used to provoke any diagnostic trouble codes (DTC). The function reduces the conditions for how quickly diagnostic trouble codes (DTCs) are stored in the control module and the test drive becomes easier.

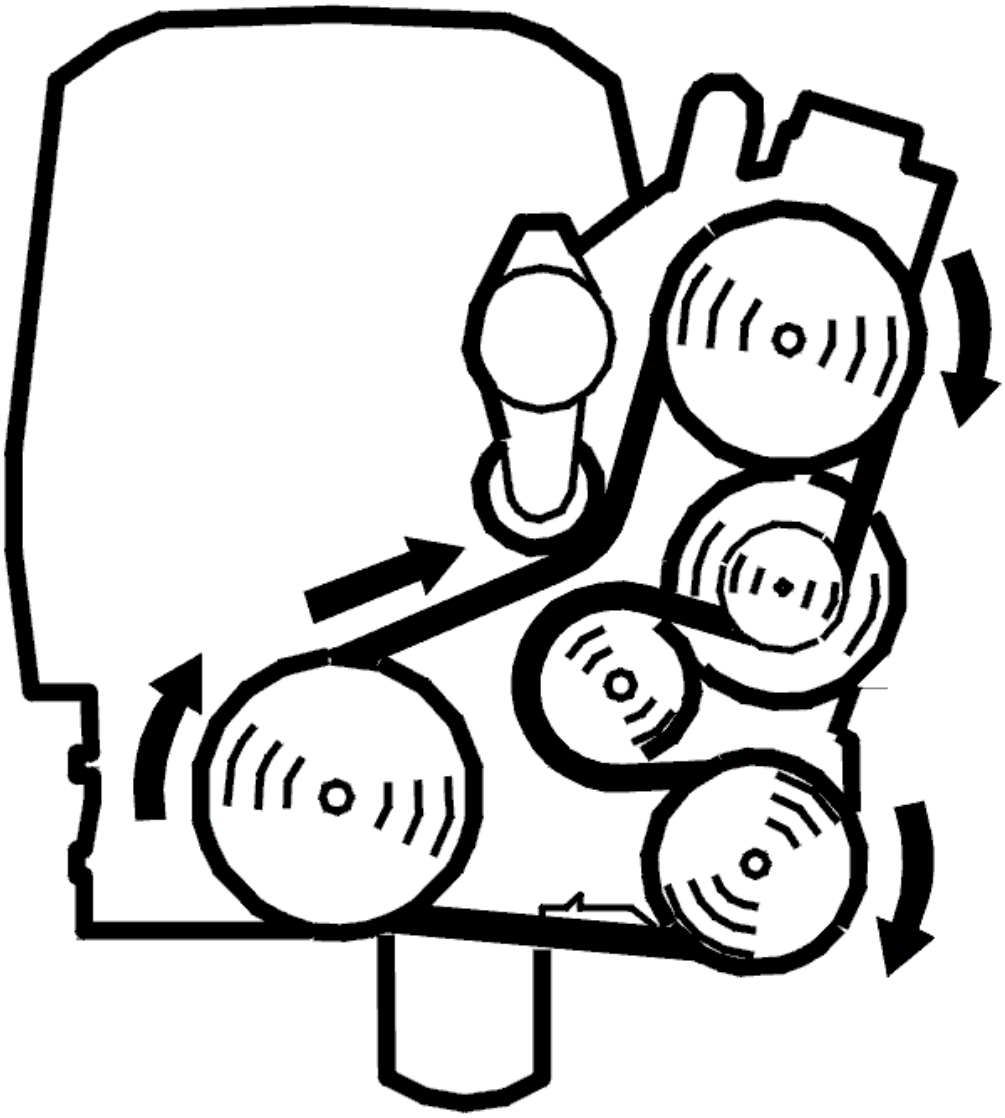

Fig. 119: Identifying Belt Routing
Courtesy of VOLVO CARS CORPORATION

- Start the engine
- Activate TEST MODE.

NOTE: **Do not switch off the engine**

- Disconnect scan tool. Test drive the car as described below.

WARNING: **Please observe traffic regulations.**

NOTE: **Before test driving, the transmission should be at operating temperature,**

approximately 80-90 °C.

Shift the gear selector to position D (third gear with geartronic). Carefully accelerate to 50-65 km/h. Maintain the same speed for at least 20 seconds.

HINT: The car must be driven at an engine speed where the lock-up function is not normally activated.

Criteria for diagnostic trouble code (DTC):

- The transmission fluid temperature must exceed 30°C
- The engine must be running for at least 20 seconds
- Gear selector in position D, 3 or 2 (4T65EV).

  Gear selector in Geartronic position and gears 4, 3 or 2 (4T65EV-GT)

- Speed 50-65 km/h for at least 5 seconds
- At least 5 seconds since the last gear shift
- Positive engine torque (no engine braking).

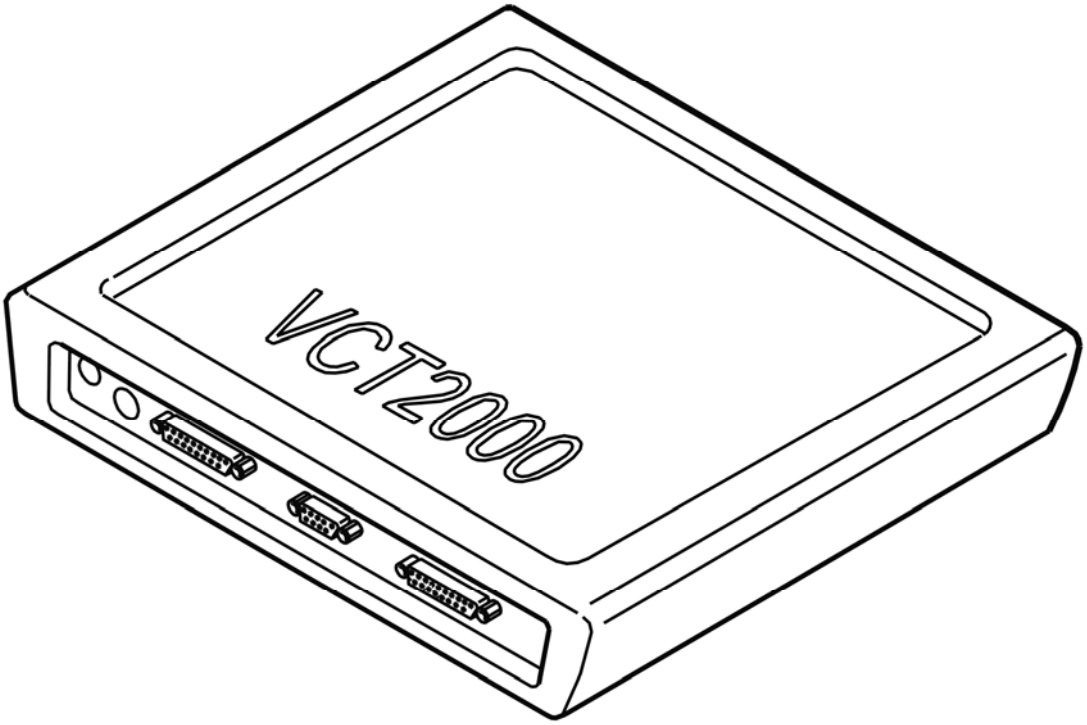

Fig. 120: Identifying VCT2000 Diagnostic Tool Symbol In VIDA
Courtesy of VOLVO CARS CORPORATION

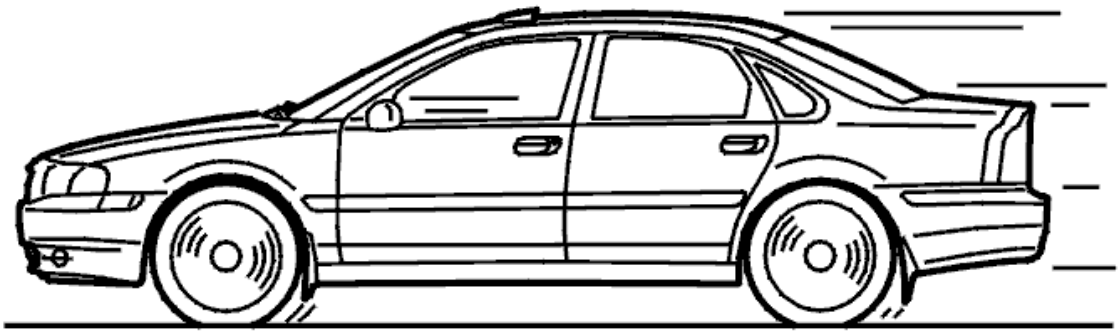

Fig. 121: Identifying Test Drive
Courtesy of VOLVO CARS CORPORATION

- **Continue**

Refer to **READING OFF DIAGNOSTIC TROUBLE CODES (DTCS)**

READING OFF DIAGNOSTIC TROUBLE CODES (DTCS)

NOTE: **After the software has been updated, diagnostic trouble code (DTC) TCM-008D is replaced with diagnostic trouble codes (DTCs) TCM-0053 and TCM-0054. Fault-trace according to the relevant information.**

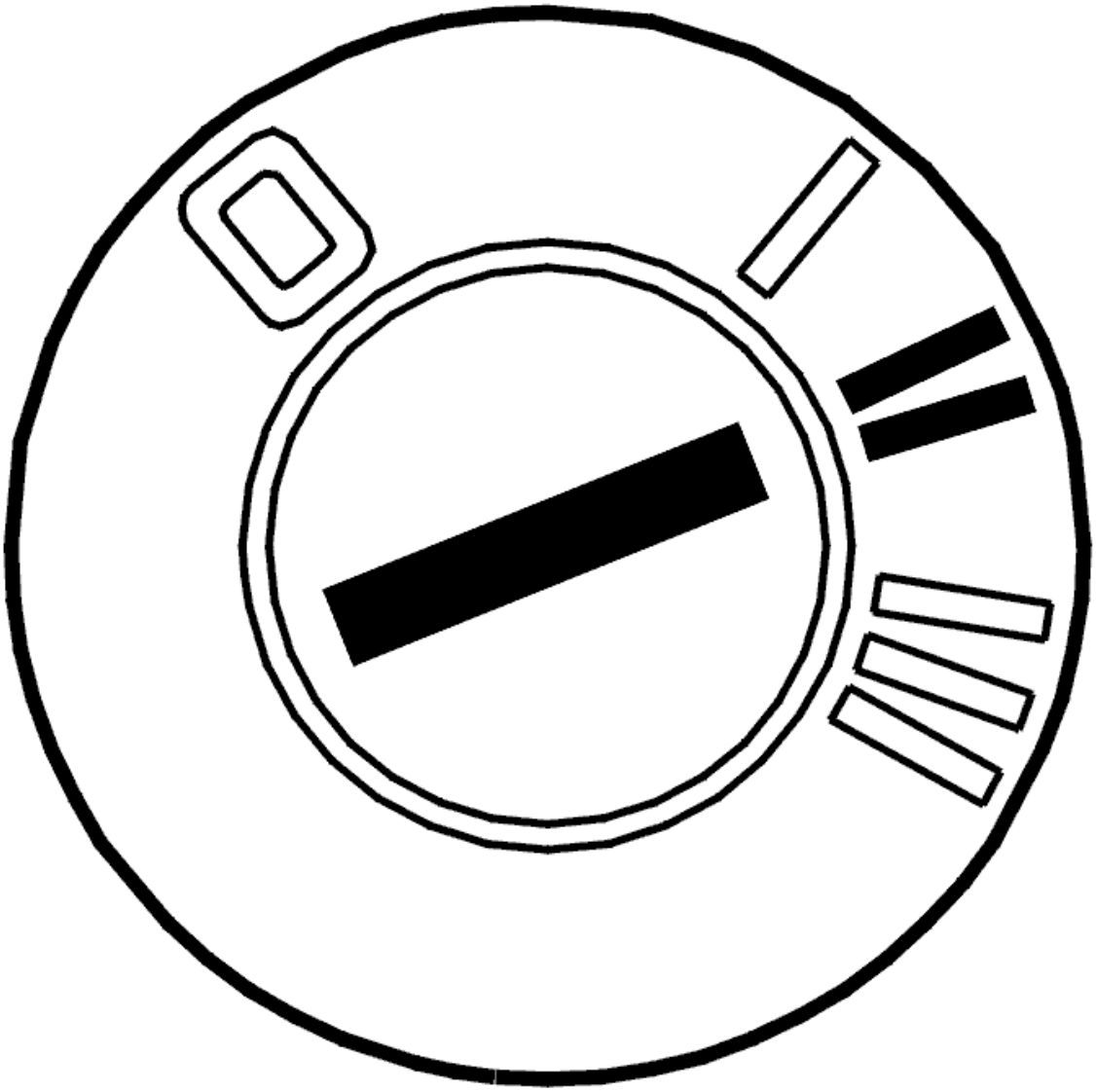

Fig. 122: Identifying Ignition ON
Courtesy of VOLVO CARS CORPORATION

- Ignition on
- Read off diagnostic trouble codes (DTCs).

  If the fault persists, diagnostic trouble code (DTC) TCM-0053 or TCM-0054 will still be stored. Fault-trace for codes after this fault-tracing is complete. If the diagnostic trouble codes (DTCs) are not stored, the fault has probably been remedied by replacing the software.

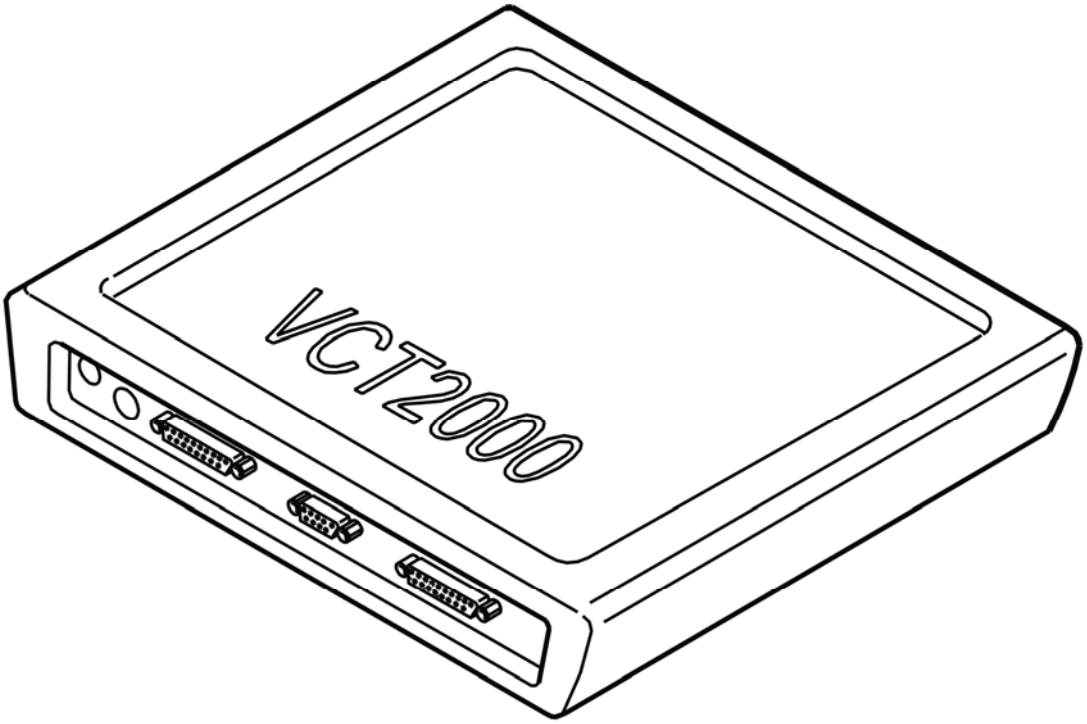

Fig. 123: Identifying VCT2000 Diagnostic Tool Symbol In VIDA
Courtesy of VOLVO CARS CORPORATION

TCM-0090: SHIFT LOCK SOLENOID. SIGNAL TOO HIGH (4T65 AWD; 2003-2006)

DIAGNOSTIC TROUBLE CODE INFORMATION

Condition

If the control unit registers signal too high from solenoid P position lock, diagnostic trouble code TCM-0090 is set.

Substitute Value

- Gear selector not blocked.

Possible Source

- Signal wire short circuited to voltage supply.
- Solenoid defective.

Fault symptom[s]

- Orange general warning lamp is on.
- Malfunction indicator light (MIL) is on.
- Gear selector movable with ignition off.

SIGNAL TOO HIGH

CHECKS

CHECKING THE P-SHIFT LOCK SOLENOID

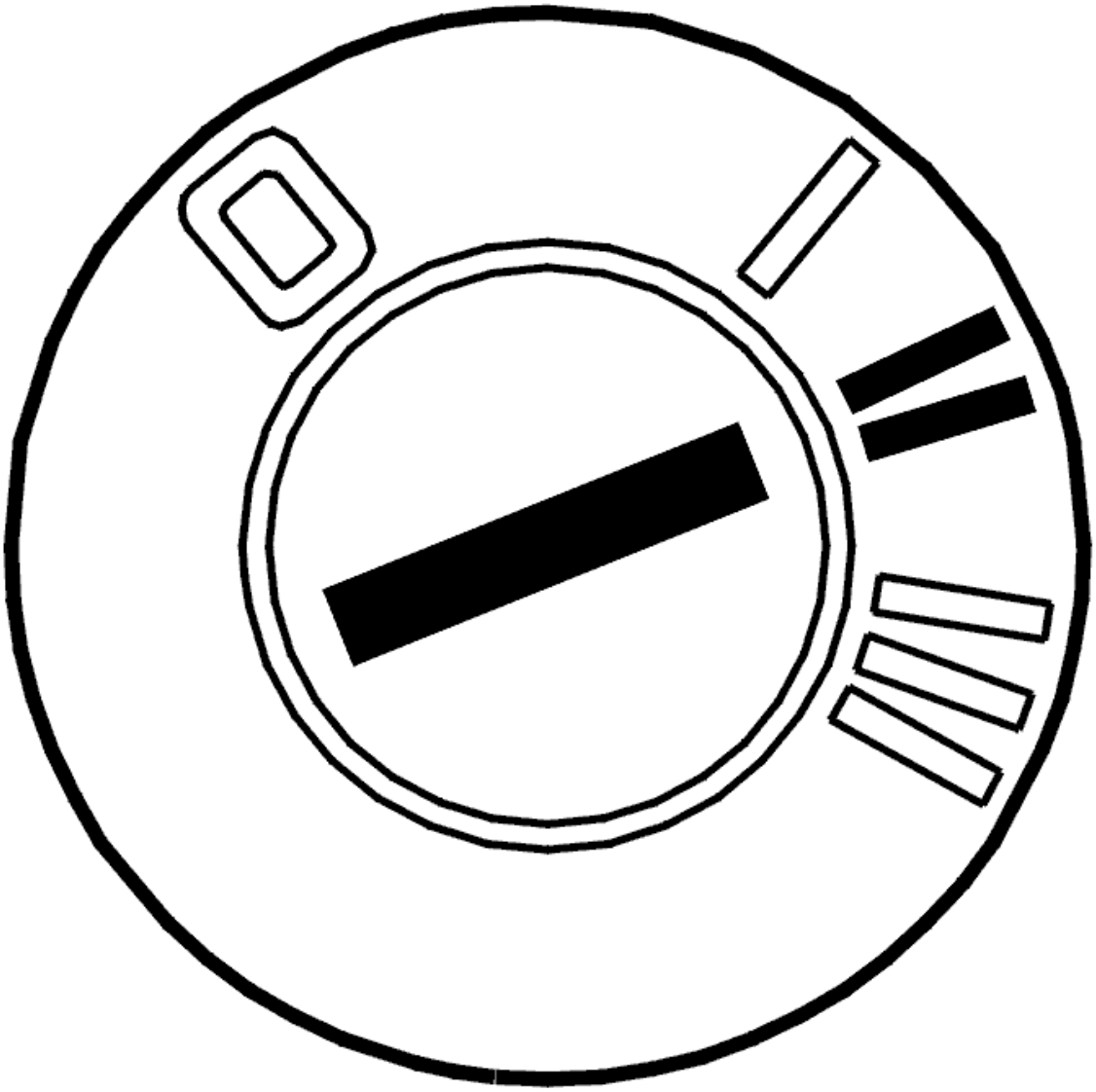

Fig. 124: Identifying Ignition ON
Courtesy of VOLVO CARS CORPORATION

- Ignition on
- Gear selector in position P

- Try moving the gear selector to another position without depressing the brake pedal. It should not be possible to move the gear selector
- Depress the brake pedal and try moving the gear selector to another position. It should now be possible to move the gear selector.

Was the function OK?

- **YES**

  Refer to **INTERMITTENT FAULT**

- **NO**

  Refer to **CHECKING THE WIRING AND COMPONENT**

CHECKING THE WIRING AND COMPONENT

Check the cable between the gear selector module (GSM) and the solenoid connectors. Check for a short-circuit to supply voltage. See **SHORT-CIRCUIT TO SUPPLY VOLTAGE. PERMANENT FAULTS** .

HINT: With a voltmeter connected to solenoid connector terminals #1 and #2 (gear selector control module side), the voltage should be 0 V when the brake pedal is not depressed and approximately Ubat when it is depressed. Replace the solenoid if the voltage is OK

Remedy as necessary.

Other information

- To check or replace the shift lock solenoid, see **SOLENOID SHIFT LOCK, REPLACE** .

- **Continue**

  Refer to **VERIFICATION**

INTERMITTENT FAULT

Check the cable between the control module for the gear selector and the shift lock solenoid. Check for an intermittent short-circuit to supply voltage according to **SHORT-CIRCUIT TO SUPPLY VOLTAGE, INTERMITTENT FAULTS** .

Remedy as necessary.

Other information:

- To check or replace the shift lock solenoid, see **SOLENOID SHIFT LOCK, REPLACE** .

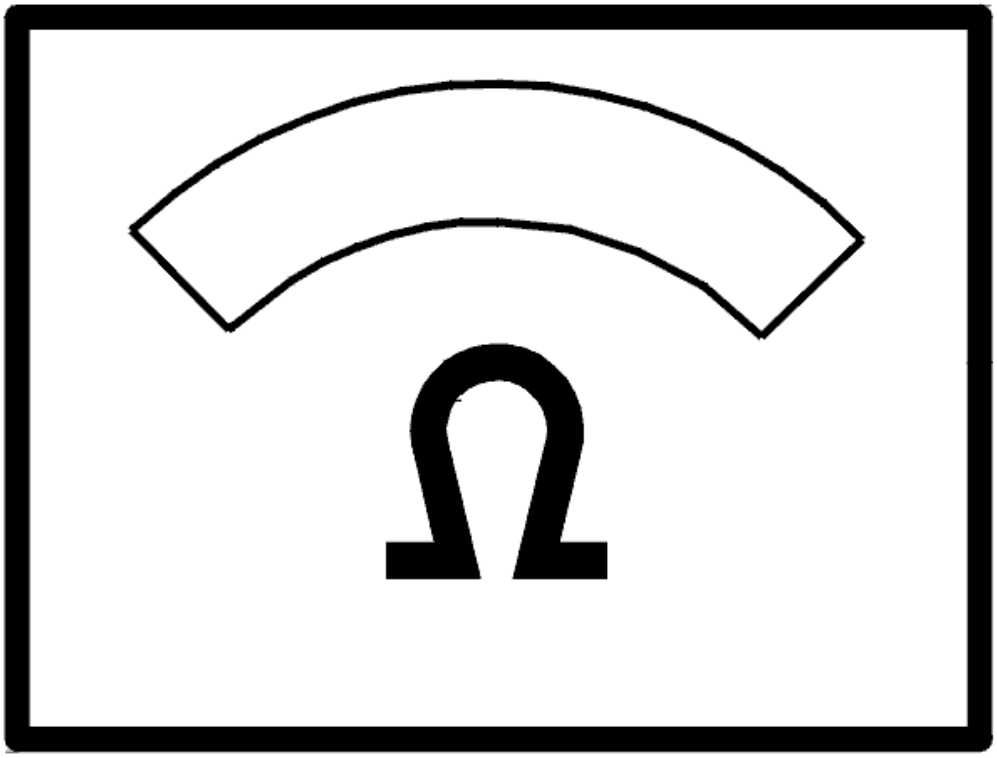

Fig. 125: Identifying Ohms Display
Courtesy of VOLVO CARS CORPORATION

- **Continue**

  Refer to **INFORMATION**

VERIFICATION

VERIFICATION

HINT: After carrying out the repair, check that the fault has been remedied.

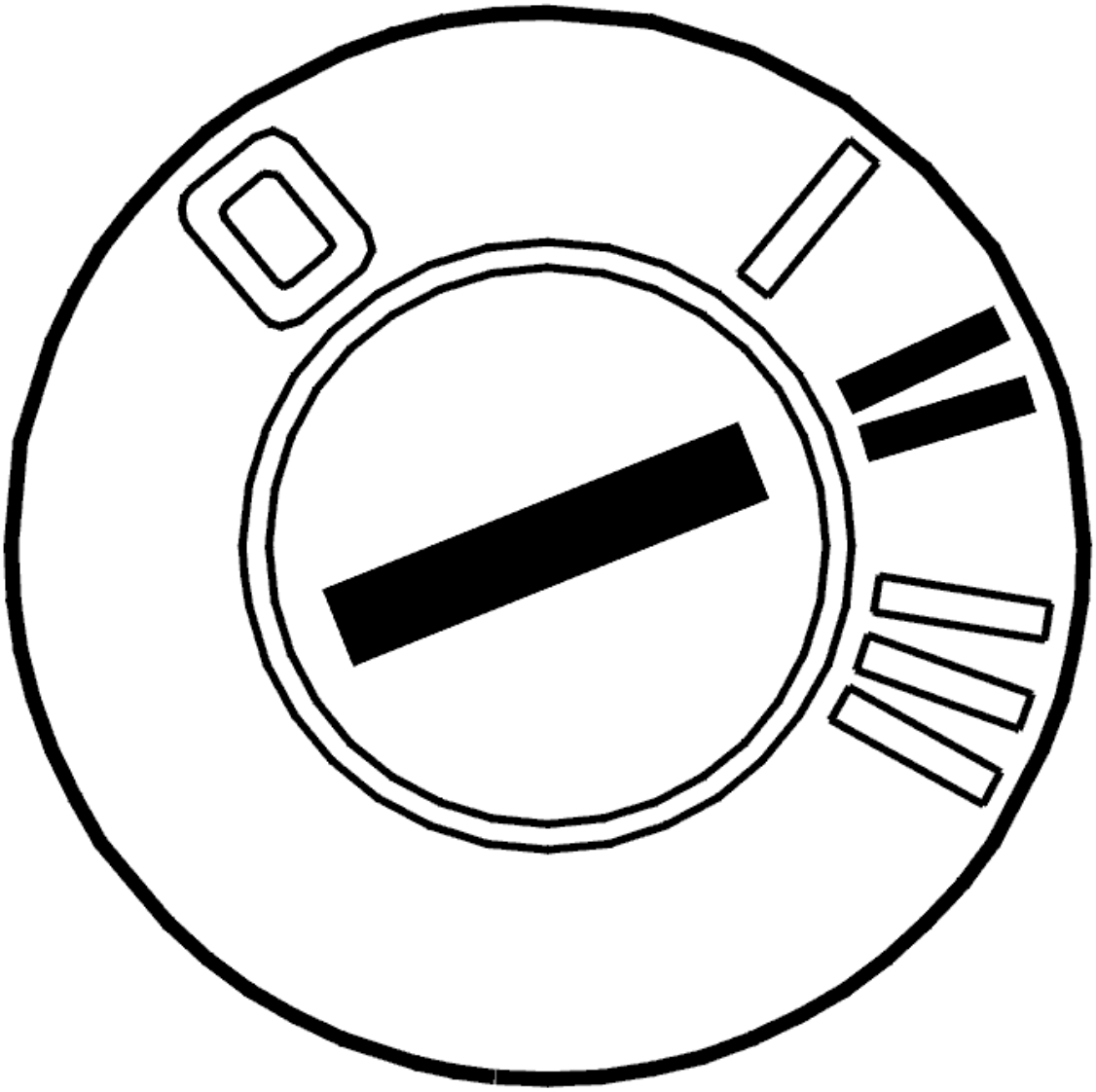

Fig. 126: Identifying Ignition ON
Courtesy of VOLVO CARS CORPORATION

- Ignition on.
- Gear selector in position P.

  Try moving the gear selector to another position without depressing the brake pedal. It should not be possible to move the gear selector.

  Depress the brake pedal and try moving the gear selector to another position. It should now be possible to move the gear selector.

Was the function OK?

- **YES**

VERIFIED: Troubleshooting has been completed.

- **NO**

  Refer to **INFORMATION**

INFORMATION

FAULT-TRACING INFORMATION

The fault should have been detected and remedied. As this is not the case fault-tracing has failed.

Exit fault-tracing for this diagnostic trouble code (DTC) or make another attempt.

INFORMATION

FAULT-TRACING INFORMATION

If the fault is intermittent, do not verify fault-tracing if the fault does not recur.

It is possible to view the information again, or leave fault-tracing for this diagnostic trouble code (DTC).

TCM-0090: SHIFT LOCK SOLENOID. SIGNAL TOO HIGH (AW50/51 AWD; AW55-50/51SN; 2003-2007)

DIAGNOSTIC TROUBLE CODE INFORMATION

see **DIAGNOSTIC TROUBLE CODE INFORMATION**

SIGNAL TOO HIGH

CHECKS

CHECKING THE P-SHIFT LOCK SOLENOID

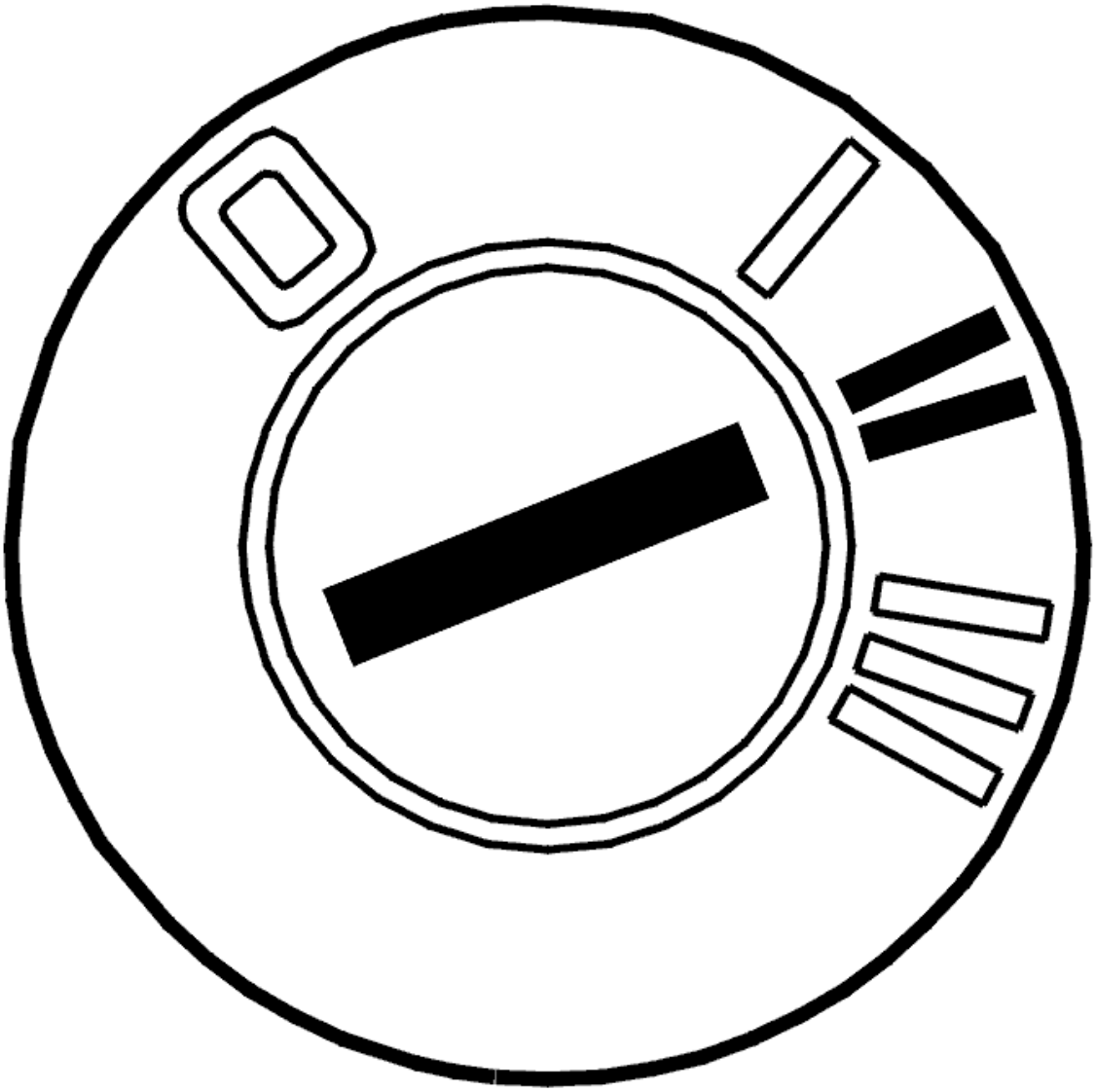

Fig. 127: Identifying Ignition ON
Courtesy of VOLVO CARS CORPORATION

- Ignition on
- Gear selector in position P
- Try moving the gear selector to another position without depressing the brake pedal. It should not be possible to move the gear selector
- Depress the brake pedal and try moving the gear selector to another position. It should now be possible to move the gear selector.

Was the function OK?

- **YES**

  Refer to **INTERMITTENT FAULT**

- **NO**

  Refer to **CHECKING THE WIRING AND COMPONENT**

CHECKING THE WIRING AND COMPONENT

Check the cable between the control module for the gear selector and the solenoid connector. Check for a short-circuit to supply voltage according to **SHORT-CIRCUIT TO SUPPLY VOLTAGE. PERMANENT FAULTS** .

Check the voltage between terminals #1 and #2 on the solenoid connector (female half).

When the ignition is on and the brake pedal is not depressed the voltage should be 0 V. When the brake pedal is depressed the voltage should be Ubat.

Replace the solenoid if the voltage is OK.

Other information

- To check or replace the shift lock solenoid, see **SOLENOID SHIFT LOCK, REPLACE** .

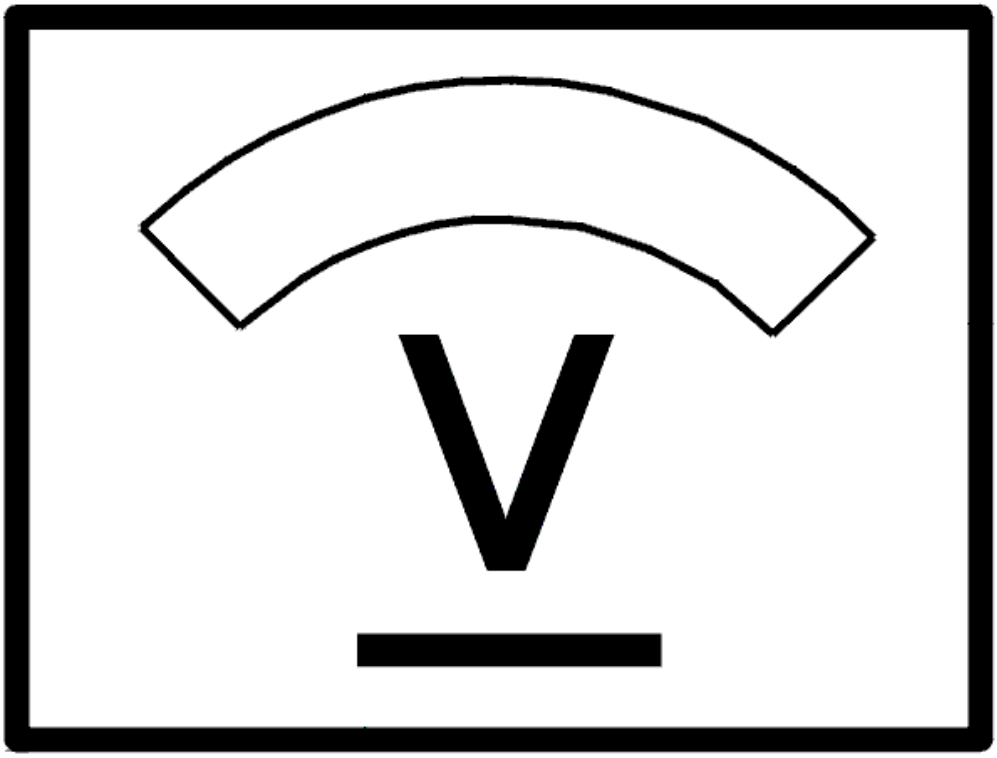

Fig. 128: Identifying Voltage Display
Courtesy of VOLVO CARS CORPORATION

- **Continue**

  Refer to **VERIFICATION**

INTERMITTENT FAULT

Check the cable between the control module for the gear selector and the shift lock solenoid. Check for an intermittent short-circuit to supply voltage according to **SHORT-CIRCUIT TO SUPPLY VOLTAGE, INTERMITTENT FAULTS** .

Remedy as necessary.

Other information:

- To check or replace the shift lock solenoid, see **SOLENOID SHIFT LOCK, REPLACE** .

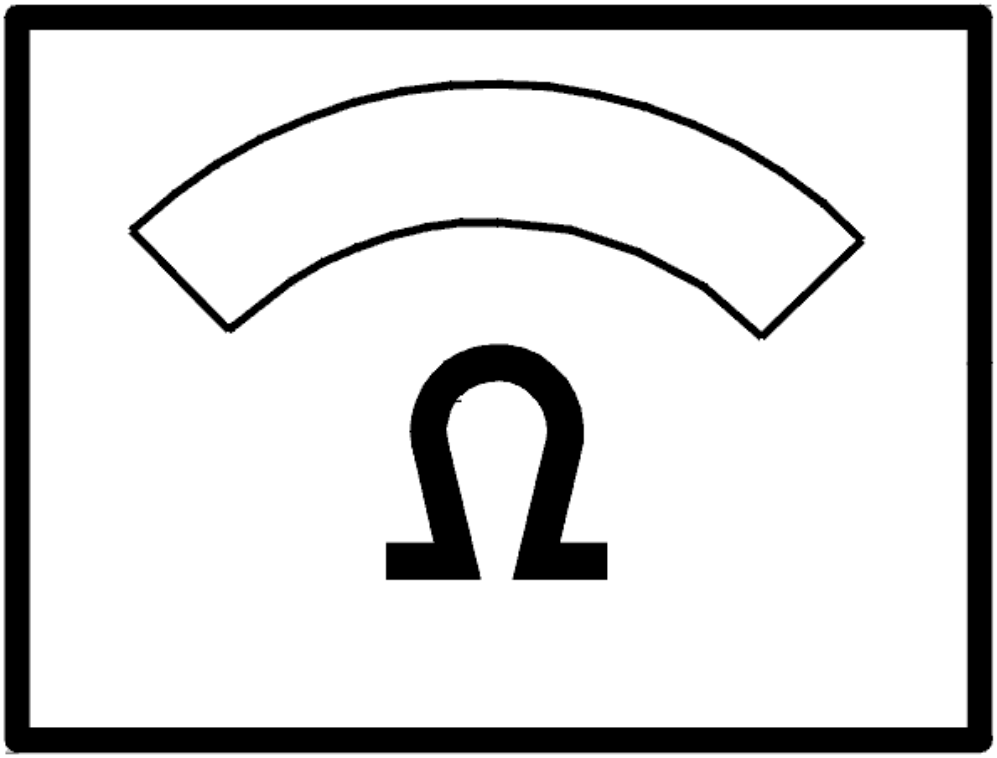

Fig. 129: Identifying Ohms Display
Courtesy of VOLVO CARS CORPORATION

- **Continue**

  Refer to **INFORMATION**

VERIFICATION

VERIFICATION

HINT: After carrying out the repair, check that the fault has been remedied.

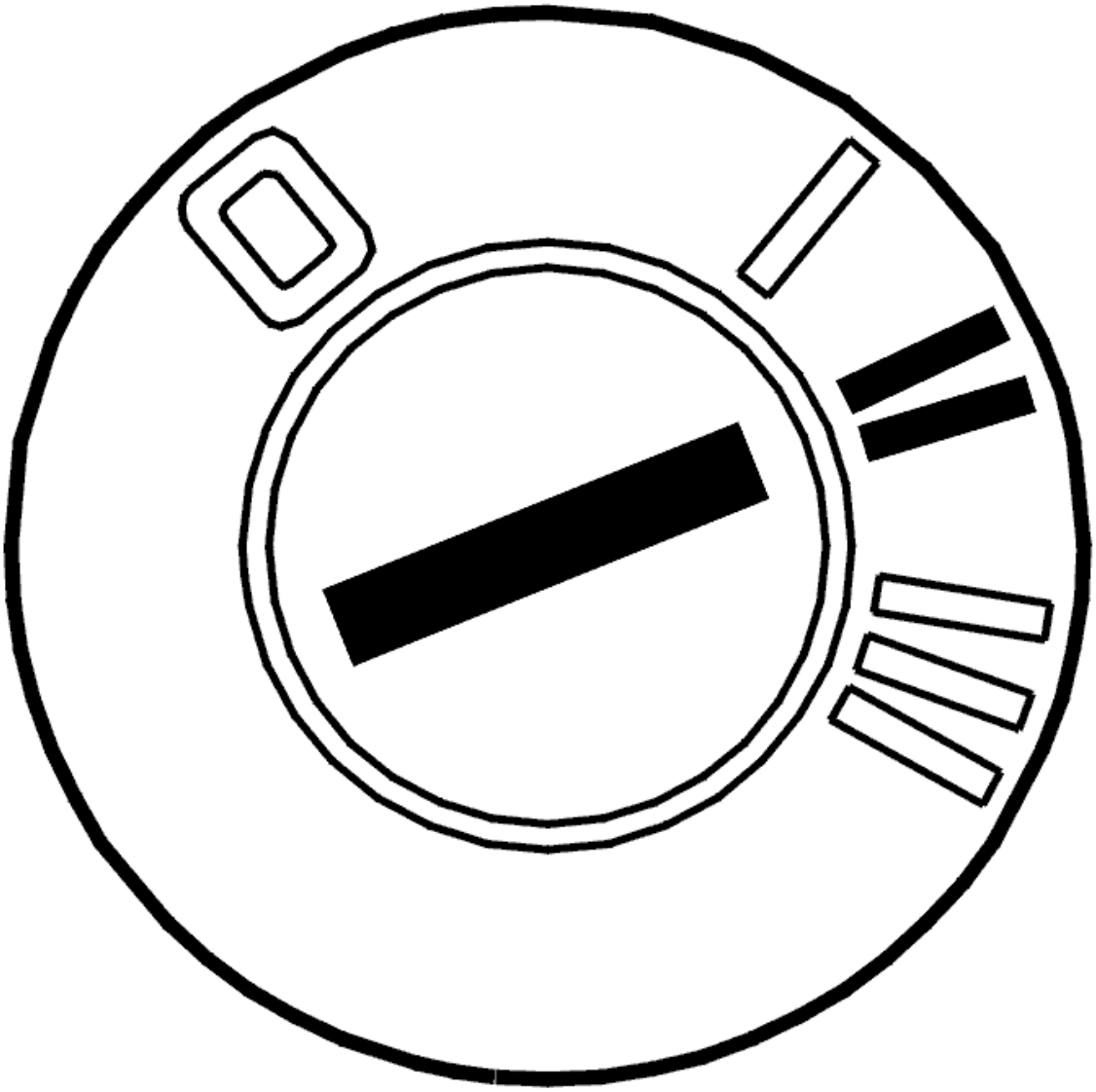

Fig. 130: Identifying Ignition ON
Courtesy of VOLVO CARS CORPORATION

- Ignition on.
- Gear selector in position P.

  Try moving the gear selector to another position without depressing the brake pedal. It should not be possible to move the gear selector.

  Depress the brake pedal and try moving the gear selector to another position. It should now be possible to move the gear selector.

Was the function OK?

- **YES**

VERIFIED: Troubleshooting has been completed.

- **NO**

  Refer to **INFORMATION**

INFORMATION

FAULT-TRACING INFORMATION

The fault should have been detected and remedied. As this is not the case fault-tracing has failed.

Exit fault-tracing for this diagnostic trouble code (DTC) or make another attempt.

INFORMATION

FAULT-TRACING INFORMATION

If the fault is intermittent, do not verify fault-tracing if the fault does not recur.

It is possible to view the information again, or leave fault-tracing for this diagnostic trouble code (DTC).

TCM-0091: SHIFT LOCK SOLENOID. SIGNAL MISSING (4T65 AWD; 2003-2006)

DIAGNOSTIC TROUBLE CODE INFORMATION

Condition

If the control unit registers signal missing from solenoid P position lock, diagnostic trouble code TCM-0091 will be set.

Substitute Value

- Gear selector blocked.

Possible Source

- Contact resistance in the connectors.
- Open circuit in signal wire or ground wire

Fault symptom[s]

- Orange general warning lamp is on.
- Malfunction indicator light (MIL) is on.
- The gear selector cannot be moved.

SIGNAL MISSING

CHECKS

CHECKING THE P-SHIFT LOCK SOLENOID

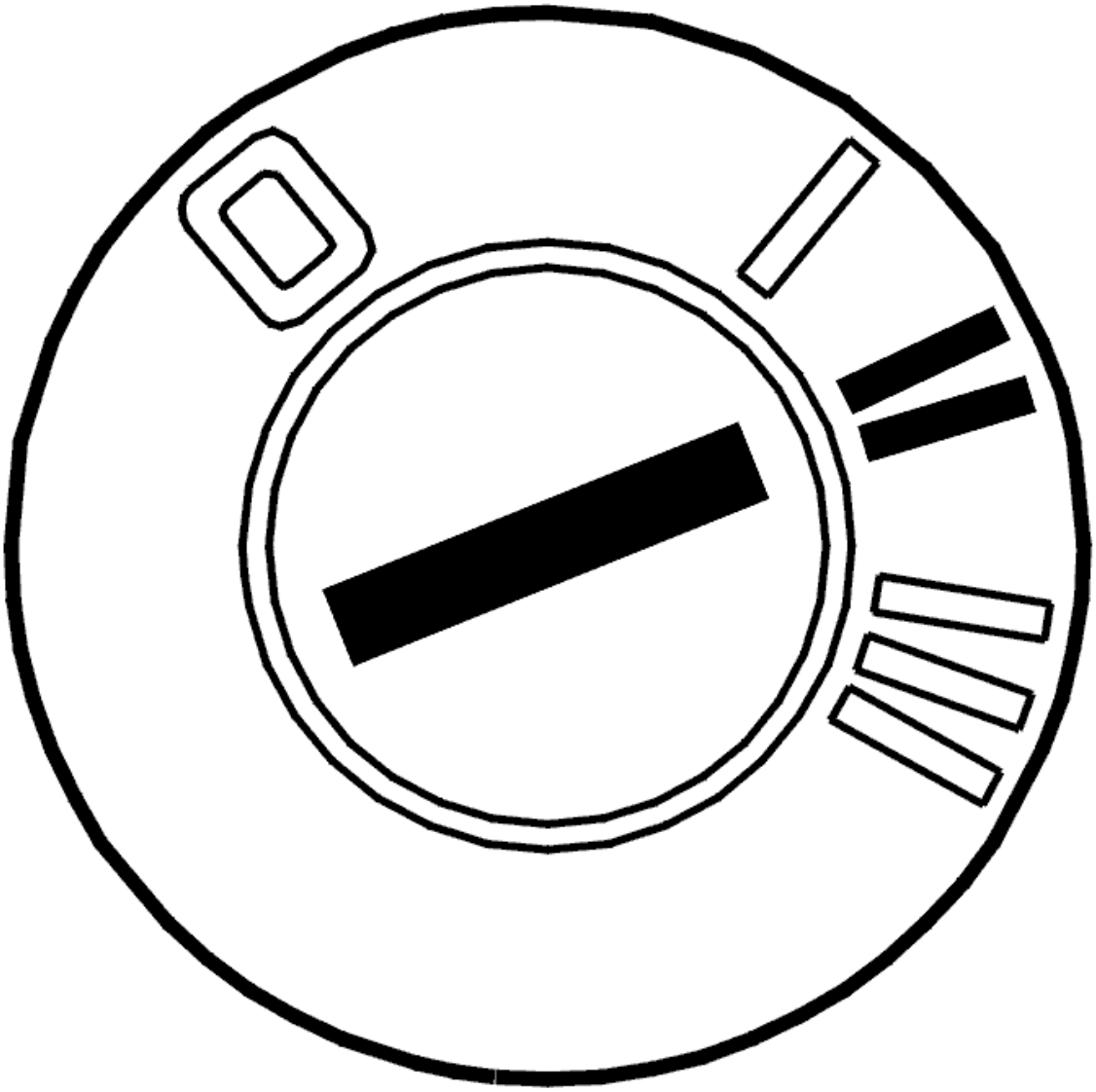

Fig. 131: Identifying Ignition ON
Courtesy of VOLVO CARS CORPORATION

- Ignition on
- Gear selector in position P
- Try moving the gear selector to another position without depressing the brake pedal. It should not be possible to move the gear selector
- Depress the brake pedal and try moving the gear selector to another position. It should now be possible to move the gear selector.

Was the function OK?

- **YES**

  Refer to **INTERMITTENT FAULT**

- **NO**

  Refer to **CHECKING THE WIRING AND COMPONENT**

CHECKING THE WIRING AND COMPONENT

Check the cable between the gear selector module (GSM) and the shift lock solenoid connector (control module side). Check for an open-circuit. See **OPEN-CIRCUIT, PERMANENT FAULTS** .

HINT: With a voltmeter connected to solenoid connector terminals #1 and #2 (gear selector control module side), the voltage should be 0 V when the brake pedal is not depressed and approximately Ubat when it is depressed. Replace the solenoid if the voltage is OK.

Remedy as necessary.

Other information

- To check or replace the shift lock solenoid, see **SOLENOID SHIFT LOCK, REPLACE** .

- **Continue**

  Refer to **VERIFICATION**

INTERMITTENT FAULT

Check the control module for the gear selector and the solenoid connectors. Check for intermittent contact resistance according to **LOOSE CONNECTIONS (TERMINALS)** .

Check the cable between the gear selector module (GSM) and the shift lock solenoid. Check for an intermittent open-circuit. See **OPEN-CIRCUIT, INTERMITTENT FAULTS** .

Remedy as necessary.

Other information:

- To check or replace the shift lock solenoid, see **SOLENOID SHIFT LOCK, REPLACE** .

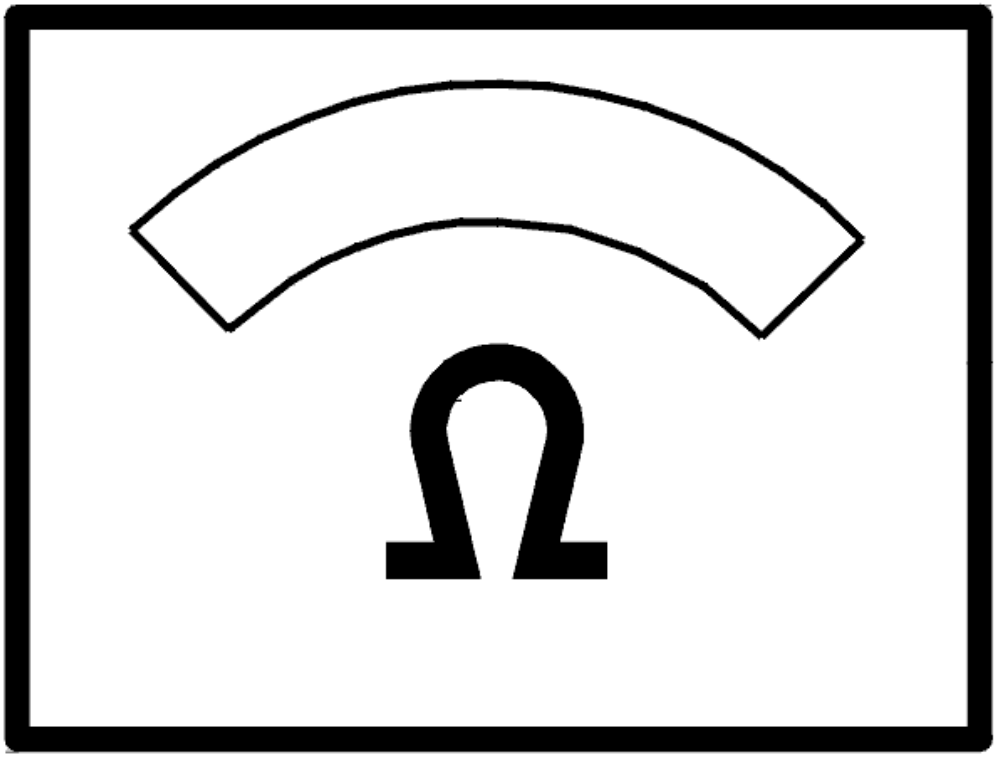

Fig. 132: Identifying Ohms Display
Courtesy of VOLVO CARS CORPORATION

- **Continue**

  Refer to **INFORMATION**

VERIFICATION

VERIFICATION

HINT: After carrying out the repair, check that the fault has been remedied.

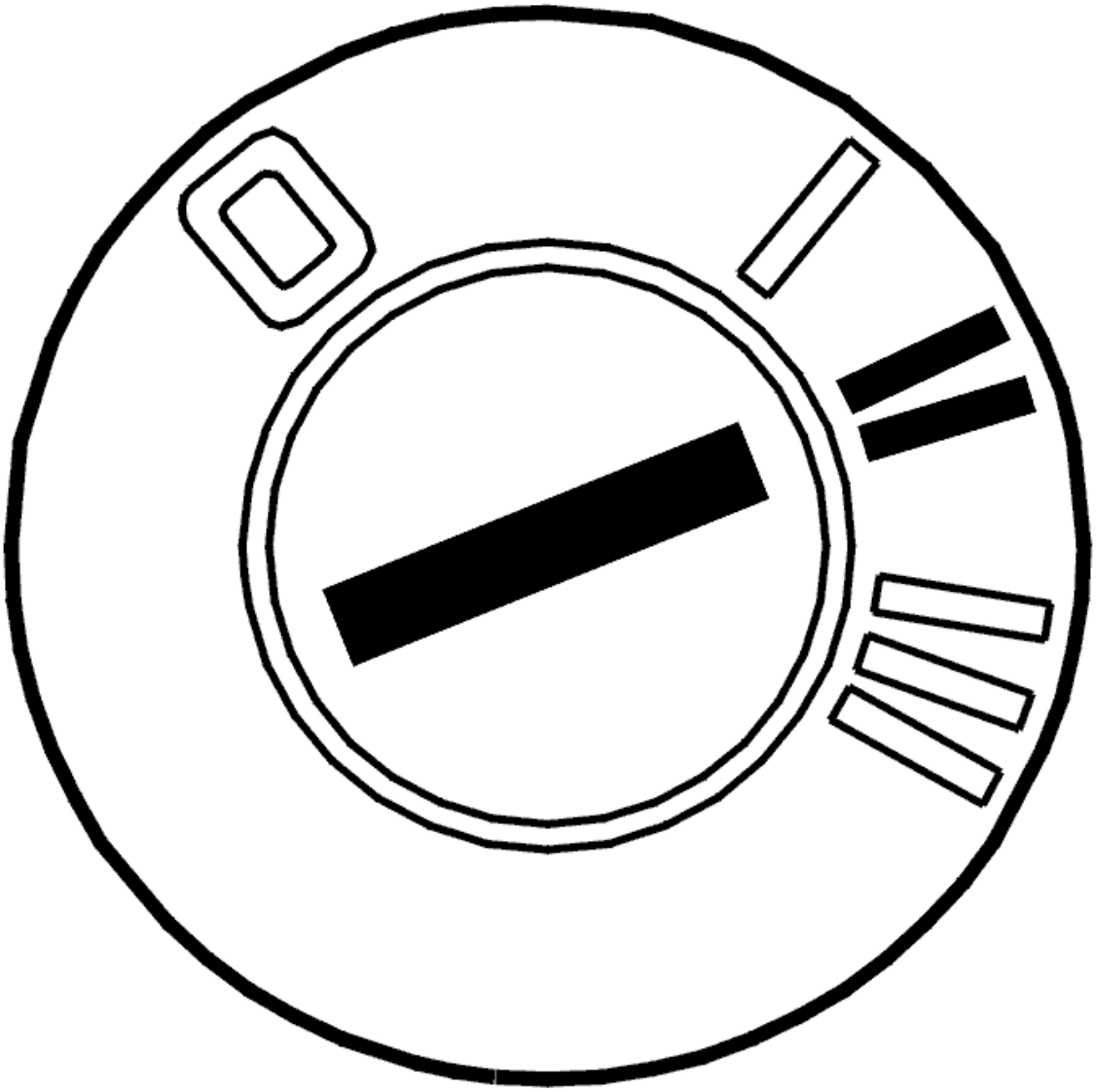

Fig. 133: Identifying Ignition ON
Courtesy of VOLVO CARS CORPORATION

- Ignition on.
- Gear selector in position P.

  Try moving the gear selector to another position without depressing the brake pedal. It should not be possible to move the gear selector.

  Depress the brake pedal and try moving the gear selector to another position. It should now be possible to move the gear selector.

Was the function OK?

- **YES**

VERIFIED: Troubleshooting has been completed.

- **NO**

  Refer to **INFORMATION**

INFORMATION

FAULT-TRACING INFORMATION

The fault should have been detected and remedied. As this is not the case fault-tracing has failed.

Exit fault-tracing for this diagnostic trouble code (DTC) or make another attempt.

INFORMATION

FAULT-TRACING INFORMATION

If the fault is intermittent, do not verify fault-tracing if the fault does not recur.

It is possible to view the information again, or leave fault-tracing for this diagnostic trouble code (DTC).

TCM-0091: SHIFT LOCK SOLENOID. SIGNAL MISSING (AW50/51 AWD; AW55-50/51SN; 2003-2007)

DIAGNOSTIC TROUBLE CODE INFORMATION

see **DIAGNOSTIC TROUBLE CODE INFORMATION**

SIGNAL MISSING

CHECKS

CHECKING THE P-SHIFT LOCK SOLENOID

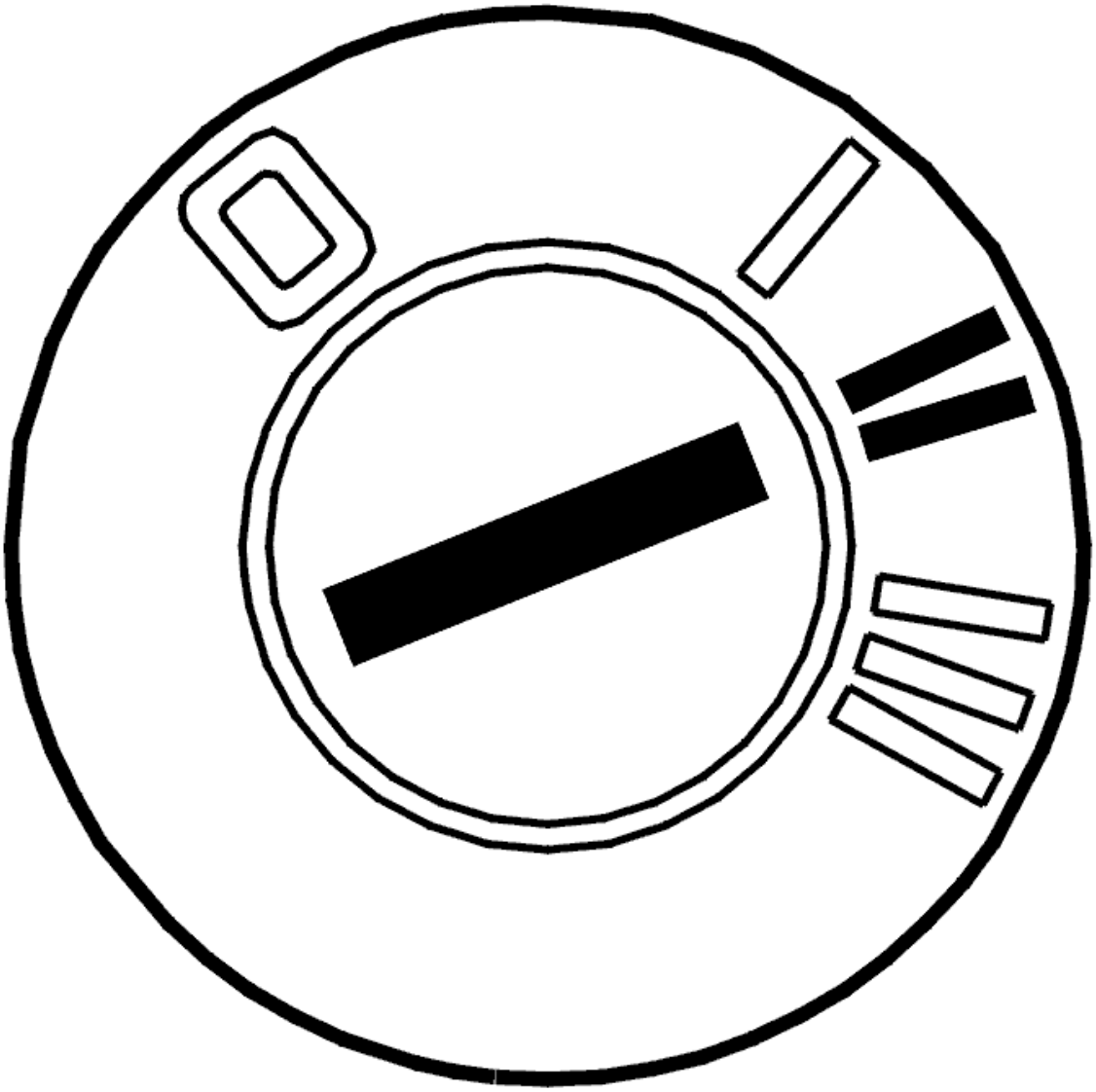

Fig. 134: Identifying Ignition ON
Courtesy of VOLVO CARS CORPORATION

- Ignition on
- Gear selector in position P
- Try moving the gear selector to another position without depressing the brake pedal. It should not be possible to move the gear selector
- Depress the brake pedal and try moving the gear selector to another position. It should now be possible to move the gear selector.

Was the function OK?

- **YES**

  Refer to **INTERMITTENT FAULT**

- **NO**

  Refer to **CHECKING THE WIRING AND COMPONENT**

CHECKING THE WIRING AND COMPONENT

Check the cable between the control module for the gear selector and the shift lock solenoid connector (control module side). Check for an open-circuit according to **OPEN-CIRCUIT, PERMANENT FAULTS** .

Check the voltage between terminals #1 and #2 on the solenoid connector (female half).

When the brake pedal is not depressed the voltage should be 0 V. When the brake pedal is depressed the voltage should be battery voltage.

Replace the solenoid if the voltage is OK.

Other information

- To check or replace the shift lock solenoid, see **SOLENOID SHIFT LOCK, REPLACE** .
- **Continue**

  Refer to **VERIFICATION**

INTERMITTENT FAULT

Check the control module for the gear selector and the solenoid connectors. Check for intermittent contact resistance according to **LOOSE CONNECTIONS (TERMINALS)** .

Check the cable between the control module for the gear selector and the shift lock solenoid. Check for an intermittent open-circuit according to **OPEN-CIRCUIT, INTERMITTENT FAULTS** .

Remedy as necessary.

Other information:

- To check or replace the shift lock solenoid, see **SOLENOID SHIFT LOCK, REPLACE** .

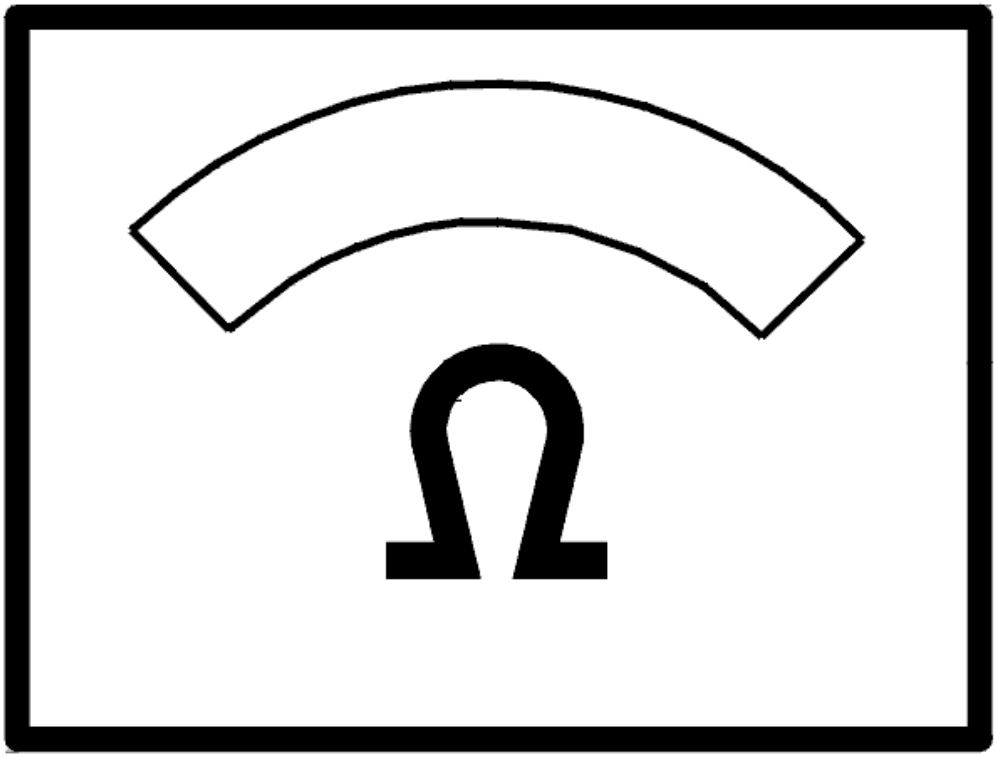

Fig. 135: Identifying Ohms Display
Courtesy of VOLVO CARS CORPORATION

- **Continue**

  Refer to **INFORMATION**

VERIFICATION

VERIFICATION

HINT: After carrying out the repair, check that the fault has been remedied.

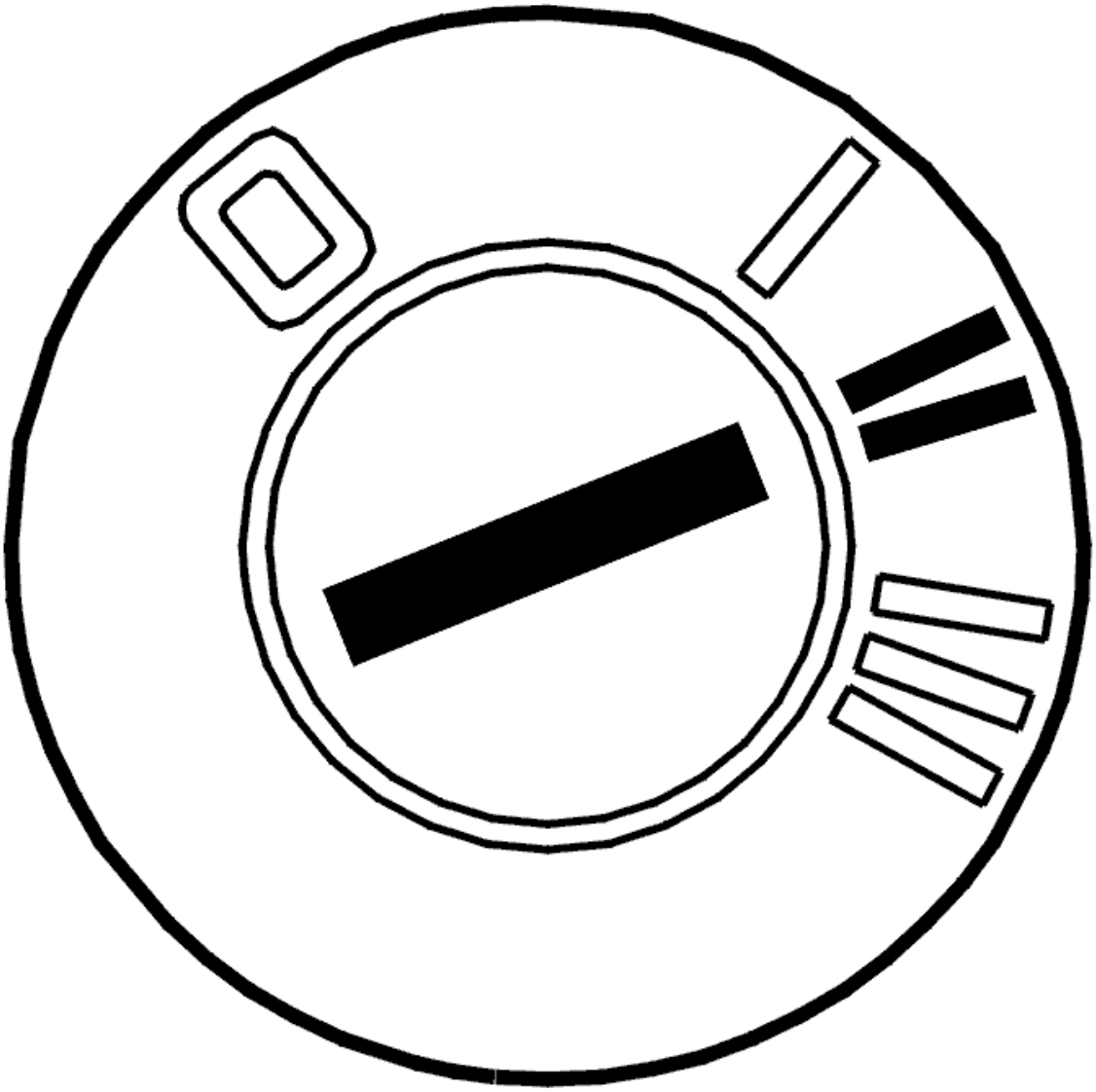

Fig. 136: Identifying Ignition ON
Courtesy of VOLVO CARS CORPORATION

- Ignition on.
- Gear selector in position P.

  Try moving the gear selector to another position without depressing the brake pedal. It should not be possible to move the gear selector.

  Depress the brake pedal and try moving the gear selector to another position. It should now be possible to move the gear selector.

Was the function OK?

- **YES**

VERIFIED: Troubleshooting has been completed.

- **NO**

  Refer to **INFORMATION**

INFORMATION

FAULT-TRACING INFORMATION

The fault should have been detected and remedied. As this is not the case fault-tracing has failed.

Exit fault-tracing for this diagnostic trouble code (DTC) or make another attempt.

INFORMATION

FAULT-TRACING INFORMATION

If the fault is intermittent, do not verify fault-tracing if the fault does not recur.

It is possible to view the information again, or leave fault-tracing for this diagnostic trouble code (DTC).

TCM-0092: SHIFT LOCK SOLENOID. SIGNAL TOO LOW (4T65 AWD; 2003-2006)

DIAGNOSTIC TROUBLE CODE INFORMATION

Condition

If the control unit registers signal too low from solenoid P position lock, diagnostic trouble code TCM-0092 will be set.

Substitute Value

- Gear selector blocked.

Possible Source

- Contact resistance in the connectors.
- Signal wire short-circuited to ground.

Fault symptom[s]

- Orange general warning lamp is on.
- Malfunction indicator light (MIL) is on.
- The gear selector cannot be moved.

SIGNAL TOO LOW

CHECKS

CHECKING THE P-SHIFT LOCK SOLENOID

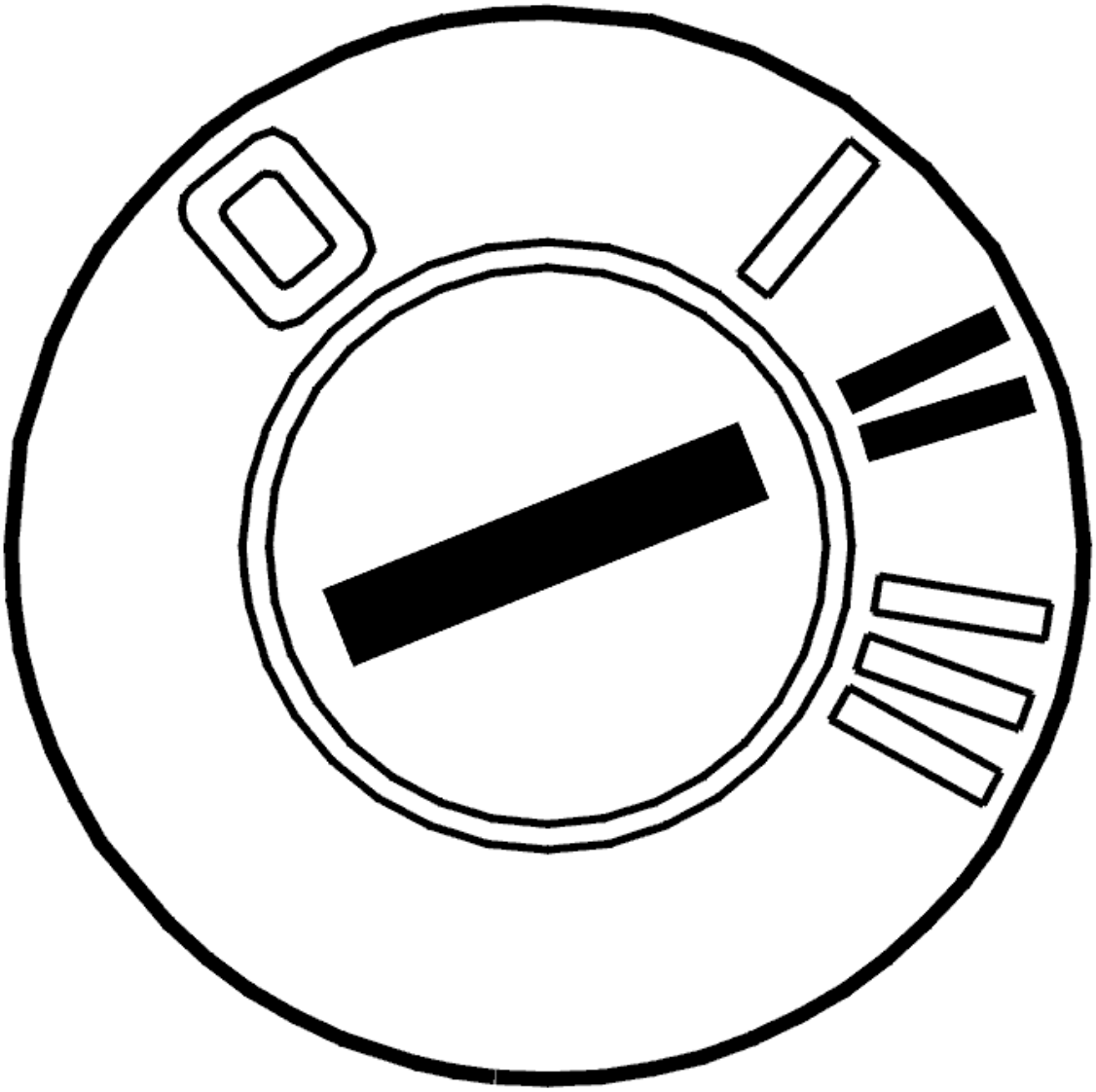

Fig. 137: Identifying Ignition ON
Courtesy of VOLVO CARS CORPORATION

- Ignition on
- Gear selector in position P.

  Try moving the gear selector to another position without depressing the brake pedal. It should not be possible to move the gear selector.

  Depress the brake pedal and try moving the gear selector to another position. It should now be possible to

move the gear selector to another position.

Was the function OK?

- **YES**

  Refer to **INTERMITTENT FAULT**

- **NO**

  Refer to **CHECKING THE WIRING AND COMPONENT**

CHECKING THE WIRING AND COMPONENT

Check the cable between the gear selector module (GSM) and the shift lock solenoid. Check for a short-circuit to ground.

If no fault is found in the wiring, connect an ohmmeter to solenoid connector terminals #1 and #2 (solenoid side).

The resistance must be 15-25 ohms. Replace the solenoid if the resistance is incorrect. Replace the printed circuit board in the top panel if the resistance is OK.

Remedy as necessary.

Other information

- To replace the shift lock solenoid, see **SOLENOID SHIFT LOCK, REPLACE**
- To replace the circuit board in the top panel (standard), see **PRINTED CIRCUIT BOARD GEAR SELECTOR ASSEMBLY/TOP PANEL, REPLACING**
- To replace the circuit board in the top panel (Geartronic), see **PRINTED CIRCUIT BOARD GEAR SELECTOR ASSEMBLY/TOP PANEL GEARTRONIC, REPLACING**
- see **CHECKING WIRING AND TERMINALS**

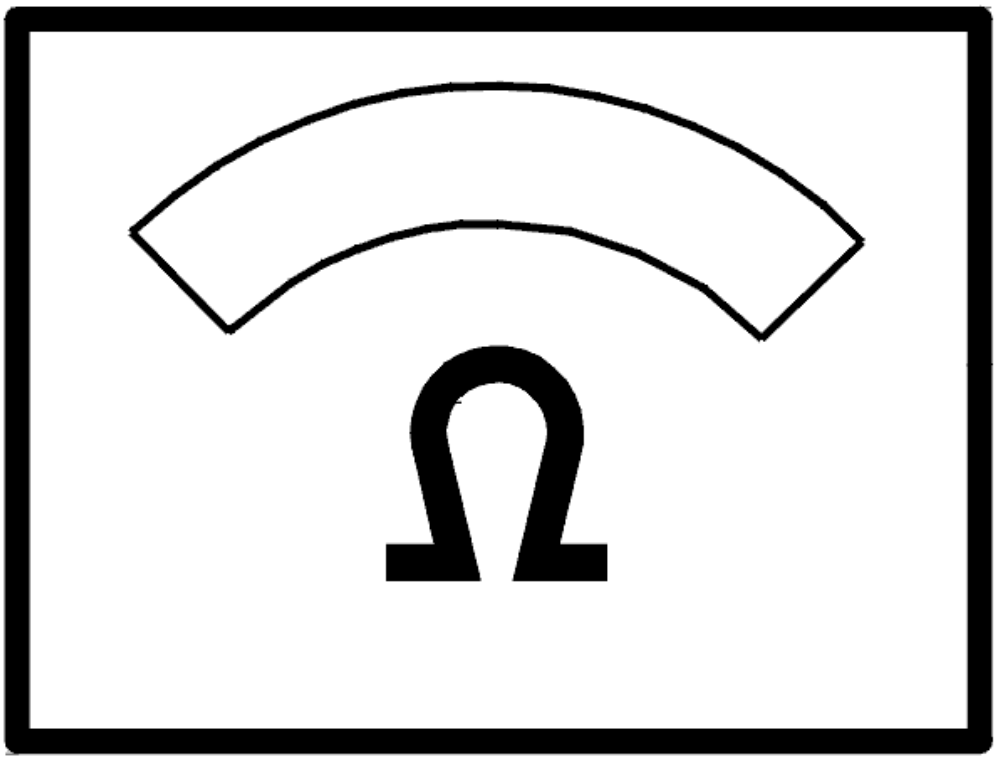

Fig. 138: Identifying Ohms Display
Courtesy of VOLVO CARS CORPORATION

- **Continue**

  Refer to **VERIFICATION**

INTERMITTENT FAULT

Check ground terminal 31/6 at the A-post. Check for intermittent contact resistance and oxidation.

Check the 4-pin connector and connector 54/3RF (passenger compartment cable harness - engine compartment cable harness). Check for damage to the terminals and pins.

Check the connectors for the gear selector module (GSM) and for the shift lock solenoid. Check for an intermittent contact resistance.

Check the cable between the gear selector module (GSM) and the shift lock solenoid. Check for an intermittent short-circuit to ground.

Remedy as necessary.

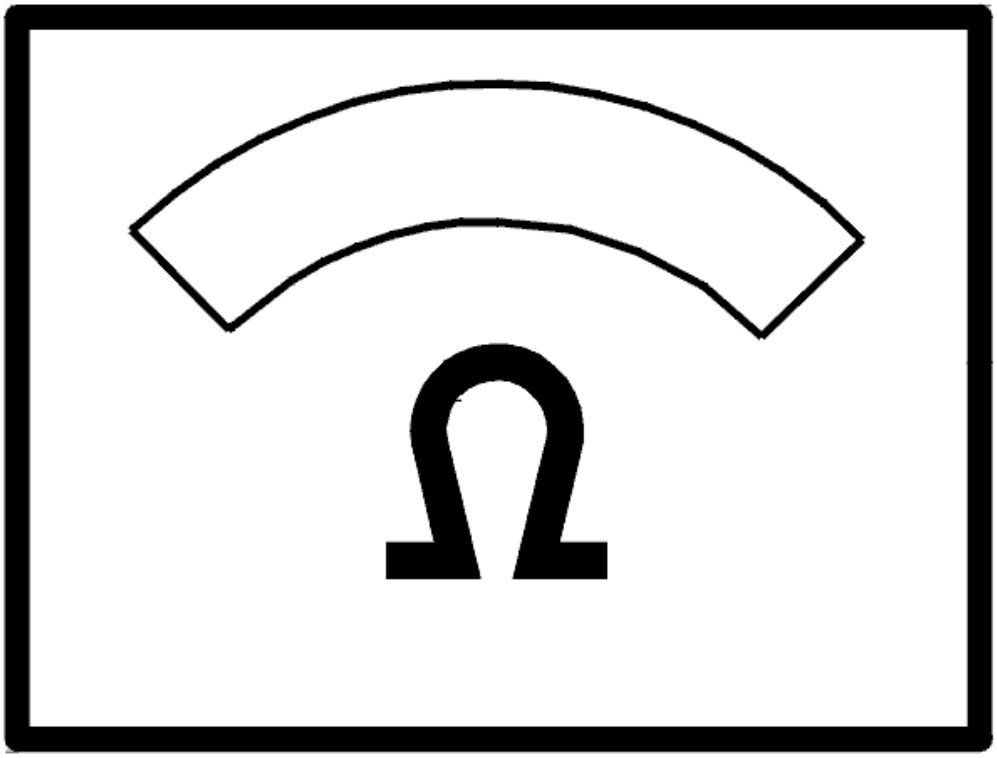

Fig. 139: Identifying Ohms Display
Courtesy of VOLVO CARS CORPORATION

- **Continue**

  Refer to **INFORMATION**

VERIFICATION

VERIFICATION

HINT: After carrying out the repair, check that the fault has been remedied.

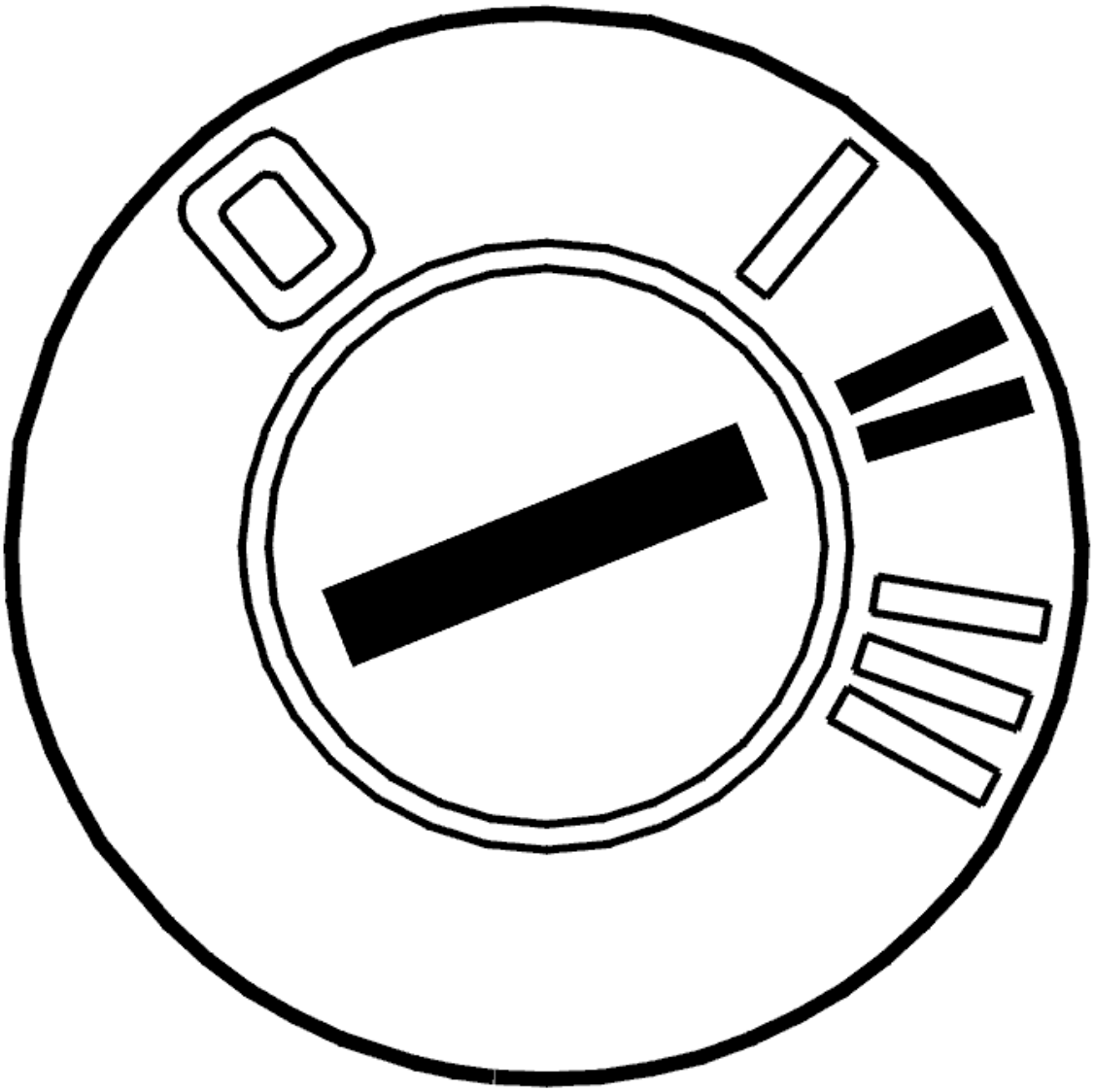

Fig. 140: Identifying Ignition ON
Courtesy of VOLVO CARS CORPORATION

- Ignition on.
- Gear selector in position P.

  Try moving the gear selector to another position without depressing the brake pedal. It should not be possible to move the gear selector.

  Depress the brake pedal and try moving the gear selector to another position. It should now be possible to move the gear selector.

Was the function OK?

- **YES**

  VERIFIED: Troubleshooting has been completed.

- **NO**

  Refer to **INFORMATION**

INFORMATION

FAULT-TRACING INFORMATION

The fault should have been detected and remedied. As this is not the case fault-tracing has failed.

Exit fault-tracing for this diagnostic trouble code (DTC) or make another attempt.

INFORMATION

FAULT-TRACING INFORMATION

If the fault is intermittent, do not verify fault-tracing if the fault does not recur.

It is possible to view the information again, or leave fault-tracing for this diagnostic trouble code (DTC).

TCM-0092: SHIFT LOCK SOLENOID. SIGNAL TOO LOW (AW50/51 AWD; AW55-50/51SN; 2003-2007)

DIAGNOSTIC TROUBLE CODE INFORMATION

see **DIAGNOSTIC TROUBLE CODE INFORMATION**

SIGNAL TOO LOW

CHECKS

CHECKING THE P-SHIFT LOCK SOLENOID

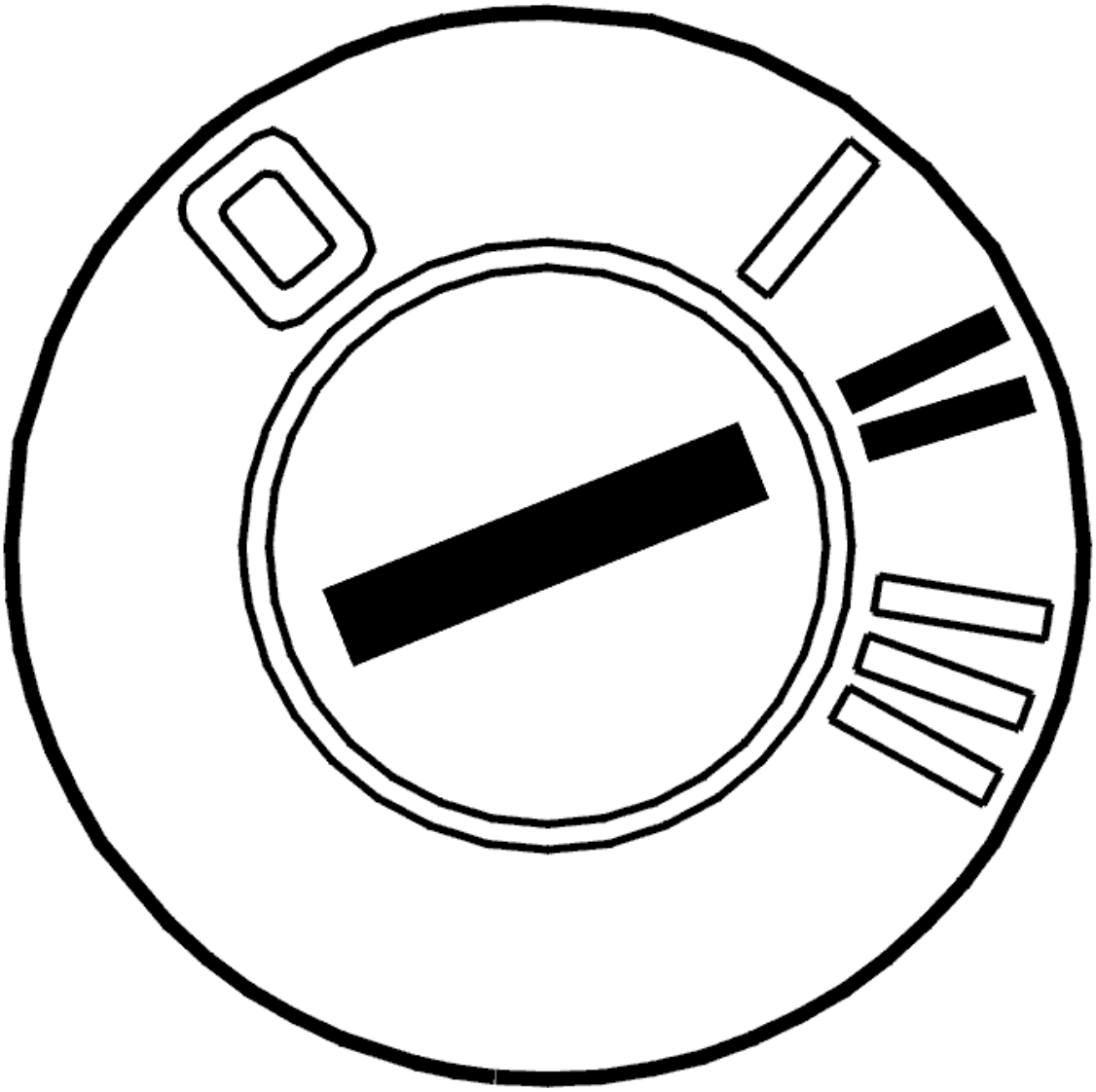

Fig. 141: Identifying Ignition ON
Courtesy of VOLVO CARS CORPORATION

- Ignition on
- Gear selector in position P
- Try moving the gear selector to another position without depressing the brake pedal. It should not be possible to move the gear selector
- Depress the brake pedal and try moving the gear selector to another position. It should now be possible to move the gear selector to another position.

Was the function OK?

- **YES**

  Refer to **INTERMITTENT FAULT**

- **NO**

  Refer to **CHECKING THE WIRING AND COMPONENT**

CHECKING THE WIRING AND COMPONENT

Check the cable between the gear selector module (GSM) and the shift lock solenoid. Check for a short-circuit to ground.

If no fault is found in the wiring, connect an ohmmeter to solenoid connector terminals #1 and #2 (solenoid side).

Resistance should be 35-45 ohmsReplace the solenoid if the resistance is incorrect. If the resistance is OK, replace the circuit board in the top panel.

Other information

- To check or replace the shift lock solenoid, see **SOLENOID SHIFT LOCK, REPLACE**
- To replace the circuit board in the top panel (standard), see **PRINTED CIRCUIT BOARD GEAR SELECTOR ASSEMBLY/TOP PANEL, REPLACING**
- To replace the circuit board in the top panel (Geartronic), see **PRINTED CIRCUIT BOARD GEAR SELECTOR ASSEMBLY/TOP PANEL, GEARTRONIC, REPLACING**
- see **CHECKING WIRING AND TERMINALS**

- **Continue**

  Refer to **VERIFICATION**

INTERMITTENT FAULT

Check the gear selector module (GSM) and solenoid connectors. Check for intermittent contact resistance.

Check the cable between the gear selector module (GSM) and the shift lock solenoid. Check for an intermittent short-circuit to ground.

Remedy as necessary.

Other information:

- To replace the shift lock solenoid, see **SOLENOID SHIFT LOCK, REPLACE**
- see **CHECKING WIRING AND TERMINALS**

- **Continue**

  Refer to **INFORMATION**

VERIFICATION

VERIFICATION

HINT: After carrying out the repair, check that the fault has been remedied.

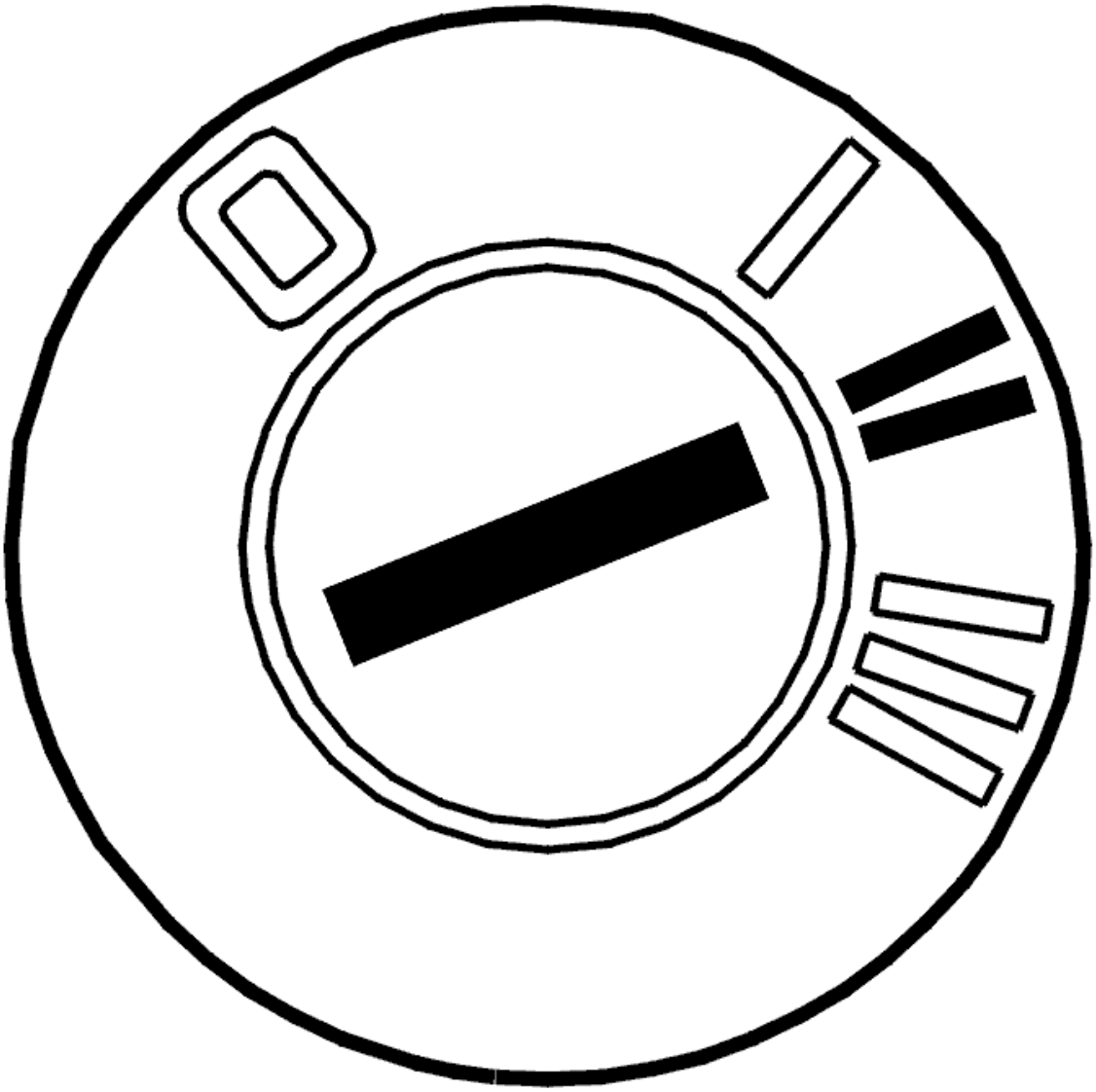

Fig. 142: Identifying Ignition ON
Courtesy of VOLVO CARS CORPORATION

- Ignition on.
- Gear selector in position P.

  Try moving the gear selector to another position without depressing the brake pedal. It should not be possible to move the gear selector.

  Depress the brake pedal and try moving the gear selector to another position. It should now be possible to

move the gear selector.

Was the function OK?

- **YES**

  VERIFIED: Troubleshooting has been completed.

- **NO**

  Refer to **INFORMATION**

INFORMATION

FAULT-TRACING INFORMATION

The fault should have been detected and remedied. As this is not the case fault-tracing has failed.

Exit fault-tracing for this diagnostic trouble code (DTC) or make another attempt.

INFORMATION

FAULT-TRACING INFORMATION

If the fault is intermittent, do not verify fault-tracing if the fault does not recur.

It is possible to view the information again, or leave fault-tracing for this diagnostic trouble code (DTC).

TCM-0093: CONTROL MODULE COMMUNICATION, GEAR SELECTOR LEVER SIGNAL TOO HIGH (4T65 AWD; 2003-2006)

DIAGNOSTIC TROUBLE CODE INFORMATION

Condition

If the control unit registers that the signal from the gear selector control unit (GSM) is too high, diagnostic trouble code TCM-0093 is set.

Substitute Value

- No substitute value.

Possible Source

- Contact resistance in the connectors.
- Communication wire short-circuited to voltage supply.

Fault symptom[s]

- Malfunction indicator light (MIL) is on.
- Orange general warning lamp is on.
- Position indication on the gear selector panel not working.

SIGNAL TOO HIGH

CHECKS

CHECKING COMMUNICATION

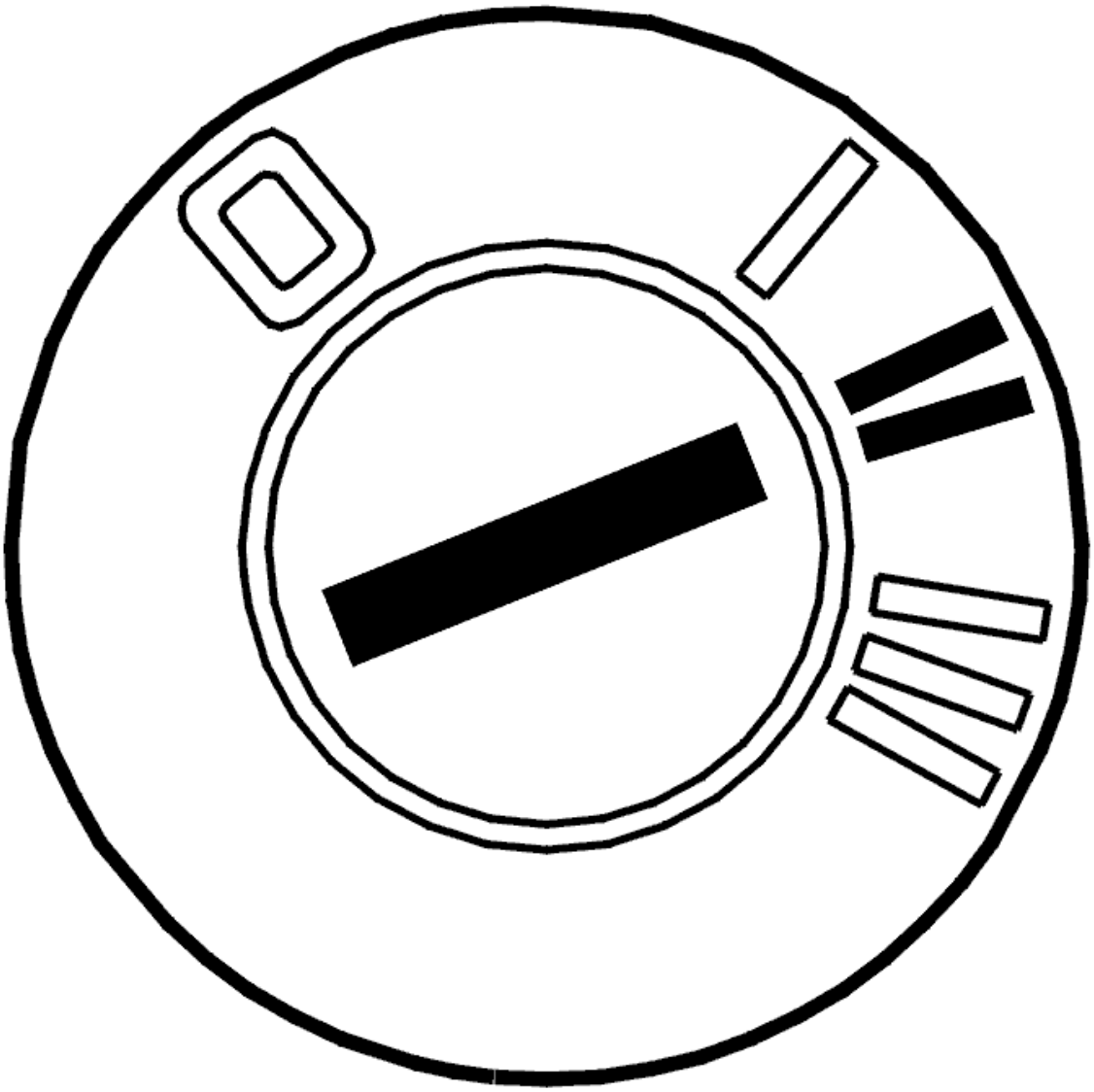

Fig. 143: Identifying Ignition ON
Courtesy of VOLVO CARS CORPORATION

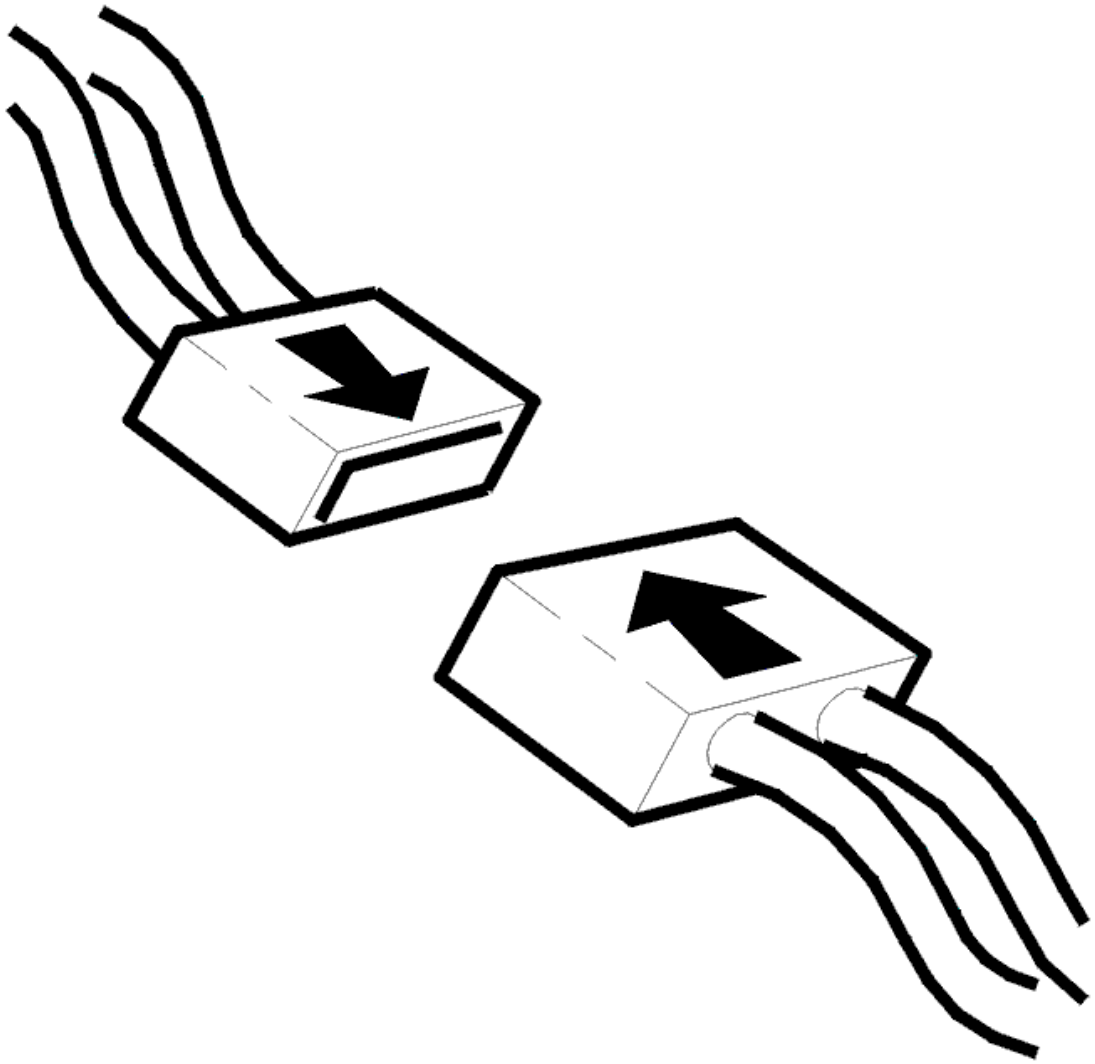

Fig. 144: Identifying Connector(s) Reinstallation
Courtesy of VOLVO CARS CORPORATION

- Ignition off
- Check the transmission control module (TCM) and Gear selector module (GSM) connectors. Check for contact resistance and oxidation
- Reinstall the components, reconnect the connectors etc.
- Ignition on.

  Press the brake pedal and move the gear shift selector to the different positions. Check that the gear position is updated in the display in the combined instrument panel. Compare with the indicators in the panel for the gear selector.

  If the gear position is updated in the combined instrument panel and in the panel at the gear selector, the problem was probably caused by contact resistance or oxidation.

If the gear position is updated in the combined instrument panel but not in the panel at the gear selector, replace the printed circuit board in the top panel.

If the gear position is updated in the panel at the gear selector but not in the combined instrument panel there is probably a fault in another system. Exit fault-tracing and fault-trace the central electronic module (CEM) or the driver information module (DIM).

Other information

- To check the transmission control module (TCM) connector, see **CONNECTING BREAKOUT BOX, TRANSMISSION CONTROL MODULE (TCM)**
- To check or replace the printed circuit board (standard), see **PRINTED CIRCUIT BOARD GEAR SELECTOR ASSEMBLY/TOP PANEL, REPLACING**
- To check or replace the printed circuit board (Geartronic), see **PRINTED CIRCUIT BOARD GEAR SELECTOR ASSEMBLY/TOP PANEL GEARTRONIC, REPLACING** .

Select an option:

1. The gear position is updated in the combined instrument panel and in the panel at the gear selector

   OKAY: Troubleshooting has been completed.

2. The gear position is updated in the combined instrument panel but not in the panel at the gear selector

   Refer to **VERIFICATION**

3. The gear position is updated in the panel at the gear selector but not in the combined instrument panel

   OKAY: Troubleshooting has been completed.

4. The gear position is not updated in the combined instrument panel or in the panel at the gear selector.

   Refer to **CHECKING THE WIRING**

CHECKING THE WIRING

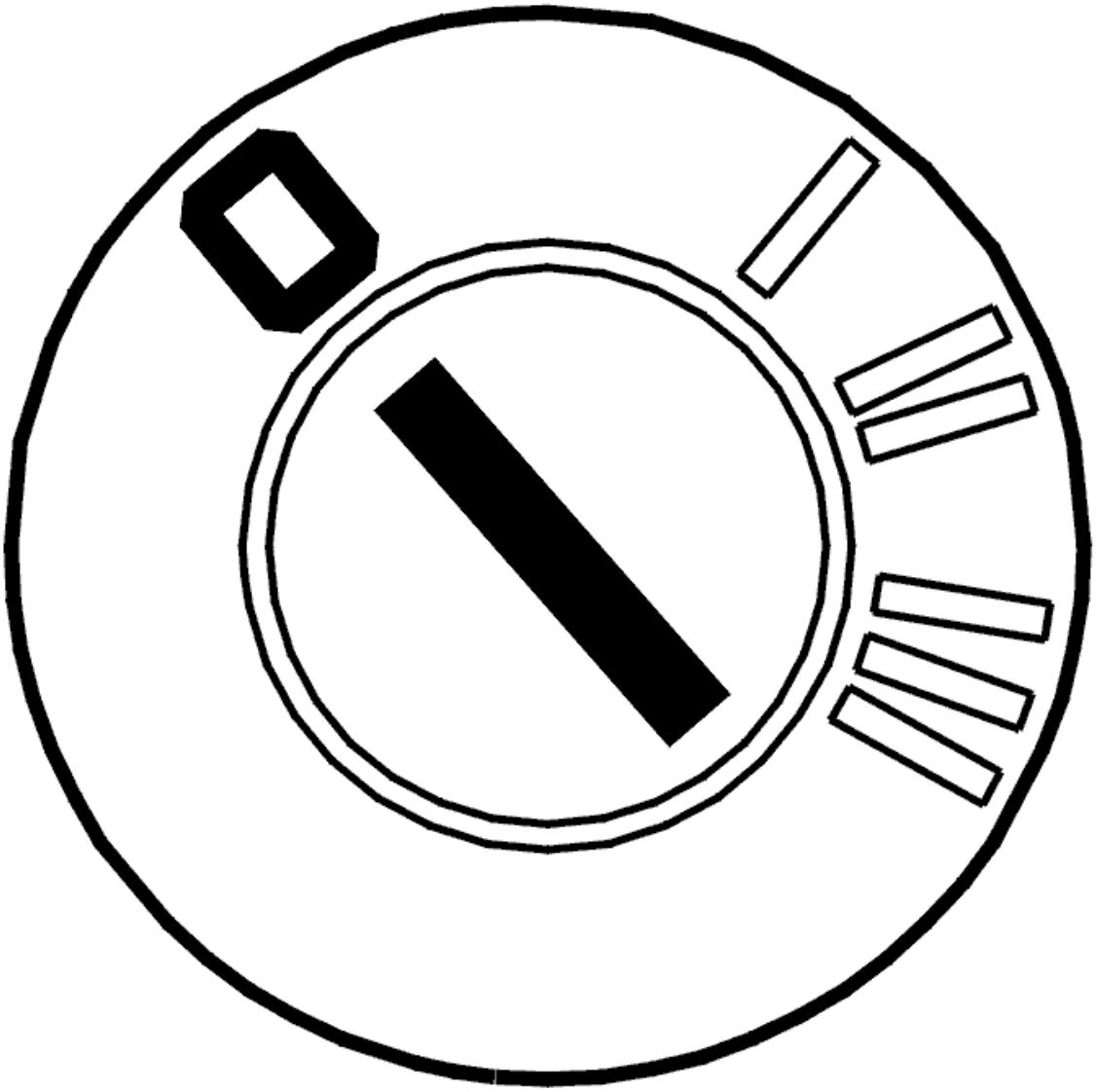

Fig. 145: Identifying Ignition OFF
Courtesy of VOLVO CARS CORPORATION

- Ignition off.

  Check the communication cable between the gear selector module (GEM) terminal #2 and transmission control module (TCM) terminal #B21. Check for a short-circuit to supply voltage.

  Other information

  - To connect the breakout box, see **CONNECTING BREAKOUT BOX, TRANSMISSION CONTROL MODULE (TCM)**
  - For information about signals, see **SIGNAL DESCRIPTION. TRANSMISSION CONTROL MODULE (TCM)**
  - To replace the printed circuit board (standard), see **PRINTED CIRCUIT BOARD GEAR**

SELECTOR ASSEMBLY/TOP PANEL, REPLACING

- To replace the printed circuit board (geartronic), see **PRINTED CIRCUIT BOARD GEAR SELECTOR ASSEMBLY/TOP PANEL GEARTRONIC, REPLACING**
- see **CHECKING WIRING AND TERMINALS**

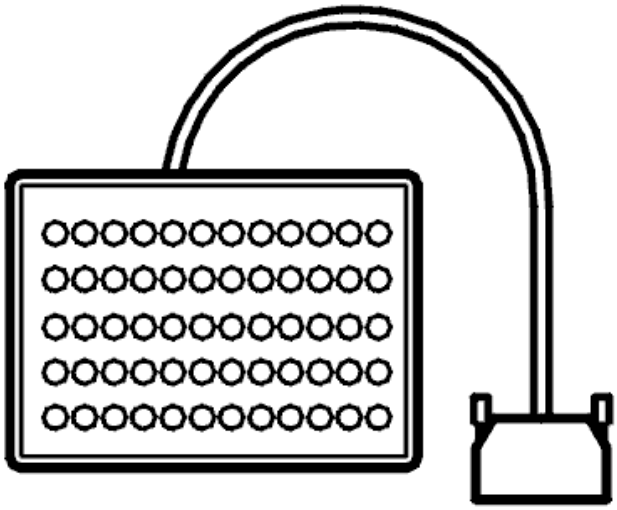

Fig. 146: Identifying Breakout Box
Courtesy of VOLVO CARS CORPORATION

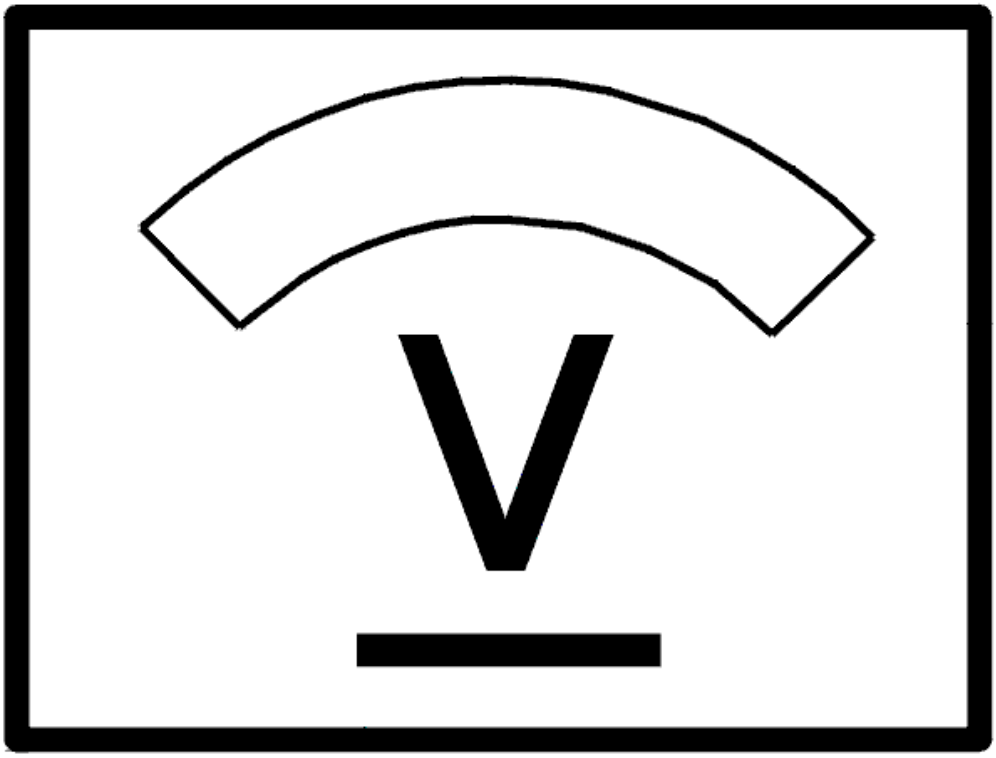

Fig. 147: Identifying Voltage Display
Courtesy of VOLVO CARS CORPORATION

Was a fault detected?

- **YES**

  Refer to **VERIFICATION**

- **NO**

  Refer to **CHECKING THE CONTROL MODULE**

CHECKING THE CONTROL MODULE

HINT: To determine whether the control module is faulty, disconnect the connector for the gear selector

module (GSM) and temporarily connect a cable to short-circuit the control module terminals.

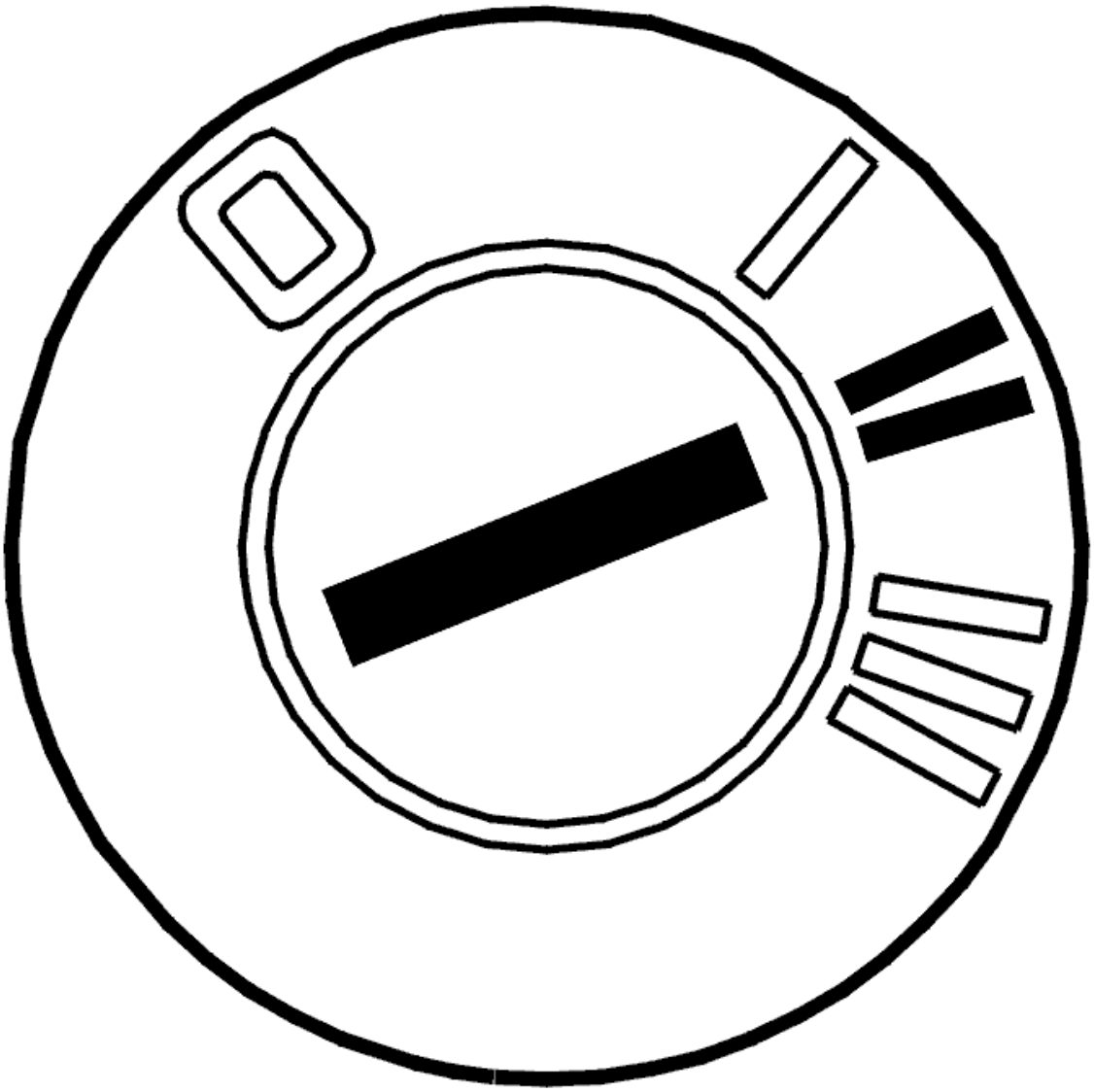

Fig. 148: Identifying Ignition ON
Courtesy of VOLVO CARS CORPORATION

- Ignition off
- The breakout box connected
- Disconnect the 6-pin connector for the gear selector module (GSM)
- Connect a temporary cable between terminals #A53 and #B31 on the breakout box.

CAUTION: Thoroughly check that the cable is connected to the correct terminals. Also check that there is no risk of unintentional short-circuits.

- Ignition on

- Read off the status.

  Check that the status indicates "1" when the cable is connected.

  Disconnect the cable end that is connected to terminal #A35 and move the cable to terminal #A53.

  NOTE: Leave the cable end connected to terminal #B31 in place.

  Check that the status changes to "0" when the cable has been transferred to terminal #A53.

  If the status shifts to "0" the transmission control module (TCM) is??? OK. Replace the circuit board in the top panel.

  If the status shifts to "0" the transmission control module (TCM) is??? faulty. Replace the control module.

  Remedy as necessary.

  Other information

  - To connect the breakout box, see **CONNECTING BREAKOUT BOX, TRANSMISSION CONTROL MODULE (TCM)**
  - For information about signals, see **SIGNAL DESCRIPTION. TRANSMISSION CONTROL MODULE (TCM)**
  - To replace the transmission control module (TCM), see **TRANSMISSION CONTROL MODULE (TCM), REPLACING**
  - To replace the printed circuit board (standard), see **PRINTED CIRCUIT BOARD GEAR SELECTOR ASSEMBLY/TOP PANEL, REPLACING**
  - To replace the printed circuit board (geartronic), see **PRINTED CIRCUIT BOARD GEAR SELECTOR ASSEMBLY/TOP PANEL GEARTRONIC, REPLACING** .

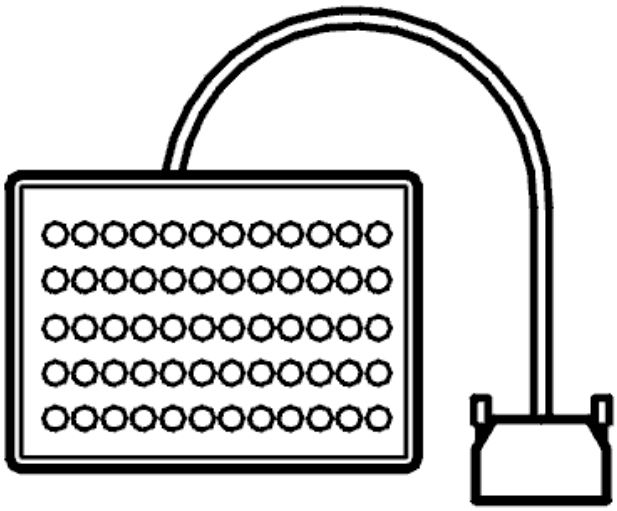

Fig. 149: Identifying Breakout Box

Courtesy of VOLVO CARS CORPORATION

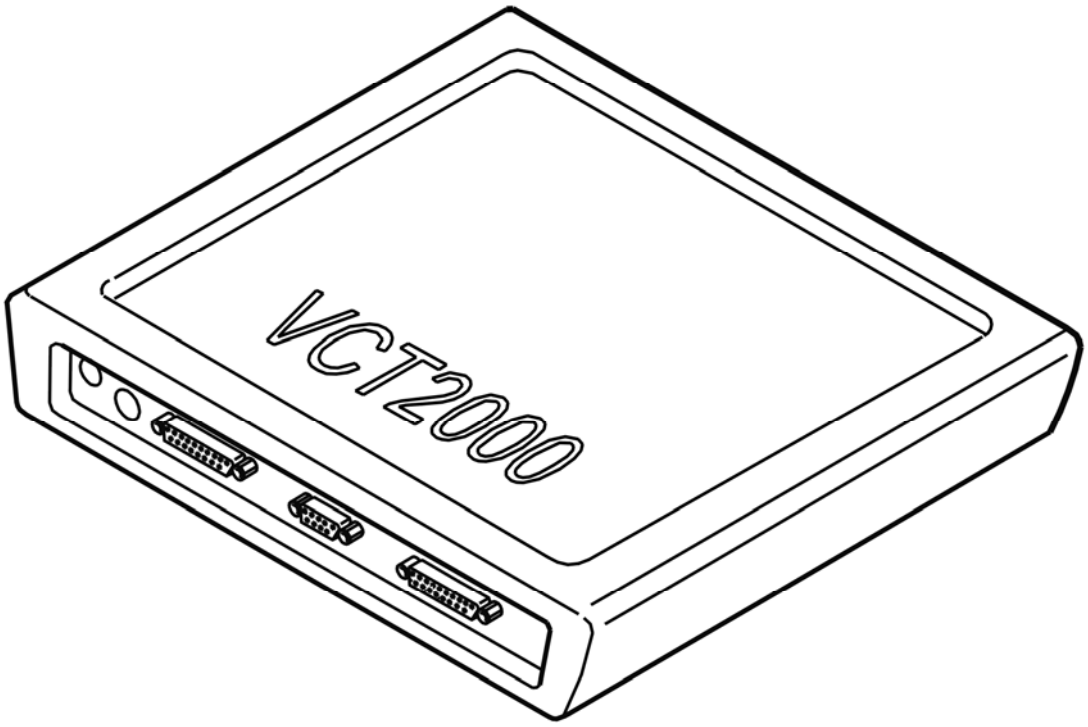

Fig. 150: Identifying VCT2000 Diagnostic Tool Symbol In VIDA
Courtesy of VOLVO CARS CORPORATION

- **Continue**

  Refer to **VERIFICATION**

VERIFICATION

VERIFICATION

HINT: After carrying out the repair, check that the fault has been remedied.

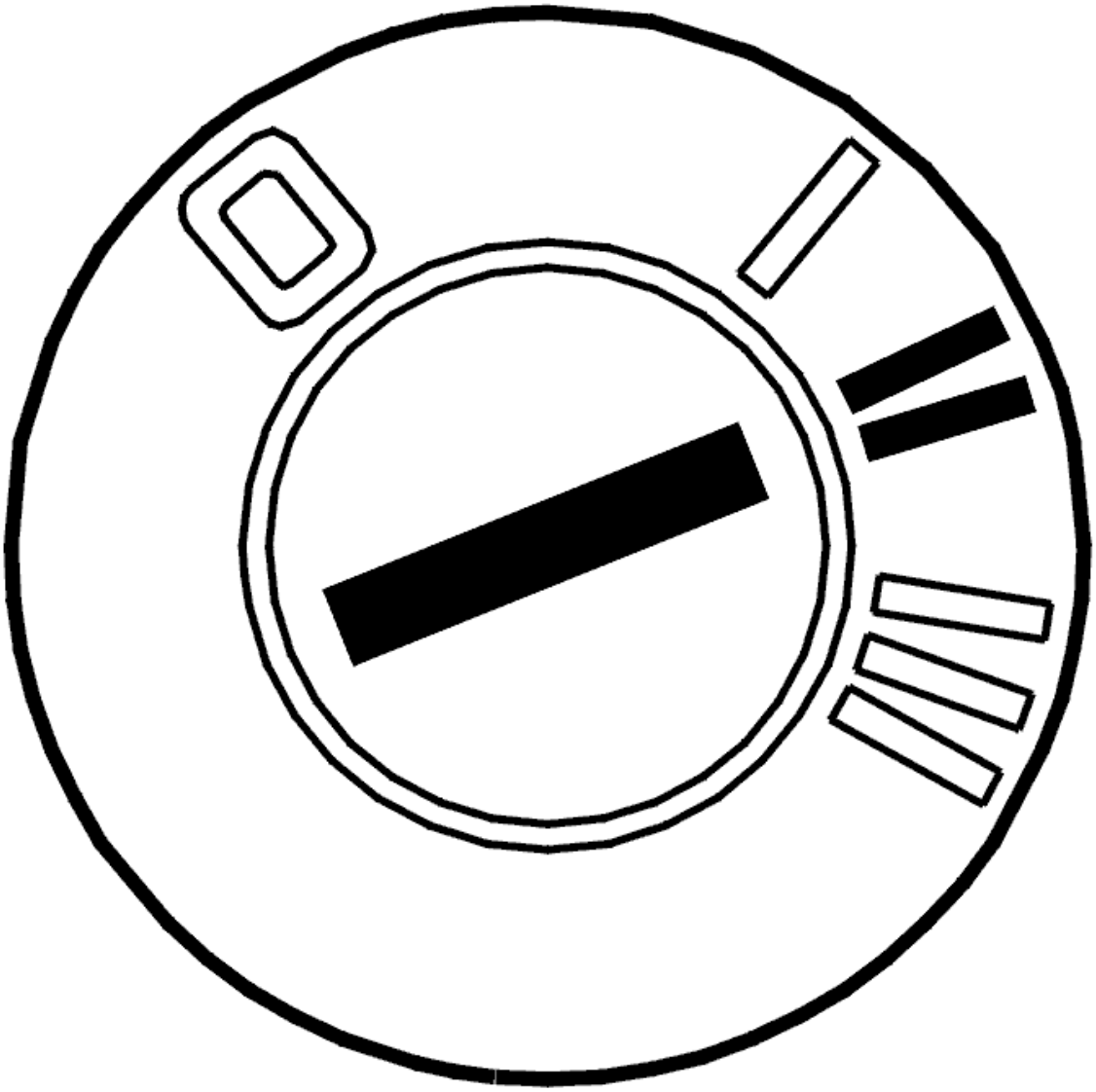

Fig. 151: Identifying Ignition ON
Courtesy of VOLVO CARS CORPORATION

- Ignition on.

  Depress the brake pedal. Move the gear shift selector to different positions. Check that the gear position is updated in the display in the combined instrument panel.

Is the gear position updated?

- **YES**

  VERIFIED: Troubleshooting has been completed.

- **NO**

Refer to **INFORMATION**

INFORMATION

FAULT-TRACING INFORMATION

The fault should have been detected and remedied. As this is not the case fault-tracing has failed.

Exit fault-tracing for this diagnostic trouble code (DTC) or make another attempt.

TCM-0093: GEAR SELECTOR LEVER CONTROL MODULE COMMUNICATION. SIGNAL TOO HIGH (AW50/51 AWD; AW55-50/51SN; 2003-2007)

DIAGNOSTIC TROUBLE CODE INFORMATION

Condition

If the control unit registers that the signal from the gear selector control unit (GSM) is too high, diagnostic trouble code TCM-0093 is set.

Substitute Value

- None.

Possible Source

- Contact resistance in the connectors.
- Communication wire short-circuited to voltage supply.

Fault symptom[s]

- Malfunction indicator light (MIL) is on.
- General warning lamp on.
- Position indication on the gear selector panel not working.

SIGNAL TOO HIGH

CHECKS

CHECKING COMMUNICATION

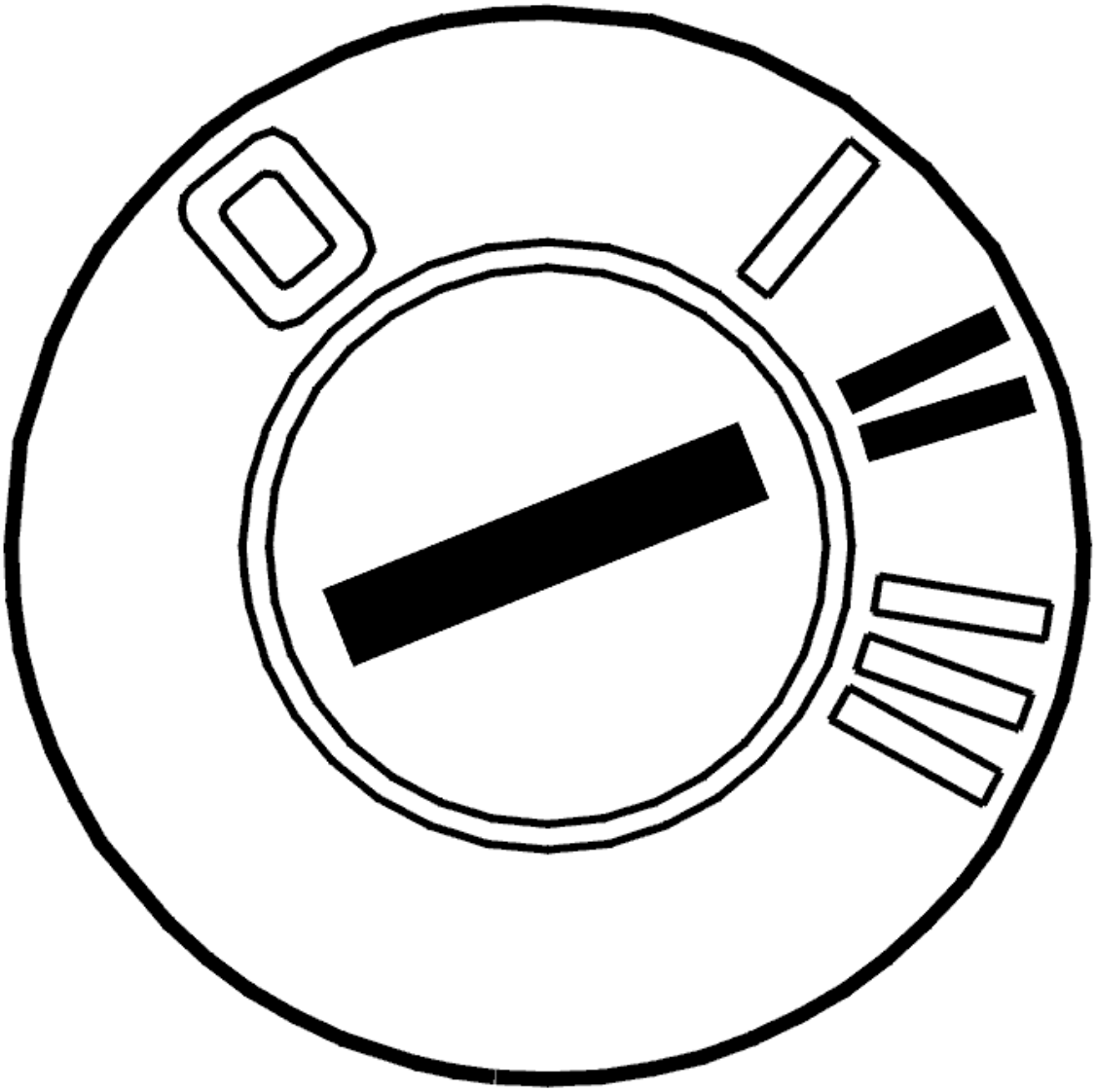

Fig. 152: Identifying Ignition ON
Courtesy of VOLVO CARS CORPORATION

- Ignition on.

  Depress the brake pedal and move the gear shift selector to different positions. Check that the gear position is updated in the display in the combined instrument panel and on the panel on the gear selector assembly.

Is the gear position updated?

- **YES**

  Refer to **INTERMITTENT FAULT**

- **NO**

Refer to **CHECKING THE WIRING AND COMPONENT**

CHECKING THE WIRING AND COMPONENT

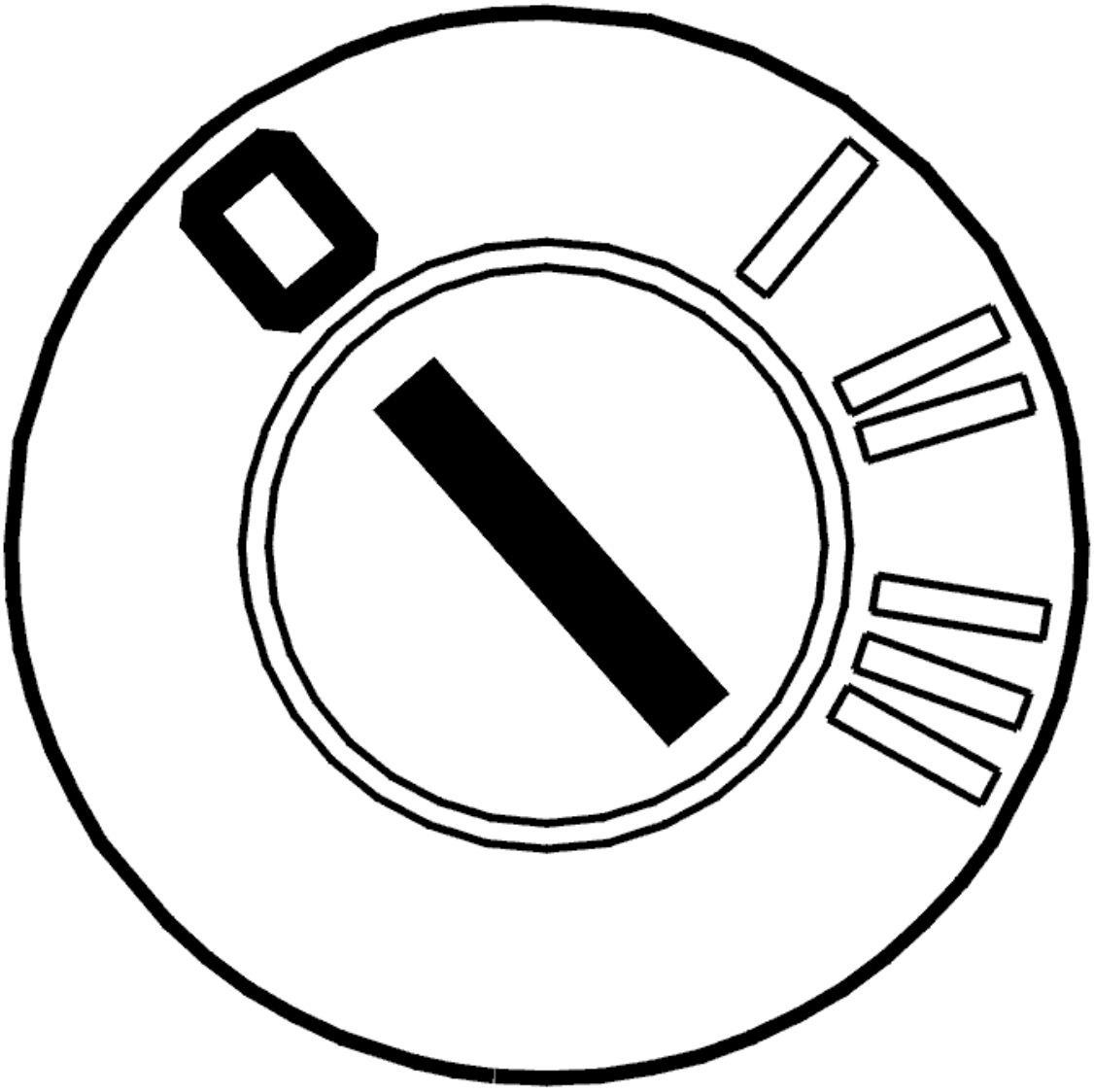

Fig. 153: Identifying Ignition OFF
Courtesy of VOLVO CARS CORPORATION

- Ignition off.

  Check the communication cable between gear selector control module terminal #2 and the transmission control module (TCM) terminal #B31 (#B21). Check for a short-circuit to supply voltage according to **SHORT-CIRCUIT TO SUPPLY VOLTAGE. PERMANENT FAULTS** .

  Replace the circuit board in the top panel if no fault is found in the cable.

  Remedy as necessary.

Other information:

- To connect the breakout box, see **CONNECTING THE BREAKOUT BOX**
- To replace the circuit board in the top panel (standard), see **PRINTED CIRCUIT BOARD GEAR SELECTOR ASSEMBLY/TOP PANEL, REPLACING**
- To replace the circuit board in the top panel (geartronic), see **PRINTED CIRCUIT BOARD GEAR SELECTOR ASSEMBLY/TOP PANEL GEARTRONIC, REPLACING**
- For information about signals, see **SIGNAL DESCRIPTION. TRANSMISSION CONTROL MODULE (TCM)** .

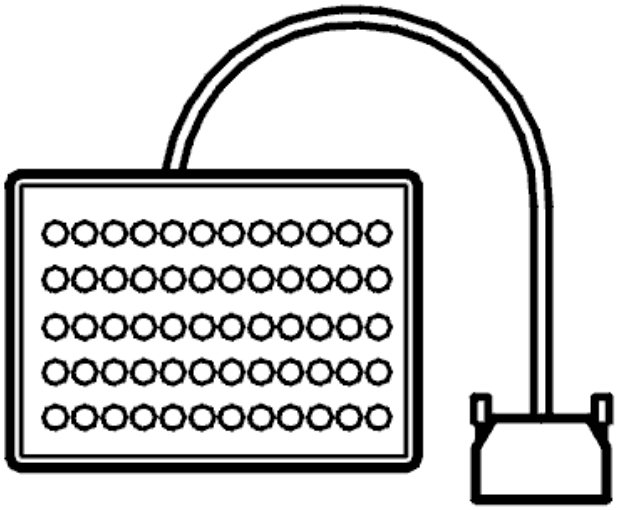

Fig. 154: Identifying Breakout Box
Courtesy of VOLVO CARS CORPORATION

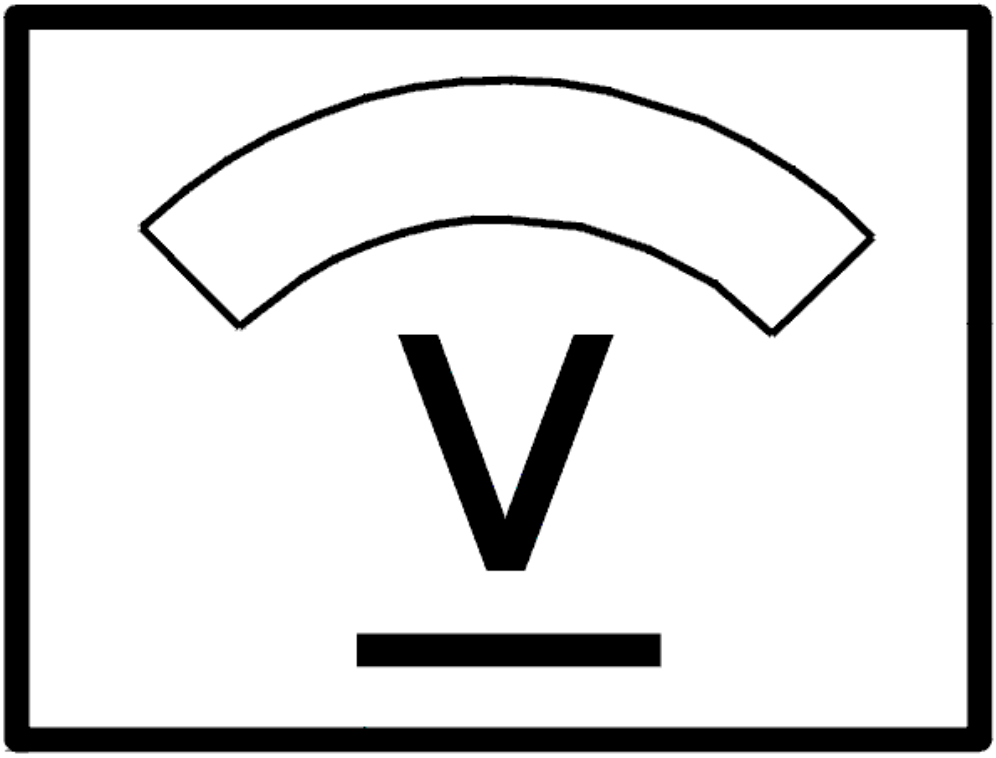

Fig. 155: Identifying Voltage Display
Courtesy of VOLVO CARS CORPORATION

Was a fault detected?

- **YES**

  Refer to **VERIFICATION**

- **NO**

  FAULT NOT FOUND: Troubleshooting has been completed.

INTERMITTENT FAULT

Check the communication cable between gear selector control module terminal #2 and transmission control

module (TCM) terminal #B31 (#B21). Check for an intermittent short-circuit to supply voltage according to **SHORT-CIRCUIT TO SUPPLY VOLTAGE, INTERMITTENT FAULTS** .

Remedy as necessary.

Other information:

- To connect the breakout box, see **CONNECTING THE BREAKOUT BOX**
- For information about signals, see **SIGNAL DESCRIPTION. TRANSMISSION CONTROL MODULE (TCM)** .

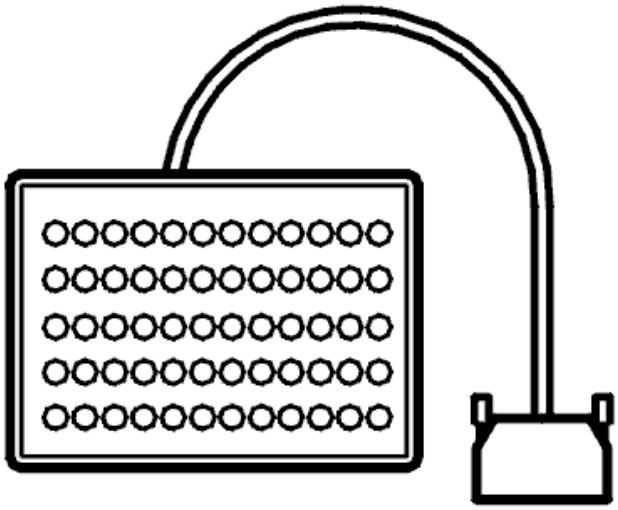

Fig. 156: Identifying Breakout Box
Courtesy of VOLVO CARS CORPORATION

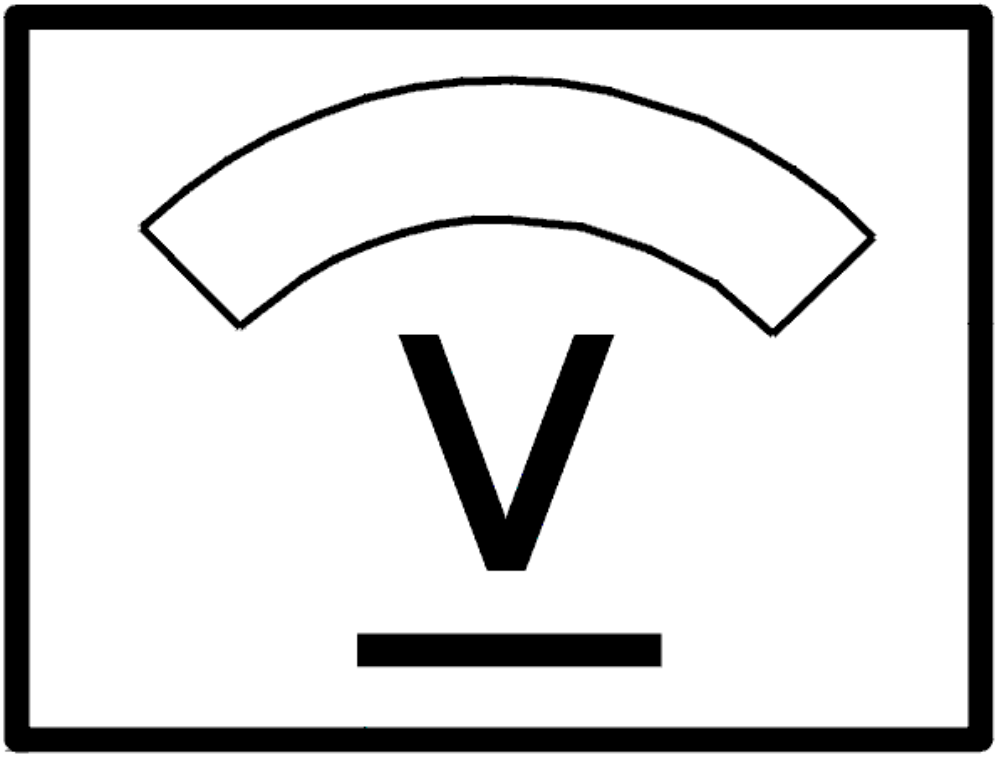

Fig. 157: Identifying Voltage Display
Courtesy of VOLVO CARS CORPORATION

- **Continue**

  Refer to **INFORMATION**

VERIFICATION

VERIFICATION

HINT: After carrying out the repair, check that the fault has been remedied.

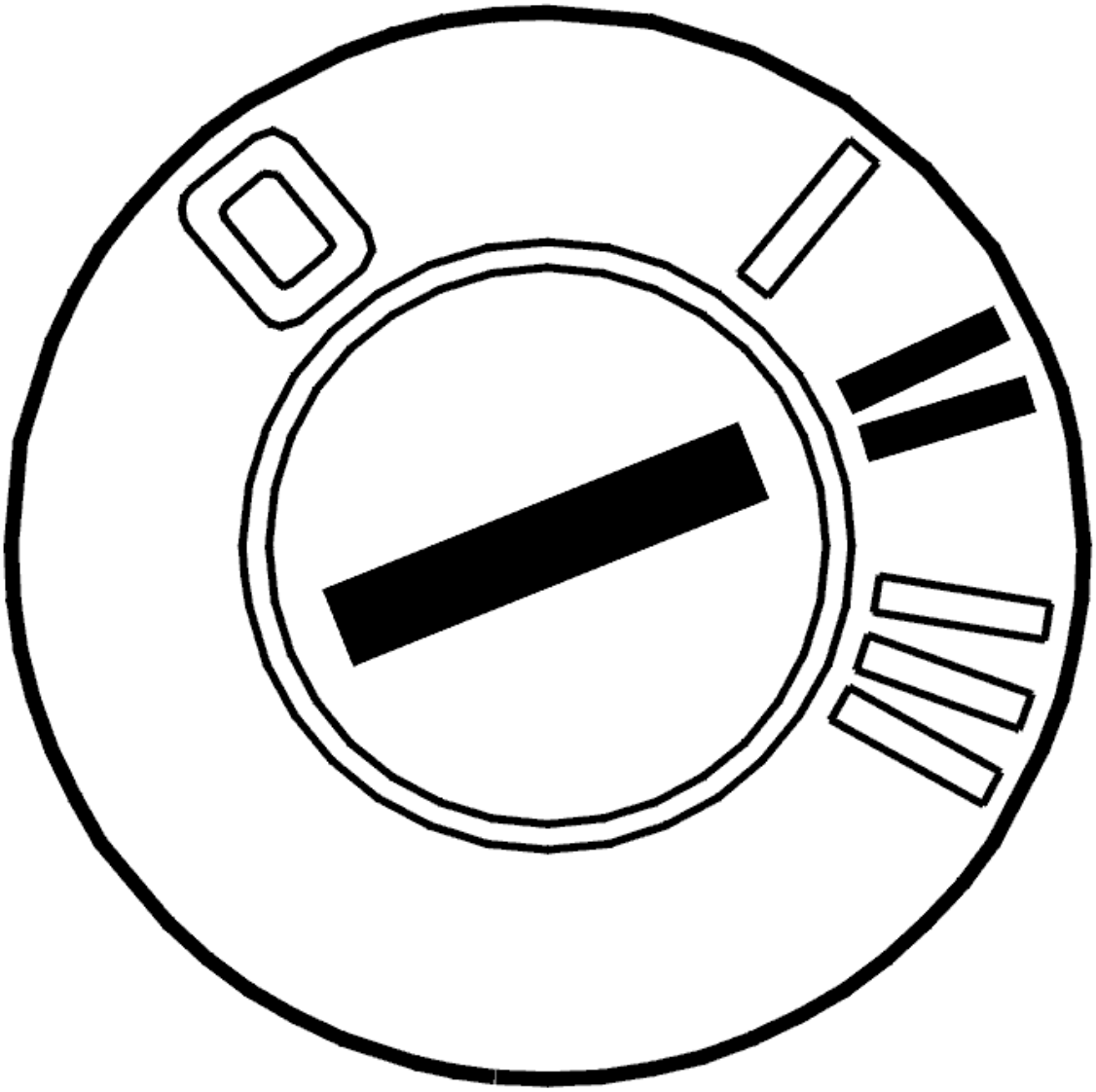

Fig. 158: Identifying Ignition ON
Courtesy of VOLVO CARS CORPORATION

- Ignition on.

  Depress the brake pedal and move the gear shift selector to different positions. Check that the gear position is updated in the display in the combined instrument panel and on the panel on the gear selector assembly.

Is the gear position updated?

- **YES**

  VERIFIED: Troubleshooting has been completed.

- **NO**

Refer to **INFORMATION**

INFORMATION

FAULT-TRACING INFORMATION

The fault should have been detected and remedied. As this is not the case fault-tracing has failed.

Exit fault-tracing for this diagnostic trouble code (DTC) or make another attempt.

INFORMATION

FAULT-TRACING INFORMATION

If the fault is intermittent, do not verify fault-tracing if the fault does not recur.

It is possible to view the information again, or leave fault-tracing for this diagnostic trouble code (DTC).

TCM-0094: CONTROL MODULE COMMUNICATION, GEAR SELECTOR LEVER SIGNAL MISSING (4T65 AWD; 2003-2006)

DIAGNOSTIC TROUBLE CODE INFORMATION

Condition

If the control unit registers no signal from P position lock solenoid, diagnostic trouble code TCM-0094 is set.

Substitute Value

- No substitute value.

Possible Source

- Contact resistance in the connectors.
- Open circuit in the communication wire.

Fault symptom[s]

- Malfunction indicator light (MIL) is on.
- Orange general warning lamp is on.
- Position indication on the gear selector panel not working.

SIGNAL MISSING

CHECKS

CHECKING COMMUNICATION

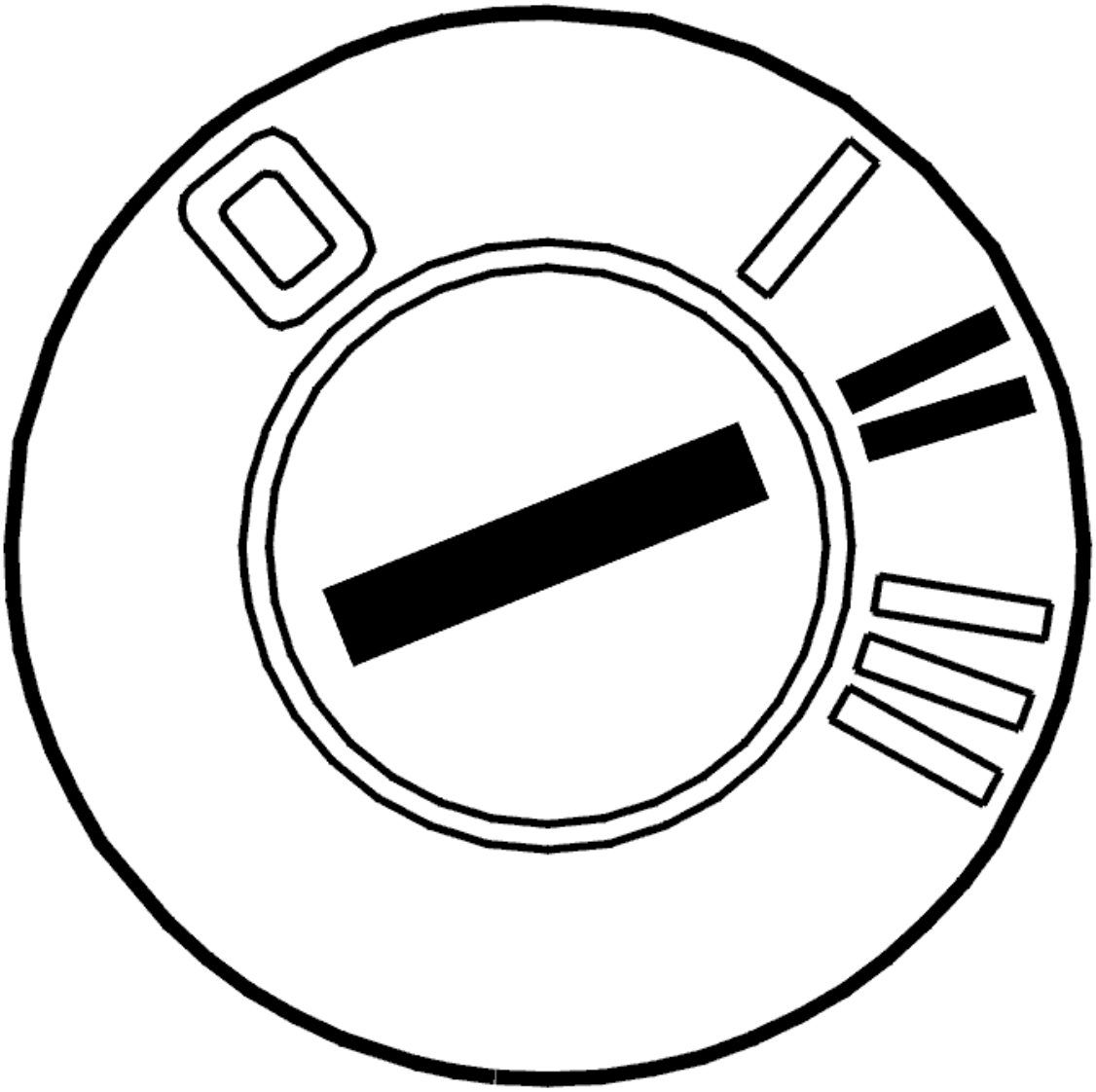

Fig. 159: Identifying Ignition ON
Courtesy of VOLVO CARS CORPORATION

- Ignition on.

  Press the brake pedal. Move the gear selector to different positions.

  Check that the gear position is updated in the display in the combined instrument panel.

Is the gear position updated?

- **YES**

  Refer to **INTERMITTENT FAULT**

- **NO**

Refer to **CHECKING THE WIRING AND COMPONENT**

CHECKING THE WIRING AND COMPONENT

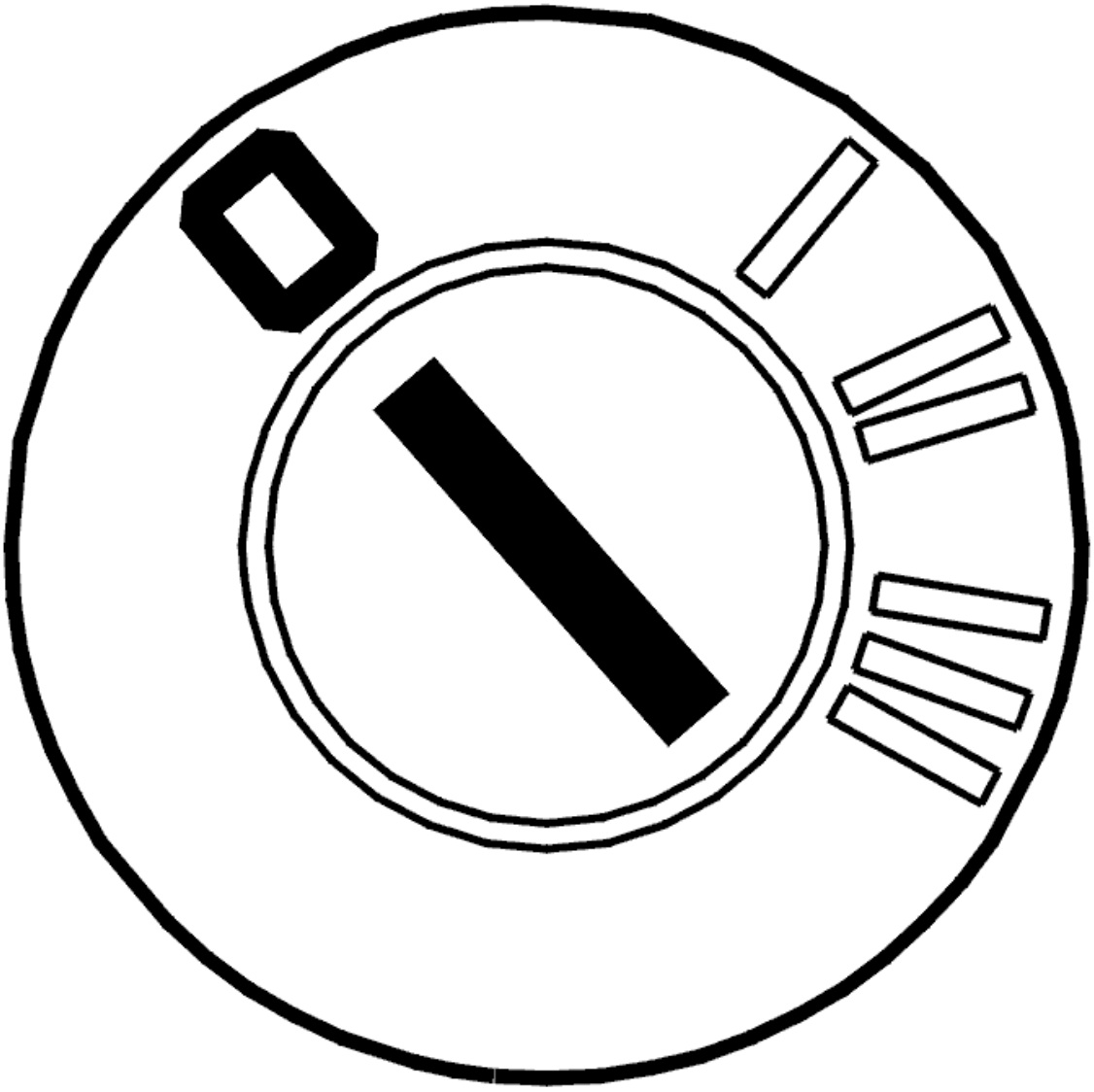

Fig. 160: Identifying Ignition OFF
Courtesy of VOLVO CARS CORPORATION

- Ignition off.

  Check ground terminal 31/6 at the A-post. Check for contact resistance and oxidation. See **CONTACT RESISTANCE AND OXIDATION** .

  Check the communication cable between gear selector control module terminal #2 and transmission control module (TCM) terminal #B21 (#B31). Check for an open-circuit. See **OPEN-CIRCUIT, PERMANENT FAULTS** .

Check the 6-pin connector and connector 54/3RF (passenger compartment cable harness - engine compartment cable harness). Check for damage to the terminals and pins.

Check the cable between the gear selector module (GSM) terminal #6 and ground terminal 31/6. Check for an open-circuit. See **OPEN-CIRCUIT, PERMANENT FAULTS** .

Replace the circuit board in the top panel if no fault is found in the wiring or connectors.

Other information:

- To connect the breakout box, see **CONNECTING BREAKOUT BOX, TRANSMISSION CONTROL MODULE (TCM)**
- To replace the circuit board in the top panel (standard), see **PRINTED CIRCUIT BOARD GEAR SELECTOR ASSEMBLY/TOP PANEL, REPLACING**
- To replace the circuit board in the top panel (Geartronic), see **PRINTED CIRCUIT BOARD GEAR SELECTOR ASSEMBLY/TOP PANEL GEARTRONIC, REPLACING**
- For information about signals, see **SIGNAL DESCRIPTION. TRANSMISSION CONTROL MODULE (TCM)** .

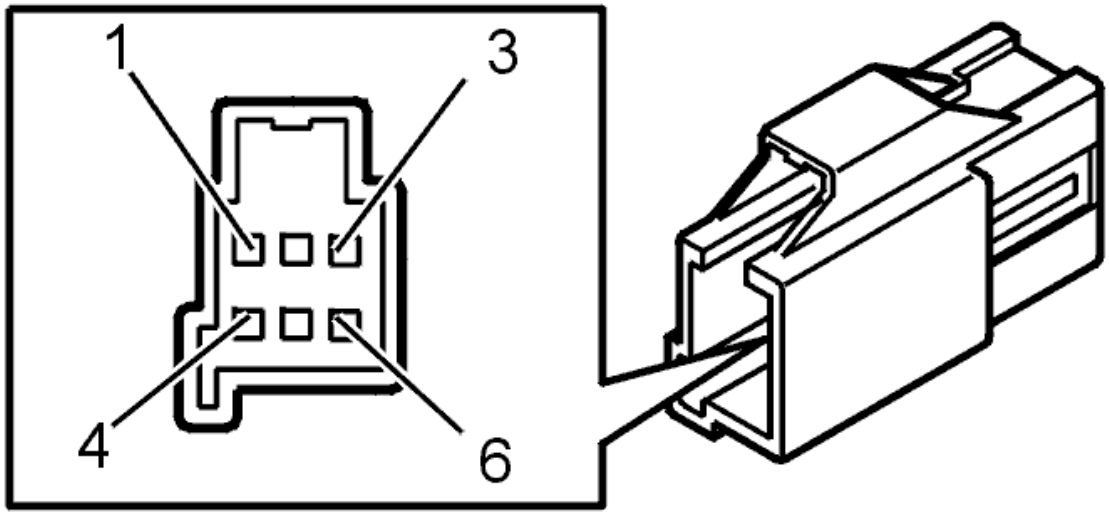

Fig. 161: Identifying 6--Pin Connector Terminals
Courtesy of VOLVO CARS CORPORATION

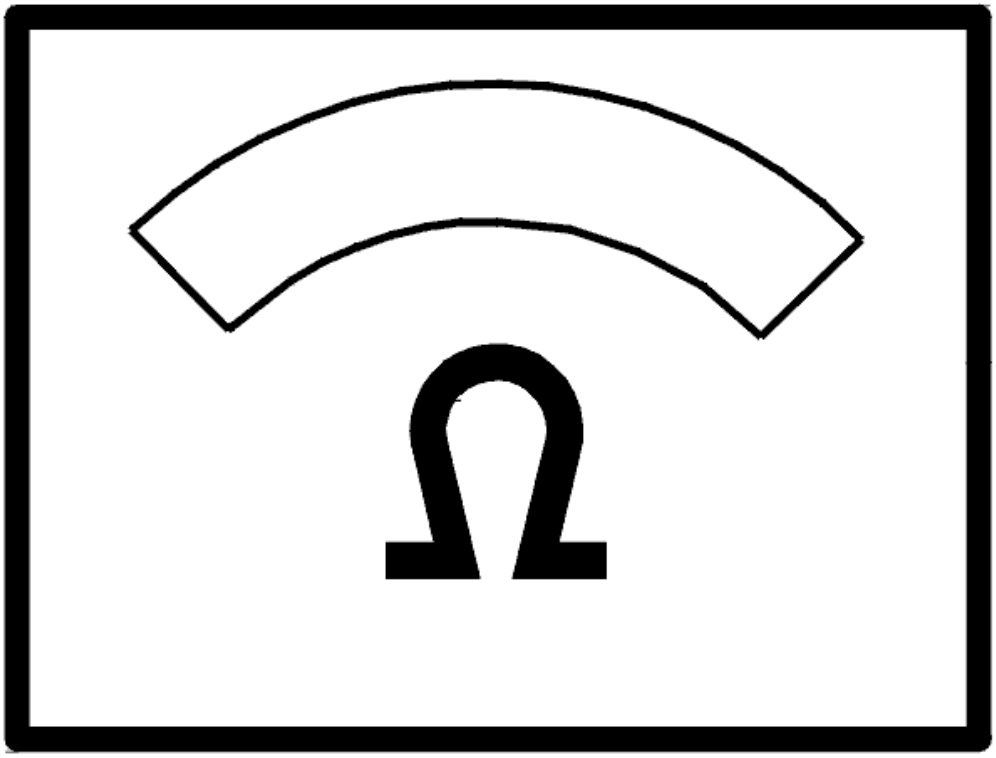

Fig. 162: Identifying Ohms Display
Courtesy of VOLVO CARS CORPORATION

- **Continue**

  Refer to **VERIFICATION**

INTERMITTENT FAULT

Check ground terminal 31/6 at the A-post. Check for contact resistance and oxidation. See **CONTACT RESISTANCE AND OXIDATION** .

Check the communication cable between gear selector control module terminal #2 and transmission control module (TCM) terminal #B21 (#B31). Check for an open-circuit. See **OPEN-CIRCUIT, INTERMITTENT FAULTS** .

Check the 6-pin connector and connector 54/3RF (passenger compartment cable harness - engine compartment cable harness). Check for damage to the terminals and pins.

Check the cable between the gear selector module (GSM) terminal #6 and ground terminal 31/6. Check for an open-circuit. See **OPEN-CIRCUIT, INTERMITTENT FAULTS** .

Remedy as necessary.

Other information:

- To connect the breakout box, see **CONNECTING BREAKOUT BOX, TRANSMISSION CONTROL MODULE (TCM)**
- For information about signals, see **SIGNAL DESCRIPTION. TRANSMISSION CONTROL MODULE (TCM)** .

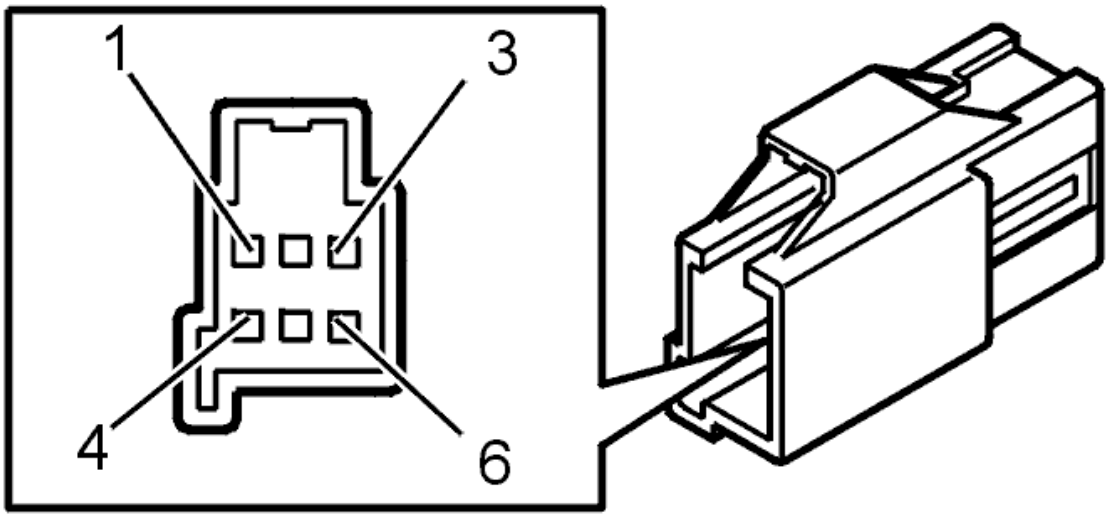

Fig. 163: Identifying 6--Pin Connector Terminals
Courtesy of VOLVO CARS CORPORATION

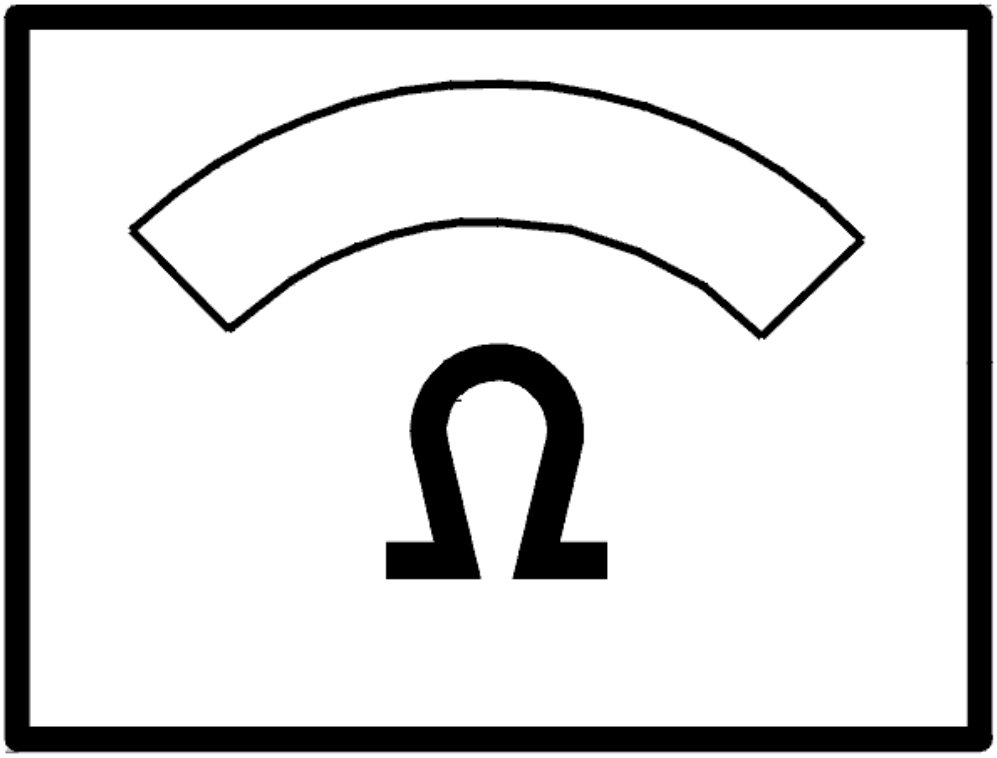

Fig. 164: Identifying Ohms Display
Courtesy of VOLVO CARS CORPORATION

- **Continue**

  Refer to **INFORMATION**

VERIFICATION

VERIFICATION

HINT: After carrying out the repair, check that the fault has been remedied.

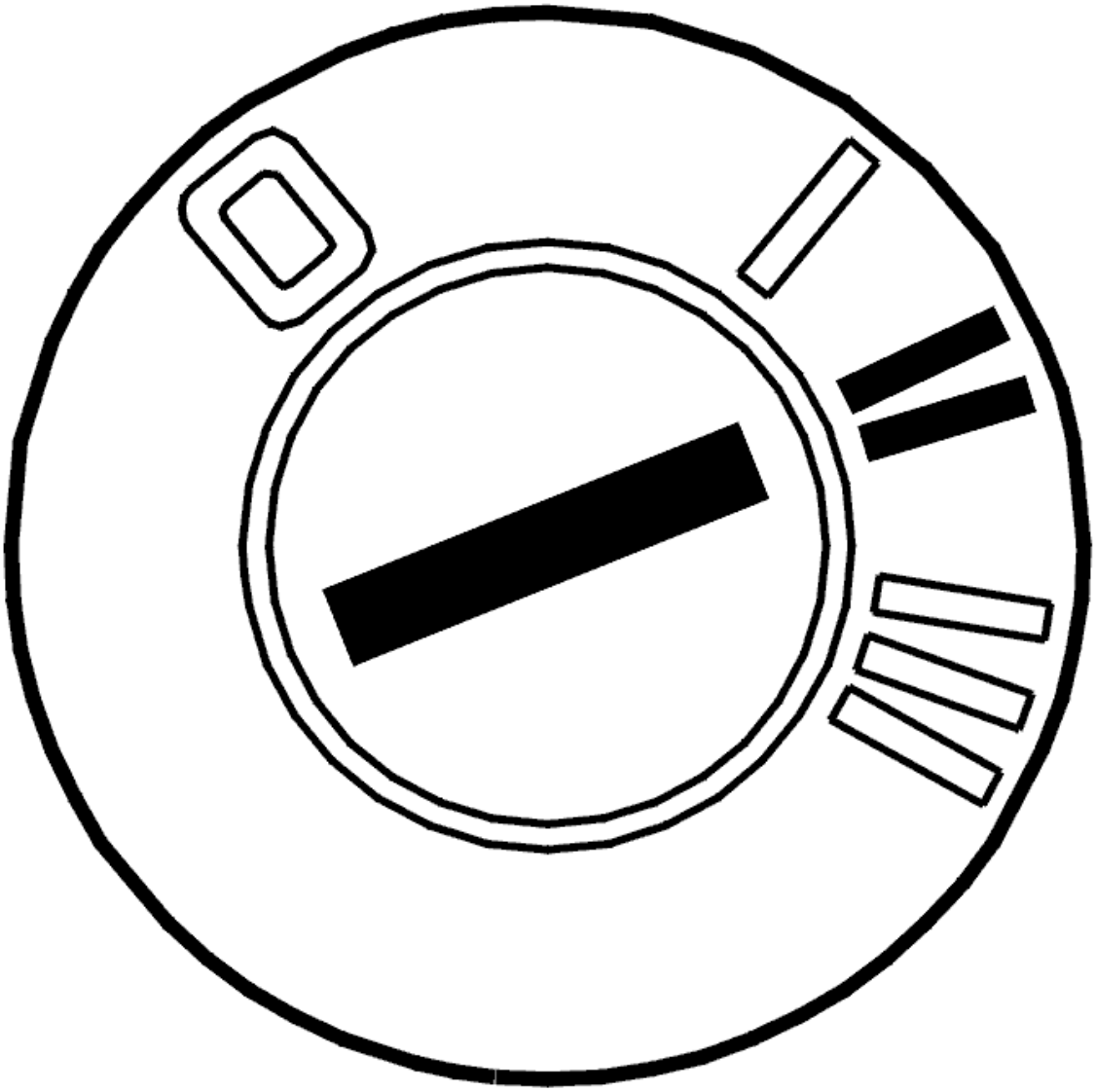

Fig. 165: Identifying Ignition ON
Courtesy of VOLVO CARS CORPORATION

- Ignition on.

  Depress the brake pedal. Move the gear shift selector to different positions. Check that the gear position is updated in the display in the combined instrument panel.

Is the gear position updated?

- **YES**

  VERIFIED: Troubleshooting has been completed.

- **NO**

Refer to **INFORMATION**

INFORMATION

FAULT-TRACING INFORMATION

The fault should have been detected and remedied. As this is not the case fault-tracing has failed.

Exit fault-tracing for this diagnostic trouble code (DTC) or make another attempt.

INFORMATION

FAULT-TRACING INFORMATION

If the fault is intermittent, do not verify fault-tracing if the fault does not recur.

It is possible to view the information again, or leave fault-tracing for this diagnostic trouble code (DTC).

TCM-0094: GEAR SELECTOR LEVER CONTROL MODULE COMMUNICATION. SIGNAL MISSING (AW50/51 AWD; AW55-50/51SN; 2003-2007)

DIAGNOSTIC TROUBLE CODE INFORMATION

Condition

If the control unit registers that there is no signal from the gear selector control unit (GSM) diagnostic trouble code TCM-0094 will be set.

Substitute Value

- None.

Possible Source

- Contact resistance in the connectors.
- Open circuit in the communication wire.

Fault symptom[s]

- Malfunction indicator light (MIL) is on.
- General warning lamp on.
- Position indication on the gear selector panel not working.

SIGNAL MISSING

CHECKS

CHECKING COMMUNICATION

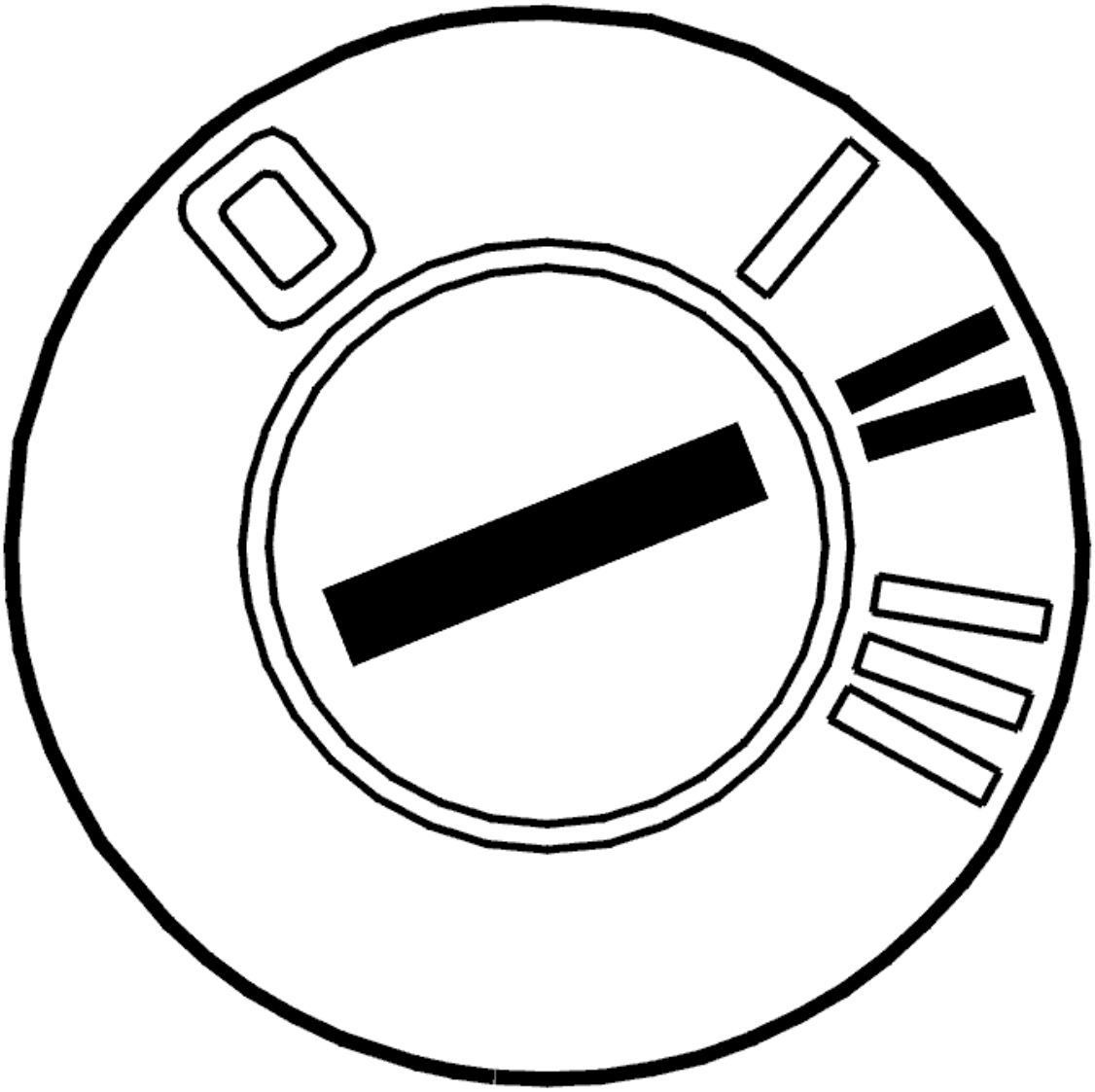

Fig. 166: Identifying Ignition ON
Courtesy of VOLVO CARS CORPORATION

- Ignition on.

  Depress the brake pedal and move the gear shift selector to different positions. Check that the gear position is updated in the display in the combined instrument panel and on the panel on the gear selector assembly.

Is the gear position updated?

- **YES**

Refer to **INTERMITTENT FAULT**

- **NO**

  Refer to **CHECKING THE WIRING AND COMPONENT**

CHECKING THE WIRING AND COMPONENT

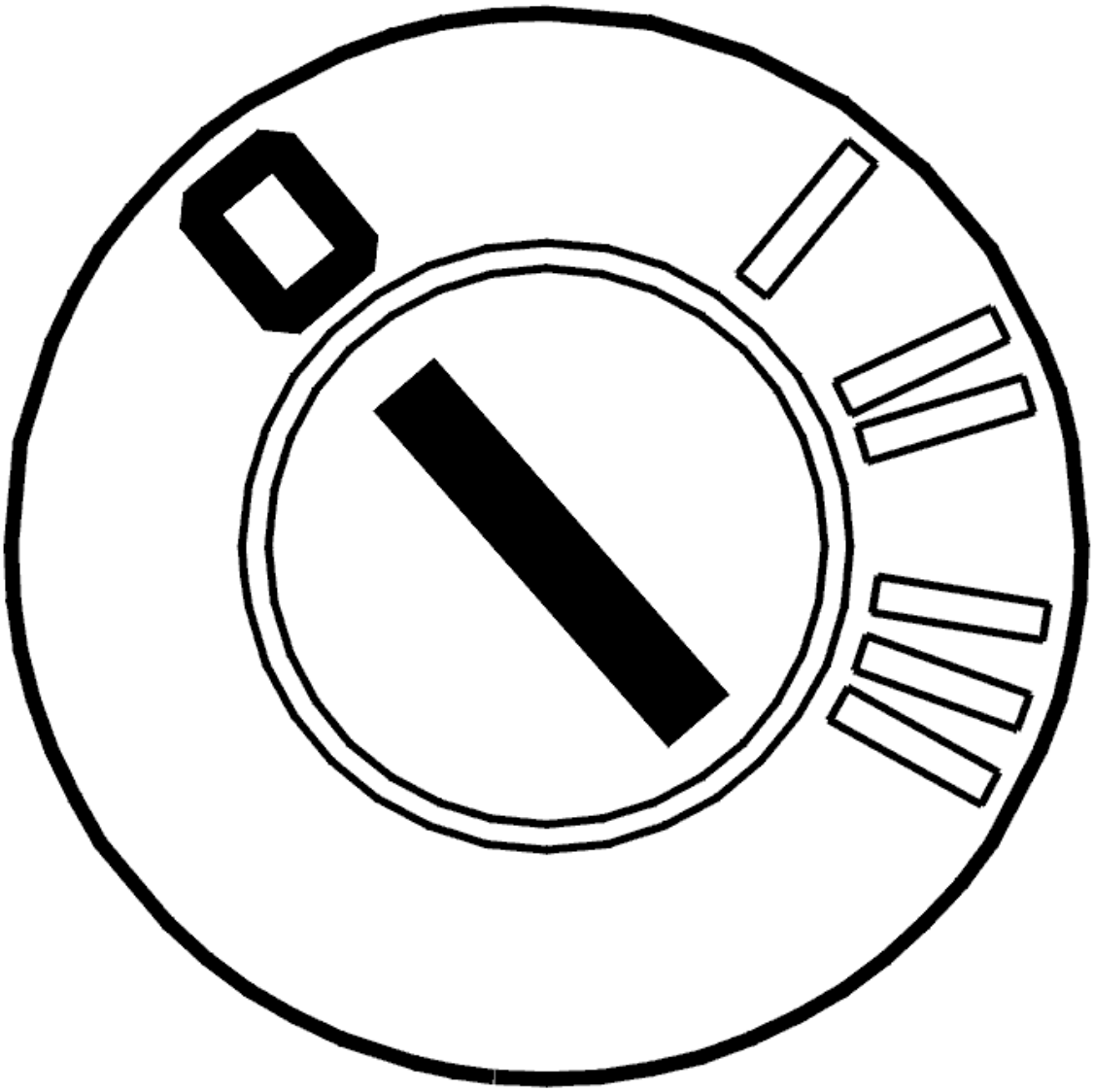

Fig. 167: Identifying Ignition OFF
Courtesy of VOLVO CARS CORPORATION

- Ignition off.

  Check the communication cable between gear selector control module terminal #2 and transmission control module (TCM) terminal #B31 (#B21). Check for an open-circuit. See **OPEN-CIRCUIT, PERMANENT FAULTS** .

Replace the circuit board in the top panel if no fault is found in the cable.

Remedy as necessary.

Other information:

- To connect the breakout box, see **CONNECTING THE BREAKOUT BOX**
- To replace the circuit board in the top panel (standard), see **PRINTED CIRCUIT BOARD GEAR SELECTOR ASSEMBLY/TOP PANEL, REPLACING**
- To replace the circuit board in the top panel (Geartronic), see **PRINTED CIRCUIT BOARD GEAR SELECTOR ASSEMBLY/TOP PANEL GEARTRONIC, REPLACING**
- For information about signals, see **SIGNAL DESCRIPTION. TRANSMISSION CONTROL MODULE (TCM)** .

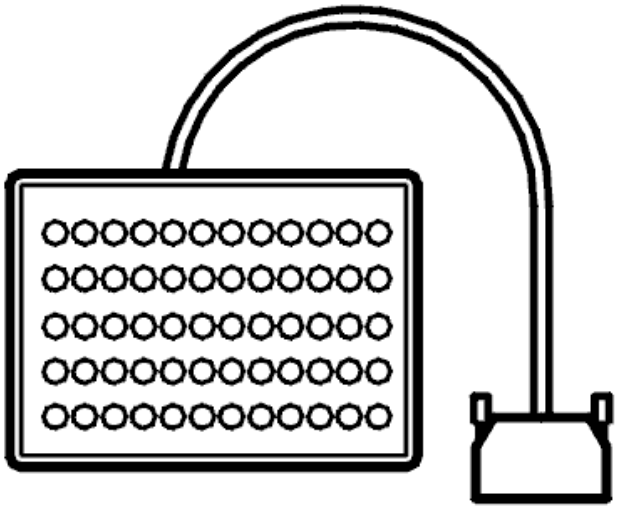

Fig. 168: Identifying Breakout Box
Courtesy of VOLVO CARS CORPORATION

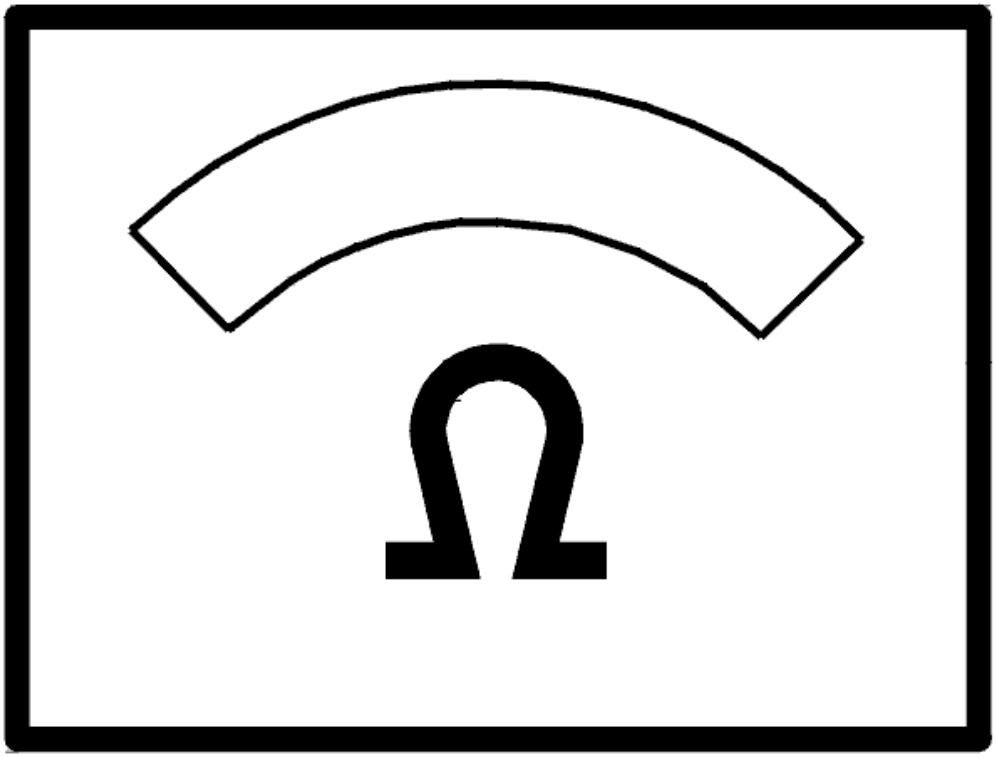

Fig. 169: Identifying Ohms Display
Courtesy of VOLVO CARS CORPORATION

Was a fault detected?

- **YES**

  Refer to **VERIFICATION**

- **NO**

  FAULT NOT FOUND: Troubleshooting has been completed.

INTERMITTENT FAULT

HINT: Check the communication cable between gear selector control module terminal #2 and

transmission control module (TCM) terminal #B31 (#B21). Check for an intermittent open-circuit. See OPEN-CIRCUIT, INTERMITTENT FAULTS . Check for contact resistance and oxidation. See CONTACT RESISTANCE AND OXIDATION .

Remedy as necessary.

Other information:

- To connect the breakout box, see **CONNECTING THE BREAKOUT BOX**
- For information about signals, see **SIGNAL DESCRIPTION. TRANSMISSION CONTROL MODULE (TCM)** .

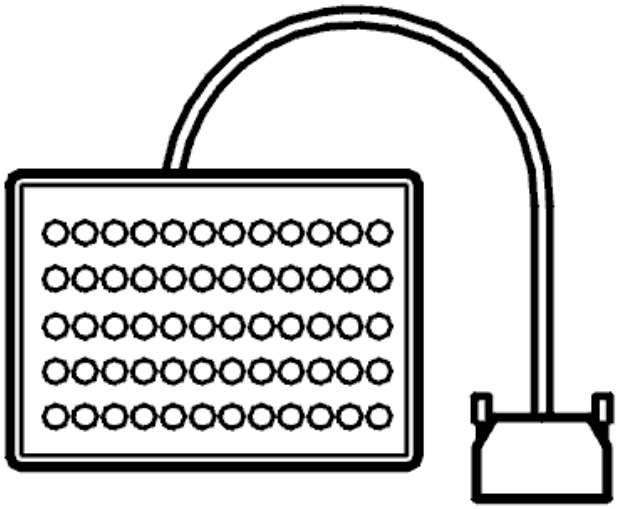

Fig. 170: Identifying Breakout Box
Courtesy of VOLVO CARS CORPORATION

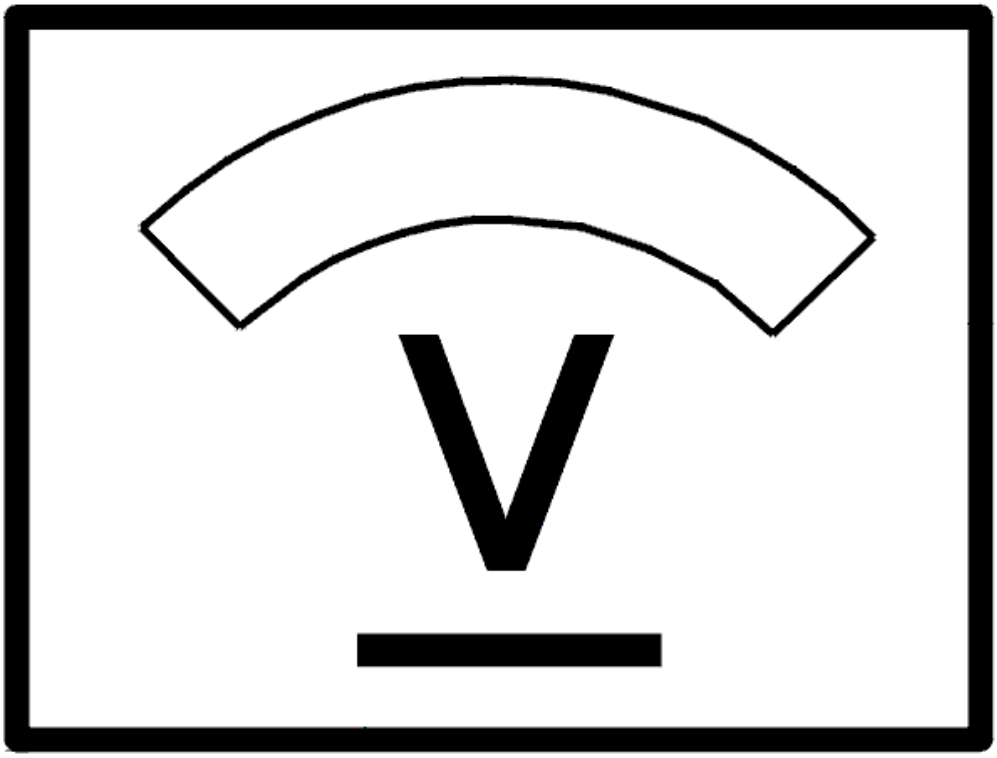

Fig. 171: Identifying Voltage Display
Courtesy of VOLVO CARS CORPORATION

- **Continue**

  Refer to **INFORMATION**

VERIFICATION

VERIFICATION

HINT: After carrying out the repair, check that the fault has been remedied.

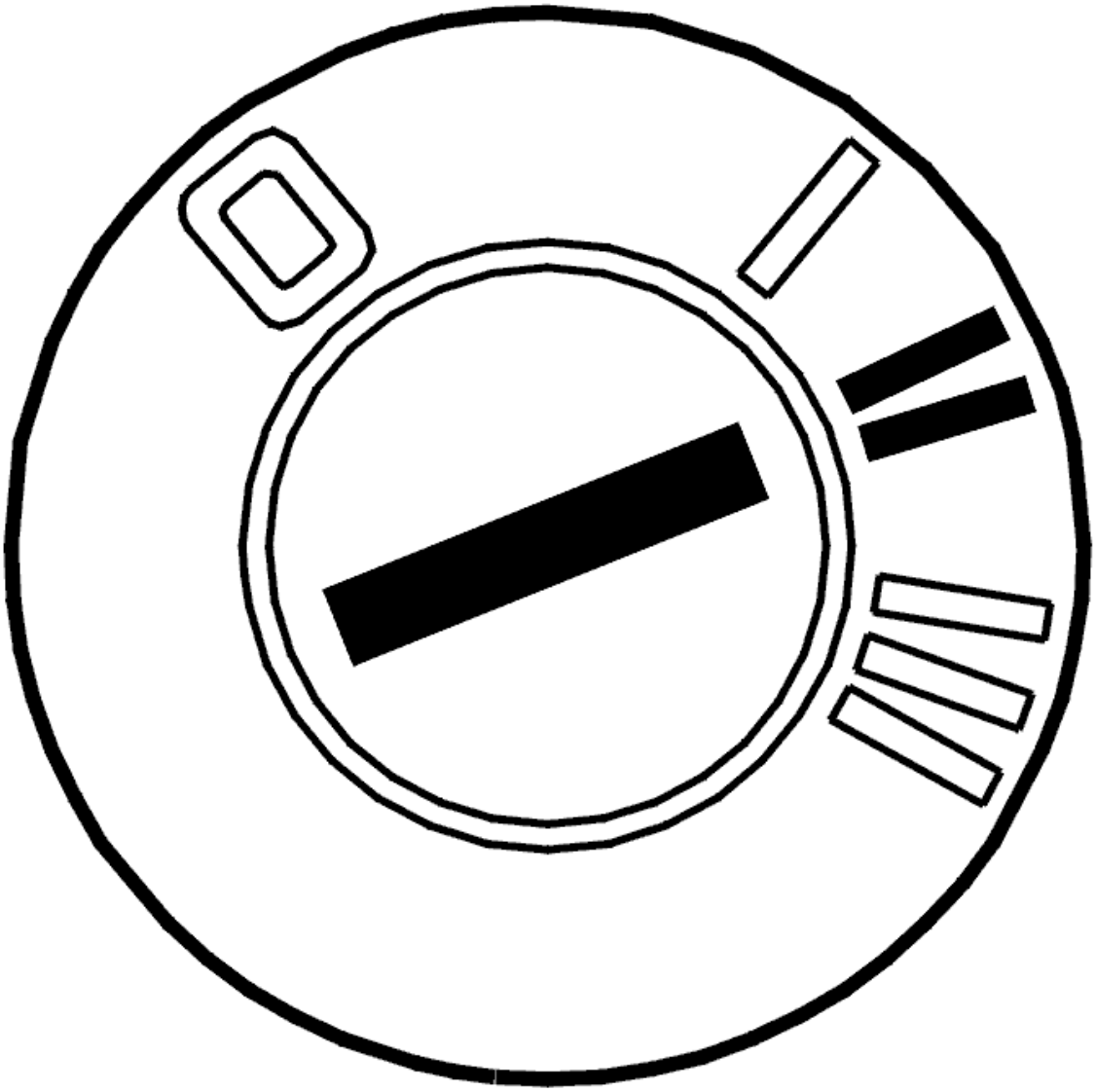

Fig. 172: Identifying Ignition ON
Courtesy of VOLVO CARS CORPORATION

- Ignition on.

  Depress the brake pedal and move the gear shift selector to different positions. Check that the gear position is updated in the display in the combined instrument panel and on the panel on the gear selector assembly.

Is the gear position updated?

- **YES**

  VERIFIED: Troubleshooting has been completed.

- **NO**

Refer to **INFORMATION**

INFORMATION

FAULT-TRACING INFORMATION

The fault should have been detected and remedied. As this is not the case fault-tracing has failed.

Exit fault-tracing for this diagnostic trouble code (DTC) or make another attempt.

INFORMATION

FAULT-TRACING INFORMATION

If the fault is intermittent, do not verify fault-tracing if the fault does not recur.

It is possible to view the information again, or leave fault-tracing for this diagnostic trouble code (DTC).

TCM-0095: CONTROL MODULE COMMUNICATION, GEAR SELECTOR LEVER SIGNAL TOO LOW (4T65 AWD; 2003-2006)

DIAGNOSTIC TROUBLE CODE INFORMATION

Condition

If the control unit registers that the signal from the gear selector control unit (GSM) is too low, diagnostic trouble code TCM-0095 is set.

Substitute Value

- No substitute value.

Possible Source

- Contact resistance in the connectors.
- Communication wire short-circuited to ground.

Fault symptom[s]

- Malfunction indicator light (MIL) is on.
- Orange general warning lamp is on.
- Position indication on the gear selector panel not working.

SIGNAL TOO LOW

CHECKS

CHECKING COMMUNICATION

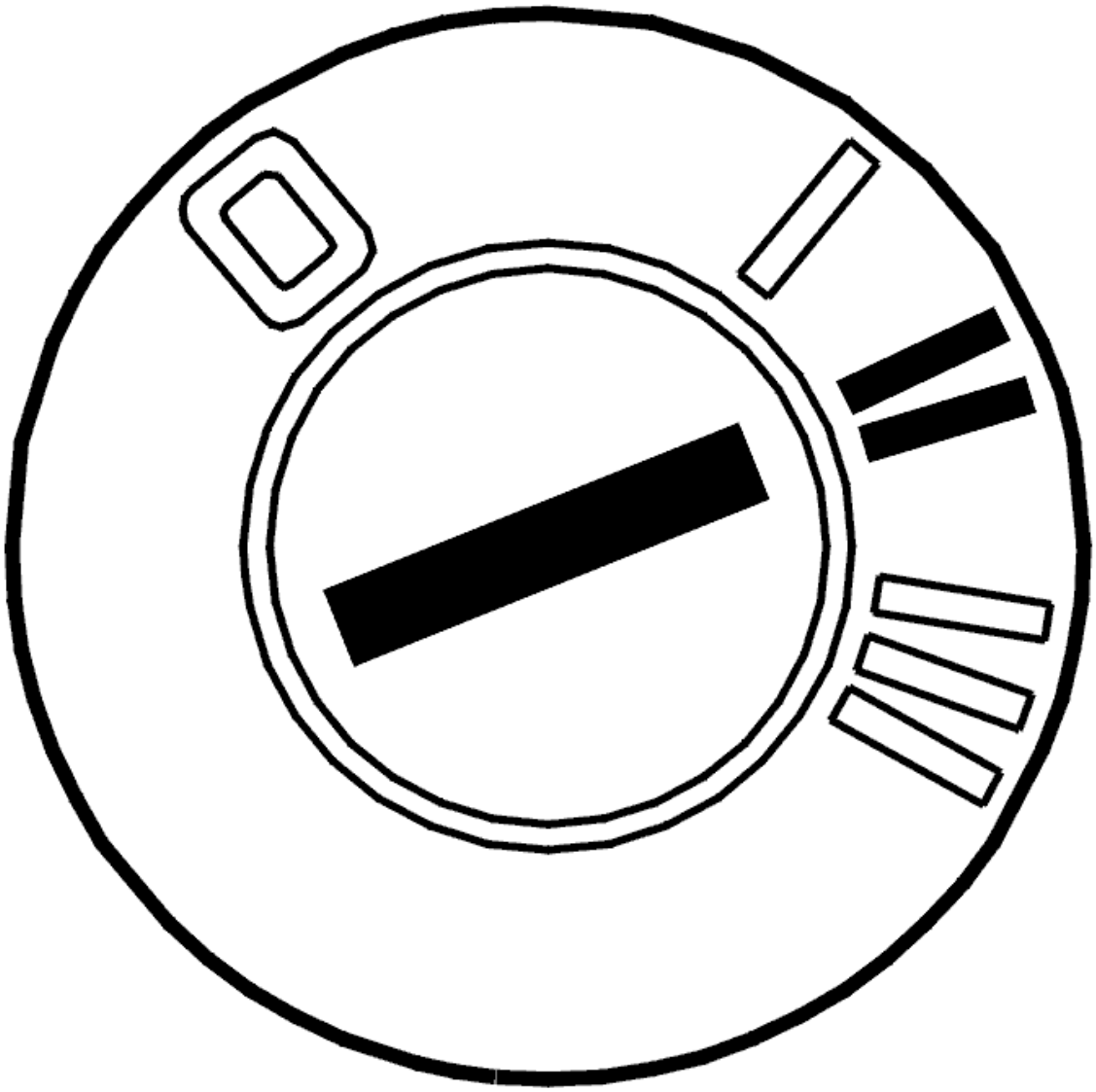

Fig. 173: Identifying Ignition ON
Courtesy of VOLVO CARS CORPORATION

- Ignition off
- Check the transmission control module (TCM) and Gear selector module (GSM) connectors. Check for contact resistance and oxidation
- Ignition on.

  Press the brake pedal and move the gear shift selector to the different positions. Check that the gear position is updated in the display in the combined instrument panel. Compare with the indicators in the panel for the gear selector.

  If the gear position is updated in the combined instrument panel and in the panel at the gear selector, the problem was probably caused by contact resistance or oxidation.

If the gear position is updated in the combined instrument panel but not in the panel at the gear selector, replace the printed circuit board in the top panel.

If the gear position is updated in the panel at the gear selector but not in the combined instrument panel there is probably a fault in another system. Exit fault-tracing and fault-trace the central electronic module (CEM) or the driver information module (DIM).

Other information

- To check the transmission control module (TCM) connector, see **CONNECTING BREAKOUT BOX, TRANSMISSION CONTROL MODULE (TCM)**
- To check or replace the printed circuit board (standard), see **PRINTED CIRCUIT BOARD GEAR SELECTOR ASSEMBLY/TOP PANEL, REPLACING**
- To check or replace the printed circuit board (Geartronic), see **PRINTED CIRCUIT BOARD GEAR SELECTOR ASSEMBLY/TOP PANEL GEARTRONIC, REPLACING** .

Select an option:

1. The gear position is updated in the combined instrument panel and in the panel at the gear selector

   OKAY: Troubleshooting has been completed.

2. The gear position is updated in the combined instrument panel but not in the panel at the gear selector

   Refer to **VERIFICATION**

3. The gear position is updated in the panel at the gear selector but not in the combined instrument panel

   OKAY: Troubleshooting has been completed.

4. The gear position is not updated in the combined instrument panel or in the panel at the gear selector.

   Refer to **CHECKING THE WIRING**

CHECKING THE WIRING

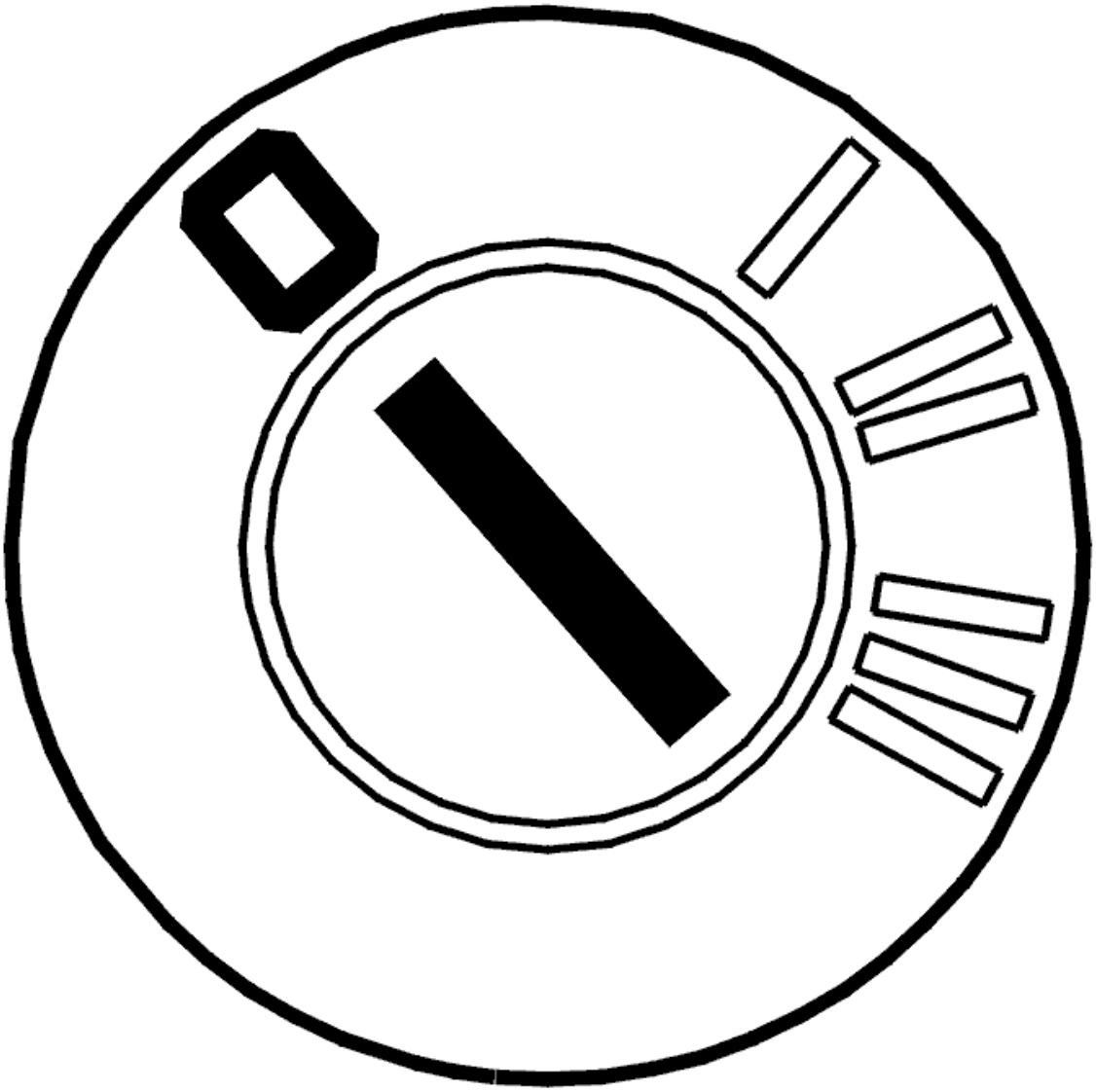

Fig. 174: Identifying Ignition OFF
Courtesy of VOLVO CARS CORPORATION

- Ignition off.

  Check the communication cable between gear selector module (GSM) terminal #2 and transmission control module (TCM) terminal #B21. Check for short-circuit to ground.

  Other information

  - To connect the breakout box, see **CONNECTING BREAKOUT BOX, TRANSMISSION CONTROL MODULE (TCM)**
  - For information about signals, see **SIGNAL DESCRIPTION. TRANSMISSION CONTROL MODULE (TCM)**
  - To replace the printed circuit board (standard), see **PRINTED CIRCUIT BOARD GEAR**

SELECTOR ASSEMBLY/TOP PANEL, REPLACING

- To replace the printed circuit board (geartronic), see **PRINTED CIRCUIT BOARD GEAR SELECTOR ASSEMBLY/TOP PANEL GEARTRONIC, REPLACING**
- see **CHECKING WIRING AND TERMINALS**

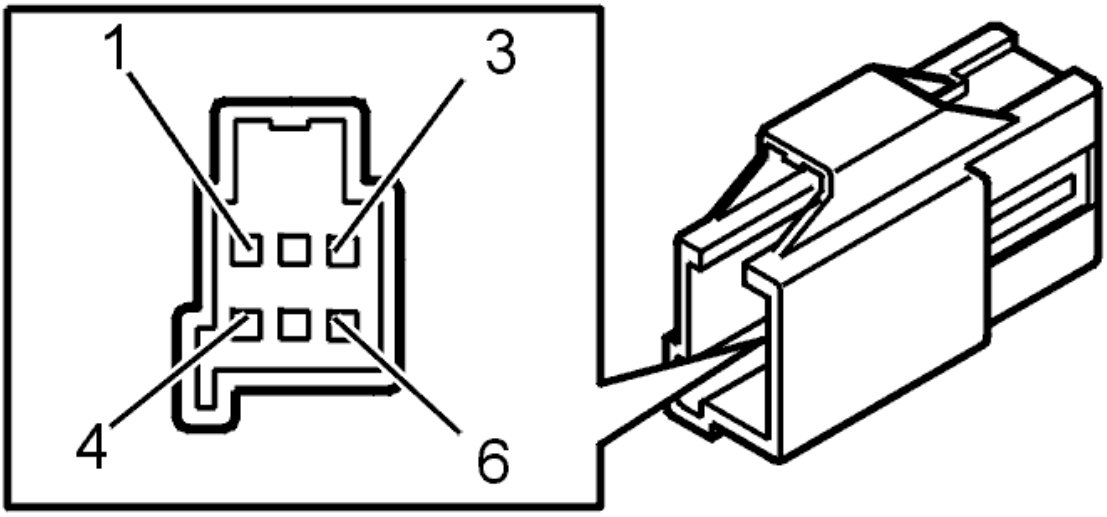

Fig. 175: Identifying 6--Pin Connector Terminals
Courtesy of VOLVO CARS CORPORATION

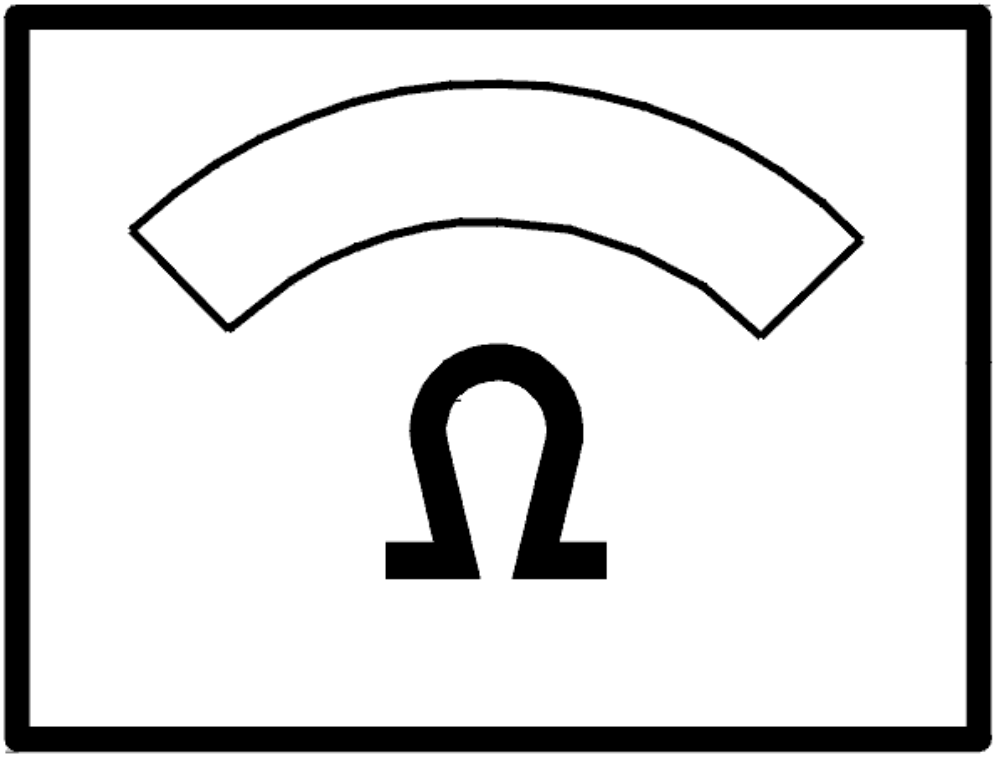

Fig. 176: Identifying Ohms Display
Courtesy of VOLVO CARS CORPORATION

Was a fault detected?

- **YES**

  Refer to **VERIFICATION**

- **NO**

  Refer to **CHECKING THE CONTROL MODULE**

CHECKING THE CONTROL MODULE

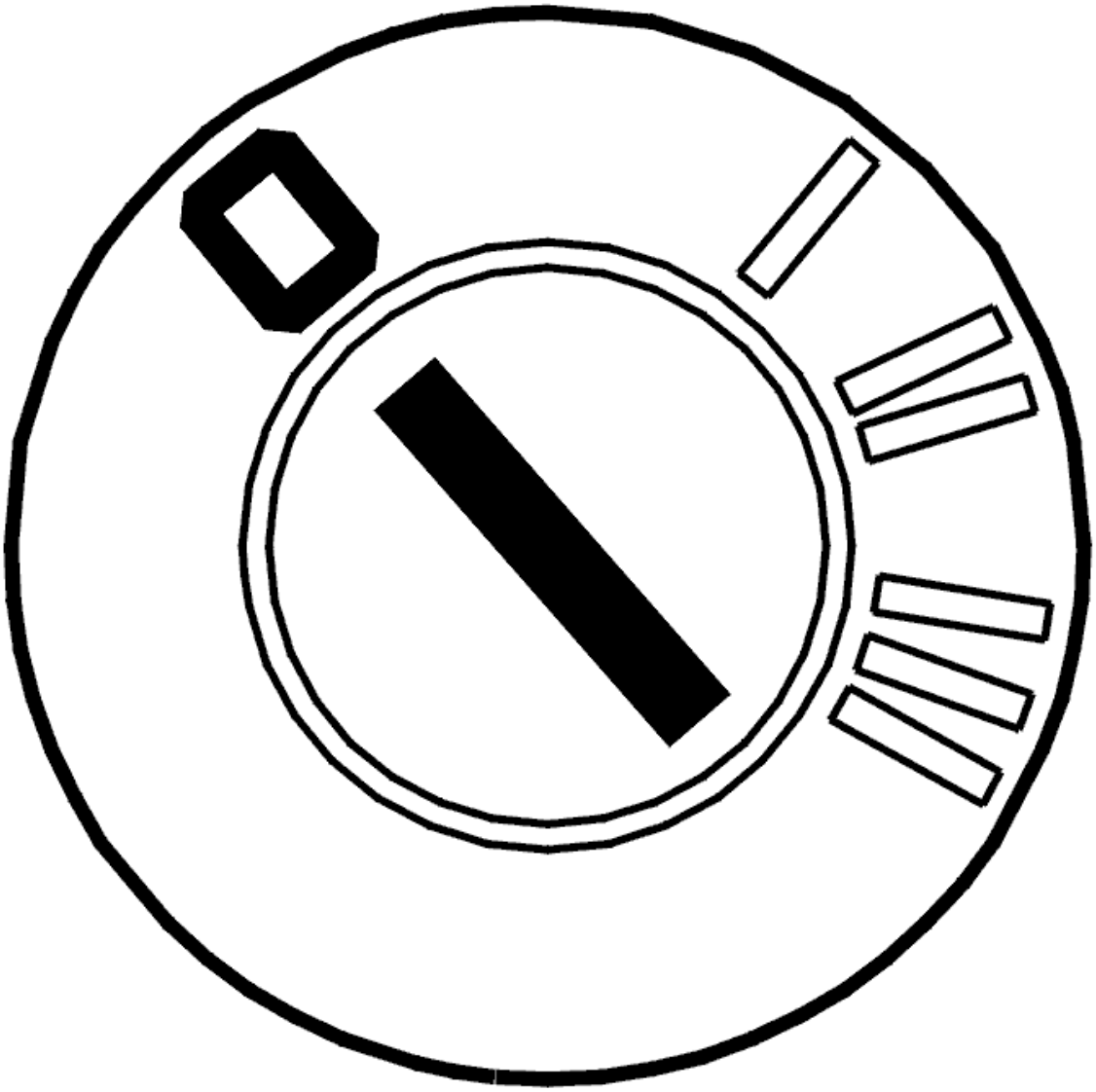

Fig. 177: Identifying Ignition OFF
Courtesy of VOLVO CARS CORPORATION

- Ignition off
- The breakout box connected
- Disconnect the 6-pin connector for the gear selector module (GSM)
- Connect a temporary cable between terminals #A53 and #B31 on the breakout box.

CAUTION: Thoroughly check that the cable is connected to the correct terminals. Also check that there is no risk of unintentional short-circuits.

- Ignition on
- Read off the status.

Check that the status indicates "1" when the cable is connected.

Disconnect the cable end that is connected to terminal #A35 and move the cable to terminal #A53.

NOTE: Leave the cable end connected to terminal #B31 in place.

Check that the status changes to "0" when the cable has been transferred to terminal #A53.

If the status shifts to "0" the transmission control module (TCM) is??? OK. Replace the circuit board in the top panel.

If the status shifts to "0" the transmission control module (TCM) is??? faulty. Replace the control module.

Remedy as necessary.

Other information

- To connect the breakout box, see **CONNECTING BREAKOUT BOX, TRANSMISSION CONTROL MODULE (TCM)**
- For information about signals, see **SIGNAL DESCRIPTION. TRANSMISSION CONTROL MODULE (TCM)**
- To replace the transmission control module (TCM), see **TRANSMISSION CONTROL MODULE (TCM), REPLACING**
- To replace the printed circuit board (standard), see **PRINTED CIRCUIT BOARD GEAR SELECTOR ASSEMBLY/TOP PANEL, REPLACING**
- To replace the printed circuit board (geartronic), see **PRINTED CIRCUIT BOARD GEAR SELECTOR ASSEMBLY/TOP PANEL GEARTRONIC, REPLACING** .

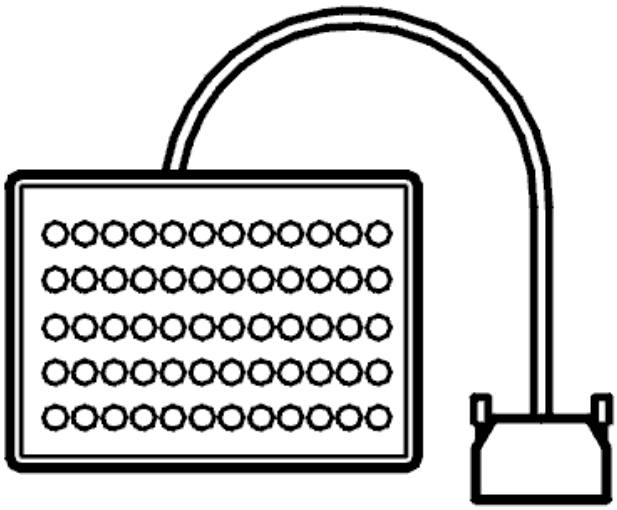

Fig. 178: Identifying Breakout Box
Courtesy of VOLVO CARS CORPORATION

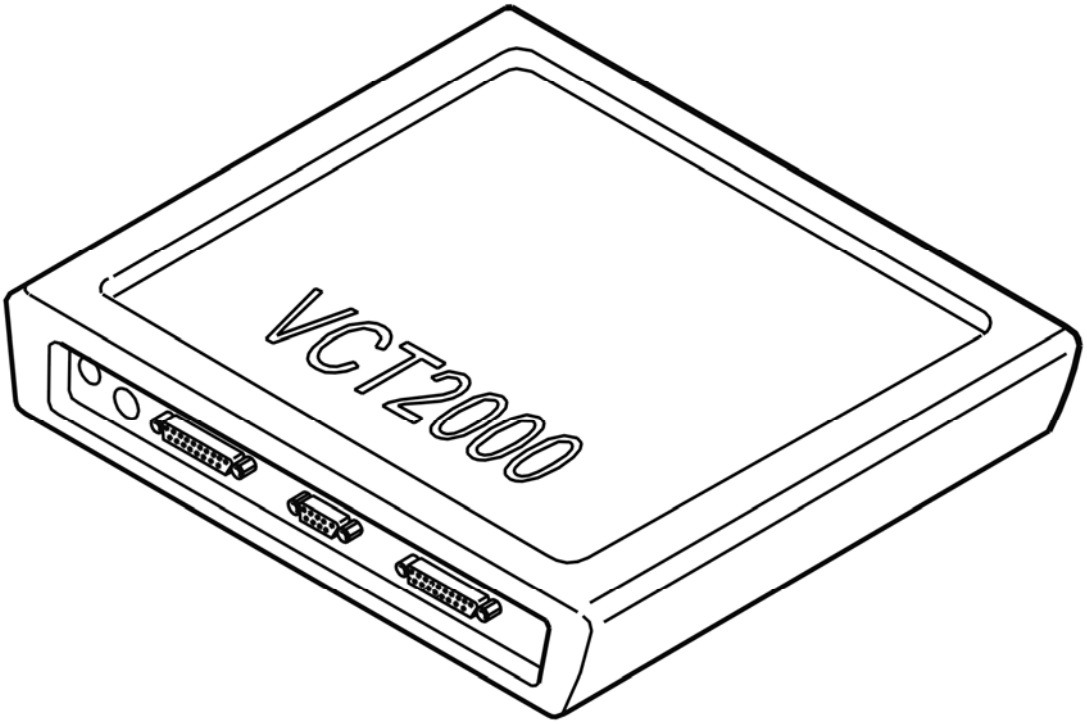

Fig. 179: Identifying VCT2000 Diagnostic Tool Symbol In VIDA
Courtesy of VOLVO CARS CORPORATION

- **Continue**

  Refer to **VERIFICATION**

VERIFICATION

VERIFICATION

HINT: After carrying out the repair, check that the fault has been remedied.

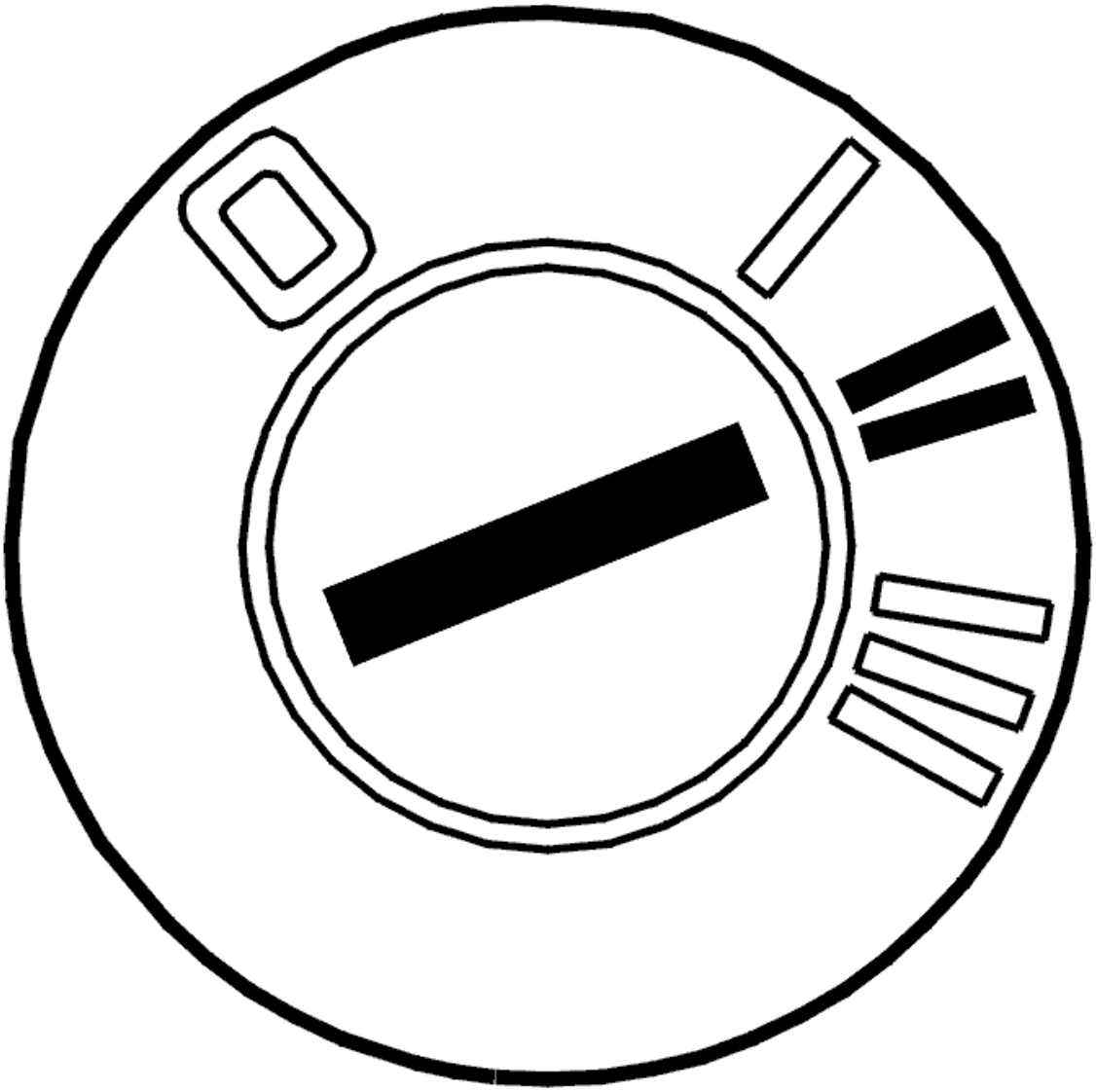

Fig. 180: Identifying Ignition ON
Courtesy of VOLVO CARS CORPORATION

- Ignition on.

  Depress the brake pedal. Move the gear shift selector to different positions. Check that the gear position is updated in the display in the combined instrument panel.

Is the gear position updated?

- **YES**

  VERIFIED: Troubleshooting has been completed.

- **NO**

Refer to **INFORMATION**

INFORMATION

FAULT-TRACING INFORMATION

The fault should have been detected and remedied. As this is not the case fault-tracing has failed.

Exit fault-tracing for this diagnostic trouble code (DTC) or make another attempt.

TCM-0095: GEAR SELECTOR LEVER CONTROL MODULE COMMUNICATION. SIGNAL TOO LOW (AW50/51 AWD; AW55-50/51SN; 2003-2007)

DIAGNOSTIC TROUBLE CODE INFORMATION

Condition

If the control unit registers that the signal from the gear selector control unit (GSM) is too low, diagnostic trouble code TCM-0095 is set.

Substitute Value

- None.

Possible Source

- Contact resistance in the connectors.
- Communication wire short-circuited to ground.

Fault symptom[s]

- Malfunction indicator light (MIL) is on.
- General warning lamp on.
- Position indication on the gear selector panel not working.

SIGNAL TOO LOW

CHECKS

CHECKING COMMUNICATION

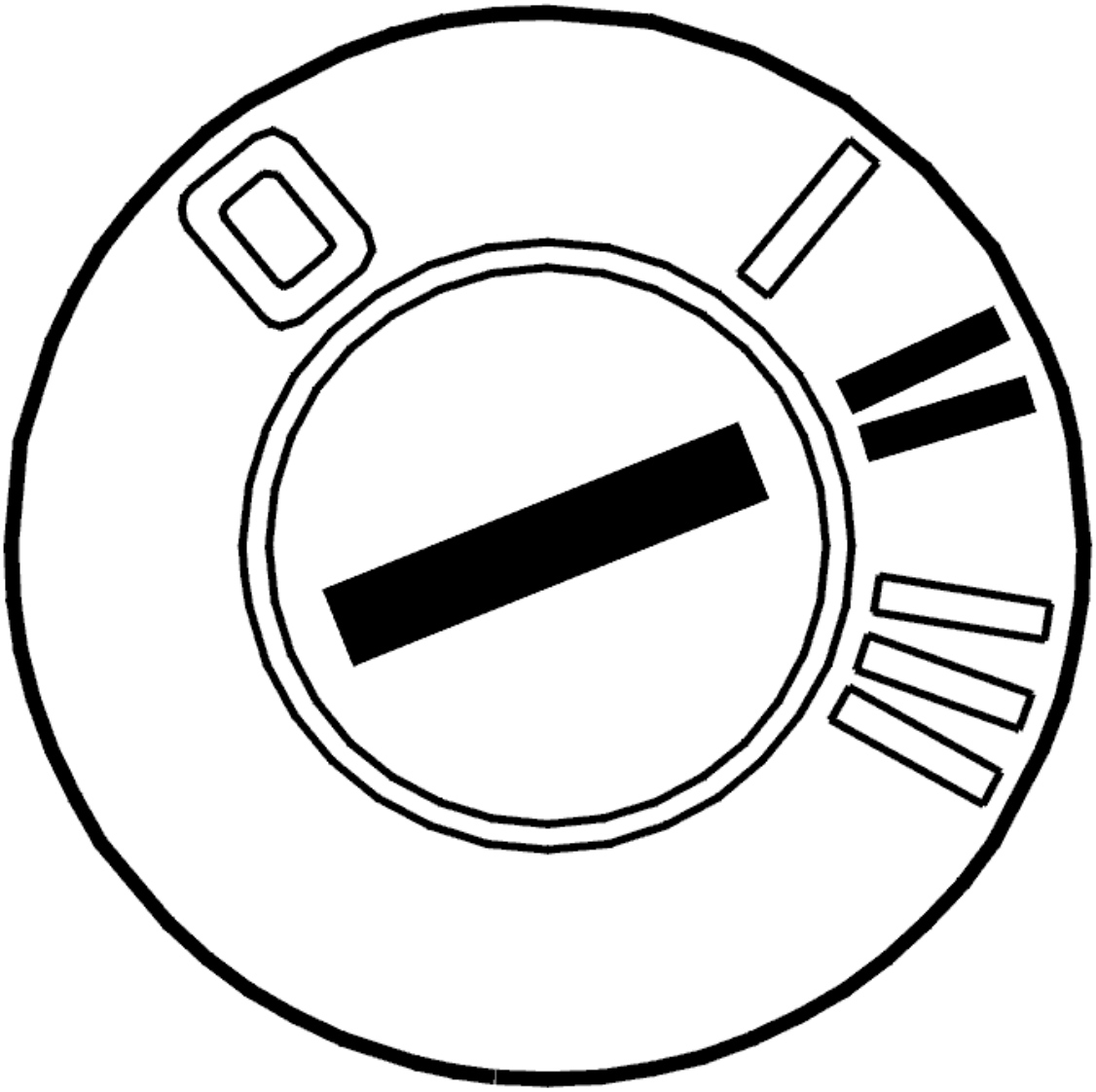

Fig. 181: Identifying Ignition ON
Courtesy of VOLVO CARS CORPORATION

- Ignition on.

  Depress the brake pedal and move the gear shift selector to different positions. Check that the gear position is updated in the display in the combined instrument panel and on the panel on the gear selector assembly.

Is the gear position updated?

- **YES**

  Refer to **INTERMITTENT FAULT**

- **NO**

Refer to **CHECKING THE WIRING AND COMPONENT**

CHECKING THE WIRING AND COMPONENT

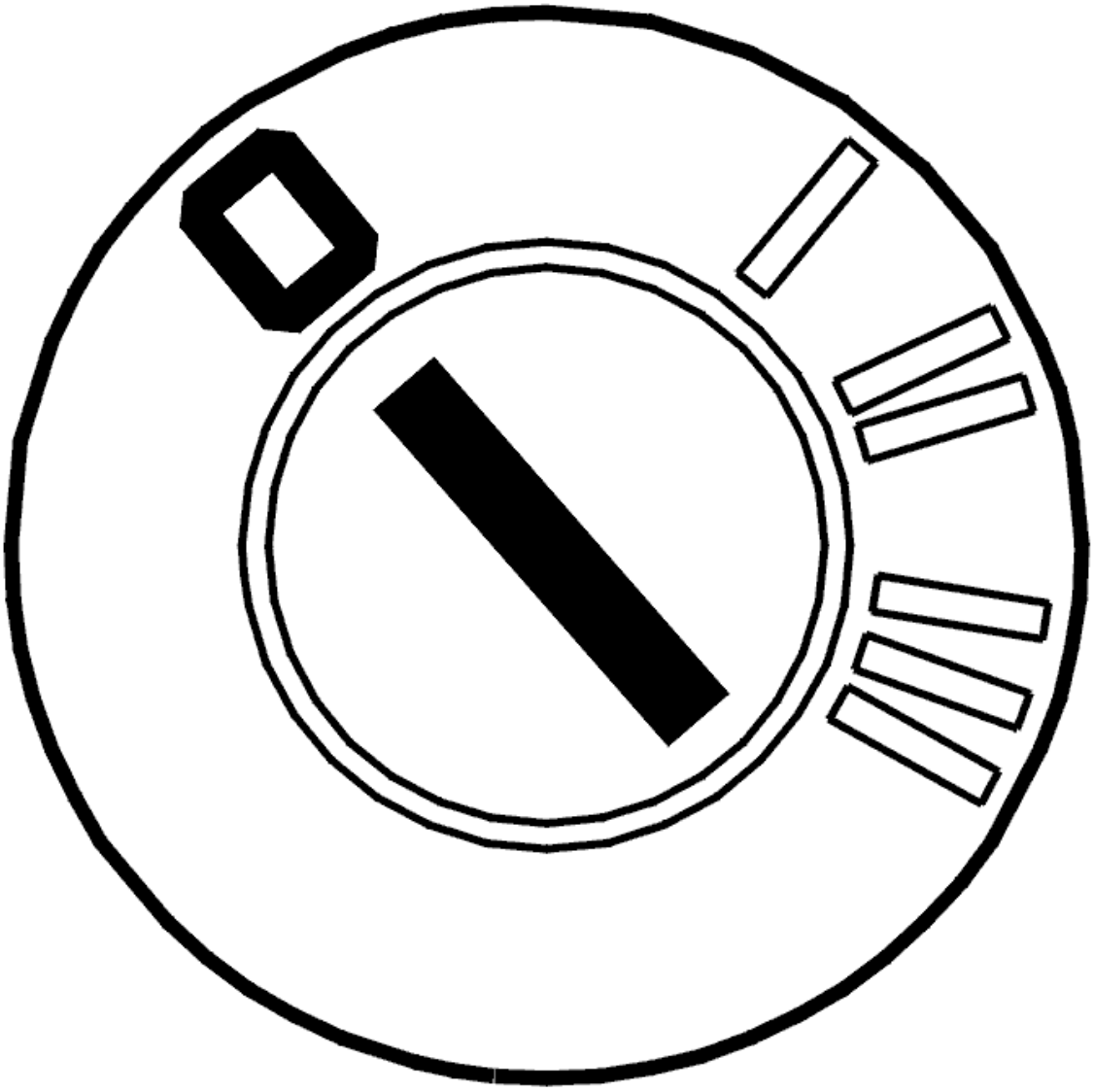

Fig. 182: Identifying Ignition OFF
Courtesy of VOLVO CARS CORPORATION

- Ignition off.

  Check the communication cable between the gear selector control module terminal #2 and the transmission control module (TCM) terminal #B31 (#B21). Check for a short-circuit to ground. See **SHORT-CIRCUIT TO GROUND, PERMANENT FAULTS** .

  Replace the circuit board in the top panel if no fault is found in the cable.

  Remedy as necessary.

Other information:

- To connect the breakout box, see **CONNECTING THE BREAKOUT BOX**
- To replace the circuit board in the top panel (standard), see **PRINTED CIRCUIT BOARD GEAR SELECTOR ASSEMBLY/TOP PANEL, REPLACING**
- To replace the circuit board in the top panel (geartronic), see **PRINTED CIRCUIT BOARD GEAR SELECTOR ASSEMBLY/TOP PANEL GEARTRONIC, REPLACING**
- For information about signals, see **SIGNAL DESCRIPTION. TRANSMISSION CONTROL MODULE (TCM)** .

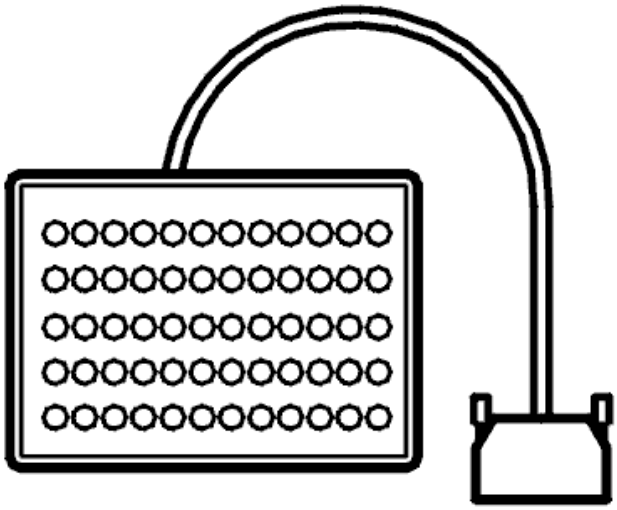

Fig. 183: Identifying Breakout Box
Courtesy of VOLVO CARS CORPORATION

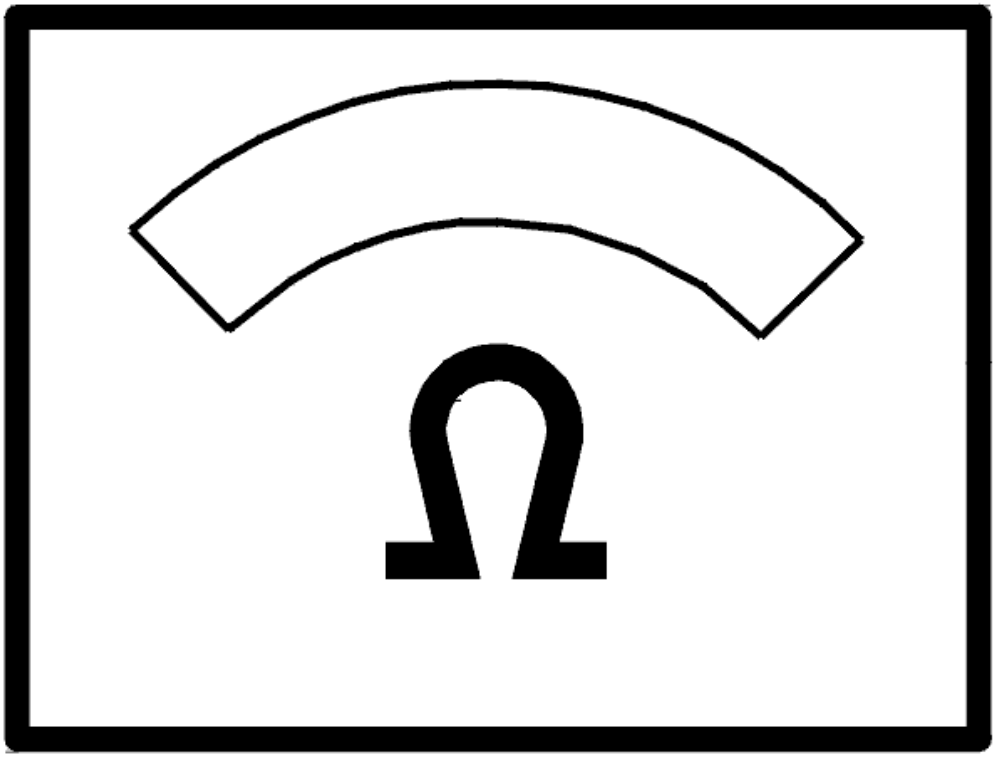

Fig. 184: Identifying Ohms Display
Courtesy of VOLVO CARS CORPORATION

Was a fault detected?

- **YES**

  Refer to **VERIFICATION**

- **NO**

  FAULT NOT FOUND: Troubleshooting has been completed.

INTERMITTENT FAULT

Check the communication cable between gear selector control module terminal #2 and transmission control

module (TCM) terminal #B31 (#B21). Check for an intermittent short-circuit to ground. See **SHORT-CIRCUIT TO GROUND, INTERMITTENT FAULTS** . Check for contact resistance and oxidation. See **CONTACT RESISTANCE AND OXIDATION** .

Remedy as necessary.

Other information:

- To connect the breakout box, see **CONNECTING THE BREAKOUT BOX**
- For other values, see **SIGNAL DESCRIPTION. TRANSMISSION CONTROL MODULE (TCM)** .

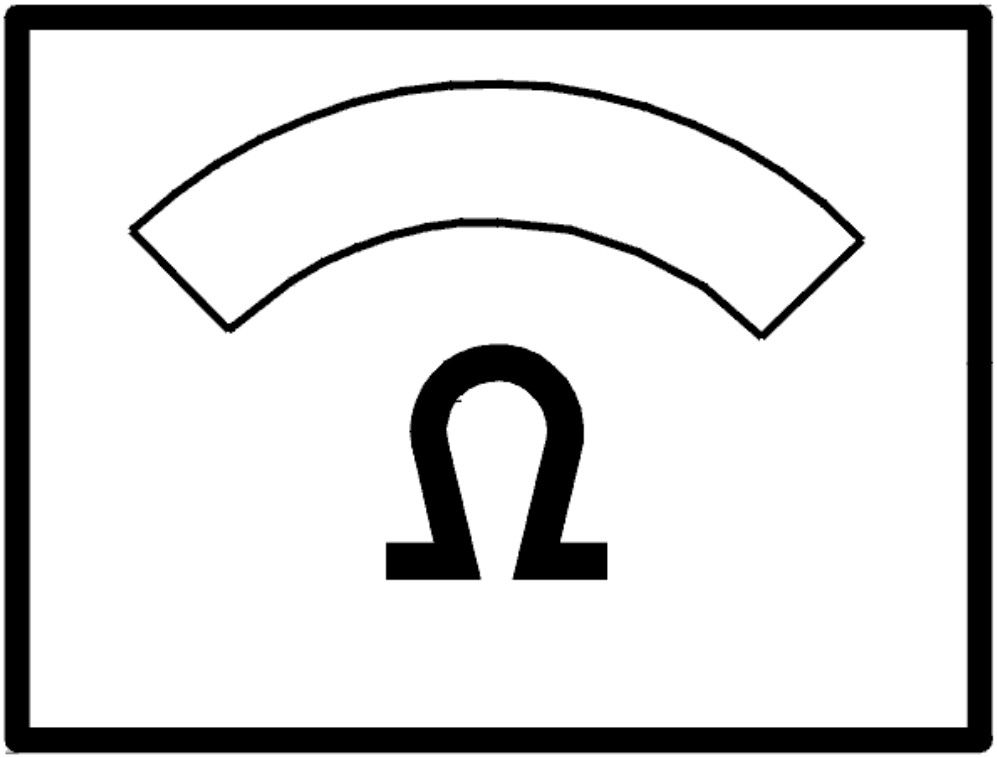

Fig. 185: Identifying Ohms Display
Courtesy of VOLVO CARS CORPORATION

- **Continue**

Refer to **INFORMATION**

VERIFICATION

VERIFICATION

HINT: After carrying out the repair, check that the fault has been remedied.

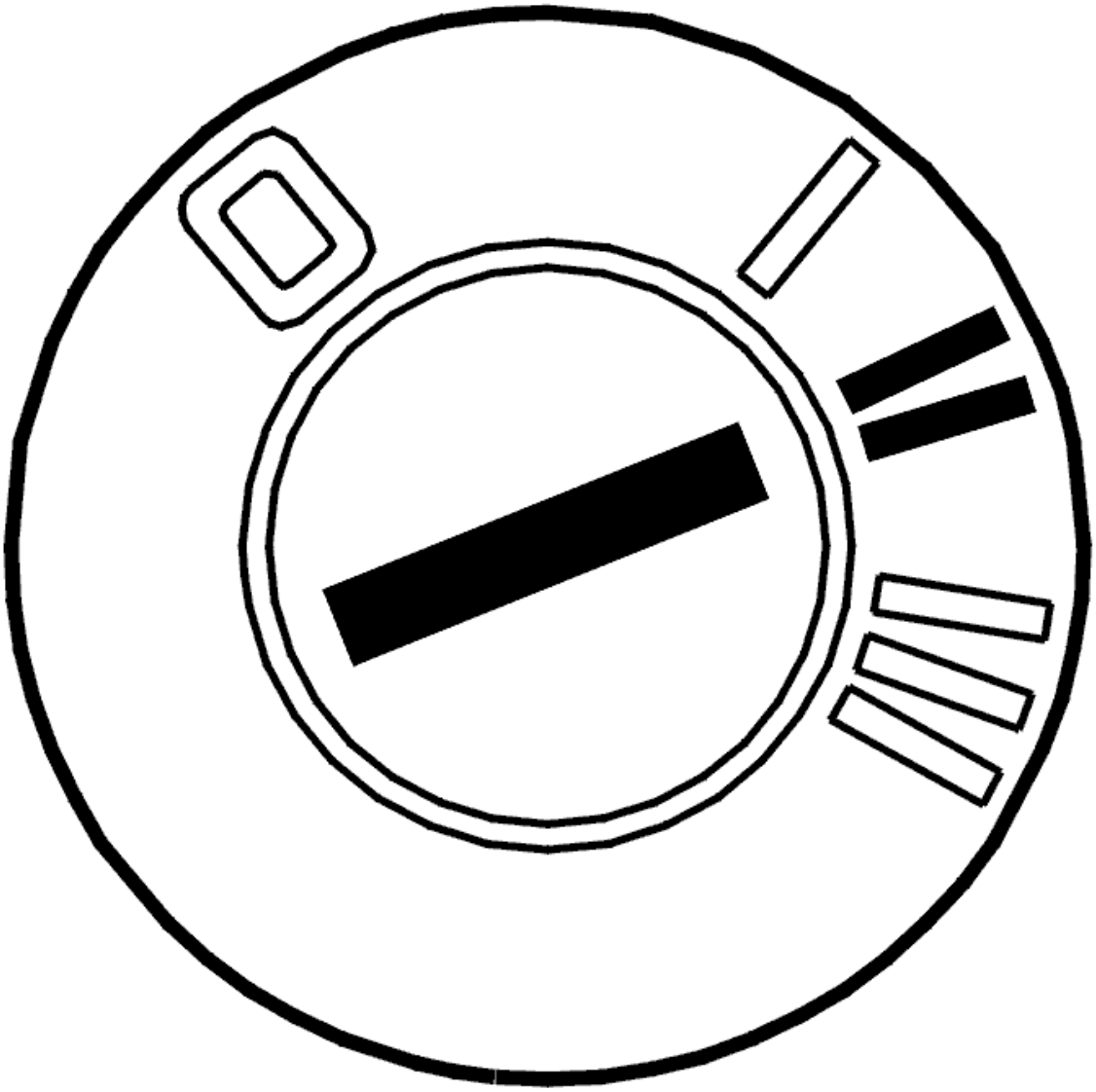

Fig. 186: Identifying Ignition ON
Courtesy of VOLVO CARS CORPORATION

- Ignition on.

  Depress the brake pedal and move the gear shift selector to different positions. Check that the gear position is updated in the display in the combined instrument panel and on the panel on the gear selector assembly.

Is the gear position updated?

- **YES**

  VERIFIED: Troubleshooting has been completed.

- **NO**

  Refer to **INFORMATION**

INFORMATION

FAULT-TRACING INFORMATION

The fault should have been detected and remedied. As this is not the case fault-tracing has failed.

Exit fault-tracing for this diagnostic trouble code (DTC) or make another attempt.

INFORMATION

FAULT-TRACING INFORMATION

If the fault is intermittent, do not verify fault-tracing if the fault does not recur.

It is possible to view the information again, or leave fault-tracing for this diagnostic trouble code (DTC).

TCM-0096: QUICKSHIFT SENSOR. FAULTY SIGNAL (4T65 AWD; 2003-2006)

DIAGNOSTIC TROUBLE CODE (DTC) INFORMATION

Condition

Diagnostic trouble code (DTC) TCM-0096 is stored if the gear selector module registers that signals from the gear selector position Quickshift do not agree.

Possible Source

- Defective gear selector control module.

Fault symptom[s]

- No shifting.

FAULTY SIGNAL

CHECKS

CHECKING THE POSITION SENSOR

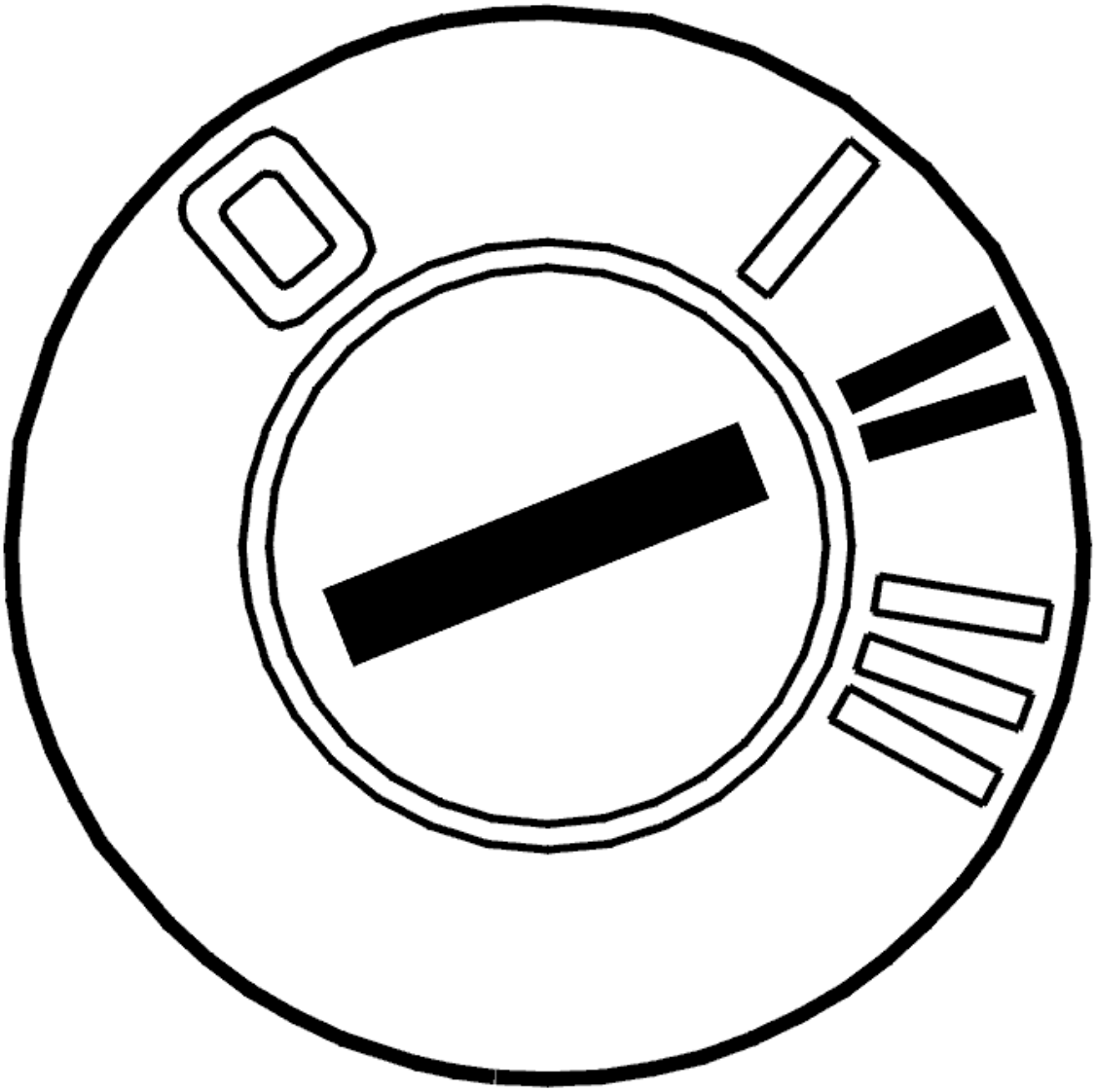

Fig. 187: Identifying Ignition ON
Courtesy of VOLVO CARS CORPORATION

- Ignition on
- Depress the brake pedal. Move the gear selector to "Quickshift" position
- Move the gear selector to + and check that the gear selection is updated in the display on the combined instrument panel. Move the gear selector to -. Check that the gear selection is updated.

Was the function OK?

- **YES**

  FAULT NOT FOUND: Troubleshooting has been completed.

- **NO**

Refer to **CHECKING THE WIRING AND COMPONENT**

CHECKING THE WIRING AND COMPONENT

Try a new gear shift selector control module.

Other information

- To access or replace the gear shift selector control module, see **PRINTED CIRCUIT BOARD GEAR SELECTOR ASSEMBLY/TOP PANEL GEARTRONIC, REPLACING** .

- **Continue**

  Refer to **VERIFICATION**

VERIFICATION

HINT: After carrying out the repair, check that the fault has been remedied.

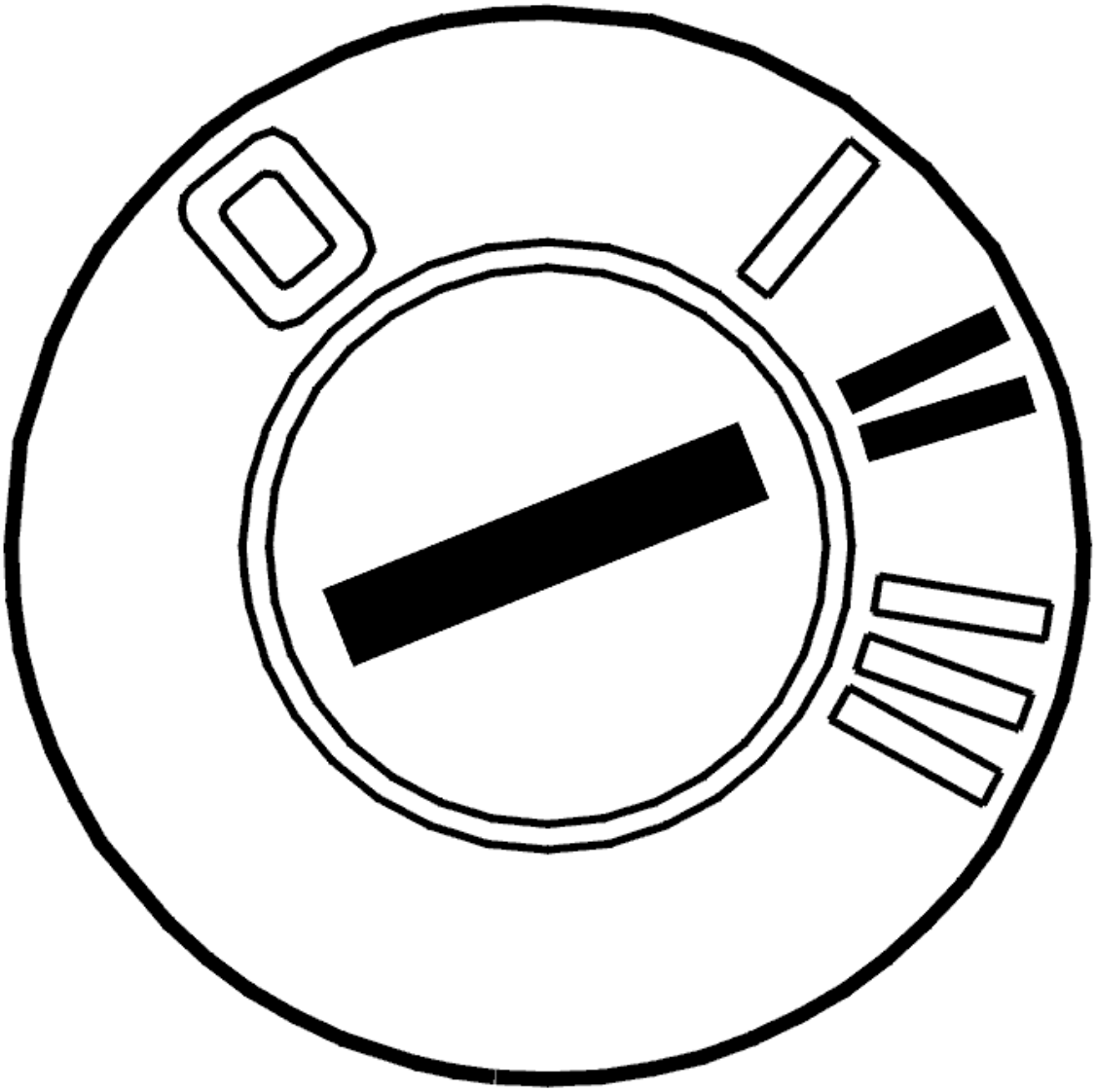

Fig. 188: Identifying Ignition ON
Courtesy of VOLVO CARS CORPORATION

- Ignition on
- Depress the brake pedal. Move the gear selector to "Quickshift" position
- Move the gear selector to + and check that the gear selection is updated in the display on the combined instrument panel. Move the gear selector to -. Check that the gear selection is updated.

Was the function OK?

- **YES**

  OKAY: Troubleshooting has been completed.

- **NO**

Refer to **INFORMATION**

INFORMATION

FAULT-TRACING INFORMATION

The fault should have been detected and remedied. As this is not the case fault-tracing has failed.

Exit fault-tracing for this diagnostic trouble code (DTC) or make another attempt.

TCM-0096: QUICKSHIFT SENSOR. FAULTY SIGNAL (AW50/51 AWD; AW55-50/51SN; 2003-2007)

DIAGNOSTIC TROUBLE CODE (DTC) INFORMATION

see **DIAGNOSTIC TROUBLE CODE (DTC) INFORMATION**

FAULTY SIGNAL

see **FAULTY SIGNAL**

TCM-0097: FAULTY SOFTWARE (AW50/51 AWD; AW55-50/51SN; 2003-2007)

FAULTY SOFTWARE

ORDERING SOFTWARE AND PROGRAMMING THE CONTROL MODULE

The software in the control module requires updating with new software.

Order software according to the table below.

XC90	9438291

Programming can be carried out when the software has been delivered.

Program the control module according to the table below.

XC90	9438291

- **Continue**

  Refer to **TEST DRIVING AND READING OFF DIAGNOSTIC TROUBLE CODES (DTCS)**

TEST DRIVING AND READING OFF DIAGNOSTIC TROUBLE CODES (DTCS)

HINT: To check that the fault is remedied, test drive the car and then read off the diagnostic trouble codes (DTCs).

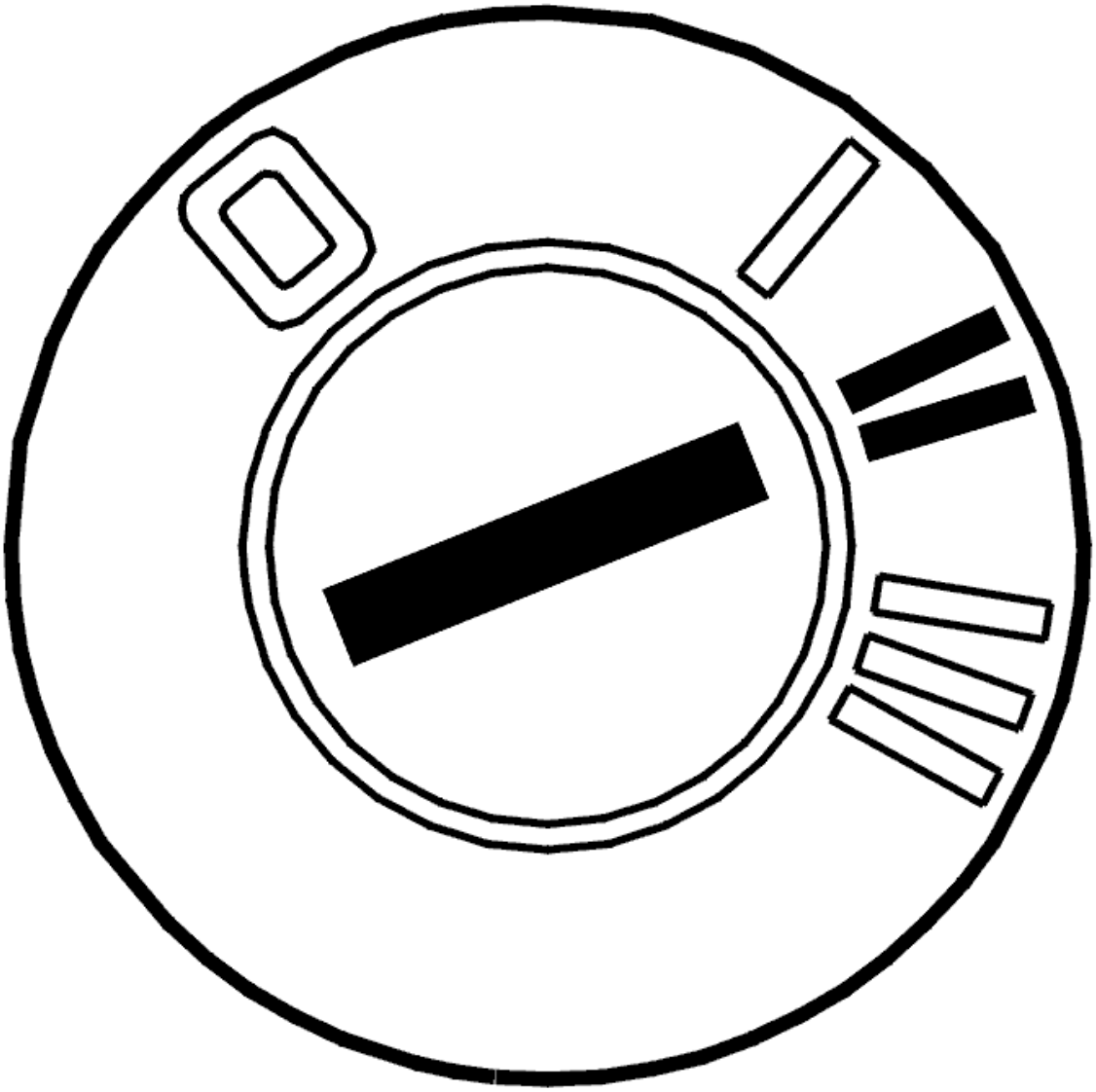

Fig. 189: Identifying Ignition ON
Courtesy of VOLVO CARS CORPORATION

- Ignition on
- Read off diagnostic trouble codes (DTCs).

Other information

- For the test driving schedule, see **TEST DRIVE SCHEDULE, DESCRIPTION** .

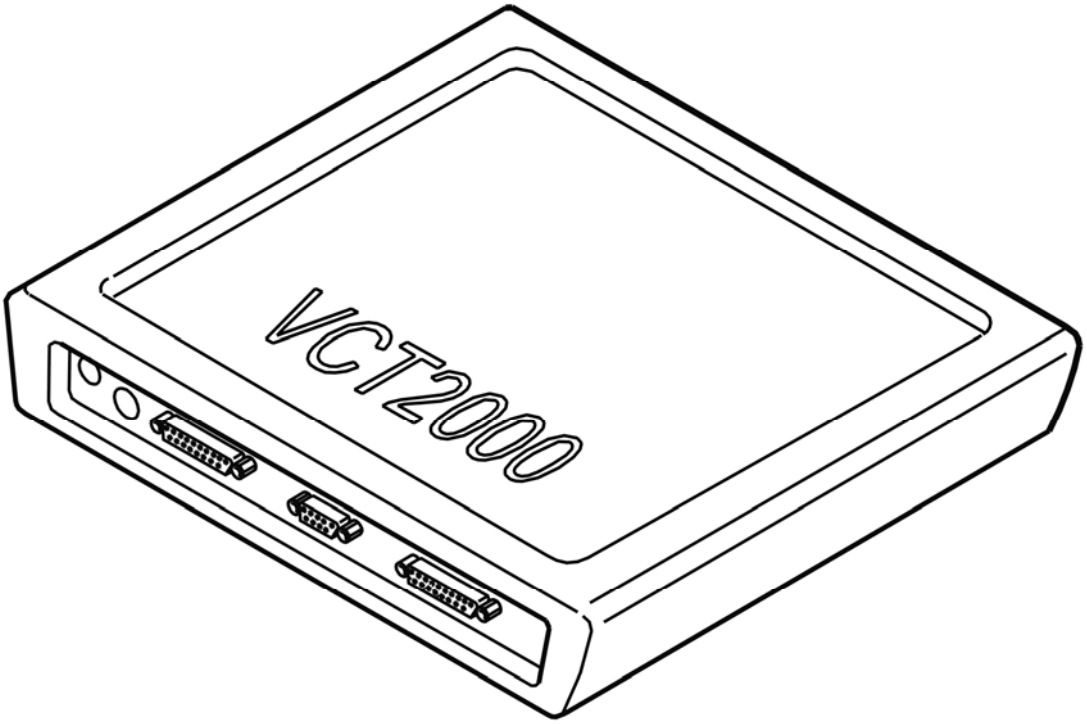

Fig. 190: Identifying VCT2000 Diagnostic Tool Symbol In VIDA
Courtesy of VOLVO CARS CORPORATION

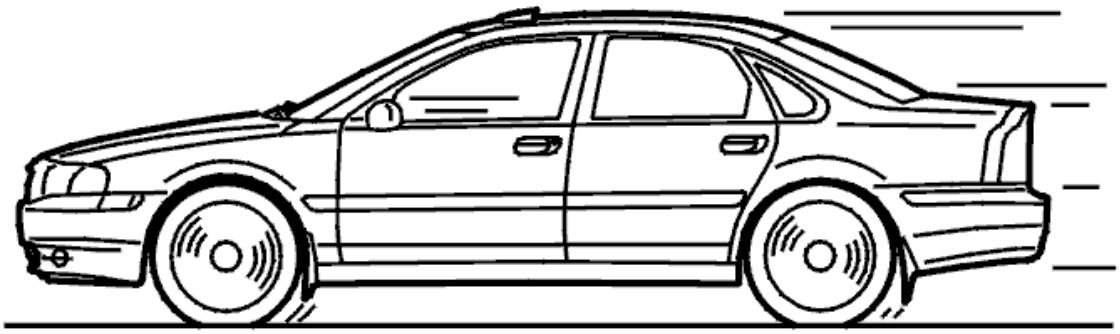

Fig. 191: Identifying Test Drive
Courtesy of VOLVO CARS CORPORATION

Does diagnostic trouble code (DTC) TCM-0097 or TCM-0098 recur?

- **YES**

  Refer to **REPLACING THE TRANSMISSION CONTROL MODULE (TCM)**

- **NO**

  OKAY: Troubleshooting has been completed.

REPLACING THE TRANSMISSION CONTROL MODULE (TCM)

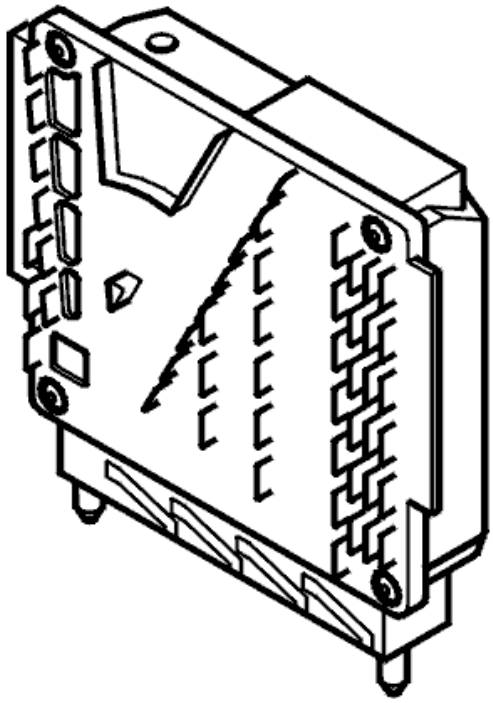

Fig. 192: Identifying Transmission Control Module (TCM)
Courtesy of VOLVO CARS CORPORATION

Replace the transmission control module (TCM). See **TRANSMISSION CONTROL MODULE (TCM), REPLACING** .

TCM-0099: CONTROL MODULE. INTERNAL FAULT (4T65 AWD; 2003-2006)

DIAGNOSTIC TROUBLE CODE (DTC) INFORMATION

Condition

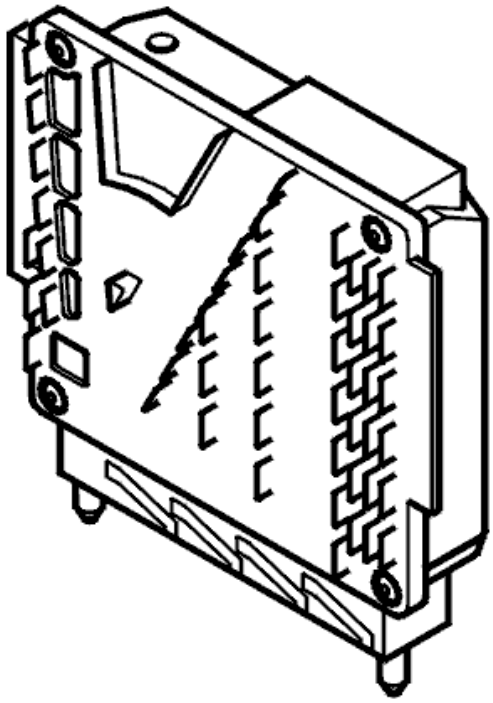

Fig. 193: Identifying Transmission Control Module (TCM)
Courtesy of VOLVO CARS CORPORATION

Diagnostic trouble code (DTC) TCM-0099 is stored if the transmission control module (TCM) registers that the storage of data to the control module EEPROM memory is not correctly completed.

Substitute Value

- None.

Possible Source

- Faulty software in the control module
- Defective EEPROM memory.

Fault symptom[s]

- None.

INTERNAL FAULT

REPLACING THE CONTROL MODULE AND PROGRAMMING

The control module has registered an internal fault.

CAUTION: A new control module is delivered without software. The control module must be programmed in order to function after replacement.

For further information about programming and replacing the control module, see **TRANSMISSION CONTROL MODULE (TCM), REPLACING** .

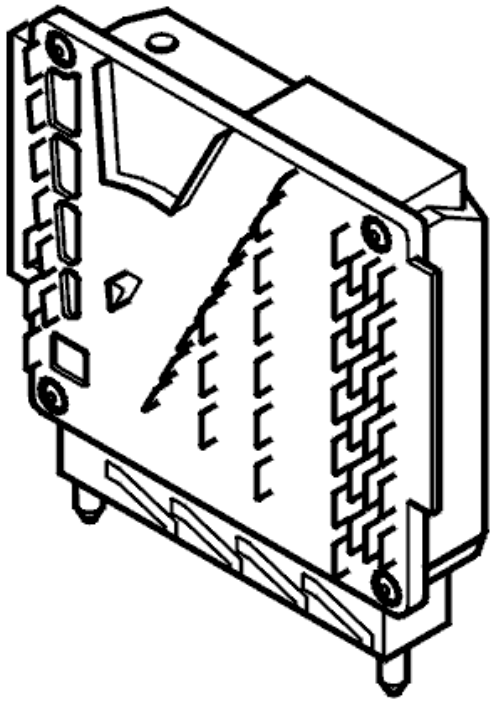

Fig. 194: Identifying Transmission Control Module (TCM)
Courtesy of VOLVO CARS CORPORATION

TCM-0099: CONTROL MODULE. INTERNAL FAULT (AW50/51 AWD; AW55-50/51SN; 2003-2007)

DIAGNOSTIC TROUBLE CODE (DTC) INFORMATION

see **DIAGNOSTIC TROUBLE CODE (DTC) INFORMATION**

INTERNAL FAULT

see **INTERNAL FAULT**

TCM-009A: BATTERY VOLTAGE. SIGNAL TOO LOW (4T65 AWD; 2003-2006)

DIAGNOSTIC TROUBLE CODE (DTC) INFORMATION

Condition

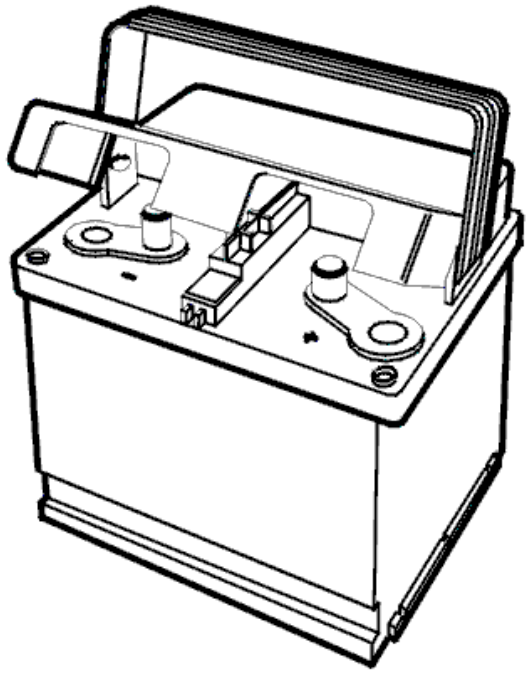

Fig. 195: Identifying Battery
Courtesy of VOLVO CARS CORPORATION

Diagnostic trouble code (DTC) TCM-009A is stored if the control module registers that the power supply is too low in comparison with the supply to the central electronic module (CEM).

Substitute Value

- None.

Possible Source

- Contact resistance or oxidation in the control module or transmission connectors.

Fault symptom[s]

- General orange warning lamp lit.

SIGNAL TOO LOW

CHECKS

CHECKING THE BATTERY VOLTAGE

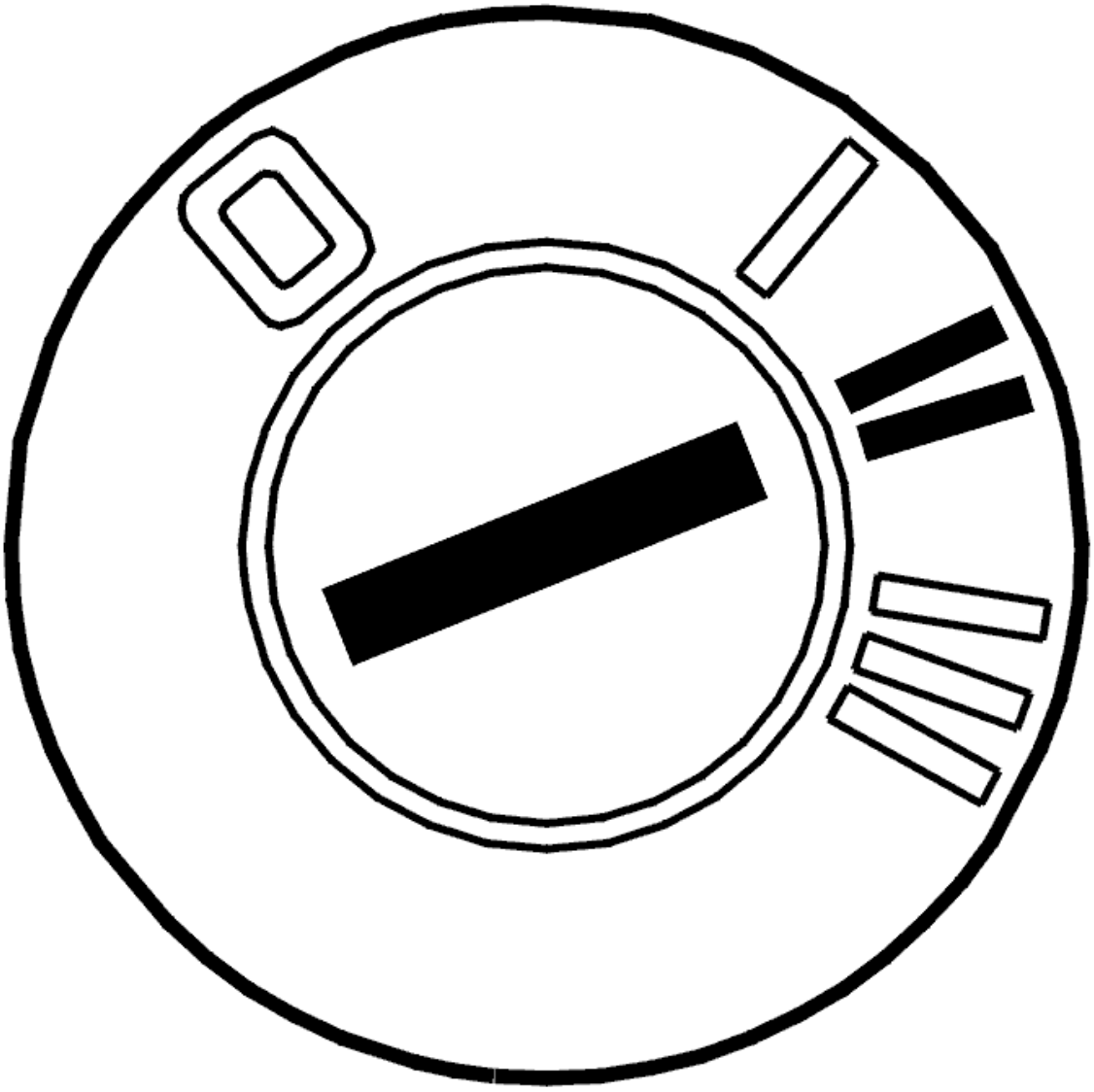

Fig. 196: Identifying Ignition ON
Courtesy of VOLVO CARS CORPORATION

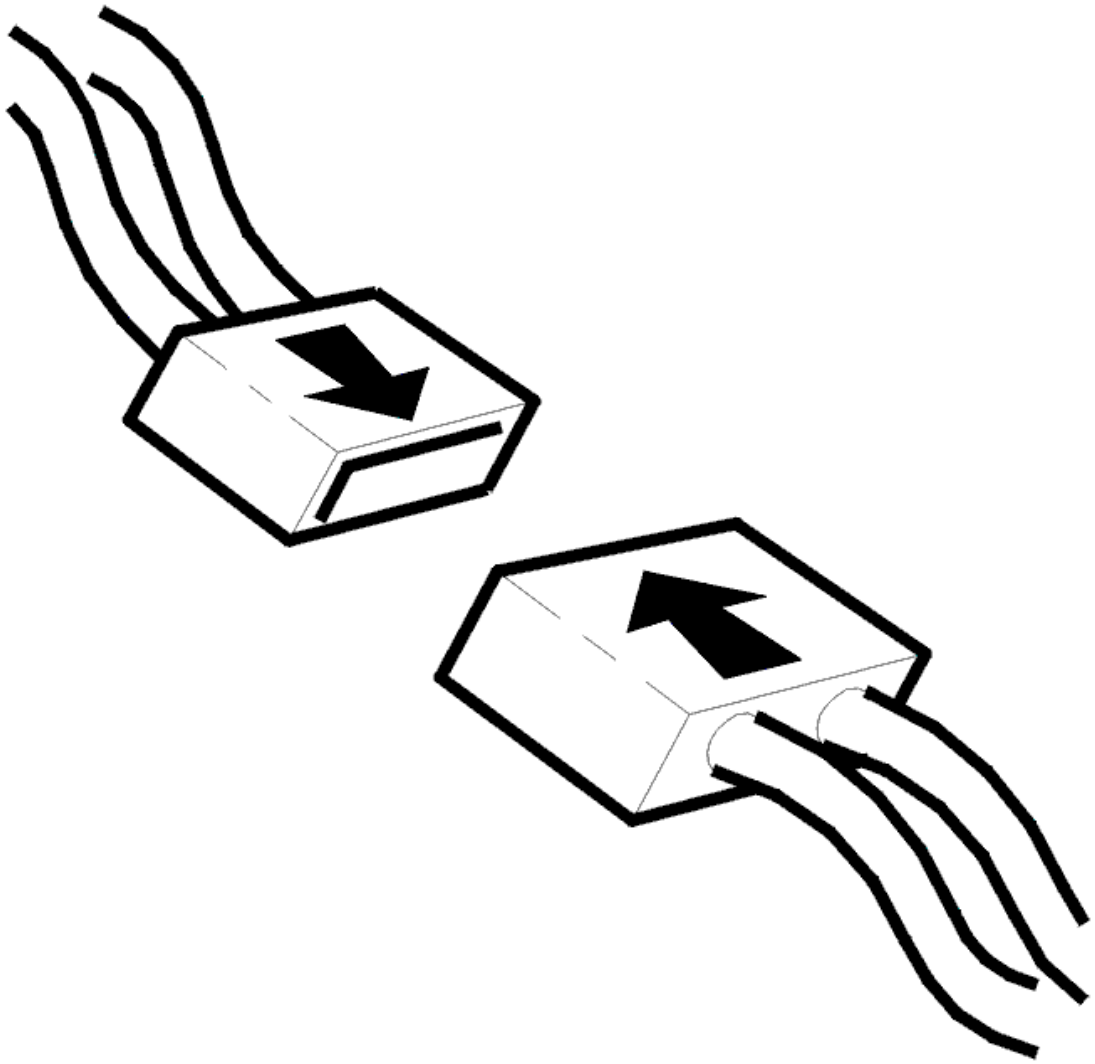

Fig. 197: Identifying Connector(s) Reinstallation
Courtesy of VOLVO CARS CORPORATION

- Ignition on
- Read off the voltage for the transmission control module (TCM) and the central electronic module (CEM).

  The voltage must be battery voltage for both the control modules.

  Select an option:

  1. Voltage too low for both control modules

     Refer to **CHECKING THE BATTERY VOLTAGE**

  2. Voltage too low for the transmission control module (TCM).

Refer to **CHECKING THE POWER SUPPLY**

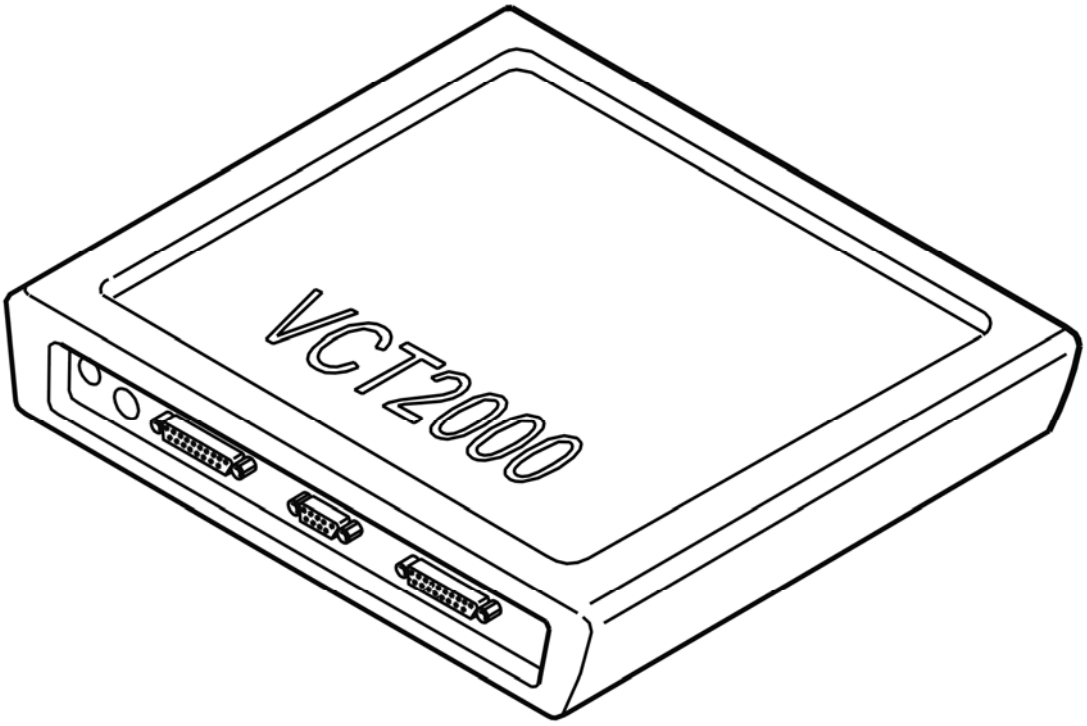

Fig. 198: Identifying VCT2000 Diagnostic Tool Symbol In VIDA
Courtesy of VOLVO CARS CORPORATION

CHECKING THE BATTERY VOLTAGE

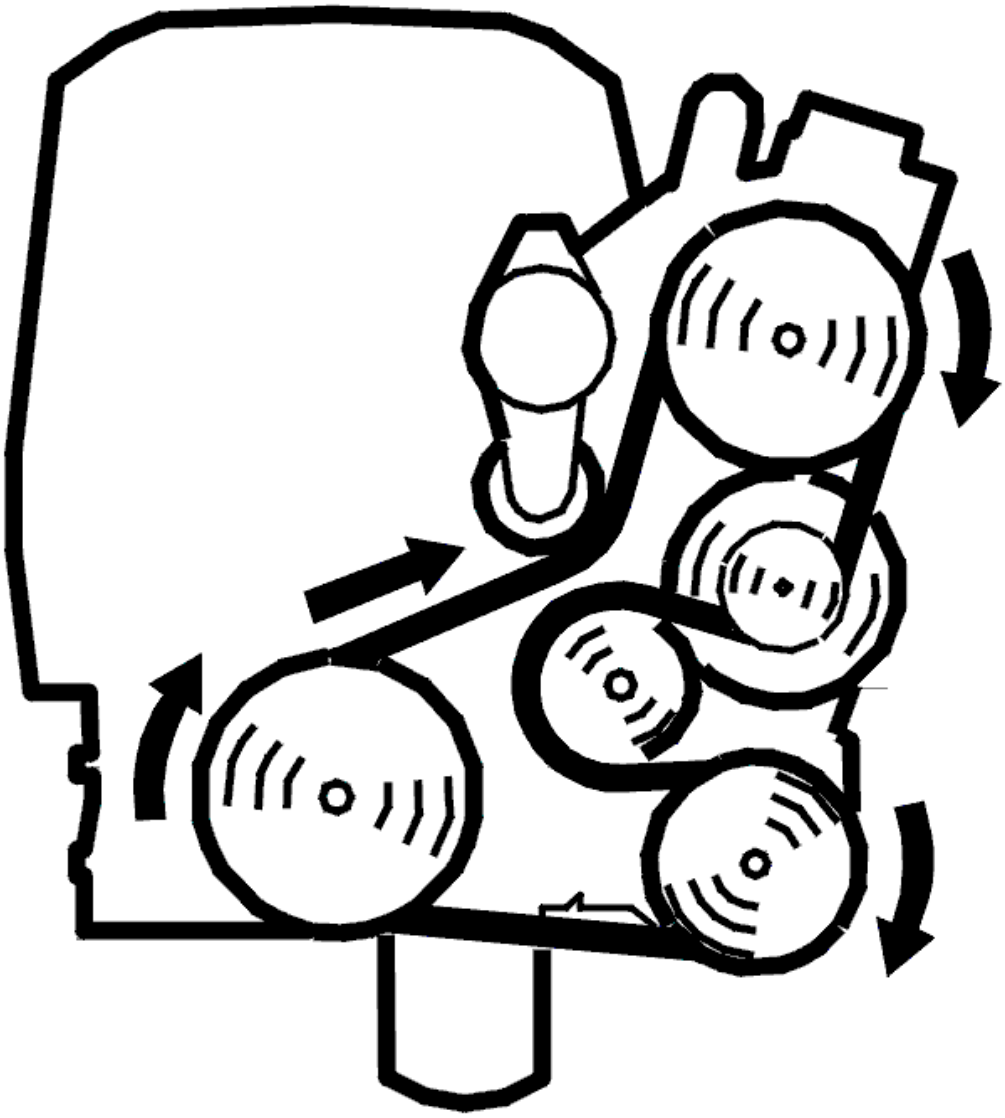

Fig. 199: Identifying Belt Routing
Courtesy of VOLVO CARS CORPORATION

- Start the engine and let it run at idle speed
- Connect a voltmeter between the battery positive and negative terminals.

  The voltmeter must read 12-15 V. If the voltage is lower, check the charging system. Check for low charge voltage.

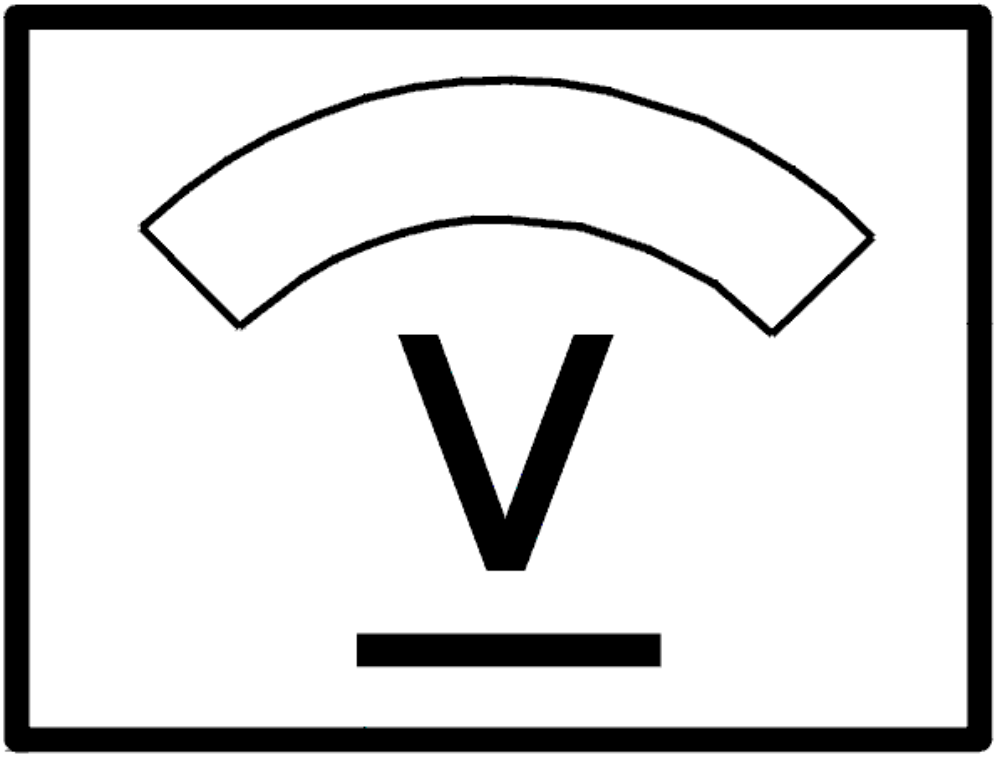

Fig. 200: Identifying Voltage Display
Courtesy of VOLVO CARS CORPORATION

Was a fault detected?

- **YES**

  Refer to **VERIFICATION**

- **NO**

  Refer to **CHECKING THE BATTERY TERMINALS**

CHECKING THE BATTERY TERMINALS

Check the battery positive and negative terminals and the front terminals in the engine compartment. Check for

contact resistance and oxidation.

Remedy as necessary.

- **Continue**

  Refer to **INFORMATION**

CHECKING THE POWER SUPPLY

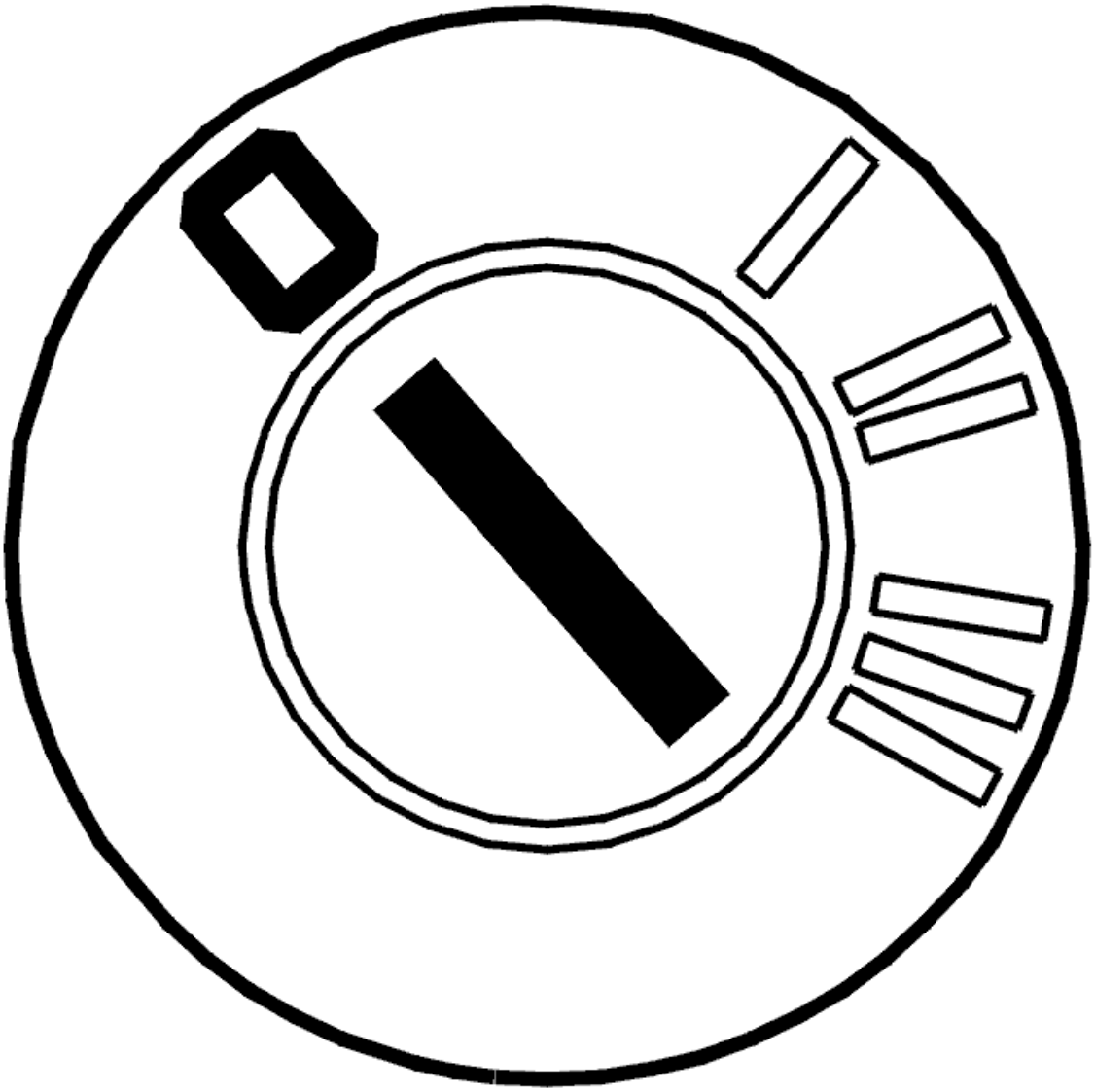

Fig. 201: Identifying Ignition OFF
Courtesy of VOLVO CARS CORPORATION

- Ignition off.

  Check the control module connector. Check for contact resistance and oxidation.

Check the power supply cable. Check for an intermittent open-circuit.

Other information:

- To connect the breakout box, see **CONNECTING THE BREAKOUT BOX**
- For information about signals, see **SIGNAL SPECIFICATION**
- see **CHECKING WIRING AND TERMINALS**

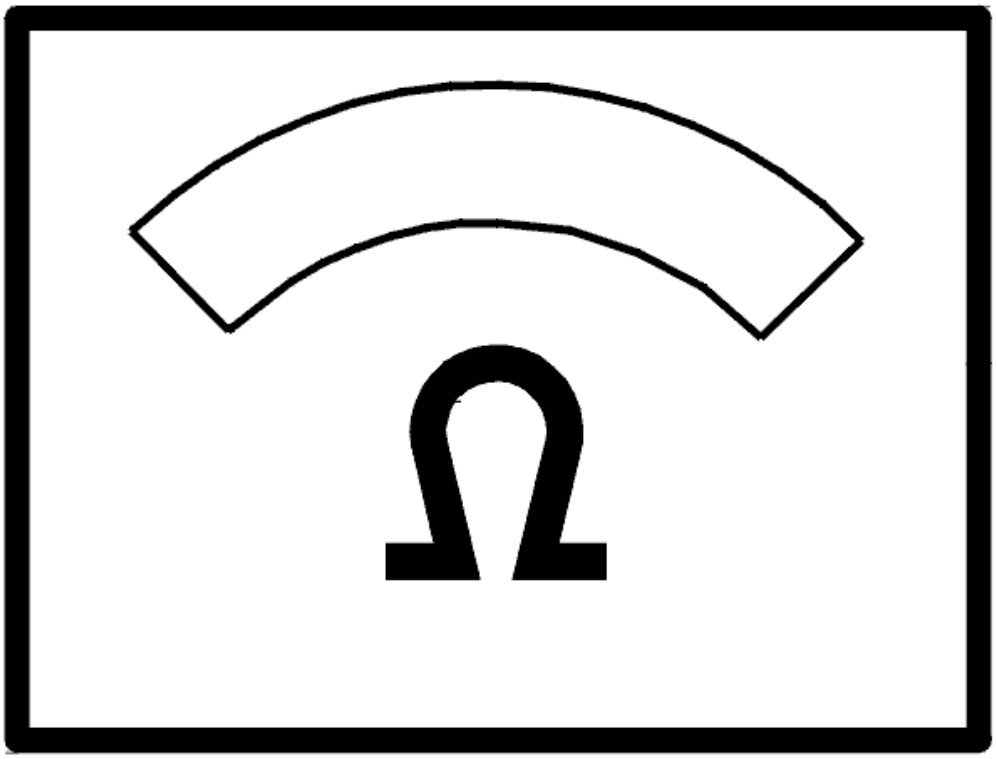

Fig. 202: Identifying Ohms Display
Courtesy of VOLVO CARS CORPORATION

Was a fault detected?

- **YES**

Refer to **VERIFICATION**

- **NO**

  Refer to **CHECKING THE CONTROL MODULE**

CHECKING THE CONTROL MODULE

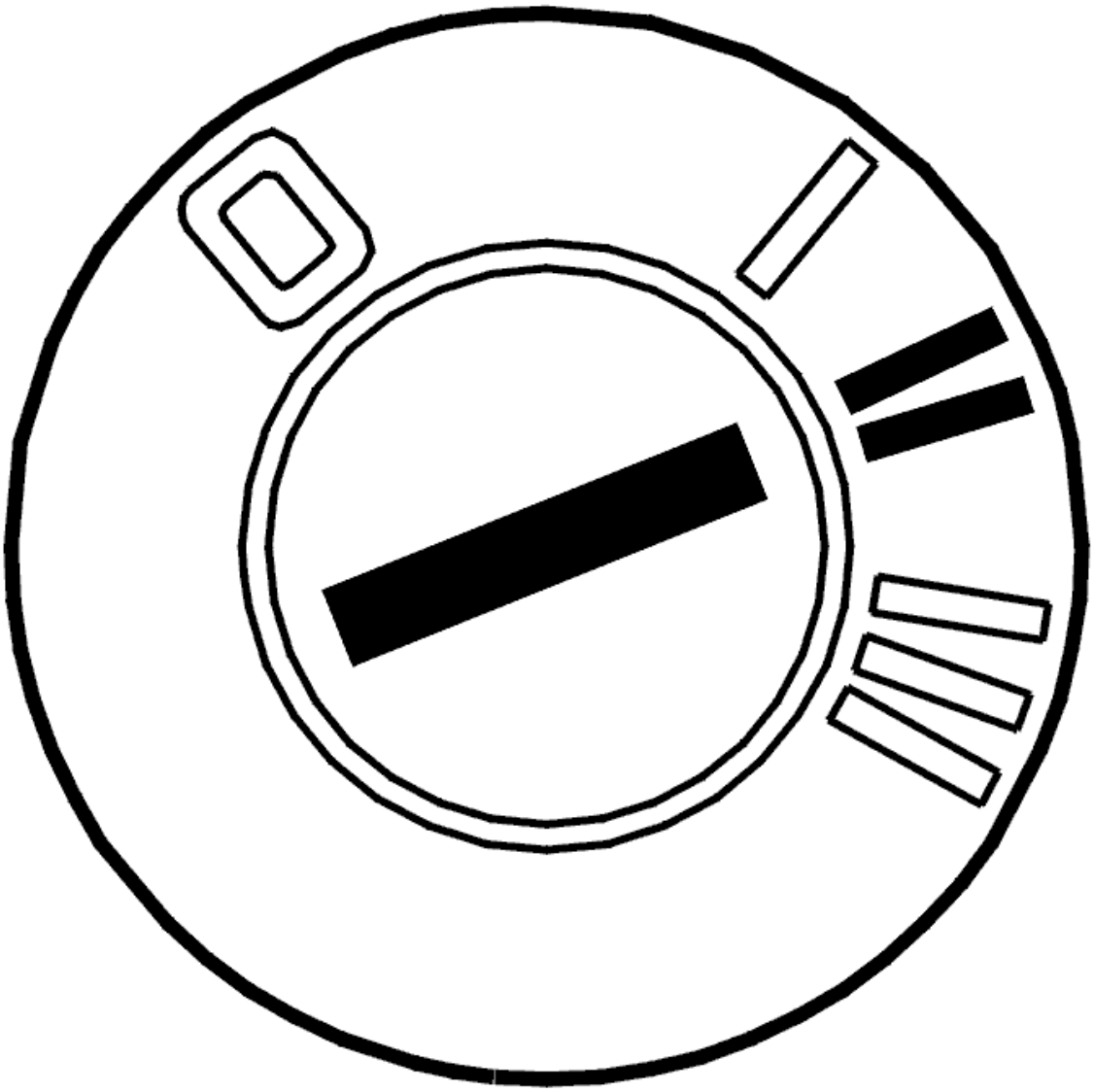

Fig. 203: Identifying Ignition ON
Courtesy of VOLVO CARS CORPORATION

- The breakout box connected
- Ignition on
- Read off the voltage
- Connect a voltmeter between terminals #35 (#A35) and #53 (#A53) on the breakout box. The voltage

must be normal system voltage.

Compare the power supplies with each other.

The difference between the read off voltage and the voltmeter voltage must not exceed 1.5 V. If the difference is greater, replace the control module.

Other information

- To connect the breakout box, see **CONNECTING THE BREAKOUT BOX**
- For information about signals, see **SIGNAL SPECIFICATION**
- To replace the transmission control module (TCM), see **SIGNAL SPECIFICATION** .

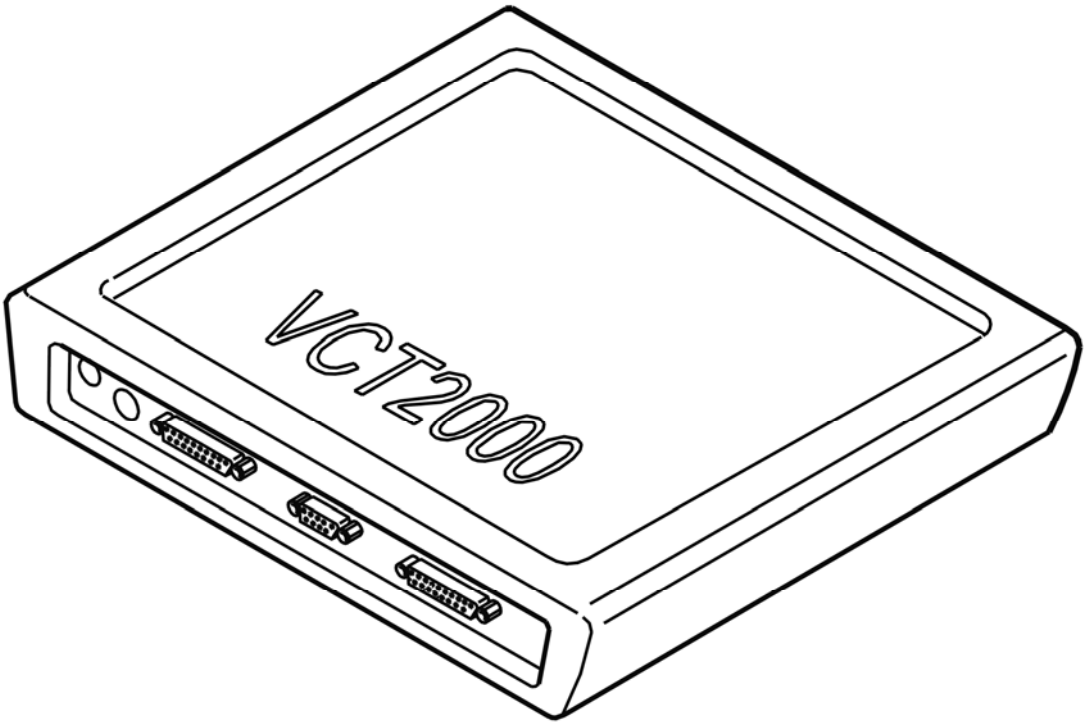

Fig. 204: Identifying VCT2000 Diagnostic Tool Symbol In VIDA
Courtesy of VOLVO CARS CORPORATION

Was the difference greater than 1.5 V?

- **YES**

  Refer to **VERIFICATION**

- **NO**

Refer to **INFORMATION**

INFORMATION

FAULT-TRACING INFORMATION

The fault should be diagnosed and remedied. Since this is not the case the fault-tracing process has failed.

Complete the fault-tracing for those fault or try again.

VERIFICATION

VERIFICATION

HINT: After carrying out the repair, check that the fault has been remedied.

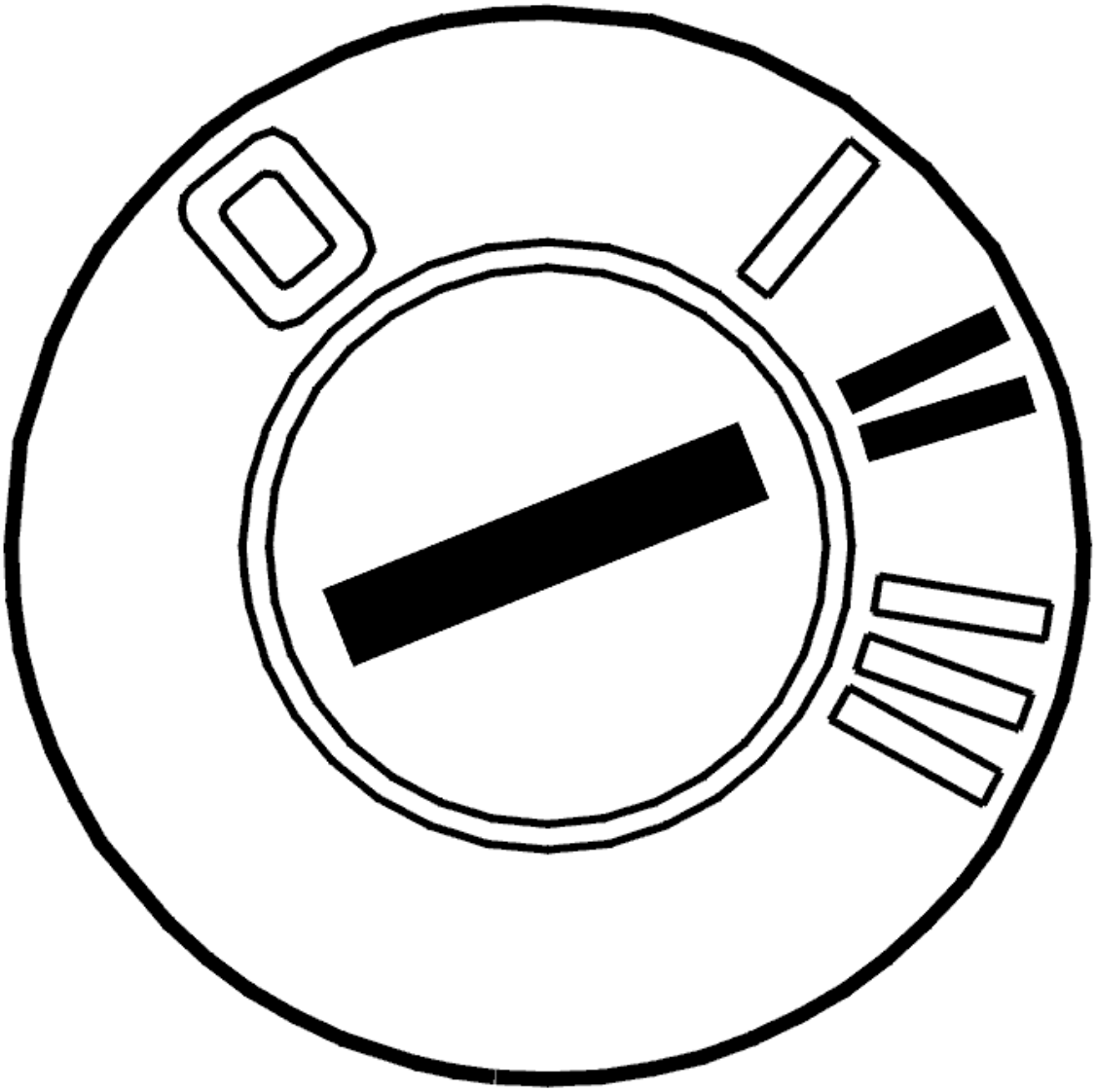

Fig. 205: Identifying Ignition ON
Courtesy of VOLVO CARS CORPORATION

- Ignition on.
- Read off the voltage for the transmission control module (TCM) and the central electronic module (CEM).

  The voltage must be battery voltage for both the control modules.

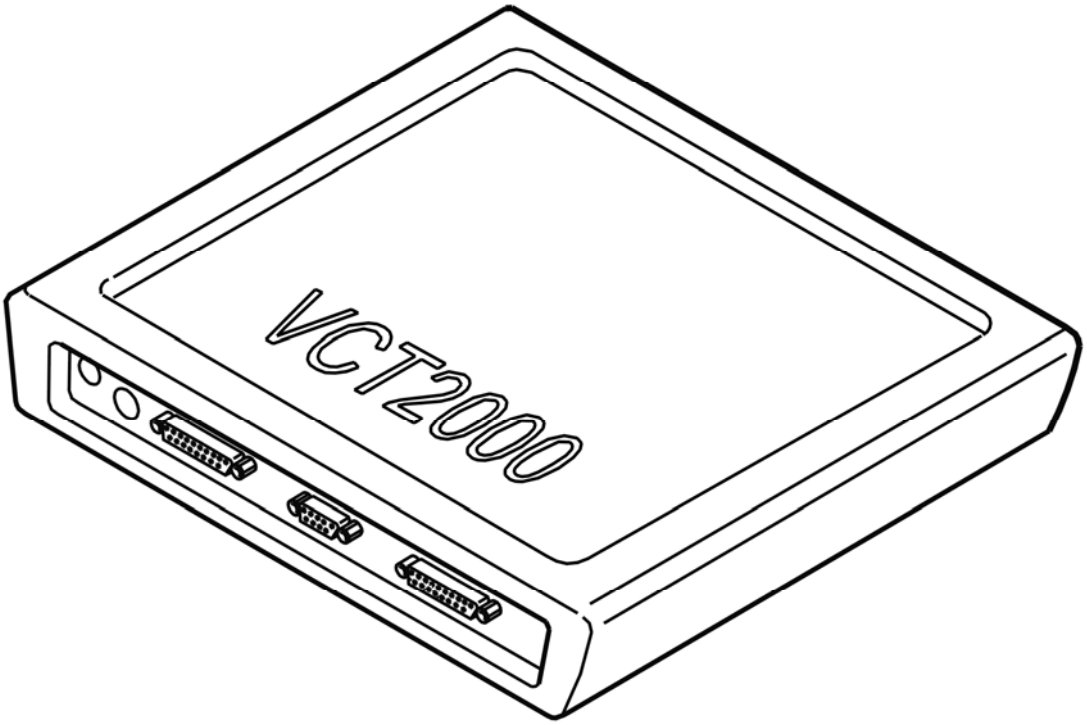

Fig. 206: Identifying VCT2000 Diagnostic Tool Symbol In VIDA
Courtesy of VOLVO CARS CORPORATION

Was the voltage OK?

- **YES**

  VERIFIED: Troubleshooting has been completed.

- **NO**

  Refer to **INFORMATION**

INFORMATION

FAULT-TRACING INFORMATION

The fault should have been detected and remedied. As this is not the case fault-tracing has failed.

Exit fault-tracing for this diagnostic trouble code (DTC) or make another attempt.

INFORMATION

FAULT-TRACING INFORMATION

If the fault is intermittent, do not verify fault-tracing if the fault does not recur.

It is possible to view the information again, or leave fault-tracing for this diagnostic trouble code (DTC).

TCM-009A: BATTERY VOLTAGE. SIGNAL TOO LOW (AW50/51 AWD; AW55-50/51SN; 2003-2007)

DIAGNOSTIC TROUBLE CODE (DTC) INFORMATION

see **DIAGNOSTIC TROUBLE CODE (DTC) INFORMATION**

SIGNAL TOO LOW

CHECKS

CHECKING THE BATTERY VOLTAGE

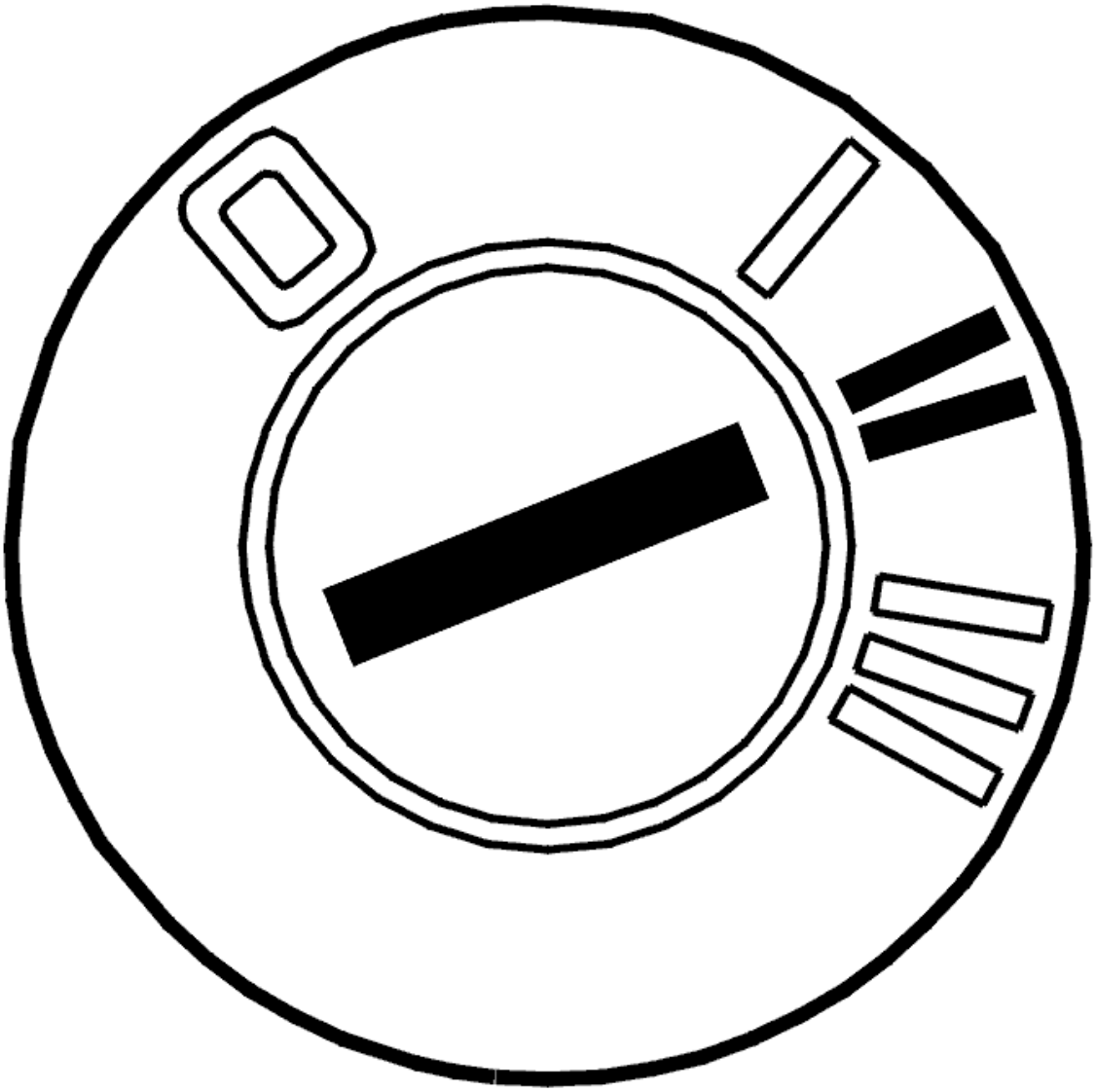

Fig. 207: Identifying Ignition ON
Courtesy of VOLVO CARS CORPORATION

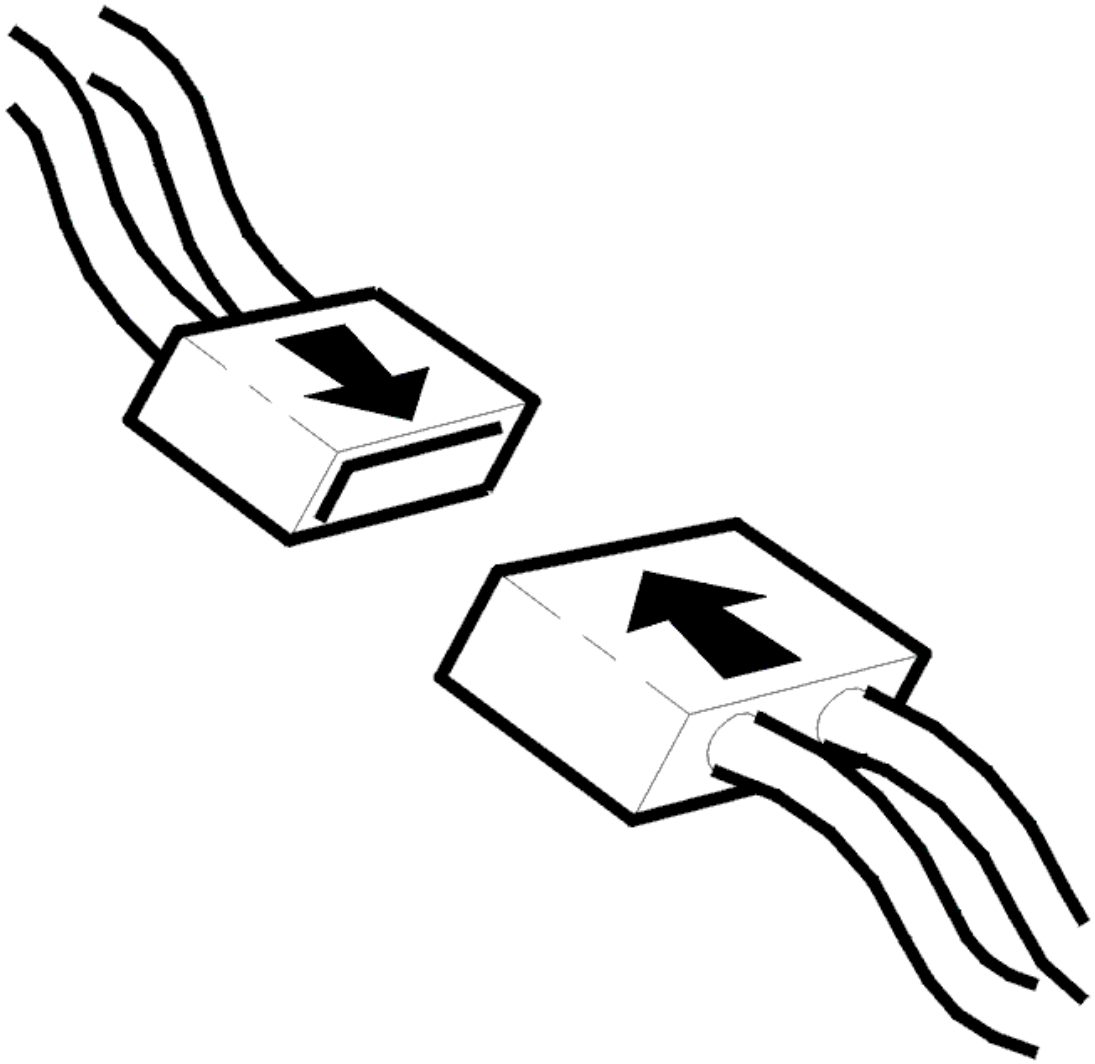

Fig. 208: Identifying Connector(s) Reinstallation
Courtesy of VOLVO CARS CORPORATION

- Ignition on
- Read off the voltage for the transmission control module (TCM) and the central electronic module (CEM).

  The voltage must be battery voltage for both the control modules.

  Other information:

  - To disconnect the control module, see **TRANSMISSION CONTROL MODULE (TCM), REPLACING** .

  Select an option:

1. Voltage too low for both control modules

   Refer to **CHECKING THE BATTERY VOLTAGE**

2. Voltage too low for the transmission control module (TCM).

   Refer to **CHECKING THE POWER SUPPLY**

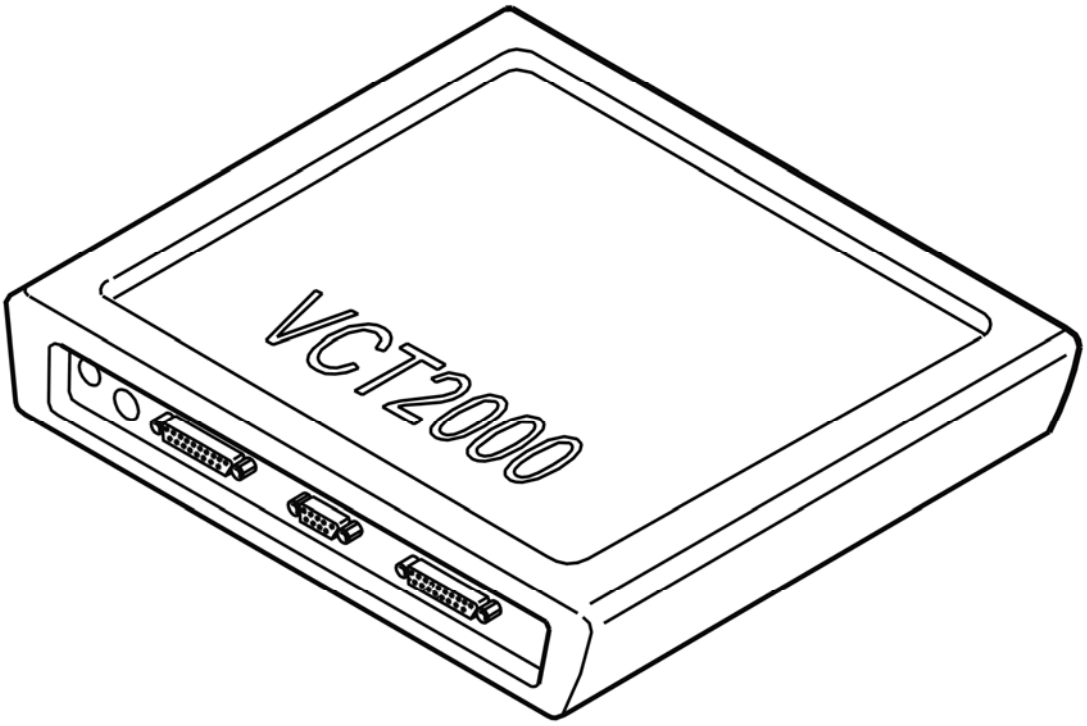

Fig. 209: Identifying VCT2000 Diagnostic Tool Symbol In VIDA
Courtesy of VOLVO CARS CORPORATION

CHECKING THE BATTERY VOLTAGE

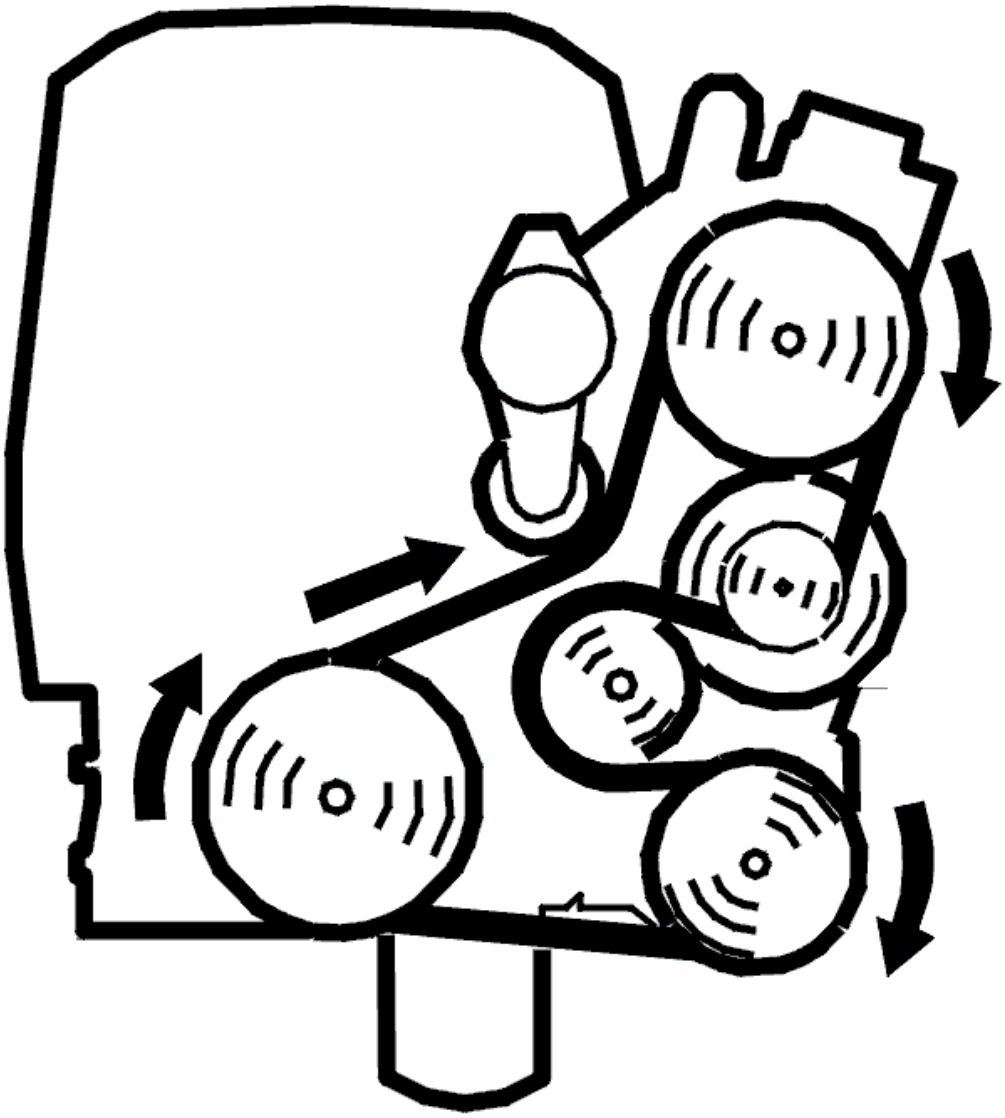

Fig. 210: Identifying Belt Routing
Courtesy of VOLVO CARS CORPORATION

- Start the engine and let it run at idle speed
- Connect a voltmeter between the battery positive and negative terminals.

  The voltmeter should read 12-15 V. If the voltage is lower, check the charging system for low charge voltage.

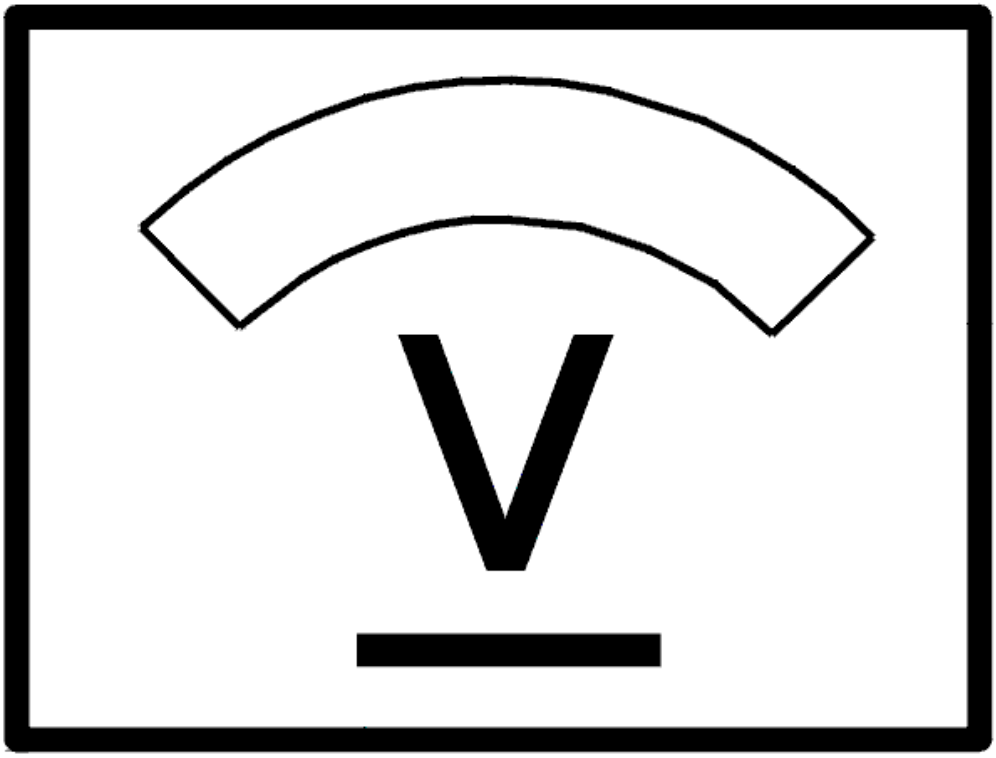

Fig. 211: Identifying Voltage Display
Courtesy of VOLVO CARS CORPORATION

Was a fault detected?

- **YES**

  Refer to **VERIFICATION**

- **NO**

  Refer to **CHECKING THE BATTERY TERMINALS**

CHECKING THE BATTERY TERMINALS

Check the battery positive and negative terminals and the front terminals in the engine compartment. Check for

contact resistance and oxidation.

Remedy as necessary.

- **Continue**

  Refer to **INFORMATION**

CHECKING THE POWER SUPPLY

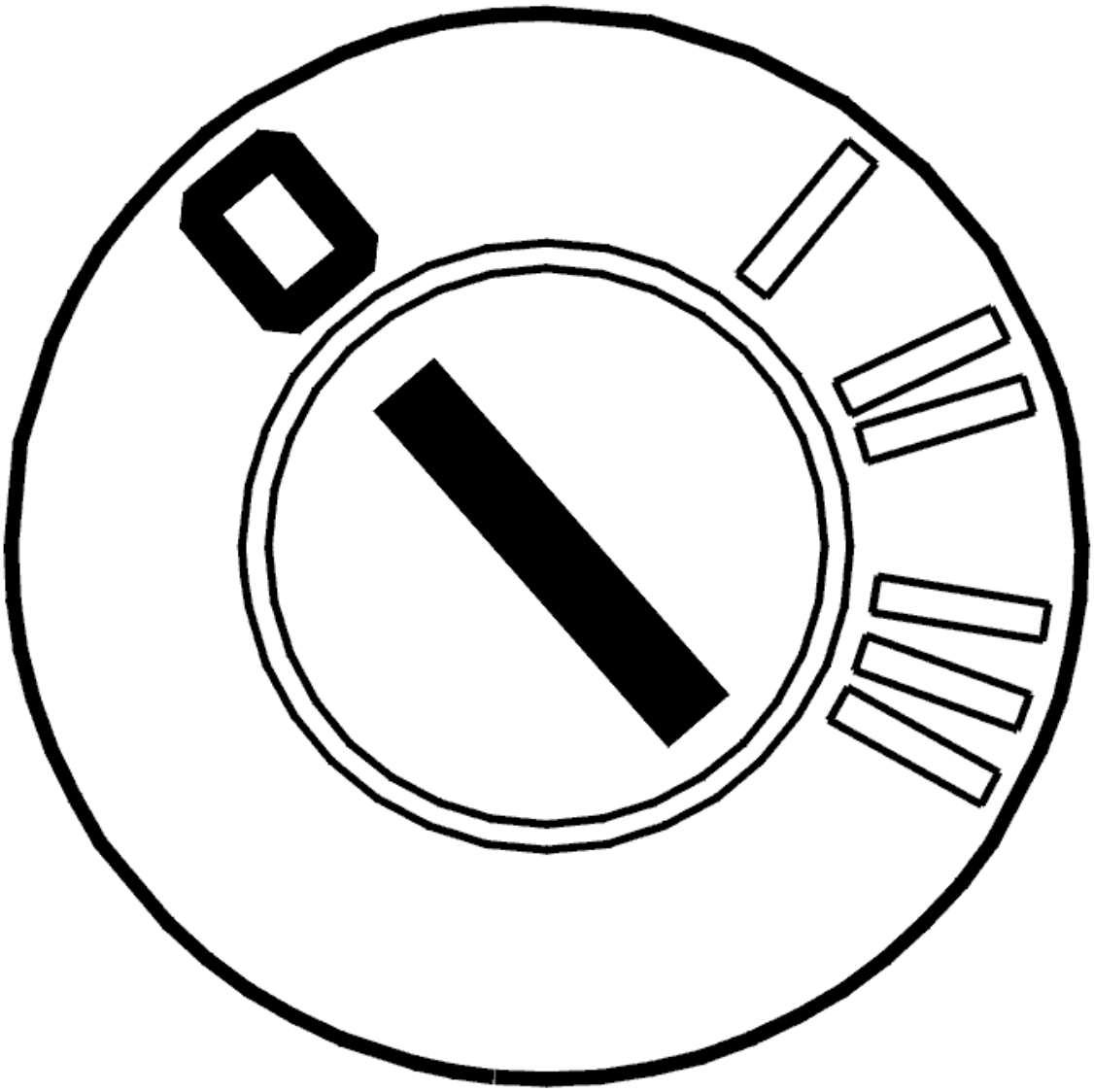

Fig. 212: Identifying Ignition OFF
Courtesy of VOLVO CARS CORPORATION

- Ignition off.

  Check the transmission control module (TCM) connector and the relay for extended X supply 2/101

(located in the central electronic module (CEM). Check for contact resistance and oxidation according to **CONTACT RESISTANCE AND OXIDATION** .

Check the power supply cable between fuse 20 in the integrated relay / fusebox in the engine compartment and the relay for extended X supply 2/101 (terminal #3 on the central electronic module CEM). Check the power supply cable between relay terminal #1 and transmission control module (TCM) terminal #A35 (#A35). Check for an open-circuit according to **OPEN-CIRCUIT, PERMANENT FAULTS** .

HINT: With the ignition on and voltmeter connected between transmission control module (TCM) terminals #A35 (#A35) and #A53 (#A53) the voltmeter should read battery voltage.

Other information:

- To connect the breakout box, see **CONNECTING THE BREAKOUT BOX**
- To disconnect the control module, see **TRANSMISSION CONTROL MODULE (TCM), REPLACING**
- To disconnect relay 2/101 for extended X-supply:
  - For -2004, see: **CENTRAL ELECTRONIC MODULE (CEM), REPLACING**
  - For 2005-, see: **CENTRAL ELECTRONIC MODULE (CEM), REPLACING** .
- For information about signals, see **SIGNAL DESCRIPTION. TRANSMISSION CONTROL MODULE (TCM)** .

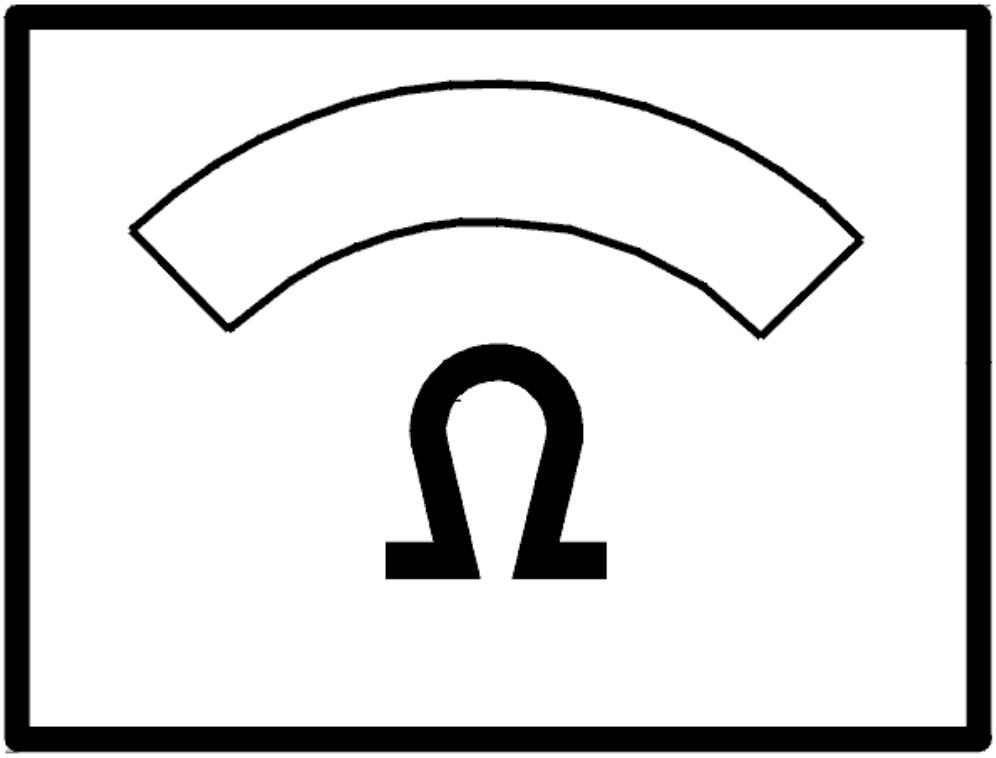

Fig. 213: Identifying Ohms Display
Courtesy of VOLVO CARS CORPORATION

- **Continue**

  Refer to **VERIFICATION**

INFORMATION

FAULT-TRACING INFORMATION

The fault should be diagnosed and remedied. Since this is not the case the fault-tracing process has failed.

Complete the fault-tracing for those fault or try again.

VERIFICATION

VERIFICATION

HINT: After carrying out the repair, check that the fault has been remedied.

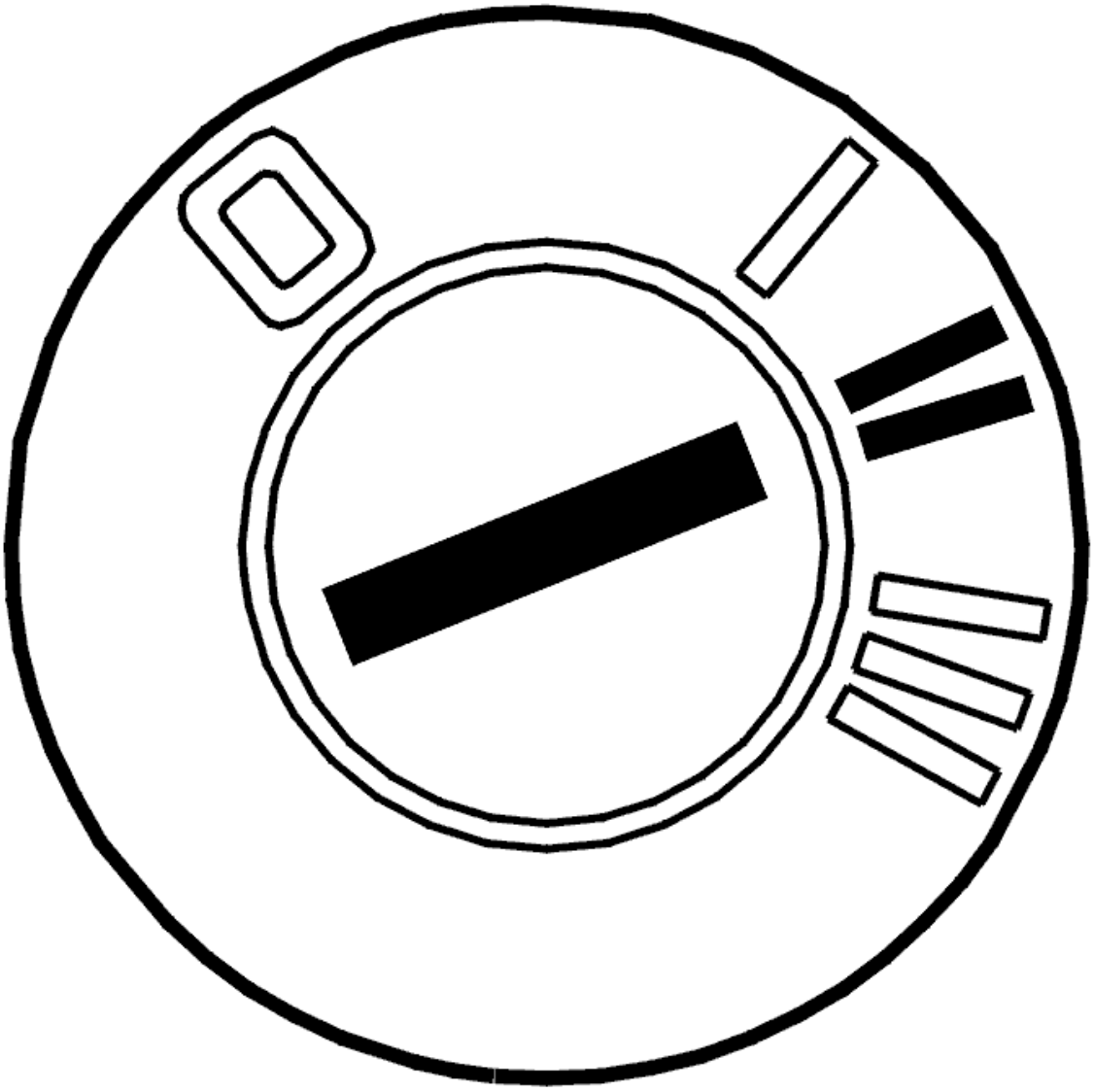

Fig. 214: Identifying Ignition ON
Courtesy of VOLVO CARS CORPORATION

- Ignition on.
- Read off the voltage for the transmission control module (TCM) and the central electronic module (CEM).

  The voltage must be battery voltage for both the control modules.

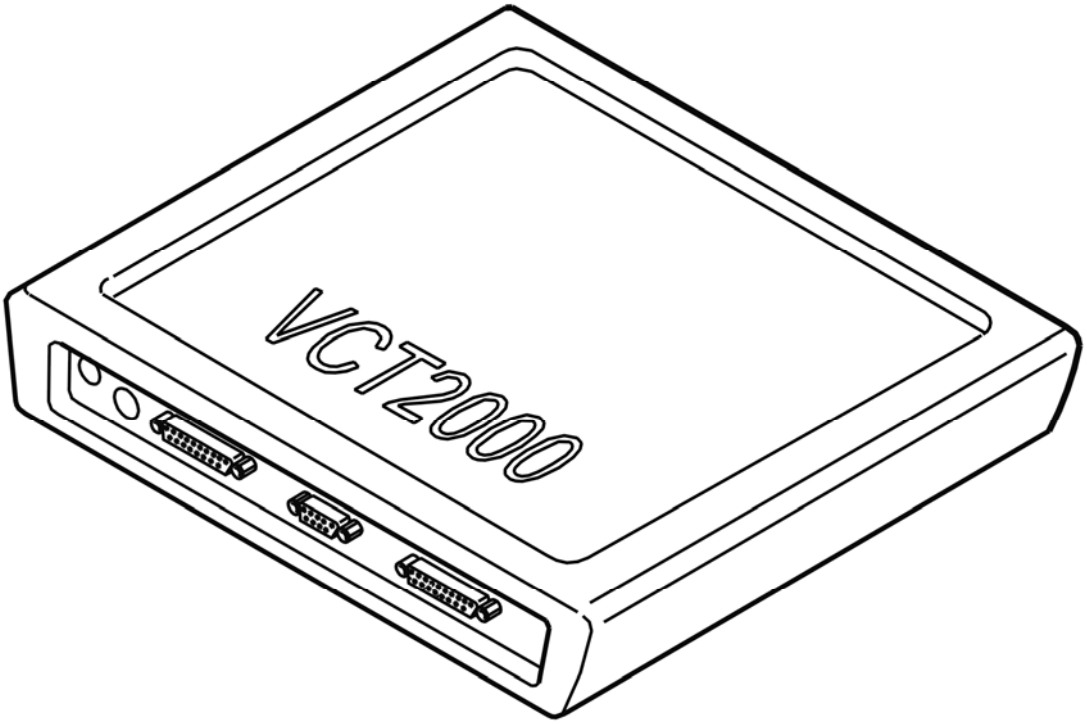

Fig. 215: Identifying VCT2000 Diagnostic Tool Symbol In VIDA
Courtesy of VOLVO CARS CORPORATION

Was the voltage OK?

- **YES**

  VERIFIED: Troubleshooting has been completed.

- **NO**

  Refer to **INFORMATION**

INFORMATION

FAULT-TRACING INFORMATION

The fault should have been detected and remedied. As this is not the case fault-tracing has failed.

Exit fault-tracing for this diagnostic trouble code (DTC) or make another attempt.

INFORMATION

FAULT-TRACING INFORMATION

If the fault is intermittent, do not verify fault-tracing if the fault does not recur.

It is possible to view the information again, or leave fault-tracing for this diagnostic trouble code (DTC).

TCM-0100: POOR GEAR SHIFTING QUALITY (AW50/51 AWD; AW55-50/51SN; 2003-2007)

DIAGNOSTIC TROUBLE CODE (DTC) INFORMATION

Condition

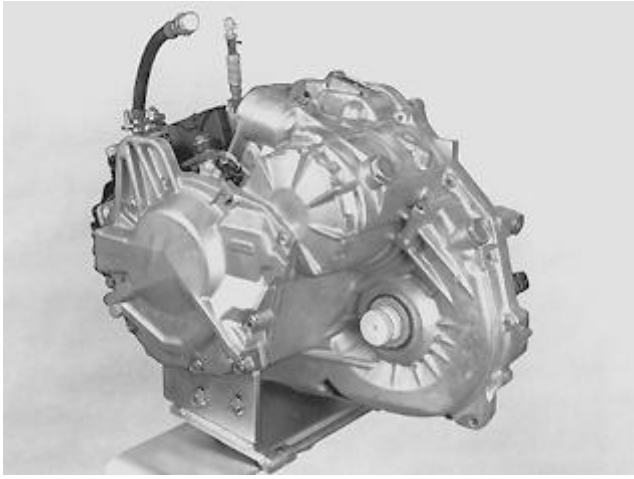

Fig. 216: Identifying Transmission
Courtesy of VOLVO CARS CORPORATION

Diagnostic trouble code (DTC) TCM-0100 is stored if the transmission control module (TCM) registers that the quality of gearshifts in the transmission is too low.

Substitute Value

- The transmission control module (TCM) "Emergency mode I" program has been initiated.

Possible Source

- Mechanical fault in the transmission.
- Hydraulic fault in the transmission.

Fault symptom[s]

- General warning lamp lit

POOR GEAR SHIFTING QUALITY

CHECKS

CHECKING DIAGNOSTIC TROUBLE CODES (DTCS)

HINT: Remedy any other diagnostic trouble codes (DTCs) stored for the transmission control module (TCM) first. One of these faults could have caused diagnostic trouble code (DTC) TCM-0100.

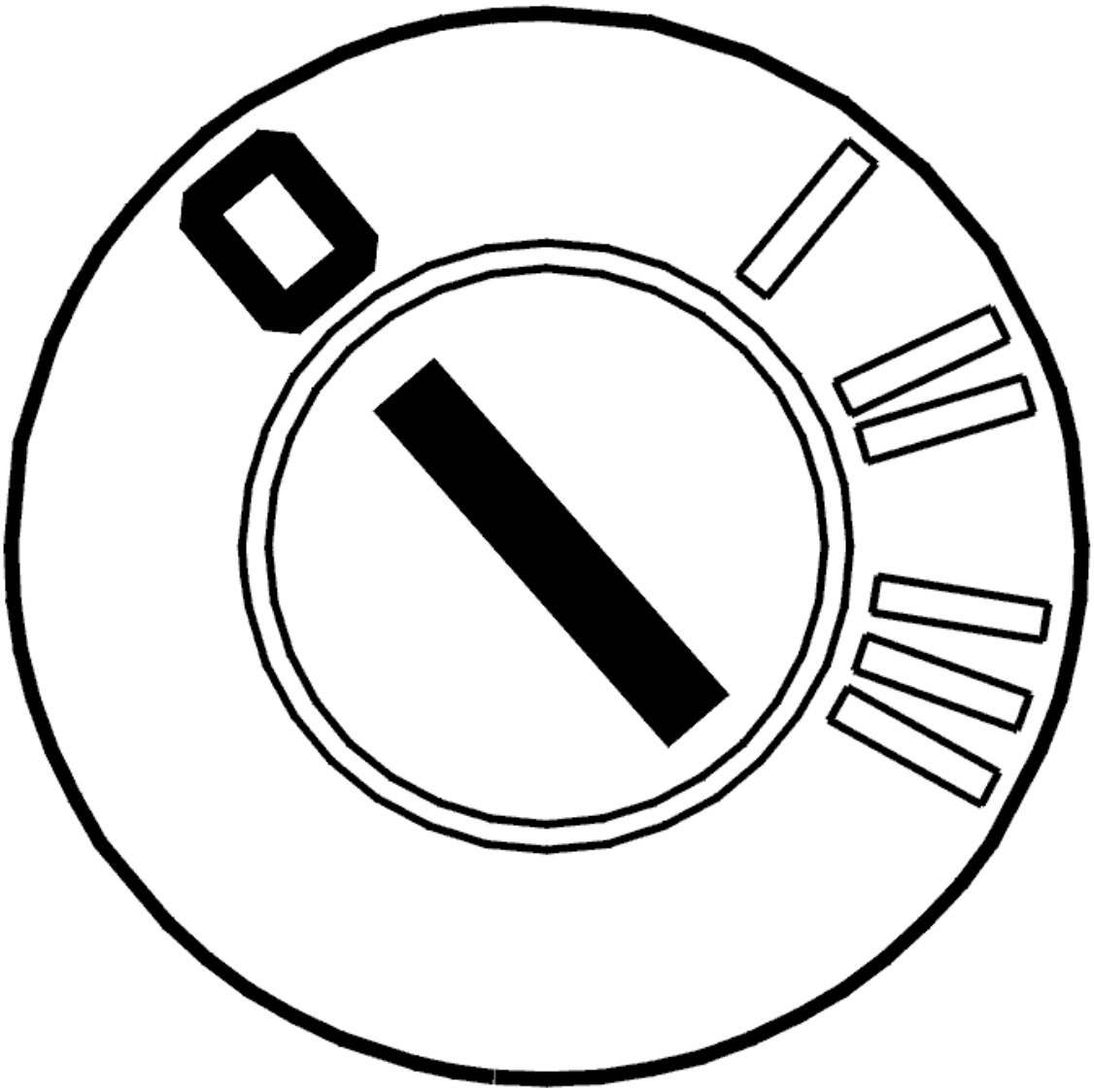

Fig. 217: Identifying Ignition OFF
Courtesy of VOLVO CARS CORPORATION

- Ignition on
- Read off diagnostic trouble codes (DTCs).

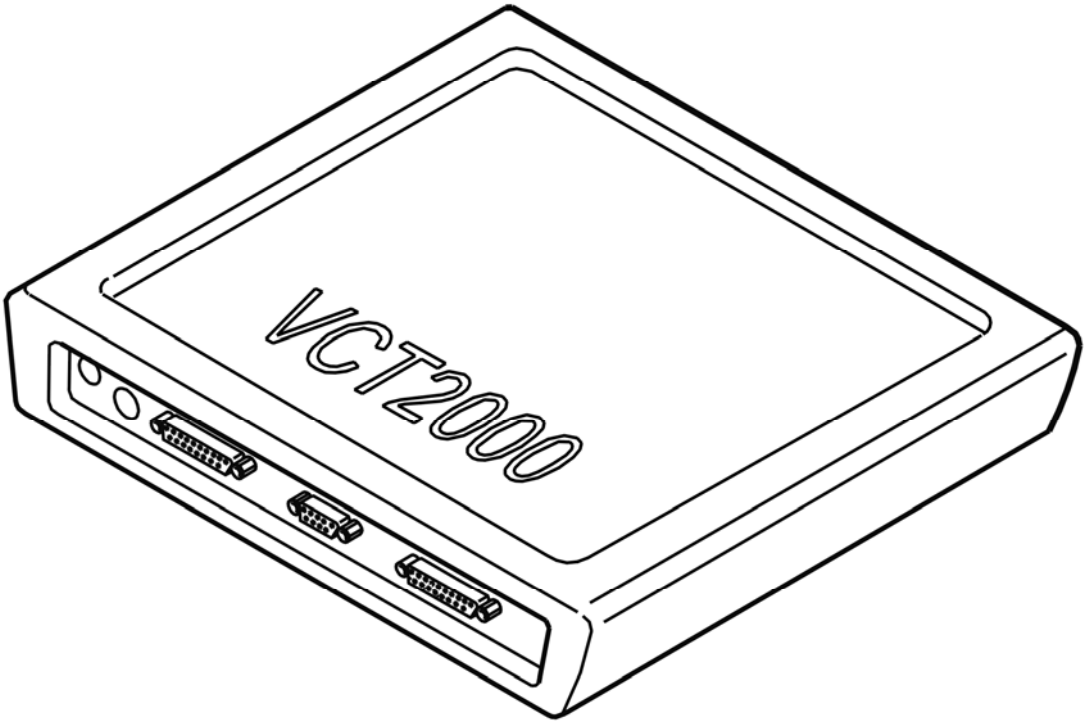

Fig. 218: Identifying VCT2000 Diagnostic Tool Symbol In VIDA
Courtesy of VOLVO CARS CORPORATION

Are other diagnostic trouble codes (DTCs) stored?

- **YES**

  OKAY: Troubleshooting has been completed.

- **NO**

  Refer to **CHECKING FOR CONTACT RESISTANCE AND OXIDATION**

CHECKING FOR CONTACT RESISTANCE AND OXIDATION

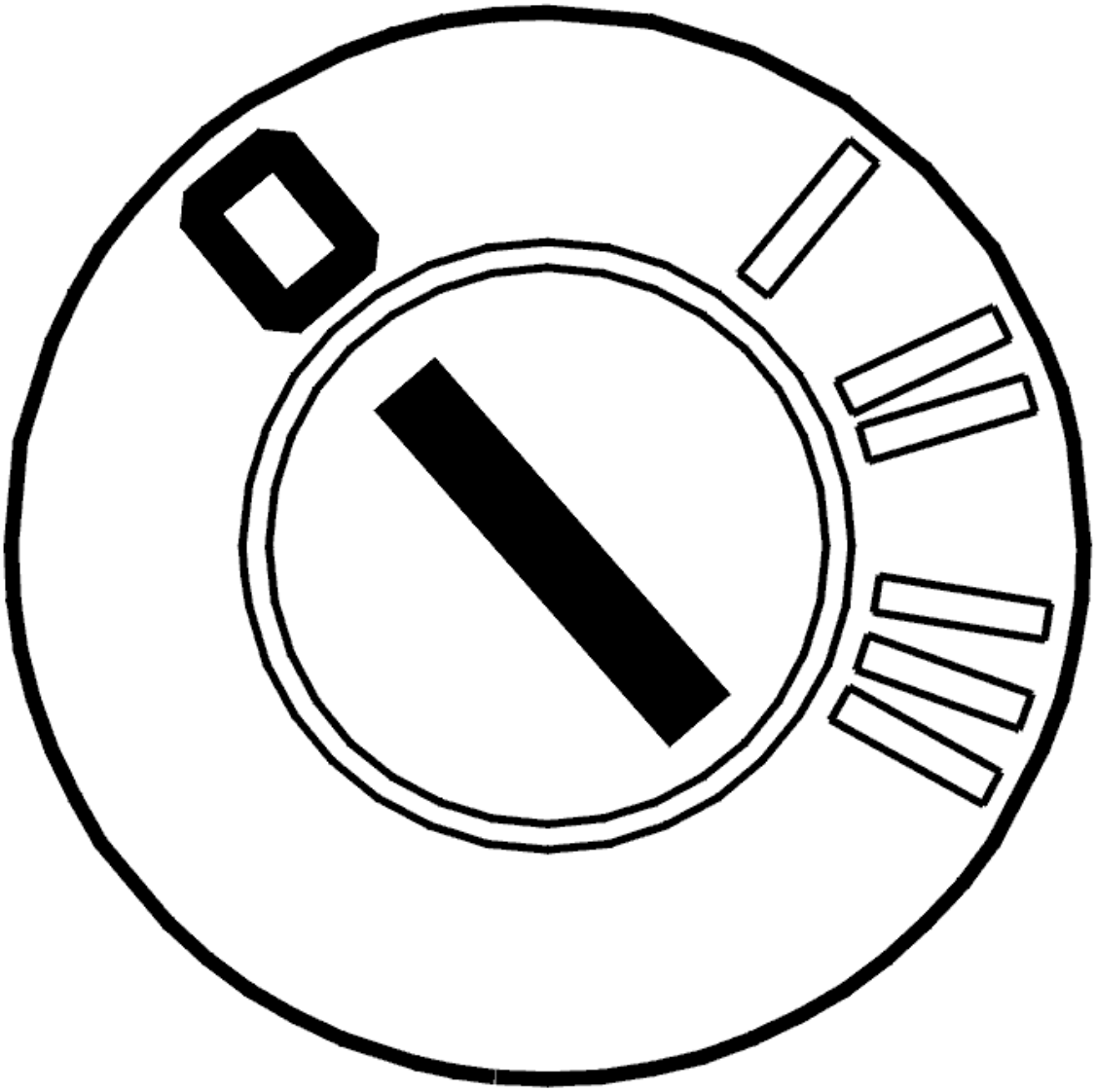

Fig. 219: Identifying Ignition OFF
Courtesy of VOLVO CARS CORPORATION

- Ignition off
- Check the transmission connectors and transmission control module (TCM) connector. Check for contact resistance and oxidation. See **CONTACT RESISTANCE AND OXIDATION**
- Reconnect the connectors, reinstall components etc.
- Test drive the car. See **TEST DRIVE SCHEDULE, DESCRIPTION** .

  Check for any clearly audible noises from the transmission. Check for malfunctions.

  Other information

  - To access the transmission connectors, see **CONNECTORS, TRANSMISSION, DISCONNECTING / CONNECTING**

- To access the control module connector, see **TRANSMISSION CONTROL MODULE (TCM), REPLACING** .

Is the transmission operating correctly?

- **YES**

  OKAY: Troubleshooting has been completed.

- **NO**

  Refer to **REPLACING THE CONTROL SYSTEM**

REPLACING THE CONTROL SYSTEM

Fault-tracing indicates an internal fault in the transmission.

Replace the control system. See **SOLENOID CONTROL SYSTEM, REPLACING** .

- **Continue**

  Refer to **RESETTING THE ADAPTATION**

RESETTING THE ADAPTATION

RESETTING ADAPTATION AND THE COUNTER FOR "TRANSMISSION OIL CHANGE"

HINT: The transmission has torque controlled adaptive pressure control. Pressure control means that the transmission regulates the pressure itself during each gear shift. This avoids harsh gear shifting. Each gear shift is evaluated by the control module and stored in the memory. This allows for compensation for wear and tear in the transmission and clutch. It is important that the adaptation in the memory is reset after the transmission has been repaired. This is to ensure normal operation. The oil is replaced during repair; the "Transmission oil change" counter must be reset. If the counter is not reset when the fluid is drained and replaced, there is a risk that a diagnostic trouble code (DTC) will be stored in incorrect circumstances.

NOTE: **This applies only if the transmission or one of the components in the transmission have been replaced.**

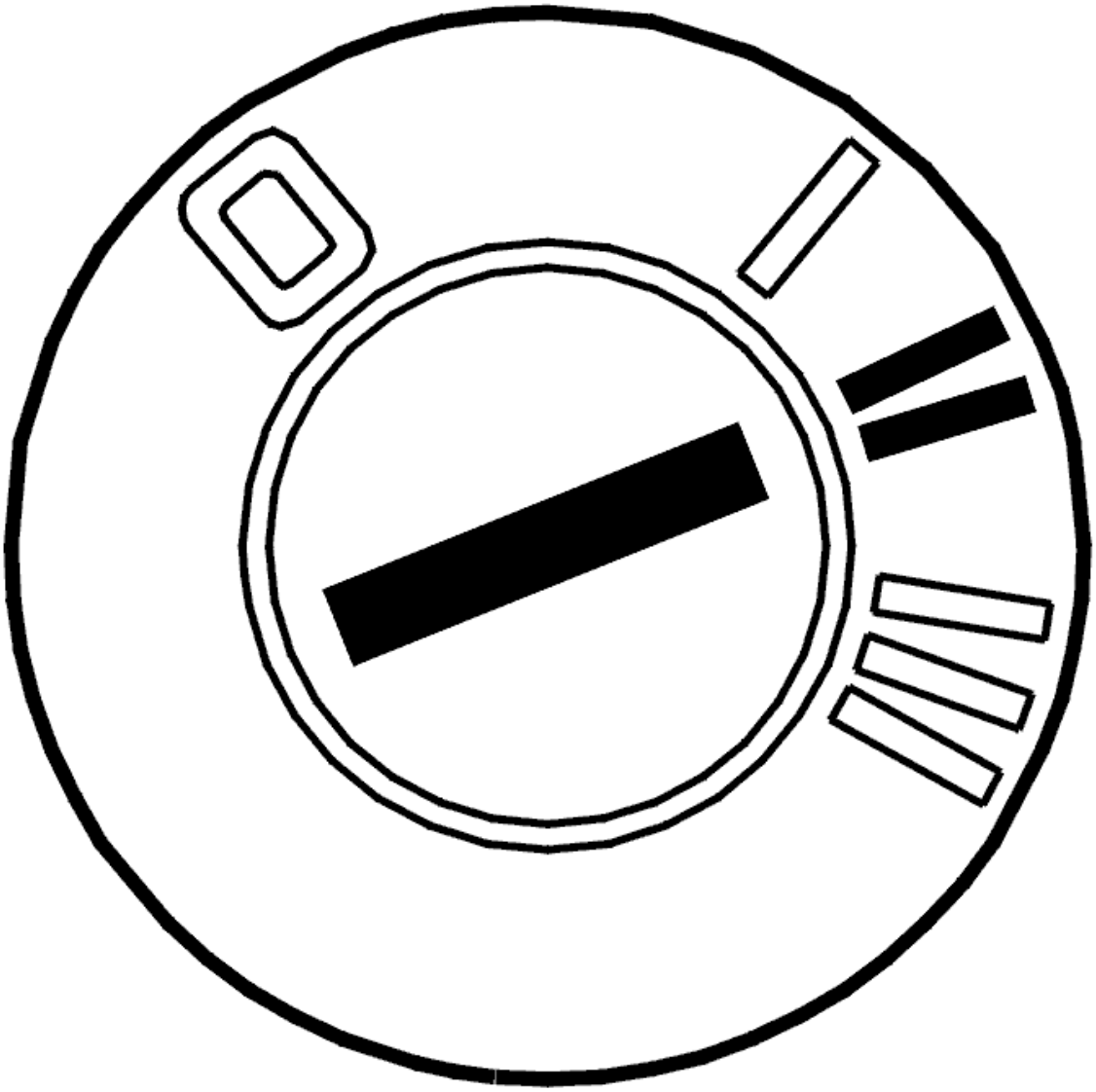

Fig. 220: Identifying Ignition ON
Courtesy of VOLVO CARS CORPORATION

- Ignition on.

  Use the VCT2000 (or appropriate scan tool) to reset the adaptation and counter.

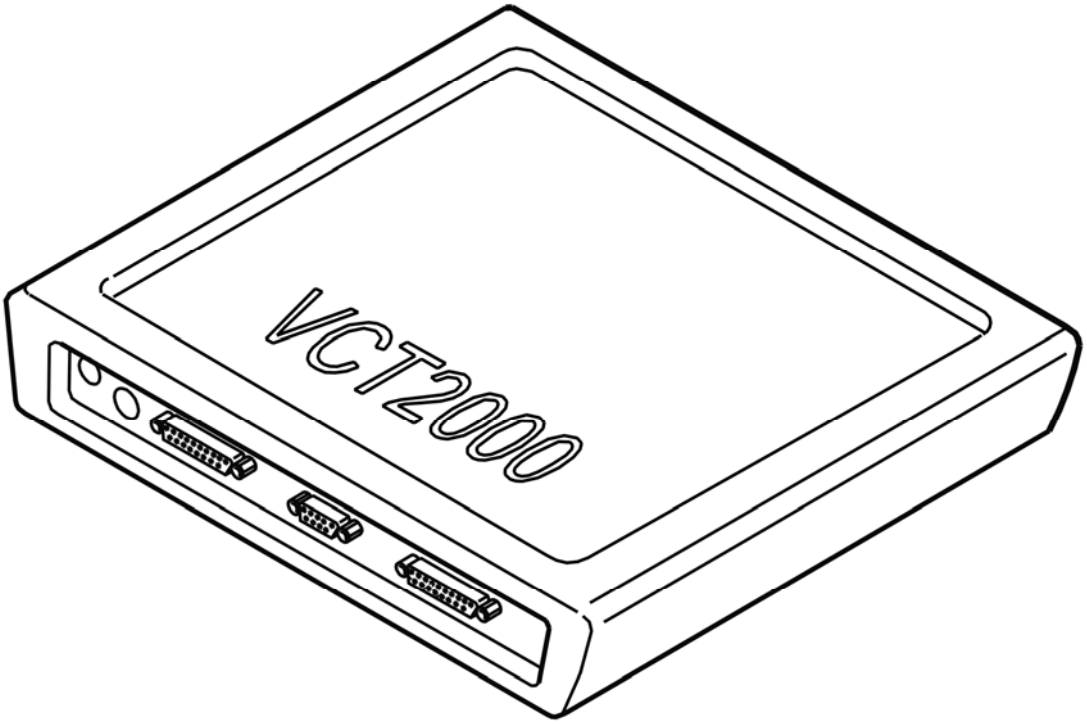

Fig. 221: Identifying VCT2000 Diagnostic Tool Symbol In VIDA
Courtesy of VOLVO CARS CORPORATION

- **Continue**

  Refer to **VERIFICATION**

VERIFICATION

VERIFICATION

HINT: After carrying out the repair, check that the fault has been remedied.

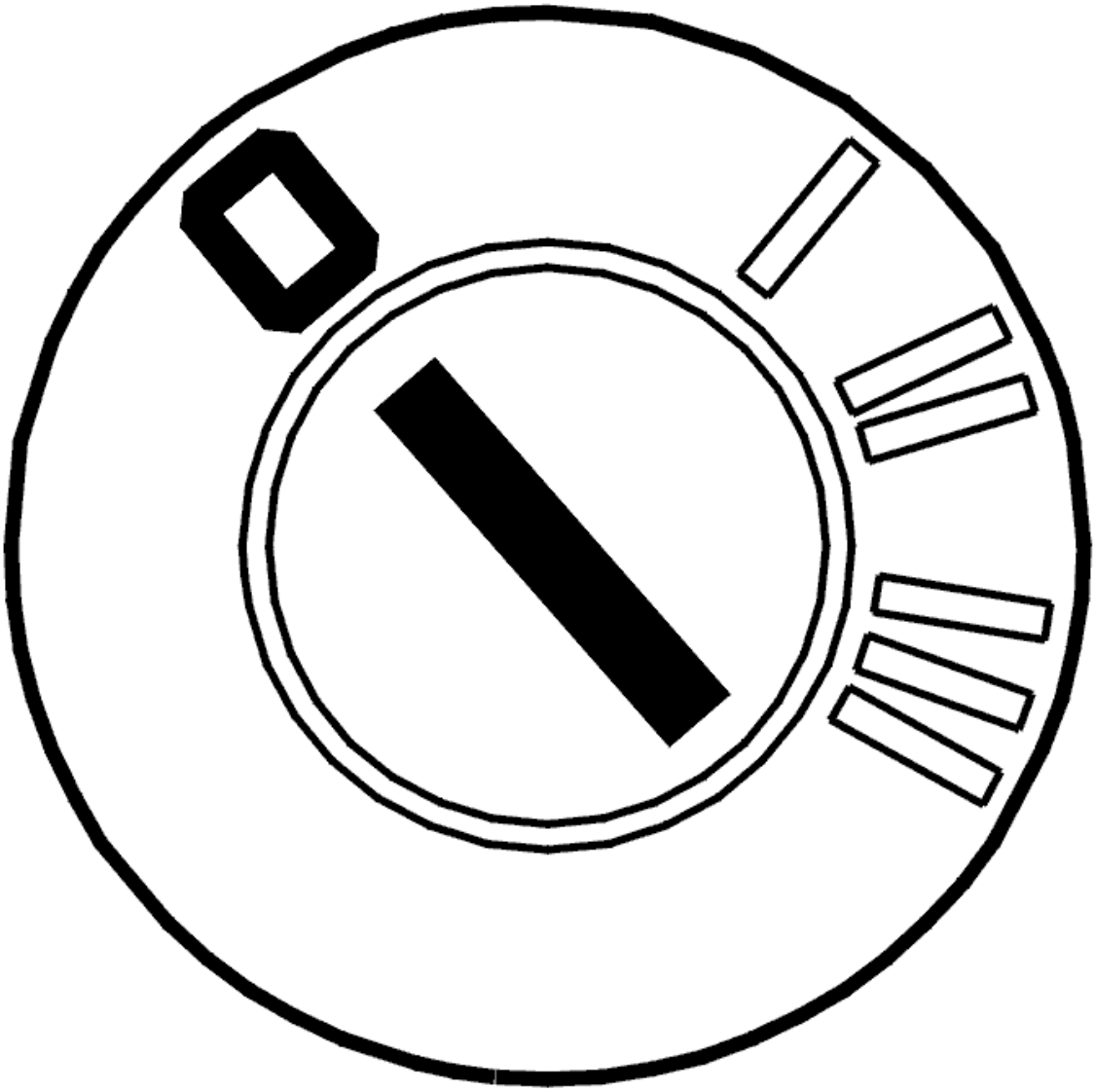

Fig. 222: Identifying Ignition OFF
Courtesy of VOLVO CARS CORPORATION

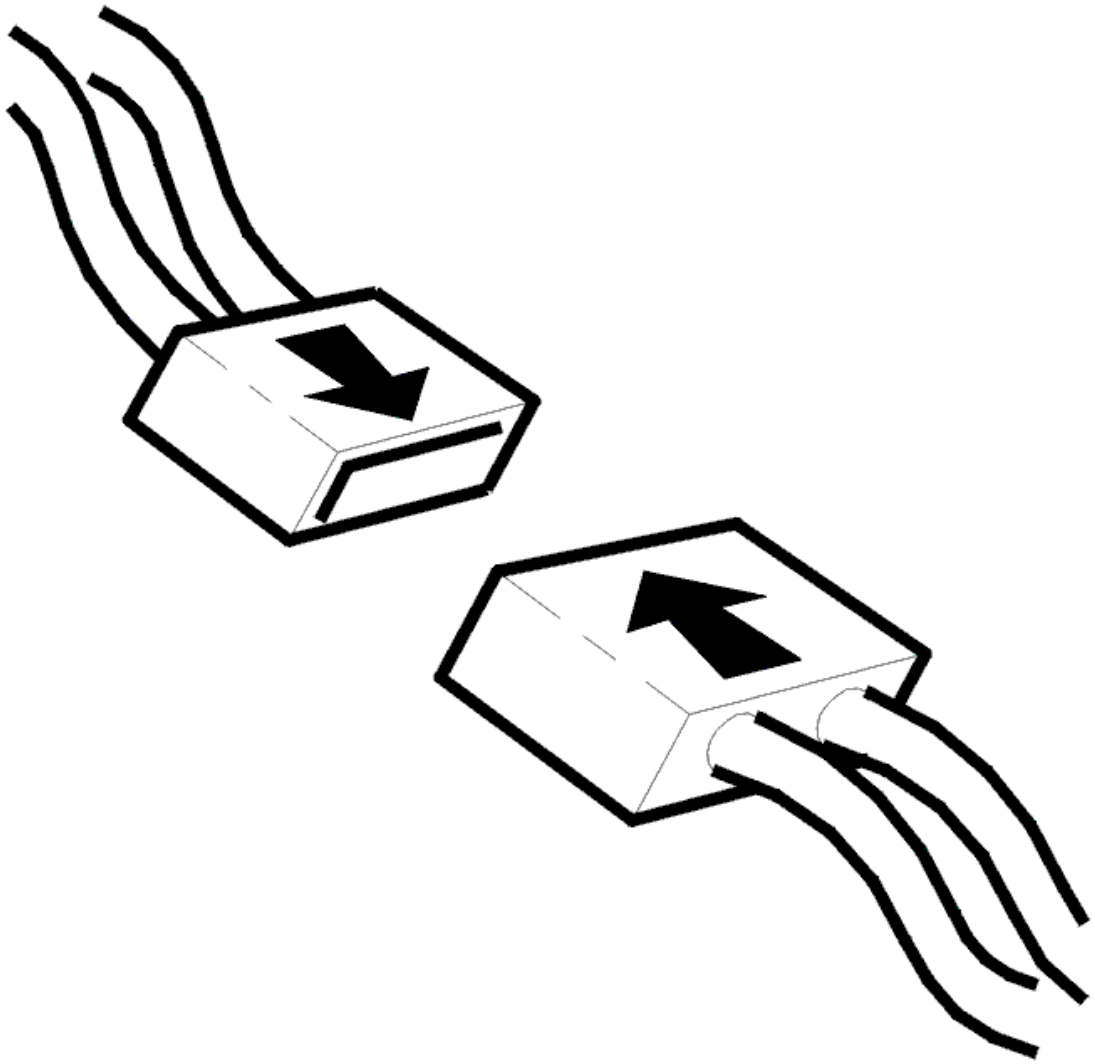

Fig. 223: Identifying Connector(s) Reinstallation
Courtesy of VOLVO CARS CORPORATION

- Ignition off.
- Reconnect the connectors. Reinstall the components.
- Test drive the car according to **TEST DRIVE SCHEDULE, DESCRIPTION** .

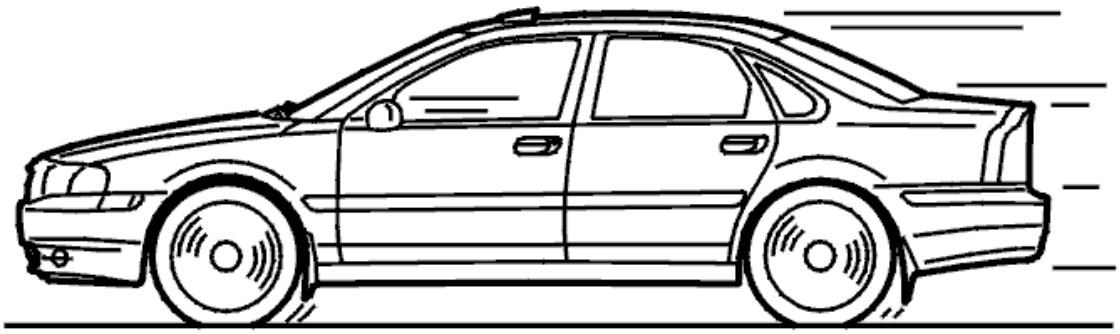

Fig. 224: Identifying Test Drive
Courtesy of VOLVO CARS CORPORATION

Is the function of the transmission OK?

- **YES**

  VERIFIED: Troubleshooting has been completed.

- **NO**

  Refer to **INFORMATION**

INFORMATION

FAULT-TRACING INFORMATION

The fault should have been detected and remedied. As this is not the case fault-tracing has failed.

Exit fault-tracing for this diagnostic trouble code (DTC) or make another attempt.

TCM-0101: SHIFT SOLENOID S3. SIGNAL TOO HIGH (AW50/51 AWD; AW55-50/51SN; 2003-2007)

DIAGNOSTIC TROUBLE CODE (DTC) INFORMATION

Condition

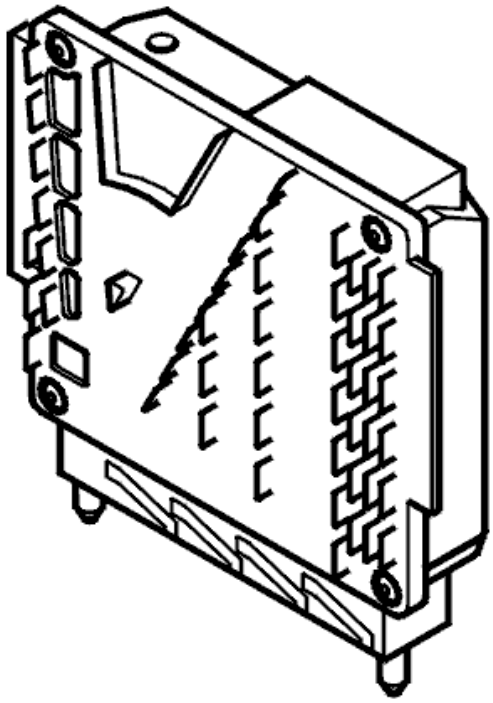

Fig. 225: Identifying Transmission Control Module (TCM)
Courtesy of VOLVO CARS CORPORATION

Shift solenoids S1, S2, S3, S4 and S5 operate in tandem to control gear-shifting. The solenoids are controlled by power stages in the transmission control module (TCM). The transmission control module (TCM) opens the power stages to activate the solenoids and sends a voltage through the circuit. Diagnostic trouble codes (DTCs) TCM-0001, TCM-0007, TCM-0101 TCM-0107 or TCM-010A are stored (depending on the solenoid) if the transmission control module (TCM) registers that the signal in circuits S1, S2, S3, S4 or S5 is too high when the solenoid should not be activated.

Substitute Value

- The transmission control module (TCM) "Emergency mode I" program has been initiated.

Possible Source

- Short-circuit to supply voltage in the signal cable.
- Internal fault in the control module.

Fault symptom[s]

- General orange warning lamp lit.
- Malfunction indicator lamp (MIL) lit.
- Harsh gear shifting.
- No shifting.
- No lock-up function.

SIGNAL TOO HIGH

CHECKS

CHECKING THE TEMPERATURE SENSOR

HINT: In some cases, the diagnostic trouble code (DTC) may be caused by a defective oil temperature sensor. Check the function of the oil temperature sensor first.

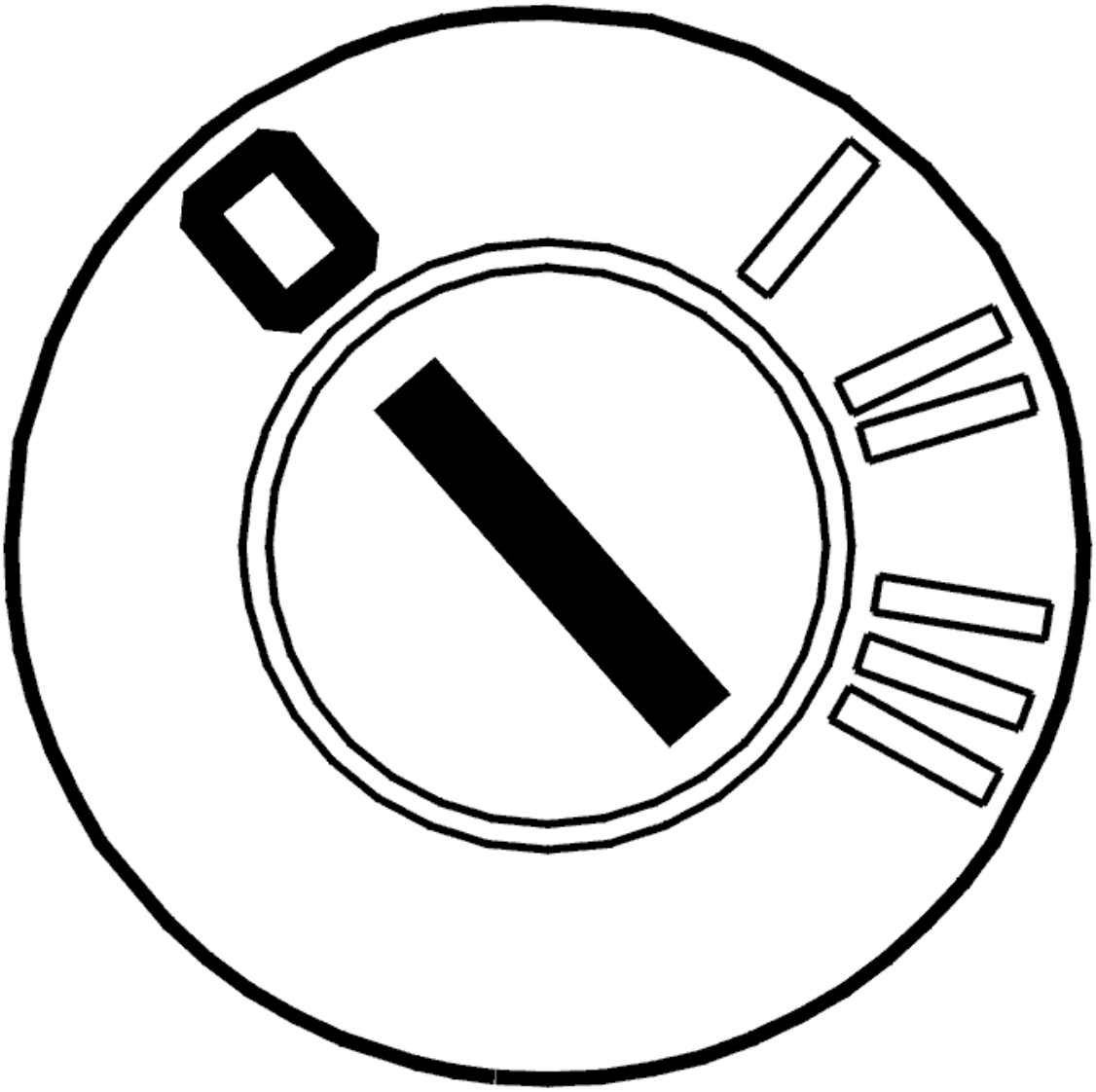

Fig. 226: Identifying Ignition OFF
Courtesy of VOLVO CARS CORPORATION

- Ignition off
- Read off the oil temperature.

Check that the function of the temperature sensor is OK. Test drive the car to increase the temperature of the transmission fluid. Read off the temperature again. Check that the temperature has increased.

NOTE: **If the temperature is outside its permitted range, fault-trace the temperature sensor.**

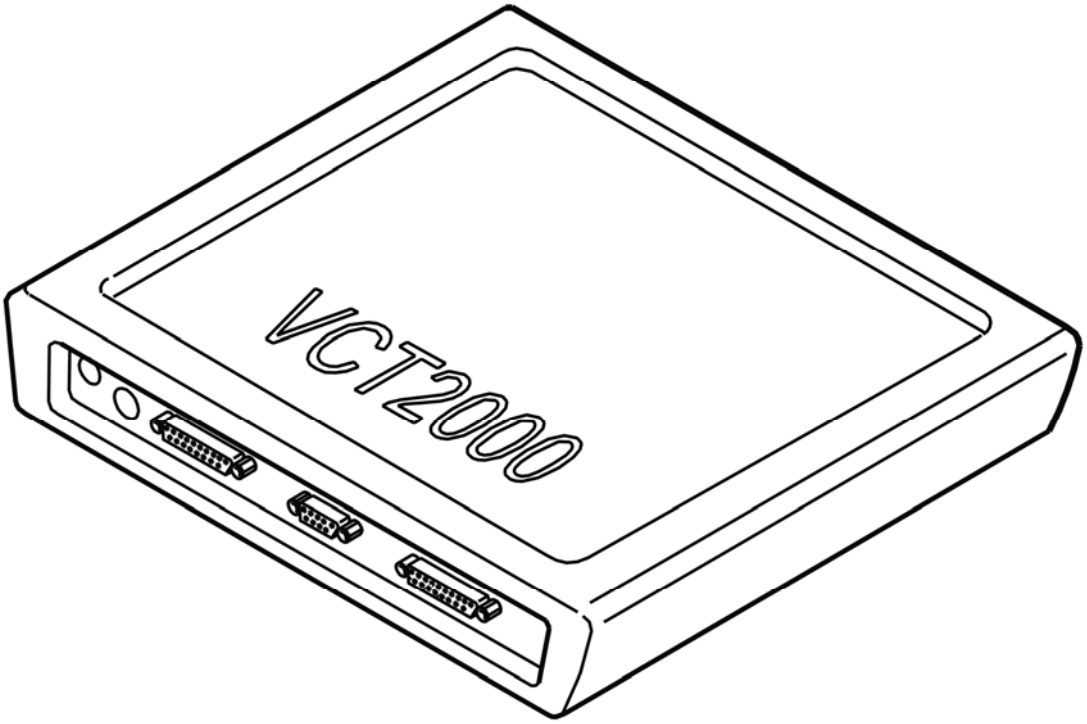

Fig. 227: Identifying VCT2000 Diagnostic Tool Symbol In VIDA
Courtesy of VOLVO CARS CORPORATION

Is the oil temperature within its permitted range?

- **YES**

  Refer to **CHECKING SHIFT SOLENOID S3**

- **NO**

  Refer to **FAULTY SIGNAL**

CHECKING SHIFT SOLENOID S3

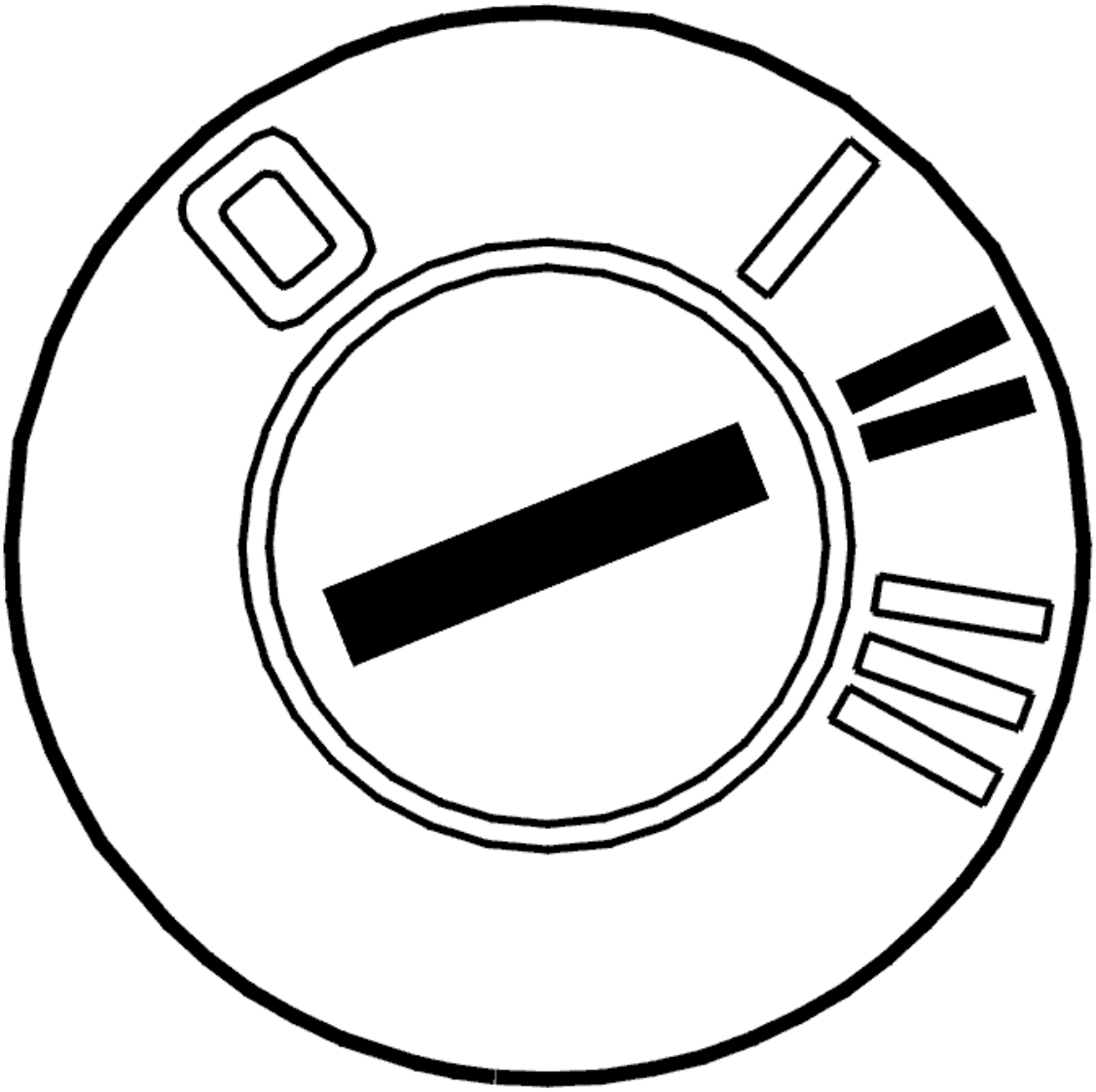

Fig. 228: Identifying Ignition ON
Courtesy of VOLVO CARS CORPORATION

- Ignition on
- Gear selector in position P
- Activate solenoid S3.

The value must change between OFF and ON.

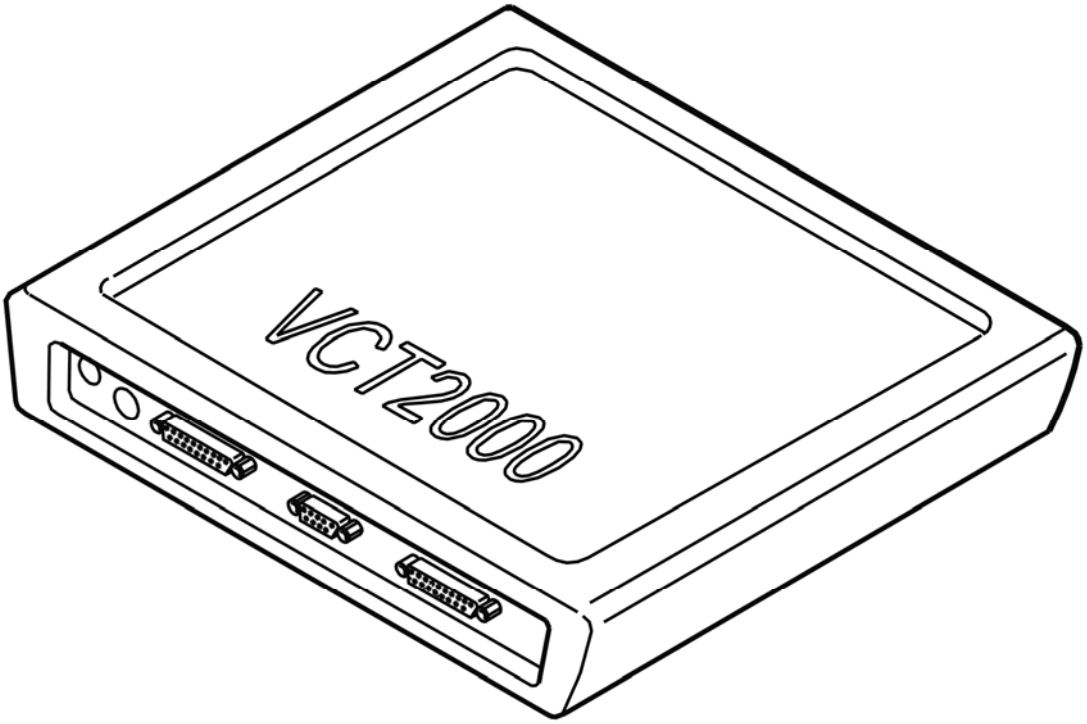

Fig. 229: Identifying VCT2000 Diagnostic Tool Symbol In VIDA
Courtesy of VOLVO CARS CORPORATION

Does the value change?

- **YES**

  Refer to **INTERMITTENT FAULT**

- **NO**

  Refer to **CHECKING THE WIRING**

CHECKING THE WIRING

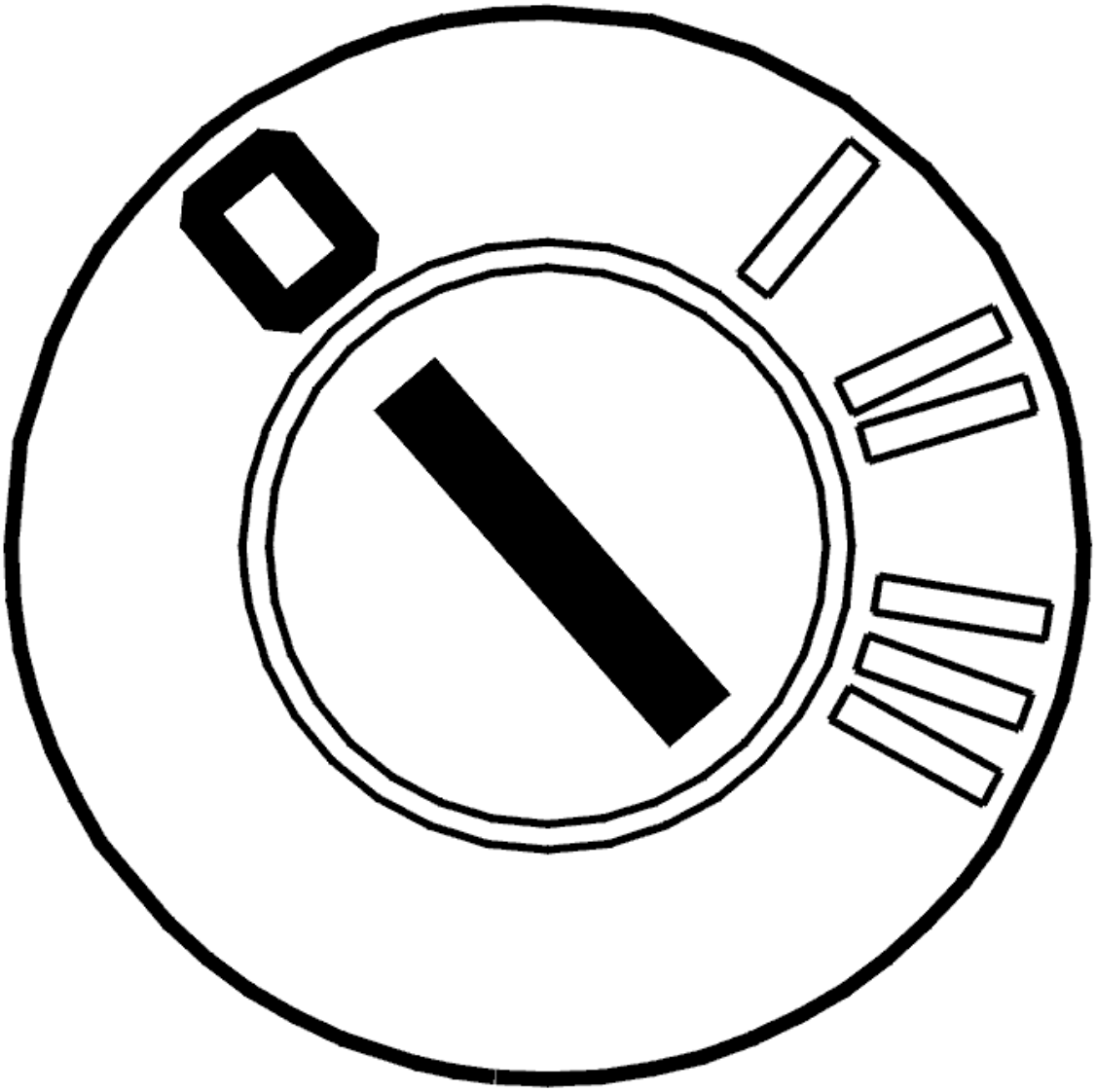

Fig. 230: Identifying Ignition OFF
Courtesy of VOLVO CARS CORPORATION

- Ignition off.

  Check the cable between control module terminal #A48 (#A48) and transmission connector terminal #C3 (control module side). Check for a short-circuit to supply voltage according to **SHORT-CIRCUIT TO SUPPLY VOLTAGE. PERMANENT FAULTS** . Also check against the other cables in the circuit.

  Other information:

  - To connect the breakout box, see **CONNECTING THE BREAKOUT BOX**
  - To disconnect the transmission connectors, see **CONNECTORS, TRANSMISSION, DISCONNECTING / CONNECTING**
  - For information about signals, see **SIGNAL DESCRIPTION. TRANSMISSION CONTROL**

MODULE (TCM) .

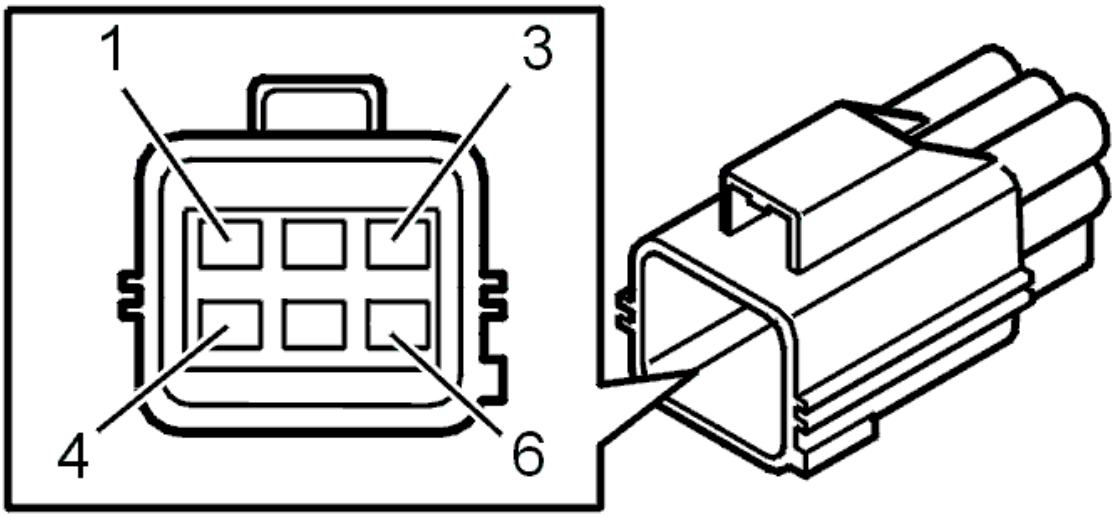

Fig. 231: Identifying Transmission Connector Terminals
Courtesy of VOLVO CARS CORPORATION

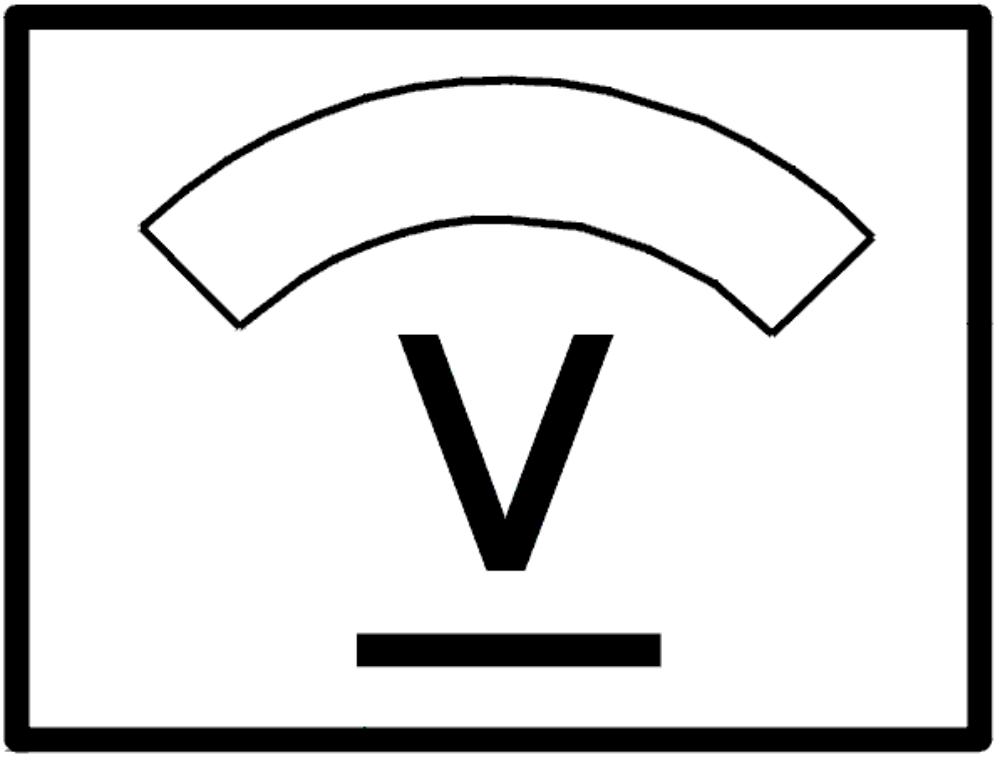

Fig. 232: Identifying Voltage Display
Courtesy of VOLVO CARS CORPORATION

Was a fault detected?

- **YES**

  Refer to **VERIFICATION**

- **NO**

  Refer to **CHECKING THE WIRING AND COMPONENT**

CHECKING THE WIRING AND COMPONENT

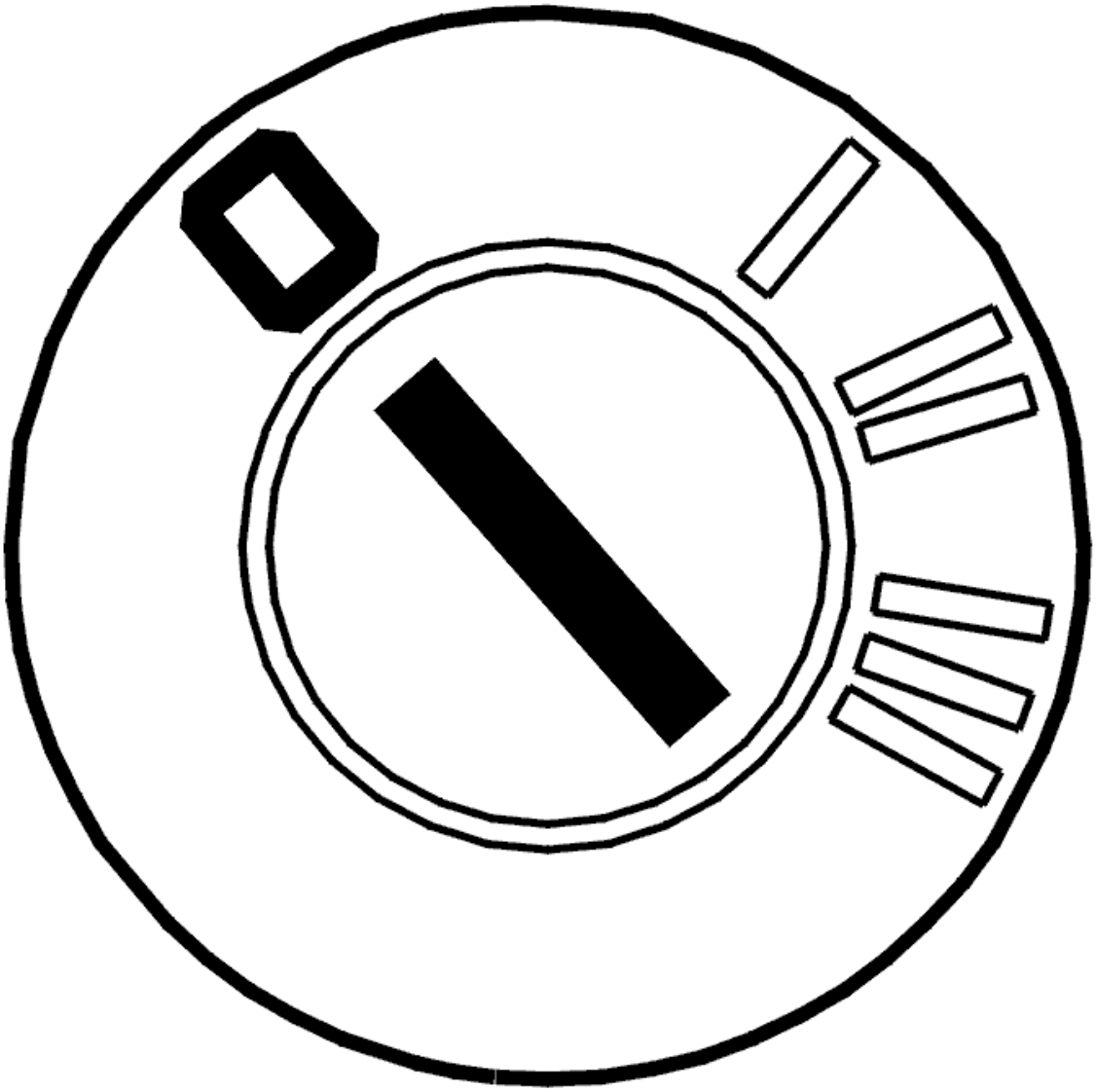

Fig. 233: Identifying Ignition OFF
Courtesy of VOLVO CARS CORPORATION

- Ignition off
- Open the control system.

  Check the cable between transmission connector terminal #C3 (transmission side) and the connector for solenoid S3. Check for a short-circuit to supply voltage according to **SHORT-CIRCUIT TO SUPPLY VOLTAGE. PERMANENT FAULTS** . Also check against the other cables in the circuit.

  Replace solenoid S3 if no faults are found in the cable-.

  Remedy as necessary.

  Other information:

- To connect the breakout box, see **CONNECTING THE BREAKOUT BOX**
- To disconnect the transmission connectors, see **CONNECTORS, TRANSMISSION, DISCONNECTING / CONNECTING**
- To open the control system and to check or replace solenoid S3, see **SOLENOID CONTROL SYSTEM, REPLACING**
- To replace the cable harness for the control system, see **TEMPERATURE SENSOR FLUID, TRANSAXLE, (TFT)**
- For information about signals, see **SIGNAL DESCRIPTION. TRANSMISSION CONTROL MODULE (TCM)** .

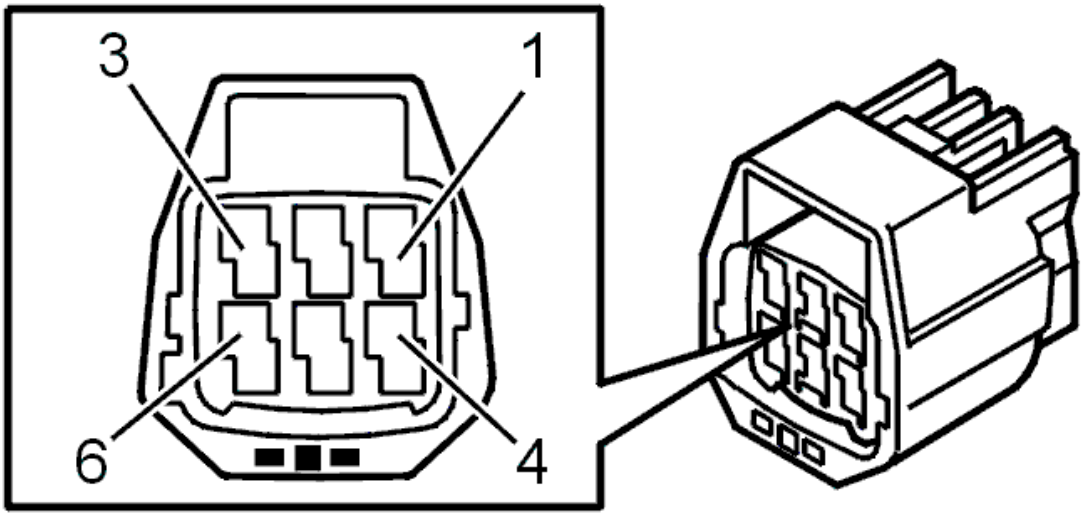

Fig. 234: Identifying 6-Pin Transmission Connector Terminals
Courtesy of VOLVO CARS CORPORATION

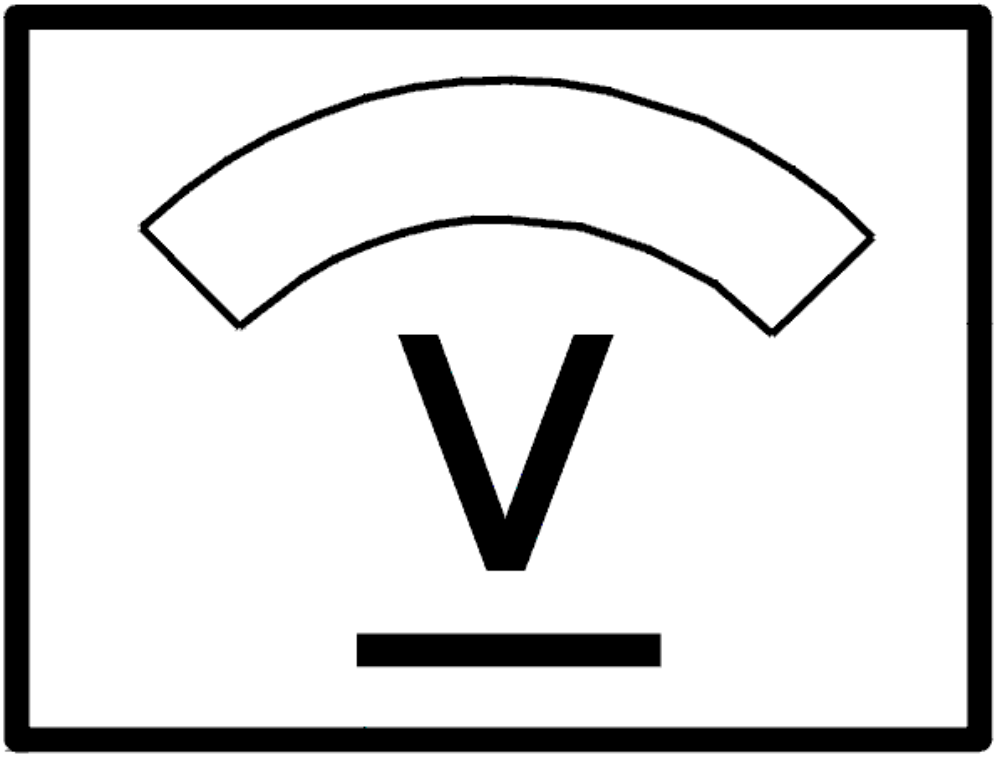

Fig. 235: Identifying Voltage Display
Courtesy of VOLVO CARS CORPORATION

- **Continue**

  Refer to **RESETTING THE ADAPTATION**

INTERMITTENT FAULT

Check the cable between transmission control module (TCM) terminal #A48 (#A48) and transmission connector terminal #C3. Check for an intermittent short-circuit to supply voltage according to **SHORT-CIRCUIT TO SUPPLY VOLTAGE, INTERMITTENT FAULTS** .

Remedy as necessary.

Other information:

- To connect the breakout box, see **CONNECTING THE BREAKOUT BOX**
- To disconnect the transmission connectors, see **CONNECTORS, TRANSMISSION, DISCONNECTING / CONNECTING**
- For information about signals, see **SIGNAL DESCRIPTION. TRANSMISSION CONTROL MODULE (TCM)** .

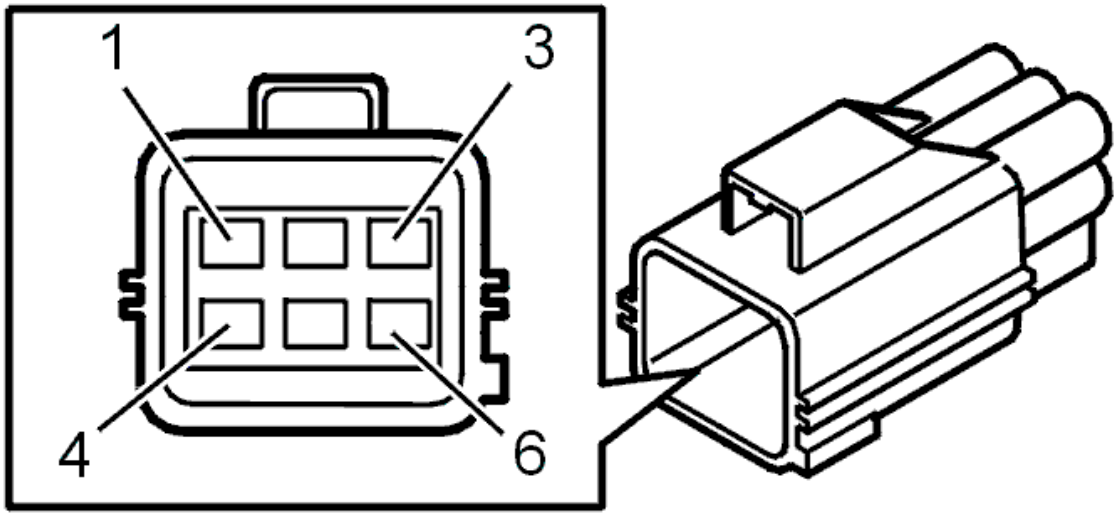

Fig. 236: Identifying Transmission Connector Terminals
Courtesy of VOLVO CARS CORPORATION

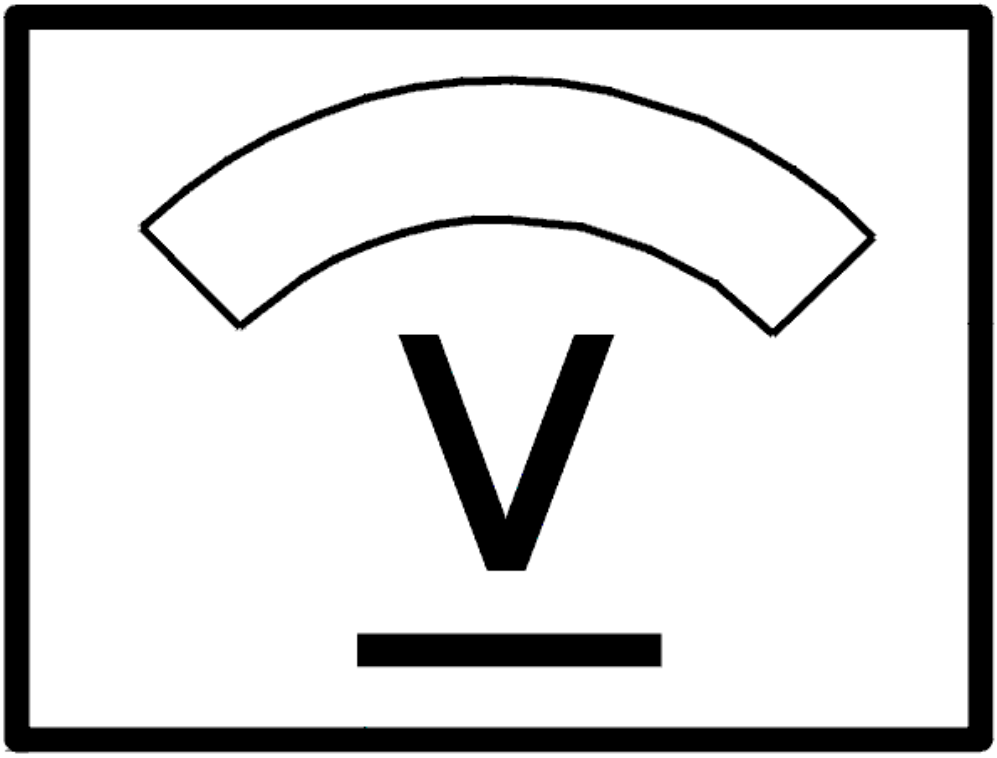

Fig. 237: Identifying Voltage Display
Courtesy of VOLVO CARS CORPORATION

- **Continue**

  Refer to **INFORMATION**

RESETTING THE ADAPTATION

RESETTING ADAPTATION AND THE COUNTER FOR "TRANSMISSION OIL CHANGE"

HINT: The transmission has torque controlled adaptive pressure control. Pressure control means that the transmission regulates the pressure itself during each gear shift. This avoids harsh gear shifting. Each gear shift is evaluated by the control module and stored in the memory. This allows for compensation for wear and tear in the transmission and clutch. It is important that the adaptation in the memory is reset after the transmission has been repaired. This is to ensure normal operation. The oil is replaced during

repair; the "Transmission oil change" counter must be reset. If the counter is not reset when the fluid is drained and replaced, there is a risk that a diagnostic trouble code (DTC) will be stored in incorrect circumstances.

NOTE: This applies only if the transmission or one of the components in the transmission have been replaced.

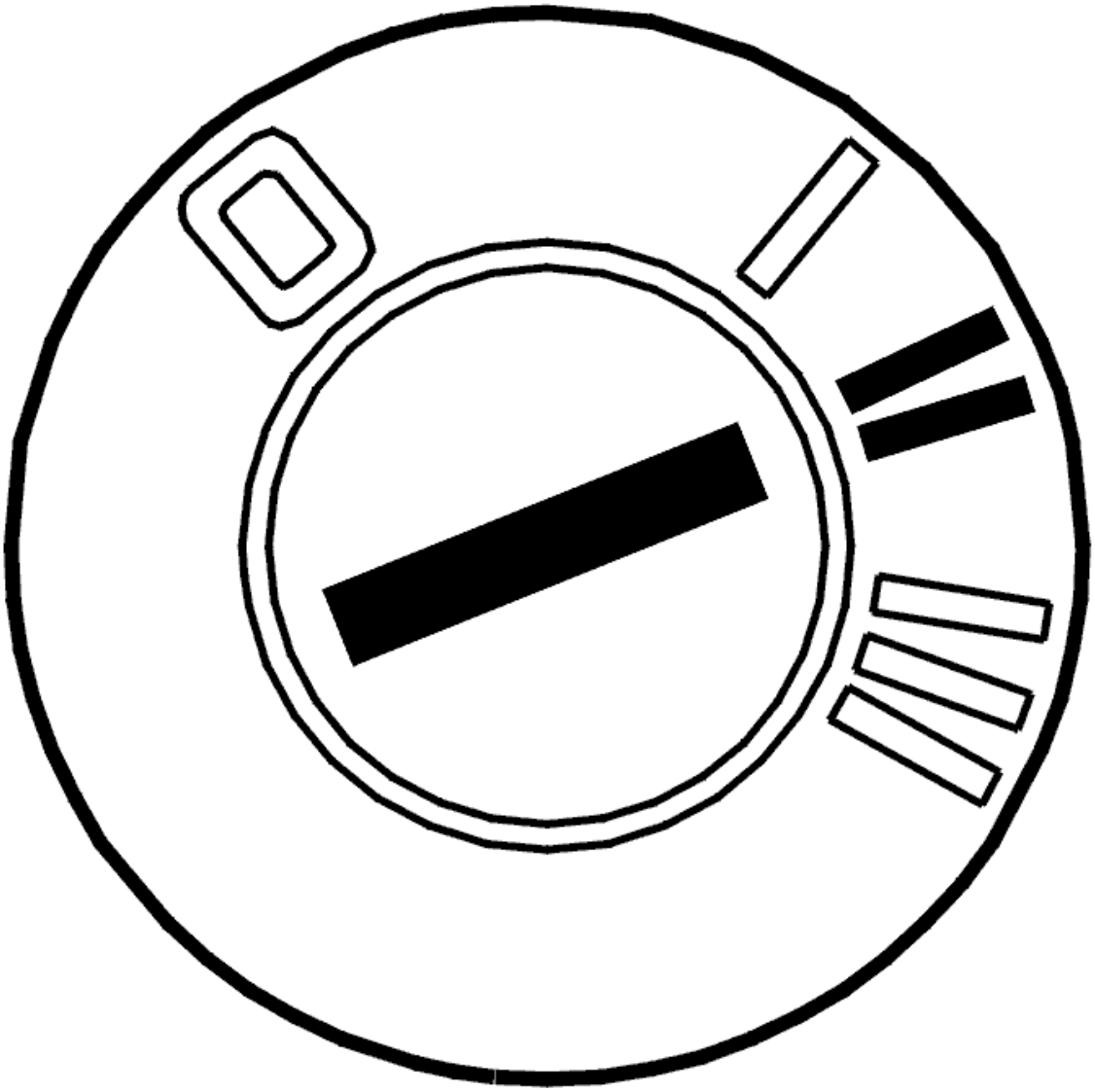

Fig. 238: Identifying Ignition ON
Courtesy of VOLVO CARS CORPORATION

- Ignition on.

  Use the VCT2000 (or appropriate scan tool) to reset the adaptation and counter.

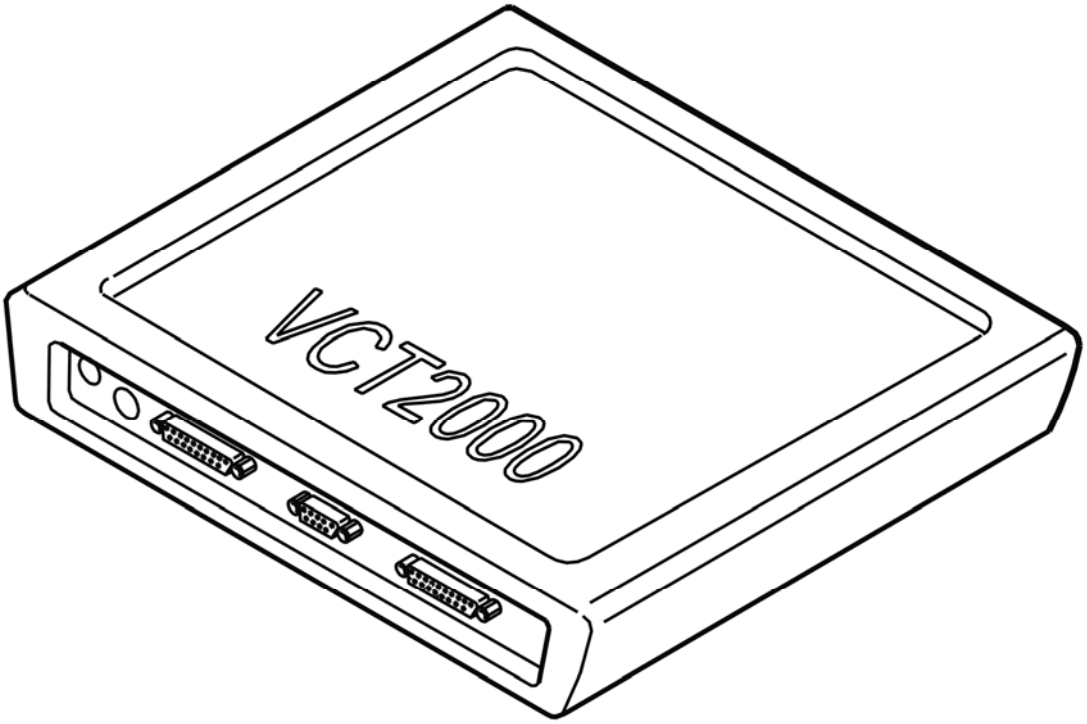

Fig. 239: Identifying VCT2000 Diagnostic Tool Symbol In VIDA
Courtesy of VOLVO CARS CORPORATION

- **Continue**

  Refer to **VERIFICATION**

VERIFICATION

VERIFICATION

HINT: After carrying out the repair, check that the fault has been remedied.

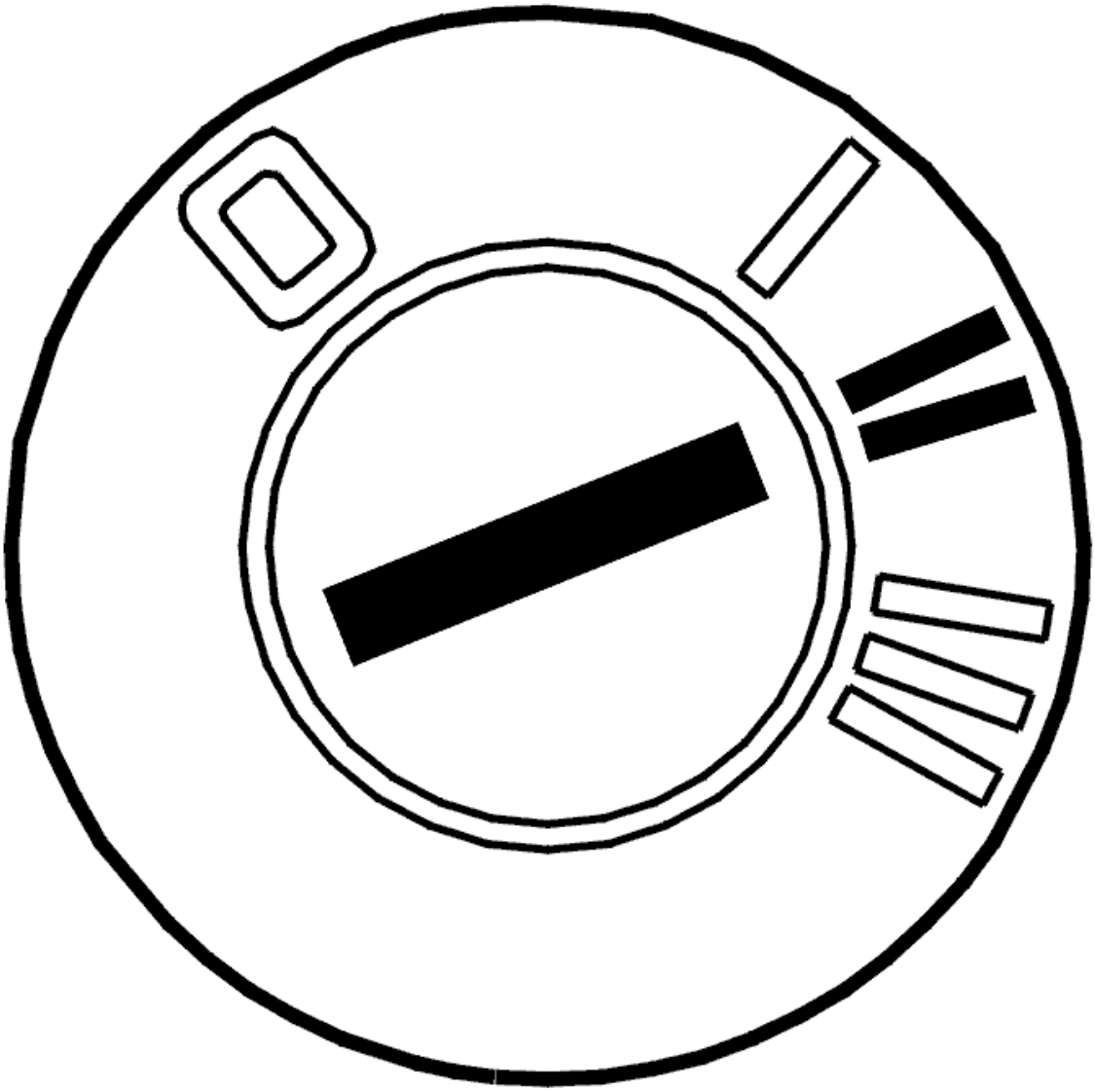

Fig. 240: Identifying Ignition ON
Courtesy of VOLVO CARS CORPORATION

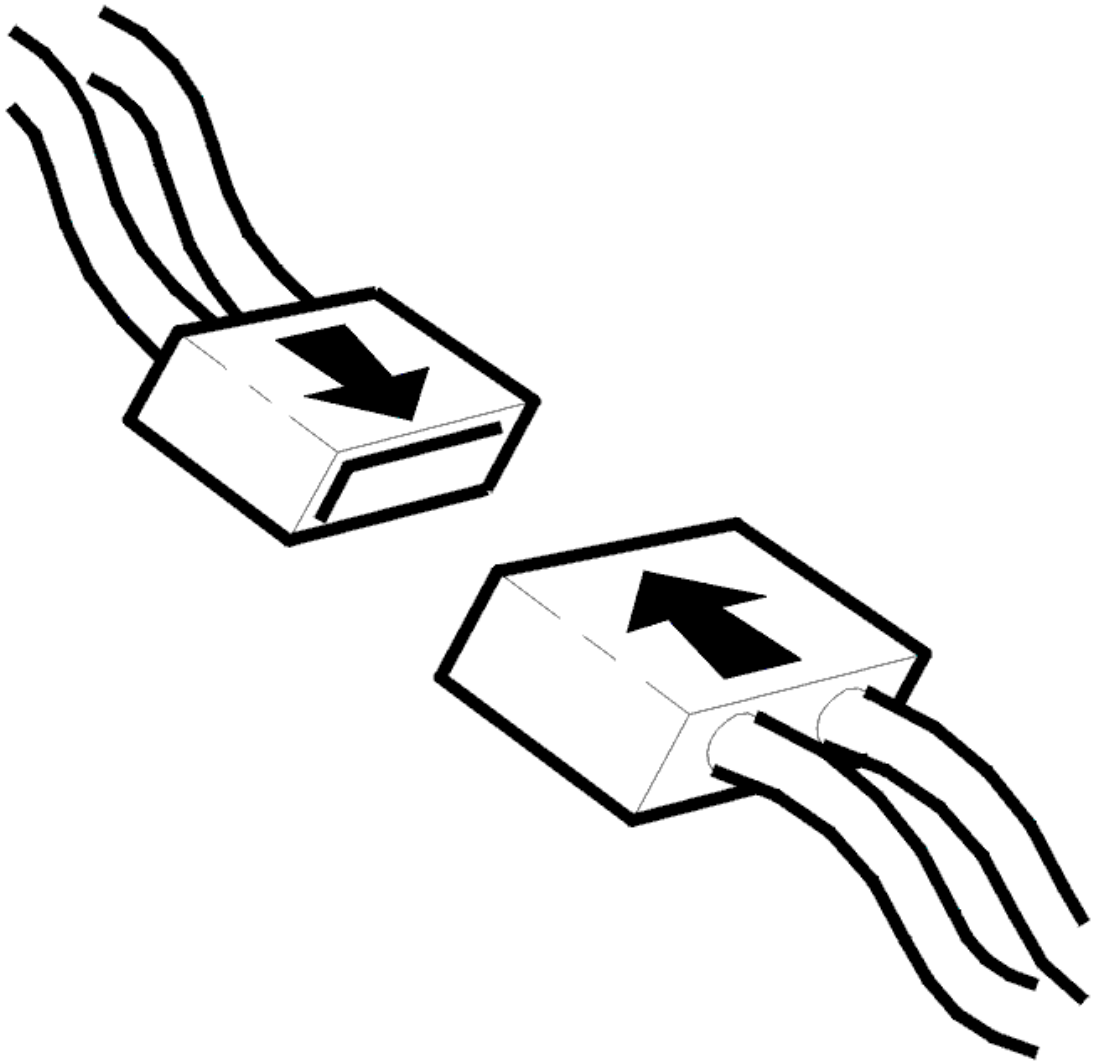

Fig. 241: Identifying Connector(s) Reinstallation
Courtesy of VOLVO CARS CORPORATION

- Ignition off.
- Reinstall the components, reconnect the connectors etc.
- Ignition on.
- Gear selector in position P.
- Activate solenoid S3.

  The value should change between OFF and ON.

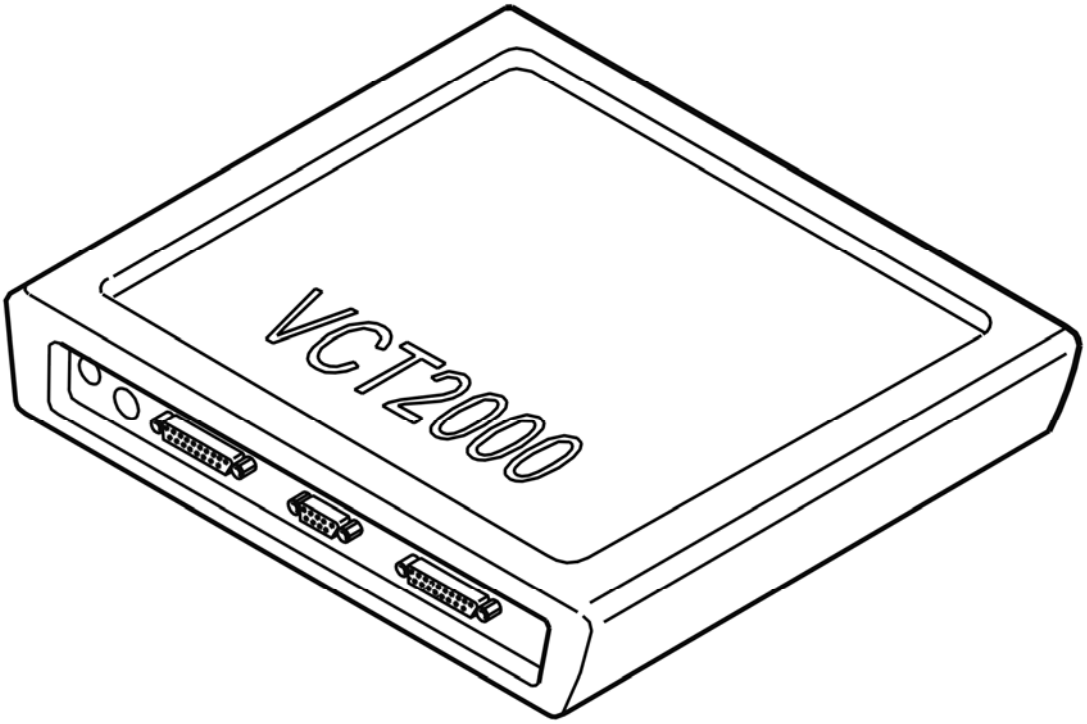

Fig. 242: Identifying VCT2000 Diagnostic Tool Symbol In VIDA
Courtesy of VOLVO CARS CORPORATION

Does the value change between OFF and ON?

- **YES**

  VERIFIED: Troubleshooting has been completed.

- **NO**

  Refer to **INFORMATION**

INFORMATION

FAULT-TRACING INFORMATION

The fault should have been detected and remedied. As this is not the case fault-tracing has failed.

Exit fault-tracing for this diagnostic trouble code (DTC) or make another attempt.

INFORMATION

FAULT-TRACING INFORMATION

If the fault is intermittent, do not verify fault-tracing if the fault does not recur.

It is possible to view the information again, or leave fault-tracing for this diagnostic trouble code (DTC).

FAULTY SIGNAL

CHECKING TRANSMISSION FLUID TEMPERATURE SENSOR

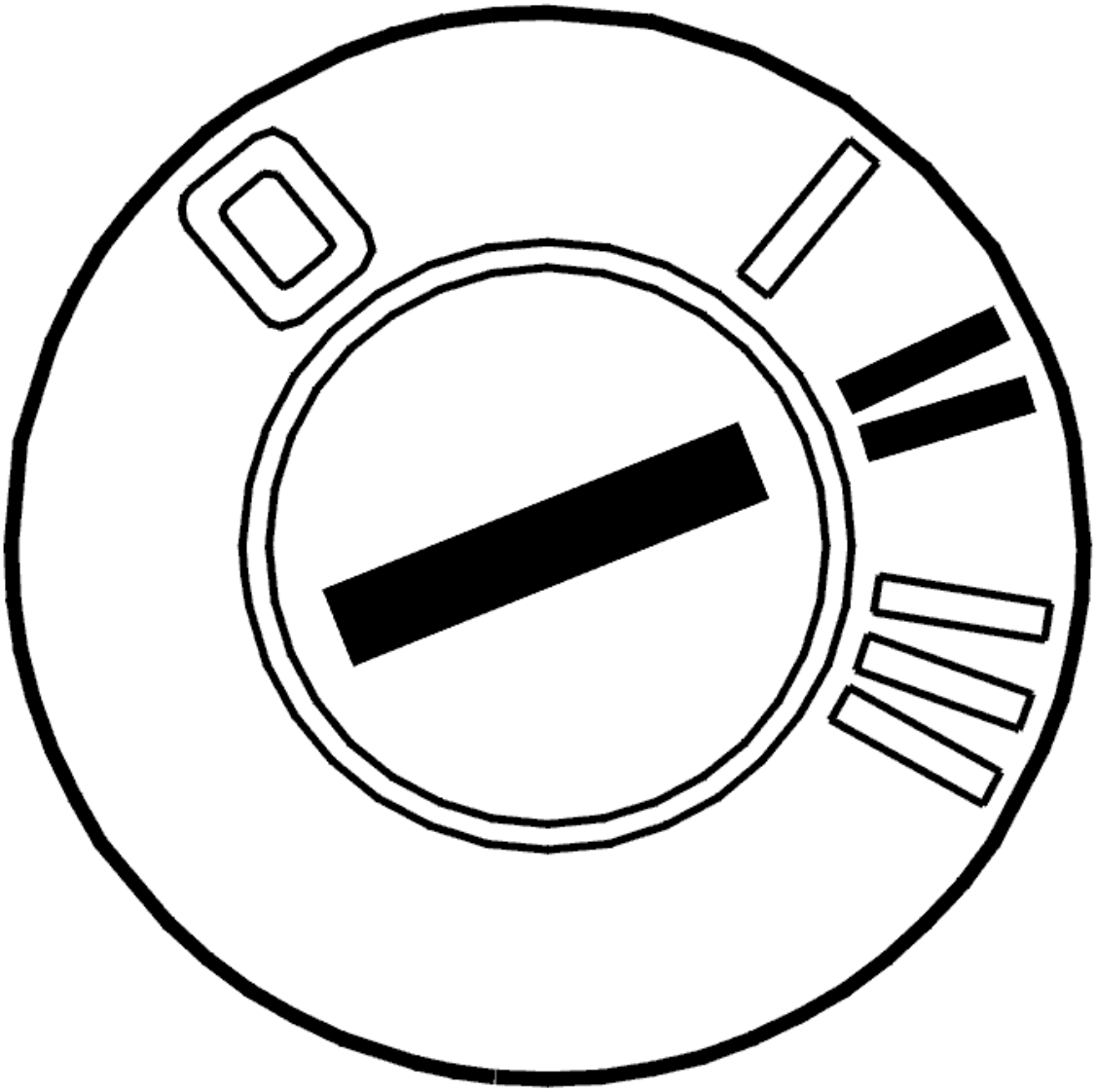

Fig. 243: Identifying Ignition ON
Courtesy of VOLVO CARS CORPORATION

- Ignition on
- Read off the oil temperature.

  Check that the temperature is within its permitted range.

Compare with the transmission temperature.

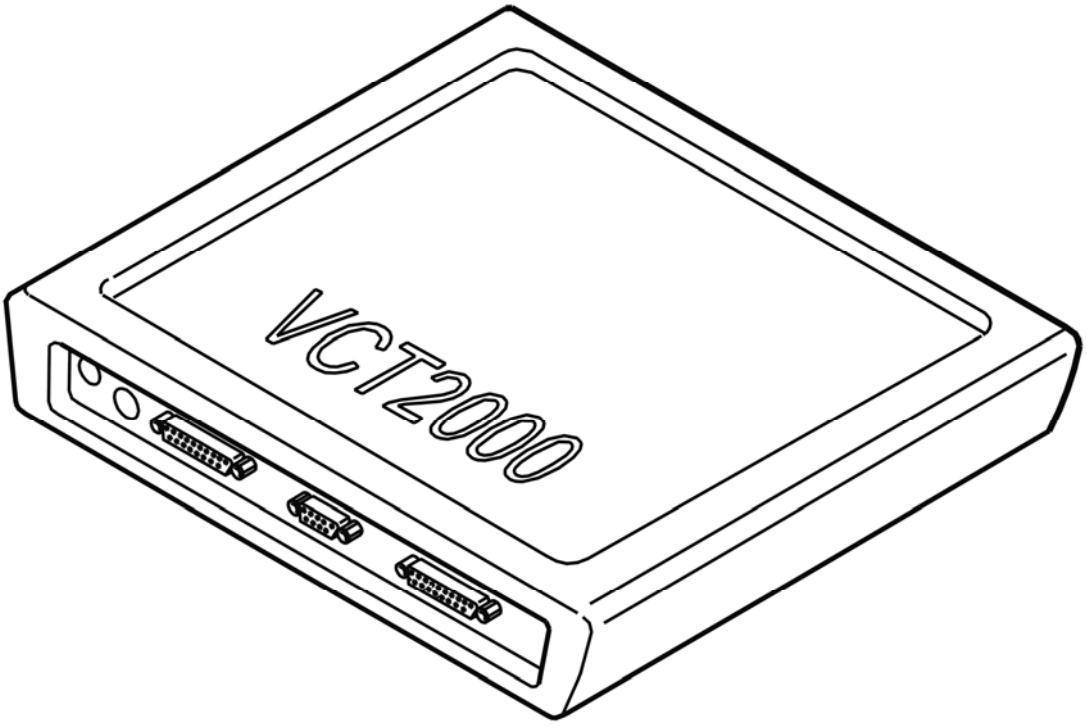

Fig. 244: Identifying VCT2000 Diagnostic Tool Symbol In VIDA
Courtesy of VOLVO CARS CORPORATION

Was the transmission temperature within its permitted range?

- **YES**

  Refer to **INTERMITTENT FAULT**

- **NO**

  Refer to **CHECKING TRANSMISSION FLUID TEMPERATURE SENSOR**

CHECKING TRANSMISSION FLUID TEMPERATURE SENSOR

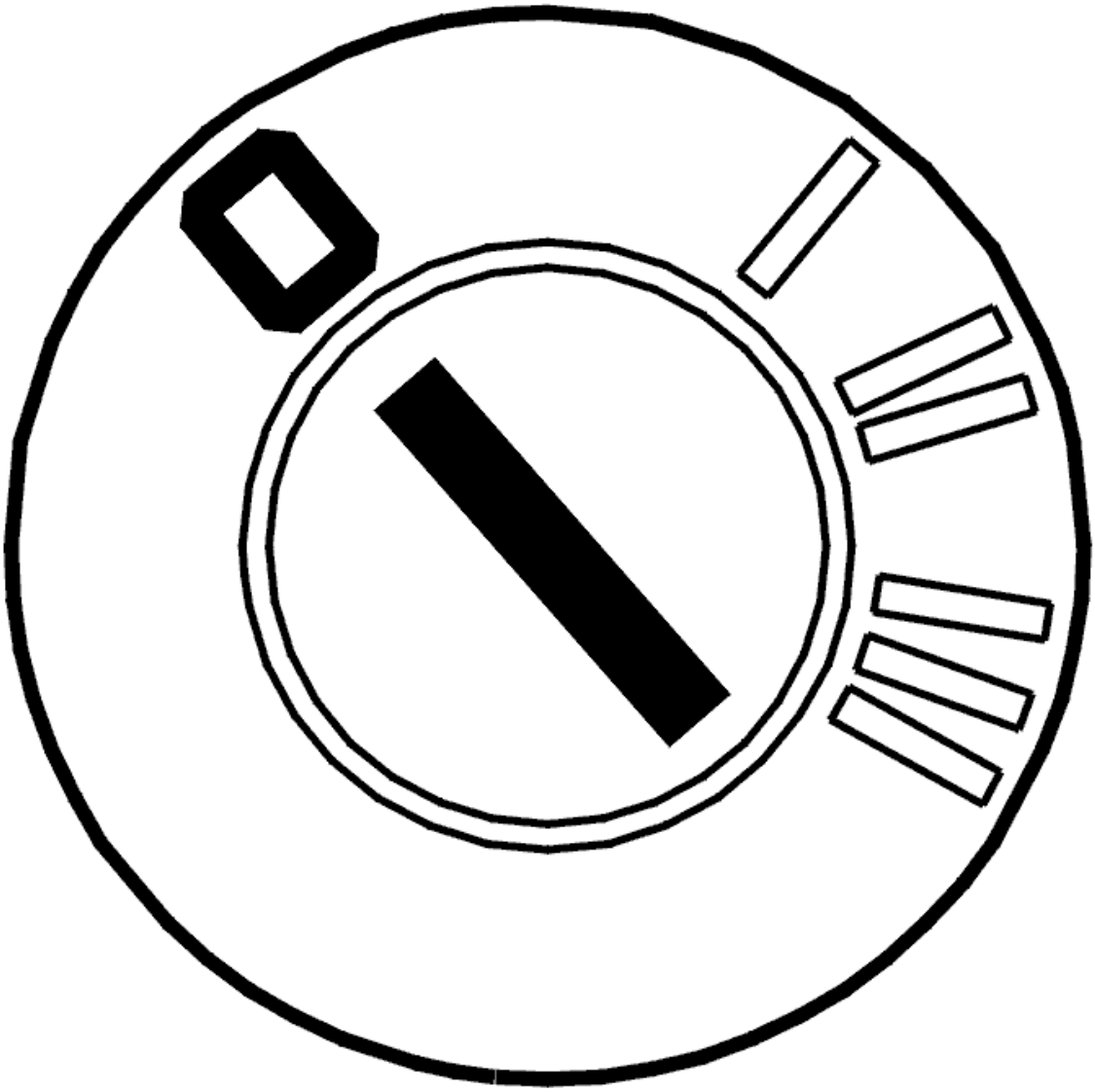

Fig. 245: Identifying Ignition OFF
Courtesy of VOLVO CARS CORPORATION

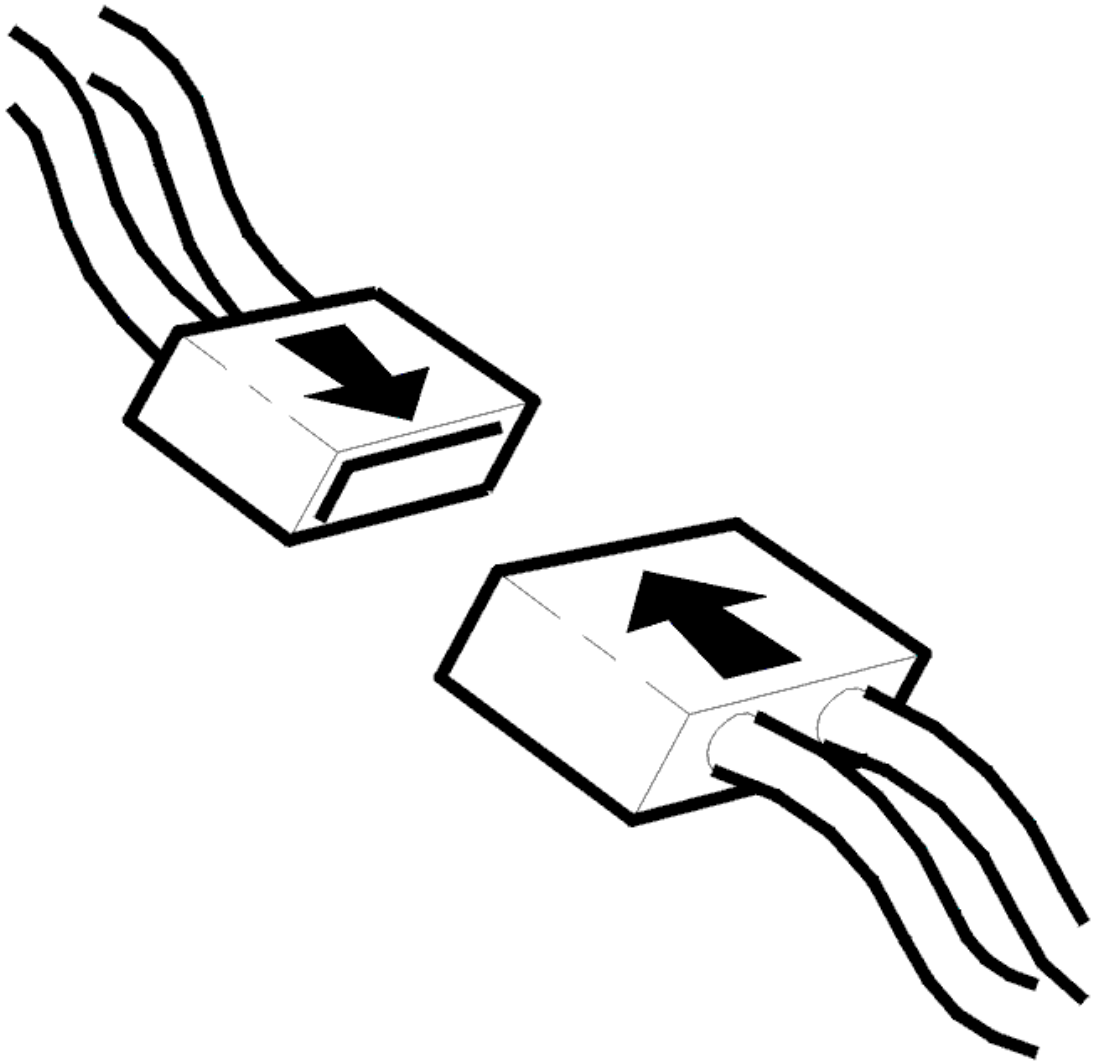

Fig. 246: Identifying Connector(s) Reinstallation
Courtesy of VOLVO CARS CORPORATION

- Ignition off
- Transmission connector D disconnected.

  Check the temperature sensor. Measure the resistance between transmission connector D terminals #D7 and #D8.

  The resistance must be 4.5-6 kohms at 20°C.

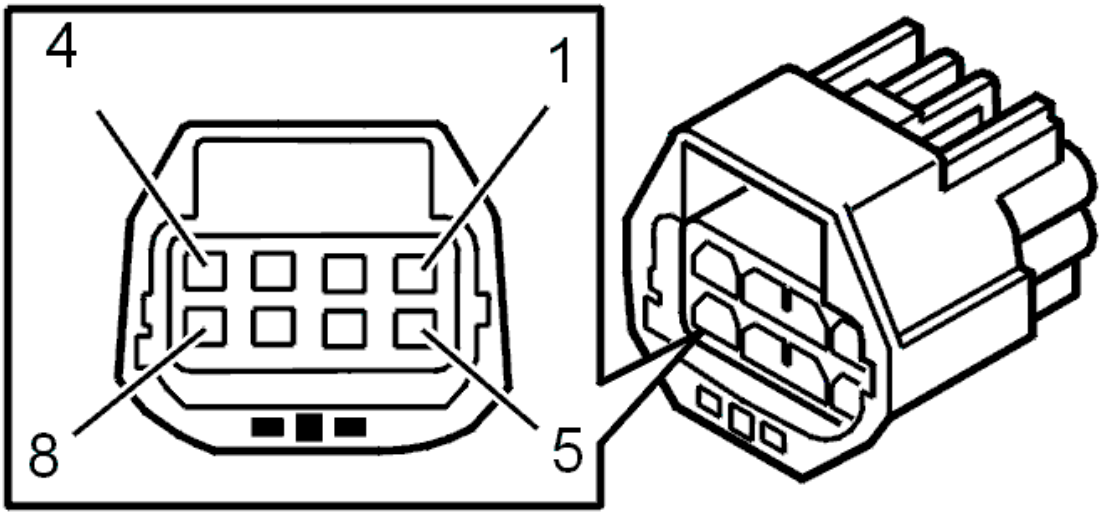

Fig. 247: Identifying 8-Pin Transmission Connector Terminals
Courtesy of VOLVO CARS CORPORATION

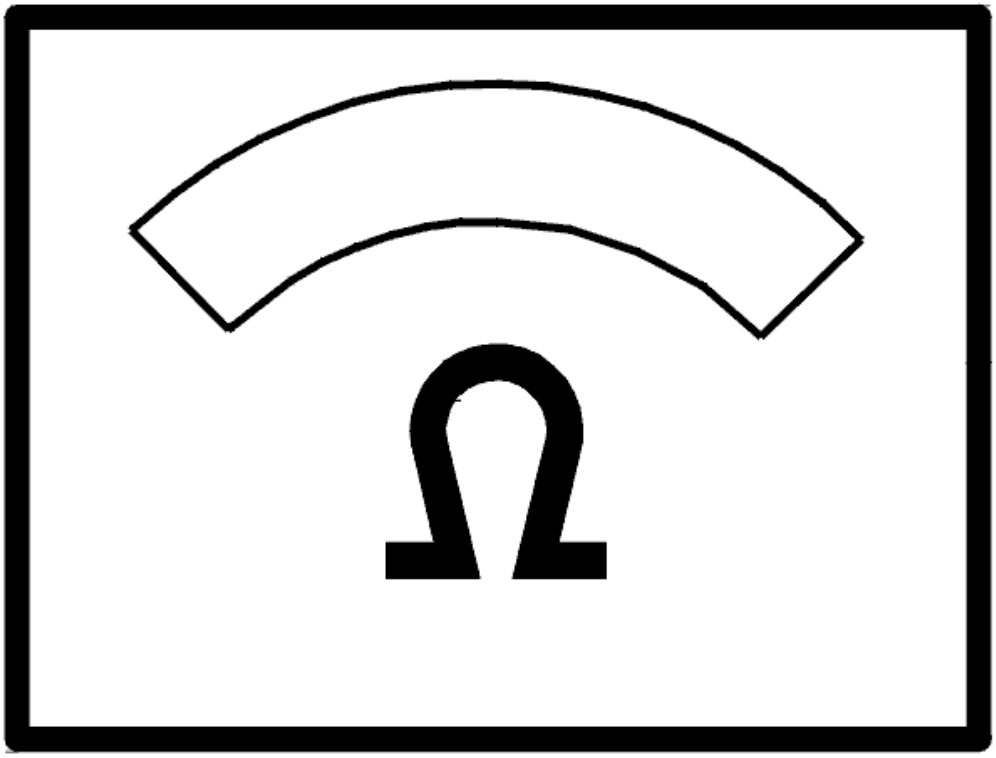

Fig. 248: Identifying Ohms Display
Courtesy of VOLVO CARS CORPORATION

Was the resistance OK?

- **YES**

  Refer to **CHECKING TRANSMISSION FLUID TEMPERATURE SENSOR**

- **NO**

  Refer to **CHECKING THE CABLE AND COMPONENT**

CHECKING TRANSMISSION FLUID TEMPERATURE SENSOR

Check the cable between control module terminal #A37 (#A37) and transmission connector terminal #D7

(control module side). Check for an open-circuit according to **OPEN-CIRCUIT, PERMANENT FAULTS** .

Check the cable between control module terminal #A55 (#A55)and transmission connector terminal #D8 (control module side). Check for an open-circuit according to **OPEN-CIRCUIT, PERMANENT FAULTS** .

Remedy as necessary.

Other information:

- To connect the breakout box, see **CONNECTING THE BREAKOUT BOX**
- To disconnect the transmission connectors, see **CONNECTORS, TRANSMISSION, DISCONNECTING / CONNECTING**
- For information about signals, see **SIGNAL DESCRIPTION. TRANSMISSION CONTROL MODULE (TCM)** .

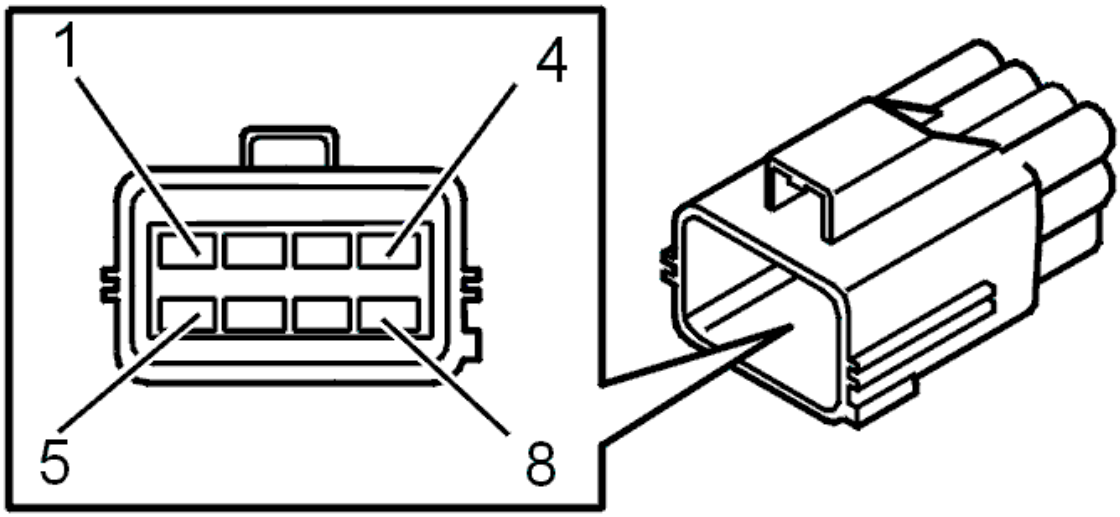

Fig. 249: Identifying Transmission Connector Terminals
Courtesy of VOLVO CARS CORPORATION

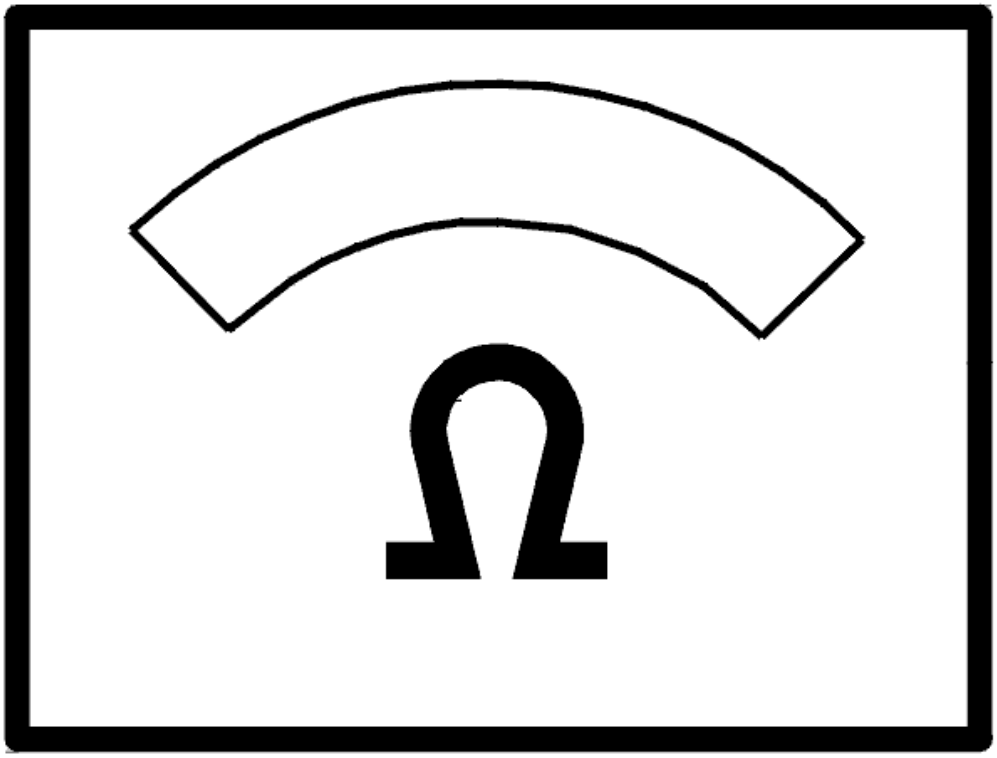

Fig. 250: Identifying Ohms Display
Courtesy of VOLVO CARS CORPORATION

Was a fault detected?

- **YES**

  Refer to **VERIFICATION**

- **NO**

  Refer to **CHECKING THE CABLE AND COMPONENT**

CHECKING THE CABLE AND COMPONENT

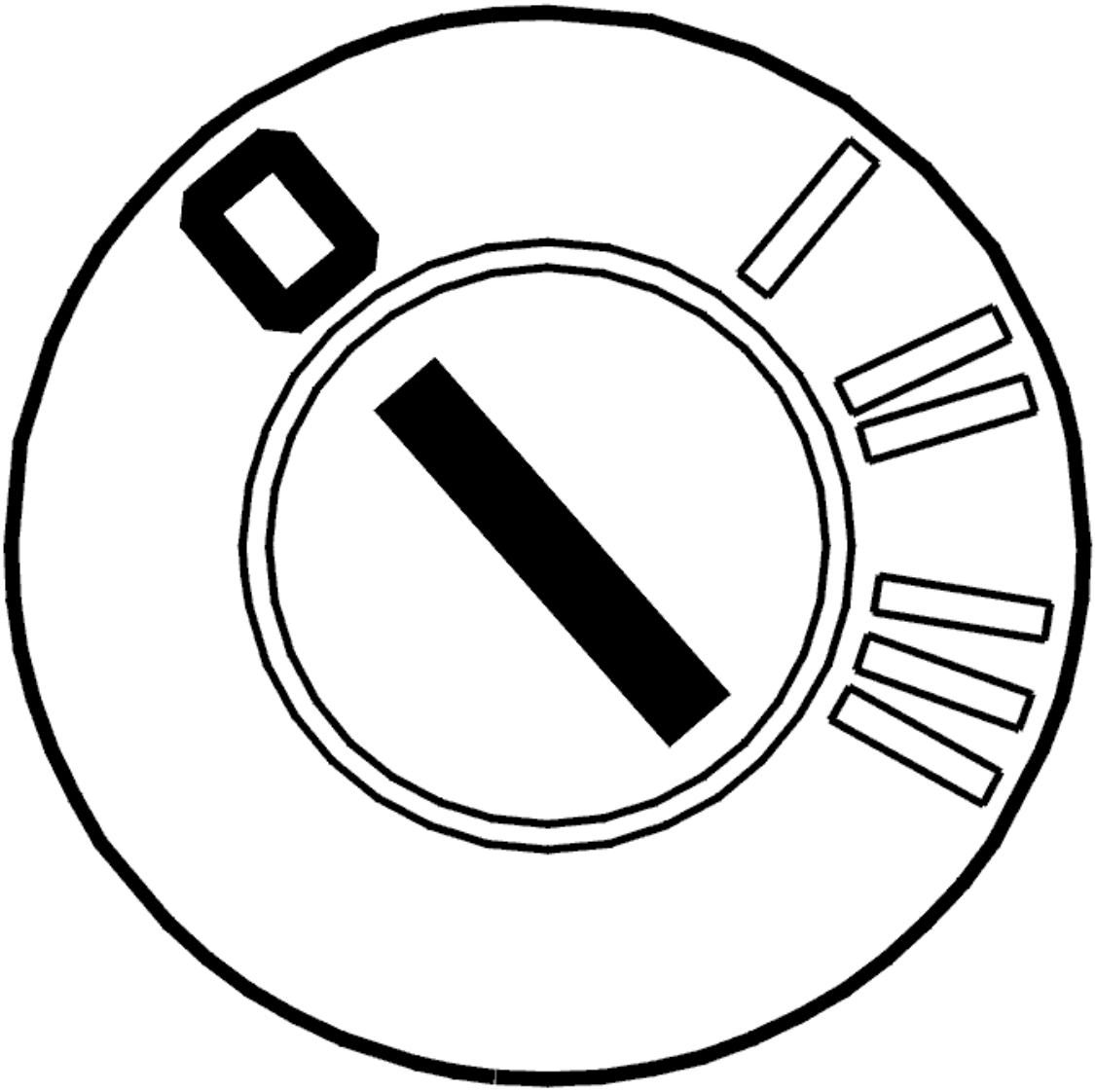

Fig. 251: Identifying Ignition OFF
Courtesy of VOLVO CARS CORPORATION

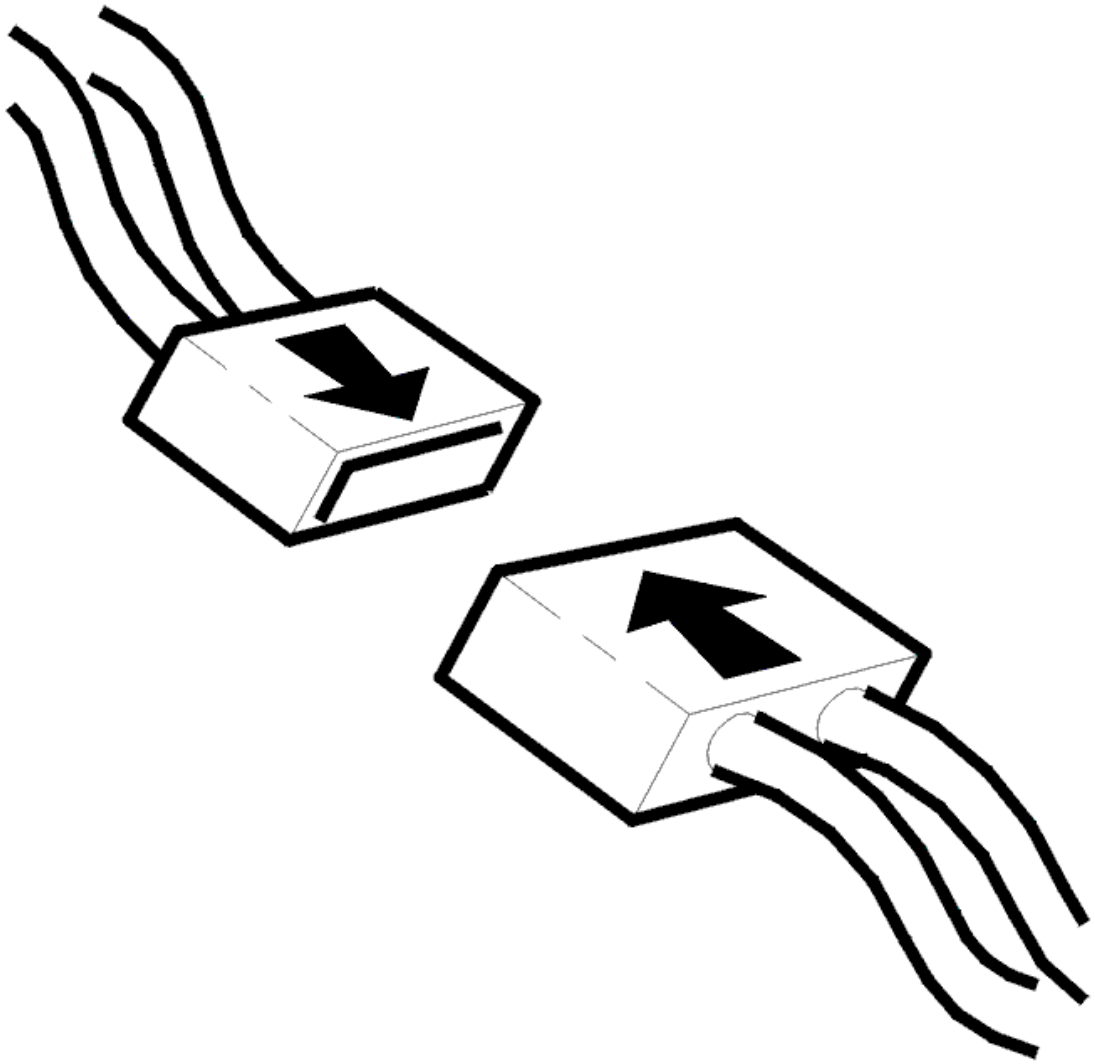

Fig. 252: Identifying Connector(s) Reinstallation
Courtesy of VOLVO CARS CORPORATION

- Ignition off
- Open the transmission control system.

  Check the cable between transmission connector terminal #D7 and temperature sensor terminal #1. Check the cable between transmission connector #D8 and temperature sensor terminal #2. Check for an open-circuit according to **OPEN-CIRCUIT, PERMANENT FAULTS** .

  Also check the cables for a short-circuit to each other.

  HINT: Check the temperature sensor. With the ignition off and transmission connector D disconnected, measure the resistance between transmission connector D terminals #D7 and #D8. The resistance must be 4.5-6 kohms at 20 °C.

Remedy as necessary.

Other information:

- To connect the breakout box, see **CONNECTING THE BREAKOUT BOX**
- To disconnect the transmission connectors, see **CONNECTORS, TRANSMISSION, DISCONNECTING / CONNECTING**
- To open the transmission control system and to check or replace the temperature sensor, see **SOLENOID CONTROL SYSTEM, REPLACING**
- For information about signals, see **SIGNAL DESCRIPTION. TRANSMISSION CONTROL MODULE (TCM)** .

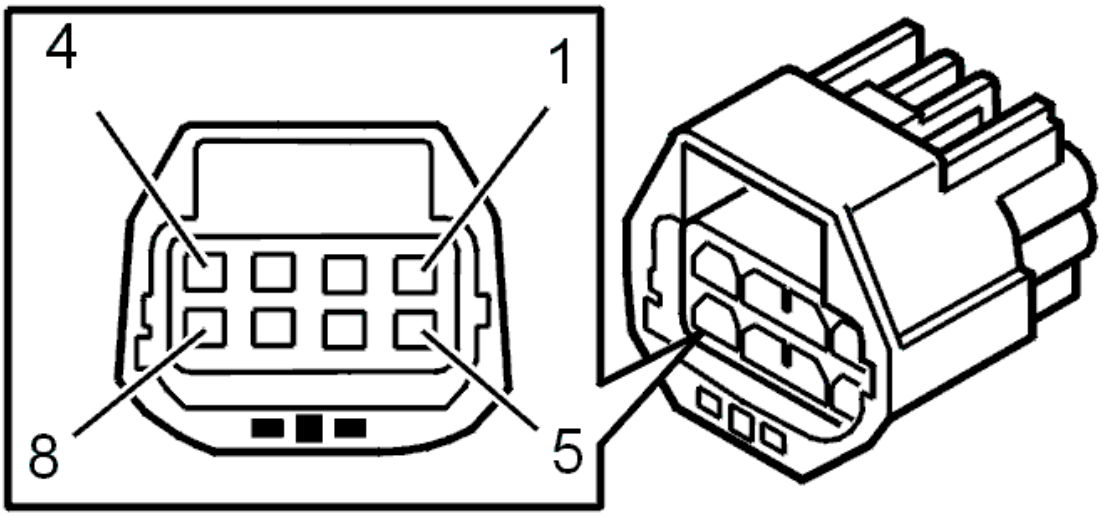

Fig. 253: Identifying 8-Pin Transmission Connector Terminals
Courtesy of VOLVO CARS CORPORATION

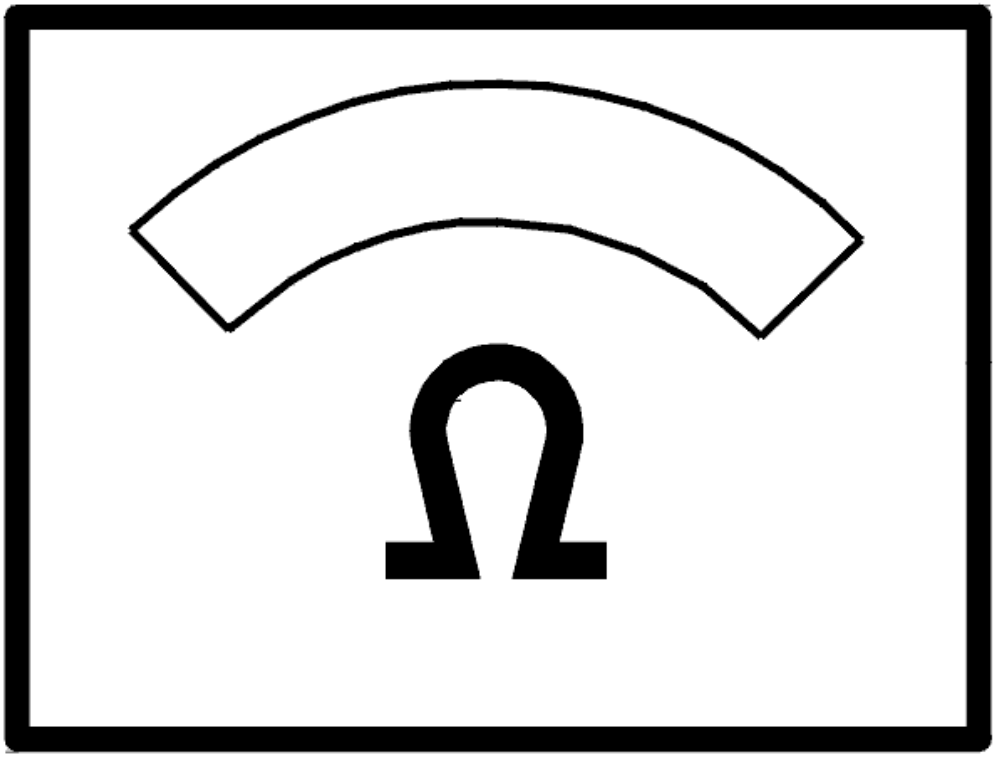

Fig. 254: Identifying Ohms Display
Courtesy of VOLVO CARS CORPORATION

- **Continue**

  Refer to **RESETTING TRANSMISSION FLUID CHANGE COUNTER**

INTERMITTENT FAULT

Check the transmission control module (TCM) and transmission connector D. Check for contact resistance and oxidation according to **CONTACT RESISTANCE AND OXIDATION** .

Check the cable between transmission control module (TCM) terminal #A37 (#A37) and transmission connector terminal #D7 (control module side). Check for an intermittent open-circuit according to **OPEN-CIRCUIT, INTERMITTENT FAULTS** .

Check the cable between control module terminal #A55 (#A55)and transmission connector terminal #D8 (control module side). Check for an intermittent open-circuit according to **OPEN-CIRCUIT, INTERMITTENT FAULTS** .

Remedy as necessary.

Other information:

- To connect the breakout box, see **CONNECTING THE BREAKOUT BOX**
- To disconnect the transmission connectors, see **CONNECTORS, TRANSMISSION, DISCONNECTING / CONNECTING**
- For information about signals, see **SIGNAL DESCRIPTION. TRANSMISSION CONTROL MODULE (TCM)** .

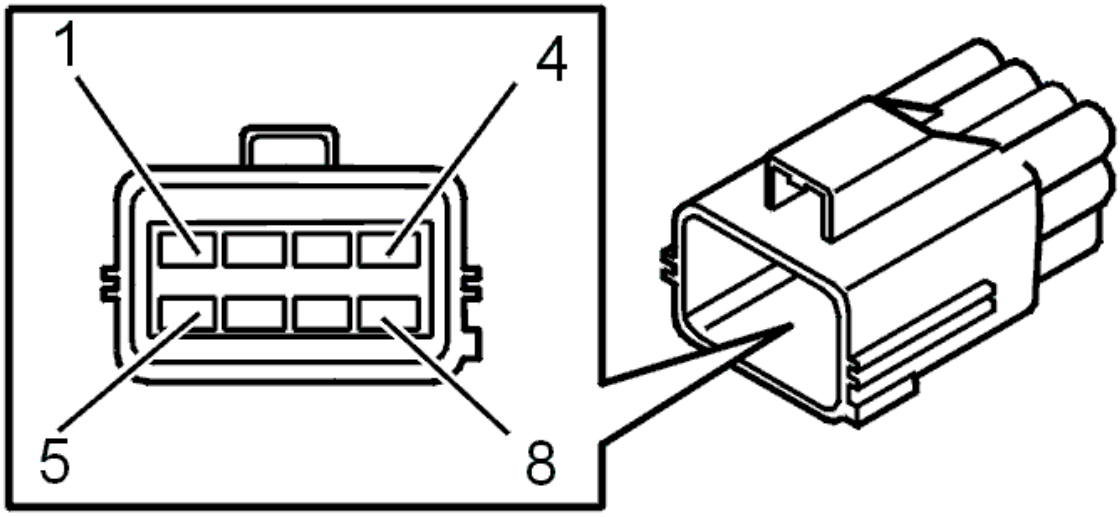

Fig. 255: Identifying Transmission Connector Terminals
Courtesy of VOLVO CARS CORPORATION

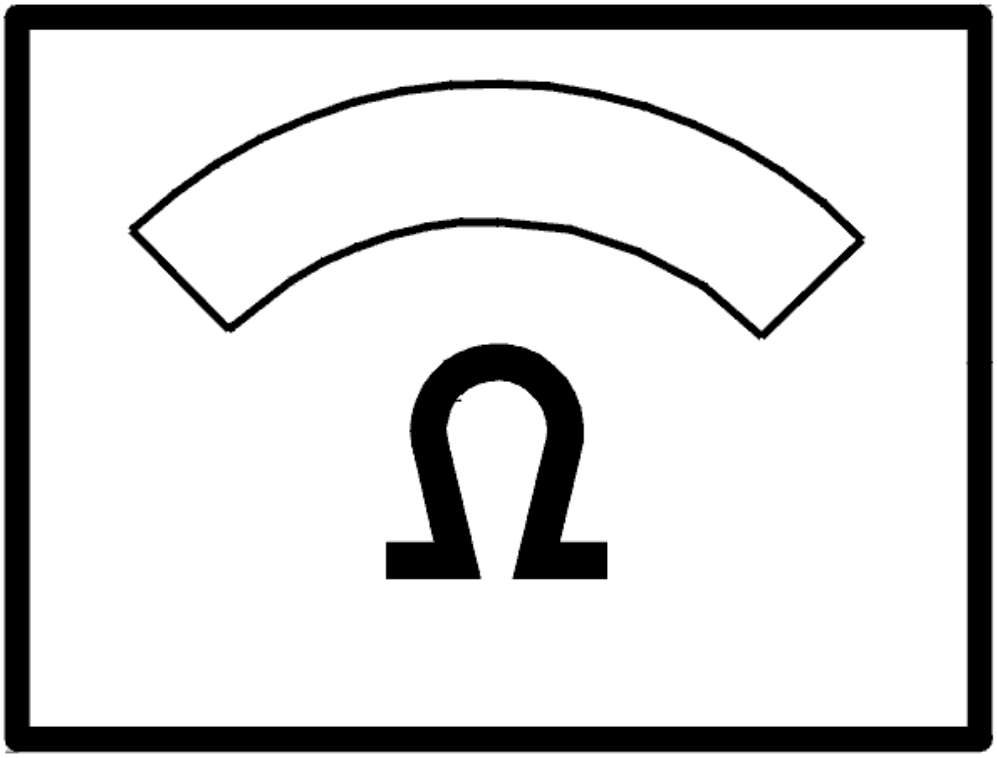

Fig. 256: Identifying Ohms Display
Courtesy of VOLVO CARS CORPORATION

- **Continue**

  Refer to **INFORMATION**

RESETTING TRANSMISSION FLUID CHANGE COUNTER

RESETTING TRANSMISSION FLUID CHANGE COUNTER

HINT: The transmission control module (TCM) has a counter for the oil quality. The counter counts up if the transmission is exposed to too high a load or an ambient temperature that is too high. If the counter is not reset when the oil is drained or changed, there is a risk that a diagnostic trouble code (DTC) will be stored in faulty circumstances. Therefore it is important that the "Transmission oil change" counter is reset.

NOTE: **This applies only when the transmission fluid is changed and when the fluid is changed when repairs are carried out to the transmission temperature sensor.**

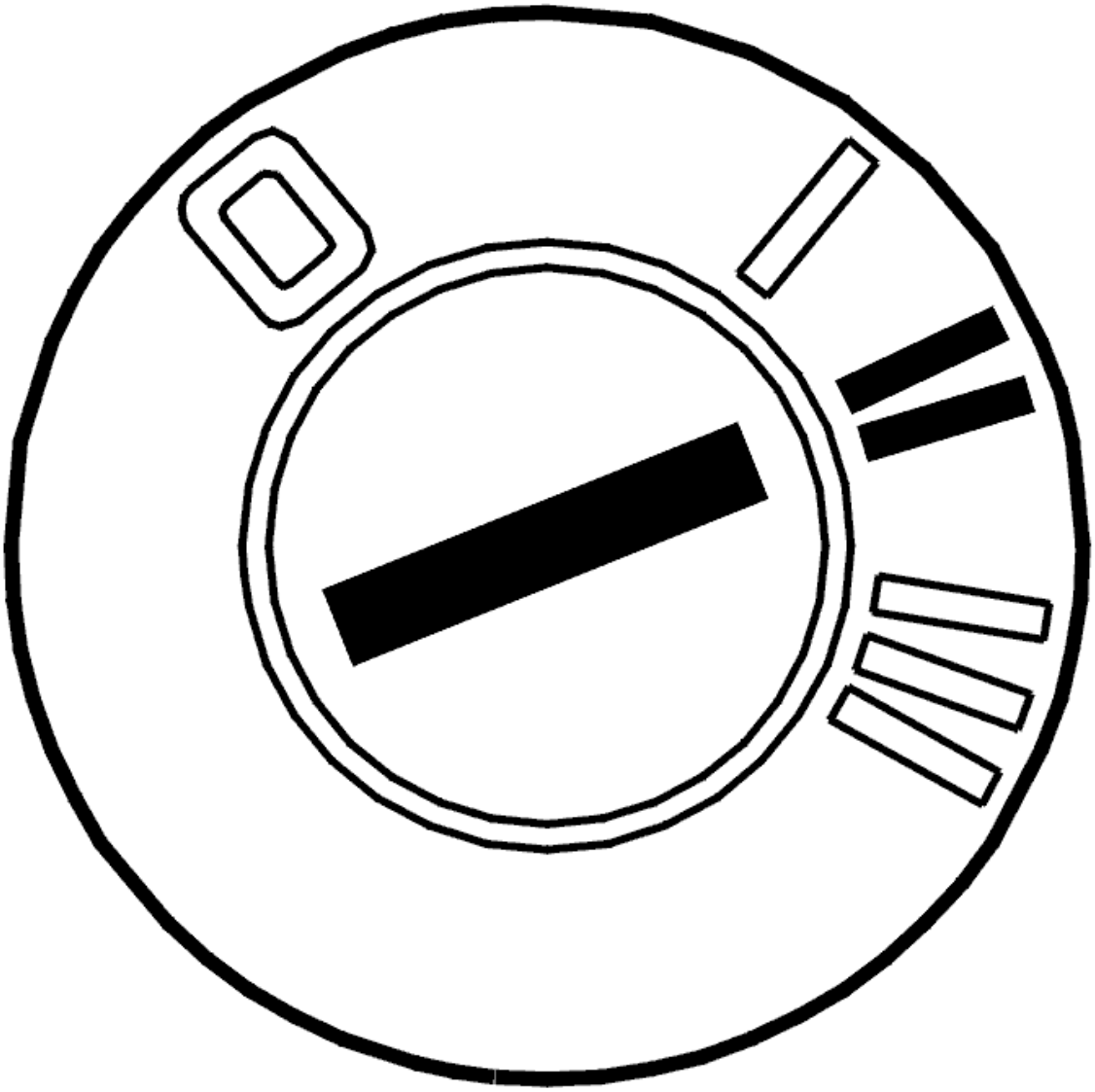

Fig. 257: Identifying Ignition ON
Courtesy of VOLVO CARS CORPORATION

- Ignition on.

  Reset the counter by clicking on the VCT 2000 symbol.

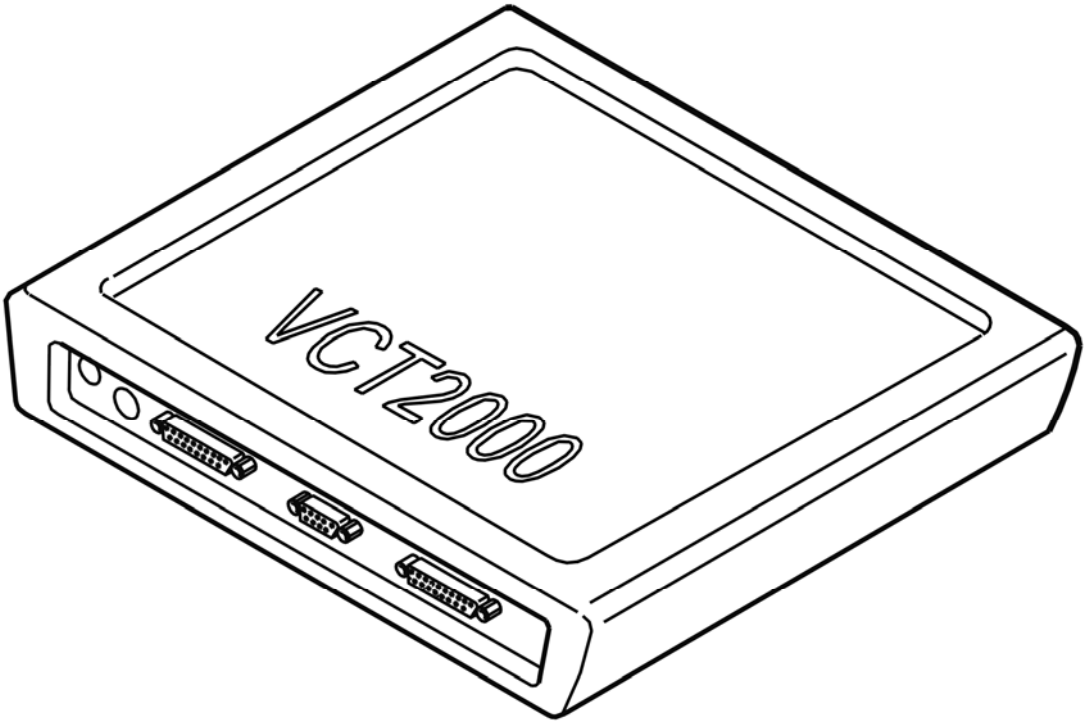

Fig. 258: Identifying VCT2000 Diagnostic Tool Symbol In VIDA
Courtesy of VOLVO CARS CORPORATION

- **Continue**

  Refer to **VERIFICATION**

VERIFICATION

VERIFICATION

HINT: After carrying out the repair, check that the fault has been remedied.

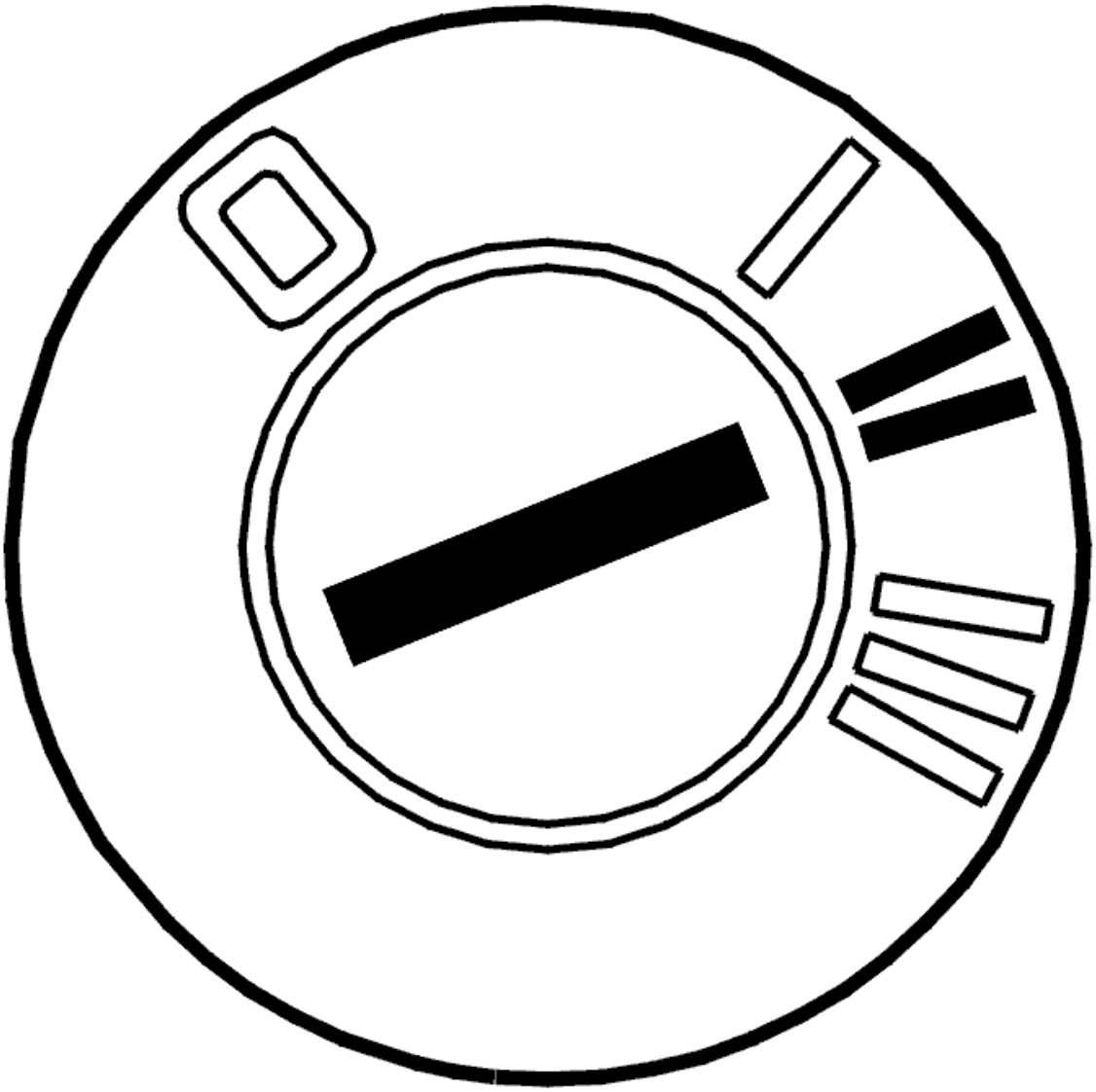

Fig. 259: Identifying Ignition ON
Courtesy of VOLVO CARS CORPORATION

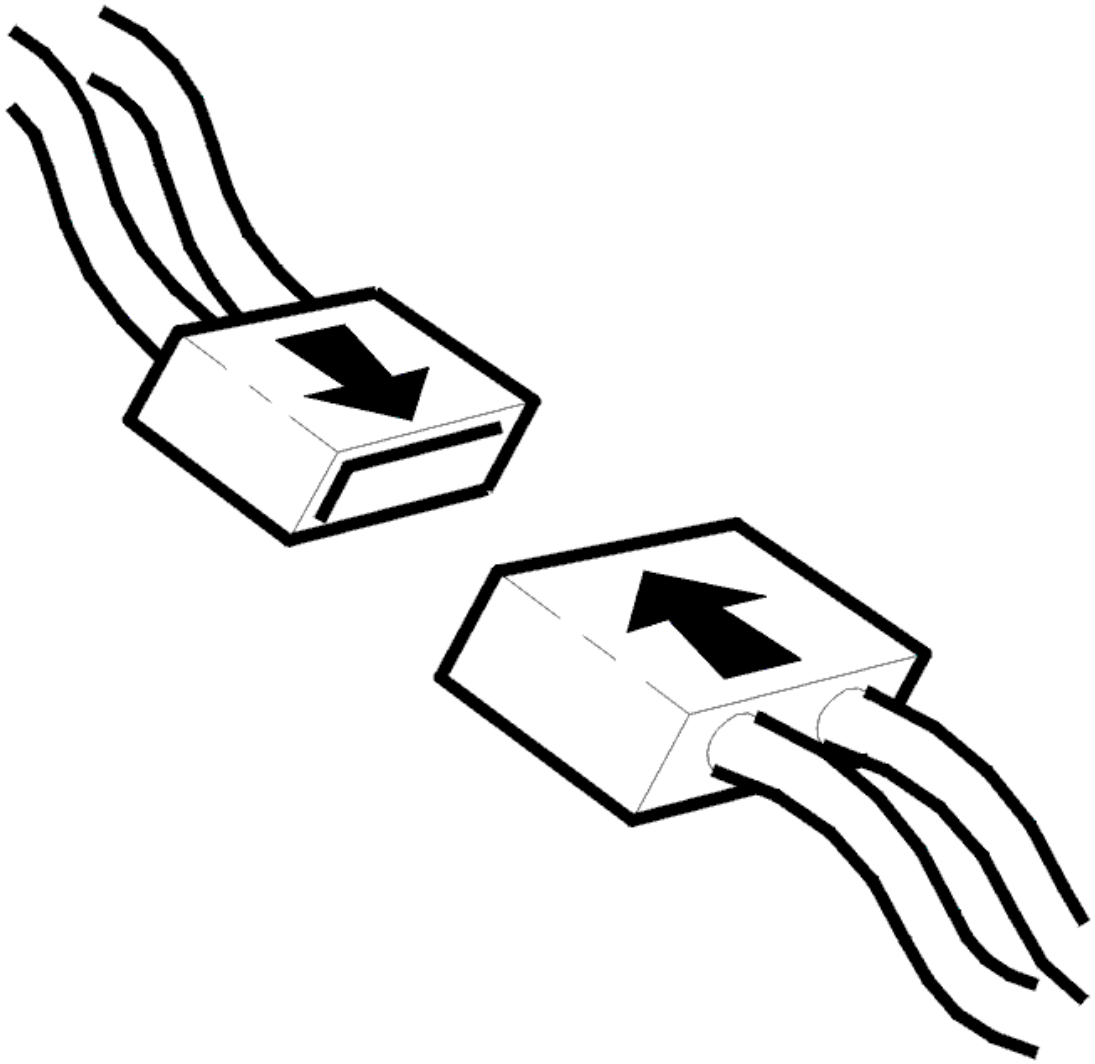

Fig. 260: Identifying Connector(s) Reinstallation
Courtesy of VOLVO CARS CORPORATION

- Ignition off.
- Reinstall the connectors, components etc.
- Ignition on.
- Read off the oil temperature.

Check that the transmission oil temperature is within its permitted range.

Compare with the transmission temperature.

NOTE: **The transmission temperature sensor is located inside the control unit and can be affected by the heat given off by the solenoids.**

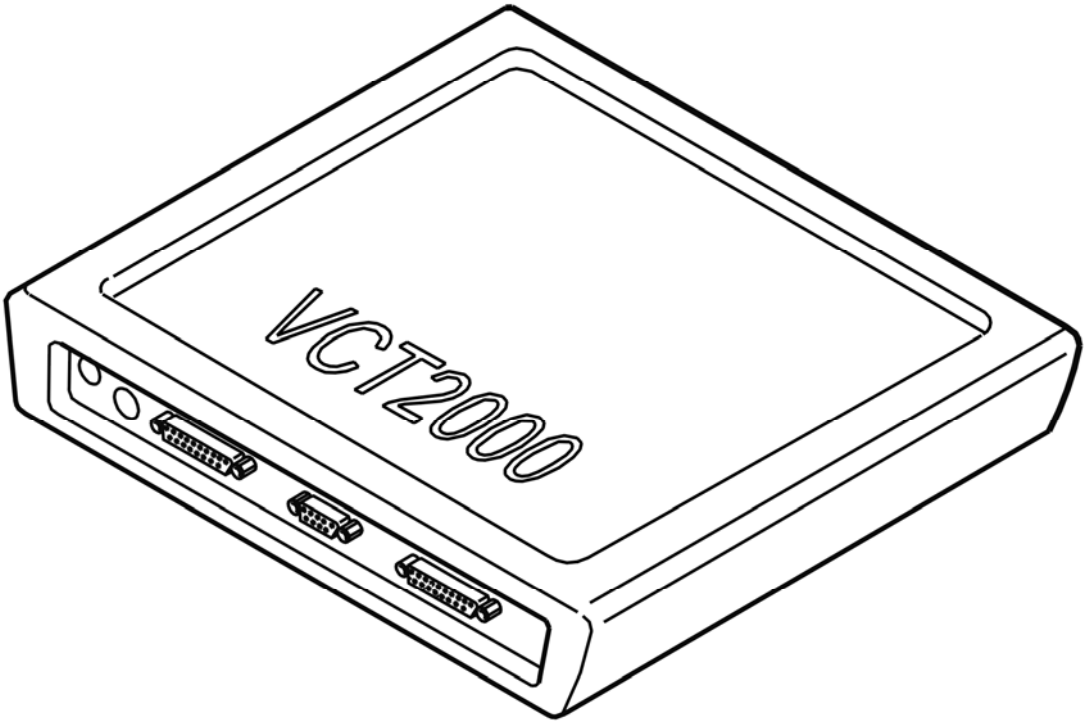

Fig. 261: Identifying VCT2000 Diagnostic Tool Symbol In VIDA
Courtesy of VOLVO CARS CORPORATION

Is the oil temperature within its permitted range?

- **YES**

  VERIFIED: Troubleshooting has been completed.

- **NO**

  Refer to **INFORMATION**

TCM-0102: SHIFT SOLENOID S3. SIGNAL MISSING (AW50/51 AWD; AW55-50/51SN; 2003-2007)

DIAGNOSTIC TROUBLE CODE (DTC) INFORMATION

Condition

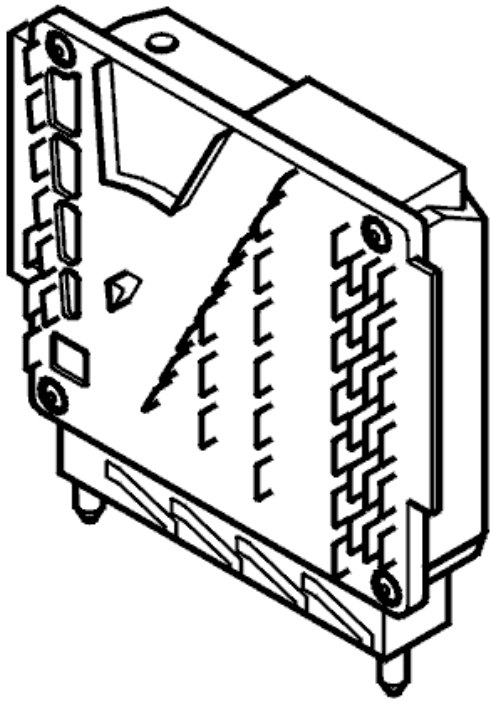

Fig. 262: Identifying Transmission Control Module (TCM)
Courtesy of VOLVO CARS CORPORATION

Shift solenoids S1, S2, S3, S4 and S5 operate in tandem to control gear-shifting. The solenoids are controlled by power stages in the transmission control module (TCM). The transmission control module (TCM) opens the power stages to activate the solenoids and sends a voltage through the circuit. Diagnostic trouble codes (DTCs) TCM-0002, TCM-0008, TCM-0102, TCM-0108 or TCM-010B are stored (depending on the solenoid) if the transmission control module (TCM) registers that the signal in circuits S1, S2, S3, S4 or S5 is missing when the solenoid is activated.

Substitute Value

- The transmission control module (TCM) "Emergency mode I" program has been initiated.

Possible Source

- Contact resistance in terminals.
- Open-circuit in the signal cable.
- Defective solenoid.
- Internal fault in the control module.

Fault symptom[s]

- General orange warning lamp lit.
- Malfunction indicator lamp (MIL) lit.
- Harsh gear shifting.
- No shifting.
- No lock-up function.

SIGNAL MISSING

CHECKS

CHECKING THE TEMPERATURE SENSOR

HINT: In some cases, the diagnostic trouble code (DTC) may be caused by a defective oil temperature sensor. Check the function of the oil temperature sensor first.

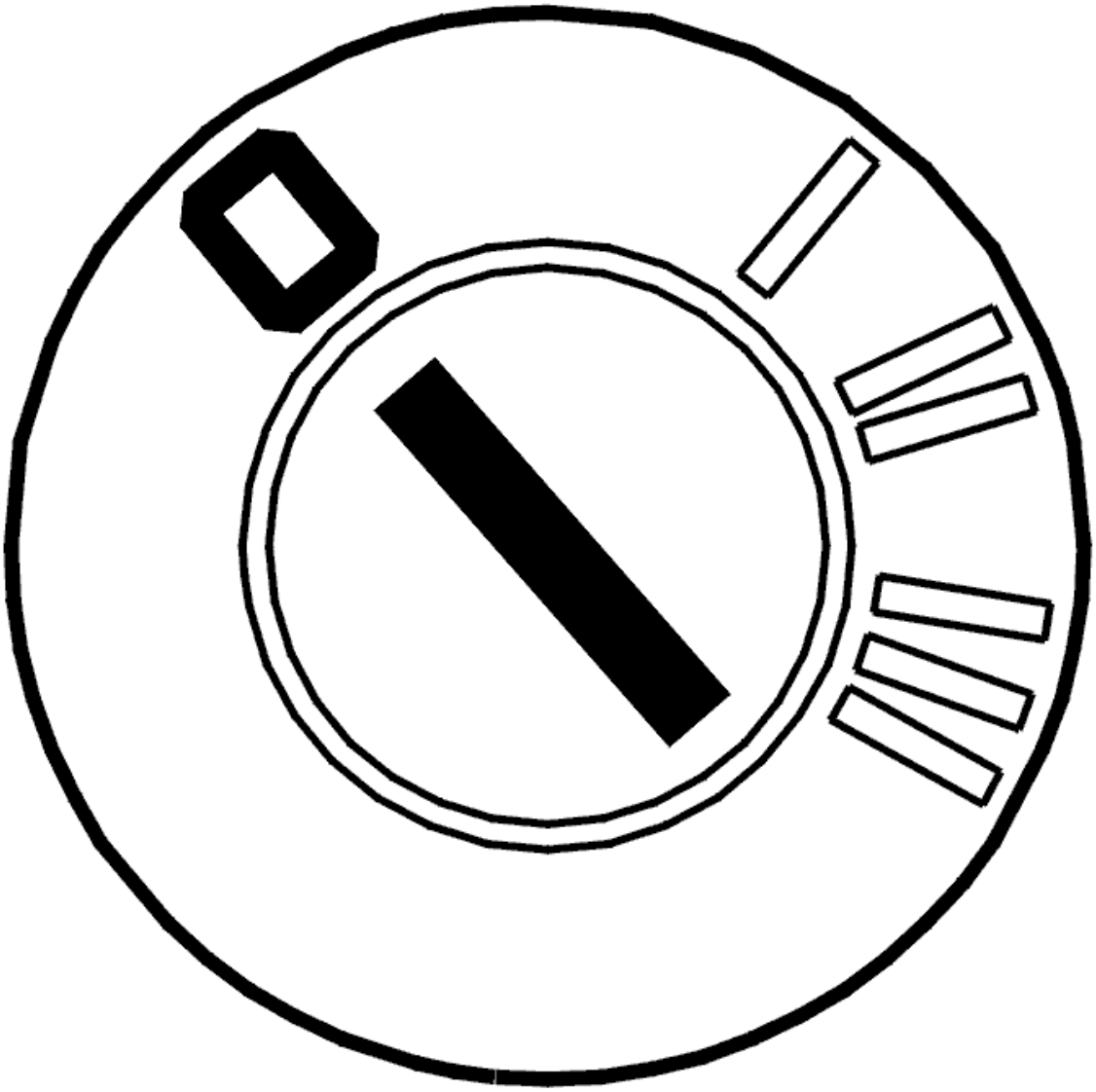

Fig. 263: Identifying Ignition OFF
Courtesy of VOLVO CARS CORPORATION

- Ignition off
- Read off the oil temperature.

  Check that the function of the temperature sensor is OK. Test drive the car to increase the temperature of the transmission fluid. Read off the temperature again. Check that the temperature has increased.

  HINT: If the temperature is outside its permitted range, fault-trace the temperature sensor.

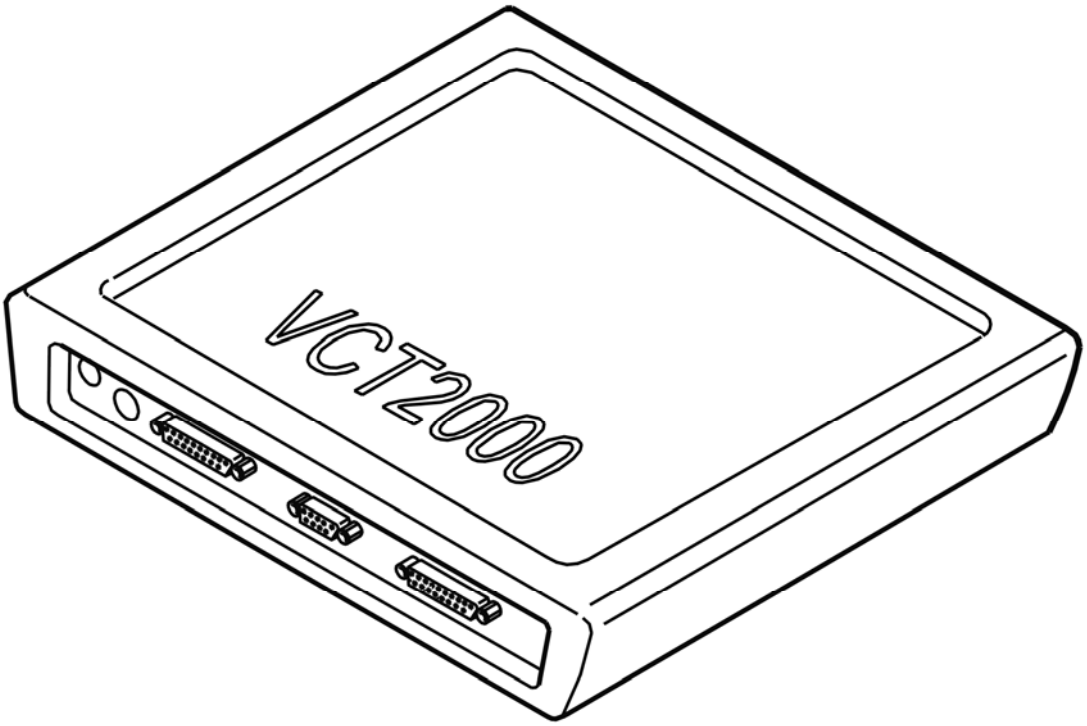

Fig. 264: Identifying VCT2000 Diagnostic Tool Symbol In VIDA
Courtesy of VOLVO CARS CORPORATION

Is the oil temperature within its permitted range?

- **YES**

  Refer to **CHECKING SHIFT SOLENOID S3**

- **NO**

  Refer to **FAULTY SIGNAL**

CHECKING SHIFT SOLENOID S3

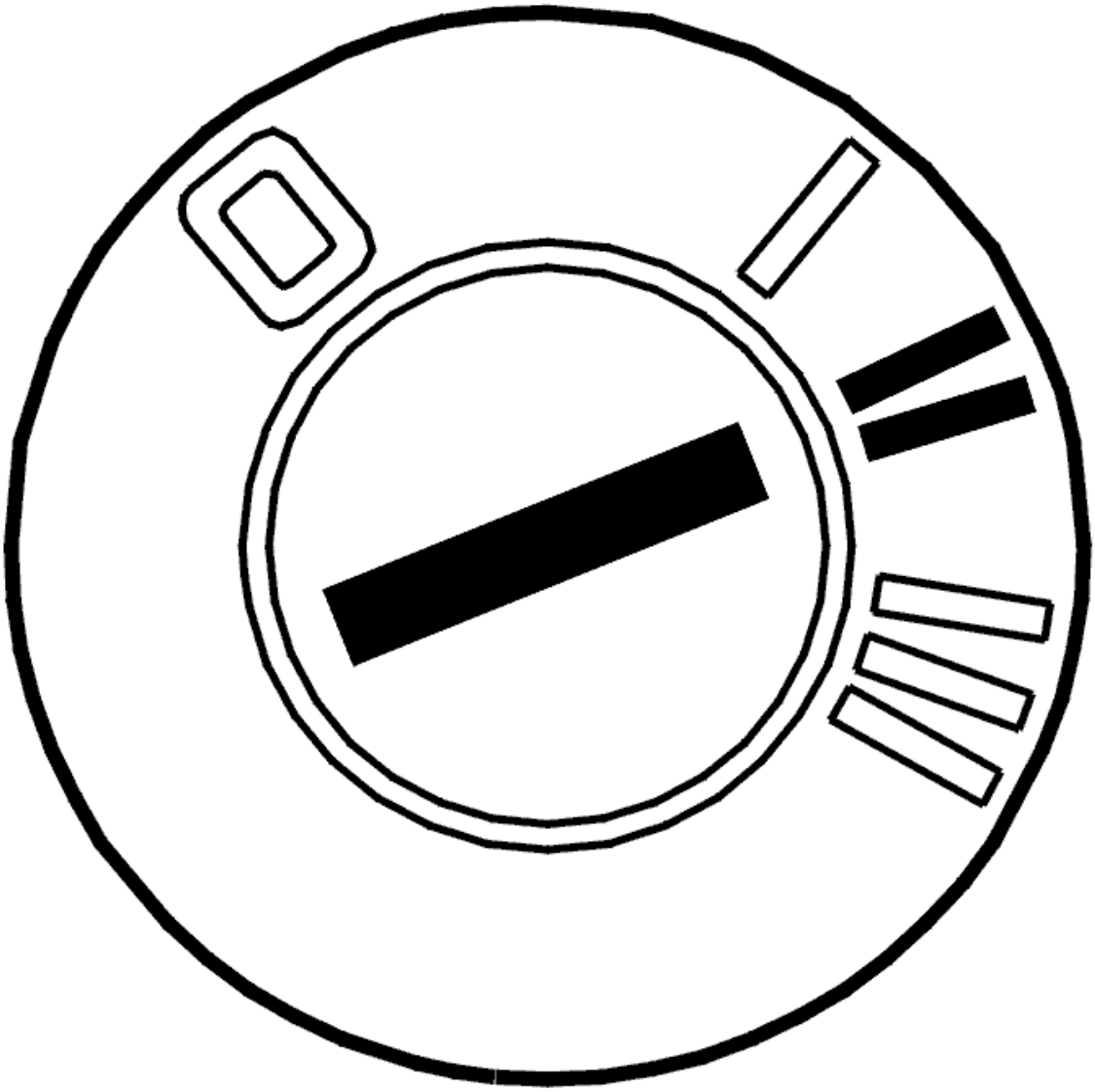

Fig. 265: Identifying Ignition ON
Courtesy of VOLVO CARS CORPORATION

- Ignition on
- Gear selector in position P
- Activate solenoid S3.

  The current should oscillate between 0 and approximately 1.5 A.

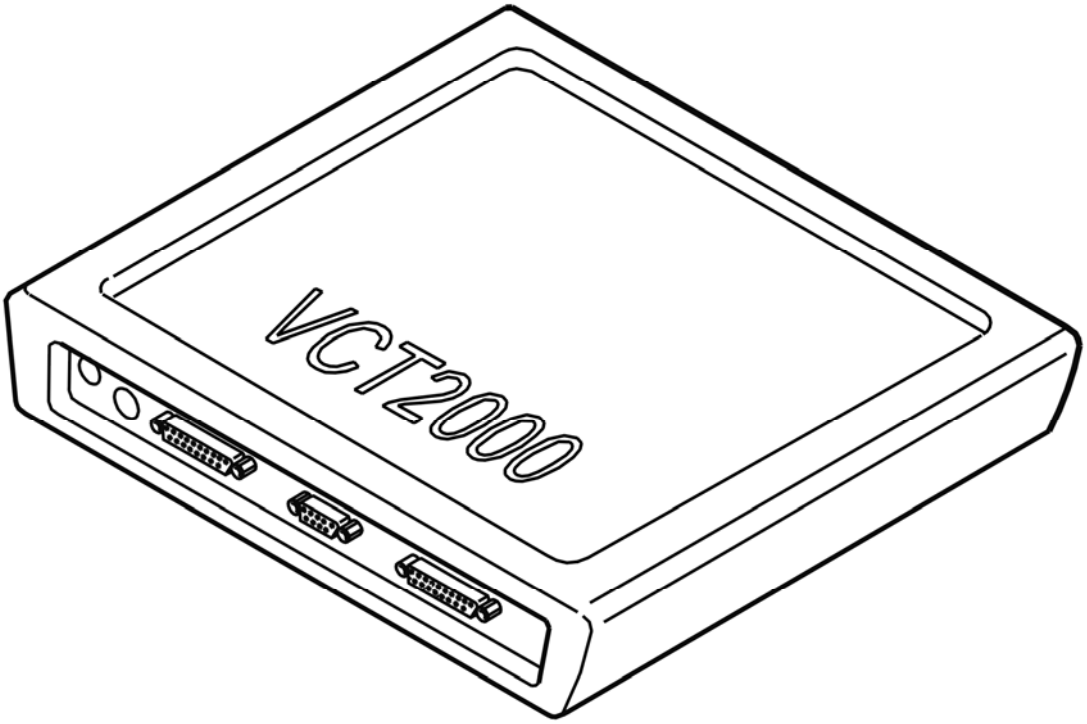

Fig. 266: Identifying VCT2000 Diagnostic Tool Symbol In VIDA
Courtesy of VOLVO CARS CORPORATION

Does the current oscillate?

- **YES**

  Refer to **INTERMITTENT FAULT**

- **NO**

  Refer to **CHECKING RESISTANCE**

CHECKING RESISTANCE

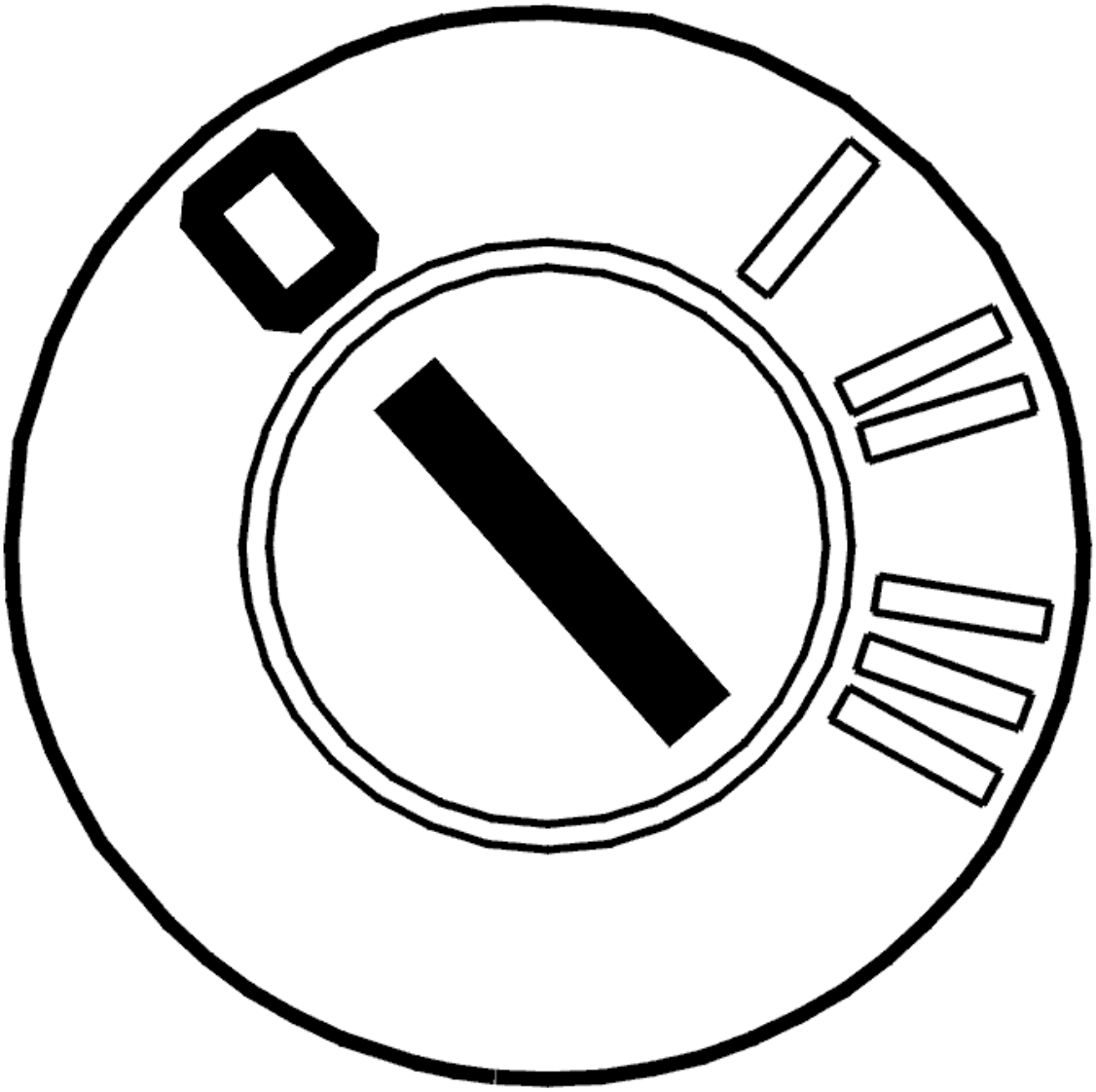

Fig. 267: Identifying Ignition OFF
Courtesy of VOLVO CARS CORPORATION

- Ignition off
- Disconnect the transmission connector.

  Check solenoid S3 by measuring the resistance between transmission connector terminal #C3 and the transmission housing. The resistance must be 11-15 ohms.

  Other information:

  - To disconnect the transmission connectors, see **CONNECTORS, TRANSMISSION, DISCONNECTING / CONNECTING**
  - For information about signals, see **SIGNAL DESCRIPTION. TRANSMISSION CONTROL MODULE (TCM)** .

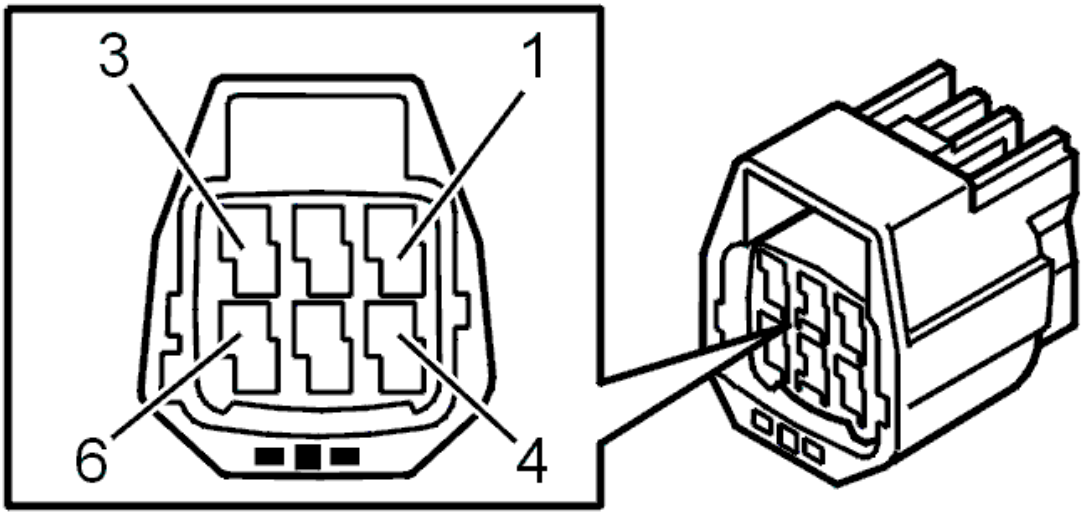

Fig. 268: Identifying 6-Pin Transmission Connector Terminals
Courtesy of VOLVO CARS CORPORATION

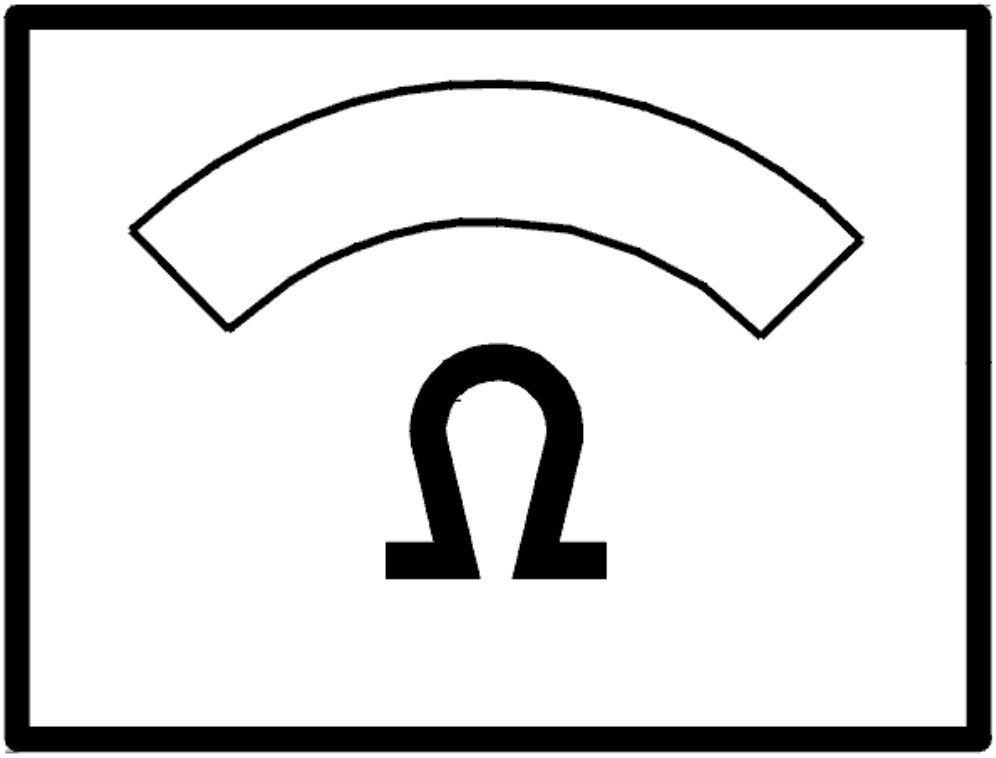

Fig. 269: Identifying Ohms Display
Courtesy of VOLVO CARS CORPORATION

Was the resistance OK

- **YES**

  Refer to **CHECKING THE WIRING**

- **NO**

  Refer to **CHECKING THE WIRING AND COMPONENT**

CHECKING THE WIRING

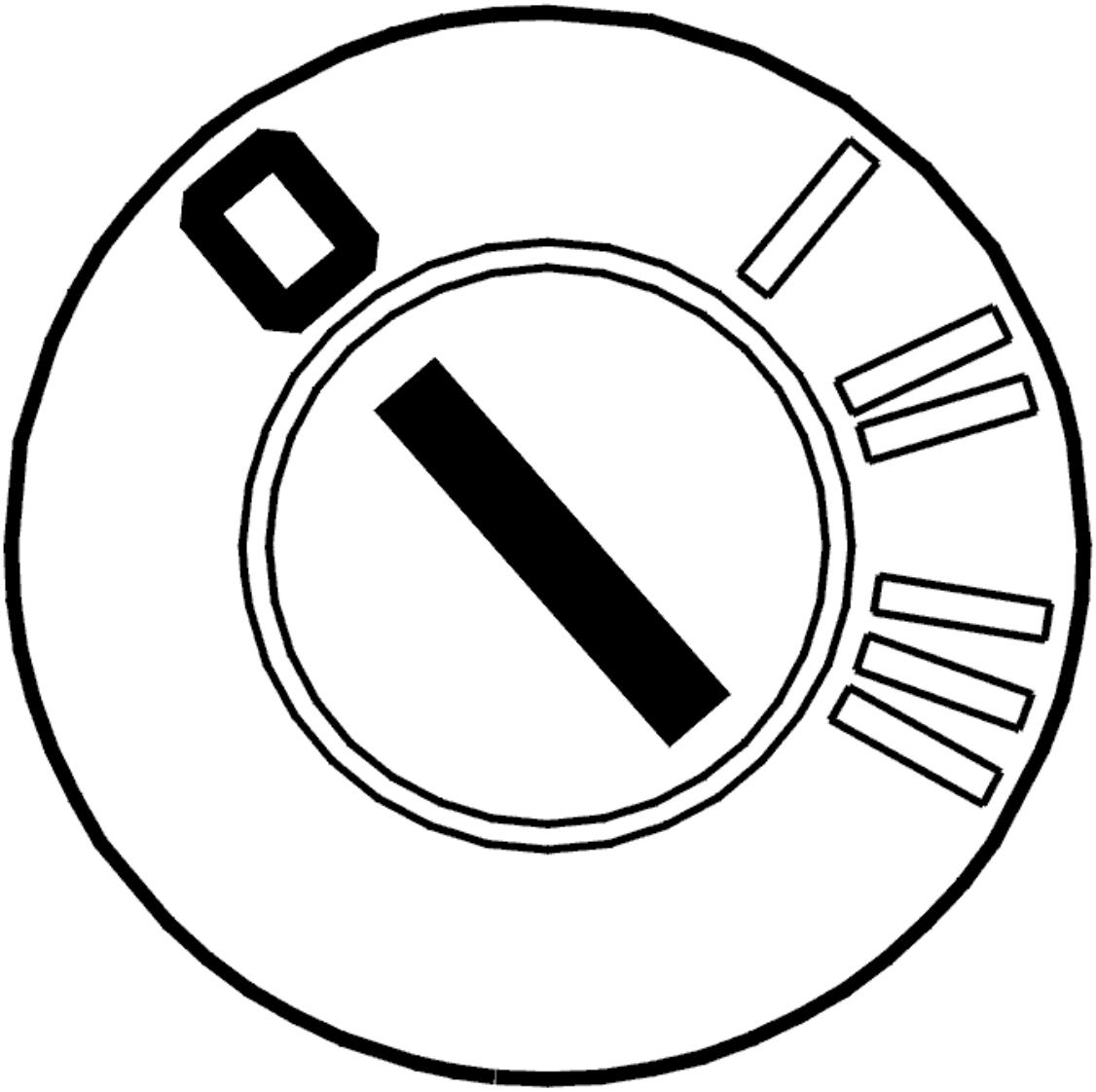

Fig. 270: Identifying Ignition OFF
Courtesy of VOLVO CARS CORPORATION

- Ignition off.

  Check the cable between control module terminal #A48 (#A48) and transmission connector terminal #C3 (control module side). Check for an open-circuit according to **OPEN-CIRCUIT, PERMANENT FAULTS** .

  Remedy as necessary.

  Other information:

  - To connect the breakout box, see **CONNECTING THE BREAKOUT BOX**
  - To disconnect the transmission connectors, see **CONNECTORS, TRANSMISSION, DISCONNECTING / CONNECTING**

- For information about signals, see **SIGNAL DESCRIPTION. TRANSMISSION CONTROL MODULE (TCM)** .

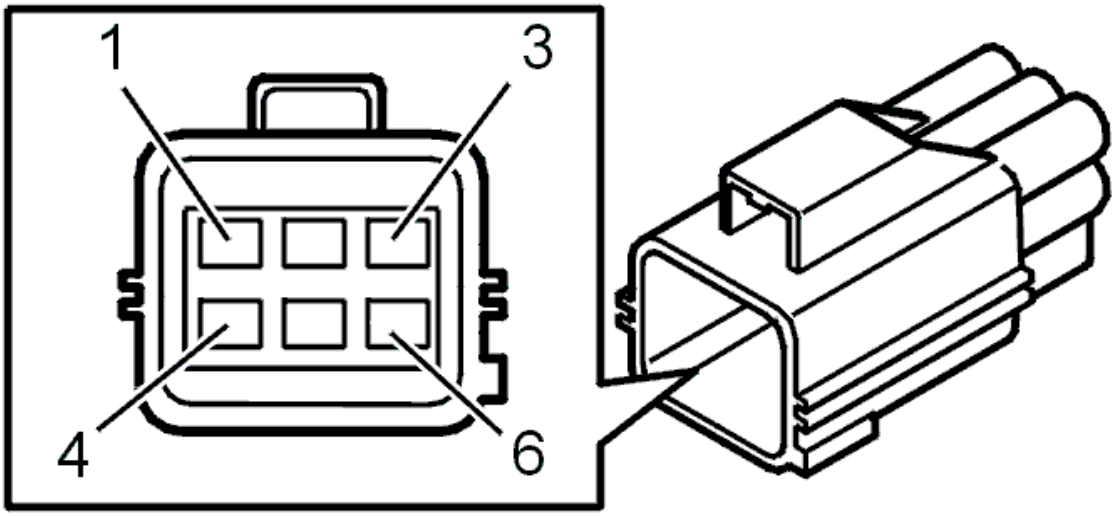

Fig. 271: Identifying Transmission Connector Terminals
Courtesy of VOLVO CARS CORPORATION

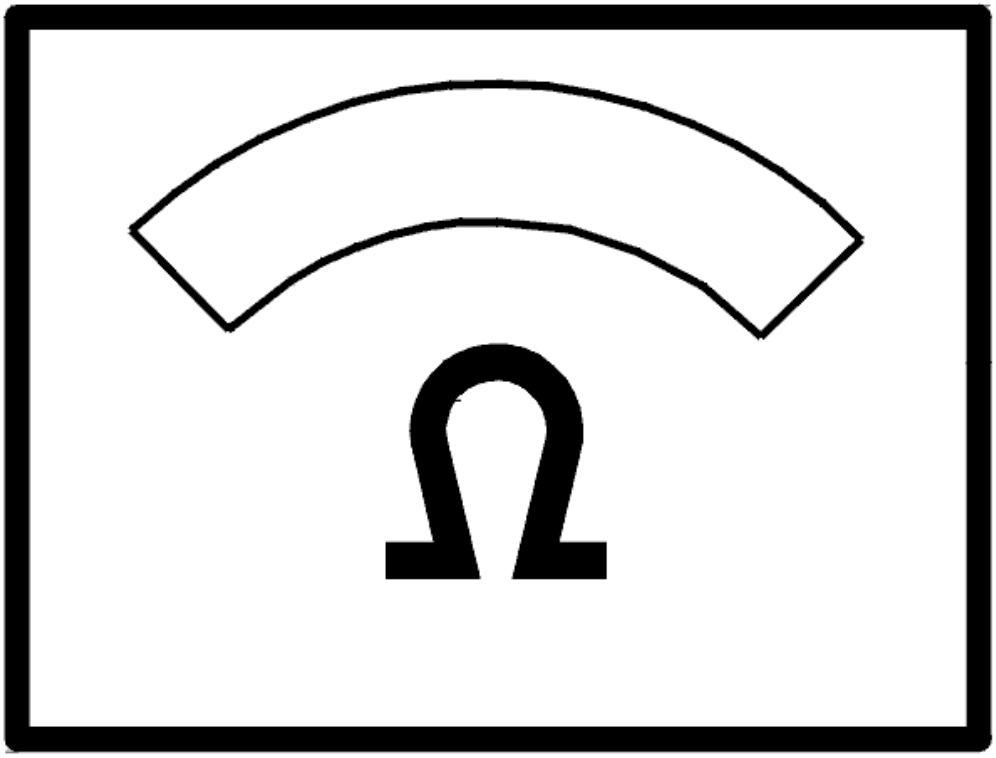

Fig. 272: Identifying Ohms Display
Courtesy of VOLVO CARS CORPORATION

Was a fault detected?

- **YES**

  Refer to **VERIFICATION**

- **NO**

  Refer to **CHECKING THE CONTROL MODULE**

CHECKING THE CONTROL MODULE

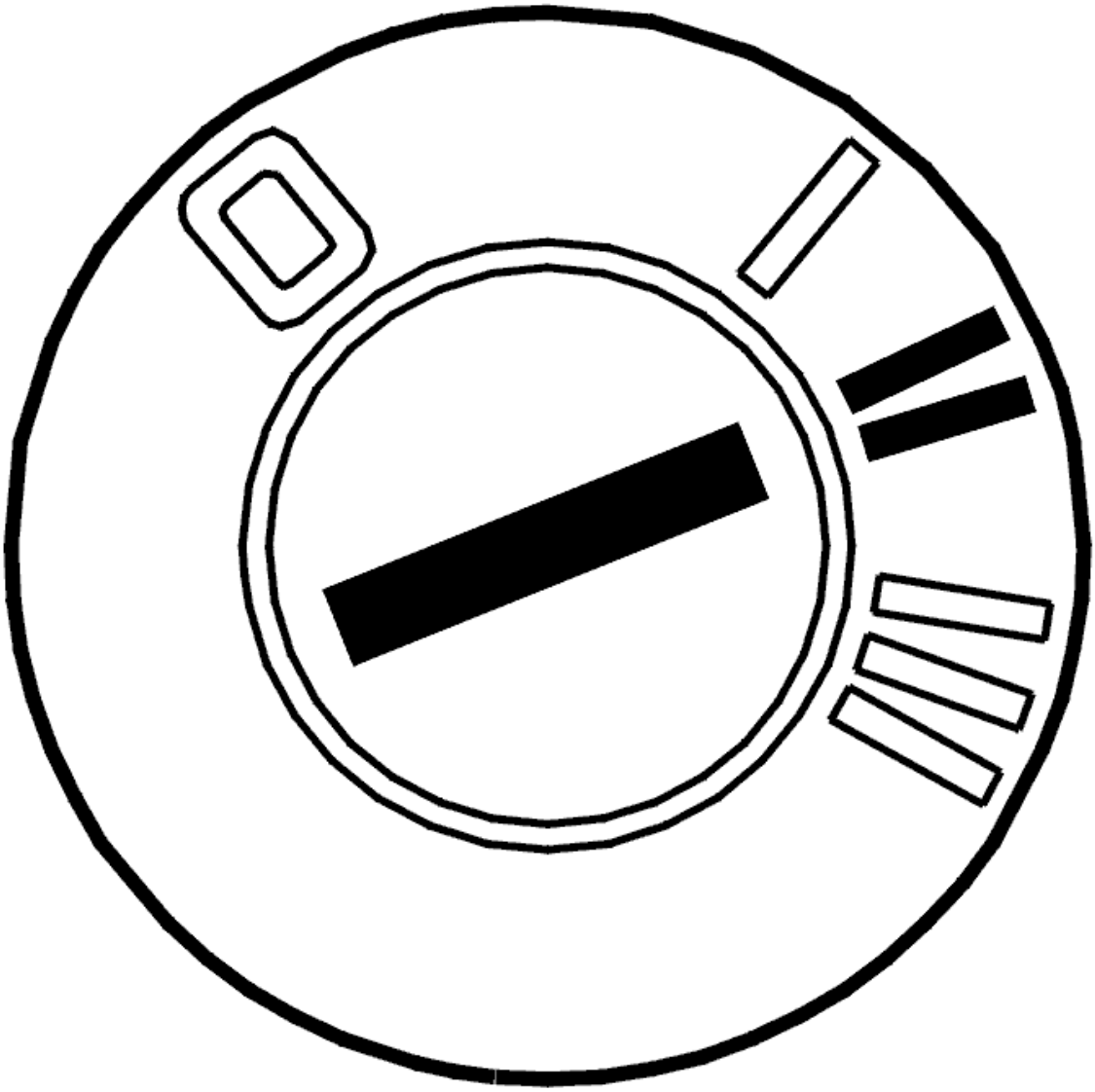

Fig. 273: Identifying Ignition ON
Courtesy of VOLVO CARS CORPORATION

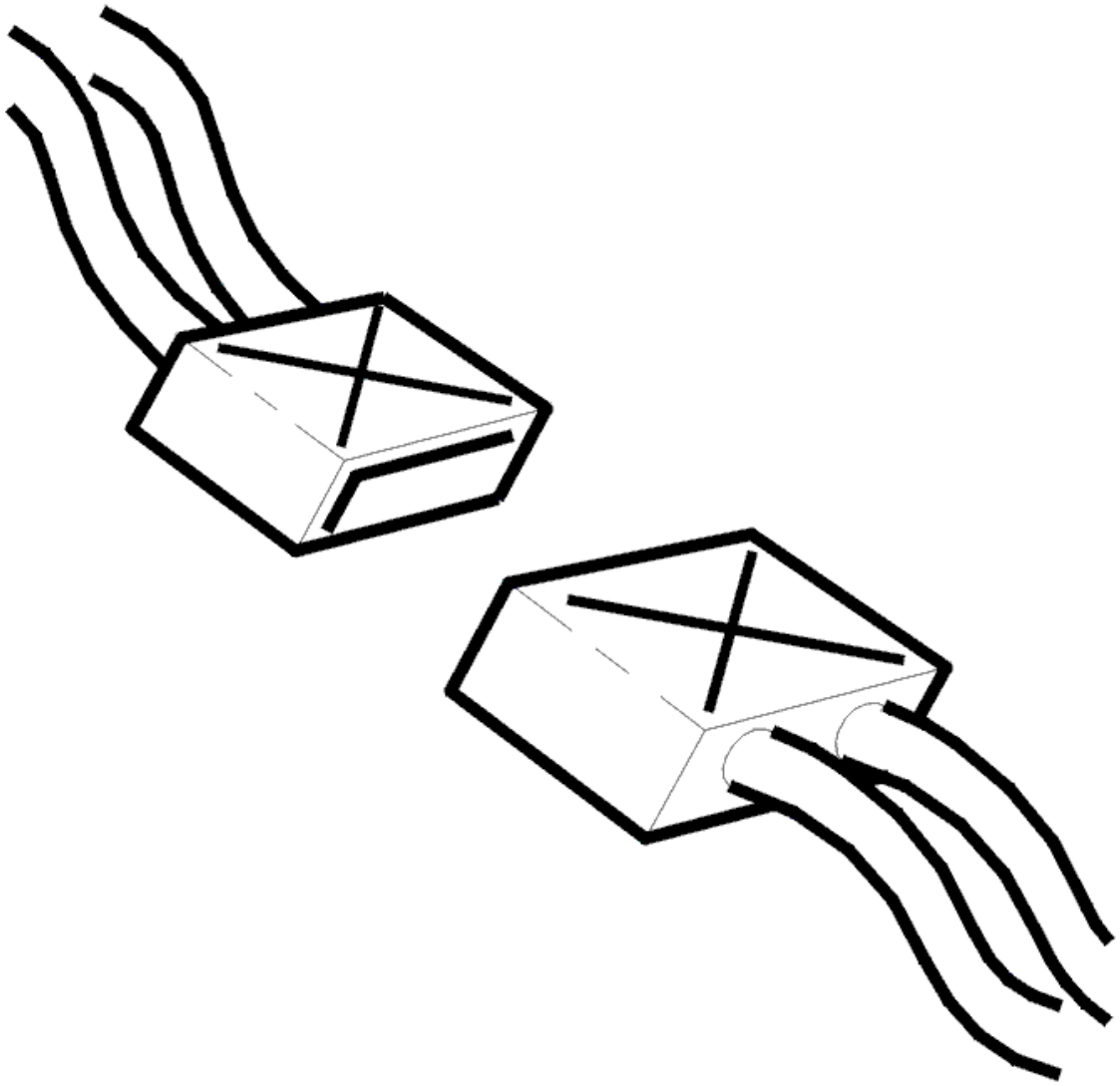

Fig. 274: Identifying Connectors
Courtesy of VOLVO CARS CORPORATION

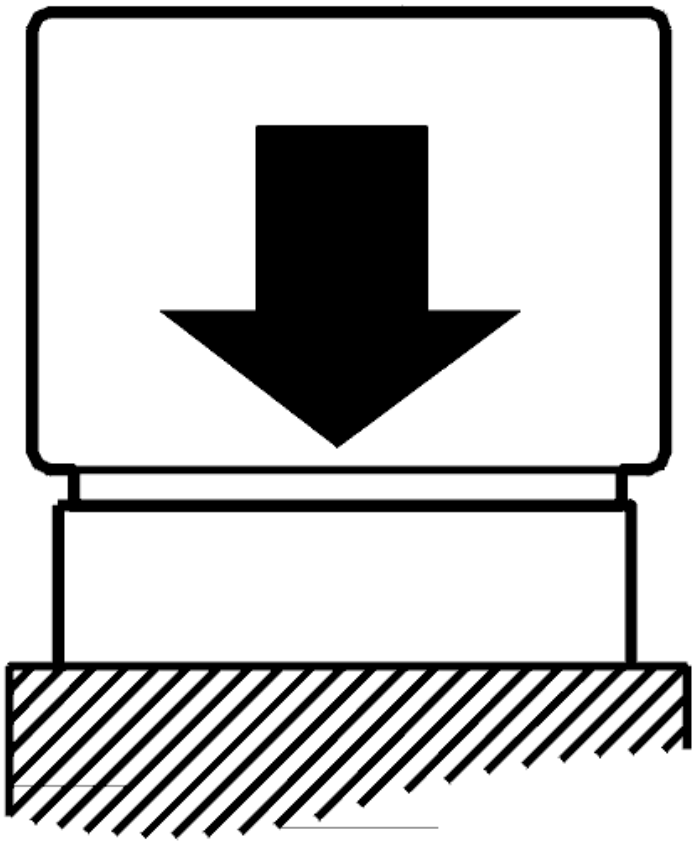

Fig. 275: Identifying Control Module Connected
Courtesy of VOLVO CARS CORPORATION

- Ignition off
- The breakout box connected
- Connect the control module.
- Transmission connector C disconnected
- Ignition on
- Gear selector in position P.

Check the transmission control module (TCM) by measuring the resistance between terminals #A48 (#A48) and #A53 (#A53) on the breakout box. The resistance must be approximately 9 kohms.

NOTE: When removing the transmission connector, the control module may store

diagnostic trouble codes (DTCs) for the gear-shift position sensor, the shift solenoids, the temperature sensor etc.

Try a new control module if the resistance is infinite.

Other information:

- To disconnect the transmission connectors, see **CONNECTORS, TRANSMISSION, DISCONNECTING / CONNECTING**
- To replace the control module, see **TRANSMISSION CONTROL MODULE (TCM), REPLACING**
- For information about signals, see **SIGNAL DESCRIPTION. TRANSMISSION CONTROL MODULE (TCM)** .

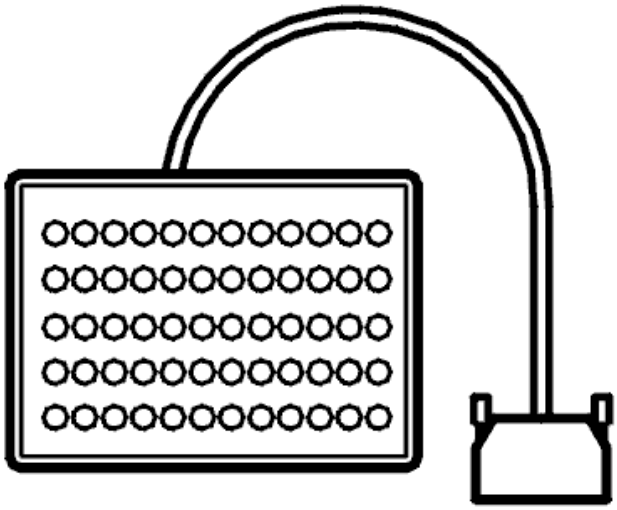

Fig. 276: Identifying Breakout Box
Courtesy of VOLVO CARS CORPORATION

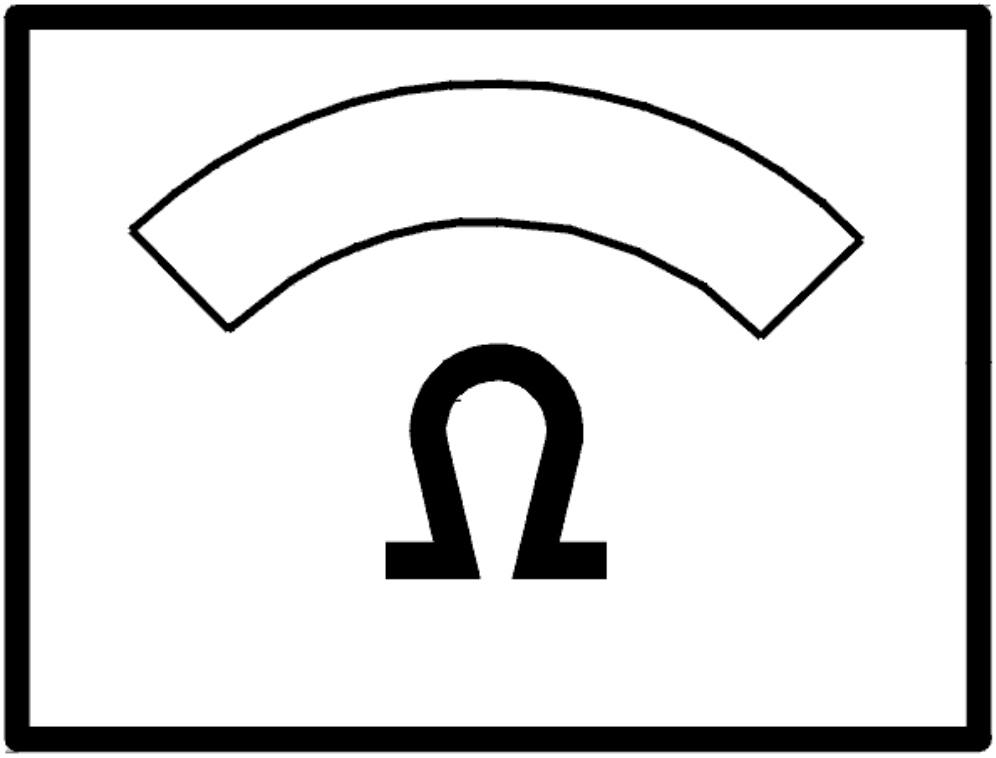

Fig. 277: Identifying Ohms Display
Courtesy of VOLVO CARS CORPORATION

Was the resistance OK?

- **YES**

  FAULT NOT FOUND: Troubleshooting has been completed.

- **NO**

  Refer to **VERIFICATION**

CHECKING THE WIRING AND COMPONENT

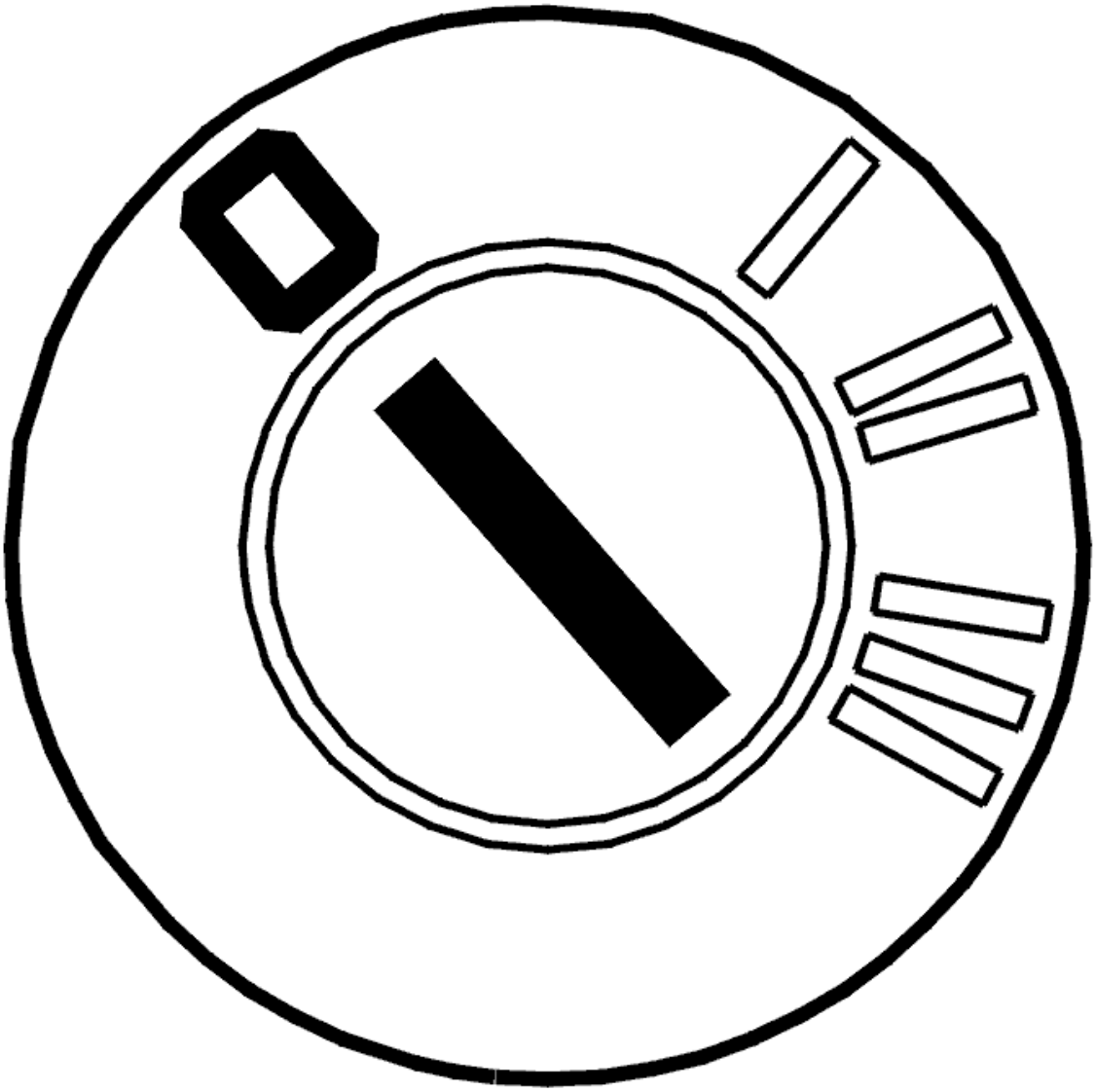

Fig. 278: Identifying Ignition OFF
Courtesy of VOLVO CARS CORPORATION

- Ignition off
- Open the control system.

  Check the cable between transmission connector terminal #C3 (transmission side) and the connector for solenoid S3. Check for an open-circuit according to **OPEN-CIRCUIT, PERMANENT FAULTS** .

  - Check solenoid S3 by measuring the resistance between the terminal pin on solenoid S3 and the transmission housing. The resistance must be 11-15 ohms.

  Remedy as necessary.

  Other information:

- To disconnect the transmission connectors, see **CONNECTORS, TRANSMISSION, DISCONNECTING / CONNECTING**
- To open the control system and to check or replace solenoid S3, see **SOLENOID CONTROL SYSTEM, REPLACING**
- To replace the cable harness for the control system, see **TEMPERATURE SENSOR FLUID, TRANSAXLE, (TFT)**
- For information about signals, see **SIGNAL DESCRIPTION. TRANSMISSION CONTROL MODULE (TCM)** .

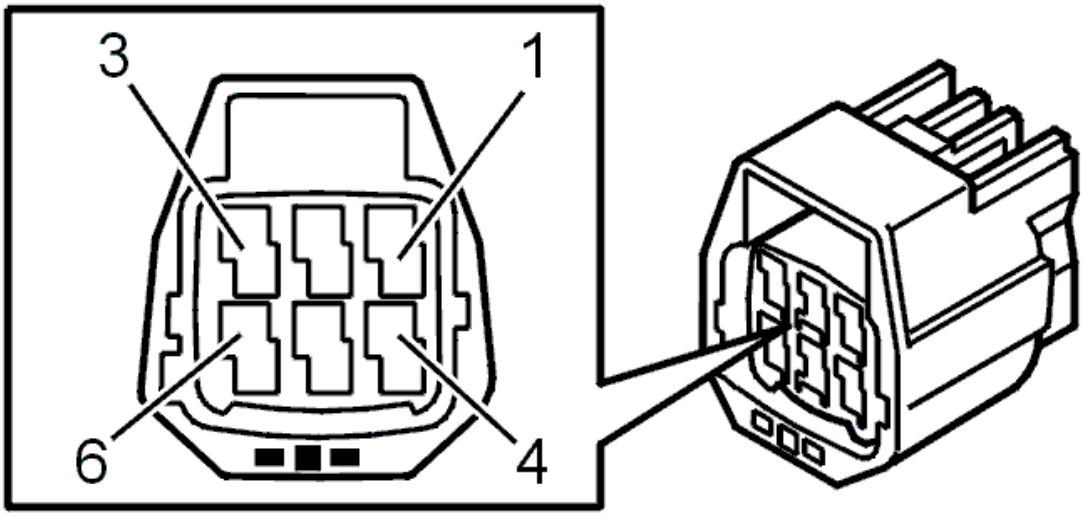

Fig. 279: Identifying 6-Pin Transmission Connector Terminals
Courtesy of VOLVO CARS CORPORATION

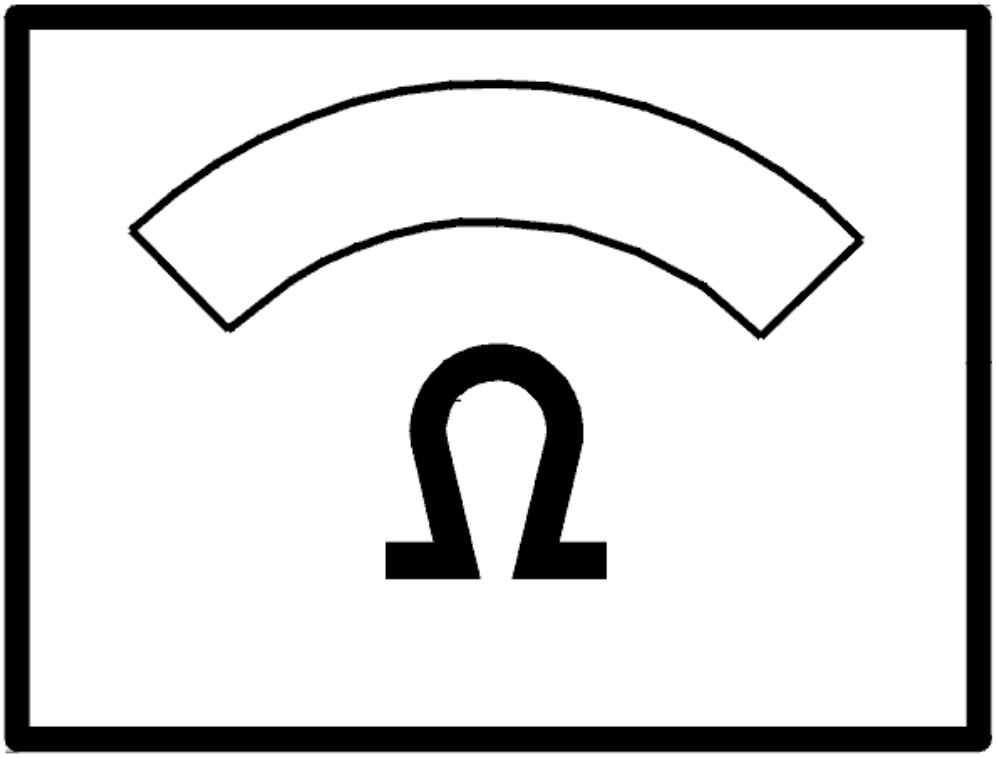

Fig. 280: Identifying Ohms Display
Courtesy of VOLVO CARS CORPORATION

- **Continue**

  Refer to **RESETTING THE ADAPTATION**

INTERMITTENT FAULT

Check the transmission control module (TCM) connector and transmission connector C. Check for contact resistance and oxidation according to **CONTACT RESISTANCE AND OXIDATION** .

Check the cable between control module terminal #A48 (#A48) and transmission connector terminal #C3 (control module side). Check for an intermittent open-circuit according to **OPEN-CIRCUIT, INTERMITTENT FAULTS** .

- Check the circuit for solenoid S3. Switch off the ignition. Disconnect the control module. Measure the resistance between terminals #A48 (#A48) and #A53 (#A53) on the breakout box. The resistance must be 11-15 ohms.

Remedy as necessary.

Other information:

- To connect the breakout box, see **CONNECTING THE BREAKOUT BOX**
- To disconnect the transmission connectors, see **CONNECTORS, TRANSMISSION, DISCONNECTING / CONNECTING**
- For information about signals, see **SIGNAL DESCRIPTION. TRANSMISSION CONTROL MODULE (TCM)** .

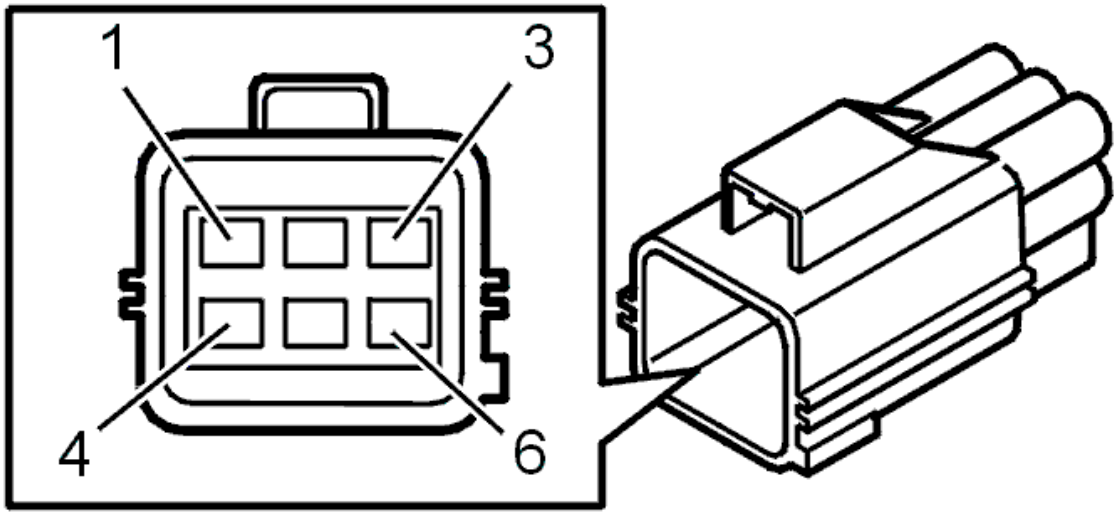

Fig. 281: Identifying Transmission Connector Terminals
Courtesy of VOLVO CARS CORPORATION

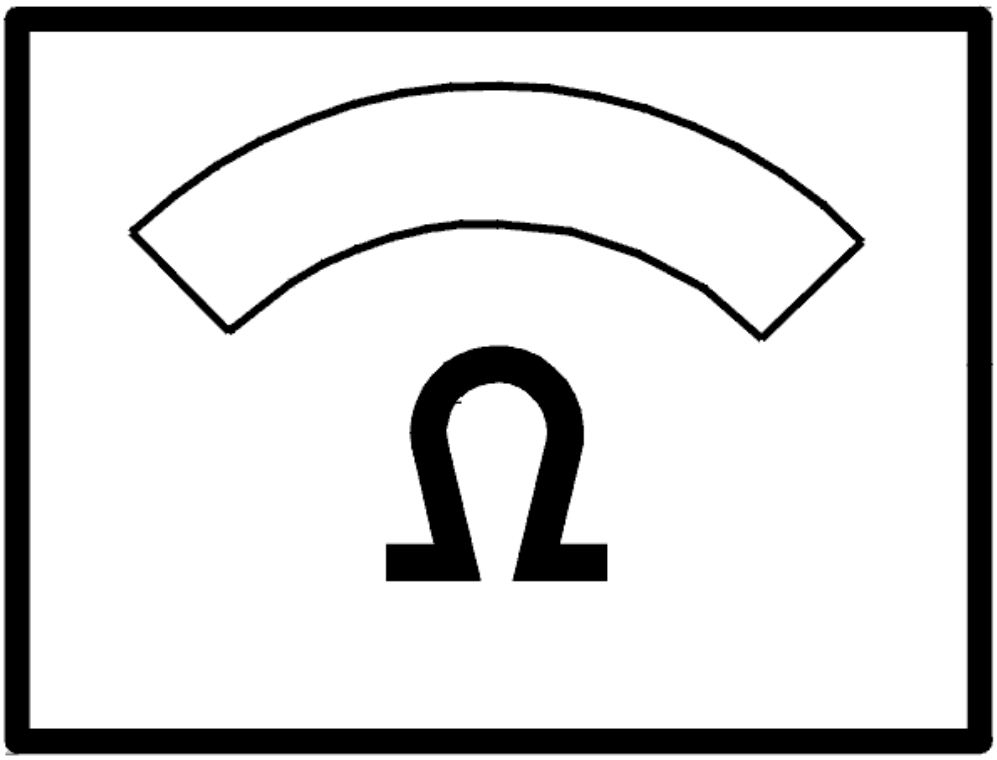

Fig. 282: Identifying Ohms Display
Courtesy of VOLVO CARS CORPORATION

- **Continue**

  Refer to **INFORMATION**

RESETTING THE ADAPTATION

RESETTING ADAPTATION AND THE COUNTER FOR "TRANSMISSION OIL CHANGE"

HINT: The transmission has torque controlled adaptive pressure control. Pressure control means that the transmission regulates the pressure itself during each gear shift. This avoids harsh gear shifting. Each gear shift is evaluated by the control module and stored in the memory. This allows for compensation for wear and tear in the transmission and clutch. It is important that the adaptation in the memory is reset after the transmission has been repaired. This is to ensure normal operation. The oil is replaced during

repair; the "Transmission oil change" counter must be reset. If the counter is not reset when the fluid is drained and replaced, there is a risk that a diagnostic trouble code (DTC) will be stored in incorrect circumstances.

NOTE: This applies only if the transmission or one of the components in the transmission have been replaced.

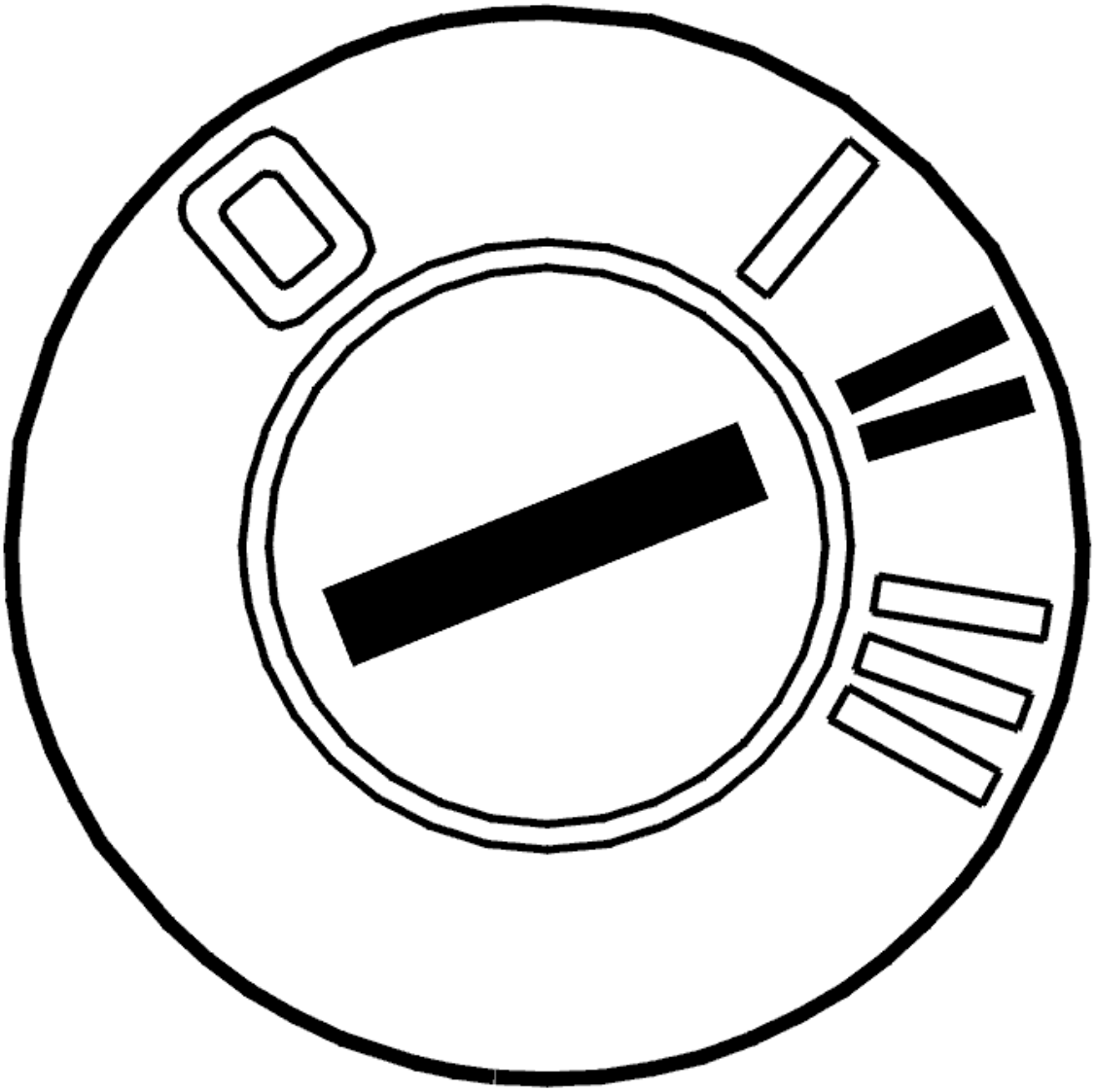

Fig. 283: Identifying Ignition ON
Courtesy of VOLVO CARS CORPORATION

- Ignition on.

  Use the VCT2000 (or appropriate scan tool) to reset the adaptation and counter.

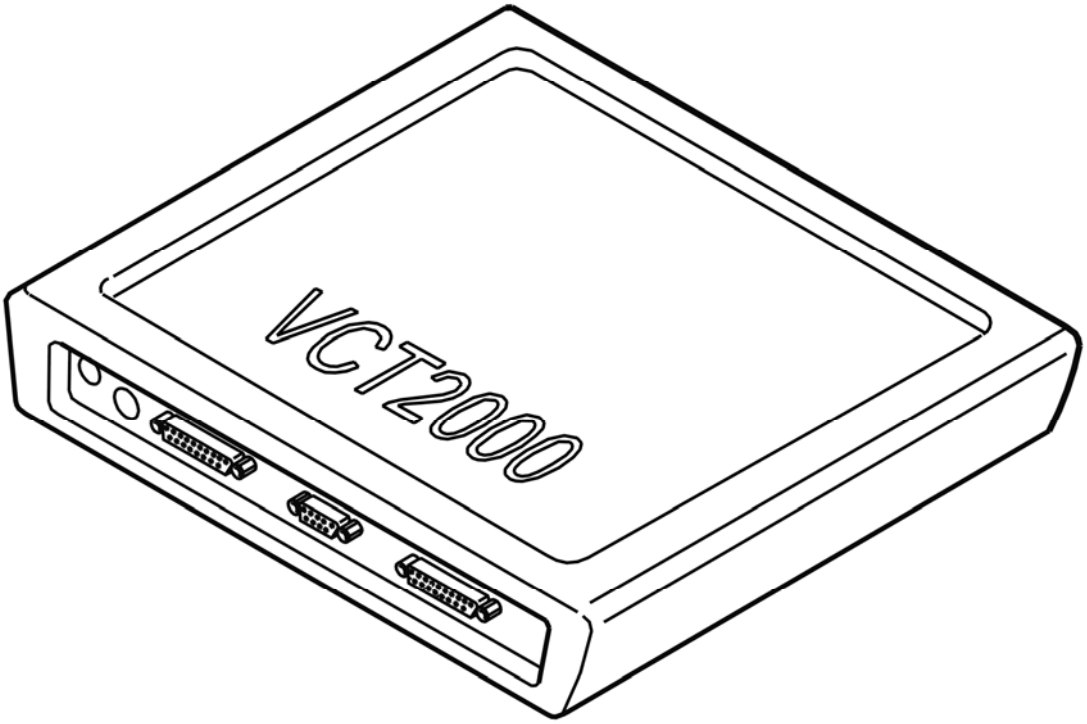

Fig. 284: Identifying VCT2000 Diagnostic Tool Symbol In VIDA
Courtesy of VOLVO CARS CORPORATION

- **Continue**

  Refer to **VERIFICATION**

VERIFICATION

VERIFICATION

HINT: After carrying out the repair, check that the fault has been remedied.

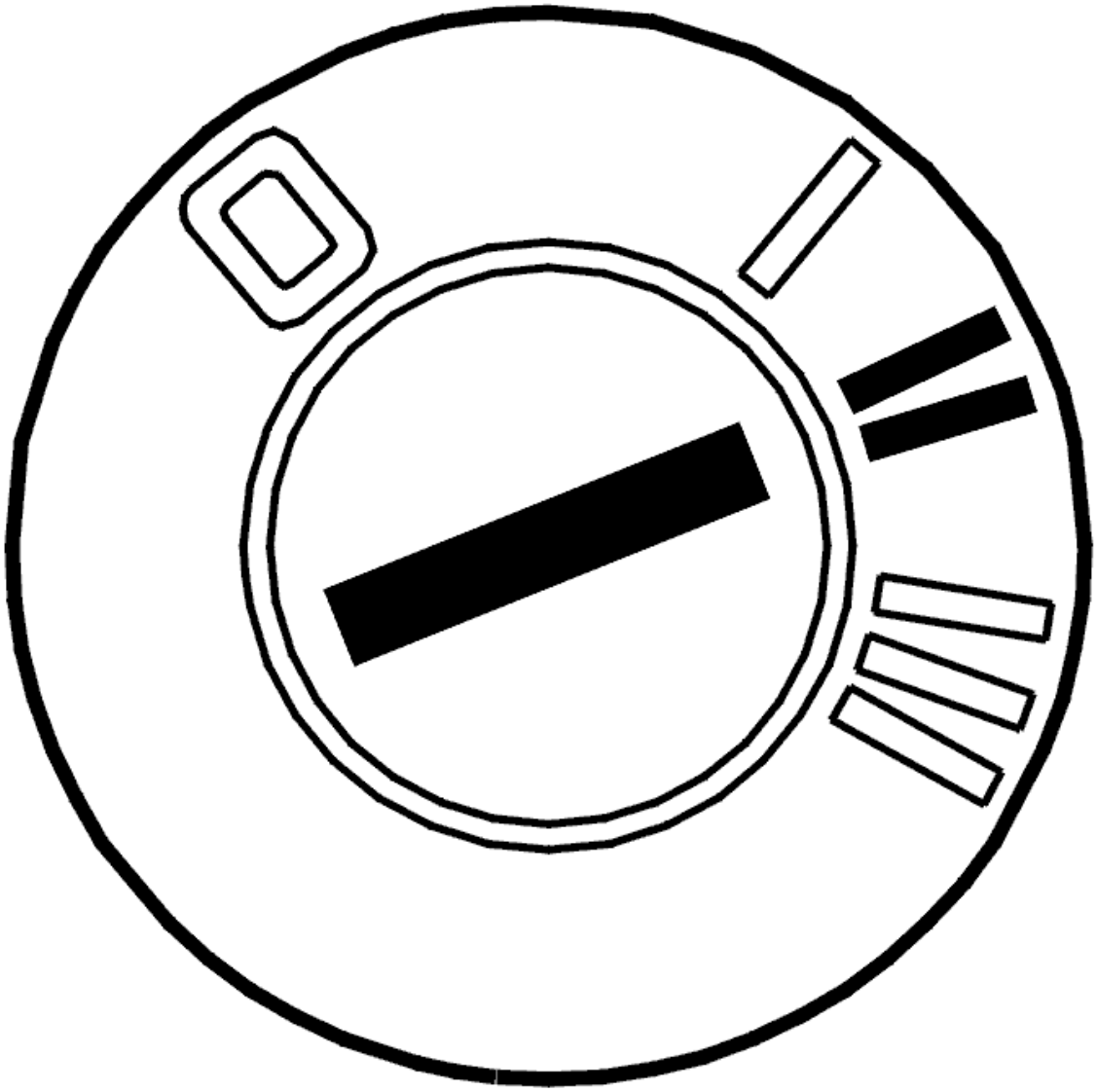

Fig. 285: Identifying Ignition ON
Courtesy of VOLVO CARS CORPORATION

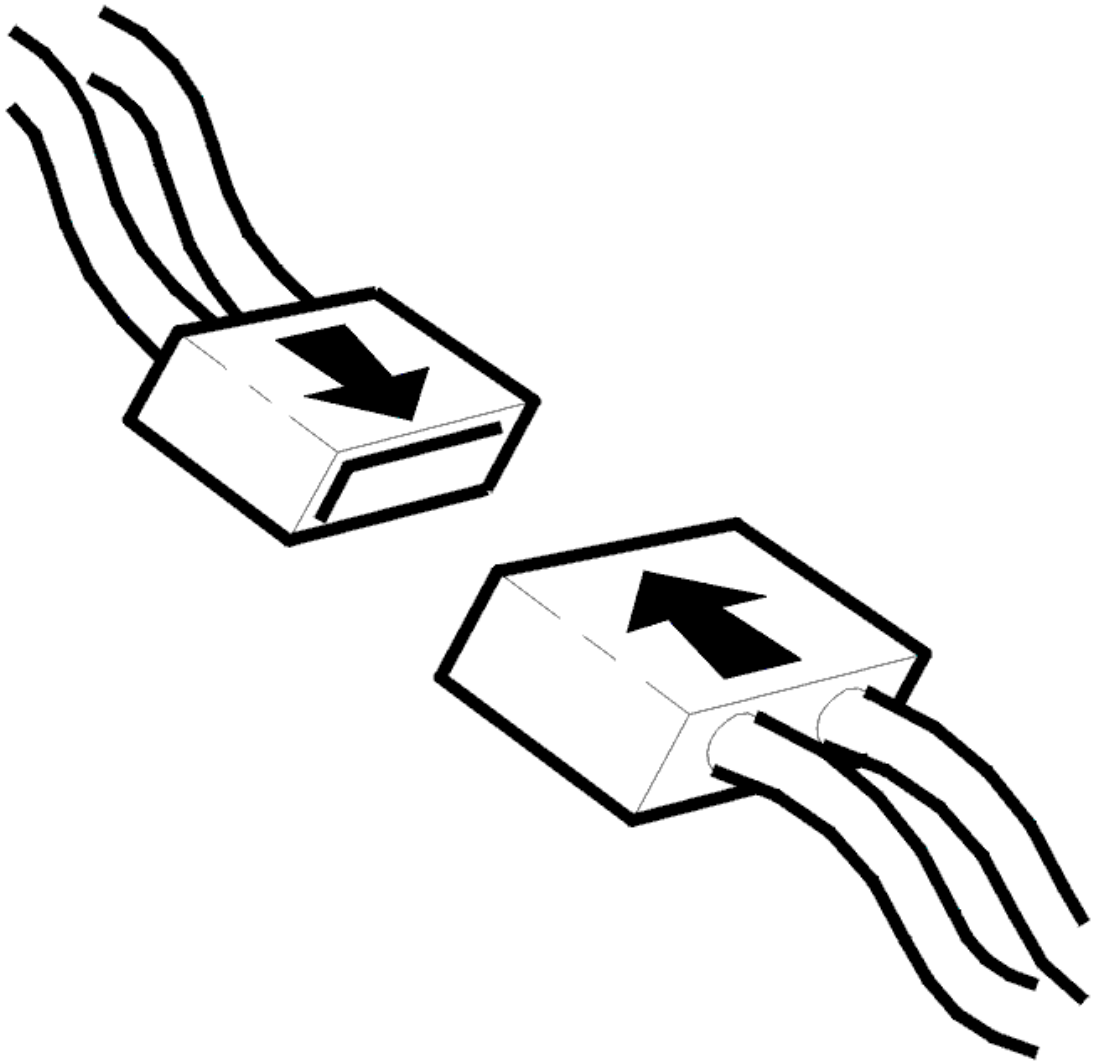

Fig. 286: Identifying Connector(s) Reinstallation
Courtesy of VOLVO CARS CORPORATION

- Ignition off.
- Reinstall the components, reconnect the connectors etc.
- Ignition on.
- Gear selector in position P.
- Activate solenoid S3.

  The current should oscillate between 0 and 1.5 A.

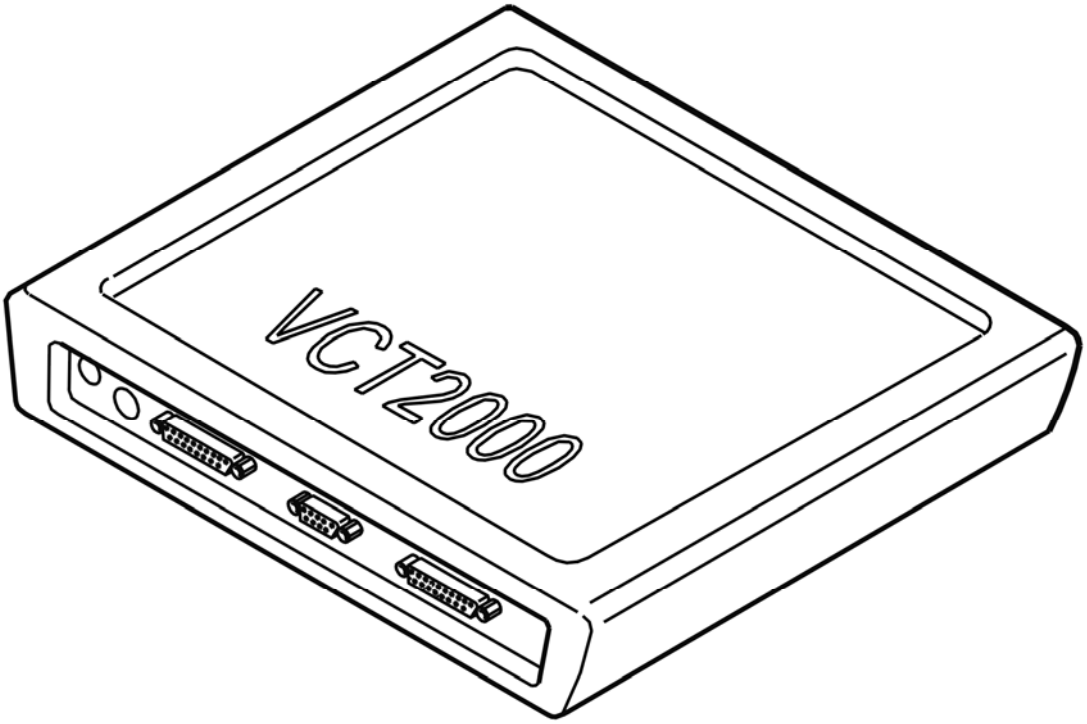

Fig. 287: Identifying VCT2000 Diagnostic Tool Symbol In VIDA
Courtesy of VOLVO CARS CORPORATION

Does the current oscillate?

- **YES**

  VERIFIED: Troubleshooting has been completed.

- **NO**

  Refer to **INFORMATION**

INFORMATION

FAULT-TRACING INFORMATION

The fault should have been detected and remedied. As this is not the case fault-tracing has failed.

Exit fault-tracing for this diagnostic trouble code (DTC) or make another attempt.

INFORMATION

FAULT-TRACING INFORMATION

If the fault is intermittent, do not verify fault-tracing if the fault does not recur.

It is possible to view the information again, or leave fault-tracing for this diagnostic trouble code (DTC).

FAULTY SIGNAL

CHECKING TRANSMISSION FLUID TEMPERATURE SENSOR

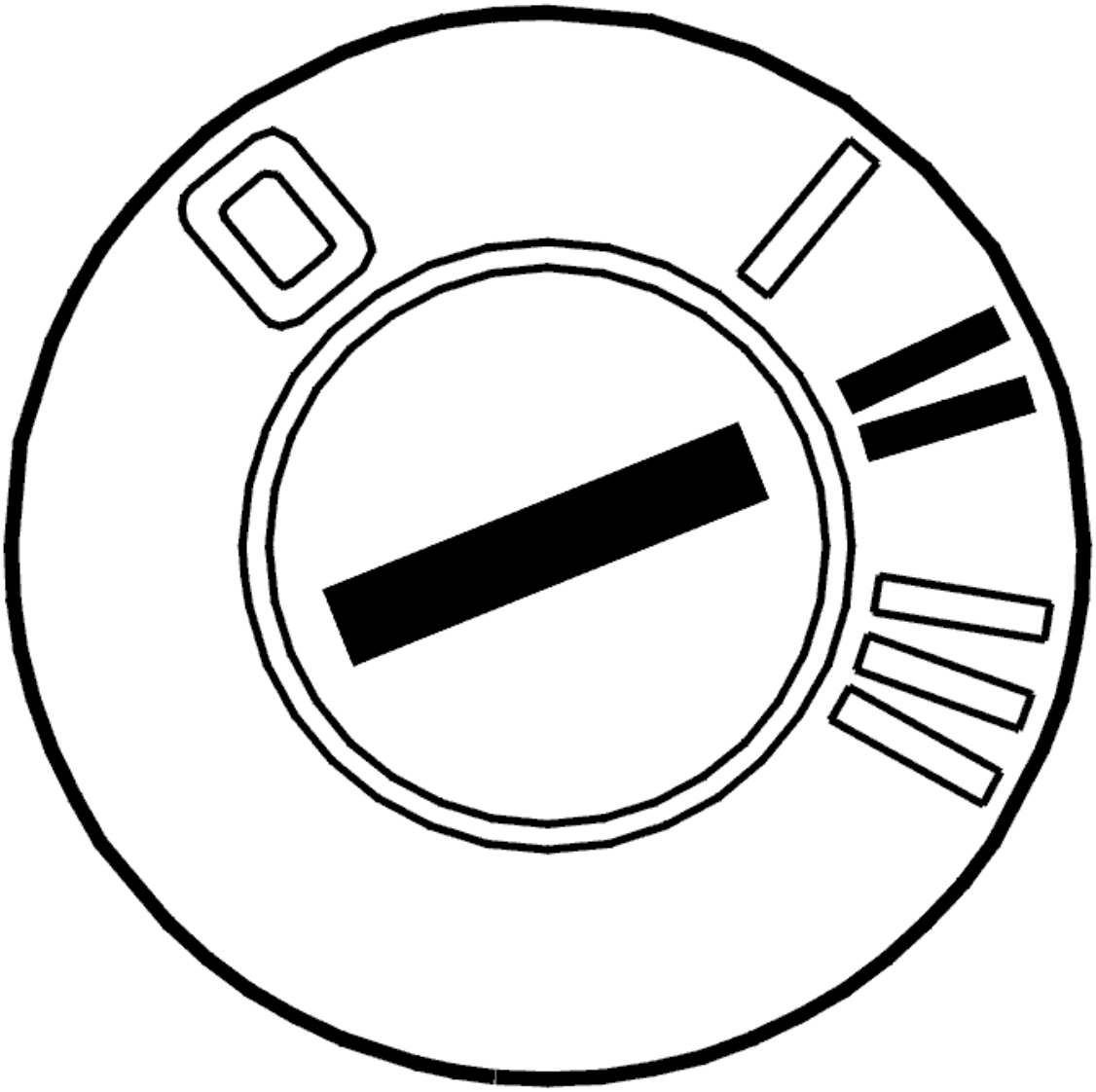

Fig. 288: Identifying Ignition ON
Courtesy of VOLVO CARS CORPORATION

- Ignition on
- Read off the oil temperature.

  Check that the temperature is within its permitted range.

Compare with the transmission temperature.

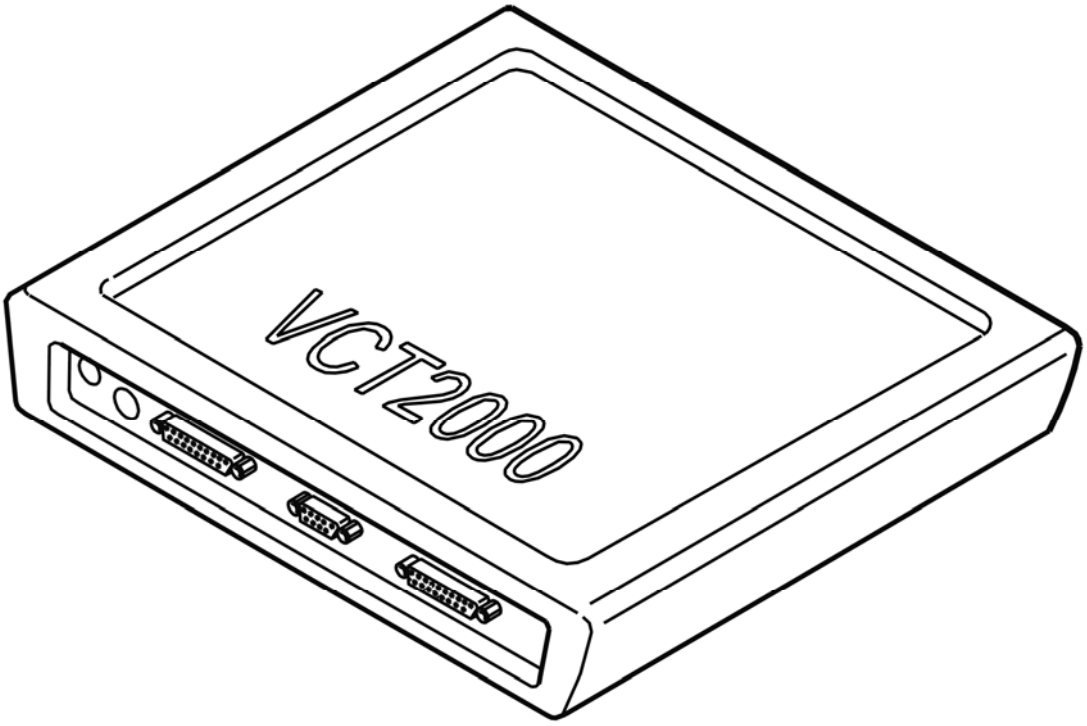

Fig. 289: Identifying VCT2000 Diagnostic Tool Symbol In VIDA
Courtesy of VOLVO CARS CORPORATION

Was the transmission temperature within its permitted range?

- **YES**

  Refer to **INTERMITTENT FAULT**

- **NO**

  Refer to **CHECKING TRANSMISSION FLUID TEMPERATURE SENSOR**

CHECKING TRANSMISSION FLUID TEMPERATURE SENSOR

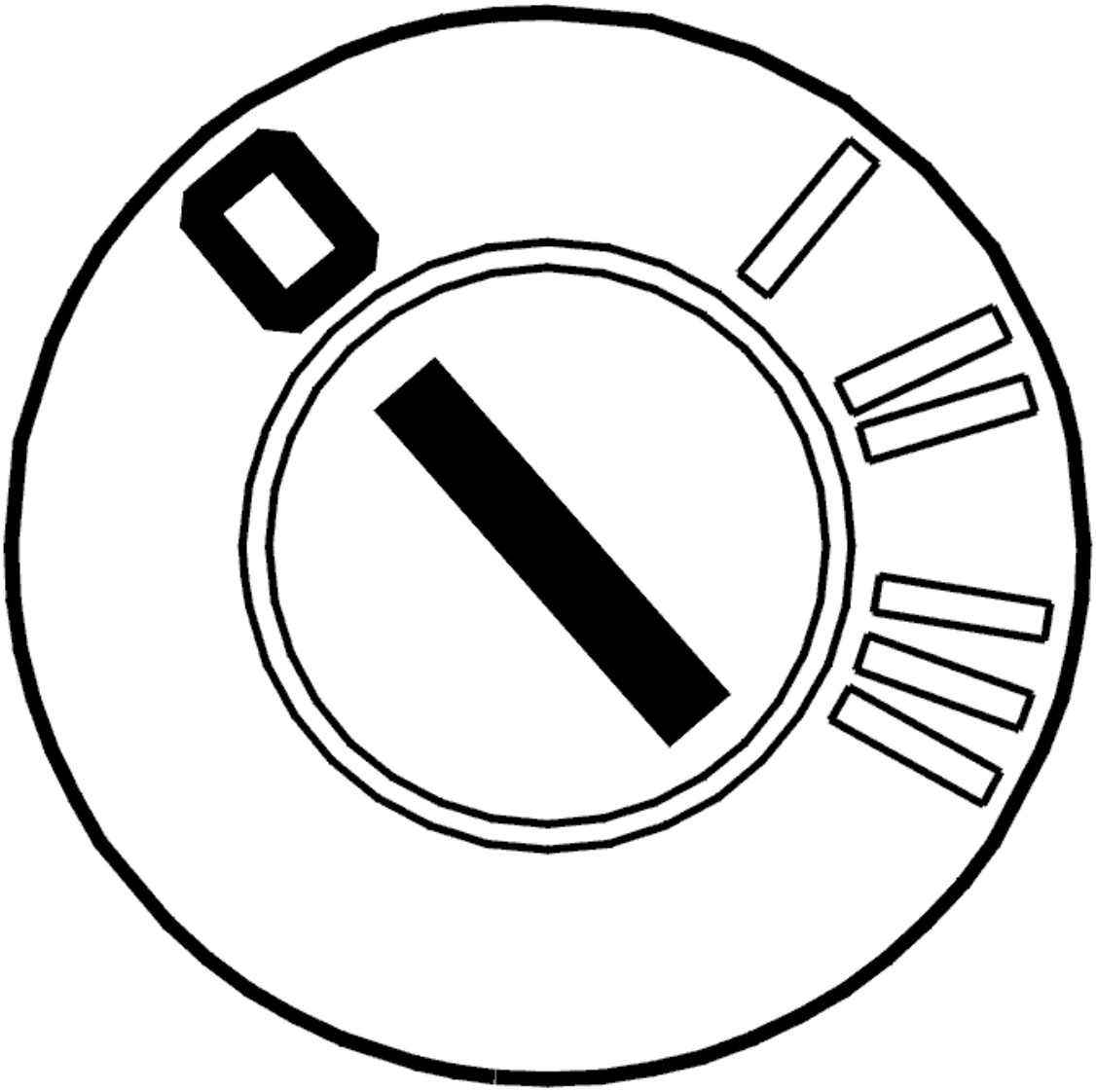

Fig. 290: Identifying Ignition OFF
Courtesy of VOLVO CARS CORPORATION

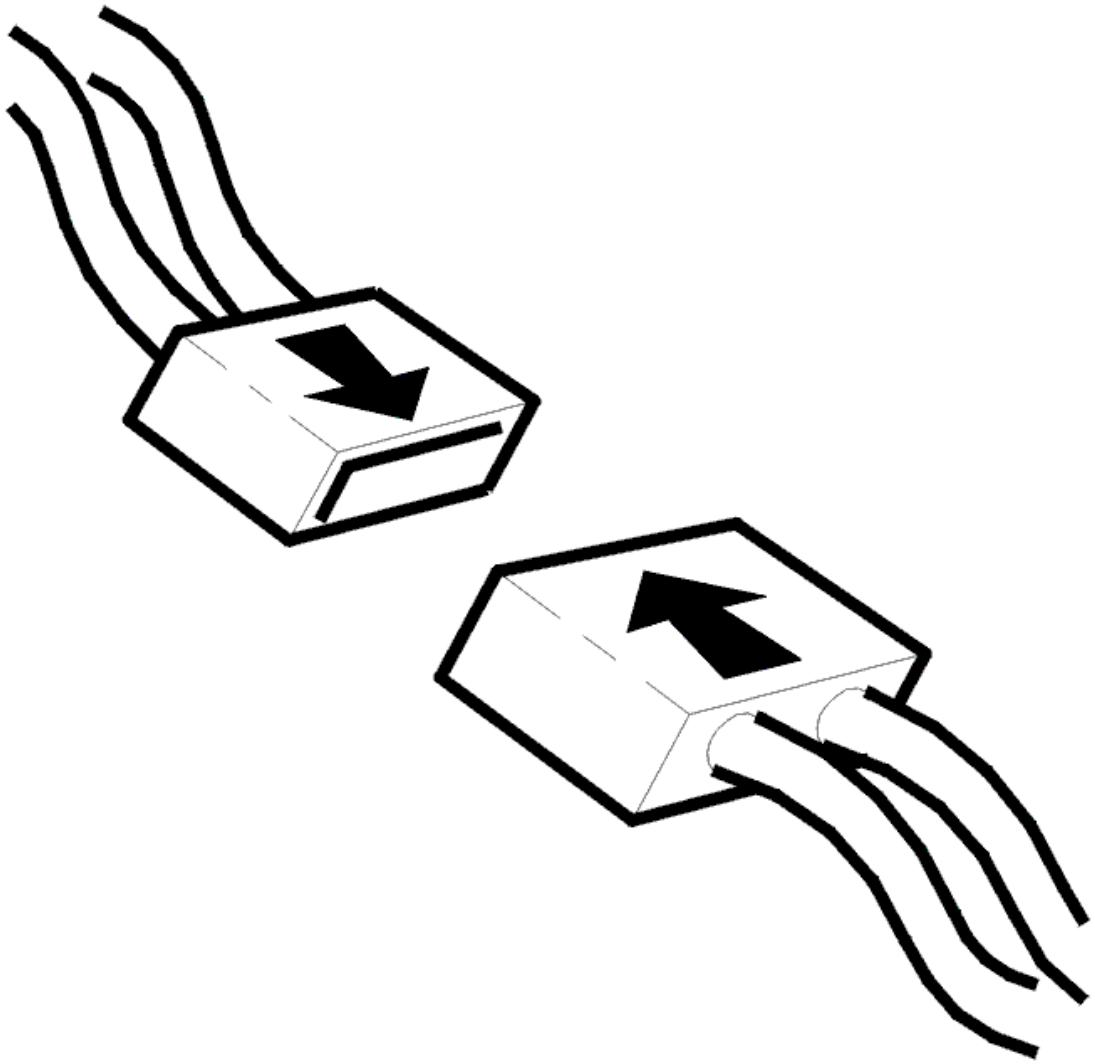

Fig. 291: Identifying Connector(s) Reinstallation
Courtesy of VOLVO CARS CORPORATION

- Ignition off
- Transmission connector D disconnected.

  Check the temperature sensor. Measure the resistance between transmission connector D terminals #D7 and #D8.

  The resistance must be 4.5-6 kohms at 20°C.

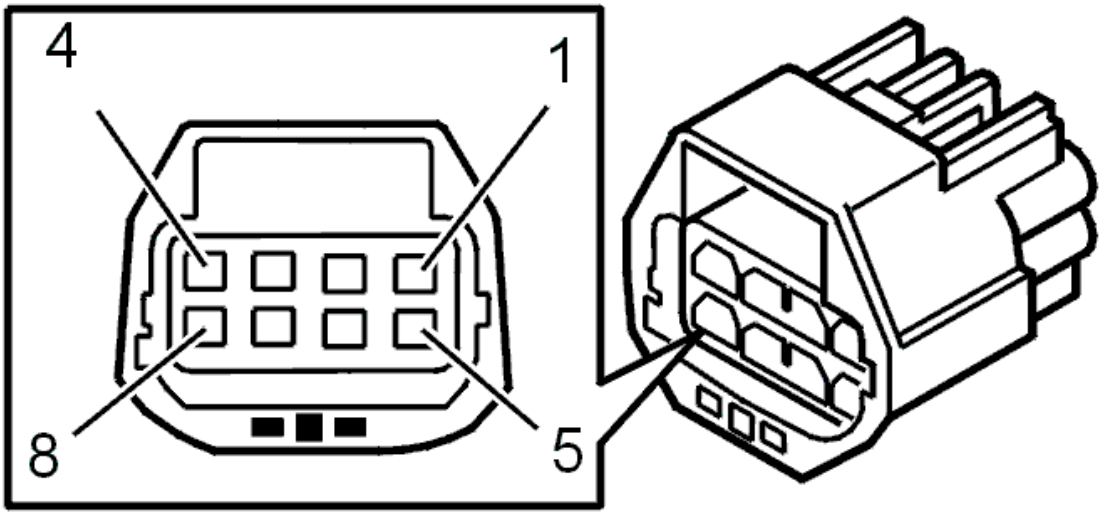

Fig. 292: Identifying 8-Pin Transmission Connector Terminals
Courtesy of VOLVO CARS CORPORATION

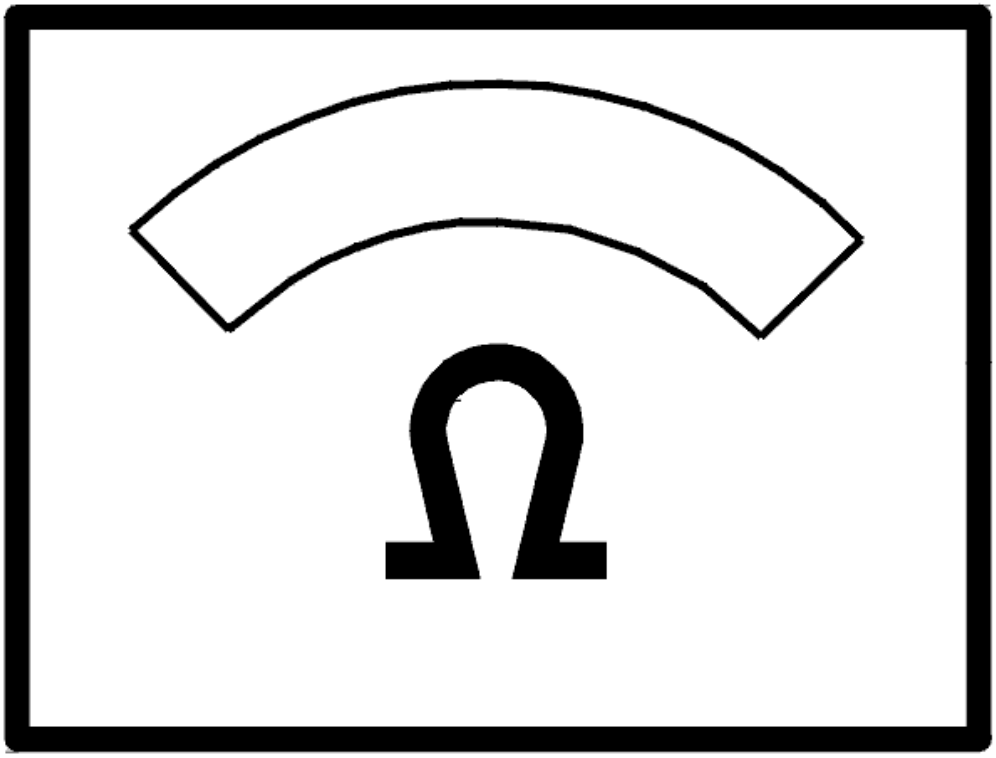

Fig. 293: Identifying Ohms Display
Courtesy of VOLVO CARS CORPORATION

Was the resistance OK?

- **YES**

  Refer to **CHECKING TRANSMISSION FLUID TEMPERATURE SENSOR**

- **NO**

  Refer to **CHECKING THE CABLE AND COMPONENT**

CHECKING TRANSMISSION FLUID TEMPERATURE SENSOR

Check the cable between control module terminal #A37 (#A37) and transmission connector terminal #D7

(control module side). Check for an open-circuit according to **OPEN-CIRCUIT, PERMANENT FAULTS** .

Check the cable between control module terminal #A55 (#A55)and transmission connector terminal #D8 (control module side). Check for an open-circuit according to **OPEN-CIRCUIT, PERMANENT FAULTS** .

Remedy as necessary.

Other information:

- To connect the breakout box, see **CONNECTING THE BREAKOUT BOX**
- To disconnect the transmission connectors, see **CONNECTORS, TRANSMISSION, DISCONNECTING / CONNECTING**
- For information about signals, see **SIGNAL DESCRIPTION. TRANSMISSION CONTROL MODULE (TCM)** .

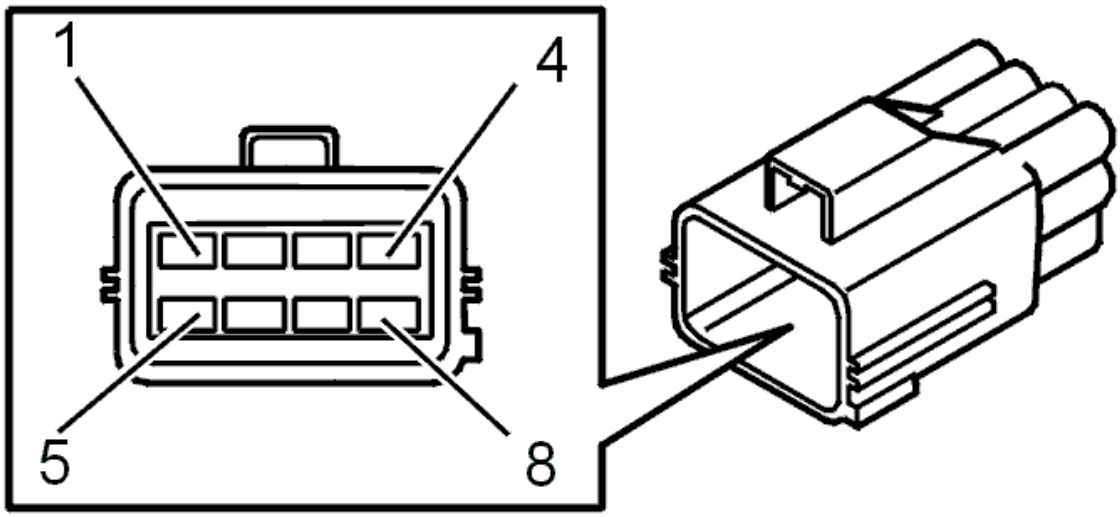

Fig. 294: Identifying Transmission Connector Terminals
Courtesy of VOLVO CARS CORPORATION

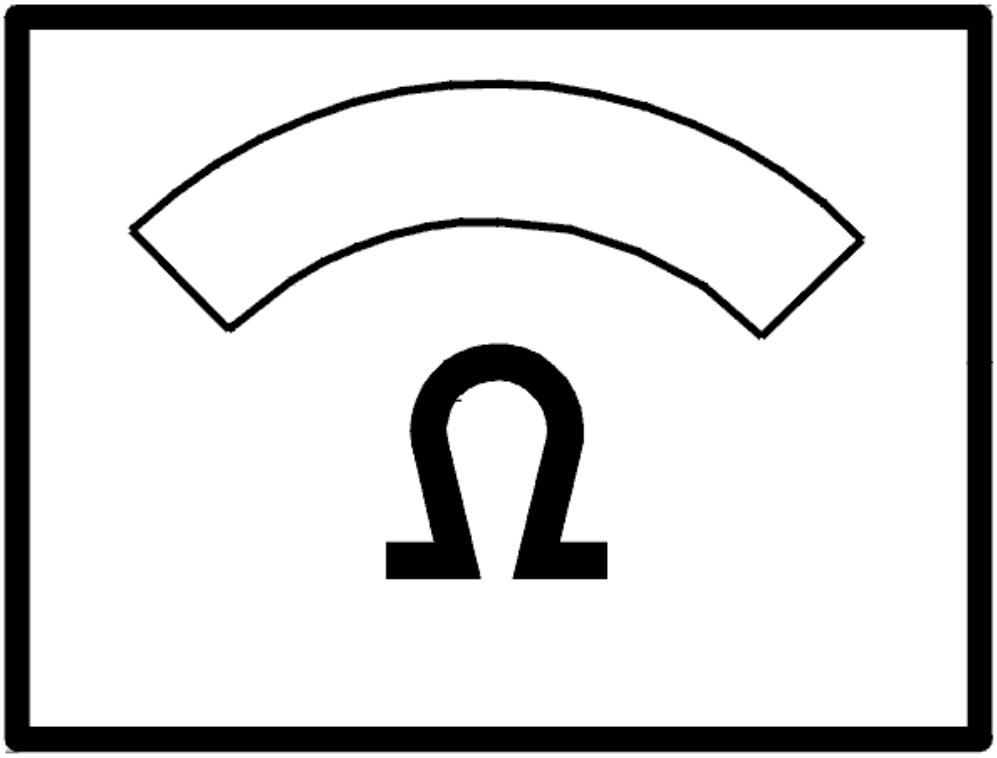

Fig. 295: Identifying Ohms Display
Courtesy of VOLVO CARS CORPORATION

Was a fault detected?

- **YES**

  Refer to **VERIFICATION**

- **NO**

  Refer to **CHECKING THE CABLE AND COMPONENT**

CHECKING THE CABLE AND COMPONENT

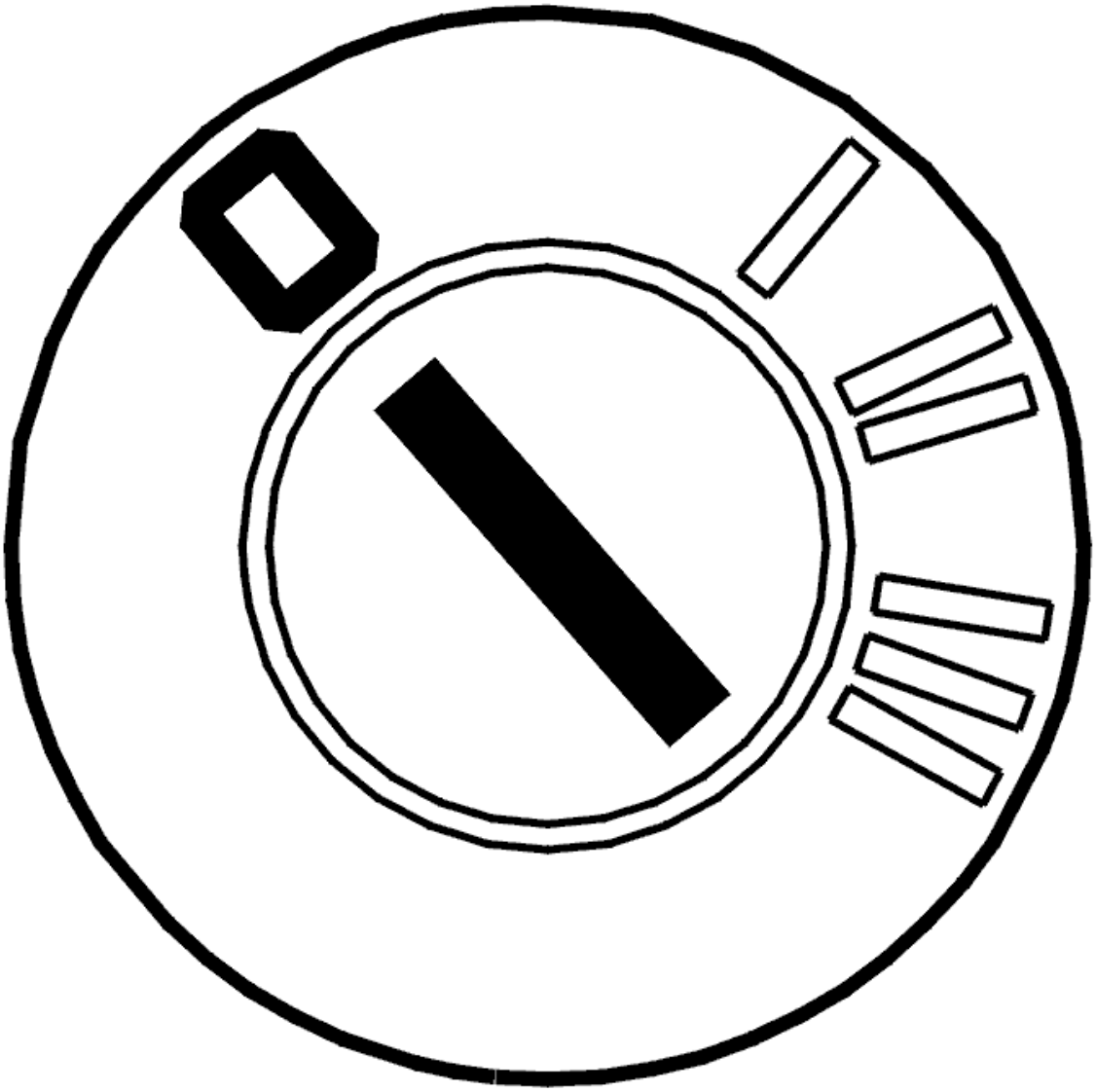

Fig. 296: Identifying Ignition OFF
Courtesy of VOLVO CARS CORPORATION

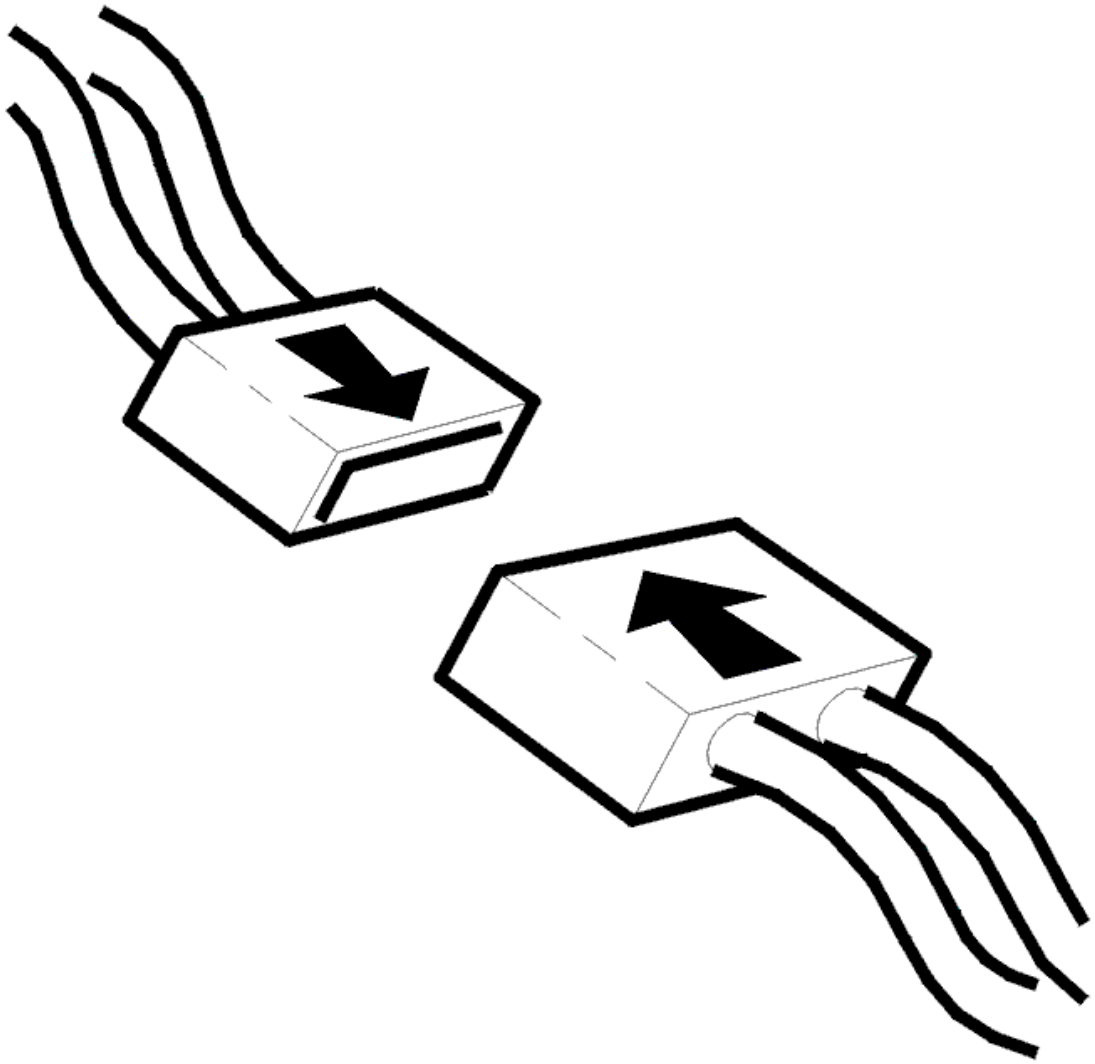

Fig. 297: Identifying Connector(s) Reinstallation
Courtesy of VOLVO CARS CORPORATION

- Ignition off
- Open the transmission control system.

  Check the cable between transmission connector terminal #D7 and temperature sensor terminal #1. Check the cable between transmission connector #D8 and temperature sensor terminal #2. Check for an open-circuit according to **OPEN-CIRCUIT, PERMANENT FAULTS** .

  Also check the cables for a short-circuit to each other.

  HINT: Check the temperature sensor. With the ignition off and transmission connector D disconnected, measure the resistance between transmission connector D terminals #D7 and #D8. The resistance must be 4.5-6 kohms at 20 °C.

Remedy as necessary.

Other information:

- To connect the breakout box, see **CONNECTING THE BREAKOUT BOX**
- To disconnect the transmission connectors, see **CONNECTORS, TRANSMISSION, DISCONNECTING / CONNECTING**
- To open the transmission control system and to check or replace the temperature sensor, see **SOLENOID CONTROL SYSTEM, REPLACING**
- For information about signals, see **SIGNAL DESCRIPTION. TRANSMISSION CONTROL MODULE (TCM)** .

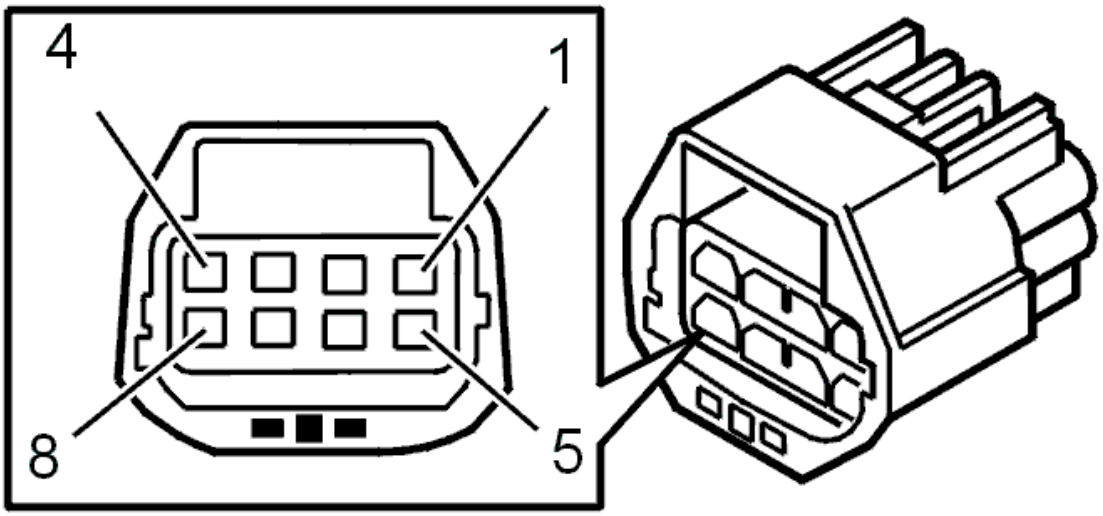

Fig. 298: Identifying 8-Pin Transmission Connector Terminals
Courtesy of VOLVO CARS CORPORATION

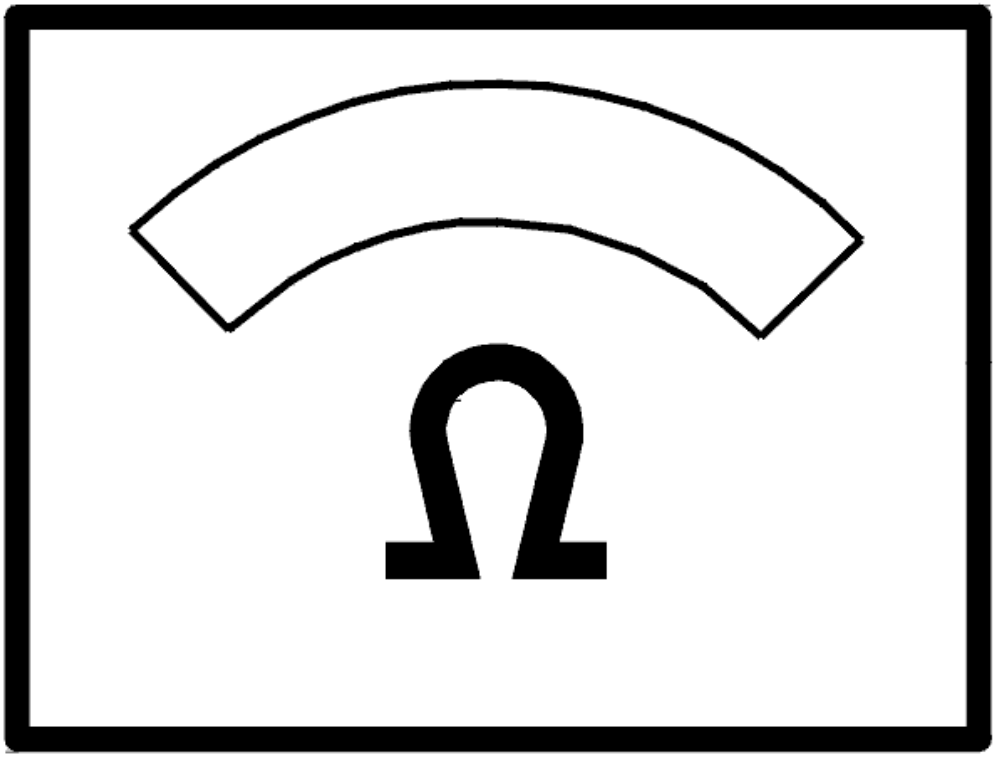

Fig. 299: Identifying Ohms Display
Courtesy of VOLVO CARS CORPORATION

- **Continue**

  Refer to **RESETTING TRANSMISSION FLUID CHANGE COUNTER**

INTERMITTENT FAULT

Check the transmission control module (TCM) and transmission connector D. Check for contact resistance and oxidation according to **CONTACT RESISTANCE AND OXIDATION** .

Check the cable between transmission control module (TCM) terminal #A37 (#A37) and transmission connector terminal #D7 (control module side). Check for an intermittent open-circuit according to **OPEN-CIRCUIT, INTERMITTENT FAULTS** .

Check the cable between control module terminal #A55 (#A55)and transmission connector terminal #D8 (control module side). Check for an intermittent open-circuit according to **OPEN-CIRCUIT, INTERMITTENT FAULTS** .

Remedy as necessary.

Other information:

- To connect the breakout box, see **CONNECTING THE BREAKOUT BOX**
- To disconnect the transmission connectors, see **CONNECTORS, TRANSMISSION, DISCONNECTING / CONNECTING**
- For information about signals, see **SIGNAL DESCRIPTION. TRANSMISSION CONTROL MODULE (TCM)** .

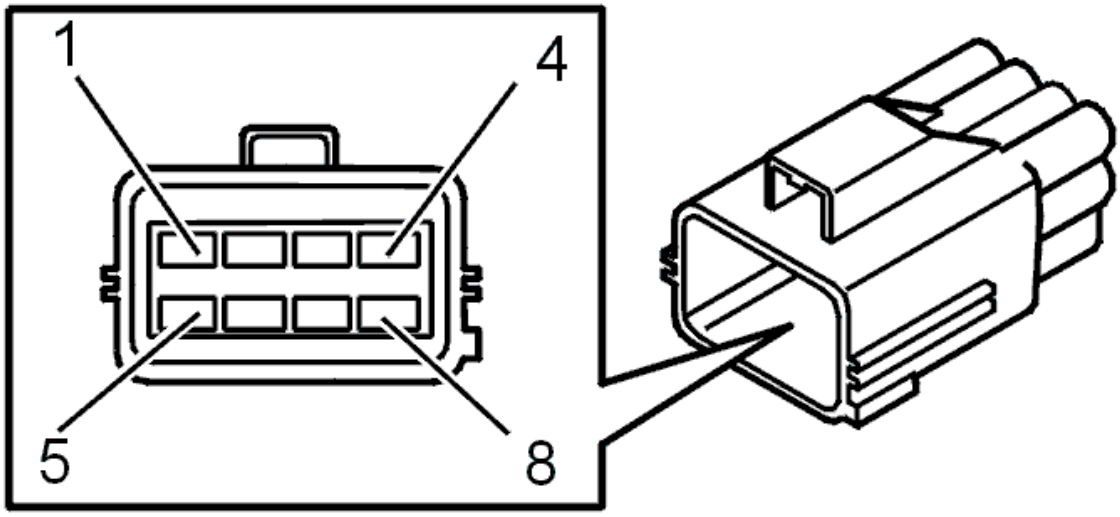

Fig. 300: Identifying Transmission Connector Terminals
Courtesy of VOLVO CARS CORPORATION

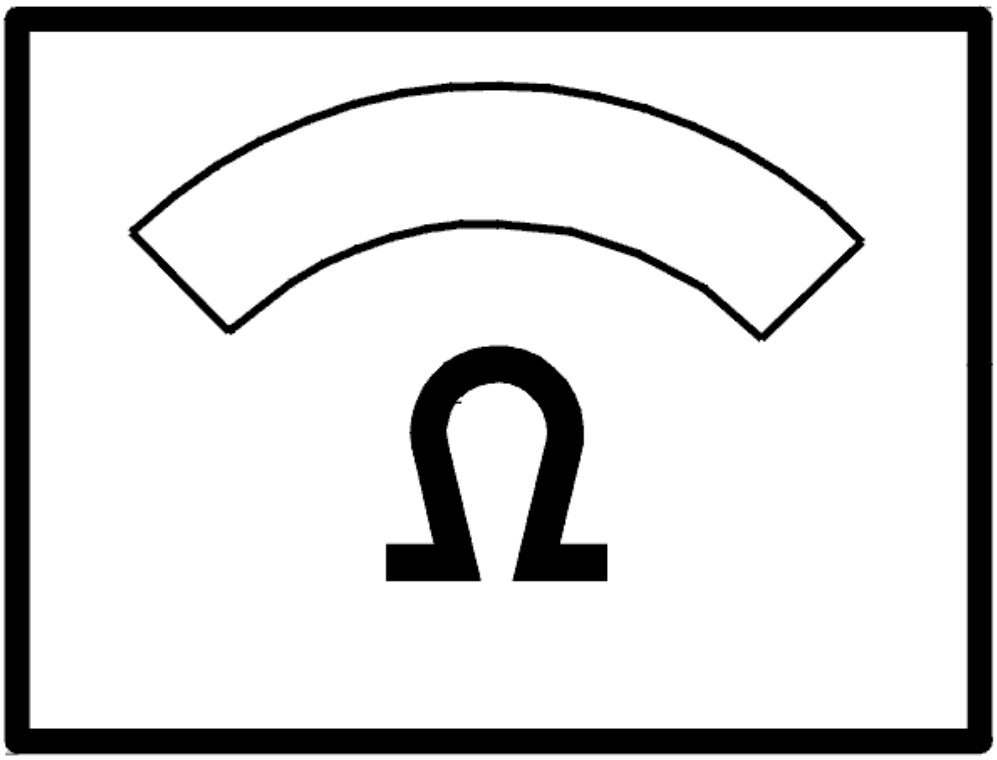

Fig. 301: Identifying Ohms Display
Courtesy of VOLVO CARS CORPORATION

- **Continue**

  Refer to **INFORMATION**

RESETTING TRANSMISSION FLUID CHANGE COUNTER

RESETTING TRANSMISSION FLUID CHANGE COUNTER

HINT: The transmission control module (TCM) has a counter for the oil quality. The counter counts up if the transmission is exposed to too high a load or an ambient temperature that is too high. If the counter is not reset when the oil is drained or changed, there is a risk that a diagnostic trouble code (DTC) will be stored in faulty circumstances. Therefore it is important that the "Transmission oil change" counter is reset.

NOTE: **This applies only when the transmission fluid is changed and when the fluid is changed when repairs are carried out to the transmission temperature sensor.**

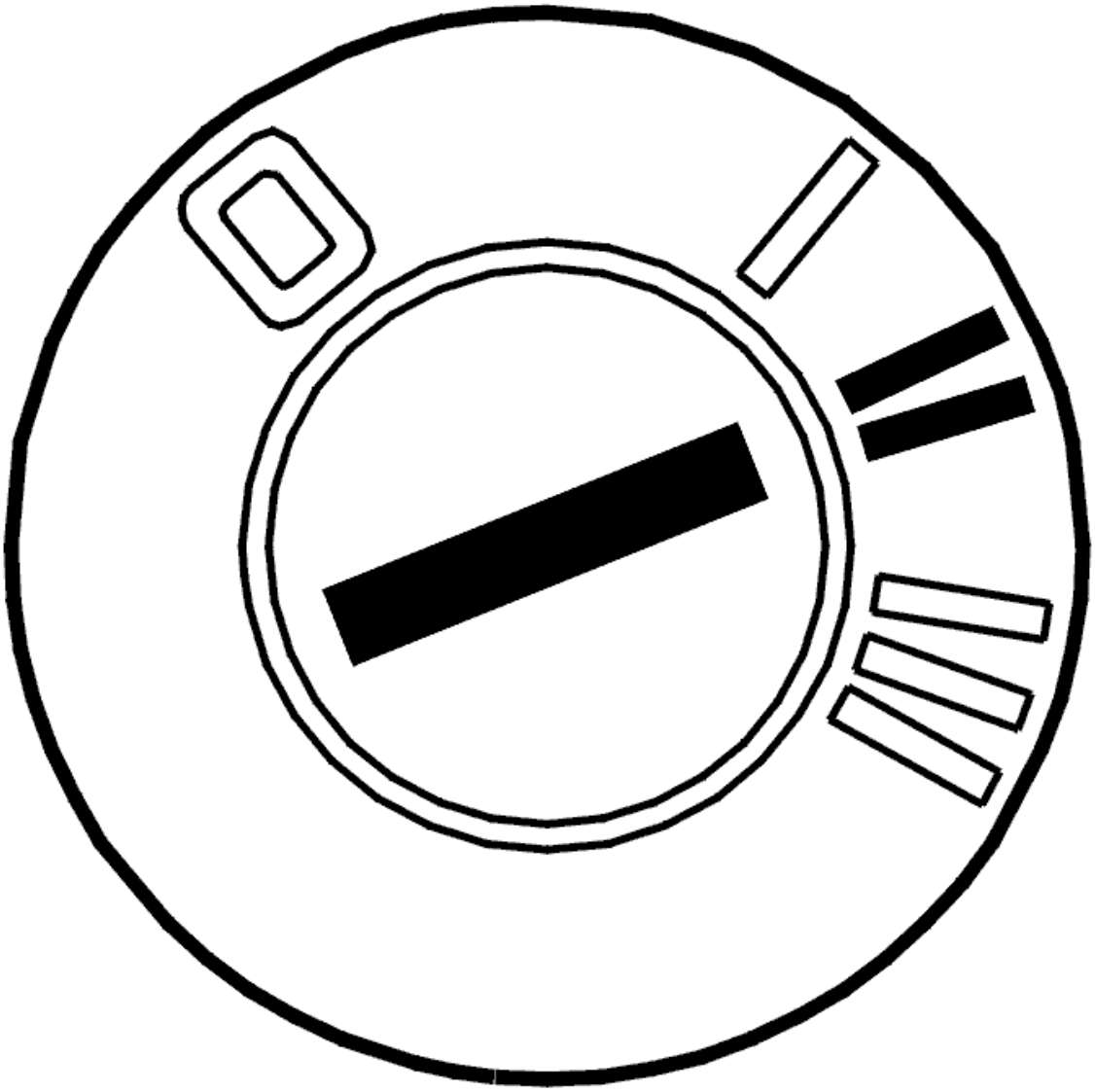

Fig. 302: Identifying Ignition ON
Courtesy of VOLVO CARS CORPORATION

- Ignition on.

  Reset the counter by clicking on the VCT 2000 symbol.

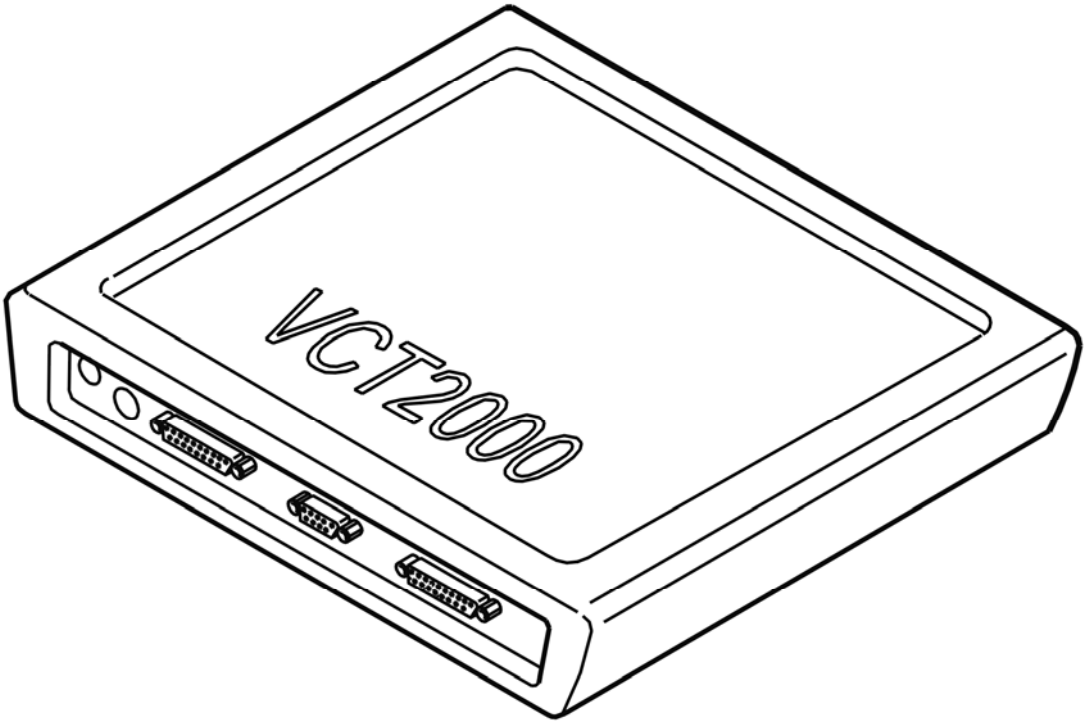

Fig. 303: Identifying VCT2000 Diagnostic Tool Symbol In VIDA
Courtesy of VOLVO CARS CORPORATION

- **Continue**

  Refer to **VERIFICATION**

VERIFICATION

VERIFICATION

HINT: After carrying out the repair, check that the fault has been remedied.

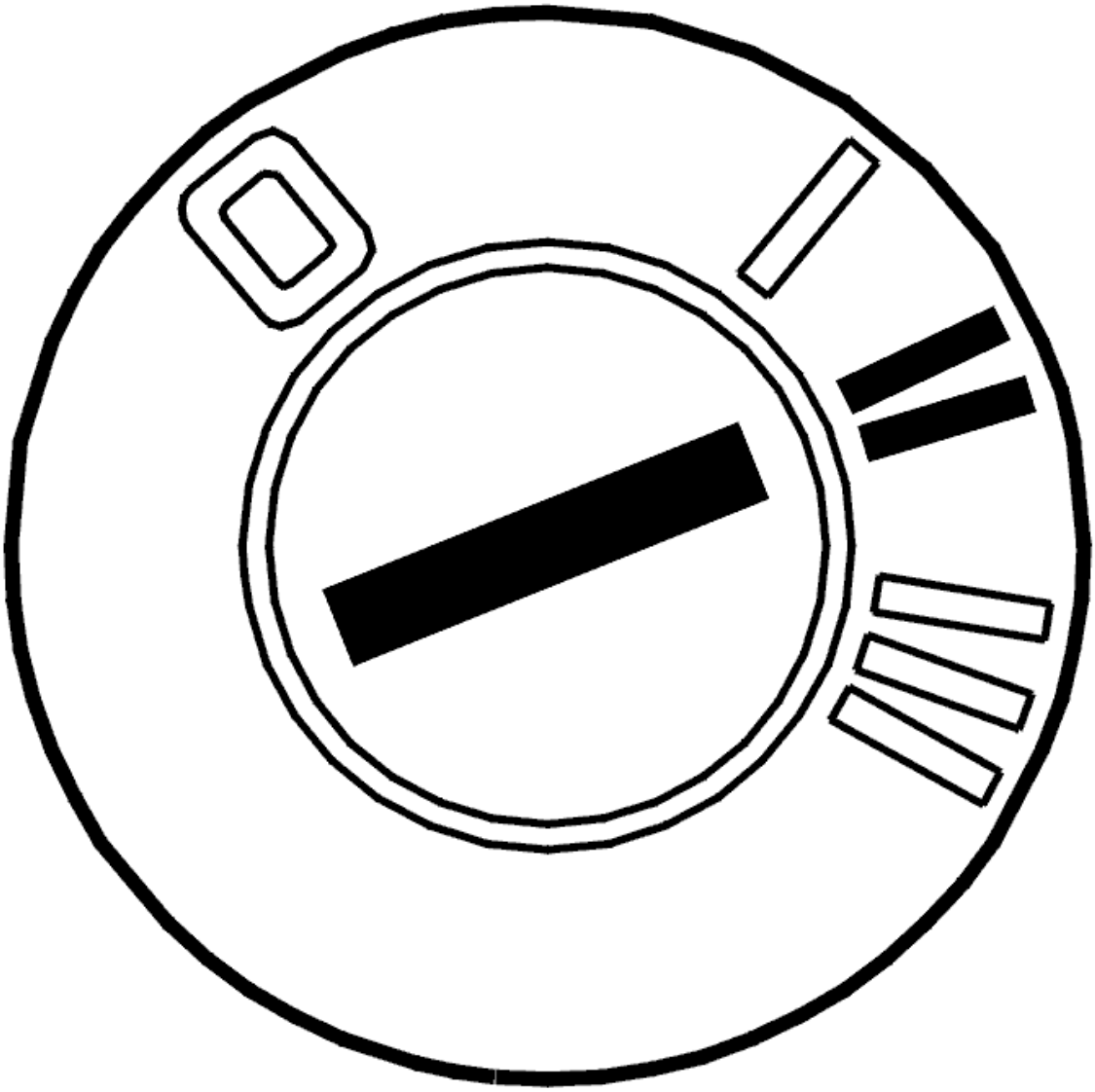

Fig. 304: Identifying Ignition ON
Courtesy of VOLVO CARS CORPORATION

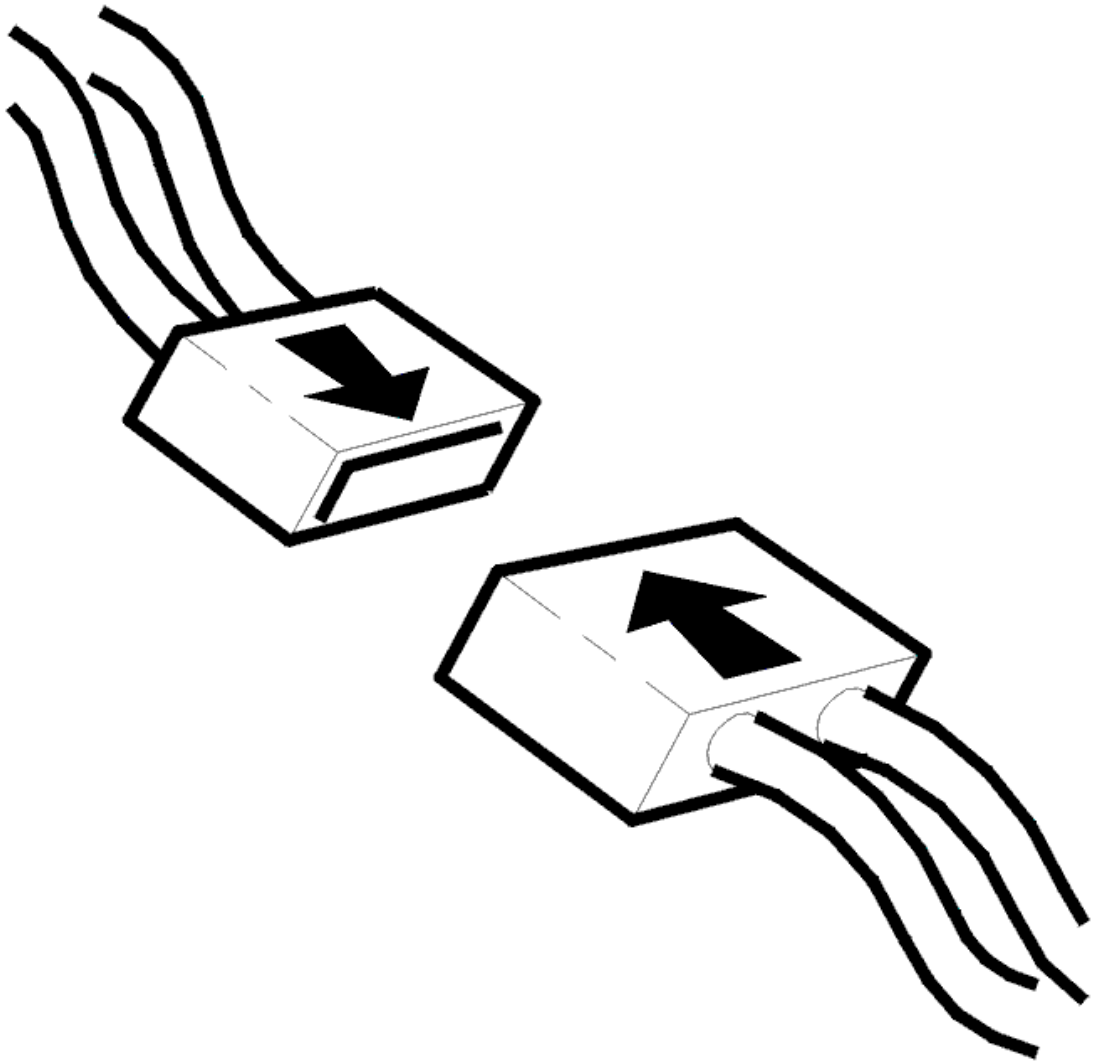

Fig. 305: Identifying Connector(s) Reinstallation
Courtesy of VOLVO CARS CORPORATION

- Ignition off.
- Reinstall the connectors, components etc.
- Ignition on.
- Read off the oil temperature.

Check that the transmission oil temperature is within its permitted range.

Compare with the transmission temperature.

NOTE: **The transmission temperature sensor is located inside the control unit and can be affected by the heat given off by the solenoids.**

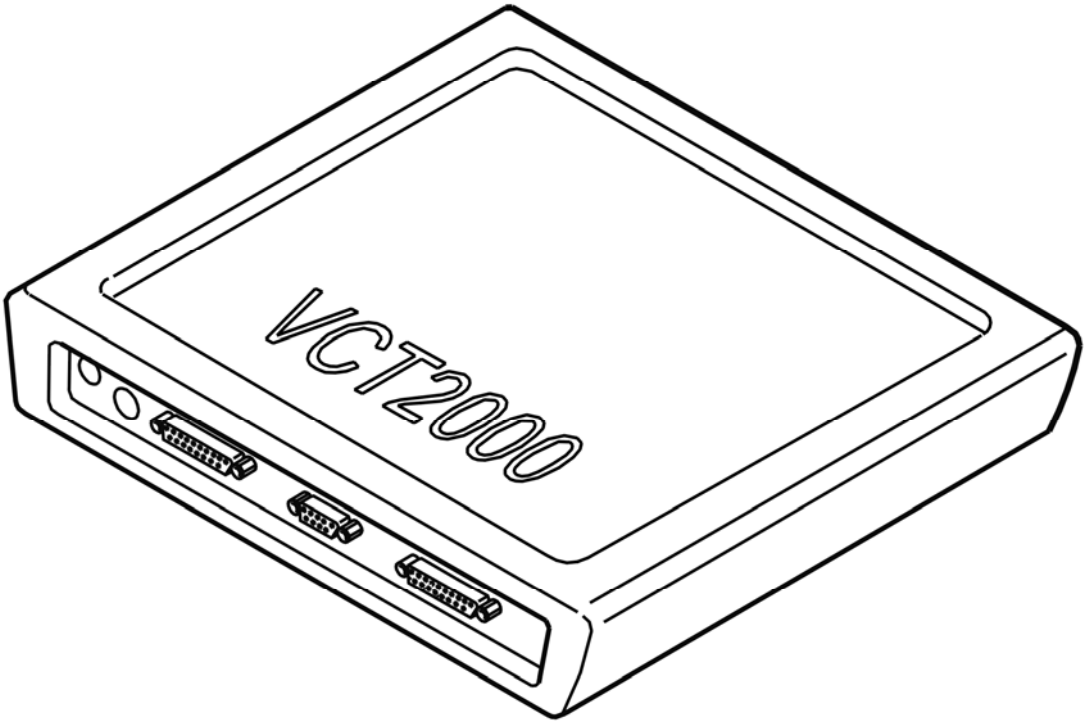

Fig. 306: Identifying VCT2000 Diagnostic Tool Symbol In VIDA
Courtesy of VOLVO CARS CORPORATION

Is the oil temperature within its permitted range?

- **YES**

  VERIFIED: Troubleshooting has been completed.

- **NO**

  Refer to **INFORMATION**

TCM-0103: SHIFT SOLENOID S3. SIGNAL TOO LOW (AW50/51 AWD; AW55-50/51SN; 2003-2007)

DIAGNOSTIC TROUBLE CODE (DTC) INFORMATION

Condition

Shift solenoids S1, S2, S3, S4 and S5 operate in tandem to control gear-shifting. Diagnostic trouble codes (DTCs) TCM-0003, TCM-0009, TCM-0103, TCM-0109 or TCM-010C are stored if the transmission control module (TCM) registers that there is a short-circuit to ground in circuits S1, S2, S3, S4 or S5 when the solenoid

should be activated.

Substitute Value

- The transmission control module (TCM) "Emergency mode I" program has been initiated.

Possible Source

- Short-circuit to ground in the signal cable.
- Defective solenoid.
- Internal fault in the control module.

Fault symptom[s]

- General orange warning lamp lit.
- No lock-up function.
- Harsh gear shifting.
- No shifting.

SIGNAL TOO LOW

CHECKS

CHECKING THE TEMPERATURE SENSOR

HINT: In some cases, the diagnostic trouble code (DTC) may be caused by a defective oil temperature sensor. Check the function of the oil temperature sensor first.

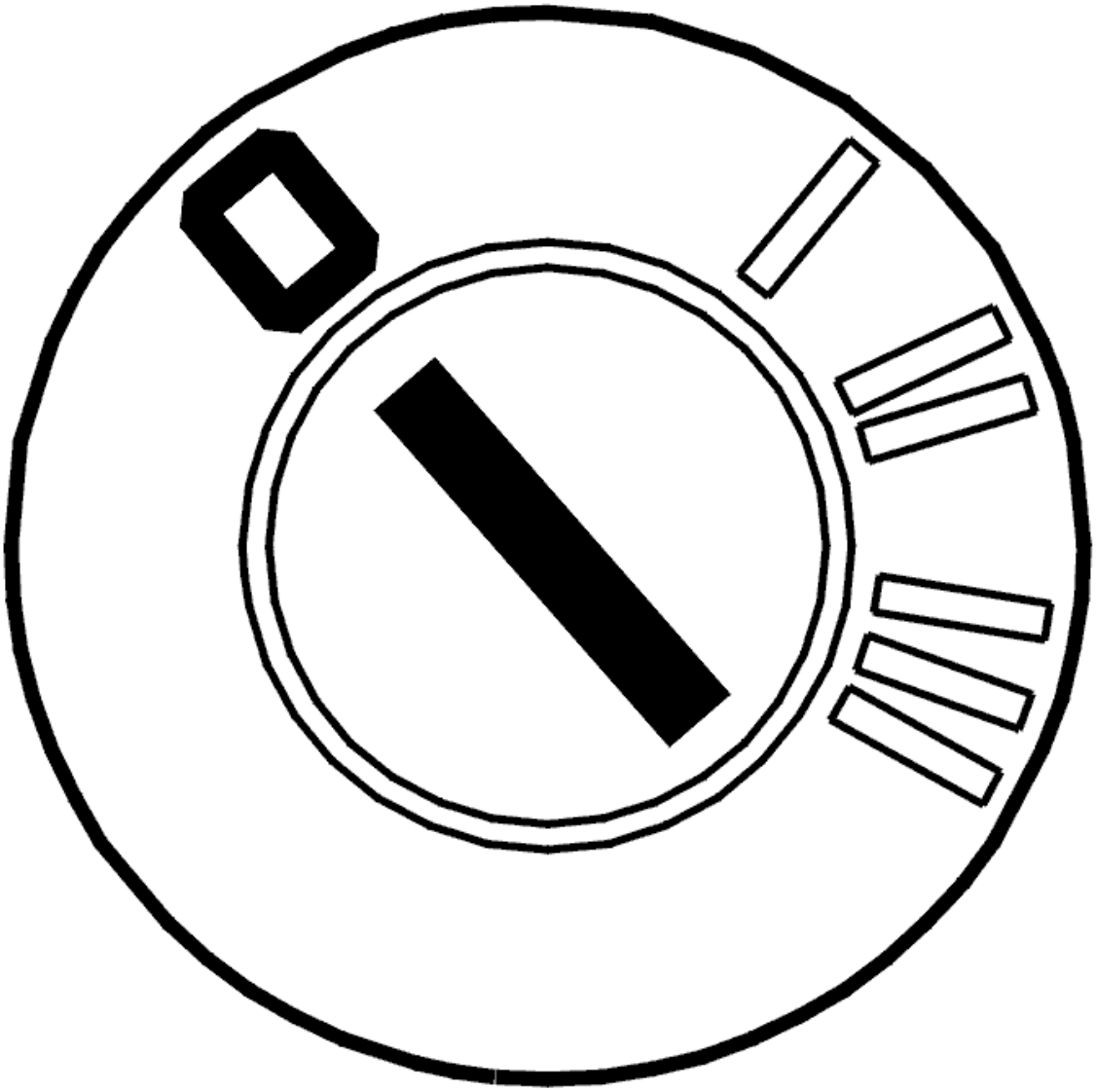

Fig. 307: Identifying Ignition OFF
Courtesy of VOLVO CARS CORPORATION

- Ignition off
- Read off the oil temperature.

  Check that the function of the temperature sensor is OK. Test drive the car to increase the temperature of the transmission fluid. Read off the temperature again. Check that the temperature has increased.

  HINT: If the temperature is outside its permitted range, fault-trace the temperature sensor.

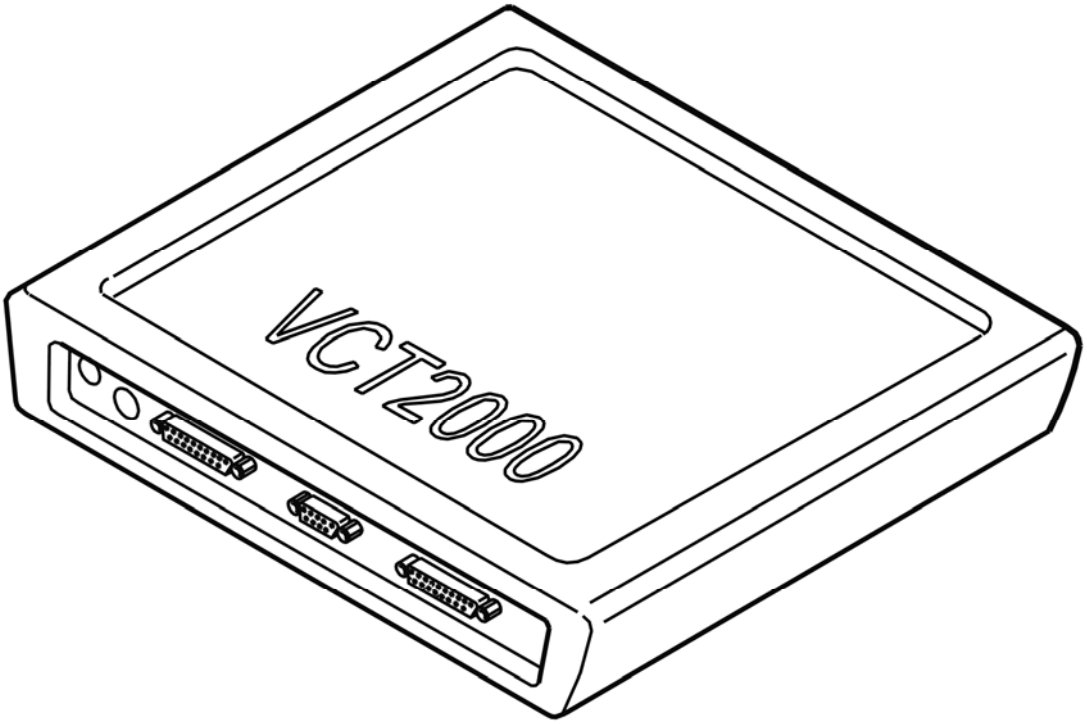

Fig. 308: Identifying VCT2000 Diagnostic Tool Symbol In VIDA
Courtesy of VOLVO CARS CORPORATION

Is the oil temperature within its permitted range?

- **YES**

  Refer to **CHECKING SHIFT SOLENOID S3**

- **NO**

  Refer to **FAULTY SIGNAL**

CHECKING SHIFT SOLENOID S3

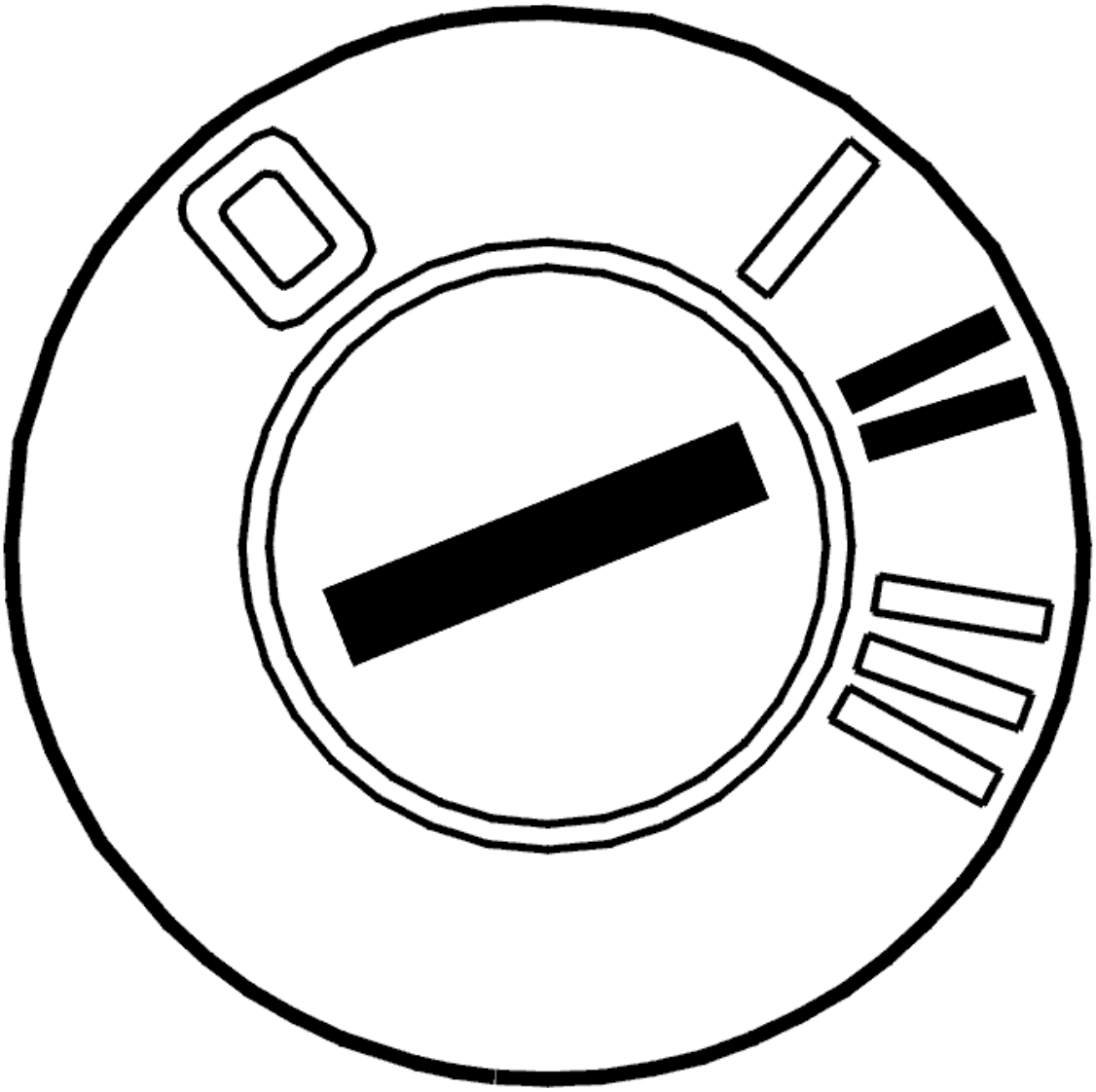

Fig. 309: Identifying Ignition ON
Courtesy of VOLVO CARS CORPORATION

- Ignition on
- Gear selector in position P
- Activate solenoid S3.

The value must change between OFF and ON.

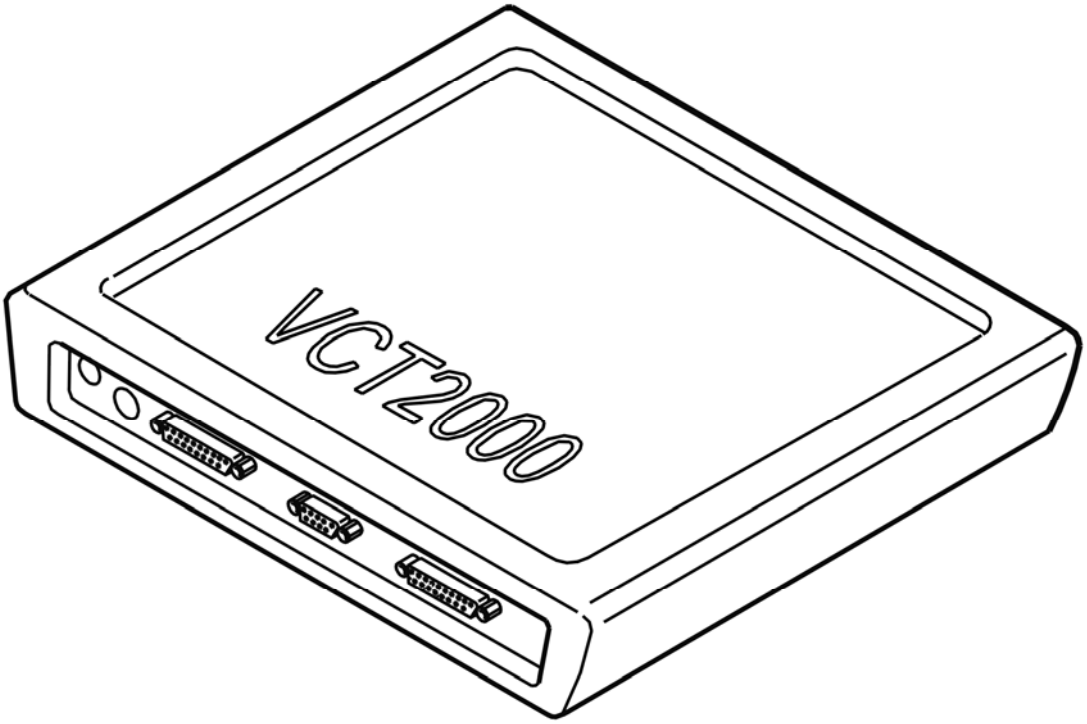

Fig. 310: Identifying VCT2000 Diagnostic Tool Symbol In VIDA
Courtesy of VOLVO CARS CORPORATION

Does the value change?

- **YES**

  Refer to **INTERMITTENT FAULT**

- **NO**

  Refer to **CHECKING RESISTANCE**

CHECKING RESISTANCE

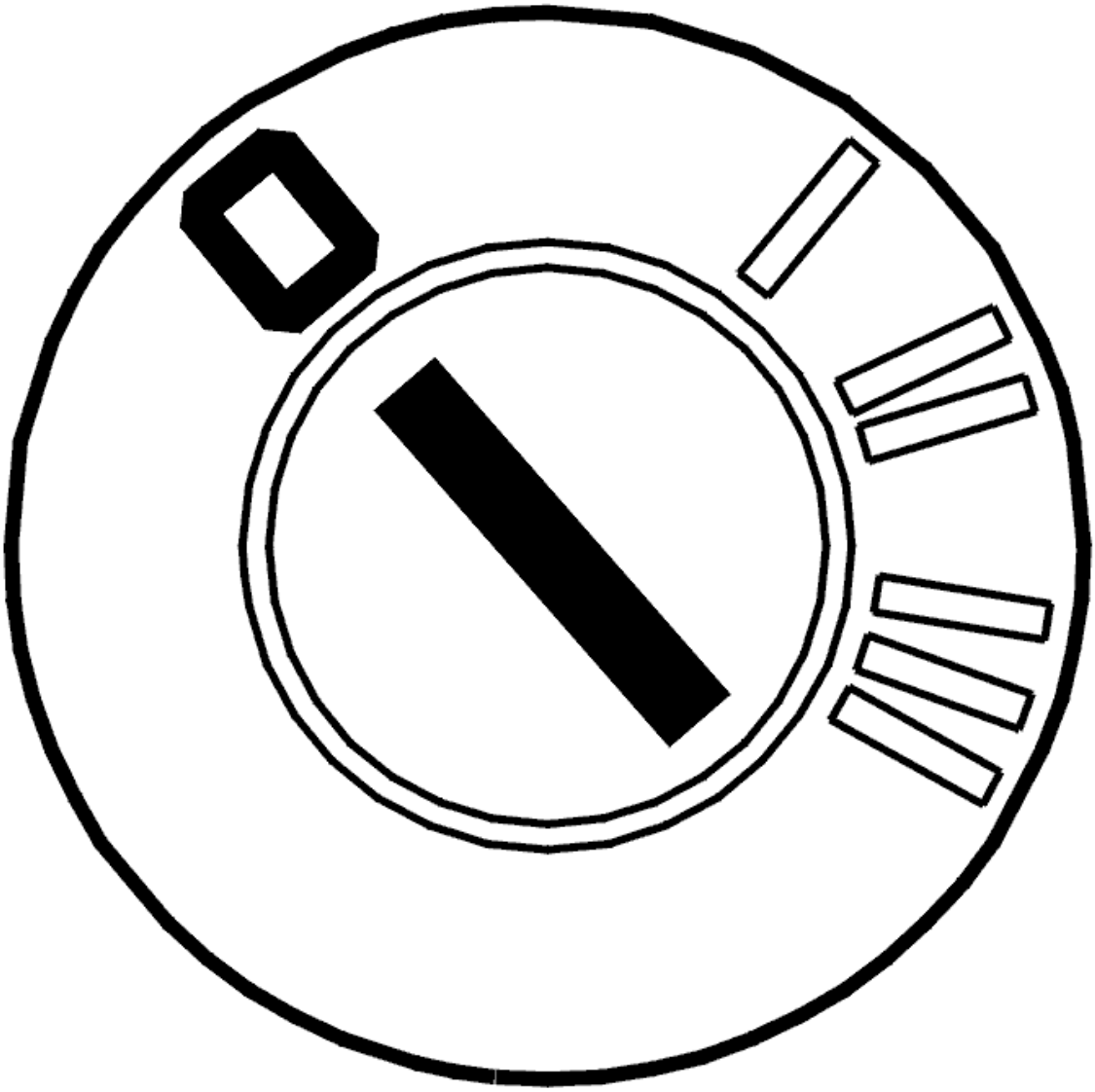

Fig. 311: Identifying Ignition OFF
Courtesy of VOLVO CARS CORPORATION

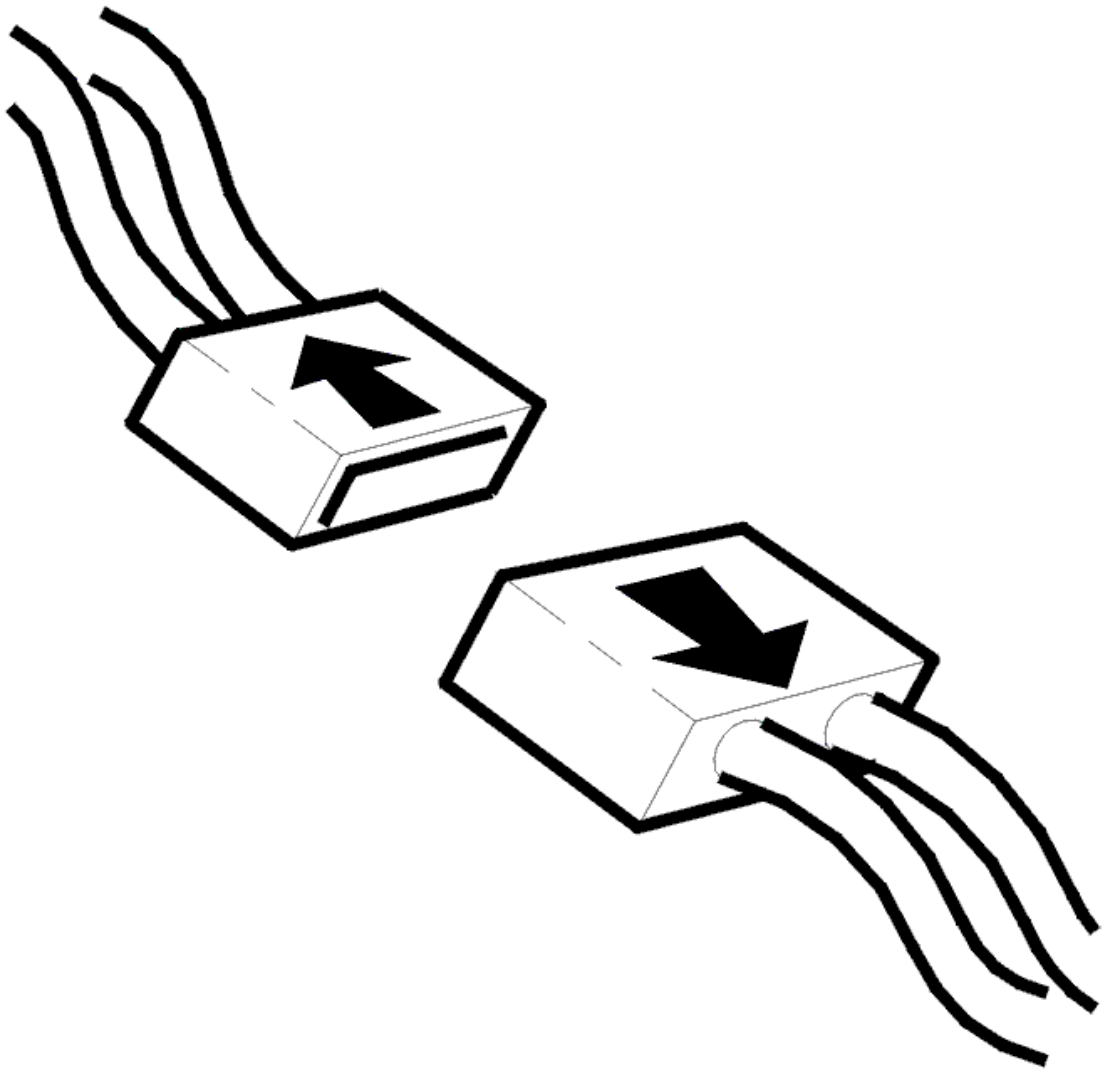

Fig. 312: Identifying Connector(s) Disconnected
Courtesy of VOLVO CARS CORPORATION

- Ignition off
- Disconnect transmission connector C.

  Check solenoid S3 by measuring the resistance between transmission connector terminal #C3 and the transmission housing. The resistance must be 11-15 ohms.

  Other information:

  - To disconnect the transmission connectors, see **CONNECTORS, TRANSMISSION, DISCONNECTING / CONNECTING**
  - For information about signals, see **SIGNAL DESCRIPTION. TRANSMISSION CONTROL MODULE (TCM)** .

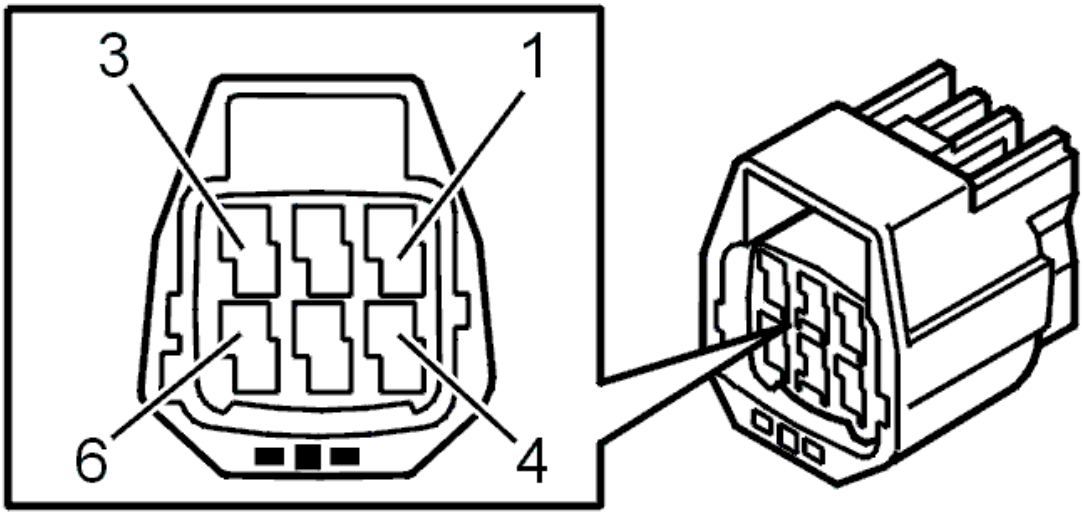

Fig. 313: Identifying 6-Pin Transmission Connector Terminals
Courtesy of VOLVO CARS CORPORATION

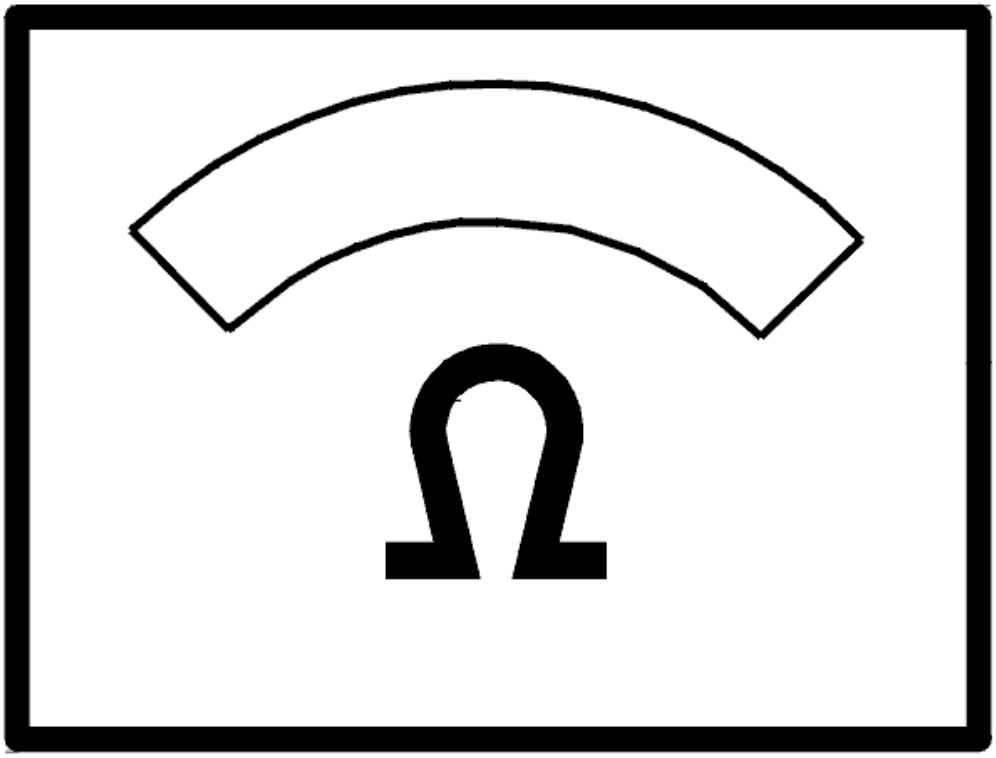

Fig. 314: Identifying Ohms Display
Courtesy of VOLVO CARS CORPORATION

Was the resistance OK

- **YES**

  Refer to **CHECKING THE WIRING**

- **NO**

  Refer to **CHECKING THE WIRING AND COMPONENT**

CHECKING THE WIRING

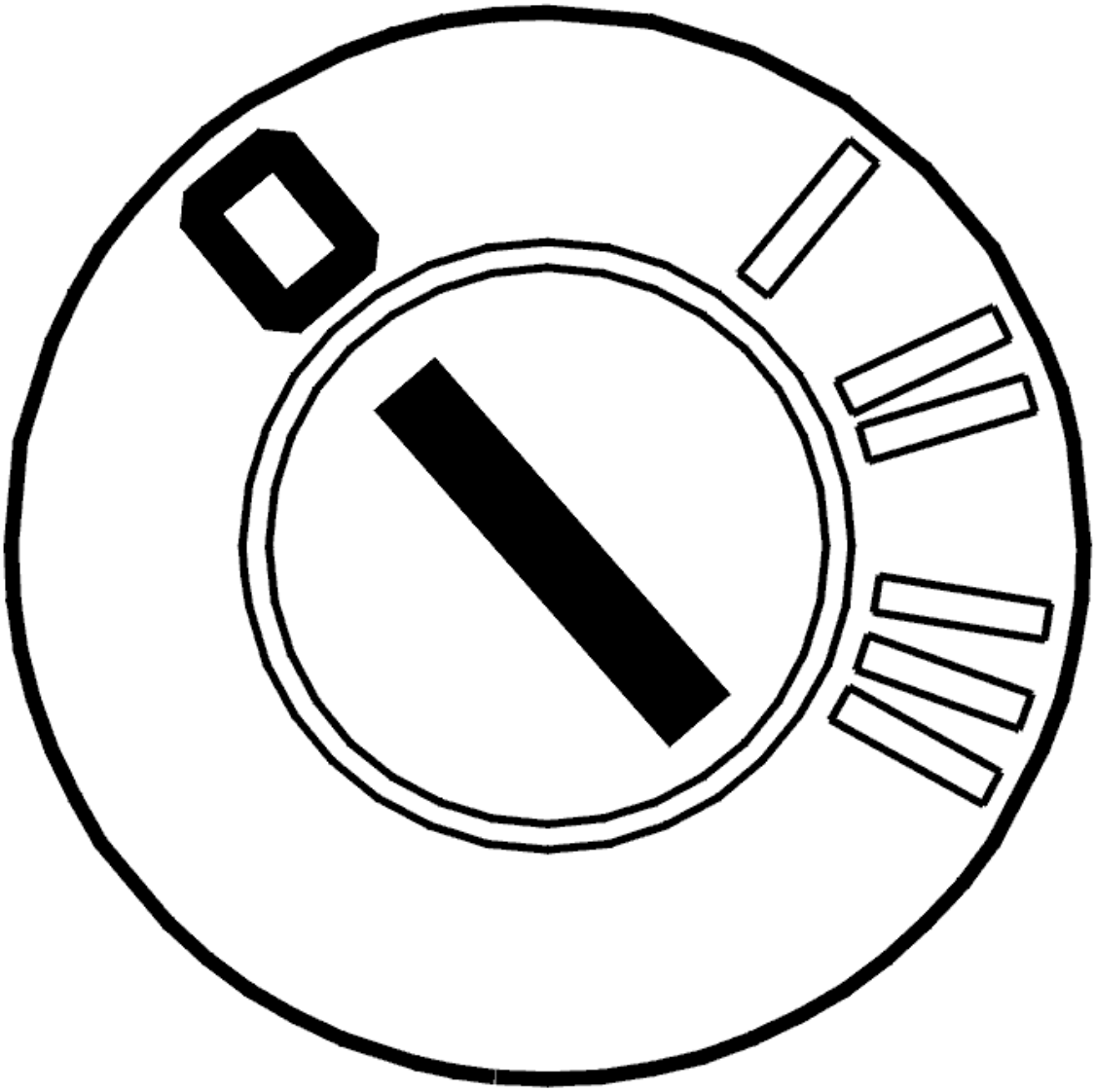

Fig. 315: Identifying Ignition OFF
Courtesy of VOLVO CARS CORPORATION

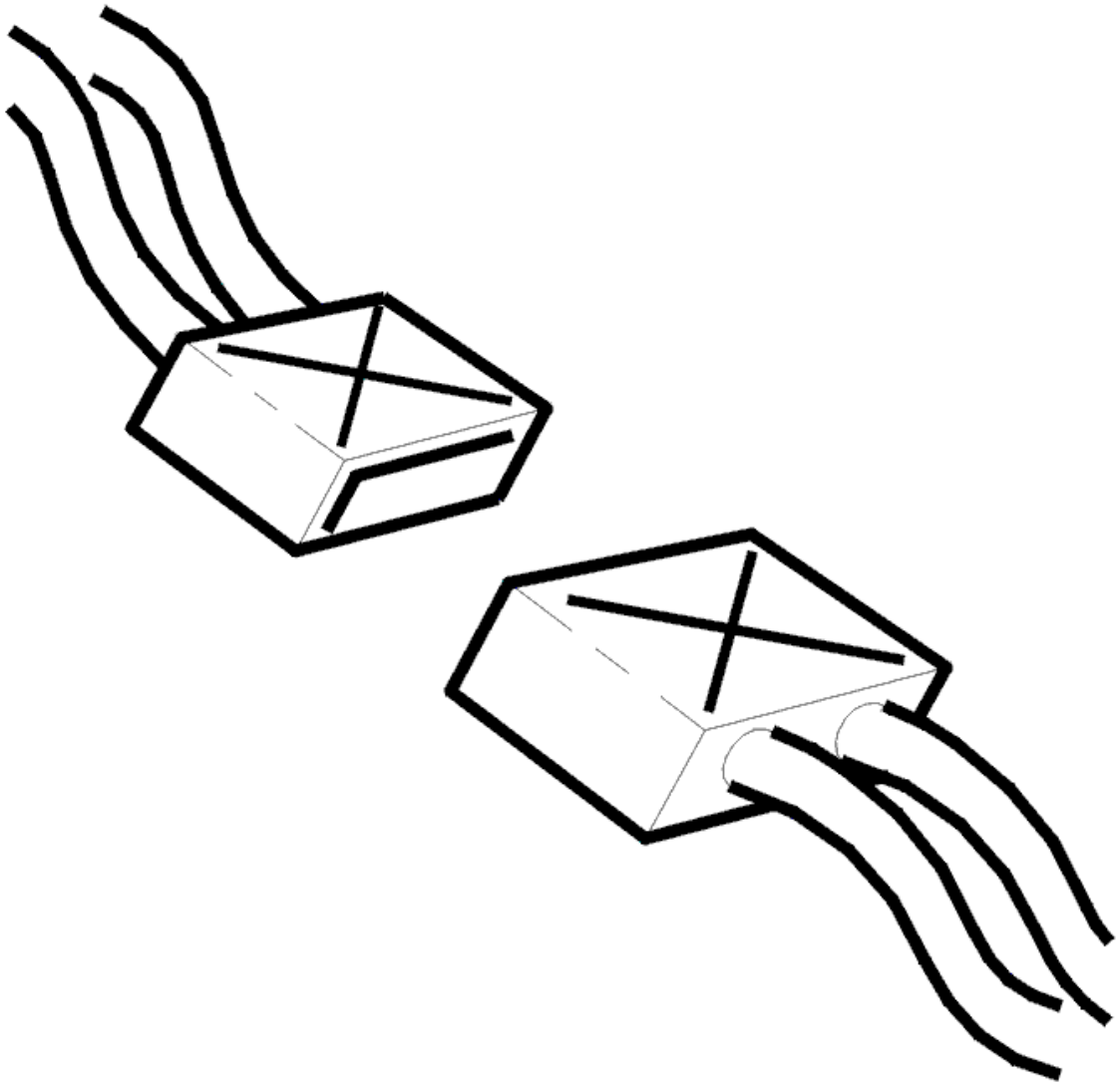

Fig. 316: Identifying Connectors
Courtesy of VOLVO CARS CORPORATION

- Ignition off
- Transmission connector C disconnected.

  Check the cable between control module terminal #A48 (#A48) and transmission connector terminal #C3 (control module side). Check for a short-circuit to ground according to **SHORT-CIRCUIT TO GROUND, PERMANENT FAULTS** .

  Remedy as necessary.

  Other information:

  - To connect the breakout box, see **CONNECTING THE BREAKOUT BOX**

- To disconnect the transmission connectors, see **CONNECTORS, TRANSMISSION, DISCONNECTING / CONNECTING**
- For information about signals, see **SIGNAL DESCRIPTION. TRANSMISSION CONTROL MODULE (TCM)** .

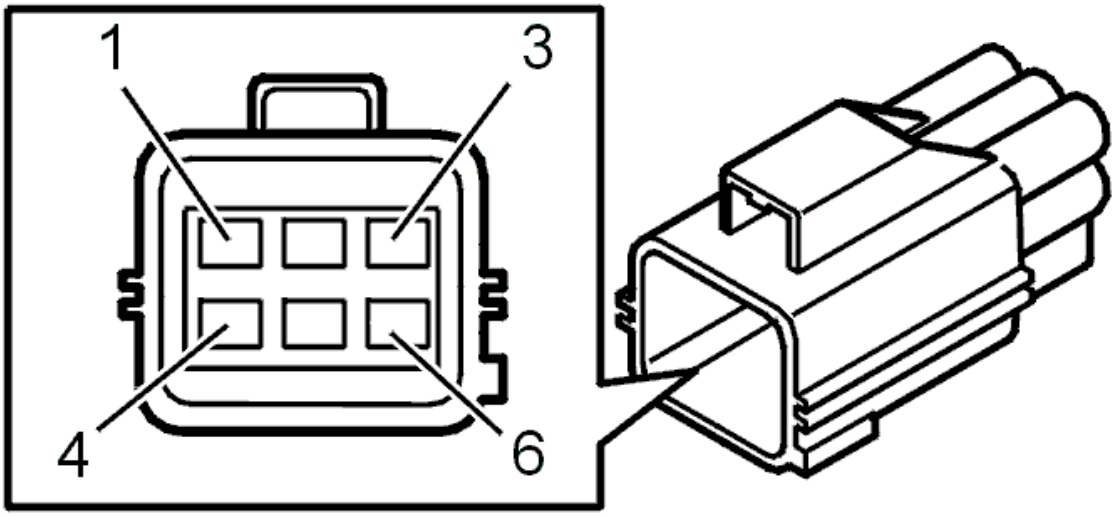

Fig. 317: Identifying Transmission Connector Terminals
Courtesy of VOLVO CARS CORPORATION

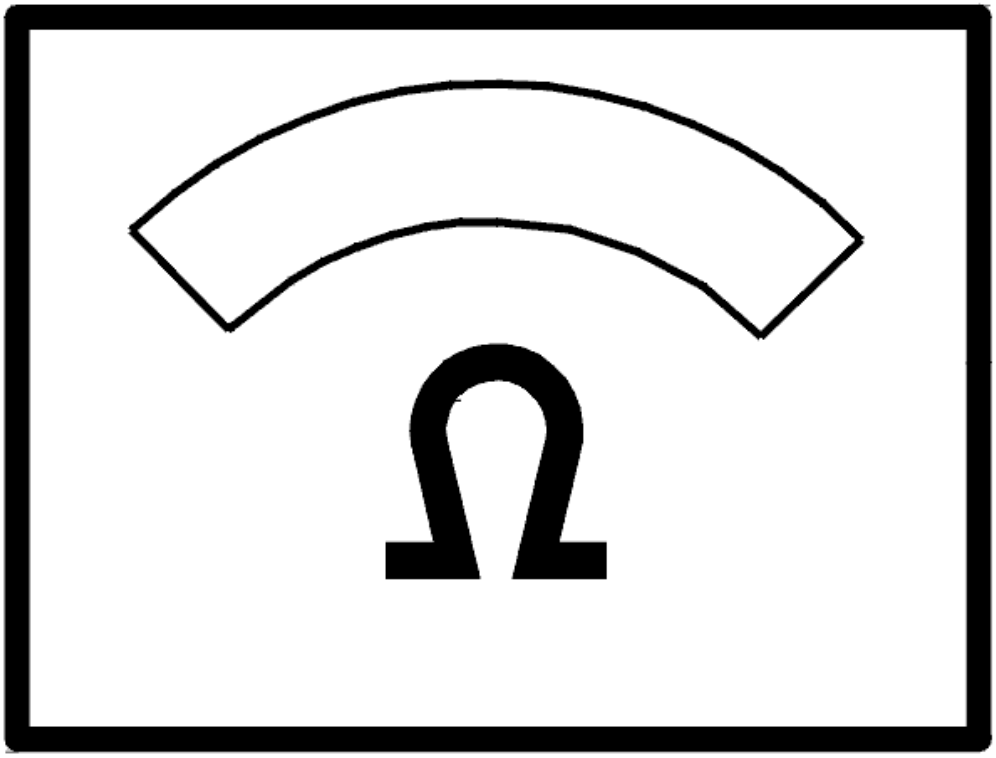

Fig. 318: Identifying Ohms Display
Courtesy of VOLVO CARS CORPORATION

Was a fault detected?

- **YES**

  Refer to **VERIFICATION**

- **NO**

  Refer to **CHECKING THE CONTROL MODULE**

CHECKING THE CONTROL MODULE

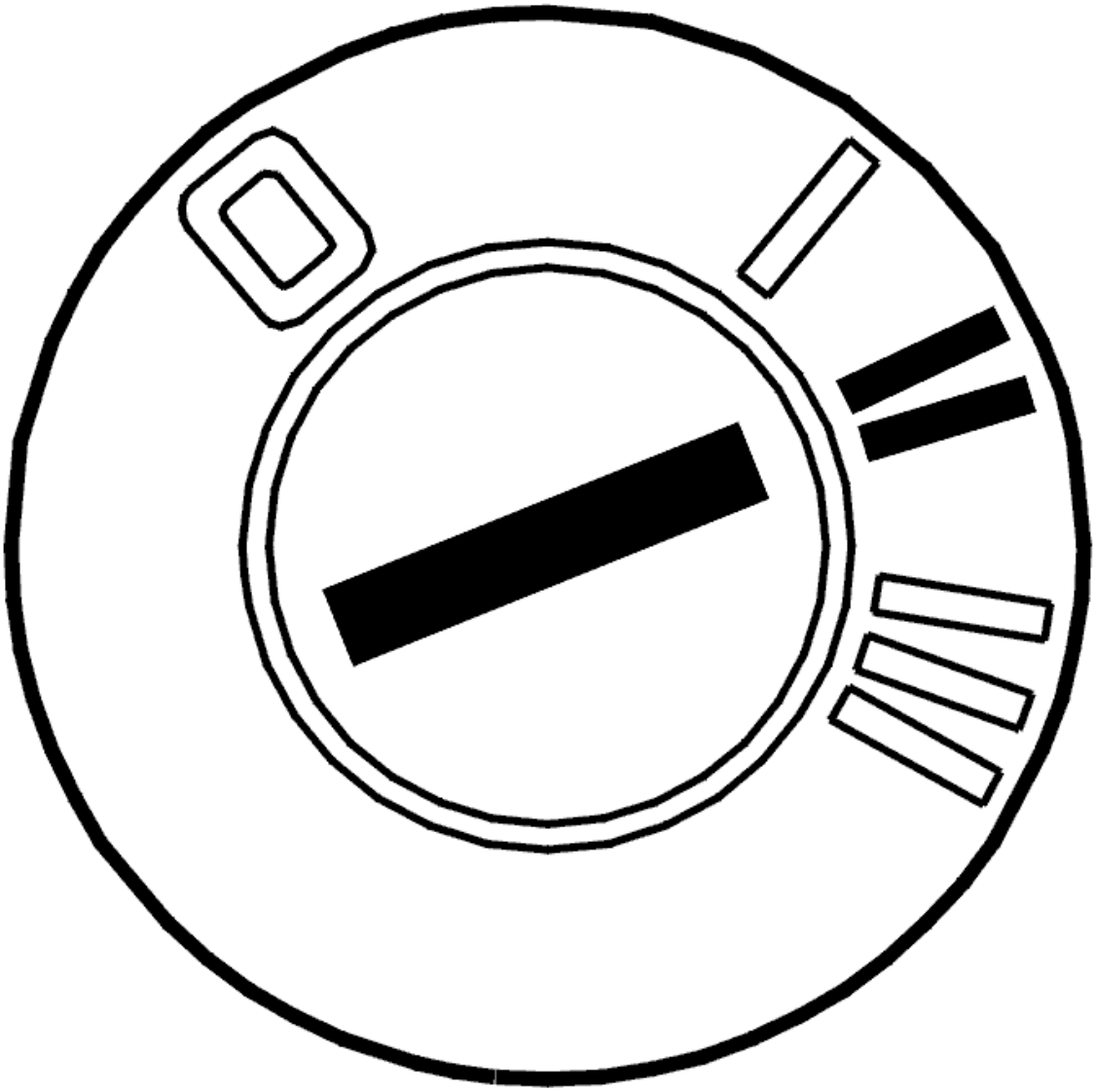

Fig. 319: Identifying Ignition ON
Courtesy of VOLVO CARS CORPORATION

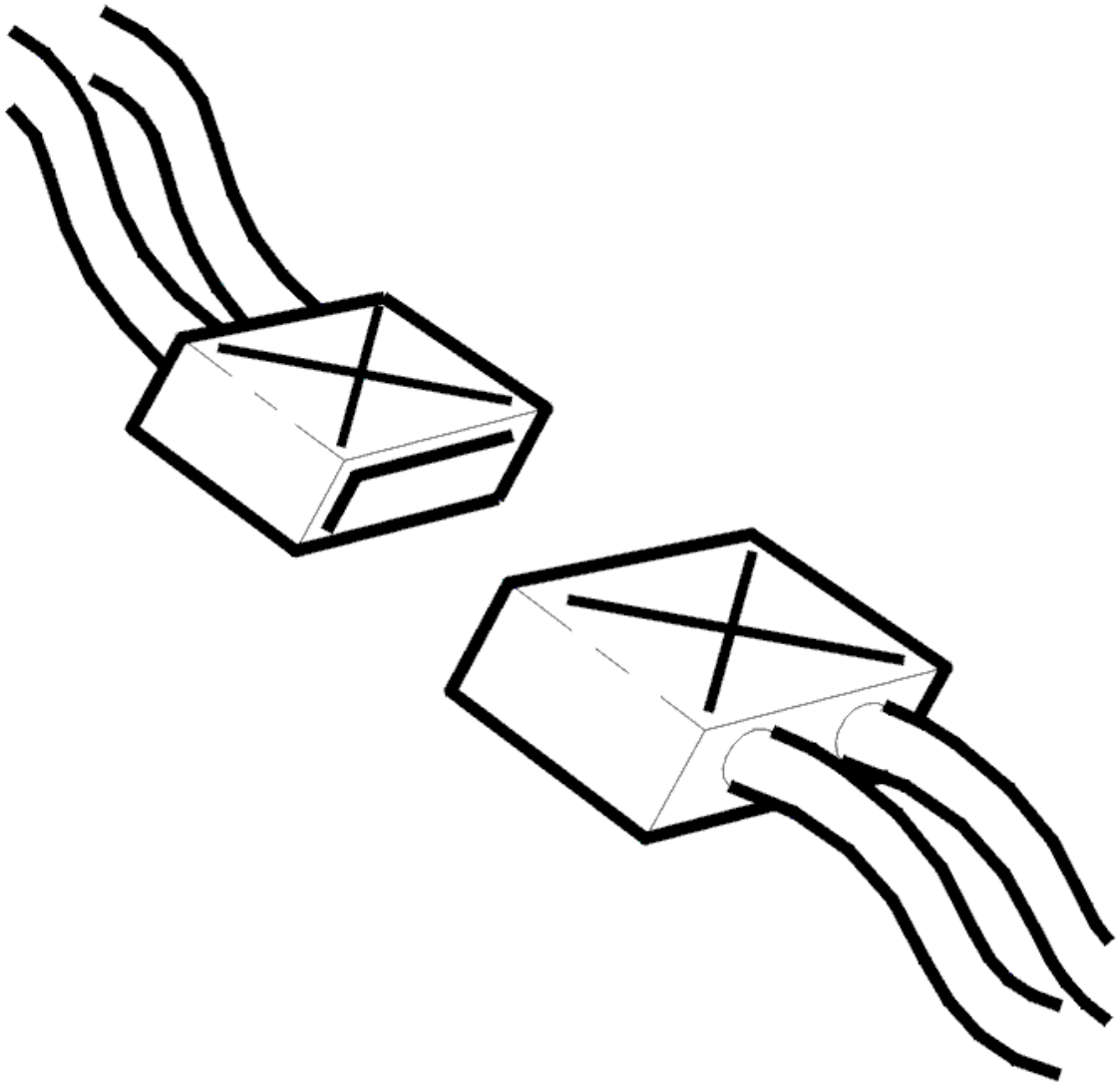

Fig. 320: Identifying Connectors
Courtesy of VOLVO CARS CORPORATION

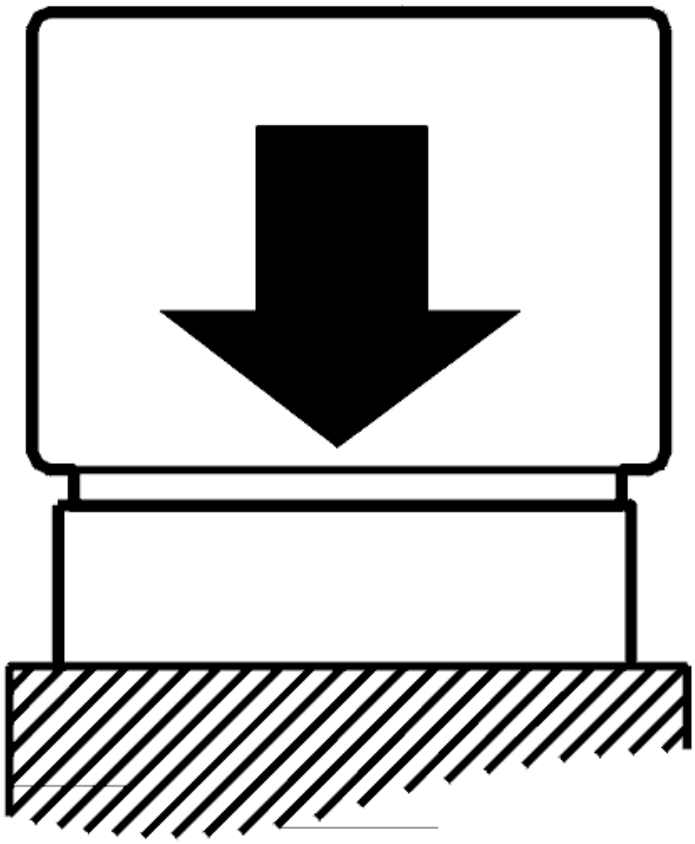

Fig. 321: Identifying Control Module Connected
Courtesy of VOLVO CARS CORPORATION

- Ignition off
- The breakout box connected
- Connect the control module.
- Transmission connector disconnected
- Ignition on
- Gear selector in position P.

Check the transmission control module (TCM) by measuring the resistance between terminals #A48 (#A48) and #A53 (#A53) on the breakout box. The resistance must be approximately 9 kohms.

NOTE: When removing the transmission connector, the control module may store

diagnostic trouble codes (DTCs) for the gear-shift position sensor, the shift solenoids, the temperature sensor etc.

Try a new control module if the resistance is infinite.

Other information:

- To disconnect the transmission connectors, see **CONNECTORS, TRANSMISSION, DISCONNECTING / CONNECTING**
- For information about signals, see **SIGNAL DESCRIPTION. TRANSMISSION CONTROL MODULE (TCM)**
- To replace the control module, see **TRANSMISSION CONTROL MODULE (TCM), REPLACING** .

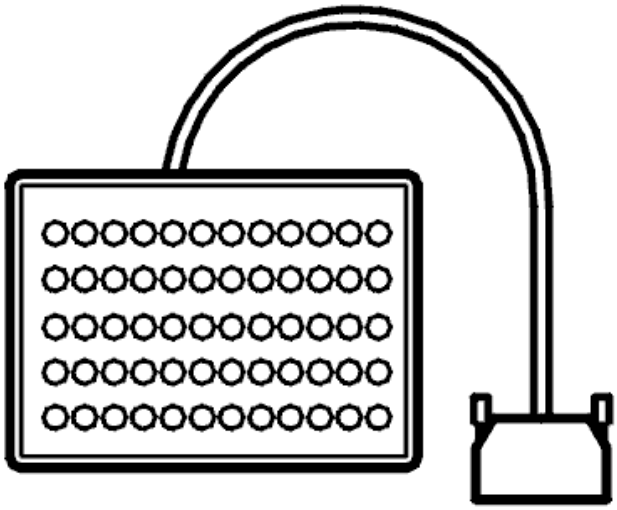

Fig. 322: Identifying Breakout Box
Courtesy of VOLVO CARS CORPORATION

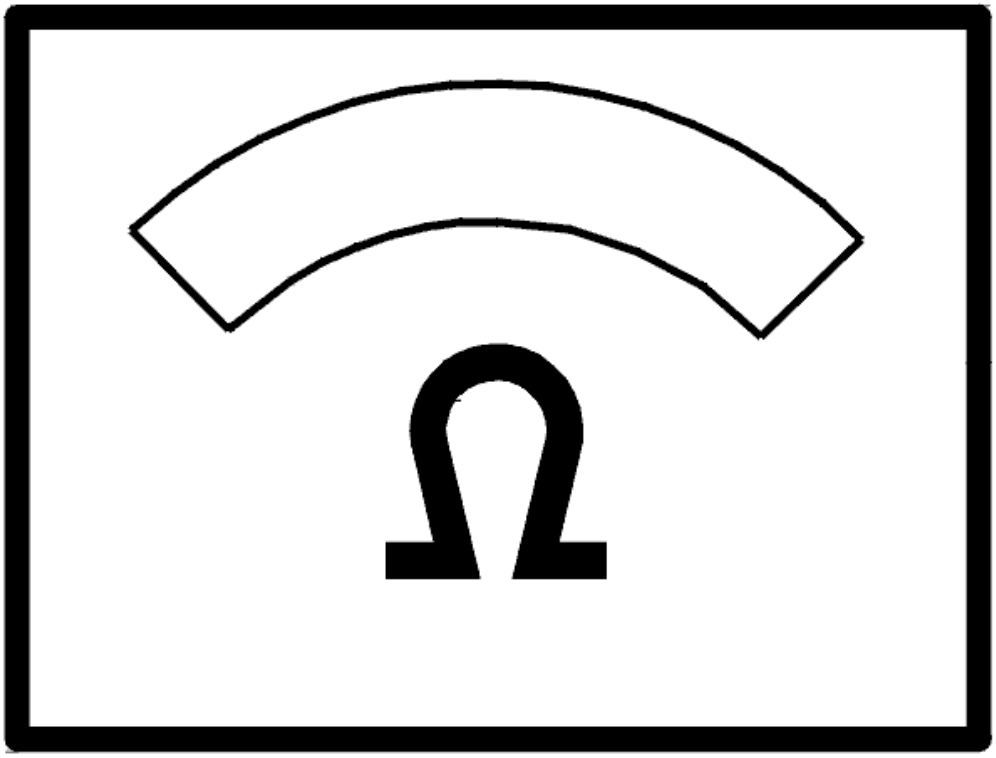

Fig. 323: Identifying Ohms Display
Courtesy of VOLVO CARS CORPORATION

Was the resistance OK?

- **YES**

  FAULT NOT FOUND: Troubleshooting has been completed.

- **NO**

  Refer to **VERIFICATION**

CHECKING THE WIRING AND COMPONENT

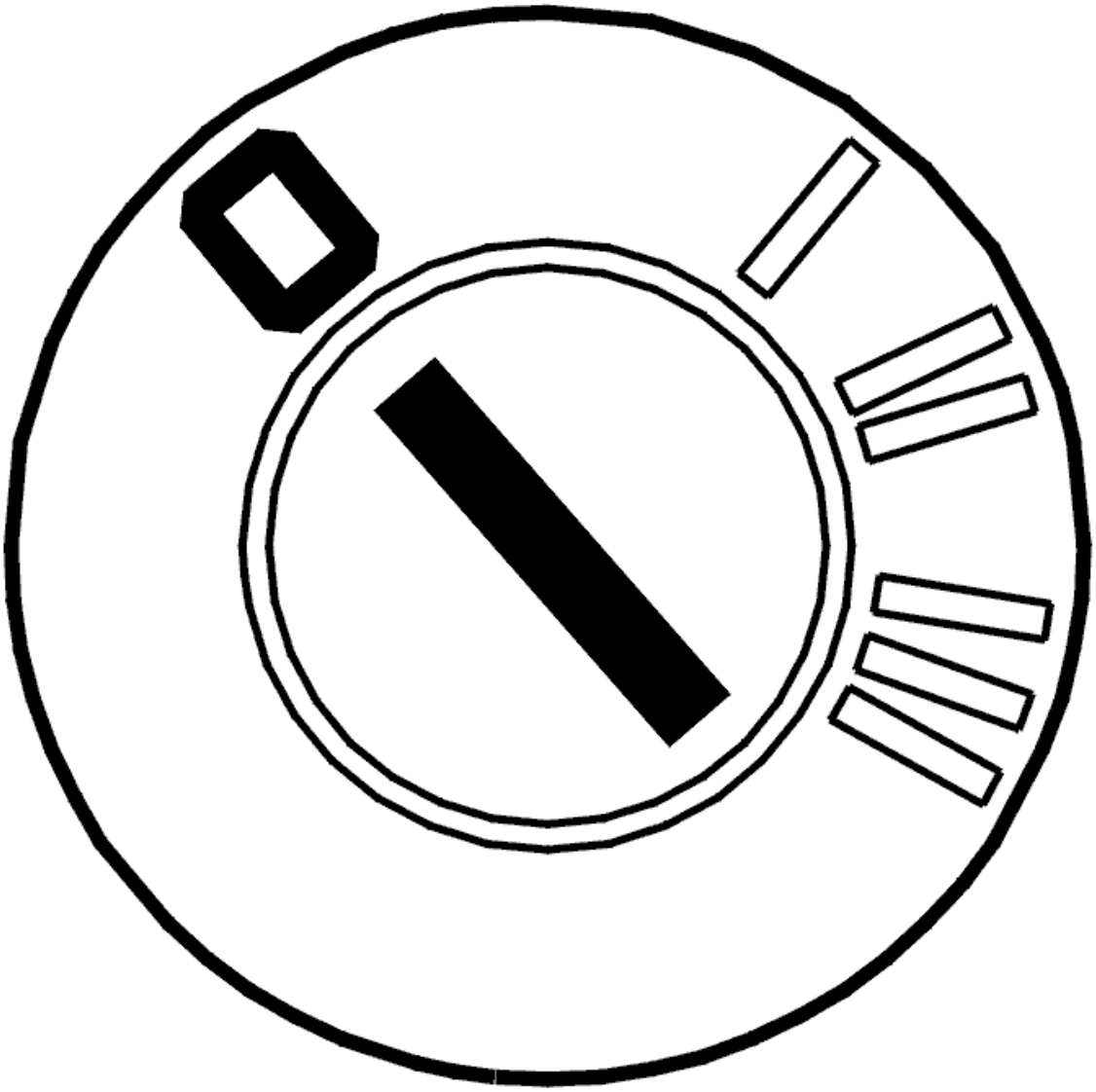

Fig. 324: Identifying Ignition OFF
Courtesy of VOLVO CARS CORPORATION

- Ignition off
- Open the control system.

  Check the cable between transmission connector terminal #C3 (transmission side) and the connector for solenoid S3. Check for a short-circuit to ground according to **SHORT-CIRCUIT TO GROUND, PERMANENT FAULTS** .

  Check solenoid S3 by measuring the resistance between the terminal pin on solenoid S3 and the transmission housing. The resistance must be 11-15 ohms.

  Remedy as necessary.

  Other information:

- To disconnect the transmission connectors, see **CONNECTORS, TRANSMISSION, DISCONNECTING / CONNECTING**
- To open the control system and to check or replace solenoid S3, see **SOLENOID CONTROL SYSTEM, REPLACING**
- To replace the cable harness for the control system, see **TEMPERATURE SENSOR FLUID, TRANSAXLE, (TFT)**
- For information about signals, see **SIGNAL DESCRIPTION. TRANSMISSION CONTROL MODULE (TCM)** .

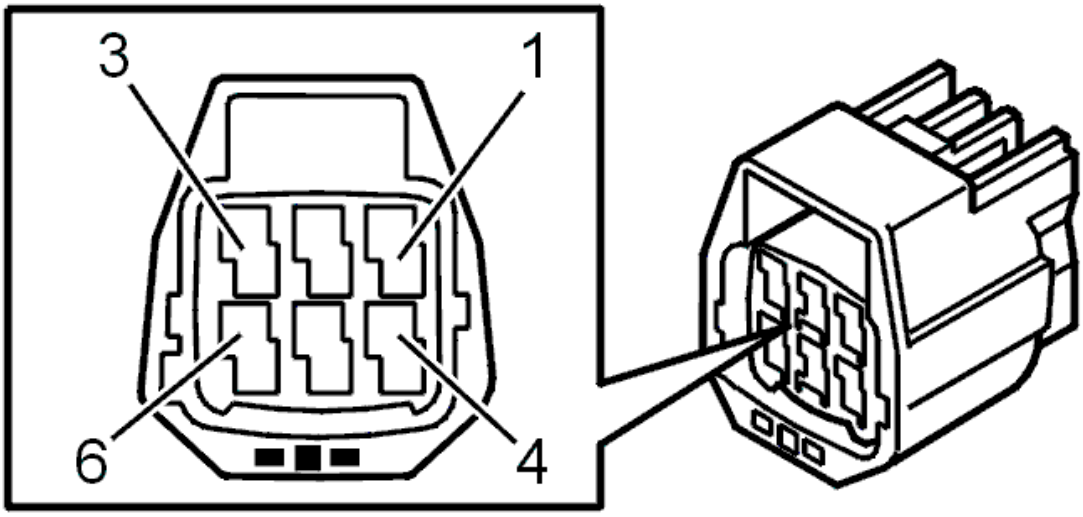

Fig. 325: Identifying 6-Pin Transmission Connector Terminals
Courtesy of VOLVO CARS CORPORATION

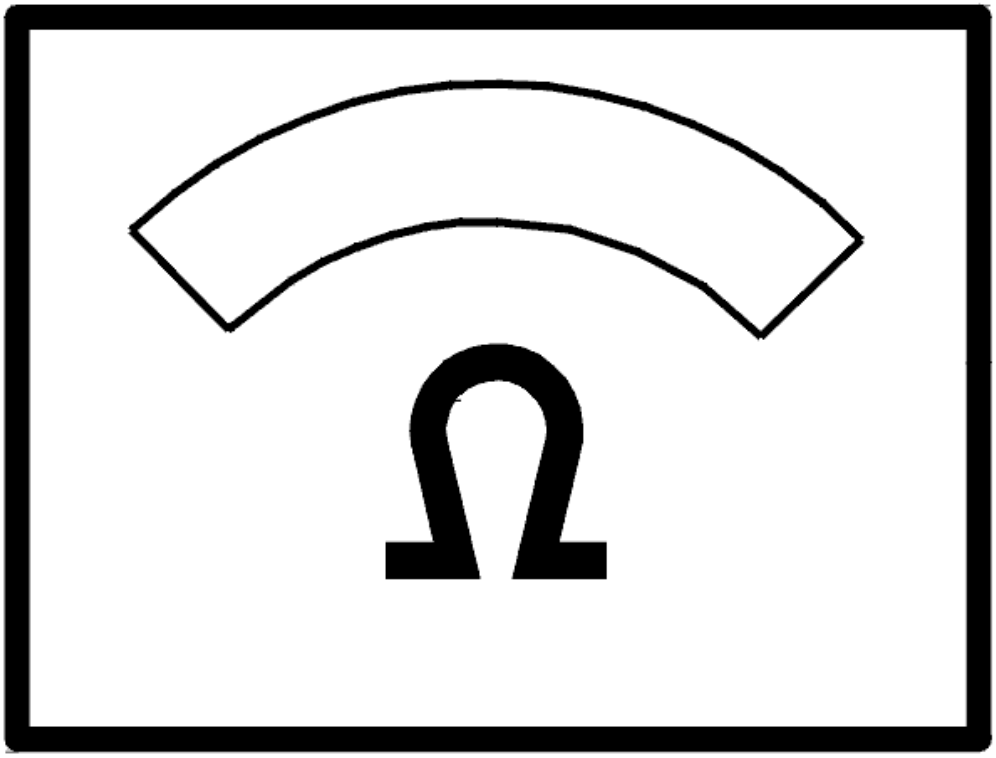

Fig. 326: Identifying Ohms Display
Courtesy of VOLVO CARS CORPORATION

- **Continue**

  Refer to **RESETTING THE ADAPTATION**

INTERMITTENT FAULT

Check the cable between transmission control module (TCM) terminal #A48 (#A48) and transmission connector terminal #C3. Check for intermittent short-circuit to ground according to **SHORT-CIRCUIT TO GROUND, INTERMITTENT FAULTS** . Check for contact resistance and oxidation according to **CONTACT RESISTANCE AND OXIDATION** .

- Check the circuit for solenoid S3. Switch off the ignition. Disconnect the control module. Measure the resistance between terminals #A48 (#A48) and #A53 (#A53) on the breakout box. The resistance must be

11-15 ohms.

Remedy as necessary.

Other information:

- To connect the breakout box, see **CONNECTING THE BREAKOUT BOX**
- To disconnect the transmission connectors, see **CONNECTORS, TRANSMISSION, DISCONNECTING / CONNECTING**
- For information about signals, see **SIGNAL DESCRIPTION. TRANSMISSION CONTROL MODULE (TCM)** .

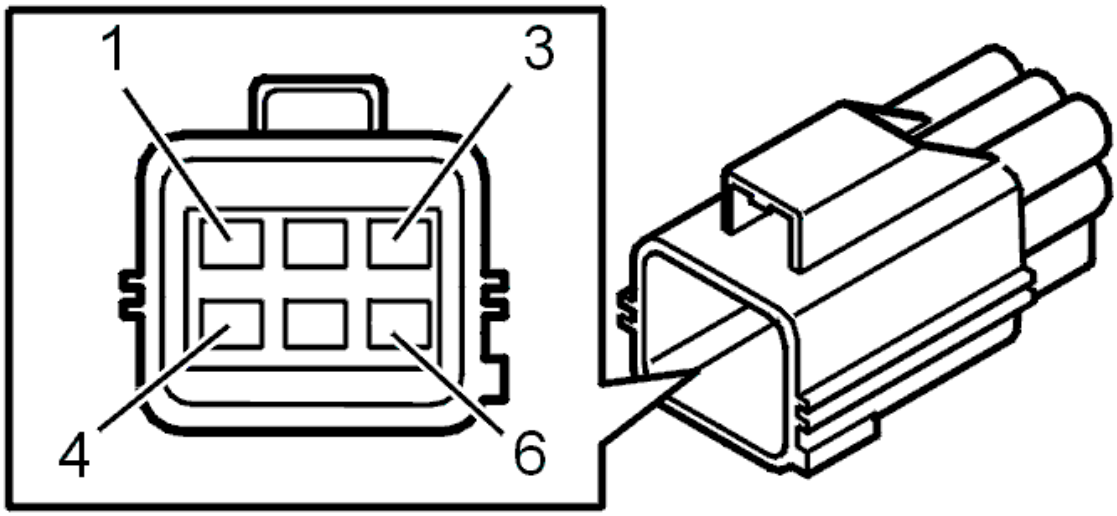

Fig. 327: Identifying Transmission Connector Terminals
Courtesy of VOLVO CARS CORPORATION

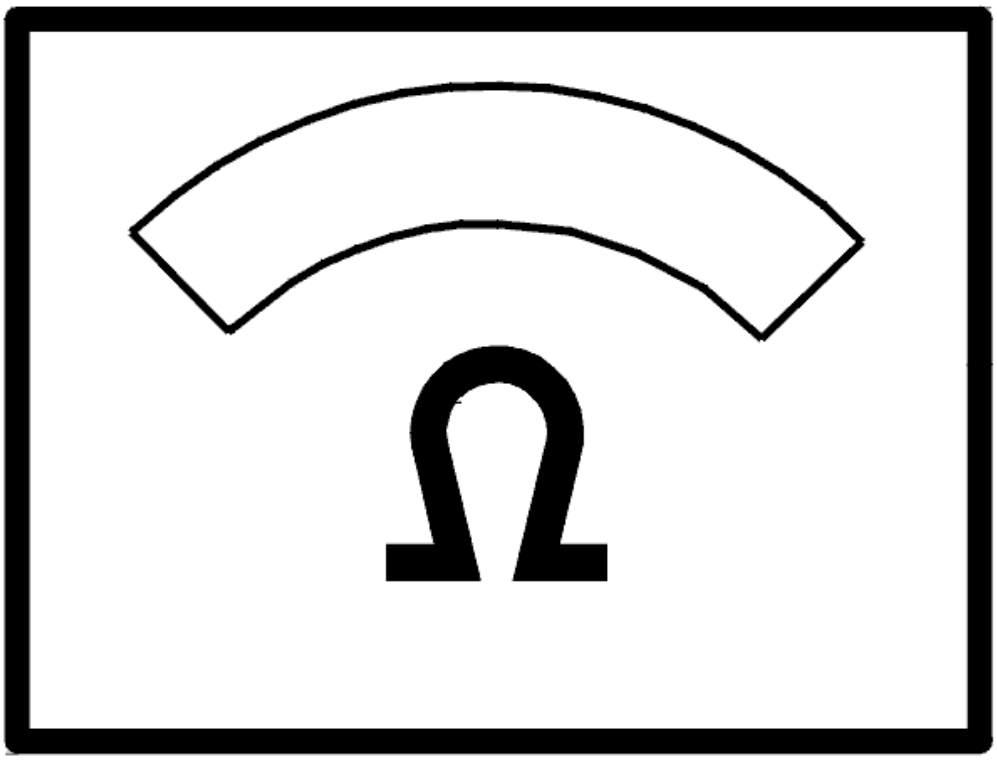

Fig. 328: Identifying Ohms Display
Courtesy of VOLVO CARS CORPORATION

- **Continue**

  Refer to **INFORMATION**

RESETTING THE ADAPTATION

RESETTING ADAPTATION AND THE COUNTER FOR "TRANSMISSION OIL CHANGE"

HINT: The transmission has torque controlled adaptive pressure control. Pressure control means that the transmission regulates the pressure itself during each gear shift. This avoids harsh gear shifting. Each gear shift is evaluated by the control module and stored in the memory. This allows for compensation for wear and tear in the transmission and clutch. It is important that the adaptation in the memory is reset after the transmission has been repaired. This is to ensure normal operation. The oil is replaced during

repair; the "Transmission oil change" counter must be reset. If the counter is not reset when the fluid is drained and replaced, there is a risk that a diagnostic trouble code (DTC) will be stored in incorrect circumstances.

NOTE: This applies only if the transmission or one of the components in the transmission have been replaced.

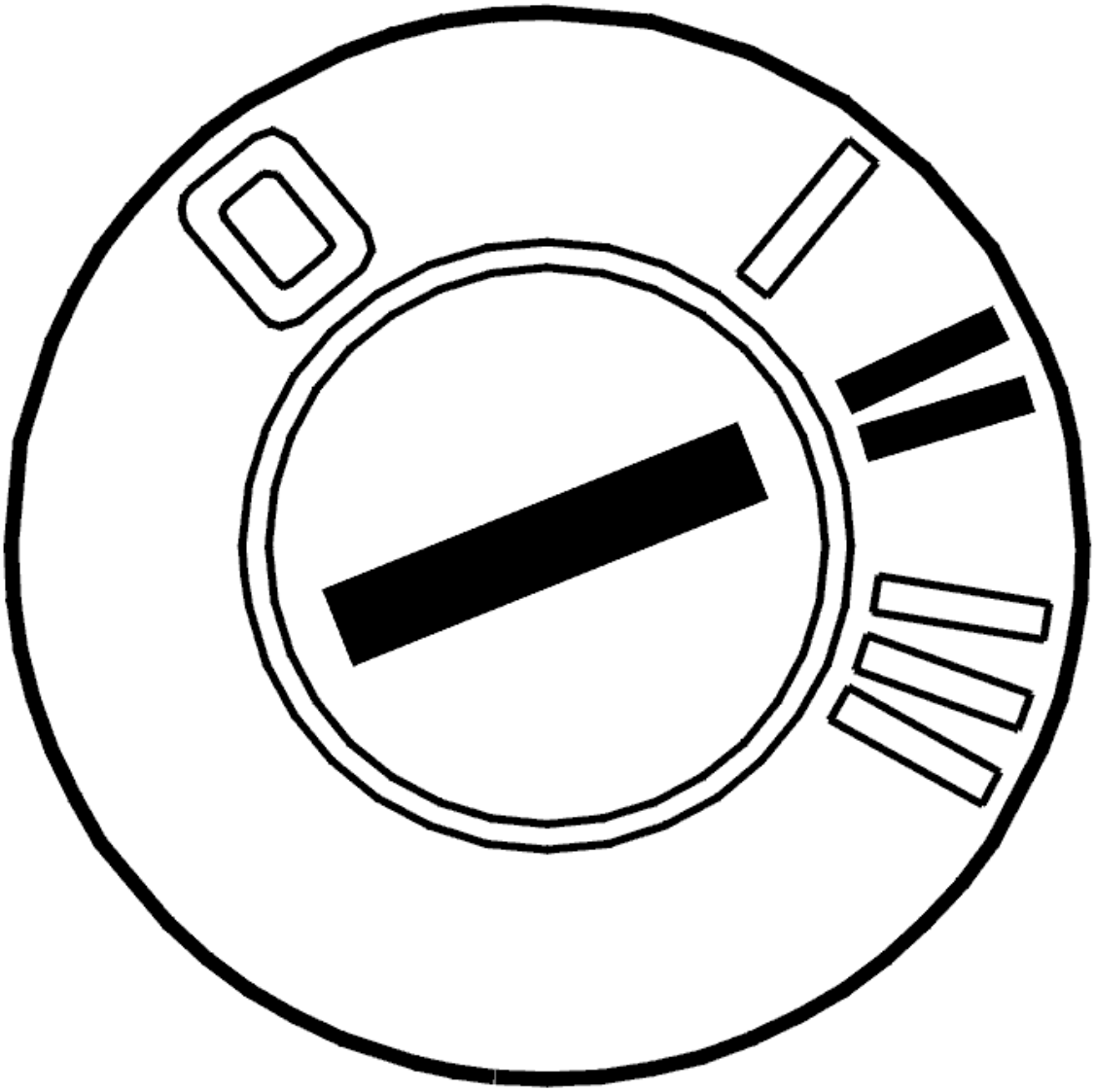

Fig. 329: Identifying Ignition ON
Courtesy of VOLVO CARS CORPORATION

- Ignition on.

  Use the VCT2000 (or appropriate scan tool) to reset the adaptation and counter.

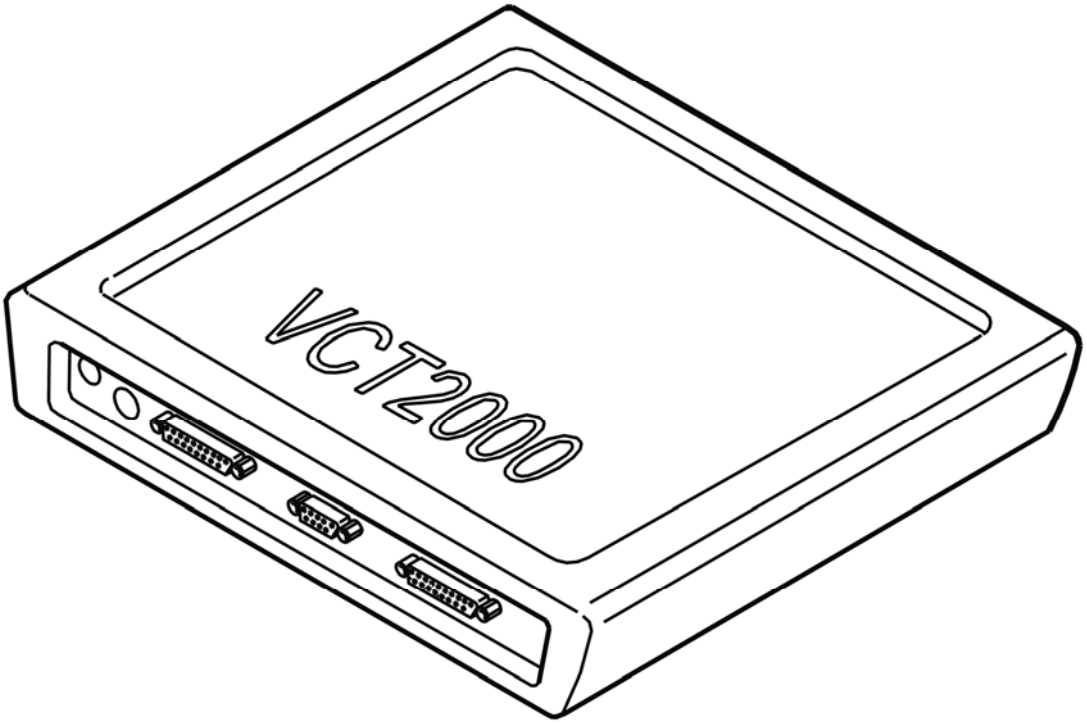

Fig. 330: Identifying VCT2000 Diagnostic Tool Symbol In VIDA
Courtesy of VOLVO CARS CORPORATION

- **Continue**

  Refer to **VERIFICATION**

VERIFICATION

VERIFICATION

HINT: After carrying out the repair, check that the fault has been remedied.

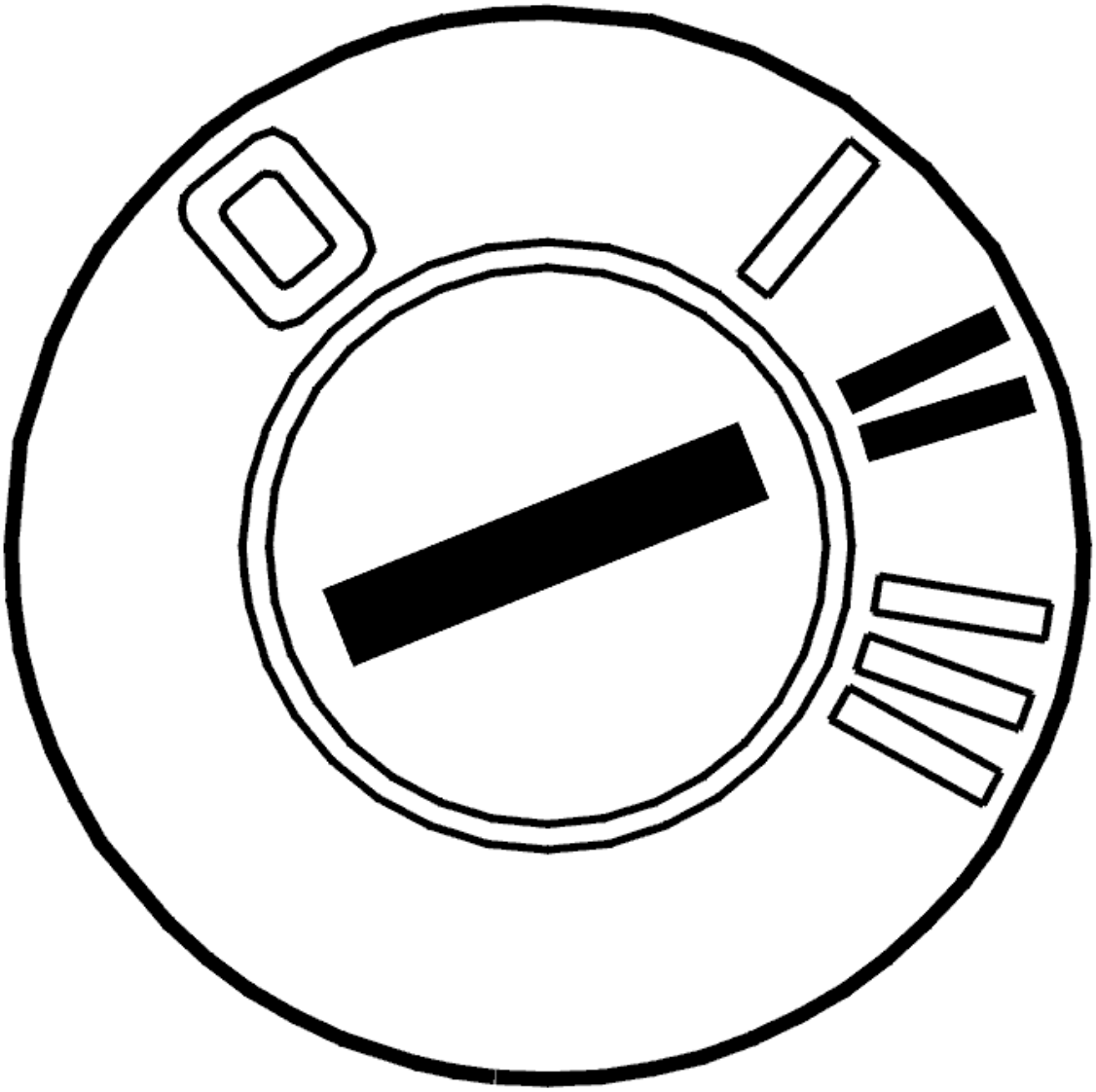

Fig. 331: Identifying Ignition ON
Courtesy of VOLVO CARS CORPORATION

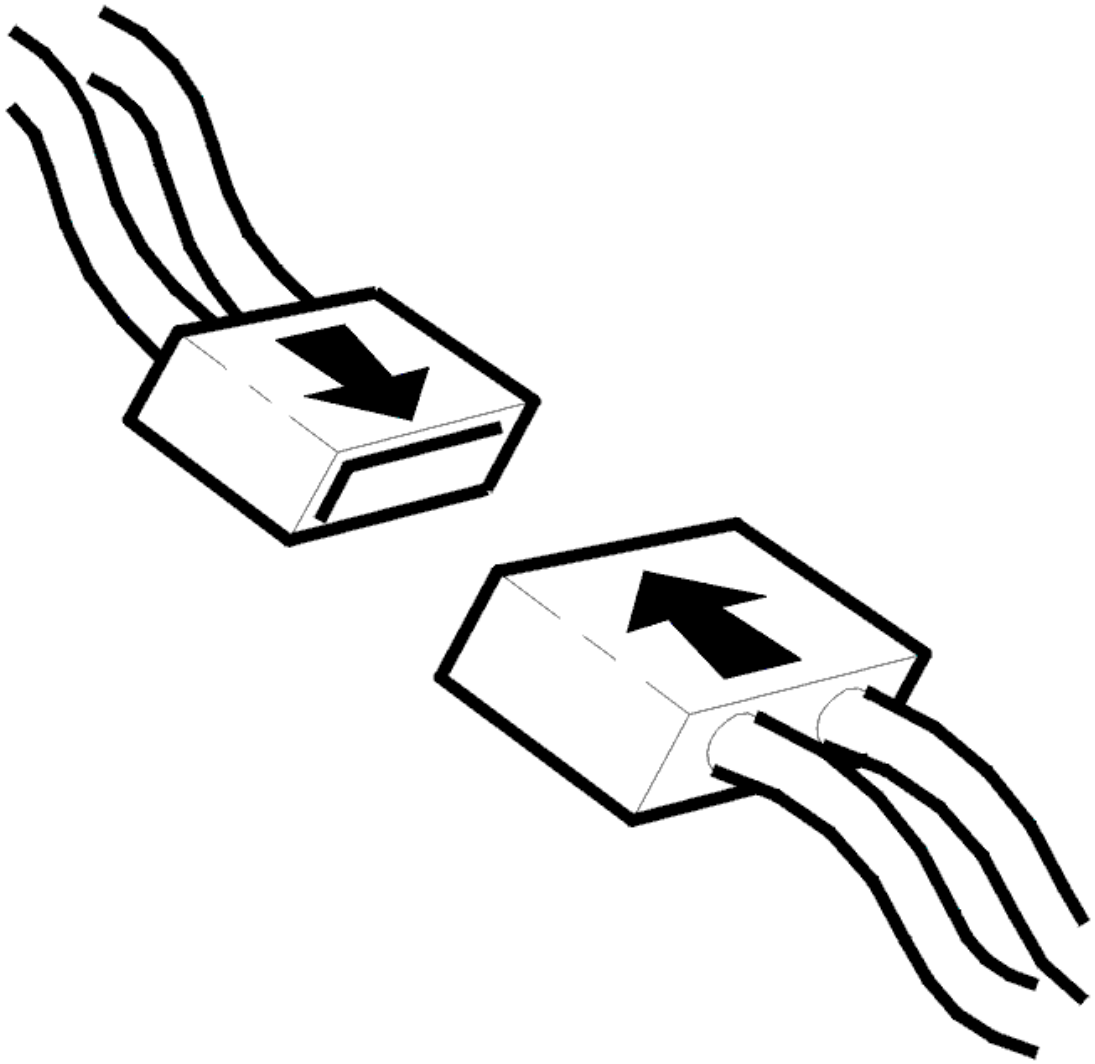

Fig. 332: Identifying Connector(s) Reinstallation
Courtesy of VOLVO CARS CORPORATION

- Ignition off.
- Reinstall the components, reconnect the connectors etc.
- Ignition on.
- Gear selector in position P.
- Activate solenoid S3.

  The value should change between OFF and ON.

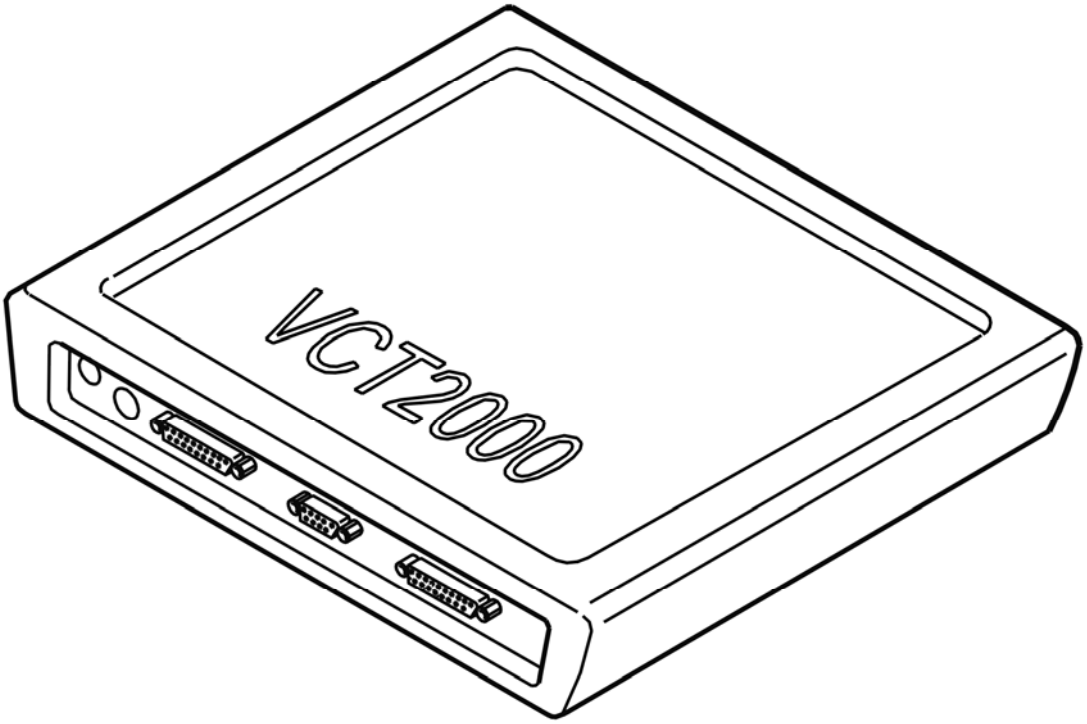

Fig. 333: Identifying VCT2000 Diagnostic Tool Symbol In VIDA
Courtesy of VOLVO CARS CORPORATION

Does the value change between OFF and ON?

- **YES**

  VERIFIED: Troubleshooting has been completed.

- **NO**

  Refer to **INFORMATION**

INFORMATION

FAULT-TRACING INFORMATION

The fault should have been detected and remedied. As this is not the case fault-tracing has failed.

Exit fault-tracing for this diagnostic trouble code (DTC) or make another attempt.

INFORMATION

FAULT-TRACING INFORMATION

If the fault is intermittent, do not verify fault-tracing if the fault does not recur.

It is possible to view the information again, or leave fault-tracing for this diagnostic trouble code (DTC).

FAULTY SIGNAL

CHECKING TRANSMISSION FLUID TEMPERATURE SENSOR

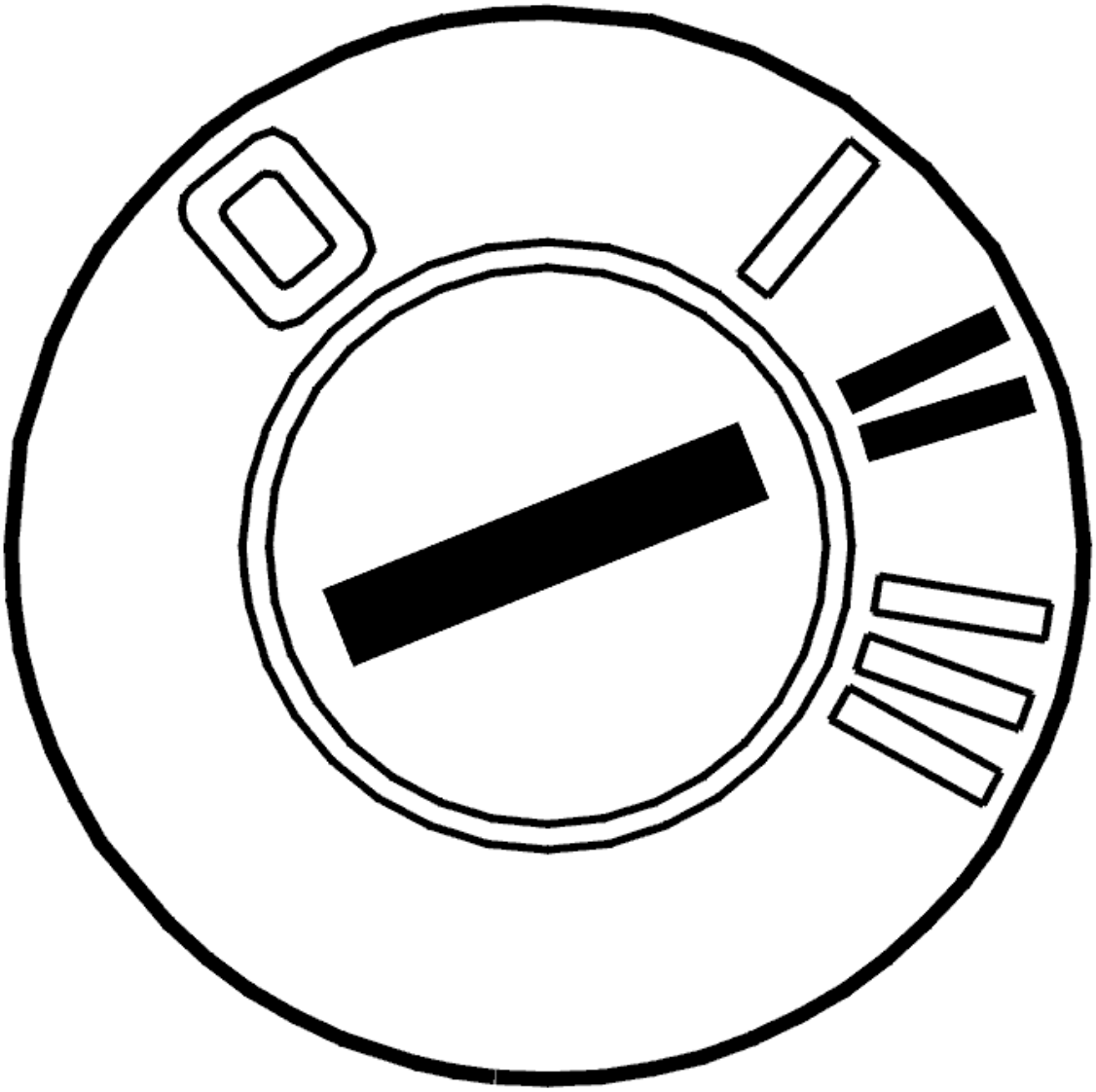

Fig. 334: Identifying Ignition ON
Courtesy of VOLVO CARS CORPORATION

- Ignition on
- Read off the oil temperature.

  Check that the temperature is within its permitted range.

Compare with the transmission temperature.

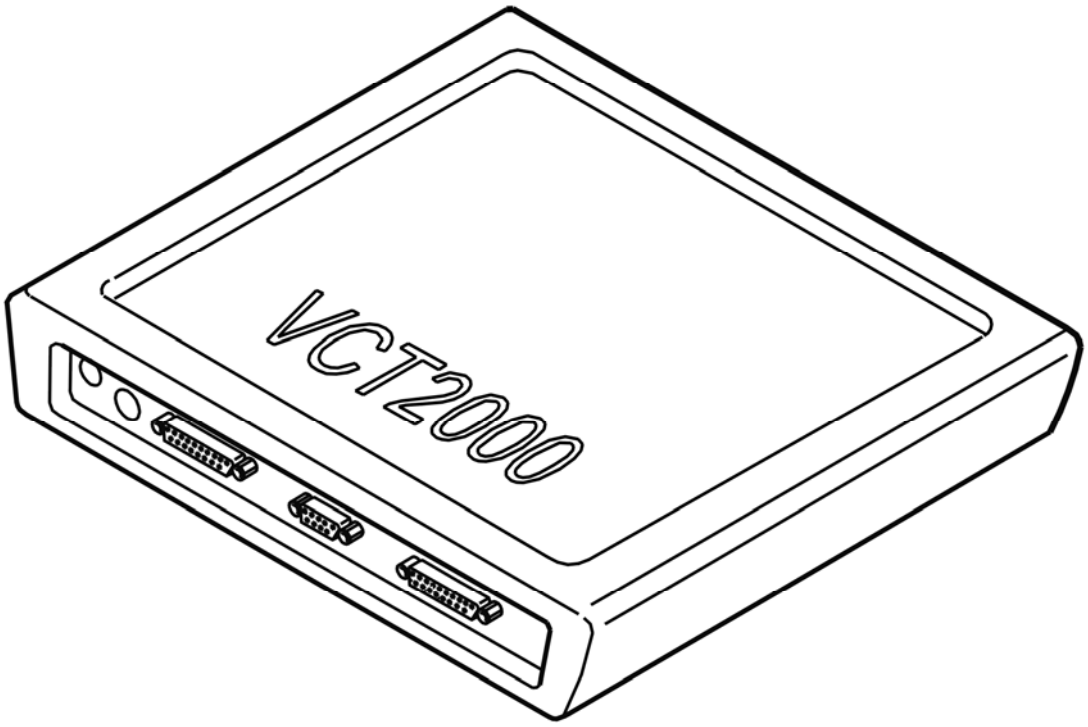

Fig. 335: Identifying VCT2000 Diagnostic Tool Symbol In VIDA
Courtesy of VOLVO CARS CORPORATION

Was the transmission temperature within its permitted range?

- **YES**

  Refer to **INTERMITTENT FAULT**

- **NO**

  Refer to **CHECKING TRANSMISSION FLUID TEMPERATURE SENSOR**

CHECKING TRANSMISSION FLUID TEMPERATURE SENSOR

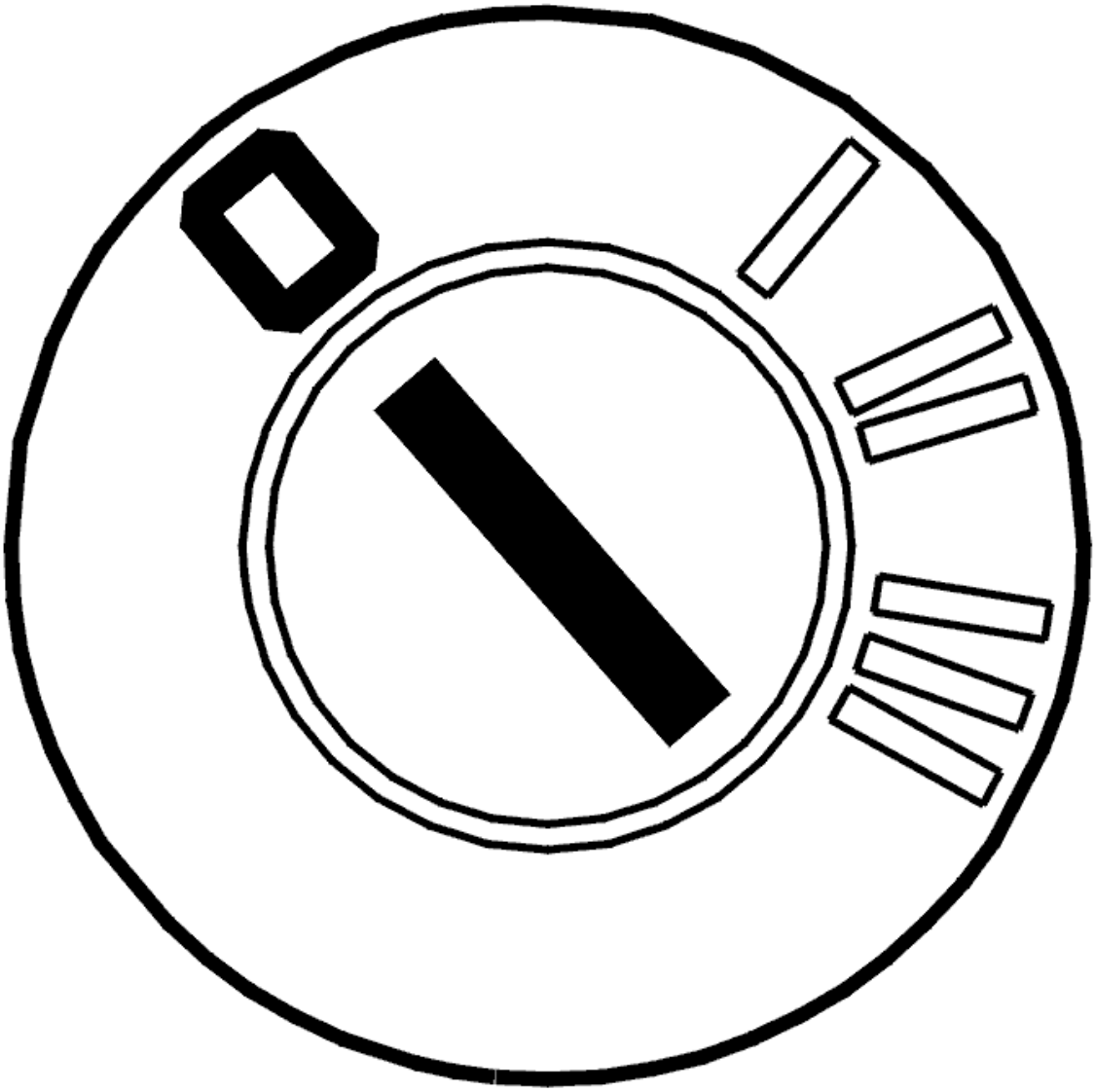

Fig. 336: Identifying Ignition OFF
Courtesy of VOLVO CARS CORPORATION

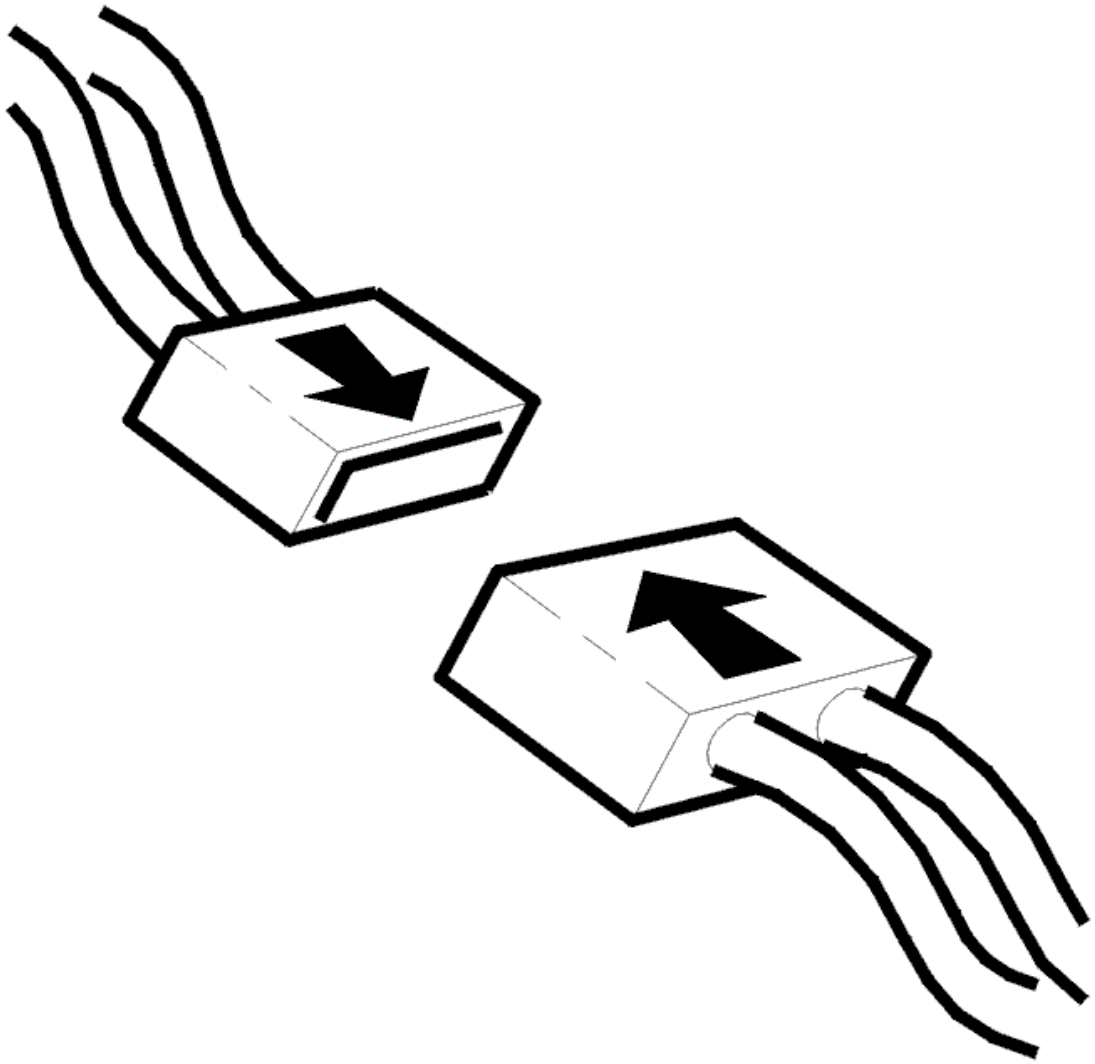

Fig. 337: Identifying Connector(s) Reinstallation
Courtesy of VOLVO CARS CORPORATION

- Ignition off
- Transmission connector D disconnected.

  Check the temperature sensor. Measure the resistance between transmission connector D terminals #D7 and #D8.

  The resistance must be 4.5-6 kohms at 20°C.

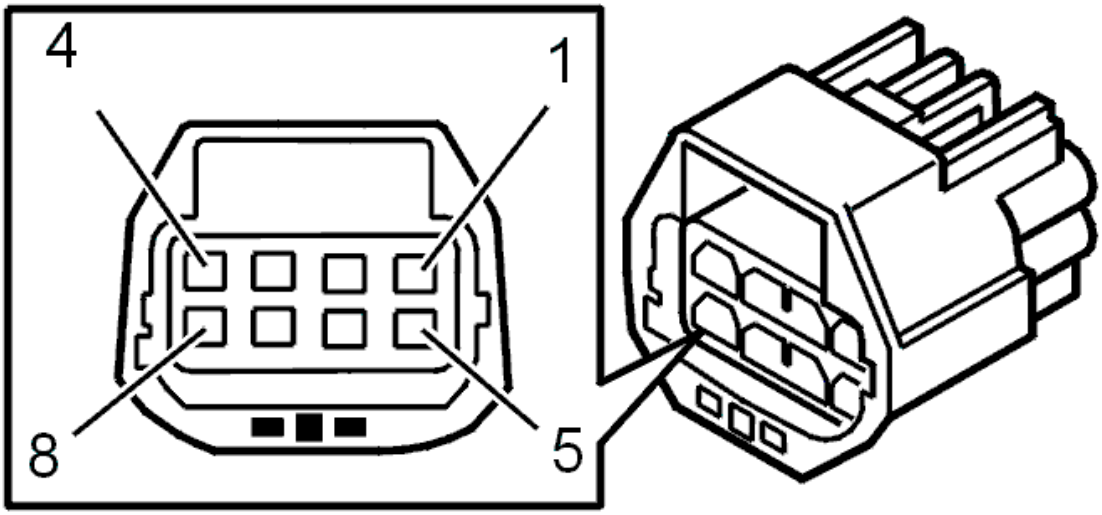

Fig. 338: Identifying 8-Pin Transmission Connector Terminals
Courtesy of VOLVO CARS CORPORATION

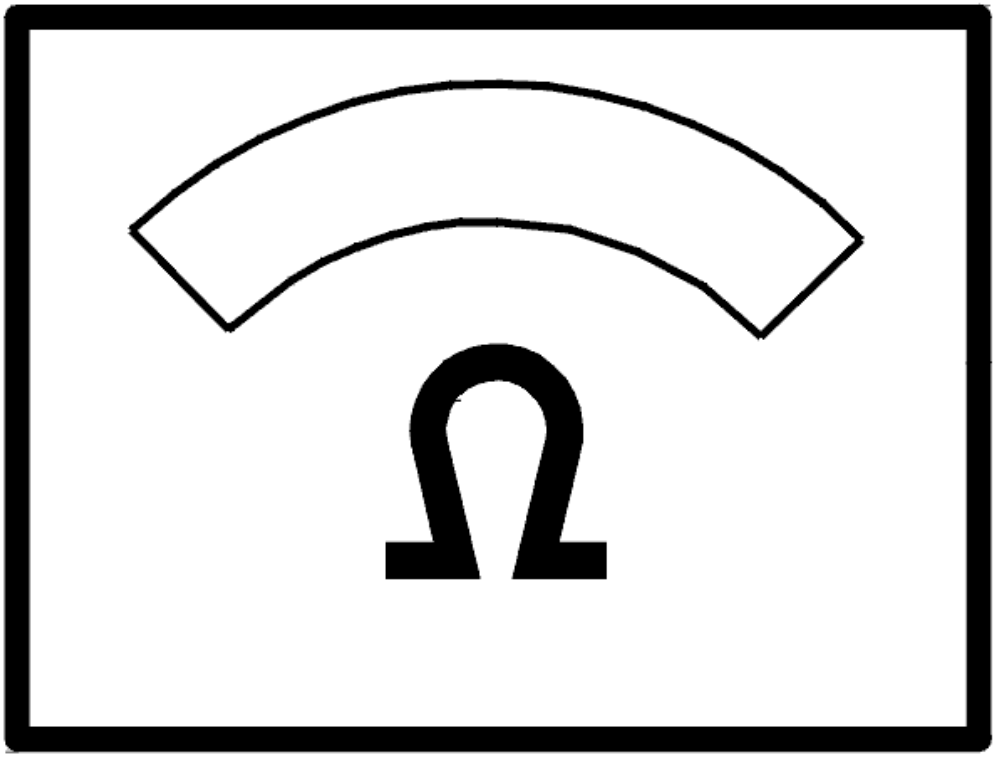

Fig. 339: Identifying Ohms Display
Courtesy of VOLVO CARS CORPORATION

Was the resistance OK?

- **YES**

  Refer to **CHECKING TRANSMISSION FLUID TEMPERATURE SENSOR**

- **NO**

  Refer to **CHECKING THE CABLE AND COMPONENT**

CHECKING TRANSMISSION FLUID TEMPERATURE SENSOR

Check the cable between control module terminal #A37 (#A37) and transmission connector terminal #D7

(control module side). Check for an open-circuit according to **OPEN-CIRCUIT, PERMANENT FAULTS** .

Check the cable between control module terminal #A55 (#A55)and transmission connector terminal #D8 (control module side). Check for an open-circuit according to **OPEN-CIRCUIT, PERMANENT FAULTS** .

Remedy as necessary.

Other information:

- To connect the breakout box, see **CONNECTING THE BREAKOUT BOX**
- To disconnect the transmission connectors, see **CONNECTORS, TRANSMISSION, DISCONNECTING / CONNECTING**
- For information about signals, see **SIGNAL DESCRIPTION. TRANSMISSION CONTROL MODULE (TCM)** .

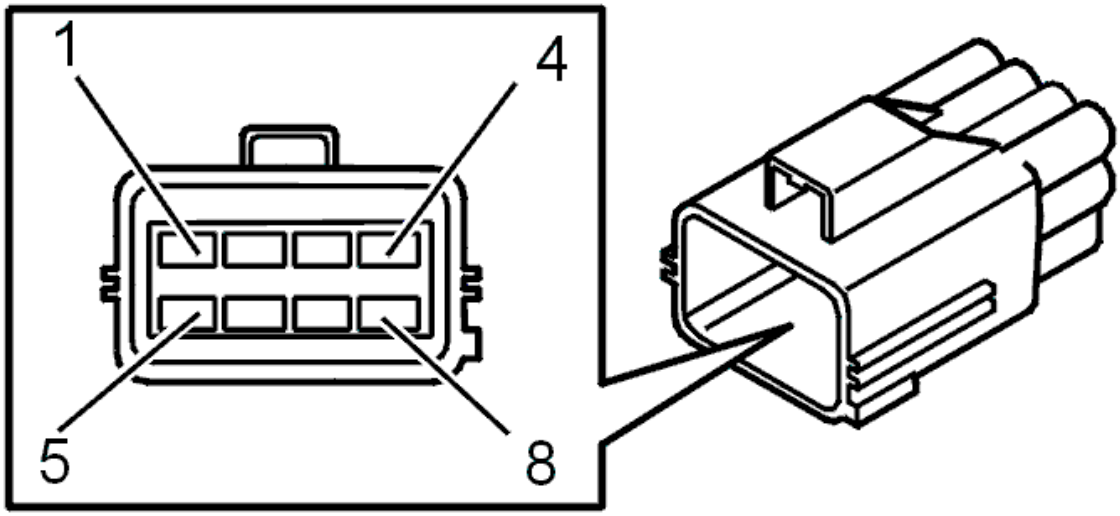

Fig. 340: Identifying Transmission Connector Terminals
Courtesy of VOLVO CARS CORPORATION

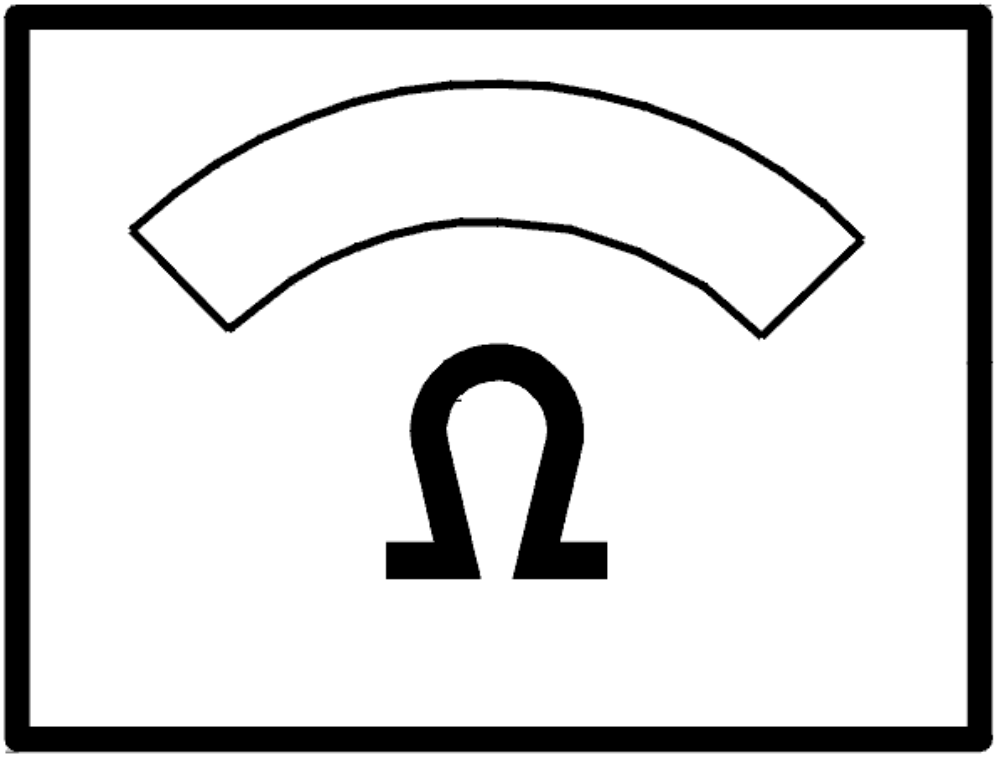

Fig. 341: Identifying Ohms Display
Courtesy of VOLVO CARS CORPORATION

Was a fault detected?

- **YES**

  Refer to **VERIFICATION**

- **NO**

  Refer to **CHECKING THE CABLE AND COMPONENT**

CHECKING THE CABLE AND COMPONENT

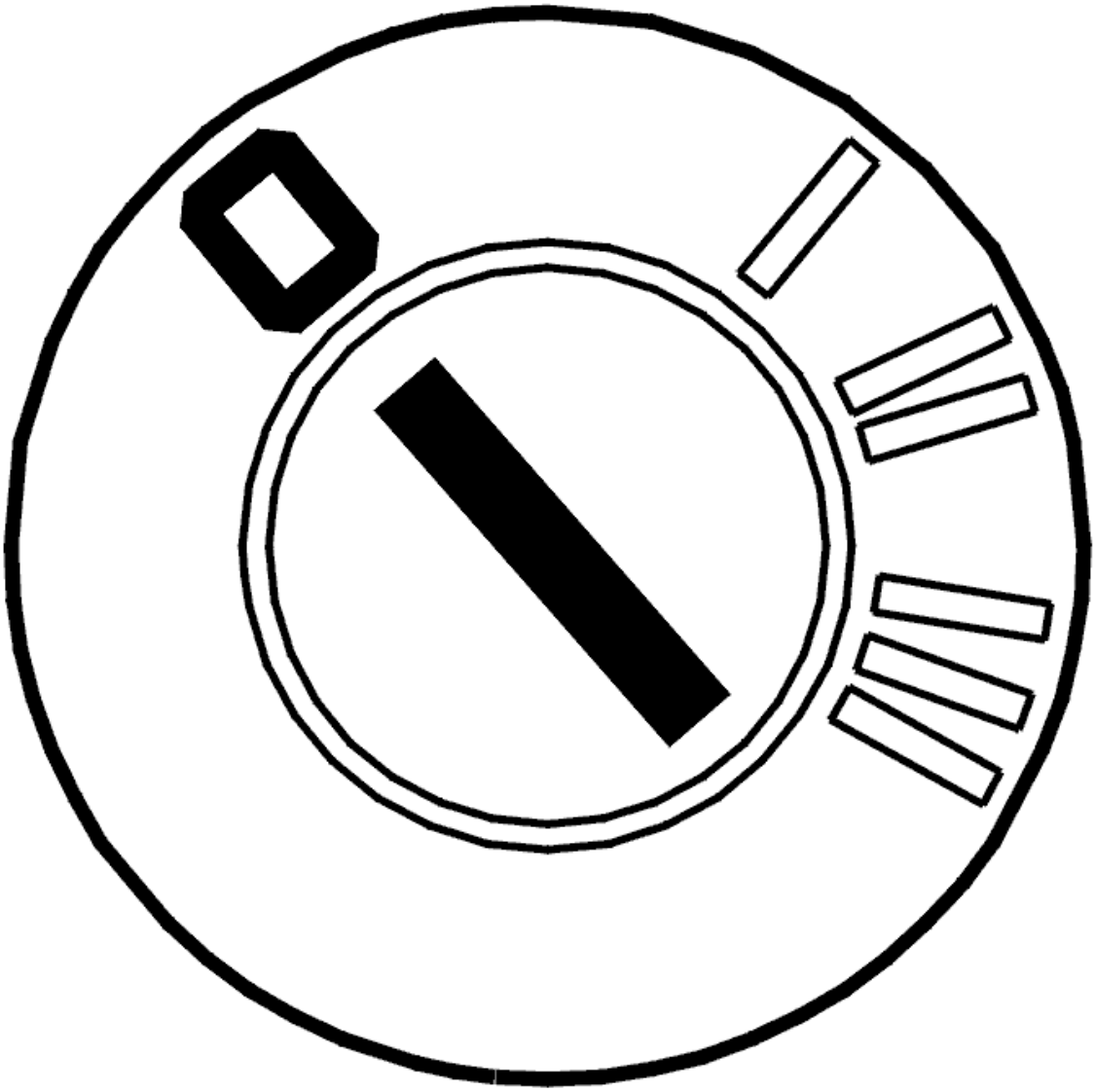

Fig. 342: Identifying Ignition OFF
Courtesy of VOLVO CARS CORPORATION

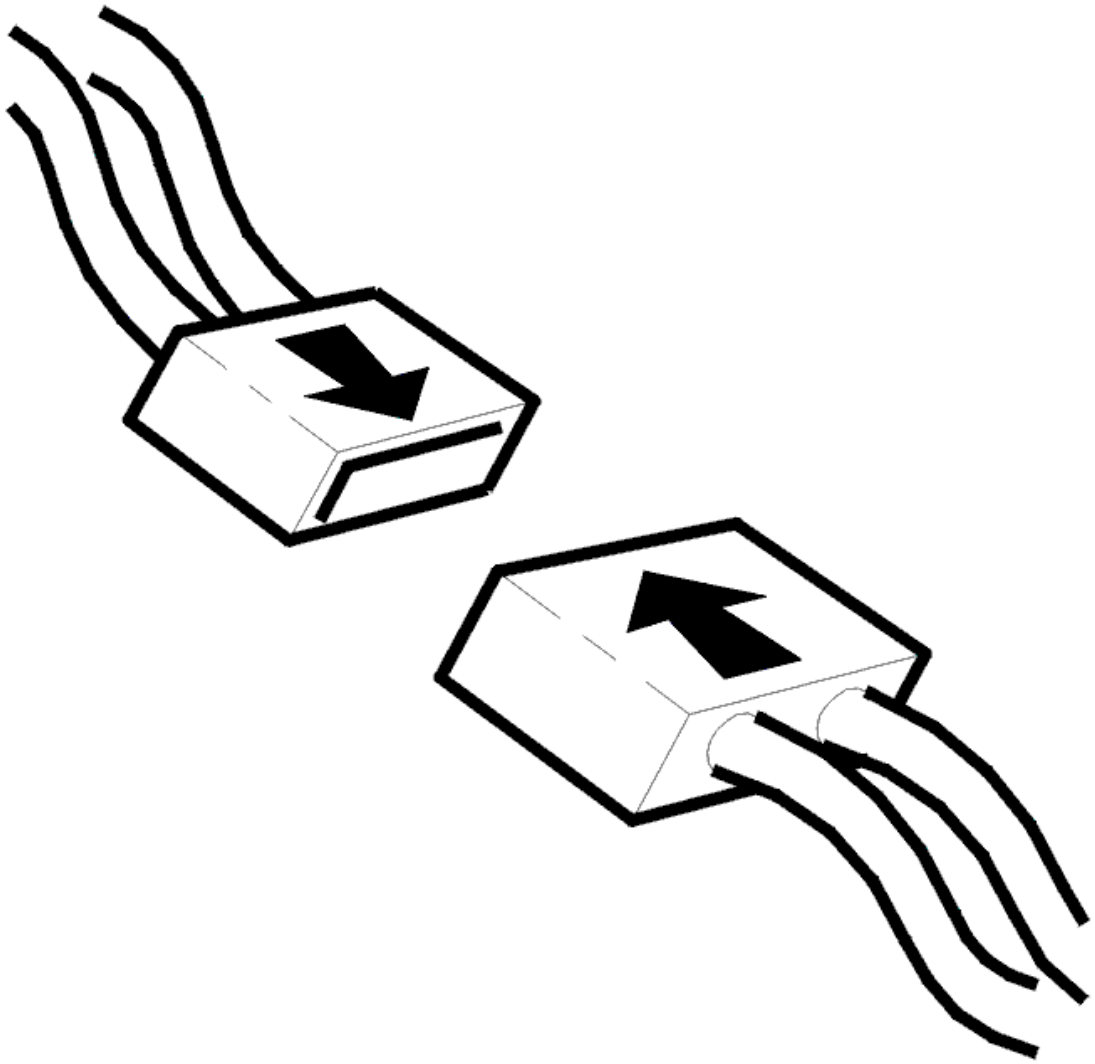

Fig. 343: Identifying Connector(s) Reinstallation
Courtesy of VOLVO CARS CORPORATION

- Ignition off
- Open the transmission control system.

  Check the cable between transmission connector terminal #D7 and temperature sensor terminal #1. Check the cable between transmission connector #D8 and temperature sensor terminal #2. Check for an open-circuit according to **OPEN-CIRCUIT, PERMANENT FAULTS** .

  Also check the cables for a short-circuit to each other.

  HINT: Check the temperature sensor. With the ignition off and transmission connector D disconnected, measure the resistance between transmission connector D terminals #D7 and #D8. The resistance must be 4.5-6 kohms at 20 °C.

Remedy as necessary.

Other information:

- To connect the breakout box, see **CONNECTING THE BREAKOUT BOX**
- To disconnect the transmission connectors, see **CONNECTORS, TRANSMISSION, DISCONNECTING / CONNECTING**
- To open the transmission control system and to check or replace the temperature sensor, see **SOLENOID CONTROL SYSTEM, REPLACING**
- For information about signals, see **SIGNAL DESCRIPTION. TRANSMISSION CONTROL MODULE (TCM)** .

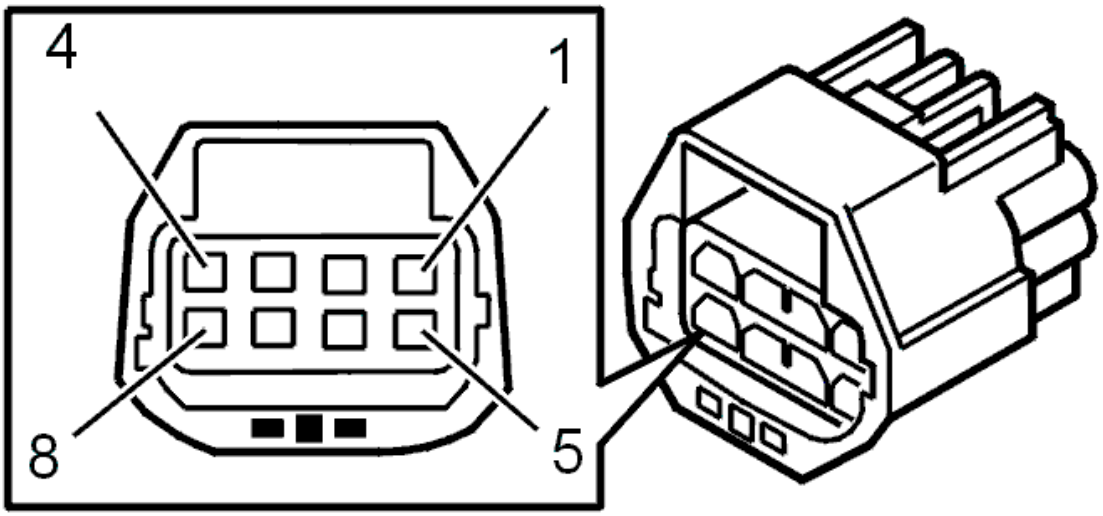

Fig. 344: Identifying 8-Pin Transmission Connector Terminals
Courtesy of VOLVO CARS CORPORATION

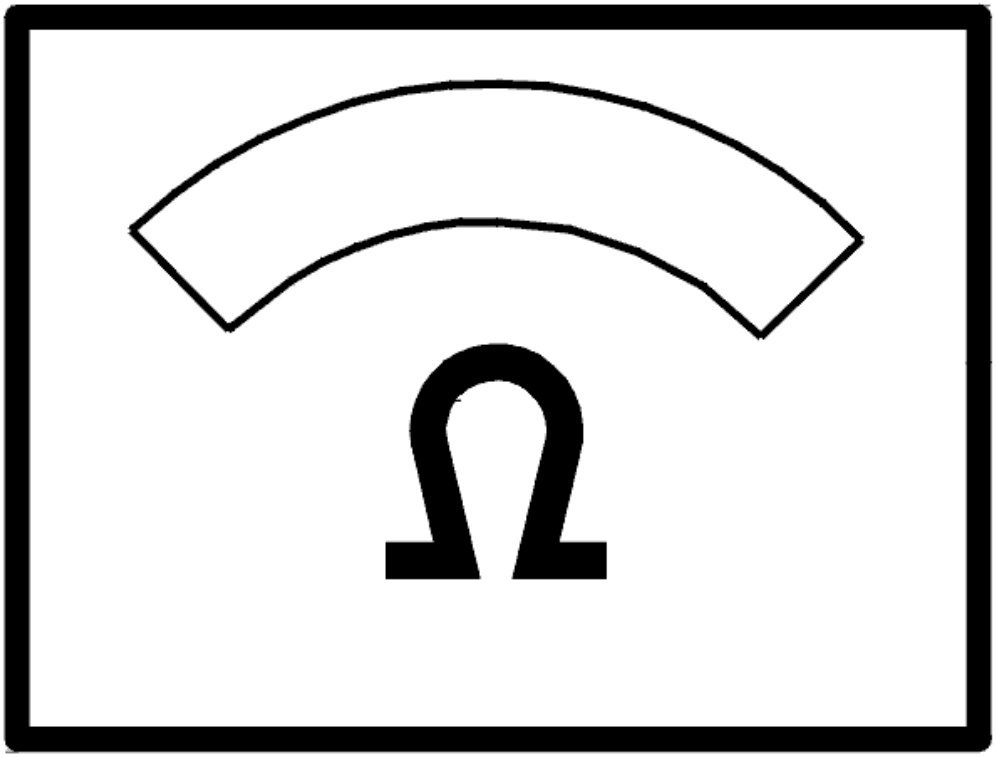

Fig. 345: Identifying Ohms Display
Courtesy of VOLVO CARS CORPORATION

- **Continue**

  Refer to **RESETTING TRANSMISSION FLUID CHANGE COUNTER**

INTERMITTENT FAULT

Check the transmission control module (TCM) and transmission connector D. Check for contact resistance and oxidation according to **CONTACT RESISTANCE AND OXIDATION** .

Check the cable between transmission control module (TCM) terminal #A37 (#A37) and transmission connector terminal #D7 (control module side). Check for an intermittent open-circuit according to **OPEN-CIRCUIT, INTERMITTENT FAULTS** .

Check the cable between control module terminal #A55 (#A55)and transmission connector terminal #D8 (control module side). Check for an intermittent open-circuit according to **OPEN-CIRCUIT, INTERMITTENT FAULTS** .

Remedy as necessary.

Other information:

- To connect the breakout box, see **CONNECTING THE BREAKOUT BOX**
- To disconnect the transmission connectors, see **CONNECTORS, TRANSMISSION, DISCONNECTING / CONNECTING**
- For information about signals, see **SIGNAL DESCRIPTION. TRANSMISSION CONTROL MODULE (TCM)** .

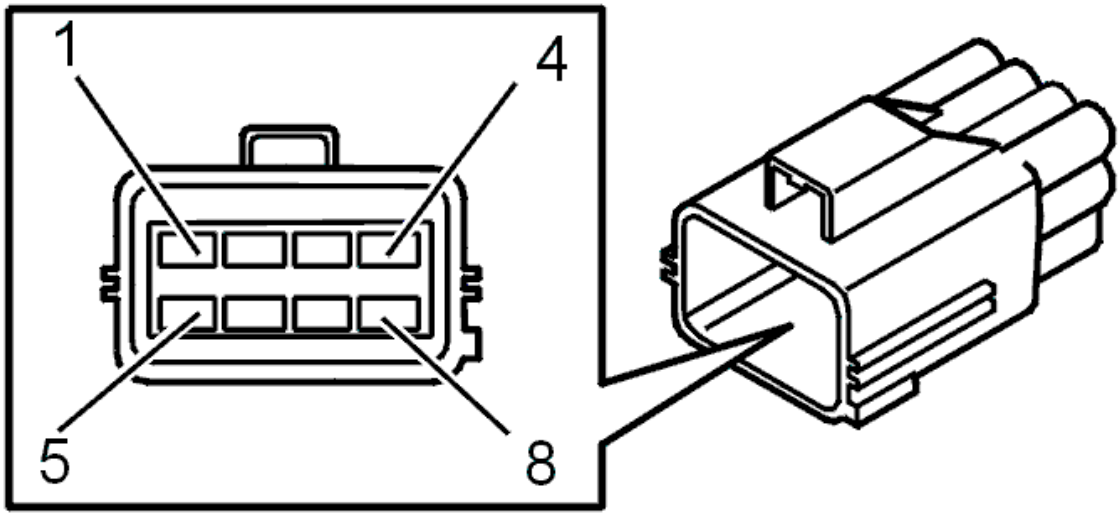

Fig. 346: Identifying Transmission Connector Terminals
Courtesy of VOLVO CARS CORPORATION

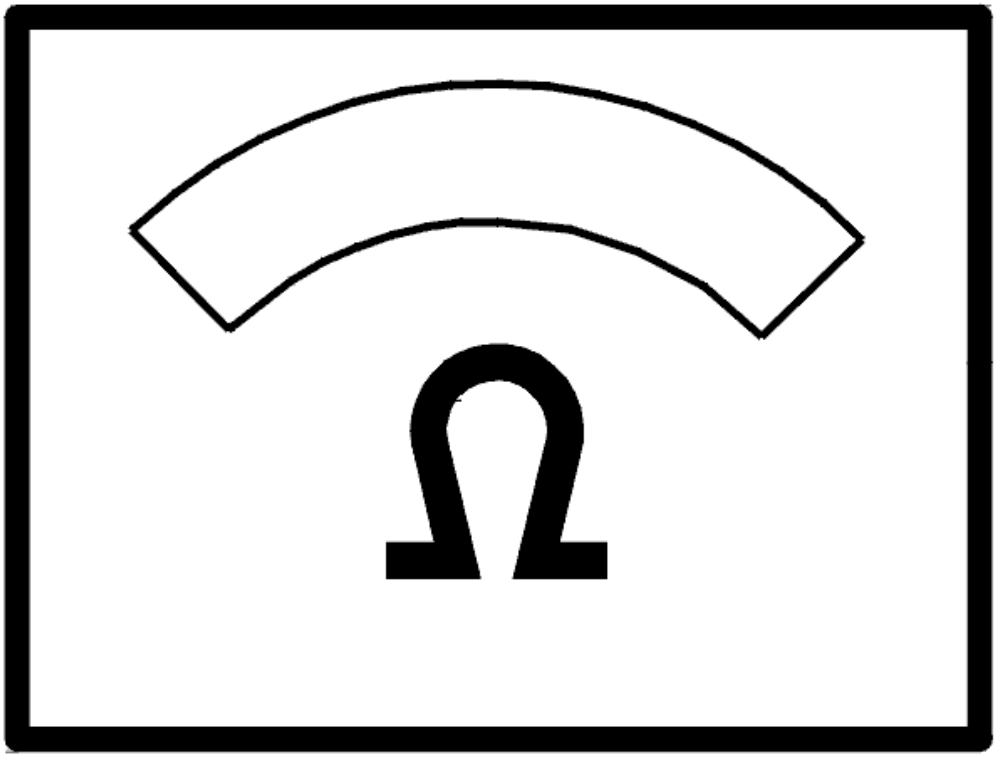

Fig. 347: Identifying Ohms Display
Courtesy of VOLVO CARS CORPORATION

- **Continue**

  Refer to **INFORMATION**

RESETTING TRANSMISSION FLUID CHANGE COUNTER

RESETTING TRANSMISSION FLUID CHANGE COUNTER

HINT: The transmission control module (TCM) has a counter for the oil quality. The counter counts up if the transmission is exposed to too high a load or an ambient temperature that is too high. If the counter is not reset when the oil is drained or changed, there is a risk that a diagnostic trouble code (DTC) will be stored in faulty circumstances. Therefore it is important that the "Transmission oil change" counter is reset.

NOTE: **This applies only when the transmission fluid is changed and when the fluid is changed when repairs are carried out to the transmission temperature sensor.**

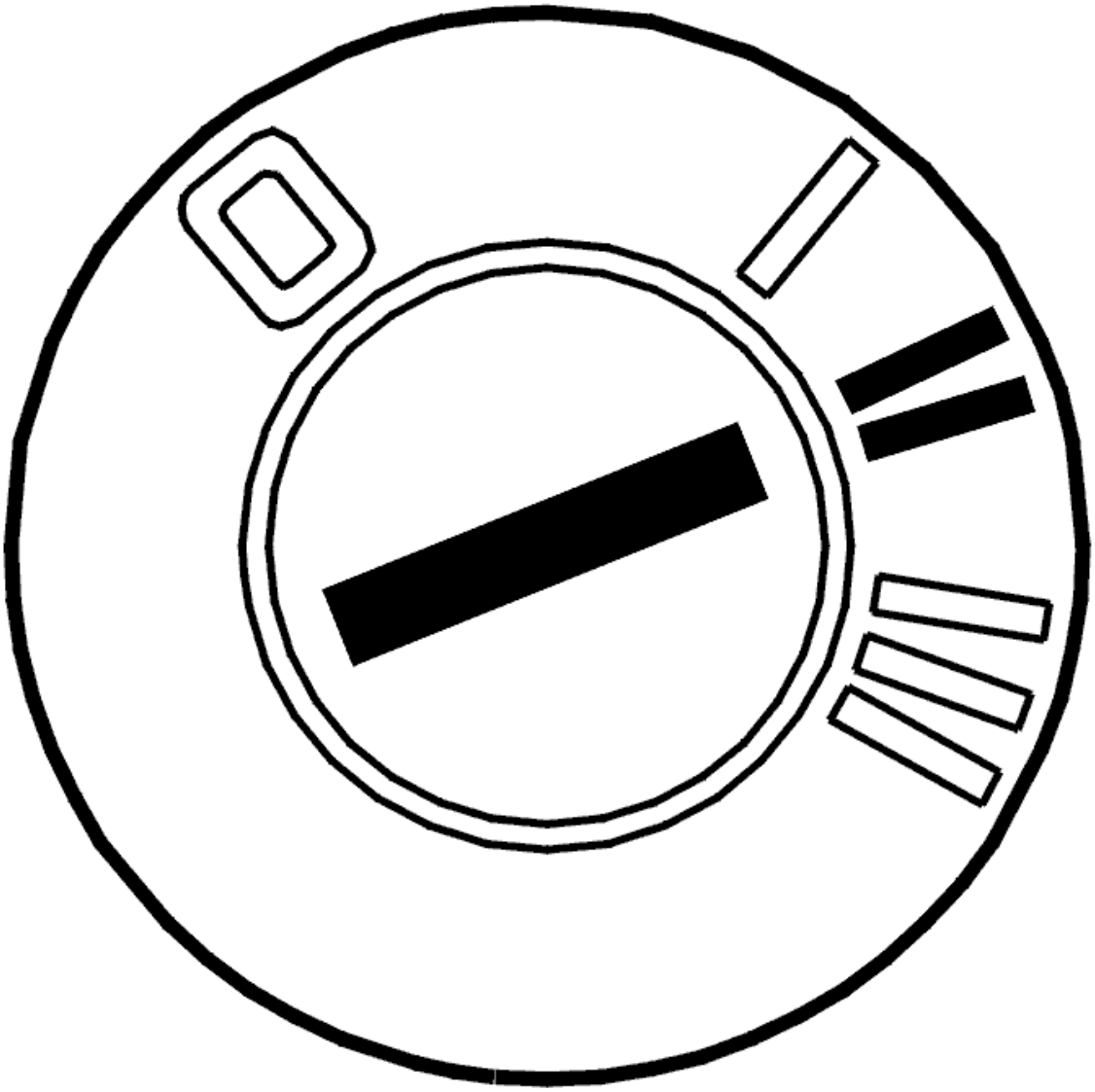

Fig. 348: Identifying Ignition ON
Courtesy of VOLVO CARS CORPORATION

- Ignition on.

  Reset the counter by clicking on the VCT 2000 symbol.

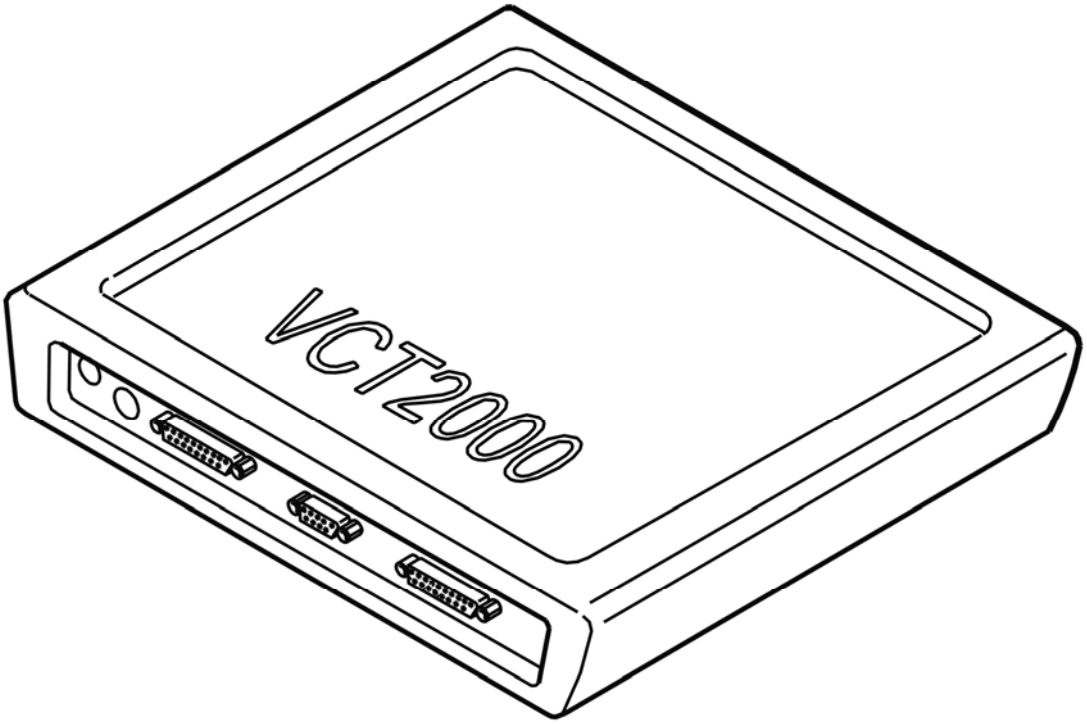

Fig. 349: Identifying VCT2000 Diagnostic Tool Symbol In VIDA
Courtesy of VOLVO CARS CORPORATION

- **Continue**

  Refer to **VERIFICATION**

VERIFICATION

VERIFICATION

HINT: After carrying out the repair, check that the fault has been remedied.

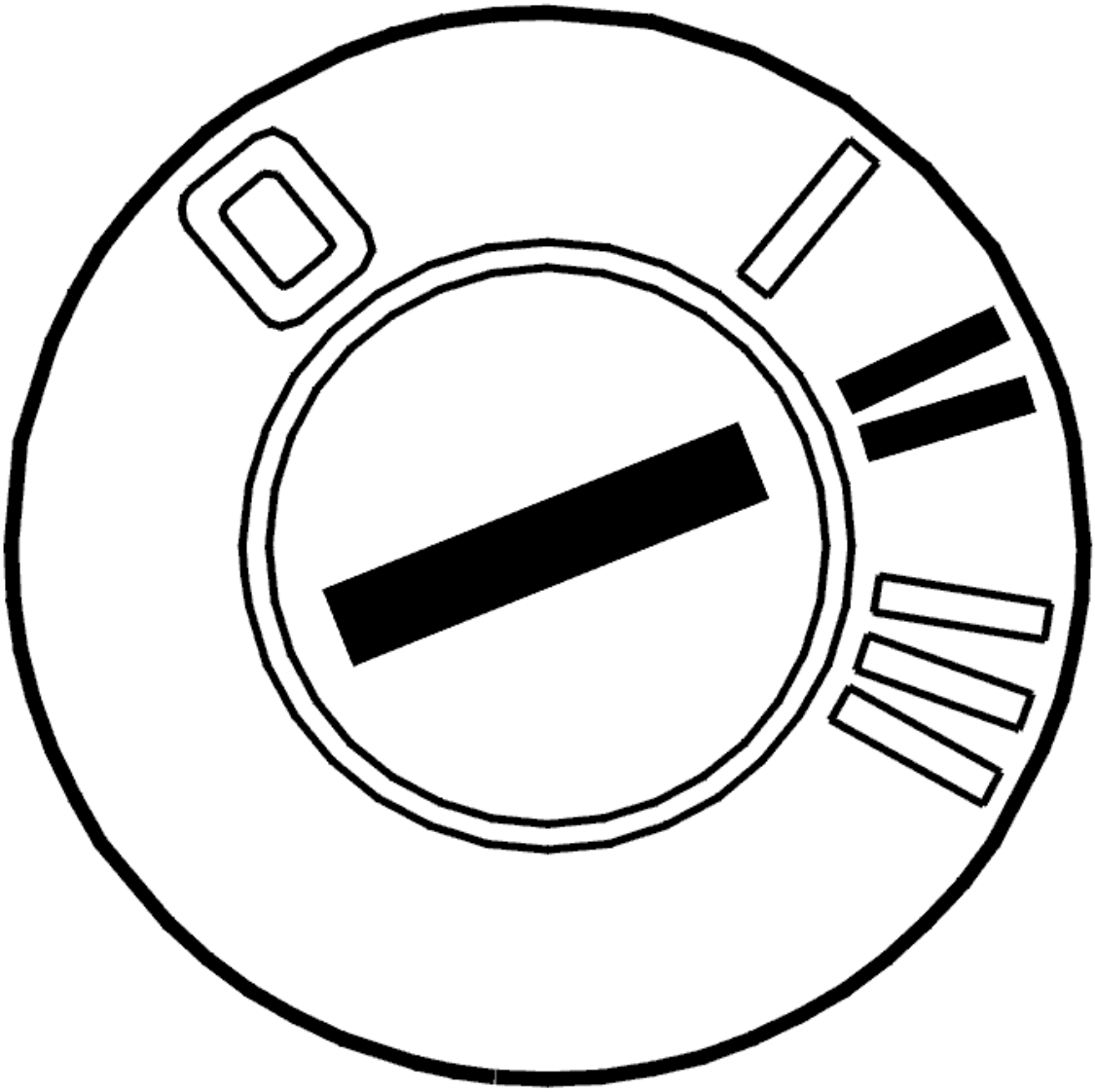

Fig. 350: Identifying Ignition ON
Courtesy of VOLVO CARS CORPORATION

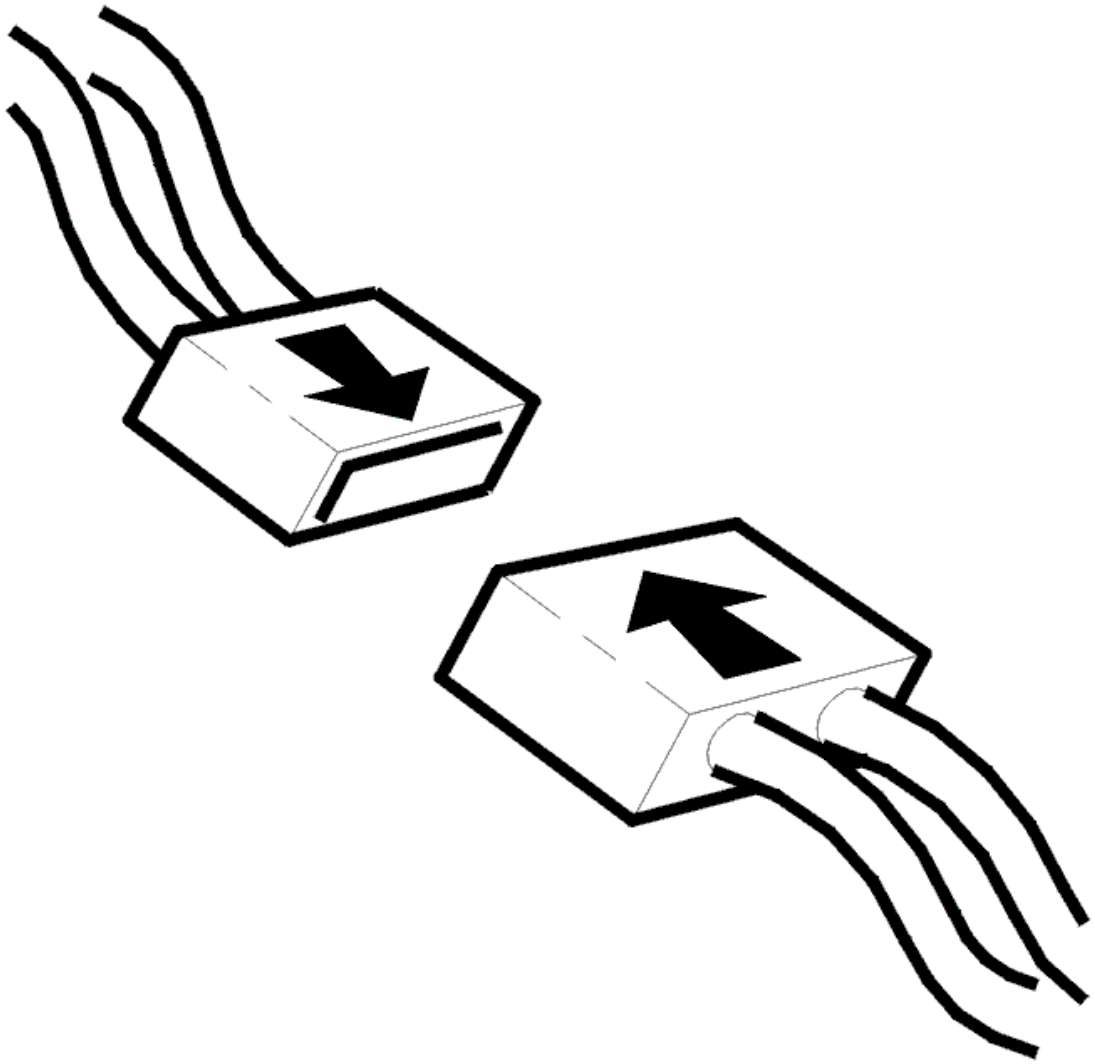

Fig. 351: Identifying Connector(s) Reinstallation
Courtesy of VOLVO CARS CORPORATION

- Ignition off.
- Reinstall the connectors, components etc.
- Ignition on.
- Read off the oil temperature.

Check that the transmission oil temperature is within its permitted range.

Compare with the transmission temperature.

NOTE: **The transmission temperature sensor is located inside the control unit and can be affected by the heat given off by the solenoids.**

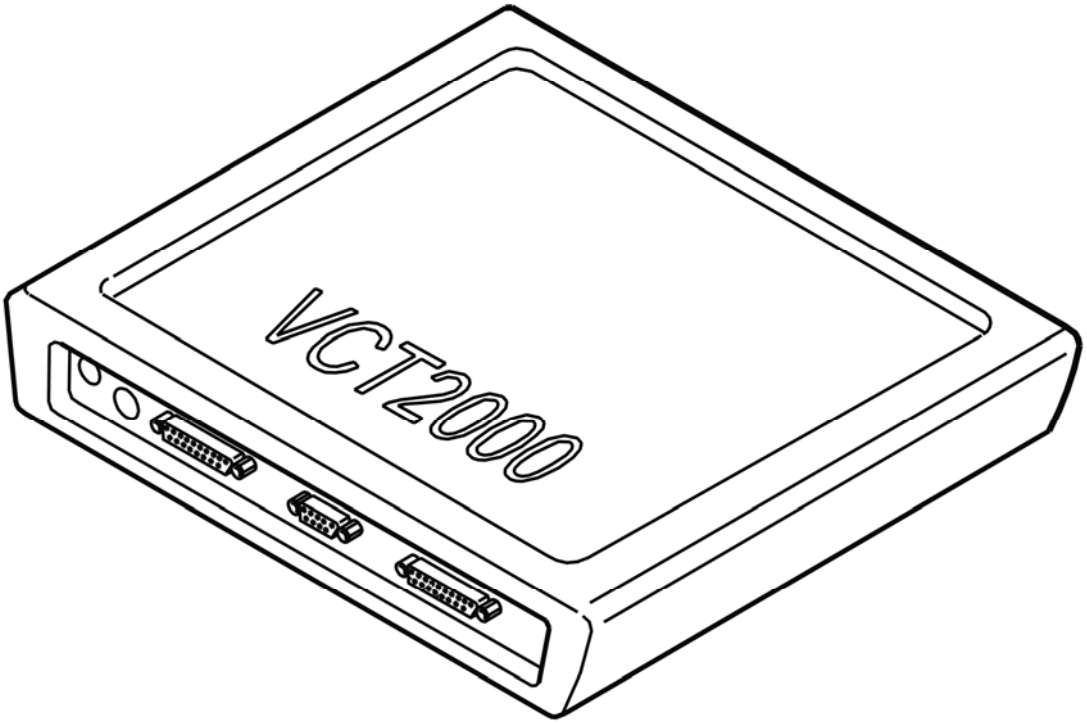

Fig. 352: Identifying VCT2000 Diagnostic Tool Symbol In VIDA
Courtesy of VOLVO CARS CORPORATION

Is the oil temperature within its permitted range?

- **YES**

  VERIFIED: Troubleshooting has been completed.

- **NO**

  Refer to **INFORMATION**

TCM-0107: SHIFT SOLENOID S4. SIGNAL TOO HIGH (AW50/51 AWD; AW55-50/51SN; 2003-2007)

DIAGNOSTIC TROUBLE CODE (DTC) INFORMATION

Condition

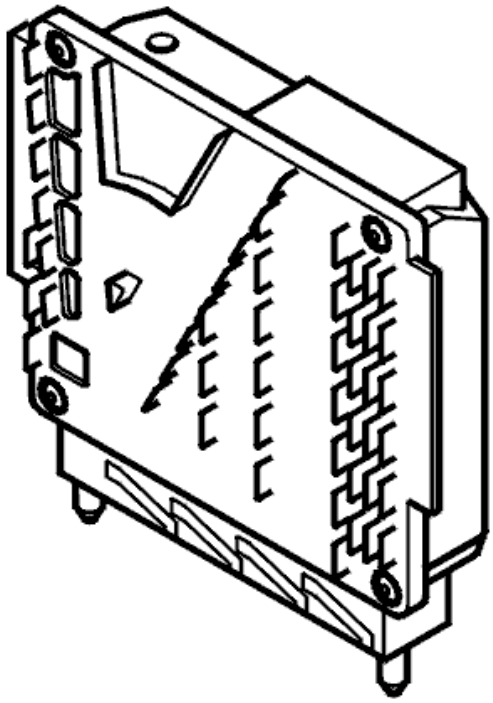

Fig. 353: Identifying Transmission Control Module (TCM)
Courtesy of VOLVO CARS CORPORATION

Shift solenoids S1, S2, S3, S4 and S5 operate in tandem to control gear-shifting. The solenoids are controlled by power stages in the transmission control module (TCM). The transmission control module (TCM) opens the power stages to activate the solenoids and sends a voltage through the circuit. Diagnostic trouble codes (DTCs) TCM-0001, TCM-0007, TCM-0101 TCM-0107 or TCM-010A are stored (depending on the solenoid) if the transmission control module (TCM) registers that the signal in circuits S1, S2, S3, S4 or S5 is too high when the solenoid should not be activated.

Substitute Value

- The transmission control module (TCM) "Emergency mode I" program has been initiated.

Possible Source

- Short-circuit to supply voltage in the signal cable.
- Internal fault in the control module.

Fault symptom[s]

- General orange warning lamp lit.
- Malfunction indicator lamp (MIL) lit.

- Harsh gear shifting.
- No shifting.
- No lock-up function.

SIGNAL TOO HIGH

CHECKS

CHECKING THE TEMPERATURE SENSOR

HINT: In some cases, the diagnostic trouble code (DTC) may be caused by a defective oil temperature sensor. Check the function of the oil temperature sensor first.

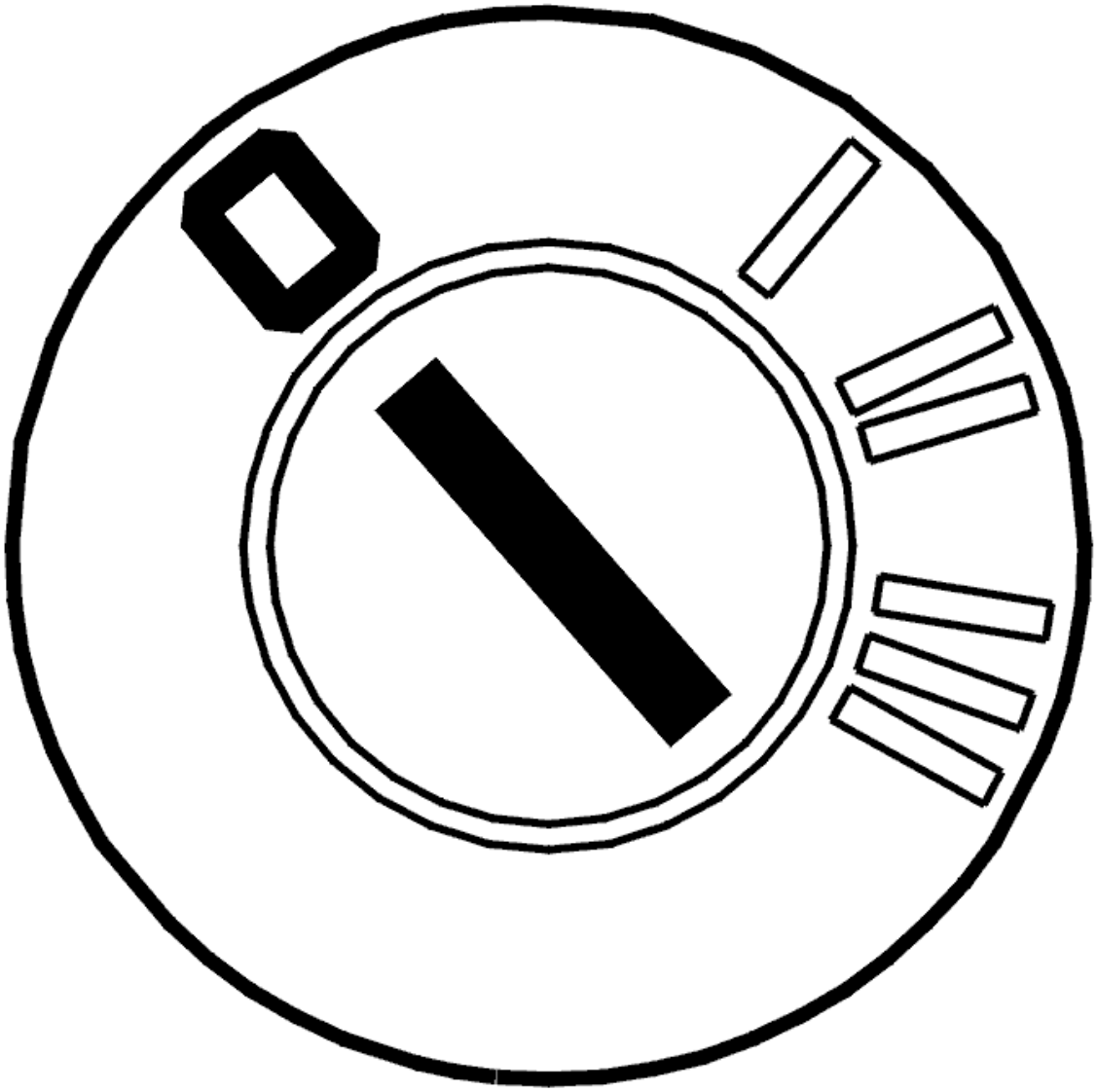

Fig. 354: Identifying Ignition OFF
Courtesy of VOLVO CARS CORPORATION

- Ignition off
- Read off the oil temperature.

  Check that the function of the temperature sensor is OK. Test drive the car to increase the temperature of the transmission fluid. Read off the temperature again. Check that the temperature has increased.

NOTE: **If the temperature is outside its permitted range, fault-trace the temperature sensor.**

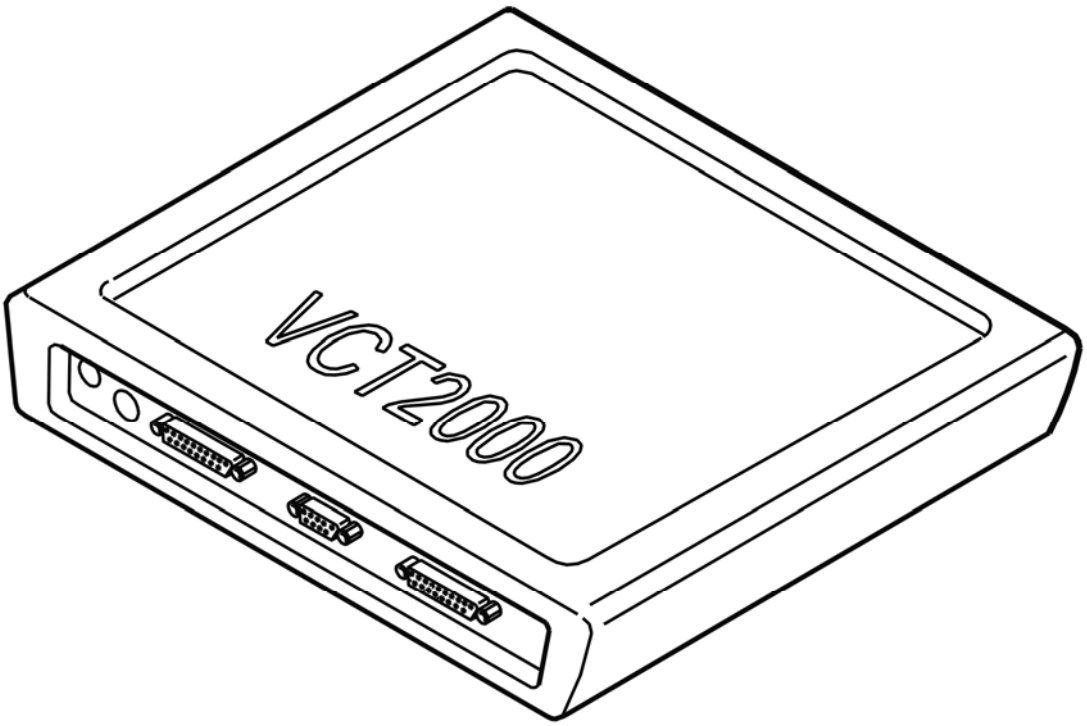

Fig. 355: Identifying VCT2000 Diagnostic Tool Symbol In VIDA
Courtesy of VOLVO CARS CORPORATION

Is the oil temperature within its permitted range?

- **YES**

  Refer to **CHECKING SHIFT SOLENOID S4**

- **NO**

  Refer to **FAULTY SIGNAL**

CHECKING SHIFT SOLENOID S4

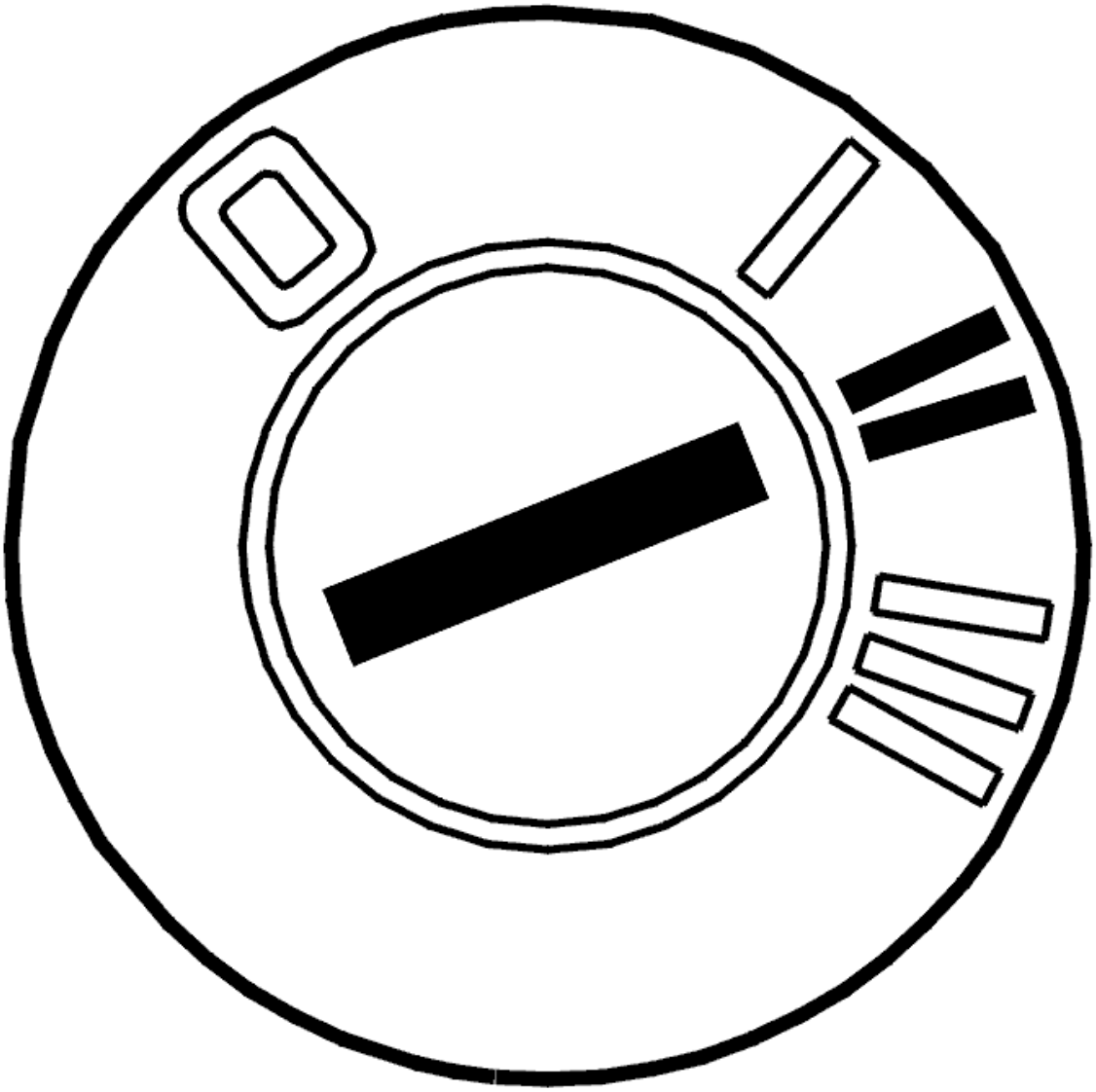

Fig. 356: Identifying Ignition ON
Courtesy of VOLVO CARS CORPORATION

- Ignition on
- Gear selector in position P
- Activate solenoid S4.

The value must change between OFF and ON.

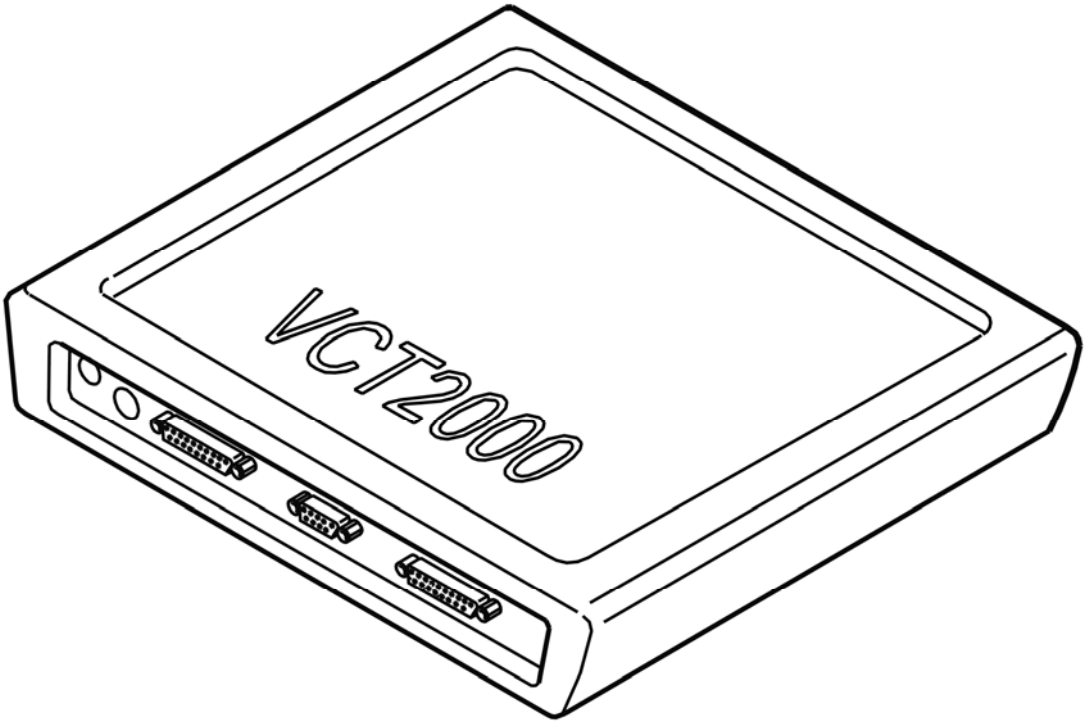

Fig. 357: Identifying VCT2000 Diagnostic Tool Symbol In VIDA
Courtesy of VOLVO CARS CORPORATION

Does the value change?

- **YES**

  Refer to **INTERMITTENT FAULT**

- **NO**

  Refer to **CHECKING SOLENOID S4**

CHECKING SOLENOID S4

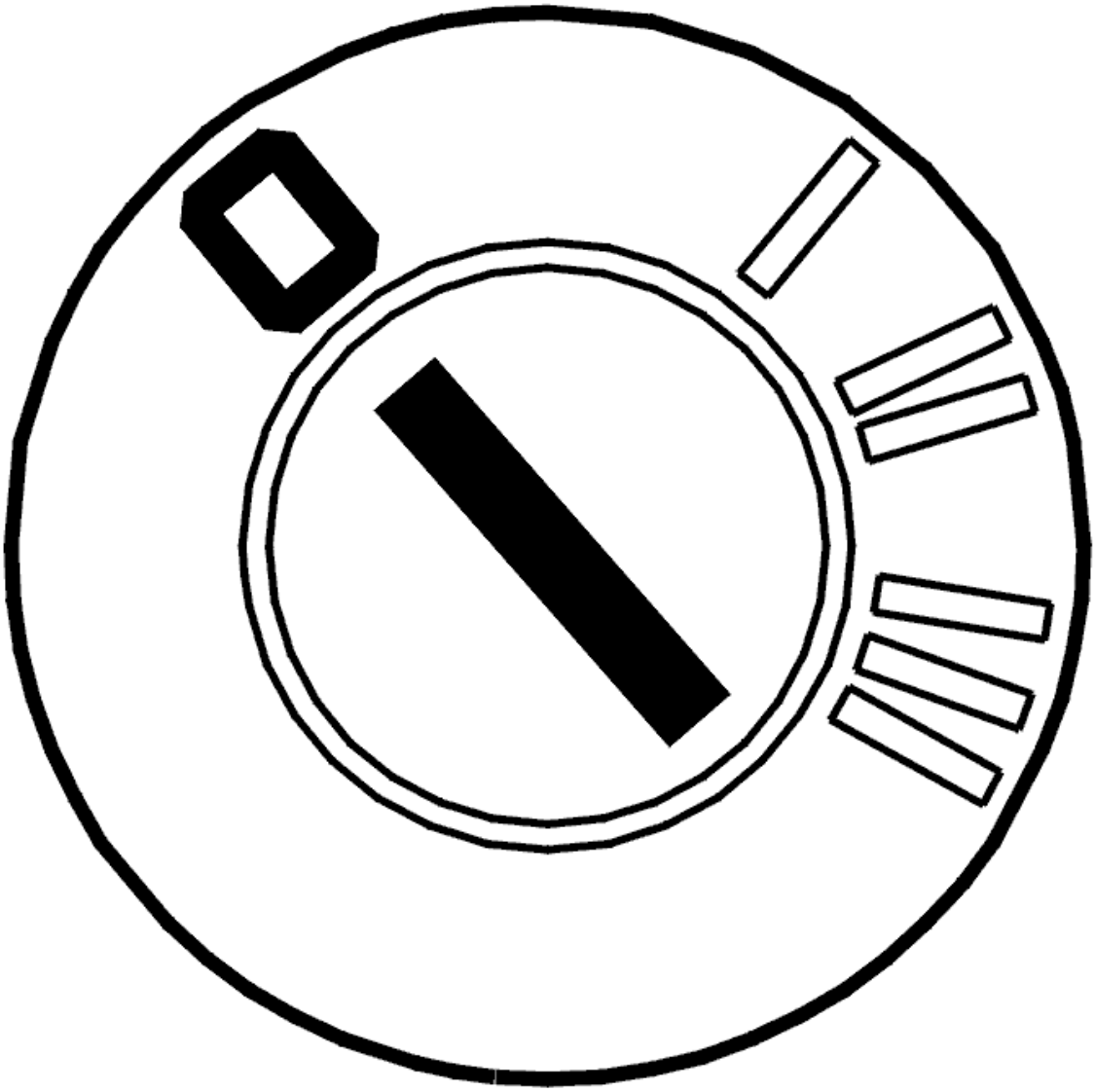

Fig. 358: Identifying Ignition OFF
Courtesy of VOLVO CARS CORPORATION

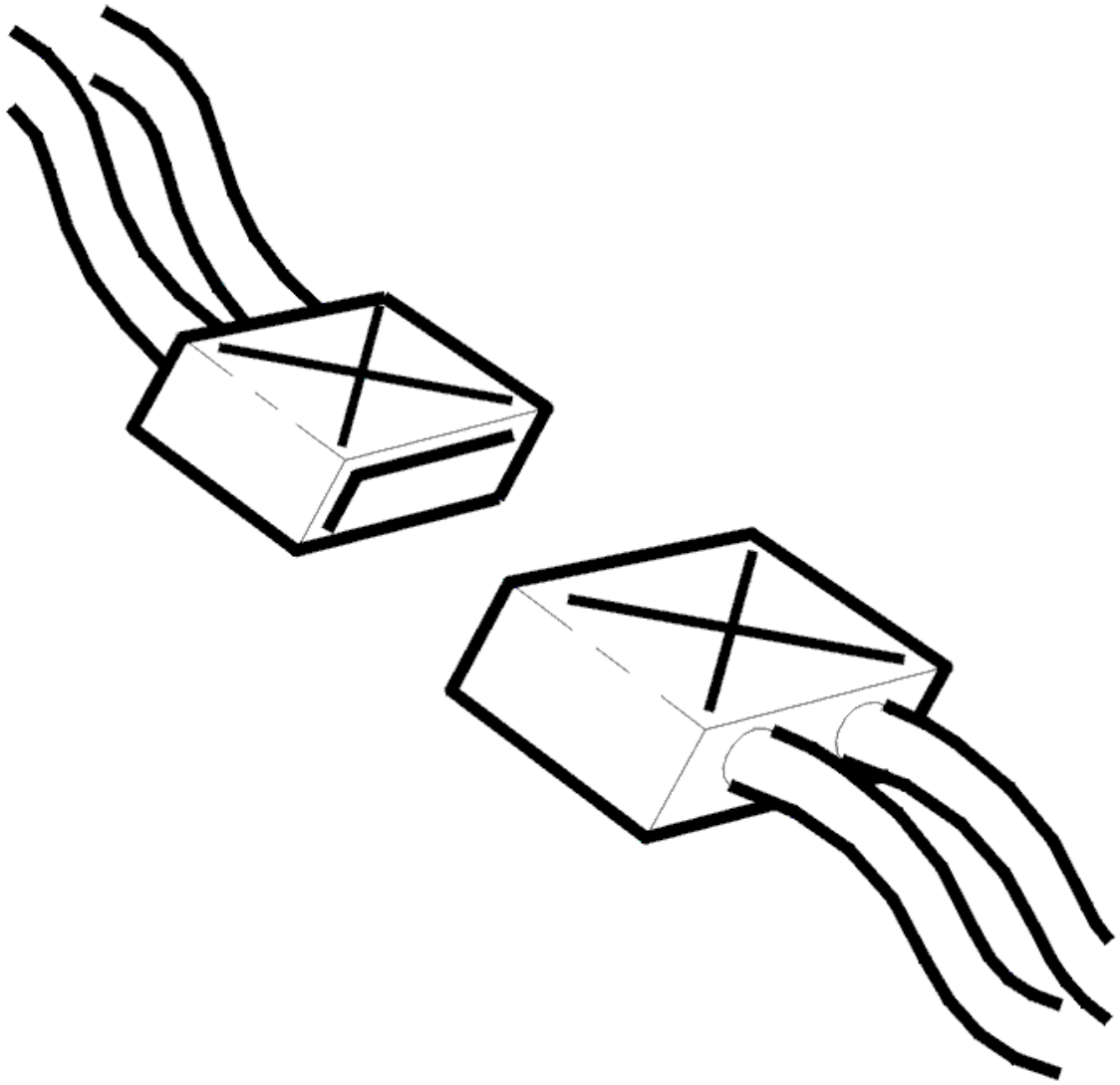

Fig. 359: Identifying Connectors
Courtesy of VOLVO CARS CORPORATION

- Ignition off
- Disconnect transmission connector C.

  Check solenoid S4 by measuring the resistance between transmission connector terminal #C4 and the transmission housing. The ohmmeter should read 11-15 ohms at 20°C.

  Other information:

  - To disconnect the transmission connectors, see **CONNECTORS, TRANSMISSION, DISCONNECTING / CONNECTING**
  - For information about signals, see **SIGNAL DESCRIPTION. TRANSMISSION CONTROL MODULE (TCM)** .

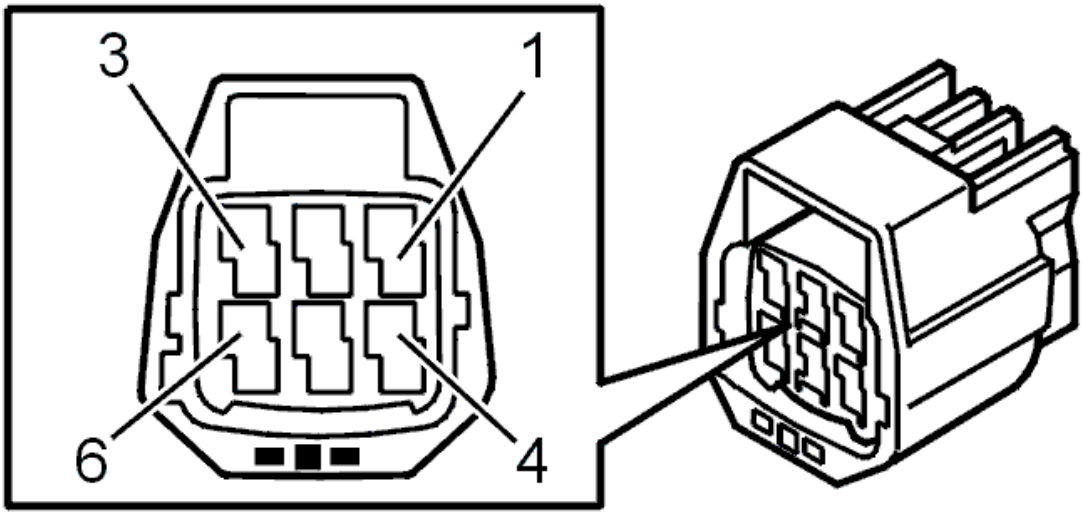

Fig. 360: Identifying 6-Pin Transmission Connector Terminals
Courtesy of VOLVO CARS CORPORATION

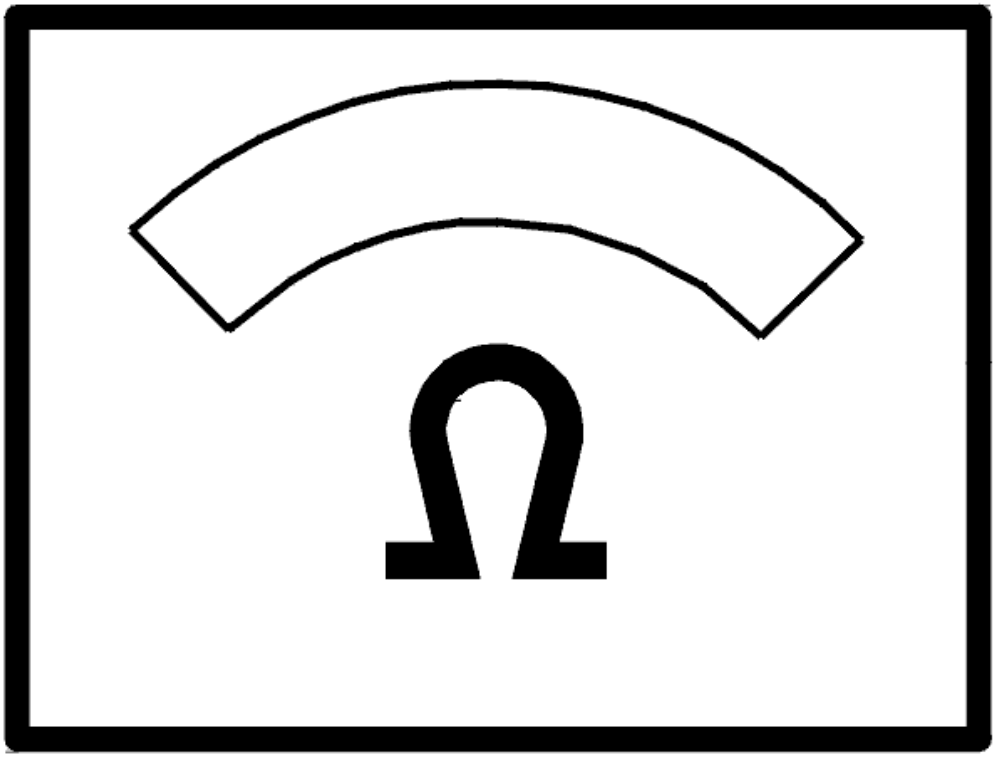

Fig. 361: Identifying Ohms Display
Courtesy of VOLVO CARS CORPORATION

Was the resistance OK?

- **OK**

  Refer to **CHECKING THE WIRING**

- **NOT OK**

  Refer to **CHECKING THE WIRING AND COMPONENT**

CHECKING THE WIRING

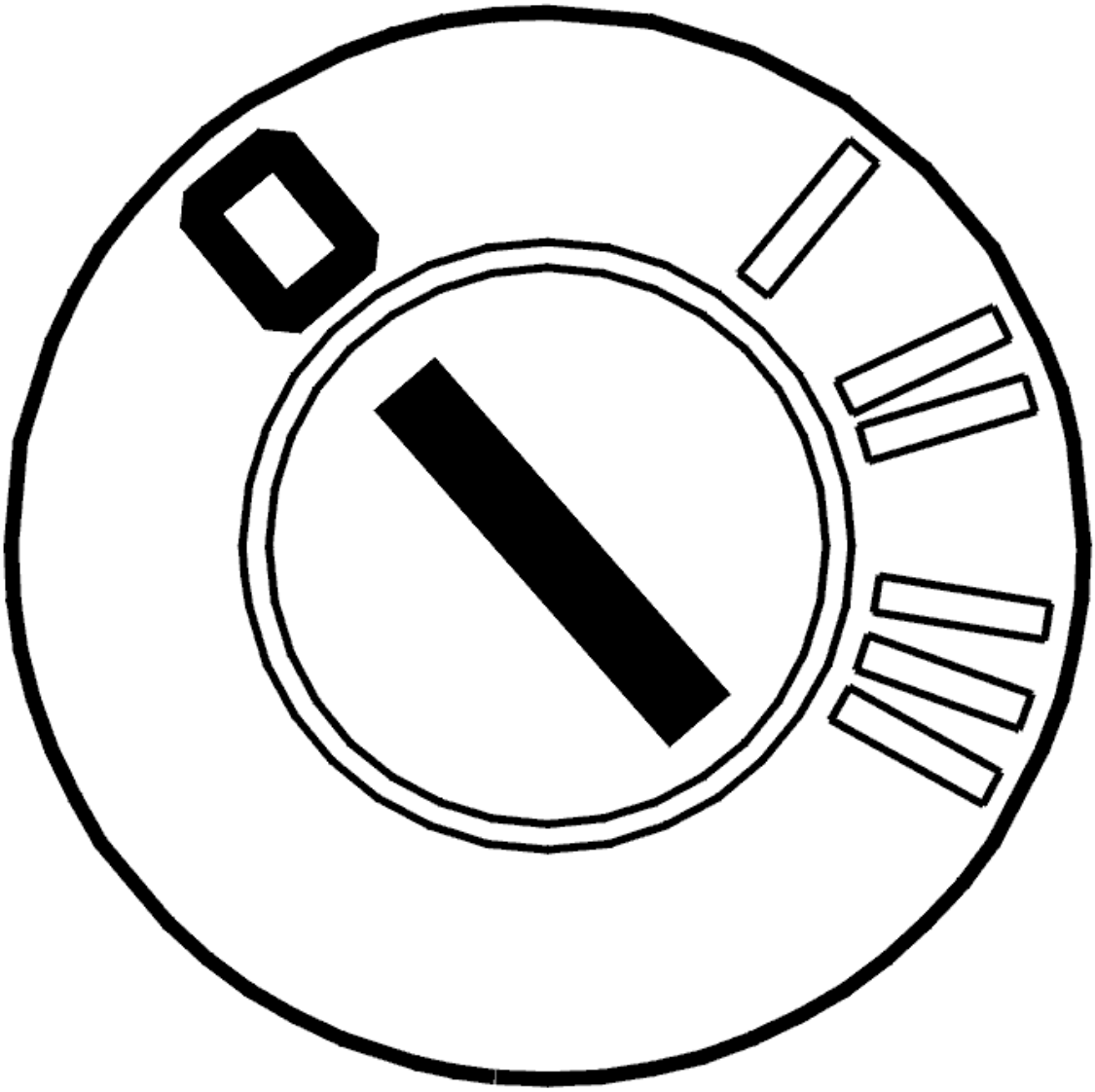

Fig. 362: Identifying Ignition OFF
Courtesy of VOLVO CARS CORPORATION

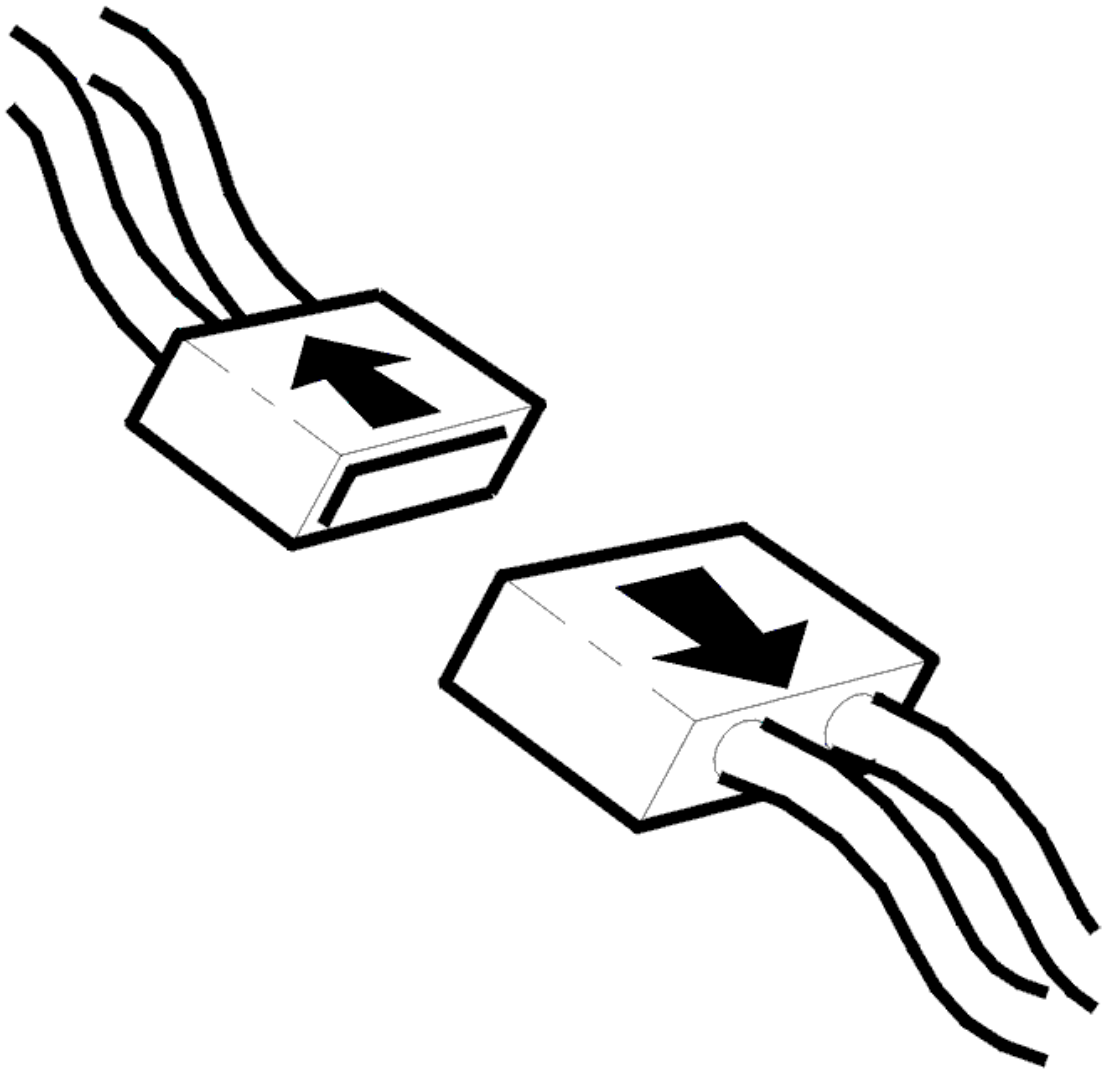

Fig. 363: Identifying Connector(s) Disconnected
Courtesy of VOLVO CARS CORPORATION

- Ignition off
- The breakout box connected
- Transmission connector C disconnected.

  Check the cable between control module terminal #A47 (#A47) and transmission connector terminal #C4 (control module side). Check for a short-circuit to supply voltage according to **SHORT-CIRCUIT TO SUPPLY VOLTAGE. PERMANENT FAULTS** . Also check against the other cables in the circuit.

  Other information:

  - To connect the breakout box, see **CONNECTING THE BREAKOUT BOX**
  - To disconnect the transmission connectors, see **CONNECTORS, TRANSMISSION,**

DISCONNECTING / CONNECTING

- For information about signals, see **SIGNAL DESCRIPTION. TRANSMISSION CONTROL MODULE (TCM)** .

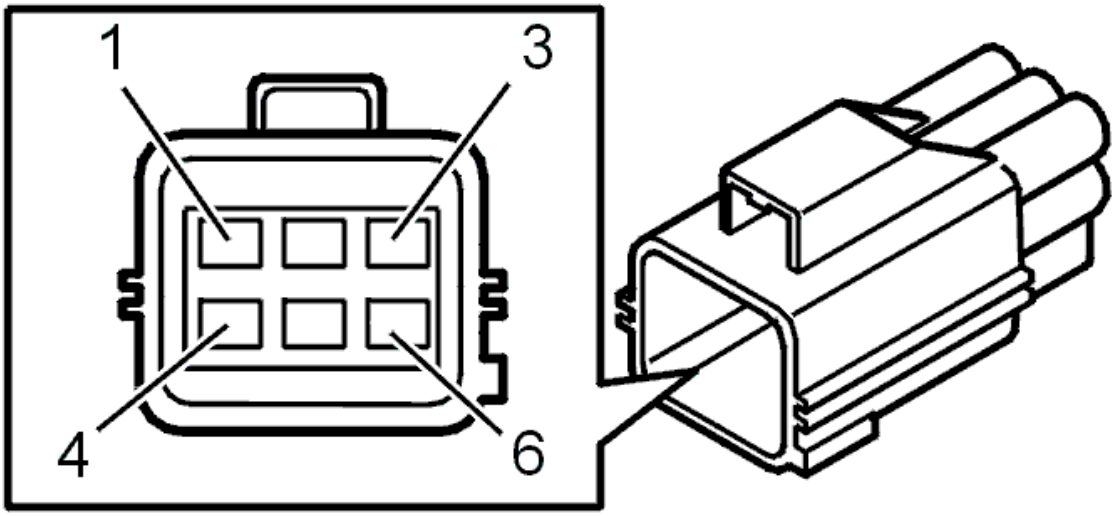

Fig. 364: Identifying Transmission Connector Terminals
Courtesy of VOLVO CARS CORPORATION

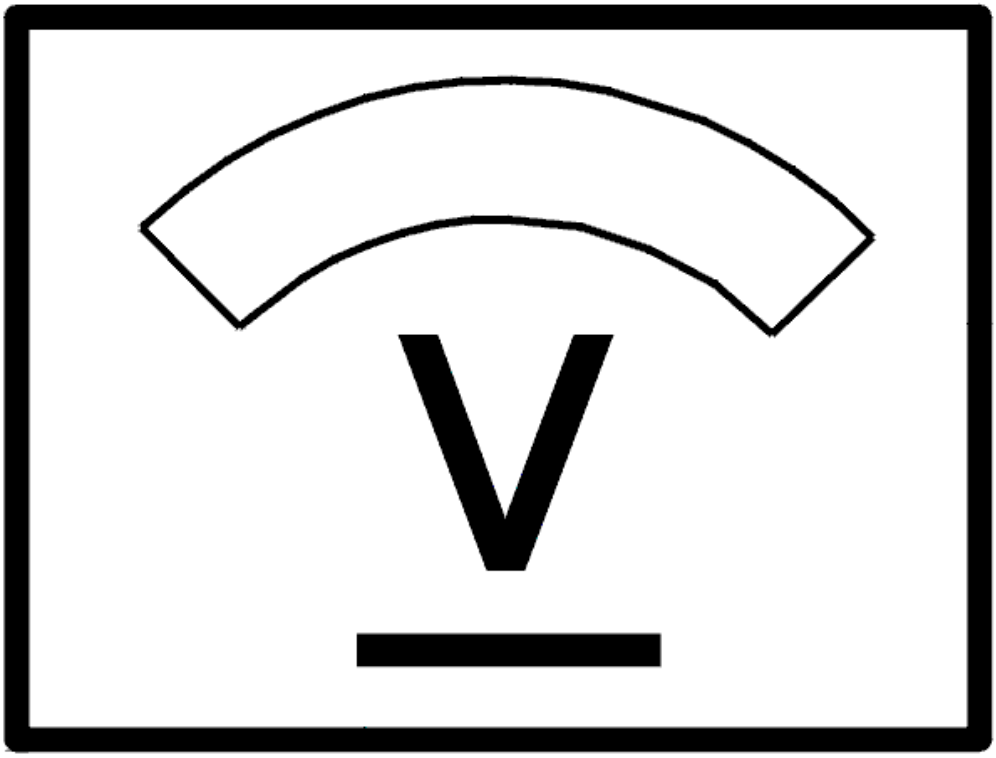

Fig. 365: Identifying Voltage Display
Courtesy of VOLVO CARS CORPORATION

Was a fault detected?

- **YES**

  Refer to **VERIFICATION**

- **NO**

  Refer to **CHECKING THE WIRING AND COMPONENT**

CHECKING THE WIRING AND COMPONENT

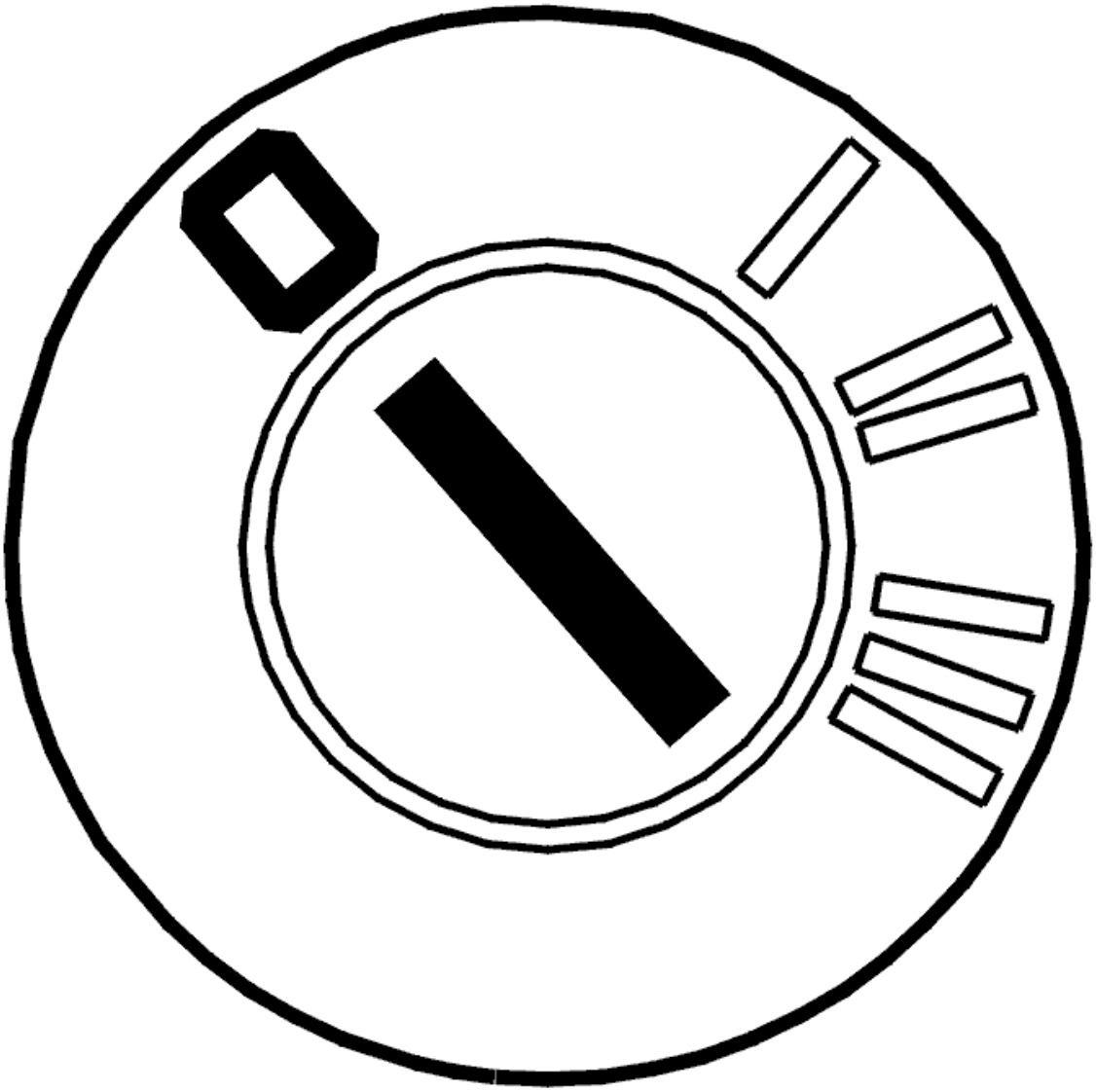

Fig. 366: Identifying Ignition OFF
Courtesy of VOLVO CARS CORPORATION

- Ignition off
- Open the transmission control system.

  Check the cable between transmission connector terminal #C4 (transmission side) and the connector for solenoid S4. Check for a short-circuit to supply voltage according to **SHORT-CIRCUIT TO SUPPLY VOLTAGE. PERMANENT FAULTS** . Also check against the other cables in the circuit.

  Replace solenoid S4 if no faults are found in the cable-.

  Remedy as necessary.

  Other information:

- To connect the breakout box, see **CONNECTING THE BREAKOUT BOX**
- To disconnect the transmission connectors, see **CONNECTORS, TRANSMISSION, DISCONNECTING / CONNECTING**
- To open the control system and to check or replace solenoid S4, see **SOLENOID CONTROL SYSTEM, REPLACING**
- To replace the cable harness for the control system, see **TEMPERATURE SENSOR FLUID, TRANSAXLE, (TFT)**
- For information about signals, see **SIGNAL DESCRIPTION. TRANSMISSION CONTROL MODULE (TCM)** .

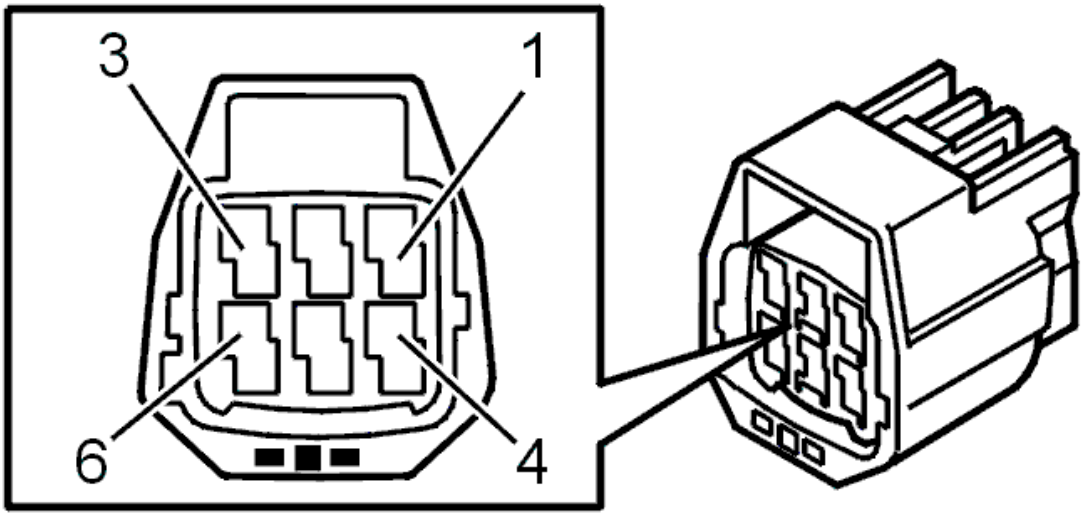

Fig. 367: Identifying 6-Pin Transmission Connector Terminals
Courtesy of VOLVO CARS CORPORATION

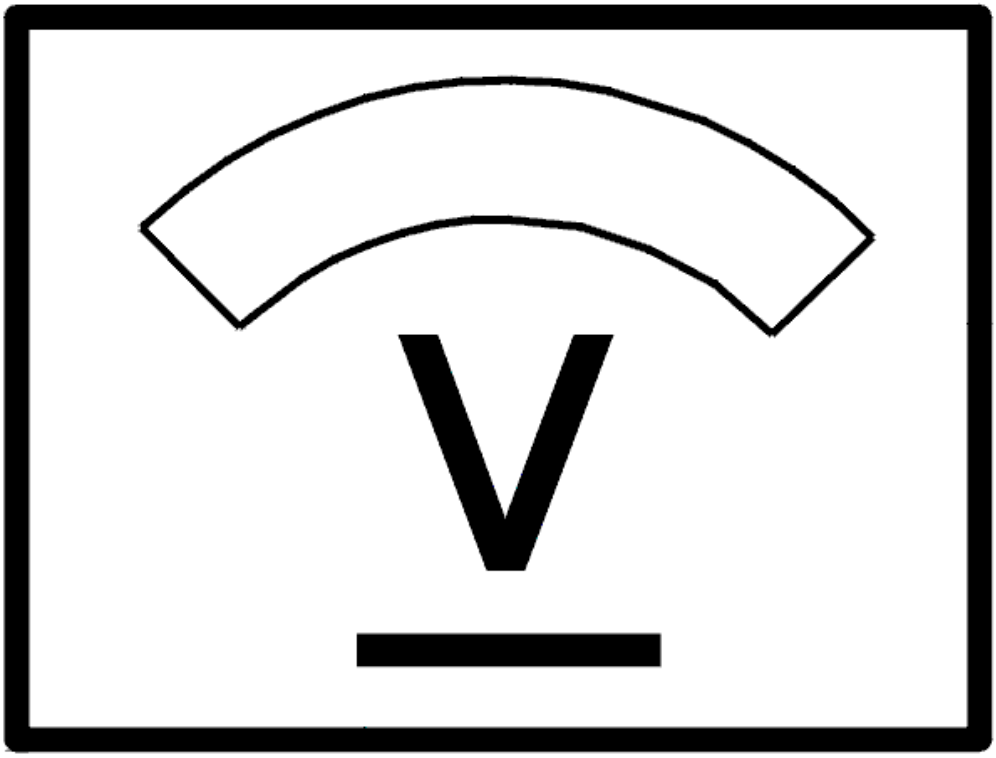

Fig. 368: Identifying Voltage Display
Courtesy of VOLVO CARS CORPORATION

- **Continue**

  Refer to **RESETTING THE ADAPTATION**

INTERMITTENT FAULT

Check the cable between transmission control module (TCM) terminal #A47 (#A47) and transmission connector terminal #C4. Check for an intermittent short-circuit to supply voltage according to **SHORT-CIRCUIT TO SUPPLY VOLTAGE, INTERMITTENT FAULTS** .

Remedy as necessary.

Other information:

- To connect the breakout box, see **CONNECTING THE BREAKOUT BOX**
- To disconnect the transmission connectors, see **CONNECTORS, TRANSMISSION, DISCONNECTING / CONNECTING**
- For information about signals, see **SIGNAL DESCRIPTION. TRANSMISSION CONTROL MODULE (TCM)** .

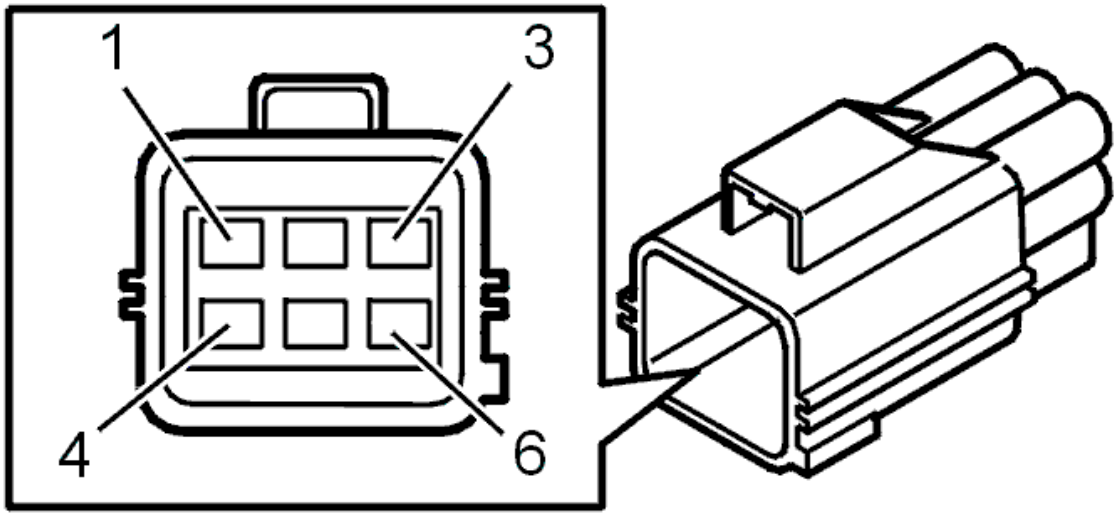

Fig. 369: Identifying Transmission Connector Terminals
Courtesy of VOLVO CARS CORPORATION

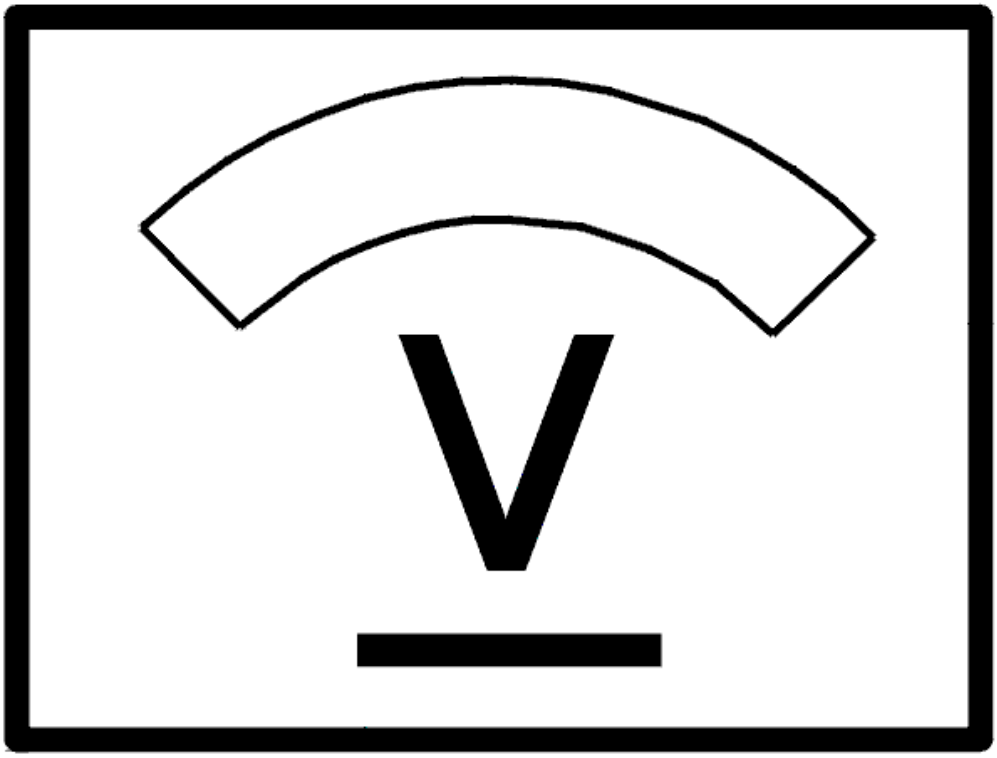

Fig. 370: Identifying Voltage Display
Courtesy of VOLVO CARS CORPORATION

- **Continue**

  Refer to **INFORMATION**

RESETTING THE ADAPTATION

RESETTING ADAPTATION AND THE COUNTER FOR "TRANSMISSION OIL CHANGE"

HINT: The transmission has torque controlled adaptive pressure control. Pressure control means that the transmission regulates the pressure itself during each gear shift. This avoids harsh gear shifting. Each gear shift is evaluated by the control module and stored in the memory. This allows for compensation for wear and tear in the transmission and clutch. It is important that the adaptation in the memory is reset after the transmission has been repaired. This is to ensure normal operation. The oil is replaced during

repair; the "Transmission oil change" counter must be reset. If the counter is not reset when the fluid is drained and replaced, there is a risk that a diagnostic trouble code (DTC) will be stored in incorrect circumstances.

NOTE: This applies only if the transmission or one of the components in the transmission have been replaced.

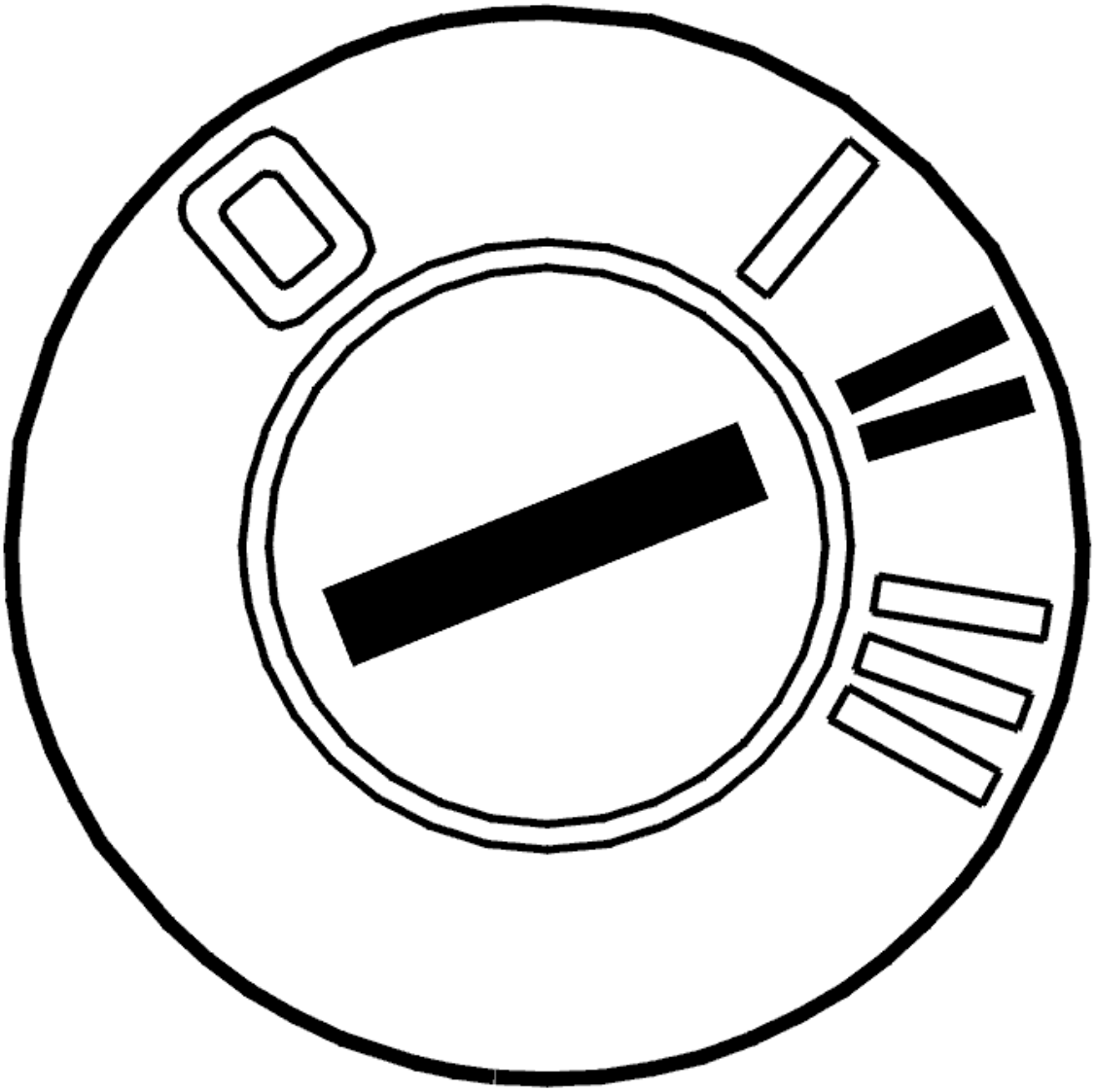

Fig. 371: Identifying Ignition ON
Courtesy of VOLVO CARS CORPORATION

- Ignition on.

  Use the VCT2000 (or appropriate scan tool) to reset the adaptation and counter.

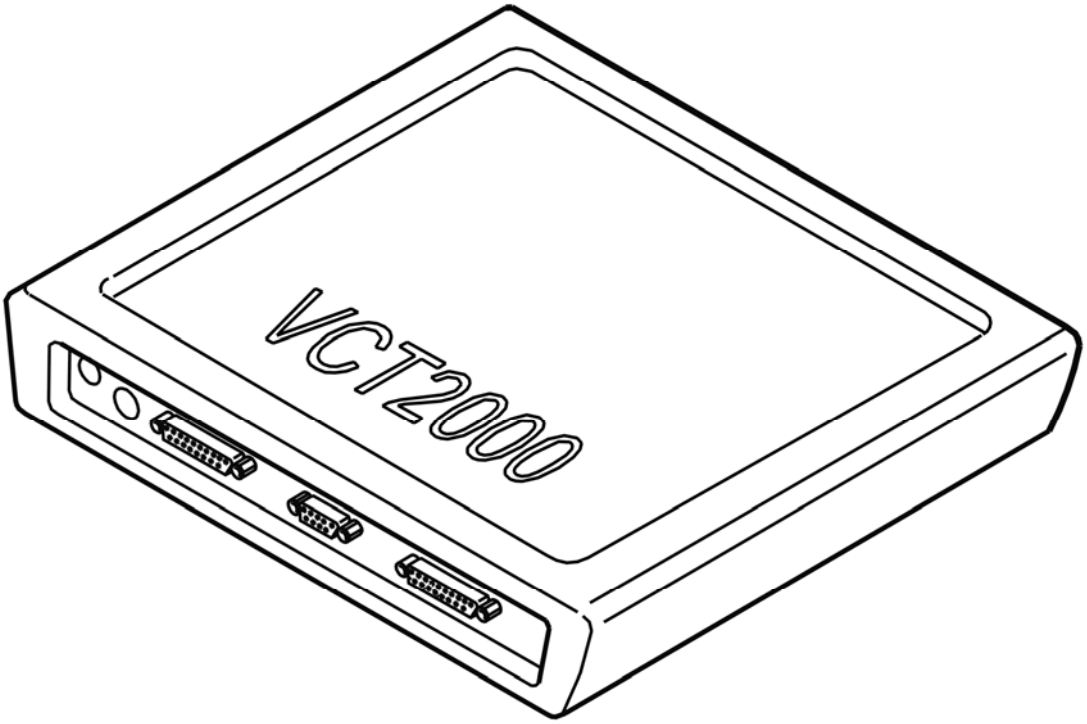

Fig. 372: Identifying VCT2000 Diagnostic Tool Symbol In VIDA
Courtesy of VOLVO CARS CORPORATION

- **Continue**

  Refer to **VERIFICATION**

VERIFICATION

VERIFICATION

HINT: After carrying out the repair, check that the fault has been remedied.

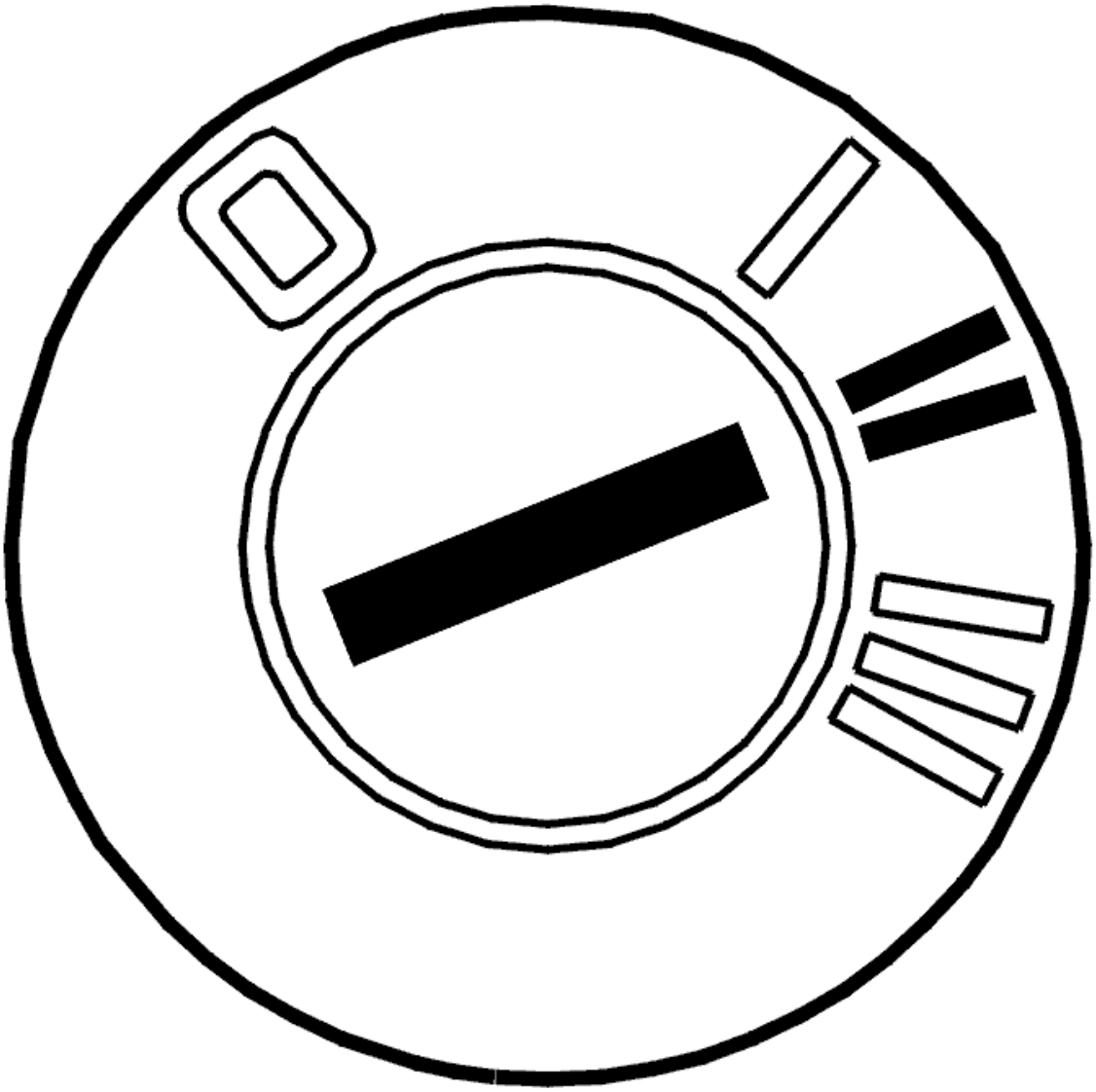

Fig. 373: Identifying Ignition ON
Courtesy of VOLVO CARS CORPORATION

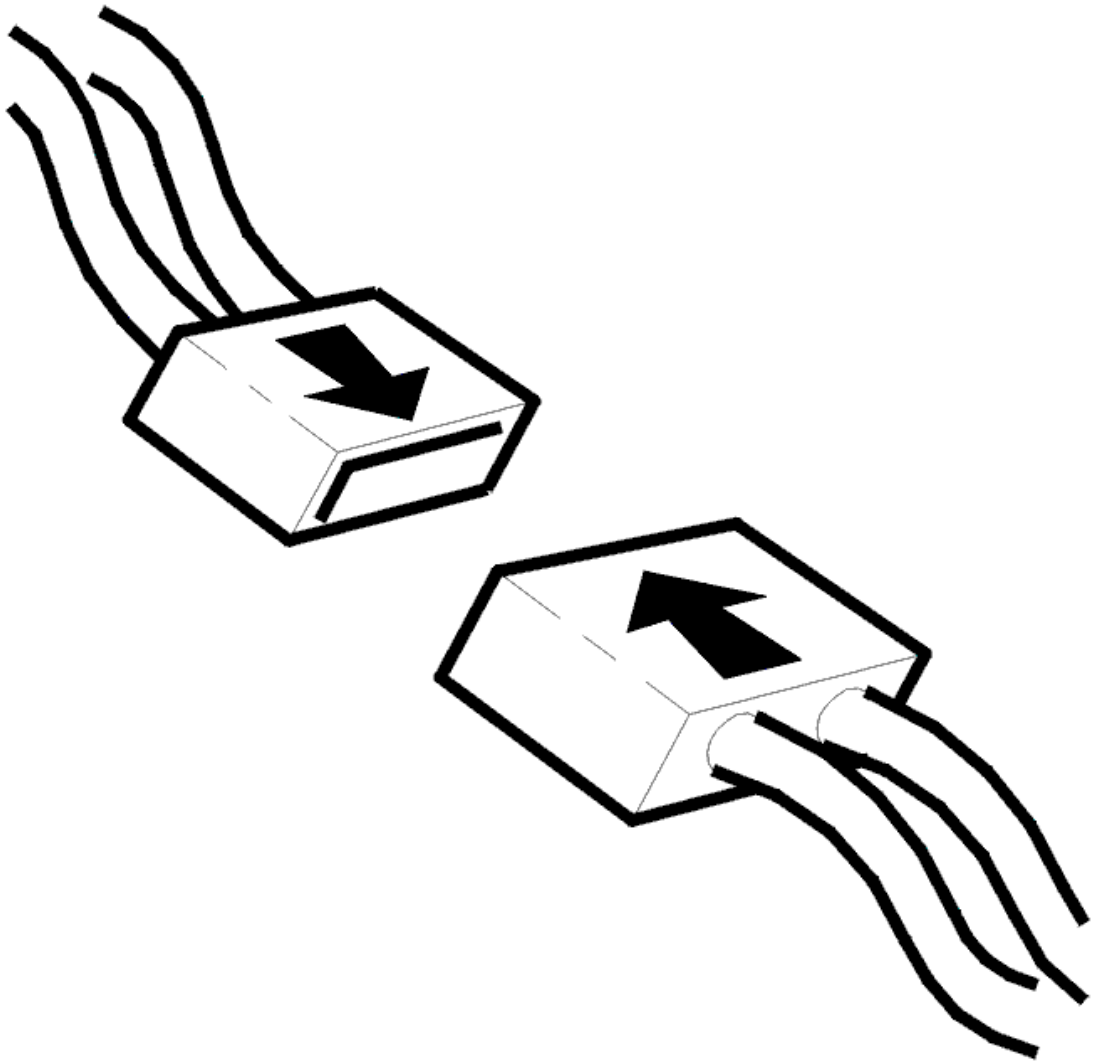

Fig. 374: Identifying Connector(s) Reinstallation
Courtesy of VOLVO CARS CORPORATION

- Ignition off.
- Reinstall the components, reconnect the connectors etc.
- Ignition on.
- Gear selector in position P.
- Activate solenoid S4.

  The value should change between OFF and ON.

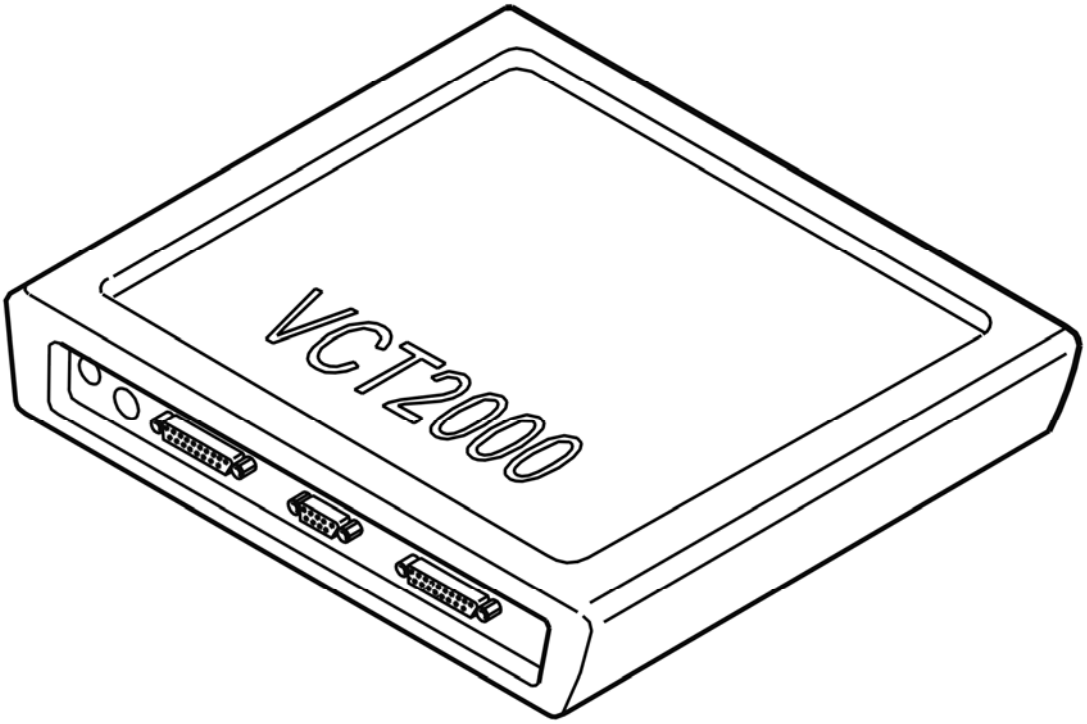

Fig. 375: Identifying VCT2000 Diagnostic Tool Symbol In VIDA
Courtesy of VOLVO CARS CORPORATION

Does the value change between OFF and ON?

- **YES**

  VERIFIED: Troubleshooting has been completed.

- **NO**

  Refer to **INFORMATION**

INFORMATION

FAULT-TRACING INFORMATION

The fault should have been detected and remedied. As this is not the case fault-tracing has failed.

Exit fault-tracing for this diagnostic trouble code (DTC) or make another attempt.

INFORMATION

FAULT-TRACING INFORMATION

If the fault is intermittent, do not verify fault-tracing if the fault does not recur.

It is possible to view the information again, or leave fault-tracing for this diagnostic trouble code (DTC).

FAULTY SIGNAL

CHECKING TRANSMISSION FLUID TEMPERATURE SENSOR

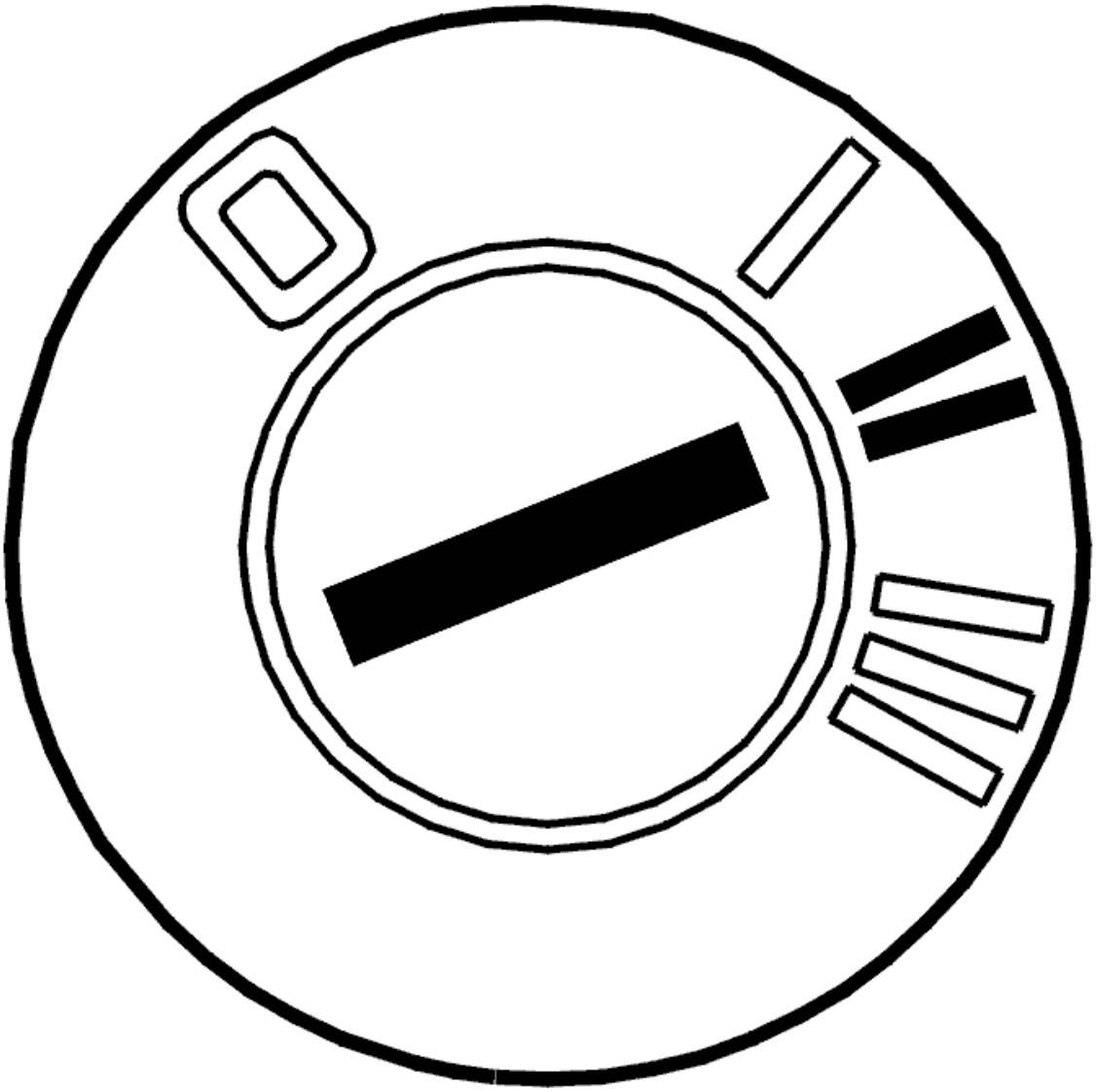

Fig. 376: Identifying Ignition ON
Courtesy of VOLVO CARS CORPORATION

- Ignition on
- Read off the oil temperature.

  Check that the temperature is within its permitted range.

Compare with the transmission temperature.

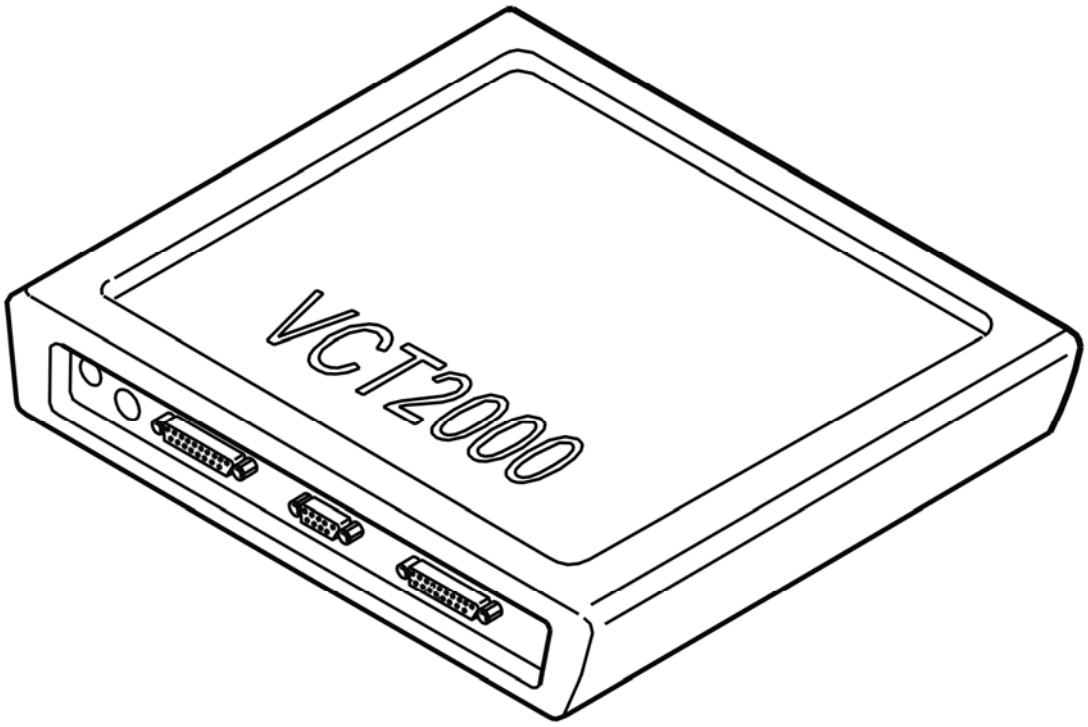

Fig. 377: Identifying VCT2000 Diagnostic Tool Symbol In VIDA
Courtesy of VOLVO CARS CORPORATION

Was the transmission temperature within its permitted range?

- **YES**

  Refer to **INTERMITTENT FAULT**

- **NO**

  Refer to **CHECKING TRANSMISSION FLUID TEMPERATURE SENSOR**

CHECKING TRANSMISSION FLUID TEMPERATURE SENSOR

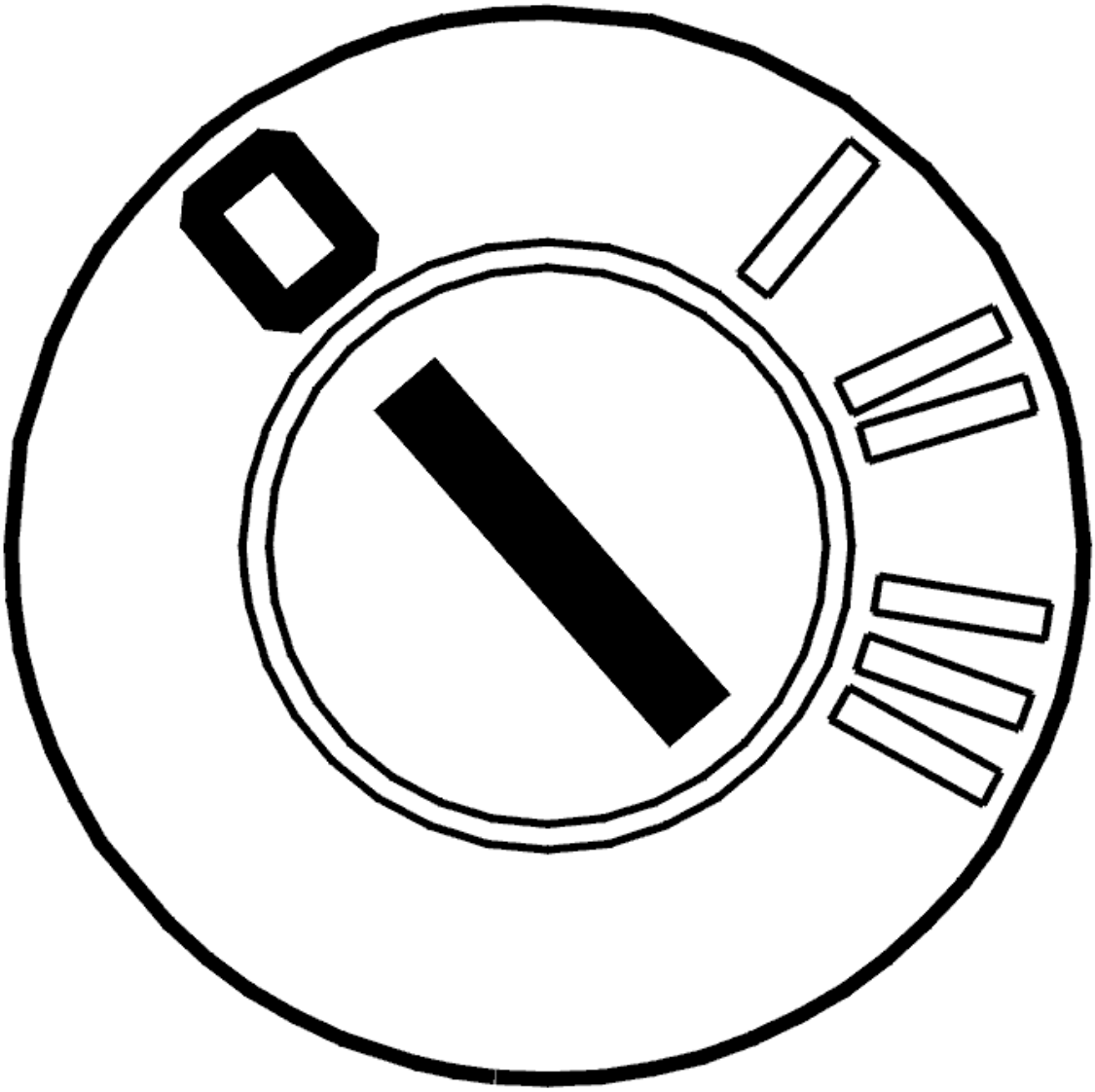

Fig. 378: Identifying Ignition OFF
Courtesy of VOLVO CARS CORPORATION

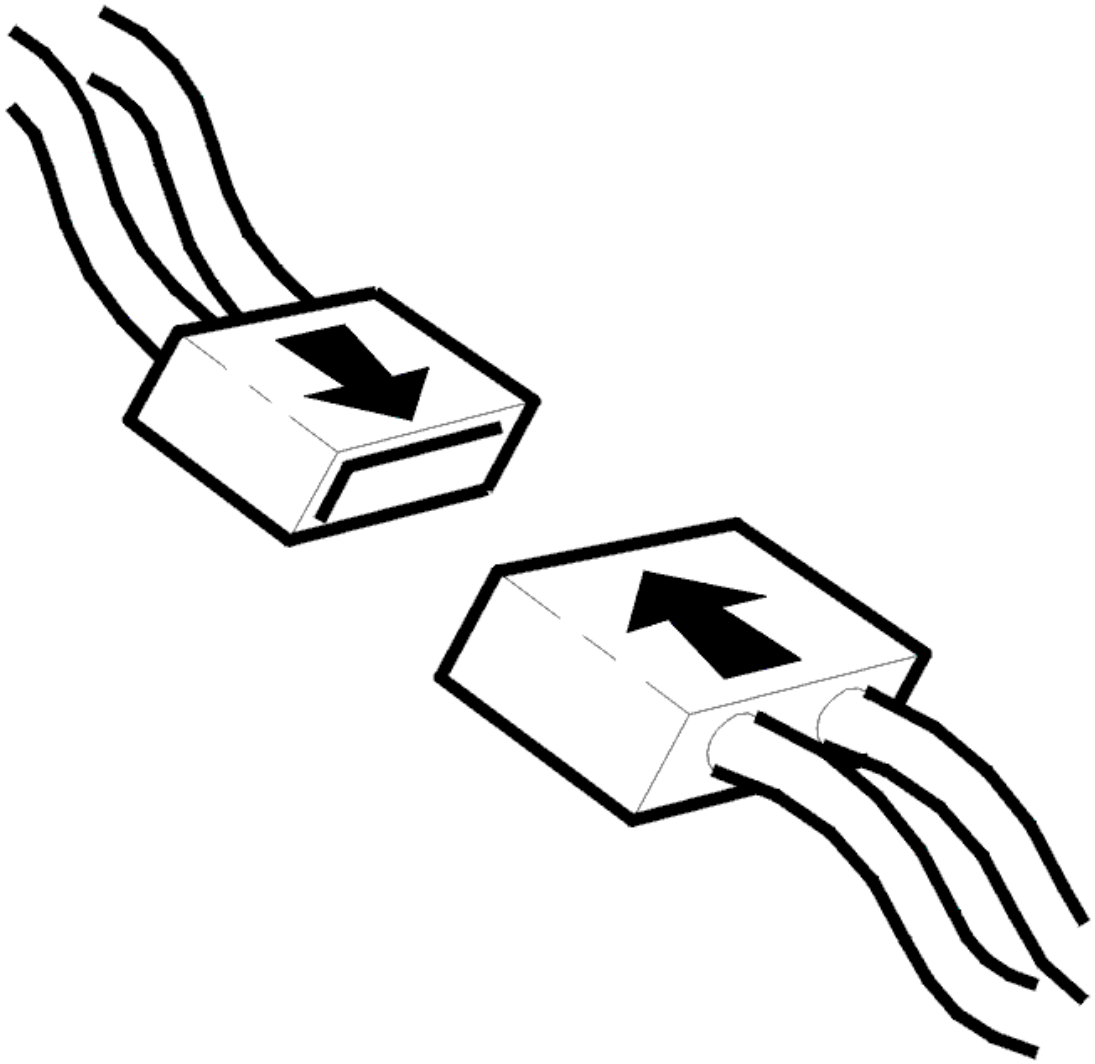

Fig. 379: Identifying Connector(s) Reinstallation
Courtesy of VOLVO CARS CORPORATION

- Ignition off
- Transmission connector D disconnected.

  Check the temperature sensor. Measure the resistance between transmission connector D terminals #D7 and #D8.

  The resistance must be 4.5-6 kohms at 20°C.

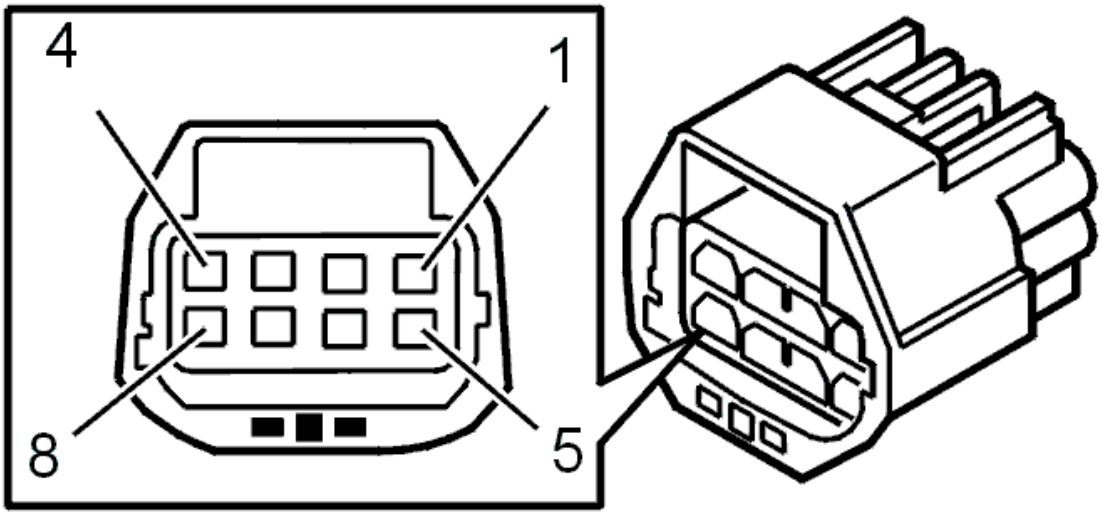

Fig. 380: Identifying 8-Pin Transmission Connector Terminals
Courtesy of VOLVO CARS CORPORATION

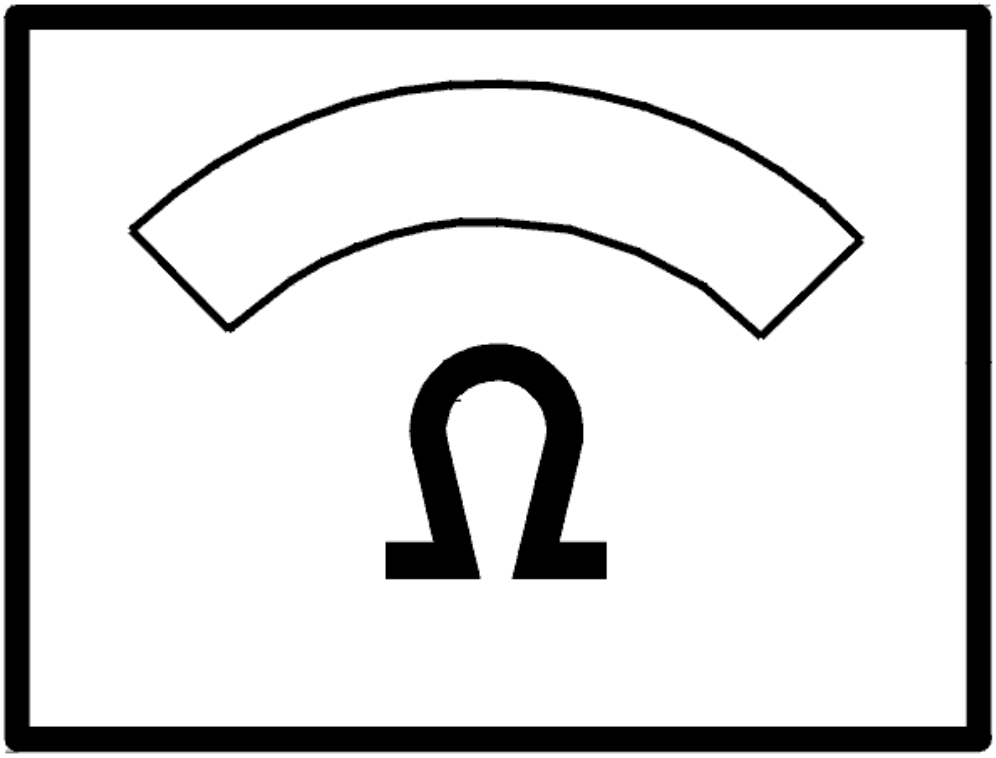

Fig. 381: Identifying Ohms Display
Courtesy of VOLVO CARS CORPORATION

Was the resistance OK?

- **YES**

  Refer to **CHECKING TRANSMISSION FLUID TEMPERATURE SENSOR**

- **NO**

  Refer to **CHECKING THE CABLE AND COMPONENT**

CHECKING TRANSMISSION FLUID TEMPERATURE SENSOR

Check the cable between control module terminal #A37 (#A37) and transmission connector terminal #D7

(control module side). Check for an open-circuit according to **OPEN-CIRCUIT, PERMANENT FAULTS** .

Check the cable between control module terminal #A55 (#A55)and transmission connector terminal #D8 (control module side). Check for an open-circuit according to **OPEN-CIRCUIT, PERMANENT FAULTS** .

Remedy as necessary.

Other information:

- To connect the breakout box, see **CONNECTING THE BREAKOUT BOX**
- To disconnect the transmission connectors, see **CONNECTORS, TRANSMISSION, DISCONNECTING / CONNECTING**
- For information about signals, see **SIGNAL DESCRIPTION. TRANSMISSION CONTROL MODULE (TCM)** .

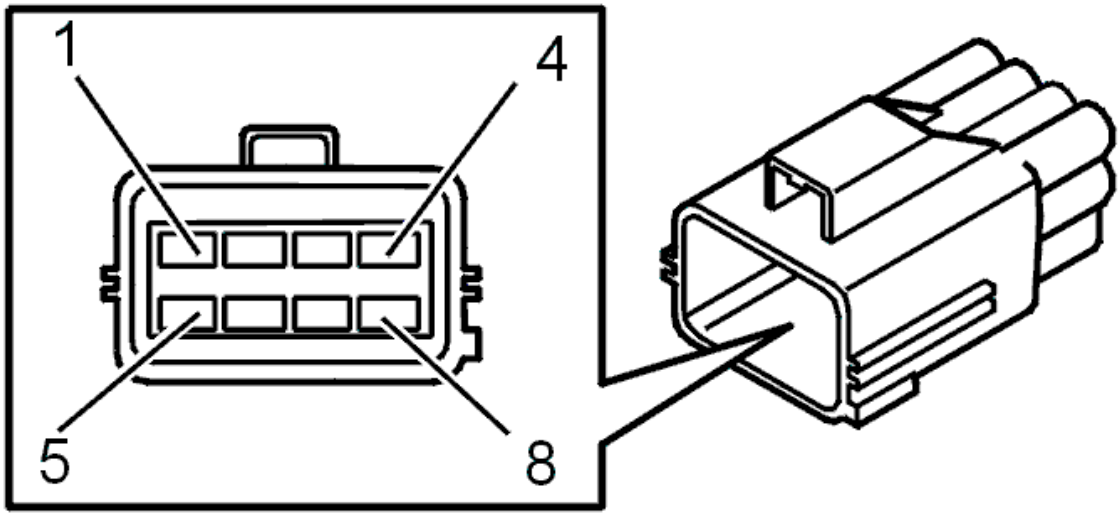

Fig. 382: Identifying Transmission Connector Terminals
Courtesy of VOLVO CARS CORPORATION

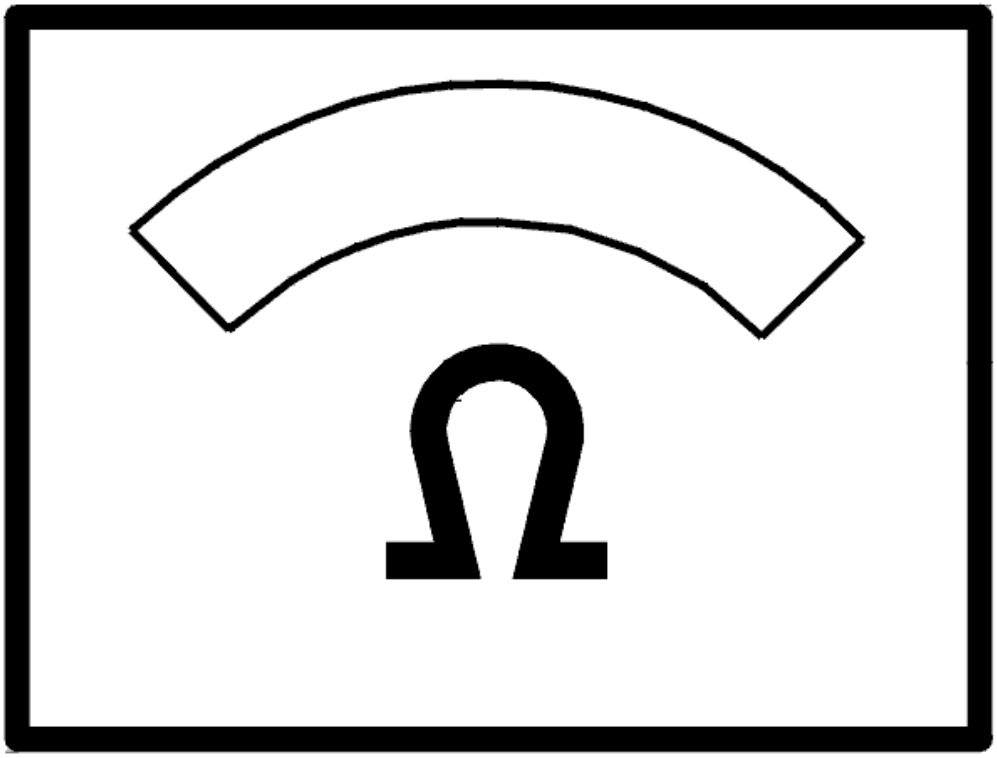

Fig. 383: Identifying Ohms Display
Courtesy of VOLVO CARS CORPORATION

Was a fault detected?

- **YES**

  Refer to **VERIFICATION**

- **NO**

  Refer to **CHECKING THE CABLE AND COMPONENT**

CHECKING THE CABLE AND COMPONENT

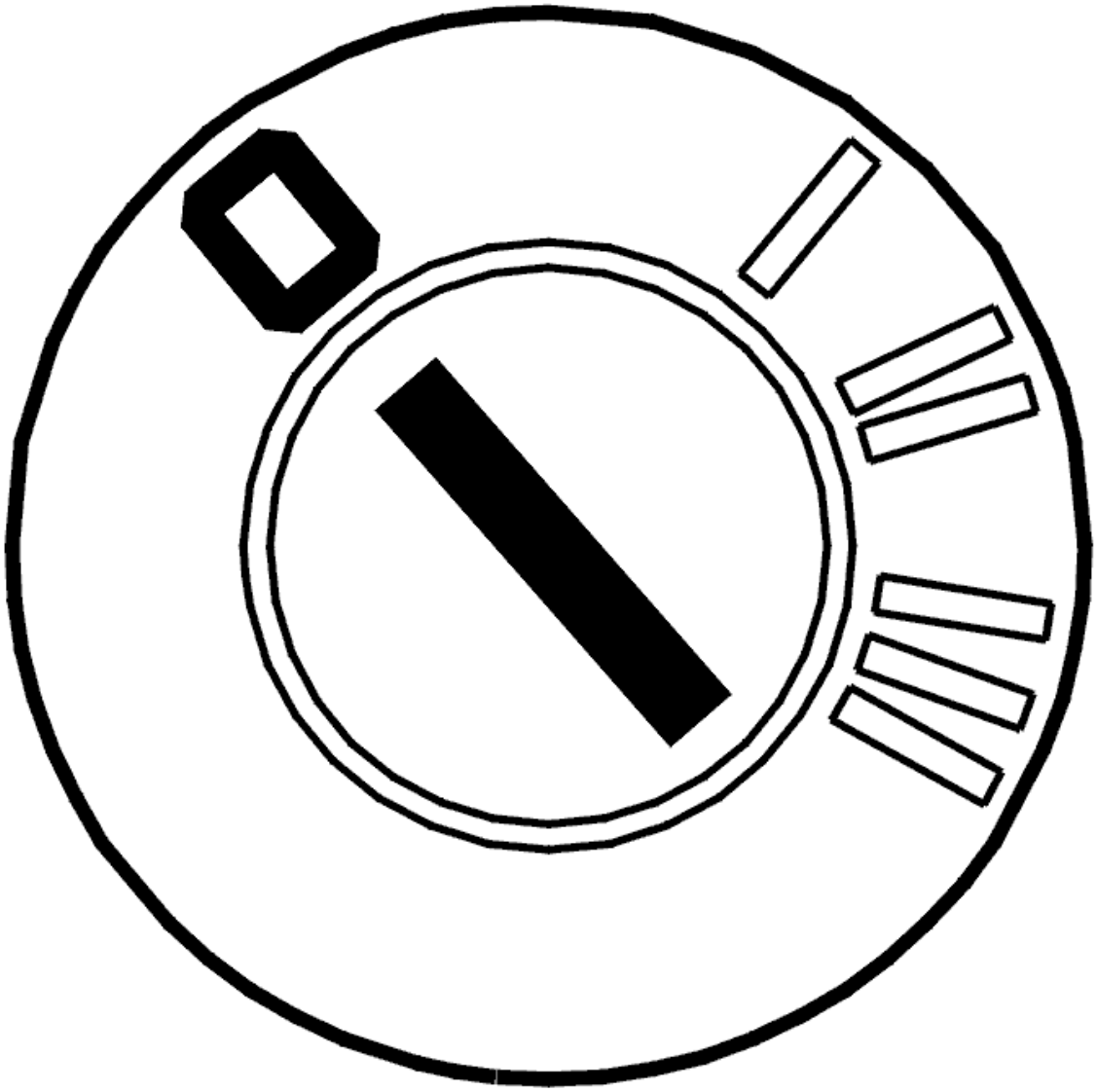

Fig. 384: Identifying Ignition OFF
Courtesy of VOLVO CARS CORPORATION

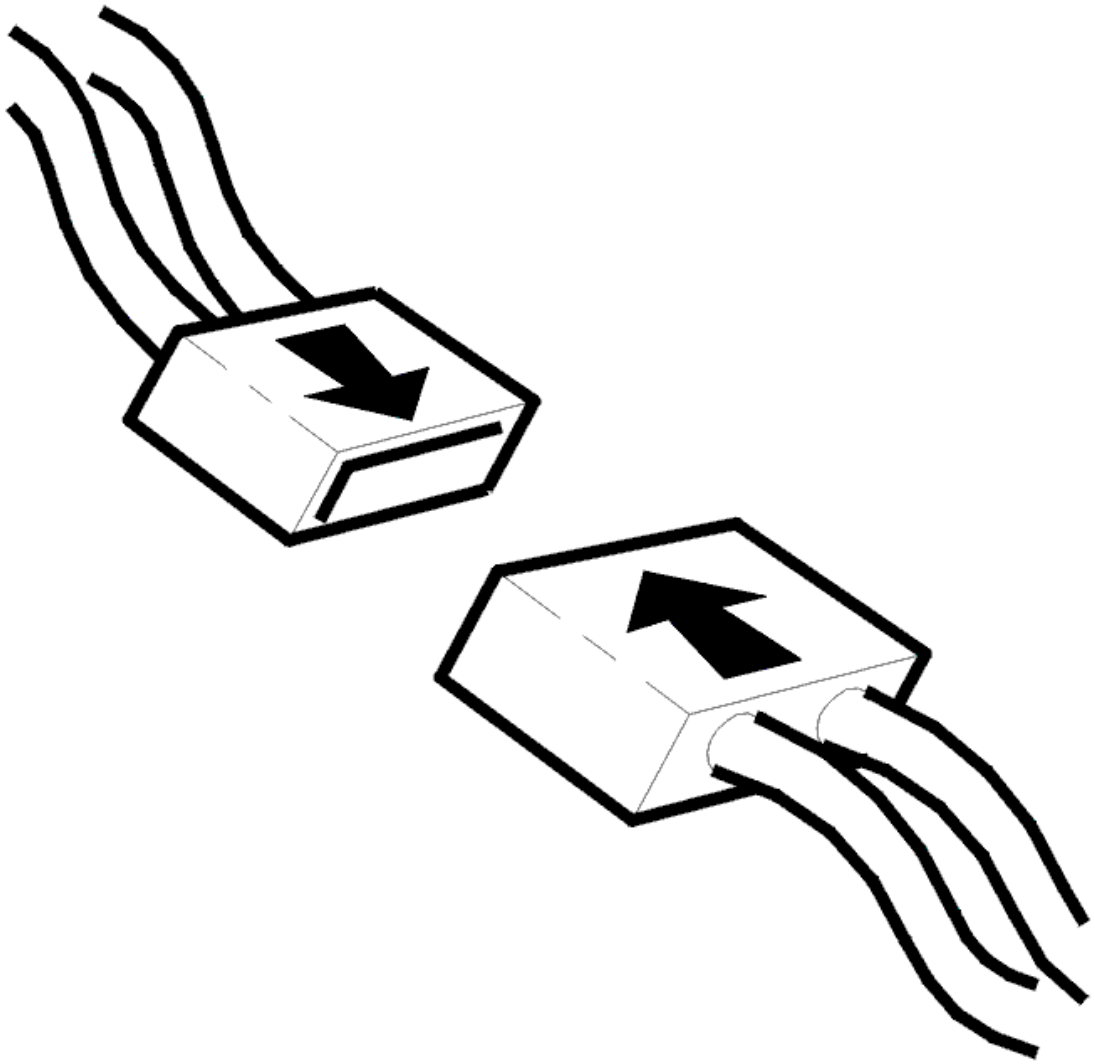

Fig. 385: Identifying Connector(s) Reinstallation
Courtesy of VOLVO CARS CORPORATION

- Ignition off
- Open the transmission control system.

  Check the cable between transmission connector terminal #D7 and temperature sensor terminal #1. Check the cable between transmission connector #D8 and temperature sensor terminal #2. Check for an open-circuit according to **OPEN-CIRCUIT, PERMANENT FAULTS** .

  Also check the cables for a short-circuit to each other.

  HINT: Check the temperature sensor. With the ignition off and transmission connector D disconnected, measure the resistance between transmission connector D terminals #D7 and #D8. The resistance must be 4.5-6 kohms at 20 °C.

Remedy as necessary.

Other information:

- To connect the breakout box, see **CONNECTING THE BREAKOUT BOX**
- To disconnect the transmission connectors, see **CONNECTORS, TRANSMISSION, DISCONNECTING / CONNECTING**
- To open the transmission control system and to check or replace the temperature sensor, see **SOLENOID CONTROL SYSTEM, REPLACING**
- For information about signals, see **SIGNAL DESCRIPTION. TRANSMISSION CONTROL MODULE (TCM)** .

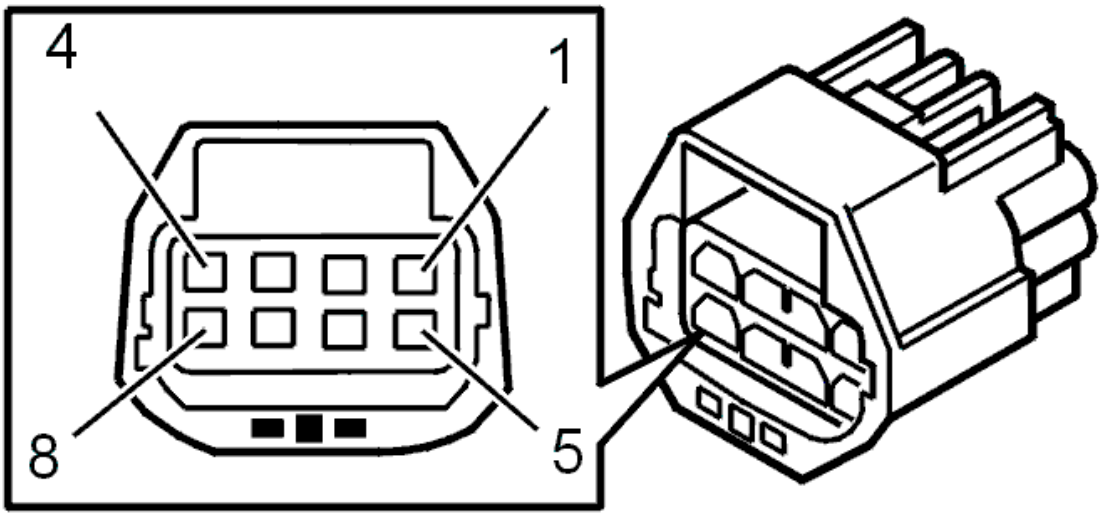

Fig. 386: Identifying 8-Pin Transmission Connector Terminals
Courtesy of VOLVO CARS CORPORATION

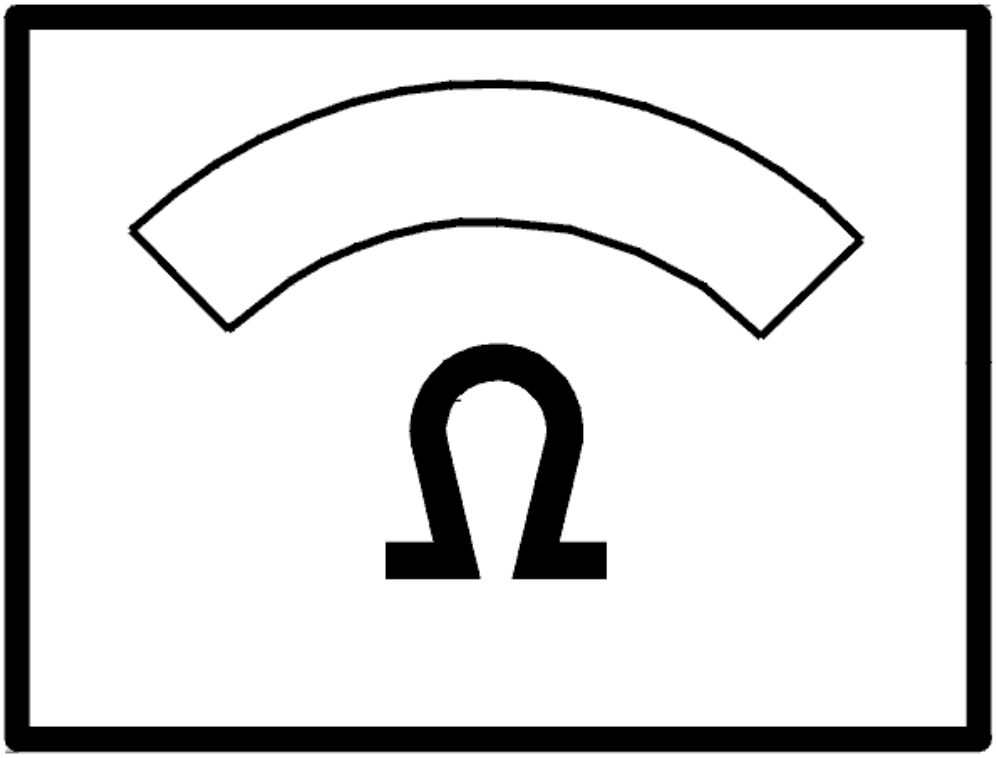

Fig. 387: Identifying Ohms Display
Courtesy of VOLVO CARS CORPORATION

- **Continue**

  Refer to **RESETTING TRANSMISSION FLUID CHANGE COUNTER**

INTERMITTENT FAULT

Check the transmission control module (TCM) and transmission connector D. Check for contact resistance and oxidation according to **CONTACT RESISTANCE AND OXIDATION** .

Check the cable between transmission control module (TCM) terminal #A37 (#A37) and transmission connector terminal #D7 (control module side). Check for an intermittent open-circuit according to **OPEN-CIRCUIT, INTERMITTENT FAULTS** .

Check the cable between control module terminal #A55 (#A55)and transmission connector terminal #D8 (control module side). Check for an intermittent open-circuit according to **OPEN-CIRCUIT, INTERMITTENT FAULTS** .

Remedy as necessary.

Other information:

- To connect the breakout box, see **CONNECTING THE BREAKOUT BOX**
- To disconnect the transmission connectors, see **CONNECTORS, TRANSMISSION, DISCONNECTING / CONNECTING**
- For information about signals, see **SIGNAL DESCRIPTION. TRANSMISSION CONTROL MODULE (TCM)** .

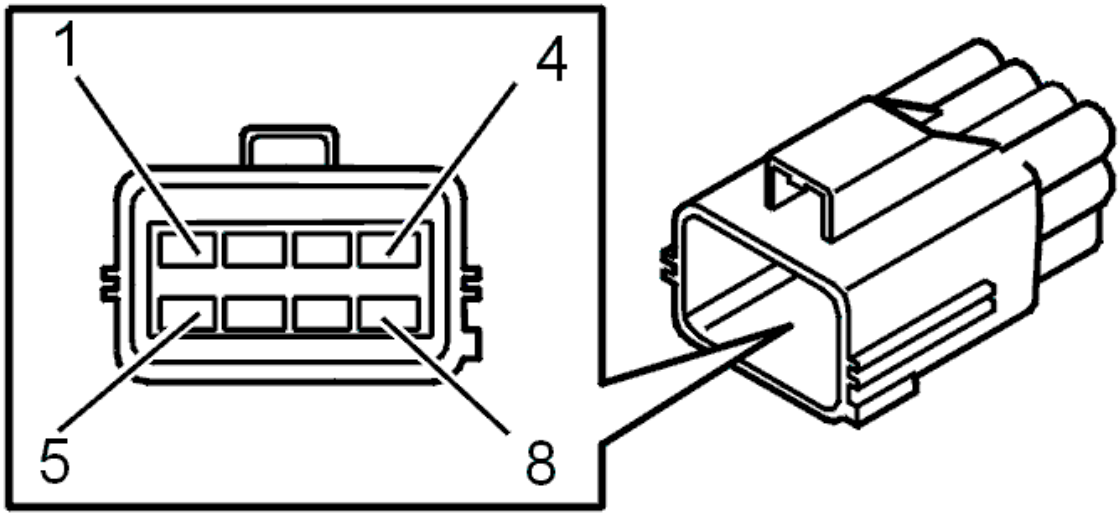

Fig. 388: Identifying Transmission Connector Terminals
Courtesy of VOLVO CARS CORPORATION

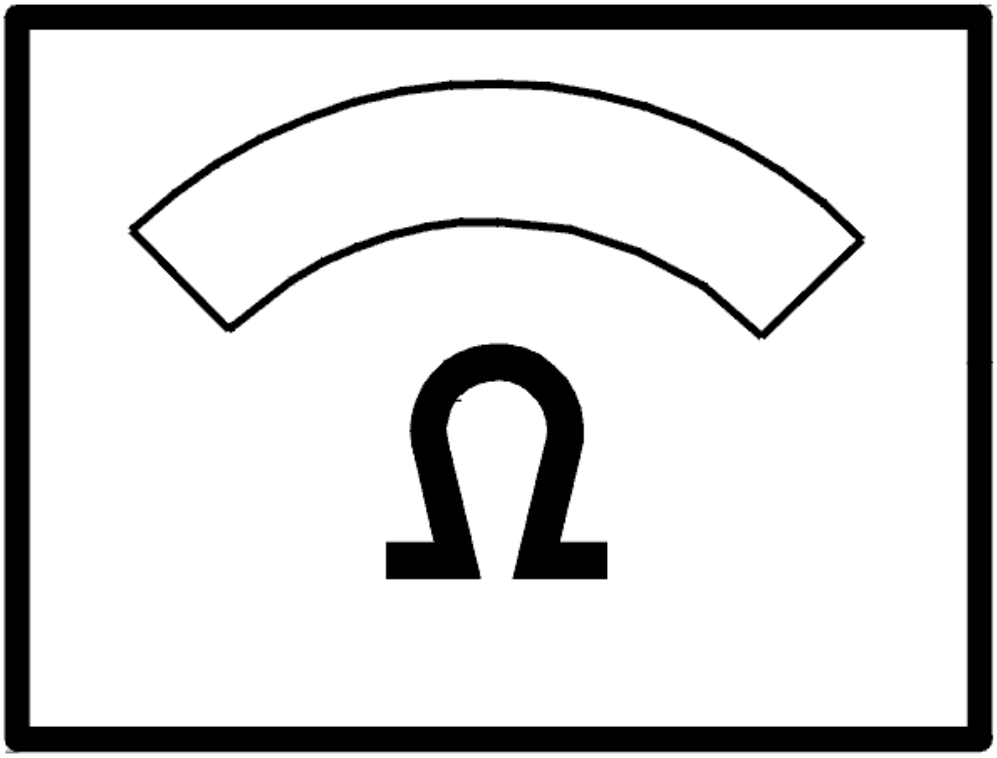

Fig. 389: Identifying Ohms Display
Courtesy of VOLVO CARS CORPORATION

- **Continue**

  Refer to **INFORMATION**

RESETTING TRANSMISSION FLUID CHANGE COUNTER

RESETTING TRANSMISSION FLUID CHANGE COUNTER

HINT: The transmission control module (TCM) has a counter for the oil quality. The counter counts up if the transmission is exposed to too high a load or an ambient temperature that is too high. If the counter is not reset when the oil is drained or changed, there is a risk that a diagnostic trouble code (DTC) will be stored in faulty circumstances. Therefore it is important that the "Transmission oil change" counter is reset.

NOTE: **This applies only when the transmission fluid is changed and when the fluid is changed when repairs are carried out to the transmission temperature sensor.**

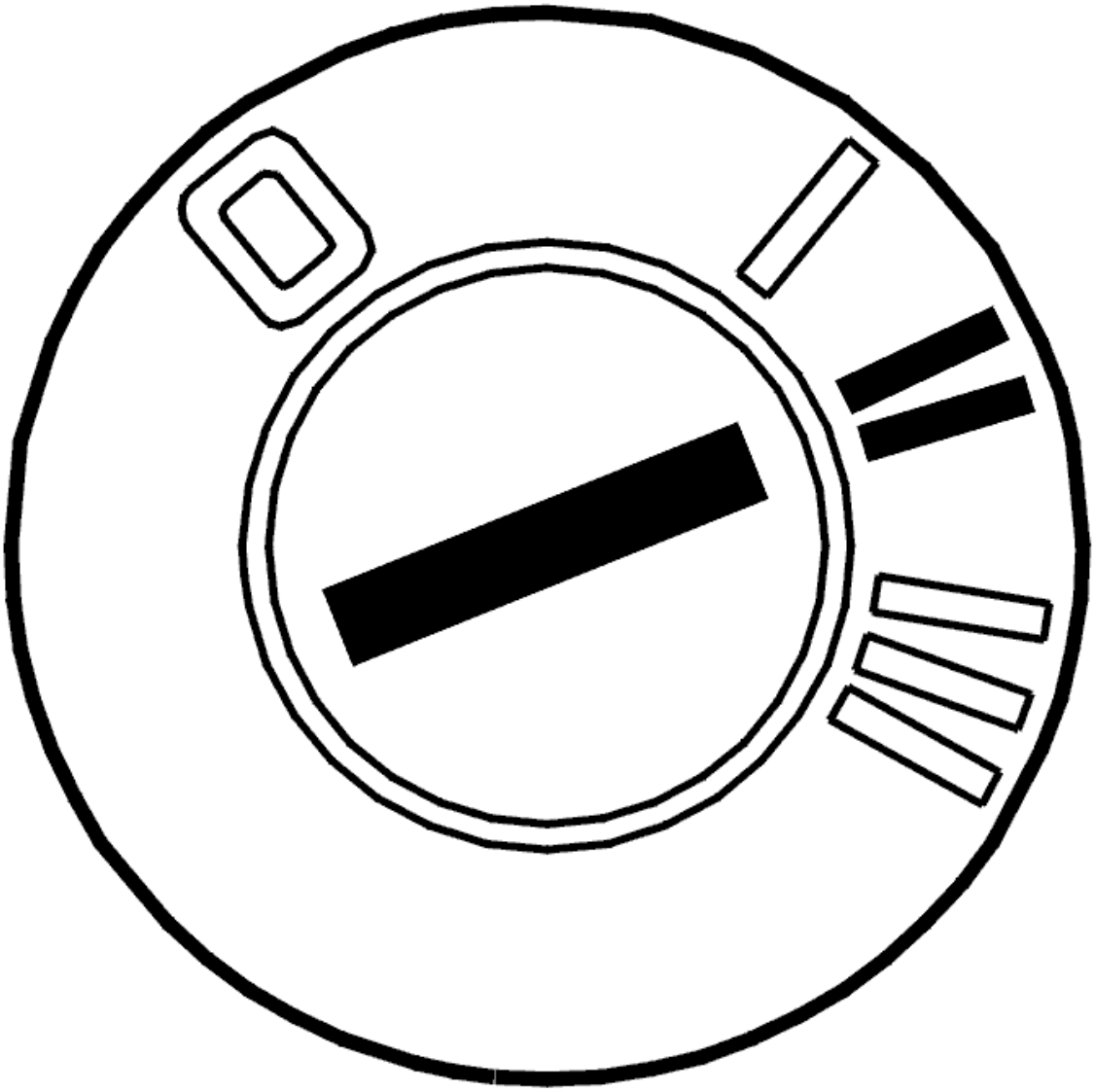

Fig. 390: Identifying Ignition ON
Courtesy of VOLVO CARS CORPORATION

- Ignition on.

  Reset the counter by clicking on the VCT 2000 symbol.

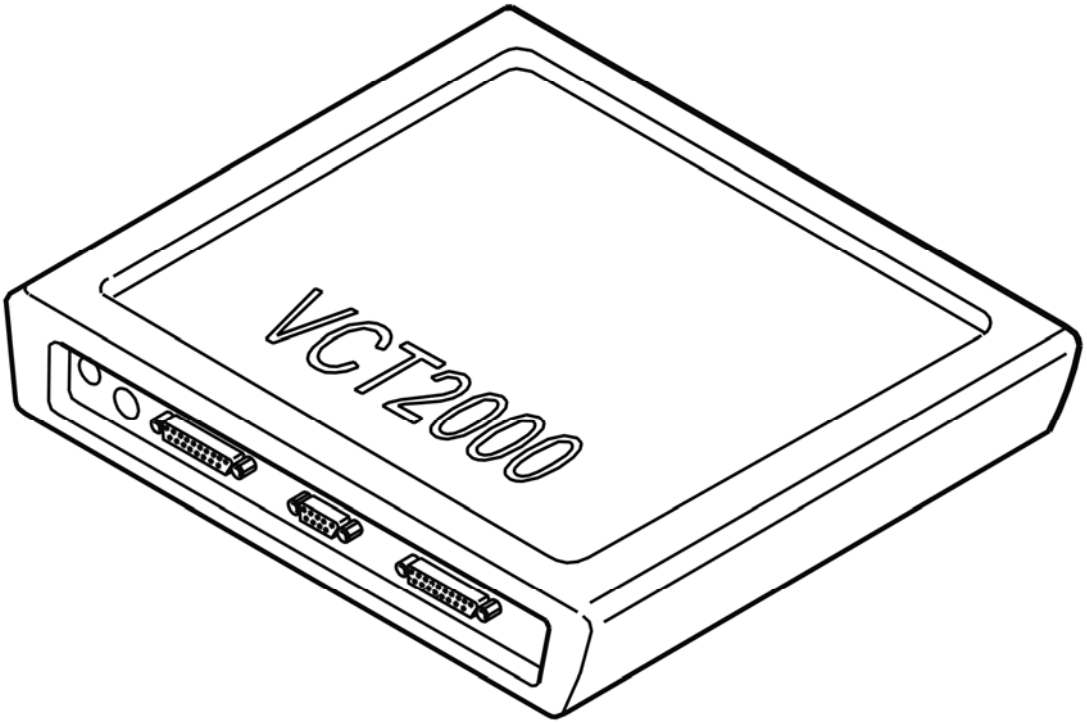

Fig. 391: Identifying VCT2000 Diagnostic Tool Symbol In VIDA
Courtesy of VOLVO CARS CORPORATION

- **Continue**

  Refer to **VERIFICATION**

VERIFICATION

VERIFICATION

HINT: After carrying out the repair, check that the fault has been remedied.

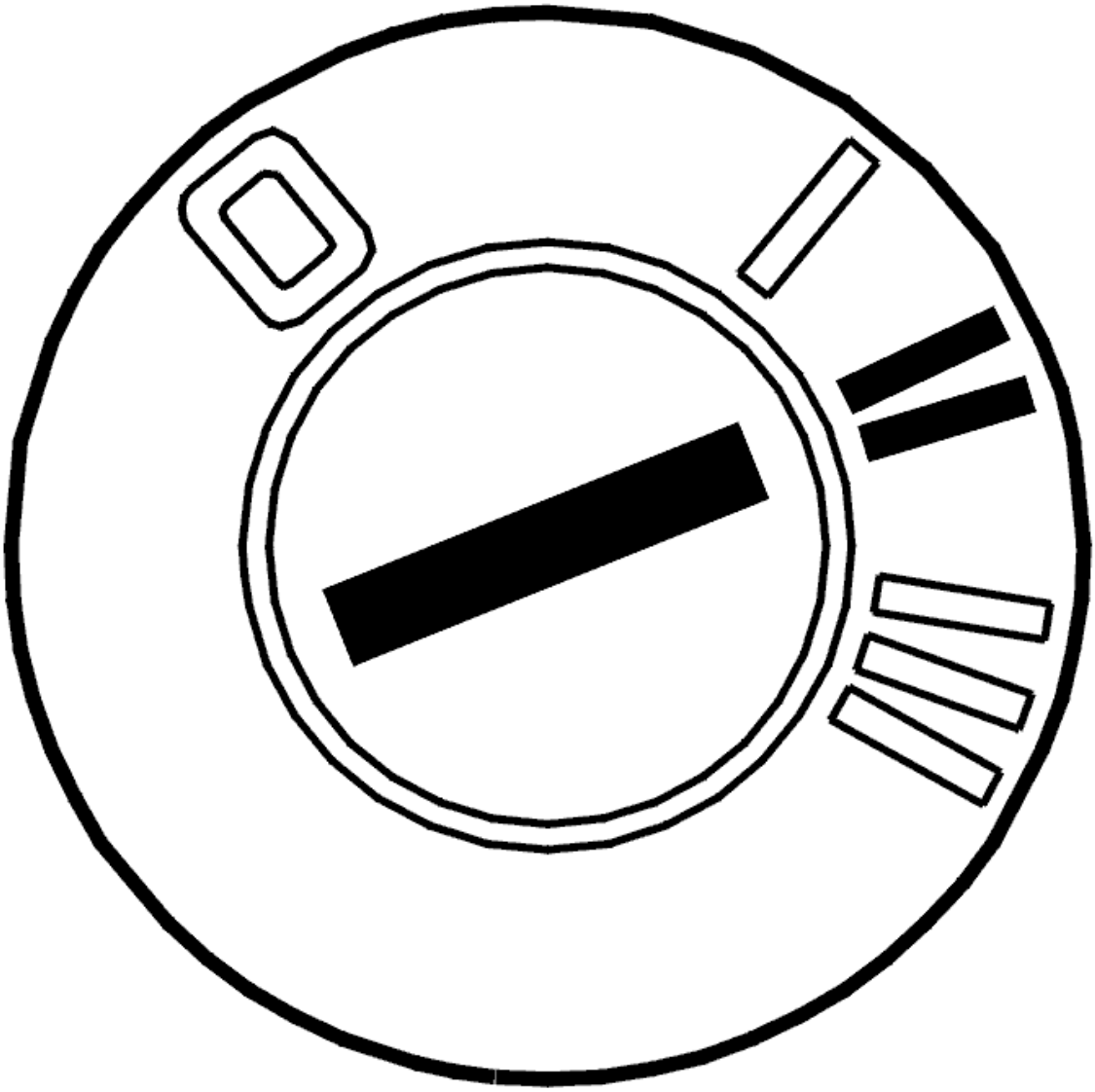

Fig. 392: Identifying Ignition ON
Courtesy of VOLVO CARS CORPORATION

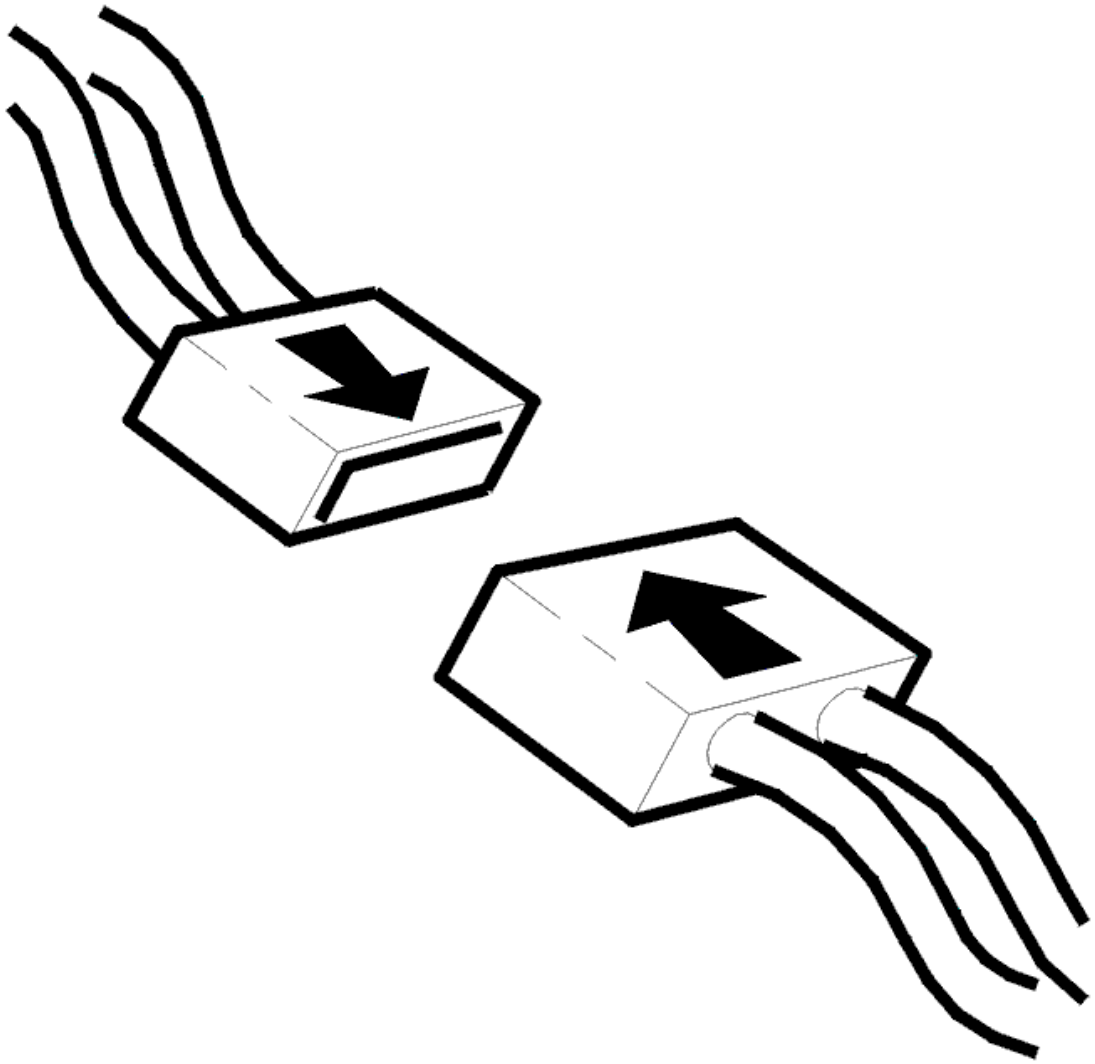

Fig. 393: Identifying Connector(s) Reinstallation
Courtesy of VOLVO CARS CORPORATION

- Ignition off.
- Reinstall the connectors, components etc.
- Ignition on.
- Read off the oil temperature.

Check that the transmission oil temperature is within its permitted range.

Compare with the transmission temperature.

NOTE: **The transmission temperature sensor is located inside the control unit and can be affected by the heat given off by the solenoids.**

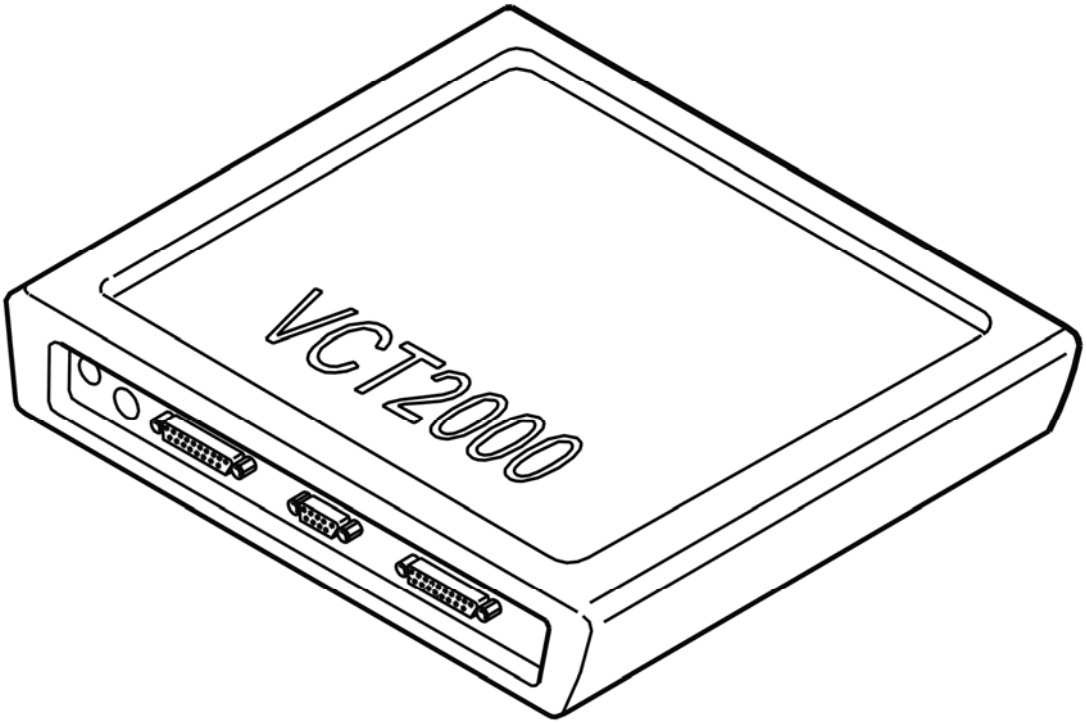

Fig. 394: Identifying VCT2000 Diagnostic Tool Symbol In VIDA
Courtesy of VOLVO CARS CORPORATION

Is the oil temperature within its permitted range?

- **YES**

  VERIFIED: Troubleshooting has been completed.

- **NO**

  Refer to **INFORMATION**

TCM-0108: SHIFT SOLENOID S4. SIGNAL MISSING (AW50/51 AWD; AW55-50/51SN; 2003-2007)

DIAGNOSTIC TROUBLE CODE (DTC) INFORMATION

Condition

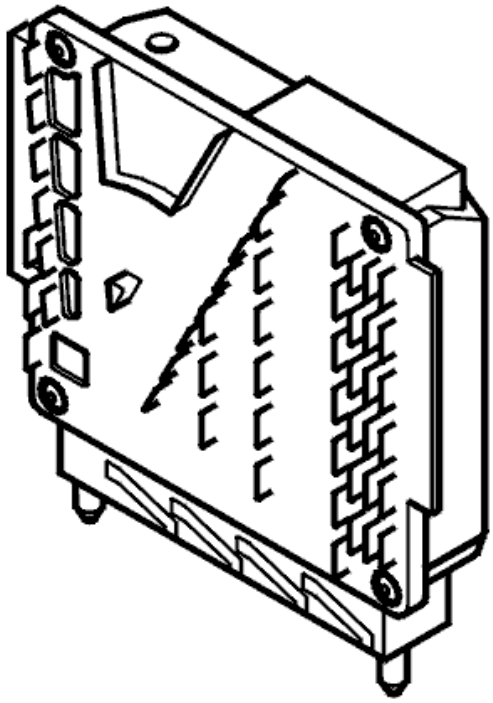

Fig. 395: Identifying Transmission Control Module (TCM)
Courtesy of VOLVO CARS CORPORATION

Shift solenoids S1, S2, S3, S4 and S5 operate in tandem to control gear-shifting. The solenoids are controlled by power stages in the transmission control module (TCM). The transmission control module (TCM) opens the power stages to activate the solenoids and sends a voltage through the circuit. Diagnostic trouble codes (DTCs) TCM-0002, TCM-0008, TCM-0102, TCM-0108 or TCM-010B are stored (depending on the solenoid) if the transmission control module (TCM) registers that the signal in circuits S1, S2, S3, S4 or S5 is missing when the solenoid is activated.

Substitute Value

- The transmission control module (TCM) "Emergency mode I" program has been initiated.

Possible Source

- Contact resistance in terminals.
- Open-circuit in the signal cable.
- Defective solenoid.
- Internal fault in the control module.

Fault symptom[s]

- General orange warning lamp lit.
- Malfunction indicator lamp (MIL) lit.
- Harsh gear shifting.
- No shifting.
- No lock-up function.

SIGNAL MISSING

CHECKS

CHECKING THE TEMPERATURE SENSOR

HINT: In some cases, the diagnostic trouble code (DTC) may be caused by a defective oil temperature sensor. Check the function of the oil temperature sensor first.

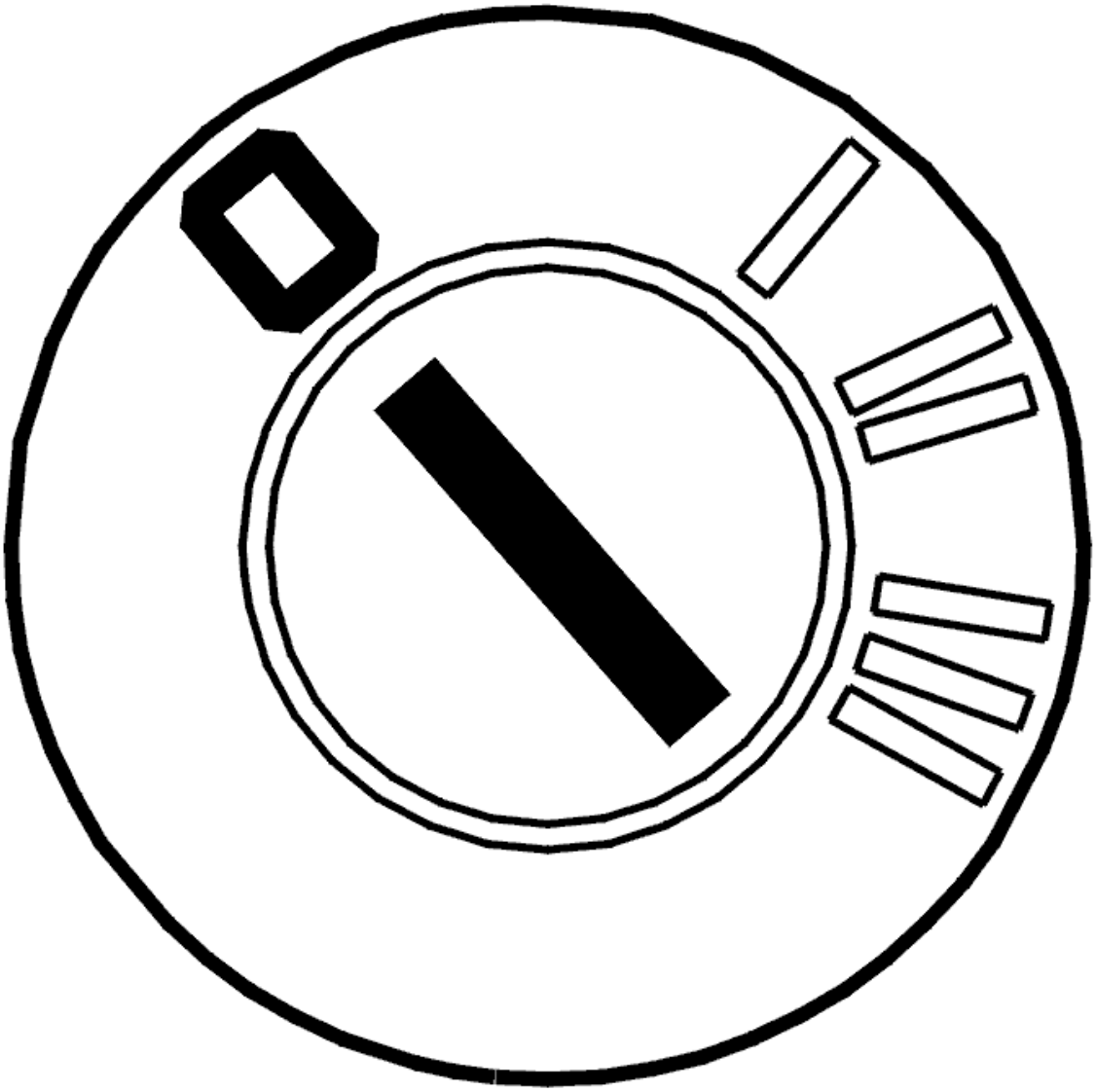

Fig. 396: Identifying Ignition OFF
Courtesy of VOLVO CARS CORPORATION

- Ignition off
- Read off the oil temperature.

  Check that the function of the temperature sensor is OK. Test drive the car to increase the temperature of the transmission fluid. Read off the temperature again. Check that the temperature has increased.

  HINT: If the temperature is outside its permitted range, fault-trace the temperature sensor.

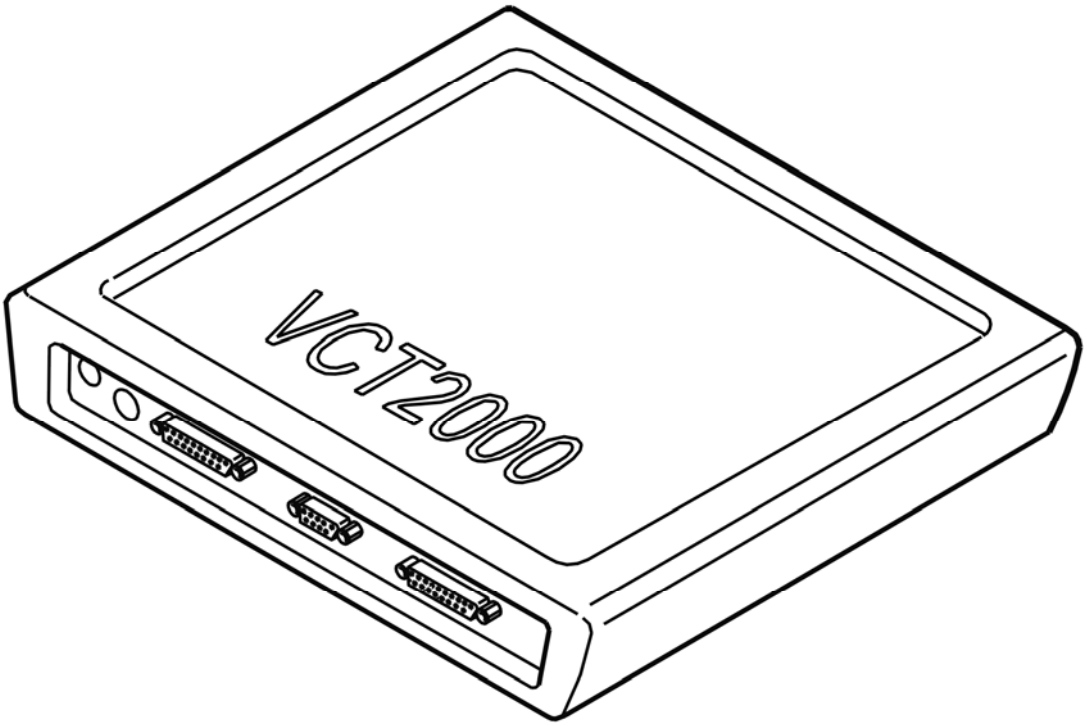

Fig. 397: Identifying VCT2000 Diagnostic Tool Symbol In VIDA
Courtesy of VOLVO CARS CORPORATION

Is the oil temperature within its permitted range?

- **YES**

  Refer to **CHECKING SHIFT SOLENOID S4**

- **NO**

  Refer to **FAULTY SIGNAL**

CHECKING SHIFT SOLENOID S4

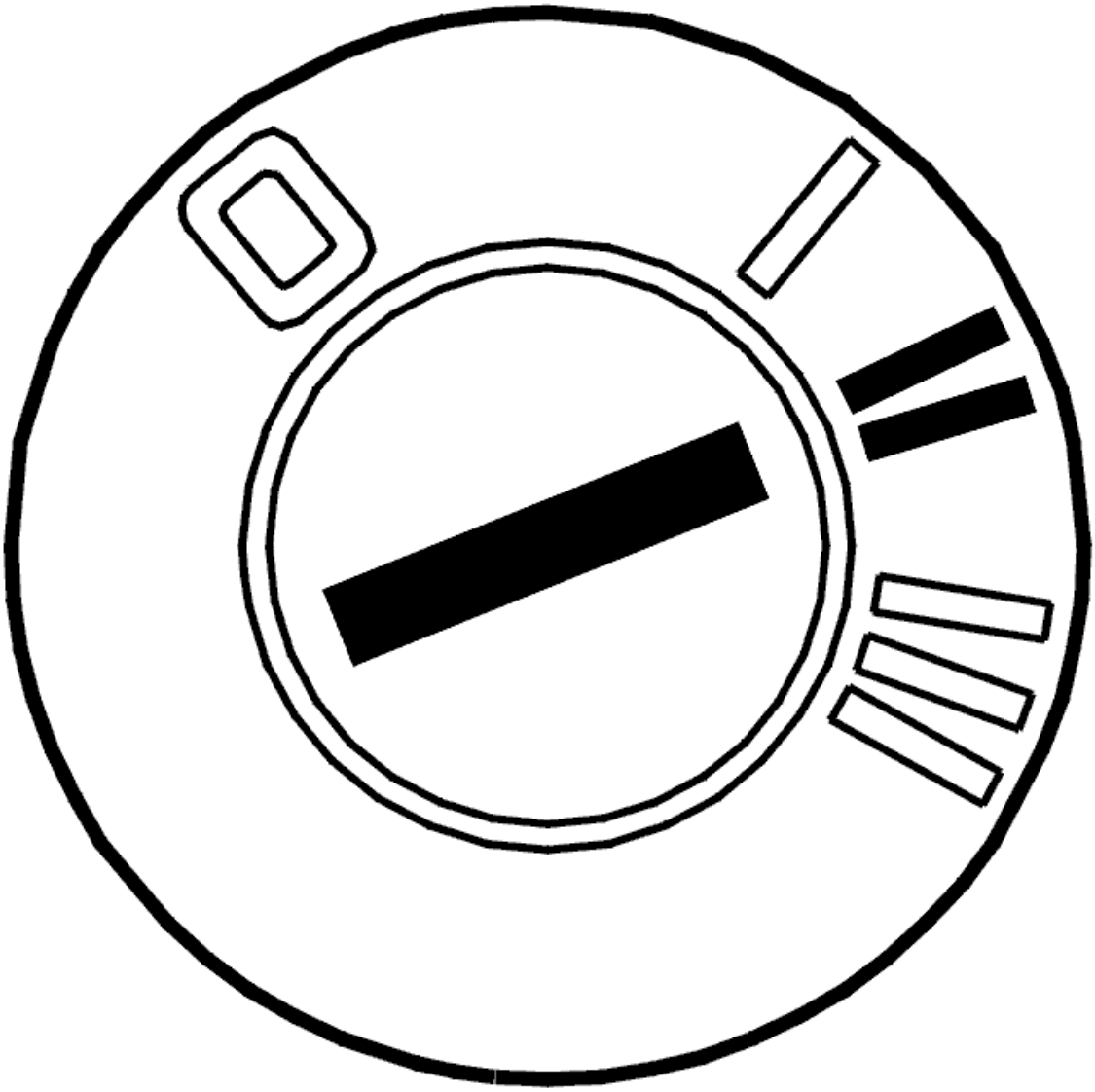

Fig. 398: Identifying Ignition ON
Courtesy of VOLVO CARS CORPORATION

- Ignition on
- Gear selector in position P
- Activate solenoid S4.

  The current should oscillate between 0 and approximately 1.5 A.

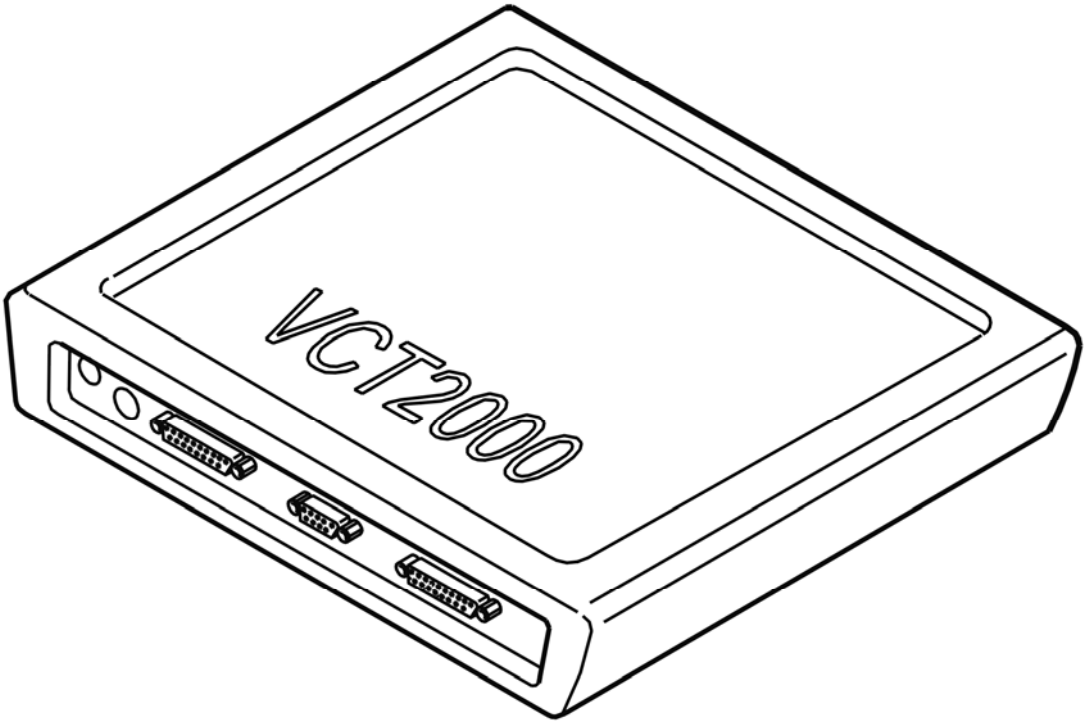

Fig. 399: Identifying VCT2000 Diagnostic Tool Symbol In VIDA
Courtesy of VOLVO CARS CORPORATION

Does the current oscillate?

- **YES**

  Refer to **INTERMITTENT FAULT**

- **NO**

  Refer to **CHECKING RESISTANCE**

CHECKING RESISTANCE

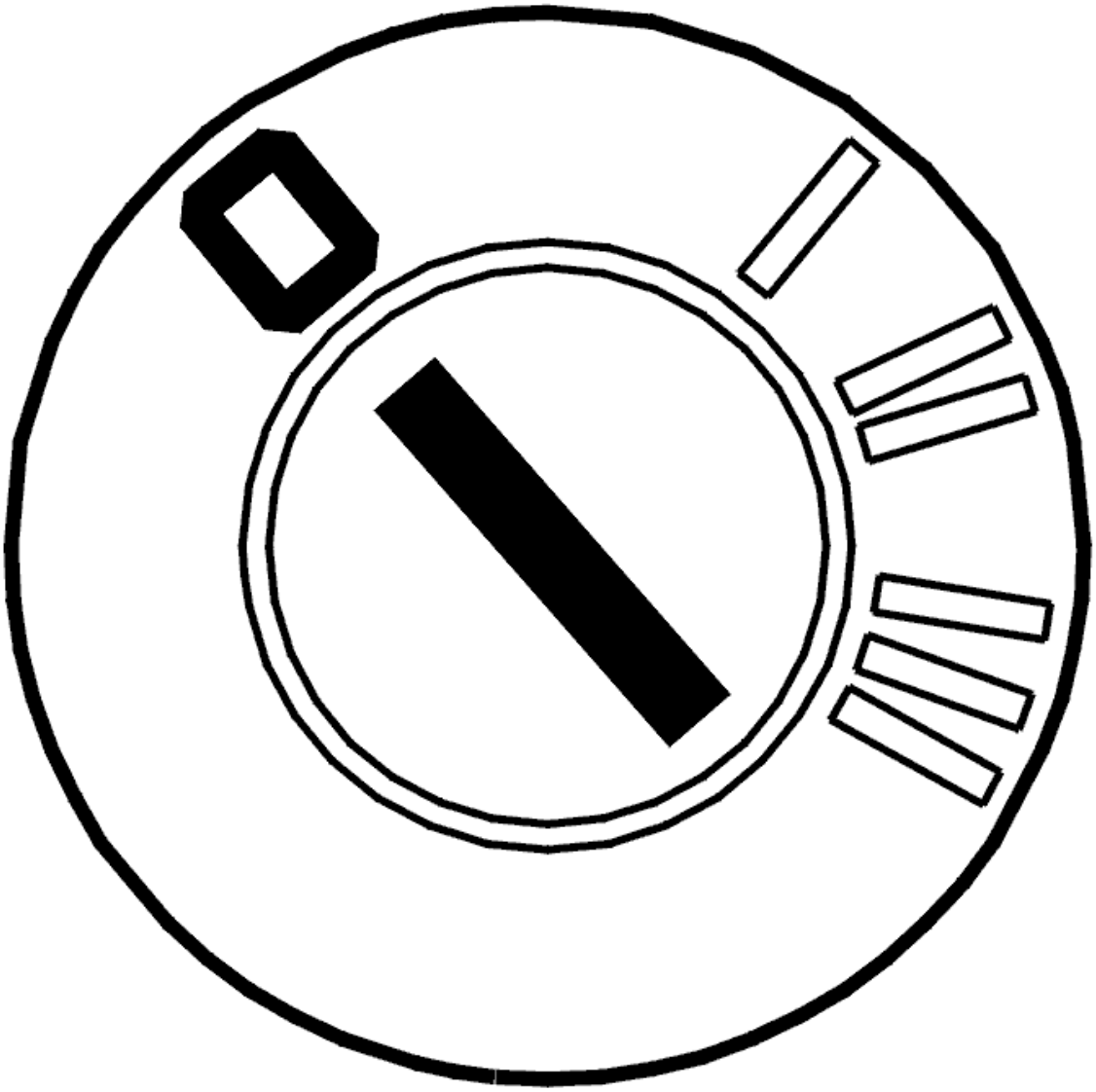

Fig. 400: Identifying Ignition OFF
Courtesy of VOLVO CARS CORPORATION

- Ignition off
- Disconnect transmission connector C.

  Check solenoid S4 by measuring the resistance between transmission connector terminal #C4 and the transmission housing. The resistance must be 11-15 ohms.

  Other information:

  - To disconnect the transmission connectors, see **CONNECTORS, TRANSMISSION, DISCONNECTING / CONNECTING**
  - For information about signals, see **SIGNAL DESCRIPTION. TRANSMISSION CONTROL MODULE (TCM)** .

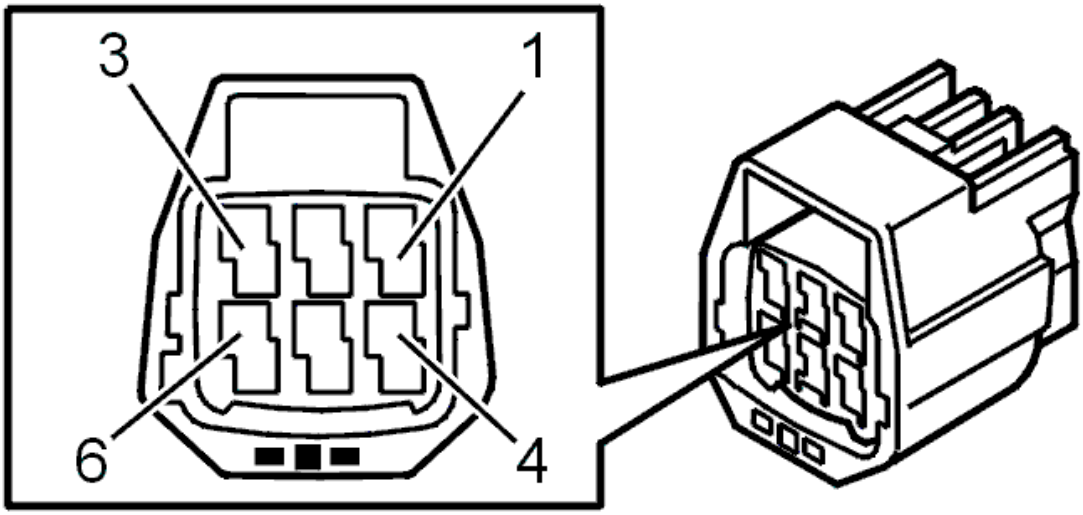

Fig. 401: Identifying 6-Pin Transmission Connector Terminals
Courtesy of VOLVO CARS CORPORATION

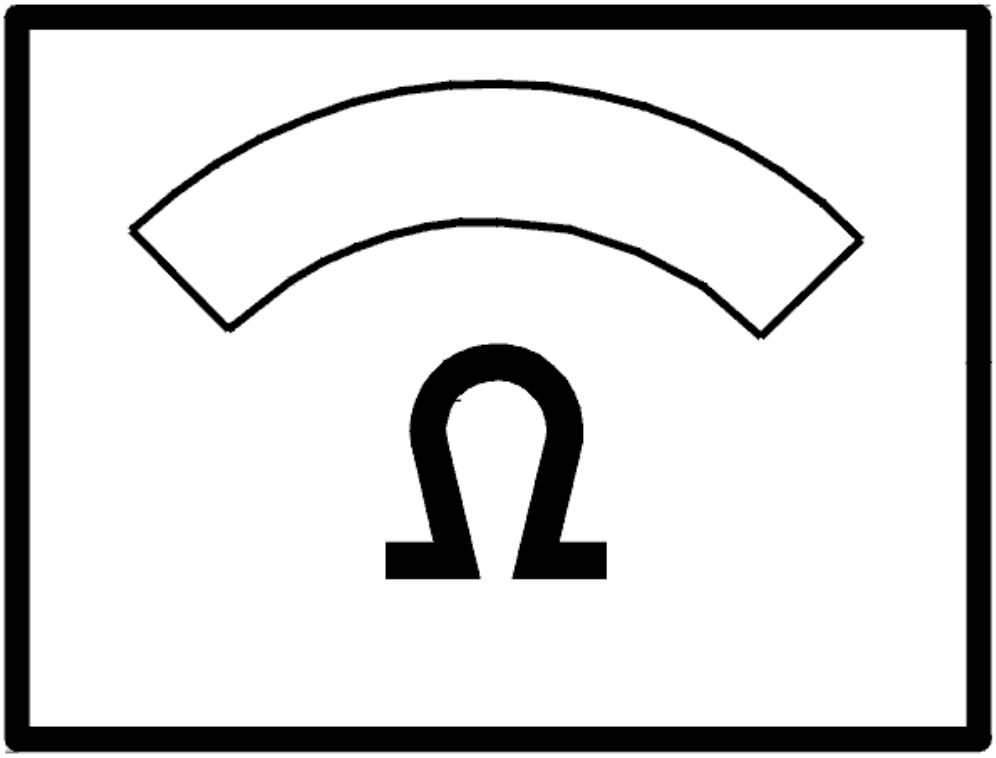

Fig. 402: Identifying Ohms Display
Courtesy of VOLVO CARS CORPORATION

Was the resistance OK?

- **YES**

  Refer to **CHECKING THE WIRING**

- **NO**

  Refer to **CHECKING THE WIRING AND COMPONENT**

CHECKING THE WIRING

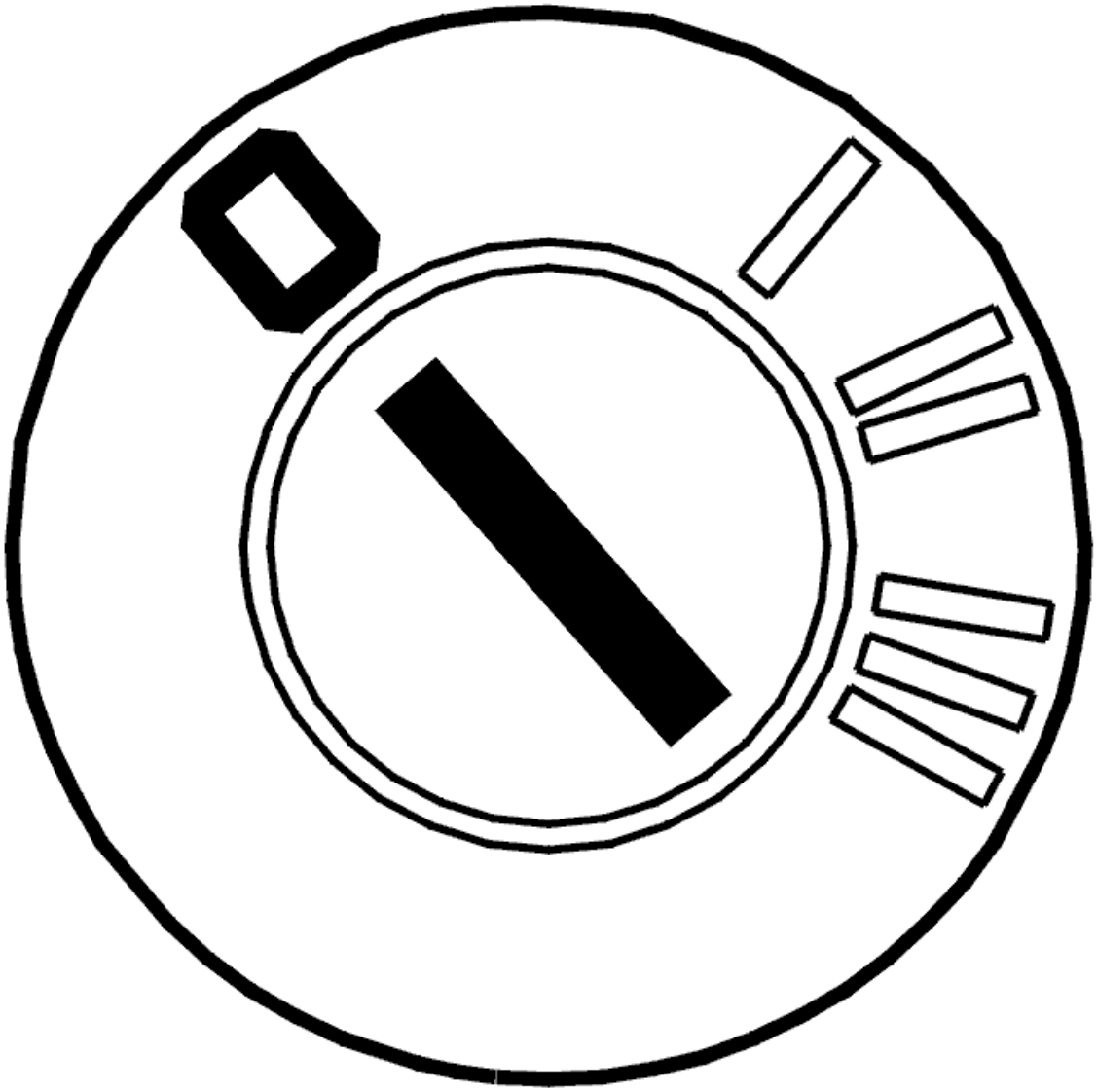

Fig. 403: Identifying Ignition OFF
Courtesy of VOLVO CARS CORPORATION

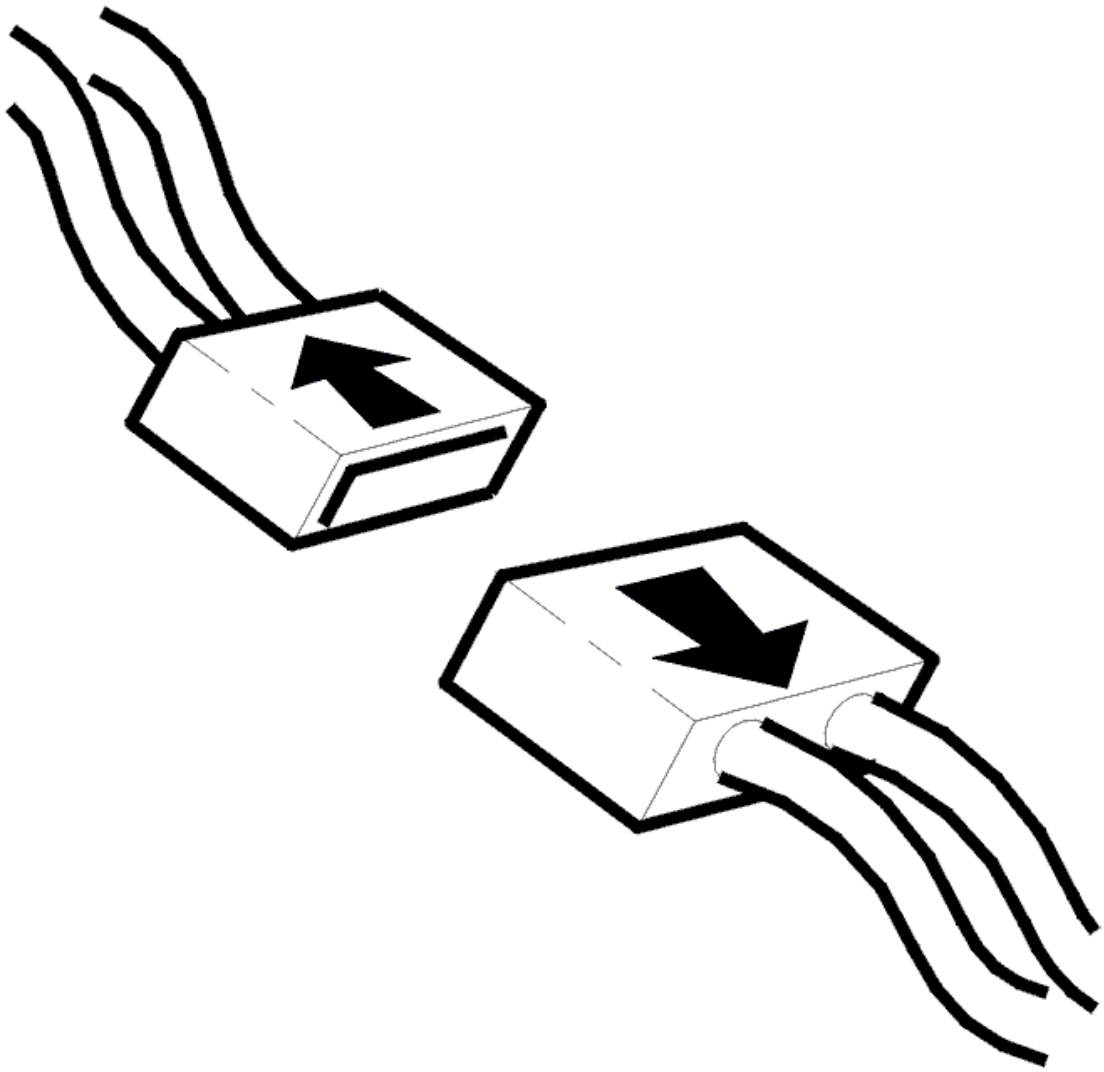

Fig. 404: Identifying Connector(s) Disconnected
Courtesy of VOLVO CARS CORPORATION

- Ignition off
- The breakout box connected
- Transmission connector C disconnected.

  Check the cable between control module terminal #A47 (#A47) and transmission connector terminal #C4 (control module side). Check for an open-circuit according to **OPEN-CIRCUIT, PERMANENT FAULTS** .

  Remedy as necessary.

  Other information:

- To connect the breakout box, see **CONNECTING THE BREAKOUT BOX**
- To disconnect the transmission connectors, see **CONNECTORS, TRANSMISSION, DISCONNECTING / CONNECTING**
- For information about signals, see **SIGNAL DESCRIPTION. TRANSMISSION CONTROL MODULE (TCM)** .

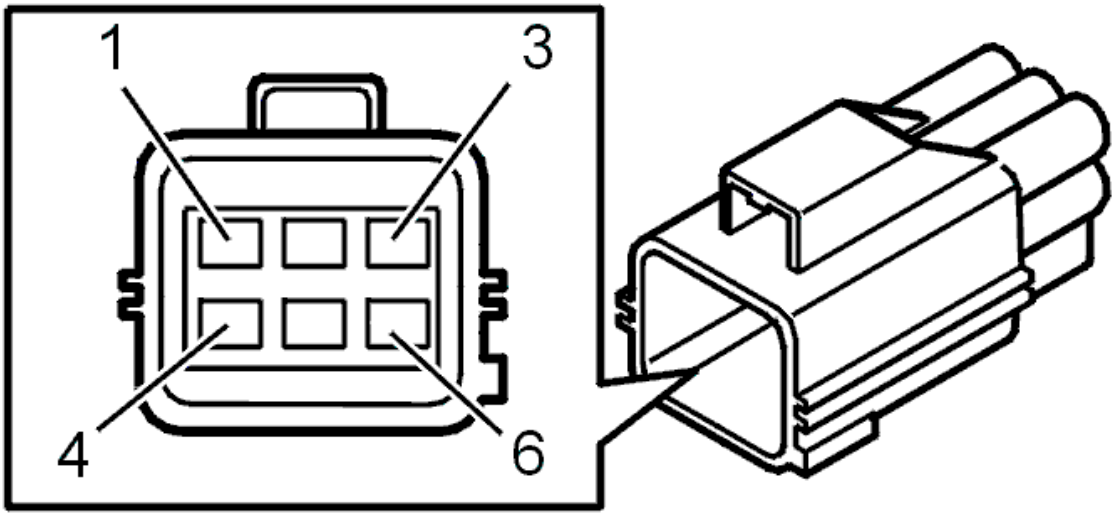

Fig. 405: Identifying Transmission Connector Terminals
Courtesy of VOLVO CARS CORPORATION

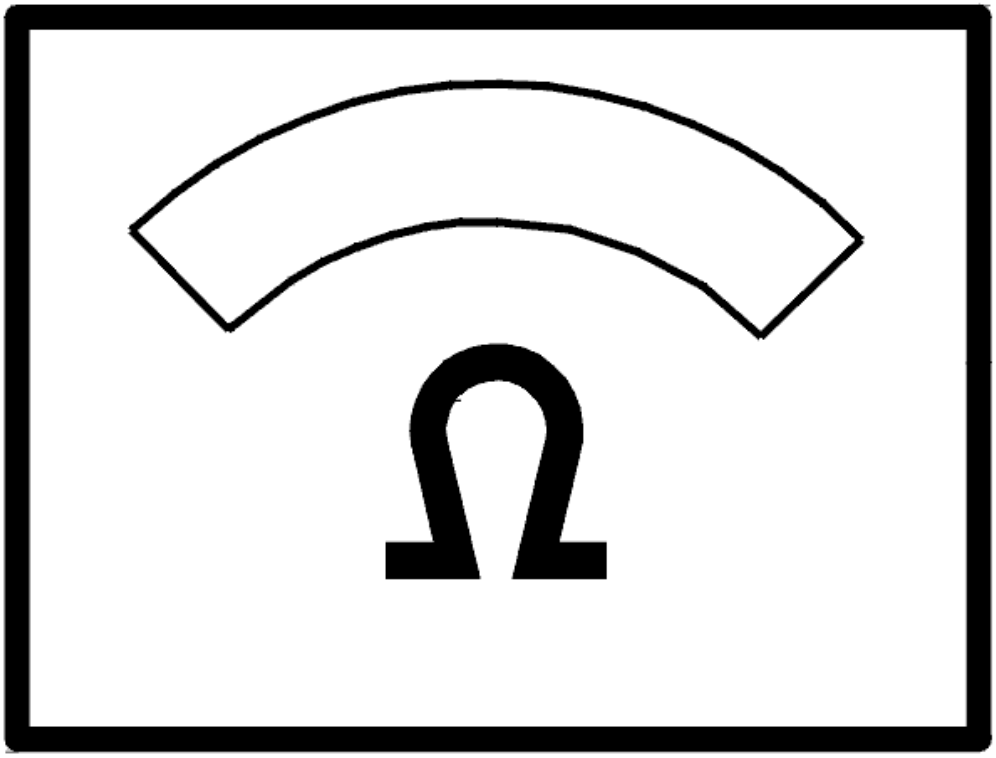

Fig. 406: Identifying Ohms Display
Courtesy of VOLVO CARS CORPORATION

Was a fault detected?

- **YES**

  Refer to **VERIFICATION**

- **NO**

  Refer to **CHECKING THE CONTROL MODULE**

CHECKING THE CONTROL MODULE

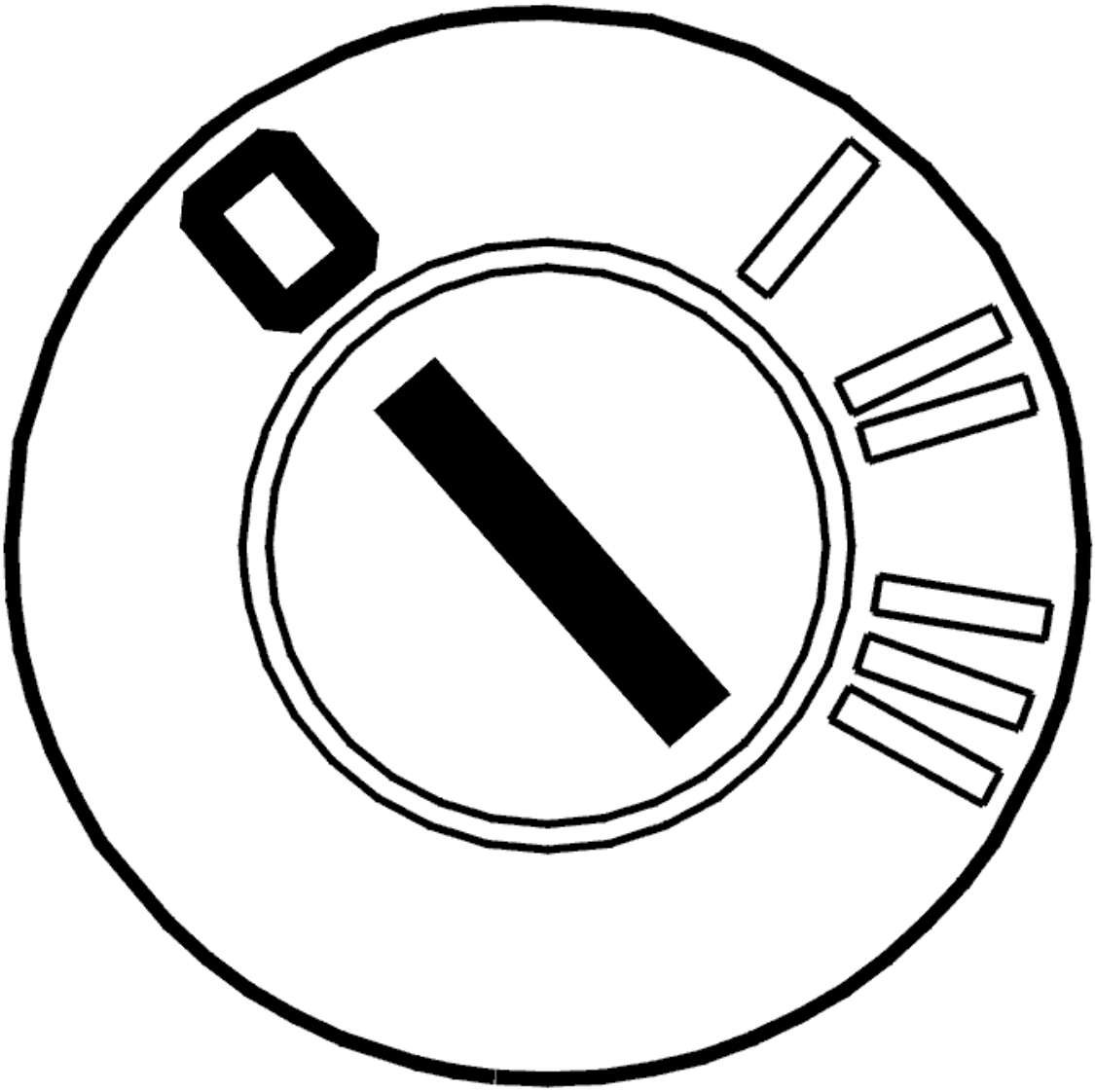

Fig. 407: Identifying Ignition OFF
Courtesy of VOLVO CARS CORPORATION

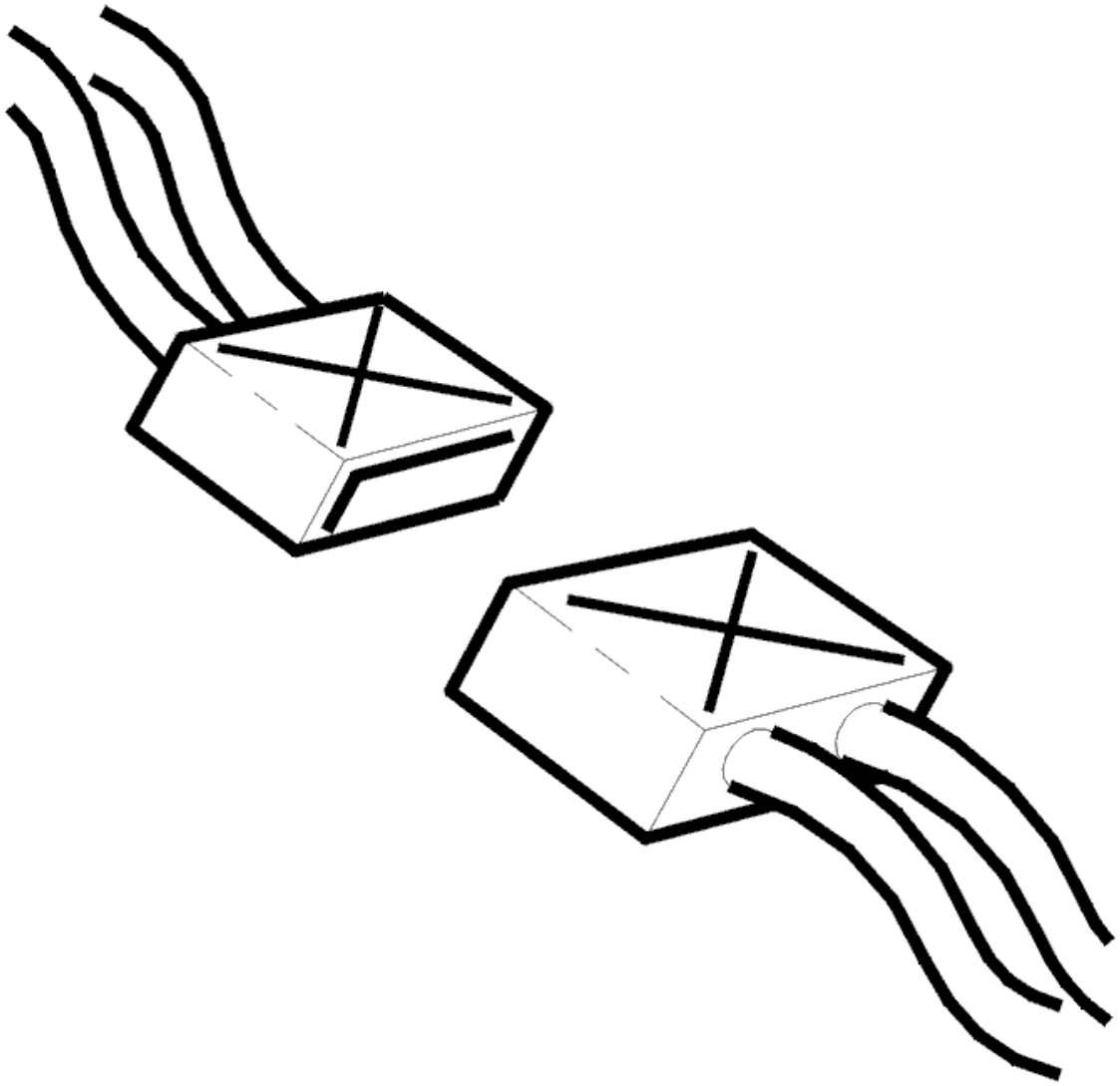

Fig. 408: Identifying Connectors
Courtesy of VOLVO CARS CORPORATION

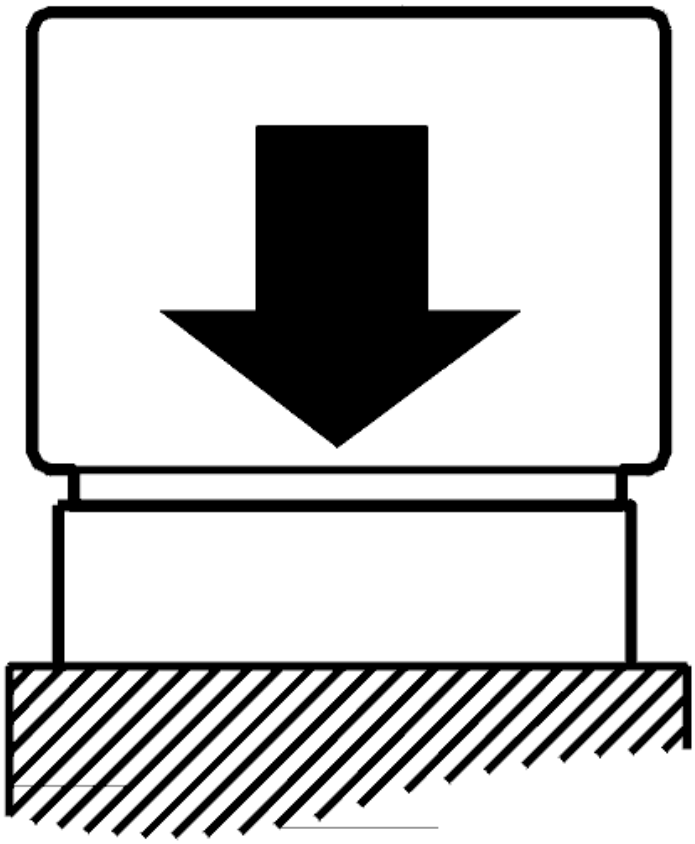

Fig. 409: Identifying Control Module Connected
Courtesy of VOLVO CARS CORPORATION

- Ignition off
- The breakout box connected
- Connect the control module.
- Transmission connector C disconnected
- Gear selector in position P.

Check the transmission control module (TCM) by measuring the resistance between terminals #A47 (#A47) and #A53 (#A53) on the breakout box. The resistance must be approximately 9 kohms.

NOTE: **When removing the transmission connector, the control module may store diagnostic trouble codes (DTCs) for the gear-shift position sensor, the shift solenoids, the temperature sensor etc.**

Try a new control module if the resistance is infinite.

Other information:

- To disconnect the transmission connectors, see **CONNECTORS, TRANSMISSION, DISCONNECTING / CONNECTING**
- To replace the control module, see **TRANSMISSION CONTROL MODULE (TCM), REPLACING**
- For information about signals, see **SIGNAL DESCRIPTION. TRANSMISSION CONTROL MODULE (TCM)** .

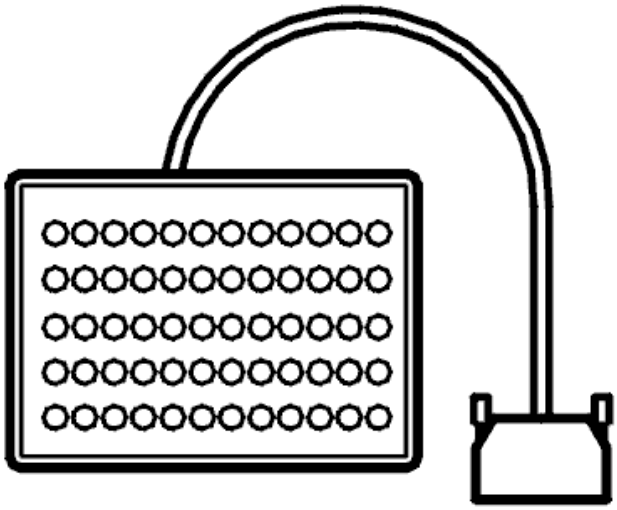

Fig. 410: Identifying Breakout Box
Courtesy of VOLVO CARS CORPORATION

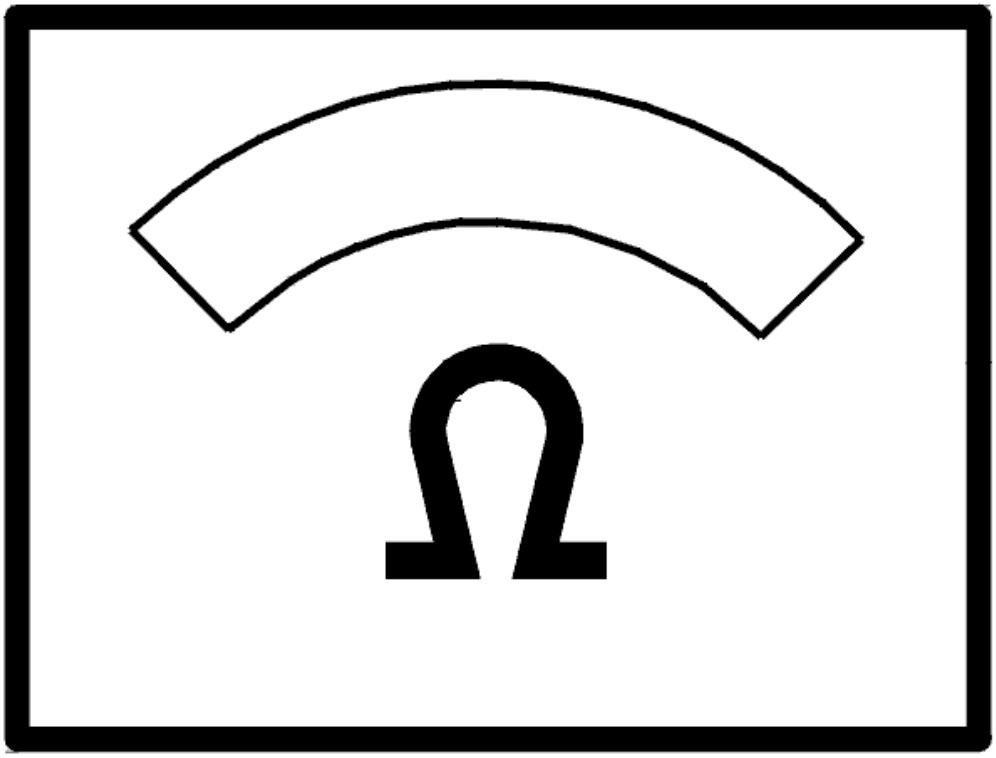

Fig. 411: Identifying Ohms Display
Courtesy of VOLVO CARS CORPORATION

Was the resistance OK?

- **YES**

  FAULT NOT FOUND: Troubleshooting has been completed.

- **NO**

  Refer to **VERIFICATION**

CHECKING THE WIRING AND COMPONENT

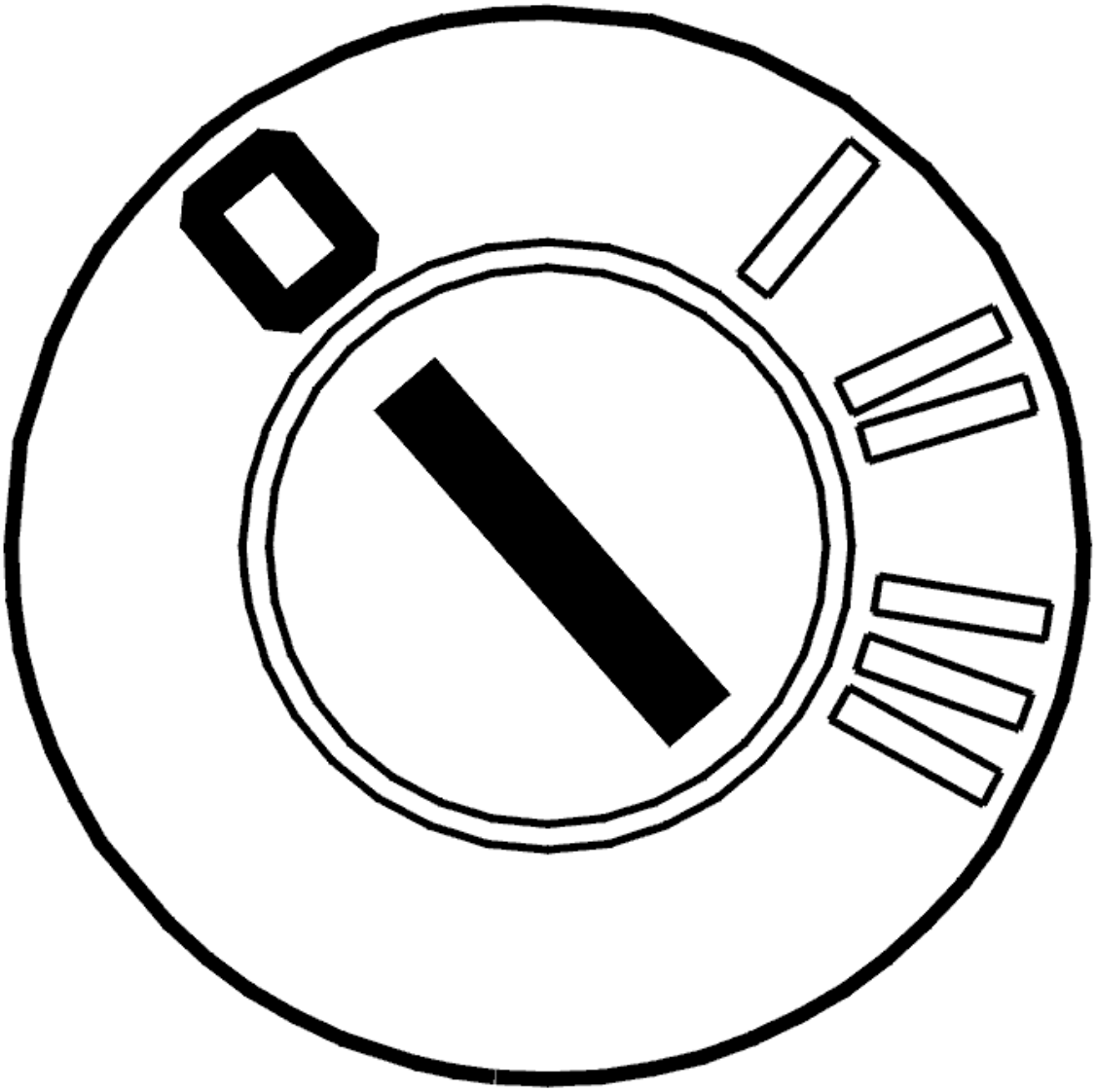

Fig. 412: Identifying Ignition OFF
Courtesy of VOLVO CARS CORPORATION

- Ignition off
- Open the transmission control system.

  Check the cable between transmission connector terminal #C4 (transmission side) and the connector for solenoid S4. Check for an open-circuit according to **OPEN-CIRCUIT, PERMANENT FAULTS** .

  Check solenoid S4 by measuring the resistance between the terminal pin on solenoid S4 and the transmission housing. The resistance must be 11-15 ohms. Replace solenoid S4 if the resistance is incorrect.

  Remedy as necessary.

  Other information:

- To disconnect the transmission connectors, see **CONNECTORS, TRANSMISSION, DISCONNECTING / CONNECTING**
- To open the control system and to check or replace solenoid S4, see **SOLENOID CONTROL SYSTEM, REPLACING**
- To replace the cable harness for the control system, see **TEMPERATURE SENSOR FLUID, TRANSAXLE, (TFT)**
- For information about signals, see **SIGNAL DESCRIPTION. TRANSMISSION CONTROL MODULE (TCM)** .

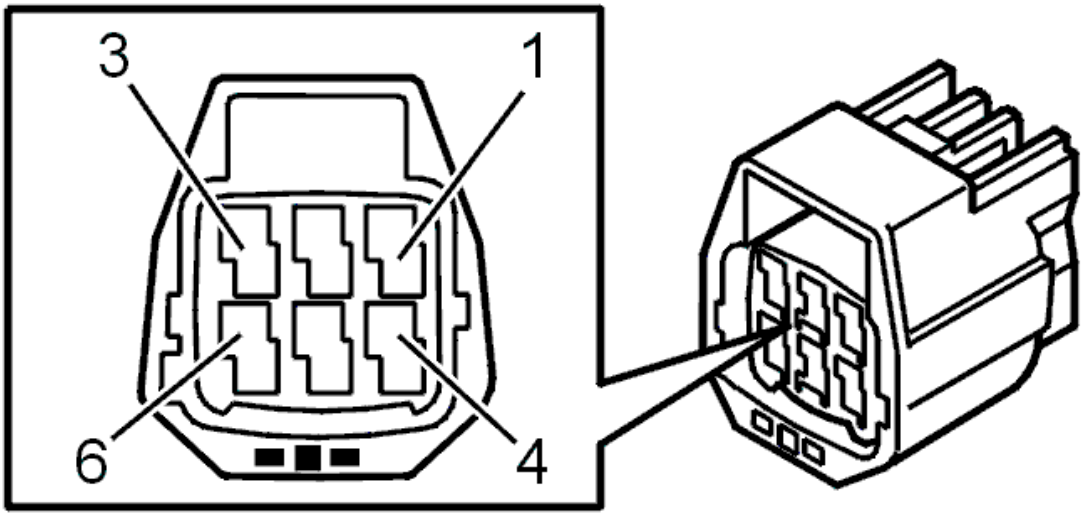

Fig. 413: Identifying 6-Pin Transmission Connector Terminals
Courtesy of VOLVO CARS CORPORATION

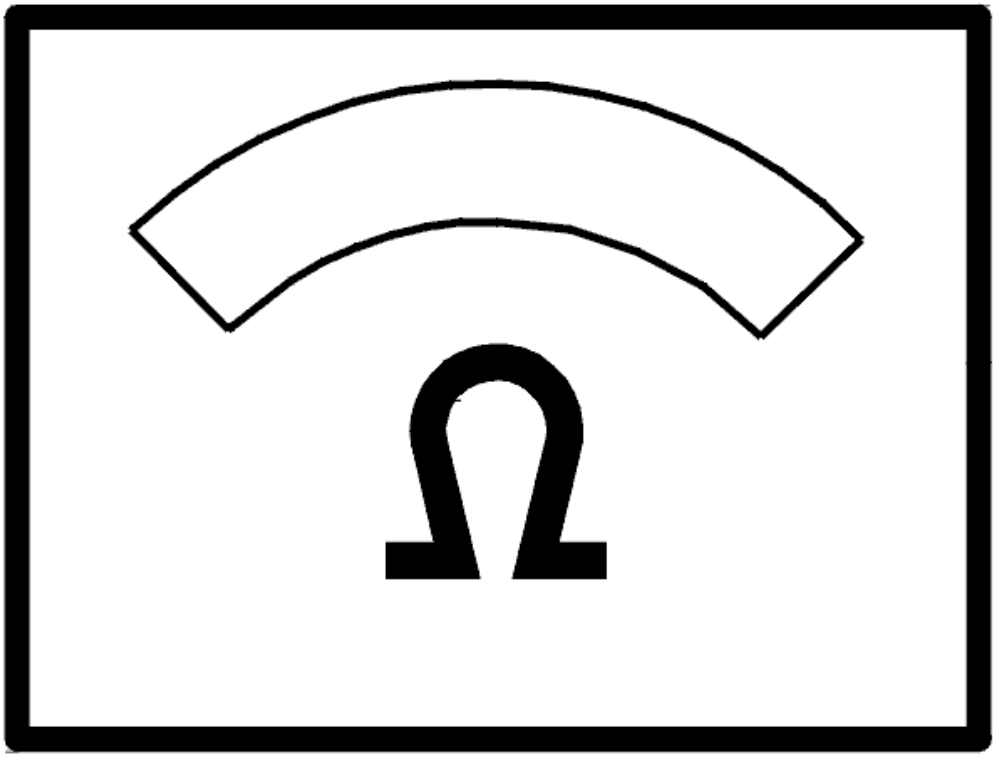

Fig. 414: Identifying Ohms Display
Courtesy of VOLVO CARS CORPORATION

- **Continue**

  Refer to **RESETTING THE ADAPTATION**

VERIFICATION

HINT: After carrying out the repair, check that the fault has been remedied.

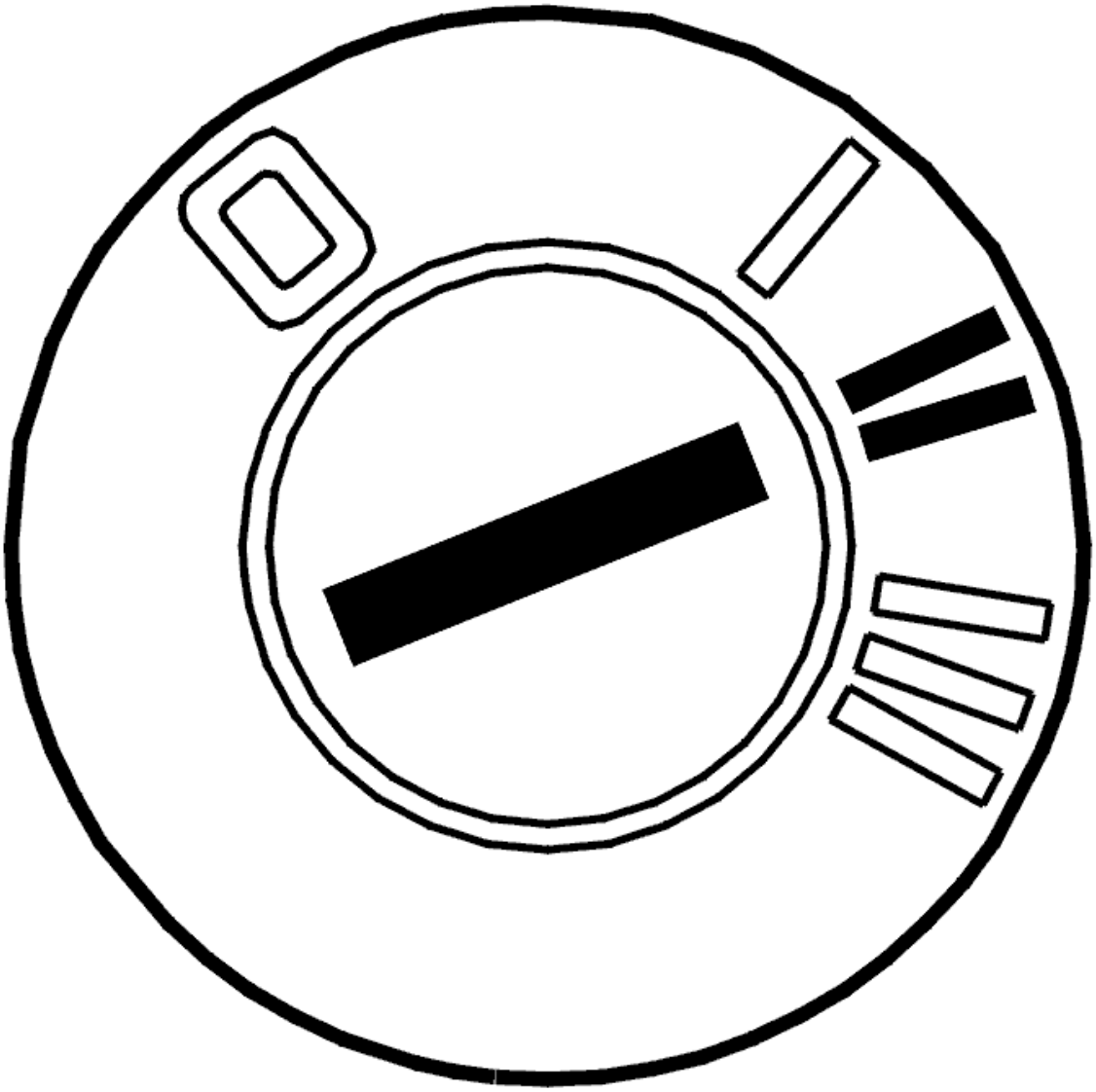

Fig. 415: Identifying Ignition ON
Courtesy of VOLVO CARS CORPORATION

- Ignition on
- Gear selector in position P
- Activate solenoid S4.

The current should oscillate between 0 and approximately 1.5 A.

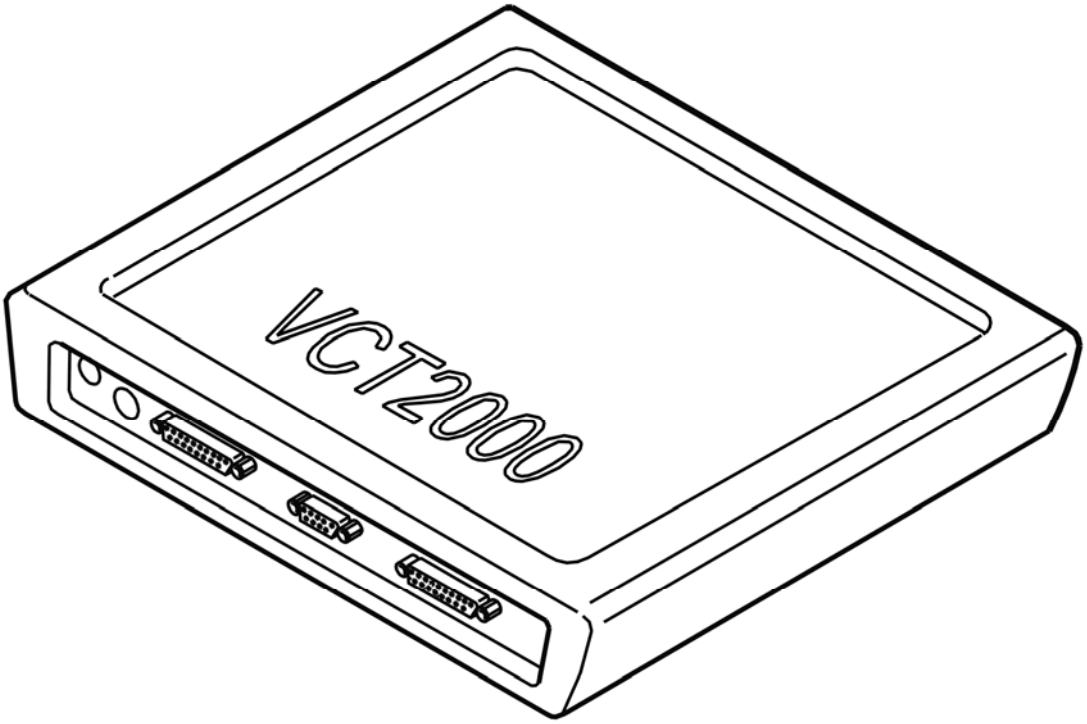

Fig. 416: Identifying VCT2000 Diagnostic Tool Symbol In VIDA
Courtesy of VOLVO CARS CORPORATION

Does the current oscillate?

- **YES**

  VERIFIED: Troubleshooting has been completed.

- **NO**

  Refer to **INFORMATION**

INTERMITTENT FAULT

Check the transmission control module (TCM) and transmission connectors. Check for contact resistance and oxidation according to **CONTACT RESISTANCE AND OXIDATION** .

Check the cable between control module terminal #A47 (#A47) and transmission connector terminal #C4. Check for an intermittent open-circuit according to **OPEN-CIRCUIT, INTERMITTENT FAULTS** .

- Check the circuit for solenoid S4. Switch off the ignition. Disconnect the control module. Measure the resistance between terminals #A47 (#A47) and #A53 (#A53) on the breakout box. The resistance must be 11-15 ohms.

Remedy as necessary.

Other information:

- To connect the breakout box, see **CONNECTING THE BREAKOUT BOX**
- To disconnect the transmission connectors, see **CONNECTORS, TRANSMISSION, DISCONNECTING / CONNECTING**
- For information about signals, see **SIGNAL DESCRIPTION. TRANSMISSION CONTROL MODULE (TCM)** .

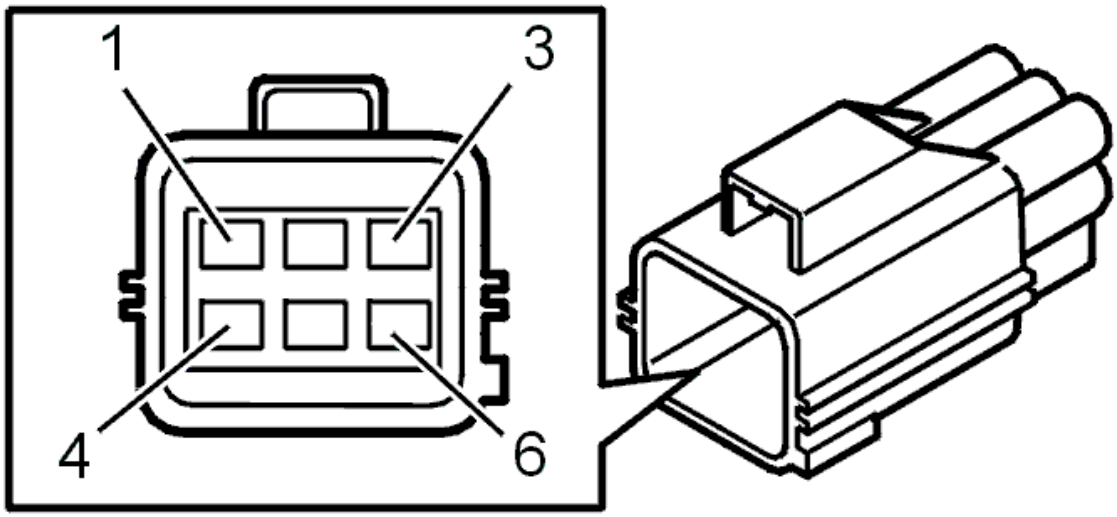

Fig. 417: Identifying Transmission Connector Terminals
Courtesy of VOLVO CARS CORPORATION

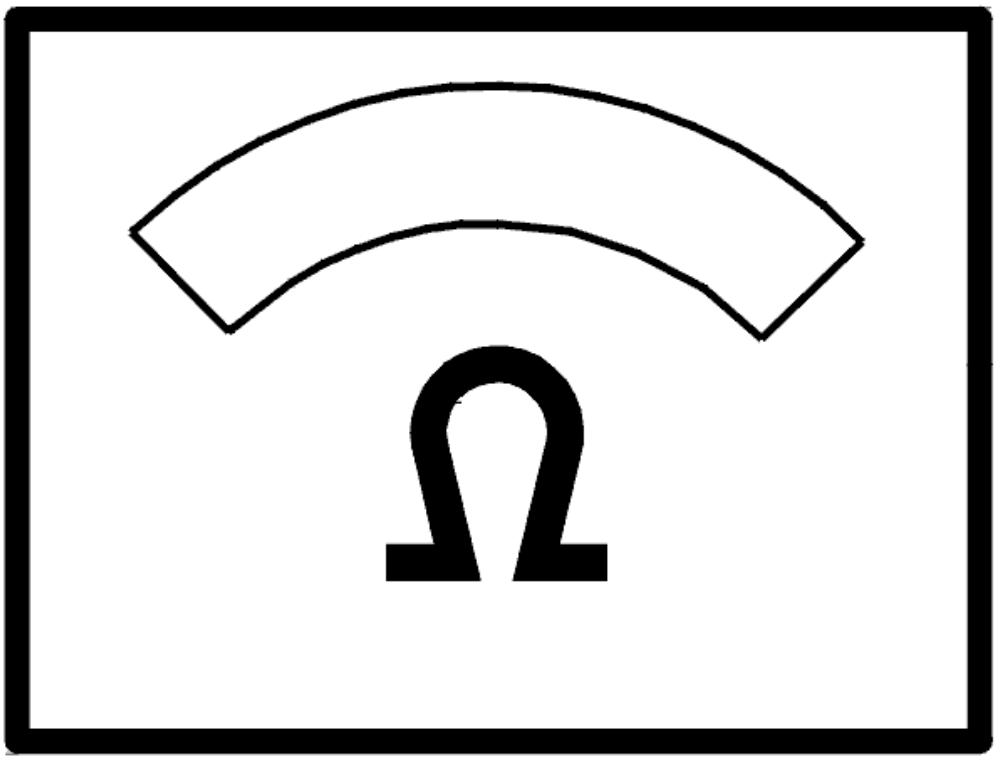

Fig. 418: Identifying Ohms Display
Courtesy of VOLVO CARS CORPORATION

- **Continue**

  Refer to **INFORMATION**

RESETTING THE ADAPTATION

RESETTING ADAPTATION AND THE COUNTER FOR "TRANSMISSION OIL CHANGE"

HINT: The transmission has torque controlled adaptive pressure control. Pressure control means that the transmission regulates the pressure itself during each gear shift. This avoids harsh gear shifting. Each gear shift is evaluated by the control module and stored in the memory. This allows for compensation for wear and tear in the transmission and clutch. It is important that the adaptation in the memory is reset after the transmission has been repaired. This is to ensure normal operation. The oil is replaced during

repair; the "Transmission oil change" counter must be reset. If the counter is not reset when the fluid is drained and replaced, there is a risk that a diagnostic trouble code (DTC) will be stored in incorrect circumstances.

NOTE: This applies only if the transmission or one of the components in the transmission have been replaced.

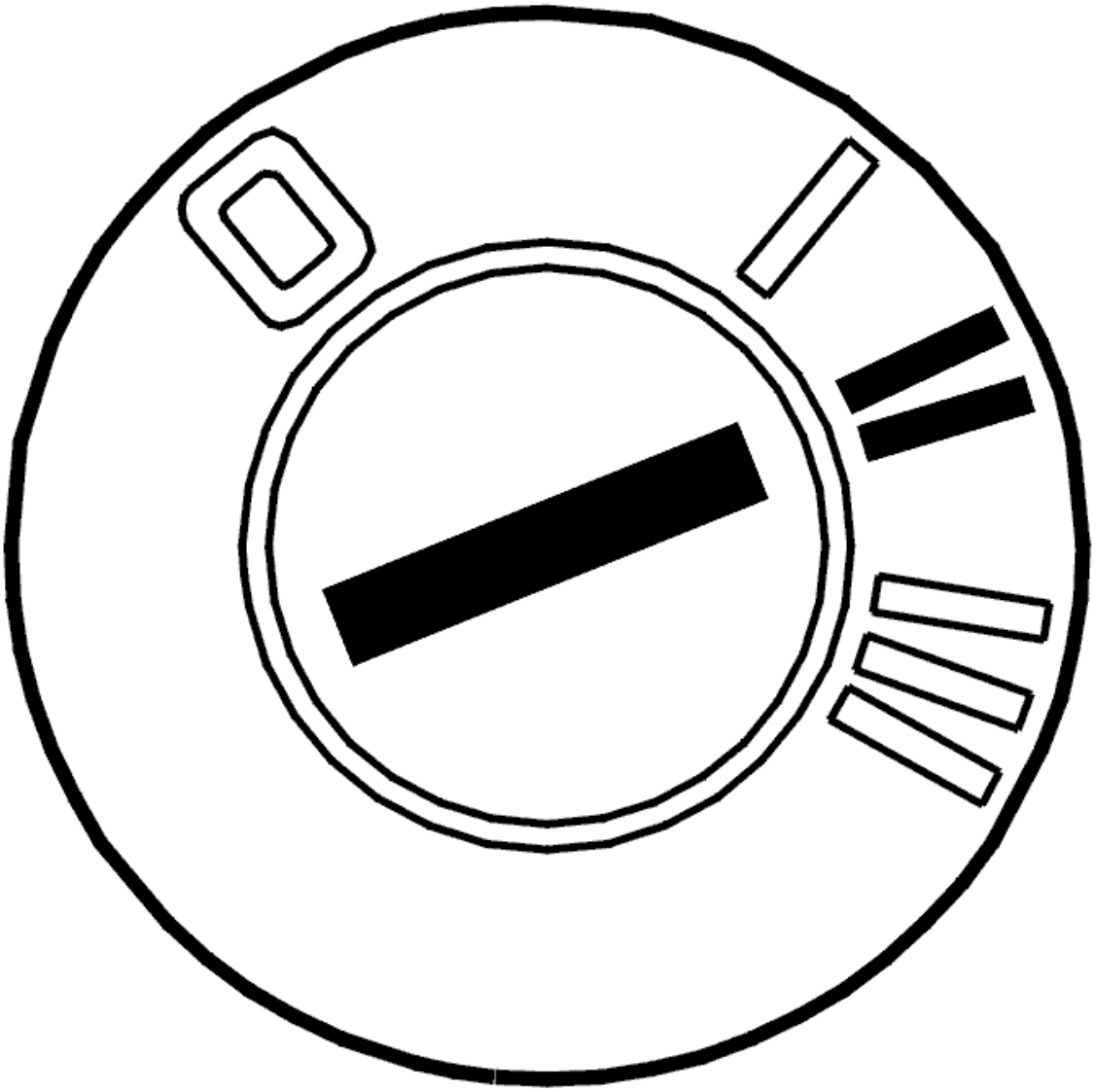

Fig. 419: Identifying Ignition ON
Courtesy of VOLVO CARS CORPORATION

- Ignition on.

  Use the VCT2000 (or appropriate scan tool) to reset the adaptation and counter.

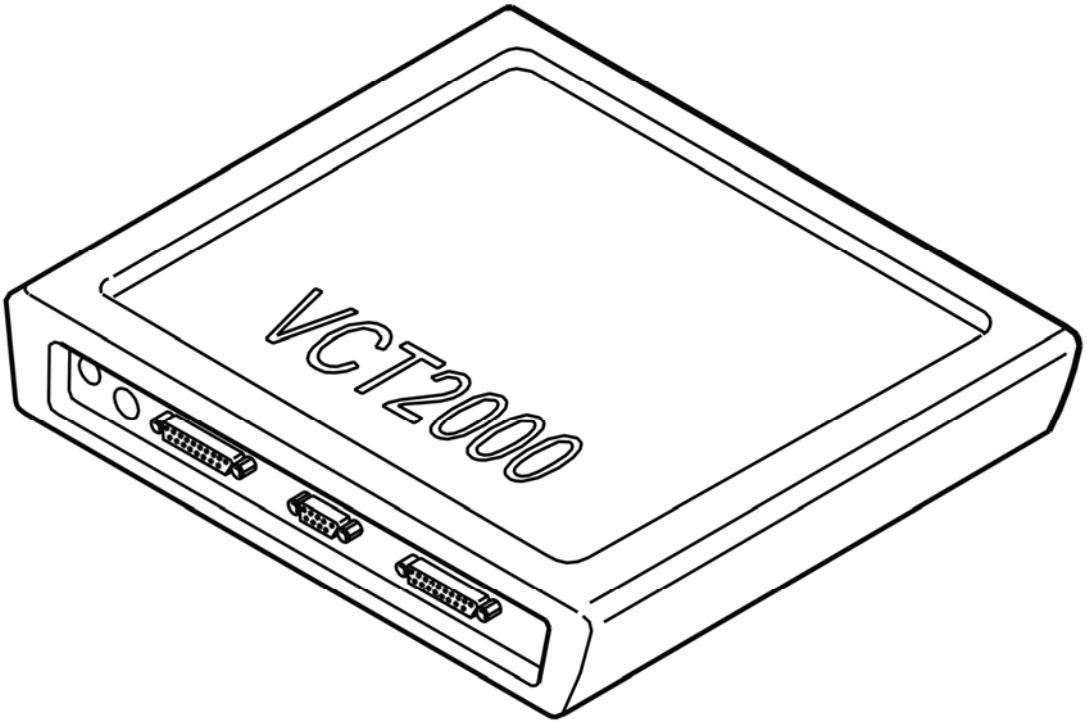

Fig. 420: Identifying VCT2000 Diagnostic Tool Symbol In VIDA
Courtesy of VOLVO CARS CORPORATION

- **Continue**

  Refer to **VERIFICATION**

INFORMATION

FAULT-TRACING INFORMATION

The fault should have been detected and remedied. As this is not the case fault-tracing has failed.

Exit fault-tracing for this diagnostic trouble code (DTC) or make another attempt.

INFORMATION

FAULT-TRACING INFORMATION

If the fault is intermittent, do not verify fault-tracing if the fault does not recur.

It is possible to view the information again, or leave fault-tracing for this diagnostic trouble code (DTC).

FAULTY SIGNAL

CHECKING TRANSMISSION FLUID TEMPERATURE SENSOR

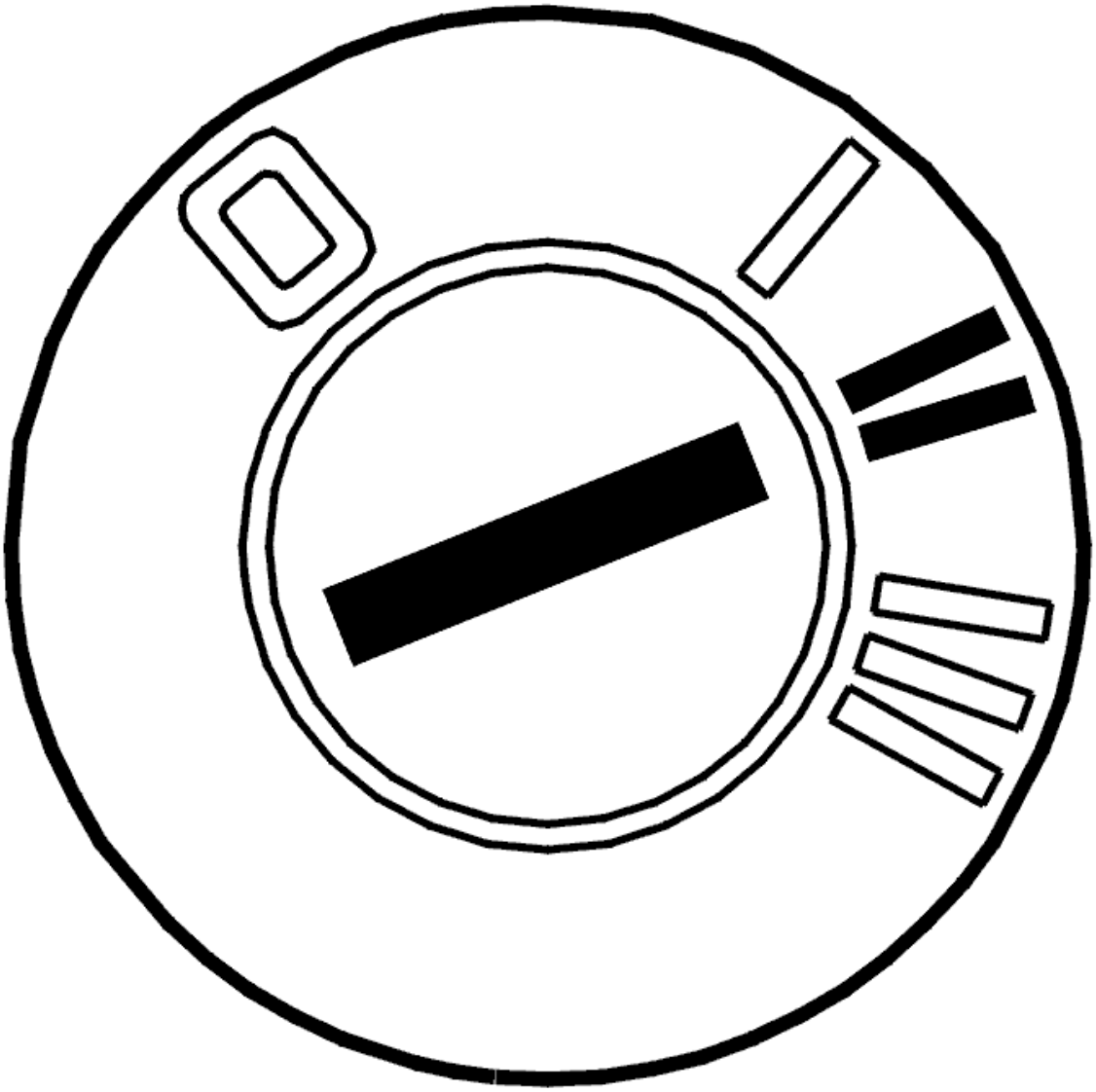

Fig. 421: Identifying Ignition ON
Courtesy of VOLVO CARS CORPORATION

- Ignition on
- Read off the oil temperature.

  Check that the temperature is within its permitted range.

  Compare with the transmission temperature.

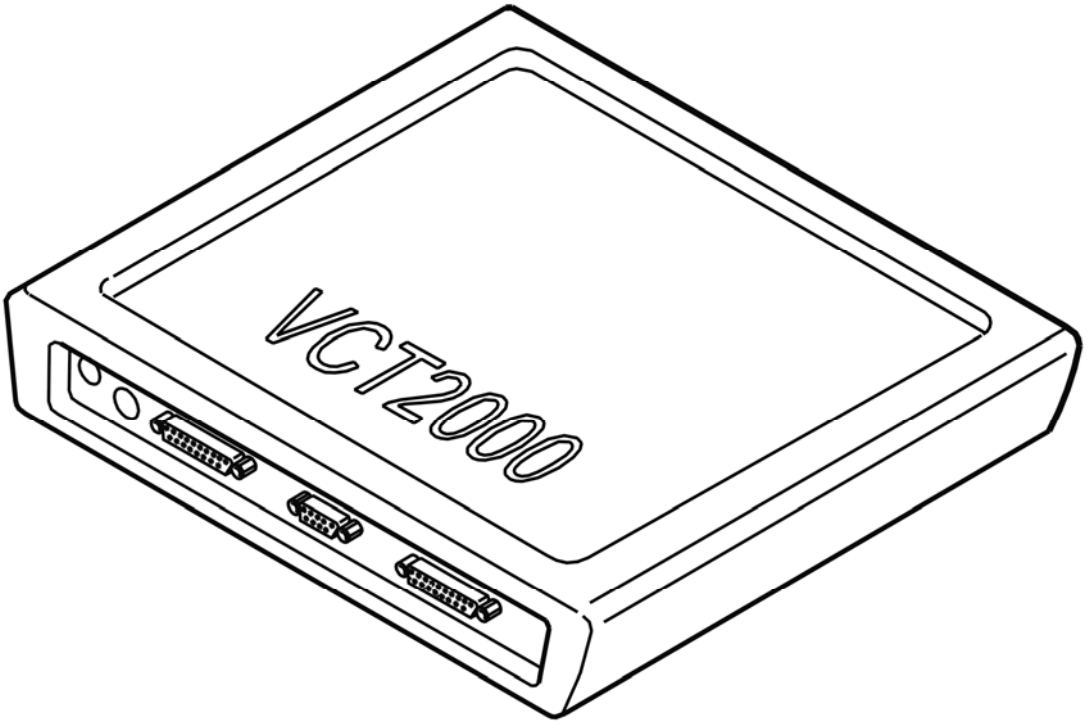

Fig. 422: Identifying VCT2000 Diagnostic Tool Symbol In VIDA
Courtesy of VOLVO CARS CORPORATION

Was the transmission temperature within its permitted range?

- **YES**

  Refer to **INTERMITTENT FAULT**

- **NO**

  Refer to **CHECKING TRANSMISSION FLUID TEMPERATURE SENSOR**

CHECKING TRANSMISSION FLUID TEMPERATURE SENSOR

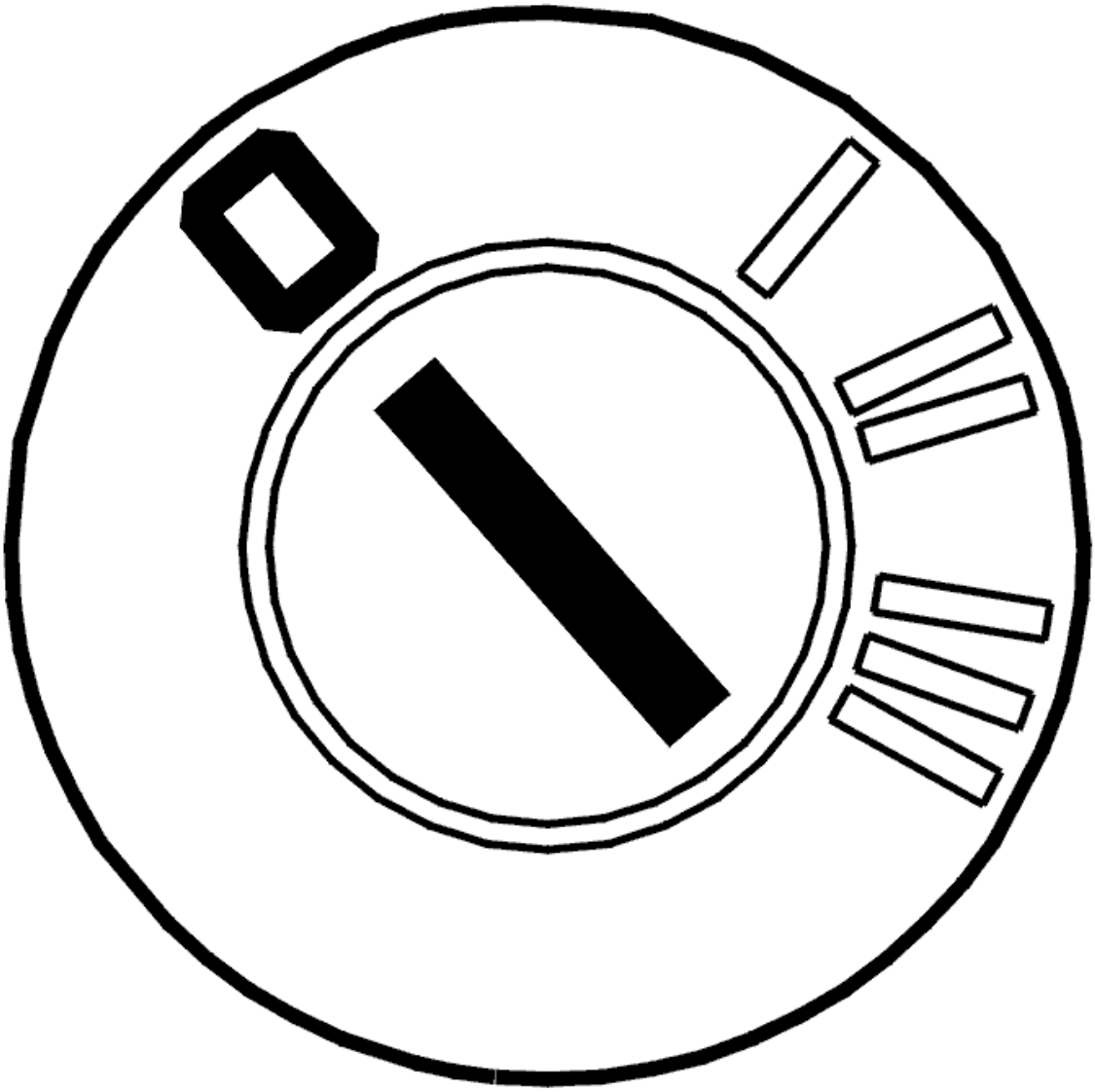

Fig. 423: Identifying Ignition OFF
Courtesy of VOLVO CARS CORPORATION

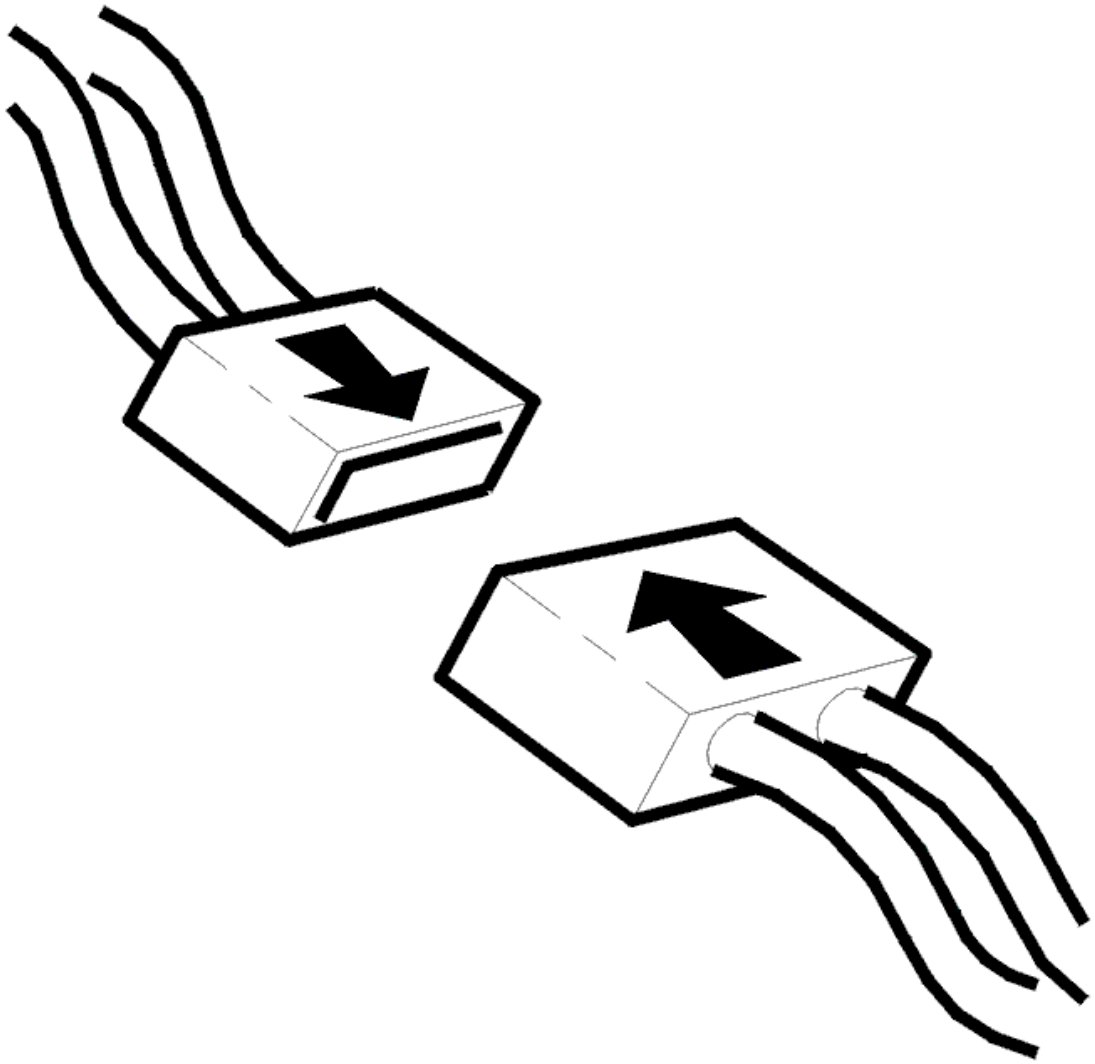

Fig. 424: Identifying Connector(s) Reinstallation
Courtesy of VOLVO CARS CORPORATION

- Ignition off
- Transmission connector D disconnected.

  Check the temperature sensor. Measure the resistance between transmission connector D terminals #D7 and #D8.

  The resistance must be 4.5-6 kohms at 20°C.

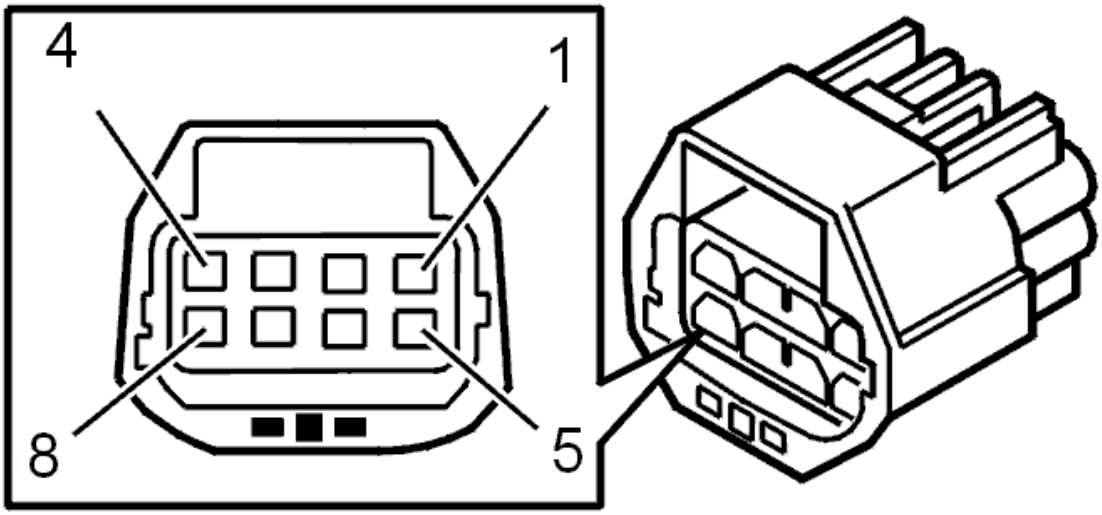

Fig. 425: Identifying 8-Pin Transmission Connector Terminals
Courtesy of VOLVO CARS CORPORATION

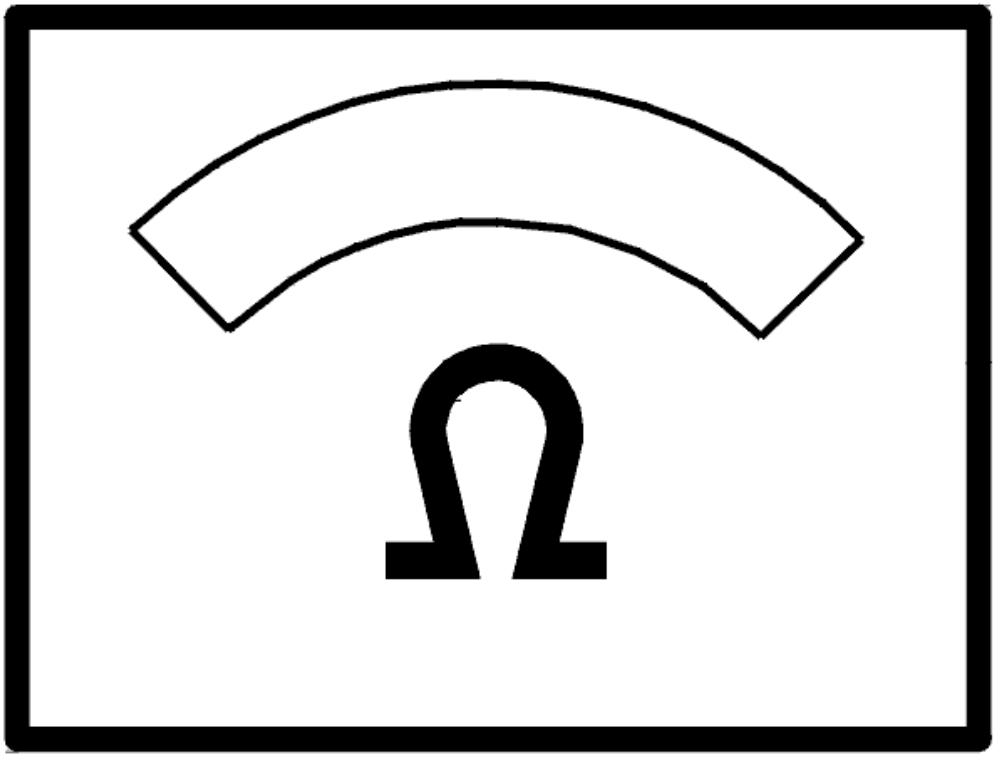

Fig. 426: Identifying Ohms Display
Courtesy of VOLVO CARS CORPORATION

Was the resistance OK?

- **YES**

  Refer to **CHECKING TRANSMISSION FLUID TEMPERATURE SENSOR**

- **NO**

  Refer to **CHECKING THE CABLE AND COMPONENT**

CHECKING TRANSMISSION FLUID TEMPERATURE SENSOR

Check the cable between control module terminal #A37 (#A37) and transmission connector terminal #D7

(control module side). Check for an open-circuit according to **OPEN-CIRCUIT, PERMANENT FAULTS** .

Check the cable between control module terminal #A55 (#A55)and transmission connector terminal #D8 (control module side). Check for an open-circuit according to **OPEN-CIRCUIT, PERMANENT FAULTS** .

Remedy as necessary.

Other information:

- To connect the breakout box, see **CONNECTING THE BREAKOUT BOX**
- To disconnect the transmission connectors, see **CONNECTORS, TRANSMISSION, DISCONNECTING / CONNECTING**
- For information about signals, see **SIGNAL DESCRIPTION. TRANSMISSION CONTROL MODULE (TCM)** .

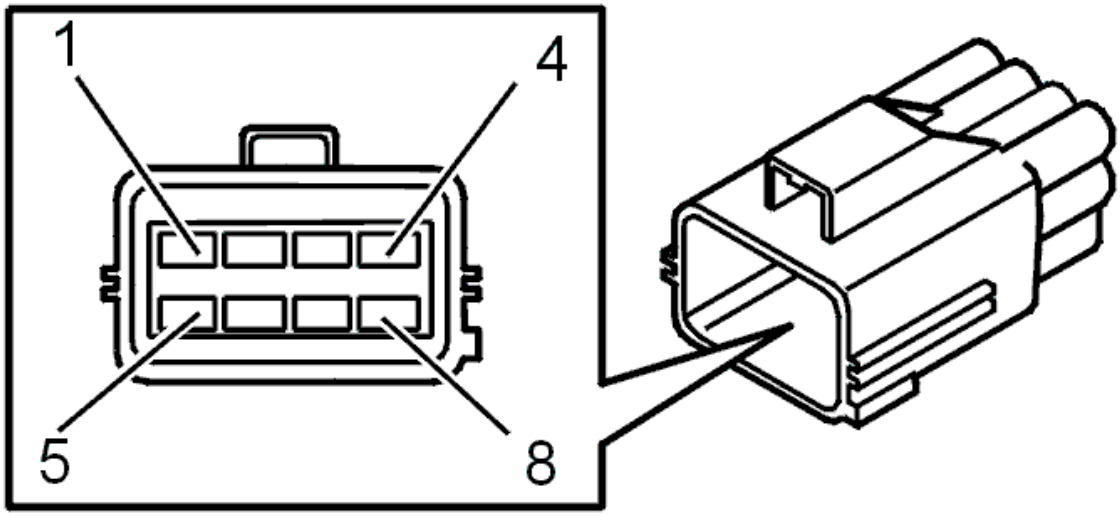

Fig. 427: Identifying Transmission Connector Terminals
Courtesy of VOLVO CARS CORPORATION

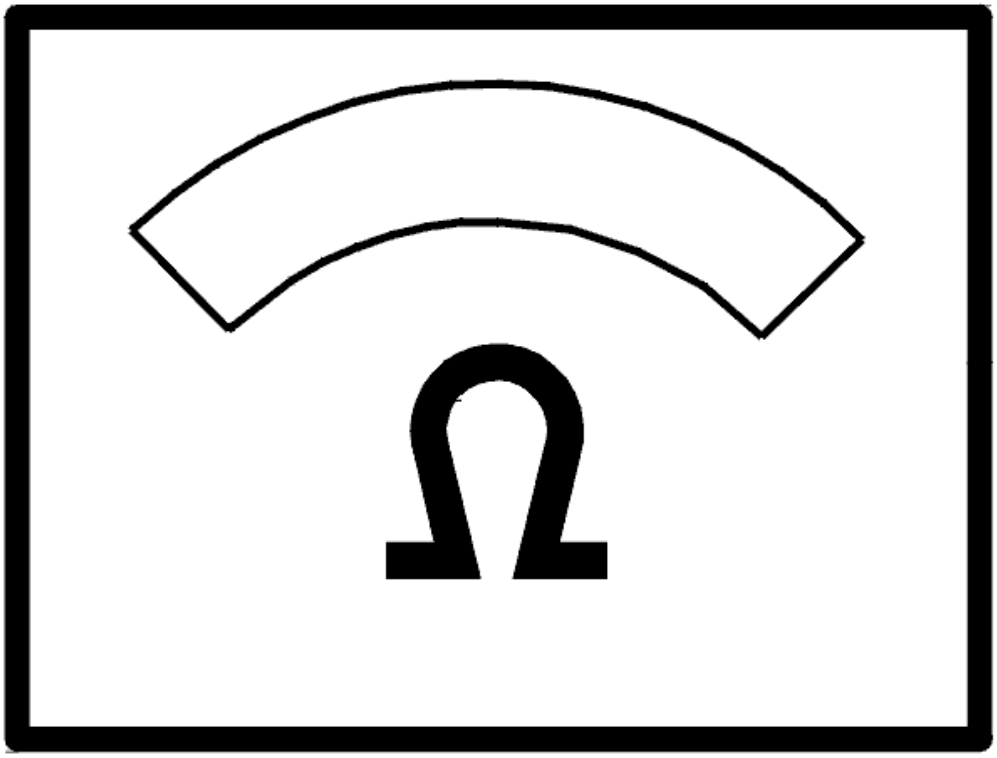

Fig. 428: Identifying Ohms Display
Courtesy of VOLVO CARS CORPORATION

Was a fault detected?

- **YES**

  Refer to **VERIFICATION**

- **NO**

  Refer to **CHECKING THE CABLE AND COMPONENT**

CHECKING THE CABLE AND COMPONENT

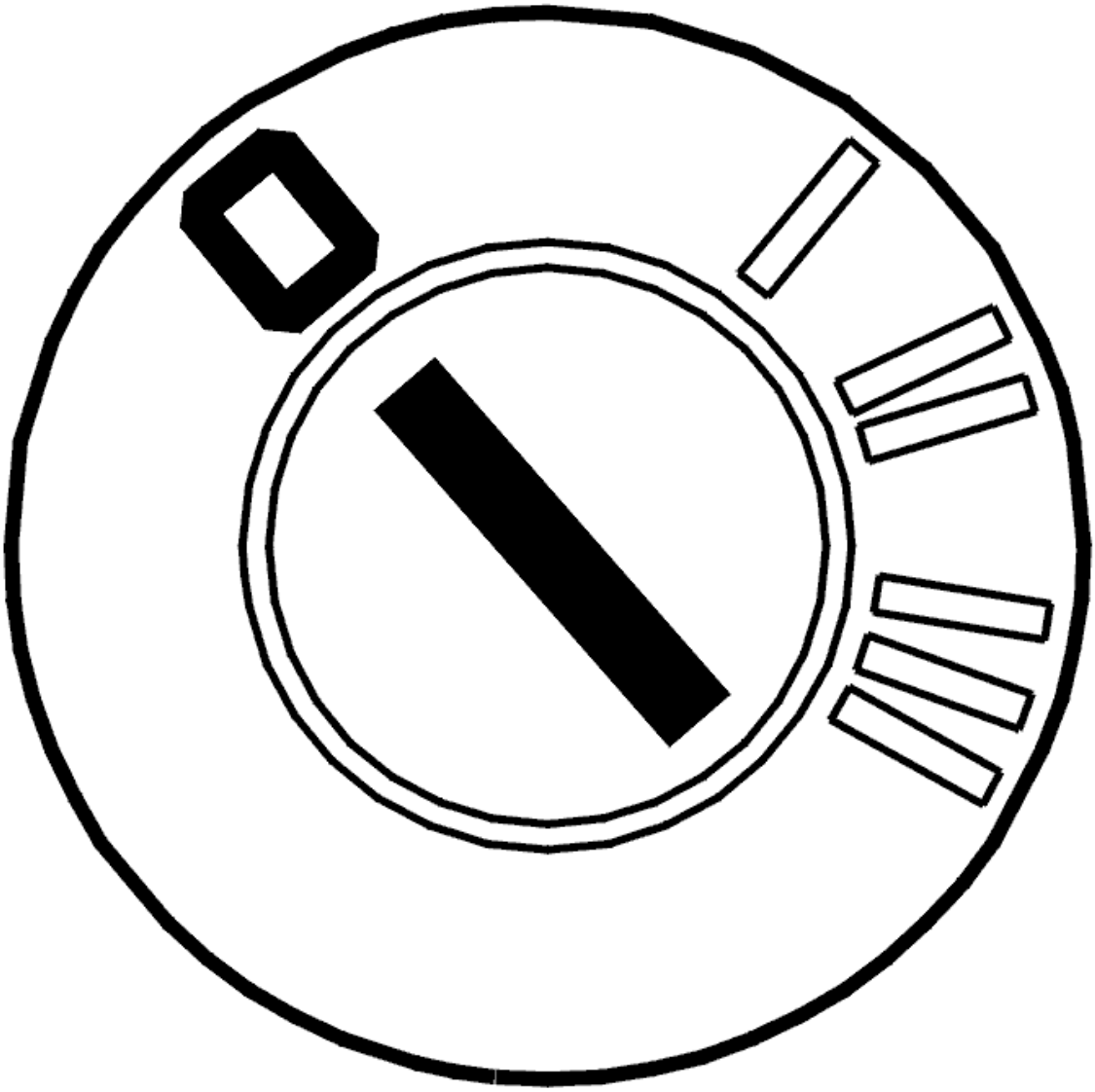

Fig. 429: Identifying Ignition OFF
Courtesy of VOLVO CARS CORPORATION

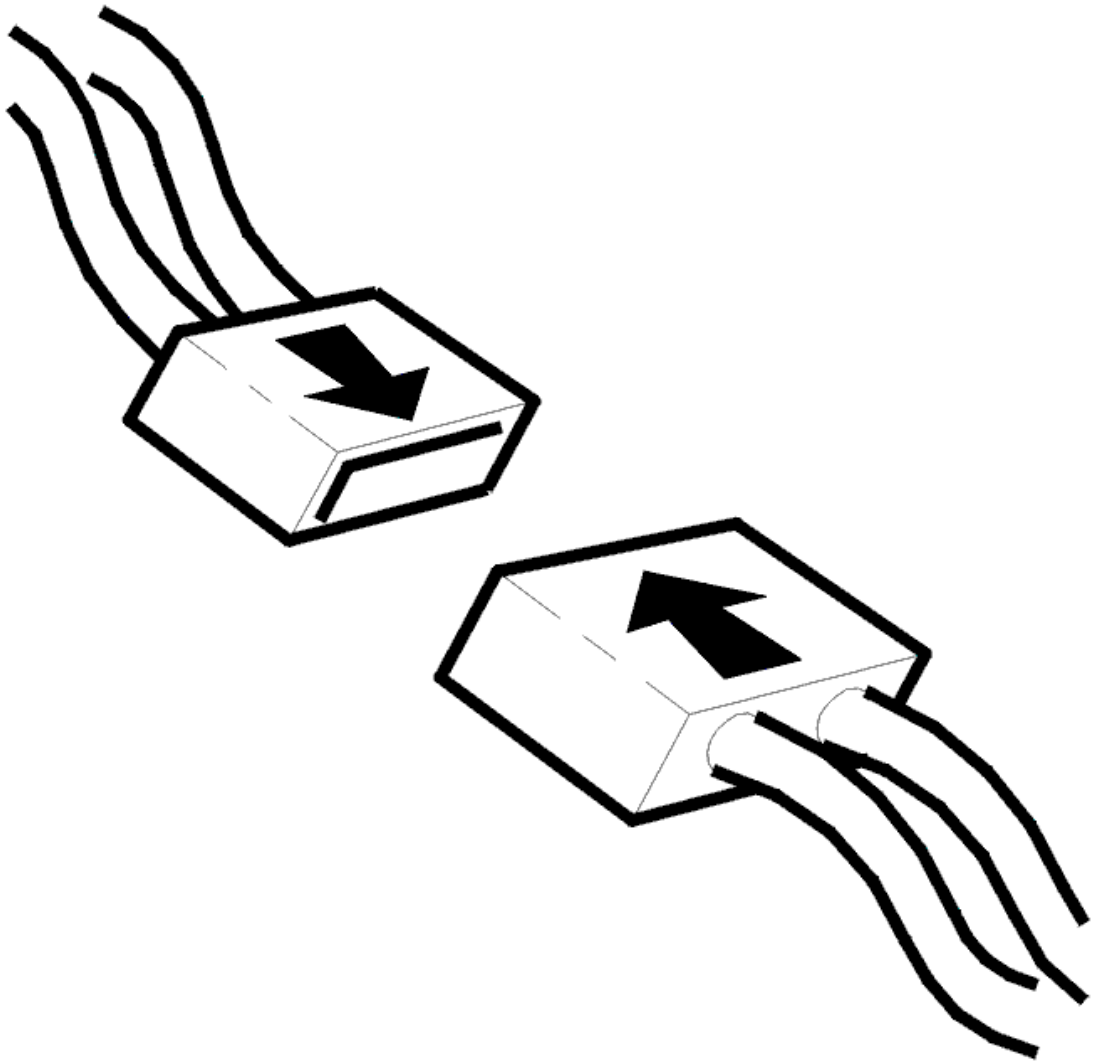

Fig. 430: Identifying Connector(s) Reinstallation
Courtesy of VOLVO CARS CORPORATION

- Ignition off
- Open the transmission control system.

  Check the cable between transmission connector terminal #D7 and temperature sensor terminal #1. Check the cable between transmission connector #D8 and temperature sensor terminal #2. Check for an open-circuit according to **OPEN-CIRCUIT, PERMANENT FAULTS** .

  Also check the cables for a short-circuit to each other.

  HINT: Check the temperature sensor. With the ignition off and transmission connector D disconnected, measure the resistance between transmission connector D terminals #D7 and #D8. The resistance must be 4.5-6 kohms at 20 °C.

Remedy as necessary.

Other information:

- To connect the breakout box, see **CONNECTING THE BREAKOUT BOX**
- To disconnect the transmission connectors, see **CONNECTORS, TRANSMISSION, DISCONNECTING / CONNECTING**
- To open the transmission control system and to check or replace the temperature sensor, see **SOLENOID CONTROL SYSTEM, REPLACING**
- For information about signals, see **SIGNAL DESCRIPTION. TRANSMISSION CONTROL MODULE (TCM)** .

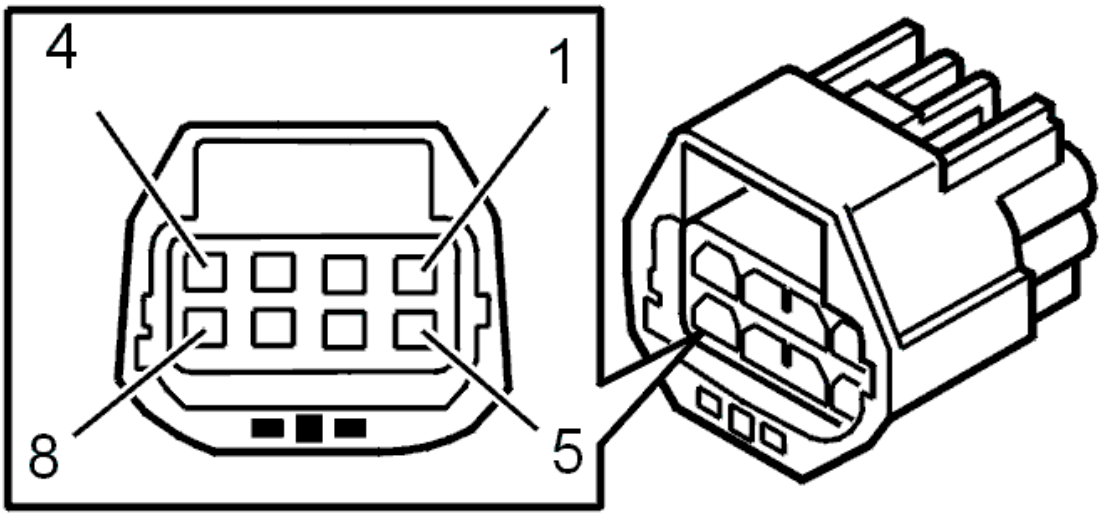

Fig. 431: Identifying 8-Pin Transmission Connector Terminals
Courtesy of VOLVO CARS CORPORATION

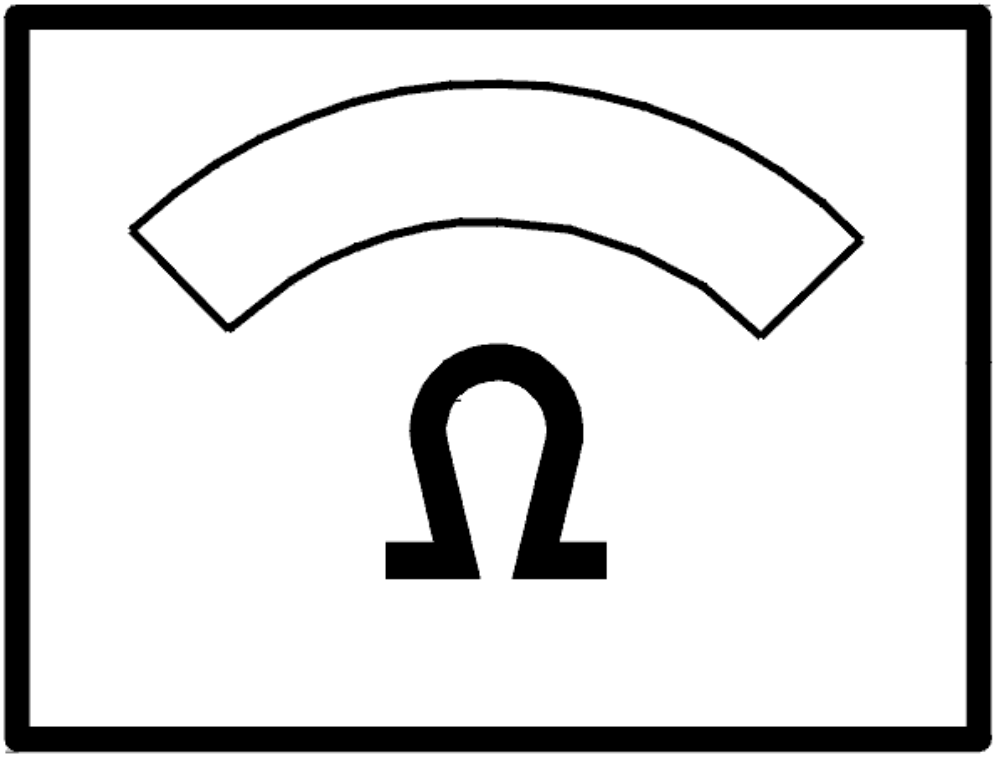

Fig. 432: Identifying Ohms Display
Courtesy of VOLVO CARS CORPORATION

- **Continue**

  Refer to **RESETTING TRANSMISSION FLUID CHANGE COUNTER**

INTERMITTENT FAULT

Check the transmission control module (TCM) and transmission connector D. Check for contact resistance and oxidation according to **CONTACT RESISTANCE AND OXIDATION** .

Check the cable between transmission control module (TCM) terminal #A37 (#A37) and transmission connector terminal #D7 (control module side). Check for an intermittent open-circuit according to **OPEN-CIRCUIT, INTERMITTENT FAULTS** .

Check the cable between control module terminal #A55 (#A55)and transmission connector terminal #D8 (control module side). Check for an intermittent open-circuit according to **OPEN-CIRCUIT, INTERMITTENT FAULTS** .

Remedy as necessary.

Other information:

- To connect the breakout box, see **CONNECTING THE BREAKOUT BOX**
- To disconnect the transmission connectors, see **CONNECTORS, TRANSMISSION, DISCONNECTING / CONNECTING**
- For information about signals, see **SIGNAL DESCRIPTION. TRANSMISSION CONTROL MODULE (TCM)** .

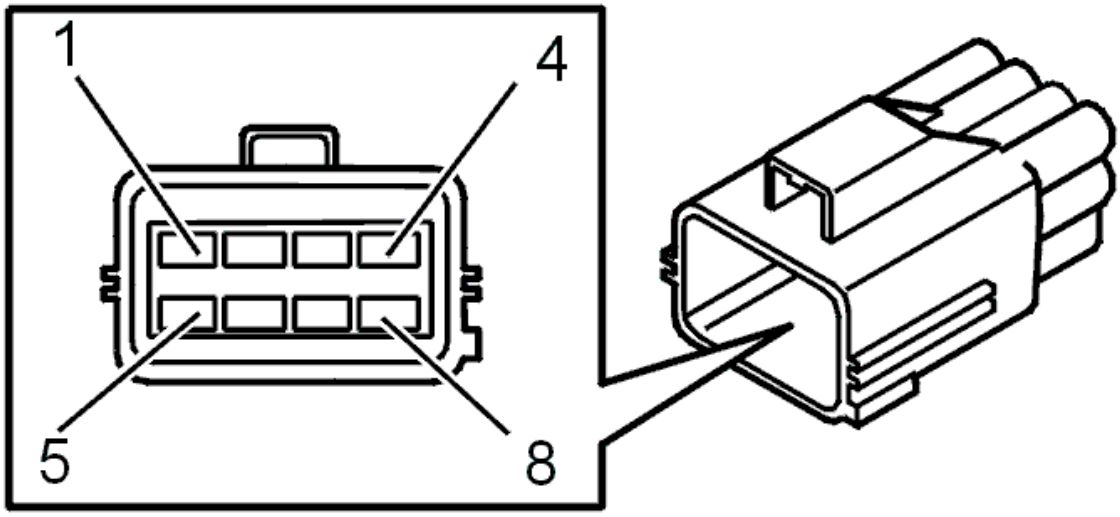

Fig. 433: Identifying Transmission Connector Terminals
Courtesy of VOLVO CARS CORPORATION

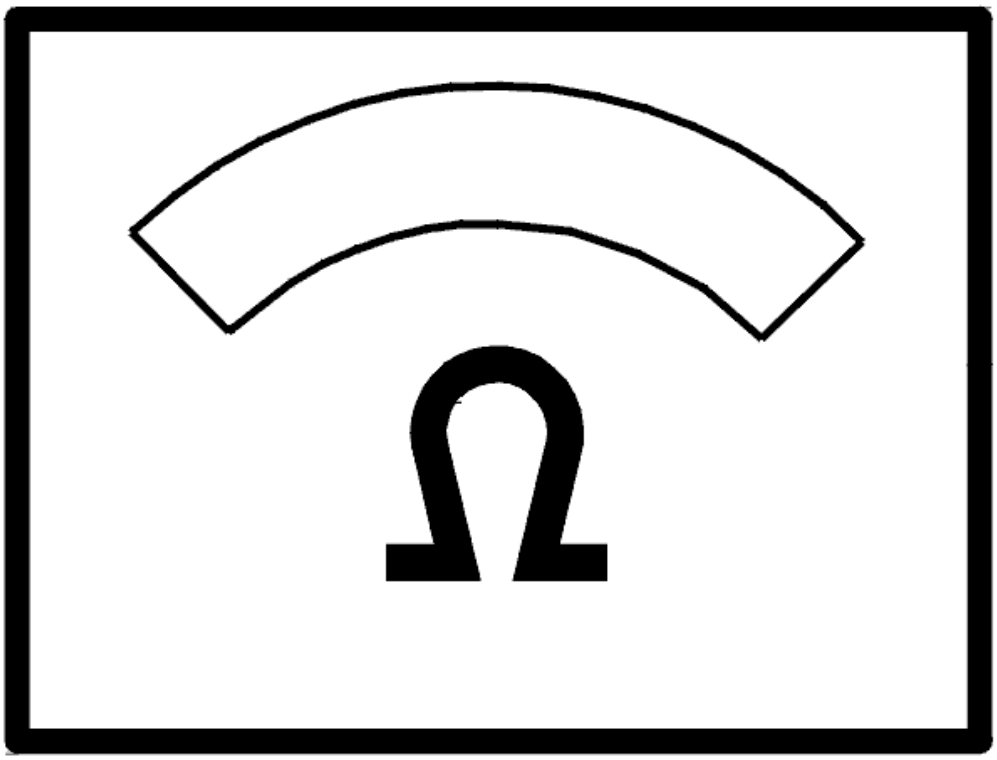

Fig. 434: Identifying Ohms Display
Courtesy of VOLVO CARS CORPORATION

- **Continue**

  Refer to **INFORMATION**

RESETTING TRANSMISSION FLUID CHANGE COUNTER

RESETTING TRANSMISSION FLUID CHANGE COUNTER

HINT: The transmission control module (TCM) has a counter for the oil quality. The counter counts up if the transmission is exposed to too high a load or an ambient temperature that is too high. If the counter is not reset when the oil is drained or changed, there is a risk that a diagnostic trouble code (DTC) will be stored in faulty circumstances. Therefore it is important that the "Transmission oil change" counter is reset.

NOTE: **This applies only when the transmission fluid is changed and when the fluid is changed when repairs are carried out to the transmission temperature sensor.**

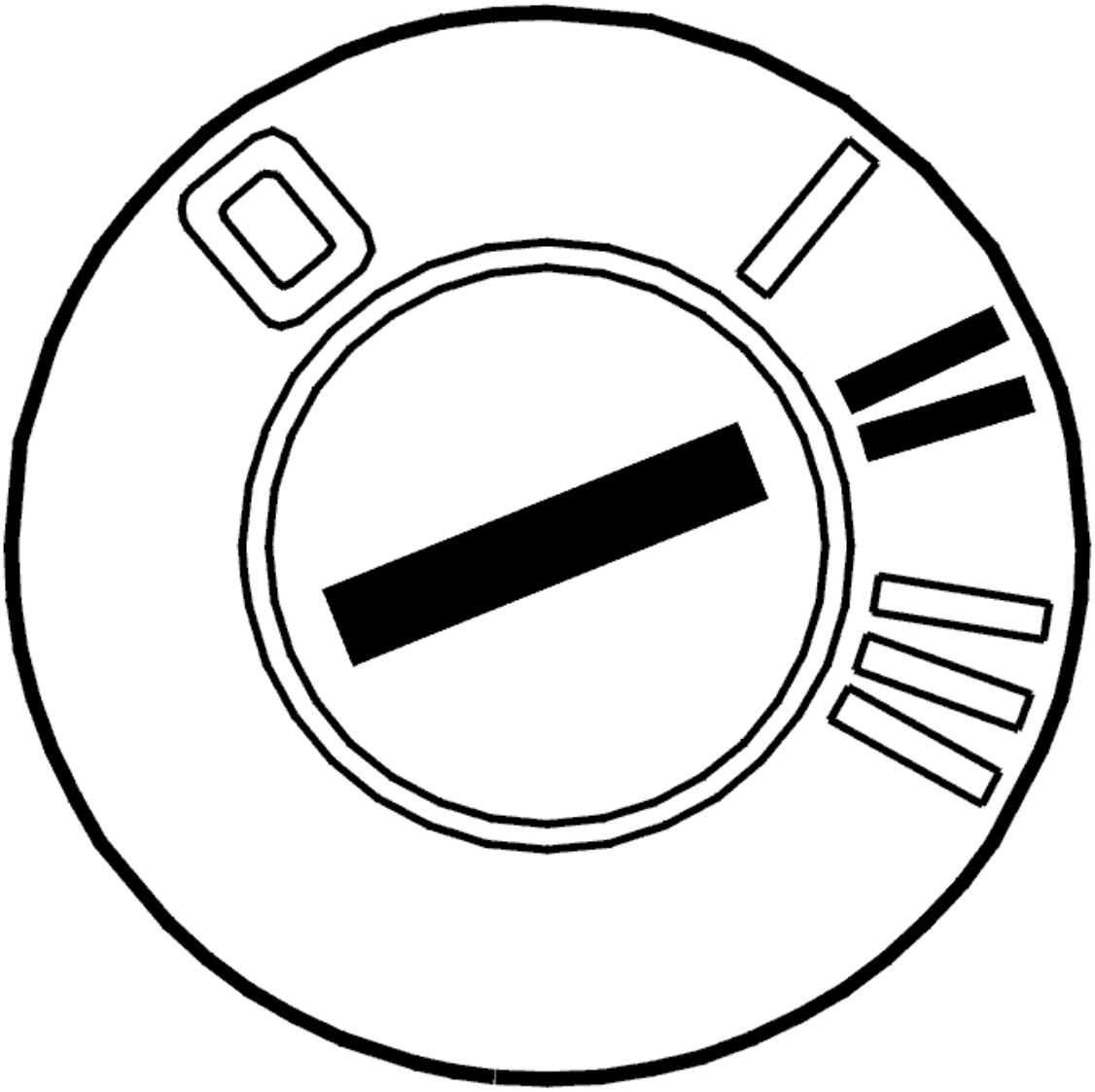

Fig. 435: Identifying Ignition ON
Courtesy of VOLVO CARS CORPORATION

- Ignition on.

  Reset the counter by clicking on the VCT 2000 symbol.

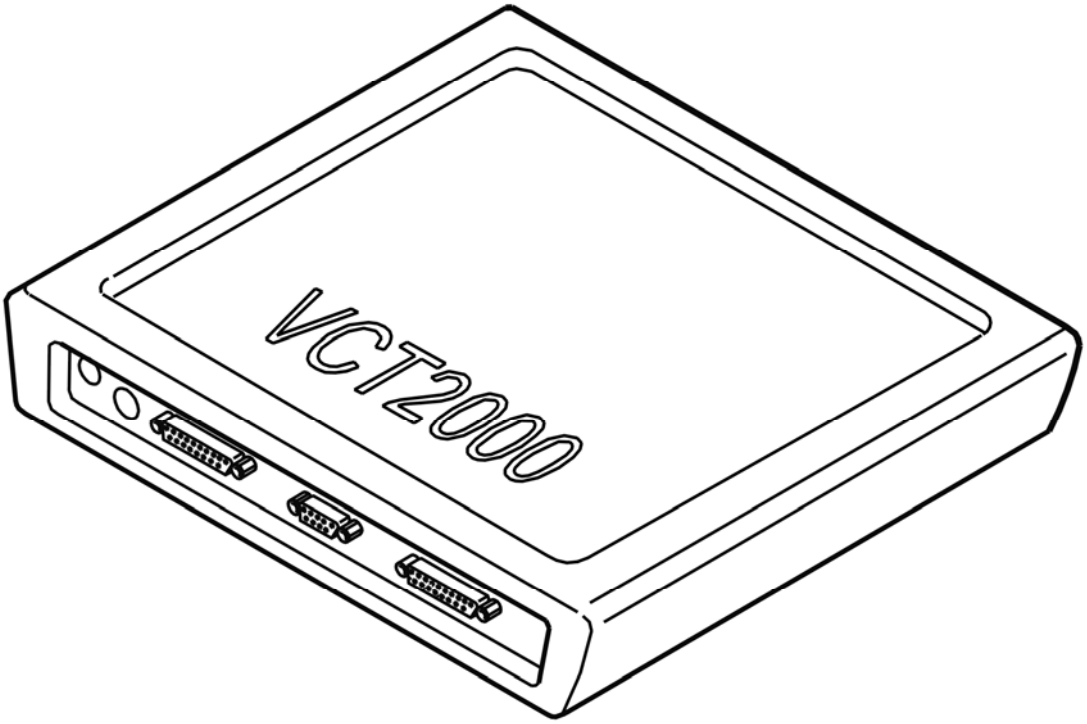

Fig. 436: Identifying VCT2000 Diagnostic Tool Symbol In VIDA
Courtesy of VOLVO CARS CORPORATION

- **Continue**

  Refer to **VERIFICATION**

VERIFICATION

VERIFICATION

HINT: After carrying out the repair, check that the fault has been remedied.

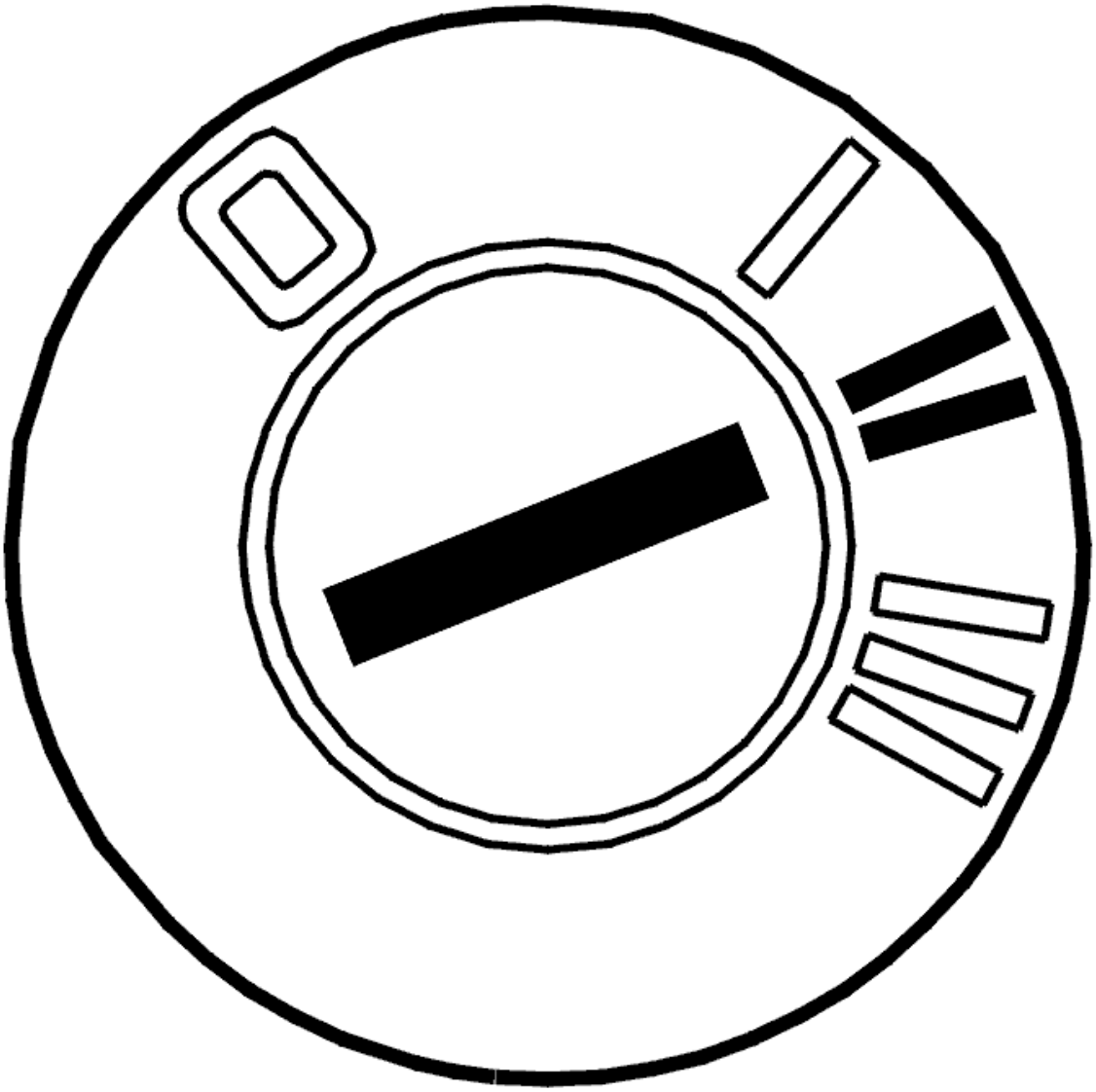

Fig. 437: Identifying Ignition ON
Courtesy of VOLVO CARS CORPORATION

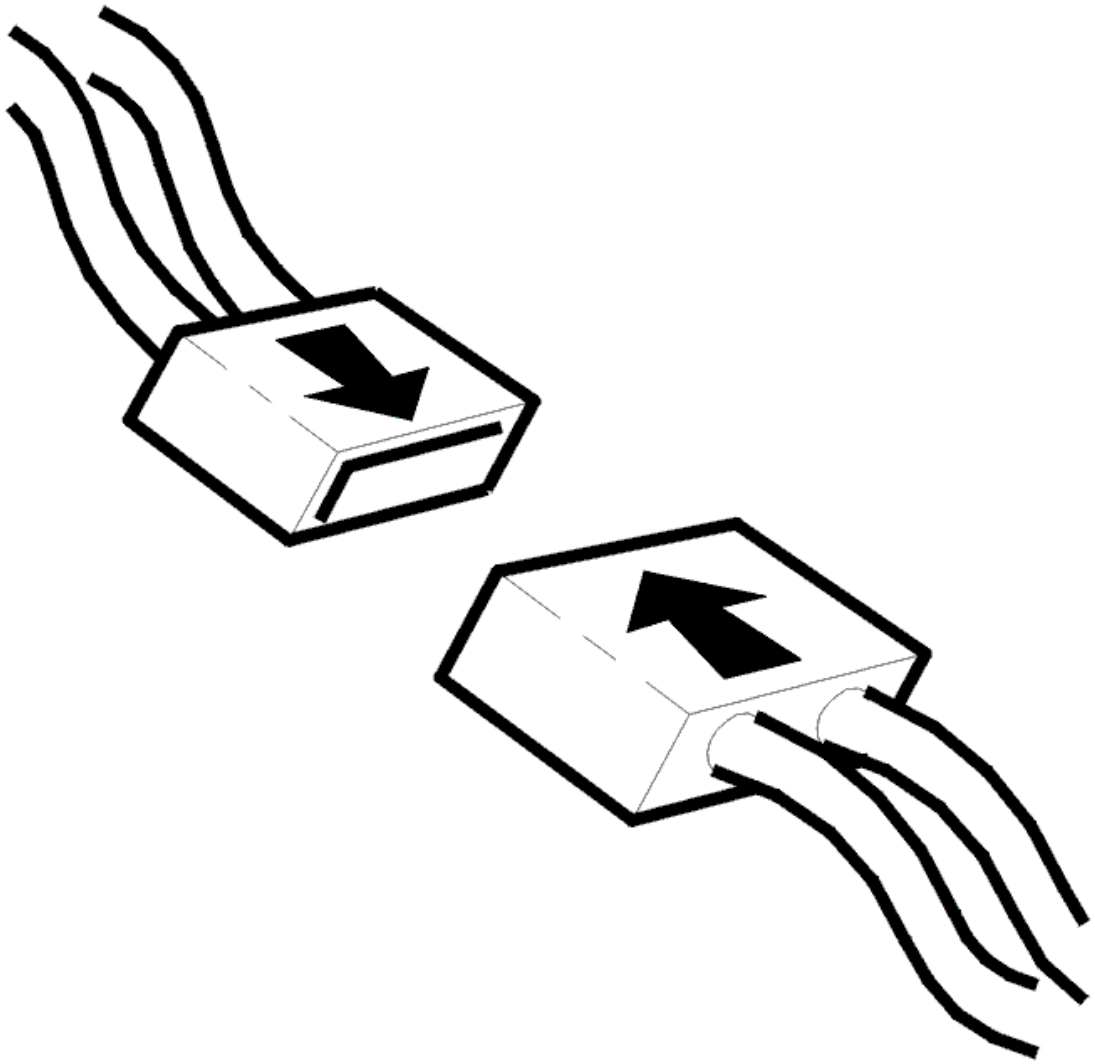

Fig. 438: Identifying Connector(s) Reinstallation
Courtesy of VOLVO CARS CORPORATION

- Ignition off.
- Reinstall the connectors, components etc.
- Ignition on.
- Read off the oil temperature.

Check that the transmission oil temperature is within its permitted range.

Compare with the transmission temperature.

NOTE: **The transmission temperature sensor is located inside the control unit and can be affected by the heat given off by the solenoids.**

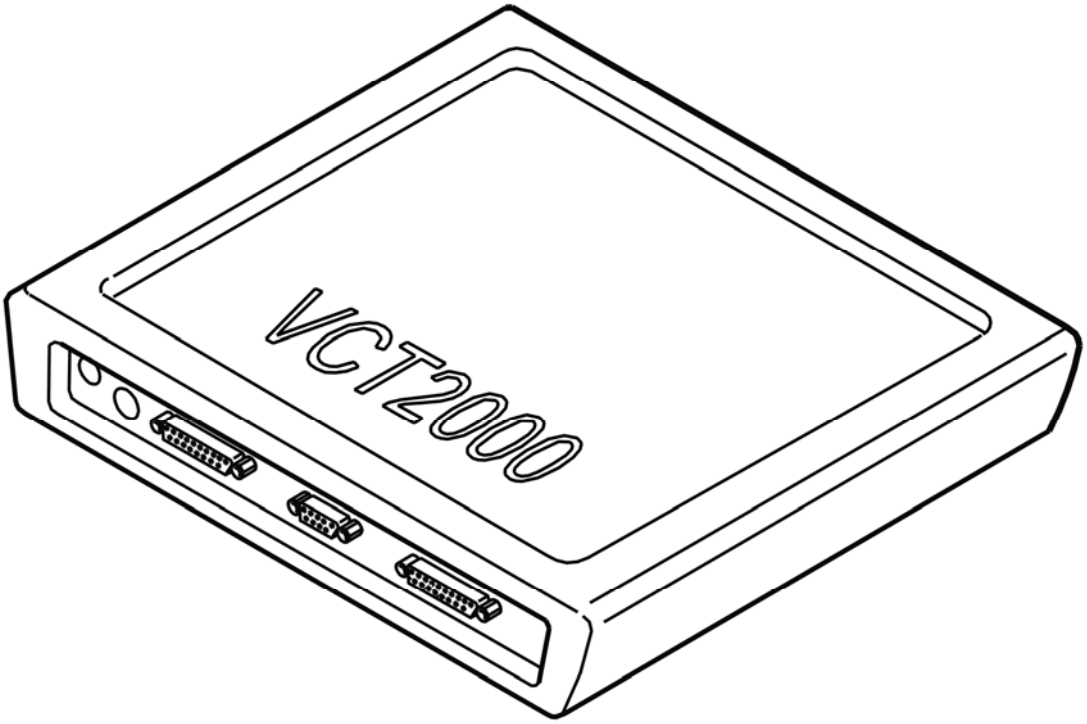

Fig. 439: Identifying VCT2000 Diagnostic Tool Symbol In VIDA
Courtesy of VOLVO CARS CORPORATION

Is the oil temperature within its permitted range?

- **YES**

  VERIFIED: Troubleshooting has been completed.

- **NO**

  Refer to **INFORMATION**

TCM-0109: SHIFT SOLENOID S4. SIGNAL TOO LOW (AW50/51 AWD; AW55-50/51SN; 2003-2007)

DIAGNOSTIC TROUBLE CODE (DTC) INFORMATION

Condition

Shift solenoids S1, S2, S3, S4 and S5 operate in tandem to control gear-shifting. Diagnostic trouble codes (DTCs) TCM-0003, TCM-0009, TCM-0103, TCM-0109 or TCM-010C are stored if the transmission control module (TCM) registers that there is a short-circuit to ground in circuits S1, S2, S3, S4 or S5 when the solenoid

should be activated.

Substitute Value

- The transmission control module (TCM) "Emergency mode I" program has been initiated.

Possible Source

- Short-circuit to ground in the signal cable.
- Defective solenoid.
- Internal fault in the control module.

Fault symptom[s]

- General orange warning lamp lit.
- No lock-up function.
- Harsh gear shifting.
- No shifting.

SIGNAL TOO LOW

CHECKS

CHECKING THE TEMPERATURE SENSOR

HINT: In some cases, the diagnostic trouble code (DTC) may be caused by a defective oil temperature sensor. Check the function of the oil temperature sensor first.

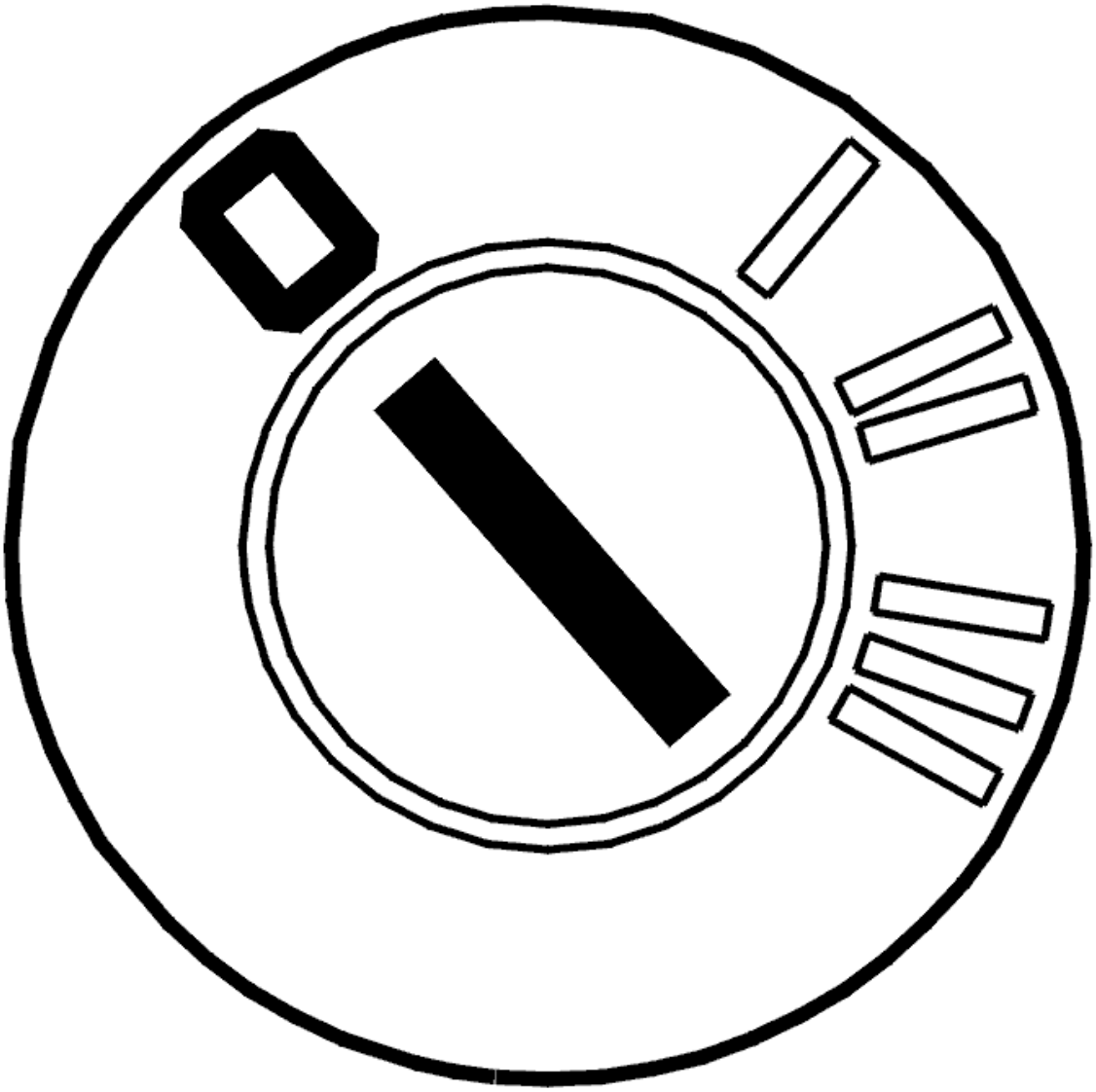

Fig. 440: Identifying Ignition OFF
Courtesy of VOLVO CARS CORPORATION

- Ignition off
- Read off the oil temperature.

  Check that the function of the temperature sensor is OK. Test drive the car to increase the temperature of the transmission fluid. Read off the temperature again. Check that the temperature has increased.

  HINT: If the temperature is outside its permitted range, fault-trace the temperature sensor.

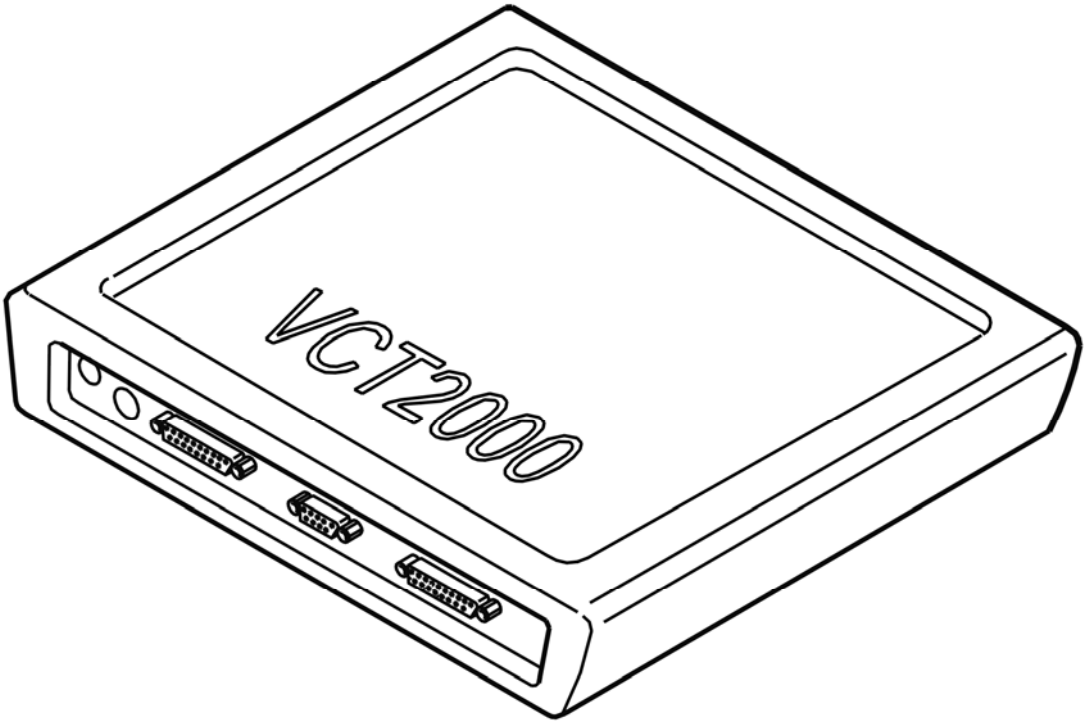

Fig. 441: Identifying VCT2000 Diagnostic Tool Symbol In VIDA
Courtesy of VOLVO CARS CORPORATION

Is the oil temperature within its permitted range?

- **YES**

  Refer to **CHECKING SHIFT SOLENOID S4**

- **NO**

  Refer to **FAULTY SIGNAL**

CHECKING SHIFT SOLENOID S4

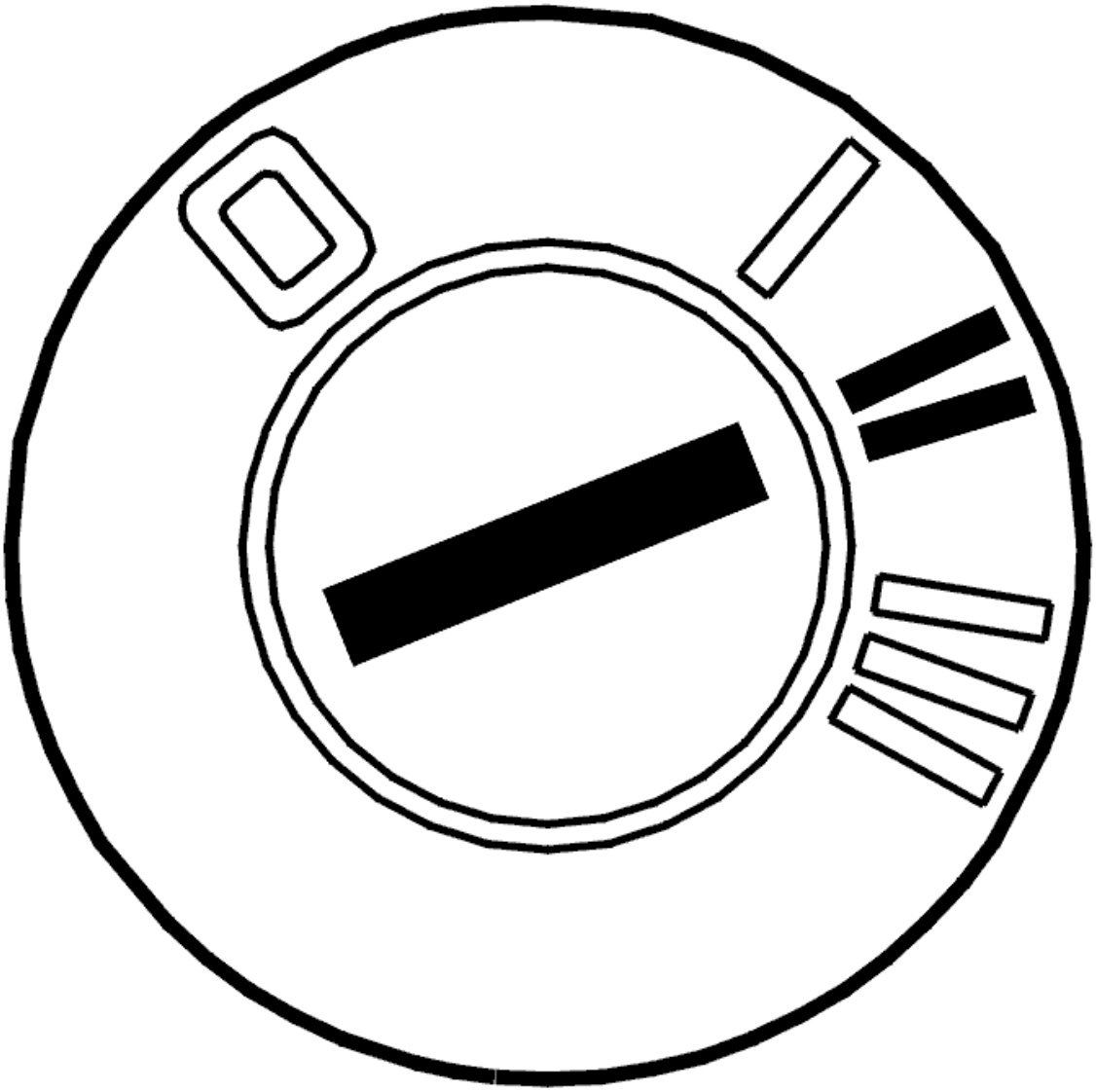

Fig. 442: Identifying Ignition ON
Courtesy of VOLVO CARS CORPORATION

- Ignition on
- Gear selector in position P
- Activate solenoid S4.

The value must change between OFF and ON.

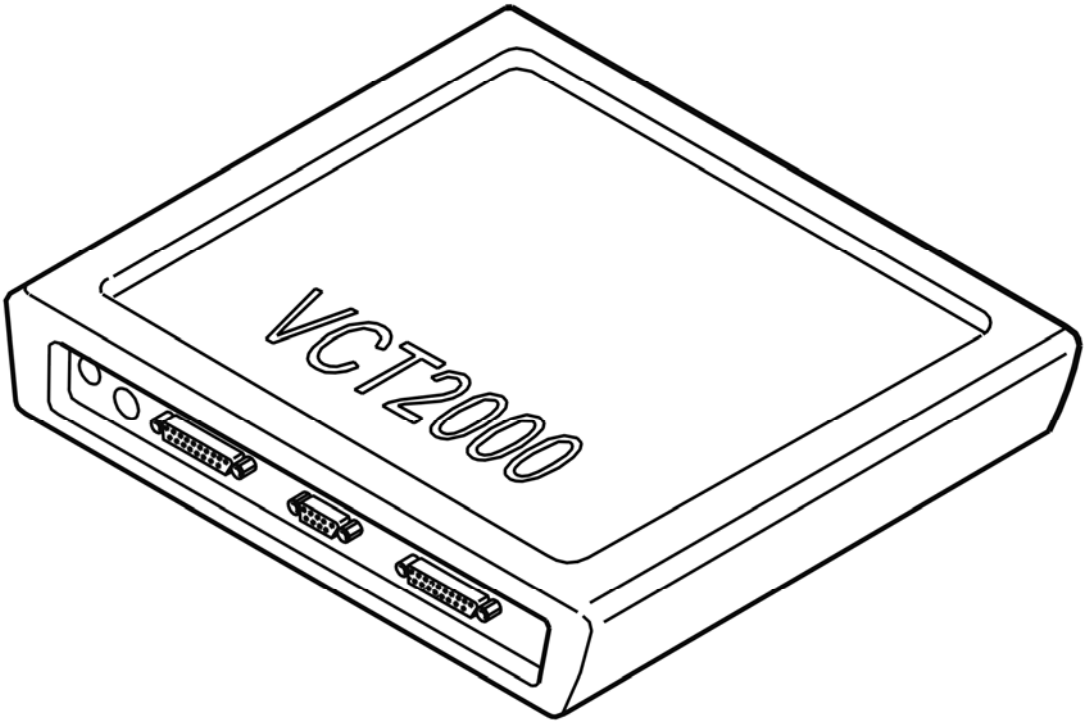

Fig. 443: Identifying VCT2000 Diagnostic Tool Symbol In VIDA
Courtesy of VOLVO CARS CORPORATION

Does the value change?

- **YES**

  Refer to **INTERMITTENT FAULT**

- **NO**

  Refer to **CHECKING RESISTANCE**

CHECKING RESISTANCE

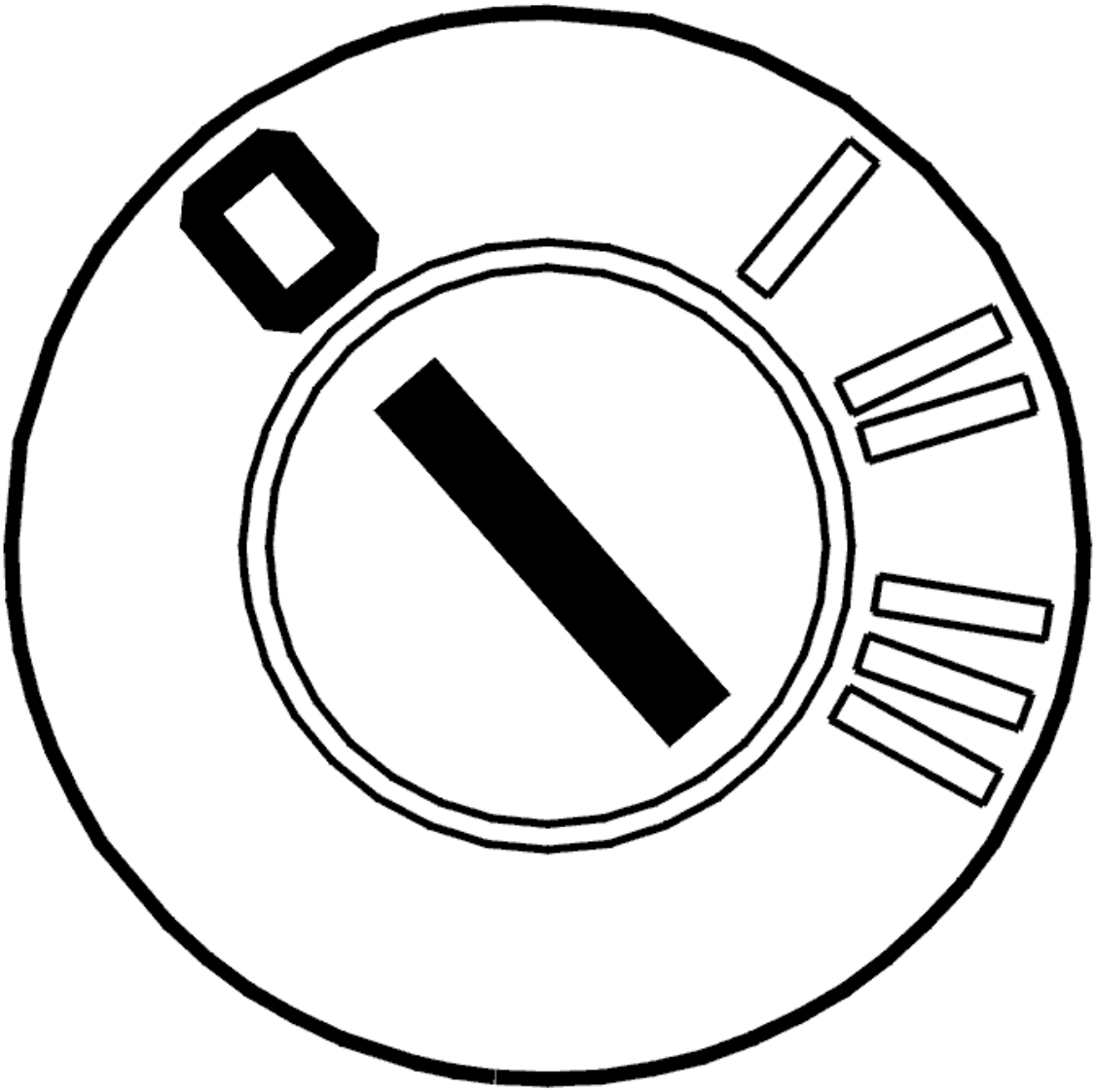

Fig. 444: Identifying Ignition OFF
Courtesy of VOLVO CARS CORPORATION

- Ignition off
- Disconnect transmission connector C.

  Check solenoid S4 by measuring the resistance between transmission connector terminal #C4 and the transmission housing. The resistance must be 11-15 ohms.

  Other information:

  - To disconnect the transmission connectors, see **CONNECTORS, TRANSMISSION, DISCONNECTING / CONNECTING**
  - For information about signals, see **SIGNAL DESCRIPTION. TRANSMISSION CONTROL MODULE (TCM)** .

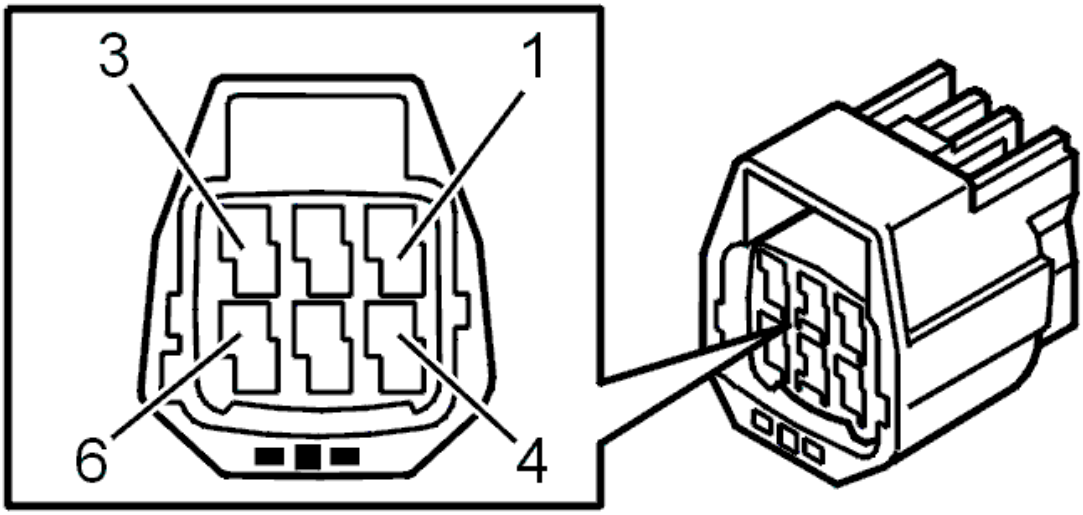

Fig. 445: Identifying 6-Pin Transmission Connector Terminals
Courtesy of VOLVO CARS CORPORATION

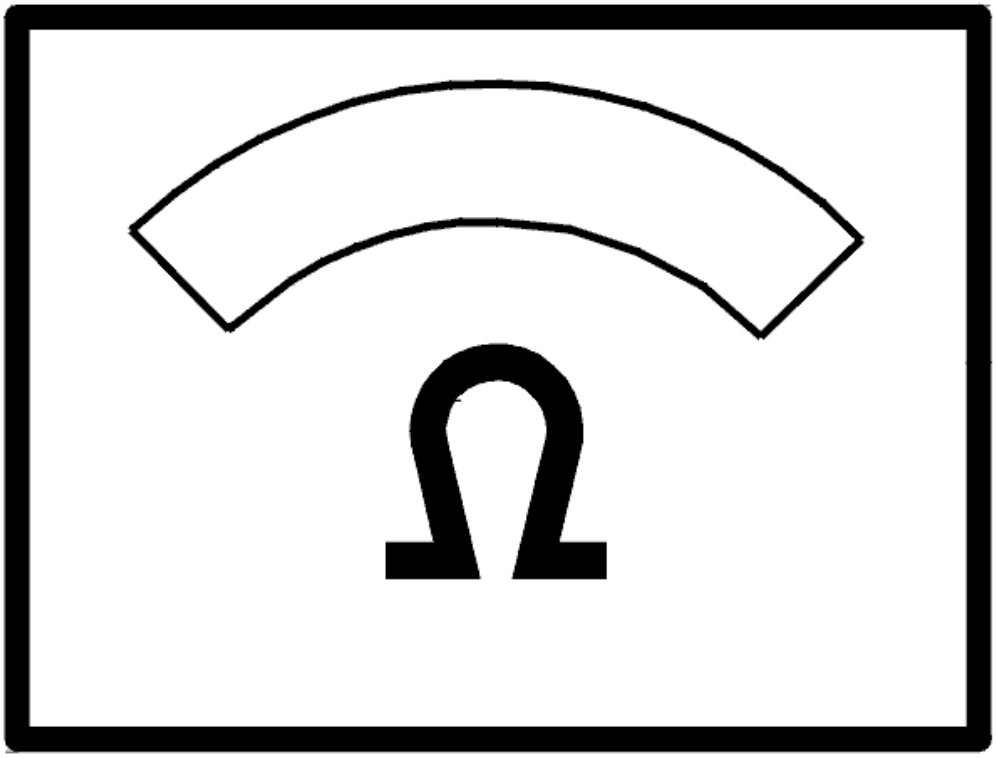

Fig. 446: Identifying Ohms Display
Courtesy of VOLVO CARS CORPORATION

Was the resistance OK

- **YES**

  Refer to **CHECKING THE WIRING**

- **NO**

  Refer to **CHECKING THE WIRING AND COMPONENT**

CHECKING THE WIRING

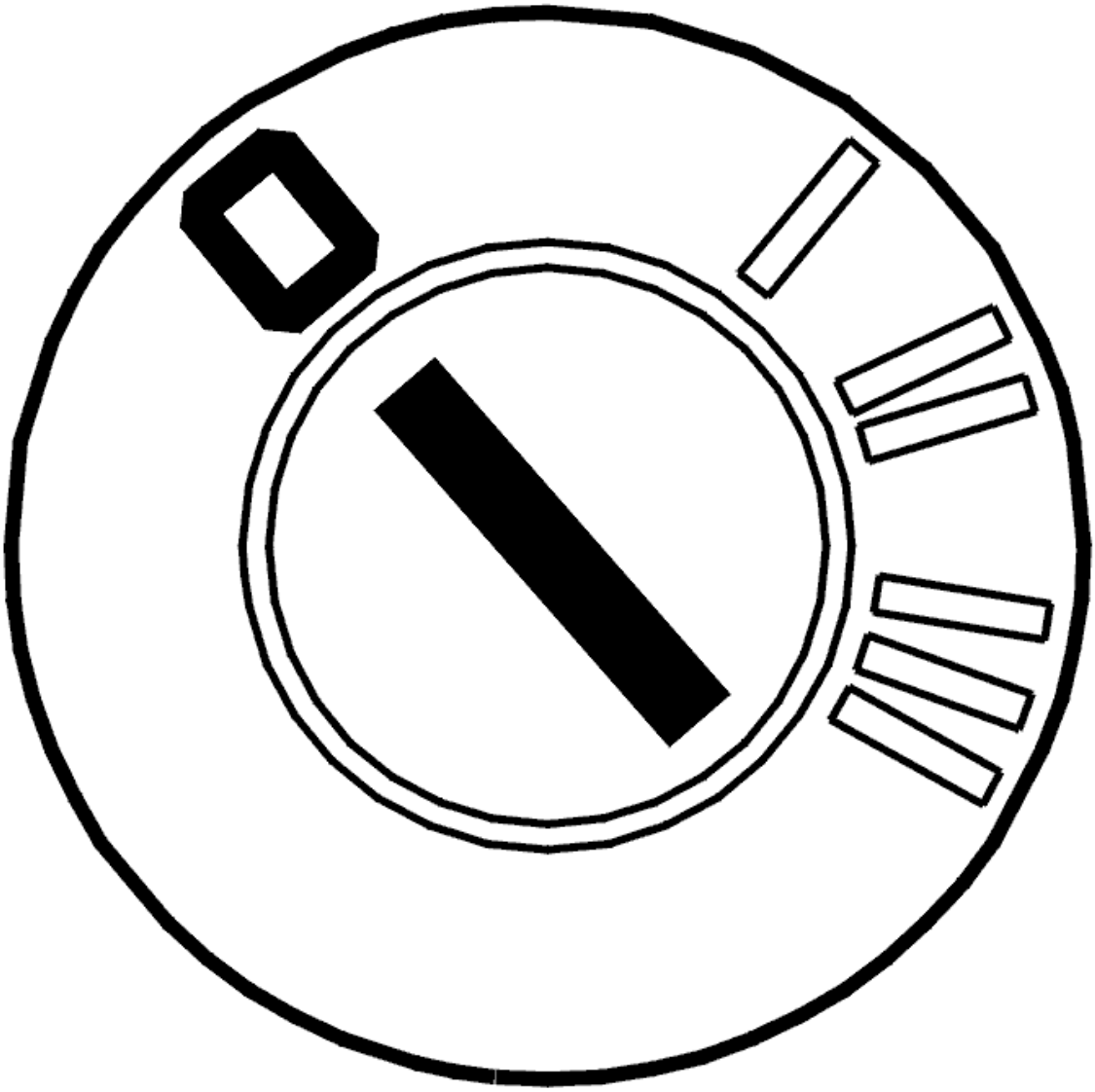

Fig. 447: Identifying Ignition OFF
Courtesy of VOLVO CARS CORPORATION

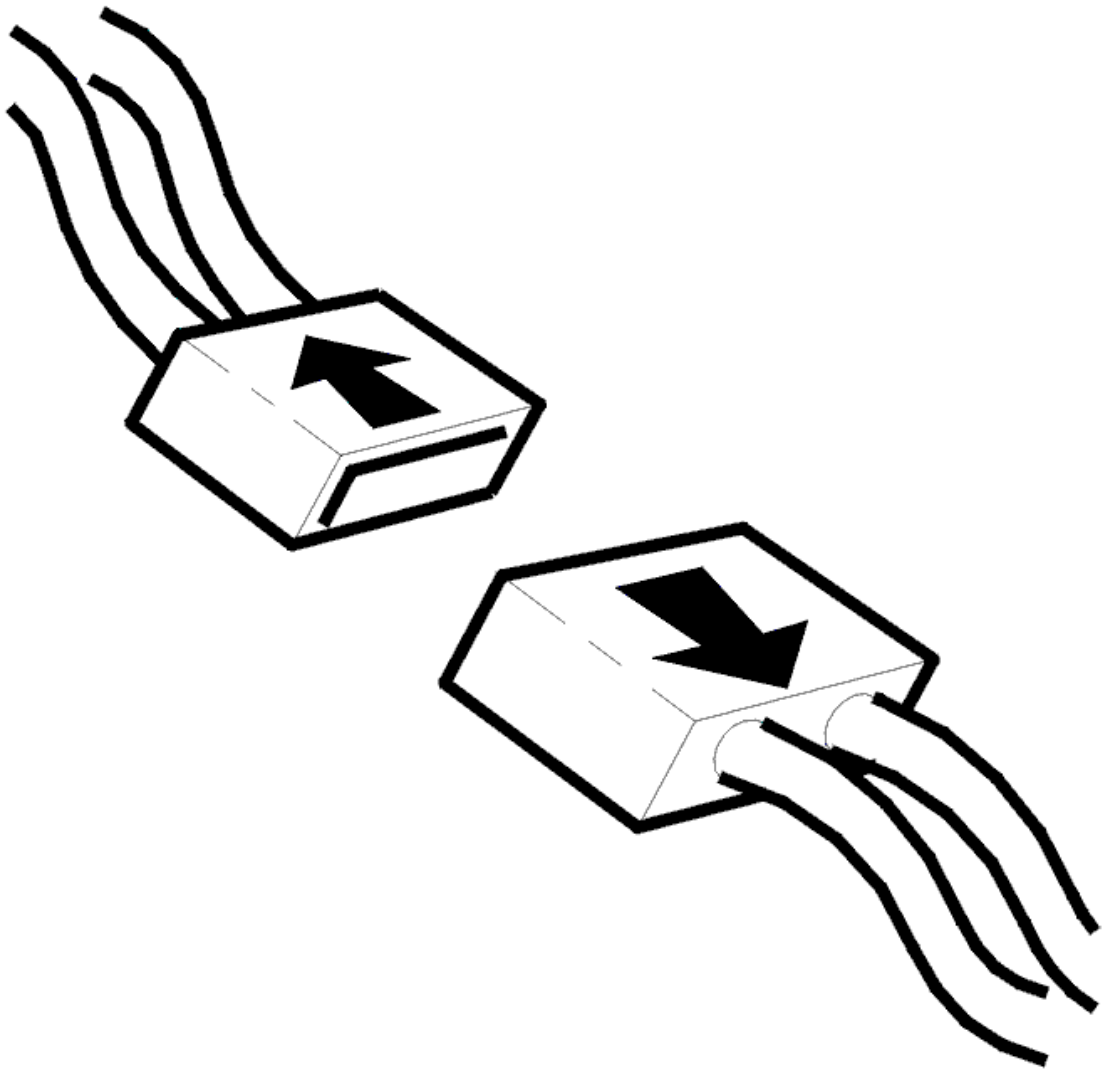

Fig. 448: Identifying Connector(s) Disconnected
Courtesy of VOLVO CARS CORPORATION

- Ignition off
- The breakout box connected
- Transmission connector C disconnected.

Check the cable between transmission control module (TCM) terminal #A47 (#A47) and transmission connector terminal #C4 (control module side). Check for a short-circuit to ground according to **SHORT-CIRCUIT TO GROUND, PERMANENT FAULTS** .

Remedy as necessary.

Other information:

- To connect the breakout box, see **CONNECTING THE BREAKOUT BOX**
- To disconnect the transmission connectors, see **CONNECTORS, TRANSMISSION, DISCONNECTING / CONNECTING**
- For information about signals, see **SIGNAL DESCRIPTION. TRANSMISSION CONTROL MODULE (TCM)** .

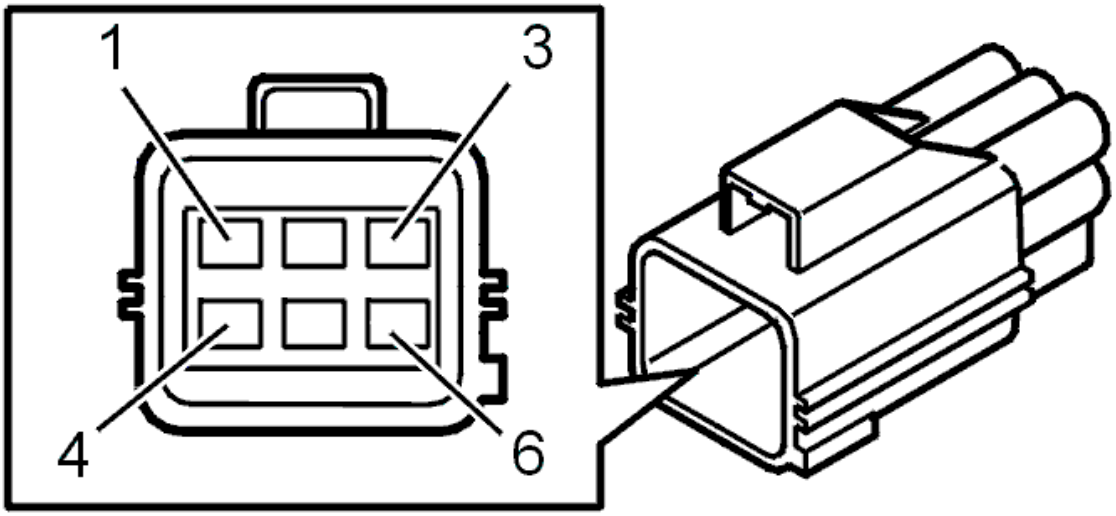

Fig. 449: Identifying Transmission Connector Terminals
Courtesy of VOLVO CARS CORPORATION

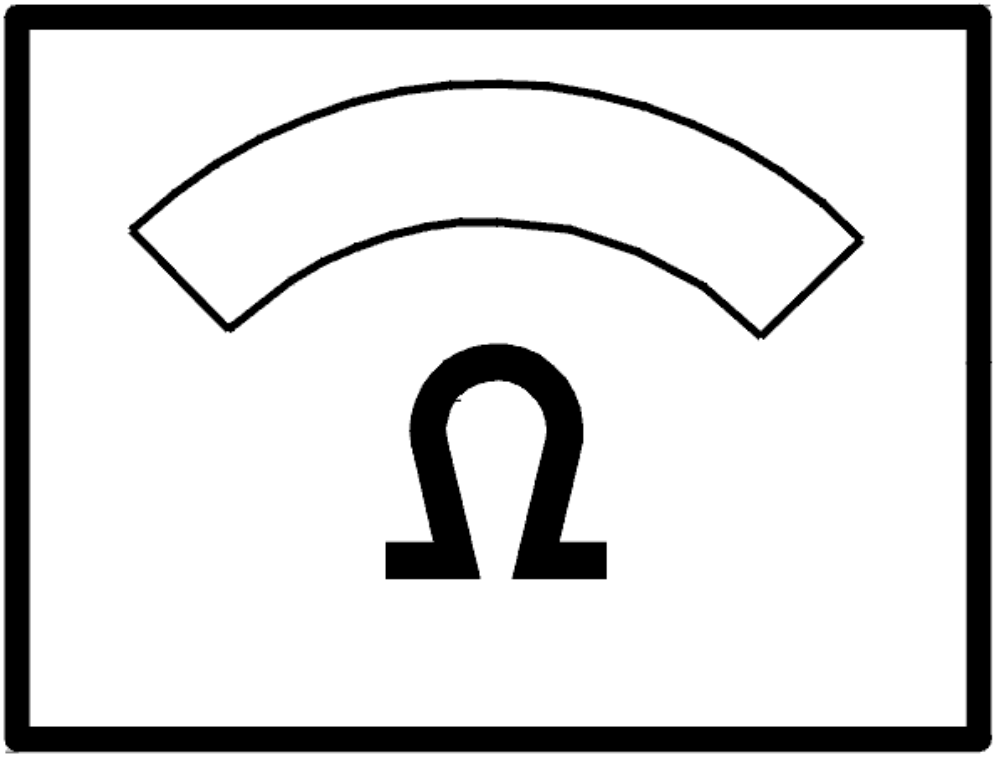

Fig. 450: Identifying Ohms Display
Courtesy of VOLVO CARS CORPORATION

Was a fault detected?

- **YES**

  Refer to **VERIFICATION**

- **NO**

  Refer to **CHECKING THE CONTROL MODULE**

CHECKING THE CONTROL MODULE

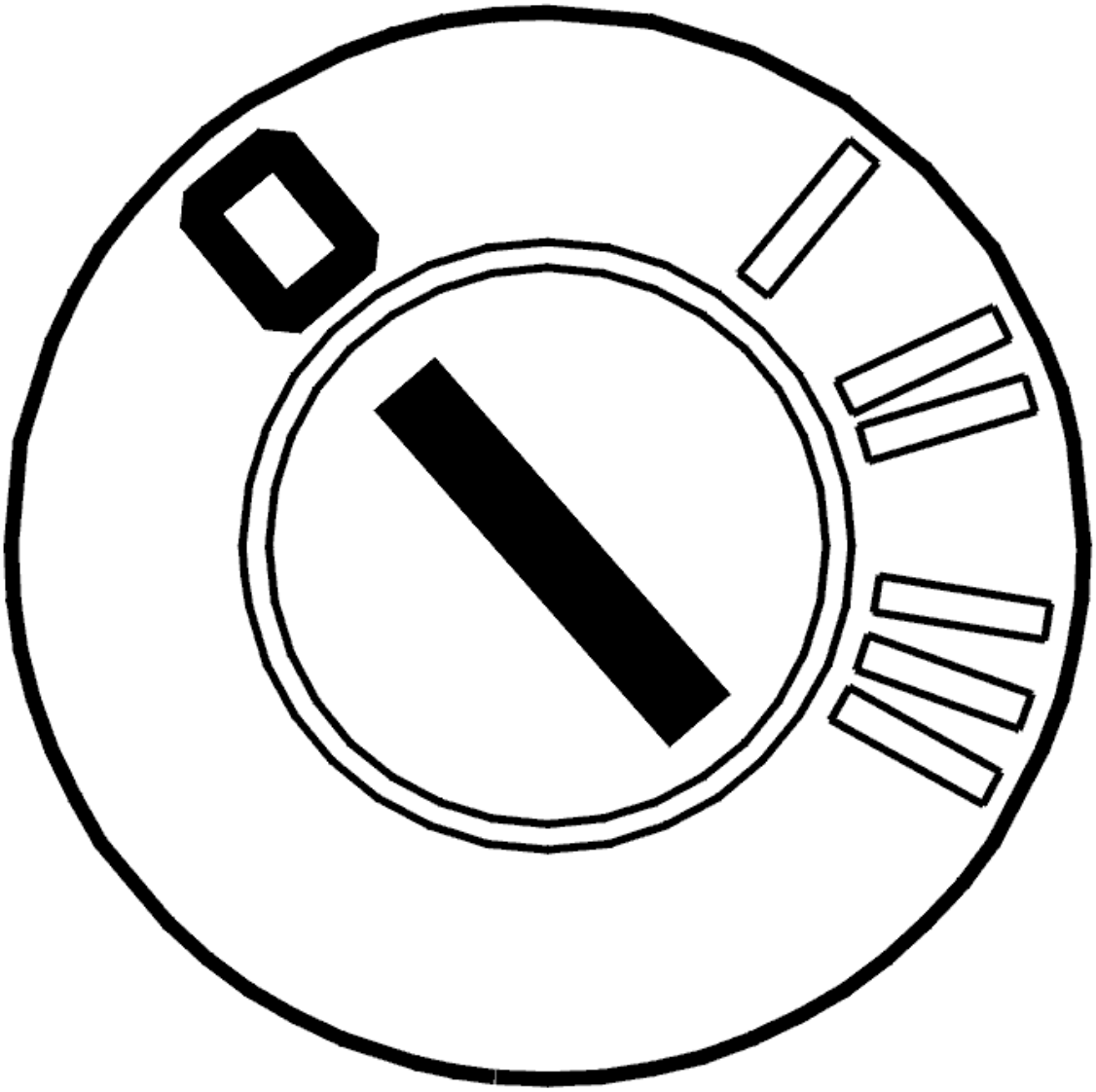

Fig. 451: Identifying Ignition OFF
Courtesy of VOLVO CARS CORPORATION

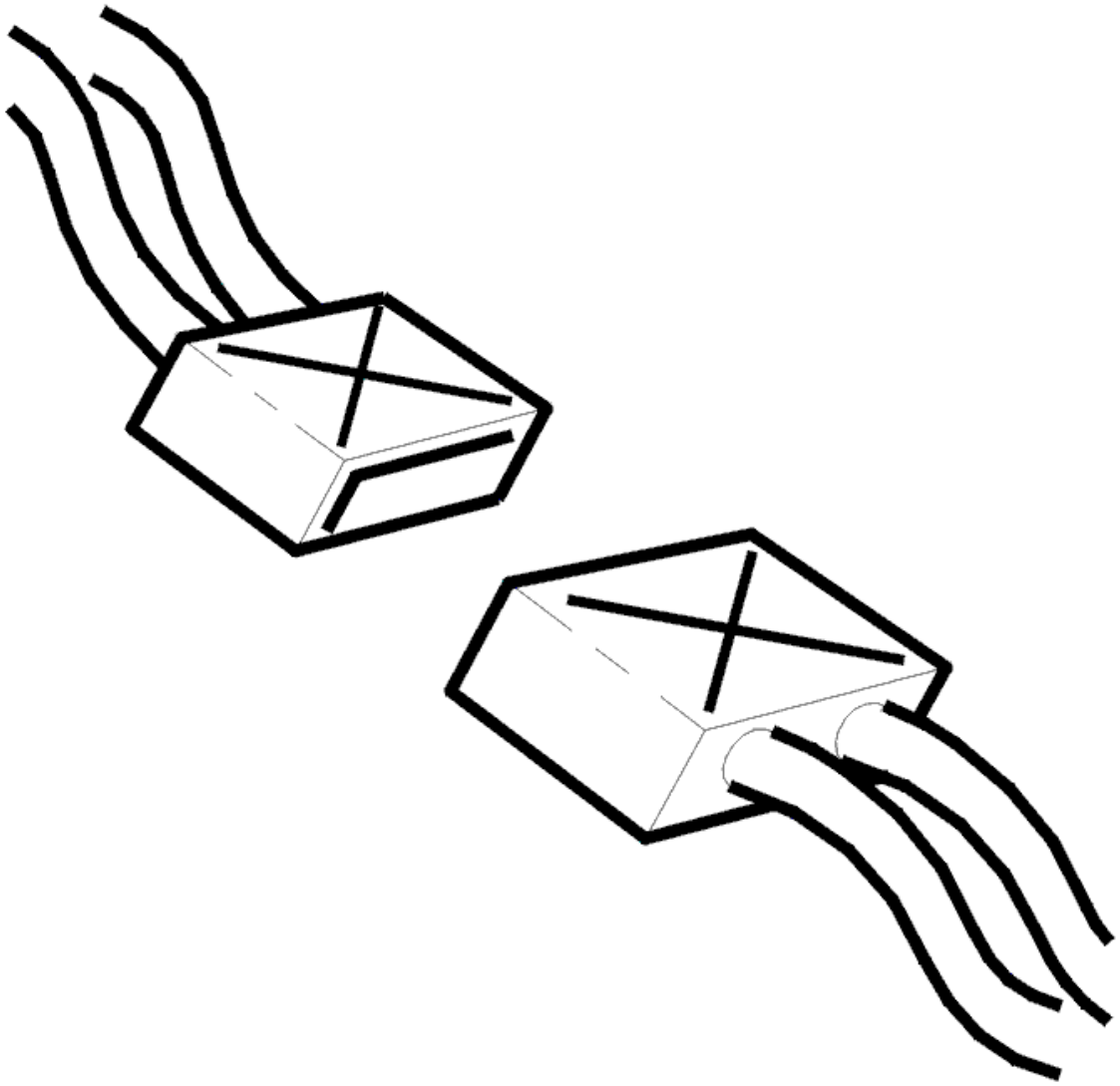

Fig. 452: Identifying Connectors
Courtesy of VOLVO CARS CORPORATION

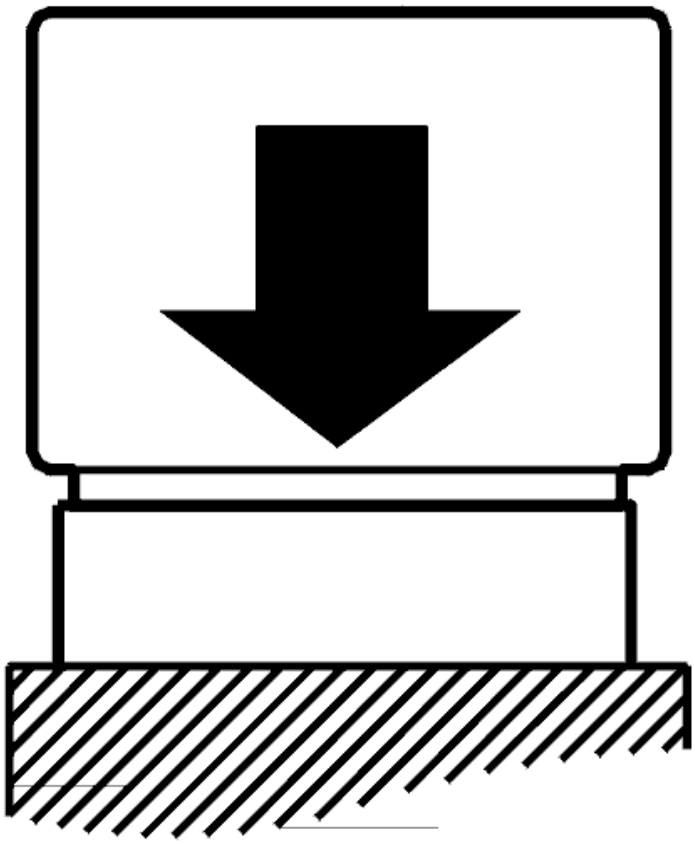

Fig. 453: Identifying Control Module Connected
Courtesy of VOLVO CARS CORPORATION

- Ignition off
- The breakout box connected
- Connect the control module.
- Transmission connector disconnected
- Gear selector in position P.

Check the transmission control module (TCM) by measuring the resistance between terminals #A47 (#A47) and #A53 (#A53) on the breakout box. The resistance must be approximately 9 kohms.

NOTE: **When removing the transmission connector, the control module may store diagnostic trouble codes (DTCs) for the gear-shift position sensor, the shift solenoids, the temperature sensor etc.**

Try a new control module if the resistance is infinite.

Other information:

- To disconnect the transmission connectors, see **CONNECTORS, TRANSMISSION, DISCONNECTING / CONNECTING**
- For information about signals, see **SIGNAL DESCRIPTION. TRANSMISSION CONTROL MODULE (TCM)**
- To replace the control module, see **TRANSMISSION CONTROL MODULE (TCM), REPLACING** .

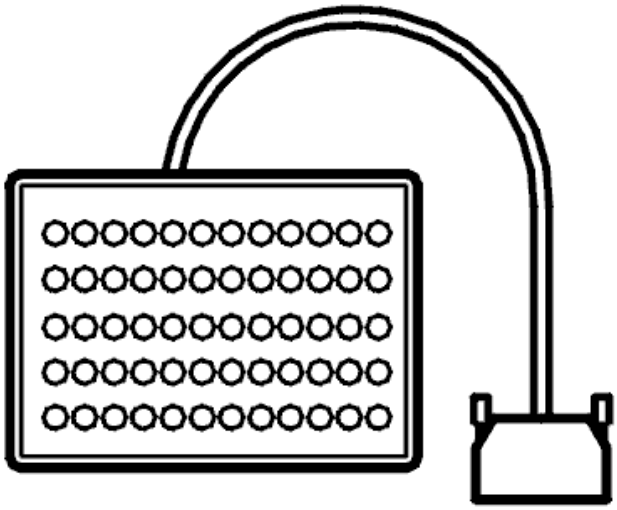

Fig. 454: Identifying Breakout Box
Courtesy of VOLVO CARS CORPORATION

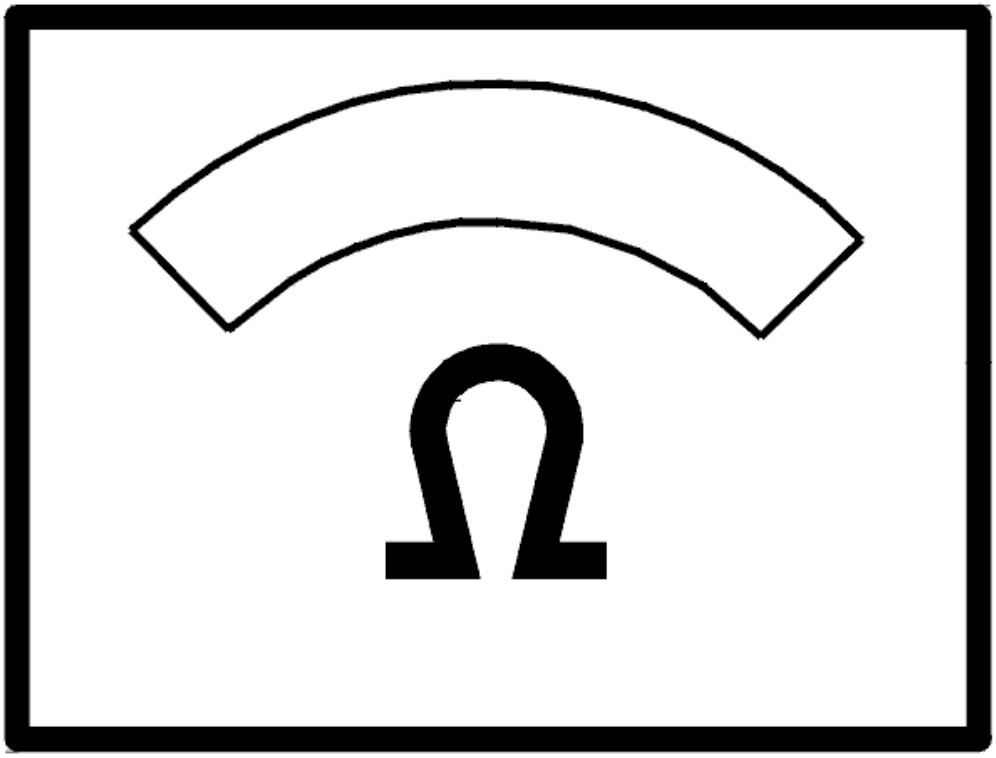

Fig. 455: Identifying Ohms Display
Courtesy of VOLVO CARS CORPORATION

Was the resistance OK?

- **YES**

  FAULT NOT FOUND: Troubleshooting has been completed.

- **NO**

  Refer to **VERIFICATION**

CHECKING THE WIRING AND COMPONENT

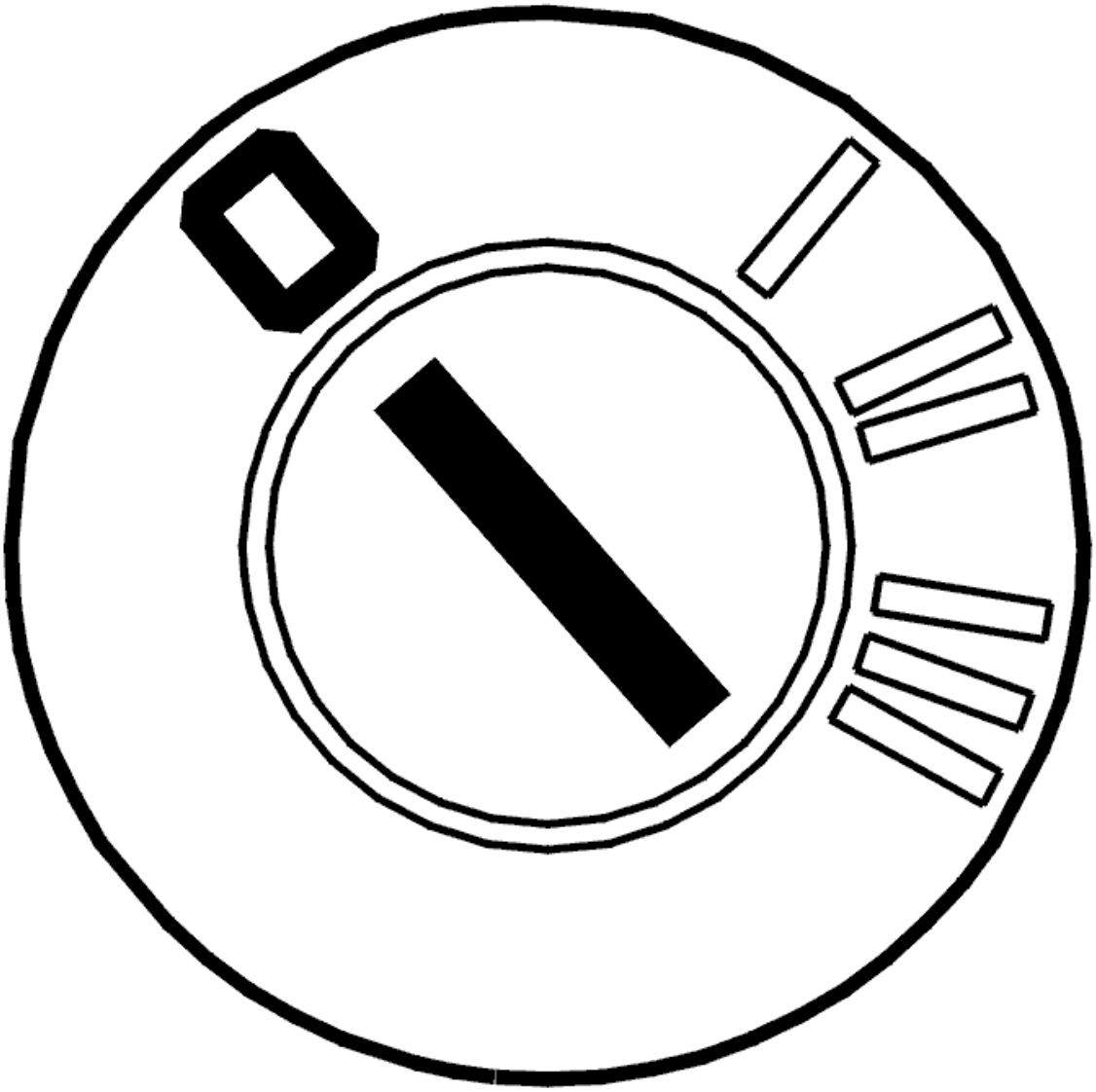

Fig. 456: Identifying Ignition OFF
Courtesy of VOLVO CARS CORPORATION

- Ignition off
- Open the transmission control system.

  Check the cable between transmission connector terminal #C4 (transmission side) and the connector for solenoid S4. Check for a short-circuit to ground according to **SHORT-CIRCUIT TO GROUND, PERMANENT FAULTS** .

  Check solenoid S4 by measuring the resistance between the terminal pin on solenoid S4 and the transmission housing. The resistance must be 11-15 ohms. Replace solenoid S4 if the resistance is incorrect.

  Remedy as necessary.

Other information:

- To disconnect the transmission connectors, see **CONNECTORS, TRANSMISSION, DISCONNECTING / CONNECTING**
- To open the control system and to check or replace solenoid S4, see **SOLENOID CONTROL SYSTEM, REPLACING**
- To replace the cable harness for the control system, see **TEMPERATURE SENSOR FLUID, TRANSAXLE, (TFT)**
- For information about signals, see **SIGNAL DESCRIPTION. TRANSMISSION CONTROL MODULE (TCM)** .

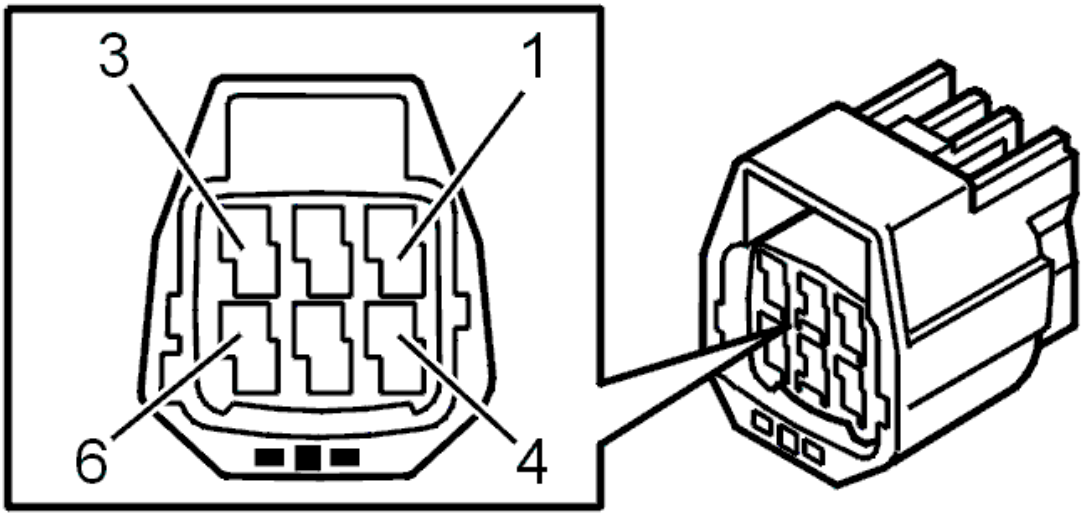

Fig. 457: Identifying 6-Pin Transmission Connector Terminals
Courtesy of VOLVO CARS CORPORATION

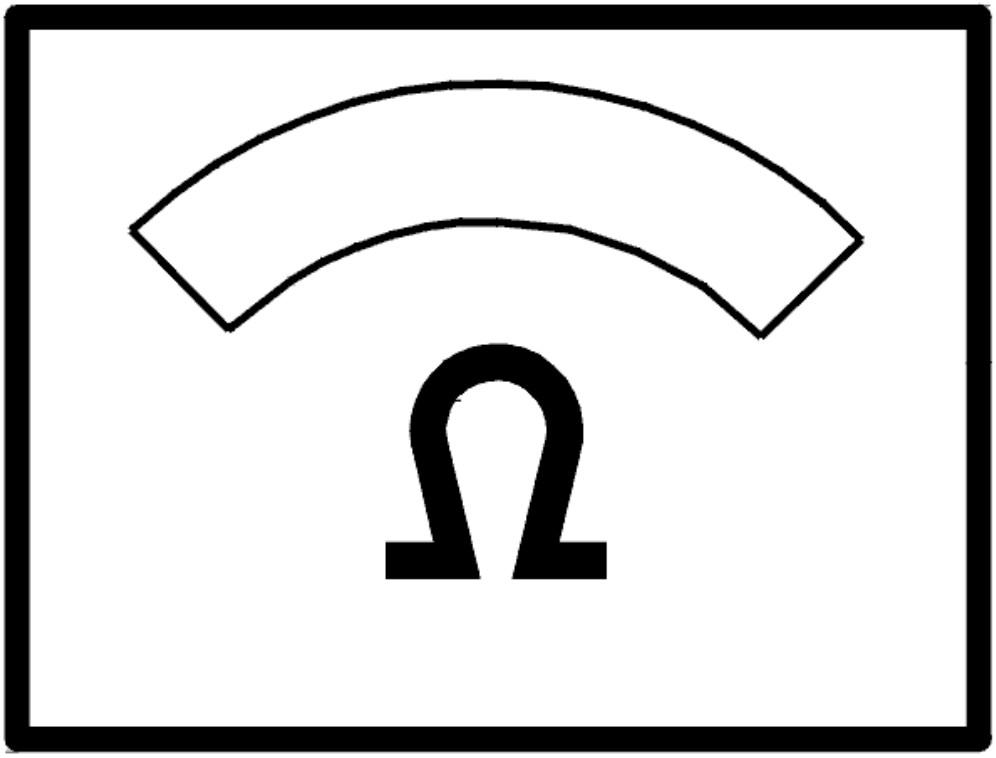

Fig. 458: Identifying Ohms Display
Courtesy of VOLVO CARS CORPORATION

- **Continue**

  Refer to **RESETTING THE ADAPTATION**

INTERMITTENT FAULT

Check the cable between control module terminal #A47 (#A47) and transmission connector terminal #C4 (control module side). Check for intermittent short-circuit to ground according to **SHORT-CIRCUIT TO GROUND, INTERMITTENT FAULTS** . Check for contact resistance and oxidation according to **CONTACT RESISTANCE AND OXIDATION** .

- Check the circuit for solenoid S4. Switch off the ignition. Disconnect the control module. Measure the resistance between terminals #A47 (#A47) and #A53 (#A53) on the breakout box. The resistance must be

11-15 ohms.

Remedy as necessary.

Other information:

- To connect the breakout box, see **CONNECTING THE BREAKOUT BOX**
- To disconnect the transmission connectors, see **CONNECTORS, TRANSMISSION, DISCONNECTING / CONNECTING**
- For information about signals, see **SIGNAL DESCRIPTION. TRANSMISSION CONTROL MODULE (TCM)** .

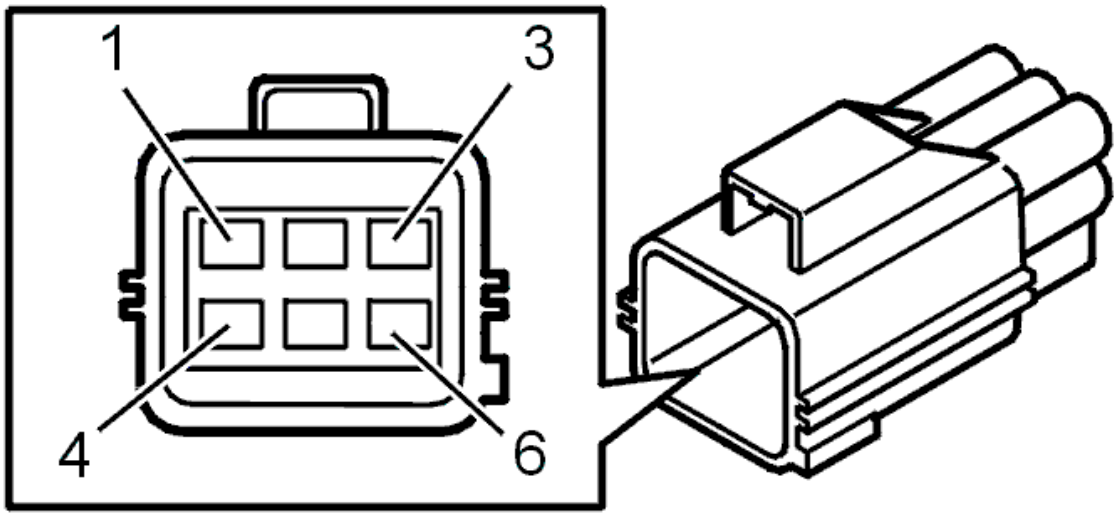

Fig. 459: Identifying Transmission Connector Terminals
Courtesy of VOLVO CARS CORPORATION

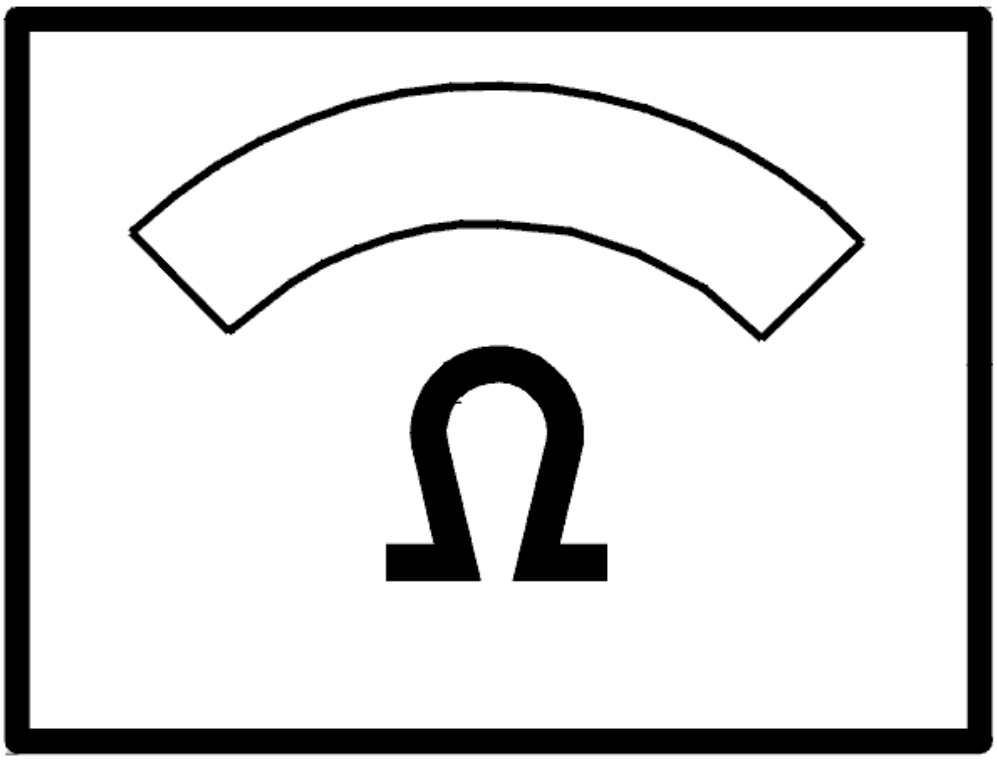

Fig. 460: Identifying Ohms Display
Courtesy of VOLVO CARS CORPORATION

- **Continue**

  Refer to **INFORMATION**

RESETTING THE ADAPTATION

RESETTING ADAPTATION AND THE COUNTER FOR "TRANSMISSION OIL CHANGE"

HINT: The transmission has torque controlled adaptive pressure control. Pressure control means that the transmission regulates the pressure itself during each gear shift. This avoids harsh gear shifting. Each gear shift is evaluated by the control module and stored in the memory. This allows for compensation for wear and tear in the transmission and clutch. It is important that the adaptation in the memory is reset after the transmission has been repaired. This is to ensure normal operation. The oil is replaced during

repair; the "Transmission oil change" counter must be reset. If the counter is not reset when the fluid is drained and replaced, there is a risk that a diagnostic trouble code (DTC) will be stored in incorrect circumstances.

NOTE: **This applies only if the transmission or one of the components in the transmission have been replaced.**

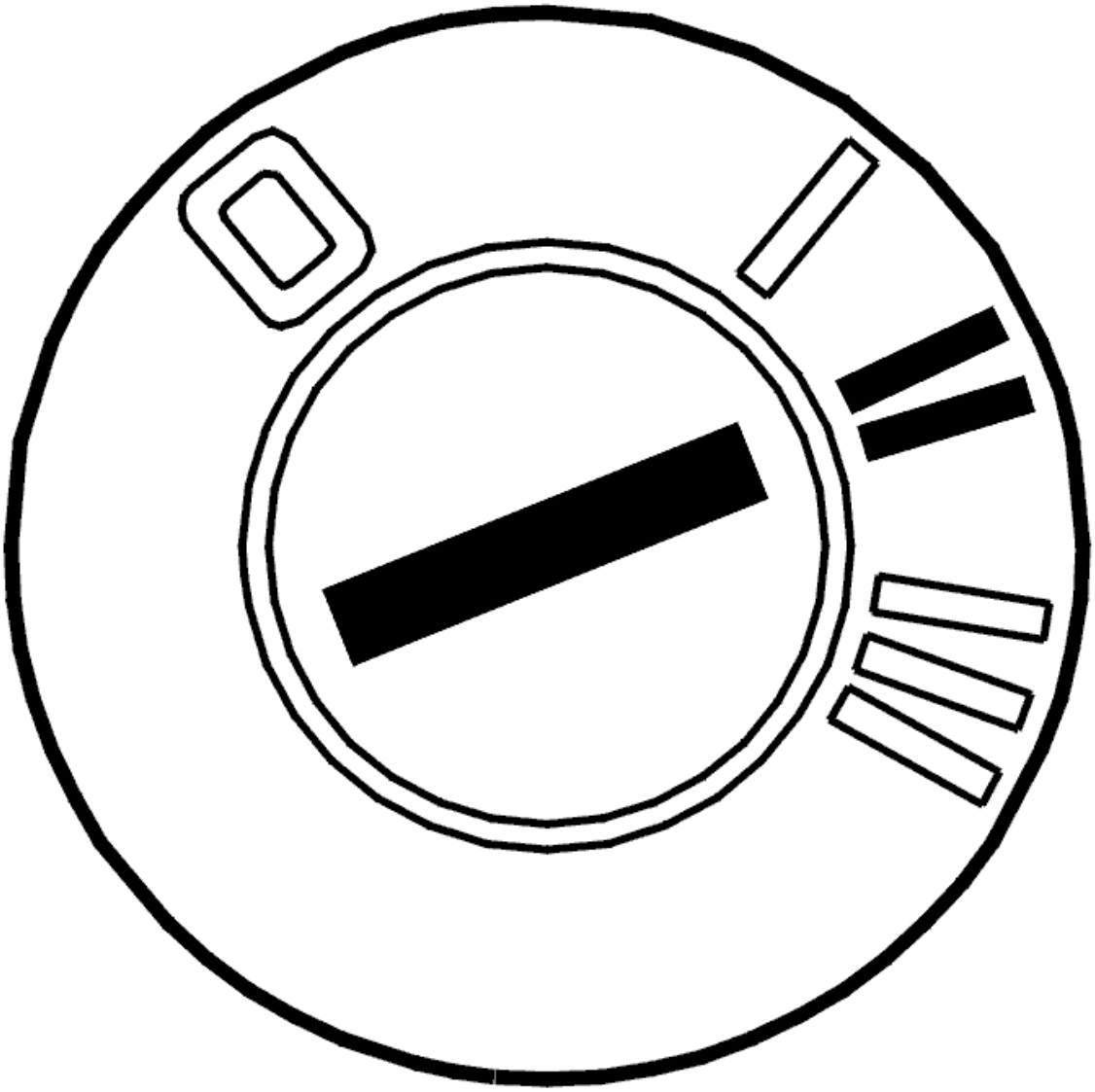

Fig. 461: Identifying Ignition ON
Courtesy of VOLVO CARS CORPORATION

- Ignition on.

  Use the VCT2000 (or appropriate scan tool) to reset the adaptation and counter.

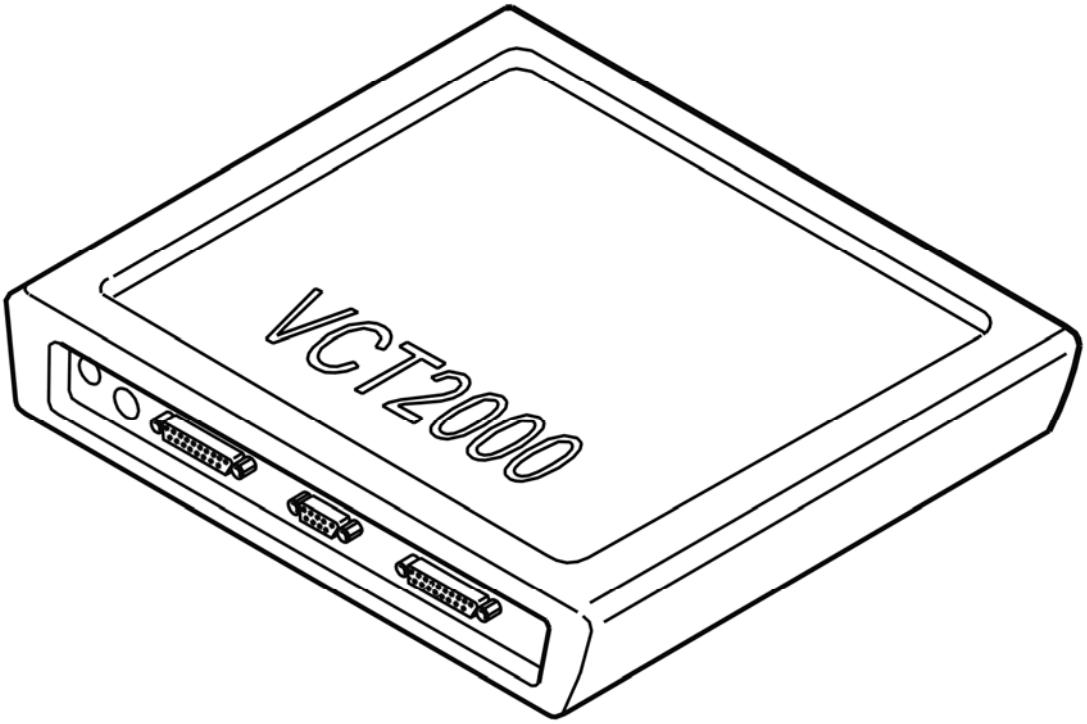

Fig. 462: Identifying VCT2000 Diagnostic Tool Symbol In VIDA
Courtesy of VOLVO CARS CORPORATION

- **Continue**

  Refer to **VERIFICATION**

VERIFICATION

VERIFICATION

HINT: After carrying out the repair, check that the fault has been remedied.

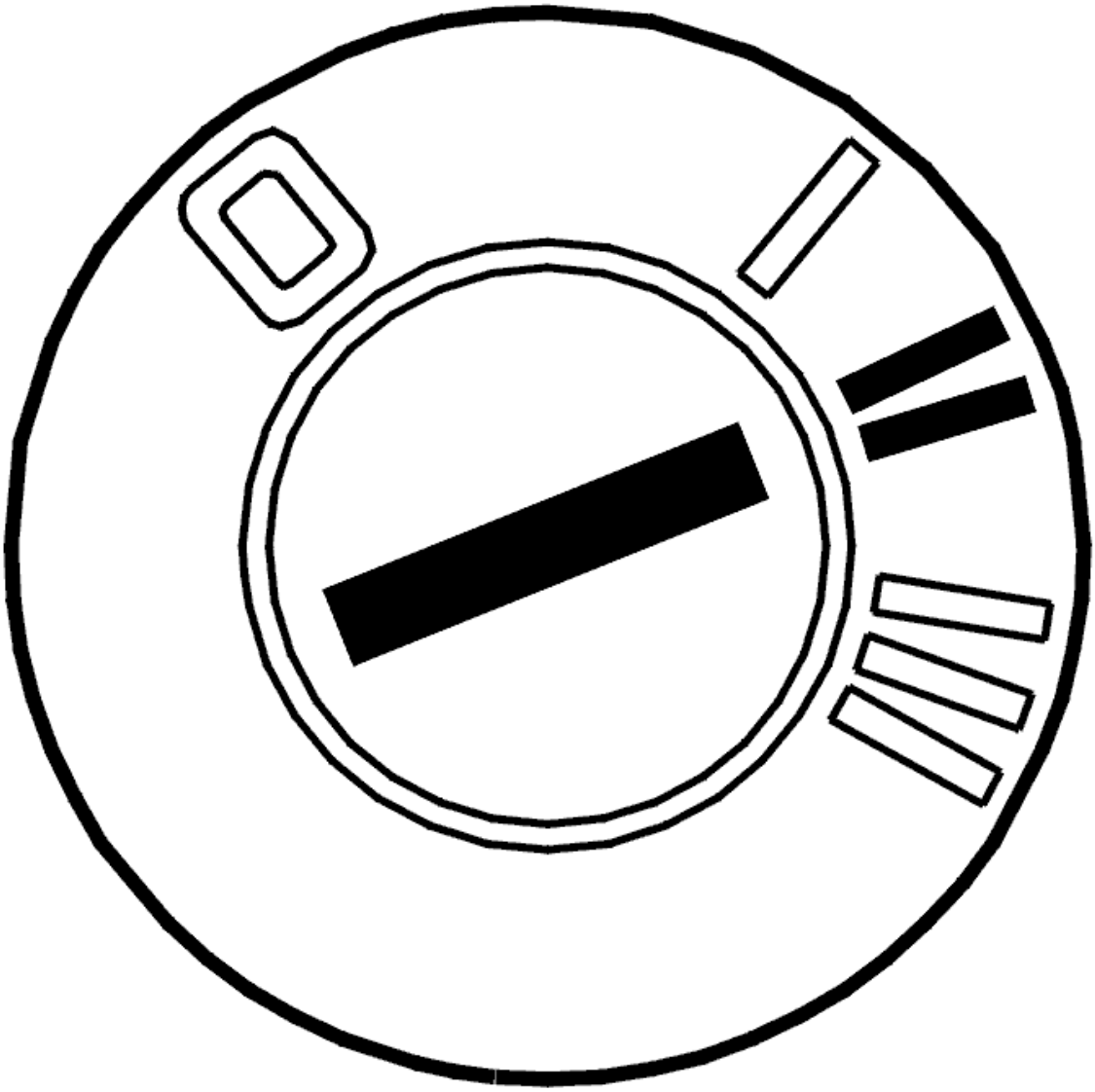

Fig. 463: Identifying Ignition ON
Courtesy of VOLVO CARS CORPORATION

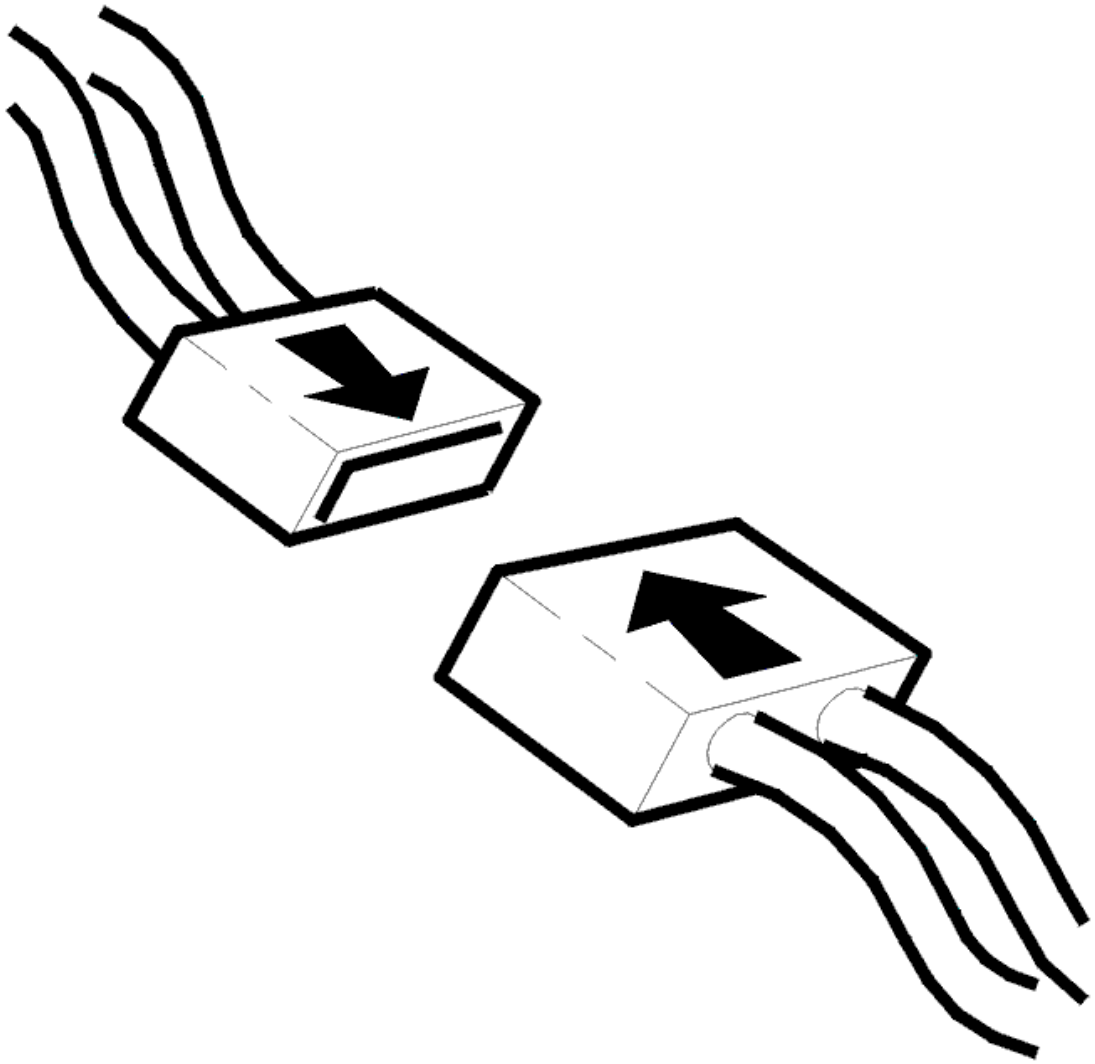

Fig. 464: Identifying Connector(s) Reinstallation
Courtesy of VOLVO CARS CORPORATION

- Ignition off.
- Reinstall the components, reconnect the connectors etc.
- Ignition on.
- Gear selector in position P.
- Activate solenoid S4.

  The value should change between OFF and ON.

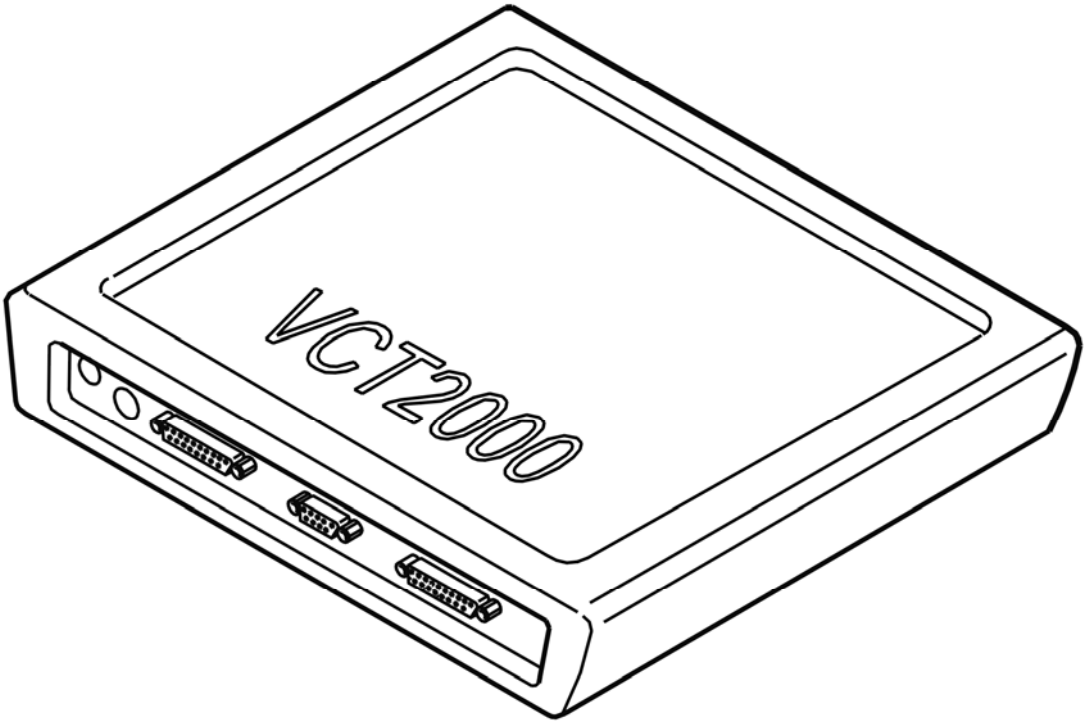

Fig. 465: Identifying VCT2000 Diagnostic Tool Symbol In VIDA
Courtesy of VOLVO CARS CORPORATION

Does the value change between OFF and ON?

- **YES**

  VERIFIED: Troubleshooting has been completed.

- **NO**

  Refer to **INFORMATION**

INFORMATION

FAULT-TRACING INFORMATION

The fault should have been detected and remedied. As this is not the case fault-tracing has failed.

Exit fault-tracing for this diagnostic trouble code (DTC) or make another attempt.

INFORMATION

FAULT-TRACING INFORMATION

If the fault is intermittent, do not verify fault-tracing if the fault does not recur.

It is possible to view the information again, or leave fault-tracing for this diagnostic trouble code (DTC).

FAULTY SIGNAL

CHECKING TRANSMISSION FLUID TEMPERATURE SENSOR

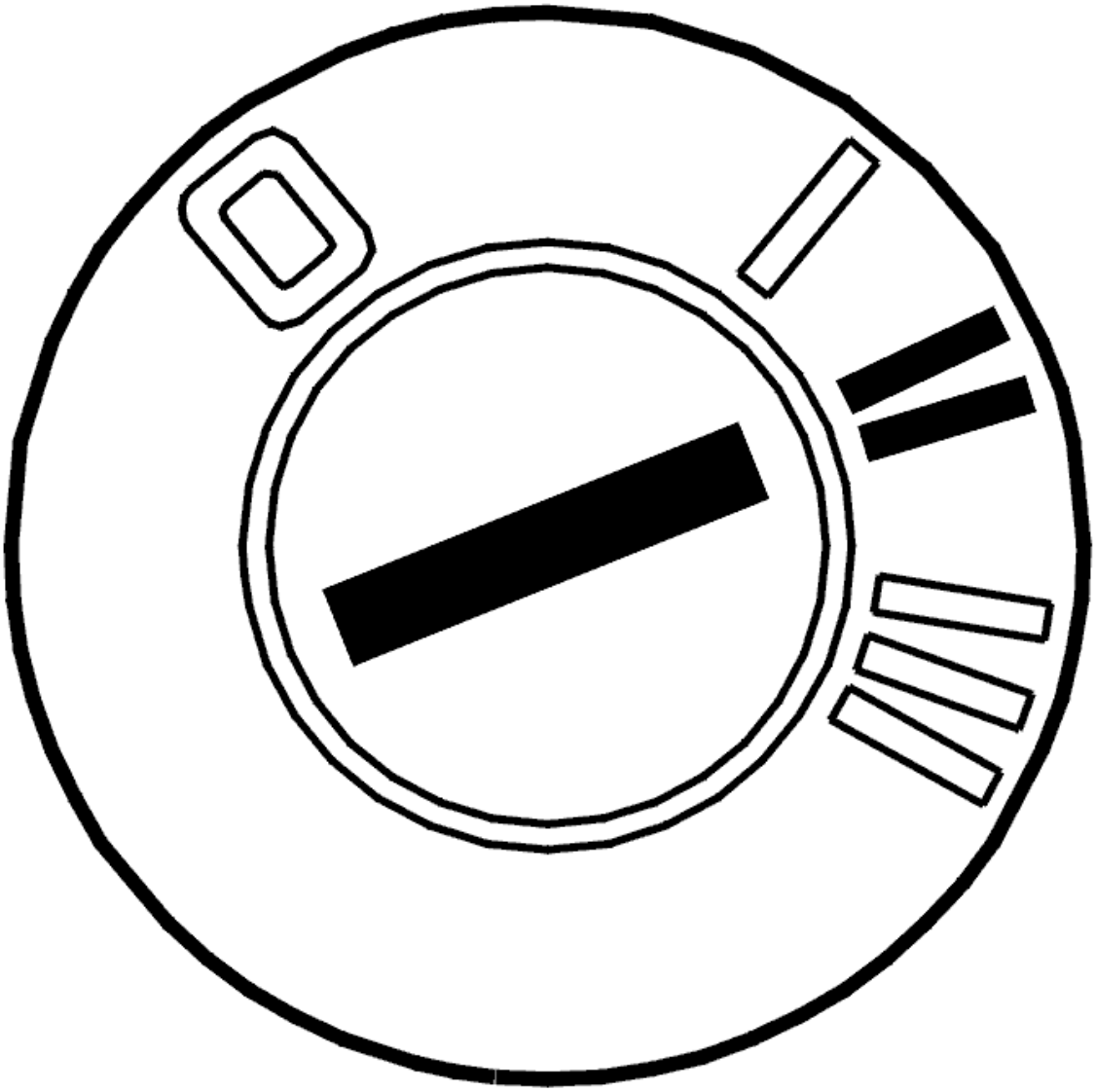

Fig. 466: Identifying Ignition ON
Courtesy of VOLVO CARS CORPORATION

- Ignition on
- Read off the oil temperature.

  Check that the temperature is within its permitted range.

Compare with the transmission temperature.

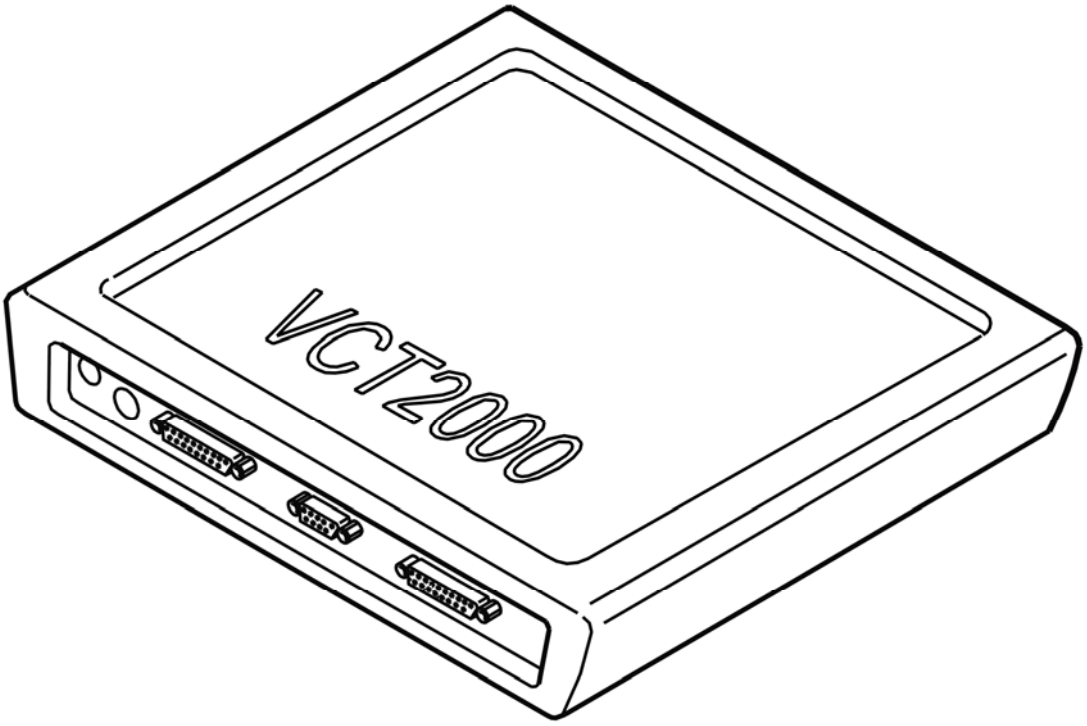

Fig. 467: Identifying VCT2000 Diagnostic Tool Symbol In VIDA
Courtesy of VOLVO CARS CORPORATION

Was the transmission temperature within its permitted range?

- **YES**

  Refer to **INTERMITTENT FAULT**

- **NO**

  Refer to **CHECKING TRANSMISSION FLUID TEMPERATURE SENSOR**

CHECKING TRANSMISSION FLUID TEMPERATURE SENSOR

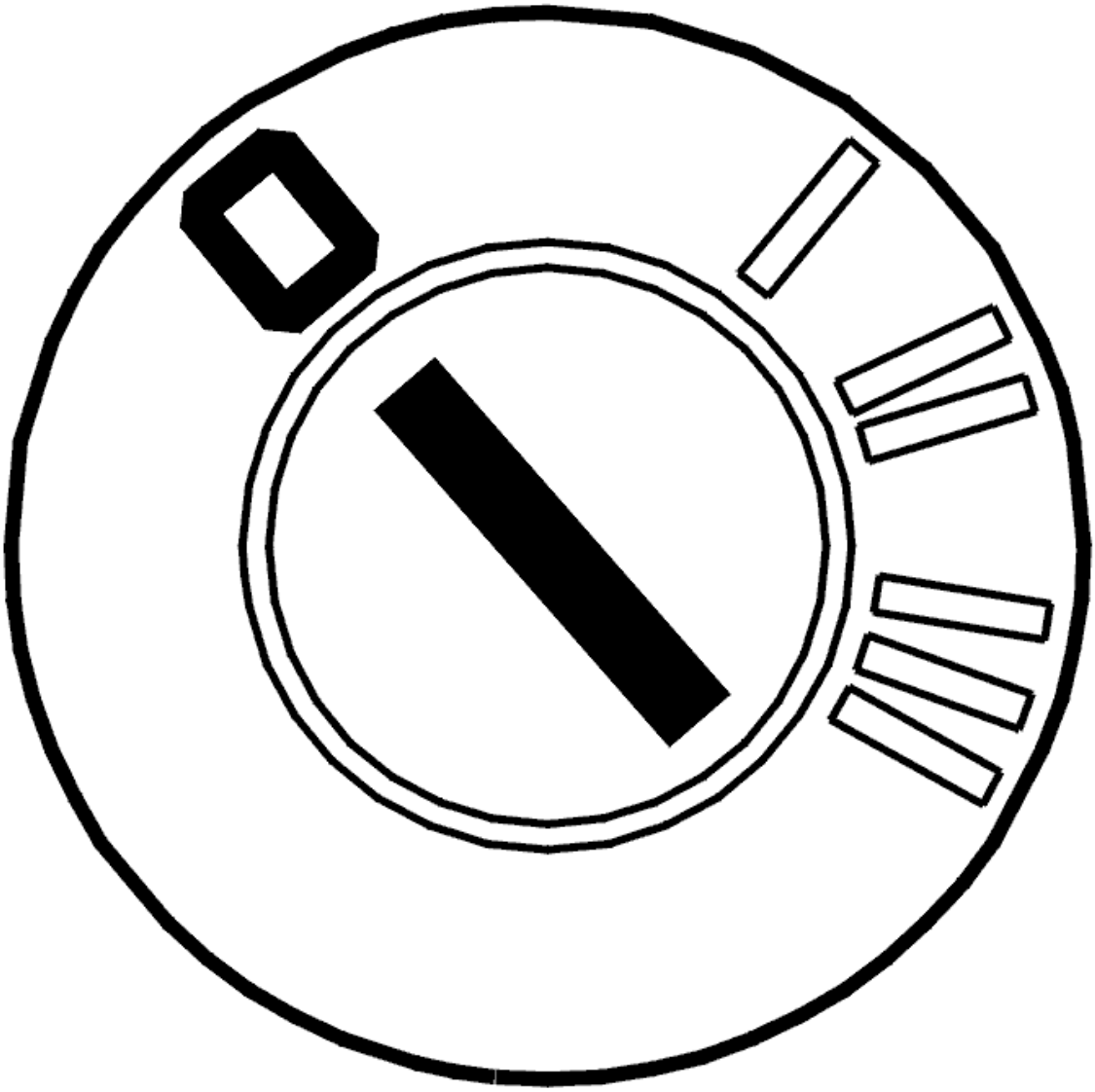

Fig. 468: Identifying Ignition OFF
Courtesy of VOLVO CARS CORPORATION

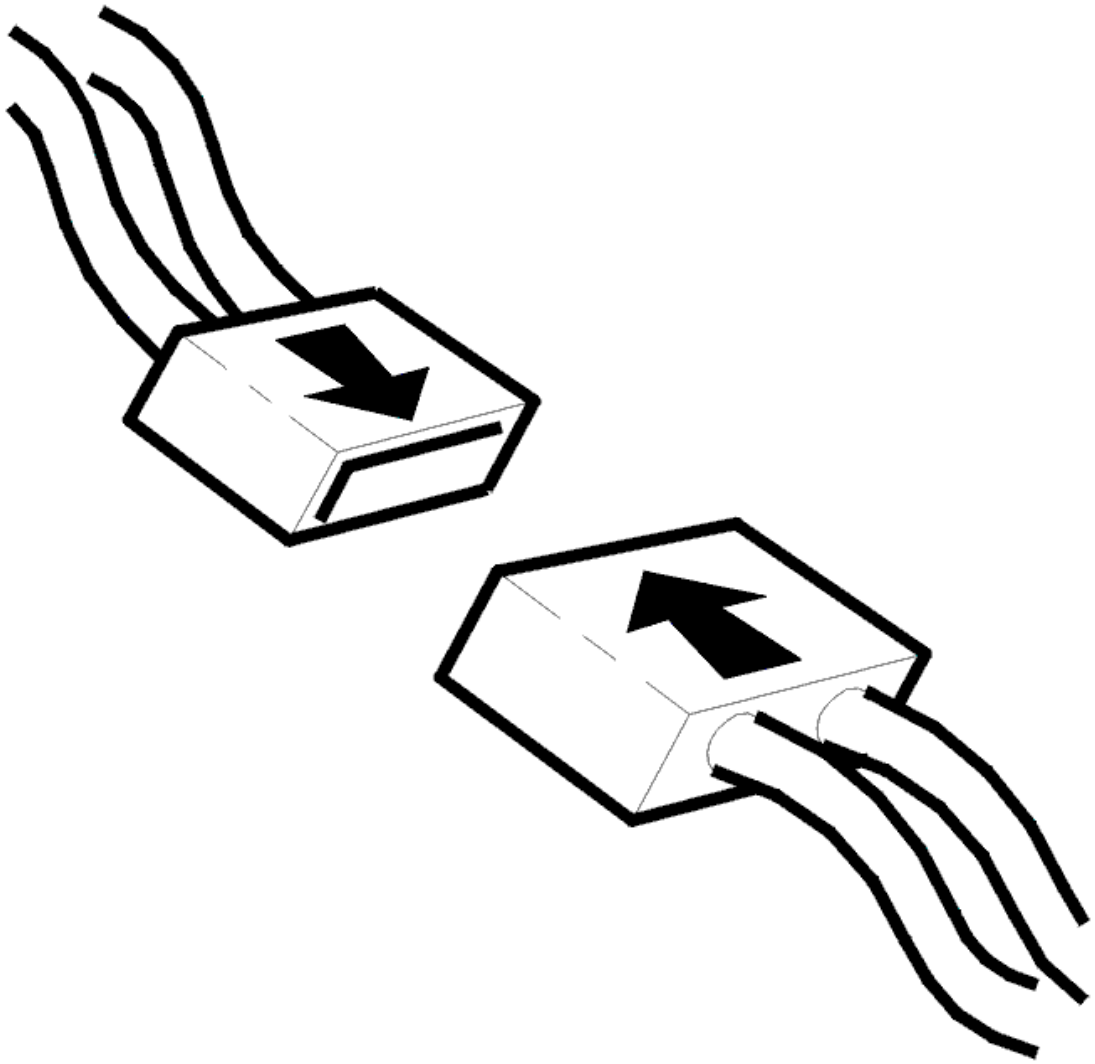

Fig. 469: Identifying Connector(s) Reinstallation
Courtesy of VOLVO CARS CORPORATION

- Ignition off
- Transmission connector D disconnected.

  Check the temperature sensor. Measure the resistance between transmission connector D terminals #D7 and #D8.

  The resistance must be 4.5-6 kohms at 20°C.

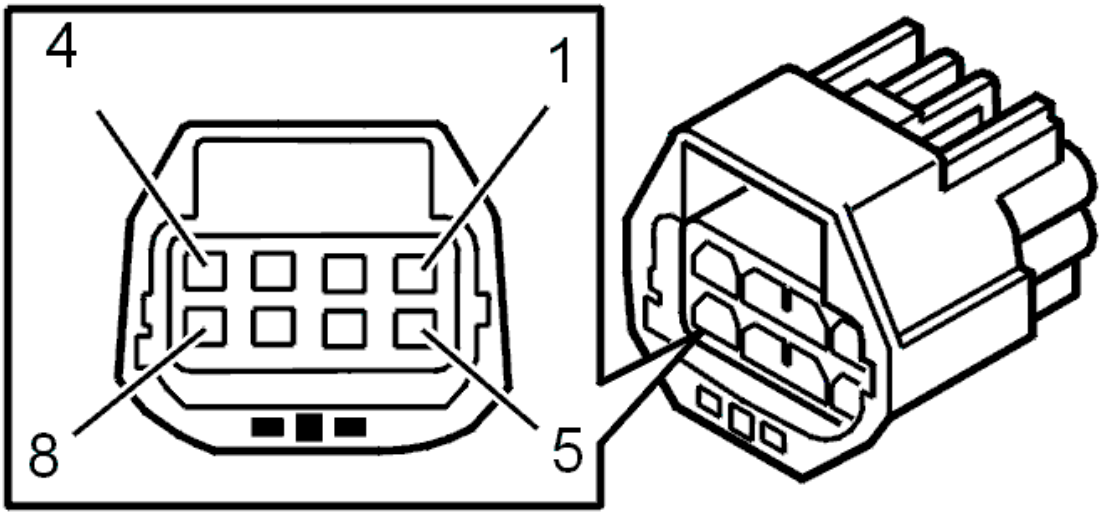

Fig. 470: Identifying 8-Pin Transmission Connector Terminals
Courtesy of VOLVO CARS CORPORATION

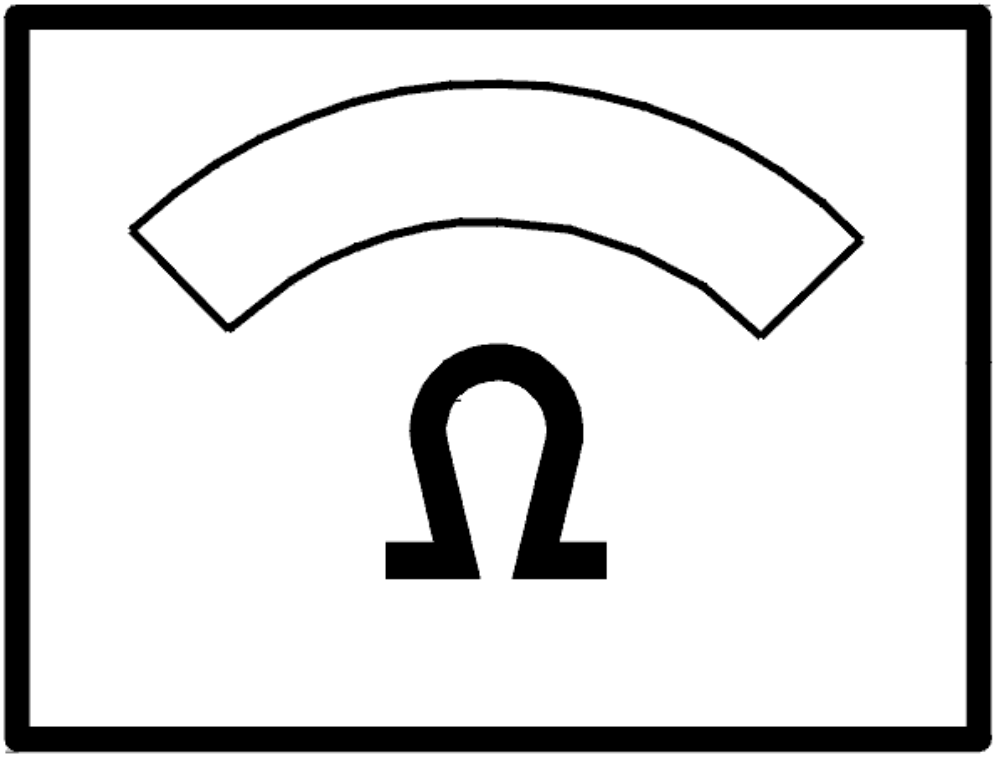

Fig. 471: Identifying Ohms Display
Courtesy of VOLVO CARS CORPORATION

Was the resistance OK?

- **YES**

  Refer to **CHECKING TRANSMISSION FLUID TEMPERATURE SENSOR**

- **NO**

  Refer to **CHECKING THE CABLE AND COMPONENT**

CHECKING TRANSMISSION FLUID TEMPERATURE SENSOR

Check the cable between control module terminal #A37 (#A37) and transmission connector terminal #D7

(control module side). Check for an open-circuit according to **OPEN-CIRCUIT, PERMANENT FAULTS** .

Check the cable between control module terminal #A55 (#A55)and transmission connector terminal #D8 (control module side). Check for an open-circuit according to **OPEN-CIRCUIT, PERMANENT FAULTS** .

Remedy as necessary.

Other information:

- To connect the breakout box, see **CONNECTING THE BREAKOUT BOX**
- To disconnect the transmission connectors, see **CONNECTORS, TRANSMISSION, DISCONNECTING / CONNECTING**
- For information about signals, see **SIGNAL DESCRIPTION. TRANSMISSION CONTROL MODULE (TCM)** .

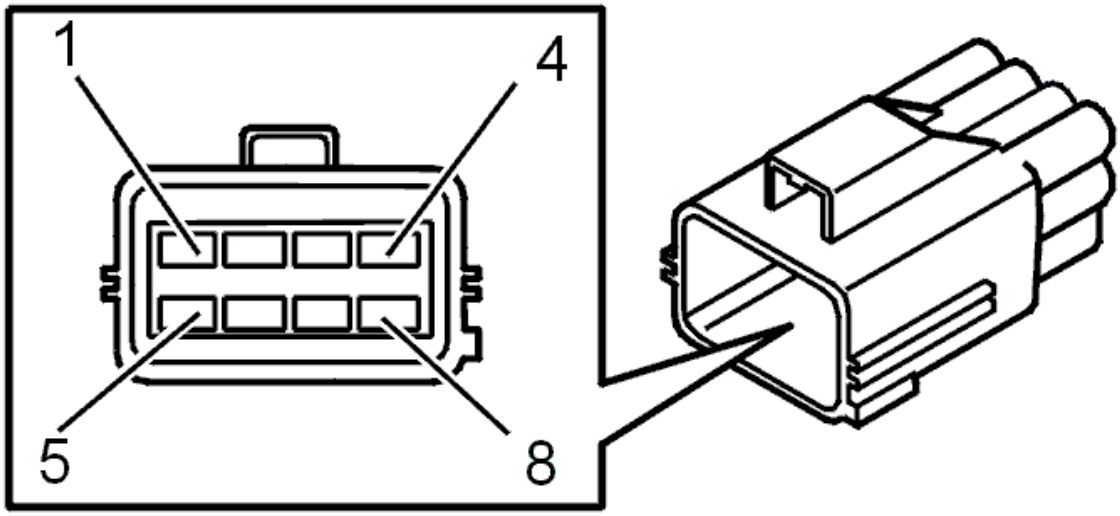

Fig. 472: Identifying Transmission Connector Terminals
Courtesy of VOLVO CARS CORPORATION

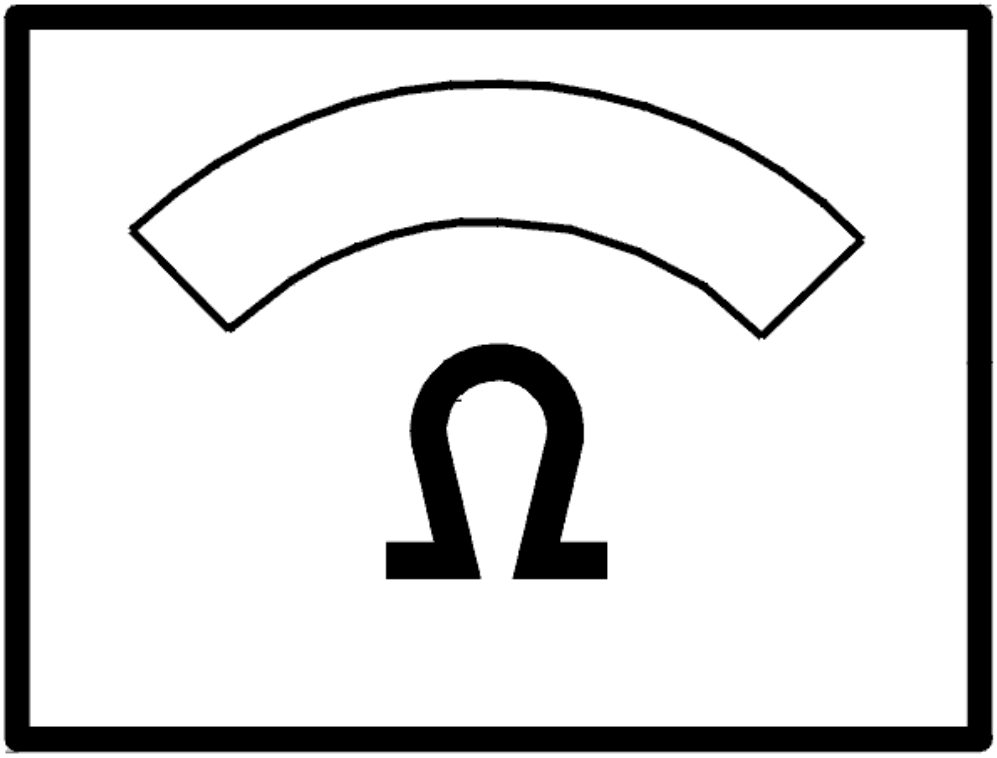

Fig. 473: Identifying Ohms Display
Courtesy of VOLVO CARS CORPORATION

Was a fault detected?

- **YES**

  Refer to **VERIFICATION**

- **NO**

  Refer to **CHECKING THE CABLE AND COMPONENT**

CHECKING THE CABLE AND COMPONENT

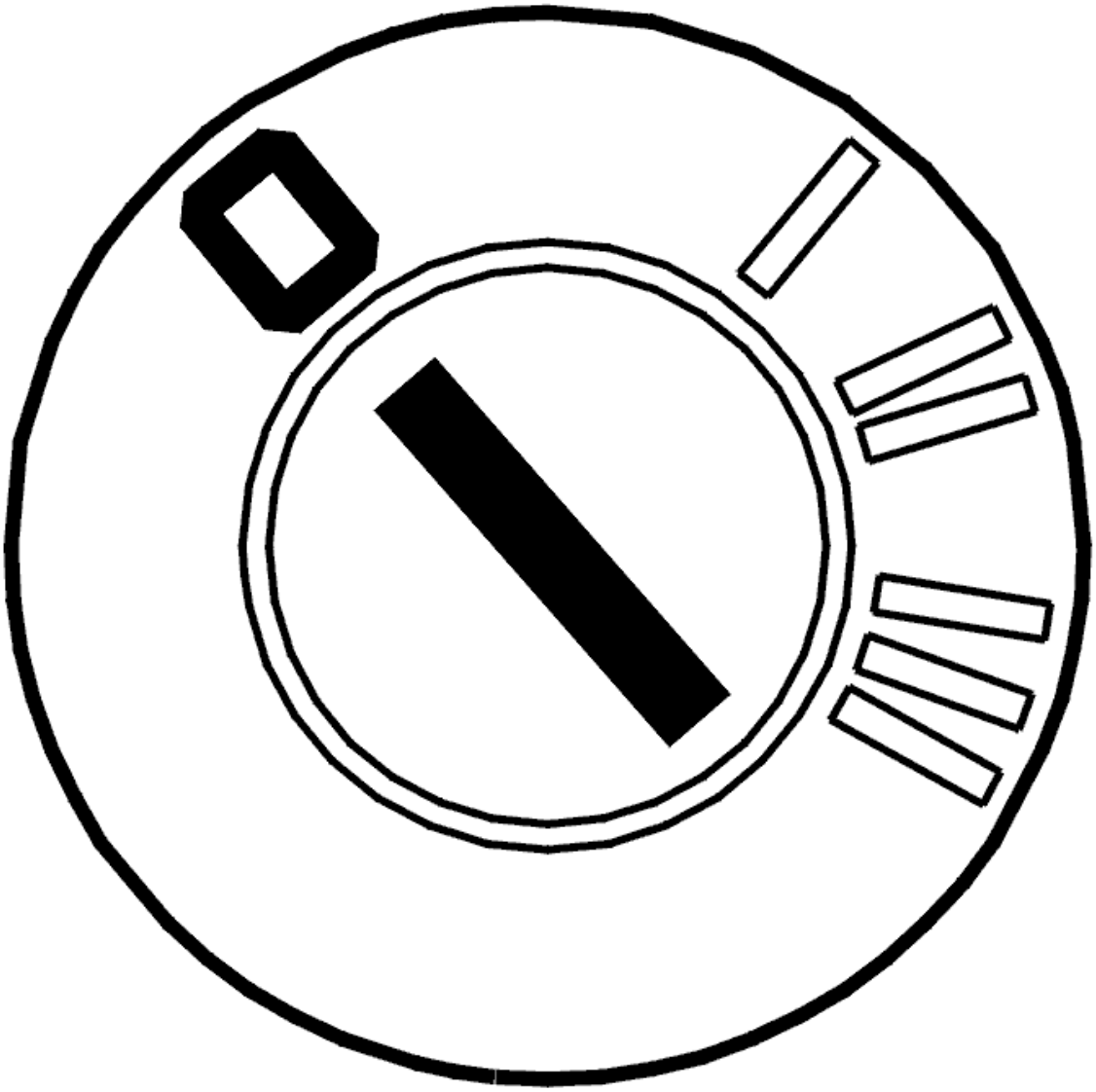

Fig. 474: Identifying Ignition OFF
Courtesy of VOLVO CARS CORPORATION

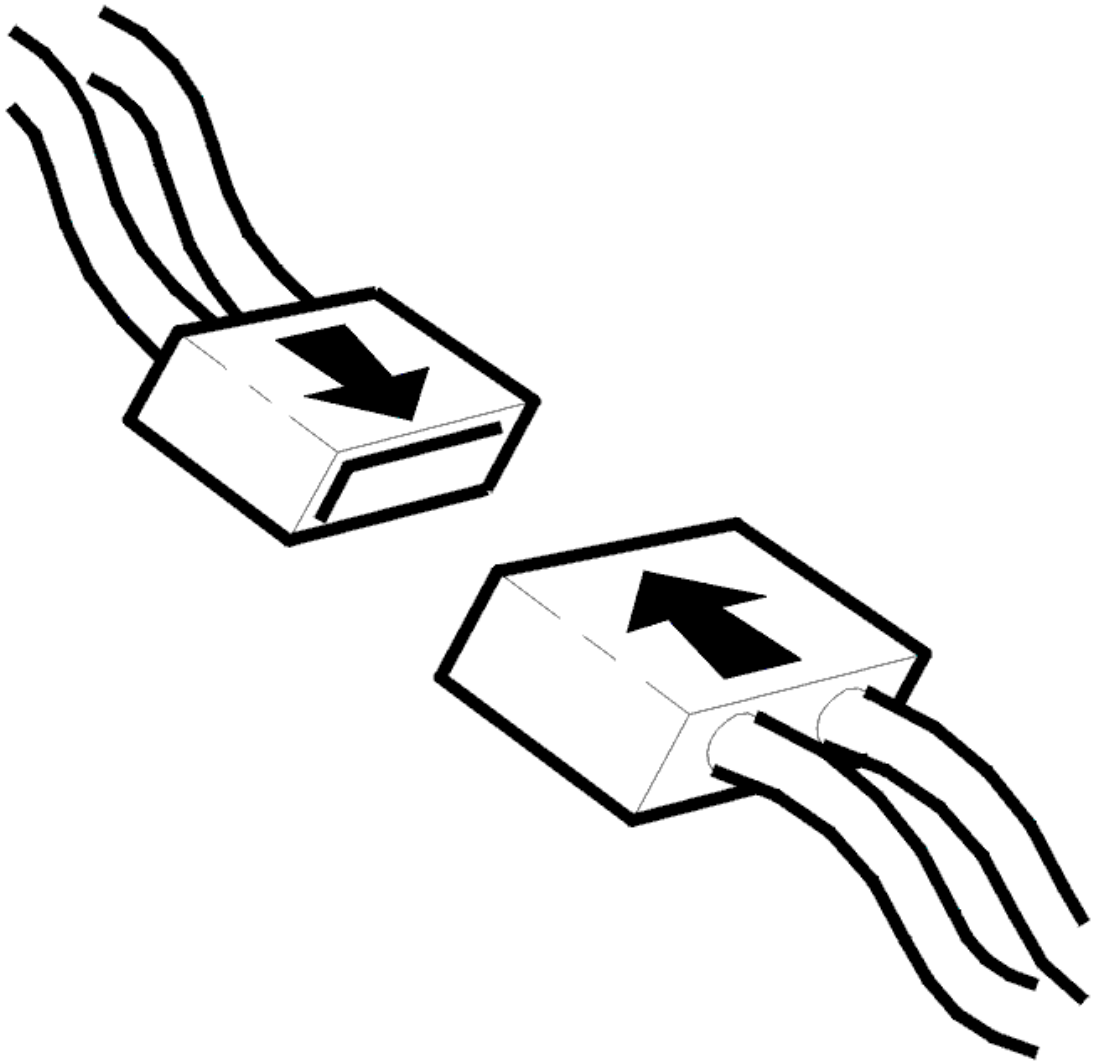

Fig. 475: Identifying Connector(s) Reinstallation
Courtesy of VOLVO CARS CORPORATION

- Ignition off
- Open the transmission control system.

  Check the cable between transmission connector terminal #D7 and temperature sensor terminal #1. Check the cable between transmission connector #D8 and temperature sensor terminal #2. Check for an open-circuit according to **OPEN-CIRCUIT, PERMANENT FAULTS** .

  Also check the cables for a short-circuit to each other.

  HINT: Check the temperature sensor. With the ignition off and transmission connector D disconnected, measure the resistance between transmission connector D terminals #D7 and #D8. The resistance must be 4.5-6 kohms at 20 °C.

Remedy as necessary.

Other information:

- To connect the breakout box, see **CONNECTING THE BREAKOUT BOX**
- To disconnect the transmission connectors, see **CONNECTORS, TRANSMISSION, DISCONNECTING / CONNECTING**
- To open the transmission control system and to check or replace the temperature sensor, see **SOLENOID CONTROL SYSTEM, REPLACING**
- For information about signals, see **SIGNAL DESCRIPTION. TRANSMISSION CONTROL MODULE (TCM)** .

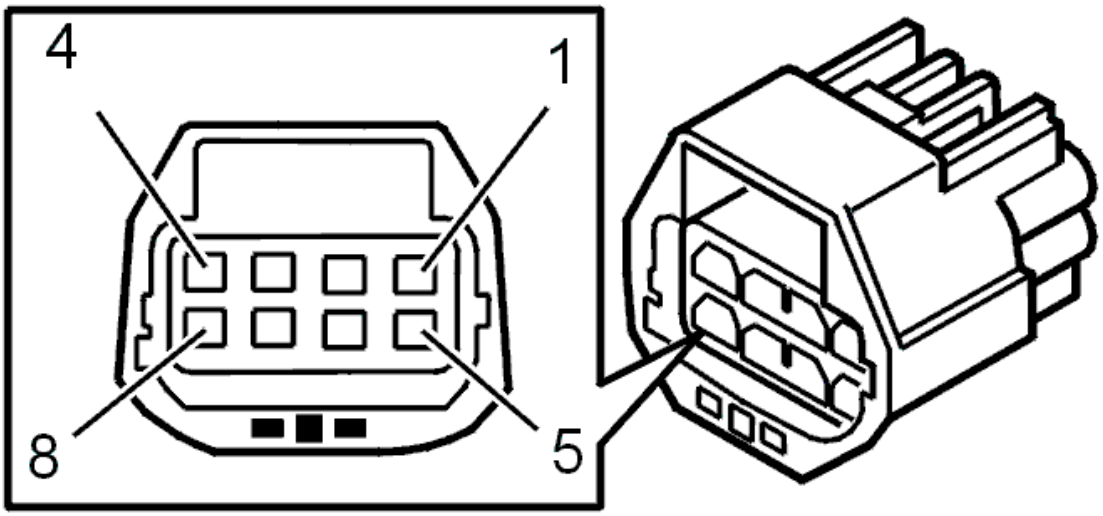

Fig. 476: Identifying 8-Pin Transmission Connector Terminals
Courtesy of VOLVO CARS CORPORATION

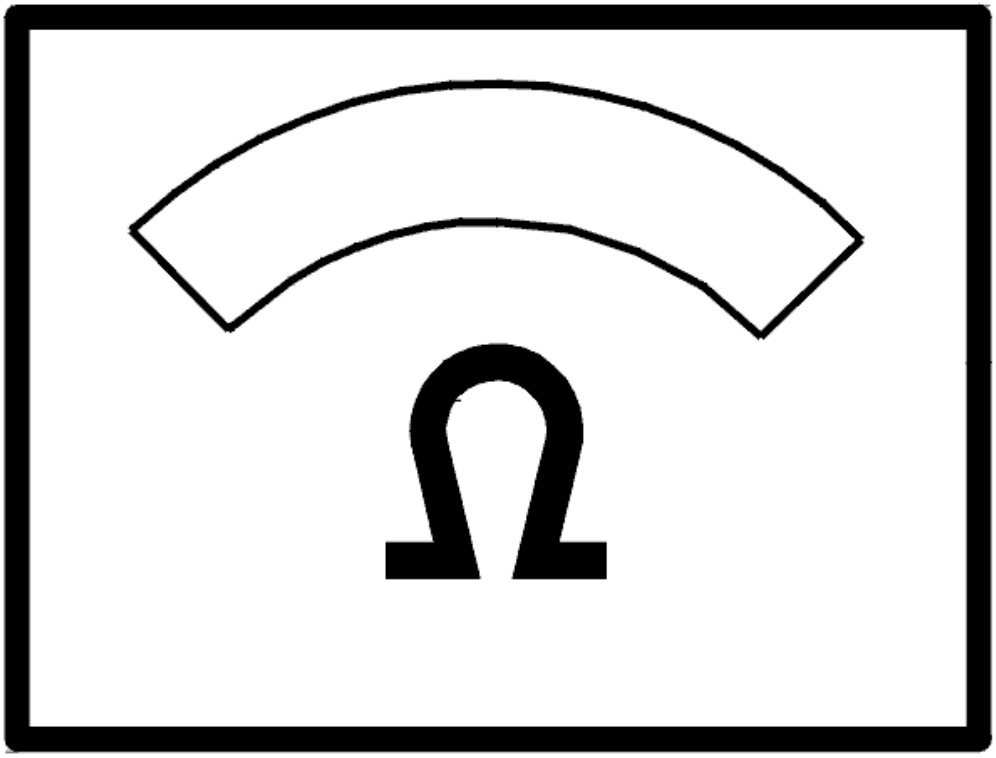

Fig. 477: Identifying Ohms Display
Courtesy of VOLVO CARS CORPORATION

- **Continue**

  Refer to **RESETTING TRANSMISSION FLUID CHANGE COUNTER**

INTERMITTENT FAULT

Check the transmission control module (TCM) and transmission connector D. Check for contact resistance and oxidation according to **CONTACT RESISTANCE AND OXIDATION** .

Check the cable between transmission control module (TCM) terminal #A37 (#A37) and transmission connector terminal #D7 (control module side). Check for an intermittent open-circuit according to **OPEN-CIRCUIT, INTERMITTENT FAULTS** .

Check the cable between control module terminal #A55 (#A55)and transmission connector terminal #D8 (control module side). Check for an intermittent open-circuit according to **OPEN-CIRCUIT, INTERMITTENT FAULTS** .

Remedy as necessary.

Other information:

- To connect the breakout box, see **CONNECTING THE BREAKOUT BOX**
- To disconnect the transmission connectors, see **CONNECTORS, TRANSMISSION, DISCONNECTING / CONNECTING**
- For information about signals, see **SIGNAL DESCRIPTION. TRANSMISSION CONTROL MODULE (TCM)** .

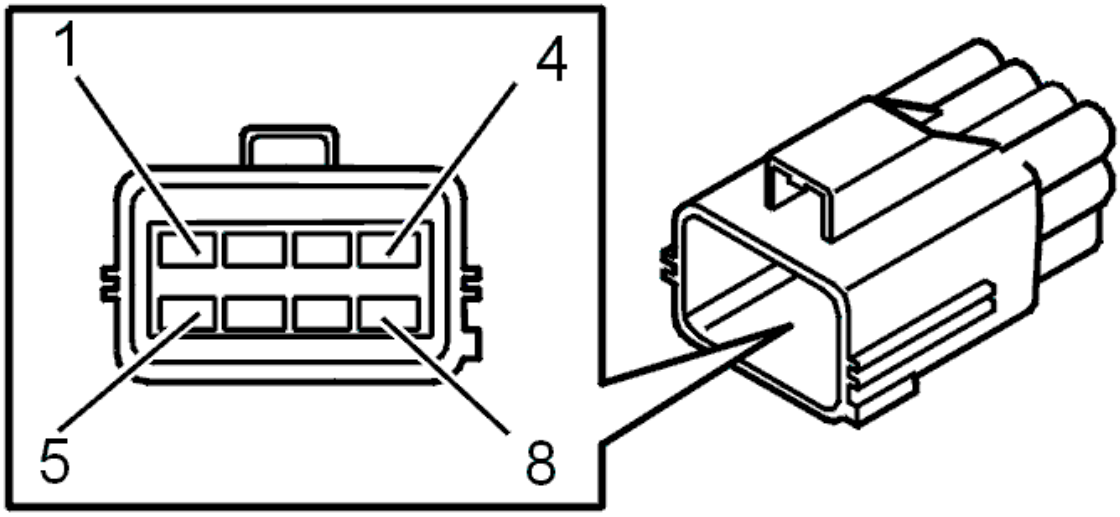

Fig. 478: Identifying Transmission Connector Terminals
Courtesy of VOLVO CARS CORPORATION

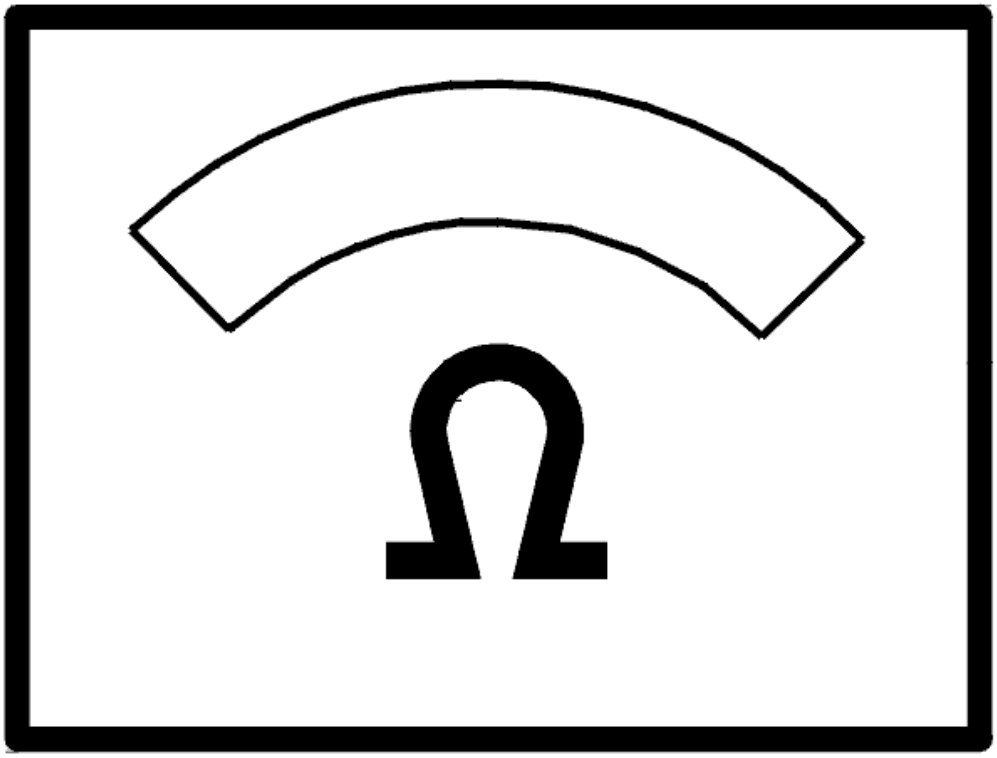

Fig. 479: Identifying Ohms Display
Courtesy of VOLVO CARS CORPORATION

- **Continue**

  Refer to **INFORMATION**

RESETTING TRANSMISSION FLUID CHANGE COUNTER

RESETTING TRANSMISSION FLUID CHANGE COUNTER

HINT: The transmission control module (TCM) has a counter for the oil quality. The counter counts up if the transmission is exposed to too high a load or an ambient temperature that is too high. If the counter is not reset when the oil is drained or changed, there is a risk that a diagnostic trouble code (DTC) will be stored in faulty circumstances. Therefore it is important that the "Transmission oil change" counter is reset.

NOTE: **This applies only when the transmission fluid is changed and when the fluid is changed when repairs are carried out to the transmission temperature sensor.**

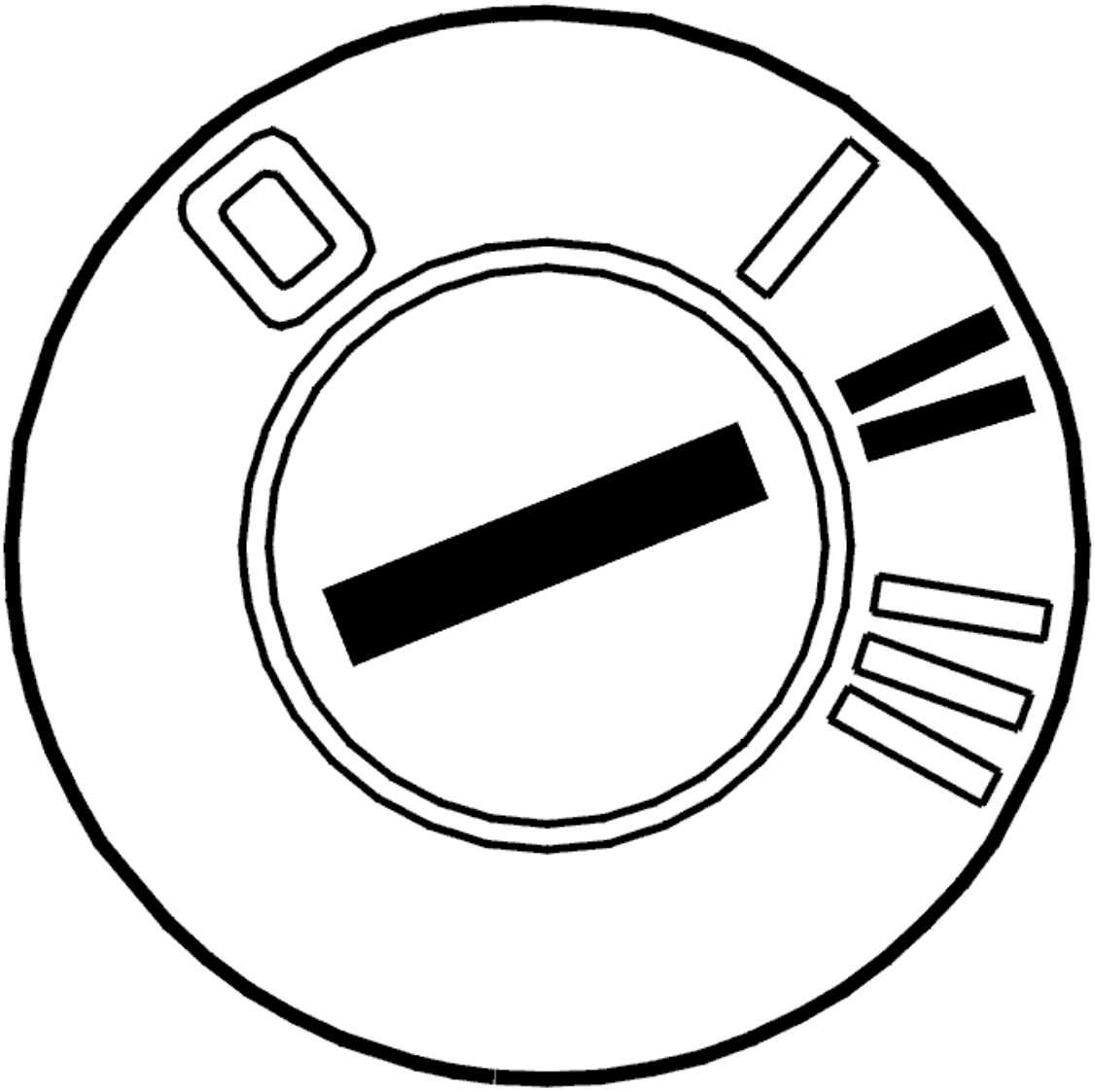

Fig. 480: Identifying Ignition ON
Courtesy of VOLVO CARS CORPORATION

- Ignition on.

  Reset the counter by clicking on the VCT 2000 symbol.

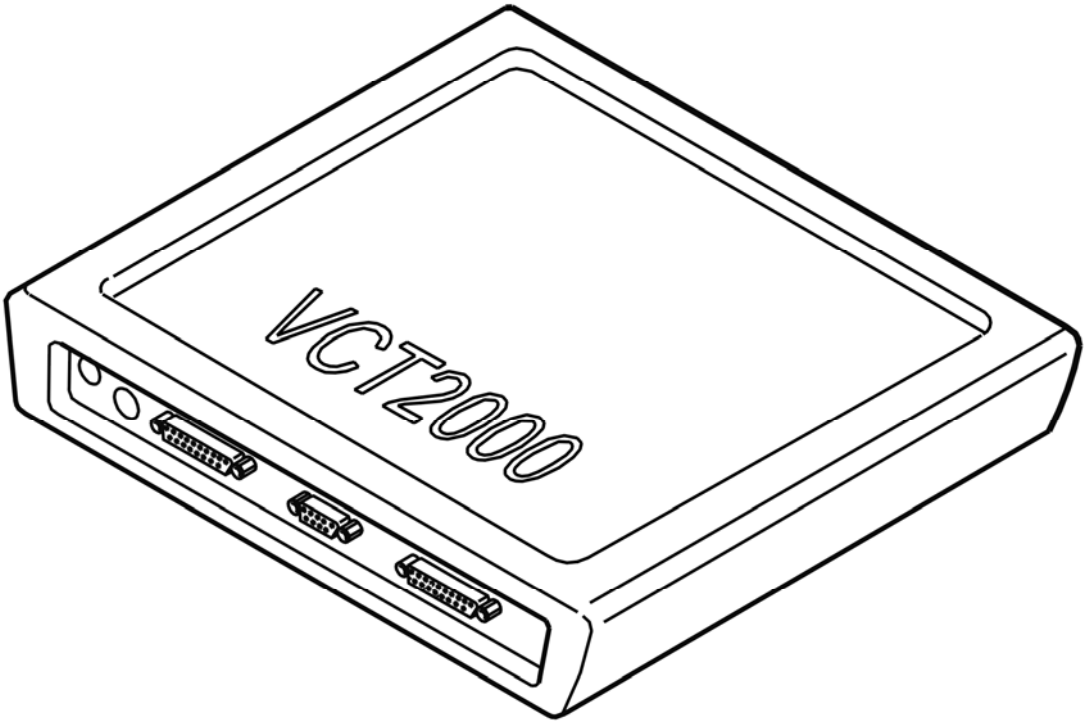

Fig. 481: Identifying VCT2000 Diagnostic Tool Symbol In VIDA
Courtesy of VOLVO CARS CORPORATION

- **Continue**

  Refer to **VERIFICATION**

VERIFICATION

VERIFICATION

HINT: After carrying out the repair, check that the fault has been remedied.

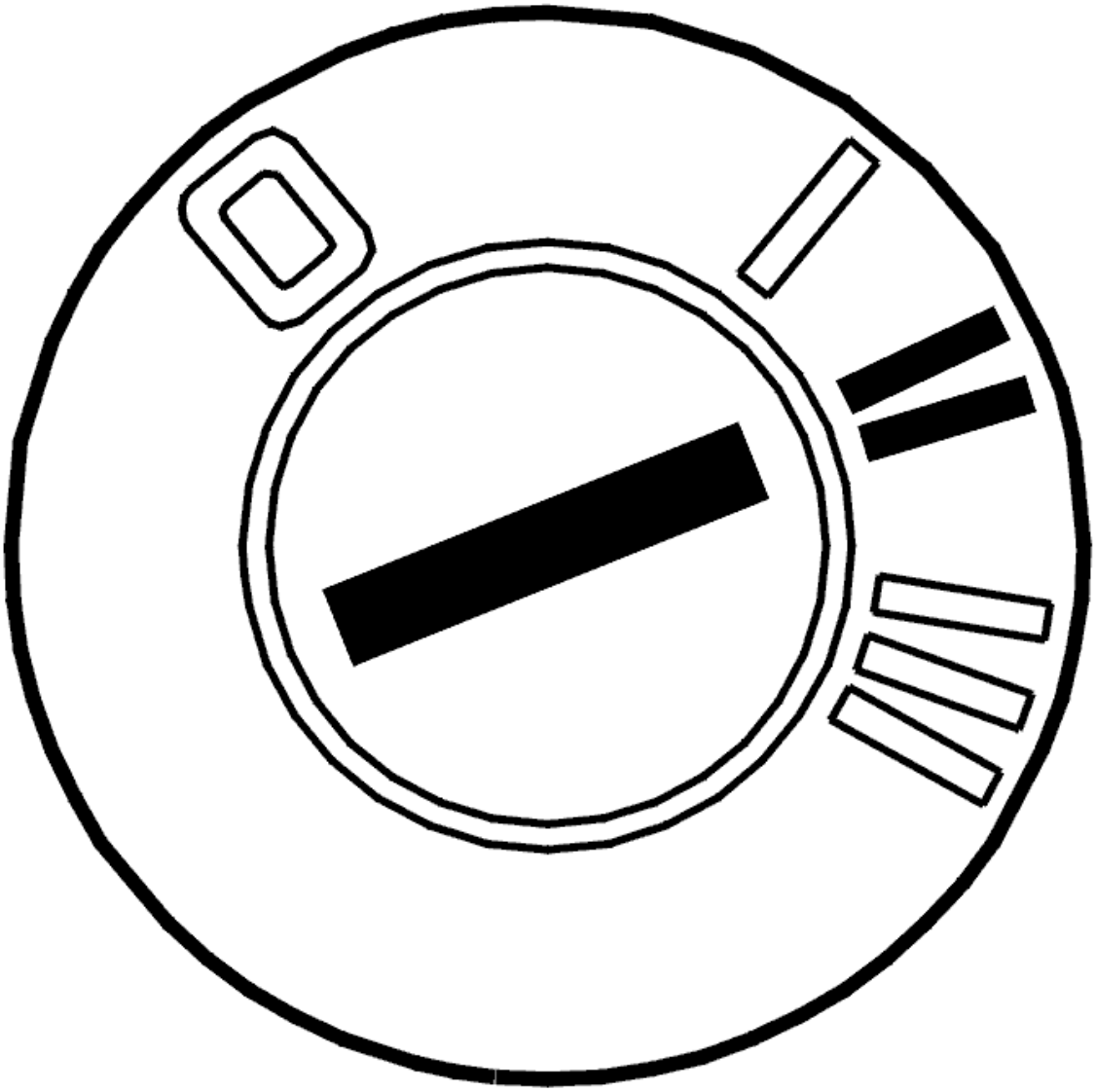

Fig. 482: Identifying Ignition ON
Courtesy of VOLVO CARS CORPORATION

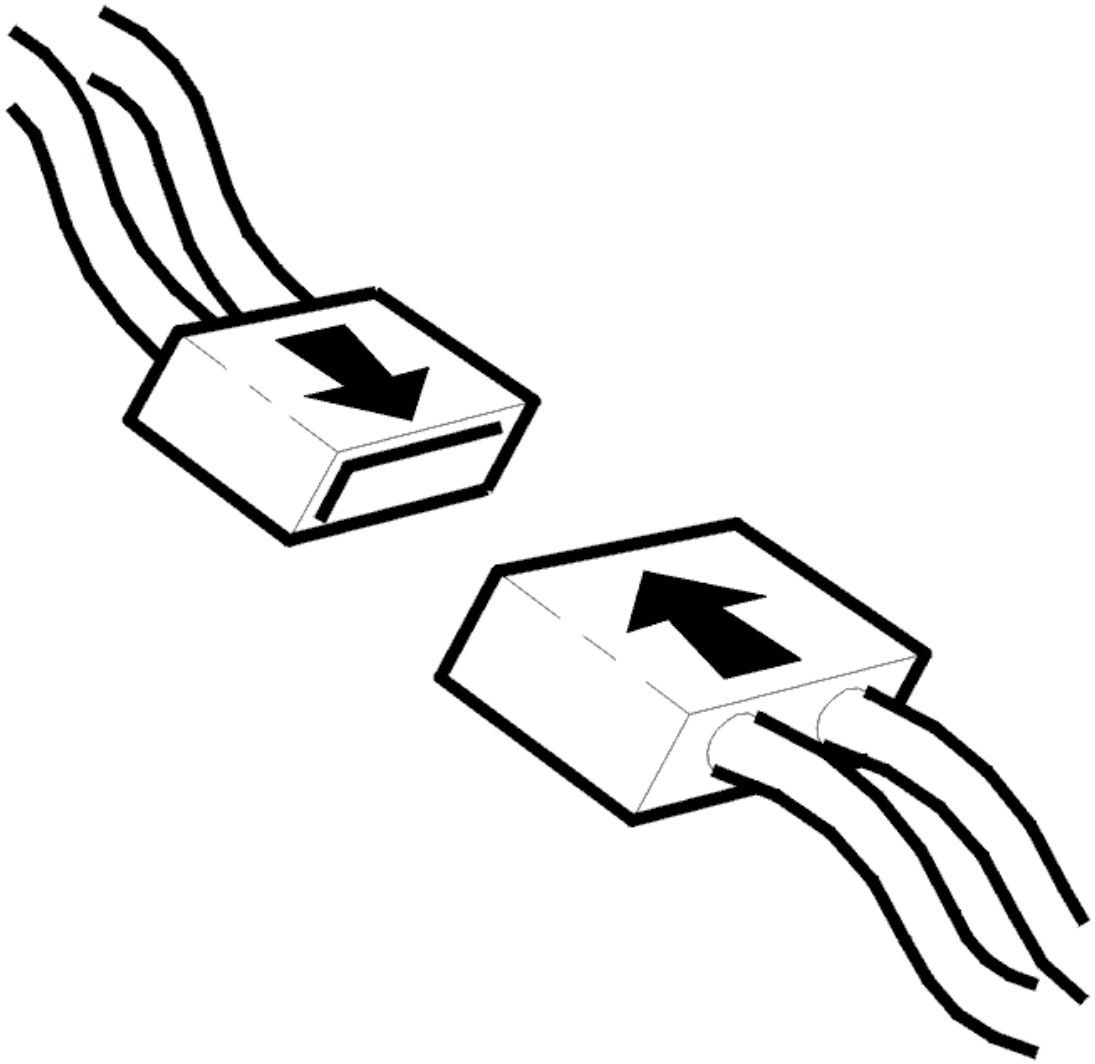

Fig. 483: Identifying Connector(s) Reinstallation
Courtesy of VOLVO CARS CORPORATION

- Ignition off.
- Reinstall the connectors, components etc.
- Ignition on.
- Read off the oil temperature.

Check that the transmission oil temperature is within its permitted range.

Compare with the transmission temperature.

NOTE: **The transmission temperature sensor is located inside the control unit and can be affected by the heat given off by the solenoids.**

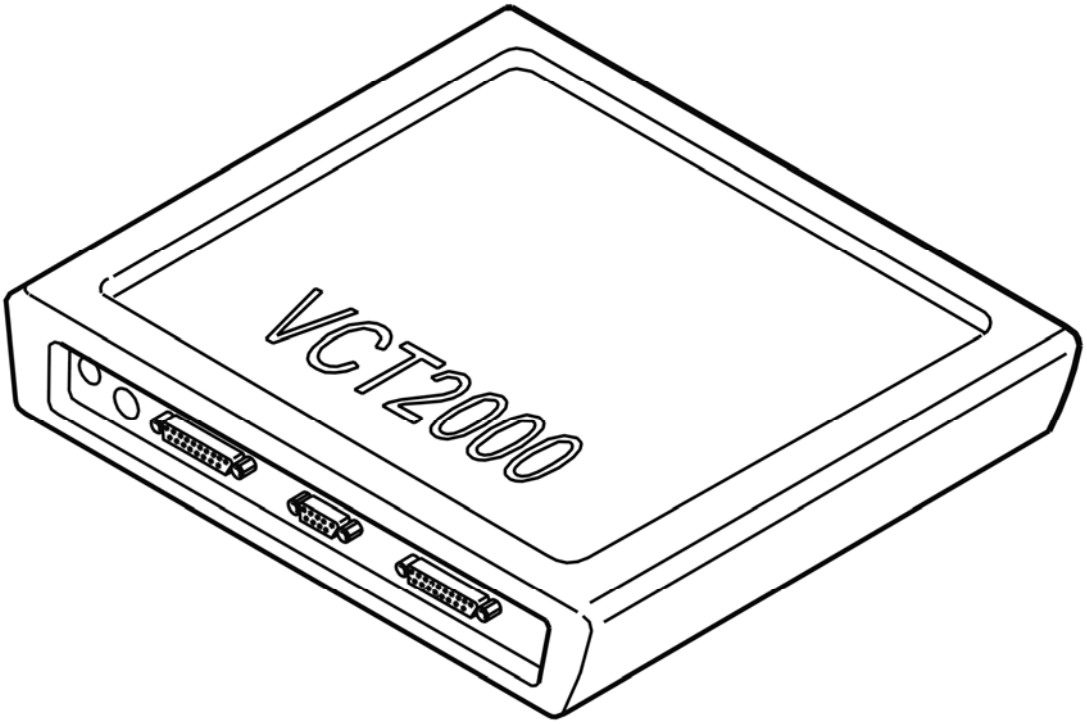

Fig. 484: Identifying VCT2000 Diagnostic Tool Symbol In VIDA
Courtesy of VOLVO CARS CORPORATION

Is the oil temperature within its permitted range?

- **YES**

  VERIFIED: Troubleshooting has been completed.

- **NO**

  Refer to **INFORMATION**

TCM-010A: SHIFT SOLENOID S5. SIGNAL TOO HIGH (AW50/51 AWD; AW55-50/51SN; 2003-2007)

DIAGNOSTIC TROUBLE CODE (DTC) INFORMATION

Condition

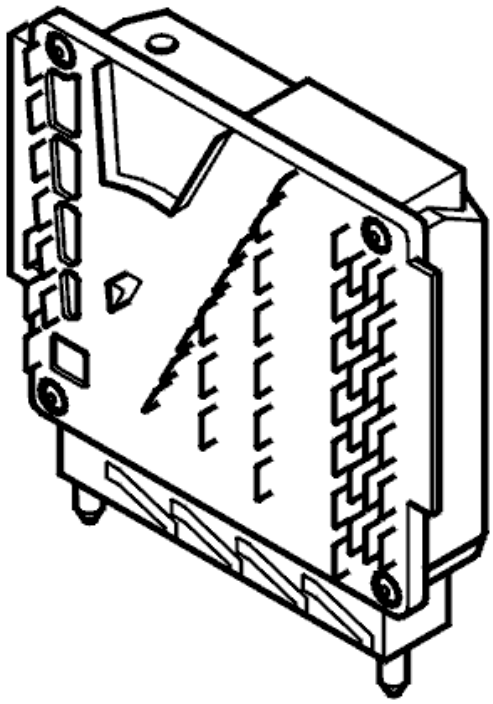

Fig. 1: Identifying Transmission Control Module (TCM)
Courtesy of VOLVO CARS CORPORATION

Shift solenoids S1, S2, S3, S4 and S5 operate in tandem to control gear-shifting. The solenoids are controlled by power stages in the transmission control module (TCM). The transmission control module (TCM) opens the power stages to activate the solenoids and sends a voltage through the circuit. Diagnostic trouble codes (DTCs) TCM-0001, TCM-0007, TCM-0101 TCM-0107 or TCM-010A are stored (depending on the solenoid) if the transmission control module (TCM) registers that the signal in circuits S1, S2, S3, S4 or S5 is too high when the solenoid should not be activated.

Substitute Value

- The transmission control module (TCM) "Emergency mode I" program has been initiated.

Possible Source

- Short-circuit to supply voltage in the signal cable.
- Internal fault in the control module.

Fault symptom[s]

- General orange warning lamp lit.
- Malfunction indicator lamp (MIL) lit.
- Harsh gear shifting.
- No shifting.
- No lock-up function.

SIGNAL TOO HIGH

CHECKS

CHECKING THE TEMPERATURE SENSOR

HINT: In some cases, the diagnostic trouble code (DTC) may be caused by a defective oil temperature sensor. Check the function of the oil temperature sensor first.

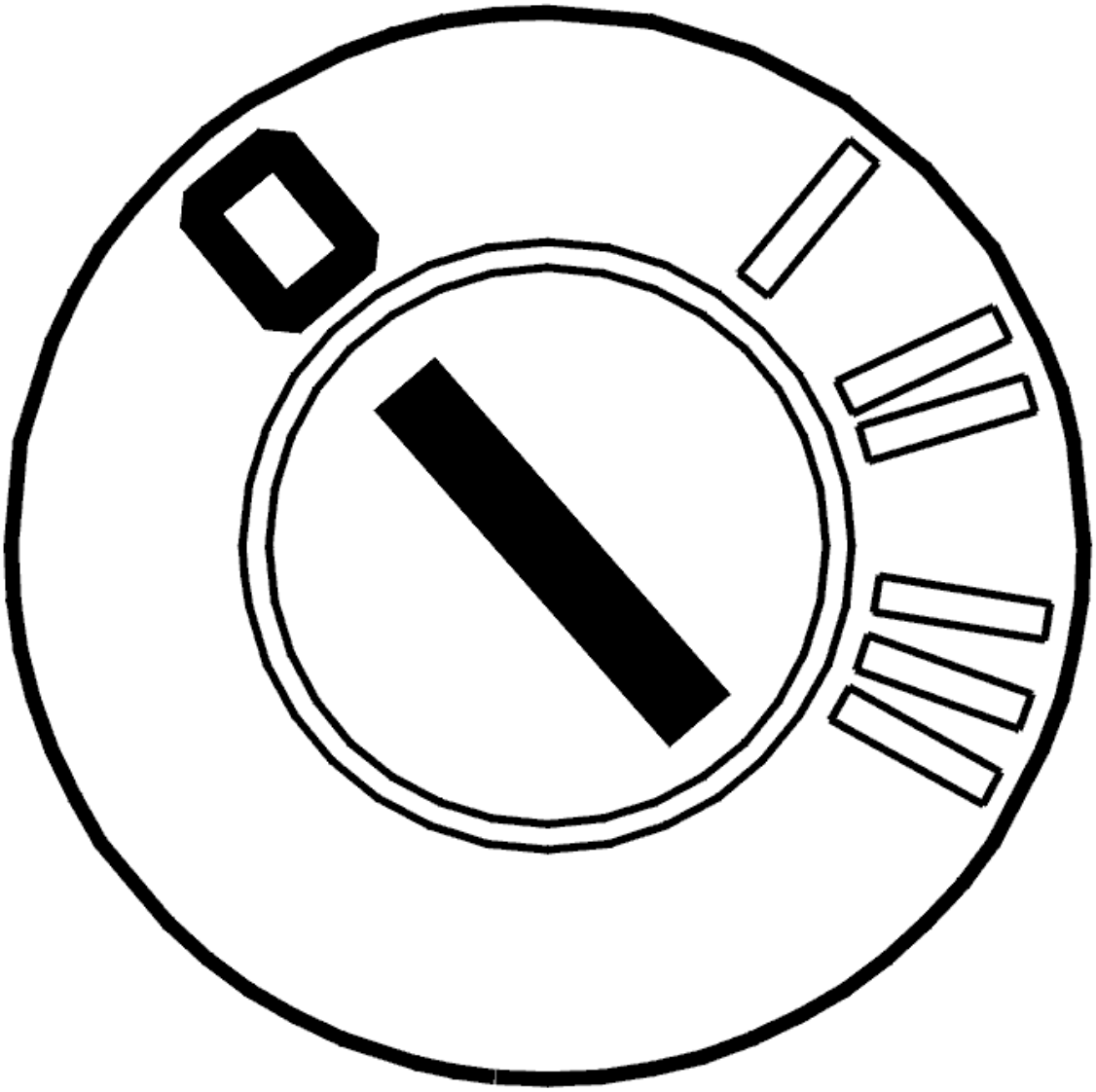

Fig. 2: Identifying Ignition OFF
Courtesy of VOLVO CARS CORPORATION

- Ignition off
- Read off the oil temperature.

Check that the function of the temperature sensor is OK. Test drive the car to increase the temperature of the transmission fluid. Read off the temperature again. Check that the temperature has increased.

NOTE: **If the temperature is outside its permitted range, fault-trace the temperature sensor.**

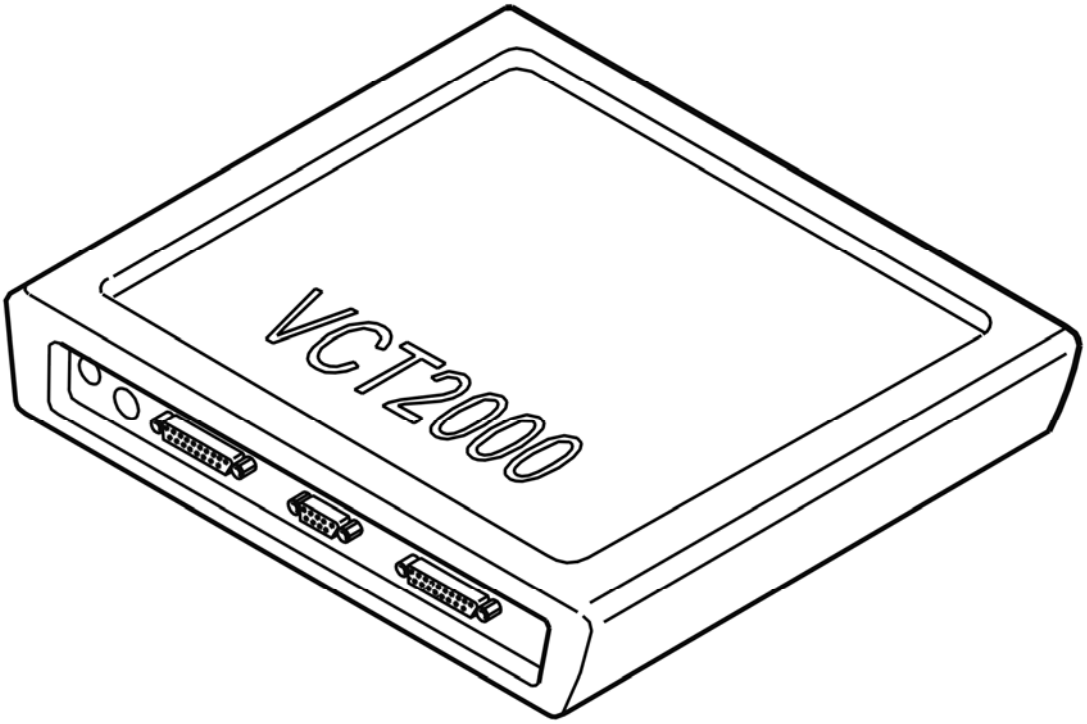

Fig. 3: Identifying VCT2000 Diagnostic Tool Symbol In VIDA
Courtesy of VOLVO CARS CORPORATION

Is the oil temperature within its permitted range?

- **YES**

  Refer to **CHECKING SHIFT SOLENOID S5**

- **NO**

  Refer to **FAULTY SIGNAL**

CHECKING SHIFT SOLENOID S5

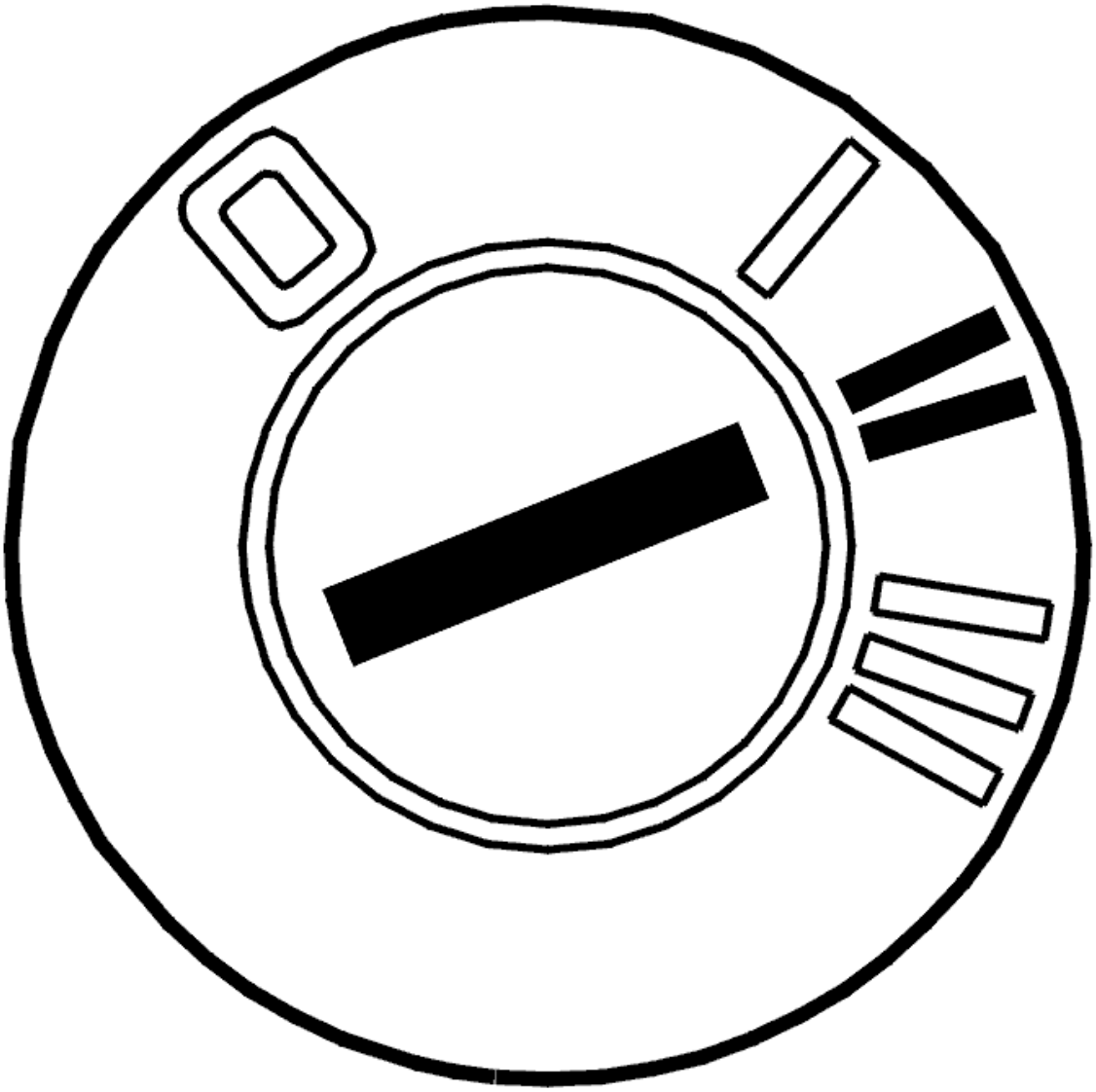

Fig. 4: Identifying Ignition ON
Courtesy of VOLVO CARS CORPORATION

- Ignition on
- Gear selector in position P
- Activate solenoid S5.

The value must change between OFF and ON.

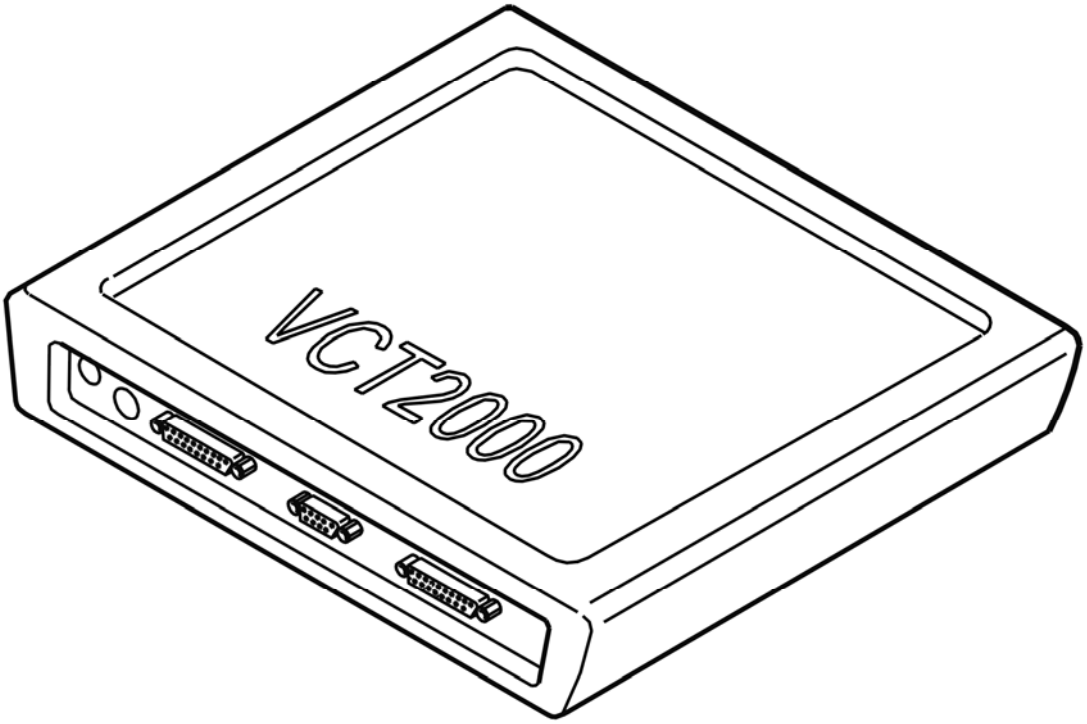

Fig. 5: Identifying VCT2000 Diagnostic Tool Symbol In VIDA
Courtesy of VOLVO CARS CORPORATION

Does the value change?

- **YES**

  Refer to **INTERMITTENT FAULT**

- **NO**

  Refer to **CHECKING THE WIRING**

CHECKING THE WIRING

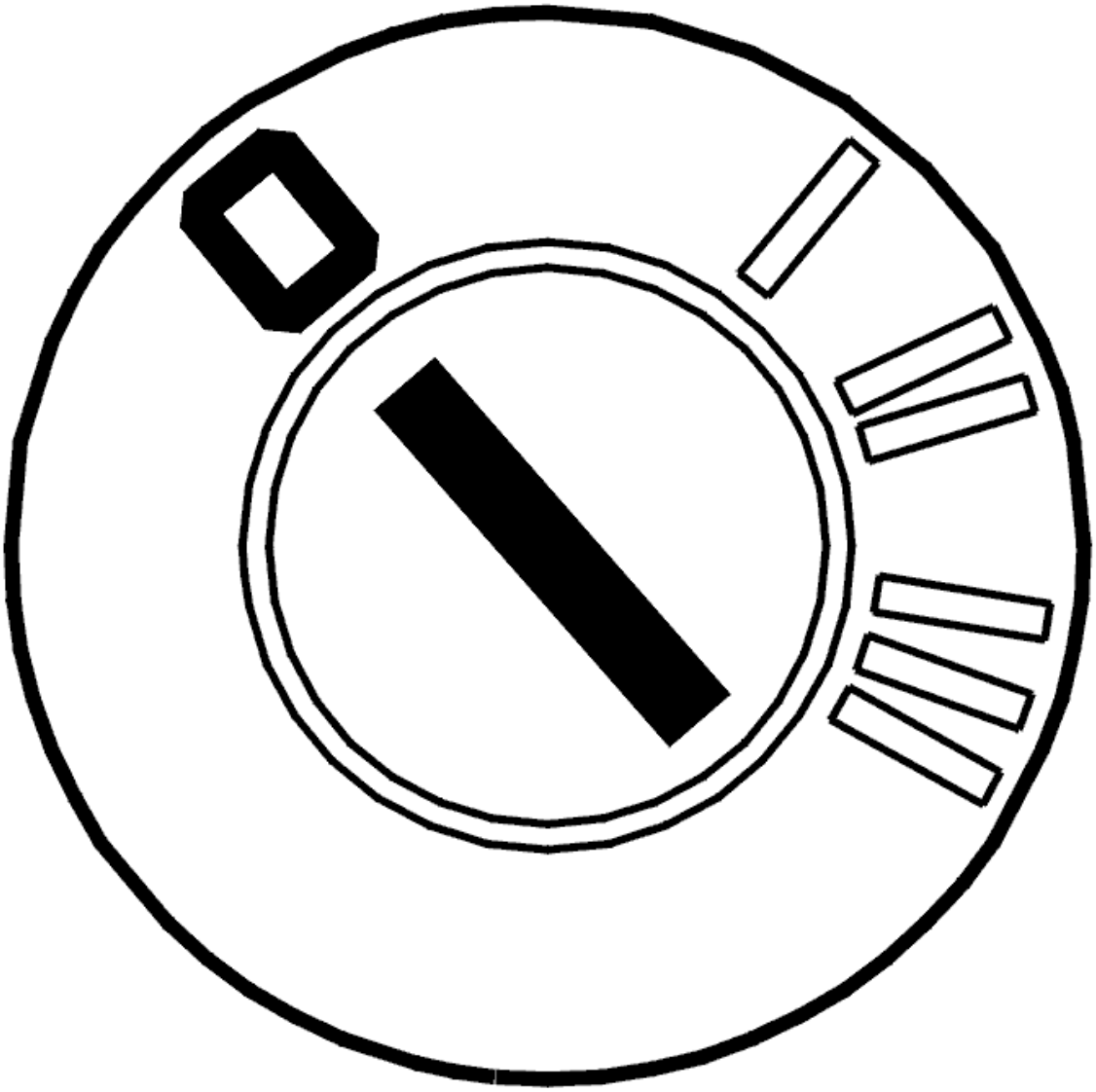

Fig. 6: Identifying Ignition OFF
Courtesy of VOLVO CARS CORPORATION

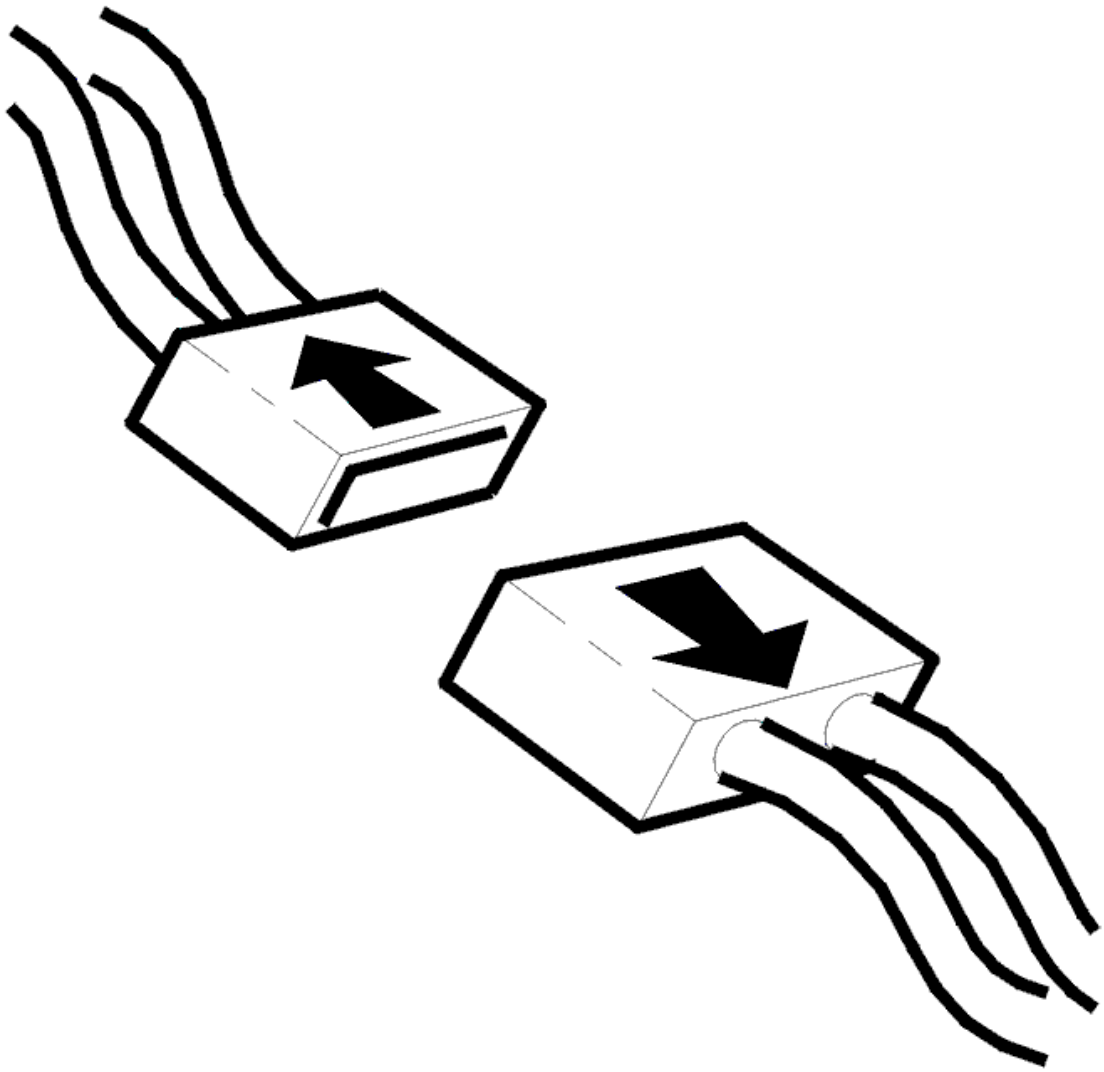

Fig. 7: Identifying Connector(s) Disconnected
Courtesy of VOLVO CARS CORPORATION

- Ignition off
- The breakout box connected
- Transmission connector C disconnected.

  Check the cable between control module terminal #B6 (#A66) and transmission connector terminal #C5 (control module side). Check for a short-circuit to supply voltage according to **SHORT-CIRCUIT TO SUPPLY VOLTAGE. PERMANENT FAULTS** . Also check against the other cables in the circuit.

  Other information:

  - To connect the breakout box, see **CONNECTING THE BREAKOUT BOX**
  - To disconnect the transmission connectors, see **CONNECTORS, TRANSMISSION,**

DISCONNECTING / CONNECTING

- For information about signals, see **SIGNAL DESCRIPTION. TRANSMISSION CONTROL MODULE (TCM)** .

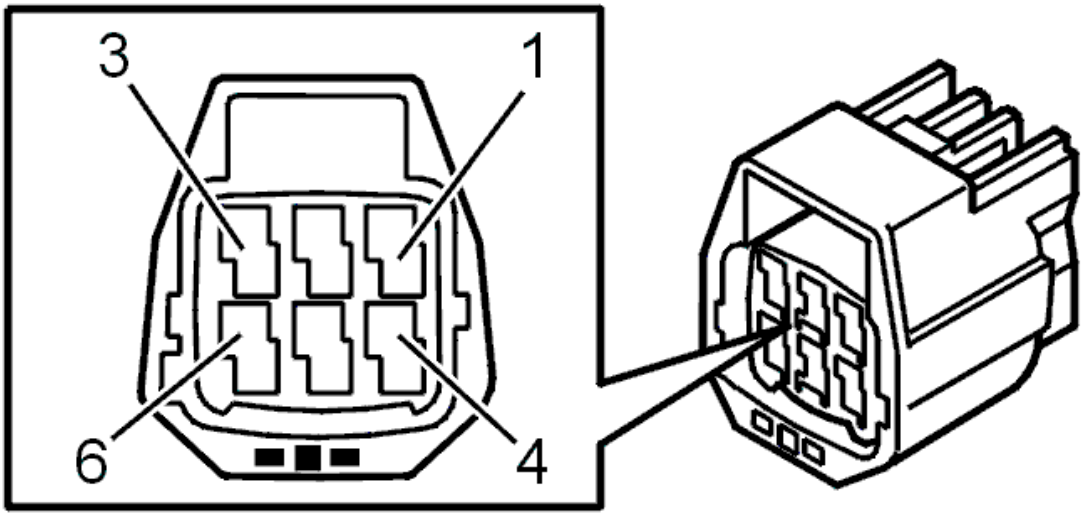

Fig. 8: Identifying 6-Pin Transmission Connector Terminals
Courtesy of VOLVO CARS CORPORATION

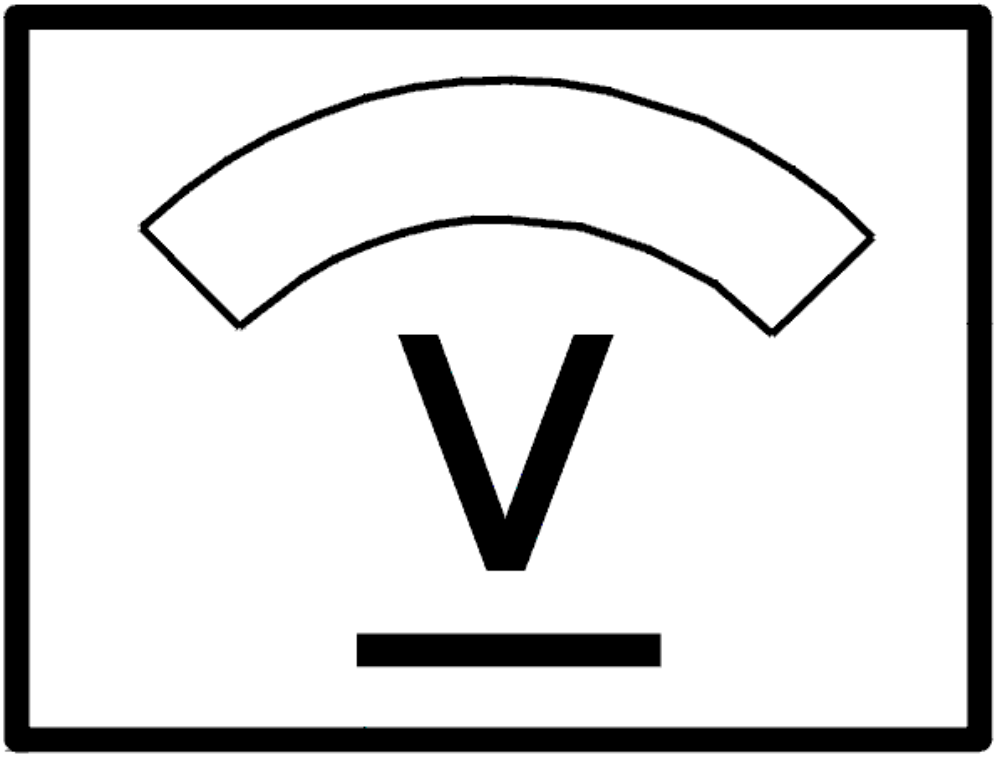

Fig. 9: Identifying Voltage Display
Courtesy of VOLVO CARS CORPORATION

Was a fault detected?

- **YES**

  Refer to **VERIFICATION**

- **NO**

  Refer to **CHECKING THE WIRING AND COMPONENT**

CHECKING THE WIRING AND COMPONENT

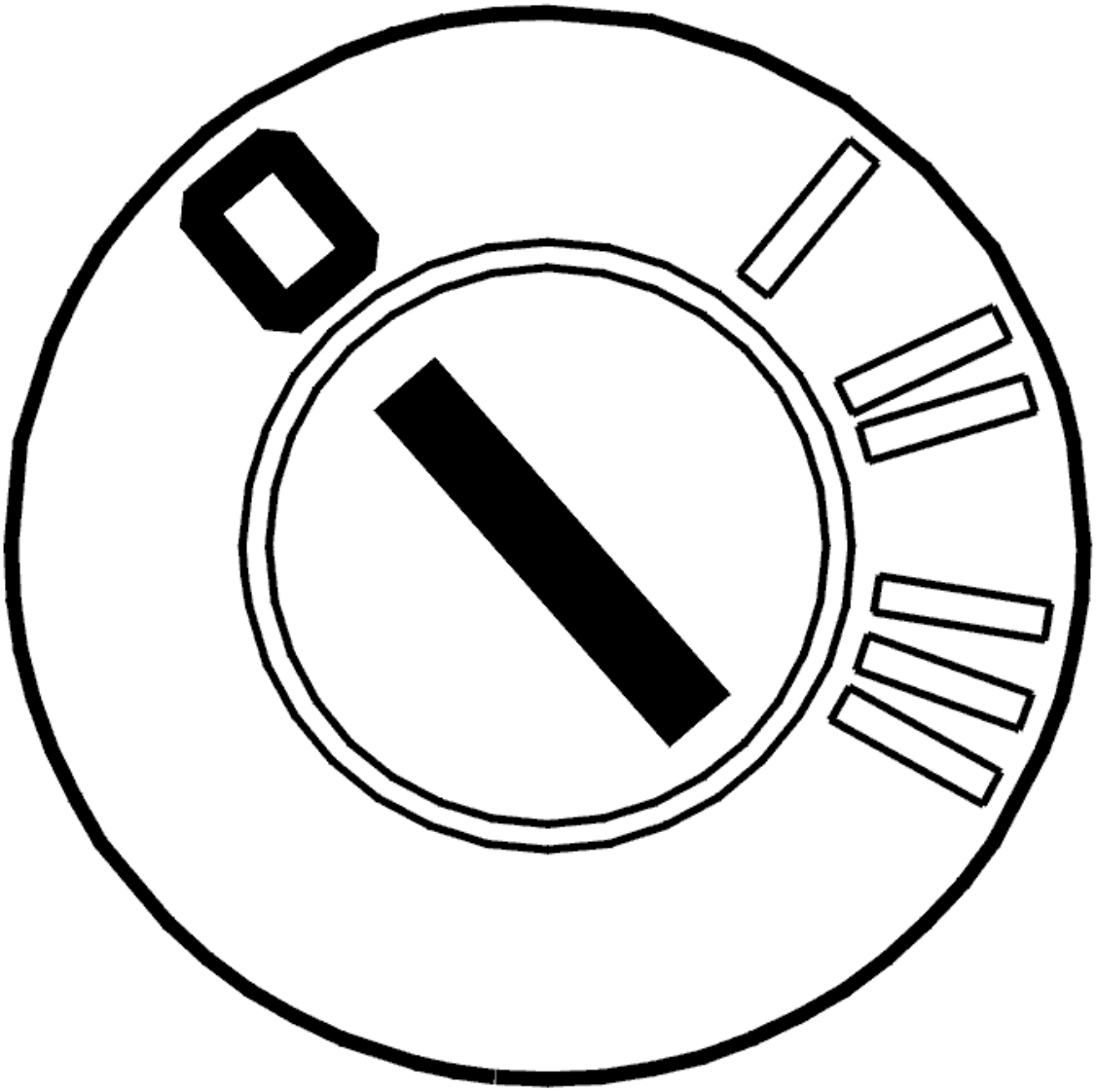

Fig. 10: Identifying Ignition OFF
Courtesy of VOLVO CARS CORPORATION

- Ignition off
- Open the control system.

  Check the cable between transmission connector terminal #C5 (transmission side) and the connector for solenoid S5. Check for a short-circuit to supply voltage according to **SHORT-CIRCUIT TO SUPPLY VOLTAGE. PERMANENT FAULTS** . Also check against the other cables in the circuit.

  Replace solenoid S5 if no faults are found in the cable.

  Remedy as necessary.

  Other information:

- To connect the breakout box, see **CONNECTING THE BREAKOUT BOX**
- To disconnect the transmission connectors, see **CONNECTORS, TRANSMISSION, DISCONNECTING / CONNECTING**
- To open the control system and to check or replace solenoid S5, see **SOLENOID CONTROL SYSTEM, REPLACING**
- To replace the cable harness for the control system, see **TEMPERATURE SENSOR FLUID, TRANSAXLE, (TFT)**
- For information about signals, see **SIGNAL DESCRIPTION. TRANSMISSION CONTROL MODULE (TCM)** .

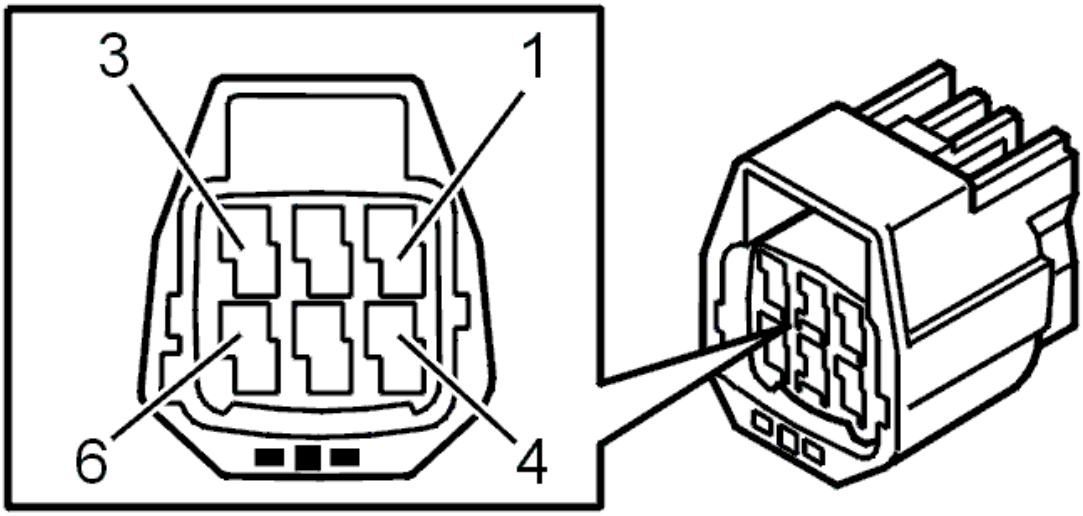

Fig. 11: Identifying 6-Pin Transmission Connector Terminals
Courtesy of VOLVO CARS CORPORATION

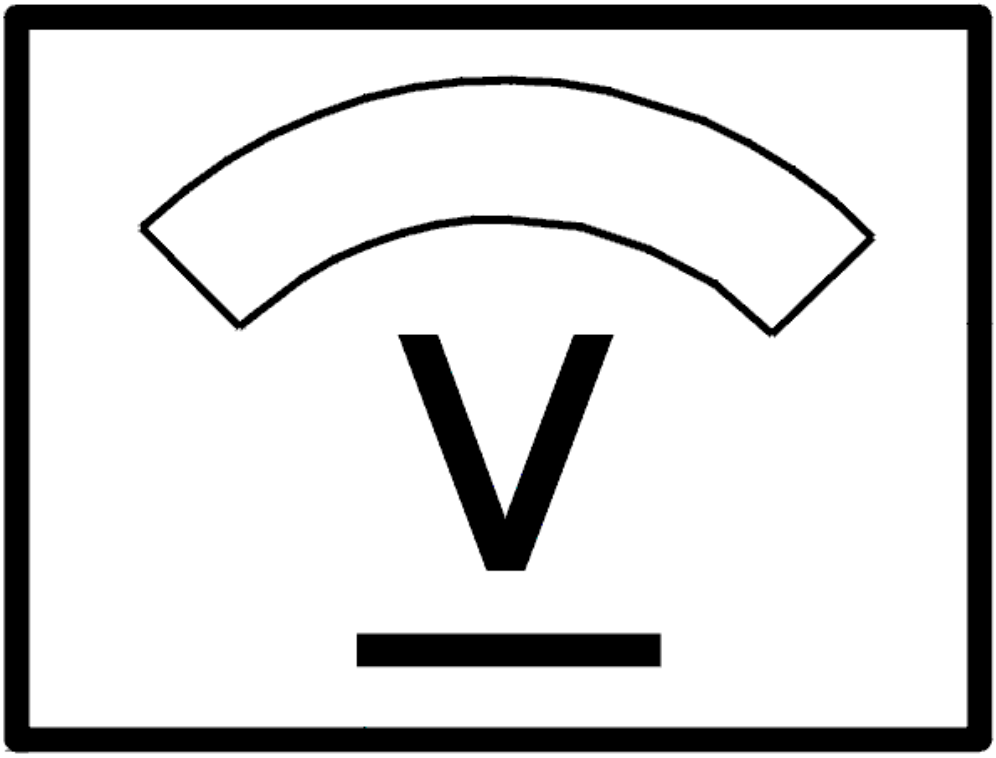

Fig. 12: Identifying Voltage Display
Courtesy of VOLVO CARS CORPORATION

- **Continue**

  Refer to **RESETTING THE ADAPTATION**

INTERMITTENT FAULT

Check the cable between control module terminal #B6 (#A66) and transmission connector terminal #C5 (control module side). Check for an intermittent short-circuit to supply voltage according to **SHORT-CIRCUIT TO SUPPLY VOLTAGE, INTERMITTENT FAULTS** .

Remedy as necessary.

Other information:

- To connect the breakout box, see **CONNECTING THE BREAKOUT BOX**
- To disconnect the transmission connectors, see **CONNECTORS, TRANSMISSION, DISCONNECTING / CONNECTING**
- For information about signals, see **SIGNAL DESCRIPTION. TRANSMISSION CONTROL MODULE (TCM)** .

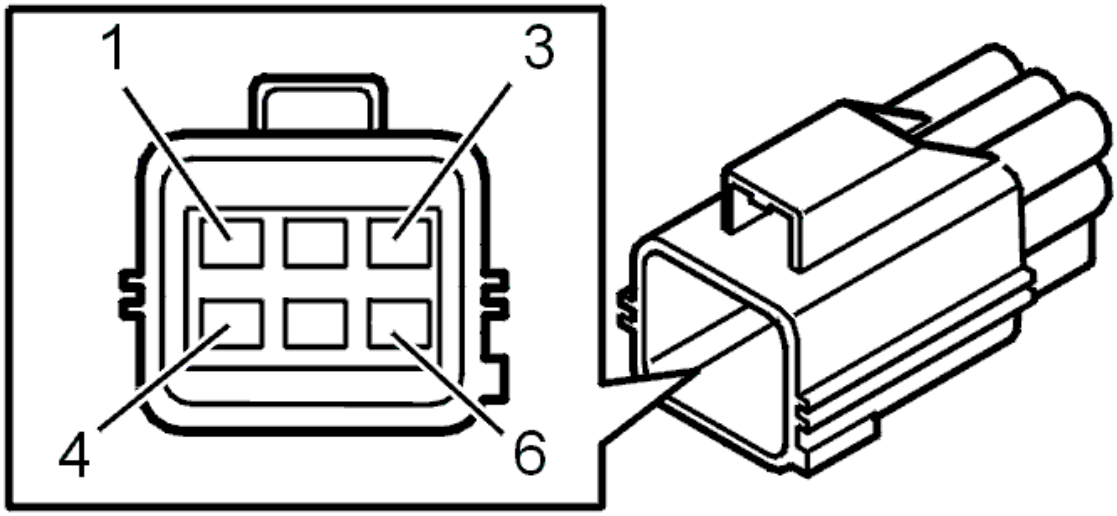

Fig. 13: Identifying 6-Pin Transmission Connector Terminals
Courtesy of VOLVO CARS CORPORATION

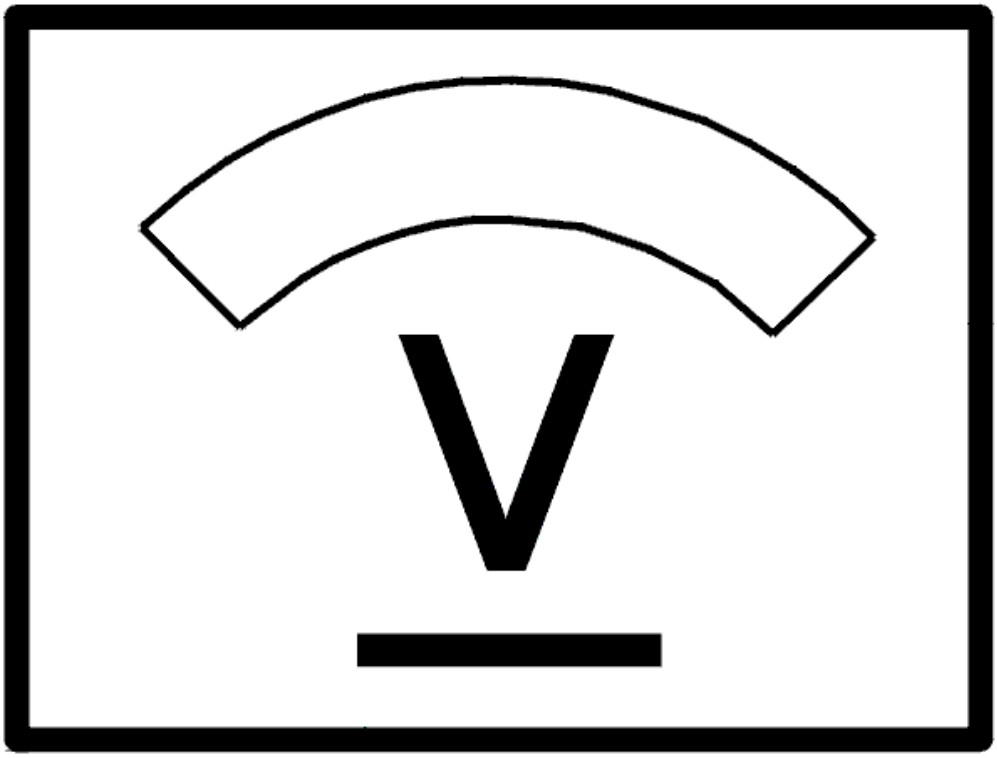

Fig. 14: Identifying Voltage Display
Courtesy of VOLVO CARS CORPORATION

- **Continue**

  Refer to **INFORMATION**

RESETTING THE ADAPTATION

RESETTING ADAPTATION AND THE COUNTER FOR "TRANSMISSION OIL CHANGE"

HINT: The transmission has torque controlled adaptive pressure control. Pressure control means that the transmission regulates the pressure itself during each gear shift. This avoids harsh gear shifting. Each gear shift is evaluated by the control module and stored in the memory. This allows for compensation for wear and tear in the transmission and clutch. It is important that the adaptation in the memory is reset after the transmission has been repaired. This is to ensure normal operation. The oil is replaced during

repair; the "Transmission oil change" counter must be reset. If the counter is not reset when the fluid is drained and replaced, there is a risk that a diagnostic trouble code (DTC) will be stored in incorrect circumstances.

NOTE: This applies only if the transmission or one of the components in the transmission have been replaced.

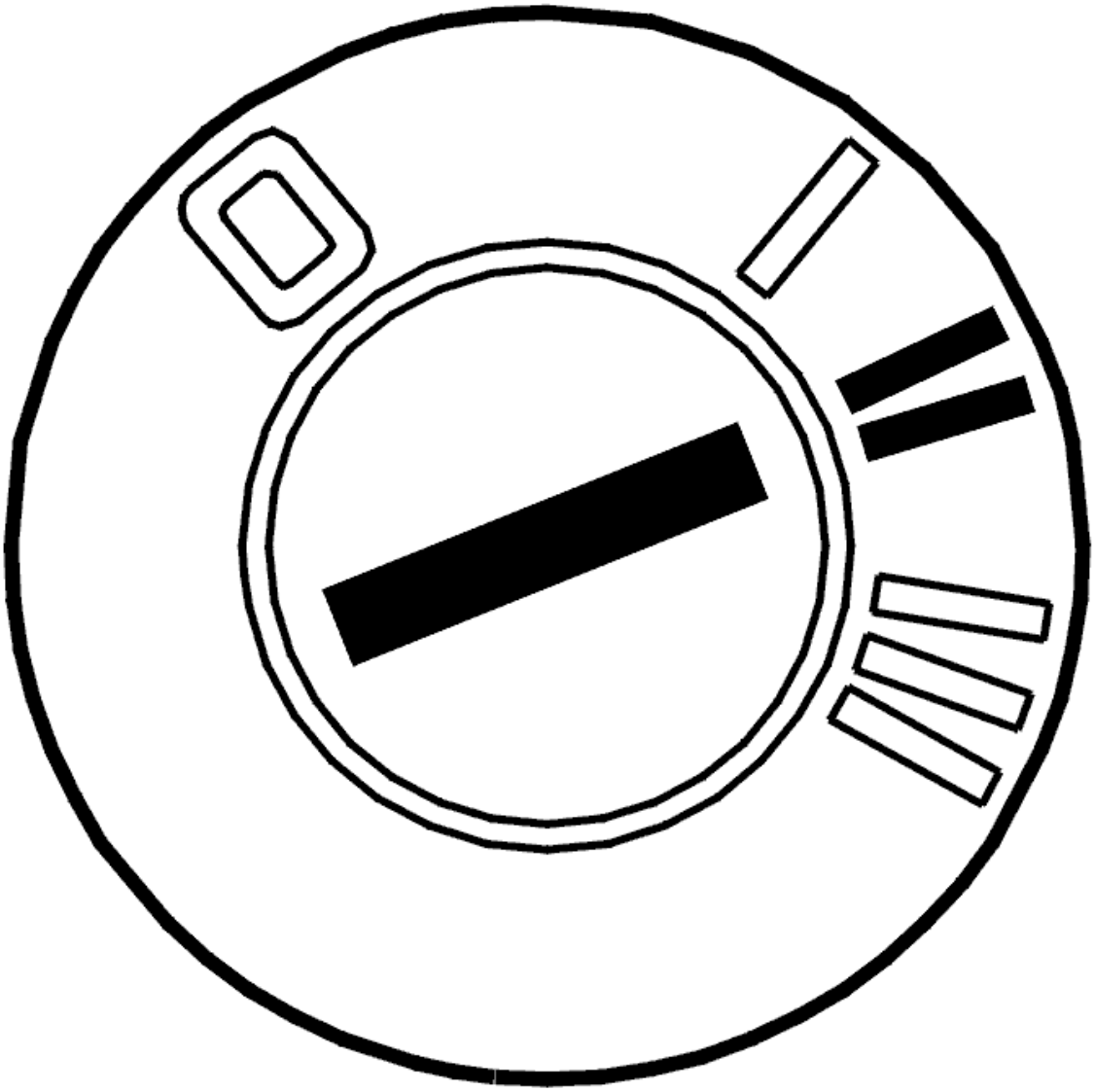

Fig. 15: Identifying Ignition ON
Courtesy of VOLVO CARS CORPORATION

- Ignition on.

  Click on the VCT2000 symbol to reset the adaptation and counter.

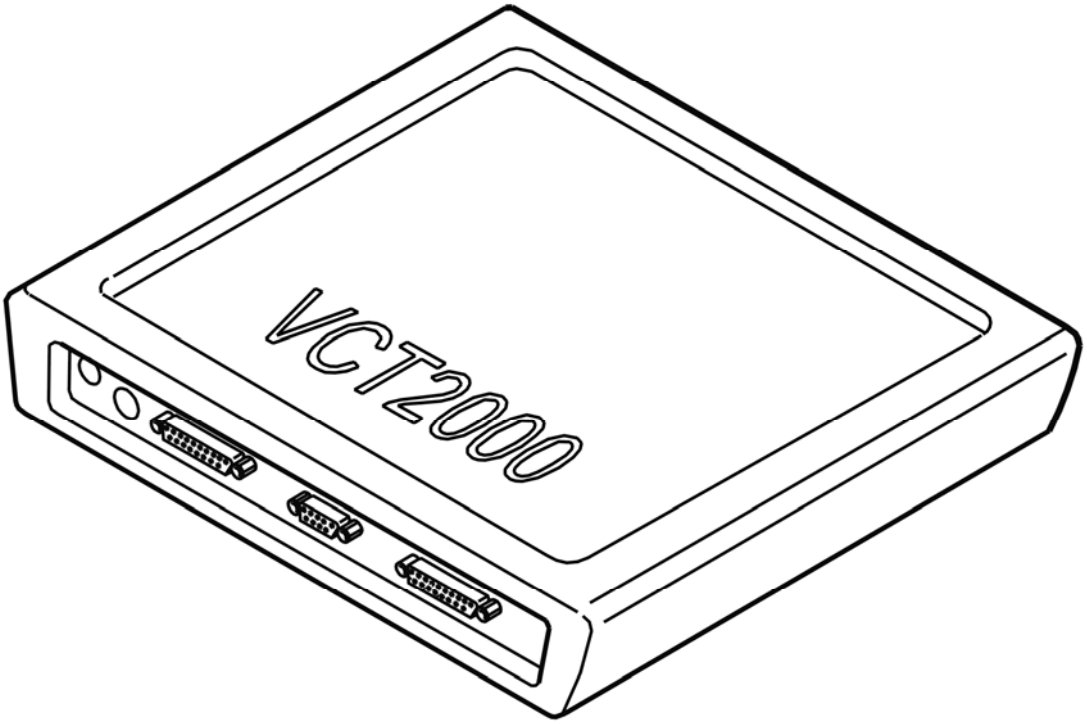

Fig. 16: Identifying VCT2000 Diagnostic Tool Symbol In VIDA
Courtesy of VOLVO CARS CORPORATION

- **Continue**

  Refer to **VERIFICATION**

VERIFICATION

VERIFICATION

HINT: After carrying out the repair, check that the fault has been remedied.

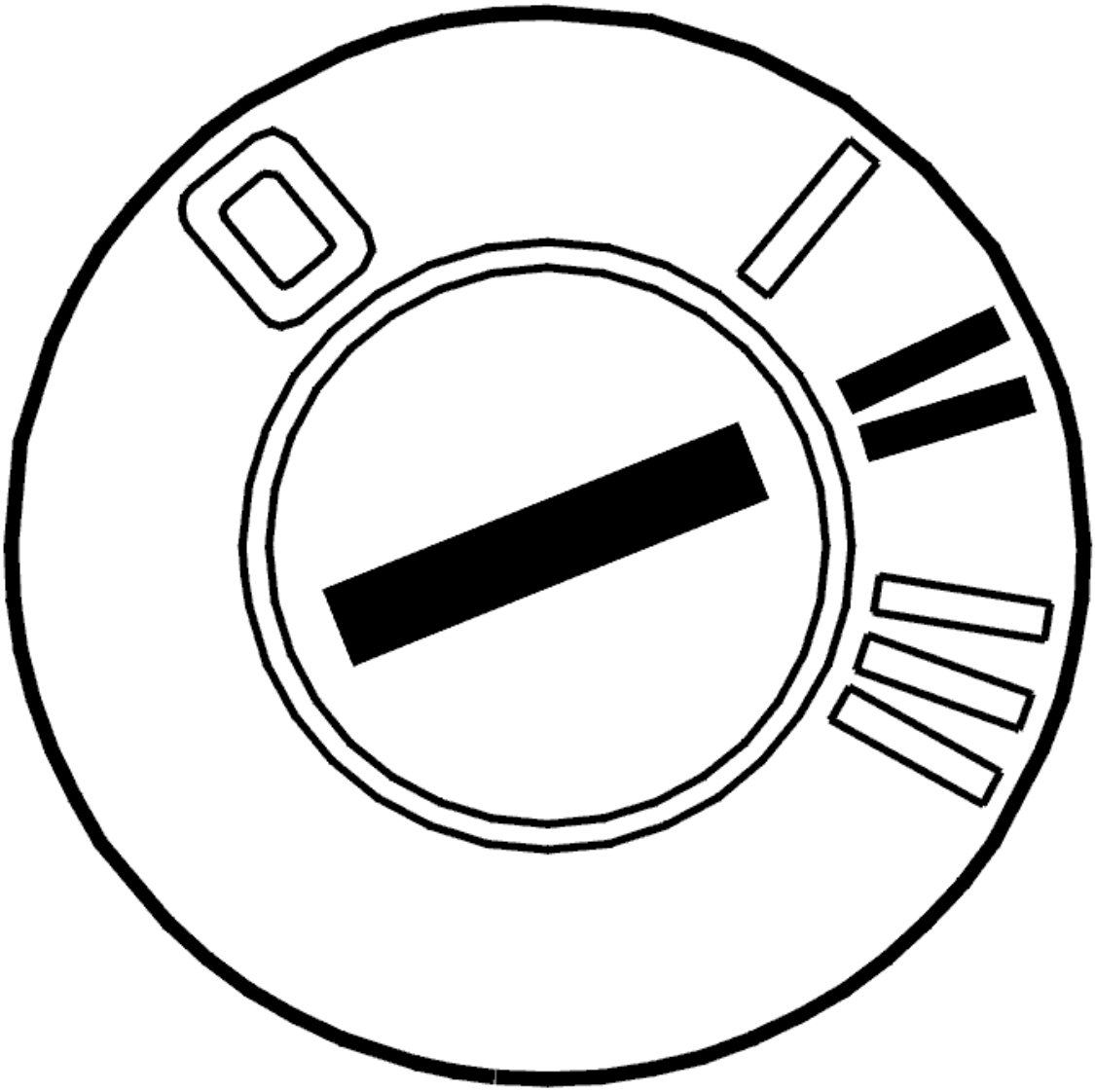

Fig. 17: Identifying Ignition ON
Courtesy of VOLVO CARS CORPORATION

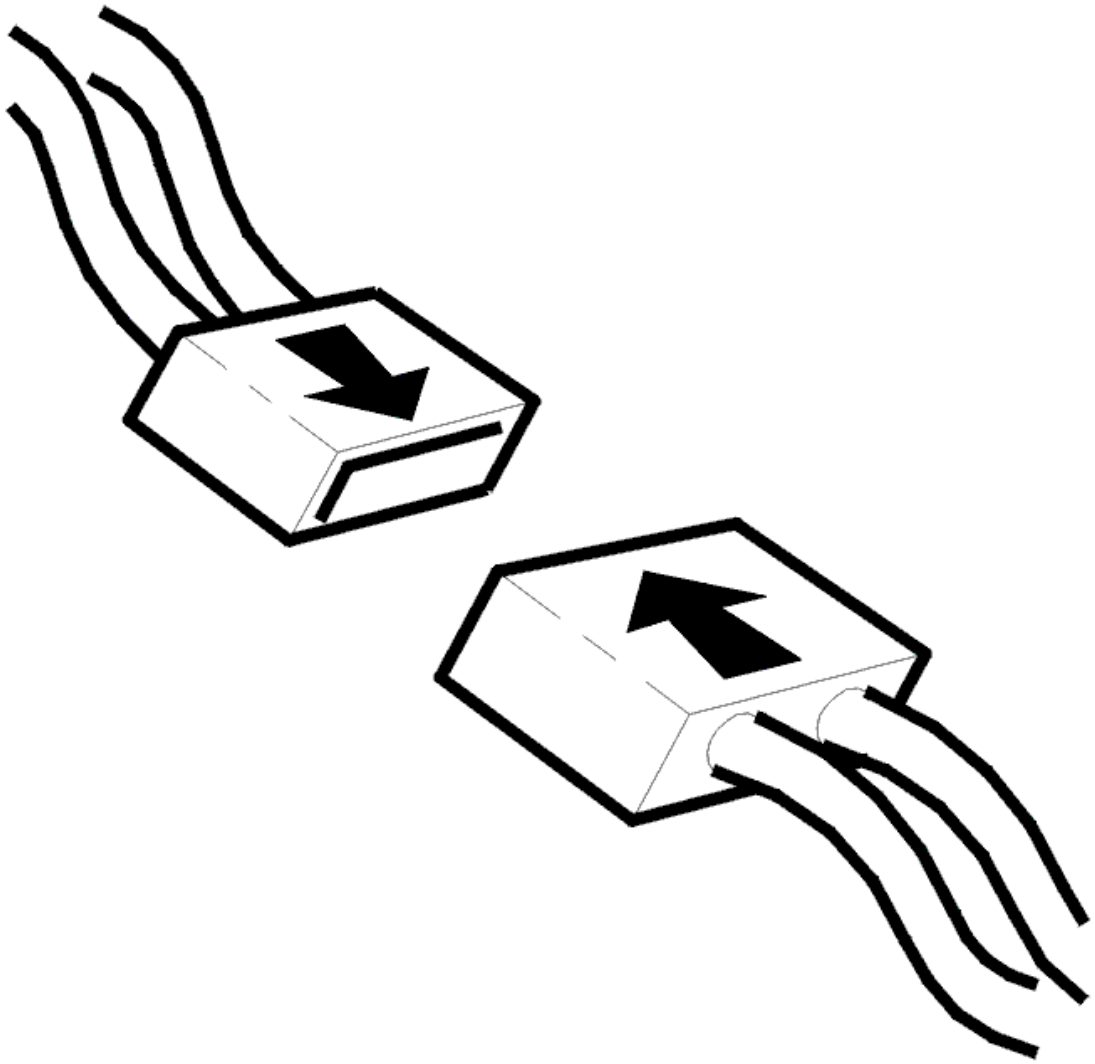

Fig. 18: Identifying Connector(s) Reinstallation
Courtesy of VOLVO CARS CORPORATION

- Ignition off.
- Reinstall the components, reconnect the connectors etc.
- Ignition on.
- Gear selector in position P.
- Activate solenoid S5.

  The value should change between OFF and ON.

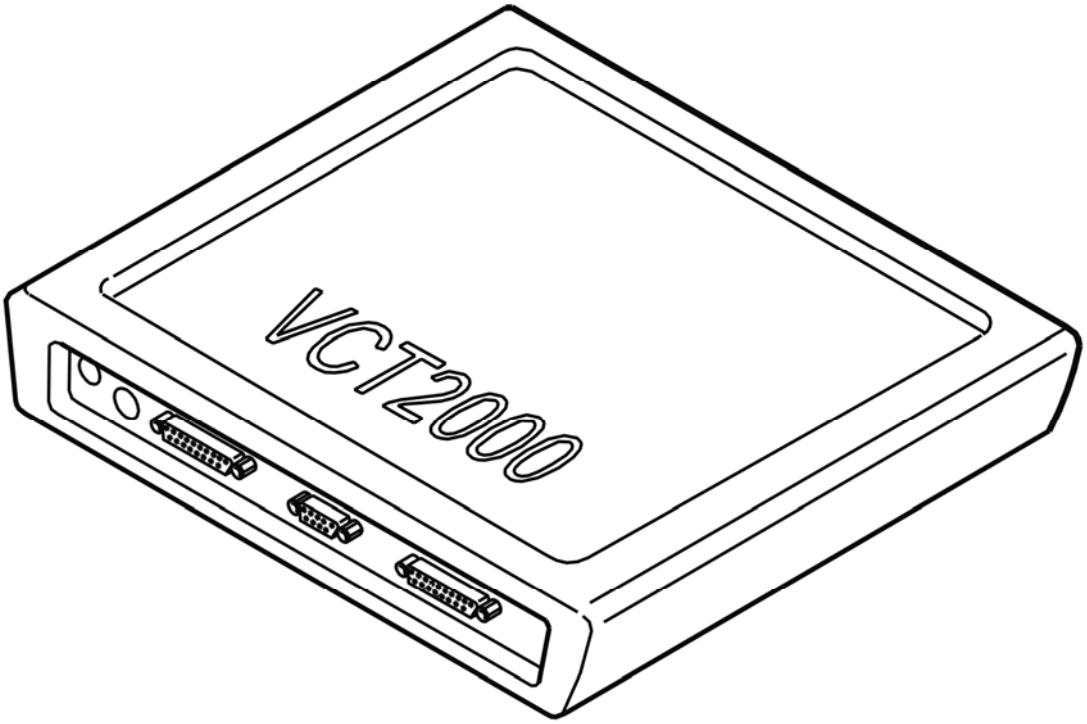

Fig. 19: Identifying VCT2000 Diagnostic Tool Symbol In VIDA
Courtesy of VOLVO CARS CORPORATION

Does the value change between OFF and ON?

- **YES**

  VERIFIED: Troubleshooting has been completed.

- **NO**

  Refer to **INFORMATION**

INFORMATION

FAULT-TRACING INFORMATION

The fault should have been detected and remedied. As this is not the case fault-tracing has failed.

Exit fault-tracing for this diagnostic trouble code (DTC) or make another attempt.

INFORMATION

FAULT-TRACING INFORMATION

If the fault is intermittent, do not verify fault-tracing if the fault does not recur.

It is possible to view the information again, or leave fault-tracing for this diagnostic trouble code (DTC).

FAULTY SIGNAL

CHECKING TRANSMISSION FLUID TEMPERATURE SENSOR

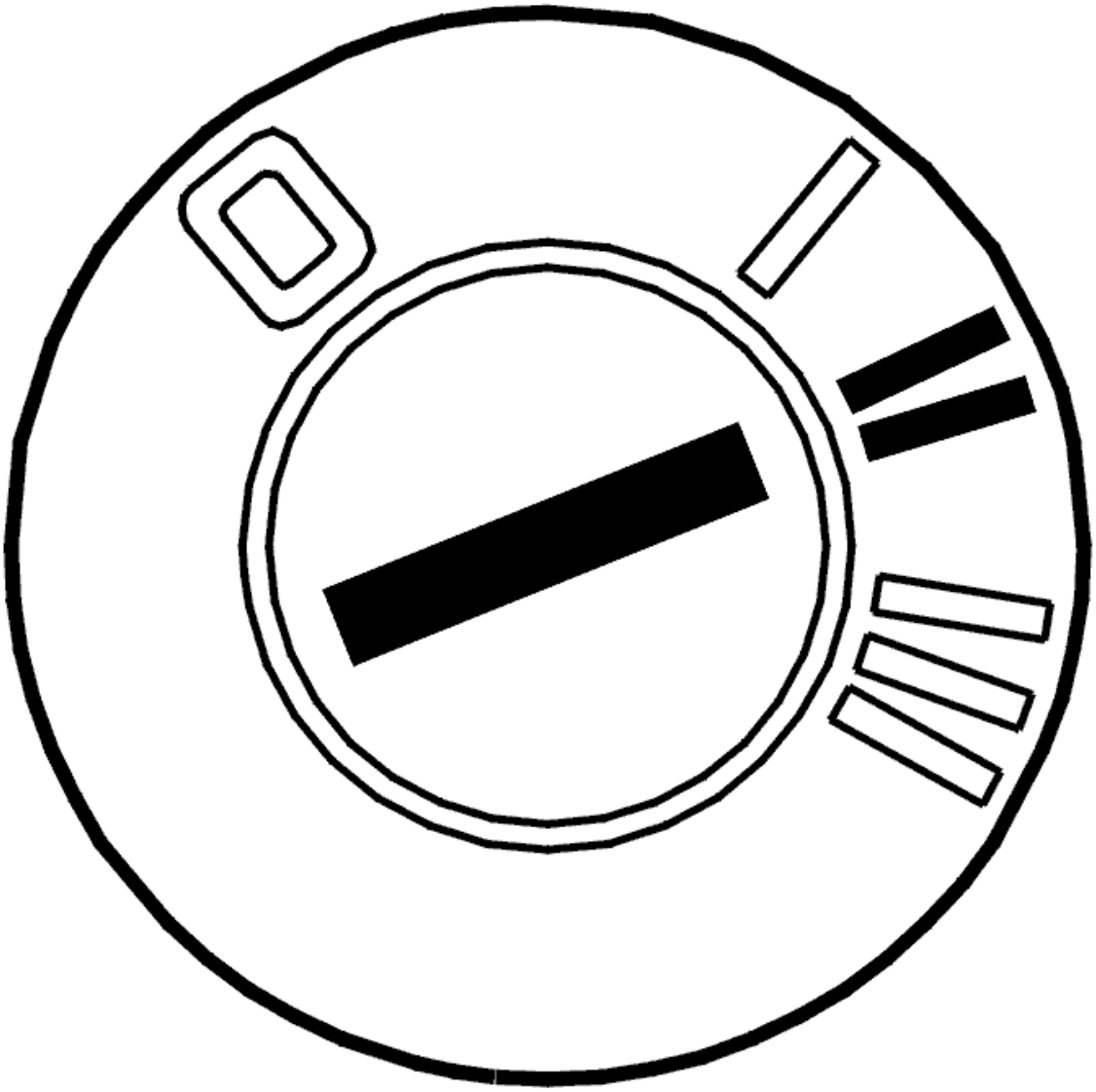

Fig. 20: Identifying Ignition ON
Courtesy of VOLVO CARS CORPORATION

- Ignition on
- Read off the oil temperature.

  Check that the temperature is within its permitted range.

Compare with the transmission temperature.

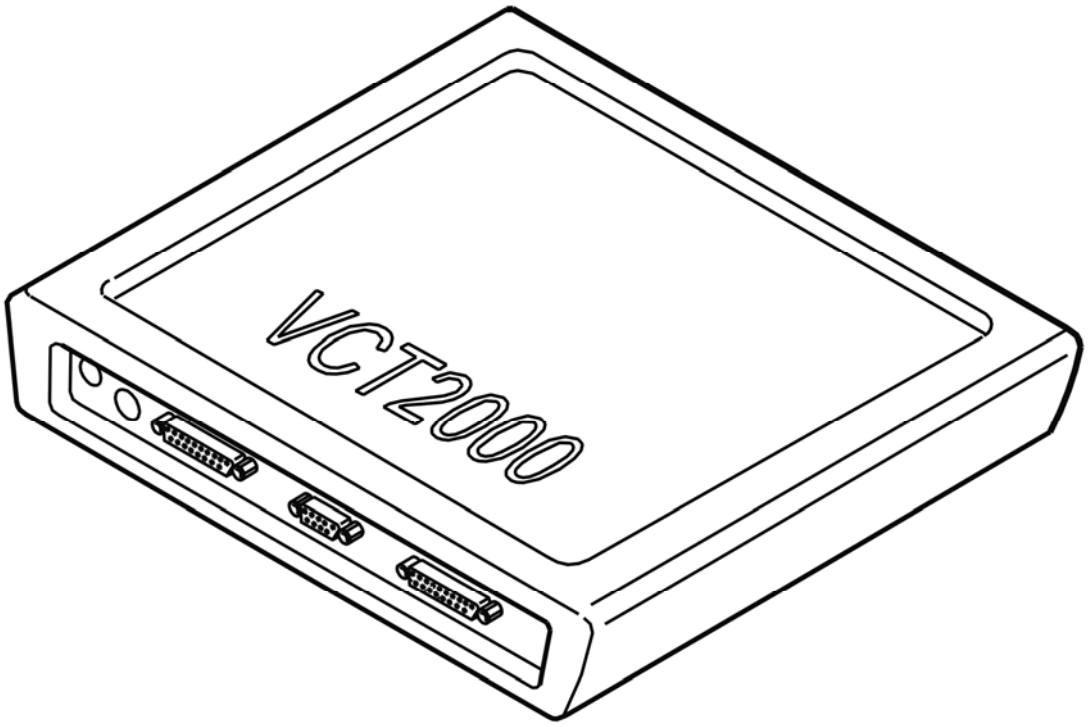

Fig. 21: Identifying VCT2000 Diagnostic Tool Symbol In VIDA
Courtesy of VOLVO CARS CORPORATION

Was the transmission temperature within its permitted range?

- **YES**

  Refer to **INTERMITTENT FAULT**

- **NO**

  Refer to **CHECKING TRANSMISSION FLUID TEMPERATURE SENSOR**

CHECKING TRANSMISSION FLUID TEMPERATURE SENSOR

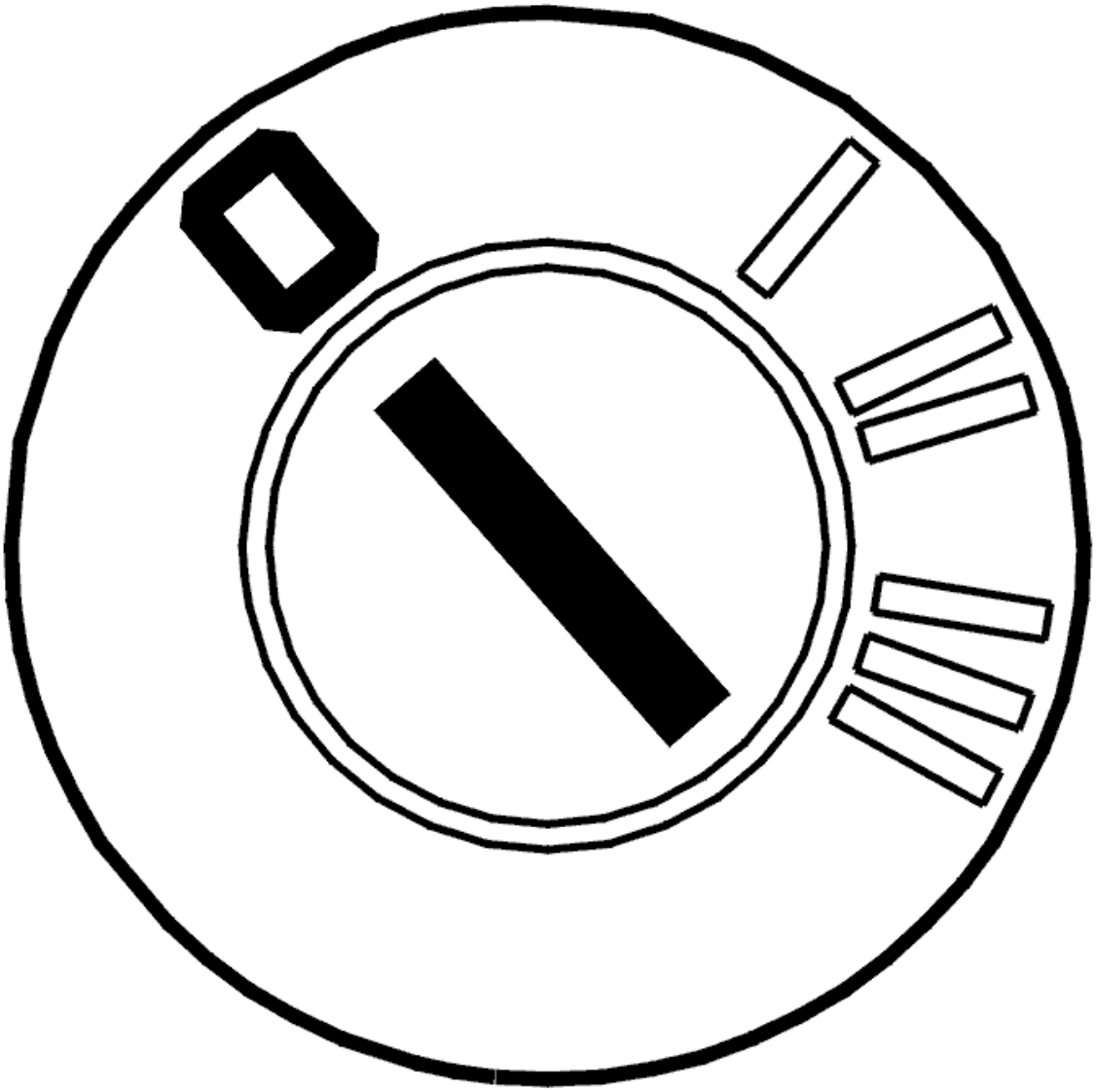

Fig. 22: Identifying Ignition OFF
Courtesy of VOLVO CARS CORPORATION

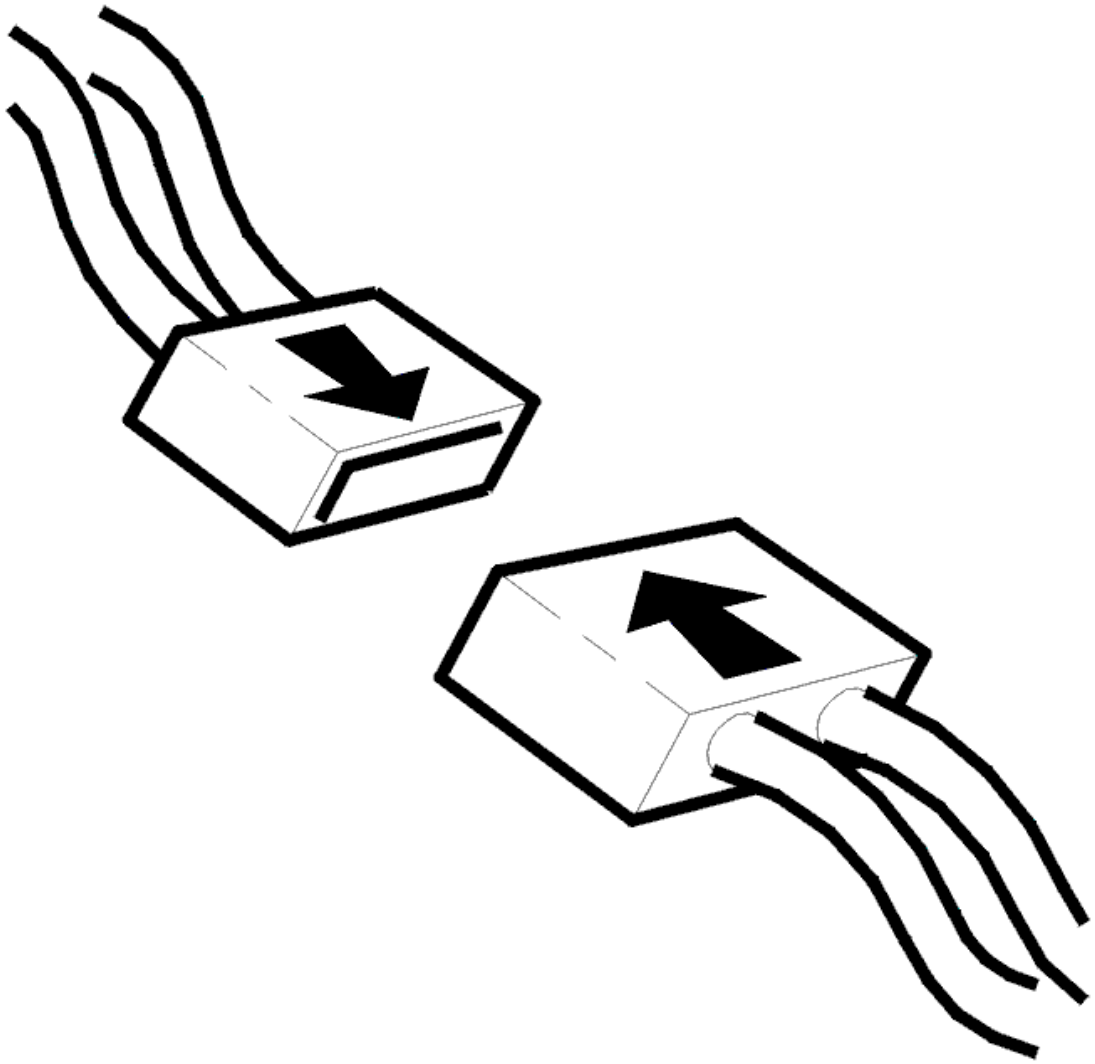

Fig. 23: Identifying Connector(s) Reinstallation
Courtesy of VOLVO CARS CORPORATION

- Ignition off
- Transmission connector D disconnected.

  Check the temperature sensor. Measure the resistance between transmission connector D terminals #D7 and #D8.

  The resistance must be 4.5-6 kohms at 20°C.

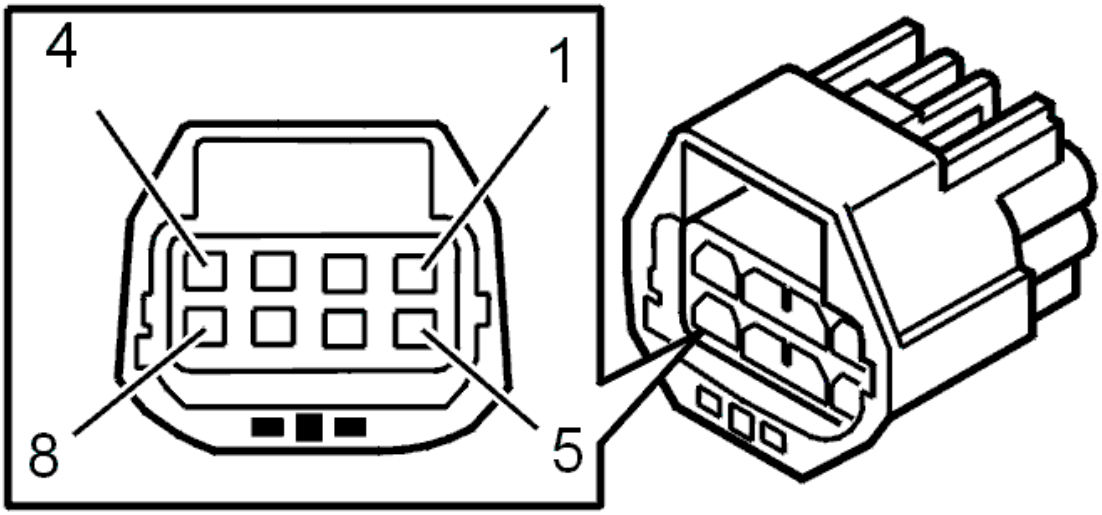

Fig. 24: Identifying 8-Pin Transmission Connector Terminals
Courtesy of VOLVO CARS CORPORATION

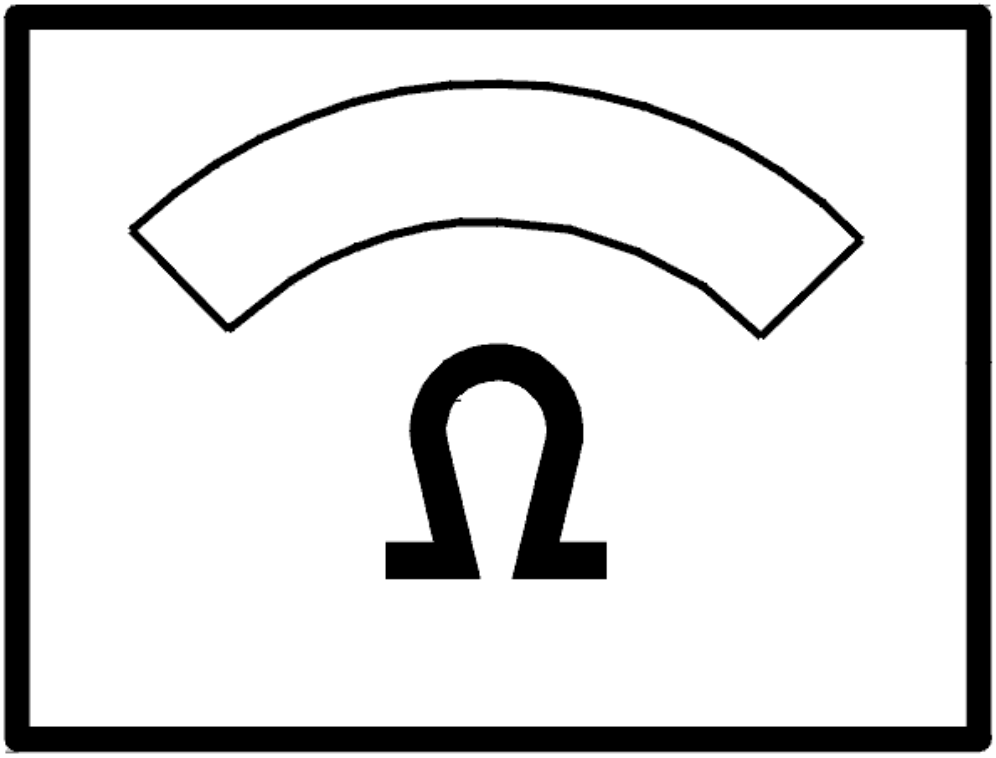

Fig. 25: Identifying Ohms Display
Courtesy of VOLVO CARS CORPORATION

Was the resistance OK?

- **YES**

  Refer to **CHECKING TRANSMISSION FLUID TEMPERATURE SENSOR**

- **NO**

  Refer to **CHECKING THE CABLE AND COMPONENT**

CHECKING TRANSMISSION FLUID TEMPERATURE SENSOR

Check the cable between control module terminal #A37 (#A37) and transmission connector terminal #D7

(control module side). Check for an open-circuit according to **OPEN-CIRCUIT, PERMANENT FAULTS** .

Check the cable between control module terminal #A55 (#A55)and transmission connector terminal #D8 (control module side). Check for an open-circuit according to **OPEN-CIRCUIT, PERMANENT FAULTS** .

Remedy as necessary.

Other information:

- To connect the breakout box, see **CONNECTING THE BREAKOUT BOX**
- To disconnect the transmission connectors, see **CONNECTORS, TRANSMISSION, DISCONNECTING / CONNECTING**
- For information about signals, see **SIGNAL DESCRIPTION. TRANSMISSION CONTROL MODULE (TCM)** .

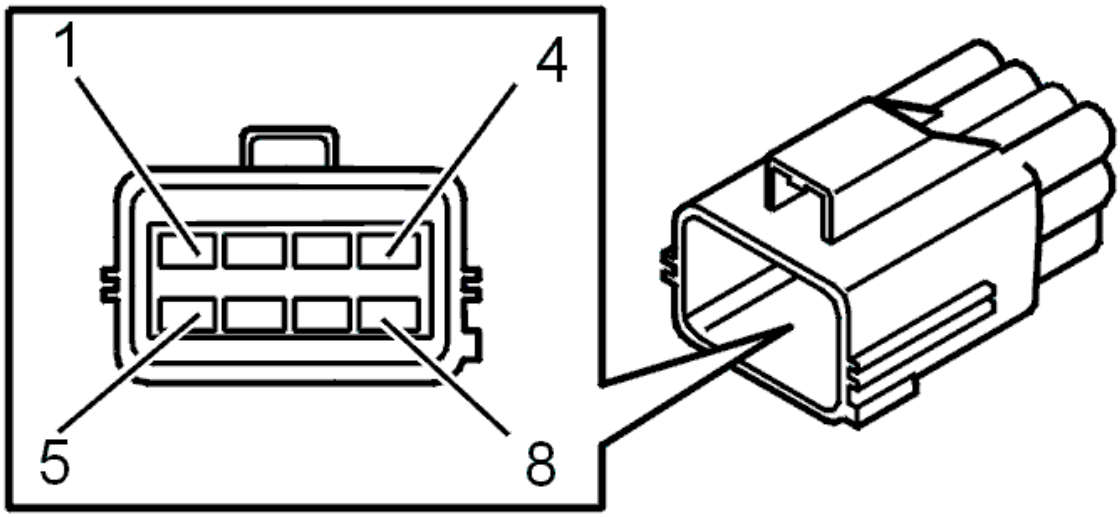

Fig. 26: Identifying Transmission Connector Terminals
Courtesy of VOLVO CARS CORPORATION

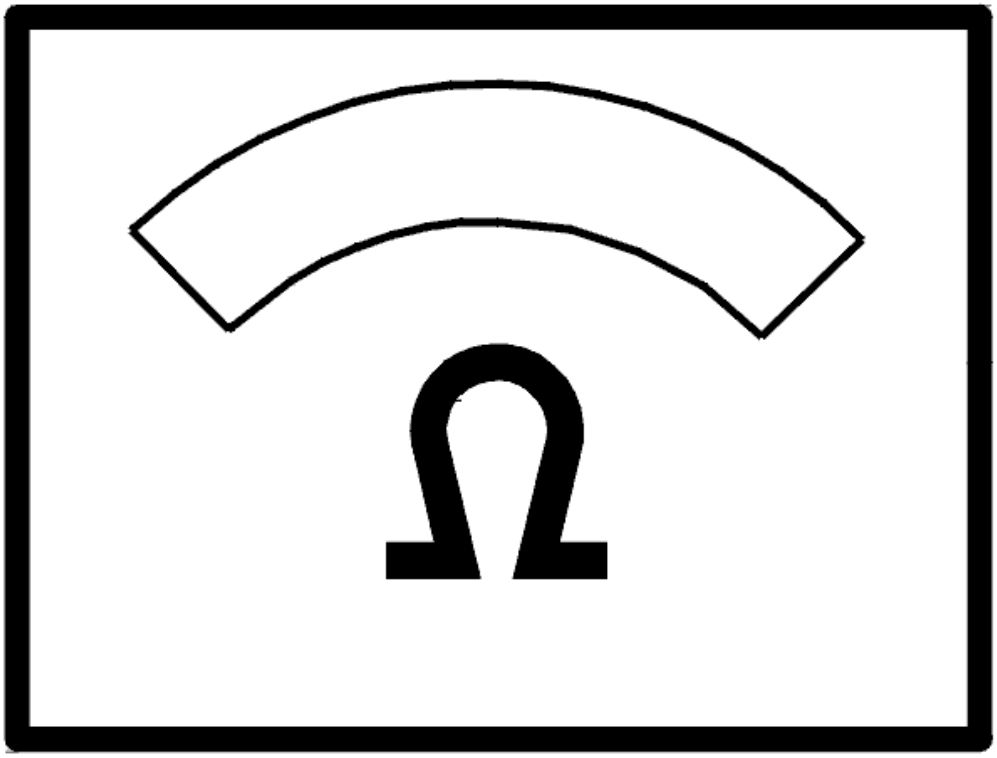

Fig. 27: Identifying Ohms Display
Courtesy of VOLVO CARS CORPORATION

Was a fault detected?

- **YES**

  Refer to **VERIFICATION**

- **NO**

  Refer to **CHECKING THE CABLE AND COMPONENT**

CHECKING THE CABLE AND COMPONENT

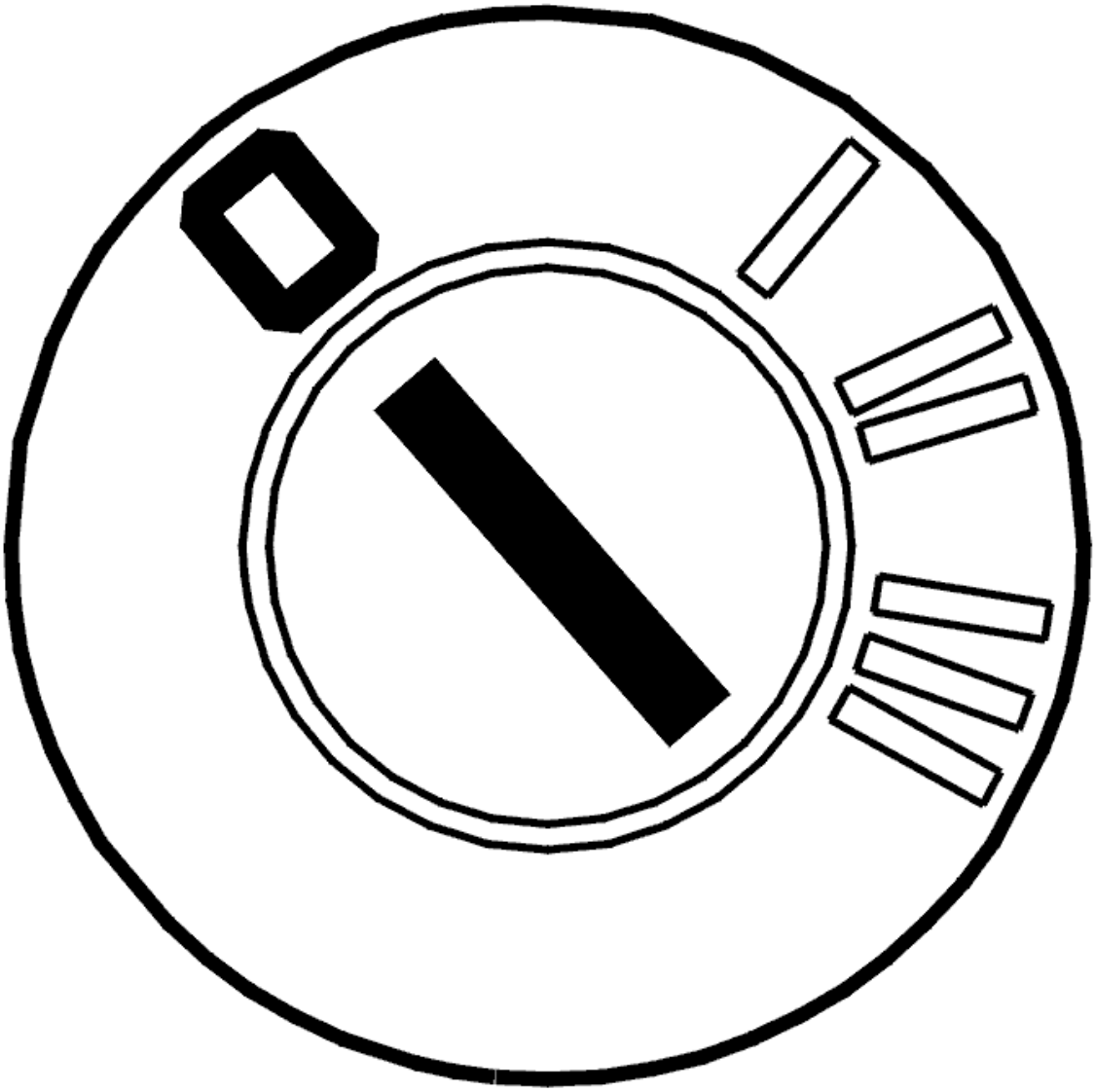

Fig. 28: Identifying Ignition OFF
Courtesy of VOLVO CARS CORPORATION

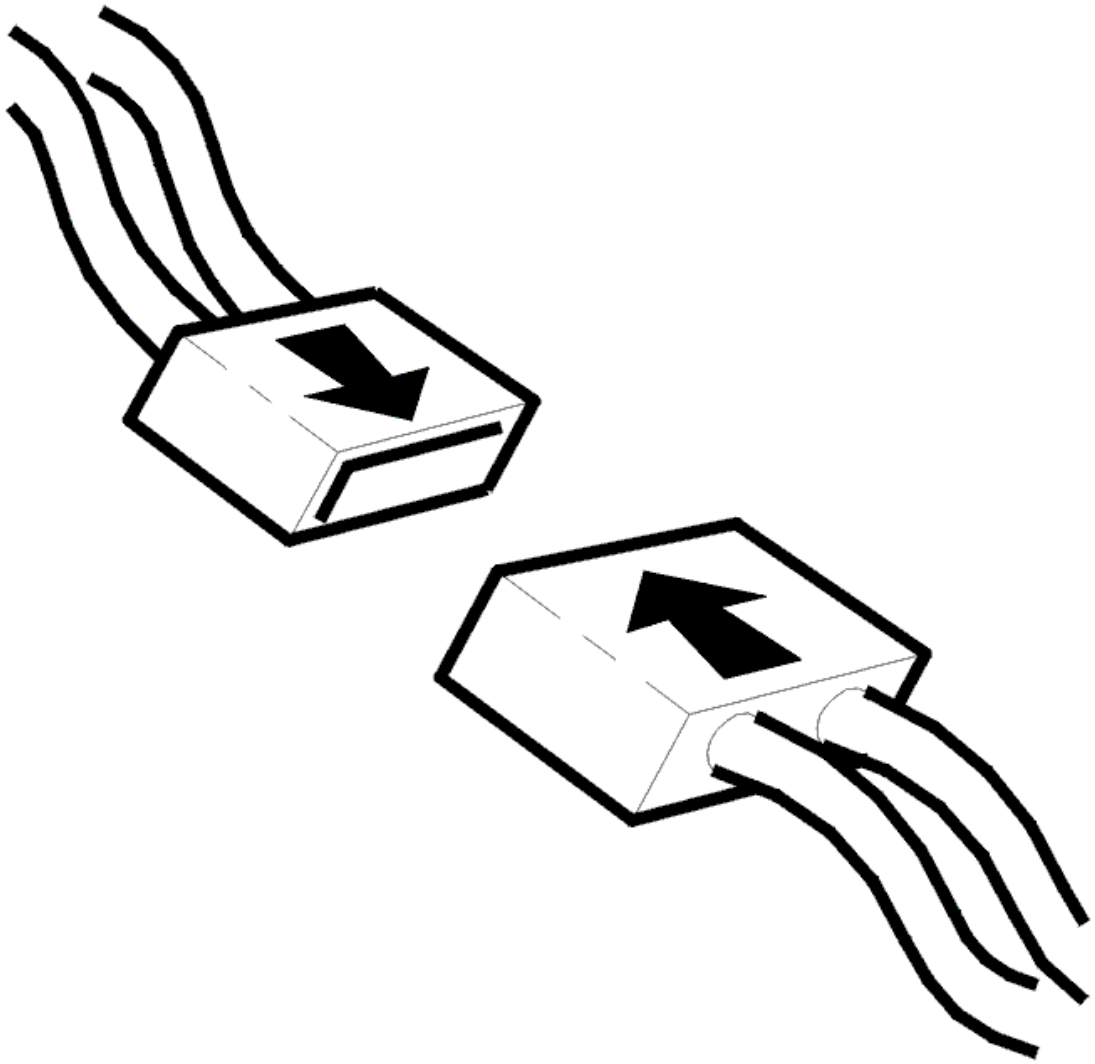

Fig. 29: Identifying Connector(s) Reinstallation
Courtesy of VOLVO CARS CORPORATION

- Ignition off
- Open the transmission control system.

  Check the cable between transmission connector terminal #D7 and temperature sensor terminal #1. Check the cable between transmission connector #D8 and temperature sensor terminal #2. Check for an open-circuit according to **OPEN-CIRCUIT, PERMANENT FAULTS** .

  Also check the cables for a short-circuit to each other.

  HINT: Check the temperature sensor. With the ignition off and transmission connector D disconnected, measure the resistance between transmission connector D terminals #D7 and #D8. The resistance must be 4.5-6 kohms at 20 °C.

Remedy as necessary.

Other information:

- To connect the breakout box, see **CONNECTING THE BREAKOUT BOX**
- To disconnect the transmission connectors, see **CONNECTORS, TRANSMISSION, DISCONNECTING / CONNECTING**
- To open the transmission control system and to check or replace the temperature sensor, see **SOLENOID CONTROL SYSTEM, REPLACING**
- For information about signals, see **SIGNAL DESCRIPTION. TRANSMISSION CONTROL MODULE (TCM)** .

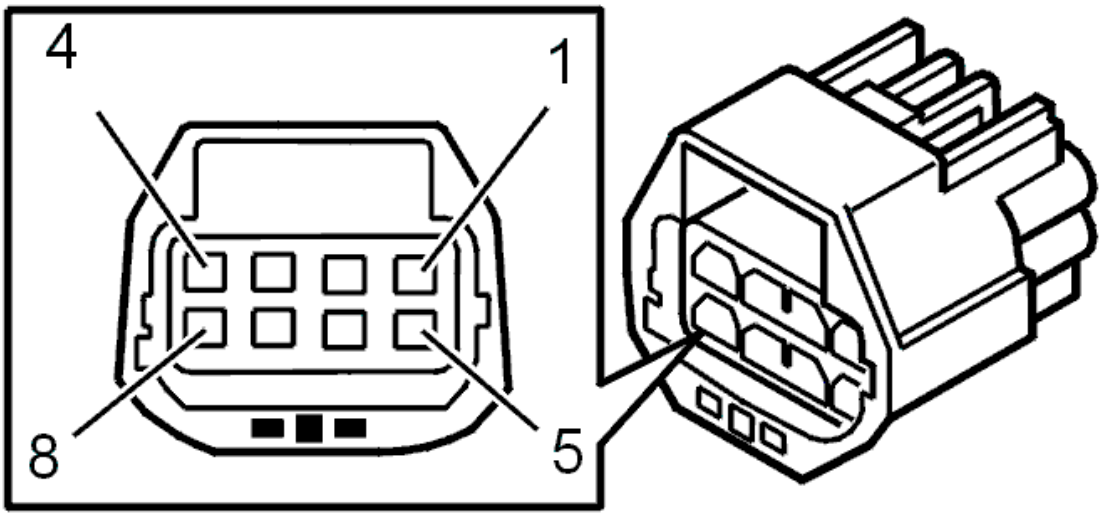

Fig. 30: Identifying 8-Pin Transmission Connector Terminals
Courtesy of VOLVO CARS CORPORATION

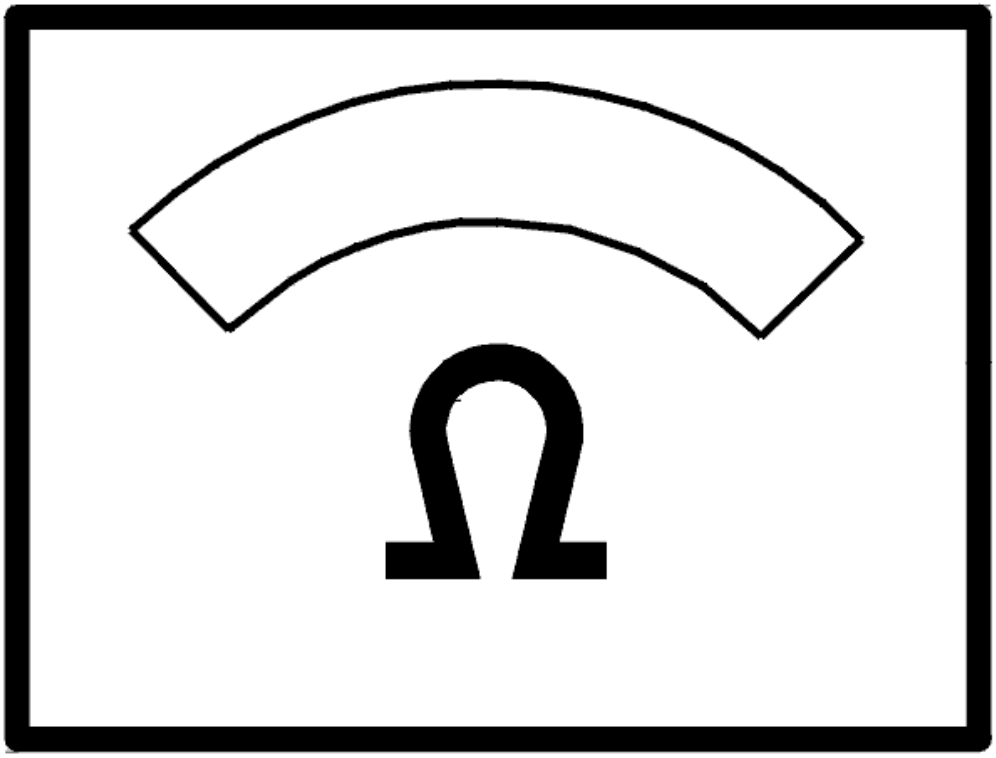

Fig. 31: Identifying Ohms Display
Courtesy of VOLVO CARS CORPORATION

- **Continue**

  Refer to **RESETTING TRANSMISSION FLUID CHANGE COUNTER**

INTERMITTENT FAULT

Check the transmission control module (TCM) and transmission connector D. Check for contact resistance and oxidation according to **CONTACT RESISTANCE AND OXIDATION** .

Check the cable between transmission control module (TCM) terminal #A37 (#A37) and transmission connector terminal #D7 (control module side). Check for an intermittent open-circuit according to **OPEN-CIRCUIT, INTERMITTENT FAULTS** .

Check the cable between control module terminal #A55 (#A55)and transmission connector terminal #D8 (control module side). Check for an intermittent open-circuit according to **OPEN-CIRCUIT, INTERMITTENT FAULTS** .

Remedy as necessary.

Other information:

- To connect the breakout box, see **CONNECTING THE BREAKOUT BOX**
- To disconnect the transmission connectors, see **CONNECTORS, TRANSMISSION, DISCONNECTING / CONNECTING**
- For information about signals, see **SIGNAL DESCRIPTION. TRANSMISSION CONTROL MODULE (TCM)** .

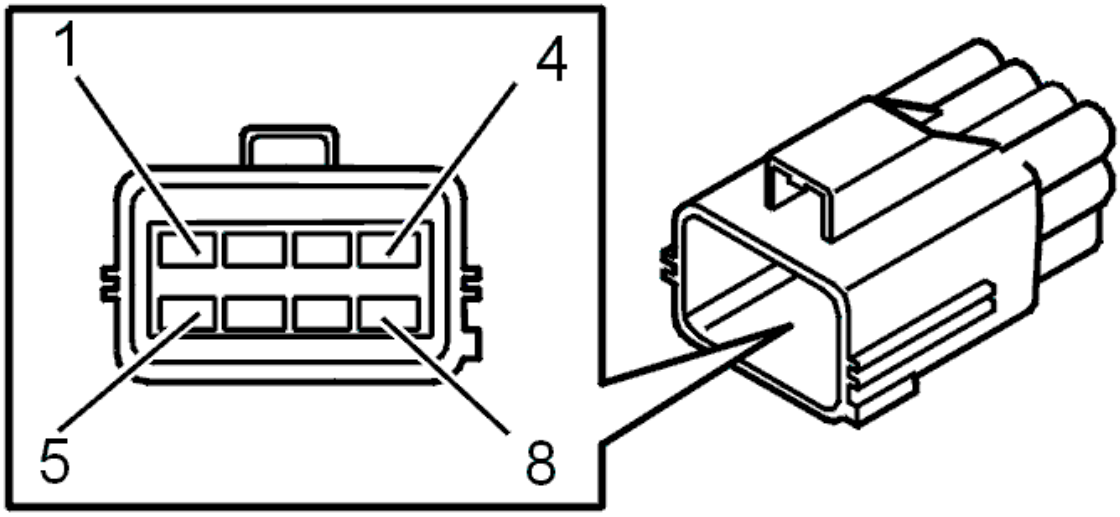

Fig. 32: Identifying Transmission Connector Terminals
Courtesy of VOLVO CARS CORPORATION

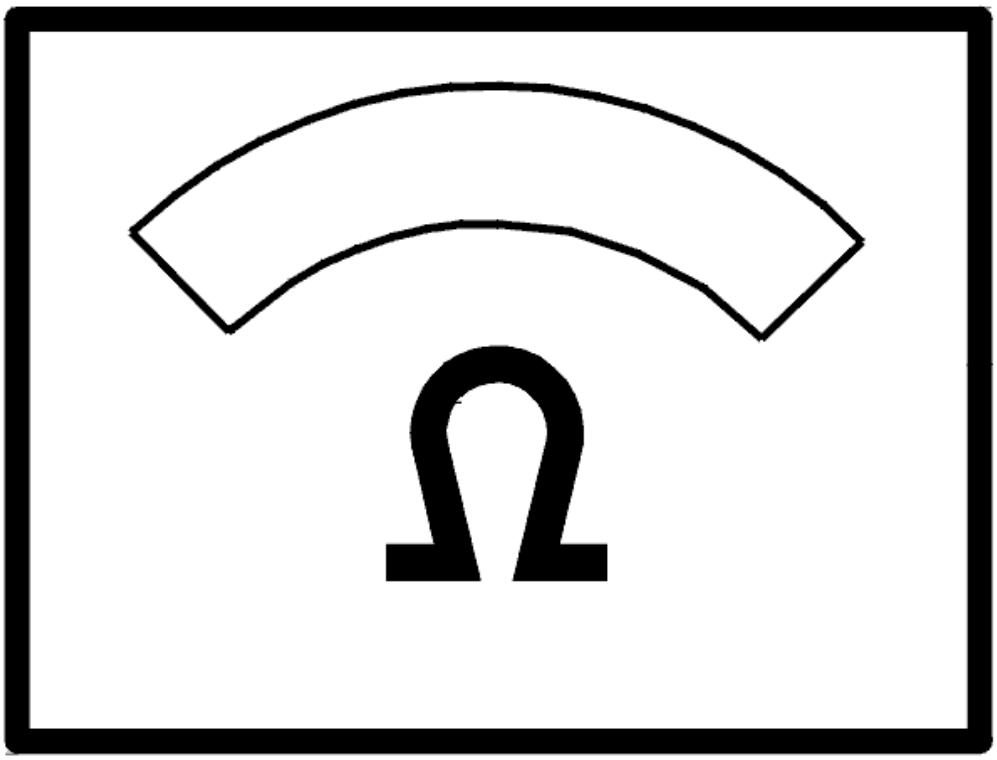

Fig. 33: Identifying Ohms Display
Courtesy of VOLVO CARS CORPORATION

- **Continue**

  Refer to **INFORMATION**

RESETTING TRANSMISSION FLUID CHANGE COUNTER

RESETTING TRANSMISSION FLUID CHANGE COUNTER

HINT: The transmission control module (TCM) has a counter for the oil quality. The counter counts up if the transmission is exposed to too high a load or an ambient temperature that is too high. If the counter is not reset when the oil is drained or changed, there is a risk that a diagnostic trouble code (DTC) will be stored in faulty circumstances. Therefore it is important that the "Transmission oil change" counter is reset.

NOTE: **This applies only when the transmission fluid is changed and when the fluid is changed when repairs are carried out to the transmission temperature sensor.**

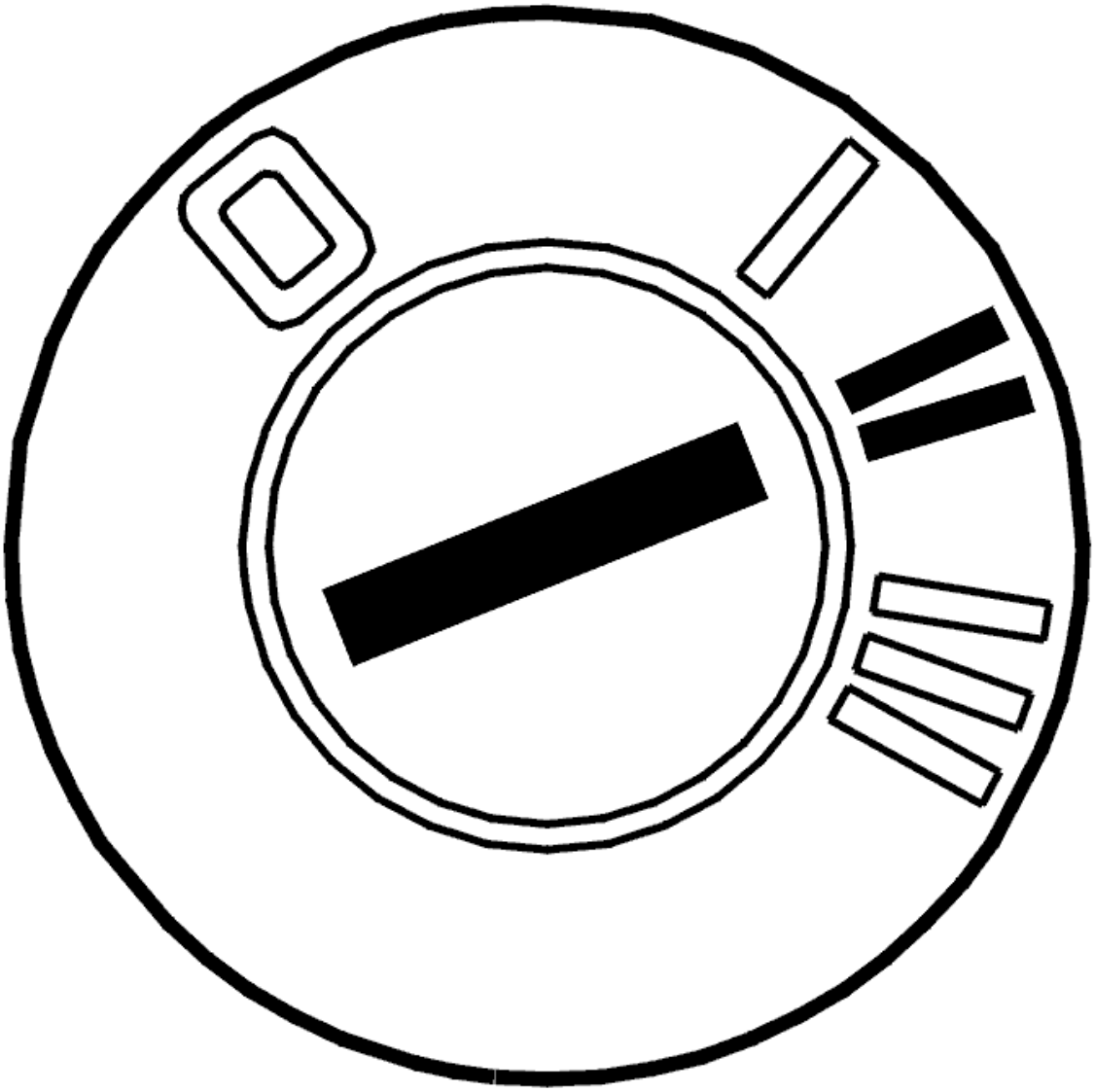

Fig. 34: Identifying Ignition ON
Courtesy of VOLVO CARS CORPORATION

- Ignition on.

  Reset the counter by clicking on the VCT 2000 symbol.

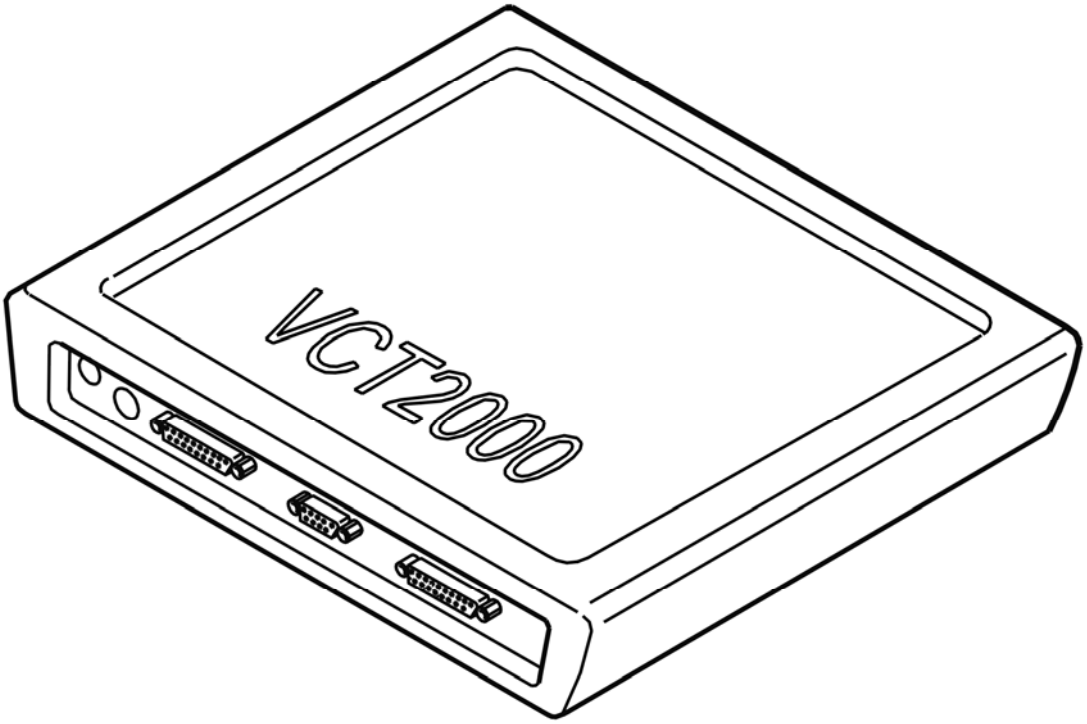

Fig. 35: Identifying VCT2000 Diagnostic Tool Symbol In VIDA
Courtesy of VOLVO CARS CORPORATION

- **Continue**

  Refer to **VERIFICATION**

VERIFICATION

VERIFICATION

HINT: After carrying out the repair, check that the fault has been remedied.

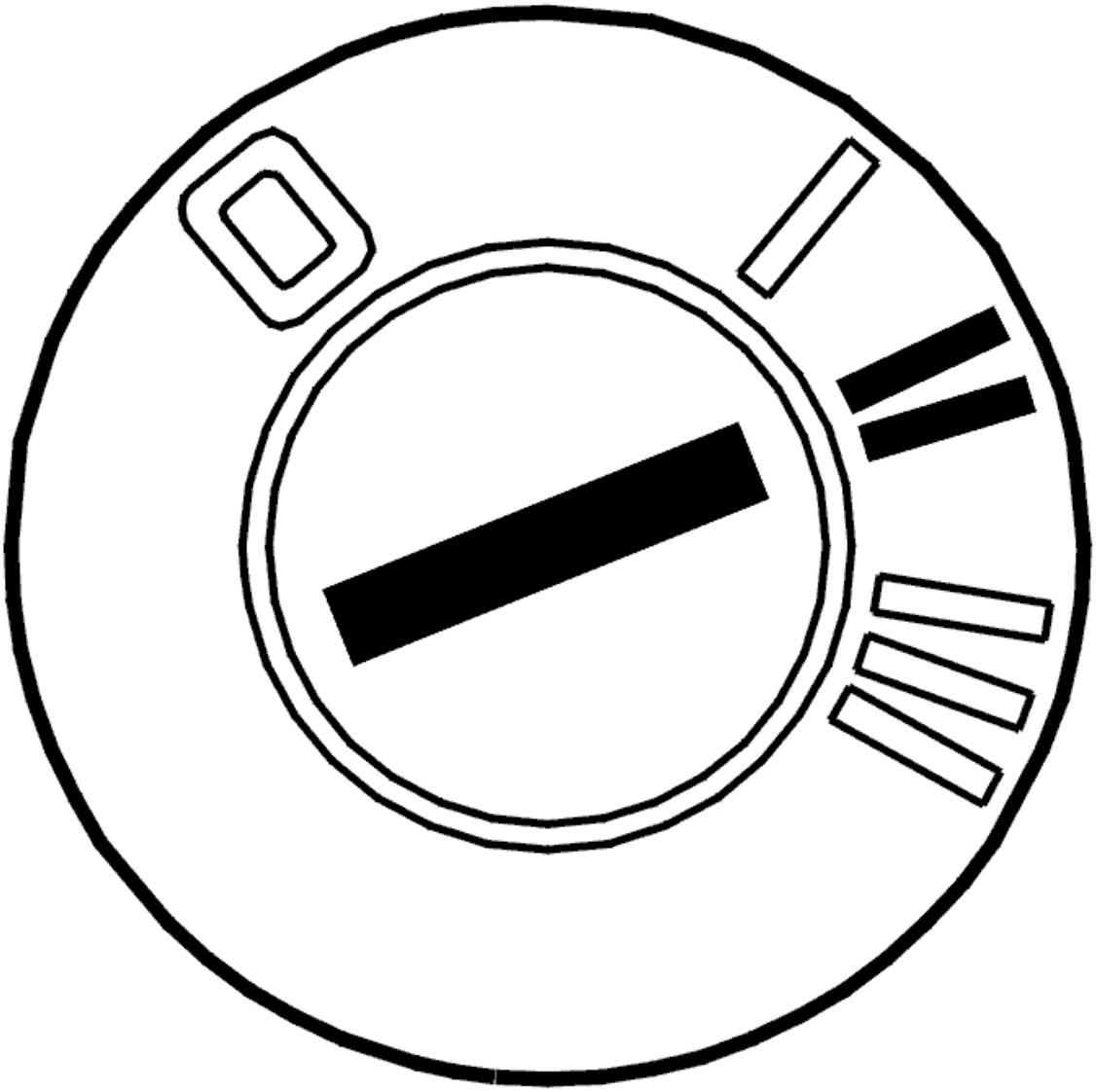

Fig. 36: Identifying Ignition ON
Courtesy of VOLVO CARS CORPORATION

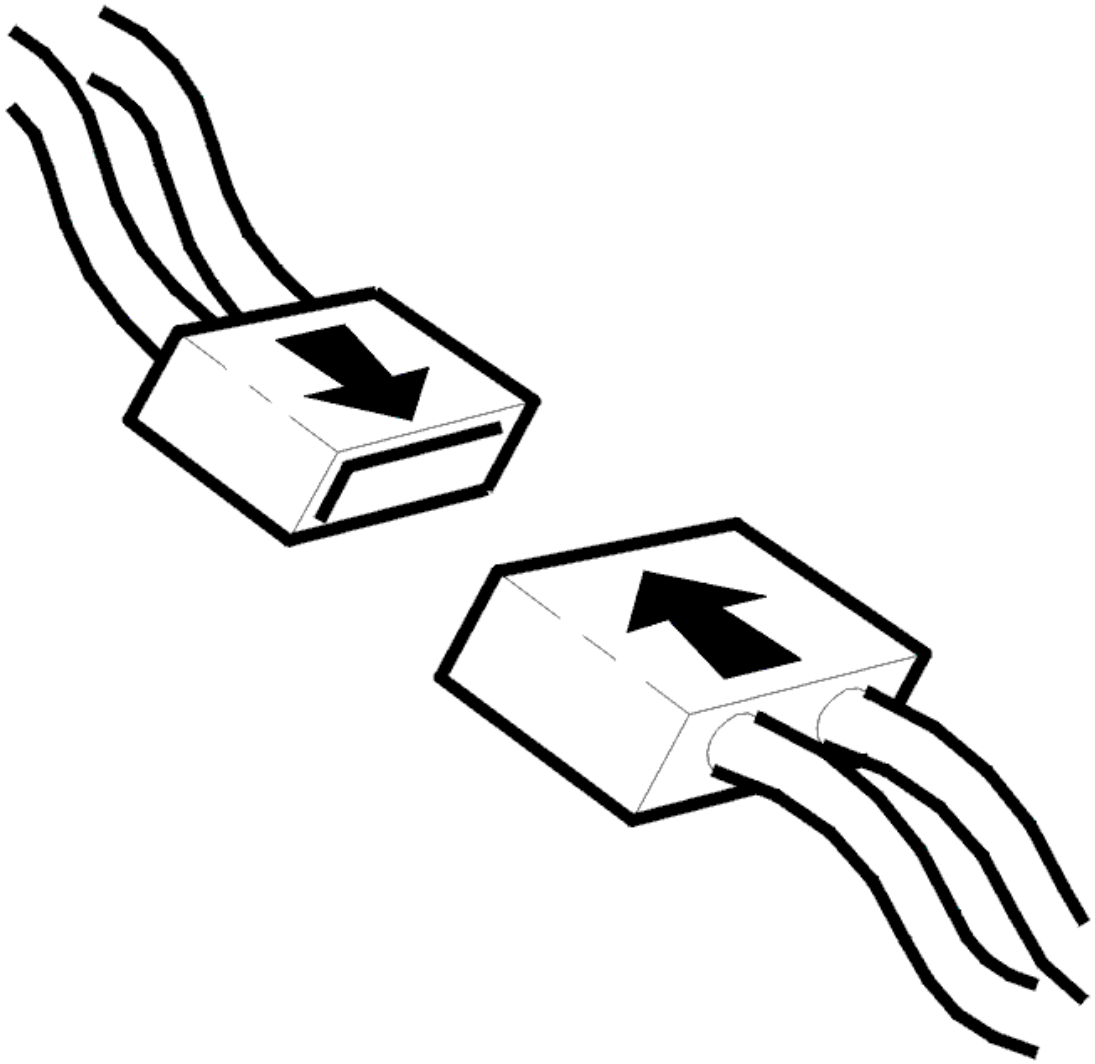

Fig. 37: Identifying Connector(s) Reinstallation
Courtesy of VOLVO CARS CORPORATION

- Ignition off.
- Reinstall the connectors, components etc.
- Ignition on.
- Read off the oil temperature.

Check that the transmission oil temperature is within its permitted range.

Compare with the transmission temperature.

NOTE: **The transmission temperature sensor is located inside the control unit and can be affected by the heat given off by the solenoids.**

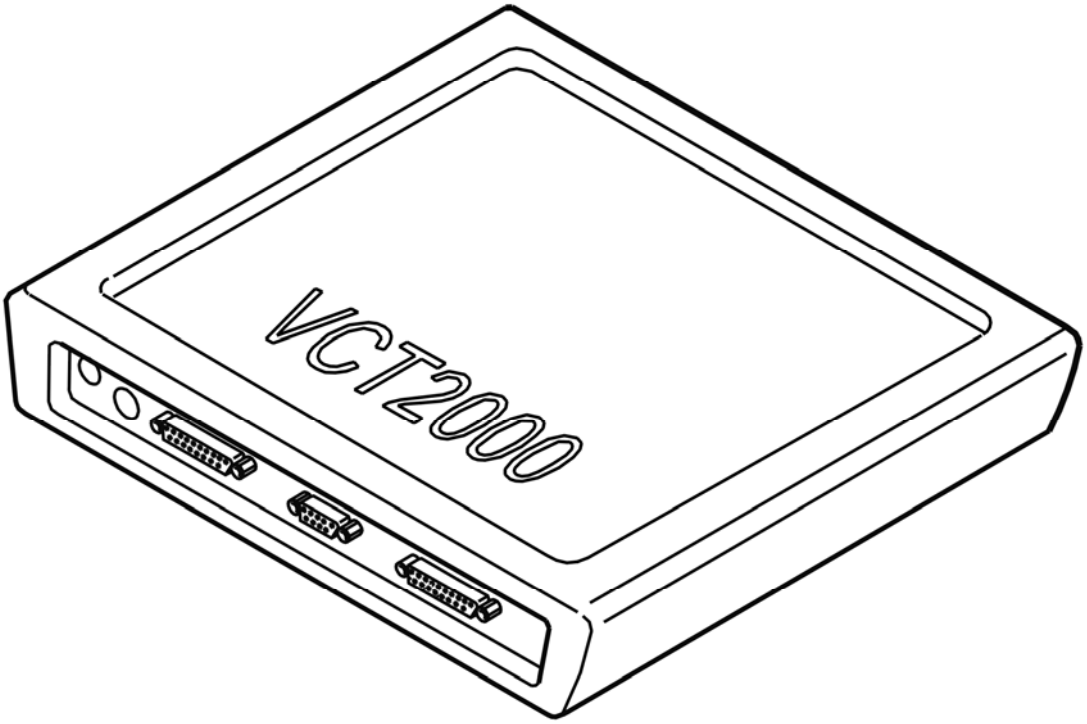

Fig. 38: Identifying VCT2000 Diagnostic Tool Symbol In VIDA
Courtesy of VOLVO CARS CORPORATION

Is the oil temperature within its permitted range?

- **YES**

  VERIFIED: Troubleshooting has been completed.

- **NO**

  Refer to **INFORMATION**

TCM-010B: SHIFT SOLENOID S5. SIGNAL MISSING (AW50/51 AWD; AW55-50/51SN; 2003-2007)

DIAGNOSTIC TROUBLE CODE (DTC) INFORMATION

Condition

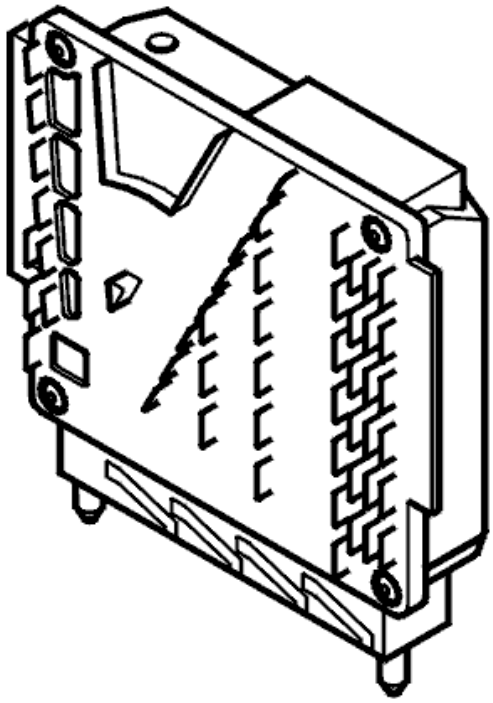

Fig. 39: Identifying Transmission Control Module (TCM)
Courtesy of VOLVO CARS CORPORATION

Shift solenoids S1, S2, S3, S4 and S5 operate in tandem to control gear-shifting. The solenoids are controlled by power stages in the transmission control module (TCM). The transmission control module (TCM) opens the power stages to activate the solenoids and sends a voltage through the circuit. Diagnostic trouble codes (DTCs) TCM-0002, TCM-0008, TCM-0102, TCM-0108 or TCM-010B are stored (depending on the solenoid) if the transmission control module (TCM) registers that the signal in circuits S1, S2, S3, S4 or S5 is missing when the solenoid is activated.

Substitute Value

- The transmission control module (TCM) "Emergency mode I" program has been initiated.

Possible Source

- Contact resistance in terminals.
- Open-circuit in the signal cable.
- Defective solenoid.
- Internal fault in the control module.

Fault symptom[s]

- General orange warning lamp lit.
- Malfunction indicator lamp (MIL) lit.
- Harsh gear shifting.
- No shifting.
- No lock-up function.

SIGNAL MISSING

CHECKS

CHECKING THE TEMPERATURE SENSOR

HINT: In some cases, the diagnostic trouble code (DTC) may be caused by a defective oil temperature sensor. Check the function of the oil temperature sensor first.

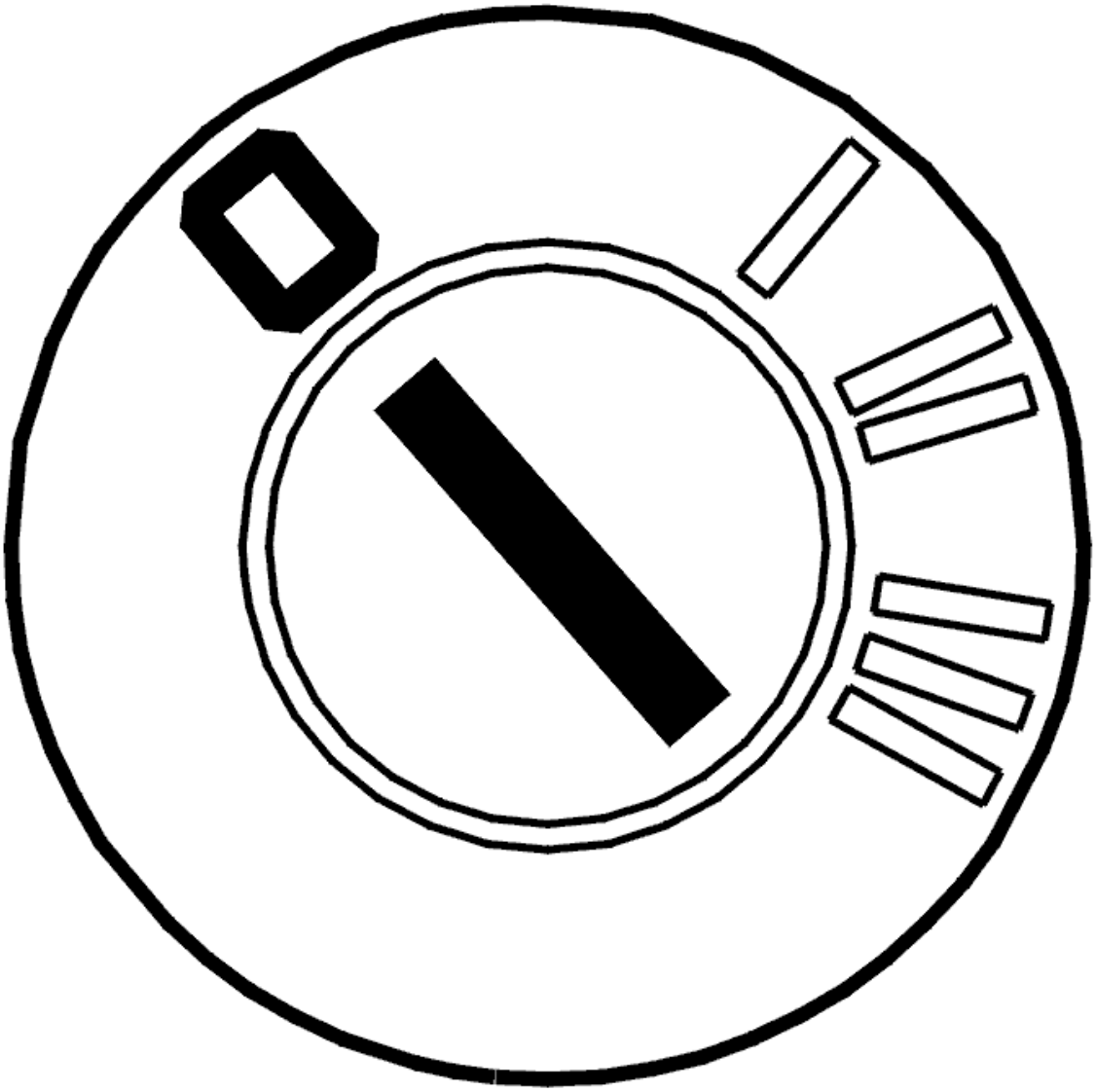

Fig. 40: Identifying Ignition OFF
Courtesy of VOLVO CARS CORPORATION

- Ignition off
- Read off the oil temperature.

  Check that the function of the temperature sensor is OK. Test drive the car to increase the temperature of the transmission fluid. Read off the temperature again. Check that the temperature has increased.

  HINT: If the temperature is outside its permitted range, fault-trace the temperature sensor.

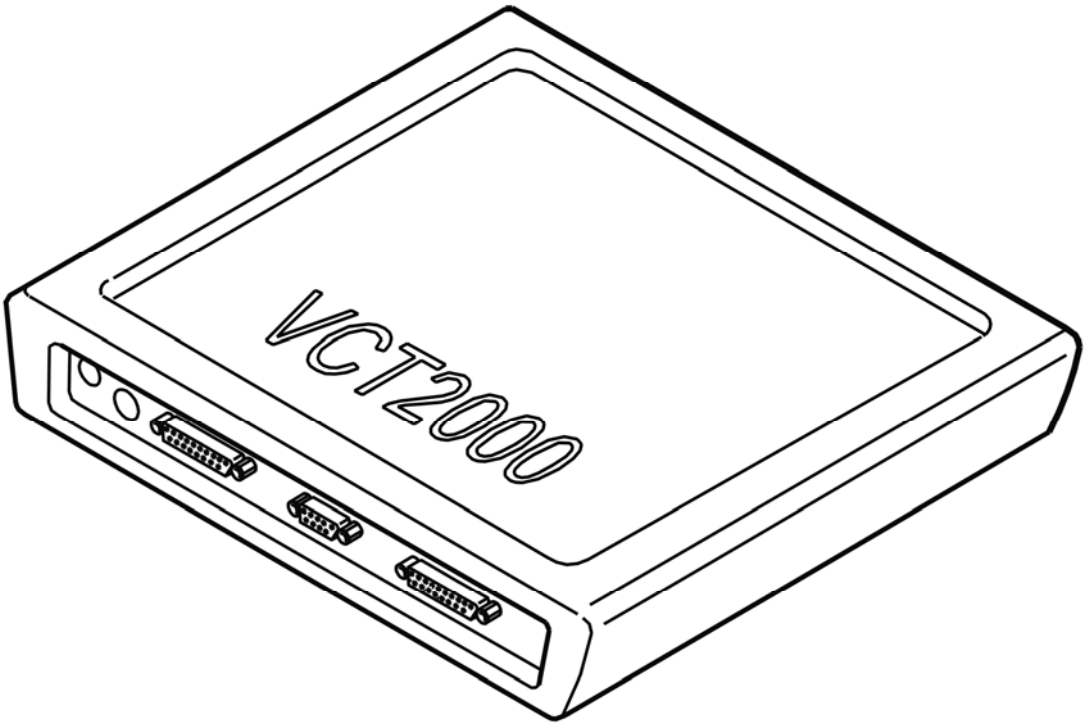

Fig. 41: Identifying VCT2000 Diagnostic Tool Symbol In VIDA
Courtesy of VOLVO CARS CORPORATION

Is the oil temperature within its permitted range?

- **YES**

  Refer to **CHECKING SHIFT SOLENOID S5**

- **NO**

  Refer to **FAULTY SIGNAL**

CHECKING SHIFT SOLENOID S5

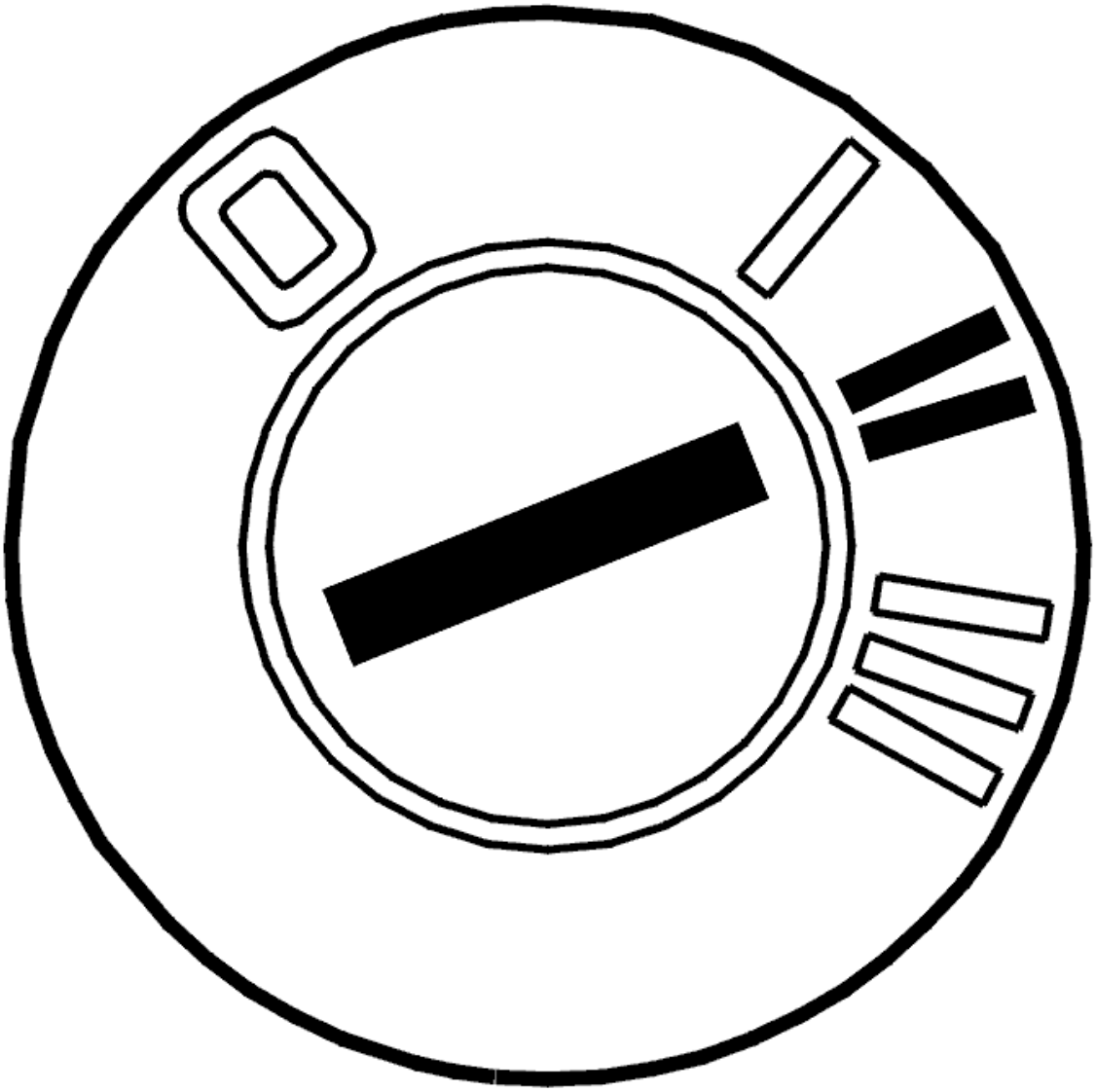

Fig. 42: Identifying Ignition ON
Courtesy of VOLVO CARS CORPORATION

- Ignition on
- Gear selector in position P
- Activate solenoid S5.

  The current should oscillate between 0 and approximately 1.5 A.

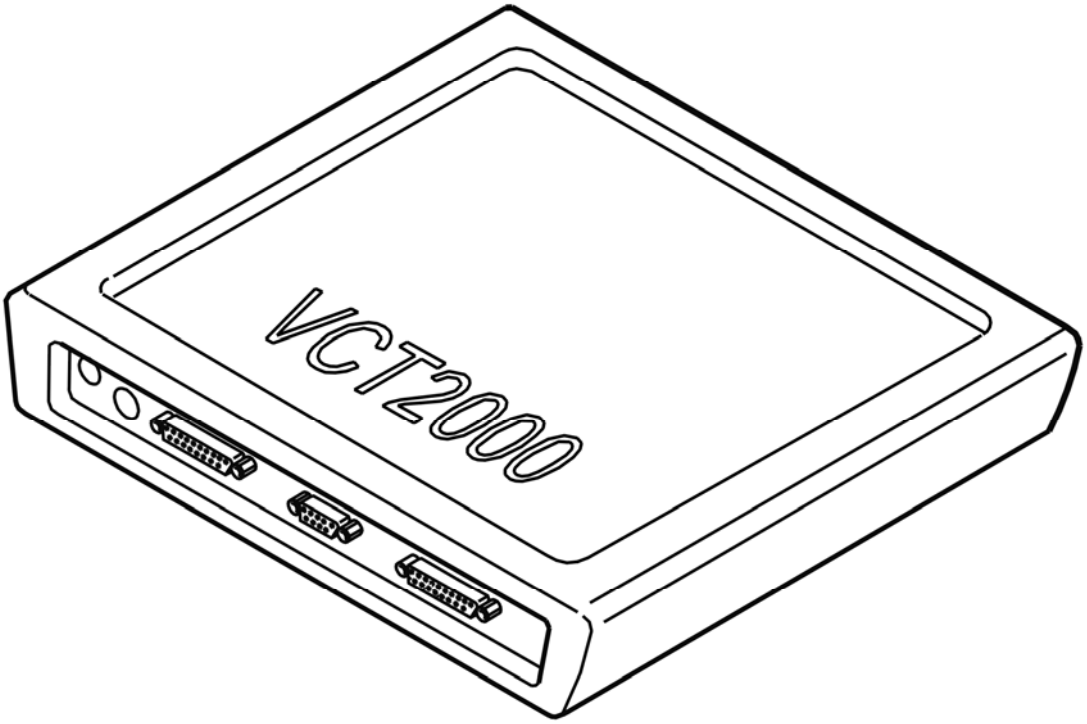

Fig. 43: Identifying VCT2000 Diagnostic Tool Symbol In VIDA
Courtesy of VOLVO CARS CORPORATION

Does the current oscillate?

- **YES**

  Refer to **INTERMITTENT FAULT**

- **NO**

  Refer to **CHECKING RESISTANCE**

CHECKING RESISTANCE

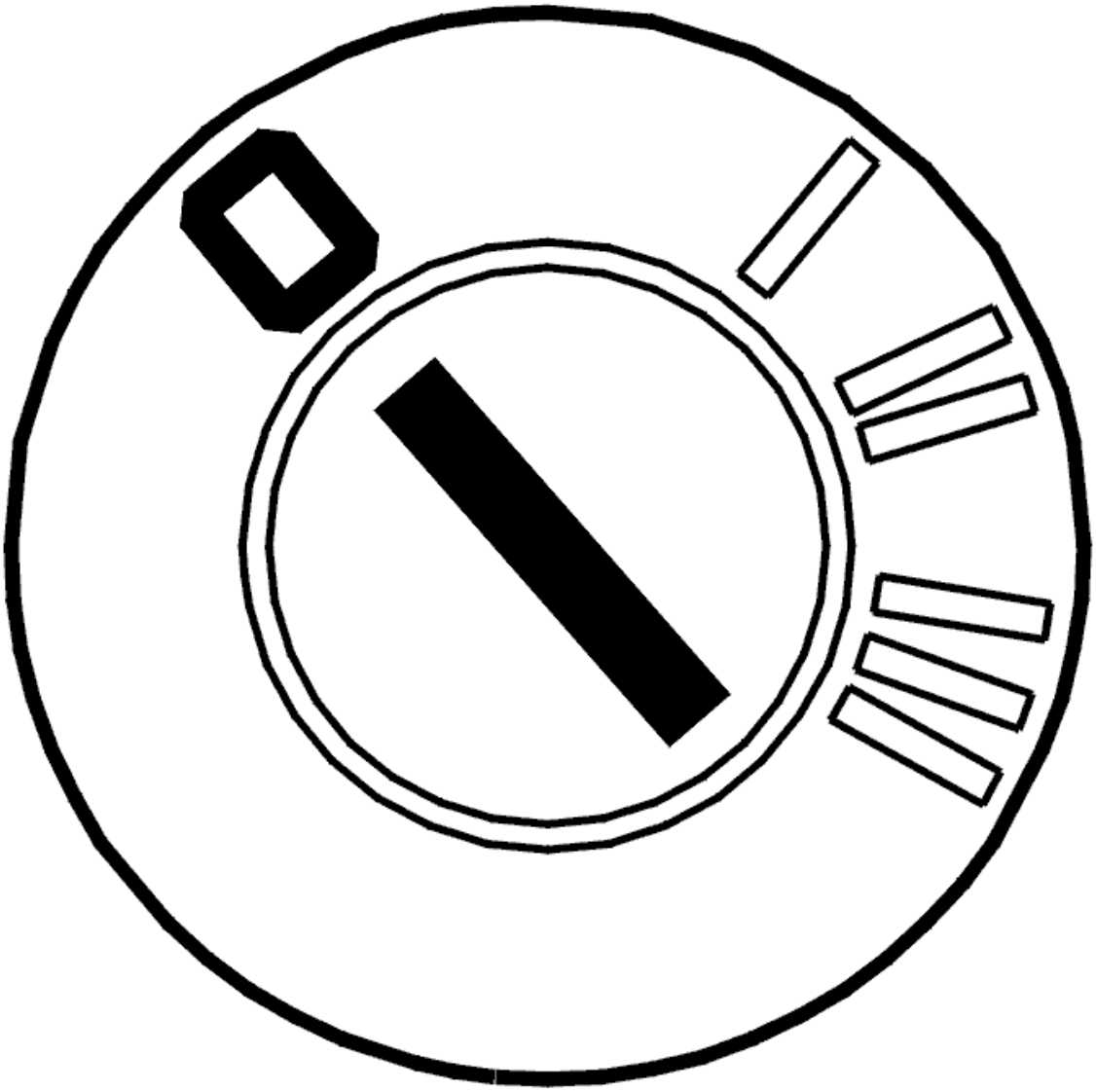

Fig. 44: Identifying Ignition OFF
Courtesy of VOLVO CARS CORPORATION

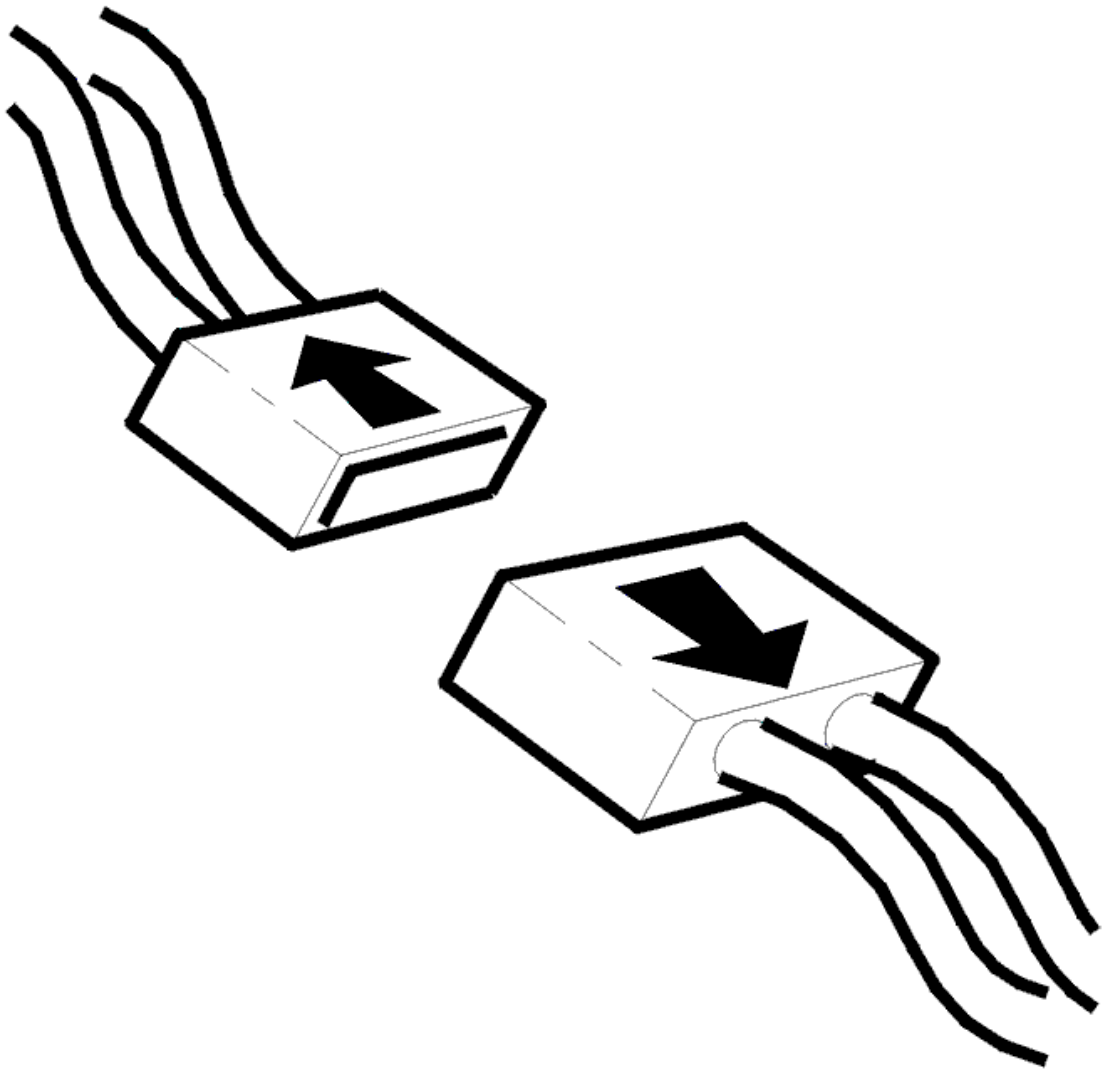

Fig. 45: Identifying Connector(s) Disconnected
Courtesy of VOLVO CARS CORPORATION

- Ignition off
- Disconnect transmission connector C.

  Check solenoid S5. Measure the resistance between transmission connector terminal #C5 (transmission side) and the transmission housing. The resistance must be 11-15 ohms.

  Other information:

  - To disconnect the transmission connectors, see **CONNECTORS, TRANSMISSION, DISCONNECTING / CONNECTING**
  - For information about signals, see **SIGNAL DESCRIPTION. TRANSMISSION CONTROL MODULE (TCM)** .

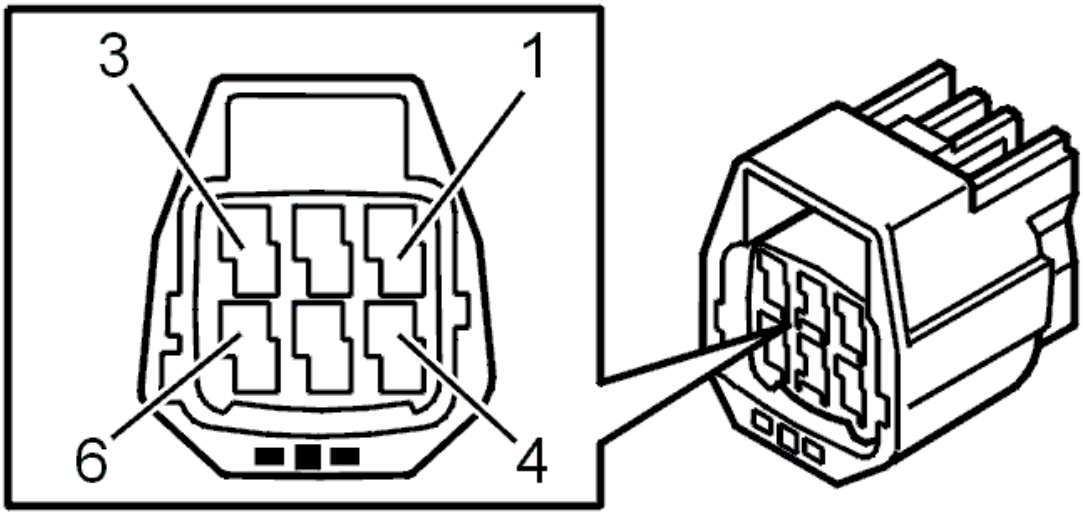

Fig. 46: Identifying 6-Pin Transmission Connector Terminals
Courtesy of VOLVO CARS CORPORATION

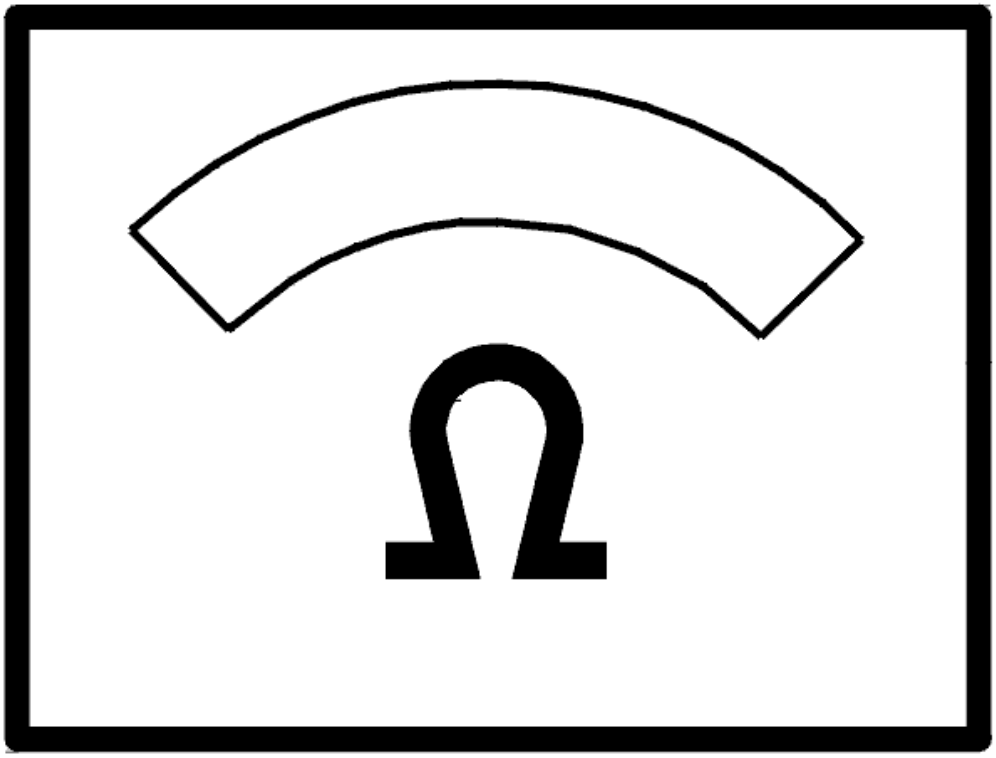

Fig. 47: Identifying Ohms Display
Courtesy of VOLVO CARS CORPORATION

Was the resistance OK?

- **YES**

  Refer to **CHECKING THE WIRING**

- **NO**

  Refer to **CHECKING THE WIRING AND COMPONENT**

CHECKING THE WIRING

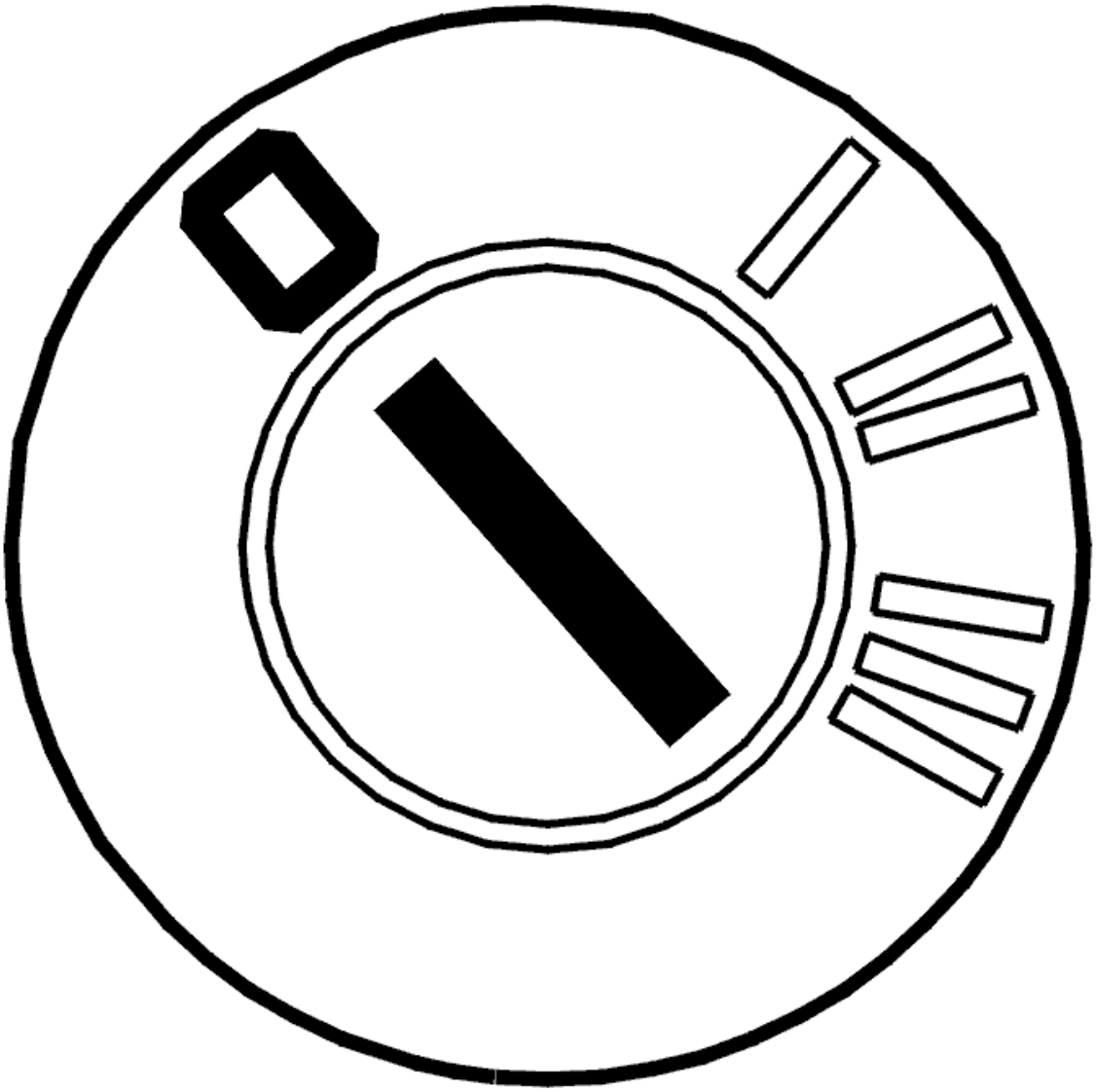

Fig. 48: Identifying Ignition OFF
Courtesy of VOLVO CARS CORPORATION

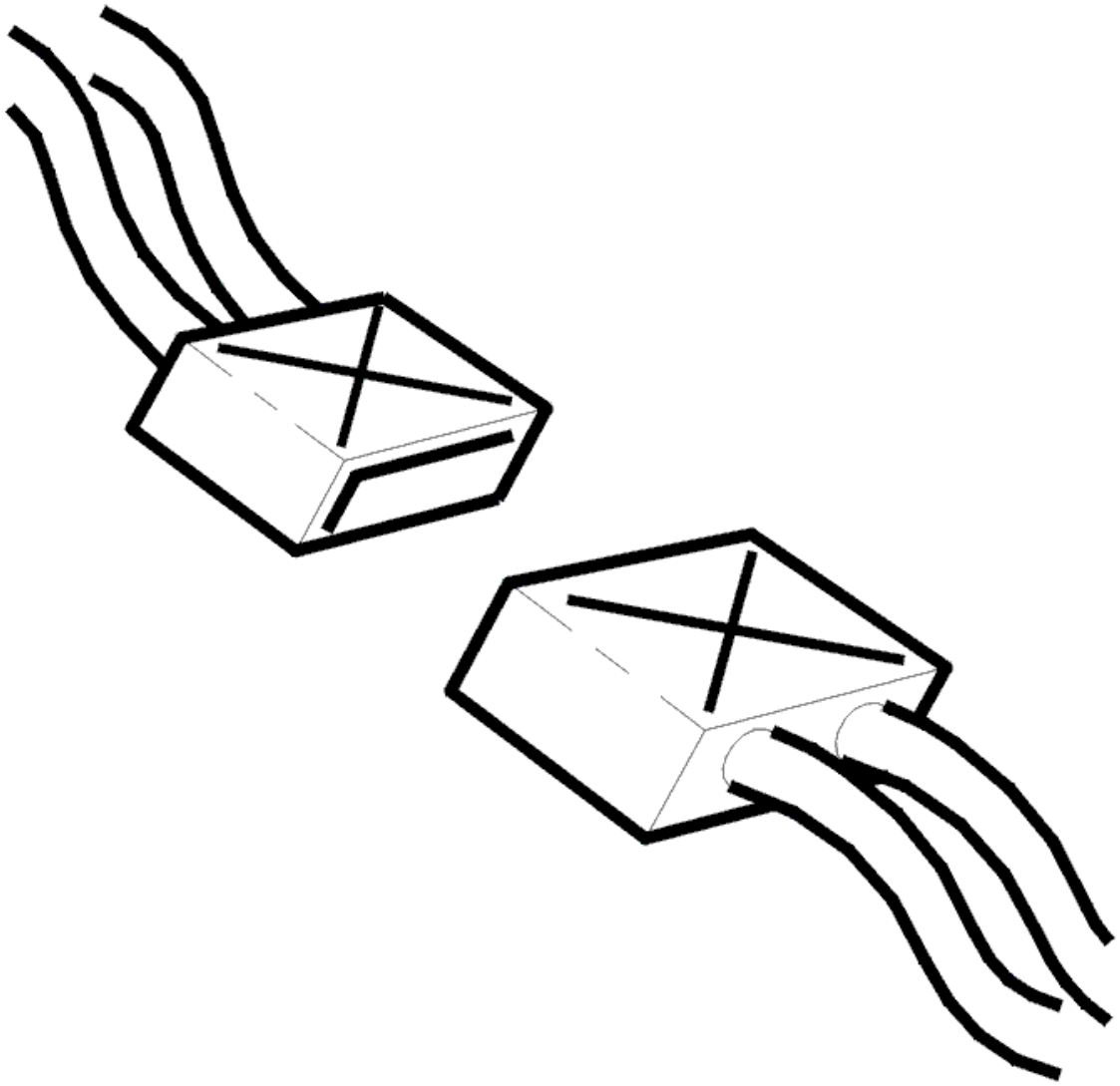

Fig. 49: Identifying Connectors
Courtesy of VOLVO CARS CORPORATION

- Ignition off
- The breakout box connected
- Transmission connector C disconnected.

Check the cable between transmission control module (TCM) terminal #B6 (#A66) and transmission connector terminal #C5 (control module side). Check for an open-circuit according to **OPEN-CIRCUIT, PERMANENT FAULTS** .

Remedy as necessary.

Other information:

- To connect the breakout box, see **CONNECTING THE BREAKOUT BOX**
- To disconnect the transmission connectors, see **CONNECTORS, TRANSMISSION, DISCONNECTING / CONNECTING**
- For information about signals, see **SIGNAL DESCRIPTION. TRANSMISSION CONTROL MODULE (TCM)** .

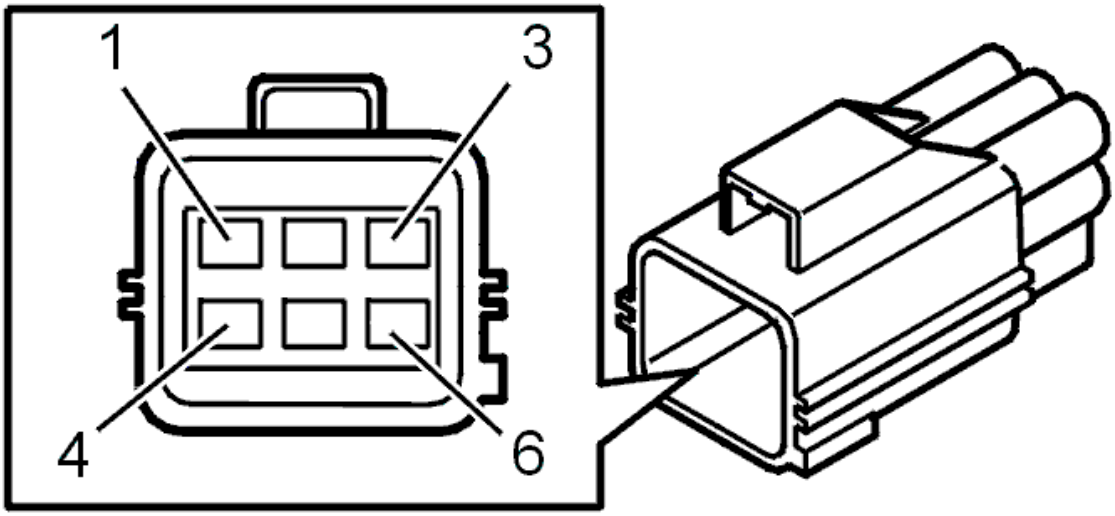

Fig. 50: Identifying 6-Pin Transmission Connector Terminals
Courtesy of VOLVO CARS CORPORATION

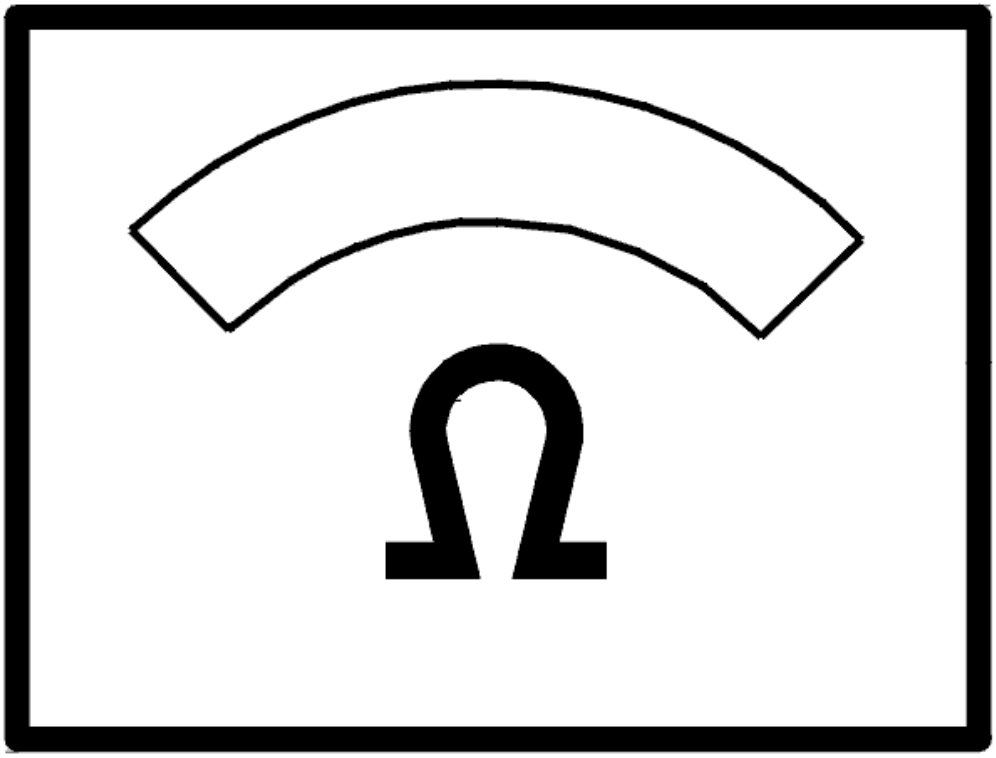

Fig. 51: Identifying Ohms Display
Courtesy of VOLVO CARS CORPORATION

Was a fault detected?

- **YES**

  Refer to **VERIFICATION**

- **NO**

  Refer to **CHECKING THE CONTROL MODULE**

CHECKING THE CONTROL MODULE

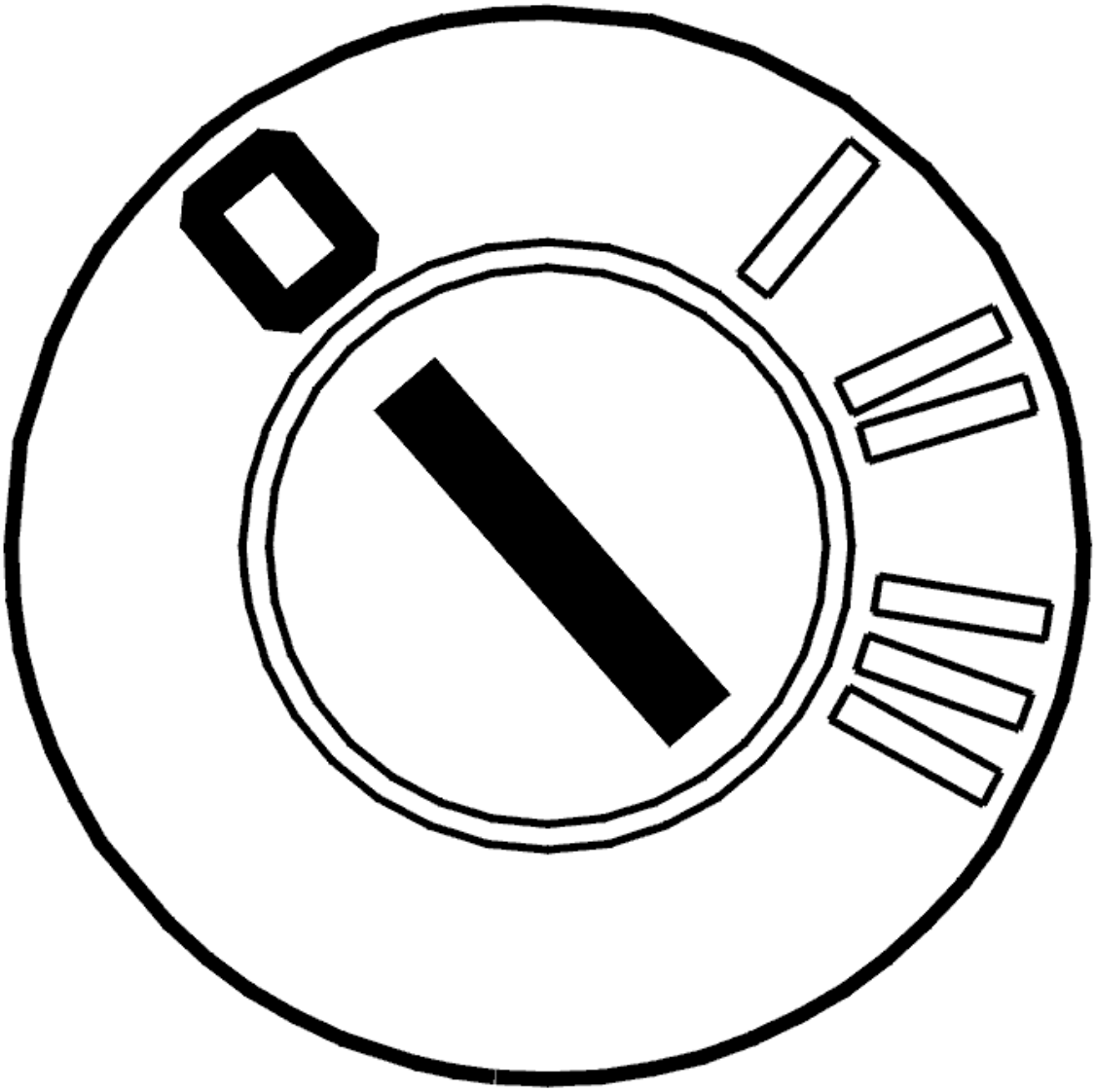

Fig. 52: Identifying Ignition OFF
Courtesy of VOLVO CARS CORPORATION

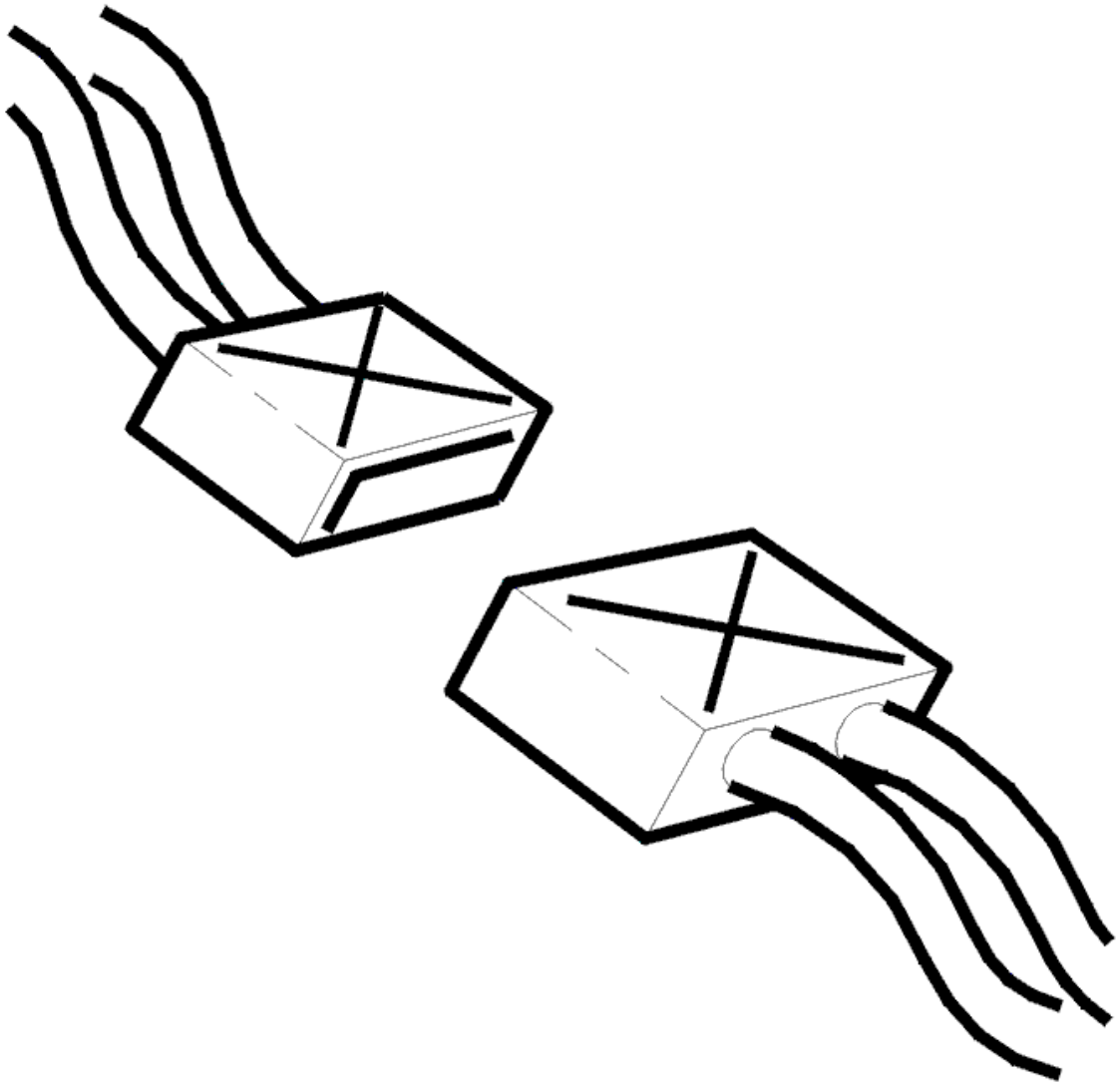

Fig. 53: Identifying Connectors
Courtesy of VOLVO CARS CORPORATION

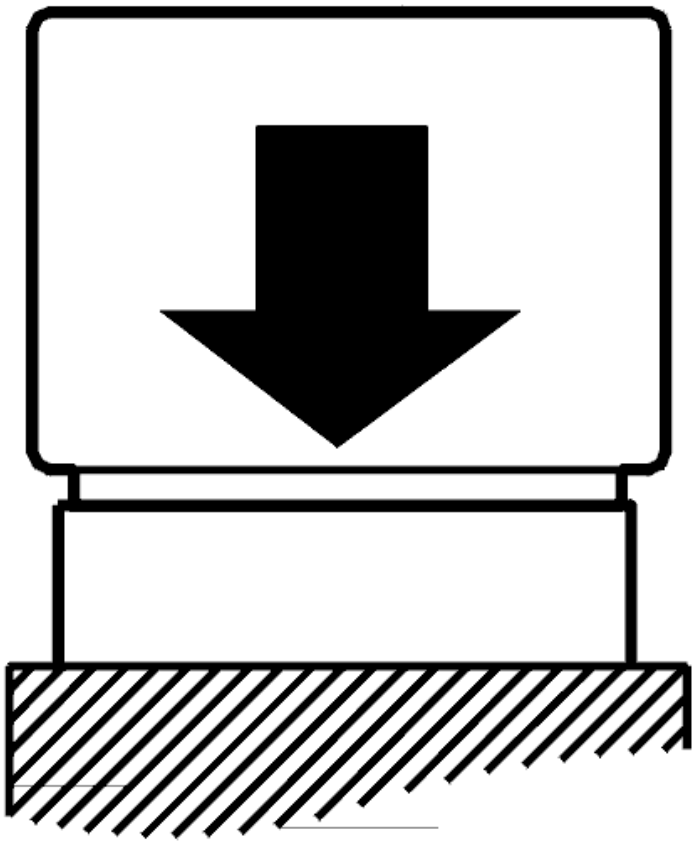

Fig. 54: Identifying Control Module Connected
Courtesy of VOLVO CARS CORPORATION

- Ignition off
- The breakout box connected
- Connect the control module.
- Transmission connector C disconnected
- Gear selector in position P.

Check the transmission control module (TCM) by measuring the resistance between terminals #B6 (#A66) and #A53 (#A53) on the breakout box. The resistance must be approximately 9 kohms.

NOTE: **When removing the transmission connector, the control module may store diagnostic trouble codes (DTCs) for the gear-shift position sensor, the shift solenoids, the temperature sensor etc.**

Try a new control module if the resistance is infinite.

Other information:

- To disconnect the transmission connectors, see **CONNECTORS, TRANSMISSION, DISCONNECTING / CONNECTING**
- To replace the control module, see **TRANSMISSION CONTROL MODULE (TCM), REPLACING**
- For information about signals, see **SIGNAL DESCRIPTION. TRANSMISSION CONTROL MODULE (TCM)** .

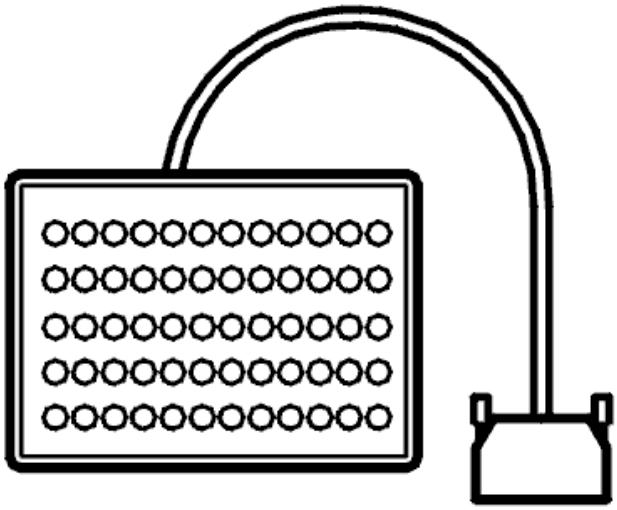

Fig. 55: Identifying Breakout Box
Courtesy of VOLVO CARS CORPORATION

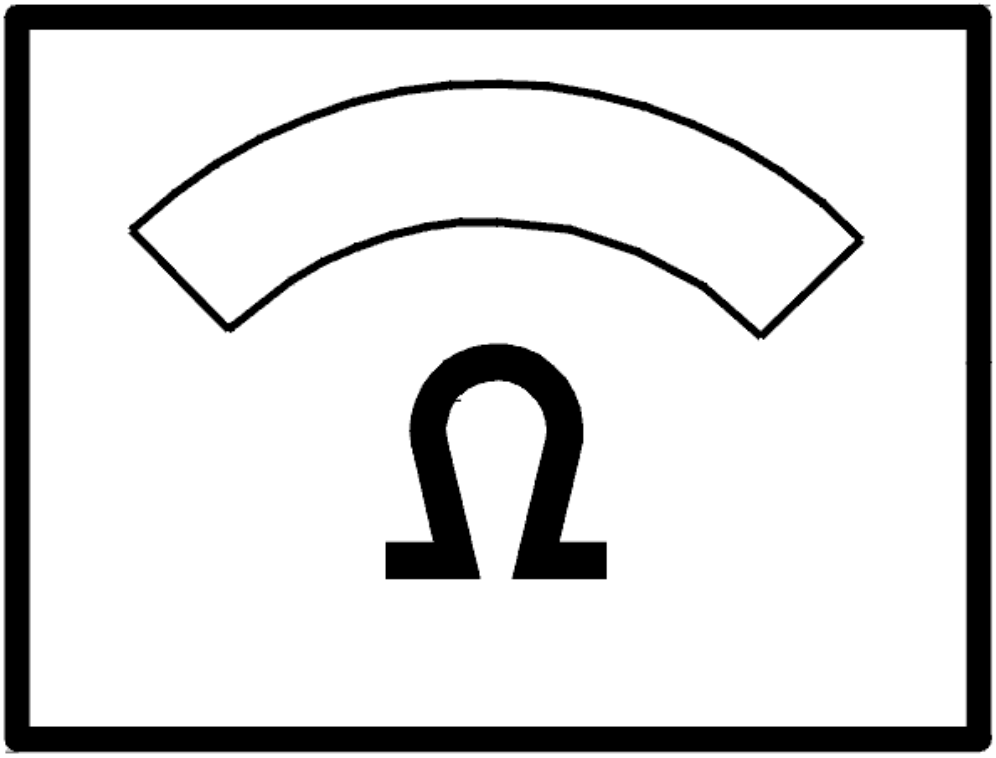

Fig. 56: Identifying Ohms Display
Courtesy of VOLVO CARS CORPORATION

Was the resistance OK?

- **YES**

  FAULT NOT FOUND: Troubleshooting has been completed.

- **NO**

  Refer to **VERIFICATION**

CHECKING THE WIRING AND COMPONENT

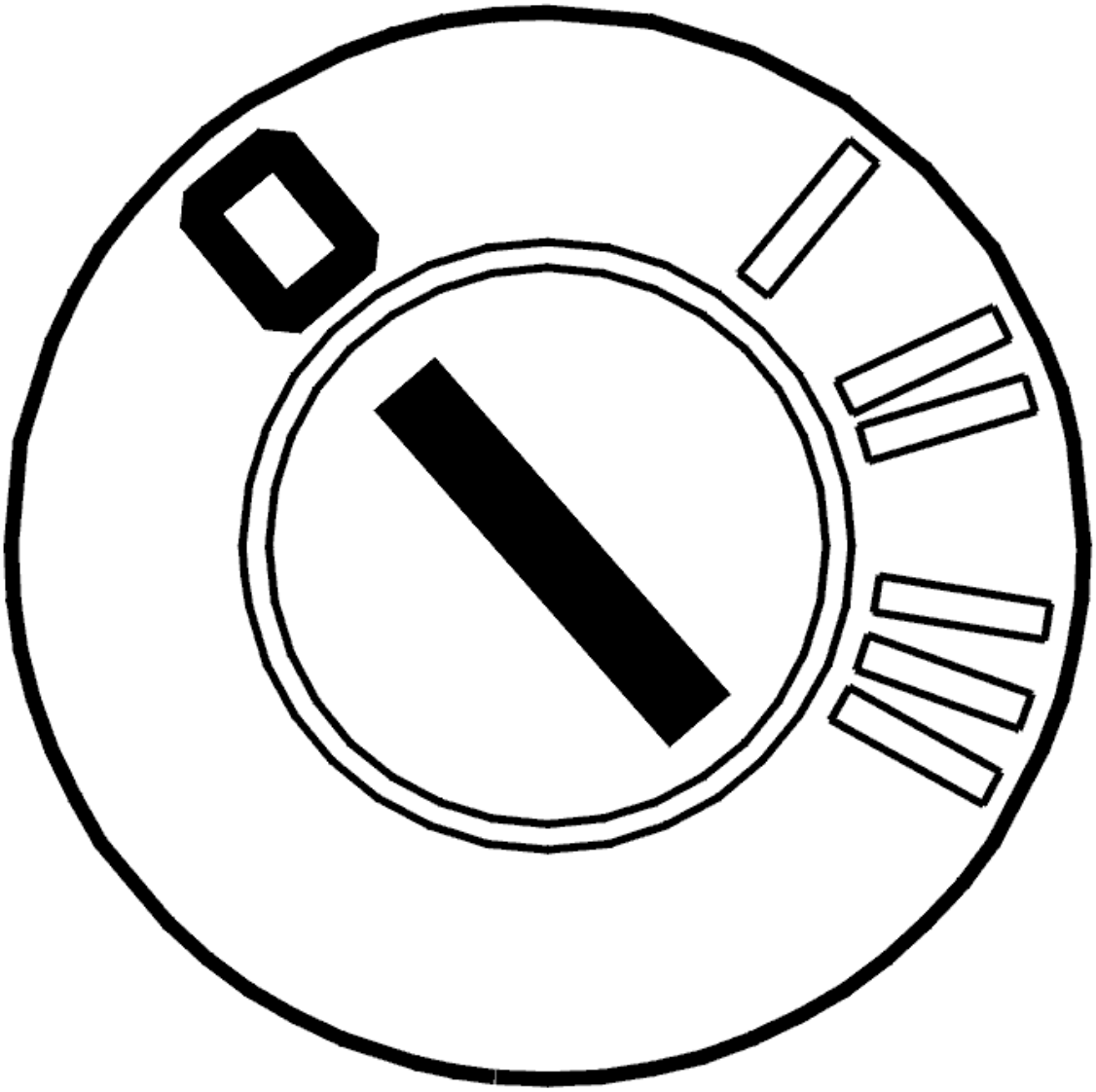

Fig. 57: Identifying Ignition OFF
Courtesy of VOLVO CARS CORPORATION

- Ignition off
- Open the transmission control system.

  Check the cable between transmission connector terminal #C5 (transmission side) and the connector for solenoid S5. Check for an open-circuit according to **OPEN-CIRCUIT, PERMANENT FAULTS** .

  Check solenoid S5 by measuring the resistance between the terminal pin on solenoid S5 and the transmission housing. The resistance must be 11-15 ohms. Replace solenoid S5 if the resistance is incorrect.

  Remedy as necessary.

  Other information:

- To disconnect the transmission connectors, see **CONNECTORS, TRANSMISSION, DISCONNECTING / CONNECTING**
- To open the control system and to check or replace solenoid S5, see **SOLENOID CONTROL SYSTEM, REPLACING**
- To replace the cable harness for the control system, see **TEMPERATURE SENSOR FLUID, TRANSAXLE, (TFT)**
- For information about signals, see **SIGNAL DESCRIPTION. TRANSMISSION CONTROL MODULE (TCM)** .

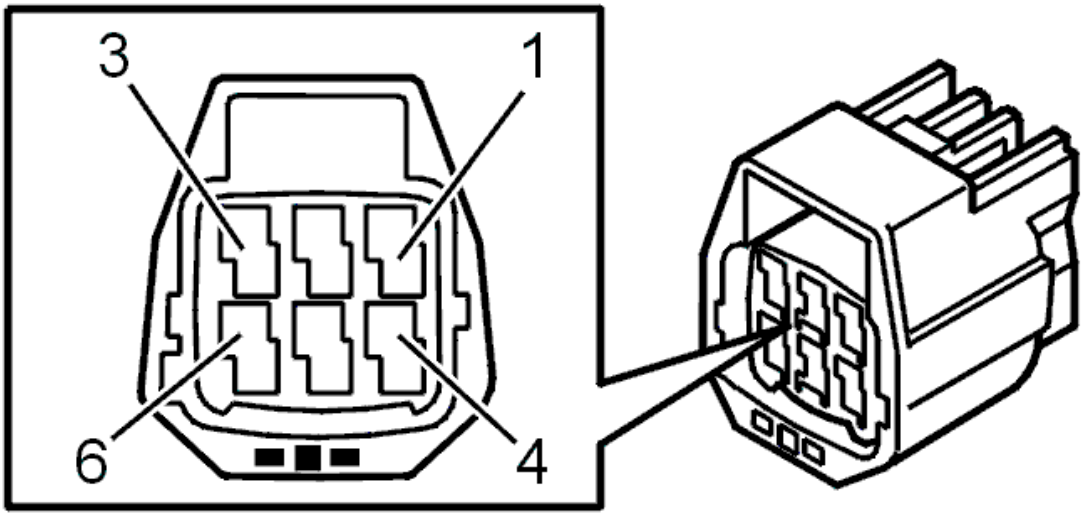

Fig. 58: Identifying 6-Pin Transmission Connector Terminals
Courtesy of VOLVO CARS CORPORATION

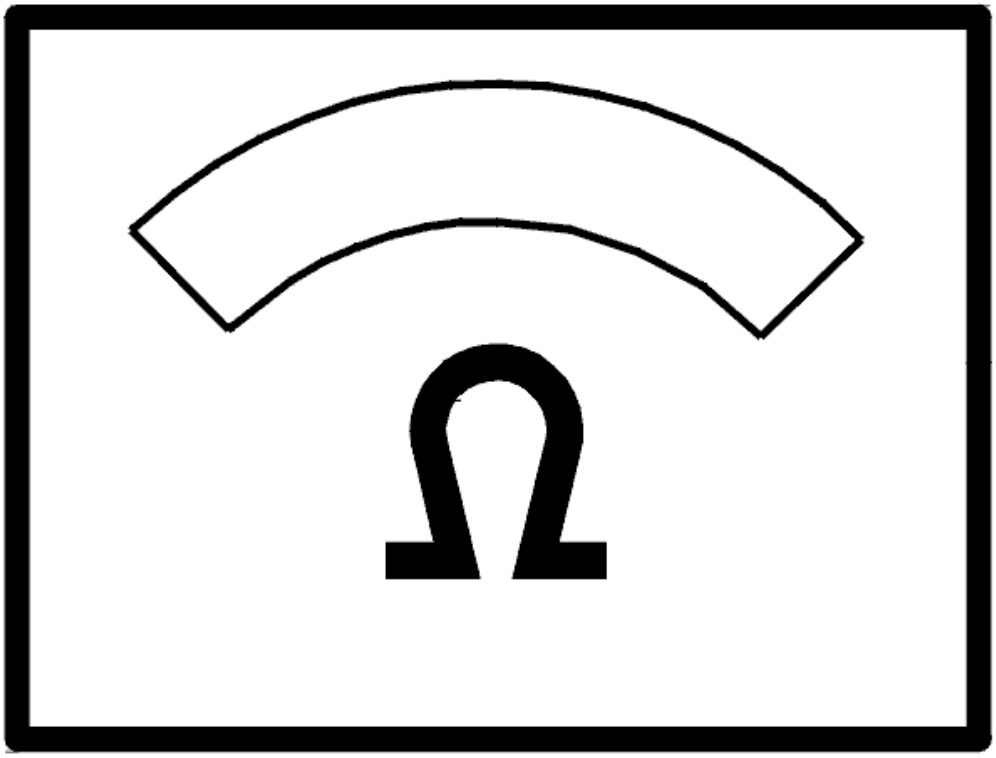

Fig. 59: Identifying Ohms Display
Courtesy of VOLVO CARS CORPORATION

- **Continue**

  Refer to **RESETTING THE ADAPTATION**

INTERMITTENT FAULT

Check the transmission control module (TCM) and transmission connectors. Check for contact resistance and oxidation according to **CONTACT RESISTANCE AND OXIDATION** .

Check the cable between control module terminal #B6 (#A66) and transmission connector terminal #C5 (control module side). Check for an intermittent open-circuit according to **OPEN-CIRCUIT, INTERMITTENT FAULTS** .

- Check the circuit for solenoid S5. Switch off the ignition. Disconnect the control module. Measure the resistance between terminals #B6 (#A66) and #A53 (#A53) on the breakout box. The resistance must be 11-15 ohms.

Remedy as necessary.

Other information:

- To connect the breakout box, see **CONNECTING THE BREAKOUT BOX**
- To disconnect the transmission connectors, see **CONNECTORS, TRANSMISSION, DISCONNECTING / CONNECTING**
- For information about signals, see **SIGNAL DESCRIPTION. TRANSMISSION CONTROL MODULE (TCM)** .

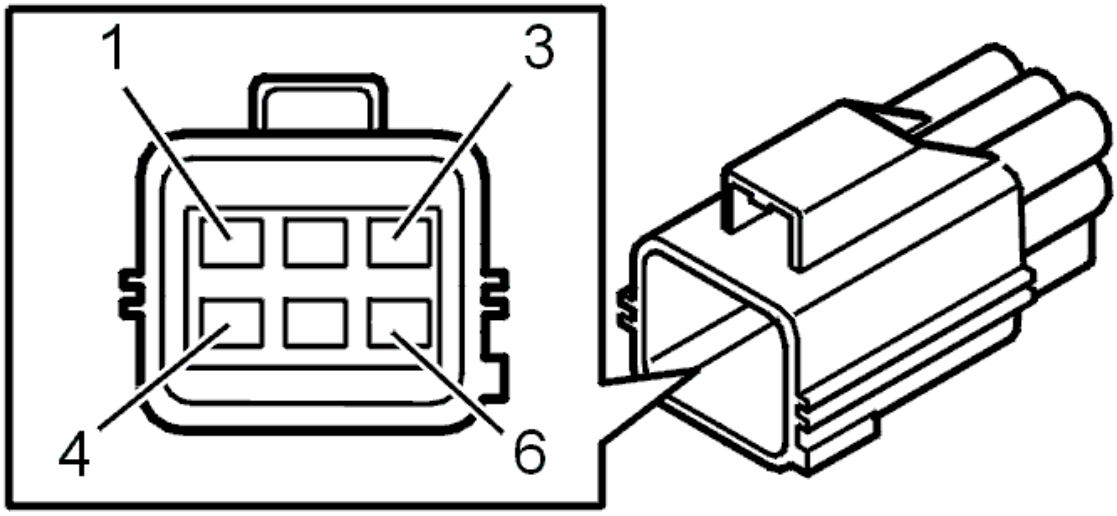

Fig. 60: Identifying 6-Pin Transmission Connector Terminals
Courtesy of VOLVO CARS CORPORATION

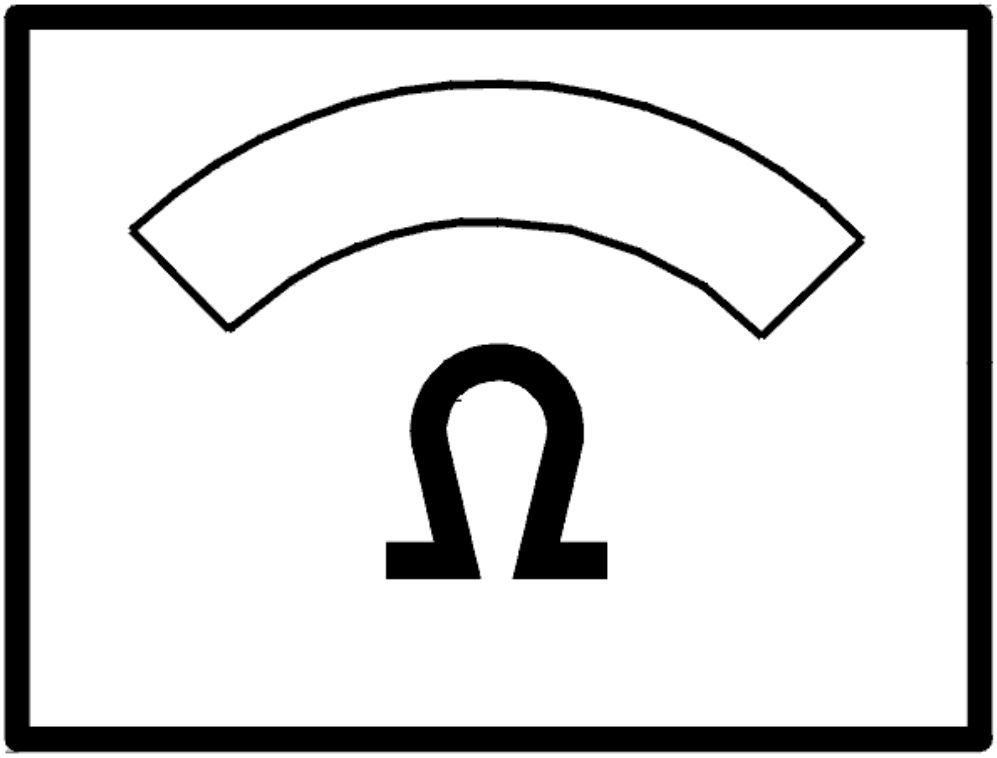

Fig. 61: Identifying Ohms Display
Courtesy of VOLVO CARS CORPORATION

- **Continue**

  Refer to **INFORMATION**

RESETTING THE ADAPTATION

RESETTING ADAPTATION AND THE COUNTER FOR "TRANSMISSION OIL CHANGE"

HINT: The transmission has torque controlled adaptive pressure control. Pressure control means that the transmission regulates the pressure itself during each gear shift. This avoids harsh gear shifting. Each gear shift is evaluated by the control module and stored in the memory. This allows for compensation for wear and tear in the transmission and clutch. It is important that the adaptation in the memory is reset after the transmission has been repaired. This is to ensure normal operation. The oil is replaced during

repair; the "Transmission oil change" counter must be reset. If the counter is not reset when the fluid is drained and replaced, there is a risk that a diagnostic trouble code (DTC) will be stored in incorrect circumstances.

NOTE: **This applies only if the transmission or one of the components in the transmission have been replaced.**

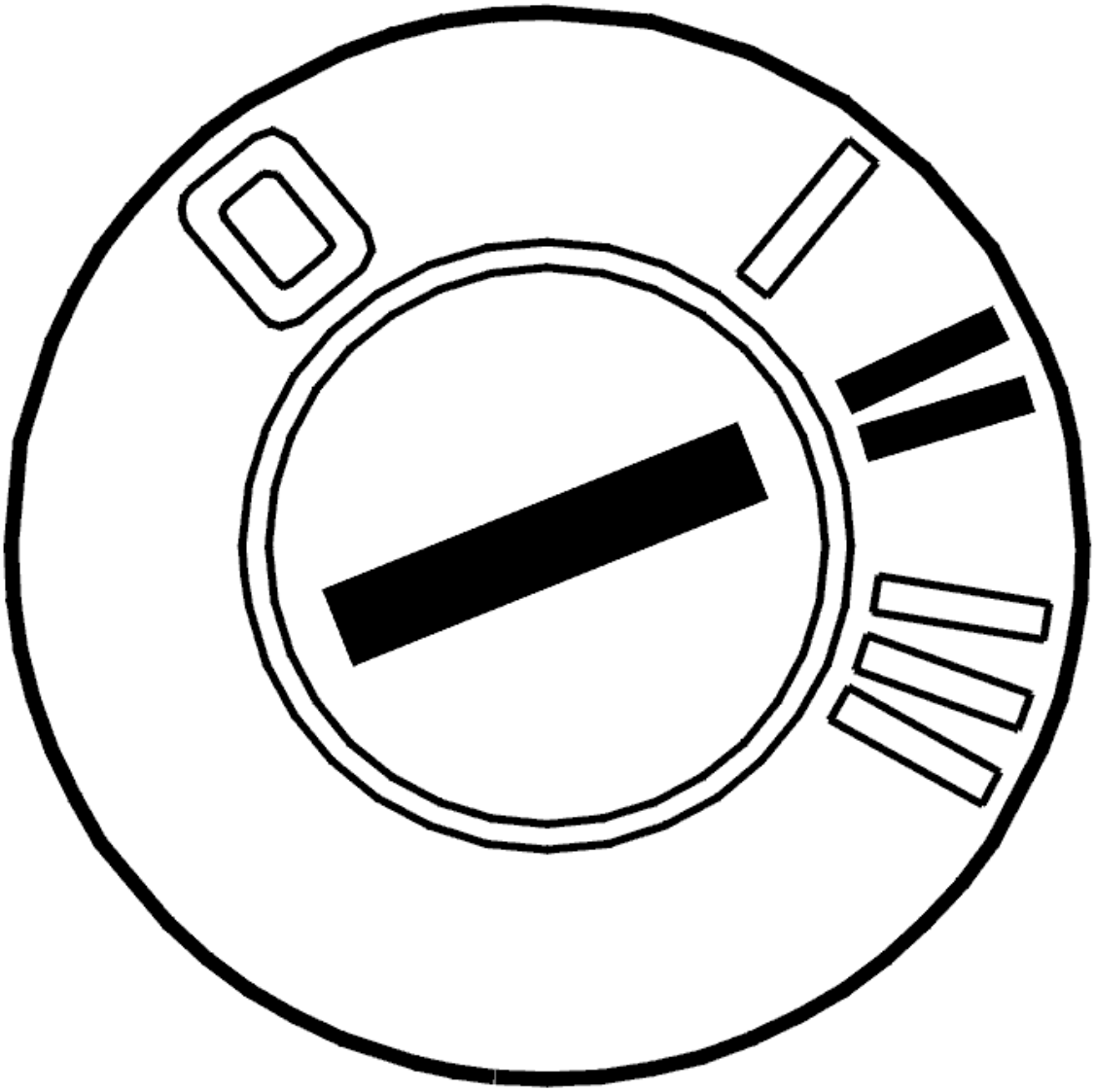

Fig. 62: Identifying Ignition ON
Courtesy of VOLVO CARS CORPORATION

- Ignition on.

  Click on the VCT2000 symbol to reset the adaptation and counter.

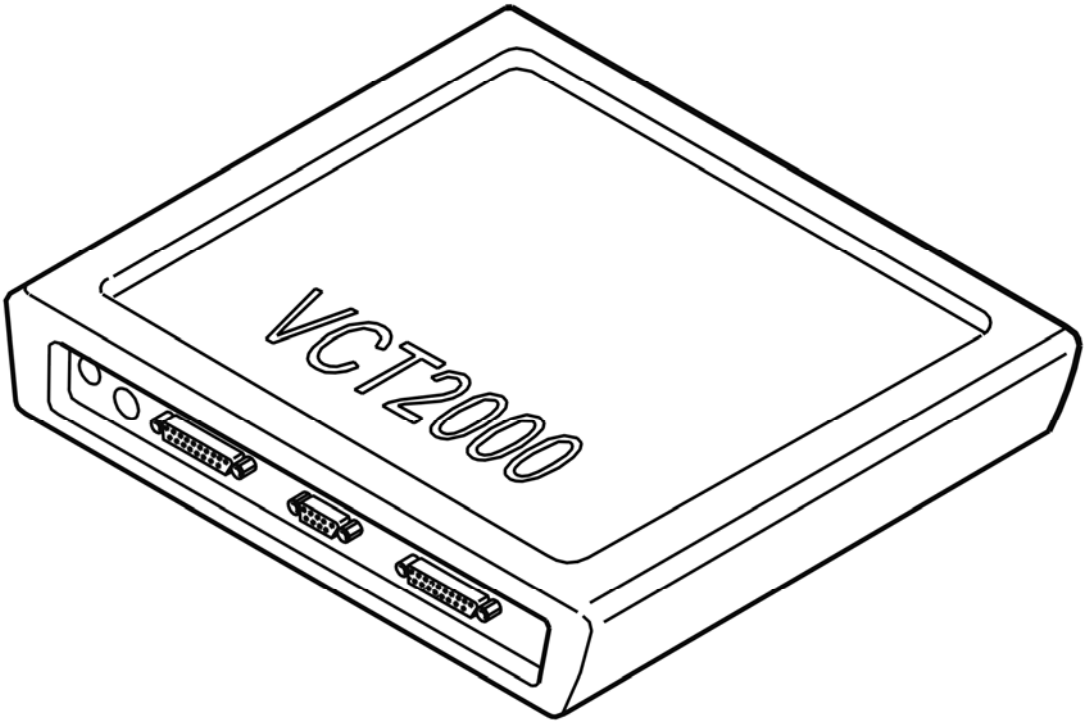

Fig. 63: Identifying VCT2000 Diagnostic Tool Symbol In VIDA
Courtesy of VOLVO CARS CORPORATION

- **Continue**

  Refer to **VERIFICATION**

VERIFICATION

VERIFICATION

HINT: After carrying out the repair, check that the fault has been remedied.

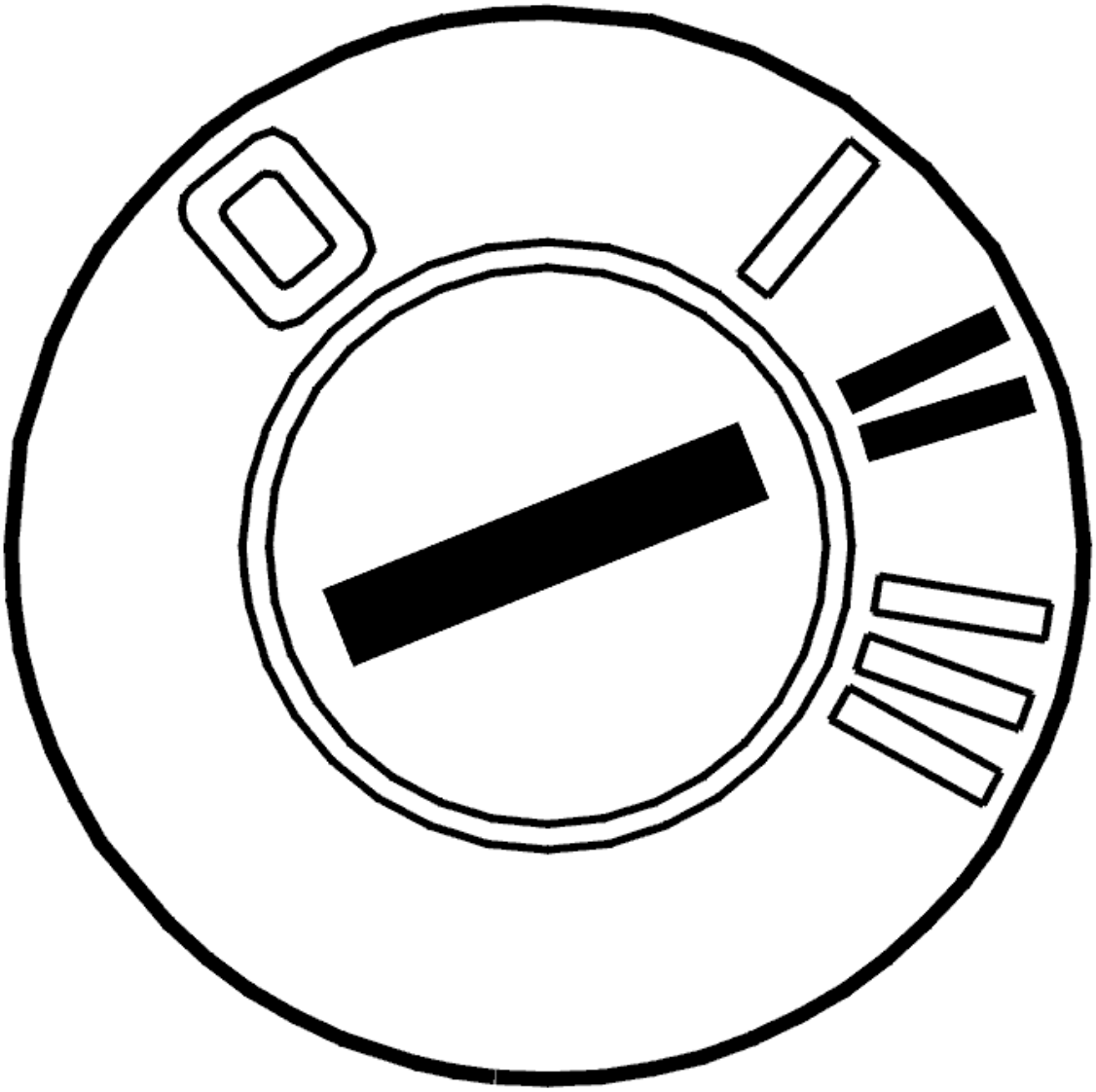

Fig. 64: Identifying Ignition ON
Courtesy of VOLVO CARS CORPORATION

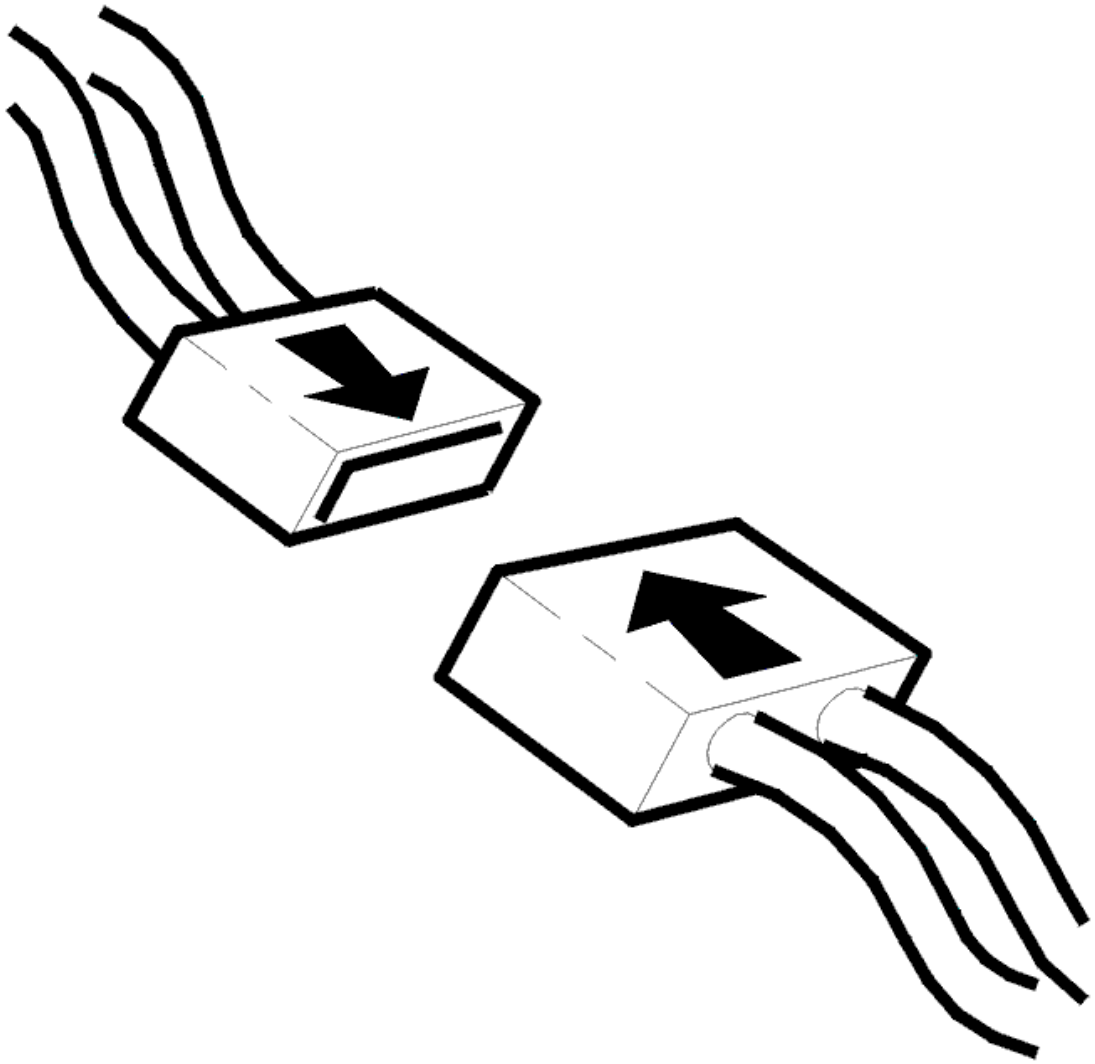

Fig. 65: Identifying Connector(s) Reinstallation
Courtesy of VOLVO CARS CORPORATION

- Ignition off.
- Reinstall the components, reconnect the connectors etc.
- Ignition on.
- Gear selector in position P.
- Activate solenoid S5.

  The current should oscillate between 0 and 1.5 A.

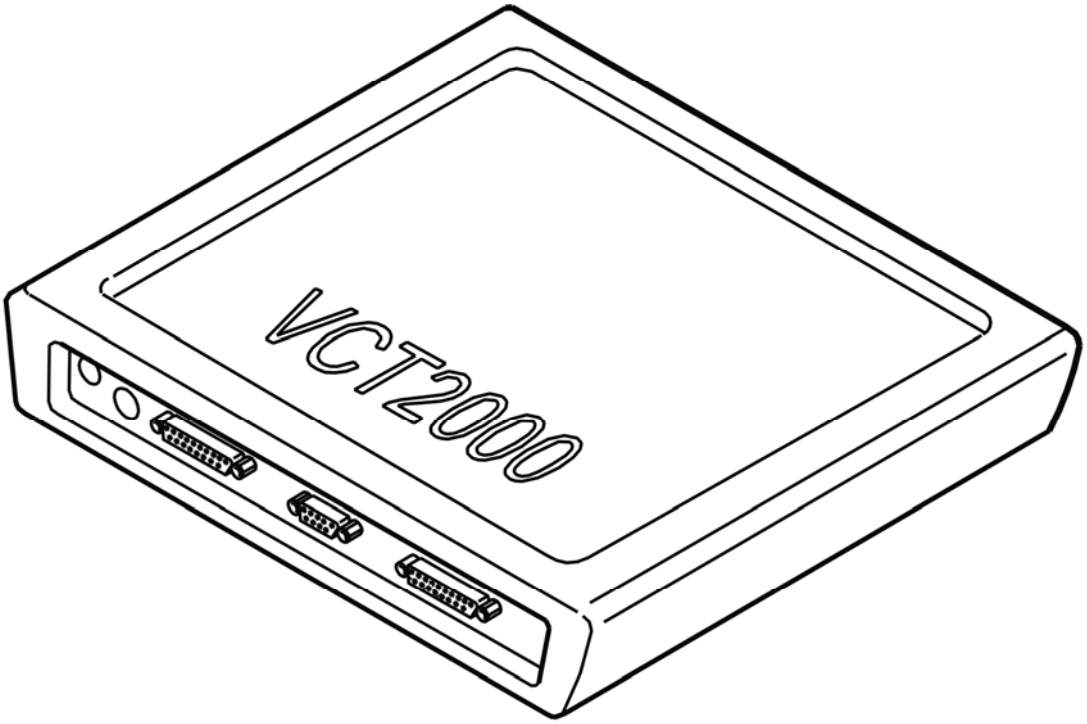

Fig. 66: Identifying VCT2000 Diagnostic Tool Symbol In VIDA
Courtesy of VOLVO CARS CORPORATION

Does the current oscillate?

- **YES**

  VERIFIED: Troubleshooting has been completed.

- **NO**

  Refer to **INFORMATION**

INFORMATION

FAULT-TRACING INFORMATION

The fault should have been detected and remedied. As this is not the case fault-tracing has failed.

Exit fault-tracing for this diagnostic trouble code (DTC) or make another attempt.

INFORMATION

FAULT-TRACING INFORMATION

If the fault is intermittent, do not verify fault-tracing if the fault does not recur.

It is possible to view the information again, or leave fault-tracing for this diagnostic trouble code (DTC).

FAULTY SIGNAL

CHECKING TRANSMISSION FLUID TEMPERATURE SENSOR

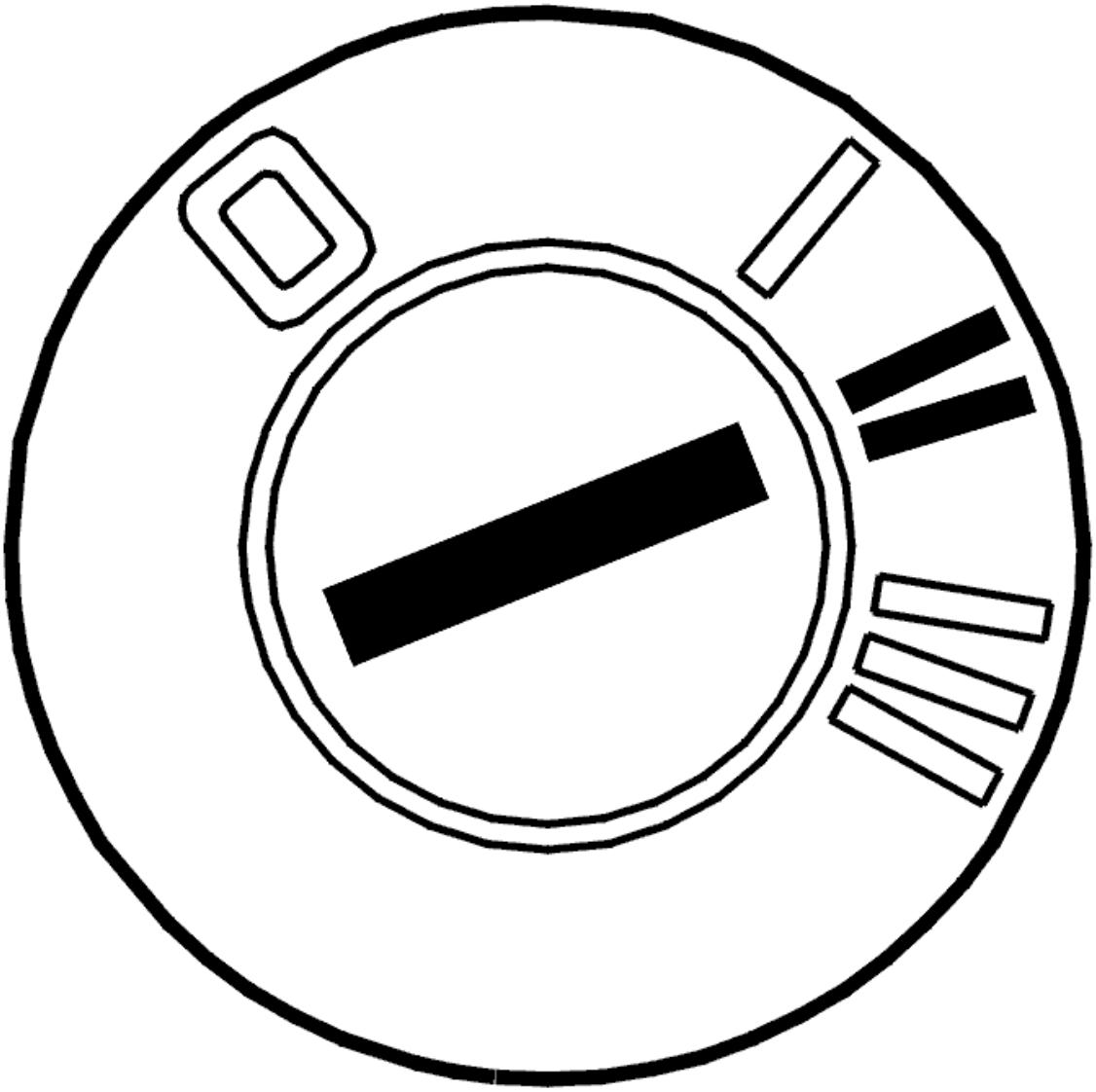

Fig. 67: Identifying Ignition ON
Courtesy of VOLVO CARS CORPORATION

- Ignition on
- Read off the oil temperature.

  Check that the temperature is within its permitted range.

Compare with the transmission temperature.

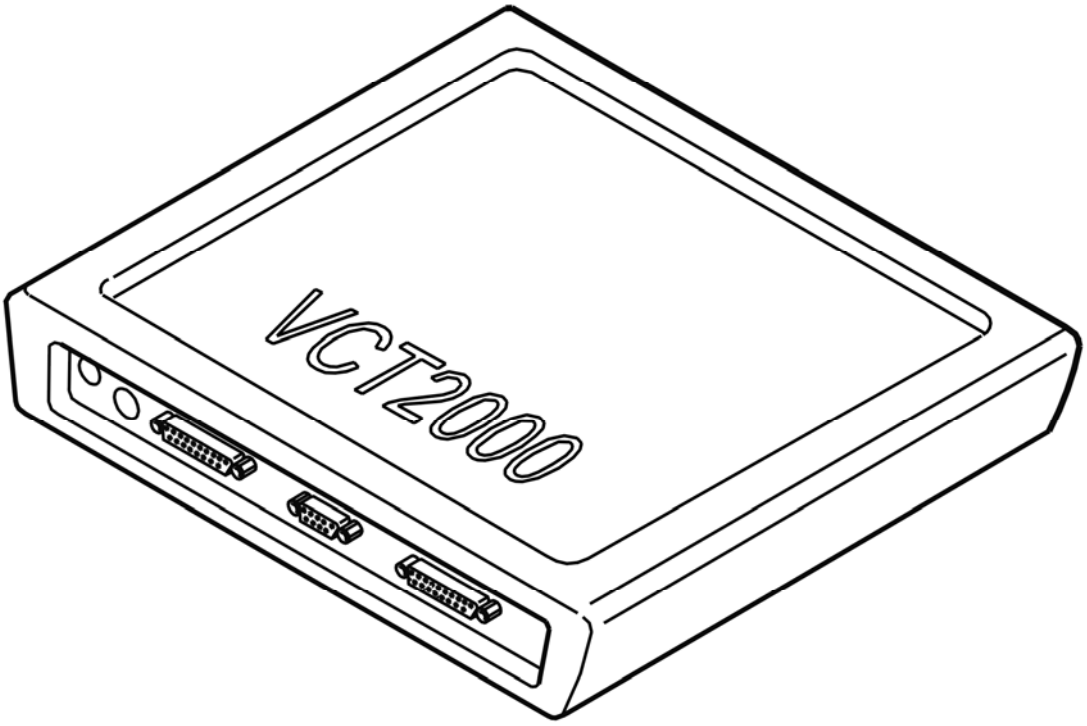

Fig. 68: Identifying VCT2000 Diagnostic Tool Symbol In VIDA
Courtesy of VOLVO CARS CORPORATION

Was the transmission temperature within its permitted range?

- **YES**

  Refer to **INTERMITTENT FAULT**

- **NO**

  Refer to **CHECKING TRANSMISSION FLUID TEMPERATURE SENSOR**

CHECKING TRANSMISSION FLUID TEMPERATURE SENSOR

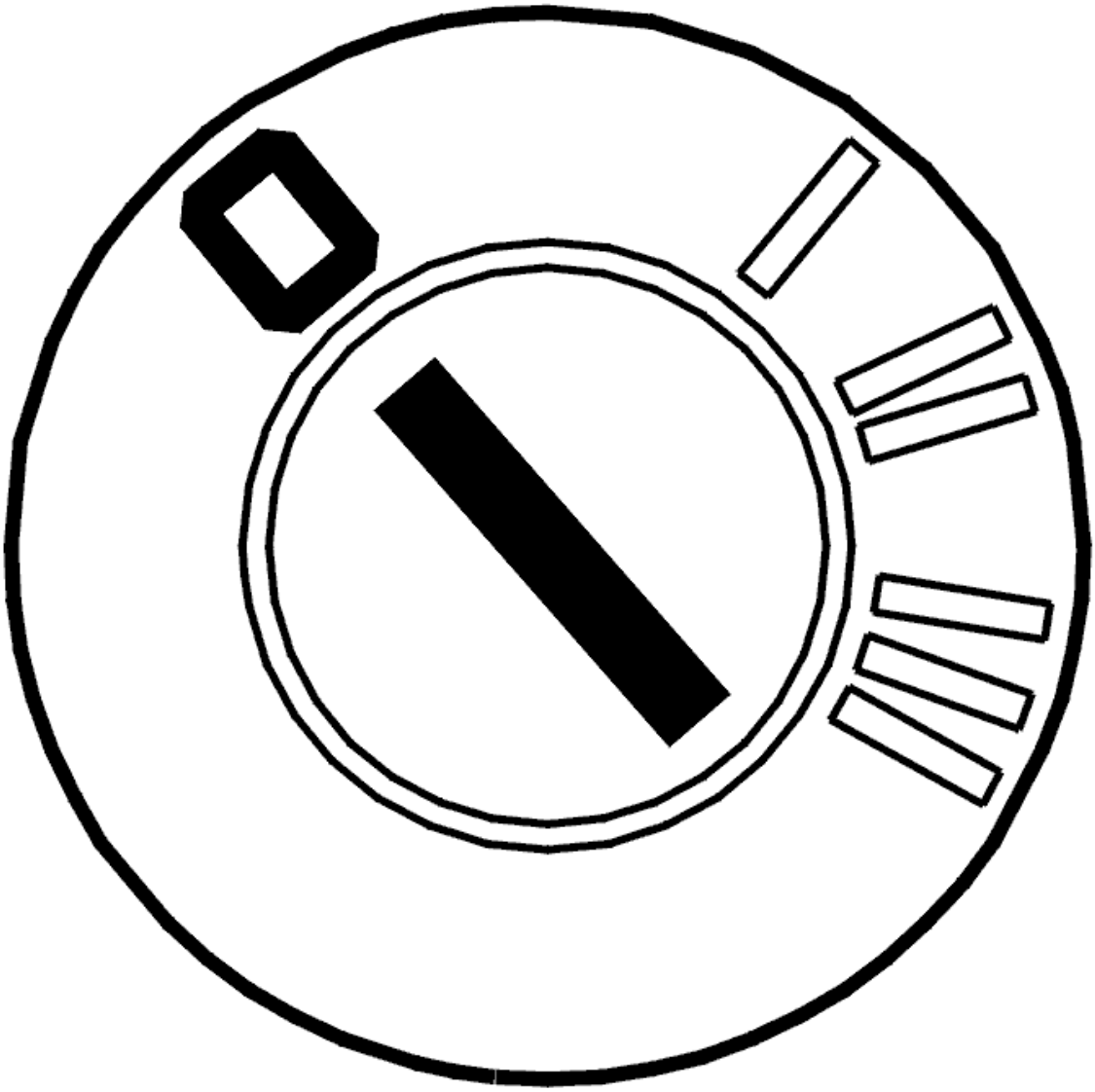

Fig. 69: Identifying Ignition OFF
Courtesy of VOLVO CARS CORPORATION

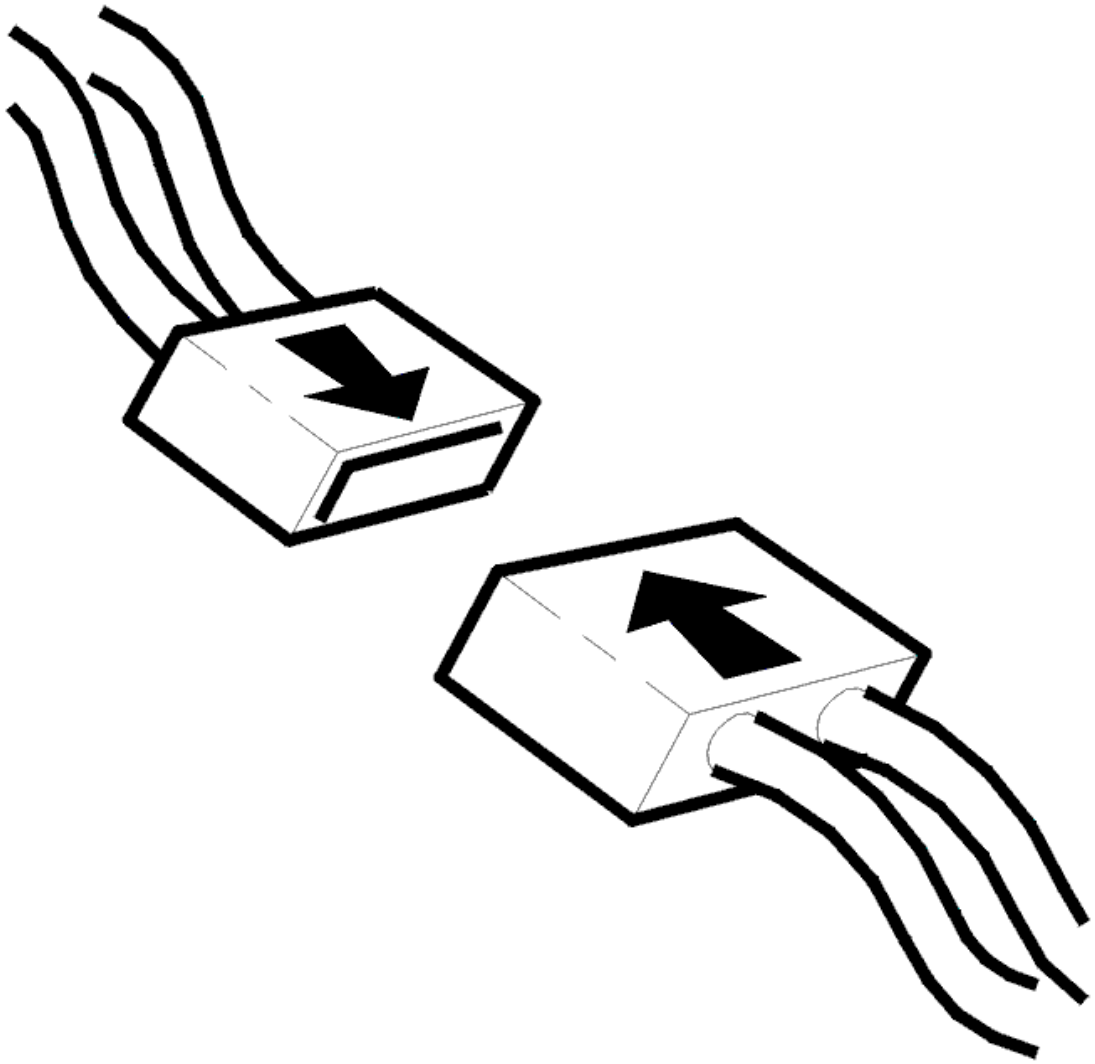

Fig. 70: Identifying Connector(s) Reinstallation
Courtesy of VOLVO CARS CORPORATION

- Ignition off
- Transmission connector D disconnected.

  Check the temperature sensor. Measure the resistance between transmission connector D terminals #D7 and #D8.

  The resistance must be 4.5-6 kohms at 20°C.

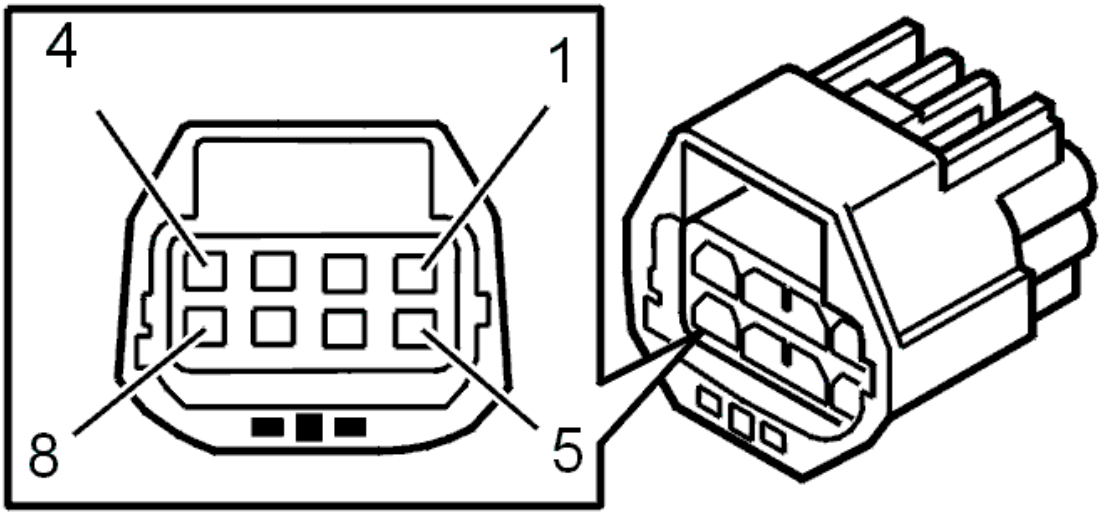

Fig. 71: Identifying 8-Pin Transmission Connector Terminals
Courtesy of VOLVO CARS CORPORATION

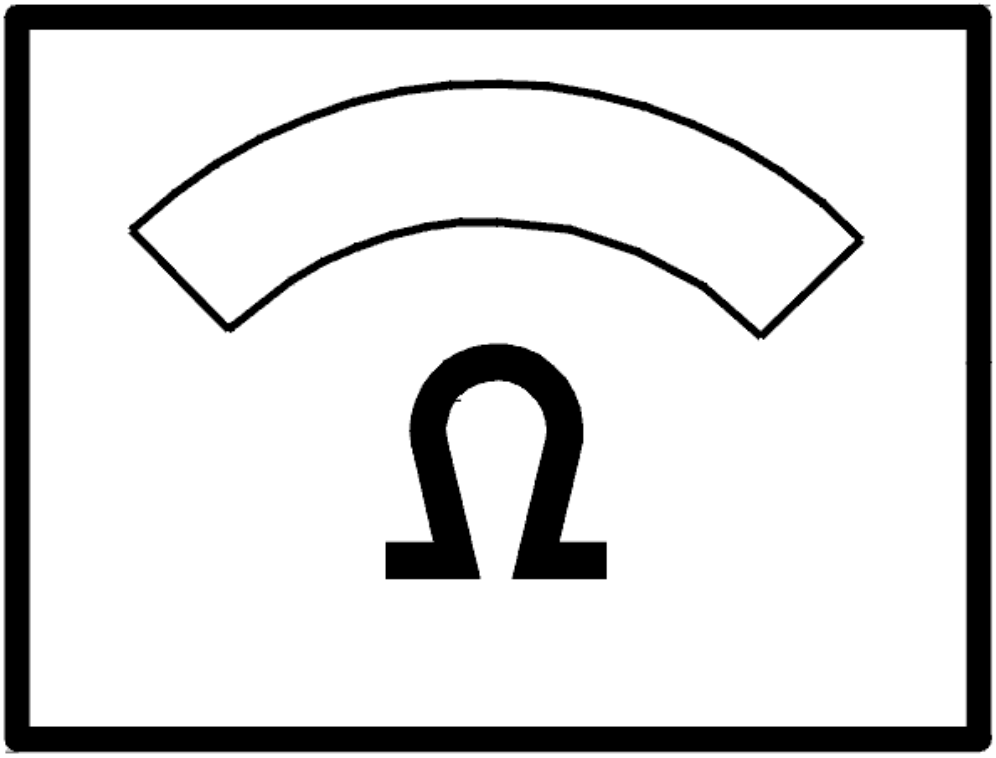

Fig. 72: Identifying Ohms Display
Courtesy of VOLVO CARS CORPORATION

Was the resistance OK?

- **YES**

  Refer to **CHECKING TRANSMISSION FLUID TEMPERATURE SENSOR**

- **NO**

  Refer to **CHECKING THE CABLE AND COMPONENT**

CHECKING TRANSMISSION FLUID TEMPERATURE SENSOR

Check the cable between control module terminal #A37 (#A37) and transmission connector terminal #D7

(control module side). Check for an open-circuit according to **OPEN-CIRCUIT, PERMANENT FAULTS** .

Check the cable between control module terminal #A55 (#A55)and transmission connector terminal #D8 (control module side). Check for an open-circuit according to **OPEN-CIRCUIT, PERMANENT FAULTS** .

Remedy as necessary.

Other information:

- To connect the breakout box, see **CONNECTING THE BREAKOUT BOX**
- To disconnect the transmission connectors, see **CONNECTORS, TRANSMISSION, DISCONNECTING / CONNECTING**
- For information about signals, see **SIGNAL DESCRIPTION. TRANSMISSION CONTROL MODULE (TCM)** .

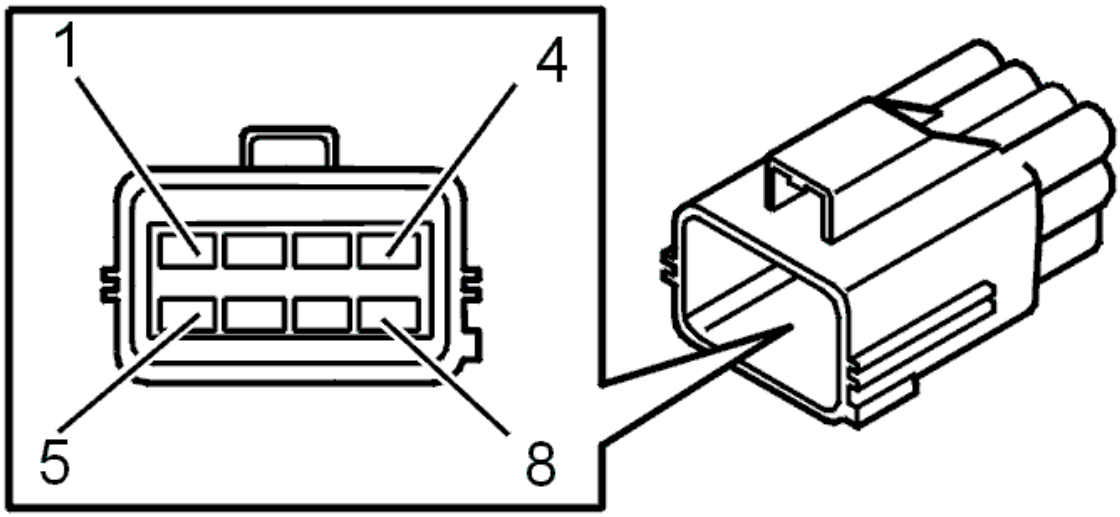

Fig. 73: Identifying Transmission Connector Terminals
Courtesy of VOLVO CARS CORPORATION

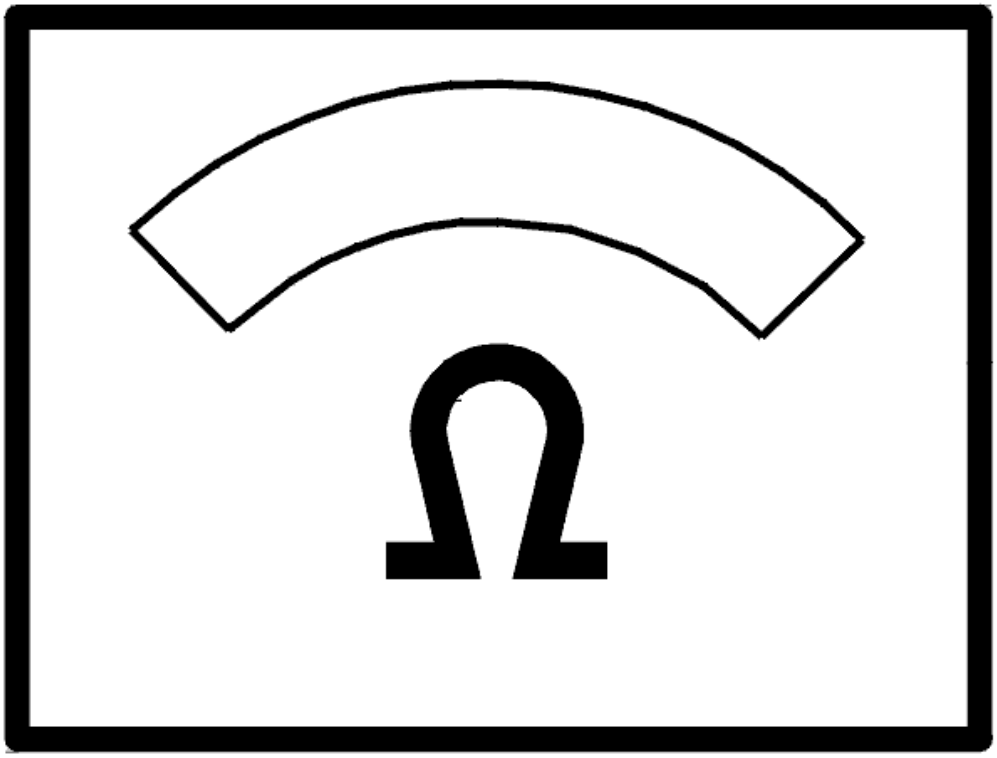

Fig. 74: Identifying Ohms Display
Courtesy of VOLVO CARS CORPORATION

Was a fault detected?

- **YES**

  Refer to **VERIFICATION**

- **NO**

  Refer to **CHECKING THE CABLE AND COMPONENT**

CHECKING THE CABLE AND COMPONENT

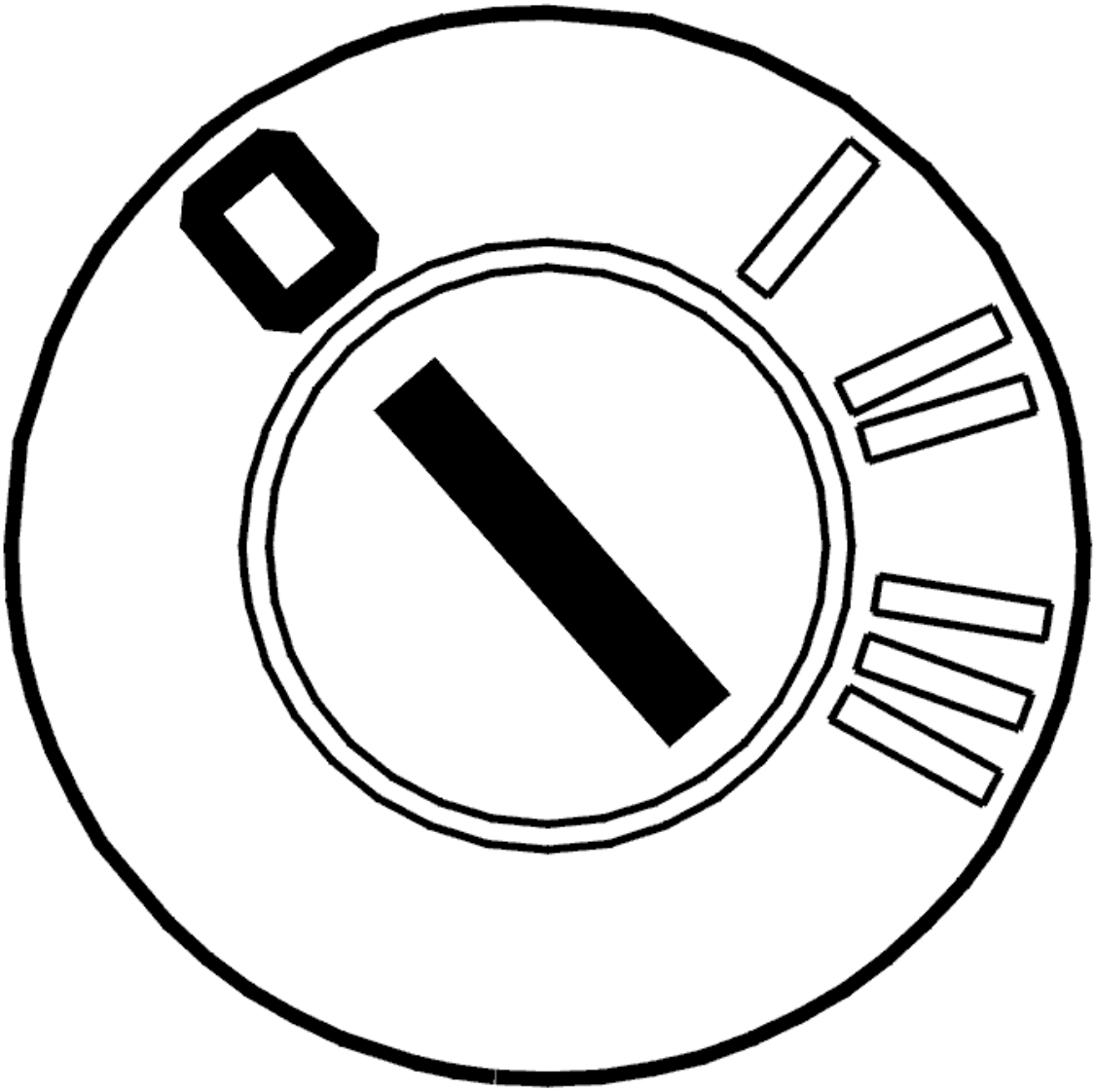

Fig. 75: Identifying Ignition OFF
Courtesy of VOLVO CARS CORPORATION

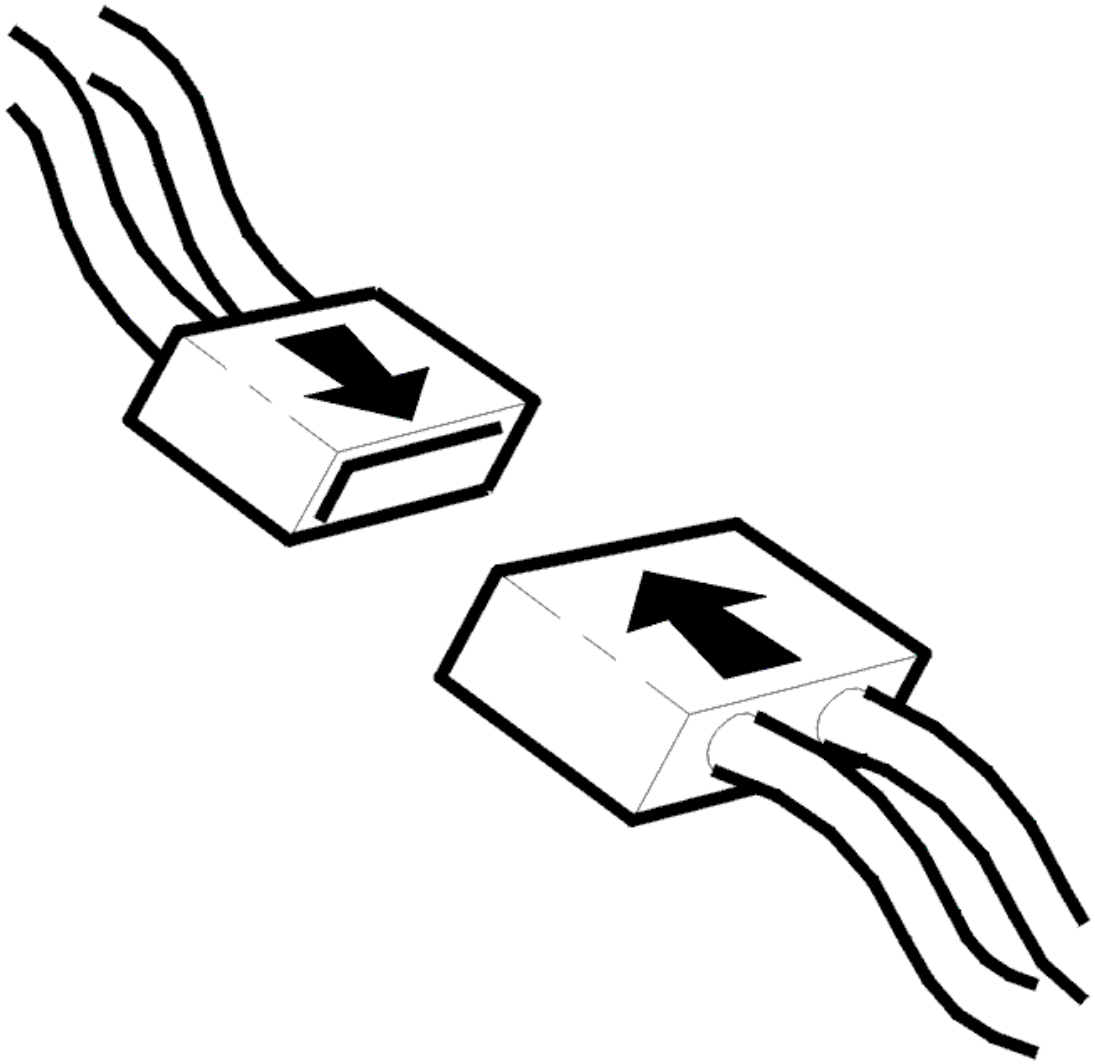

Fig. 76: Identifying Connector(s) Reinstallation
Courtesy of VOLVO CARS CORPORATION

- Ignition off
- Open the transmission control system.

  Check the cable between transmission connector terminal #D7 and temperature sensor terminal #1. Check the cable between transmission connector #D8 and temperature sensor terminal #2. Check for an open-circuit according to **OPEN-CIRCUIT, PERMANENT FAULTS** .

  Also check the cables for a short-circuit to each other.

  HINT: Check the temperature sensor. With the ignition off and transmission connector D disconnected, measure the resistance between transmission connector D terminals #D7 and #D8. The resistance must be 4.5-6 kohms at 20 °C.

Remedy as necessary.

Other information:

- To connect the breakout box, see **CONNECTING THE BREAKOUT BOX**
- To disconnect the transmission connectors, see **CONNECTORS, TRANSMISSION, DISCONNECTING / CONNECTING**
- To open the transmission control system and to check or replace the temperature sensor, see **SOLENOID CONTROL SYSTEM, REPLACING**
- For information about signals, see **SIGNAL DESCRIPTION. TRANSMISSION CONTROL MODULE (TCM)** .

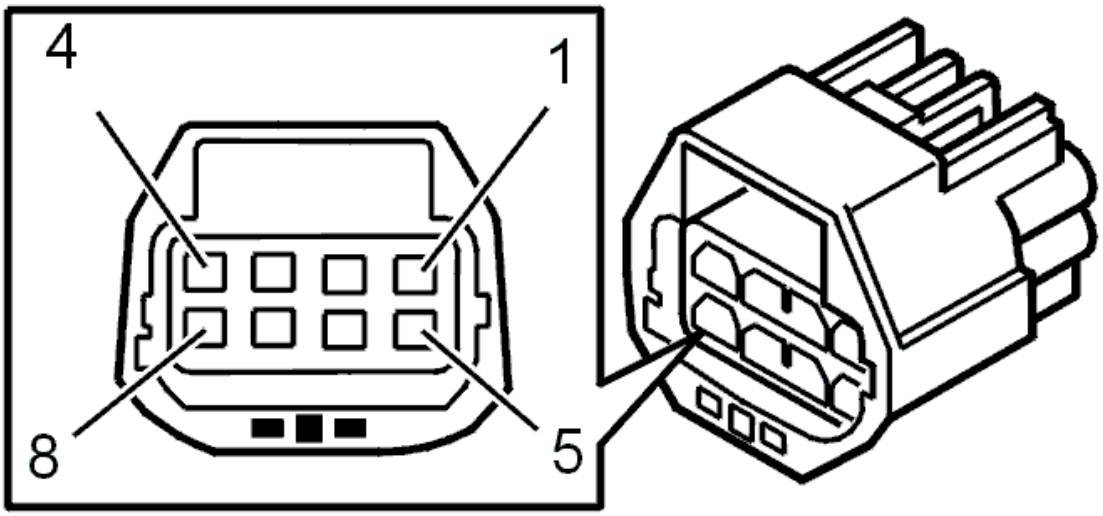

Fig. 77: Identifying 8-Pin Transmission Connector Terminals
Courtesy of VOLVO CARS CORPORATION

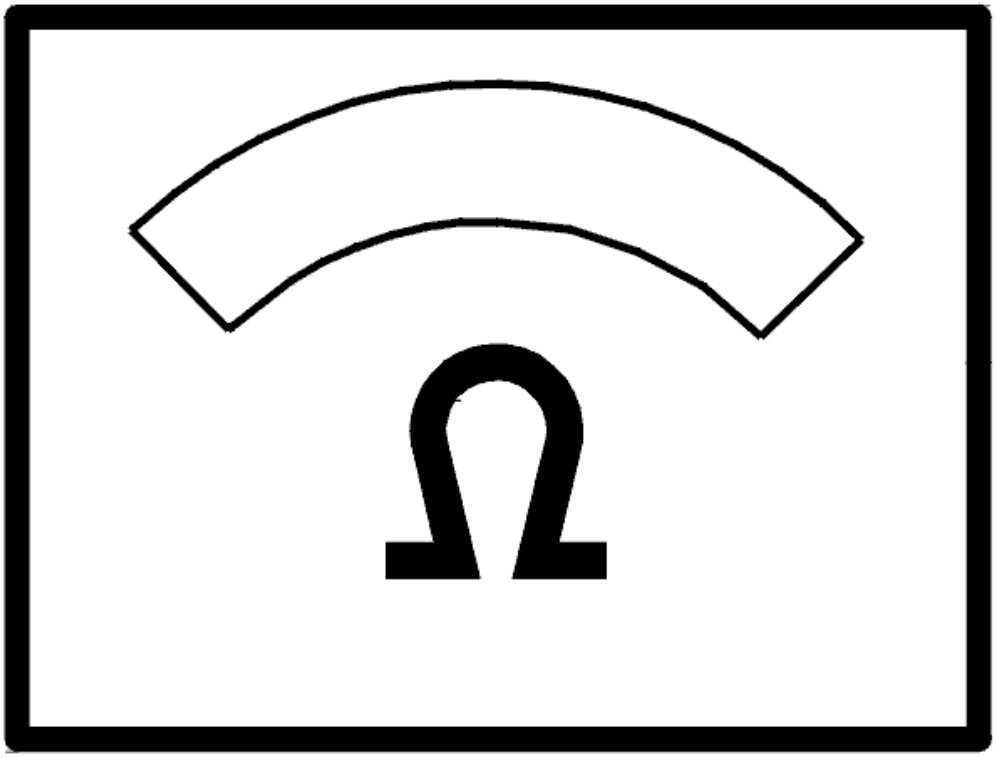

Fig. 78: Identifying Ohms Display
Courtesy of VOLVO CARS CORPORATION

- **Continue**

  Refer to **RESETTING TRANSMISSION FLUID CHANGE COUNTER**

INTERMITTENT FAULT

Check the transmission control module (TCM) and transmission connector D. Check for contact resistance and oxidation according to **CONTACT RESISTANCE AND OXIDATION** .

Check the cable between transmission control module (TCM) terminal #A37 (#A37) and transmission connector terminal #D7 (control module side). Check for an intermittent open-circuit according to **OPEN-CIRCUIT, INTERMITTENT FAULTS** .

Check the cable between control module terminal #A55 (#A55)and transmission connector terminal #D8 (control module side). Check for an intermittent open-circuit according to **OPEN-CIRCUIT, INTERMITTENT FAULTS** .

Remedy as necessary.

Other information:

- To connect the breakout box, see **CONNECTING THE BREAKOUT BOX**
- To disconnect the transmission connectors, see **CONNECTORS, TRANSMISSION, DISCONNECTING / CONNECTING**
- For information about signals, see **SIGNAL DESCRIPTION. TRANSMISSION CONTROL MODULE (TCM)** .

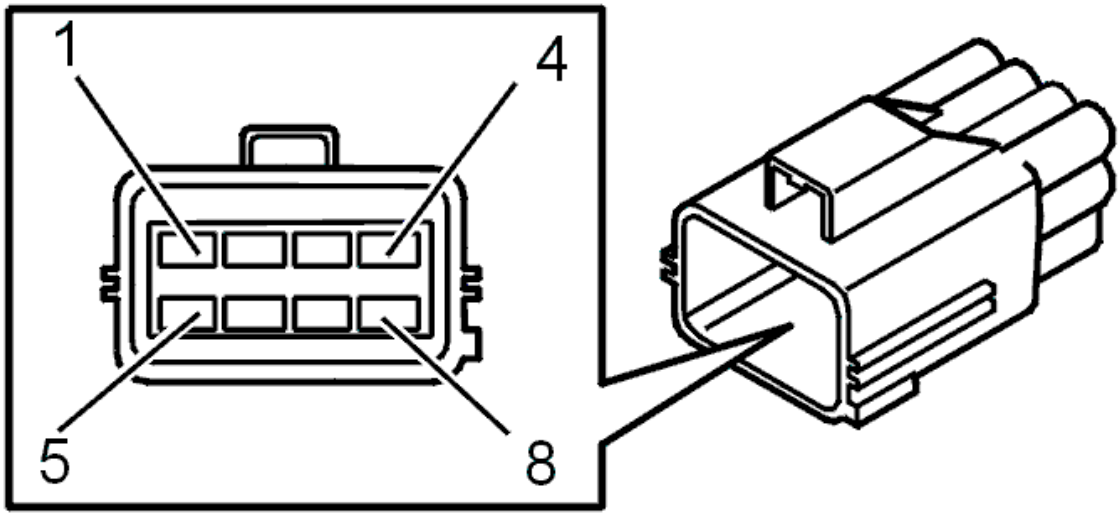

Fig. 79: Identifying Transmission Connector Terminals
Courtesy of VOLVO CARS CORPORATION

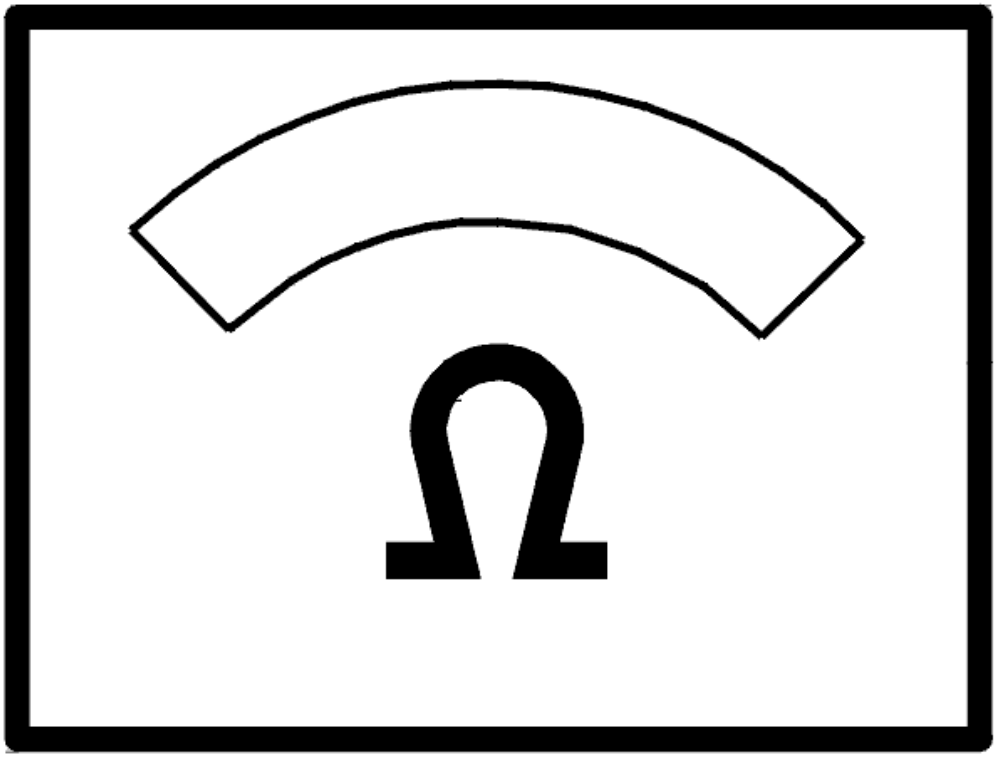

Fig. 80: Identifying Ohms Display
Courtesy of VOLVO CARS CORPORATION

- **Continue**

  Refer to **INFORMATION**

RESETTING TRANSMISSION FLUID CHANGE COUNTER

RESETTING TRANSMISSION FLUID CHANGE COUNTER

HINT: The transmission control module (TCM) has a counter for the oil quality. The counter counts up if the transmission is exposed to too high a load or an ambient temperature that is too high. If the counter is not reset when the oil is drained or changed, there is a risk that a diagnostic trouble code (DTC) will be stored in faulty circumstances. Therefore it is important that the "Transmission oil change" counter is reset.

NOTE: **This applies only when the transmission fluid is changed and when the fluid is changed when repairs are carried out to the transmission temperature sensor.**

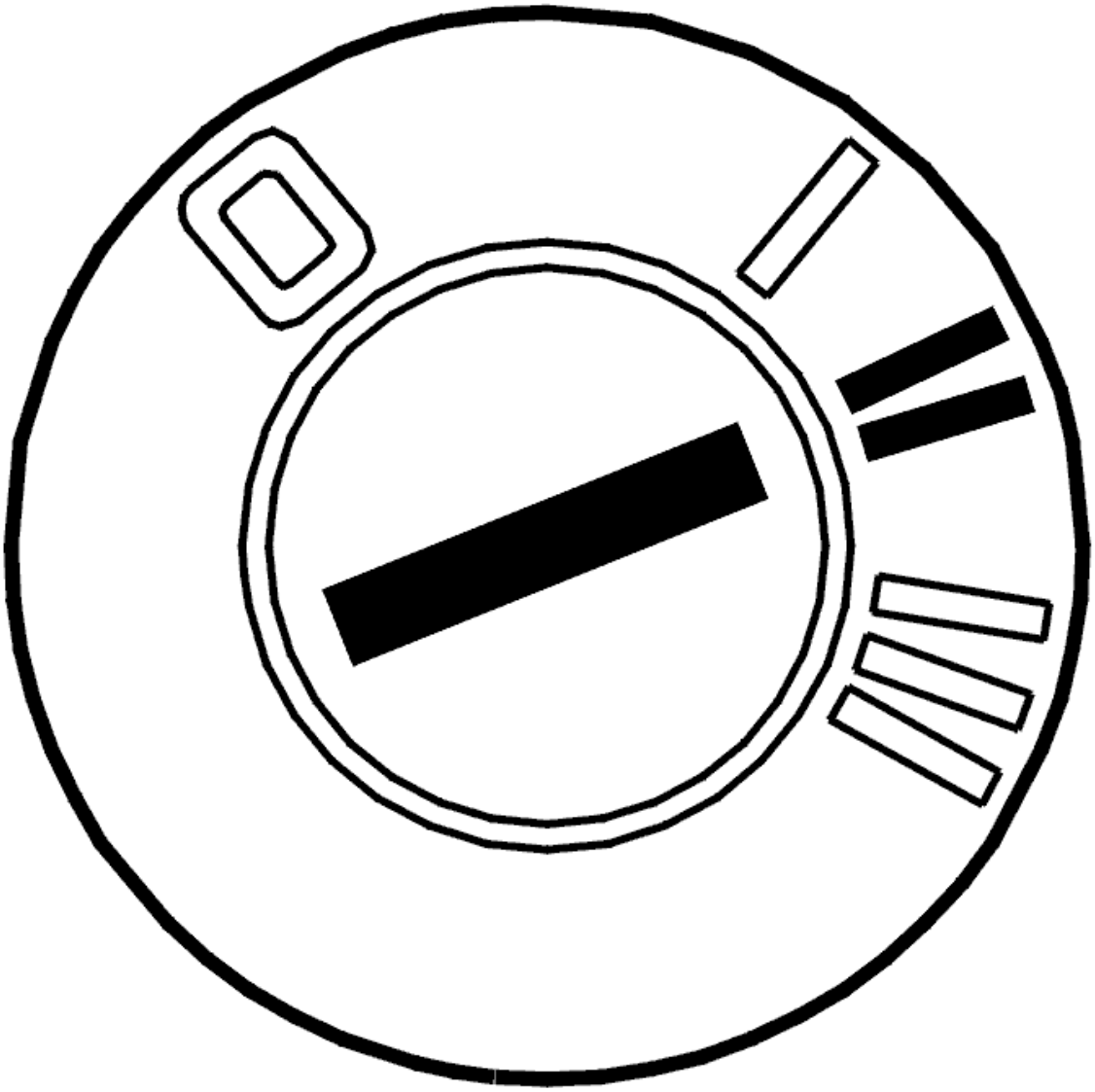

Fig. 81: Identifying Ignition ON
Courtesy of VOLVO CARS CORPORATION

- Ignition on.

  Reset the counter by clicking on the VCT 2000 symbol.

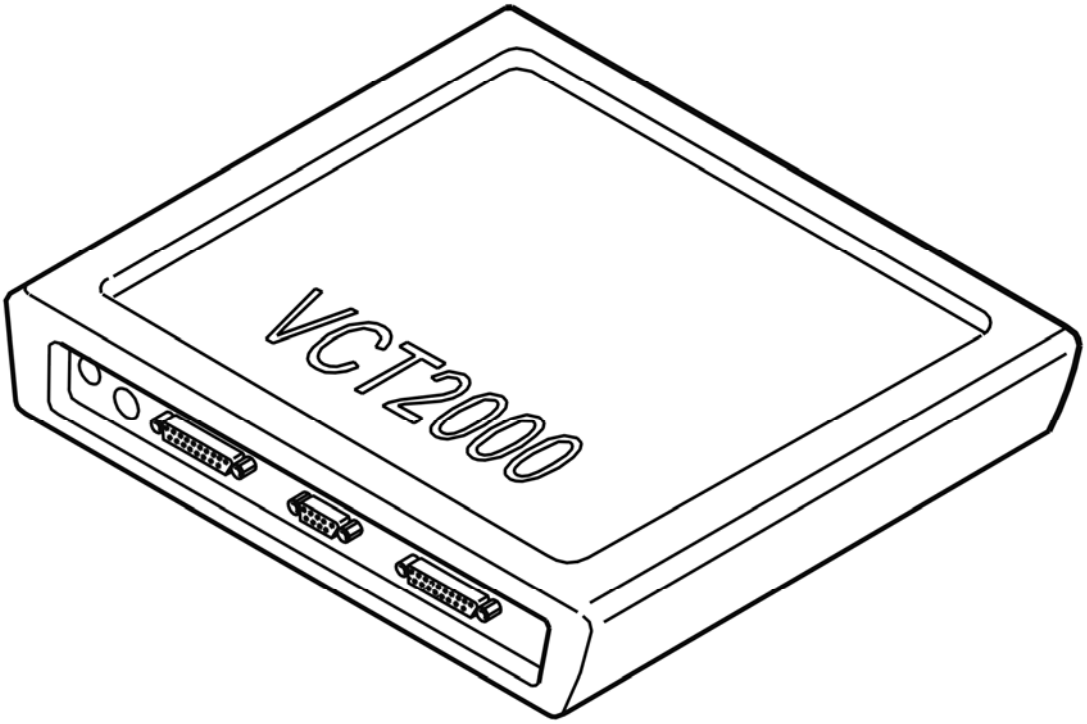

Fig. 82: Identifying VCT2000 Diagnostic Tool Symbol In VIDA
Courtesy of VOLVO CARS CORPORATION

- **Continue**

  Refer to **VERIFICATION**

VERIFICATION

VERIFICATION

HINT: After carrying out the repair, check that the fault has been remedied.

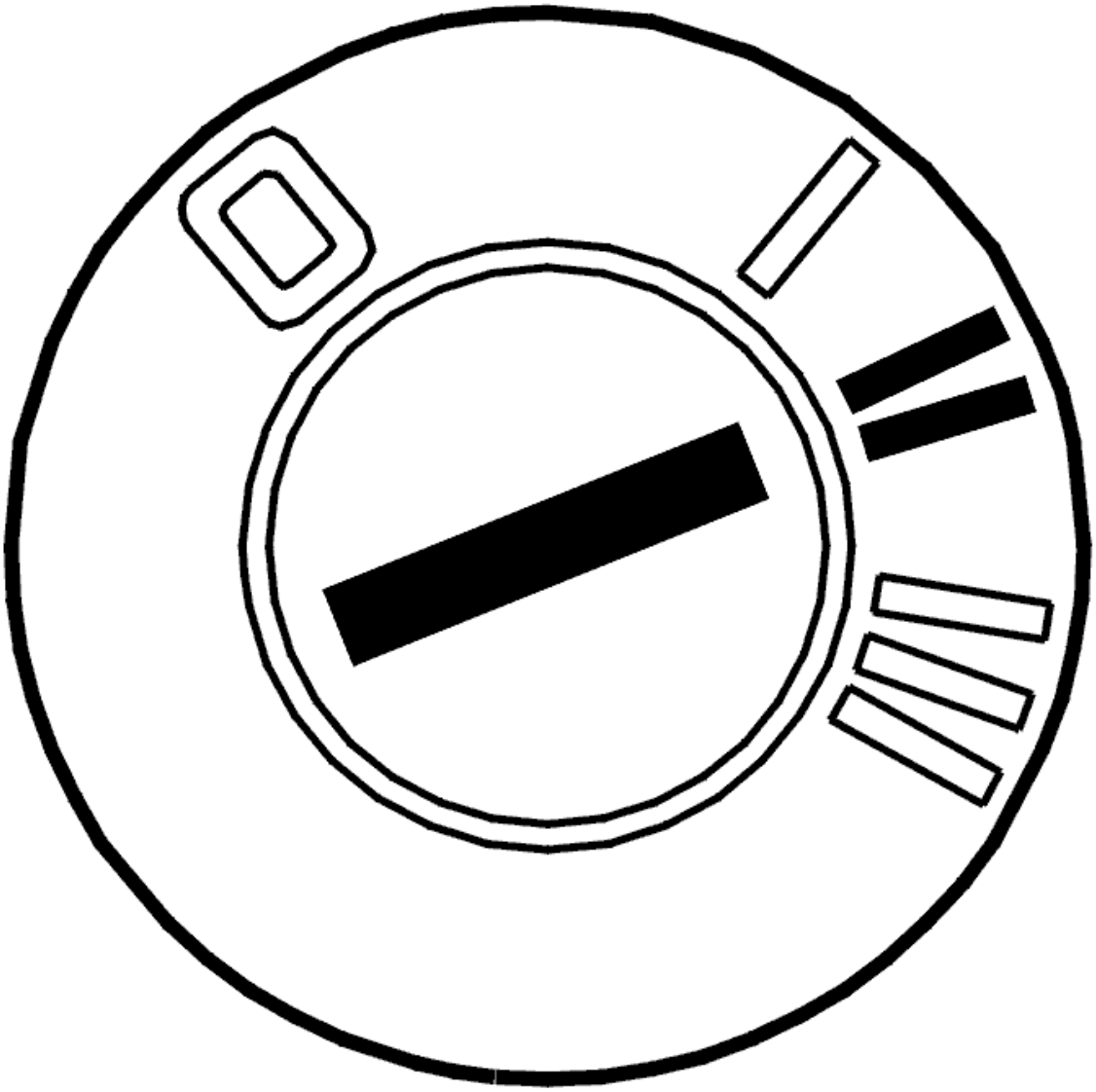

Fig. 83: Identifying Ignition ON
Courtesy of VOLVO CARS CORPORATION

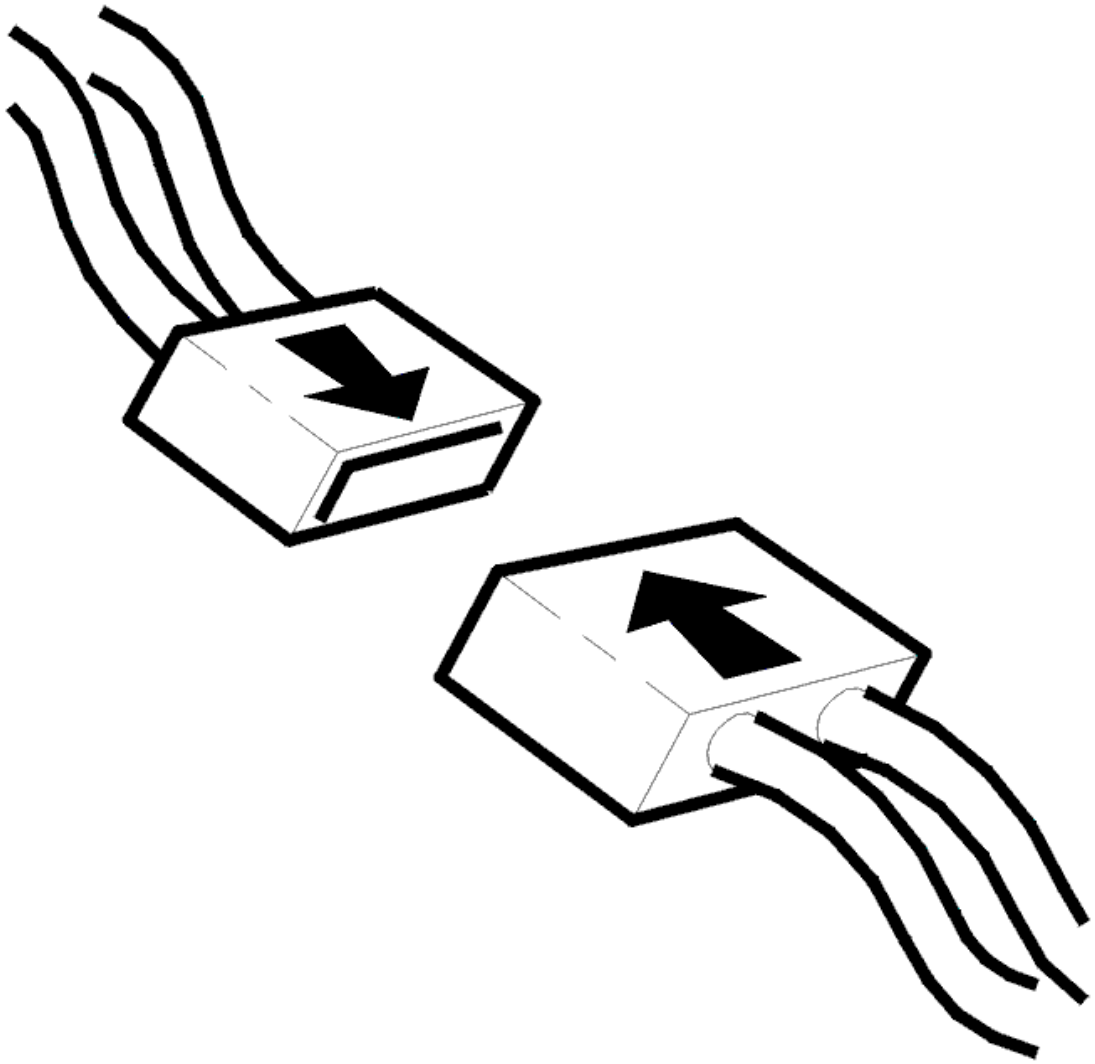

Fig. 84: Identifying Connector(s) Reinstallation
Courtesy of VOLVO CARS CORPORATION

- Ignition off.
- Reinstall the connectors, components etc.
- Ignition on.
- Read off the oil temperature.

Check that the transmission oil temperature is within its permitted range.

Compare with the transmission temperature.

NOTE: **The transmission temperature sensor is located inside the control unit and can be affected by the heat given off by the solenoids.**

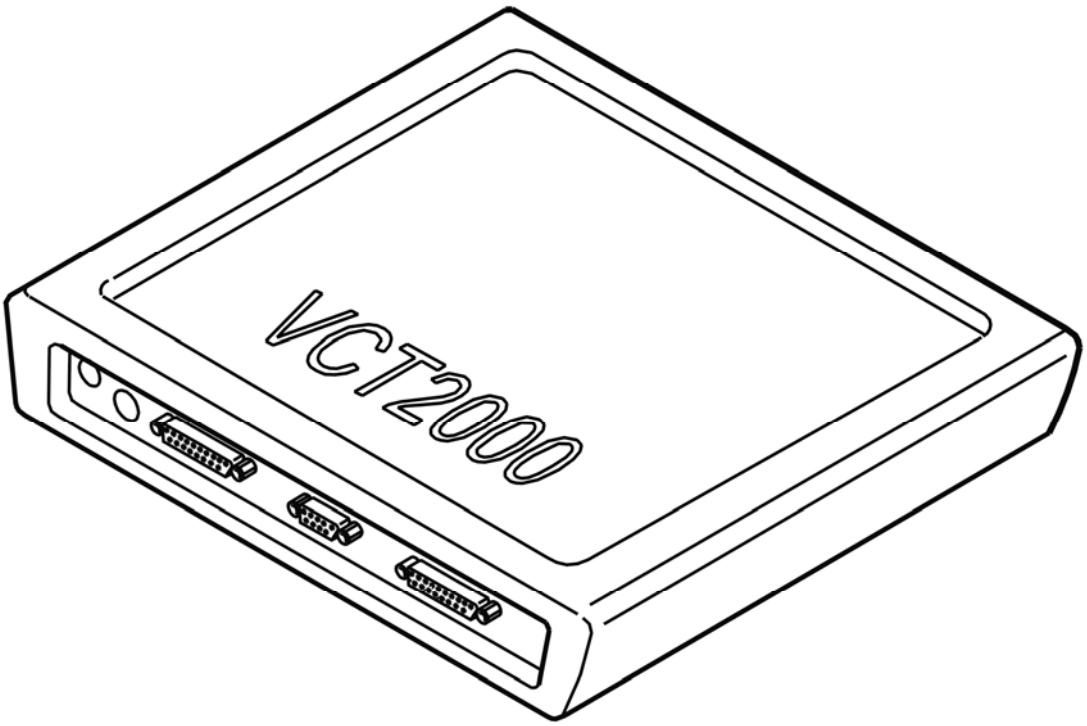

Fig. 85: Identifying VCT2000 Diagnostic Tool Symbol In VIDA
Courtesy of VOLVO CARS CORPORATION

Is the oil temperature within its permitted range?

- **YES**

  VERIFIED: Troubleshooting has been completed.

- **NO**

  Refer to **INFORMATION**

TCM-010C: SHIFT SOLENOID S5. SIGNAL TOO LOW (AW50/51 AWD; AW55-50/51SN; 2003-2007)

DIAGNOSTIC TROUBLE CODE (DTC) INFORMATION

Condition

Shift solenoids S1, S2, S3, S4 and S5 operate in tandem to control gear-shifting. Diagnostic trouble codes (DTCs) TCM-0003, TCM-0009, TCM-0103, TCM-0109 or TCM-010C are stored if the transmission control module (TCM) registers that there is a short-circuit to ground in circuits S1, S2, S3, S4 or S5 when the solenoid

should be activated.

Substitute Value

- The transmission control module (TCM) "Emergency mode I" program has been initiated.

Possible Source

- Short-circuit to ground in the signal cable.
- Defective solenoid.
- Internal fault in the control module.

Fault symptom[s]

- General orange warning lamp lit.
- No lock-up function.
- Harsh gear shifting.
- No shifting.

SIGNAL TOO LOW

CHECKS

CHECKING THE TEMPERATURE SENSOR

HINT: In some cases, the diagnostic trouble code (DTC) may be caused by a defective oil temperature sensor. Check the function of the oil temperature sensor first.

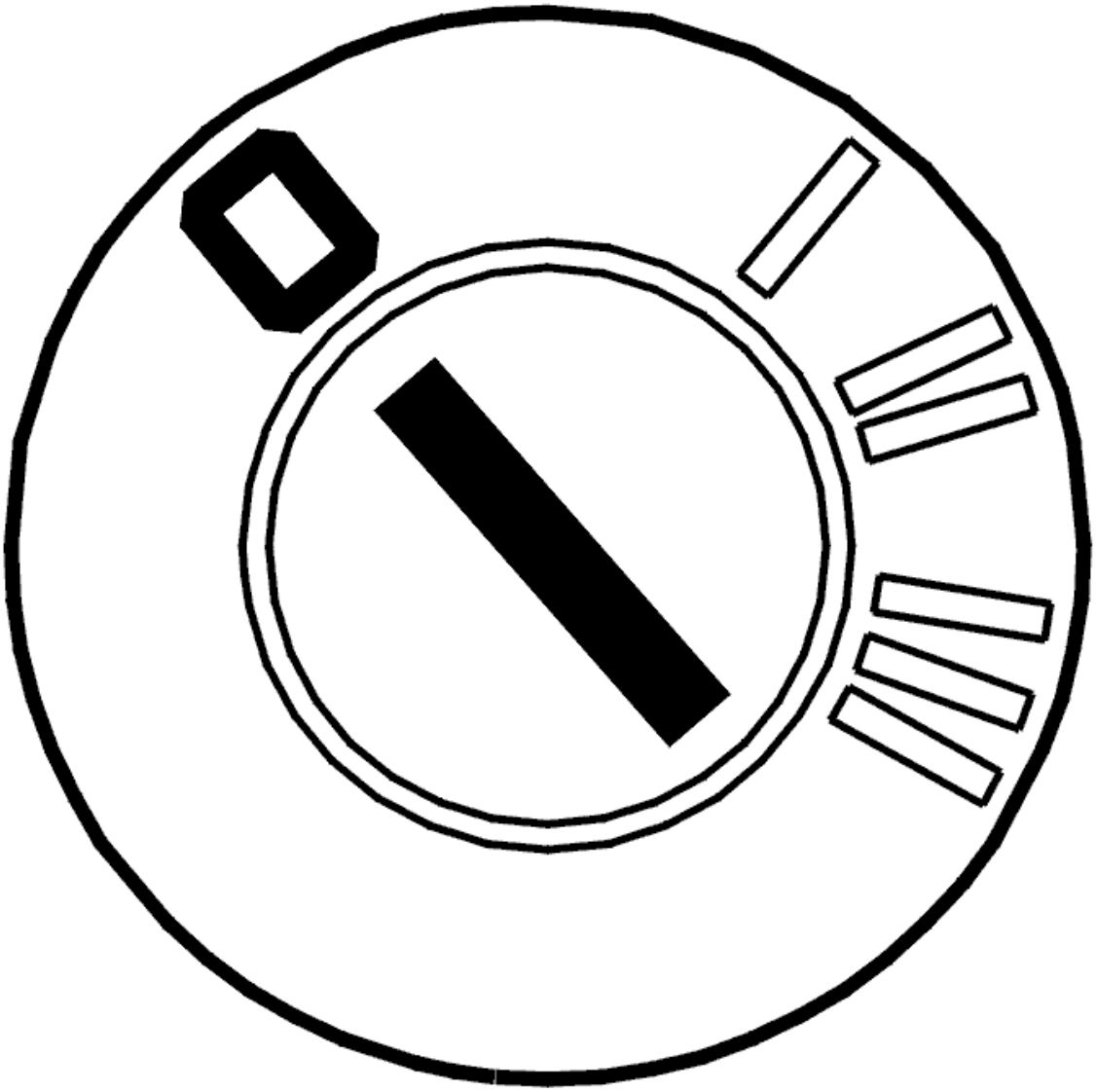

Fig. 86: Identifying Ignition OFF
Courtesy of VOLVO CARS CORPORATION

- Ignition off
- Read off the oil temperature.

  Check that the function of the temperature sensor is OK. Test drive the car to increase the temperature of the transmission fluid. Read off the temperature again. Check that the temperature has increased.

  HINT: If the temperature is outside its permitted range, fault-trace the temperature sensor.

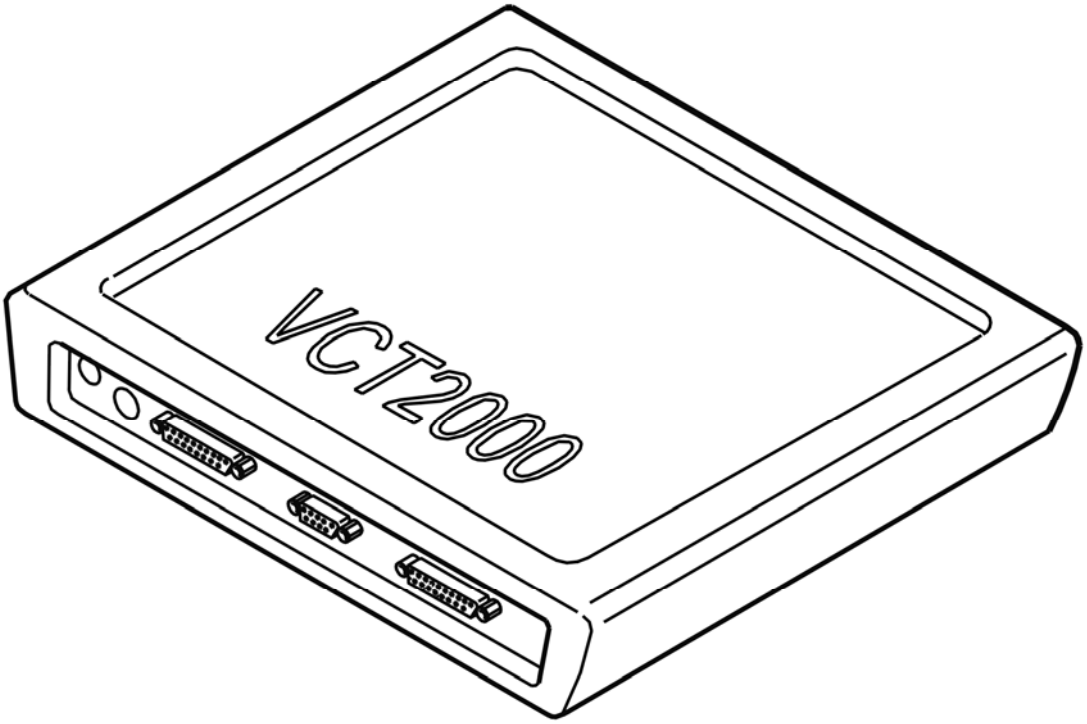

Fig. 87: Identifying VCT2000 Diagnostic Tool Symbol In VIDA
Courtesy of VOLVO CARS CORPORATION

Is the oil temperature within its permitted range?

- **YES**

  Refer to **CHECKING SHIFT SOLENOID S5**

- **NO**

  Refer to **FAULTY SIGNAL**

CHECKING SHIFT SOLENOID S5

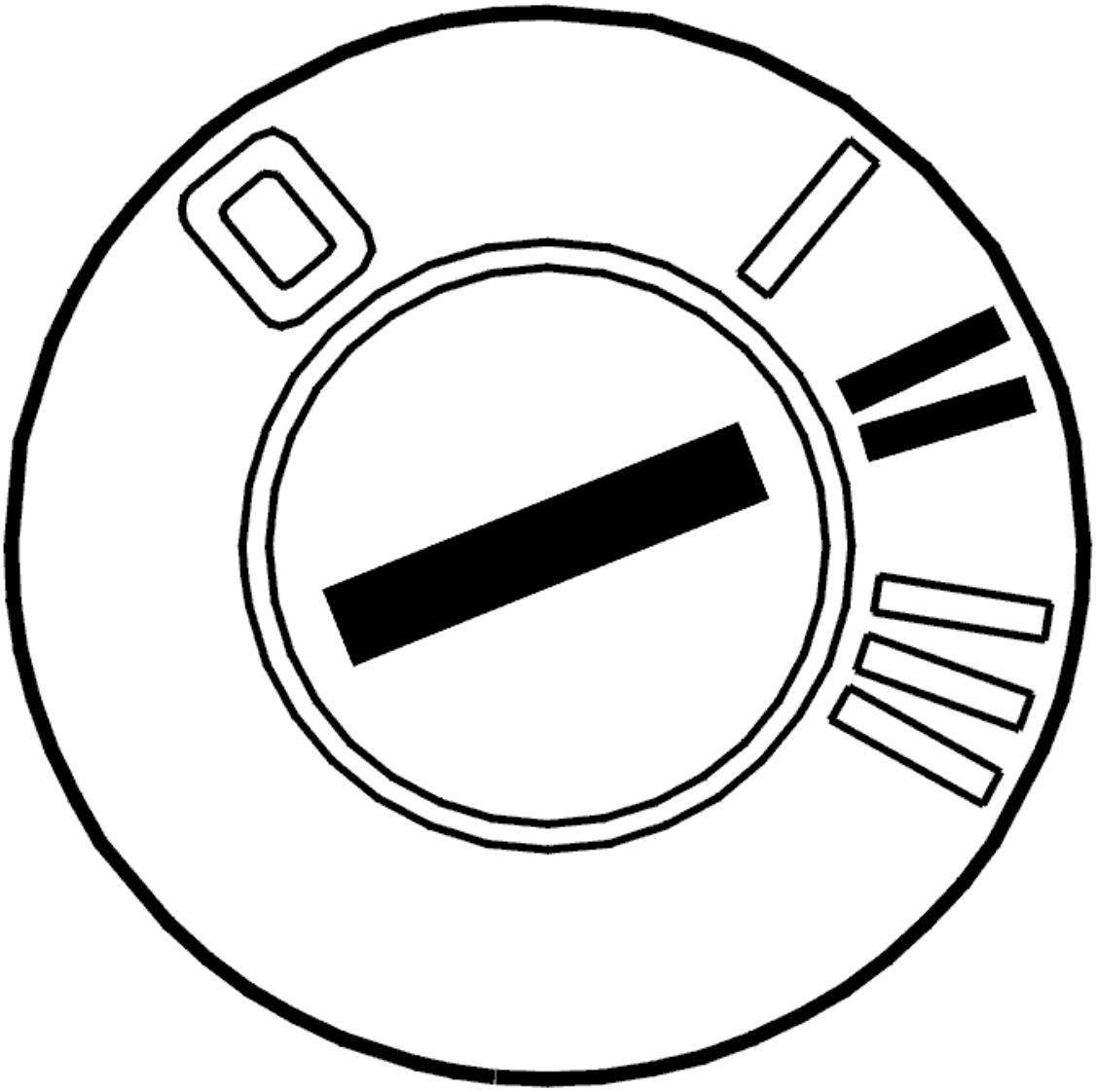

Fig. 88: Identifying Ignition ON
Courtesy of VOLVO CARS CORPORATION

- Ignition on
- Gear selector in position P
- Activate solenoid S5.

The value must change between OFF and ON.

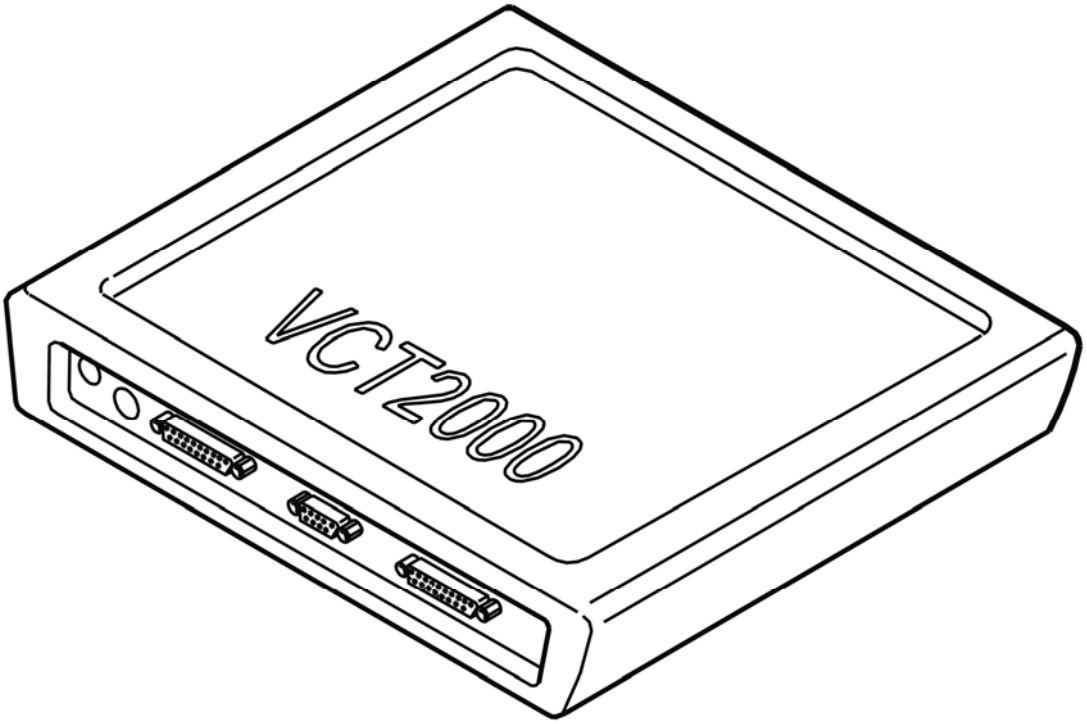

Fig. 89: Identifying VCT2000 Diagnostic Tool Symbol In VIDA
Courtesy of VOLVO CARS CORPORATION

Does the value change?

- **YES**

  Refer to **INTERMITTENT FAULT**

- **NO**

  Refer to **CHECKING RESISTANCE**

CHECKING RESISTANCE

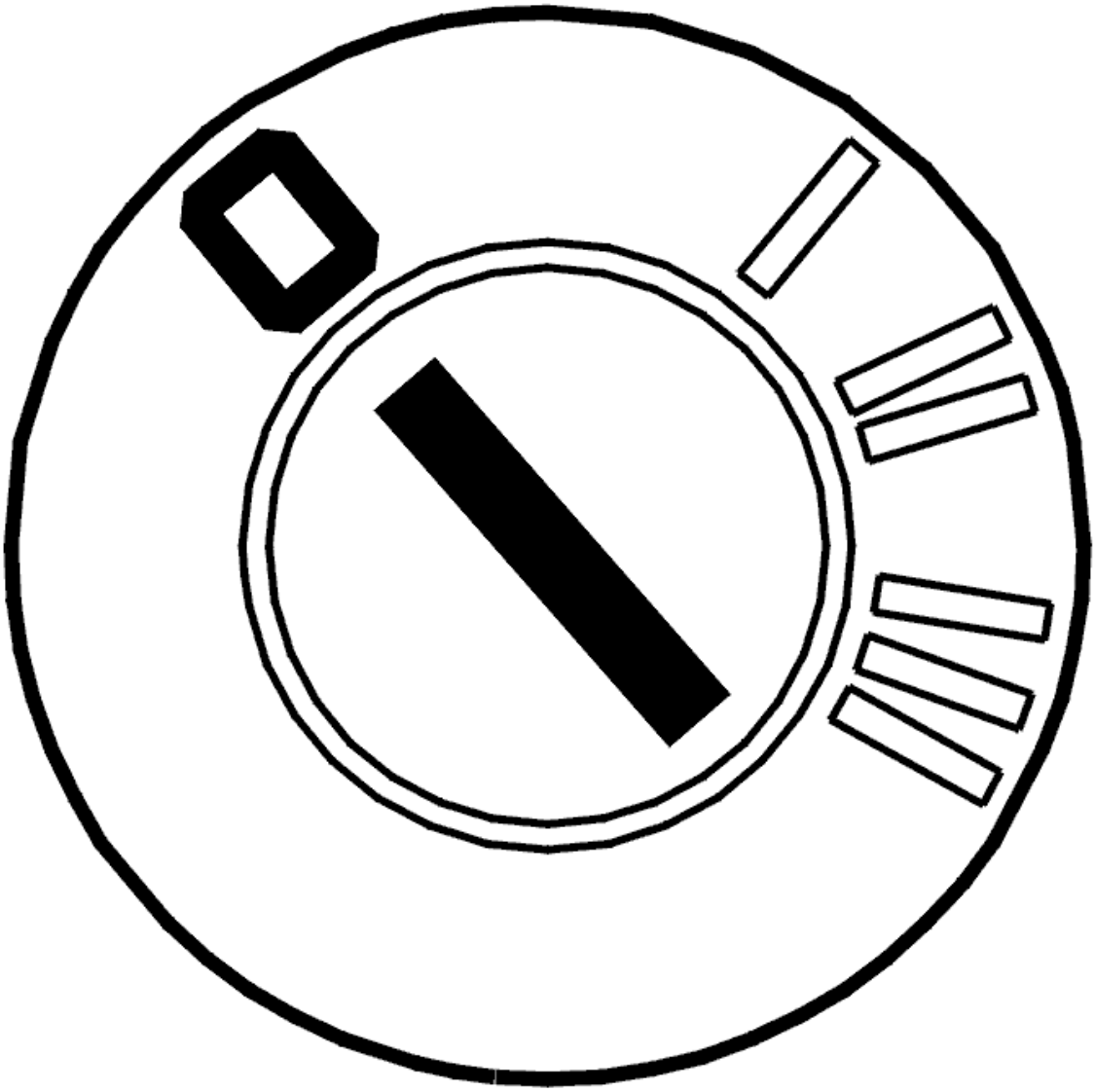

Fig. 90: Identifying Ignition OFF
Courtesy of VOLVO CARS CORPORATION

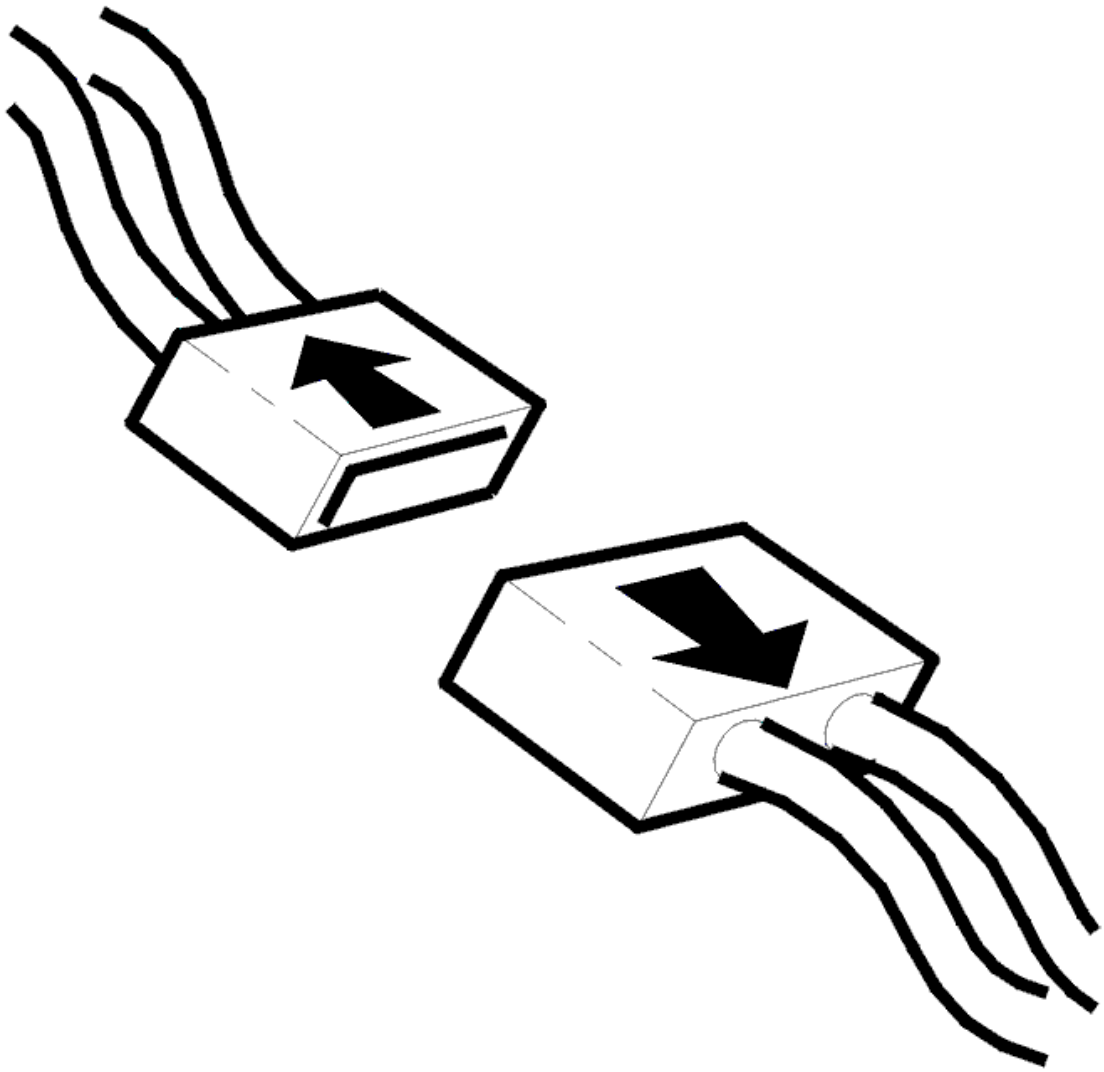

Fig. 91: Identifying Connector(s) Disconnected
Courtesy of VOLVO CARS CORPORATION

- Ignition off
- Disconnect transmission connector C.

  Check solenoid S5. Measure the resistance between transmission connector terminal #C5 (transmission side) and the transmission housing. The resistance must be 11-15 ohms.

  Other information:

  - To disconnect the transmission connectors, see **CONNECTORS, TRANSMISSION, DISCONNECTING / CONNECTING**
  - For information about signals, see **SIGNAL DESCRIPTION. TRANSMISSION CONTROL MODULE (TCM)** .

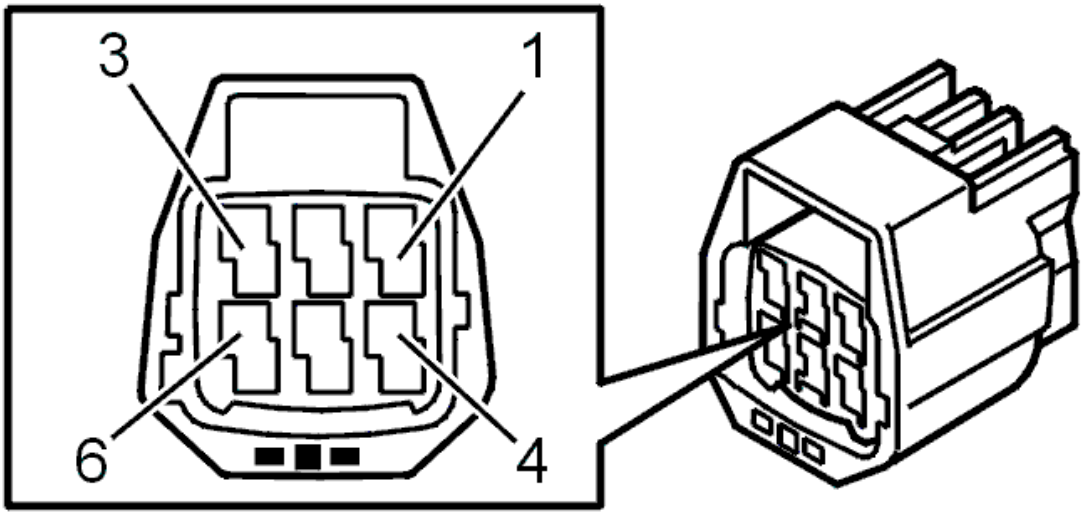

Fig. 92: Identifying 6-Pin Transmission Connector Terminals
Courtesy of VOLVO CARS CORPORATION

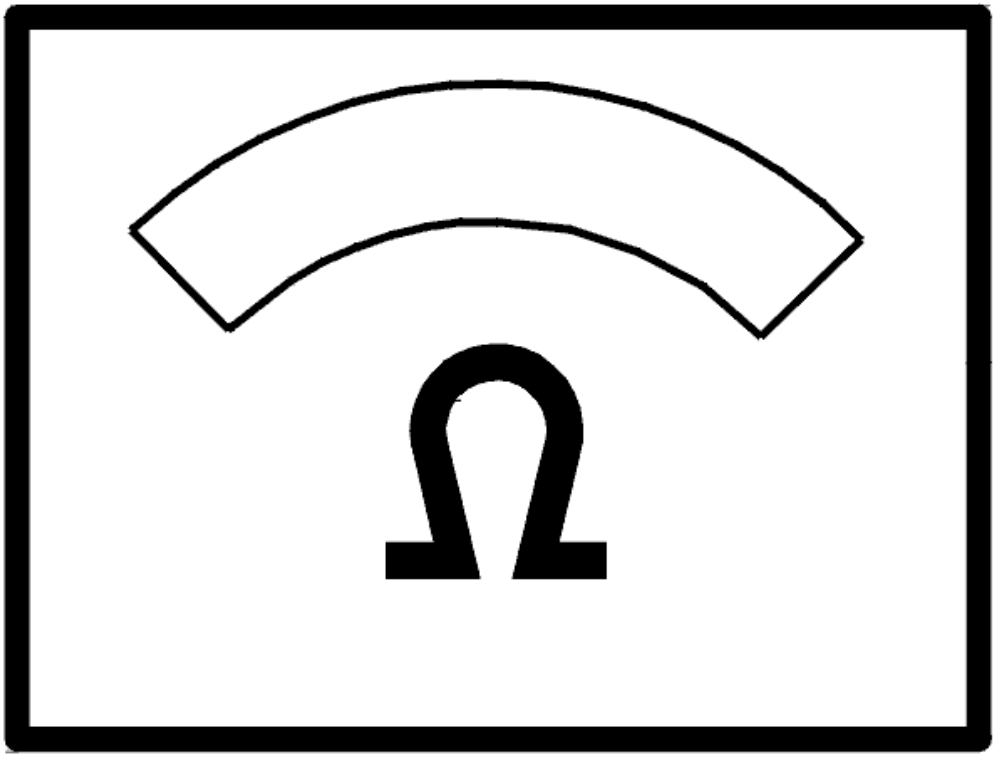

Fig. 93: Identifying Ohms Display
Courtesy of VOLVO CARS CORPORATION

Was the resistance OK

- **YES**

  Refer to **CHECKING THE WIRING**

- **NO**

  Refer to **CHECKING THE WIRING AND COMPONENT**

CHECKING THE WIRING

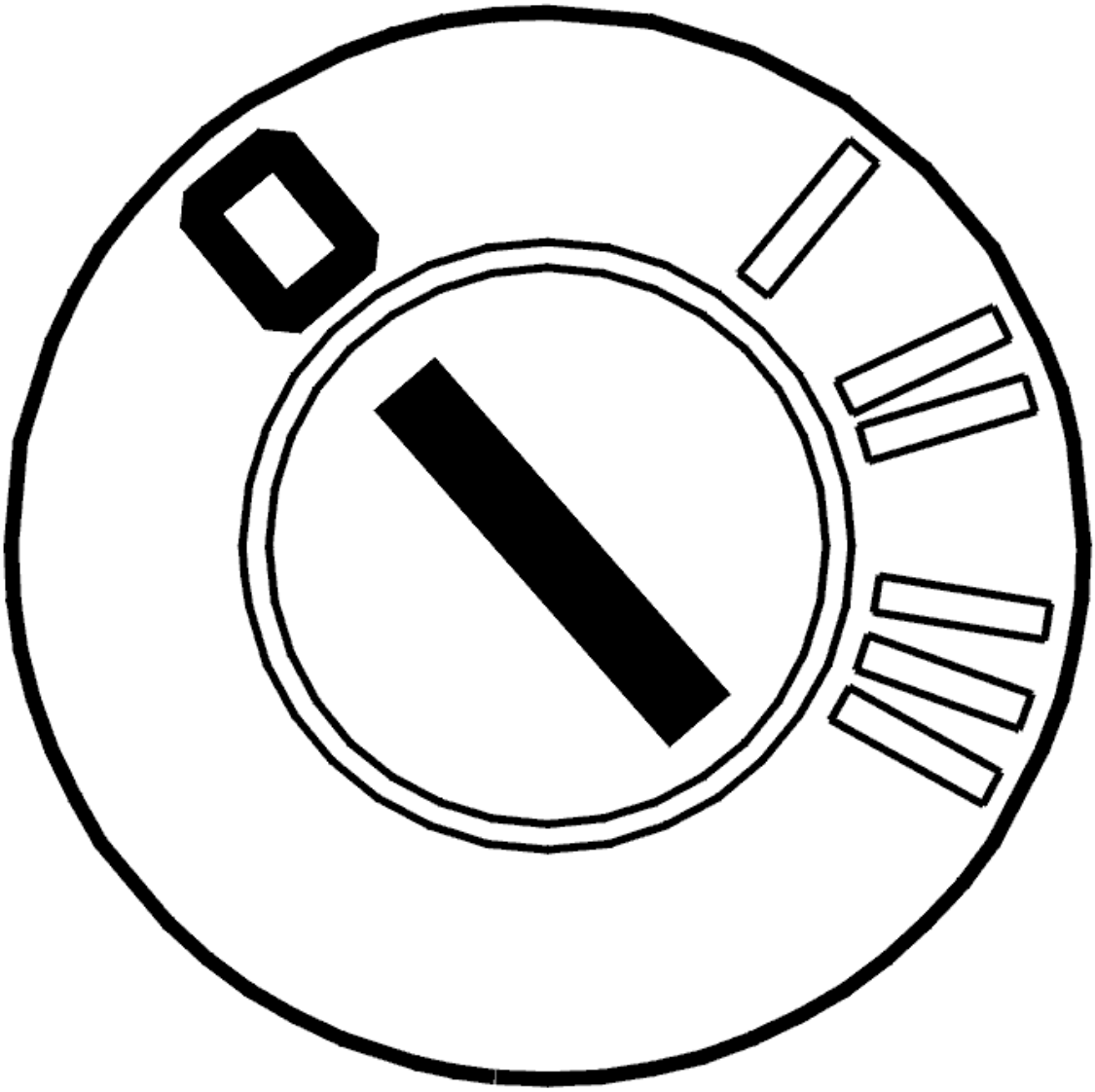

Fig. 94: Identifying Ignition OFF
Courtesy of VOLVO CARS CORPORATION

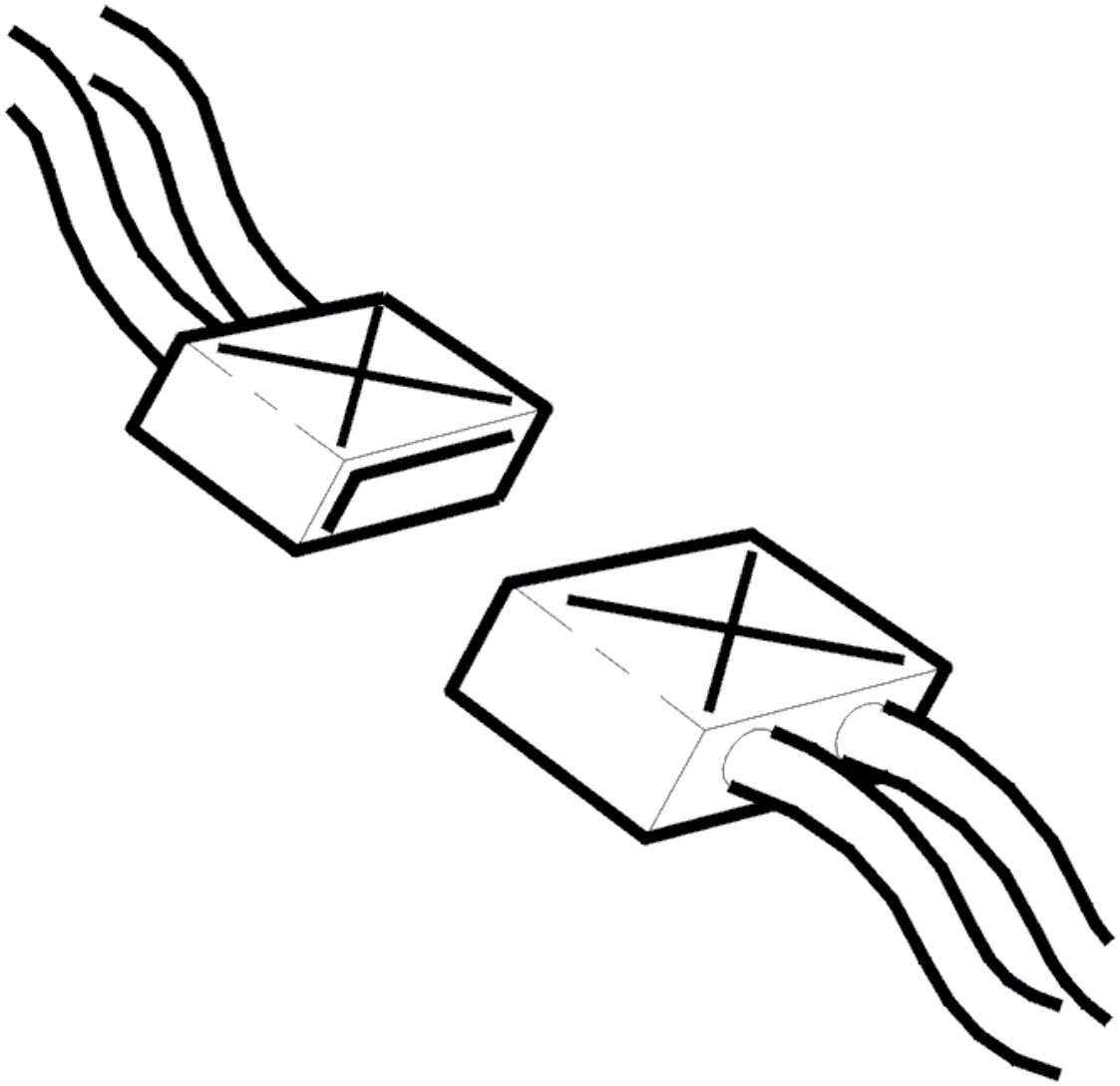

Fig. 95: Identifying Connectors
Courtesy of VOLVO CARS CORPORATION

- Ignition off
- The breakout box connected
- Transmission connector C disconnected.

  Check the cable between control module terminal #B6 (#A66) and transmission connector terminal #C5 (control module side). Check for a short-circuit to ground. See **SHORT-CIRCUIT TO GROUND, PERMANENT FAULTS** .

  Remedy as necessary.

  Other information:

- To connect the breakout box, see **CONNECTING THE BREAKOUT BOX**
- To disconnect the transmission connectors, see **CONNECTORS, TRANSMISSION, DISCONNECTING / CONNECTING**
- For information about signals, see **SIGNAL DESCRIPTION. TRANSMISSION CONTROL MODULE (TCM)** .

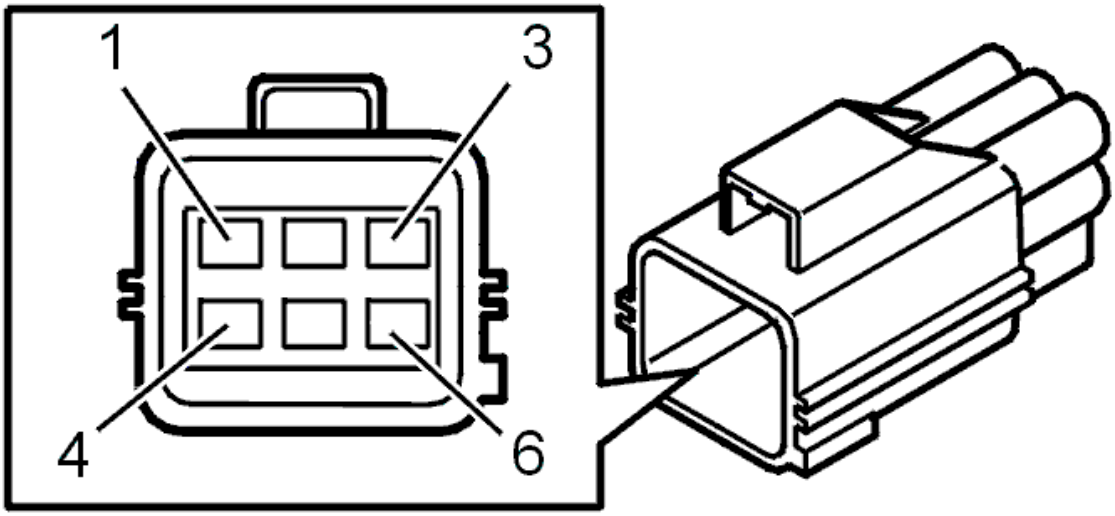

Fig. 96: Identifying 6-Pin Transmission Connector Terminals
Courtesy of VOLVO CARS CORPORATION

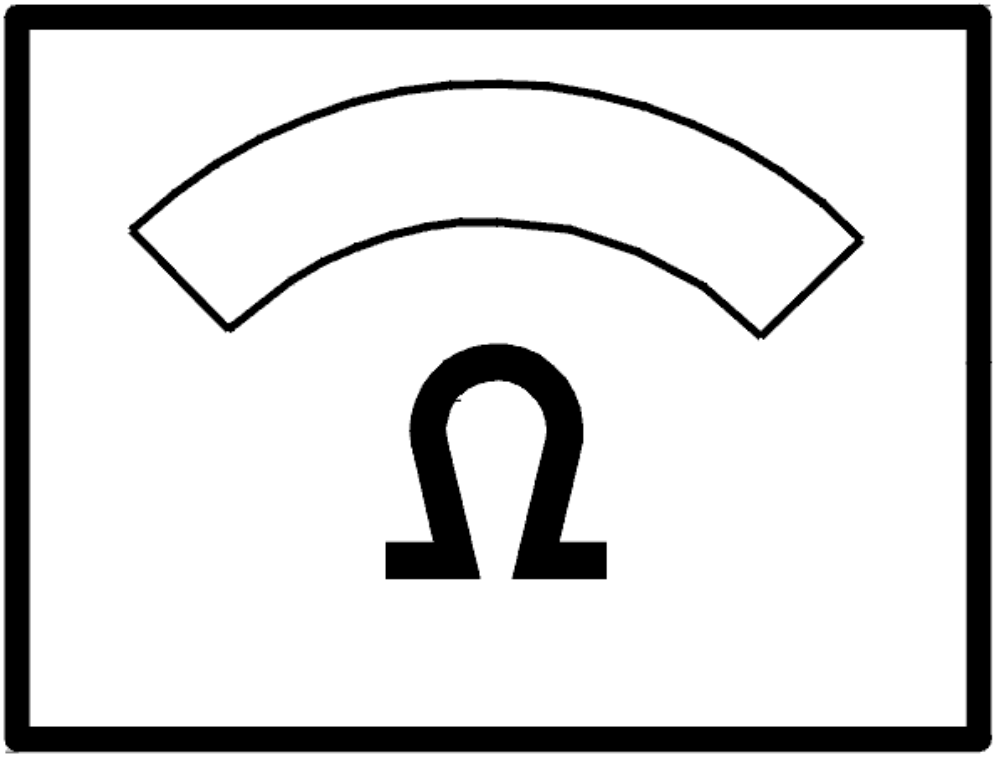

Fig. 97: Identifying Ohms Display
Courtesy of VOLVO CARS CORPORATION

Was a fault detected?

- **YES**

  Refer to **VERIFICATION**

- **NO**

  Refer to **CHECKING THE CONTROL MODULE**

CHECKING THE CONTROL MODULE

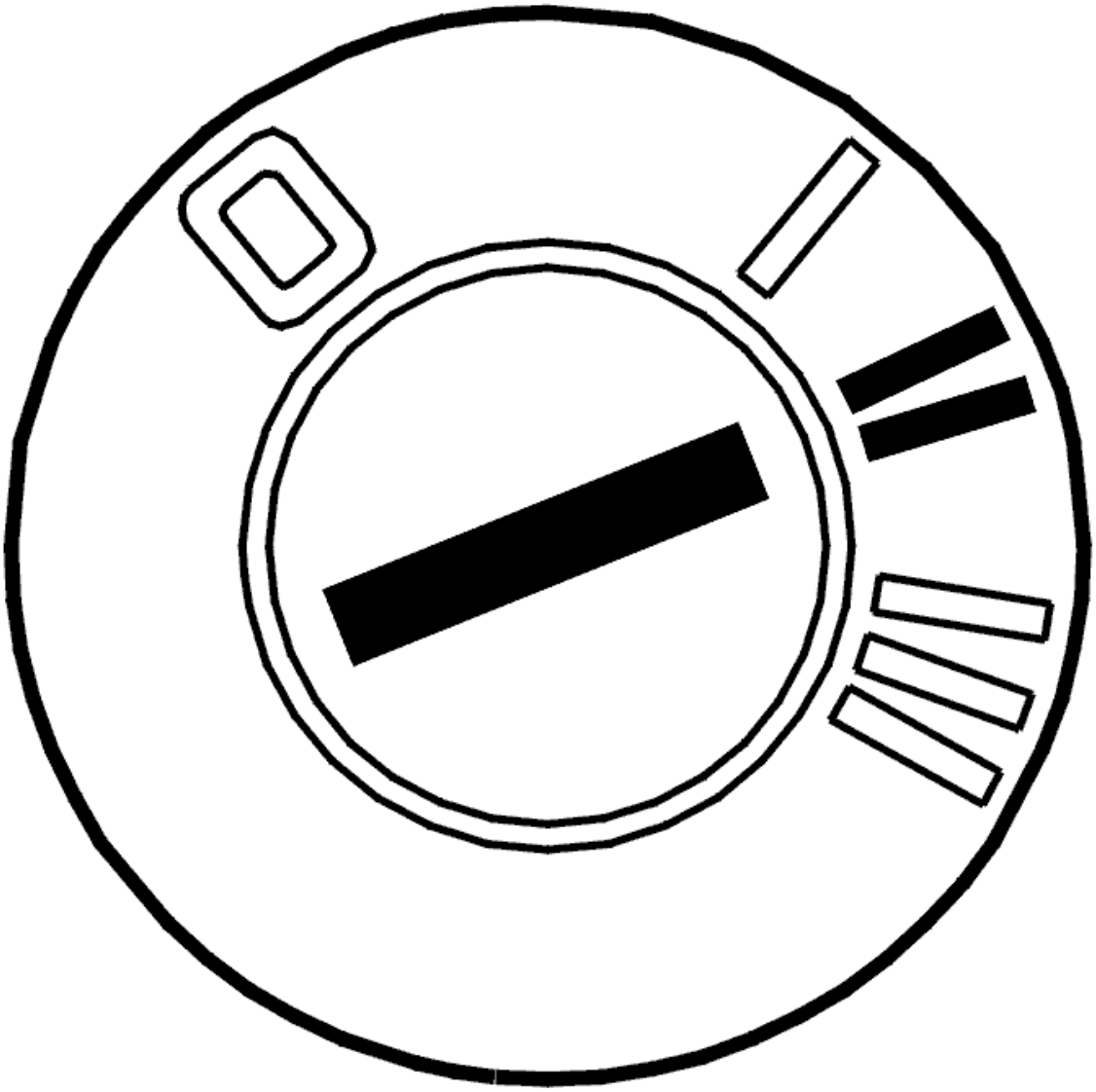

Fig. 98: Identifying Ignition ON
Courtesy of VOLVO CARS CORPORATION

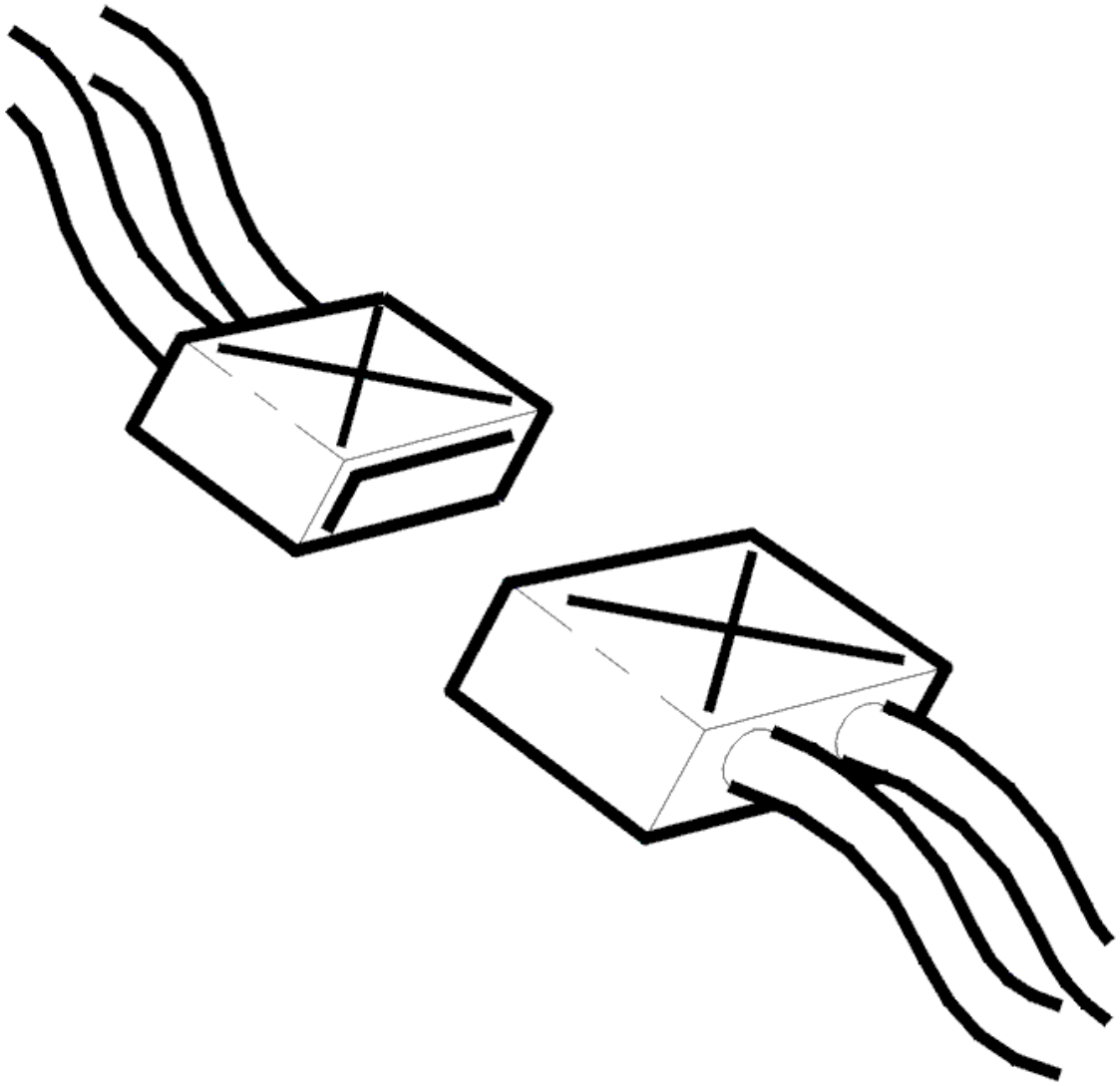

Fig. 99: Identifying Connectors
Courtesy of VOLVO CARS CORPORATION

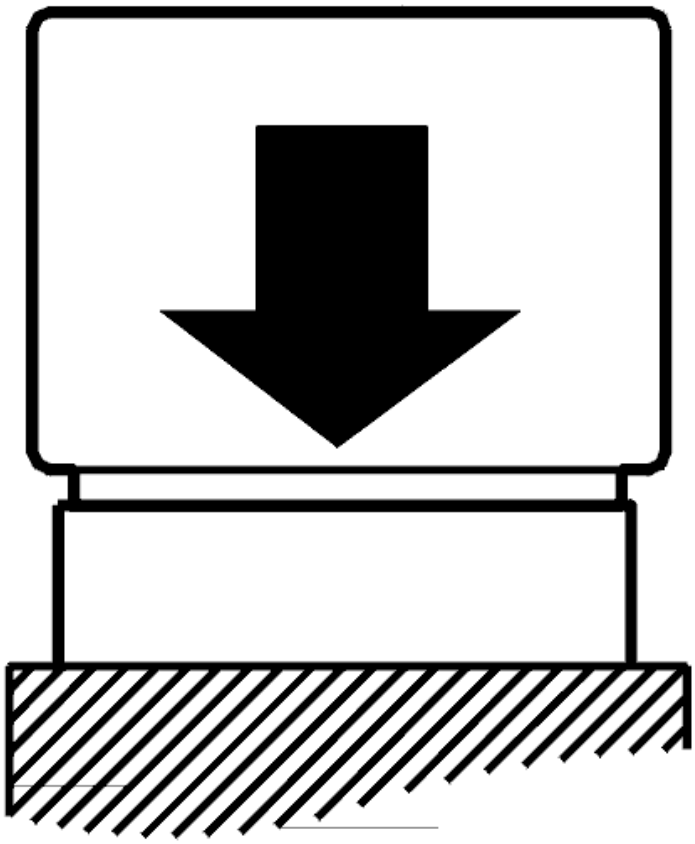

Fig. 100: Identifying Control Module Connected
Courtesy of VOLVO CARS CORPORATION

- Ignition off
- The breakout box connected
- Connect the control module.
- Transmission connector disconnected
- Ignition on
- Gear selector in position P.

Check the transmission control module (TCM) by measuring the resistance between terminals #B6 (#A66) and #A53 (#A53) on the breakout box. The resistance must be approximately 9 kohms.

NOTE: When removing the transmission connector, the control module may store

diagnostic trouble codes (DTCs) for the gear-shift position sensor, the shift solenoids, the temperature sensor etc.

Try a new control module if the resistance is infinite.

Other information:

- To disconnect the transmission connectors, see **CONNECTORS, TRANSMISSION, DISCONNECTING / CONNECTING**
- For information about signals, see **SIGNAL DESCRIPTION. TRANSMISSION CONTROL MODULE (TCM)**
- To replace the control module, see **TRANSMISSION CONTROL MODULE (TCM), REPLACING** .

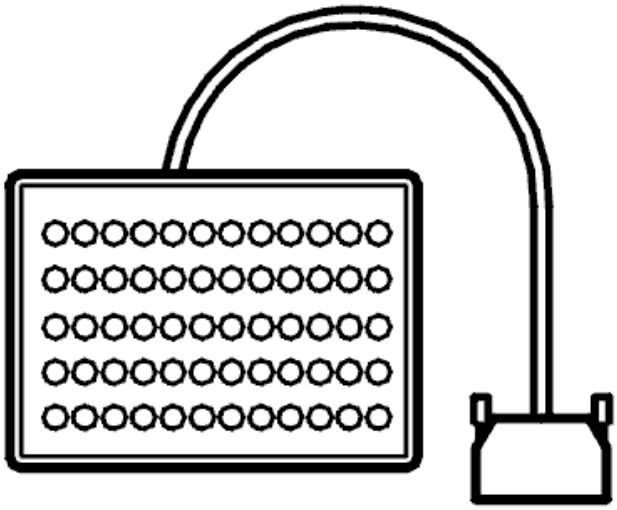

Fig. 101: Identifying Breakout Box
Courtesy of VOLVO CARS CORPORATION

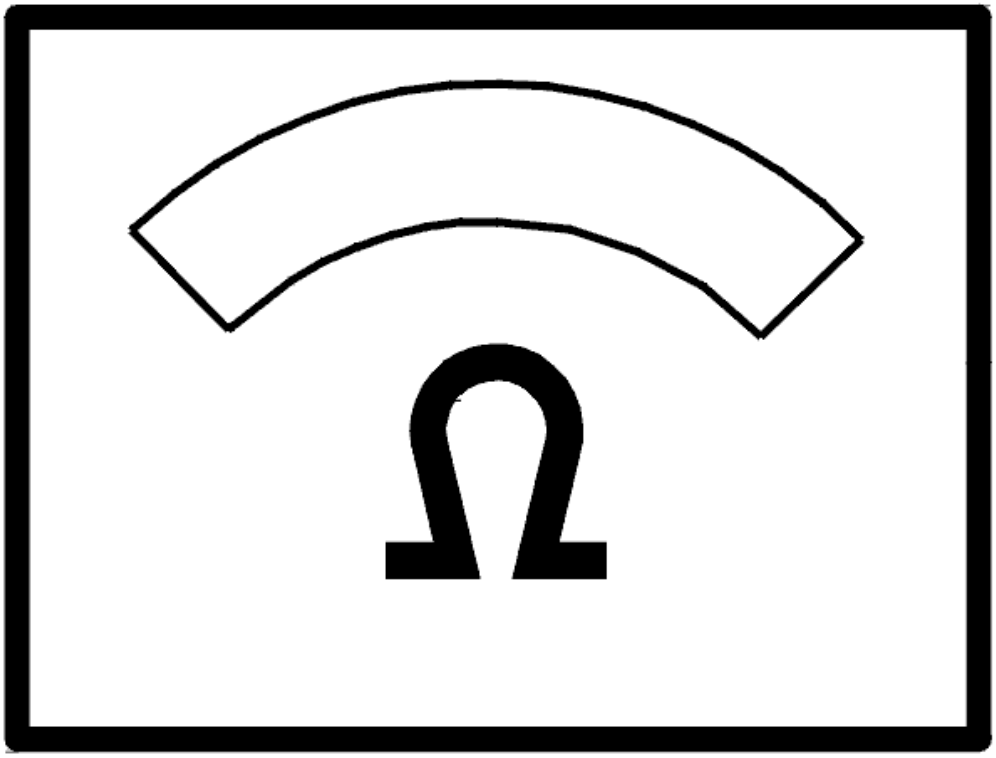

Fig. 102: Identifying Ohms Display
Courtesy of VOLVO CARS CORPORATION

Was the resistance OK?

- **YES**

  FAULT NOT FOUND: Troubleshooting has been completed.

- **NO**

  Refer to **VERIFICATION**

CHECKING THE WIRING AND COMPONENT

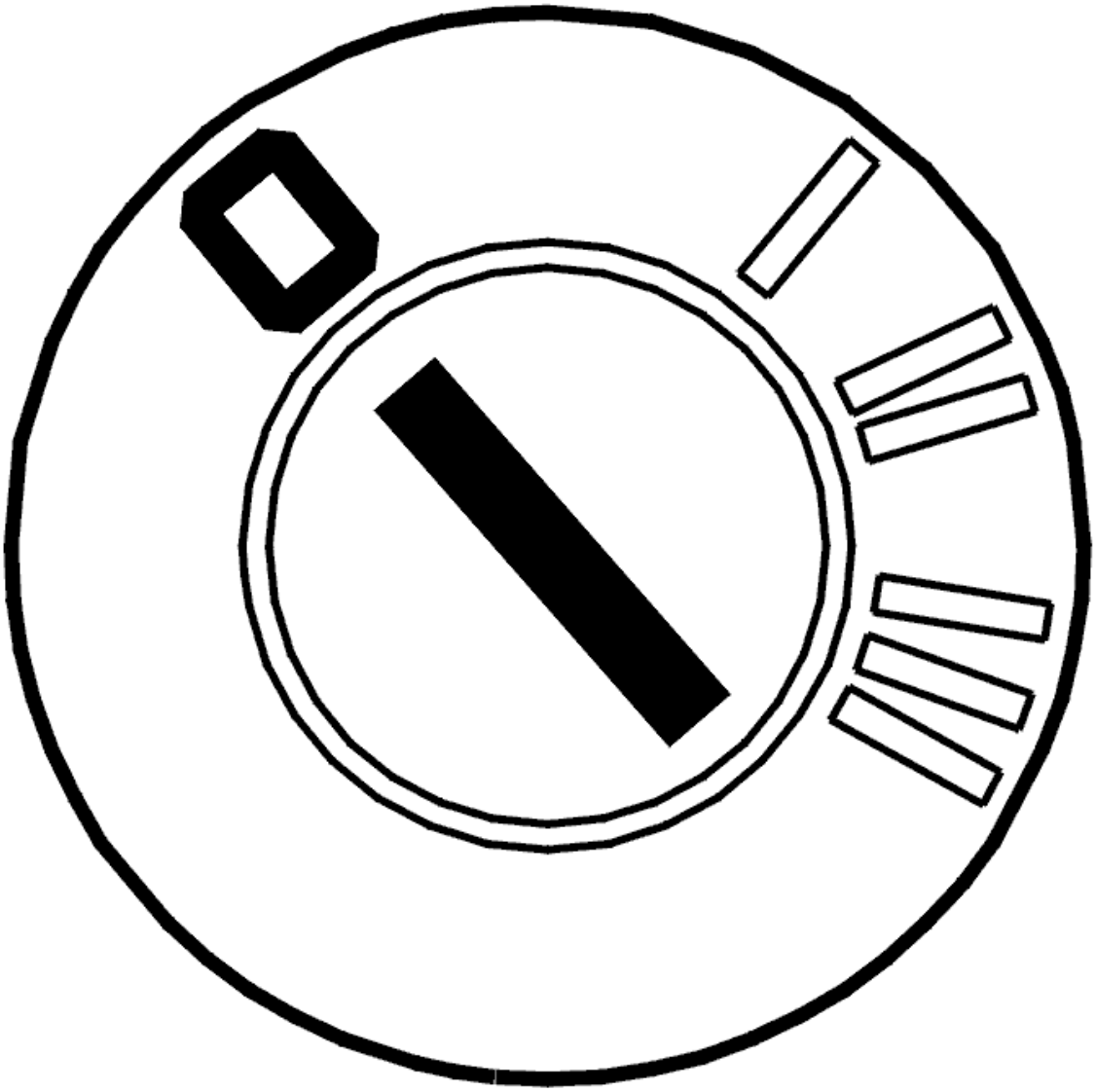

Fig. 103: Identifying Ignition OFF
Courtesy of VOLVO CARS CORPORATION

- Ignition off
- Open the transmission control system.

  Check the cable between transmission connector terminal #C5 (transmission side) and the connector for solenoid S5. Check for a short-circuit to ground. See **SHORT-CIRCUIT TO GROUND, PERMANENT FAULTS** .

  Check solenoid S5 by measuring the resistance between the terminal pin on solenoid S5 and the transmission housing. The resistance must be 11-15 ohms. Replace solenoid S5 if the resistance is incorrect.

  Remedy as necessary.

Other information:

- To disconnect the transmission connectors, see **CONNECTORS, TRANSMISSION, DISCONNECTING / CONNECTING**
- To open the control system and to check or replace solenoid S5, see **SOLENOID CONTROL SYSTEM, REPLACING**
- To replace the cable harness for the control system, see **TEMPERATURE SENSOR FLUID, TRANSAXLE, (TFT)**
- For information about signals, see **SIGNAL DESCRIPTION. TRANSMISSION CONTROL MODULE (TCM)** .

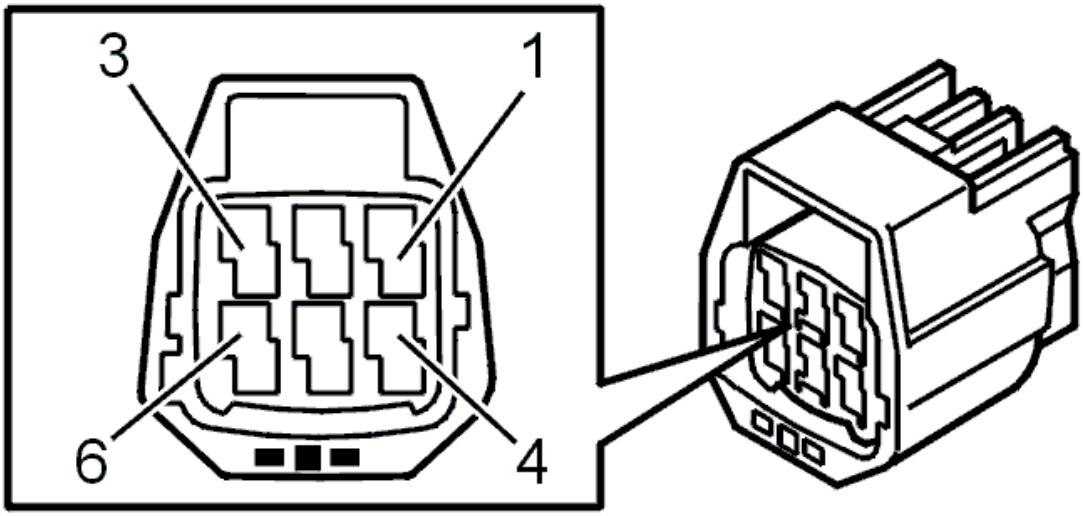

Fig. 104: Identifying 6-Pin Transmission Connector Terminals
Courtesy of VOLVO CARS CORPORATION

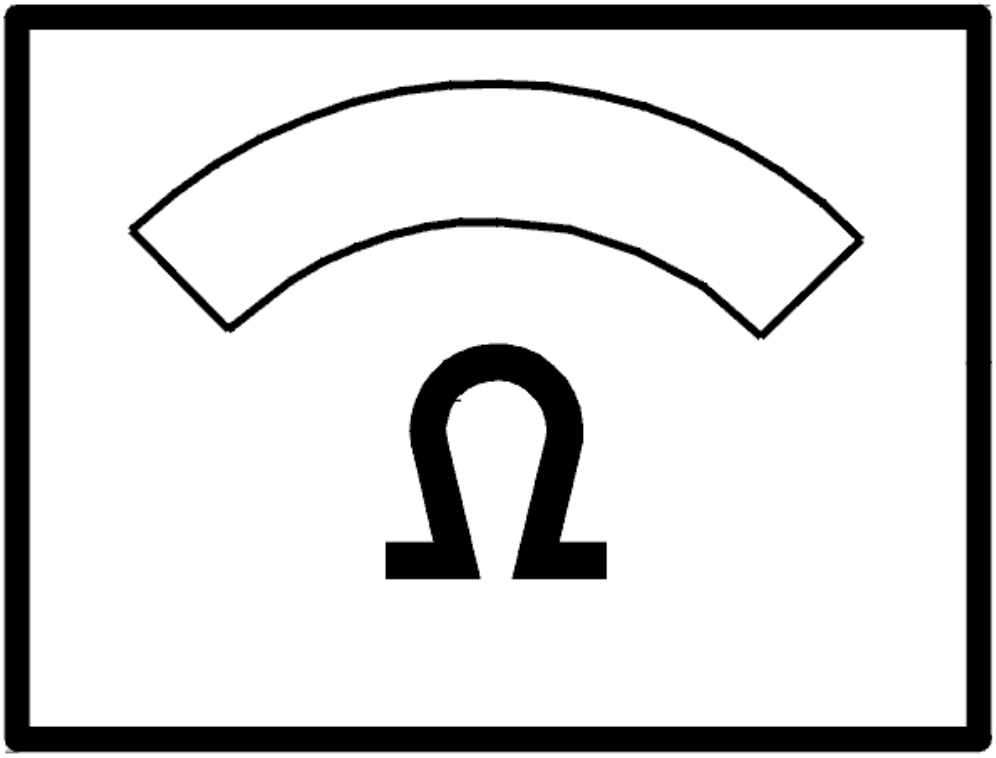

Fig. 105: Identifying Ohms Display
Courtesy of VOLVO CARS CORPORATION

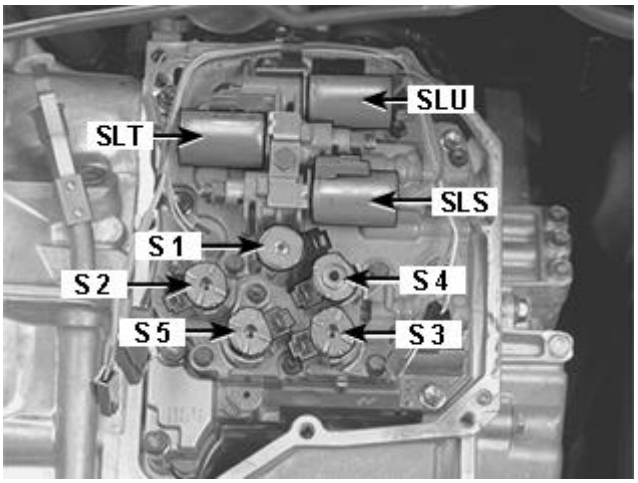

Fig. 106: Identifying S1-S5, SLT, SLU And SLS Solenoids
Courtesy of VOLVO CARS CORPORATION

- **Continue**

  Refer to **RESETTING THE ADAPTATION**

INTERMITTENT FAULT

Check the cable between transmission control module (TCM) terminal #B6 (#A66) and transmission connector terminal #C5 (control module side). Check for an intermittent short-circuit to ground. See **SHORT-CIRCUIT TO GROUND, INTERMITTENT FAULTS** . Check for contact resistance and oxidation. See **CONTACT RESISTANCE AND OXIDATION** .

- Check the circuit for solenoid S5. Switch off the ignition. Disconnect the control module. Measure the resistance between terminals #B6 (#A66) and #A53 (#A53) on the breakout box. The resistance must be 11-15 ohms.

Remedy as necessary.

Other information:

- To connect the breakout box, see **CONNECTING THE BREAKOUT BOX**
- To disconnect the transmission connectors, see **CONNECTORS, TRANSMISSION, DISCONNECTING / CONNECTING**
- For information about signals, see **SIGNAL DESCRIPTION. TRANSMISSION CONTROL MODULE (TCM)** .

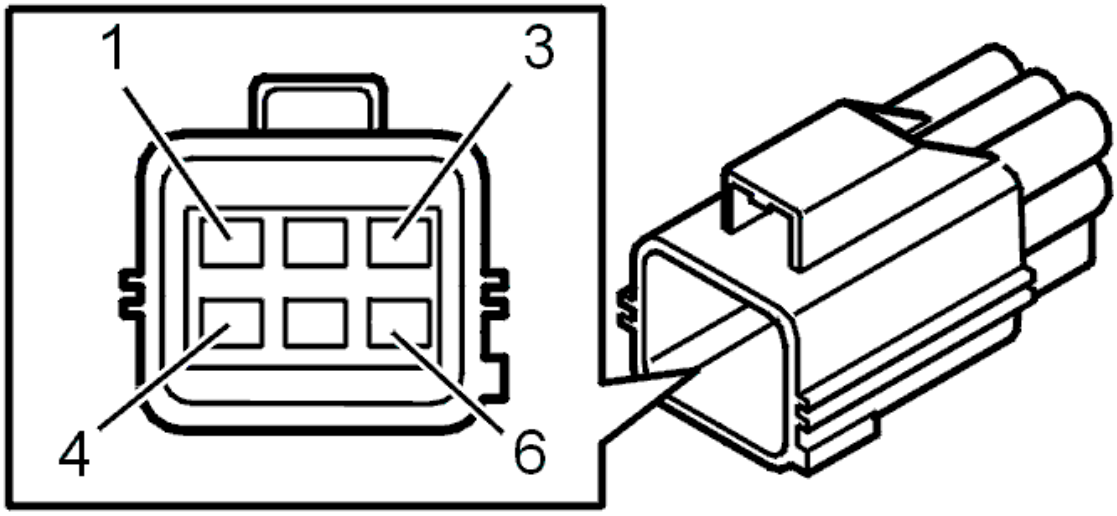

Fig. 107: Identifying 6-Pin Transmission Connector Terminals
Courtesy of VOLVO CARS CORPORATION

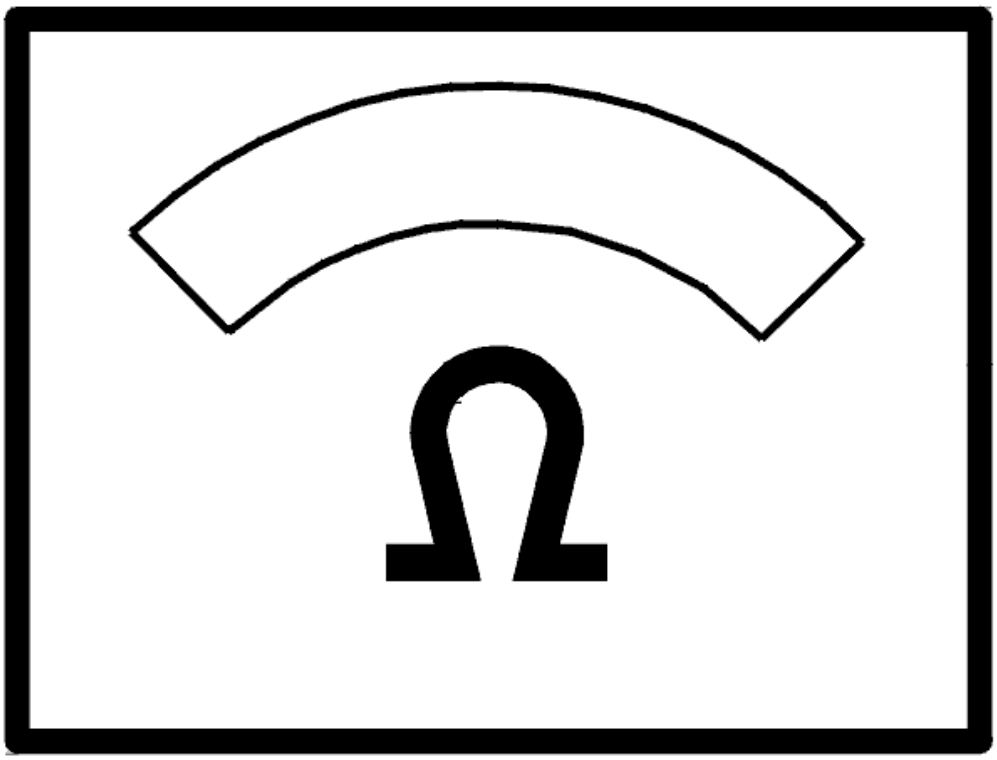

Fig. 108: Identifying Ohms Display
Courtesy of VOLVO CARS CORPORATION

- **Continue**

  Refer to **INFORMATION**

RESETTING THE ADAPTATION

RESETTING ADAPTATION AND THE COUNTER FOR "TRANSMISSION OIL CHANGE"

HINT: The transmission has torque controlled adaptive pressure control. Pressure control means that the transmission regulates the pressure itself during each gear shift. This avoids harsh gear shifting. Each gear shift is evaluated by the control module and stored in the memory. This allows for compensation for wear and tear in the transmission and clutch. It is important that the adaptation in the memory is reset after the transmission has been repaired. This is to ensure normal operation. The oil is replaced during

repair; the "Transmission oil change" counter must be reset. If the counter is not reset when the fluid is drained and replaced, there is a risk that a diagnostic trouble code (DTC) will be stored in incorrect circumstances.

NOTE: **This applies only if the transmission or one of the components in the transmission have been replaced.**

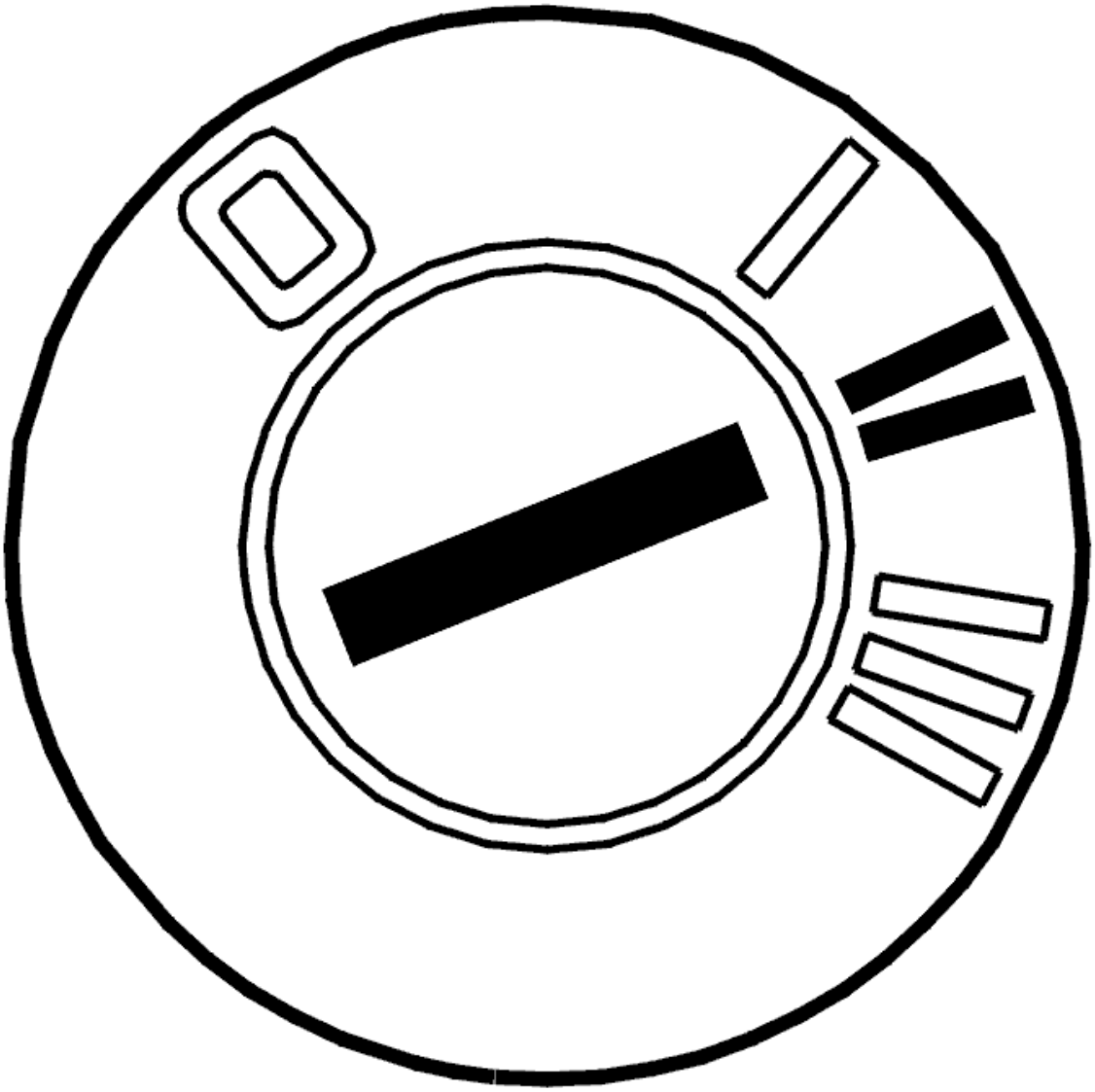

Fig. 109: Identifying Ignition ON
Courtesy of VOLVO CARS CORPORATION

- Ignition on.

  Click on the VCT2000 symbol to reset the adaptation and counter.

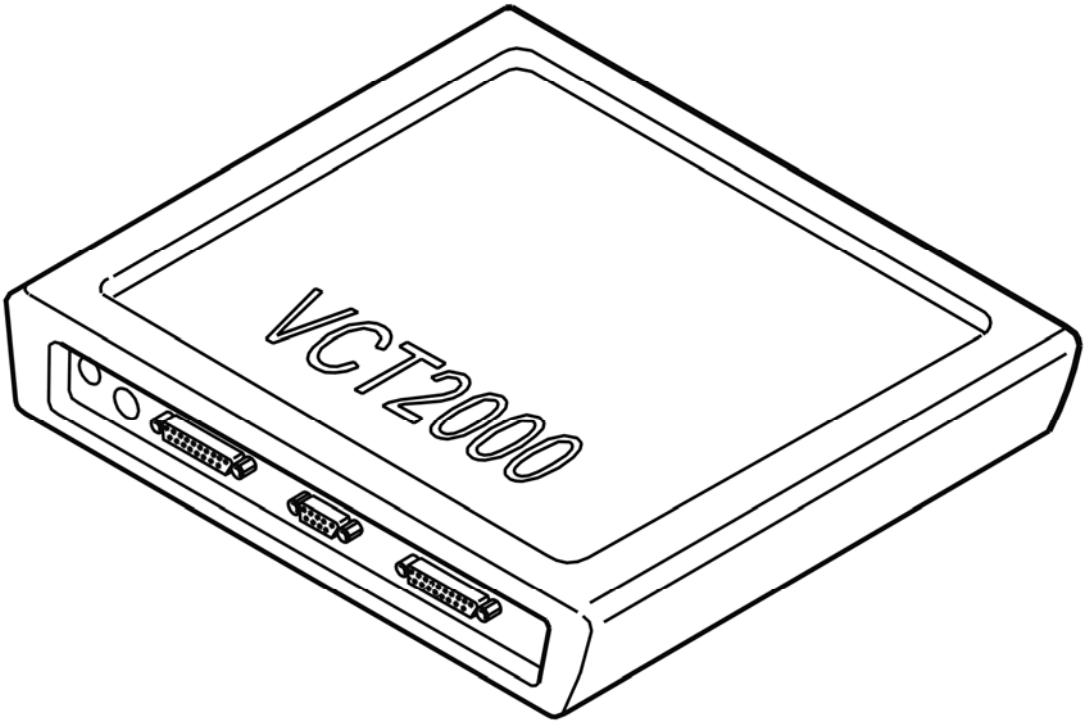

Fig. 110: Identifying VCT2000 Diagnostic Tool Symbol In VIDA
Courtesy of VOLVO CARS CORPORATION

- **Continue**

  Refer to **VERIFICATION**

VERIFICATION

VERIFICATION

HINT: After carrying out the repair, check that the fault has been remedied.

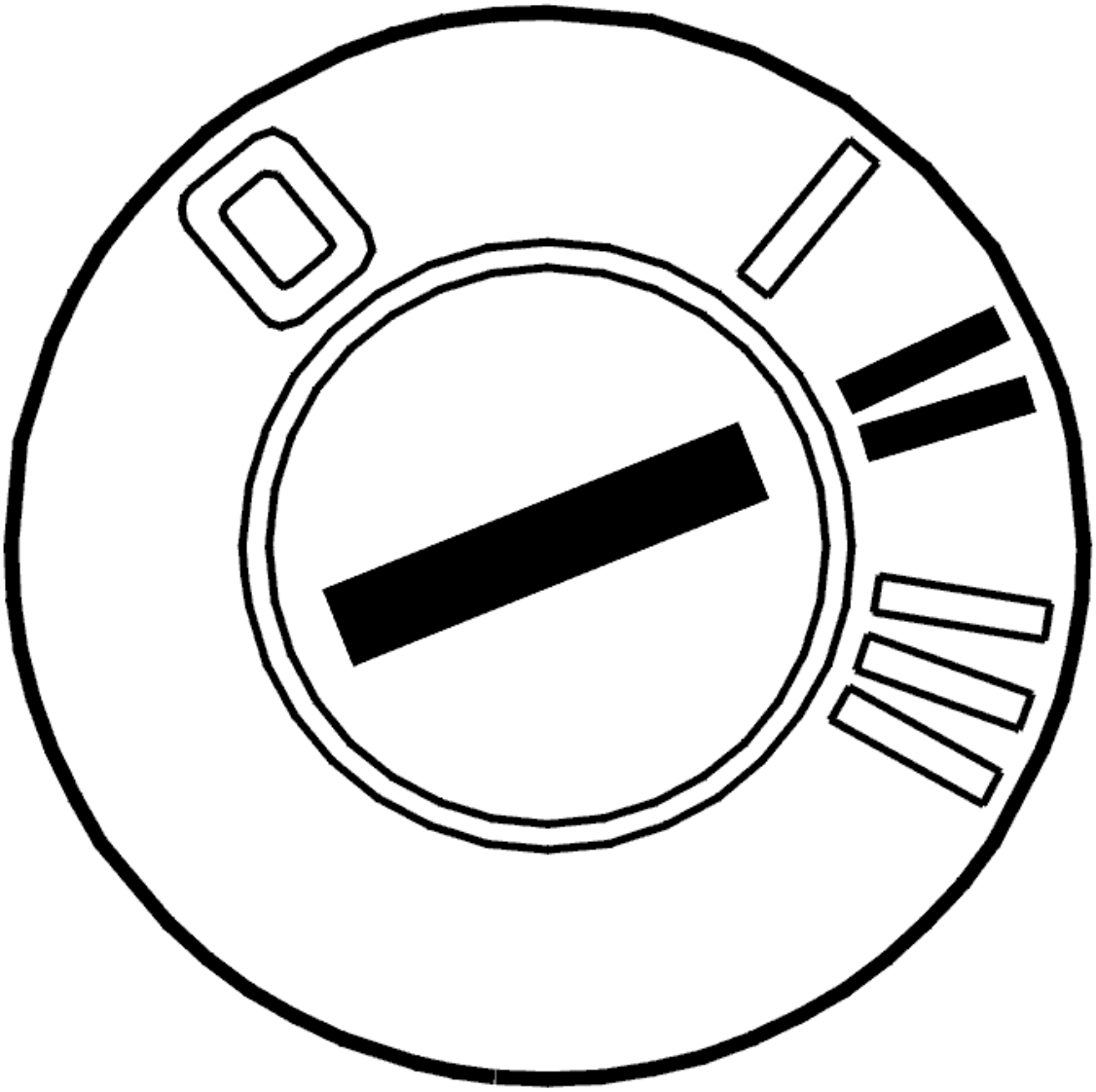

Fig. 111: Identifying Ignition ON
Courtesy of VOLVO CARS CORPORATION

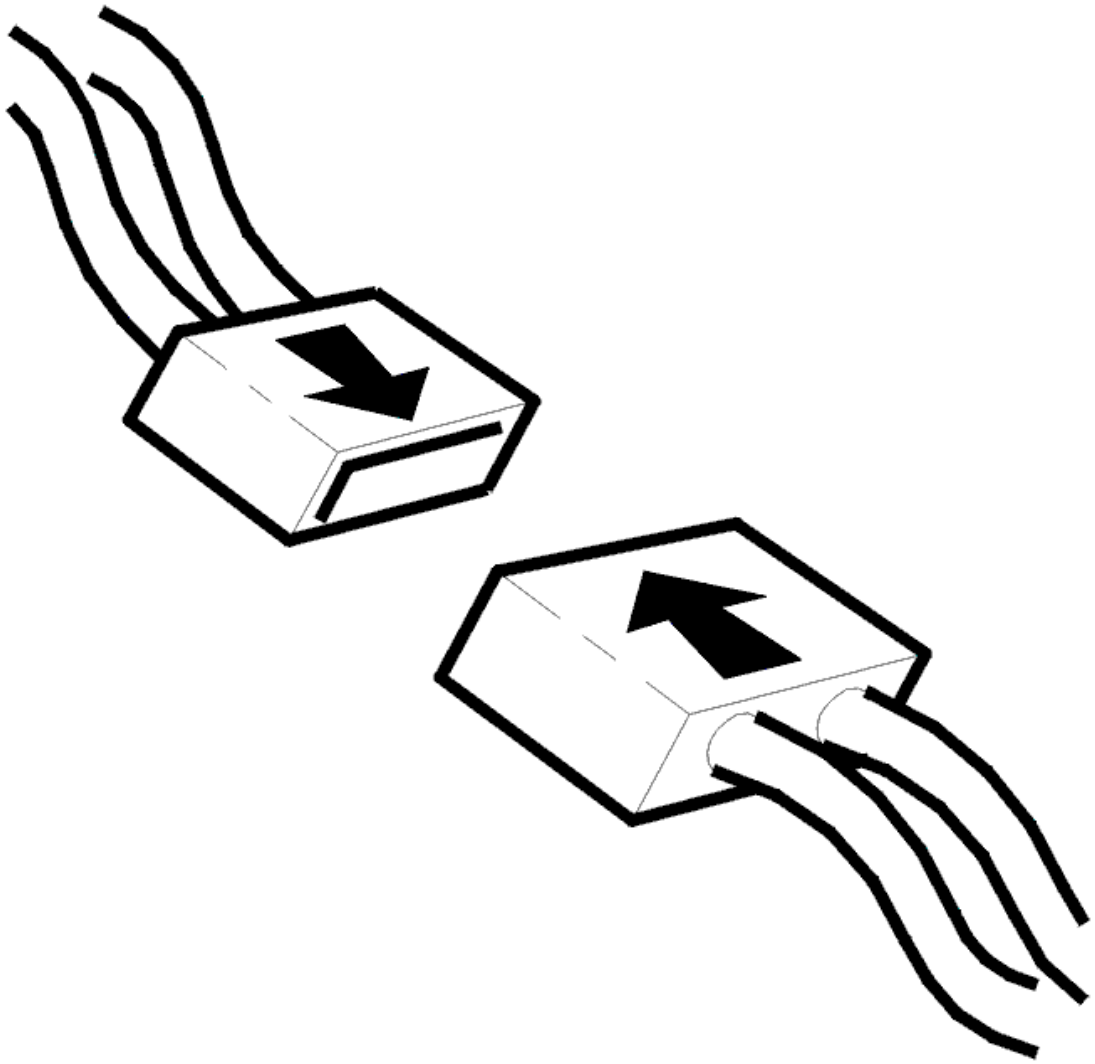

Fig. 112: Identifying Connector(s) Reinstallation
Courtesy of VOLVO CARS CORPORATION

- Ignition off.
- Reinstall the components, reconnect the connectors etc.
- Ignition on.
- Gear selector in position P.
- Activate solenoid S5.

  The value should change between OFF and ON.

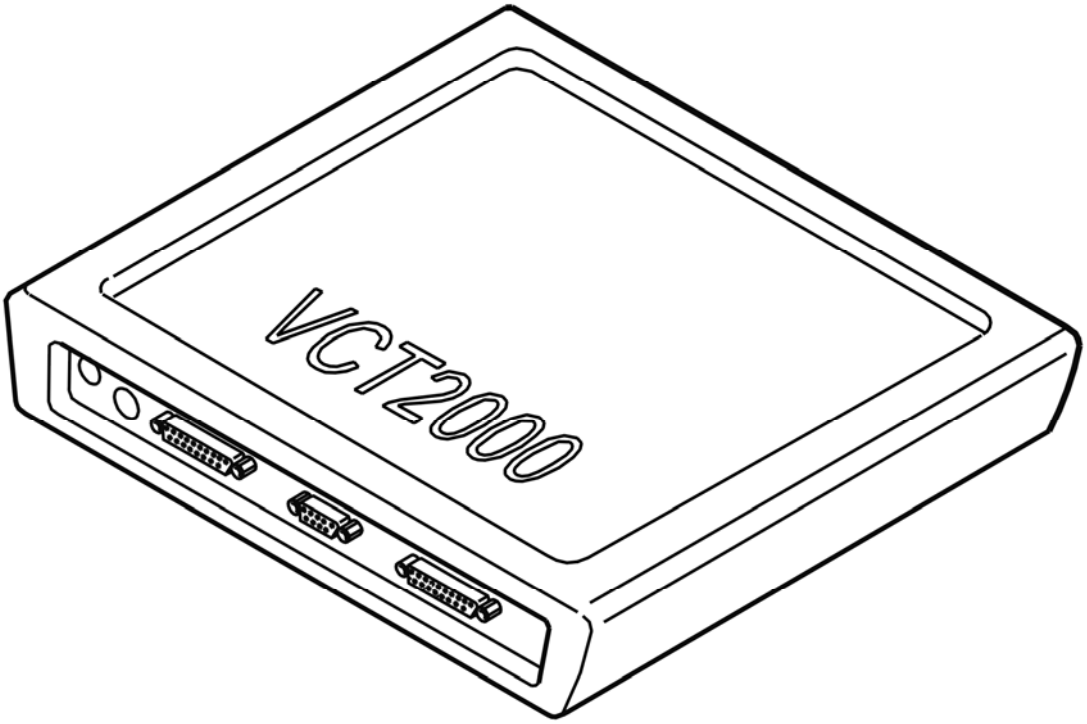

Fig. 113: Identifying VCT2000 Diagnostic Tool Symbol In VIDA
Courtesy of VOLVO CARS CORPORATION

Does the value change between OFF and ON?

- **YES**

  VERIFIED: Troubleshooting has been completed.

- **NO**

  Refer to **INFORMATION**

INFORMATION

FAULT-TRACING INFORMATION

The fault should have been detected and remedied. As this is not the case fault-tracing has failed.

Exit fault-tracing for this diagnostic trouble code (DTC) or make another attempt.

INFORMATION

FAULT-TRACING INFORMATION

If the fault is intermittent, do not verify fault-tracing if the fault does not recur.

It is possible to view the information again, or leave fault-tracing for this diagnostic trouble code (DTC).

FAULTY SIGNAL

CHECKING TRANSMISSION FLUID TEMPERATURE SENSOR

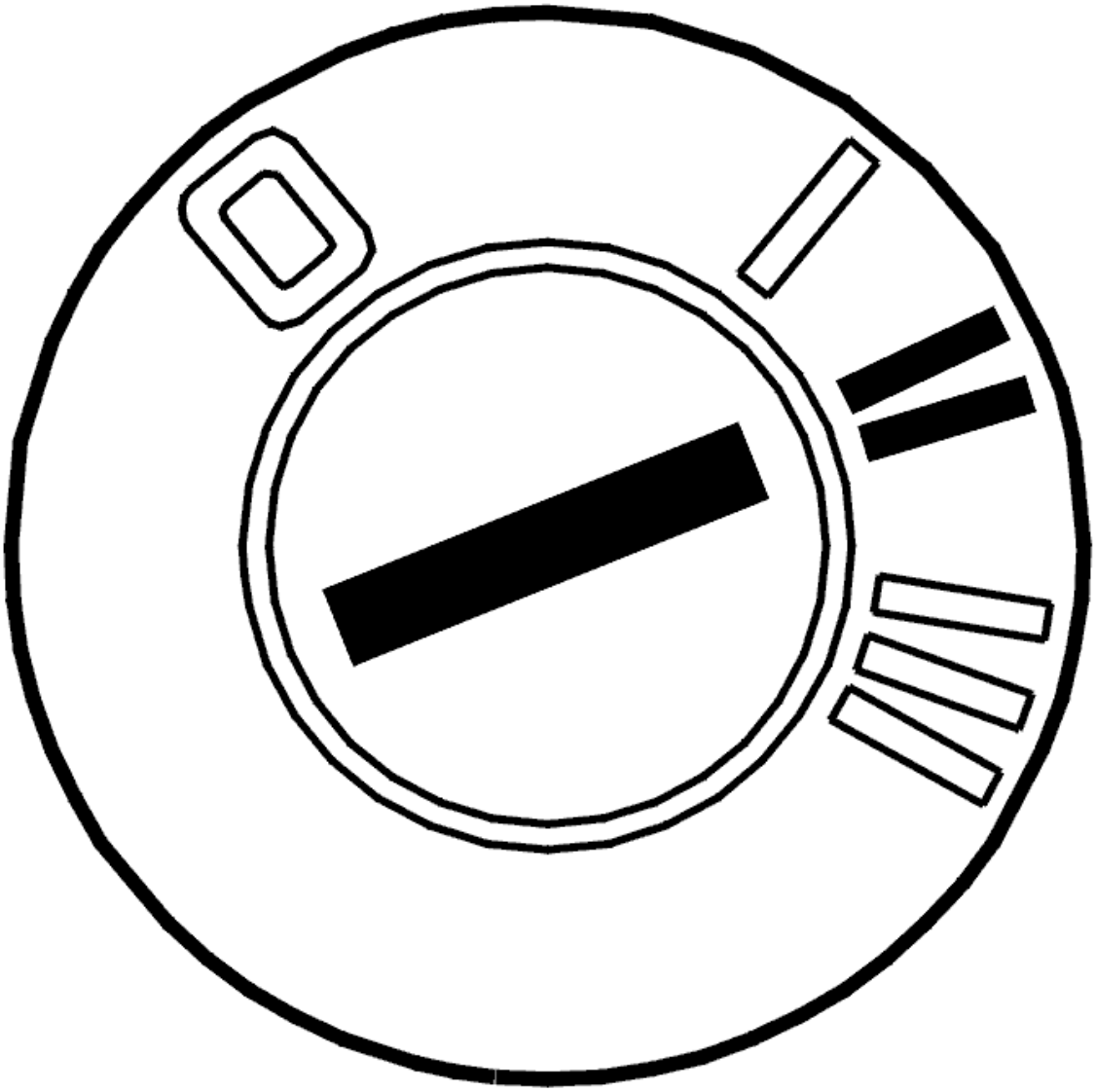

Fig. 114: Identifying Ignition ON
Courtesy of VOLVO CARS CORPORATION

- Ignition on
- Read off the oil temperature.

  Check that the temperature is within its permitted range.

Compare with the transmission temperature.

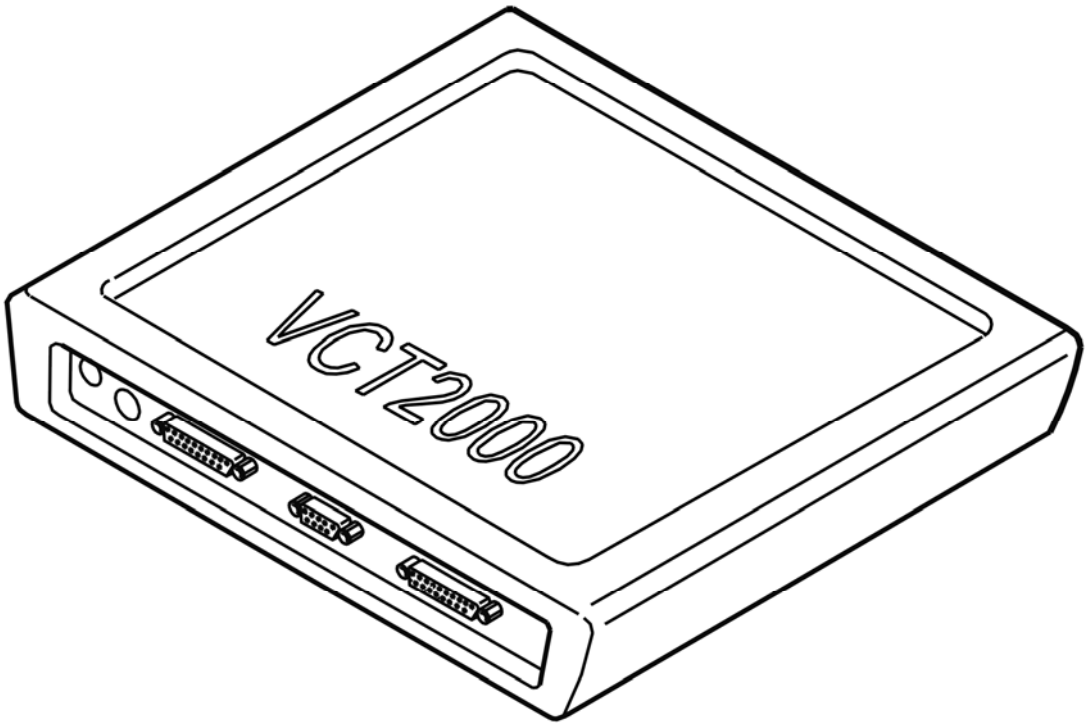

Fig. 115: Identifying VCT2000 Diagnostic Tool Symbol In VIDA
Courtesy of VOLVO CARS CORPORATION

Was the transmission temperature within its permitted range?

- **YES**

  Refer to **INTERMITTENT FAULT**

- **NO**

  Refer to **CHECKING TRANSMISSION FLUID TEMPERATURE SENSOR**

CHECKING TRANSMISSION FLUID TEMPERATURE SENSOR

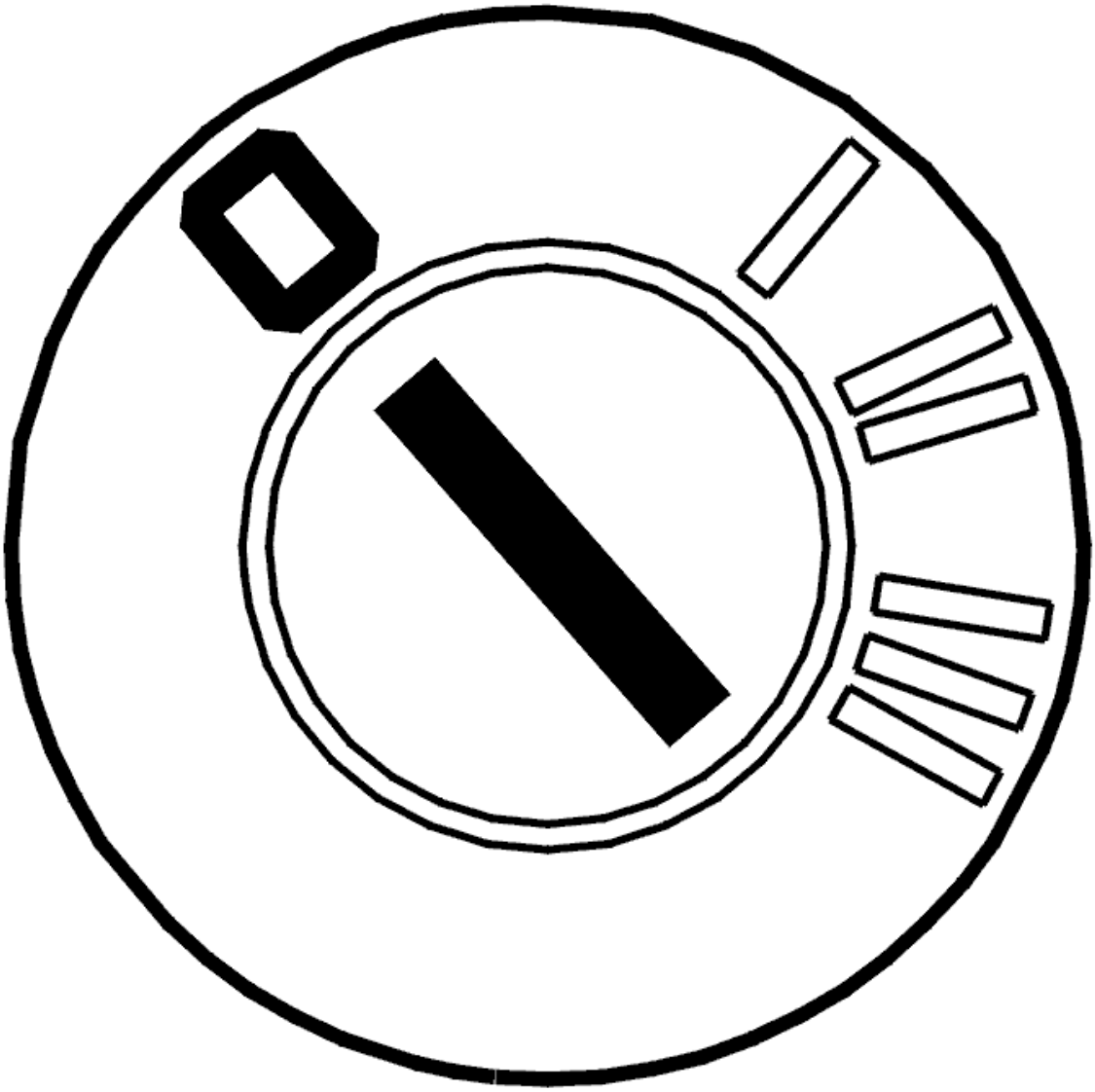

Fig. 116: Identifying Ignition OFF
Courtesy of VOLVO CARS CORPORATION

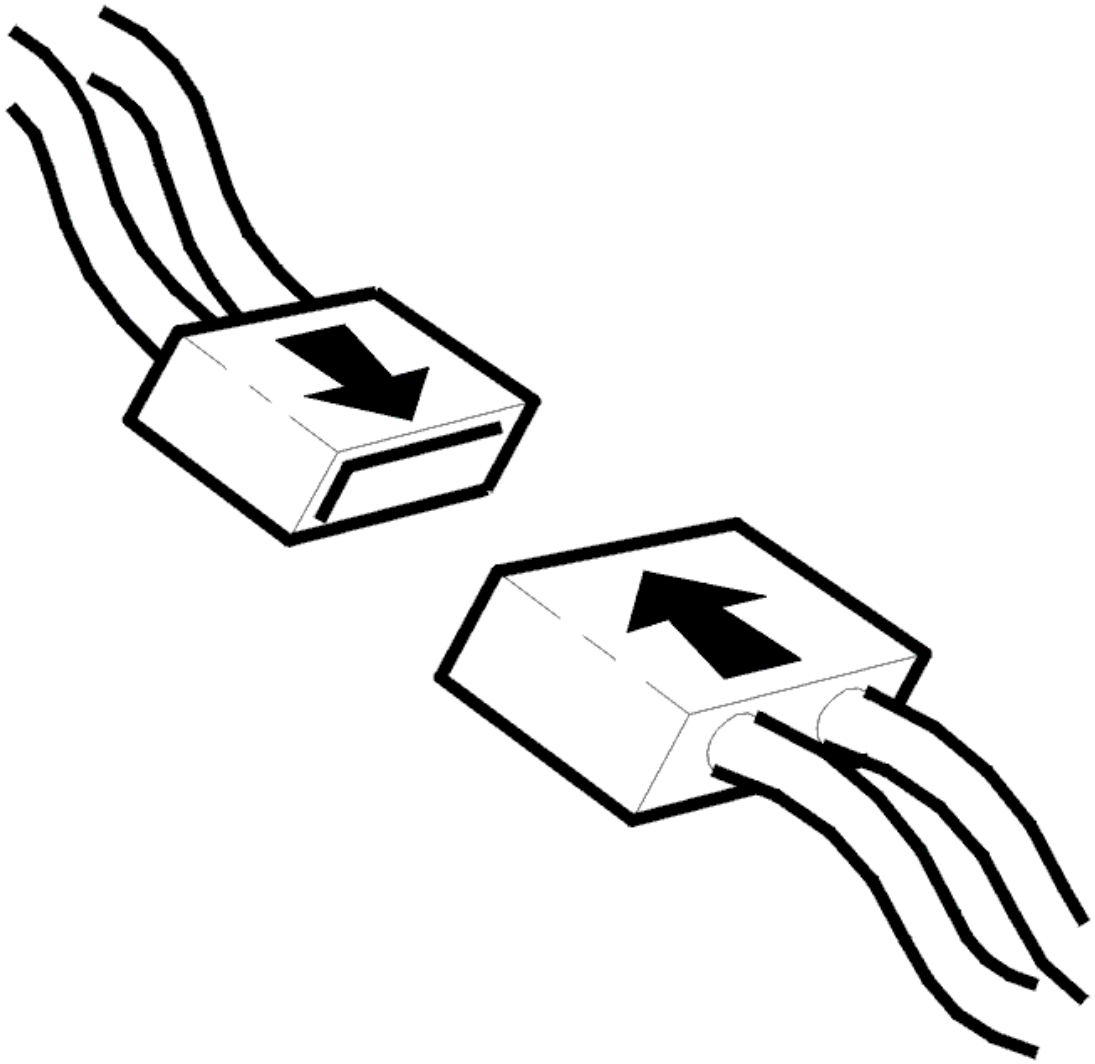

Fig. 117: Identifying Connector(s) Reinstallation
Courtesy of VOLVO CARS CORPORATION

- Ignition off
- Transmission connector D disconnected.

  Check the temperature sensor. Measure the resistance between transmission connector D terminals #D7 and #D8.

  The resistance must be 4.5-6 kohms at 20°C.

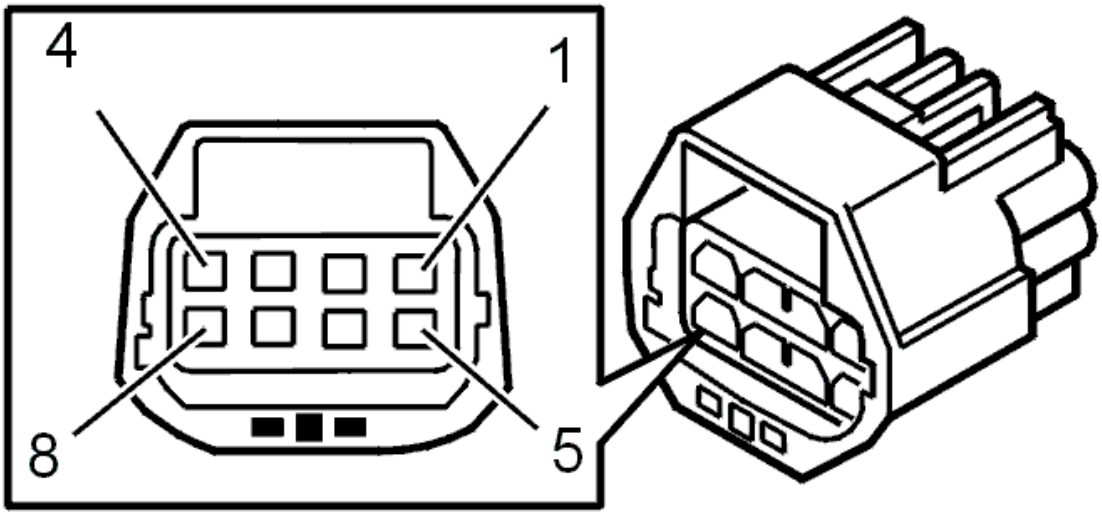

Fig. 118: Identifying 8-Pin Transmission Connector Terminals
Courtesy of VOLVO CARS CORPORATION

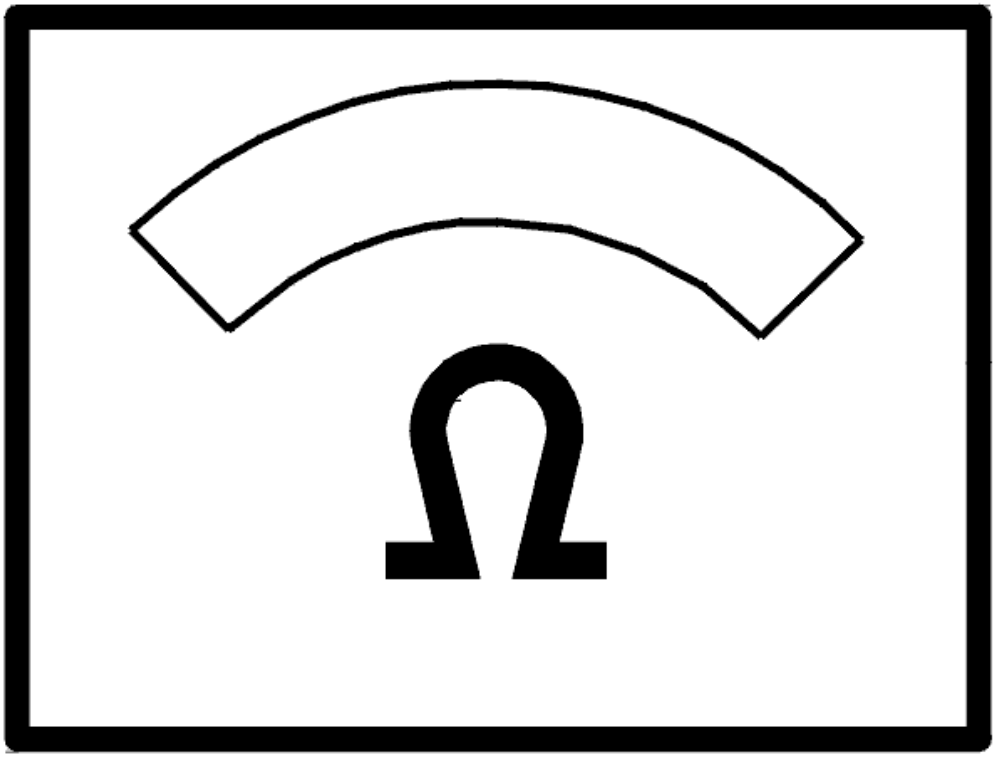

Fig. 119: Identifying Ohms Display
Courtesy of VOLVO CARS CORPORATION

Was the resistance OK?

- **YES**

  Refer to **CHECKING TRANSMISSION FLUID TEMPERATURE SENSOR**

- **NO**

  Refer to **CHECKING THE CABLE AND COMPONENT**

CHECKING TRANSMISSION FLUID TEMPERATURE SENSOR

Check the cable between control module terminal #A37 (#A37) and transmission connector terminal #D7

(control module side). Check for an open-circuit according to **OPEN-CIRCUIT, PERMANENT FAULTS** .

Check the cable between control module terminal #A55 (#A55)and transmission connector terminal #D8 (control module side). Check for an open-circuit according to **OPEN-CIRCUIT, PERMANENT FAULTS** .

Remedy as necessary.

Other information:

- To connect the breakout box, see **CONNECTING THE BREAKOUT BOX**
- To disconnect the transmission connectors, see **CONNECTORS, TRANSMISSION, DISCONNECTING / CONNECTING**
- For information about signals, see **SIGNAL DESCRIPTION. TRANSMISSION CONTROL MODULE (TCM)** .

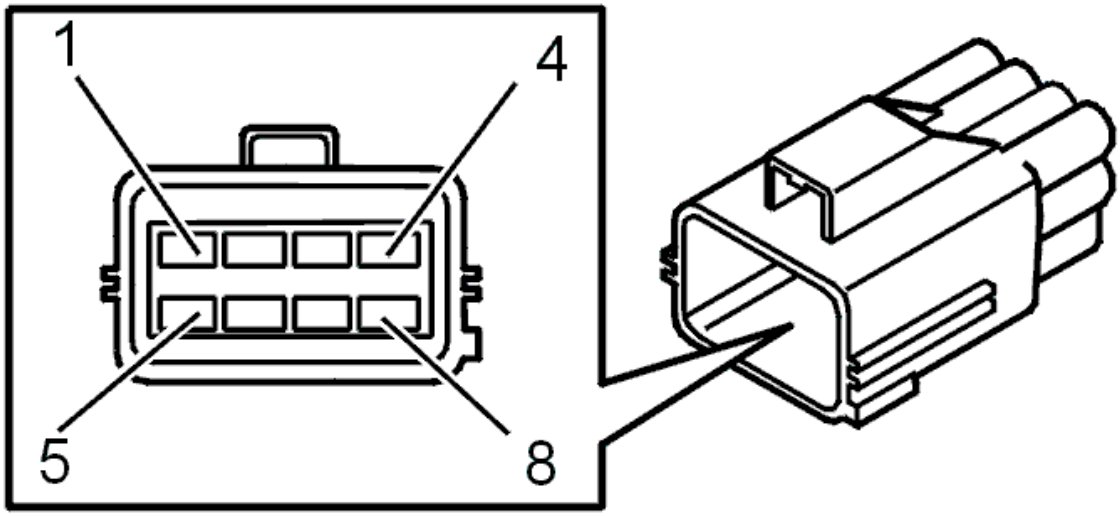

Fig. 120: Identifying Transmission Connector Terminals
Courtesy of VOLVO CARS CORPORATION

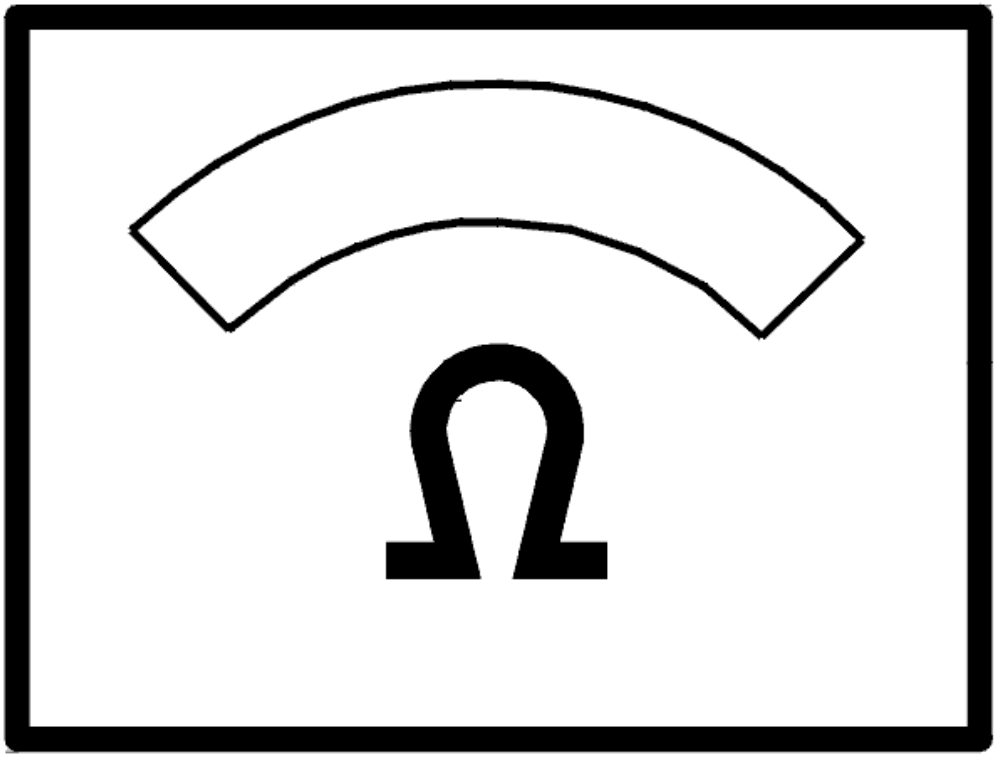

Fig. 121: Identifying Ohms Display
Courtesy of VOLVO CARS CORPORATION

Was a fault detected?

- **YES**

  Refer to **VERIFICATION**

- **NO**

  Refer to **CHECKING THE CABLE AND COMPONENT**

CHECKING THE CABLE AND COMPONENT

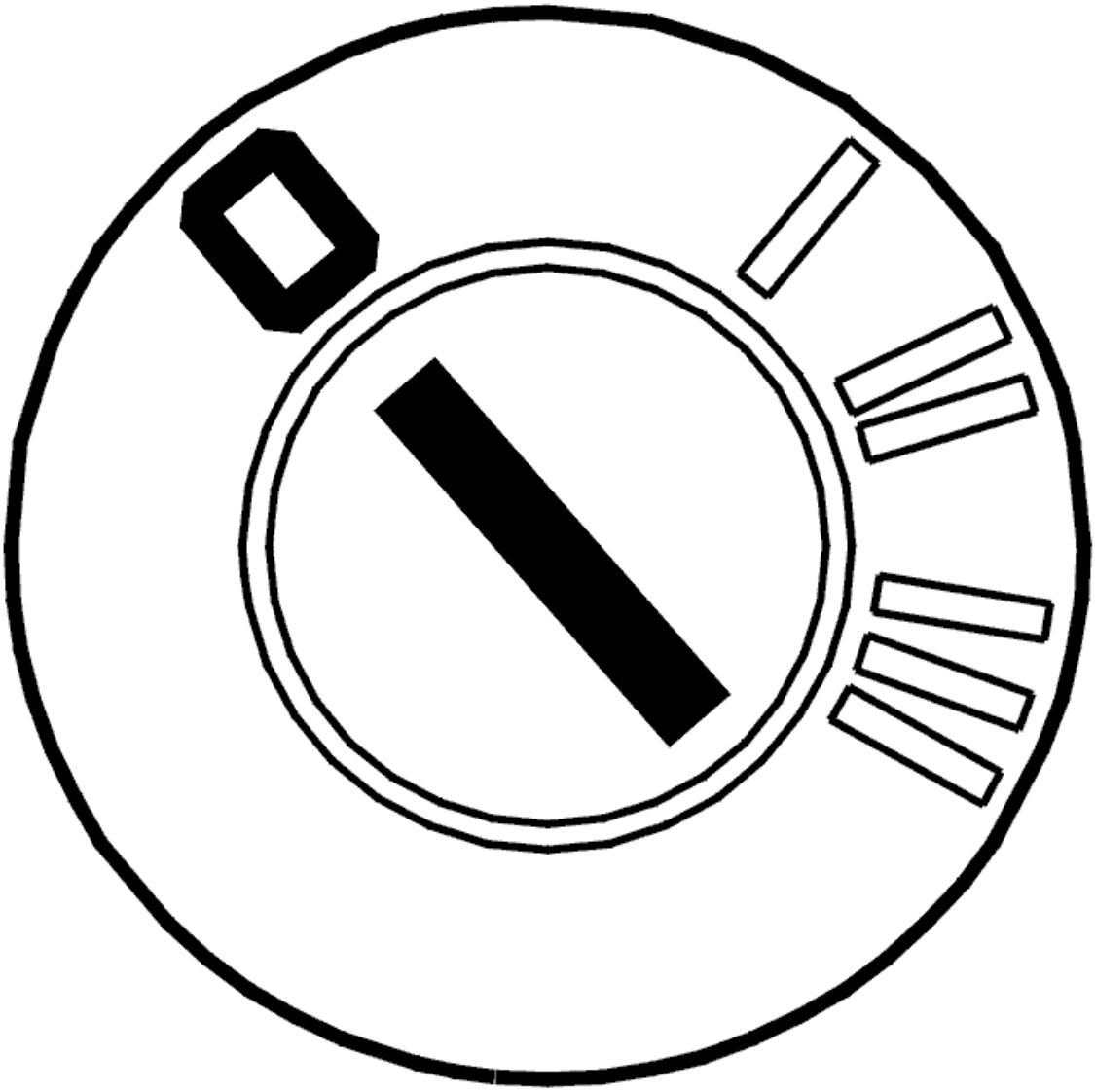

Fig. 122: Identifying Ignition OFF
Courtesy of VOLVO CARS CORPORATION

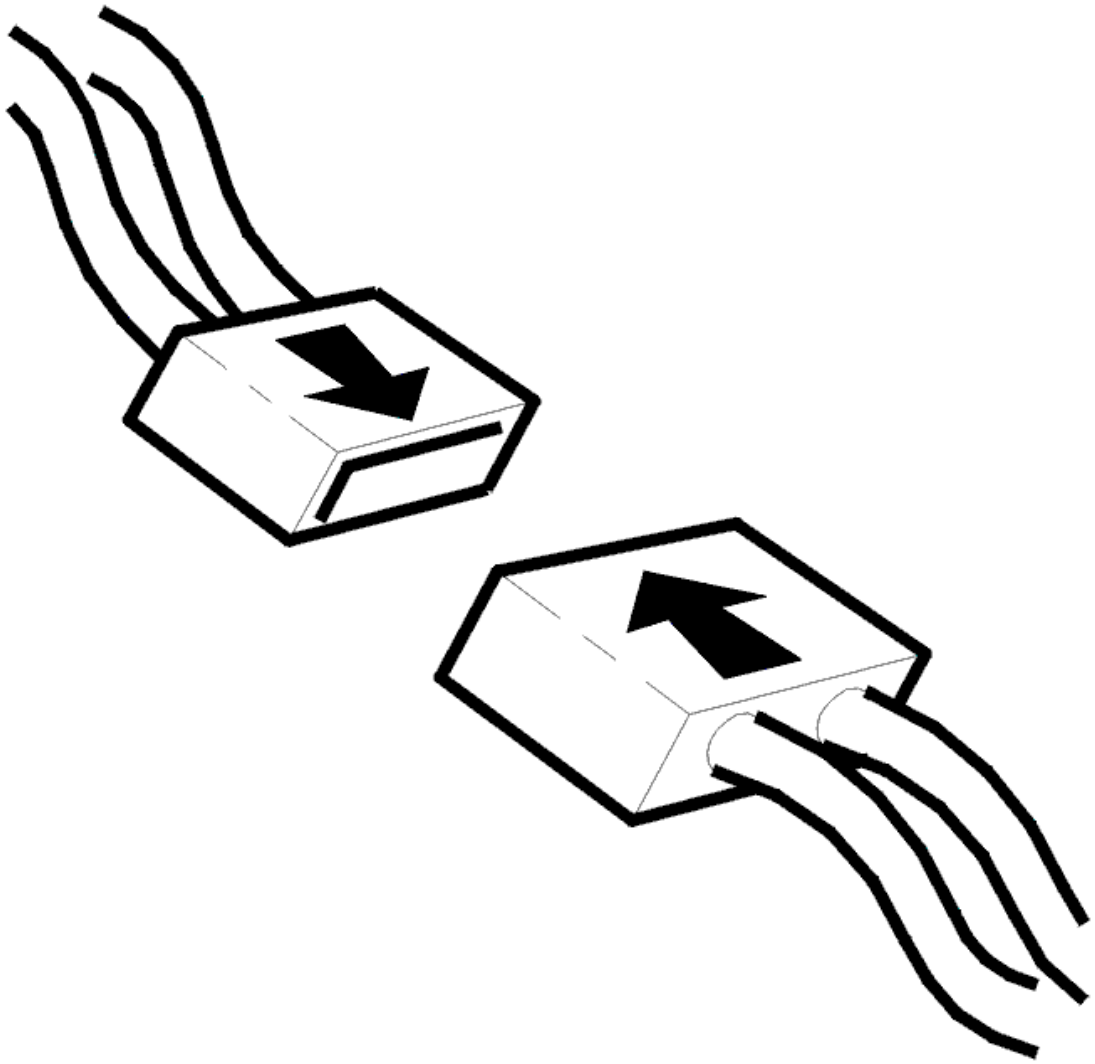

Fig. 123: Identifying Connector(s) Reinstallation
Courtesy of VOLVO CARS CORPORATION

- Ignition off
- Open the transmission control system.

  Check the cable between transmission connector terminal #D7 and temperature sensor terminal #1. Check the cable between transmission connector #D8 and temperature sensor terminal #2. Check for an open-circuit according to **OPEN-CIRCUIT, PERMANENT FAULTS** .

  Also check the cables for a short-circuit to each other.

  HINT: Check the temperature sensor. With the ignition off and transmission connector D disconnected, measure the resistance between transmission connector D terminals #D7 and #D8. The resistance must be 4.5-6 kohms at 20 °C.

Remedy as necessary.

Other information:

- To connect the breakout box, see **CONNECTING THE BREAKOUT BOX**
- To disconnect the transmission connectors, see **CONNECTORS, TRANSMISSION, DISCONNECTING / CONNECTING**
- To open the transmission control system and to check or replace the temperature sensor, see **SOLENOID CONTROL SYSTEM, REPLACING**
- For information about signals, see **SIGNAL DESCRIPTION. TRANSMISSION CONTROL MODULE (TCM)** .

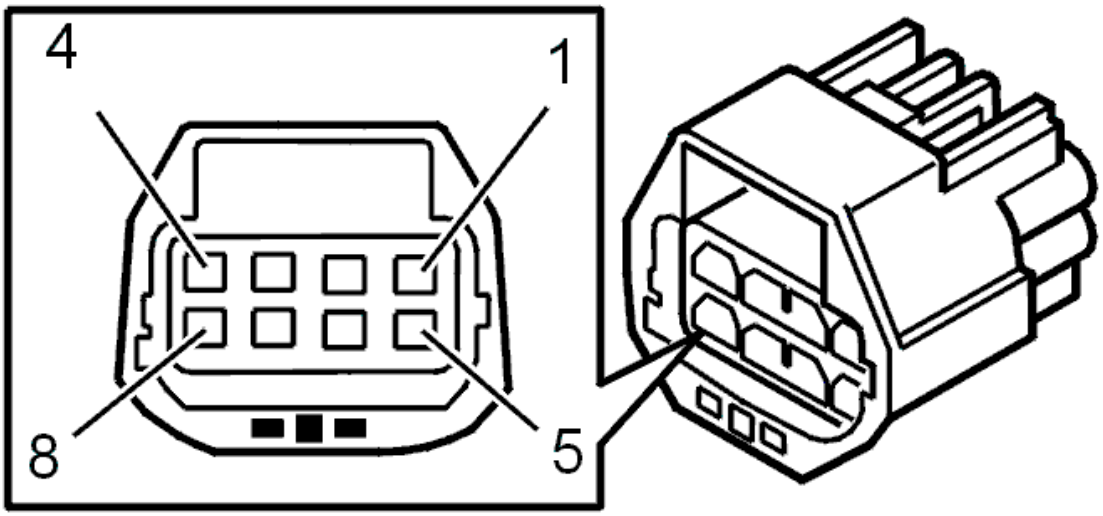

Fig. 124: Identifying 8-Pin Transmission Connector Terminals
Courtesy of VOLVO CARS CORPORATION

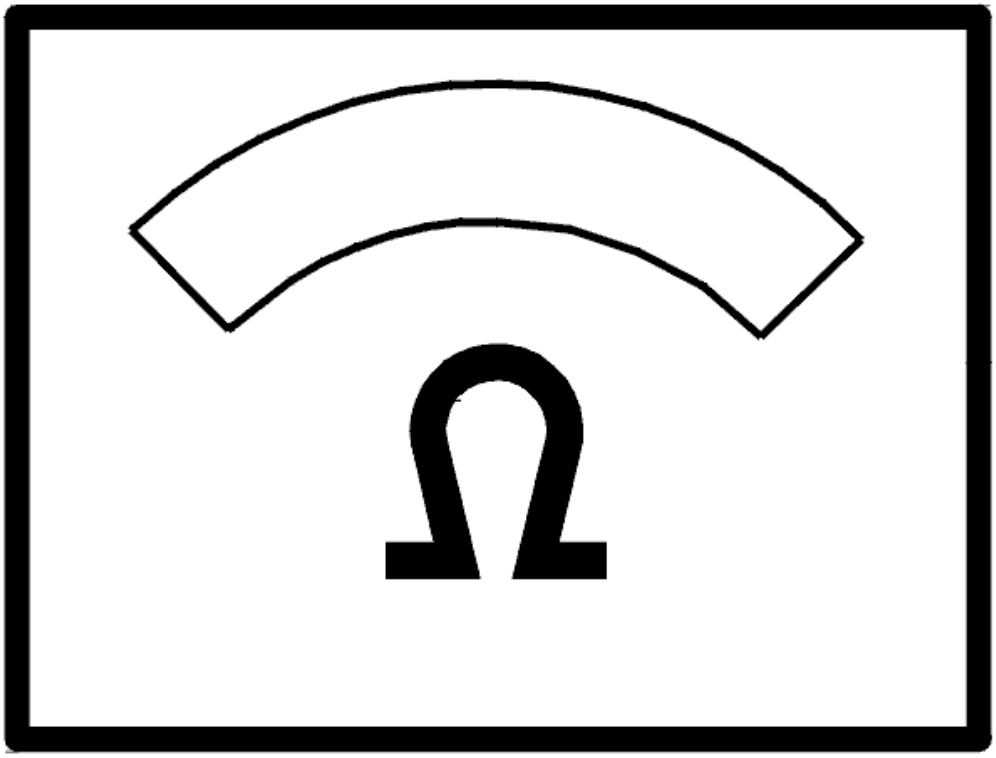

Fig. 125: Identifying Ohms Display
Courtesy of VOLVO CARS CORPORATION

- **Continue**

  Refer to **RESETTING TRANSMISSION FLUID CHANGE COUNTER**

INTERMITTENT FAULT

Check the transmission control module (TCM) and transmission connector D. Check for contact resistance and oxidation according to **CONTACT RESISTANCE AND OXIDATION** .

Check the cable between transmission control module (TCM) terminal #A37 (#A37) and transmission connector terminal #D7 (control module side). Check for an intermittent open-circuit according to **OPEN-CIRCUIT, INTERMITTENT FAULTS** .

Check the cable between control module terminal #A55 (#A55)and transmission connector terminal #D8 (control module side). Check for an intermittent open-circuit according to **OPEN-CIRCUIT, INTERMITTENT FAULTS** .

Remedy as necessary.

Other information:

- To connect the breakout box, see **CONNECTING THE BREAKOUT BOX**
- To disconnect the transmission connectors, see **CONNECTORS, TRANSMISSION, DISCONNECTING / CONNECTING**
- For information about signals, see **SIGNAL DESCRIPTION. TRANSMISSION CONTROL MODULE (TCM)** .

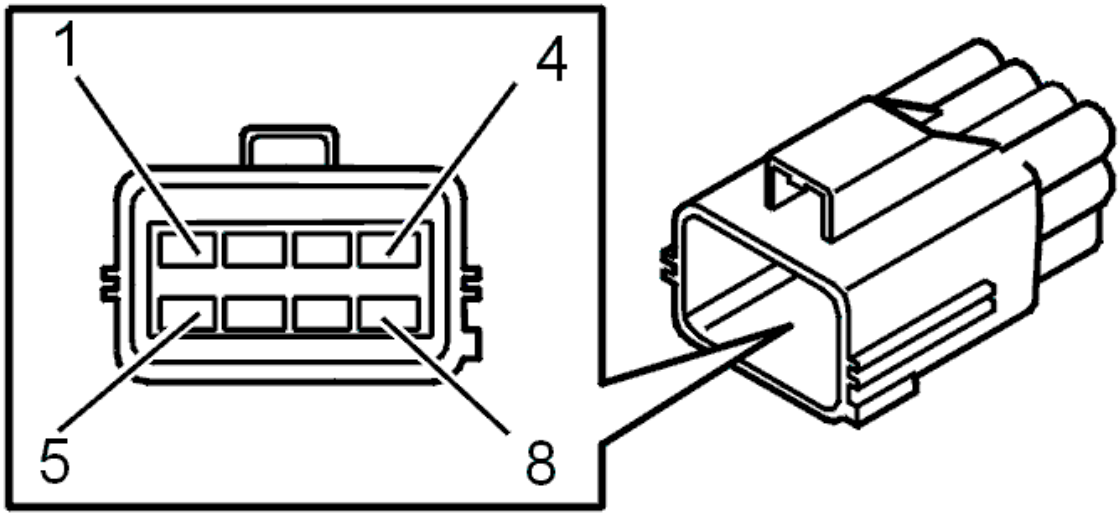

Fig. 126: Identifying Transmission Connector Terminals
Courtesy of VOLVO CARS CORPORATION

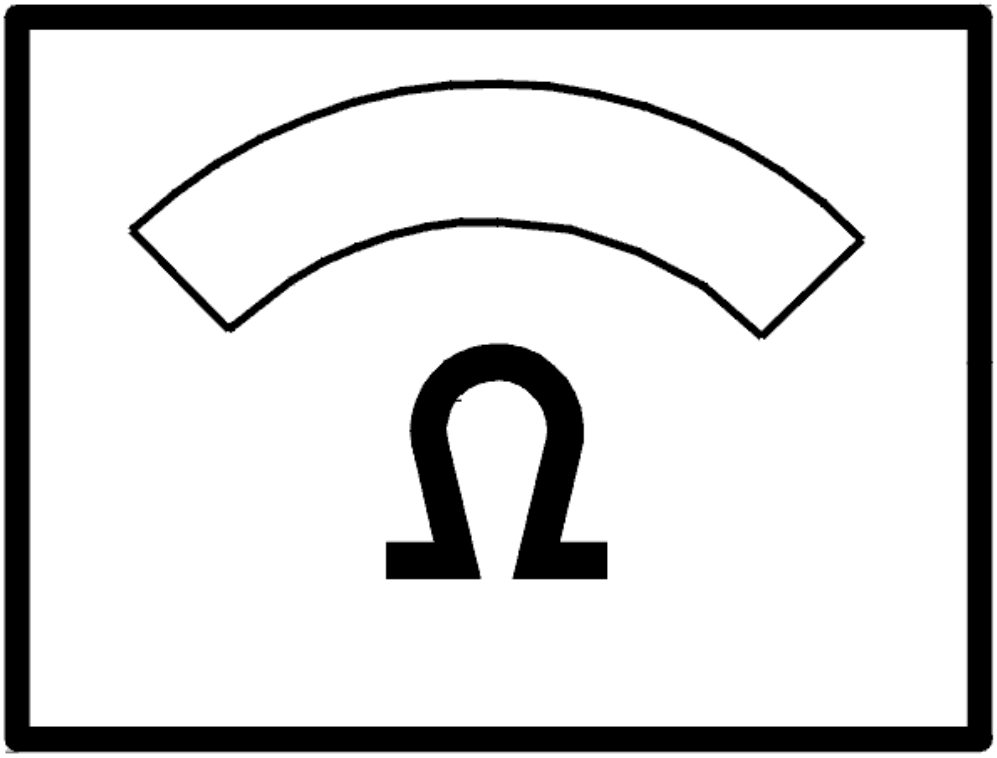

Fig. 127: Identifying Ohms Display
Courtesy of VOLVO CARS CORPORATION

- **Continue**

  Refer to **INFORMATION**

RESETTING TRANSMISSION FLUID CHANGE COUNTER

RESETTING TRANSMISSION FLUID CHANGE COUNTER

HINT: The transmission control module (TCM) has a counter for the oil quality. The counter counts up if the transmission is exposed to too high a load or an ambient temperature that is too high. If the counter is not reset when the oil is drained or changed, there is a risk that a diagnostic trouble code (DTC) will be stored in faulty circumstances. Therefore it is important that the "Transmission oil change" counter is reset.

NOTE: **This applies only when the transmission fluid is changed and when the fluid is changed when repairs are carried out to the transmission temperature sensor.**

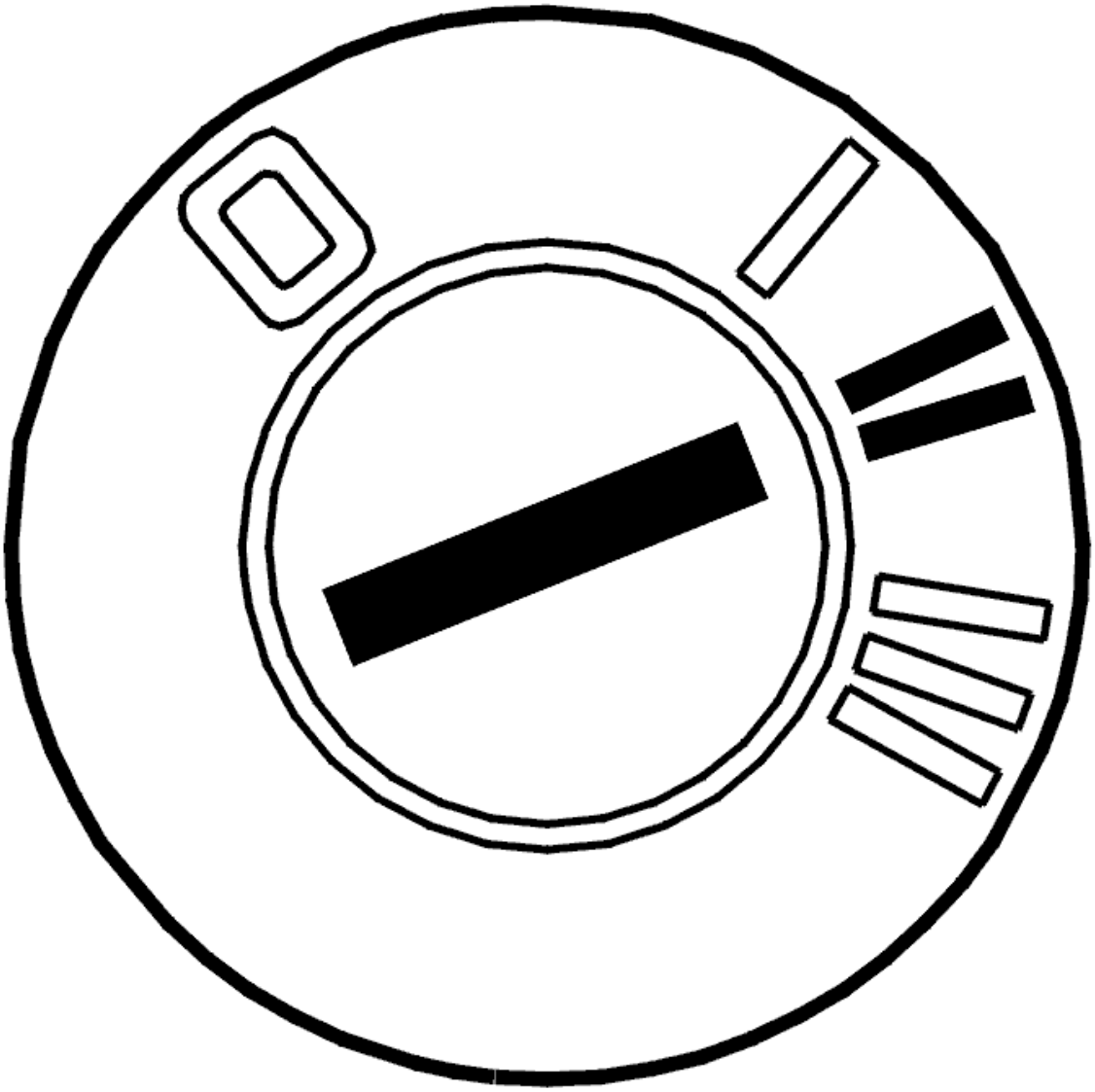

Fig. 128: Identifying Ignition ON
Courtesy of VOLVO CARS CORPORATION

- Ignition on.

  Reset the counter by clicking on the VCT 2000 symbol.

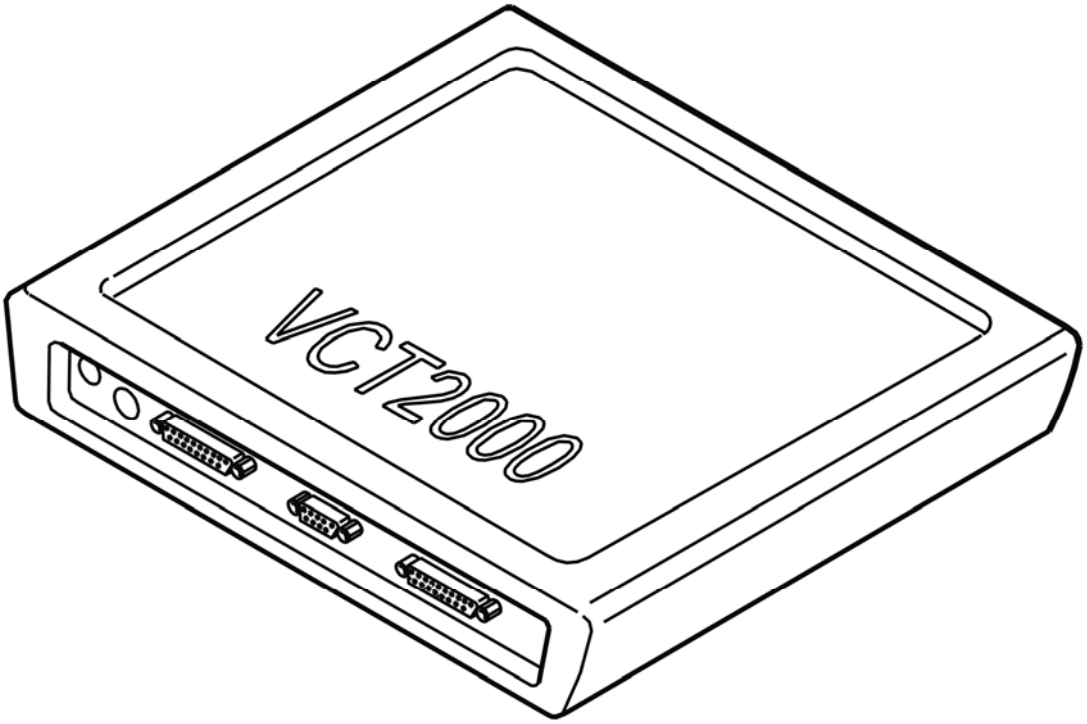

Fig. 129: Identifying VCT2000 Diagnostic Tool Symbol In VIDA
Courtesy of VOLVO CARS CORPORATION

- **Continue**

  Refer to **VERIFICATION**

VERIFICATION

VERIFICATION

HINT: After carrying out the repair, check that the fault has been remedied.

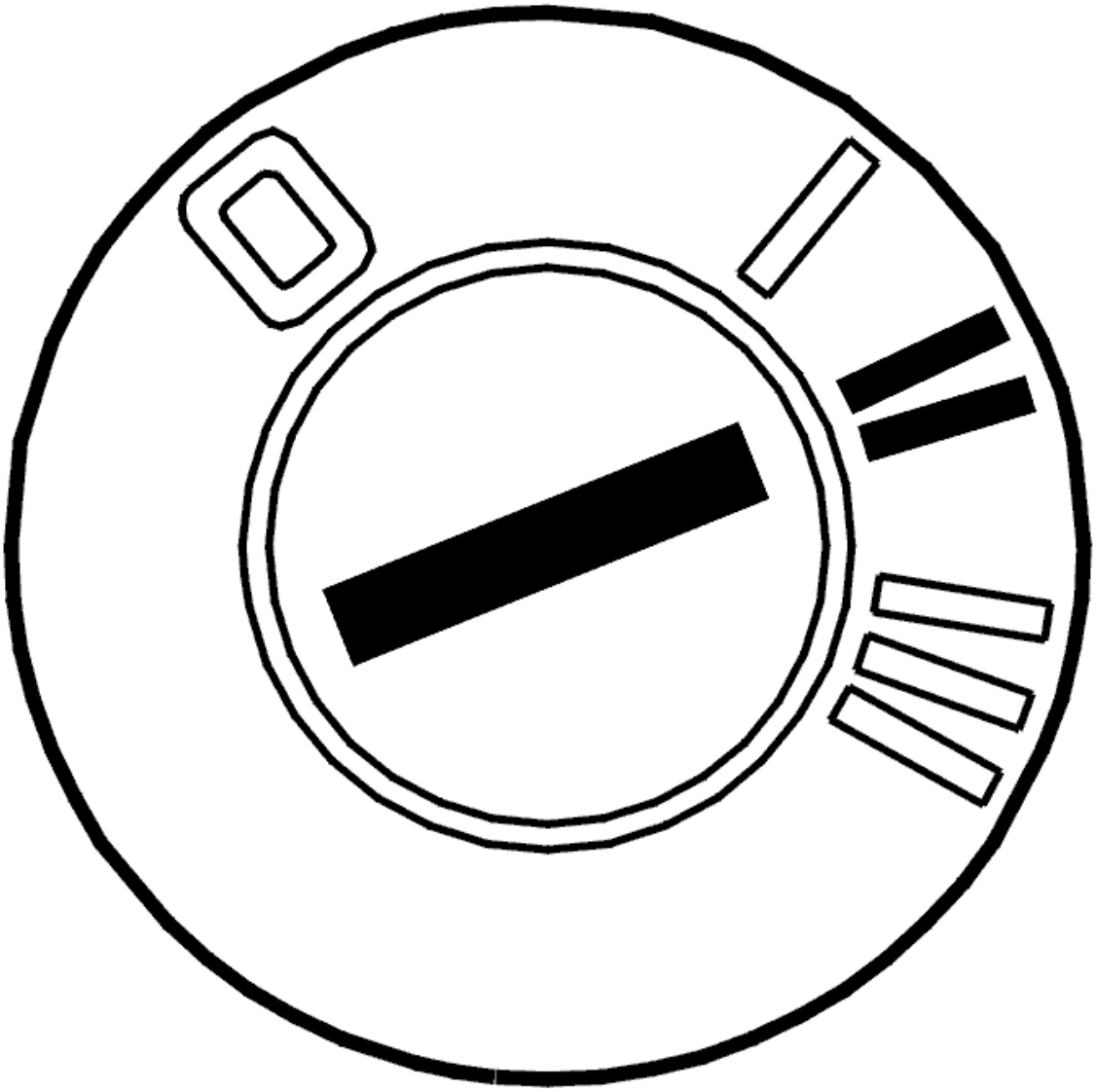

Fig. 130: Identifying Ignition ON
Courtesy of VOLVO CARS CORPORATION

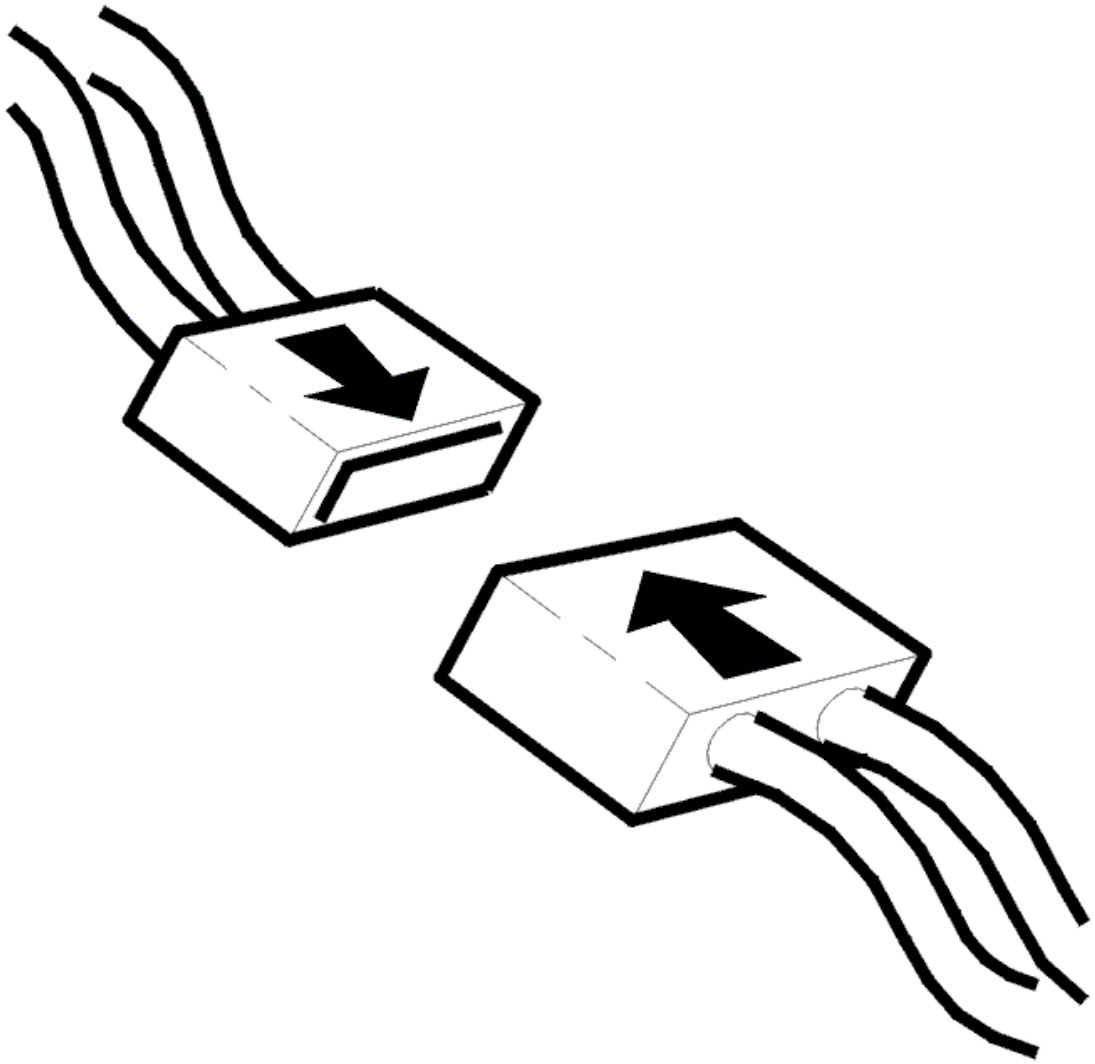

Fig. 131: Identifying Connector(s) Reinstallation
Courtesy of VOLVO CARS CORPORATION

- Ignition off.
- Reinstall the connectors, components etc.
- Ignition on.
- Read off the oil temperature.

Check that the transmission oil temperature is within its permitted range.

Compare with the transmission temperature.

NOTE: **The transmission temperature sensor is located inside the control unit and can be affected by the heat given off by the solenoids.**

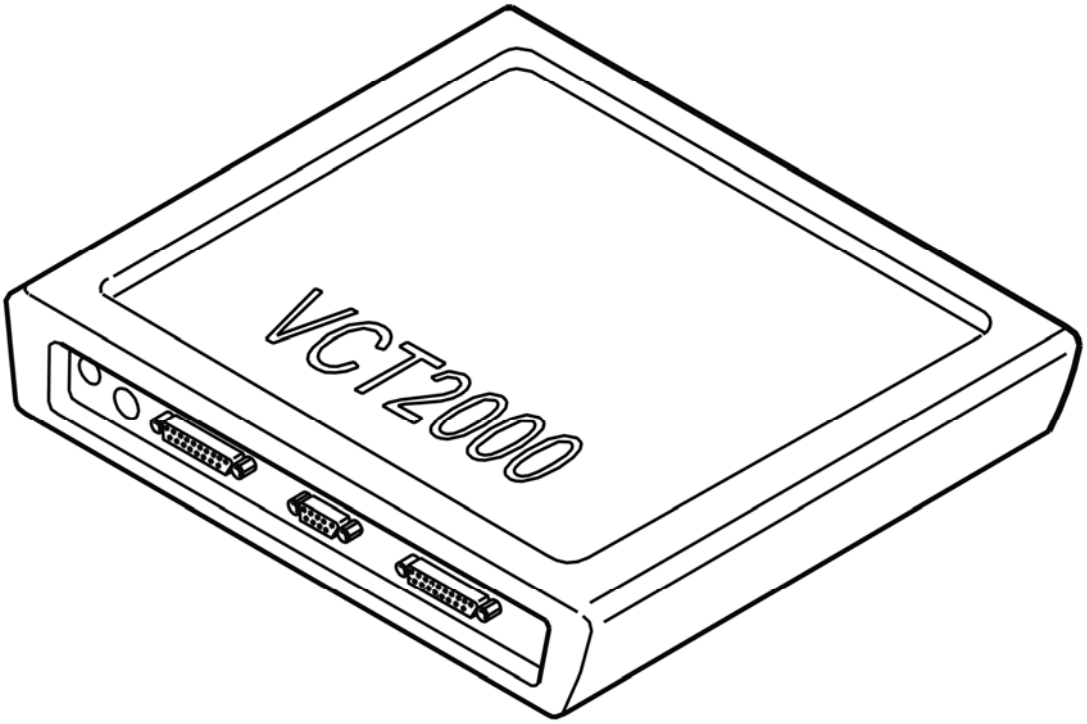

Fig. 132: Identifying VCT2000 Diagnostic Tool Symbol In VIDA
Courtesy of VOLVO CARS CORPORATION

Is the oil temperature within its permitted range?

- **YES**

  VERIFIED: Troubleshooting has been completed.

- **NO**

  Refer to **INFORMATION**

TCM-010D: LOCK-UP SOLENOID SLU. SIGNAL TOO HIGH. INTERMITTENT (AW50/51 AWD; AW55-50/51SN; 2003-2007)

DIAGNOSTIC TROUBLE CODE (DTC) INFORMATION

Condition

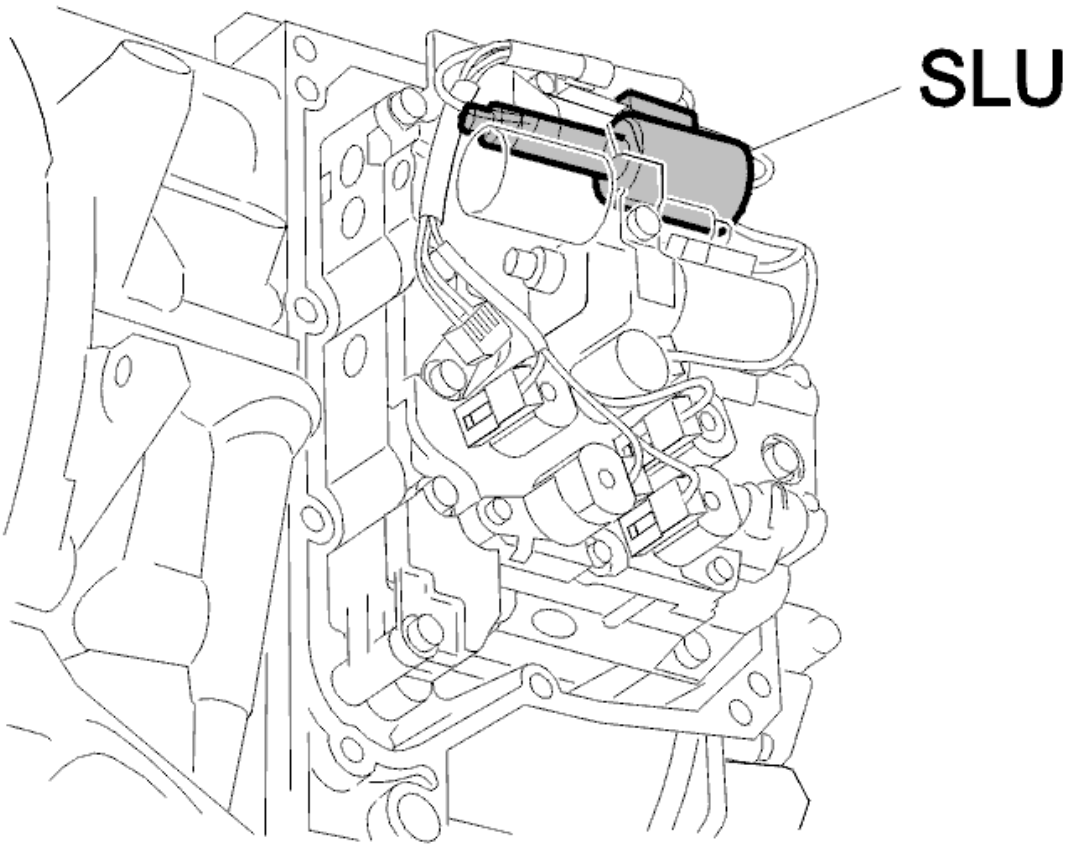

Fig. 133: Identifying Lock-Up Solenoid, SLU
Courtesy of VOLVO CARS CORPORATION

Lock-up solenoid SL controls the transmission lock-up function. Solenoid SLU operates when it receives voltage from the transmission control module (TCM) and is activated under different driving conditions depending on road speed, throttle position and the driving mode selected. Diagnostic trouble code (DTC) TCM-010D is stored if the transmission control module (TCM) registers a short-circuit to supply voltage in the solenoid SLU circuit when the solenoid should not be activated. Solenoid SLU is probably activated permanently.

Substitute Value

- The transmission control module (TCM) "Emergency mode I" program has been initiated.
- The transmission control module (TCM) does not activate the lock-up solenoid.

Possible Source

- Short-circuit to supply voltage in the signal cable.
- Defective control module.

Fault symptom[s]

- General orange warning lamp lit.

- Harsh gear shifting.
- No shifting.
- Irregular shifting.

HINT: Harsh shifting is caused by the solenoid being permanently activated.

SIGNAL TOO HIGH. INTERMITTENT FAULT

INTERMITTENT FAULT

Check the wiring between transmission control module (TCM) terminal #A51 (#A51) and transmission connector terminal #D1. Check the wiring between control module terminal #B9 (#A69) and transmission connector terminal #D2. Check for an intermittent short-circuit to supply voltage according to **SHORT-CIRCUIT TO SUPPLY VOLTAGE, INTERMITTENT FAULTS** .

Remedy as necessary.

Other information:

- To connect the breakout box, see **CONNECTING THE BREAKOUT BOX**
- To disconnect the transmission connectors, see **CONNECTORS, TRANSMISSION, DISCONNECTING / CONNECTING**
- For information about signals, see **SIGNAL DESCRIPTION. TRANSMISSION CONTROL MODULE (TCM)** .

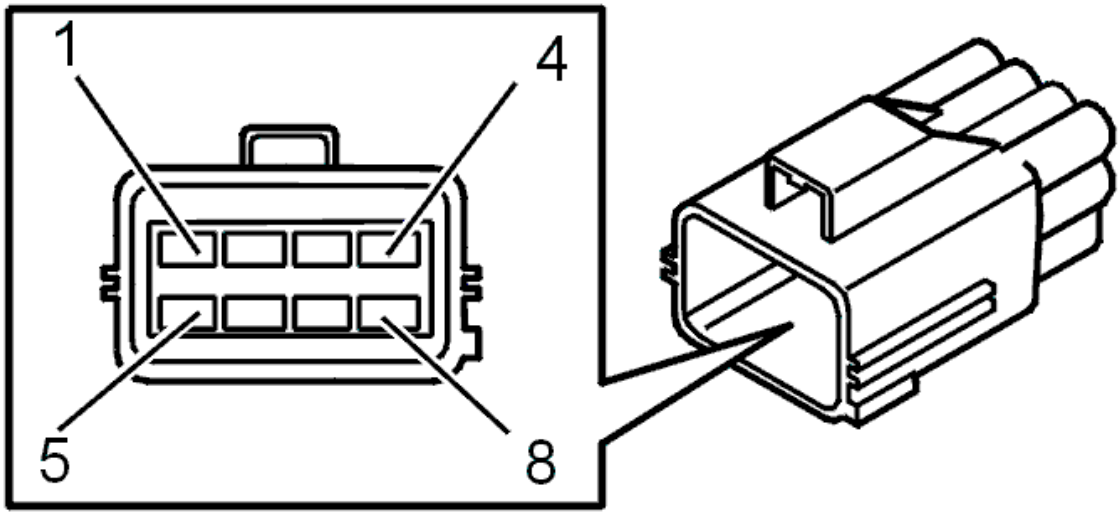

Fig. 134: Identifying Transmission Connector Terminals
Courtesy of VOLVO CARS CORPORATION

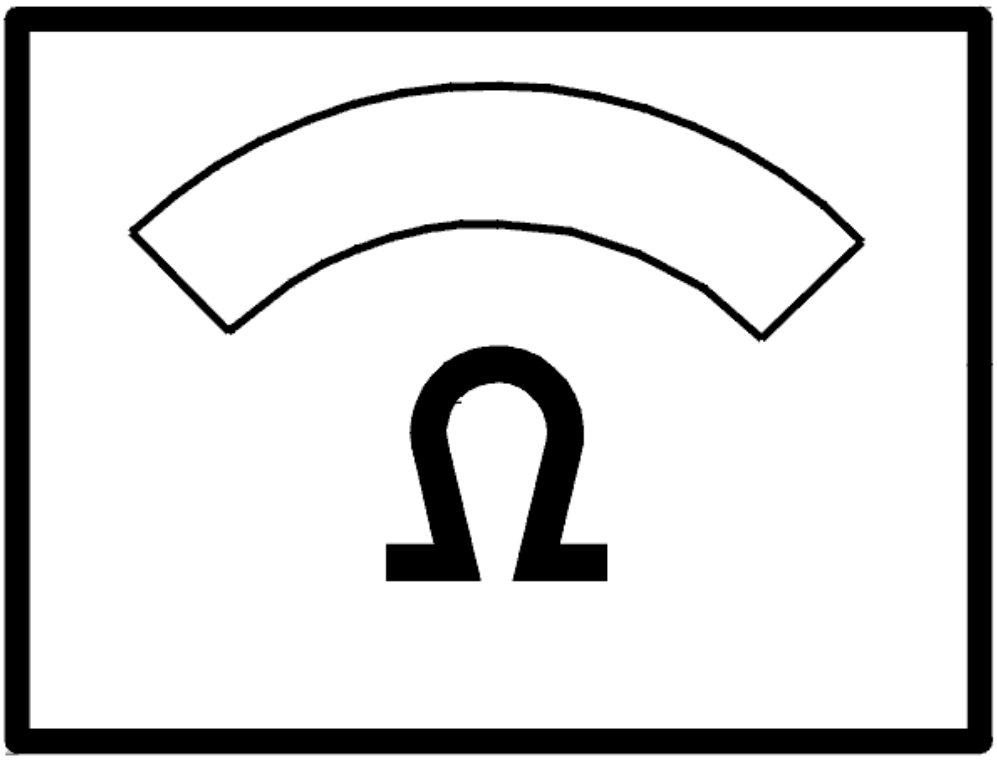

Fig. 135: Identifying Ohms Display
Courtesy of VOLVO CARS CORPORATION

- **Continue**

  Refer to **INFORMATION**

INFORMATION

FAULT-TRACING INFORMATION

If the fault is intermittent, do not verify fault-tracing if the fault does not recur.

It is possible to view the information again, or leave fault-tracing for this diagnostic trouble code (DTC).

TCM-010D: LOCK-UP SOLENOID SLU. SIGNAL TOO HIGH. PERMANENT

FAULT (AW50/51 AWD; AW55-50/51SN; 2003-2007)

DIAGNOSTIC TROUBLE CODE (DTC) INFORMATION

see **DIAGNOSTIC TROUBLE CODE (DTC) INFORMATION**

SIGNAL TOO HIGH. PERMANENT FAULT

CHECKS

CHECKING LINE PRESSURE SOLENOID SLU

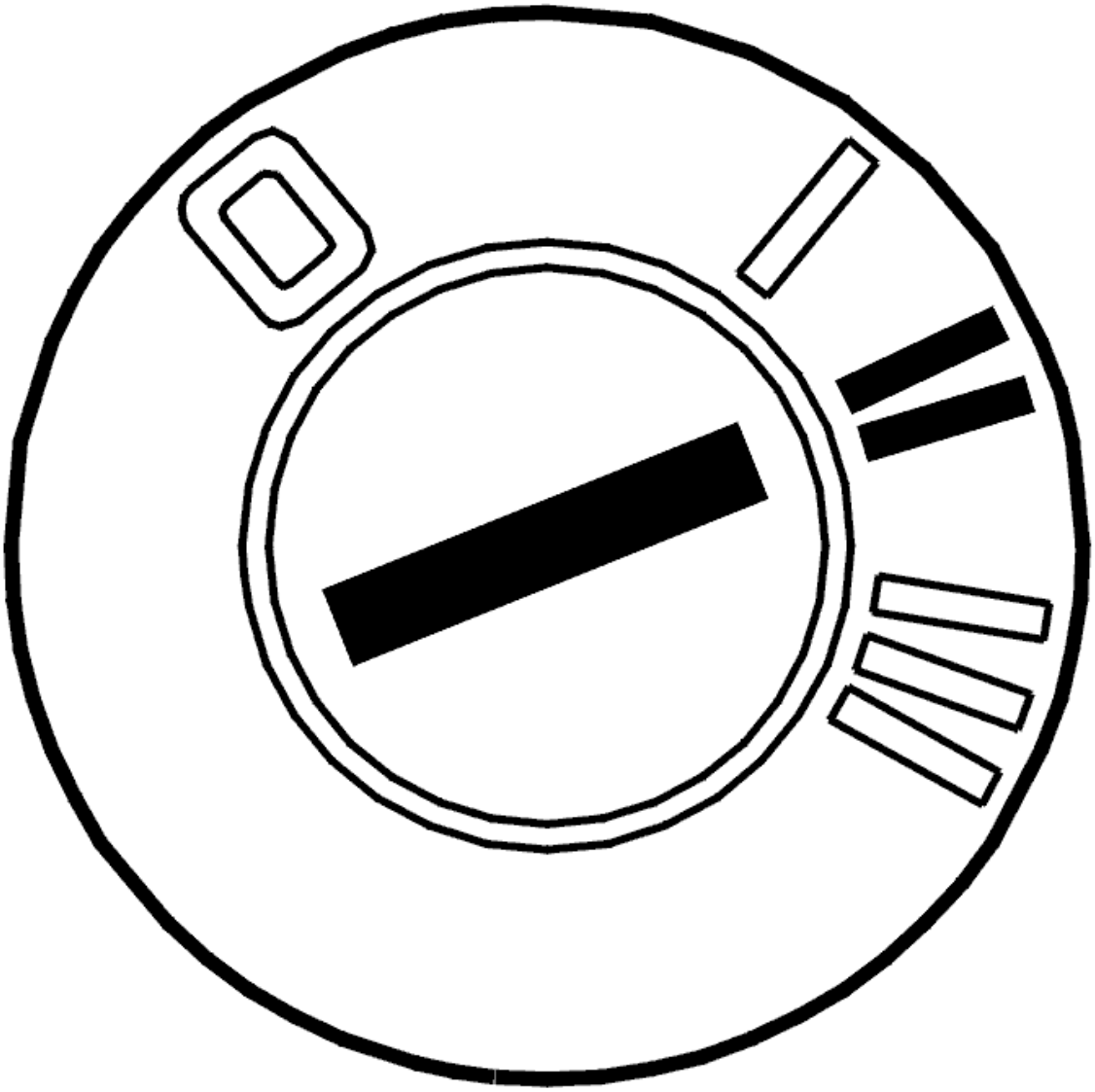

Fig. 136: Identifying Ignition ON
Courtesy of VOLVO CARS CORPORATION

- Ignition on

- Activate solenoid SLU.

  Read off the current through the solenoid SLU circuit.

  The current should oscillate between 0 and 1000 mA.

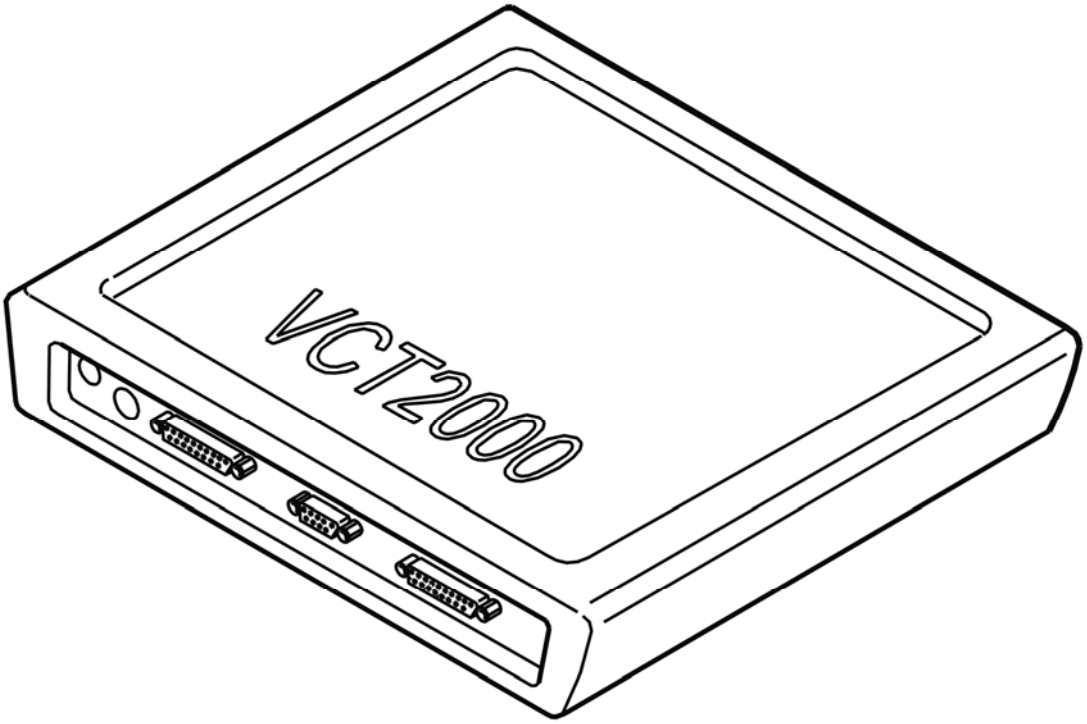

Fig. 137: Identifying VCT2000 Diagnostic Tool Symbol In VIDA
Courtesy of VOLVO CARS CORPORATION

Does the current oscillate?

- **YES**

  FAULT NOT FOUND: Troubleshooting has been completed.

- **NO**

  Refer to **CHECKING THE WIRING**

CHECKING THE WIRING

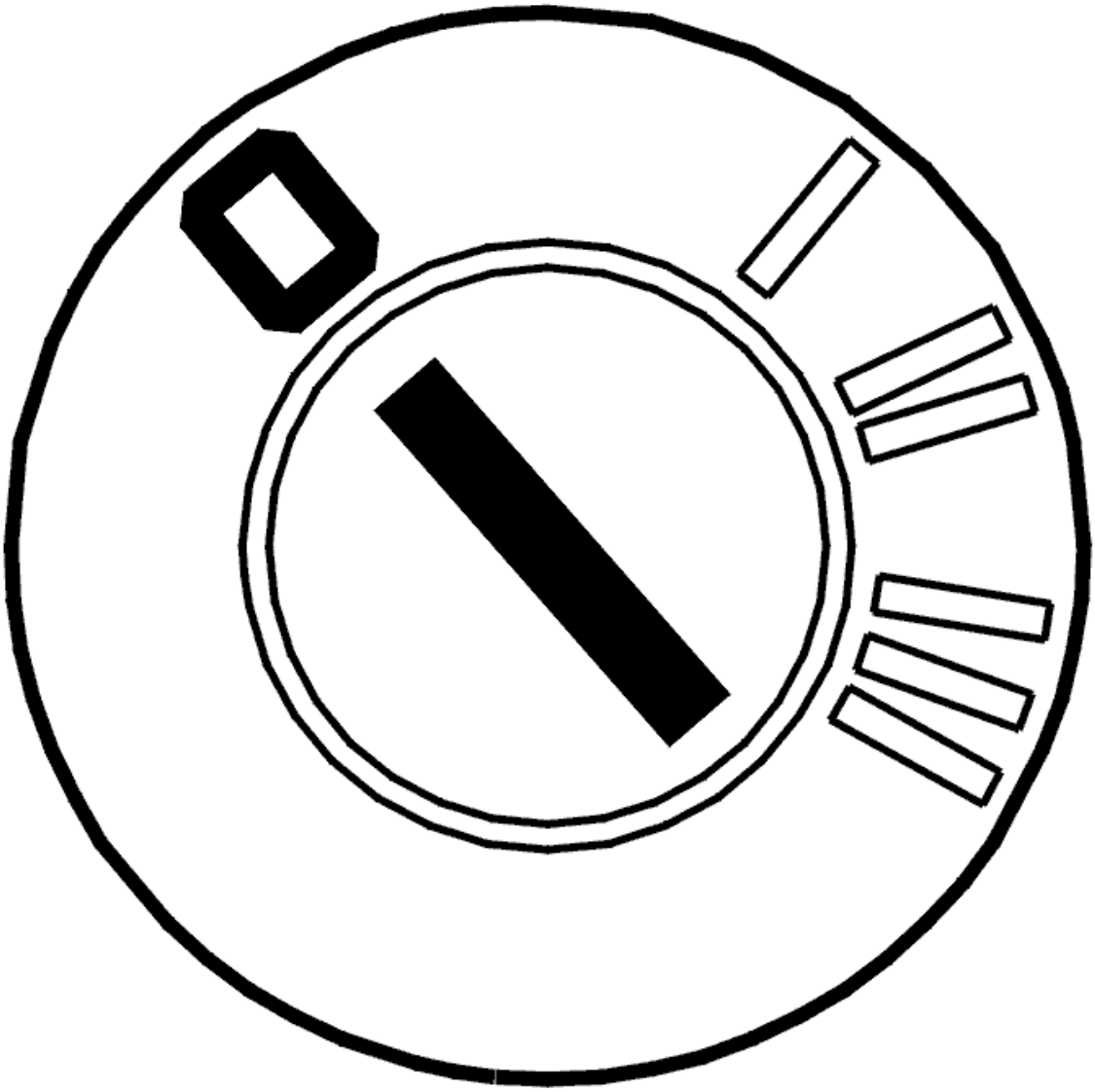

Fig. 138: Identifying Ignition OFF
Courtesy of VOLVO CARS CORPORATION

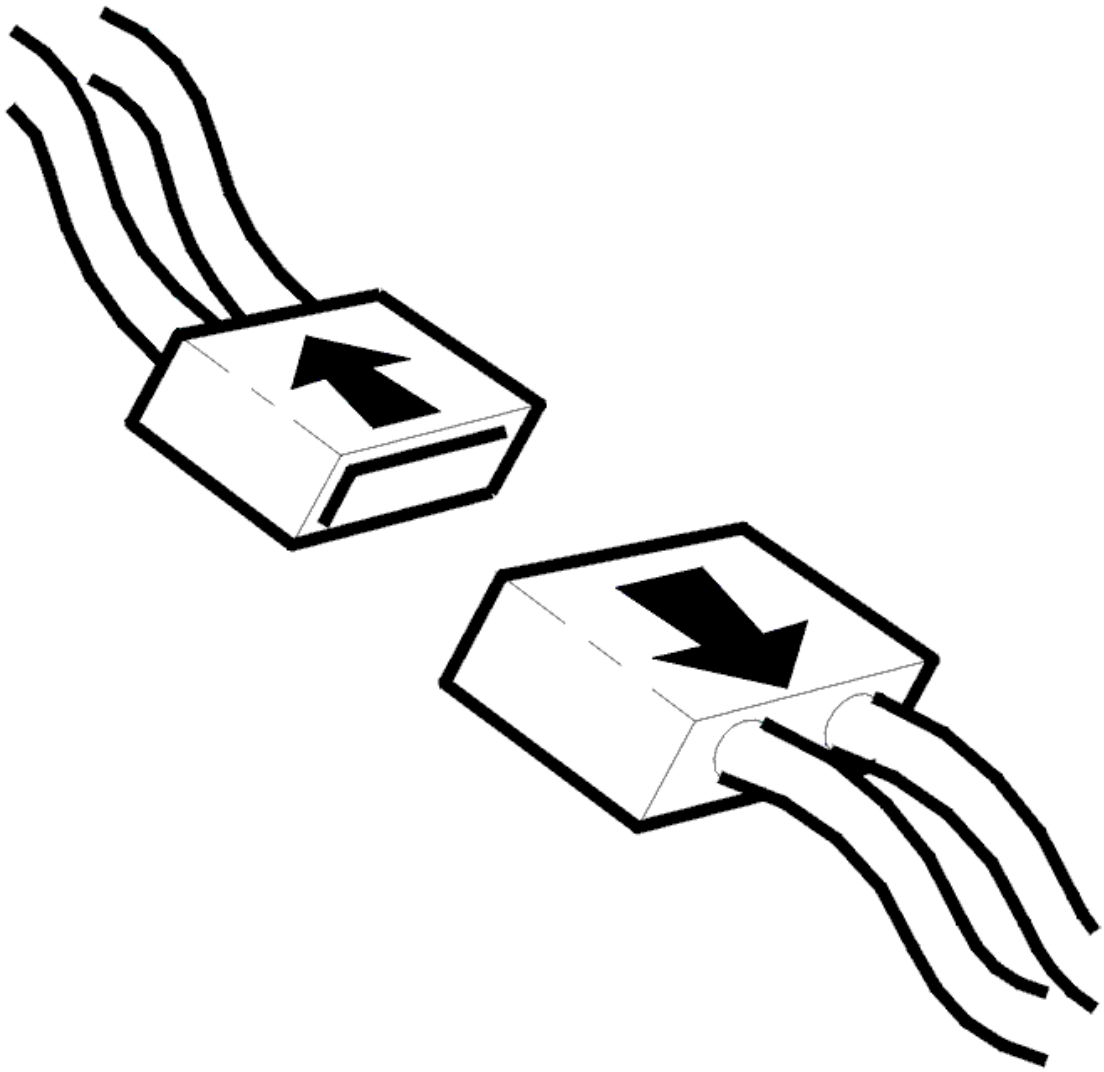

Fig. 139: Identifying Connector(s) Disconnected
Courtesy of VOLVO CARS CORPORATION

- Ignition off
- The breakout box connected
- Disconnect transmission connector D.

  Check the cable between transmission control module (TCM) terminal #A51 (#A51) and transmission connector terminal #D1 (control module side). Check for a short-circuit to supply voltage. See **SHORT-CIRCUIT TO SUPPLY VOLTAGE. PERMANENT FAULTS** .

  Check the cable between control module terminal #B9 (#A69) and transmission connector terminal #D2 (control module side). Check for a short-circuit to supply voltage. See **SHORT-CIRCUIT TO SUPPLY VOLTAGE. PERMANENT FAULTS** .

Also check against the other cables in the circuit.

Remedy as necessary.

Other information:

- To connect the breakout box, see **CONNECTING THE BREAKOUT BOX**
- To disconnect the transmission connectors, see **CONNECTORS, TRANSMISSION, DISCONNECTING / CONNECTING**
- For information about signals, see **SIGNAL DESCRIPTION. TRANSMISSION CONTROL MODULE (TCM)** .

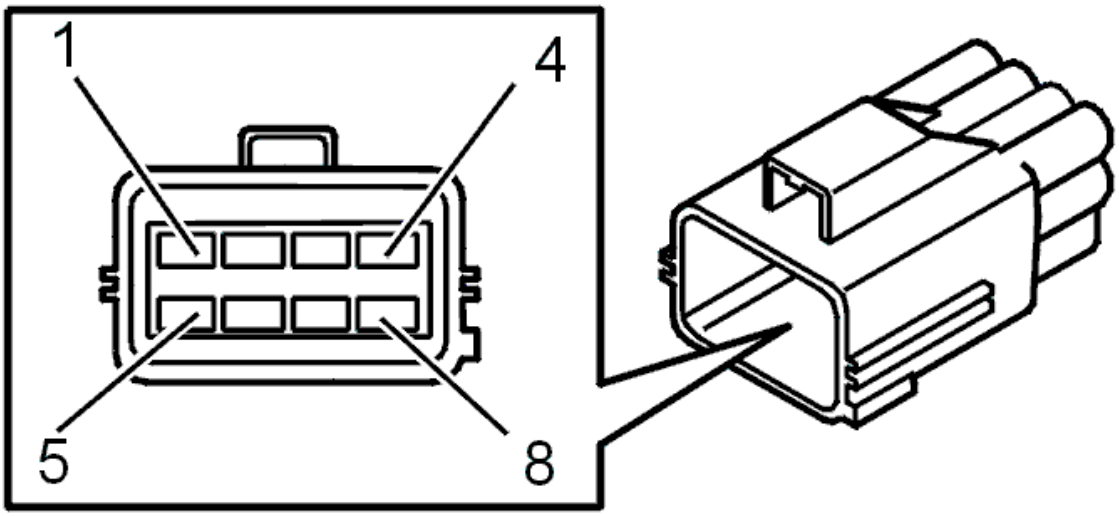

Fig. 140: Identifying Transmission Connector Terminals
Courtesy of VOLVO CARS CORPORATION

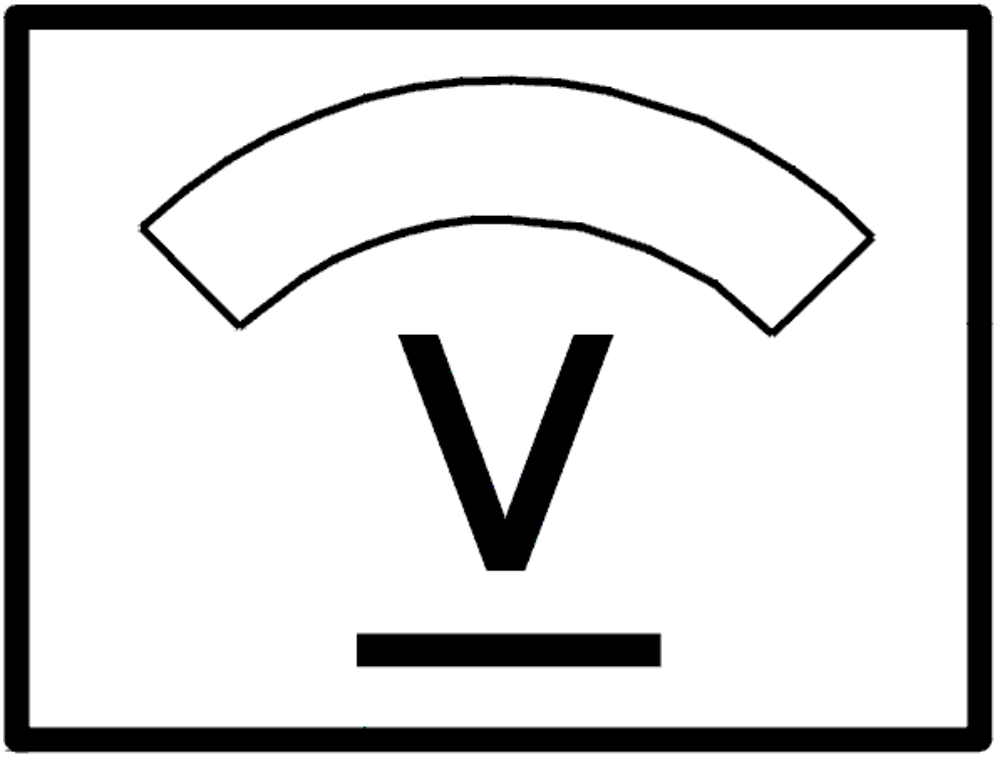

Fig. 141: Identifying Voltage Display
Courtesy of VOLVO CARS CORPORATION

Was a fault detected?

- **YES**

  Refer to **VERIFICATION**

- **NO**

  Refer to **CHECKING THE WIRING AND COMPONENT**

CHECKING THE WIRING AND COMPONENT

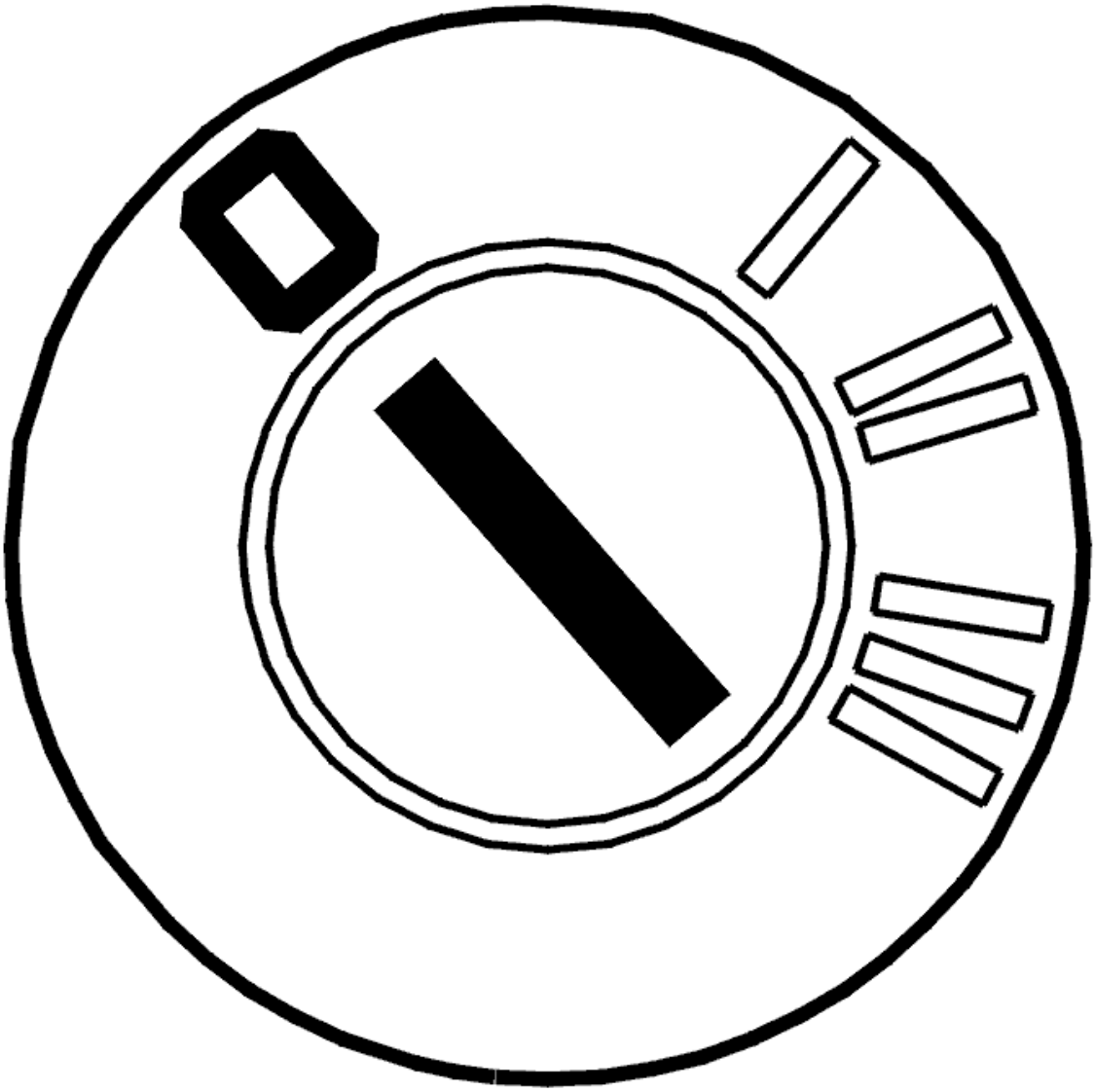

Fig. 142: Identifying Ignition OFF
Courtesy of VOLVO CARS CORPORATION

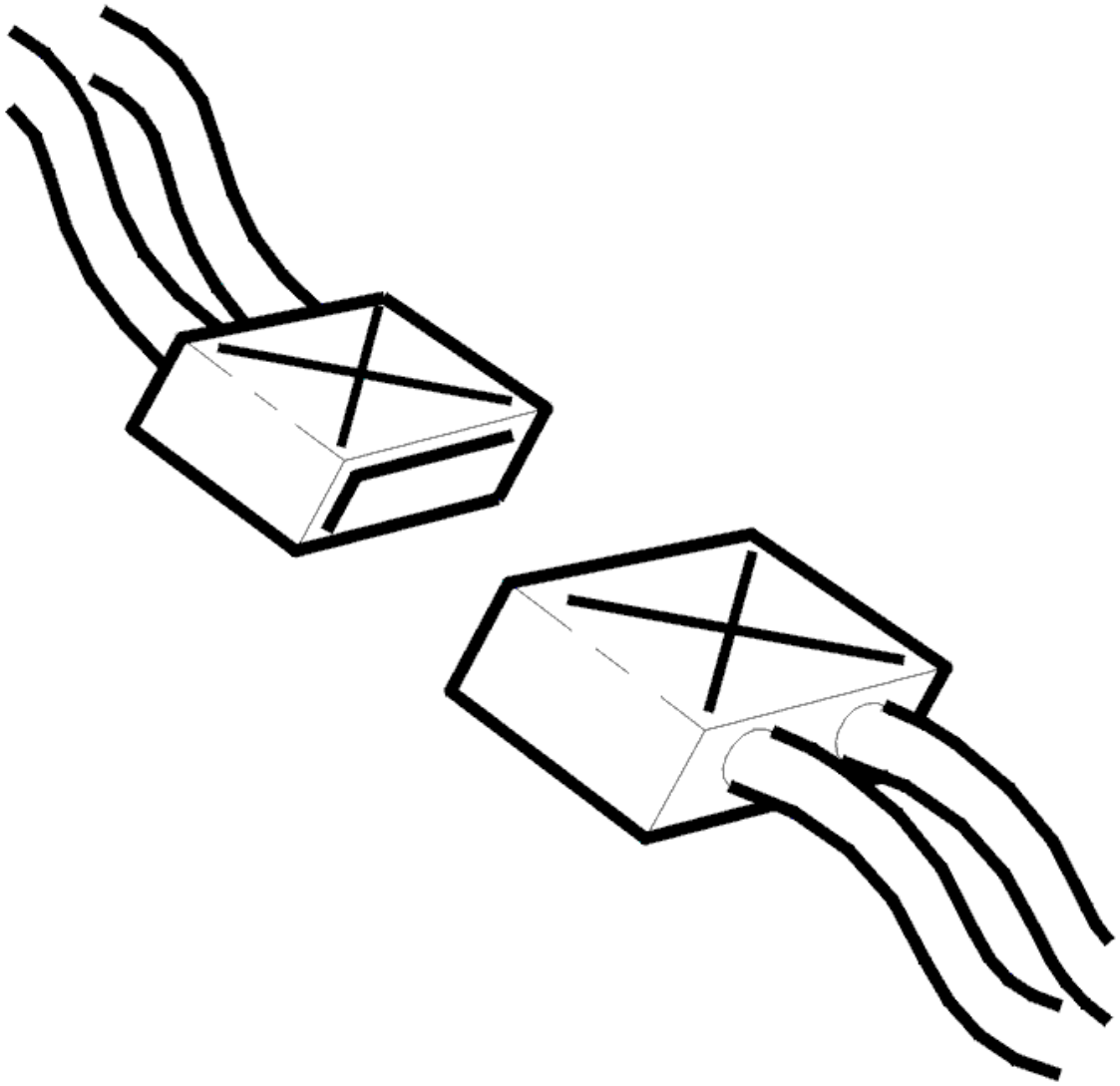

Fig. 143: Identifying Connectors
Courtesy of VOLVO CARS CORPORATION

- Ignition off
- Open the transmission control system.

  Check the wiring between transmission connector terminal #D1 and solenoid SLU terminal #1. Check the wiring between transmission connector terminal #D2 and solenoid SLU terminal #2. Check for a short-circuit to supply voltage. See **SHORT-CIRCUIT TO SUPPLY VOLTAGE. PERMANENT FAULTS** .

  Also check against the other cables in the circuit.

  Check solenoid SLU by measuring the resistance between terminals #1 and #2 on the connector. The resistance must be 5-5.6 ohms at 20°C. Replace the transmission control system if the resistance is incorrect.

Other information:

- To disconnect the transmission connectors, see **CONNECTORS, TRANSMISSION, DISCONNECTING / CONNECTING**
- To replace the transmission control system, see **SOLENOID CONTROL SYSTEM, REPLACING**
- To replace the cable harness for the control system, see **TEMPERATURE SENSOR FLUID, TRANSAXLE, (TFT)**
- For information about signals, see **SIGNAL DESCRIPTION. TRANSMISSION CONTROL MODULE (TCM)** .

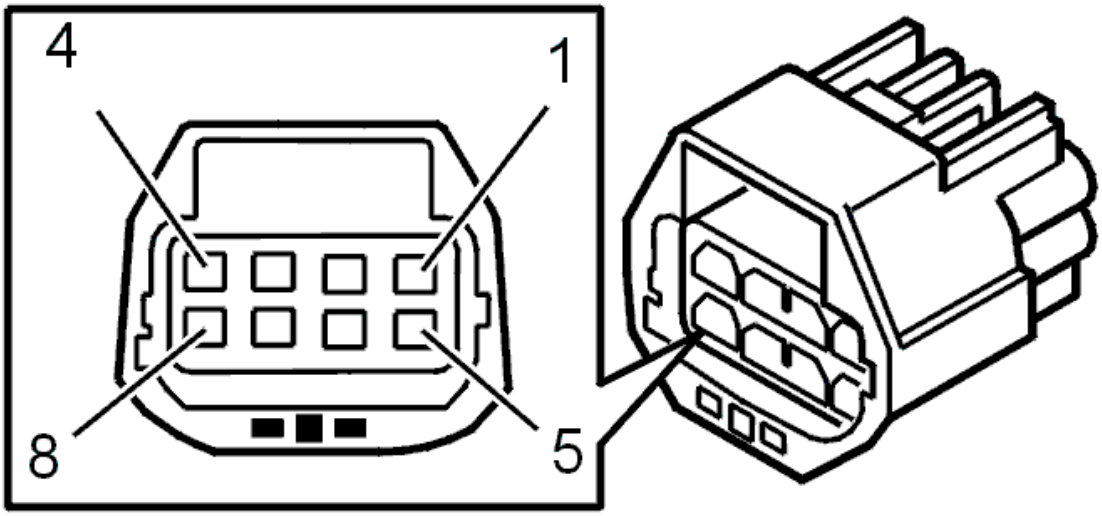

Fig. 144: Identifying 8-Pin Transmission Connector Terminals
Courtesy of VOLVO CARS CORPORATION

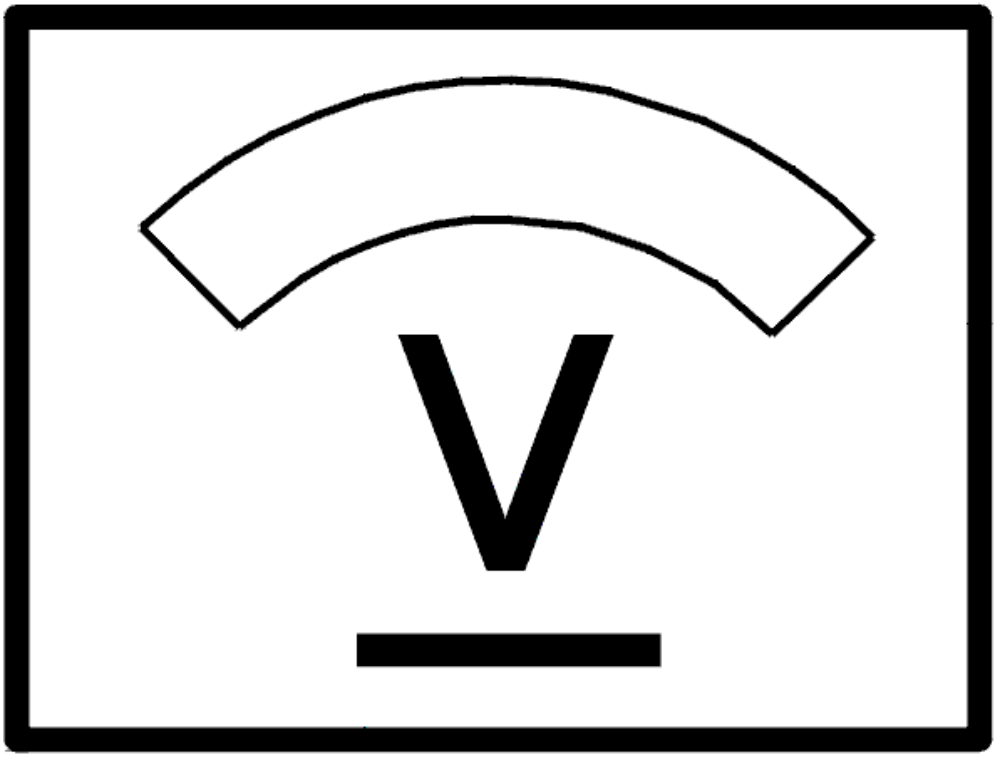

Fig. 145: Identifying Voltage Display
Courtesy of VOLVO CARS CORPORATION

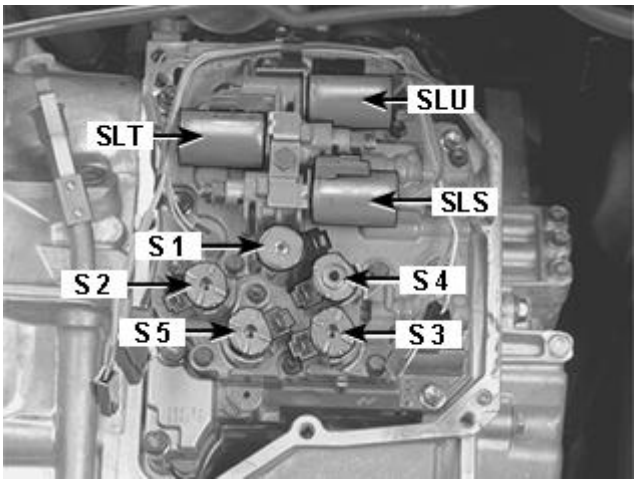

Fig. 146: Identifying S1-S5, SLT, SLU And SLS Solenoids
Courtesy of VOLVO CARS CORPORATION

- **Continue**

Refer to **RESETTING THE ADAPTATION**

RESETTING THE ADAPTATION

RESETTING ADAPTATION AND THE COUNTER FOR "TRANSMISSION OIL CHANGE"

HINT: The transmission has torque controlled adaptive pressure control. Pressure control means that the transmission regulates the pressure itself during each gear shift. This avoids harsh gear shifting. Each gear shift is evaluated by the control module and stored in the memory. This allows for compensation for wear and tear in the transmission and clutch. It is important that the adaptation in the memory is reset after the transmission has been repaired. This is to ensure normal operation. The oil is replaced during repair; the "Transmission oil change" counter must be reset. If the counter is not reset when the fluid is drained and replaced, there is a risk that a diagnostic trouble code (DTC) will be stored in incorrect circumstances.

NOTE: **This applies only if the transmission or one of the components in the transmission have been replaced.**

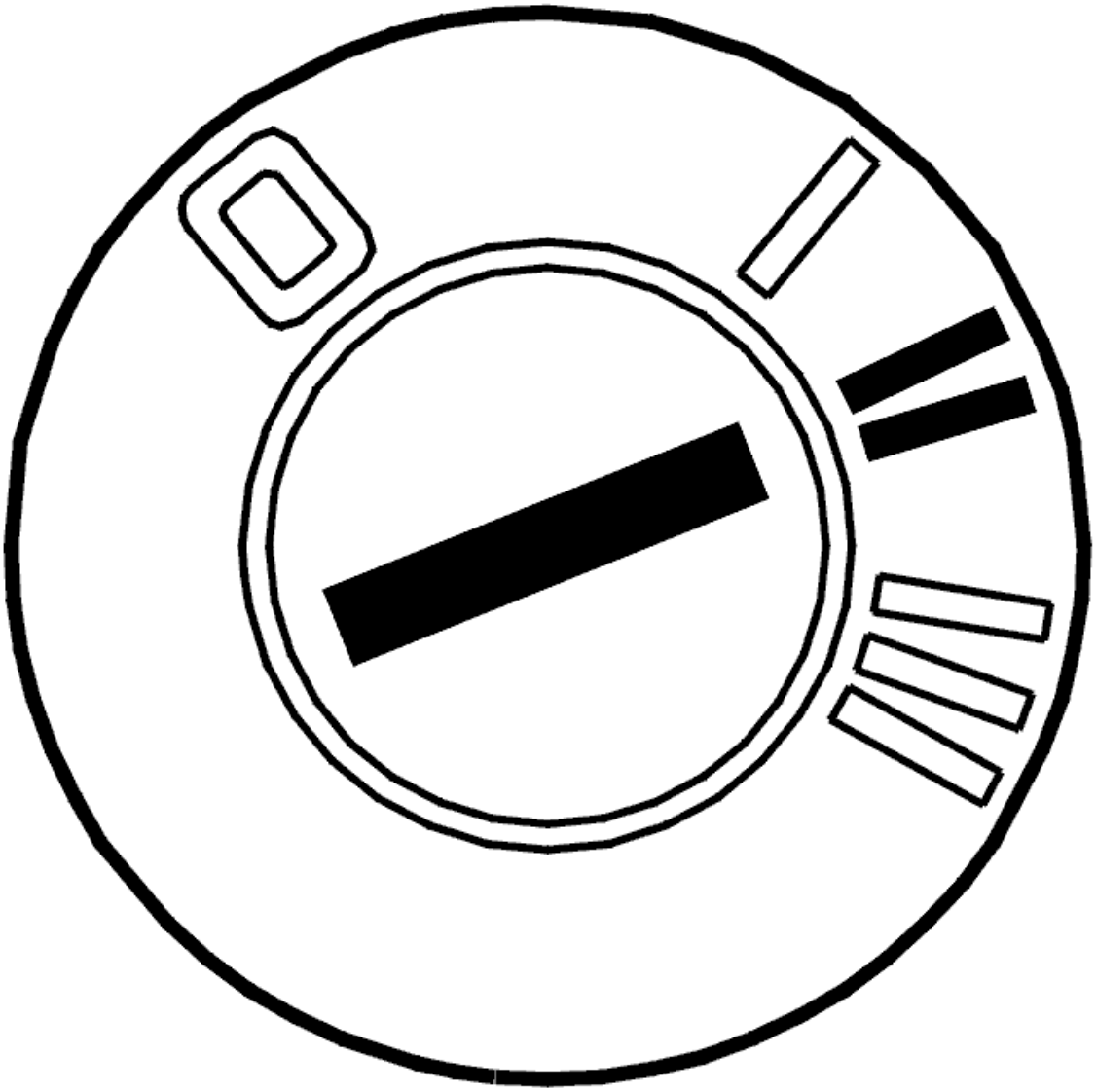

Fig. 147: Identifying Ignition ON
Courtesy of VOLVO CARS CORPORATION

- Ignition on.

  Click on the VCT2000 symbol to reset the adaptation and counter.

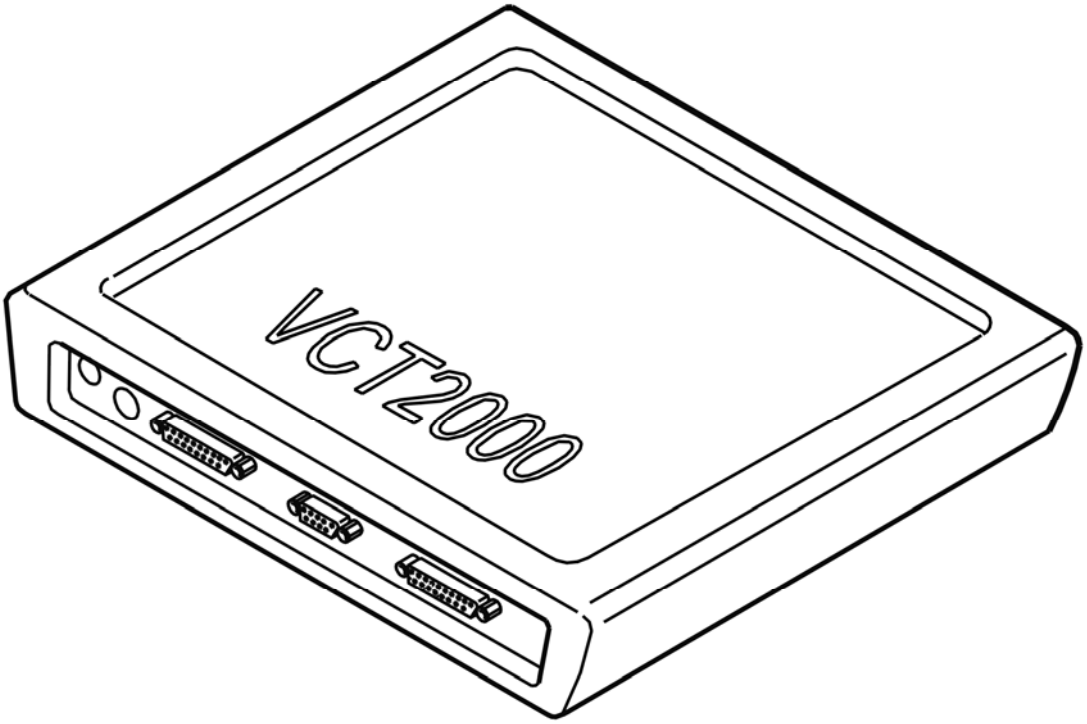

Fig. 148: Identifying VCT2000 Diagnostic Tool Symbol In VIDA
Courtesy of VOLVO CARS CORPORATION

- **Continue**

  Refer to **VERIFICATION**

VERIFICATION

VERIFICATION

HINT: After carrying out the repair, check that the fault has been remedied.

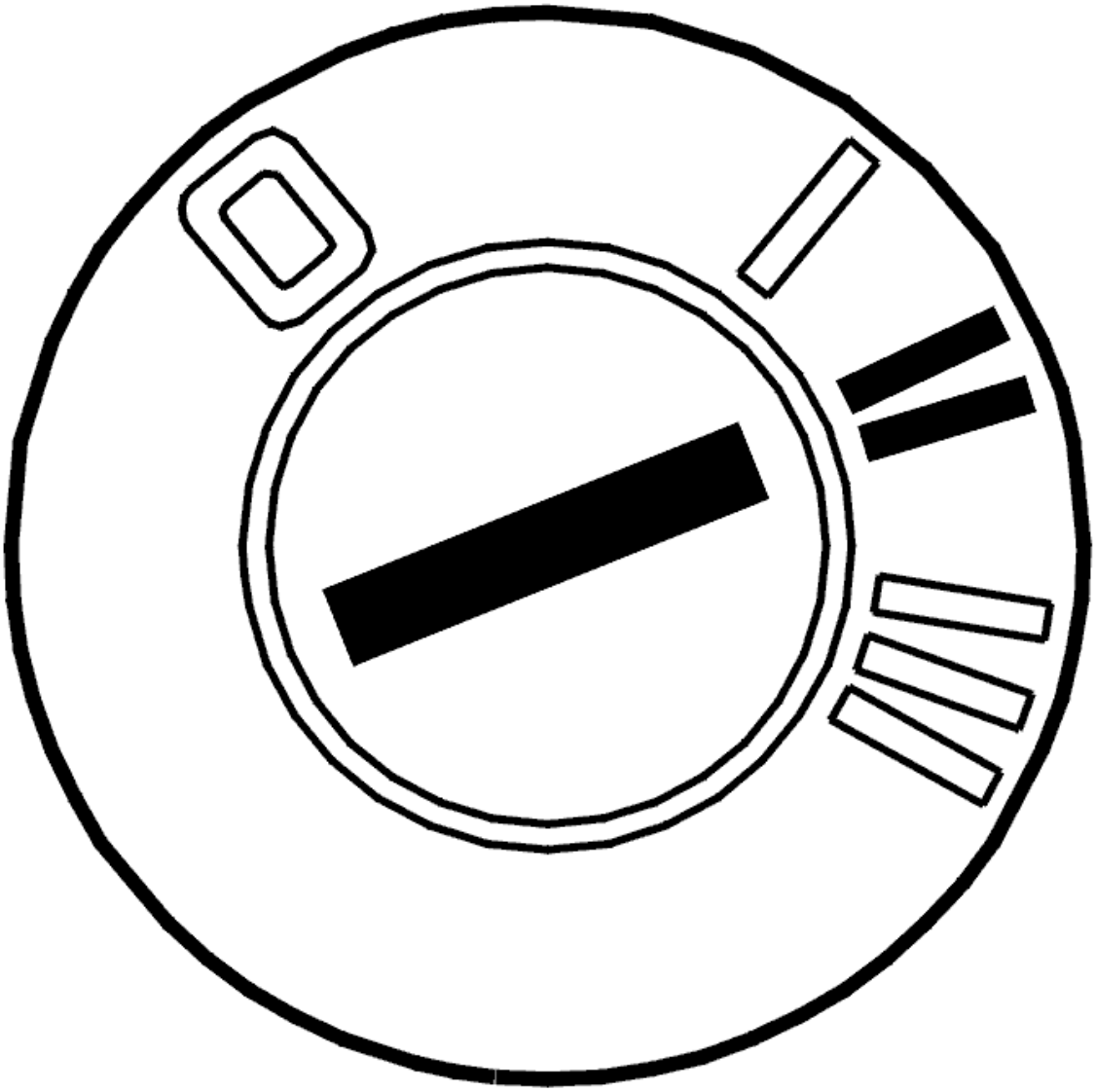

Fig. 149: Identifying Ignition ON
Courtesy of VOLVO CARS CORPORATION

- Ignition on.
- Activate solenoid SLU.

  Read off the current through the solenoid SLU circuit.

  The current should oscillate between 0 and 1000 mA.

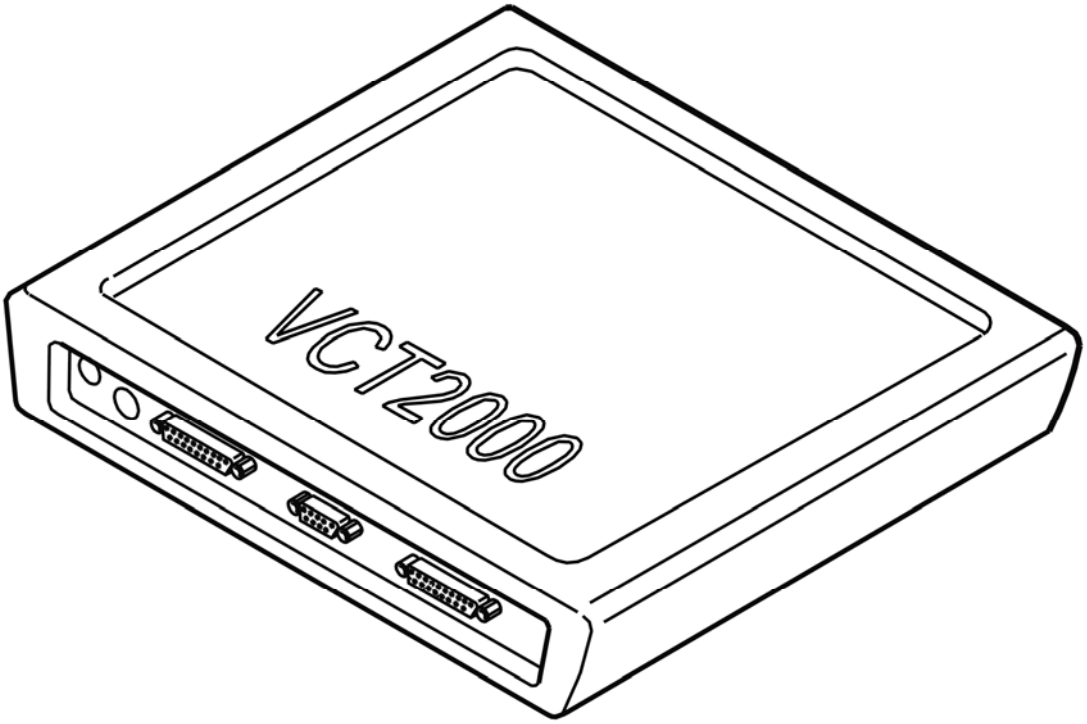

Fig. 150: Identifying VCT2000 Diagnostic Tool Symbol In VIDA
Courtesy of VOLVO CARS CORPORATION

Does the current oscillate?

- **YES**

  VERIFIED: Troubleshooting has been completed.

- **NO**

  Refer to **INFORMATION**

INFORMATION

FAULT-TRACING INFORMATION

The fault should have been detected and remedied. As this is not the case fault-tracing has failed.

Exit fault-tracing for this diagnostic trouble code (DTC) or make another attempt.

TCM-010F: LOCK-UP SOLENOID SLU. SIGNAL MISSING. INTERMITTENT FAULT (AW50/51 AWD; AW55-50/51SN; 2003-2007)

DIAGNOSTIC TROUBLE CODE (DTC) INFORMATION

Condition

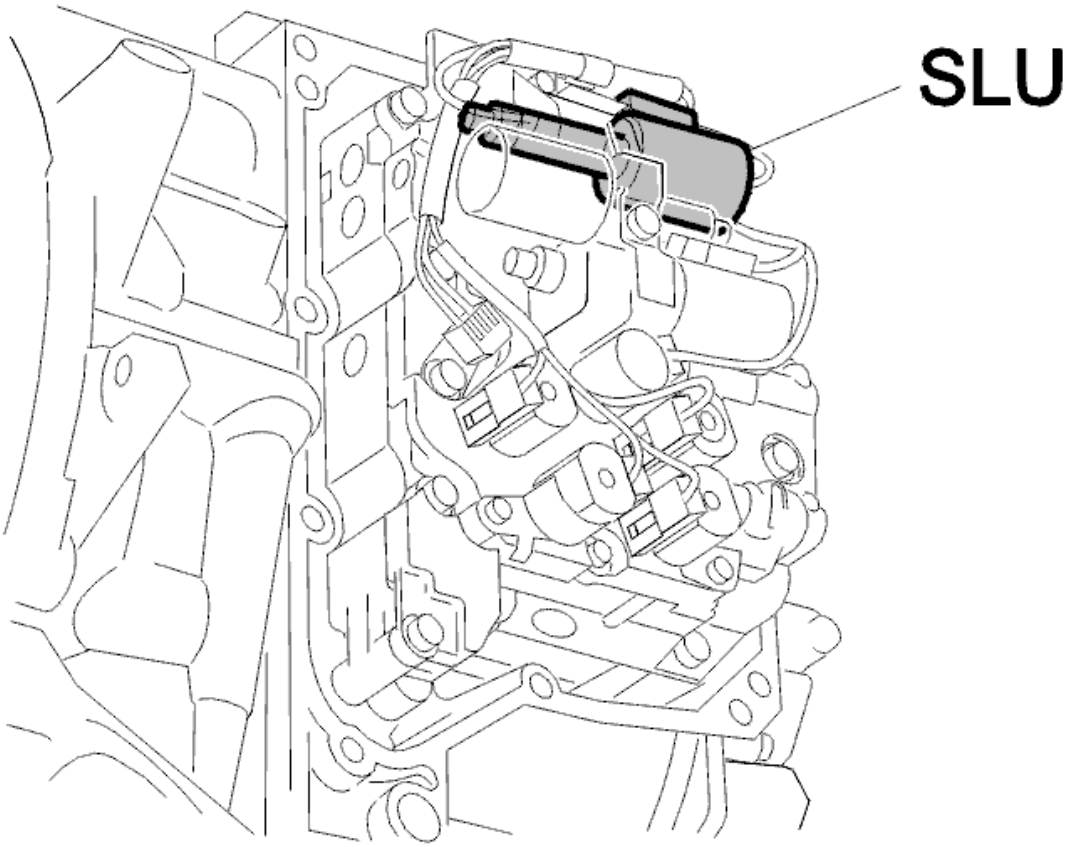

Fig. 151: Identifying Lock-Up Solenoid, SLU
Courtesy of VOLVO CARS CORPORATION

Lock-up solenoid SL controls the transmission lock-up function. Solenoid SLU operates when it receives voltage from the transmission control module (TCM) and is activated under different driving conditions depending on road speed, throttle position and the driving mode selected. Diagnostic trouble code (DTC) TCM-010F is stored if the control module registers an open-circuit in the solenoid SL circuit when the solenoid should be activated. Solenoid SLU cannot then be activated.

Substitute Value

- The transmission control module (TCM) "Emergency mode I" program has been initiated.
- The transmission control module (TCM) does not activate the lock-up solenoid.

Possible Source

- Contact resistance in terminals.
- Open-circuit in the signal cable.
- Defective solenoid.

- Open-circuit in the power ground.
- Defective control module.

Fault symptom[s]

- General orange warning lamp lit.
- No lock-up function.
- Harsh gear shifting.

SIGNAL MISSING. INTERMITTENT FAULT

INTERMITTENT FAULT

Check the transmission control module (TCM) and transmission connectors. Check for contact resistance and oxidation according to **CONTACT RESISTANCE AND OXIDATION** .

Check the wiring between transmission control module (TCM) terminal #A51 (#A51) and transmission connector terminal #D1. Check the wiring between control module terminal #B9 (#A69) and transmission connector terminal #D2. Check for an intermittent open-circuit according to **OPEN-CIRCUIT, INTERMITTENT FAULTS** .

HINT: Check the solenoid SLU by measuring the resistance between terminals #D1 and #D2 on transmission connector D. The resistance should be 5-6 ohms at 20°C.

Remedy as necessary.

Other information:

- To connect the breakout box, see **CONNECTING THE BREAKOUT BOX**
- To disconnect the transmission control module (TCM), see **TRANSMISSION CONTROL MODULE (TCM), REPLACING**
- To disconnect the transmission connectors, see **CONNECTORS, TRANSMISSION, DISCONNECTING / CONNECTING**
- For information about signals, see **SIGNAL DESCRIPTION. TRANSMISSION CONTROL MODULE (TCM)** .

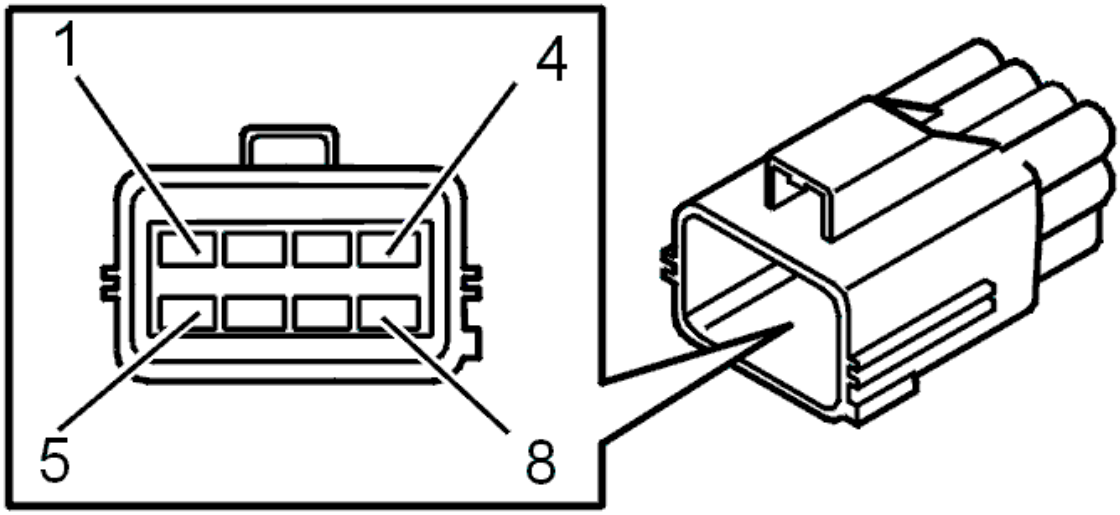

Fig. 152: Identifying Transmission Connector Terminals
Courtesy of VOLVO CARS CORPORATION

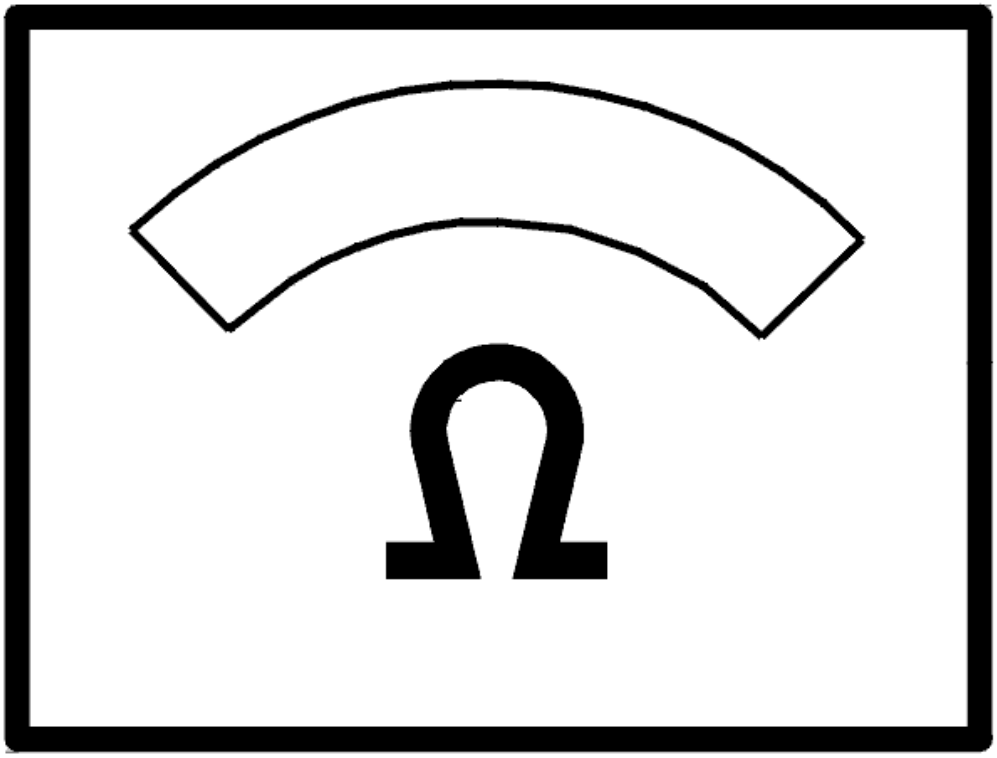

Fig. 153: Identifying Ohms Display
Courtesy of VOLVO CARS CORPORATION

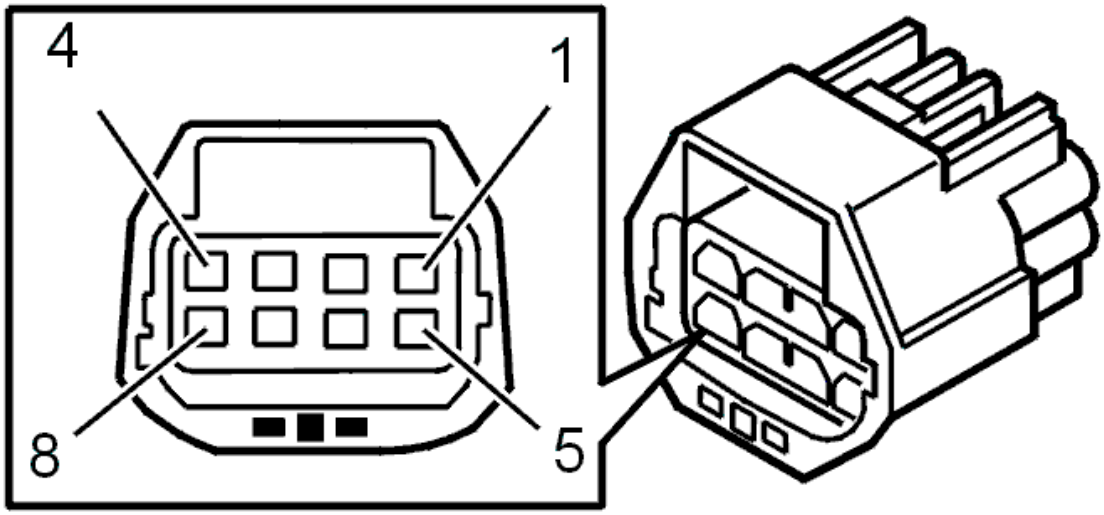

Fig. 154: Identifying 8-Pin Transmission Connector Terminals
Courtesy of VOLVO CARS CORPORATION

- **Continue**

  Refer to **INFORMATION**

INFORMATION

FAULT-TRACING INFORMATION

If the fault is intermittent, do not verify fault-tracing if the fault does not recur.

It is possible to view the information again, or leave fault-tracing for this diagnostic trouble code (DTC).

TCM-010F: LOCK-UP SOLENOID SLU. SIGNAL MISSING. PERMANENT FAULT (AW50/51 AWD; AW55-50/51SN; 2003-2007)

DIAGNOSTIC TROUBLE CODE (DTC) INFORMATION

see **DIAGNOSTIC TROUBLE CODE (DTC) INFORMATION**

SIGNAL MISSING. PERMANENT FAULT

CHECKS

CHECKING LINE PRESSURE SOLENOID SLU

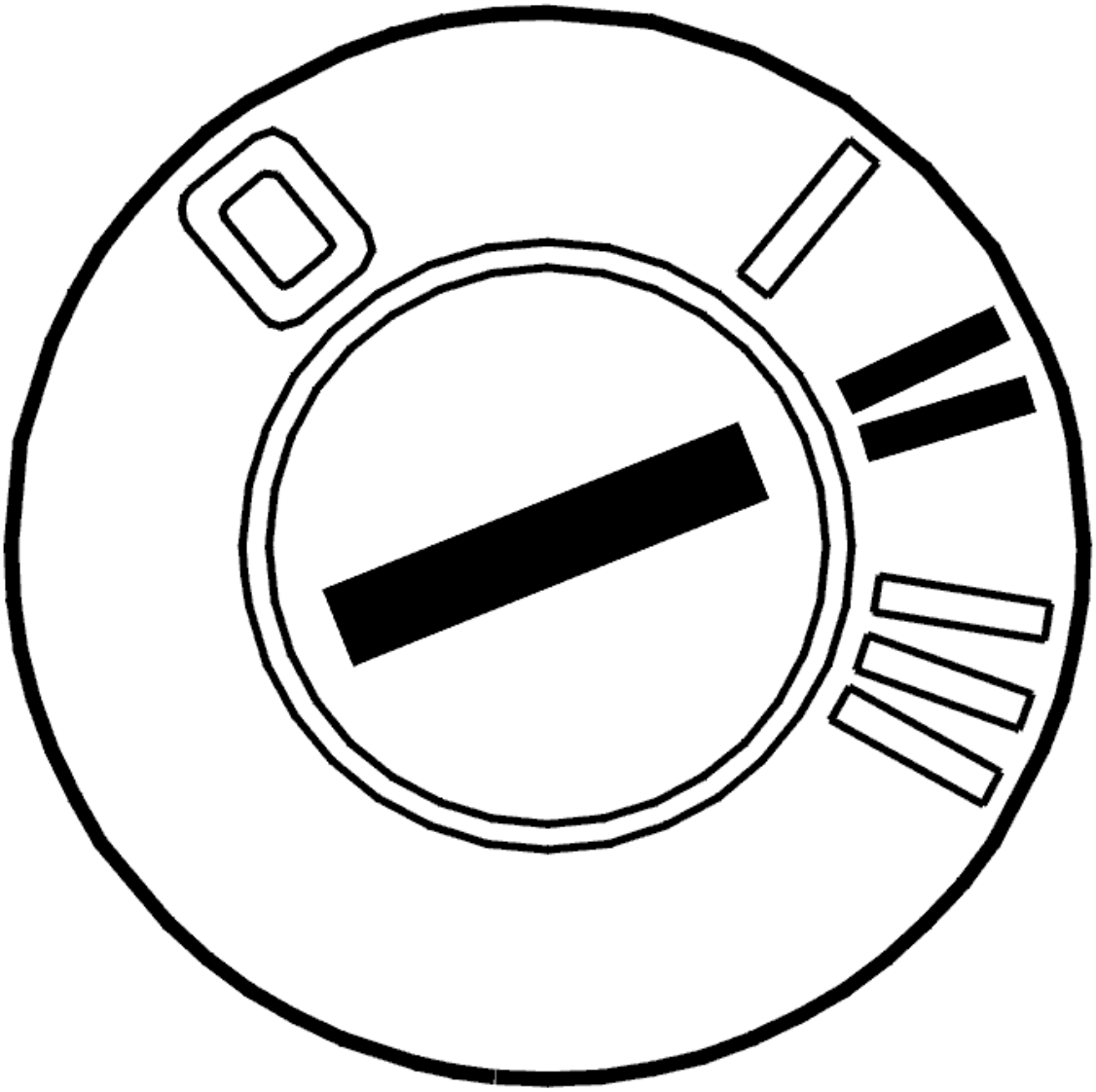

Fig. 155: Identifying Ignition ON
Courtesy of VOLVO CARS CORPORATION

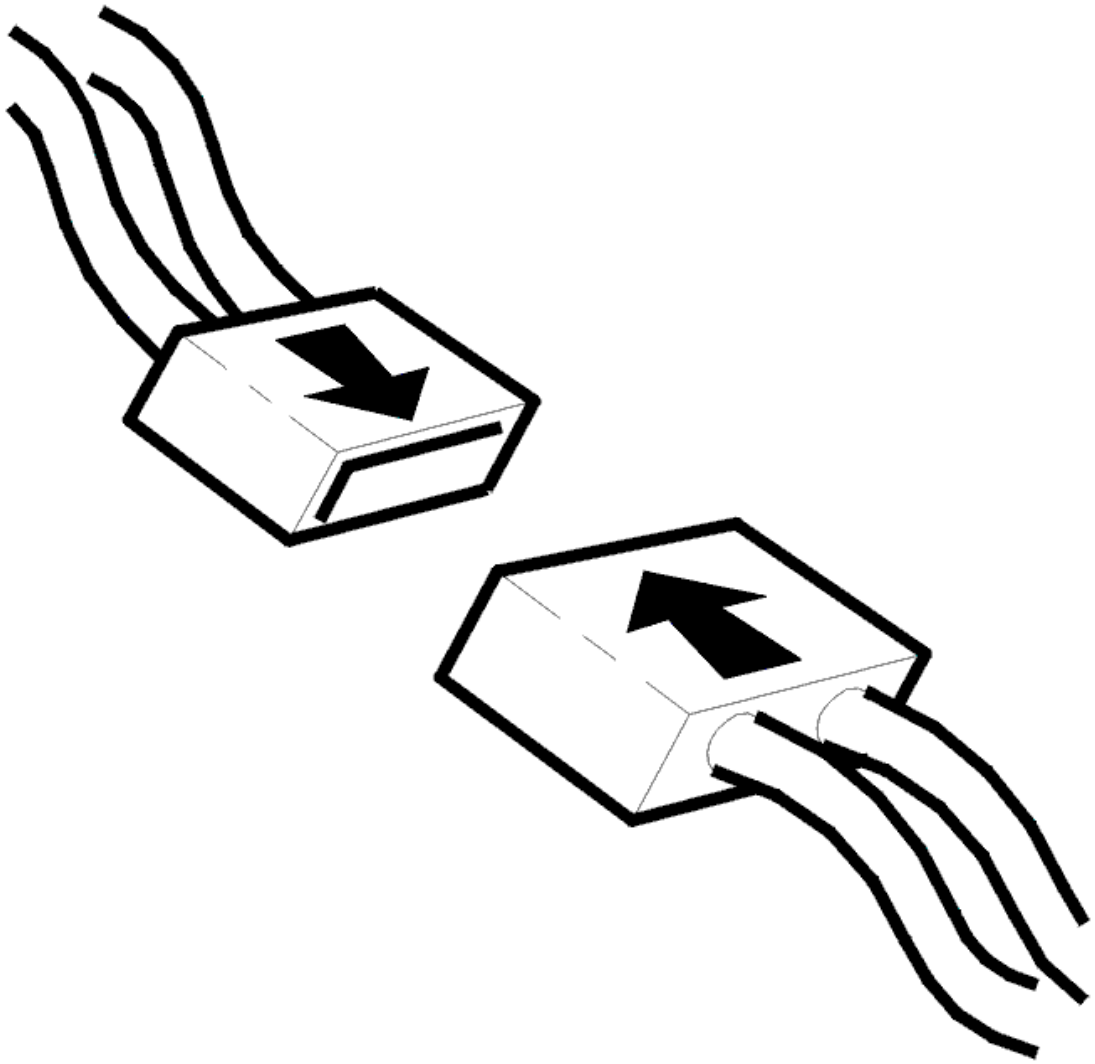

Fig. 156: Identifying Connector(s) Reinstallation
Courtesy of VOLVO CARS CORPORATION

- Ignition off
- Check the transmission control module (TCM) connector and transmission connector D. Check for contact resistance and oxidation. See **CONTACT RESISTANCE AND OXIDATION** . Remedy if necessary
- Reinstall the components, reconnect the connectors etc.
- Ignition on
- Activate solenoid SLU.

  Read off the current through the solenoid SLU circuit.

  The current should oscillate between 0 and 1000 mA.

Other information:

- To disconnect the transmission connectors, see **CONNECTORS, TRANSMISSION, DISCONNECTING / CONNECTING**
- To disconnect the control module, see **TRANSMISSION CONTROL MODULE (TCM), REPLACING** .

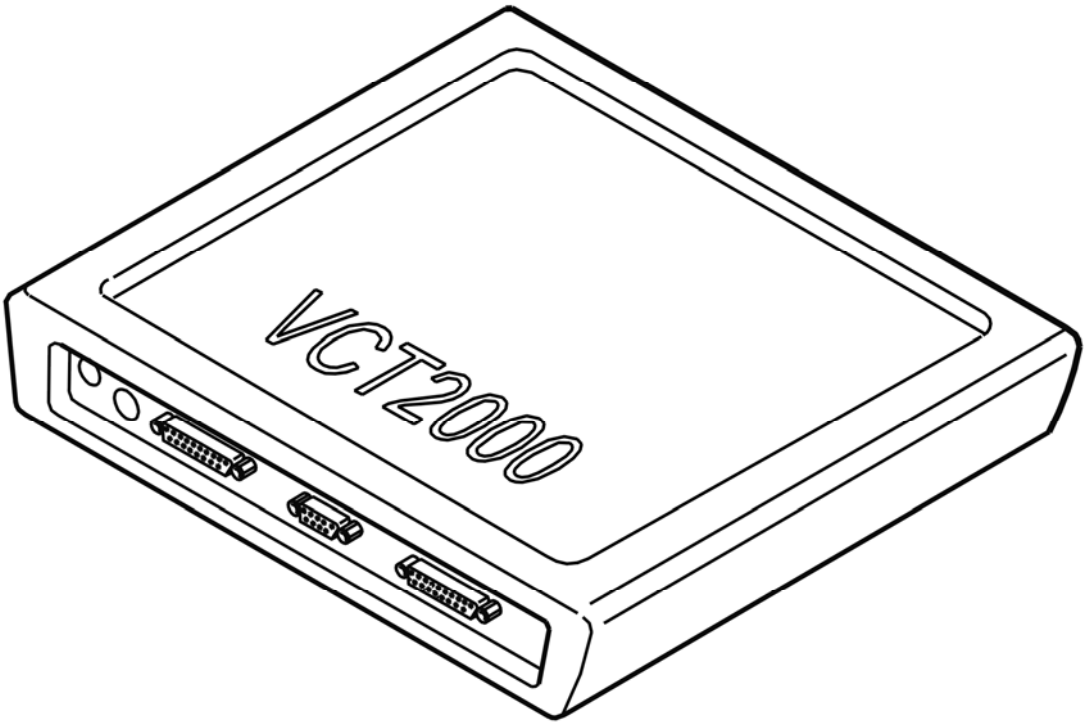

Fig. 157: Identifying VCT2000 Diagnostic Tool Symbol In VIDA
Courtesy of VOLVO CARS CORPORATION

Does the current oscillate?

- **YES**

  OKAY: Troubleshooting has been completed.

- **NO**

  Refer to **CHECKING RESISTANCE**

CHECKING RESISTANCE

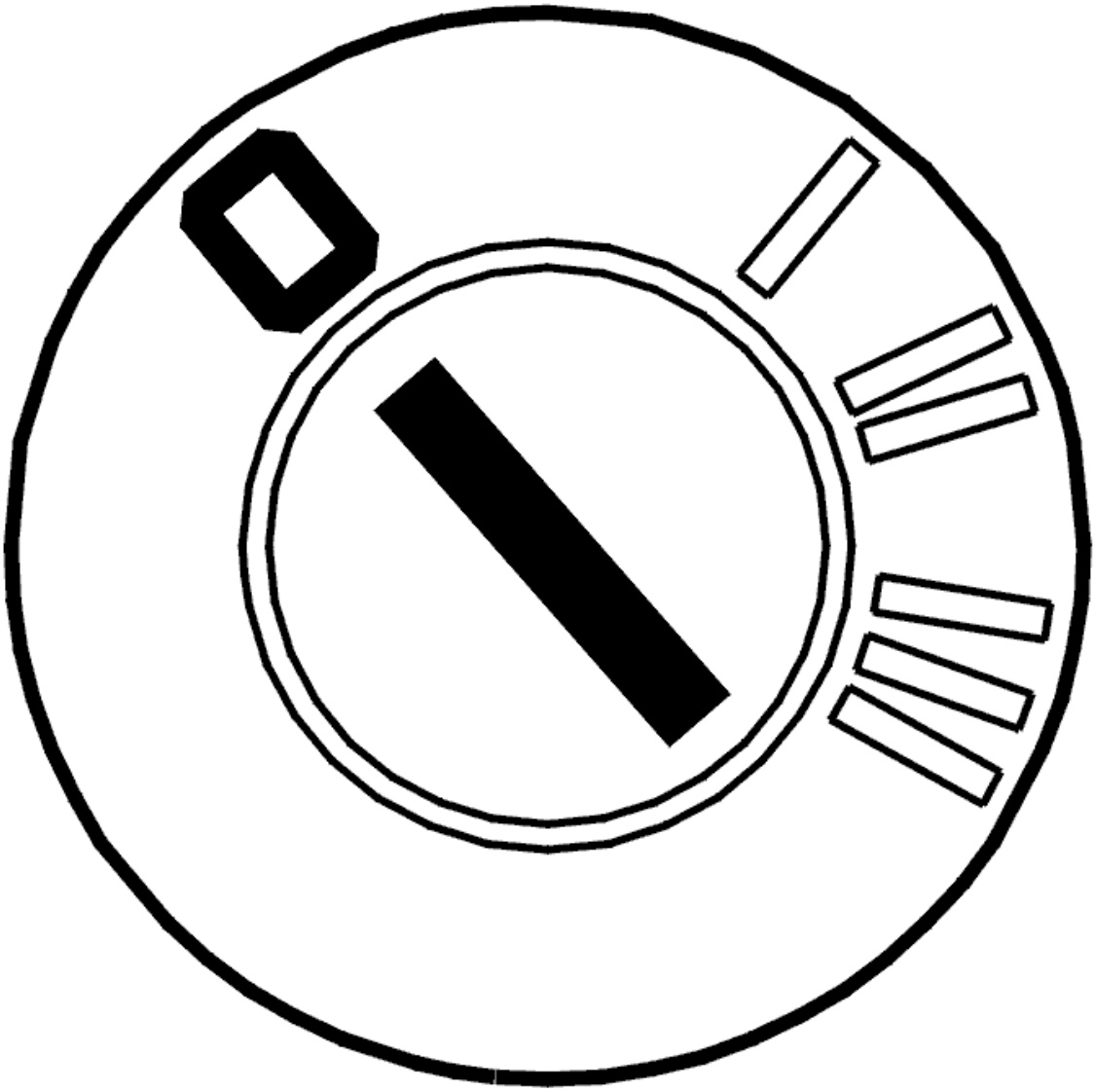

Fig. 158: Identifying Ignition OFF
Courtesy of VOLVO CARS CORPORATION

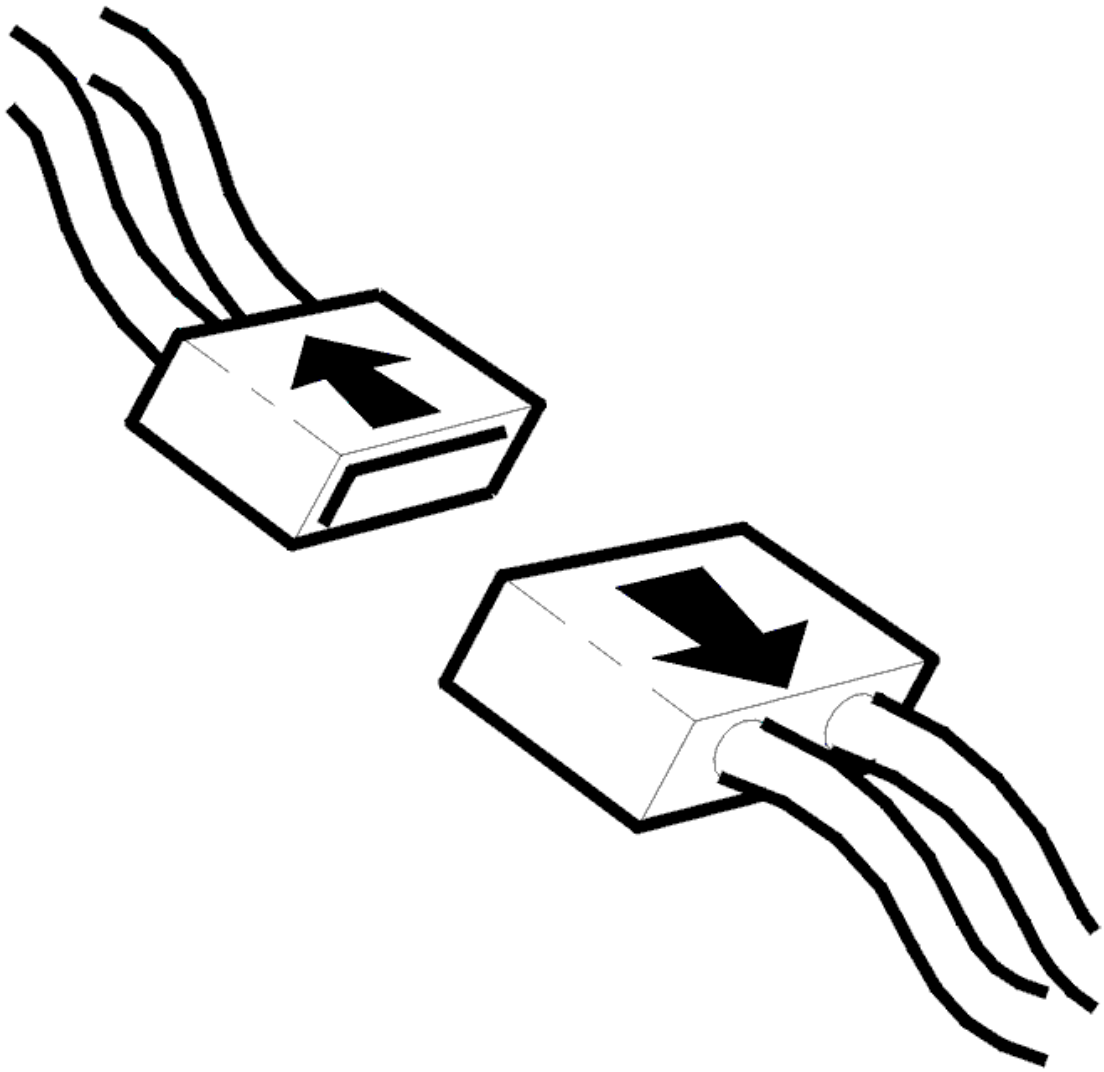

Fig. 159: Identifying Connector(s) Disconnected
Courtesy of VOLVO CARS CORPORATION

- Ignition off
- Disconnect transmission connector D.

  Check the circuit for solenoid SLU. Measure the resistance between transmission connector D terminals #D1 and #D2.

  The ohmmeter should read 5-5.6 ohms (at 20°C).

  Other information:

  - To disconnect the transmission connectors, see **CONNECTORS, TRANSMISSION, DISCONNECTING / CONNECTING**

- For information about signals, see **SIGNAL DESCRIPTION. TRANSMISSION CONTROL MODULE (TCM)** .

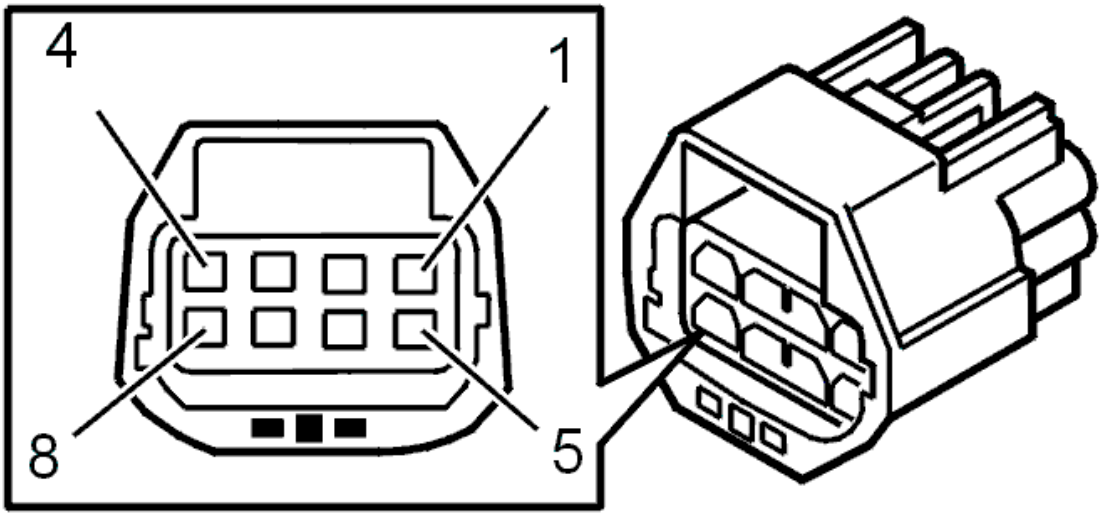

Fig. 160: Identifying 8-Pin Transmission Connector Terminals
Courtesy of VOLVO CARS CORPORATION

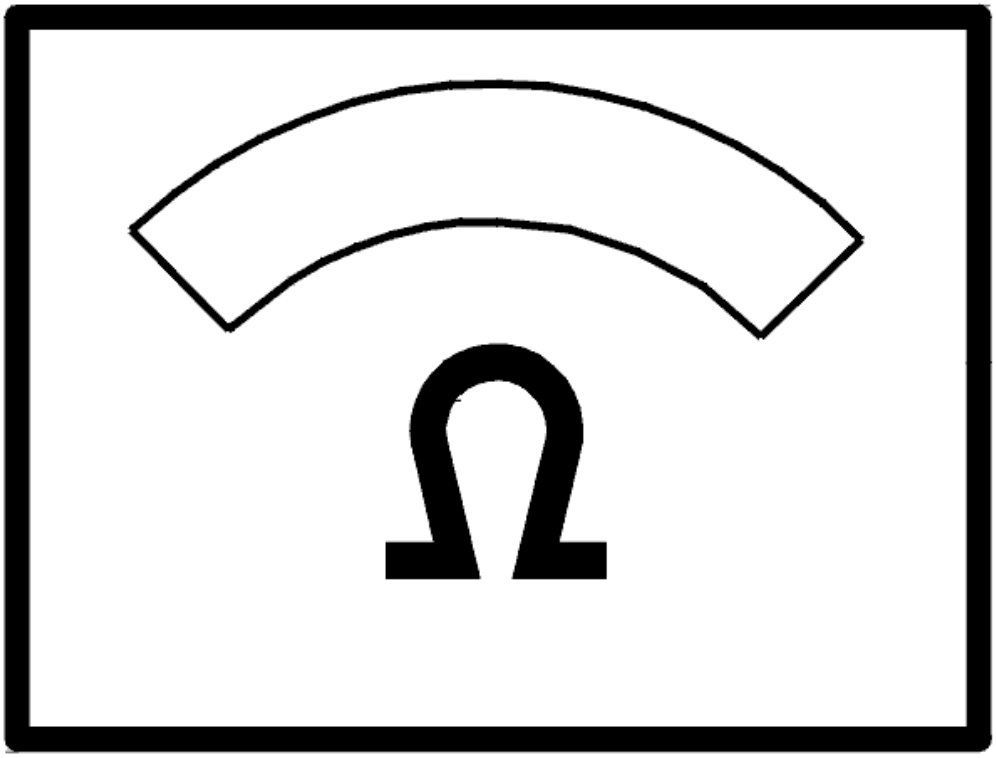

Fig. 161: Identifying Ohms Display
Courtesy of VOLVO CARS CORPORATION

Was the resistance OK?

- **YES**

  Refer to **CHECKING THE WIRING**

- **NO**

  Refer to **CHECKING THE WIRING AND COMPONENT**

CHECKING THE WIRING

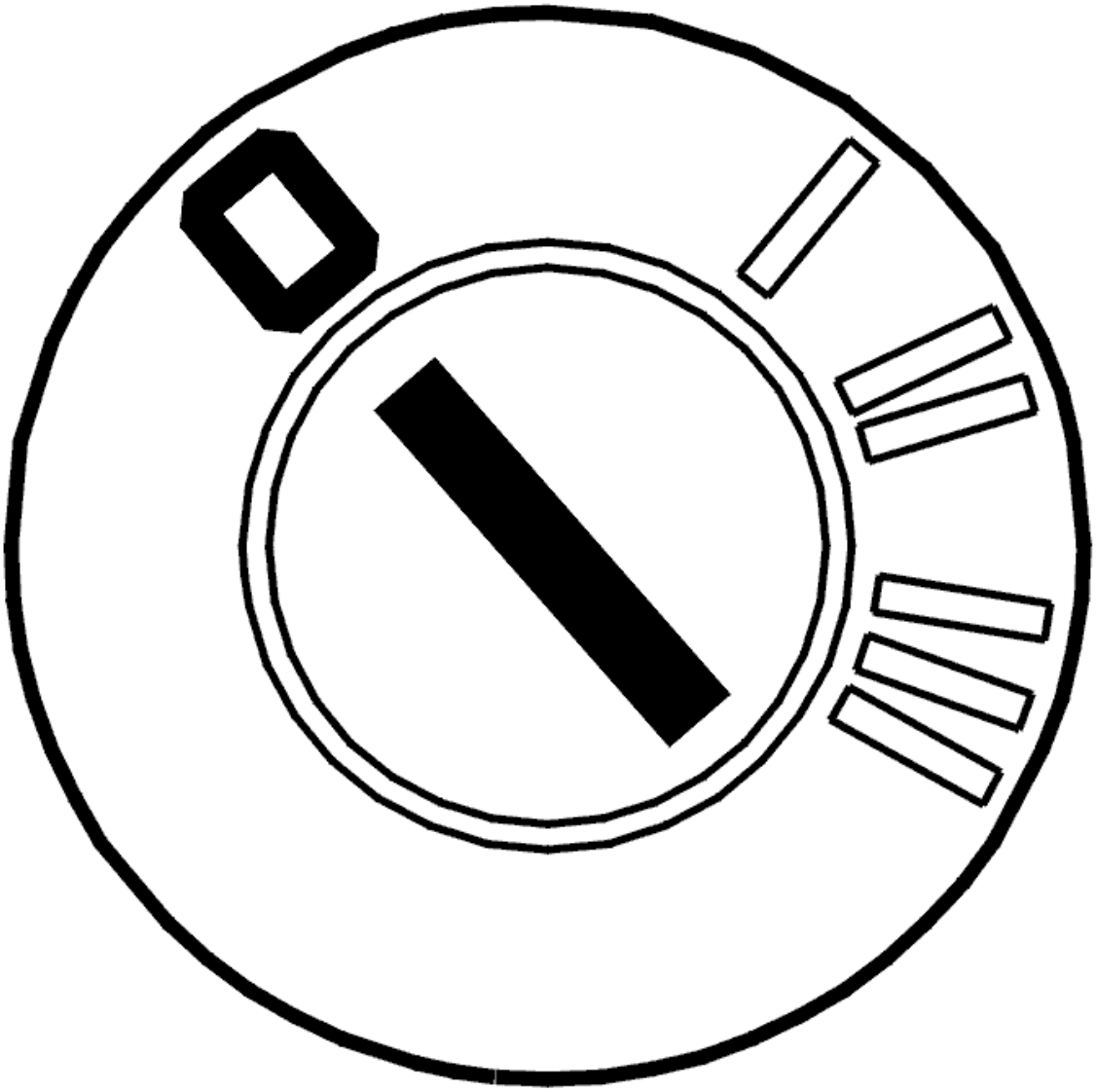

Fig. 162: Identifying Ignition OFF
Courtesy of VOLVO CARS CORPORATION

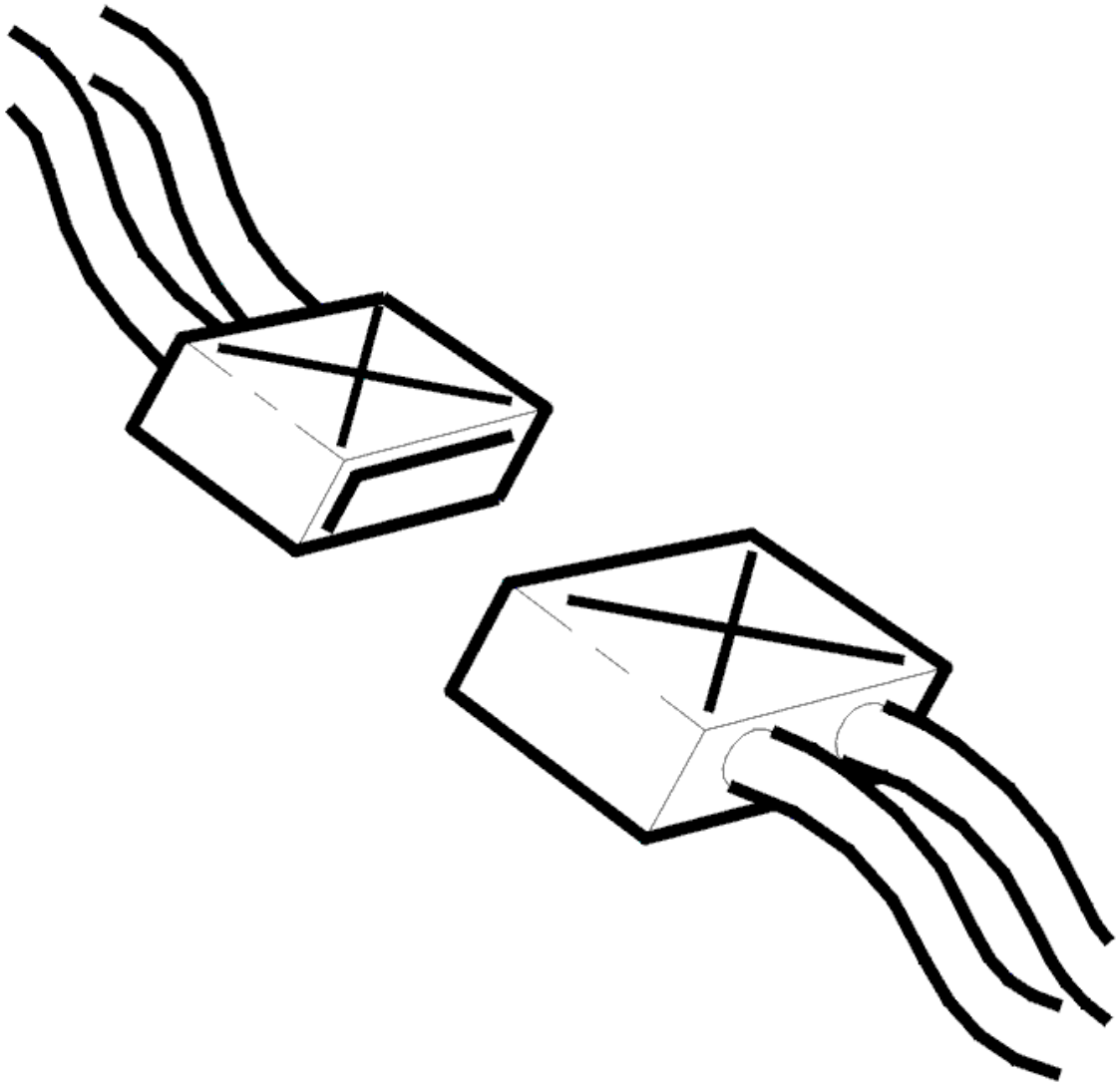

Fig. 163: Identifying Connectors
Courtesy of VOLVO CARS CORPORATION

- Ignition off
- The breakout box connected
- Transmission connector D disconnected.

  Check the cable between control module terminal #A51 (#A51) and transmission connector terminal #D1 (control module side). Check for an open-circuit. See **OPEN-CIRCUIT, PERMANENT FAULTS** .

  Check the cable between control module terminal #B9 (#A69) and transmission connector #D2 (control module side). Check for an open-circuit. See **OPEN-CIRCUIT, PERMANENT FAULTS** .

  Remedy as necessary.

Other information:

- To connect the breakout box, see **CONNECTING THE BREAKOUT BOX**
- To disconnect the transmission connectors, see **CONNECTORS, TRANSMISSION, DISCONNECTING / CONNECTING**
- For information about signals, see **SIGNAL DESCRIPTION. TRANSMISSION CONTROL MODULE (TCM)** .

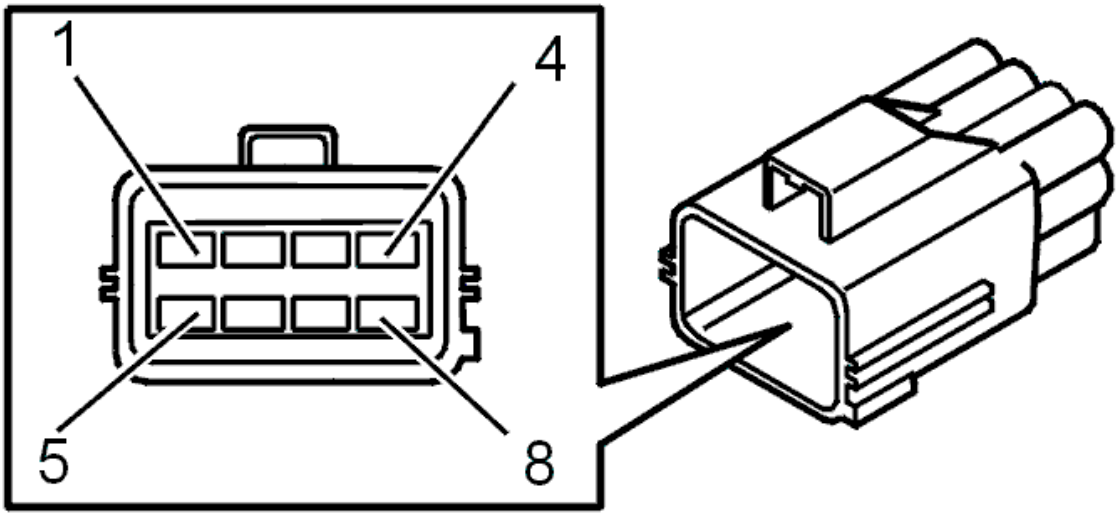

Fig. 164: Identifying Transmission Connector Terminals
Courtesy of VOLVO CARS CORPORATION

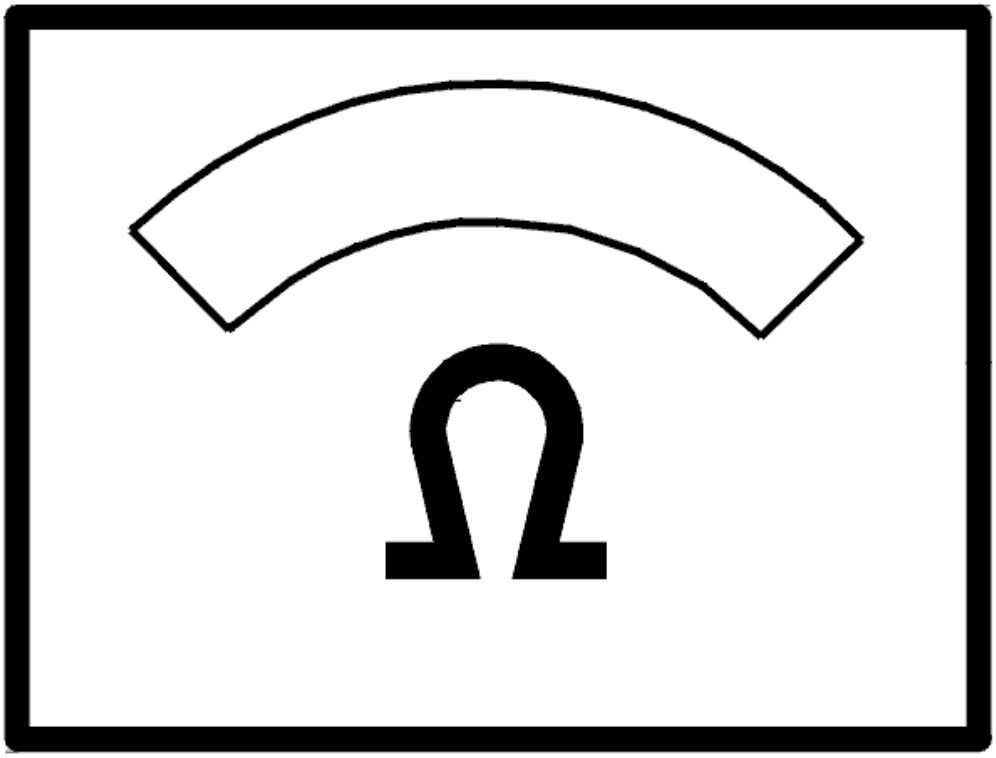

Fig. 165: Identifying Ohms Display
Courtesy of VOLVO CARS CORPORATION

Was a fault found in the wiring?

- **YES**

  Refer to **VERIFICATION**

- **NO**

  Refer to **CHECKING THE CONTROL MODULE**

CHECKING THE CONTROL MODULE

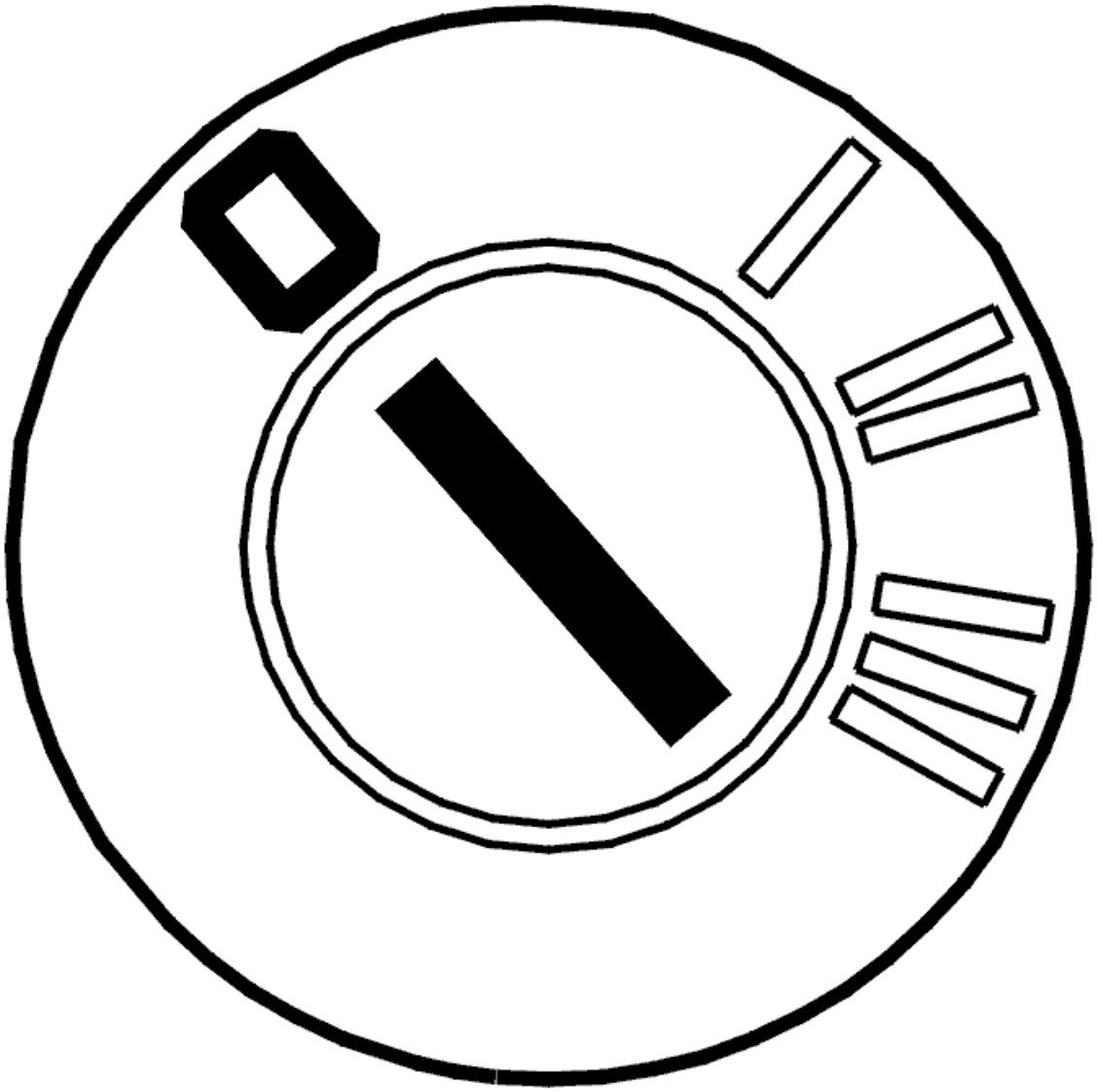

Fig. 166: Identifying Ignition OFF
Courtesy of VOLVO CARS CORPORATION

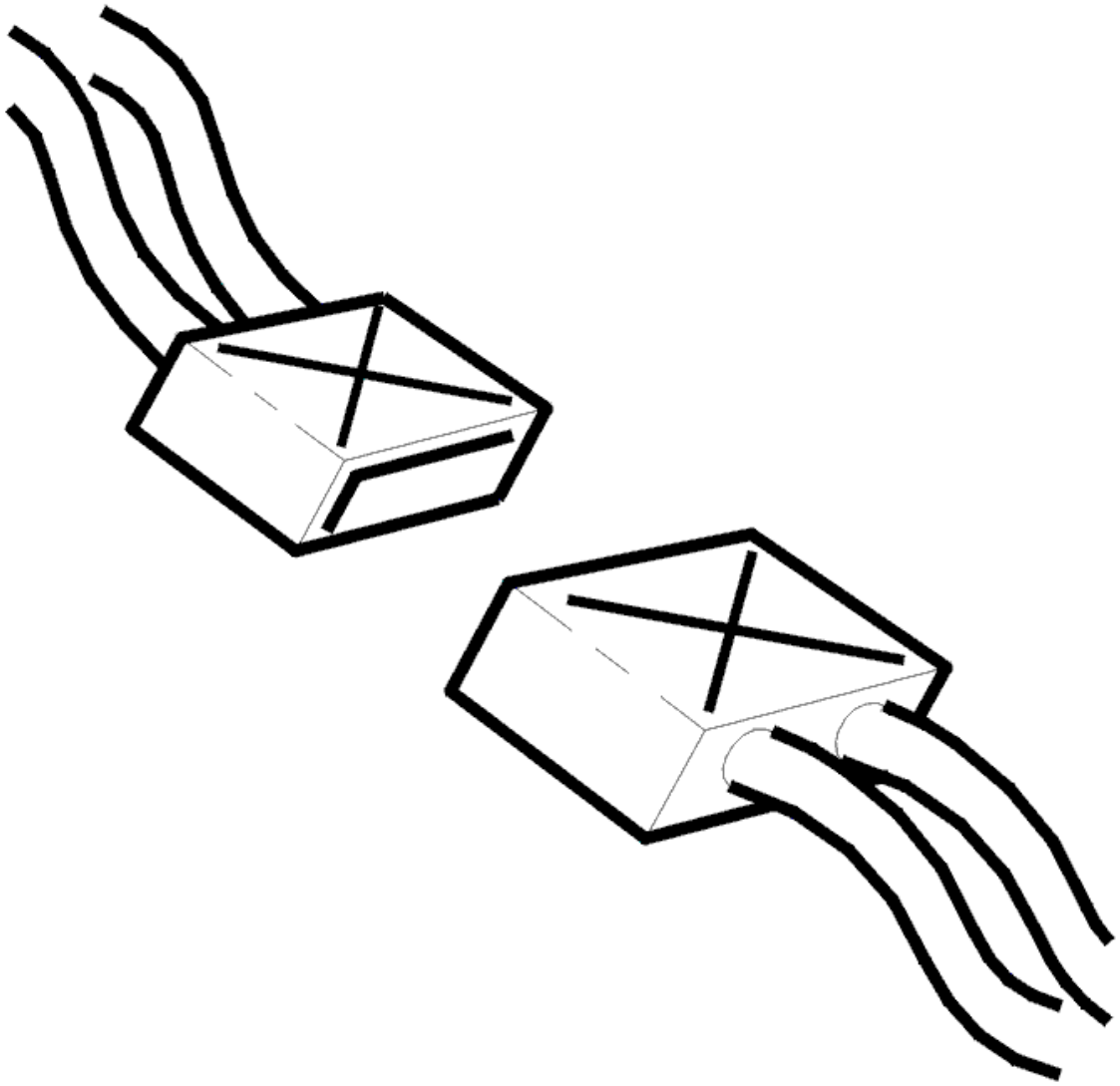

Fig. 167: Identifying Connectors
Courtesy of VOLVO CARS CORPORATION

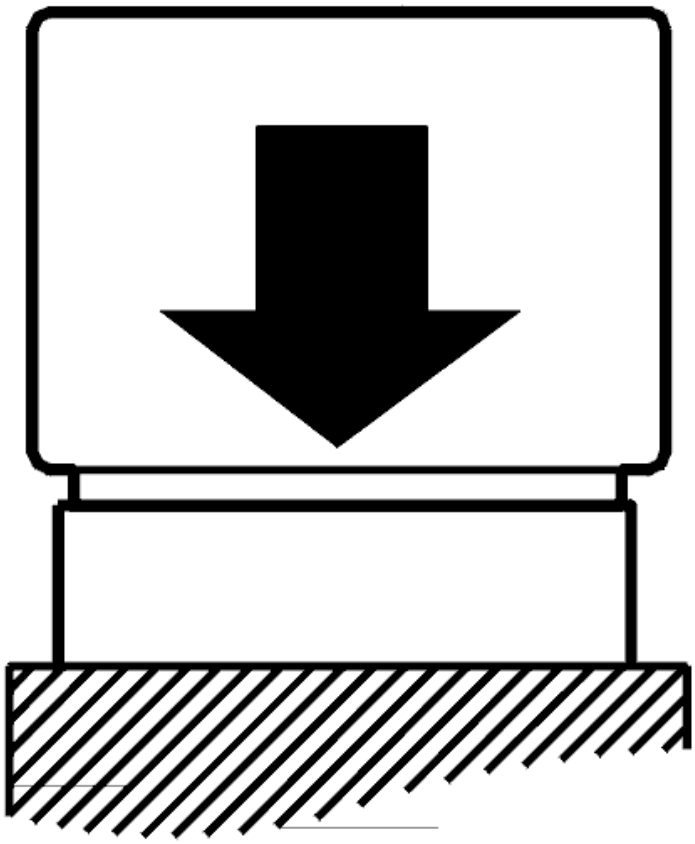

Fig. 168: Identifying Control Module Connected
Courtesy of VOLVO CARS CORPORATION

- Ignition off
- The breakout box connected
- Connect the control module.
- Transmission connector D disconnected.

Check the transmission control module (TCM) by measuring the resistance between terminals #A51 (#A51) and #B9 (#A69) on the breakout box. The resistance must be approximately 9 kohms.

NOTE: **When removing the transmission connector, the control module may store diagnostic trouble codes (DTCs) for the gear-shift position sensor, the shift solenoids, the temperature sensor etc.**

Try a new control module if the resistance is infinite.

Other information:

- To disconnect the transmission connectors, see **CONNECTORS, TRANSMISSION, DISCONNECTING / CONNECTING**
- To replace the control module, see **TRANSMISSION CONTROL MODULE (TCM), REPLACING**
- For information about signals, see **SIGNAL DESCRIPTION. TRANSMISSION CONTROL MODULE (TCM)** .

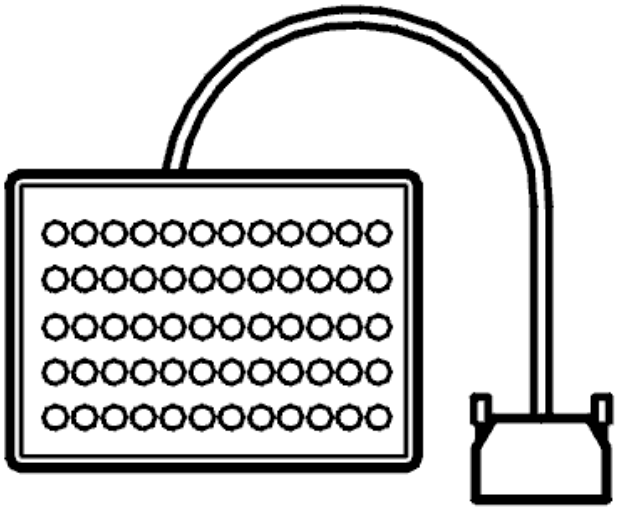

Fig. 169: Identifying Breakout Box
Courtesy of VOLVO CARS CORPORATION

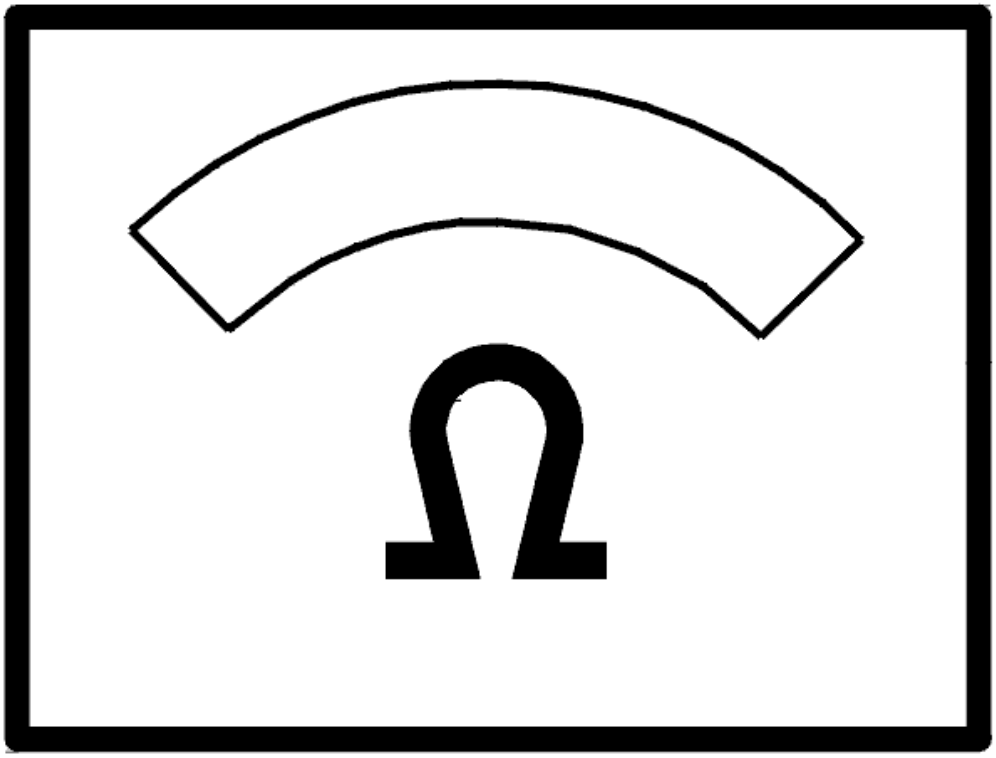

Fig. 170: Identifying Ohms Display
Courtesy of VOLVO CARS CORPORATION

Was the resistance OK?

- **YES**

  FAULT NOT FOUND: Troubleshooting has been completed.

- **NO**

  Refer to **VERIFICATION**

CHECKING THE WIRING AND COMPONENT

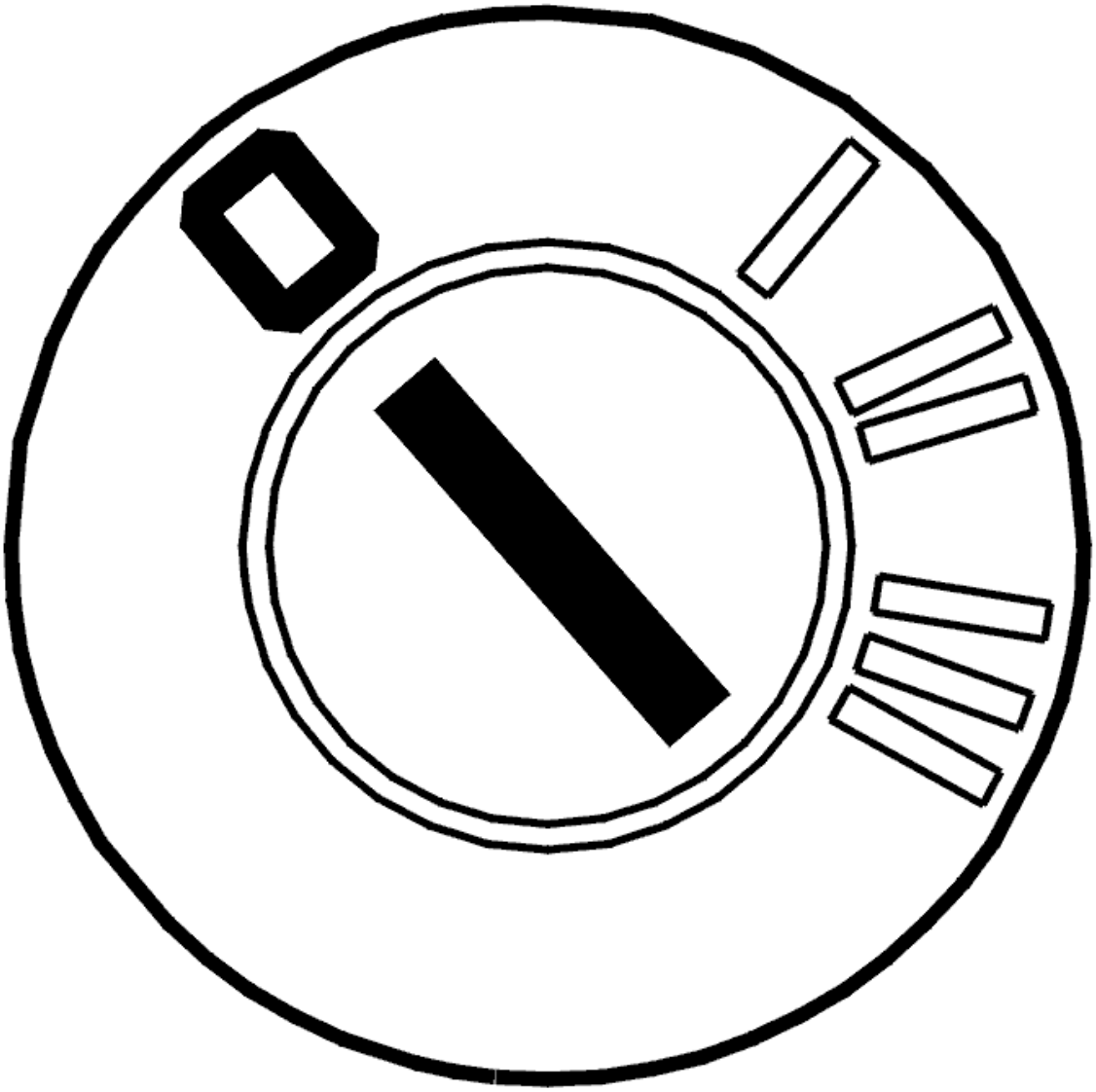

Fig. 171: Identifying Ignition OFF
Courtesy of VOLVO CARS CORPORATION

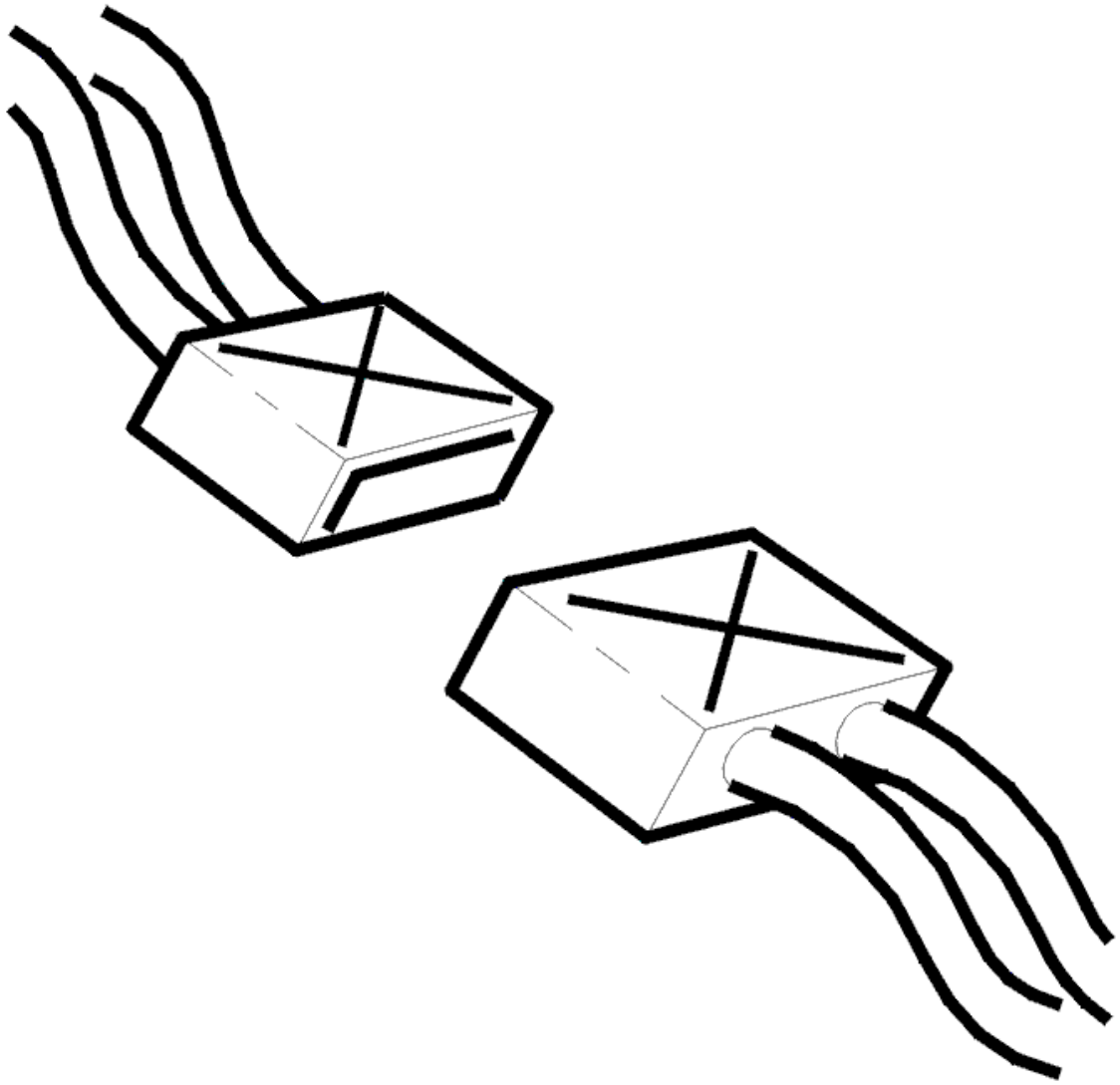

Fig. 172: Identifying Connectors
Courtesy of VOLVO CARS CORPORATION

- Ignition off
- Open the transmission control system.

  Check the wiring between transmission connector terminal #D1 and solenoid SLU terminal #1. Check the wiring between transmission connector terminal #D2 and solenoid SLU terminal #2. Check for an open-circuit. See **OPEN-CIRCUIT, PERMANENT FAULTS** .

  Also check against the other cables in the circuit.

  Check the solenoid SLU by measuring the resistance between terminals #1 and #2. The resistance should be 5-5.6 ohms at 20°C. Replace the transmission control system if the resistance is incorrect.

  Other information:

- To disconnect the transmission connectors, see **CONNECTORS, TRANSMISSION, DISCONNECTING / CONNECTING**
- To replace the transmission control system, see **SOLENOID CONTROL SYSTEM, REPLACING**
- To replace the cable harness for the control system, see **TEMPERATURE SENSOR FLUID, TRANSAXLE, (TFT)**
- For information about signals, see **SIGNAL DESCRIPTION. TRANSMISSION CONTROL MODULE (TCM)** .

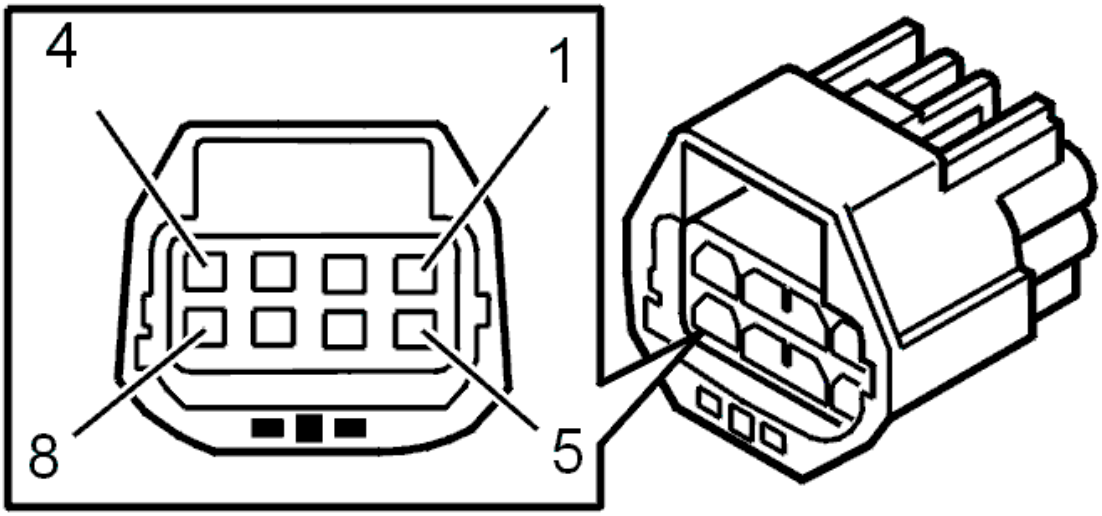

Fig. 173: Identifying 8-Pin Transmission Connector Terminals
Courtesy of VOLVO CARS CORPORATION

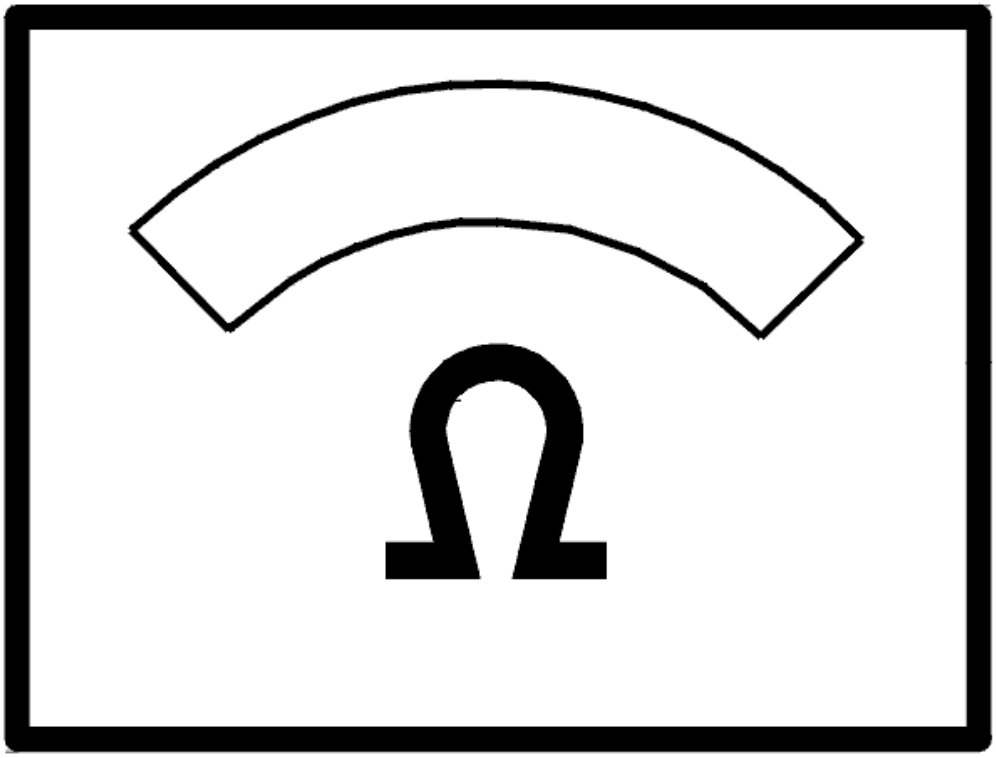

Fig. 174: Identifying Ohms Display
Courtesy of VOLVO CARS CORPORATION

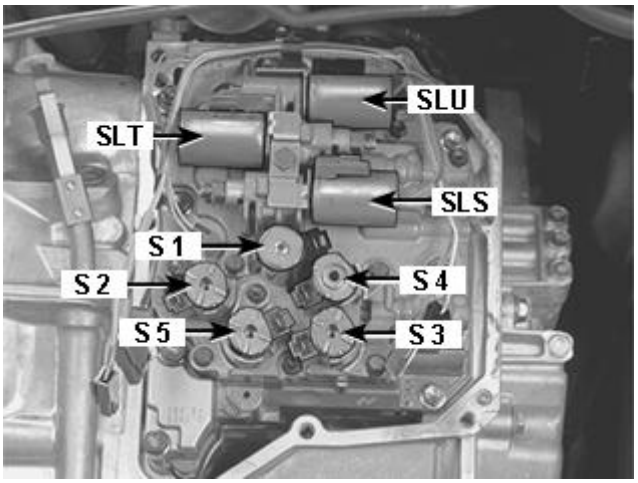

Fig. 175: Identifying S1-S5, SLT, SLU And SLS Solenoids
Courtesy of VOLVO CARS CORPORATION

- **Continue**

Refer to **RESETTING THE ADAPTATION**

RESETTING THE ADAPTATION

RESETTING ADAPTATION AND THE COUNTER FOR "TRANSMISSION OIL CHANGE"

HINT: The transmission has torque controlled adaptive pressure control. Pressure control means that the transmission regulates the pressure itself during each gear shift. This avoids harsh gear shifting. Each gear shift is evaluated by the control module and stored in the memory. This allows for compensation for wear and tear in the transmission and clutch. It is important that the adaptation in the memory is reset after the transmission has been repaired. This is to ensure normal operation. The oil is replaced during repair; the "Transmission oil change" counter must be reset. If the counter is not reset when the fluid is drained and replaced, there is a risk that a diagnostic trouble code (DTC) will be stored in incorrect circumstances.

NOTE: **This applies only if the transmission or one of the components in the transmission have been replaced.**

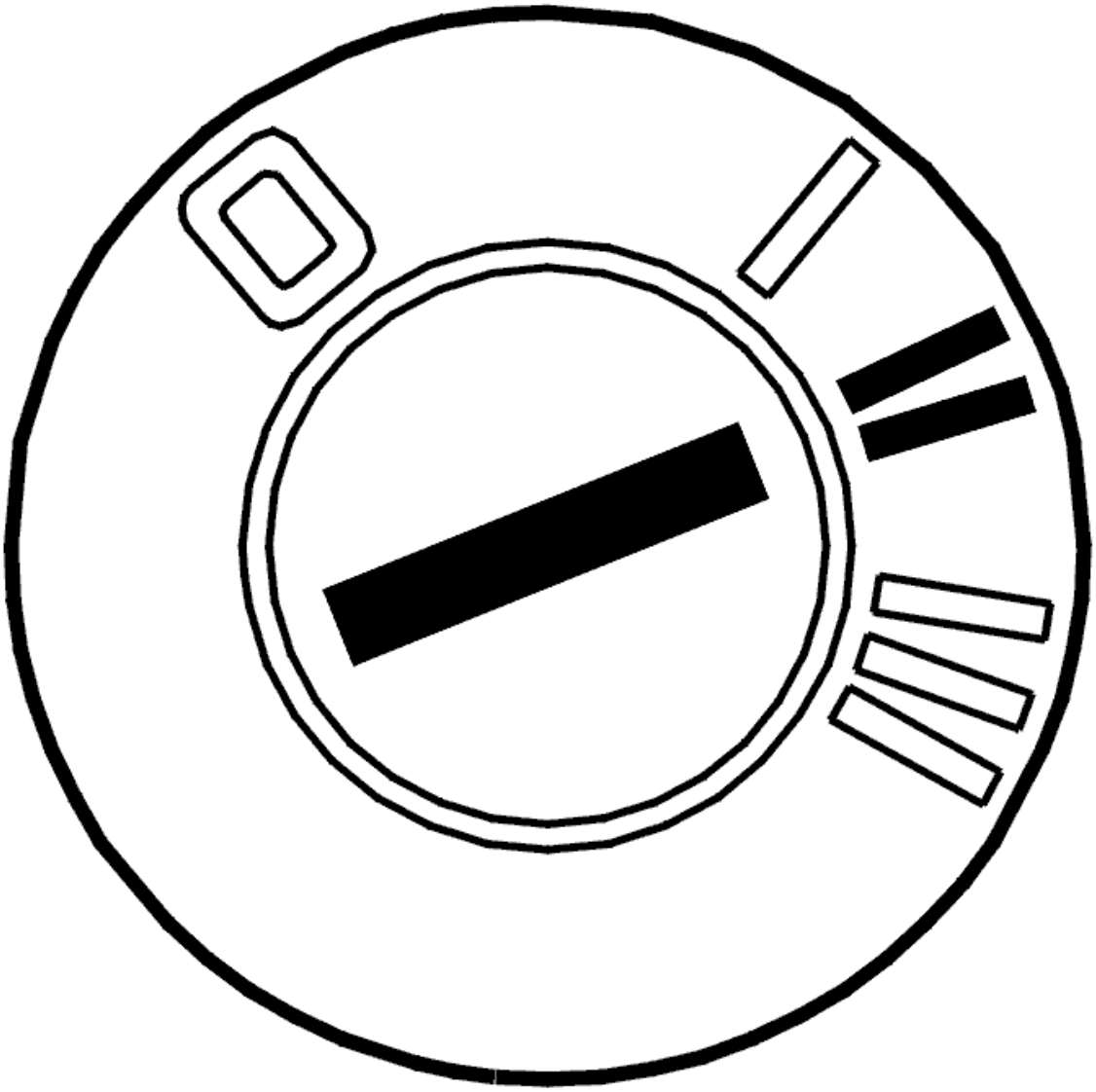

Fig. 176: Identifying Ignition ON
Courtesy of VOLVO CARS CORPORATION

- Ignition on.

  Click on the VCT2000 symbol to reset the adaptation and counter.

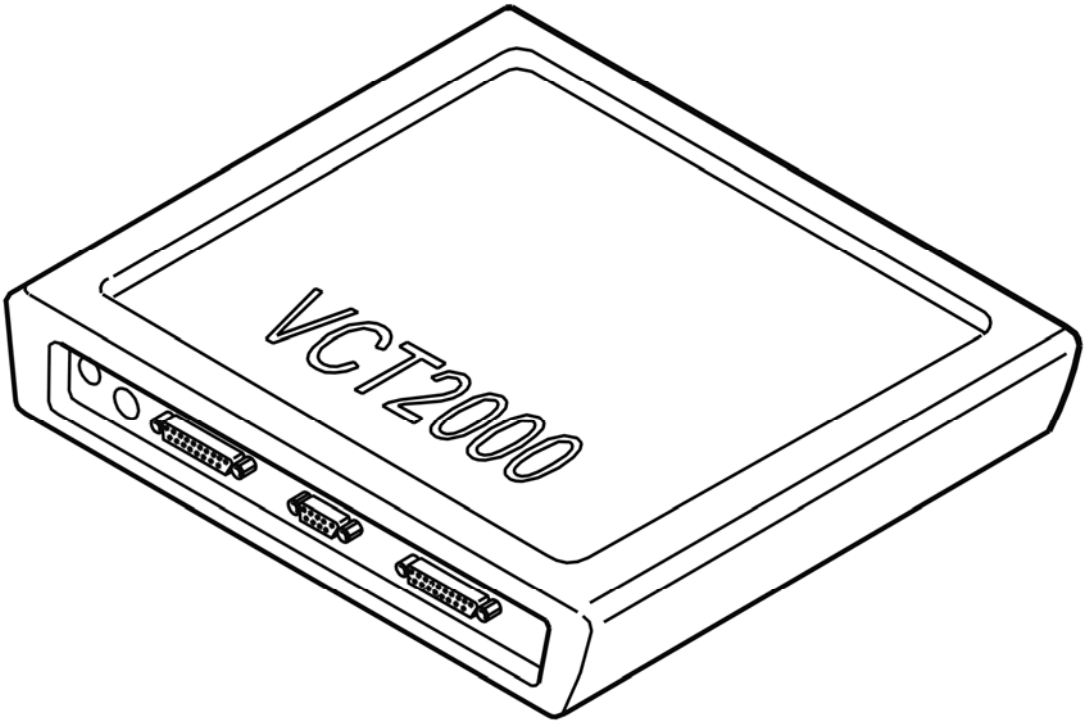

Fig. 177: Identifying VCT2000 Diagnostic Tool Symbol In VIDA
Courtesy of VOLVO CARS CORPORATION

- **Continue**

  Refer to **VERIFICATION**

VERIFICATION

VERIFICATION

HINT: After carrying out the repair, check that the fault has been remedied.

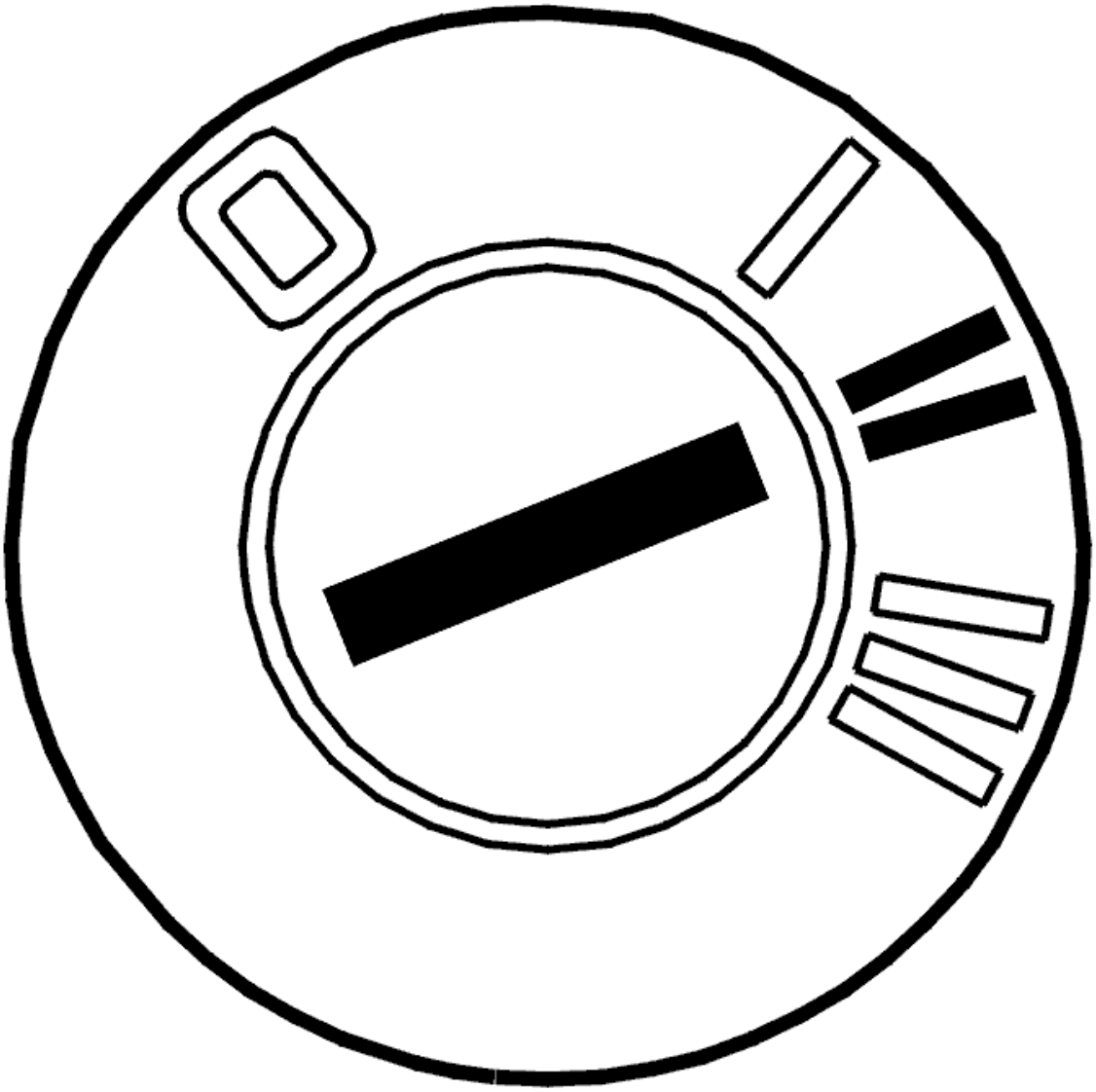

Fig. 178: Identifying Ignition ON
Courtesy of VOLVO CARS CORPORATION

- Ignition on.
- Activate solenoid SLU.

  Read off the current through the solenoid SLU circuit.

  The current should oscillate between 0 and 1000 mA.

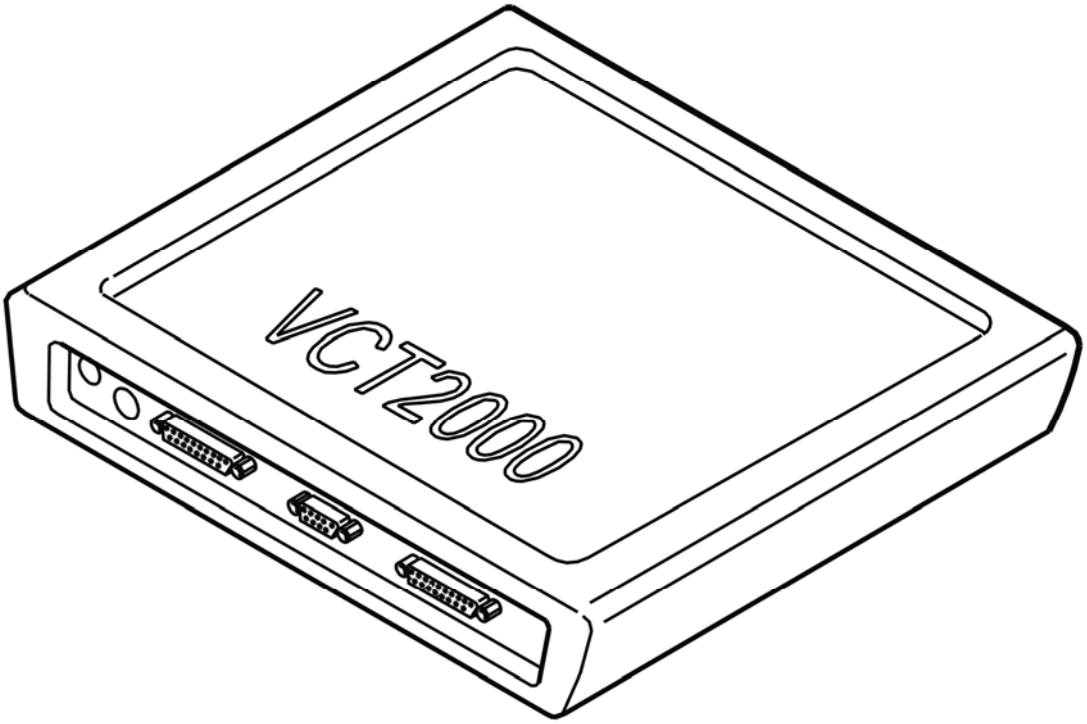

Fig. 179: Identifying VCT2000 Diagnostic Tool Symbol In VIDA
Courtesy of VOLVO CARS CORPORATION

Does the current oscillate?

- **YES**

  VERIFIED: Troubleshooting has been completed.

- **NO**

  Refer to **INFORMATION**

INFORMATION

FAULT-TRACING INFORMATION

The fault should have been detected and remedied. As this is not the case fault-tracing has failed.

Exit fault-tracing for this diagnostic trouble code (DTC) or make another attempt.

TCM-0110: LOCK-UP SOLENOID SLU. SIGNAL TOO LOW. INTERMITTENT FAULT (AW50/51 AWD; AW55-50/51SN; 2003-2007)

DIAGNOSTIC TROUBLE CODE (DTC) INFORMATION

Condition

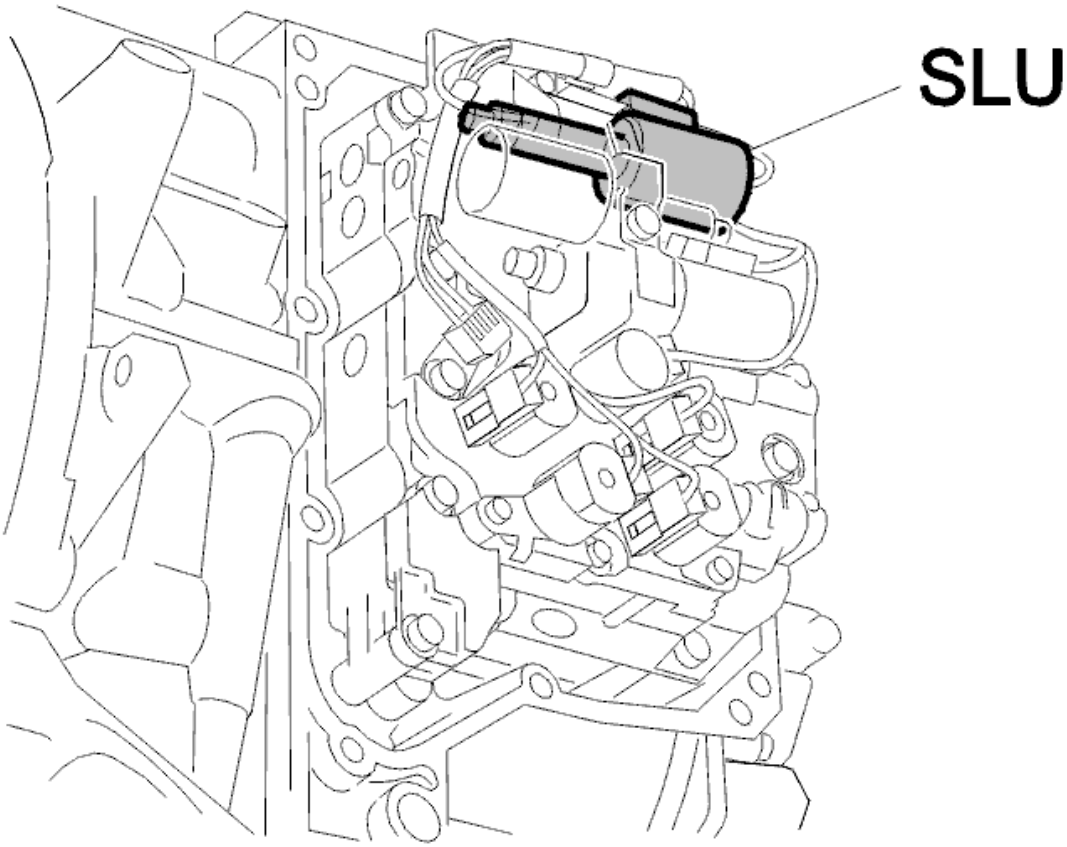

Fig. 180: Identifying Lock-Up Solenoid, SLU
Courtesy of VOLVO CARS CORPORATION

Lock-up solenoid SL controls the transmission lock-up function and certain gear shifts in the transmission. Solenoid SLU operates when it receives voltage from the transmission control module (TCM) and is activated under different driving conditions depending on road speed, throttle position and the driving mode selected. Diagnostic trouble code (DTC) TCM-0110 is stored if the control module registers a short-circuit to ground in the solenoid SLU circuit when the solenoid should be activated. Solenoid SLU can probably not be activated.

Substitute Value

- The transmission control module (TCM) "Emergency mode I" program has been initiated.
- The transmission control module (TCM) does not activate the lock-up solenoid.

Possible Source

- Short-circuit to ground in the signal cable.
- Defective control module.
- Defective solenoid.

Fault symptom[s]

- General orange warning lamp lit.
- No shifting.
- Irregular shifting.
- No lock-up function.

SIGNAL TOO LOW. INTERMITTENT FAULT

INTERMITTENT FAULT

Check the transmission control module (TCM) and transmission connectors. Check for contact resistance and oxidation according to **CONTACT RESISTANCE AND OXIDATION** .

Check the wiring between transmission control module (TCM) terminal #A51 (#A51) and transmission connector terminal #D1. Check the wiring between control module terminal #B9 (#A69) and transmission connector terminal #D2. Check for an intermittent short-circuit to ground according to **SHORT-CIRCUIT TO GROUND, INTERMITTENT FAULTS** .

HINT: Check solenoid SLU. Measure the resistance between terminals #D1 and #D2 on transmission connector D. The resistance should be 5-5.6 ohms at 20°C.

Remedy as necessary.

Other information:

- To connect the breakout box, see **CONNECTING THE BREAKOUT BOX**
- To disconnect the control module, see **TRANSMISSION CONTROL MODULE (TCM), REPLACING**
- To disconnect the transmission connectors, see **CONNECTORS, TRANSMISSION, DISCONNECTING / CONNECTING**
- For information about signals, see **SIGNAL DESCRIPTION. TRANSMISSION CONTROL MODULE (TCM)** .

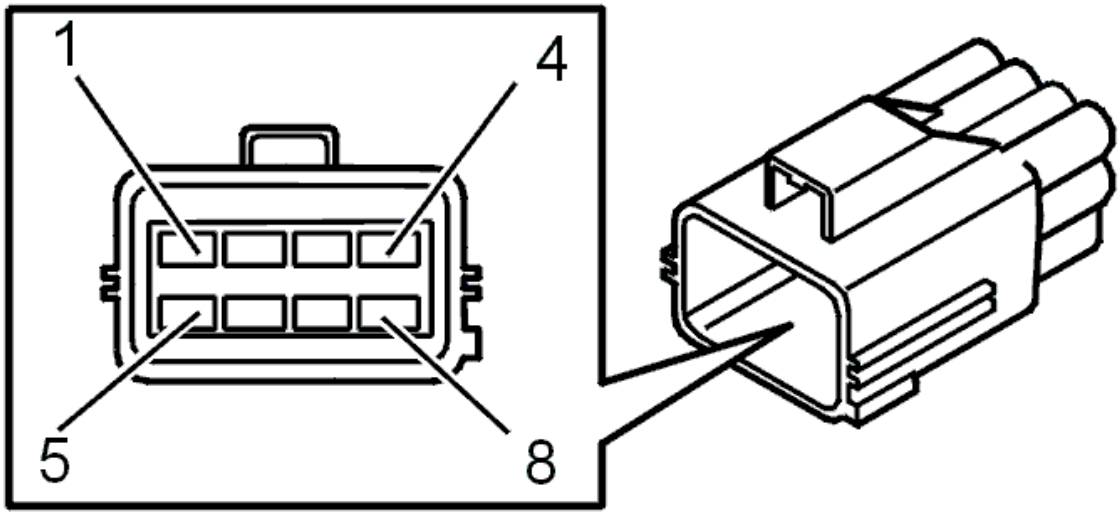

Fig. 181: Identifying Transmission Connector Terminals
Courtesy of VOLVO CARS CORPORATION

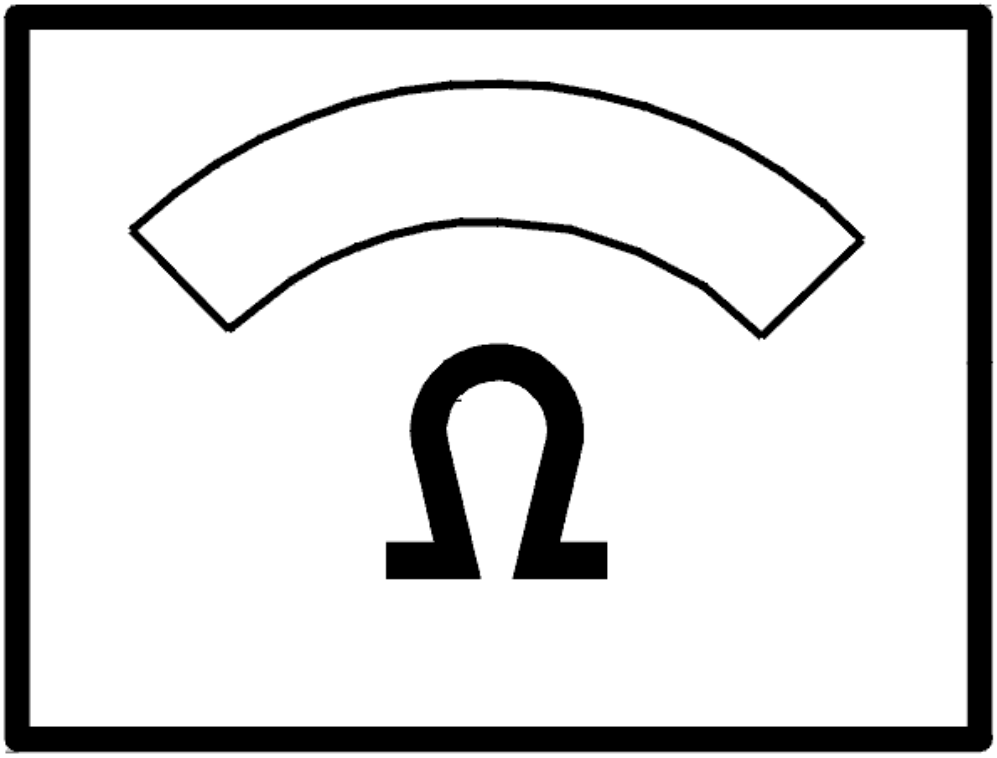

Fig. 182: Identifying Ohms Display
Courtesy of VOLVO CARS CORPORATION

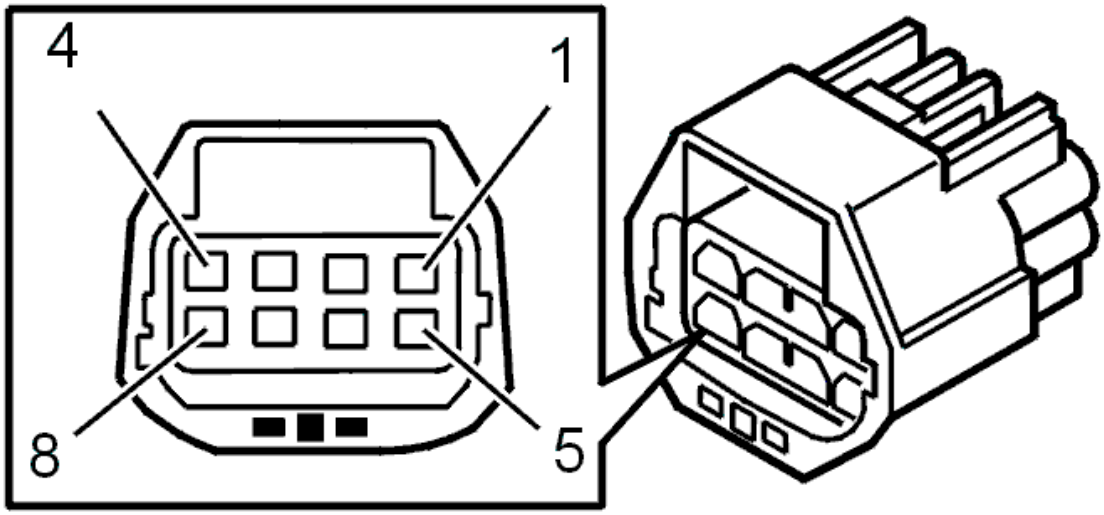

Fig. 183: Identifying 8-Pin Transmission Connector Terminals
Courtesy of VOLVO CARS CORPORATION

- **Continue**

  Refer to **INFORMATION**

INFORMATION

FAULT-TRACING INFORMATION

If the fault is intermittent, do not verify fault-tracing if the fault does not recur.

It is possible to view the information again, or leave fault-tracing for this diagnostic trouble code (DTC).

TCM-0110: LOCK-UP SOLENOID SLU. SIGNAL TOO LOW. PERMANENT FAULT (AW50/51 AWD; AW55-50/51SN; 2003-2007)

DIAGNOSTIC TROUBLE CODE (DTC) INFORMATION

see **DIAGNOSTIC TROUBLE CODE (DTC) INFORMATION**

SIGNAL TOO LOW. PERMANENT FAULT

CHECKS

CHECKING LINE PRESSURE SOLENOID SLU

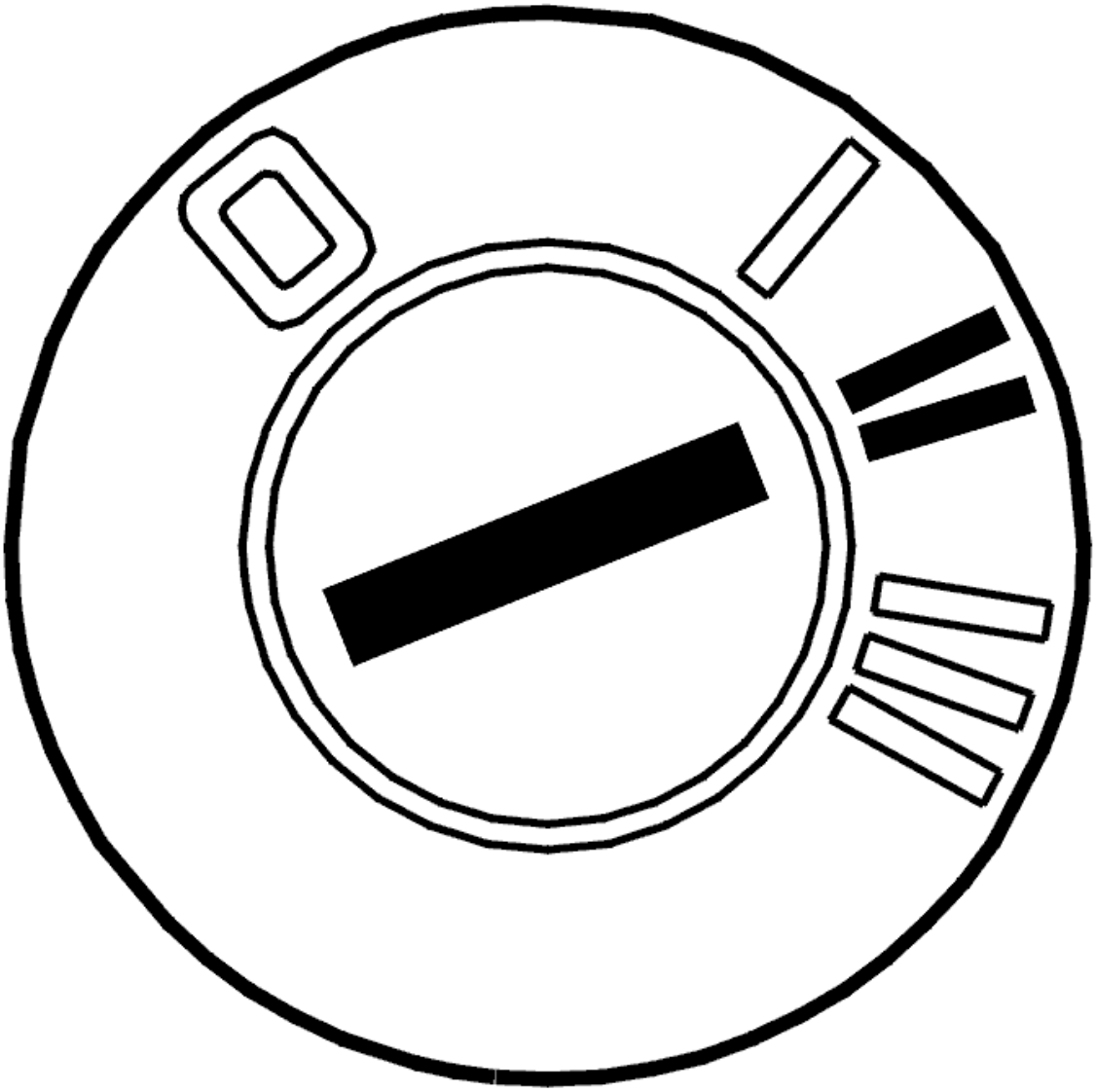

Fig. 184: Identifying Ignition ON
Courtesy of VOLVO CARS CORPORATION

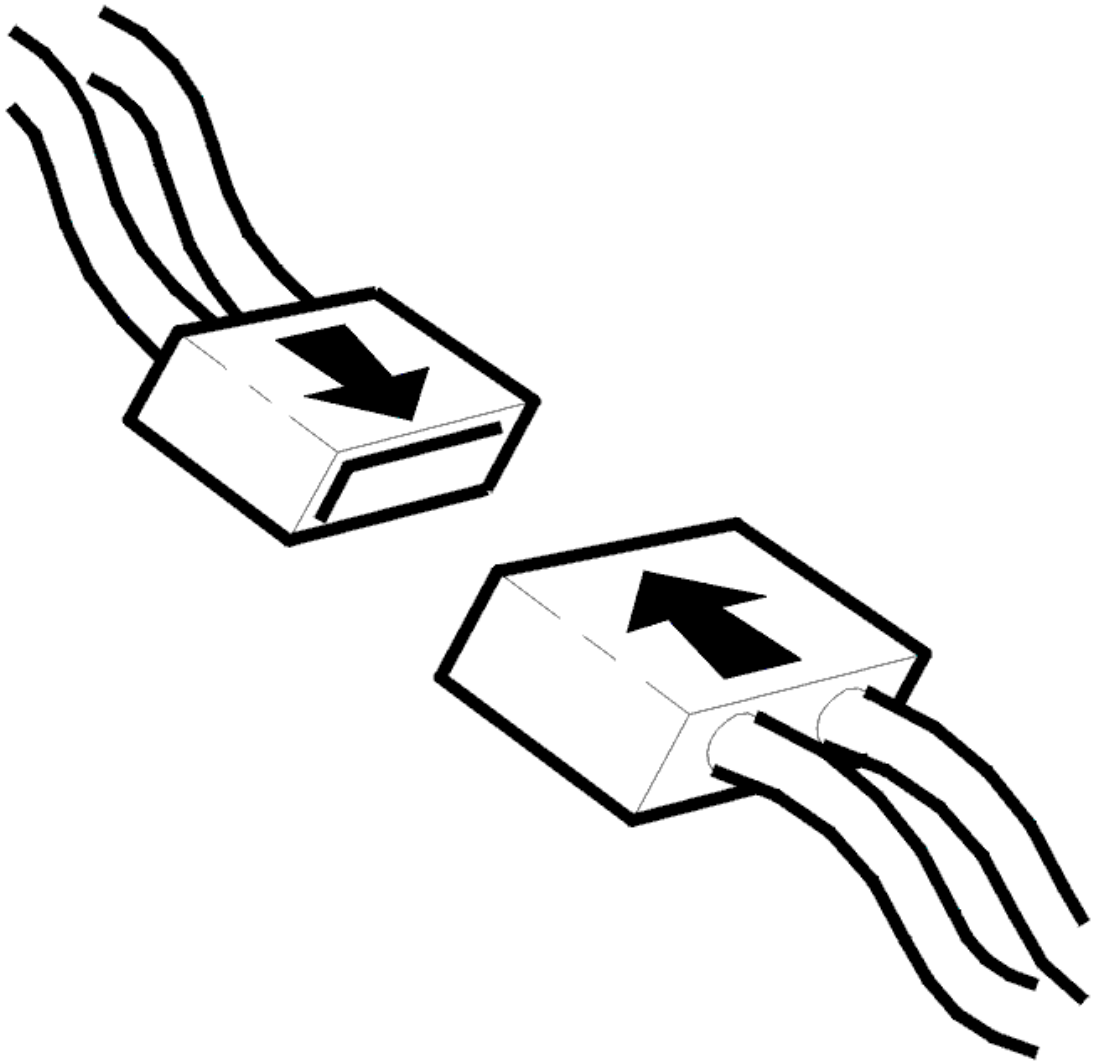

Fig. 185: Identifying Connector(s) Reinstallation
Courtesy of VOLVO CARS CORPORATION

- Ignition off
- Check the transmission control module (TCM) connector and transmission connector D. Check for contact resistance and oxidation. See **CONTACT RESISTANCE AND OXIDATION** . Remedy if necessary
- Reinstall the components, reconnect the connectors etc.
- Ignition on
- Activate solenoid SLU.

  Read off the current through the solenoid SLU circuit.

  The current should oscillate between 0 and 1000 mA.

Other information:

- To disconnect the transmission connectors, see **CONNECTORS, TRANSMISSION, DISCONNECTING / CONNECTING**
- To disconnect the control module, see **TRANSMISSION CONTROL MODULE (TCM), REPLACING** .

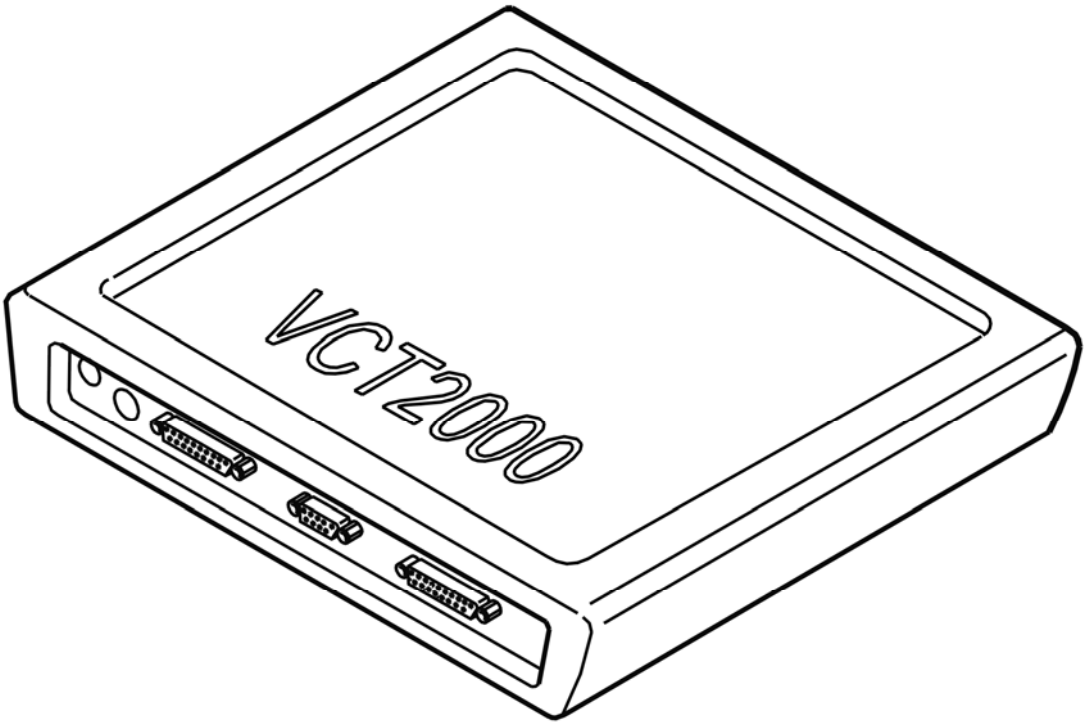

Fig. 186: Identifying VCT2000 Diagnostic Tool Symbol In VIDA
Courtesy of VOLVO CARS CORPORATION

Does the current oscillate?

- **YES**

  OKAY: Troubleshooting has been completed.

- **NO**

  Refer to **CHECKING RESISTANCE**

CHECKING RESISTANCE

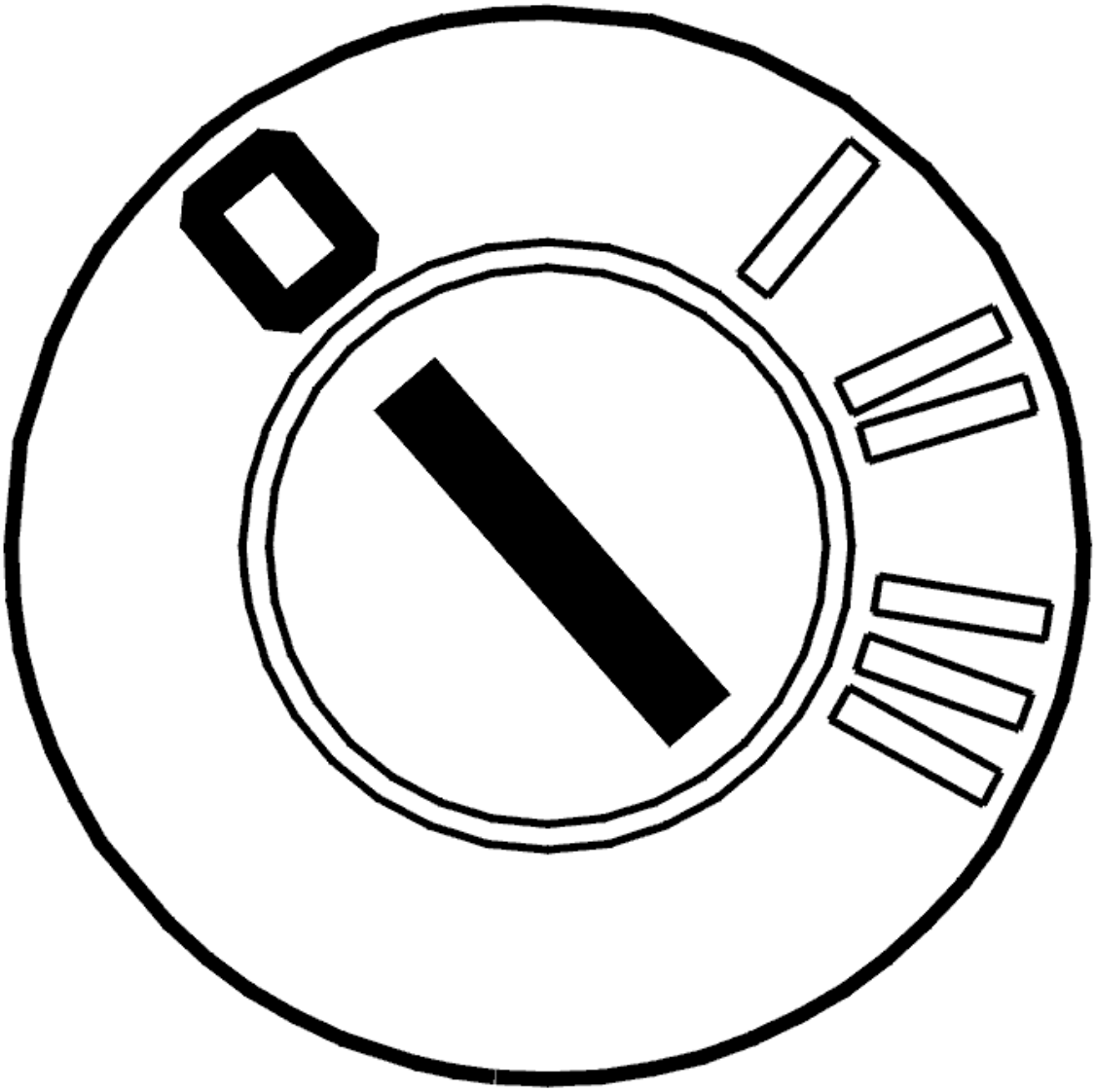

Fig. 187: Identifying Ignition OFF
Courtesy of VOLVO CARS CORPORATION

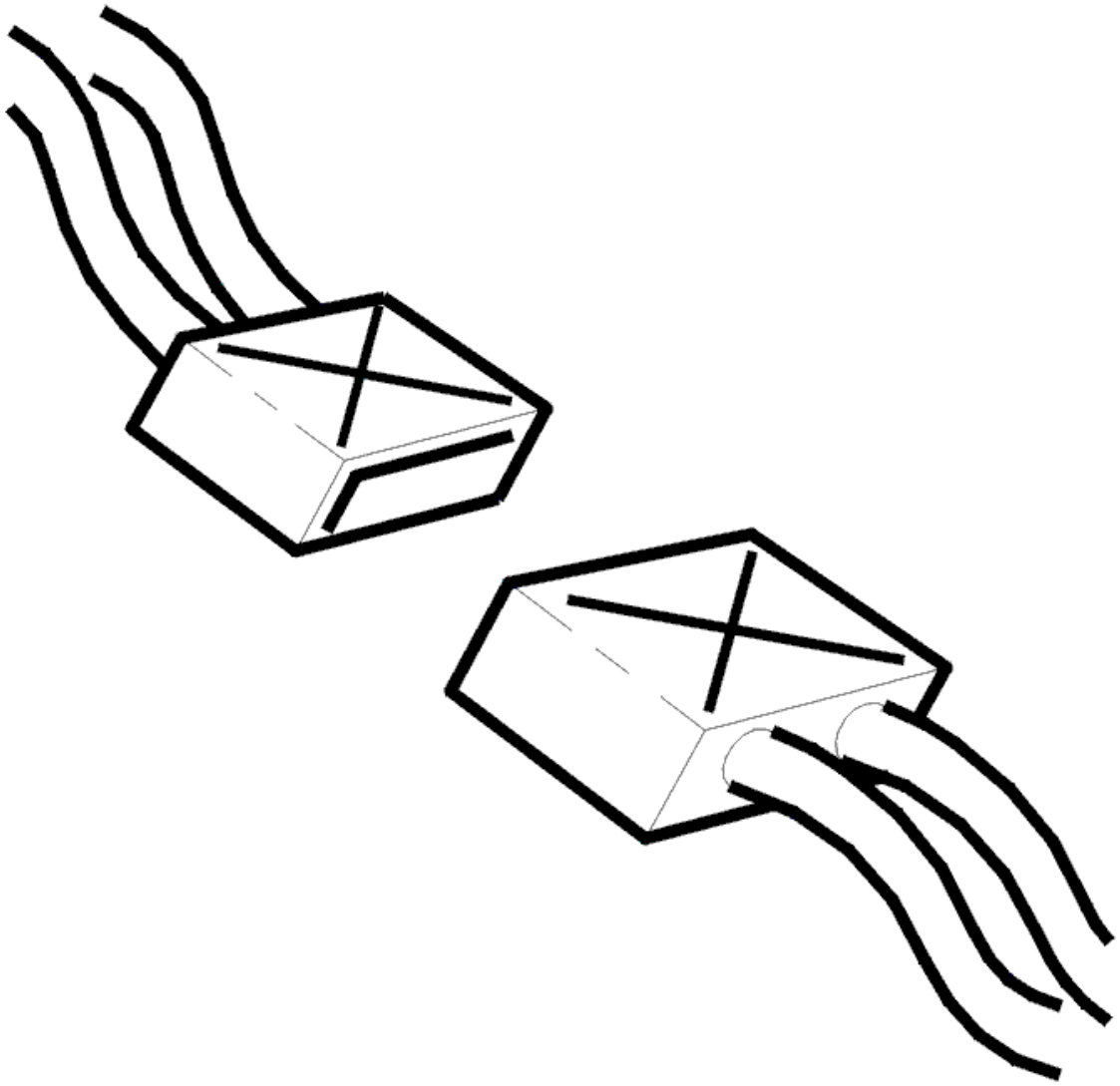

Fig. 188: Identifying Connectors
Courtesy of VOLVO CARS CORPORATION

- Ignition off
- Transmission connector D disconnected.

  Check solenoid SLU. Measure the resistance between terminals #D1 and #D2 on transmission connector D. The resistance must be 5-5.6 ohms at 20°C.

  Other information:

  - To disconnect the transmission connectors, see **CONNECTORS, TRANSMISSION, DISCONNECTING / CONNECTING**
  - For information about signals, see **SIGNAL DESCRIPTION. TRANSMISSION CONTROL MODULE (TCM)** .

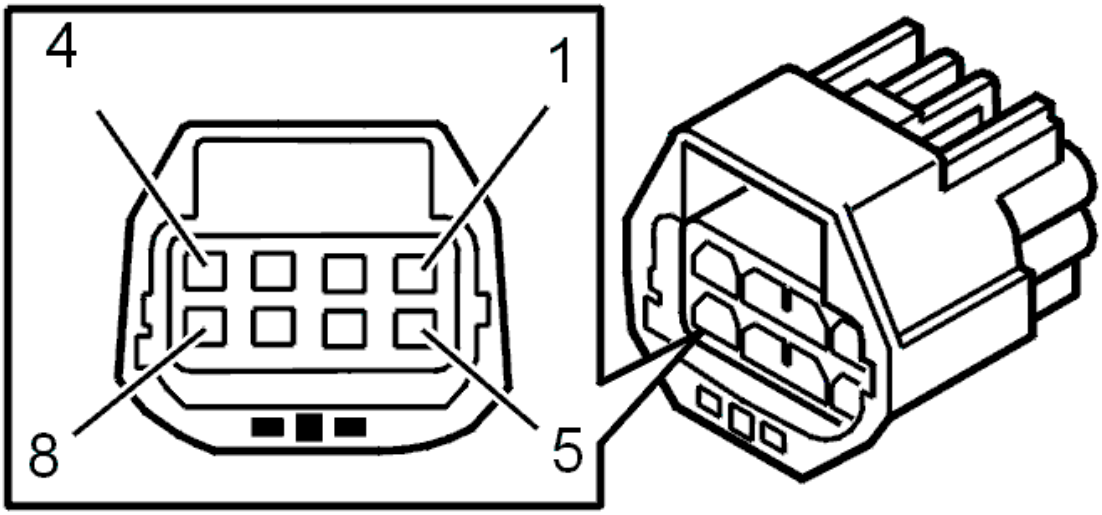

Fig. 189: Identifying 8-Pin Transmission Connector Terminals
Courtesy of VOLVO CARS CORPORATION

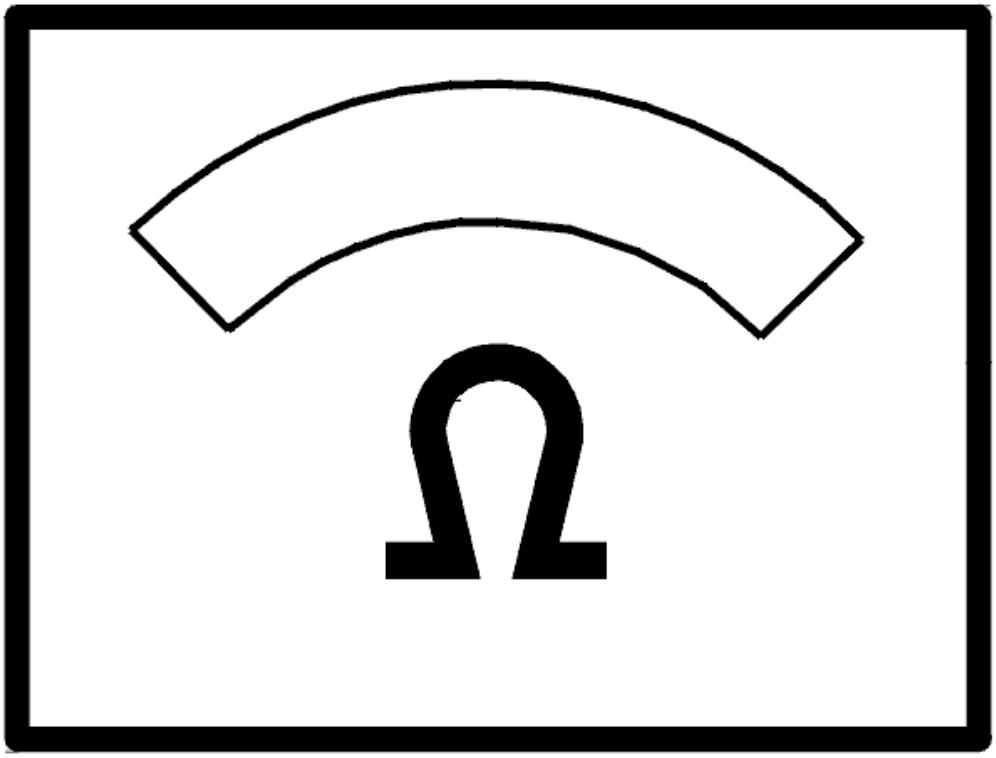

Fig. 190: Identifying Ohms Display
Courtesy of VOLVO CARS CORPORATION

Was the resistance OK?

- **YES**

  Refer to **CHECKING THE WIRING**

- **NO**

  Refer to **CHECKING THE WIRING AND COMPONENT**

CHECKING THE WIRING

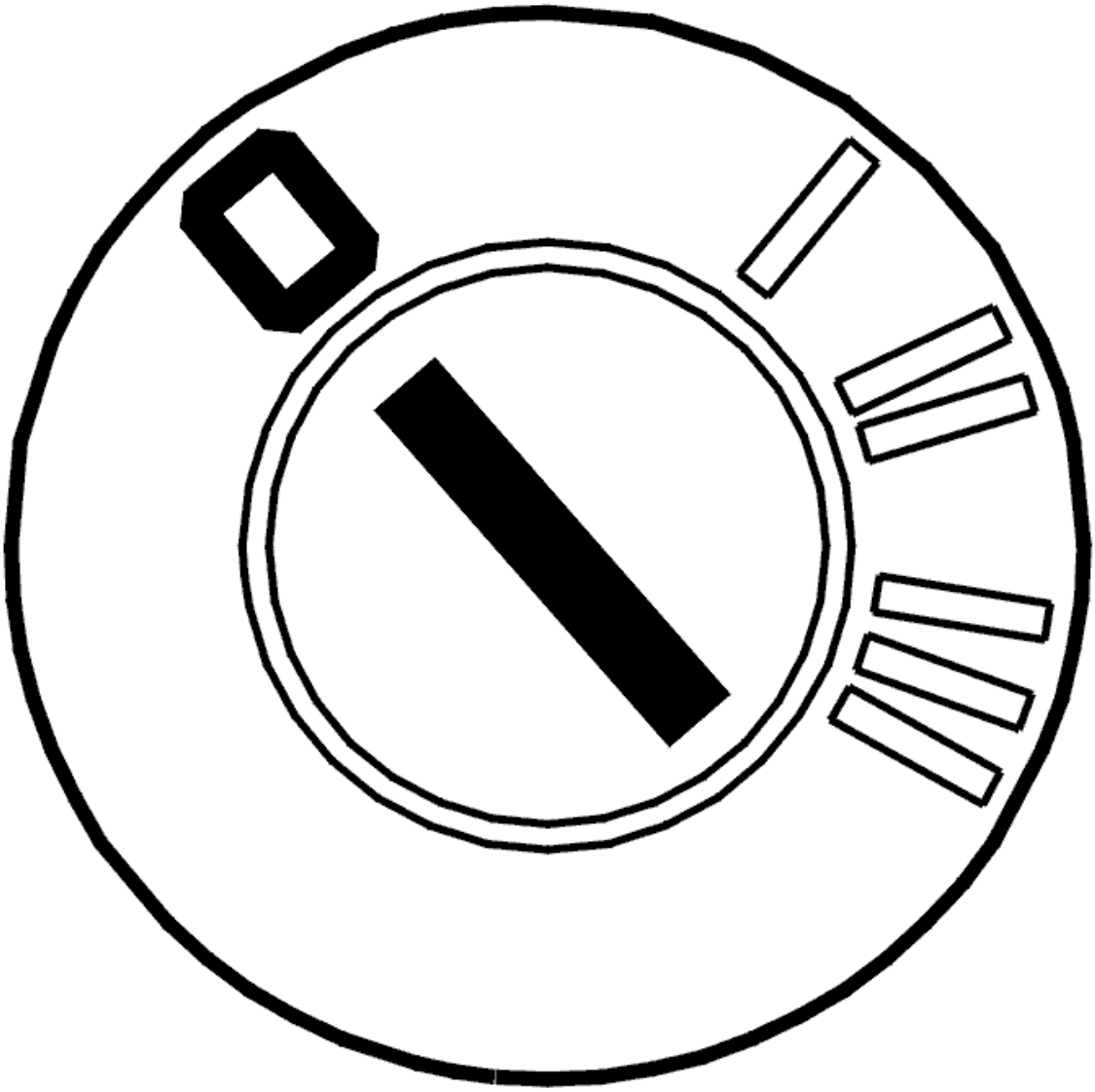

Fig. 191: Identifying Ignition OFF
Courtesy of VOLVO CARS CORPORATION

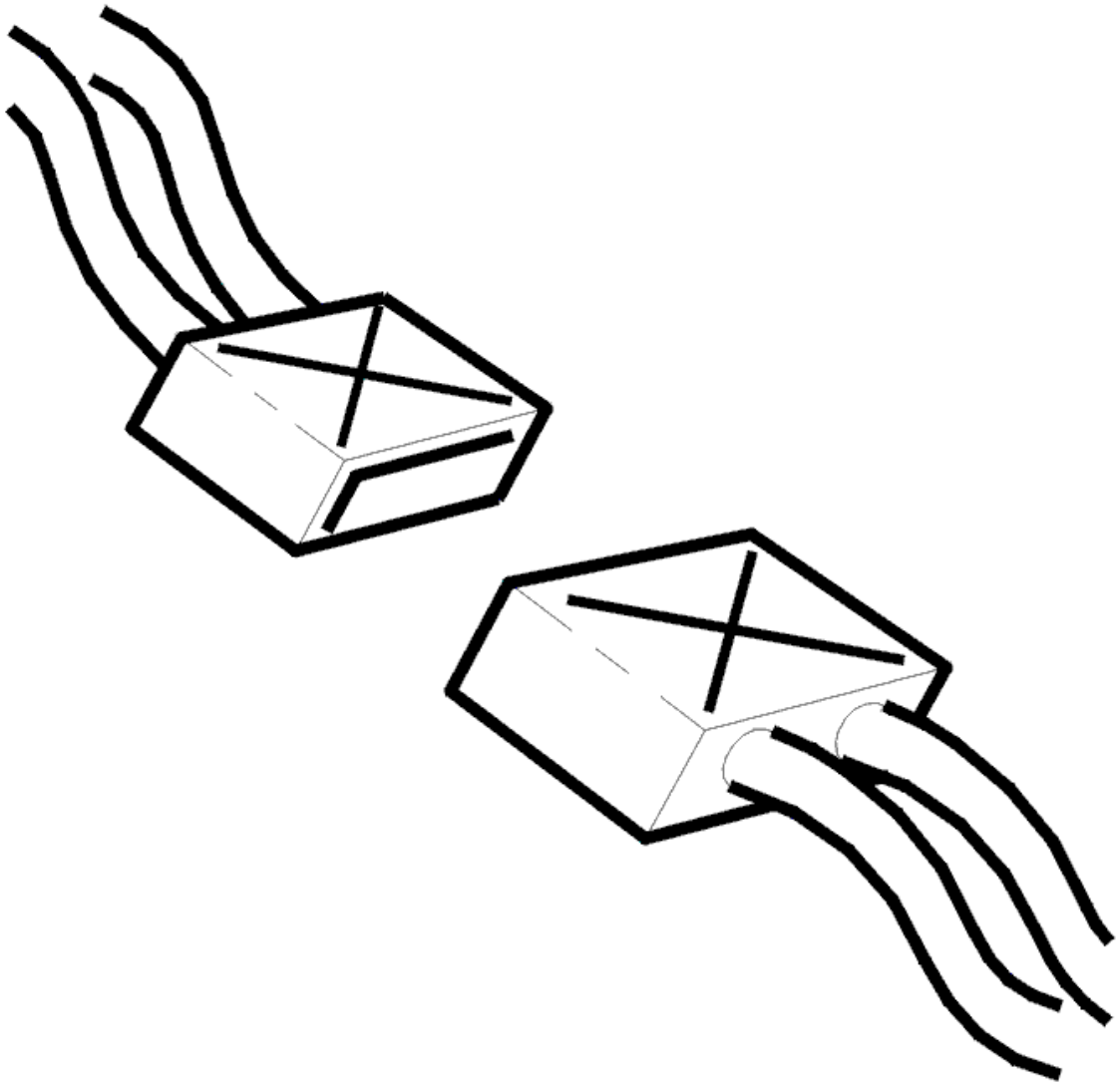

Fig. 192: Identifying Connectors
Courtesy of VOLVO CARS CORPORATION

- Ignition off
- The breakout box connected
- Transmission connector D disconnected.

Check the cable between control module terminal #A51 (#A51) and transmission connector terminal #D1 (control module side). Check for a short-circuit to ground. See **SHORT-CIRCUIT TO GROUND, PERMANENT FAULTS** .

Check the cable between control module terminal #B9 (#A69) and transmission connector terminal #D2 (control module side). Check for a short-circuit to ground. See **SHORT-CIRCUIT TO GROUND, PERMANENT FAULTS** .

Remedy as necessary.

Other information:

- To connect the breakout box, see **CONNECTING THE BREAKOUT BOX**
- To disconnect the transmission connectors, see **CONNECTORS, TRANSMISSION, DISCONNECTING / CONNECTING**
- For information about signals, see **SIGNAL DESCRIPTION. TRANSMISSION CONTROL MODULE (TCM)** .

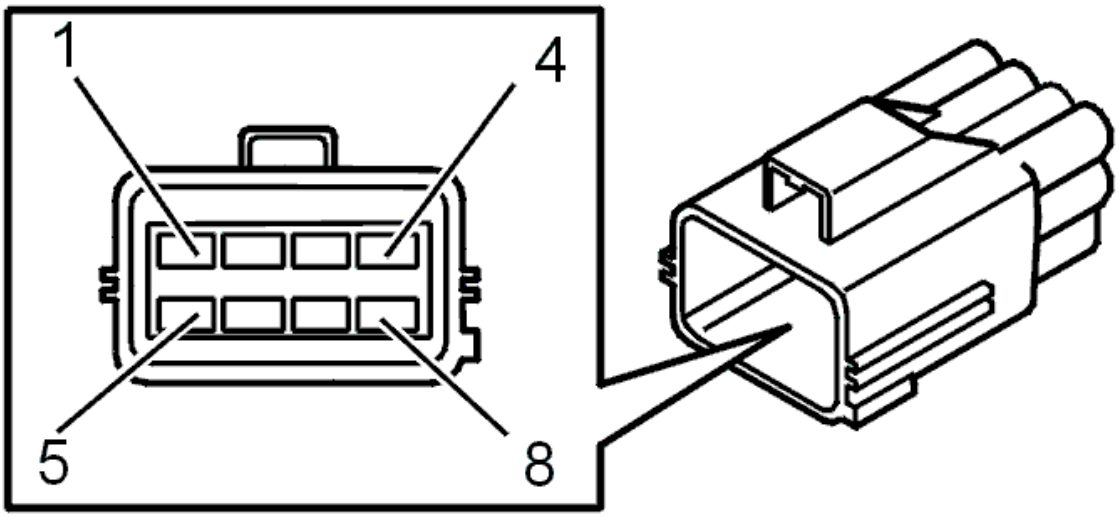

Fig. 193: Identifying Transmission Connector Terminals
Courtesy of VOLVO CARS CORPORATION

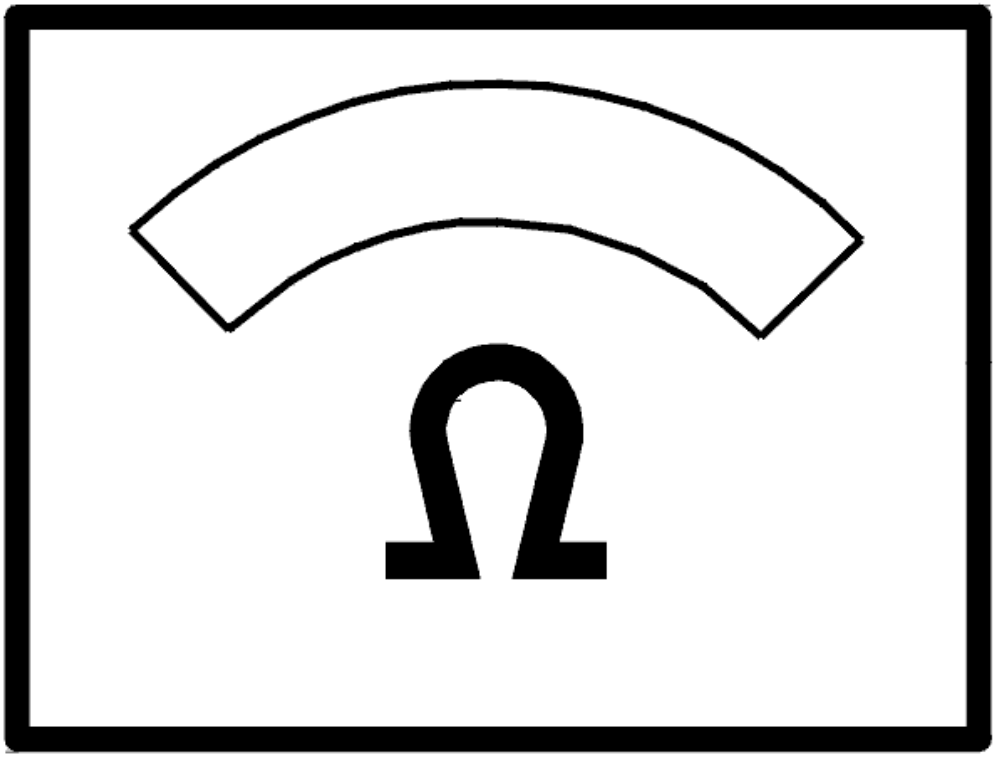

Fig. 194: Identifying Ohms Display
Courtesy of VOLVO CARS CORPORATION

Was a fault detected?

- **YES**

  Refer to **VERIFICATION**

- **NO**

  Refer to **CHECKING THE CONTROL MODULE**

CHECKING THE CONTROL MODULE

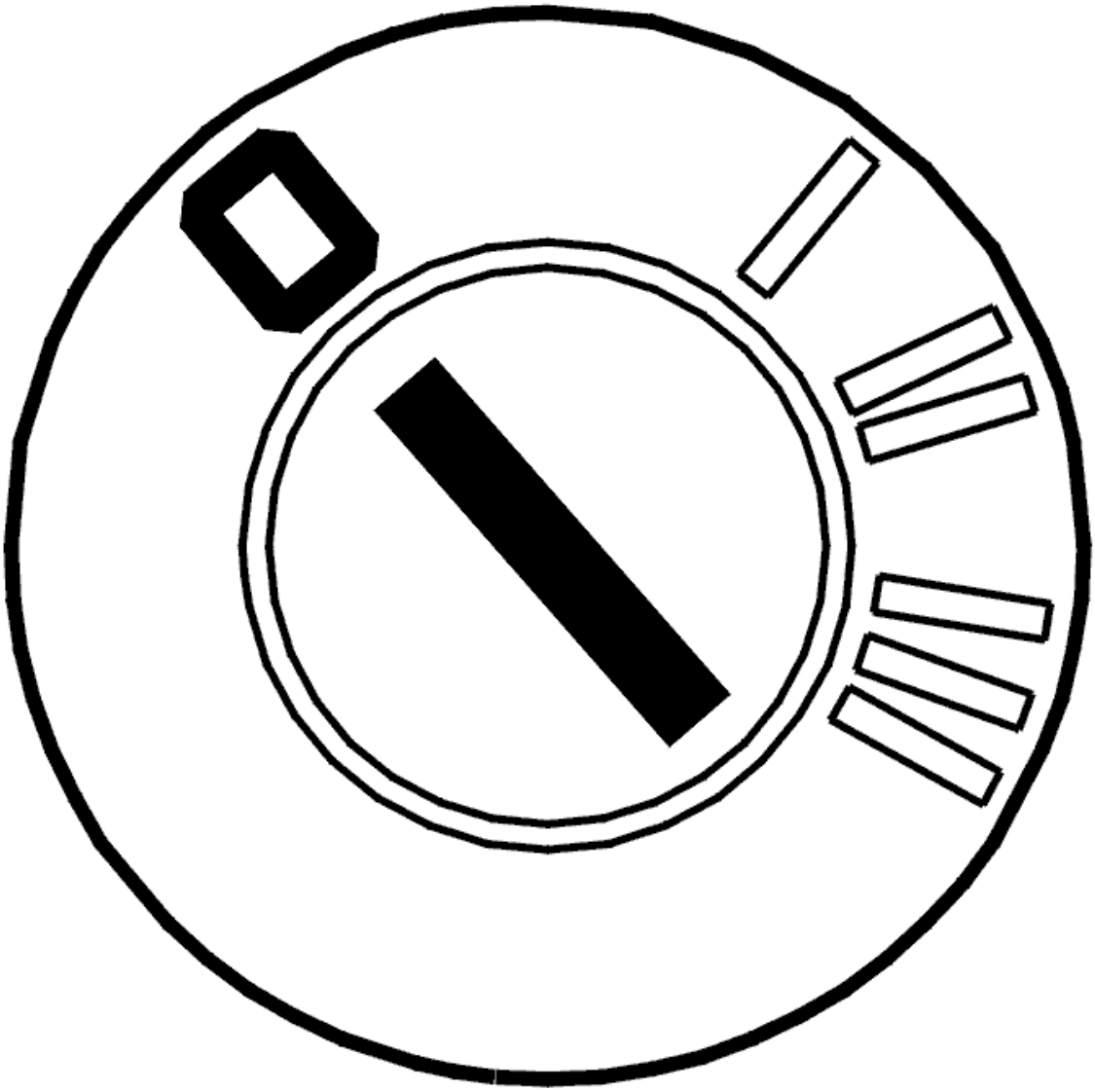

Fig. 195: Identifying Ignition OFF
Courtesy of VOLVO CARS CORPORATION

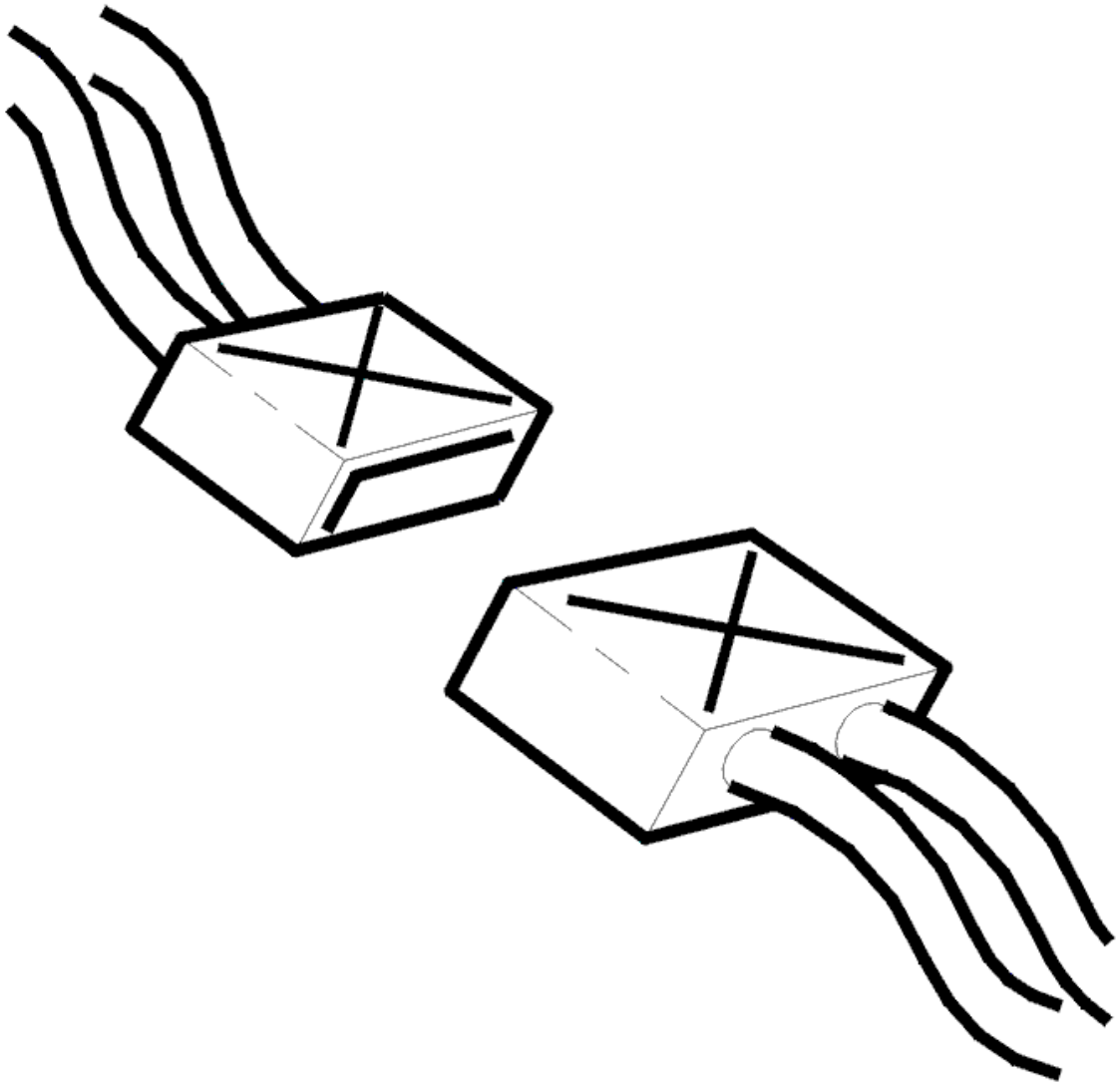

Fig. 196: Identifying Connectors
Courtesy of VOLVO CARS CORPORATION

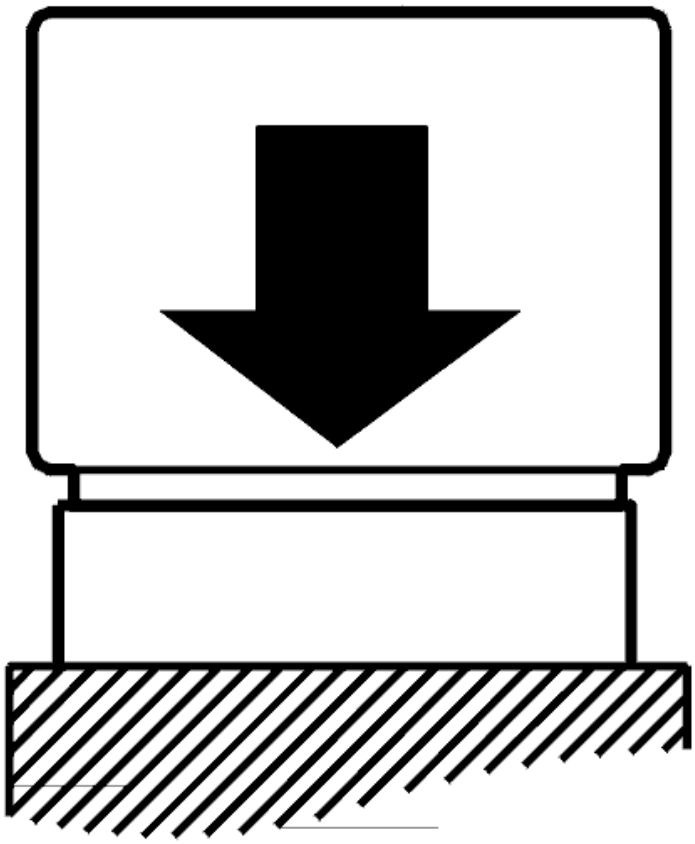

Fig. 197: Identifying Control Module Connected
Courtesy of VOLVO CARS CORPORATION

- Ignition off
- The breakout box connected
- Connect the control module.
- Transmission connector D disconnected.

Check the transmission control module (TCM) by measuring the resistance between terminals #A51 (#A51) and #B9 (#A69). The resistance must be approximately 9 kohms.

NOTE: **When removing the transmission connector, the control module may store diagnostic trouble codes (DTCs) for the gear-shift position sensor, the shift solenoids, the temperature sensor etc.**

Try a new control module if the resistance is infinite.

Other information:

- To disconnect the transmission connectors, see **CONNECTORS, TRANSMISSION, DISCONNECTING / CONNECTING**
- To replace the control module, see **TRANSMISSION CONTROL MODULE (TCM), REPLACING**
- For information about signals, see **SIGNAL DESCRIPTION. TRANSMISSION CONTROL MODULE (TCM)** .

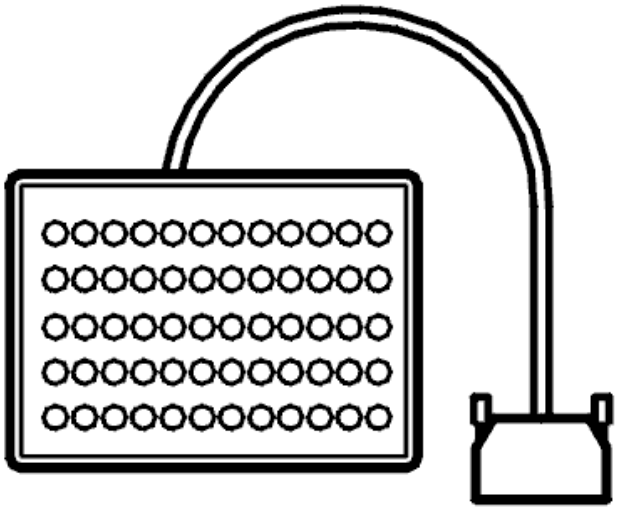

Fig. 198: Identifying Breakout Box
Courtesy of VOLVO CARS CORPORATION

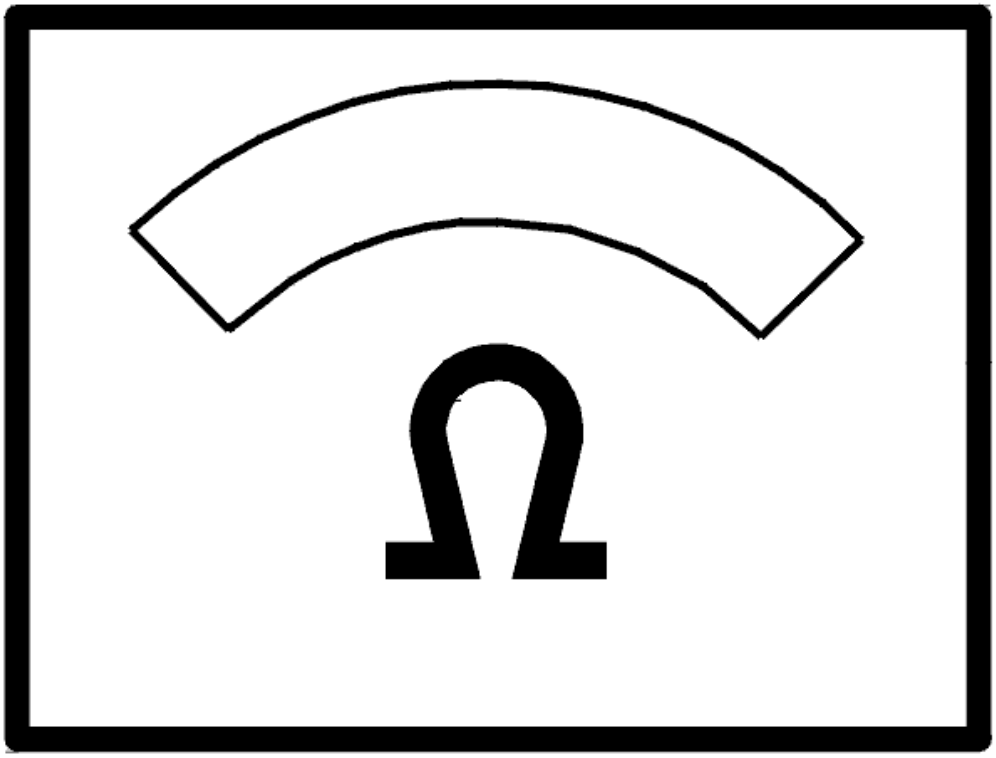

Fig. 199: Identifying Ohms Display
Courtesy of VOLVO CARS CORPORATION

Was the resistance OK?

- **YES**

  FAULT NOT FOUND: Troubleshooting has been completed.

- **NO**

  Refer to **VERIFICATION**

CHECKING THE WIRING AND COMPONENT

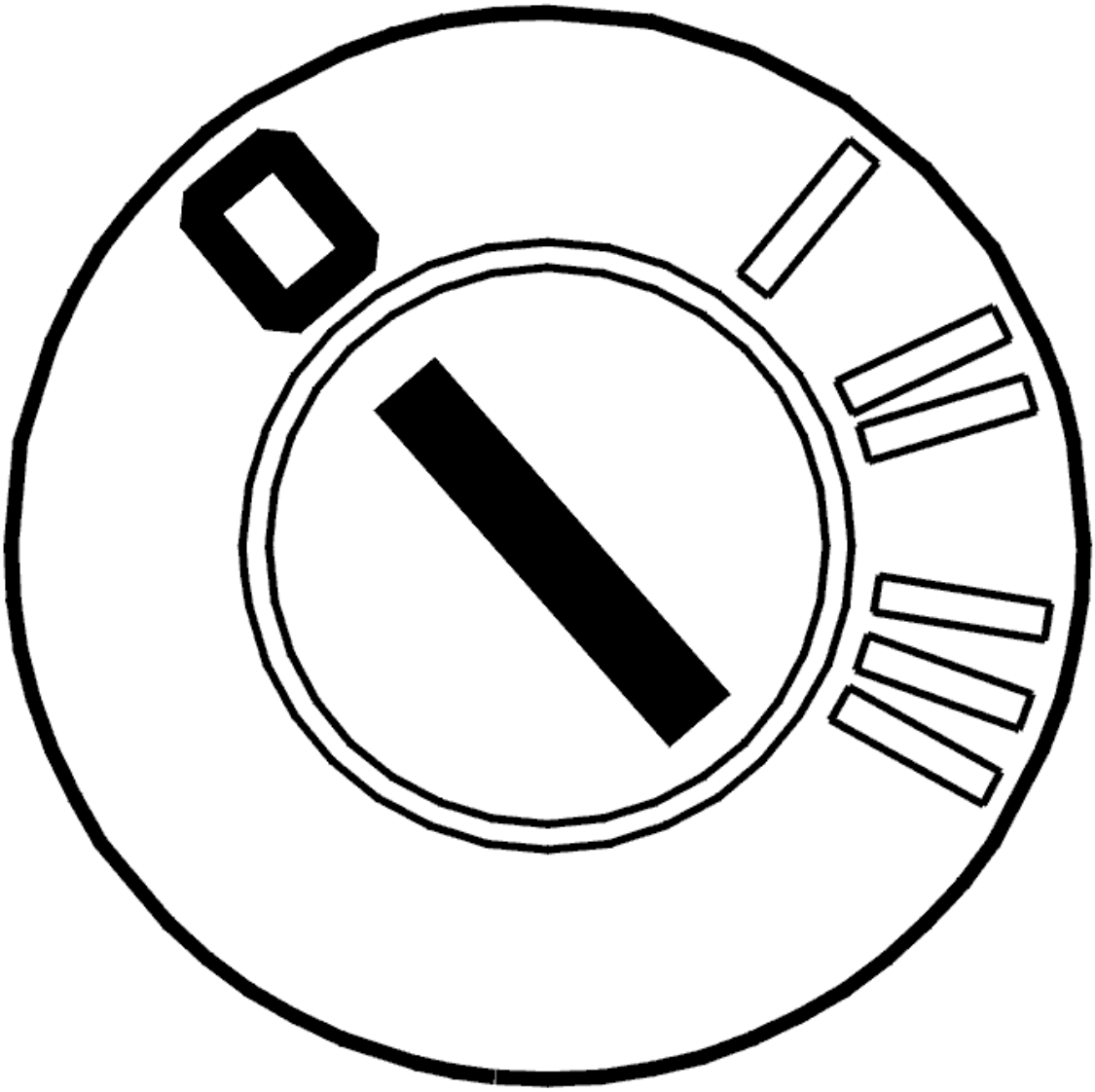

Fig. 200: Identifying Ignition OFF
Courtesy of VOLVO CARS CORPORATION

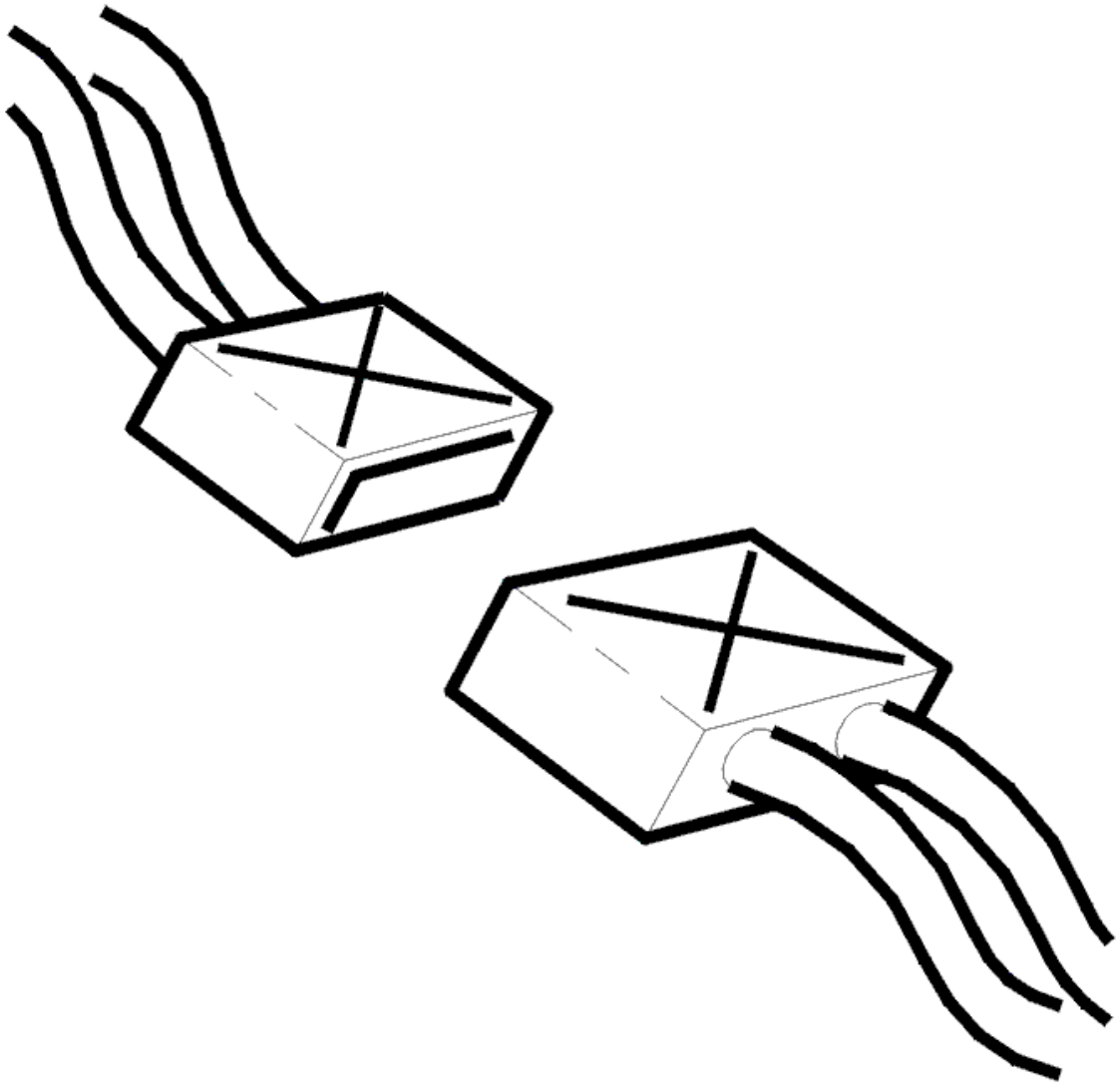

Fig. 201: Identifying Connectors
Courtesy of VOLVO CARS CORPORATION

- Ignition off
- Open the transmission control system.

  Check the wiring between transmission connector terminal #D1 and solenoid SLU terminal #1. Check the wiring between transmission connector terminal #D2 and solenoid SLU terminal #2. Check for a short-circuit to ground. See **SHORT-CIRCUIT TO GROUND, PERMANENT FAULTS** .

  Check the solenoid SLU by measuring the resistance between solenoid connector terminals #1 and #2. The resistance should be 5-5.6 ohms at 20°C.

  Replace the transmission control system if the resistance is incorrect.

  Other information:

- To disconnect the transmission connectors, see **CONNECTORS, TRANSMISSION, DISCONNECTING / CONNECTING**
- To open and replace the transmission control system, see **SOLENOID CONTROL SYSTEM, REPLACING**
- To replace the cable harness for the control system, see **TEMPERATURE SENSOR FLUID, TRANSAXLE, (TFT)**
- For information about signals, see **SIGNAL DESCRIPTION. TRANSMISSION CONTROL MODULE (TCM)** .

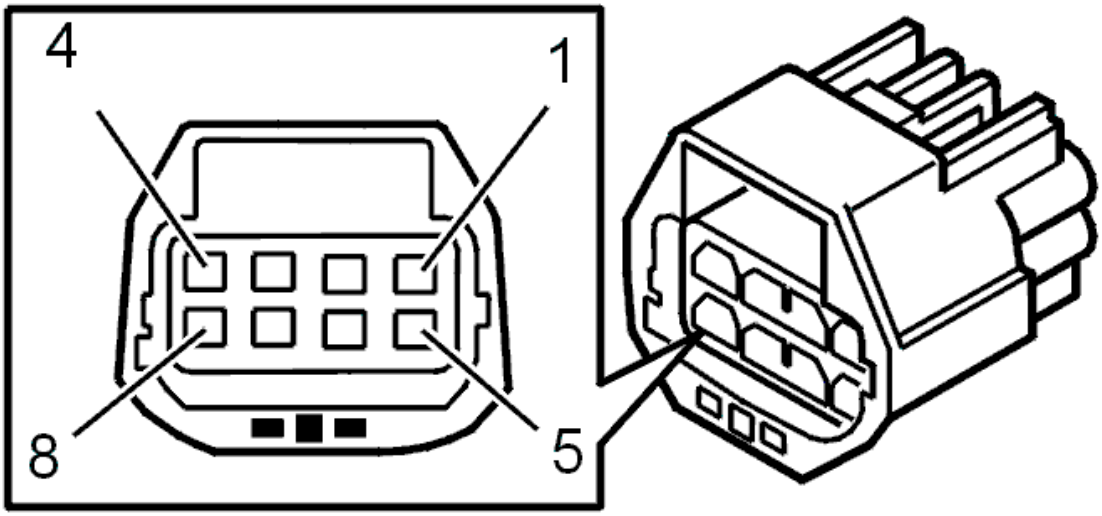

Fig. 202: Identifying 8-Pin Transmission Connector Terminals
Courtesy of VOLVO CARS CORPORATION

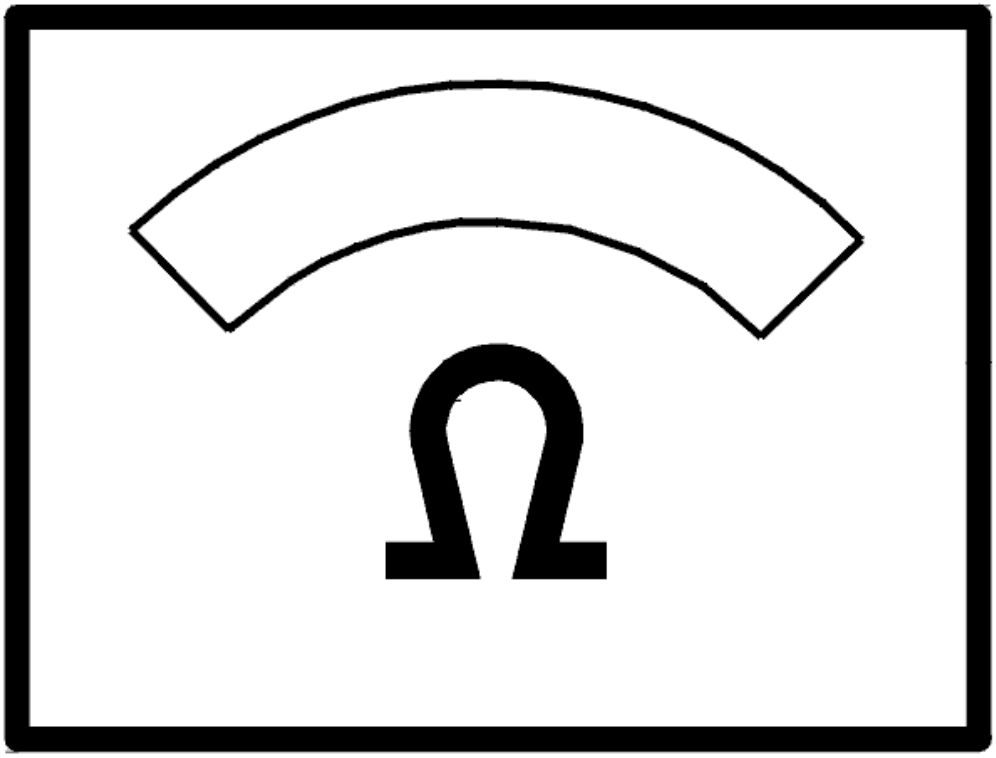

Fig. 203: Identifying Ohms Display
Courtesy of VOLVO CARS CORPORATION

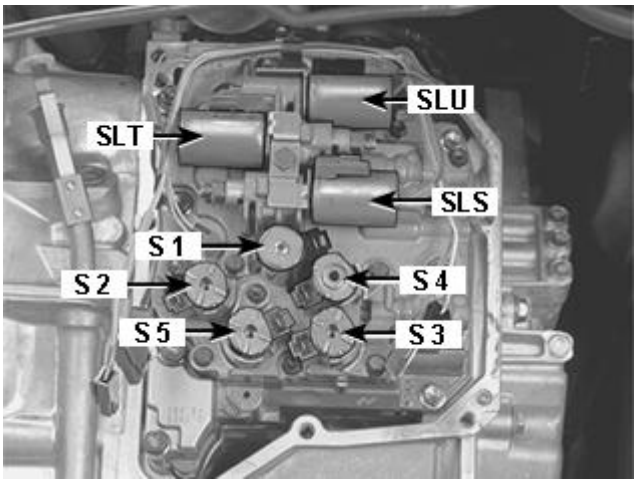

Fig. 204: Identifying S1-S5, SLT, SLU And SLS Solenoids
Courtesy of VOLVO CARS CORPORATION

- **Continue**

Refer to **RESETTING THE ADAPTATION**

RESETTING THE ADAPTATION

RESETTING ADAPTATION AND THE COUNTER FOR "TRANSMISSION OIL CHANGE"

HINT: The transmission has torque controlled adaptive pressure control. Pressure control means that the transmission regulates the pressure itself during each gear shift. This avoids harsh gear shifting. Each gear shift is evaluated by the control module and stored in the memory. This allows for compensation for wear and tear in the transmission and clutch. It is important that the adaptation in the memory is reset after the transmission has been repaired. This is to ensure normal operation. The oil is replaced during repair; the "Transmission oil change" counter must be reset. If the counter is not reset when the fluid is drained and replaced, there is a risk that a diagnostic trouble code (DTC) will be stored in incorrect circumstances.

NOTE: **This applies only if the transmission or one of the components in the transmission have been replaced.**

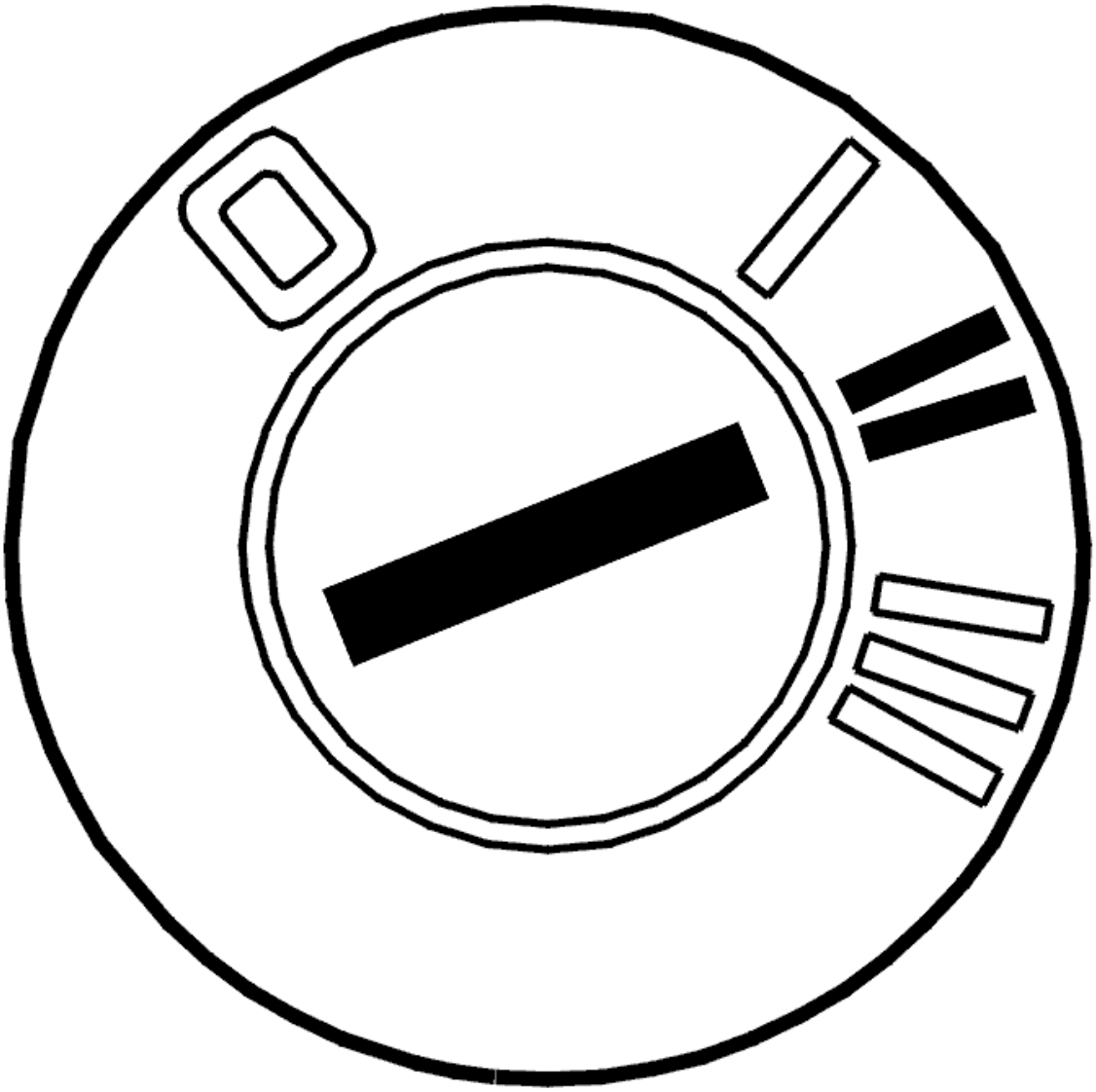

Fig. 205: Identifying Ignition ON
Courtesy of VOLVO CARS CORPORATION

- Ignition on.

  Click on the VCT2000 symbol to reset the adaptation and counter.

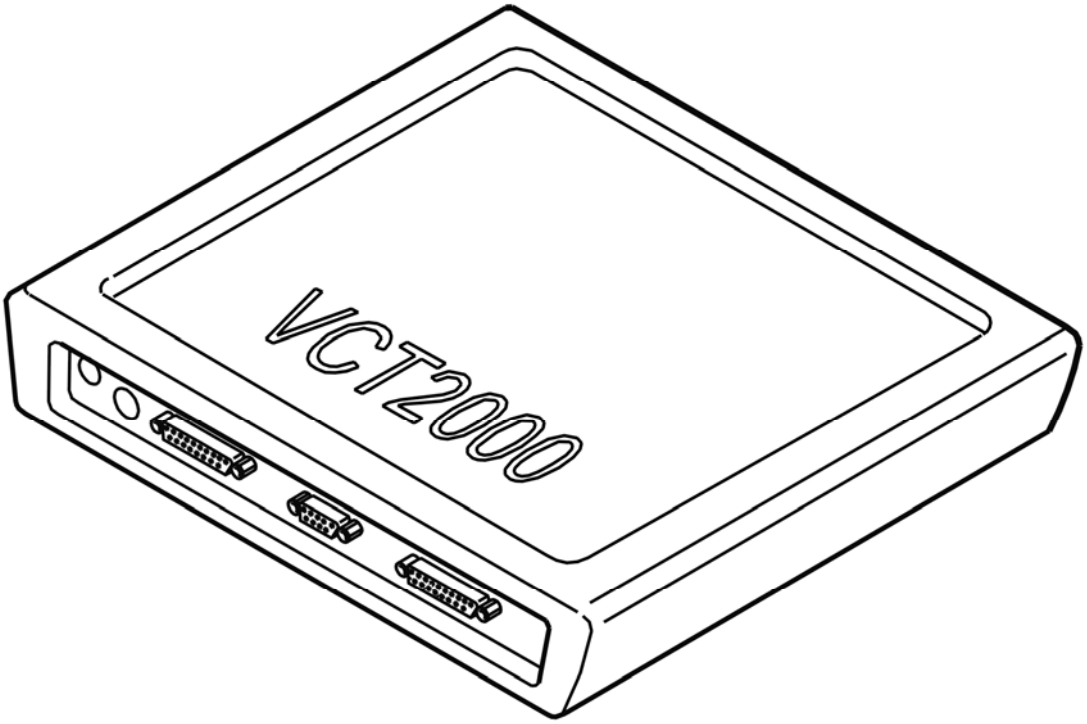

Fig. 206: Identifying VCT2000 Diagnostic Tool Symbol In VIDA
Courtesy of VOLVO CARS CORPORATION

- **Continue**

  Refer to **VERIFICATION**

VERIFICATION

VERIFICATION

HINT: After carrying out the repair, check that the fault has been remedied.

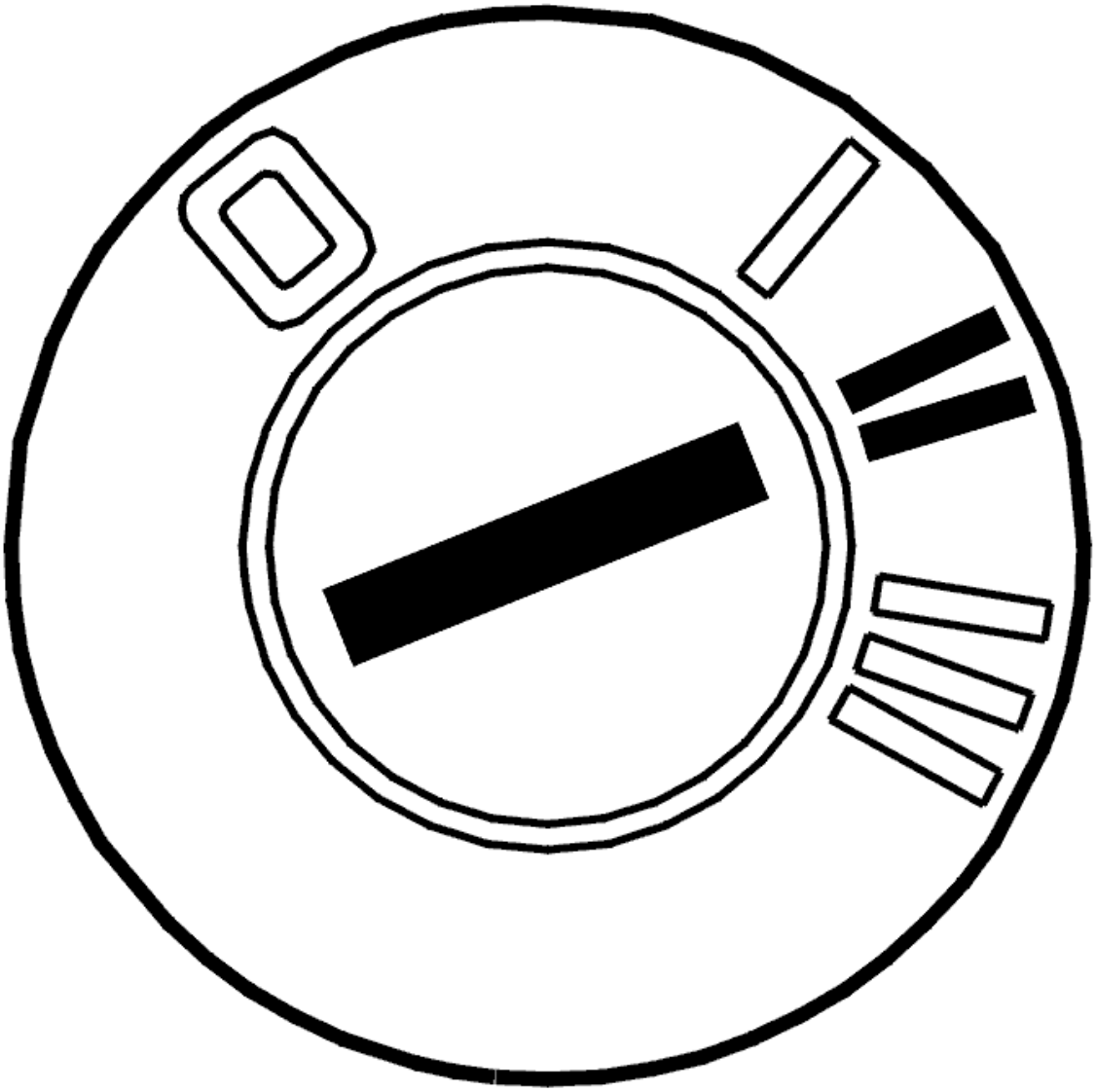

Fig. 207: Identifying Ignition ON
Courtesy of VOLVO CARS CORPORATION

- Ignition on.
- Activate solenoid SLU.

  Read off the current through the solenoid SLU circuit.

  The current should oscillate between 0 and 1000 mA.

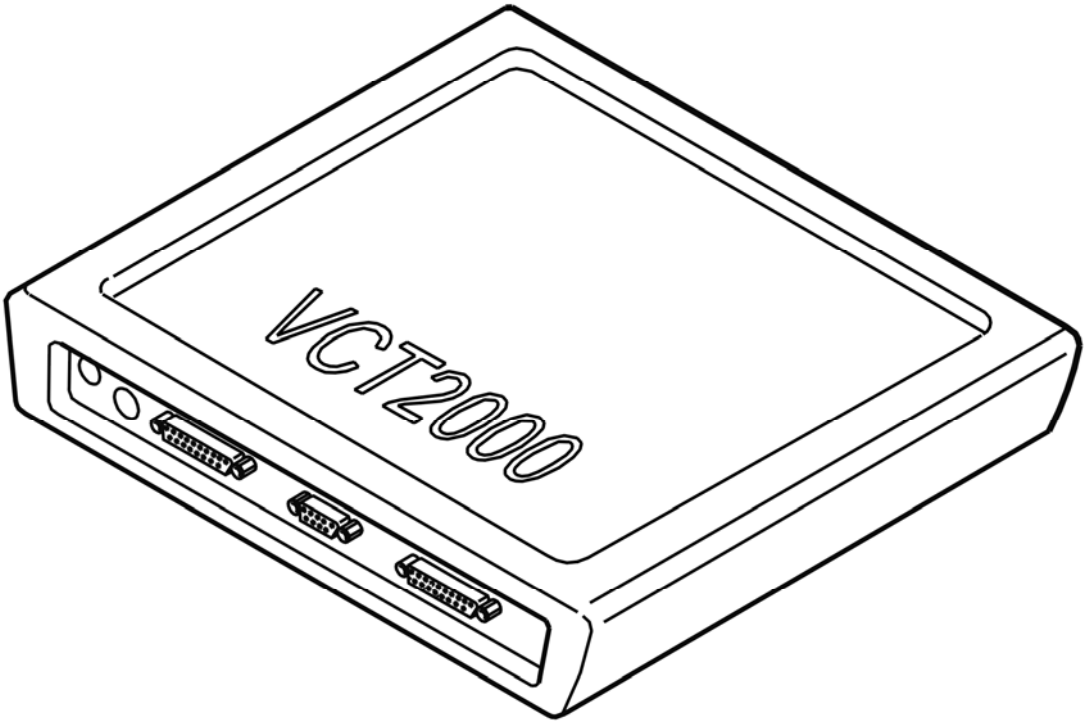

Fig. 208: Identifying VCT2000 Diagnostic Tool Symbol In VIDA
Courtesy of VOLVO CARS CORPORATION

Does the current oscillate?

- **YES**

  VERIFIED: Troubleshooting has been completed.

- **NO**

  Refer to **INFORMATION**

INFORMATION

FAULT-TRACING INFORMATION

The fault should have been detected and remedied. As this is not the case fault-tracing has failed.

Exit fault-tracing for this diagnostic trouble code (DTC) or make another attempt.

TCM-0112: LINE PRESSURE SOLENOID SLS. SIGNAL TOO HIGH. INTERMITTENT FAULT (AW50/51 AWD; AW55-50/51SN; 2003-2007)

DIAGNOSTIC TROUBLE CODE (DTC) INFORMATION

Condition

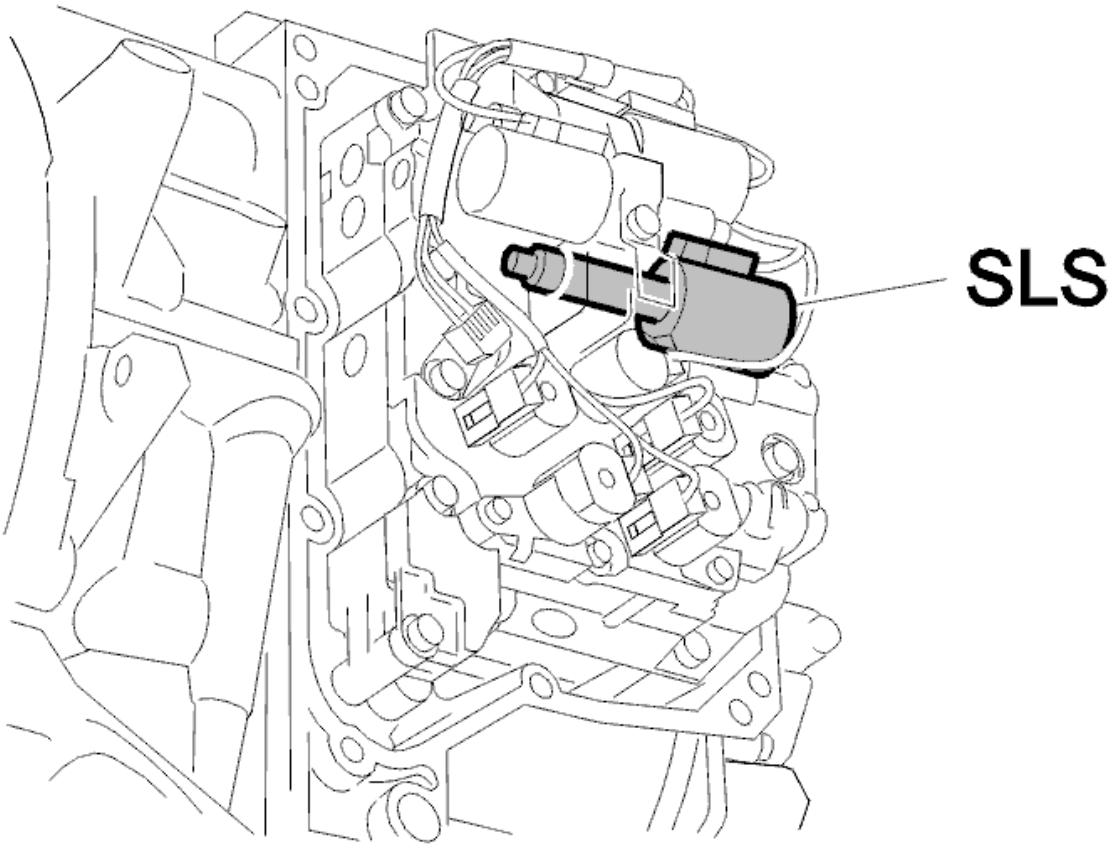

Fig. 209: Identifying Line Pressure Solenoid SLS
Courtesy of VOLVO CARS CORPORATION

Line pressure solenoid SLS regulates the line pressure in the transmission. The solenoid is controlled by a power stage in the transmission control module (TCM) output. The transmission control module (TCM) uses the power stage to control the current to the solenoid. A low amperage results in a high line pressure. A high amperage (approximately 1 A) gives a low line pressure. The amperage is primarily affected by the throttle position. Diagnostic trouble code (DTC) TCM-0112 is stored if the control module (TCM) registers a short-circuit to battery voltage in the circuit for solenoid SLS. This results in too high an amperage in the circuit. Solenoid SLS cannot then control the line pressure.

Substitute Value

- The transmission control module (TCM) Emergency mode III program is initiated.

Possible Source

- Short-circuit to supply voltage in the control signal wiring or signal wiring.
- Short-circuit between the control signal cable and the signal cable.

- Defective solenoid.

Fault symptom[s]

- General orange warning lamp lit.
- No shifting.
- No lock-up function.

HINT: No shifting because the control module prevents activation of the solenoids.

CAUTION: There is a danger that this fault will cause line pressure in the transmission to be too low. This will result in a high level of wear.

SIGNAL TOO HIGH. INTERMITTENT FAULT

INTERMITTENT FAULT

Check the wiring between transmission control module (TCM) terminal #A49 (#A49) and transmission connector terminal #D5. Check the wiring between control module terminal #B7 (#A67) and transmission connector terminal #D6. Check for an intermittent short-circuit to supply voltage according to **SHORT-CIRCUIT TO SUPPLY VOLTAGE, INTERMITTENT FAULTS** .

HINT: Check solenoid SLS. Measure the resistance between terminals #D5 and #D6 on transmission connector D. The resistance should be 5-5.6 ohms at 20°C.

Remedy as necessary.

Other information:

- To connect the breakout box, see **CONNECTING THE BREAKOUT BOX**
- To disconnect the transmission control module (TCM), see **TRANSMISSION CONTROL MODULE (TCM), REPLACING**
- To disconnect the transmission connectors, see **CONNECTORS, TRANSMISSION, DISCONNECTING / CONNECTING**
- For information about signals, see **SIGNAL DESCRIPTION. TRANSMISSION CONTROL MODULE (TCM)** .

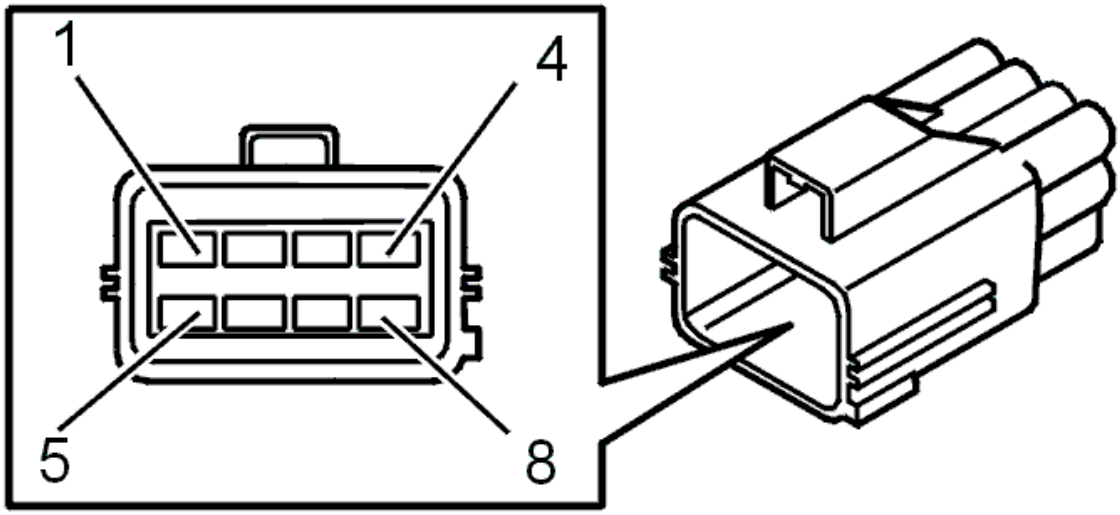

Fig. 210: Identifying Transmission Connector Terminals
Courtesy of VOLVO CARS CORPORATION

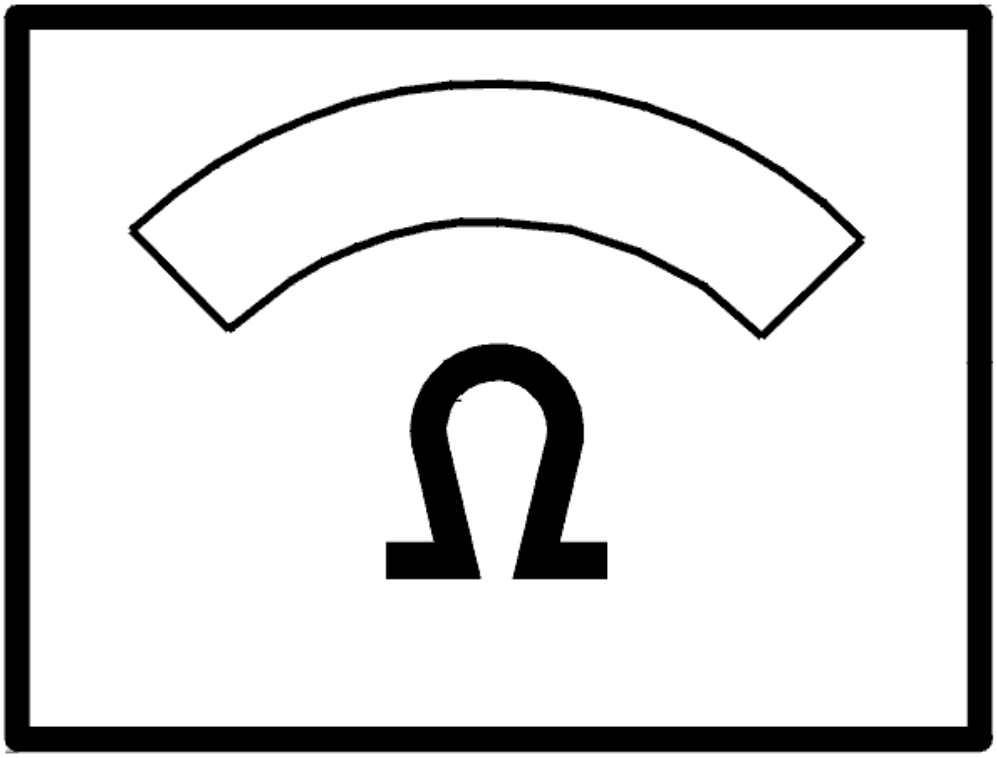

Fig. 211: Identifying Ohms Display
Courtesy of VOLVO CARS CORPORATION

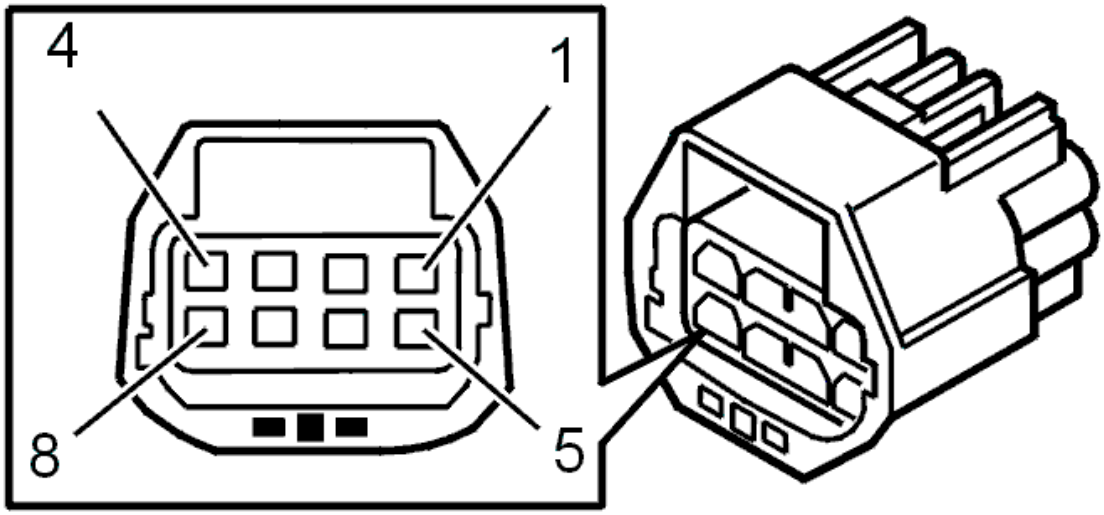

Fig. 212: Identifying 8-Pin Transmission Connector Terminals
Courtesy of VOLVO CARS CORPORATION

- **Continue**

  Refer to **INFORMATION**

INFORMATION

FAULT-TRACING INFORMATION

If the fault is intermittent, do not verify fault-tracing if the fault does not recur.

It is possible to view the information again, or leave fault-tracing for this diagnostic trouble code (DTC).

TCM-0112: LINE PRESSURE SOLENOID SLS. SIGNAL TOO HIGH. PERMANENT FAULT (AW50/51 AWD; AW55-50/51SN; 2003-2007)

DIAGNOSTIC TROUBLE CODE (DTC) INFORMATION

see **DIAGNOSTIC TROUBLE CODE (DTC) INFORMATION**

SIGNAL TOO HIGH. PERMANENT FAULT

CHECKS

CHECKING LINE PRESSURE SOLENOID SLS

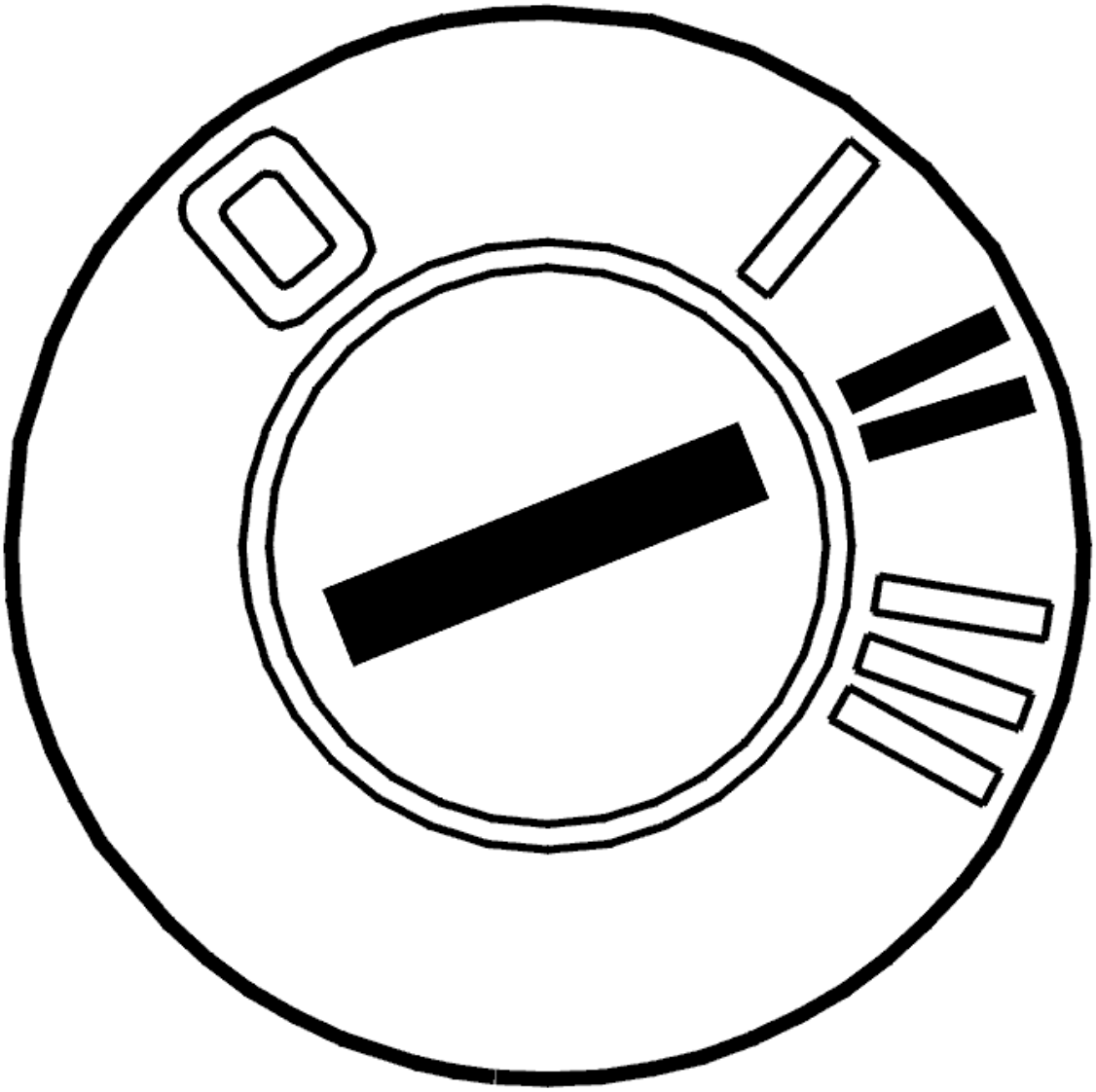

Fig. 213: Identifying Ignition ON
Courtesy of VOLVO CARS CORPORATION

- Ignition on
- Activate solenoid SLS.

  Read off the current through the solenoid SLS circuit.

  The current should oscillate between 0 and 1000 mA.

  Other information:

  - To disconnect the transmission connectors, see **CONNECTORS, TRANSMISSION, DISCONNECTING / CONNECTING**
  - To disconnect the control module, see **TRANSMISSION CONTROL MODULE (TCM),**

REPLACING

- For information about signals, see **SIGNAL DESCRIPTION. TRANSMISSION CONTROL MODULE (TCM)** .

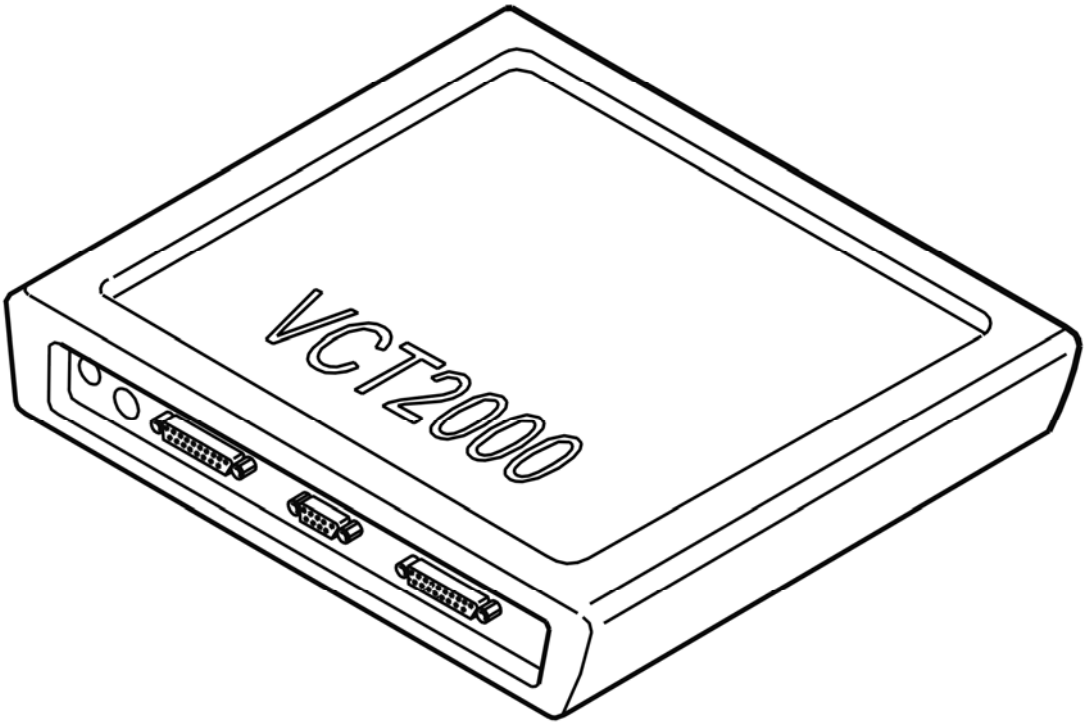

Fig. 214: Identifying VCT2000 Diagnostic Tool Symbol In VIDA
Courtesy of VOLVO CARS CORPORATION

Does the current oscillate?

- **YES**

  FAULT NOT FOUND: Troubleshooting has been completed.

- **NO**

  Refer to **CHECKING THE WIRING**

CHECKING THE WIRING

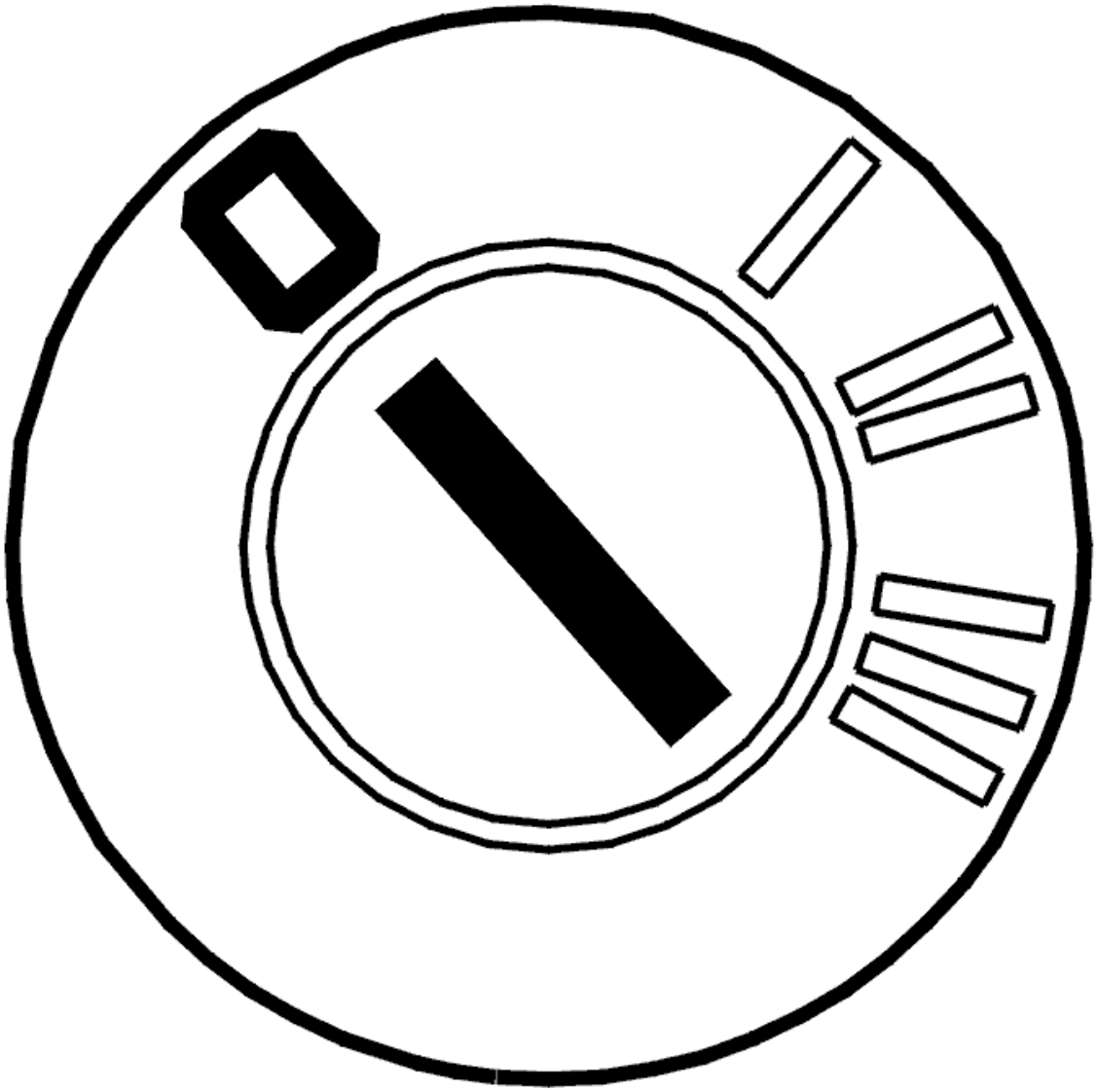

Fig. 215: Identifying Ignition OFF
Courtesy of VOLVO CARS CORPORATION

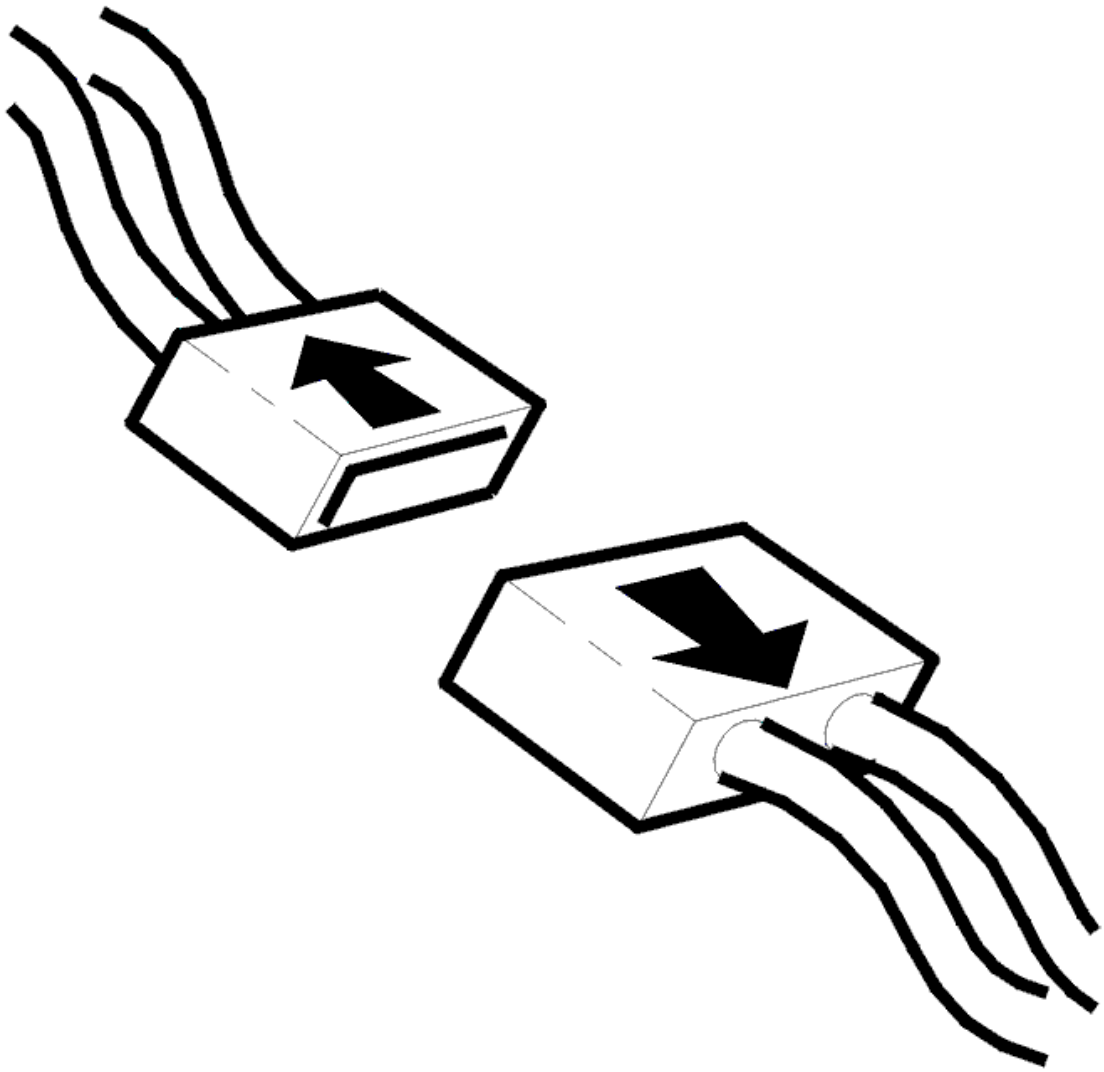

Fig. 216: Identifying Connector(s) Disconnected
Courtesy of VOLVO CARS CORPORATION

- Ignition off
- The breakout box connected
- Disconnect transmission connector D.

  Check the cable between control module terminal #A49 (#A49) and transmission connector terminal #D5 (control module side). Check for a short-circuit to supply voltage. See **SHORT-CIRCUIT TO SUPPLY VOLTAGE. PERMANENT FAULTS** .

  Check the cable between control module terminal #B7 (#A67) and transmission connector terminal #D6 (control module side). Check for a short-circuit to supply voltage. See **SHORT-CIRCUIT TO SUPPLY VOLTAGE. PERMANENT FAULTS** .

Check the wiring in the circuit for short-circuits to other cables in the circuit.

Remedy as necessary.

Other information:

- To connect the breakout box, see **CONNECTING THE BREAKOUT BOX**
- To disconnect the transmission connectors, see **CONNECTORS, TRANSMISSION, DISCONNECTING / CONNECTING**
- For information about signals, see **SIGNAL DESCRIPTION. TRANSMISSION CONTROL MODULE (TCM)** .

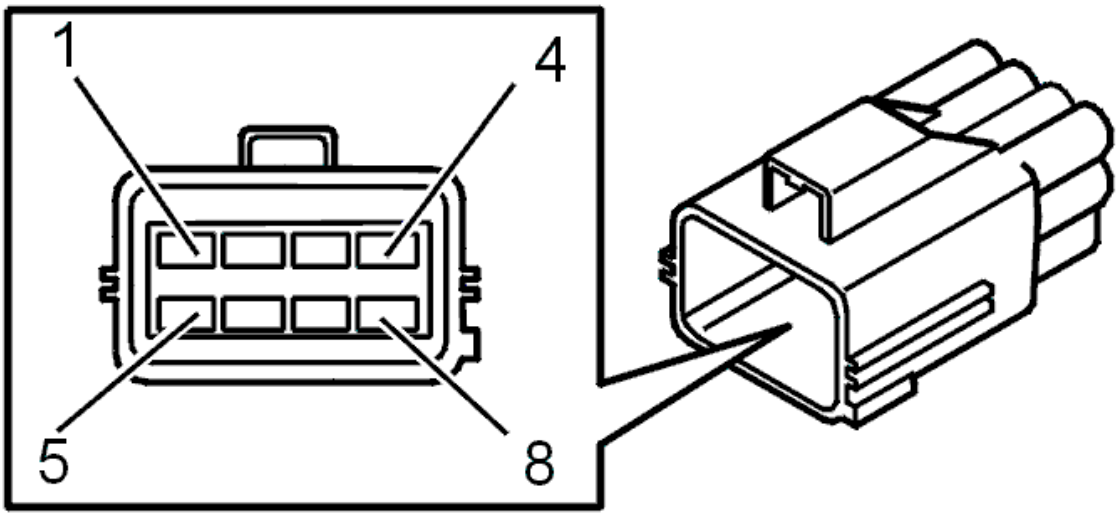

Fig. 217: Identifying Transmission Connector Terminals
Courtesy of VOLVO CARS CORPORATION

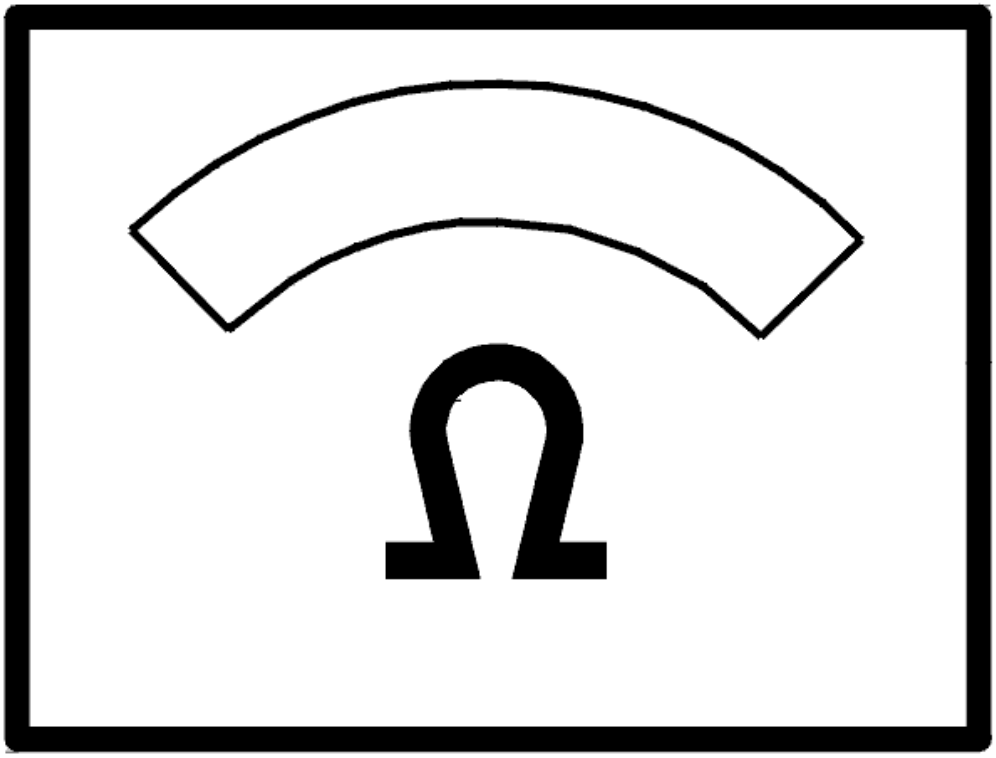

Fig. 218: Identifying Ohms Display
Courtesy of VOLVO CARS CORPORATION

Was a fault found in the wiring?

- **YES**

  Refer to **VERIFICATION**

- **NO**

  Refer to **CHECKING THE WIRING AND COMPONENT**

CHECKING THE WIRING AND COMPONENT

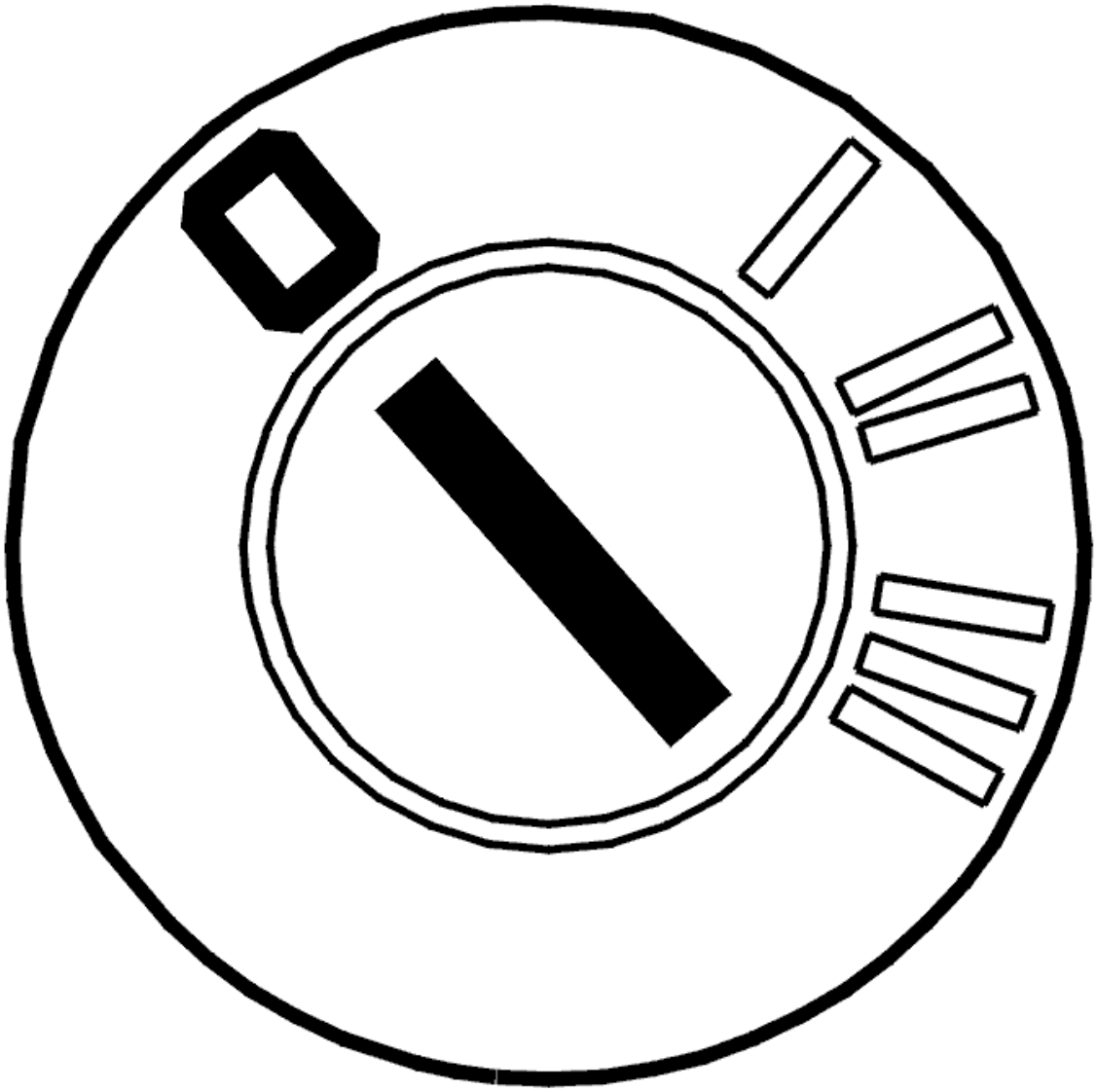

Fig. 219: Identifying Ignition OFF
Courtesy of VOLVO CARS CORPORATION

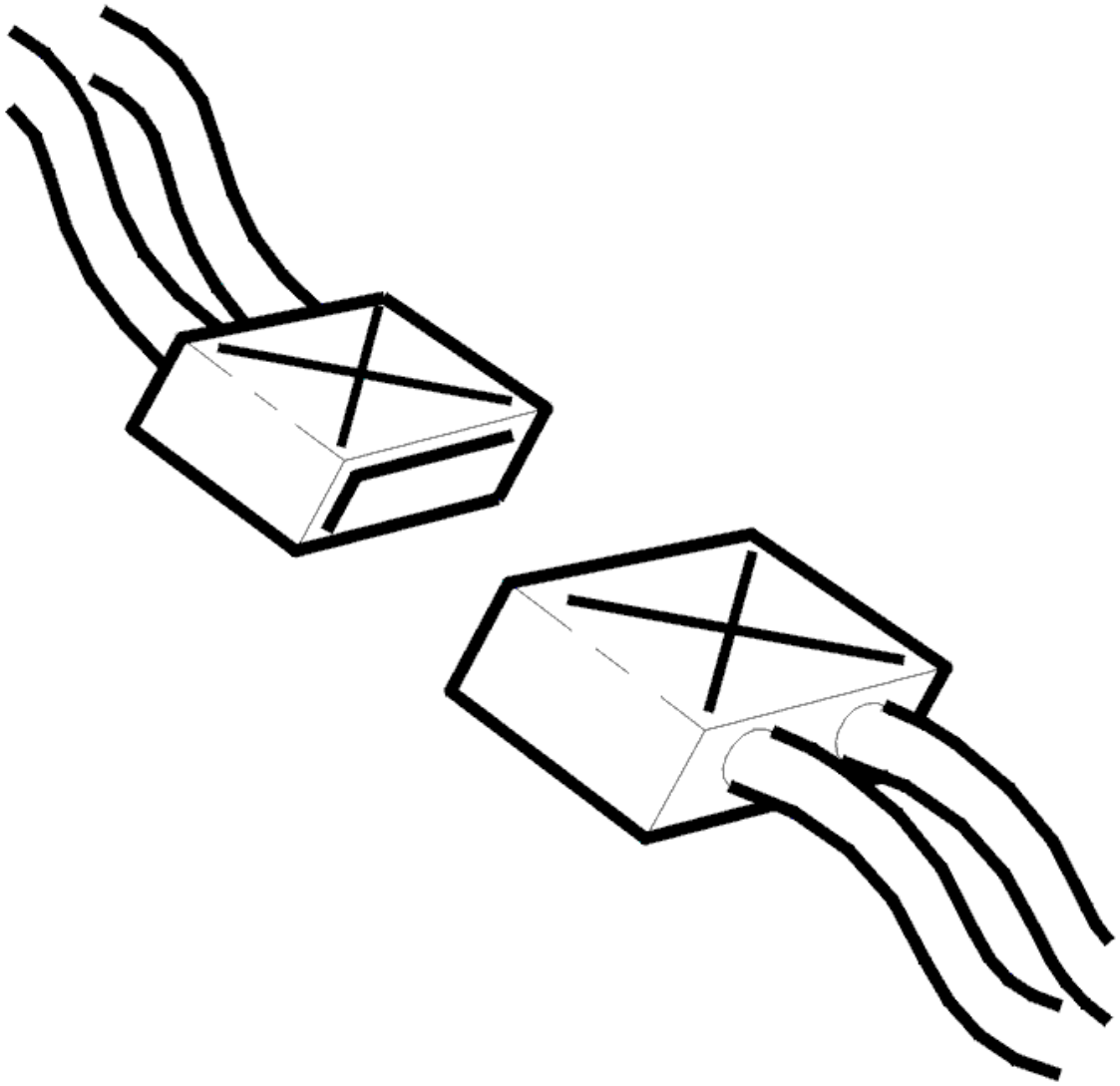

Fig. 220: Identifying Connectors
Courtesy of VOLVO CARS CORPORATION

- Ignition off
- Open the transmission control system.

  Check the wiring between transmission connector terminal #D5 (transmission side) and solenoid SLS terminal #1. Check the wiring between transmission connector terminal #D6 (transmission side) and solenoid SLS terminal #2. Check for a short-circuit to supply voltage. See **SHORT-CIRCUIT TO SUPPLY VOLTAGE. PERMANENT FAULTS** .

  Also check against the other cables in the circuit.

  Check solenoid SLS by measuring the resistance between terminals #1 and #2 on the connector. The resistance must be 5-5.6 ohms (at 20°C). Replace the transmission control system if the resistance is incorrect.

Other information:

- To disconnect the transmission connectors, see **CONNECTORS, TRANSMISSION, DISCONNECTING / CONNECTING**
- To open and replace the transmission control system, see **SOLENOID CONTROL SYSTEM, REPLACING**
- To replace the cable harness for the control system, see **TEMPERATURE SENSOR FLUID, TRANSAXLE, (TFT)**
- For information about signals, see **SIGNAL DESCRIPTION. TRANSMISSION CONTROL MODULE (TCM)** .

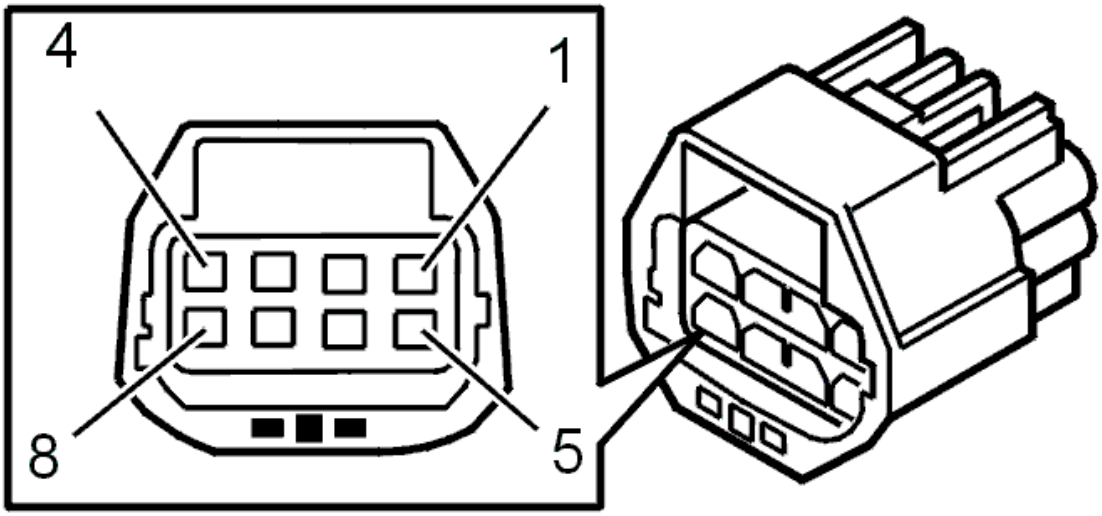

Fig. 221: Identifying 8-Pin Transmission Connector Terminals
Courtesy of VOLVO CARS CORPORATION

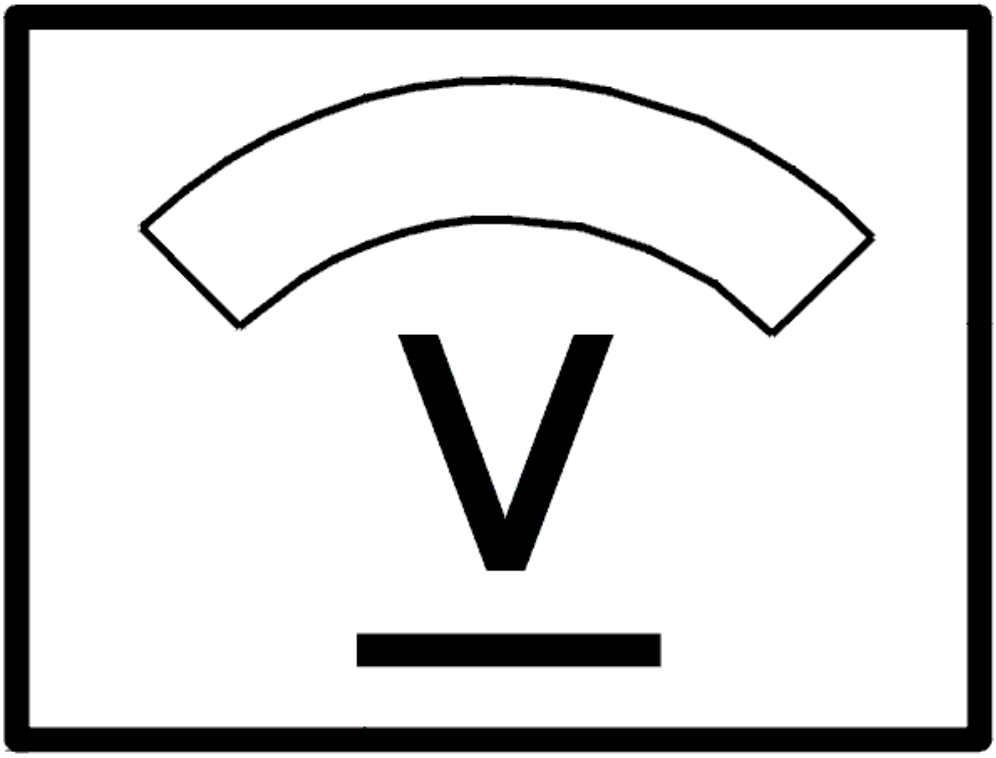

Fig. 222: Identifying Voltage Display
Courtesy of VOLVO CARS CORPORATION

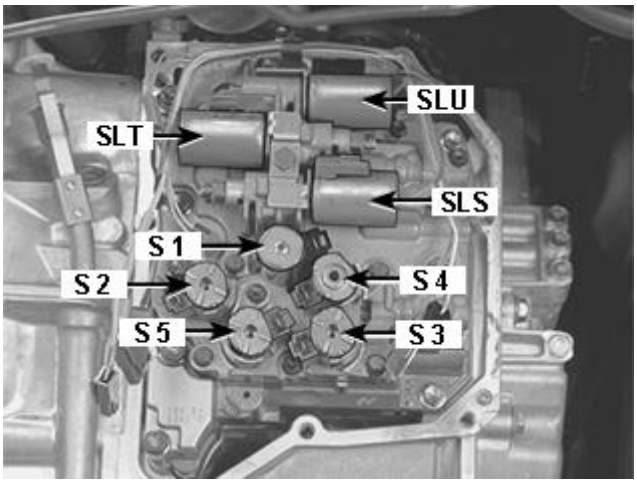

Fig. 223: Identifying S1-S5, SLT, SLU And SLS Solenoids
Courtesy of VOLVO CARS CORPORATION

- **Continue**

Refer to **RESETTING THE ADAPTATION**

RESETTING THE ADAPTATION

RESETTING ADAPTATION AND THE COUNTER FOR "TRANSMISSION OIL CHANGE"

HINT: The transmission has torque controlled adaptive pressure control. Pressure control means that the transmission regulates the pressure itself during each gear shift. This avoids harsh gear shifting. Each gear shift is evaluated by the control module and stored in the memory. This allows for compensation for wear and tear in the transmission and clutch. It is important that the adaptation in the memory is reset after the transmission has been repaired. This is to ensure normal operation. The oil is replaced during repair; the "Transmission oil change" counter must be reset. If the counter is not reset when the fluid is drained and replaced, there is a risk that a diagnostic trouble code (DTC) will be stored in incorrect circumstances.

NOTE: **This applies only if the transmission or one of the components in the transmission have been replaced.**

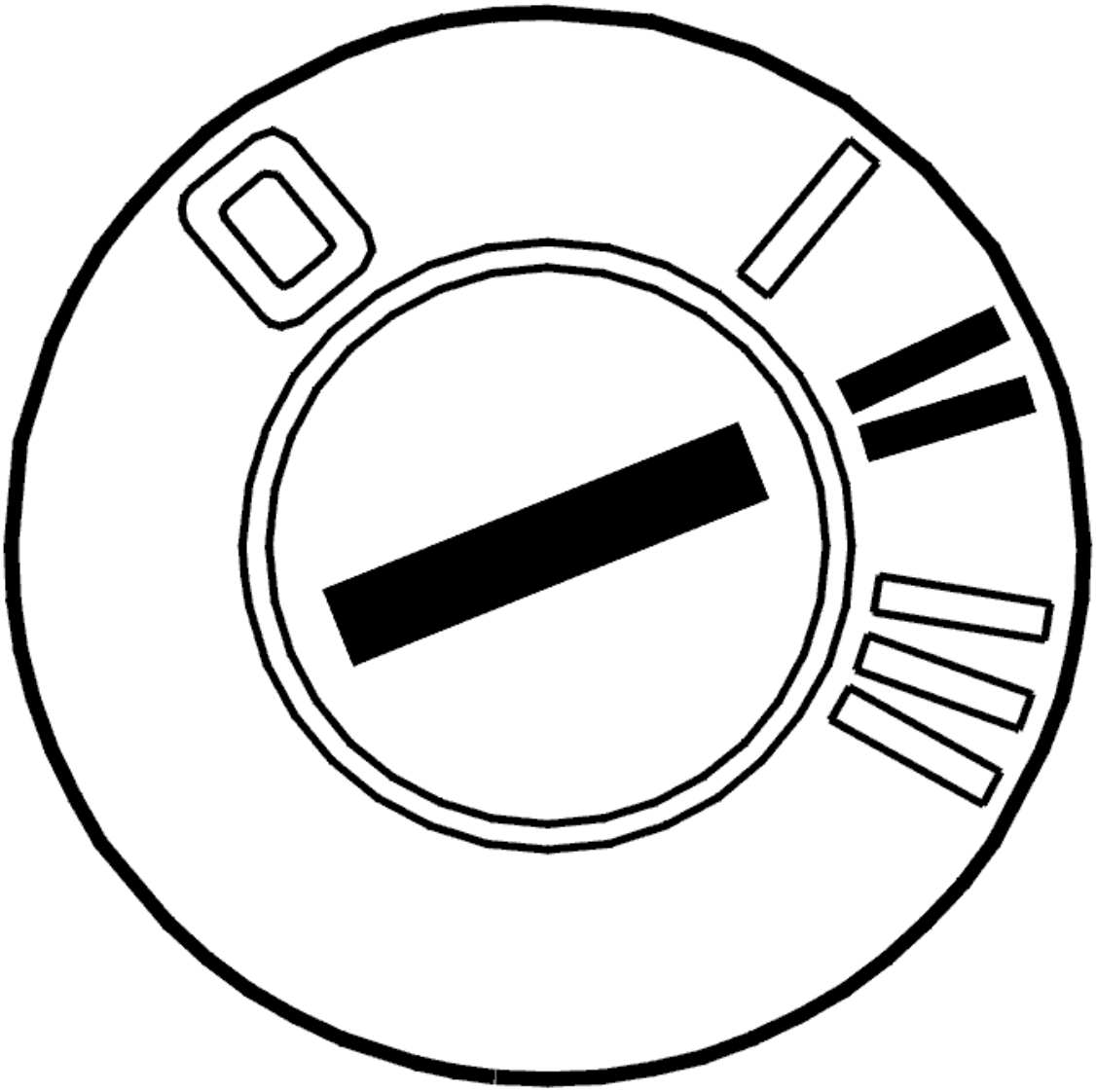

Fig. 224: Identifying Ignition ON
Courtesy of VOLVO CARS CORPORATION

- Ignition on.

  Click on the VCT2000 symbol to reset the adaptation and counter.

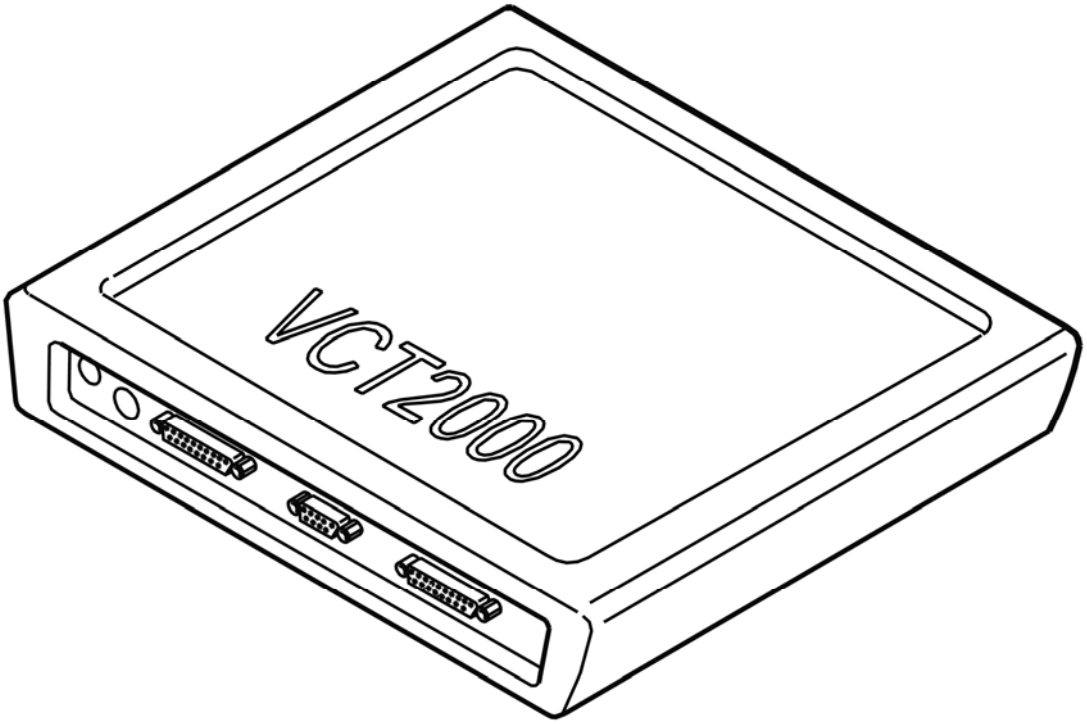

Fig. 225: Identifying VCT2000 Diagnostic Tool Symbol In VIDA
Courtesy of VOLVO CARS CORPORATION

- **Continue**

  Refer to **VERIFICATION**

VERIFICATION

VERIFICATION

HINT: After carrying out the repair, check that the fault has been remedied.

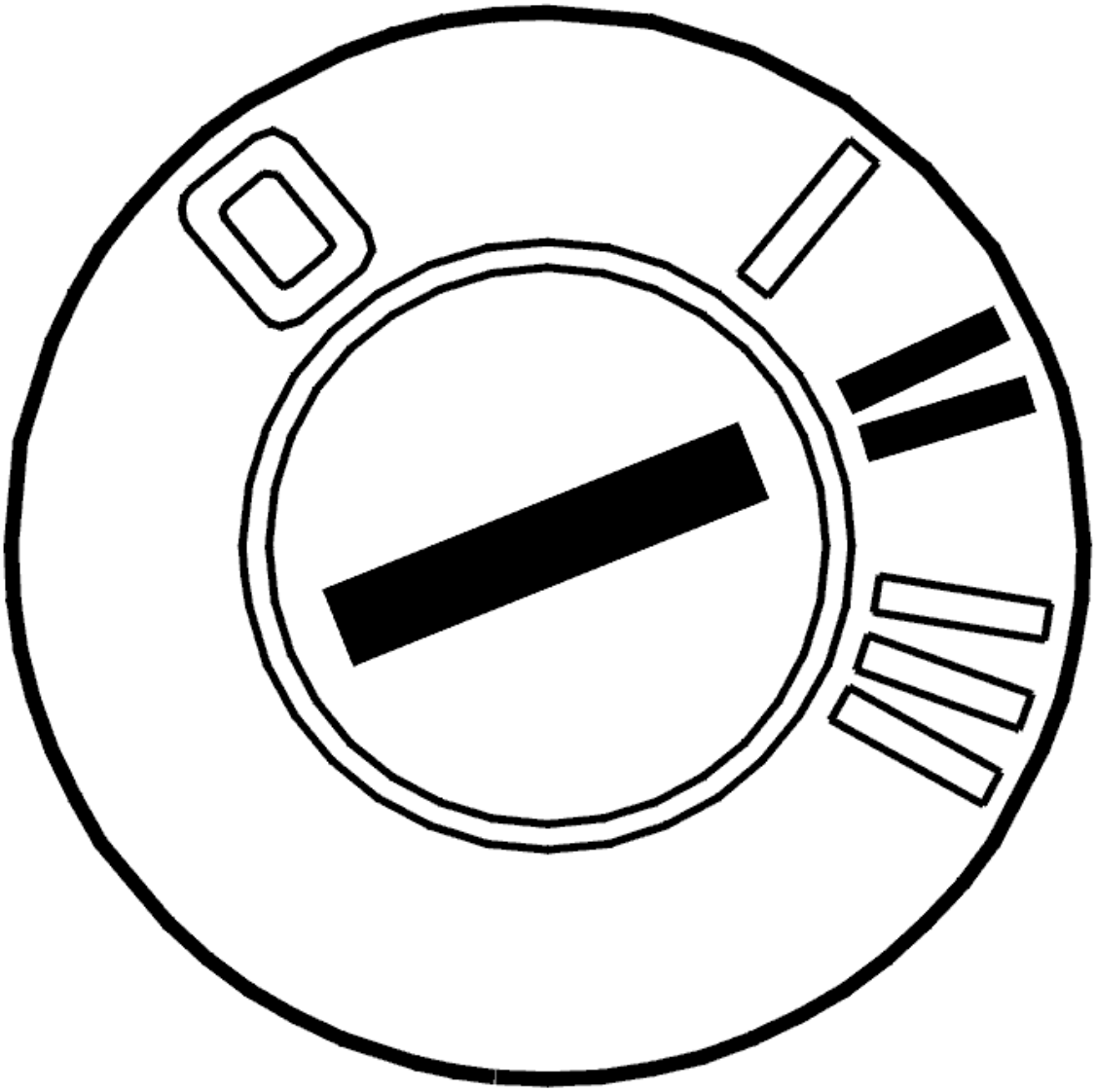

Fig. 226: Identifying Ignition ON
Courtesy of VOLVO CARS CORPORATION

- Ignition on.
- Activate solenoid SLU.

  Read off the current through the solenoid SLU circuit.

  The current should oscillate between 0 and 1000 mA.

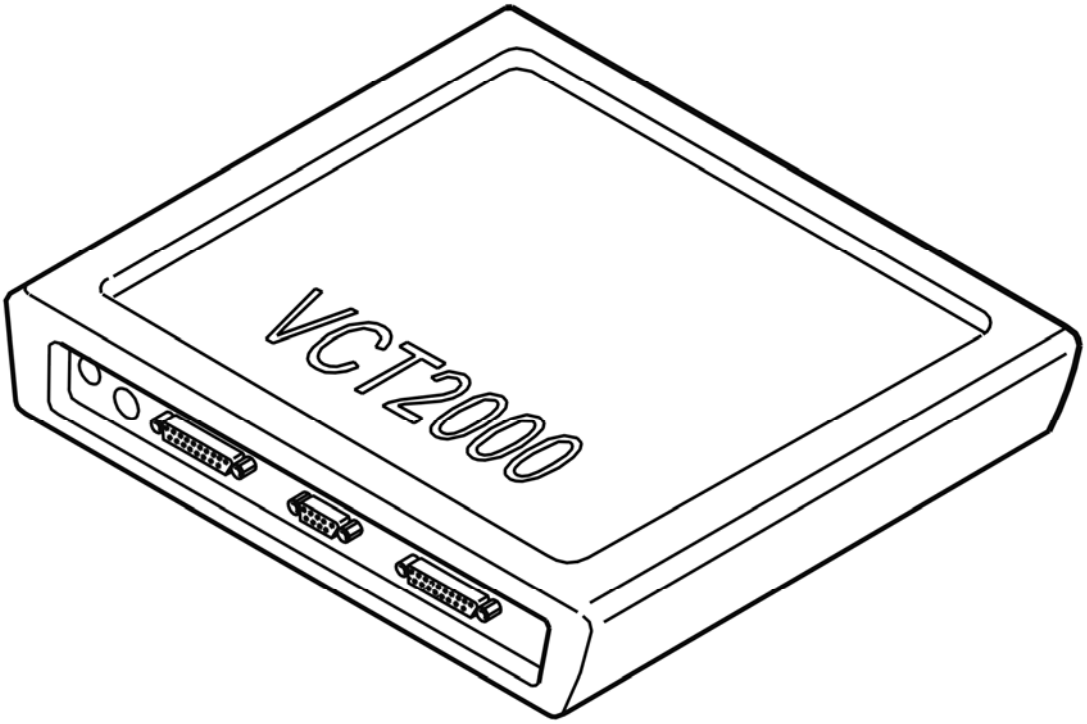

Fig. 227: Identifying VCT2000 Diagnostic Tool Symbol In VIDA
Courtesy of VOLVO CARS CORPORATION

Does the current oscillate?

- **YES**

  VERIFIED: Troubleshooting has been completed.

- **NO**

  Refer to **INFORMATION**

INFORMATION

FAULT-TRACING INFORMATION

The fault should have been detected and remedied. As this is not the case fault-tracing has failed.

Exit fault-tracing for this diagnostic trouble code (DTC) or make another attempt.

TCM-0113: LINE PRESSURE SOLENOID SLS. SIGNAL MISSING. INTERMITTENT FAULT (AW50/51 AWD; AW55-50/51SN; 2003-2007)

DIAGNOSTIC TROUBLE CODE (DTC) INFORMATION

Condition

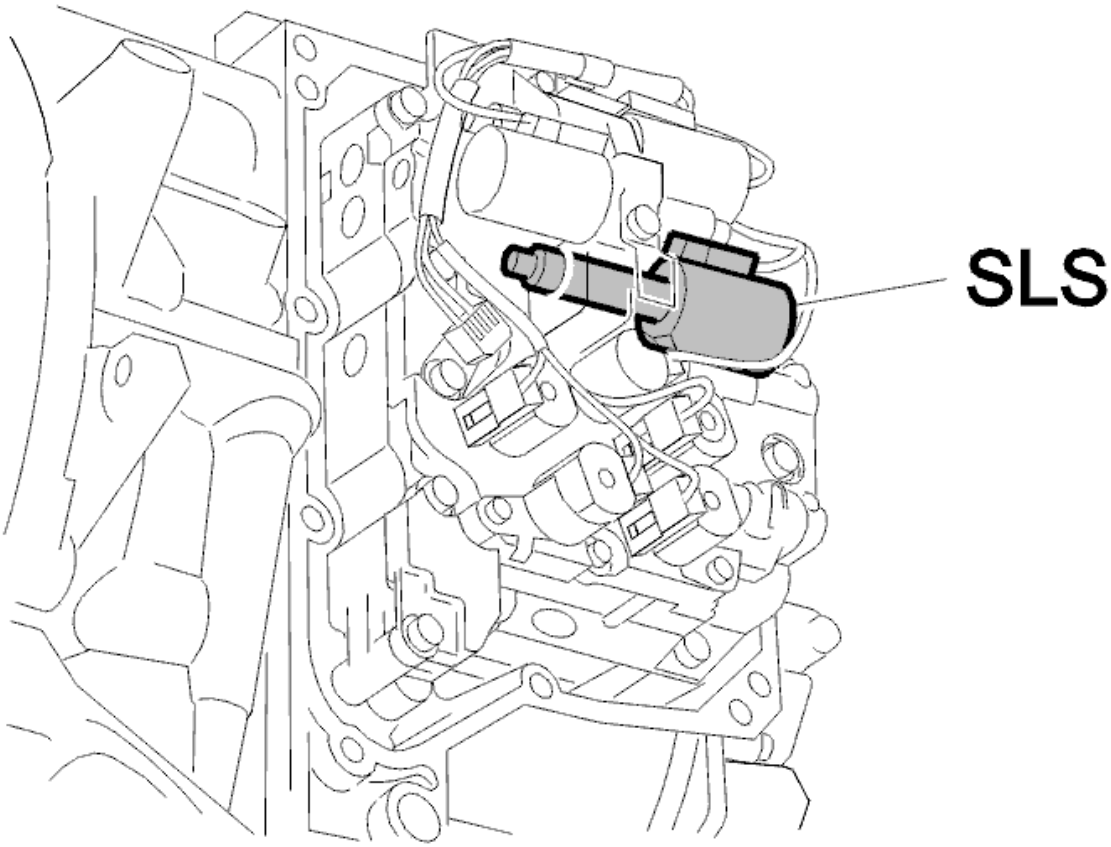

Fig. 228: Identifying Line Pressure Solenoid SLS
Courtesy of VOLVO CARS CORPORATION

Line pressure solenoid SLS regulates the line pressure in the transmission. The solenoid is controlled by a power stage in the transmission control module (TCM) output. The transmission control module (TCM) uses the power stage to control the current to the solenoid. A low amperage results in a high line pressure. A high amperage (approximately 1 A) gives a low line pressure. The amperage is primarily affected by the throttle position. Diagnostic trouble code (DTC) TCM-113 is stored if the control module registers that there is an open-circuit in the circuit for solenoid SLS. Solenoid SLS cannot then control the line pressure.

Substitute Value

- The transmission control module (TCM) Emergency mode III program is initiated.

Possible Source

- Open-circuit in the control signal cable or the signal cable.
- Defective solenoid.
- Open-circuit in the power ground.

- Contact resistance in terminals.
- Defective control module.

Fault symptom[s]

- General orange warning lamp lit.
- No lock-up function.
- Harsh gear shifting.

HINT: Harsh gear shifting can be caused by:

- No torque limiting request to the engine control module (ECM) when shifting.
- No line pressure solenoid SLS control. This results in constant maximum line pressure.

SIGNAL MISSING. INTERMITTENT FAULT

INTERMITTENT FAULT

Check the transmission control module (TCM) and transmission connectors. Check for contact resistance and oxidation according to **CONTACT RESISTANCE AND OXIDATION** .

Check the wiring between control module terminal #A49 (#A49) and transmission connector terminal #D5. Check the wiring between control module terminal #B7 (#A67) and transmission connector terminal #D6. Check for an intermittent open-circuit according to **OPEN-CIRCUIT, INTERMITTENT FAULTS** .

HINT: Check solenoid SLS. Measure the resistance between terminals #D5 and #D6 on transmission connector D. The resistance should be 5-6 ohms at 20°C.

Remedy as necessary.

Other information:

- To connect the breakout box, see **CONNECTING THE BREAKOUT BOX**
- To disconnect the transmission control module (TCM), see **TRANSMISSION CONTROL MODULE (TCM), REPLACING**
- To disconnect the transmission connectors, see **CONNECTORS, TRANSMISSION, DISCONNECTING / CONNECTING**
- For information about signals, see **SIGNAL DESCRIPTION. TRANSMISSION CONTROL MODULE (TCM)** .

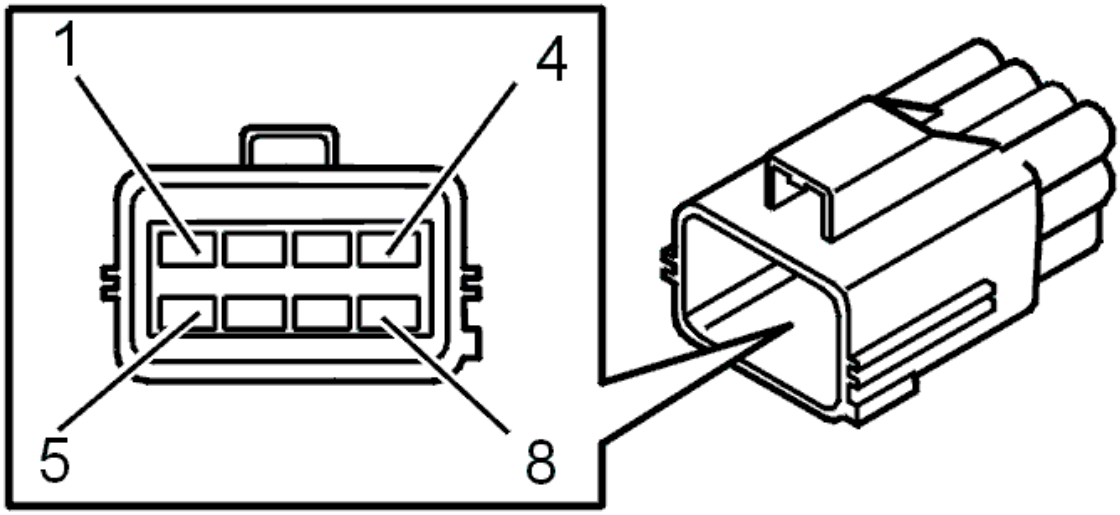

Fig. 229: Identifying Transmission Connector Terminals
Courtesy of VOLVO CARS CORPORATION

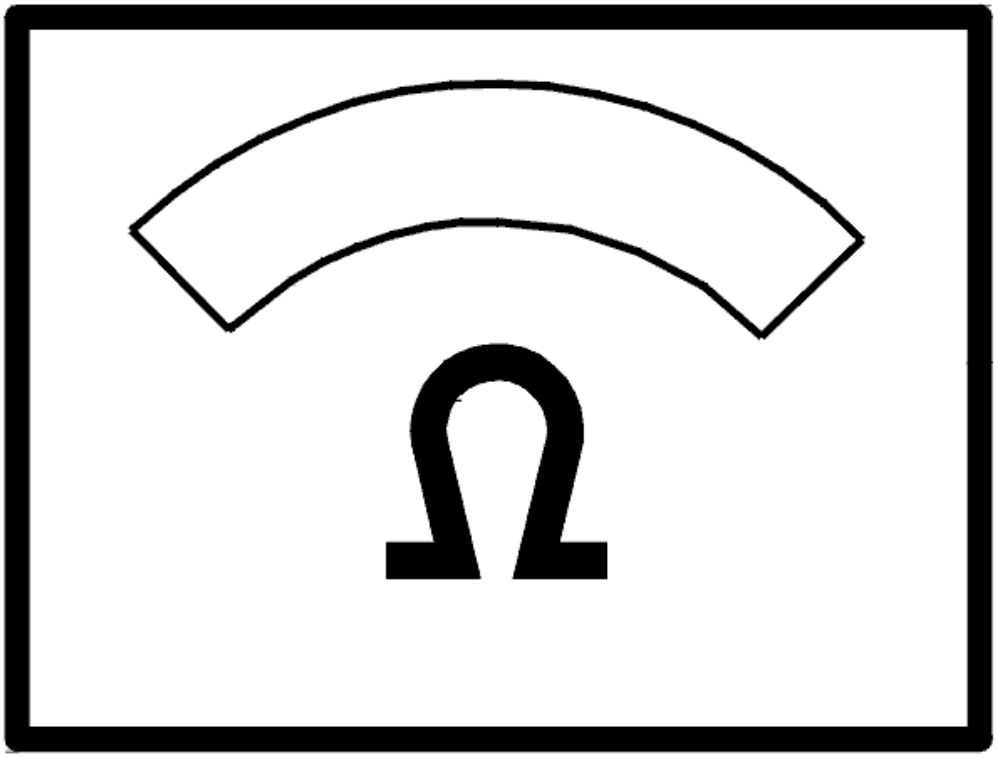

Fig. 230: Identifying Ohms Display
Courtesy of VOLVO CARS CORPORATION

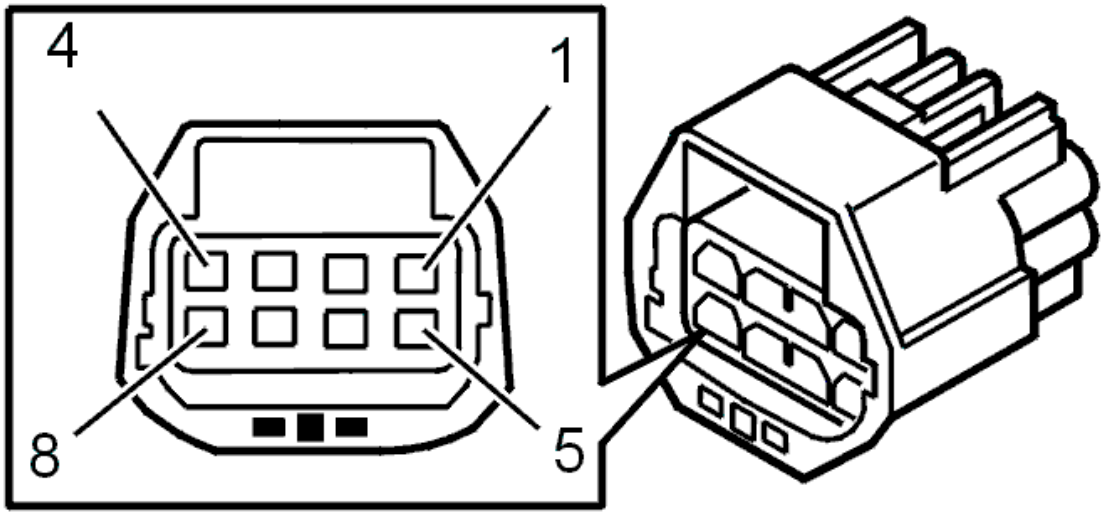

Fig. 231: Identifying 8-Pin Transmission Connector Terminals
Courtesy of VOLVO CARS CORPORATION

- **Continue**

  Refer to **INFORMATION**

INFORMATION

FAULT-TRACING INFORMATION

If the fault is intermittent, do not verify fault-tracing if the fault does not recur.

It is possible to view the information again, or leave fault-tracing for this diagnostic trouble code (DTC).

TCM-0113: LINE PRESSURE SOLENOID SLS. SIGNAL MISSING. PERMANENT FAULT (AW50/51 AWD; AW55-50/51SN; 2003-2007)

DIAGNOSTIC TROUBLE CODE (DTC) INFORMATION

see **DIAGNOSTIC TROUBLE CODE (DTC) INFORMATION**

SIGNAL MISSING. PERMANENT FAULT

CHECKS

CHECKING LINE PRESSURE SOLENOID SLS

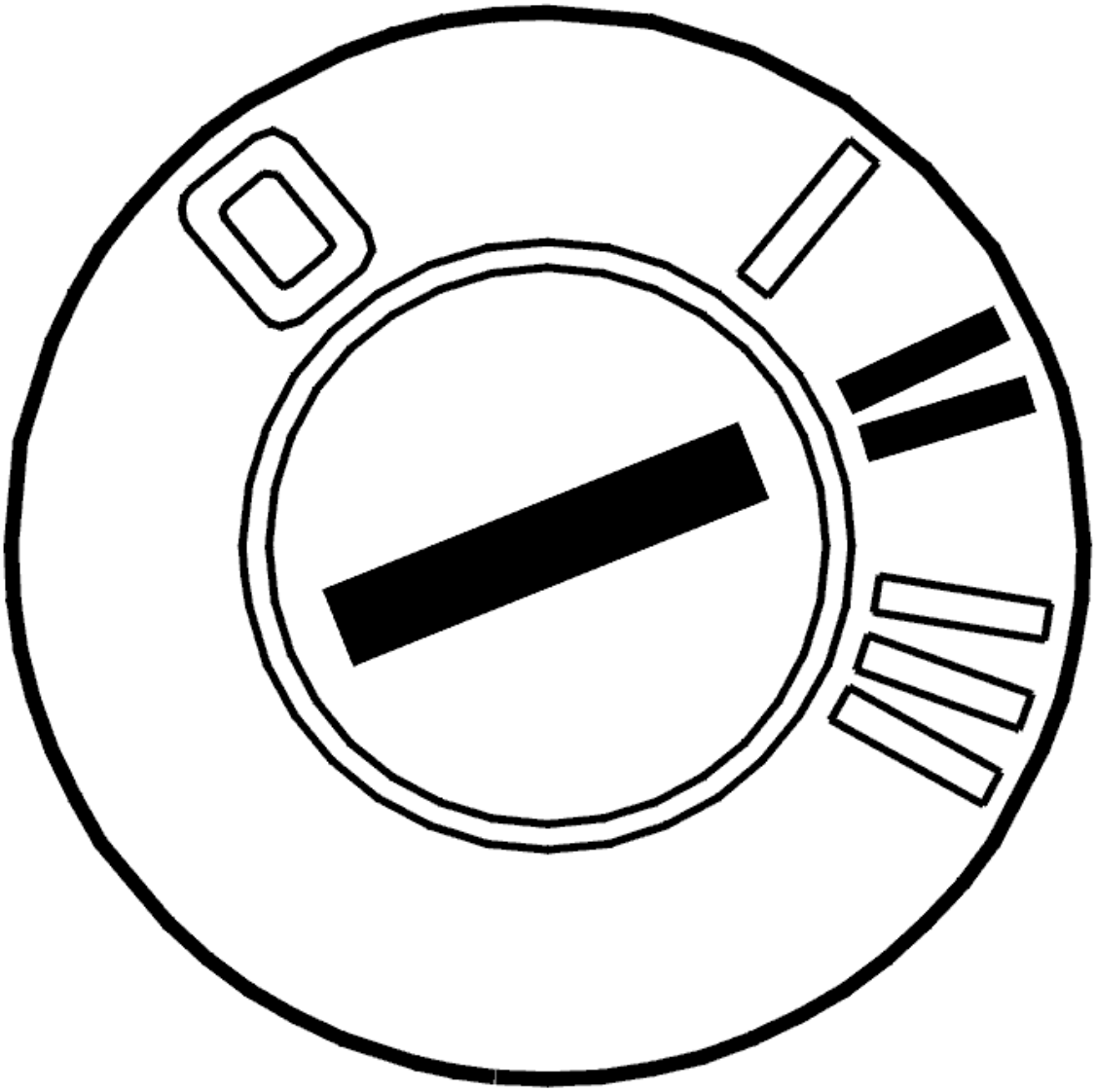

Fig. 232: Identifying Ignition ON
Courtesy of VOLVO CARS CORPORATION

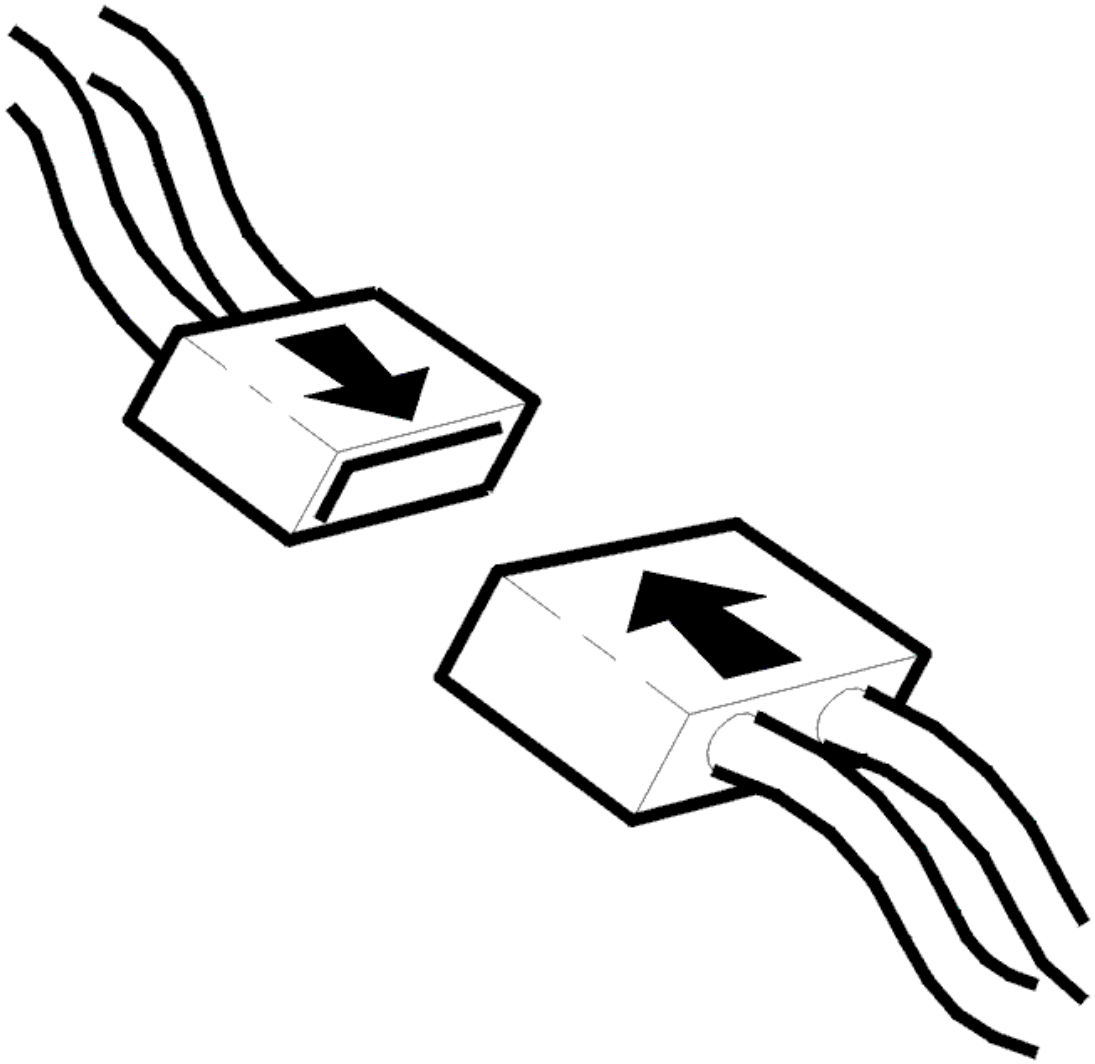

Fig. 233: Identifying Connector(s) Reinstallation
Courtesy of VOLVO CARS CORPORATION

- Ignition off
- Check the control module connector and automatic transmission connector D. Check for contact resistance and oxidation. See **CONTACT RESISTANCE AND OXIDATION** . Remedy if necessary
- Reinstall the components, reconnect the connectors etc.
- Ignition on
- Activate solenoid SLS.

  Read off the current through the solenoid SLS circuit.

  The current should oscillate between 0 and 1000 mA.

  Other information:

- To disconnect the transmission connectors, see **CONNECTORS, TRANSMISSION, DISCONNECTING / CONNECTING**
- To disconnect the control module, see **TRANSMISSION CONTROL MODULE (TCM), REPLACING**
- For information about signals, see **SIGNAL DESCRIPTION. TRANSMISSION CONTROL MODULE (TCM)** .

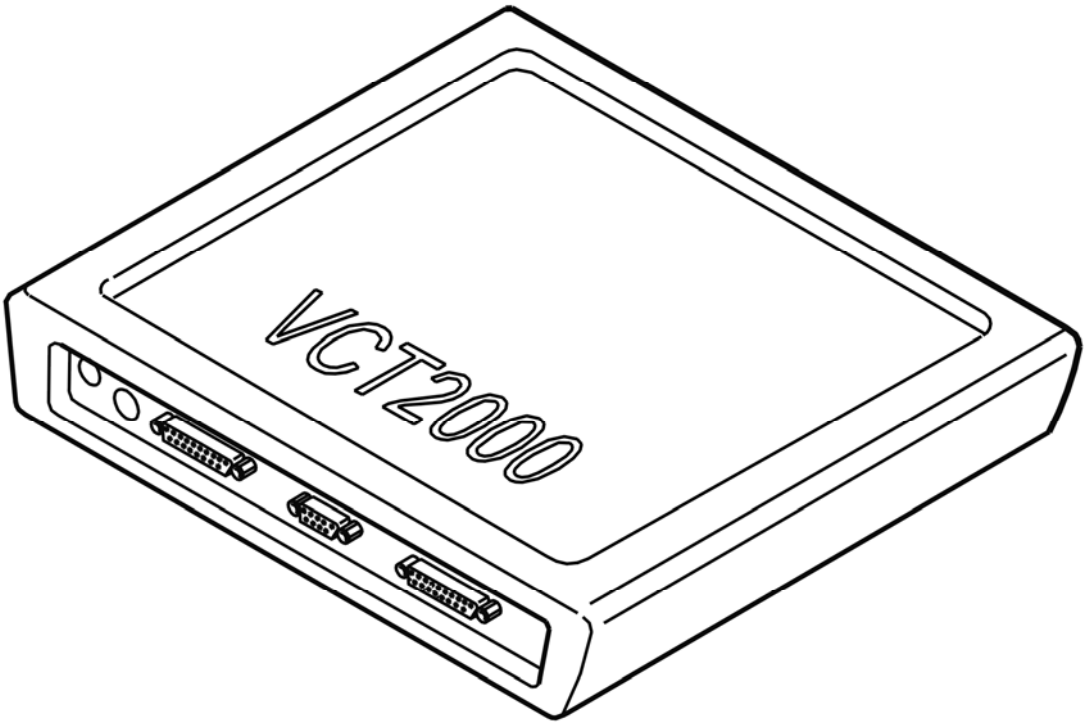

Fig. 234: Identifying VCT2000 Diagnostic Tool Symbol In VIDA
Courtesy of VOLVO CARS CORPORATION

Does the current oscillate?

- **YES**

  OKAY: Troubleshooting has been completed.

- **NO**

  Refer to **CHECKING RESISTANCE**

CHECKING RESISTANCE

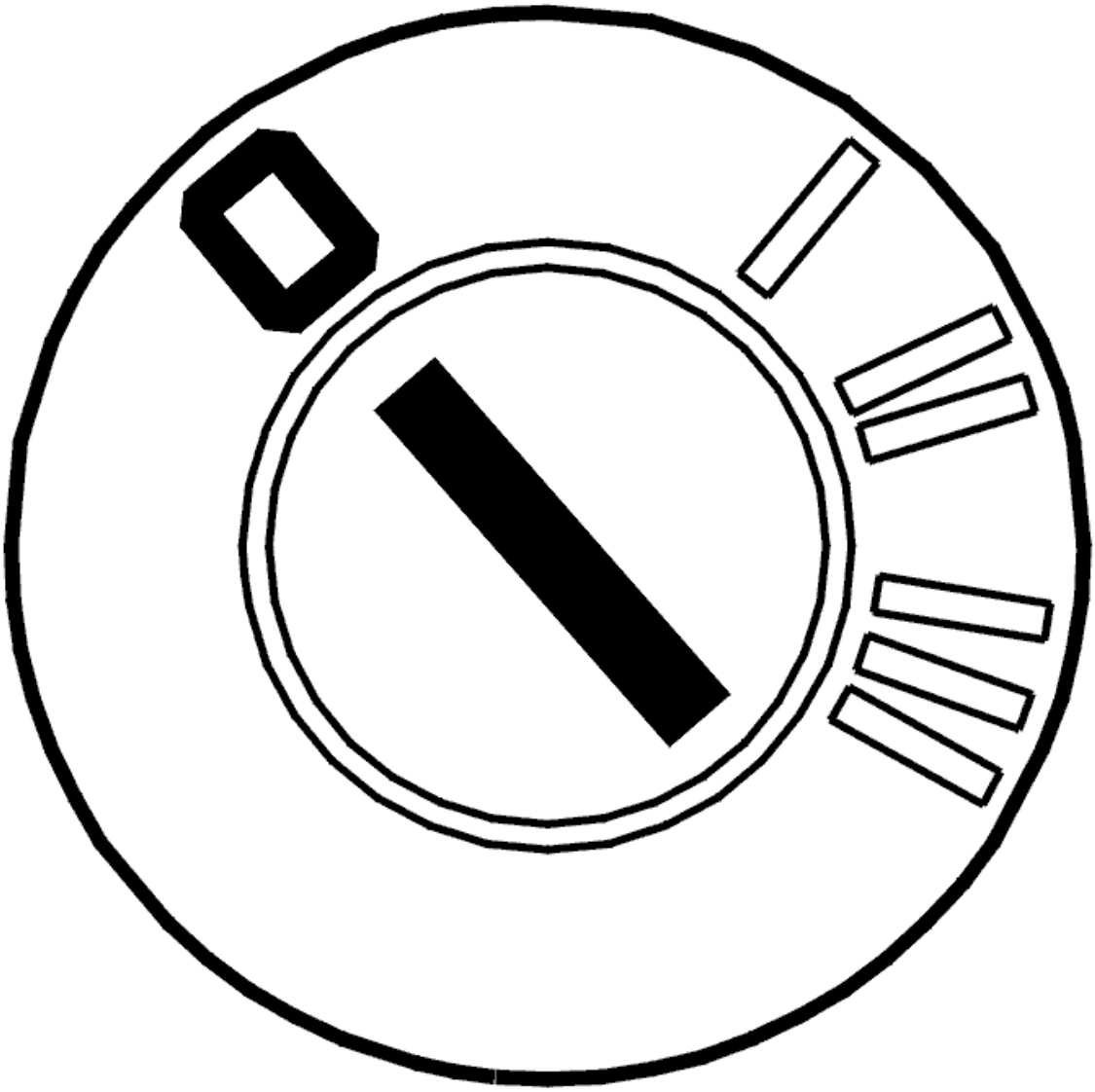

Fig. 235: Identifying Ignition OFF
Courtesy of VOLVO CARS CORPORATION

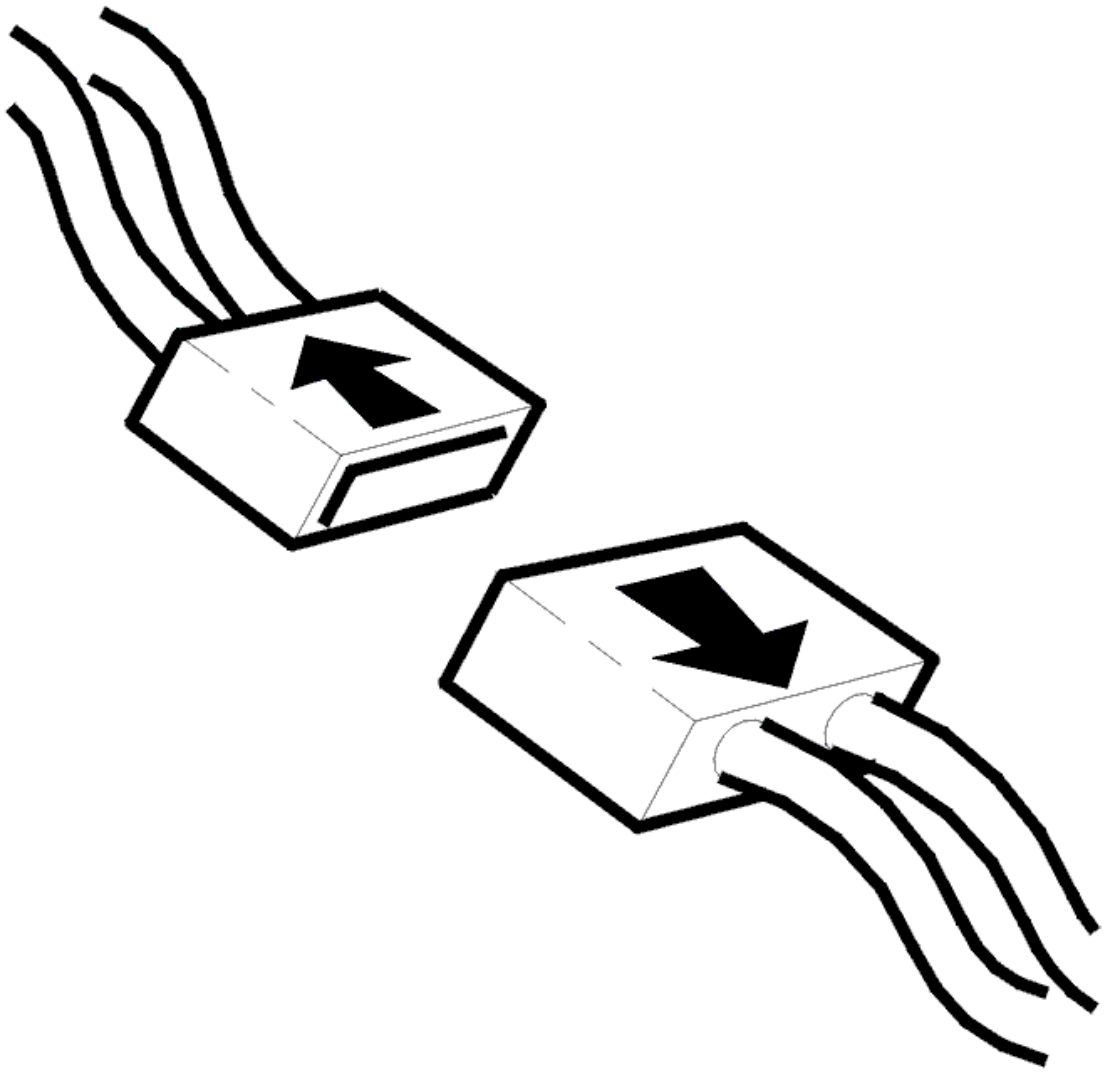

Fig. 236: Identifying Connector(s) Disconnected
Courtesy of VOLVO CARS CORPORATION

- Ignition off
- Disconnect transmission connector D.

  Check solenoid SLS. Measure the resistance between terminals #D5 and #D6 on transmission connector D. The resistance should be 5-5.6 ohms at 20°C.

  Other information:

  - To disconnect the transmission connectors, see **CONNECTORS, TRANSMISSION, DISCONNECTING / CONNECTING**
  - For information about signals, see **SIGNAL DESCRIPTION. TRANSMISSION CONTROL MODULE (TCM)** .

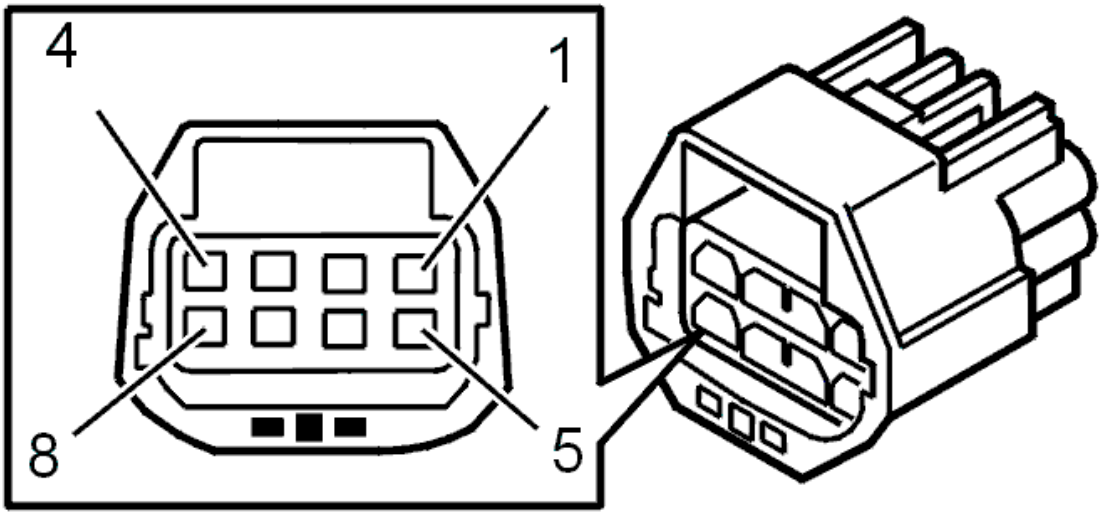

Fig. 237: Identifying 8-Pin Transmission Connector Terminals
Courtesy of VOLVO CARS CORPORATION

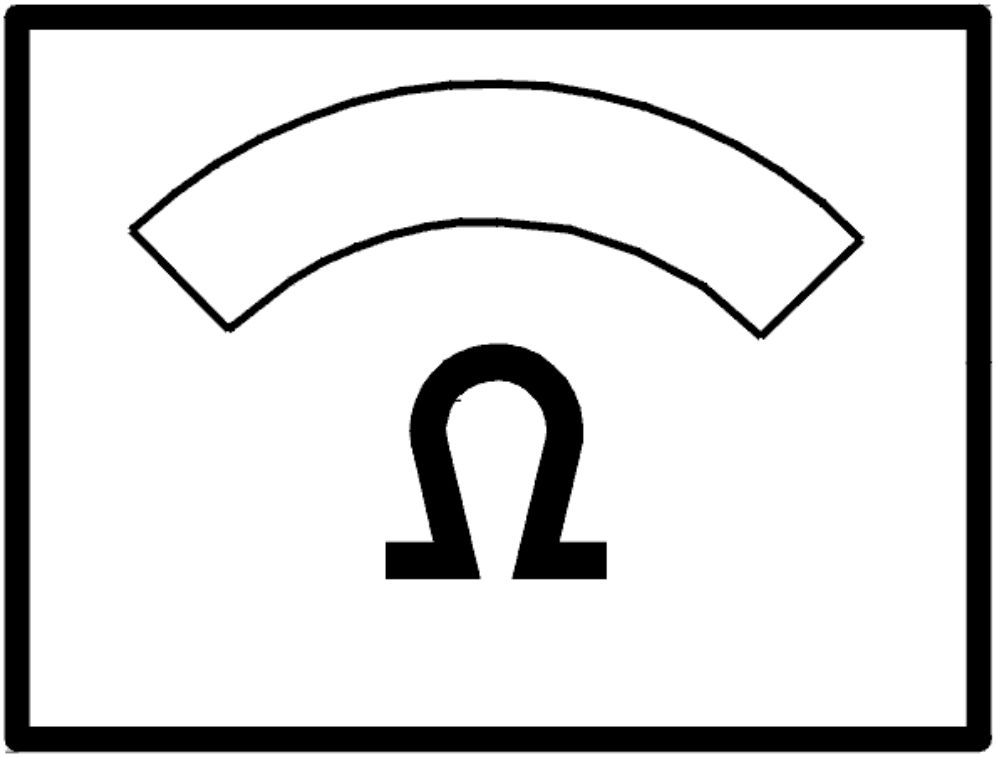

Fig. 238: Identifying Ohms Display
Courtesy of VOLVO CARS CORPORATION

Was the resistance OK?

- **YES**

  Refer to **CHECKING THE WIRING**

- **NO**

  Refer to **CHECKING THE WIRING AND COMPONENT**

CHECKING THE WIRING

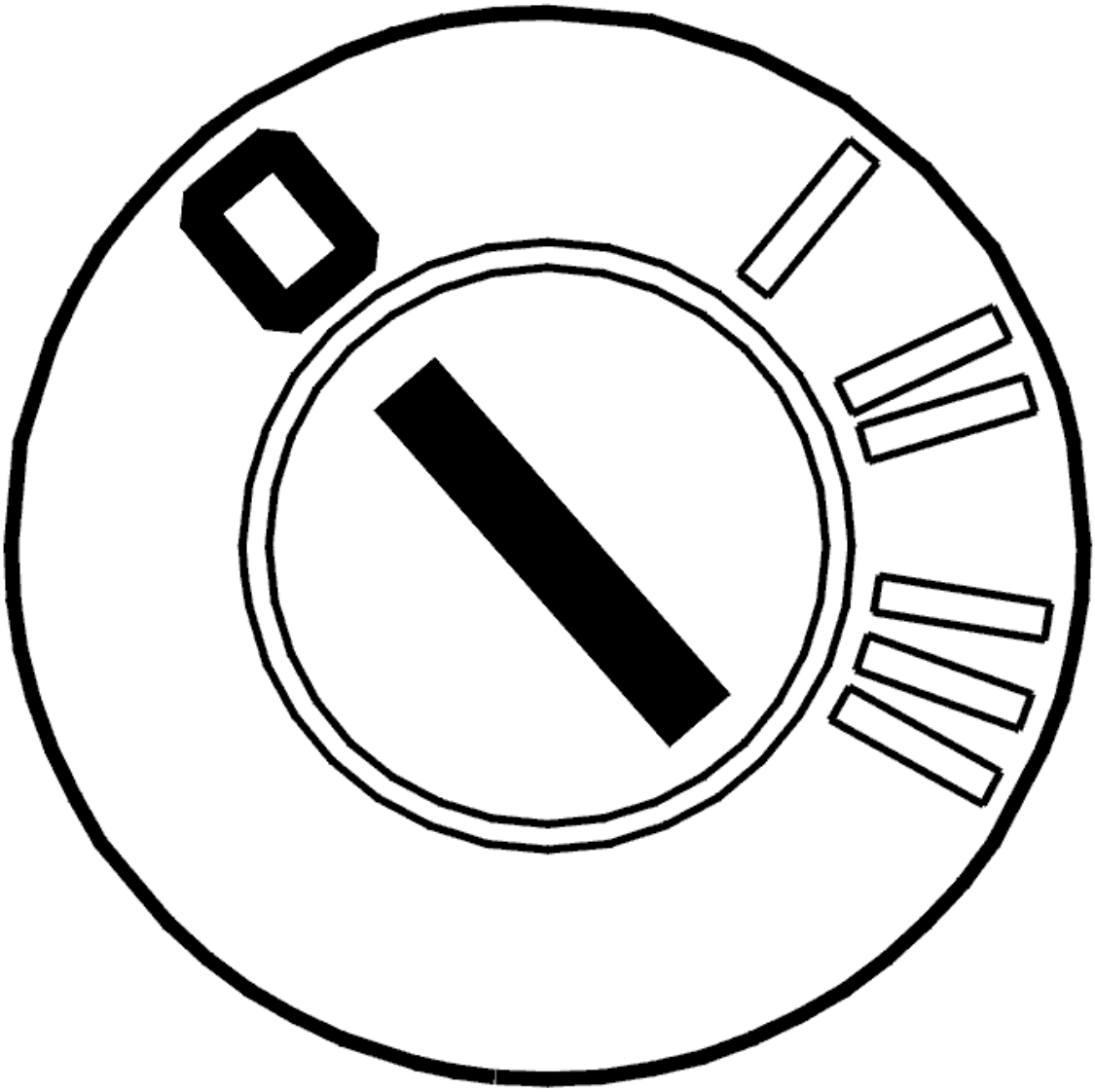

Fig. 239: Identifying Ignition OFF
Courtesy of VOLVO CARS CORPORATION

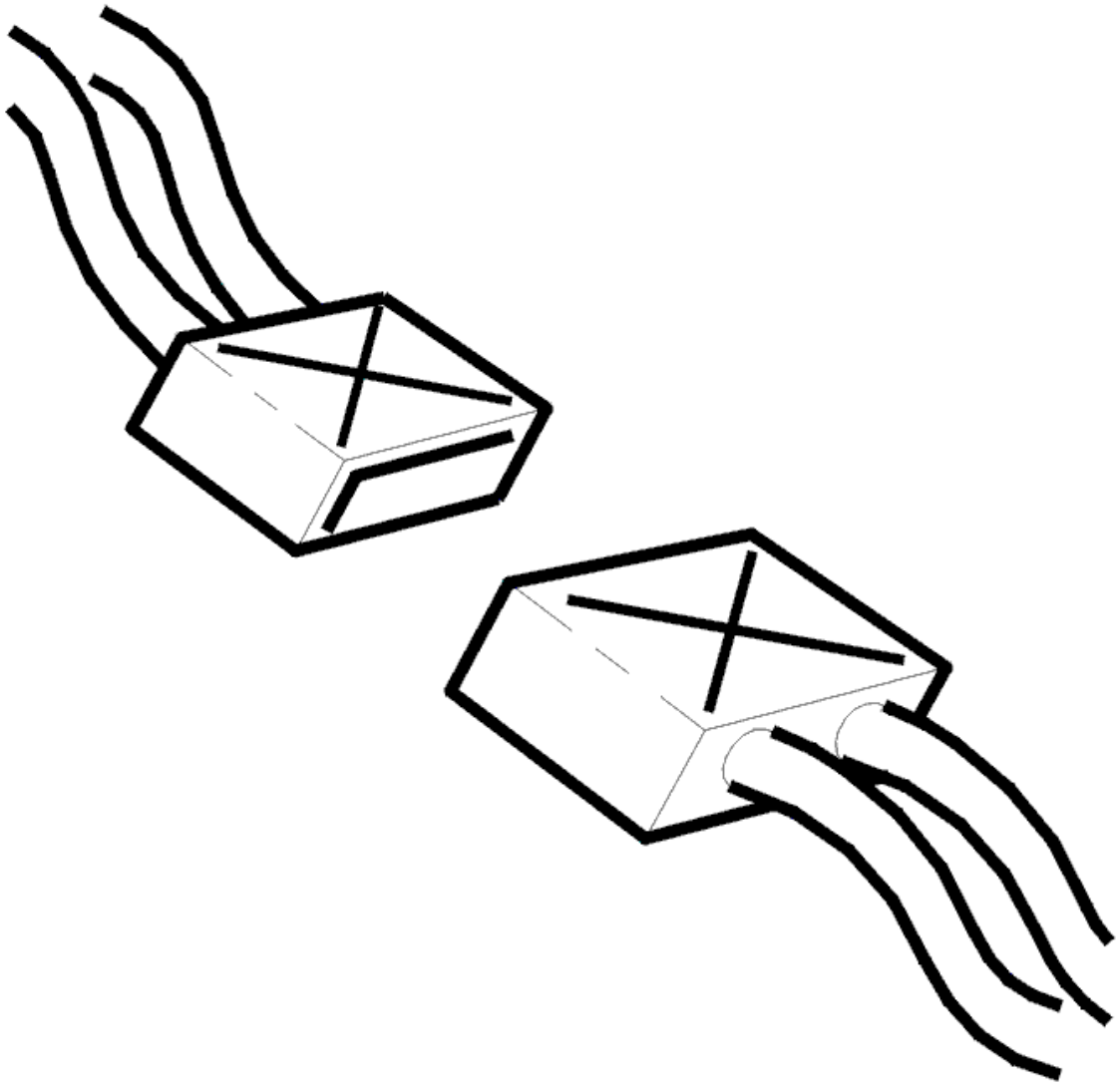

Fig. 240: Identifying Connectors
Courtesy of VOLVO CARS CORPORATION

- Ignition off
- The breakout box connected
- Transmission connector D disconnected.

  Check the cable between control module terminal #A49 (#A49) and transmission connector terminal #D5 (control module side). Check for an open-circuit. See **OPEN-CIRCUIT, PERMANENT FAULTS** .

  Check the cable between control module terminal #B7 (#A67) and transmission connector #D6 (control module side). Check for an open-circuit. See **OPEN-CIRCUIT, PERMANENT FAULTS** .

  Remedy as necessary.

Other information:

- To connect the breakout box, see **CONNECTING THE BREAKOUT BOX**
- To disconnect the transmission connectors, see **CONNECTORS, TRANSMISSION, DISCONNECTING / CONNECTING**
- For information about signals, see **SIGNAL DESCRIPTION. TRANSMISSION CONTROL MODULE (TCM)** .

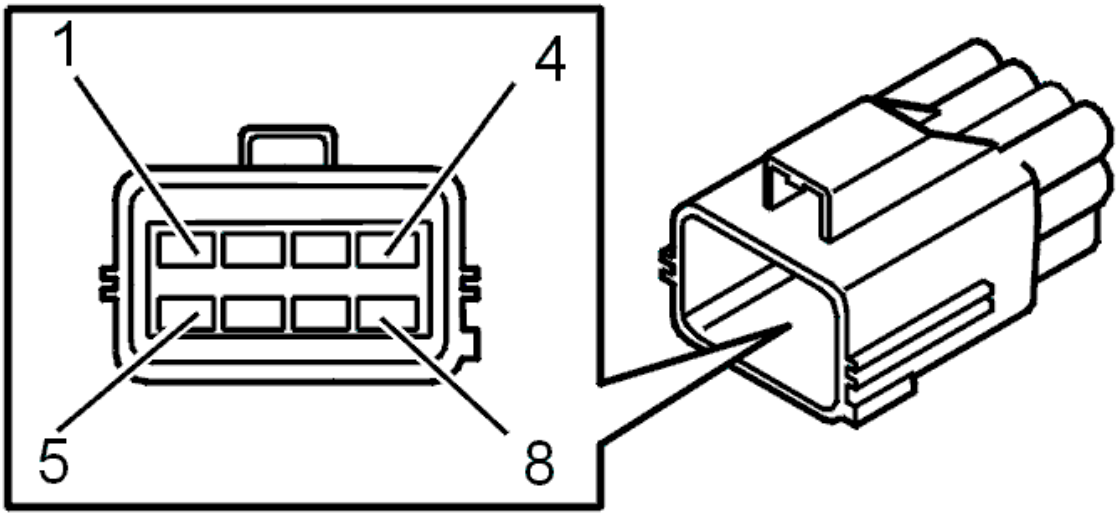

Fig. 241: Identifying Transmission Connector Terminals
Courtesy of VOLVO CARS CORPORATION

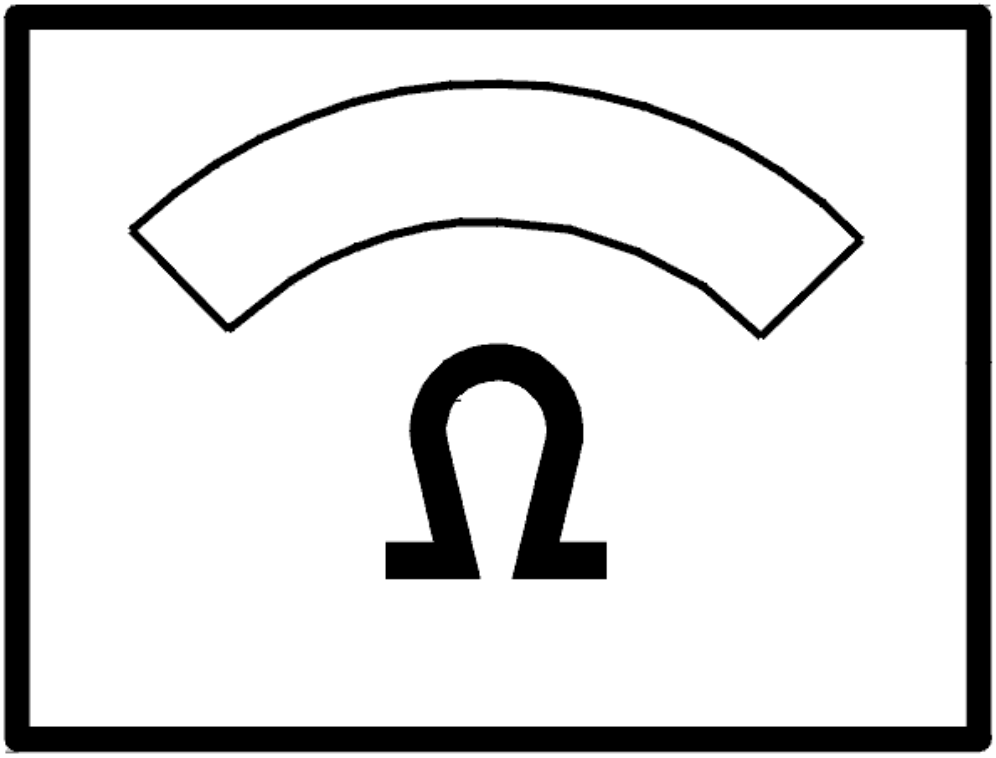

Fig. 242: Identifying Ohms Display
Courtesy of VOLVO CARS CORPORATION

Was a fault found in the wiring?

- **YES**

  Refer to **VERIFICATION**

- **NO**

  Refer to **CHECKING THE CONTROL MODULE**

CHECKING THE CONTROL MODULE

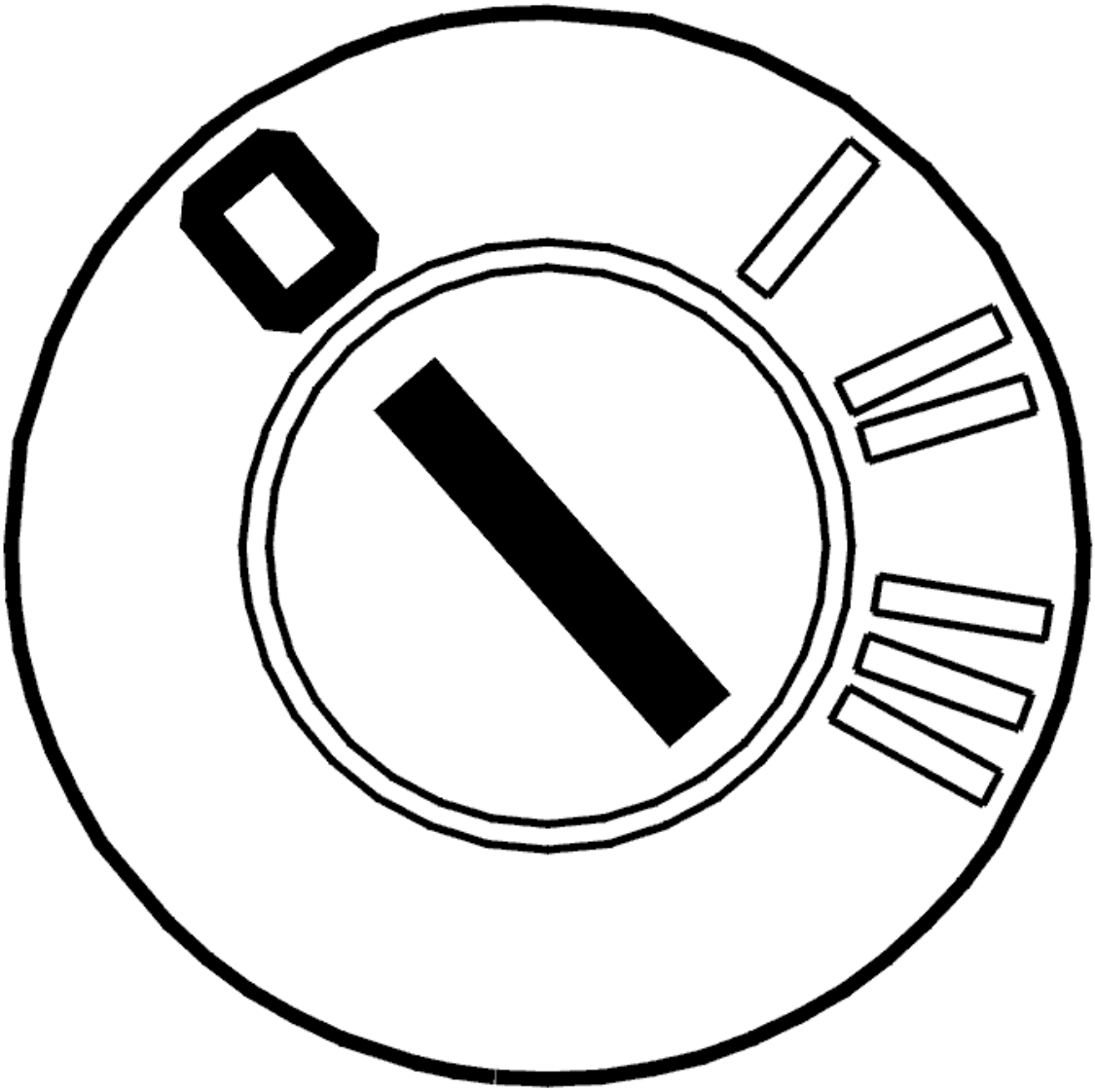

Fig. 243: Identifying Ignition OFF
Courtesy of VOLVO CARS CORPORATION

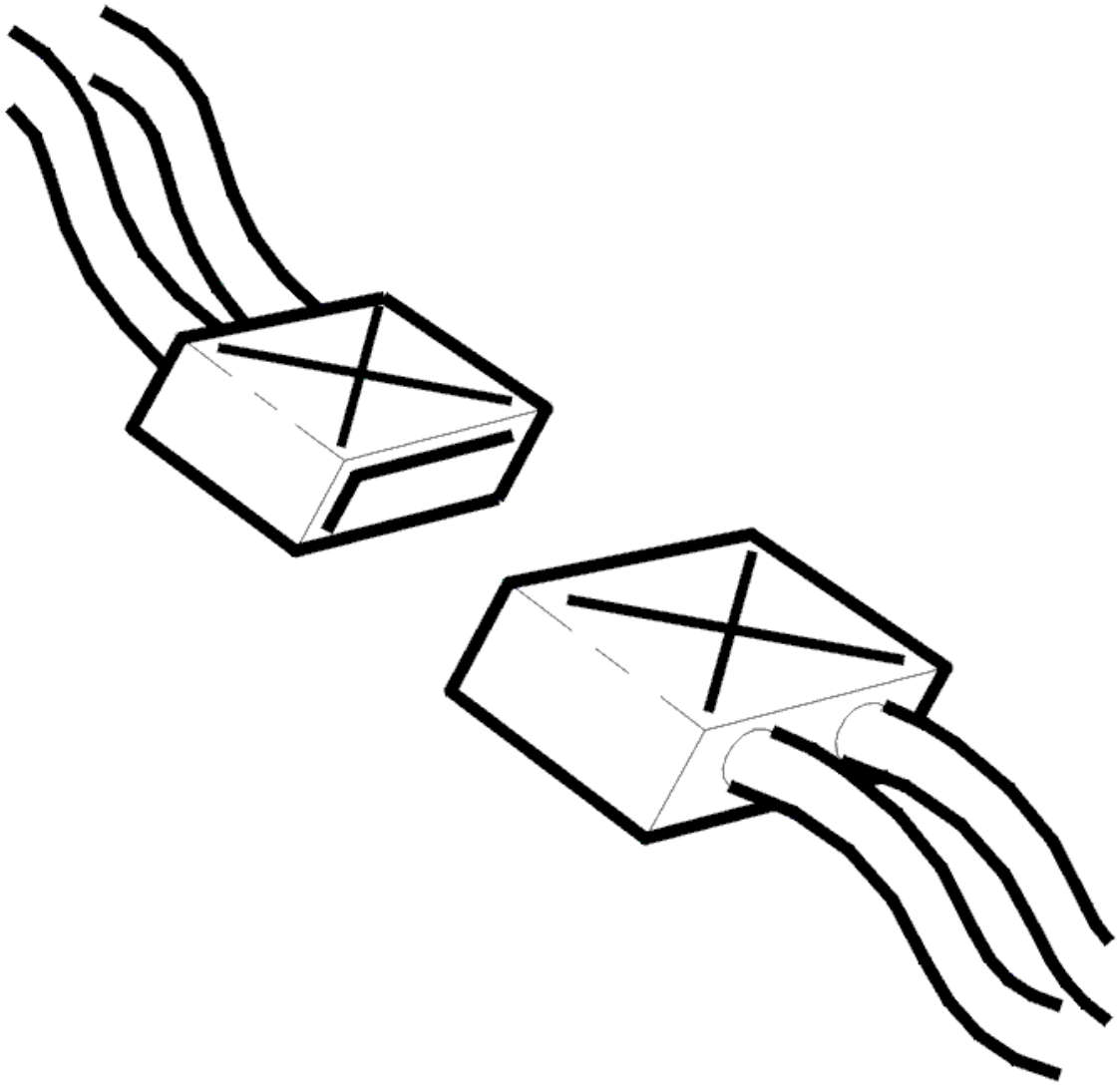

Fig. 244: Identifying Connectors
Courtesy of VOLVO CARS CORPORATION

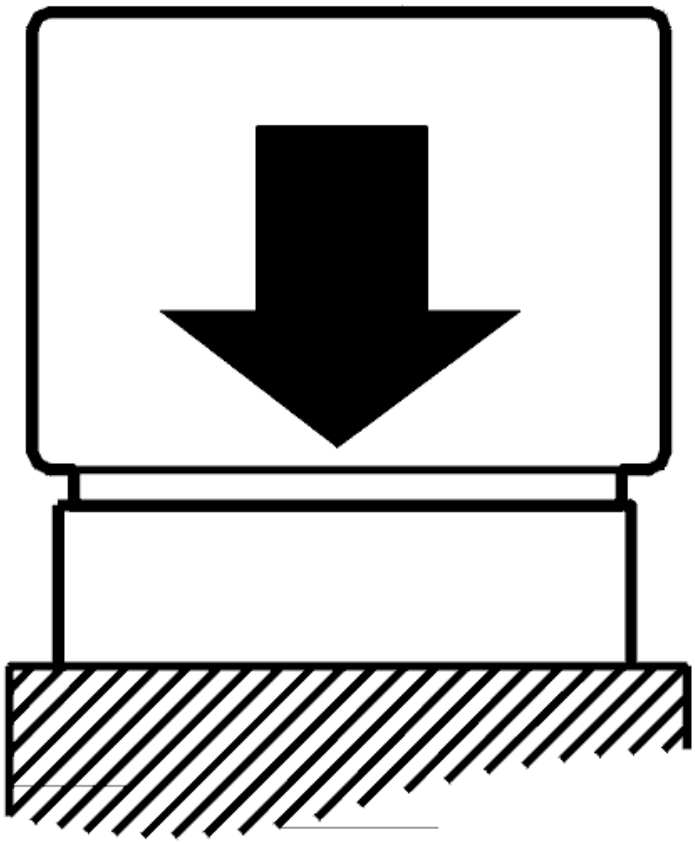

Fig. 245: Identifying Control Module Connected
Courtesy of VOLVO CARS CORPORATION

- Ignition off
- The breakout box connected
- Connect the control module.
- Transmission connector D disconnected.

Check the transmission control module (TCM) by measuring the resistance between terminals #A49 (#A49) and #B7 (#A67) on the breakout box. The resistance must be approximately 9 kohms.

NOTE: **When removing the transmission connector, the control module may store diagnostic trouble codes (DTCs) for the gear-shift position sensor, the shift solenoids, the temperature sensor etc.**

Try a new control module if the resistance is infinite.

Other information:

- To disconnect the transmission connectors, see **CONNECTORS, TRANSMISSION, DISCONNECTING / CONNECTING**
- To replace the control module, see **TRANSMISSION CONTROL MODULE (TCM), REPLACING**
- For information about signals, see **SIGNAL DESCRIPTION. TRANSMISSION CONTROL MODULE (TCM)** .

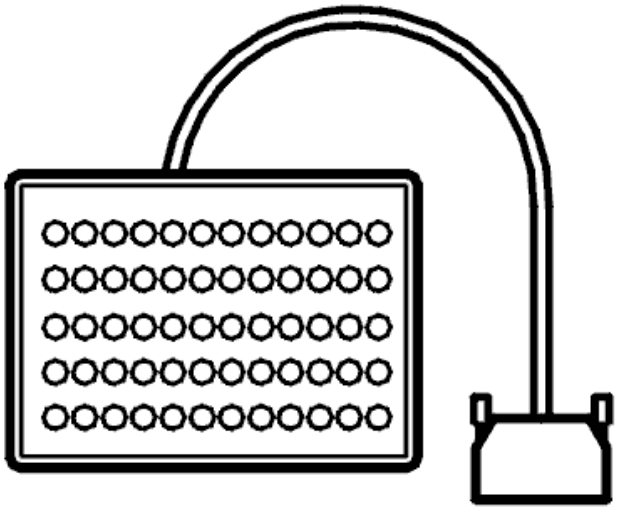

Fig. 246: Identifying Breakout Box
Courtesy of VOLVO CARS CORPORATION

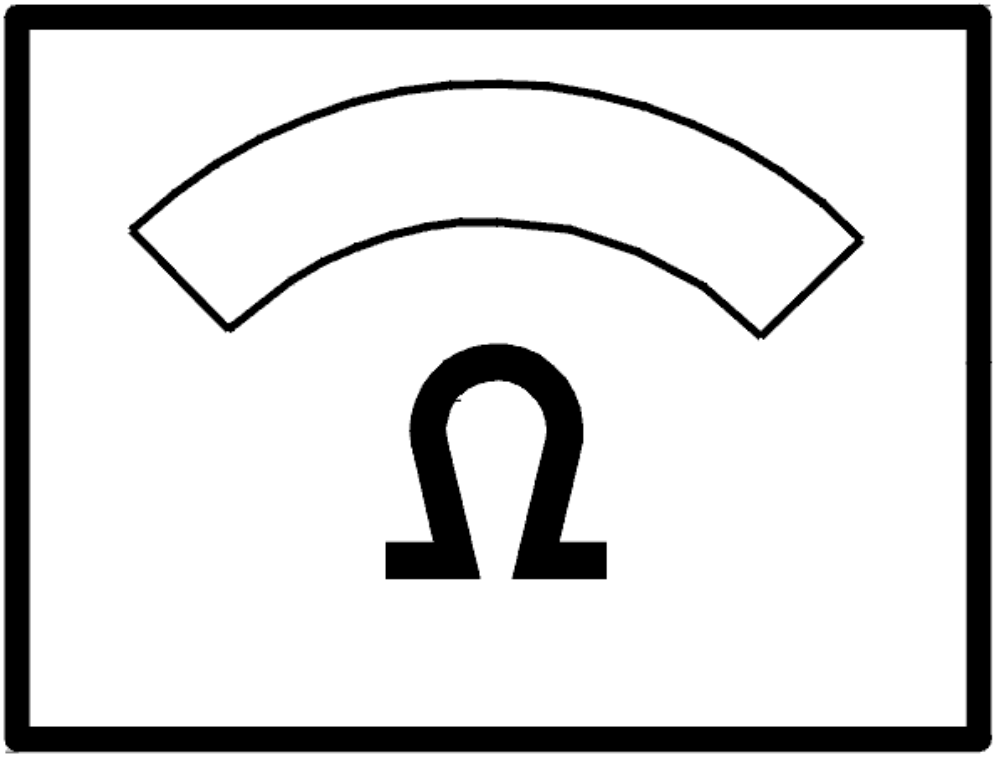

Fig. 247: Identifying Ohms Display
Courtesy of VOLVO CARS CORPORATION

Was the resistance OK?

- **YES**

  FAULT NOT FOUND: Troubleshooting has been completed.

- **NO**

  Refer to **VERIFICATION**

CHECKING THE WIRING AND COMPONENT

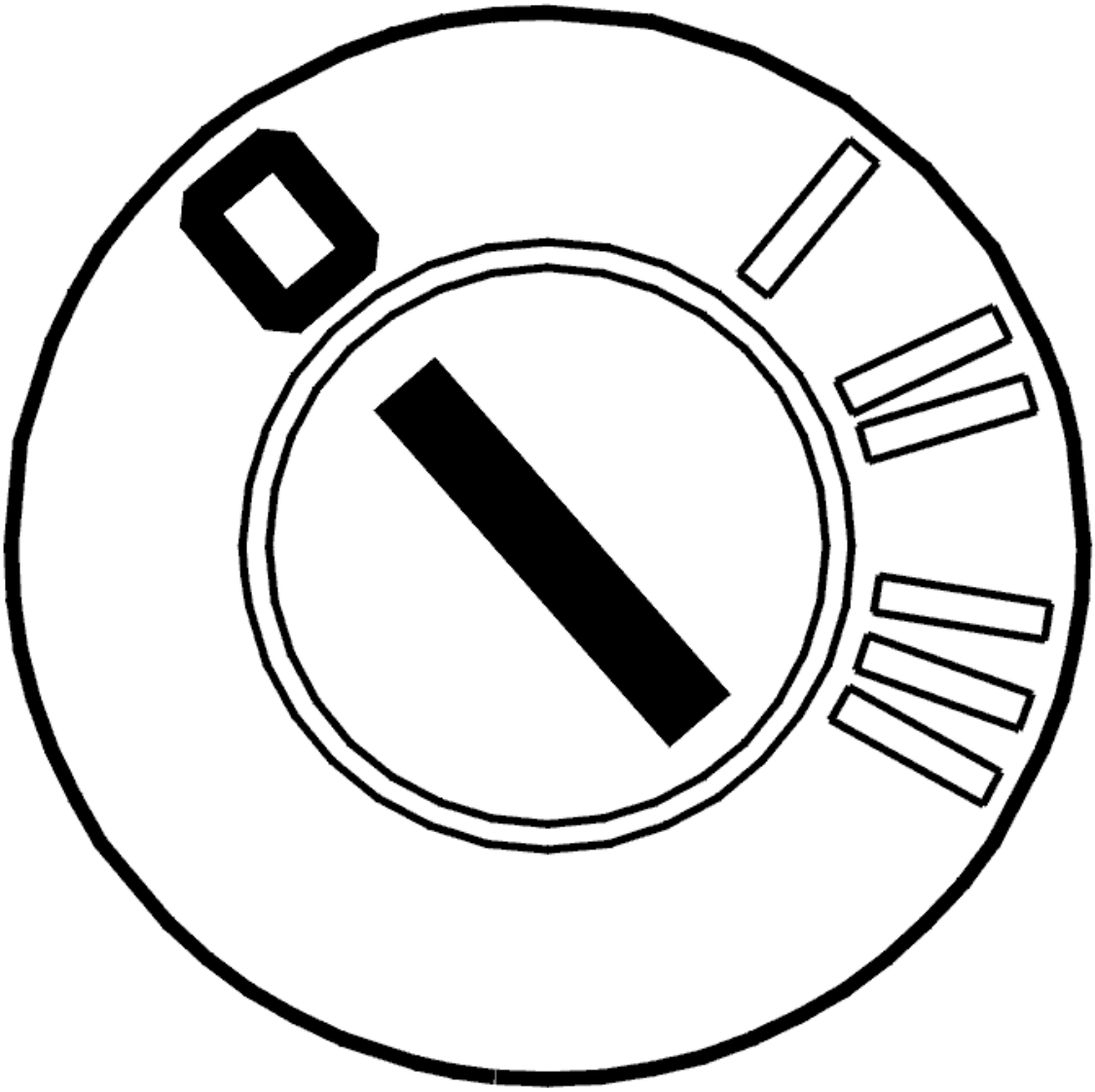

Fig. 248: Identifying Ignition OFF
Courtesy of VOLVO CARS CORPORATION

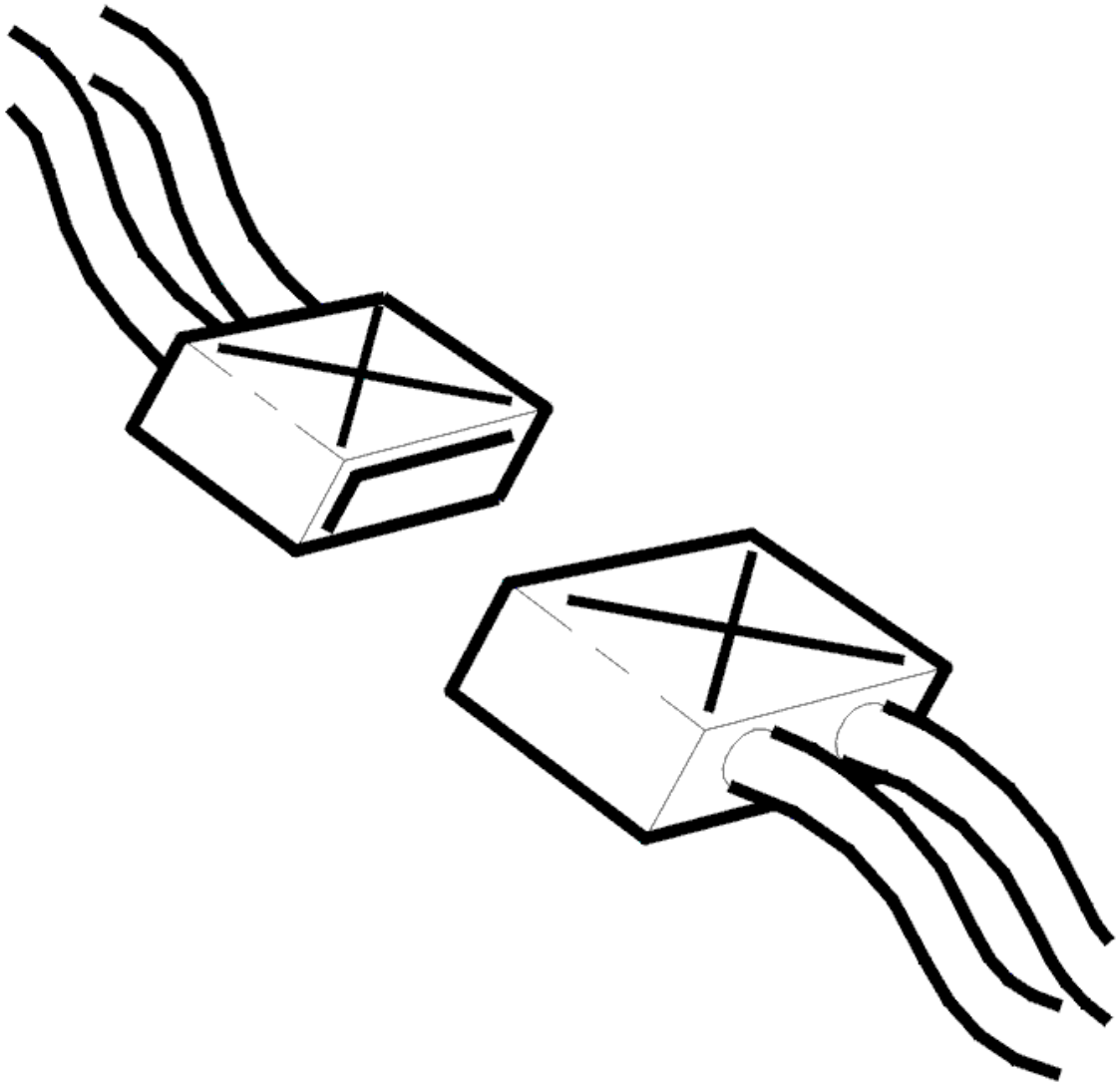

Fig. 249: Identifying Connectors
Courtesy of VOLVO CARS CORPORATION

- Ignition off
- Open the transmission control system.

  Check the wiring between transmission connector terminal #D5 (transmission side) and solenoid SLS terminal #1. Check the wiring between transmission connector terminal #D6 (transmission side) and solenoid SLS terminal #2. Check for an open-circuit. See **OPEN-CIRCUIT, PERMANENT FAULTS** .

  Also check against the other cables in the circuit.

  Check the solenoid SLS by measuring the resistance between terminals #1 and #2. The resistance should be 5-5.6 ohms at 20°C. Replace the transmission control system if the resistance is incorrect.

  Other information:

- To disconnect the transmission connectors, see **CONNECTORS, TRANSMISSION, DISCONNECTING / CONNECTING**
- To open and replace the transmission control system, see **SOLENOID CONTROL SYSTEM, REPLACING**
- To replace the cable harness for the control system, see **TEMPERATURE SENSOR FLUID, TRANSAXLE, (TFT)**
- For information about signals, see **SIGNAL DESCRIPTION. TRANSMISSION CONTROL MODULE (TCM)** .

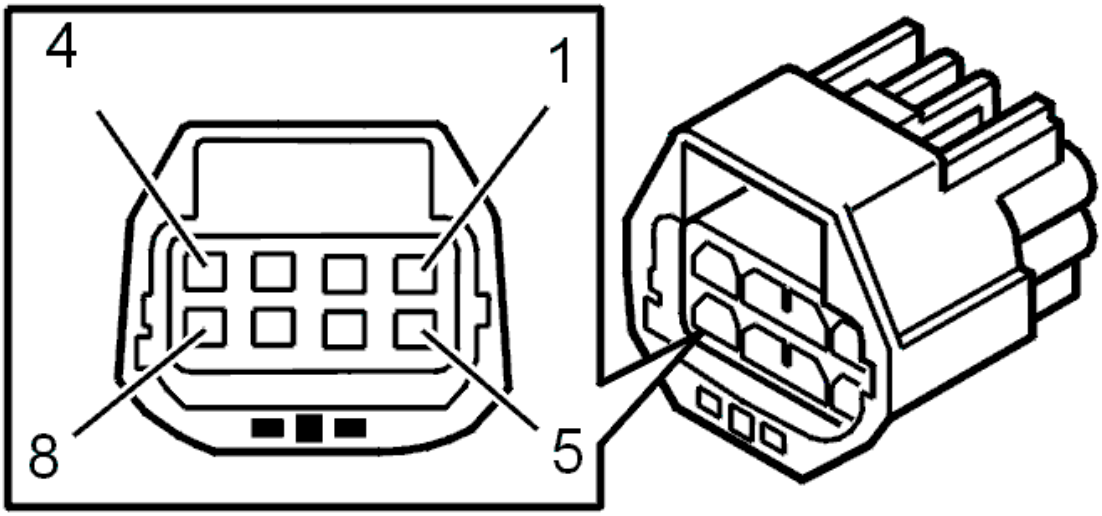

Fig. 250: Identifying 8-Pin Transmission Connector Terminals
Courtesy of VOLVO CARS CORPORATION

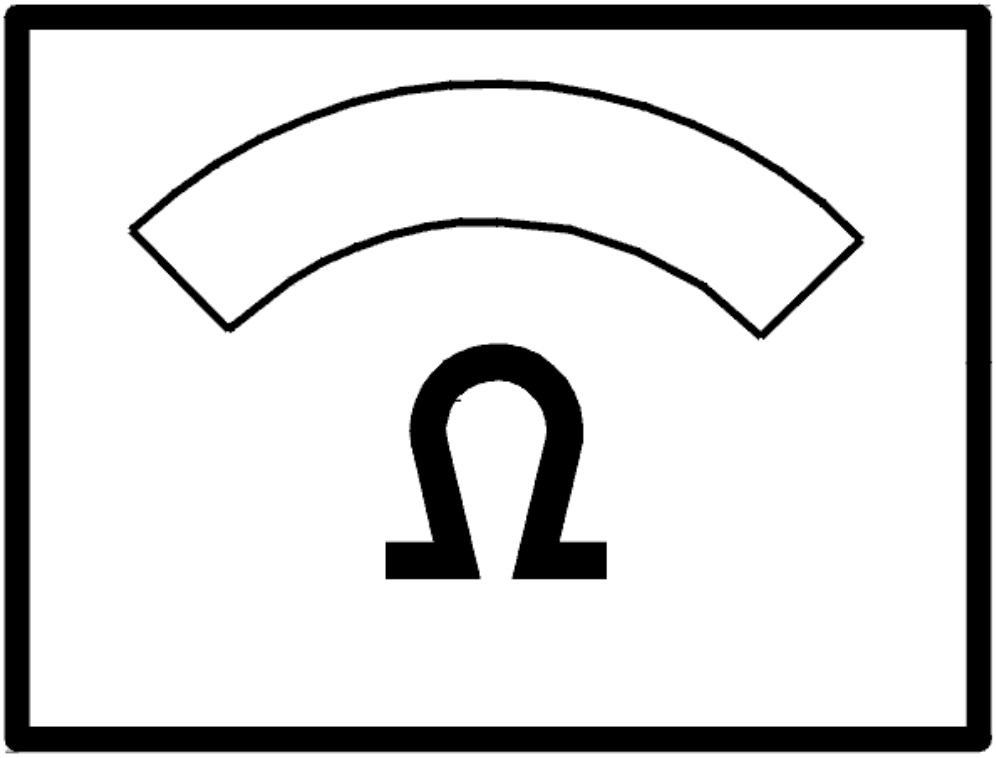

Fig. 251: Identifying Ohms Display
Courtesy of VOLVO CARS CORPORATION

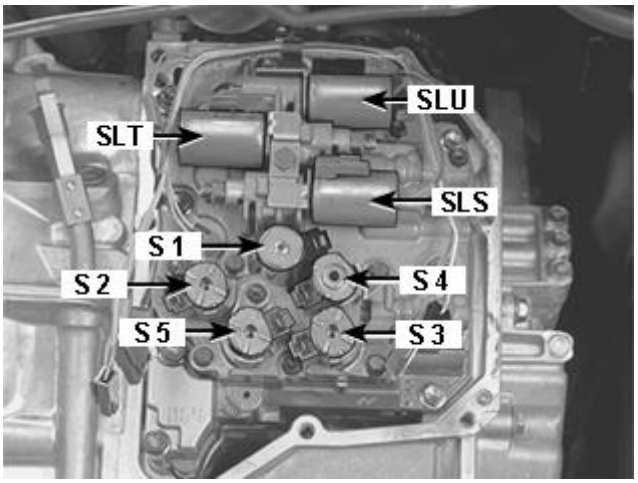

Fig. 252: Identifying S1-S5, SLT, SLU And SLS Solenoids
Courtesy of VOLVO CARS CORPORATION

- **Continue**

Refer to **RESETTING THE ADAPTATION**

RESETTING THE ADAPTATION

RESETTING ADAPTATION AND THE COUNTER FOR "TRANSMISSION OIL CHANGE"

HINT: The transmission has torque controlled adaptive pressure control. Pressure control means that the transmission regulates the pressure itself during each gear shift. This avoids harsh gear shifting. Each gear shift is evaluated by the control module and stored in the memory. This allows for compensation for wear and tear in the transmission and clutch. It is important that the adaptation in the memory is reset after the transmission has been repaired. This is to ensure normal operation. The oil is replaced during repair; the "Transmission oil change" counter must be reset. If the counter is not reset when the fluid is drained and replaced, there is a risk that a diagnostic trouble code (DTC) will be stored in incorrect circumstances.

NOTE: **This applies only if the transmission or one of the components in the transmission have been replaced.**

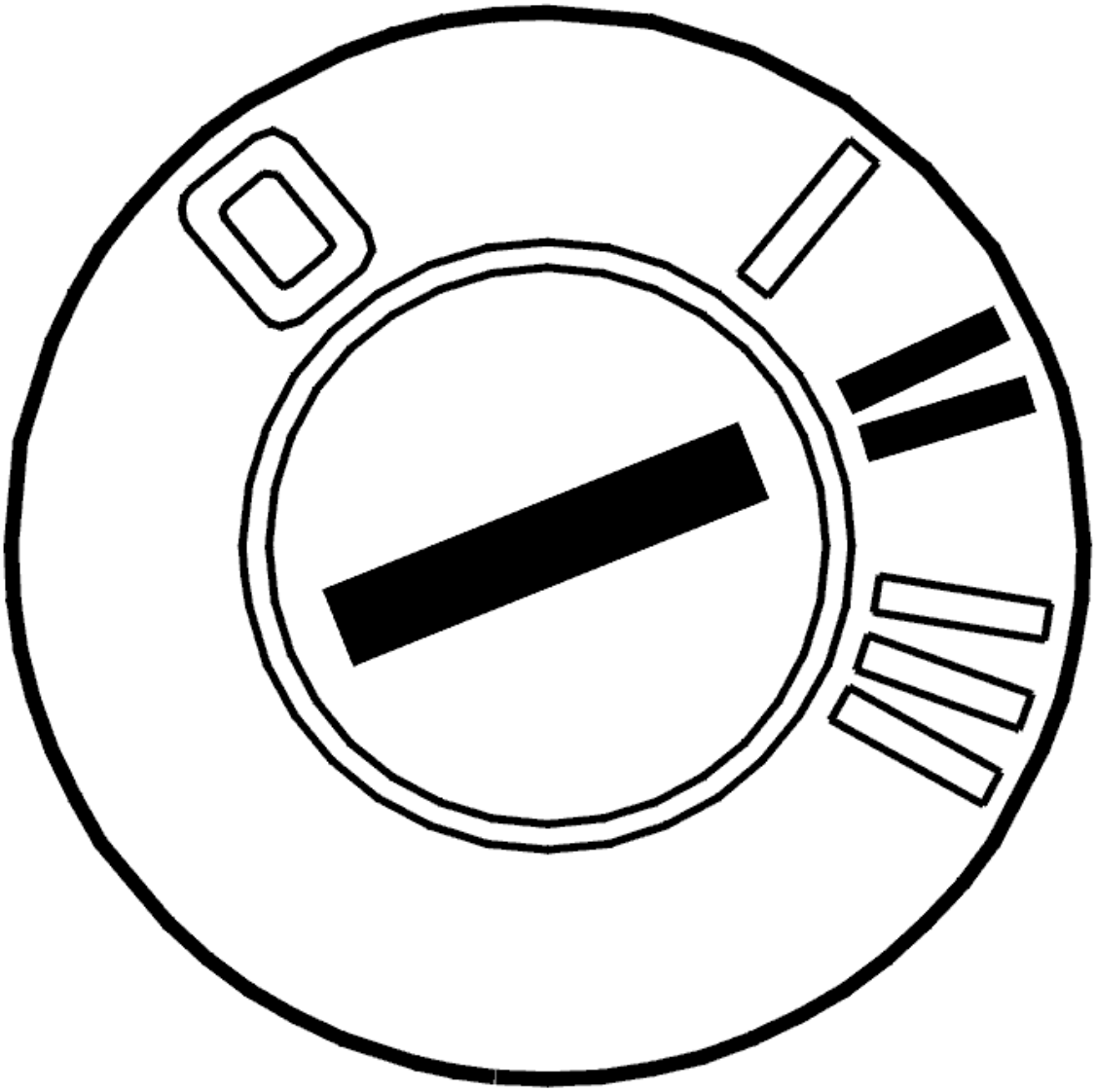

Fig. 253: Identifying Ignition ON
Courtesy of VOLVO CARS CORPORATION

- Ignition on.

  Click on the VCT2000 symbol to reset the adaptation and counter.

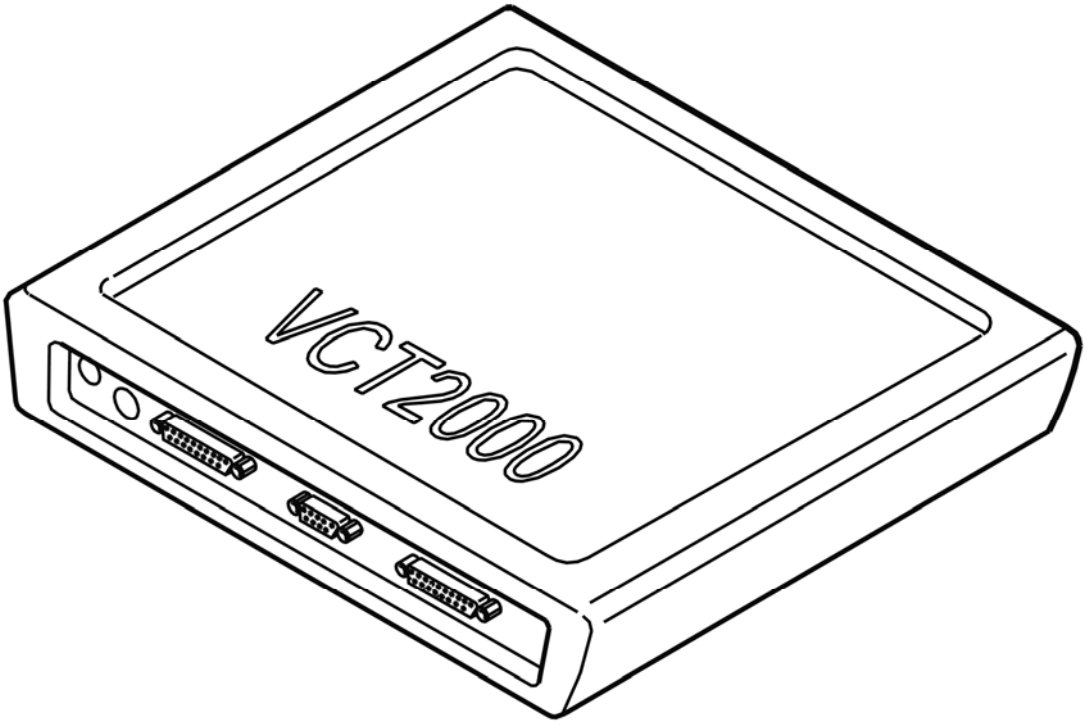

Fig. 254: Identifying VCT2000 Diagnostic Tool Symbol In VIDA
Courtesy of VOLVO CARS CORPORATION

- **Continue**

  Refer to **VERIFICATION**

VERIFICATION

VERIFICATION

HINT: After carrying out the repair, check that the fault has been remedied.

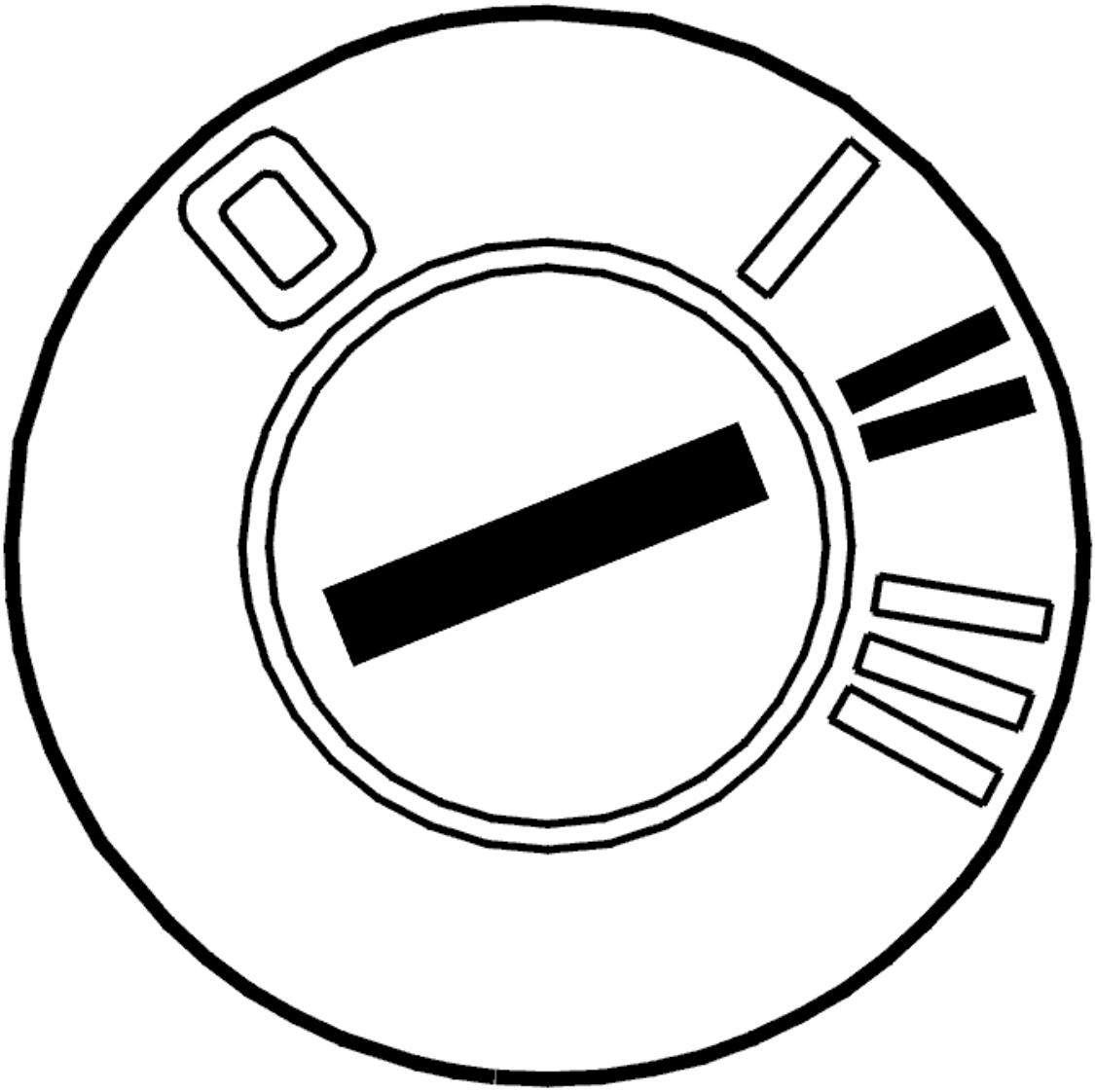

Fig. 255: Identifying Ignition ON
Courtesy of VOLVO CARS CORPORATION

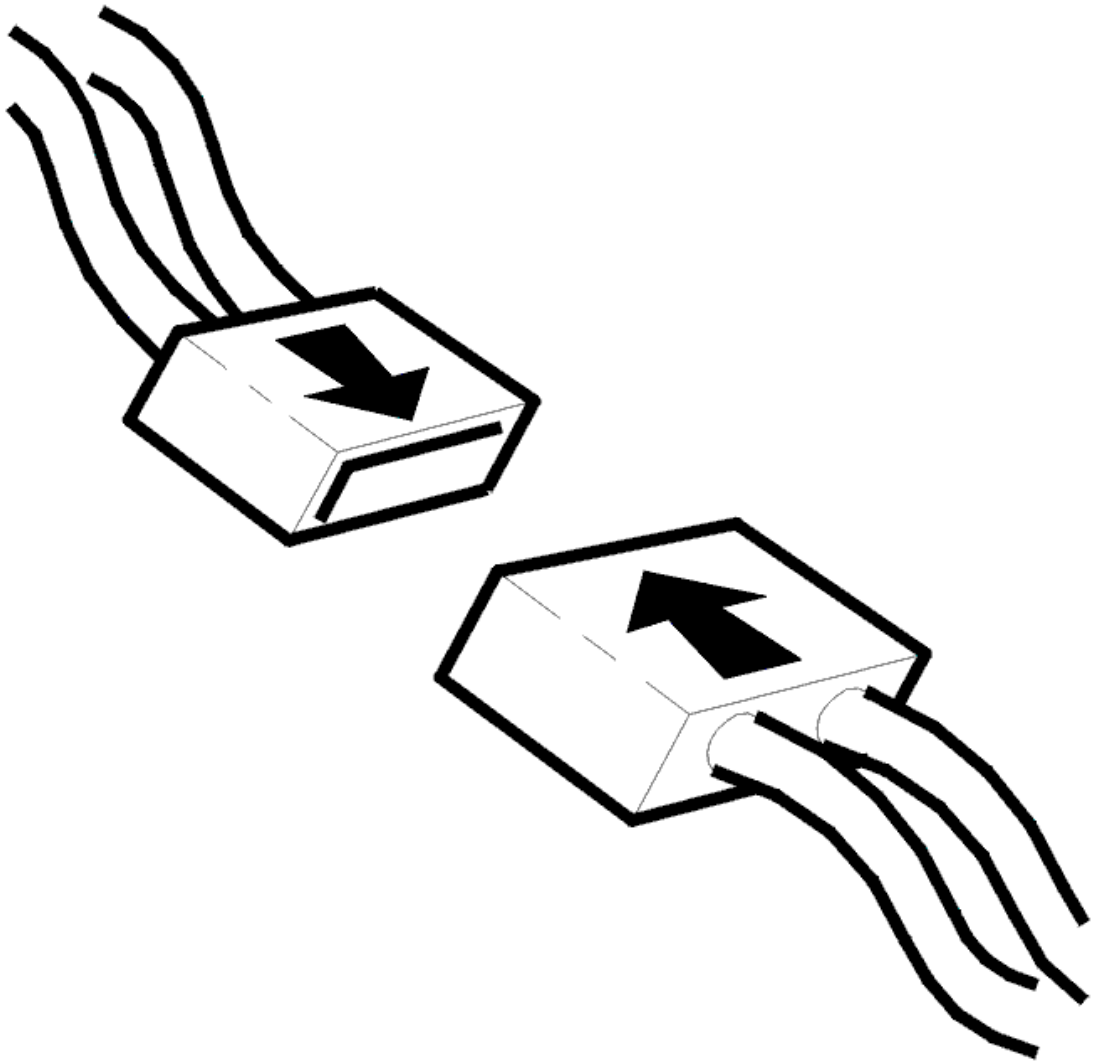

Fig. 256: Identifying Connector(s) Reinstallation
Courtesy of VOLVO CARS CORPORATION

- Ignition on.
- Activate solenoid SLS.

  Read off the current through the solenoid SLS circuit.

  The current should oscillate between 0 and 1000 mA.

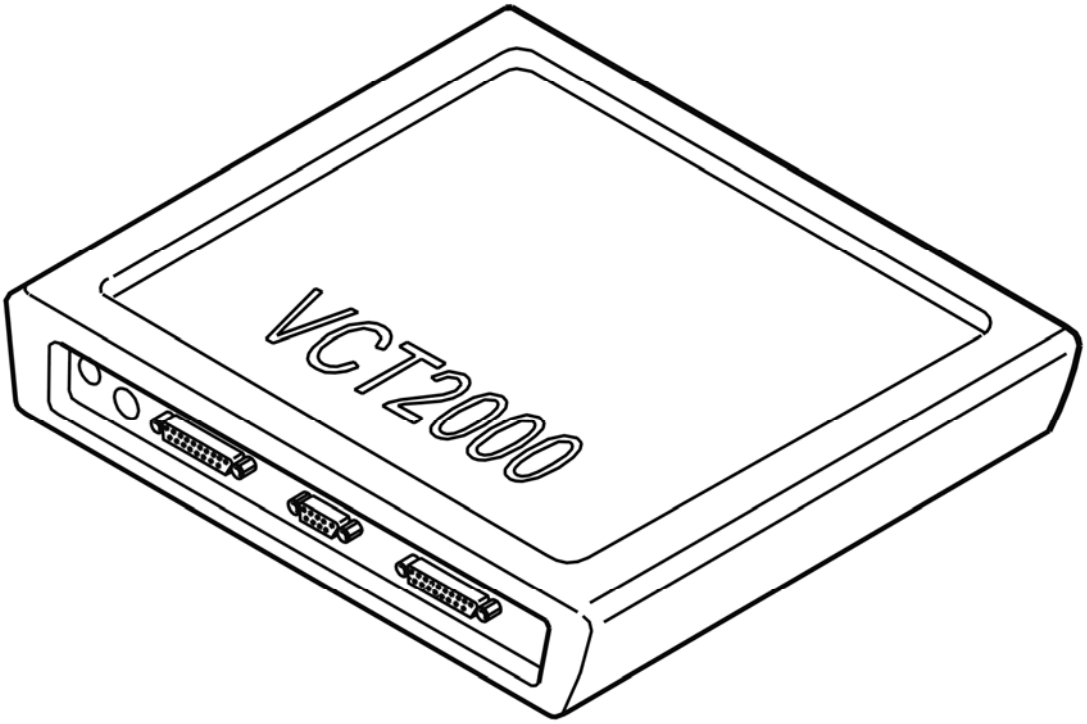

Fig. 257: Identifying VCT2000 Diagnostic Tool Symbol In VIDA
Courtesy of VOLVO CARS CORPORATION

Does the current oscillate?

- **YES**

  VERIFIED: Troubleshooting has been completed.

- **NO**

  Refer to **INFORMATION**

INFORMATION

FAULT-TRACING INFORMATION

The fault should have been detected and remedied. As this is not the case fault-tracing has failed.

Exit fault-tracing for this diagnostic trouble code (DTC) or make another attempt.

TCM-0114: LINE PRESSURE SOLENOID SLS. SIGNAL TOO LOW. INTERMITTENT FAULT (AW50/51 AWD; AW55-50/51SN; 2003-2007)

DIAGNOSTIC TROUBLE CODE (DTC) INFORMATION

Condition

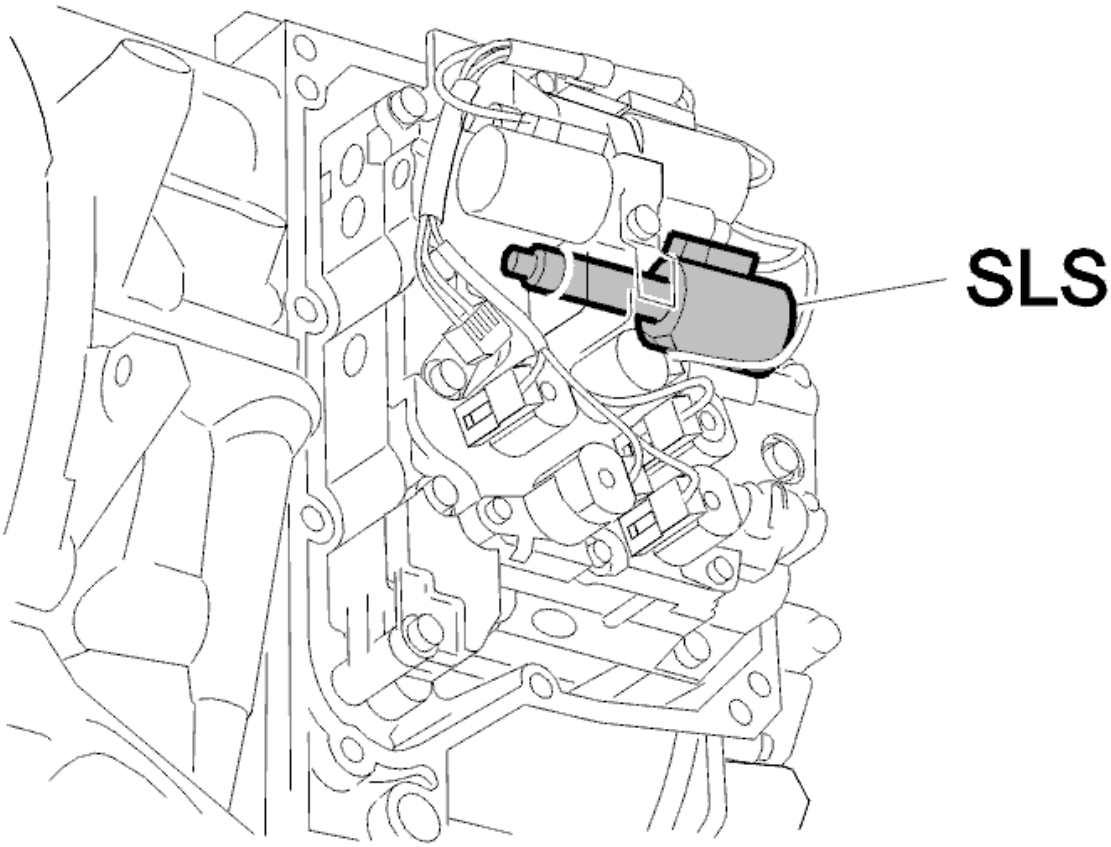

Fig. 258: Identifying Line Pressure Solenoid SLS
Courtesy of VOLVO CARS CORPORATION

Line pressure solenoid SLS regulates the line pressure in the transmission. The solenoid is controlled by a power stage in the transmission control module (TCM) output. The transmission control module (TCM) uses the power stage to control the current to the solenoid. A low amperage results in a high line pressure. A high amperage (approximately 1 A) gives a low line pressure. The amperage is primarily affected by the throttle position. Diagnostic trouble code (DTC) TCM-114 is stored if the control module registers that there is an open-circuit in the circuit for solenoid SLS. Solenoid SLS cannot then control the line pressure.

Substitute Value

- The transmission control module (TCM) Emergency mode III program is initiated.

Possible Source

- Open-circuit in the control signal cable or the signal cable.
- Defective solenoid.
- Open-circuit in the power ground.

- Contact resistance in terminals.
- Defective control module.

Fault symptom[s]

- General orange warning lamp lit.
- No lock-up function.
- Harsh gear shifting.

HINT: Harsh gear shifting can be caused by:

- No torque limiting request to the engine control module (ECM) when shifting.
- No line pressure solenoid SLS or SLT control. This results in constant maximum line pressure.

SIGNAL TOO LOW. INTERMITTENT FAULT

INTERMITTENT FAULT

Check the transmission control module (TCM) connector and transmission connector D. Check for contact resistance and oxidation according to **CONTACT RESISTANCE AND OXIDATION** .

Check the wiring between control module terminal #A49 (#A49) and transmission connector terminal #D5. Check the wiring between control module terminal #B7 (#A67) and transmission connector terminal #D6. Check for an intermittent short-circuit to ground according to **SHORT-CIRCUIT TO GROUND, INTERMITTENT FAULTS** .

HINT: Check solenoid SLS. Measure the resistance between terminals #D5 and #D6 on transmission connector D. The resistance should be 5-5.6 ohms at 20°C.

Remedy as necessary.

Other information:

- To connect the breakout box, see **CONNECTING THE BREAKOUT BOX**
- To disconnect the transmission control module (TCM), see **TRANSMISSION CONTROL MODULE (TCM), REPLACING**
- To disconnect the transmission connectors, see **CONNECTORS, TRANSMISSION, DISCONNECTING / CONNECTING**
- For information about signals, see **SIGNAL DESCRIPTION. TRANSMISSION CONTROL MODULE (TCM)** .

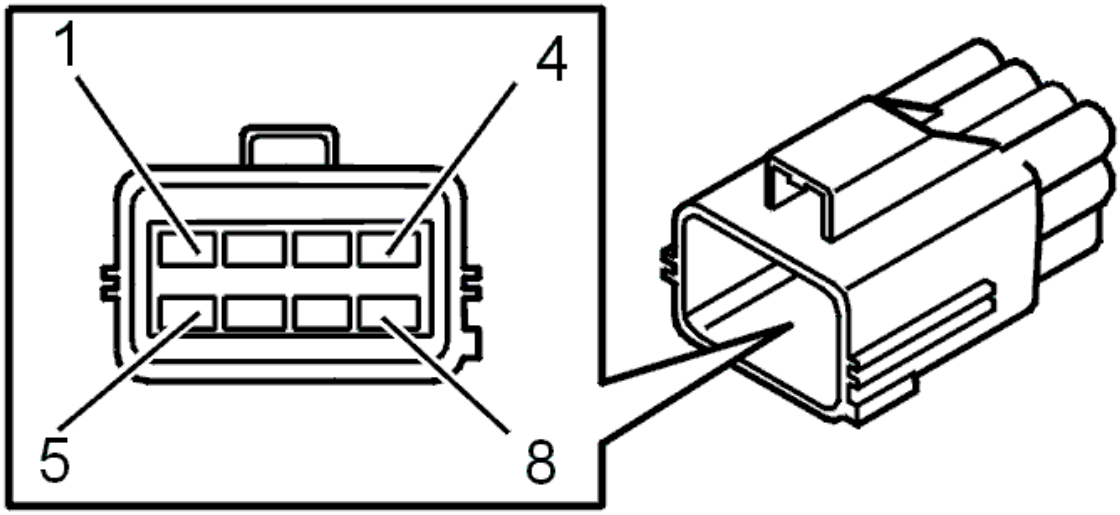

Fig. 259: Identifying Transmission Connector Terminals
Courtesy of VOLVO CARS CORPORATION

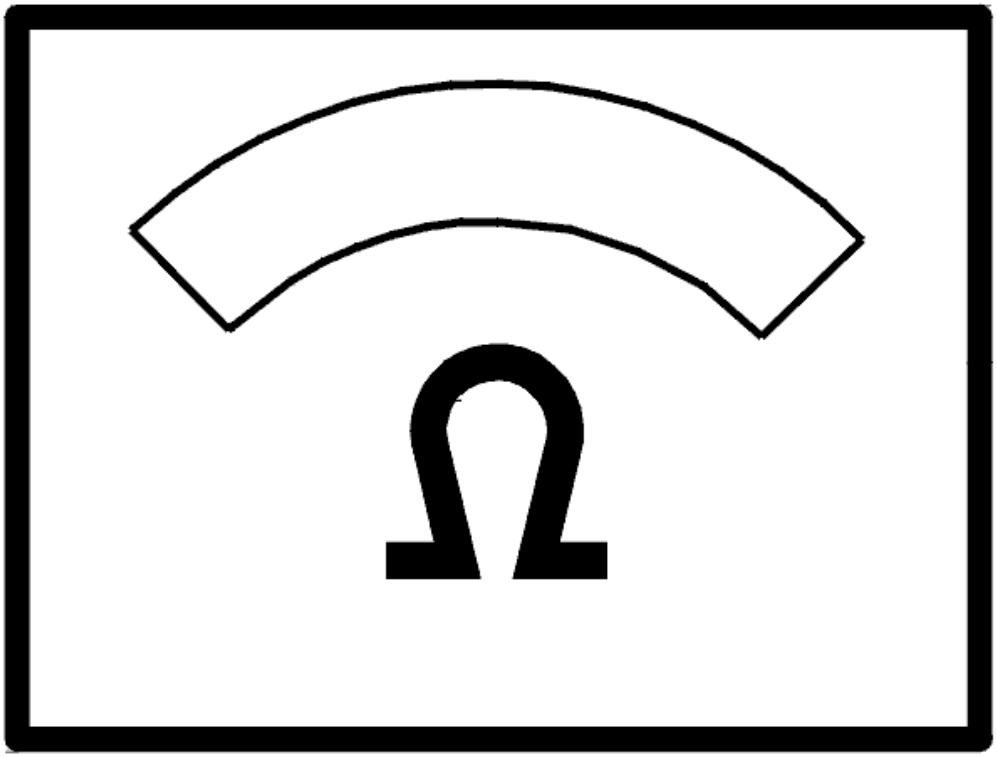

Fig. 260: Identifying Ohms Display
Courtesy of VOLVO CARS CORPORATION

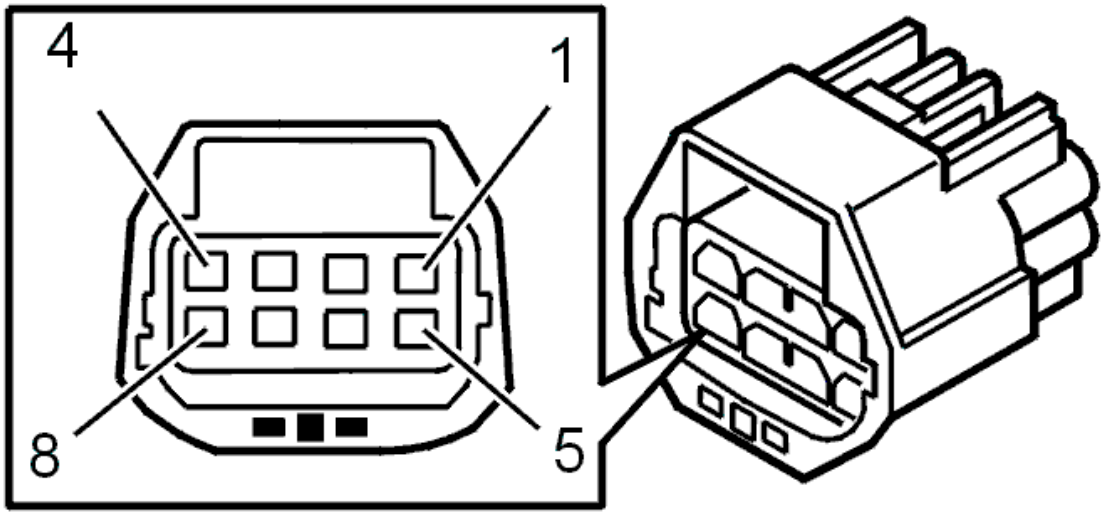

Fig. 261: Identifying 8-Pin Transmission Connector Terminals
Courtesy of VOLVO CARS CORPORATION

- **Continue**

  Refer to **INFORMATION**

INFORMATION

FAULT-TRACING INFORMATION

If the fault is intermittent, do not verify fault-tracing if the fault does not recur.

It is possible to view the information again, or leave fault-tracing for this diagnostic trouble code (DTC).

TCM-0114: LINE PRESSURE SOLENOID SLS. SIGNAL TOO LOW. PERMANENT FAULT (AW50/51 AWD; AW55-50/51SN; 2003-2007)

DIAGNOSTIC TROUBLE CODE (DTC) INFORMATION

see **DIAGNOSTIC TROUBLE CODE (DTC) INFORMATION**

SIGNAL TOO LOW. PERMANENT FAULT

CHECKS

CHECKING LINE PRESSURE SOLENOID SLS

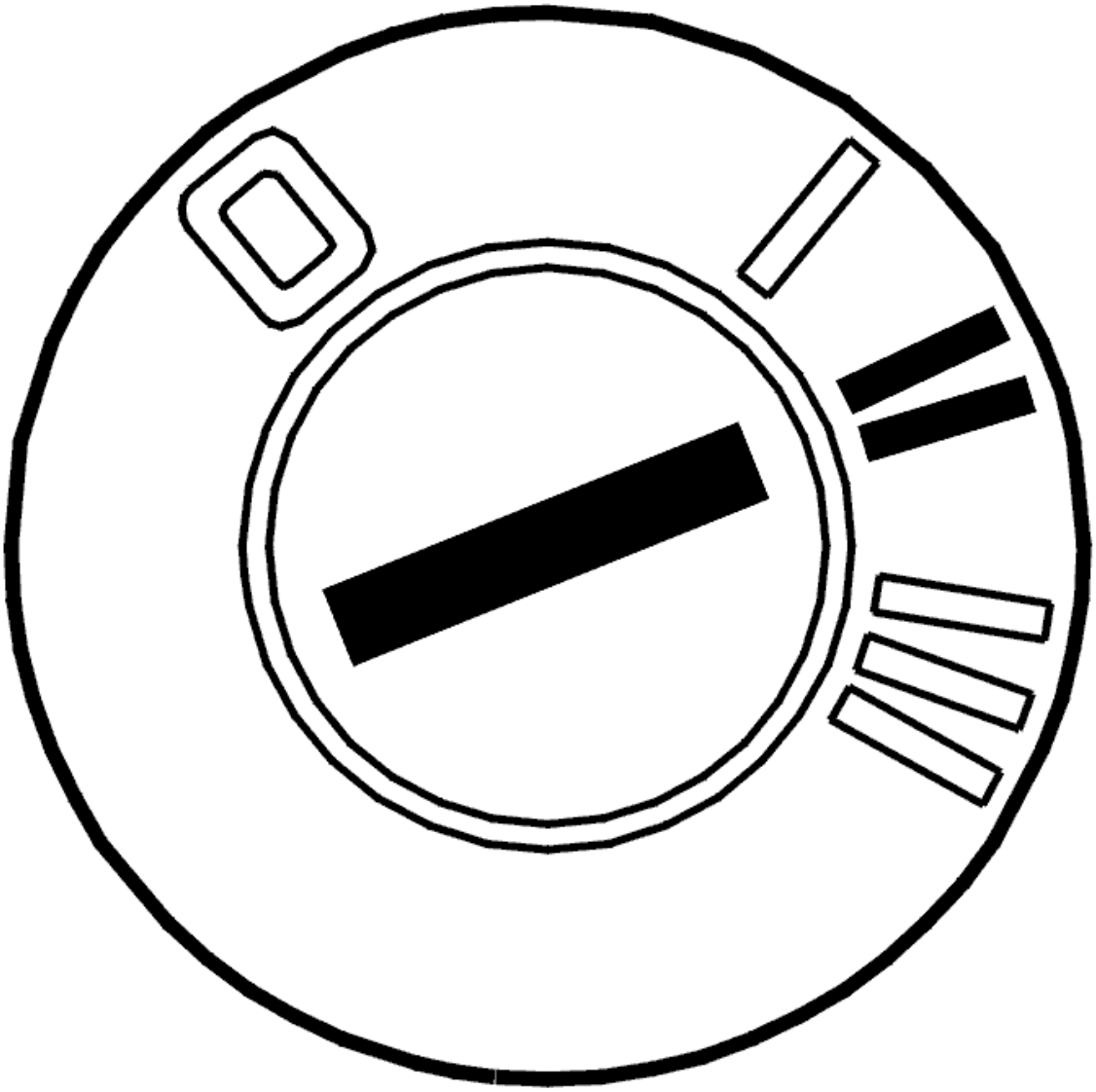

Fig. 262: Identifying Ignition ON
Courtesy of VOLVO CARS CORPORATION

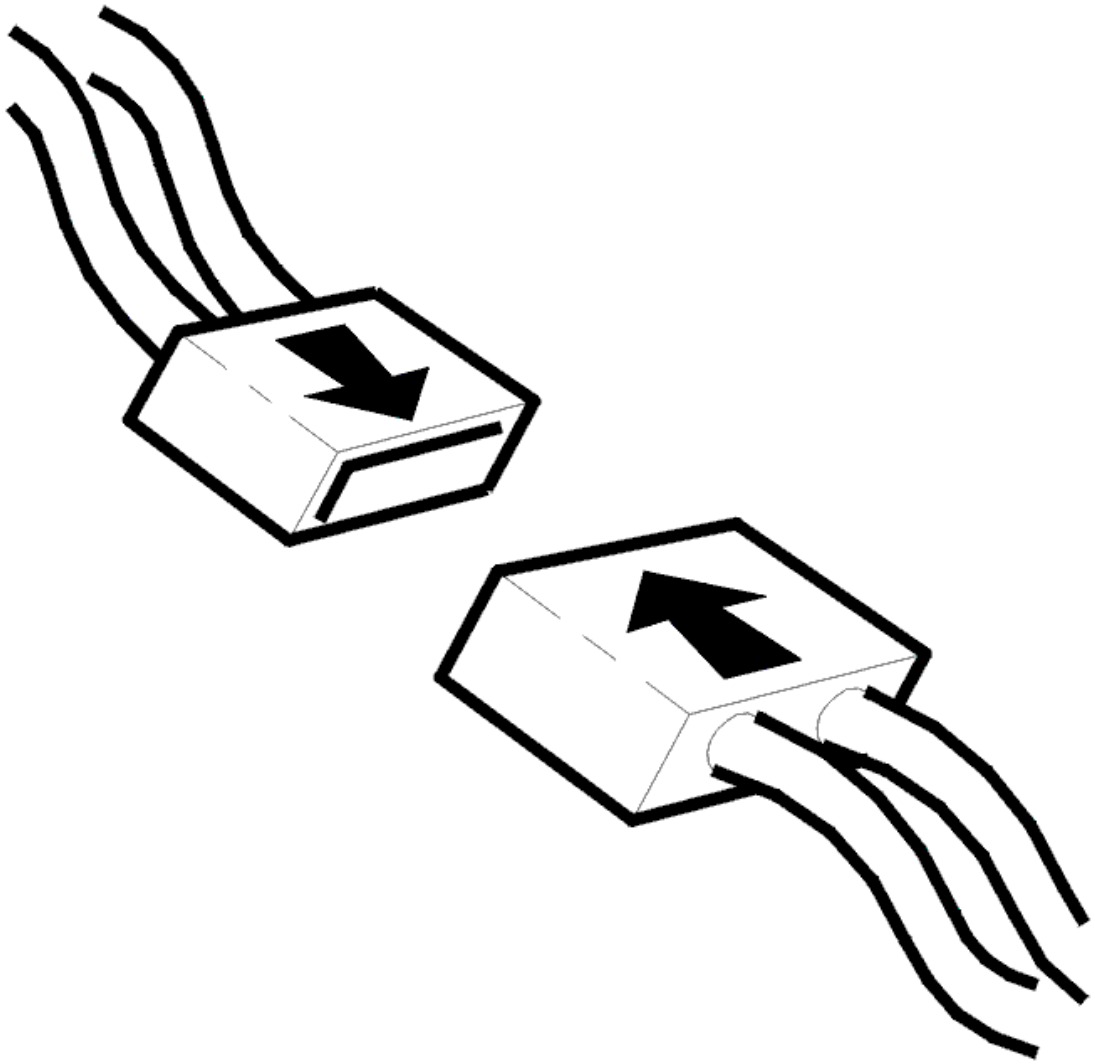

Fig. 263: Identifying Connector(s) Reinstallation
Courtesy of VOLVO CARS CORPORATION

- Ignition off
- Check the control module connector and automatic transmission connector D. Check for contact resistance and oxidation. See **CONTACT RESISTANCE AND OXIDATION** . Remedy if necessary
- Reinstall the components, reconnect the connectors etc.
- Ignition on
- Activate solenoid SLS.

  Read off the current through the solenoid SLS circuit.

  The current should oscillate between 0 and 1000 mA.

  Other information:

- To disconnect the transmission connectors, see **CONNECTORS, TRANSMISSION, DISCONNECTING / CONNECTING**
- To disconnect the control module, see **TRANSMISSION CONTROL MODULE (TCM), REPLACING**
- For information about signals, see **SIGNAL DESCRIPTION. TRANSMISSION CONTROL MODULE (TCM)** .

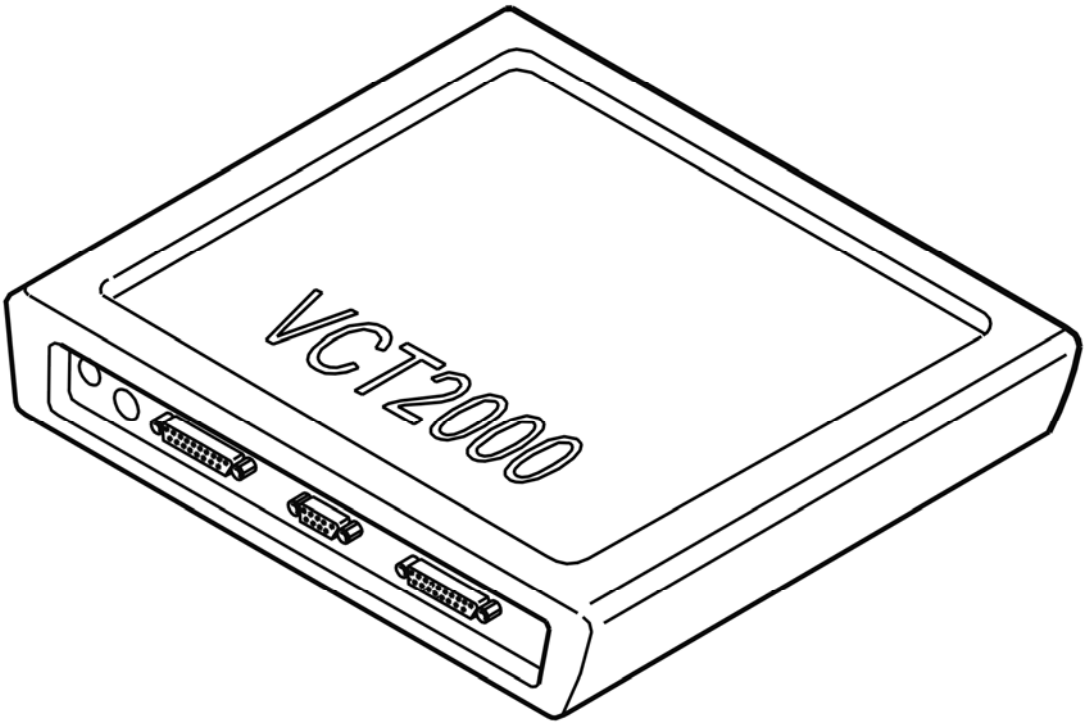

Fig. 264: Identifying VCT2000 Diagnostic Tool Symbol In VIDA
Courtesy of VOLVO CARS CORPORATION

Does the current oscillate?

- **YES**

  OKAY: Troubleshooting has been completed.

- **NO**

  Refer to **CHECKING RESISTANCE**

CHECKING RESISTANCE

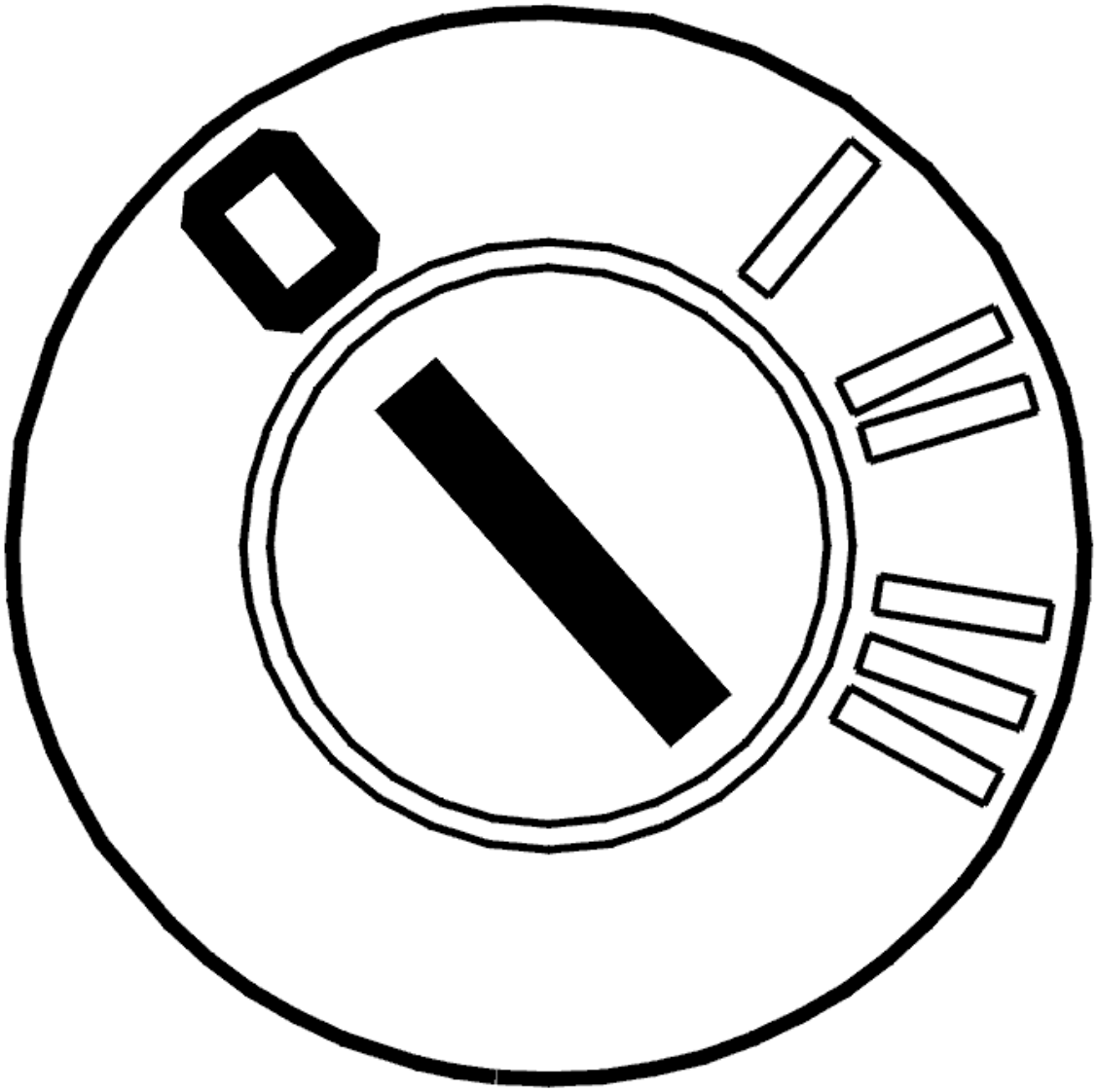

Fig. 265: Identifying Ignition OFF
Courtesy of VOLVO CARS CORPORATION

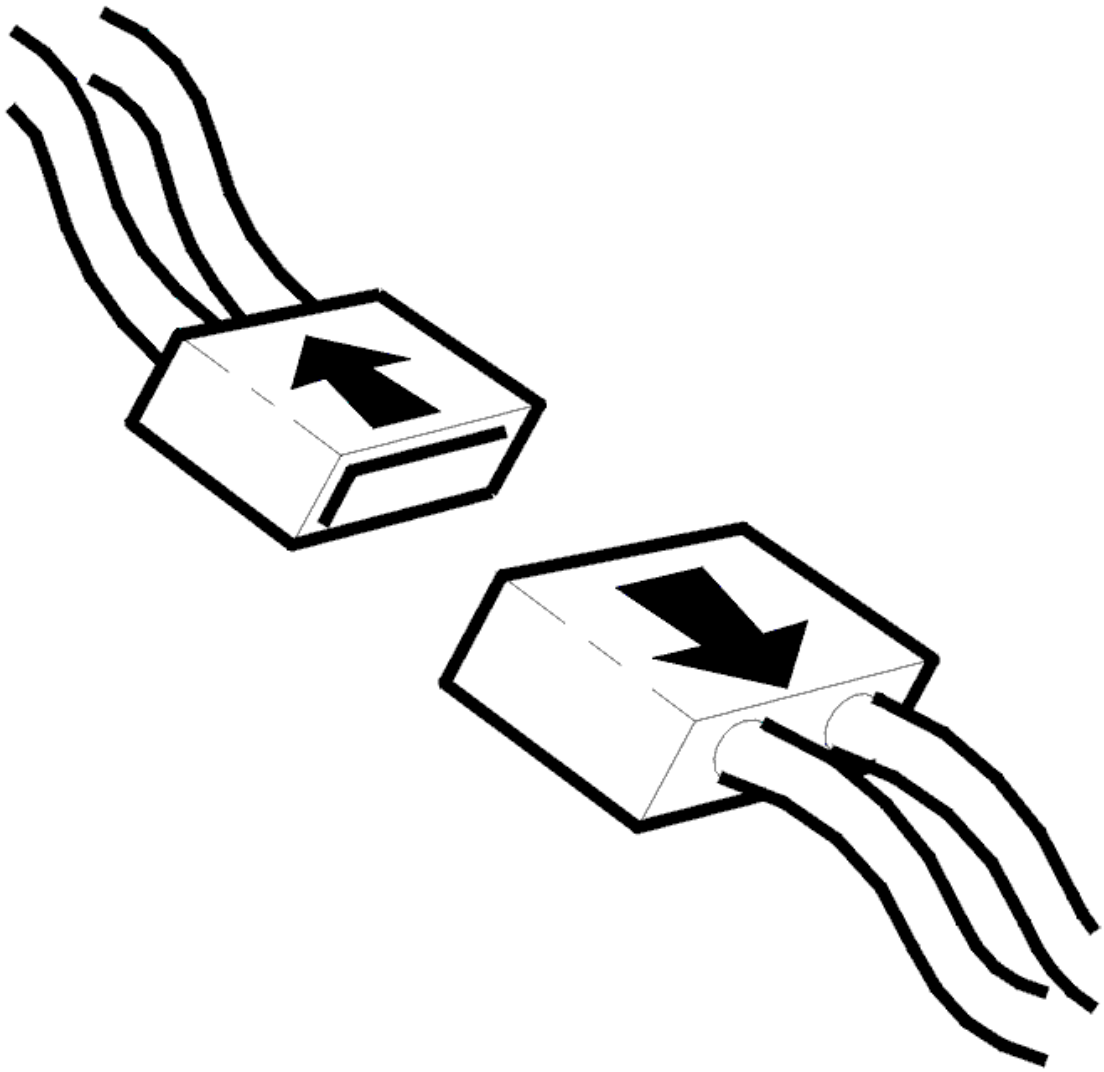

Fig. 266: Identifying Connector(s) Disconnected
Courtesy of VOLVO CARS CORPORATION

- Ignition off
- Disconnect transmission connector D.

  Check solenoid SLS. Measure the resistance between terminals #D5 and #D6 on transmission connector D. The resistance should be 5-5.6 ohms at 20°C.

  Other information:

  - To disconnect the transmission connectors, see **CONNECTORS, TRANSMISSION, DISCONNECTING / CONNECTING**
  - For information about signals, see **SIGNAL DESCRIPTION. TRANSMISSION CONTROL MODULE (TCM)** .

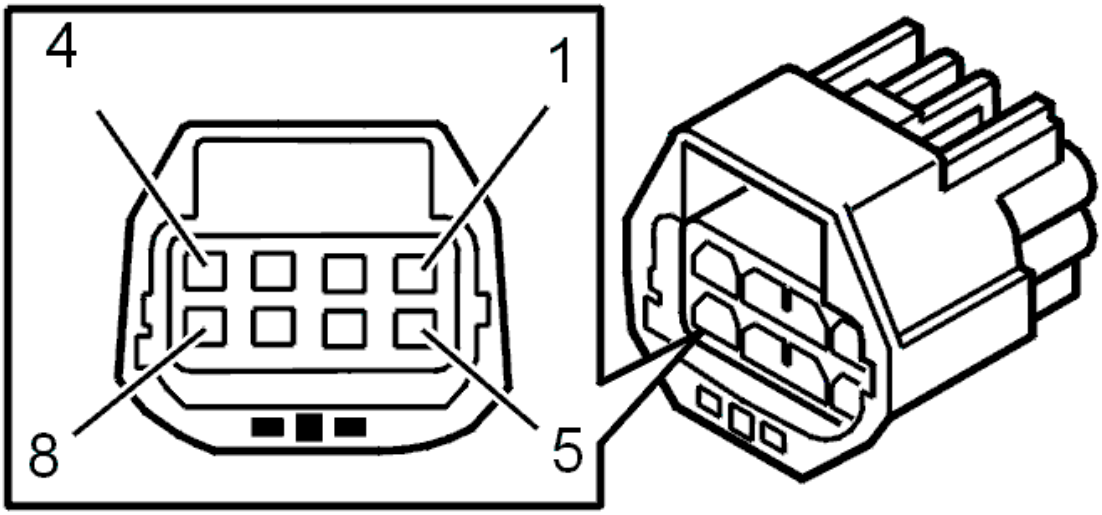

Fig. 267: Identifying 8-Pin Transmission Connector Terminals
Courtesy of VOLVO CARS CORPORATION

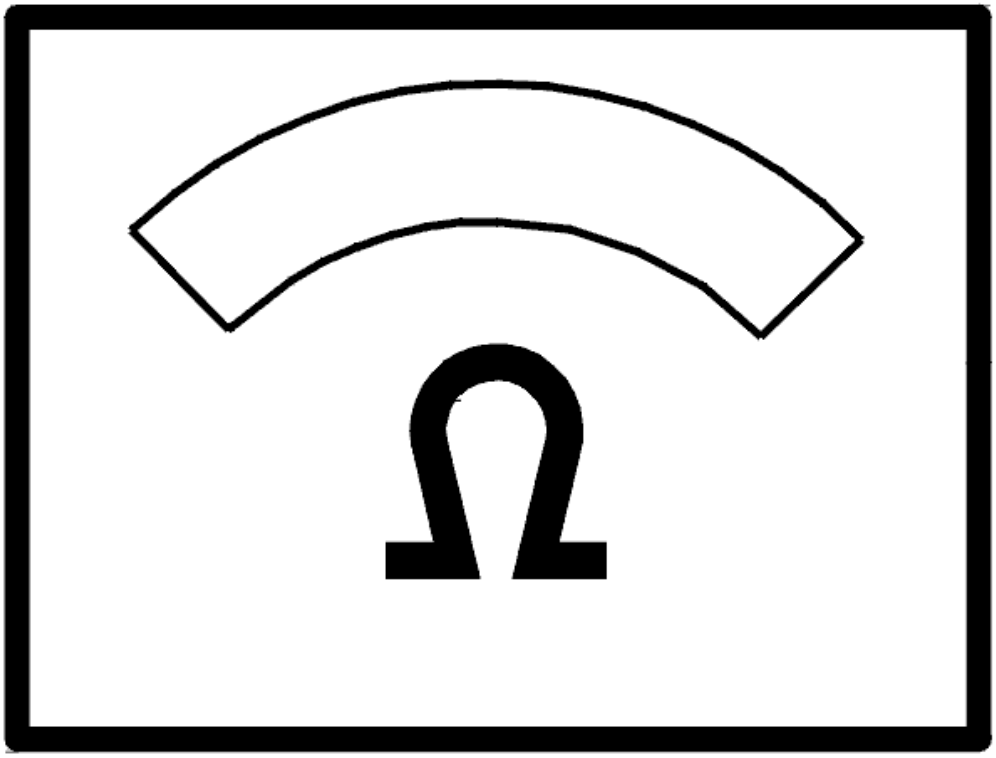

Fig. 268: Identifying Ohms Display
Courtesy of VOLVO CARS CORPORATION

Was the resistance OK?

- **YES**

  Refer to **CHECKING THE WIRING**

- **NO**

  Refer to **CHECKING THE WIRING AND COMPONENT**

CHECKING THE WIRING

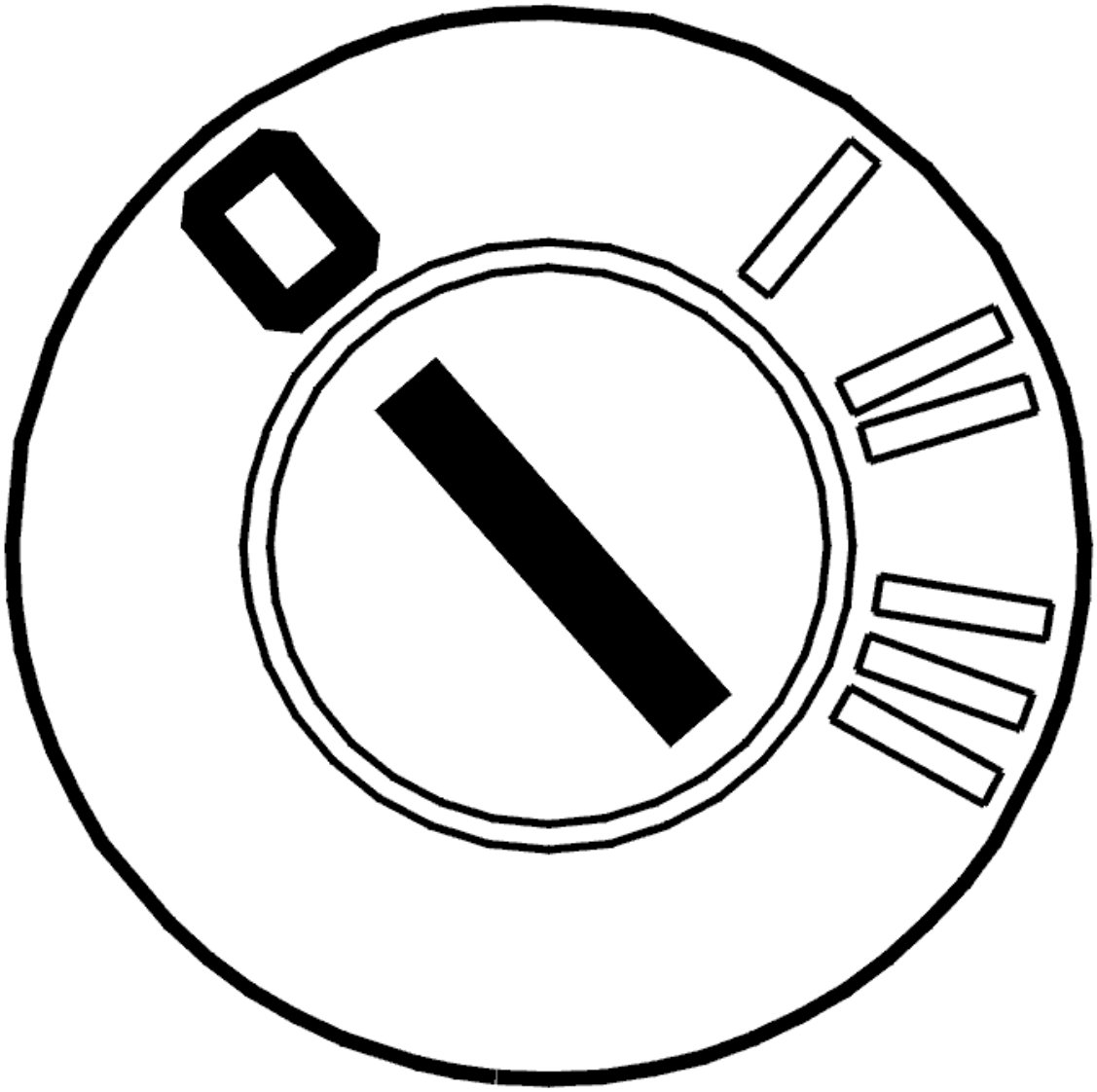

Fig. 269: Identifying Ignition OFF
Courtesy of VOLVO CARS CORPORATION

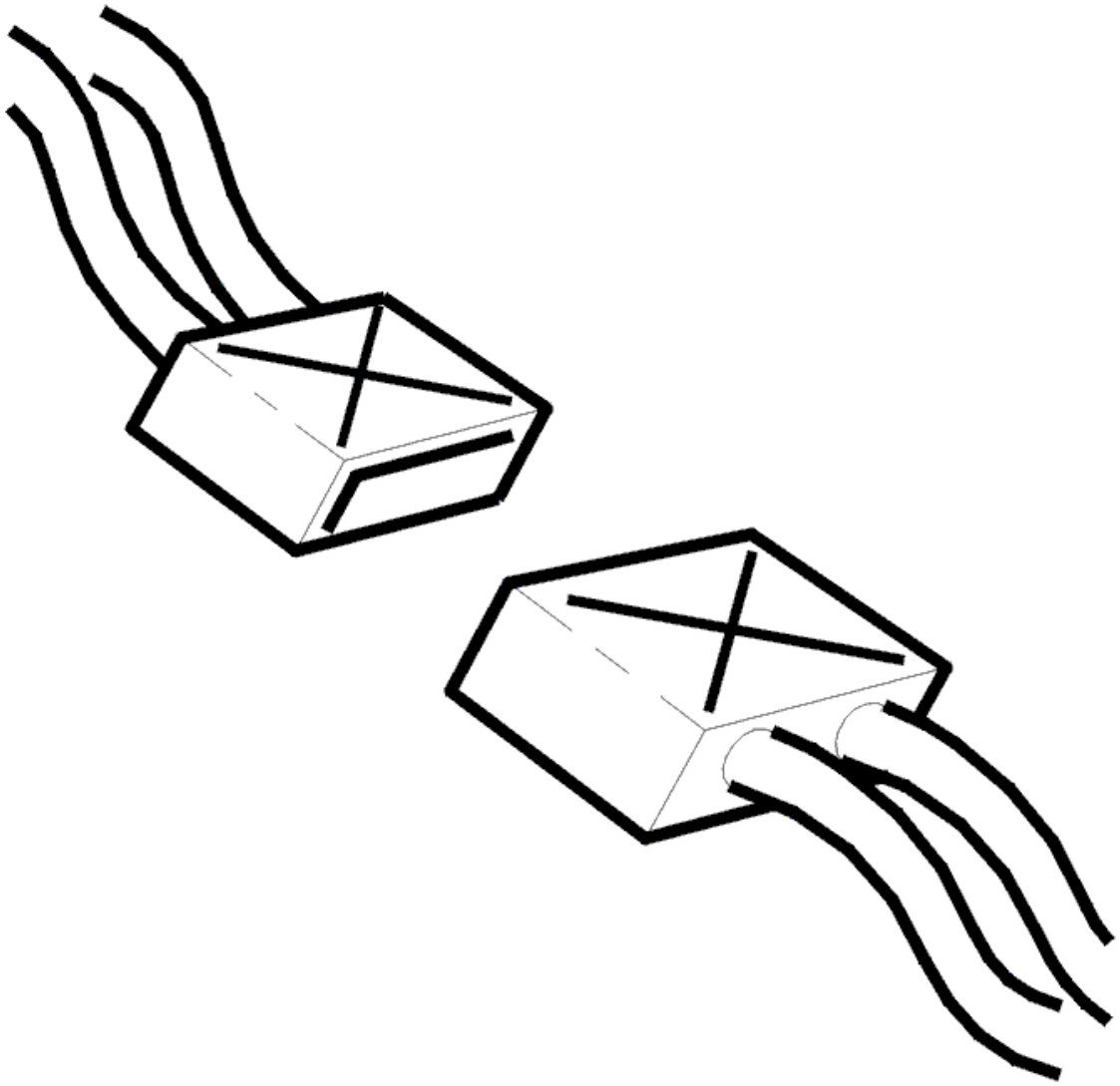

Fig. 270: Identifying Connectors
Courtesy of VOLVO CARS CORPORATION

- Ignition off
- The breakout box connected
- Transmission connector D disconnected.

Check the cable between transmission control module (TCM) terminal #A49 (#A49) and transmission connector terminal #D5 (control module side). Check for a short-circuit to ground. See **SHORT-CIRCUIT TO GROUND, PERMANENT FAULTS** .

Check the cable between control module terminal #B7 (#A67) and transmission connector terminal #D6 (control module side). Check for a short-circuit to ground. See **SHORT-CIRCUIT TO GROUND, PERMANENT FAULTS** .

Remedy as necessary.

Other information:

- To connect the breakout box, see **CONNECTING THE BREAKOUT BOX**
- To disconnect the transmission connectors, see **CONNECTORS, TRANSMISSION, DISCONNECTING / CONNECTING**
- For information about signals, see **SIGNAL DESCRIPTION. TRANSMISSION CONTROL MODULE (TCM)** .

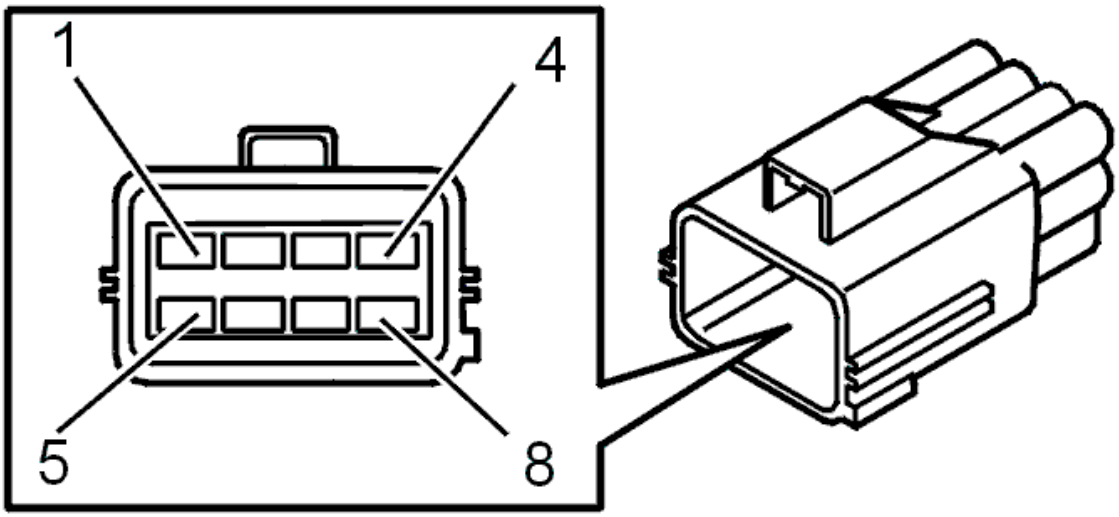

Fig. 271: Identifying Transmission Connector Terminals
Courtesy of VOLVO CARS CORPORATION

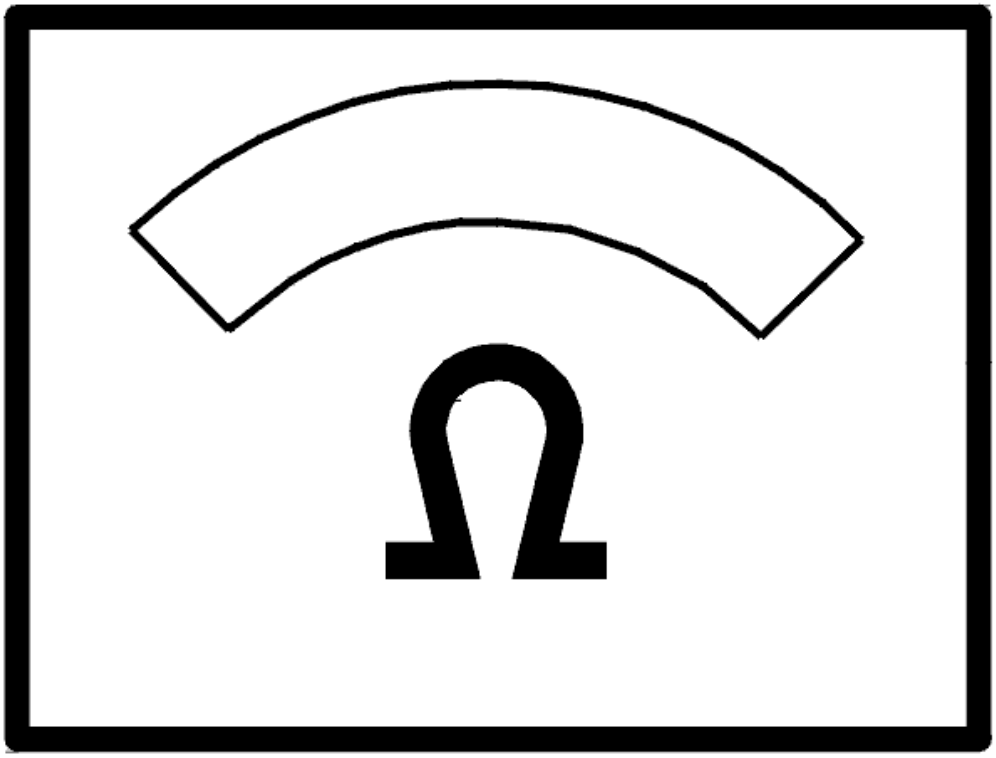

Fig. 272: Identifying Ohms Display
Courtesy of VOLVO CARS CORPORATION

Was a fault detected?

- **YES**

  Refer to **VERIFICATION**

- **NO**

  Refer to **CHECKING THE CONTROL MODULE**

CHECKING THE CONTROL MODULE

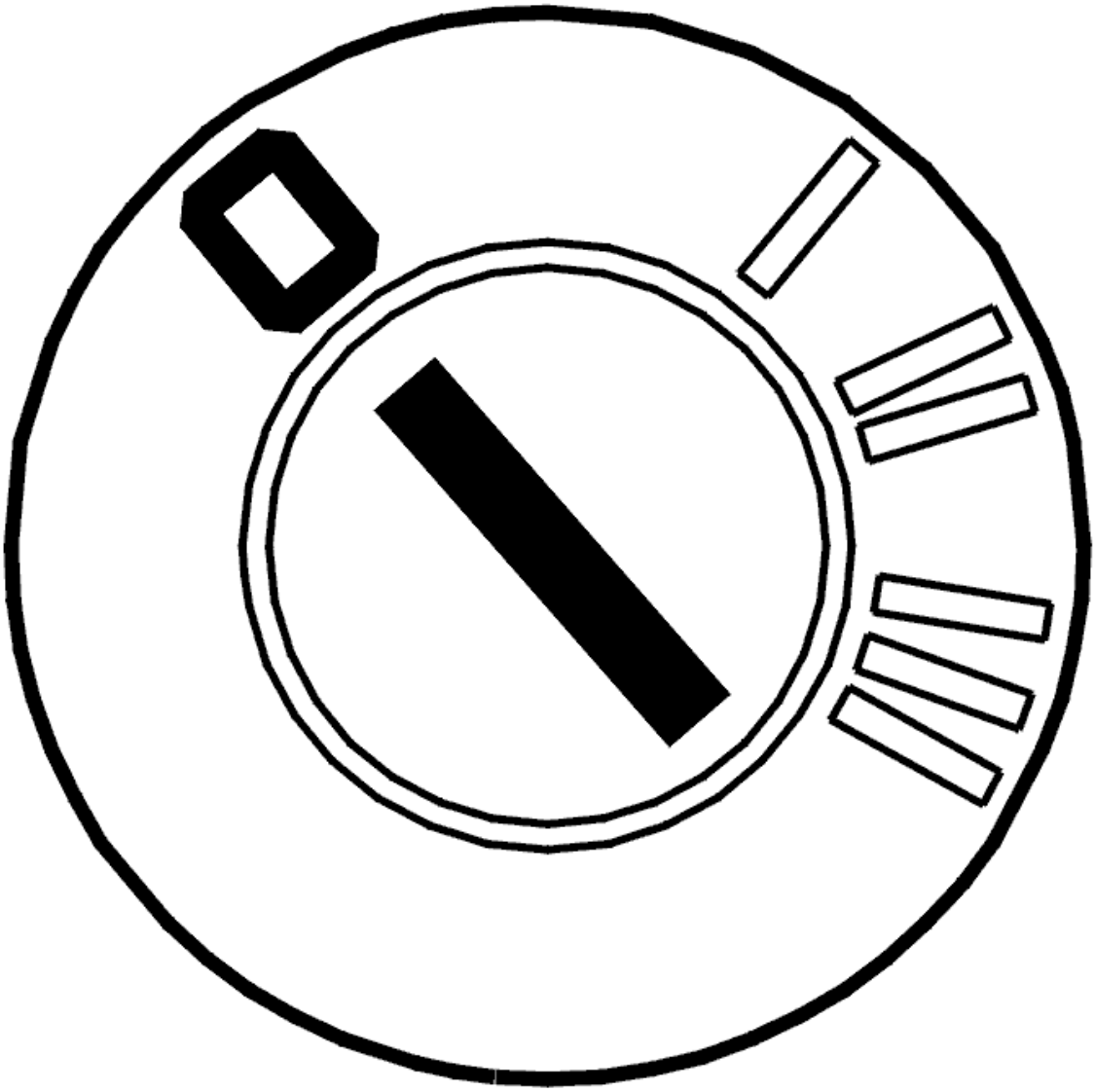

Fig. 273: Identifying Ignition OFF
Courtesy of VOLVO CARS CORPORATION

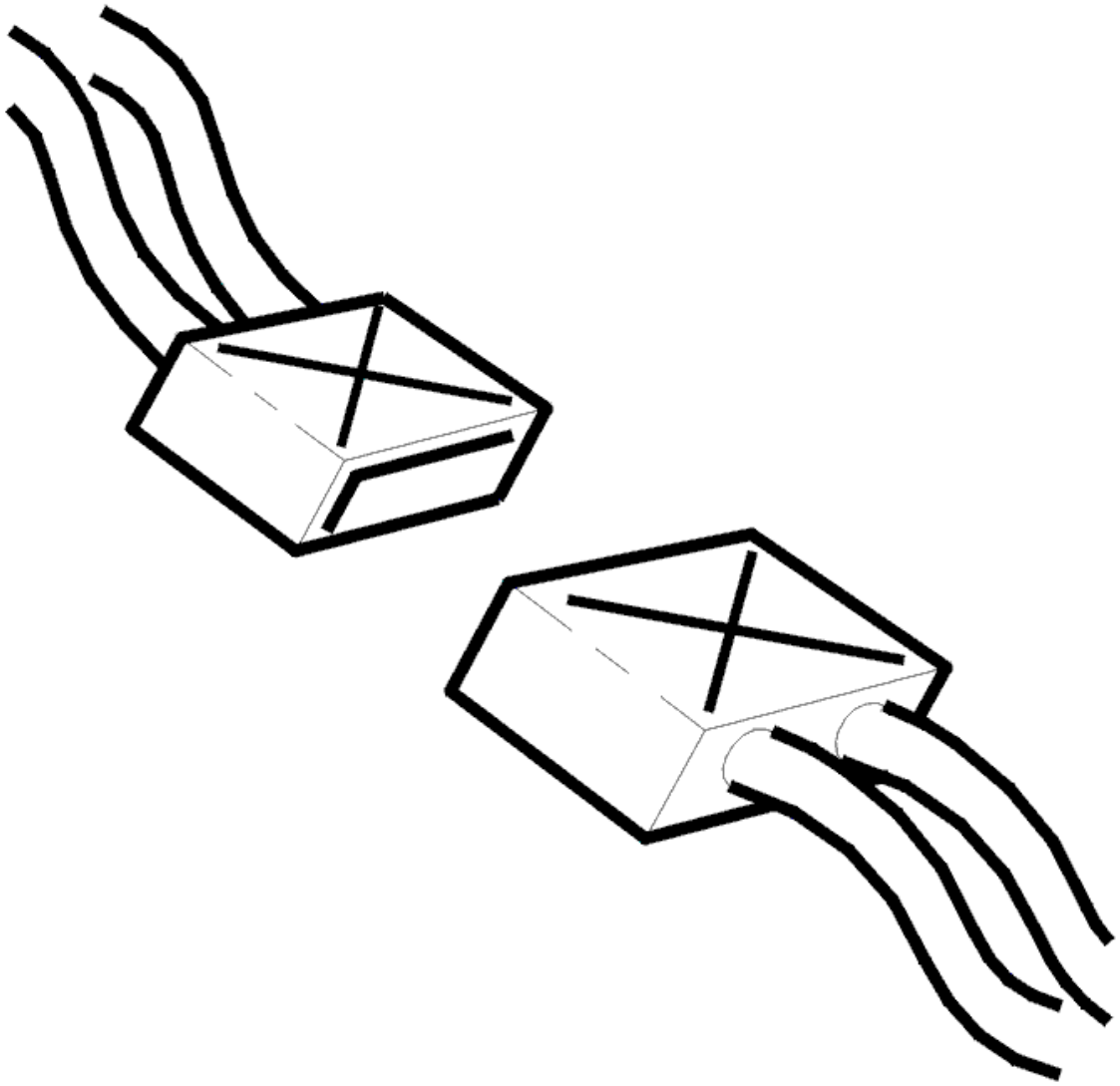

Fig. 274: Identifying Connectors
Courtesy of VOLVO CARS CORPORATION

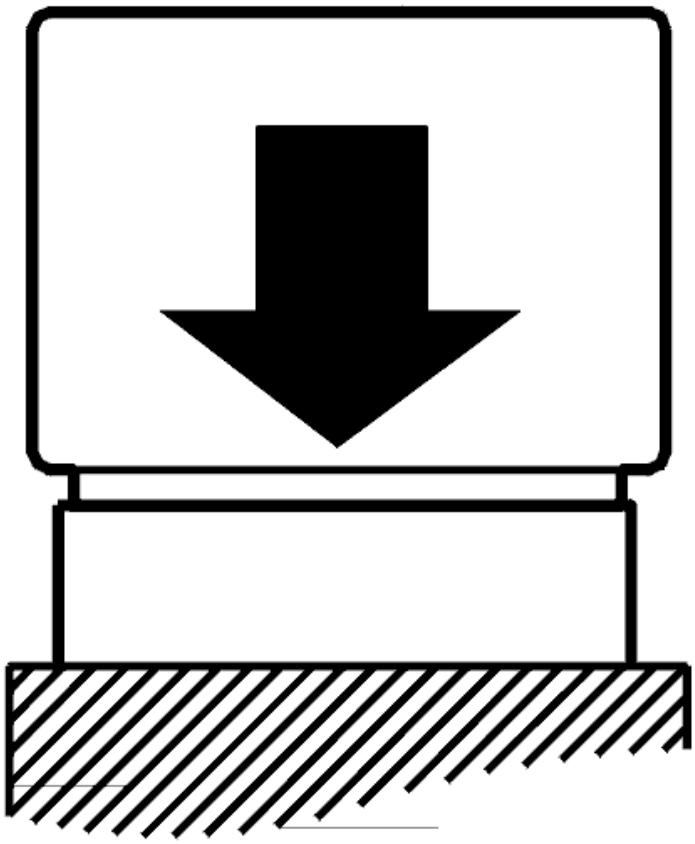

Fig. 275: Identifying Control Module Connected
Courtesy of VOLVO CARS CORPORATION

- Ignition off
- The breakout box connected
- Connect the control module.
- Transmission connector D disconnected.

Check the transmission control module (TCM) by measuring the resistance between terminals #A49 (#A49) and #B7 (#A67) on the breakout box. The resistance must be approximately 9 kohms.

NOTE: **When removing the transmission connector, the control module may store diagnostic trouble codes (DTCs) for the gear-shift position sensor, the shift solenoids, the temperature sensor etc.**

Try a new control module if the resistance is infinite.

Other information:

- To disconnect the transmission connectors, see **CONNECTORS, TRANSMISSION, DISCONNECTING / CONNECTING**
- To replace the control module, see **TRANSMISSION CONTROL MODULE (TCM), REPLACING**
- For information about signals, see **SIGNAL DESCRIPTION. TRANSMISSION CONTROL MODULE (TCM)** .

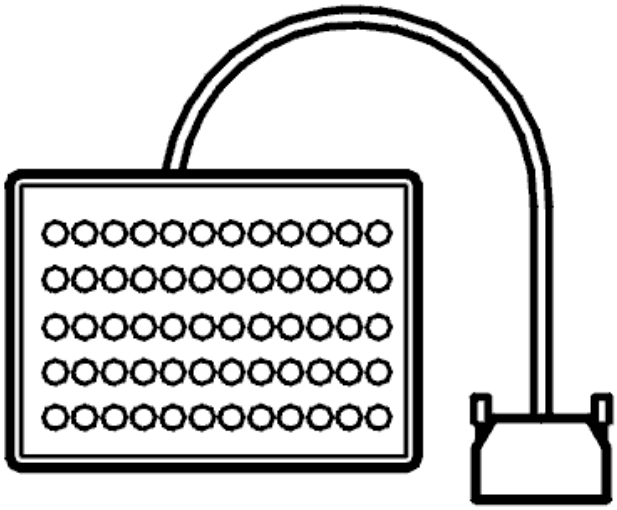

Fig. 276: Identifying Breakout Box
Courtesy of VOLVO CARS CORPORATION

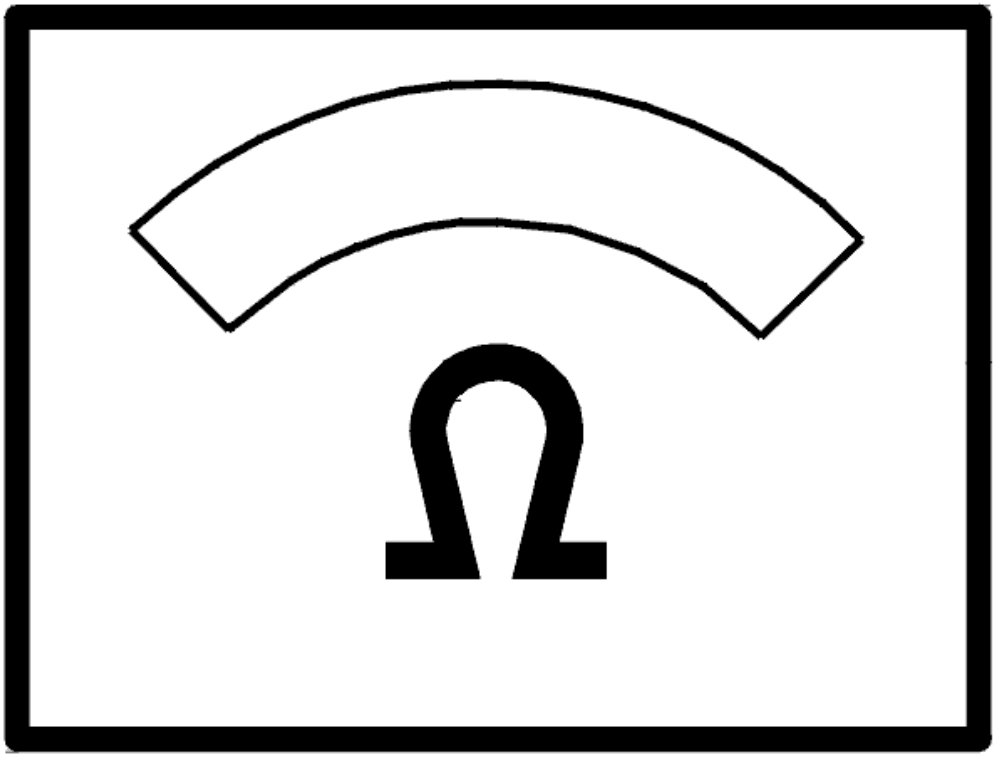

Fig. 277: Identifying Ohms Display
Courtesy of VOLVO CARS CORPORATION

Was the resistance OK?

- **YES**

  FAULT NOT FOUND: Troubleshooting has been completed.

- **NO**

  Refer to **VERIFICATION**

CHECKING THE WIRING AND COMPONENT

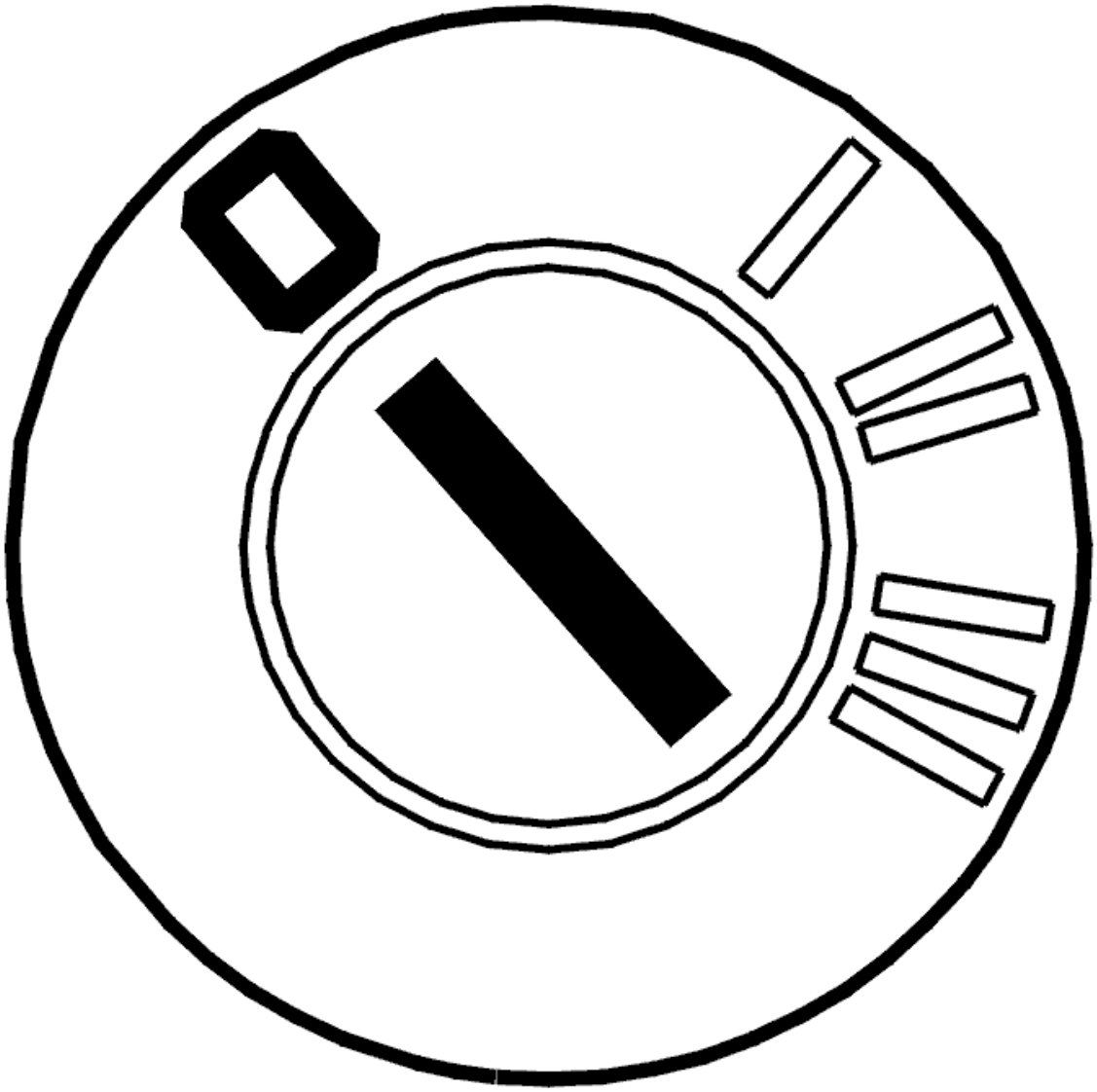

Fig. 278: Identifying Ignition OFF
Courtesy of VOLVO CARS CORPORATION

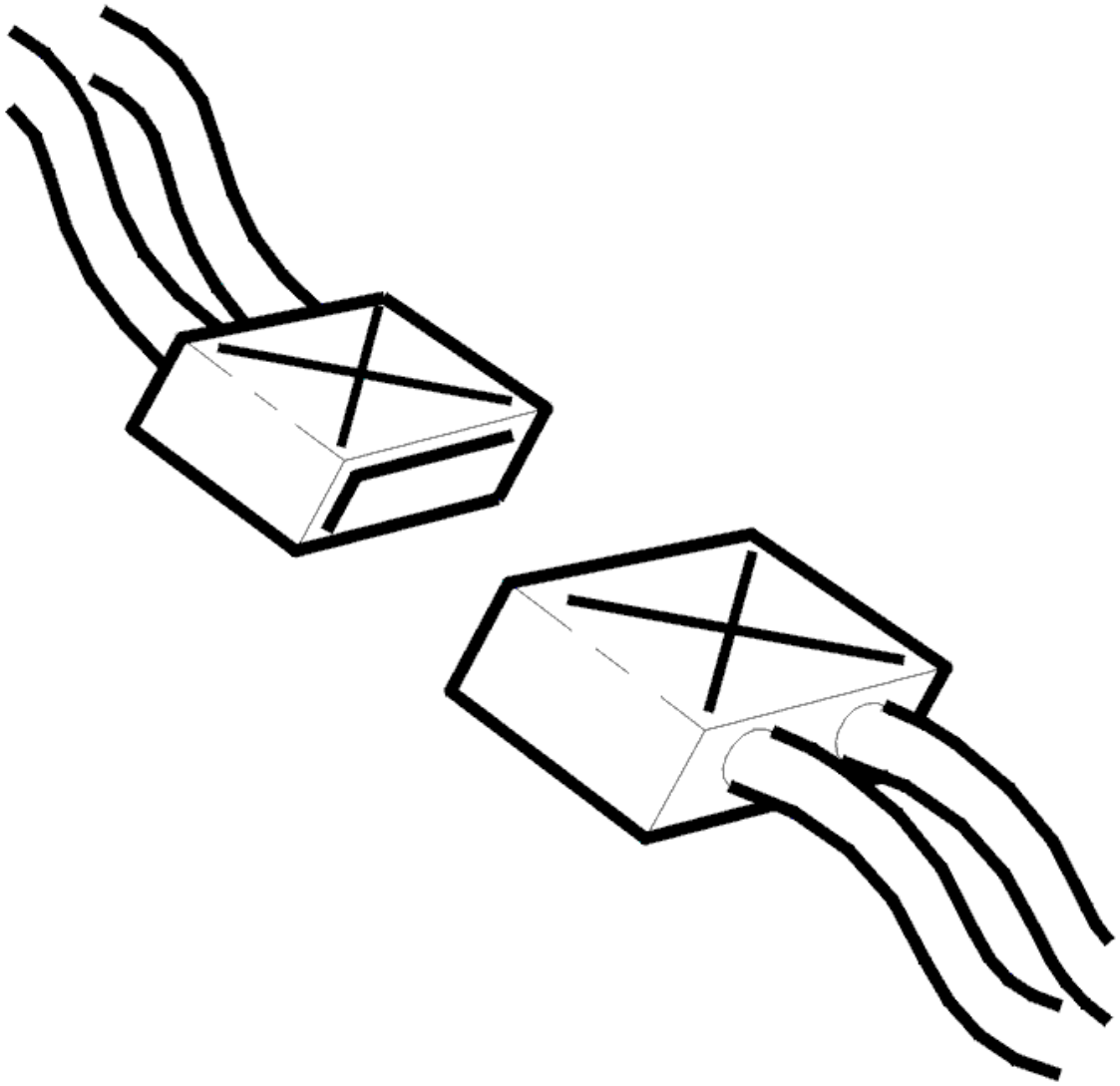

Fig. 279: Identifying Connectors
Courtesy of VOLVO CARS CORPORATION

- Ignition off
- Open the transmission control system.

  Check the wiring between transmission connector terminal #D5 (transmission side) and solenoid SLS terminal #1. Check the wiring between transmission connector terminal #D6 (transmission side) and solenoid SLS terminal #2. Check for a short-circuit to ground. See **SHORT-CIRCUIT TO GROUND, PERMANENT FAULTS** .

  Check solenoid SLS by measuring the resistance between terminals #1 and #2 on the connector. The resistance must be 5-5.6 ohms at 20°C. Replace the transmission control system if the resistance is incorrect.

  Other information:

- To disconnect the transmission connectors, see **CONNECTORS, TRANSMISSION, DISCONNECTING / CONNECTING**
- To open and replace the transmission control system, see **SOLENOID CONTROL SYSTEM, REPLACING**
- To replace the cable harness for the control system, see **TEMPERATURE SENSOR FLUID, TRANSAXLE, (TFT)**
- For information about signals, see **SIGNAL DESCRIPTION. TRANSMISSION CONTROL MODULE (TCM)** .

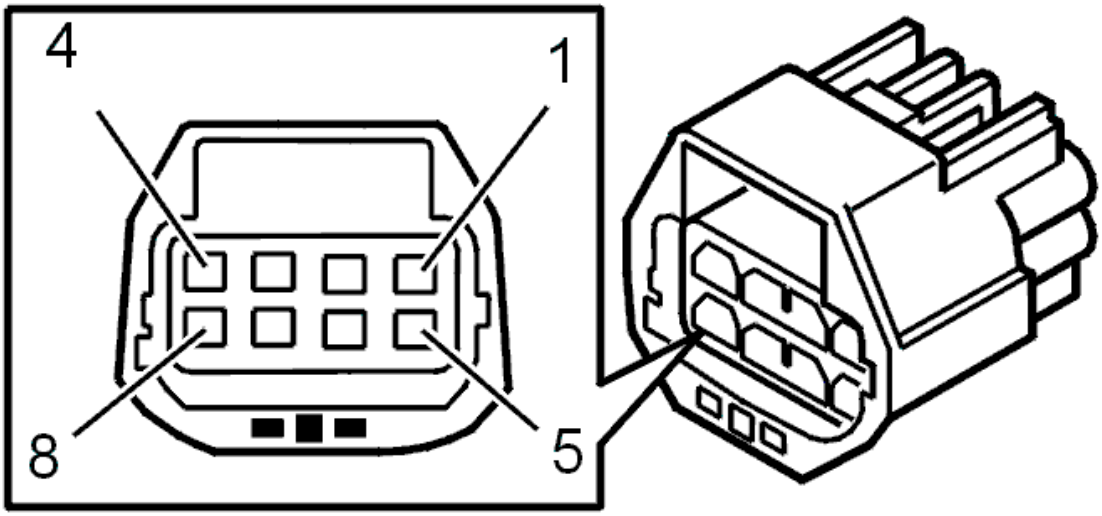

Fig. 280: Identifying 8-Pin Transmission Connector Terminals
Courtesy of VOLVO CARS CORPORATION

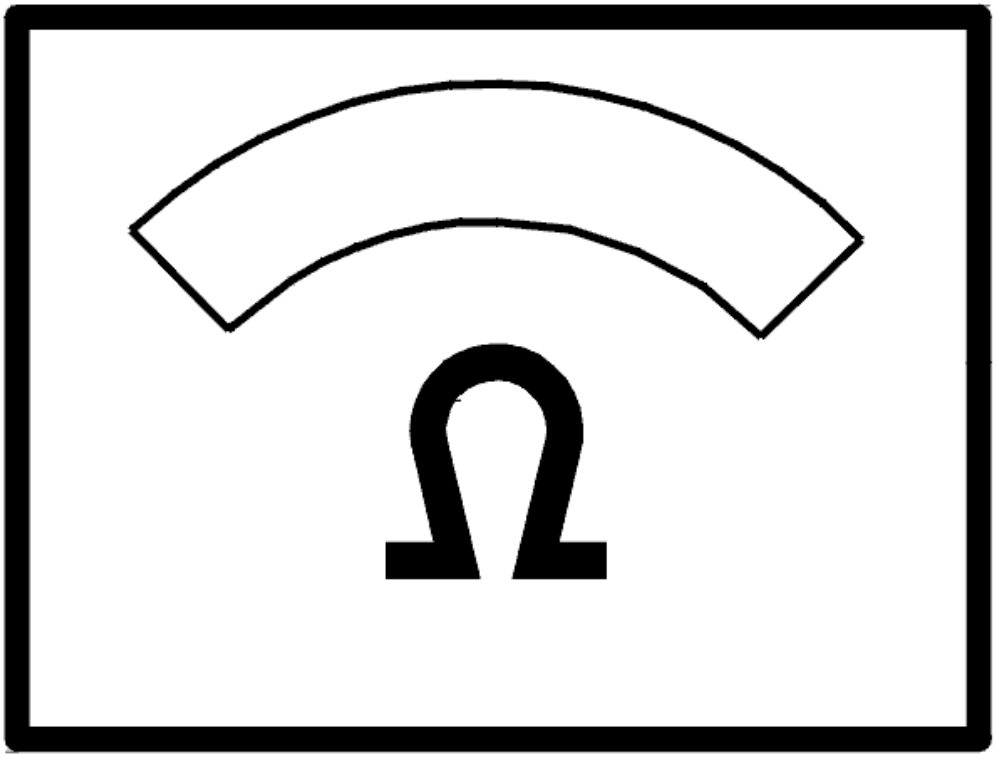

Fig. 281: Identifying Ohms Display
Courtesy of VOLVO CARS CORPORATION

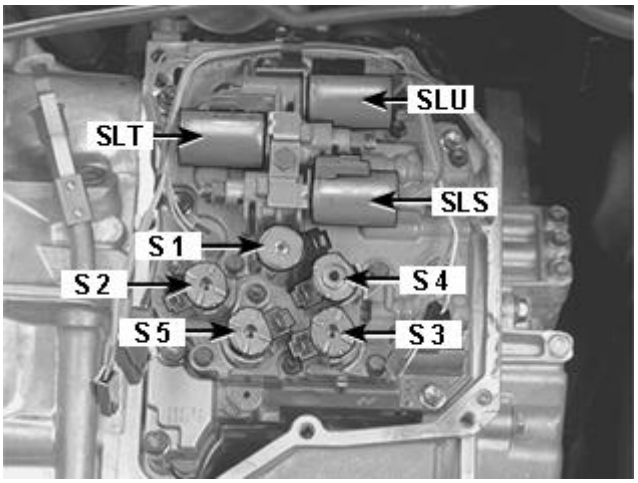

Fig. 282: Identifying S1-S5, SLT, SLU And SLS Solenoids
Courtesy of VOLVO CARS CORPORATION

- **Continue**

Refer to **RESETTING THE ADAPTATION**

RESETTING THE ADAPTATION

RESETTING ADAPTATION AND THE COUNTER FOR "TRANSMISSION OIL CHANGE"

HINT: The transmission has torque controlled adaptive pressure control. Pressure control means that the transmission regulates the pressure itself during each gear shift. This avoids harsh gear shifting. Each gear shift is evaluated by the control module and stored in the memory. This allows for compensation for wear and tear in the transmission and clutch. It is important that the adaptation in the memory is reset after the transmission has been repaired. This is to ensure normal operation. The oil is replaced during repair; the "Transmission oil change" counter must be reset. If the counter is not reset when the fluid is drained and replaced, there is a risk that a diagnostic trouble code (DTC) will be stored in incorrect circumstances.

NOTE: **This applies only if the transmission or one of the components in the transmission have been replaced.**

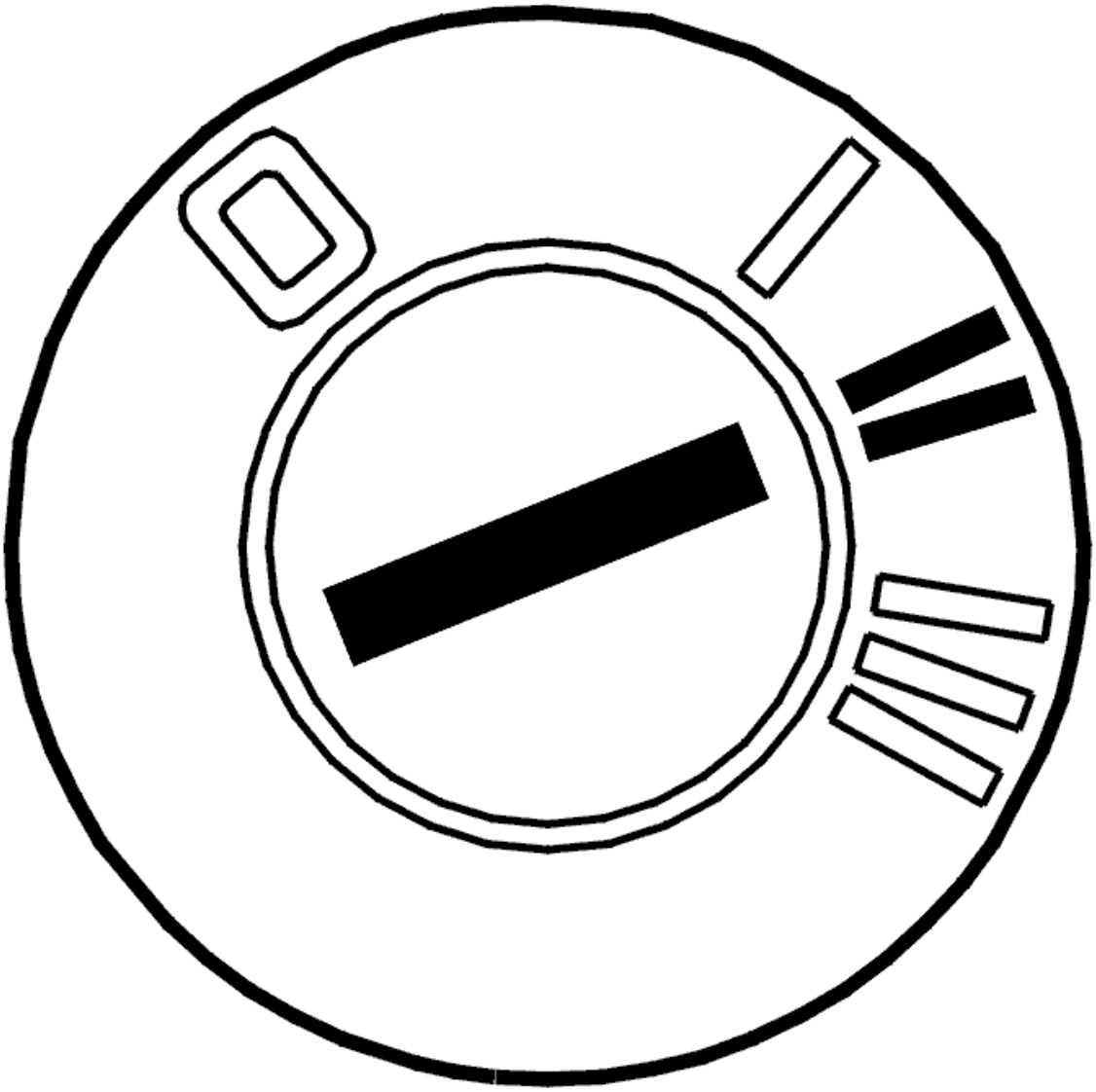

Fig. 283: Identifying Ignition ON
Courtesy of VOLVO CARS CORPORATION

- Ignition on.

  Click on the VCT2000 symbol to reset the adaptation and counter.

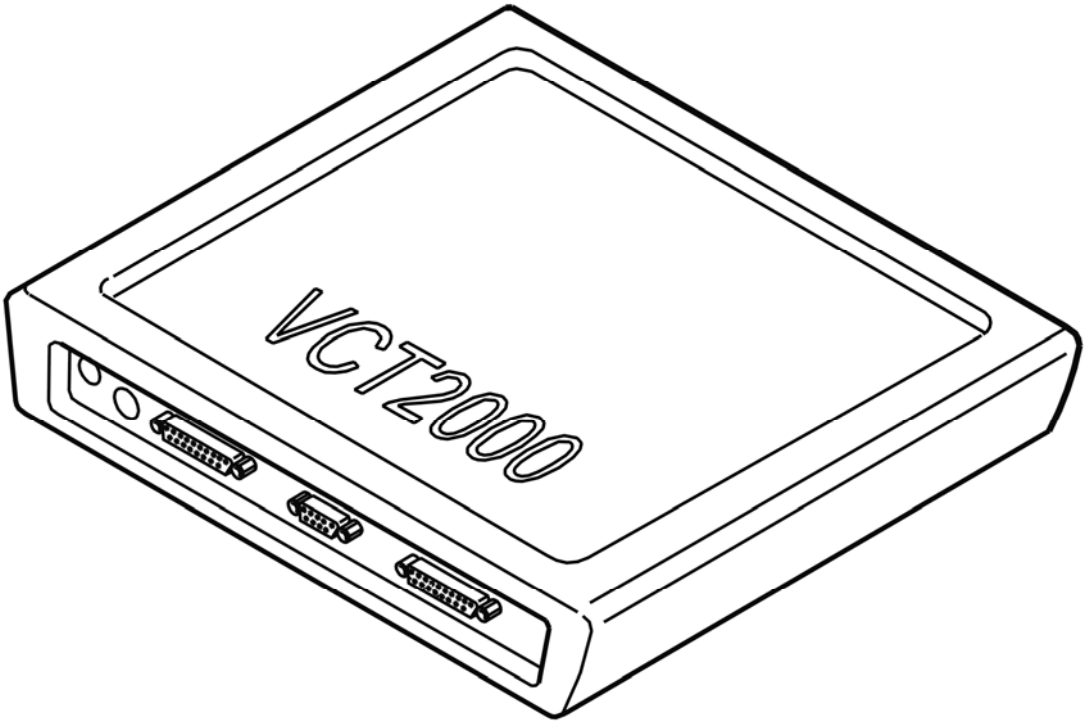

Fig. 284: Identifying VCT2000 Diagnostic Tool Symbol In VIDA
Courtesy of VOLVO CARS CORPORATION

- **Continue**

  Refer to **VERIFICATION**

VERIFICATION

VERIFICATION

HINT: After carrying out the repair, check that the fault has been remedied.

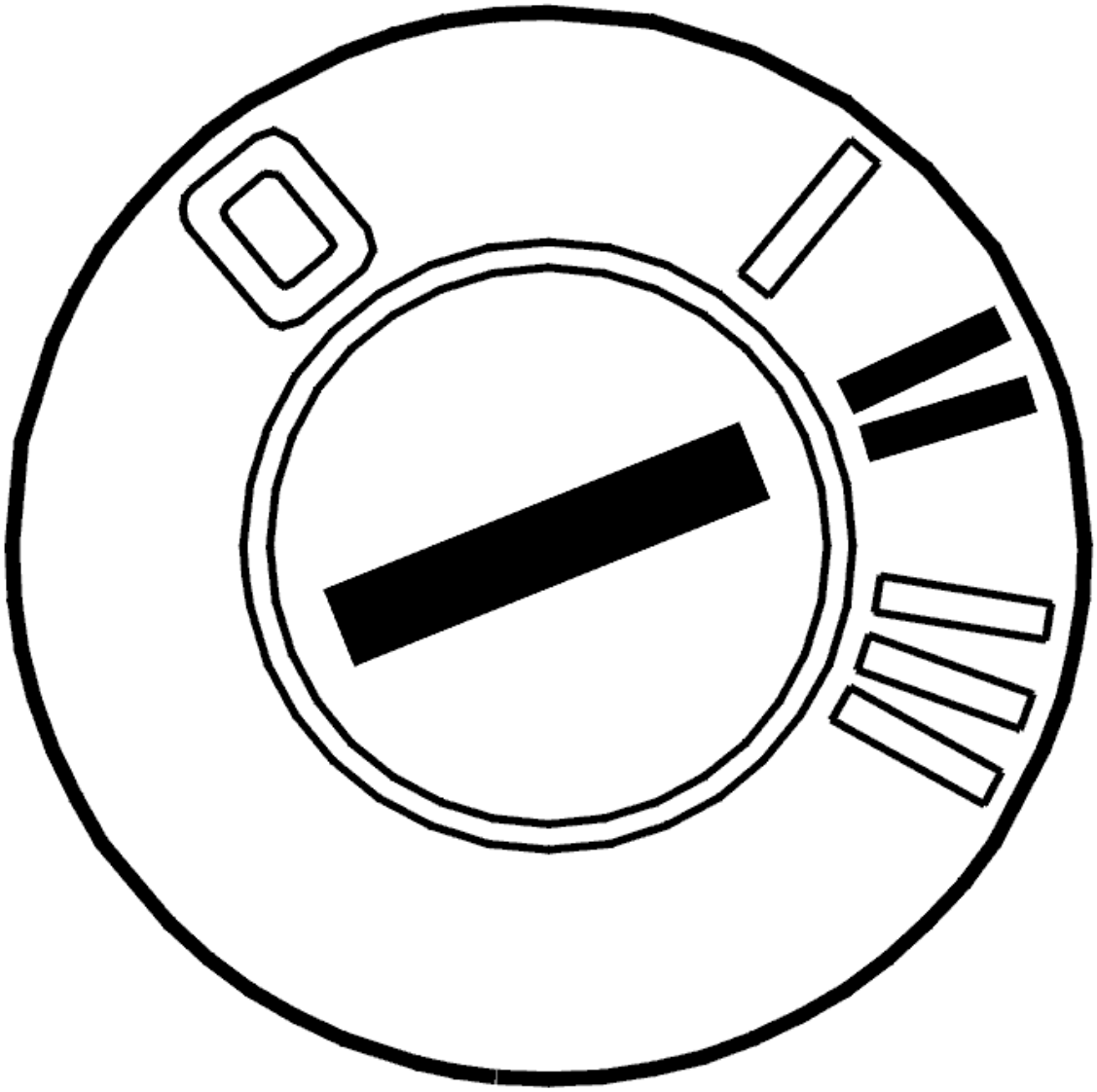

Fig. 285: Identifying Ignition ON
Courtesy of VOLVO CARS CORPORATION

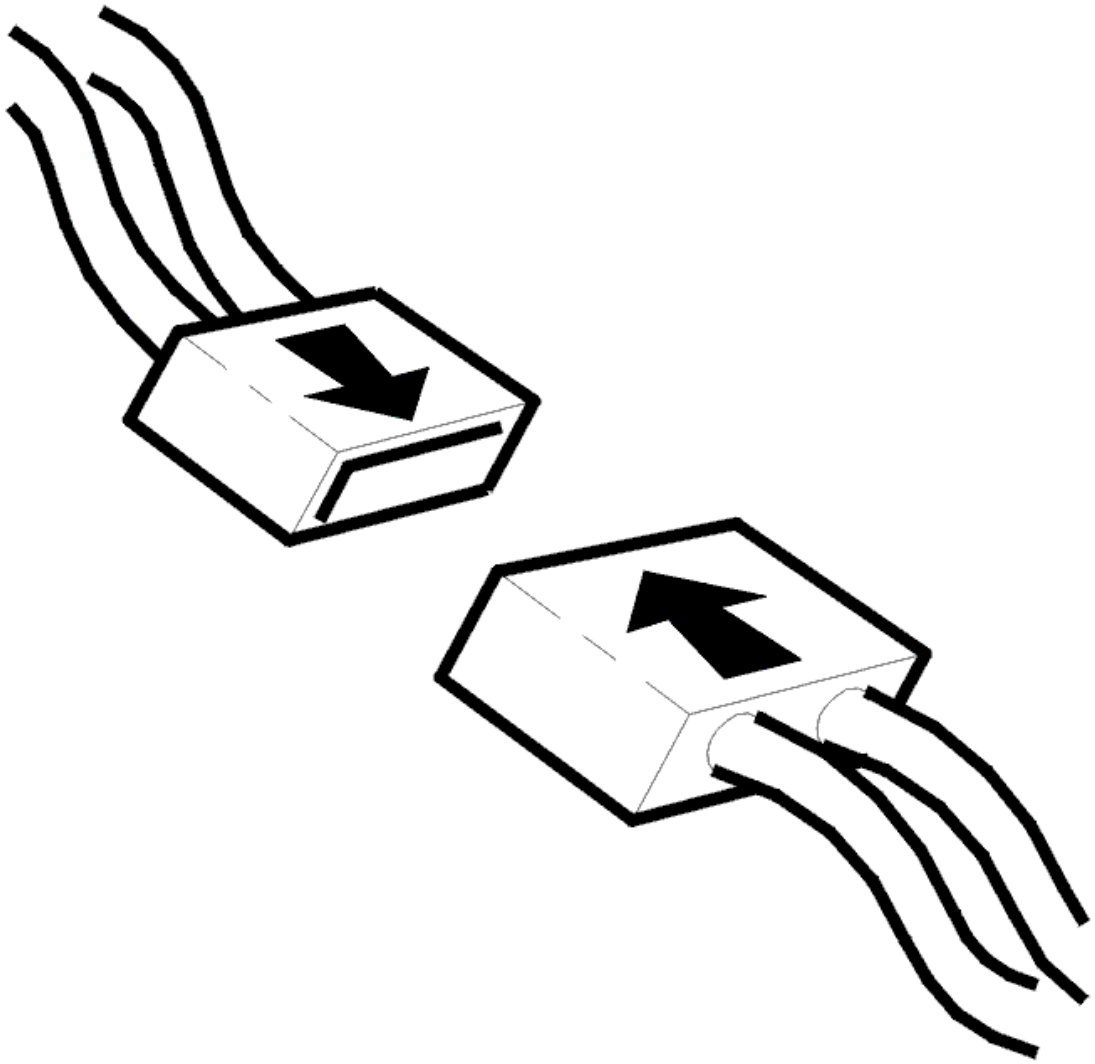

Fig. 286: Identifying Connector(s) Reinstallation
Courtesy of VOLVO CARS CORPORATION

- Ignition on.
- Activate solenoid SLS.

  Read off the current through the solenoid SLS circuit.

  The current should oscillate between 0 and 1000 mA.

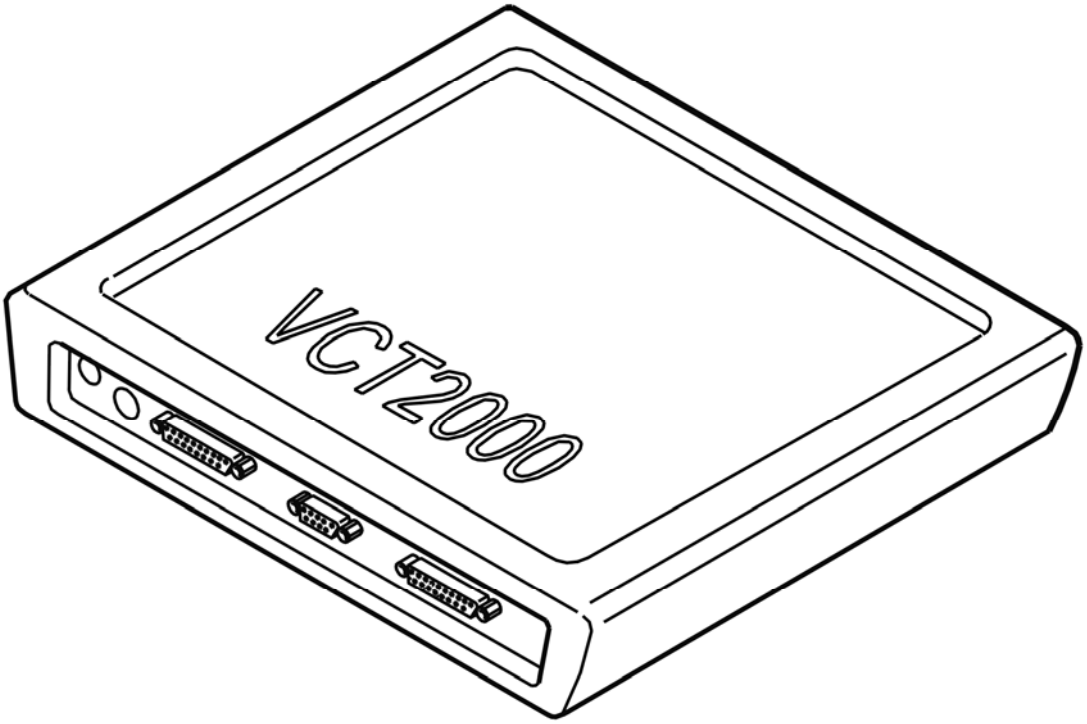

Fig. 287: Identifying VCT2000 Diagnostic Tool Symbol In VIDA
Courtesy of VOLVO CARS CORPORATION

Does the current oscillate?

- **YES**

  VERIFIED: Troubleshooting has been completed.

- **NO**

  Refer to **INFORMATION**

INFORMATION

FAULT-TRACING INFORMATION

The fault should have been detected and remedied. As this is not the case fault-tracing has failed.

Exit fault-tracing for this diagnostic trouble code (DTC) or make another attempt.

TCM-0115: SHIFT SOLENOID S3. HYDRAULIC FAULT (AW50/51 AWD; AW55-50/51SN; 2003-2007)

DIAGNOSTIC TROUBLE CODE (DTC) INFORMATION

Condition

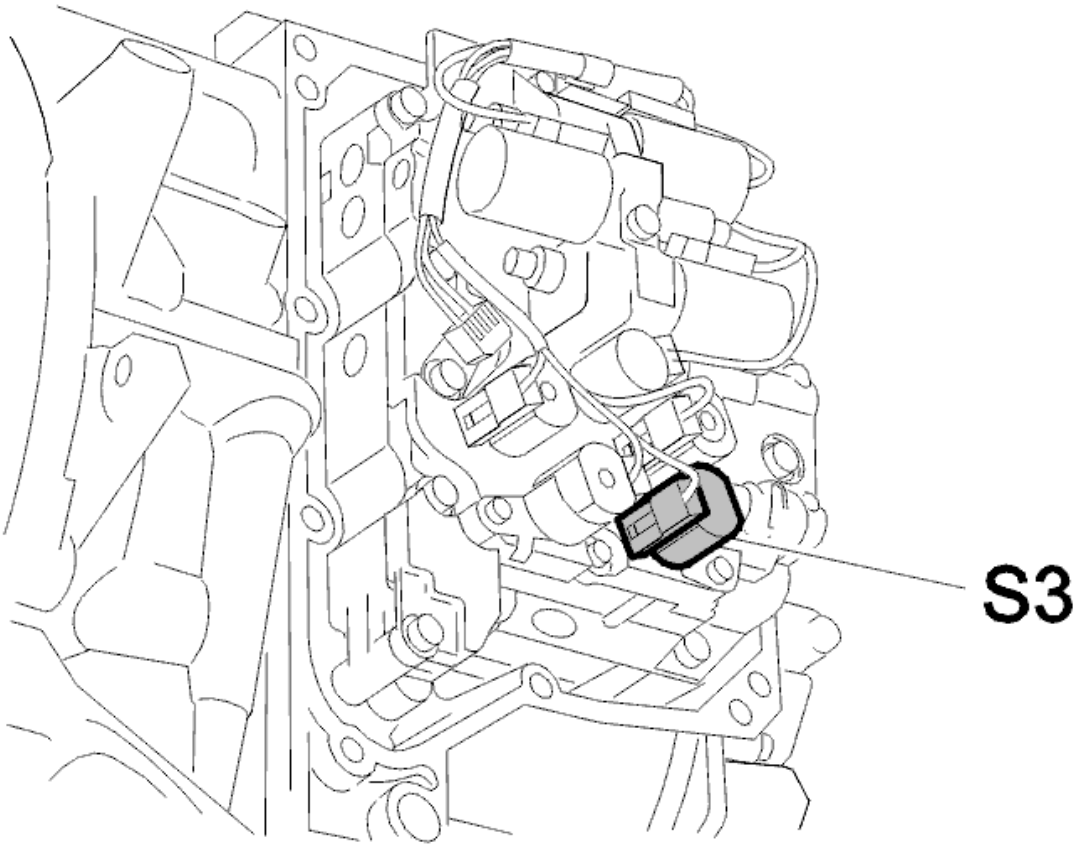

Fig. 288: Identifying Solenoid S3
Courtesy of VOLVO CARS CORPORATION

Transmission control module (TCM) receives a speed signal from the ABS system and from the automatic transmission speed sensor. The transmission control module (TCM) compares the speed signals from the ABS system and from the transmission speed sensor. The two signals should be approximately the same. The control module derives and compares the transmission speed with the vehicle speed. The transmission control module (TCM) uses this comparison to calculate gear-shift timing. Engine speed (RPM) and vehicle speed data affects the adjustment of system pressure, lock-up function control and engine torque reduction. The result is smooth gear-shifting. The transmission control module also derives and calculates the ABS system signal with the engine speed (RPM) signal. The control module also checks which gear is selected and compares it with the calculated gear. The ABS system and transmission speed signals should be almost identical. The engine speed (RPM) signal should be greater or lower than the ABS system speed signal (note that vehicle speed must be above 30 km/h, engine speed (RPM) above 1400 RPM and transmission oil temperature over 20°C). Diagnostic trouble code (DTC) TCM-0115 is stored if the control module detects that the transmission speed and engine speed (RPM) signals do not correspond with the programmed values and that an "incorrect" gear is selected. This is because solenoid S3 is stuck in the open or closed position.

Substitute Value

- The transmission control module (TCM) Emergency mode II program is initiated.

Possible Source

- The solenoid has stuck in the open or closed position.
- Defective solenoid.

Fault symptom[s]

- General orange warning lamp lit.
- No shifting.
- Harsh gear shifting.
- No lock-up function.

HINT: Harsh shifting because there is no line pressure solenoid SLT control. This results in constant maximum line pressure.

HINT: No shifting because the control module prevents activation of the solenoids.

HYDRAULIC FAULT

CHECKS

CHECKING THE OIL QUALITY AND THE OIL LEVEL IN THE TRANSMISSION

NOTE: **Transmission fluid quality and level are extremely important for transmission function. Therefore it is imperative that these are correct. In addition the oil level is dependent on oil temperature.**

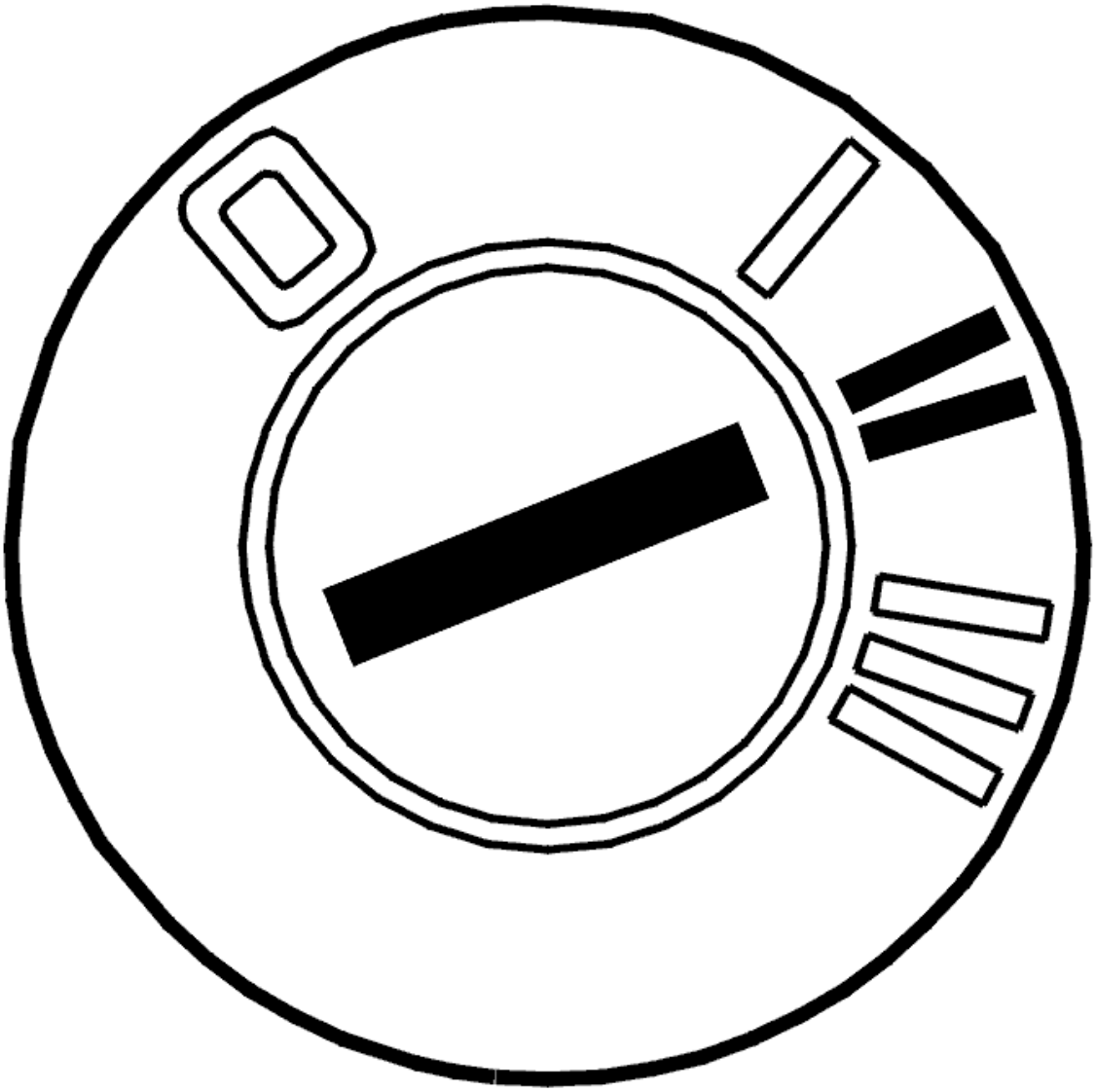

Fig. 289: Identifying Ignition ON
Courtesy of VOLVO CARS CORPORATION

- Ignition on
- Read off the oil temperature.

  Check the oil level. If the oil level is low check for leakage. Top up with oil.

  Check the quality of the oil.

  Replace the transmission fluid if the fluid smells burnt.

  Check the transmission fluid for metal shavings. Take a sample using the dip stick.

  Replace the transmission if the transmission fluid contains metal shavings.

Other information:

- To replace the transmission fluid, see **TRANSMISSION FLUID, REPLACING**
- To check the level, see **OIL LEVEL, CHECKING**
- To check the quality of the transmission fluid, see **OIL GRADE, CHECKING** .

Select an alternative below:

1. No fault detected

   Refer to **CHECKING SHIFT SOLENOID S3**

2. Transmission fluid replaced, the level was low or quality was poor

   Refer to **RESETTING THE ADAPTATION**

3. The transmission fluid contains metal shavings.

   Refer to **REPLACING THE TRANSMISSION**

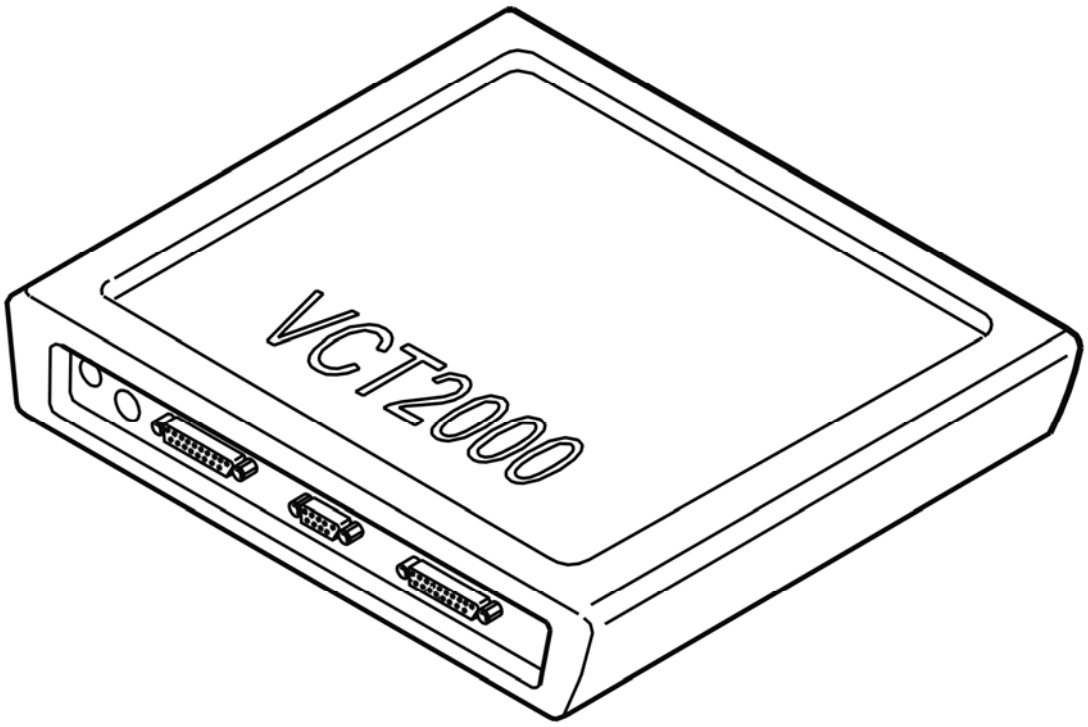

Fig. 290: Identifying VCT2000 Diagnostic Tool Symbol In VIDA
Courtesy of VOLVO CARS CORPORATION

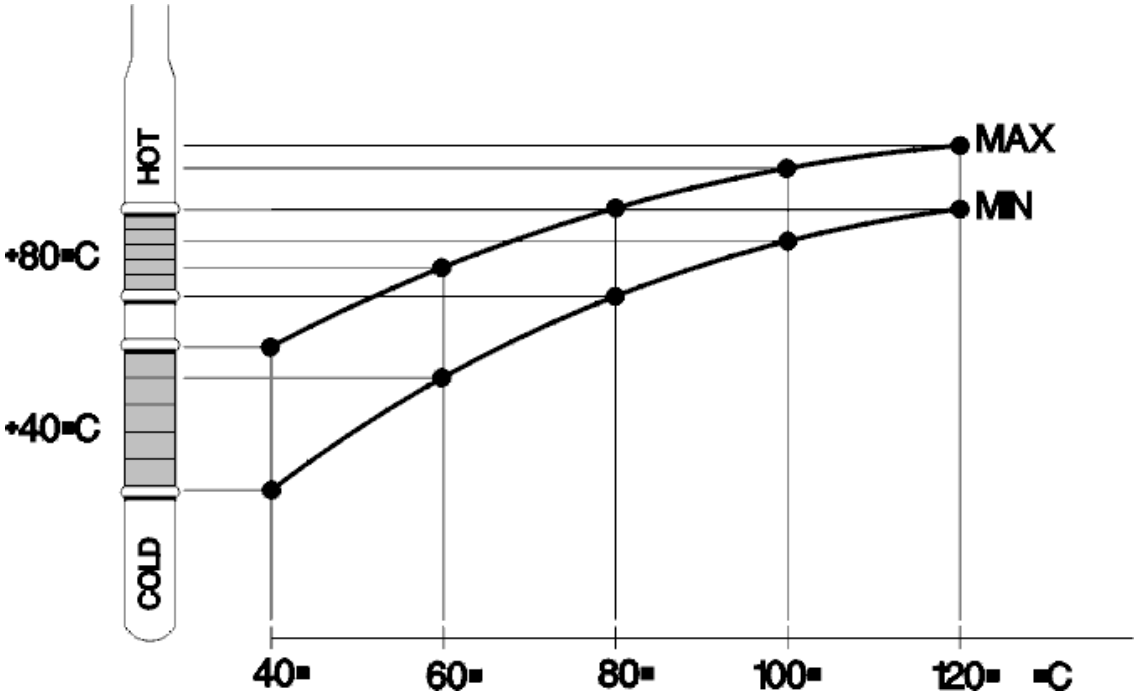

Fig. 291: Identifying Oil Level Temperature Graph
Courtesy of VOLVO CARS CORPORATION

CHECKING SHIFT SOLENOID S3

NOTE: The transmission must not be colder than room temperature when activated.

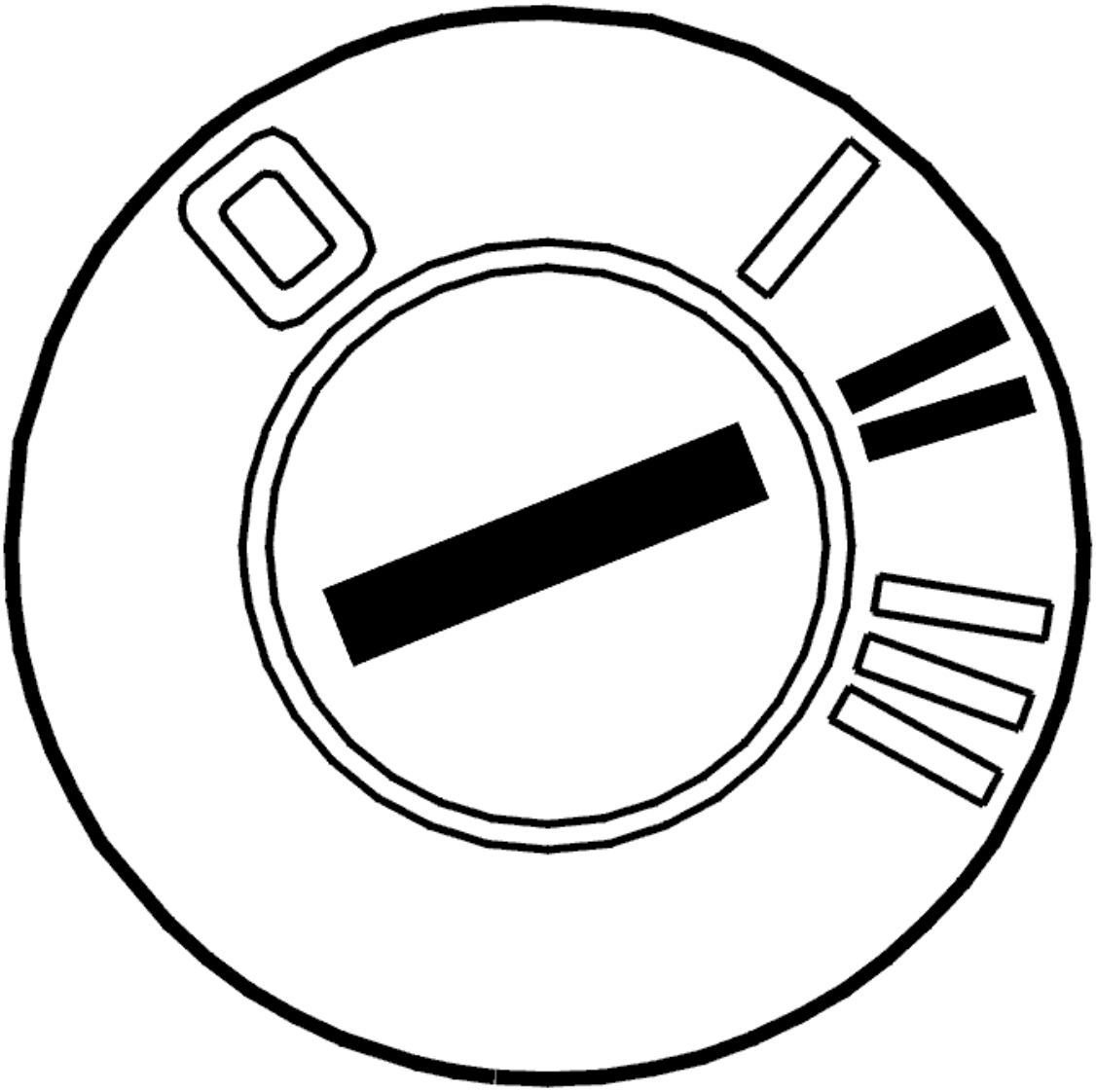

Fig. 292: Identifying Ignition ON
Courtesy of VOLVO CARS CORPORATION

- Ignition off
- Check the transmission and control module connectors. Check for contact resistance and oxidation. See **CONTACT RESISTANCE AND OXIDATION**
- Ignition on
- Activate shift solenoid S3.

  A "click" should be heard when the solenoid is activated. Use a stethoscope to hear the click more clearly.

  There is a mechanical fault if the solenoids do not click. If the solenoid "clicks" the cause of the fault is contact resistance and oxidation.

  Other information

- To access the transmission connectors, see **CONNECTORS, TRANSMISSION, DISCONNECTING / CONNECTING**
- To access the control module connector, see **TRANSMISSION CONTROL MODULE (TCM), REPLACING** .

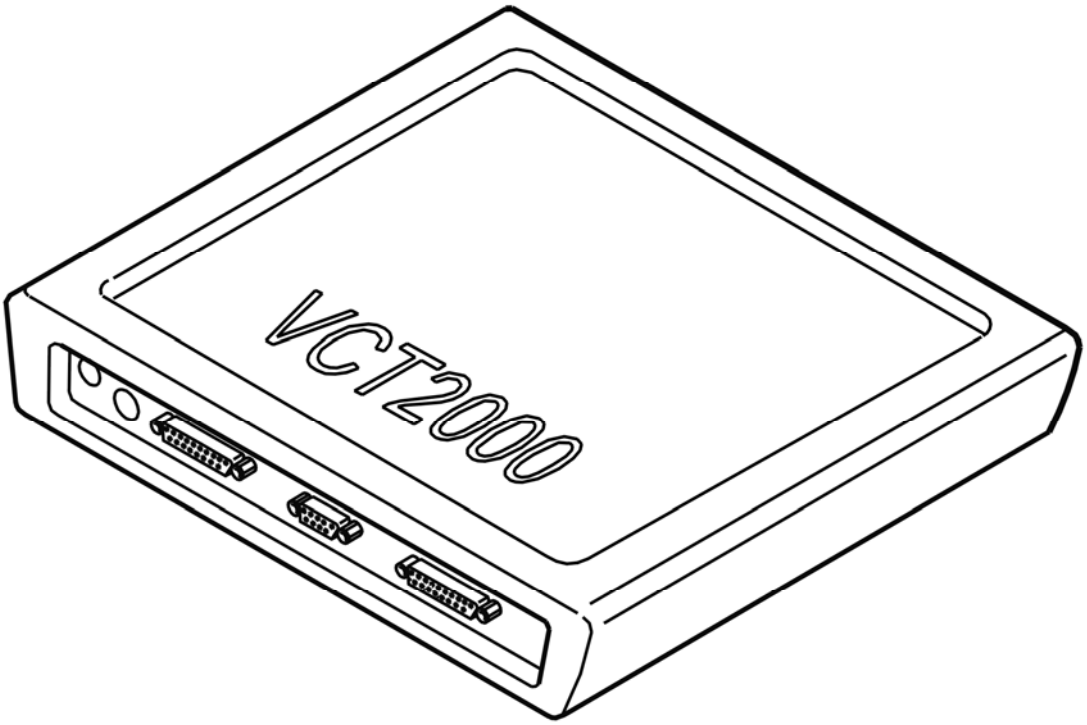

Fig. 293: Identifying VCT2000 Diagnostic Tool Symbol In VIDA
Courtesy of VOLVO CARS CORPORATION

Was there a click from the solenoid?

- **YES**

  Refer to **CHECKING NOISE IN THE TRANSMISSION**

- **NO**

  Refer to **CHECKING THE WIRING AND COMPONENT**

CHECKING THE WIRING AND COMPONENT

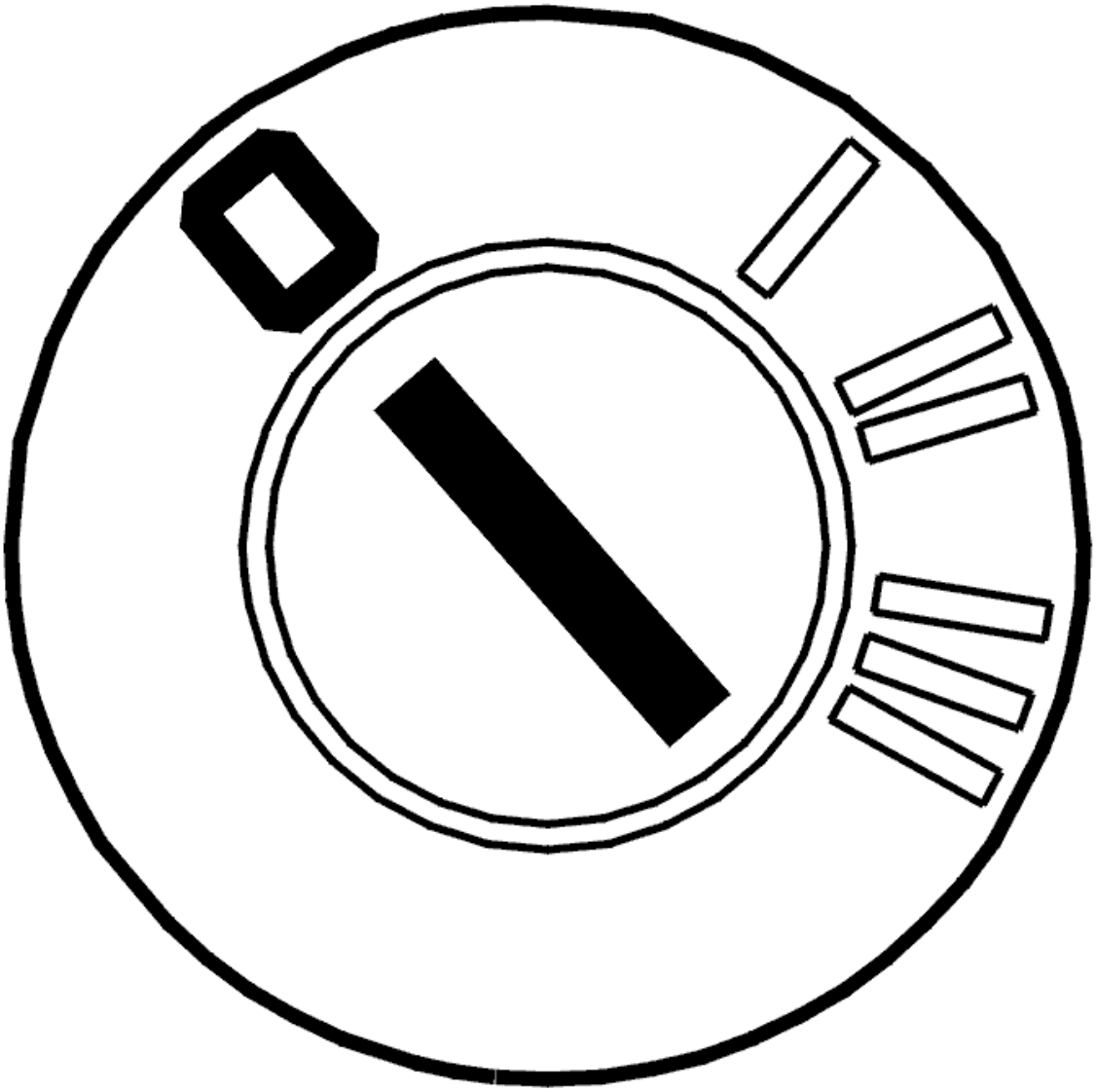

Fig. 294: Identifying Ignition OFF
Courtesy of VOLVO CARS CORPORATION

- Ignition off
- Open the transmission control system.

  Check that there is no metal shavings or dirt in the control system. Replace solenoid S3 if the control system is OK.

  Replace the transmission if there is any metal shavings in the control system.

  Remedy as necessary.

  Other information:

  - To open the control system and to check or replace solenoid S3, see **SOLENOID CONTROL**

SYSTEM, REPLACING

- For information about signals, see **SIGNAL DESCRIPTION. TRANSMISSION CONTROL MODULE (TCM)** .

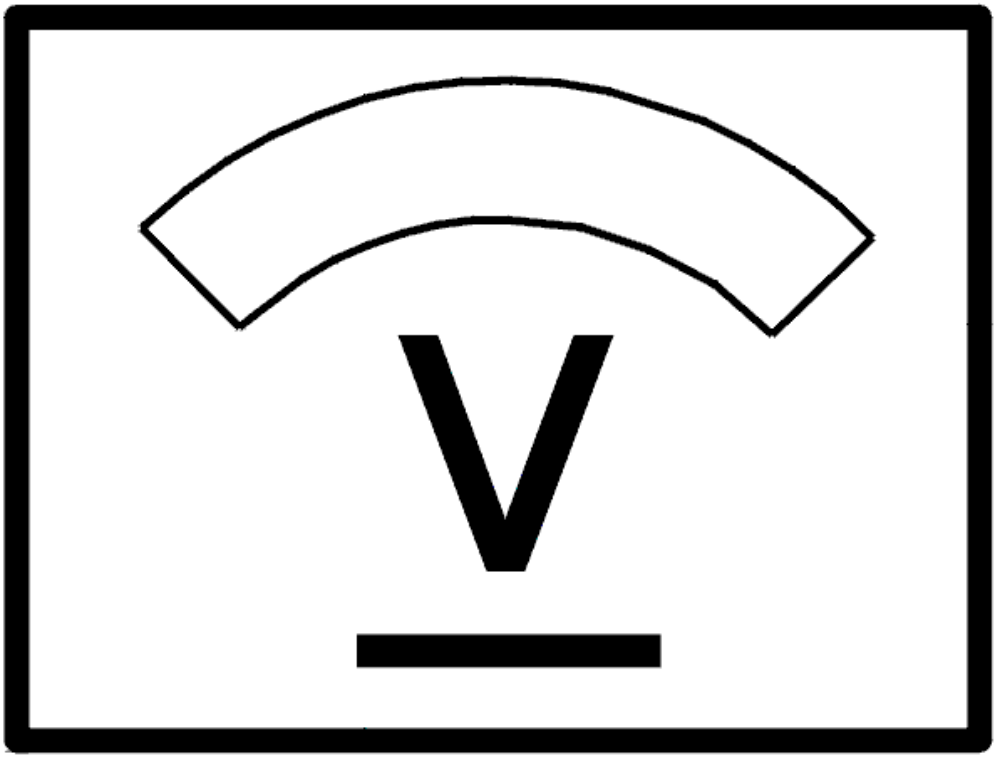

Fig. 295: Identifying Voltage Display
Courtesy of VOLVO CARS CORPORATION

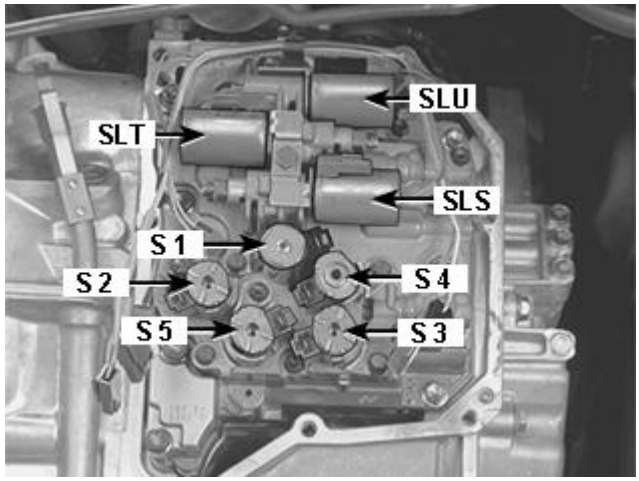

Fig. 296: Identifying S1-S5, SLT, SLU And SLS Solenoids
Courtesy of VOLVO CARS CORPORATION

Is there any metal shavings in the transmission?

- **YES**

  Refer to **REPLACING THE TRANSMISSION**

- **NO**

  Refer to **RESETTING THE ADAPTATION**

CHECKING NOISE IN THE TRANSMISSION

- Test drive the car. See **TEST DRIVE SCHEDULE, DESCRIPTION**
- Check for any clearly audible noises from the transmission. Check for malfunctions.

Is the function of the transmission OK?

- **YES**

  OKAY: Troubleshooting has been completed.

- **NO**

  Refer to **REPLACING THE TRANSMISSION**

REPLACING THE TRANSMISSION

The previous tests indicate an internal fault in the transmission.

Replace the transmission. See **TRANSMISSION - REMOVAL, REPLACEMENT AND INSTALLATION** .

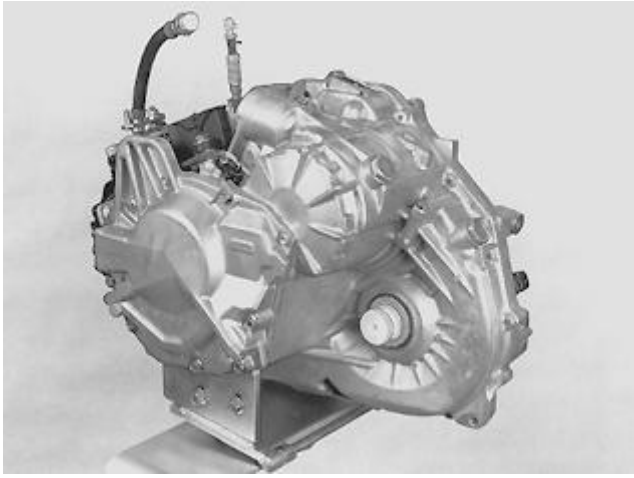

Fig. 297: Identifying Transmission
Courtesy of VOLVO CARS CORPORATION

- **Continue**

  Refer to **RESETTING THE ADAPTATION**

RESETTING THE ADAPTATION

RESETTING ADAPTATION AND THE COUNTER FOR "TRANSMISSION OIL CHANGE"

HINT: The transmission has torque controlled adaptive pressure control. Pressure control means that the transmission regulates the pressure itself during each gear shift. This avoids harsh gear shifting. Each gear shift is evaluated by the control module and stored in the memory. This allows for compensation for wear and tear in the transmission and clutch. It is important that the adaptation in the memory is reset after the transmission has been repaired. This is to ensure normal operation. The oil is replaced during repair; the "Transmission oil change" counter must be reset. If the counter is not reset when the fluid is drained and replaced, there is a risk that a diagnostic trouble code (DTC) will be stored in incorrect circumstances.

NOTE: This applies only if the transmission or one of the components in the transmission have been replaced.

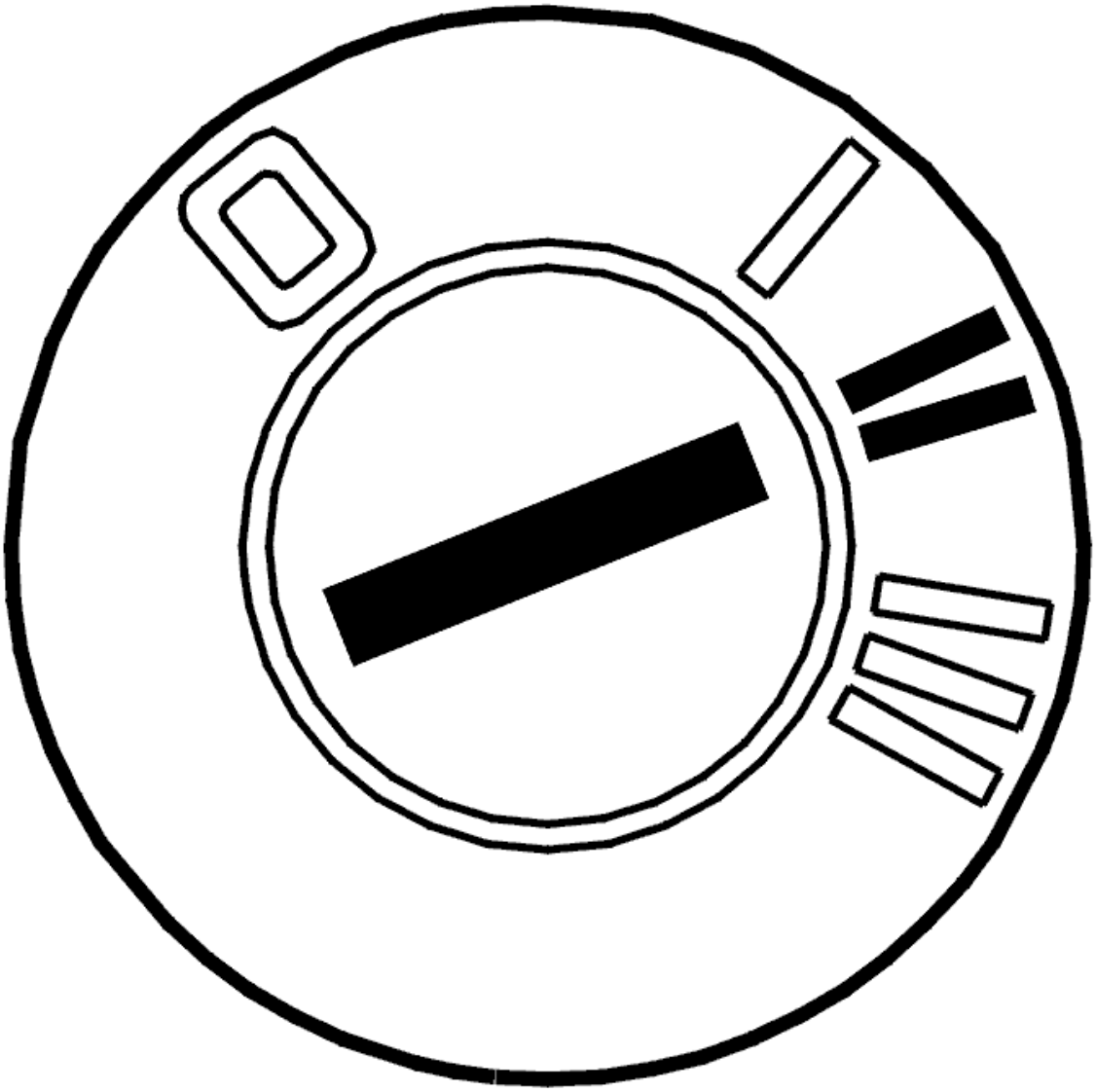

Fig. 298: Identifying Ignition ON
Courtesy of VOLVO CARS CORPORATION

- Ignition on.

  Click on the VCT2000 symbol to reset the adaptation and counter.

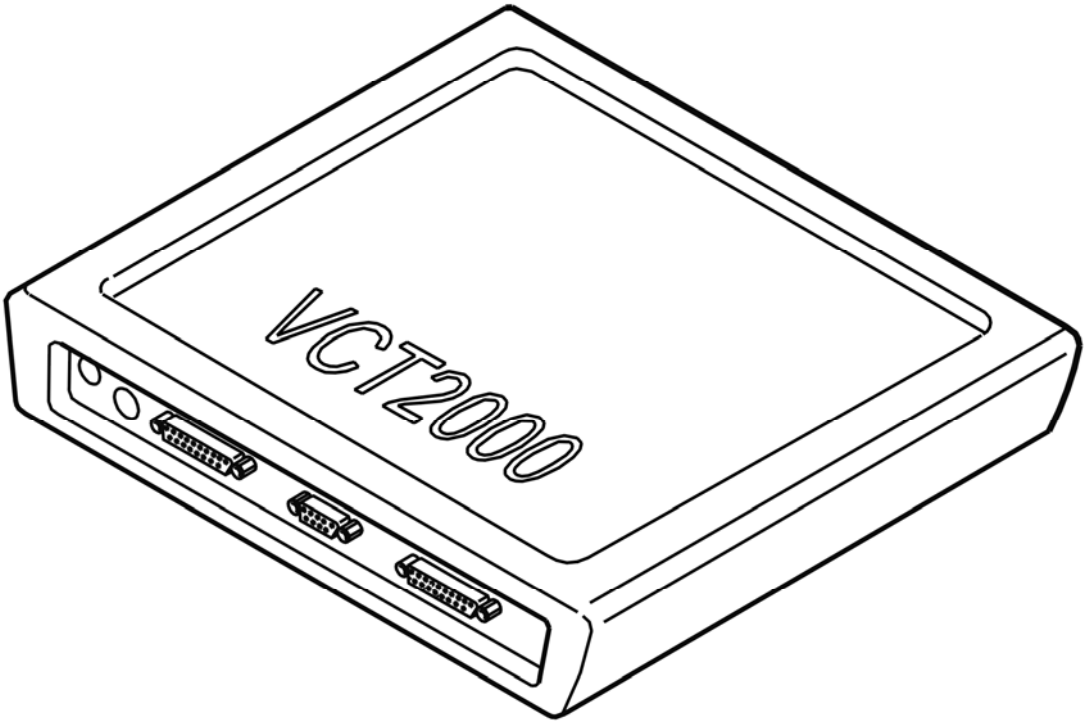

Fig. 299: Identifying VCT2000 Diagnostic Tool Symbol In VIDA
Courtesy of VOLVO CARS CORPORATION

- **Continue**

  Refer to **VERIFICATION**

VERIFICATION

VERIFICATION

HINT: After carrying out the repair, check that the fault has been remedied.

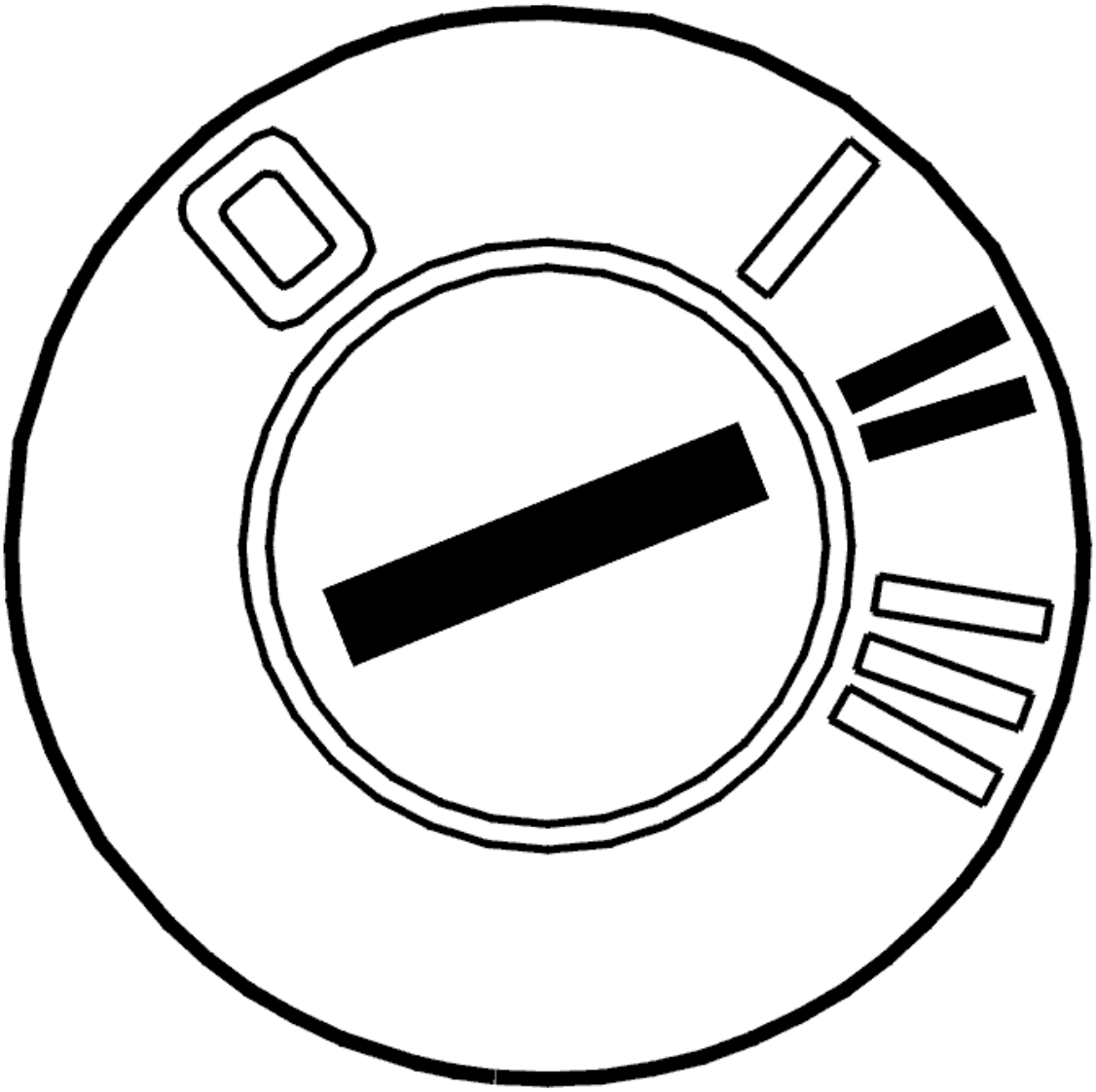

Fig. 300: Identifying Ignition ON
Courtesy of VOLVO CARS CORPORATION

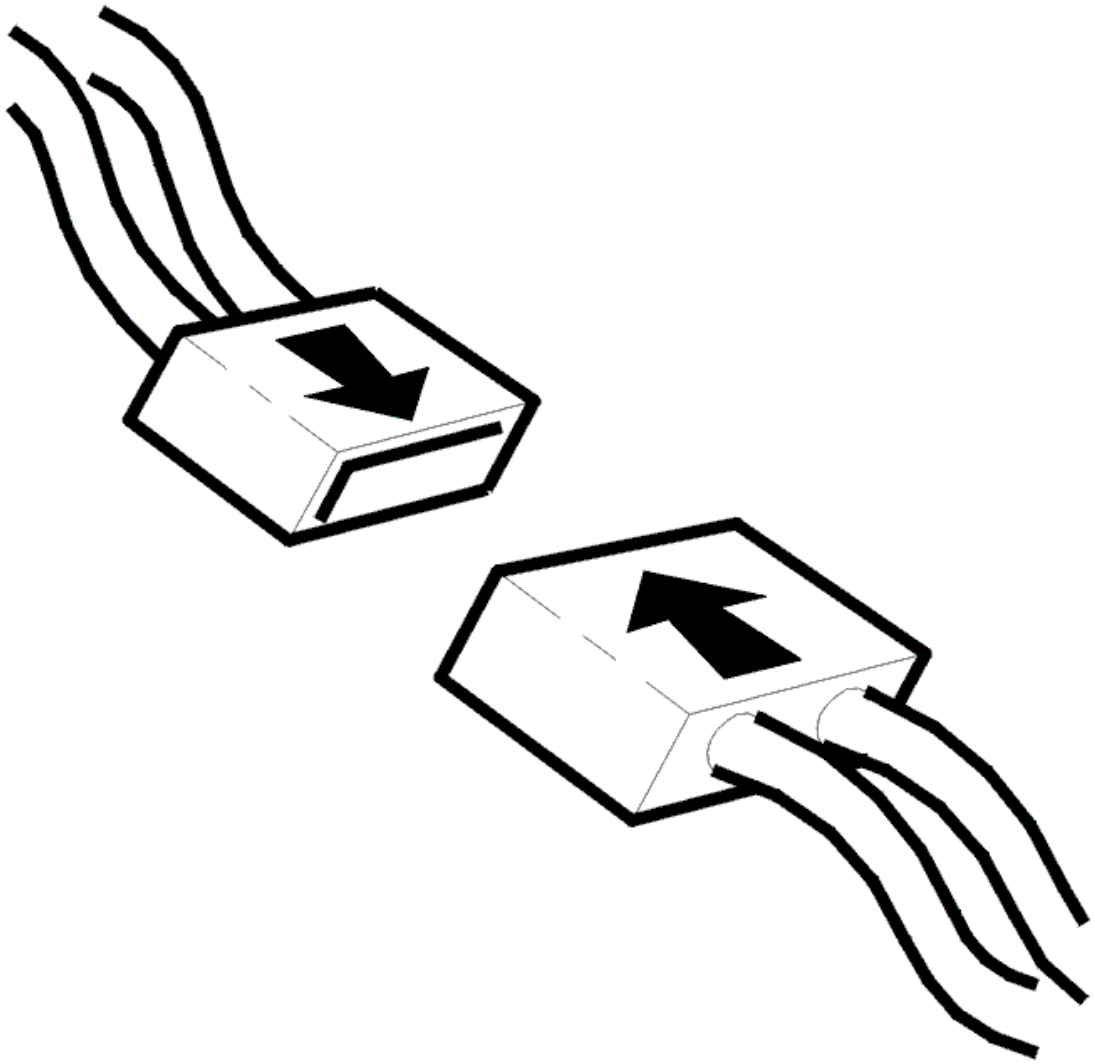

Fig. 301: Identifying Connector(s) Reinstallation
Courtesy of VOLVO CARS CORPORATION

- Ignition off
- Reconnect the connectors, components, etc.
- Ignition on

  Test drive the vehicle following:**TEST DRIVE FORM, DESCRIPTION**

  During the test drive, oil temperature should be over 20 °C.

  Note any deviations in transmission function.

Does the transmission function flawlessly?

- **YES**

  VERIFIED: Troubleshooting has been completed.

- **NO**

  Refer to **INFORMATION**

INFORMATION

FAULT-TRACING INFORMATION

The fault should have been detected and remedied. As this is not the case fault-tracing has failed.

Exit fault-tracing for this diagnostic trouble code (DTC) or make another attempt.

TCM-0116: THROTTLE SOLENOID SLT. SIGNAL TOO HIGH. INTERMITTENT FAULT (AW50/51 AWD; AW55-50/51SN; 2003-2007)

DIAGNOSTIC TROUBLE CODE (DTC) INFORMATION

Condition

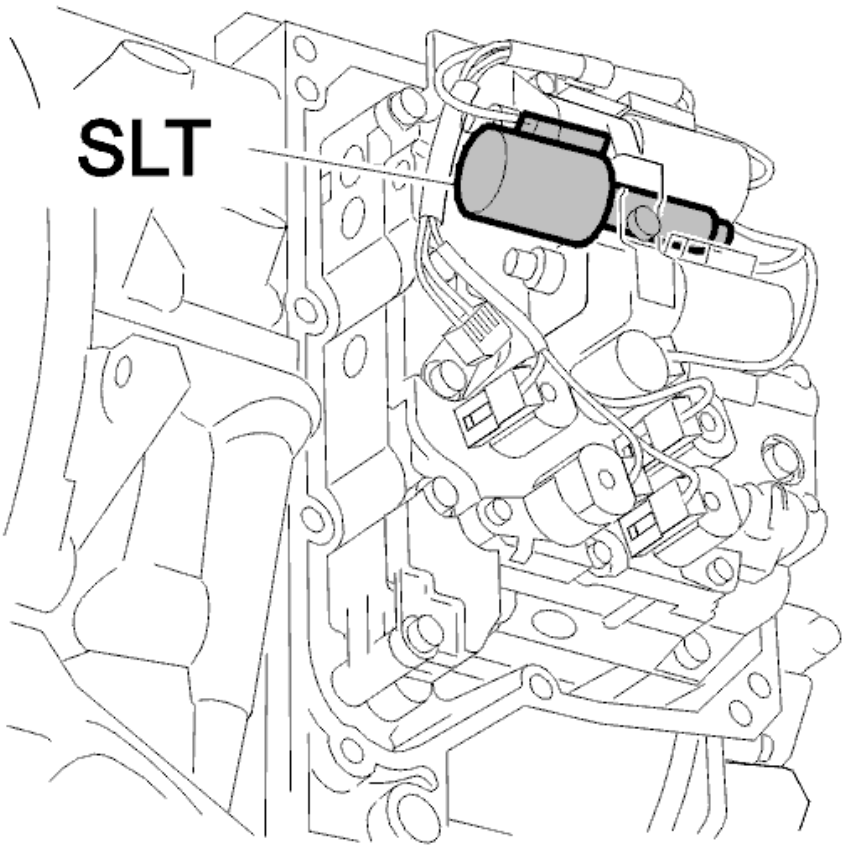

Fig. 302: Identifying Line Pressure Solenoid
Courtesy of VOLVO CARS CORPORATION

Throttle solenoid SLT controls the line pressure in the transmission. The solenoid is controlled by a power stage in the transmission control module (TCM) output. The transmission control module (TCM) uses the power stage to control the current to the solenoid. A low amperage results in a high line pressure. A high amperage (approximately 1 A) gives a low line pressure. The amperage is primarily affected by the throttle position. Diagnostic trouble code (DTC) TCM-0116 is stored if the transmission control module (TCM) registers a short-circuit to battery voltage in the solenoid SLT circuit. This results in too high an amperage. Solenoid SLT cannot then control the line pressure.

Substitute Value

- The transmission control module (TCM) "Emergency mode I" program has been initiated.

Possible Source

- Short-circuit to supply voltage in the control signal wiring or signal wiring.
- Short-circuit between the control signal cable and the signal cable.
- Defective solenoid.

Fault symptom[s]

- General orange warning lamp lit.
- No shifting.
- Malfunction indicator lamp (MIL) lit.
- No lock-up function.

HINT: No shifting because the control module prevents activation of the solenoids.

CAUTION: There is a danger that this fault will cause line pressure in the transmission to be too low. This will result in a high level of wear.

SIGNAL TOO HIGH. INTERMITTENT FAULT

INTERMITTENT FAULT

Check the wiring between transmission control module (TCM) terminal #A52 (#A52) and transmission connector terminal #D3. Check the wiring between control module terminal #B10 (#A70) and transmission connector terminal #D4. Check for an intermittent short-circuit to supply voltage. See **SHORT-CIRCUIT TO SUPPLY VOLTAGE, INTERMITTENT FAULTS** .

HINT: Check solenoid SLT. Measure the resistance between terminals #D3 and #D4 on transmission connector D. The resistance should be 5-5.6 ohms at 20°C.

Remedy as necessary.

Other information:

- To connect the breakout box, see **CONNECTING THE BREAKOUT BOX**
- To disconnect the transmission connectors, see **CONNECTORS, TRANSMISSION, DISCONNECTING / CONNECTING**
- For information about signals, see **SIGNAL DESCRIPTION. TRANSMISSION CONTROL MODULE (TCM)** .

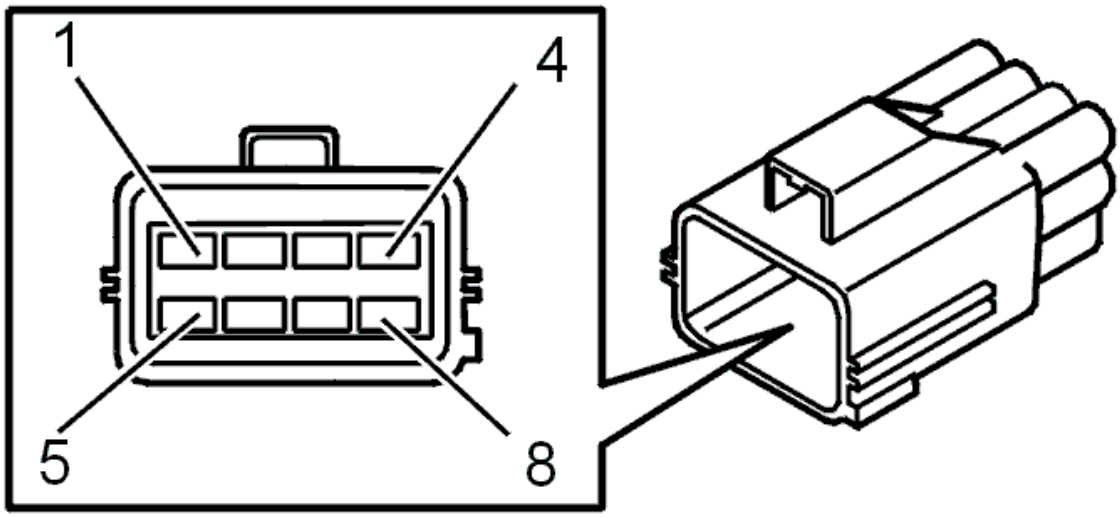

Fig. 303: Identifying Transmission Connector Terminals
Courtesy of VOLVO CARS CORPORATION

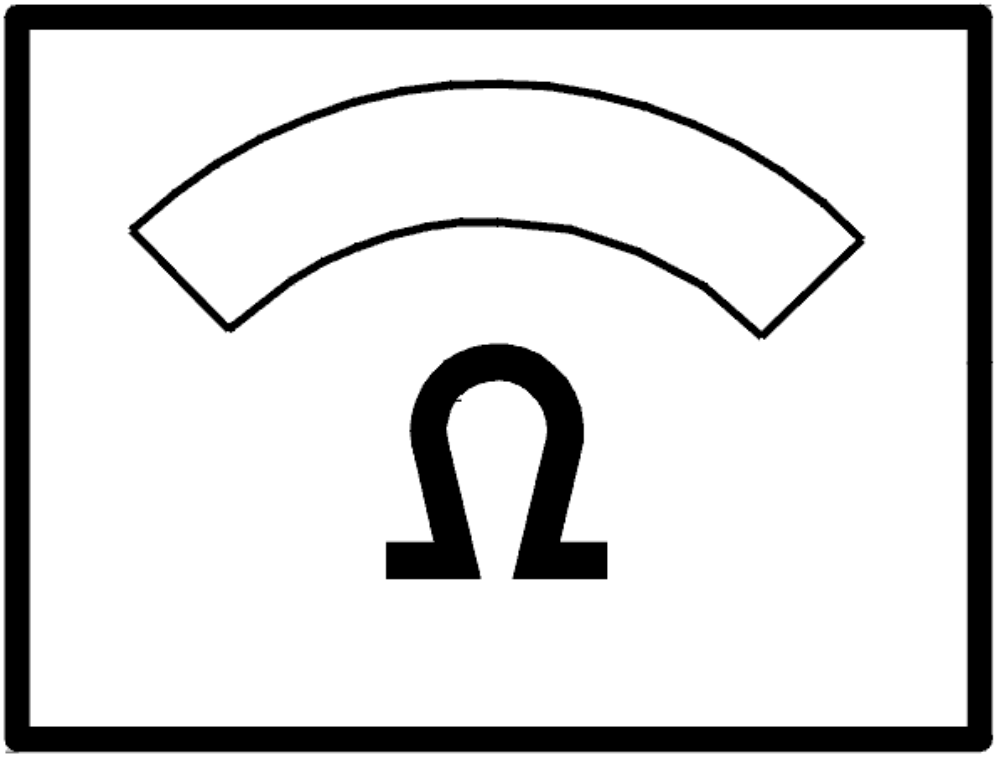

Fig. 304: Identifying Ohms Display
Courtesy of VOLVO CARS CORPORATION

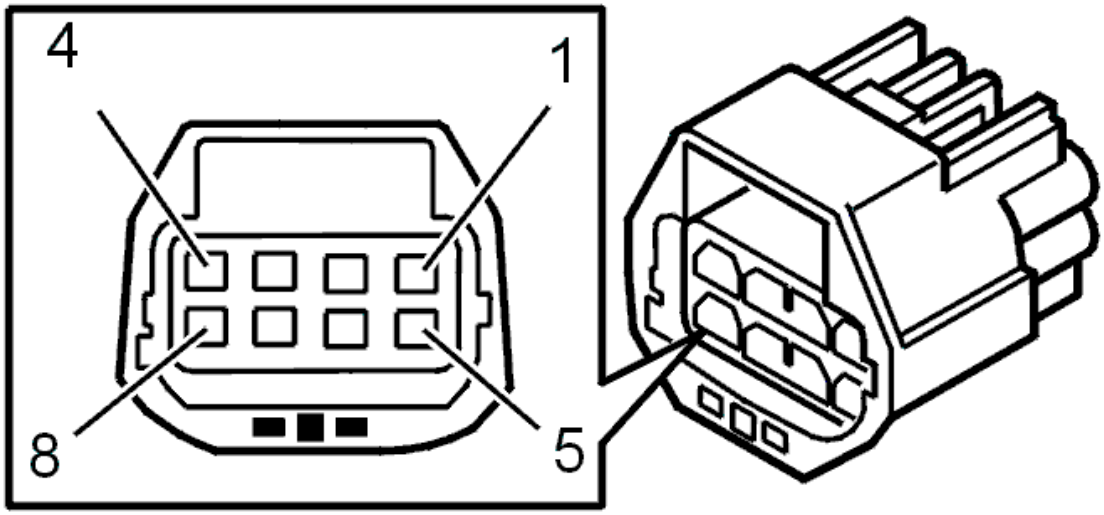

Fig. 305: Identifying 8-Pin Transmission Connector Terminals
Courtesy of VOLVO CARS CORPORATION

- **Continue**

  Refer to **INFORMATION**

INFORMATION

FAULT-TRACING INFORMATION

If the fault is intermittent, do not verify fault-tracing if the fault does not recur.

It is possible to view the information again, or leave fault-tracing for this diagnostic trouble code (DTC).

TCM-0116: THROTTLE SOLENOID SLT. SIGNAL TOO HIGH. PERMANENT FAULT (AW50/51 AWD; AW55-50/51SN; 2003-2007)

DIAGNOSTIC TROUBLE CODE (DTC) INFORMATION

see **DIAGNOSTIC TROUBLE CODE (DTC) INFORMATION**

SIGNAL TOO HIGH. PERMANENT FAULT

CHECKS

CHECKING LINE PRESSURE SOLENOID SLT

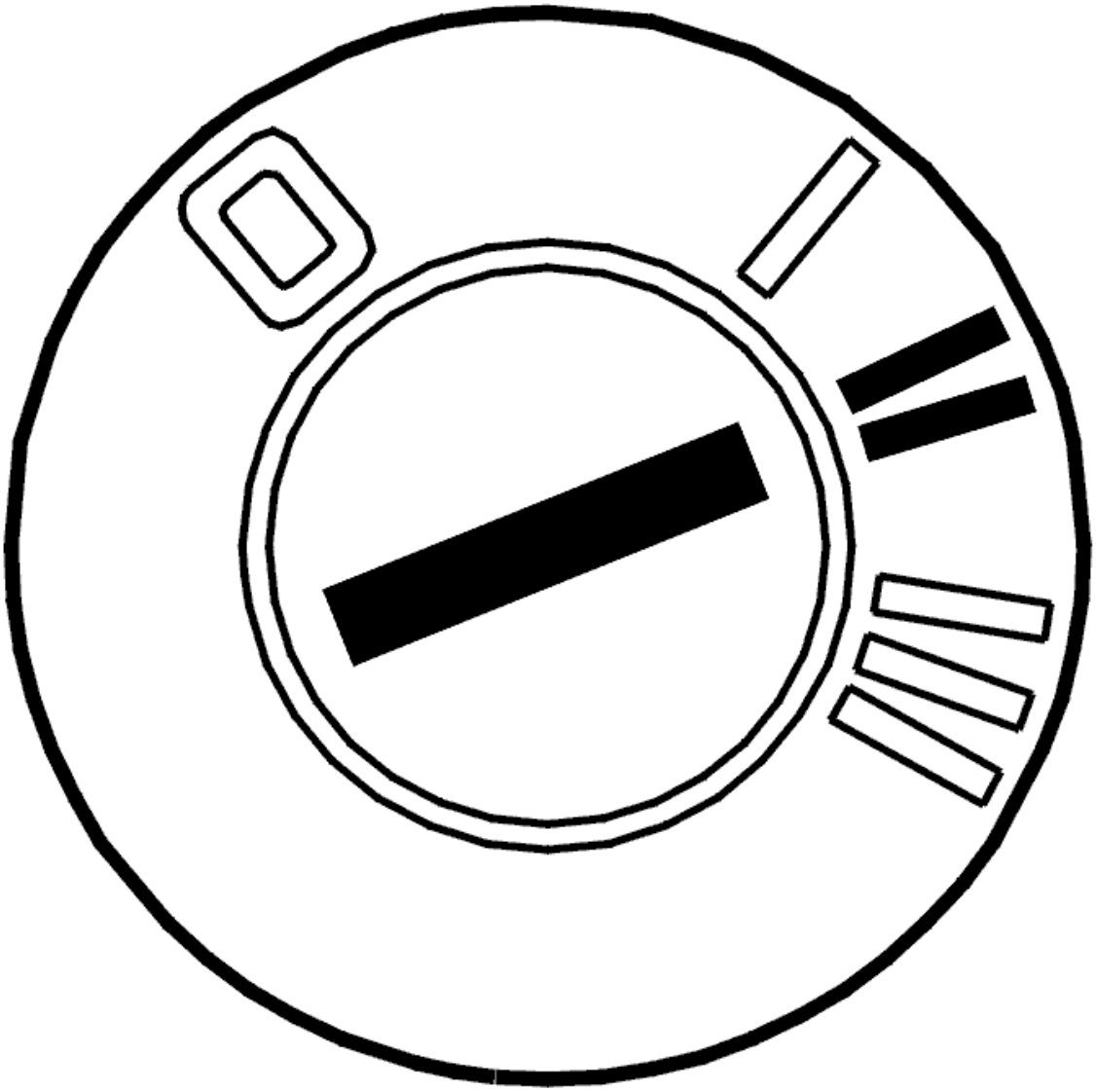

Fig. 306: Identifying Ignition ON
Courtesy of VOLVO CARS CORPORATION

- Ignition on
- Activate solenoid SLT.

  Read off the current through the solenoid SLT circuit.

  The current should oscillate between 0 and 1000 mA.

  Other information:

  - see **SIGNAL DESCRIPTION. TRANSMISSION CONTROL MODULE (TCM)**
  - see **CONNECTORS, TRANSMISSION, DISCONNECTING / CONNECTING**
  - see **TRANSMISSION CONTROL MODULE (TCM), REPLACING**

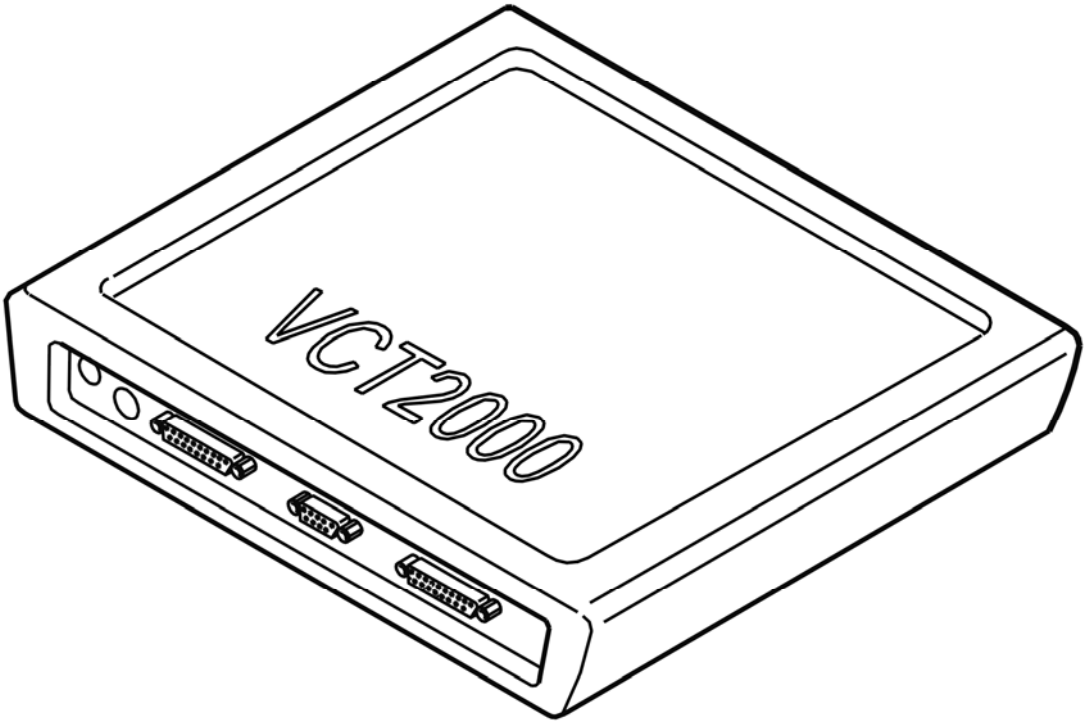

Fig. 307: Identifying VCT2000 Diagnostic Tool Symbol In VIDA
Courtesy of VOLVO CARS CORPORATION

Does the current oscillate?

- **YES**

  Refer to **FAULT-TRACING INFORMATION**

- **NO**

  Refer to **CHECKING THE WIRING**

CHECKING THE WIRING

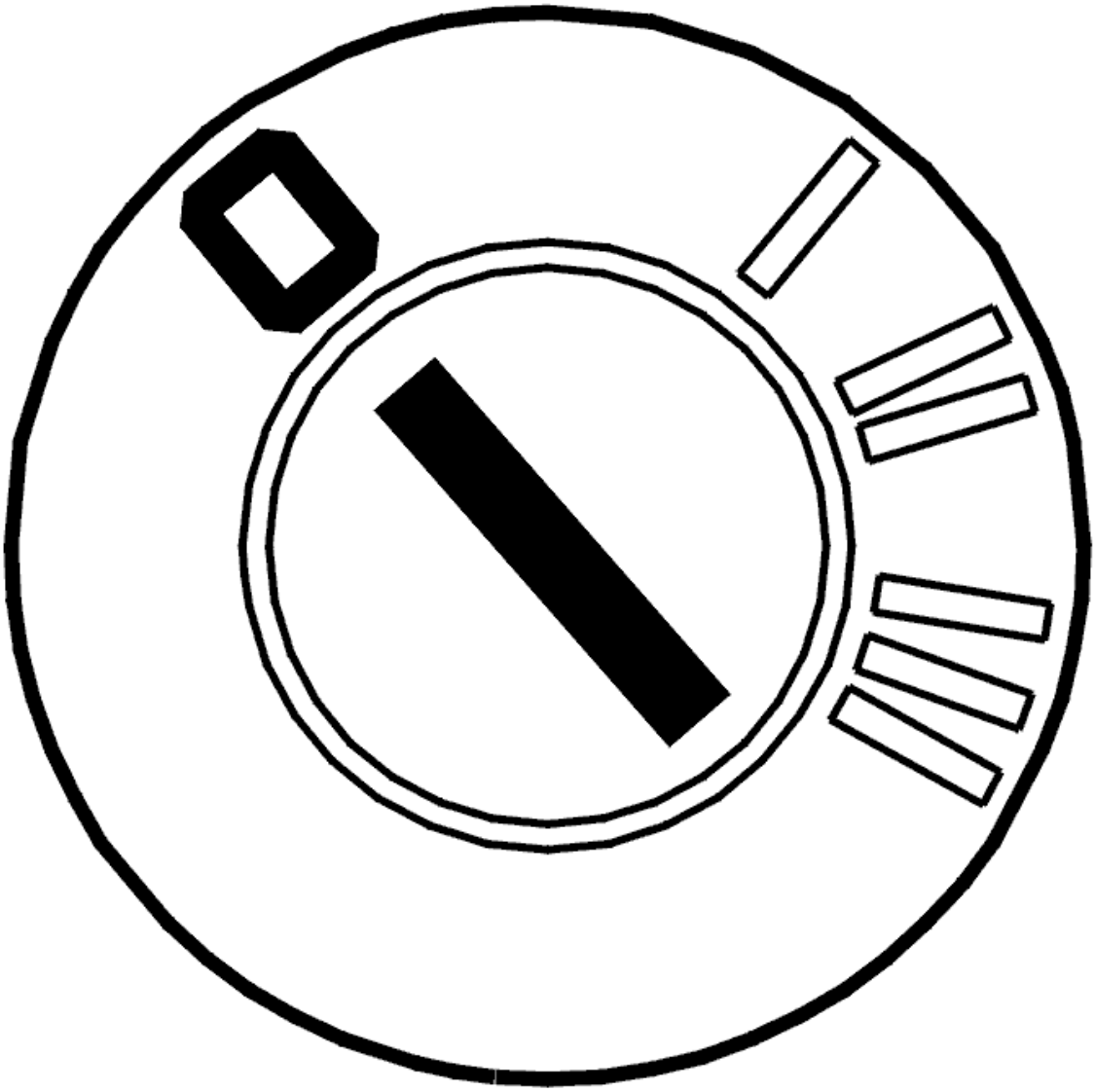

Fig. 308: Identifying Ignition OFF
Courtesy of VOLVO CARS CORPORATION

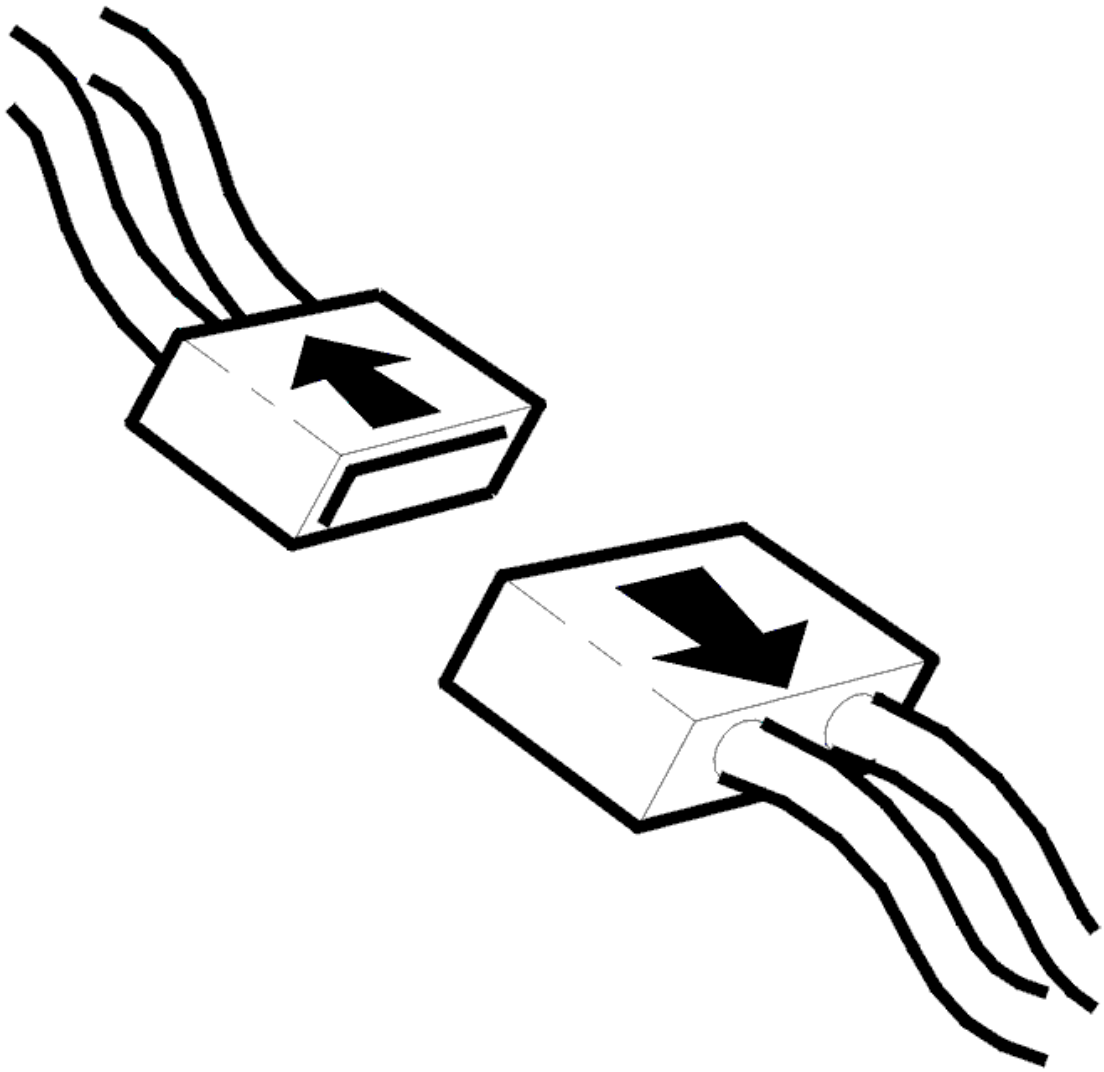

Fig. 309: Identifying Connector(s) Disconnected
Courtesy of VOLVO CARS CORPORATION

- Ignition off
- Breakout box connected.
- Disconnect gearbox connector D.

  Check the cable between transmission control module (TCM) terminal #A52 (#A52) and transmission connector terminal #D3 (control module side). Check for a short-circuit to supply voltage. Check the cable for short-circuits to other cables in the circuit.

  Check the cable between control module terminal #B10 (#A70) and transmission connector terminal #D4 (control module side). Check for a short-circuit to supply voltage. Check the cable for short-circuits to other cables in the circuit.

Check the cables between connector terminals #D3 and #D4 on the transmission side. Check for damage. Check for short-circuits to other cables in the circuit.

Check the connector. Check for damage and pressed in pins.

Remedy as necessary.

Other information:

- see **CONNECTING THE BREAKOUT BOX**
- see **SIGNAL DESCRIPTION. TRANSMISSION CONTROL MODULE (TCM)**
- see **CONNECTORS, TRANSMISSION, DISCONNECTING / CONNECTING**
- see **SHORT-CIRCUIT TO SUPPLY VOLTAGE. PERMANENT FAULTS**

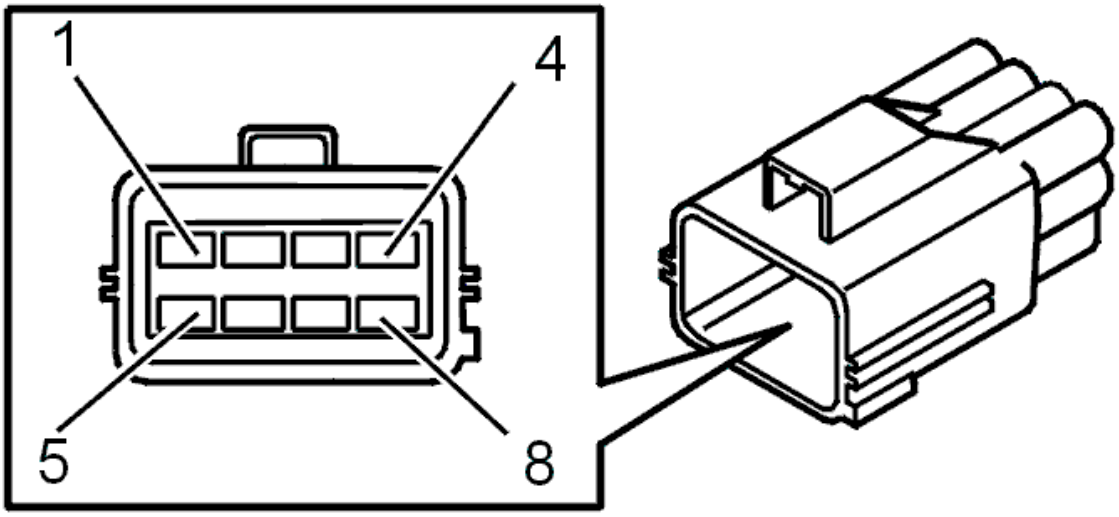

Fig. 310: Identifying Transmission Connector Terminals
Courtesy of VOLVO CARS CORPORATION

Was a fault detected?

- **YES**

  Refer to **VERIFICATION**

- **NO**

  Refer to **CHECKING THE WIRING AND COMPONENT**

CHECKING THE WIRING AND COMPONENT

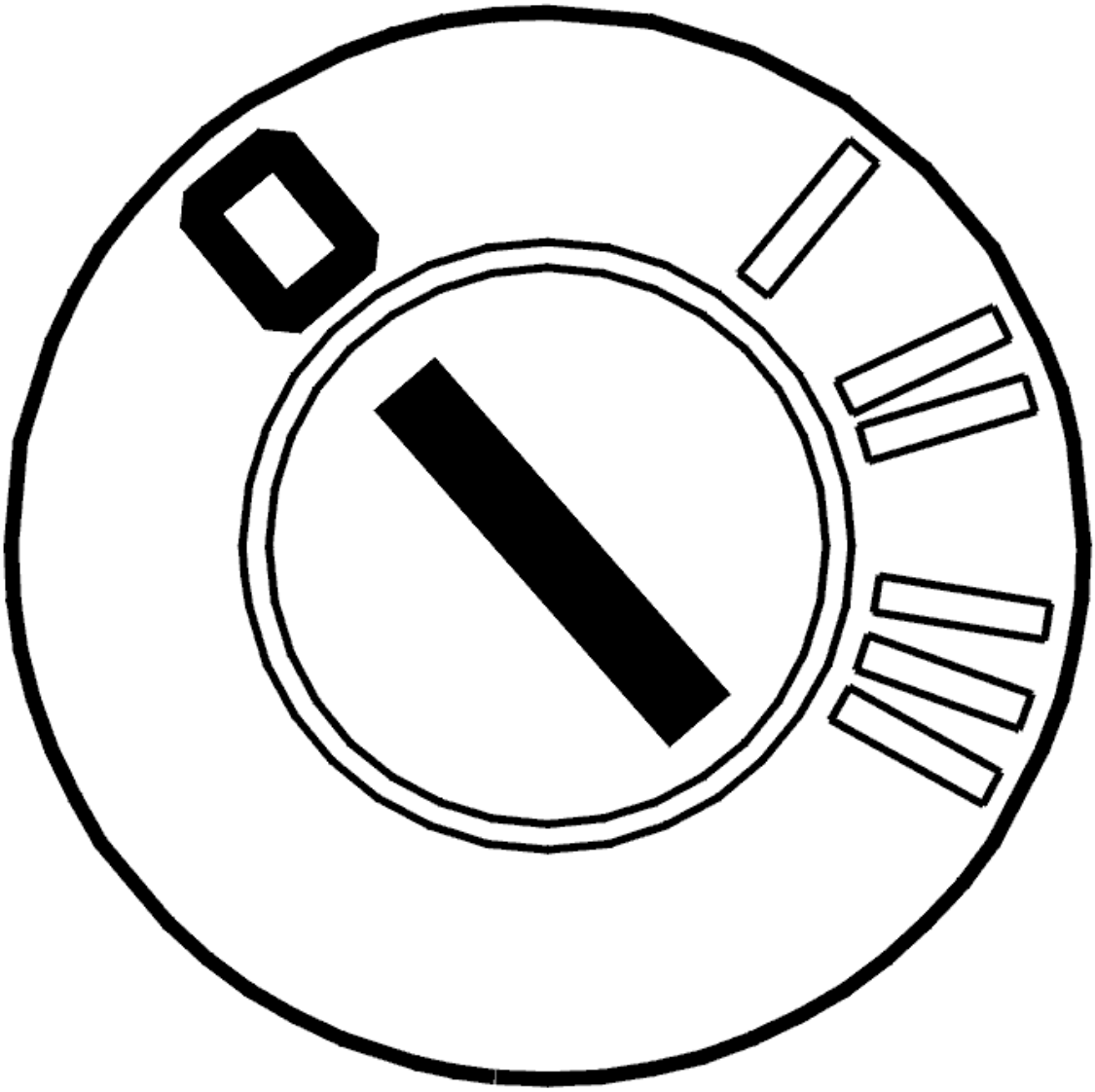

Fig. 311: Identifying Ignition OFF
Courtesy of VOLVO CARS CORPORATION

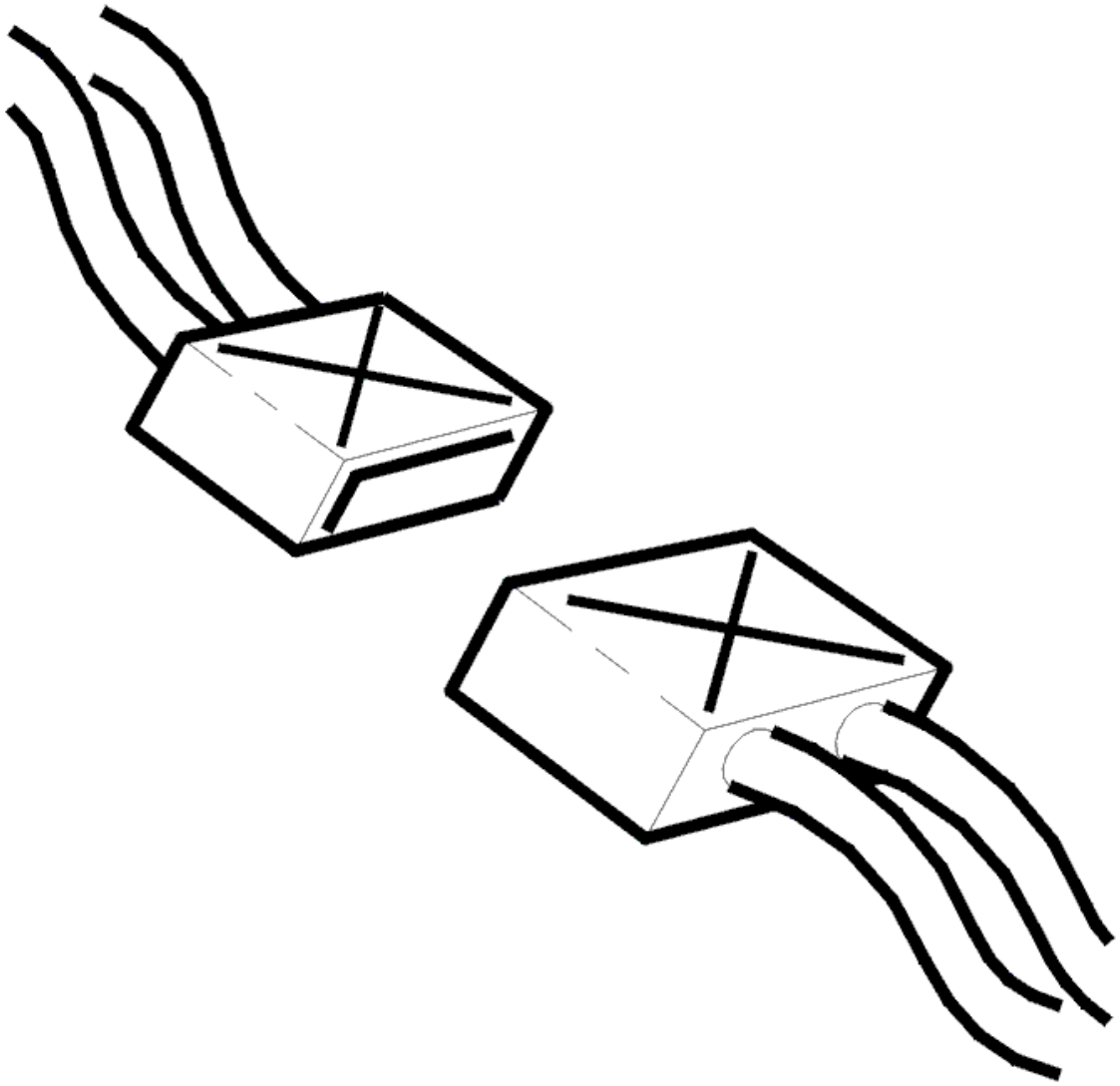

Fig. 312: Identifying Connectors
Courtesy of VOLVO CARS CORPORATION

- Ignition off
- Open the gearbox control system

  Check the connector. Check for damage and pressed in pins.

  Check the wiring between transmission connector terminal #D3 and solenoid SLT terminal #1. Check the wiring between transmission connector terminal #D4 and solenoid SLT terminal #2. Check for a short-circuit to supply voltage.

  Also check against the other cables in the circuit.

  Check the solenoid SLT by measuring the resistance between terminals #1 and #2. The resistance must be 5-5.6 ohms at 20°C. Replace the transmission control system if the resistance is incorrect.

Other information:

- see **SIGNAL DESCRIPTION. TRANSMISSION CONTROL MODULE (TCM)**
- see **CONNECTORS, TRANSMISSION, DISCONNECTING / CONNECTING**
- see **SOLENOID CONTROL SYSTEM, REPLACING**
- see **TEMPERATURE SENSOR FLUID, TRANSAXLE, (TFT)**
- see **CONTENTS**

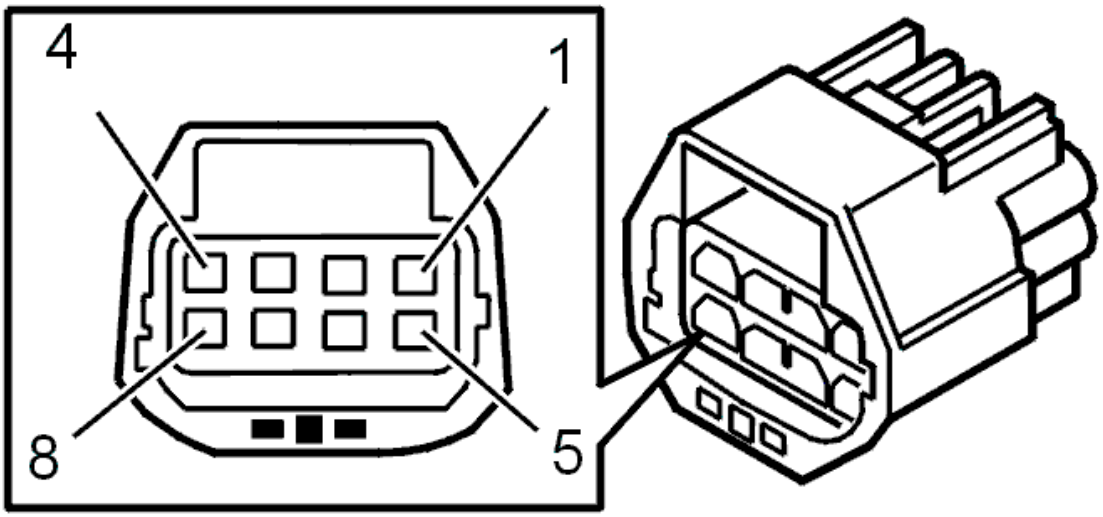

Fig. 313: Identifying 8-Pin Transmission Connector Terminals
Courtesy of VOLVO CARS CORPORATION

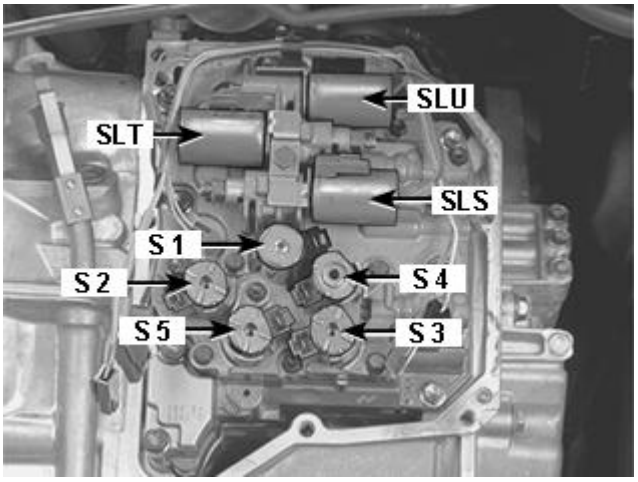

Fig. 314: Identifying S1-S5, SLT, SLU And SLS Solenoids
Courtesy of VOLVO CARS CORPORATION

- **Continue**

  Refer to **RESETTING THE ADAPTATION**

FAULT-TRACING INFORMATION

The transmission control module (TCM) has previously registered a fault but the faulty no longer occurs. The diagnostic trouble code (DTC) was probably caused by an intermittent fault. If the fault remains, fault tracing according to this diagnostic trouble code (DTC) should be carried out despite no fault symptoms being detected. The fault is evaluated on an individual basis.

- **Continue**

  FAULT NOT FOUND: Troubleshooting has been completed.

RESETTING THE ADAPTATION

RESETTING ADAPTATION AND THE COUNTER FOR "TRANSMISSION OIL CHANGE"

HINT: The transmission has torque controlled adaptive pressure control. Pressure control means that the transmission regulates the pressure itself during each gear shift. This avoids harsh gear shifting. Each gear shift is evaluated by the control module and stored in the memory. This allows for compensation for wear and tear in the transmission and clutch. It is important that the adaptation in the memory is reset after the transmission has been repaired. This is to ensure normal operation. The oil is replaced during repair; the "Transmission oil change" counter must be reset. If the counter is not reset when the fluid is drained and replaced, there is a risk that a diagnostic trouble code (DTC) will be stored in incorrect circumstances.

NOTE: This applies only if the transmission or one of the components in the transmission have been replaced.

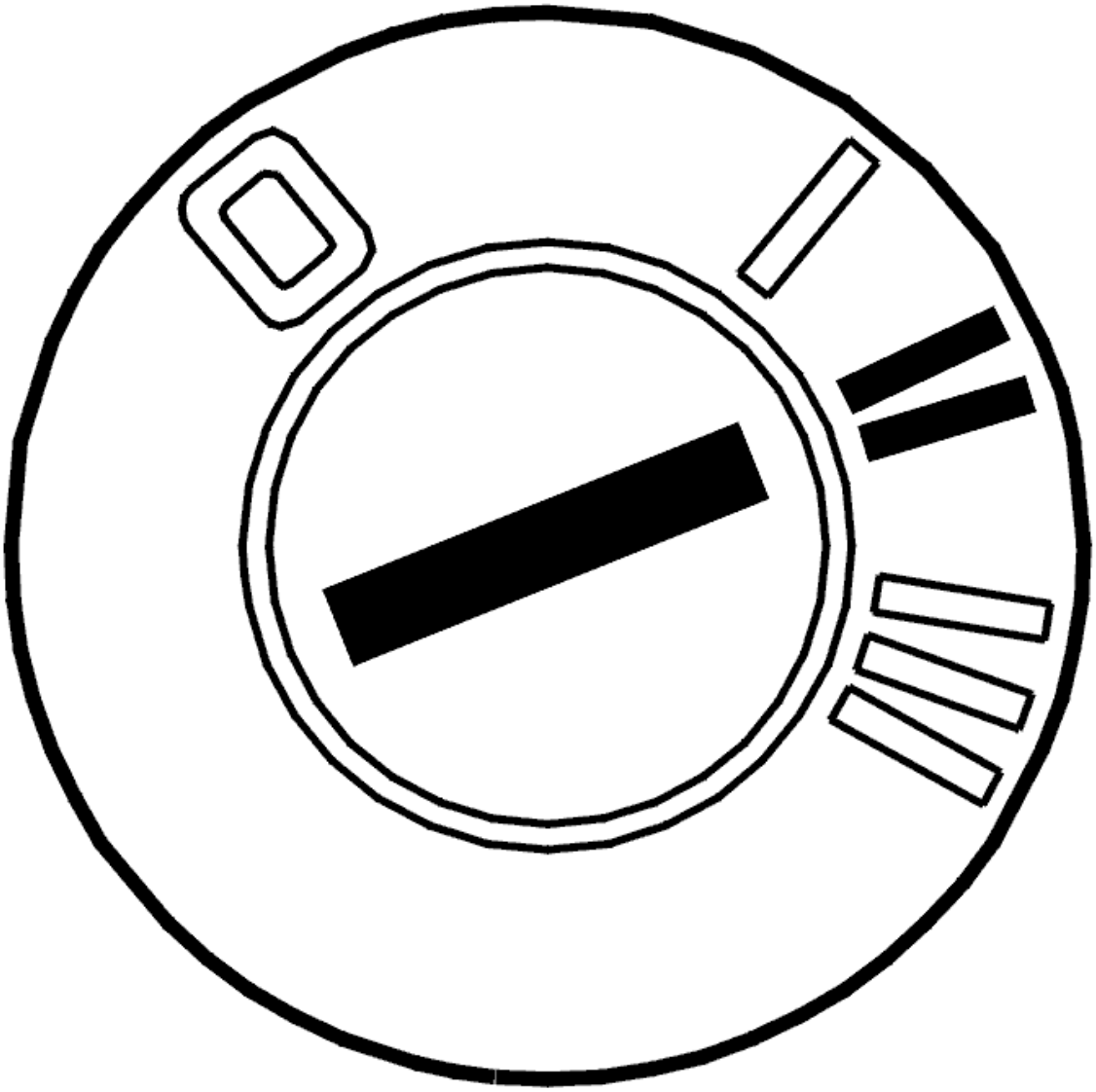

Fig. 315: Identifying Ignition ON
Courtesy of VOLVO CARS CORPORATION

- Ignition on.

  Click on the VCT2000 symbol to reset the adaptation and counter.

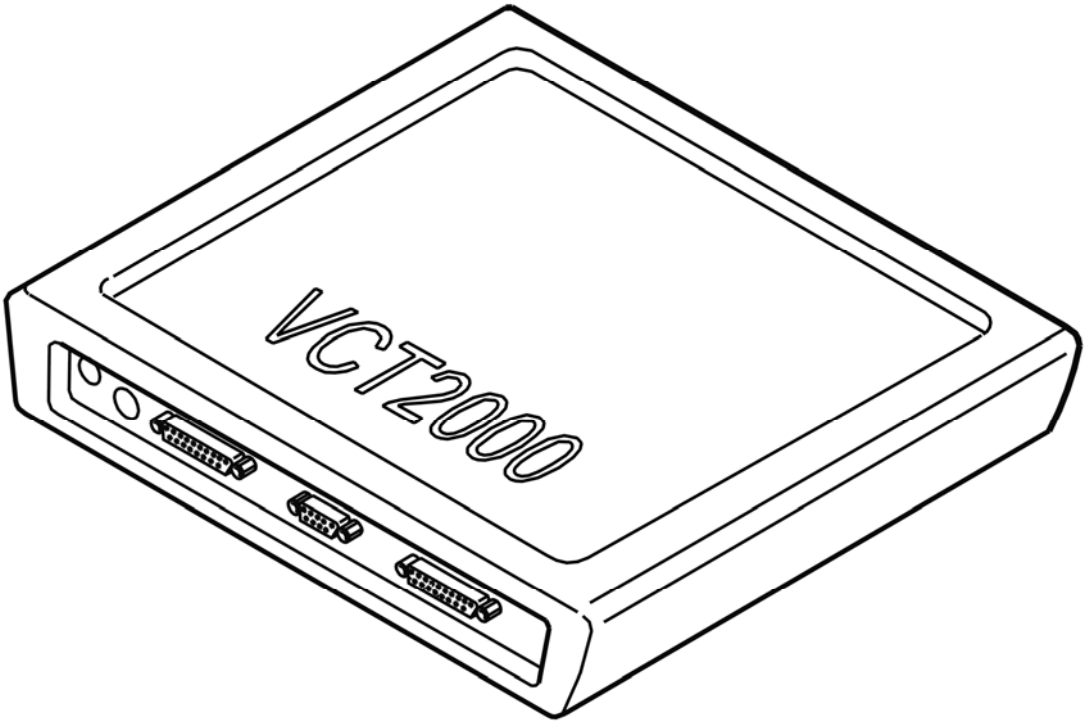

Fig. 316: Identifying VCT2000 Diagnostic Tool Symbol In VIDA
Courtesy of VOLVO CARS CORPORATION

- **Continue**

  Refer to **VERIFICATION**

VERIFICATION

VERIFICATION

HINT: After carrying out the repair, check that the fault has been remedied.

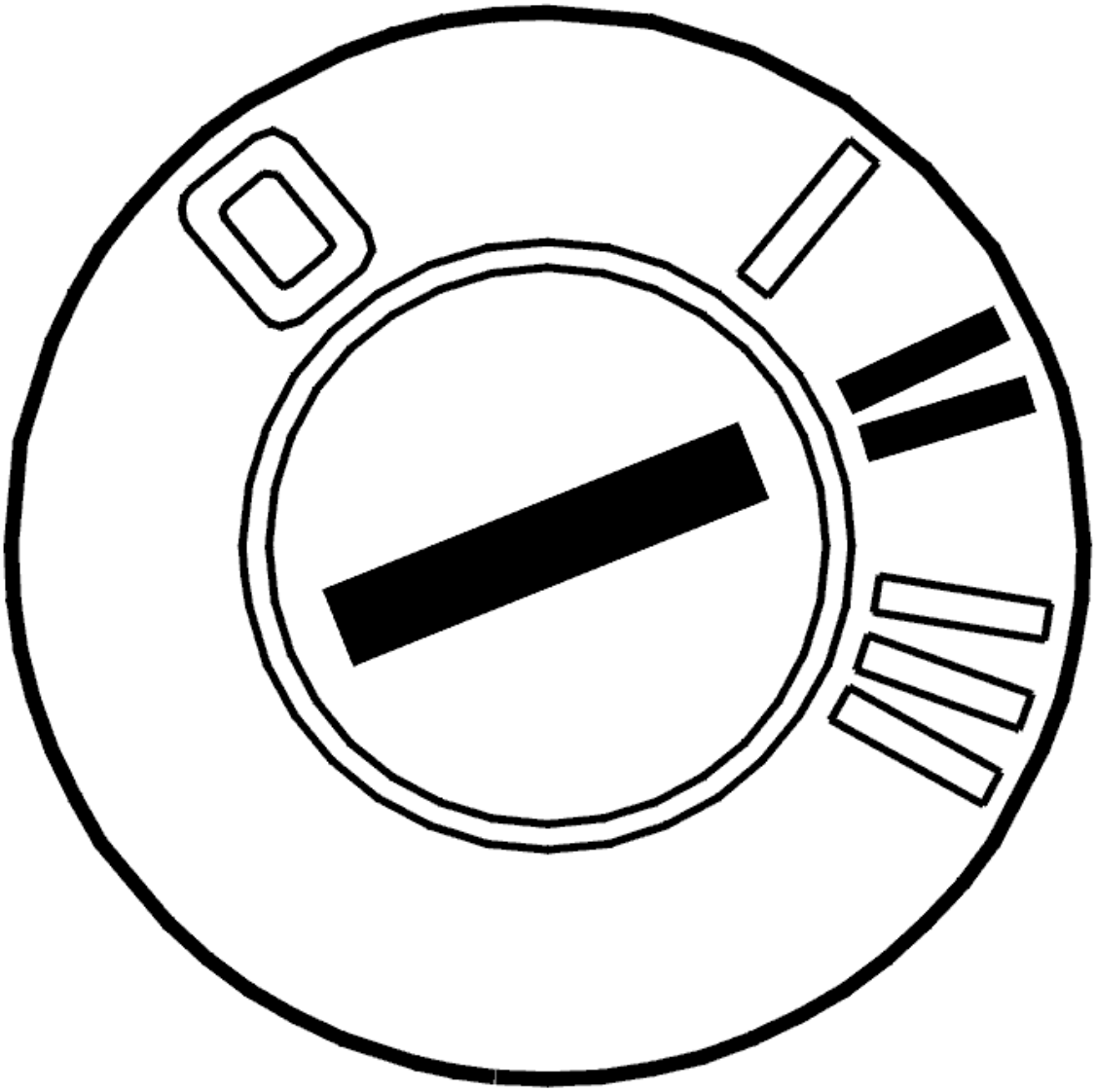

Fig. 317: Identifying Ignition ON
Courtesy of VOLVO CARS CORPORATION

- Ignition on.
- Activate solenoid SLT.

  Read off the current through the solenoid SLT circuit.

  The current should oscillate between 0 and 1000 mA.

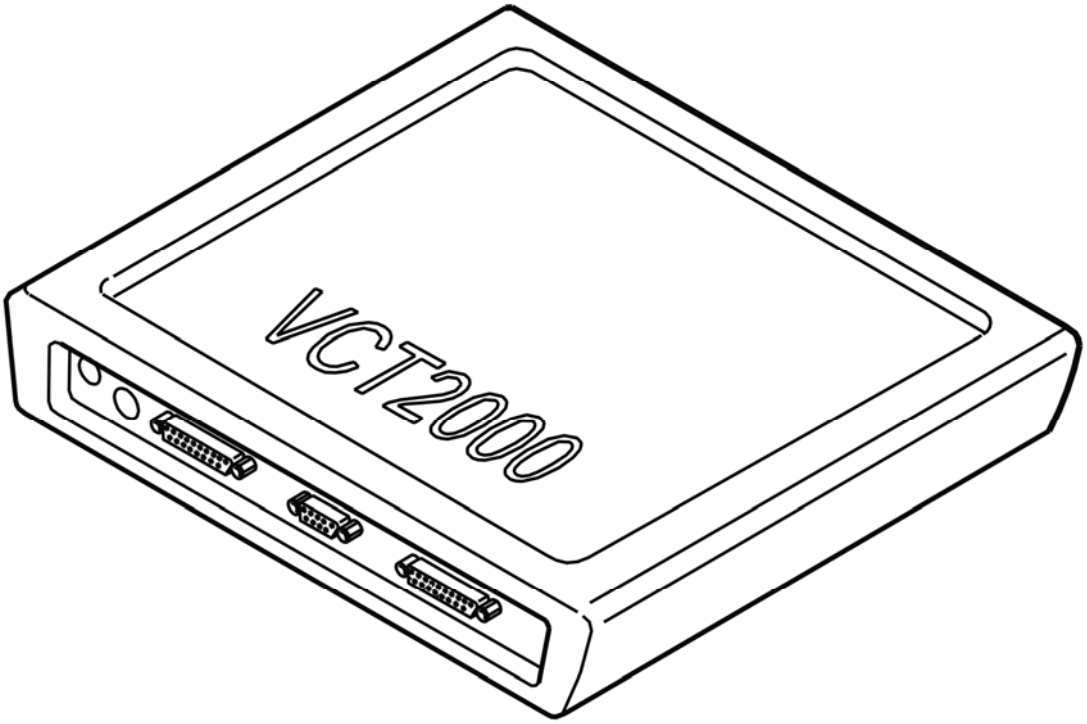

Fig. 318: Identifying VCT2000 Diagnostic Tool Symbol In VIDA
Courtesy of VOLVO CARS CORPORATION

Does the current oscillate?

- **YES**

  VERIFIED: Troubleshooting has been completed.

- **NO**

  Refer to **INFORMATION**

INFORMATION

FAULT-TRACING INFORMATION

The fault should have been detected and remedied. As this is not the case fault-tracing has failed.

Exit fault-tracing for this diagnostic trouble code (DTC) or make another attempt.

TCM-0117: THROTTLE SOLENOID SLT. SIGNAL MISSING. INTERMITTENT FAULT (AW50/51 AWD; AW55-50/51SN; 2003-2007)

DIAGNOSTIC TROUBLE CODE (DTC) INFORMATION

Condition

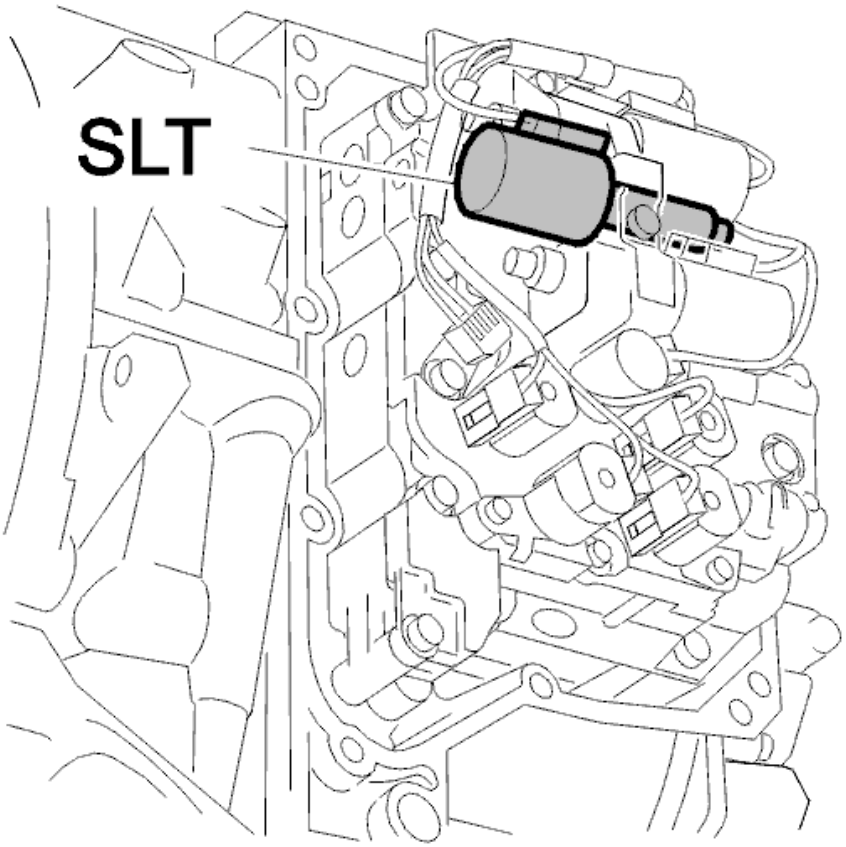

Fig. 319: Identifying Line Pressure Solenoid
Courtesy of VOLVO CARS CORPORATION

Throttle solenoid SLT controls the line pressure in the transmission. The solenoid is controlled by a power stage in the transmission control module (TCM) output. The transmission control module (TCM) uses the power stage to control the current to the solenoid. A low amperage results in a high line pressure. A high amperage (approximately 1 A) gives a low line pressure. The amperage is primarily affected by the throttle position. Diagnostic trouble code (DTC) TCM-0117 is stored if the control module registers that there is an open-circuit in the circuit for solenoid SLT. Solenoid SLT cannot then control the line pressure.

Substitute Value

- The transmission control module (TCM) "Emergency mode I" program has been initiated.

Possible Source

- Contact resistance in terminals.
- Open-circuit in the control signal cable or the signal cable.
- Defective solenoid SLT.

Fault symptom[s]

- General orange warning lamp lit.
- Malfunction indicator lamp (MIL) lit.
- No lock-up function.
- Harsh gear shifting.

HINT: Harsh gear shifting can be caused by:

- No torque limiting request to the engine control module (ECM) when shifting.

SIGNAL MISSING. INTERMITTENT FAULT

INTERMITTENT FAULT

Check the transmission control module (TCM) and transmission connectors. Check for contact resistance and oxidation according to **CONTACT RESISTANCE AND OXIDATION** .

Check the cables between control module terminal #A52 (#A52) and transmission connector terminal #D3. Check the cables between control module terminal #B10 (#A70) and transmission connector terminal #D4. Check for an intermittent open-circuit according to **OPEN-CIRCUIT, INTERMITTENT FAULTS** .

HINT: Check solenoid SLT. Measure the resistance between terminals #D3 and #D4 on transmission connector A. The resistance should be 5-6 ohms at 20°C.

Remedy as necessary.

Other information:

- To connect the breakout box, see **CONNECTING THE BREAKOUT BOX**
- To disconnect the transmission control module (TCM), see **TRANSMISSION CONTROL MODULE (TCM), REPLACING**
- To disconnect the transmission connectors, see **CONNECTORS, TRANSMISSION, DISCONNECTING / CONNECTING**
- For information about signals, see **SIGNAL DESCRIPTION. TRANSMISSION CONTROL MODULE (TCM)** .

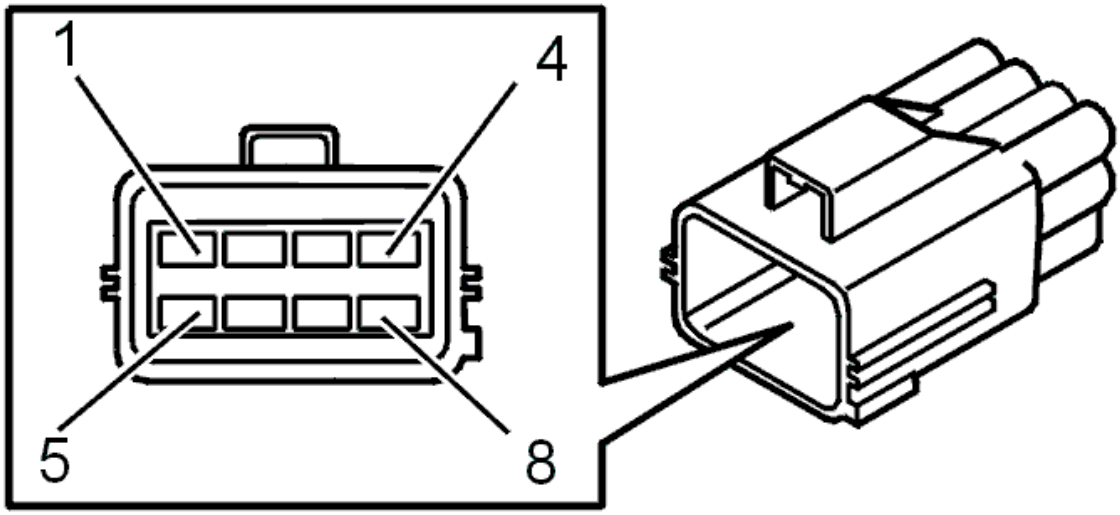

Fig. 320: Identifying Transmission Connector Terminals
Courtesy of VOLVO CARS CORPORATION

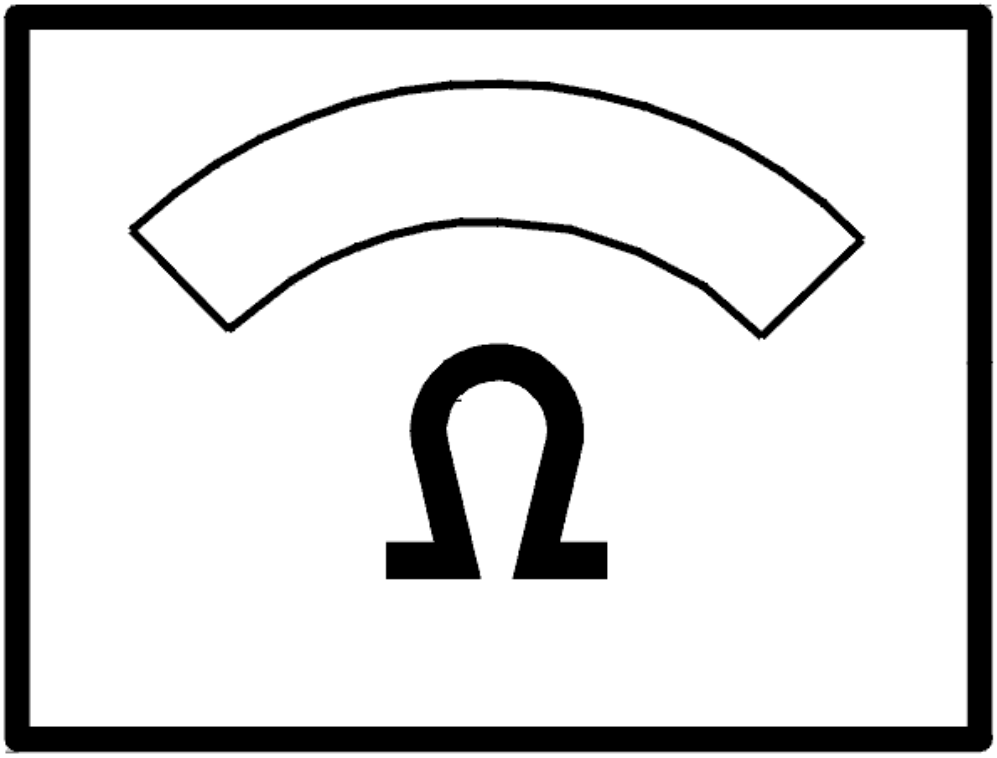

Fig. 321: Identifying Ohms Display
Courtesy of VOLVO CARS CORPORATION

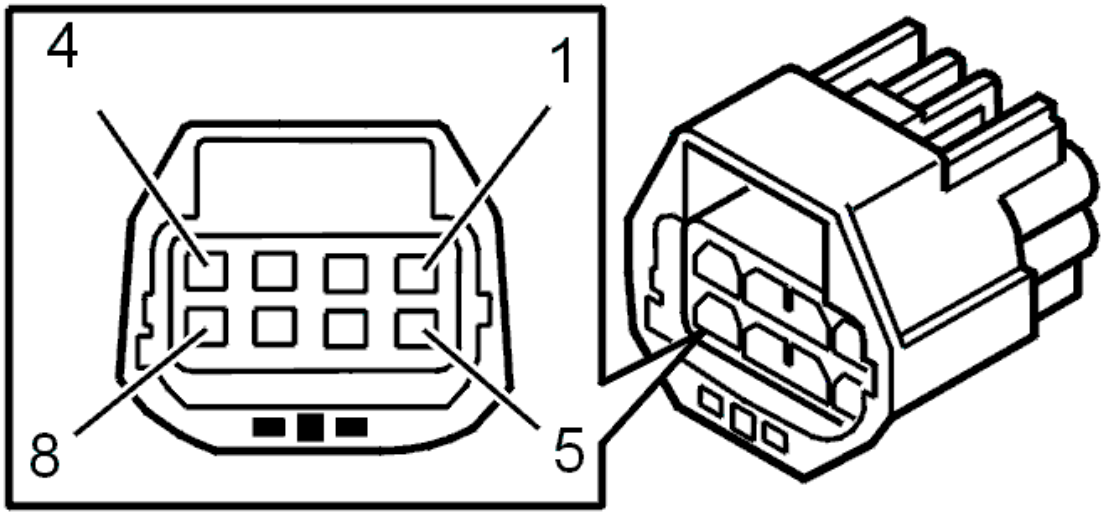

Fig. 322: Identifying 8-Pin Transmission Connector Terminals
Courtesy of VOLVO CARS CORPORATION

- **Continue**

  Refer to **INFORMATION**

INFORMATION

FAULT-TRACING INFORMATION

If the fault is intermittent, do not verify fault-tracing if the fault does not recur.

It is possible to view the information again, or leave fault-tracing for this diagnostic trouble code (DTC).

TCM-0117: THROTTLE SOLENOID SLT. SIGNAL MISSING. PERMANENT FAULT (AW50/51 AWD; AW55-50/51SN; 2003-2007)

DIAGNOSTIC TROUBLE CODE (DTC) INFORMATION

see **DIAGNOSTIC TROUBLE CODE (DTC) INFORMATION**

SIGNAL MISSING. PERMANENT FAULT

CHECKS

CHECKING LINE PRESSURE SOLENOID SLT

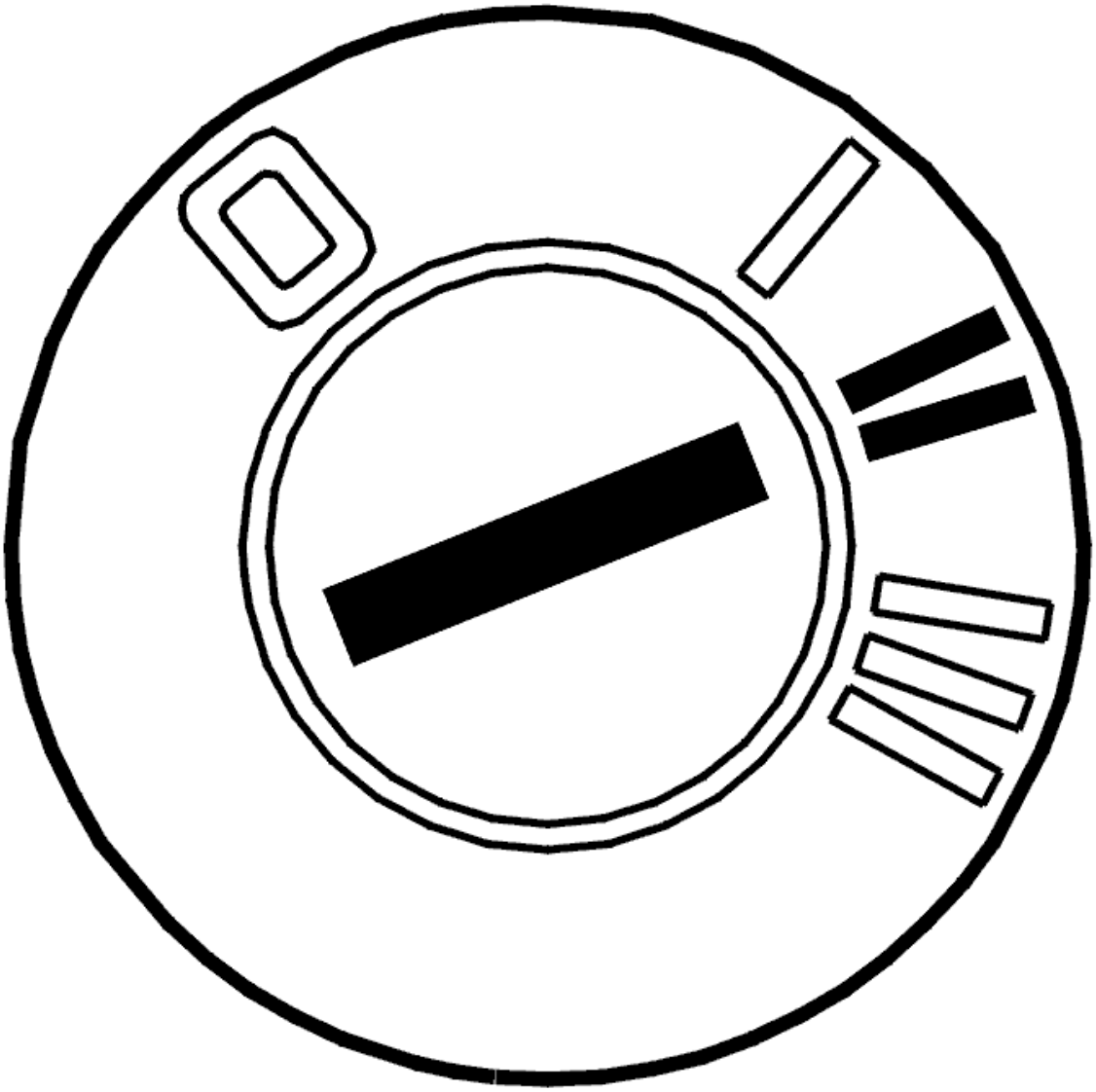

Fig. 323: Identifying Ignition ON
Courtesy of VOLVO CARS CORPORATION

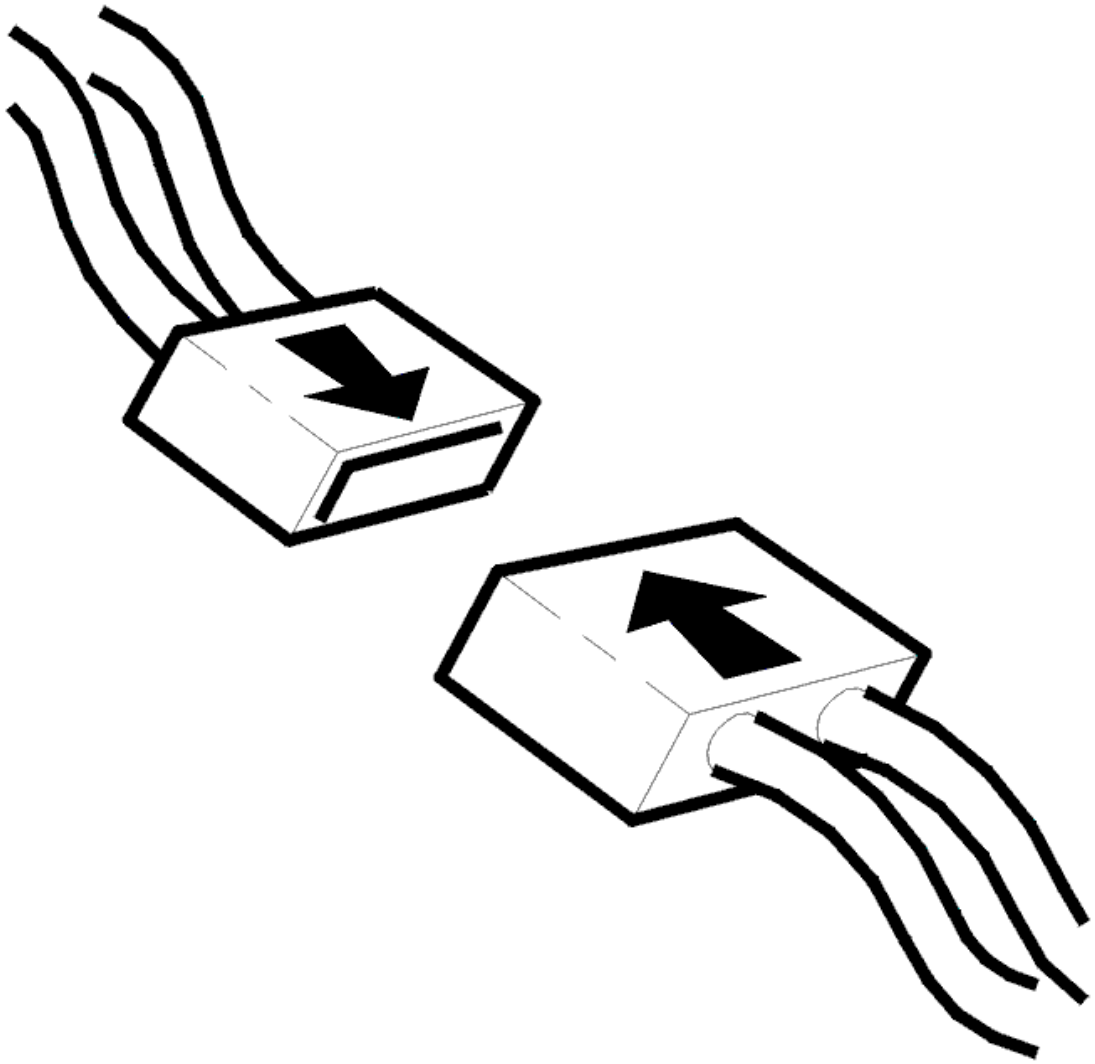

Fig. 324: Identifying Connector(s) Reinstallation
Courtesy of VOLVO CARS CORPORATION

- Ignition off
- Check the control module connector and automatic transmission connector D. Check for contact resistance and oxidation. See **CONTACT RESISTANCE AND OXIDATION** . Remedy if necessary
- Reinstall the components, reconnect the connectors etc.
- Ignition on
- Activate solenoid SLT.

  Read off the current through the solenoid SLT circuit.

  The current should oscillate between 0 and 1000 mA.

  Other information:

- To disconnect the transmission connectors, see **CONNECTORS, TRANSMISSION, DISCONNECTING / CONNECTING**
- To disconnect the control module, see **TRANSMISSION CONTROL MODULE (TCM), REPLACING** .

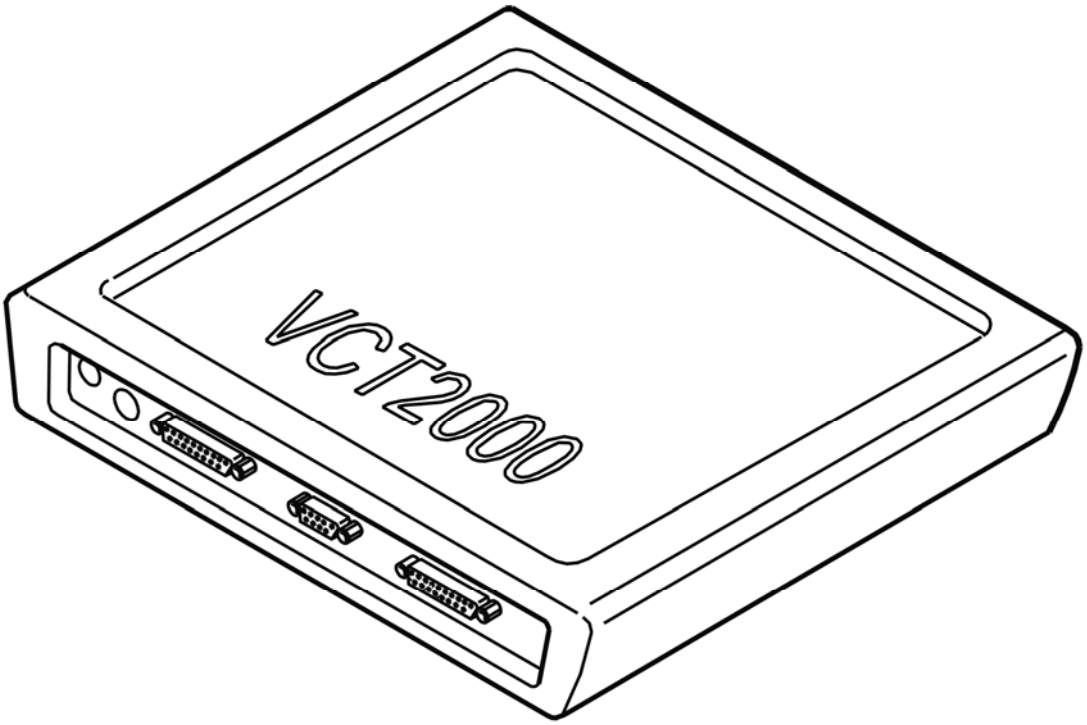

Fig. 325: Identifying VCT2000 Diagnostic Tool Symbol In VIDA
Courtesy of VOLVO CARS CORPORATION

Does the current oscillate?

- **YES**

  OKAY: Troubleshooting has been completed.

- **NO**

  Refer to **CHECKING RESISTANCE**

CHECKING RESISTANCE

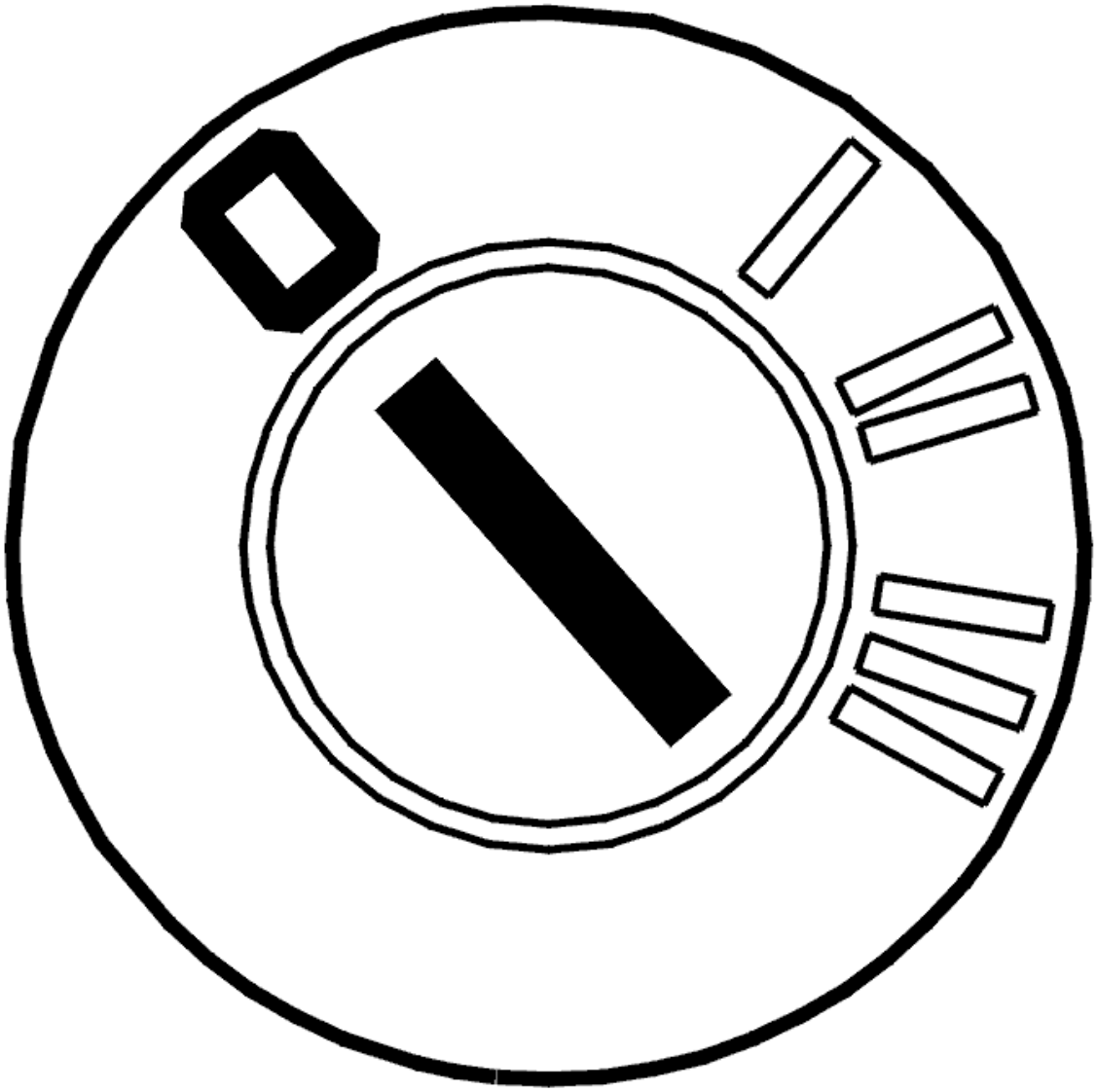

Fig. 326: Identifying Ignition OFF
Courtesy of VOLVO CARS CORPORATION

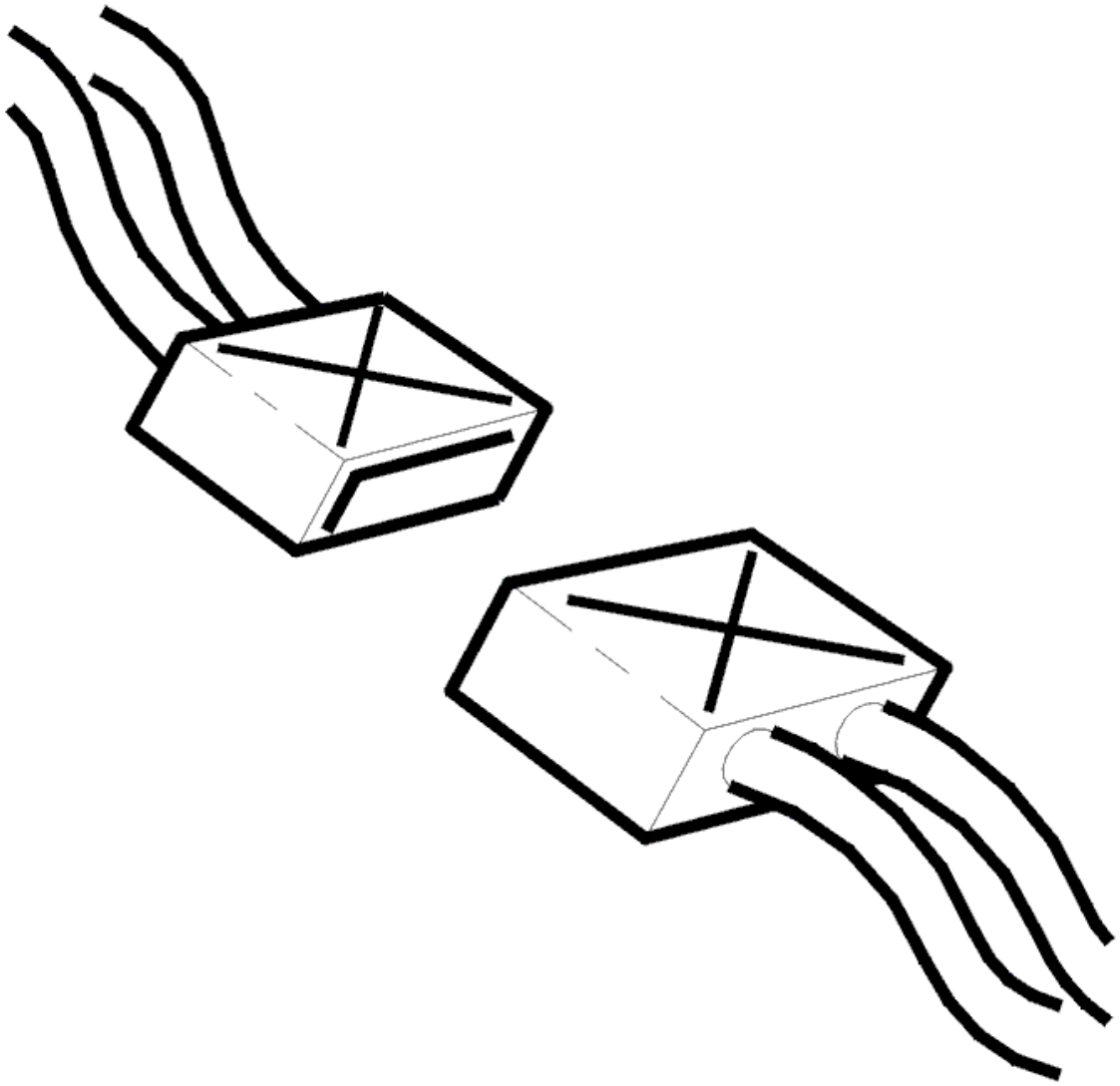

Fig. 327: Identifying Connectors
Courtesy of VOLVO CARS CORPORATION

- Ignition off
- Transmission connector D disconnected.

  Check the circuit for solenoid SLT. Measure the resistance between terminals #D3 and #D4 on transmission connector D. The resistance must be 5-5.6 ohms at 20°C.

  Other information:

  - To disconnect the transmission connectors, see **CONNECTORS, TRANSMISSION, DISCONNECTING / CONNECTING**
  - For information about signals, see **SIGNAL DESCRIPTION. TRANSMISSION CONTROL MODULE (TCM)** .

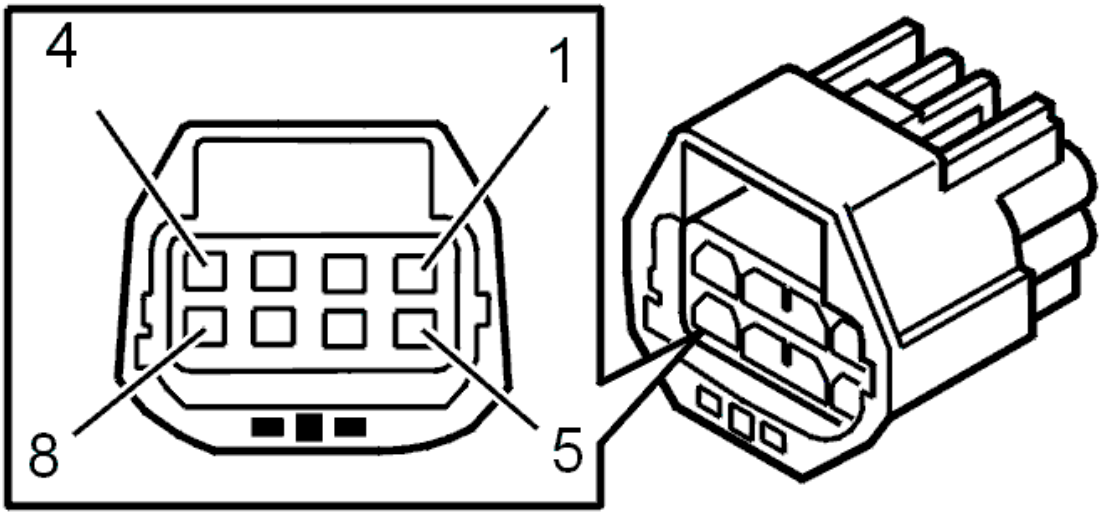

Fig. 328: Identifying 8-Pin Transmission Connector Terminals
Courtesy of VOLVO CARS CORPORATION

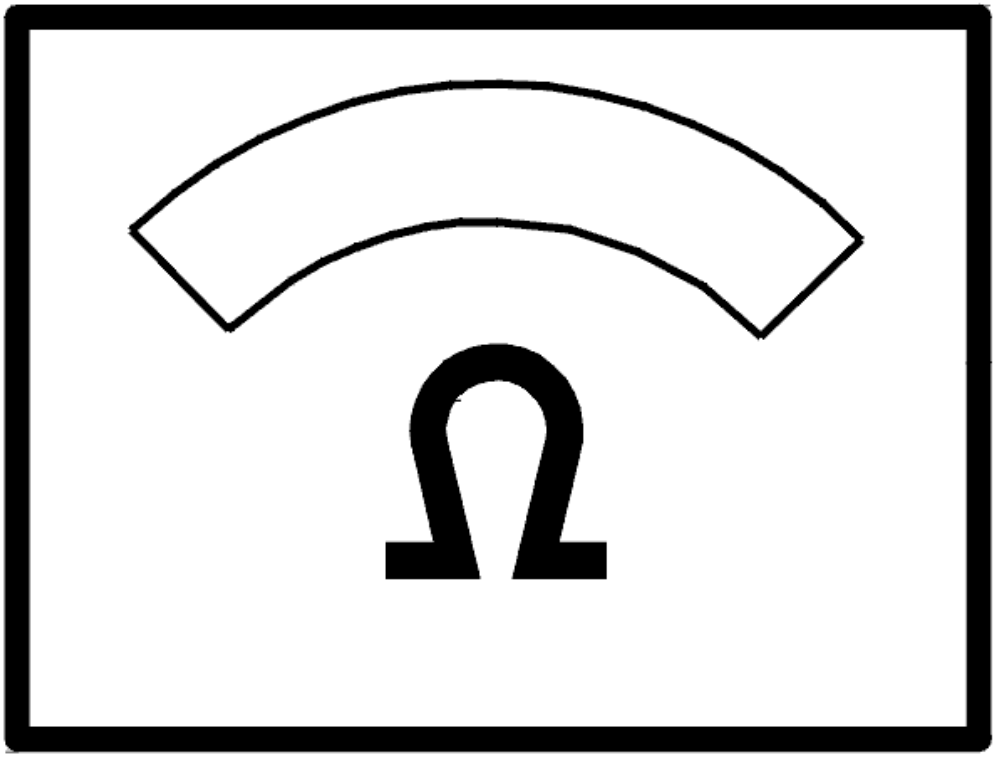

Fig. 329: Identifying Ohms Display
Courtesy of VOLVO CARS CORPORATION

Was the resistance OK?

- **OK**

  Refer to **CHECKING THE WIRING**

- **NOT OK**

  Refer to **CHECKING THE WIRING AND COMPONENT**

CHECKING THE WIRING

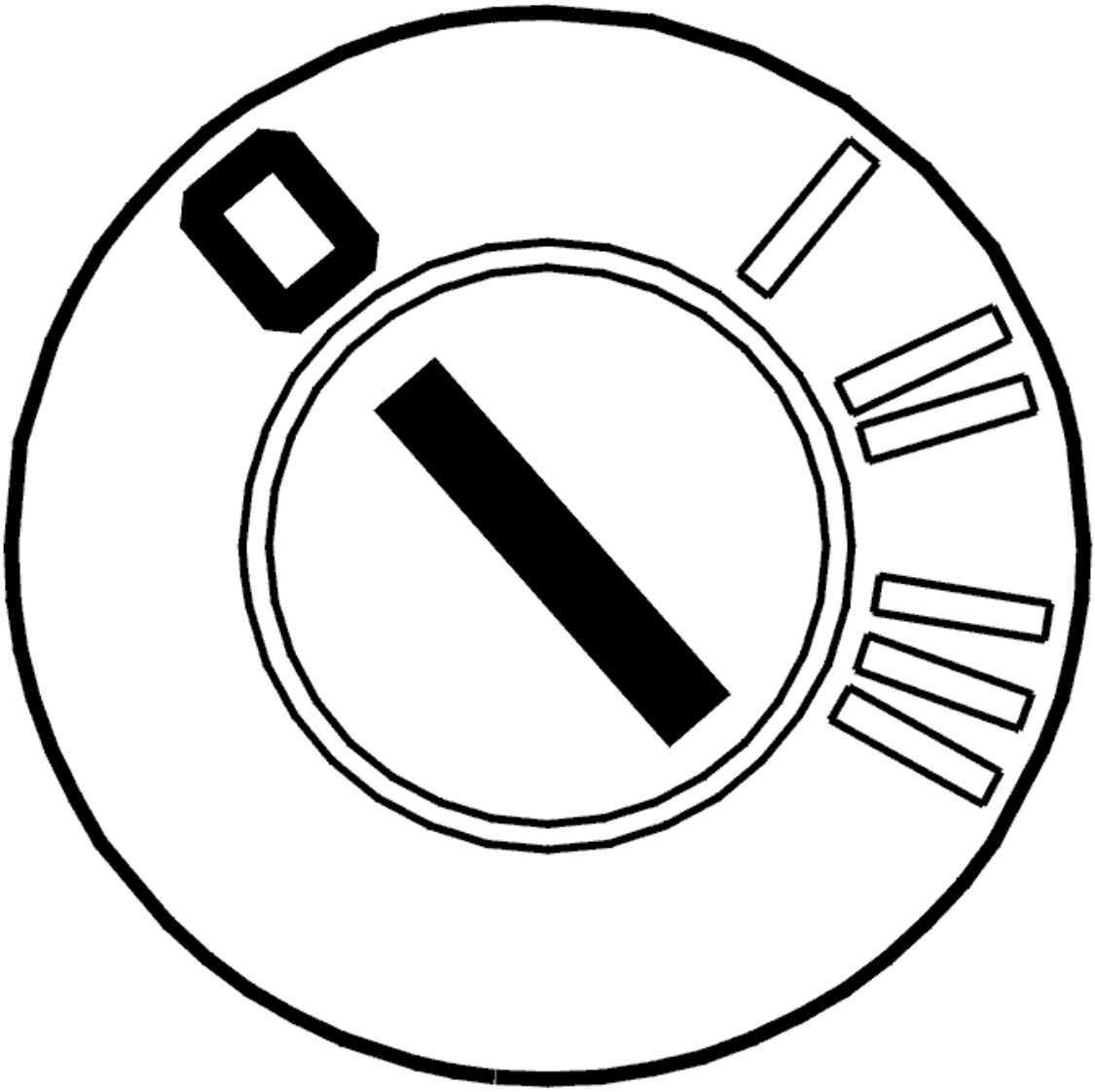

Fig. 330: Identifying Ignition OFF
Courtesy of VOLVO CARS CORPORATION

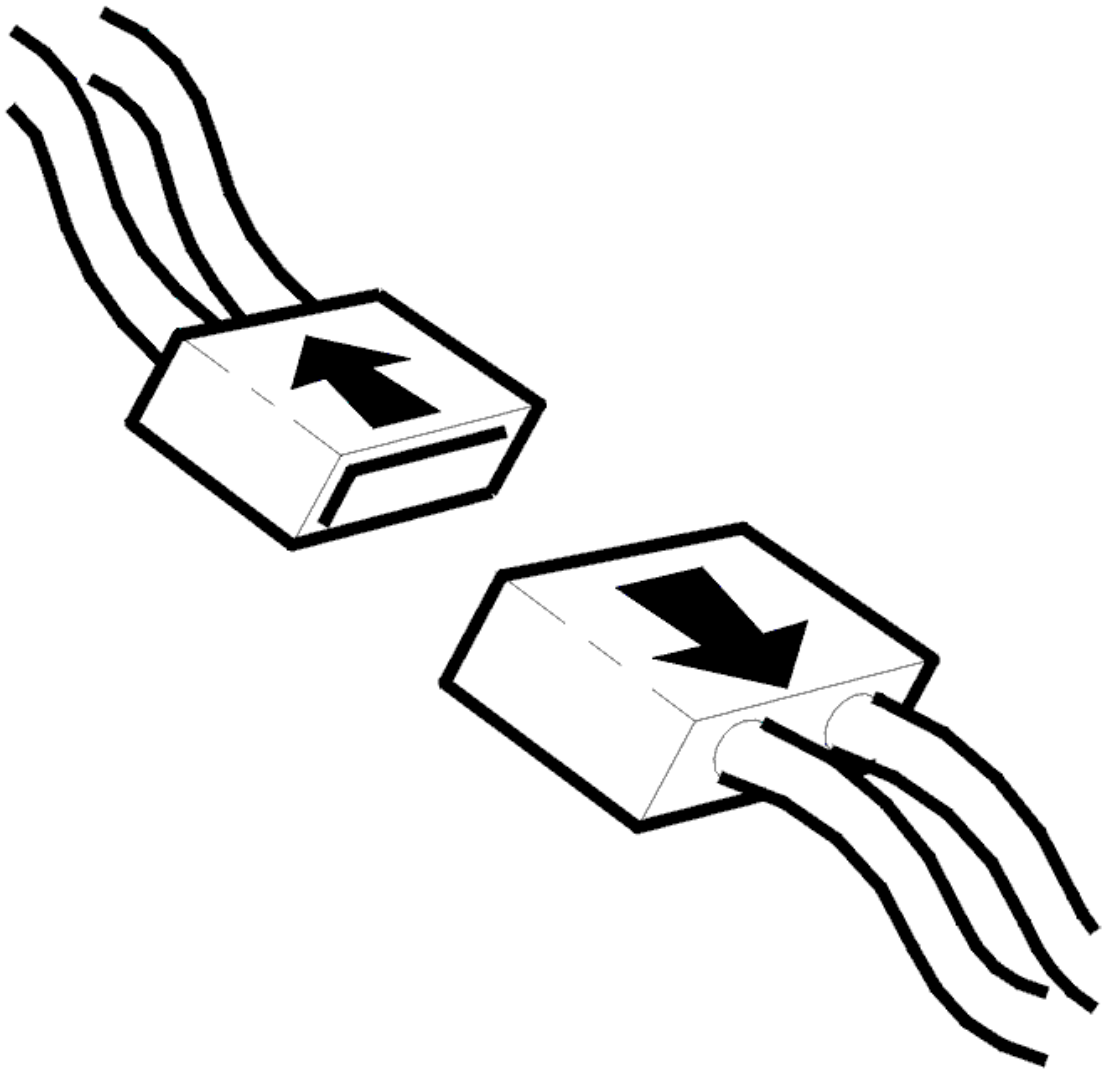

Fig. 331: Identifying Connector(s) Disconnected
Courtesy of VOLVO CARS CORPORATION

- Ignition off
- Disconnect transmission connector D.

  Check the cable between transmission control module (TCM) terminal #A52 (#A52) and transmission connector terminal #D3 (control module side). Check for an open-circuit. See **OPEN-CIRCUIT, PERMANENT FAULTS** .

  Check the cable between control module terminal #B10 (#A70) and transmission connector terminal #D4 (control module side). Check for an open-circuit. See **OPEN-CIRCUIT, PERMANENT FAULTS** .

  Remedy as necessary.

  Other information:

- To connect the breakout box, see **CONNECTING THE BREAKOUT BOX**
- To disconnect the transmission connectors, see **CONNECTORS, TRANSMISSION, DISCONNECTING / CONNECTING**
- For information about signals, see **SIGNAL DESCRIPTION. TRANSMISSION CONTROL MODULE (TCM)** .

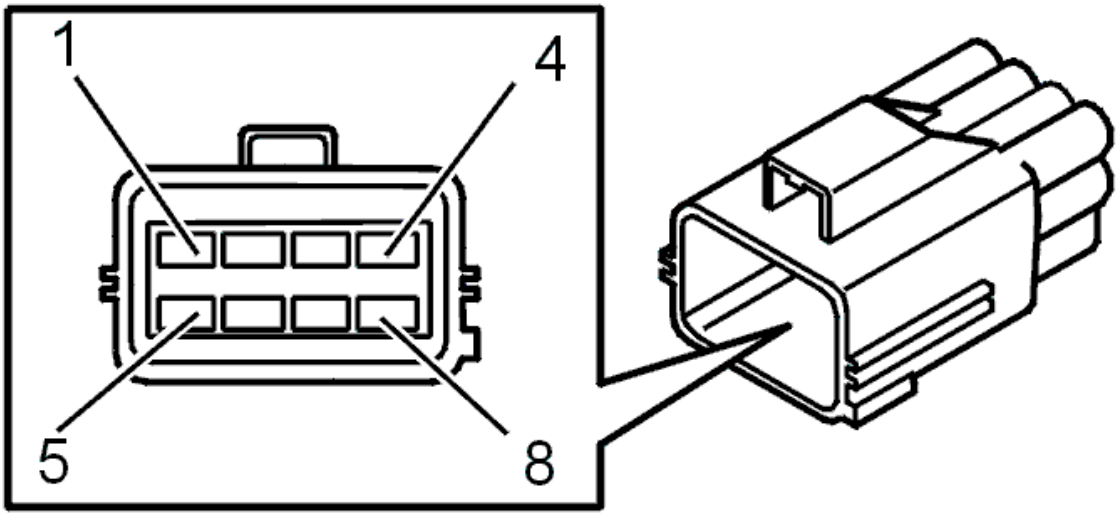

Fig. 332: Identifying Transmission Connector Terminals
Courtesy of VOLVO CARS CORPORATION

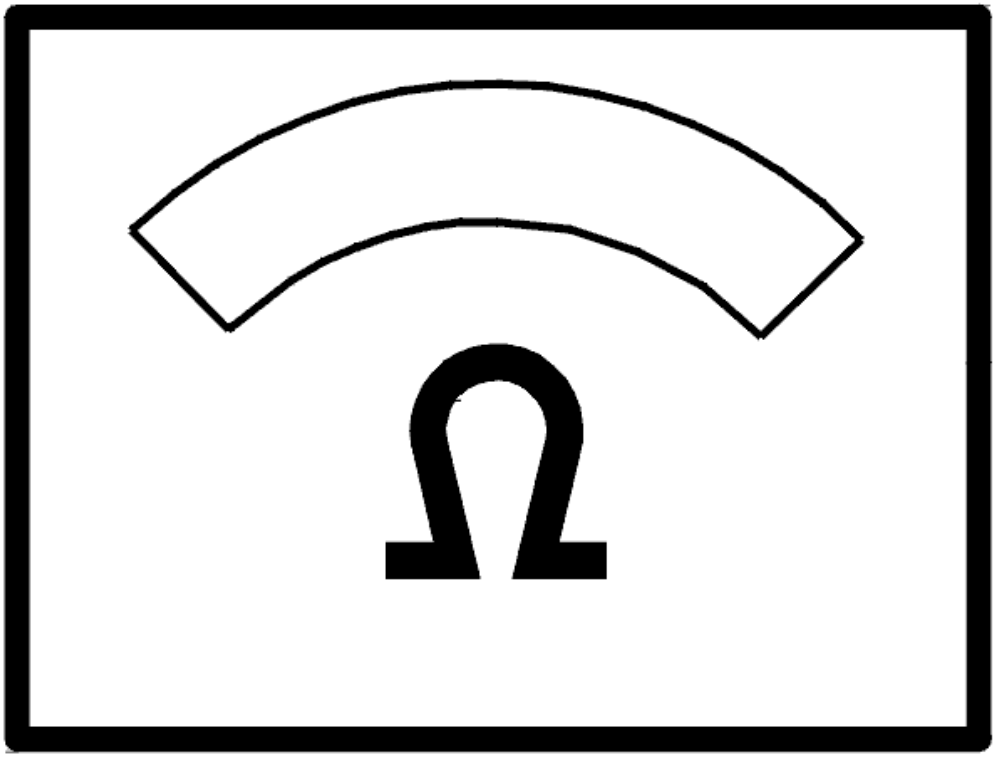

Fig. 333: Identifying Ohms Display
Courtesy of VOLVO CARS CORPORATION

Was a fault found in the wiring?

- **YES**

  Refer to **VERIFICATION**

- **NO**

  Refer to **CHECKING THE CONTROL MODULE**

CHECKING THE CONTROL MODULE

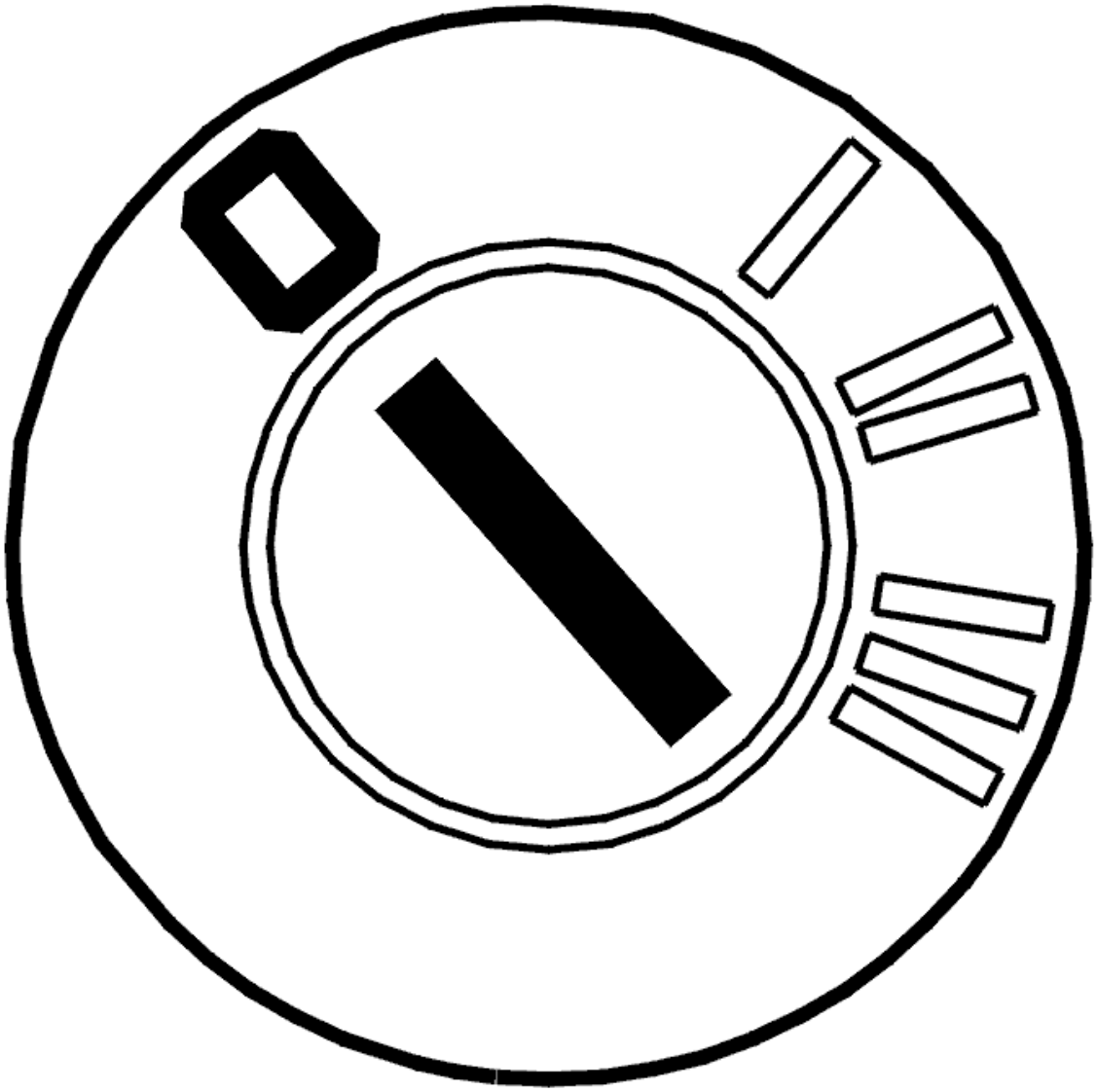

Fig. 334: Identifying Ignition OFF
Courtesy of VOLVO CARS CORPORATION

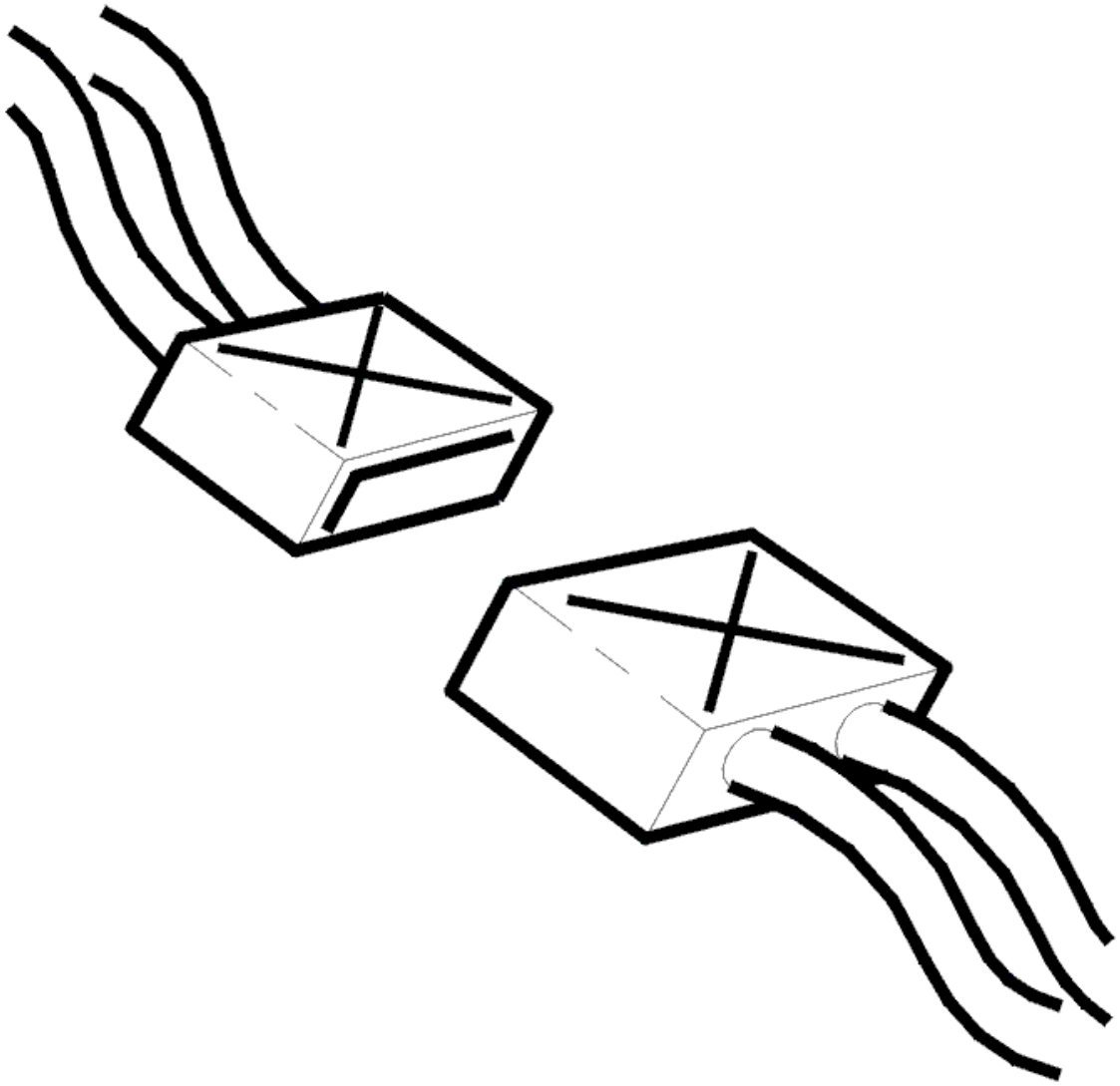

Fig. 335: Identifying Connectors
Courtesy of VOLVO CARS CORPORATION

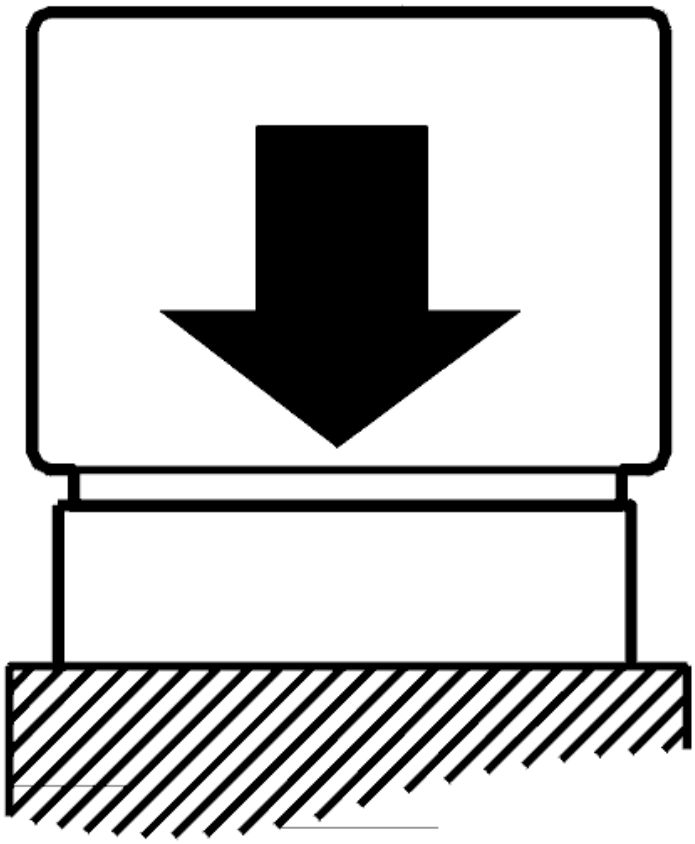

Fig. 336: Identifying Control Module Connected
Courtesy of VOLVO CARS CORPORATION

- Ignition off
- The breakout box connected
- Connect the control module.
- Transmission connector D disconnected.

Check the transmission control module (TCM) by measuring the resistance between terminals #52 (#A52) and #B10 (#A70) on the breakout box. The resistance must be approximately 9 kohms.

NOTE: **When removing the transmission connector, the control module may store diagnostic trouble codes (DTCs) for the gear-shift position sensor, the shift solenoids, the temperature sensor etc.**

Try a new control module if the resistance is infinite.

Other information:

- To disconnect the transmission connectors, see **CONNECTORS, TRANSMISSION, DISCONNECTING / CONNECTING**
- To replace the control module, see **TRANSMISSION CONTROL MODULE (TCM), REPLACING**
- For information about signals, see **SIGNAL DESCRIPTION. TRANSMISSION CONTROL MODULE (TCM)** .

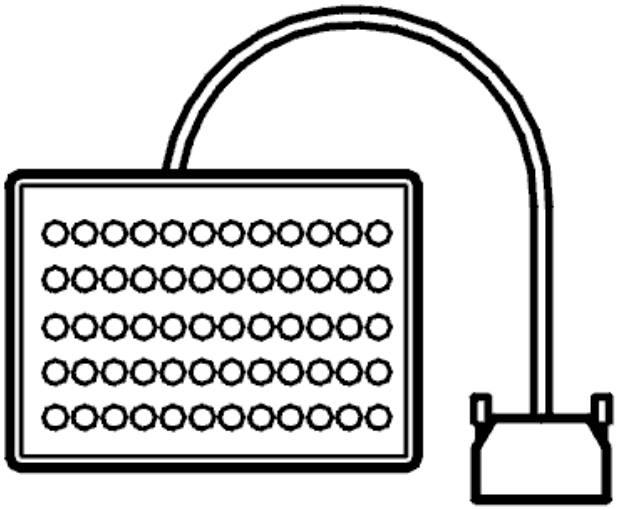

Fig. 337: Identifying Breakout Box
Courtesy of VOLVO CARS CORPORATION

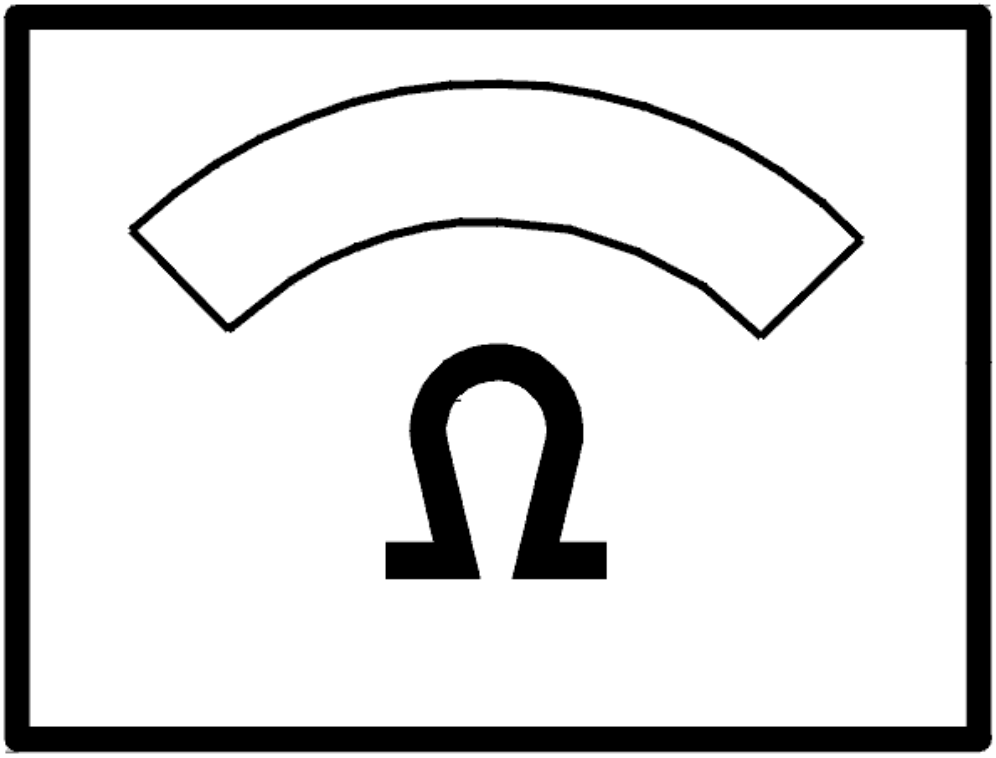

Fig. 338: Identifying Ohms Display
Courtesy of VOLVO CARS CORPORATION

Was the resistance OK?

- **YES**

  FAULT NOT FOUND: Troubleshooting has been completed.

- **NO**

  Refer to **VERIFICATION**

CHECKING THE WIRING AND COMPONENT

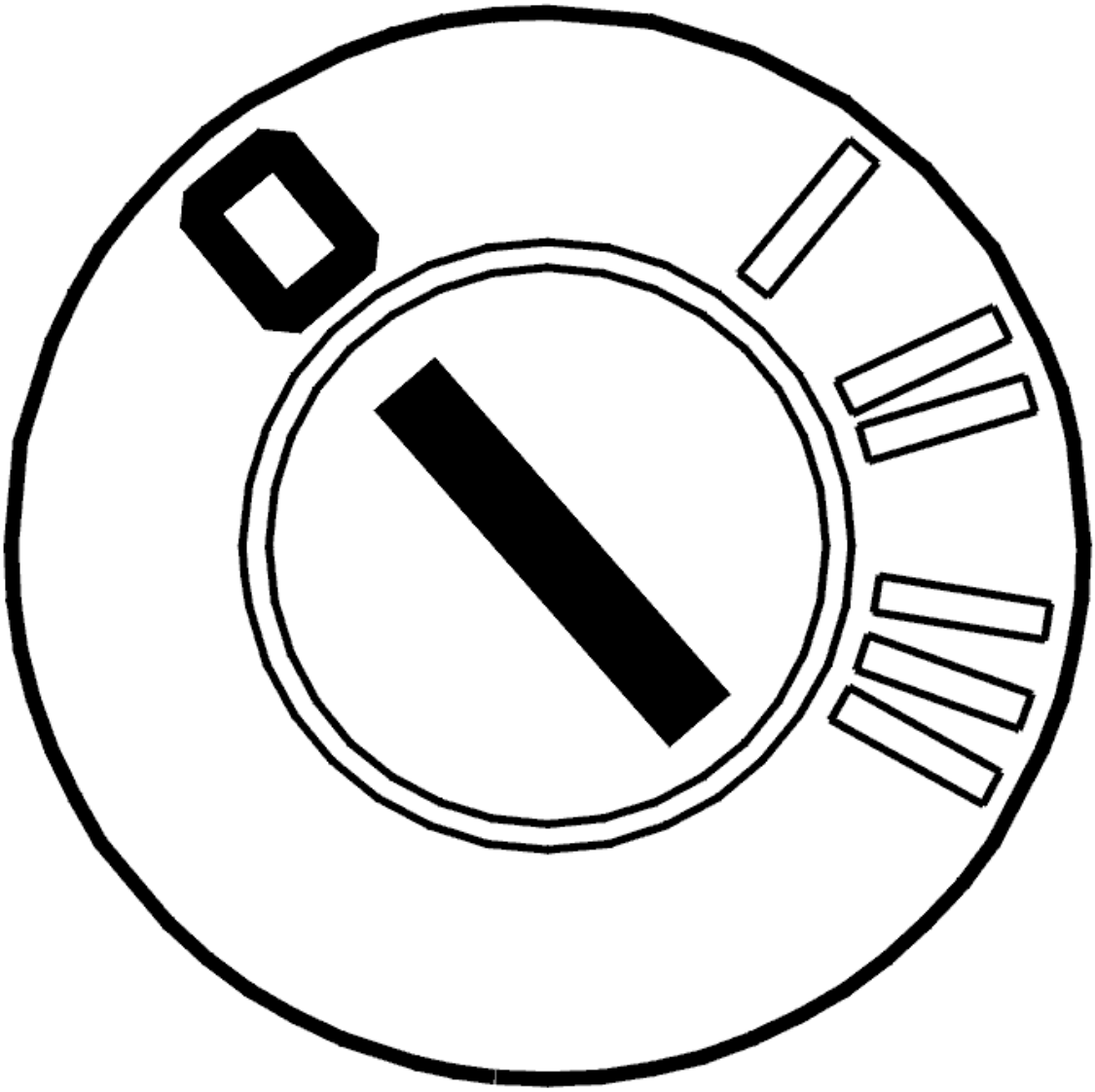

Fig. 339: Identifying Ignition OFF
Courtesy of VOLVO CARS CORPORATION

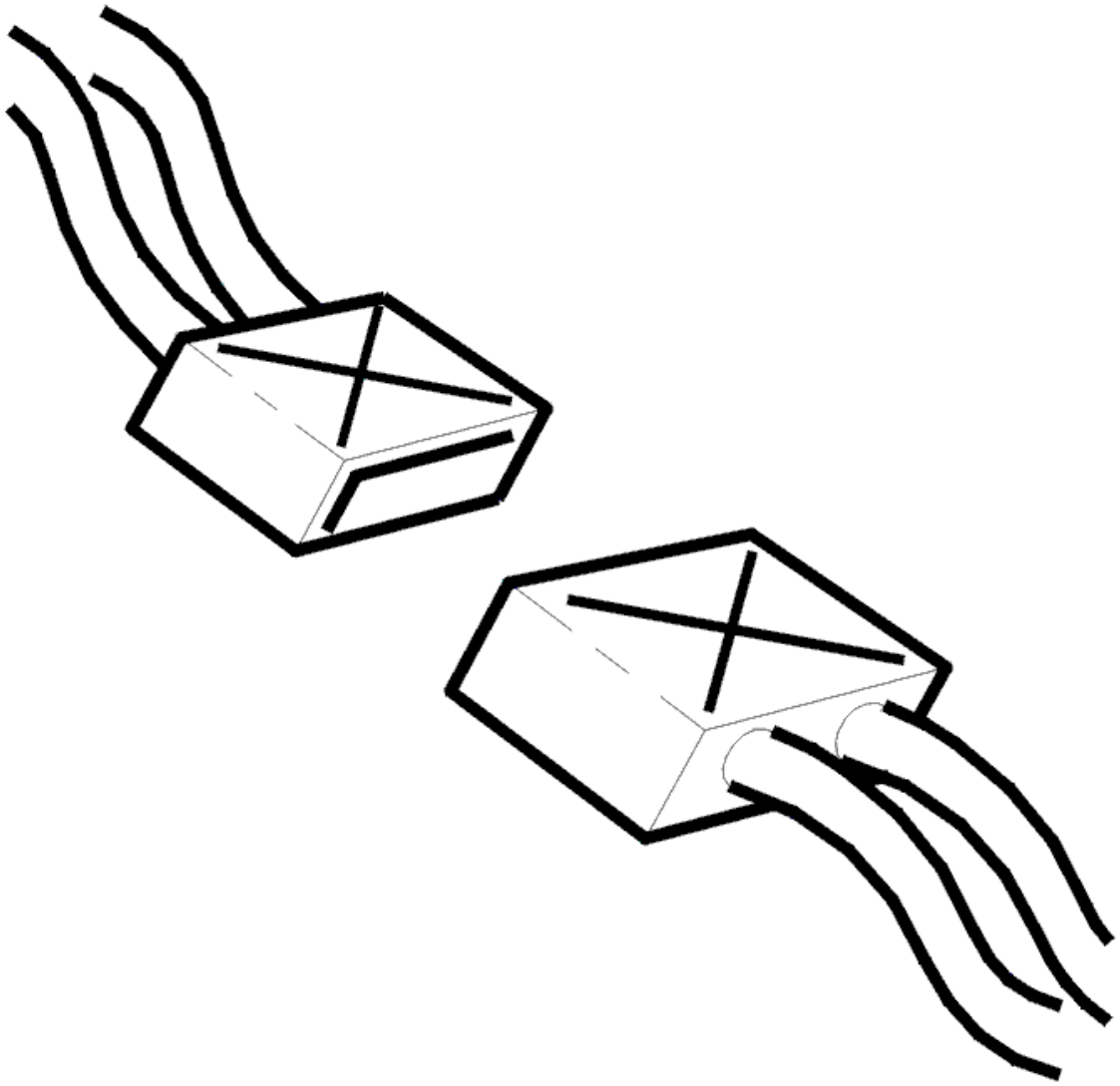

Fig. 340: Identifying Connectors
Courtesy of VOLVO CARS CORPORATION

- Ignition off
- Open the transmission control system.

  Check the wiring between transmission connector terminal #D3 and solenoid SLT terminal #1. Check the wiring between transmission connector terminal #D4 and solenoid SLT terminal #2. Check for an open-circuit. See **OPEN-CIRCUIT, PERMANENT FAULTS** .

  Also check against the other cables in the circuit.

  Check solenoid SLT by measuring the resistance between terminals #1 and #2 on the connector. The resistance must be 5-5.6 ohms at 20°C. Replace the control system if the resistance is incorrect.

  Other information:

- To disconnect the transmission connectors, see **CONNECTORS, TRANSMISSION, DISCONNECTING / CONNECTING**
- To open and replace the transmission control system, see **SOLENOID CONTROL SYSTEM, REPLACING**
- To replace the cable harness for the control system, see **TEMPERATURE SENSOR FLUID, TRANSAXLE, (TFT)**
- For information about signals, see **CONNECTOR A, TRANSMISSION**.

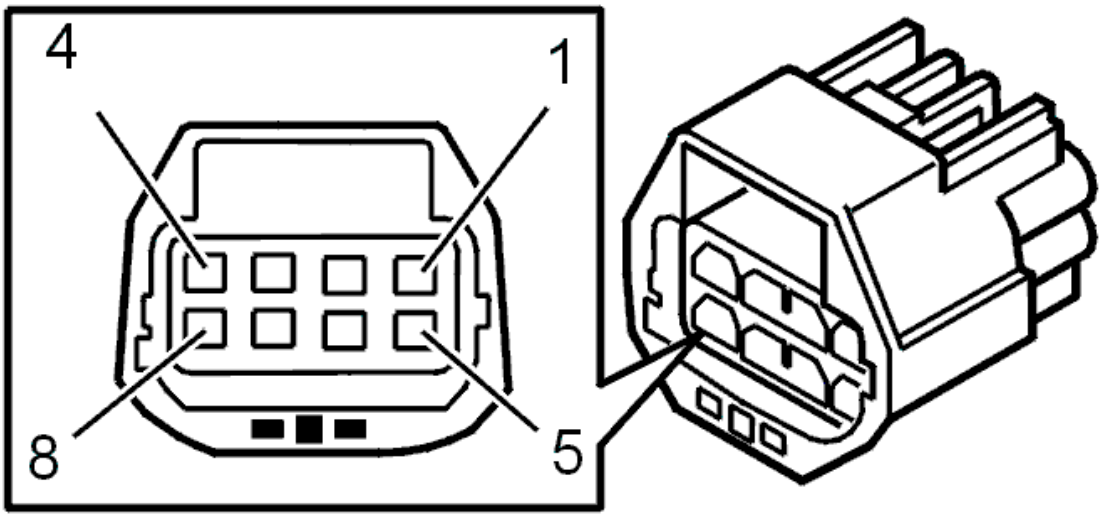

Fig. 341: Identifying 8-Pin Transmission Connector Terminals
Courtesy of VOLVO CARS CORPORATION

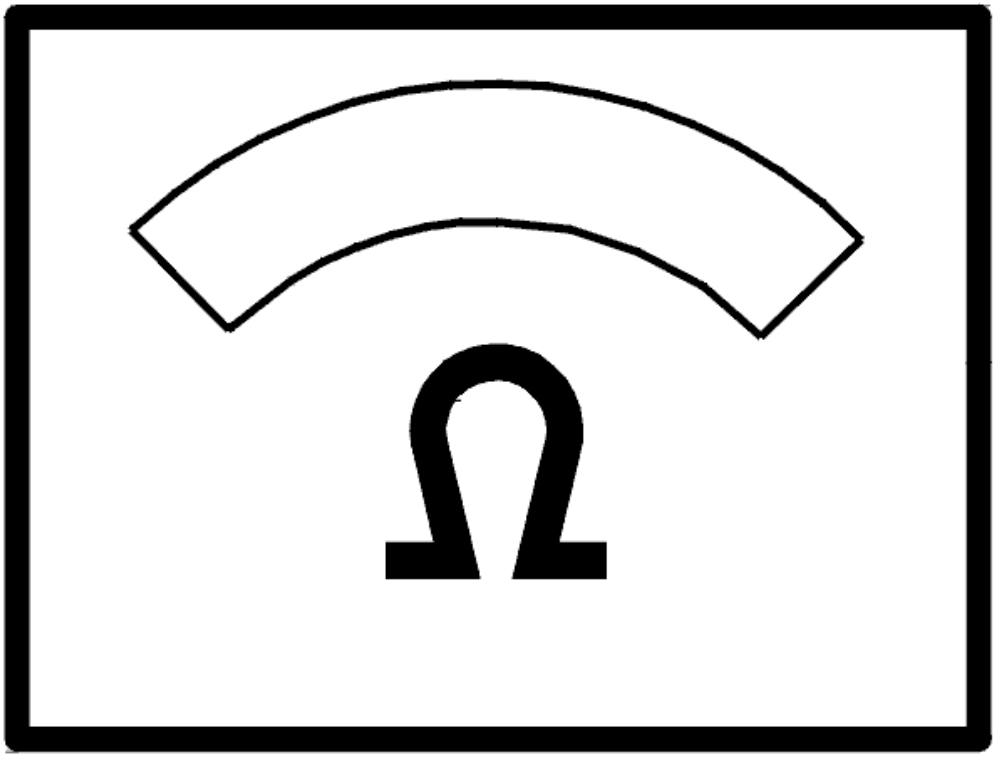

Fig. 342: Identifying Ohms Display
Courtesy of VOLVO CARS CORPORATION

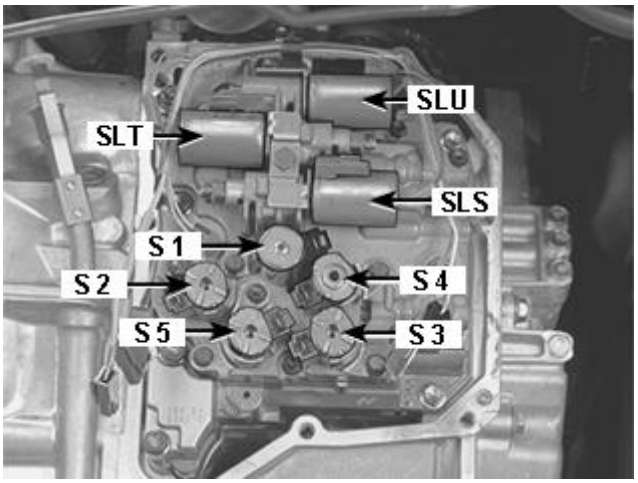

Fig. 343: Identifying S1-S5, SLT, SLU And SLS Solenoids
Courtesy of VOLVO CARS CORPORATION

- **Continue**

Refer to **RESETTING THE ADAPTATION**

RESETTING THE ADAPTATION

RESETTING ADAPTATION AND THE COUNTER FOR "TRANSMISSION OIL CHANGE"

HINT: The transmission has torque controlled adaptive pressure control. Pressure control means that the transmission regulates the pressure itself during each gear shift. This avoids harsh gear shifting. Each gear shift is evaluated by the control module and stored in the memory. This allows for compensation for wear and tear in the transmission and clutch. It is important that the adaptation in the memory is reset after the transmission has been repaired. This is to ensure normal operation. The oil is replaced during repair; the "Transmission oil change" counter must be reset. If the counter is not reset when the fluid is drained and replaced, there is a risk that a diagnostic trouble code (DTC) will be stored in incorrect circumstances.

NOTE: **This applies only if the transmission or one of the components in the transmission have been replaced.**

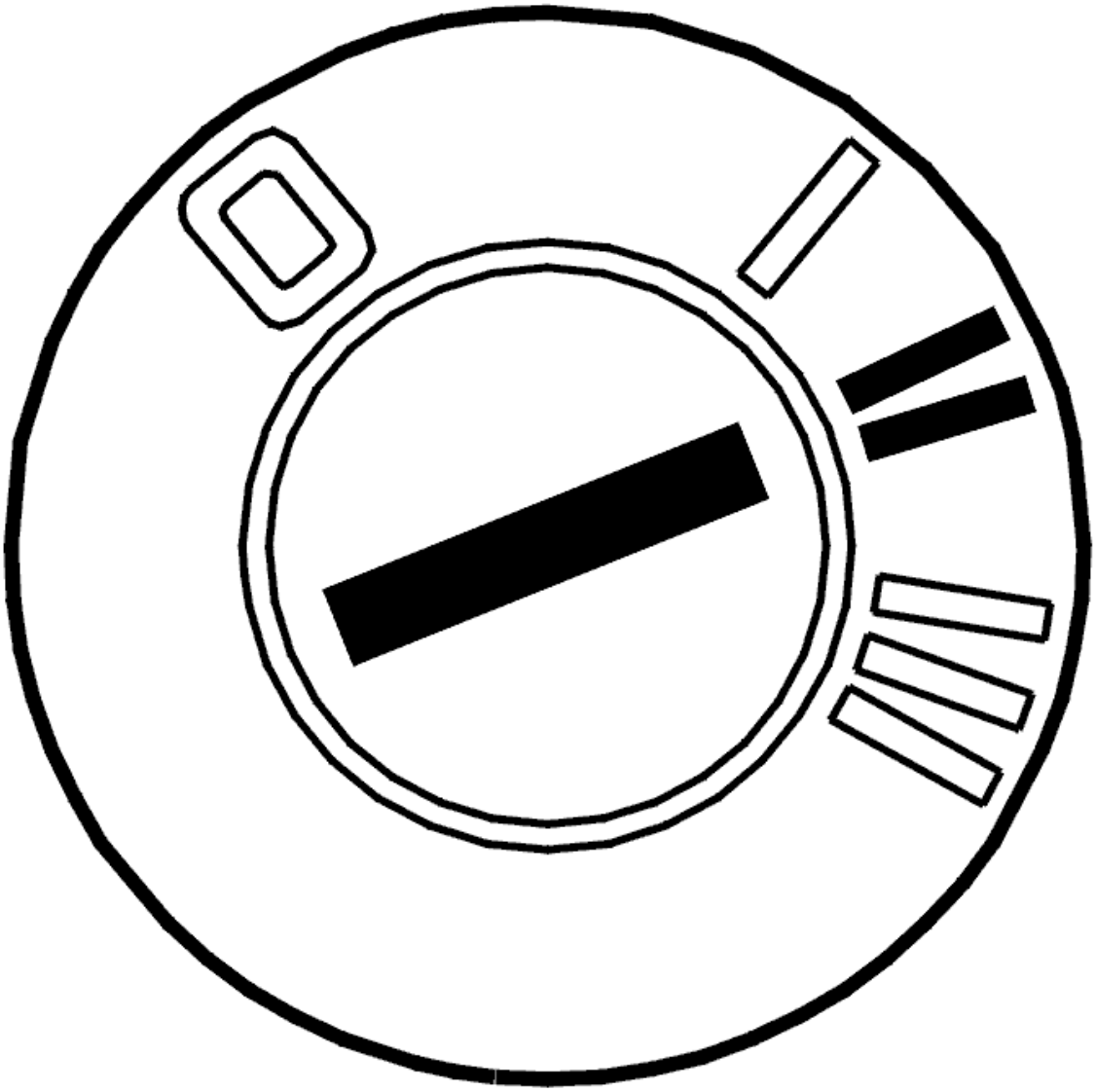

Fig. 344: Identifying Ignition ON
Courtesy of VOLVO CARS CORPORATION

- Ignition on.

  Click on the VCT2000 symbol to reset the adaptation and counter.

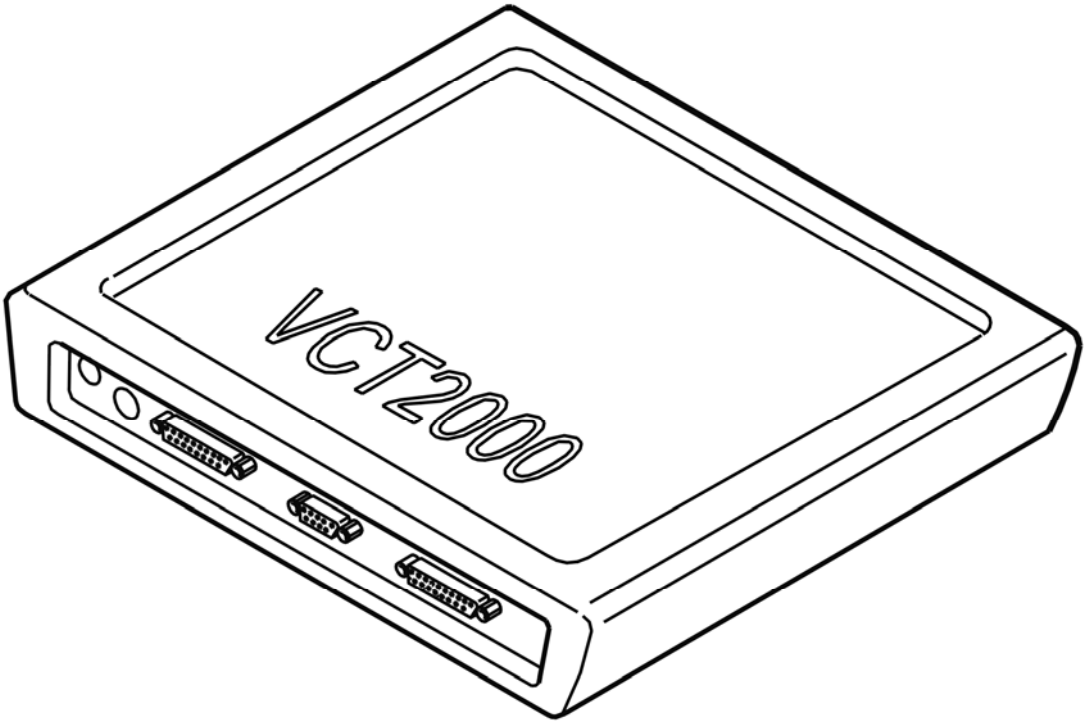

Fig. 345: Identifying VCT2000 Diagnostic Tool Symbol In VIDA
Courtesy of VOLVO CARS CORPORATION

- **Continue**

  Refer to **VERIFICATION**

VERIFICATION

VERIFICATION

HINT: After carrying out the repair, check that the fault has been remedied.

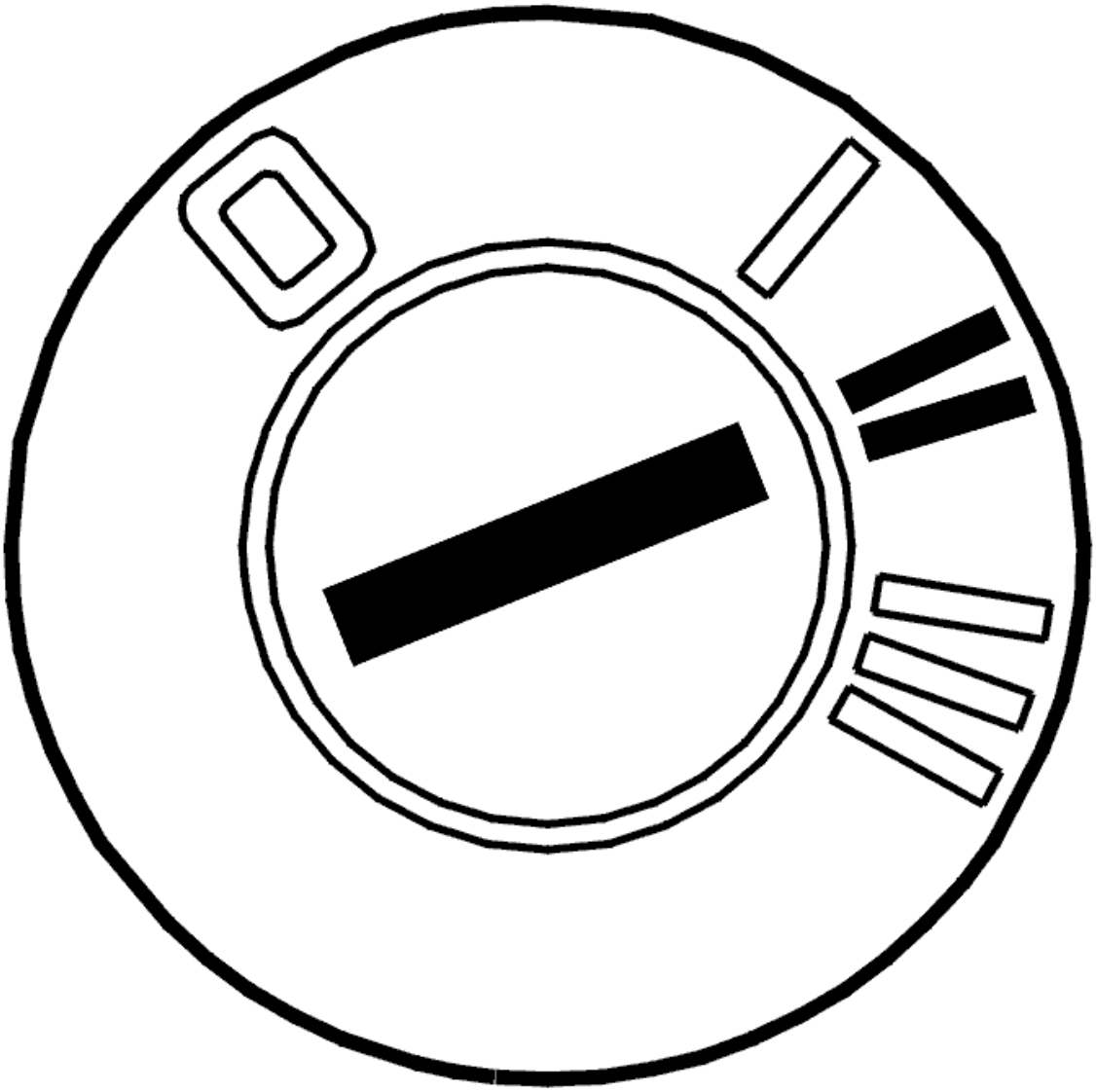

Fig. 346: Identifying Ignition ON
Courtesy of VOLVO CARS CORPORATION

- Ignition on.
- Activate solenoid SLT.

  Read off the current through the solenoid SLT circuit.

  The current should oscillate between 0 and 1000 mA.

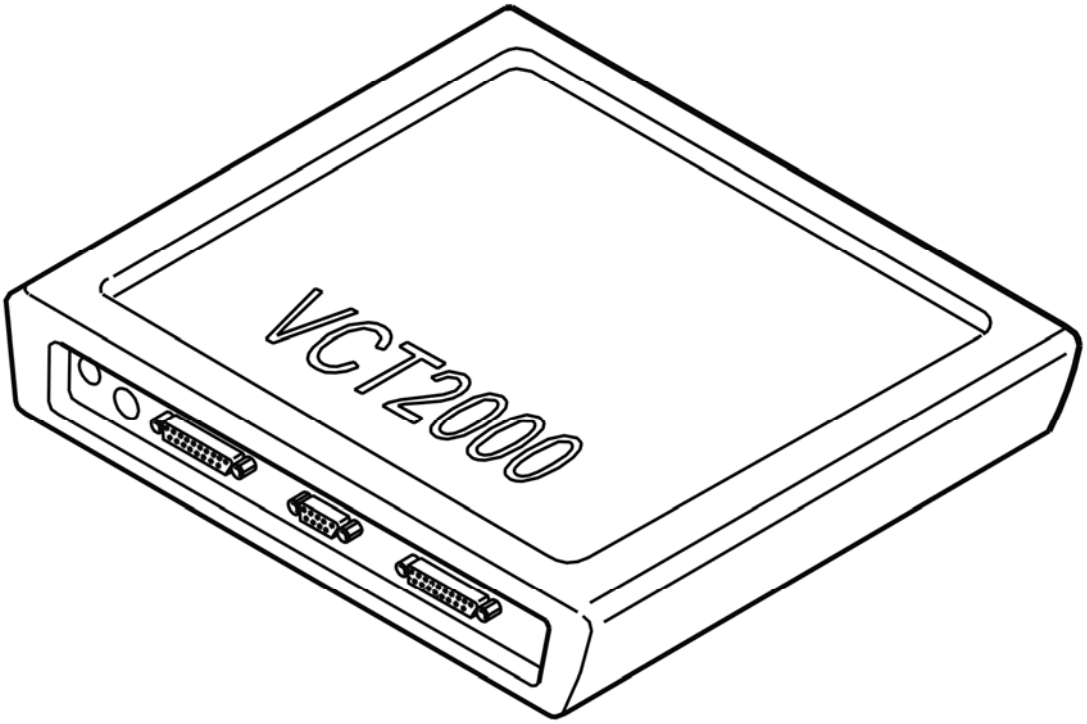

Fig. 347: Identifying VCT2000 Diagnostic Tool Symbol In VIDA
Courtesy of VOLVO CARS CORPORATION

Does the current oscillate?

- **YES**

  VERIFIED: Troubleshooting has been completed.

- **NO**

  Refer to **INFORMATION**

INFORMATION

FAULT-TRACING INFORMATION

The fault should have been detected and remedied. As this is not the case fault-tracing has failed.

Exit fault-tracing for this diagnostic trouble code (DTC) or make another attempt.

CONNECTOR A, TRANSMISSION

4-WAY, 26-PIN CONNECTOR

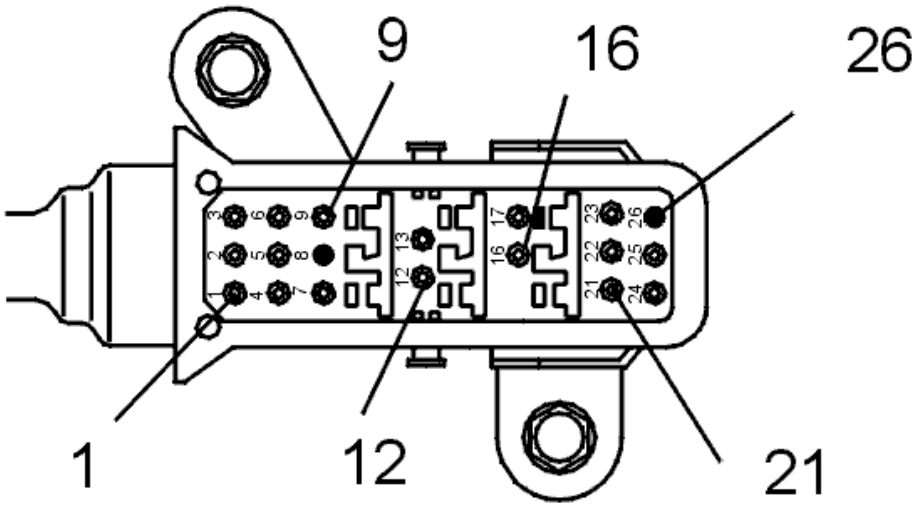

Fig. 348: Identifying Transmission Connector
Courtesy of VOLVO CARS CORPORATION

Control module terminals #A1-#A60 correspond to #A1-#A60 on the breakout box, #A61-#A70 correspond to #B1-#B10 on the breakout box.

Pin	Signal	Connected to control module #
1	Signal, gear-shift position sensor terminal A	A46
2	Signal, gear-shift position sensor terminal B	A64
3	Signal, gear-shift position sensor terminal C	A45
4	Signal, gear-shift position sensor terminal PA	A63
5	-	-
6	-	-
7	-	-
8	Signal ground, gear-shift position sensor	A53
9	-	-
12	Signal (OT), oil temperature sensor	A37
13	Signal ground (OTG), oil temperature sensor	A55
16	Signal (NC1), engine speed (RPM) sensor	A59
17	Signal ground (NC1G), engine speed (RPM) sensor	A41
21	Control signal, solenoid S1	A50
22	Control signal, solenoid S2	A68
23	Control signal (SLU), lock-up solenoid SLU	A51
24	Control signal (SLT), throttle solenoid SLT	A52
25	Signal ground (SLTG), throttle solenoid SLT	A70
26	Signal ground (SLUG), lock-up solenoid SLU	A69

TCM-0118: THROTTLE SOLENOID SLT. SIGNAL TOO LOW. INTERMITTENT

FAULT (AW50/51 AWD; AW55-50/51SN; 2003-2007)

DIAGNOSTIC TROUBLE CODE (DTC) INFORMATION

Condition

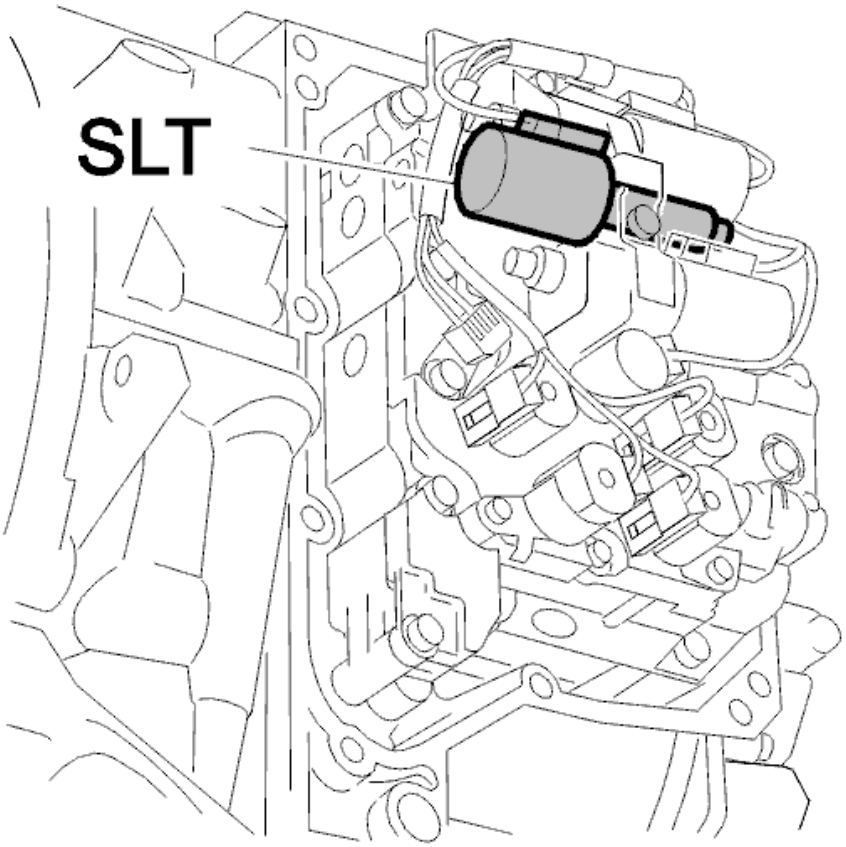

Fig. 349: Identifying Line Pressure Solenoid
Courtesy of VOLVO CARS CORPORATION

Throttle solenoid SLT controls the line pressure in the transmission. The solenoid is controlled by a power stage in the transmission control module (TCM) output. The transmission control module (TCM) uses the power stage to control the current to the solenoid. A low amperage results in a high line pressure. A high amperage (approximately 1 A) results in a low line pressure. The amperage is primarily affected by the throttle position. Diagnostic trouble code (DTC) TCM-0118 is stored if the control module registers a short-circuit to ground in the solenoid SLT circuit. Solenoid SLT cannot then control the line pressure.

Substitute Value

- The transmission control module (TCM) "Emergency mode I" program has been initiated.

Possible Source

- Short-circuit to ground in the control signal cable or the signal cable.

- Defective solenoid SLT.

Fault symptom[s]

- General orange warning lamp lit.
- Malfunction indicator lamp (MIL) lit.
- No lock-up function.
- Harsh gear shifting.

HINT: The shifting may be harsh if there is no request for torque limiting to the engine control module (ECM) during shifting.

SIGNAL TOO LOW. INTERMITTENT FAULT

INTERMITTENT FAULT

Check control module connector and transmission connector D. Check for contact resistance and oxidation according to **CONTACT RESISTANCE AND OXIDATION** .

Check the wiring between transmission control module (TCM) terminal #A52 (#A52) and transmission connector terminal #D3. Check the wiring between control module terminal #B10 (#A70) and transmission connector terminal #D4. Check for an intermittent short-circuit to ground according to **SHORT-CIRCUIT TO GROUND, INTERMITTENT FAULTS** .

HINT: Check solenoid SLT. Measure the resistance between terminals #D3 and #D4 on transmission connector D. The resistance should be 5-5.6 ohms at 20°C.

Remedy as necessary.

Other information:

- To connect the breakout box, see **CONNECTING THE BREAKOUT BOX**
- To disconnect the transmission control module (TCM), see **TRANSMISSION CONTROL MODULE (TCM), REPLACING**
- To disconnect the transmission connectors, see **CONNECTORS, TRANSMISSION, DISCONNECTING / CONNECTING**
- For information about signals, see **SIGNAL DESCRIPTION. TRANSMISSION CONTROL MODULE (TCM)** .

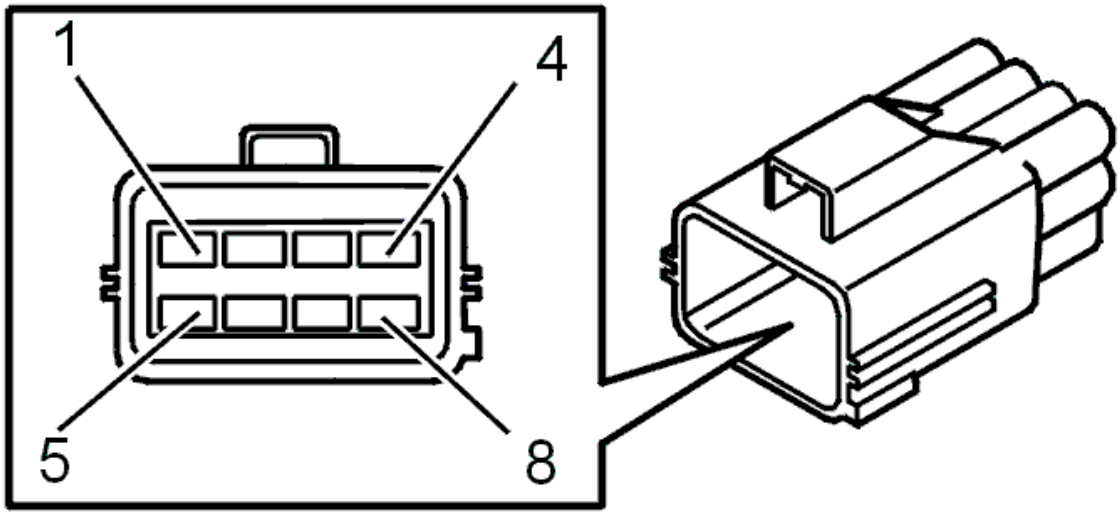

Fig. 350: Identifying Transmission Connector Terminals
Courtesy of VOLVO CARS CORPORATION

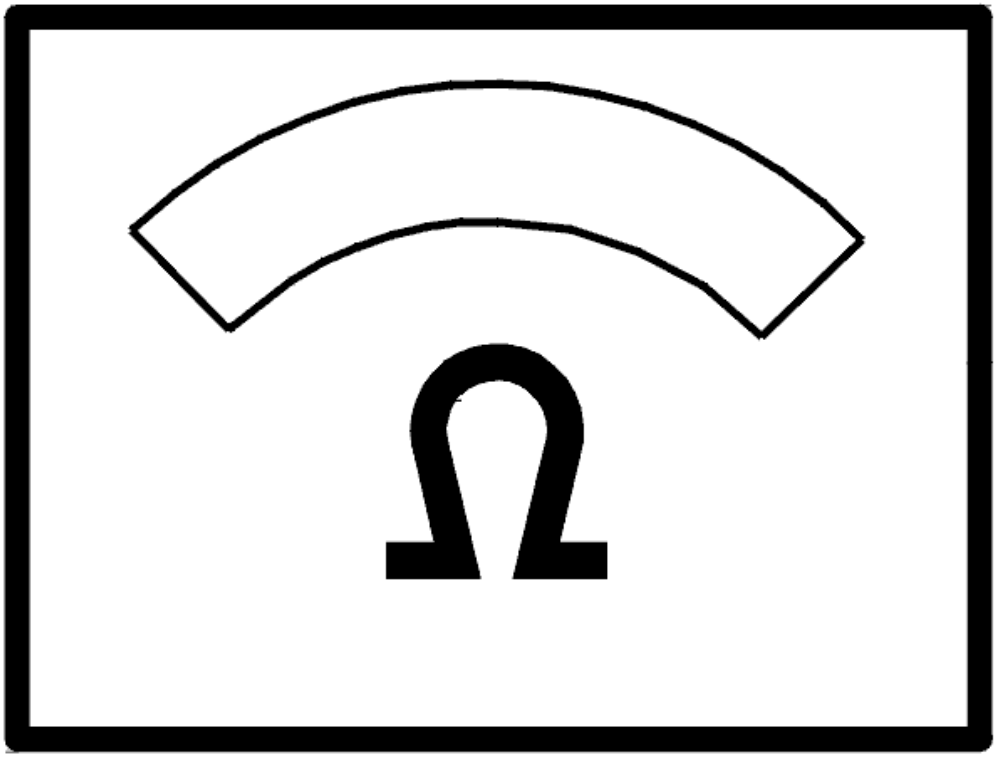

Fig. 351: Identifying Ohms Display
Courtesy of VOLVO CARS CORPORATION

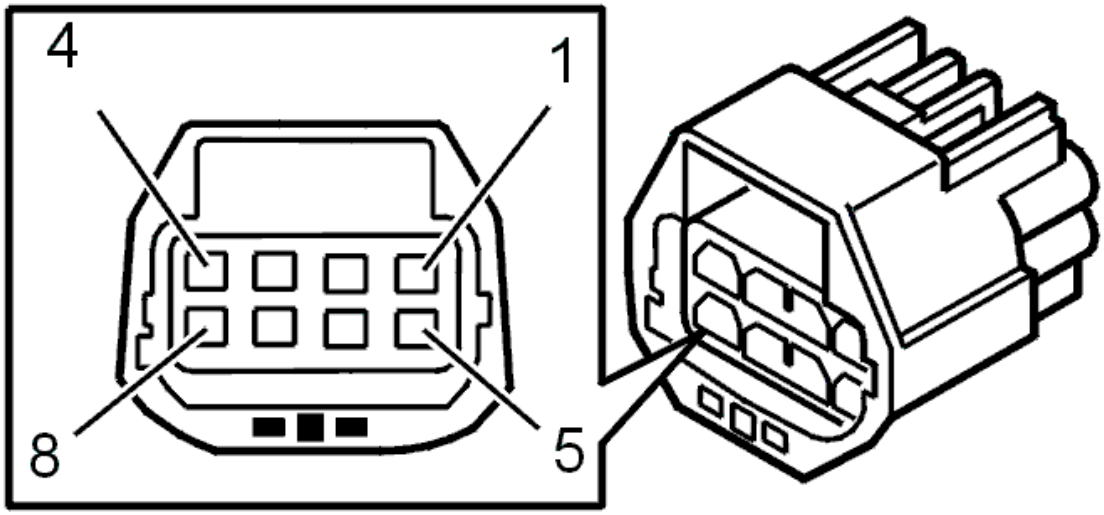

Fig. 352: Identifying 8-Pin Transmission Connector Terminals
Courtesy of VOLVO CARS CORPORATION

- **Continue**

  Refer to **INFORMATION**

INFORMATION

FAULT-TRACING INFORMATION

If the fault is intermittent, do not verify fault-tracing if the fault does not recur.

It is possible to view the information again, or leave fault-tracing for this diagnostic trouble code (DTC).

TCM-0118: THROTTLE SOLENOID SLT. SIGNAL TOO LOW. PERMANENT FAULT (AW50/51 AWD; AW55-50/51SN; 2003-2007)

DIAGNOSTIC TROUBLE CODE (DTC) INFORMATION

see **DIAGNOSTIC TROUBLE CODE (DTC) INFORMATION**

SIGNAL TOO LOW. PERMANENT FAULT

CHECKS

CHECKING LINE PRESSURE SOLENOID SLT

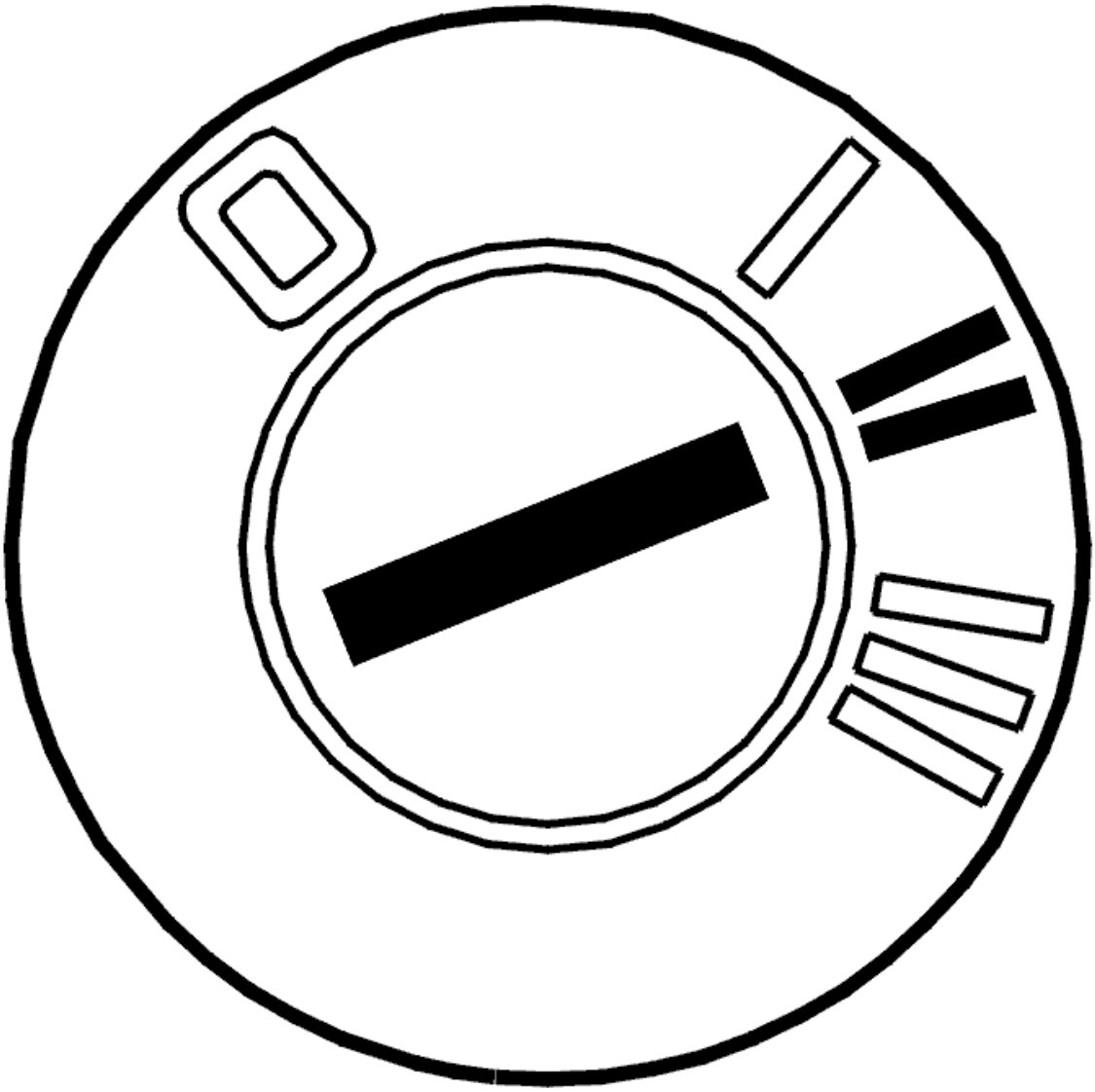

Fig. 353: Identifying Ignition ON
Courtesy of VOLVO CARS CORPORATION

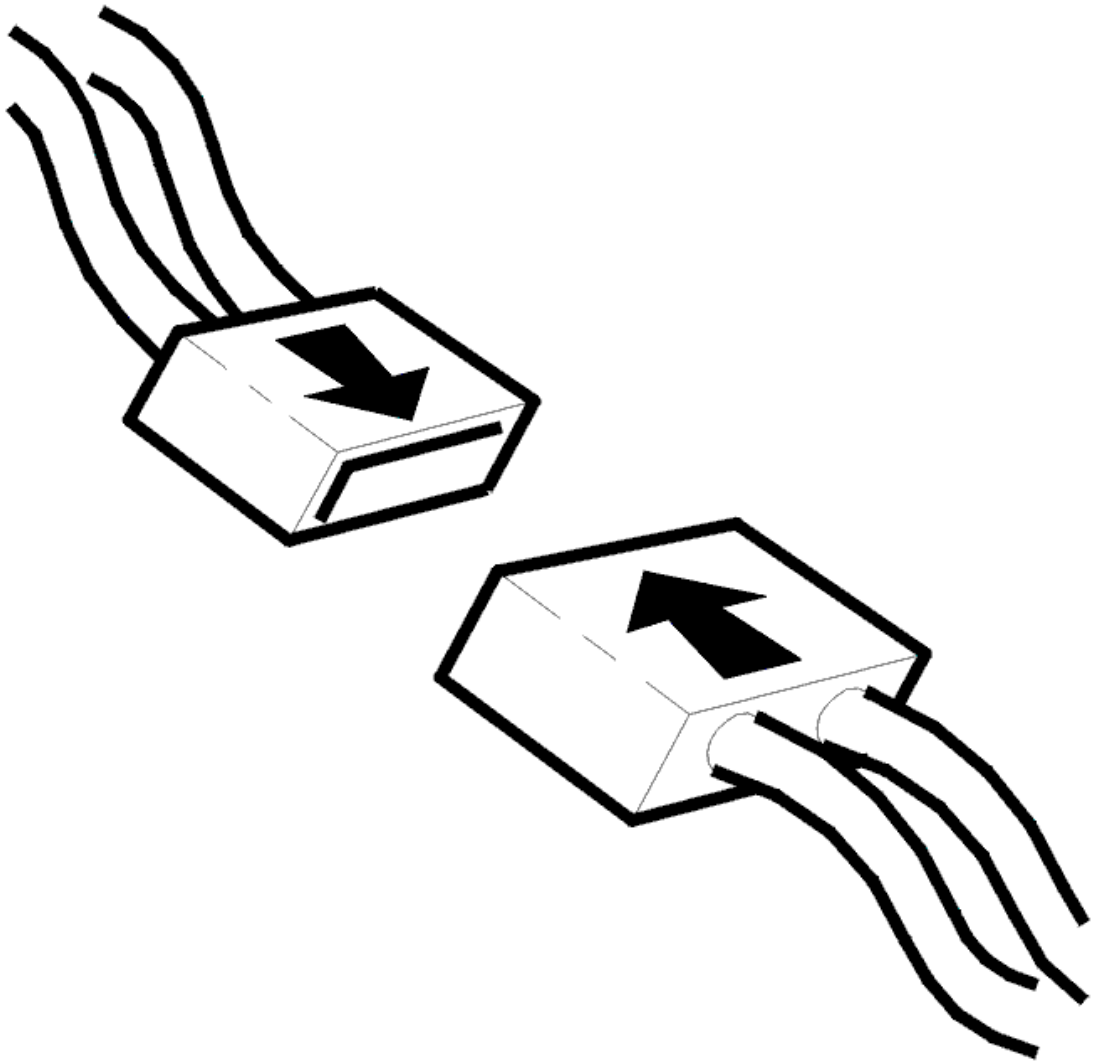

Fig. 354: Identifying Connector(s) Reinstallation
Courtesy of VOLVO CARS CORPORATION

- Ignition off
- Check the control module connector and automatic transmission connector D. Check for contact resistance and oxidation. See **CONTACT RESISTANCE AND OXIDATION** . Remedy if necessary
- Reinstall the components, reconnect the connectors etc.
- Ignition on
- Activate solenoid SLT.

  Read off the current through the solenoid SLT circuit.

  The current should oscillate between 0 and 1000 mA.

  Other information:

- To disconnect the transmission connectors, see **CONNECTORS, TRANSMISSION, DISCONNECTING / CONNECTING**
- To disconnect the control module, see **TRANSMISSION CONTROL MODULE (TCM), REPLACING** .

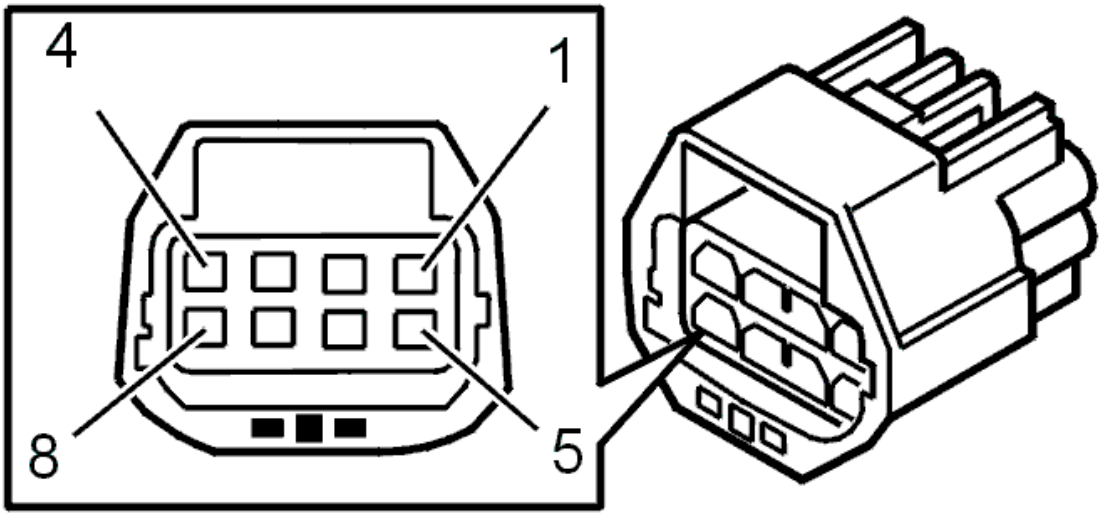

Fig. 355: Identifying 8-Pin Transmission Connector Terminals
Courtesy of VOLVO CARS CORPORATION

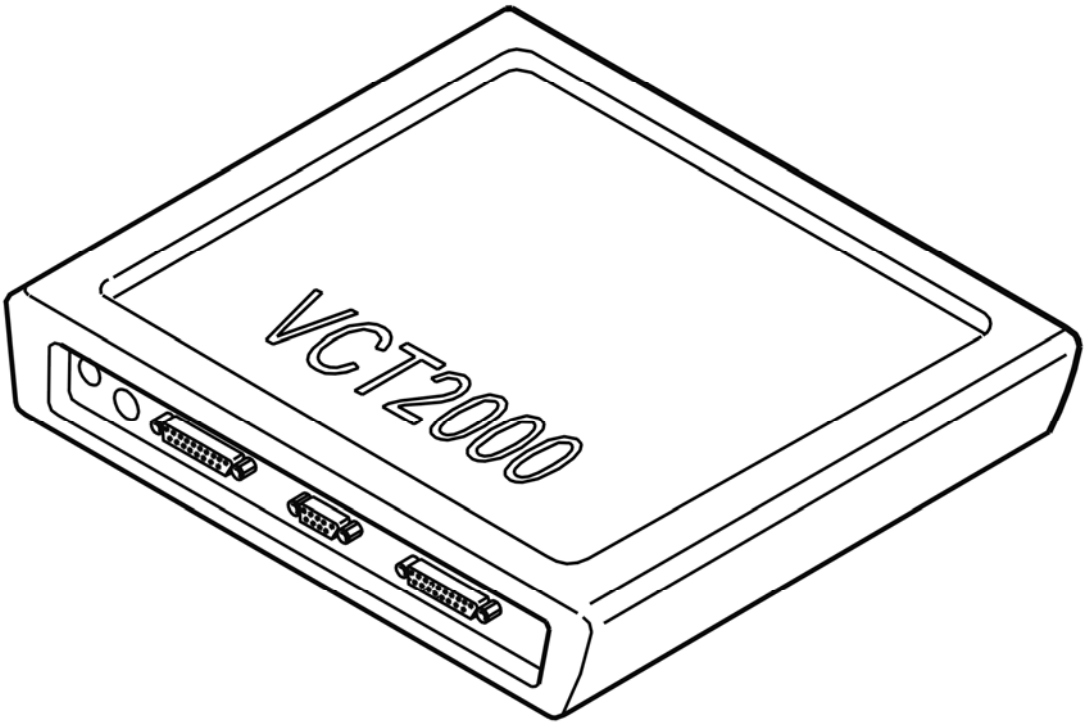

Fig. 356: Identifying VCT2000 Diagnostic Tool Symbol In VIDA

Courtesy of VOLVO CARS CORPORATION

Does the current oscillate?

- **YES**

  OKAY: Troubleshooting has been completed.

- **NO**

  Refer to **CHECKING RESISTANCE**

CHECKING RESISTANCE

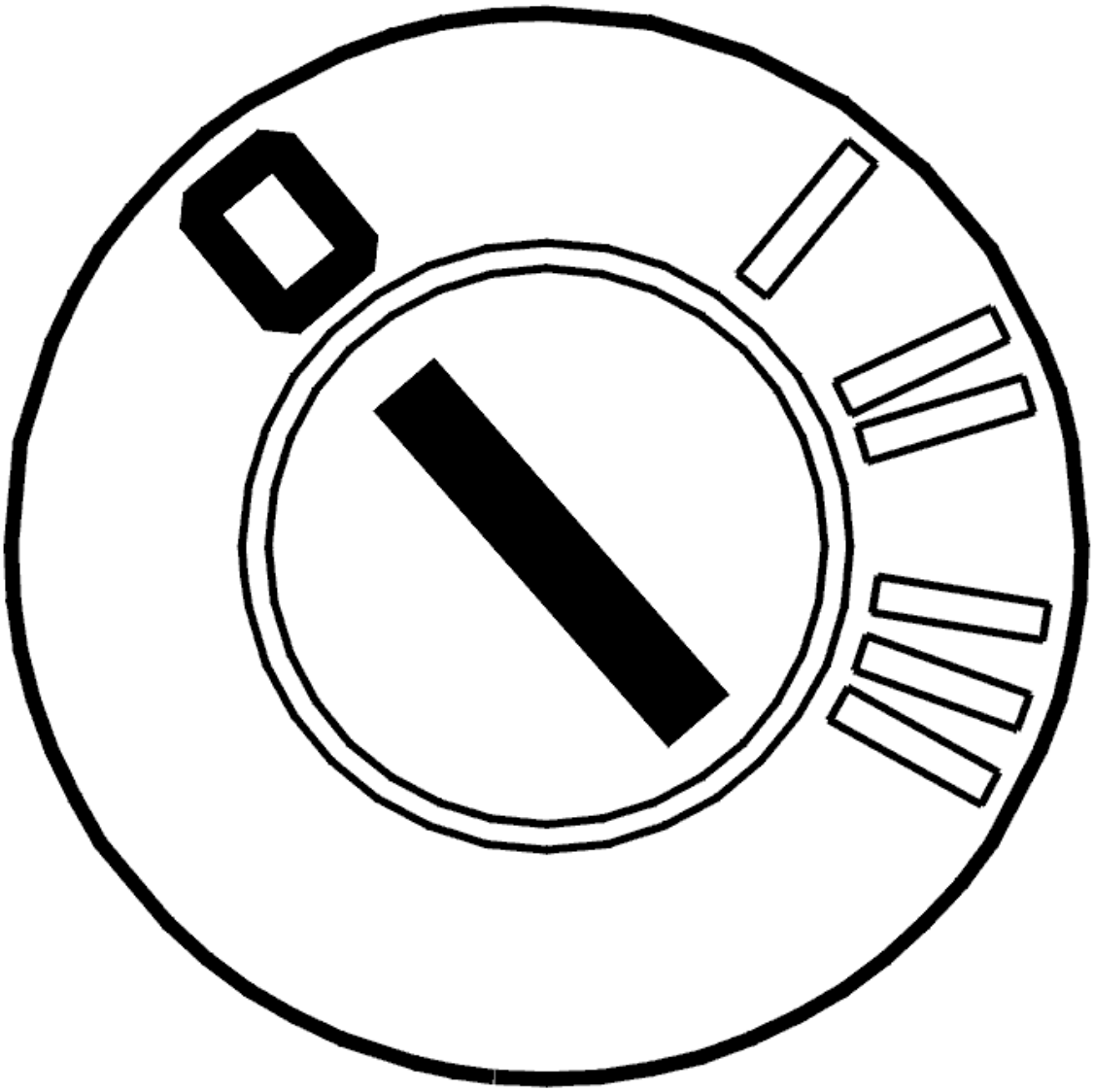

Fig. 357: Identifying Ignition OFF
Courtesy of VOLVO CARS CORPORATION

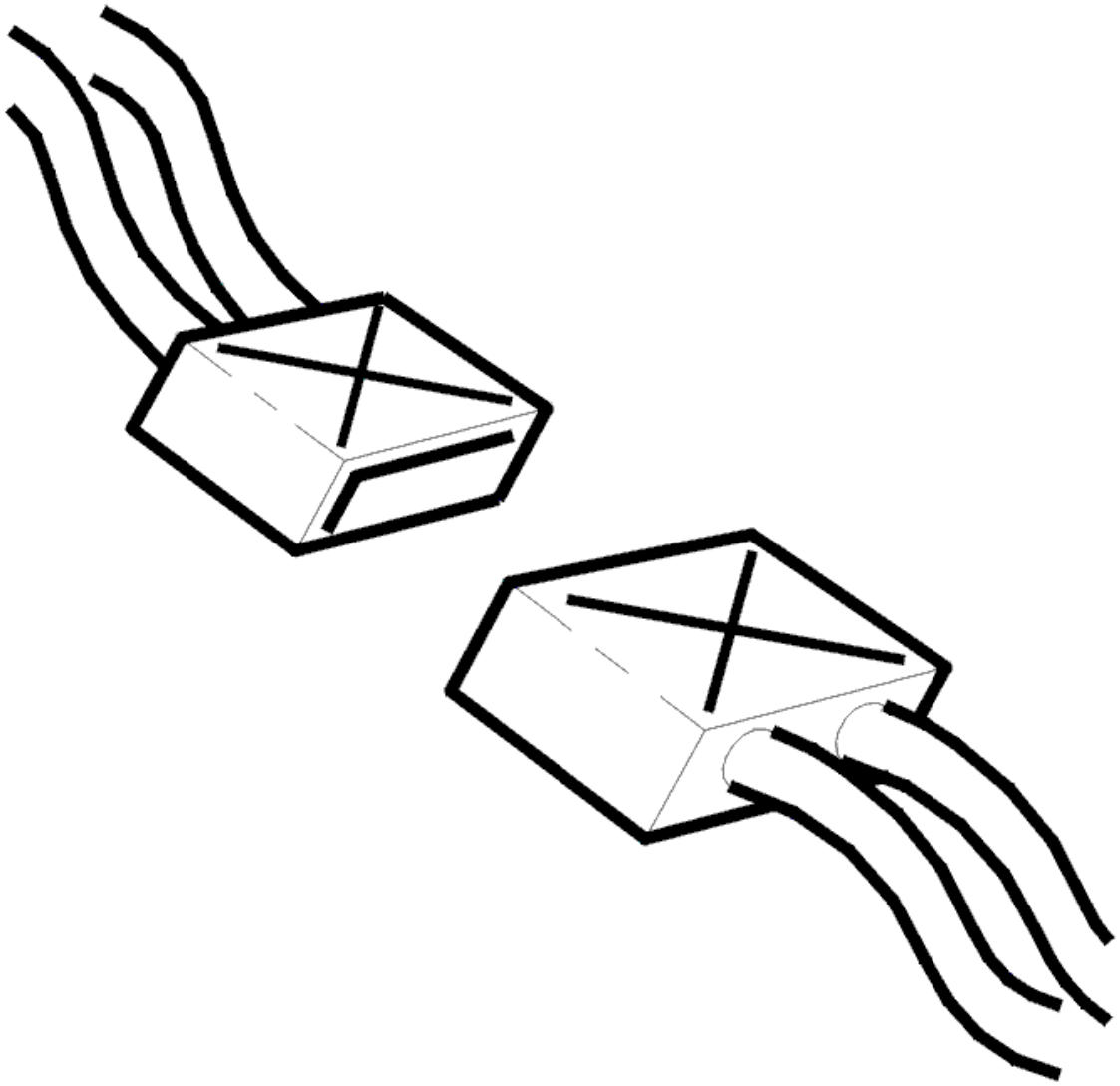

Fig. 358: Identifying Connectors
Courtesy of VOLVO CARS CORPORATION

- Ignition off
- Transmission connector D disconnected.

  Check solenoid SLT. Measure the resistance between terminals #D3 and #D4 on transmission connector D. The resistance should be 5-5.6 ohms at 20°C.

  Other information:

  - To disconnect the transmission connectors, see **CONNECTORS, TRANSMISSION, DISCONNECTING / CONNECTING**
  - For information about signals, see **SIGNAL DESCRIPTION. TRANSMISSION CONTROL MODULE (TCM)** .

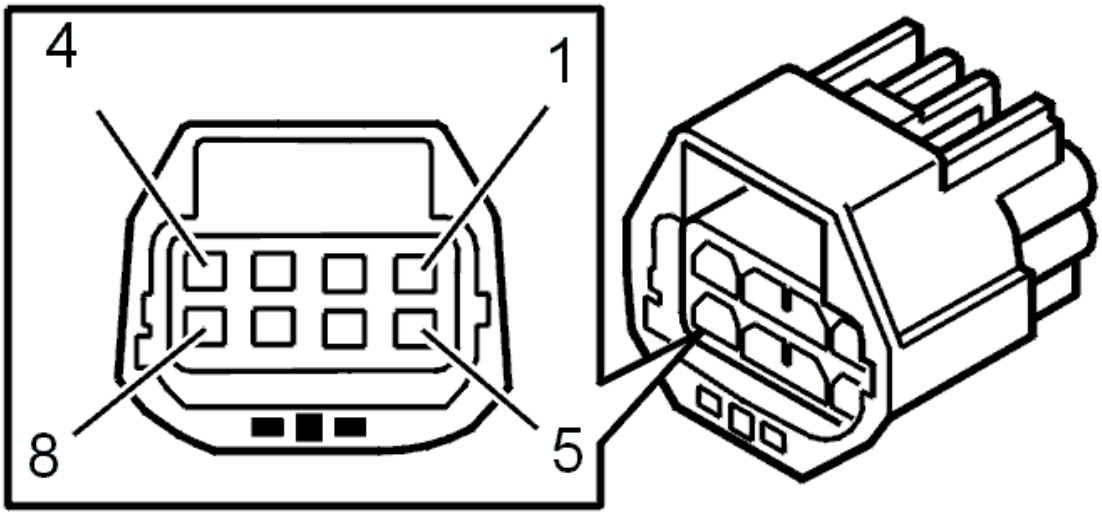

Fig. 359: Identifying 8-Pin Transmission Connector Terminals
Courtesy of VOLVO CARS CORPORATION

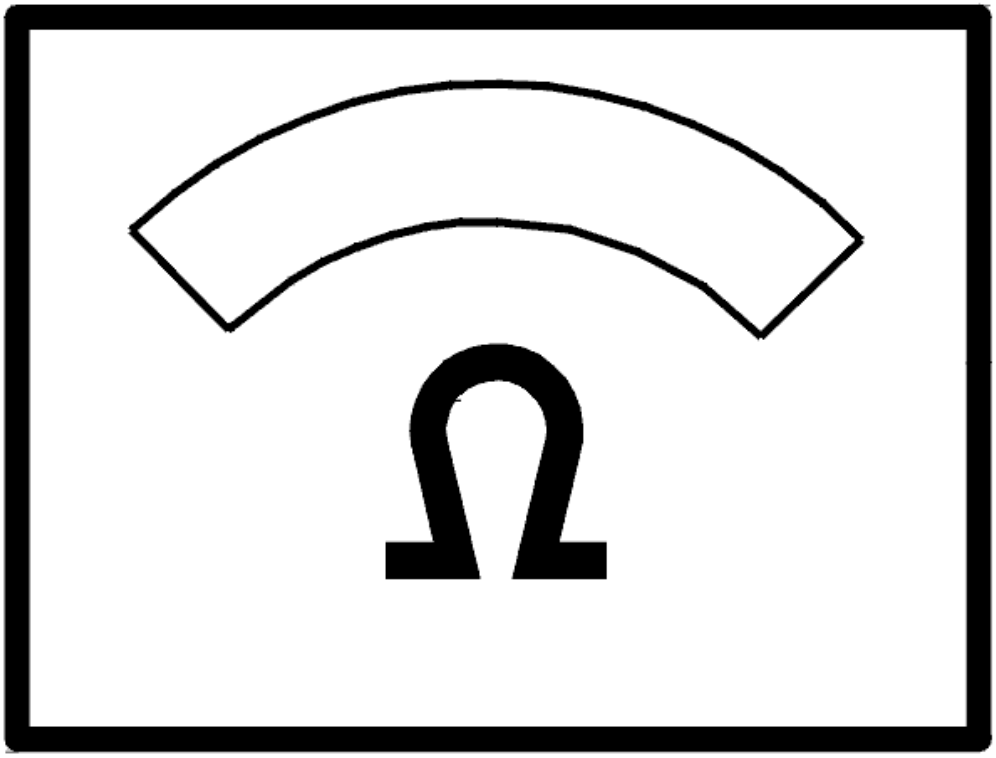

Fig. 360: Identifying Ohms Display
Courtesy of VOLVO CARS CORPORATION

Was the resistance OK?

- **YES**

  Refer to **CHECKING THE WIRING**

- **NO**

  Refer to **CHECKING THE WIRING AND COMPONENT**

CHECKING THE WIRING

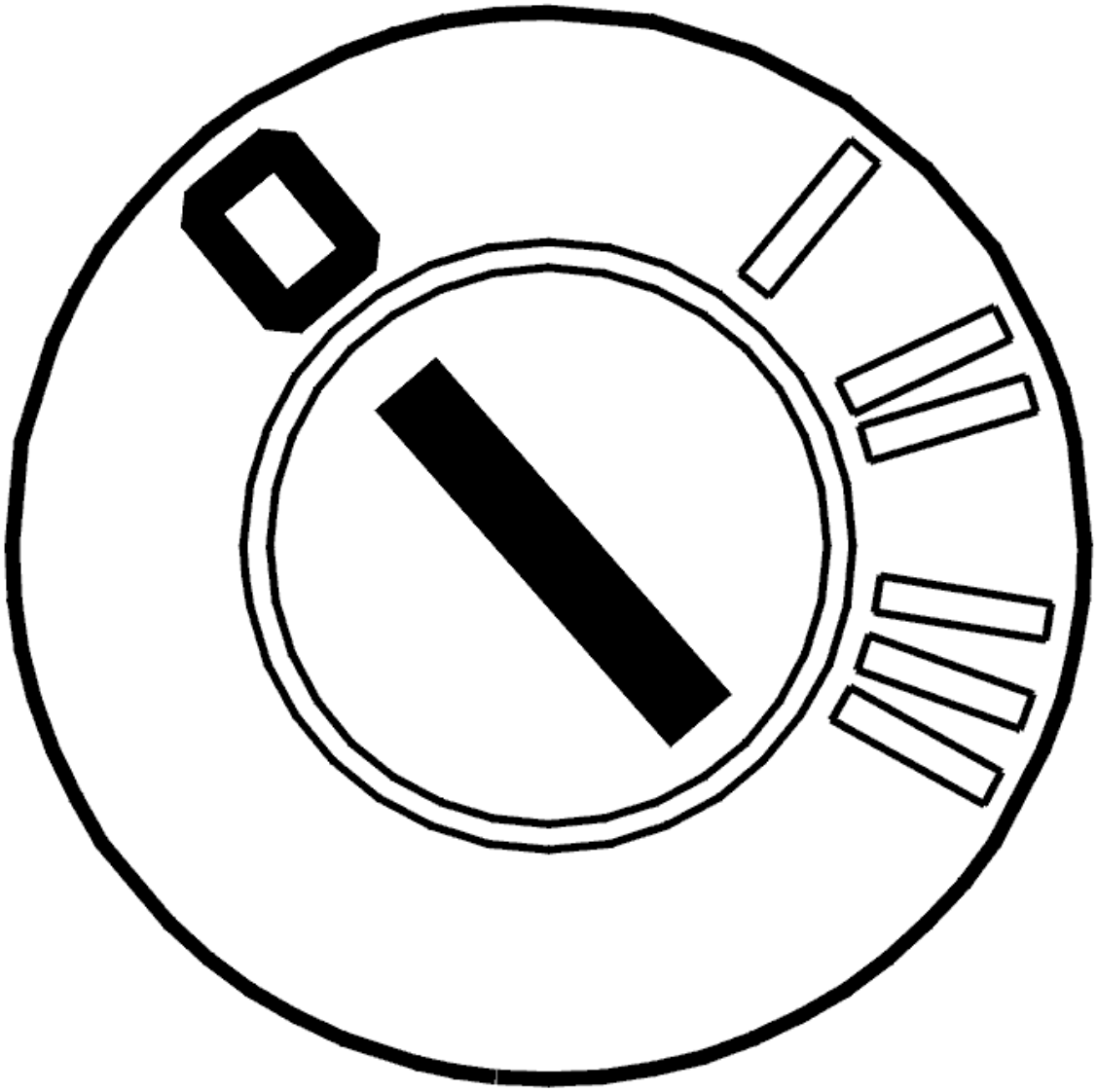

Fig. 361: Identifying Ignition OFF
Courtesy of VOLVO CARS CORPORATION

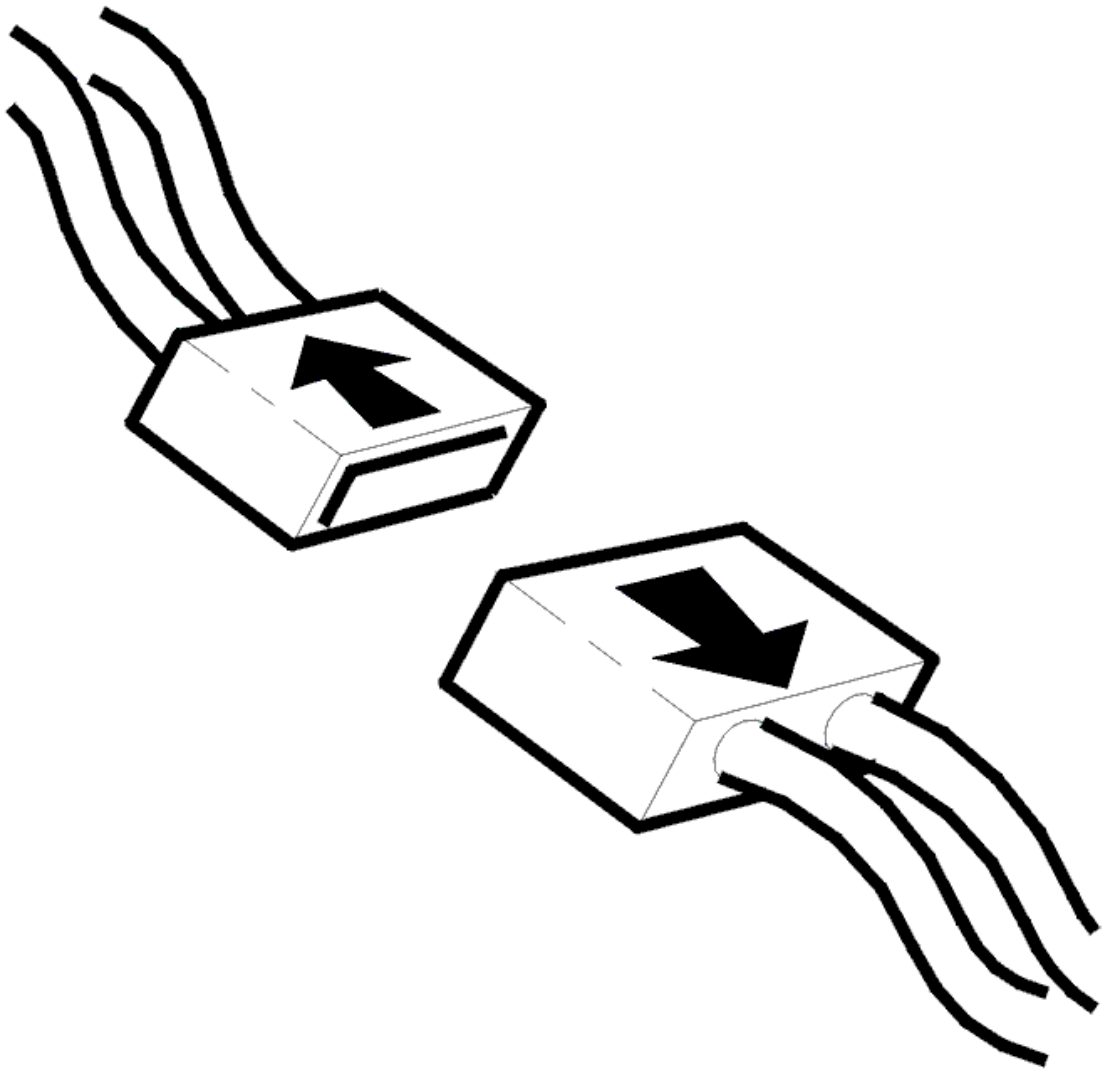

Fig. 362: Identifying Connector(s) Disconnected
Courtesy of VOLVO CARS CORPORATION

- Ignition off
- The breakout box connected
- Disconnect transmission connector D.

  Check the cable between control module terminal #A52 (#A52) and transmission connector terminal #D3 (control module side). Check for a short-circuit to ground. See **SHORT-CIRCUIT TO GROUND, PERMANENT FAULTS** .

  Check the cable between control module terminal #B10 (#A70) and transmission connector terminal #D4 (control module side). Check for a short-circuit to ground. See **SHORT-CIRCUIT TO GROUND, PERMANENT FAULTS** .

Remedy as necessary.

Other information:

- To connect the breakout box, see **CONNECTING THE BREAKOUT BOX**
- To disconnect the transmission connectors, see **CONNECTORS, TRANSMISSION, DISCONNECTING / CONNECTING**
- For information about signals, see **SIGNAL DESCRIPTION. TRANSMISSION CONTROL MODULE (TCM)** .

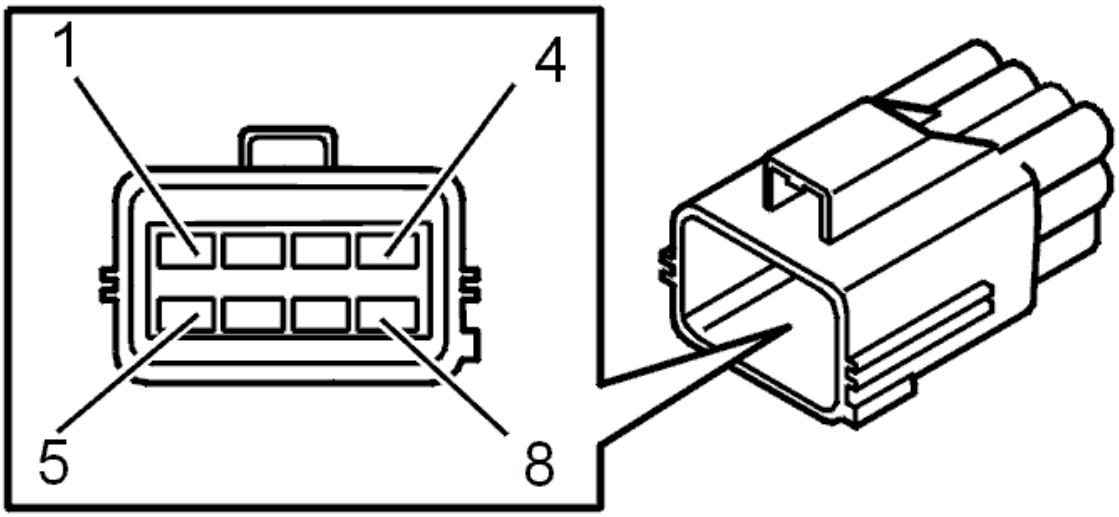

Fig. 363: Identifying Transmission Connector Terminals
Courtesy of VOLVO CARS CORPORATION

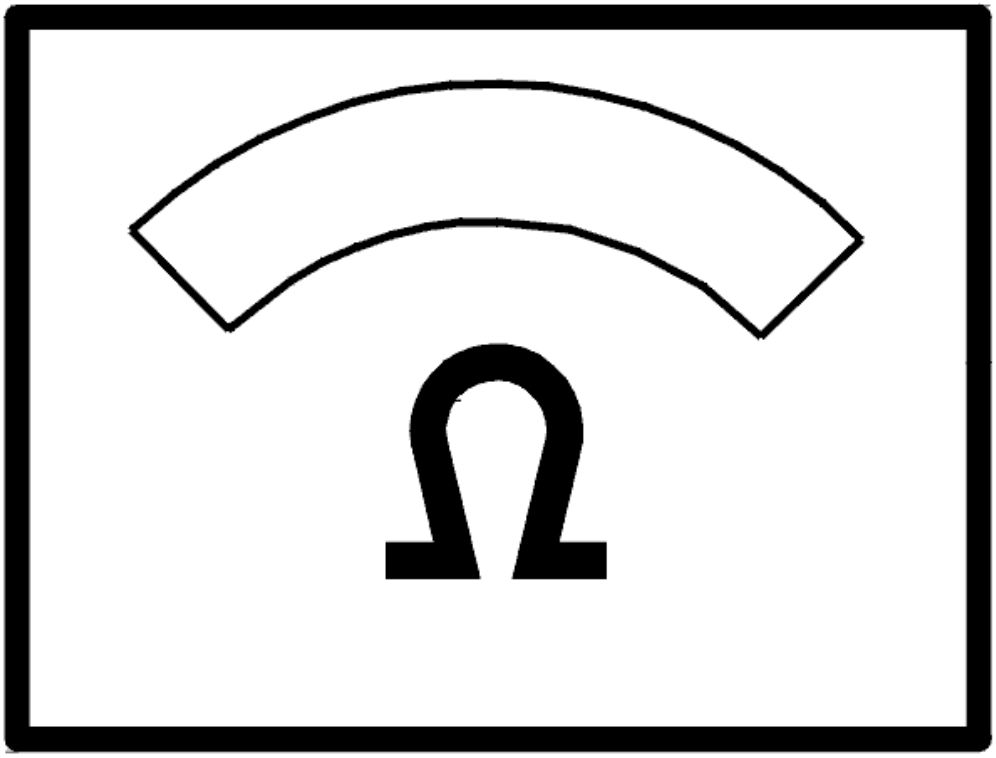

Fig. 364: Identifying Ohms Display
Courtesy of VOLVO CARS CORPORATION

Was a fault detected?

- **YES**

  Refer to **VERIFICATION**

- **NO**

  Refer to **CHECKING THE CONTROL MODULE**

CHECKING THE CONTROL MODULE

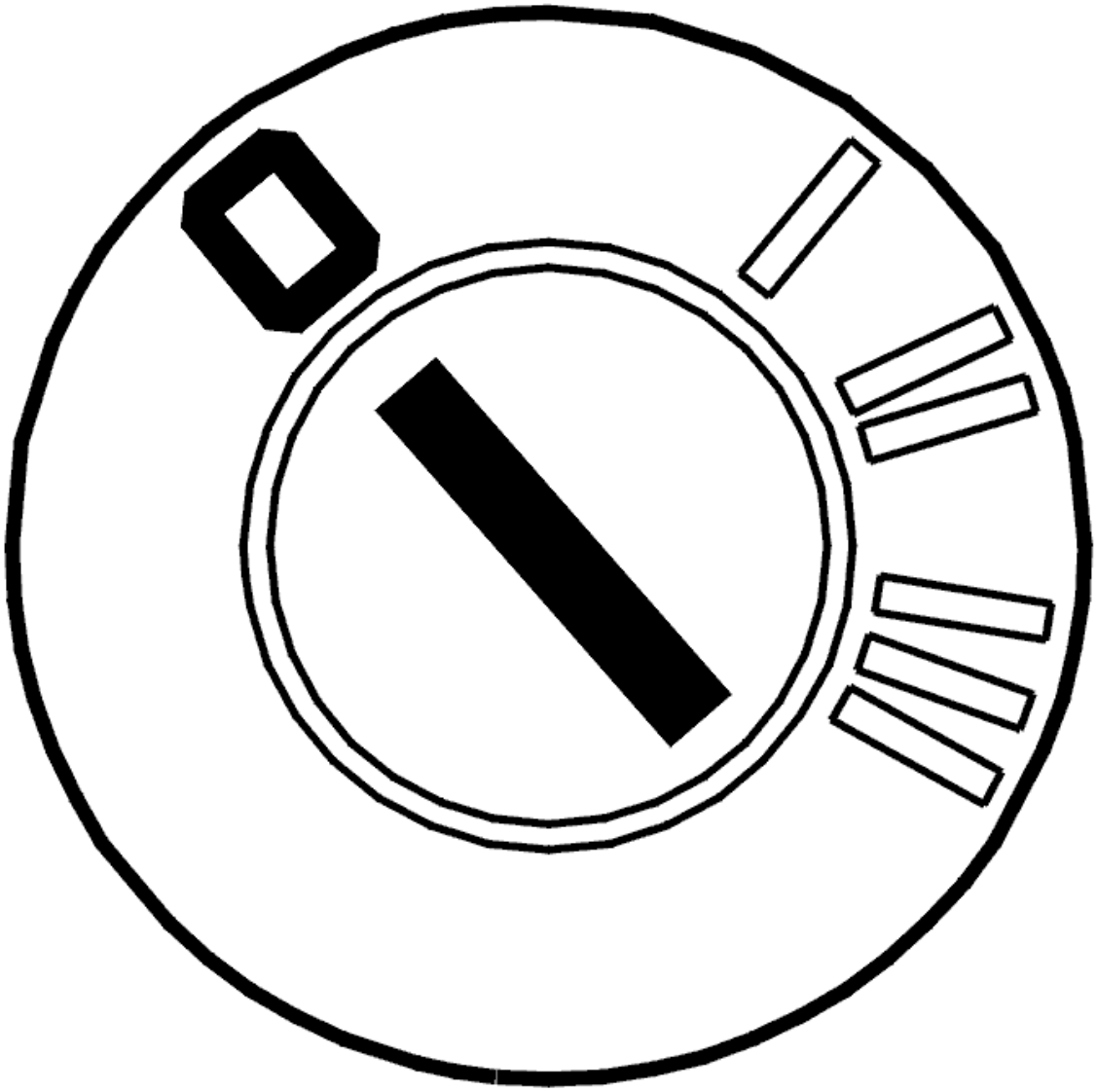

Fig. 365: Identifying Ignition OFF
Courtesy of VOLVO CARS CORPORATION

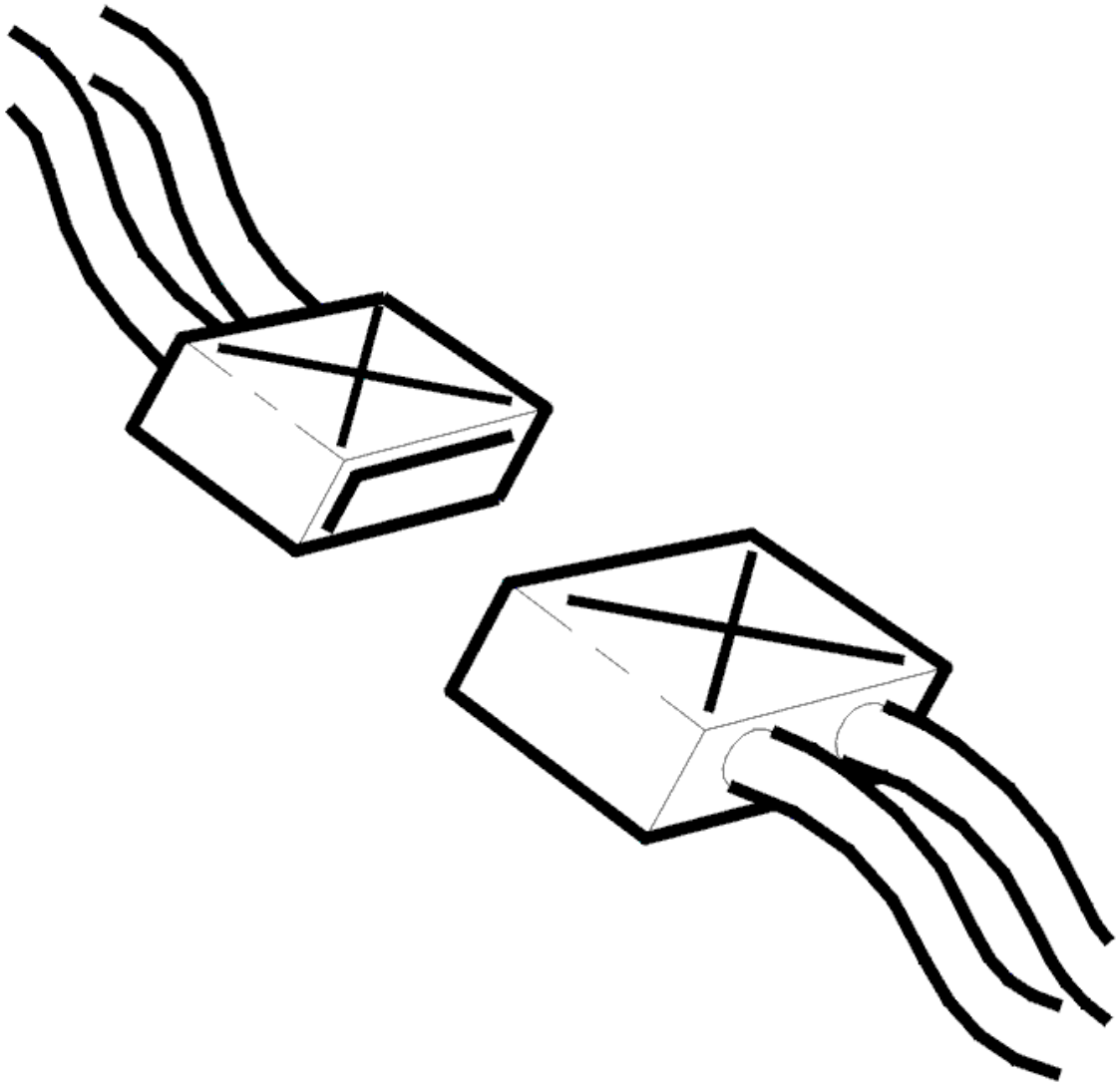

Fig. 366: Identifying Connectors
Courtesy of VOLVO CARS CORPORATION

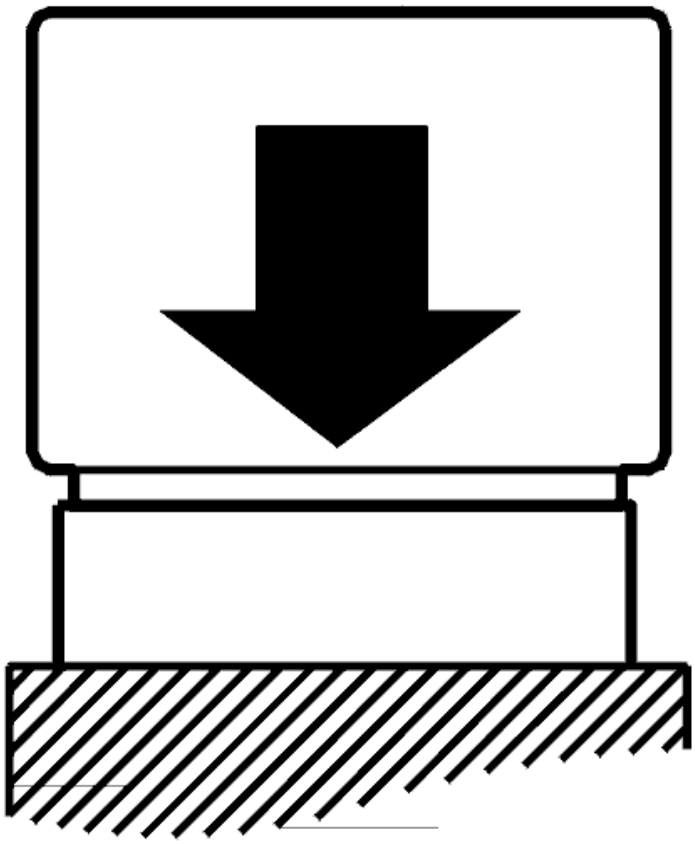

Fig. 367: Identifying Control Module Connected
Courtesy of VOLVO CARS CORPORATION

- Ignition off
- The breakout box connected
- Connect the control module.
- Transmission connector D disconnected.

Check the transmission control module (TCM) by measuring the resistance between terminals #A52 (#A52) and #B10 (#A70) on the breakout box. The resistance must be approximately 9 kohms.

NOTE: **When removing the transmission connector, the control module may store diagnostic trouble codes (DTCs) for the gear-shift position sensor, the shift solenoids, the temperature sensor etc.**

Try a new control module if the resistance is infinite.

Other information:

- To disconnect the transmission connectors, see **CONNECTORS, TRANSMISSION, DISCONNECTING / CONNECTING**
- To replace the control module, see **TRANSMISSION CONTROL MODULE (TCM), REPLACING**
- For information about signals, see **SIGNAL DESCRIPTION. TRANSMISSION CONTROL MODULE (TCM)** .

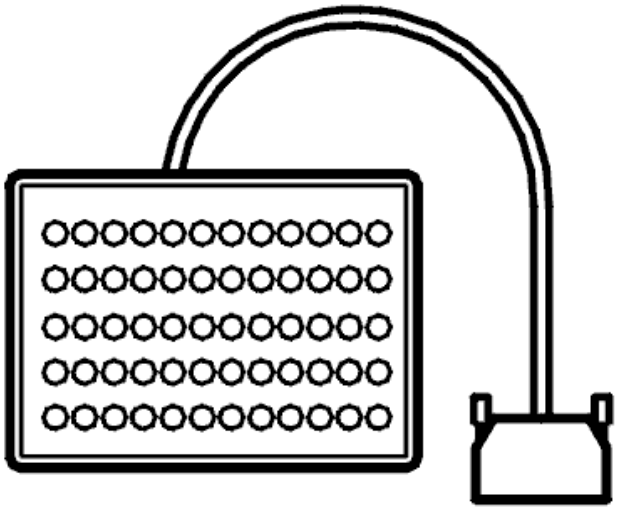

Fig. 368: Identifying Breakout Box
Courtesy of VOLVO CARS CORPORATION

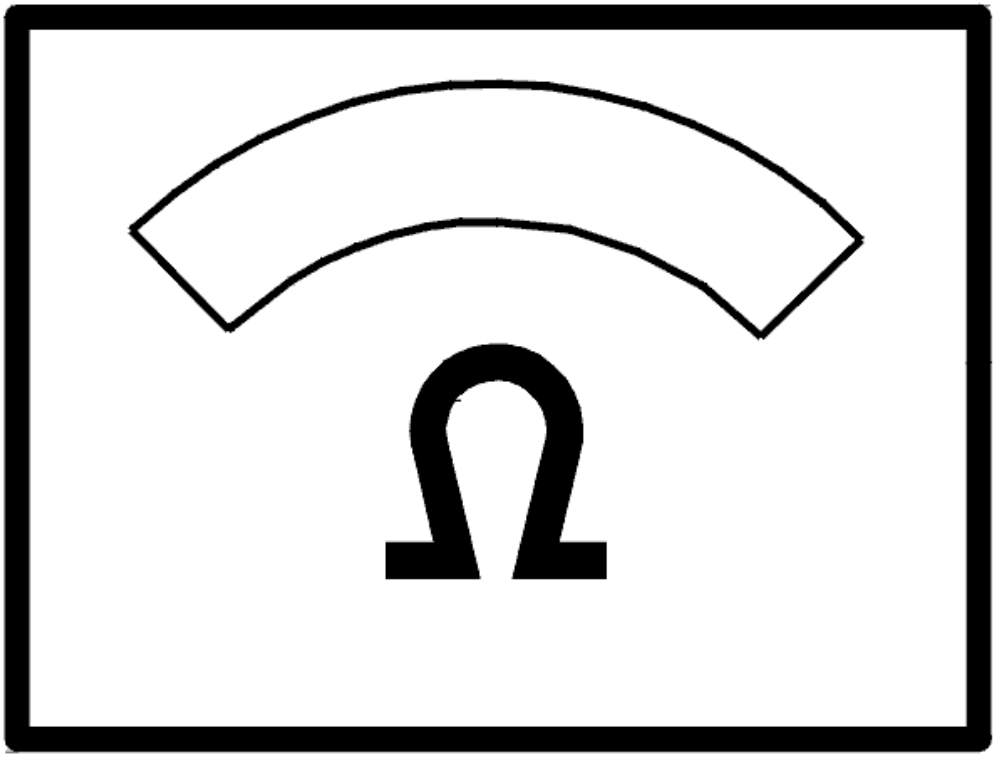

Fig. 369: Identifying Ohms Display
Courtesy of VOLVO CARS CORPORATION

Was the resistance OK?

- **YES**

  FAULT NOT FOUND: Troubleshooting has been completed.

- **NO**

  Refer to **VERIFICATION**

CHECKING THE WIRING AND COMPONENT

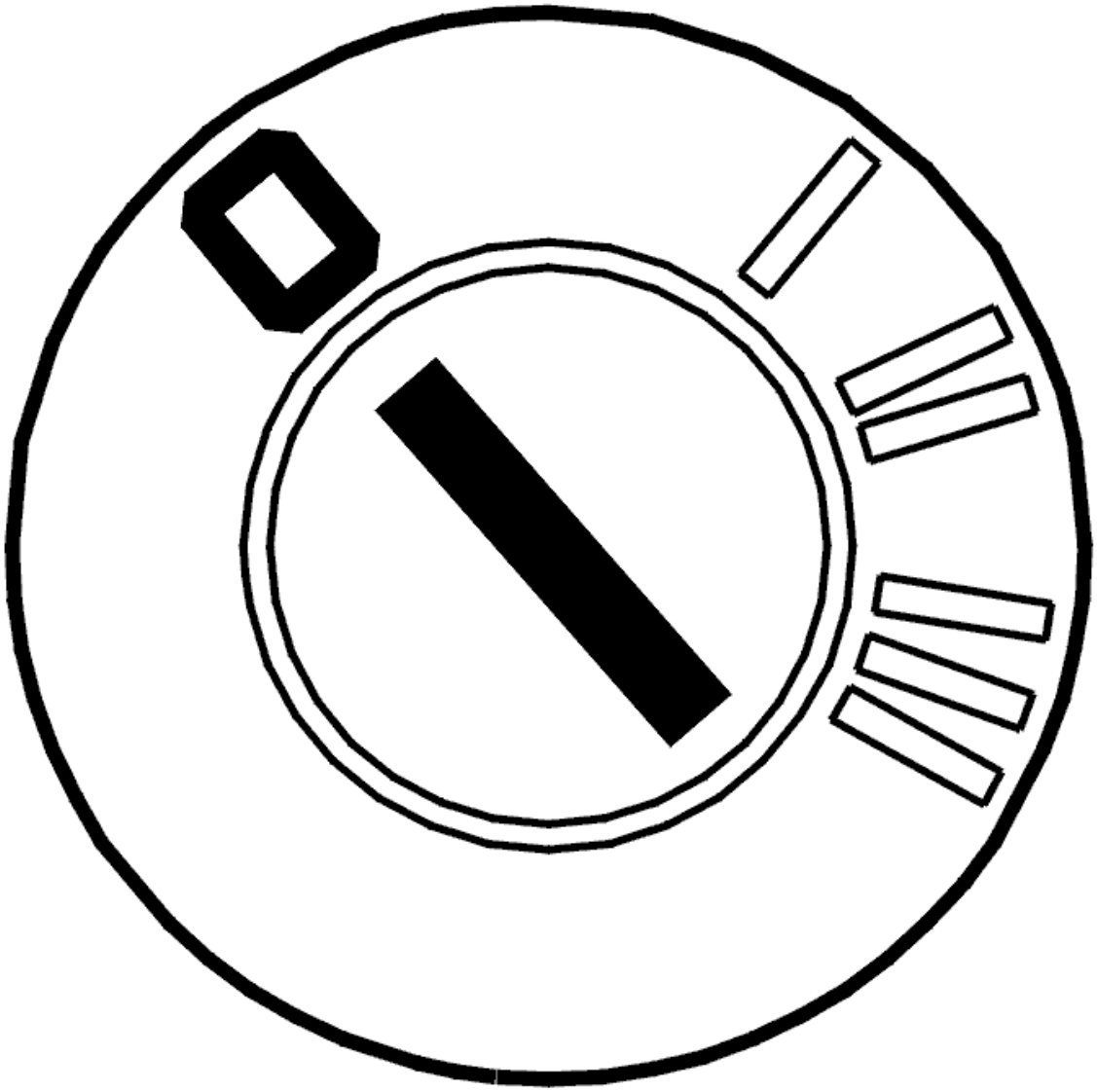

Fig. 370: Identifying Ignition OFF
Courtesy of VOLVO CARS CORPORATION

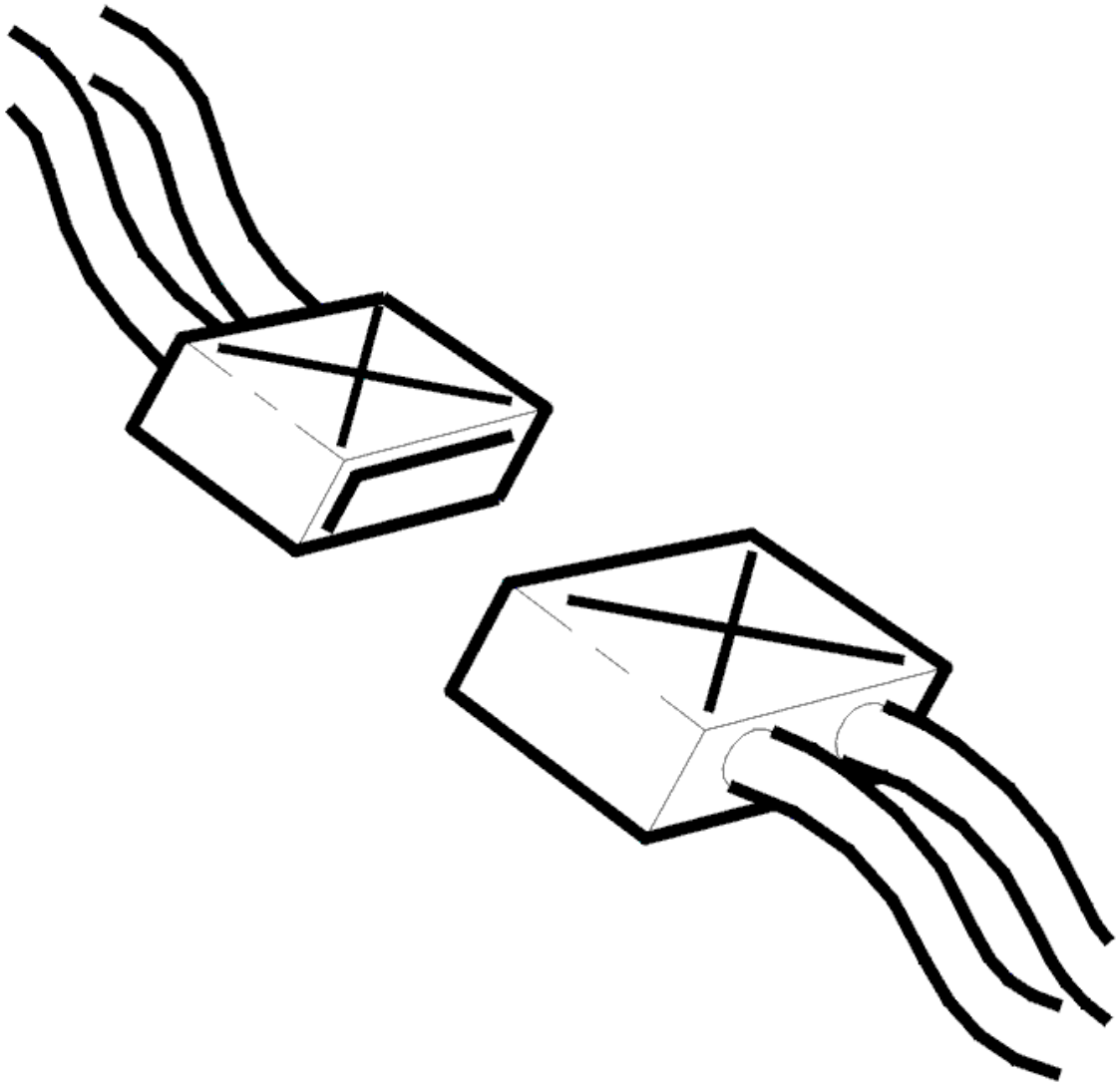

Fig. 371: Identifying Connectors
Courtesy of VOLVO CARS CORPORATION

- Ignition off
- Open the transmission control system.

  Check the wiring between transmission connector terminal #D3 and solenoid SLT terminal #1. Check the wiring between transmission connector terminal #D4 and solenoid SLT terminal #2. Check for a short-circuit to ground. See **SHORT-CIRCUIT TO GROUND, PERMANENT FAULTS** .

  Also check against the other cables in the circuit.

  Check solenoid SLT by measuring the resistance between terminals #1 and #2 on the connector. The resistance must be 5-5.6 ohms at 20°C. Replace the transmission control system if the resistance is incorrect.

Other information:

- To disconnect the transmission connectors, see **CONNECTORS, TRANSMISSION, DISCONNECTING / CONNECTING**
- To open and replace the transmission control system, see **SOLENOID CONTROL SYSTEM, REPLACING**
- To replace the cable harness for the control system, see **TEMPERATURE SENSOR FLUID, TRANSAXLE, (TFT)**
- For information about signals, see **SIGNAL DESCRIPTION. TRANSMISSION CONTROL MODULE (TCM)** .

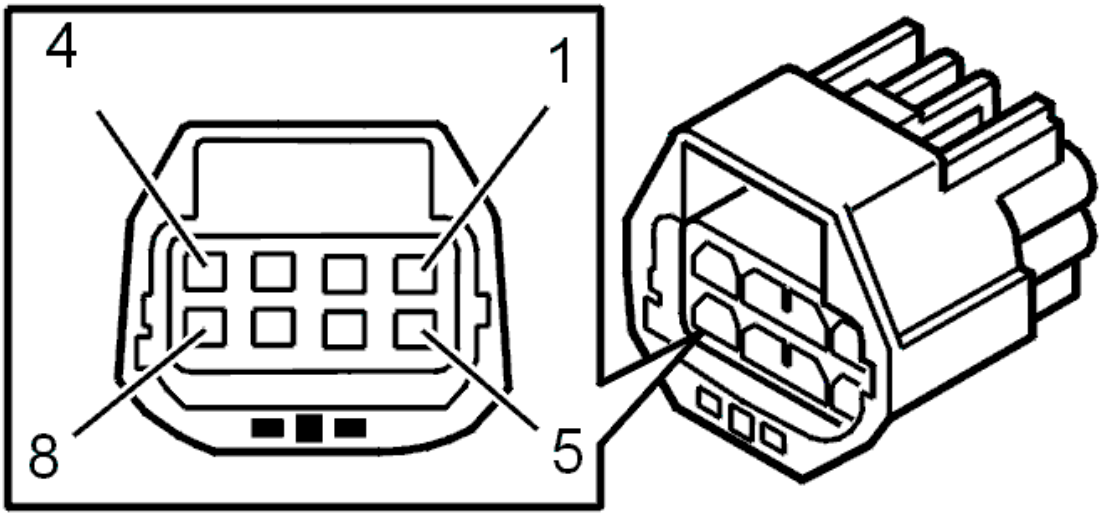

Fig. 372: Identifying 8-Pin Transmission Connector Terminals
Courtesy of VOLVO CARS CORPORATION

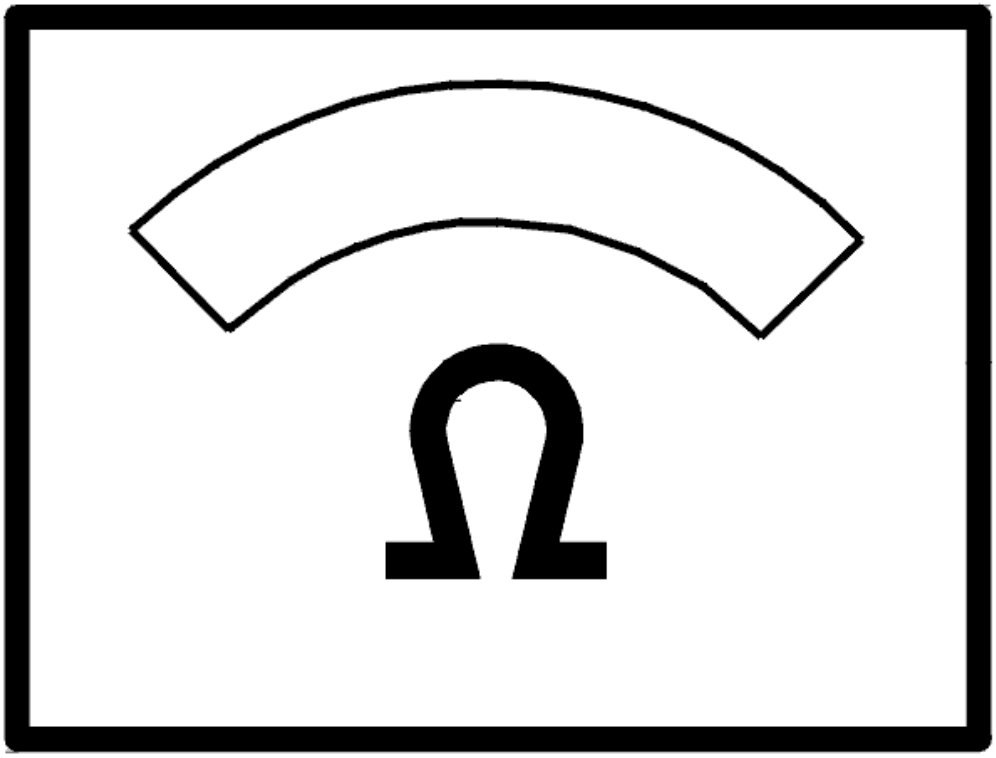

Fig. 373: Identifying Ohms Display
Courtesy of VOLVO CARS CORPORATION

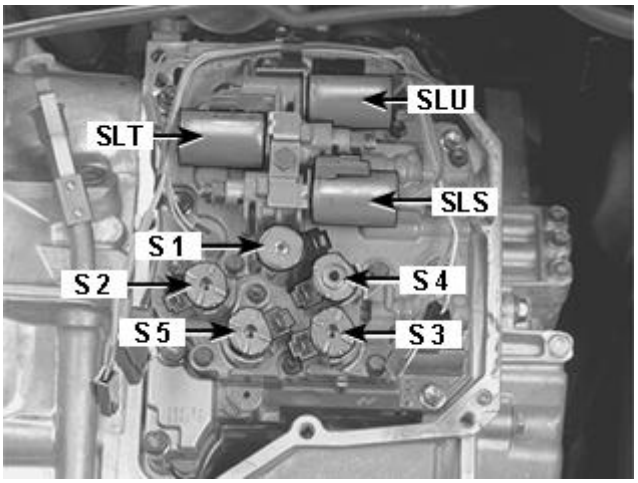

Fig. 374: Identifying S1-S5, SLT, SLU And SLS Solenoids
Courtesy of VOLVO CARS CORPORATION

- **Continue**

Refer to **RESETTING THE ADAPTATION**

RESETTING THE ADAPTATION

RESETTING ADAPTATION AND THE COUNTER FOR "TRANSMISSION OIL CHANGE"

HINT: The transmission has torque controlled adaptive pressure control. Pressure control means that the transmission regulates the pressure itself during each gear shift. This avoids harsh gear shifting. Each gear shift is evaluated by the control module and stored in the memory. This allows for compensation for wear and tear in the transmission and clutch. It is important that the adaptation in the memory is reset after the transmission has been repaired. This is to ensure normal operation. The oil is replaced during repair; the "Transmission oil change" counter must be reset. If the counter is not reset when the fluid is drained and replaced, there is a risk that a diagnostic trouble code (DTC) will be stored in incorrect circumstances.

NOTE: **This applies only if the transmission or one of the components in the transmission have been replaced.**

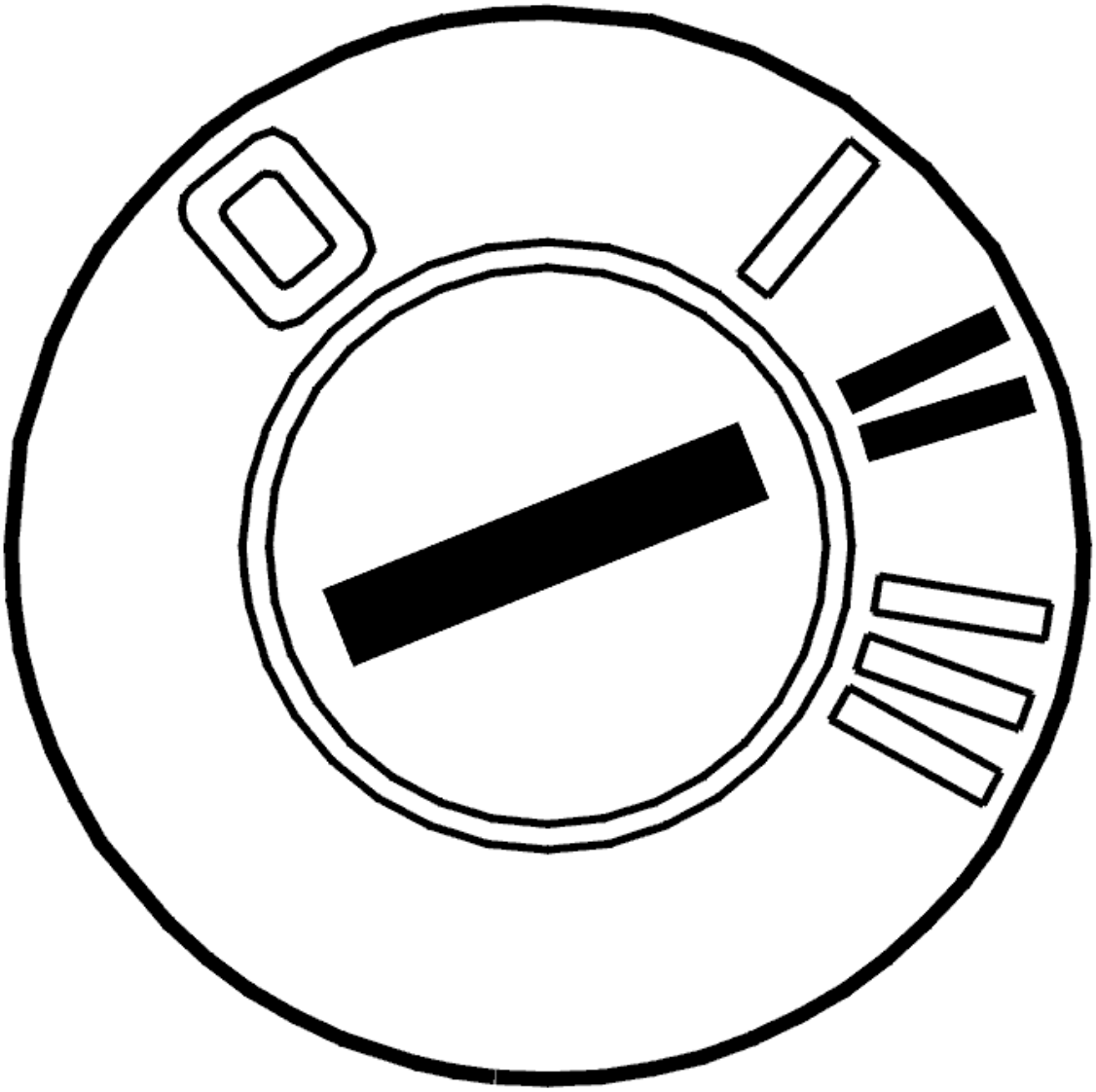

Fig. 375: Identifying Ignition ON
Courtesy of VOLVO CARS CORPORATION

- Ignition on.

  Click on the VCT2000 symbol to reset the adaptation and counter.

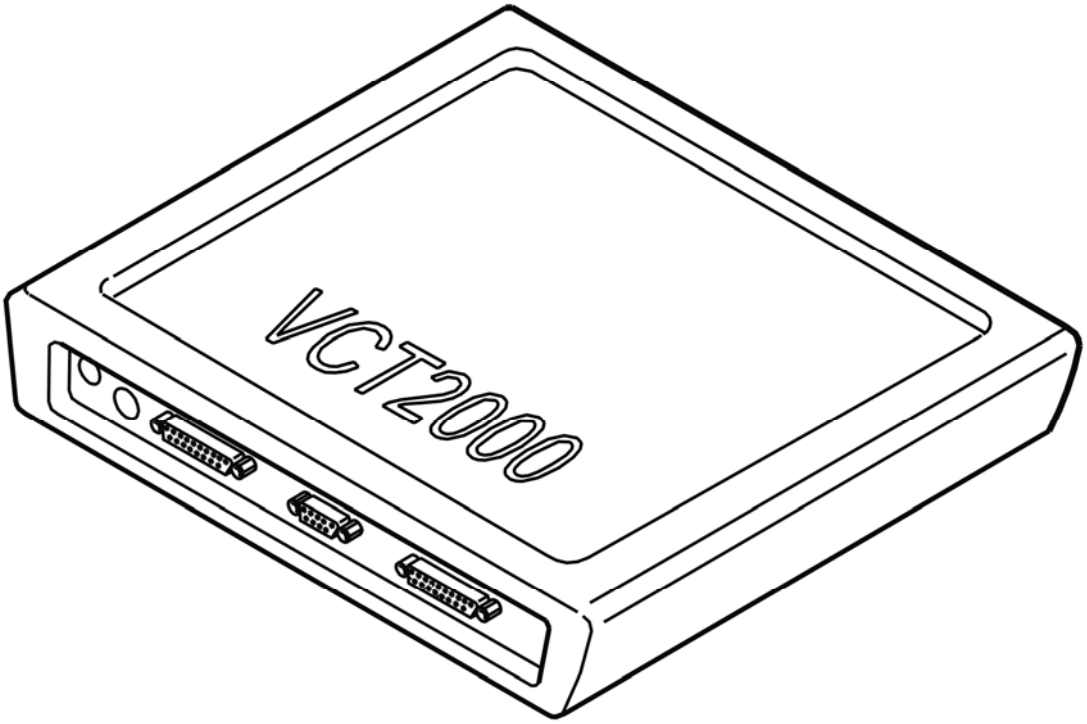

Fig. 376: Identifying VCT2000 Diagnostic Tool Symbol In VIDA
Courtesy of VOLVO CARS CORPORATION

- **Continue**

  Refer to **VERIFICATION**

VERIFICATION

VERIFICATION

HINT: After carrying out the repair, check that the fault has been remedied.

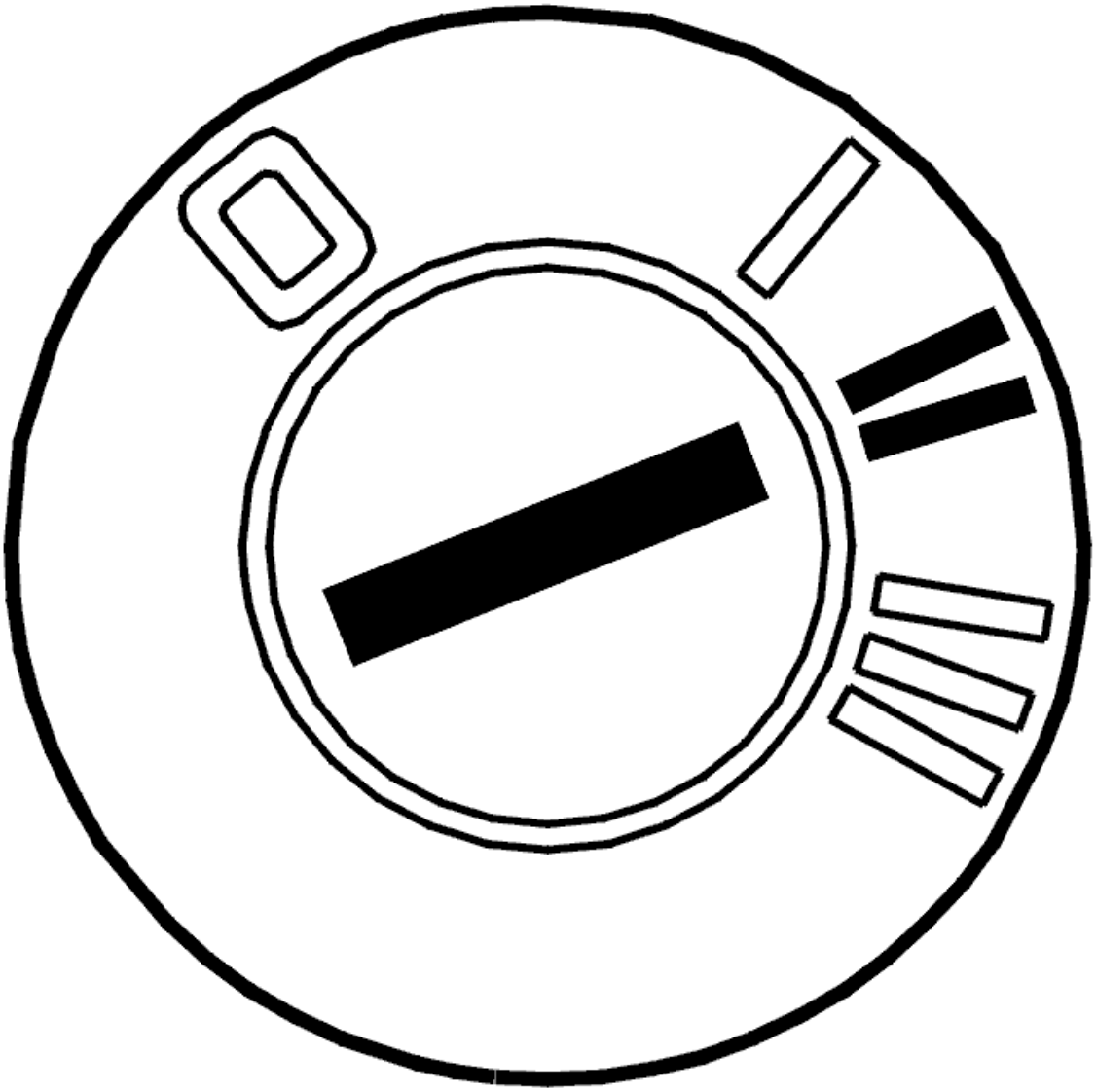

Fig. 377: Identifying Ignition ON
Courtesy of VOLVO CARS CORPORATION

- Ignition on.
- Activate solenoid SLT.

  Read off the current through the solenoid SLT circuit.

  The current should oscillate between 0 and 1000 mA.

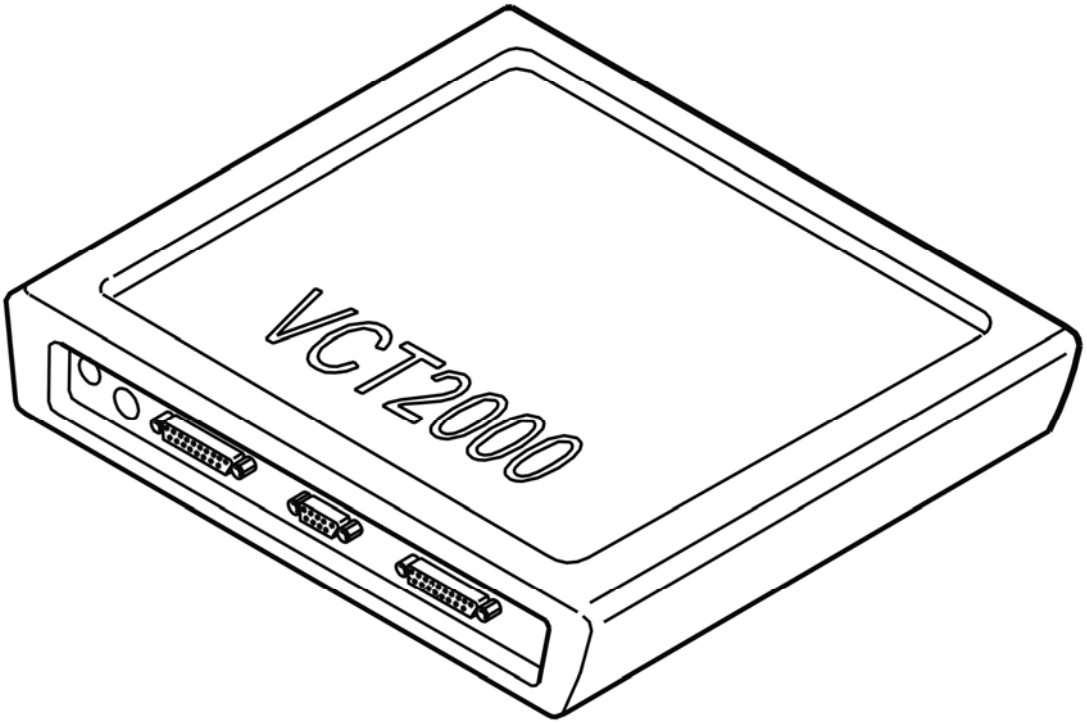

Fig. 378: Identifying VCT2000 Diagnostic Tool Symbol In VIDA
Courtesy of VOLVO CARS CORPORATION

Does the current oscillate?

- **YES**

  VERIFIED: Troubleshooting has been completed.

- **NO**

  Refer to **INFORMATION**

INFORMATION

FAULT-TRACING INFORMATION

The fault should have been detected and remedied. As this is not the case fault-tracing has failed.

Exit fault-tracing for this diagnostic trouble code (DTC) or make another attempt.

TCM-0120: CONTROL UNIT. INTERNAL FAULT (AW50/51 AWD; AW55-50/51SN; 2003-2007)

DIAGNOSTIC TROUBLE CODE INFORMATION

Condition

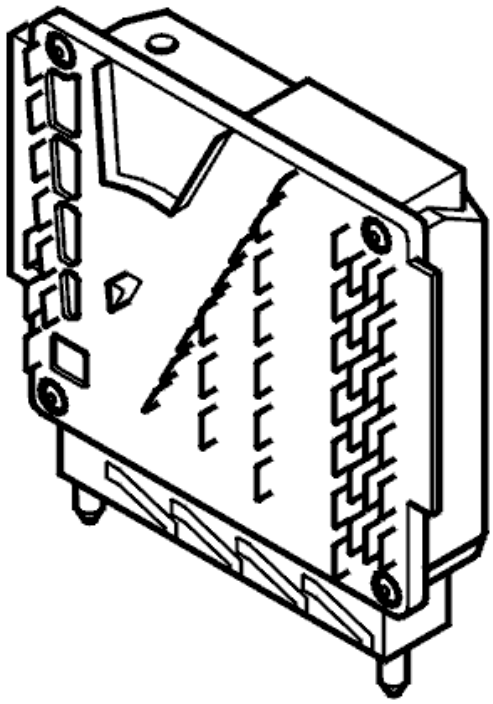

Fig. 379: Identifying Transmission Control Module (TCM)
Courtesy of VOLVO CARS CORPORATION

Solenoids are controlled by output stages in the transmission control unit (TCM). The control unit opens the output stages when the solenoids should be activated, and voltage is supplied to the circuit. If the control unit registers that there is an internal fault in the output stage circuit for solenoid S1, S2, S3, S4, S5, SLU, SLT or SLS diagnostic trouble code TCM-0060, TCM-0120, TCM-0121, TCM-0122, TCM-0123 or TCM-0124 will be stored depending on the output stage.

Substitute Value

- Transmission control unit help program "Limp-home" has started to work.

Possible Source

- Internal fault in control unit.

Fault symptom[s]

- Orange general warning lamp is on.
- Malfunction indicator light (MIL) is on.
- Lock up function not working.
- Rough gear shifts.
- Gear shifts not working.

- Rough gear shifts can be caused by:

- No reduction of system pressure during gear shifts
- No request for torque limitation to the engine control unit during gear shifts

HINT: Gear shift failure is caused by the transmission control unit interrupting all solenoid activation.

INTERNAL FAULT

REPLACING THE CONTROL MODULE

The control module has registered an internal fault.

CAUTION: A new control module is delivered without software. The control module must be programmed in order to function after replacement.

For further information about programming and replacing the control module, see **TRANSMISSION CONTROL MODULE (TCM), REPLACING** .

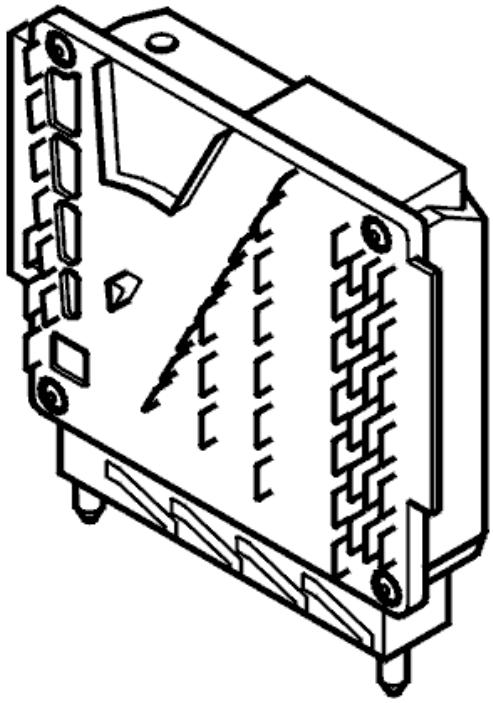

Fig. 380: Identifying Transmission Control Module (TCM)
Courtesy of VOLVO CARS CORPORATION

- **Continue**

  Refer to **VERIFICATION**

VERIFICATION

VERIFICATION

HINT: After carrying out the repair, check that the fault has been remedied.

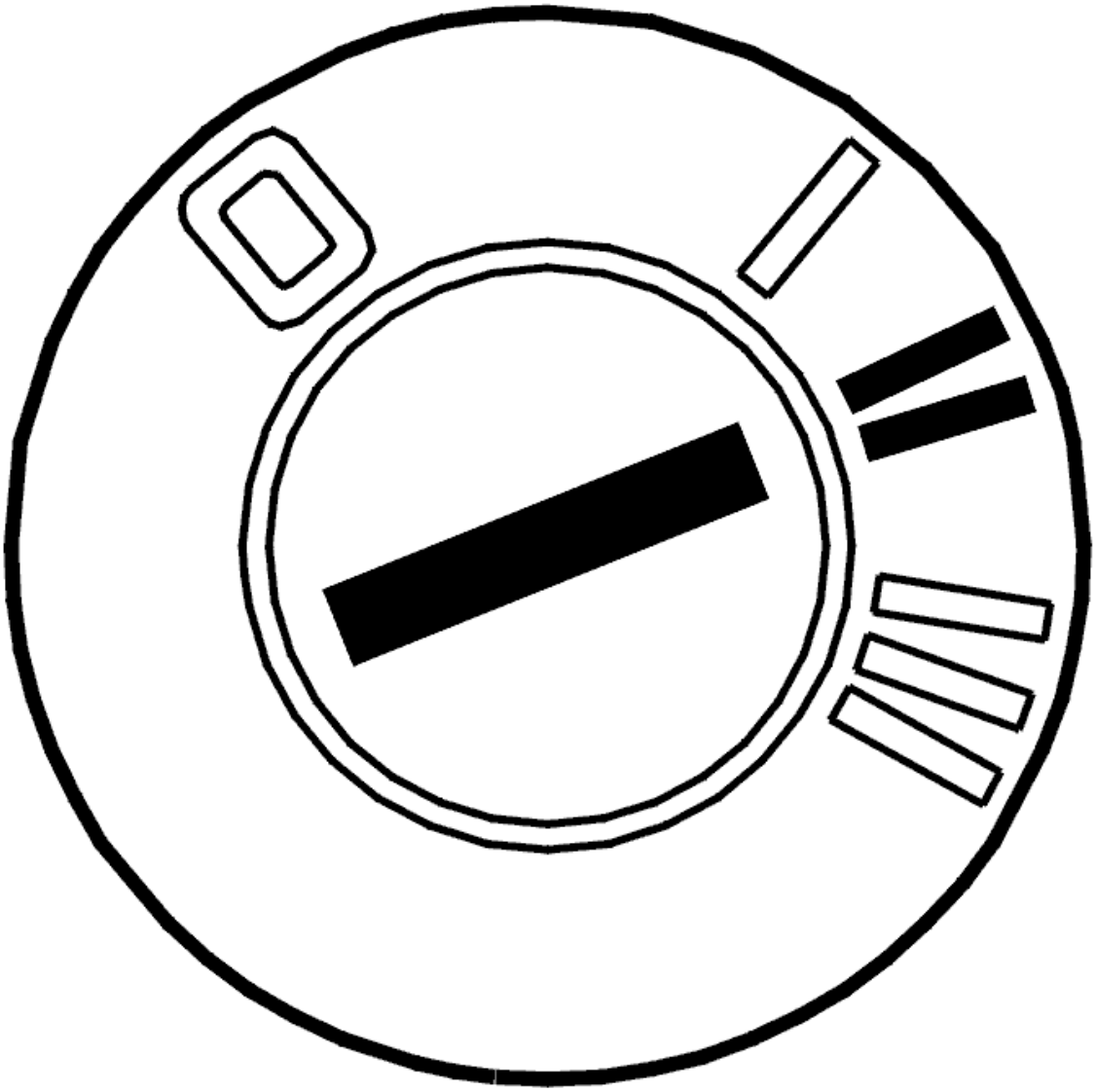

Fig. 381: Identifying Ignition ON
Courtesy of VOLVO CARS CORPORATION

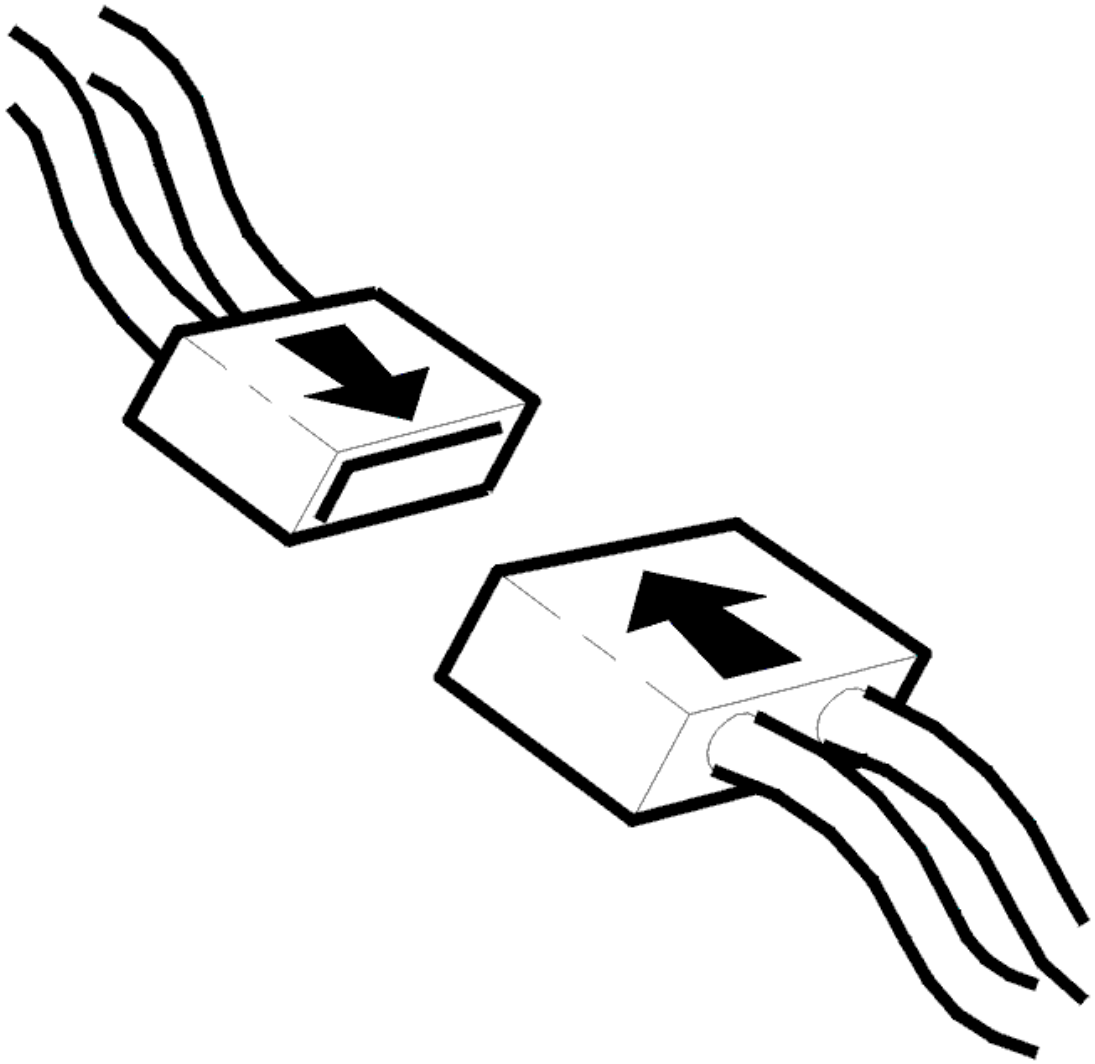

Fig. 382: Identifying Connector(s) Reinstallation
Courtesy of VOLVO CARS CORPORATION

- Ignition off.
- Reinstall the components, reconnect the connectors etc.
- Ignition on.
- Gear selector in position P.
- Activate solenoid S3.

  The value should change between OFF and ON.

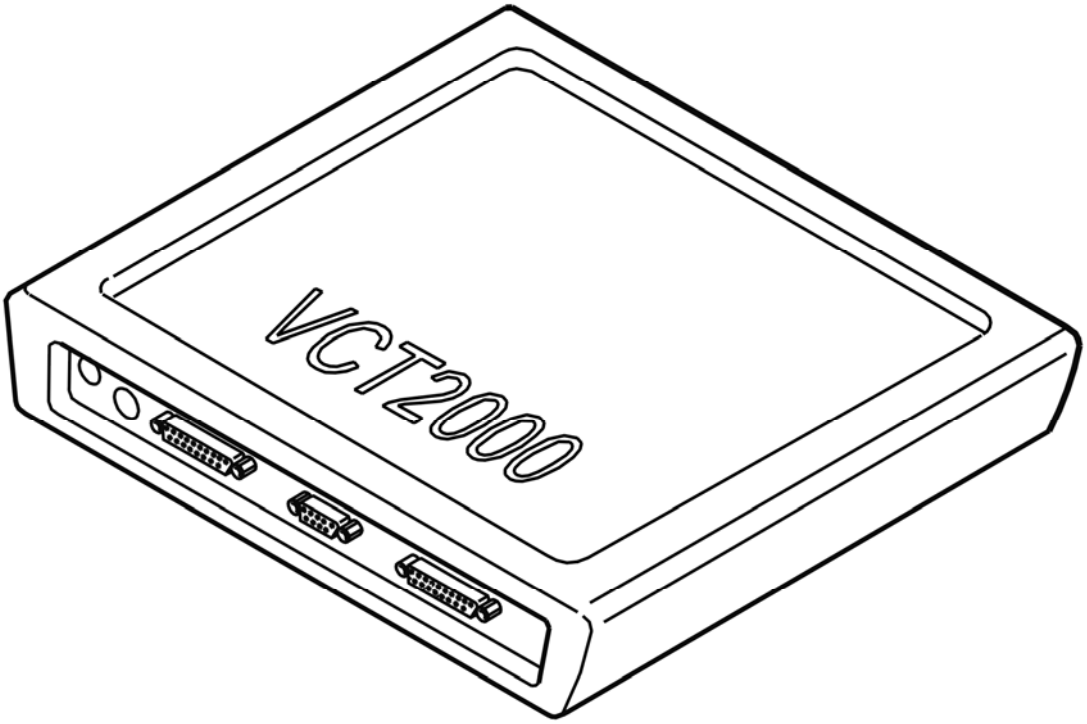

Fig. 383: Identifying VCT2000 Diagnostic Tool Symbol In VIDA
Courtesy of VOLVO CARS CORPORATION

Does the value change between OFF and ON?

- **YES**

  VERIFIED: Troubleshooting has been completed.

- **NO**

  Refer to **INFORMATION**

INFORMATION

FAULT-TRACING INFORMATION

The fault should have been detected and remedied. As this is not the case fault-tracing has failed.

Exit fault-tracing for this diagnostic trouble code (DTC) or make another attempt.

TCM-0121: CONTROL UNIT. INTERNAL FAULT (AW50/51 AWD; AW55-50/51SN; 2003-2007)

DIAGNOSTIC TROUBLE CODE INFORMATION

see **DIAGNOSTIC TROUBLE CODE INFORMATION**

INTERNAL FAULT

REPLACING THE CONTROL MODULE

The control module has registered an internal fault.

CAUTION: A new control module is delivered without software. The control module must be programmed in order to function after replacement.

For further information about programming and replacing the control module, see **TRANSMISSION CONTROL MODULE (TCM), REPLACING** .

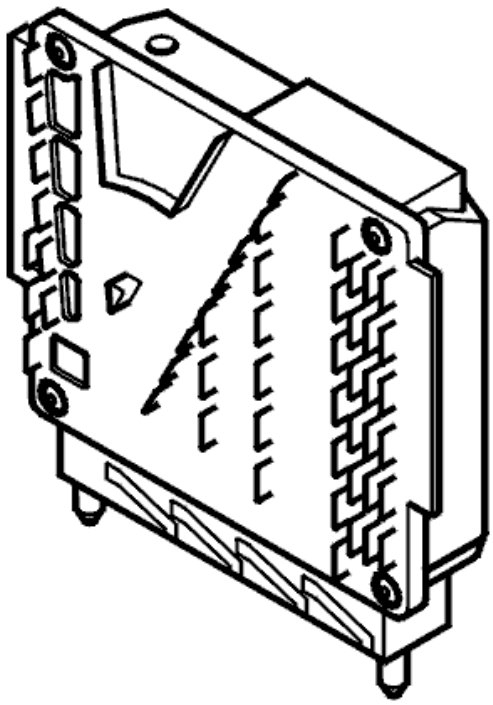

Fig. 384: Identifying Transmission Control Module (TCM)
Courtesy of VOLVO CARS CORPORATION

- **Continue**

  Refer to **VERIFICATION**

VERIFICATION

VERIFICATION

HINT: After carrying out the repair, check that the fault has been remedied.

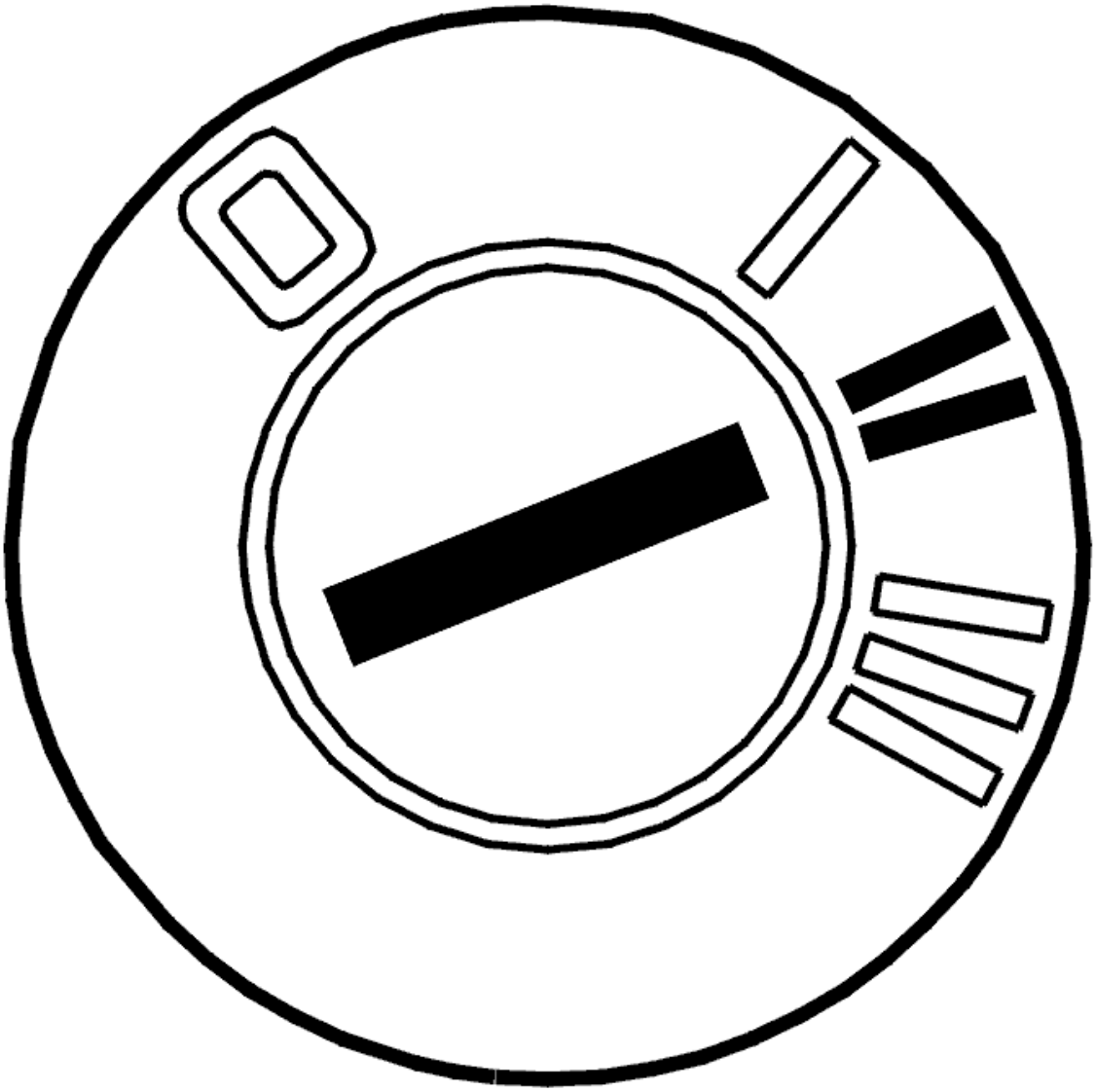

Fig. 385: Identifying Ignition ON
Courtesy of VOLVO CARS CORPORATION

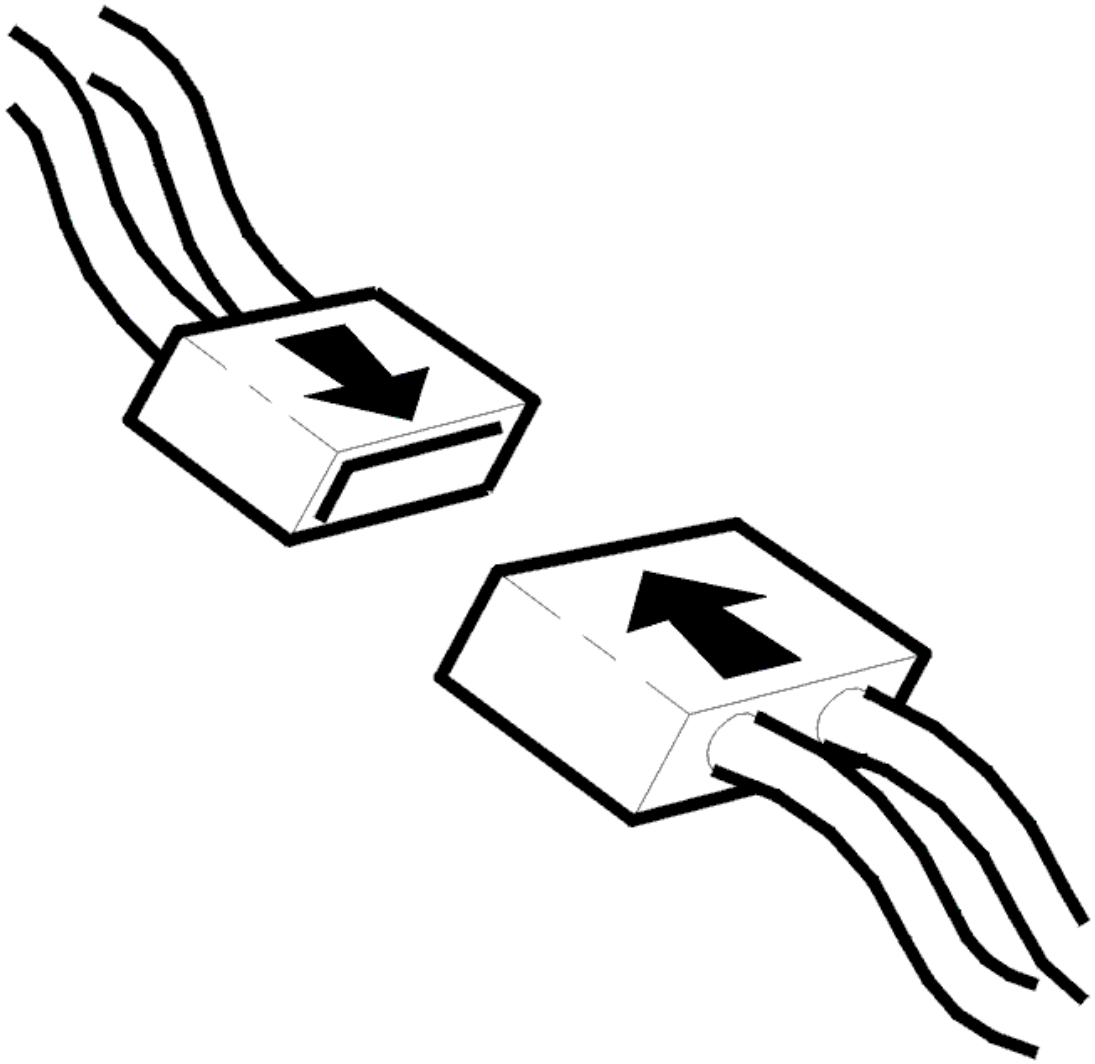

Fig. 386: Identifying Connector(s) Reinstallation
Courtesy of VOLVO CARS CORPORATION

- Ignition off.
- Reinstall the components, reconnect the connectors etc.
- Ignition on.
- Gear selector in position P.
- Activate solenoids S4 and S5 individually.

  Read off the current in the circuit. The current should oscillate between 0 and approximately 1 A.

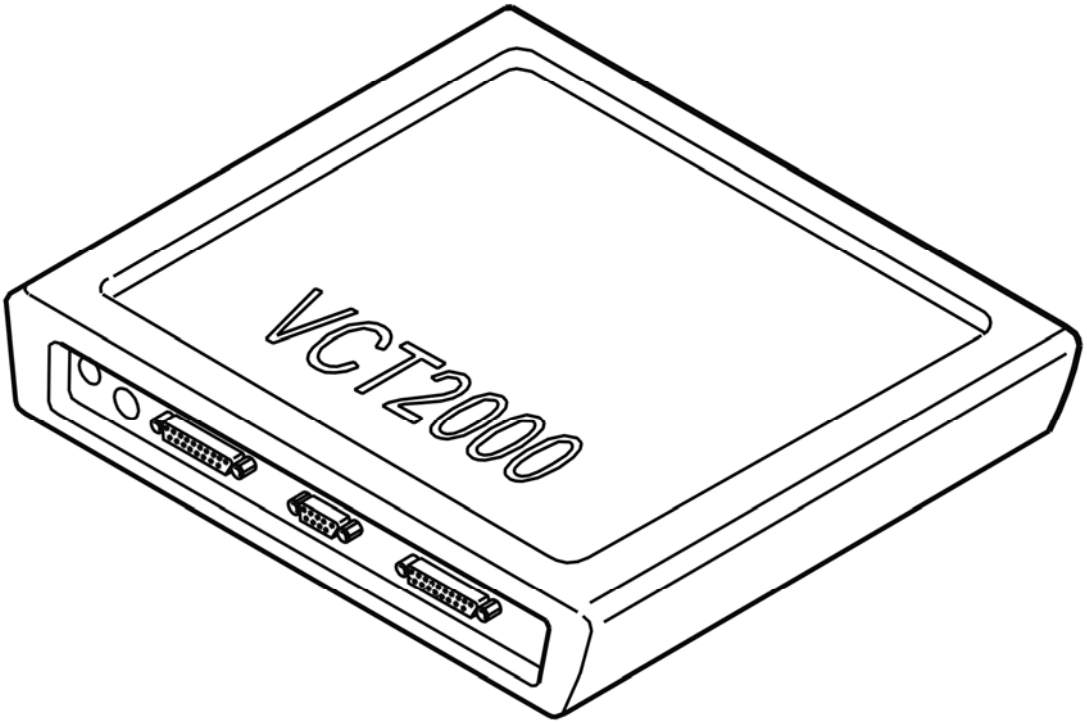

Fig. 387: Identifying VCT2000 Diagnostic Tool Symbol In VIDA
Courtesy of VOLVO CARS CORPORATION

Does the current oscillate?

- **YES**

  VERIFIED: Troubleshooting has been completed.

- **NO**

  Refer to **INFORMATION**

INFORMATION

FAULT-TRACING INFORMATION

The fault should have been detected and remedied. As this is not the case fault-tracing has failed.

Exit fault-tracing for this diagnostic trouble code (DTC) or make another attempt.

TCM-0122: CONTROL UNIT. INTERNAL FAULT (AW50/51 AWD; AW55-50/51SN; 2003-2007)

DIAGNOSTIC TROUBLE CODE INFORMATION

see **DIAGNOSTIC TROUBLE CODE INFORMATION**

INTERNAL FAULT

REPLACING THE CONTROL MODULE

The control module has registered an internal fault.

CAUTION: A new control module is delivered without software. The control module must be programmed in order to function after replacement.

For further information about programming and replacing the control module, see **TRANSMISSION CONTROL MODULE (TCM), REPLACING** .

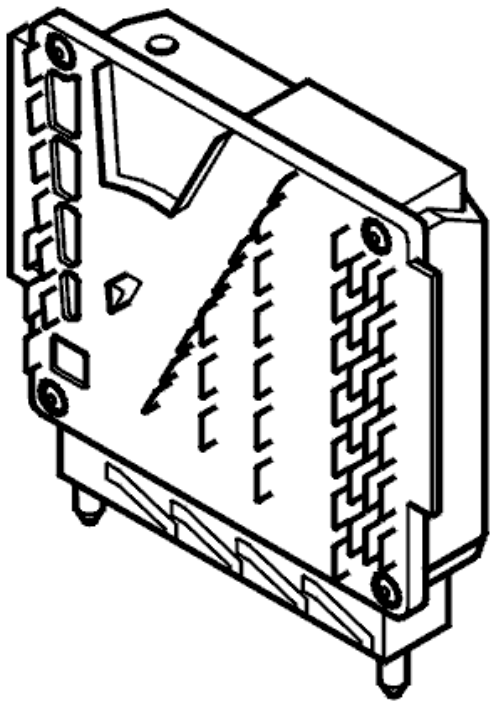

Fig. 388: Identifying Transmission Control Module (TCM)
Courtesy of VOLVO CARS CORPORATION

- **Continue**

  Refer to **VERIFICATION**

VERIFICATION

VERIFICATION

HINT: After carrying out the repair, check that the fault has been remedied.

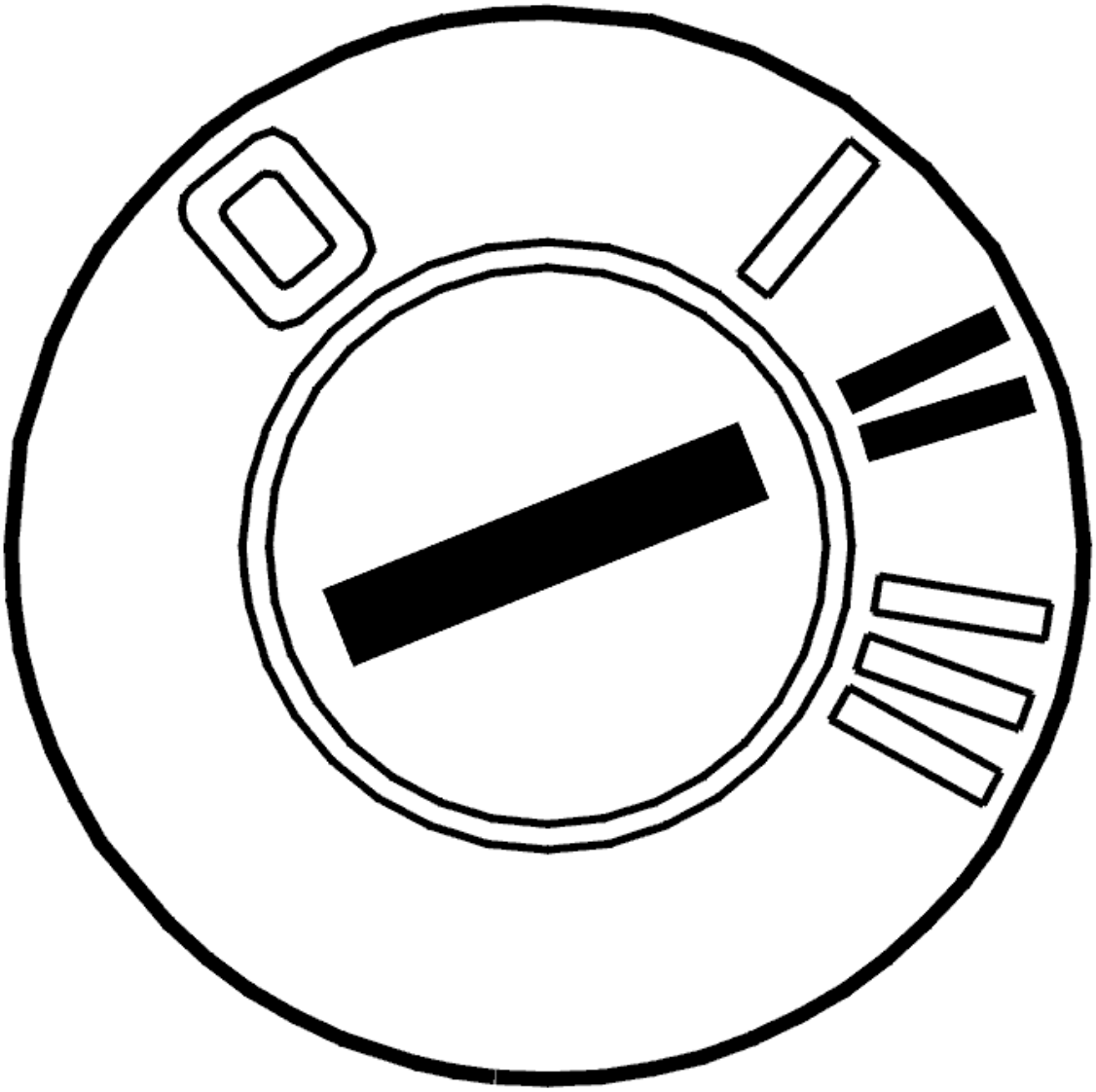

Fig. 389: Identifying Ignition ON
Courtesy of VOLVO CARS CORPORATION

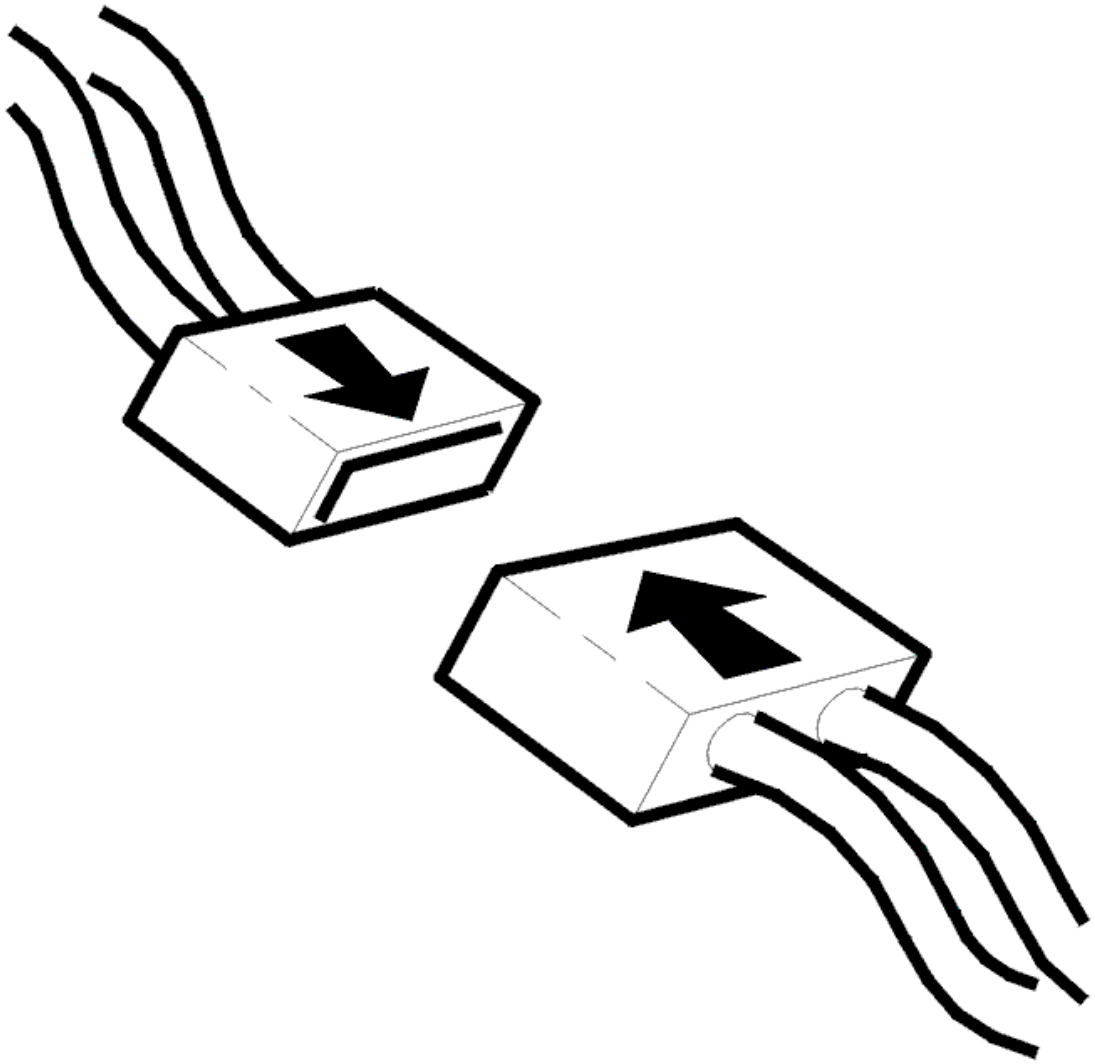

Fig. 390: Identifying Connector(s) Reinstallation
Courtesy of VOLVO CARS CORPORATION

- Ignition on.
- Activate solenoid SLS.

  Read off the current through the solenoid SLS circuit.

  The current should oscillate between 0 and 1000 mA.

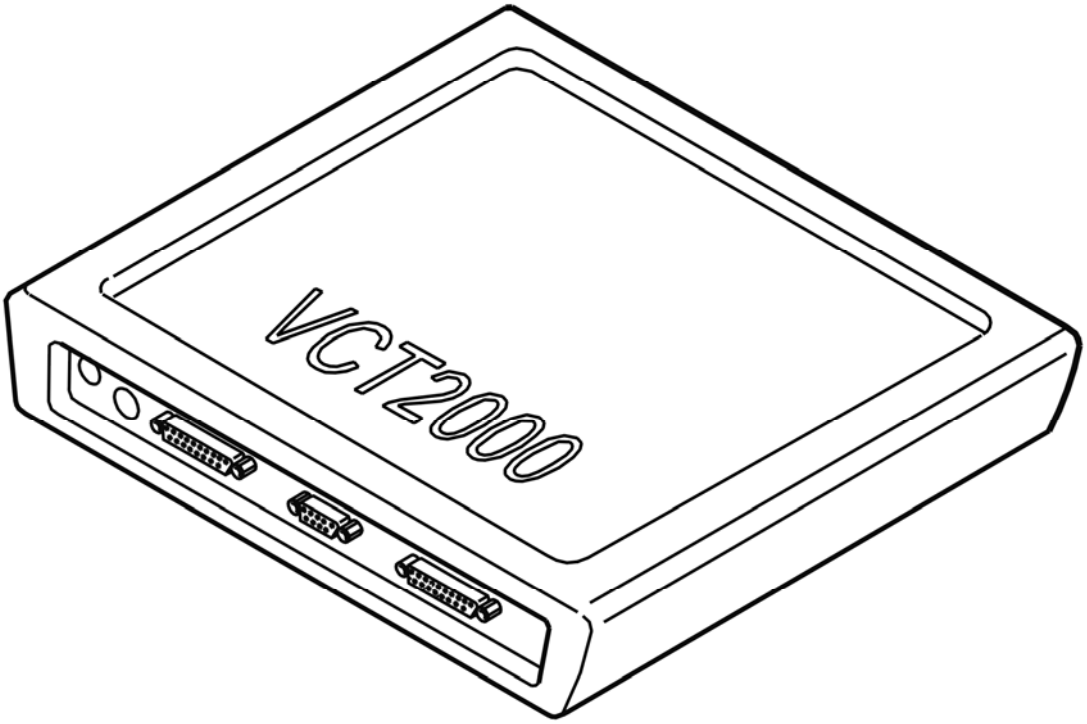

Fig. 391: Identifying VCT2000 Diagnostic Tool Symbol In VIDA
Courtesy of VOLVO CARS CORPORATION

Does the current oscillate?

- **YES**

  VERIFIED: Troubleshooting has been completed.

- **NO**

  Refer to **INFORMATION**

INFORMATION

FAULT-TRACING INFORMATION

The fault should have been detected and remedied. As this is not the case fault-tracing has failed.

Exit fault-tracing for this diagnostic trouble code (DTC) or make another attempt.

TCM-0123: CONTROL UNIT. INTERNAL FAULT (AW50/51 AWD; AW55-50/51SN; 2003-2007)

DIAGNOSTIC TROUBLE CODE INFORMATION

see **DIAGNOSTIC TROUBLE CODE INFORMATION**

INTERNAL FAULT

REPLACING THE CONTROL MODULE

The control module has registered an internal fault.

CAUTION: A new control module is delivered without software. The control module must be programmed in order to function after replacement.

For further information about programming and replacing the control module, see **TRANSMISSION CONTROL MODULE (TCM), REPLACING** .

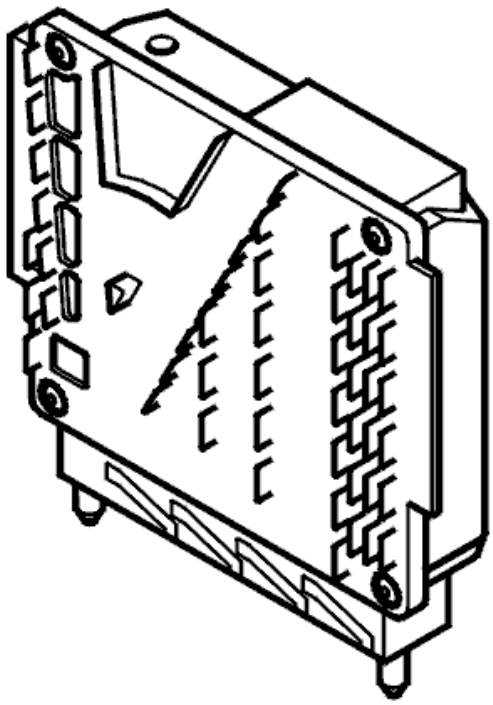

Fig. 392: Identifying Transmission Control Module (TCM)
Courtesy of VOLVO CARS CORPORATION

- **Continue**

  Refer to **VERIFICATION**

VERIFICATION

VERIFICATION

HINT: After carrying out the repair, check that the fault has been remedied.

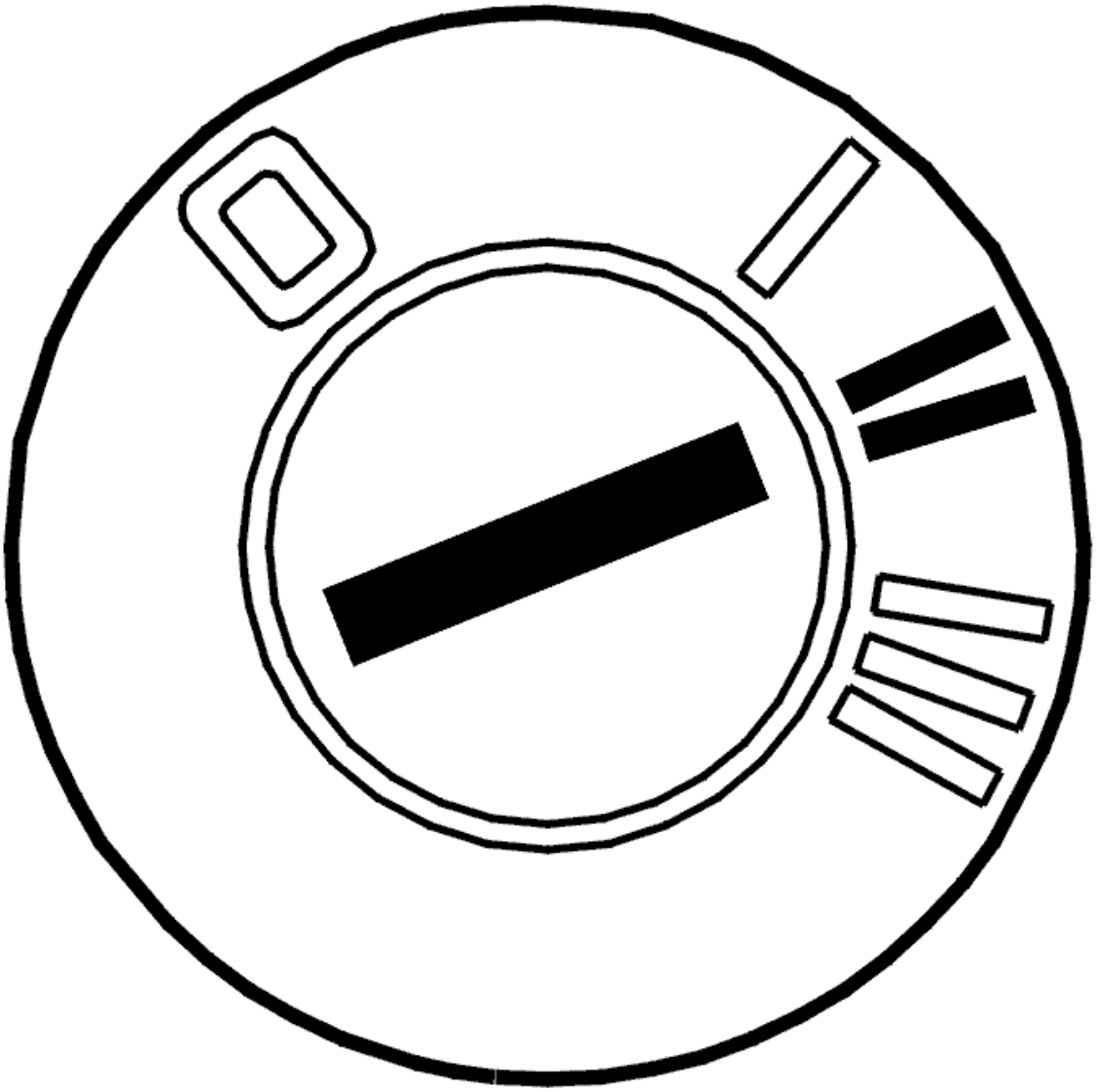

Fig. 393: Identifying Ignition ON
Courtesy of VOLVO CARS CORPORATION

- Ignition on.
- Activate solenoid SLU.

  Read off the current through the solenoid SLU circuit.

  The current should oscillate between 0 and 1000 mA.

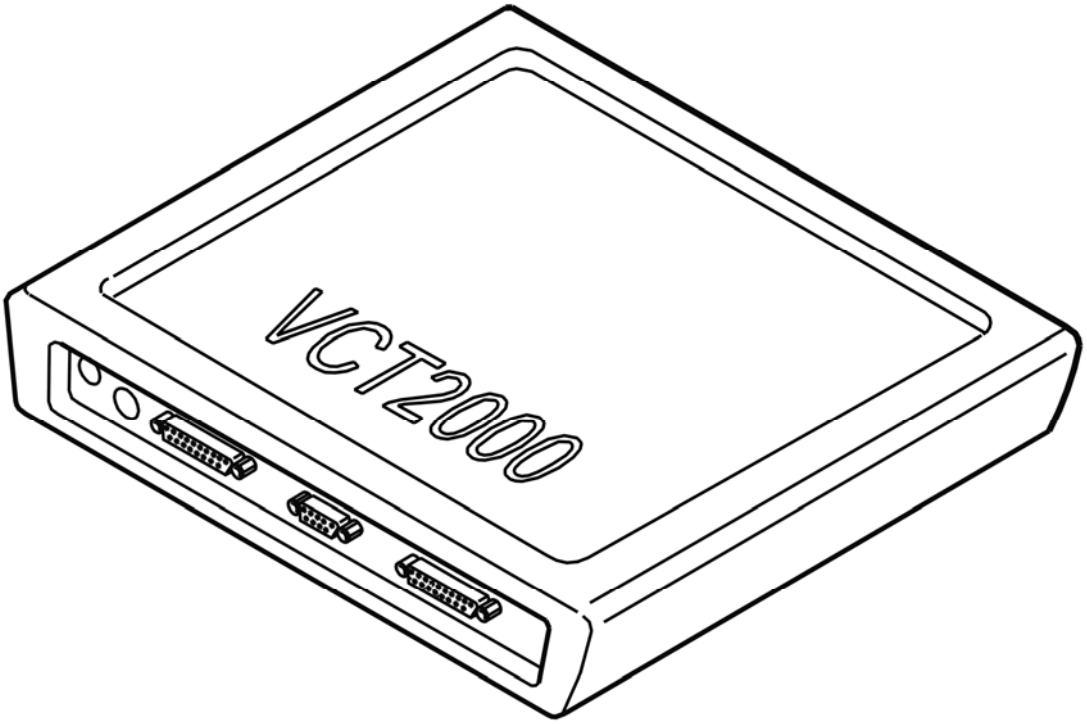

Fig. 394: Identifying VCT2000 Diagnostic Tool Symbol In VIDA
Courtesy of VOLVO CARS CORPORATION

Does the current oscillate?

- **YES**

  VERIFIED: Troubleshooting has been completed.

- **NO**

  Refer to **INFORMATION**

INFORMATION

FAULT-TRACING INFORMATION

The fault should have been detected and remedied. As this is not the case fault-tracing has failed.

Exit fault-tracing for this diagnostic trouble code (DTC) or make another attempt.

TCM-0124: CONTROL UNIT. INTERNAL FAULT (AW50/51 AWD; AW55-50/51SN; 2003-2007)

DIAGNOSTIC TROUBLE CODE INFORMATION

see **DIAGNOSTIC TROUBLE CODE INFORMATION**

INTERNAL FAULT

REPLACING THE CONTROL MODULE

The control module has registered an internal fault.

CAUTION: A new control module is delivered without software. The control module must be programmed in order to function after replacement.

For further information about programming and replacing the control module, see **TRANSMISSION CONTROL MODULE (TCM), REPLACING** .

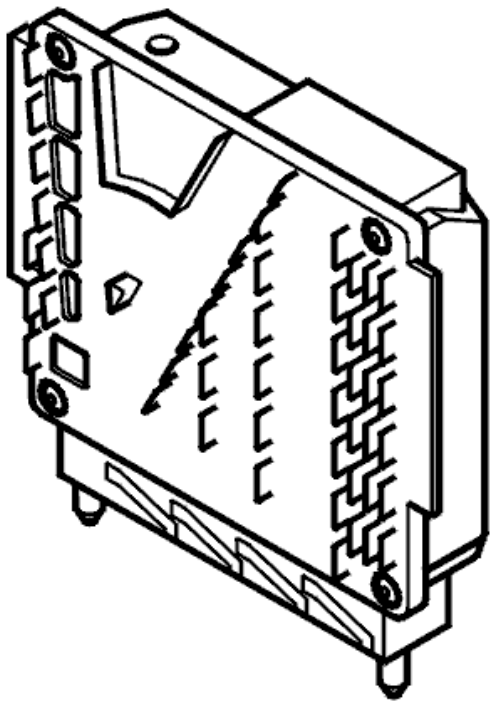

Fig. 395: Identifying Transmission Control Module (TCM)
Courtesy of VOLVO CARS CORPORATION

- **Continue**

  Refer to **VERIFICATION**

VERIFICATION

VERIFICATION

HINT: After carrying out the repair, check that the fault has been remedied.

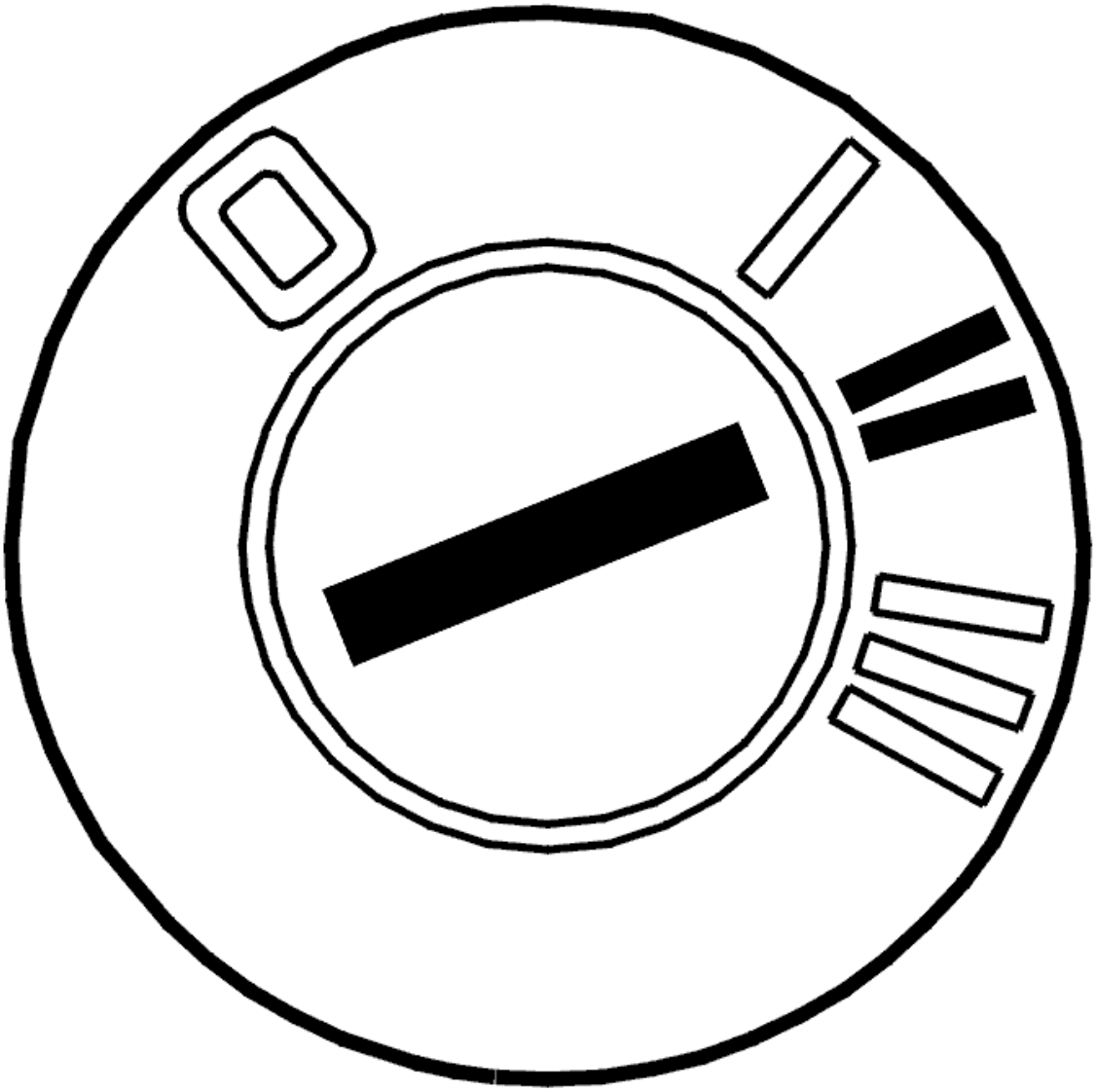

Fig. 396: Identifying Ignition ON
Courtesy of VOLVO CARS CORPORATION

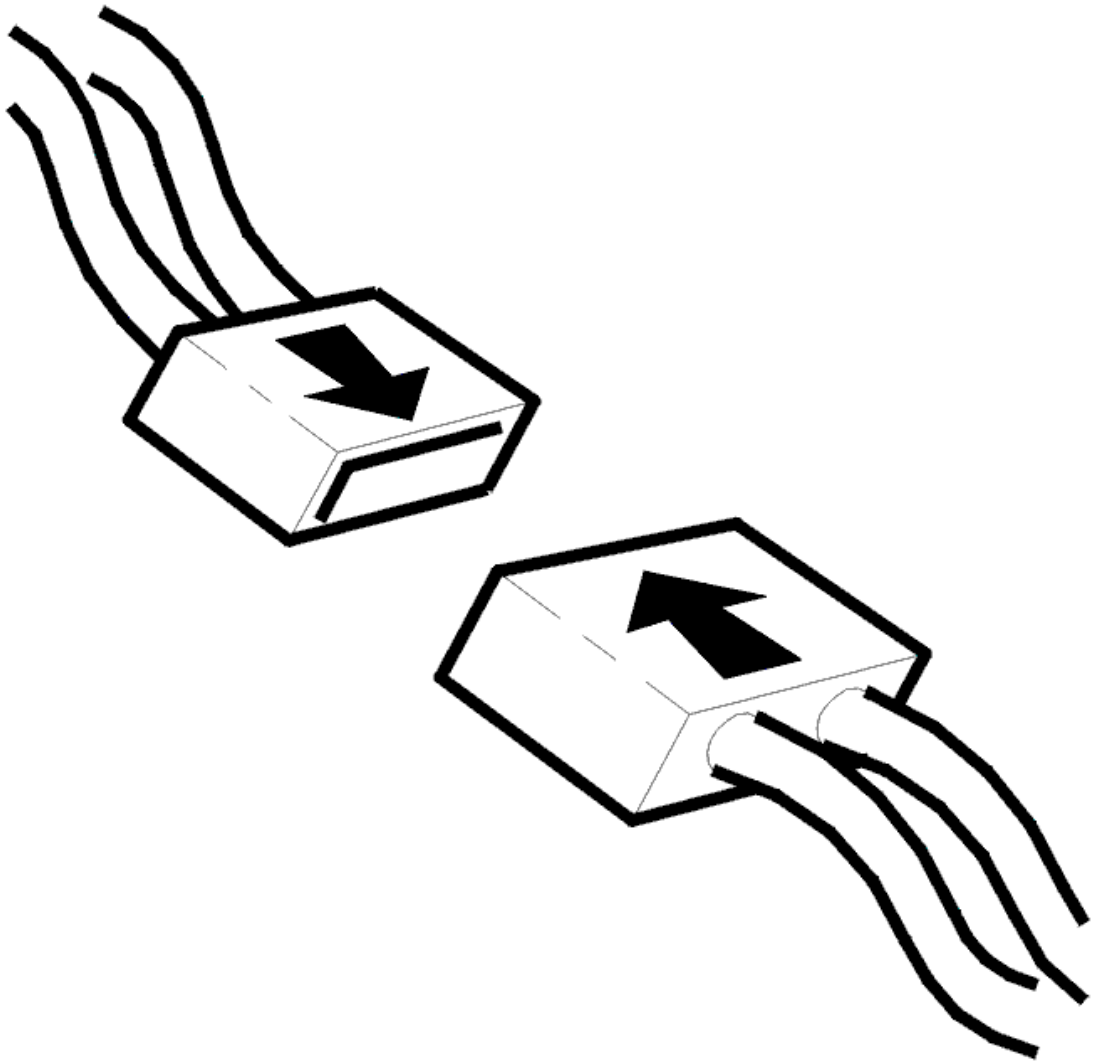

Fig. 397: Identifying Connector(s) Reinstallation
Courtesy of VOLVO CARS CORPORATION

- Ignition off.
- Reconnect connectors, reinstall components etc.
- Start the car.
- Depress the accelerator pedal (AP) slowly.
- Read off the current through the solenoid circuit.

  The current should decrease as the accelerator pedal (AP) is depressed.

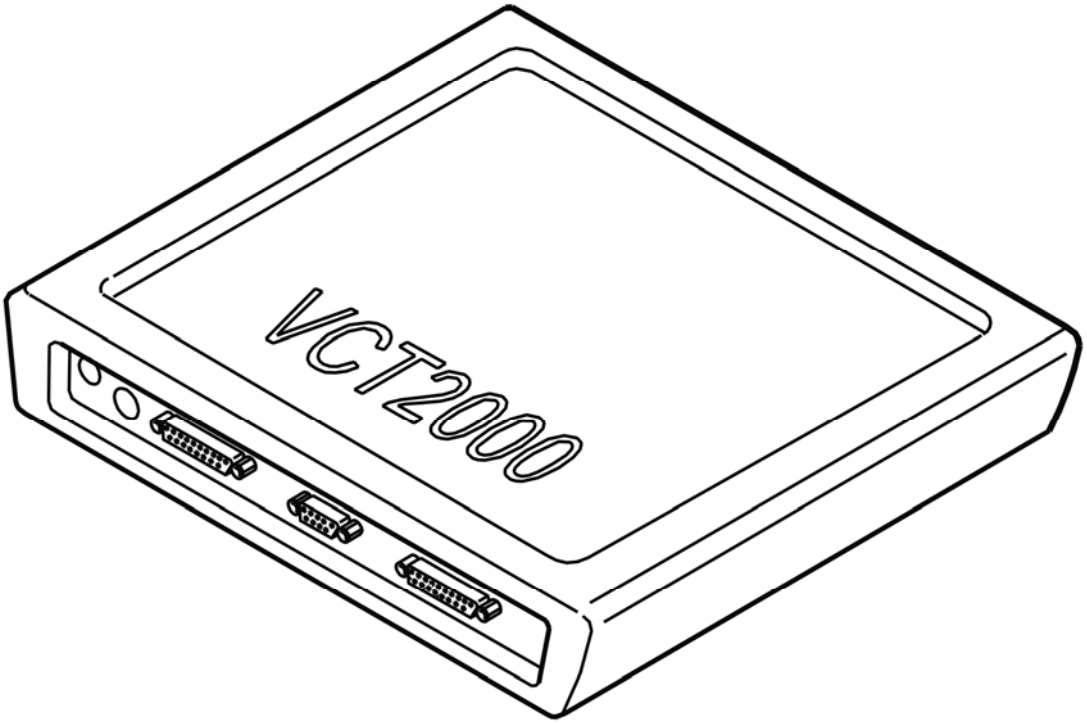

Fig. 398: Identifying VCT2000 Diagnostic Tool Symbol In VIDA
Courtesy of VOLVO CARS CORPORATION

Does the current decrease?

- **YES**

  VERIFIED: Troubleshooting has been completed.

- **NO**

  Refer to **INFORMATION**

INFORMATION

FAULT-TRACING INFORMATION

The fault should have been detected and remedied. As this is not the case fault-tracing has failed.

Exit fault-tracing for this diagnostic trouble code (DTC) or make another attempt.

TCM-012A: NEUTRAL CHECK FAULTY CONNECTION (AW50/51 AWD; AW55-50/51SN; 2003-2007)

DIAGNOSTIC TROUBLE CODE (DTC) INFORMATION

Condition

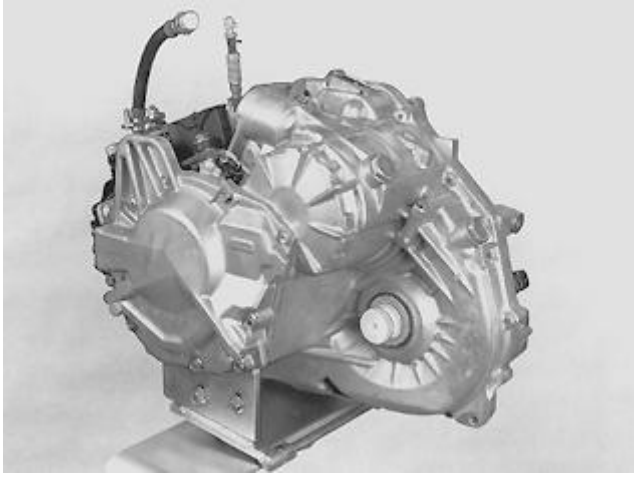

Fig. 399: Identifying Transmission
Courtesy of VOLVO CARS CORPORATION

The driving section of the transmission is disengaged when certain conditions are met:

- Stationary
- Engine idling
- Stop pedal depressed
- Gear position D, 3 or 4.

The function decreases fuel consumption and vibration from the transmission when running the engine at idle speed.

Diagnostic trouble code (DTC) TCM-012A is stored if the transmission control module (TCM) registers that clutch C1 disengages incorrectly.

Substitute Value

- None.

Possible Source

- Shift solenoid S1 has jammed in the OFF position
- Shift solenoid S2 has jammed in the ON position
- Solenoid SLT has jammed in the OFF position
- Internal fault in the transmission
- Defective control module.

Fault symptom[s]

- General orange warning lamp lit
- Malfunction indicator lamp (MIL) lit.

FAULTY CONNECTION

CHECKS

CHECKING THE NEUTRAL CHECK

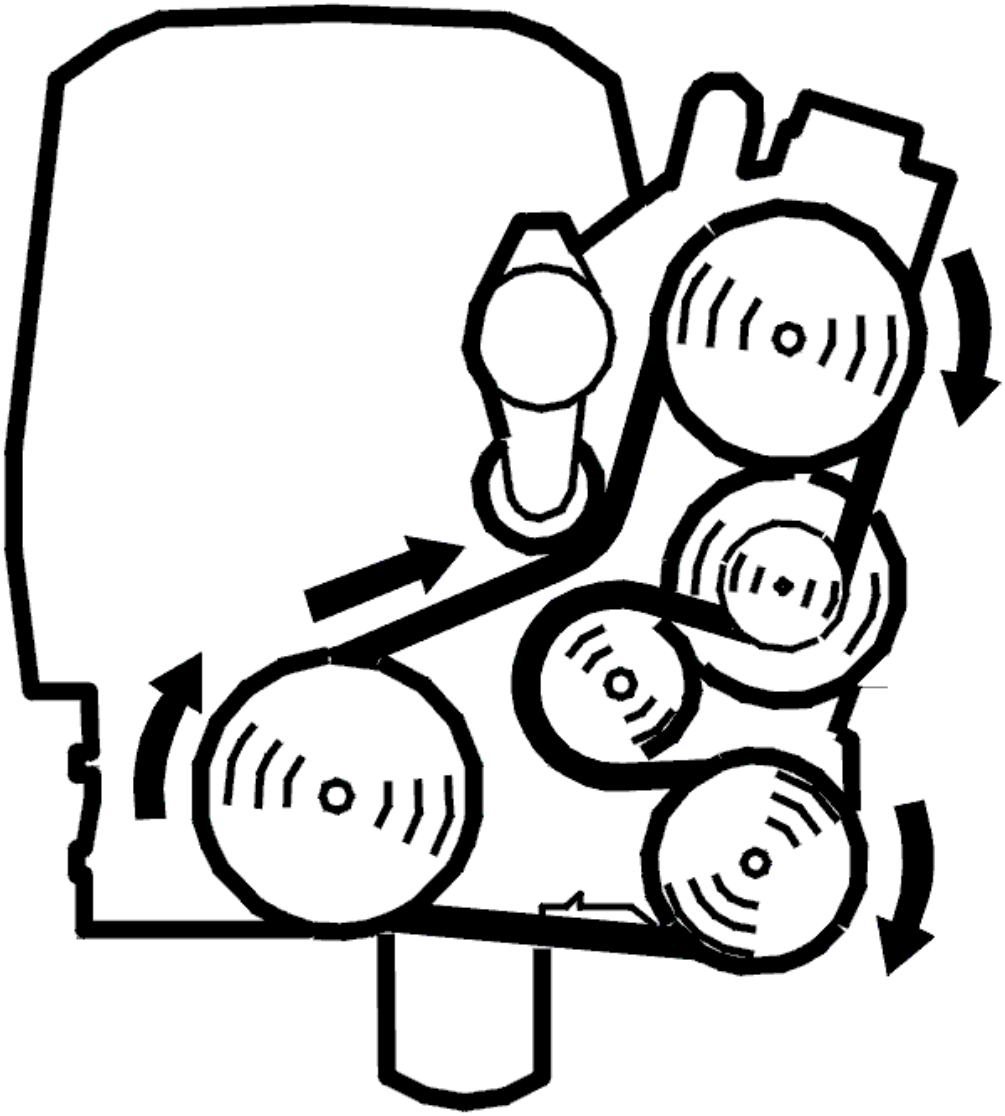

Fig. 400: Identifying Belt Routing
Courtesy of VOLVO CARS CORPORATION

- Ignition off
- Check the transmission connectors and the control module connector. Check for contact resistance and

oxidation. See **CONTACT RESISTANCE AND OXIDATION**

- Reconnect the connectors, reinstall components etc.
- Raise the car so that the drive wheels can rotate freely
- Start the car
- Move the gear selector to position D. Accelerate so that the speed exceeds 50 km/h
- Brake the wheels and let the engine run at idling speed without touching the accelerator pedal (AP). The neutral check must display the status as "Active" (this may take up to 30 seconds)
- Brake the wheels. Move the gear selector to position D. Carefully depress the accelerator. Check that the neutral check changes to the "Inactive" status.

  Check that the function operates in gear positions 4, 3 and 2.

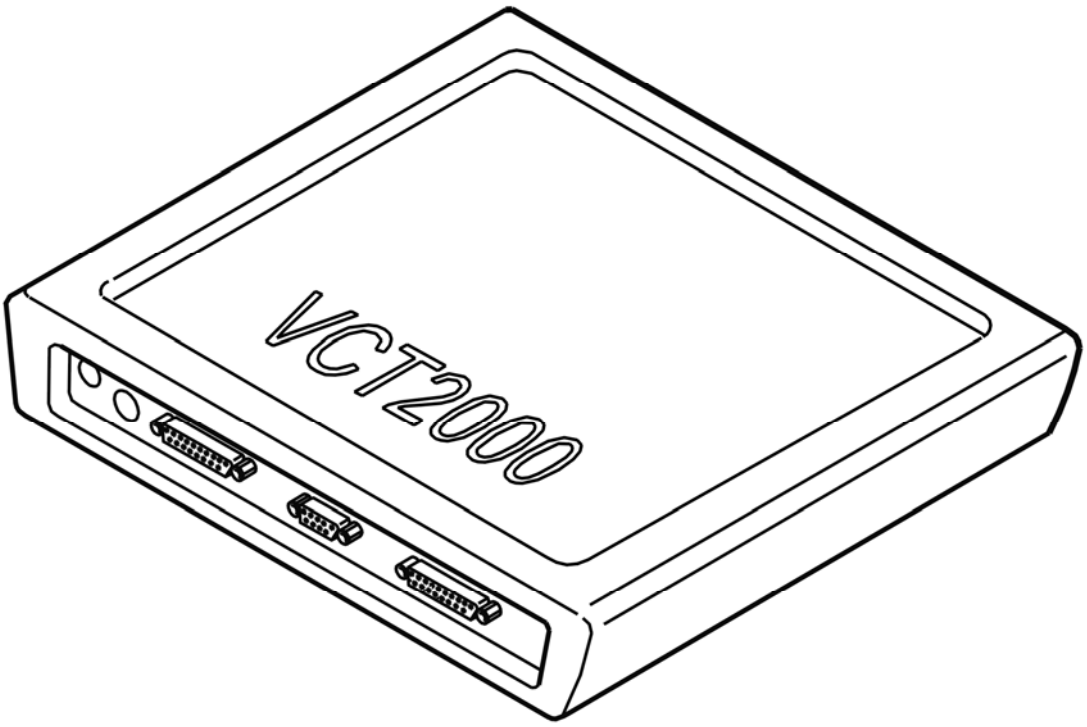

Fig. 401: Identifying VCT2000 Diagnostic Tool Symbol In VIDA
Courtesy of VOLVO CARS CORPORATION

Does the status change?

- **YES**

  OKAY: Troubleshooting has been completed.

- **NO**

Refer to **CHECKING SHIFT SOLENOIDS S1 AND S2**

CHECKING SHIFT SOLENOIDS S1 AND S2

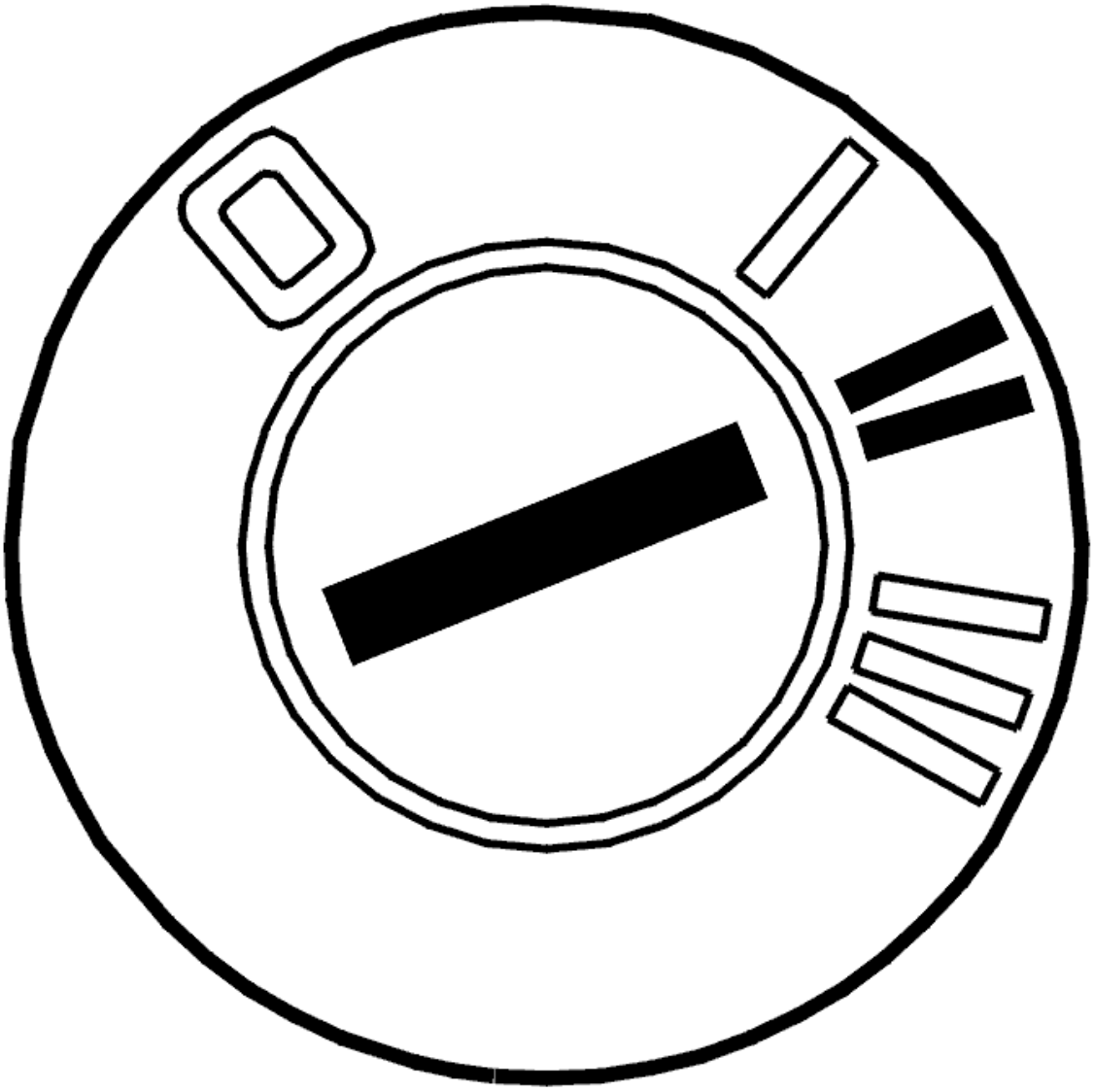

Fig. 402: Identifying Ignition ON
Courtesy of VOLVO CARS CORPORATION

- Ignition on
- Gear selector in position P
- Activate solenoids S1 and S2 individually.

NOTE: Select to read the status for the solenoid that should be activated.

The value should shift between OFF and ON and a " clicking sound" should be heard in the transmission (at 20° C).

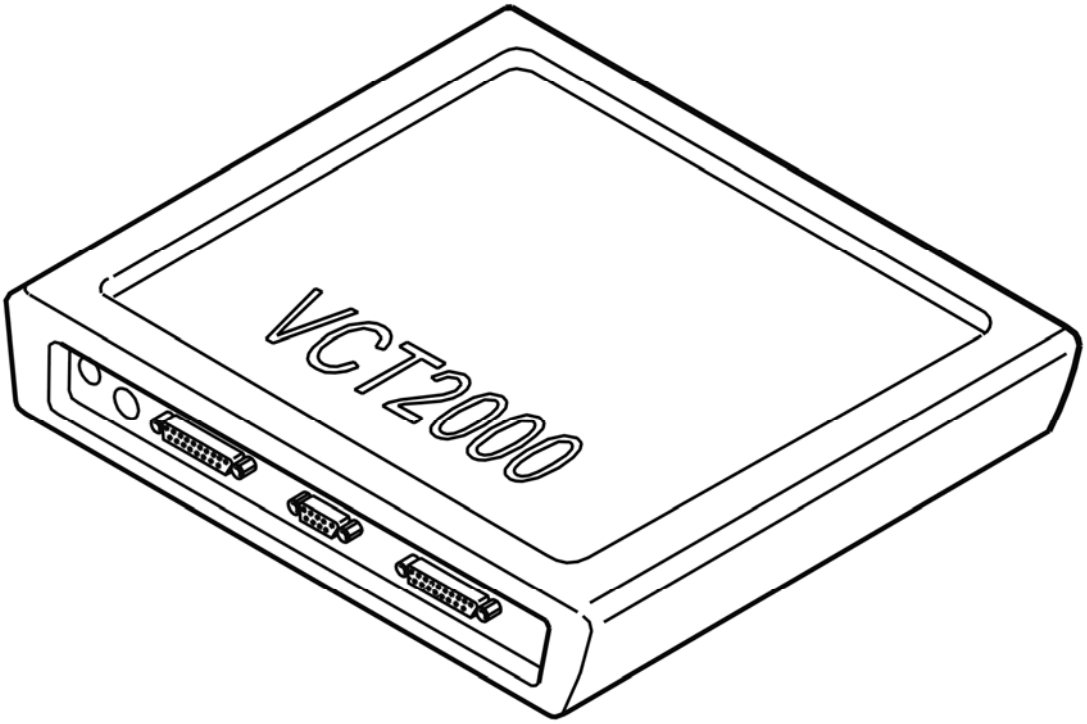

Fig. 403: Identifying VCT2000 Diagnostic Tool Symbol In VIDA
Courtesy of VOLVO CARS CORPORATION

Does the value change?

- **YES**

  Refer to **CHECKING SOLENOID SLT**

- **NO**

  Refer to **REPLACING THE TRANSMISSION CONTROL SYSTEM**

CHECKING SOLENOID SLT

NOTE: The transmission must not be colder than room temperature when activated.

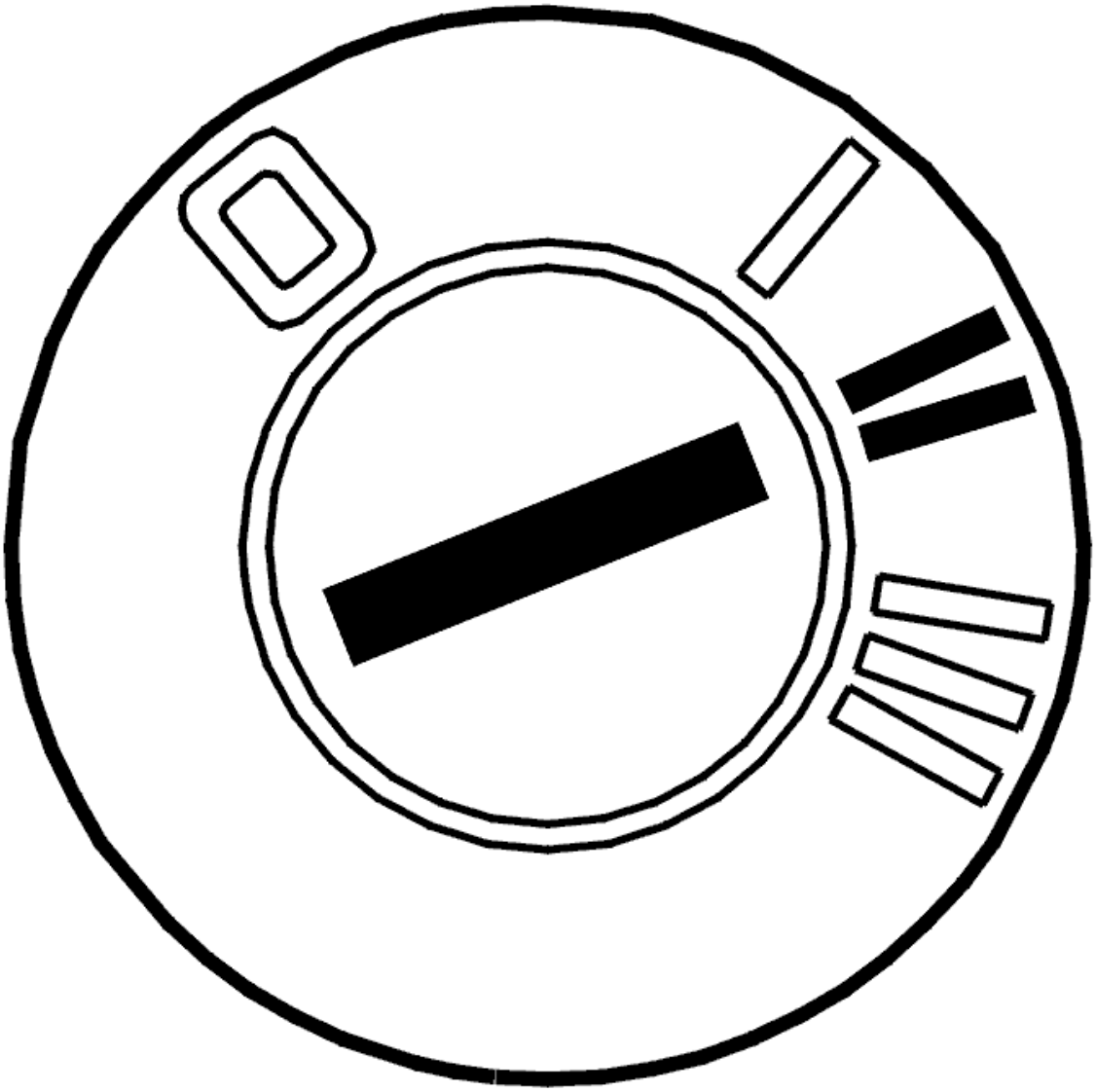

Fig. 404: Identifying Ignition ON
Courtesy of VOLVO CARS CORPORATION

- Ignition on
- Activate solenoid SLT.

  Check that the solenoid " clicks" on activation. Use a stethoscope to hear the sound more clearly.

  If no "click" is heard, this indicates that there is a mechanical fault.

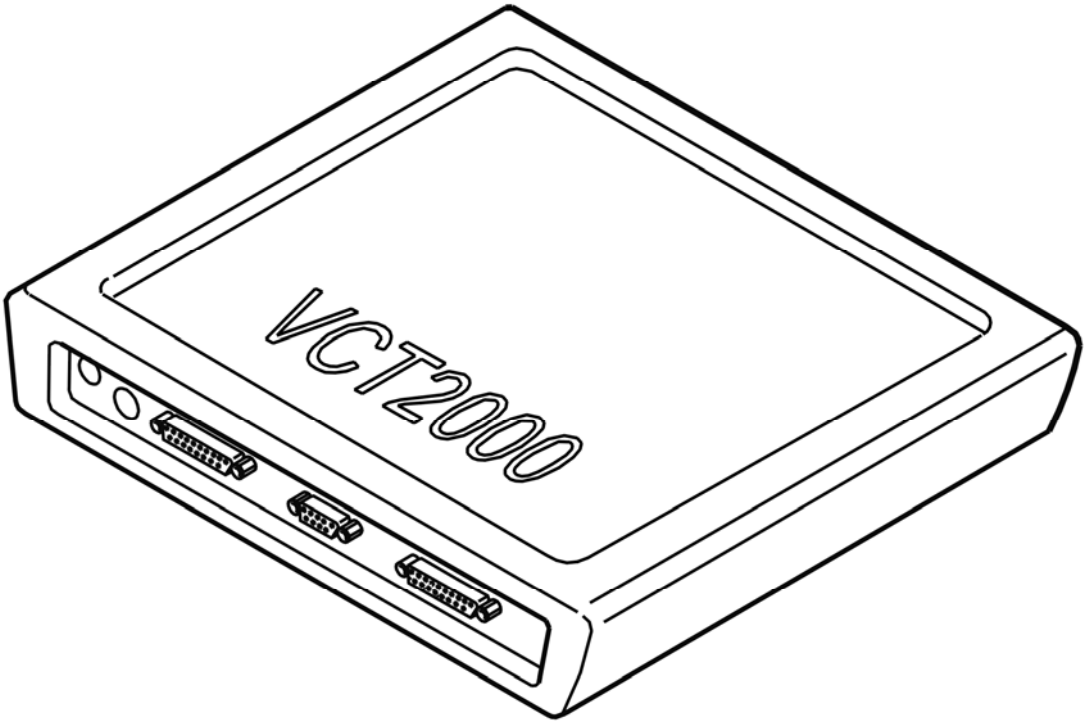

Fig. 405: Identifying VCT2000 Diagnostic Tool Symbol In VIDA
Courtesy of VOLVO CARS CORPORATION

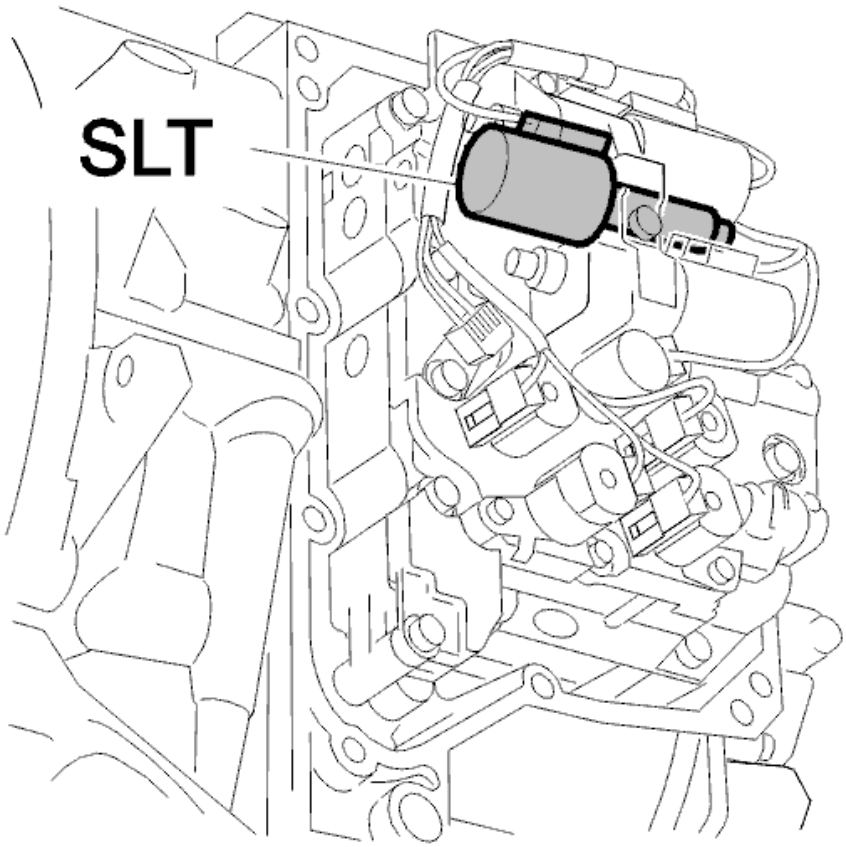

Fig. 406: Identifying Line Pressure Solenoid
Courtesy of VOLVO CARS CORPORATION

Was solenoid SLT OK?

- **YES**

  FAULT NOT FOUND: Troubleshooting has been completed.

- **NO**

  Refer to **REPLACING THE TRANSMISSION CONTROL SYSTEM**

REPLACING THE TRANSMISSION CONTROL SYSTEM

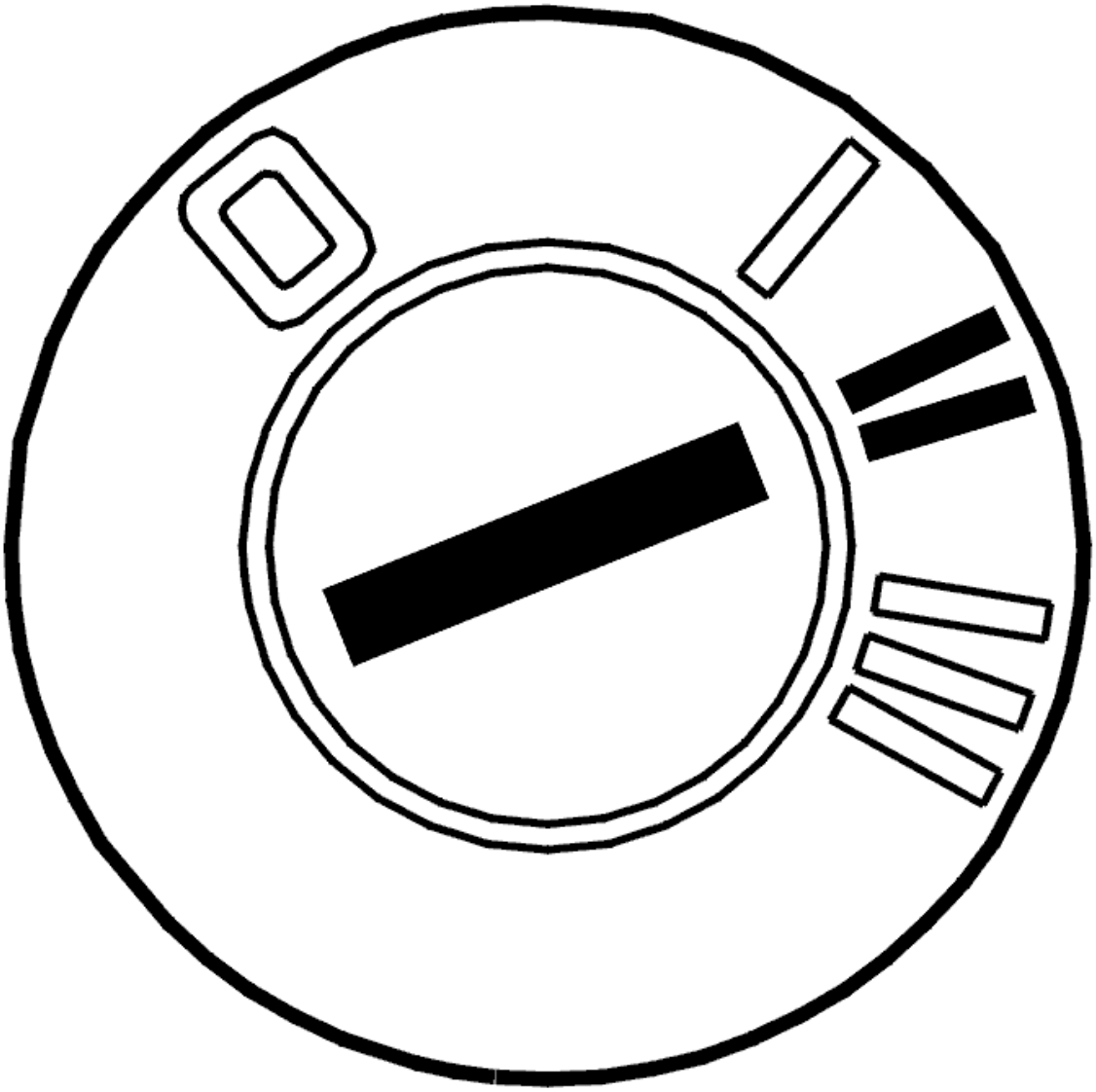

Fig. 407: Identifying Ignition ON
Courtesy of VOLVO CARS CORPORATION

- Ignition off
- Replace the faulty shift solenoid.

  The transmission control system must be replaced if there is a fault in solenoid SLT. To replace the solenoids and the transmission control system, see **SOLENOID CONTROL SYSTEM, REPLACING** .

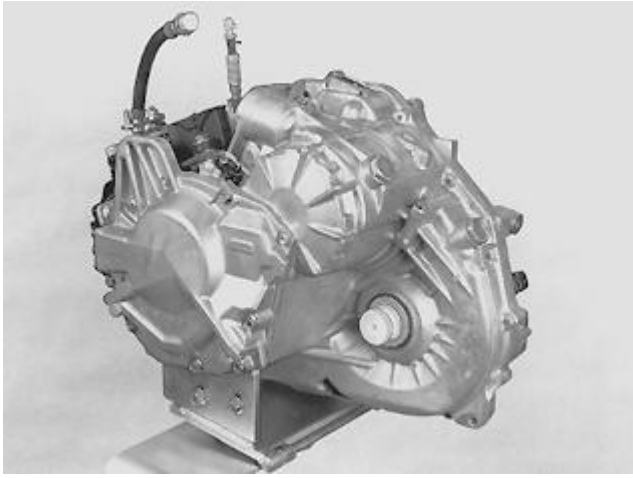

Fig. 408: Identifying Transmission
Courtesy of VOLVO CARS CORPORATION

- **Continue**

  Refer to **RESETTING THE ADAPTATION**

RESETTING THE ADAPTATION

RESETTING ADAPTATION AND THE COUNTER FOR "TRANSMISSION OIL CHANGE"

HINT: The transmission has torque controlled adaptive pressure control. Pressure control means that the transmission regulates the pressure itself during each gear shift. This avoids harsh gear shifting. Each gear shift is evaluated by the control module and stored in the memory. This allows for compensation for wear and tear in the transmission and clutch. It is important that the adaptation in the memory is reset after the transmission has been repaired. This is to ensure normal operation. The oil is replaced during repair; the "Transmission oil change" counter must be reset. If the counter is not reset when the fluid is drained and replaced, there is a risk that a diagnostic trouble code (DTC) will be stored in incorrect circumstances.

NOTE: **This applies only if the transmission or one of the components in the transmission have been replaced.**

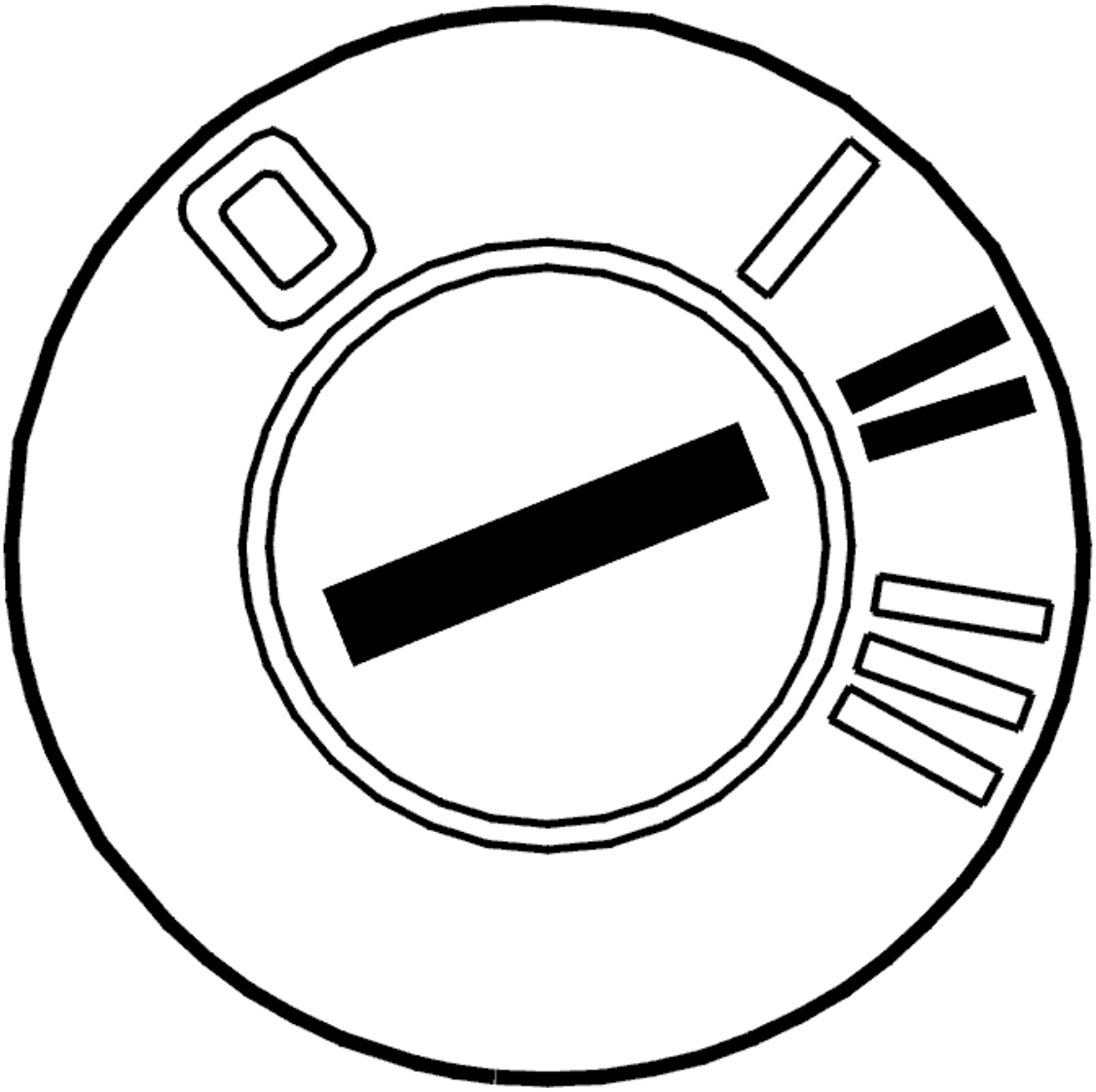

Fig. 409: Identifying Ignition ON
Courtesy of VOLVO CARS CORPORATION

- Ignition on.

  Click on the VCT2000 symbol to reset the adaptation and counter.

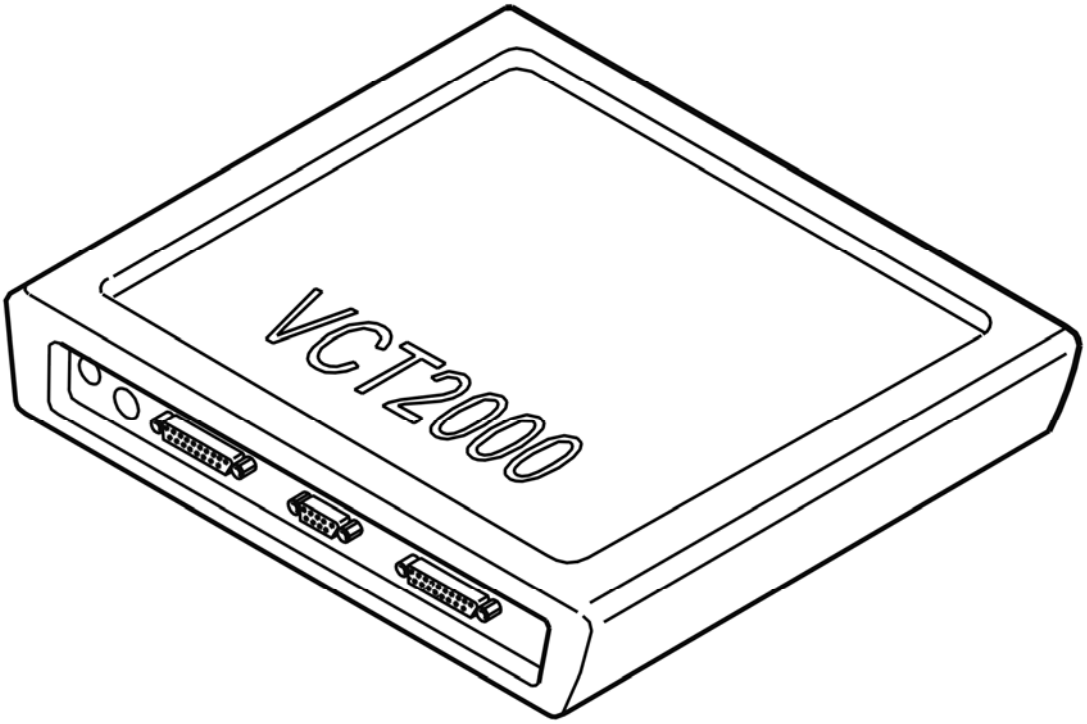

Fig. 410: Identifying VCT2000 Diagnostic Tool Symbol In VIDA
Courtesy of VOLVO CARS CORPORATION

- **Continue**

  Refer to **VERIFICATION**

VERIFICATION

VERIFICATION

HINT: After carrying out the repair, check that the fault has been remedied.

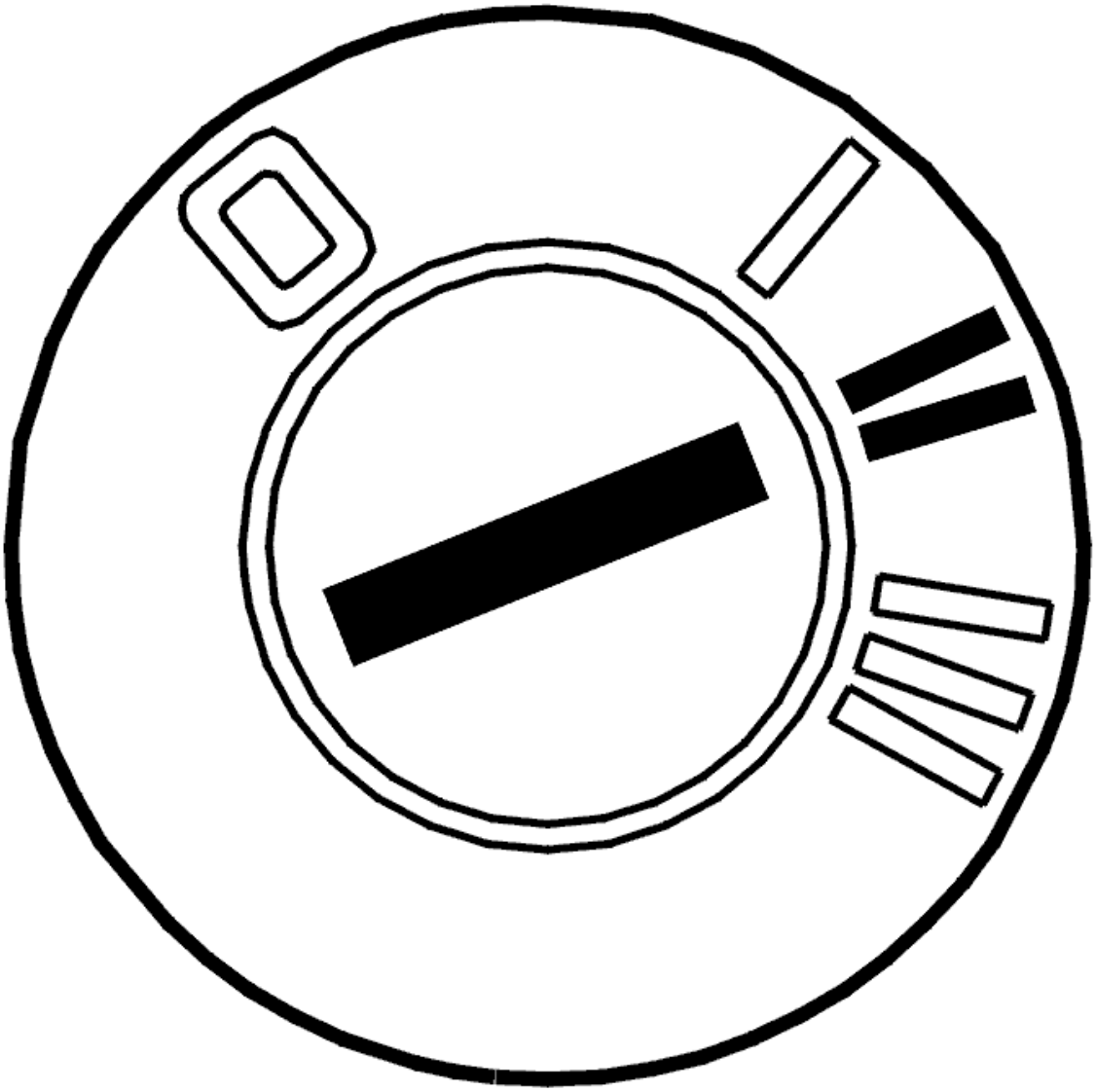

Fig. 411: Identifying Ignition ON
Courtesy of VOLVO CARS CORPORATION

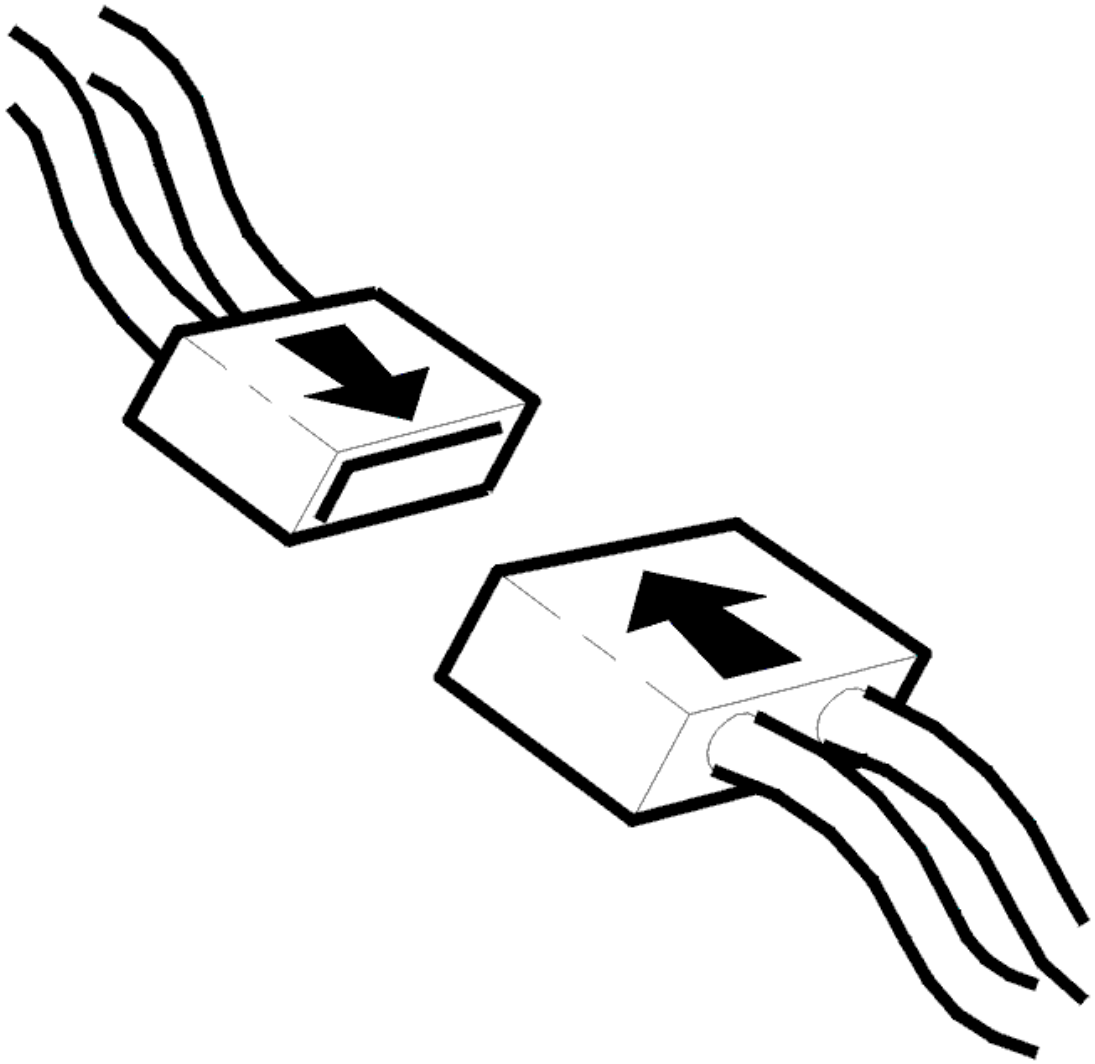

Fig. 412: Identifying Connector(s) Reinstallation
Courtesy of VOLVO CARS CORPORATION

- Ignition off.
- Reconnect the connectors, reinstall components etc.
- Raise the car so that the drive wheels are unimpeded.
- Start the car.
- Move the gear selector to position D and accelerate so that the speed exceeds 50 km/h.
- Brake the wheels and let the engine run at idling speed without touching the accelerator pedal (AP). The neutral check should display "Active" status (this may take up to 30 seconds).
- Brake the wheels, move the gear selector to position D. Carefully depress the accelerator and check that the neutral check changes to the "Inactive" status.

  Check that the function operates in gear positions 4, 3 and 2.

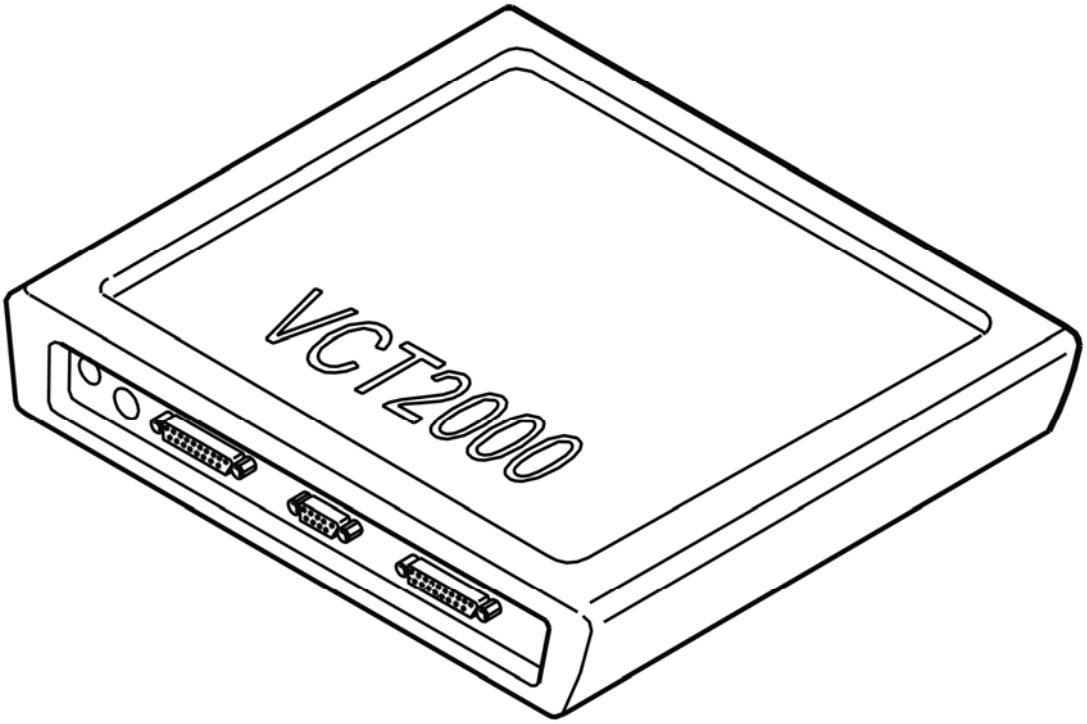

Fig. 413: Identifying VCT2000 Diagnostic Tool Symbol In VIDA
Courtesy of VOLVO CARS CORPORATION

Is transmission function OK ?

- **YES**

  VERIFIED: Troubleshooting has been completed.

- **NO**

  Refer to **INFORMATION**

INFORMATION

FAULT-TRACING INFORMATION

The fault should have been detected and remedied. As this is not the case fault-tracing has failed.

Exit fault-tracing for this diagnostic trouble code (DTC) or make another attempt.

TCM-012B: NEUTRAL CHECK NO NEUTRAL CHECK (AW50/51 AWD; AW55-50/51SN; 2003-2007)

DIAGNOSTIC TROUBLE CODE (DTC) INFORMATION

Condition

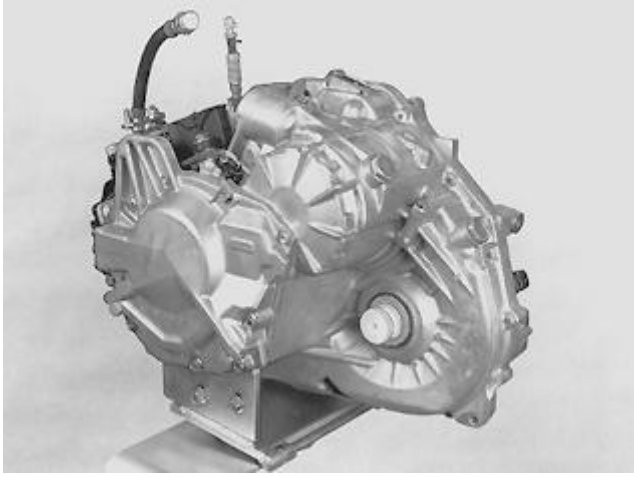

Fig. 414: Identifying Transmission
Courtesy of VOLVO CARS CORPORATION

The driving section of the transmission is disengaged when certain conditions are met:

- Stationary
- Engine idling
- Stop pedal depressed
- Gear position D, 3 or 4.

The function decreases fuel consumption and vibration from the transmission when running the engine at idle speed.

Diagnostic trouble code (DTC) TCM-012B is stored if the transmission control module (TCM) registers that clutch C1 does not engage.

Substitute Value

- None.

Possible Source

- Shift solenoid SLS has jammed in the OFF position
- Internal fault in the transmission
- Internal fault in the control module.

Fault symptom[s]

- General orange warning lamp lit

- Malfunction indicator lamp (MIL) lit.

NO NEUTRAL CHECK

CHECKS

CHECKING THE NEUTRAL CHECK

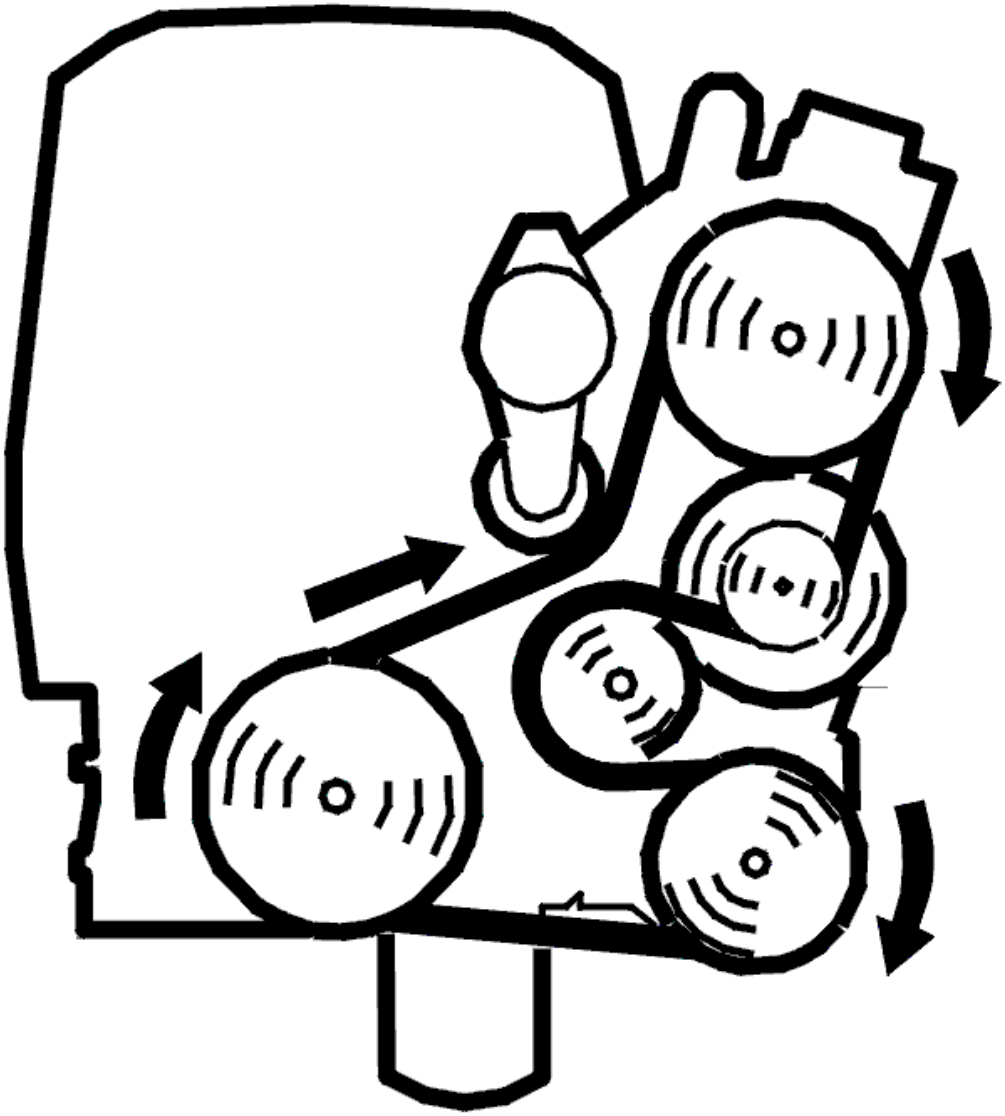

Fig. 415: Identifying Belt Routing
Courtesy of VOLVO CARS CORPORATION

- Ignition off
- Check the transmission connectors and the control module connector. Check for contact resistance and oxidation. See **CONTACT RESISTANCE AND OXIDATION**
- Reconnect the connectors, reinstall components etc.

- Raise the car so that the drive wheels can rotate freely
- Start the car
- Move the gear selector to position D. Accelerate so that the speed exceeds 50 km/h
- Brake the wheels and let the engine run at idling speed without touching the accelerator pedal (AP). The neutral check must display the status as "Active" (this may take up to 30 seconds)
- Brake the wheels. Move the gear selector to position D. Carefully depress the accelerator. Check that the neutral check changes to the "Inactive" status.

  The engine speed (RPM) should be even when transferring from Active to Inactive status.

  Check that the function operates in gear positions 4, 3 and 2.

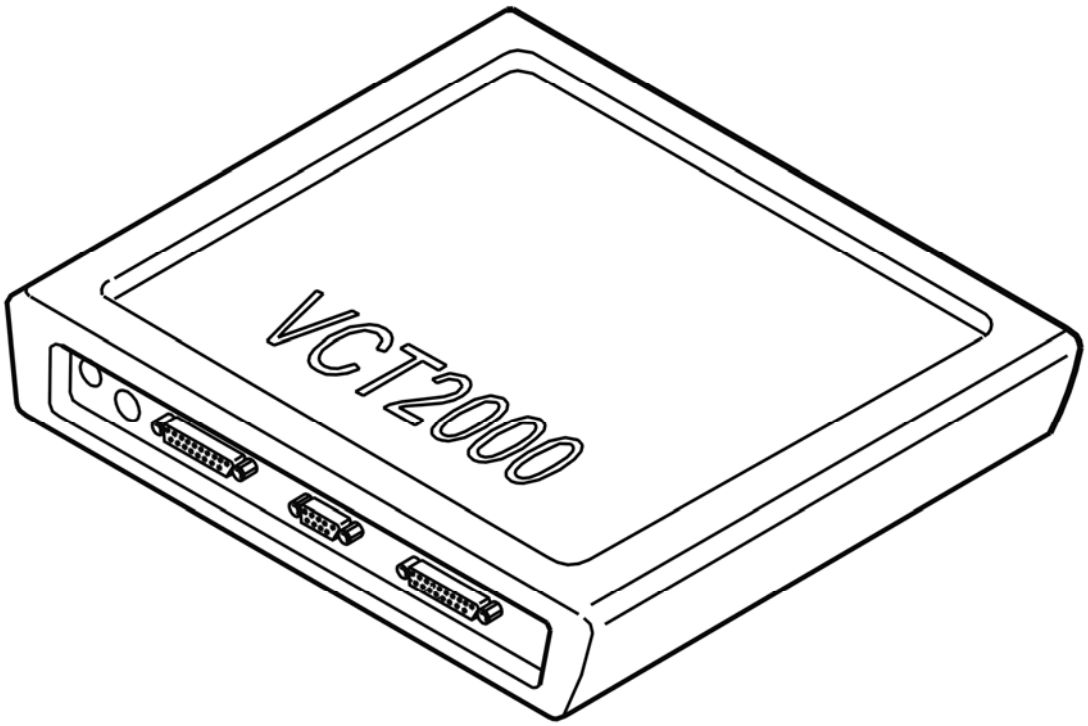

Fig. 416: Identifying VCT2000 Diagnostic Tool Symbol In VIDA
Courtesy of VOLVO CARS CORPORATION

Is the function of the transmission OK?

- **YES**

  Refer to **TEST DRIVING**

- **NO**

Refer to **CHECKING SOLENOID SLT**

CHECKING SOLENOID SLT

NOTE: The transmission must not be colder than room temperature when activated.

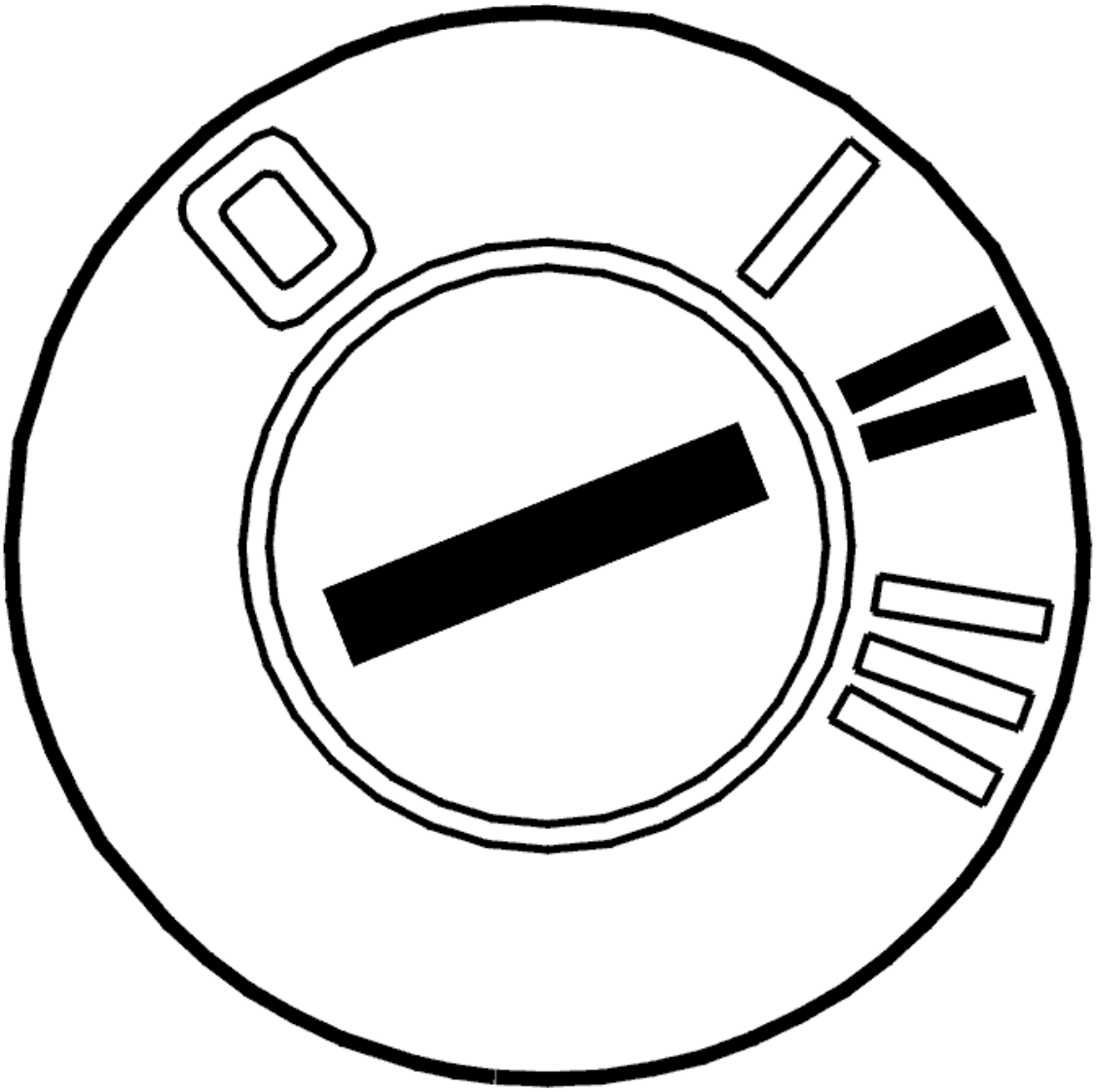

Fig. 417: Identifying Ignition ON
Courtesy of VOLVO CARS CORPORATION

- Ignition on
- Activate solenoid SLT.

  Check that the solenoid " clicks" on activation and that the current changes from approximately 0 to 1 A. Use a stethoscope to hear the sound more clearly.

If no "click" is heard, this indicates that there is a mechanical fault.

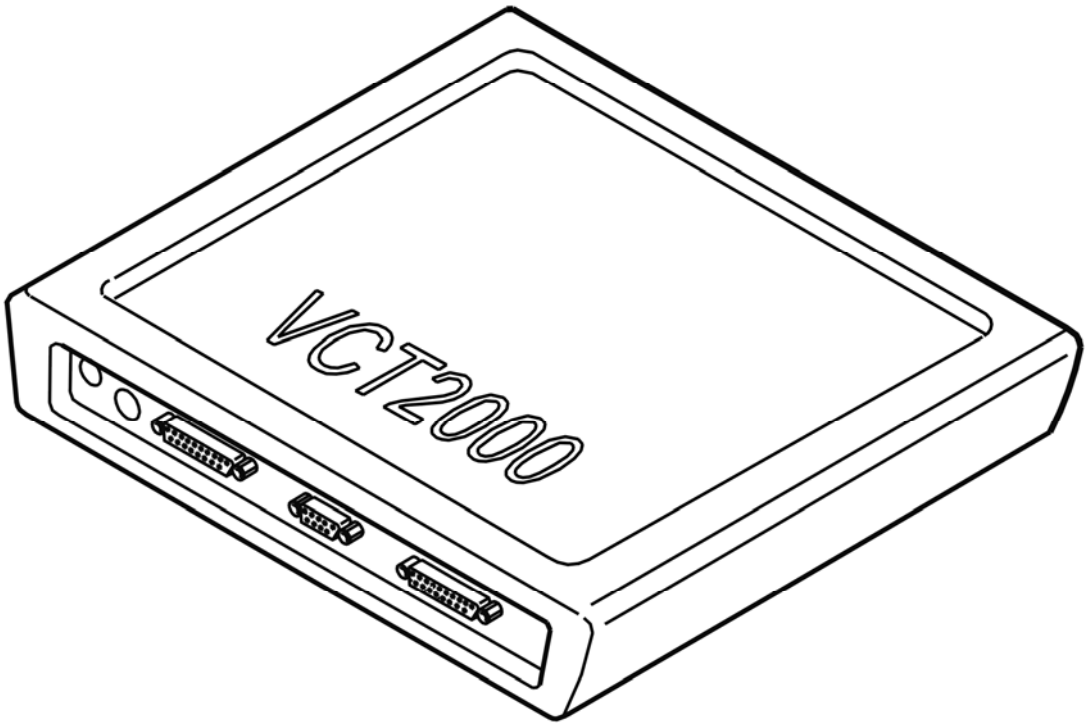

Fig. 418: Identifying VCT2000 Diagnostic Tool Symbol In VIDA
Courtesy of VOLVO CARS CORPORATION

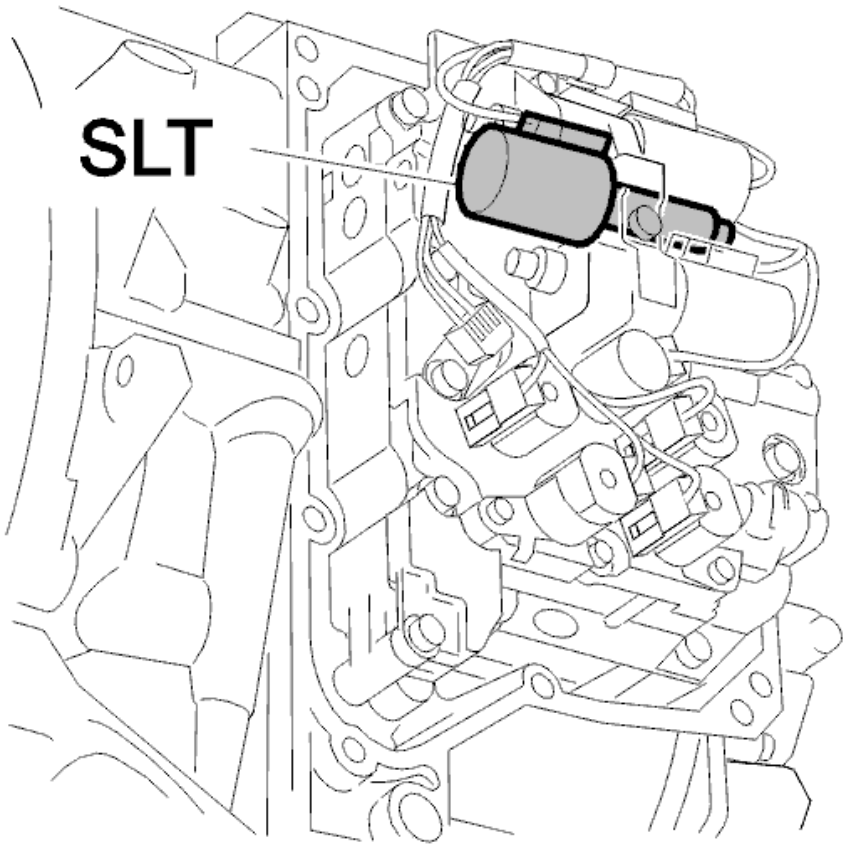

Fig. 419: Identifying Line Pressure Solenoid
Courtesy of VOLVO CARS CORPORATION

Was there a click from the solenoid?

- **YES**

  Refer to **TEST DRIVING**

- **NO**

  Refer to **REPLACING THE TRANSMISSION CONTROL SYSTEM**

TEST DRIVING

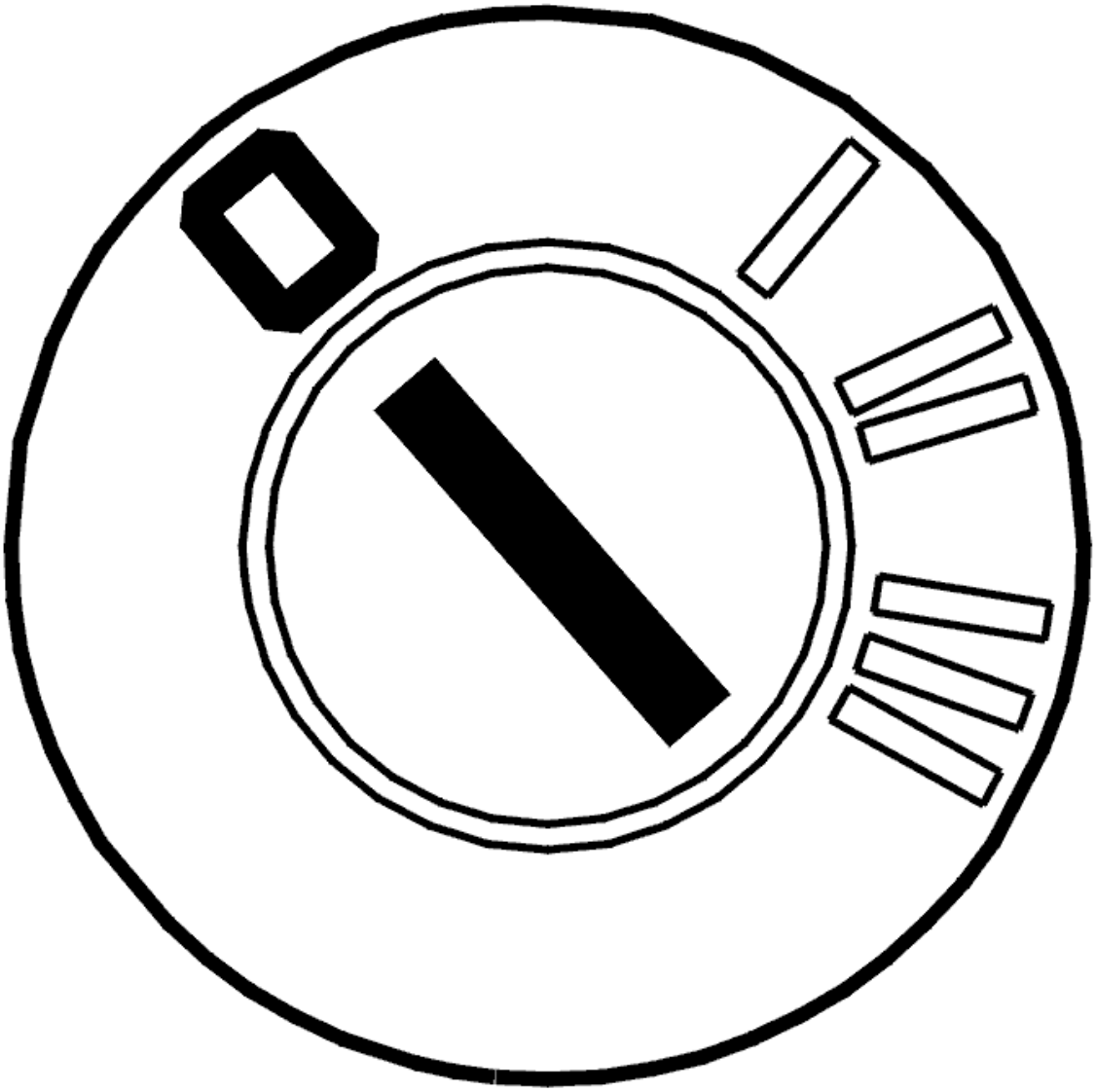

Fig. 420: Identifying Ignition OFF
Courtesy of VOLVO CARS CORPORATION

- Ignition off
- Reconnect the connectors, reinstall components etc.
- Test drive the car. See **TEST DRIVE SCHEDULE, DESCRIPTION** .

  Check that the shifts and the neutral check function without any problems.

  Other information

  - To access the transmission connectors, see **CONNECTORS, TRANSMISSION, DISCONNECTING / CONNECTING**
  - To access the control module connector, see **CONNECTING THE BREAKOUT BOX** .

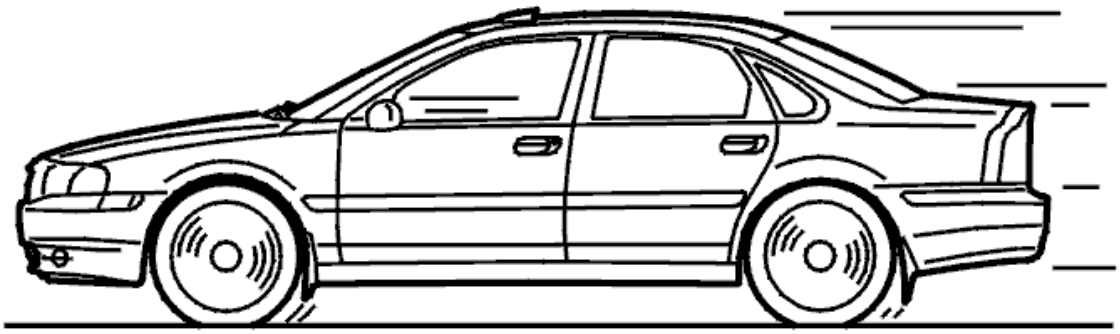

Fig. 421: Identifying Test Drive
Courtesy of VOLVO CARS CORPORATION

Is the transmission operating correctly?

- **YES**

  OKAY: Troubleshooting has been completed.

- **NO**

  Refer to **REPLACING THE TRANSMISSION CONTROL SYSTEM**

REPLACING THE TRANSMISSION CONTROL SYSTEM

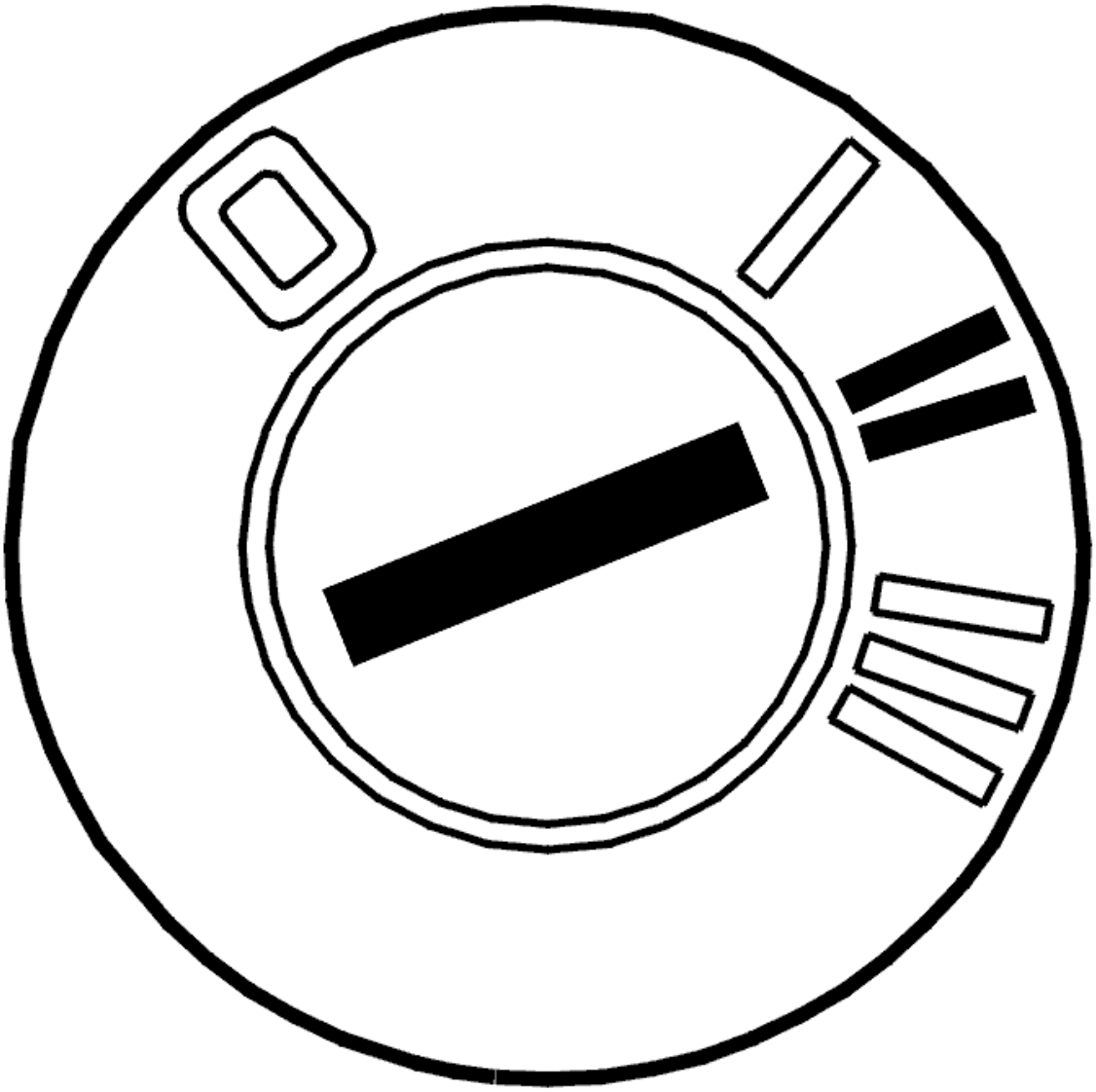

Fig. 422: Identifying Ignition ON
Courtesy of VOLVO CARS CORPORATION

- Ignition off.

  The transmission control system must be replaced if there is a fault in solenoid SLT. To replace the solenoids and the transmission control system, see **SOLENOID CONTROL SYSTEM, REPLACING** .

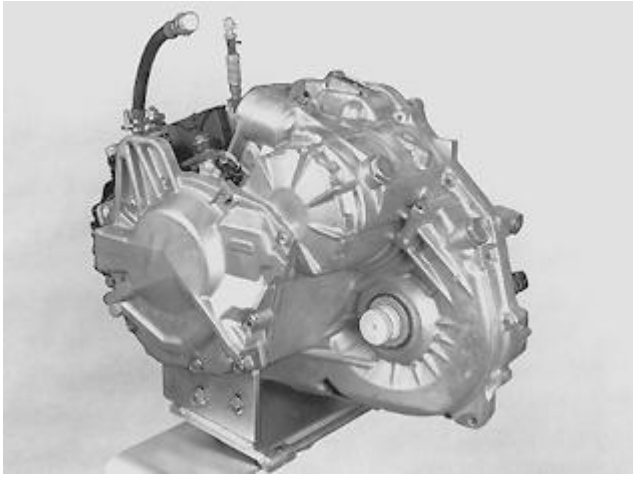

Fig. 423: Identifying Transmission
Courtesy of VOLVO CARS CORPORATION

- **Continue**

  Refer to **RESETTING THE ADAPTATION**

RESETTING THE ADAPTATION

RESETTING ADAPTATION AND THE COUNTER FOR "TRANSMISSION OIL CHANGE"

HINT: The transmission has torque controlled adaptive pressure control. Pressure control means that the transmission regulates the pressure itself during each gear shift. This avoids harsh gear shifting. Each gear shift is evaluated by the control module and stored in the memory. This allows for compensation for wear and tear in the transmission and clutch. It is important that the adaptation in the memory is reset after the transmission has been repaired. This is to ensure normal operation. The oil is replaced during repair; the "Transmission oil change" counter must be reset. If the counter is not reset when the fluid is drained and replaced, there is a risk that a diagnostic trouble code (DTC) will be stored in incorrect circumstances.

NOTE: **This applies only if the transmission or one of the components in the transmission have been replaced.**

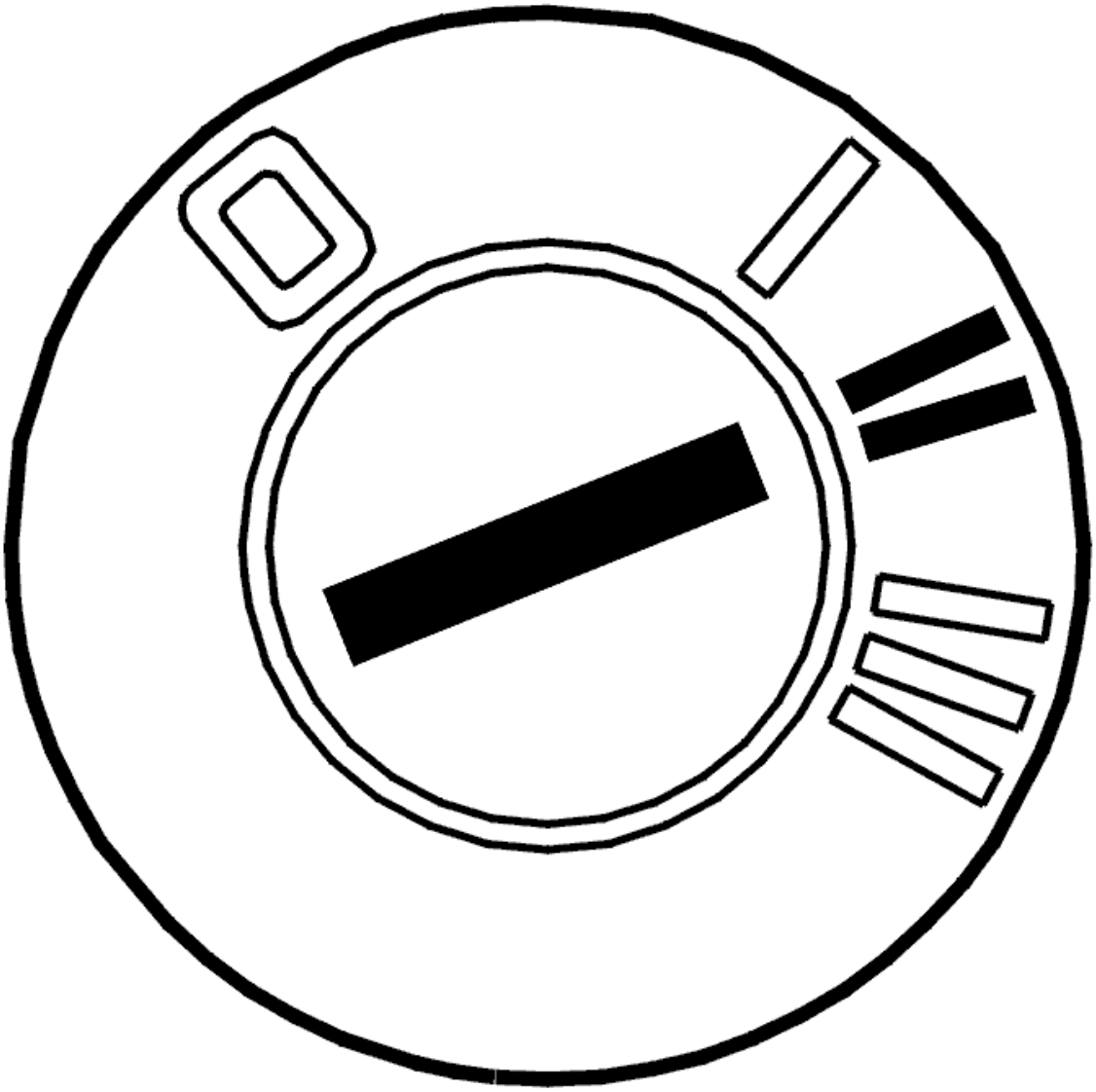

Fig. 424: Identifying Ignition ON
Courtesy of VOLVO CARS CORPORATION

- Ignition on.

  Click on the VCT2000 symbol to reset the adaptation and counter.

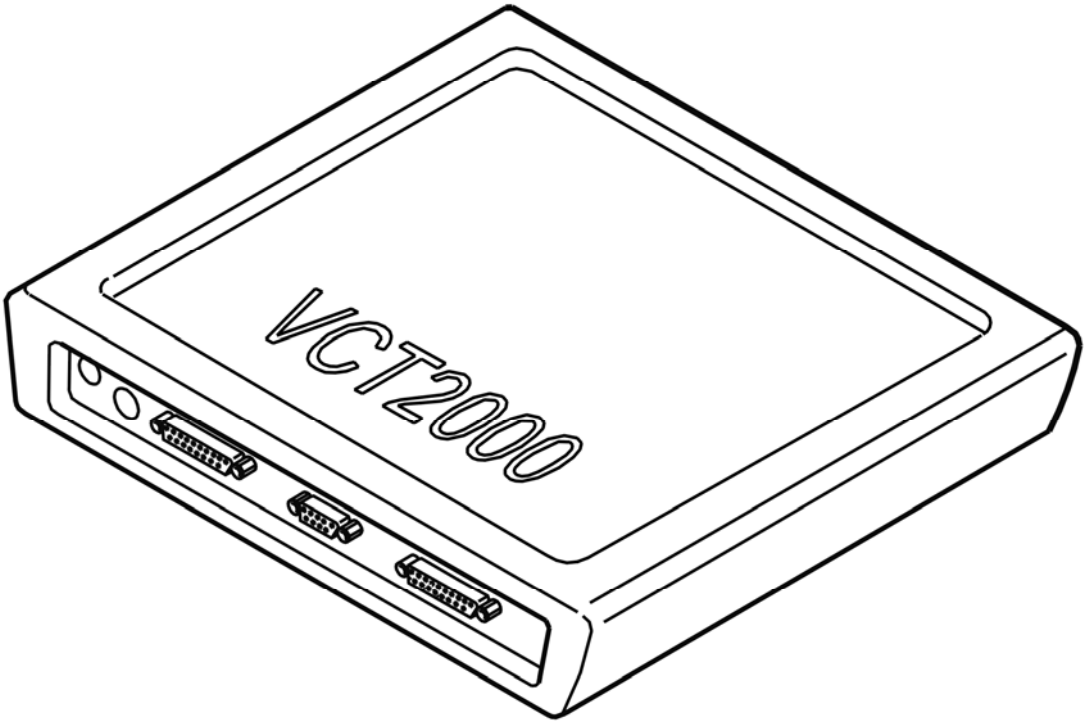

Fig. 425: Identifying VCT2000 Diagnostic Tool Symbol In VIDA
Courtesy of VOLVO CARS CORPORATION

- **Continue**

  Refer to **VERIFICATION**

VERIFICATION

VERIFICATION

HINT: After carrying out the repair, check that the fault has been remedied.

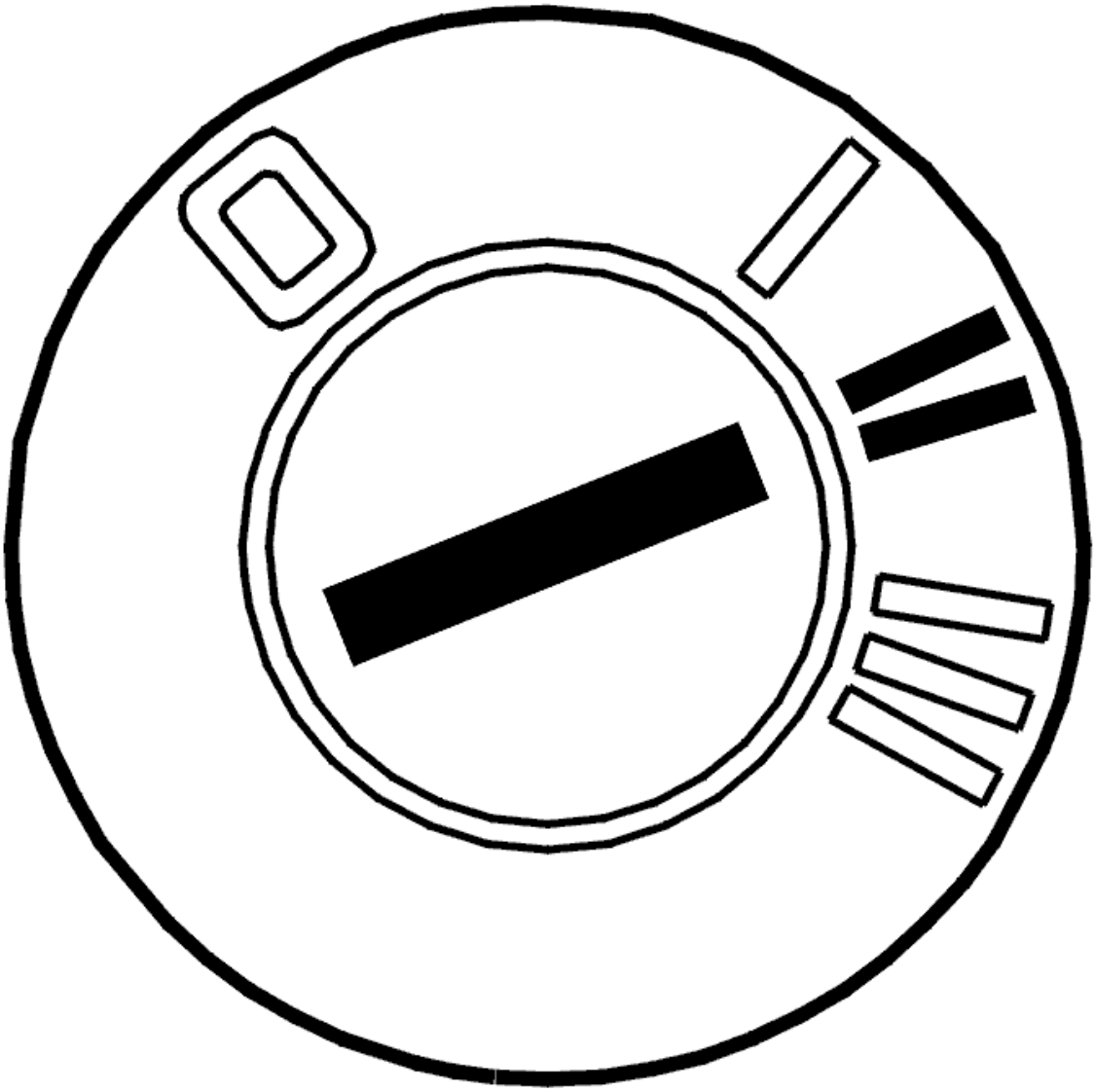

Fig. 426: Identifying Ignition ON
Courtesy of VOLVO CARS CORPORATION

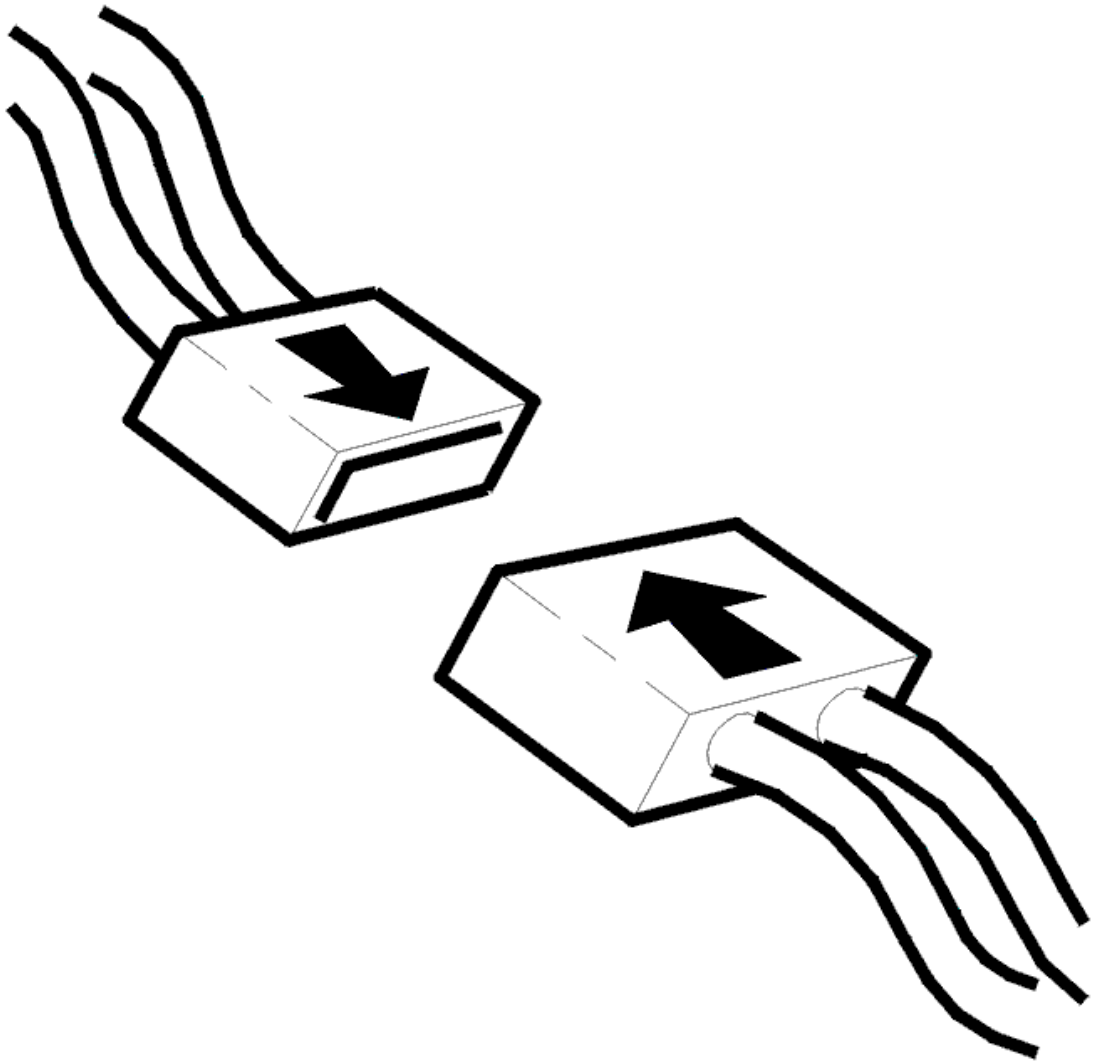

Fig. 427: Identifying Connector(s) Reinstallation
Courtesy of VOLVO CARS CORPORATION

- Ignition off.
- Reconnect the connectors, reinstall components etc.
- Raise the car so that the drive wheels are unimpeded.
- Start the car.
- Move the gear selector to position D and accelerate so that the speed exceeds 50 km/h.
- Brake the wheels and let the engine run at idling speed without touching the accelerator pedal (AP). The neutral check should display "Active" status (this may take up to 30 seconds).
- Brake the wheels, move the gear selector to position D. Carefully depress the accelerator and check that the neutral check changes to the "Inactive" status.

  Check that the function operates in gear positions 4, 3 and 2.

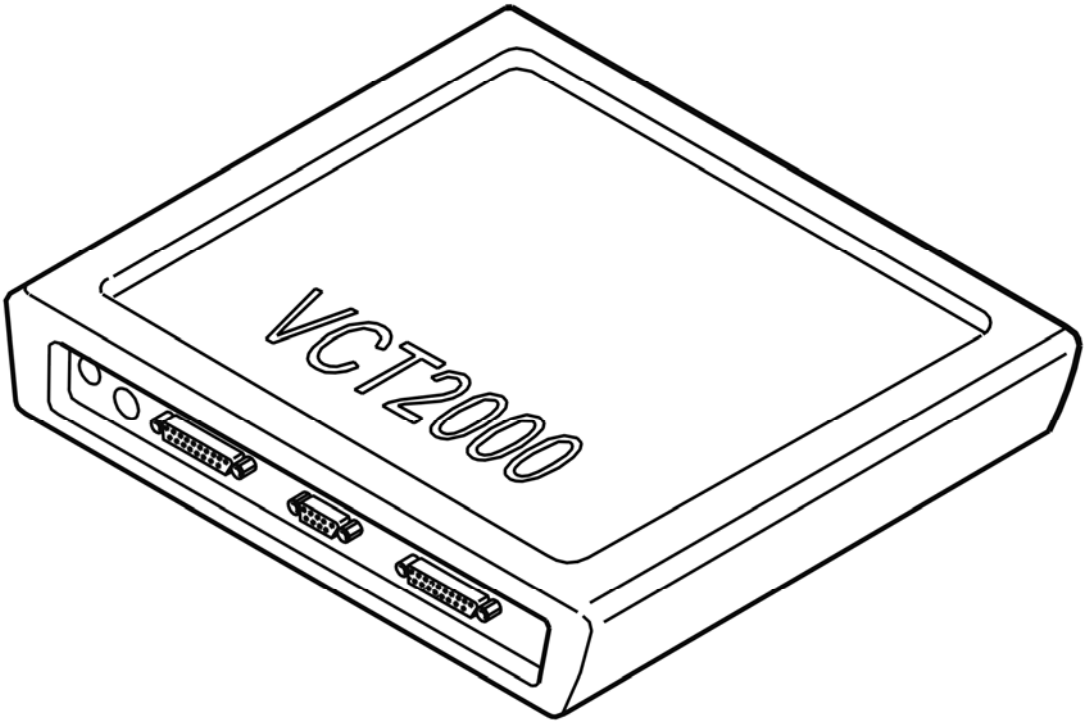

Fig. 428: Identifying VCT2000 Diagnostic Tool Symbol In VIDA
Courtesy of VOLVO CARS CORPORATION

Is transmission function OK ?

- **YES**

  VERIFIED: Troubleshooting has been completed.

- **NO**

  Refer to **INFORMATION**

INFORMATION

FAULT-TRACING INFORMATION

The fault should have been detected and remedied. As this is not the case fault-tracing has failed.

Exit fault-tracing for this diagnostic trouble code (DTC) or make another attempt.

TCM-012C: NEUTRAL CHECK. THE ENGINE SPEED (RPM) OSCILLATES (AW50/51 AWD; AW55-50/51SN; 2003-2007)

DIAGNOSTIC TROUBLE CODE (DTC) INFORMATION

Condition

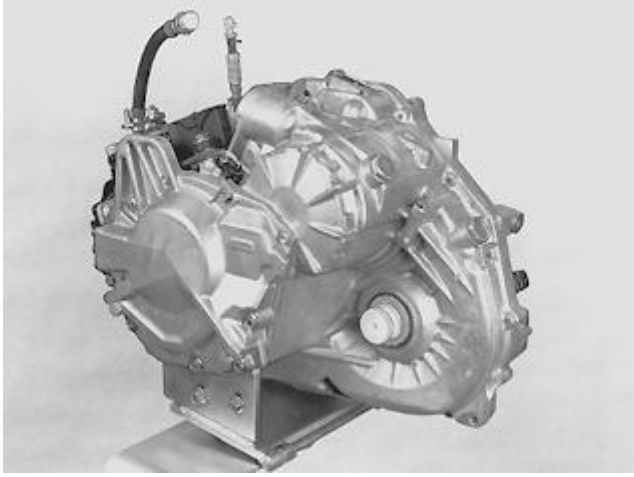

Fig. 429: Identifying Transmission
Courtesy of VOLVO CARS CORPORATION

The driving section of the transmission is disengaged when certain conditions are met:

- Stationary
- Engine idling
- Stop pedal depressed
- Gear position D, 3 or 4.

The function decreases fuel consumption and vibration from the transmission when running the engine at idle speed.

Diagnostic trouble code (DTC) TCM-012C is stored if the transmission control module (TCM) registers that the engine is juddering or running unevenly when engaging clutch C1.

Substitute Value

- The transmission control module (TCM) "Emergency mode I" program has been initiated.

Possible Source

- Solenoid SLS jammed in the ON position
- Internal fault in the transmission
- Internal fault in the control module.

Fault symptom[s]

- General orange warning lamp lit

- The engine speed (RPM) oscillates
- No lock-up function
- Malfunction indicator lamp (MIL) lit.

THE-ENGINE: SPEED (RPM) OSCILLATES

CHECKS

CHECKING THE NEUTRAL CHECK

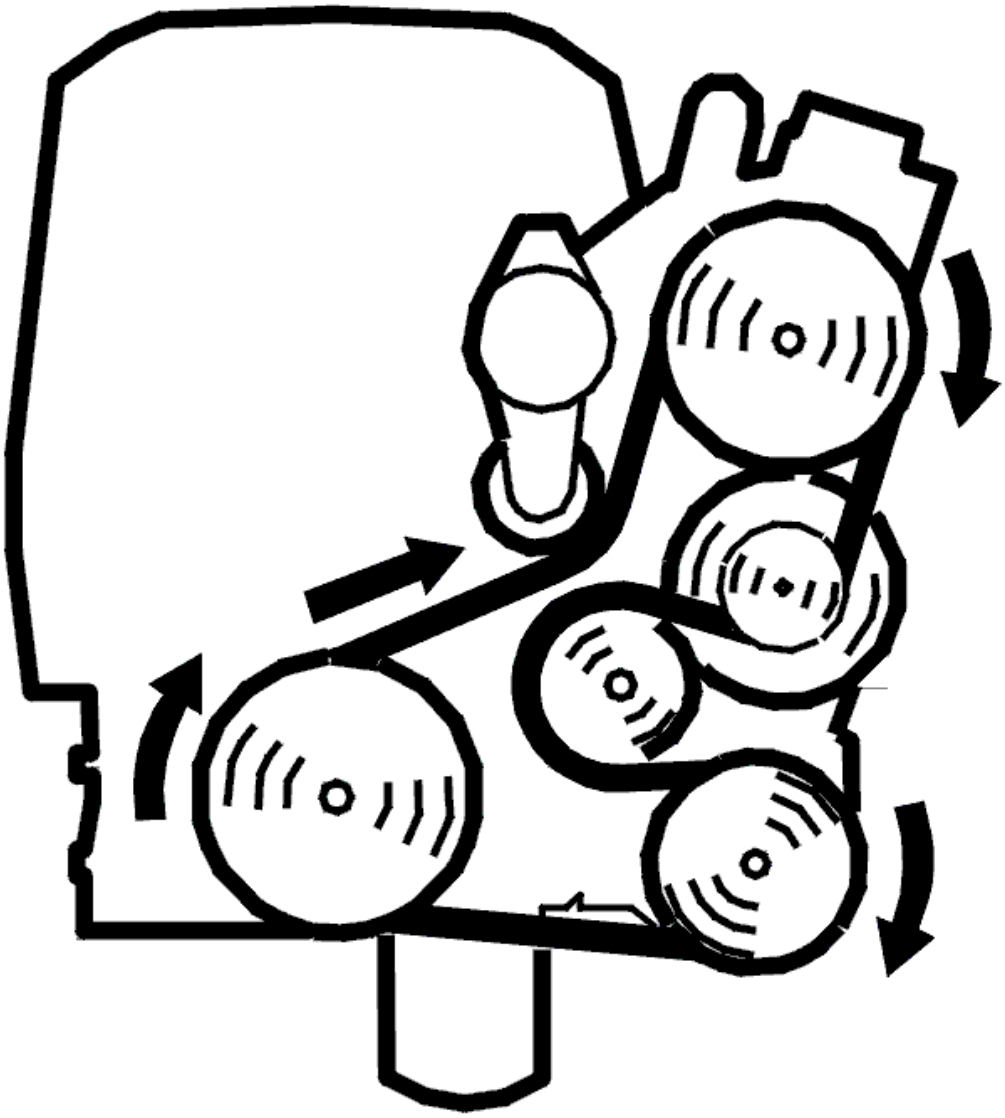

Fig. 430: Identifying Belt Routing
Courtesy of VOLVO CARS CORPORATION

- Ignition off
- Check the transmission connectors and the control module connector. Check for contact resistance and

oxidation. See **CONTACT RESISTANCE AND OXIDATION**

- Reconnect the connectors, reinstall components etc.
- Raise the car so that the drive wheels can rotate freely
- Start the car
- Move the gear selector to position D. Accelerate so that the speed exceeds 50 km/h
- Brake the wheels and let the engine run at idling speed without touching the accelerator pedal (AP). The neutral check must display the status as "Active" (this may take up to 30 seconds)
- Brake the wheels. Move the gear selector to position D. Carefully depress the accelerator. Check that the neutral check changes to the "Inactive" status.

  The engine speed (RPM) should be even when transferring from Active to Inactive status.

  Check that the function operates in gear positions 4, 3 and 2.

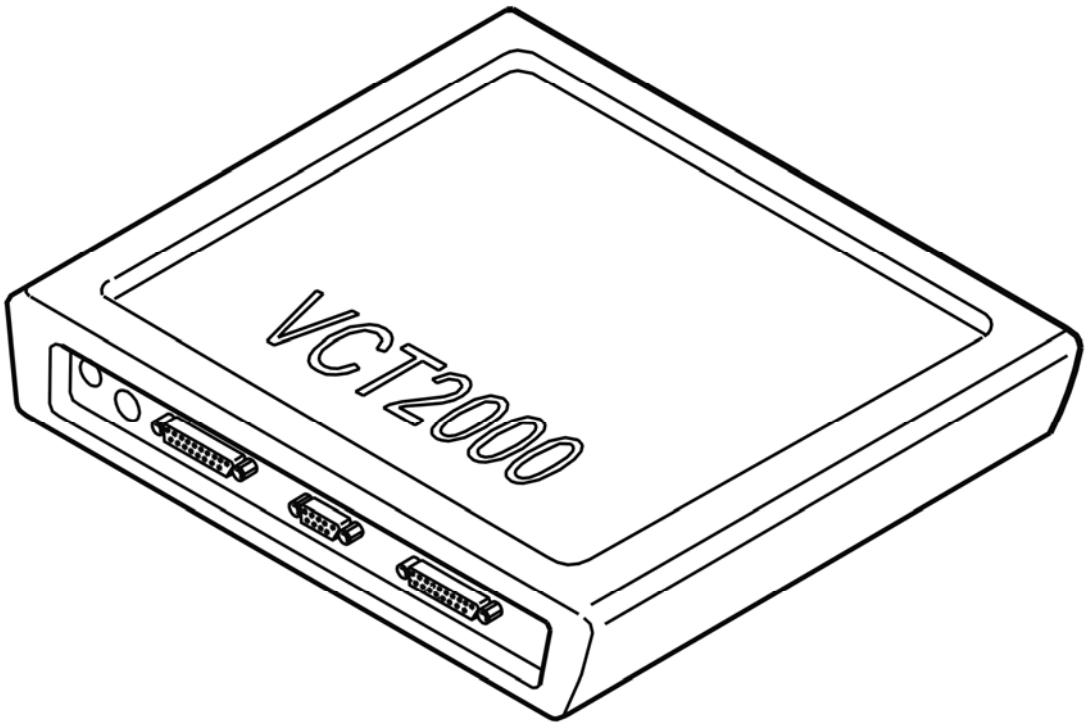

Fig. 431: Identifying VCT2000 Diagnostic Tool Symbol In VIDA
Courtesy of VOLVO CARS CORPORATION

Is the function of the transmission OK?

- **YES**

  Refer to **TEST DRIVING**

- **NO**

  Refer to **CHECKING SOLENOID SLT**

CHECKING SOLENOID SLT

NOTE: The transmission must not be colder than room temperature when activated.

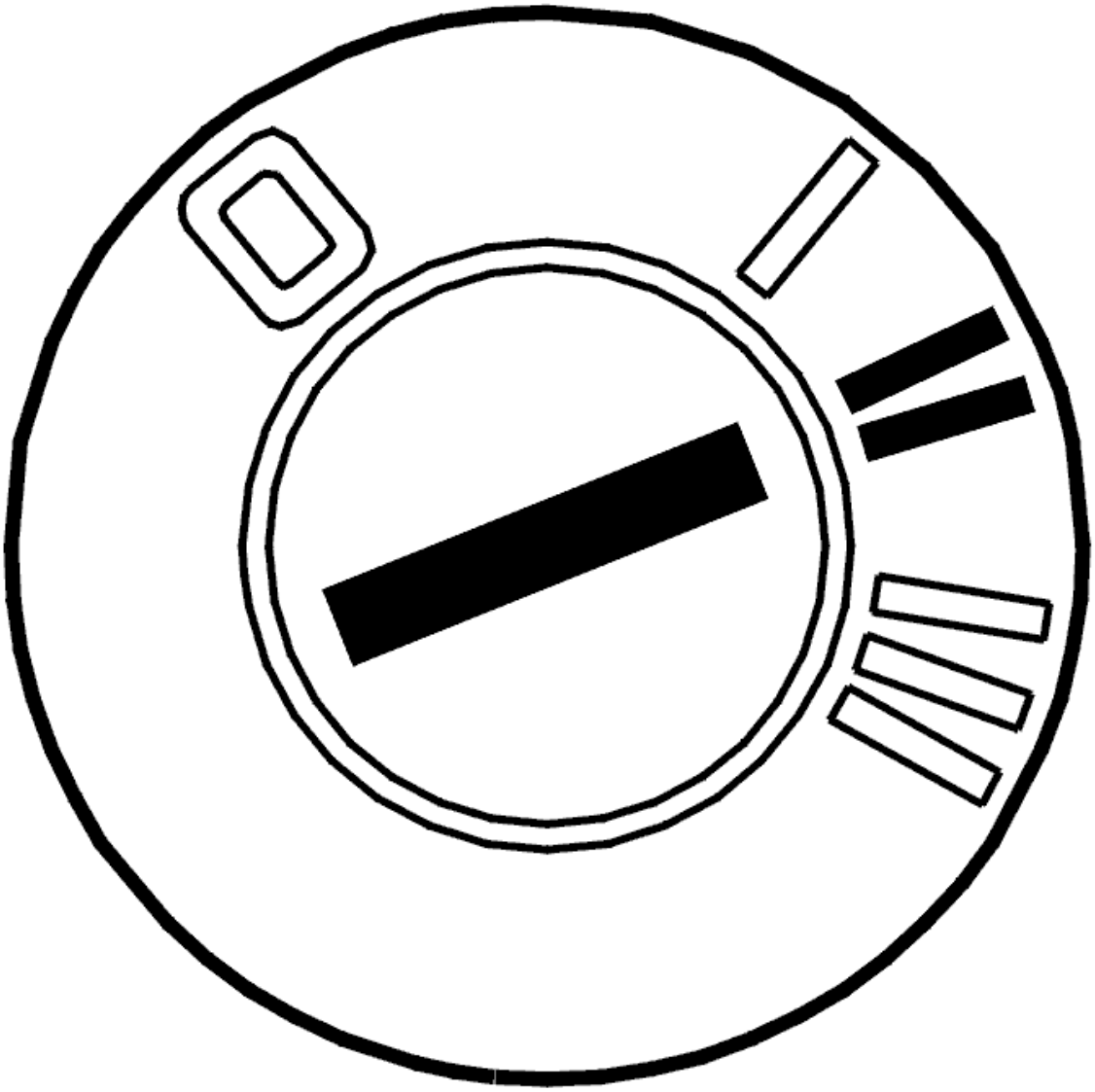

Fig. 432: Identifying Ignition ON
Courtesy of VOLVO CARS CORPORATION

- Ignition on
- Activate solenoid SLT.

  The solenoid must "click" on activation (use a stethoscope to hear the sound more clearly) and the current

must oscillate between 0 and 1 A. There is a mechanical fault if no "clicking" noise is heard.

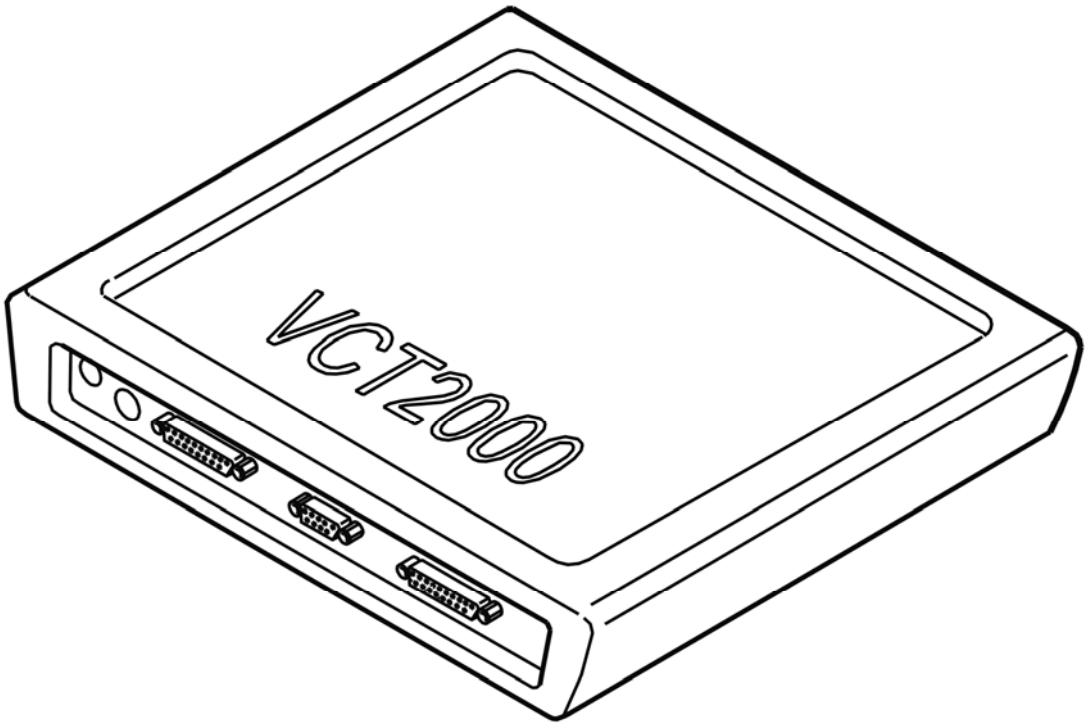

Fig. 433: Identifying VCT2000 Diagnostic Tool Symbol In VIDA
Courtesy of VOLVO CARS CORPORATION

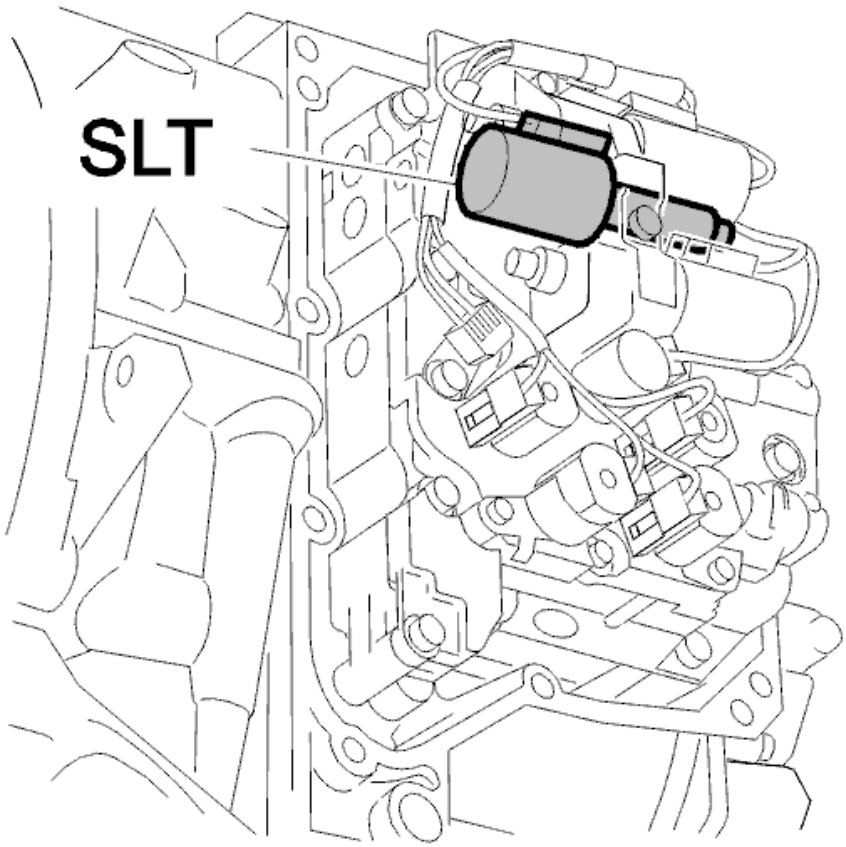

Fig. 434: Identifying Line Pressure Solenoid
Courtesy of VOLVO CARS CORPORATION

Was solenoid SLT OK?

- **YES**

  Refer to **TEST DRIVING**

- **NO**

  Refer to **REPLACING THE TRANSMISSION CONTROL SYSTEM**

TEST DRIVING

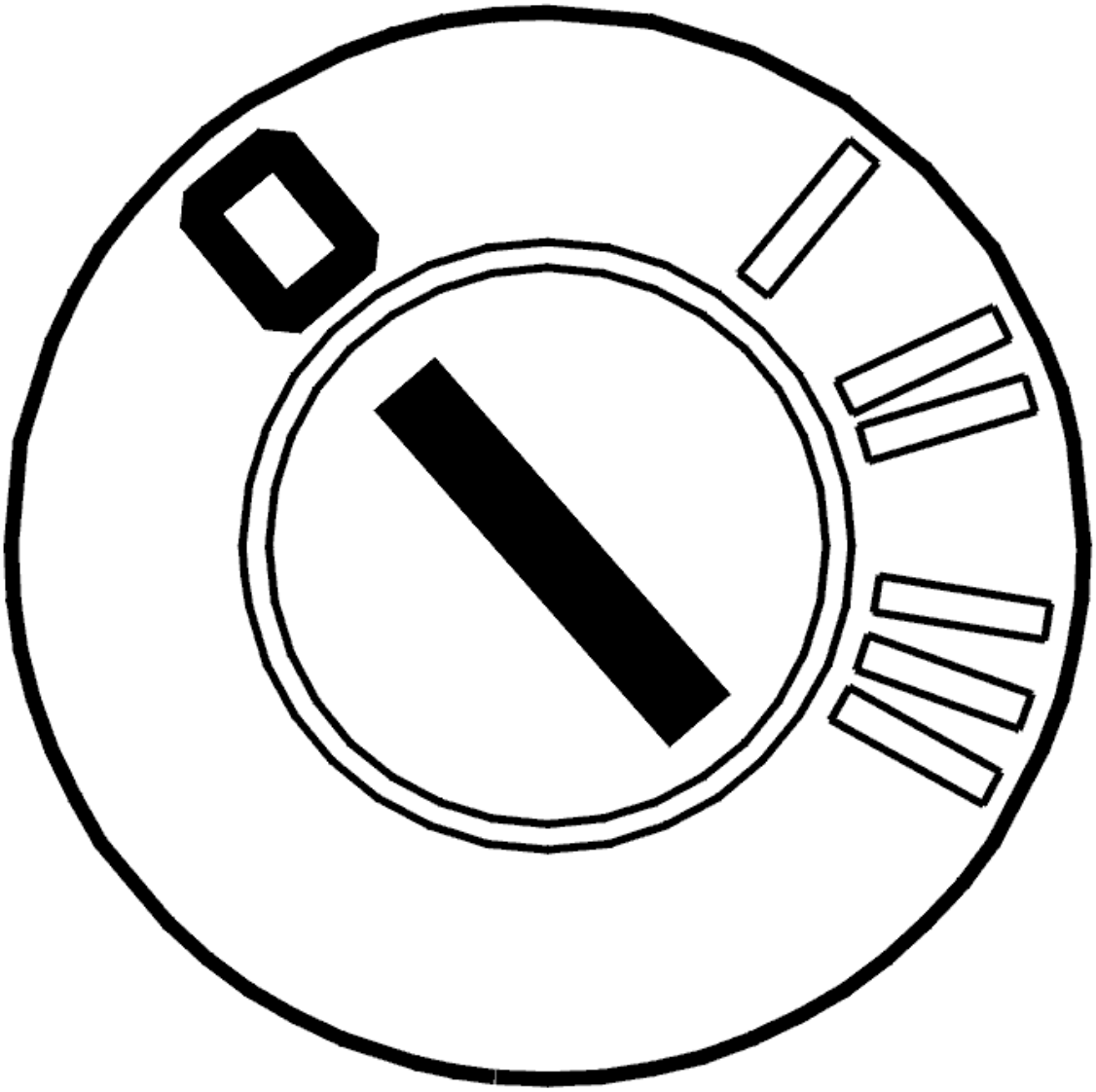

Fig. 435: Identifying Ignition OFF
Courtesy of VOLVO CARS CORPORATION

- Ignition off
- Reconnect the connectors, reinstall components etc.
- Test drive the car. See **VERIFICATION**.

  Check that the shifts and the neutral check function without any problems.

  Other information

  - To access the transmission connectors, see **CONNECTORS, TRANSMISSION, DISCONNECTING / CONNECTING**
  - To access the control module connector, see **TRANSMISSION CONTROL MODULE (TCM), REPLACING** .

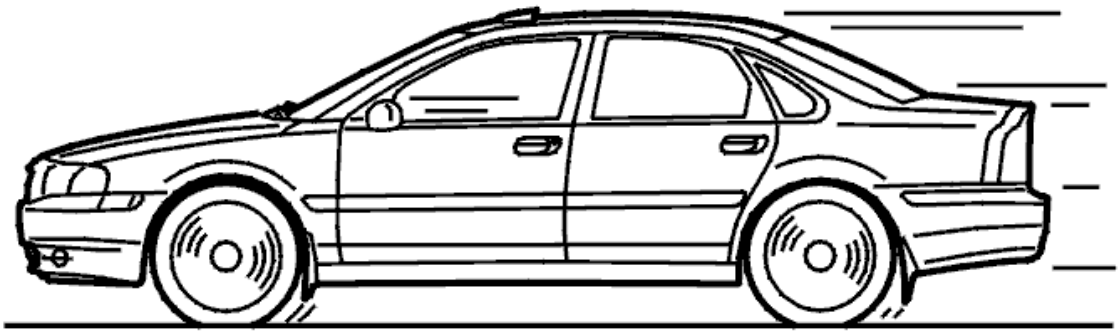

Fig. 436: Identifying Test Drive
Courtesy of VOLVO CARS CORPORATION

Is the transmission operating correctly?

- **YES**

  OKAY: Troubleshooting has been completed.

- **NO**

  Refer to **REPLACING THE TRANSMISSION CONTROL SYSTEM**

REPLACING THE TRANSMISSION CONTROL SYSTEM

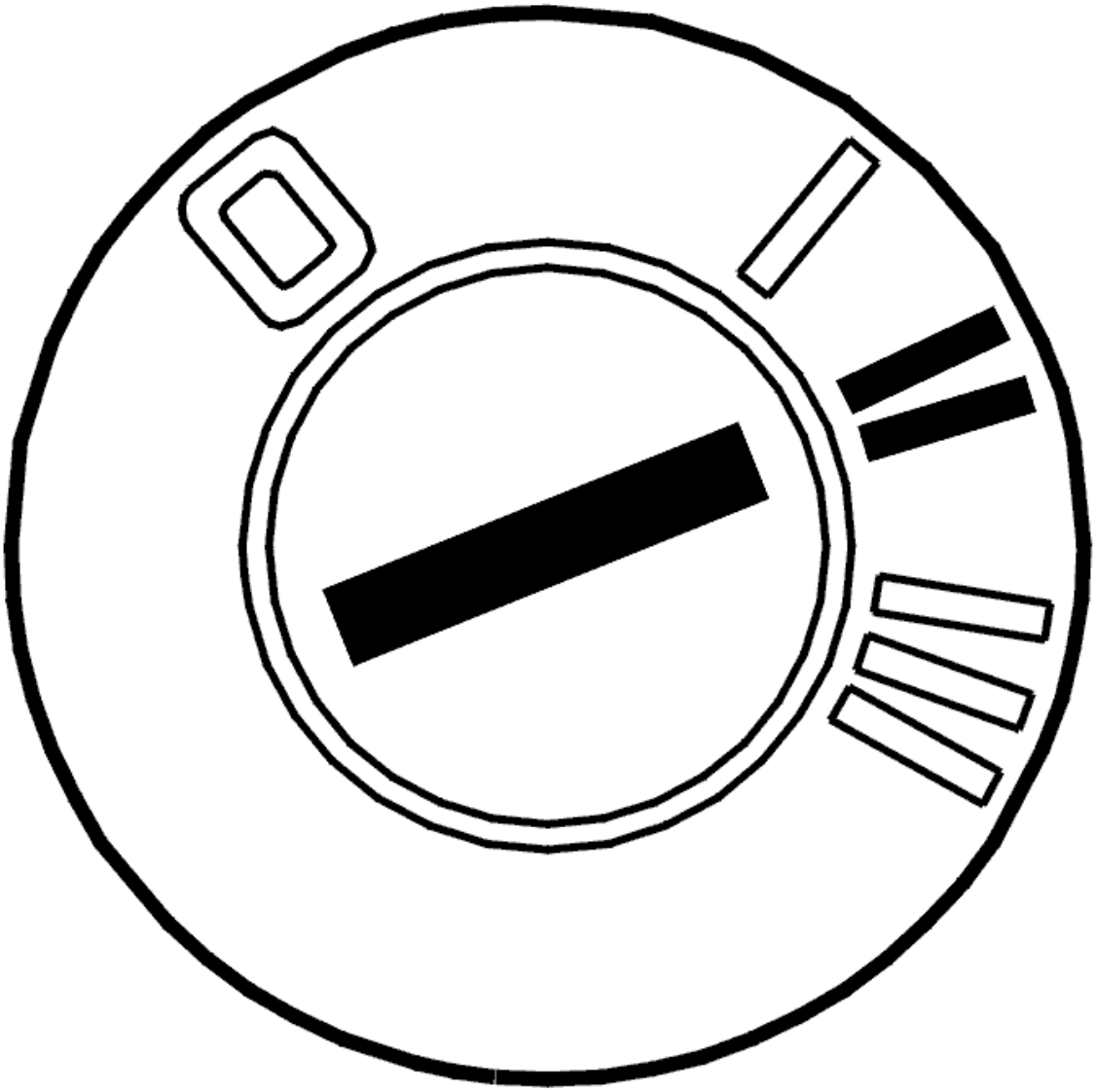

Fig. 437: Identifying Ignition ON
Courtesy of VOLVO CARS CORPORATION

- Ignition off.

  The transmission control system must be replaced if there is a fault in solenoid SLT. To replace the solenoids and the transmission control system, see **SOLENOID CONTROL SYSTEM, REPLACING** .

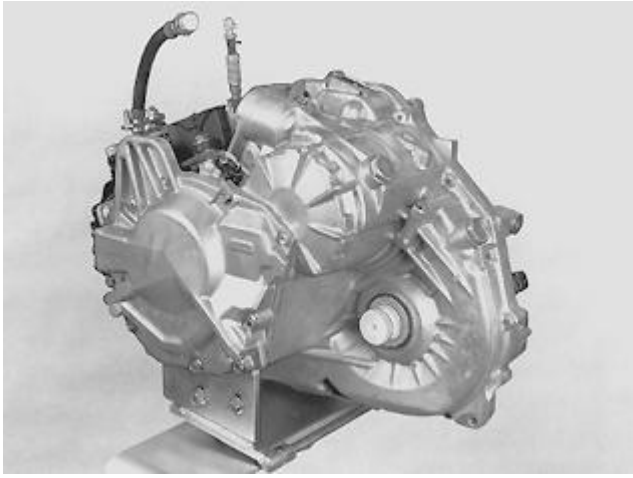

Fig. 438: Identifying Transmission
Courtesy of VOLVO CARS CORPORATION

- **Continue**

  Refer to **RESETTING THE ADAPTATION**

RESETTING THE ADAPTATION

RESETTING ADAPTATION AND THE COUNTER FOR "TRANSMISSION OIL CHANGE"

HINT: The transmission has torque controlled adaptive pressure control. Pressure control means that the transmission regulates the pressure itself during each gear shift. This avoids harsh gear shifting. Each gear shift is evaluated by the control module and stored in the memory. This allows for compensation for wear and tear in the transmission and clutch. It is important that the adaptation in the memory is reset after the transmission has been repaired. This is to ensure normal operation. The oil is replaced during repair; the "Transmission oil change" counter must be reset. If the counter is not reset when the fluid is drained and replaced, there is a risk that a diagnostic trouble code (DTC) will be stored in incorrect circumstances.

NOTE: This applies only if the transmission or one of the components in the transmission have been replaced.

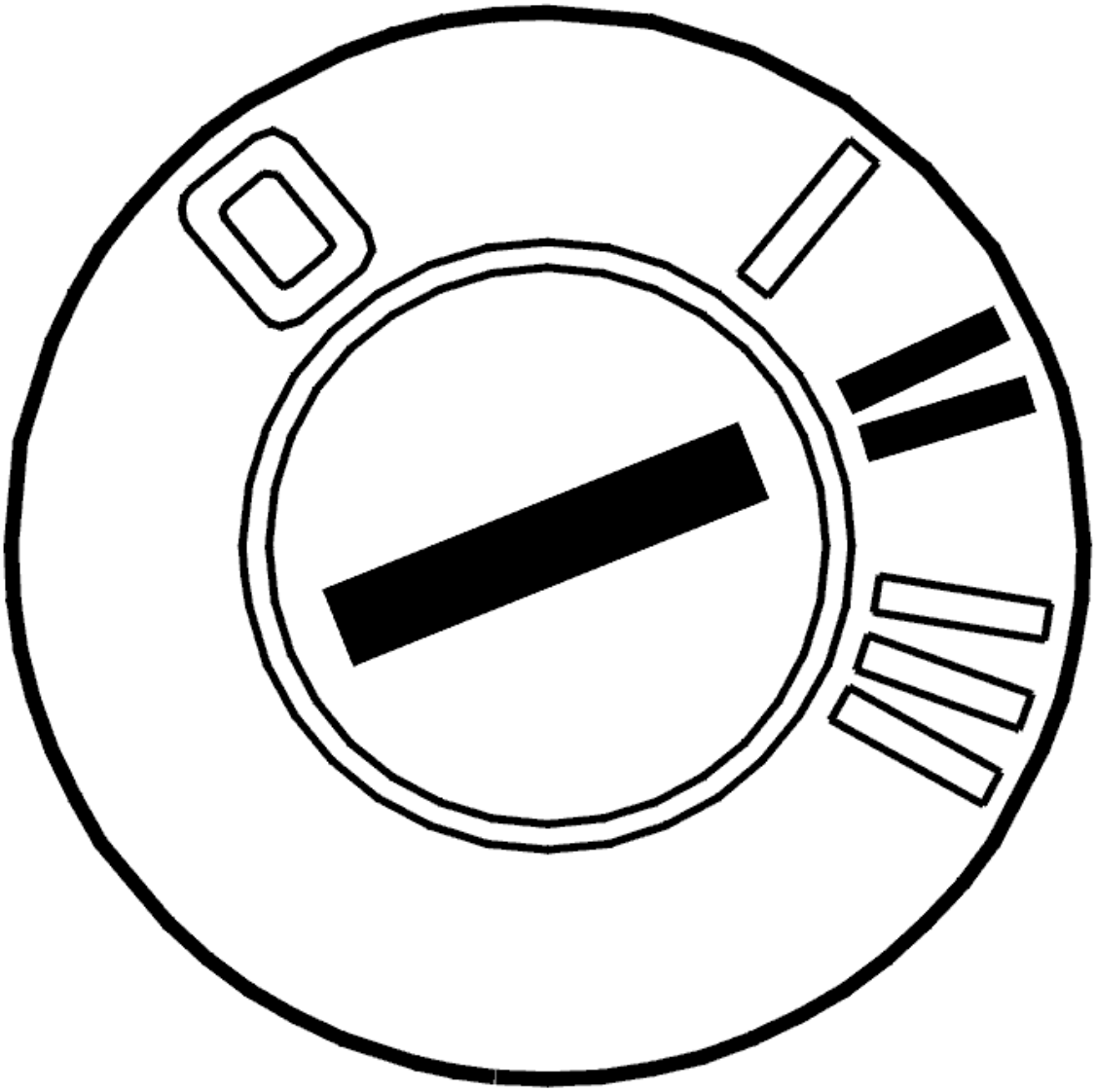

Fig. 439: Identifying Ignition ON
Courtesy of VOLVO CARS CORPORATION

- Ignition on.

  Click on the VCT2000 symbol to reset the adaptation and counter.

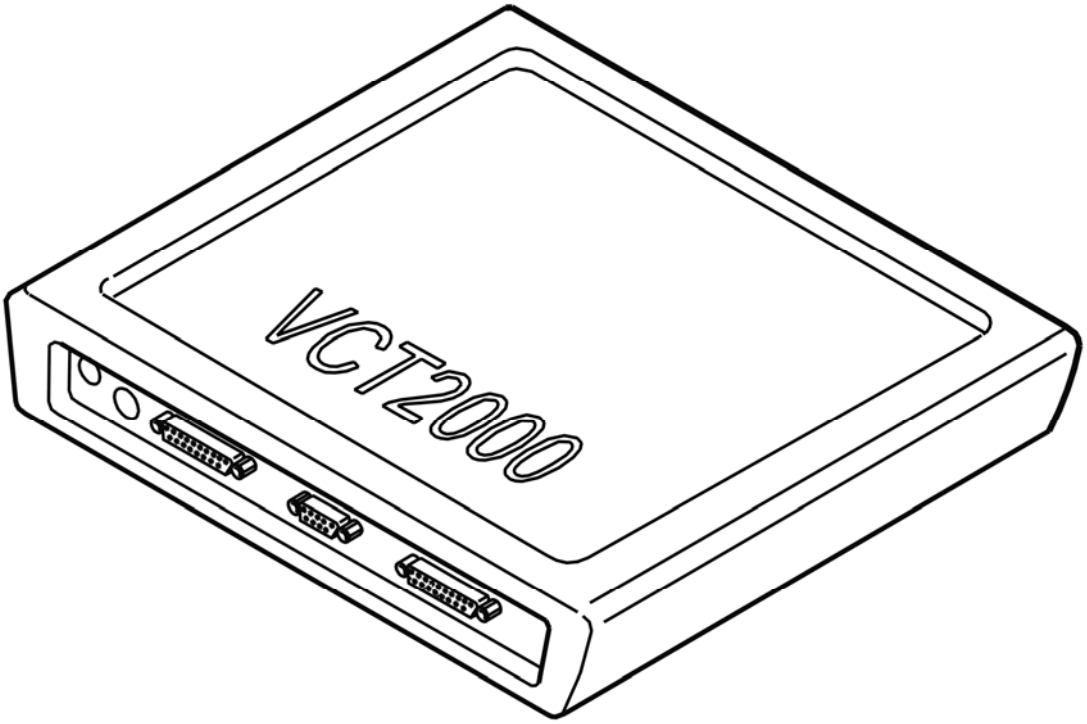

Fig. 440: Identifying VCT2000 Diagnostic Tool Symbol In VIDA
Courtesy of VOLVO CARS CORPORATION

- **Continue**

  Refer to **VERIFICATION**

VERIFICATION

VERIFICATION

HINT: After carrying out the repair, check that the fault has been remedied.

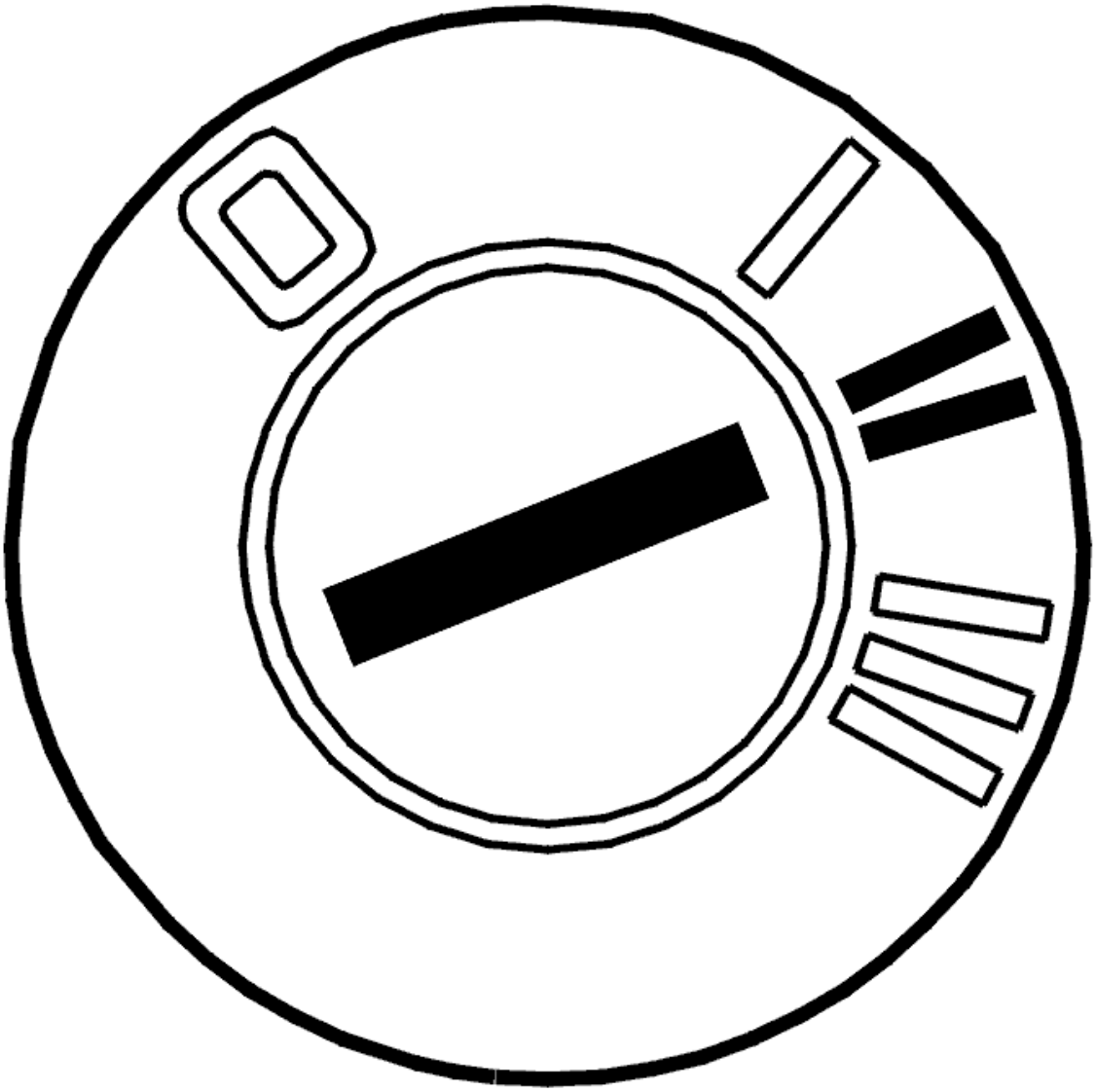

Fig. 441: Identifying Ignition ON
Courtesy of VOLVO CARS CORPORATION

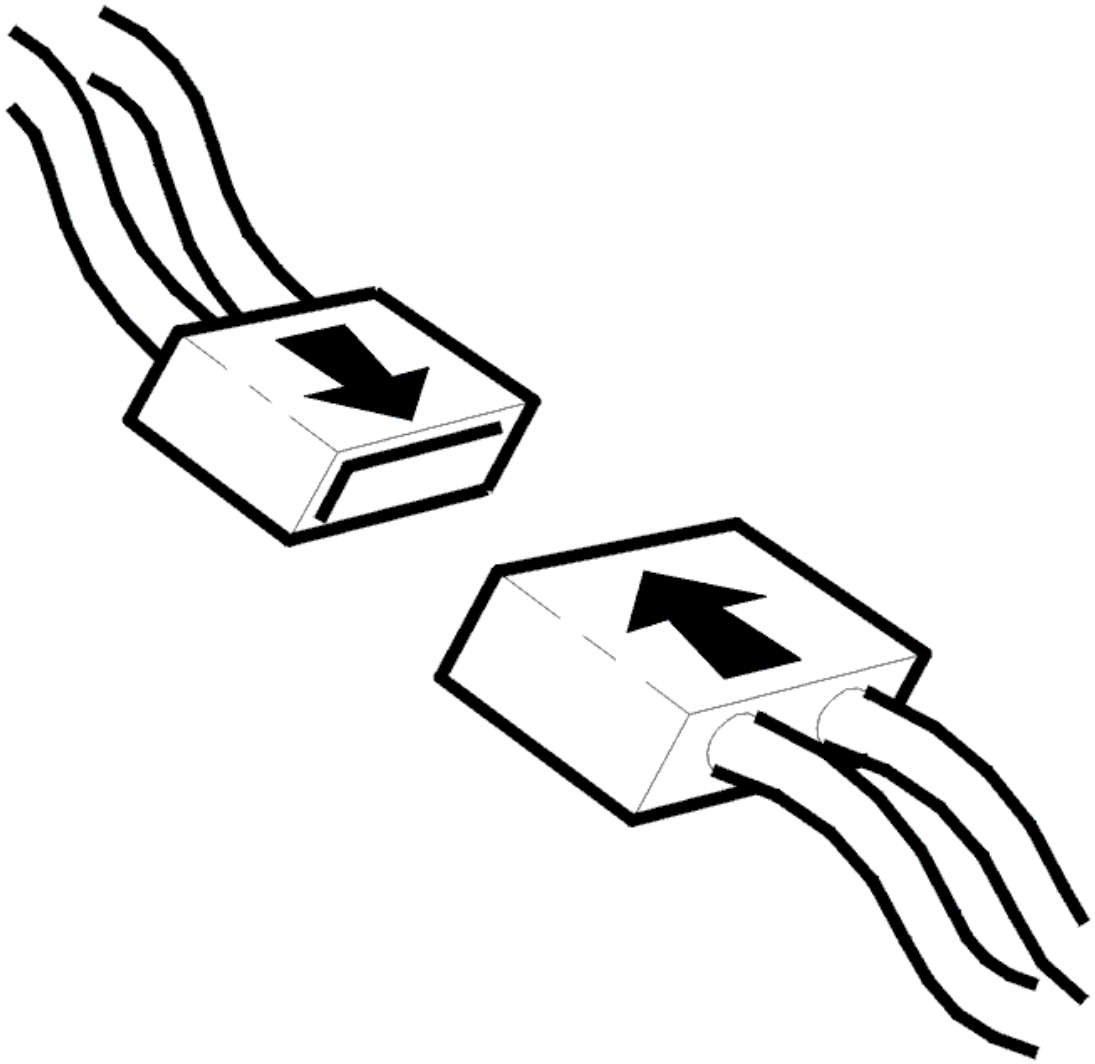

Fig. 442: Identifying Connector(s) Reinstallation
Courtesy of VOLVO CARS CORPORATION

- Ignition off.
- Reconnect the connectors, reinstall components etc.
- Raise the car so that the drive wheels are unimpeded.
- Start the car.
- Move the gear selector to position D and accelerate so that the speed exceeds 50 km/h.
- Brake the wheels and let the engine run at idling speed without touching the accelerator pedal (AP). The neutral check should display "Active" status (this may take up to 30 seconds).
- Brake the wheels, move the gear selector to position D. Carefully depress the accelerator and check that the neutral check changes to the "Inactive" status.

  Check that the function operates in gear positions 4, 3 and 2.

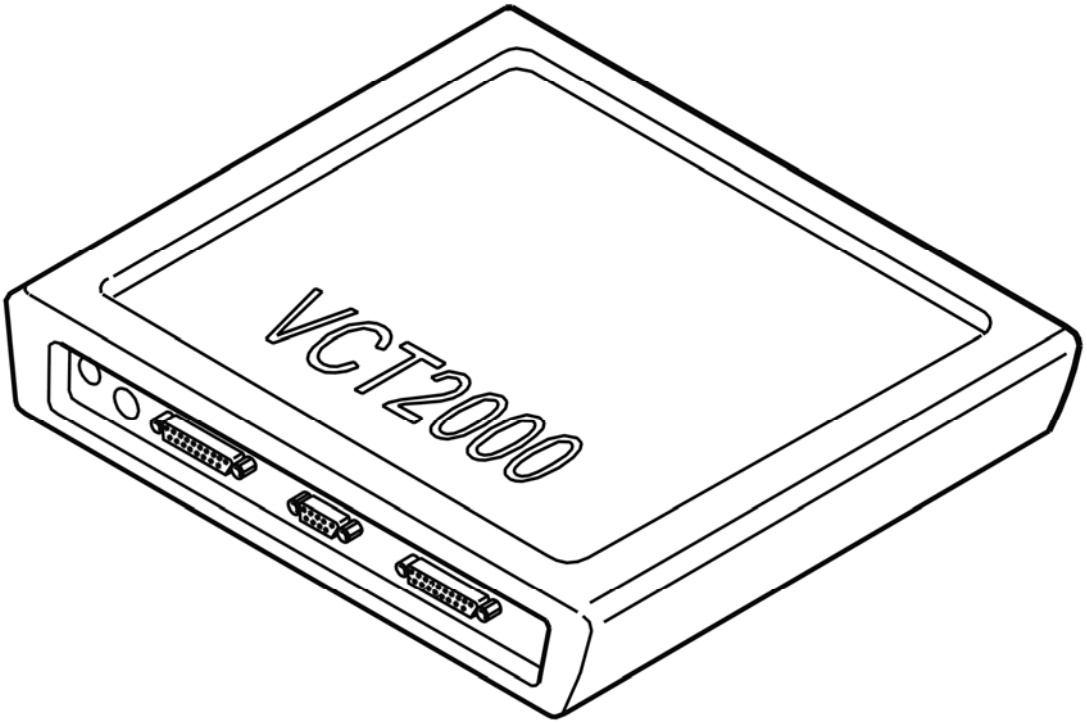

Fig. 443: Identifying VCT2000 Diagnostic Tool Symbol In VIDA
Courtesy of VOLVO CARS CORPORATION

Is transmission function OK ?

- **YES**

  VERIFIED: Troubleshooting has been completed.

- **NO**

  Refer to **INFORMATION**

INFORMATION

FAULT-TRACING INFORMATION

The fault should have been detected and remedied. As this is not the case fault-tracing has failed.

Exit fault-tracing for this diagnostic trouble code (DTC) or make another attempt.

TCM-0350: TRANSMISSION. WRONG TYPE OF TRANSMISSION (4T65 AWD; 2003-2006)

DIAGNOSTIC TROUBLE CODE (DTC) INFORMATION TCM-0350

Condition

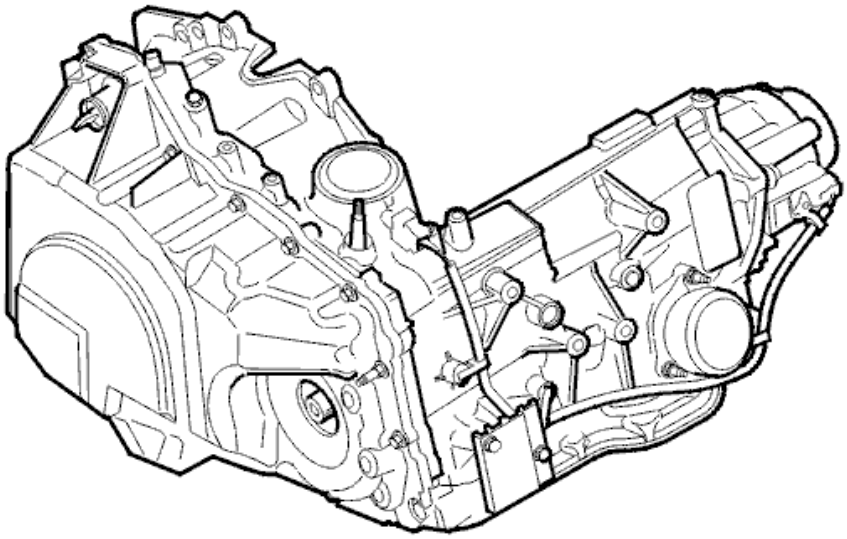

Fig. 444: Identifying Transmission
Courtesy of VOLVO CARS CORPORATION

Transmissions 4T65EV and 4T65EV-GT have mechanical differences but the same appearance. If a transmission of the wrong type be installed in the car, the transmission control module (TCM) can use the gear ratios to identify that it is the wrong type.

Diagnostic trouble code (DTC) TCM-0350 is stored if the transmission control module (TCM) registers that the wrong type of transmission is installed in the vehicle.

Substitute Value

- None.

Possible Source

- Incorrect transmission in the vehicle.

Fault symptom[s]

- General warning lamp lit.

TCM-E000: CONTROL MODULE COMMUNICATION. FAULTY COMMUNICATION (4T65 AWD; 2005-2006)

DIAGNOSTIC TROUBLE CODE (DTC) INFORMATION TCM-E000

Condition

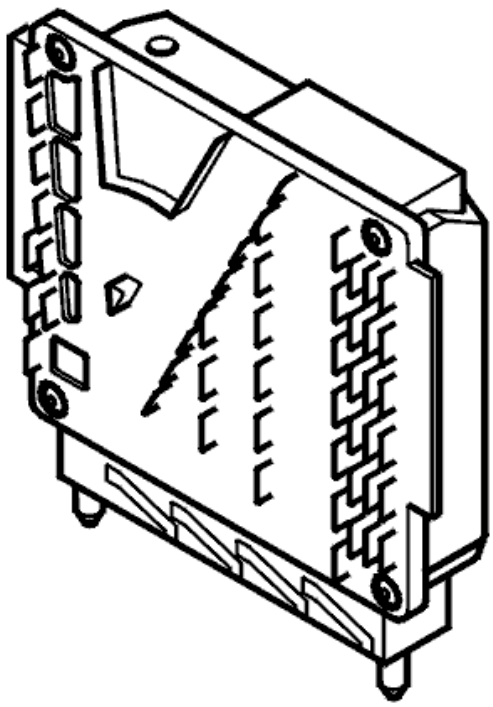

Fig. 445: Identifying Transmission Control Module (TCM)
Courtesy of VOLVO CARS CORPORATION

The control modules transmit and receive information via a standardized serial communication method - CAN (Controller Area Network). The diagnostic trouble code (DTC) is stored if the control module registers serious interference (CAN communication blocked).

NOTE: **In the event of system communication problems, it is not possible to communicate with the control module. Therefore it will only be possible to read off the fault if it is intermittent.**

Substitute Value

- Control module shuts itself off ("bus-off").

  HINT: The control module will remain shut off until the power supply is broken (15, 30, X). When the power supply is connected the control module will make a new attempt to communicate.

Possible Source

- Short-circuit between the control area network (CAN) wiring
- Open-circuit in the control area network (CAN) wiring
- Damaged pins on Transmission control module (TCM).
- Internal fault in the control module
- Internal fault in another control module in the same part of the control area network (CAN).

Fault symptom[s]

- No shifting.
- Text window and warning symbol/Yellow symbol and text message

TCM-E000: CONTROL MODULE COMMUNICATION. FAULTY COMMUNICATION (4T65 AWD; AW50/51 AWD; AW55-50/51SN; 2003-2004)

DIAGNOSTIC TROUBLE CODE (DTC) INFORMATION TCM-E000

see **DIAGNOSTIC TROUBLE CODE (DTC) INFORMATION TCM-E000**

FAULTY COMMUNICATION

see **FAULTY COMMUNICATION**

TCM-E000: CONTROL MODULE COMMUNICATION. FAULTY COMMUNICATION (AW50/51 AWD; AW55-50/51SN; 2005-2007)

DIAGNOSTIC TROUBLE CODE (DTC) INFORMATION TCM-E000

see **DIAGNOSTIC TROUBLE CODE (DTC) INFORMATION TCM-E000**

TCM-E003: CONFIGURATION FAULT. FAULTY CONFIGURATION (4T65 AWD; 2005-2006)

DIAGNOSTIC TROUBLE CODE (DTC) INFORMATION TCM-E003

Condition

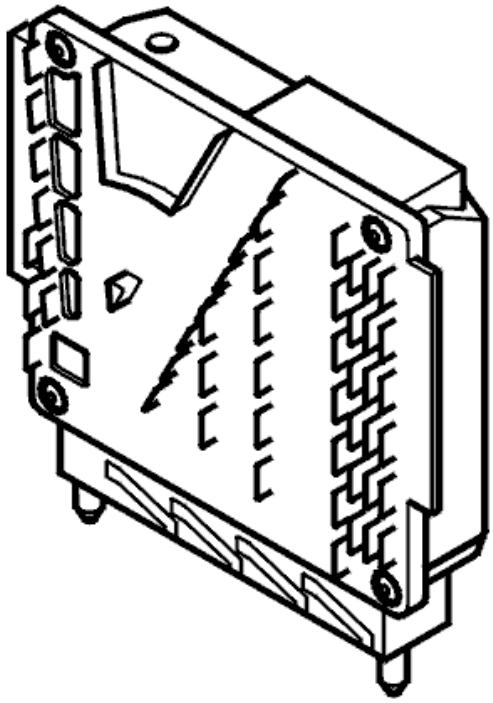

Fig. 446: Identifying Transmission Control Module (TCM)
Courtesy of VOLVO CARS CORPORATION

The control module compares its configuration ID with the signal configuration transmitted on the control area network (CAN) by the central electronic module (CEM). If the configuration IDs do not correspond the fault code is stored. The diagnostic trouble code (DTC) is also stored if the communication between the control module and the central electronic module (CEM) is interrupted.

NOTE: **In the event of open-circuit in both the control area network (CAN) cables, it is not possible to communicate with the control module. Therefore it will only be possible to read off the diagnostic trouble code (DTC) if this type of fault is intermittent. When the diagnostic trouble code (DTC) is stored, the control module responds to the diagnostic command, however normal control area network (CAN) communication does not work. ("Expulsion mode")**

Substitute Value

- The transmission control module (TCM) "Emergency mode I" program has been initiated.

Possible Source

- Faulty control area network (CAN) configuration ID. (The node is not intended for this car, for example a used control module with different software/hardware.)

- Open-circuit in the control area network (CAN) wiring between the control module and the central electrical module (CEM).

Fault symptom[s]

- No shifting.

TCM-E003: CONFIGURATION FAULT. FAULTY CONFIGURATION (4T65 AWD; AW50/51 AWD; AW55-50/51SN; 2003-2004)

DIAGNOSTIC TROUBLE CODE (DTC) INFORMATION TCM-E003

see **DIAGNOSTIC TROUBLE CODE (DTC) INFORMATION TCM-E003**

TCM-E003: CONFIGURATION FAULT. FAULTY CONFIGURATION (AW50/51 AWD; AW55-50/51SN; 2005-2007)

DIAGNOSTIC TROUBLE CODE (DTC) INFORMATION TCM-E003

see **DIAGNOSTIC TROUBLE CODE (DTC) INFORMATION TCM-E003**

TCM-P021868: TRANSMISSION FLUID OVERTEMPERATURE CONDITION. ALGORITHM BASED FAILURES. EVENT INFORMATION (B6324S, TF-80SC; B6324S, TF-80SC AWD; 2007-2010)

DIAGNOSTIC TROUBLE CODE (DTC) INFORMATION TCM-P021868

Condition

NOTE: **This diagnostic trouble code (DTC) status is an event controlled diagnostic trouble code (DTC). An event controlled diagnostic trouble code (DTC) does not mean that there is a fault in the control module when it is active, but is designed as information.**

The oil temperature sensor provides the Transmission control module (TCM) with a signal that is used, among other things, for the temperature controlled lock-up and engagement high temperature program functions.

If the Transmission control module (TCM) registers that oil temperature in the transmission is too high, a signal is transmitted to the Engine control module (ECM) to reduce the engine's torque. This is to protect the gear box from too high load, which can result in internal mechanical faults.

The diagnostic trouble code (DTC) is stored if the control module detects that:

- The gear box oil temperature has been greater than 135 °C for longer than 1 minute.
- The output speed from the gearbox exceeds 5726 RPM (approximately 140 km/h).

The control module's test for the diagnostic trouble code (DTC) starts in the event of:

- Normal driving.

NOTE: The control module can only detect the fault once the test has been started and the diagnostic trouble code (DTC) is stored when the conditions are met.

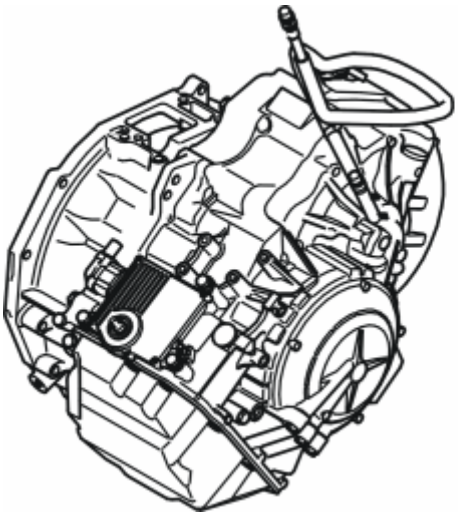

Fig. 447: Identifying Transmission
Courtesy of VOLVO CARS CORPORATION

Substitute Value

- The engine limits the torque until the gear box oil temperature has dropped below a certain level.

Possible Source

- The gear box oil has had too high a temperature for too long.

Fault symptom[s]

- Message in information display

FAULT-TRACING INFORMATION

INFORMATION

There is no fault-tracing for this diagnostic fault code (DTC).

For further information on this diagnostic trouble code, see Diagnostic trouble code (DTC) information.

TCM-P021868: TRANSMISSION FLUID OVERTEMPERATURE CONDITION. ALGORITHM BASED FAILURES. EVENT INFORMATION (B6324S5, TF-

80SC; B6324S5, TF-80SC AWD; 2011-2012)

DIAGNOSTIC TROUBLE CODE (DTC) INFORMATION TCM-P021868

see **DIAGNOSTIC TROUBLE CODE (DTC) INFORMATION TCM-P021868**

FAULT-TRACING INFORMATION

INFORMATION

There is no fault-tracing for this diagnostic fault code (DTC).

For further information on this diagnostic trouble code, see Diagnostic trouble code (DTC) information.

TCM-P050000: VEHICLE SPEED SENSOR A. GENERAL FAILURE INFORMATION. NO SUB TYPE INFORMATION (B6324S, TF-80SC; B6324S, TF-80SC AWD; 2007-2010)

DIAGNOSTIC TROUBLE CODE (DTC) INFORMATION TCM-P050000

Condition

The output speed sensor is located within the transmission. The transmission control module (TCM) uses the signal to calculate the RPM of the transmission output shaft. The signal is used to compare the outgoing RPM with the incoming RPM on the transmission and with vehicle speed. The brake control module transmits information on speed via the CAN network.

The control module uses these signals to calculate shifting time points. The RPM and vehicle speed data are also used to adjust system pressure and reduce engine torque when shifting. The result is smooth gear-shifting.

The information is also used to control the function.

The diagnostic trouble code (DTC) is stored if the control module detects that:

- The voltage in the circuit of the transmission output speed sensor is too low.

The control module's test for the diagnostic trouble code (DTC) starts in the event of:

- Normal driving.

NOTE: **The control module can only detect the fault once the test has been started and the diagnostic trouble code (DTC) is stored when the conditions are met.**

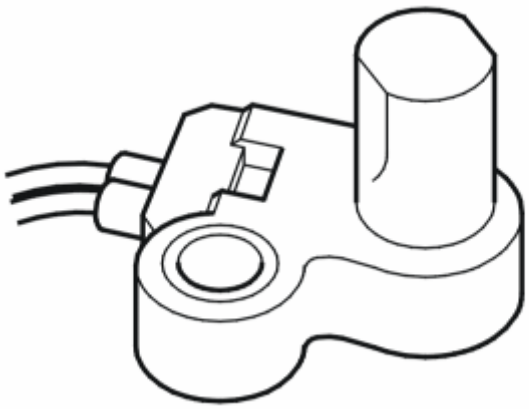

Fig. 448: Identifying Vehicle Speed Sensor
Courtesy of VOLVO CARS CORPORATION

Substitute Value

- The transmission control module (TCM) uses the speed signal from the brake control module (BCM).
- If the brake control module also sends a signal that the speed signal is incorrect, the auxiliary program **Emergency mode 1 will become** active.

  HINT: EMERGENCY MODE IN THE EVENT OF A FAULT

- Neutral control function is blocked.
- function is blocked.

Possible Source

- Break in circuit for output speed sensor.
- Power supply to output speed sensor short-circuited to ground.
- Transmission output speed sensor not working.
- Internal fault in the transmission control module (TCM).

Fault symptom[s]

- Malfunction indicator light (MIL), on
- General warning lamp lit
- No lock-up
- Rough gear shift
- No gear shift

FAULT-TRACING

CHECKS

CHECKING THE FUNCTION

WARNING: Ensure that the vehicle is safely raised. Check that no objects are caught in the tire treads.

CAUTION: On vehicles with four-wheel-drive, the tests should be carried out with the vehicle raised so that all four wheels can rotate freely with attachments far out on the link arms so that the drive shafts are not damaged.

NOTE: If the vehicle has TRACS or TC (STC, DSTC), this function must be disabled. This is carried out by removing the fuse for the brake system pump motor in the engine compartment relay and fusebox. Note that this will generate diagnostic trouble codes in the brake control module (BCM). These diagnostic trouble codes must be erased before the vehicle is returned to the customer.

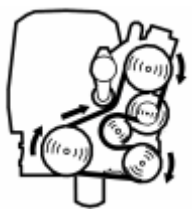

Fig. 449: Identifying Belt Routing
Courtesy of VOLVO CARS CORPORATION

- Raise the vehicle so that the drive wheels can rotate freely.
- Start the engine. Allow the engine to idle.
- Shift the gear selector to position D so that the drive wheels begin to rotate.

NOTE: Ensure that the wheels are not rotating when the gear selector is moved.

Read off the transmission output speed.

Check that the transmission speed is updated.

If the transmission input speed updates correctly it means that the fault was present previously but is not active now. There is an intermittent fault.

If the transmission input speed does not update correctly it means that the fault is permanent.

Fig. 450: Identifying VCT2000 Diagnostic Tool Symbol In VIDA
Courtesy of VOLVO CARS CORPORATION

- **Continue**

  Refer to **CHECKING THE WIRING AND SENSORS**

CHECKING THE WIRING AND SENSORS

Fig. 451: Identifying Ignition In Off Position
Courtesy of VOLVO CARS CORPORATION

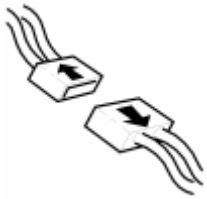

Fig. 452: Identifying Connectors
Courtesy of VOLVO CARS CORPORATION

- Ignition off.
- Disconnect the transmission connector.
- Transmission control module (TCM) disconnected.

  Check connector B (22-pin) for the transmission control module (TCM). Check for damaged or pressed in pins. Check for contact resistance and oxidation.

  HINT: Check the transmission speed sensor. See CHECKING INTERNAL COMPONENTS OF THE TRANSMISSION

  If a faulty value is measured in the test above, open the control system for the transmission and fault trace the wiring and components.

  If the wiring is faulty, replace the cable harness.

If the sensor is faulty, replace the transmission.

Remedy as necessary.

Other information

- see **CONNECTING THE BREAKOUT BOX**
- see **SIGNAL SPECIFICATION**
- see **TRANSMISSION - REMOVAL, REPLACEMENT AND INSTALLATION**
- see **TRANSMISSION CONTROL UNIT WIRING HARNESS**
- To access connector B:**TRANSMISSION CONTROL MODULE (TCM)**
- To access the transmission control system:**COVER CONTROL SYSTEM, REPLACING (2007-2011)**

Select one of the following options

1. Transmission replaced.

   Refer to **VERIFICATION**

2. Cable harness replaced.

   Refer to **RESETTING ADAPTATION**

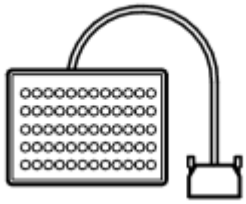

Fig. 453: Identifying Breakout Box
Courtesy of VOLVO CARS CORPORATION

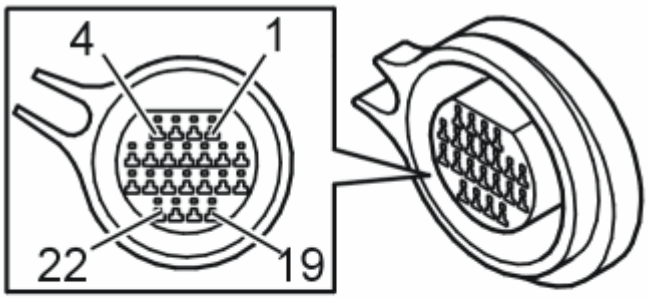

Fig. 454: Identifying 22--Pin Connector
Courtesy of VOLVO CARS CORPORATION

INFORMATION

FAULT-TRACING INFORMATION

In case of this defect, troubleshooting is not followed by verification.

The information can be displayed again or the fault-tracing for this fault can be interrupted.

VERIFICATION

VERIFICATION

HINT: After carrying out the repair, check that the fault has been remedied.

CAUTION: On vehicles with four-wheel-drive, the tests should be carried out with the vehicle raised so that all four wheels can rotate freely with attachments far out on the link arms so that the drive shafts are not damaged.

WARNING: Ensure that the vehicle is safely raised. Check that no objects are caught in the tire treads.

NOTE: If the vehicle has TRACS or TC (STC, DSTC), this function must be disabled. This is carried out by removing the fuse for the brake system pump motor in the engine compartment relay and fusebox. Note that this will generate diagnostic trouble codes in the brake control module (BCM). These diagnostic trouble codes must be erased before the vehicle is returned to the customer.

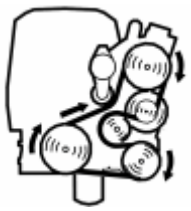

Fig. 455: Identifying Belt Routing
Courtesy of VOLVO CARS CORPORATION

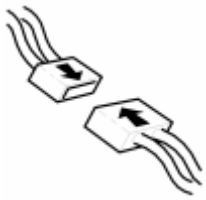

Fig. 456: Identifying Connector(s) Reinstallation
Courtesy of VOLVO CARS CORPORATION

- Ignition off.
- Reinstall the connectors, components etc.
- Raise the vehicle so that the drive wheels can rotate freely.
- Start the engine. Allow the engine to idle.
- Shift the gear selector to position D so that the drive wheels begin to rotate.

NOTE: Ensure that the wheels are not rotating when the gear selector is moved.

- Read off the transmission output speed.

Check that the transmission speed is updated.

NOTE: Diagnostic trouble codes may be stored in the brake control module (BCM) when the back wheels are stationary and the front wheels rotate. Erase any diagnostic trouble codes (DTCs) after fault-tracing.

Fig. 457: Identifying VCT2000 Diagnostic Tool Symbol In VIDA
Courtesy of VOLVO CARS CORPORATION

Is the speed updated?

- **YES**

VERIFIED: Troubleshooting has been completed.

- **NO**

  Refer to **INFORMATION**

RESETTING ADAPTATION

RESETTING THE ADAPTATION AND THE COUNTER FOR "TRANSMISSION OIL, REPLACE"

HINT: The transmission has torque-regulated, adaptive pressure regulation. The pressure regulator enables the transmission to regulate pressure during each shift to prevent hard shifting. Each shift is assessed by the transmission control module (TCM) and is stored in the internal memory. This makes it possible to compensate for transmission and clutch wear. It is important that the adaptation in the memory is reset so that the transmission works normally after the repair. Because the fluid was changed during the repair, the counter for transmission fluid change must also be reset. If the counter is not reset during draining/replacement, a diagnostic trouble code may be generated under the wrong conditions.

NOTE: This applies only if the transmission or one of the components in the transmission have been replaced.

Fig. 458: Identifying Ignition ON
Courtesy of VOLVO CARS CORPORATION

- Ignition on.

  Click on the VCT2000 symbol to reset the adaptation and counter.

Fig. 459: Identifying VCT2000 Diagnostic Tool Symbol In VIDA
Courtesy of VOLVO CARS CORPORATION

- **Continue**

  Refer to **VERIFICATION**

TCM-P050000: VEHICLE SPEED SENSOR A. GENERAL FAILURE INFORMATION. NO SUB TYPE INFORMATION (B6324S5, TF-80SC; B6324S5, TF-80SC AWD; 2011-2012)

DIAGNOSTIC TROUBLE CODE (DTC) INFORMATION TCM-P050000

see **DIAGNOSTIC TROUBLE CODE (DTC) INFORMATION TCM-P050000**

FAULT-TRACING

see **FAULT-TRACING**

TCM-P050000: SPEED SENSOR A. GENERAL FAULT INFORMATION. NO INFORMATION ON FAULT TYPE (B8444S, TF-80SC AWD; 2006-2011)

DIAGNOSTIC TROUBLE CODE (DTC) INFORMATION TCM-P050000

Condition

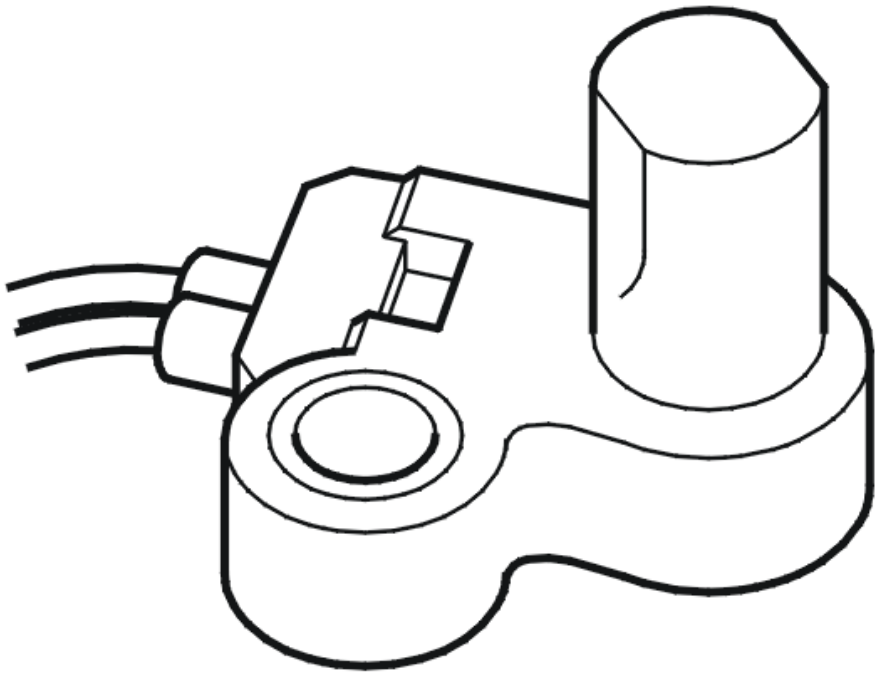

Fig. 460: Identifying Transmission Speed Sensor
Courtesy of VOLVO CARS CORPORATION

The output speed sensor is located inside the gearbox. The transmission control module (TCM) calculates the speed of the gearbox output shaft based on the signal. The signal is used to compare the output speed with the input speed of the gearbox and with the vehicle speed. The speed information is put on the CAN network by the brake control module (BCM).

With the help of these signals, the control module can calculate the shifting points. RPM and speed information affect the adjustment of the system pressure and the reduction in engine torque for gear changing. This results in smoother gear changes.

The information is also used to control the lock-up function. If the control module registers that the voltage in the circuit to the gearbox output speed sensor is too low, a diagnostic trouble code (DTC) will be generated.

The diagnostic trouble code (DTC) can be diagnosed when driving normally.

Substitute Value

- The transmission control module (TCM) uses the speed signal from the brake control module (BCM).
- If the brake control module (ECM) also sends a signal that the speed signal is incorrect, the auxiliary program **Emergency mode 1** will become active.

  HINT: EMERGENCY MODE IN CASE OF MALFUNCTION

- The neutral check function is blocked.
- Lock-up function is blocked.

Possible Source

- Break in circuit for output speed sensor.
- Power supply to output speed sensor short-circuited to ground.
- Gearbox output speed sensor not working.
- Internal fault in transmission control module (TCM).

Fault symptom[s]

- Malfunction indicator lamp (MIL) lit (if Emergency mode 1).
- General warning lamp lit.
- No lock-up function.
- Harsh gear changing (if Emergency mode 1).
- No gear changing (if Emergency mode 1).

FAULT TRACING TCM-P050000

CHECKS

CHECKING THE FUNCTION

WARNING: Ensure that the vehicle is safely raised. Check that no objects are caught in the tire treads.

CAUTION: On vehicles with four-wheel-drive, the tests should be carried out with the vehicle raised so that all four wheels can rotate freely with attachments far out on the link arms so that the drive shafts are not damaged.

NOTE: If the vehicle is equipped with TRACS or traction control (STC, DSTC) this function must be deactivated. Remove the fuse for the pump motor for the brake system in the relay/fusebox in the engine compartment. Note that this will store a diagnostic trouble code (DTC) in the brake control module (BCM). These diagnostic trouble codes (DTC) must be erased before delivery to the customer.

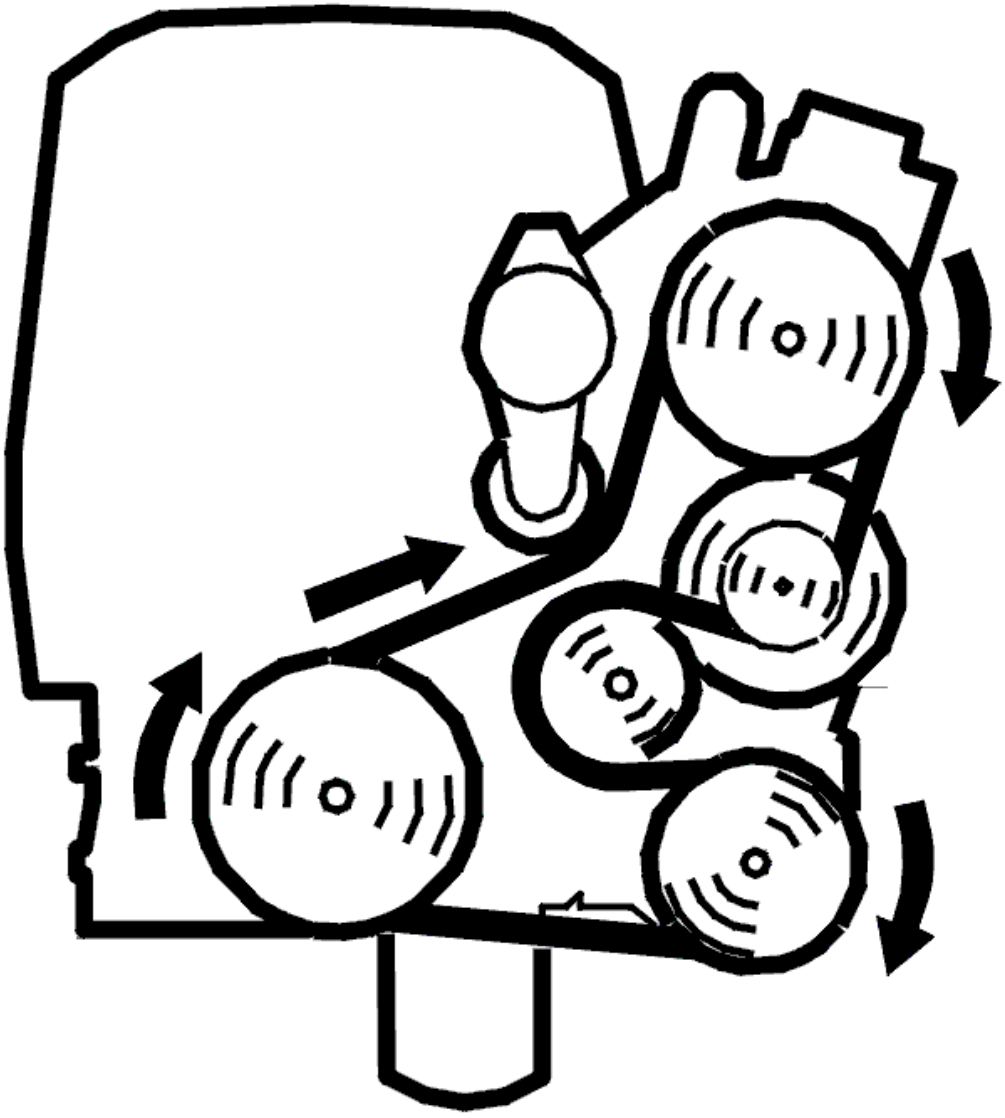

Fig. 461: Identifying Belt Routing
Courtesy of VOLVO CARS CORPORATION

- Raise the vehicle so that the drive wheels hang freely.
- Start the engine and allow it to idle.
- Put the gear selector in position D so that the drive wheels start to rotate.

NOTE: Ensure that the wheels are not rotating when the gear selector is moved.

- Read off the gearbox output speed.

  Read off the transmission input speed.

  If the transmission input speed updates correctly it means that the fault was present previously but is not active now. There is an intermittent fault.

  If the transmission input speed does not update correctly it means that the fault is permanent.

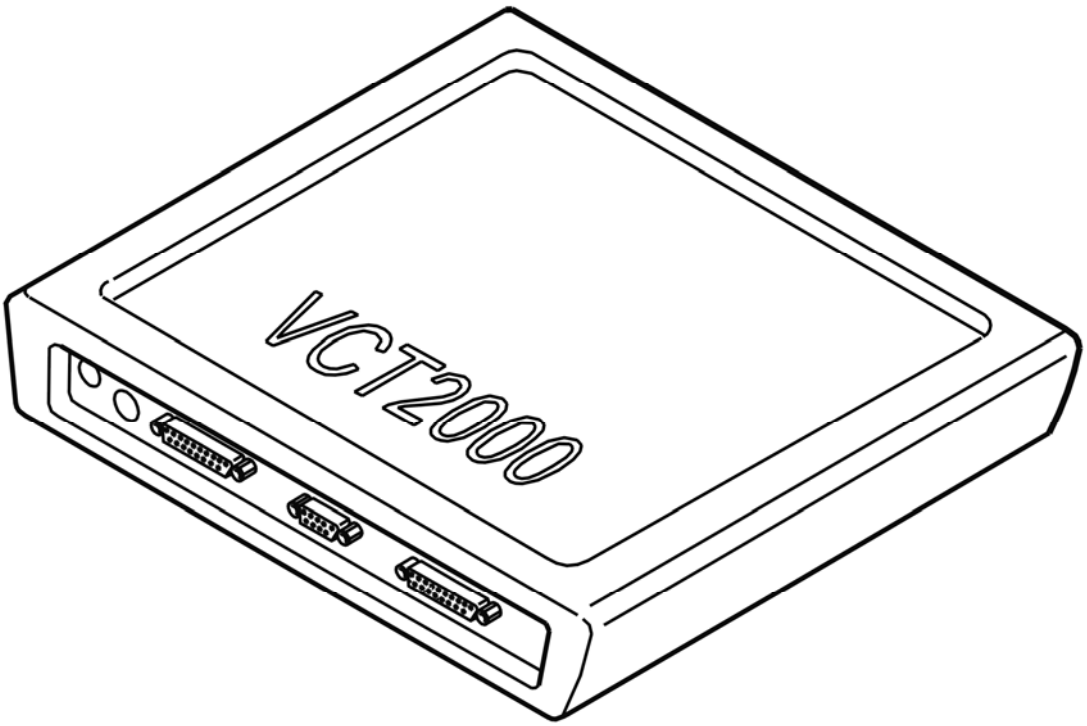

Fig. 462: Identifying VCT2000 Diagnostic Tool Symbol In VIDA
Courtesy of VOLVO CARS CORPORATION

- **Continue**

  Refer to **CHECKING WIRING AND SENSORS**

CHECKING WIRING AND SENSORS

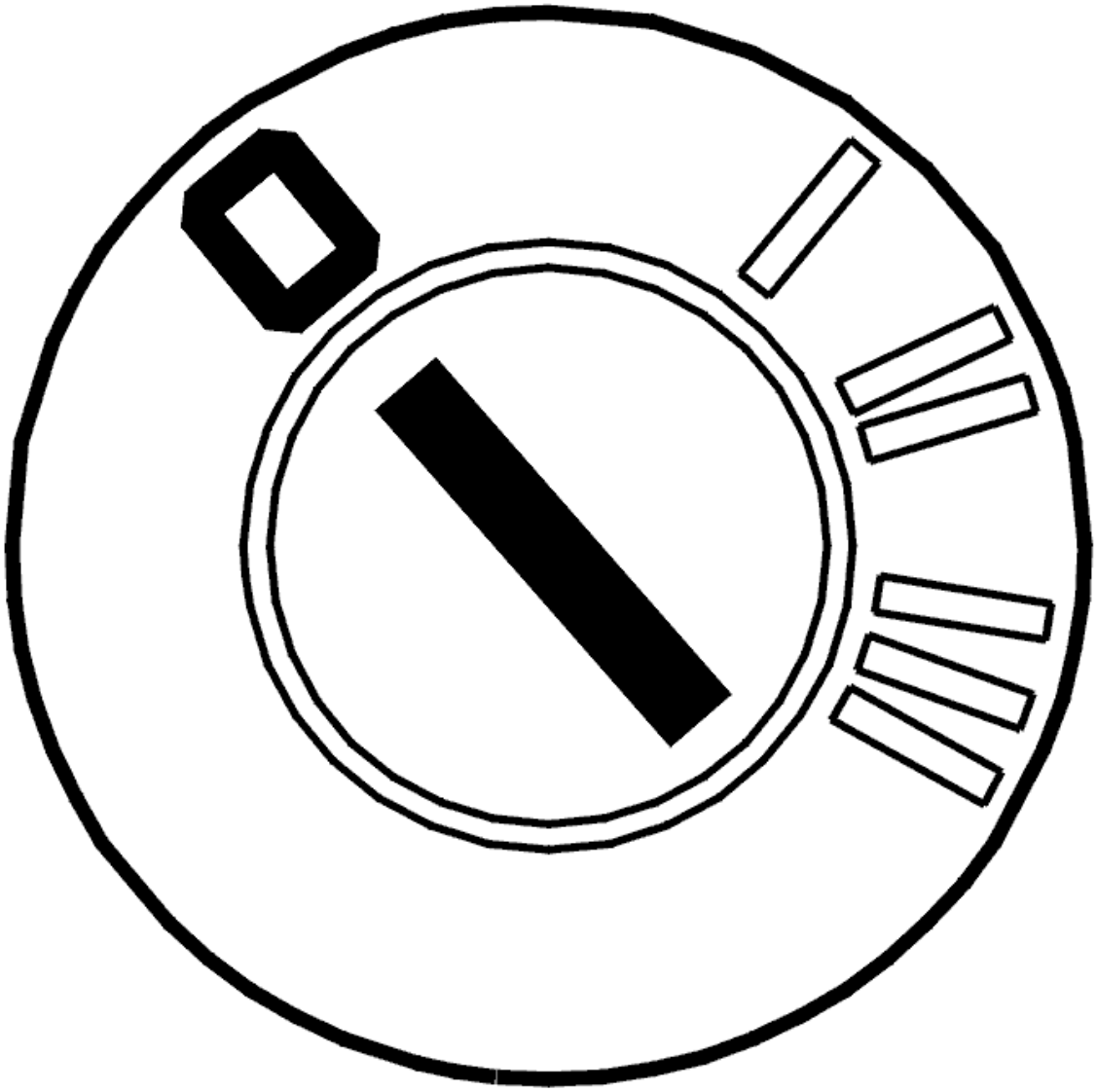

Fig. 463: Identifying Ignition OFF
Courtesy of VOLVO CARS CORPORATION

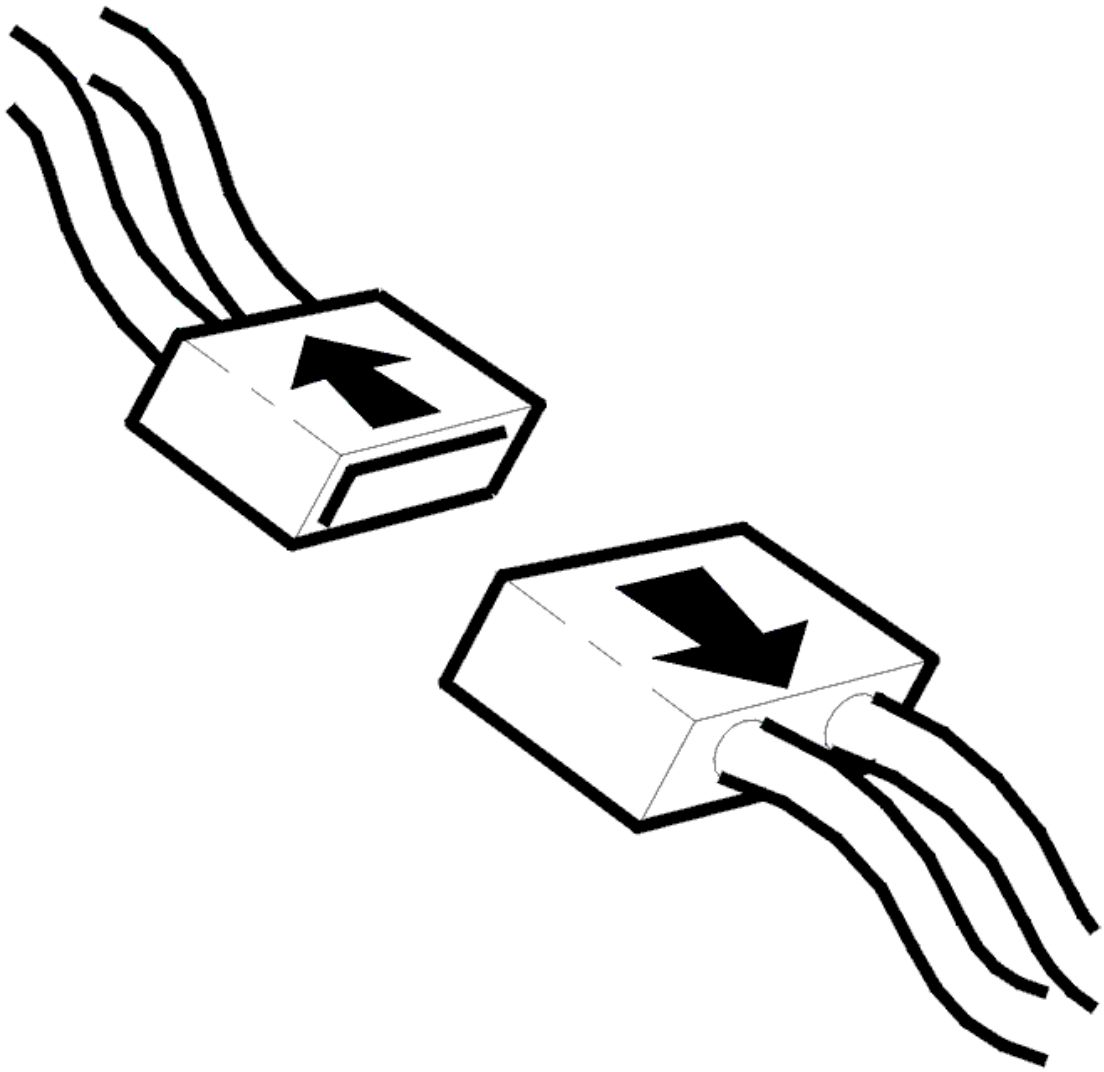

Fig. 464: Identifying Connector(s) Disconnected
Courtesy of VOLVO CARS CORPORATION

- Ignition off
- Disconnect the connector for the transmission.
- Transmission control module (TCM) disconnected.
- Check connector B (22-pin) for the transmission control module (TCM). Check for damaged or pressed in pins. Check for contact resistance and oxidation.

  HINT: Check the transmission speed sensor. See CHECKING THE INPUT AND OUTPUT SPEED SENSORS FOR THE TRANSMISSION

  If a faulty value is measured in the test above, open the control system for the transmission and fault trace the wiring and components.

If the sensor is faulty - replace the transmission.

If the wiring is faulty - replace the cable harness.

Remedy as necessary.

Other information

- see **CONNECTING THE BREAKOUT BOX**
- see **SIGNAL DESCRIPTION**
- see **REPLACING THE GEARBOX**
- see **CABLE HARNESS, CONTROL SYSTEM, GEARBOX, REPLACING**
- To access connector B: **TRANSMISSION CONTROL MODULE (TCM), REPLACING**
- To access the transmission control system: **COVER CONTROL SYSTEM, REPLACING (2007-2011)**

Select an alternative:

1. Transmission replaced.
2. Cable harness replaced.

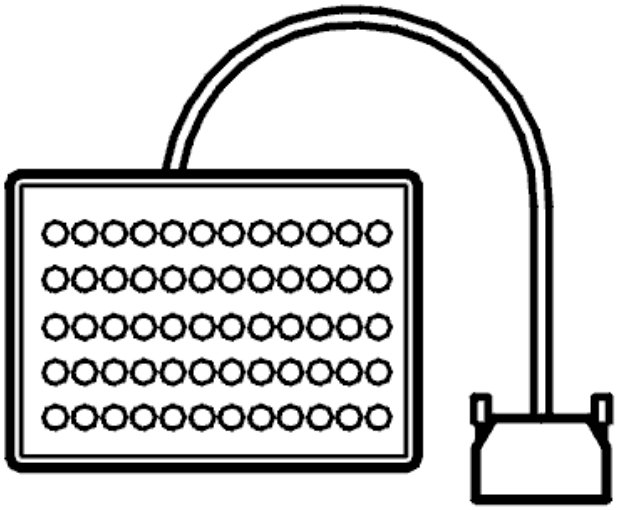

Fig. 465: Identifying Breakout Box
Courtesy of VOLVO CARS CORPORATION

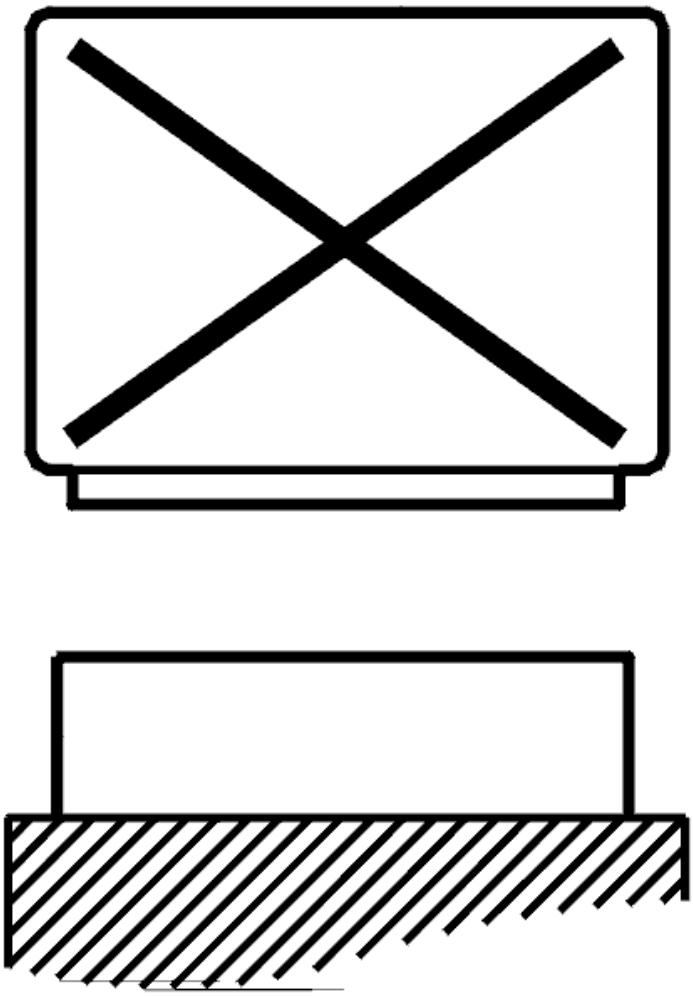

Fig. 466: Identifying Control Module Disconnected
Courtesy of VOLVO CARS CORPORATION

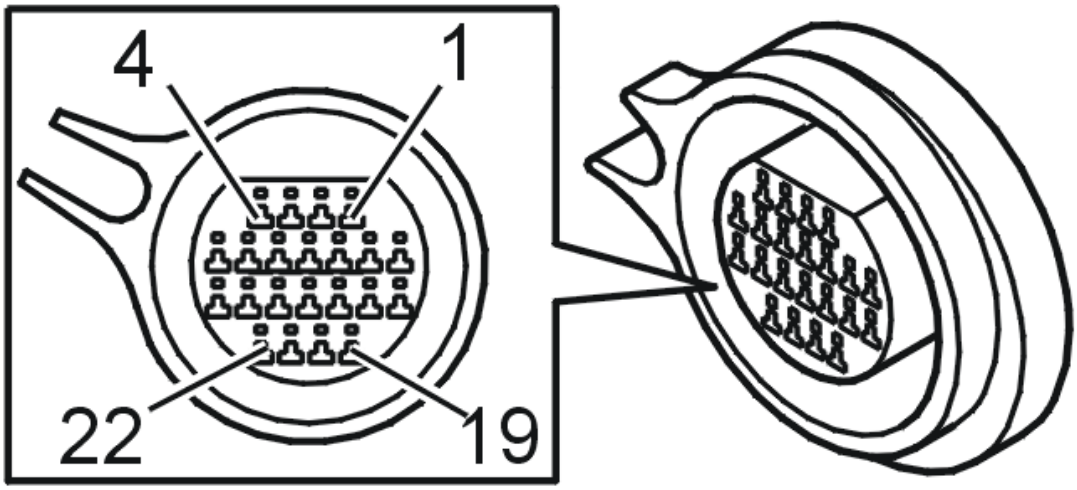

Fig. 467: Identifying Connector B Terminals
Courtesy of VOLVO CARS CORPORATION

- **1**

  Refer to **VERIFICATION**

- **2**

  Refer to **RESETTING ADAPTATION**

RESETTING ADAPTATION

RESETTING ADAPTATION AND COUNTER FOR "TRANSMISSION OIL, CHANGING"

HINT: The transmission has torque-controlled, adaptive pressure control. The pressure control means that the transmission itself controls the pressure during each shift sequence in order to avoid harsh shifting. Each shift is assessed by the transmission control module (TCM) and is stored in the internal memory, which results in compensation for wear in the transmission and clutch. In order for the transmission to function correctly after repair, it is important to reset the adaptation in the memory. Since the oil is changed during the repair, the counter for "Transmission oil, change" shall also be reset. If the counter is not reset when draining/changing oil, there is a risk that a diagnostic trouble code may be generated under incorrect conditions.

NOTE: **This applies only if the transmission or one of the components in the transmission have been replaced.**

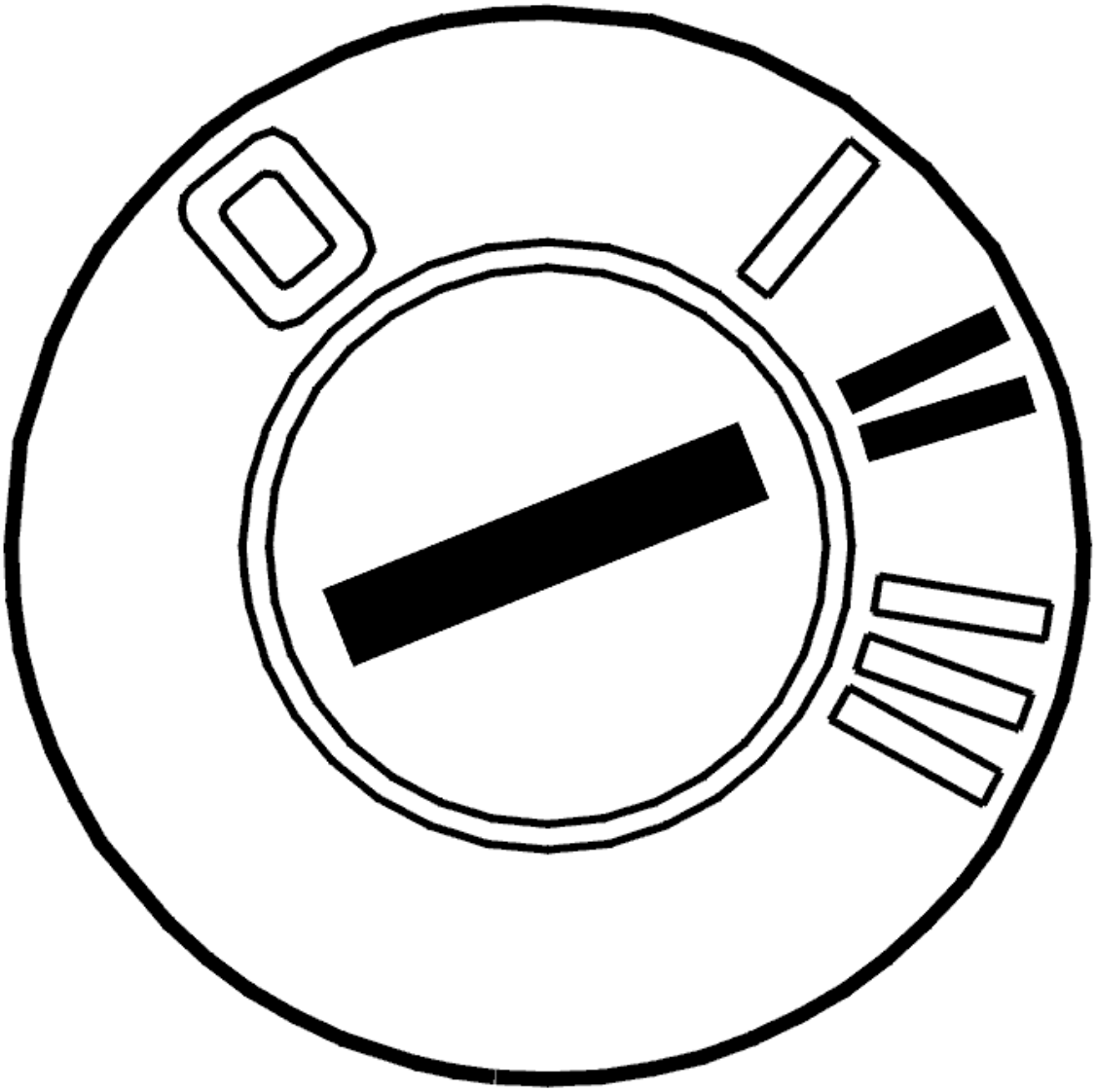

Fig. 468: Identifying Ignition ON
Courtesy of VOLVO CARS CORPORATION

- Ignition on

  Activate reset of the adaptation and the counter by clicking on the symbol for VCT2000.

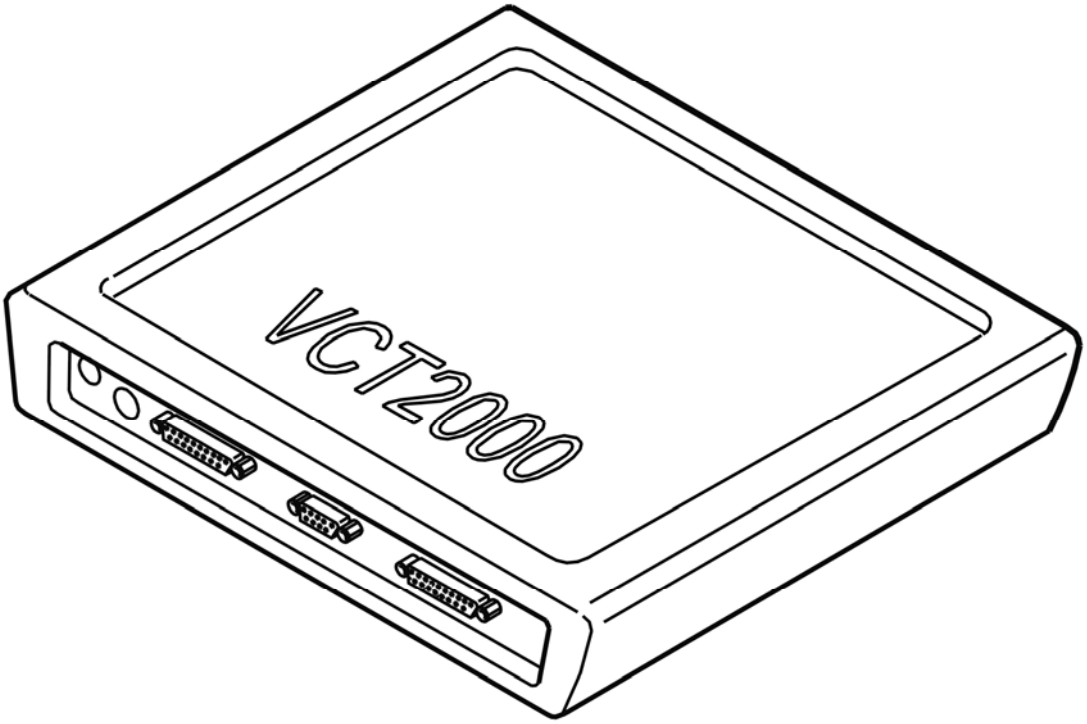

Fig. 469: Identifying VCT2000 Diagnostic Tool Symbol In VIDA
Courtesy of VOLVO CARS CORPORATION

- **Continue**

  Refer to **VERIFICATION**

VERIFICATION

VERIFICATION

HINT: After carrying out the repair, check that the fault has been remedied.

CAUTION: On vehicles with four-wheel-drive, the tests should be carried out with the vehicle raised so that all four wheels can rotate freely with attachments far out on the link arms so that the drive shafts are not damaged.

WARNING: Ensure that the vehicle is safely raised. Check that no objects are caught in the tire treads.

NOTE: If the vehicle is equipped with TRACS (traction control system) or Traction Control (DSTC (Dynamic stability and traction control), STC (Stability and traction control) the function must be deactivated. This is carried out by

removing the fuse for the brake system pump motor in the engine compartment relay and fusebox. Note that diagnostic trouble codes (DTCs) will be stored in the brake control module (BCM). These must be erased before returning the vehicle to the customer.

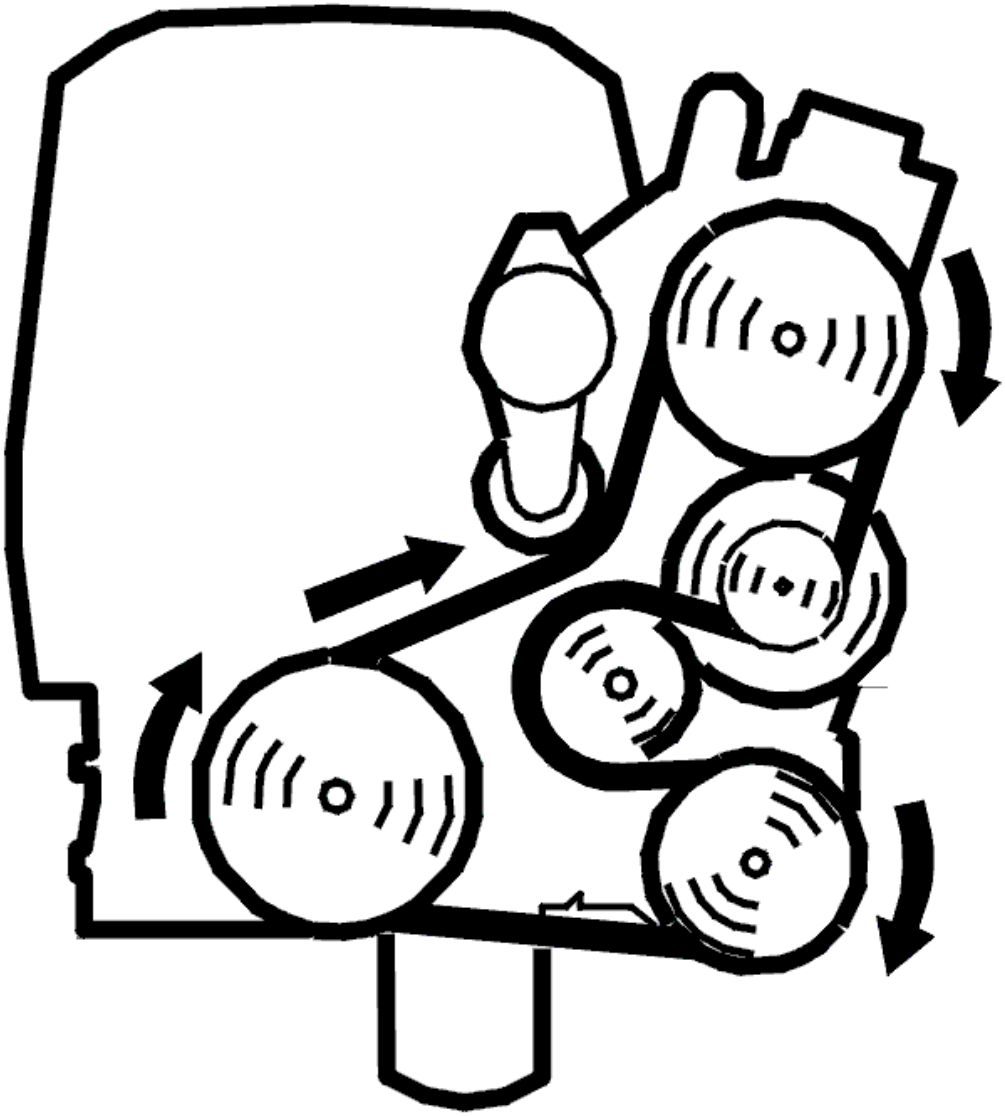

Fig. 470: Identifying Belt Routing
Courtesy of VOLVO CARS CORPORATION

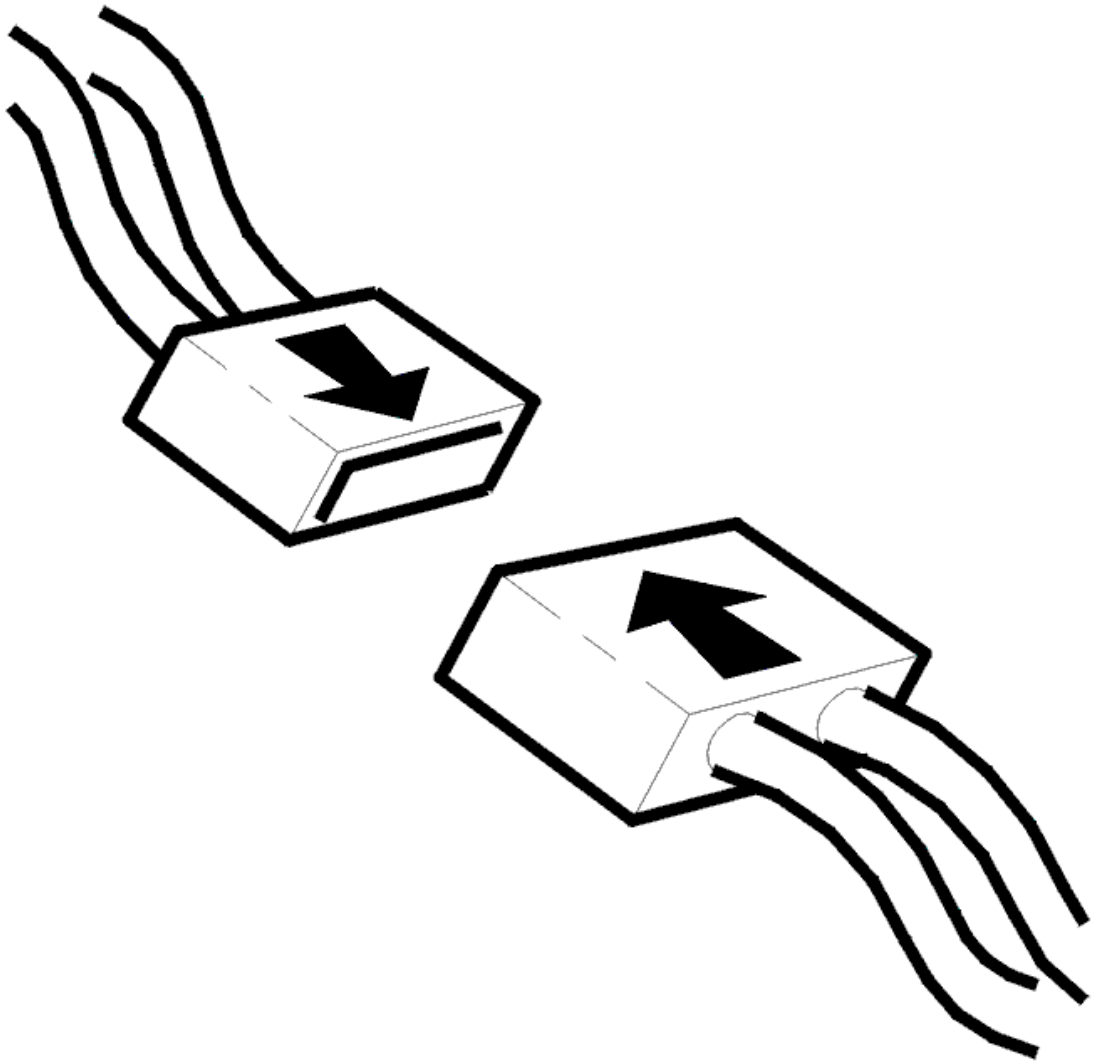

Fig. 471: Identifying Connector(s) Reinstallation
Courtesy of VOLVO CARS CORPORATION

- Ignition off
- Reinstall the connectors, components etc.
- Raise the vehicle so that the drive wheels hang freely.
- Start the engine and allow it to idle.
- Put the gear selector in position D so that the drive wheels start to rotate.

NOTE: Ensure that the wheels are not rotating when the gear selector is moved.

- Read off the gearbox output speed.

  Check that the speed is updated.

NOTE: **Diagnostic trouble codes (DTCs) may be stored in the brake control module (BCM) when the rear wheels are stationary and the front wheels rotate. Erase any diagnostic trouble codes (DTCs) after fault-tracing.**

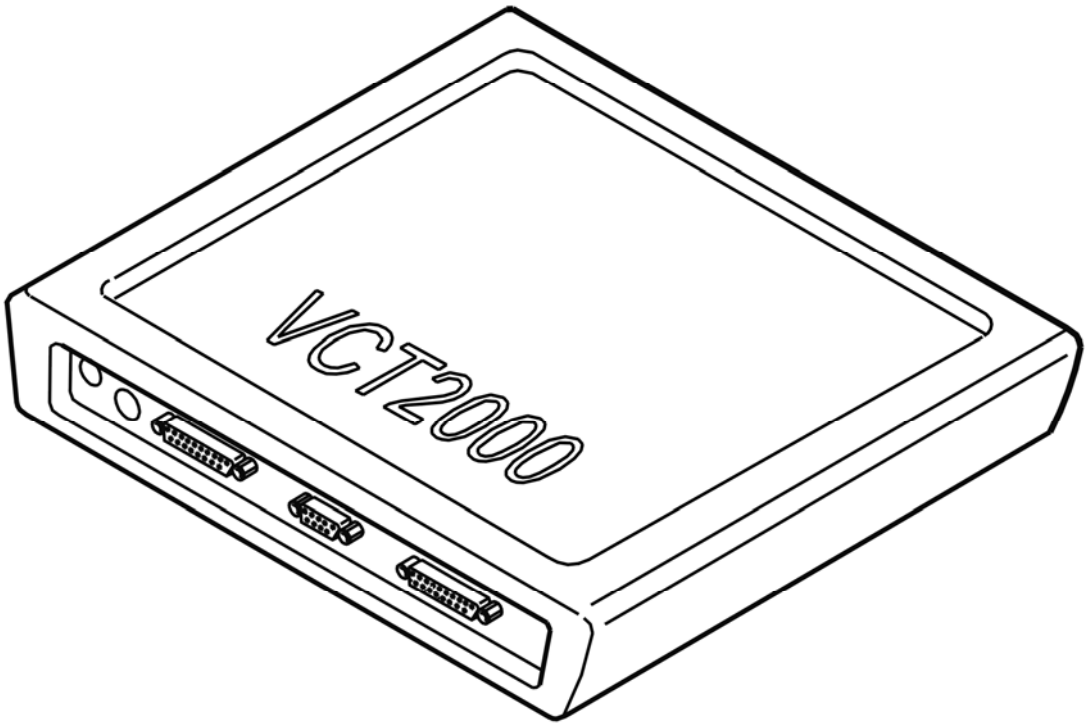

Fig. 472: Identifying VCT2000 Diagnostic Tool Symbol In VIDA
Courtesy of VOLVO CARS CORPORATION

Was the speed updated?

- **YES**

  VERIFIED: Troubleshooting has been completed.

- **NO**

  Refer to **INFORMATION**

INFORMATION

FAULT-TRACING INFORMATION

The fault should have been detected and remedied. As this is not the case fault-tracing has failed.

Exit fault-tracing for this diagnostic trouble code (DTC) or make another attempt.

TCM-P050000: SPEED SENSOR A. GENERAL FAULT INFORMATION. NO INFORMATION ON FAULT TYPE (TF-80SC AWD; 2005)

DIAGNOSTIC TROUBLE CODE (DTC) INFORMATION TCM-P050000

see **DIAGNOSTIC TROUBLE CODE (DTC) INFORMATION TCM-P050000**

FAULT TRACING TCM-P050000

see **FAULT TRACING TCM-P050000**

TCM-P056008: SYSTEM VOLTAGE. GENERAL FAULT INFORMATION. BUS/MESSAGE FAULT (B8444S, TF-80SC AWD; 2006-2011)

DIAGNOSTIC TROUBLE CODE (DTC) TCM-P056008

Condition

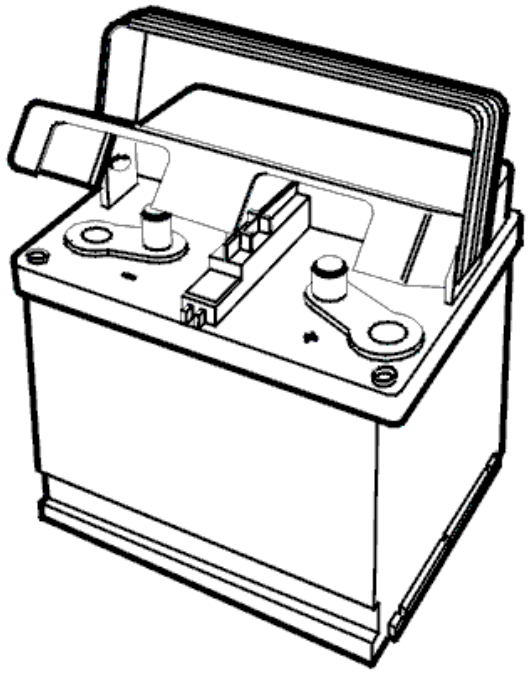

Fig. 473: Identifying Battery
Courtesy of VOLVO CARS CORPORATION

The transmission control module (TCM) continuously monitors the voltage and compares it with a voltage value sent out on the CAN network by the central electronic module (CEM).

If the transmission control module (TCM) registers that the system voltage differs more than ±1.7V from the voltage in the central electronic module (CEM) a fault code will be generated.

The diagnostic trouble code can be diagnosed when the ignition is on.

Substitute Value

- Auxiliary program **Emergency mode 1** in the transmission control module (TCM) has started.

  HINT: EMERGENCY MODE IN CASE OF MALFUNCTION

Possible Source

- Contact resistance or oxidation in the connector on the transmission control model (TCM) or the gearbox.
- Battery charger with incorrect voltage has been used.
- Internal fault in transmission control module (TCM).

Fault symptom[s]

- General warning lamp lit

FAULT TRACING TCM-P056008

CHECKS

CHECKING THE POWER SUPPLY

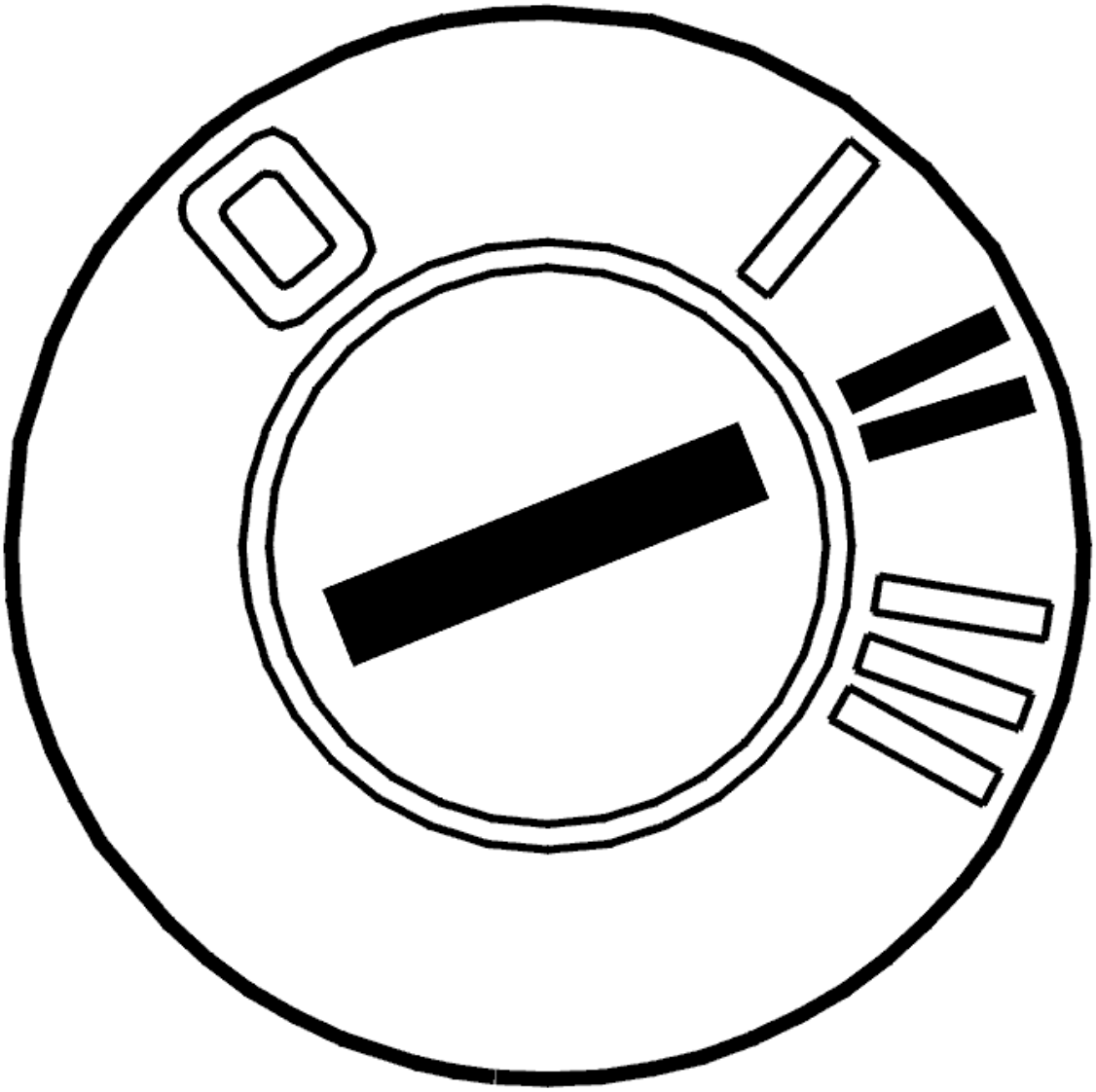

Fig. 474: Identifying Ignition ON
Courtesy of VOLVO CARS CORPORATION

- Ignition on
- Read the voltage supply for the transmission control module (TCM) and central electronic module (CEM).

  The voltage supply for the transmission control module (TCM) and central electronic module (CEM) must be approximately the same.

  If the voltage for the transmission control module (TCM) deviates more than 1.7 V from the central electronic module (CEM) it means that the fault is permanent.

  If the voltages are approximately the same then this would suggest that the fault is intermittent, i. e. that the fault has previously been present but is no longer active.

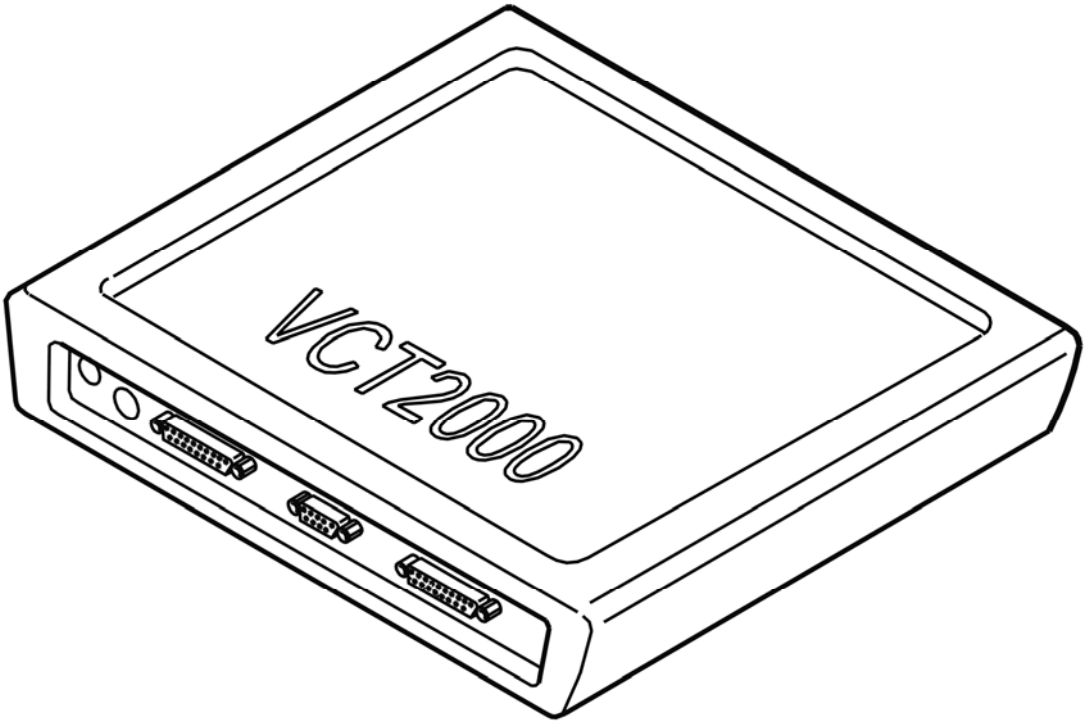

Fig. 475: Identifying VCT2000 Diagnostic Tool Symbol In VIDA
Courtesy of VOLVO CARS CORPORATION

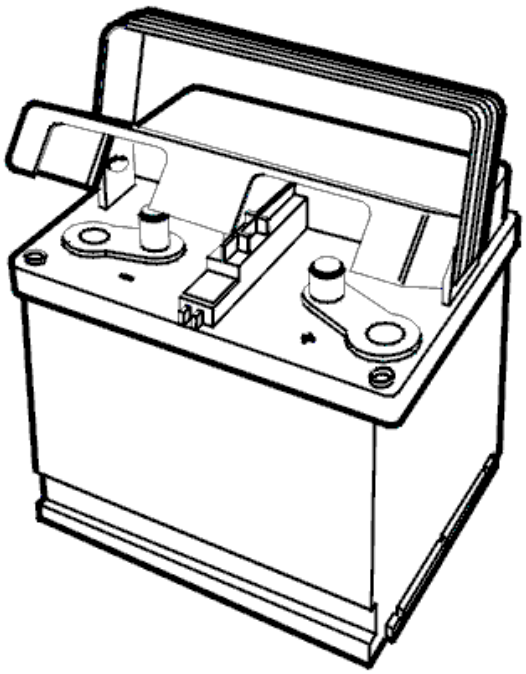

Fig. 476: Identifying Battery

Courtesy of VOLVO CARS CORPORATION

- **Continue**

  Refer to **CHECKING CABLE AND COMPONENT**

CHECKING CABLE AND COMPONENT

Check connector A on the transmission control module (TCM). Check for contact resistance and oxidation.

Check the power supply cable (30 supply) between the fuse in the relay /fusebox in the engine compartment and the transmission control module (TCM) terminal #A1 (#31). Check for contact resistance and oxidation.

Check the power supply cable (15 supply) between the fuse in the relay /fusebox in the engine compartment and the transmission control module (TCM) terminal #A11 (#41). Check for contact resistance and oxidation.

HINT: With the ignition on the voltmeter must display battery voltage at both terminals when measured against ground.

Check the ground cable between the ground terminal and the transmission control module (TCM) terminal #A9 (#39). Check for contact resistance and oxidation.

HINT: With the ignition on the voltmeter must display battery voltage between #A9 (#39) and the battery + pole.

NOTE: No fault is found, fault trace central electronic module (CEM).

Remedy as necessary.

Other information

- see **CONNECTING THE BREAKOUT BOX**
- see **SIGNAL DESCRIPTION**
- To access connector A: **TRANSMISSION CONTROL MODULE (TCM), REPLACING**
- see **CONTENTS**

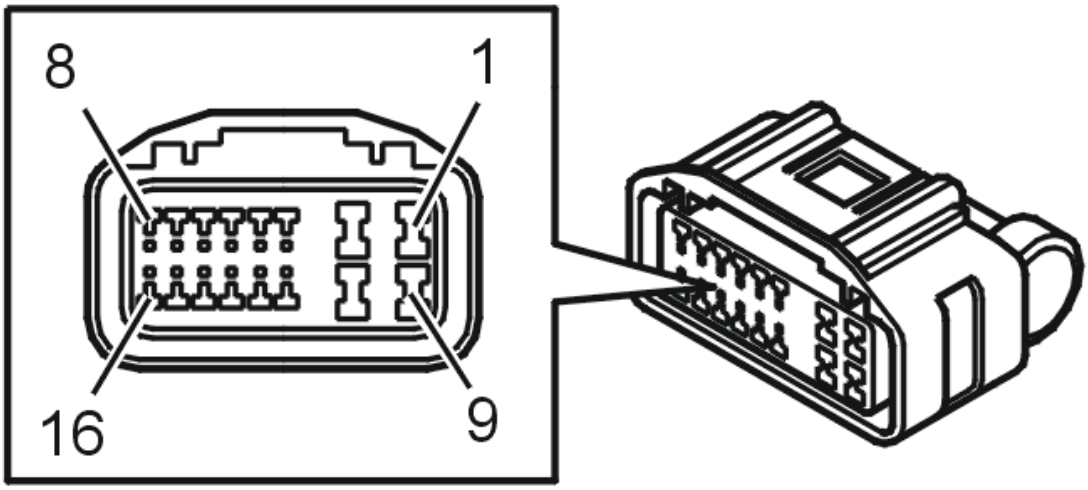

Fig. 477: Identifying Connector A Terminals
Courtesy of VOLVO CARS CORPORATION

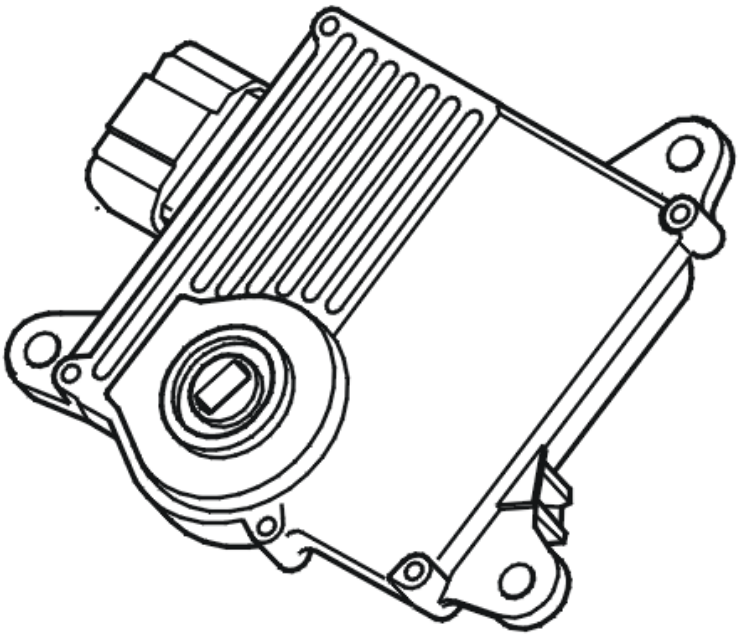

Fig. 478: Identifying Transmission Control Module (TCM)
Courtesy of VOLVO CARS CORPORATION

- **Continue**

  Refer to **VERIFICATION**

VERIFICATION

VERIFICATION

HINT: After carrying out the repair, check that the fault has been remedied.

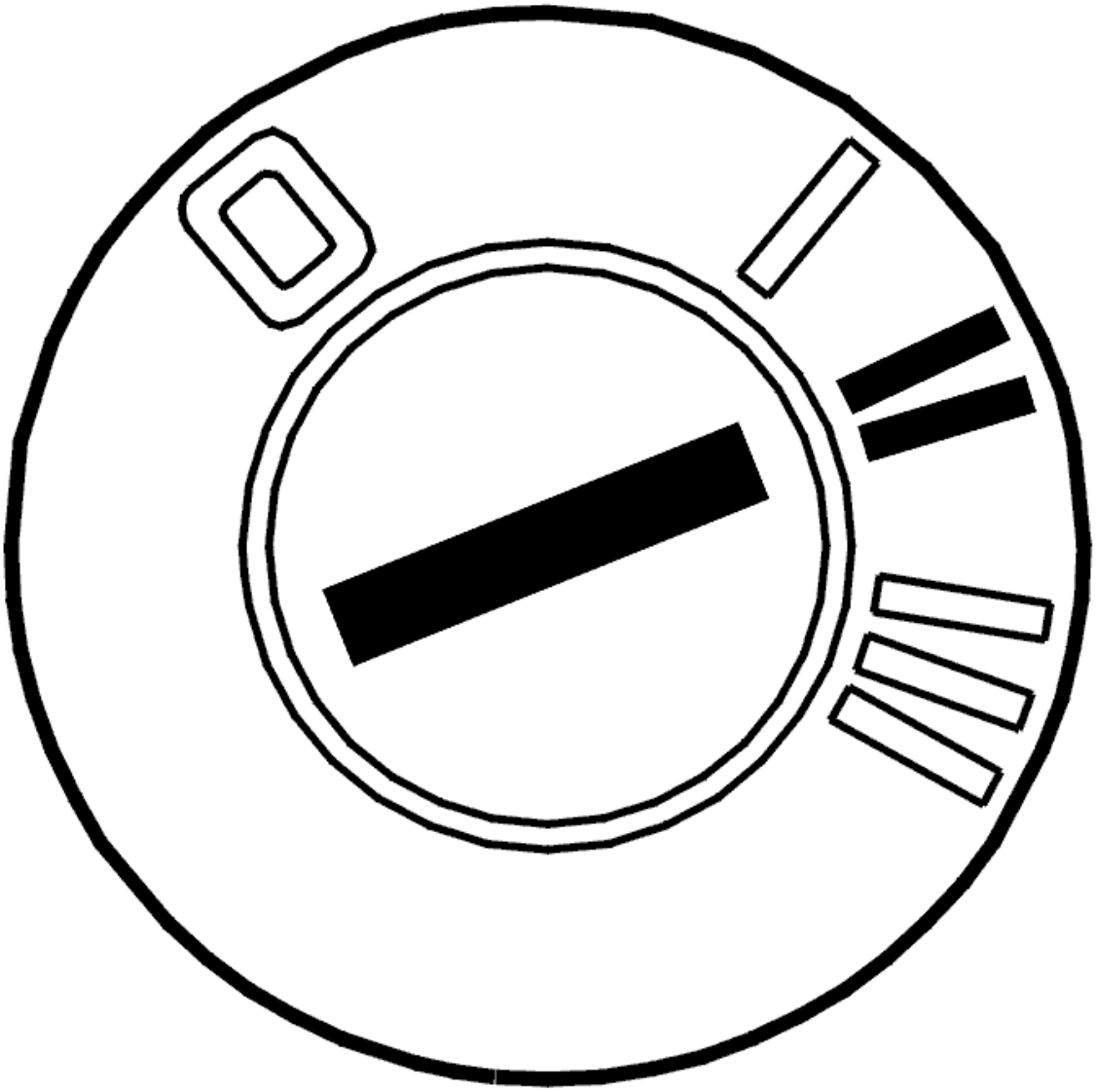

Fig. 479: Identifying Ignition ON
Courtesy of VOLVO CARS CORPORATION

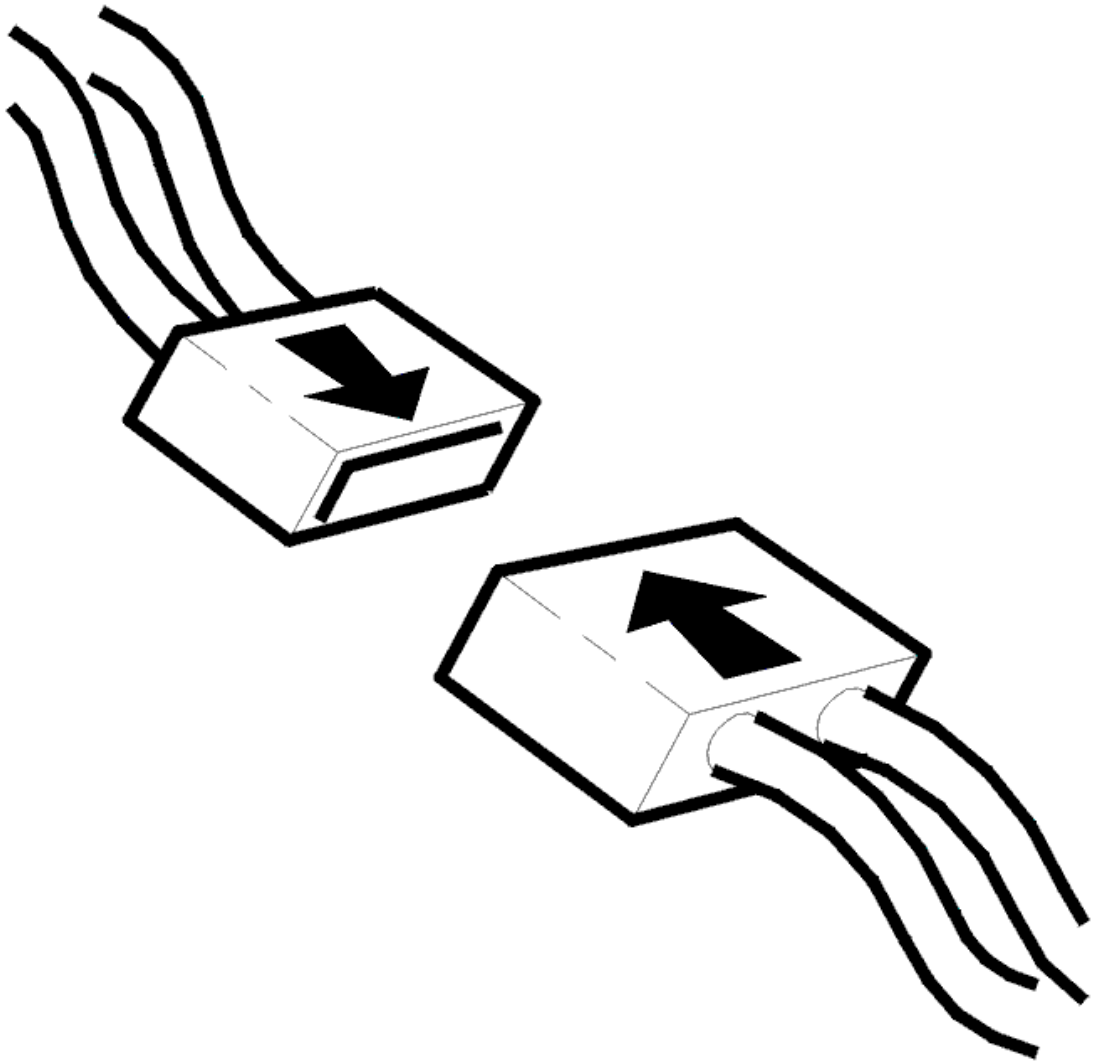

Fig. 480: Identifying Connector(s) Reinstallation
Courtesy of VOLVO CARS CORPORATION

- Ignition off
- Reinstall the connectors, components etc.
- Ignition on
- Read off the power supply for the transmission control module (TCM).

  The voltage must be about the same as the battery voltage.

  - Start the engine and allow it to idle.
  - Read off the power supply for the transmission control module (TCM) again.

  The voltage should rise to 13-15 V, depending on the alternator charging voltage.

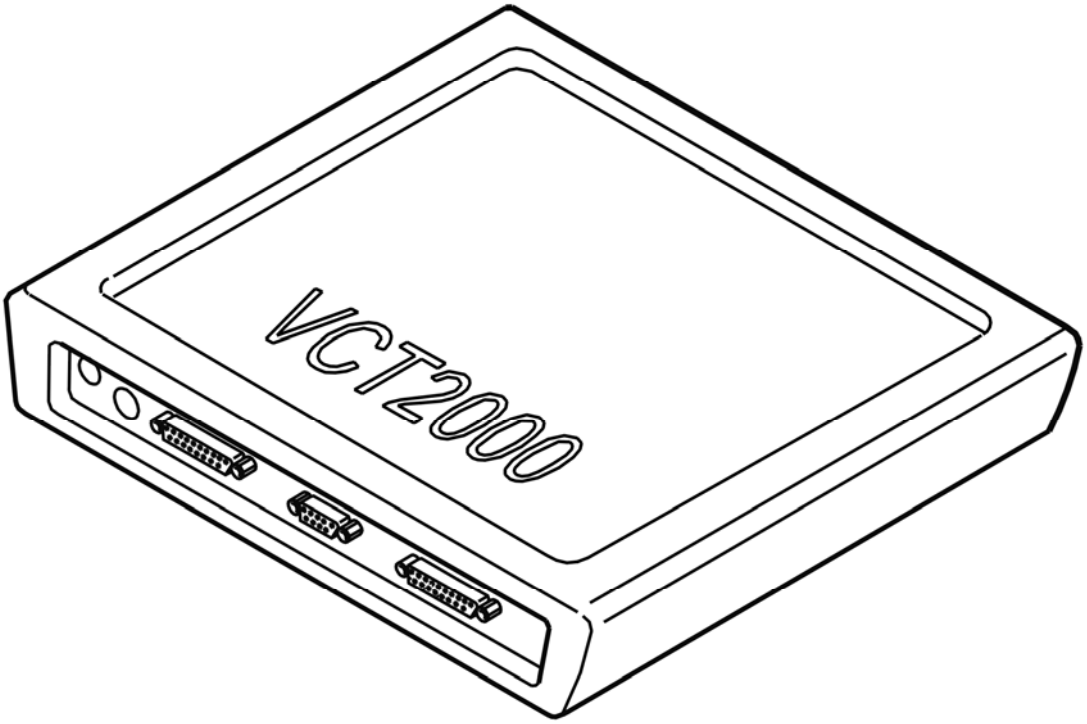

Fig. 481: Identifying VCT2000 Diagnostic Tool Symbol In VIDA
Courtesy of VOLVO CARS CORPORATION

Is the voltage OK?

- **YES**

  VERIFIED: Troubleshooting has been completed.

- **NO**

  Refer to **INFORMATION**

INFORMATION

FAULT-TRACING INFORMATION

The fault should have been detected and remedied. As this is not the case fault-tracing has failed.

Exit fault-tracing for this diagnostic trouble code (DTC) or make another attempt.

TCM-P056008: SYSTEM VOLTAGE. GENERAL FAULT INFORMATION. BUS/MESSAGE FAULT (TF-80SC AWD; 2005)

DIAGNOSTIC TROUBLE CODE (DTC) TCM-P056008

see **DIAGNOSTIC TROUBLE CODE (DTC) TCM-P056008**

FAULT TRACING TCM-P056008

see **FAULT TRACING TCM-P056008**

TCM-P056100: SYSTEM VOLTAGE UNSTABLE. GENERAL FAILURE INFORMATION. NO SUB TYPE INFORMATION (B6324S, TF-80SC; B6324S, TF-80SC AWD; 2007-2010)

DIAGNOSTIC TROUBLE CODE (DTC) INFORMATION TCM-P056100

Condition

The transmission control module (TCM) continuously monitors the voltage and compares it with a voltage value sent out on the CAN network by the central electronic module (CEM).

The diagnostic trouble code (DTC) is stored if the control module detects that:

- Power supply to the control module is less than 10.2 V or is greater than 15.5 V.

The control module's test for the diagnostic trouble code (DTC) starts in the event of:

- Engine running.

NOTE: **The control module can only detect the fault once the test has been started and the diagnostic trouble code (DTC) is stored when the conditions are met.**

Fig. 482: Identifying Battery
Courtesy of VOLVO CARS CORPORATION

Substitute Value

- Auxiliary program **Emergency mode 1** in the transmission control module (TCM) has started.

  HINT: EMERGENCY MODE IN THE EVENT OF A FAULT

Possible Source

- Battery voltage too low.
- Contact resistance or oxidation in the connector on the transmission control model (TCM) or the gearbox.
- Battery charger with incorrect voltage has been used.
- Internal fault in the transmission control module (TCM).

Fault symptom[s]

- Malfunction indicator light (MIL), on
- General warning lamp lit

FAULT-TRACING

CHECKS

CHECKING THE POWER SUPPLY

Fig. 483: Identifying Ignition ON
Courtesy of VOLVO CARS CORPORATION

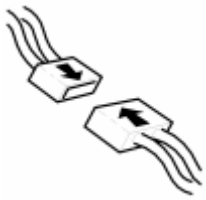

Fig. 484: Identifying Connector(s) Reinstallation
Courtesy of VOLVO CARS CORPORATION

- Ignition on.
- Read off the power supply for the transmission control module (TCM).

  Voltage should be about equal to battery voltage.

- Start the engine. Allow the engine to idle.
- Read off the power supply for the transmission control module (TCM) again.

The voltage must be raised to 13-15V depending on the generator (GEN) charging voltage.

Select an option:

1. Normal voltage.

   Refer to **CHECKING THE COMPONENTS AND WIRING**

2. Voltage too low

   Refer to **CHECKING THE BATTERY VOLTAGE**

3. Voltage too high.

   Refer to **CHECKING THE POWER SUPPLY**

Fig. 485: Identifying VCT2000 Diagnostic Tool Symbol In VIDA
Courtesy of VOLVO CARS CORPORATION

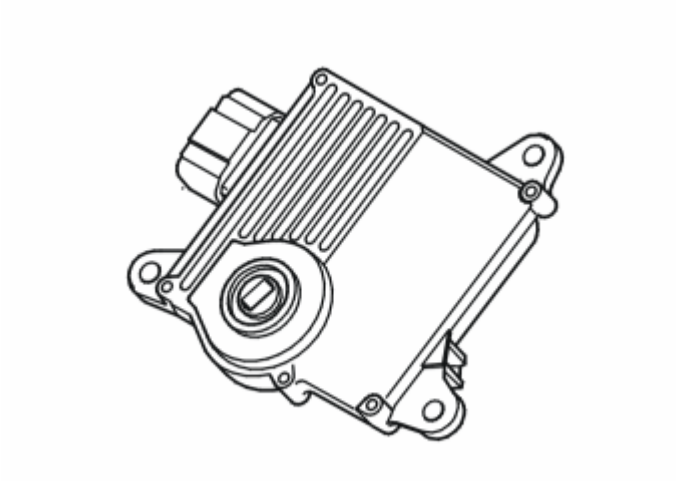

Fig. 486: Identifying Transmission Control Module (TCM)
Courtesy of VOLVO CARS CORPORATION

CHECKING THE BATTERY VOLTAGE

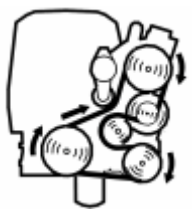

Fig. 487: Identifying Belt Routing
Courtesy of VOLVO CARS CORPORATION

- Start the engine. Allow the engine to idle.
- Expose the battery.
- Connect a voltmeter between the battery positive and negative terminals.

  The voltmeter should read 13-15 V depending on the alternator charging voltage.

Is the voltage OK?

- **YES**

  Refer to **CHECKING THE WIRING AND TERMINALS**

- **NO**

  Refer to **CHECKING THE POWER SUPPLY**

CHECKING THE POWER SUPPLY

Check that no battery charger is connected with too high a charge voltage.

Check the vehicle's charging system with regard to high charging voltage.

Remedy as necessary.

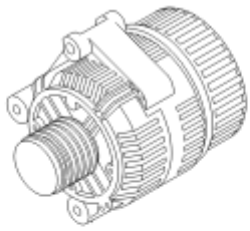

Fig. 488: Identifying Alternator
Courtesy of VOLVO CARS CORPORATION

- **Continue**

  Refer to **VERIFICATION**

CHECKING THE COMPONENTS AND WIRING

Fault tracing indicates that the transmission control module (TCM) has previously registered a fault but the fault is no longer active.

Check connector A on the transmission control module (TCM). Check for contact resistance and oxidation.

Check the power supply cable (30 supply). Check for an intermittent open-circuit.

Take readings between:

- Transmission control module (TCM) terminal #A1 (#31) and the fuse in the engine compartment relay/fuse box.

Check the power supply cable (15 supply). Check for an intermittent open-circuit.

Take readings between:

- Transmission control module (TCM) and ignition switch (via central electronic module (CEM).

HINT: With the ignition on the voltmeter must display battery voltage at both terminals when measured against ground.

Check the ground cable. Check for an intermittent open-circuit.

Take readings between:

- Transmission control module (TCM) terminal #A9 (#39) and grounding point.

HINT: The diagnostic trouble code has been stored because a battery charger with too high of a charging voltage had been connected previously.

Remedy as necessary.

Other information

- see **CONNECTING THE BREAKOUT BOX**
- see **SIGNAL SPECIFICATION**
- To access connector A:**TRANSMISSION CONTROL MODULE (TCM)**
- see **CHECKING WIRING AND TERMINALS**

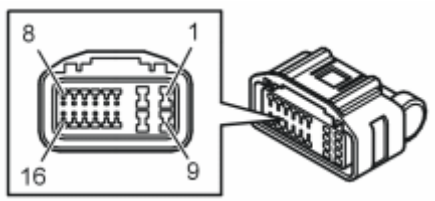

Fig. 489: Identifying Connector Terminals
Courtesy of VOLVO CARS CORPORATION

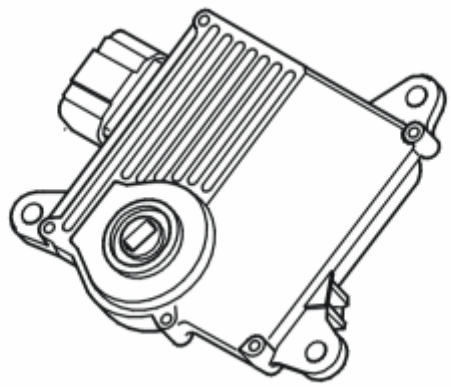

Fig. 490: Identifying Transmission Control Module (TCM)
Courtesy of VOLVO CARS CORPORATION

- **Continue**

  Refer to **INFORMATION**

CHECKING THE WIRING AND TERMINALS

Check connector A on the transmission control module (TCM). Check for contact resistance and oxidation.

Check the power supply cable (30 supply). Check for an intermittent open-circuit.

Take readings between:

- Transmission control module (TCM) terminal #A1 (#31) and the fuse in the engine compartment relay/fuse box.

Check the power supply cable (15 supply). Check for an intermittent open-circuit.

Take readings between:

- Transmission control module (TCM) terminal #A11 (#41) and the fuse in the passenger compartment relay/fuse box.

HINT: With the ignition on the voltmeter must display battery voltage at both terminals when measured against ground.

Check the ground lead. Check for an open-circuit.

Take readings between:

- Transmission control module (TCM) terminal #A9 (#39) and grounding point.

HINT: When the ignition is on, the voltmeter should show battery voltage between #A9 (#39) and the positive battery terminal.

NOTE: No fault is found, fault trace central electronic module (CEM).

Remedy as necessary.

Other information

- see **CONNECTING THE BREAKOUT BOX**
- see **SIGNAL SPECIFICATION**
- To access connector A:**TRANSMISSION CONTROL MODULE (TCM)**
- see **CHECKING WIRING AND TERMINALS**

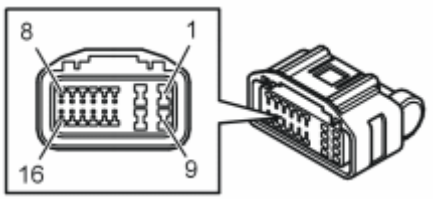

Fig. 491: Identifying Connector Terminals
Courtesy of VOLVO CARS CORPORATION

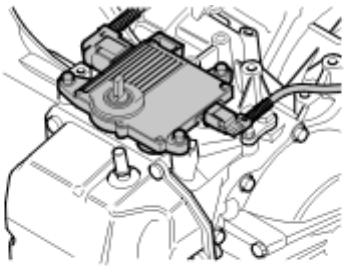

Fig. 492: Identifying Transmission Control Module (TCM)
Courtesy of VOLVO CARS CORPORATION

- **Continue**

  Refer to **VERIFICATION**

CHECKING THE POWER SUPPLY

Check the vehicle's charging system with regard to the charging.

Remedy as necessary.

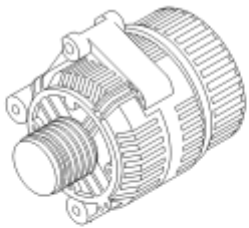

Fig. 493: Identifying Alternator
Courtesy of VOLVO CARS CORPORATION

- **Continue**

  Refer to **VERIFICATION**

INFORMATION

FAULT-TRACING INFORMATION

If the fault is intermittent, do not verify fault-tracing if the fault does not recur.

It is possible to view the information again, or leave fault-tracing for this diagnostic trouble code (DTC).

VERIFICATION

VERIFICATION

HINT: After carrying out the repair, check that the fault has been remedied.

Fig. 494: Identifying Ignition ON
Courtesy of VOLVO CARS CORPORATION

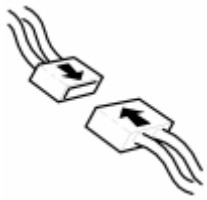

Fig. 495: Identifying Connector(s) Reinstallation
Courtesy of VOLVO CARS CORPORATION

- Ignition off.
- Reinstall the connectors, components etc.
- Ignition on.
- Read off the power supply for the transmission control module (TCM).

  Voltage should be about equal to battery voltage.

  - Start the engine. Allow the engine to idle.
  - Read off the power supply for the transmission control module (TCM) again.

  The voltage must be raised to 13-15V depending on the generator (GEN) charging voltage.

Fig. 496: Identifying VCT2000 Diagnostic Tool Symbol In VIDA
Courtesy of VOLVO CARS CORPORATION

Is the voltage OK?

- **YES**

  VERIFIED: Troubleshooting has been completed.

- **NO**

Refer to **INFORMATION**

INFORMATION

FAULT-TRACING INFORMATION

The fault should have been detected and remedied. As this is not the case fault-tracing has failed.

Exit fault-tracing for this diagnostic trouble code (DTC) or make another attempt.

TCM-P056100: SYSTEM VOLTAGE UNSTABLE. GENERAL FAILURE INFORMATION. NO SUB TYPE INFORMATION (B6324S5, TF-80SC; B6324S5, TF-80SC AWD; 2011-2012)

DIAGNOSTIC TROUBLE CODE (DTC) INFORMATION TCM-P056100

see **DIAGNOSTIC TROUBLE CODE (DTC) INFORMATION TCM-P056100**

FAULT-TRACING

see **FAULT-TRACING**

TCM-P056100: SYSTEM VOLTAGE UNSTABLE. GENERAL FAULT INFORMATION. NO INFORMATION ON FAULT TYPE (B8444S, TF-80SC AWD; 2006-2011)

DIAGNOSTIC TROUBLE CODE (DTC) INFORMATION TCM-P056100

Condition

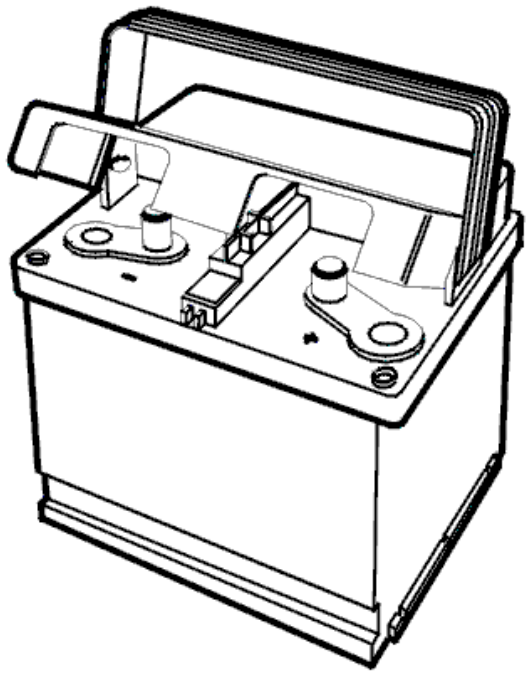

Fig. 497: Identifying Battery
Courtesy of VOLVO CARS CORPORATION

The transmission control module (TCM) continuously monitors the voltage and compares it with a voltage value sent out on the CAN network by the central electronic module (CEM).

If transmission control module (TCM) registers that the power supply to the control unit is below approximately 10.2V or above 15.5V, the diagnostic trouble code (DTC) will be generated.

The diagnostic trouble code (DTC) can be diagnosed while the engine is running.

Substitute Value

- Auxiliary program **Emergency mode 1** in the transmission control module (TCM) has started.

  HINT: EMERGENCY MODE IN CASE OF MALFUNCTION

Possible Source

- Battery voltage too low.
- Contact resistance or oxidation in the connector on the transmission control model (TCM) or the gearbox.
- Battery charger with incorrect voltage has been used.
- Internal fault in transmission control module (TCM).

Fault symptom[s]

- Malfunction indicator lamp (MIL) lit.

- General warning lamp lit

FAULT TRACING

CHECKS

CHECKING THE POWER SUPPLY

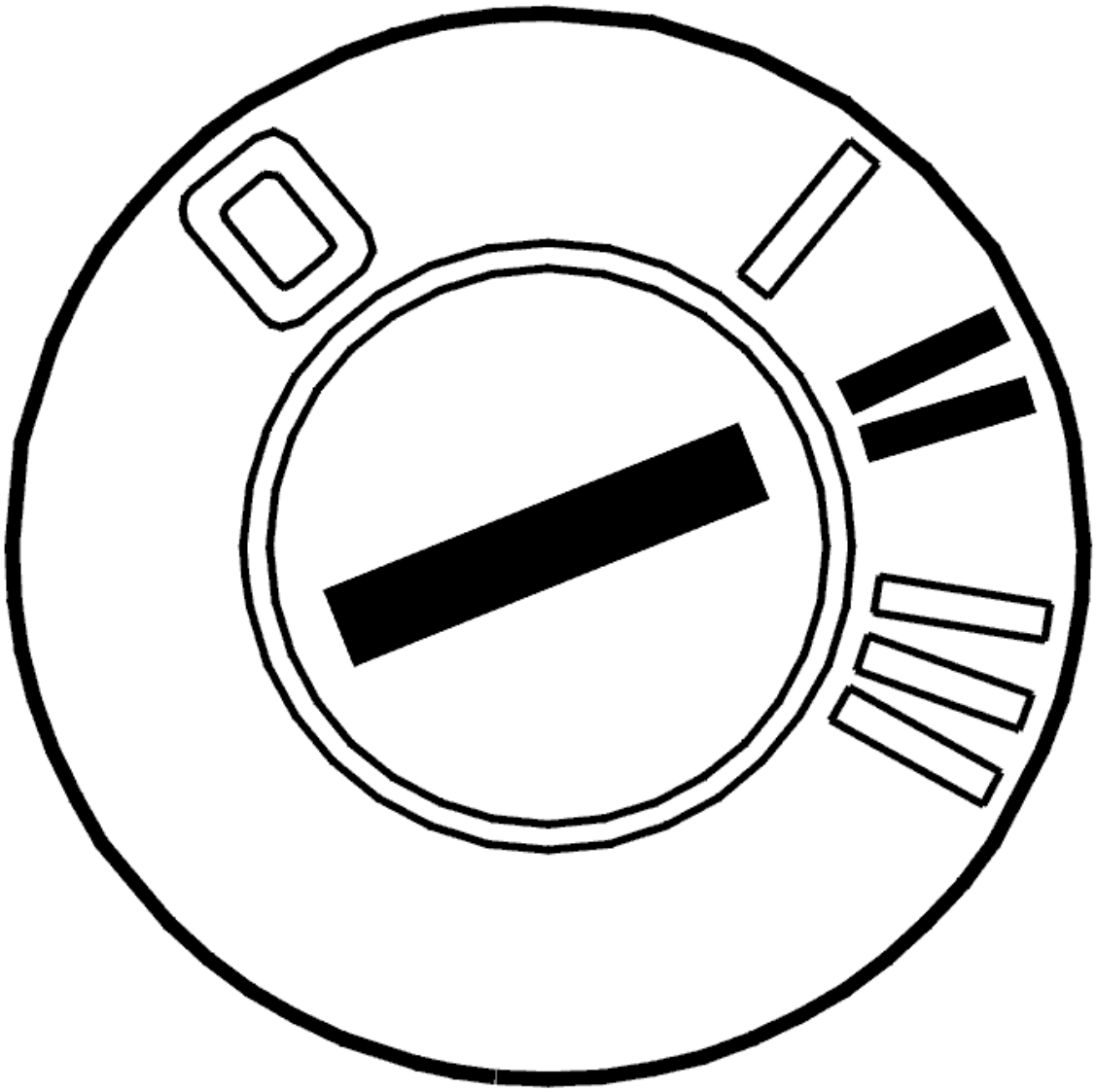

Fig. 498: Identifying Ignition ON
Courtesy of VOLVO CARS CORPORATION

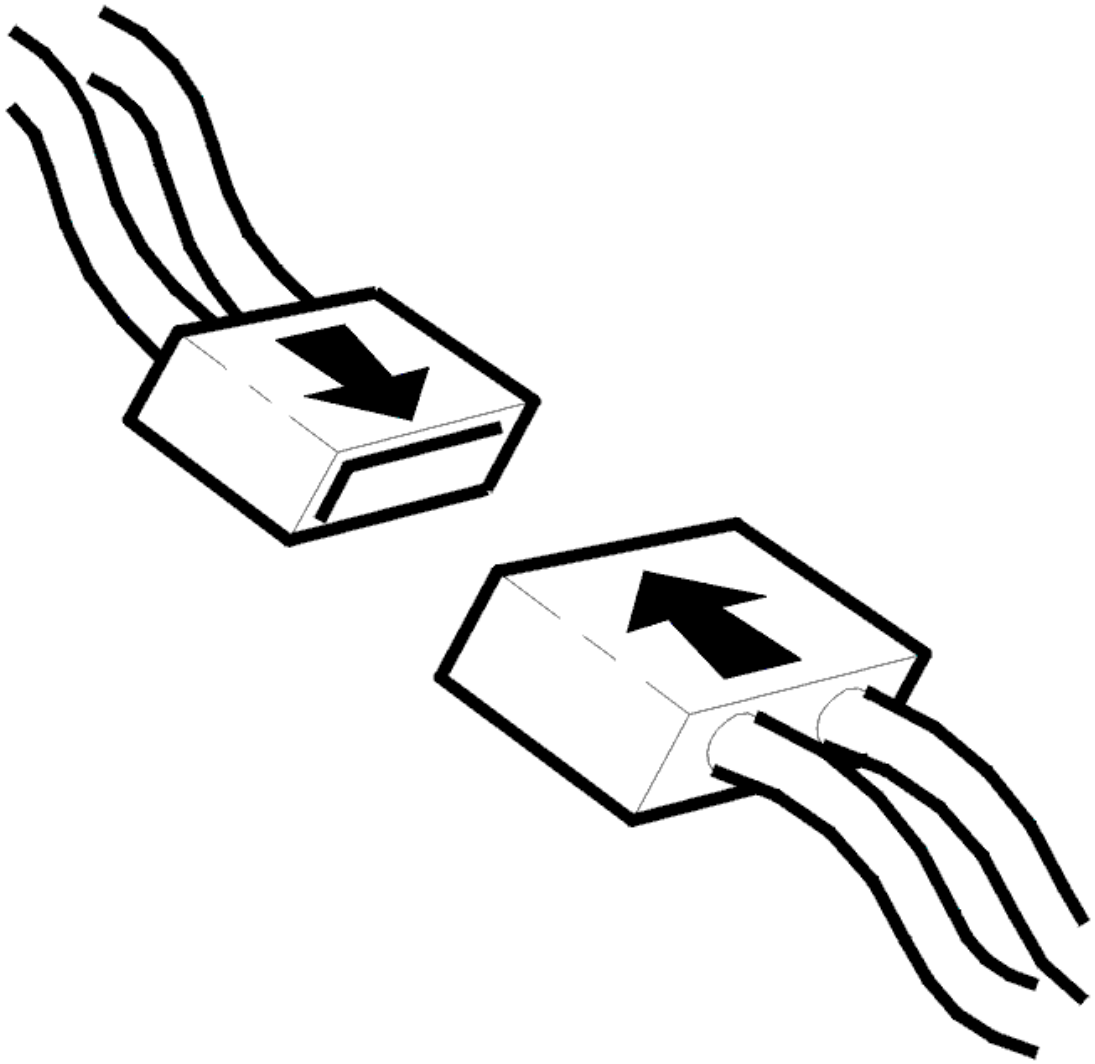

Fig. 499: Identifying Connector(s) Reinstallation
Courtesy of VOLVO CARS CORPORATION

- Ignition on
- Read off the power supply for the transmission control module (TCM).

  The voltage must be about the same as the battery voltage.

  - Start the engine and allow it to idle.
  - Read off the power supply for the transmission control module (TCM) again.

  The voltage should rise to 13-15 V, depending on the alternator charging voltage.

  Select an alternative:

1. Normal voltage.

   Refer to **CHECKING THE COMPONENTS AND WIRING**

2. Voltage too low.

   Refer to **CHECKING THE BATTERY VOLTAGE**

3. Voltage too high.

   Refer to **CHECKING THE POWER SUPPLY**

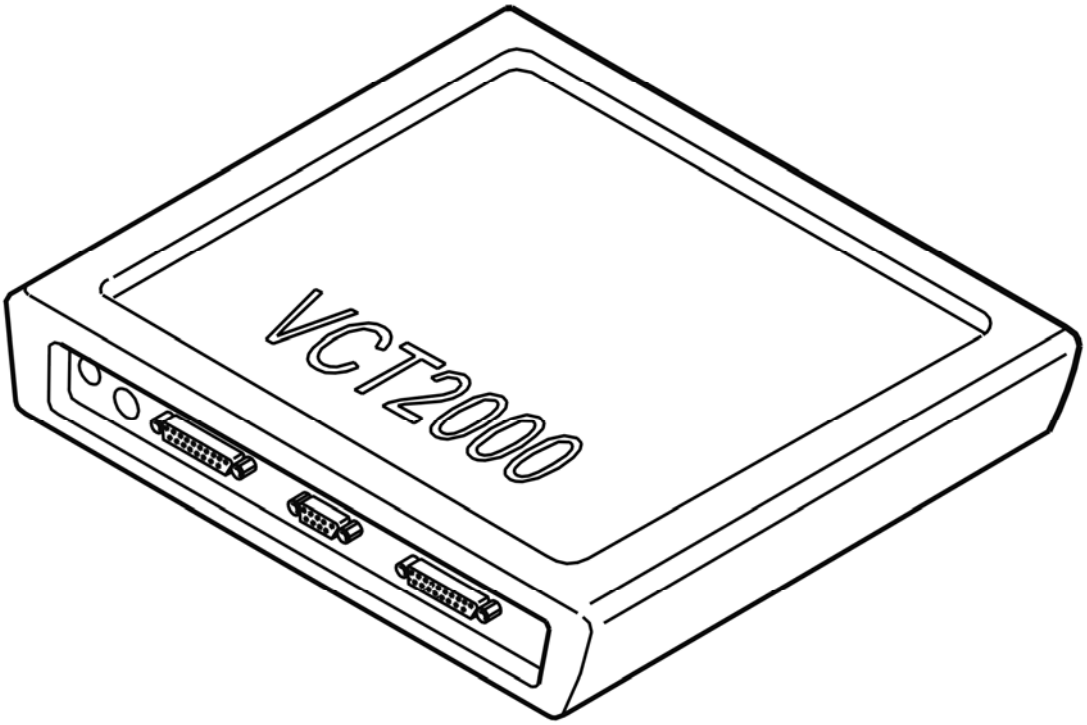

Fig. 500: Identifying VCT2000 Diagnostic Tool Symbol In VIDA
Courtesy of VOLVO CARS CORPORATION

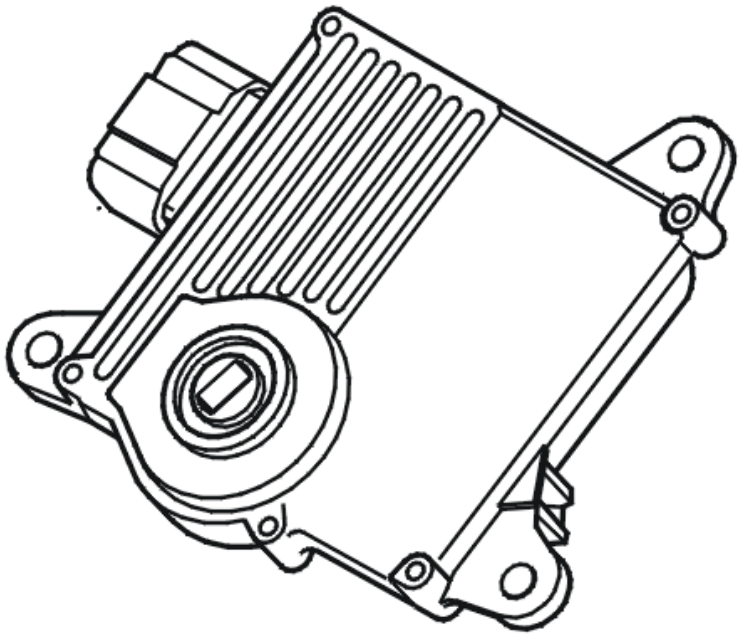

Fig. 501: Identifying Transmission Control Module (TCM)
Courtesy of VOLVO CARS CORPORATION

CHECKING THE BATTERY VOLTAGE

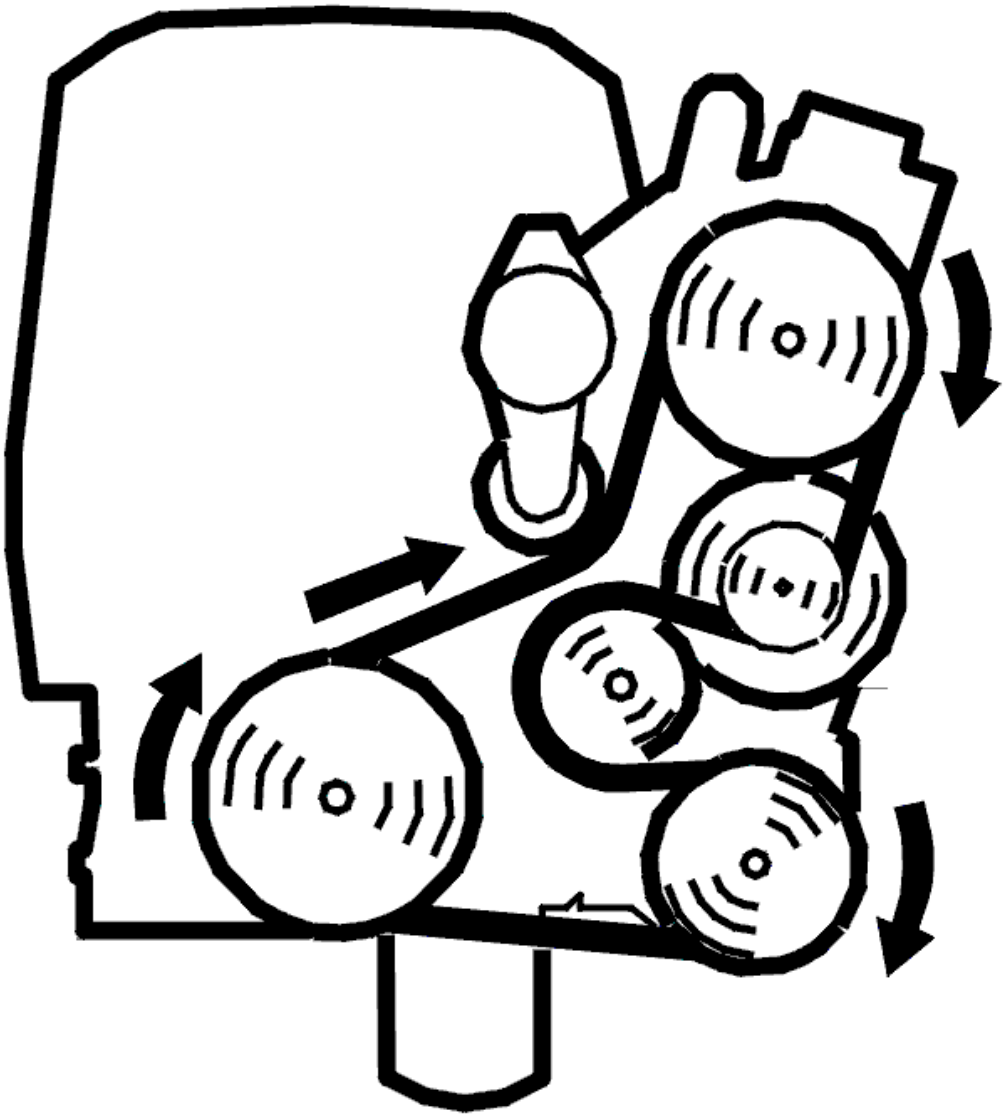

Fig. 502: Identifying Belt Routing
Courtesy of VOLVO CARS CORPORATION

- Start the engine and allow it to idle.
- Expose the battery.
- Connect a voltmeter between the positive and negative battery terminals.

  The voltmeter should read 13-15V depending on the alternator charging voltage.

Is the voltage OK?

- **OK**

  Refer to **CHECKING WIRING AND TERMINALS**

- **NOT OK**

  Refer to **CHECKING THE POWER SUPPLY**

CHECKING WIRING AND TERMINALS

Check the connector A one the transmission control module (TCM) with regard to contact resistance and oxidation.

Check the power supply lead (30 supply) between the fuse in the main relay and fuse box in the engine compartment and the transmission control module (TCM) #A1 (#31) with regard to an open circuit.

Check the power supply lead (15 supply) between the fuse in the main relay and fuse box in the cabin and transmission control module (TCM) #A11 (#41) with regard to intermittent open circuits.

HINT: When the ignition is on, the voltmeter should show battery voltage on both connections when measuring to chassis ground.

Check the ground lead between the chassis ground point and transmission control module (TCM) #A9 (#39) with regard to open circuits.

HINT: When the ignition is on, the voltmeter should show battery voltage between #A9 (#39) and the positive battery terminal.

NOTE: If a fault was not found, check for faults in the central electronic module (CEM).

Remedy as necessary.

Other information:

- see **CONNECTING THE BREAKOUT BOX**
- see **SIGNAL DESCRIPTION**
- For access to connector A: **TRANSMISSION CONTROL MODULE (TCM), REPLACING**
- see **CONTENTS**

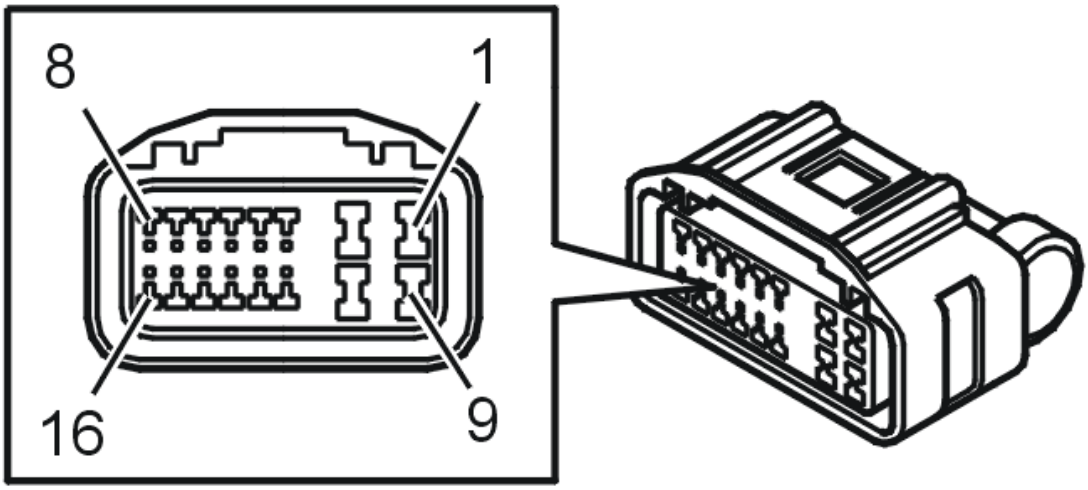

Fig. 503: Identifying Connector A Terminals
Courtesy of VOLVO CARS CORPORATION

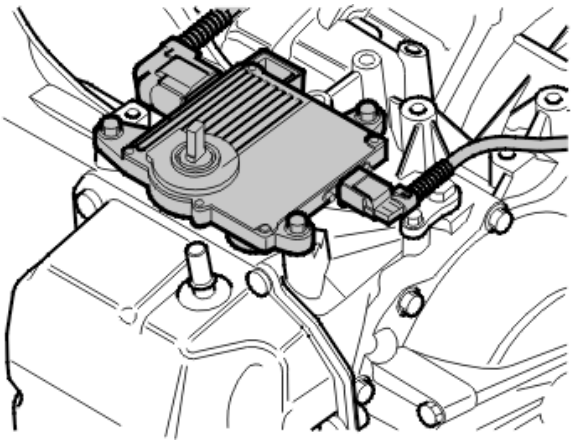

Fig. 504: Identifying Rear Electronic Module (REM)
Courtesy of VOLVO CARS CORPORATION

- **Continue**

  Refer to **VERIFICATION**

CHECKING THE POWER SUPPLY

Check the vehicle's charging system with regard to the charging.

Remedy as necessary.

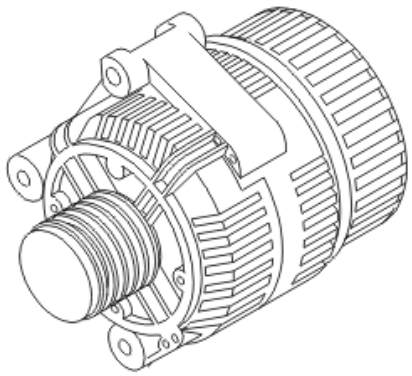

Fig. 505: Identifying Generator (GEN)
Courtesy of VOLVO CARS CORPORATION

- **Continue**

  Refer to **VERIFICATION**

CHECKING THE POWER SUPPLY

Make sure a battery charger with a charging voltage that is too high is not connected.

Check the vehicle's charging system with regard to high charging voltage.

Remedy as necessary.

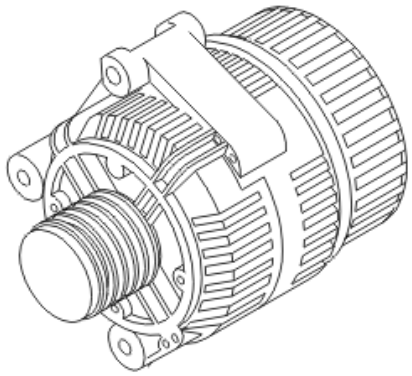

Fig. 506: Identifying Generator (GEN)
Courtesy of VOLVO CARS CORPORATION

- **Continue**

  Refer to **VERIFICATION**

CHECKING THE COMPONENTS AND WIRING

Fault tracing indicates that the transmission control module (TCM) has previously registered a fault but the fault is no longer active.

Check the connector A one the transmission control module (TCM) with regard to contact resistance and oxidation.

Check the power supply lead (30 supply) between the fuse in the main relay and fuse box in the engine compartment and transmission control module (TCM) #A1 (#31) with regard to an intermittent open circuit.

Check the power supply lead (15 supply) between the transmission control module (TCM) and the ignition switch (via the central electronic module (CEM).

HINT: When the ignition is on, the voltmeter should show battery voltage on both connections when measuring to chassis ground.

Check the ground lead between the chassis ground point and transmission control module (TCM) #A9 (#39) with regard to an intermittent open circuit.

HINT: The diagnostic trouble code (DTC) may have been stored due to a battery charger with a charging voltage that is too high having earlier been connected.

Remedy as necessary.

Other information:

- see **CONNECTING THE BREAKOUT BOX**
- see **SIGNAL DESCRIPTION**
- For access to connector A: **TRANSMISSION CONTROL MODULE (TCM), REPLACING**
- see **CONTENTS**

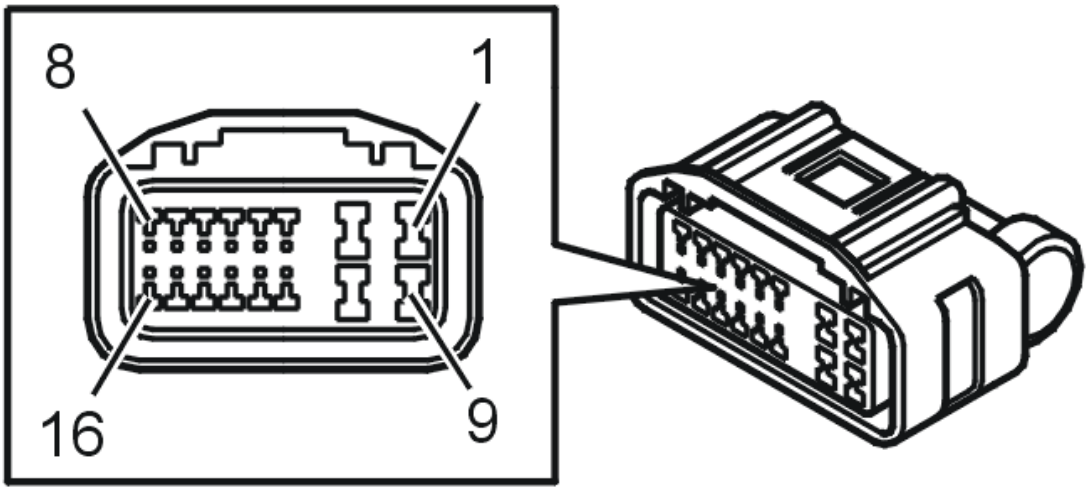

Fig. 507: Identifying Connector A Terminals
Courtesy of VOLVO CARS CORPORATION

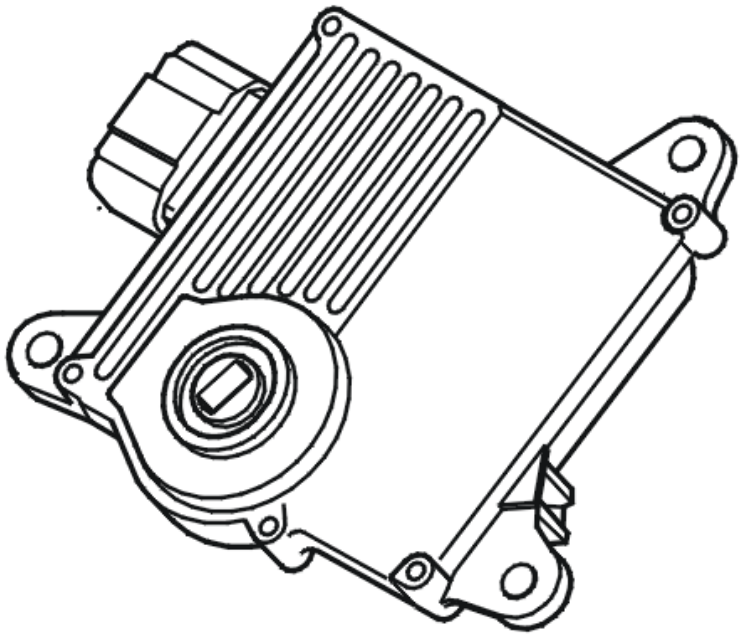

Fig. 508: Identifying Transmission Control Module (TCM)
Courtesy of VOLVO CARS CORPORATION

- **Continue**

  Refer to **INFORMATION**

VERIFICATION

VERIFICATION

HINT: After carrying out the repair, check that the fault has been remedied.

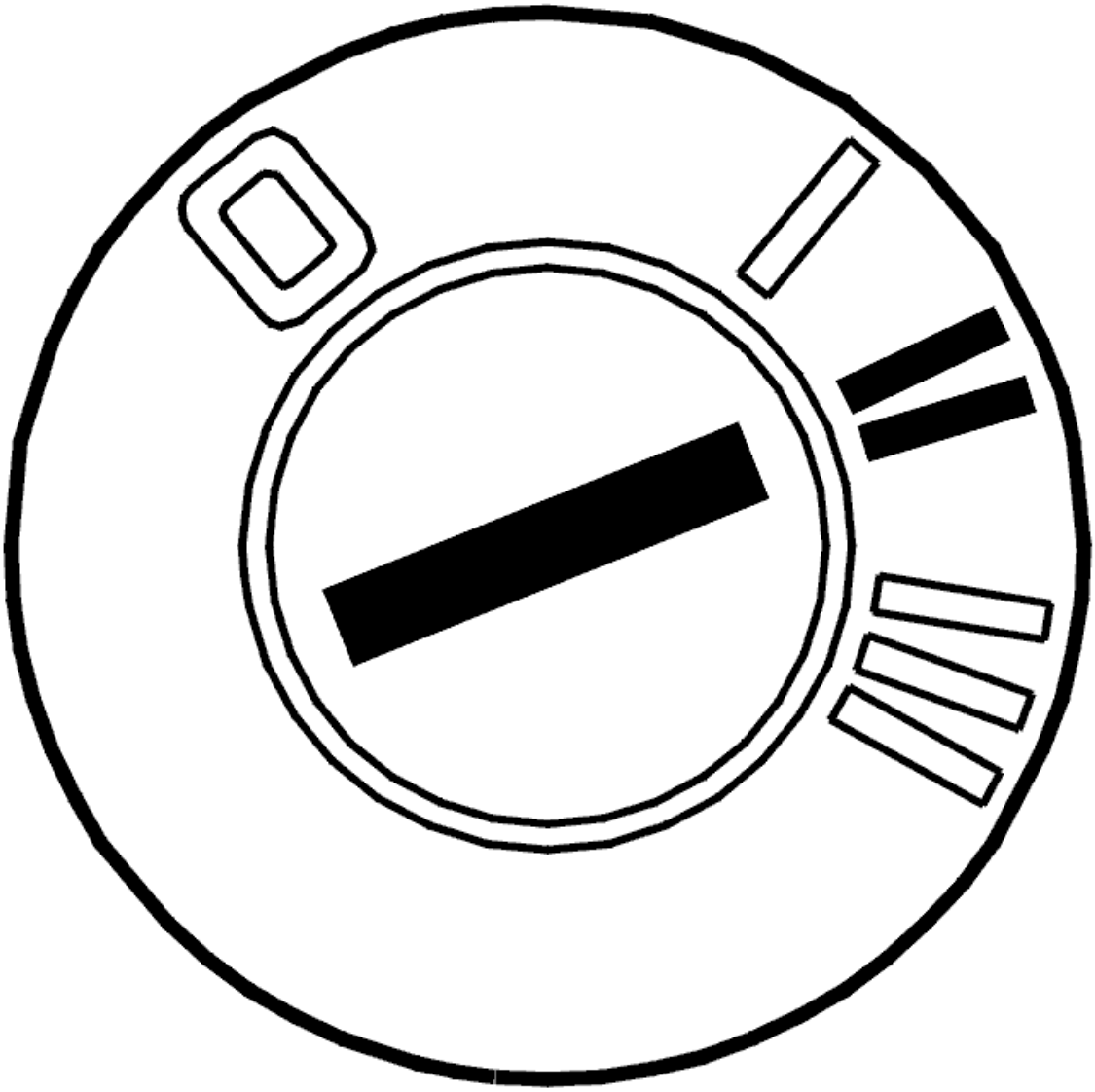

Fig. 509: Identifying Ignition ON
Courtesy of VOLVO CARS CORPORATION

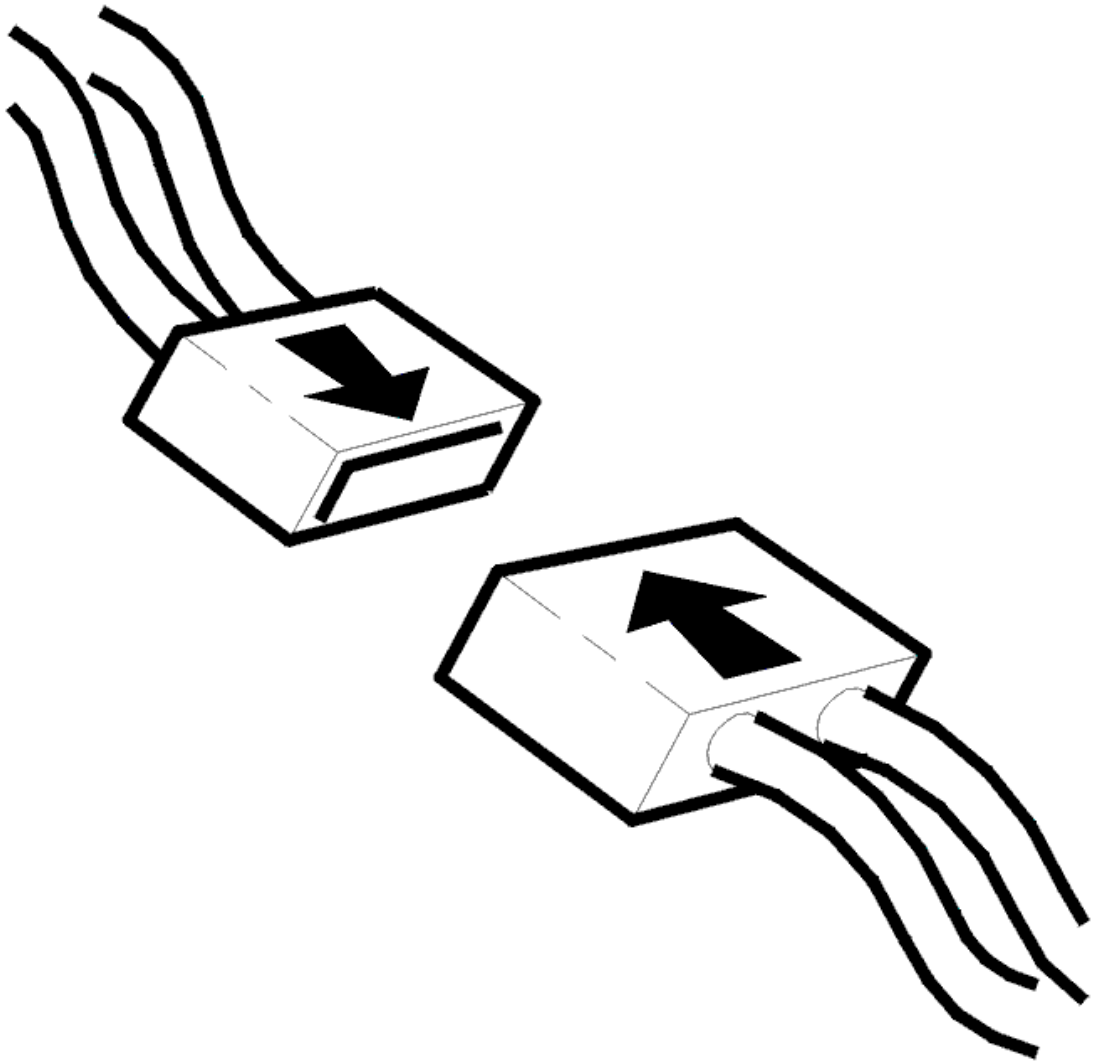

Fig. 510: Identifying Connector(s) Reinstallation
Courtesy of VOLVO CARS CORPORATION

- Ignition off
- Reinstall the connectors, components etc.
- Ignition on
- Read off the power supply for the transmission control module (TCM).

  The voltage must be about the same as the battery voltage.

  - Start the engine and allow it to idle.
  - Read off the power supply for the transmission control module (TCM) again.

  The voltage should rise to 13-15 V, depending on the alternator charging voltage.

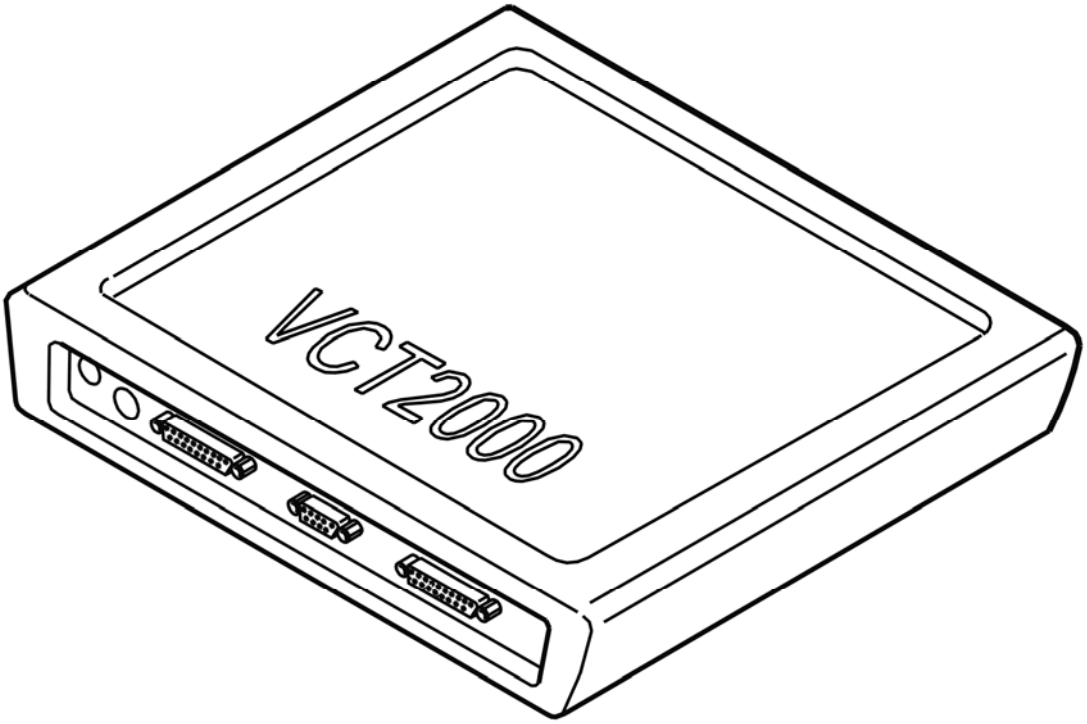

Fig. 511: Identifying VCT2000 Diagnostic Tool Symbol In VIDA
Courtesy of VOLVO CARS CORPORATION

Is the voltage OK?

- **YES**

  VERIFIED: Troubleshooting has been completed.

- **NO**

  Refer to **INFORMATION**

INFORMATION

FAULT-TRACING INFORMATION

The fault should have been detected and remedied. As this is not the case fault-tracing has failed.

Exit fault-tracing for this diagnostic trouble code (DTC) or make another attempt.

INFORMATION

FAULT-TRACING INFORMATION

If the fault is intermittent, do not verify fault-tracing if the fault does not recur.

It is possible to view the information again, or leave fault-tracing for this diagnostic trouble code (DTC).

TCM-P056100: SYSTEM VOLTAGE UNSTABLE. GENERAL FAULT INFORMATION. NO INFORMATION ON FAULT TYPE (TF-80SC AWD; 2005)

DIAGNOSTIC TROUBLE CODE (DTC) INFORMATION TCM-P056100

see **DIAGNOSTIC TROUBLE CODE (DTC) INFORMATION TCM-P056100**

FAULT TRACING

see **FAULT TRACING**

TCM-P056200: SYSTEM VOLTAGE LOW. GENERAL FAILURE INFORMATION. NO SUB TYPE INFORMATION (B6324S, TF-80SC; B6324S, TF-80SC AWD; 2007-2010)

DIAGNOSTIC TROUBLE CODE (DTC) INFORMATION TCM-P056200

Condition

The transmission control module (TCM) continuously monitors the voltage and compares it with a voltage value sent out on the CAN network by the central electronic module (CEM).

The diagnostic trouble code (DTC) is stored if the control module detects that:

- The system voltage is lower than 9.0 V.

The control module's test for the diagnostic trouble code (DTC) starts in the event of:

- Engine running.

NOTE: **The control module can only detect the fault once the test has been started and the diagnostic trouble code (DTC) is stored when the conditions are met.**

Fig. 512: Identifying Battery
Courtesy of VOLVO CARS CORPORATION

Substitute Value

- Auxiliary program **Emergency mode 1** in the transmission control module (TCM) has started.

  HINT: EMERGENCY MODE IN THE EVENT OF A FAULT

Possible Source

- Battery voltage too low.
- Contact resistance or oxidation in the connector on the transmission control model (TCM) or the gearbox.
- Internal fault in the transmission control module (TCM).

Fault symptom[s]

- Malfunction indicator light (MIL), on
- General warning lamp lit

FAULT-TRACING

CHECKS

CHECKING THE POWER SUPPLY

Fig. 513: Identifying Ignition ON

Courtesy of VOLVO CARS CORPORATION

- Ignition on.
- Read the voltage supply for the transmission control module (TCM) and central electronic module (CEM).

  The voltage supply for the transmission control module (TCM) and central electronic module (CEM) must be approximately the same.

  If the voltage for the transmission control module (TCM) is below 9 V it means that the fault is permanent.

  If the voltages are approximately the same then this would suggest that the fault has previously been present but is no longer active. The fault is intermittent.

Fig. 514: Identifying VCT2000 Diagnostic Tool Symbol In VIDA
Courtesy of VOLVO CARS CORPORATION

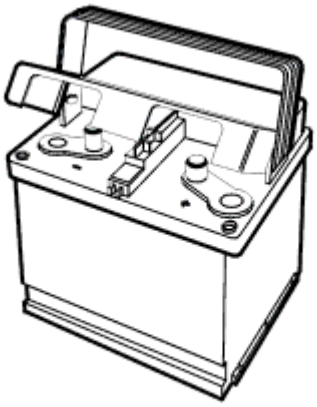

Fig. 515: Identifying Battery
Courtesy of VOLVO CARS CORPORATION

- **Continue**

  Refer to **CHECKING THE COMPONENTS AND WIRING**

CHECKING THE COMPONENTS AND WIRING

Check the battery status.

Check connector A on the transmission control module (TCM). Check for contact resistance and oxidation.

Check the power supply cable (30 supply). Check for an intermittent open-circuit.

Take readings between:

- Transmission control module (TCM) terminal #A1 (#31) and the fuse in the engine compartment relay/fuse box.

Check the power supply cable (15 supply). Check for contact resistance and oxidation.

Take readings between:

- Transmission control module (TCM) terminal #A11 (#41) and the fuse in the passenger compartment relay/fuse box.

HINT: With the ignition on the voltmeter must display battery voltage at both terminals when measured against ground.

Check the ground cable. Check for an intermittent open-circuit.

Take readings between:

- Transmission control module (TCM) terminal #A9 (#39) and grounding point.

HINT: When the ignition is on, the voltmeter should show battery voltage between #A9 (#39) and the positive battery terminal.

NOTE: No fault is found, fault trace central electronic module (CEM).

Remedy as necessary.

Other information

- see **CONNECTING THE BREAKOUT BOX**
- see **SIGNAL SPECIFICATION**
- To access connector A:**TRANSMISSION CONTROL MODULE (TCM)**
- see **CHECKING WIRING AND TERMINALS**

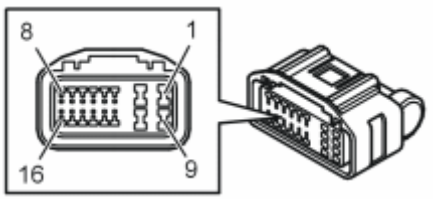

Fig. 516: Identifying Connector Terminals
Courtesy of VOLVO CARS CORPORATION

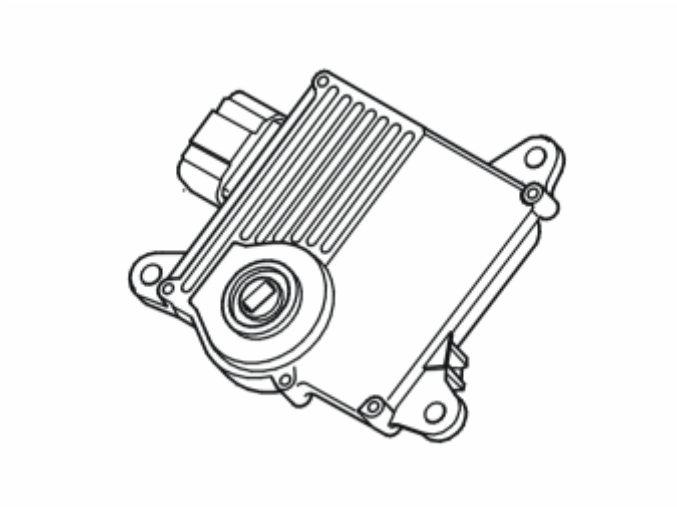

Fig. 517: Identifying Transmission Control Module (TCM)
Courtesy of VOLVO CARS CORPORATION

- **Continue**

  Refer to **VERIFICATION**

VERIFICATION

VERIFICATION

HINT: After carrying out the repair, check that the fault has been remedied.

Fig. 518: Identifying Ignition ON
Courtesy of VOLVO CARS CORPORATION

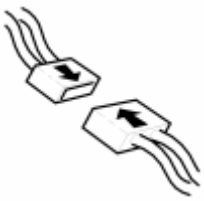

Fig. 519: Identifying Connector(s) Reinstallation
Courtesy of VOLVO CARS CORPORATION

- Ignition off.
- Reinstall the connectors, components etc.
- Ignition on.
- Read off the power supply for the transmission control module (TCM).

  Voltage should be about equal to battery voltage.

  - Start the engine. Allow the engine to idle.
  - Read off the power supply for the transmission control module (TCM) again.

  The voltage must be raised to 13-15V depending on the generator (GEN) charging voltage.

Fig. 520: Identifying VCT2000 Diagnostic Tool Symbol In VIDA
Courtesy of VOLVO CARS CORPORATION

Is the voltage OK?

- **YES**

  VERIFIED: Troubleshooting has been completed.

- **NO**

  Refer to **INFORMATION**

INFORMATION

FAULT-TRACING INFORMATION

The fault should have been detected and remedied. As this is not the case fault-tracing has failed.

Exit fault-tracing for this diagnostic trouble code (DTC) or make another attempt.

TCM-P056200: SYSTEM VOLTAGE LOW. GENERAL FAILURE INFORMATION. NO SUB TYPE INFORMATION (B6324S5, TF-80SC; B6324S5, TF-80SC AWD; 2011-2012)

DIAGNOSTIC TROUBLE CODE (DTC) INFORMATION TCM-P056200

see **DIAGNOSTIC TROUBLE CODE (DTC) INFORMATION TCM-P056200**

FAULT-TRACING

see **FAULT-TRACING**

TCM-P056200: SYSTEM VOLTAGE LOW. GENERAL INFORMATION. NO INFORMATION ON FAULT TYPE (B8444S, TF-80SC AWD; 2006-2011)

DIAGNOSTIC TROUBLE CODE (DTC) INFORMATION TCM-P056200

Condition

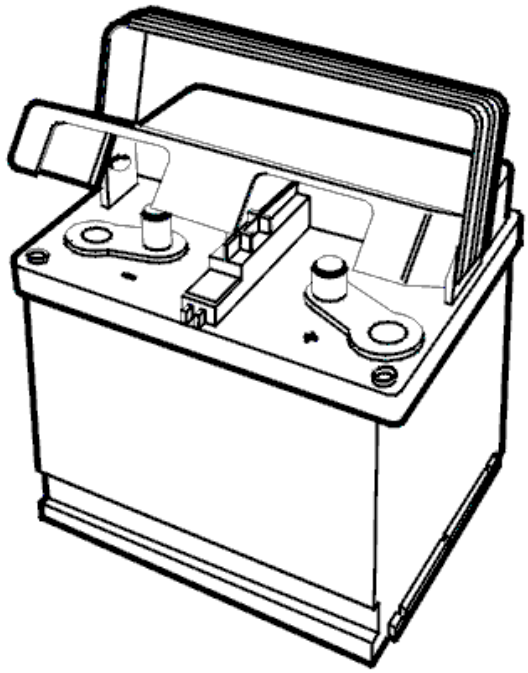

Fig. 1: Identifying Battery
Courtesy of VOLVO CARS CORPORATION

The transmission control module (TCM) continuously monitors the supply voltage and compares it with a voltage value sent out on the CAN network by the central electronic module (CEM).

If the transmission control module (TCM) registers a system voltage below 9.0V, the diagnostic trouble code (DTC) will be generated.

The diagnostic trouble code can be diagnosed when the engine is running.

Substitute Value

- Auxiliary program **Emergency mode 1** in the transmission control module (TCM) has started.

  HINT: EMERGENCY MODE IN CASE OF MALFUNCTION

Possible Source

- Battery voltage too low.

- Contact resistance or oxidation in the connector on the transmission control model (TCM) or the gearbox.
- Internal fault in transmission control module (TCM).

Fault symptom[s]

- Malfunction indicator lamp (MIL) lit.
- General warning lamp lit

FAULT TRACING TCM-P056200

CHECKS

CHECKING THE POWER SUPPLY

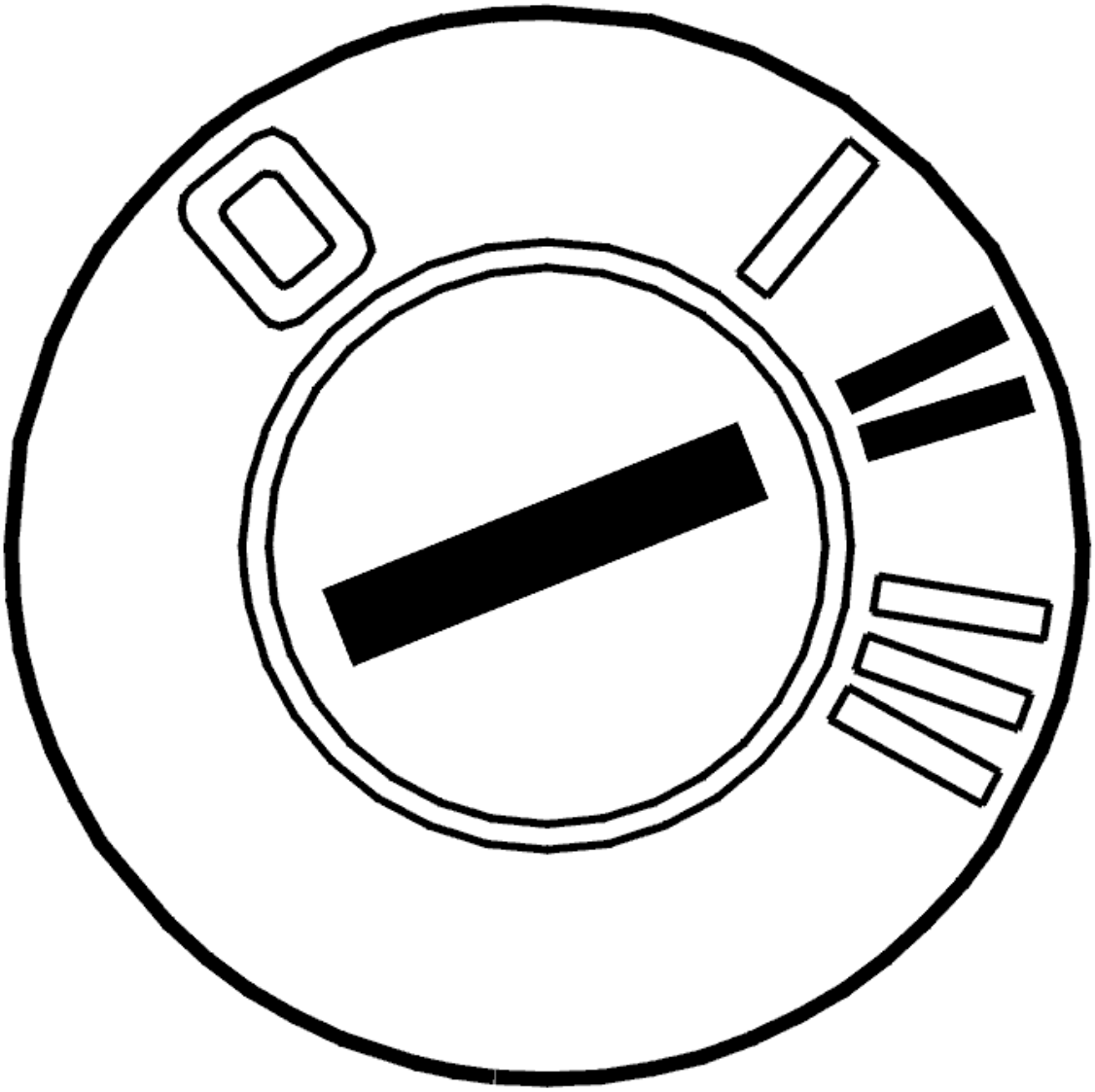

Fig. 2: Identifying Ignition ON

Courtesy of VOLVO CARS CORPORATION

- Ignition on
- Read the voltage supply for the transmission control module (TCM) and central electronic module (CEM).

  The voltage supply for the transmission control module (TCM) and central electronic module (CEM) must be approximately the same.

  If the voltage for the transmission control module (TCM) is below 9 V it means that the fault is permanent.

  If the voltages are approximately the same then this would suggest that the fault has previously been present but is no longer active. The fault is intermittent.

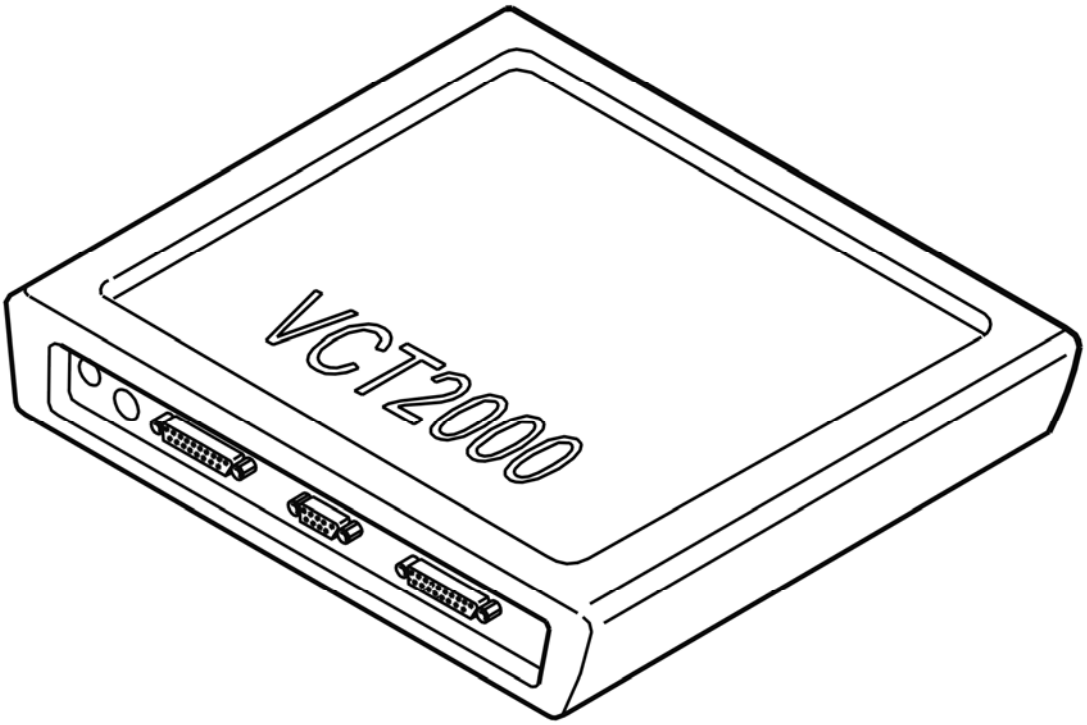

Fig. 3: Identifying VCT2000 Diagnostic Tool Symbol In VIDA
Courtesy of VOLVO CARS CORPORATION

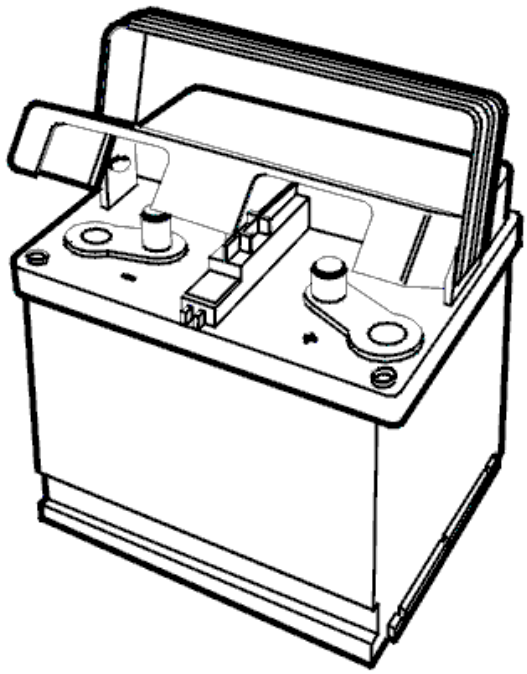

Fig. 4: Identifying Battery
Courtesy of VOLVO CARS CORPORATION

- **Continue**

  Refer to **CHECKING CABLE AND COMPONENT**

CHECKING CABLE AND COMPONENT

Check the battery status.

Check connector A on the transmission control module (TCM). Check for contact resistance and oxidation.

Check the power supply cable (30 supply) between the fuse in the relay /fusebox in the engine compartment and the transmission control module (TCM) terminal #A1 (#31). Check for contact resistance and oxidation.

Check the power supply cable (15 supply) between the fuse in the relay /fusebox in the engine compartment and the transmission control module (TCM) terminal #A11 (#41). Check for contact resistance and oxidation.

HINT: With the ignition on the voltmeter must display battery voltage at both terminals when measured against ground.

Check the ground cable between the ground terminal and the transmission control module (TCM) terminal #A9 (#39). Check for contact resistance and oxidation.

HINT: With the ignition on the voltmeter must display battery voltage between #A9 (#39) and the battery + pole.

NOTE: No fault is found, fault trace central electronic module (CEM).

Remedy as necessary.

Other information

- see **CONNECTING THE BREAKOUT BOX**
- see **SIGNAL DESCRIPTION**
- To access connector A: **TRANSMISSION CONTROL MODULE (TCM), REPLACING**
- see **CONTENTS**

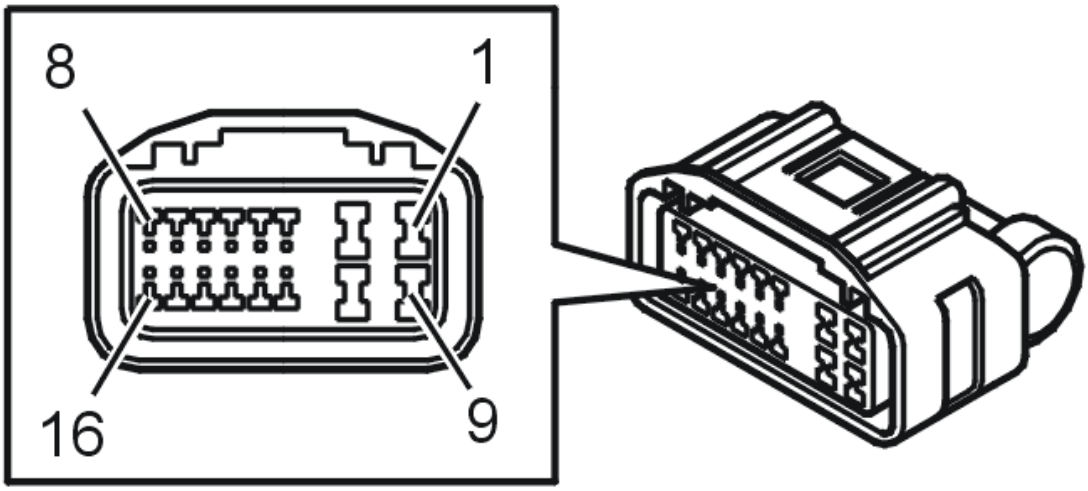

Fig. 5: Identifying Connector A Terminals
Courtesy of VOLVO CARS CORPORATION

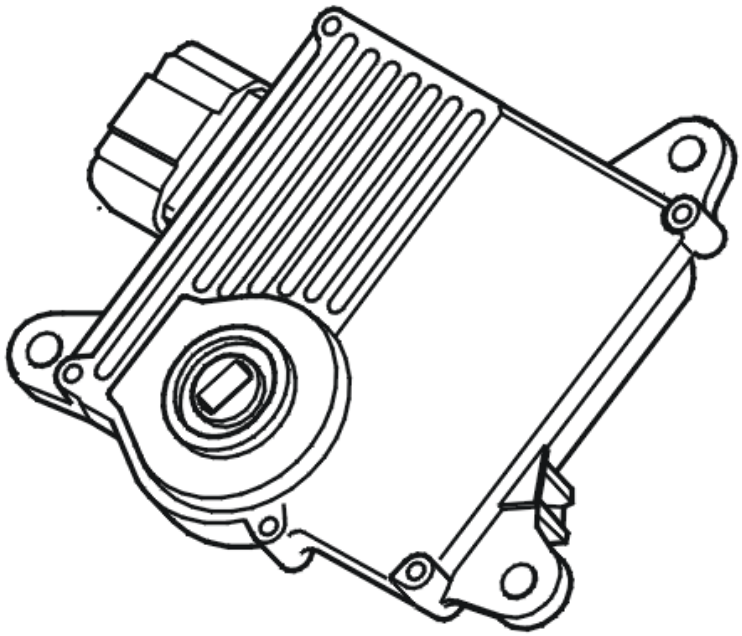

Fig. 6: Identifying Transmission Control Module (TCM)
Courtesy of VOLVO CARS CORPORATION

- **Continue**

  Refer to **VERIFICATION**

VERIFICATION

VERIFICATION

HINT: After carrying out the repair, check that the fault has been remedied.

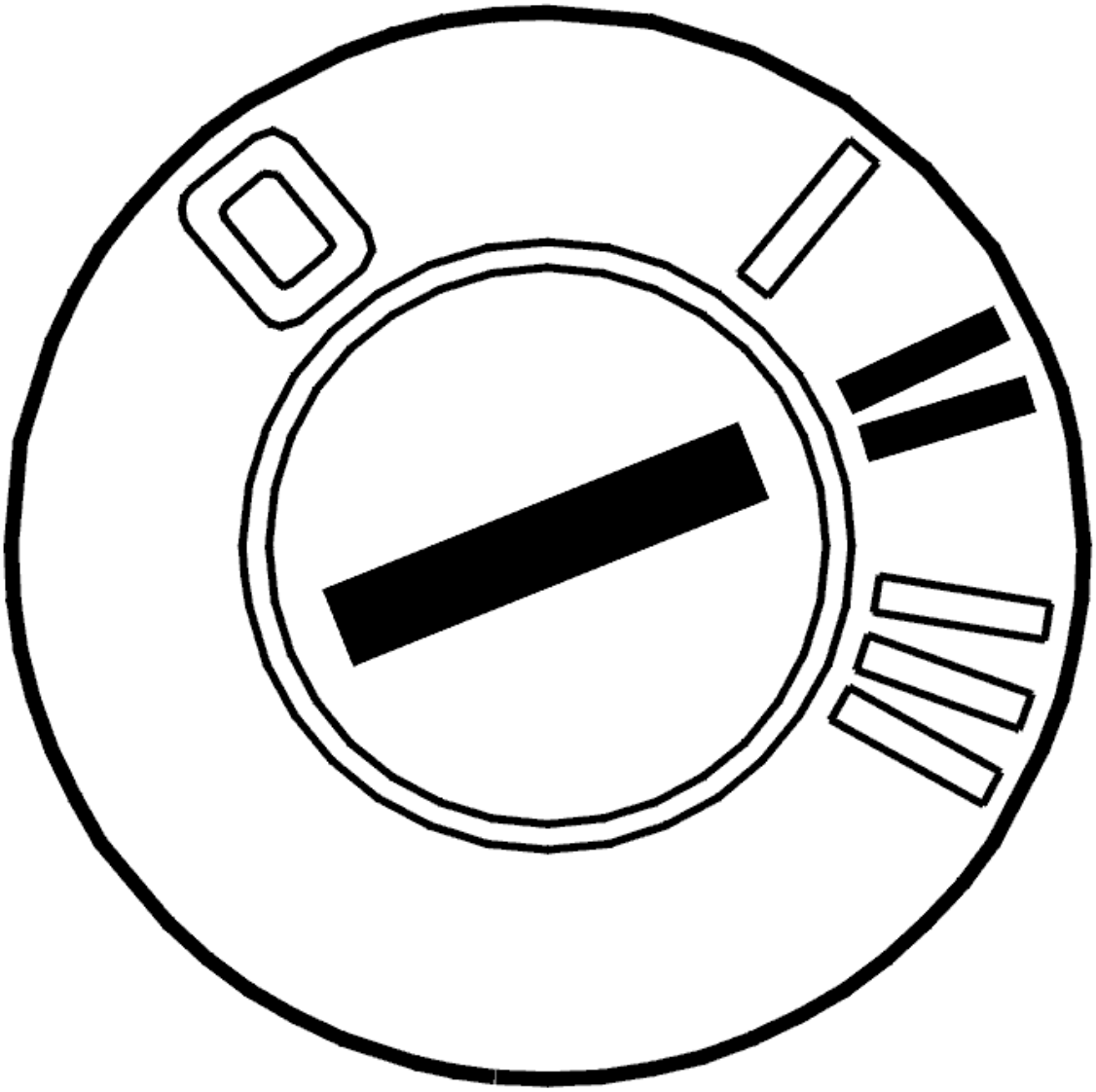

Fig. 7: Identifying Ignition ON
Courtesy of VOLVO CARS CORPORATION

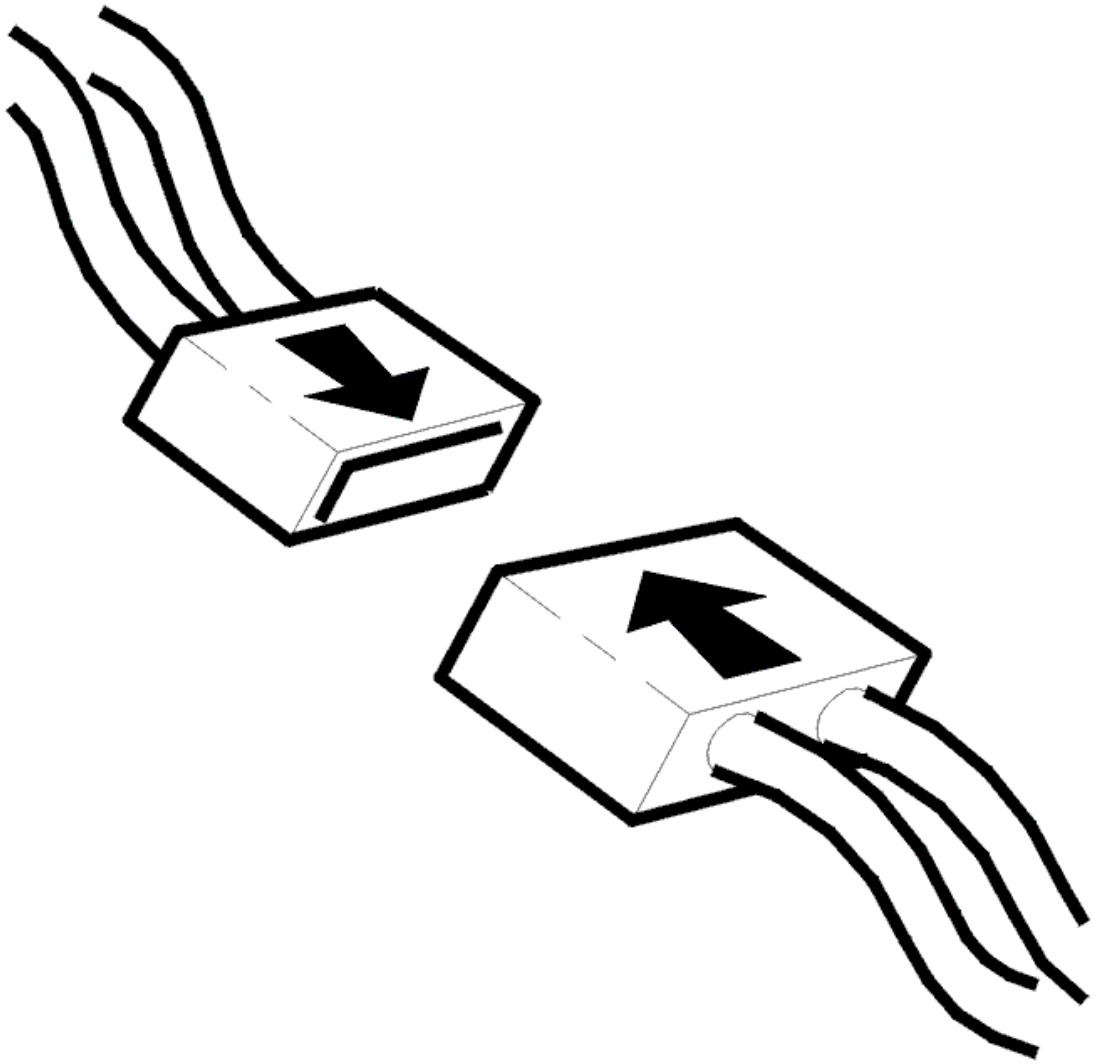

Fig. 8: Identifying Connector(s) Reinstallation
Courtesy of VOLVO CARS CORPORATION

- Ignition off
- Reinstall the connectors, components etc.
- Ignition on
- Read off the power supply for the transmission control module (TCM).

  The voltage should be approx. the same as the battery voltage.

  - Start the engine and allow it to idle.
  - Read off the power supply for the transmission control module (TCM) again.

  The voltage should rise to 13-15 V, depending on the alternator charging voltage.

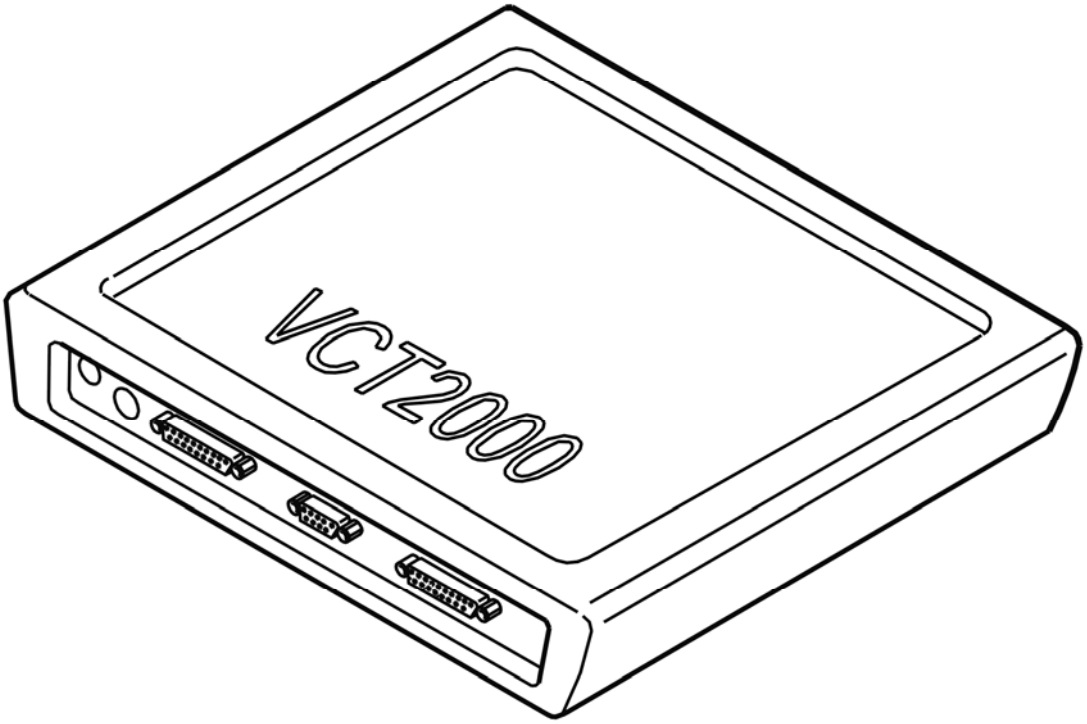

Fig. 9: Identifying VCT2000 Diagnostic Tool Symbol In VIDA
Courtesy of VOLVO CARS CORPORATION

Is the voltage OK?

- **YES**

  VERIFIED: Troubleshooting has been completed.

- **NO**

  Refer to **INFORMATION**

INFORMATION

FAULT-TRACING INFORMATION

The fault should have been detected and remedied. As this is not the case fault-tracing has failed.

Exit fault-tracing for this diagnostic trouble code (DTC) or make another attempt.

TCM-P056200: SYSTEM VOLTAGE LOW. GENERAL INFORMATION. NO INFORMATION ON FAULT TYPE (TF-80SC AWD; 2005)

DIAGNOSTIC TROUBLE CODE (DTC) INFORMATION TCM-P056200

see **DIAGNOSTIC TROUBLE CODE (DTC) INFORMATION TCM-P056200**

FAULT TRACING TCM-P056200

see **FAULT TRACING TCM-P056200**

TCM-P056300: SYSTEM VOLTAGE HIGH. GENERAL FAULT INFORMATION. NO INFORMATION ON FAULT TYPE (B8444S, TF-80SC AWD; 2006-2011)

DIAGNOSTIC TROUBLE CODE (DTC) INFORMATION TCM-P056300

Condition

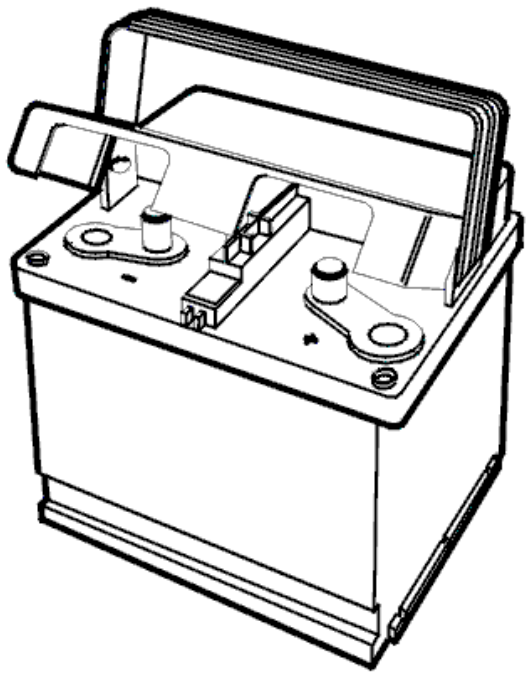

Fig. 10: Identifying Battery
Courtesy of VOLVO CARS CORPORATION

The transmission control module (TCM) continuously monitors the voltage and compares it with a voltage value sent out on the CAN network by the central electronic module (CEM).

If the transmission control module (TCM) registers that the power supply is too high (above 15.5V) to guarantee the function of the control module, the diagnostic trouble code (DTC) will be generated.

The diagnostic trouble code (DTC) can be diagnosed while the engine is running.

Substitute Value

- Auxiliary program **Emergency mode 1** in the transmission control module (TCM) has started.

  HINT: EMERGENCY MODE IN CASE OF MALFUNCTION

Possible Source

- Battery charger with incorrect voltage has been used.
- Internal fault in transmission control module (TCM).

Fault symptom[s]

- Malfunction indicator lamp (MIL) lit.
- General warning lamp lit

FAULT TRACING

see **FAULT TRACING**

TCM-P056300: SYSTEM VOLTAGE HIGH. GENERAL FAULT INFORMATION. NO INFORMATION ON FAULT TYPE (TF-80SC AWD; 2005)

DIAGNOSTIC TROUBLE CODE (DTC) INFORMATION TCM-P056300

see **DIAGNOSTIC TROUBLE CODE (DTC) INFORMATION TCM-P056300**

FAULT TRACING

see **FAULT TRACING**

TCM-P060000: SERIAL COMMUNICATION LINK. GENERAL FAULT INFORMATION. NO INFORMATION ON FAULT TYPE (B8444S, TF-80SC AWD; 2006-2011)

DIAGNOSTIC TROUBLE CODE (DTC) INFORMATION TCM-P060000

Condition

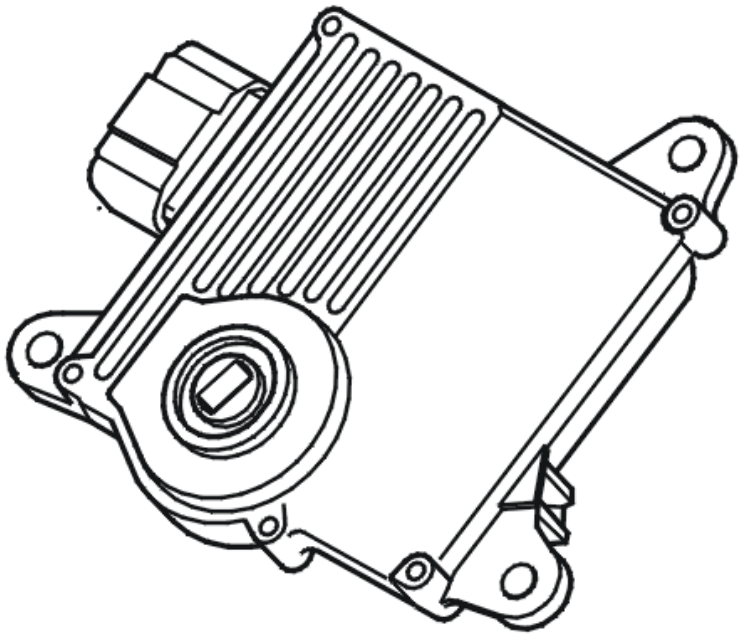

Fig. 11: Identifying Transmission Control Module (TCM)
Courtesy of VOLVO CARS CORPORATION

The control modules transmit and receive information via a standardized serial communication method - CAN (Control Area Network). The diagnostic trouble code (DTC) is stored if the transmission control module (TCM) registers serious interference (CAN communication blocked).

NOTE: **In case of a system communication fault, it will not be possible to communicate with the transmission control module (TCM). It will therefore only be possible to read if the fault is intermittent.**

Substitute Value

- Auxiliary program **Emergency mode 1** in the transmission control module (TCM) has started.

  HINT: EMERGENCY MODE IN CASE OF MALFUNCTION

Possible Source

- Contact resistance or oxidation in the terminals
- Open-circuit in the control area network (CAN) wiring.
- Short-circuit between the control area network (CAN) wiring.
- Internal fault in transmission control module (TCM).

- Internal fault in another control module in the same part of the control area network (CAN).

Fault symptom[s]

- General warning lamp lit
- No gear changing.

TCM-P060100: INTERNAL CONTROL MODULE MEMORY CHECK SUM ERROR. GENERAL FAILURE INFORMATION. NO SUB TYPE INFORMATION (B6324S, TF-80SC; B6324S, TF-80SC AWD; 2007-2010)

DIAGNOSTIC TROUBLE CODE (DTC) INFORMATION TCM-P060100

Condition

The Transmission control module (TCM) has three different internal memories, one for the program application (FLASH), one for permanent storage of information (EEPROM) and one for current information (RAM).

With the ignition off, certain information is saved from RAM to EEPROM and then the information is erased from RAM.

The diagnostic trouble code (DTC) is stored if the control module detects that:

- The checksum calculated after the ignition is switched on differs from the saved one.

The control module's test for the diagnostic trouble code (DTC) starts in the event of:

- Ignition on.

NOTE: The control module can only detect the fault once the test has been started and the diagnostic trouble code (DTC) is stored when the conditions are met.

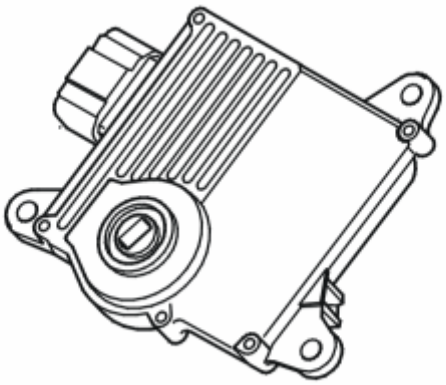

Fig. 12: Identifying Transmission Control Module (TCM)
Courtesy of VOLVO CARS CORPORATION

Substitute Value

- Auxiliary program **Emergency mode 1** in the transmission control module (TCM) has started.

  HINT: EMERGENCY MODE IN THE EVENT OF A FAULT

Possible Source

- Internal fault in the transmission control module (TCM).

Fault symptom[s]

- No gear shift
- Rough gear shift

FAULT-TRACING

ERASING DIAGNOSTIC TROUBLE CODE (DTC)

HINT: The transmission control module (TCM) has registered an internal fault.

HINT: The fault may intermittent and is why the diagnostic trouble code (DTC) must be erased and read off again.

NOTE: **In the event of erasing, all stored diagnostic trouble codes (DTCs) with corresponding information disappear.**

If there are other diagnostic trouble codes (DTCs) for Transmission control module (TCM), these must be fault-traced first.

If necessary, go to Vehicle communication and read out "Extended diagnostic trouble code (DTC) information"

Fig. 13: Identifying Ignition ON
Courtesy of VOLVO CARS CORPORATION

- Ignition on.
- Erase the diagnostic trouble code (DTC) by clicking the VCT2000 symbol.

Fig. 14: Identifying VCT2000 Diagnostic Tool Symbol In VIDA
Courtesy of VOLVO CARS CORPORATION

- **Continue**

  Refer to **READING OFF DIAGNOSTIC TROUBLE CODES (DTCS)**

READING OFF DIAGNOSTIC TROUBLE CODES (DTCS)

Fig. 15: Identifying Ignition ON
Courtesy of VOLVO CARS CORPORATION

- Ignition off.
- Wait for two minutes so that the diagnostic trouble codes (DTCs) are stored in the memory of the transmission control module (TCM).
- Ignition on.
- Read off the diagnostic trouble codes (DTCs) by clicking on the VCT2000 symbol.

Fig. 16: Identifying VCT2000 Diagnostic Tool Symbol In VIDA
Courtesy of VOLVO CARS CORPORATION

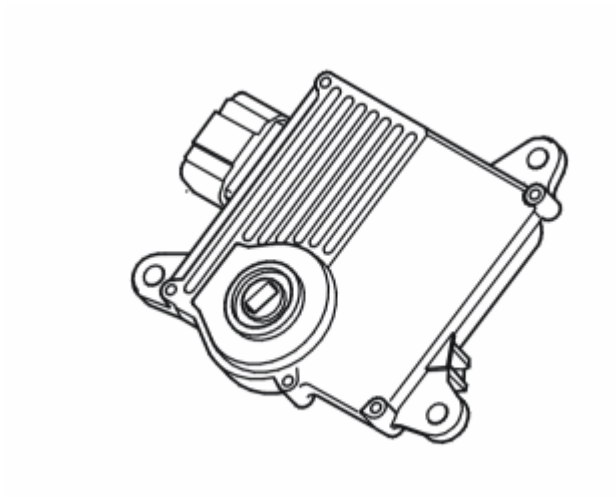

Fig. 17: Identifying Transmission Control Module (TCM)
Courtesy of VOLVO CARS CORPORATION

Are the diagnostic trouble code (DTCs) still stored?

- **YES**

  Refer to **REPLACING THE CONTROL MODULE AND PROGRAMMING**

- **NO**

  OKAY: Troubleshooting has been completed.

REPLACING THE CONTROL MODULE AND PROGRAMMING

The transmission control module (TCM) has registered an internal fault.

Replace control module.

CAUTION: A new control module is delivered without software.

For the transmission control module (TCM) to work after replacement, it must be programmed.

Other information

- Program and change control module according to:**TRANSMISSION CONTROL MODULE (TCM)**

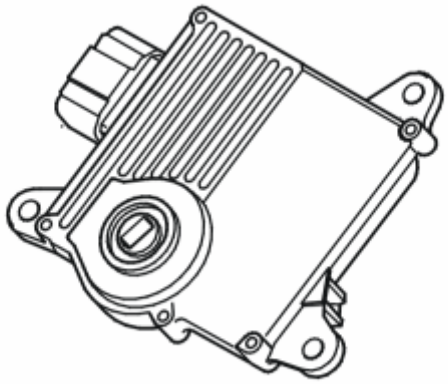

Fig. 18: Identifying Transmission Control Module (TCM)
Courtesy of VOLVO CARS CORPORATION

TCM-P060100: INTERNAL CONTROL MODULE MEMORY CHECK SUM ERROR. GENERAL FAILURE INFORMATION. NO SUB TYPE INFORMATION (B6324S5, TF-80SC; B6324S5, TF-80SC AWD; 2011-2012)

DIAGNOSTIC TROUBLE CODE (DTC) INFORMATION TCM-P060100

see **DIAGNOSTIC TROUBLE CODE (DTC) INFORMATION TCM-P060100**

FAULT-TRACING

see **FAULT-TRACING**

TCM-P060100: INTERNAL FAULT IN CONTROL MODULE MEMORY CHECKSUM. GENERAL FAULT INFORMATION. NO INFORMATION ON FAULT TYPE (B8444S, TF-80SC AWD; 2006-2011)

DIAGNOSTIC TROUBLE CODE (DTC) INFORMATION TCM-P060100

Condition

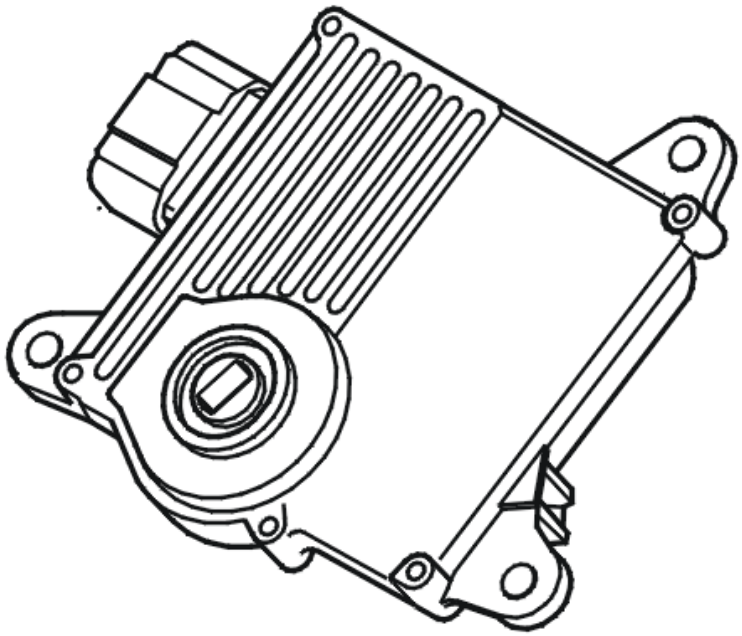

Fig. 19: Identifying Transmission Control Module (TCM)
Courtesy of VOLVO CARS CORPORATION

The transmission control module (TCM) has three different internal memories, one for the software application (FLASH), one for permanent storage of information (EEPROM) and one for current information (RAM). When turning off the ignition, certain information will be saved from the RAM memory to the EEPROM and then deleted from RAM.

The diagnostic trouble code can be diagnosed when the ignition is on.

Substitute Value

- Auxiliary program **Emergency mode 1** in the transmission control module (TCM) has started.

  HINT: EMERGENCY MODE IN CASE OF MALFUNCTION

Possible Source

- Internal fault in transmission control module (TCM).

Fault symptom[s]

- No gear changing.

- Harsh gear changing

FAULT TRACING TCM-P060100

ERASING DIAGNOSTIC TROUBLE CODE (DTC)

HINT: The transmission control module (TCM) has registered an internal fault. The fault can be of intermittent nature, so the diagnostic trouble code (DTC) should be deleted and read again.

NOTE: Erasing will delete all the stored diagnostic trouble codes (DTC) with any associated information. If there are any other diagnostic trouble codes (DTC) present for the transmission control module (TCM), they should be investigated first. If necessary, go to Car Communication and read off "Extended diagnostic trouble code (DTC) information".

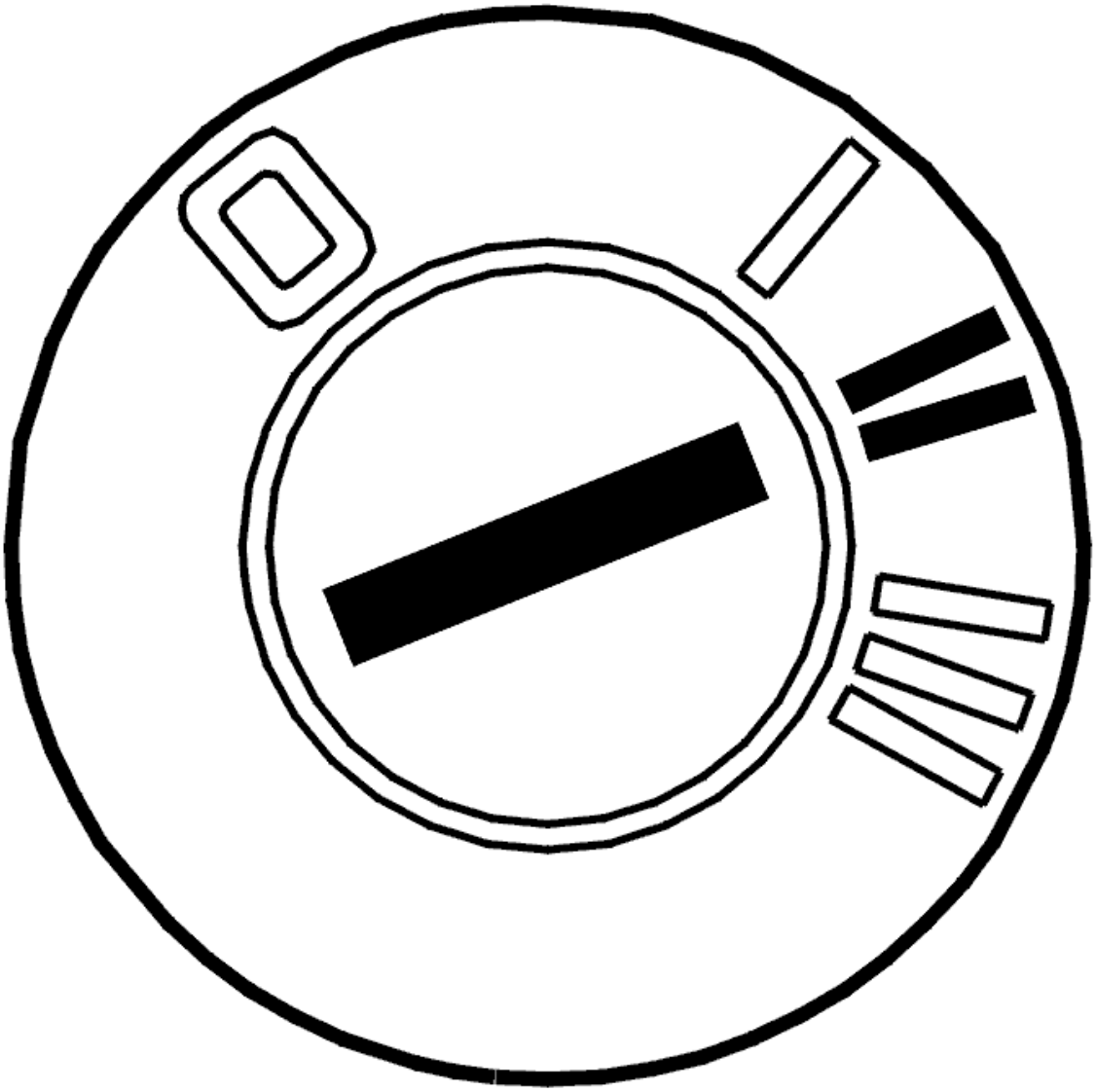

Fig. 20: Identifying Ignition ON
Courtesy of VOLVO CARS CORPORATION

- Ignition on
- Erase diagnostic trouble code (DTC) by clicking the VCT2000 symbol.

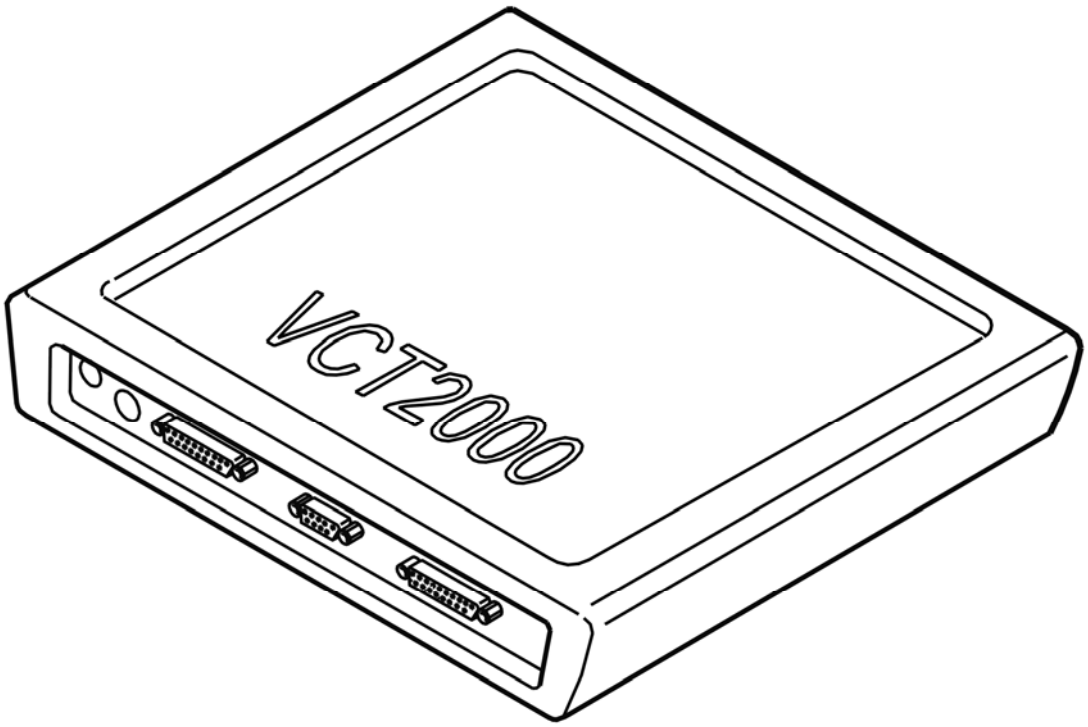

Fig. 21: Identifying VCT2000 Diagnostic Tool Symbol In VIDA
Courtesy of VOLVO CARS CORPORATION

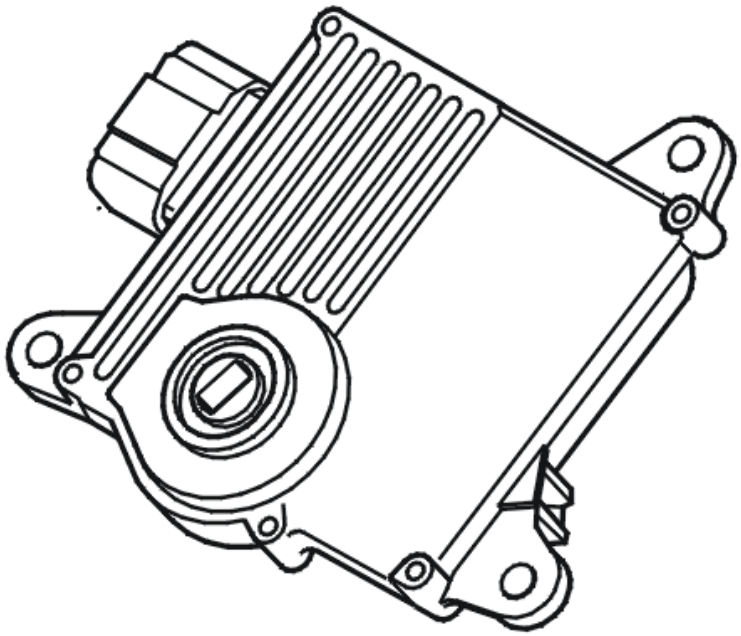

Fig. 22: Identifying Transmission Control Module (TCM)
Courtesy of VOLVO CARS CORPORATION

- **Continue**

  Refer to **READING OFF DIAGNOSTIC TROUBLE CODES (DTCS)**

READING OFF DIAGNOSTIC TROUBLE CODES (DTCS)

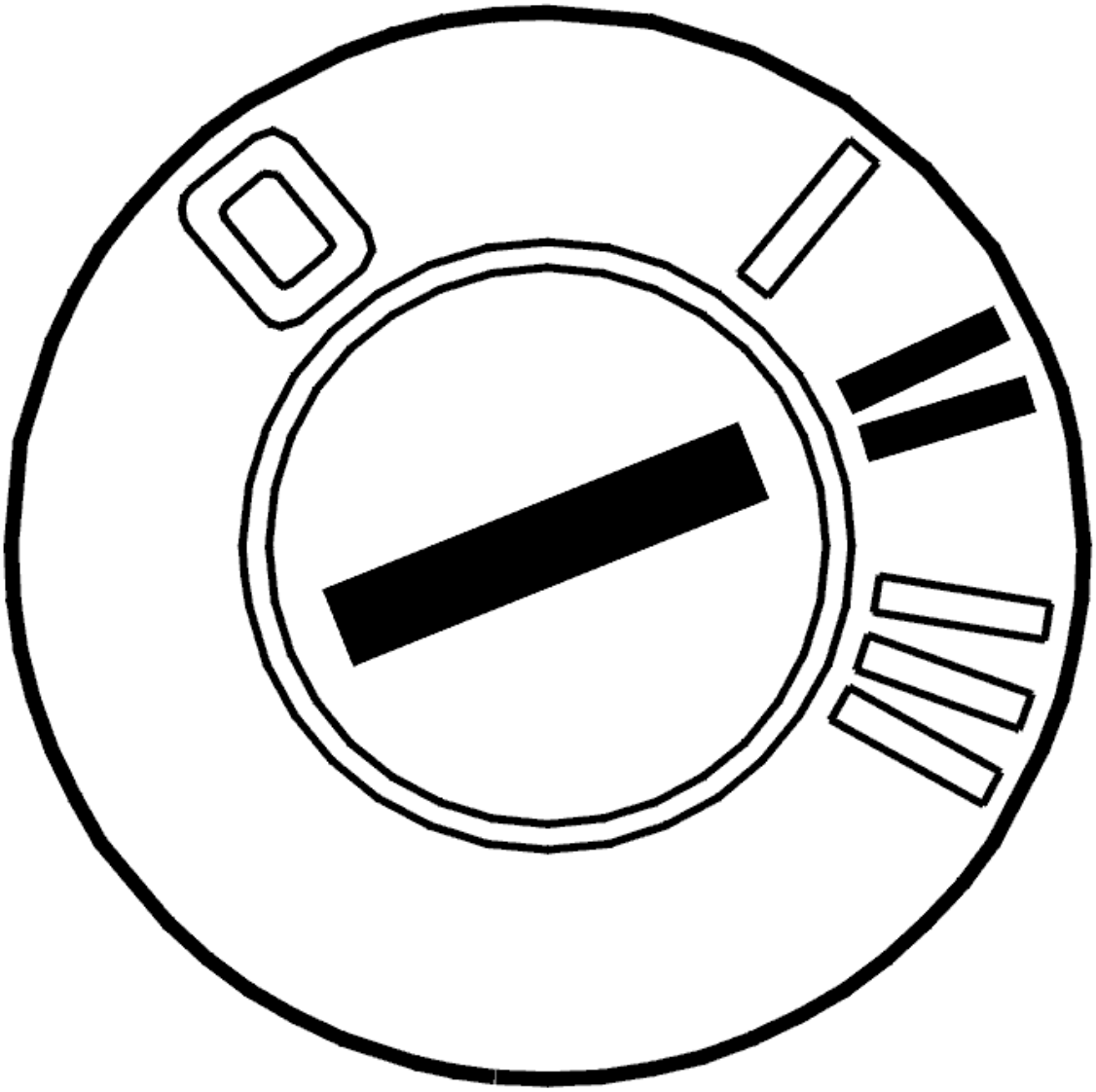

Fig. 23: Identifying Ignition ON
Courtesy of VOLVO CARS CORPORATION

- Ignition off
- Wait for two minutes so that the diagnostic trouble codes (DTC) can be stored in memory in the transmission control module (TCM).
- Ignition on
- Read out diagnostic trouble codes by clicking the VCT2000 symbol.

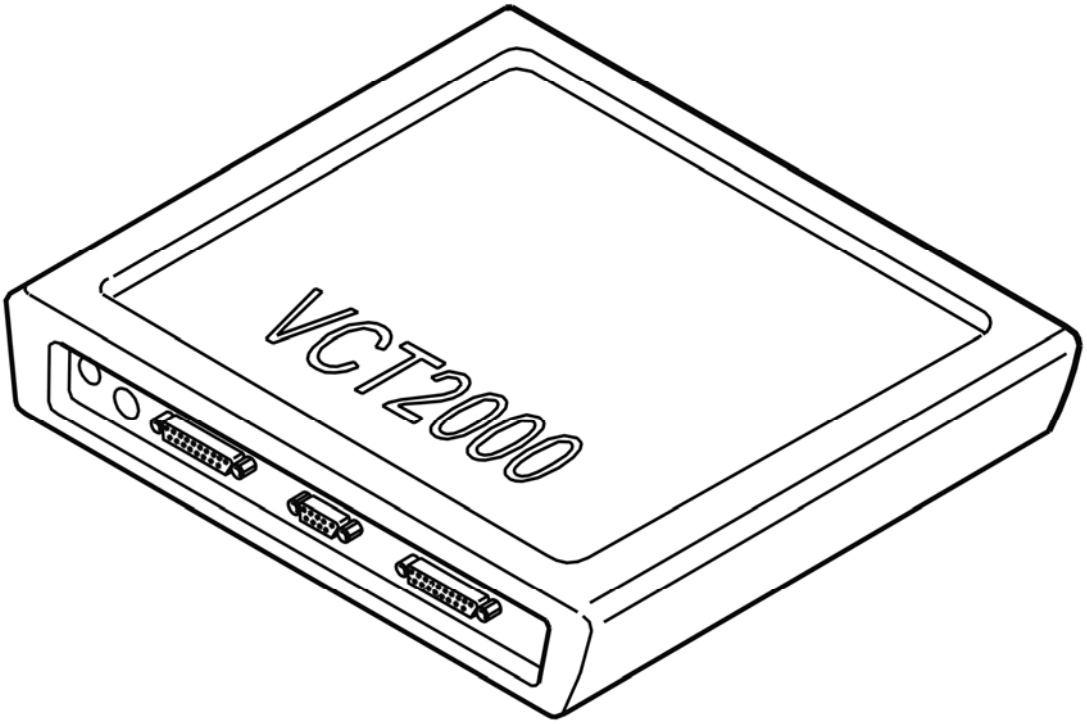

Fig. 24: Identifying VCT2000 Diagnostic Tool Symbol In VIDA
Courtesy of VOLVO CARS CORPORATION

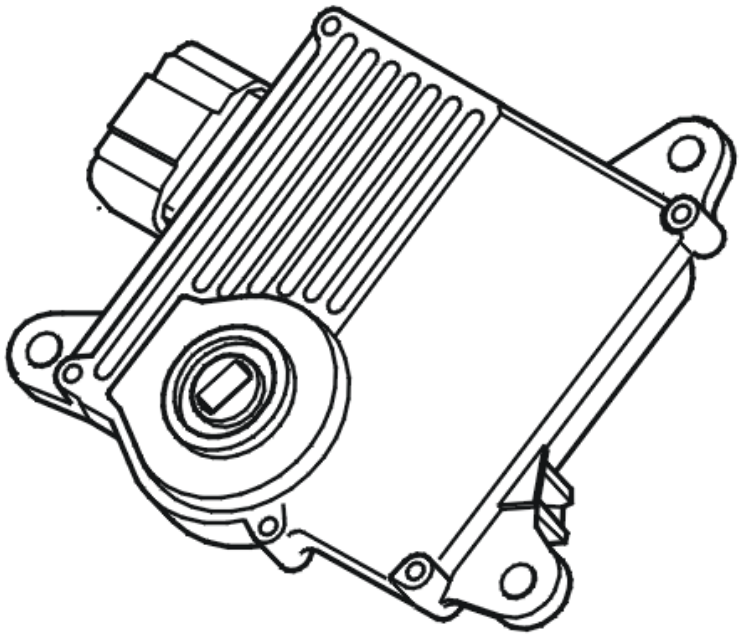

Fig. 25: Identifying Transmission Control Module (TCM)
Courtesy of VOLVO CARS CORPORATION

Are there any diagnostic trouble codes (DTC) still stored?

- **YES**

  Refer to **CONTROL MODULE REPLACEMENT AND PROGRAMMING**

- **NO**

  OKAY: Troubleshooting has been completed.

CONTROL MODULE REPLACEMENT AND PROGRAMMING

Transmission control module (TCM) has registered an internal fault.

Replace control module.

CAUTION: A new control module is delivered without software. The control module must be programmed in order to function after replacement.

Other information

- Program and change control module according to: **TRANSMISSION CONTROL MODULE (TCM), REPLACING**

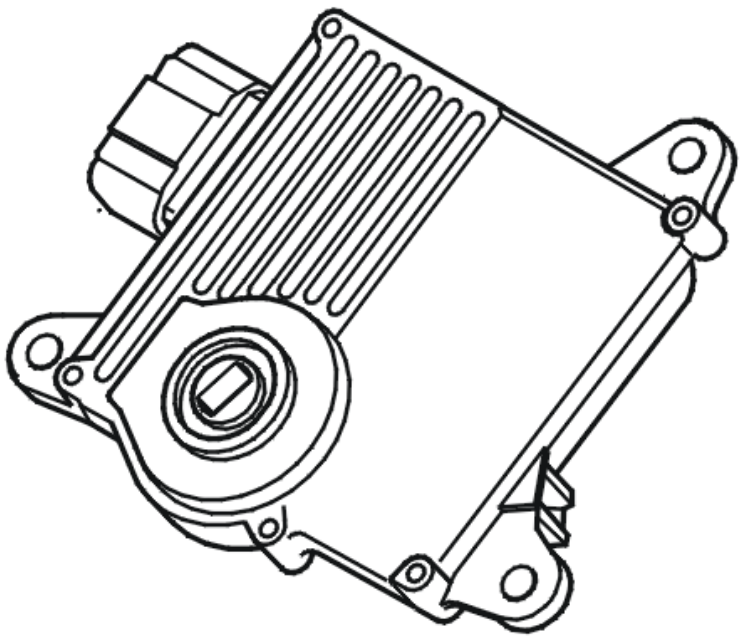

Fig. 26: Identifying Transmission Control Module (TCM)
Courtesy of VOLVO CARS CORPORATION

TCM-P060100: INTERNAL FAULT IN CONTROL MODULE MEMORY CHECKSUM. GENERAL FAULT INFORMATION. NO INFORMATION ON FAULT TYPE (TF-80SC AWD; 2005)

DIAGNOSTIC TROUBLE CODE (DTC) INFORMATION TCM-P060100

see **DIAGNOSTIC TROUBLE CODE (DTC) INFORMATION TCM-P060100**

FAULT TRACING TCM-P060100

see **FAULT TRACING TCM-P060100**

TCM-P060300: INTERNAL CONTROL MODULE KEEP ALIVE MEMORY (KAM) ERROR. GENERAL FAILURE INFORMATION. NO SUB TYPE INFORMATION (B6324S, TF-80SC; B6324S, TF-80SC AWD; 2007-2010)

DIAGNOSTIC TROUBLE CODE (DTC) INFORMATION TCM-P060300

Condition

The Transmission control module (TCM) has three different internal memories, one for the program application (FLASH), one for permanent storage of information (EEPROM) and one for current information (RAM).

With the ignition off, certain information is saved from RAM to EEPROM and then the information is erased from RAM.

The information that is stored includes diagnostic trouble codes (DTCs) and accompanying data, adaptation values, etc.

The diagnostic trouble code (DTC) is stored if the control module detects that:

- Fault arise when information is to be written to the control module memory.

The control module's test for the diagnostic trouble code (DTC) starts in the event of:

- Ignition on.

NOTE: The control module can only detect the fault once the test has been started and the diagnostic trouble code (DTC) is stored when the conditions are met.

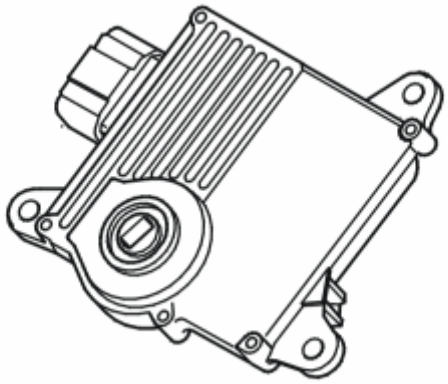

Fig. 27: Identifying Transmission Control Module (TCM)
Courtesy of VOLVO CARS CORPORATION

Substitute Value

- The transmission control module (TCM) takes a basic value for adaptation.
- Any stored diagnostic trouble codes (DTCs) can disappear.

Possible Source

- Internal fault in the transmission control module (TCM).

Fault symptom[s]

- No gear shift
- Rough gear shift

FAULT-TRACING

REPLACING THE CONTROL MODULE AND PROGRAMMING

The transmission control module (TCM) has registered an internal fault.

Replace control module.

> **CAUTION: A new control module is delivered without software.**
>
> **For the transmission control module (TCM) to work after replacement, it must be programmed.**

Other information

- Program and change control module according to:**TRANSMISSION CONTROL MODULE (TCM)**

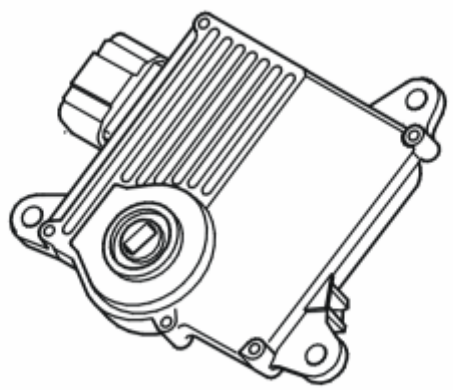

Fig. 28: Identifying Transmission Control Module (TCM)
Courtesy of VOLVO CARS CORPORATION

TCM-P060300: INTERNAL CONTROL MODULE KEEP ALIVE MEMORY (KAM) ERROR. GENERAL FAILURE INFORMATION. NO SUB TYPE INFORMATION (B6324S5, TF-80SC; B6324S5, TF-80SC AWD; 2011-2012)

DIAGNOSTIC TROUBLE CODE (DTC) INFORMATION TCM-P060300

see **DIAGNOSTIC TROUBLE CODE (DTC) INFORMATION TCM-P060300**

FAULT-TRACING

see **FAULT-TRACING**

TCM-P060300: INTERNAL MEMORY FAULT IN CONTROL MODULE (KAM). GENERAL FOR INFORMATION. NO INFORMATION ON FAULT TYPE (B8444S, TF-80SC AWD; 2006-2011)

DIAGNOSTIC TROUBLE CODE (DTC) INFORMATION TCM-P060300

Condition

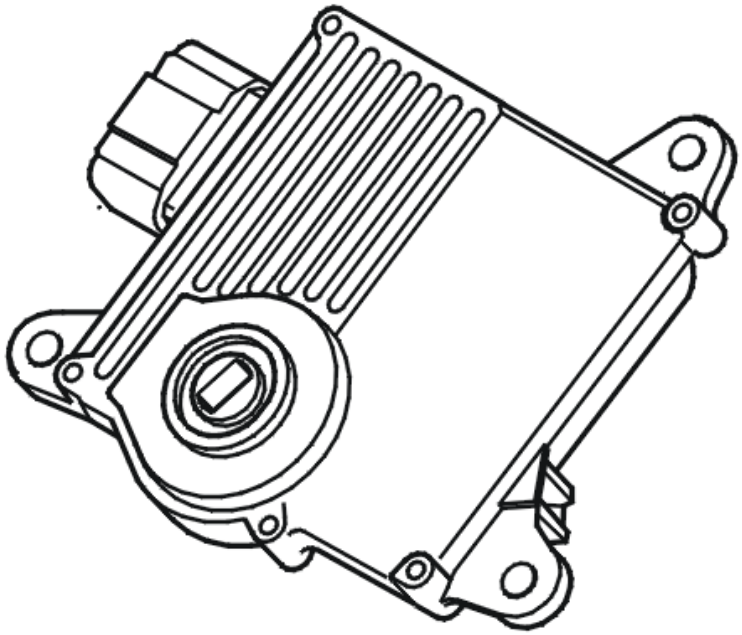

Fig. 29: Identifying Transmission Control Module (TCM)
Courtesy of VOLVO CARS CORPORATION

The transmission control module (TCM) has three different internal memories, one for the software application (FLASH), one for permanent storage of information (EEPROM) and one for current information (RAM). When turning off the ignition, certain information will be saved from the RAM memory to the EEPROM and then deleted from RAM. The information that is stored includes diagnostic trouble codes (DTC) with associated

data, adaptation values, etc.

The diagnostic trouble code can be diagnosed when the ignition is on.

Substitute Value

- The transmission control module (TCM) takes a basic value for adaptation.
- Stored diagnostic trouble codes (DTC) with associated information may be lost.

Possible Source

- Internal fault in transmission control module (TCM).

Fault symptom[s]

- No gear changing.
- Harsh gear changing

FAULT TRACING

CONTROL MODULE REPLACEMENT AND PROGRAMMING

Transmission control module (TCM) has registered an internal fault.

Replace control module.

CAUTION: A new control module is delivered without software. The control module must be programmed in order to function after replacement.

see **TRANSMISSION CONTROL MODULE (TCM), REPLACING**

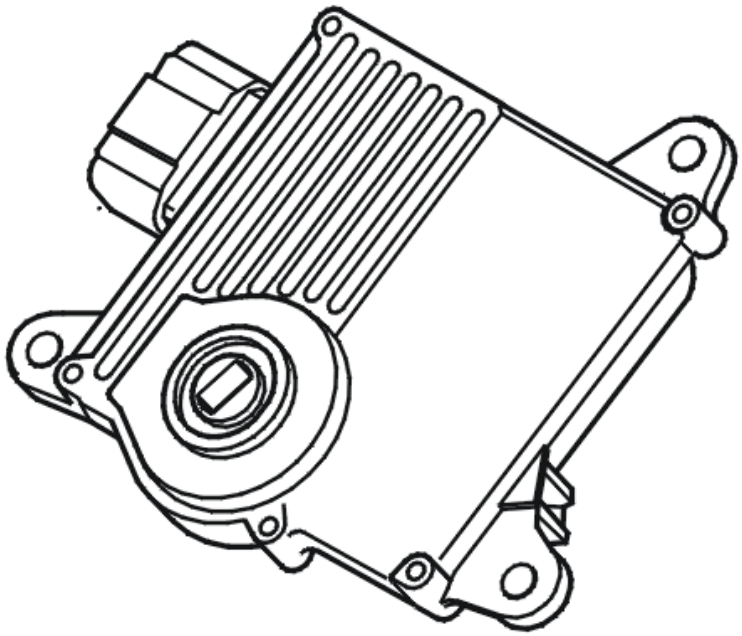

Fig. 30: Identifying Transmission Control Module (TCM)
Courtesy of VOLVO CARS CORPORATION

TCM-P060300: INTERNAL MEMORY FAULT IN CONTROL MODULE (KAM). GENERAL FOR INFORMATION. NO INFORMATION ON FAULT TYPE (TF-80SC AWD; 2005)

DIAGNOSTIC TROUBLE CODE (DTC) INFORMATION TCM-P060300

see **DIAGNOSTIC TROUBLE CODE (DTC) INFORMATION TCM-P060300**

FAULT TRACING

see **FAULT TRACING**

TCM-P060400: INTERNAL CONTROL MODULE RANDOM ACCESS MEMORY (RAM) ERROR. GENERAL FAILURE INFORMATION. NO SUB TYPE INFORMATION (B6324S, TF-80SC; B6324S, TF-80SC AWD; 2007-2010)

DIAGNOSTIC TROUBLE CODE (DTC) INFORMATION TCM-P060400

Condition

The Transmission control module (TCM) has three different internal memories, one for the program application (FLASH), one for permanent storage of information (EEPROM) and one for current information (RAM).

With the ignition off, certain information is saved from RAM to EEPROM and then the information is erased from RAM.

The information that is stored includes diagnostic trouble codes (DTCs) and accompanying data, adaptation values, etc.

The diagnostic trouble code is generated if the control module detects the following upon start-up:

- An incorrect value after information has been written to the control module's RAM memory and then read again.

The control module's test for the diagnostic trouble code (DTC) starts in the event of:

- Ignition on.

NOTE: The control module can only detect the fault once the test has been started and the diagnostic trouble code (DTC) is stored when the conditions are met.

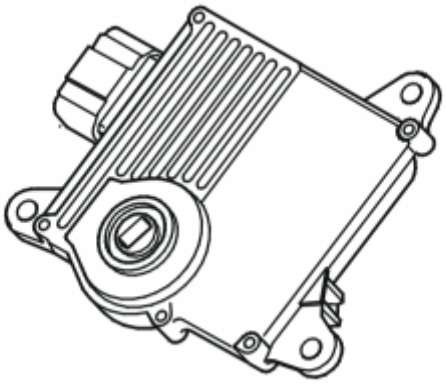

Fig. 31: Identifying Transmission Control Module (TCM)
Courtesy of VOLVO CARS CORPORATION

Substitute Value

- The transmission control module (TCM) takes a basic value for adaptation.
- Any stored diagnostic trouble codes (DTCs) can disappear.

Possible Source

- Internal fault in the transmission control module (TCM).

Fault symptom[s]

- No gear shift
- Rough gear shift

FAULT-TRACING

see **FAULT-TRACING**

TCM-P060400: INTERNAL CONTROL MODULE RANDOM ACCESS MEMORY (RAM) ERROR. GENERAL FAILURE INFORMATION. NO SUB TYPE INFORMATION (B6324S5, TF-80SC; B6324S5, TF-80SC AWD; 2011-2012)

DIAGNOSTIC TROUBLE CODE (DTC) INFORMATION TCM-P060400

see **DIAGNOSTIC TROUBLE CODE (DTC) INFORMATION TCM-P060400**

FAULT-TRACING

see **FAULT-TRACING**

TCM-P060400: INTERNAL MEMORY FAULT IN CONTROL MODULE (RAM). GENERAL FOR INFORMATION. NO INFORMATION ON FAULT TYPE (B8444S, TF-80SC AWD; 2006-2011)

DIAGNOSTIC TROUBLE CODE (DTC) INFORMATION TCM-P060400

Condition

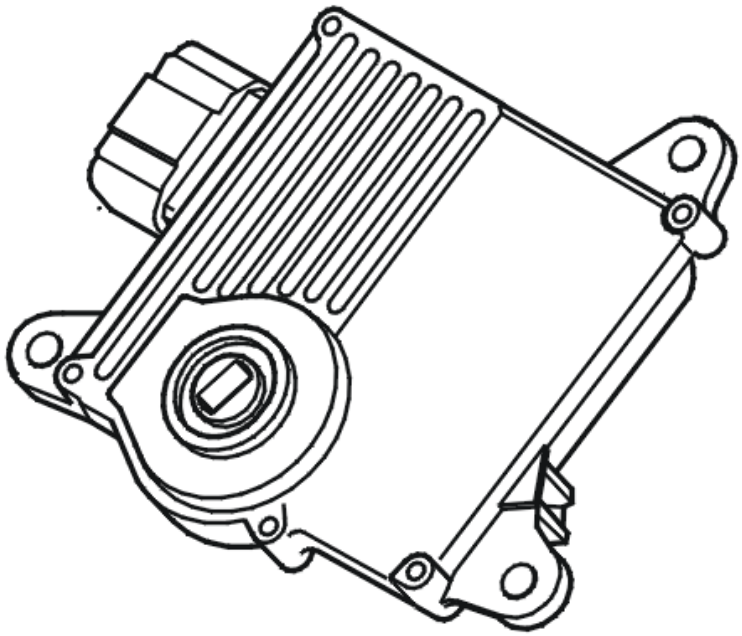

Fig. 32: Identifying Transmission Control Module (TCM)
Courtesy of VOLVO CARS CORPORATION

The transmission control module (TCM) has three different internal memories, one for the software application (FLASH), one for permanent storage of information (EEPROM) and one for current information (RAM). When turning off the ignition, certain information will be saved from the RAM memory to the EEPROM and then deleted from RAM. The information that is stored includes diagnostic trouble codes (DTC) with associated data, adaptation values, etc.

The diagnostic trouble code can be diagnosed when the ignition is on.

Substitute Value

- The transmission control module (TCM) takes a basic value for adaptation.
- Any stored diagnostic trouble codes (DTC) may be lost.

Possible Source

- Internal fault in transmission control module (TCM).

Fault symptom[s]

- No gear changing.

- Harsh gear changing

FAULT TRACING

see **FAULT TRACING**

TCM-P060400: INTERNAL MEMORY FAULT IN CONTROL MODULE (RAM). GENERAL FOR INFORMATION. NO INFORMATION ON FAULT TYPE (TF-80SC AWD; 2005)

DIAGNOSTIC TROUBLE CODE (DTC) INFORMATION TCM-P060400

see **DIAGNOSTIC TROUBLE CODE (DTC) INFORMATION TCM-P060400**

FAULT TRACING

see **FAULT TRACING**

TCM-P060500: INTERNAL CONTROL MODULE READ ONLY MEMORY (ROM) ERROR. GENERAL FAILURE INFORMATION. NO SUB TYPE INFORMATION (B6324S, TF-80SC; B6324S, TF-80SC AWD; 2007-2010)

DIAGNOSTIC TROUBLE CODE (DTC) INFORMATION TCM-P060500

Condition

The Transmission control module (TCM) has three different internal memories, one for the program application (FLASH), one for permanent storage of information (EEPROM) and one for current information (RAM).

With the ignition off, certain information is saved from RAM to EEPROM and then the information is erased from RAM.

The information that is stored includes diagnostic trouble codes (DTCs) and accompanying data, adaptation values, etc.

The diagnostic trouble code (DTC) is stored if the control module detects that:

- Data storage to the control module's EEPROM memory is not correctly carried out.

The control module's test for the diagnostic trouble code (DTC) starts in the event of:

- Ignition on.

NOTE: **The control module can only detect the fault once the test has been started and the diagnostic trouble code (DTC) is stored when the conditions are met.**

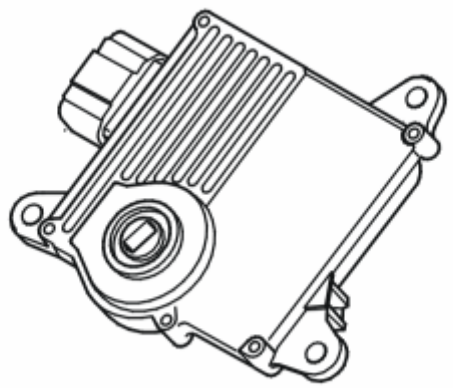

Fig. 33: Identifying Transmission Control Module (TCM)
Courtesy of VOLVO CARS CORPORATION

Substitute Value

- The transmission control module (TCM) takes a basic value for adaptation.
- Any stored diagnostic trouble codes (DTCs) can disappear.

Possible Source

- Internal fault in the transmission control module (TCM).

Fault symptom[s]

- No gear shift
- Rough gear shift

FAULT-TRACING

see **FAULT-TRACING**

TCM-P060500: INTERNAL CONTROL MODULE READ ONLY MEMORY (ROM) ERROR. GENERAL FAILURE INFORMATION. NO SUB TYPE INFORMATION (B6324S5, TF-80SC; B6324S5, TF-80SC AWD; 2011-2012)

DIAGNOSTIC TROUBLE CODE (DTC) INFORMATION TCM-P060500

see **DIAGNOSTIC TROUBLE CODE (DTC) INFORMATION TCM-P060500**

FAULT-TRACING

see **FAULT-TRACING**

TCM-P060500: INTERNAL MEMORY FAULT IN CONTROL MODULE (ROM). GENERAL FOR INFORMATION. NO INFORMATION ON FAULT TYPE (B8444S, TF-80SC AWD; 2006-2011)

DIAGNOSTIC TROUBLE CODE (DTC) INFORMATION TCM-P060500

Condition

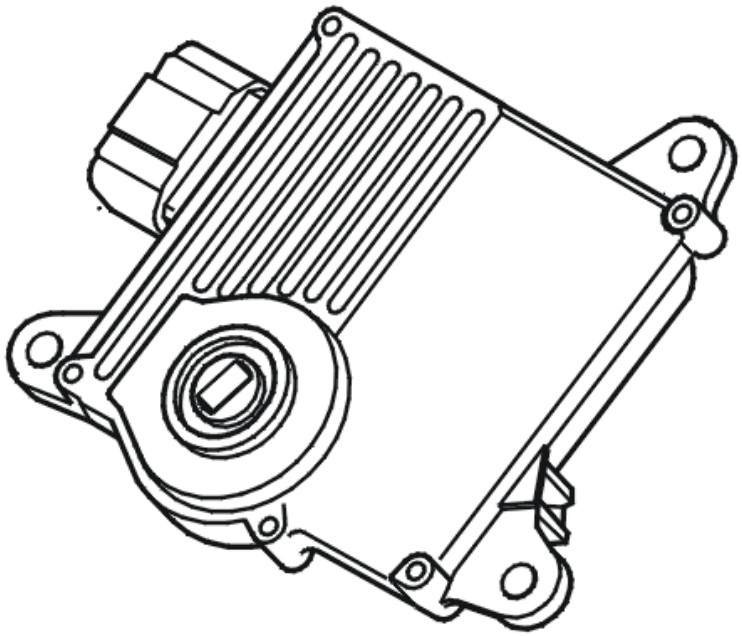

Fig. 34: Identifying Transmission Control Module (TCM)
Courtesy of VOLVO CARS CORPORATION

The transmission control module (TCM) has three different internal memories, one for the software application (FLASH), one for permanent storage of information (EEPROM) and one for current information (RAM). When turning off the ignition, certain information will be saved from the RAM memory to the EEPROM and then deleted from RAM. The information that is stored includes diagnostic trouble codes (DTC) with associated data, adaptation values, etc. If the transmission control module (TCM) registers that the storage of data to the control module EEPROM memory has not been carried out correctly, the diagnostic trouble code (DTC) will be generated.

The diagnostic trouble code can be diagnosed when the ignition is on.

Substitute Value

- The transmission control module (TCM) takes a basic value for adaptation.
- Any stored diagnostic trouble codes (DTC) may be lost.

Possible Source

- Internal fault in transmission control module (TCM).

Fault symptom[s]

- No gear changing.
- Harsh gear changing

FAULT TRACING

see **FAULT TRACING**

TCM-P060500: INTERNAL MEMORY FAULT IN CONTROL MODULE (ROM). GENERAL FOR INFORMATION. NO INFORMATION ON FAULT TYPE (TF-80SC AWD; 2005)

DIAGNOSTIC TROUBLE CODE (DTC) INFORMATION TCM-P060500

see **DIAGNOSTIC TROUBLE CODE (DTC) INFORMATION TCM-P060500**

FAULT TRACING

see **FAULT TRACING**

TCM-P061000: CONFIGURATION FAULT IN THE CONTROL MODULE. GENERAL FAULT INFORMATION. NO INFORMATION ABOUT THE FAULT TYPE (B8444S, TF-80SC AWD; 2006-2011)

DIAGNOSTIC TROUBLE CODE (DTC) INFORMATION TCM-P061000

Condition

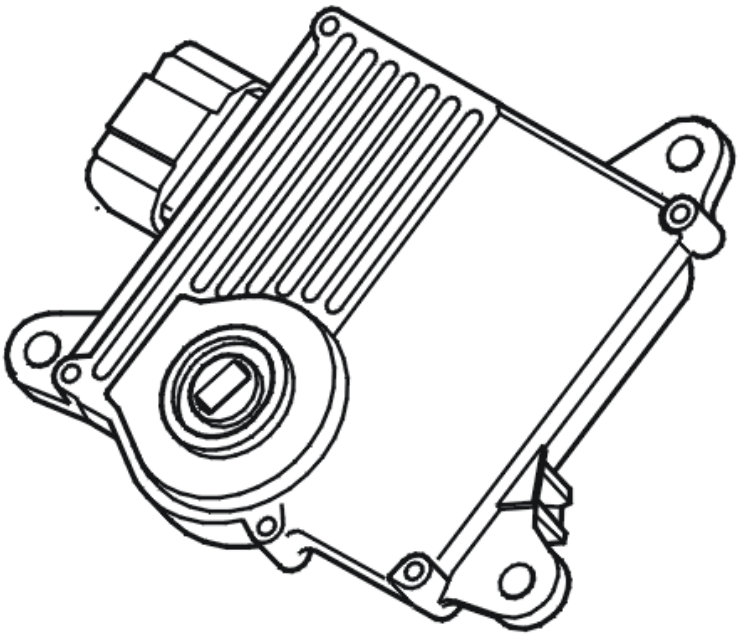

Fig. 35: Identifying Transmission Control Module (TCM)
Courtesy of VOLVO CARS CORPORATION

The transmission control module (TCM) compares its configuration ID with the signal configuration sent out on the CAN network by the central electronic module (CEM). If the configuration IDs do not agree, the diagnostic trouble code (DTC) will be generated. The diagnostic trouble code (DTC) will also be generated if communication between the transmission control module (TCM) and the central electronic module (CEM) is broken.

NOTE: **If there is a break in both CAN wires, it will not be possible to communicate with the transmission control module (TCM). It will therefore only be possible to read the diagnostic trouble code (DTC) if such a fault is intermittent. When the diagnostic trouble code (DTC) is set, the transmission control module (TCM) will respond to diagnostic commands, but it will not work for normal CAN communication "Expulsion mode".**

Substitute Value

- Auxiliary program **Emergency mode 1** in the transmission control module (TCM) has started.

  HINT: EMERGENCY MODE IN CASE OF MALFUNCTION

Possible Source

- Incorrect CAN configuration ID. (Transmission control module (TCM) in question is not intended for the vehicle, a used control module with another software/hardware for example).
- A break in the CAN leads between the transmission control module (TCM) and the central electronic module (CEM).

Fault symptom[s]

- General warning lamp lit
- No gear changing.

TCM-P061400: ECM / TCM INCOMPATIBLE. GENERAL FAILURE INFORMATION. NO SUB TYPE INFORMATION (B6324S, TF-80SC; B6324S, TF-80SC AWD; 2007-2010)

DIAGNOSTIC TROUBLE CODE (DTC) INFORMATION TCM-P061400

Condition

Information about the vehicle configuration is sent on the CAN network.

Depending on the model and equipment, the vehicle can be configured in different ways.

The central electronic module (CEM) sends the applicable signal ID for the vehicle.

The Transmission control module (TCM) compares this ID with the ID internally stored in the software.

The diagnostic trouble code (DTC) is stored if the control module detects that:

- These do not correspond, which means that the software in the Transmission control module (TCM) is not compatible with other software in the vehicle.

The control module's test for the diagnostic trouble code (DTC) starts in the event of:

- Ignition on.

NOTE: **The control module can only detect the fault once the test has been started and the diagnostic trouble code (DTC) is stored when the conditions are met.**

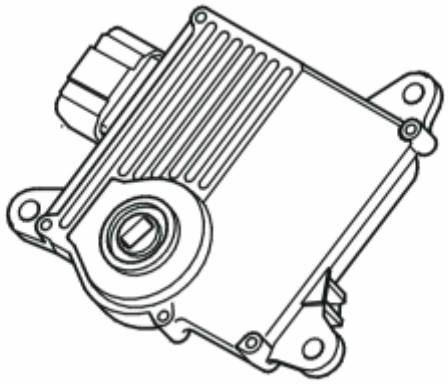

Fig. 36: Identifying Transmission Control Module (TCM)
Courtesy of VOLVO CARS CORPORATION

Substitute Value

- Auxiliary program **Emergency mode 1** in the transmission control module (TCM) has started.

  HINT: EMERGENCY MODE IN THE EVENT OF A FAULT

Possible Source

- Faulty software in the transmission control module (TCM).

Fault symptom[s]

- Malfunction indicator light (MIL), on
- General warning lamp lit

FAULT-TRACING

PROGRAMMING CONTROL MODULE

Transmission control module (TCM) has registered an internal fault that may be due to a software error.

Cancel fault-tracing.

Go to the program software manager and reprogram the Transmission control module (TCM) with the latest software.

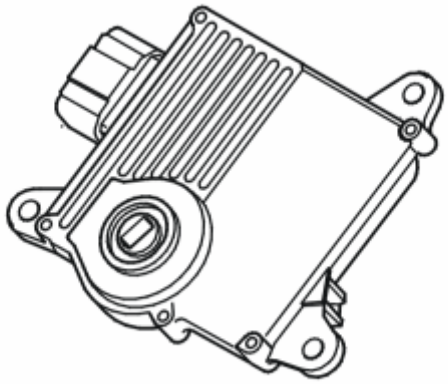

Fig. 37: Identifying Transmission Control Module (TCM)
Courtesy of VOLVO CARS CORPORATION

TCM-P061400: ECM / TCM INCOMPATIBLE. GENERAL FAILURE INFORMATION. NO SUB TYPE INFORMATION (B6324S5, TF-80SC; B6324S5, TF-80SC AWD; 2011-2012)

DIAGNOSTIC TROUBLE CODE (DTC) INFORMATION TCM-P061400

see **DIAGNOSTIC TROUBLE CODE (DTC) INFORMATION TCM-P061400**

FAULT-TRACING

see **FAULT-TRACING**

TCM-P061400: ECM/TCM NOT COMPATIBLE. GENERAL FAULT INFORMATION. NO INFORMATION ON FAULT TYPE (B8444S, TF-80SC AWD; 2006-2011)

DIAGNOSTIC TROUBLE CODE (DTC) INFORMATION TCM-P061400

Condition

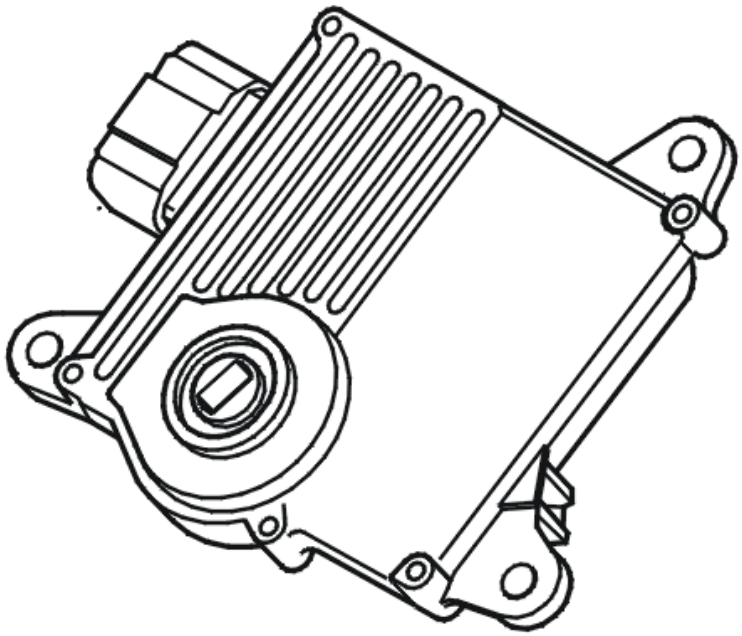

Fig. 38: Identifying Transmission Control Module (TCM)
Courtesy of VOLVO CARS CORPORATION

Information on the vehicle configuration is sent on the vehicle's CAN network. The vehicle can be configured in different ways, depending on model and equipment, etc. The central electronic module (TM) sends the signal ID that applies to the vehicle. The transmission control module (TCM) compares this ID with the one stored internally in the software. If the two do not agree, it means that the software in the transmission control module (TCM) is not compatible with the other software in the vehicle and the diagnostic trouble code (DTC) will be generated.

The diagnostic trouble code can be diagnosed when the ignition is on.

Substitute Value

- Auxiliary program **Emergency mode 1** in the transmission control module (TCM) has started.

  HINT: EMERGENCY MODE IN CASE OF MALFUNCTION

Possible Source

- Incorrect software in transmission control module (TCM).

Fault symptom[s]

- Malfunction indicator lamp (MIL) lit.
- General warning lamp lit

FAULT TRACING TCM-P061400

PROGRAMMING CONTROL MODULE

Transmission control module (TCM) has registered an internal fault that may be due to a software error.

Cancel fault tracing. Go to the software manager and reprogram transmission control module (TCM) with the latest software.

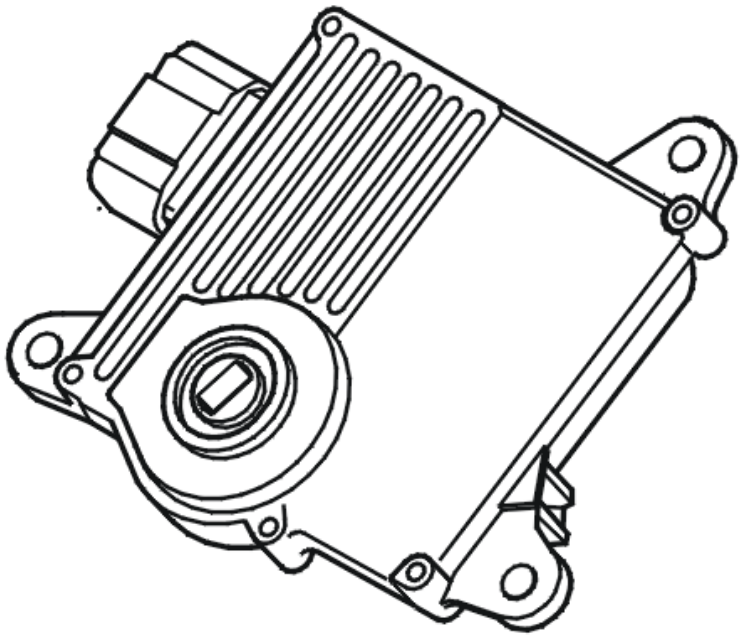

Fig. 39: Identifying Transmission Control Module (TCM)
Courtesy of VOLVO CARS CORPORATION

TCM-P061400: ECM/TCM NOT COMPATIBLE. GENERAL FAULT INFORMATION. NO INFORMATION ON FAULT TYPE (TF-80SC AWD; 2005)

DIAGNOSTIC TROUBLE CODE (DTC) INFORMATION TCM-P061400

see **DIAGNOSTIC TROUBLE CODE (DTC) INFORMATION TCM-P061400**

FAULT TRACING TCM-P061400

see **FAULT TRACING TCM-P061400**

TCM-P062F00 INTERNAL CONTROL MODULE EEPROM ERROR. GENERAL FAILURE INFORMATION. NO SUB TYPE INFORMATION (B6324S, TF-80SC; B6324S, TF-80SC AWD; 2007-2010)

DIAGNOSTIC TROUBLE CODE (DTC) INFORMATION TCM-P062F00

Condition

The Transmission control module (TCM) has three different internal memories, one for the program application (FLASH), one for permanent storage of information (EEPROM) and one for current information (RAM).

With the ignition off, certain information is saved from RAM to EEPROM and then the information is erased from RAM.

The information that is stored includes diagnostic trouble codes (DTCs) and accompanying data, adaptation values, etc.

The diagnostic trouble code (DTC) is stored if the control module detects that:

- Data storage to the control module's EEPROM memory is not correctly carried out.

The control module's test for the diagnostic trouble code (DTC) starts in the event of:

- Ignition on.

NOTE: **The control module can only detect the fault once the test has been started and the diagnostic trouble code (DTC) is stored when the conditions are met.**

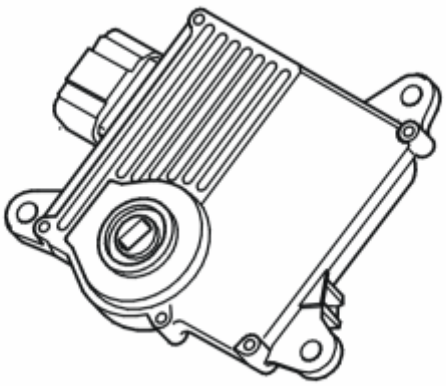

Fig. 40: Identifying Transmission Control Module (TCM)
Courtesy of VOLVO CARS CORPORATION

Substitute Value

- The transmission control module (TCM) takes a basic value for adaptation.
- Any stored diagnostic trouble codes (DTCs) can disappear.

Possible Source

- Internal fault in the transmission control module (TCM).

Fault symptom[s]

- Vibration and jerking when shifting

FAULT-TRACING

see **FAULT-TRACING**

TCM-P062F00 INTERNAL CONTROL MODULE EEPROM ERROR. GENERAL FAILURE INFORMATION. NO SUB TYPE INFORMATION (B6324S5, TF-80SC; B6324S5, TF-80SC AWD; 2011-2012)

DIAGNOSTIC TROUBLE CODE (DTC) INFORMATION TCM-P062F00

see **DIAGNOSTIC TROUBLE CODE (DTC) INFORMATION TCM-P062F00**

FAULT-TRACING

see **FAULT-TRACING**

TCM-P062F00 INTERNAL EEPROM MEMORY FAULT IN CONTROL MODULE. GENERAL FAULT INFORMATION. NO INFORMATION ON FAULT TYPE (B8444S, TF-80SC AWD; 2006-2011)

DIAGNOSTIC TROUBLE CODE (DTC) INFORMATION TCM-P062F00

Condition

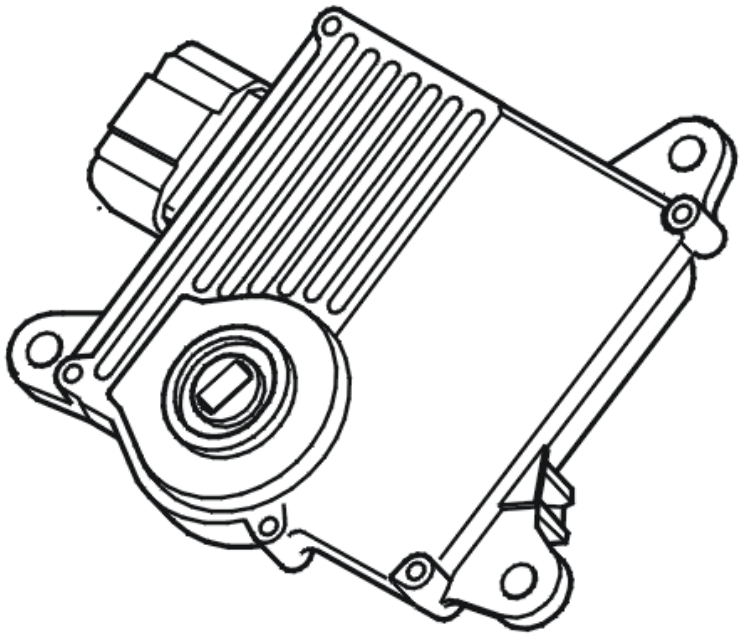

Fig. 41: Identifying Transmission Control Module (TCM)
Courtesy of VOLVO CARS CORPORATION

The transmission control module (TCM) has three different internal memories, one for the software application (FLASH), one for permanent storage of information (EEPROM) and one for current information (RAM). When turning off the ignition, certain information will be saved from the RAM memory to the EEPROM and then deleted from RAM.

The information that is stored includes diagnostic trouble codes (DTC) with associated data, adaptation values, etc. If the transmission control module (TCM) registers that the storage of data to the control module EEPROM memory has not been carried out correctly, the diagnostic trouble code (DTC) will be generated.

The diagnostic trouble code can be diagnosed when the ignition is on.

Substitute Value

- The transmission control module (TCM) takes a basic value for adaptation.
- Any stored diagnostic trouble codes (DTC) may be lost.

Possible Source

- Internal fault in transmission control module (TCM).

Fault symptom[s]

- Vibration or jerkiness when changing gear.

FAULT TRACING

see **FAULT TRACING**

TCM-P062F00 INTERNAL EEPROM MEMORY FAULT IN CONTROL MODULE. GENERAL FAULT INFORMATION. NO INFORMATION ON FAULT TYPE (TF-80SC AWD; 2005)

DIAGNOSTIC TROUBLE CODE (DTC) INFORMATION TCM-P062F00

see **DIAGNOSTIC TROUBLE CODE (DTC) INFORMATION TCM-P062F00**

FAULT TRACING

see **FAULT TRACING**

TCM-P070500: TRANSMISSION RANGE SENSOR A CIRCUIT (PRNDL INPUT). GENERAL FAILURE INFORMATION. NO SUB TYPE INFORMATION (B6324S, TF-80SC; B6324S, TF-80SC AWD; 2007-2010)

DIAGNOSTIC TROUBLE CODE (DTC) INFORMATION TCM-P070500

Condition

The gear position sensor is integrated in the transmission control module (TCM) and provides information about the selected gear position.

Two Hall sensors in the transmission control module (TCM) detect whether the selector lever is in position.

For diagnostics, there is a parallel hall sensor (2) that gives a reversed signal characteristic, so that the sum of the signal voltages from hall sensor (1) and (2) are constant.

The signal voltage (0 and 5 V) corresponds to the current gear selector position.

The diagnostic trouble code (DTC) is stored if the control module detects:

- Faulty signal

The control module's test for the diagnostic trouble code (DTC) starts in the event of:

- Ignition on.

NOTE: **The control module can only detect the fault once the test has been started and the diagnostic trouble code (DTC) is stored when the conditions are met.**

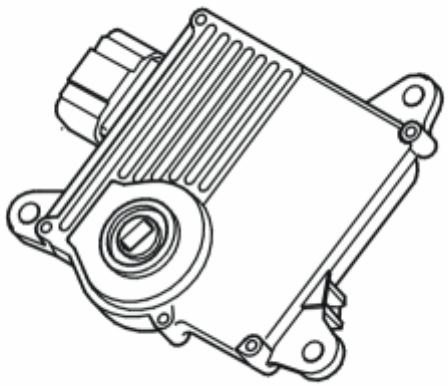

Fig. 42: Identifying Transmission Control Module (TCM)
Courtesy of VOLVO CARS CORPORATION

Substitute Value

- Auxiliary program **Emergency mode 1** in the transmission control module (TCM) has started.

  HINT: EMERGENCY MODE IN THE EVENT OF A FAULT

Possible Source

- Incorrectly adjusted gear-shift position sensor.
- Internal fault in the transmission control module (TCM).

Fault symptom[s]

- Malfunction indicator light (MIL), on
- General warning lamp lit
- Engine fails to start

FAULT-TRACING

CHECKS

CHECKING THE GEAR-SHIFT POSITION SENSOR

Fig. 43: Identifying Ignition ON
Courtesy of VOLVO CARS CORPORATION

- Check that the gear selector cable is correctly adjusted. Adjust if necessary.
- Ignition on.
- Read off the position of the gear selector.

  Shift the gear selector to all gear positions several times. This is to check the function of the gear selector sensor.

  The selected position must be the same as that displayed in the diagnostic tool.

  NOTE: If the value indicates "Undefined position" in P, R, N or D, the adjustment of the mechanical cable must be checked and the values must be read off again.

  Other information

  - For B5xx4T2, see **GEAR SELECTOR CABLES, ADJUSTING**
  - For B6xx4T, see **GEAR SELECTOR CABLE, ADJUSTING** .

Fig. 44: Identifying VCT2000 Diagnostic Tool Symbol In VIDA
Courtesy of VOLVO CARS CORPORATION

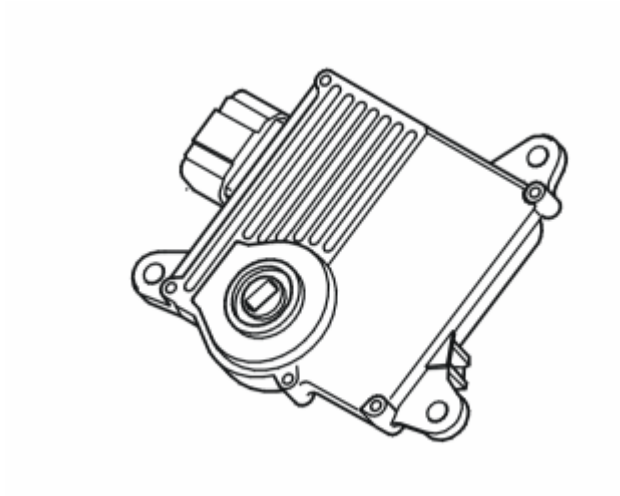

Fig. 45: Identifying Transmission Control Module (TCM)
Courtesy of VOLVO CARS CORPORATION

- **Continue**

  Refer to **ERASING DIAGNOSTIC TROUBLE CODE (DTC)**

ERASING DIAGNOSTIC TROUBLE CODE (DTC)

NOTE: **In the event of erasing, all stored diagnostic trouble codes (DTCs) with corresponding information disappear. If there are other diagnostic trouble codes (DTCs) for Transmission control module (TCM), these must be fault-traced first. If necessary, go to Vehicle communication and read out "Extended diagnostic trouble code (DTC) information"**

Fig. 46: Identifying Ignition ON
Courtesy of VOLVO CARS CORPORATION

- Ignition on.
- Erase diagnostic trouble codes by clicking the VCT2000 symbol.

Fig. 47: Identifying VCT2000 Diagnostic Tool Symbol In VIDA
Courtesy of VOLVO CARS CORPORATION

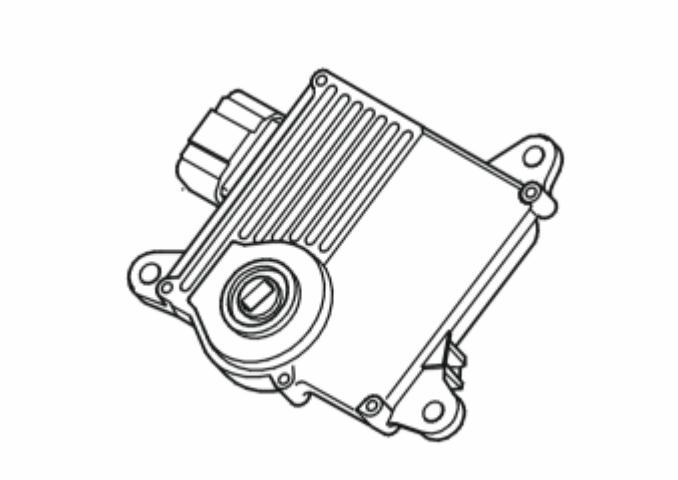

Fig. 48: Identifying Transmission Control Module (TCM)
Courtesy of VOLVO CARS CORPORATION

- **Continue**

Refer to **CALIBRATING THE POSITION SENSOR IN THE CONTROL MODULE**

CALIBRATING THE POSITION SENSOR IN THE CONTROL MODULE

Fig. 49: Identifying Ignition ON
Courtesy of VOLVO CARS CORPORATION

- Ignition on.
- Place the gear selector lever in neutral position (N).

Activate calibration of the position sensor in the control module by clicking on the VCT2000 symbol.

CAUTION: During calibration, it is important that no diagnostic trouble codes (DTCs) for the gear selector module (GSM) are stored and that the gear selector assembly is otherwise free of faults.

Fig. 50: Identifying VCT2000 Diagnostic Tool Symbol In VIDA
Courtesy of VOLVO CARS CORPORATION

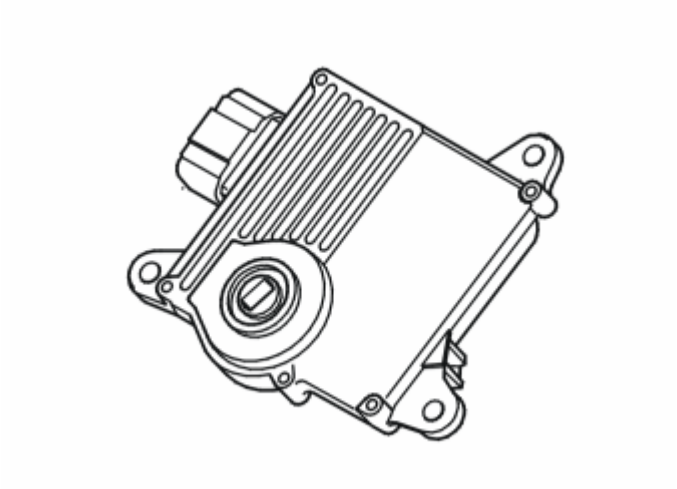

Fig. 51: Identifying Transmission Control Module (TCM)
Courtesy of VOLVO CARS CORPORATION

- **Continue**

  Refer to **READING OFF DIAGNOSTIC TROUBLE CODES (DTCS)**

READING OFF DIAGNOSTIC TROUBLE CODES (DTCS)

Fig. 52: Identifying Ignition ON
Courtesy of VOLVO CARS CORPORATION

- Ignition off.
- Wait two minutes.
- Ignition on.
- Move the gear selector several times to all gear positions.
  - Read off the diagnostic trouble codes (DTCs) by clicking on the VCT2000 symbol.

If present code diagnostic fault code (DTC) remains stored replace the transmission control module (TCM).

Other information

- see **TRANSMISSION CONTROL MODULE (TCM)**

Fig. 53: Identifying VCT2000 Diagnostic Tool Symbol In VIDA
Courtesy of VOLVO CARS CORPORATION

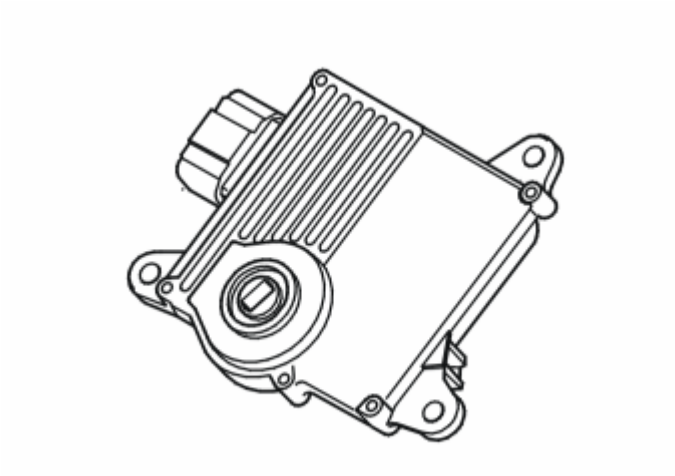

Fig. 54: Identifying Transmission Control Module (TCM)
Courtesy of VOLVO CARS CORPORATION

- **Continue**

  Refer to **VERIFICATION**

VERIFICATION

VERIFICATION

Fig. 55: Identifying Ignition ON

Courtesy of VOLVO CARS CORPORATION

- Ignition off.
- Wait two minutes.
- Ignition on.
- Move the gear selector several times to all gear positions.

Fig. 56: Identifying VCT2000 Diagnostic Tool Symbol In VIDA
Courtesy of VOLVO CARS CORPORATION

- Read off the diagnostic trouble codes (DTCs) by clicking on the VCT2000 symbol.

Is the relevant diagnostic trouble code (DTC) still stored?

- **YES**

  Refer to **INFORMATION**

- **NO**

  OKAY: Troubleshooting has been completed.

INFORMATION

FAULT-TRACING INFORMATION

The fault should have been detected and remedied. As this is not the case fault-tracing has failed.

Exit fault-tracing for this diagnostic trouble code (DTC) or make another attempt.

TCM-P070500: TRANSMISSION RANGE SENSOR A CIRCUIT (PRNDL INPUT). GENERAL FAILURE INFORMATION. NO SUB TYPE INFORMATION (B6324S5, TF-80SC; B6324S5, TF-80SC AWD; 2011-2012)

DIAGNOSTIC TROUBLE CODE (DTC) INFORMATION TCM-P070500

see **DIAGNOSTIC TROUBLE CODE (DTC) INFORMATION TCM-P070500**

FAULT-TRACING

see **FAULT-TRACING**

TCM-P070500: GEARBOX POSITION SENSOR A CIRCUIT (PRNDL INPUT). GENERAL FAULT INFORMATION. NO INFORMATION ON FAULT TYPE (B8444S, TF-80SC AWD; 2006-2011)

DIAGNOSTIC TROUBLE CODE (DTC) INFORMATION TCM-P070500

Condition

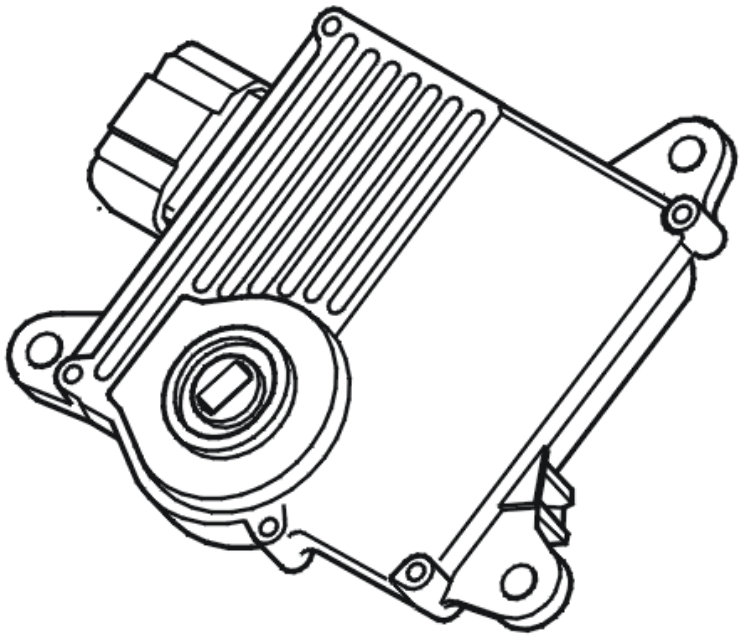

Fig. 57: Identifying Transmission Control Module (TCM)
Courtesy of VOLVO CARS CORPORATION

The gear position sensor is integrated in the transmission control module (TCM) and provides information on the selected gear position. Internally in the transmission control module (TCM) there are two Hall sensors used to detect whether the gear selector is in position. For diagnostic purposes, there is a parallel Hall sensor (2) that gives a reverse signal characteristic, so that the sum of the signal voltages from the Hall sensors (1) and (2) is constant. The signal voltage (0V and 5V) corresponds to the current gear lever position. If the transmission control module (TCM) registers an incorrect signal, the diagnostic trouble code (DTC) is generated.

The diagnostic trouble code can be diagnosed when the ignition is on.

Substitute Value

- Auxiliary program **Emergency mode 1** in the transmission control module (TCM) has started.

  HINT: EMERGENCY MODE IN CASE OF MALFUNCTION

Possible Source

- Incorrect adjustment of gear position sensor.
- Internal fault in transmission control module (TCM).

Fault symptom[s]

- Malfunction indicator lamp (MIL) lit.
- General warning lamp lit
- The engine does not start.

FAULT TRACING

CHECKS

CHECKING THE GEARSHIFT POSITION SENSOR

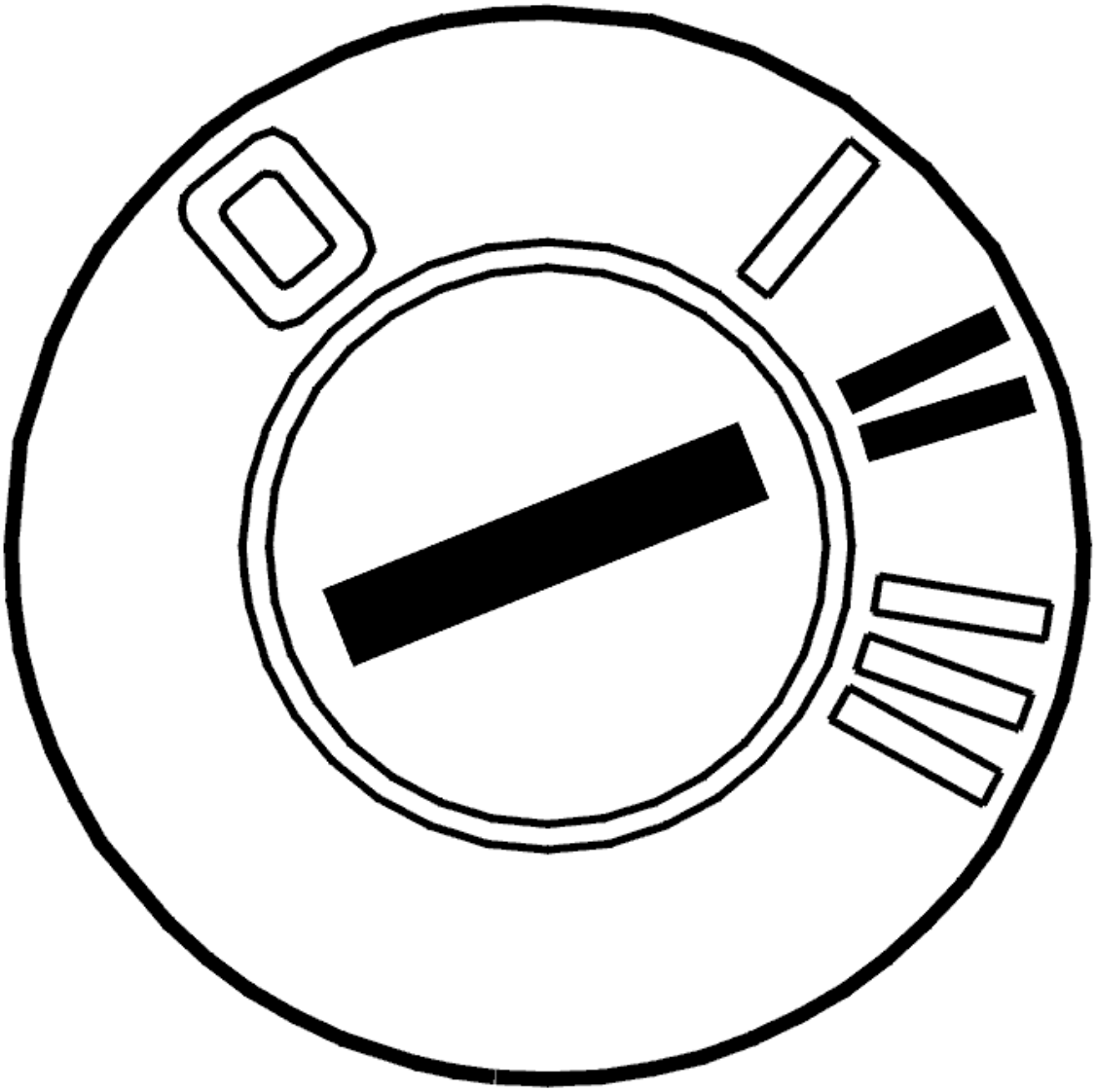

Fig. 58: Identifying Ignition ON
Courtesy of VOLVO CARS CORPORATION

- Check that the mechanical gear selector cable is correctly adjusted. Adjust if necessary.
- Ignition on.
- Read off the position of the gear selector.

  Move the gear selector lever to all the gear positions several times to check the function of the gearshift position sensor.

  The selected position must be the same as that displayed in the diagnostic tool.

  NOTE: If the value indicates "Undefined position" in P, R, N or D, the adjustment of the mechanical cable must be checked and the values must be read off again.

Other information

- see **GEAR SELECTOR CABLE, ADJUSTING**

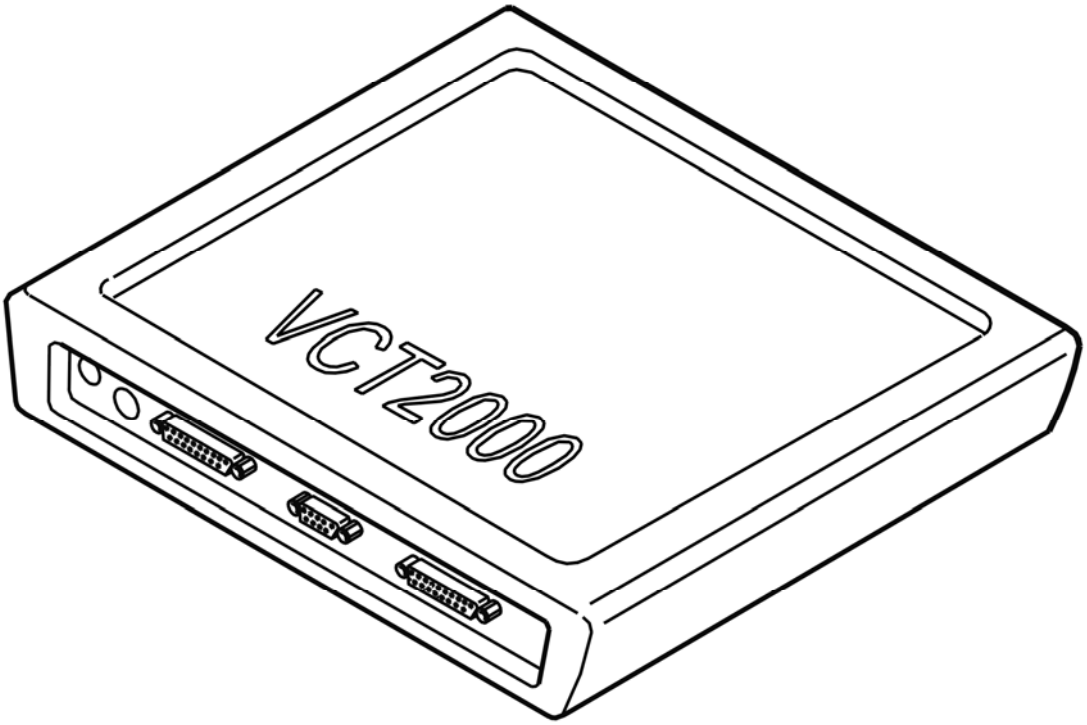

Fig. 59: Identifying VCT2000 Diagnostic Tool Symbol In VIDA
Courtesy of VOLVO CARS CORPORATION

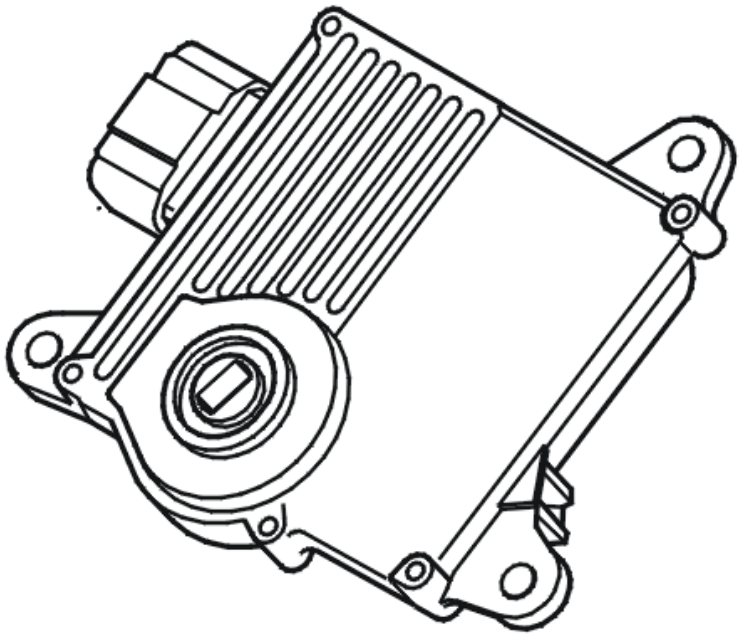

Fig. 60: Identifying Transmission Control Module (TCM)
Courtesy of VOLVO CARS CORPORATION

- **Continue**

Refer to **ERASING DIAGNOSTIC TROUBLE CODE (DTC)**

ERASING DIAGNOSTIC TROUBLE CODE (DTC)

NOTE: **When erased all stored diagnostic trouble codes (DTCs) with relevant information disappear. If there are other diagnostic trouble codes (DTCs) for the transmission control module (TCM) these must be fault-traced first. If necessary go to Car communication and read "Extended diagnostic trouble codes (DTCs)".**

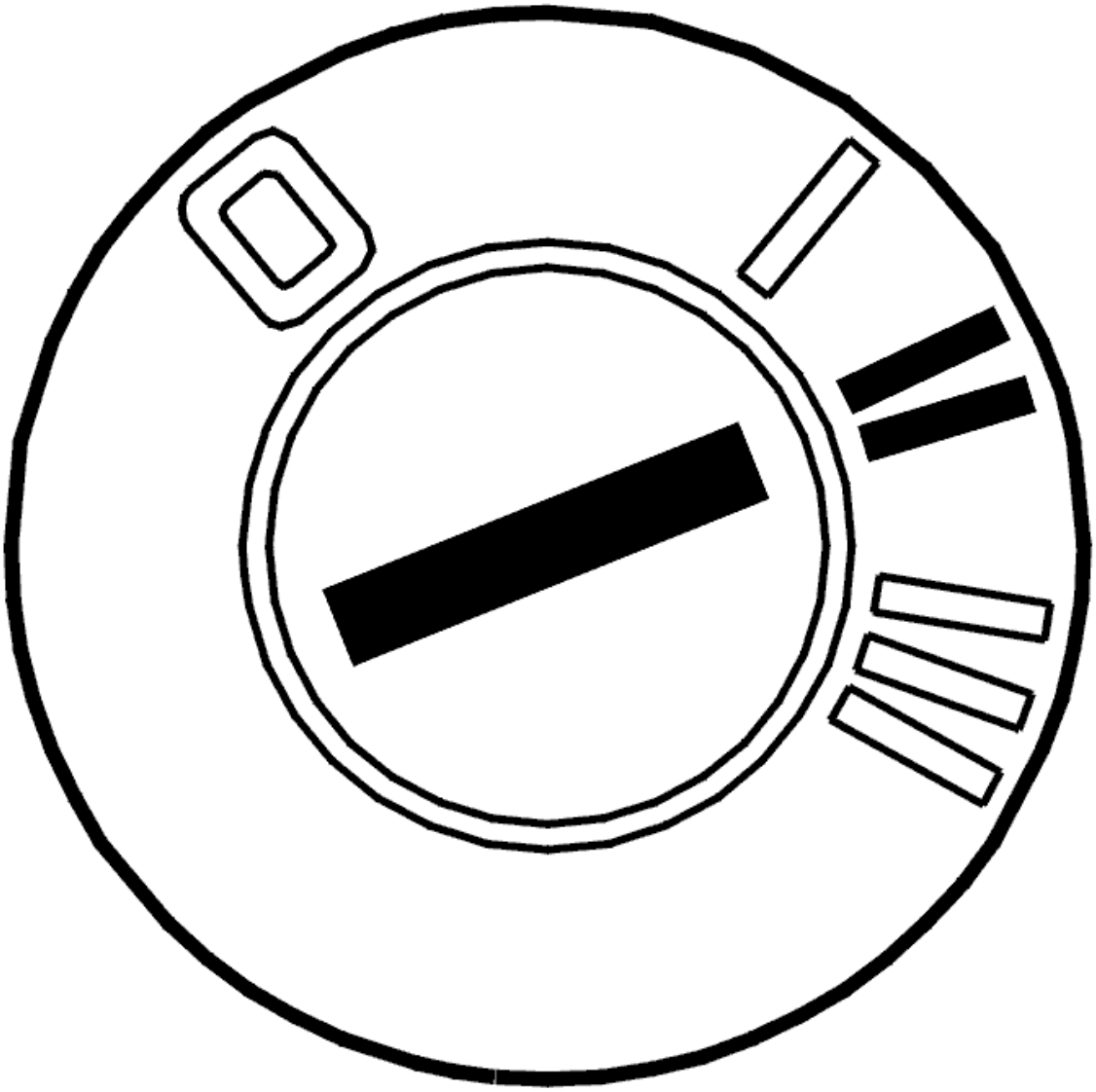

Fig. 61: Identifying Ignition ON
Courtesy of VOLVO CARS CORPORATION

- Ignition on.
- Erase diagnostic trouble codes by clicking the VCT2000 symbol.

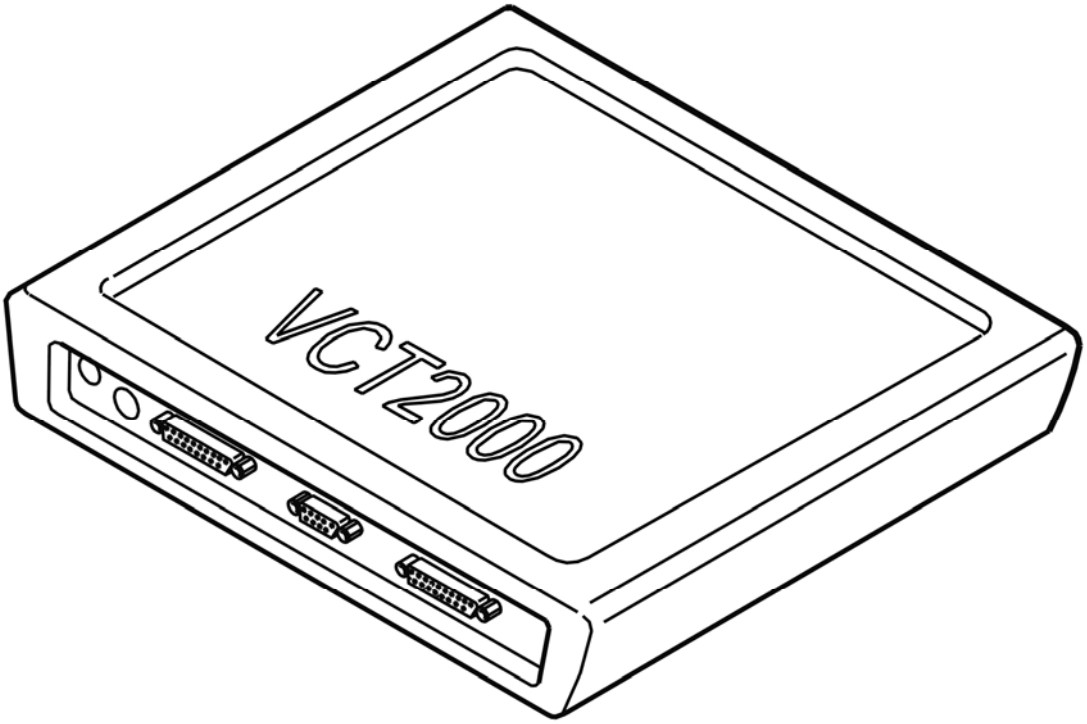

Fig. 62: Identifying VCT2000 Diagnostic Tool Symbol In VIDA
Courtesy of VOLVO CARS CORPORATION

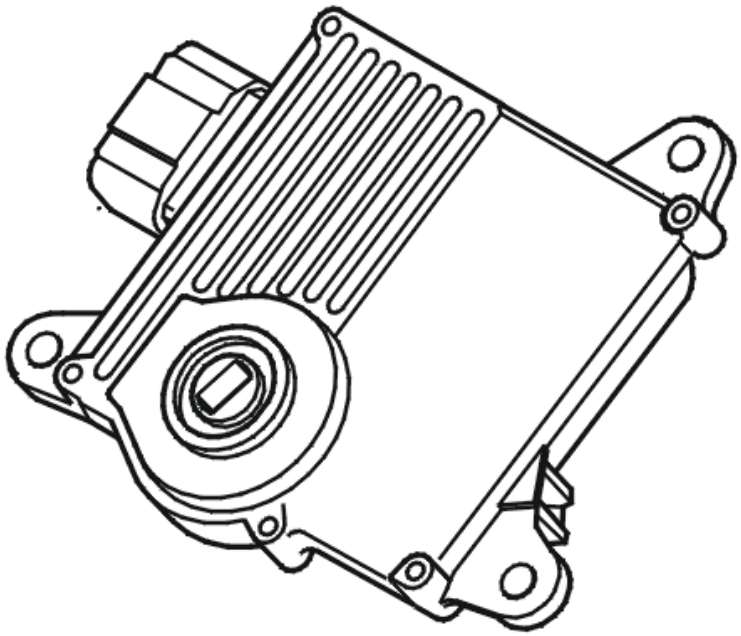

Fig. 63: Identifying Transmission Control Module (TCM)
Courtesy of VOLVO CARS CORPORATION

- **Continue**

Refer to **CALIBRATING THE POSITION SENSOR IN THE CONTROL MODULE**

CALIBRATING THE POSITION SENSOR IN THE CONTROL MODULE

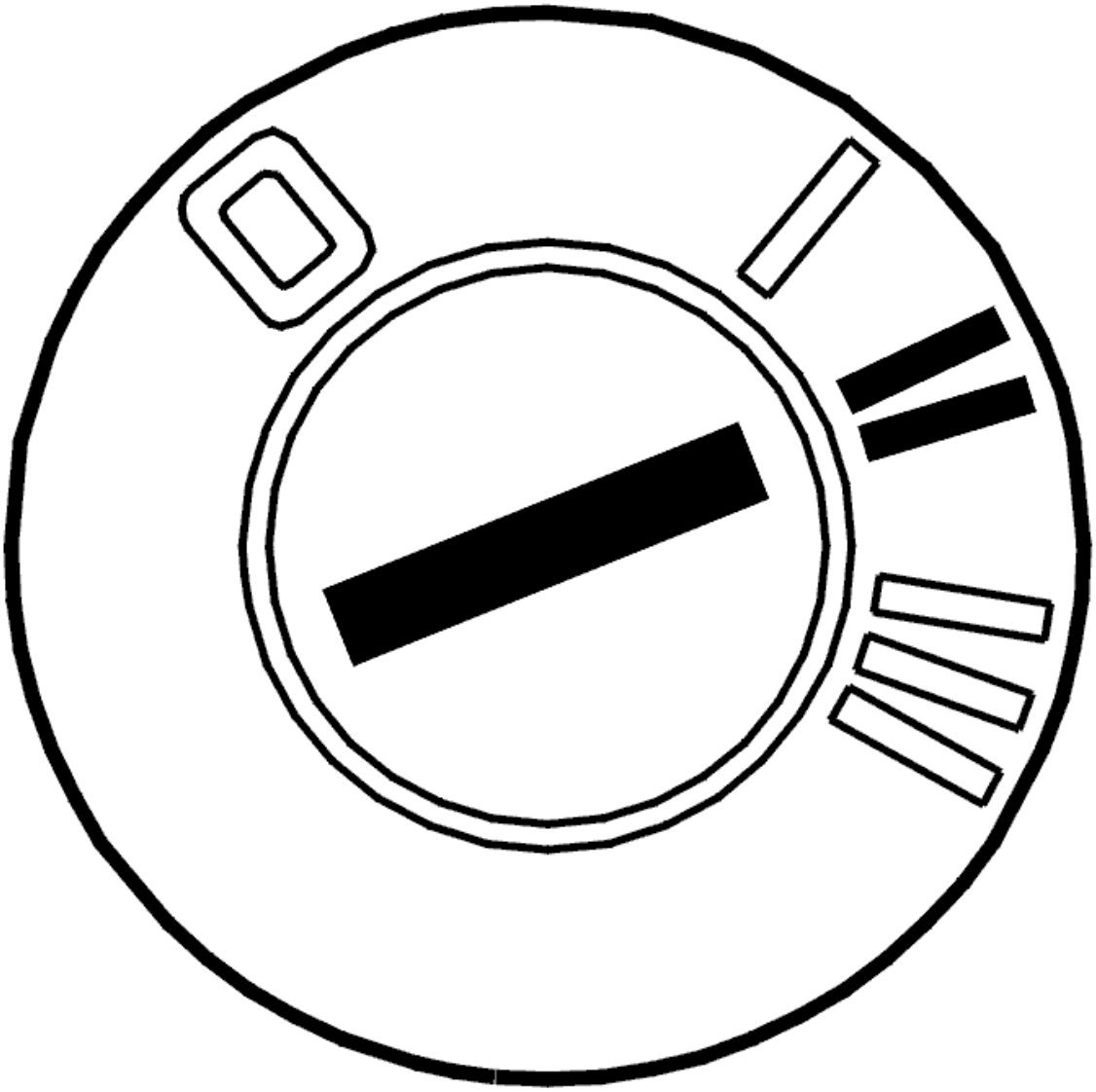

Fig. 64: Identifying Ignition ON
Courtesy of VOLVO CARS CORPORATION

- Ignition on.
- Move the gear selector lever to Neutral position (N).

Activate calibration of the position sensor in the transmission control module (TCM) by clicking the VCT2000 symbol.

CAUTION: During calibration, it is important that no diagnostic trouble codes (DTCs) for the gear selector module (GSM) are stored and that the gear selector assembly is otherwise free of faults.

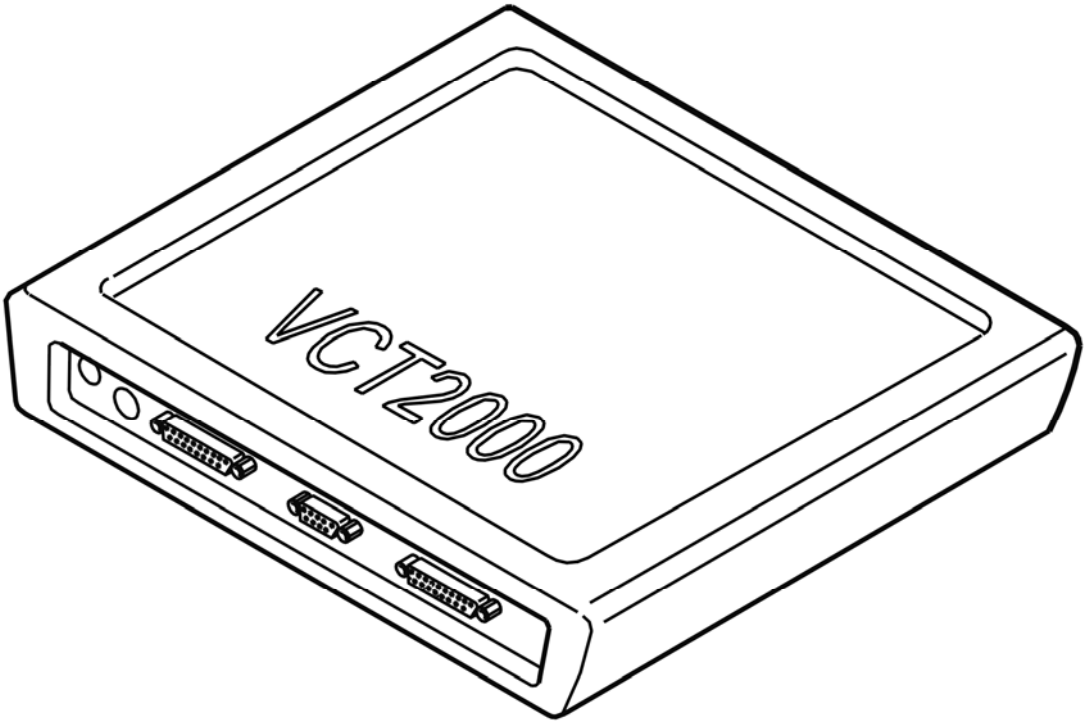

Fig. 65: Identifying VCT2000 Diagnostic Tool Symbol In VIDA
Courtesy of VOLVO CARS CORPORATION

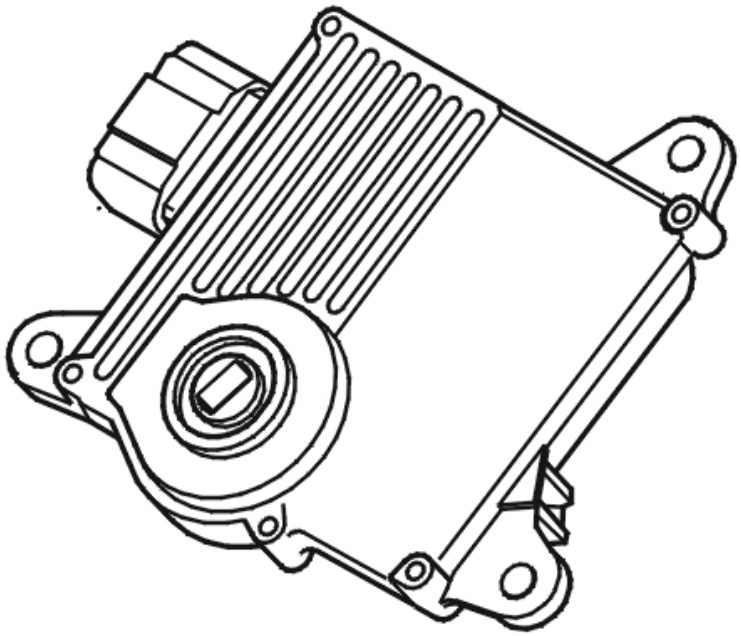

Fig. 66: Identifying Transmission Control Module (TCM)
Courtesy of VOLVO CARS CORPORATION

- **Continue**

Refer to **READING OFF DIAGNOSTIC TROUBLE CODES (DTCS)**

READING OFF DIAGNOSTIC TROUBLE CODES (DTCS)

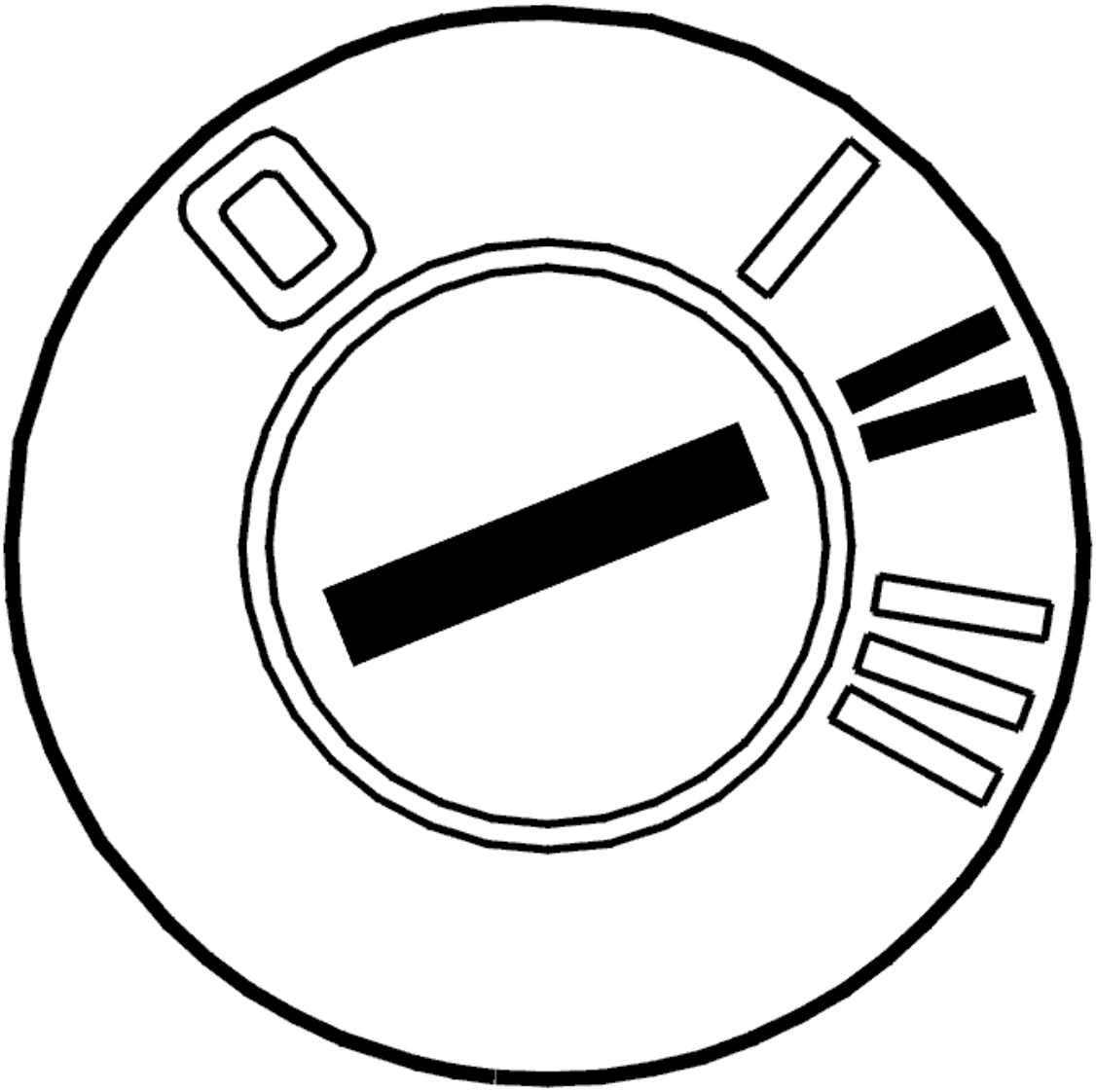

Fig. 67: Identifying Ignition ON
Courtesy of VOLVO CARS CORPORATION

- Ignition off
- Wait two minutes.
- Ignition on.
- Move the gear selector lever to all the gear positions several times.
- Read out diagnostic trouble codes by clicking the VCT2000 symbol.

  If present code diagnostic fault code (DTC) remains stored replace the transmission control module (TCM).

  Other information

  - see **TRANSMISSION CONTROL MODULE (TCM), REPLACING**

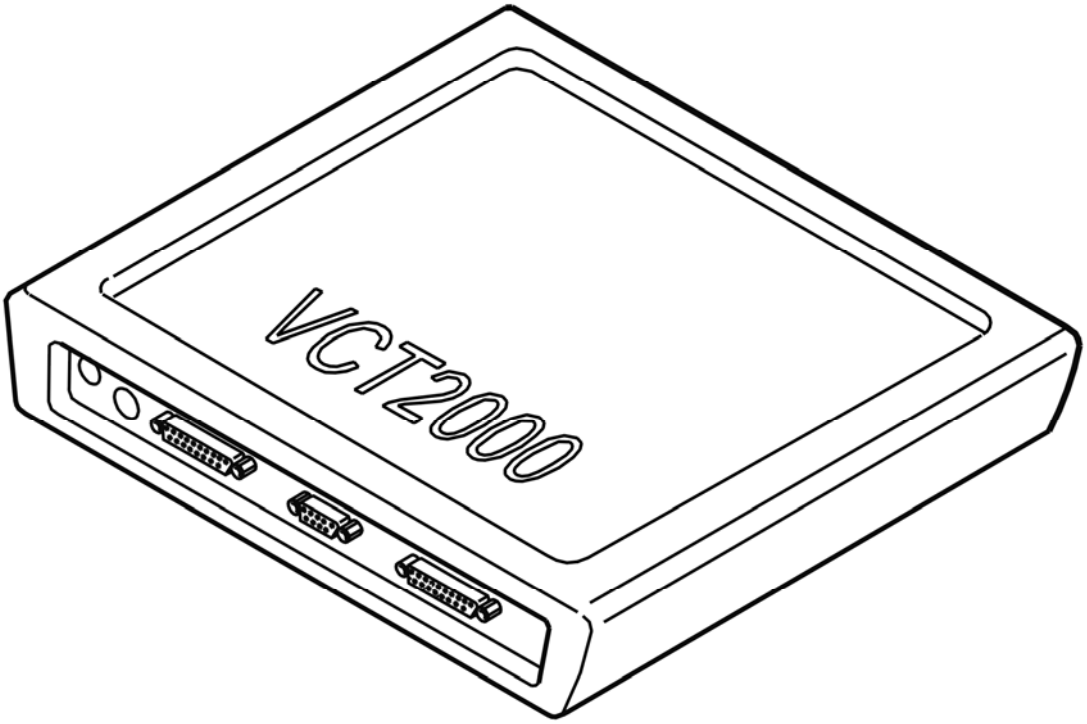

Fig. 68: Identifying VCT2000 Diagnostic Tool Symbol In VIDA
Courtesy of VOLVO CARS CORPORATION

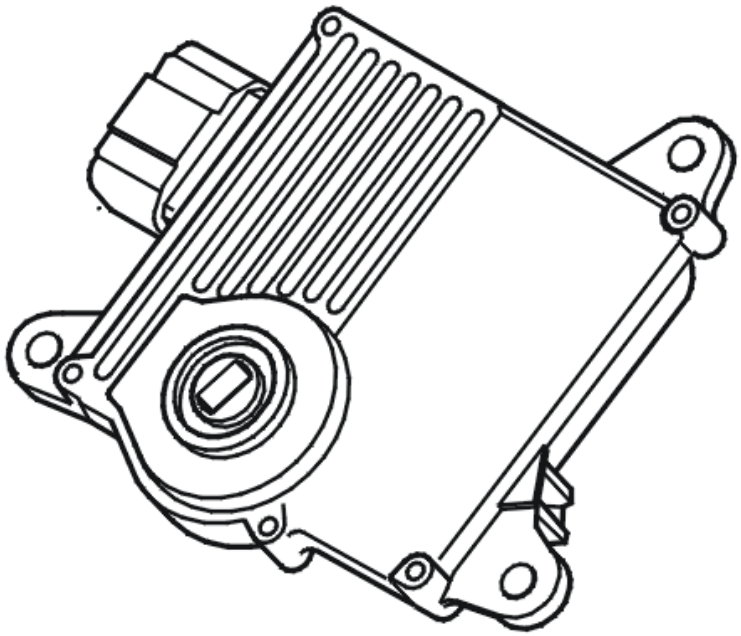

Fig. 69: Identifying Transmission Control Module (TCM)
Courtesy of VOLVO CARS CORPORATION

- **Continue**

  Refer to **VERIFICATION**

VERIFICATION

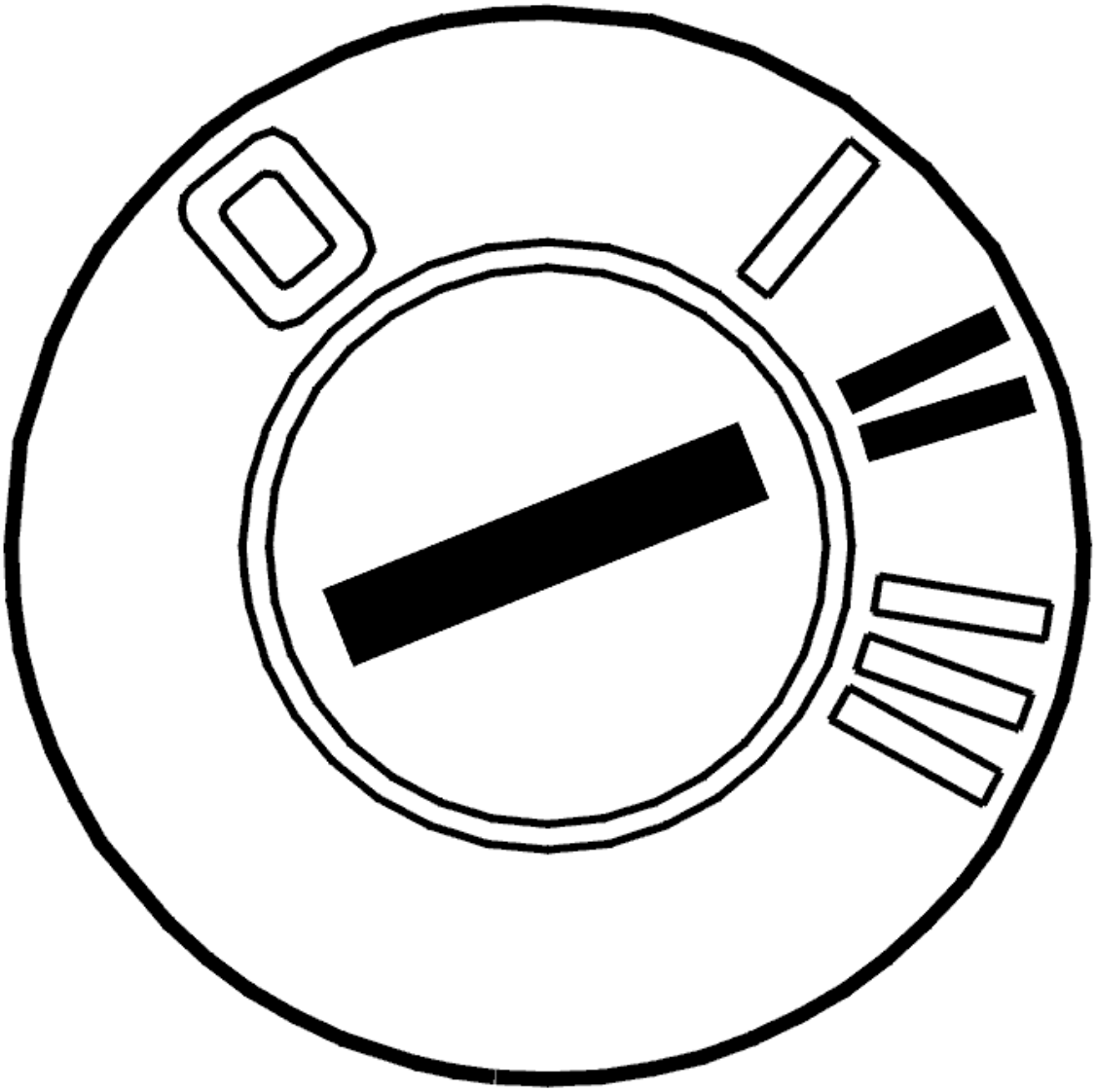

Fig. 70: Identifying Ignition ON
Courtesy of VOLVO CARS CORPORATION

- Ignition off
- Wait two minutes.
- Ignition on.
- Move the gear selector lever to all the gear positions several times.
- Read out diagnostic trouble codes by clicking the VCT2000 symbol.

  If present code diagnostic fault code (DTC) remains stored replace the transmission control module (TCM).

  Other information

  - see **TRANSMISSION CONTROL MODULE (TCM), REPLACING**

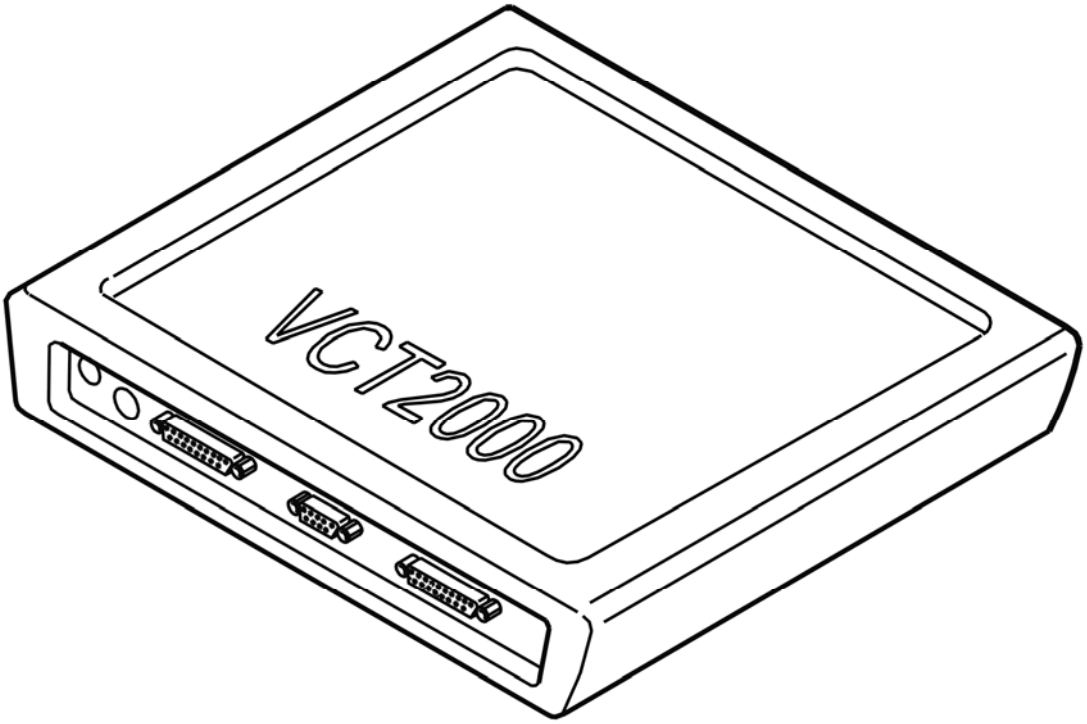

Fig. 71: Identifying VCT2000 Diagnostic Tool Symbol In VIDA
Courtesy of VOLVO CARS CORPORATION

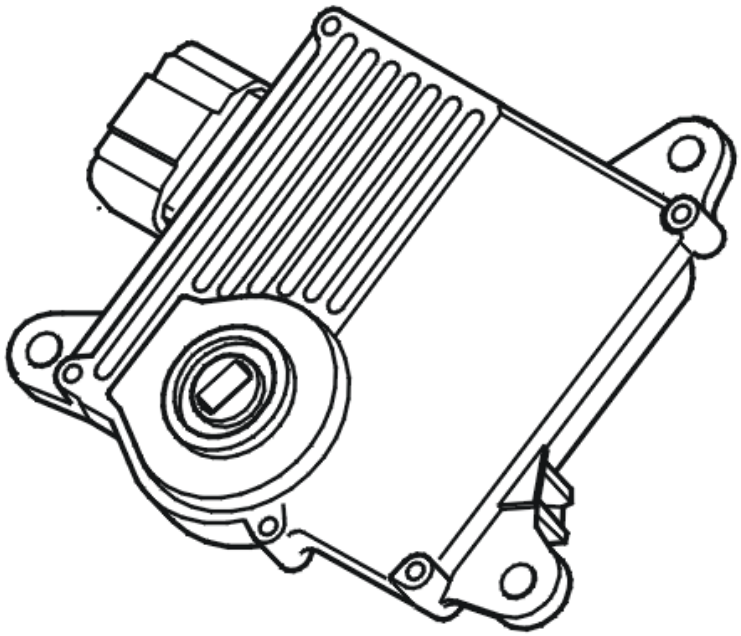

Fig. 72: Identifying Transmission Control Module (TCM)
Courtesy of VOLVO CARS CORPORATION

Is the present code diagnostic fault code (DTC) still stored?

- **YES**

  Refer to **INFORMATION**

- **NO**

  OKAY: Troubleshooting has been completed.

INFORMATION

FAULT-TRACING INFORMATION

The fault should have been detected and remedied. As this is not the case fault-tracing has failed.

Exit fault-tracing for this diagnostic trouble code (DTC) or make another attempt.

TCM-P070500: GEARBOX POSITION SENSOR A CIRCUIT (PRNDL INPUT). GENERAL FAULT INFORMATION. NO INFORMATION ON FAULT TYPE (TF-

80SC AWD; 2005)

DIAGNOSTIC TROUBLE CODE (DTC) INFORMATION TCM-P070500

see **DIAGNOSTIC TROUBLE CODE (DTC) INFORMATION TCM-P070500**

FAULT TRACING

see **FAULT TRACING**

TCM-P070600: TRANSMISSION RANGE SENSOR A CIRCUIT RANGE/PERFORMANCE. GENERAL FAILURE INFORMATION. NO SUB TYPE INFORMATION (B6324S, TF-80SC; B6324S, TF-80SC AWD; 2007-2010)

DIAGNOSTIC TROUBLE CODE (DTC) INFORMATION TCM-P070600

Condition

So that the selected gear position is always correct, the gear selector cable must be fitted, adjusted and then calibrated correctly.

The diagnostic trouble code (DTC) is stored if the control module detects:

- Incorrect signal from the gear selector sensor.

The control module's test for the diagnostic trouble code (DTC) starts in the event of:

- Ignition on.

NOTE: **The control module can only detect the fault once the test has been started and the diagnostic trouble code (DTC) is stored when the conditions are met.**

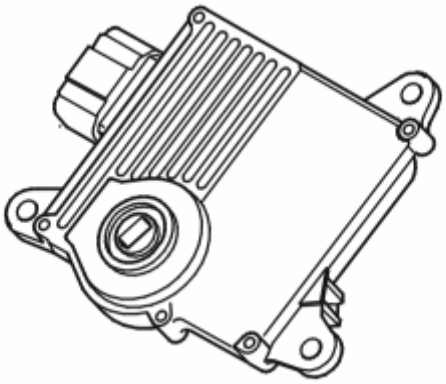

Fig. 73: Identifying Transmission Control Module (TCM)
Courtesy of VOLVO CARS CORPORATION

Substitute Value

- None.

Possible Source

- Gear selector cable fitted incorrectly.
- Gear position sensor is not calibrated.

Fault symptom[s]

- General warning lamp lit

FAULT-TRACING

CALIBRATING THE POSITION SENSOR IN THE CONTROL MODULE

Fig. 74: Identifying Ignition ON
Courtesy of VOLVO CARS CORPORATION

- Check that the gear selector cable is correctly adjusted. Adjust if necessary.
- Ignition on.
- Place the gear selector lever in neutral position (N).

Activate calibration of the position sensor in the control module by clicking on the VCT2000 symbol.

Other information

- For B5xx4T2, see **GEAR SELECTOR CABLES, ADJUSTING**
- For B6xx4T, see **GEAR SELECTOR CABLE, ADJUSTING** .

Fig. 75: Identifying VCT2000 Diagnostic Tool Symbol In VIDA
Courtesy of VOLVO CARS CORPORATION

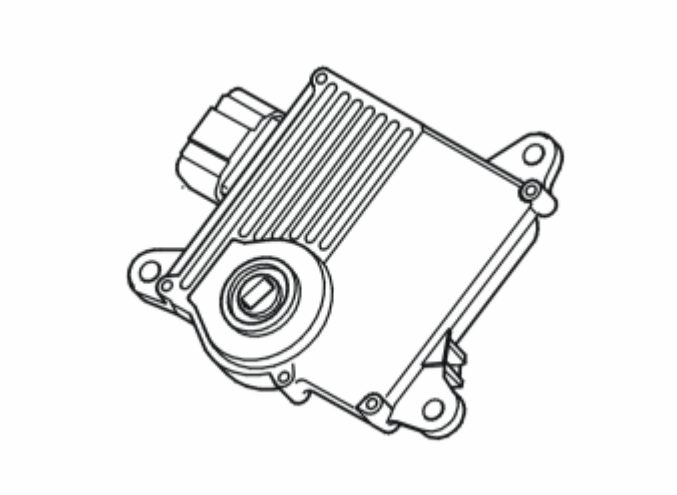

Fig. 76: Identifying Transmission Control Module (TCM)
Courtesy of VOLVO CARS CORPORATION

- **Continue**

  Refer to **VERIFICATION**

VERIFICATION

Fig. 77: Identifying Ignition ON
Courtesy of VOLVO CARS CORPORATION

- Ignition off.
- Wait two minutes.
- Ignition on.
- Move the gear selector several times to all gear positions.
  - Read off the diagnostic trouble codes (DTCs) by clicking on the VCT2000 symbol.

If present code diagnostic fault code (DTC) remains stored replace the transmission control module (TCM).

Other information

- see **TRANSMISSION CONTROL MODULE (TCM)**

Fig. 78: Identifying VCT2000 Diagnostic Tool Symbol In VIDA
Courtesy of VOLVO CARS CORPORATION

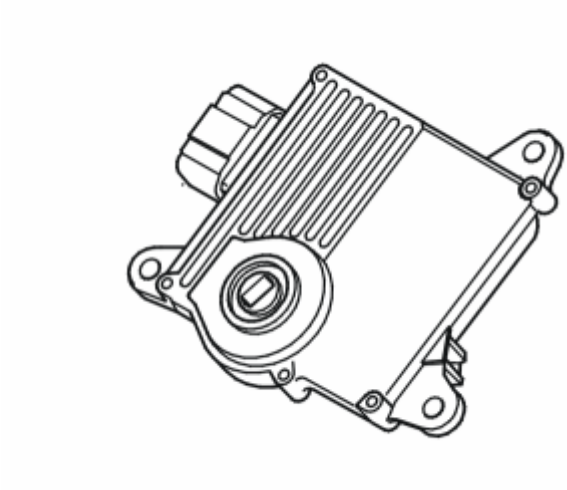

Fig. 79: Identifying Transmission Control Module (TCM)
Courtesy of VOLVO CARS CORPORATION

Is the relevant diagnostic trouble code (DTC) still stored?

- **YES**

  Refer to **INFORMATION**

- **NO**

OKAY: Troubleshooting has been completed.

INFORMATION

FAULT-TRACING INFORMATION

The fault should have been detected and remedied. As this is not the case fault-tracing has failed.

Exit fault-tracing for this diagnostic trouble code (DTC) or make another attempt.

TCM-P070600: TRANSMISSION RANGE SENSOR A CIRCUIT RANGE/PERFORMANCE. GENERAL FAILURE INFORMATION. NO SUB TYPE INFORMATION (B6324S5, TF-80SC; B6324S5, TF-80SC AWD; 2011-2012)

DIAGNOSTIC TROUBLE CODE (DTC) INFORMATION TCM-P070600

see **DIAGNOSTIC TROUBLE CODE (DTC) INFORMATION TCM-P070600**

FAULT-TRACING

see **FAULT-TRACING**

TCM-P070600: GEARBOX POSITION SENSOR A CIRCUIT INSIDE/OUTSIDE TOLERANCE. GENERAL FAULT INFORMATION. NO INFORMATION ON FAULT TYPE (B8444S, TF-80SC AWD; 2006-2011)

DIAGNOSTIC TROUBLE CODE (DTC) INFORMATION TCM-P070600

Condition

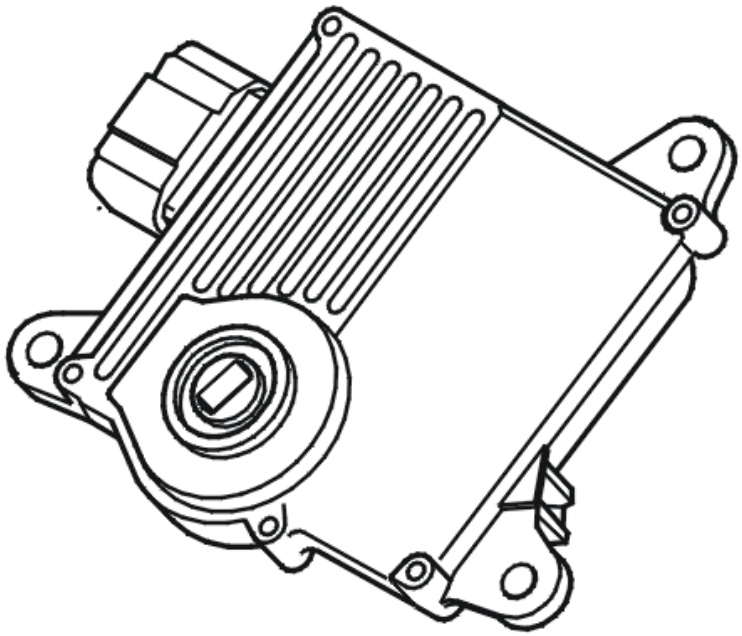

Fig. 80: Identifying Transmission Control Module (TCM)
Courtesy of VOLVO CARS CORPORATION

So that the selected gear position is always correct, the gear selector cable must be fitted, adjusted and then calibrated correctly.

If the transmission control module (TCM) registers an incorrect signal from the gear position sensor, the diagnostic trouble code (DTC) is generated.

Substitute Value

- Nothing.

Possible Source

- Gear selector cable fitted incorrectly.
- Gear position sensor not calibrated.

Fault symptom[s]

- General warning lamp lit

FAULT TRACING

CALIBRATION OF POSITION SENSOR IN TRANSMISSION CONTROL MODULE (TCM)

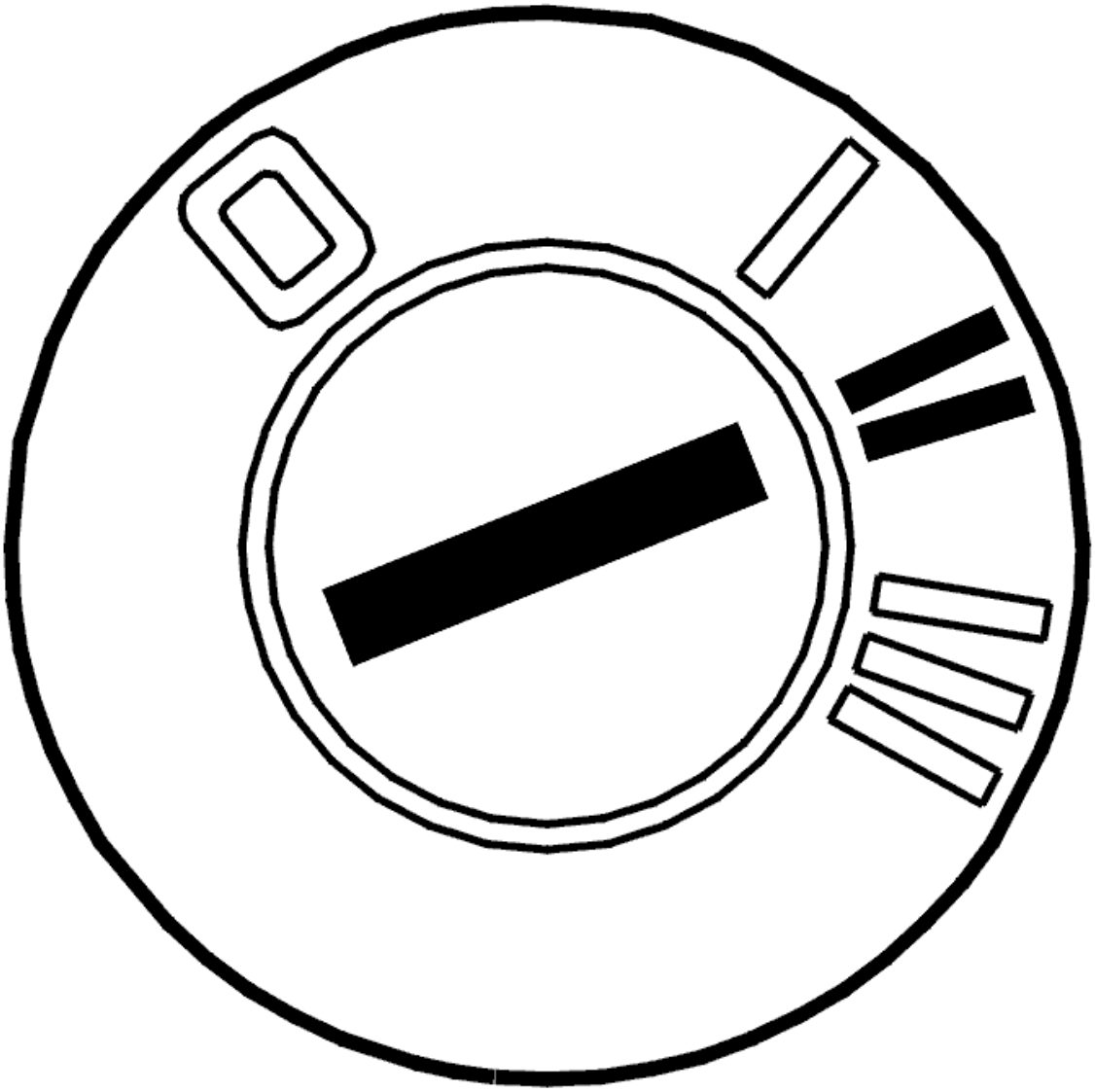

Fig. 81: Identifying Ignition ON
Courtesy of VOLVO CARS CORPORATION

- Check that the gear selector cable is adjusted correctly and readjust as necessary.
- Ignition on.
- Put gear lever in neutral (N).

  Activate calibration of position sensor in transmission control module (TCM) by clicking on the VCT2000 symbol.

  Other information

  - see **GEAR SELECTOR CABLE, ADJUSTING**

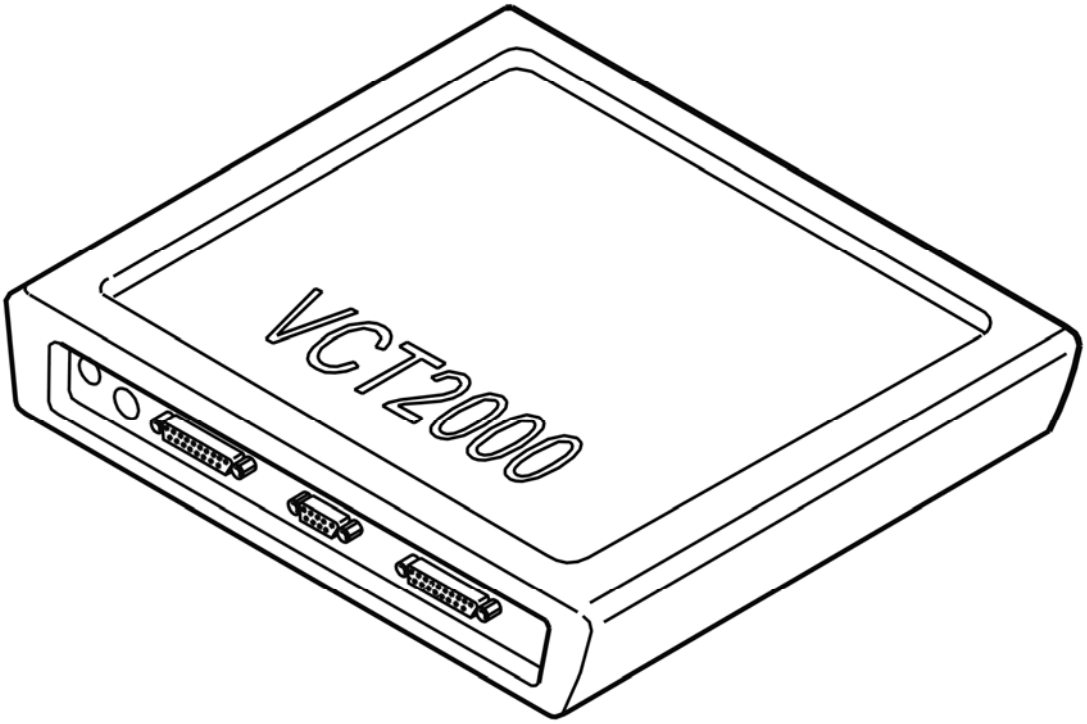

Fig. 82: Identifying VCT2000 Diagnostic Tool Symbol In VIDA
Courtesy of VOLVO CARS CORPORATION

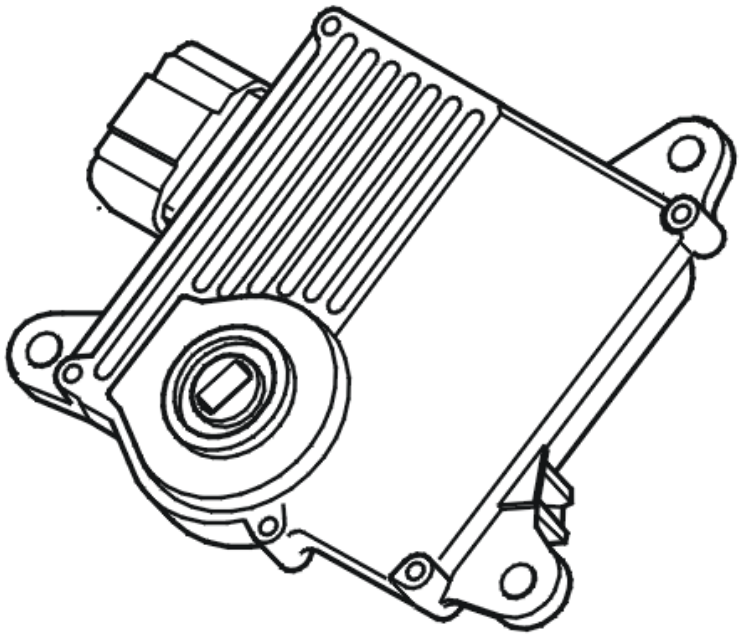

Fig. 83: Identifying Transmission Control Module (TCM)
Courtesy of VOLVO CARS CORPORATION

- **Continue**

  Refer to **VERIFICATION**

VERIFICATION

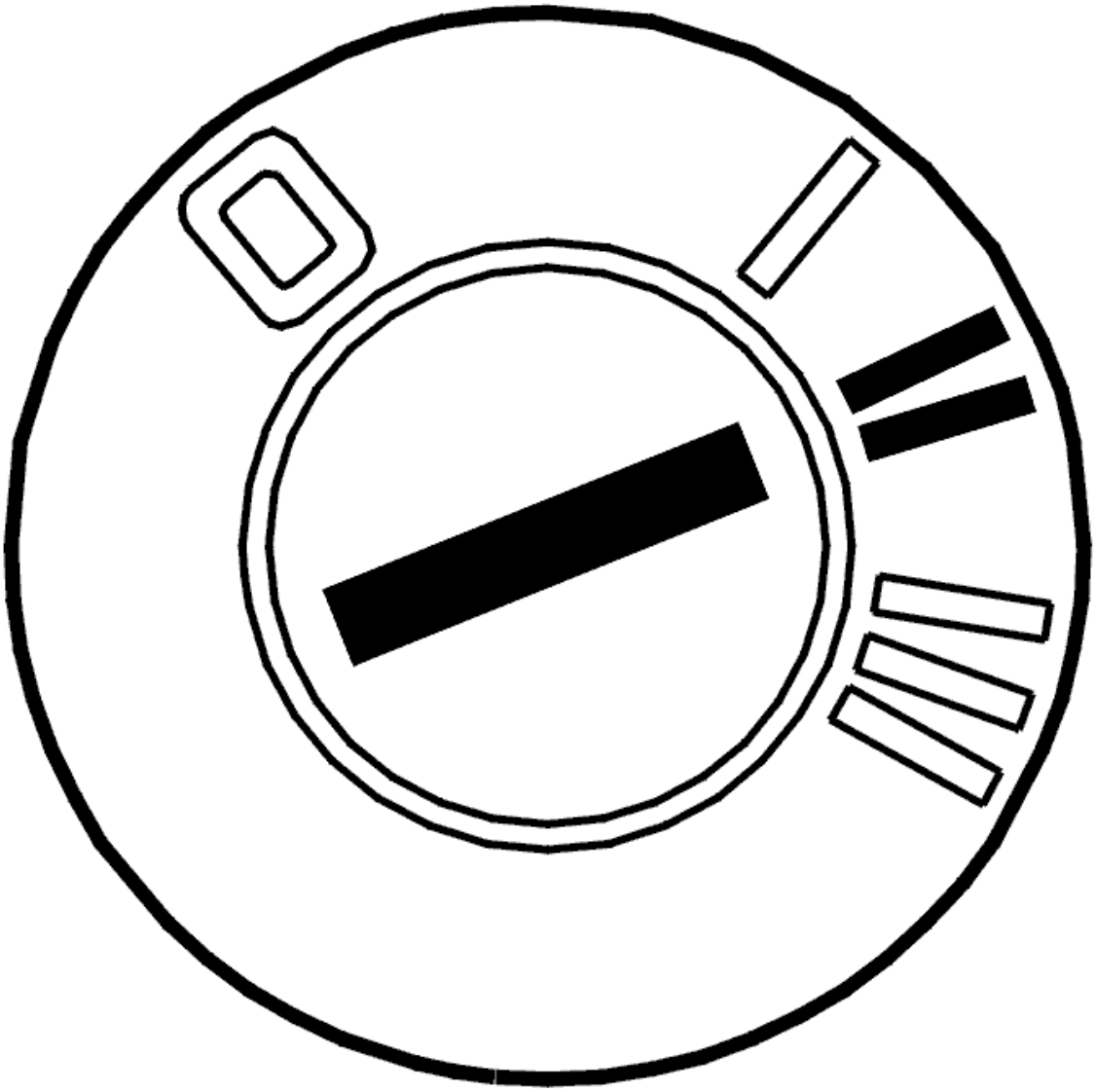

Fig. 84: Identifying Ignition ON
Courtesy of VOLVO CARS CORPORATION

- Ignition off
- Wait for two minutes.
- Ignition on.
- Move the gear selector several times through all the gear positions.
- Read out diagnostic trouble codes by clicking the VCT2000 symbol.

  If the current diagnostic trouble code (DTC) is still stored, replace the transmission control module (TCM).

  Other information

  - see **TRANSMISSION CONTROL MODULE (TCM), REPLACING**

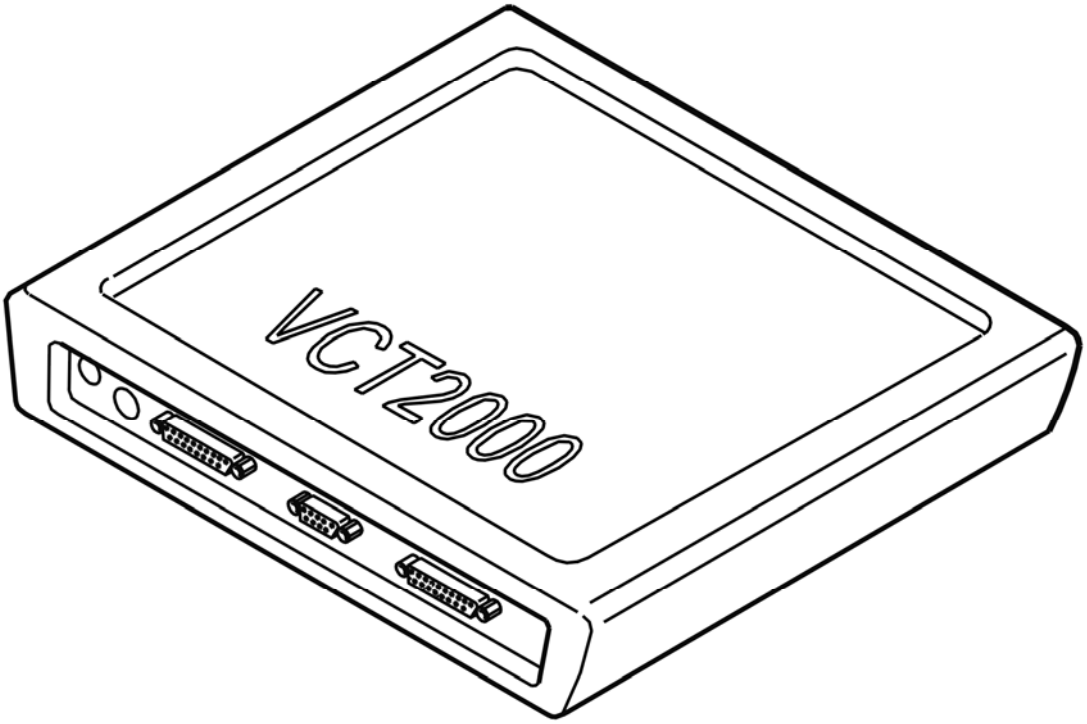

Fig. 85: Identifying VCT2000 Diagnostic Tool Symbol In VIDA
Courtesy of VOLVO CARS CORPORATION

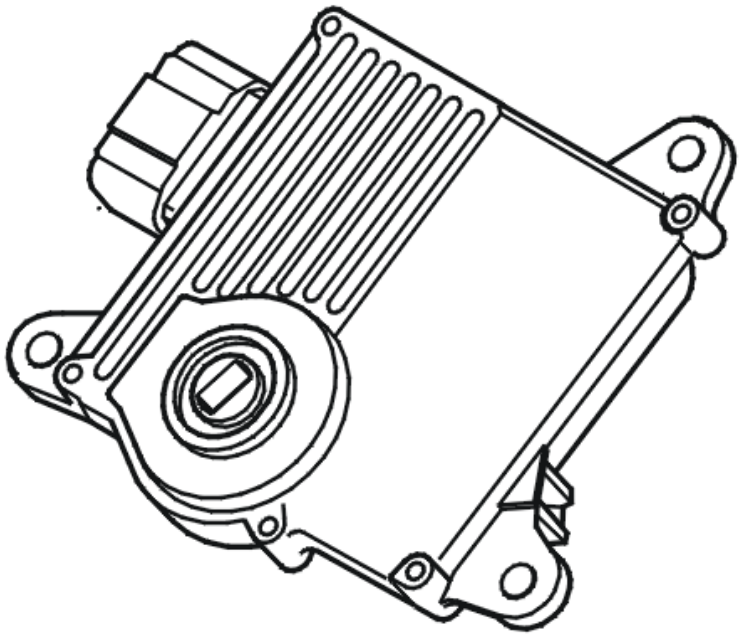

Fig. 86: Identifying Transmission Control Module (TCM)
Courtesy of VOLVO CARS CORPORATION

Is the current diagnostic trouble code still stored?

- **YES**

  Refer to **INFORMATION**

- **NO**

  OKAY: Troubleshooting has been completed.

INFORMATION

FAULT-TRACING INFORMATION

The fault should have been detected and remedied. As this is not the case fault-tracing has failed.

Exit fault-tracing for this diagnostic trouble code (DTC) or make another attempt.

TCM-P070600: GEARBOX POSITION SENSOR A CIRCUIT INSIDE/OUTSIDE TOLERANCE. GENERAL FAULT INFORMATION. NO INFORMATION ON

FAULT TYPE (TF-80SC AWD; 2005)

DIAGNOSTIC TROUBLE CODE (DTC) INFORMATION TCM-P070600

see **DIAGNOSTIC TROUBLE CODE (DTC) INFORMATION TCM-P070600**

FAULT TRACING

see **FAULT TRACING**

TCM-P070900: TRANSMISSION RANGE SENSOR A CIRCUIT INTERMITTENT. GENERAL FAILURE INFORMATION. NO SUB TYPE INFORMATION (B6324S, TF-80SC; B6324S, TF-80SC AWD; 2007-2010)

DIAGNOSTIC TROUBLE CODE (DTC) INFORMATION TCM-P070900

Condition

So that the selected gear position is always correct, the gear selector cable must be fitted, adjusted and then calibrated correctly.

The diagnostic trouble code (DTC) is stored if the control module detects that:

- Gear position sensor is not calibrated.

NOTE: The control module can only detect the fault once the test has been started and the diagnostic trouble code (DTC) is stored when the conditions are met.

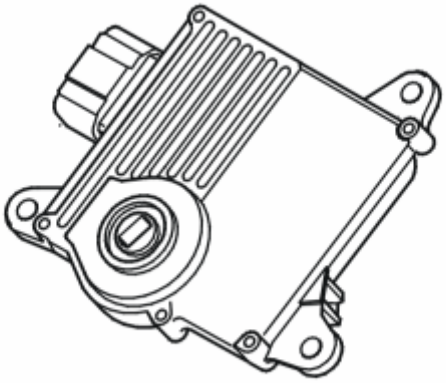

Fig. 87: Identifying Transmission Control Module (TCM)
Courtesy of VOLVO CARS CORPORATION

Substitute Value

- None.

Possible Source

- Gear selector cable fitted incorrectly.
- Gear position sensor is not calibrated.

Fault symptom[s]

- General warning lamp lit

FAULT-TRACING

see **FAULT-TRACING**

TCM-P070900: TRANSMISSION RANGE SENSOR A CIRCUIT INTERMITTENT. GENERAL FAILURE INFORMATION. NO SUB TYPE INFORMATION (B6324S5, TF-80SC; B6324S5, TF-80SC AWD; 2011-2012)

DIAGNOSTIC TROUBLE CODE (DTC) INFORMATION TCM-P070900

see **DIAGNOSTIC TROUBLE CODE (DTC) INFORMATION TCM-P070900**

FAULT-TRACING

see **FAULT-TRACING**

TCM-P070900: GEARBOX POSITION SENSOR A CIRCUIT INTERMITTENT. GENERAL FAULT INFORMATION. NO INFORMATION ON FAULT TYPE (B8444S, TF-80SC AWD; 2006-2011)

DIAGNOSTIC TROUBLE CODE (DTC) INFORMATION TCM-P070900

Condition

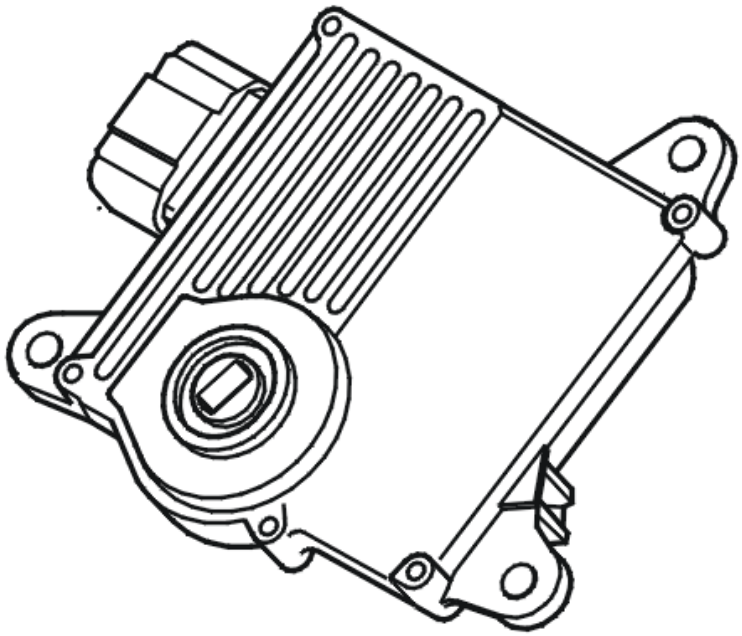

Fig. 88: Identifying Transmission Control Module (TCM)
Courtesy of VOLVO CARS CORPORATION

So that the selected gear position is always correct, the gear selector cable must be fitted, adjusted and then calibrated correctly.

If the transmission control module (TCM) registers that the gear position sensor is not calibrated, the diagnostic trouble code (DTC) is generated.

Substitute Value

- Nothing.

Possible Source

- Gear selector cable fitted incorrectly.
- Gear position sensor not calibrated.

Fault symptom[s]

- General warning lamp lit

FAULT TRACING

see **FAULT TRACING**

TCM-P070900: GEARBOX POSITION SENSOR A CIRCUIT INTERMITTENT. GENERAL FAULT INFORMATION. NO INFORMATION ON FAULT TYPE (TF-80SC AWD; 2005)

DIAGNOSTIC TROUBLE CODE (DTC) INFORMATION TCM-P070900

see **DIAGNOSTIC TROUBLE CODE (DTC) INFORMATION TCM-P070900**

FAULT TRACING

see **FAULT TRACING**

TCM-P071100: TRANSMISSION FLUID TEMPERATURE SENSOR A CIRCUIT RANGE/PERFORMANCE. GENERAL FAILURE INFORMATION. NO SUB TYPE INFORMATION (B6324S, TF-80SC; B6324S, TF-80SC AWD; 2007-2010)

DIAGNOSTIC TROUBLE CODE (DTC) INFORMATION TCM-P071100

Condition

The oil temperature sensor provides the Transmission control module (TCM) with a signal that is used, among other things, for the temperature controlled lock-up and engagement high temperature program functions.

The sensor has an NTC (negative temperature coefficient) resistor.

The signal (voltage) drops with increased oil temperature.

The diagnostic trouble code (DTC) is stored if control module:

- After the engine has run for approximately 10 minutes, an unchanged signal is received from the oil temperature sensor.

The control module's test for the diagnostic trouble code (DTC) starts in the event of:

- After at least two minutes normal driving in gear position D, 4, 3, 2 or geartronic (MAN) and engine temperature at start-up more than 70 °C or transmission oil temperature more than 50 °C.

NOTE: The control module can only detect the fault once the test has been started and the diagnostic trouble code (DTC) is stored when the conditions are met.

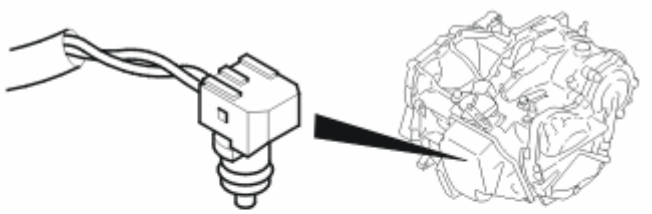

Fig. 89: Locating Oil Temperature Sensor
Courtesy of VOLVO CARS CORPORATION

Substitute Value

- Transmission control module assumes an oil temperature of 80 °C.
- function is blocked.
- Slip lock-up function is blocked.
- Neutral check function is blocked.

Possible Source

- Contact resistance in the terminals.
- Oil temperature sensor not working.

Fault symptom[s]

- General warning lamp lit

FAULT-TRACING

CHECKS

CHECKING THE OIL TEMPERATURE SENSOR

NOTE: **During this fault tracing the transmission and oil should be at room temperature from the start.**

This is to control the sensor function.

Fig. 90: Identifying Ignition ON
Courtesy of VOLVO CARS CORPORATION

- Ignition on.
- Start the engine. Allow the engine to idle.
- Read off the oil temperature.

Allow the transmission to warm up. Check that the oil temperature increases and appears to be within the permitted range.

Compare with transmission external temperature.

NOTE: The transmission temperature sensor is inside the control system and may be affected by the heat given off by the solenoids.

The fault is permanent if the temperature is outside the permitted range.

If the temperature is within the permitted range, this is an indication that the fault was present previously but that it is not active at the moment, i. e. the fault is intermittent.

Fig. 91: Identifying VCT2000 Diagnostic Tool Symbol In VIDA
Courtesy of VOLVO CARS CORPORATION

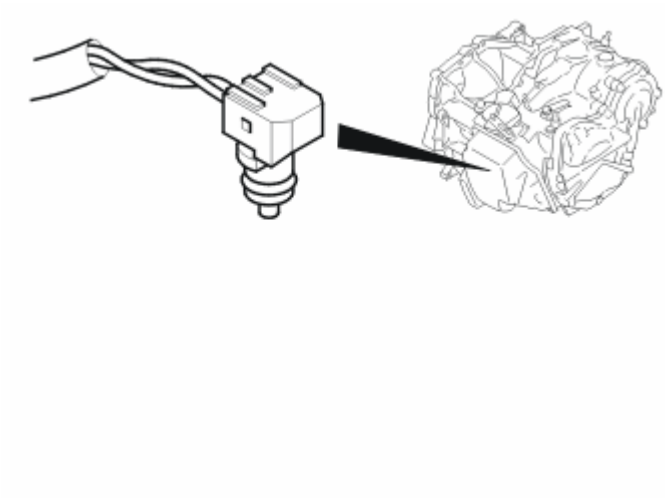

Fig. 92: Locating Oil Temperature Sensor
Courtesy of VOLVO CARS CORPORATION

- **Continue**

  Refer to **CHECKING INTERNAL COMPONENTS**

CHECKING INTERNAL COMPONENTS

Fig. 93: Identifying Ignition In Off Position
Courtesy of VOLVO CARS CORPORATION

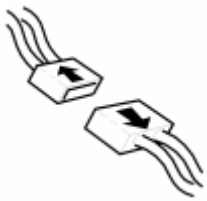

Fig. 94: Identifying Connectors Disconnected
Courtesy of VOLVO CARS CORPORATION

- Ignition off.
- Expose the connector for the transmission control module (TCM).

  Check connector B (22-pin) for the transmission control module (TCM). Check for damaged or pressed in pins. Check for contact resistance and oxidation.

HINT: Check the temperature. See CHECKING THE OIL TEMPERATURE SENSOR

Remedy as necessary.

Other information

- To replace Temperature Sensor Fluid, Transaxle, (TFT) see **CABLE HARNESS, CONTROL SYSTEM, GEARBOX, REPLACING**
- To access connector B:**TRANSMISSION CONTROL MODULE (TCM)**
- see **CHECKING WIRING AND TERMINALS**

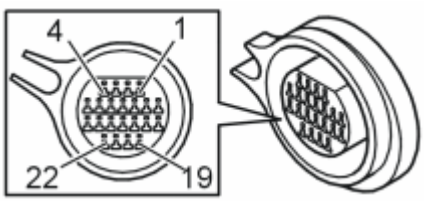

Fig. 95: Identifying Connector B Terminals
Courtesy of VOLVO CARS CORPORATION

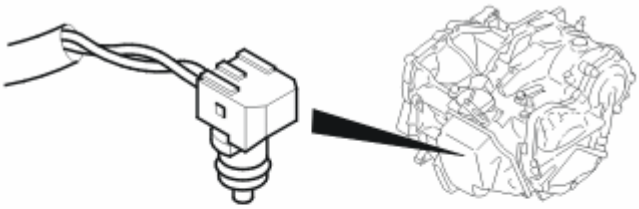

Fig. 96: Locating Oil Temperature Sensor
Courtesy of VOLVO CARS CORPORATION

- **Continue**

Refer to **RESETTING THE "TRANSMISSION FLUID CHANGE" COUNTER**

VERIFICATION

VERIFICATION

HINT: After carrying out the repair, check that the fault has been remedied.

Fig. 97: Identifying Ignition ON
Courtesy of VOLVO CARS CORPORATION

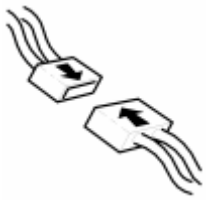

Fig. 98: Identifying Connector(s) Reinstallation
Courtesy of VOLVO CARS CORPORATION

- Ignition off.
- Reinstall the connectors, components etc.
- Ignition on.
- Start the engine. Allow the engine to idle.
- Read off the oil temperature.

  Check that the oil temperature is within its permitted range. Compare it to the automatic transmission temperature.

  NOTE: The transmission temperature sensor is inside the control system and may be affected by the heat given off by the solenoids.

Fig. 99: Identifying VCT2000 Diagnostic Tool Symbol In VIDA
Courtesy of VOLVO CARS CORPORATION

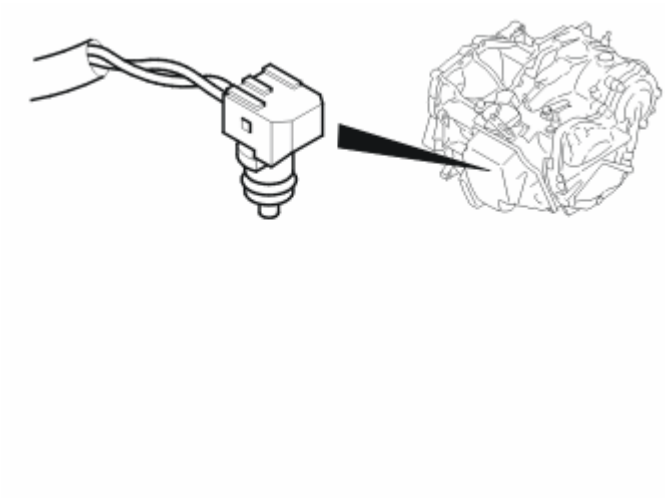

Fig. 100: Locating Oil Temperature Sensor
Courtesy of VOLVO CARS CORPORATION

Is the temperature reading OK?

- **YES**

  VERIFIED: Troubleshooting has been completed.

- **NO**

  Refer to **INFORMATION**

INFORMATION

FAULT-TRACING INFORMATION

The fault should have been detected and remedied. As this is not the case fault-tracing has failed.

Exit fault-tracing for this diagnostic trouble code (DTC) or make another attempt.

RESETTING THE "TRANSMISSION FLUID CHANGE" COUNTER

CHECKING THE FUNCTION

HINT: The transmission control module (TCM) has a counter for fluid quality that counts the number of times the transmission is subjected to too hard a load or too high an ambient temperature. If the counter is not reset during draining/replacement, there is a risk that a diagnostic trouble code will be set under the wrong conditions. Thus, it is important that the counter for transmission fluid change be reset.

NOTE: **This only applies when the transmission oil is changed and when the oil is changed during repairs to the transmission's temperature sensor.**

Fig. 101: Identifying Ignition ON
Courtesy of VOLVO CARS CORPORATION

- Ignition on.

  Click on the VCT2000 symbol to reset the counter.

  Fig. 102: Identifying VCT2000 Diagnostic Tool Symbol In VIDA
  Courtesy of VOLVO CARS CORPORATION

- **Continue**

  Refer to **VERIFICATION**

TCM-P071100: TRANSMISSION FLUID TEMPERATURE SENSOR A CIRCUIT RANGE/PERFORMANCE. GENERAL FAILURE INFORMATION. NO SUB TYPE INFORMATION (B6324S5, TF-80SC; B6324S5, TF-80SC AWD; 2011-2012)

DIAGNOSTIC TROUBLE CODE (DTC) INFORMATION TCM-P071100

see **DIAGNOSTIC TROUBLE CODE (DTC) INFORMATION TCM-P071100**

FAULT-TRACING

see **FAULT-TRACING**

TCM-P071100: GEARBOX OIL TEMPERATURE SENSOR A CIRCUIT INSIDE/OUTSIDE TOLERANCE. GENERAL FAULT INFORMATION. NO INFORMATION ON FAULT TYPE (B8444S, TF-80SC AWD; 2006-2011)

DIAGNOSTIC TROUBLE CODE (DTC) INFORMATION TCM-P071100

Condition

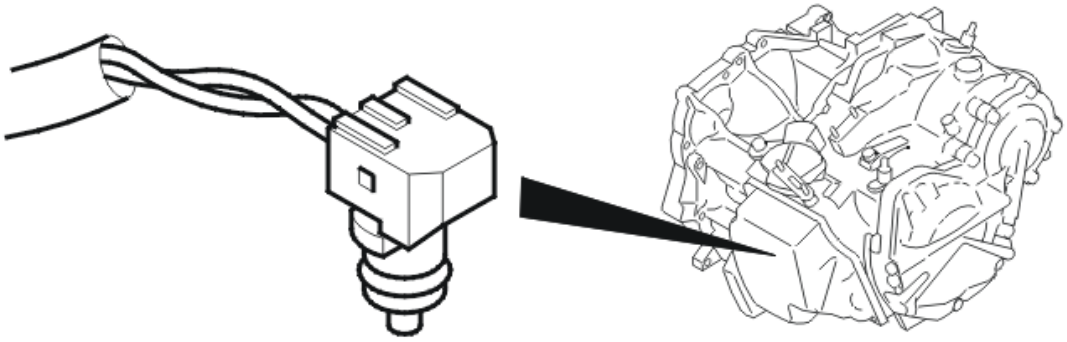

Fig. 103: Identifying Oil Temperature Sensor
Courtesy of VOLVO CARS CORPORATION

The oil temperature sensor gives the transmission control module (TCM) a signal that is used for the temperature controlled lock-up and high temperature program functions. The sensor has a temperature sensitive resistor with negative temperature coefficient (NTC). The signal (voltage) drops with rising oil temperature. If the transmission control module (TCM) receives a signal from the oil temperature sensor that has not changed for about 10 minutes since the engine was started, the diagnostic trouble code (DTC) is generated.

The diagnostic trouble code (DTC) can be diagnosed for at least two minutes of normal driving in gear positions D, 4, 3, 2 or Geartronic (**MAN**) and engine temperature when starting higher than 70 °C or the gearbox oil temperature is higher than 50 °C.

Substitute Value

- Transmission control module (TCM) assumes an oil temperature of 80 °C.
- Lock-up function is blocked.
- Slip lock-up function is blocked.
- Neutral check function is blocked.

Possible Source

- Contact resistance in the terminals
- Oil temperature sensor not working.

Fault symptom[s]

- General warning lamp lit

FAULT TRACING TCM-P071100

CHECKS

CHECKING THE OIL TEMPERATURE SENSOR

NOTE: **During this fault-tracing, the transmission and the oil should be at room temperature from the start in order to check the sensor function.**

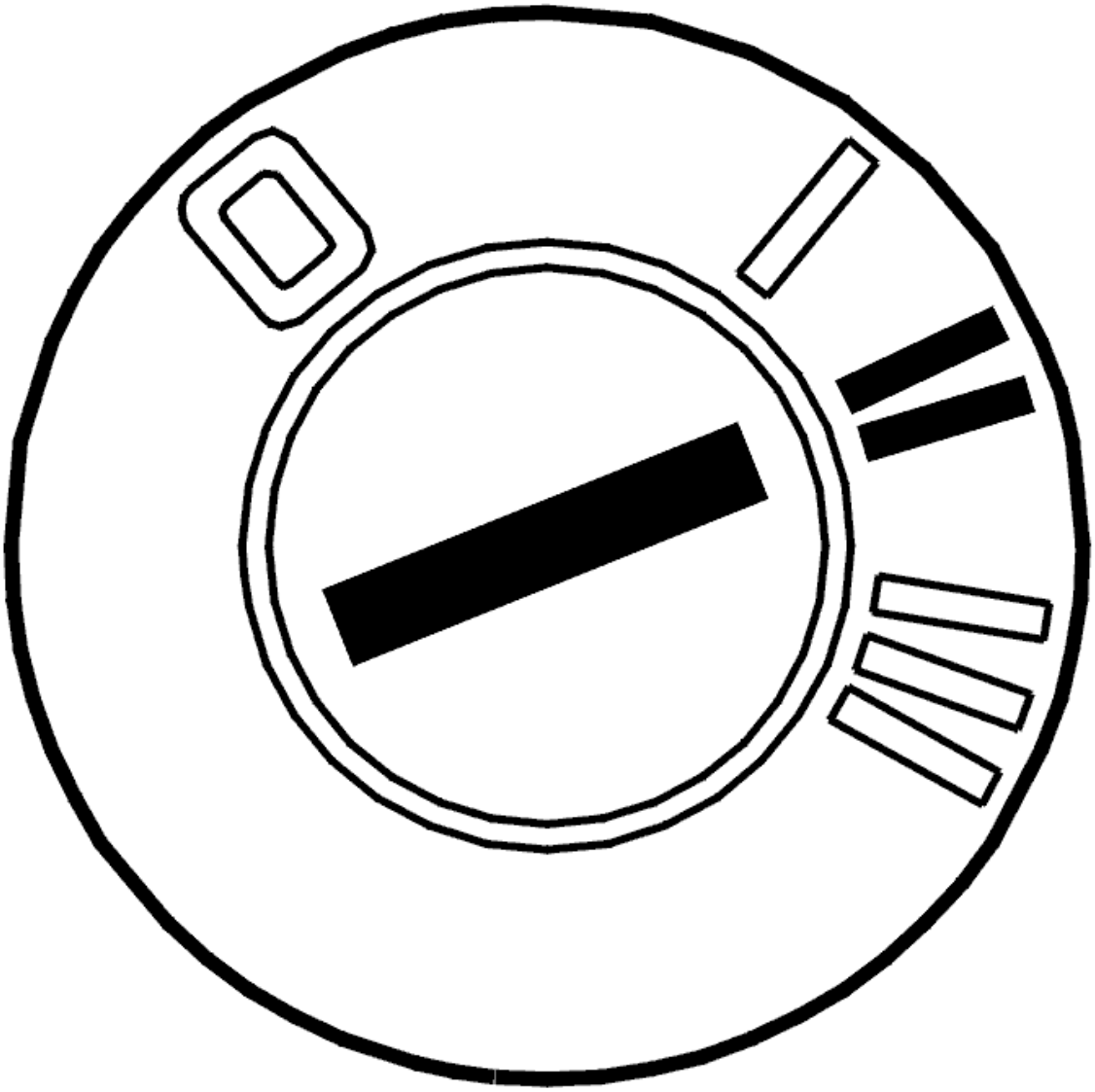

Fig. 104: Identifying Ignition ON
Courtesy of VOLVO CARS CORPORATION

- Ignition on
- Start the engine and allow it to idle.
- Read the oil temperature.

Let the transmission heat up. Check that the oil temperature increases and is within the permitted range. Compare with the external temperature of the transmission.

NOTE: **The transmission temperature sensor is located inside the control system and may be affected by the heat given off by the solenoids.**

If the temperature is not within the permitted range it means that the fault is permanent.

If the temperature is within the permitted range, it means that the fault was present previously but is not active now. The fault is intermittent.

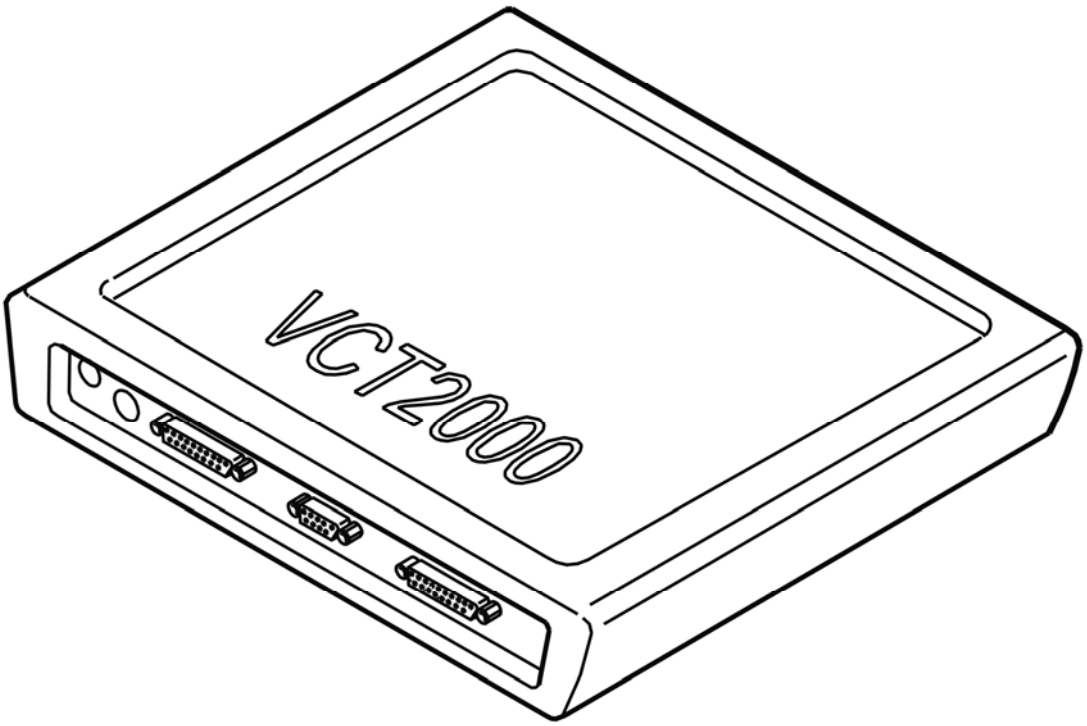

Fig. 105: Identifying VCT2000 Diagnostic Tool Symbol In VIDA
Courtesy of VOLVO CARS CORPORATION

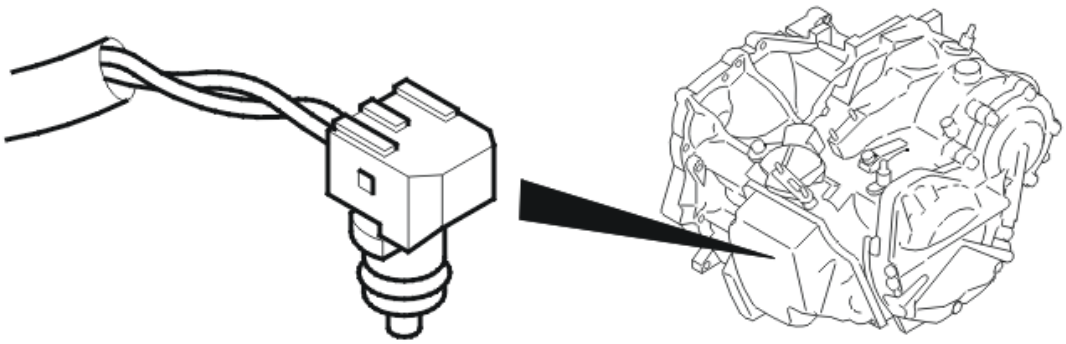

Fig. 106: Identifying Oil Temperature Sensor
Courtesy of VOLVO CARS CORPORATION

- **Continue**

Refer to **CHECKING INTERNAL COMPONENTS**

CHECKING INTERNAL COMPONENTS

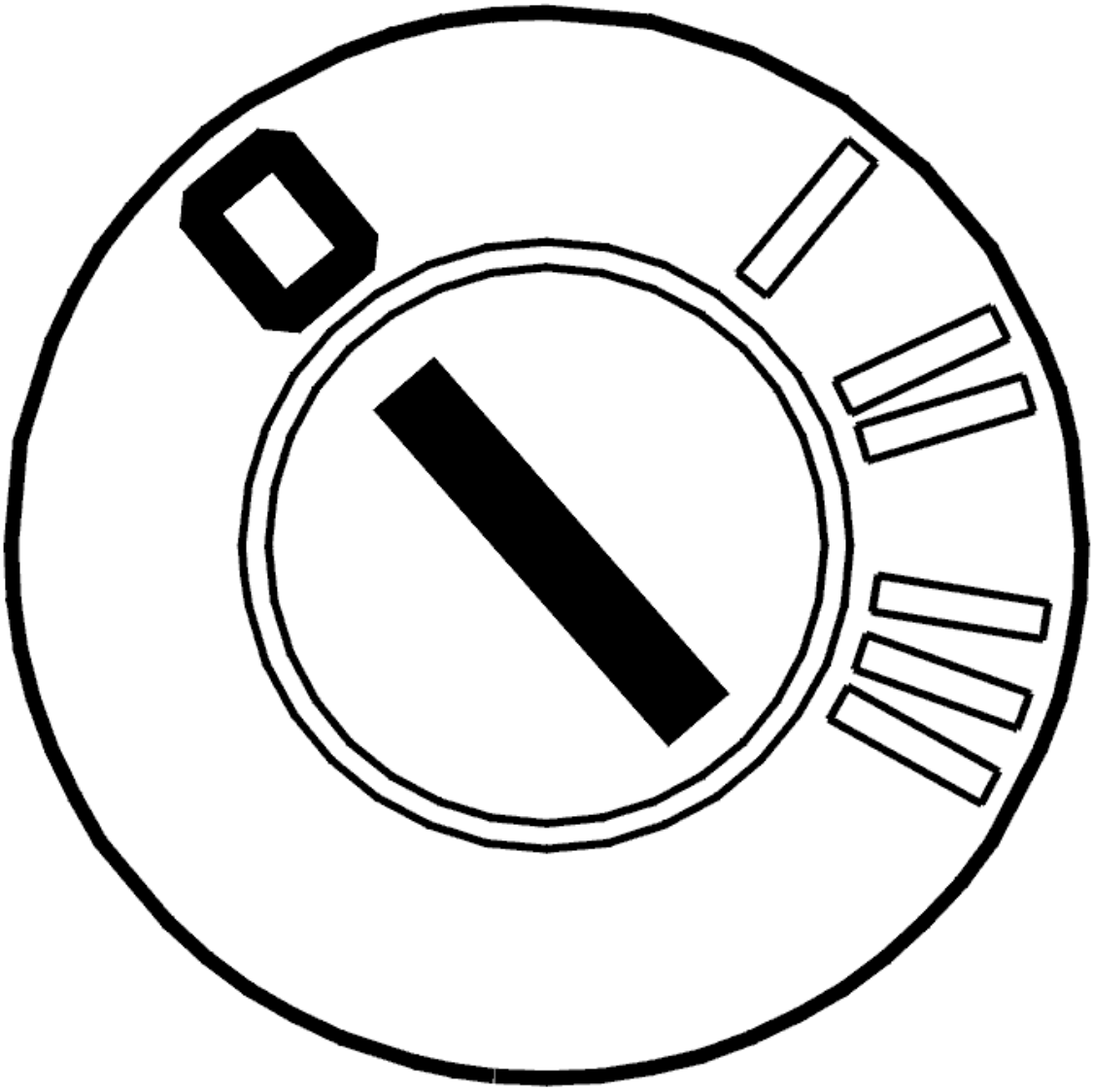

Fig. 107: Identifying Ignition OFF
Courtesy of VOLVO CARS CORPORATION

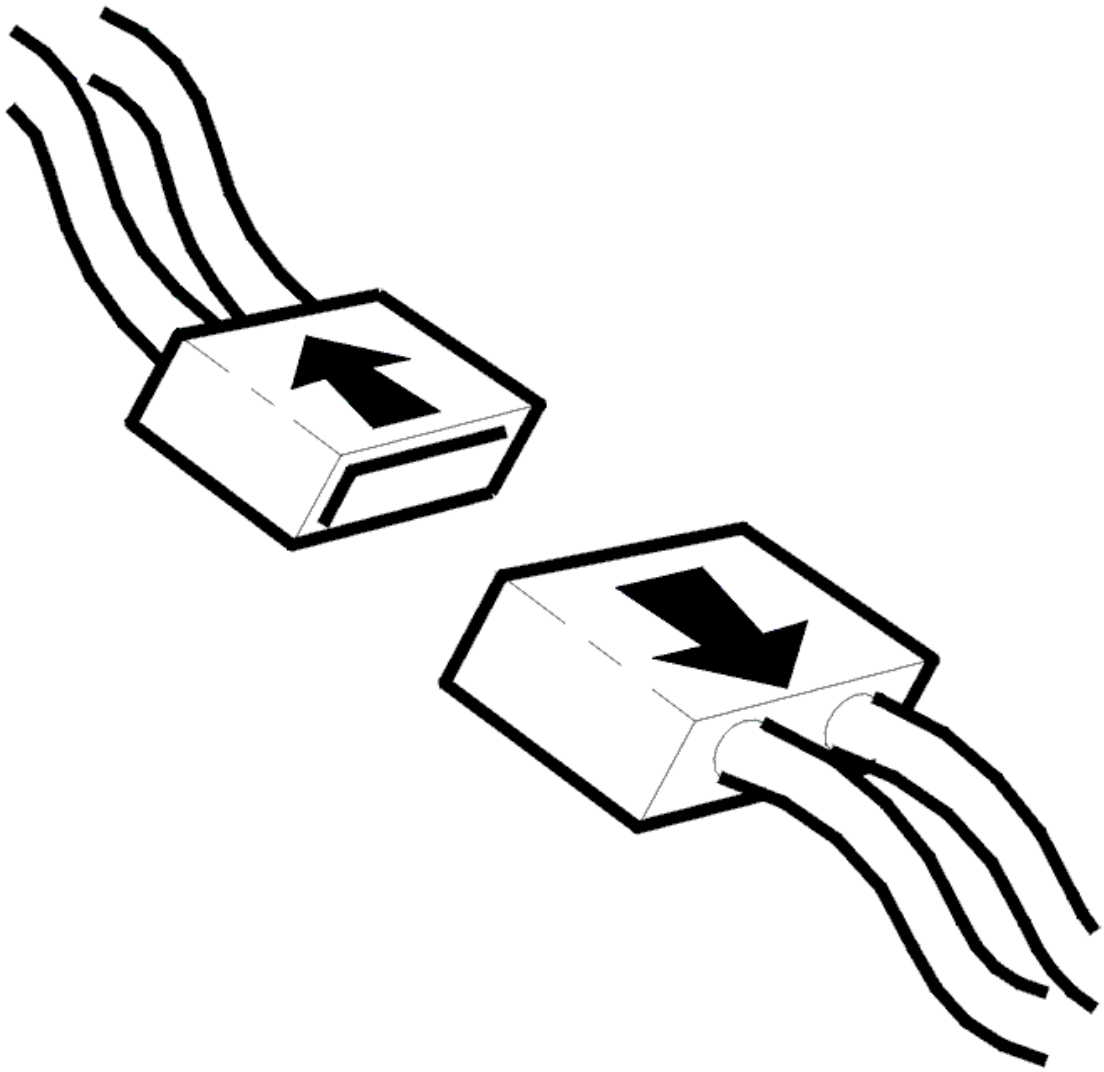

Fig. 108: Identifying Connector(s) Disconnected
Courtesy of VOLVO CARS CORPORATION

- Ignition off
- Expose the connector for the transmission control module (TCM).

  Check connector B (22-pin) for the transmission control module (TCM). Check for damaged or pressed in pins. Check for contact resistance and oxidation.

  HINT: Check the temperature. See CHECKING THE OIL TEMPERATURE SENSOR

  Remedy as necessary.

  Other information

  - To replace Temperature Sensor Fluid, Transaxle, (TFT) see **CABLE HARNESS, CONTROL**

SYSTEM, GEARBOX, REPLACING

- To access connector B: **TRANSMISSION CONTROL MODULE (TCM), REPLACING**
- see **CONTENTS**

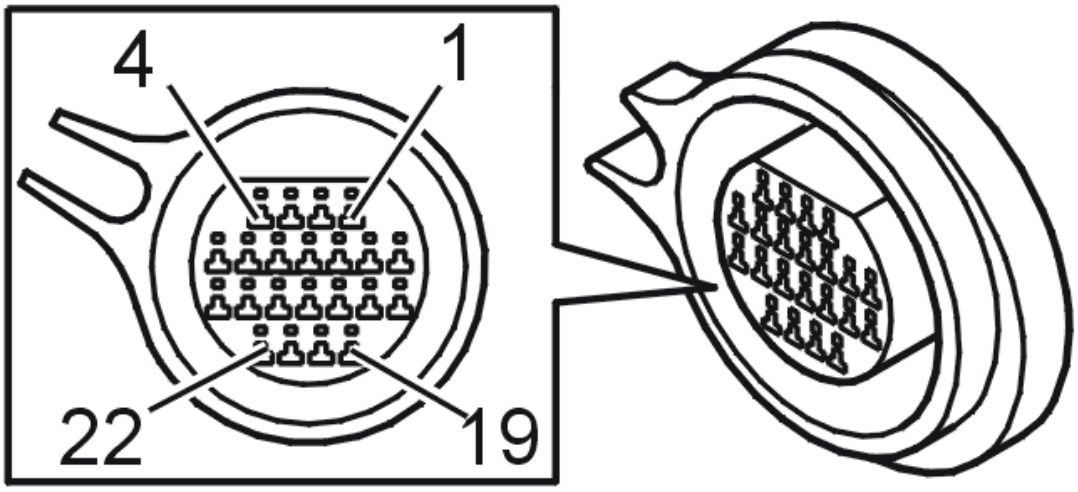

Fig. 109: Identifying Connector B Terminals
Courtesy of VOLVO CARS CORPORATION

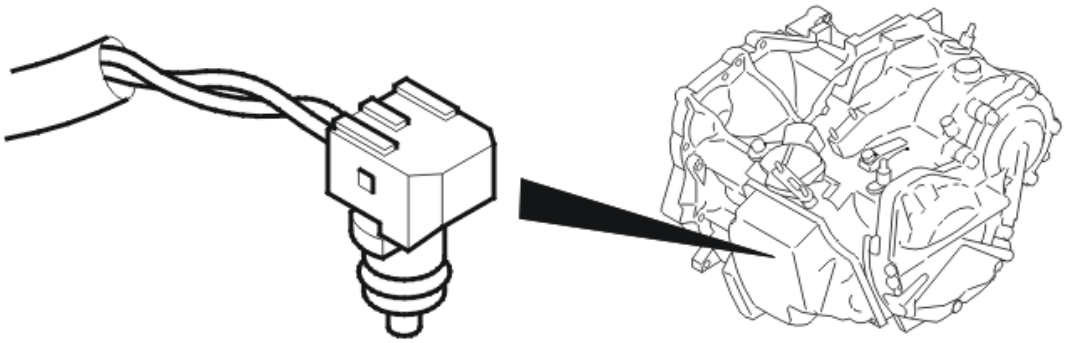

Fig. 110: Identifying Oil Temperature Sensor
Courtesy of VOLVO CARS CORPORATION

- **Continue**

Refer to **RESETTING THE COUNTER FOR TRANSMISSION OIL, CHANGE**

RESETTING THE COUNTER FOR TRANSMISSION OIL, CHANGE

RESETTING THE COUNTER FOR TRANSMISSION OIL, CHANGE

HINT: The transmission control module (TCM) has a counter for the oil's quality that counts up when the transmission is exposed to very heavy loads or high ambient temperature. If the counter is not reset when draining/changing oil, there is a risk that a diagnostic trouble code may be generated under

incorrect conditions. That is why it is important that the counter for Transmission oil, change is reset.

NOTE: This only applies when the transmission oil is changed and when the oil is changed during repairs to the transmission's temperature sensor.

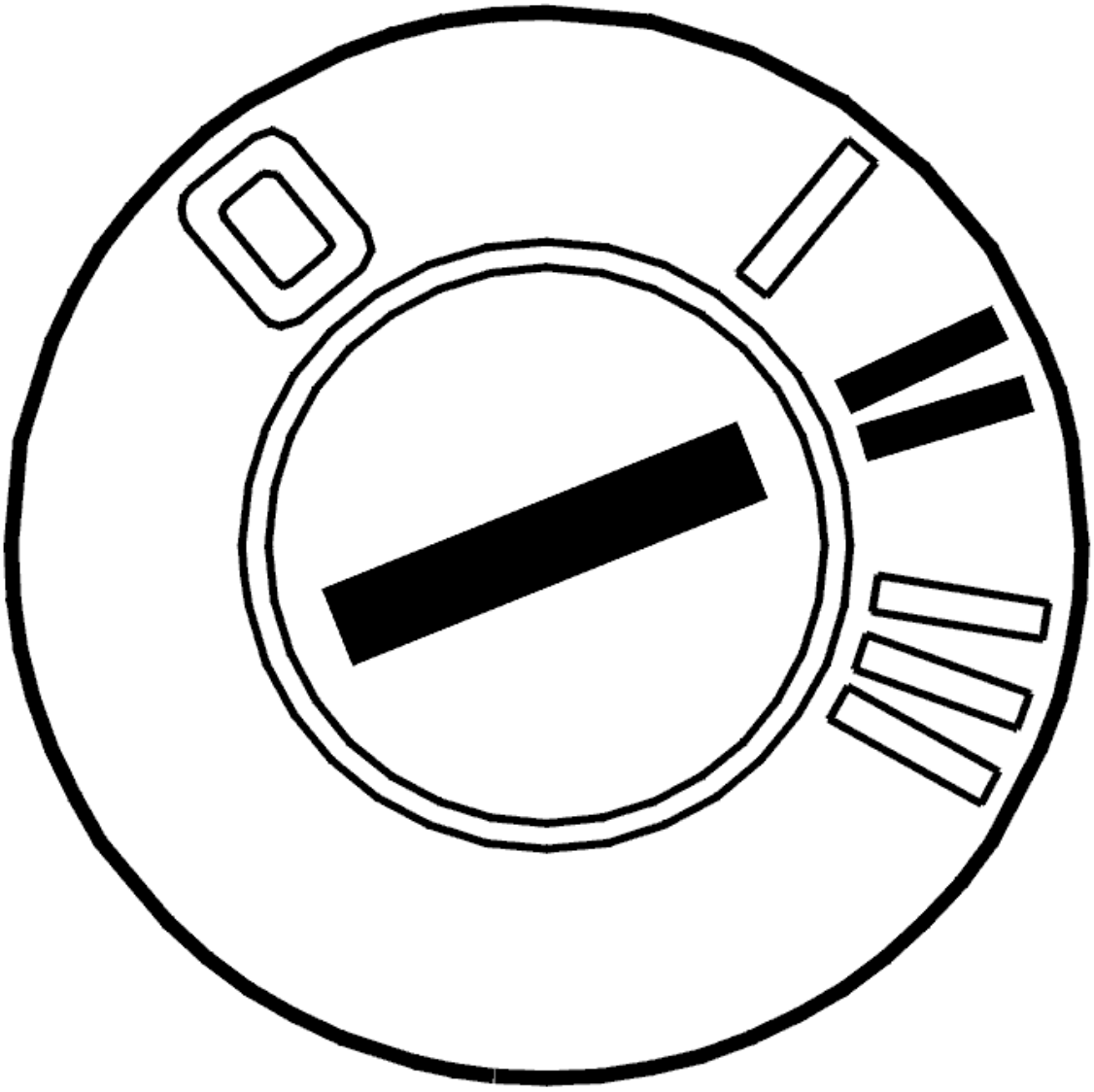

Fig. 111: Identifying Ignition ON
Courtesy of VOLVO CARS CORPORATION

- Ignition on

  Activate reset of the counter by clicking on the symbol for VCT2000.

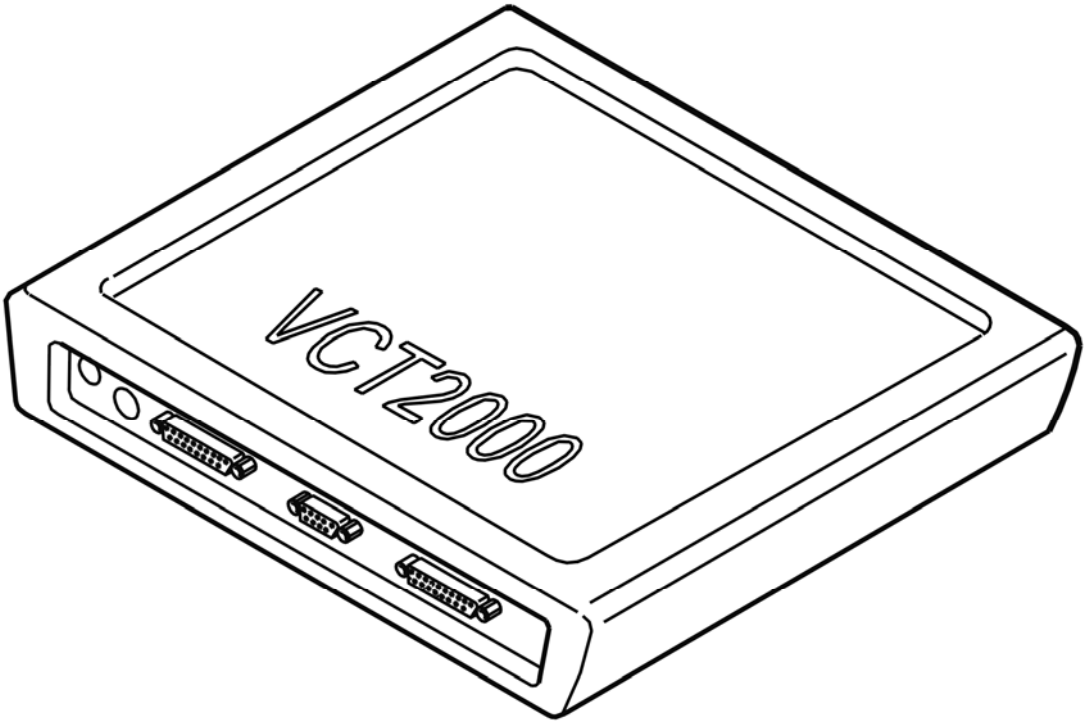

Fig. 112: Identifying VCT2000 Diagnostic Tool Symbol In VIDA
Courtesy of VOLVO CARS CORPORATION

- **Continue**

  Refer to **VERIFICATION**

VERIFICATION

VERIFICATION

HINT: After carrying out the repair, check that the fault has been remedied.

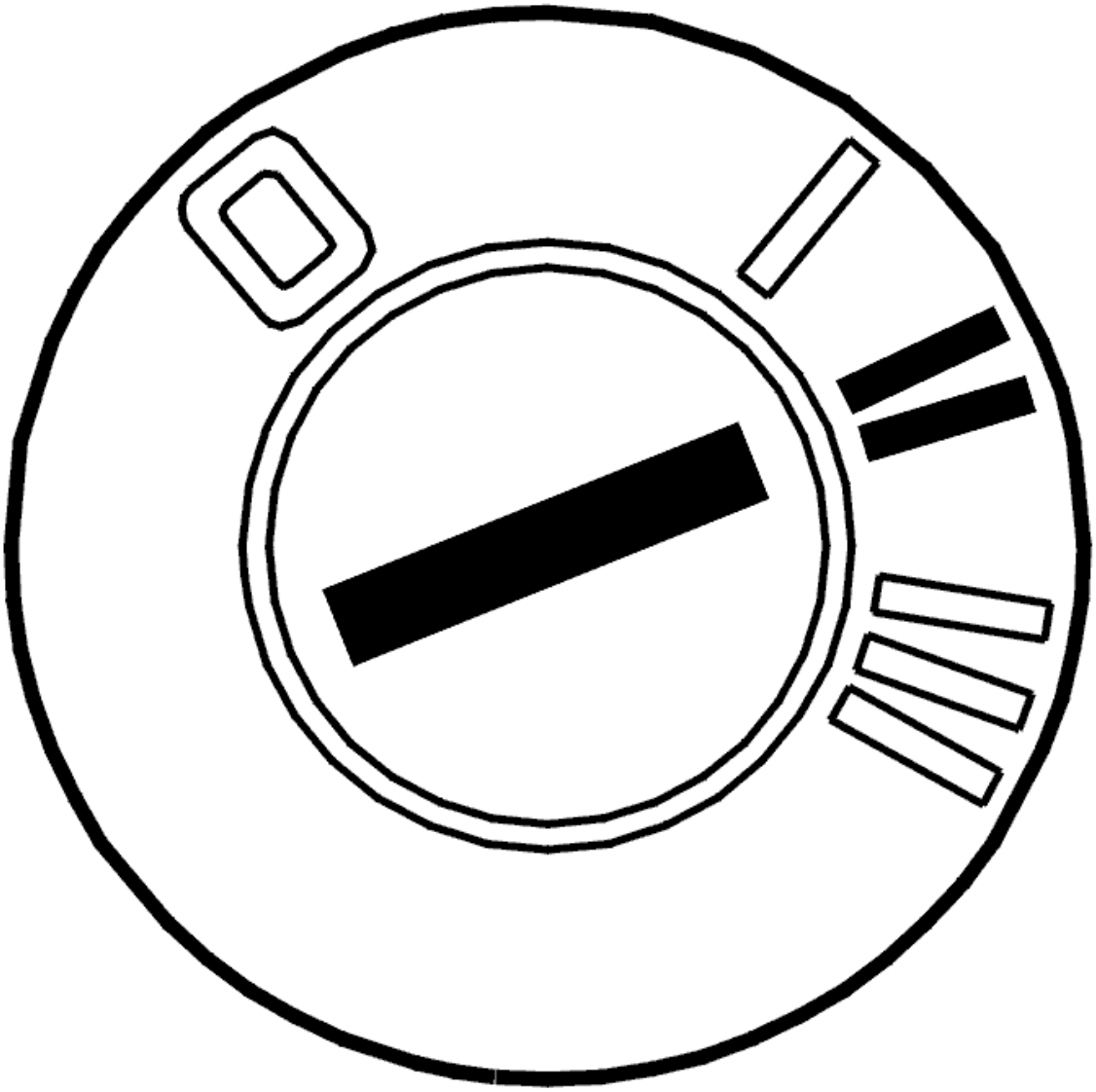

Fig. 113: Identifying Ignition ON
Courtesy of VOLVO CARS CORPORATION

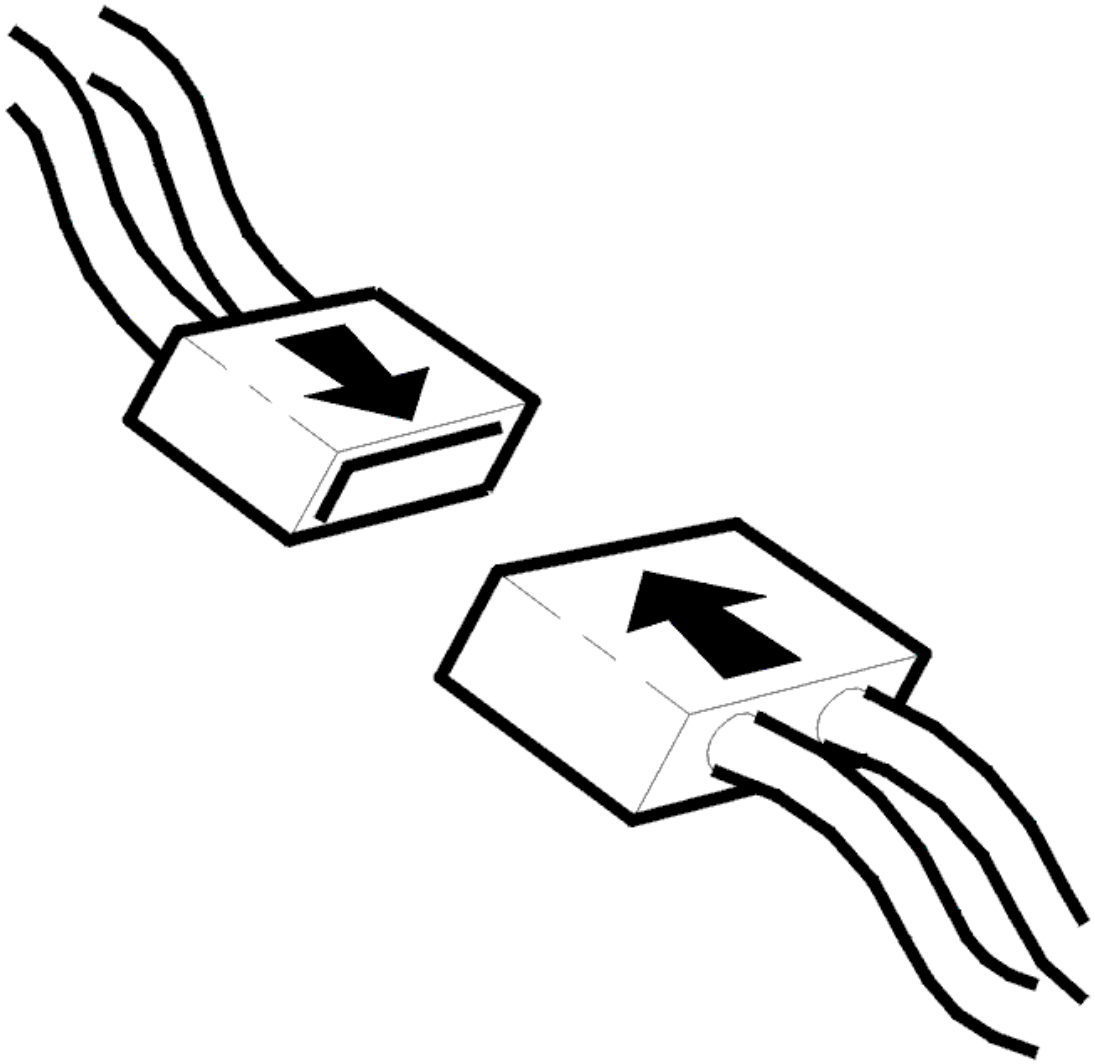

Fig. 114: Identifying Connector(s) Reinstallation
Courtesy of VOLVO CARS CORPORATION

- Ignition off
- Reinstall the connectors, components etc.
- Ignition on
- Start the engine and allow it to idle.
- Read the oil temperature for the transmission control module (TCM).

  Check that oil temperature is within the permitted range. Compare with the external temperature of the transmission.

NOTE: **The transmission temperature sensor is located inside the control system and may be affected by the heat given off by the solenoids.**

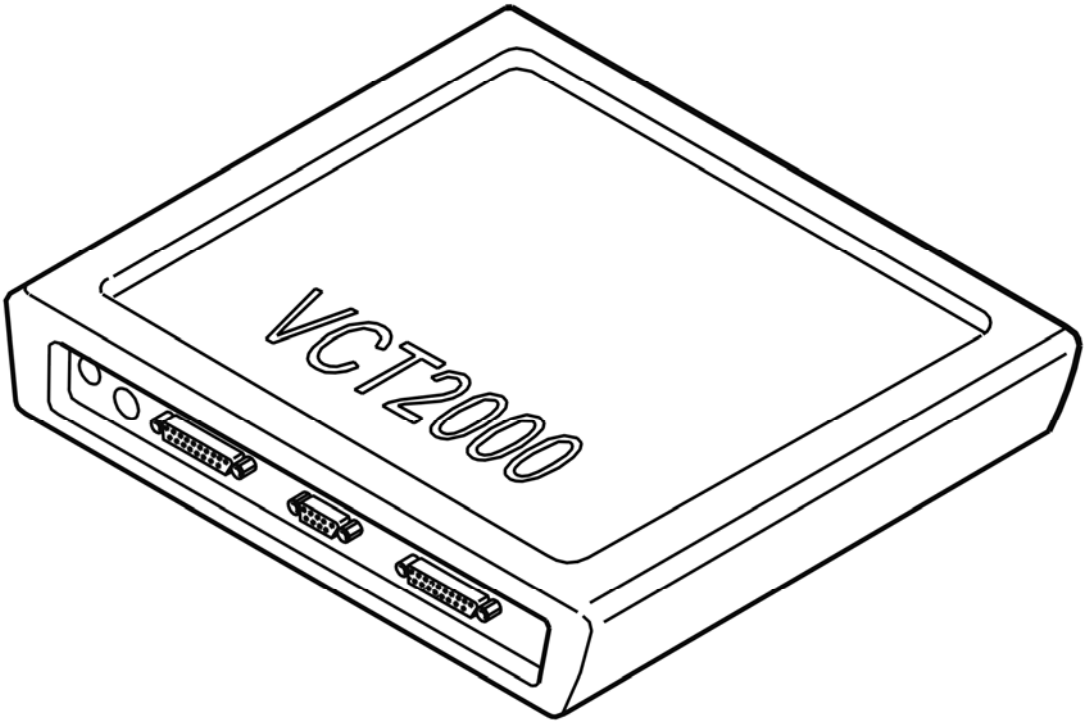

Fig. 115: Identifying VCT2000 Diagnostic Tool Symbol In VIDA
Courtesy of VOLVO CARS CORPORATION

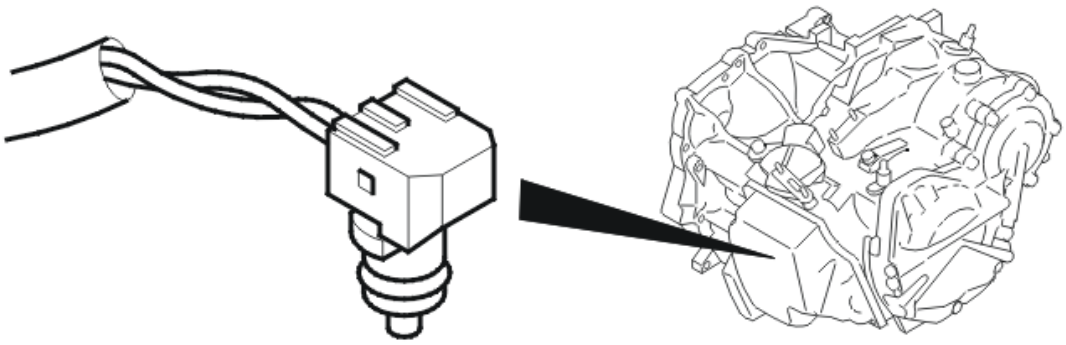

Fig. 116: Identifying Oil Temperature Sensor
Courtesy of VOLVO CARS CORPORATION

Is the temperature OK?

- **YES**

  VERIFIED: Troubleshooting has been completed.

- **NO**

  Refer to **INFORMATION**

INFORMATION

FAULT-TRACING INFORMATION

The fault should have been detected and remedied. As this is not the case fault-tracing has failed.

Exit fault-tracing for this diagnostic trouble code (DTC) or make another attempt.

TCM-P071100: GEARBOX OIL TEMPERATURE SENSOR A CIRCUIT INSIDE/OUTSIDE TOLERANCE. GENERAL FAULT INFORMATION. NO INFORMATION ON FAULT TYPE (TF-80SC AWD; 2005)

DIAGNOSTIC TROUBLE CODE (DTC) INFORMATION TCM-P071100

see **DIAGNOSTIC TROUBLE CODE (DTC) INFORMATION TCM-P071100**

FAULT TRACING TCM-P071100

see **FAULT TRACING TCM-P071100**

TCM-P071200: TRANSMISSION FLUID TEMPERATURE SENSOR A CIRCUIT LOW INPUT. GENERAL FAILURE INFORMATION. NO SUB TYPE INFORMATION (B6324S, TF-80SC; B6324S, TF-80SC AWD; 2007-2010)

DIAGNOSTIC TROUBLE CODE (DTC) INFORMATION TCM-P071200

Condition

The oil temperature sensor provides the Transmission control module (TCM) with a signal that is used, among other things, for the temperature controlled lock-up and engagement high temperature program functions.

The sensor has an NTC (negative temperature coefficient) resistor.

The signal (voltage) drops with increased oil temperature.

The diagnostic trouble code (DTC) is stored if control module:

- Receive a too low signal from the oil temperature sensor for approx. 10 seconds.

The control module's test for the diagnostic trouble code (DTC) starts in the event of:

- Ignition on.

NOTE: **The control module can only detect the fault once the test has been started and the diagnostic trouble code (DTC) is stored when the conditions are met.**

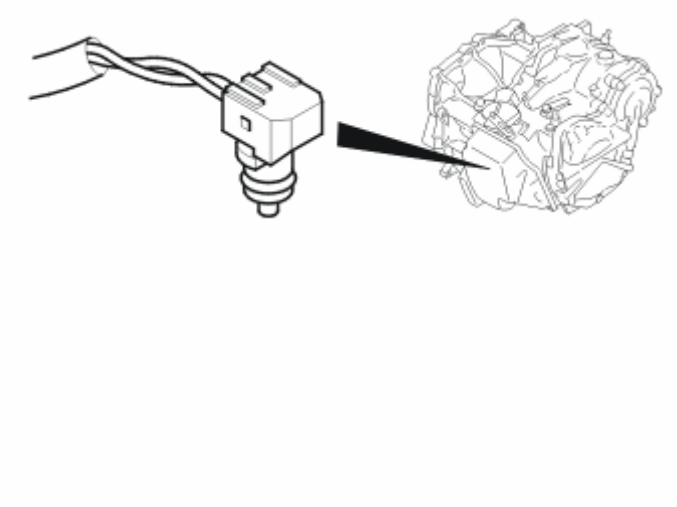

Fig. 117: Locating Oil Temperature Sensor
Courtesy of VOLVO CARS CORPORATION

Substitute Value

- Transmission control module assumes an oil temperature of 80 °C.
- function is blocked.
- Slip lock-up function is blocked.
- Neutral check function is blocked.

Possible Source

- Short-circuit to ground in the signal cable.
- Oil temperature sensor not working.

Fault symptom[s]

- General warning lamp lit
- Malfunction indicator light (MIL), on
- No lock-up
- Rough gear shift

FAULT-TRACING

CHECKS

CHECKING THE OIL TEMPERATURE SENSOR

NOTE: **During this fault tracing the transmission and oil should be at room temperature from the start.**

This is to control the sensor function.

Fig. 118: Identifying Ignition ON
Courtesy of VOLVO CARS CORPORATION

- Ignition on.
- Start the engine. Allow the engine to idle.
- Read off the oil temperature.

Allow the transmission to warm up. Check that the oil temperature increases and appears to be within the permitted range.

Compare with transmission external temperature.

NOTE: **The transmission temperature sensor is inside the control system and may be affected by the heat given off by the solenoids.**

The fault is permanent if the temperature is outside the permitted range.

If the temperature is within the permitted range, this is an indication that the fault was present previously but that it is not active at the moment, i. e. the fault is intermittent.

Fig. 119: Identifying VCT2000 Diagnostic Tool Symbol In VIDA
Courtesy of VOLVO CARS CORPORATION

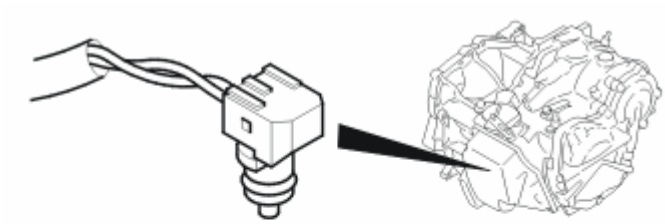

Fig. 120: Locating Oil Temperature Sensor
Courtesy of VOLVO CARS CORPORATION

- **Continue**

  Refer to **CHECKING THE CABLE AND COMPONENT**

CHECKING THE CABLE AND COMPONENT

Fig. 121: Identifying Ignition In Off Position
Courtesy of VOLVO CARS CORPORATION

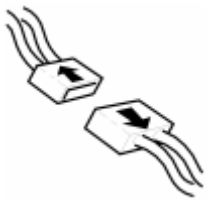

Fig. 122: Identifying Connectors Disconnected
Courtesy of VOLVO CARS CORPORATION

- Ignition off.
- Expose the transmission control system.

  Check the cable for short-circuit to ground.

  Take readings between:

- Transmission connector terminal #B7 and temperature sensor.
- Transmission connector terminal #B8 and temperature sensor.

Also check the cables for a short-circuit to each other.

HINT: Check the temperature. See CHECKING INTERNAL COMPONENTS OF THE TRANSMISSION

Remedy as necessary.

Other information

- see **SIGNAL SPECIFICATION**
- To replace Temperature Sensor Fluid, Transaxle, (TFT) see **CABLE HARNESS, CONTROL SYSTEM, GEARBOX, REPLACING**
- To access connector B:**TRANSMISSION CONTROL MODULE (TCM)**
- To access the transmission control system:**COVER CONTROL SYSTEM, REPLACING (2007-2011)**
- see **CHECKING WIRING AND TERMINALS**

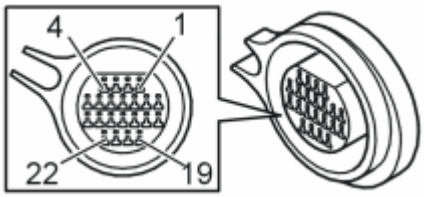

Fig. 123: Identifying Connector B Terminals
Courtesy of VOLVO CARS CORPORATION

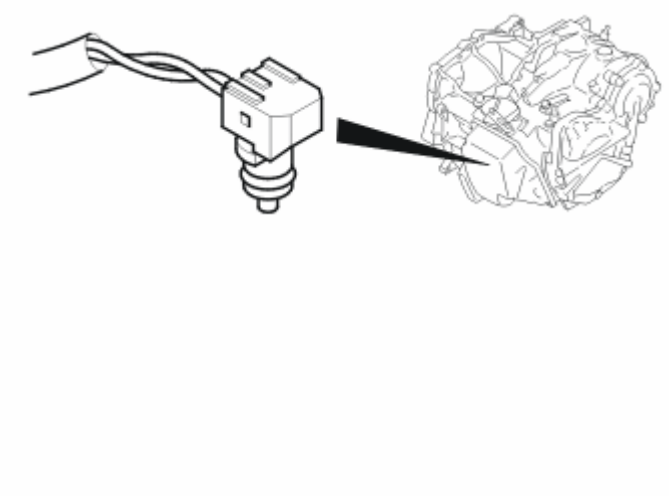

Fig. 124: Locating Oil Temperature Sensor
Courtesy of VOLVO CARS CORPORATION

- **Continue**

  Refer to **RESETTING THE "TRANSMISSION FLUID CHANGE" COUNTER**

VERIFICATION

VERIFICATION

HINT: After carrying out the repair, check that the fault has been remedied.

Fig. 125: Identifying Ignition ON
Courtesy of VOLVO CARS CORPORATION

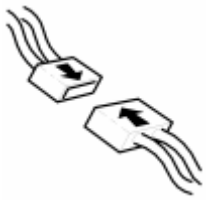

Fig. 126: Identifying Connector(s) Reinstallation
Courtesy of VOLVO CARS CORPORATION

- Ignition off.
- Reinstall the connectors, components etc.
- Ignition on.
- Start the engine. Allow the engine to idle.
- Read off the oil temperature.

  Check that the oil temperature is within its permitted range. Compare it to the automatic transmission temperature.

  NOTE: The transmission temperature sensor is inside the control system and may be affected by the heat given off by the solenoids.

Fig. 127: Identifying VCT2000 Diagnostic Tool Symbol In VIDA

Courtesy of VOLVO CARS CORPORATION

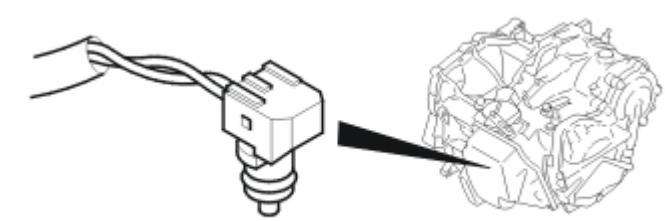

Fig. 128: Locating Oil Temperature Sensor
Courtesy of VOLVO CARS CORPORATION

Is the temperature reading OK?

- **YES**

  VERIFIED: Troubleshooting has been completed.

- **NO**

  Refer to **INFORMATION**

INFORMATION

FAULT-TRACING INFORMATION

The fault should have been detected and remedied. As this is not the case fault-tracing has failed.

Exit fault-tracing for this diagnostic trouble code (DTC) or make another attempt.

RESETTING THE "TRANSMISSION FLUID CHANGE" COUNTER

CHECKING THE FUNCTION

HINT: The transmission control module (TCM) has a counter for fluid quality that counts the number of times the transmission is subjected to too hard a load or too high an ambient temperature. If the counter is not reset during draining/replacement, there is a risk that a diagnostic trouble code will be set under the wrong conditions. Thus, it is important that the counter for transmission fluid change be reset.

NOTE: This only applies when the transmission oil is changed and when the oil is

changed during repairs to the transmission's temperature sensor.

Fig. 129: Identifying Ignition ON
Courtesy of VOLVO CARS CORPORATION

- Ignition on.

  Click on the VCT2000 symbol to reset the counter.

  Fig. 130: Identifying VCT2000 Diagnostic Tool Symbol In VIDA
  Courtesy of VOLVO CARS CORPORATION

- **Continue**

  Refer to **VERIFICATION**

TCM-P071200: TRANSMISSION FLUID TEMPERATURE SENSOR A CIRCUIT LOW INPUT. GENERAL FAILURE INFORMATION. NO SUB TYPE INFORMATION (B6324S5, TF-80SC; B6324S5, TF-80SC AWD; 2011-2012)

DIAGNOSTIC TROUBLE CODE (DTC) INFORMATION TCM-P071200

see **DIAGNOSTIC TROUBLE CODE (DTC) INFORMATION TCM-P071200**

FAULT-TRACING

see **FAULT-TRACING**

TCM-P071200: GEARBOX OIL TEMPERATURE SENSOR A CIRCUIT INSIDE/OUTSIDE TOLERANCE. GENERAL FAULT INFORMATION. NO INFORMATION ON FAULT TYPE (B8444S, TF-80SC AWD; 2006-2011)

DIAGNOSTIC TROUBLE CODE (DTC) INFORMATION TCM-P071200

Condition

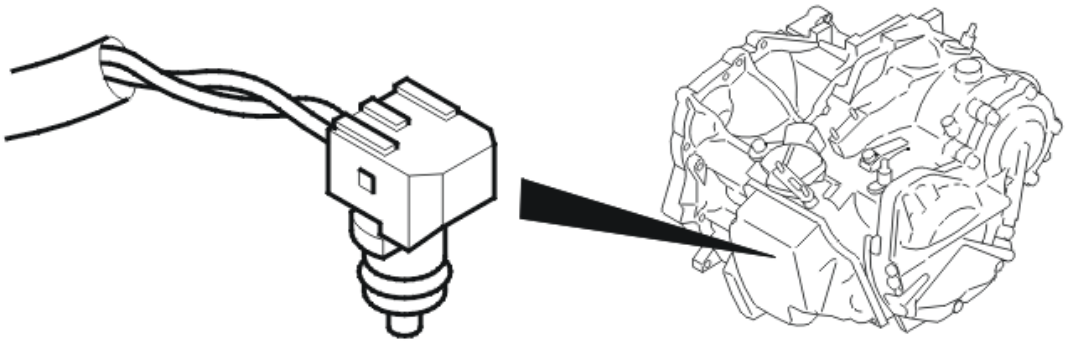

Fig. 131: Identifying Oil Temperature Sensor
Courtesy of VOLVO CARS CORPORATION

The oil temperature sensor gives the transmission control module (TCM) a signal that is used for the temperature controlled lock-up and high temperature program functions. The sensor has a temperature sensitive resistor with negative temperature coefficient (NTC). The signal (voltage) drops with rising oil temperature. If the transmission control module (TCM) receives a signal from the oil temperature sensor that is too low for about 10 seconds, the diagnostic trouble code (DTC) is generated.

The diagnostic trouble code can be diagnosed when the ignition is on.

Substitute Value

- Transmission control module (TCM) assumes an oil temperature of 80 °C.
- Lock-up function is blocked.
- Slip lock-up function is blocked.
- Neutral check function is blocked.

Possible Source

- The signal cable is short-circuited to ground.
- Oil temperature sensor not working.

Fault symptom[s]

- General warning lamp lit
- Malfunction indicator lamp (MIL) lit.
- No lock-up function.
- Harsh gear changing

FAULT TRACING TCM-P071200

CHECKS

CHECKING THE OIL TEMPERATURE SENSOR

NOTE: During this fault-tracing, the transmission and the oil should be at room temperature from the start in order to check the sensor function.

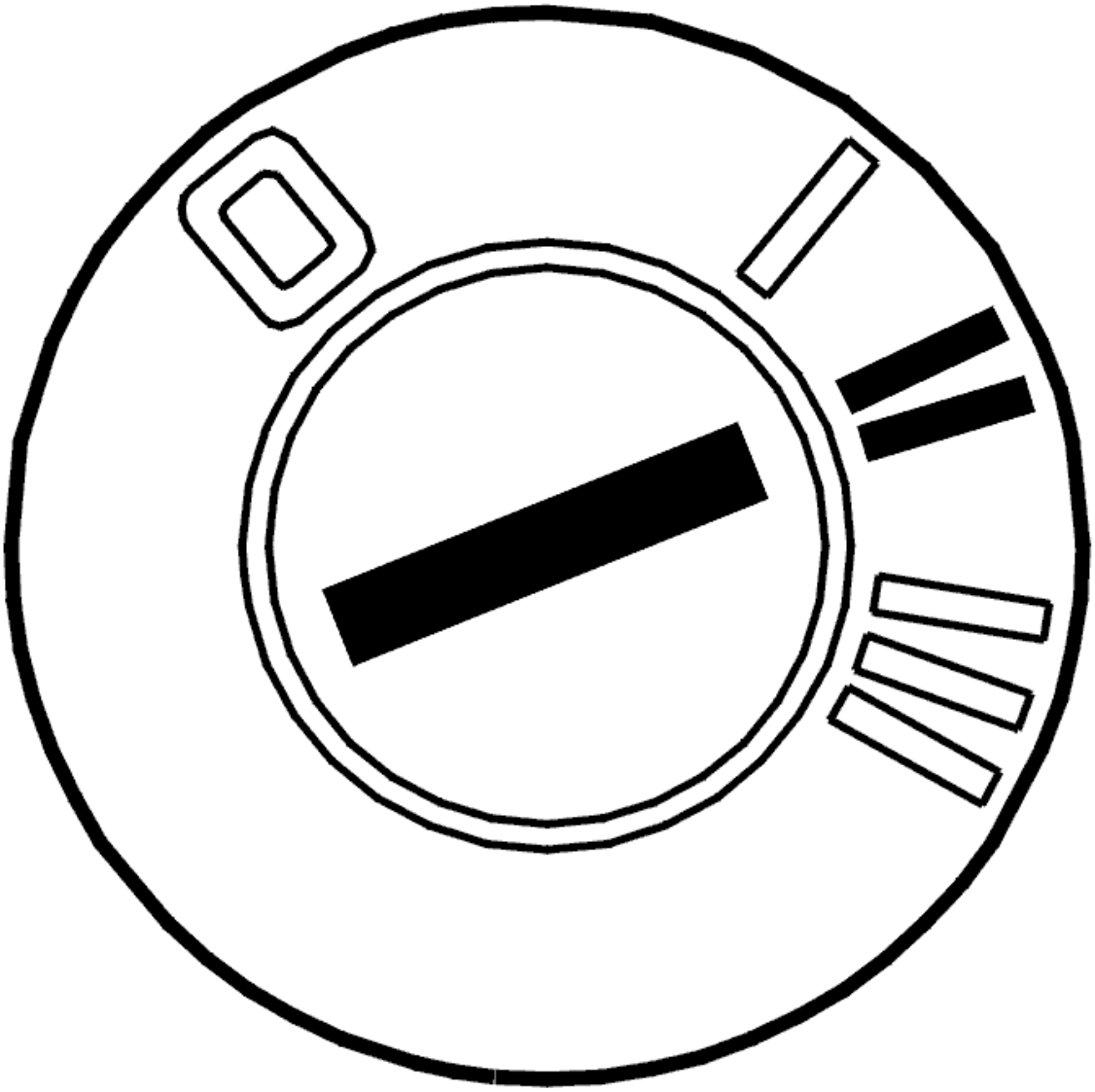

Fig. 132: Identifying Ignition ON
Courtesy of VOLVO CARS CORPORATION

- Ignition on
- Start the engine and allow it to idle.
- Read the oil temperature.

Let the transmission heat up. Check that the oil temperature increases and is within the permitted range.

Compare with the external temperature of the transmission.

NOTE: The transmission temperature sensor is located inside the control system and may be affected by the heat given off by the solenoids.

If the temperature is outside the permitted range it means that the fault is permanent.

If the temperature is within the permitted range, it means that the fault was present previously but is not active now. The fault is intermittent.

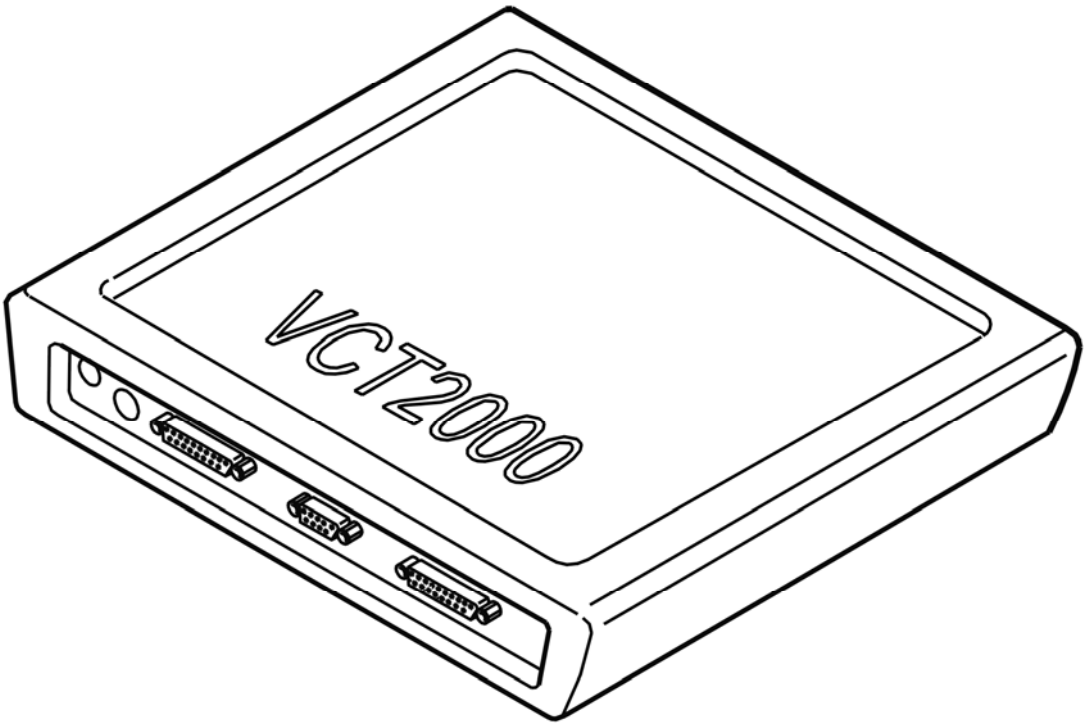

Fig. 133: Identifying VCT2000 Diagnostic Tool Symbol In VIDA
Courtesy of VOLVO CARS CORPORATION

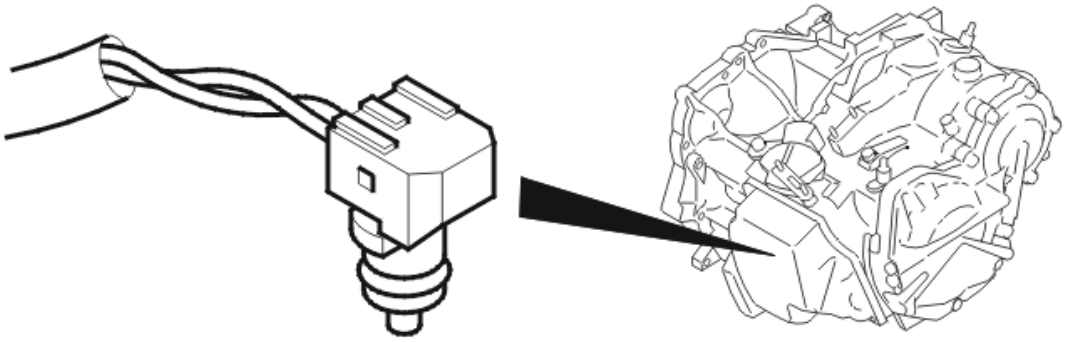

Fig. 134: Identifying Oil Temperature Sensor
Courtesy of VOLVO CARS CORPORATION

- **Continue**

  Refer to **CHECKING CABLE AND COMPONENT**

CHECKING CABLE AND COMPONENT

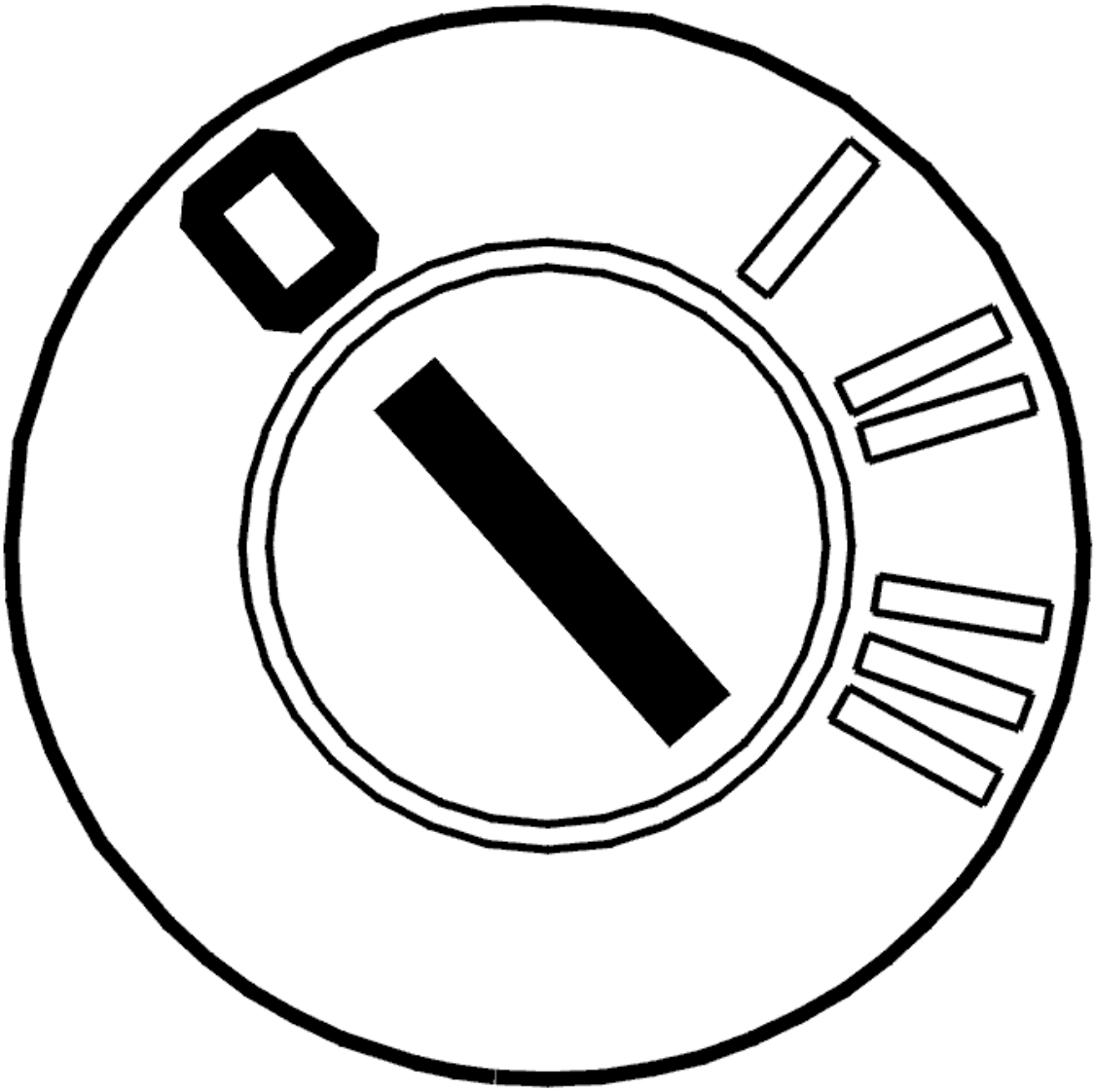

Fig. 135: Identifying Ignition OFF
Courtesy of VOLVO CARS CORPORATION

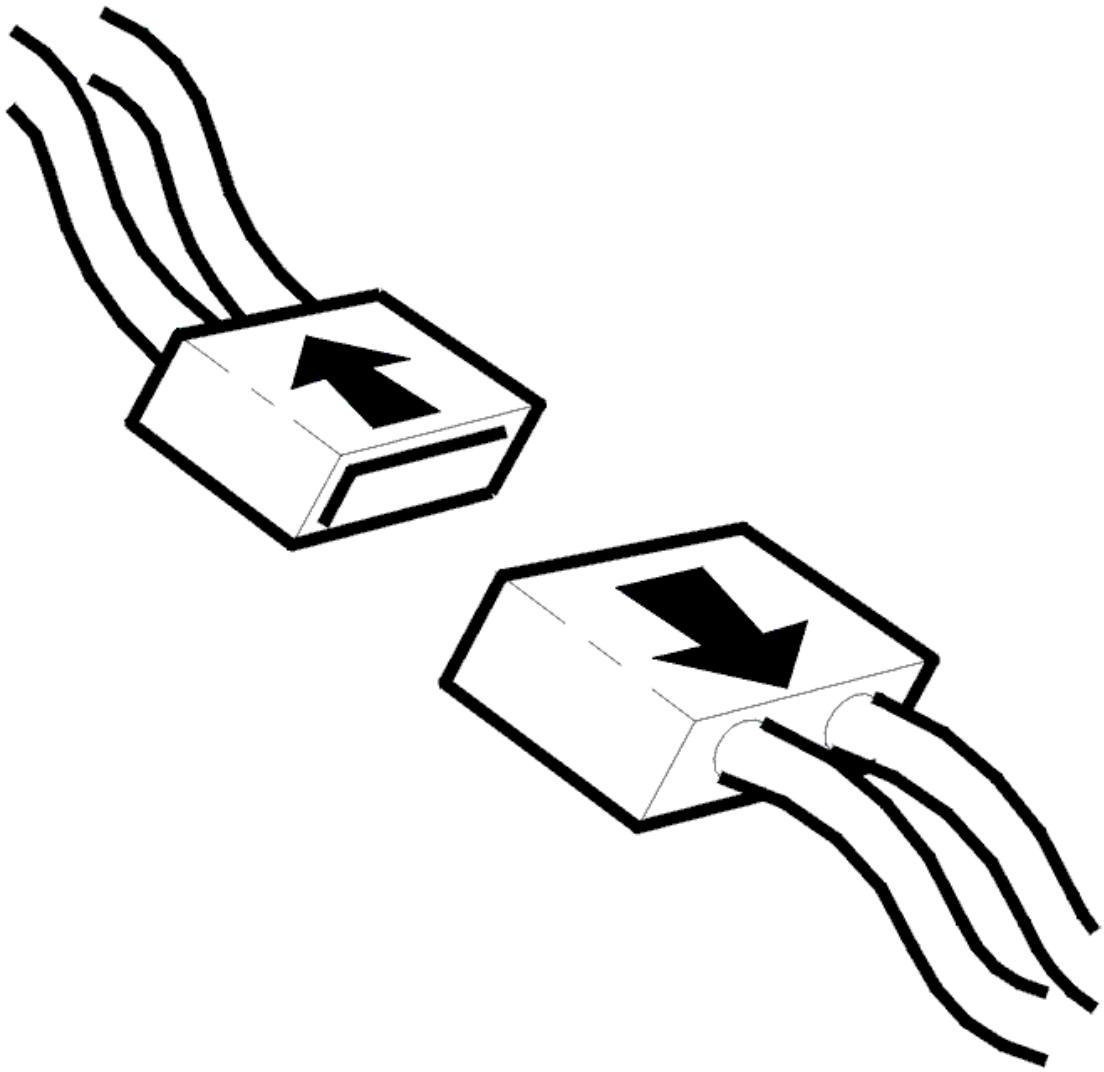

Fig. 136: Identifying Connector(s) Disconnected
Courtesy of VOLVO CARS CORPORATION

- Ignition off
- Expose the control system of the transmission.

  Check the cable between transmission connector #B7 and the temperature sensor. Check the cable between transmission connector #B8 and the temperature sensor. Check for a short-circuit to ground. Check the cables for short-circuits to each other.

  HINT: Check the temperature. See CHECKING THE OIL TEMPERATURE SENSOR

  Remedy as necessary.

  Other information

- see **SIGNAL DESCRIPTION**
- To replace Temperature Sensor Fluid, Transaxle, (TFT) see **CABLE HARNESS, CONTROL SYSTEM, GEARBOX, REPLACING**
- To access connector B: **TRANSMISSION CONTROL MODULE (TCM), REPLACING**
- To access the transmission control system: **COVER CONTROL SYSTEM, REPLACING (2007-2011)**
- see **CONTENTS**

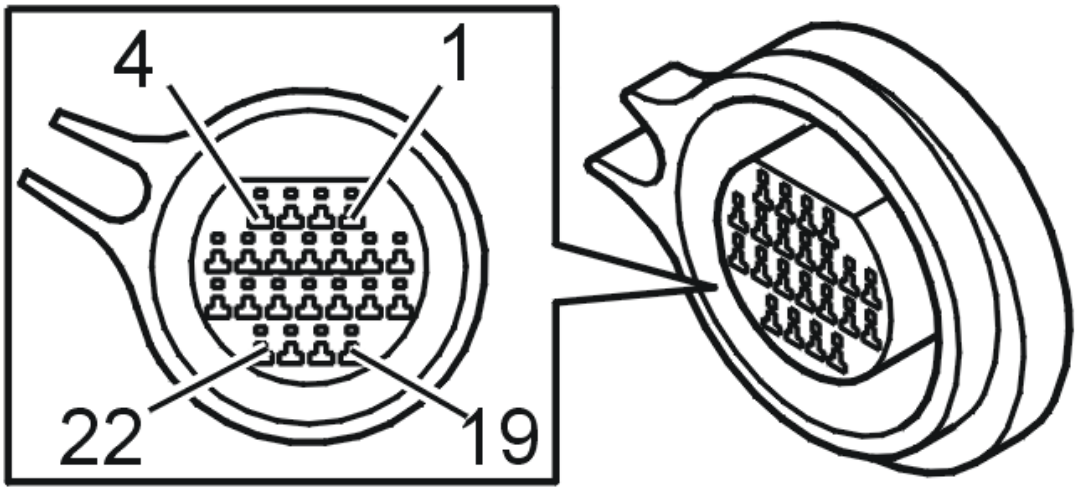

Fig. 137: Identifying Connector B Terminals
Courtesy of VOLVO CARS CORPORATION

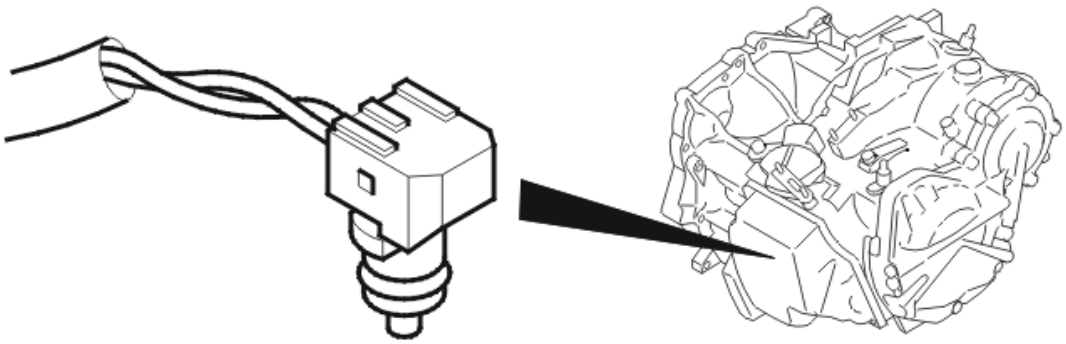

Fig. 138: Identifying Oil Temperature Sensor
Courtesy of VOLVO CARS CORPORATION

- **Continue**

Refer to **RESETTING THE COUNTER FOR TRANSMISSION OIL, CHANGE**

RESETTING THE COUNTER FOR TRANSMISSION OIL, CHANGE

RESETTING THE COUNTER FOR TRANSMISSION OIL, CHANGE

HINT: The transmission control module (TCM) has a counter for the oil's quality that counts up when the transmission is exposed to very heavy loads or high ambient temperature. If the counter is not reset when draining/changing oil, there is a risk that a diagnostic trouble code may be generated under incorrect conditions. That is why it is important that the counter for Transmission oil, change is reset.

NOTE: This only applies when the transmission oil is changed and when the oil is changed during repairs to the transmission's temperature sensor.

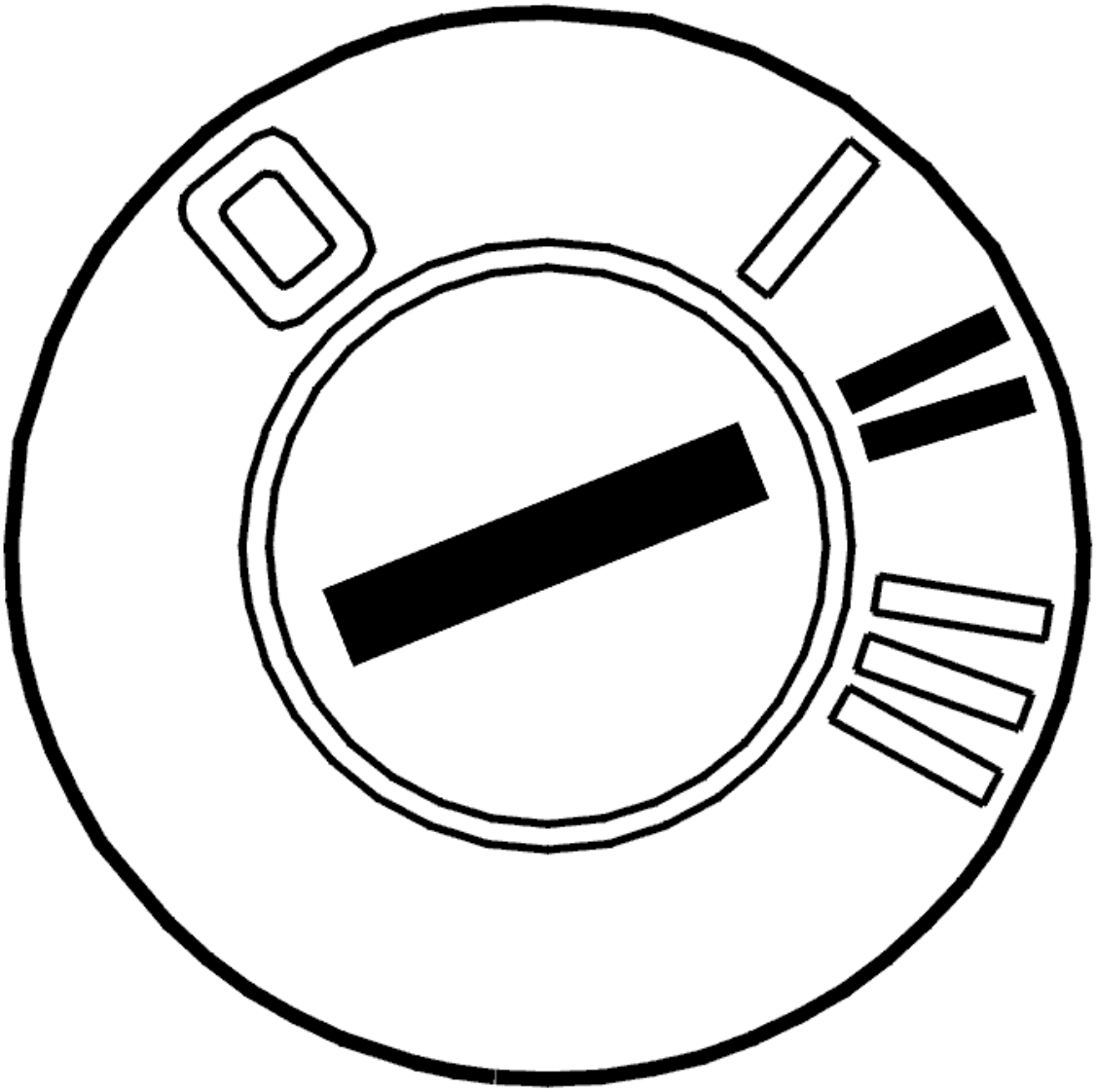

Fig. 139: Identifying Ignition ON
Courtesy of VOLVO CARS CORPORATION

- Ignition on

  Activate reset of the counter by clicking on the symbol for VCT2000.

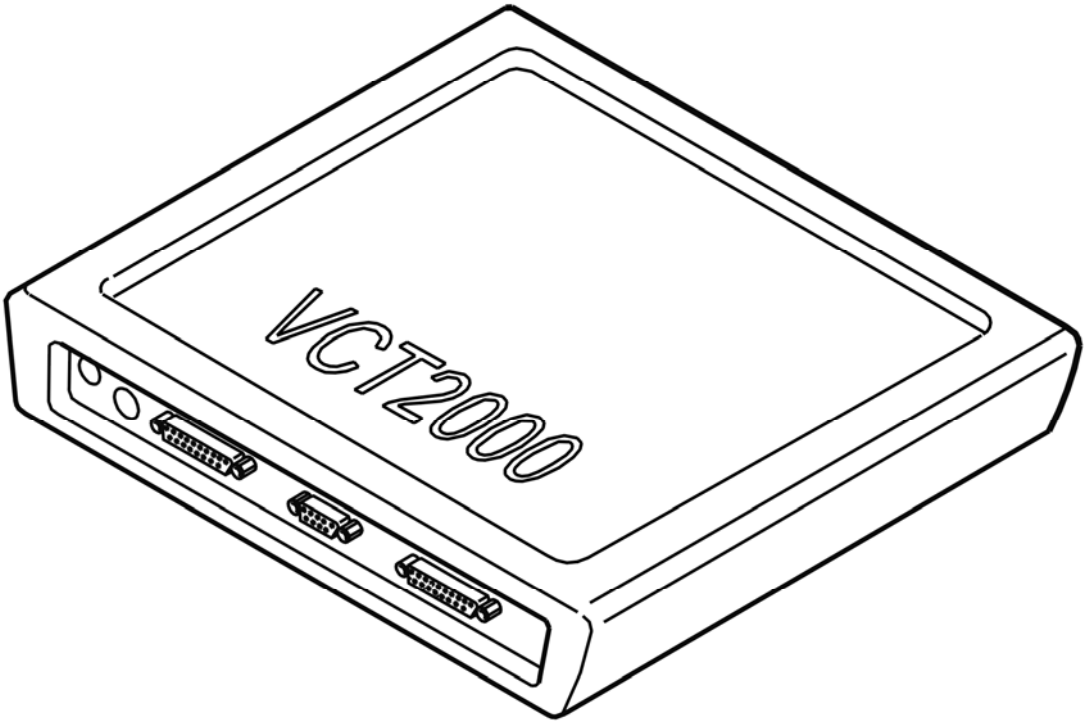

Fig. 140: Identifying VCT2000 Diagnostic Tool Symbol In VIDA
Courtesy of VOLVO CARS CORPORATION

- **Continue**

  Refer to **VERIFICATION**

VERIFICATION

VERIFICATION

HINT: After carrying out the repair, check that the fault has been remedied.

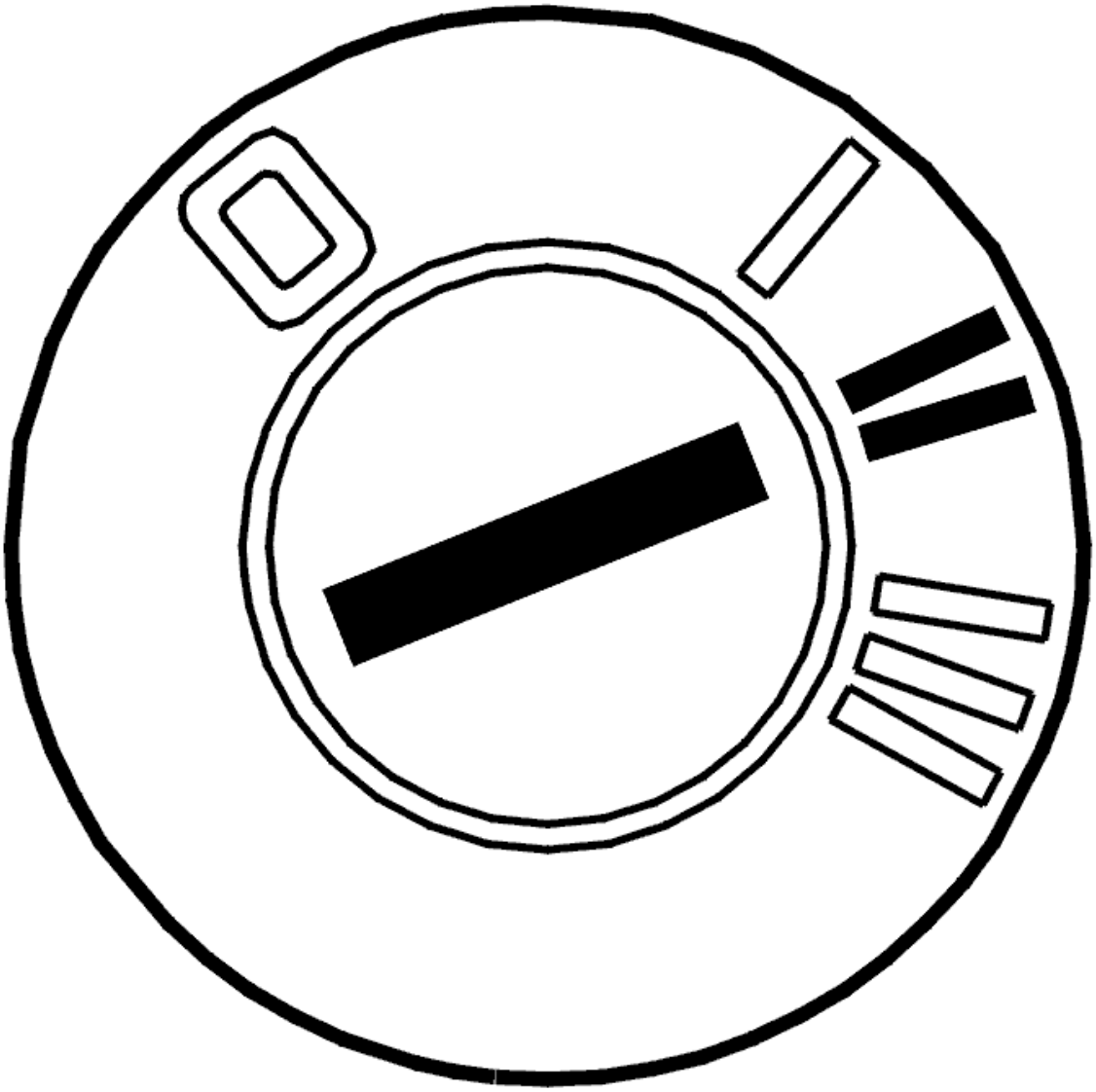

Fig. 141: Identifying Ignition ON
Courtesy of VOLVO CARS CORPORATION

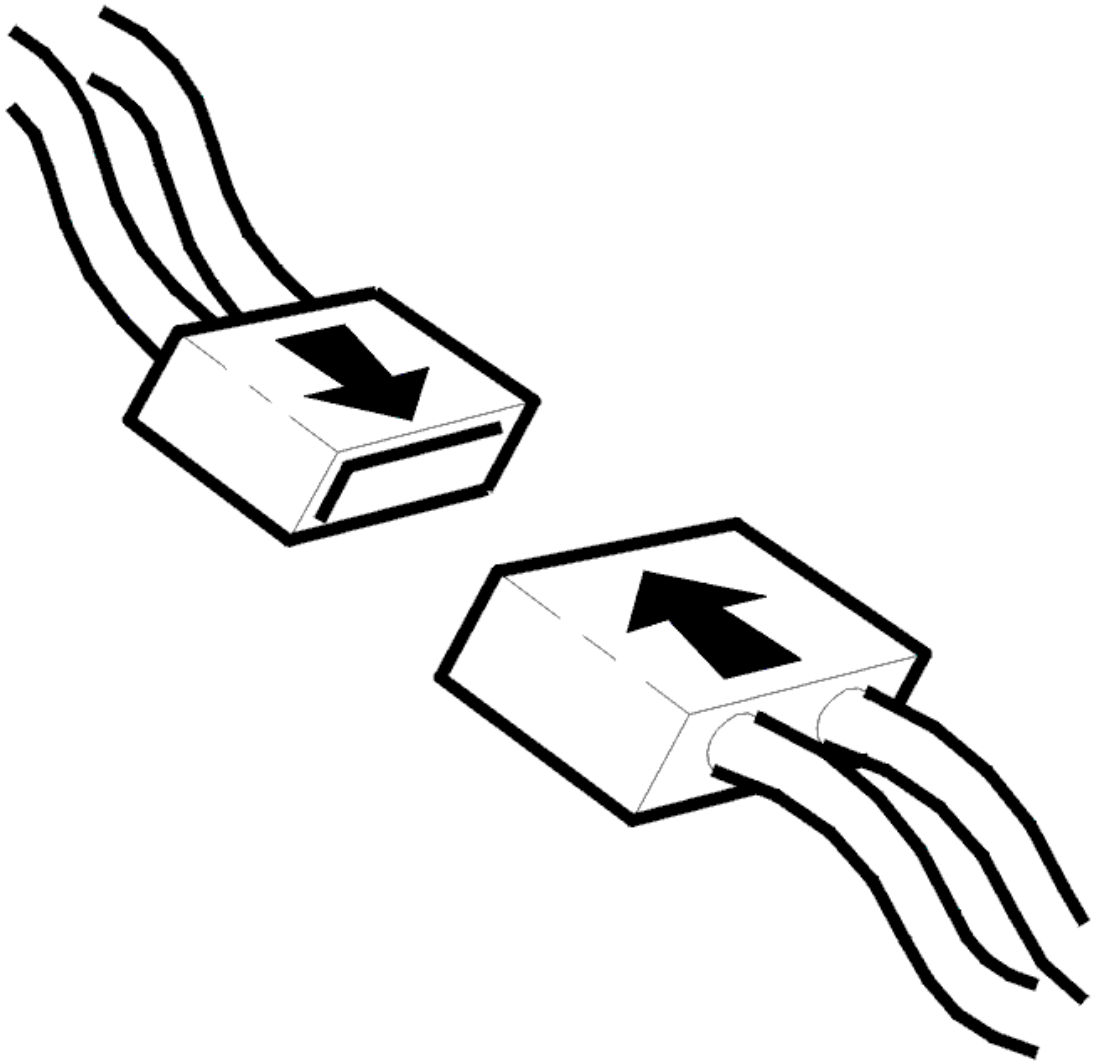

Fig. 142: Identifying Connector(s) Reinstallation
Courtesy of VOLVO CARS CORPORATION

- Ignition off
- Reinstall the connectors, components etc.
- Ignition on
- Start the engine and allow it to idle.
- Read the oil temperature for the transmission control module (TCM).

  Check that oil temperature is within the permitted range. Compare with the external temperature of the transmission.

NOTE: **The transmission temperature sensor is located inside the control system and may be affected by the heat given off by the solenoids.**

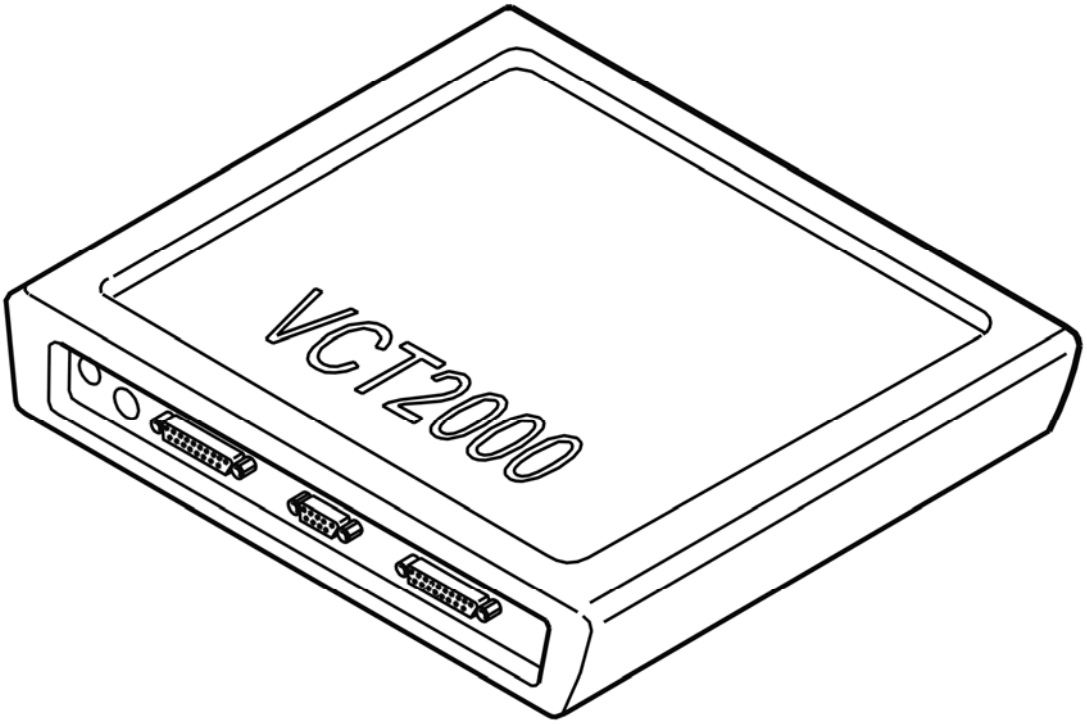

Fig. 143: Identifying VCT2000 Diagnostic Tool Symbol In VIDA
Courtesy of VOLVO CARS CORPORATION

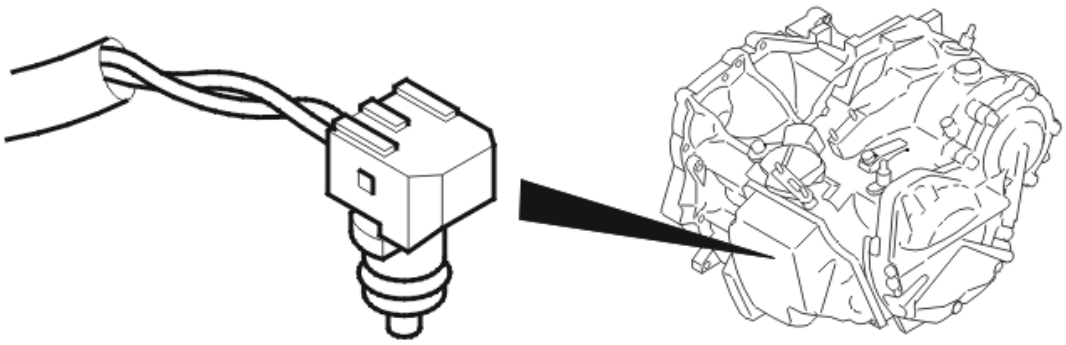

Fig. 144: Identifying Oil Temperature Sensor
Courtesy of VOLVO CARS CORPORATION

Is the temperature OK?

- **YES**

  VERIFIED: Troubleshooting has been completed.

- **NO**

  Refer to **INFORMATION**

INFORMATION

FAULT-TRACING INFORMATION

The fault should have been detected and remedied. As this is not the case fault-tracing has failed.

Exit fault-tracing for this diagnostic trouble code (DTC) or make another attempt.

TCM-P071200: GEARBOX OIL TEMPERATURE SENSOR A CIRCUIT INSIDE/OUTSIDE TOLERANCE. GENERAL FAULT INFORMATION. NO INFORMATION ON FAULT TYPE (TF-80SC AWD; 2005)

DIAGNOSTIC TROUBLE CODE (DTC) INFORMATION TCM-P071200

see **DIAGNOSTIC TROUBLE CODE (DTC) INFORMATION TCM-P071200**

FAULT TRACING TCM-P071200

see **FAULT TRACING TCM-P071200**

TCM-P071300: TRANSMISSION FLUID TEMPERATURE SENSOR A CIRCUIT HIGH INPUT. GENERAL FAILURE INFORMATION. NO SUB TYPE INFORMATION (B6324S, TF-80SC; B6324S, TF-80SC AWD; 2007-2010)

DIAGNOSTIC TROUBLE CODE (DTC) INFORMATION TCM-P071300

Condition

The oil temperature sensor provides the Transmission control module (TCM) with a signal that is used, among other things, for the temperature controlled lock-up and engagement high temperature program functions.

The sensor has an NTC (negative temperature coefficient) resistor.

The signal (voltage) increases with decreasing oil temperature.

The diagnostic trouble code (DTC) is stored if control module:

- Receive a too high signal from the oil temperature sensor for approx. 10 seconds.

The control module's test for the diagnostic trouble code (DTC) starts in the event of:

- At least two minutes normal driving with an engine temperature that exceeds 50°C.

NOTE: **The control module can only detect the fault once the test has been started and the diagnostic trouble code (DTC) is stored when the conditions are met.**

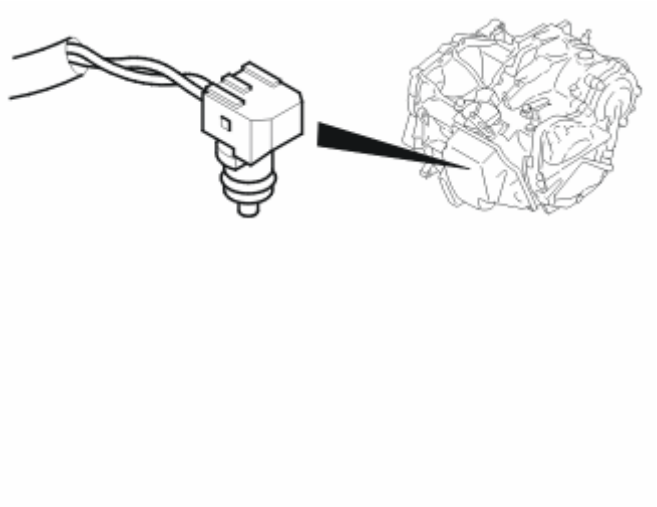

Fig. 145: Locating Oil Temperature Sensor
Courtesy of VOLVO CARS CORPORATION

Substitute Value

- Transmission control module assumes an oil temperature of 80 °C.
- function is blocked.
- Slip lock-up function is blocked.
- Neutral check function is blocked.

Possible Source

- Contact resistance in the terminals.
- Short-circuit to supply voltage in the signal cable.
- Oil temperature sensor not working.

Fault symptom[s]

- General warning lamp lit
- Malfunction indicator light (MIL), on
- Rough gear shift

FAULT-TRACING

CHECKS

CHECKING THE OIL TEMPERATURE SENSOR

NOTE: **During this fault tracing the transmission and oil should be at room temperature from the start.**

This is to control the sensor function.

Fig. 146: Identifying Ignition ON
Courtesy of VOLVO CARS CORPORATION

- Ignition on.
- Start the engine. Allow the engine to idle.
- Read off the oil temperature.

Allow the transmission to warm up. Check that the oil temperature increases and appears to be within the permitted range.

Compare with transmission external temperature.

NOTE: **The transmission temperature sensor is inside the control system and may be affected by the heat given off by the solenoids.**

The fault is permanent if the temperature is outside the permitted range.

If the temperature is within the permitted range, this is an indication that the fault was present previously but that it is not active at the moment, i. e. the fault is intermittent.

Fig. 147: Identifying VCT2000 Diagnostic Tool Symbol In VIDA
Courtesy of VOLVO CARS CORPORATION

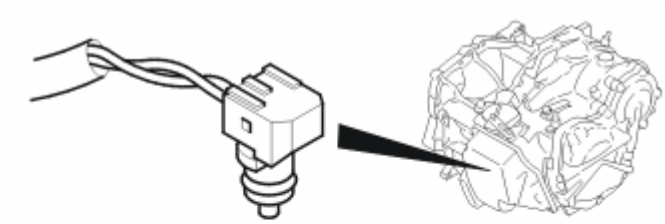

Fig. 148: Locating Oil Temperature Sensor
Courtesy of VOLVO CARS CORPORATION

- **Continue**

  Refer to **CHECKING THE CABLE AND COMPONENT**

CHECKING THE CABLE AND COMPONENT

Fig. 149: Identifying Ignition In Off Position
Courtesy of VOLVO CARS CORPORATION

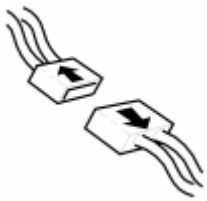

Fig. 150: Identifying Connectors Disconnected
Courtesy of VOLVO CARS CORPORATION

- Ignition off.
- Expose the transmission control system.

  Check connector B (22 pin) for the transmission control module (TCM). Check for contact resistance and oxidation.

Check the cable. Check for an open-circuit. Check for a short-circuit to supply voltage.

Take readings between:

- Transmission connector terminal #B7 and temperature sensor.
- Transmission connector terminal #B8 and temperature sensor.

Also check the cables for a short-circuit to each other.

HINT: Check the temperature. See CHECKING INTERNAL COMPONENTS OF THE TRANSMISSION

Remedy as necessary.

Other information

- see **SIGNAL SPECIFICATION**
- To replace Temperature Sensor Fluid, Transaxle, (TFT) see **CABLE HARNESS, CONTROL SYSTEM, GEARBOX, REPLACING**
- To access connector B:**TRANSMISSION CONTROL MODULE (TCM)**
- To access the transmission control system:**COVER CONTROL SYSTEM, REPLACING (2007-2011)**
- see **CHECKING WIRING AND TERMINALS**

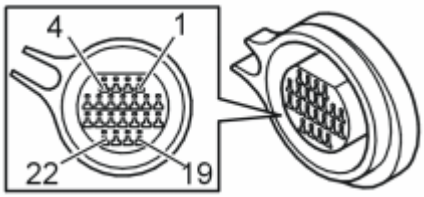

Fig. 151: Identifying Connector B Terminals
Courtesy of VOLVO CARS CORPORATION

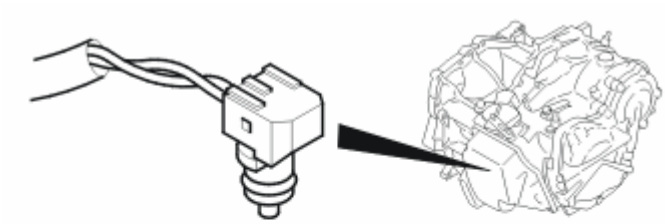

Fig. 152: Locating Oil Temperature Sensor
Courtesy of VOLVO CARS CORPORATION

- **Continue**

  Refer to **RESETTING THE "TRANSMISSION FLUID CHANGE" COUNTER**

VERIFICATION

VERIFICATION

HINT: After carrying out the repair, check that the fault has been remedied.

Fig. 153: Identifying Ignition ON
Courtesy of VOLVO CARS CORPORATION

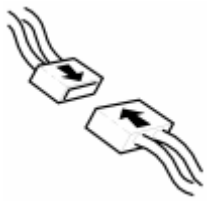

Fig. 154: Identifying Connector(s) Reinstallation
Courtesy of VOLVO CARS CORPORATION

- Ignition off.
- Reinstall the connectors, components etc.

- Ignition on.
- Start the engine. Allow the engine to idle.
- Read off the oil temperature.

  Check that the oil temperature is within its permitted range. Compare it to the automatic transmission temperature.

  NOTE: The transmission temperature sensor is inside the control system and may be affected by the heat given off by the solenoids.

Fig. 155: Identifying VCT2000 Diagnostic Tool Symbol In VIDA
Courtesy of VOLVO CARS CORPORATION

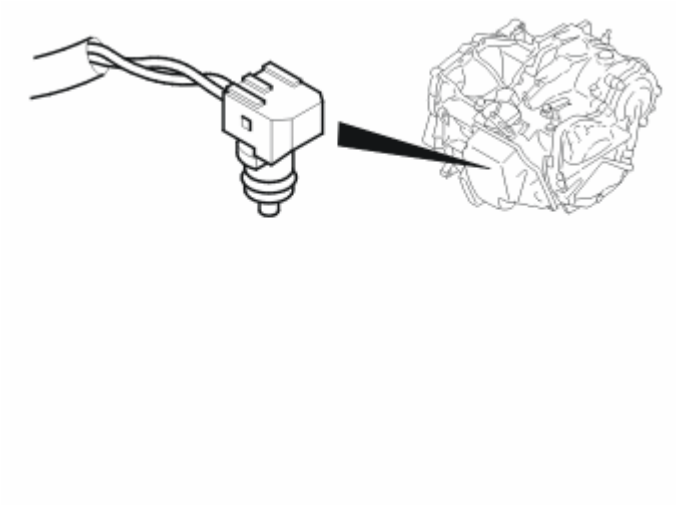

Fig. 156: Locating Oil Temperature Sensor
Courtesy of VOLVO CARS CORPORATION

Is the temperature reading OK?

- **YES**

  VERIFIED: Troubleshooting has been completed.

- **NO**

  Refer to **INFORMATION**

INFORMATION

FAULT-TRACING INFORMATION

The fault should have been detected and remedied. As this is not the case fault-tracing has failed.

Exit fault-tracing for this diagnostic trouble code (DTC) or make another attempt.

RESETTING THE "TRANSMISSION FLUID CHANGE" COUNTER

CHECKING THE FUNCTION

HINT: The transmission control module (TCM) has a counter for fluid quality that counts the number of times the transmission is subjected to too hard a load or too high an ambient temperature. If the counter is not reset during draining/replacement, there is a risk that a diagnostic trouble code will be set under the wrong conditions. Thus, it is important that the counter for transmission fluid change be reset.

NOTE: This only applies when the transmission oil is changed and when the oil is changed during repairs to the transmission's temperature sensor.

Fig. 157: Identifying Ignition ON
Courtesy of VOLVO CARS CORPORATION

- Ignition on.

  Click on the VCT2000 symbol to reset the counter.

  Fig. 158: Identifying VCT2000 Diagnostic Tool Symbol In VIDA
  Courtesy of VOLVO CARS CORPORATION

- **Continue**

  Refer to **VERIFICATION**

TCM-P071300: TRANSMISSION FLUID TEMPERATURE SENSOR A CIRCUIT

HIGH INPUT. GENERAL FAILURE INFORMATION. NO SUB TYPE INFORMATION (B6324S5, TF-80SC; B6324S5, TF-80SC AWD; 2011-2012)

DIAGNOSTIC TROUBLE CODE (DTC) INFORMATION TCM-P071300

see **DIAGNOSTIC TROUBLE CODE (DTC) INFORMATION TCM-P071300**

FAULT-TRACING

see **FAULT-TRACING**

TCM-P071300: GEARBOX OIL TEMPERATURE SENSOR A CIRCUIT INSIDE/OUTSIDE TOLERANCE. GENERAL FAULT INFORMATION. NO INFORMATION ON FAULT TYPE (B8444S, TF-80SC AWD; 2006-2011)

DIAGNOSTIC TROUBLE CODE (DTC) INFORMATION TCM-P071300

Condition

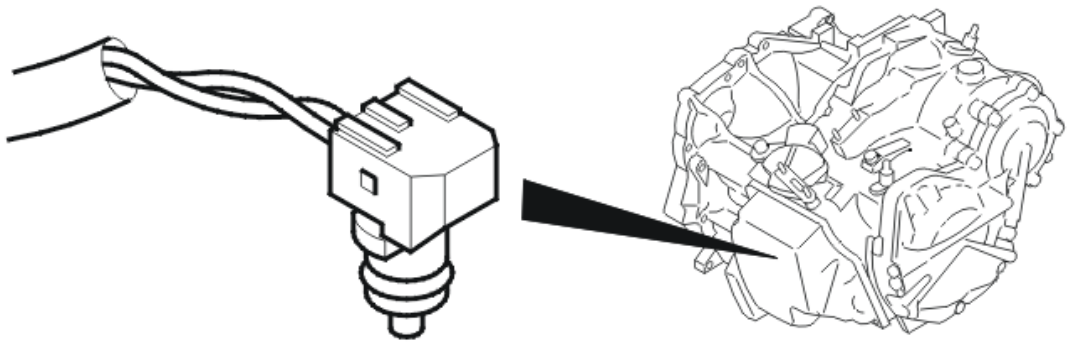

Fig. 159: Identifying Oil Temperature Sensor
Courtesy of VOLVO CARS CORPORATION

The oil temperature sensor gives the transmission control module (TCM) a signal that is used for the temperature controlled lock-up and high temperature program functions. The sensor has a temperature sensitive resistor with negative temperature coefficient (NTC). The signal (voltage) increases with decreasing oil temperature. If the transmission control module (TCM) receives a signal from the oil temperature sensor that is too high for about 10 seconds, the diagnostic trouble code (DTC) is generated.

The diagnostic trouble code (DTC) can be diagnosed after at least two minutes of normal driving with an engine temperature in excess of 50 °C.

Substitute Value

- Transmission control module (TCM) assumes an oil temperature of 80 °C.

- Lock-up function is blocked.
- Slip lock-up function is blocked.
- Neutral check function is blocked.

Possible Source

- Contact resistance in the terminals
- The signal cable is short-circuited to voltage.
- Oil temperature sensor not working.

Fault symptom[s]

- General warning lamp lit
- Malfunction indicator lamp (MIL) lit.
- Harsh gear changing

FAULT TRACING TCM-P071300

CHECKS

CHECKING THE OIL TEMPERATURE SENSOR

NOTE: During this fault-tracing, the transmission and the oil should be at room temperature from the start in order to check the sensor function.

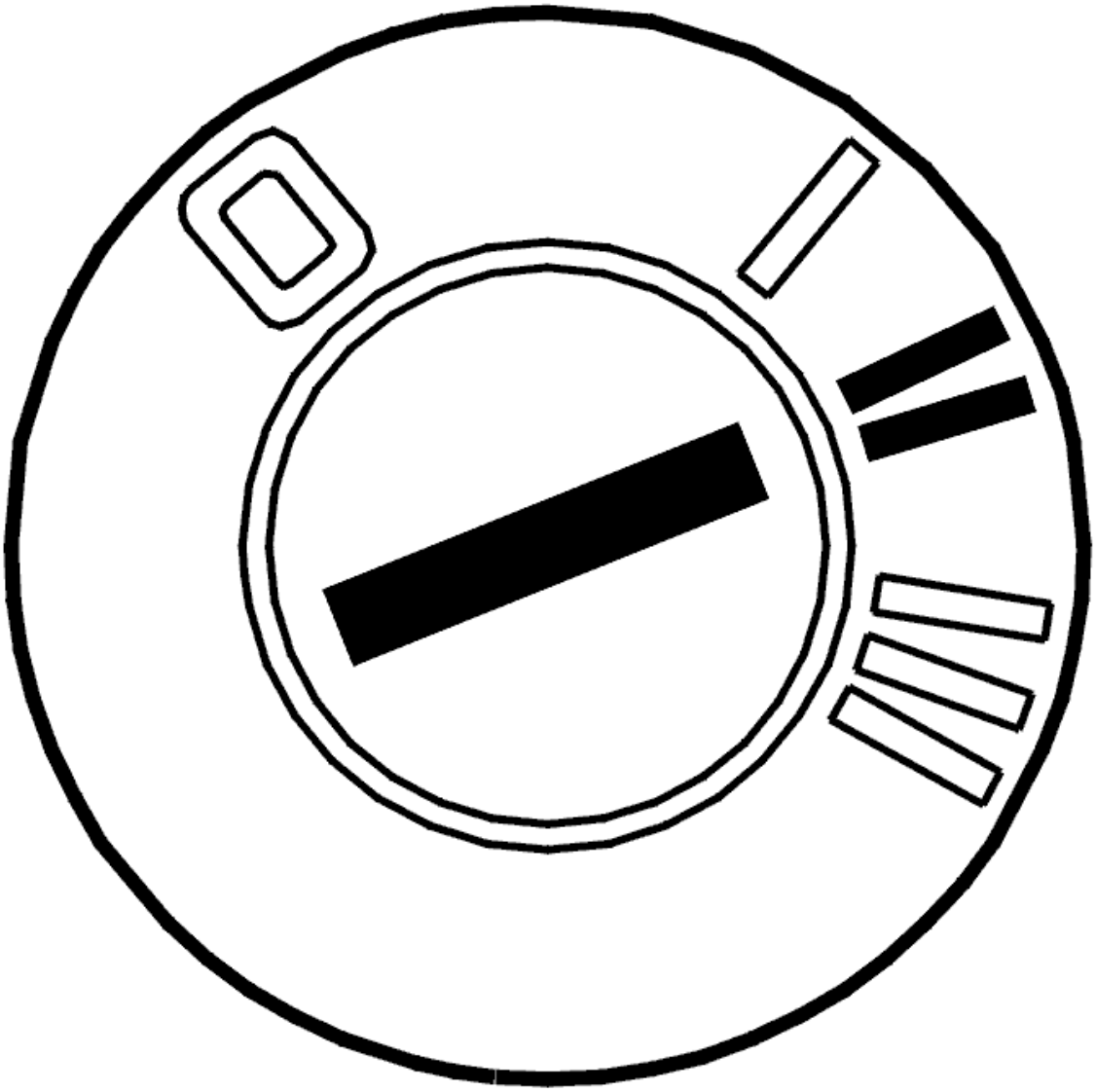

Fig. 160: Identifying Ignition ON
Courtesy of VOLVO CARS CORPORATION

- Ignition on
- Start the engine and allow it to idle.
- Read the oil temperature.

Let the transmission heat up. Check that the oil temperature increases and is within the permitted range. Compare with the external temperature of the transmission.

NOTE: **The transmission temperature sensor is located inside the control system and may be affected by the heat given off by the solenoids.**

If the temperature is outside the permitted range it means that the fault is permanent.

If the temperature is within the permitted range, it means that the fault was present previously but is not active now. The fault is intermittent.

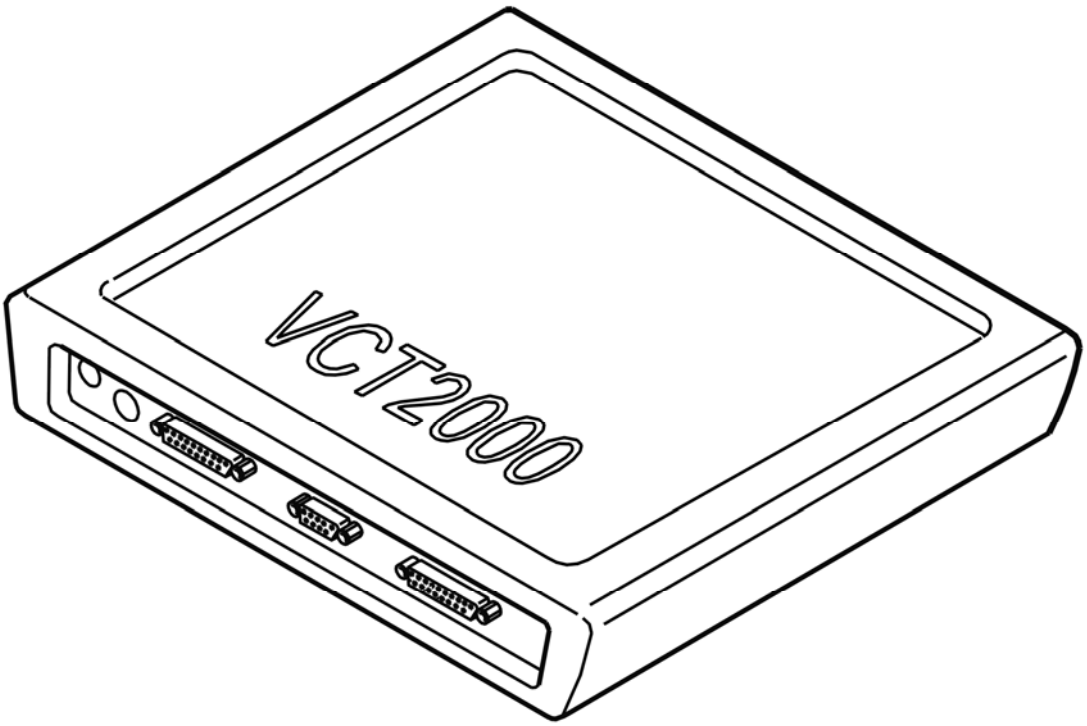

Fig. 161: Identifying VCT2000 Diagnostic Tool Symbol In VIDA
Courtesy of VOLVO CARS CORPORATION

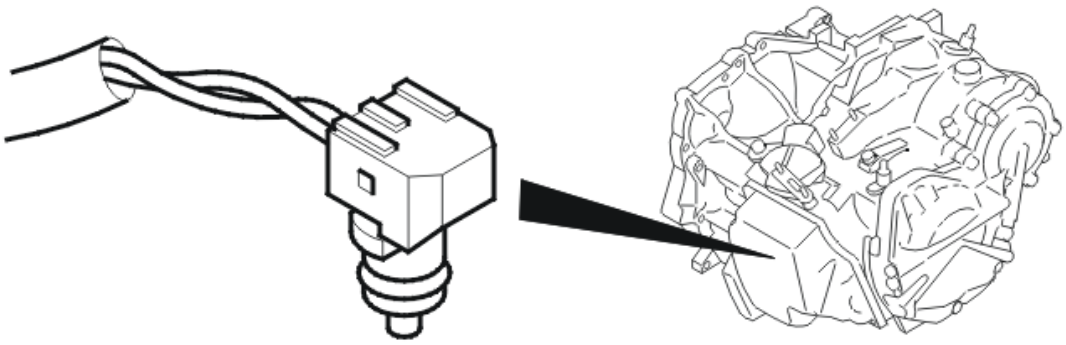

Fig. 162: Identifying Oil Temperature Sensor
Courtesy of VOLVO CARS CORPORATION

- **Continue**

Refer to **CHECKING CABLE AND COMPONENT**

CHECKING CABLE AND COMPONENT

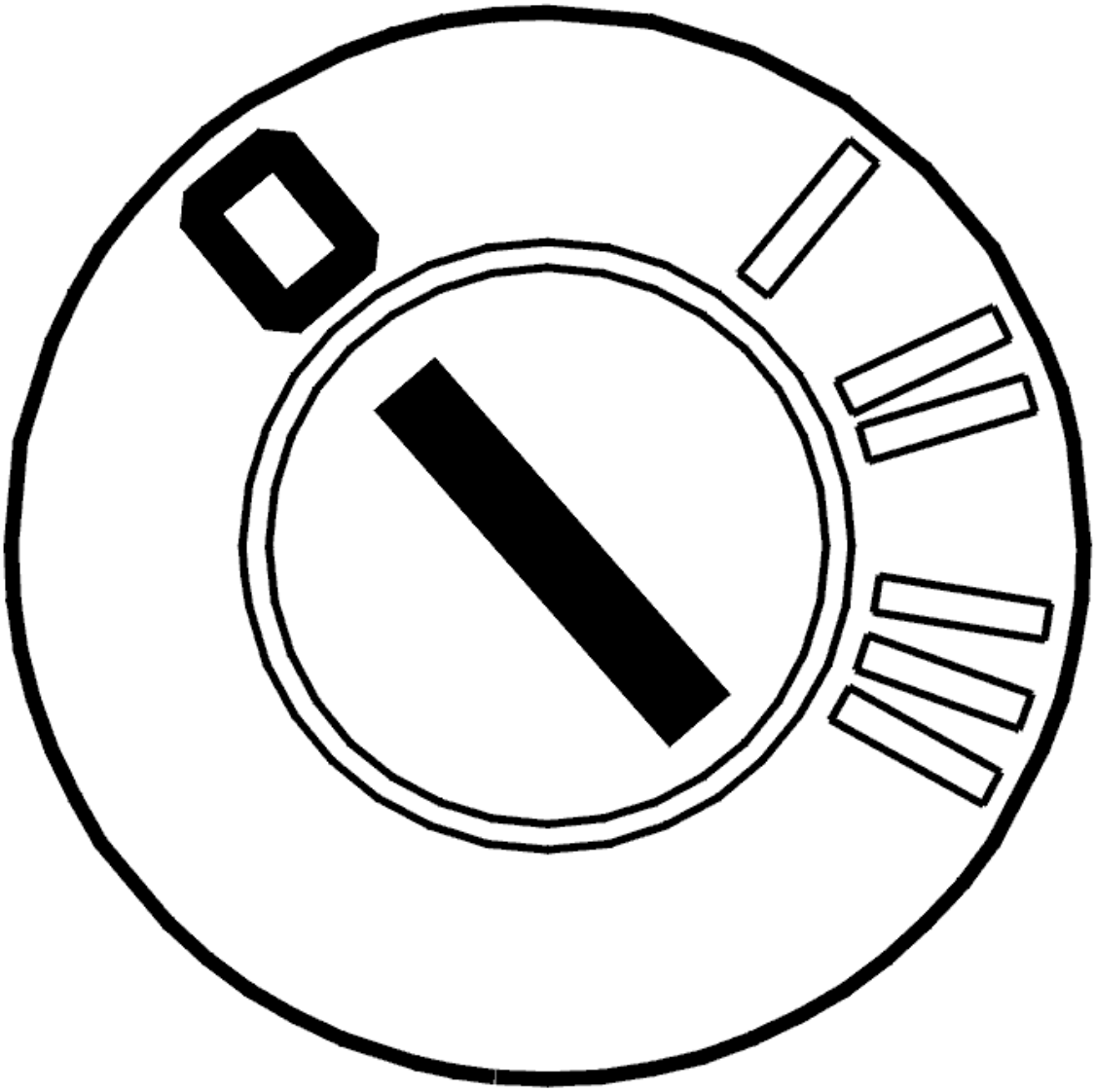

Fig. 163: Identifying Ignition OFF
Courtesy of VOLVO CARS CORPORATION

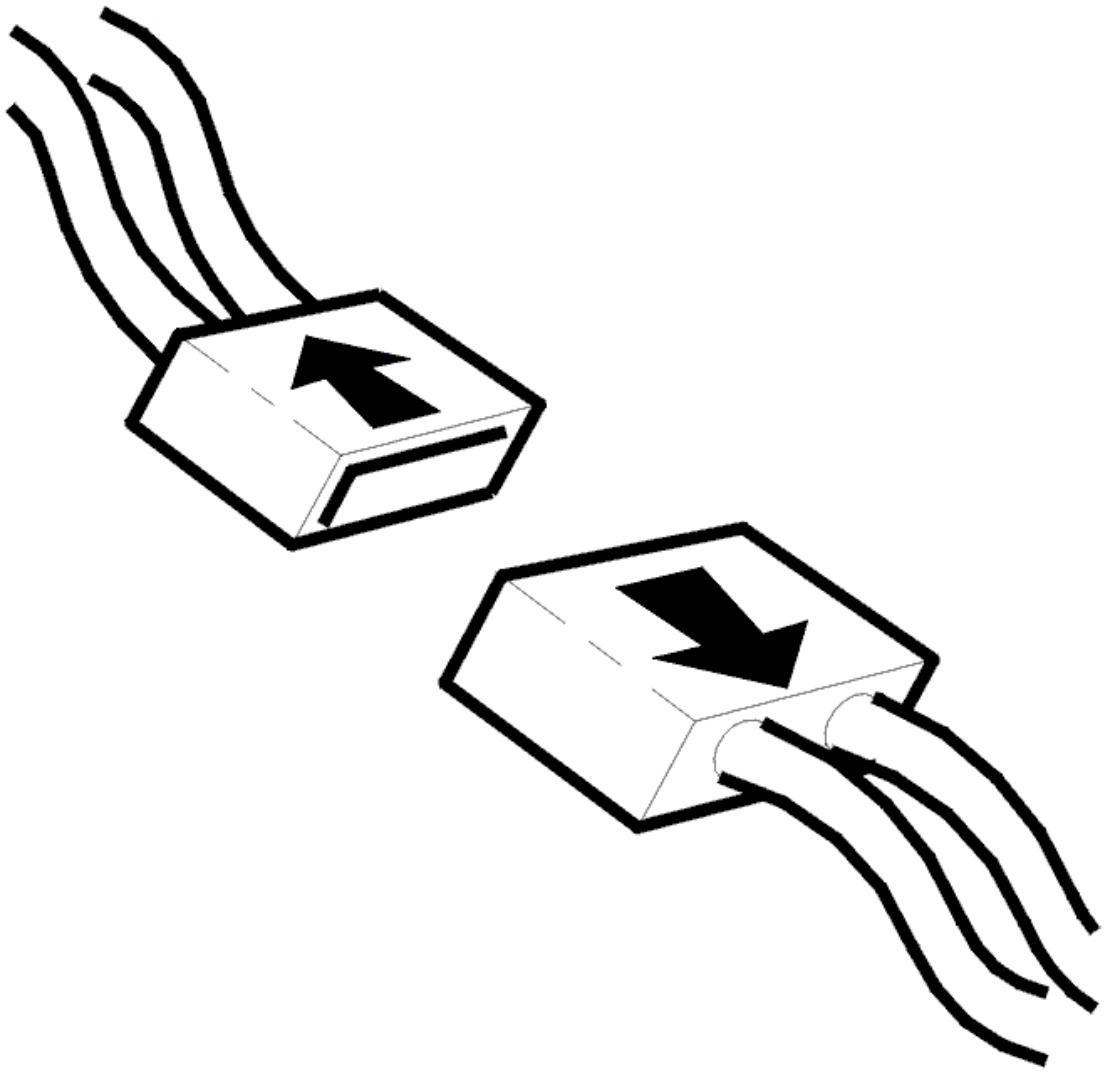

Fig. 164: Identifying Connector(s) Disconnected
Courtesy of VOLVO CARS CORPORATION

- Ignition off
- Expose the control system of the transmission.

  Check connector B (22 pin) for the transmission control module (TCM). Check for contact resistance and oxidation.

  Check the cable between transmission connector #B7 and the temperature sensor. Check the cable between transmission connector #B8 and the temperature sensor. Check for an open-circuit. Check for a short-circuit to supply voltage. Check the cables for short-circuits to each other.

  HINT: Check the temperature. See CHECKING THE OIL TEMPERATURE SENSOR

  Remedy as necessary.

Other information

- see **SIGNAL DESCRIPTION**
- To replace Temperature Sensor Fluid, Transaxle, (TFT) see **CABLE HARNESS, CONTROL SYSTEM, GEARBOX, REPLACING**
- To access connector B: **TRANSMISSION CONTROL MODULE (TCM), REPLACING**
- To access the transmission control system: **COVER CONTROL SYSTEM, REPLACING (2007-2011)**
- see **CONTENTS**

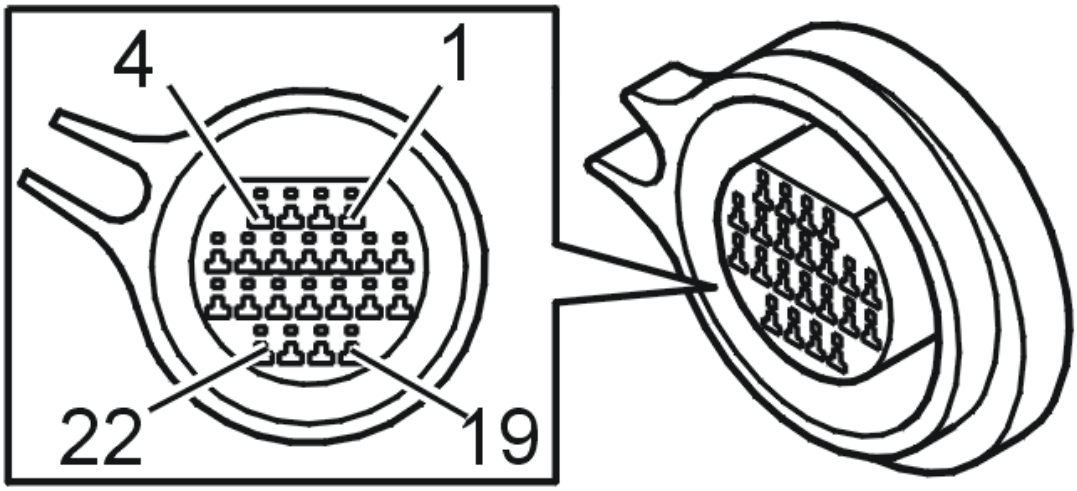

Fig. 165: Identifying Connector B Terminals
Courtesy of VOLVO CARS CORPORATION

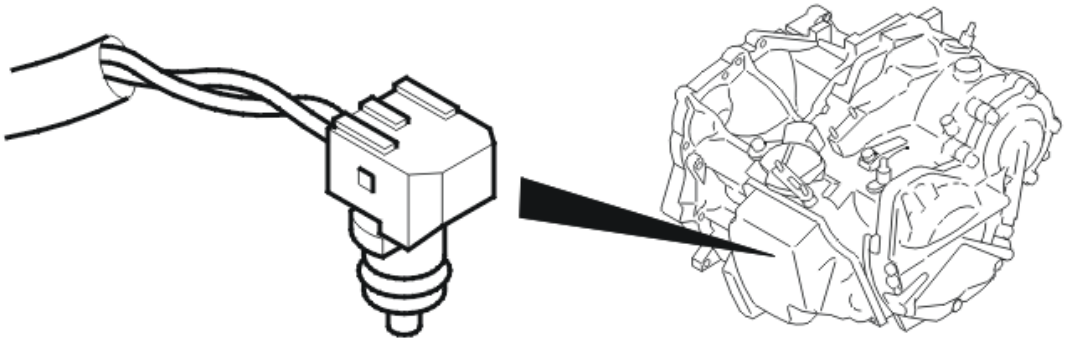

Fig. 166: Identifying Oil Temperature Sensor
Courtesy of VOLVO CARS CORPORATION

- **Continue**

Refer to **RESETTING THE COUNTER FOR TRANSMISSION OIL, CHANGE**

RESETTING THE COUNTER FOR TRANSMISSION OIL, CHANGE

RESETTING THE COUNTER FOR TRANSMISSION OIL, CHANGE

HINT: The transmission control module (TCM) has a counter for the oil's quality that counts up when the transmission is exposed to very heavy loads or high ambient temperature. If the counter is not reset when draining/changing oil, there is a risk that a diagnostic trouble code may be generated under incorrect conditions. That is why it is important that the counter for Transmission oil, change is reset.

NOTE: **This only applies when the transmission oil is changed and when the oil is changed during repairs to the transmission's temperature sensor.**

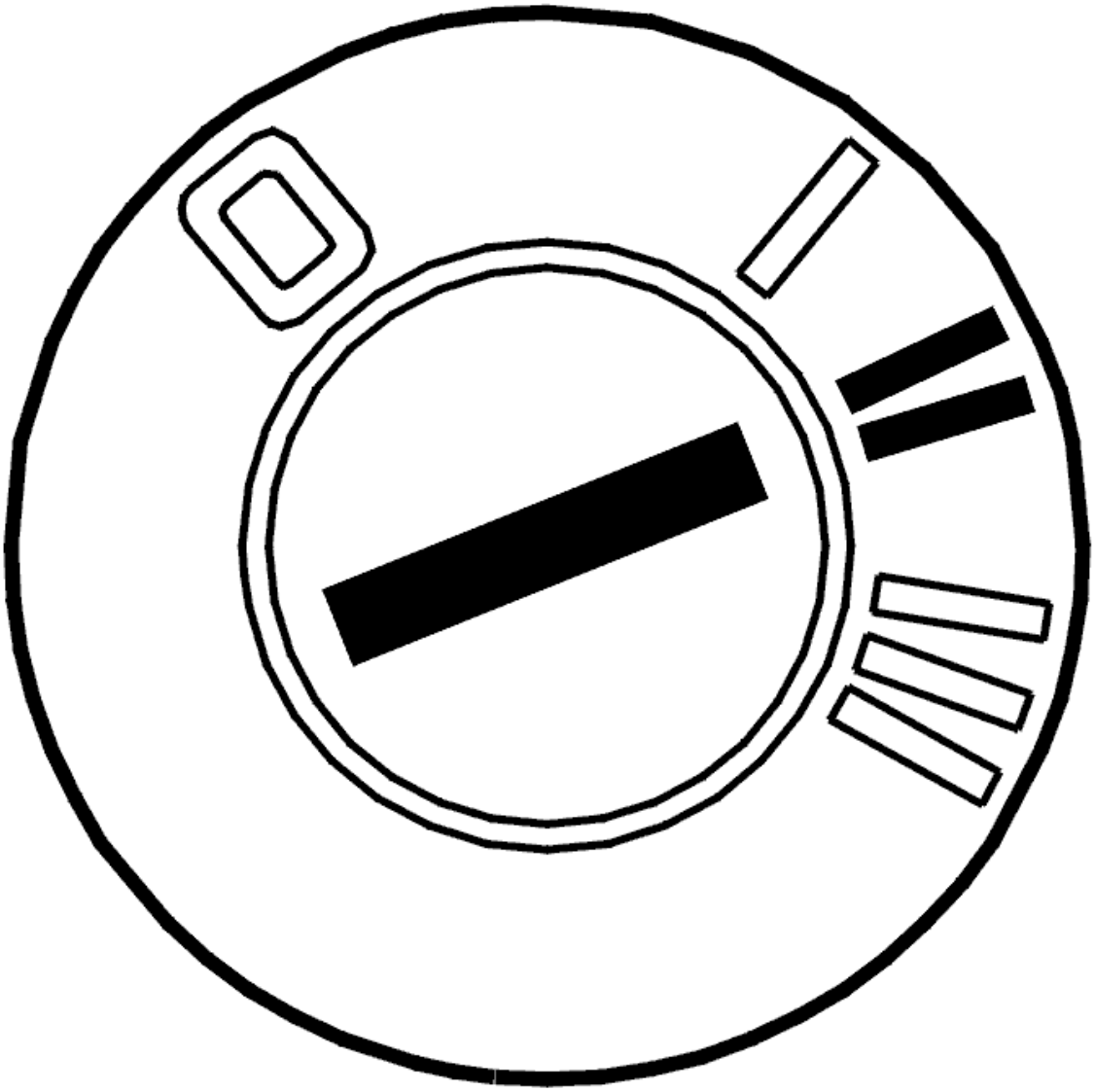

Fig. 167: Identifying Ignition ON
Courtesy of VOLVO CARS CORPORATION

- Ignition on

Activate reset of the counter by clicking on the symbol for VCT2000.

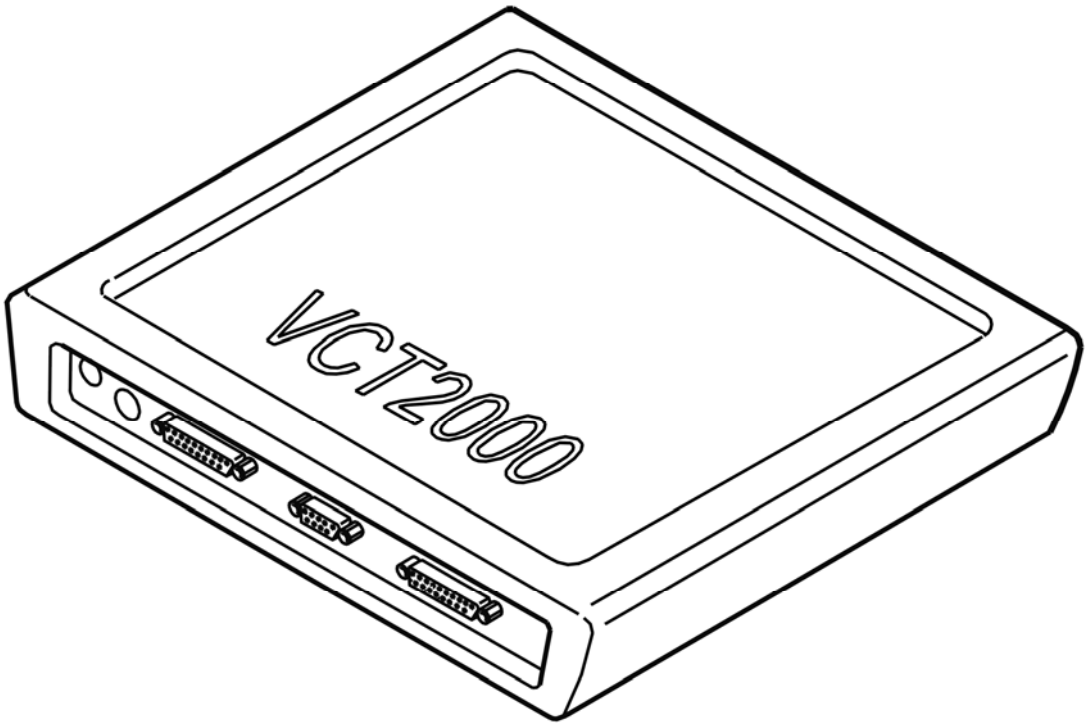

Fig. 168: Identifying VCT2000 Diagnostic Tool Symbol In VIDA
Courtesy of VOLVO CARS CORPORATION

- **Continue**

  Refer to **VERIFICATION**

VERIFICATION

VERIFICATION

HINT: After carrying out the repair, check that the fault has been remedied.

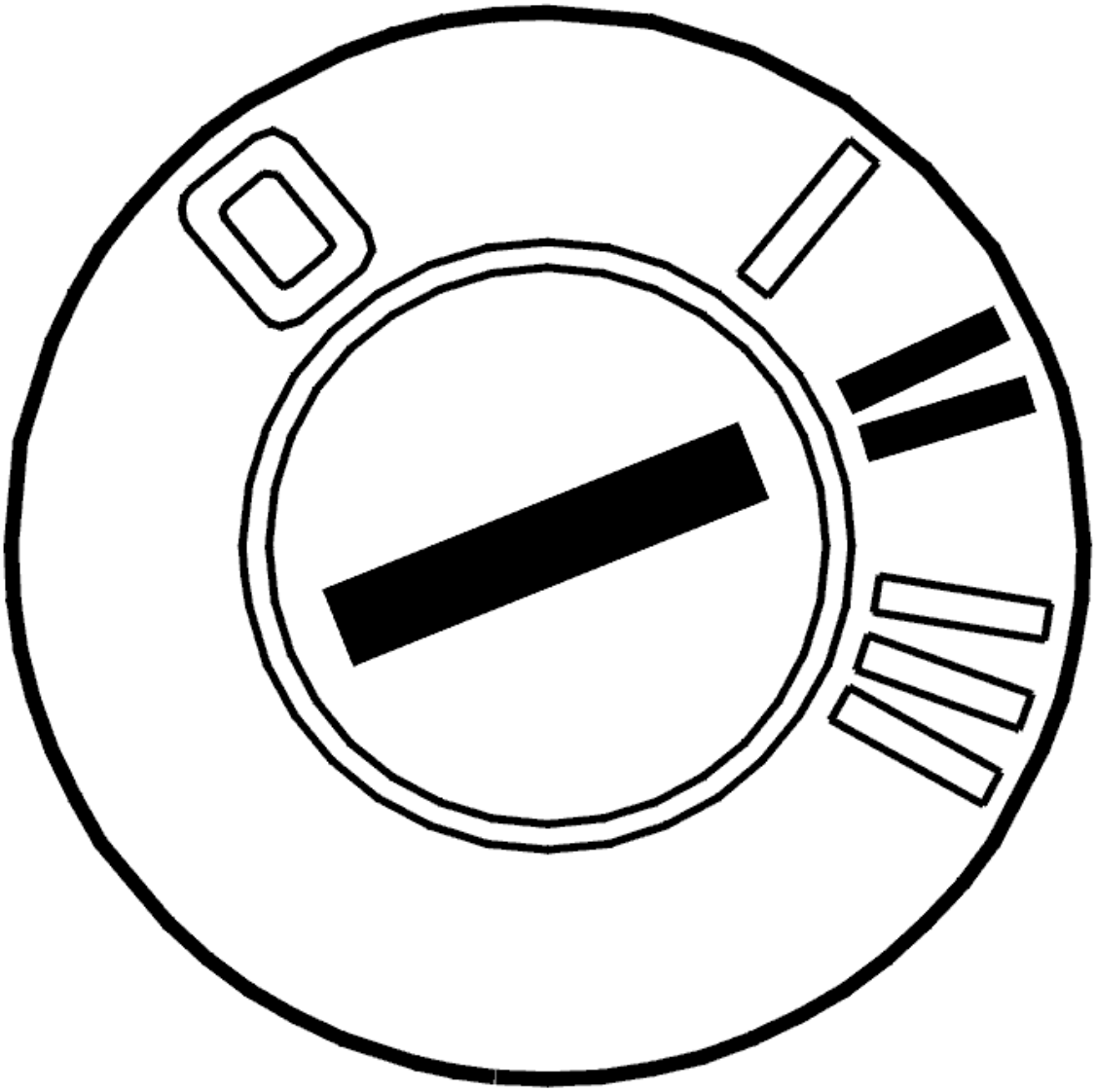

Fig. 169: Identifying Ignition ON
Courtesy of VOLVO CARS CORPORATION

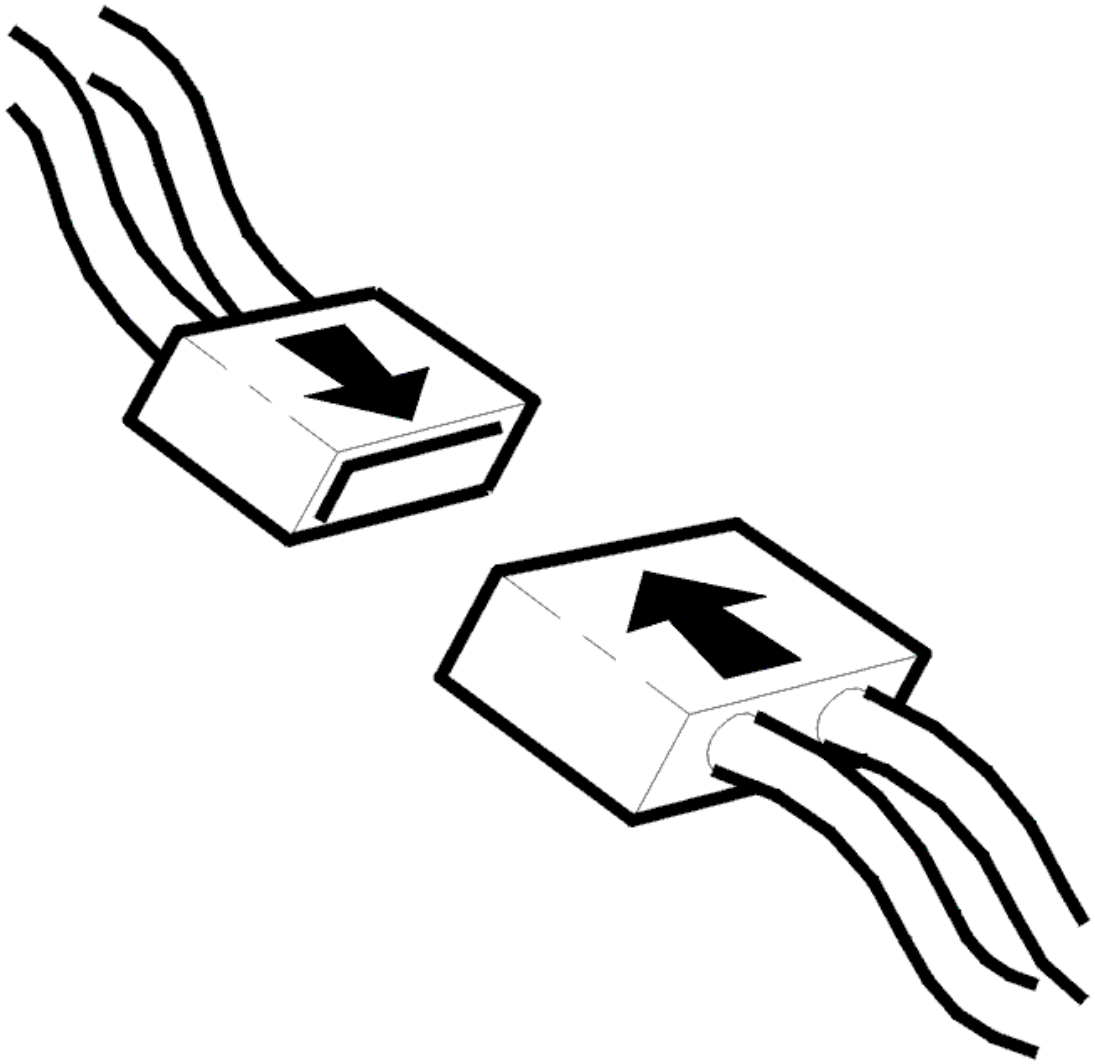

Fig. 170: Identifying Connector(s) Reinstallation
Courtesy of VOLVO CARS CORPORATION

- Ignition off
- Reinstall the connectors, components etc.
- Ignition on
- Start the engine and allow it to idle.
- Read the oil temperature for the transmission control module (TCM).

  Check that oil temperature is within the permitted range. Compare with the external temperature of the transmission.

NOTE: **The transmission temperature sensor is located inside the control system and may be affected by the heat given off by the solenoids.**

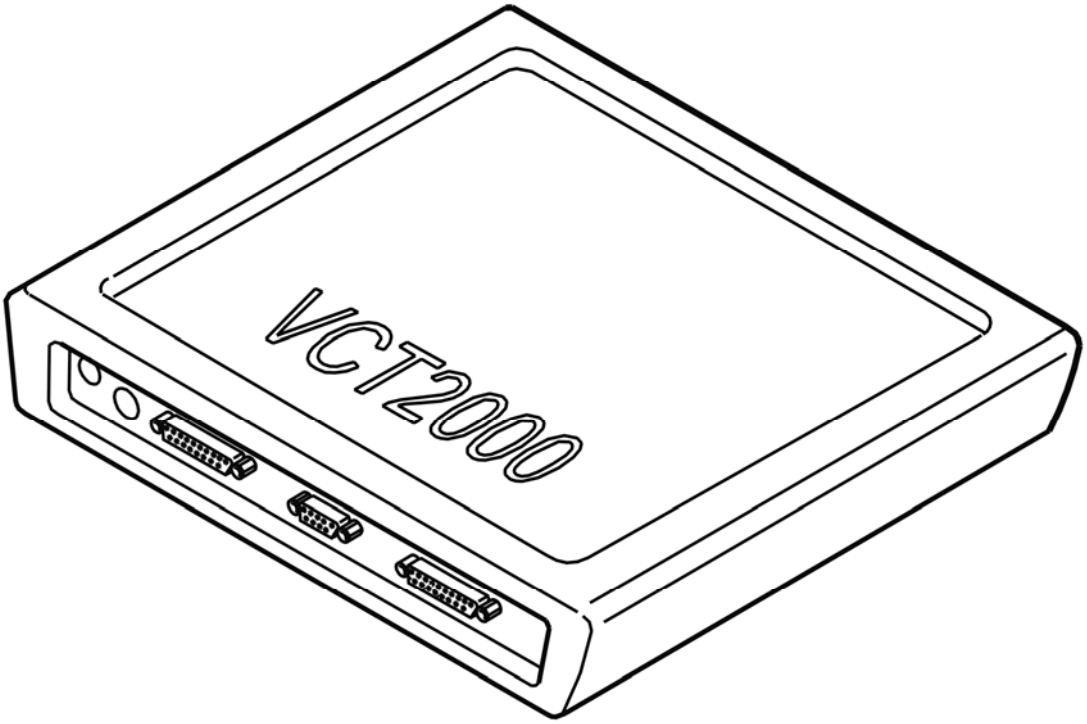

Fig. 171: Identifying VCT2000 Diagnostic Tool Symbol In VIDA
Courtesy of VOLVO CARS CORPORATION

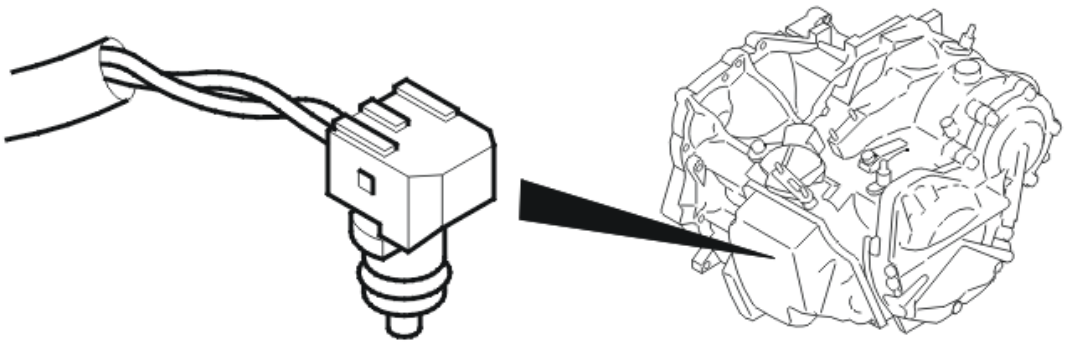

Fig. 172: Identifying Oil Temperature Sensor
Courtesy of VOLVO CARS CORPORATION

Is the temperature OK?

- **YES**

  VERIFIED: Troubleshooting has been completed.

- **NO**

  Refer to **INFORMATION**

INFORMATION

FAULT-TRACING INFORMATION

The fault should have been detected and remedied. As this is not the case fault-tracing has failed.

Exit fault-tracing for this diagnostic trouble code (DTC) or make another attempt.

TCM-P071300: GEARBOX OIL TEMPERATURE SENSOR A CIRCUIT INSIDE/OUTSIDE TOLERANCE. GENERAL FAULT INFORMATION. NO INFORMATION ON FAULT TYPE (TF-80SC AWD; 2005)

DIAGNOSTIC TROUBLE CODE (DTC) INFORMATION TCM-P071300

see **DIAGNOSTIC TROUBLE CODE (DTC) INFORMATION TCM-P071300**

FAULT TRACING TCM-P071300

see **FAULT TRACING TCM-P071300**

TCM-P071500: TURBINE/INPUT SHAFT SPEED SENSOR A CIRCUIT. GENERAL FAILURE INFORMATION. NO SUB TYPE INFORMATION (B6324S, TF-80SC; B6324S, TF-80SC AWD; 2007-2010)

DIAGNOSTIC TROUBLE CODE (DTC) INFORMATION TCM-P071500

Condition

The signal for input speed comes from a sensor within the transmission control system.

The transmission control module (TCM) uses the signal to determine the input shaft speed after the torque converter.

This signal is used to compare transmission speed and vehicle speed.

The transmission control module uses this comparison to calculate the gear-shift timing.

The rpm and road speed data are also utilized in modulating the system pressure and in reducing engine torque when shifting gear. The result is smooth gear-shifting.

The information is also used to control the function.

The diagnostic trouble code (DTC) is stored if the control module detects that:

- Voltage in the circuit to the transmission input speed sensor is too high.

The control module's test for the diagnostic trouble code (DTC) starts in the event of:

- Normal driving.

NOTE: **The control module can only detect the fault once the test has been started and the diagnostic trouble code (DTC) is stored when the conditions are met.**

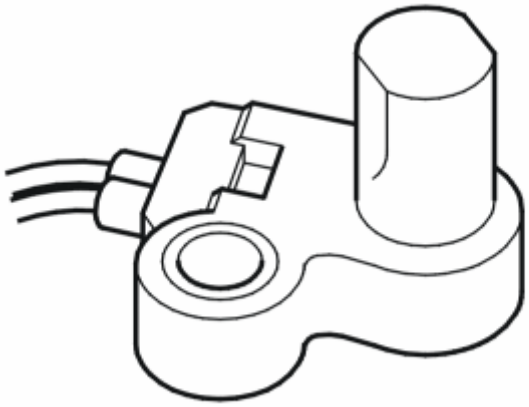

Fig. 173: Identifying Turbine/Input Shaft Speed Sensor
Courtesy of VOLVO CARS CORPORATION

Substitute Value

- Auxiliary program **Emergency mode 1** in the transmission control module (TCM) has started.

HINT: EMERGENCY MODE IN THE EVENT OF A FAULT

Possible Source

- Power supply to input speed sensor is short circuited to supply voltage.
- Transmission input speed sensor not working.
- Internal fault in the transmission control module (TCM).

Fault symptom[s]

- Malfunction indicator light (MIL), on
- General warning lamp lit
- No lock-up
- Rough gear shift
- No gear shift

FAULT-TRACING

CHECKS

CHECKING THE FUNCTION

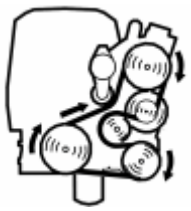

Fig. 174: Identifying Belt Routing
Courtesy of VOLVO CARS CORPORATION

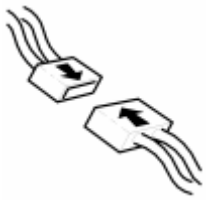

Fig. 175: Identifying Connector(s) Reinstallation
Courtesy of VOLVO CARS CORPORATION

- Start the engine. Allow the engine to idle.
- Read off the transmission input speed.

  Increase rpm and check that it is updated. Compare with the engine speed (RPM).

  Read off the transmission input speed.

  If the transmission input speed updates correctly it means that the fault was present previously but is not active now. There is an intermittent fault.

  If the transmission input speed does not update correctly it means that the fault is permanent.

  Fig. 176: Identifying VCT2000 Diagnostic Tool Symbol In VIDA
  Courtesy of VOLVO CARS CORPORATION

- **Continue**

  Refer to **CHECKING THE WIRING AND SENSORS**

CHECKING THE WIRING AND SENSORS

Fig. 177: Identifying Ignition In Off Position
Courtesy of VOLVO CARS CORPORATION

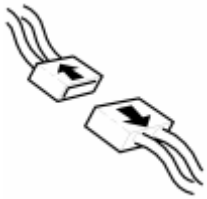

Fig. 178: Identifying Connectors Disconnected
Courtesy of VOLVO CARS CORPORATION

- Ignition off.
- Connect the breakout box to the transmission.
- Expose the transmission control system.
- Disconnect the connector for the transmission speed input sensor.

  Check the input speed sensor cables by connecting an ohmmeter between terminal #B12 (#A12) and input speed sensor terminal #2 plus between breakout box terminal #B13 (#A13) and input speed sensor terminal #1. The resistance must be 0 ohms. Also check the cables for short circuit to nearby cables in the cable harness.

  HINT: If no faults are found in the wiring check the input speed sensor. See: CHECKING INTERNAL COMPONENTS OF THE TRANSMISSION

  Remedy as necessary.

  Other information

  - see **CONNECTING THE BREAKOUT BOX**
  - see **SIGNAL SPECIFICATION**
  - For access to connector: **GEARBOX INPUT SPEED SENSOR, REPLACING**
  - see **CHECKING WIRING AND TERMINALS**

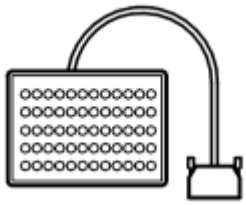

Fig. 179: Identifying Breakout Box
Courtesy of VOLVO CARS CORPORATION

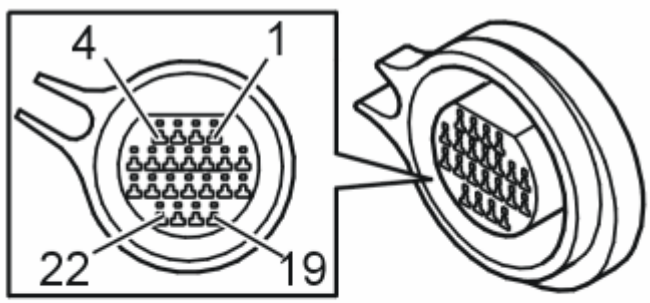

Fig. 180: Identifying Connector B Terminals
Courtesy of VOLVO CARS CORPORATION

- **Continue**

  Refer to **RESETTING ADAPTATION**

VERIFICATION

VERIFICATION

HINT: After carrying out the repair, check that the fault has been remedied.

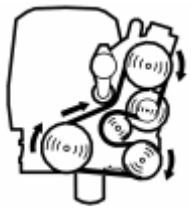

Fig. 181: Identifying Belt Routing
Courtesy of VOLVO CARS CORPORATION

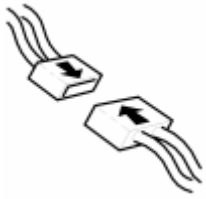

Fig. 182: Identifying Connector(s) Reinstallation
Courtesy of VOLVO CARS CORPORATION

- Ignition off.
- Reinstall the connectors, components etc.
- Start the engine. Allow the engine to idle.
- Read off the transmission input speed.

  Increase rpm and check that it is updated. Compare with the engine speed (RPM).

Fig. 183: Identifying VCT2000 Diagnostic Tool Symbol In VIDA
Courtesy of VOLVO CARS CORPORATION

Is the speed updated?

- **YES**

  VERIFIED: Troubleshooting has been completed.

- **NO**

  Refer to **INFORMATION**

INFORMATION

FAULT-TRACING INFORMATION

The fault should have been detected and remedied. As this is not the case fault-tracing has failed.

Exit fault-tracing for this diagnostic trouble code (DTC) or make another attempt.

RESETTING ADAPTATION

RESETTING THE ADAPTATION AND THE COUNTER FOR "TRANSMISSION OIL, REPLACE"

HINT: The transmission has torque-regulated, adaptive pressure regulation. The pressure regulator enables the transmission to regulate pressure during each shift to prevent hard shifting. Each shift is assessed by the transmission control module (TCM) and is stored in the internal memory. This makes it possible to compensate for transmission and clutch wear. It is important that the adaptation in the memory is reset so that the transmission works normally after the repair. Because the fluid was changed during the repair, the counter for transmission fluid change must also be reset. If the counter is not reset during draining/replacement, a diagnostic trouble code may be generated under the wrong conditions.

NOTE: This applies only if the transmission or one of the components in the

transmission have been replaced.

Fig. 184: Identifying Ignition ON
Courtesy of VOLVO CARS CORPORATION

- Ignition on.

  Click on the VCT2000 symbol to reset the adaptation and counter.

  Fig. 185: Identifying VCT2000 Diagnostic Tool Symbol In VIDA
  Courtesy of VOLVO CARS CORPORATION

- **Continue**

  Refer to **VERIFICATION**

TCM-P071500: TURBINE/INPUT SHAFT SPEED SENSOR A CIRCUIT. GENERAL FAILURE INFORMATION. NO SUB TYPE INFORMATION (B6324S5, TF-80SC; B6324S5, TF-80SC AWD; 2011-2012)

DIAGNOSTIC TROUBLE CODE (DTC) INFORMATION TCM-P071500

see **DIAGNOSTIC TROUBLE CODE (DTC) INFORMATION TCM-P071500**

FAULT-TRACING

see **FAULT-TRACING**

TCM-P071500: TURBINE/INPUT SHAFT SPEED SENSOR A CIRCUIT. GENERAL FAULT INFORMATION. NO INFORMATION ON FAULT TYPE (B8444S, TF-80SC AWD; 2006-2011)

DIAGNOSTIC TROUBLE CODE (DTC) INFORMATION TCM-P071500

Condition

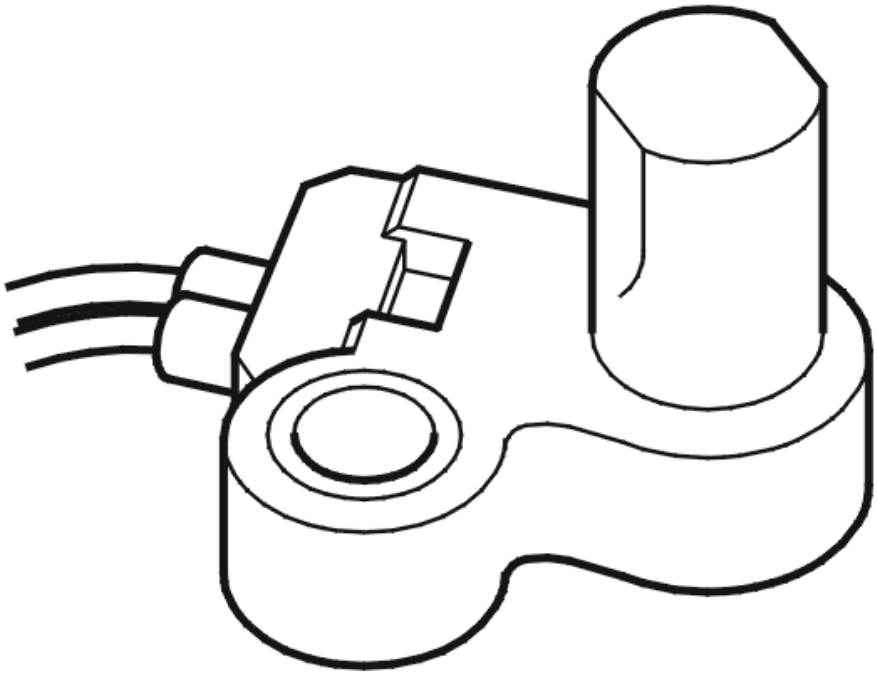

Fig. 186: Identifying Transmission Output Speed Sensor
Courtesy of VOLVO CARS CORPORATION

The signal for the input speed comes from a sensor inside the transmission control system. The transmission control module (TCM) bases its calculation of the speed of the input shaft after the torque converter on this signal. The signal is used to compare the speed of the gearbox with the vehicle speed. Using this comparison, the control module can calculate the gear shifting points.

The information on RPM and speed affects the adjustment of the system pressure and the reduction of the engine torque when changing gear. This results in smoother gear changes. The information is also used to control the lock-up function. If the control module registers that the voltage in the circuit to the gearbox input speed sensor is too high, a diagnostic trouble code (DTC) will be generated.

The diagnostic trouble code (DTC) can be diagnosed when driving normally.

Substitute Value

- Auxiliary program **Emergency mode 1** in the transmission control module (TCM) has started.

  HINT: EMERGENCY MODE IN CASE OF MALFUNCTION

Possible Source

- Power supply to input speed sensor short-circuited to voltage.
- Gearbox input speed sensor not working.
- Internal fault in transmission control module (TCM).

Fault symptom[s]

- Malfunction indicator lamp (MIL) lit.
- General warning lamp lit
- No lock-up function.
- Harsh gear changing
- No gear changing.

FAULT TRACING

CHECKS

CHECKING THE FUNCTION

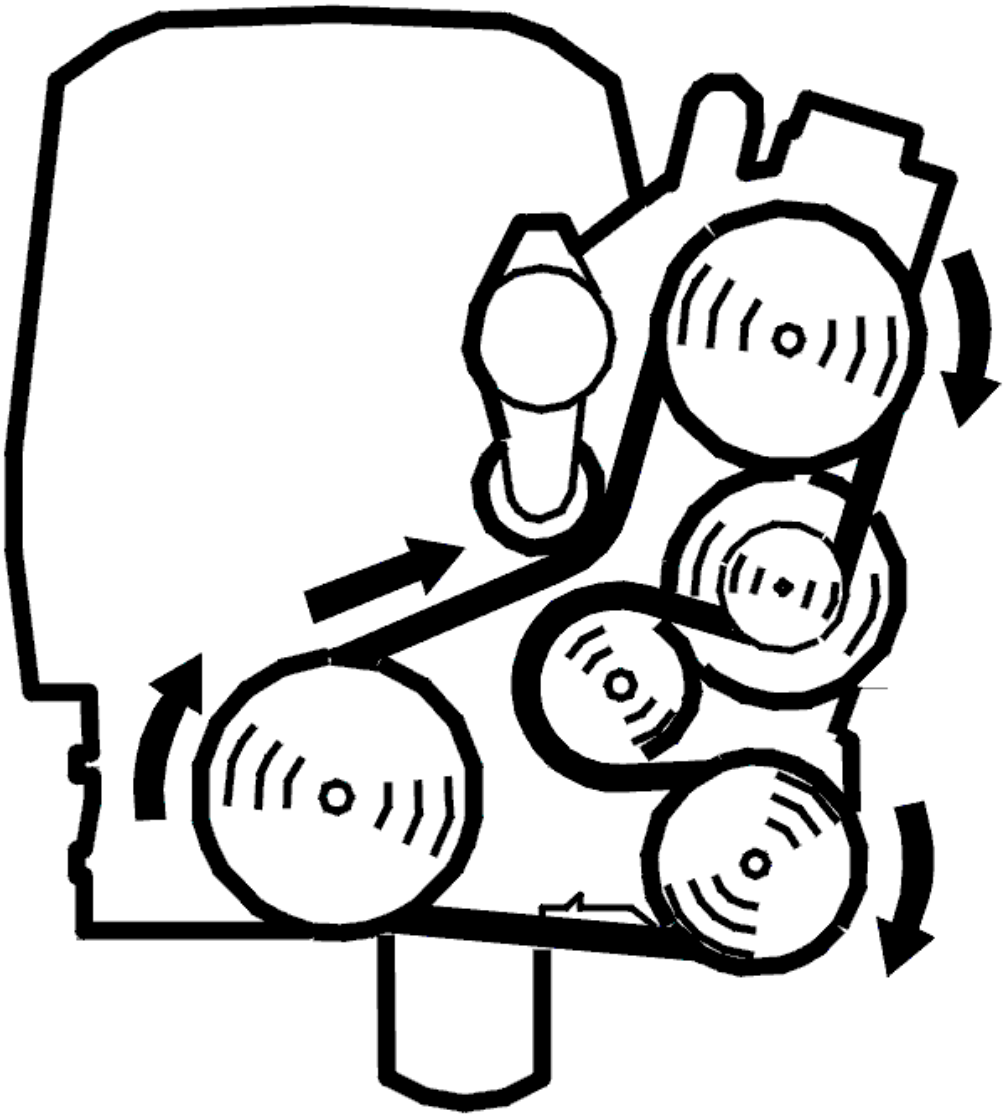

Fig. 187: Identifying Belt Routing
Courtesy of VOLVO CARS CORPORATION

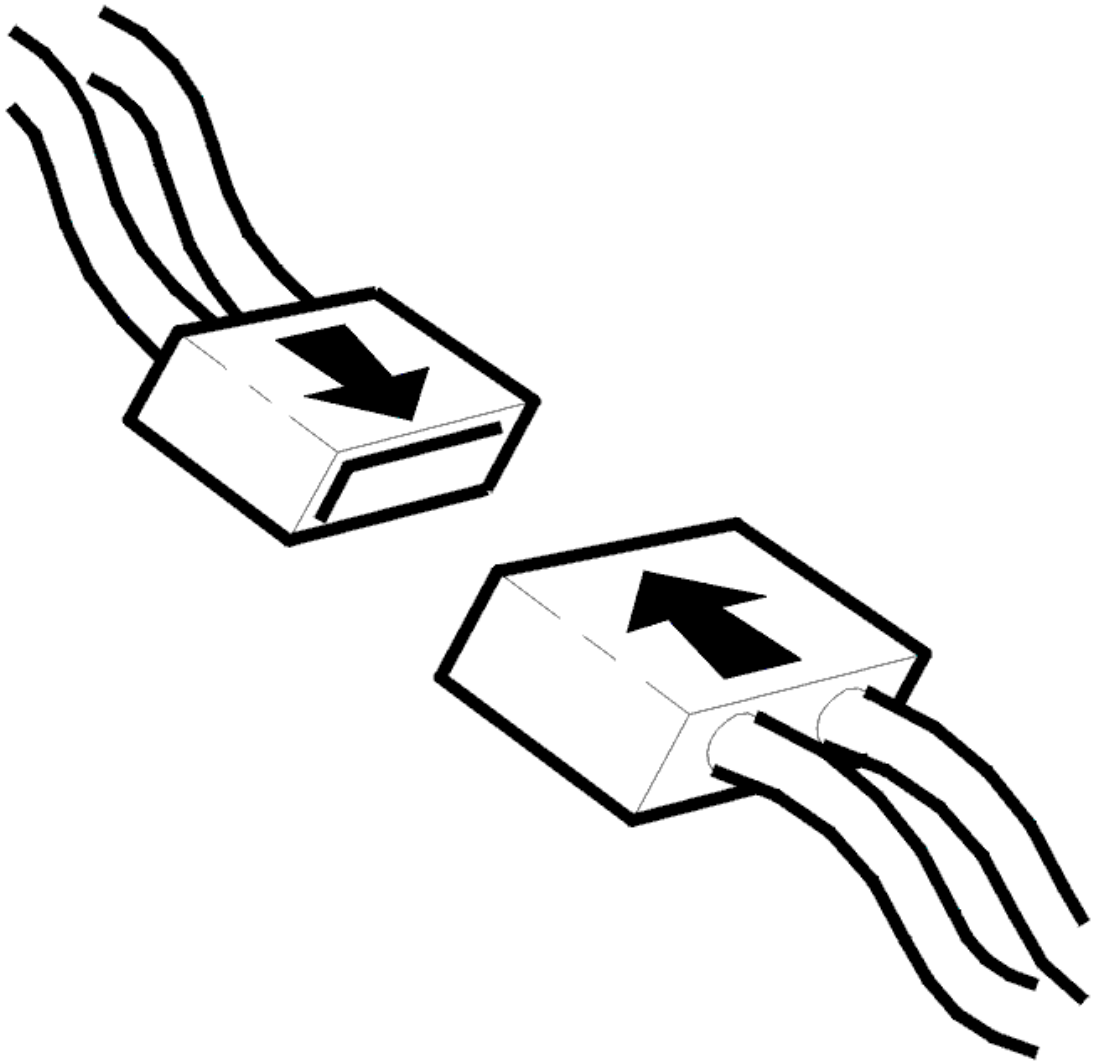

Fig. 188: Identifying Connector(s) Reinstallation
Courtesy of VOLVO CARS CORPORATION

- Start the engine and allow it to idle.
- Read off the transmission input speed.

  Read off the transmission input speed.

  If the transmission input speed updates correctly it means that the fault was present previously but is not active now. There is an intermittent fault.

  If the transmission input speed does not update correctly it means that the fault is permanent.

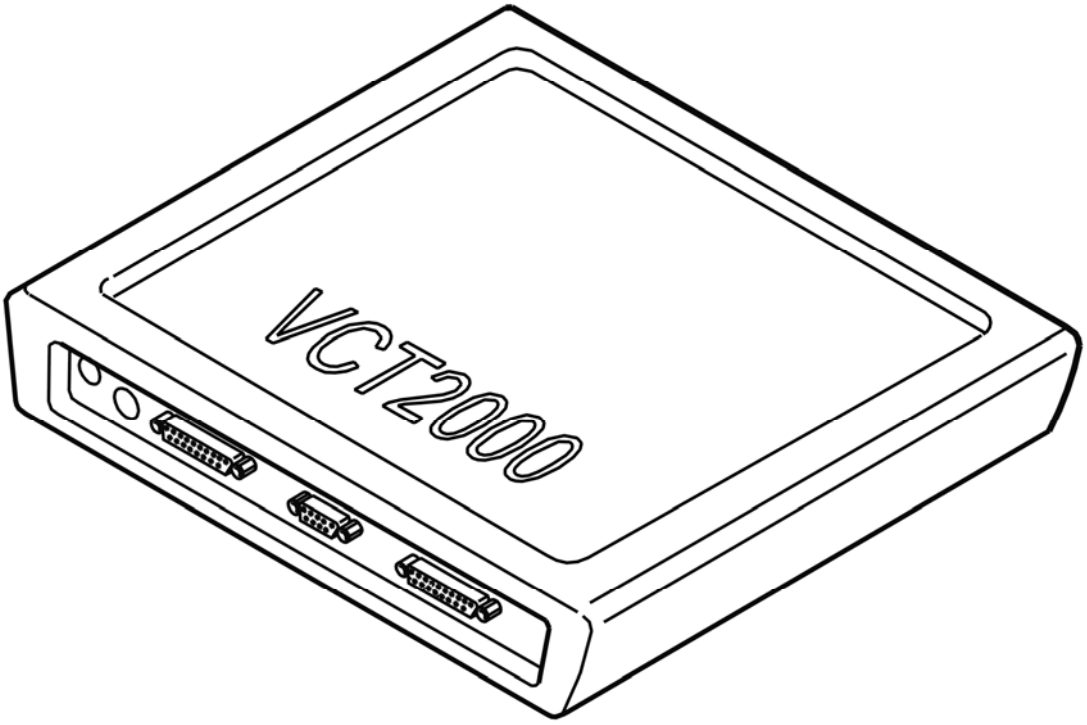

Fig. 189: Identifying VCT2000 Diagnostic Tool Symbol In VIDA
Courtesy of VOLVO CARS CORPORATION

- **Continue**

  Refer to **CHECKING WIRING AND SENSORS**

CHECKING WIRING AND SENSORS

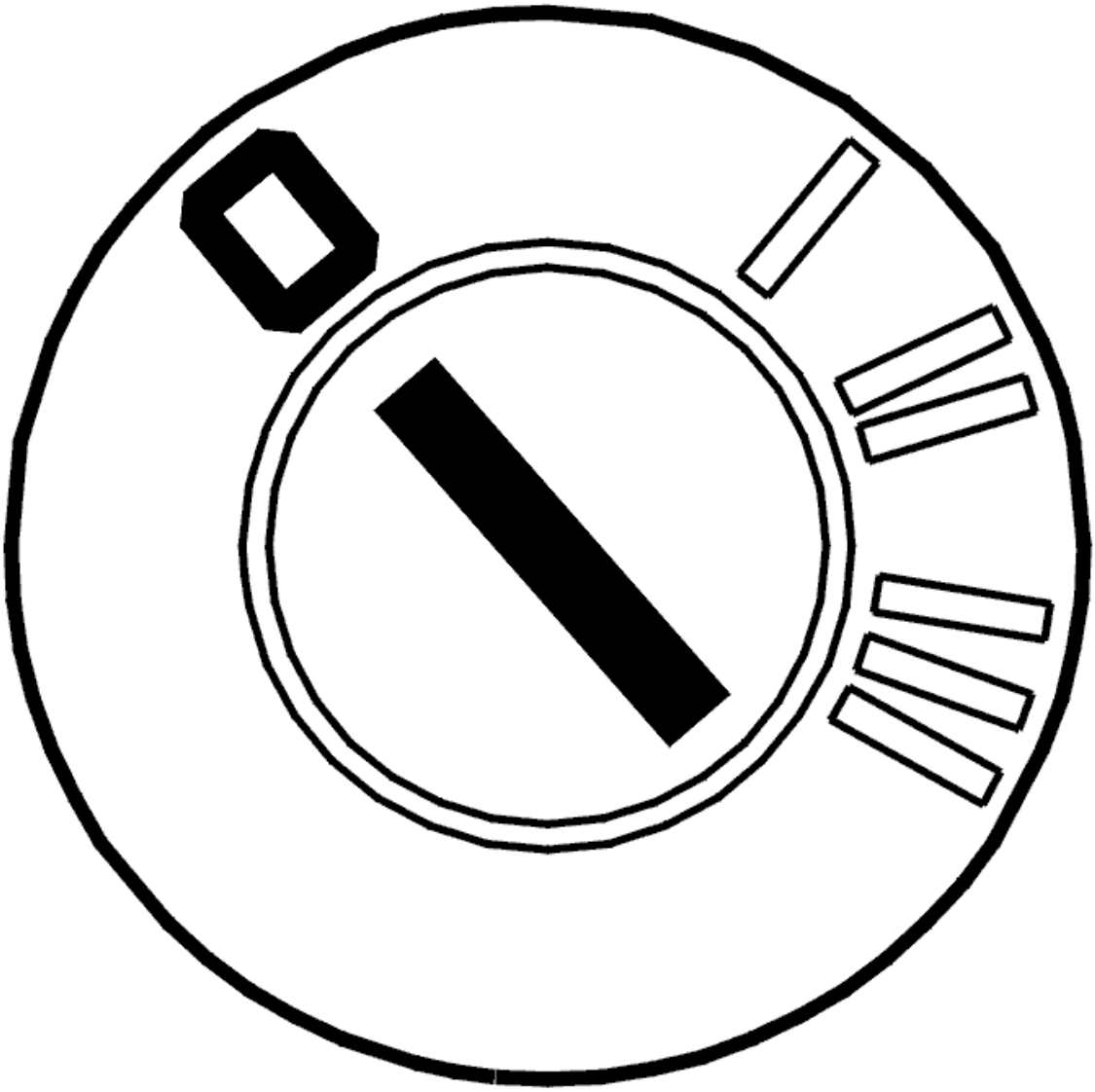

Fig. 190: Identifying Ignition OFF
Courtesy of VOLVO CARS CORPORATION

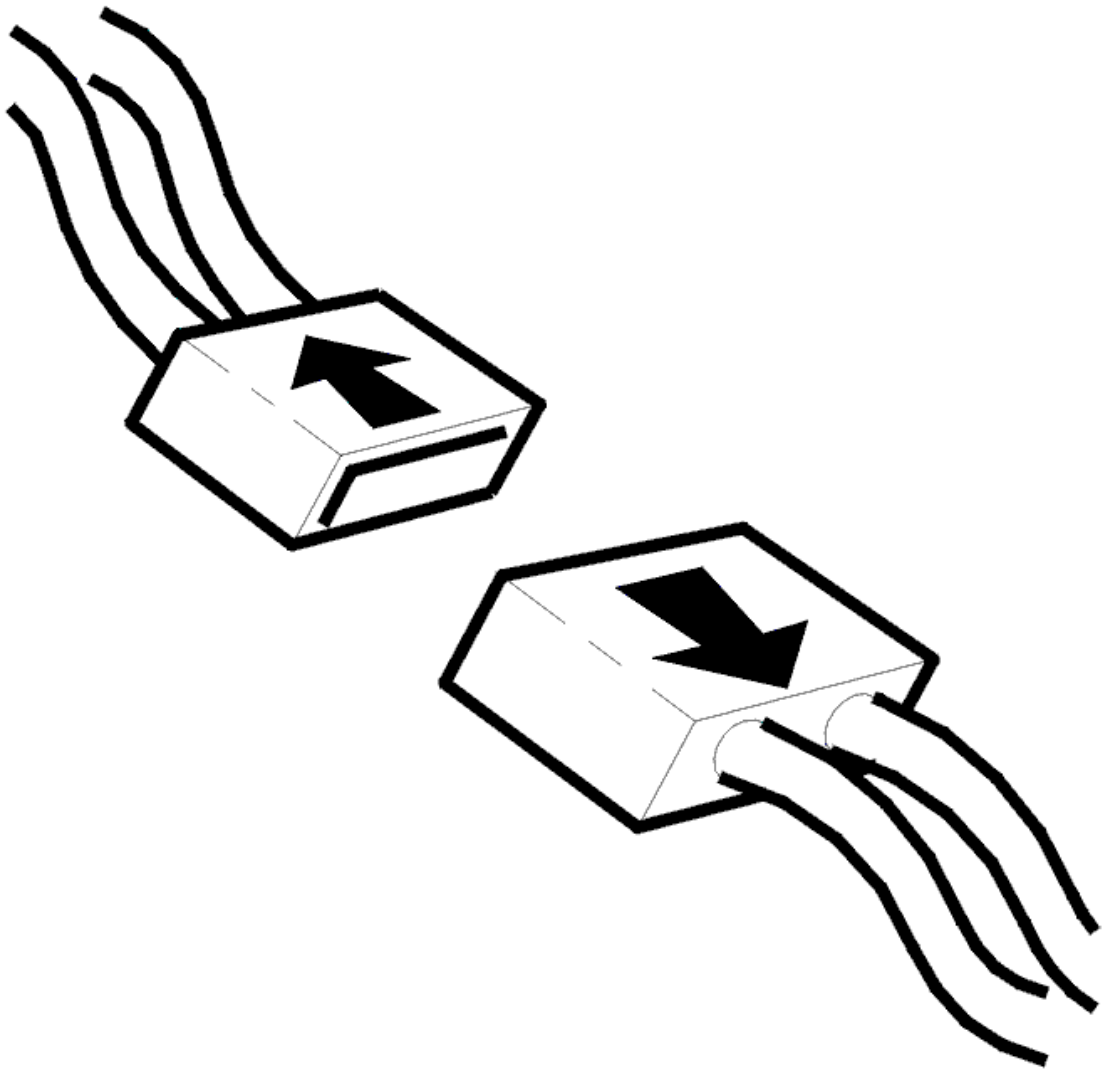

Fig. 191: Identifying Connector(s) Disconnected
Courtesy of VOLVO CARS CORPORATION

- Ignition off
- Connect the breakout box to the transmission.
- Expose the control system of the transmission.
- Disconnect the connector for the transmission speed input sensor.

  Check the wiring for the transmission input speed sensor. Connect an ohmmeter between terminal #B12 (#A12) and input speed sensor terminal #2 and between terminal #B13 (#A13) on the breakout box and input speed sensor terminal #1. The resistance must be 0 ohms. Check the wiring. Check for short-circuits to adjacent cables in the cable harness.

  HINT: If no faults are found in the wiring check the input speed sensor. See : CHECKING THE INPUT AND OUTPUT SPEED SENSORS FOR THE TRANSMISSION

Remedy as necessary.

Other information

- see **CONNECTING THE BREAKOUT BOX**
- see **SIGNAL DESCRIPTION**
- For access to connector: **GEARBOX INPUT SPEED SENSOR, REPLACING**
- see **CONTENTS**

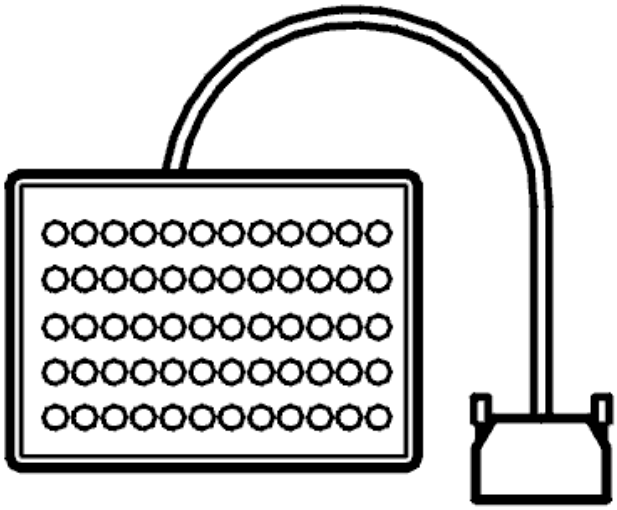

Fig. 192: Identifying Breakout Box
Courtesy of VOLVO CARS CORPORATION

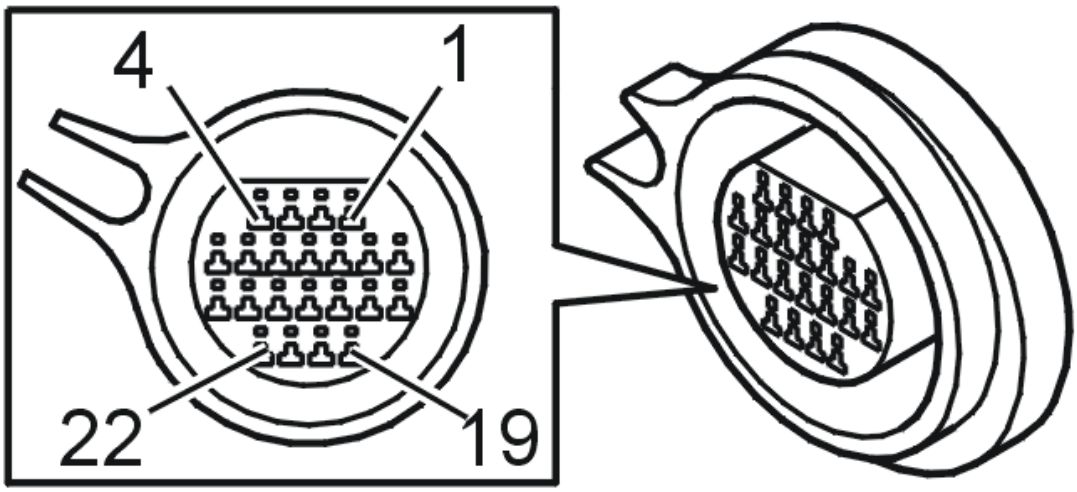

Fig. 193: Identifying Connector B Terminals
Courtesy of VOLVO CARS CORPORATION

- **Continue**

Refer to **RESETTING ADAPTATION**

RESETTING ADAPTATION

RESETTING ADAPTATION AND COUNTER FOR "TRANSMISSION OIL, CHANGING"

HINT: The transmission has torque-controlled, adaptive pressure control. The pressure control means that the transmission itself controls the pressure during each shift sequence in order to avoid harsh shifting. Each shift is assessed by the transmission control module (TCM) and is stored in the internal memory, which results in compensation for wear in the transmission and clutch. In order for the transmission to function correctly after repair, it is important to reset the adaptation in the memory. Since the oil is changed during the repair, the counter for "Transmission oil, change" shall also be reset. If the counter is not reset when draining/changing oil, there is a risk that a diagnostic trouble code may be generated under incorrect conditions.

NOTE: This applies only if the transmission or one of the components in the transmission have been replaced.

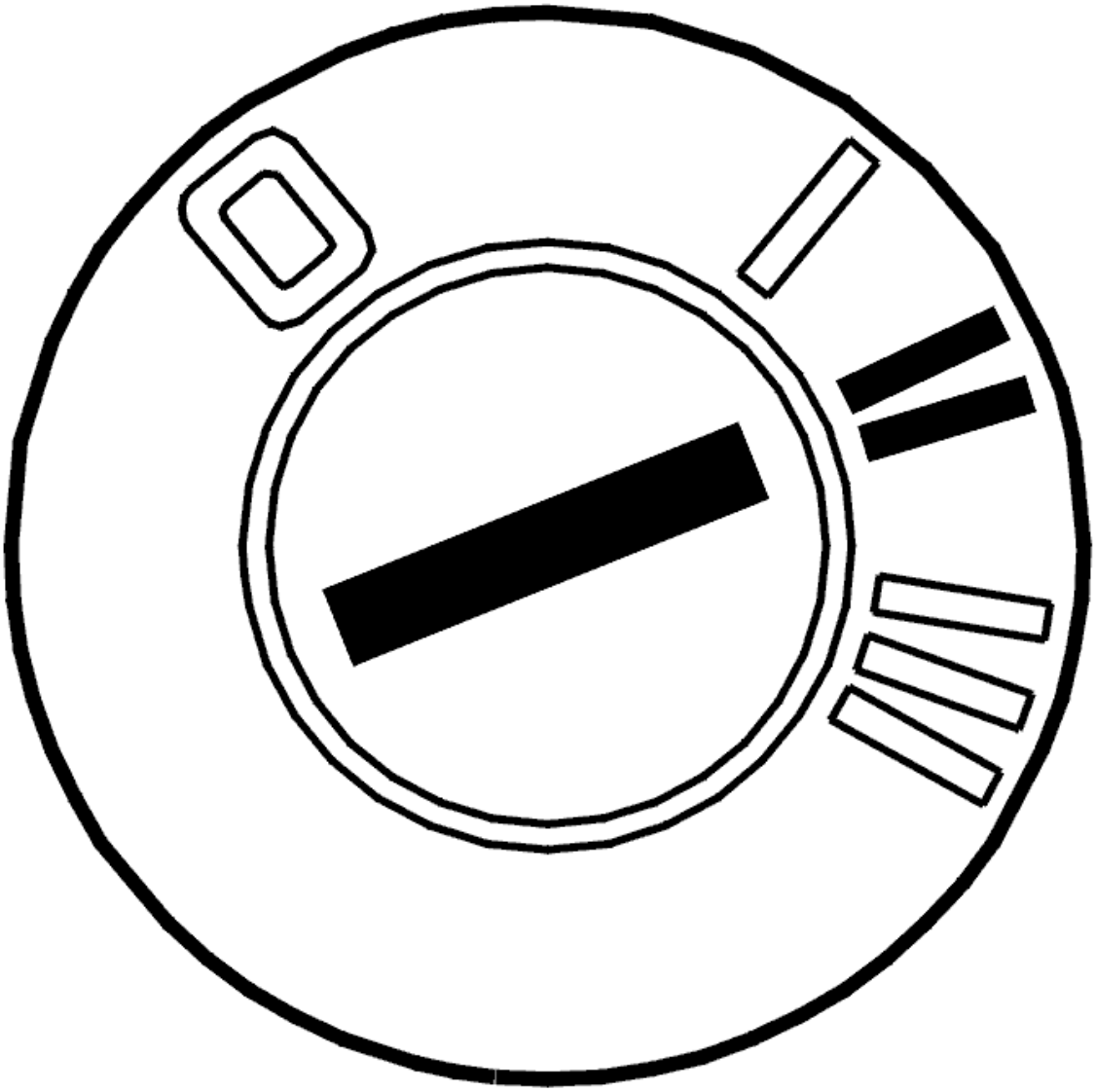

Fig. 194: Identifying Ignition ON
Courtesy of VOLVO CARS CORPORATION

- Ignition on

  Activate reset of the adaptation and the counter by clicking on the symbol for VCT2000.

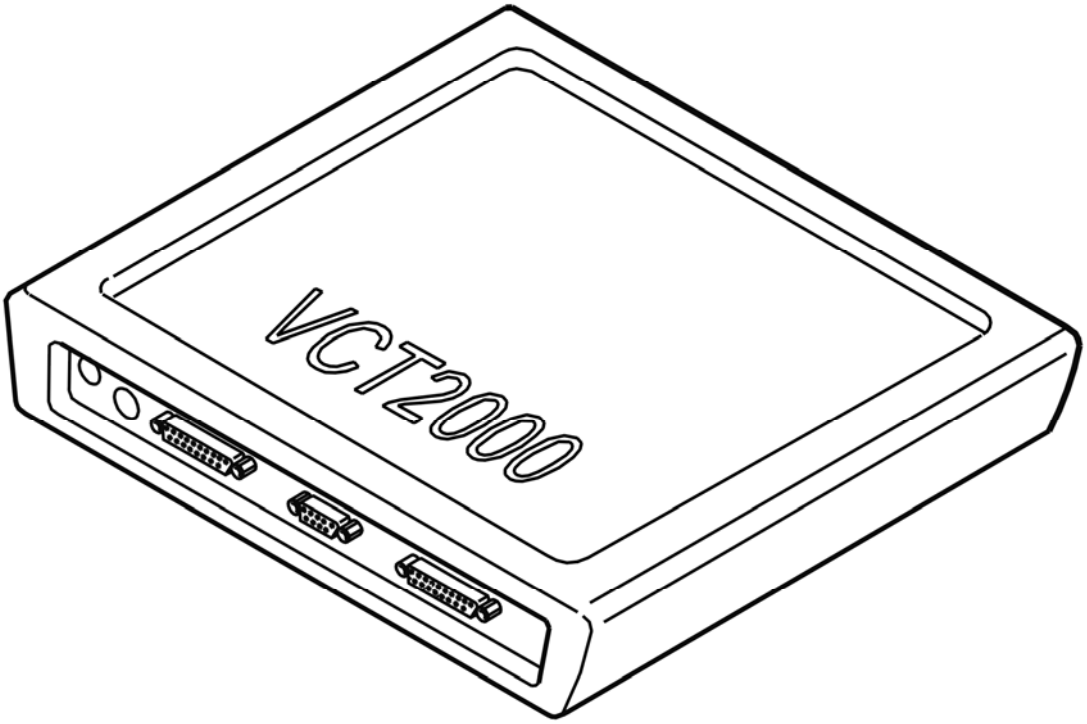

Fig. 195: Identifying VCT2000 Diagnostic Tool Symbol In VIDA
Courtesy of VOLVO CARS CORPORATION

- **Continue**

  Refer to **VERIFICATION**

VERIFICATION

VERIFICATION

HINT: After carrying out the repair, check that the fault has been remedied.

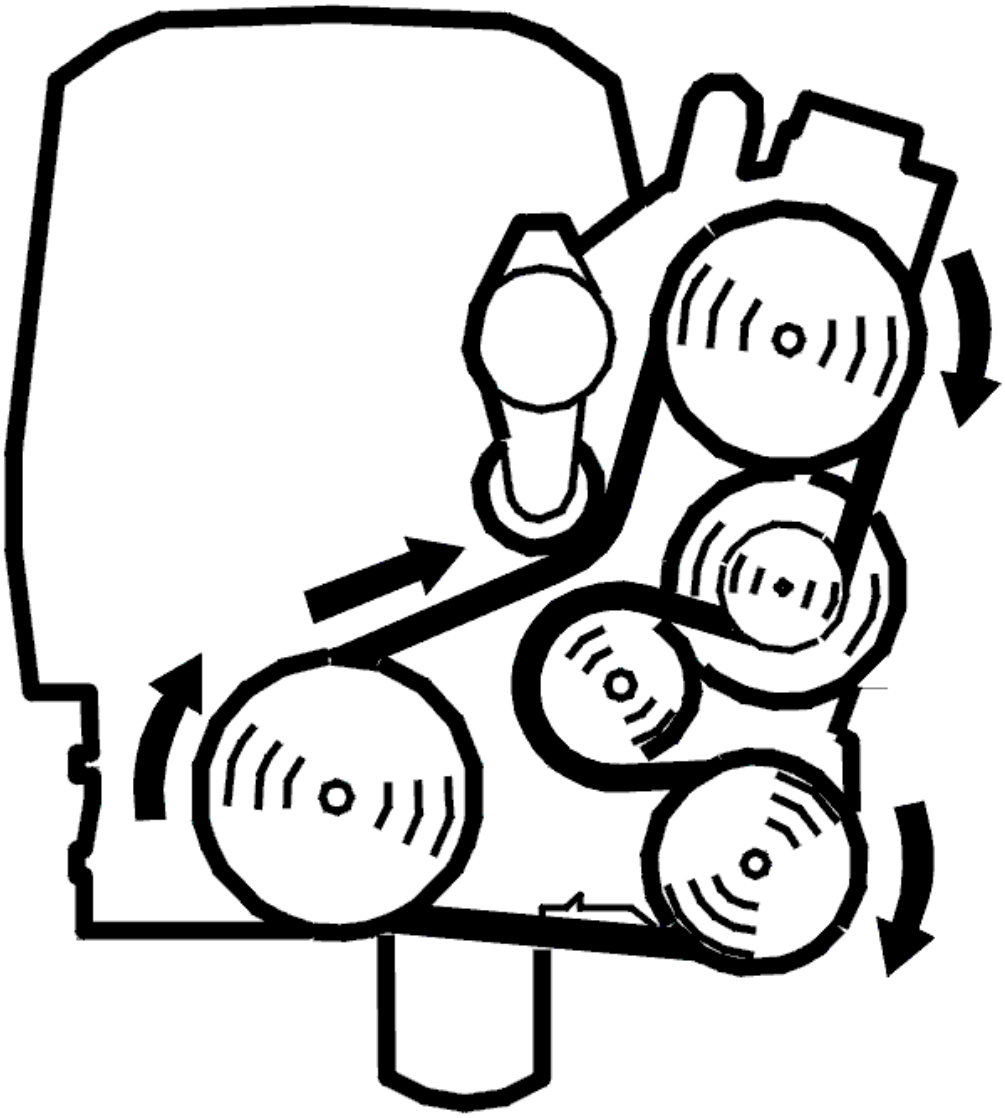

Fig. 196: Identifying Belt Routing
Courtesy of VOLVO CARS CORPORATION

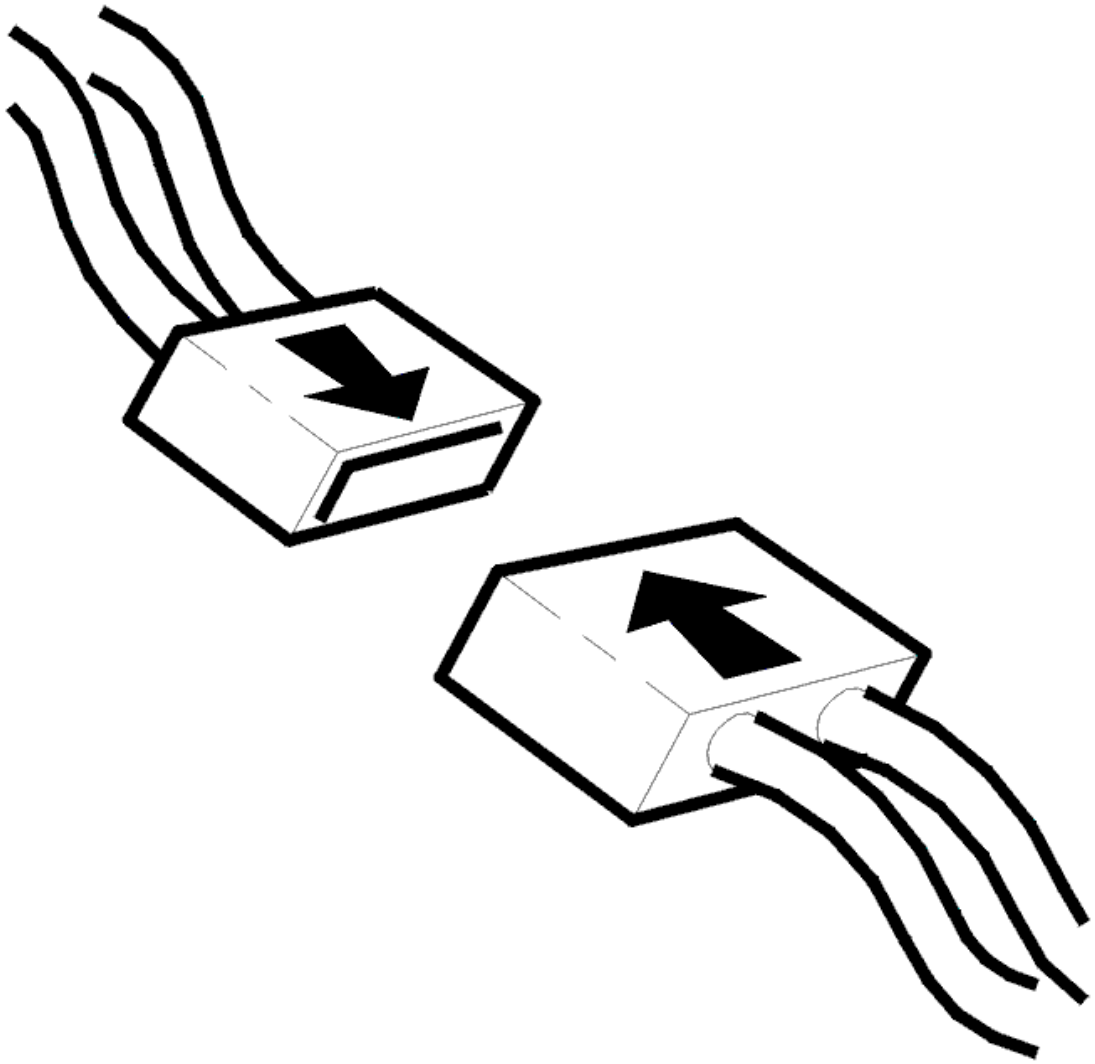

Fig. 197: Identifying Connector(s) Reinstallation
Courtesy of VOLVO CARS CORPORATION

- Ignition off
- Reinstall the connectors, components etc.
- Start the engine and allow it to idle.
- Read off the transmission's input rpm.

  Increase the rpm and check that the rpm is updated. Compare to the engine rpm.

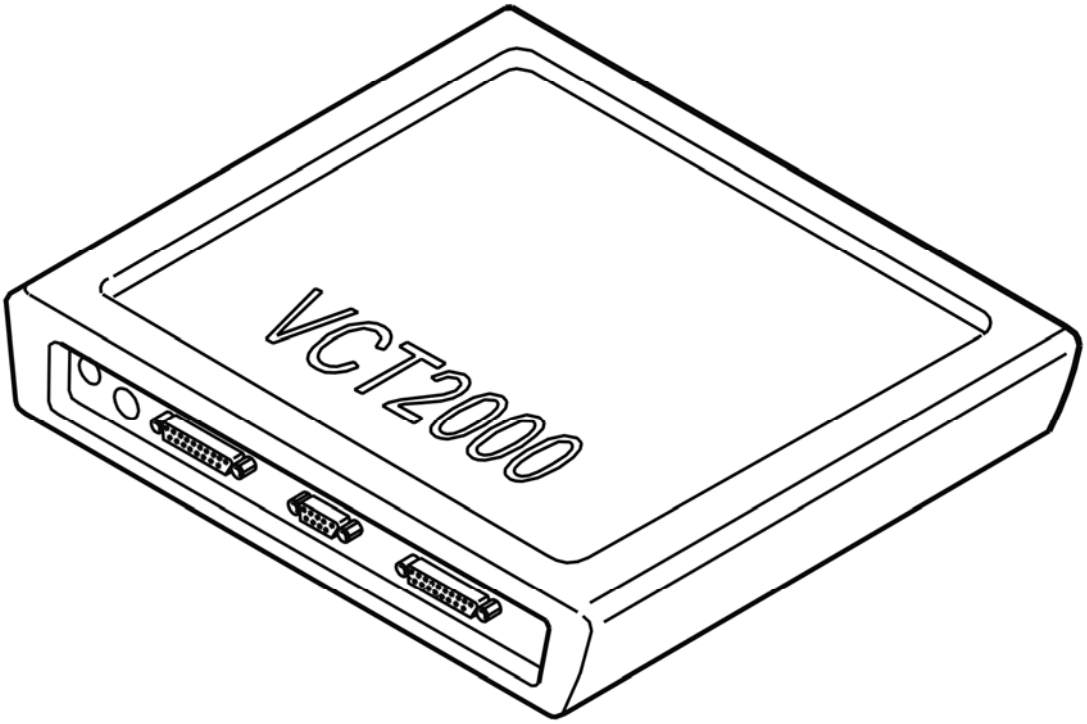

Fig. 198: Identifying VCT2000 Diagnostic Tool Symbol In VIDA
Courtesy of VOLVO CARS CORPORATION

Is the rpm updated?

- **YES**

  VERIFIED: Troubleshooting has been completed.

- **NO**

  Refer to **INFORMATION**

INFORMATION

FAULT-TRACING INFORMATION

The fault should have been detected and remedied. As this is not the case fault-tracing has failed.

Exit fault-tracing for this diagnostic trouble code (DTC) or make another attempt.

TCM-P071500: TURBINE/INPUT SHAFT SPEED SENSOR A CIRCUIT. GENERAL FAULT INFORMATION. NO INFORMATION ON FAULT TYPE (TF-

80SC AWD; 2005)

DIAGNOSTIC TROUBLE CODE (DTC) INFORMATION TCM-P071500

see **DIAGNOSTIC TROUBLE CODE (DTC) INFORMATION TCM-P071500**

FAULT TRACING

see **FAULT TRACING**

TCM-P071600: TURBINE/INPUT SHAFT SPEED SENSOR A CIRCUIT RANGE/PERFORMANCE. GENERAL FAILURE INFORMATION. NO SUB TYPE INFORMATION (B6324S, TF-80SC; B6324S, TF-80SC AWD; 2007-2010)

DIAGNOSTIC TROUBLE CODE (DTC) INFORMATION TCM-P071600

Condition

The signal for input speed comes from a sensor within the transmission control system. The transmission control module (TCM) uses the signal to determine the input shaft speed after the torque converter. This signal is used to compare transmission speed and vehicle speed. The transmission control module uses this comparison to calculate the gear-shift timing.

The rpm and road speed data are also utilized in modulating the system pressure and in reducing engine torque when shifting gear. The result is smooth gear-shifting. The information is also used to control the function.

The transmission control module (TCM) calculates and compares also the transmission input speed and output speed plus the engine speed for diagnosis.

The diagnostic trouble code (DTC) is stored if the control module detects that:

- The signal is incorrect when vehicle speed is over about 7 km/h (4 mph).

The control module's test for the diagnostic trouble code (DTC) starts in the event of:

- Speed higher than 30 km/h (20 mph), engine speed over 400 rpm and at least 3rd gear engaged.

NOTE: **The control module can only detect the fault once the test has been started and the diagnostic trouble code (DTC) is stored when the conditions are met.**

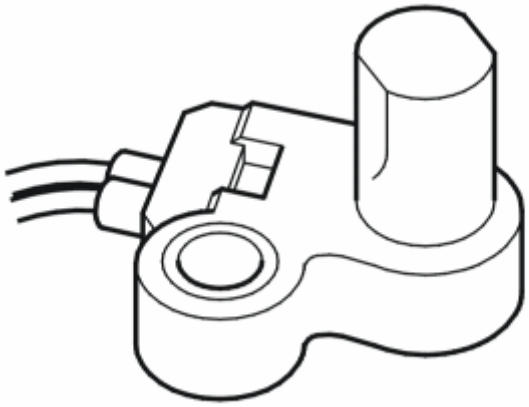

Fig. 199: Identifying Turbine/Input Shaft Speed Sensor
Courtesy of VOLVO CARS CORPORATION

Substitute Value

- Auxiliary program **Emergency mode 1** in the transmission control module (TCM) has started.

HINT: EMERGENCY MODE IN THE EVENT OF A FAULT

Possible Source

- Contact resistance in the terminals.
- Transmission input speed sensor not fitted correctly.
- Speed sensor not working.

Fault symptom[s]

- Malfunction indicator light (MIL), on
- General warning lamp lit
- No lock-up
- Rough gear shift
- No gear shift

FAULT-TRACING

CHECKS

CHECKING THE FUNCTION

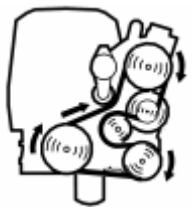

Fig. 200: Identifying Belt Routing
Courtesy of VOLVO CARS CORPORATION

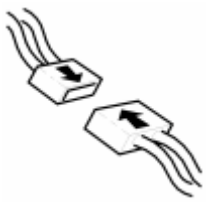

Fig. 201: Identifying Connector(s) Reinstallation
Courtesy of VOLVO CARS CORPORATION

- Start the engine. Allow the engine to idle.
- Read off the transmission input speed.

  Read off the transmission input speed.

  If the transmission input speed updates correctly it means that the fault was present previously but is not active now. There is an intermittent fault.

  If the transmission input speed does not update correctly it means that the fault is permanent.

Fig. 202: Identifying VCT2000 Diagnostic Tool Symbol In VIDA
Courtesy of VOLVO CARS CORPORATION

- **Continue**

  Refer to **CHECKING THE WIRING AND SENSORS**

CHECKING THE WIRING AND SENSORS

Fig. 203: Identifying Ignition In Off Position
Courtesy of VOLVO CARS CORPORATION

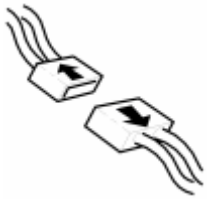

Fig. 204: Identifying Connectors Disconnected
Courtesy of VOLVO CARS CORPORATION

- Ignition off.
- Connect the breakout box to the transmission.
- Expose the transmission control system.
- Disconnect the connector for the transmission speed input sensor.

  Check the input speed sensor cables by connecting an ohmmeter between terminal #B12 (#A12) and input speed sensor terminal #2 plus between breakout box terminal #B13 (#A13) and input speed sensor terminal #1. The resistance must be 0 ohms.

  Also check the cables for short circuit to nearby cables in the cable harness.

  Check that the rpm sensor for input rpm is not loose and that the sensor is installed correctly.

  HINT: If no faults are found in the wiring check the input speed sensor. See :CHECKING INTERNAL COMPONENTS OF THE TRANSMISSION

  Remedy as necessary.

  Other information

  - see **CONNECTING THE BREAKOUT BOX**
  - see **SIGNAL SPECIFICATION**
  - For access to connector: **GEARBOX INPUT SPEED SENSOR, REPLACING**
  - see **CHECKING WIRING AND TERMINALS**

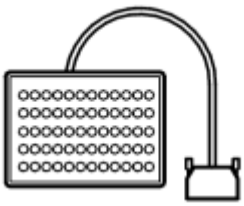

Fig. 205: Identifying Breakout Box
Courtesy of VOLVO CARS CORPORATION

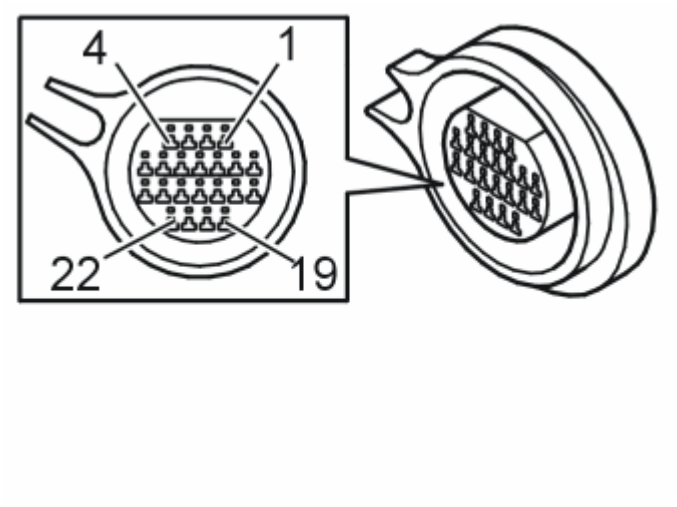

Fig. 206: Identifying Connector B Terminals
Courtesy of VOLVO CARS CORPORATION

- **Continue**

  Refer to **RESETTING ADAPTATION**

VERIFICATION

VERIFICATION

HINT: After carrying out the repair, check that the fault has been remedied.

Fig. 207: Identifying Belt Routing
Courtesy of VOLVO CARS CORPORATION

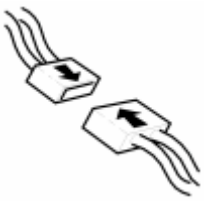

Fig. 208: Identifying Connector(s) Reinstallation
Courtesy of VOLVO CARS CORPORATION

- Ignition off.
- Reinstall the connectors, components etc.
- Start the engine. Allow the engine to idle.
- Read off the transmission input speed.

  Increase rpm and check that it is updated. Compare with the engine speed (RPM).

Fig. 209: Identifying VCT2000 Diagnostic Tool Symbol In VIDA
Courtesy of VOLVO CARS CORPORATION

Is the speed updated?

- **YES**

  VERIFIED: Troubleshooting has been completed.

- **NO**

  Refer to **INFORMATION**

INFORMATION

FAULT-TRACING INFORMATION

The fault should have been detected and remedied. As this is not the case fault-tracing has failed.

Exit fault-tracing for this diagnostic trouble code (DTC) or make another attempt.

RESETTING ADAPTATION

RESETTING THE ADAPTATION AND THE COUNTER FOR "TRANSMISSION OIL, REPLACE"

HINT: The transmission has torque-regulated, adaptive pressure regulation. The pressure regulator enables the transmission to regulate pressure during each shift to prevent hard shifting. Each shift is assessed by the transmission control module (TCM) and is stored in the internal memory. This makes it possible to compensate for transmission and clutch wear. It is important that the adaptation in the memory is reset so that the transmission works normally after the repair. Because the fluid was changed during the repair, the counter for transmission fluid change must also be reset. If the counter is not reset during draining/replacement, a diagnostic trouble code may be generated under the wrong conditions.

NOTE: This applies only if the transmission or one of the components in the transmission have been replaced.

Fig. 210: Identifying Ignition ON
Courtesy of VOLVO CARS CORPORATION

- Ignition on.

  Click on the VCT2000 symbol to reset the adaptation and counter.

  Fig. 211: Identifying VCT2000 Diagnostic Tool Symbol In VIDA
  Courtesy of VOLVO CARS CORPORATION

- **Continue**

  Refer to **VERIFICATION**

TCM-P071600: TURBINE/INPUT SHAFT SPEED SENSOR A CIRCUIT RANGE/PERFORMANCE. GENERAL FAILURE INFORMATION. NO SUB TYPE INFORMATION (B6324S5, TF-80SC; B6324S5, TF-80SC AWD; 2011-2012)

DIAGNOSTIC TROUBLE CODE (DTC) INFORMATION TCM-P071600

see **DIAGNOSTIC TROUBLE CODE (DTC) INFORMATION TCM-P071600**

FAULT-TRACING

see **FAULT-TRACING**

TCM-P071600: TURBINE/INPUT SHAFT SPEED SENSOR A CIRCUIT INSIDE/OUTSIDE TOLERANCE. GENERAL FAULT INFORMATION. NO INFORMATION ON FAULT TYPE (B8444S, TF-80SC AWD; 2006-2011)

DIAGNOSTIC TROUBLE CODE (DTC) INFORMATION TCM-P071600

Condition

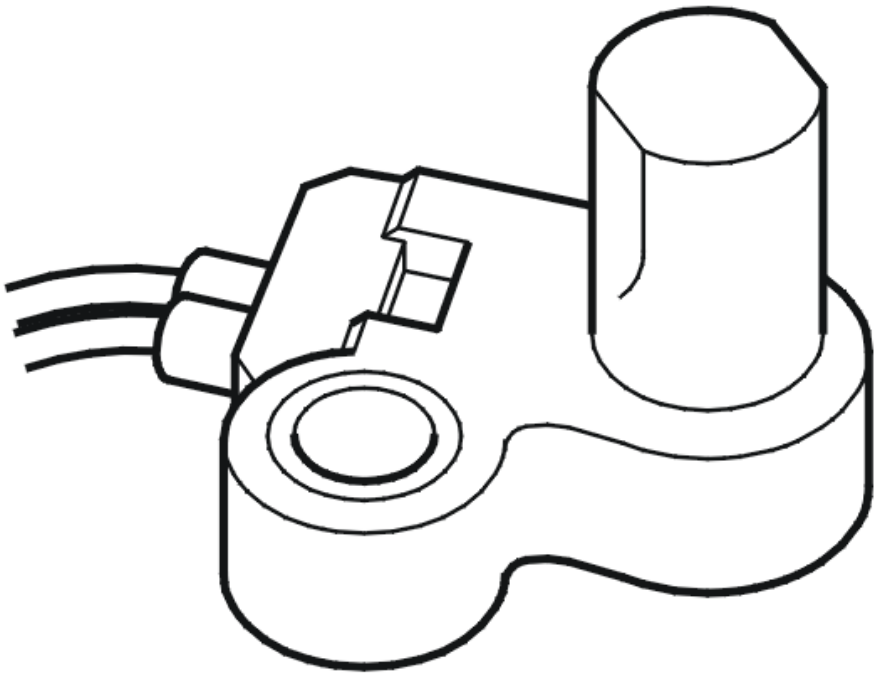

Fig. 212: Identifying Transmission Output Speed Sensor
Courtesy of VOLVO CARS CORPORATION

The signal for the input speed comes from a sensor inside the transmission control system. The transmission control module (TCM) bases its calculation of the speed of the input shaft after the torque converter on this signal. The signal is used to compare the speed of the gearbox with the vehicle speed. Using this comparison, the transmission control module (TCM) can calculate the gear shifting points.

The information on RPM and speed affects the adjustment of the system pressure (control of the lock-up function) and the reduction of the engine torque when changing gear. This results in smoother gear changes. The information is also used to control the lock-up function.

The transmission control module (TCM) calculates and compares also the gearbox input speed and output speed plus the engine speed for diagnosis. If the transmission control module (TCM) registers that the signal is incorrect when the vehicle speed is above approximately 7 km/h, the diagnostic trouble code (DTC) is generated.

The diagnostic trouble code (DTC) can be diagnosed at speeds above approximately 30 km/h and engine speeds above 400 rpm with at least 3rd gear engaged.

Substitute Value

- Auxiliary program **Emergency mode 1** in the transmission control module (TCM) has started.

  HINT: EMERGENCY MODE IN CASE OF MALFUNCTION

Possible Source

- Contact resistance in the terminals
- Gearbox input speed sensor not fitted correctly.
- Speed sensor not working.

Fault symptom[s]

- Malfunction indicator lamp (MIL) lit.
- General warning lamp lit
- No lock-up function.
- Harsh gear changing
- No gear changing.

FAULT TRACING

CHECKS

CHECKING THE FUNCTION

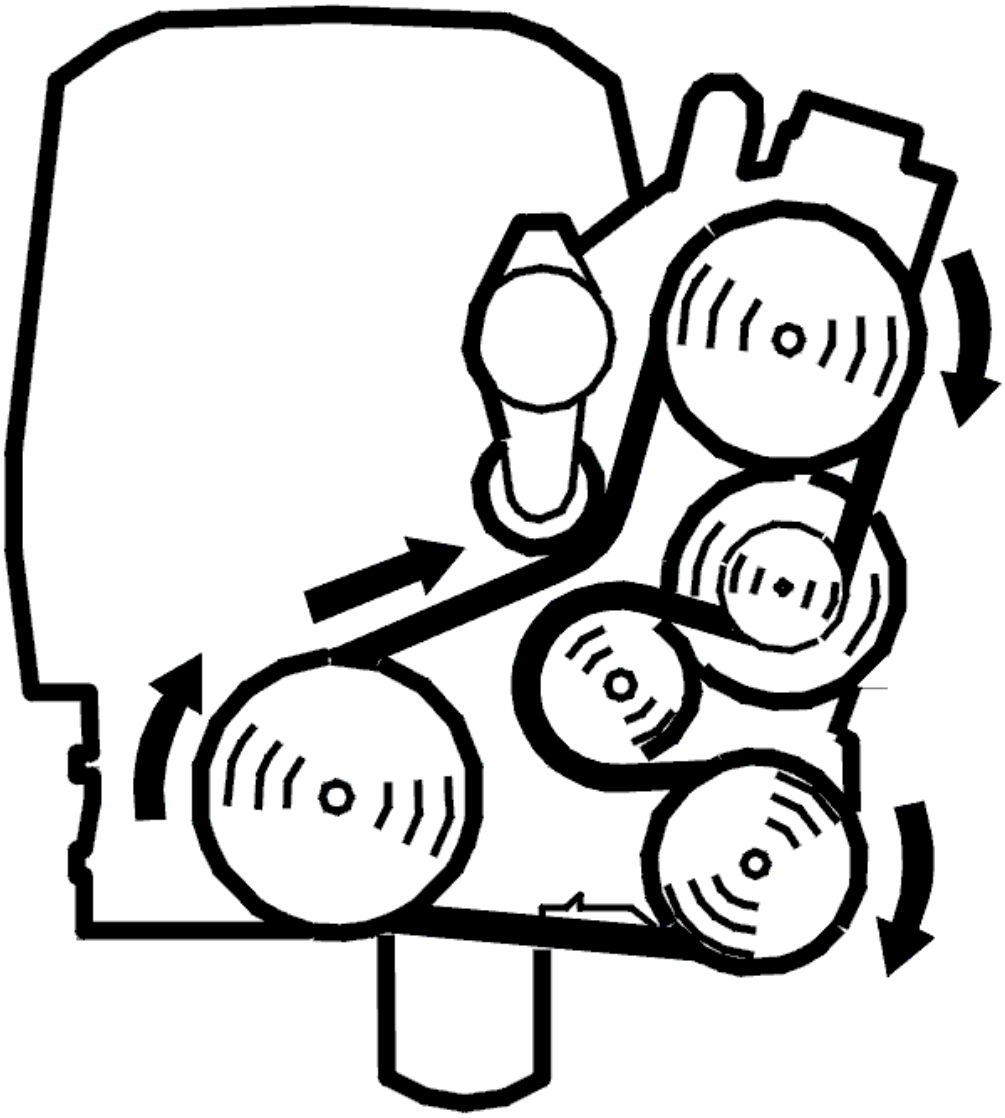

Fig. 213: Identifying Belt Routing
Courtesy of VOLVO CARS CORPORATION

- Start the engine and allow it to idle.
- Read off the transmission input speed.

  Read off the transmission input speed.

  If the transmission input speed updates correctly it means that the fault was present previously but is not active now. There is an intermittent fault.

  If the transmission input speed does not update correctly it means that the fault is permanent.

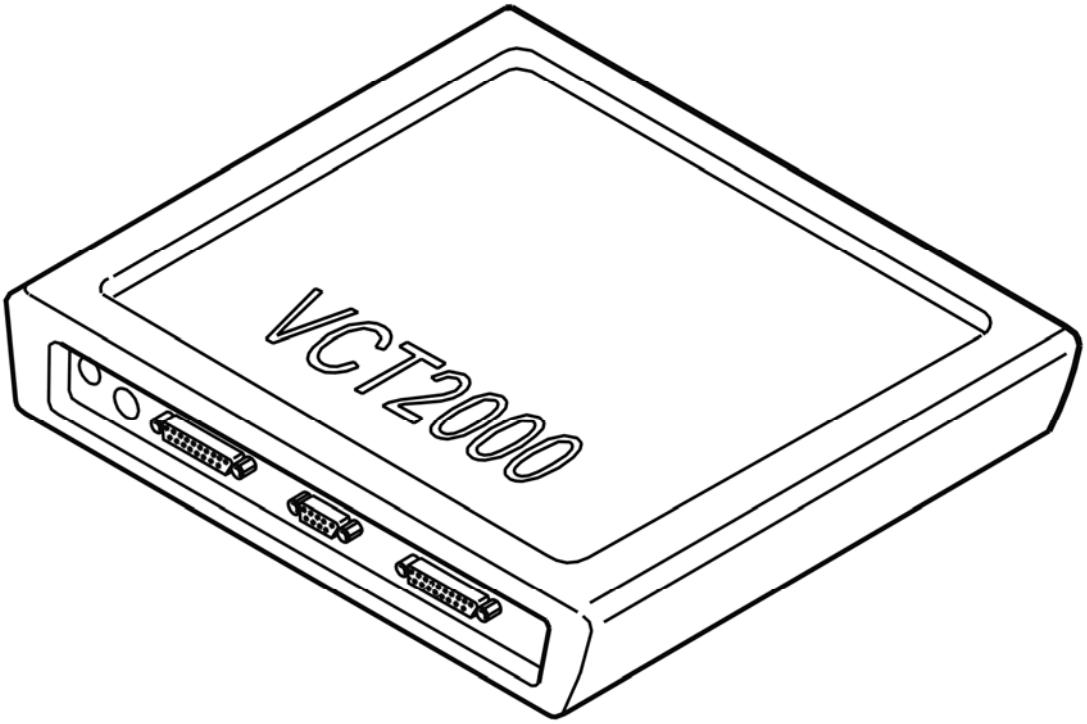

Fig. 214: Identifying VCT2000 Diagnostic Tool Symbol In VIDA
Courtesy of VOLVO CARS CORPORATION

- **Continue**

  Refer to **CHECKING WIRING AND SENSORS**

CHECKING WIRING AND SENSORS

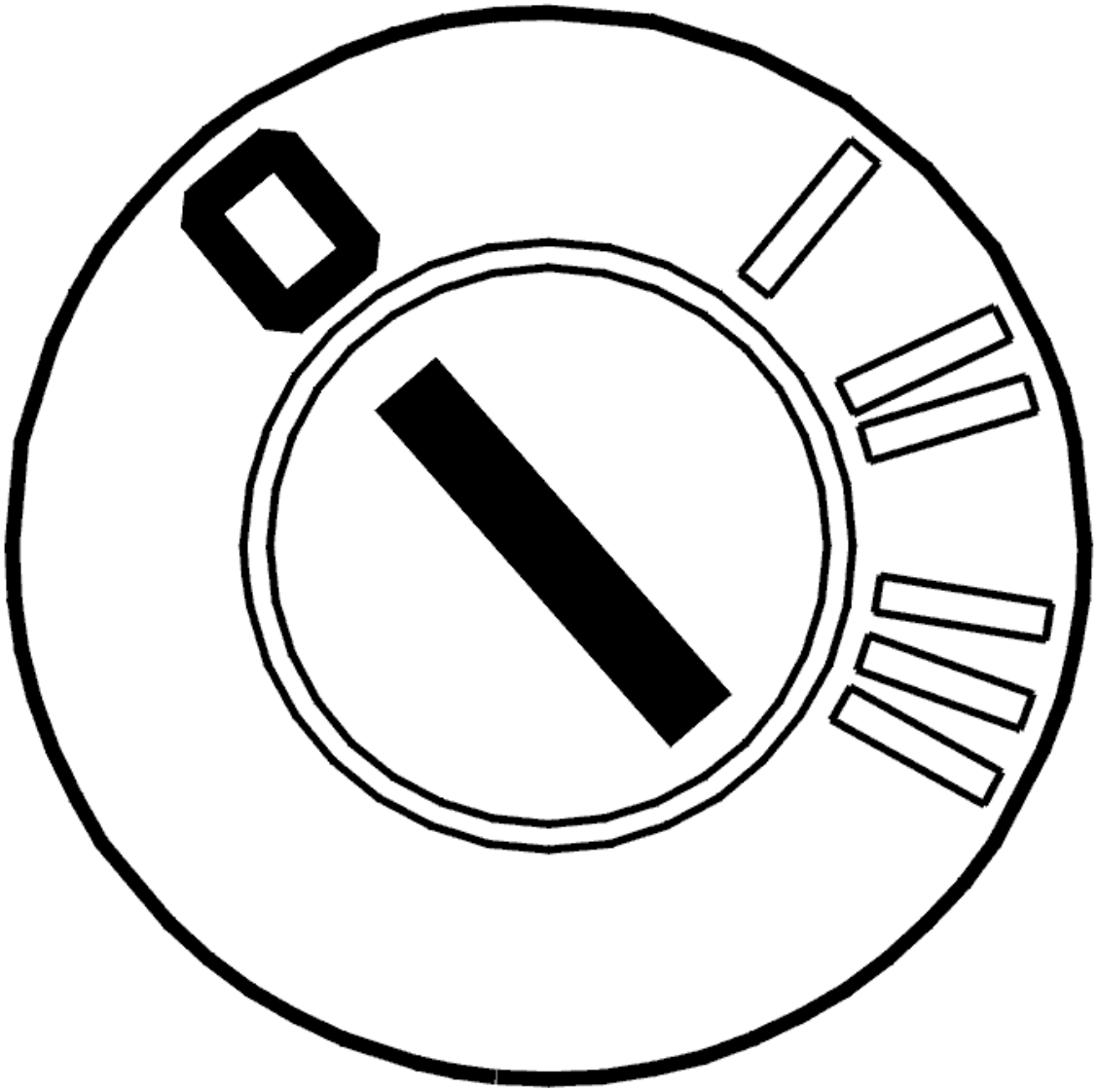

Fig. 215: Identifying Ignition OFF
Courtesy of VOLVO CARS CORPORATION

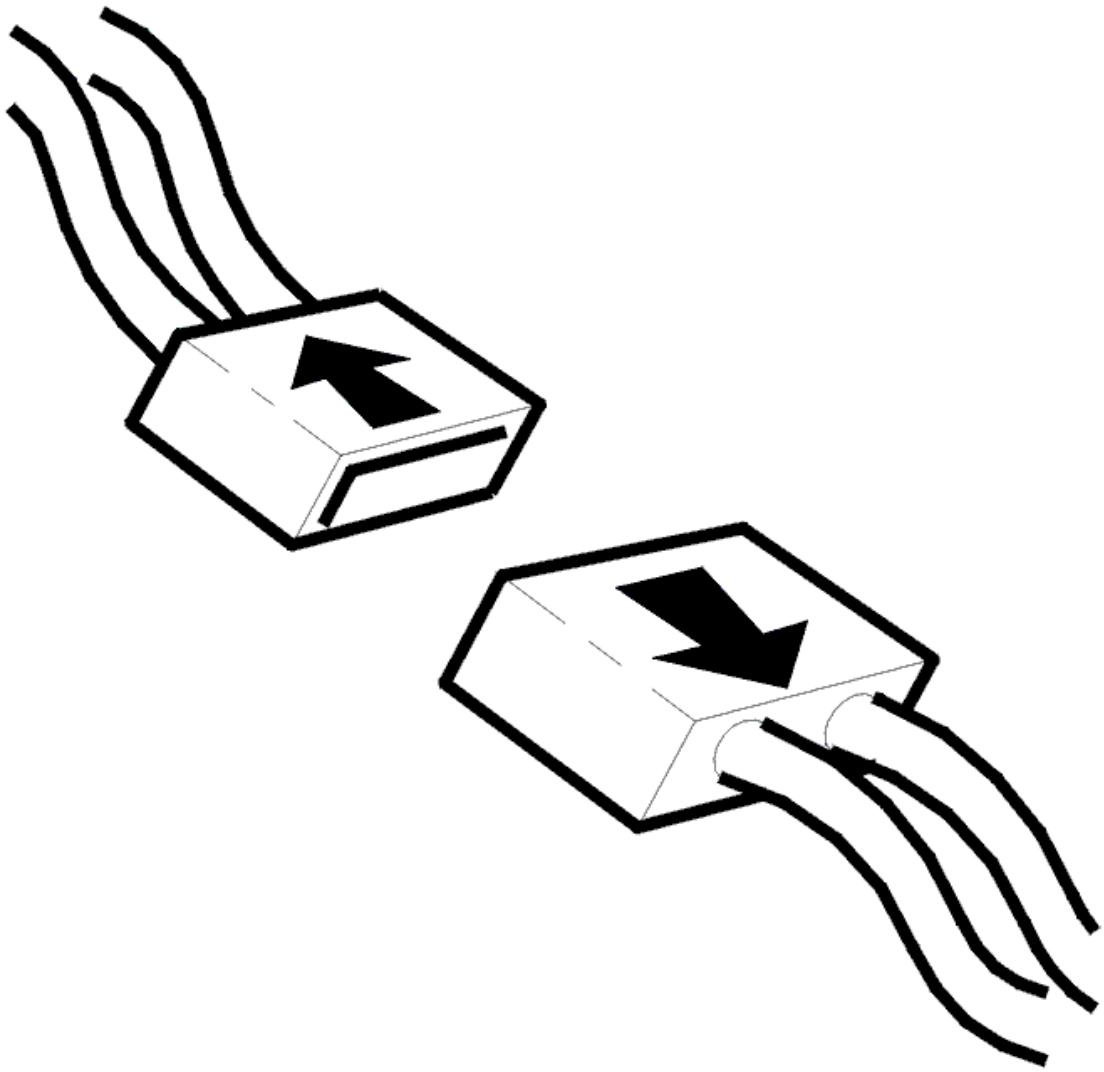

Fig. 216: Identifying Connector(s) Disconnected
Courtesy of VOLVO CARS CORPORATION

- Ignition off
- Connect the breakout box to the transmission.
- Expose the control system of the transmission.
- Disconnect the connector for the transmission speed input sensor.

  Check the wiring for the transmission input speed sensor. Connect an ohmmeter between terminal #B12 (#A12) and input speed sensor terminal #2 and between terminal #B13 (#A13) on the breakout box and input speed sensor terminal #1. The resistance must be 0 ohms. Check the wiring. Check for short-circuits to adjacent cables in the cable harness.

  Check that the rpm sensor for input rpm is not loose and that the sensor is installed correctly.

HINT: If no defects were found on the cables, check the rpm sensor for input rpm according to: CHECKING THE INPUT AND OUTPUT SPEED SENSORS FOR THE TRANSMISSION

Remedy as necessary.

Other information

- see **CONNECTING THE BREAKOUT BOX**
- see **SIGNAL DESCRIPTION**
- For access to connector: **GEARBOX INPUT SPEED SENSOR, REPLACING**
- see **CONTENTS**

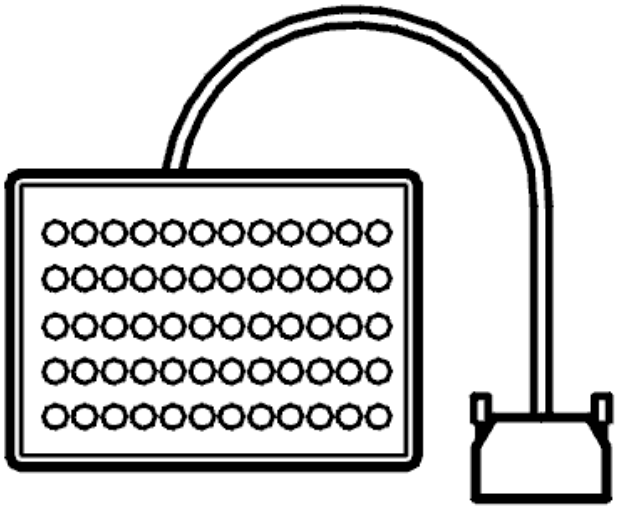

Fig. 217: Identifying Breakout Box
Courtesy of VOLVO CARS CORPORATION

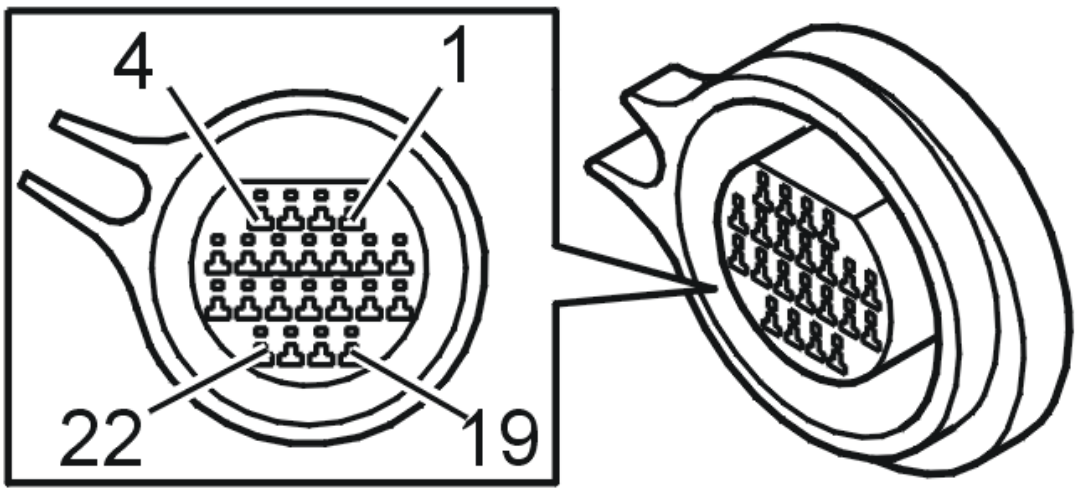

Fig. 218: Identifying Connector B Terminals
Courtesy of VOLVO CARS CORPORATION

- **Continue**

  Refer to **RESETTING ADAPTATION**

RESETTING ADAPTATION

RESETTING ADAPTATION AND COUNTER FOR "TRANSMISSION OIL, CHANGING"

HINT: The transmission has torque-controlled, adaptive pressure control. The pressure control means that the transmission itself controls the pressure during each shift sequence in order to avoid harsh shifting. Each shift is assessed by the transmission control module (TCM) and is stored in the internal memory, which results in compensation for wear in the transmission and clutch. In order for the transmission to function correctly after repair, it is important to reset the adaptation in the memory. Since the oil is changed during the repair, the counter for "Transmission oil, change" shall also be reset. If the counter is not reset when draining/changing oil, there is a risk that a diagnostic trouble code may be generated under incorrect conditions.

NOTE: This applies only if the transmission or one of the components in the transmission have been replaced.

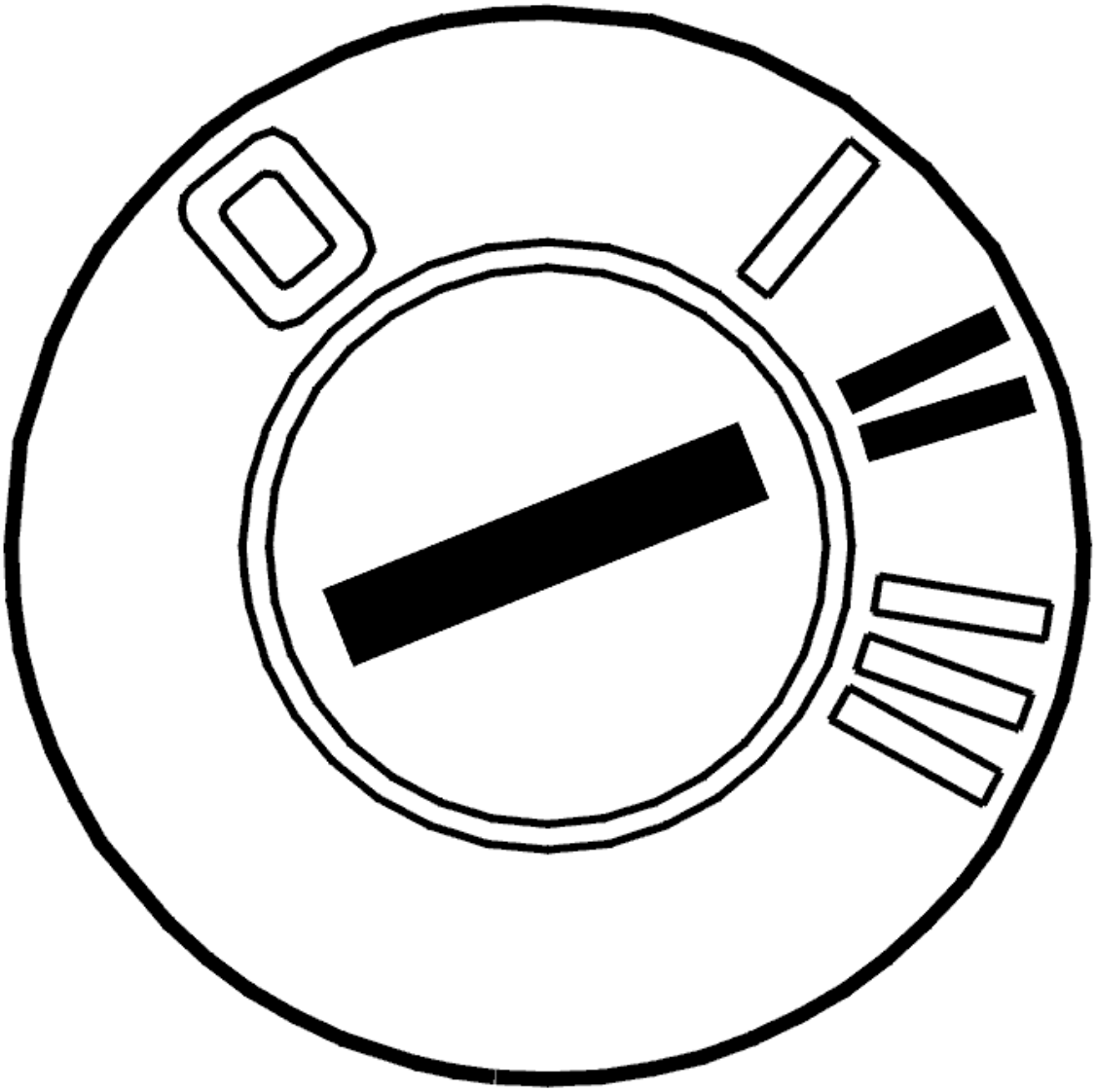

Fig. 219: Identifying Ignition ON
Courtesy of VOLVO CARS CORPORATION

- Ignition on

  Activate reset of the adaptation and the counter by clicking on the symbol for VCT2000.

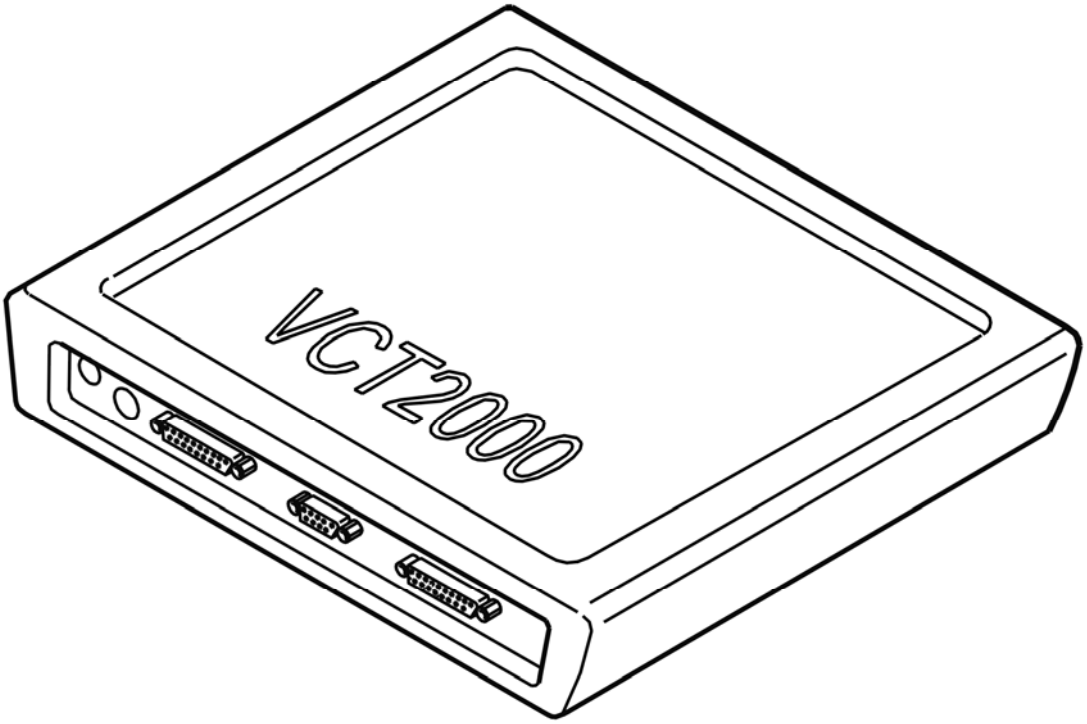

Fig. 220: Identifying VCT2000 Diagnostic Tool Symbol In VIDA
Courtesy of VOLVO CARS CORPORATION

- **Continue**

  Refer to **VERIFICATION**

VERIFICATION

VERIFICATION

HINT: After carrying out the repair, check that the fault has been remedied.

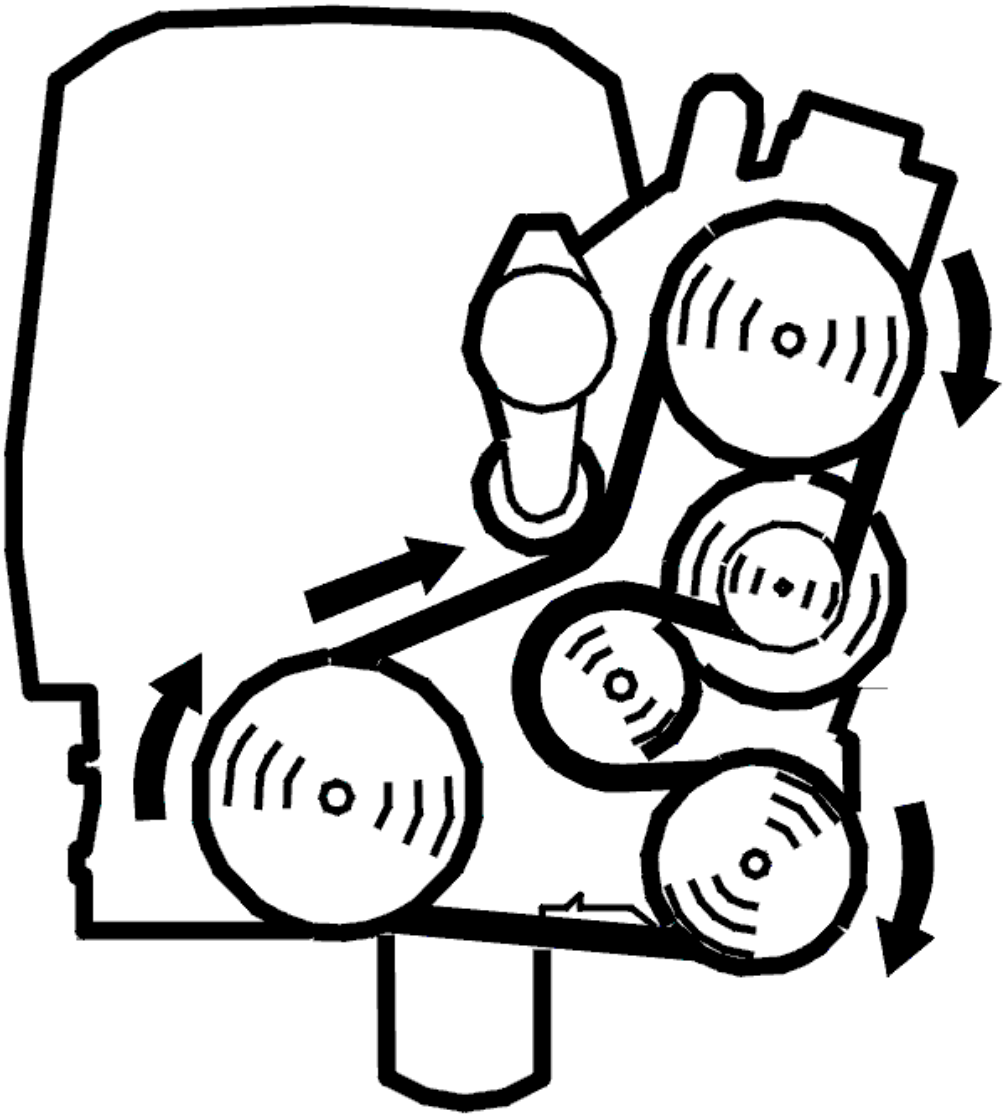

Fig. 221: Identifying Belt Routing
Courtesy of VOLVO CARS CORPORATION

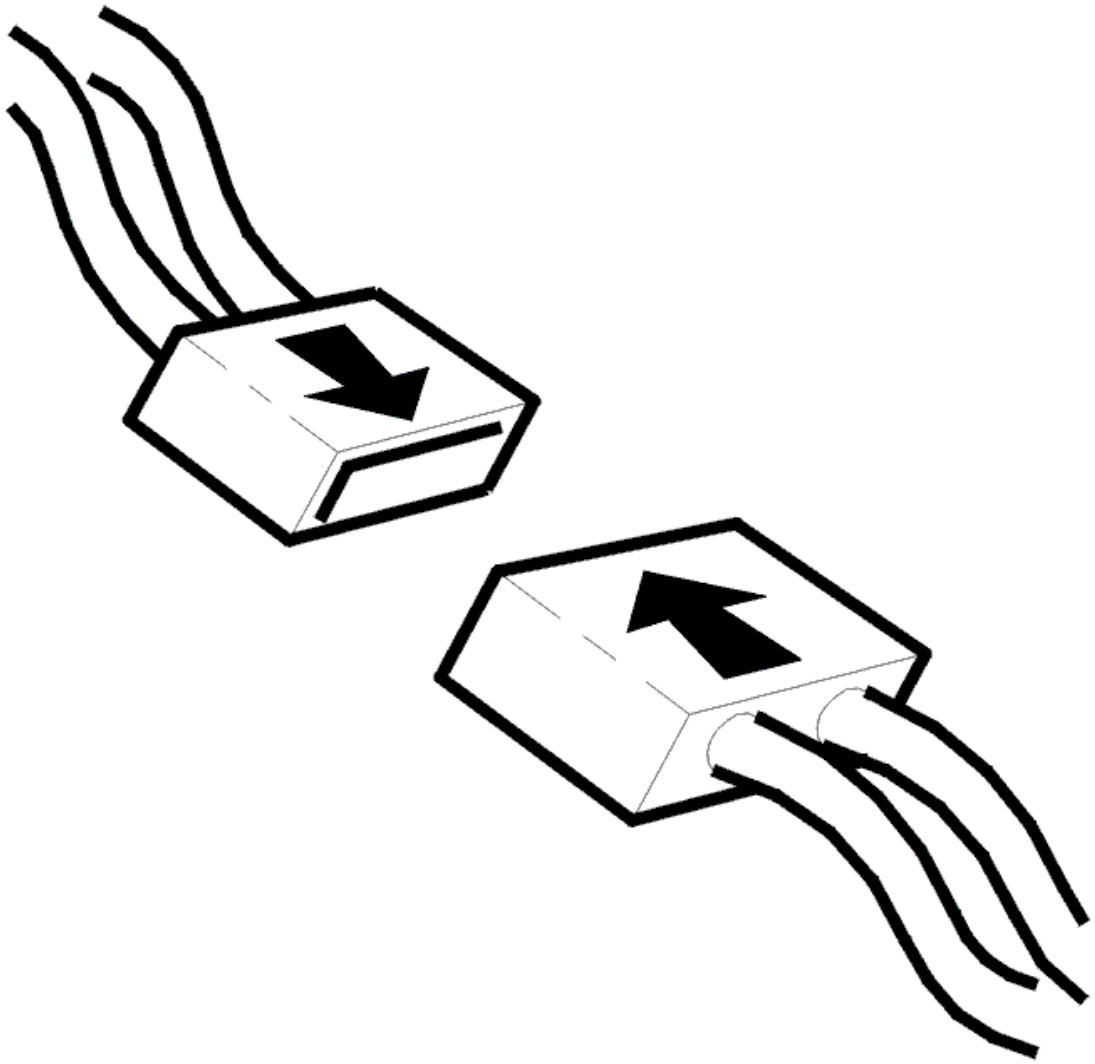

Fig. 222: Identifying Connector(s) Reinstallation
Courtesy of VOLVO CARS CORPORATION

- Ignition off
- Reinstall the connectors, components etc.
- Start the engine and allow it to idle.
- Read off the transmission's input rpm.

  Increase the rpm and check that the rpm is updated. Compare to the engine rpm.

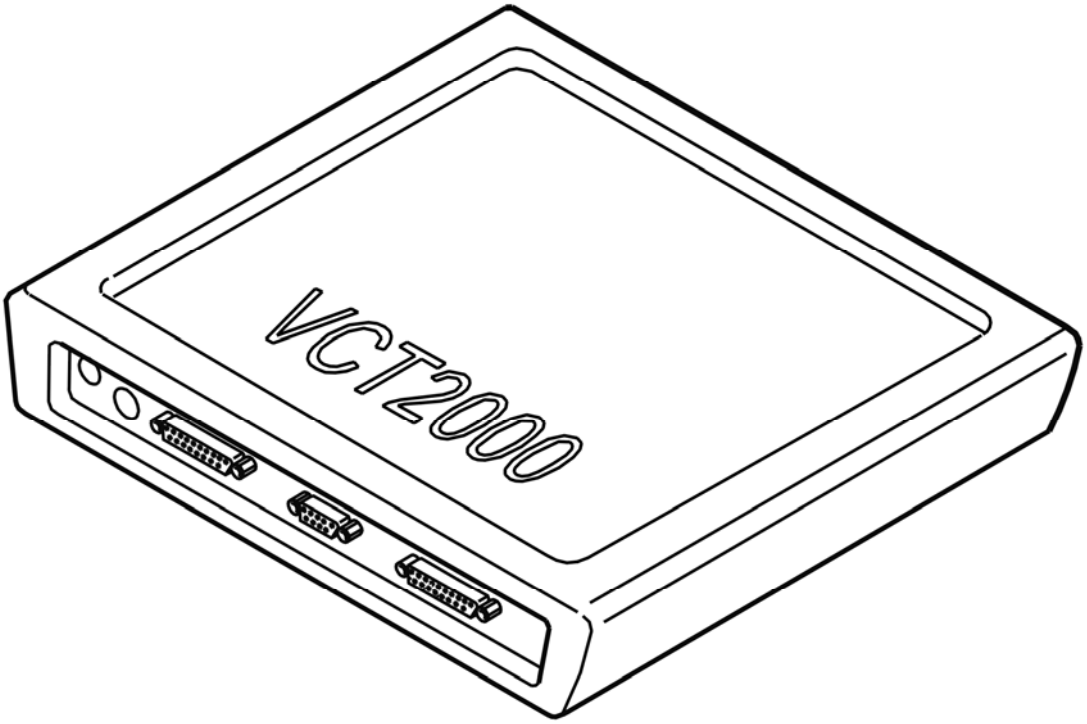

Fig. 223: Identifying VCT2000 Diagnostic Tool Symbol In VIDA
Courtesy of VOLVO CARS CORPORATION

Is the rpm updated?

- **YES**

  VERIFIED: Troubleshooting has been completed.

- **NO**

  Refer to **INFORMATION**

INFORMATION

FAULT-TRACING INFORMATION

The fault should have been detected and remedied. As this is not the case fault-tracing has failed.

Exit fault-tracing for this diagnostic trouble code (DTC) or make another attempt.

TCM-P071600: TURBINE/INPUT SHAFT SPEED SENSOR A CIRCUIT INSIDE/OUTSIDE TOLERANCE. GENERAL FAULT INFORMATION. NO

INFORMATION ON FAULT TYPE (TF-80SC AWD; 2005)

DIAGNOSTIC TROUBLE CODE (DTC) INFORMATION TCM-P071600

see **DIAGNOSTIC TROUBLE CODE (DTC) INFORMATION TCM-P071600**

FAULT TRACING

see **FAULT TRACING**

TCM-P071700: TURBINE/INPUT SHAFT SPEED SENSOR A CIRCUIT NO SIGNAL. GENERAL FAULT INFORMATION. NO INFORMATION ON FAULT TYPE (B8444S, TF-80SC AWD; 2006-2011)

DIAGNOSTIC TROUBLE CODE (DTC) INFORMATION TCM-P071700

Condition

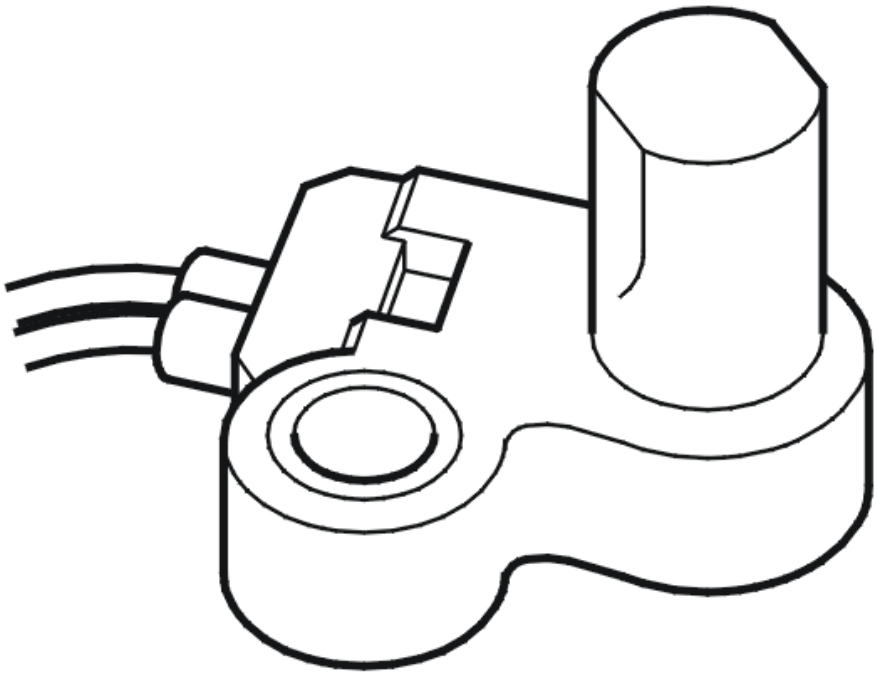

Fig. 224: Identifying Transmission Output Speed Sensor
Courtesy of VOLVO CARS CORPORATION

The signal for the input speed comes from a sensor inside the transmission control system. The transmission control module (TCM) bases its calculation of the speed of the input shaft after the torque converter on this

signal. The signal is used to compare the speed of the gearbox with the vehicle speed. Using this comparison, the control module can calculate the gear shifting points.

The information on RPM and speed affects the adjustment of the system pressure (control of the lock-up function) and the reduction of the engine torque when changing gear. This results in smoother gear changes.

The information is used also for controlling the lock-up function. The transmission control module (TCM) calculates and compares also the gearbox input speed and output speed plus the engine speed for diagnosis.

If the transmission control module (TCM) registers that the signal from the speed sensor is missing, the diagnostic trouble code (DTC) will be generated.

The diagnostic trouble code (DTC) can be diagnosed at speeds above approximately 70 km/h and when the temperature of the transmission fluid exceeds 20 °C.

Substitute Value

- Auxiliary program **Emergency mode 1** in the transmission control module (TCM) has started.

  HINT: EMERGENCY MODE IN CASE OF MALFUNCTION

Possible Source

- Contact resistance in the terminals
- Gearbox input speed sensor not working.
- Internal fault in transmission control module (TCM).

Fault symptom[s]

- Malfunction indicator lamp (MIL) lit.
- General warning lamp lit
- No lock-up function.
- Harsh gear changing
- No gear changing.

FAULT TRACING

see **FAULT TRACING**

TCM-P071700: TURBINE/INPUT SHAFT SPEED SENSOR A CIRCUIT NO SIGNAL. GENERAL FAULT INFORMATION. NO INFORMATION ON FAULT TYPE (TF-80SC AWD; 2005)

DIAGNOSTIC TROUBLE CODE (DTC) INFORMATION TCM-P071700

see **DIAGNOSTIC TROUBLE CODE (DTC) INFORMATION TCM-P071700**

FAULT TRACING

see **FAULT TRACING**

TCM-P071800: TURBINE/INPUT SHAFT SPEED SENSOR A CIRCUIT INTERMITTENT. GENERAL FAILURE INFORMATION. NO SUB TYPE INFORMATION (B6324S, TF-80SC; B6324S, TF-80SC AWD; 2007-2010)

DIAGNOSTIC TROUBLE CODE (DTC) INFORMATION TCM-P071800

Condition

The signal for input speed comes from a sensor within the transmission control system. The transmission control module (TCM) uses the signal to determine the input shaft speed after the torque converter. This signal is used to compare transmission speed and vehicle speed. The transmission control module uses this comparison to calculate the gear-shift timing.

The rpm and road speed data are also utilized in modulating the system pressure and in reducing engine torque when shifting gear. The result is smooth gear-shifting. The information is also used to control the function.

The transmission control module (TCM) calculates and compares also the transmission input speed and output speed plus the engine speed for diagnosis.

The diagnostic trouble code (DTC) is stored if the control module detects that:

- No signal from the speed (rpm) sensor.

The control module's test for the diagnostic trouble code (DTC) starts in the event of:

- Engine speed above 600 rpm.

NOTE: The control module can only detect the fault once the test has been started and the diagnostic trouble code (DTC) is stored when the conditions are met.

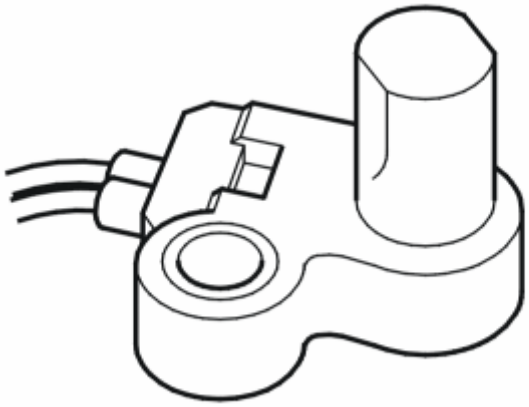

Fig. 225: Identifying Turbine/Input Shaft Speed Sensor
Courtesy of VOLVO CARS CORPORATION

Substitute Value

- Auxiliary program **Emergency mode 1** in the transmission control module (TCM) has started.

HINT: EMERGENCY MODE IN THE EVENT OF A FAULT

Possible Source

- Contact resistance in the terminals.
- Transmission input speed sensor not fitted correctly.
- Transmission input speed sensor not working.

Fault symptom[s]

- Malfunction indicator light (MIL), on
- General warning lamp lit
- No lock-up
- Rough gear shift
- No gear shift

FAULT-TRACING

see **FAULT-TRACING**

TCM-P071800: TURBINE/INPUT SHAFT SPEED SENSOR A CIRCUIT INTERMITTENT. GENERAL FAILURE INFORMATION. NO SUB TYPE INFORMATION (B6324S5, TF-80SC; B6324S5, TF-80SC AWD; 2011-2012)

DIAGNOSTIC TROUBLE CODE (DTC) INFORMATION TCM-P071800

see **DIAGNOSTIC TROUBLE CODE (DTC) INFORMATION TCM-P071800**

FAULT-TRACING

see **FAULT-TRACING**

TCM-P071800: TURBINE/INPUT SHAFT SPEED SENSOR A CIRCUIT INTERMITTENT. GENERAL FAULT INFORMATION. NO INFORMATION ON FAULT TYPE (B8444S, TF-80SC AWD; 2006-2011)

DIAGNOSTIC TROUBLE CODE (DTC) INFORMATION TCM-P071800

Condition

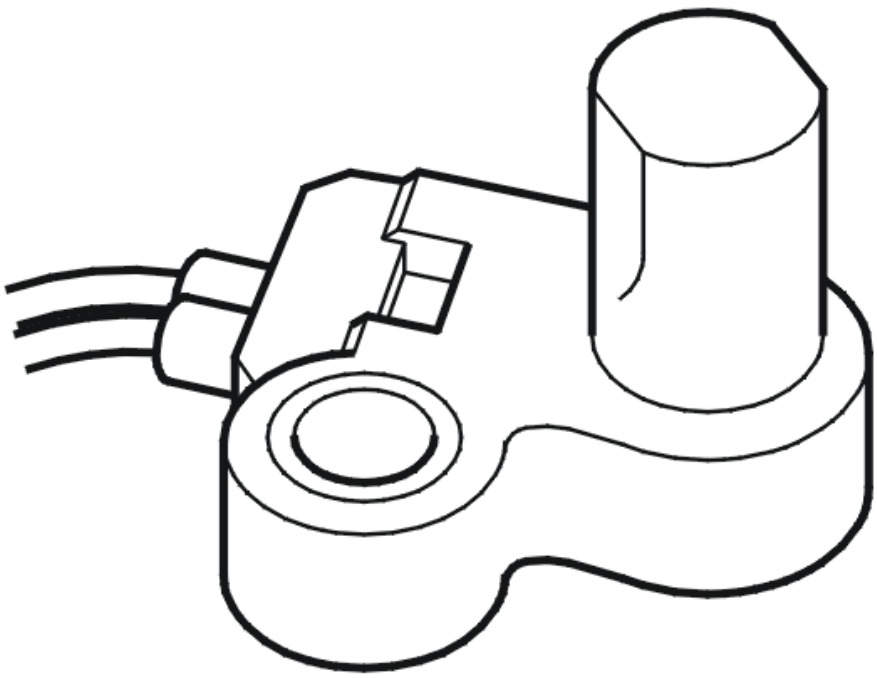

Fig. 226: Identifying Transmission Output Speed Sensor
Courtesy of VOLVO CARS CORPORATION

The signal for the input speed comes from a sensor inside the transmission control system. The transmission control module (TCM) bases its calculation of the speed of the input shaft after the torque converter on this signal. The signal is used to compare the speed of the gearbox with the vehicle speed. Using this comparison, the control module can calculate the gear shifting points.

The information on RPM and speed affects the adjustment of the system pressure (control of the lock-up function) and the reduction of the engine torque when changing gear. This results in smoother gear changes. The information is also used to control the lock-up function.

The transmission control module (TCM) calculates and compares also the gearbox input speed and output speed plus the engine speed for diagnosis.

If the transmission control module (TCM) registers that the signal from the speed sensor is missing, the diagnostic trouble code (DTC) will be generated.

The diagnostic trouble code (DTC) can be diagnosed at engine speeds above 600 rpm.

Substitute Value

- Auxiliary program **Emergency mode 1** in the transmission control module (TCM) has started.

  HINT: EMERGENCY MODE IN CASE OF MALFUNCTION

Possible Source

- Contact resistance in the terminals
- Gearbox input speed sensor not fitted correctly.
- Gearbox input speed sensor not working.

Fault symptom[s]

- Malfunction indicator lamp (MIL) lit.
- General warning lamp lit
- No lock-up function.
- Harsh gear changing
- No gear changing.

FAULT TRACING

see **FAULT TRACING**

TCM-P071800: TURBINE/INPUT SHAFT SPEED SENSOR A CIRCUIT INTERMITTENT. GENERAL FAULT INFORMATION. NO INFORMATION ON FAULT TYPE (TF-80SC AWD; 2005)

DIAGNOSTIC TROUBLE CODE (DTC) INFORMATION TCM-P071800

see **DIAGNOSTIC TROUBLE CODE (DTC) INFORMATION TCM-P071800**

FAULT TRACING

see **FAULT TRACING**

TCM-P072000: OUTPUT SHAFT SPEED SENSOR CIRCUIT. GENERAL FAILURE INFORMATION. NO SUB TYPE INFORMATION (B6324S, TF-80SC; B6324S, TF-80SC AWD; 2007-2010)

DIAGNOSTIC TROUBLE CODE (DTC) INFORMATION TCM-P072000

Condition

The transmission's output speed sensor sends the transmission control module (TCM) a signal on the speed of the output drive shaft. Using this signal, the control module calculates the outgoing speed of the transmission. The signal is compared to the input speed signal from the transmission speed sensor and is used to calculation the transmission's gear ratio and for diagnostics.

The diagnostic trouble code (DTC) is stored if the control module detects that:

- Circuit for transmission speed sensor is open.

The control module's test for the diagnostic trouble code (DTC) starts in the event of:

- Normal driving above 30 km/h (about 20 mph).

NOTE: The control module can only detect the fault once the test has been started and the diagnostic trouble code is stored when the conditions are met.

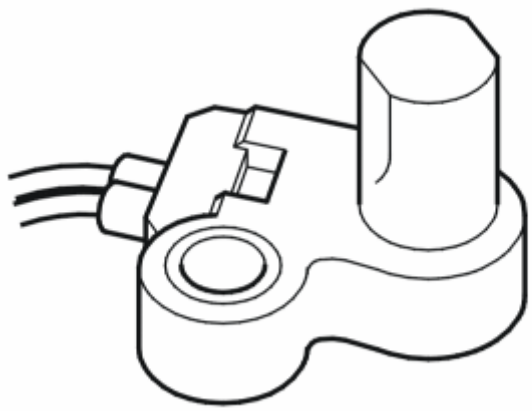

Fig. 227: Identifying Turbine/Input Shaft Speed Sensor
Courtesy of VOLVO CARS CORPORATION

Substitute Value

- Adaptation function is blocked.

- function is blocked.
- Slip lock-up function is blocked.
- Neutral check function is blocked.
- The transmission control module (TCM) uses the speed signal that the brake control module (BCM) puts on the CAN network.
- Auxiliary program **Emergency mode 1** in the transmission control module (TCM) has started.

HINT: EMERGENCY MODE IN THE EVENT OF A FAULT

Possible Source

- Open circuit in power supply or signal lead.
- Power supply or signal cable is short circuited to supply voltage.
- Transmission output speed sensor not working.
- Internal fault in the transmission control module (TCM).

Fault symptom[s]

- Malfunction indicator light (MIL), on
- General warning lamp lit
- No lock-up
- Rough gear shift

FAULT-TRACING

CHECKS

CHECKING THE FUNCTION

WARNING: Ensure that the vehicle is safely raised. Check that no objects are caught in the tire treads.

CAUTION: On vehicles with four-wheel-drive, the tests should be carried out with the vehicle raised so that all four wheels can rotate freely with attachments far out on the link arms so that the drive shafts are not damaged.

NOTE: If the vehicle has TRACS or TC (STC, DSTC), this function must be disabled. This is carried out by removing the fuse for the brake system pump motor in the engine compartment relay and fusebox. Note that this will generate diagnostic trouble codes in the brake control module (BCM). These diagnostic trouble codes must be erased before the vehicle is returned to the customer.

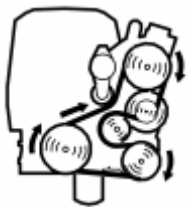

Fig. 228: Identifying Belt Routing
Courtesy of VOLVO CARS CORPORATION

- Raise the vehicle so that the drive wheels can rotate freely.
- Start the engine. Allow the engine to idle.
- Shift the gear selector to position D so that the drive wheels begin to rotate.

NOTE: Ensure that the wheels are not rotating when the gear selector is moved.

Read off the transmission output speed.

Check that the transmission speed is updated.

If the transmission input speed updates correctly it means that the fault was present previously but is not active now. There is an intermittent fault.

If the transmission input speed does not update correctly it means that the fault is permanent.

Fig. 229: Identifying VCT2000 Diagnostic Tool Symbol In VIDA
Courtesy of VOLVO CARS CORPORATION

- **Continue**

Refer to **CHECKING THE WIRING AND SENSORS**

CHECKING THE WIRING AND SENSORS

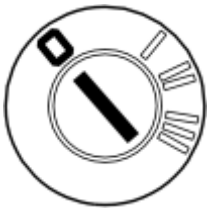

Fig. 230: Identifying Ignition In Off Position
Courtesy of VOLVO CARS CORPORATION

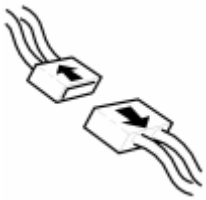

Fig. 231: Identifying Connectors Disconnected
Courtesy of VOLVO CARS CORPORATION

- Ignition off.
- Disconnect the transmission connector.
- Transmission control module (TCM) disconnected.

  Check connector B (22-pin) for the transmission control module (TCM). Check for damaged or pressed in pins. Check for contact resistance and oxidation.

  HINT: Check the transmission speed sensor. See CHECKING INTERNAL COMPONENTS OF THE TRANSMISSION

  If a faulty value is measured in the test above, open the control system for the transmission and fault trace the wiring and components.

  If the wiring is faulty, replace the cable harness.

  If the sensor is faulty, replace the transmission.

  Remedy as necessary.

  Other information

  - see **CONNECTING THE BREAKOUT BOX**
  - see **SIGNAL SPECIFICATION**
  - see **TRANSMISSION - REMOVAL, REPLACEMENT AND INSTALLATION**
  - see **TRANSMISSION CONTROL UNIT WIRING HARNESS**
  - To access connector B:**TRANSMISSION CONTROL MODULE (TCM)**
  - To access the transmission control system:**COVER CONTROL SYSTEM, REPLACING (2007-2011)**

  Select an alternative:

  1. Transmission replaced.

     Refer to **VERIFICATION**

  2. Cable harness replaced.

Refer to **RESETTING THE "TRANSMISSION FLUID CHANGE" COUNTER**

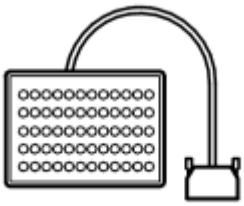

Fig. 232: Identifying Breakout Box
Courtesy of VOLVO CARS CORPORATION

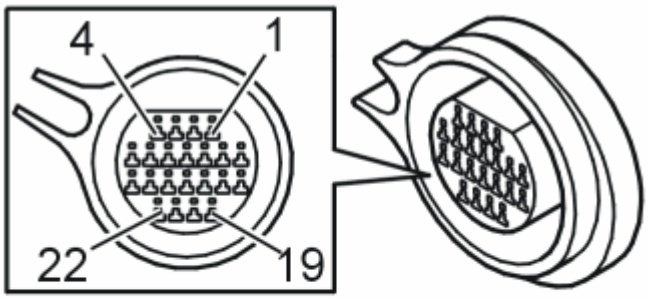

Fig. 233: Identifying Connector B Terminals
Courtesy of VOLVO CARS CORPORATION

INFORMATION

FAULT-TRACING INFORMATION

The fault should have been detected and remedied. As this is not the case fault-tracing has failed.

Exit fault-tracing for this diagnostic trouble code (DTC) or make another attempt.

VERIFICATION

VERIFICATION

HINT: After carrying out the repair, check that the fault has been remedied.

CAUTION: On vehicles with four-wheel-drive, the tests should be carried out with the vehicle raised so that all four wheels can rotate freely with attachments far out on the link arms so that the drive shafts are not damaged.

WARNING: Ensure that the vehicle is safely raised. Check that no objects are caught

in the tire treads.

NOTE: If the vehicle has TRACS or TC (STC, DSTC), this function must be disabled. This is carried out by removing the fuse for the brake system pump motor in the engine compartment relay and fusebox. Note that diagnostic trouble codes will be generated in the brake control module (BCM). These must be erased before the vehicle is returned to the customer.

Fig. 234: Identifying Belt Routing
Courtesy of VOLVO CARS CORPORATION

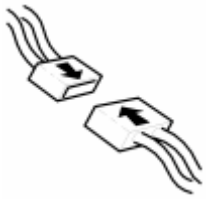

Fig. 235: Identifying Connector(s) Reinstallation
Courtesy of VOLVO CARS CORPORATION

- Ignition off.
- Reinstall the connectors, components etc.
- Raise the vehicle so that the drive wheels hang freely.
- Start the engine. Allow the engine to idle.
- Shift the gear selector to position D so that the drive wheels begin to rotate.

NOTE: Ensure that the wheels are not rotating when the gear selector is moved.

- Read off the transmission output speed.

  Check that the transmission speed is updated.

NOTE: Diagnostic trouble codes may be stored in the brake control module (BCM) when the back wheels are stationary and the front wheels rotate.

Fig. 236: Identifying VCT2000 Diagnostic Tool Symbol In VIDA
Courtesy of VOLVO CARS CORPORATION

Is the speed updated?

- **YES**

  VERIFIED: Troubleshooting has been completed.

- **NO**

  Refer to **INFORMATION**

RESETTING THE "TRANSMISSION FLUID CHANGE" COUNTER

CHECKING THE FUNCTION

HINT: The transmission control module (TCM) has a counter for fluid quality that counts the number of times the transmission is subjected to too hard a load or too high an ambient temperature. If the counter is not reset during draining/replacement, there is a risk that a diagnostic trouble code will be set under the wrong conditions. Thus, it is important that the counter for transmission fluid change be reset.

NOTE: **This only applies when the transmission oil is changed and when the oil is changed during repairs to the transmission's temperature sensor.**

Fig. 237: Identifying Ignition ON
Courtesy of VOLVO CARS CORPORATION

- Ignition on.

  Click on the VCT2000 symbol to reset the counter.

Fig. 238: Identifying VCT2000 Diagnostic Tool Symbol In VIDA
Courtesy of VOLVO CARS CORPORATION

- **Continue**

  Refer to **VERIFICATION**

TCM-P072000: OUTPUT SHAFT SPEED SENSOR CIRCUIT. GENERAL FAILURE INFORMATION. NO SUB TYPE INFORMATION (B6324S5, TF-80SC; B6324S5, TF-80SC AWD; 2011-2012)

DIAGNOSTIC TROUBLE CODE (DTC) INFORMATION TCM-P072000

see **DIAGNOSTIC TROUBLE CODE (DTC) INFORMATION TCM-P072000**

FAULT-TRACING

see **FAULT-TRACING**

TCM-P072000: OUTPUT SHAFT SPEED SENSOR CIRCUIT. GENERAL FAULT INFORMATION. NO INFORMATION ON FAULT TYPE (B8444S, TF-80SC AWD; 2006-2011)

DIAGNOSTIC TROUBLE CODE (DTC) INFORMATION TCM-P072000

Condition

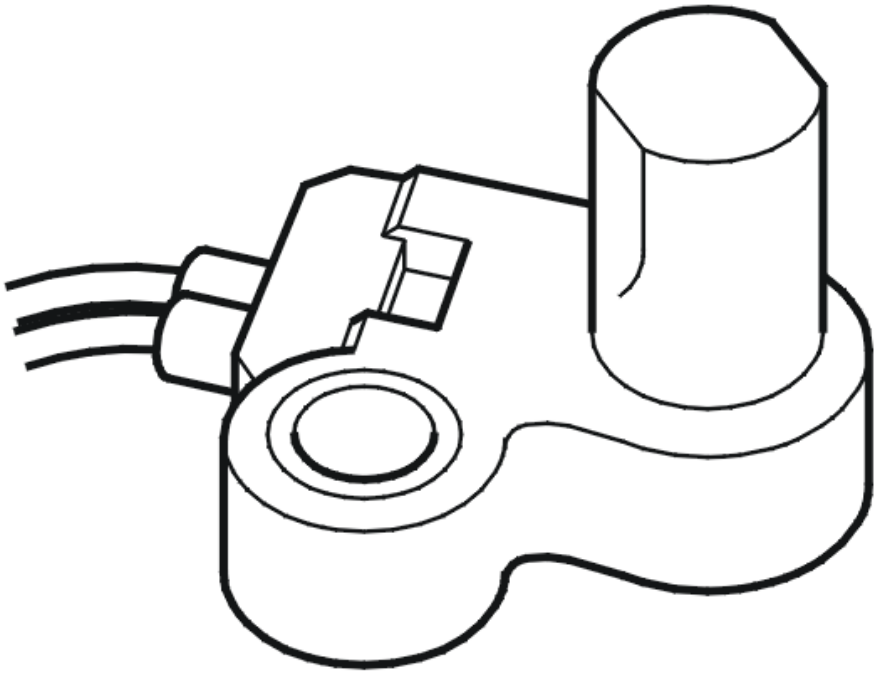

Fig. 239: Identifying Transmission Output Speed Sensor
Courtesy of VOLVO CARS CORPORATION

The gearbox output speed sensor gives the transmission control module (TCM) a signal on the speed of the output drive shaft. Using this signal, the control module can calculate the output speed of the gearbox. The signal is compared with a signal from the gearbox input speed sensor and is used to calculate the gear ratio of the gearbox as well as for diagnosis. If the control module registers that the circuit to the gearbox speed sensor is open, the diagnostic trouble code (DTC) is generated.

The diagnostic trouble code (DTC) can be diagnosed during normal driving above 30 km/h.

Substitute Value

- Adaptation function is blocked.
- Lock-up function is blocked.
- Slip lock-up function is blocked.
- Neutral check function is blocked.
- The transmission control module (TCM) uses the speed signal that the brake control module (BCM) puts on the CAN network.
- Auxiliary program **Emergency mode 1** in the transmission control module (TCM) has started.

  HINT: EMERGENCY MODE IN CASE OF MALFUNCTION

Possible Source

- Open circuit in power supply or signal lead.
- Power supply or signal lead short-circuited to voltage.
- Gearbox output speed sensor not working.
- Internal fault in transmission control module (TCM).

Fault symptom[s]

- Malfunction indicator lamp (MIL) lit.
- General warning lamp lit
- No lock-up function.
- Harsh gear changing

FAULT TRACING TCM-P072000

CHECKS

CHECKING THE FUNCTION

WARNING: Ensure that the vehicle is safely raised. Check that no objects are caught in the tire treads.

CAUTION: On vehicles with four-wheel-drive, the tests should be carried out with the vehicle raised so that all four wheels can rotate freely with attachments far out on the link arms so that the drive shafts are not damaged.

NOTE: If the vehicle is equipped with TRACS or traction control (STC, DSTC) this function must be deactivated. Remove the fuse for the pump motor for the brake system in the relay/fusebox in the engine compartment. Note that this will store a diagnostic trouble code (DTC) in the brake control module (BCM). These diagnostic trouble codes (DTC) must be erased before delivery to the customer.

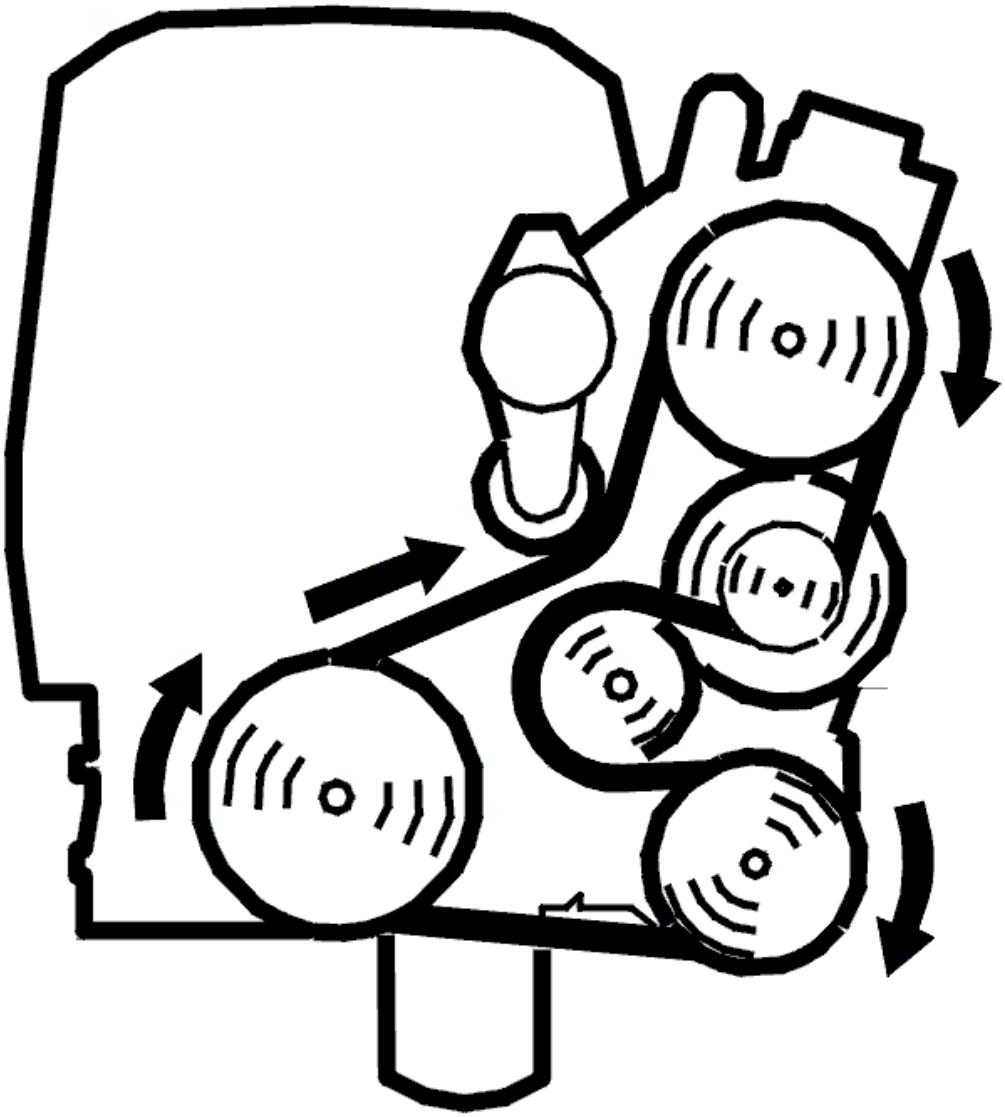

Fig. 240: Identifying Belt Routing
Courtesy of VOLVO CARS CORPORATION

- Raise the vehicle so that the drive wheels hang freely.
- Start the engine and allow it to idle.
- Put the gear selector in position D so that the drive wheels start to rotate.

NOTE: Ensure that the wheels are not rotating when the gear selector is moved.

- Read off the gearbox output speed.

  Read off the transmission input speed.

  If the transmission input speed updates correctly it means that the fault was present previously but is not active now. There is an intermittent fault.

If the transmission input speed does not update correctly it means that the fault is permanent.

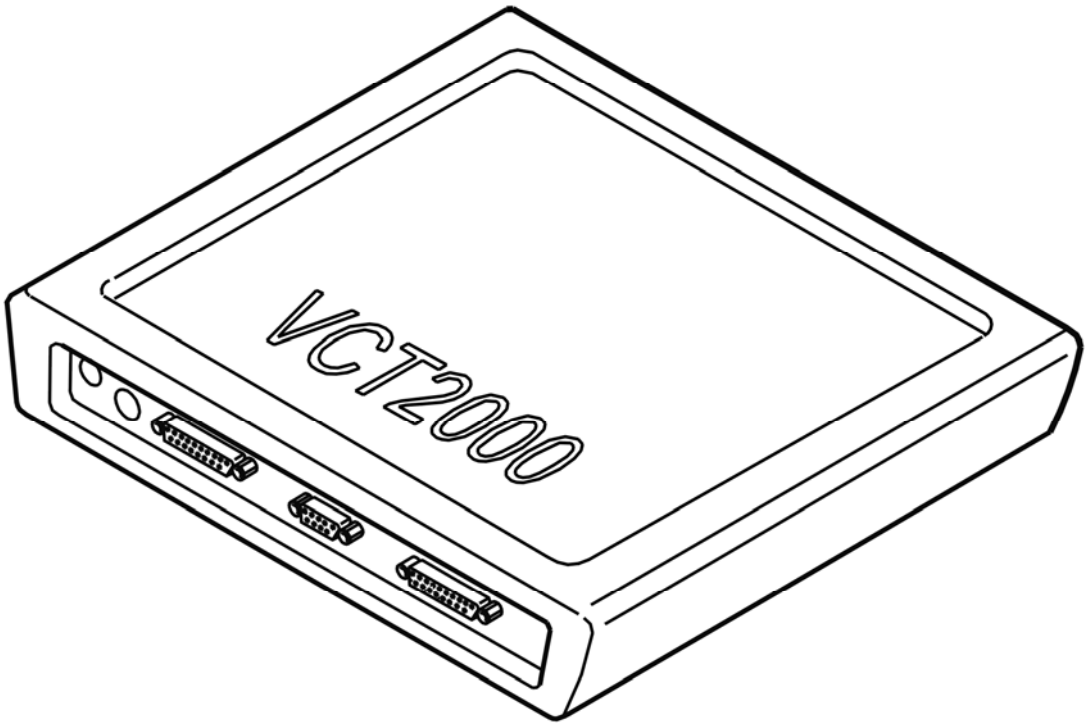

Fig. 241: Identifying VCT2000 Diagnostic Tool Symbol In VIDA
Courtesy of VOLVO CARS CORPORATION

- **Continue**

Refer to **CHECKING WIRING AND SENSORS**

CHECKING WIRING AND SENSORS

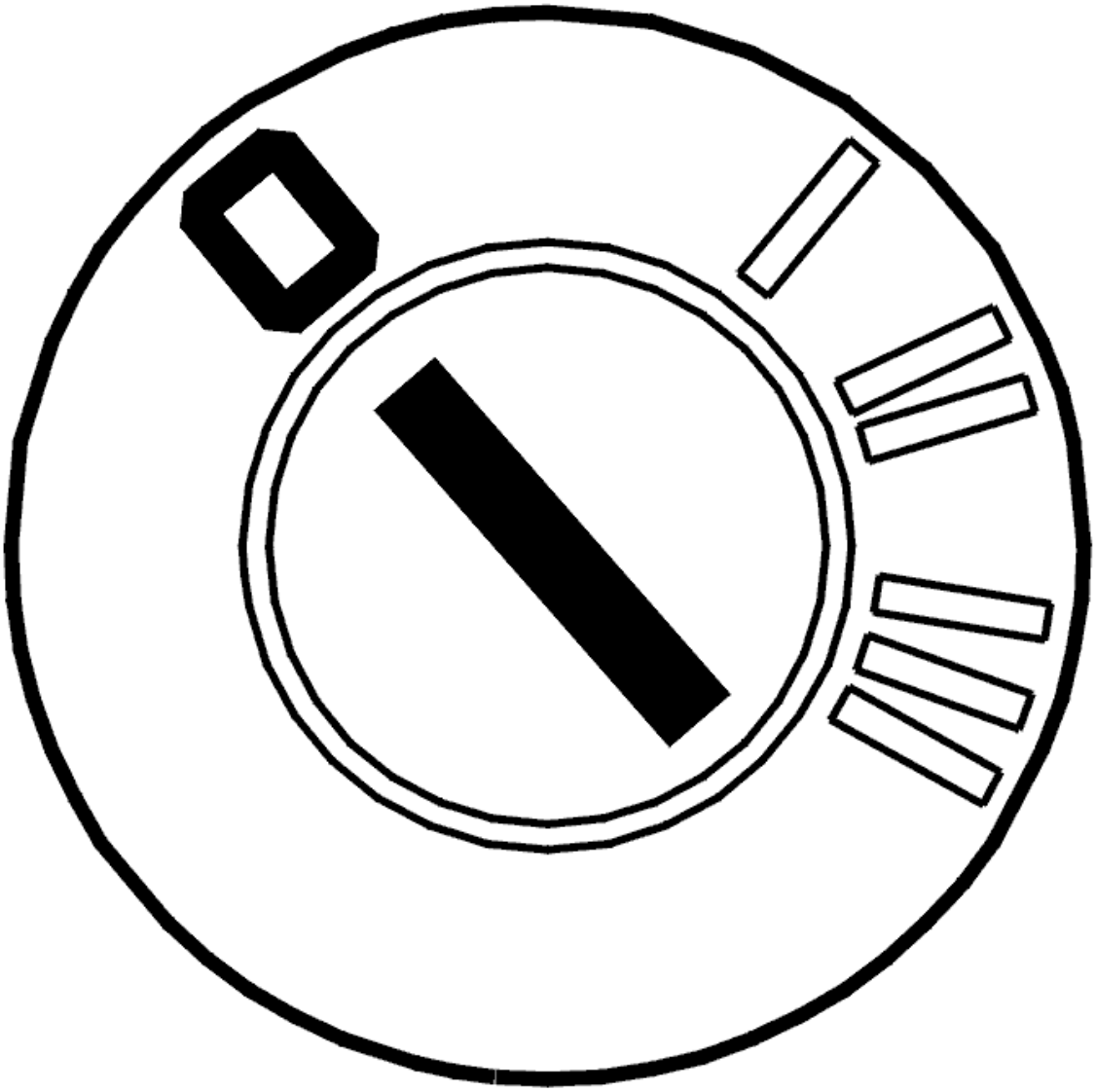

Fig. 242: Identifying Ignition OFF
Courtesy of VOLVO CARS CORPORATION

- Ignition off
- Disconnect the connector for the transmission.
- Transmission control module (TCM) disconnected.
- Check connector B (22-pin) for the transmission control module (TCM). Check for damaged or pressed in pins. Check for contact resistance and oxidation.

  HINT: Check the transmission speed sensor. See CHECKING THE INPUT AND OUTPUT SPEED SENSORS FOR THE TRANSMISSION

  If any incorrect value was measured in the test above, open the transmission's control system and troubleshoot cables and component for open circuit or short-circuit to voltage.

Remedy as necessary.

Other information

- see **CONNECTING THE BREAKOUT BOX**
- see **SIGNAL DESCRIPTION**
- see **REPLACING THE GEARBOX**
- see **CABLE HARNESS, CONTROL SYSTEM, GEARBOX, REPLACING**
- To access connector B: **TRANSMISSION CONTROL MODULE (TCM), REPLACING**
- To access the transmission control system: **COVER CONTROL SYSTEM, REPLACING (2007-2011)**

Select an alternative:

1. Transmission replaced

   Refer to **VERIFICATION**

2. Cable harness replaced.

   Refer to **RESETTING THE COUNTER FOR TRANSMISSION OIL, CHANGE**

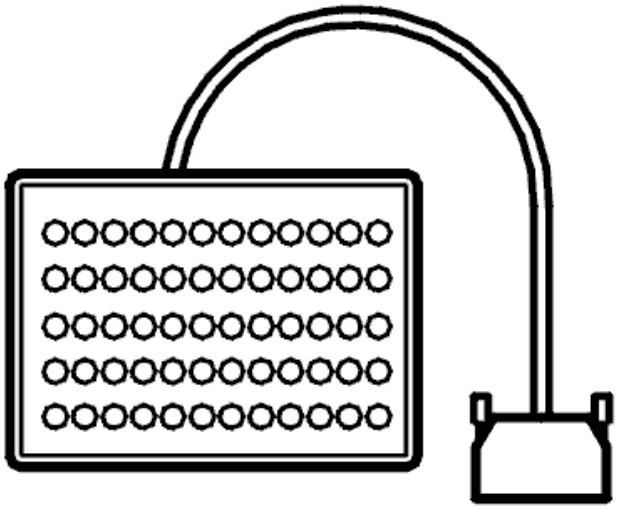

Fig. 243: Identifying Breakout Box
Courtesy of VOLVO CARS CORPORATION

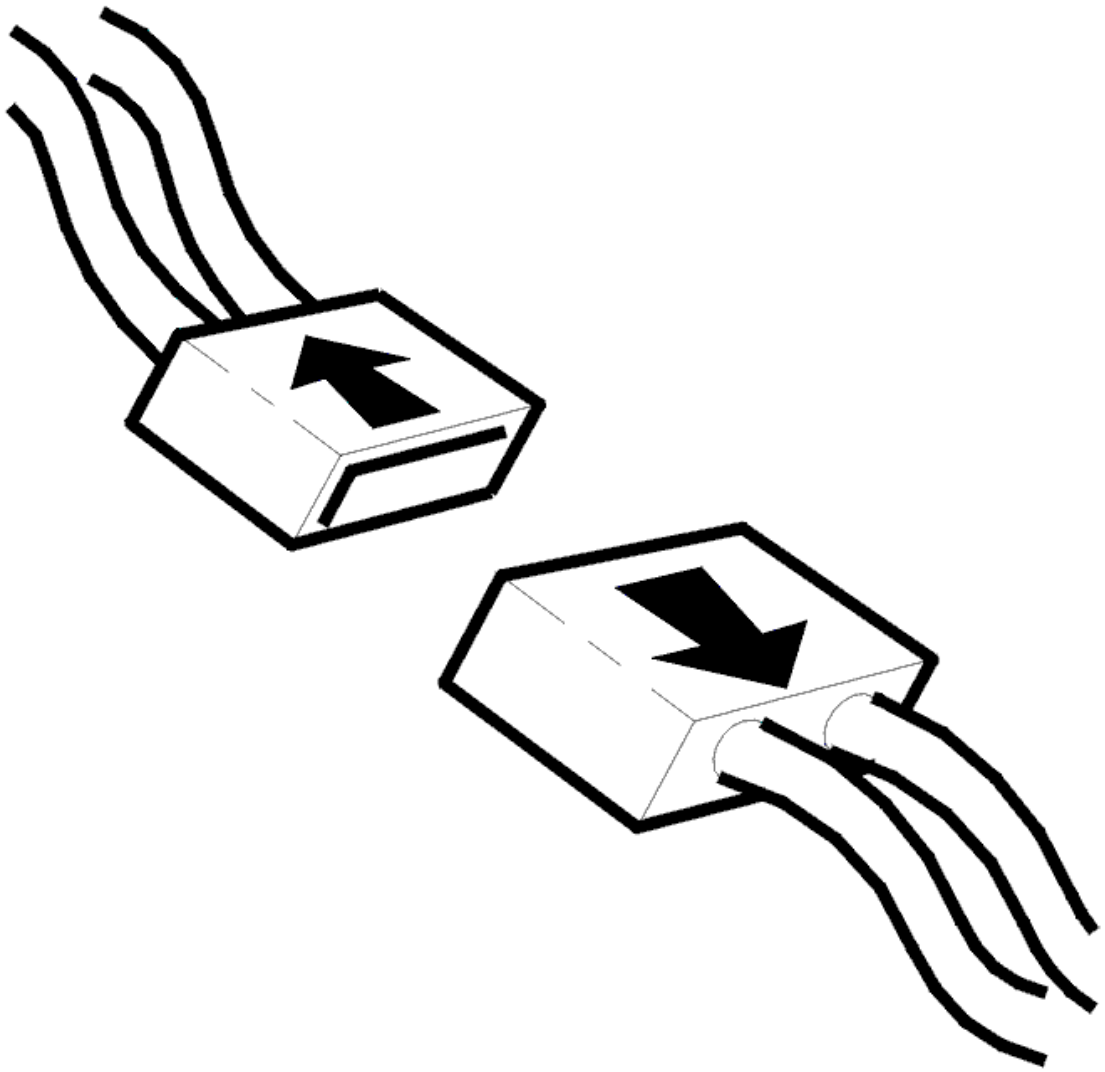

Fig. 244: Identifying Connector(s) Disconnected
Courtesy of VOLVO CARS CORPORATION

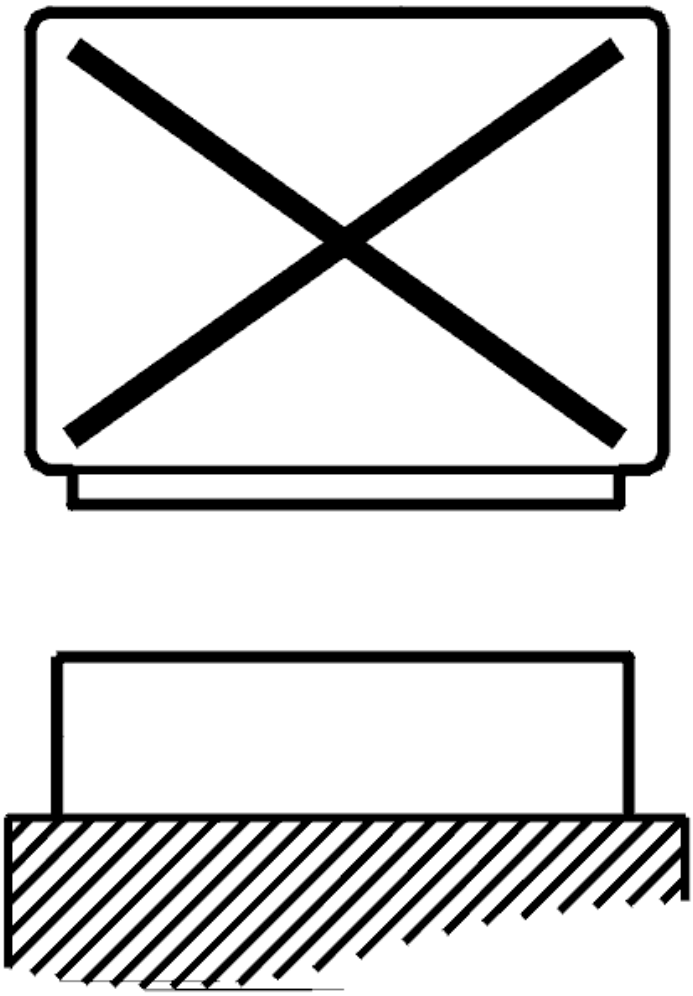

Fig. 245: Identifying Control Module Disconnected
Courtesy of VOLVO CARS CORPORATION

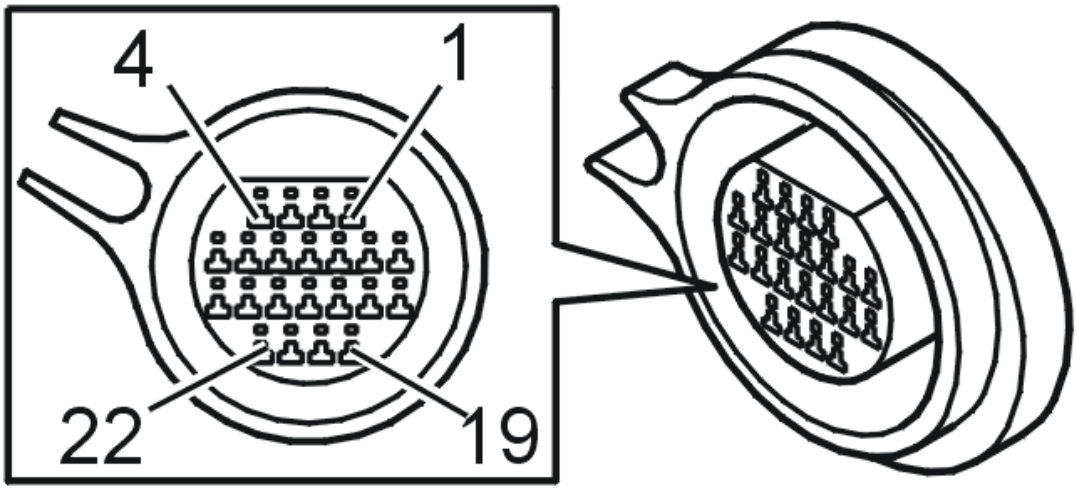

Fig. 246: Identifying Connector B Terminals
Courtesy of VOLVO CARS CORPORATION

RESETTING THE COUNTER FOR TRANSMISSION OIL, CHANGE

RESETTING THE COUNTER FOR TRANSMISSION OIL, CHANGE

HINT: The transmission control module (TCM) has a counter for the oil's quality that counts up when the transmission is exposed to very heavy loads or high ambient temperature. If the counter is not reset when draining/changing oil, there is a risk that a diagnostic trouble code may be generated under incorrect conditions. That is why it is important that the counter for Transmission oil, change is reset.

NOTE: **This only applies when the transmission oil is changed and when the oil is changed during repairs to the transmission's temperature sensor.**

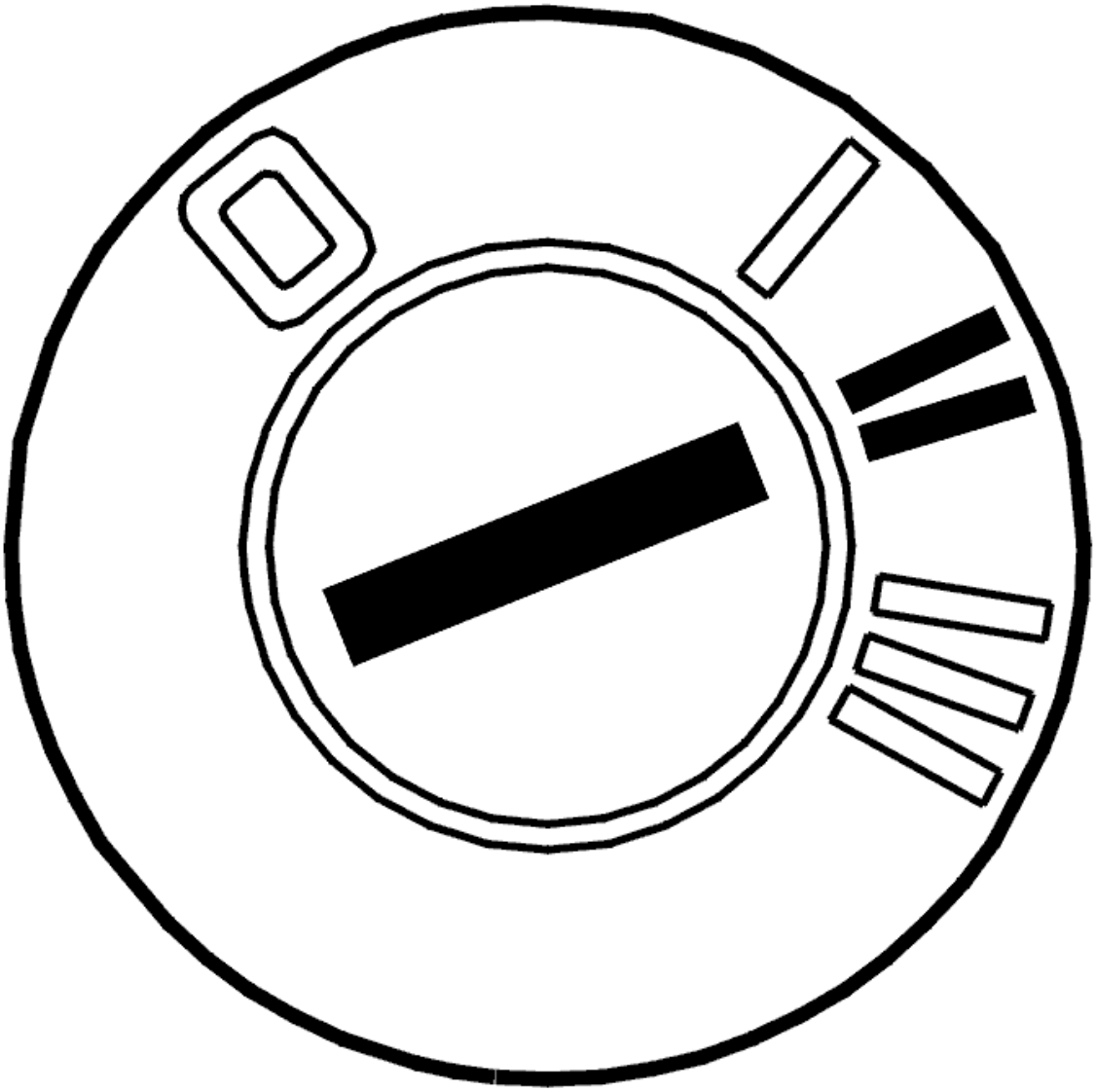

Fig. 247: Identifying Ignition ON
Courtesy of VOLVO CARS CORPORATION

- Ignition on

  Activate reset of the counter by clicking on the symbol for VCT2000.

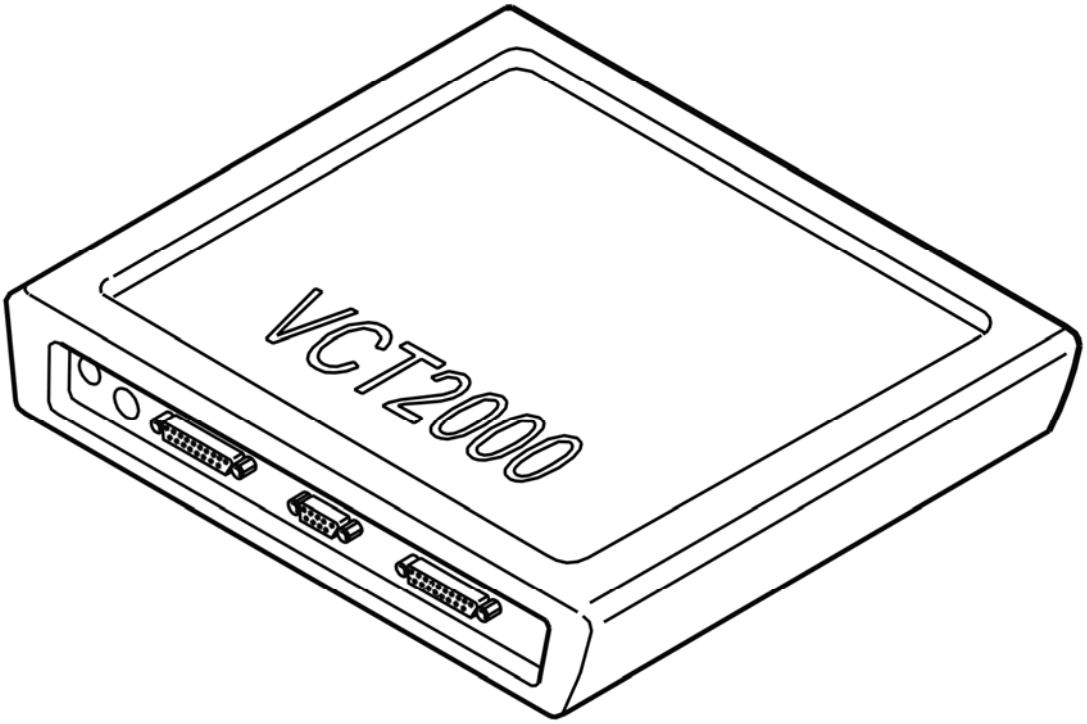

Fig. 248: Identifying VCT2000 Diagnostic Tool Symbol In VIDA
Courtesy of VOLVO CARS CORPORATION

- **Continue**

  Refer to **VERIFICATION**

VERIFICATION

VERIFICATION

HINT: After carrying out the repair, check that the fault has been remedied.

CAUTION: On vehicles with four-wheel-drive, the tests should be carried out with the vehicle raised so that all four wheels can rotate freely with attachments far out on the link arms so that the drive shafts are not damaged.

WARNING: Ensure that the vehicle is safely raised. Check that no objects are caught in the tire treads.

NOTE: If the vehicle is equipped with TRACS (traction control system) or Traction Control (DSTC (Dynamic stability and traction control), STC (Stability and traction control) the function must be deactivated. This is carried out by

removing the fuse for the brake system pump motor in the engine compartment relay and fusebox. Note that diagnostic trouble codes (DTCs) will be stored in the brake control module (BCM). These must be erased before returning the vehicle to the customer.

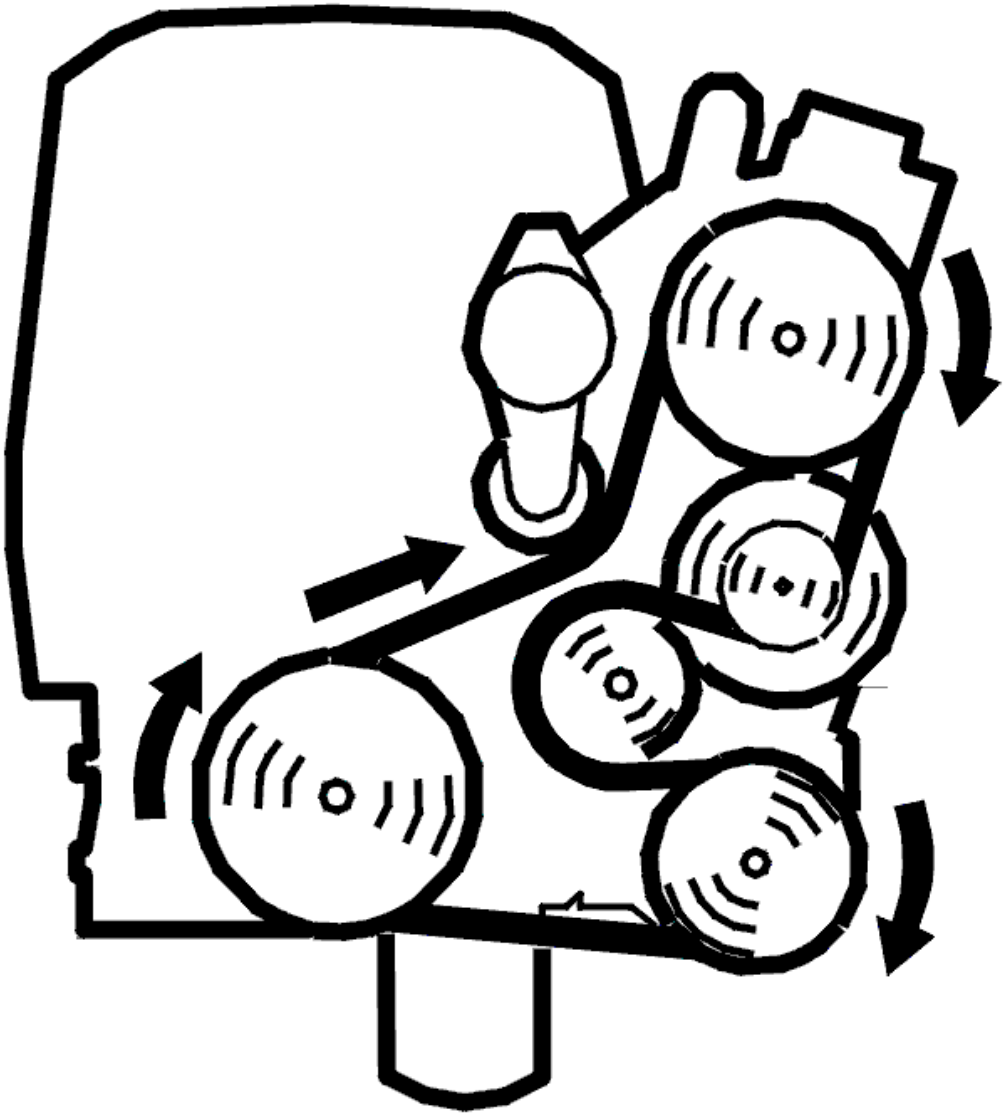

Fig. 249: Identifying Belt Routing
Courtesy of VOLVO CARS CORPORATION

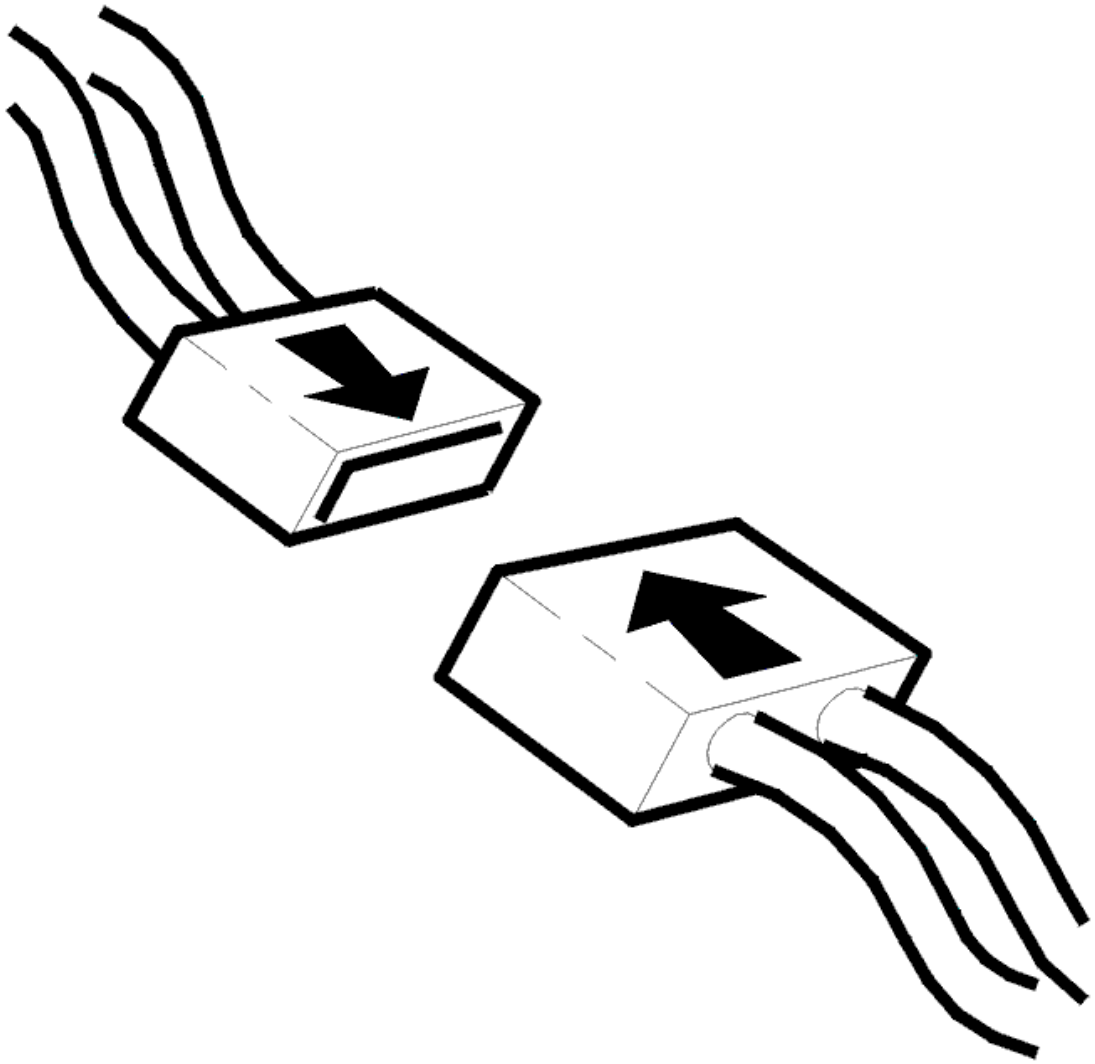

Fig. 250: Identifying Connector(s) Reinstallation
Courtesy of VOLVO CARS CORPORATION

- Ignition off
- Reinstall the connectors, components etc.
- Raise the vehicle so that the drive wheels hang freely.
- Start the engine and allow it to idle.
- Put the gear selector in position D so that the drive wheels start to rotate.

NOTE: Ensure that the wheels are not rotating when the gear selector is moved.

- Read off the gearbox output speed.

  Check that the speed is updated.

NOTE: **Diagnostic trouble codes (DTCs) may be stored in the brake control module (BCM) when the rear wheels are stationary and the front wheels rotate. Erase any diagnostic trouble codes (DTCs) after fault-tracing.**

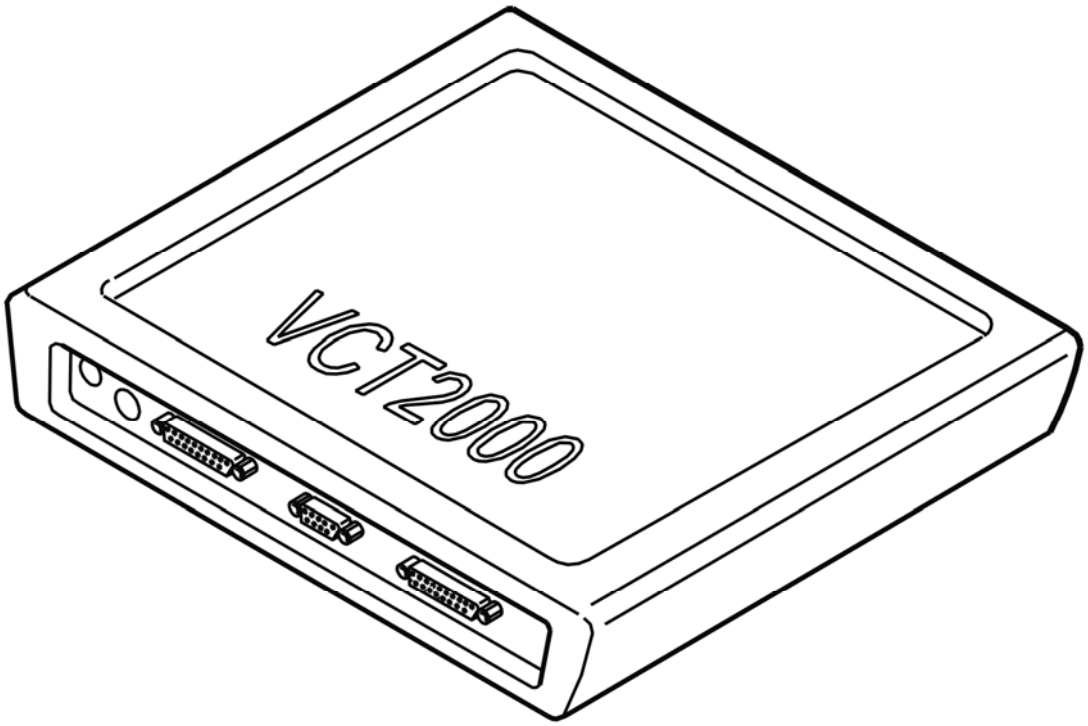

Fig. 251: Identifying VCT2000 Diagnostic Tool Symbol In VIDA
Courtesy of VOLVO CARS CORPORATION

Is the rpm updated?

- **YES**

  VERIFIED: Troubleshooting has been completed.

- **NO**

  Refer to **INFORMATION**

INFORMATION

FAULT-TRACING INFORMATION

The fault should have been detected and remedied. As this is not the case fault-tracing has failed.

Exit fault-tracing for this diagnostic trouble code (DTC) or make another attempt.

TCM-P072000: OUTPUT SHAFT SPEED SENSOR CIRCUIT. GENERAL FAULT INFORMATION. NO INFORMATION ON FAULT TYPE (TF-80SC AWD; 2005)

DIAGNOSTIC TROUBLE CODE (DTC) INFORMATION TCM-P072000

see **DIAGNOSTIC TROUBLE CODE (DTC) INFORMATION TCM-P072000**

FAULT TRACING TCM-P072000

see **FAULT TRACING TCM-P072000**

TCM-P072100: OUTPUT SHAFT SPEED SENSOR CIRCUIT RANGE/PERFORMANCE. GENERAL FAILURE INFORMATION. NO SUB TYPE INFORMATION (B6324S, TF-80SC; B6324S, TF-80SC AWD; 2007-2010)

DIAGNOSTIC TROUBLE CODE (DTC) INFORMATION TCM-P072100

Condition

The transmission's output speed sensor sends the transmission control module (TCM) a signal on the speed of the output drive shaft. Using this signal, the control module calculates the outgoing speed of the transmission. The signal is compared to the input speed signal from the transmission speed sensor and is used to calculation the transmission's gear ratio and for diagnostics.

The diagnostic trouble code (DTC) is stored if the control module detects that:

- The speed signal from the brake control module (BCM) does not match the signal from the output speed sensor.

The control module's test for the diagnostic trouble code (DTC) starts in the event of:

- Speed higher than 30 km/h (20 mph) and engine speed over 400 rpm.

NOTE: **The control module can only detect the fault once the test has been started and the diagnostic trouble code is stored when the conditions are met.**

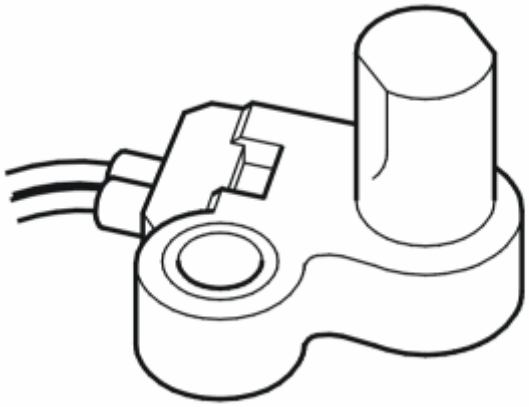

Fig. 252: Identifying Turbine/Input Shaft Speed Sensor
Courtesy of VOLVO CARS CORPORATION

Substitute Value

- Adaptation function is blocked.
- function is blocked.
- Slip lock-up function is blocked.
- Neutral check function is blocked.
- The transmission control module (TCM) uses the speed signal that the brake control module (BCM) puts on the CAN network.
- If the speed signal from the brake control module (BCM) is also missing, the auxiliary program **Emergency mode 1** in the transmission control module (TCM) will become active.

HINT: EMERGENCY MODE IN THE EVENT OF A FAULT

Possible Source

- Contact resistance in the terminals.
- Transmission output speed sensor not fitted correctly.
- Transmission output speed sensor not working.
- The wheel radius does not agree with the wheel radius programmed in the vehicle's configuration file.

Fault symptom[s]

- Malfunction indicator light (MIL), on
- General warning lamp lit
- No lock-up
- Rough gear shift
- No gear shift

FAULT-TRACING

FAULT-TRACING INFORMATION

NOTE: The diagnostic trouble code may have been caused by the wheel radius not matching with the radius that is programmed in the vehicle's configuration file.

If needed, check the programmed value in the central electronic module (CEM).

- **Continue**

  Refer to **CHECKING THE FUNCTION**

CHECKING THE FUNCTION

WARNING: Ensure that the vehicle is safely raised. Check that no objects are caught in the tire treads.

CAUTION: On vehicles with four-wheel-drive, the tests should be carried out with the vehicle raised so that all four wheels can rotate freely with attachments far out on the link arms so that the drive shafts are not damaged.

NOTE: If the vehicle has TRACS or TC (STC, DSTC), this function must be disabled. This is carried out by removing the fuse for the brake system pump motor in the engine compartment relay and fusebox. Note that this will generate diagnostic trouble codes in the brake control module (BCM). These diagnostic trouble codes must be erased before the vehicle is returned to the customer.

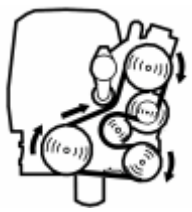

Fig. 253: Identifying Belt Routing
Courtesy of VOLVO CARS CORPORATION

- Raise the vehicle so that the drive wheels can rotate freely.
- Start the engine. Allow the engine to idle.
- Shift the gear selector to position D so that the drive wheels begin to rotate.

NOTE: Ensure that the wheels are not rotating when the gear selector is moved.

Read off the transmission output speed.

Check that the transmission speed is updated.

If the transmission input speed updates correctly it means that the fault was present previously but is not active now. There is an intermittent fault.

If the transmission input speed does not update correctly it means that the fault is permanent.

Fig. 254: Identifying VCT2000 Diagnostic Tool Symbol In VIDA
Courtesy of VOLVO CARS CORPORATION

- **Continue**

  Refer to **CHECKING THE WIRING AND SENSORS**

CHECKING THE WIRING AND SENSORS

Fig. 255: Identifying Ignition In Off Position
Courtesy of VOLVO CARS CORPORATION

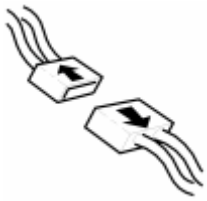

Fig. 256: Identifying Connectors Disconnected
Courtesy of VOLVO CARS CORPORATION

- Ignition off.
- Disconnect the transmission connector.
- Transmission control module (TCM) disconnected.

  Check connector B (22-pin) for the transmission control module (TCM). Check for damaged or pressed in pins. Check for contact resistance and oxidation.

HINT: Check the transmission speed sensor. See CHECKING INTERNAL COMPONENTS OF THE TRANSMISSION

If a faulty value is measured in the test above, open the control system for the transmission and fault trace the wiring and components.

If the wiring is faulty, replace the cable harness.

If the sensor is faulty, replace the transmission.

Remedy as necessary.

Other information

- see **CONNECTING THE BREAKOUT BOX**
- see **SIGNAL SPECIFICATION**
- see **TRANSMISSION - REMOVAL, REPLACEMENT AND INSTALLATION**
- see **TRANSMISSION CONTROL UNIT WIRING HARNESS**
- To access connector B:**TRANSMISSION CONTROL MODULE (TCM)**
- To access the transmission control system:**COVER CONTROL SYSTEM, REPLACING (2007-2011)**

Select an alternative:

1. Transmission replaced.

   Refer to **VERIFICATION**

2. Cable harness replaced.

   Refer to **RESETTING THE "TRANSMISSION FLUID CHANGE" COUNTER**

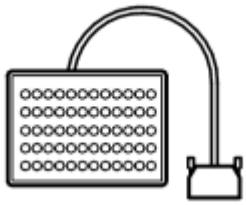

Fig. 257: Identifying Breakout Box
Courtesy of VOLVO CARS CORPORATION

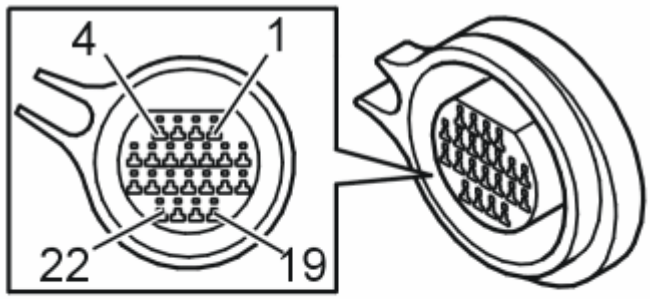

Fig. 258: Identifying Connector B Terminals
Courtesy of VOLVO CARS CORPORATION

INFORMATION

FAULT-TRACING INFORMATION

The fault should have been detected and remedied. As this is not the case fault-tracing has failed.

Exit fault-tracing for this diagnostic trouble code (DTC) or make another attempt.

VERIFICATION

VERIFICATION

HINT: After carrying out the repair, check that the fault has been remedied.

CAUTION: On vehicles with four-wheel-drive, the tests should be carried out with the vehicle raised so that all four wheels can rotate freely with attachments far out on the link arms so that the drive shafts are not damaged.

WARNING: Ensure that the vehicle is safely raised. Check that no objects are caught in the tire treads.

NOTE: If the vehicle has TRACS or TC (STC, DSTC), this function must be disabled. This is carried out by removing the fuse for the brake system pump motor in the engine compartment relay and fusebox. Note that diagnostic trouble codes will be generated in the brake control module (BCM). These must be erased before the vehicle is returned to the customer.

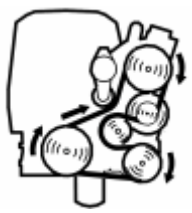

Fig. 259: Identifying Belt Routing
Courtesy of VOLVO CARS CORPORATION

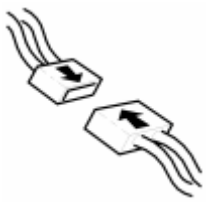

Fig. 260: Identifying Connector(s) Reinstallation
Courtesy of VOLVO CARS CORPORATION

- Ignition off.
- Reinstall the connectors, components etc.
- Raise the vehicle so that the drive wheels hang freely.
- Start the engine. Allow the engine to idle.
- Shift the gear selector to position D so that the drive wheels begin to rotate.

NOTE: Ensure that the wheels are not rotating when the gear selector is moved.

- Read off the transmission output speed.

  Check that the transmission speed is updated.

NOTE: Diagnostic trouble codes may be stored in the brake control module (BCM) when the back wheels are stationary and the front wheels rotate.

Fig. 261: Identifying VCT2000 Diagnostic Tool Symbol In VIDA
Courtesy of VOLVO CARS CORPORATION

Is the speed updated?

- **YES**

VERIFIED: Troubleshooting has been completed.

- **NO**

  Refer to **INFORMATION**

RESETTING THE "TRANSMISSION FLUID CHANGE" COUNTER

CHECKING THE FUNCTION

HINT: The transmission control module (TCM) has a counter for fluid quality that counts the number of times the transmission is subjected to too hard a load or too high an ambient temperature. If the counter is not reset during draining/replacement, there is a risk that a diagnostic trouble code will be set under the wrong conditions. Thus, it is important that the counter for transmission fluid change be reset.

NOTE: **This only applies when the transmission oil is changed and when the oil is changed during repairs to the transmission's temperature sensor.**

Fig. 262: Identifying Ignition ON
Courtesy of VOLVO CARS CORPORATION

- Ignition on.

  Click on the VCT2000 symbol to reset the counter.

Fig. 263: Identifying VCT2000 Diagnostic Tool Symbol In VIDA
Courtesy of VOLVO CARS CORPORATION

- **Continue**

  Refer to **VERIFICATION**

TCM-P072100: OUTPUT SHAFT SPEED SENSOR CIRCUIT RANGE/PERFORMANCE. GENERAL FAILURE INFORMATION. NO SUB TYPE INFORMATION (B6324S5, TF-80SC; B6324S5, TF-80SC AWD; 2011-

2012)

DIAGNOSTIC TROUBLE CODE (DTC) INFORMATION TCM-P072100

see **DIAGNOSTIC TROUBLE CODE (DTC) INFORMATION TCM-P072100**

FAULT-TRACING

see **FAULT-TRACING**

TCM-P072100: OUTPUT SHAFT SPEED SENSOR CIRCUIT INSIDE/OUTSIDE TOLERANCE. GENERAL FAULT INFORMATION. NO INFORMATION ON FAULT TYPE (B8444S, TF-80SC AWD; 2006-2011)

DIAGNOSTIC TROUBLE CODE (DTC) INFORMATION TCM-P072100

Condition

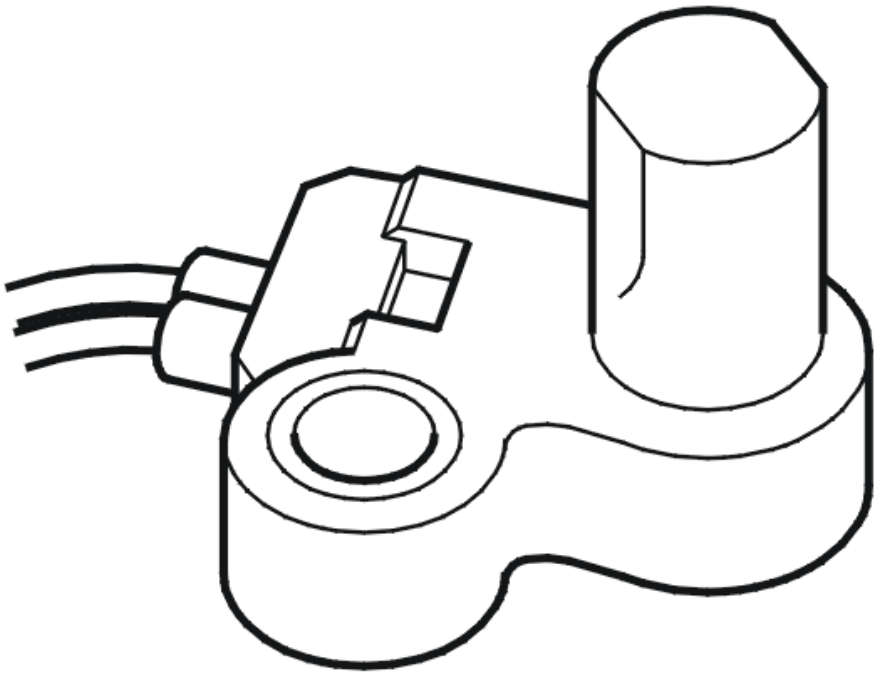

Fig. 264: Identifying Transmission Output Speed Sensor
Courtesy of VOLVO CARS CORPORATION

The gearbox output speed sensor gives the transmission control module (TCM) a signal on the speed of the output drive shaft. Using this signal, the control module can calculate the output speed of the gearbox. The

signal is compared with a signal from the gearbox input speed sensor and is used to calculate the gear ratio of the gearbox as well as for diagnosis.

If the transmission control module (TCM) registers that the speed signal from the brake control module (BCM) does not agree with the signal from the output speed sensor, the diagnostic trouble code (DTC) is generated.

The diagnostic trouble code (DTC) can be diagnosed at speeds above approximately 30 km/h and engine speeds above 400 rpm.

Substitute Value

- Adaptation function is blocked.
- Lock-up function is blocked.
- Slip lock-up function is blocked.
- Neutral check function is blocked.
- The transmission control module (TCM) uses the speed signal that the brake control module (BCM) puts on the CAN network.
- If the speed signal from the brake control module (BCM) is also missing, the auxiliary program **Emergency mode 1** in the transmission control module (TCM) will become active.

  HINT: EMERGENCY MODE IN CASE OF MALFUNCTION

Possible Source

- Contact resistance in the terminals
- Gearbox output speed sensor not fitted correctly.
- Gearbox output speed sensor not working.
- The wheel radius does not agree with the wheel radius programmed in the vehicle's configuration file.

Fault symptom[s]

- Malfunction indicator lamp (MIL) lit.
- General warning lamp lit
- No lock-up function.
- Harsh gear changing
- No gear changing.

FAULT TRACING

FAULT-TRACING INFORMATION

NOTE: The diagnostic trouble code may have been caused by the wheel radius not matching with the radius that is programmed in the vehicle's configuration file.

If needed, check the programmed value in the central electronic module (CEM).

- **Continue**

Refer to **CHECKING THE FUNCTION**

CHECKING THE FUNCTION

WARNING: Ensure that the vehicle is safely raised. Check that no objects are caught in the tire treads.

CAUTION: On vehicles with four-wheel-drive, the tests should be carried out with the vehicle raised so that all four wheels can rotate freely with attachments far out on the link arms so that the drive shafts are not damaged.

NOTE: If the vehicle is equipped with TRACS or traction control (STC, DSTC) this function must be deactivated. Remove the fuse for the pump motor for the brake system in the relay/fusebox in the engine compartment. Note that this will store a diagnostic trouble code (DTC) in the brake control module (BCM). These diagnostic trouble codes (DTC) must be erased before delivery to the customer.

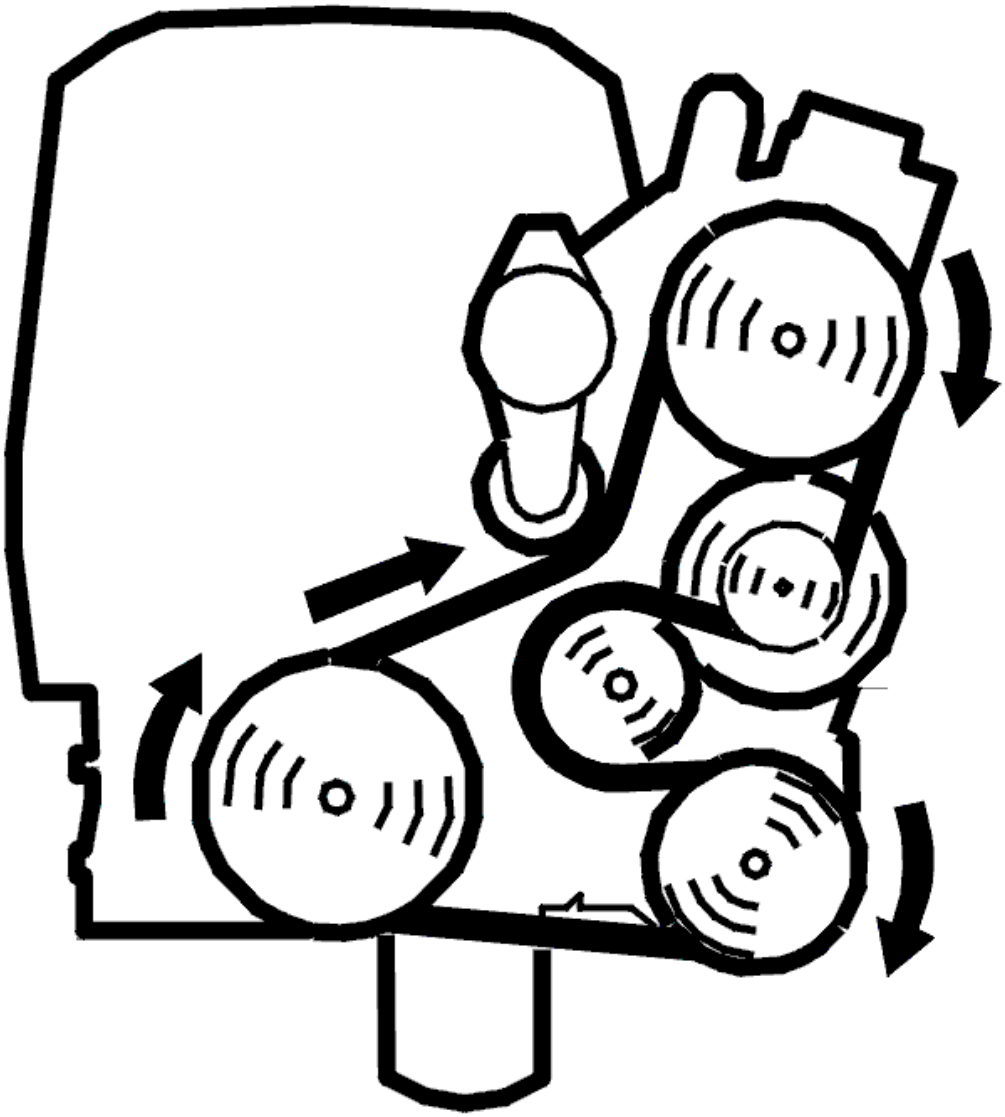

Fig. 265: Identifying Belt Routing
Courtesy of VOLVO CARS CORPORATION

- Raise the vehicle so that the drive wheels hang freely.
- Start the engine and allow it to idle.
- Put the gear selector in position D so that the drive wheels start to rotate.

NOTE: Ensure that the wheels are not rotating when the gear selector is moved.

- Read off the gearbox output speed.

  Read off the transmission input speed.

  If the transmission input speed updates correctly it means that the fault was present previously but is not active now. There is an intermittent fault.

If the transmission input speed does not update correctly it means that the fault is permanent.

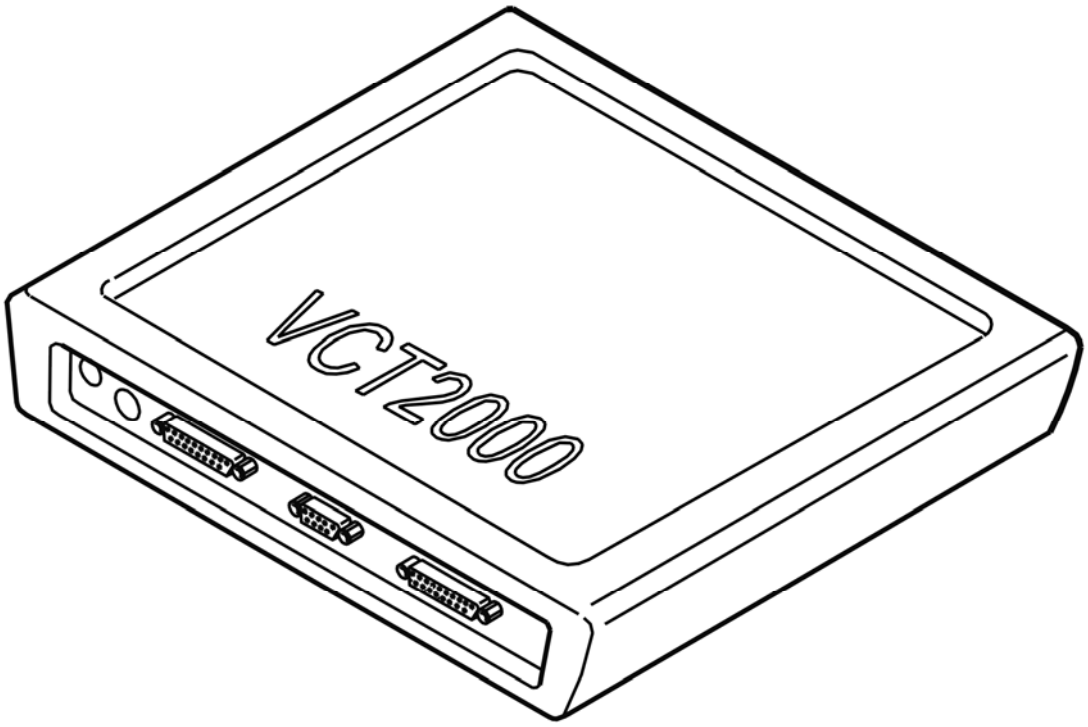

Fig. 266: Identifying VCT2000 Diagnostic Tool Symbol In VIDA
Courtesy of VOLVO CARS CORPORATION

- **Continue**

Refer to **CHECKING WIRING AND SENSORS**

CHECKING WIRING AND SENSORS

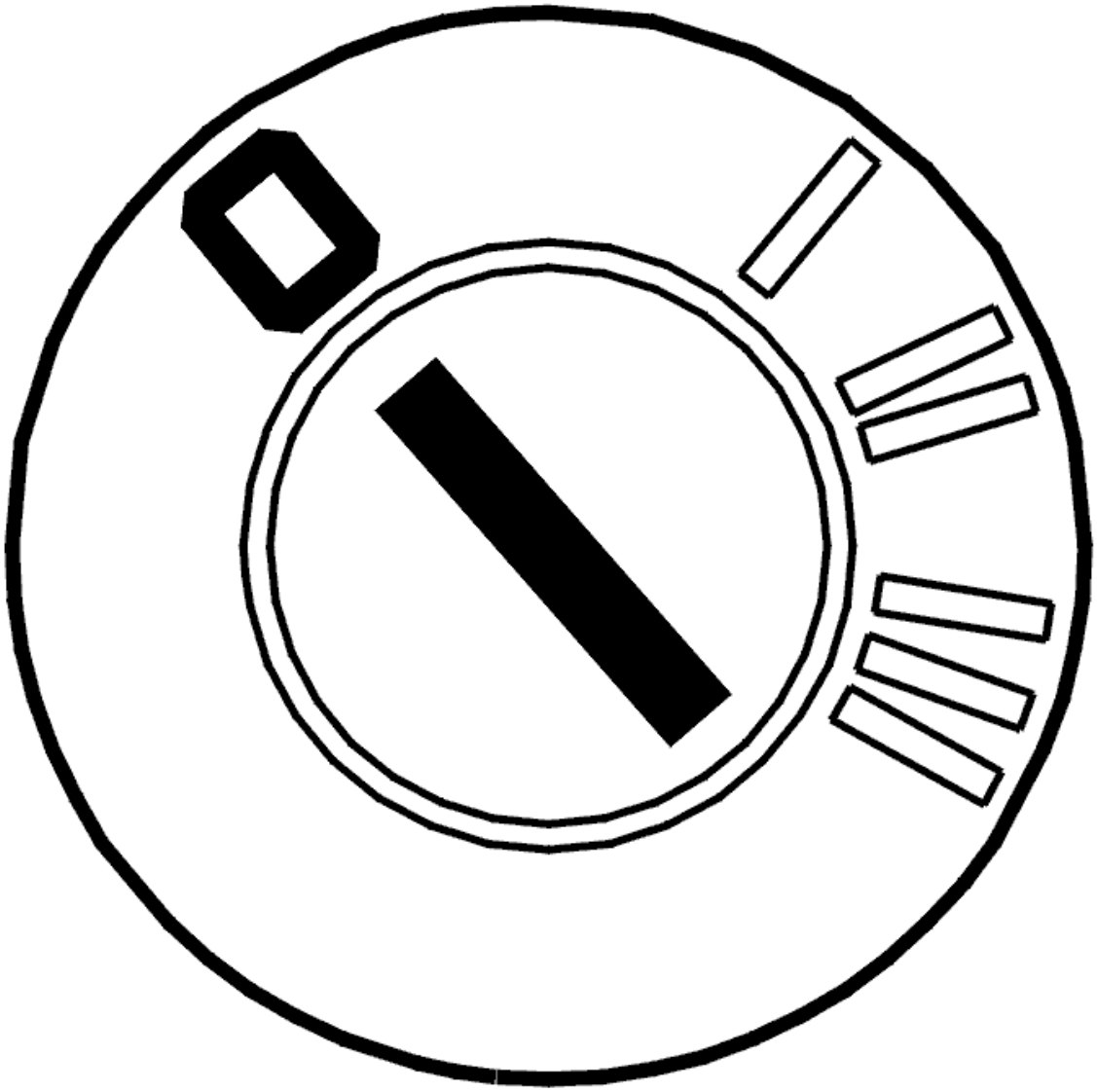

Fig. 267: Identifying Ignition OFF
Courtesy of VOLVO CARS CORPORATION

- Ignition off
- Disconnect the connector for the transmission.
- Transmission control module (TCM) disconnected.
- Check connector B (22-pin) for the transmission control module (TCM). Check for damaged or pressed in pins. Check for contact resistance and oxidation.

  HINT: Check the transmission speed sensor. See CHECKING THE INPUT AND OUTPUT SPEED SENSORS FOR THE TRANSMISSION

  If any incorrect value was measured in the test above, open the transmission's control system and troubleshoot cables and component for open circuit or short-circuit to voltage.

Remedy as necessary.

Other information

- see **CONNECTING THE BREAKOUT BOX**
- see **SIGNAL DESCRIPTION**
- see **REPLACING THE GEARBOX**
- see **CABLE HARNESS, CONTROL SYSTEM, GEARBOX, REPLACING**
- To access connector B: **TRANSMISSION CONTROL MODULE (TCM), REPLACING**
- To access the transmission control system: **COVER CONTROL SYSTEM, REPLACING (2007-2011)**

Select an alternative:

1. Transmission replaced

   Refer to **VERIFICATION**

2. Transmission replaced

   Refer to **RESETTING THE COUNTER FOR TRANSMISSION OIL, CHANGE**

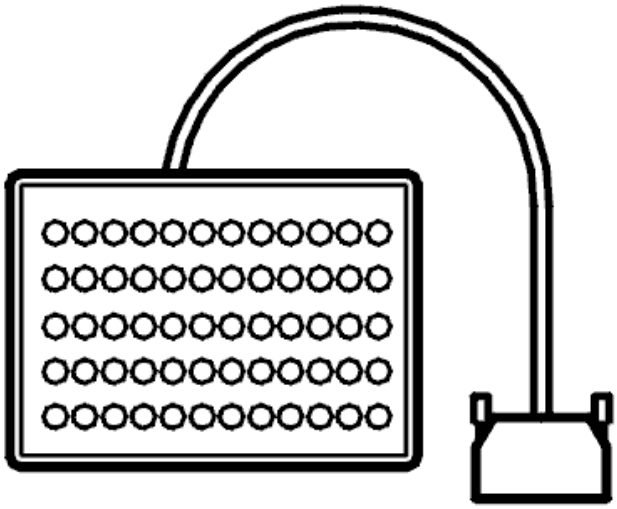

Fig. 268: Identifying Breakout Box
Courtesy of VOLVO CARS CORPORATION

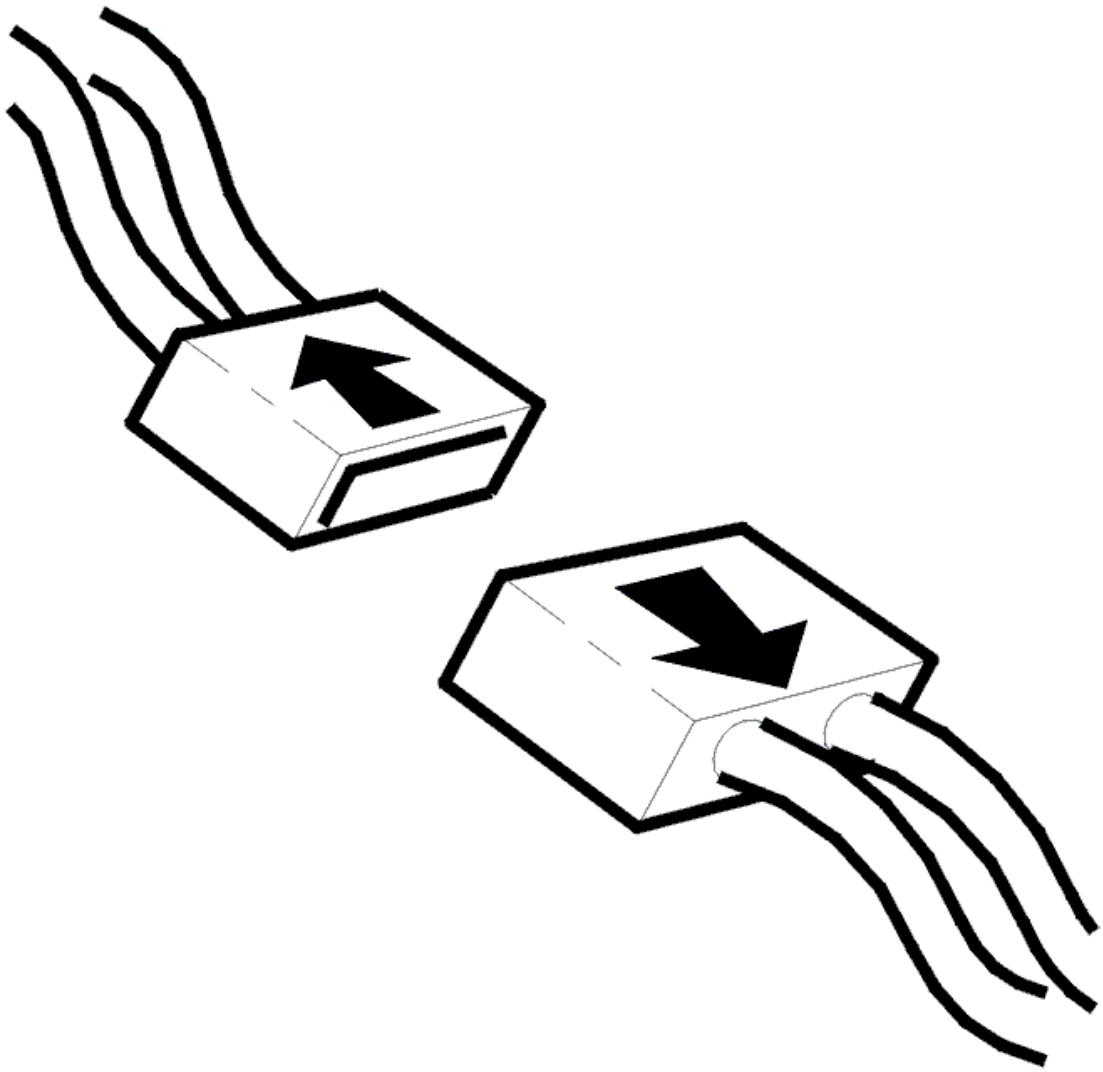

Fig. 269: Identifying Connector(s) Disconnected
Courtesy of VOLVO CARS CORPORATION

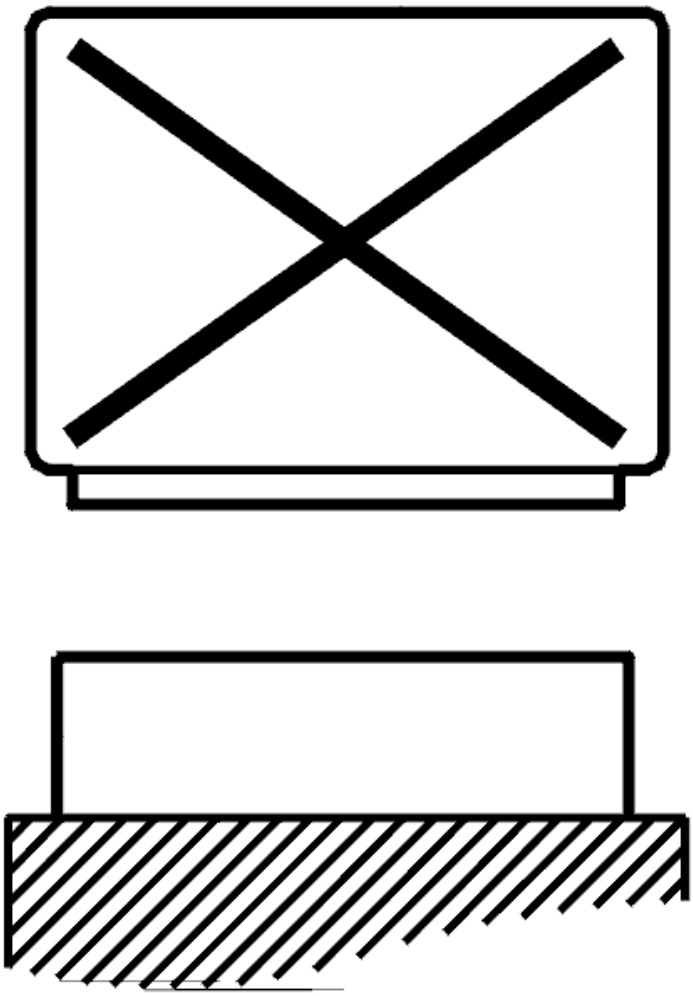

Fig. 270: Identifying Control Module Disconnected
Courtesy of VOLVO CARS CORPORATION

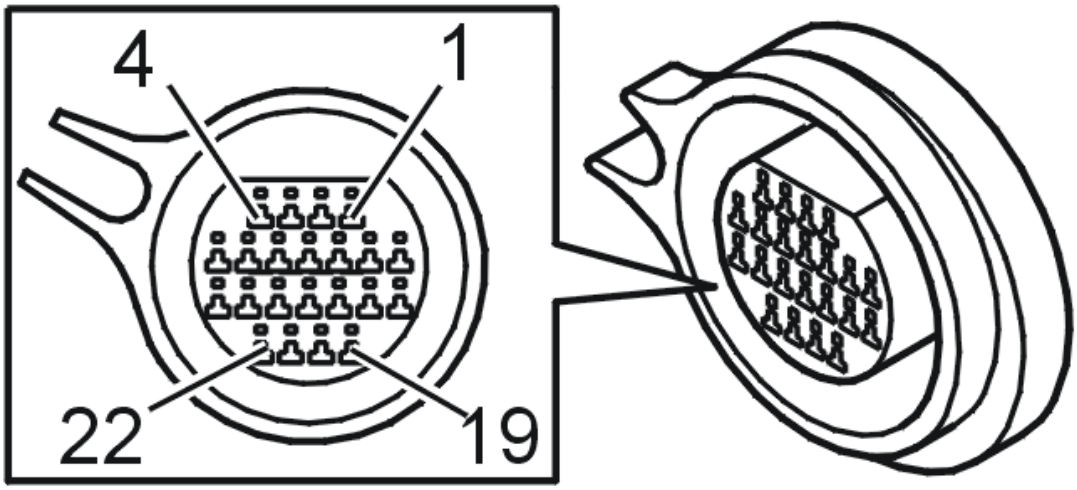

Fig. 271: Identifying Connector B Terminals
Courtesy of VOLVO CARS CORPORATION

RESETTING THE COUNTER FOR TRANSMISSION OIL, CHANGE

RESETTING THE COUNTER FOR TRANSMISSION OIL, CHANGE

HINT: The transmission control module (TCM) has a counter for the oil's quality that counts up when the transmission is exposed to very heavy loads or high ambient temperature. If the counter is not reset when draining/changing oil, there is a risk that a diagnostic trouble code may be generated under incorrect conditions. That is why it is important that the counter for Transmission oil, change is reset.

NOTE: **This only applies when the transmission oil is changed and when the oil is changed during repairs to the transmission's temperature sensor.**

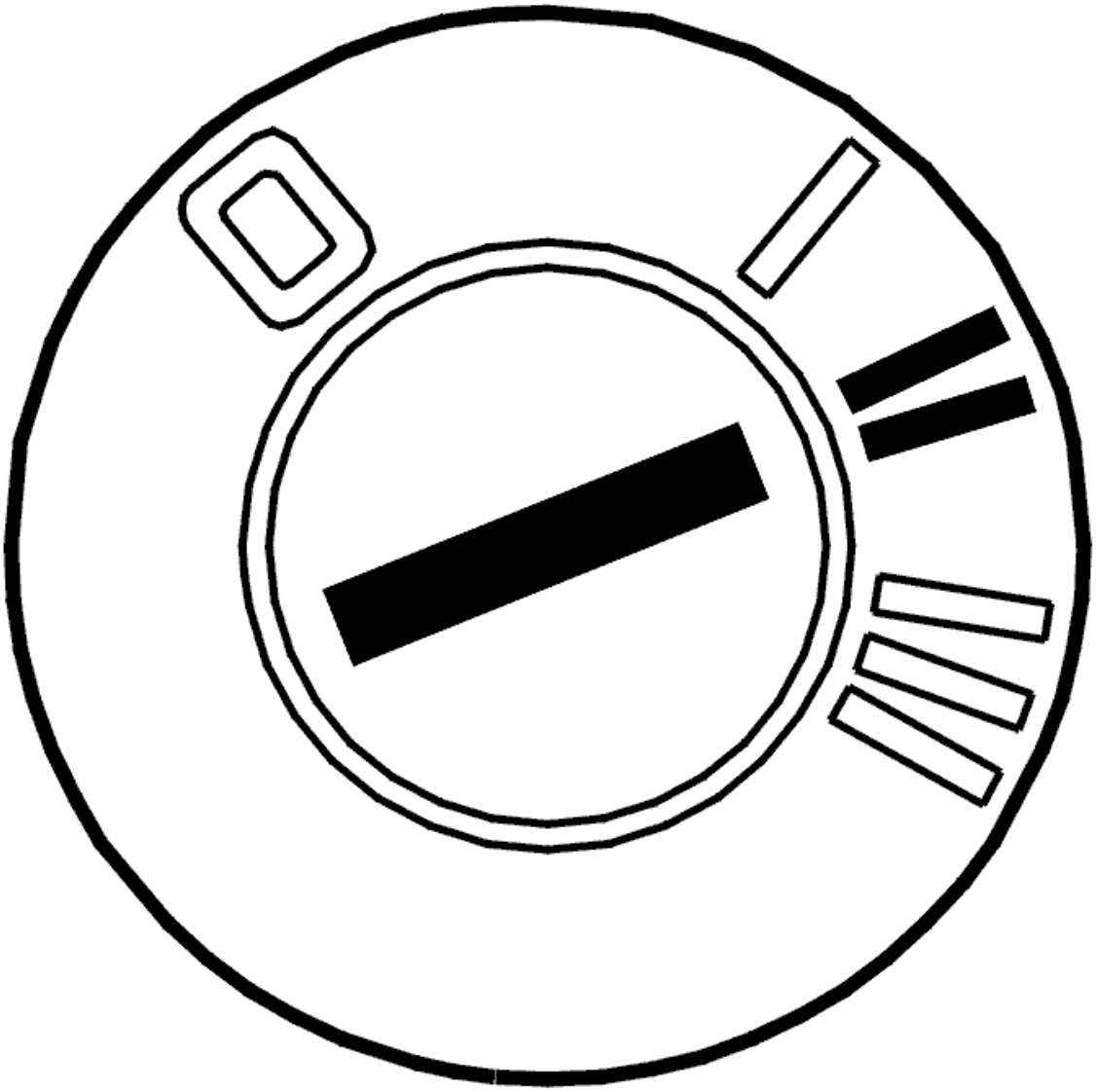

Fig. 272: Identifying Ignition ON
Courtesy of VOLVO CARS CORPORATION

- Ignition on

  Activate reset of the counter by clicking on the symbol for VCT2000.

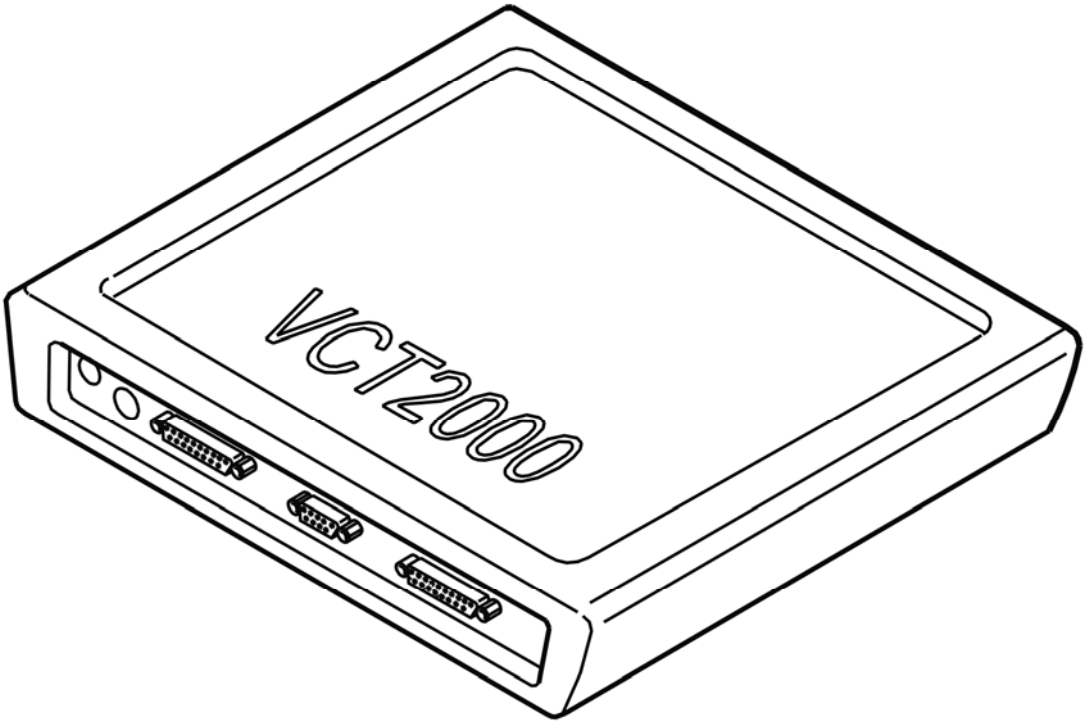

Fig. 273: Identifying VCT2000 Diagnostic Tool Symbol In VIDA
Courtesy of VOLVO CARS CORPORATION

- **Continue**

  Refer to **VERIFICATION**

VERIFICATION

VERIFICATION

HINT: After carrying out the repair, check that the fault has been remedied.

CAUTION: On vehicles with four-wheel-drive, the tests should be carried out with the vehicle raised so that all four wheels can rotate freely with attachments far out on the link arms so that the drive shafts are not damaged.

WARNING: Ensure that the vehicle is safely raised. Check that no objects are caught in the tire treads.

NOTE: If the vehicle is equipped with TRACS (traction control system) or Traction Control (DSTC (Dynamic stability and traction control), STC (Stability and traction control) the function must be deactivated. This is carried out by

removing the fuse for the brake system pump motor in the engine compartment relay and fusebox. Note that diagnostic trouble codes (DTCs) will be stored in the brake control module (BCM). These must be erased before returning the vehicle to the customer.

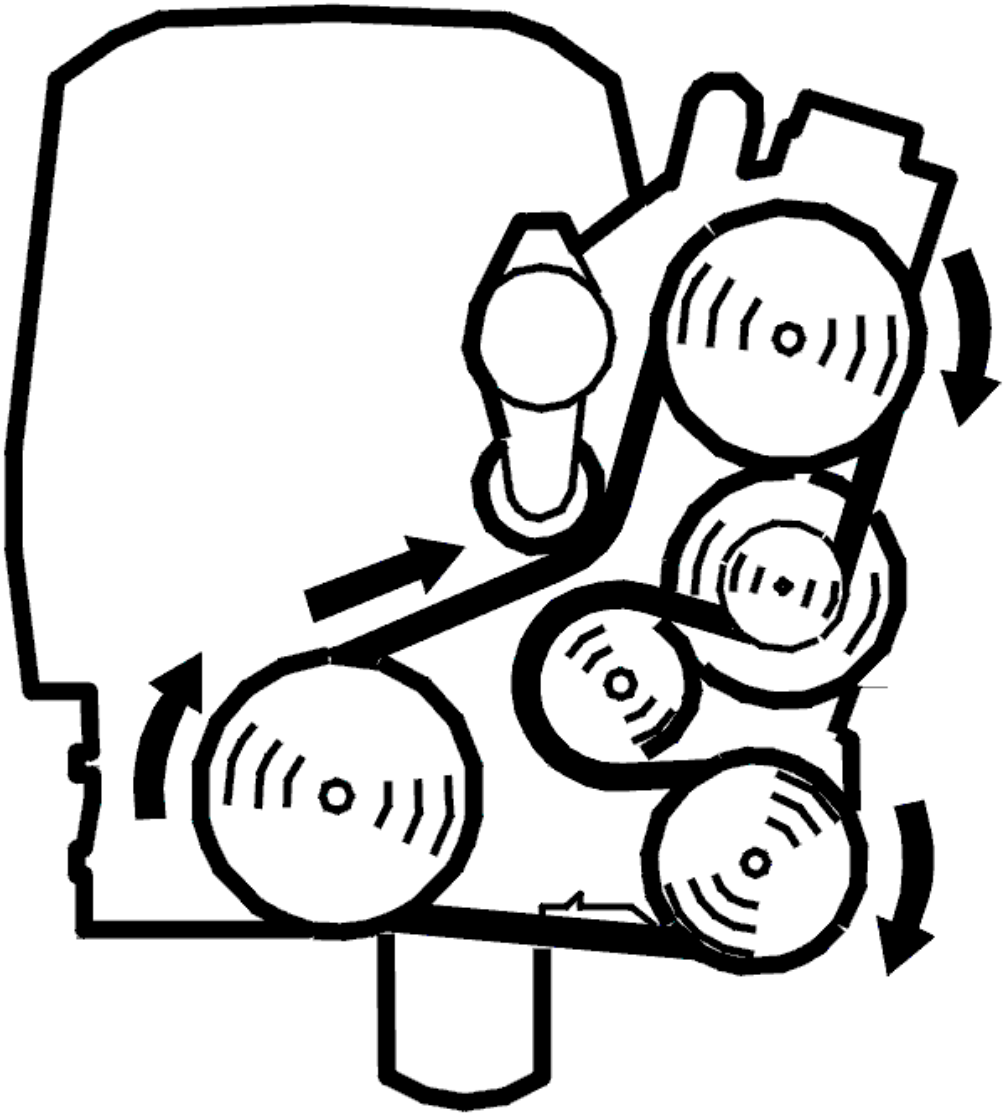

Fig. 274: Identifying Belt Routing
Courtesy of VOLVO CARS CORPORATION

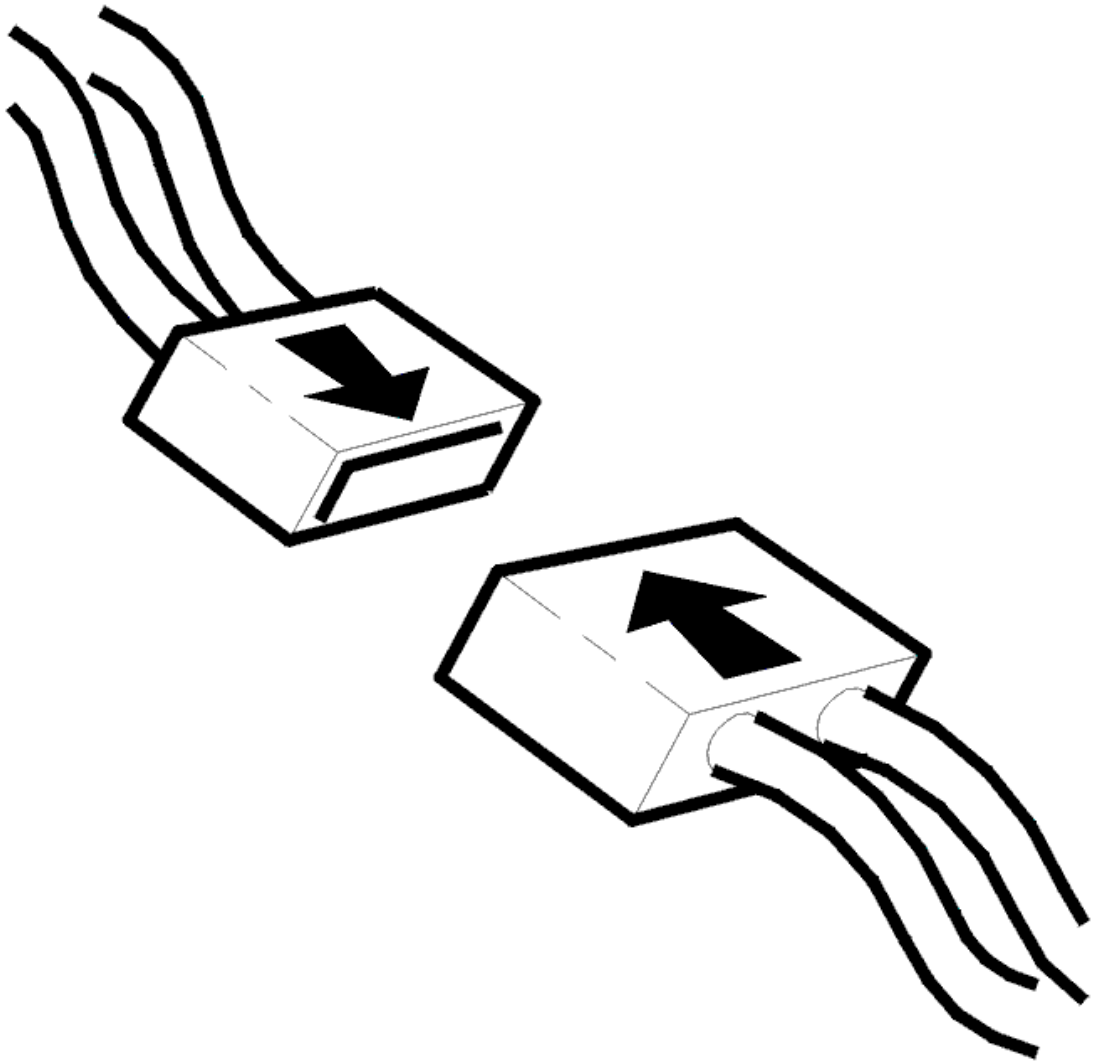

Fig. 275: Identifying Connector(s) Reinstallation
Courtesy of VOLVO CARS CORPORATION

- Ignition off
- Reinstall the connectors, components etc.
- Raise the vehicle so that the drive wheels hang freely.
- Start the engine and allow it to idle.
- Put the gear selector in position D so that the drive wheels start to rotate.

NOTE: Ensure that the wheels are not rotating when the gear selector is moved.

- Read off the gearbox output speed.

  Check that the speed is updated.

NOTE: **Diagnostic trouble codes (DTCs) may be stored in the brake control module (BCM) when the rear wheels are stationary and the front wheels rotate. Erase any diagnostic trouble codes (DTCs) after fault-tracing.**

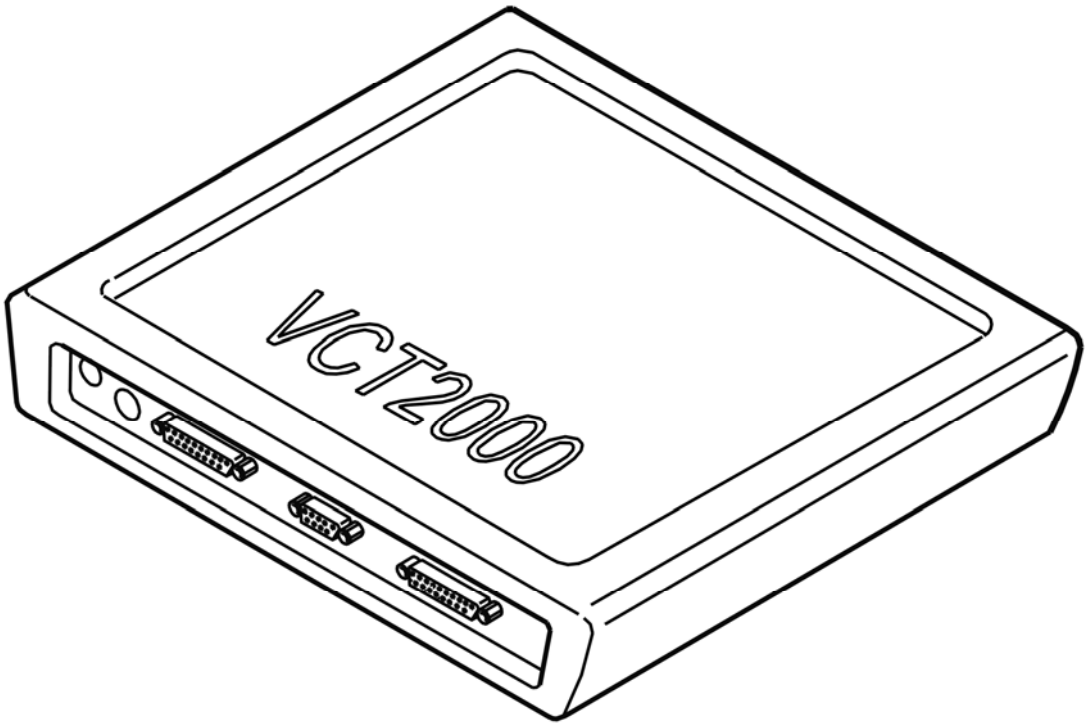

Fig. 276: Identifying VCT2000 Diagnostic Tool Symbol In VIDA
Courtesy of VOLVO CARS CORPORATION

Is the rpm updated?

- **YES**

  VERIFIED: Troubleshooting has been completed.

- **NO**

  Refer to **INFORMATION**

INFORMATION

FAULT-TRACING INFORMATION

The fault should have been detected and remedied. As this is not the case fault-tracing has failed.

Exit fault-tracing for this diagnostic trouble code (DTC) or make another attempt.

TCM-P072100: OUTPUT SHAFT SPEED SENSOR CIRCUIT INSIDE/OUTSIDE TOLERANCE. GENERAL FAULT INFORMATION. NO INFORMATION ON FAULT TYPE (TF-80SC AWD; 2005)

DIAGNOSTIC TROUBLE CODE (DTC) INFORMATION TCM-P072100

see **DIAGNOSTIC TROUBLE CODE (DTC) INFORMATION TCM-P072100**

FAULT TRACING

see **FAULT TRACING**

TCM-P072200: OUTPUT SHAFT SPEED SENSOR CIRCUIT NO SIGNAL. GENERAL FAILURE INFORMATION. NO SUB TYPE INFORMATION (B6324S, TF-80SC; B6324S, TF-80SC AWD; 2007-2010)

DIAGNOSTIC TROUBLE CODE (DTC) INFORMATION TCM-P072200

Condition

The transmission's output speed sensor sends the transmission control module (TCM) a signal on the speed of the output drive shaft. Using this signal, the control module calculates the outgoing speed of the transmission. The signal is compared to the input speed signal from the transmission speed sensor and is used to calculation the transmission's gear ratio and for diagnostics.

The diagnostic trouble code (DTC) is stored if the control module detects that:

- No output speed signal from the transmission speed sensor.

The control module's test for the diagnostic trouble code (DTC) starts in the event of:

- Speed higher than 70 km/h (44 mph) and transmission fluid temperature over 20 °C (68 °F).

NOTE: **The control module can only detect the fault once the test has been started and the diagnostic trouble code is stored when the conditions are met.**

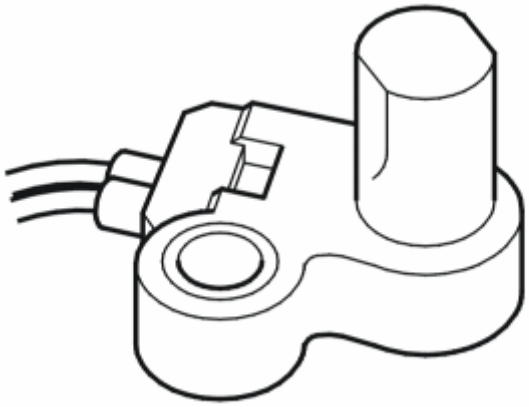

Fig. 277: Identifying Turbine/Input Shaft Speed Sensor
Courtesy of VOLVO CARS CORPORATION

Substitute Value

- Adaptation function is blocked.
- function is blocked.
- Slip lock-up function is blocked.
- Neutral check function is blocked.
- The transmission control module (TCM) uses the speed signal that the brake control module (BCM) puts on the CAN network.
- If the speed signal from the brake control module (BCM) is also missing, the auxiliary program **Emergency mode 1** in the transmission control module (TCM) will become active.

HINT: EMERGENCY MODE IN THE EVENT OF A FAULT

Possible Source

- Contact resistance in the terminals.
- Transmission output speed sensor not working.
- Internal fault in the transmission control module (TCM).

Fault symptom[s]

- Malfunction indicator light (MIL), on
- General warning lamp lit
- No lock-up
- Rough gear shift
- No gear shift

FAULT-TRACING

CHECKS

CHECKING THE FUNCTION

WARNING: Ensure that the vehicle is safely raised. Check that no objects are caught in the tire treads.

CAUTION: On vehicles with four-wheel-drive, the tests should be carried out with the vehicle raised so that all four wheels can rotate freely with attachments far out on the link arms so that the drive shafts are not damaged.

NOTE: If the vehicle has TRACS or TC (STC, DSTC), this function must be disabled. This is carried out by removing the fuse for the brake system pump motor in the engine compartment relay and fusebox. Note that this will generate diagnostic trouble codes in the brake control module (BCM). These diagnostic trouble codes must be erased before the vehicle is returned to the customer.

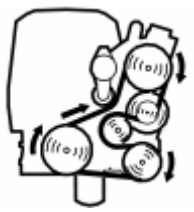

Fig. 278: Identifying Belt Routing
Courtesy of VOLVO CARS CORPORATION

- Raise the vehicle so that the drive wheels can rotate freely.
- Start the engine. Allow the engine to idle.
- Shift the gear selector to position D so that the drive wheels begin to rotate.

NOTE: Ensure that the wheels are not rotating when the gear selector is moved.

- Read off the transmission output speed.

Check that the transmission speed is updated.

If the transmission input speed updates correctly it means that the fault was present previously but is not active now. There is an intermittent fault.

If the transmission input speed does not update correctly it means that the fault is permanent.

Fig. 279: Identifying VCT2000 Diagnostic Tool Symbol In VIDA
Courtesy of VOLVO CARS CORPORATION

- **Continue**

  Refer to **CHECKING THE WIRING AND SENSORS**

CHECKING THE WIRING AND SENSORS

Fig. 280: Identifying Ignition In Off Position
Courtesy of VOLVO CARS CORPORATION

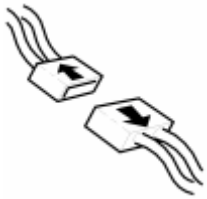

Fig. 281: Identifying Connectors Disconnected
Courtesy of VOLVO CARS CORPORATION

- Ignition off.
- Disconnect the transmission connector.
- Transmission control module (TCM) disconnected.

  Check connector B (22-pin) for the transmission control module (TCM). Check for damaged or pressed in pins. Check for contact resistance and oxidation.

  HINT: Check the transmission speed sensor. See CHECKING INTERNAL COMPONENTS OF THE TRANSMISSION

  If a faulty value is measured in the test above, open the control system for the transmission and fault trace the wiring and components.

NOTE: The cause of the malfunction may be that the sensor is loose or not

connected correctly.

If the wiring is faulty, replace the cable harness.

If the sensor is faulty, replace the transmission.

Remedy as necessary.

Other information

- see **CONNECTING THE BREAKOUT BOX**
- see **SIGNAL SPECIFICATION**
- see **TRANSMISSION - REMOVAL, REPLACEMENT AND INSTALLATION**
- see **TRANSMISSION CONTROL UNIT WIRING HARNESS**
- To access connector B:**TRANSMISSION CONTROL MODULE (TCM)**
- To access the transmission control system:**COVER CONTROL SYSTEM, REPLACING (2007-2011)**

Select an alternative:

1. Transmission replaced.

   Refer to **VERIFICATION**

2. Cable harness replaced.

   Refer to **RESETTING THE "TRANSMISSION FLUID CHANGE" COUNTER**

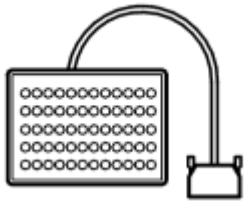

Fig. 282: Identifying Breakout Box
Courtesy of VOLVO CARS CORPORATION

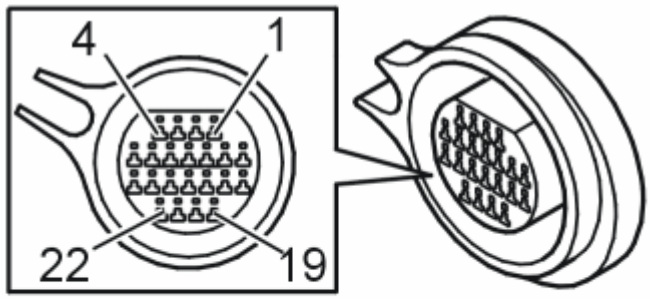

Fig. 283: Identifying Connector B Terminals
Courtesy of VOLVO CARS CORPORATION

INFORMATION

FAULT-TRACING INFORMATION

The fault should have been detected and remedied. As this is not the case fault-tracing has failed.

Exit fault-tracing for this diagnostic trouble code (DTC) or make another attempt.

VERIFICATION

VERIFICATION

HINT: After carrying out the repair, check that the fault has been remedied.

CAUTION: On vehicles with four-wheel-drive, the tests should be carried out with the vehicle raised so that all four wheels can rotate freely with attachments far out on the link arms so that the drive shafts are not damaged.

WARNING: Ensure that the vehicle is safely raised. Check that no objects are caught in the tire treads.

NOTE: If the vehicle has TRACS or TC (STC, DSTC), this function must be disabled. This is carried out by removing the fuse for the brake system pump motor in the engine compartment relay and fusebox. Note that this will generate diagnostic trouble codes in the brake control module (BCM). These diagnostic trouble codes must be erased before the vehicle is returned to the customer.

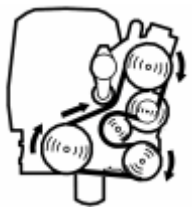

Fig. 284: Identifying Belt Routing
Courtesy of VOLVO CARS CORPORATION

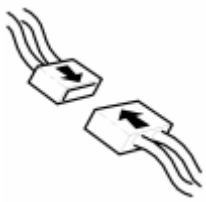

Fig. 285: Identifying Connector(s) Reinstallation
Courtesy of VOLVO CARS CORPORATION

- Ignition off.
- Reinstall the connectors, components etc.
- Raise the vehicle so that the drive wheels can rotate freely.
- Start the engine. Allow the engine to idle.
- Shift the gear selector to position D so that the drive wheels begin to rotate.

NOTE: Ensure that the wheels are not rotating when the gear selector is moved.

- Read off the transmission output speed.

Check that the transmission speed is updated.

NOTE: Diagnostic trouble codes may be stored in the brake control module (BCM) when the back wheels are stationary and the front wheels rotate. Erase any diagnostic trouble codes (DTCs) after fault-tracing.

Fig. 286: Identifying VCT2000 Diagnostic Tool Symbol In VIDA
Courtesy of VOLVO CARS CORPORATION

Is the speed updated?

- **YES**

VERIFIED: Troubleshooting has been completed.

- **NO**

  Refer to **INFORMATION**

RESETTING THE "TRANSMISSION FLUID CHANGE" COUNTER

CHECKING THE FUNCTION

HINT: The transmission control module (TCM) has a counter for fluid quality that counts the number of times the transmission is subjected to too hard a load or too high an ambient temperature. If the counter is not reset during draining/replacement, there is a risk that a diagnostic trouble code will be set under the wrong conditions. Thus, it is important that the counter for transmission fluid change be reset.

NOTE: **This only applies when the transmission oil is changed and when the oil is changed during repairs to the transmission's temperature sensor.**

Fig. 287: Identifying Ignition ON
Courtesy of VOLVO CARS CORPORATION

- Ignition on.

  Click on the VCT2000 symbol to reset the counter.

Fig. 288: Identifying VCT2000 Diagnostic Tool Symbol In VIDA
Courtesy of VOLVO CARS CORPORATION

- **Continue**

  Refer to **VERIFICATION**

TCM-P072200: OUTPUT SHAFT SPEED SENSOR CIRCUIT NO SIGNAL. GENERAL FAILURE INFORMATION. NO SUB TYPE INFORMATION (B6324S5, TF-80SC; B6324S5, TF-80SC AWD; 2011-2012)

DIAGNOSTIC TROUBLE CODE (DTC) INFORMATION TCM-P072200

see **DIAGNOSTIC TROUBLE CODE (DTC) INFORMATION TCM-P072200**

FAULT-TRACING

see **FAULT-TRACING**

TCM-P072200: OUTPUT SHAFT SPEED SENSOR CIRCUIT NO SIGNAL. GENERAL FAULT INFORMATION. NO INFORMATION ON FAULT TYPE (B8444S, TF-80SC AWD; 2006-2011)

DIAGNOSTIC TROUBLE CODE (DTC) INFORMATION TCM-P072200

Condition

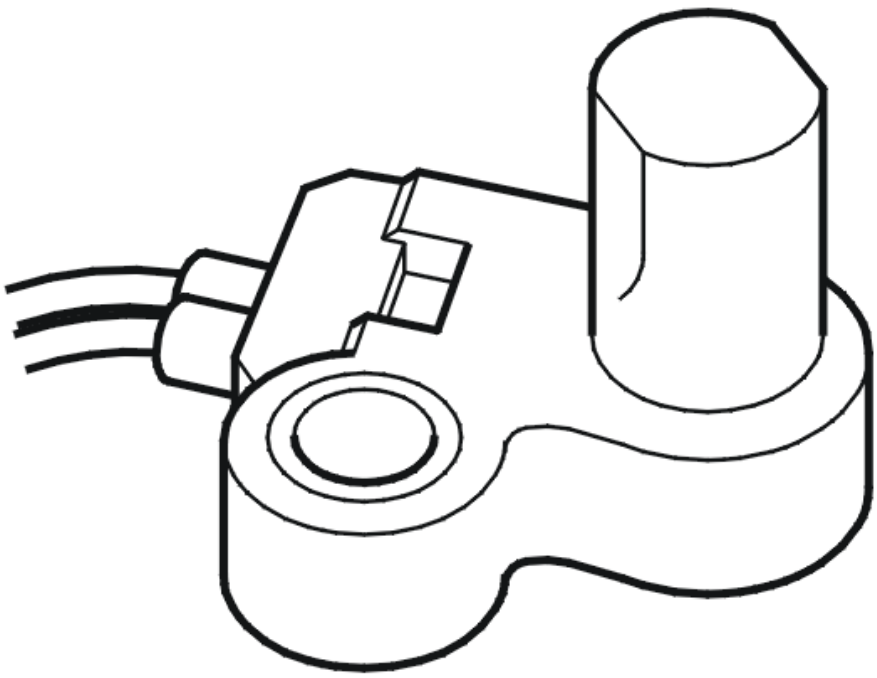

Fig. 289: Identifying Transmission Output Speed Sensor
Courtesy of VOLVO CARS CORPORATION

The gearbox output speed sensor gives the transmission control module (TCM) a signal on the speed of the output drive shaft. Using this signal, the control module can calculate the output speed of the gearbox. The signal is compared with a signal from the gearbox input speed sensor and is used to calculate the gear ratio of the gearbox as well as for diagnosis.

If the transmission control module (TCM) registers that the signal from the gearbox output speed sensor is missing, the diagnostic trouble code (DTC) is generated.

The diagnostic trouble code (DTC) can be diagnosed at speeds above approximately 70 km/hand transmission fluid above 20 °C.

Substitute Value

- Adaptation function is blocked.
- Lock-up function is blocked.
- Slip lock-up function is blocked.
- Neutral check function is blocked.
- The transmission control module (TCM) uses the speed signal that the brake control module (BCM) puts on the CAN network.
- If the speed signal from the brake control module (BCM) is also missing, the auxiliary program **Emergency mode 1** in the transmission control module (TCM) will become active.

  HINT: EMERGENCY MODE IN CASE OF MALFUNCTION

Possible Source

- Contact resistance in the terminals
- Gearbox output speed sensor not working.
- Internal fault in transmission control module (TCM).

Fault symptom[s]

- Malfunction indicator lamp (MIL) lit.
- General warning lamp lit
- No lock-up function.
- Harsh gear changing
- No gear changing.

FAULT TRACING TCM-P072200

CHECKS

CHECKING THE FUNCTION

WARNING: Ensure that the vehicle is safely raised. Check that no objects are caught in the tire treads.

CAUTION: On vehicles with four-wheel-drive, the tests should be carried out with the vehicle raised so that all four wheels can rotate freely with attachments far

out on the link arms so that the drive shafts are not damaged.

NOTE: **If the vehicle is equipped with TRACS or traction control (STC, DSTC) this function must be deactivated. Remove the fuse for the pump motor for the brake system in the relay/fusebox in the engine compartment. Note that this will store a diagnostic trouble code (DTC) in the brake control module (BCM). These diagnostic trouble codes (DTC) must be erased before delivery to the customer.**

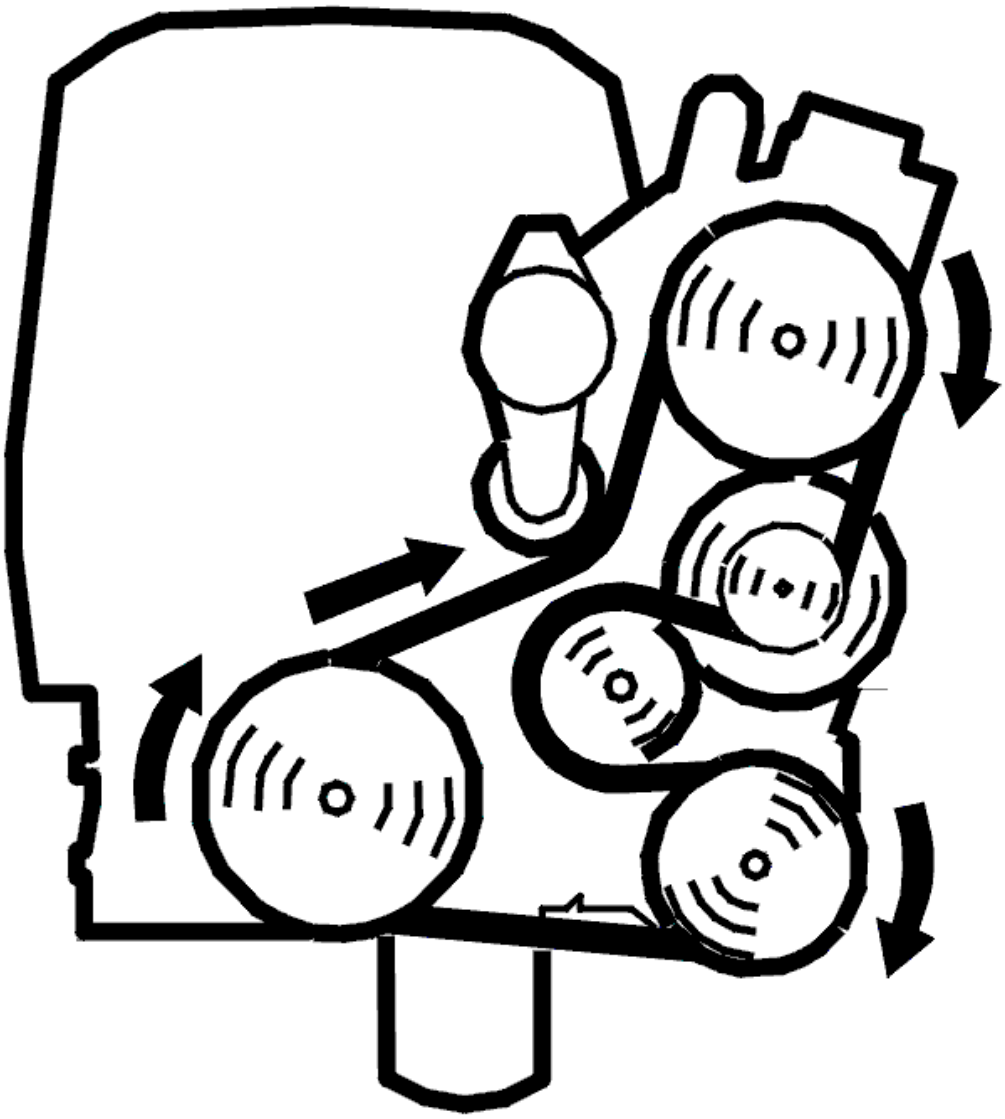

Fig. 290: Identifying Belt Routing
Courtesy of VOLVO CARS CORPORATION

- Raise the vehicle so that the drive wheels hang freely.
- Start the engine and allow it to idle.
- Put the gear selector in position D so that the drive wheels start to rotate.

NOTE: Ensure that the wheels are not rotating when the gear selector is moved.

- Read off the gearbox output speed.

  Read off the transmission input speed.

  If the transmission input speed updates correctly it means that the fault was present previously but is not active now. There is an intermittent fault.

  If the transmission input speed does not update correctly it means that the fault is permanent.

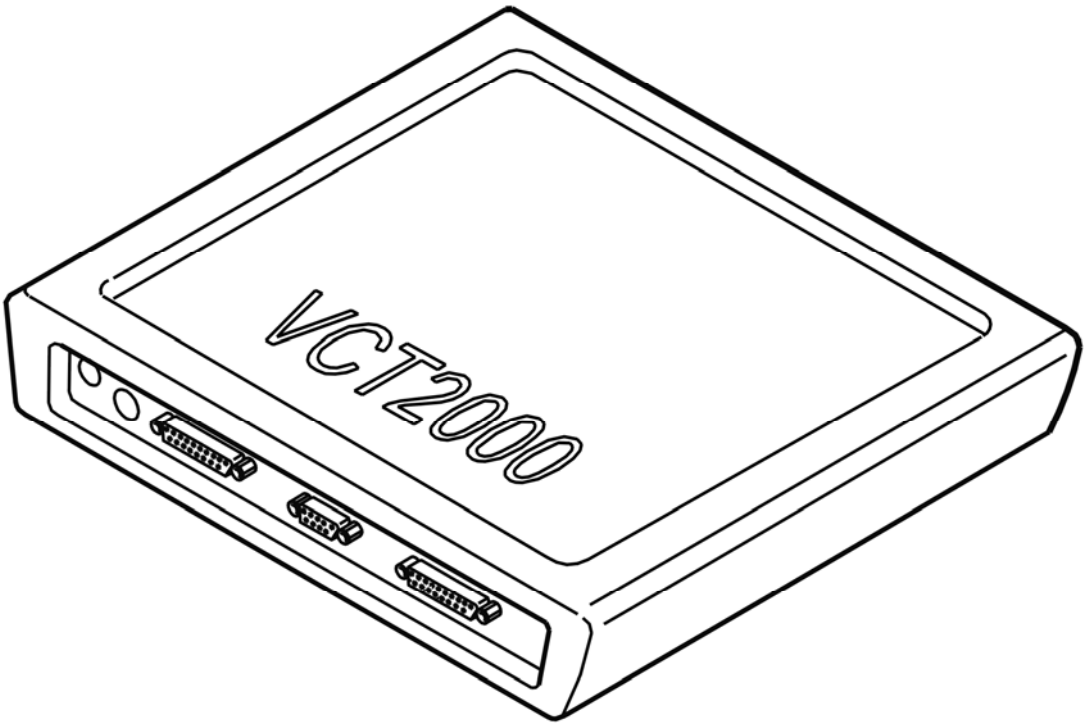

Fig. 291: Identifying VCT2000 Diagnostic Tool Symbol In VIDA
Courtesy of VOLVO CARS CORPORATION

- **Continue**

  Refer to **CHECKING WIRING AND SENSORS**

CHECKING WIRING AND SENSORS

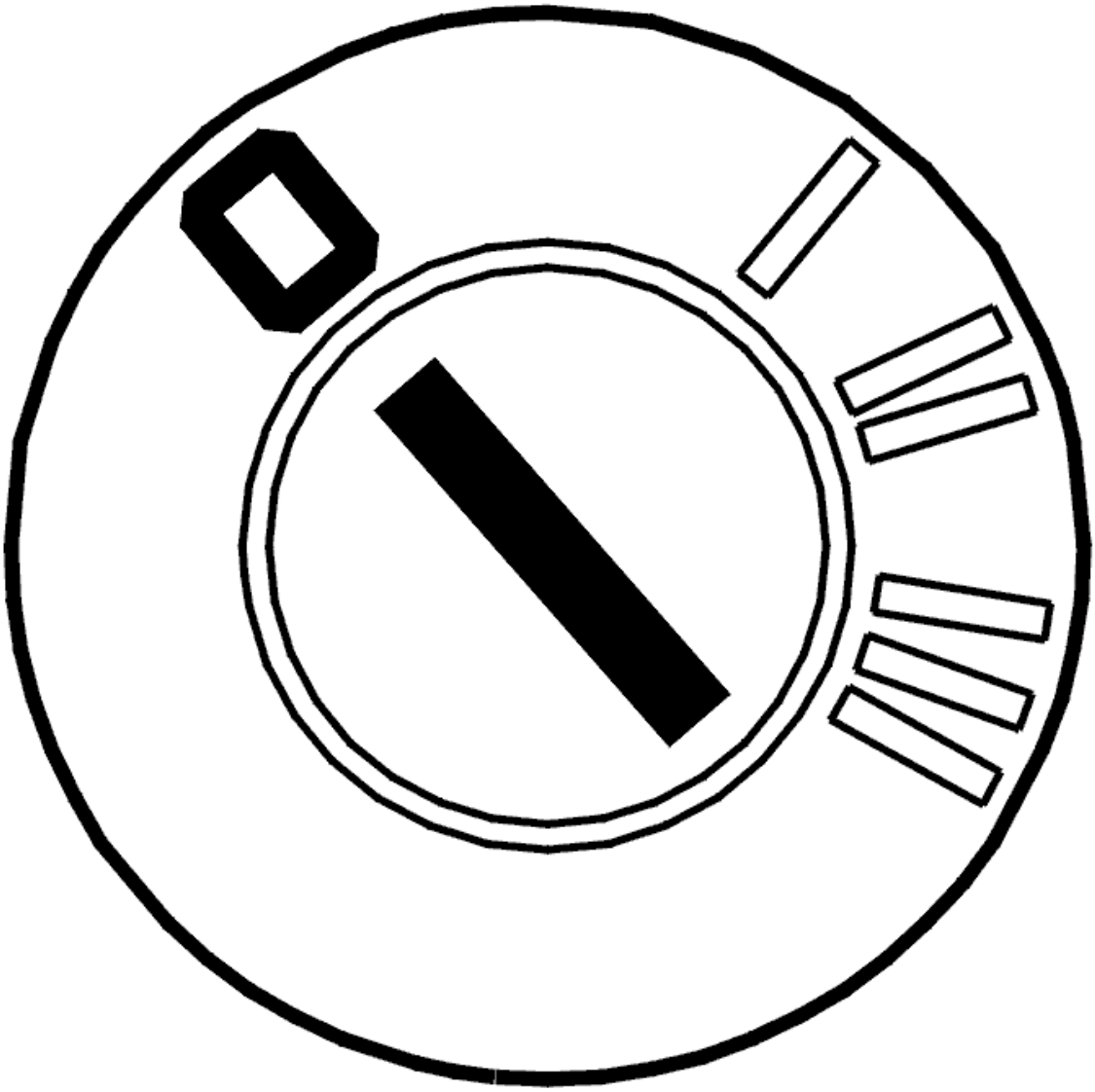

Fig. 292: Identifying Ignition OFF
Courtesy of VOLVO CARS CORPORATION

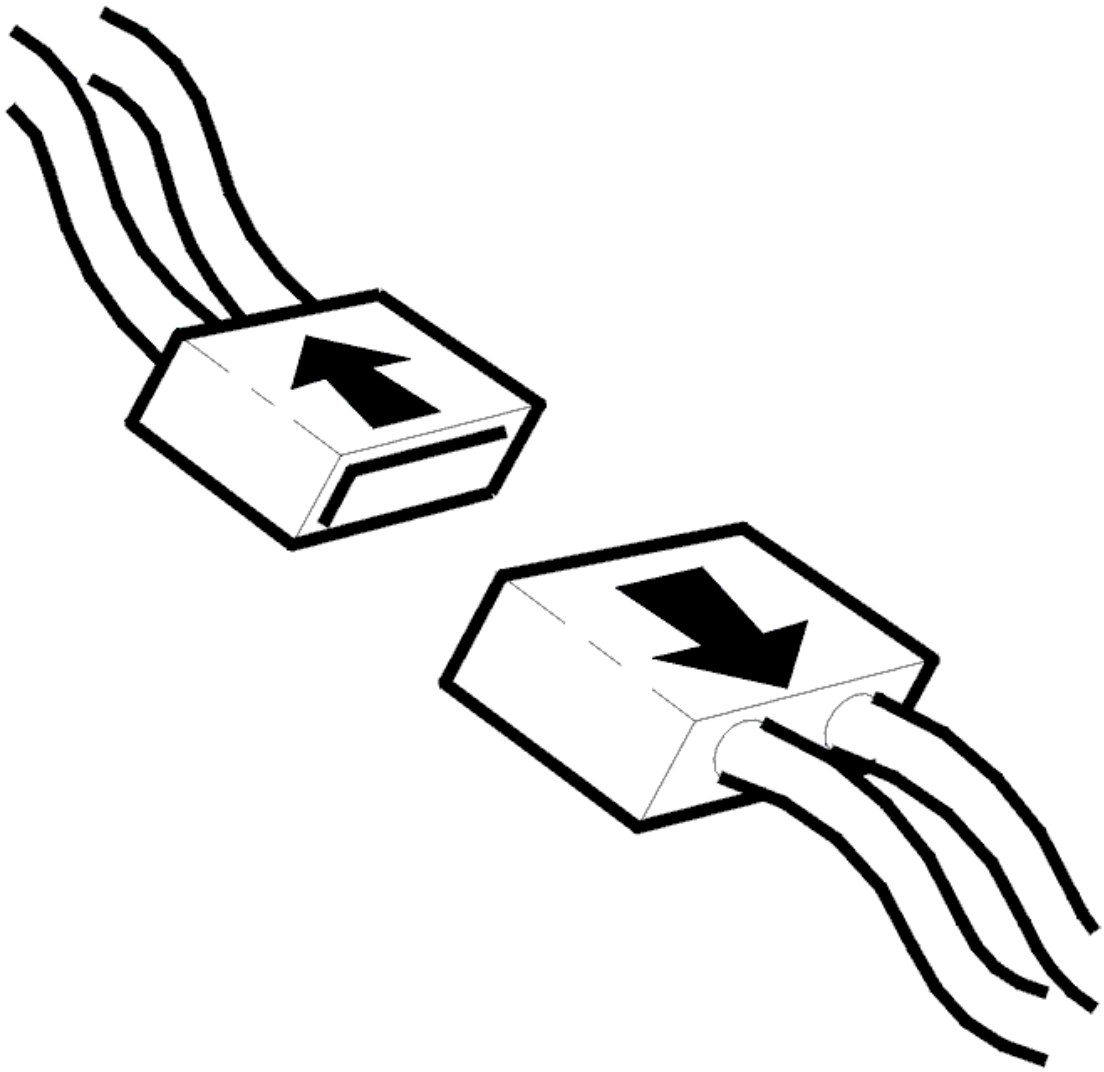

Fig. 293: Identifying Connector(s) Disconnected
Courtesy of VOLVO CARS CORPORATION

- Ignition off
- Disconnect the connector for the transmission.
- Transmission control module (TCM) disconnected.
- Check connector B (22-pin) for the transmission control module (TCM). Check for damaged or pressed in pins. Check for contact resistance and oxidation.

  HINT: Check the transmission speed sensor. See CHECKING THE INPUT AND OUTPUT SPEED SENSORS FOR THE TRANSMISSION

  If a faulty value is measured in the test above open the control system for the transmission and fault trace the wiring and components.

NOTE: **The cause of the malfunction may be that the sensor is loose or not connected correctly.**

Remedy as necessary.

Other information

- see **CONNECTING THE BREAKOUT BOX**
- see **SIGNAL DESCRIPTION**
- see **REPLACING THE GEARBOX**
- see **CABLE HARNESS, CONTROL SYSTEM, GEARBOX, REPLACING**
- To access connector B: **TRANSMISSION CONTROL MODULE (TCM), REPLACING**
- To access the transmission control system: **COVER CONTROL SYSTEM, REPLACING (2007-2011)**

Select an alternative:

1. Transmission replaced.

   Refer to **VERIFICATION**

2. Cable harness replaced or sensor loose.

   Refer to **RESETTING THE COUNTER FOR TRANSMISSION OIL, CHANGE**

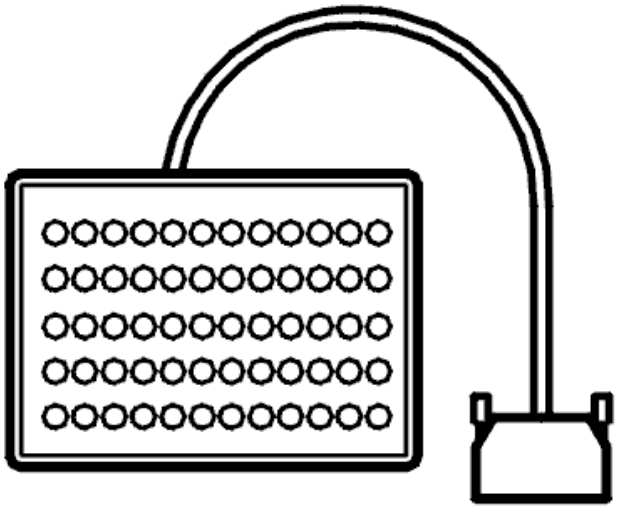

Fig. 294: Identifying Breakout Box
Courtesy of VOLVO CARS CORPORATION

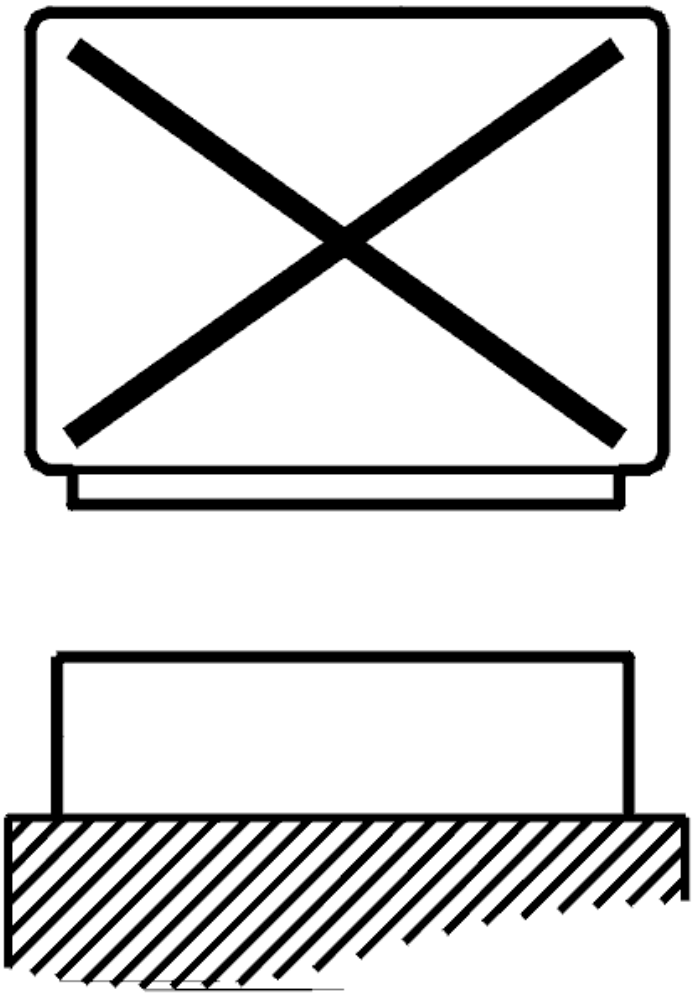

Fig. 295: Identifying Control Module Disconnected
Courtesy of VOLVO CARS CORPORATION

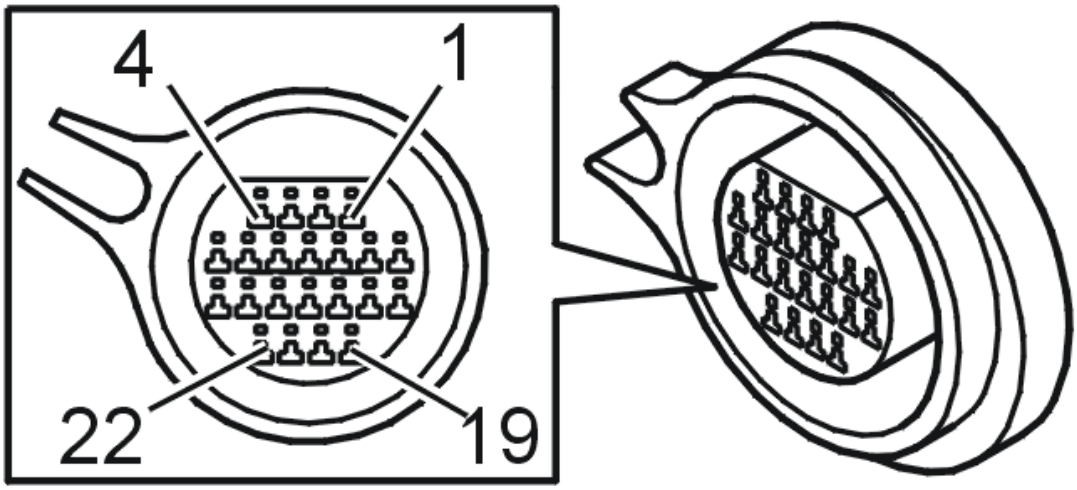

Fig. 296: Identifying Connector B Terminals
Courtesy of VOLVO CARS CORPORATION

RESETTING THE COUNTER FOR TRANSMISSION OIL, CHANGE

RESETTING THE COUNTER FOR TRANSMISSION OIL, CHANGE

HINT: The transmission control module (TCM) has a counter for the oil's quality that counts up when the transmission is exposed to very heavy loads or high ambient temperature. If the counter is not reset when draining/changing oil, there is a risk that a diagnostic trouble code may be generated under incorrect conditions. That is why it is important that the counter for Transmission oil, change is reset.

NOTE: **This only applies when the transmission oil is changed and when the oil is changed during repairs to the transmission's temperature sensor.**

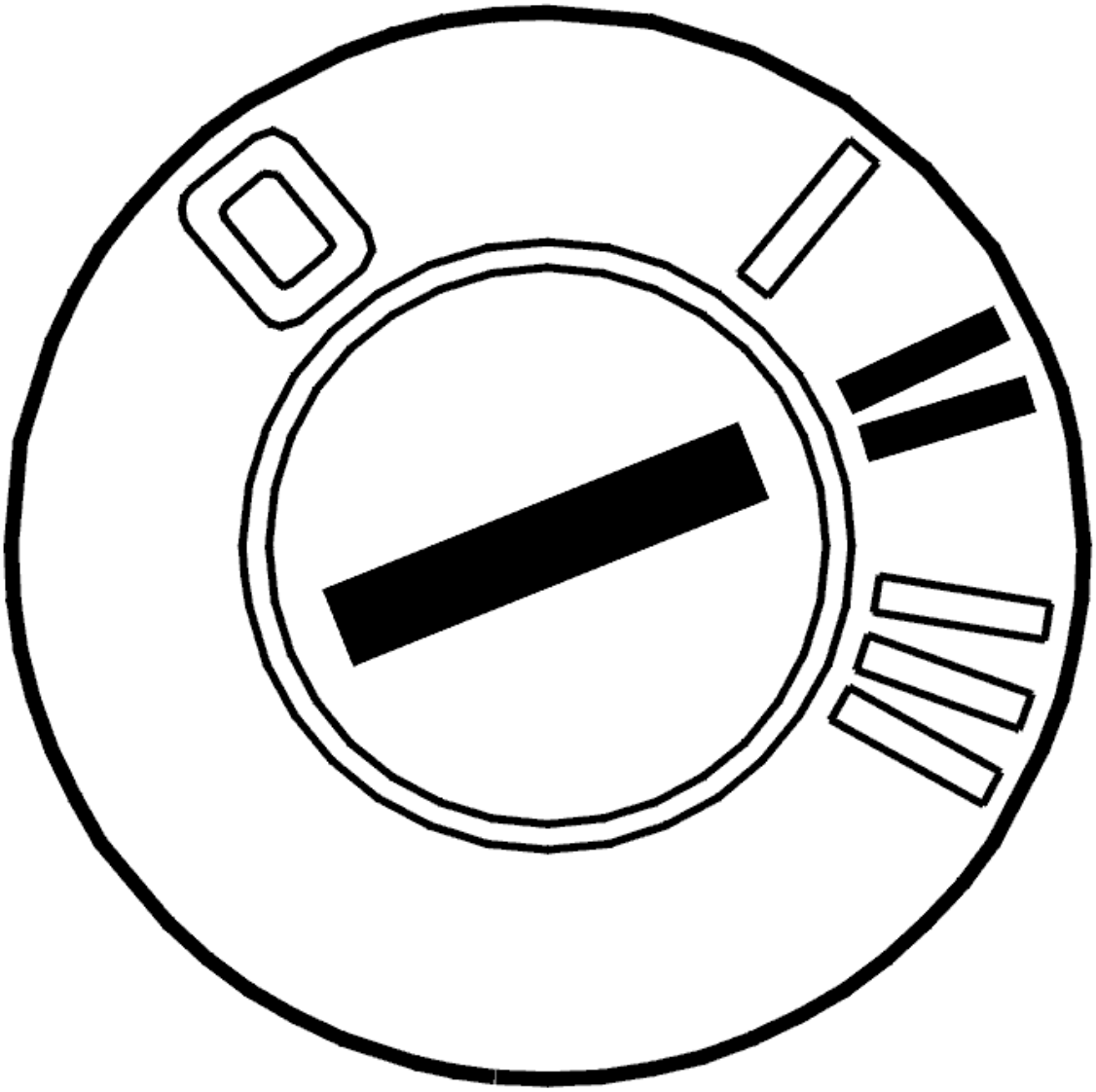

Fig. 297: Identifying Ignition ON
Courtesy of VOLVO CARS CORPORATION

- Ignition on

  Activate reset of the counter by clicking on the symbol for VCT2000.

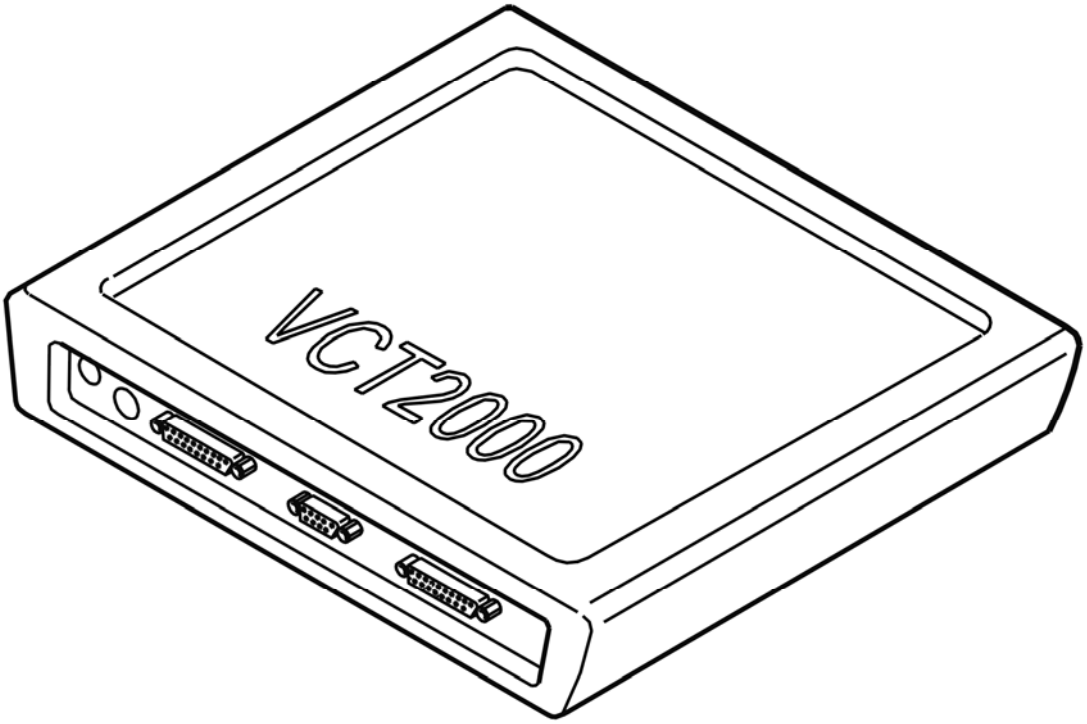

Fig. 298: Identifying VCT2000 Diagnostic Tool Symbol In VIDA
Courtesy of VOLVO CARS CORPORATION

- **Continue**

  Refer to **VERIFICATION**

VERIFICATION

VERIFICATION

HINT: After carrying out the repair, check that the fault has been remedied.

CAUTION: On vehicles with four-wheel-drive, the tests should be carried out with the vehicle raised so that all four wheels can rotate freely with attachments far out on the link arms so that the drive shafts are not damaged.

WARNING: Ensure that the vehicle is safely raised. Check that no objects are caught in the tire treads.

NOTE: If the vehicle is equipped with TRACS (traction control system) or Traction Control (DSTC (Dynamic stability and traction control), STC (Stability and traction control) the function must be deactivated. This is carried out by

removing the fuse for the brake system pump motor in the engine compartment relay and fusebox. Note that diagnostic trouble codes (DTCs) will be stored in the brake control module (BCM). These must be erased before returning the vehicle to the customer.

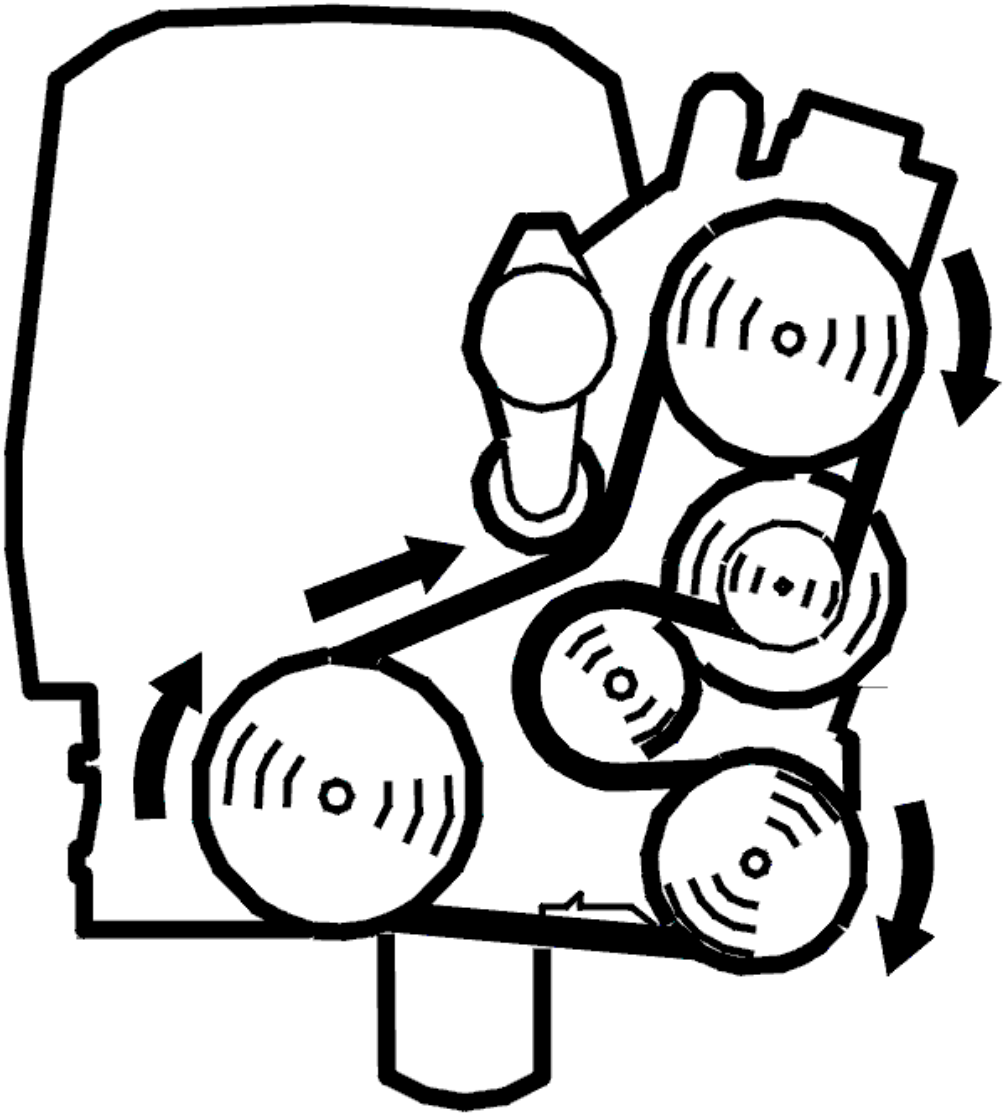

Fig. 299: Identifying Belt Routing
Courtesy of VOLVO CARS CORPORATION

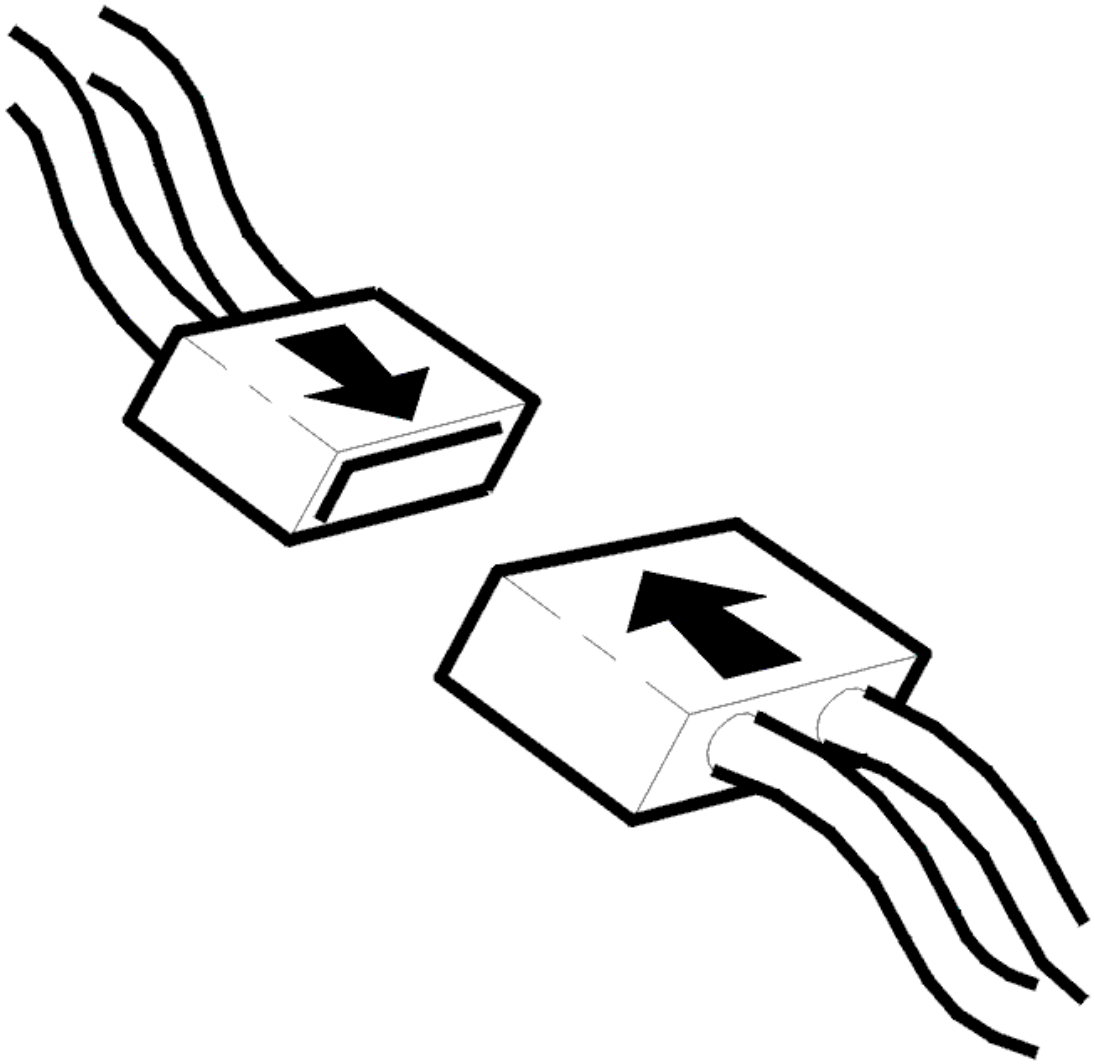

Fig. 300: Identifying Connector(s) Reinstallation
Courtesy of VOLVO CARS CORPORATION

- Ignition off
- Reinstall the connectors, components etc.
- Raise the vehicle so that the drive wheels hang freely.
- Start the engine and allow it to idle.
- Put the gear selector in position D so that the drive wheels start to rotate.

NOTE: Ensure that the wheels are not rotating when the gear selector is moved.

- Read off the gearbox output speed.

  Check that the speed is updated.

NOTE: **Diagnostic trouble codes (DTCs) may be stored in the brake control module (BCM) when the rear wheels are stationary and the front wheels rotate. Erase any diagnostic trouble codes (DTCs) after fault-tracing.**

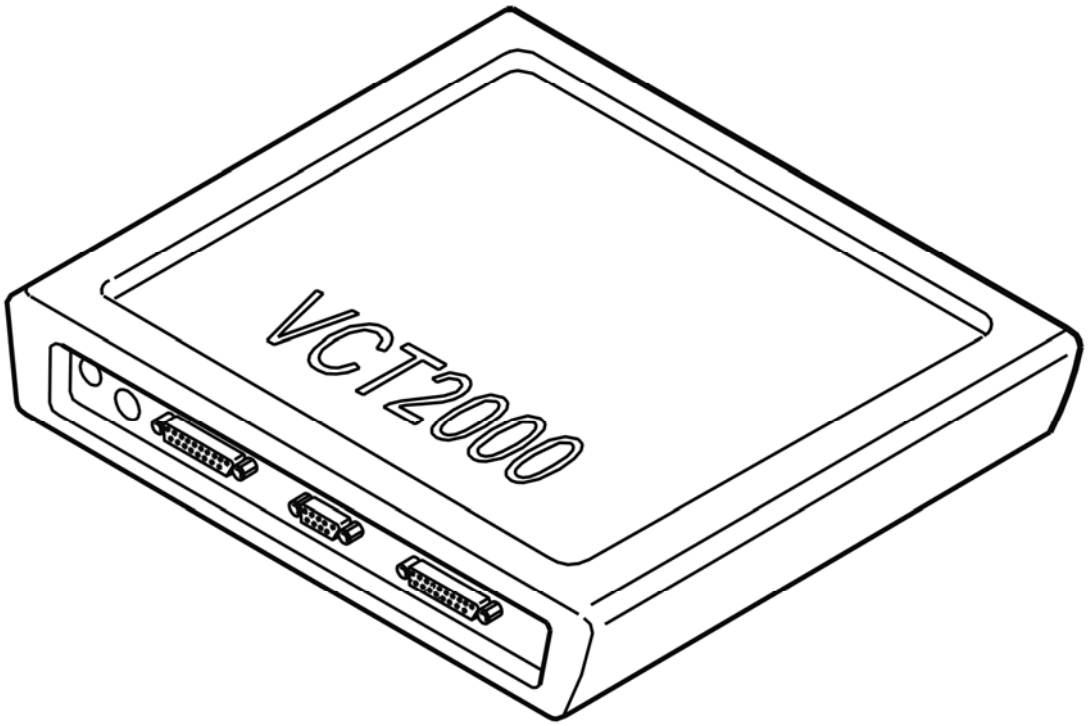

Fig. 301: Identifying VCT2000 Diagnostic Tool Symbol In VIDA
Courtesy of VOLVO CARS CORPORATION

Was the speed updated?

- **YES**

  VERIFIED: Troubleshooting has been completed.

- **NO**

  Refer to **INFORMATION**

INFORMATION

FAULT-TRACING INFORMATION

The fault should have been detected and remedied. As this is not the case fault-tracing has failed.

Exit fault-tracing for this diagnostic trouble code (DTC) or make another attempt.

TCM-P072200: OUTPUT SHAFT SPEED SENSOR CIRCUIT NO SIGNAL. GENERAL FAULT INFORMATION. NO INFORMATION ON FAULT TYPE (TF-80SC AWD; 2005)

DIAGNOSTIC TROUBLE CODE (DTC) INFORMATION TCM-P072200

see **DIAGNOSTIC TROUBLE CODE (DTC) INFORMATION TCM-P072200**

FAULT TRACING TCM-P072200

see **FAULT TRACING TCM-P072200**

TCM-P072300: OUTPUT SHAFT SPEED SENSOR CIRCUIT INTERMITTENT. GENERAL FAILURE INFORMATION. NO SUB TYPE INFORMATION (B6324S, TF-80SC; B6324S, TF-80SC AWD; 2007-2010)

DIAGNOSTIC TROUBLE CODE (DTC) INFORMATION TCM-P072300

Condition

The transmission's output speed sensor sends the transmission control module (TCM) a signal on the speed of the output drive shaft. Using this signal, the control module calculates the outgoing speed of the transmission. The signal is compared to the input speed signal from the transmission speed sensor and is used to calculation the transmission's gear ratio and for diagnostics.

The diagnostic trouble code (DTC) is stored if the control module detects that:

- No output speed signal from the transmission speed sensor.

The control module's test for the diagnostic trouble code (DTC) starts in the event of:

- Speeds above 20 km/h.

NOTE: **The control module can only detect the fault once the test has been started and the diagnostic trouble code is stored when the conditions are met.**

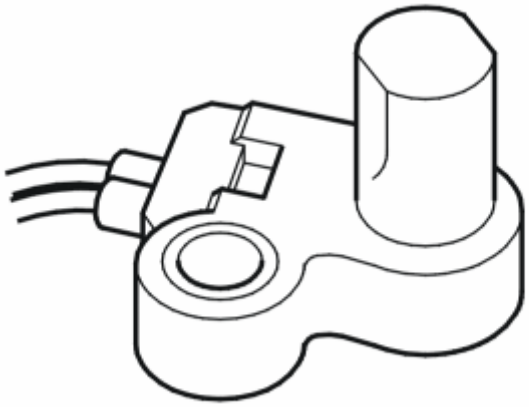

Fig. 302: Identifying Turbine/Input Shaft Speed Sensor
Courtesy of VOLVO CARS CORPORATION

Substitute Value

- Adaptation function is blocked.
- function is blocked.
- Slip lock-up function is blocked.
- Neutral check function is blocked.
- The transmission control module (TCM) uses the speed signal that the brake control module (BCM) puts on the CAN network.
- If the speed signal from the brake control module (BCM) is also missing, the auxiliary program **Emergency mode 1** in the transmission control module (TCM) will become active.

HINT: EMERGENCY MODE IN THE EVENT OF A FAULT

Possible Source

- Contact resistance in the terminals.
- Transmission output speed sensor not fitted correctly.
- Transmission output speed sensor not working.
- Internal fault in the transmission control module (TCM).

Fault symptom[s]

- Malfunction indicator light (MIL), on
- General warning lamp lit
- No lock-up
- Rough gear shift
- No gear shift

FAULT-TRACING

see **FAULT-TRACING**

TCM-P072300: OUTPUT SHAFT SPEED SENSOR CIRCUIT INTERMITTENT. GENERAL FAILURE INFORMATION. NO SUB TYPE INFORMATION (B6324S5, TF-80SC; B6324S5, TF-80SC AWD; 2011-2012)

DIAGNOSTIC TROUBLE CODE (DTC) INFORMATION TCM-P072300

see **DIAGNOSTIC TROUBLE CODE (DTC) INFORMATION TCM-P072300**

FAULT-TRACING

see **FAULT-TRACING**

TCM-P072300: OUTPUT SHAFT SPEED SENSOR CIRCUIT INTERMITTENT. GENERAL FAULT INFORMATION. NO INFORMATION ON FAULT TYPE (B8444S, TF-80SC AWD; 2006-2011)

DIAGNOSTIC TROUBLE CODE (DTC) INFORMATION TCM-P072300

Condition

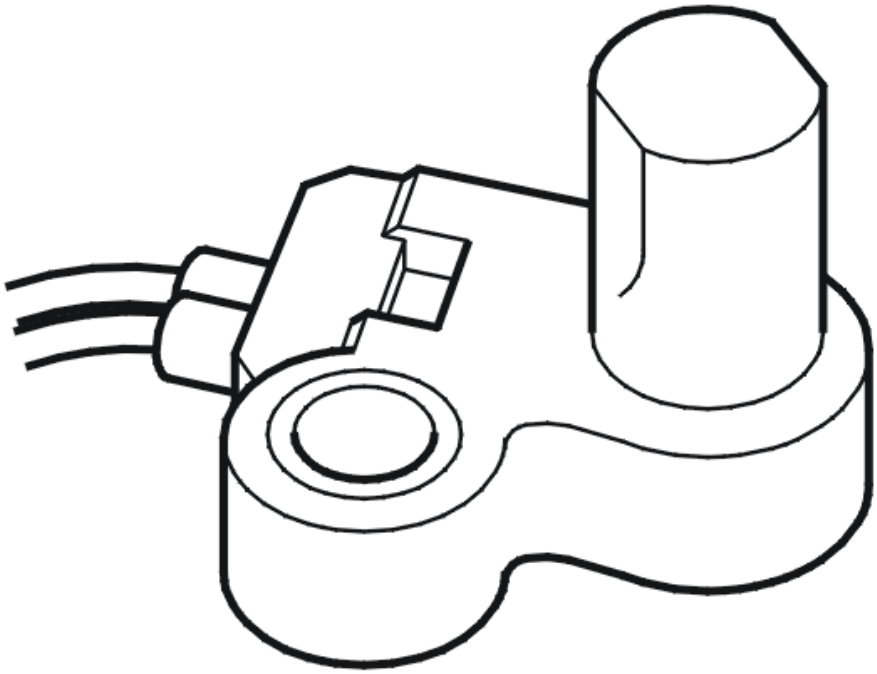

Fig. 303: Identifying Transmission Output Speed Sensor
Courtesy of VOLVO CARS CORPORATION

The gearbox output speed sensor gives the transmission control module (TCM) a signal on the speed of the output drive shaft. Using this signal, the control module can calculate the output speed of the gearbox. The signal is compared with a signal from the gearbox input speed sensor and is used to calculate the gear ratio of the gearbox as well as for diagnosis.

If the transmission control module (TCM) registers that the signal from the gearbox output speed sensor is missing, the diagnostic trouble code (DTC) is generated.

The diagnostic trouble code (DTC) can be diagnosed when driving over 20 km/h.

Substitute Value

- Adaptation function is blocked.
- Lock-up function is blocked.
- Slip lock-up function is blocked.
- Neutral check function is blocked.
- The transmission control module (TCM) uses the speed signal that the brake control module (BCM) puts on the CAN network.
- If the speed signal from the brake control module (BCM) is also missing, the auxiliary program **Emergency mode 1** in the transmission control module (TCM) will become active.

HINT: EMERGENCY MODE IN CASE OF MALFUNCTION

Possible Source

- Contact resistance in the terminals
- Gearbox output speed sensor not fitted correctly.
- Gearbox output speed sensor not working.
- Internal fault in transmission control module (TCM).

Fault symptom[s]

- Malfunction indicator lamp (MIL) lit.
- General warning lamp lit
- No lock-up function.
- Harsh gear changing
- No gear changing.

FAULT TRACING

see **FAULT TRACING**

TCM-P072300: OUTPUT SHAFT SPEED SENSOR CIRCUIT INTERMITTENT. GENERAL FAULT INFORMATION. NO INFORMATION ON FAULT TYPE (TF-80SC AWD; 2005)

DIAGNOSTIC TROUBLE CODE (DTC) INFORMATION TCM-P072300

see **DIAGNOSTIC TROUBLE CODE (DTC) INFORMATION TCM-P072300**

FAULT TRACING

see **FAULT TRACING**

TCM-P072500: ENGINE SPEED INPUT CIRCUIT. GENERAL FAILURE INFORMATION. NO SUB TYPE INFORMATION (B6324S, TF-80SC; B6324S, TF-80SC AWD; 2007-2010)

DIAGNOSTIC TROUBLE CODE (DTC) INFORMATION TCM-P072500

Condition

The engine control module (ECM) transmits a signal on engine speed on the CAN network. The transmission control module (TCM) uses the signal to check the lock-up function.

The diagnostic trouble code (DTC) is stored if the control module detects that:

- There is no speed (rpm) signal from the engine control module (ECM) or the signal is faulty.

The control module's test for the diagnostic trouble code (DTC) starts in the event of:

- Ignition on and when CAN network is OK.

NOTE: The control module can only detect the fault once the test has been started and the diagnostic trouble code (DTC) is stored when the conditions are met.

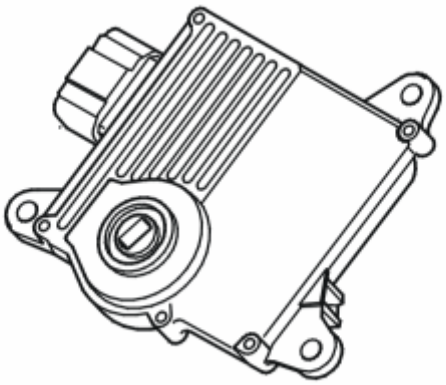

Fig. 304: Identifying Transmission Control Module (TCM)
Courtesy of VOLVO CARS CORPORATION

Substitute Value

- Auxiliary program **Emergency mode 1** in the transmission control module (TCM) has started.

HINT: EMERGENCY MODE IN THE EVENT OF A FAULT

Possible Source

- Fault-trace the central electronic module (CEM).
- Locate the cause of the fault in the engine control module (ECM).
- Intermittent open circuit or short-circuit on the CAN lead between the engine control module (ECM) and the transmission control module (TCM).

Fault symptom[s]

- General warning lamp lit
- Rough gear shift
- No gear shift

- No lock-up

FAULT-TRACING

INFORMATION

There is no fault-tracing for this diagnostic fault code (DTC).

A diagnostic trouble code for CAN communication can be stored in the central electronic module (CEM). IN some cases, a diagnostic trouble code is stored in other affected control modules. This diagnostic trouble code is not to be erased until any CAN communication trouble codes in the central electronic module (CEM) or engine control module (ECM) are remedied and erased.

Therefore, first read the diagnostic trouble codes in the central electronic module (CEM) and the engine control module (ECM), perform troubleshooting and remedy as necessary. If no diagnostic trouble codes (DTCs) are stored, fault-trace the controller area network (CAN) as follows. This diagnostic trouble code (DTC) can then be erased.

For further information on this diagnostic trouble code, see Diagnostic trouble code (DTC) information.

Other information

- see **GENERAL INFORMATION ABOUT FAULT-TRACING IN THE CAN NETWORK**

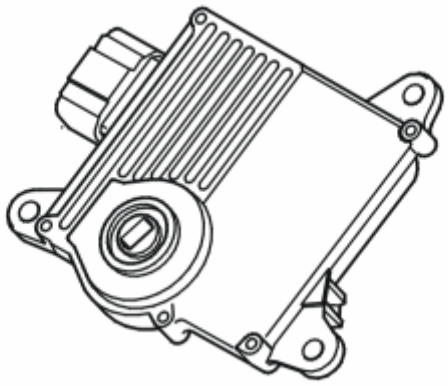

Fig. 305: Identifying Transmission Control Module (TCM)
Courtesy of VOLVO CARS CORPORATION

TCM-P072500: ENGINE SPEED INPUT CIRCUIT. GENERAL FAILURE INFORMATION. NO SUB TYPE INFORMATION (B6324S5, TF-80SC; B6324S5, TF-80SC AWD; 2011-2012)

DIAGNOSTIC TROUBLE CODE (DTC) INFORMATION TCM-P072500

see **DIAGNOSTIC TROUBLE CODE (DTC) INFORMATION TCM-P072500**

FAULT-TRACING

see **FAULT-TRACING**

TCM-P072500: ENGINE SPEED INPUT CIRCUIT. GENERAL FAULT INFORMATION. NO INFORMATION ON FAULT TYPE (B8444S, TF-80SC AWD; 2006-2011)

DIAGNOSTIC TROUBLE CODE (DTC) INFORMATION TCM-P072500

Condition

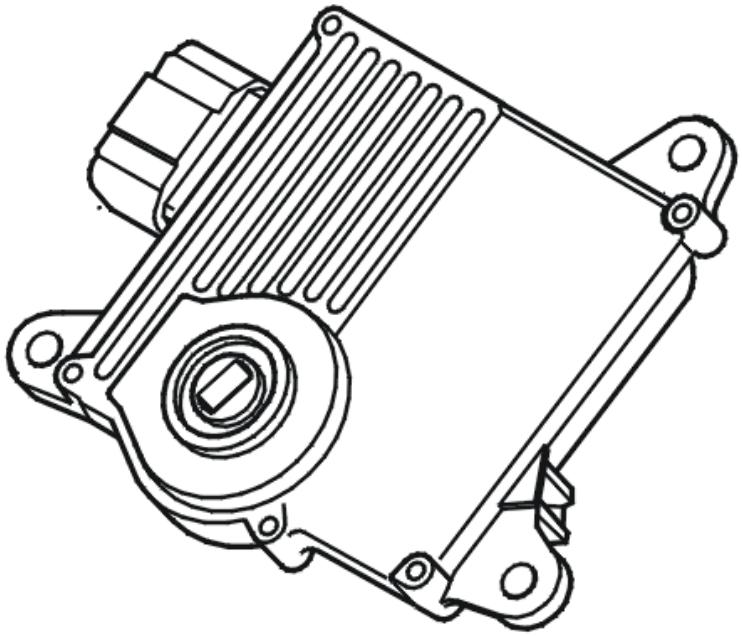

Fig. 306: Identifying Transmission Control Module (TCM)
Courtesy of VOLVO CARS CORPORATION

The engine control module (ECM) puts the signal for the engine speed on the CAN network. The transmission control module (TCM) uses the signal to check the lock-up function.

If the transmission control module (TCM) registers that the speed signal from the engine control module (ECM) is missing or is indicated as incorrect, the diagnostic trouble code (DTC) is generated.

The diagnostic trouble code (DTC) can be diagnosed when the ignition is turned on and the CAN network is OK.

Substitute Value

- Auxiliary program **Emergency mode 1** in the transmission control module (TCM) has started.

  HINT: EMERGENCY MODE IN CASE OF MALFUNCTION

Possible Source

- Seek cause of fault in central electronic module (CEM).
- Locate the cause of the fault in the engine control module (ECM).
- Intermittent open circuit or short-circuit on the CAN lead between the engine control module (ECM) and the transmission control module (TCM).

Fault symptom[s]

- General warning lamp lit
- Harsh gear changing
- No gear changing.
- No lock-up function.

FAULT-TRACING INFORMATION

INFORMATION

No fault tracing procedure has been defined for this diagnostic trouble code (DTC).

The diagnostic trouble code (DTC) for CAN communication can also be stored in the Central Electronic module (CEM). In certain instances the diagnostic trouble code (DTC) is also set in other affected control modules. This diagnostic trouble code (DTC) must not be erased before any diagnostic trouble codes (DTC) in the Central Electronic Module (CEM), for CAN communication, and in the Engine Control Module (ECM) have first been remedied and erased.

Therefore, read off any diagnostic trouble codes (DTCs) in the Central Electronic Module (CEM) and the Engine Control Module (ECM). Carry out fault tracing procedures and remedy as necessary. If no trouble codes are stored, look for faults in the Control Area Network (CAN) as described below. This diagnostic trouble code (DTC) may be then erased.

For more information about the diagnostic trouble code (DTC) see diagnostic trouble code (DTC) information.

Other information

- see **GENERAL INFORMATION ABOUT FAULT-TRACING IN THE CAN NETWORK (2005-2012)**

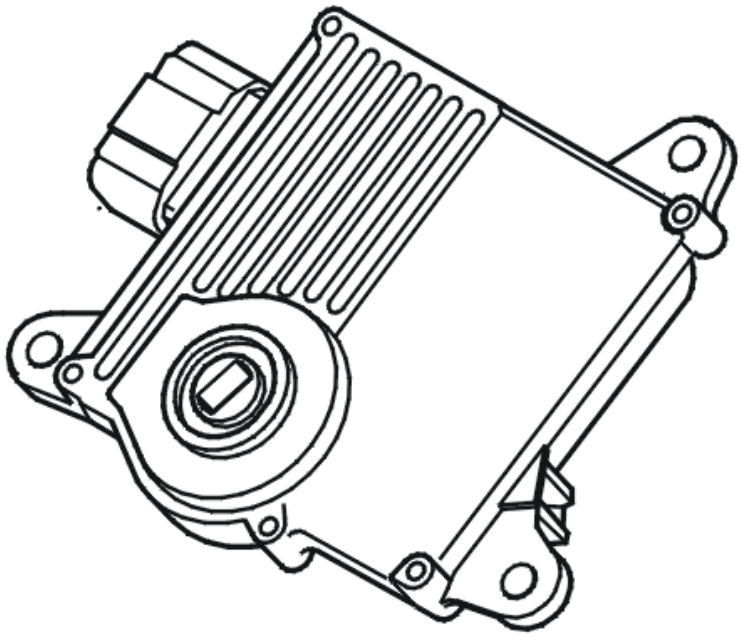

Fig. 307: Identifying Transmission Control Module (TCM)
Courtesy of VOLVO CARS CORPORATION

TCM-P072500: ENGINE SPEED INPUT CIRCUIT. GENERAL FAULT INFORMATION. NO INFORMATION ON FAULT TYPE (TF-80SC AWD; 2005)

DIAGNOSTIC TROUBLE CODE (DTC) INFORMATION TCM-P072500

see **DIAGNOSTIC TROUBLE CODE (DTC) INFORMATION TCM-P072500**

FAULT-TRACING INFORMATION

see **FAULT-TRACING INFORMATION**

TCM-P072900: GEAR 6 INCORRECT RATIO. GENERAL FAILURE INFORMATION. NO SUB TYPE INFORMATION (B6324S, TF-80SC; B6324S, TF-80SC AWD; 2007-2010)

DIAGNOSTIC TROUBLE CODE (DTC) INFORMATION TCM-P072900

Condition

The transmission control module (TCM) receives a signal about input and output speed from the transmission's two speed sensors. There is a determined ratio for each gear and the signals help calculate the transmission control module (TCM) gear ratio.

The diagnostic trouble code (DTC) is stored if the control module detects that:

- Gear ratio differs by more than 10%.

The control module's test for the diagnostic trouble code (DTC) starts in the event of:

- Fluid temperature over +20 °C (68 °F).
- 6th gear is engaged, engine speed is greater than or equal to 250 rpm, engine torque is greater than or equal to 80 Nm and there is no acceleration.

NOTE: The control module can only detect the fault once the test has been started and the diagnostic trouble code (DTC) is stored when the conditions are met.

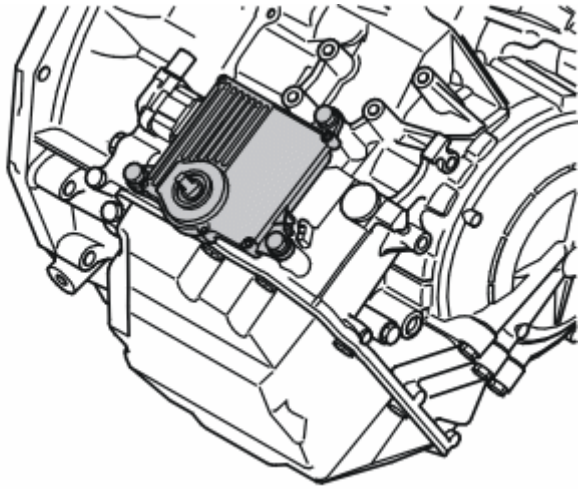

Fig. 308: Identifying Transmission Control Module (TCM)
Courtesy of VOLVO CARS CORPORATION

Substitute Value

- Auxiliary program **Emergency mode 2** in the transmission control module (TCM) has started.

HINT: EMERGENCY MODE IN THE EVENT OF A FAULT

Possible Source

- Contact resistance or one of the solenoids controlling in an incorrect manner.
- Circuit for the solenoid. SLT, SLC3
- Mechanical fault in the transmission. Worn components in the transmission causing slippage or too low line pressure.

Fault symptom[s]

- Malfunction indicator light (MIL), on
- General warning lamp lit
- Abnormal slipping gearshifts
- Rough gear shift
- No gear shift

FAULT-TRACING

FAULT-TRACING INFORMATION

CHECKING THE GEAR SYSTEM

Problems that the customer may experience are hard shifts or slipping shifts. The following test-drive contains several different driving situations that may provoke these symptoms if the transmission is damaged.

NOTE: It is important that the transmission oil is above 70 °C before the test-drive starts

Test 1

1. Driving at 100 km/h, 6th gear.
2. Perform a kickdown to 4th gear.
3. Let the transmission automatically shift up to 5th gear.
4. Let up the accelerator pedal and let the transmission shift up to 6th gear.

Test 2

1. Driving at 100 km/h, 6th gear.
2. Slight uphill grade, press accelerator pedal until you obtain shifting 6-5, not kickdown.

Test 3

1. Driving at 80 km/h.
2. Move the gear selector to position M and engage 6th gear.
3. Perform a kickdown and shift 6-5, 5-4, 4-3 at the same time.
4. Then upshift immediately to 6th gear.

Test 4

1. Stationary vehicle, engine running, parking brake applied, brake activated with left foot, gear selector in position R.
2. Press down the accelerator pedal (brake still activated).

NOTE: Let up the accelerator pedal in case of noise or slipping.

Test 5

1. Stationary vehicle, engine running, parking brake applied, brake activated with left foot, gear selector in position D.
2. Press down the accelerator pedal (brake still activated).

NOTE: Let up the accelerator pedal in case of noise or slipping.

If the symptoms hard shifts or slipping shifts arise during the test-drive, the transmission's control system must be replaced.

Other information

- see **CONTROL SYSTEMS**

Is the function OK?

- **YES**

  Refer to **CHECKING SOLENOIDS**

- **NO**

  Refer to **RESETTING ADAPTATION**

CHECKING SOLENOIDS

Fig. 309: Identifying Ignition ON
Courtesy of VOLVO CARS CORPORATION

- Ignition on.
- Activate the solenoids by clicking on the symbol for VCT2000.

  Select a solenoid and read off the current through the solenoid's circuit. The current should shift between approx. 100 and 950 mA.

  Solenoid SLT, SLC3.

Fig. 310: Identifying VCT2000 Diagnostic Tool Symbol In VIDA
Courtesy of VOLVO CARS CORPORATION

Is the function OK?

- **YES**

  Refer to **CHECKING THE OIL QUALITY AND THE OIL LEVEL IN THE TRANSMISSION**

- **NO**

  Refer to **CHECKING THE COMPONENTS AND WIRING**

CHECKING THE COMPONENTS AND WIRING

Fig. 311: Identifying Ignition In Off Position
Courtesy of VOLVO CARS CORPORATION

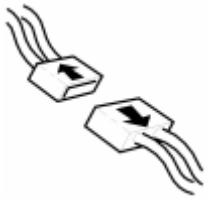

Fig. 312: Identifying Connectors Disconnected
Courtesy of VOLVO CARS CORPORATION

- Ignition off.
- Open the transmission control system.

  Check connector B (22-pin) for the transmission control module (TCM). Check for damaged or pressed in pins. Check for contact resistance and oxidation.

  HINT: Check solenoids SLT, SLC3 as described in:CHECKING INTERNAL COMPONENTS OF THE TRANSMISSION

If no defects were found on connectors or cables, replace the transmission.

Remedy as necessary.

Other information

- see **TRANSMISSION** (B6324S, TF-80SC; 2007-2010) or **TRANSMISSION** (B6324S, TF-80SC AWD; 2007-2010)
- see **COVER CONTROL SYSTEM, REPLACING**
- see **TRANSMISSION CONTROL UNIT WIRING HARNESS**
- To access connector B:**TRANSMISSION CONTROL MODULE (TCM)**
- see **CHECKING WIRING AND TERMINALS**

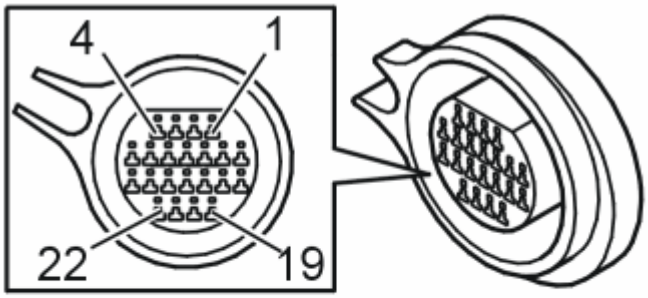

Fig. 313: Identifying Connector B Terminals
Courtesy of VOLVO CARS CORPORATION

- **Continue**

Refer to **RESETTING ADAPTATION**

CHECKING THE OIL QUALITY AND THE OIL LEVEL IN THE TRANSMISSION

NOTE: **Transmission fluid quality and level are extremely important for the function of the transmission. Therefore it is imperative that these are correct. In addition the oil level is dependent on oil temperature.**

Fig. 314: Identifying Ignition ON
Courtesy of VOLVO CARS CORPORATION

- Ignition on.
- Read off the oil temperature.

  Check the transmission oil level. If the oil level is low, check the transmission for leakage, then top up with oil.

  Check the quality of the oil.

  Replace the transmission fluid if the fluid smells burnt.

  Other information

  - see **OIL LEVEL, CHECKING**
  - see **OIL GRADE, CHECKING**
  - see **TRANSAXLE OIL**

  Select an alternative:

  1. No fault detected.

     Refer to **CHECKING THE COMPONENTS AND WIRING**

  2. Transmission fluid replaced, low level or poor quality.

     Refer to **RESETTING ADAPTATION**

Fig. 315: Identifying VCT2000 Diagnostic Tool Symbol In VIDA
Courtesy of VOLVO CARS CORPORATION

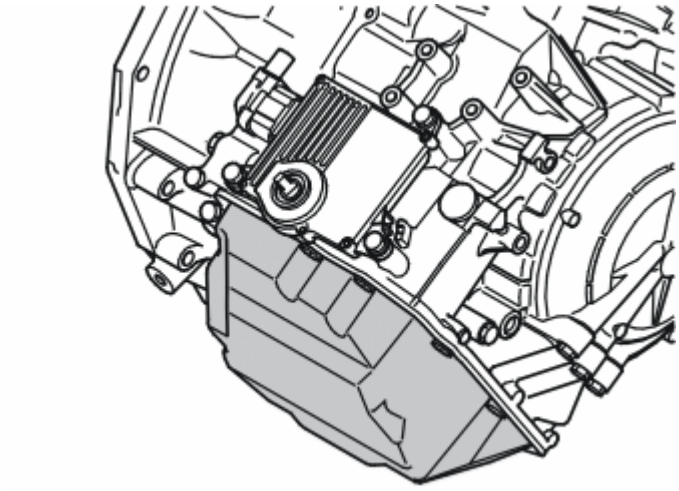

Fig. 316: Identifying Transmission Fluid Pan
Courtesy of VOLVO CARS CORPORATION

VERIFICATION

VERIFICATION

NOTE: **When the transmission's control module has been removed and reinstalled, it is important that the gear position sensor is calibrated. Select Pause and create a bookmark. Then select Vehicle communication using Volvo Scantool (VIDA).**

HINT: After carrying out the repair, check that the fault has been remedied.

Fig. 317: Identifying Ignition ON
Courtesy of VOLVO CARS CORPORATION

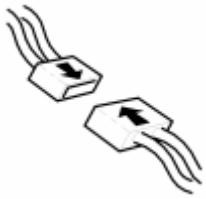

Fig. 318: Identifying Connector(s) Reinstallation
Courtesy of VOLVO CARS CORPORATION

- Ignition off.
- Reinstall the connectors, components etc.

- Test drive the vehicle following:**TEST DRIVE SCHEDULE, DESCRIPTION**

  Check that the transmission does not display any **obvious** function faults.

  NOTE: When test driving, the oil temperature must be above 20 °C.

Is the function OK?

- **YES**

  VERIFIED: Troubleshooting has been completed.

- **NO**

  Refer to **INFORMATION**

INFORMATION

FAULT-TRACING INFORMATION

The fault should have been detected and remedied. As this is not the case fault-tracing has failed.

Exit fault-tracing for this diagnostic trouble code (DTC) or make another attempt.

RESETTING ADAPTATION

RESETTING THE ADAPTATION AND THE COUNTER FOR "TRANSMISSION OIL, REPLACE"

HINT: The transmission has torque-regulated, adaptive pressure regulation. The pressure regulator enables the transmission to regulate pressure during each shift to prevent hard shifting. Each shift is assessed by the transmission control module (TCM) and is stored in the internal memory. This makes it possible to compensate for transmission and clutch wear. It is important that the adaptation in the memory is reset so that the transmission works normally after the repair. Because the fluid was changed during the repair, the counter for transmission fluid change must also be reset. If the counter is not reset during draining/replacement, a diagnostic trouble code may be generated under the wrong conditions.

NOTE: This applies only if the transmission or one of the components in the transmission have been replaced.

Fig. 319: Identifying Ignition ON
Courtesy of VOLVO CARS CORPORATION

- Ignition on.

  Click on the VCT2000 symbol to reset the adaptation and counter.

Fig. 320: Identifying VCT2000 Diagnostic Tool Symbol In VIDA
Courtesy of VOLVO CARS CORPORATION

- **Continue**

  Refer to **VERIFICATION**

TCM-P072900: GEAR 6 INCORRECT RATIO. GENERAL FAILURE INFORMATION. NO SUB TYPE INFORMATION (B6324S5, TF-80SC; B6324S5, TF-80SC AWD; 2011-2012)

DIAGNOSTIC TROUBLE CODE (DTC) INFORMATION TCM-P072900

see **DIAGNOSTIC TROUBLE CODE (DTC) INFORMATION TCM-P072900**

FAULT-TRACING

see **FAULT-TRACING**

TCM-P072900: GEAR 6 INCORRECT RATIO. GENERAL FAULT INFORMATION. NO INFORMATION ON FAULT TYPE (B8444S, TF-80SC AWD; 2006-2011)

DIAGNOSTIC TROUBLE CODE (DTC) INFORMATION

Condition

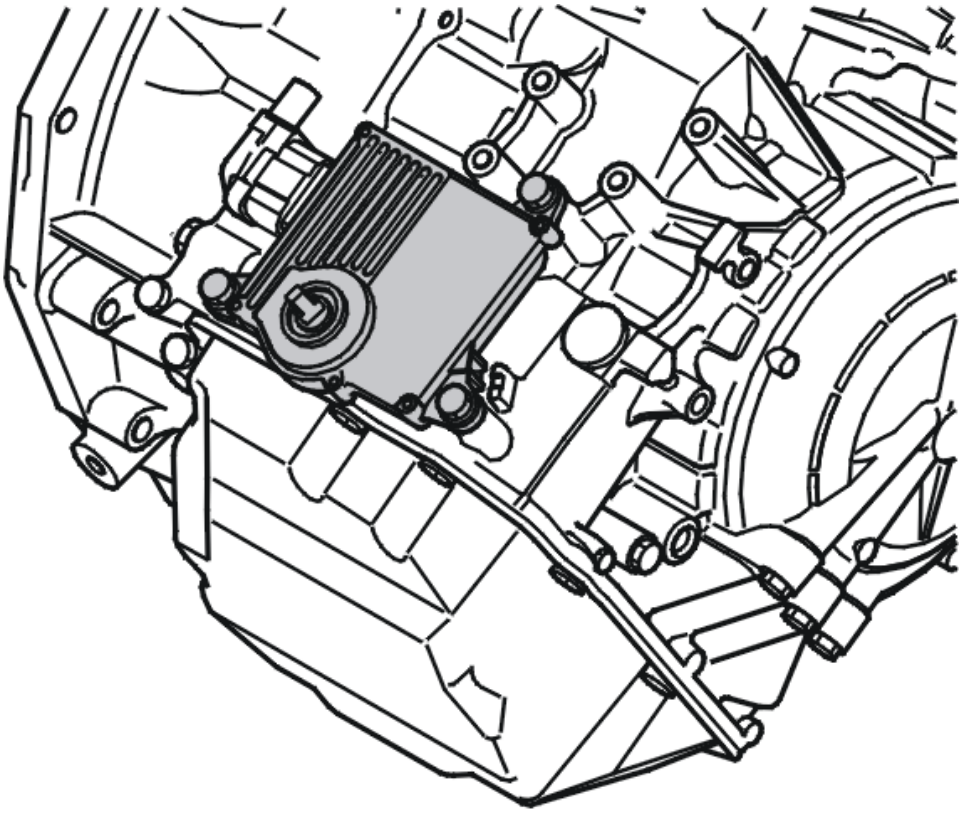

Fig. 321: Identifying Transmission Control Module (TCM)
Courtesy of VOLVO CARS CORPORATION

The transmission control module (TCM) receive signals on the input and output speed from the two gearbox speed sensors. There is a predetermined ratio for each gear and using the signals, the control module can calculate the gearbox gear ratio. If the transmission control module (TCM) registers that the gear ratio deviates more than 10%, the diagnostic trouble code (DTC) TCM-P073100, TCM-P073200, TCM-P073300, TCM-P073400, TCM-P073500 or TCM-P072900 is generated depending on the cause of the fault.

The diagnostic trouble: (DTC) can be diagnosed at transmission fluid temperatures above +20 °C and for:

- **TCM-P073100** Gear 1 and engine speed above 250 but below 1350 rpm and accelerator pedal position greater than 10% and gear ratio = 2.301 +/- 20%
- **TCM-P073200** Gear 2 and engine speed above 500 rpm plus accelerator pedal position greater than 10% and gear ratio =2.301 +/- 20%.
- **TCM-P073300** Gear 3 and engine speed above 500 rpm plus accelerator pedal position greater than 10% and gear ratio =2.301 +/- 20%.
- **TCM-P073400** Gear 4 and engine speed above 500 rpm plus accelerator pedal position greater than 10% and gear ratio =2.301 +/- 20%.
- **TCM-P073500** Gear 5 and engine speed above 500 rpm plus accelerator pedal position greater than 10% and gear ratio =2.301 +/- 20%.
- **TCM-P072900** Gear 6 and engine speed above or equal to 250 rpm plus engine torque greater than or equal to 80Nm and no acceleration.

Substitute Value

- Auxiliary program **Emergency mode 2** in the transmission control module (TCM) has started.

  HINT: EMERGENCY MODE IN CASE OF MALFUNCTION

Possible Source

- Contact resistance or one of solenoid's regulating incorrectly. See table below:

Gear/DTC	Circuit for solenoid
1/TCM-P073100	SLT, SLC2, SLC3, SLB1
2/TCM-P073200	SLT, SLC2, SLC3
3/TCM-P073300	SLT, SLC2, SLB1
4/TCM-P073400	SLT, SLC3, SLB1
5/TCM-P073500	SLT, SLC1, SLB1
6/TCM-P072900	SLT,, SLC3

- Mechanical fault in gearbox. Gearbox components worn and causing slip or system pressure too low.

Fault symptom[s]

- Malfunction indicator lamp (MIL) lit.
- General warning lamp lit
- Abnormally slipping gears.
- Harsh gear changing
- No gear changing.

FAULT TRACING

FAULT-TRACING INFORMATION

CHECKING THE GEAR SYSTEM

Problems that the customer may experience are hard shifts or slipping shifts. The following test-drive contains several different driving situations that may provoke these symptoms if the transmission is damaged.

NOTE: It is important that the transmission oil is above 70 °C before the test-drive starts

Test 1

1. Driving at 100 km/h, 6th gear.
2. Perform a kickdown to 4th gear.

3. Let the transmission automatically shift up to 5th gear.
4. Let up the accelerator pedal and let the transmission shift up to 6th gear.

Test 2

1. Driving at 100 km/h, 6th gear.
2. Slight uphill grade, press accelerator pedal until you obtain shifting 6-5, not kickdown.

Test 3

1. Driving at 80 km/h.
2. Move the gear selector to position M and engage 6th gear.
3. Perform a kickdown and shift 6-5, 5-4, 4-3 at the same time.
4. Then upshift immediately to 6th gear.

Test 4

1. Stationary vehicle, engine running, parking brake applied, brake activated with left foot, gear selector in position R.
2. Press down the accelerator pedal (brake still activated).

NOTE: Let up the accelerator pedal in case of noise or slipping.

Test 5

1. Stationary vehicle, engine running, parking brake applied, brake activated with left foot, gear selector in position D.
2. Press down the accelerator pedal (brake still activated).

NOTE: Let up the accelerator pedal in case of noise or slipping.

If the symptoms hard shifts or slipping shifts arise during the test-drive, the transmission's control system must be replaced.

Other information

- see **CONTROL SYSTEM, REPLACING**

Is the function OK?

- **YES**

  Refer to **CHECKING SOLENOIDS**

- **NO**

  Refer to **RESETTING ADAPTATION**

CHECKS

CHECKING SOLENOIDS

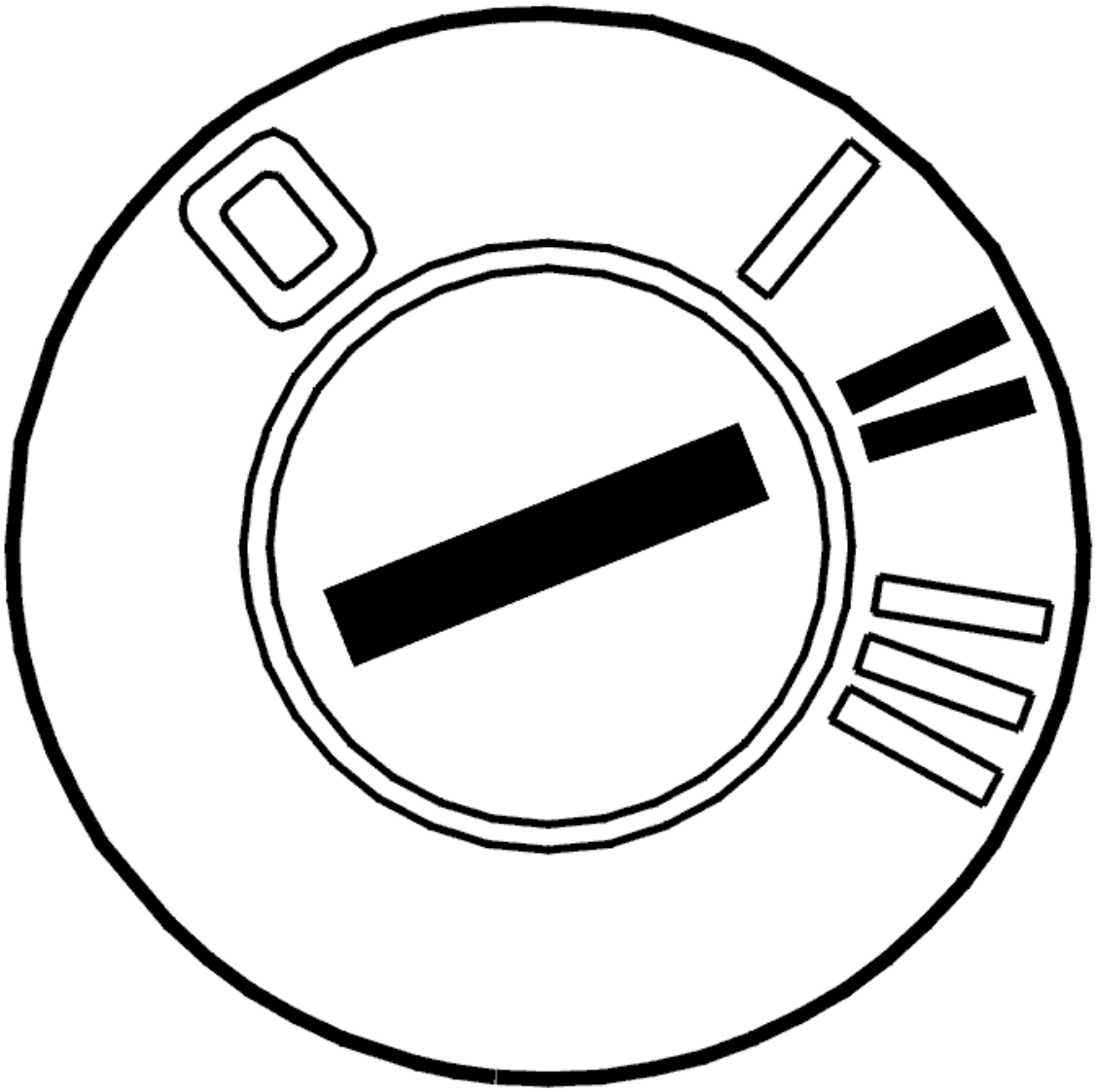

Fig. 322: Identifying Ignition ON
Courtesy of VOLVO CARS CORPORATION

- Ignition on
- Activate the solenoids by clicking on the symbol for VCT2000.

  Select a solenoid and read off the current through the solenoid's circuit. The current should shift between approx. 0 and 1000 mA.

Gear/DTC	Solenoid
1/TCM-P073100	SLT, SLC2, SLC3, SLB1
2/TCM-P073200	SLT, SLC2, SLC3
3/TCM-P073300	SLT, SLC2, SLB1
4/TCM-P073400	SLT, SLC3, SLB1
5/TCM-P073500	SLT, SLC1, SLB1
6/TCM-P072900	SLT, SLC3

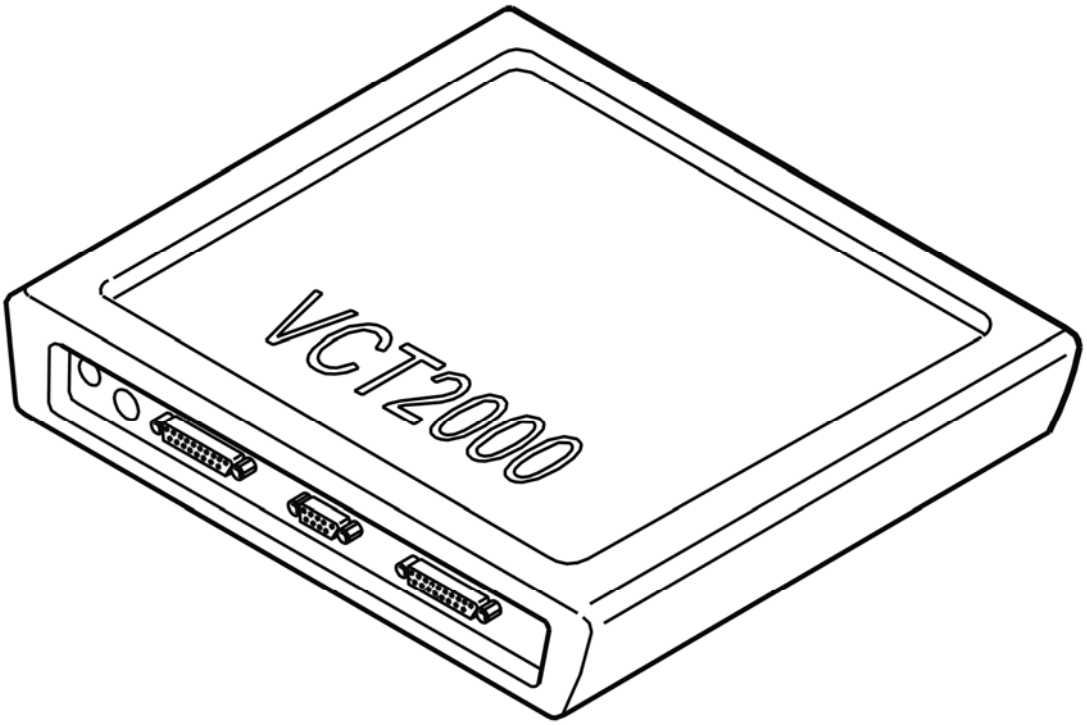

Fig. 323: Identifying VCT2000 Diagnostic Tool Symbol In VIDA
Courtesy of VOLVO CARS CORPORATION

Is the function OK?

- **YES**

  Refer to **CHECKING OIL QUALITY AND OIL LEVEL IN TRANSMISSION**

- **NO**

  Refer to **CHECKING THE WIRING AND COMPONENT**

CHECKING OIL QUALITY AND OIL LEVEL IN TRANSMISSION

NOTE: **The transmission oil's quality and level are extremely important for the function of the transmission. Therefore it is important that these are correct. In addition, the oil level is dependent on oil temperature.**

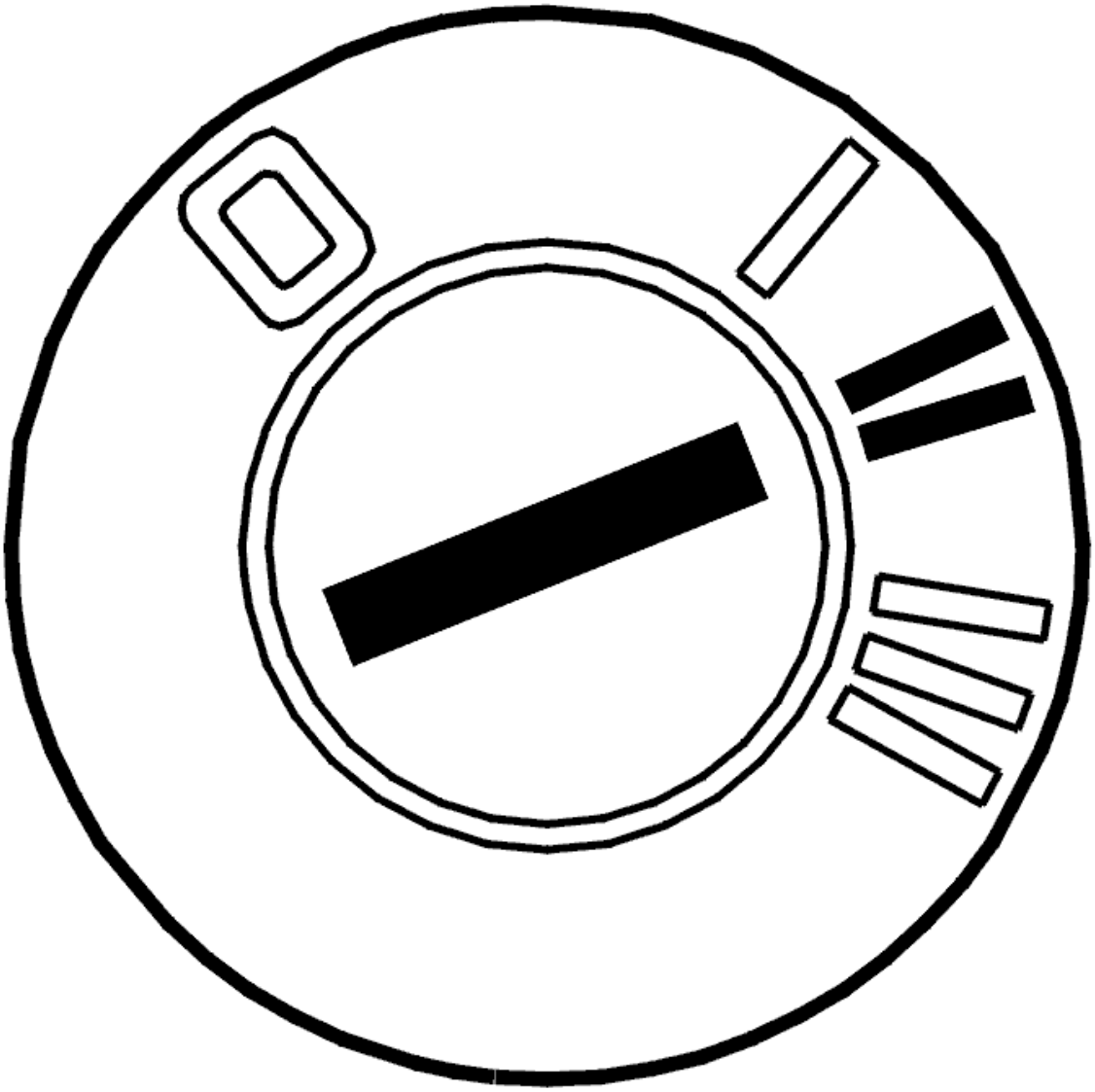

Fig. 324: Identifying Ignition ON
Courtesy of VOLVO CARS CORPORATION

- Ignition on
- Read off the oil's temperature.

  Check the transmission's oil level. If it is low, check the transmission for leaks and then top off the oil.

  Check the oil's quality.

  If the oil smells burnt, change transmission oil.

Other information

- see **OIL LEVEL, CHECKING**
- see **OIL GRADE, CHECKING (2007-2011)**
- see **TRANSMISSION FLUID, CHANGING**

Select an alternative:

1. No defect found.

   Refer to **CHECKING THE WIRING AND COMPONENT**

2. Transmission oil changed, level low or quality poor.

   Refer to **RESETTING ADAPTATION**

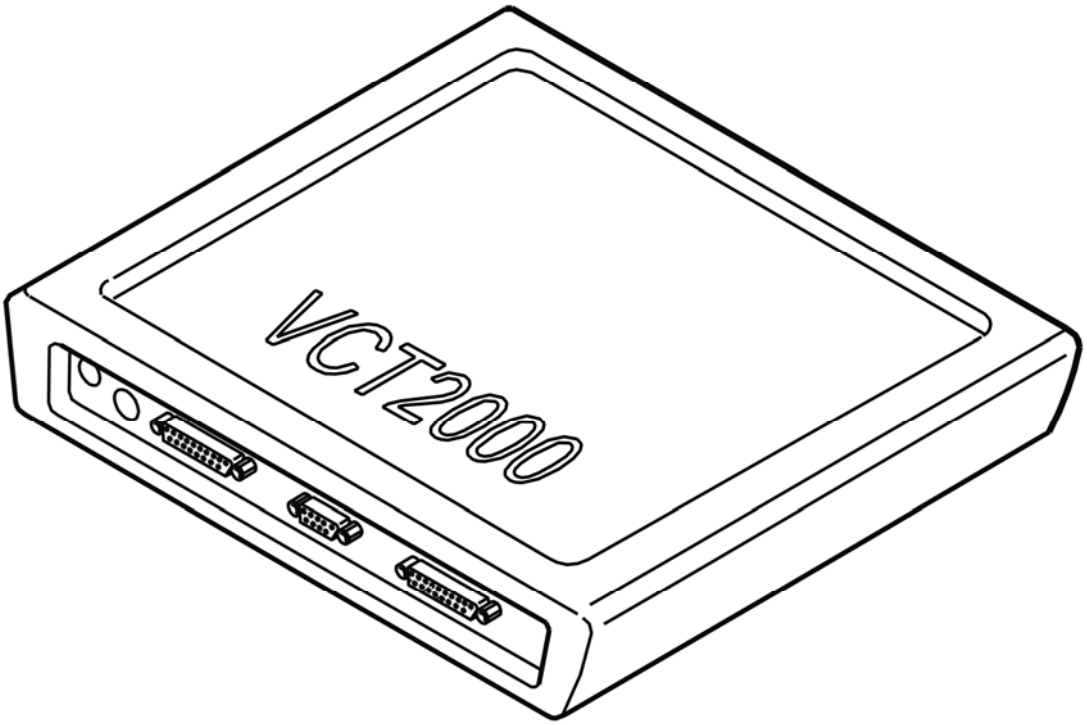

Fig. 325: Identifying VCT2000 Diagnostic Tool Symbol In VIDA
Courtesy of VOLVO CARS CORPORATION

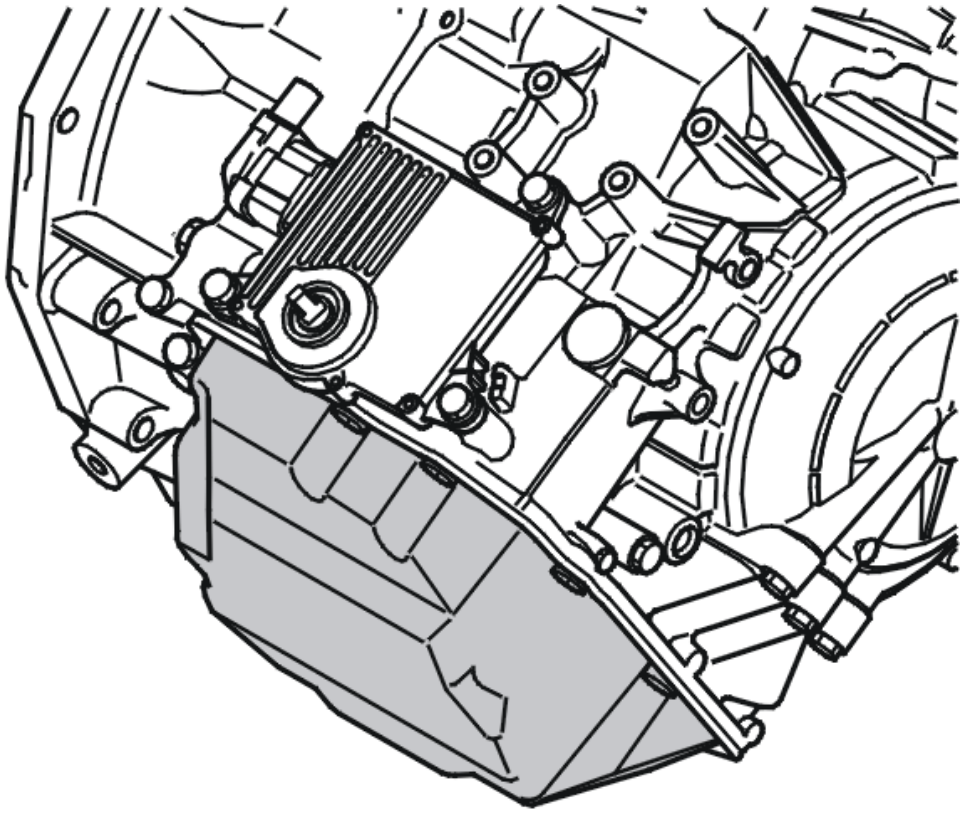

Fig. 326: Identifying Transmission Oil Pan
Courtesy of VOLVO CARS CORPORATION

CHECKING THE WIRING AND COMPONENT

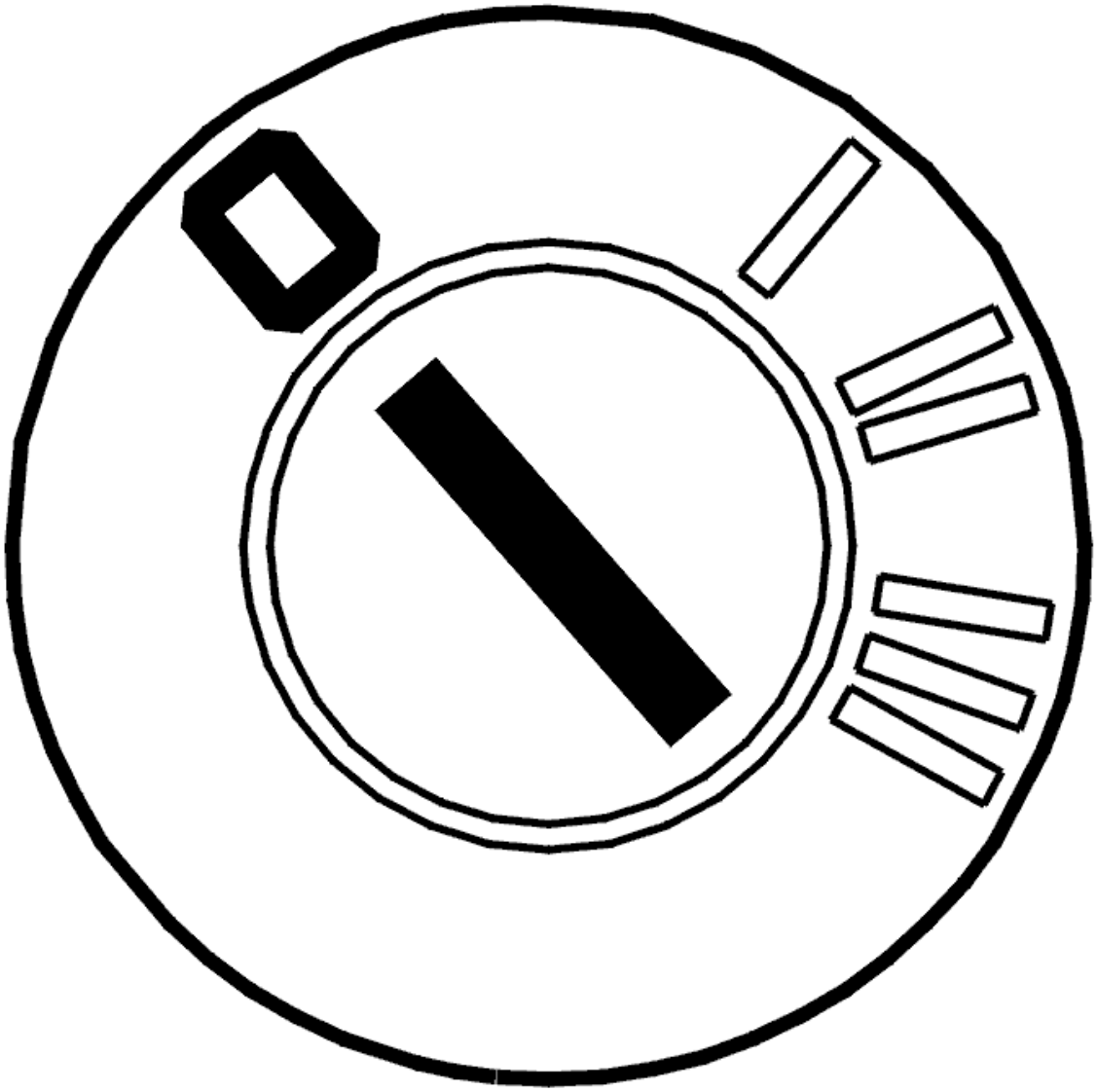

Fig. 327: Identifying Ignition OFF
Courtesy of VOLVO CARS CORPORATION

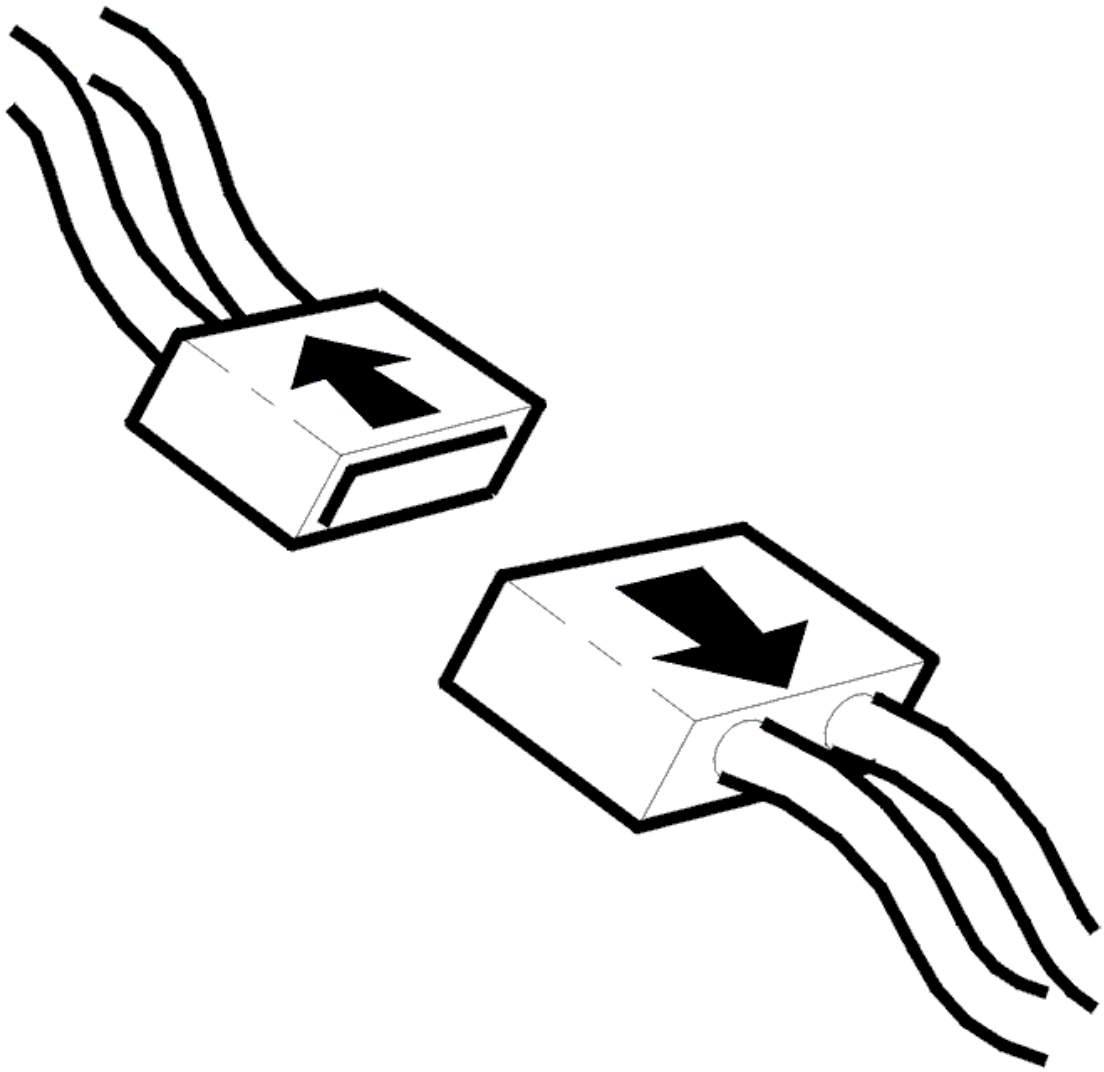

Fig. 328: Identifying Connector(s) Disconnected
Courtesy of VOLVO CARS CORPORATION

- Ignition off
- Open the gearbox control system

Check connector B (22-pin) for the transmission control module (TCM). Check for damaged or pressed in pins. Check for contact resistance and oxidation.

HINT: Check solenoid SLT, SLC1, SLC2, SLC3 and SLB1 according to: CHECKING THE LINE PRESSURE SOLENOID SLT, SLC1, SLC2, SLC3, SLB1 AND LOCK-UP SOLENOID SLU

Gear/DTC	Solenoid
1/TCM-P073100	SLT, SLC2, SLC3, SLB1
2/TCM-P073200	SLT, SLC2, SLC3

3/TCM-P073300	SLT, SLC2, SLB1
4/TCM-P073400	SLT, SLC3, SLB1
5/TCM-P073500	SLT, SLC1, SLB1
6/TCM-P072900	SLT, SLC3

If no defects were found on connectors or cables, replace the transmission.

Remedy as necessary.

Other information

- see **REPLACING THE GEARBOX**
- see **CONTROL SYSTEM, REPLACING**
- see **CABLE HARNESS, CONTROL SYSTEM, GEARBOX, REPLACING**
- To access connector B: **TRANSMISSION CONTROL MODULE (TCM), REPLACING**
- see **CONTENTS**

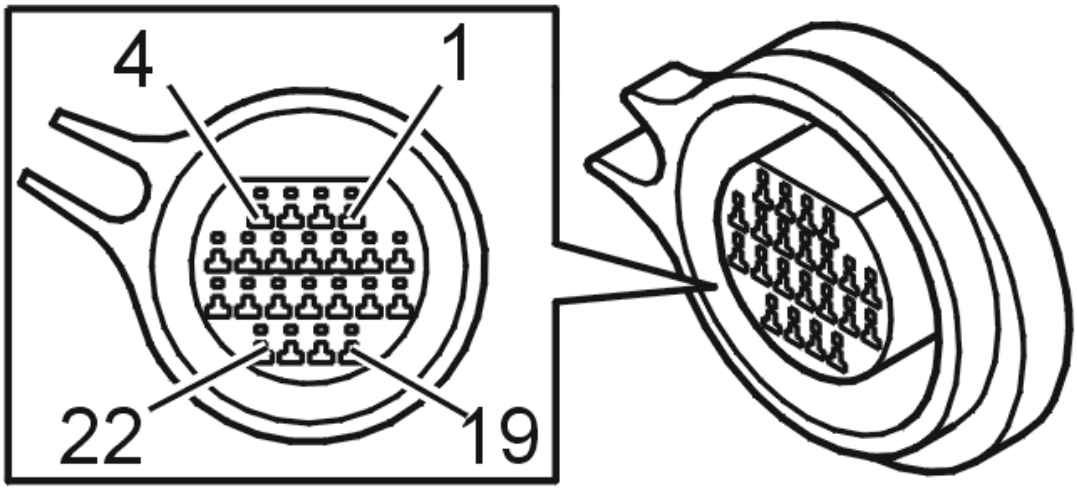

Fig. 329: Identifying Connector B Terminals
Courtesy of VOLVO CARS CORPORATION

- **Continue**

  Refer to **RESETTING ADAPTATION**

REPLACING THE TRANSMISSION

Previous tests indicate an internal malfunction in the transmission.

Other information

- see **REPLACING THE GEARBOX**

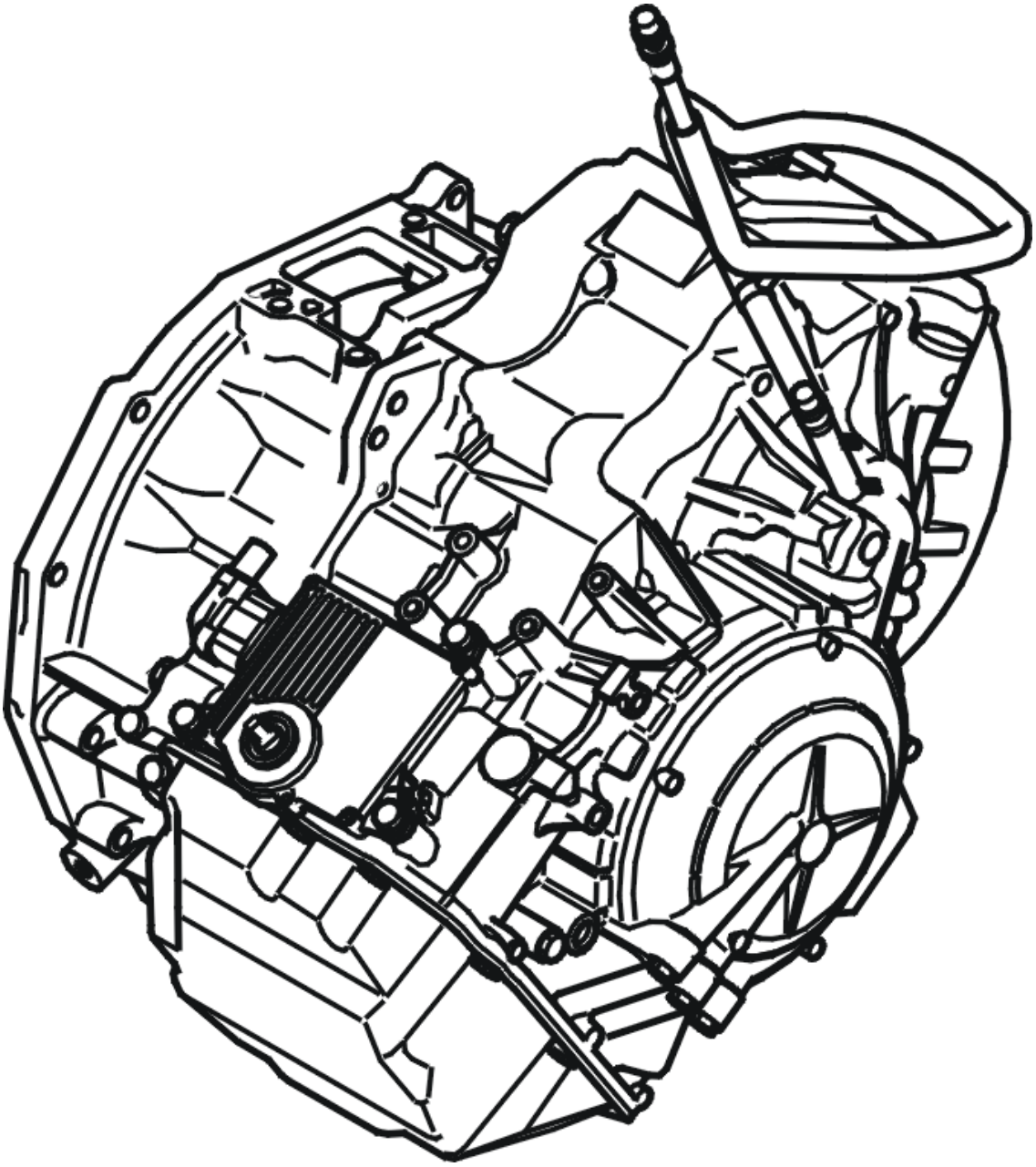

Fig. 330: Identifying Transmission
Courtesy of VOLVO CARS CORPORATION

- **Continue**

  Refer to **RESETTING ADAPTATION**

RESETTING ADAPTATION

RESETTING ADAPTATION AND COUNTER FOR "TRANSMISSION OIL, CHANGING"

HINT: The transmission has torque-controlled, adaptive pressure control. The pressure control means

that the transmission itself controls the pressure during each shift sequence in order to avoid harsh shifting. Each shift is assessed by the transmission control module (TCM) and is stored in the internal memory, which results in compensation for wear in the transmission and clutch. In order for the transmission to function correctly after repair, it is important to reset the adaptation in the memory. Since the oil is changed during the repair, the counter for "Transmission oil, change" shall also be reset. If the counter is not reset when draining/changing oil, there is a risk that a diagnostic trouble code may be generated under incorrect conditions.

NOTE: **This applies only if the transmission or one of the components in the transmission have been replaced.**

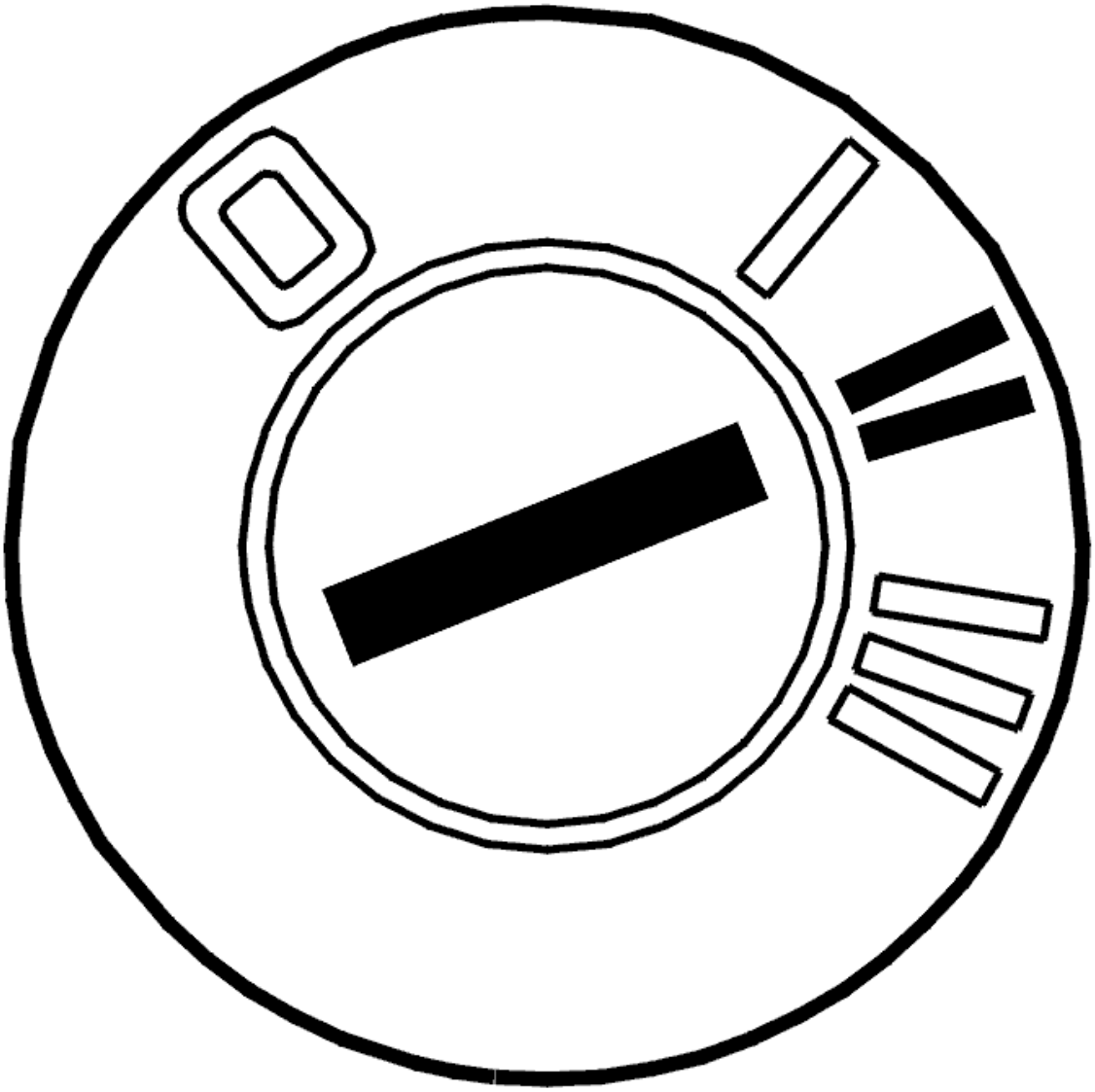

Fig. 331: Identifying Ignition ON
Courtesy of VOLVO CARS CORPORATION

- Ignition on

Activate reset of the adaptation and the counter by clicking on the symbol for VCT2000.

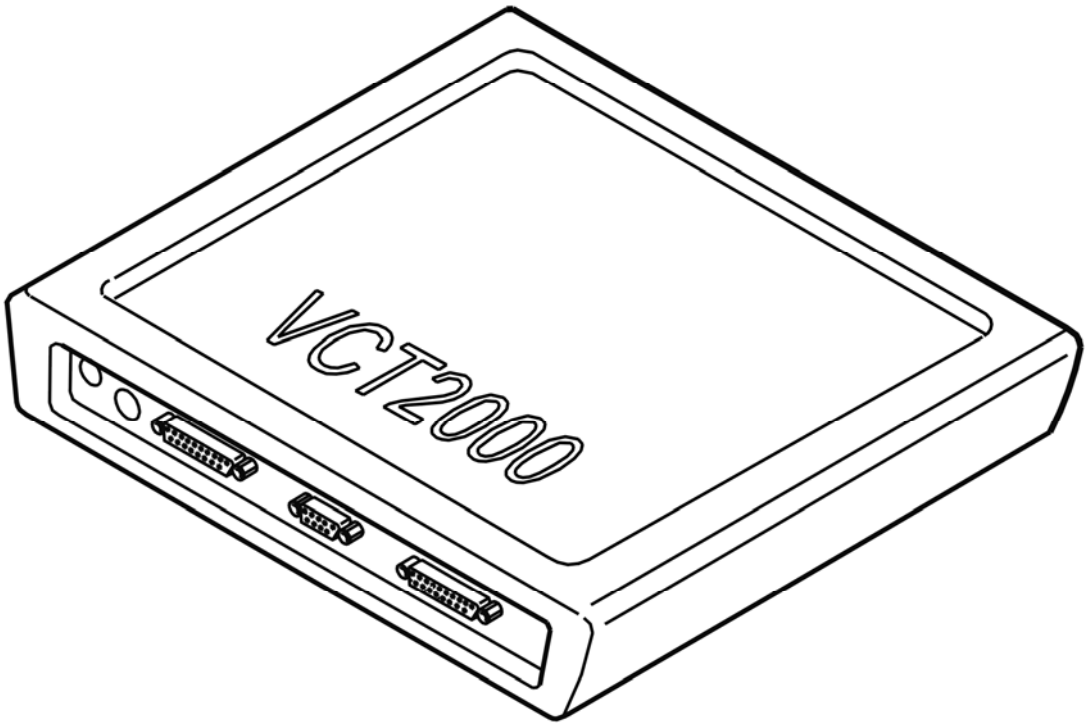

Fig. 332: Identifying VCT2000 Diagnostic Tool Symbol In VIDA
Courtesy of VOLVO CARS CORPORATION

- **Continue**

  Refer to **VERIFICATION**

VERIFICATION

VERIFICATION

NOTE: **When the transmission's control module has been removed and reinstalled, it is important that the gear position sensor is calibrated. Select Pause and create a bookmark. Then select Vehicle communication using Volvo Scantool (VIDA).**

HINT: After carrying out the repair, check that the fault has been remedied.

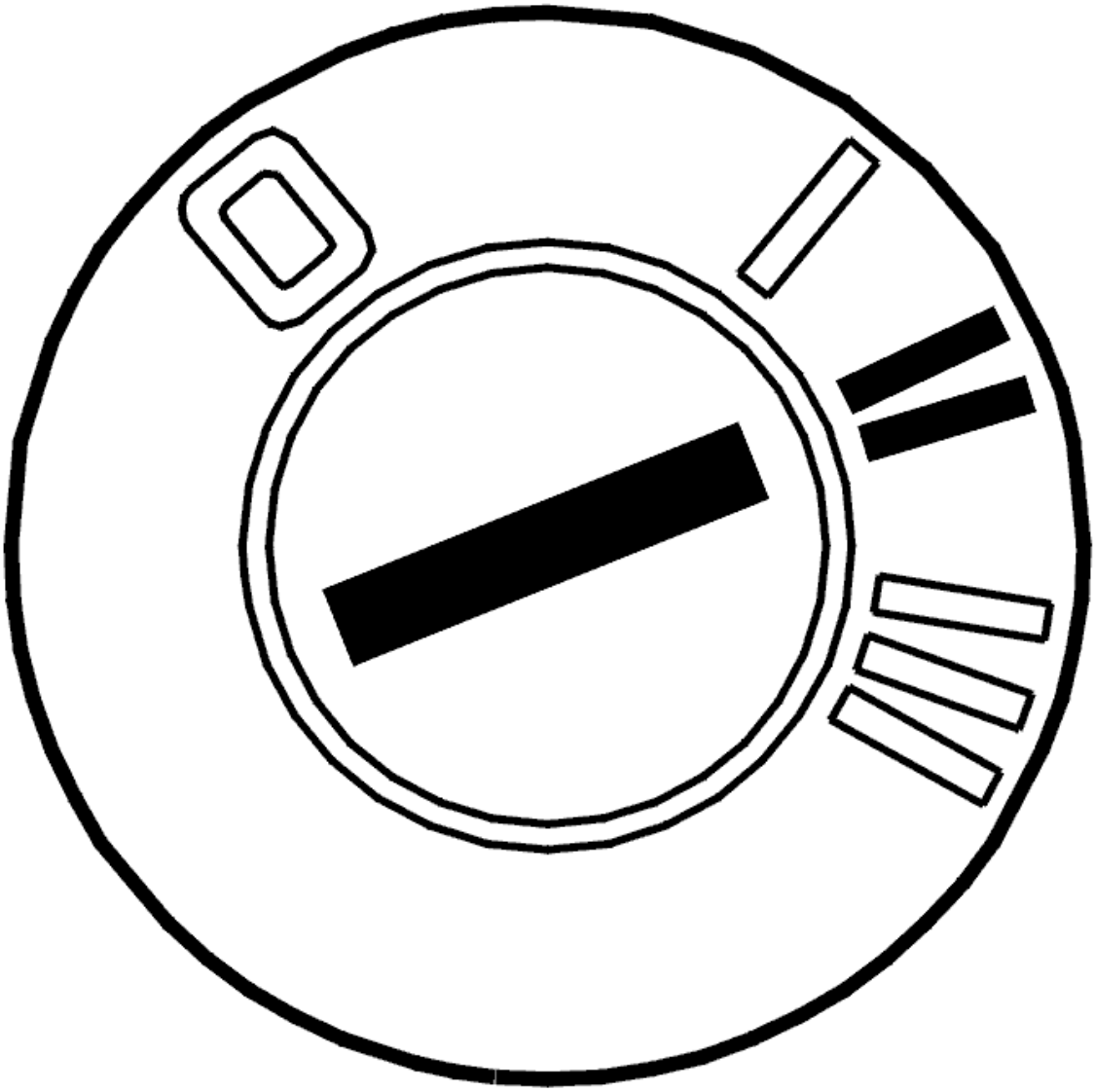

Fig. 333: Identifying Ignition ON
Courtesy of VOLVO CARS CORPORATION

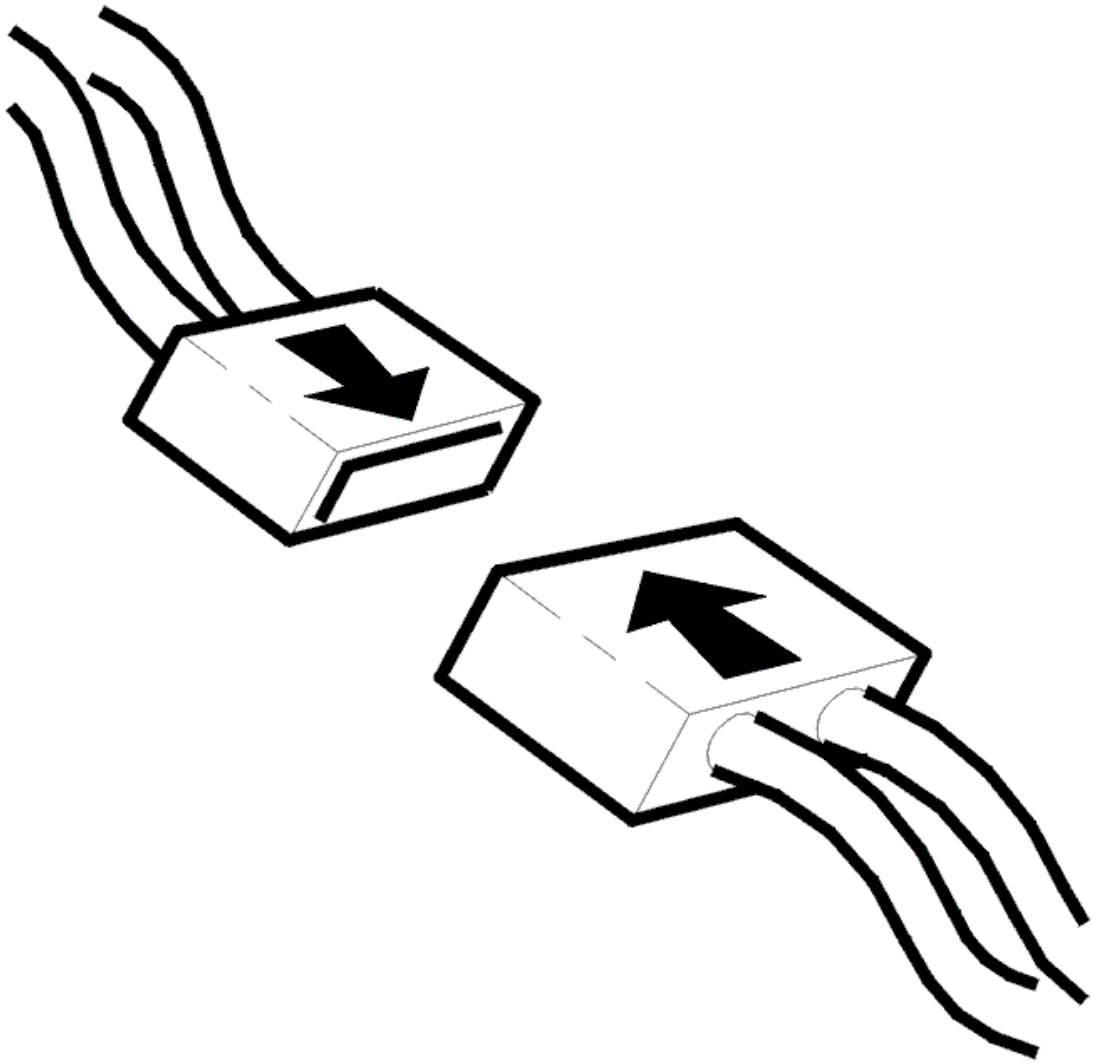

Fig. 334: Identifying Connector(s) Reinstallation
Courtesy of VOLVO CARS CORPORATION

- Ignition off
- Reinstall the components, reconnect the connectors etc.

  Test drive the vehicle following: **TEST DRIVE SCHEDULE, DESCRIPTION**

  Check that the transmission does not display any **obvious** function faults.

  NOTE: When test driving, the oil temperature must be above 20 °C.

Is the function OK?

- **YES**

VERIFIED: Troubleshooting has been completed.

- **NO**

  Refer to **INFORMATION**

INFORMATION

FAULT-TRACING INFORMATION

The fault should have been detected and remedied. As this is not the case fault-tracing has failed.

Exit fault-tracing for this diagnostic trouble code (DTC) or make another attempt.

TCM-P072900: GEAR 6 INCORRECT RATIO. GENERAL FAULT INFORMATION. NO INFORMATION ON FAULT TYPE (TF-80SC AWD; 2005)

DIAGNOSTIC TROUBLE CODE (DTC) INFORMATION

see **DIAGNOSTIC TROUBLE CODE (DTC) INFORMATION**

FAULT TRACING

see **FAULT TRACING**

TCM-P073000: INCORRECT GEAR RATIO. GENERAL FAILURE INFORMATION. NO SUB TYPE INFORMATION (B6324S, TF-80SC; B6324S, TF-80SC AWD; 2007-2010)

DIAGNOSTIC TROUBLE CODE (DTC) INFORMATION TCM-P073000

Condition

The transmission control module (TCM) receives a signal about input and output speed from the transmission's two speed sensors. There is a determined ratio for each gear and the signals help calculate the transmission control module (TCM) gear ratio.

The diagnostic trouble code (DTC) is stored if the control module detects that:

- Transmission is in mechanical neutral position despite the gear selector being moved to **D** .

The control module's test for the diagnostic trouble code (DTC) starts in the event of:

- Driving forward (gear position **D**).
- The engine speed is above 600 rpm.
- Throttle angle open more than 10%.

- Transmission's oil temperature exceeds +0 °C.
- Brake pedal unaffected.

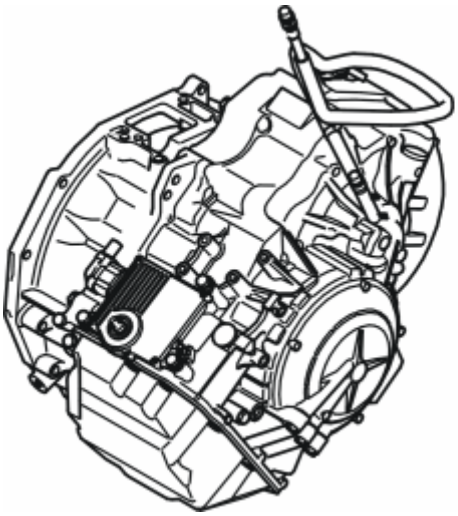

Fig. 335: Identifying Transmission
Courtesy of VOLVO CARS CORPORATION

Substitute Value

- Auxiliary program **Emergency mode 1** in the transmission control module (TCM) has started.

  HINT: EMERGENCY MODE IN THE EVENT OF A FAULT

Possible Source

- Internal malfunction in the transmission

Fault symptom[s]

- General warning lamp lit
- Malfunction indicator light (MIL), on
- No gear shift
- Abnormal slipping gearshifts

FAULT-TRACING

FAULT-TRACING INFORMATION

CHECKING THE GEAR SYSTEM

Problems that the customer may experience are hard shifts or slipping shifts. The following test-drive contains several different driving situations that may provoke these symptoms if the transmission is damaged.

NOTE: It is important that the transmission oil is above 70 °C before the test-drive starts

Test 1

1. Driving at 100 km/h, 6th gear.
2. Perform a kickdown to 4th gear.
3. Let the transmission automatically shift up to 5th gear.
4. Let up the accelerator pedal and let the transmission shift up to 6th gear.

Test 2

1. Driving at 100 km/h, 6th gear.
2. Slight uphill grade, press accelerator pedal until you obtain shifting 6-5, not kickdown.

Test 3

1. Driving at 80 km/h.
2. Move the gear selector to position M and engage 6th gear.
3. Perform a kickdown and shift 6-5, 5-4, 4-3 at the same time.
4. Then upshift immediately to 6th gear.

Test 4

1. Stationary vehicle, engine running, parking brake applied, brake activated with left foot, gear selector in position R.
2. Press down the accelerator pedal (brake still activated).

NOTE: Let up the accelerator pedal in case of noise or slipping.

Test 5

1. Stationary vehicle, engine running, parking brake applied, brake activated with left foot, gear selector in position D.
2. Press down the accelerator pedal (brake still activated).

NOTE: Let up the accelerator pedal in case of noise or slipping.

If the symptoms hard shifts or slipping shifts arise during the test-drive, the transmission's control system must be replaced.

Other information

- see **CONTROL SYSTEMS**

Is the function OK?

- **YES**

  Refer to **CHECKING SOLENOIDS**

- **NO**

  Refer to **RESETTING ADAPTATION**

CHECKS

CHECKING SOLENOIDS

Fig. 336: Identifying Ignition ON
Courtesy of VOLVO CARS CORPORATION

- Ignition on.
- Activate the solenoids by clicking on the symbol for VCT2000.

  Select a solenoid and read off the current through the solenoid's circuit. The current should shift between approx. 100 and 950 mA.

  Solenoid SLT, SLC2, SLC3, SLB1.

Fig. 337: Identifying VCT2000 Diagnostic Tool Symbol In VIDA
Courtesy of VOLVO CARS CORPORATION

Is the function OK?

- **YES**

  Refer to **CHECKING THE OIL QUALITY AND THE OIL LEVEL IN THE TRANSMISSION**

- **NO**

Refer to **CHECKING THE COMPONENTS AND WIRING**

CHECKING THE COMPONENTS AND WIRING

Fig. 338: Identifying Ignition In Off Position
Courtesy of VOLVO CARS CORPORATION

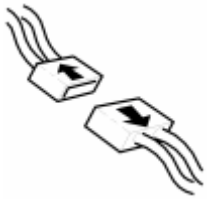

Fig. 339: Identifying Connectors Disconnected
Courtesy of VOLVO CARS CORPORATION

- Ignition off.
- Open the transmission control system.

  Check connector B (22-pin) for the transmission control module (TCM). Check for damaged or pressed in pins. Check for contact resistance and oxidation.

  HINT: Check solenoids SLT, SLC2, SLC3, SLB1 as described in:CHECKING INTERNAL COMPONENTS OF THE TRANSMISSION

  If no defects were found on connectors or cables, replace the transmission.

  Remedy as necessary.

  Other information

  - see **TRANSMISSION** (B6324S, TF-80SC; 2007-2010) or **TRANSMISSION** (B6324S, TF-80SC AWD; 2007-2010)
  - see **COVER CONTROL SYSTEM, REPLACING**
  - see **TRANSMISSION CONTROL UNIT WIRING HARNESS**
  - To access connector B:**TRANSMISSION CONTROL MODULE (TCM)**
  - see **CHECKING WIRING AND TERMINALS**

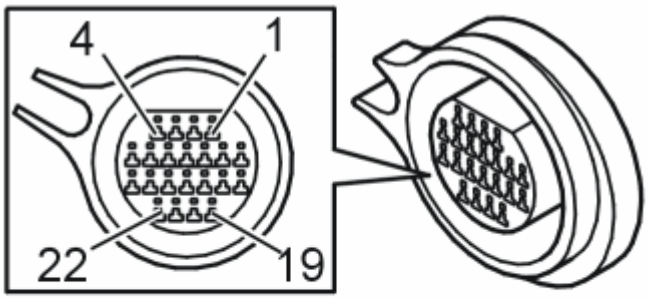

Fig. 340: Identifying Connector B Terminals
Courtesy of VOLVO CARS CORPORATION

- **Continue**

  Refer to **RESETTING ADAPTATION**

CHECKING THE OIL QUALITY AND THE OIL LEVEL IN THE TRANSMISSION

NOTE: **Transmission fluid quality and level are extremely important for the function of the transmission. Therefore it is imperative that these are correct. In addition the oil level is dependent on oil temperature.**

Fig. 341: Identifying Ignition ON
Courtesy of VOLVO CARS CORPORATION

- Ignition on.
- Read off the oil temperature.

  Check the transmission oil level. If the oil level is low, check the transmission for leakage, then top up with oil.

  Check the quality of the oil.

  Replace the transmission fluid if the fluid smells burnt.

  Other information

- see **OIL LEVEL, CHECKING**
- see **OIL GRADE, CHECKING**
- see **TRANSAXLE OIL**

Select an alternative:

1. No fault detected.

   Refer to **CHECKING THE COMPONENTS AND WIRING**

2. Transmission fluid replaced, low level or poor quality.

   Refer to **RESETTING ADAPTATION**

Fig. 342: Identifying VCT2000 Diagnostic Tool Symbol In VIDA
Courtesy of VOLVO CARS CORPORATION

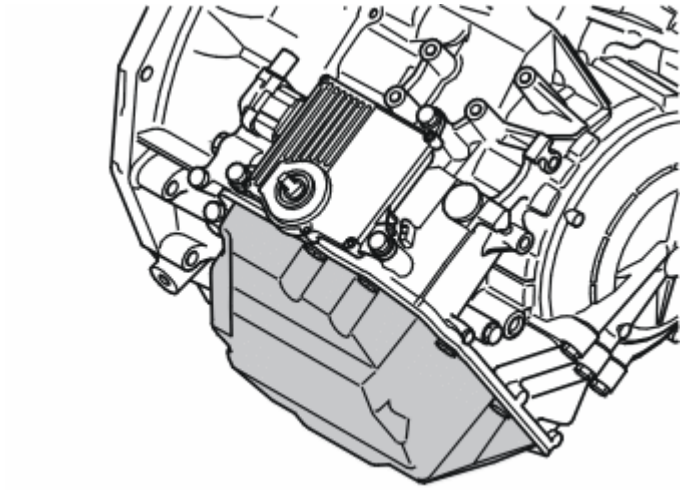

Fig. 343: Identifying Transmission Fluid Pan
Courtesy of VOLVO CARS CORPORATION

VERIFICATION

VERIFICATION

NOTE: **When the transmission's control module has been removed and reinstalled, it is important that the gear position sensor is calibrated. Select Pause and create a**

bookmark. Then select Vehicle communication using Volvo Scantool (VIDA).

HINT: After carrying out the repair, check that the fault has been remedied.

Fig. 344: Identifying Ignition ON
Courtesy of VOLVO CARS CORPORATION

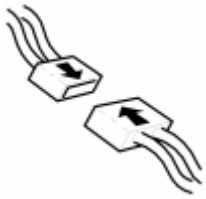

Fig. 345: Identifying Connector(s) Reinstallation
Courtesy of VOLVO CARS CORPORATION

- Ignition off.
- Reinstall the connectors, components etc.
- Test drive the vehicle following:**TEST DRIVE SCHEDULE, DESCRIPTION**

  Check that the transmission does not display any **obvious** function faults.

  NOTE: When test driving, the oil temperature must be above 20 °C.

Is the function OK?

- **YES**

  VERIFIED: Troubleshooting has been completed.

- **NO**

  Refer to **INFORMATION**

INFORMATION

FAULT-TRACING INFORMATION

The fault should have been detected and remedied. As this is not the case fault-tracing has failed.

Exit fault-tracing for this diagnostic trouble code (DTC) or make another attempt.

RESETTING ADAPTATION

RESETTING THE ADAPTATION AND THE COUNTER FOR "TRANSMISSION OIL, REPLACE"

HINT: The transmission has torque-regulated, adaptive pressure regulation. The pressure regulator enables the transmission to regulate pressure during each shift to prevent hard shifting. Each shift is assessed by the transmission control module (TCM) and is stored in the internal memory. This makes it possible to compensate for transmission and clutch wear. It is important that the adaptation in the memory is reset so that the transmission works normally after the repair. Because the fluid was changed during the repair, the counter for transmission fluid change must also be reset. If the counter is not reset during draining/replacement, a diagnostic trouble code may be generated under the wrong conditions.

NOTE: This applies only if the transmission or one of the components in the transmission have been replaced.

Fig. 346: Identifying Ignition ON
Courtesy of VOLVO CARS CORPORATION

- Ignition on.

  Click on the VCT2000 symbol to reset the adaptation and counter.

  Fig. 347: Identifying VCT2000 Diagnostic Tool Symbol In VIDA
  Courtesy of VOLVO CARS CORPORATION

- **Continue**

  Refer to **VERIFICATION**

TCM-P073000: INCORRECT GEAR RATIO. GENERAL FAILURE INFORMATION. NO SUB TYPE INFORMATION (B6324S5, TF-80SC; B6324S5, TF-80SC AWD; 2011-2012)

DIAGNOSTIC TROUBLE CODE (DTC) INFORMATION TCM-P073000

see **DIAGNOSTIC TROUBLE CODE (DTC) INFORMATION TCM-P073000**

FAULT-TRACING

see **FAULT-TRACING**

TCM-P073000: INCORRECT GEAR RATIO. GENERAL MALFUNCTION INFORMATION. NO INFORMATION ON MALFUNCTION TYPE (B8444S, TF-80SC AWD; 2006-2011)

DIAGNOSTIC TROUBLE CODE (DTC) INFORMATION TCM-P073000

Condition

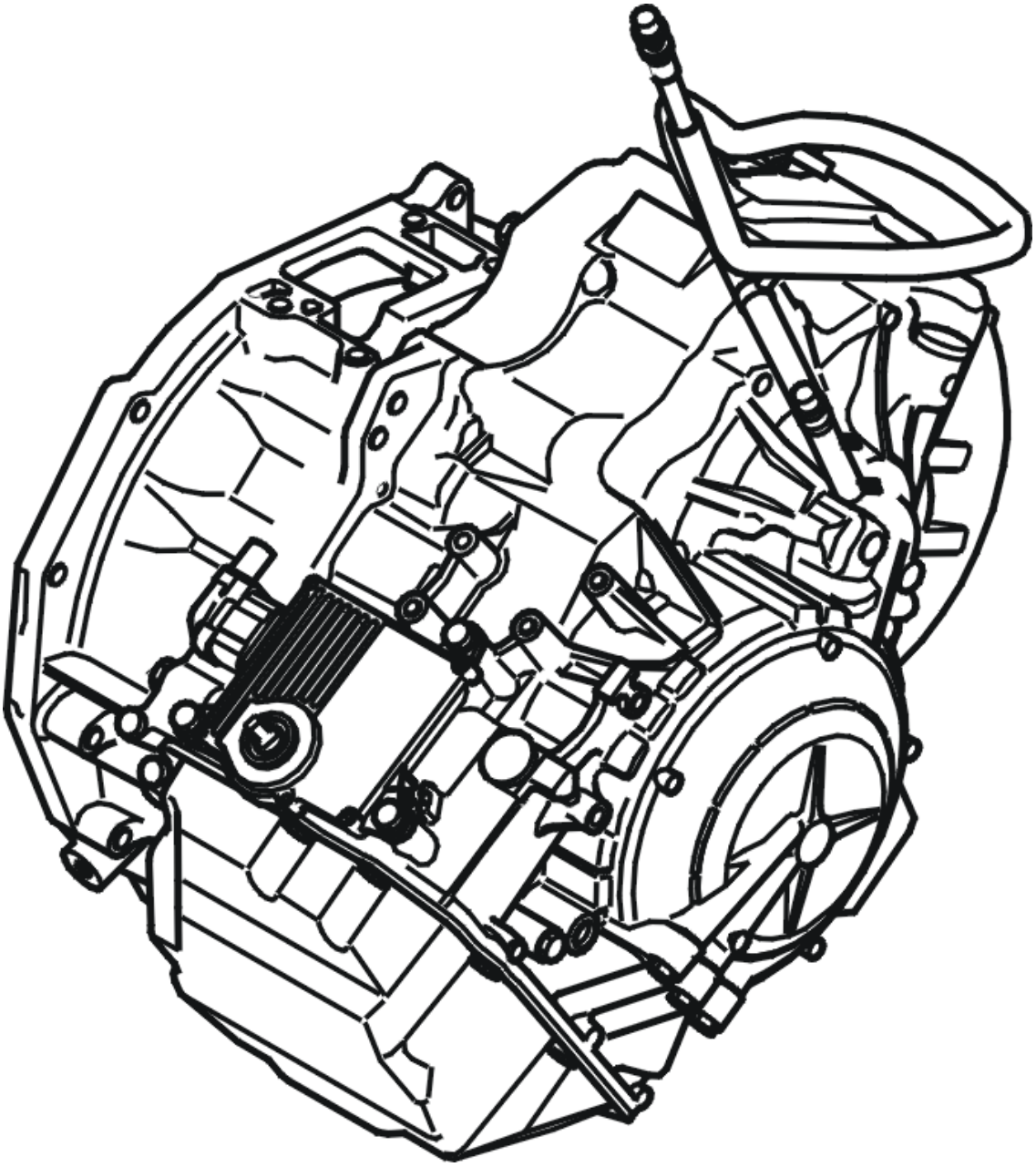

Fig. 348: Identifying Transmission
Courtesy of VOLVO CARS CORPORATION

If the transmission control module (TCM) registers that reverse or forward drive is not engaged when the gear selector is moved to position R or D, diagnostic trouble code (DTC) TCM-P170100 or TCM-P273200 depending on the cause of the fault.

The diagnostic trouble code can be diagnosed when the engine is running.

Substitute Value

- Auxiliary program **Emergency mode 1** in the transmission control module (TCM) has started.

HINT: EMERGENCY MODE IN CASE OF MALFUNCTION

Possible Source

- Internal malfunction in the transmission

Fault symptom[s]

- General warning lamp lit
- Malfunction indicator lamp (MIL) lit.
- No gear changing.
- Abnormal slipping gearshifts

FAULT TRACING

FAULT-TRACING INFORMATION

CHECKING THE GEAR SYSTEM

Problems that the customer may experience are hard shifts or slipping shifts. The following test-drive contains several different driving situations that may provoke these symptoms if the transmission is damaged.

NOTE: It is important that the transmission oil is above 70 °C before the test-drive starts

Test 1

1. Driving at 100 km/h, 6th gear.
2. Perform a kickdown to 4th gear.
3. Let the transmission automatically shift up to 5th gear.
4. Let up the accelerator pedal and let the transmission shift up to 6th gear.

Test 2

1. Driving at 100 km/h, 6th gear.
2. Slight uphill grade, press accelerator pedal until you obtain shifting 6-5, not kickdown.

Test 3

1. Driving at 80 km/h.
2. Move the gear selector to position M and engage 6th gear.
3. Perform a kickdown and shift 6-5, 5-4, 4-3 at the same time.
4. Then upshift immediately to 6th gear.

Test 4

1. Stationary vehicle, engine running, parking brake applied, brake activated with left foot, gear selector in position R.
2. Press down the accelerator pedal (brake still activated).

NOTE: Let up the accelerator pedal in case of noise or slipping.

Test 5

1. Stationary vehicle, engine running, parking brake applied, brake activated with left foot, gear selector in position D.
2. Press down the accelerator pedal (brake still activated).

NOTE: Let up the accelerator pedal in case of noise or slipping.

If the symptoms hard shifts or slipping shifts arise during the test-drive, the transmission's control system must be replaced.

Other information

- see **CONTROL SYSTEM, REPLACING**

Is the function OK?

- **YES**

  Refer to **CHECKING SOLENOID SLC1**

- **NO**

  Refer to **REPLACING THE CONTROL SYSTEM**

CHECKS

CHECKING SOLENOID SLC1

Fig. 349: Identifying Ignition ON
Courtesy of VOLVO CARS CORPORATION

- Ignition on.
- Activate solenoid SLC1 by clicking the VCT2000 symbol.

Read the current through the circuit for solenoid SLC1. The current should oscillate between 100 and 950 mA.

The fault is in the control system if the current does not oscillate. If the current varies and a clicking noise is heard, the control signal from the Transmission control module (TCM) and the solenoid's function is OK.

NOTE: Depending on the transaxle and oil temperature, the noise level from the solenoids may vary considerably. When the transaxle is hot or extremely cold, the noise level may be extremely low. Use a stethoscope.

HINT: To obtain a "click" more easily, move the gear selector to different positions and then try to activate the solenoid again.

Fig. 350: Identifying VCT2000 Diagnostic Tool Symbol In VIDA
Courtesy of VOLVO CARS CORPORATION

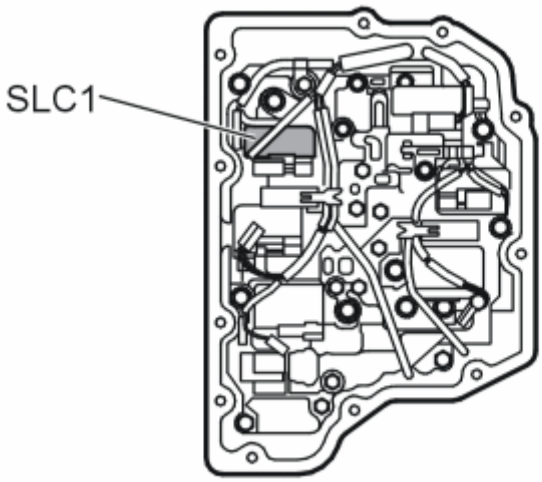

Fig. 351: Identifying Solenoid SLC1
Courtesy of VOLVO CARS CORPORATION

Is the control signal of the solenoid OK?

- **YES**

  Refer to **REPLACING THE TRANSMISSION**

- **NO**

  Refer to **REPLACING THE CONTROL SYSTEM**

REPLACING THE TRANSMISSION

The transmission control module (TCM) has registered an internal malfunction in the transmission. Replace the transmission.

Other information

- see **REPLACING THE GEARBOX**

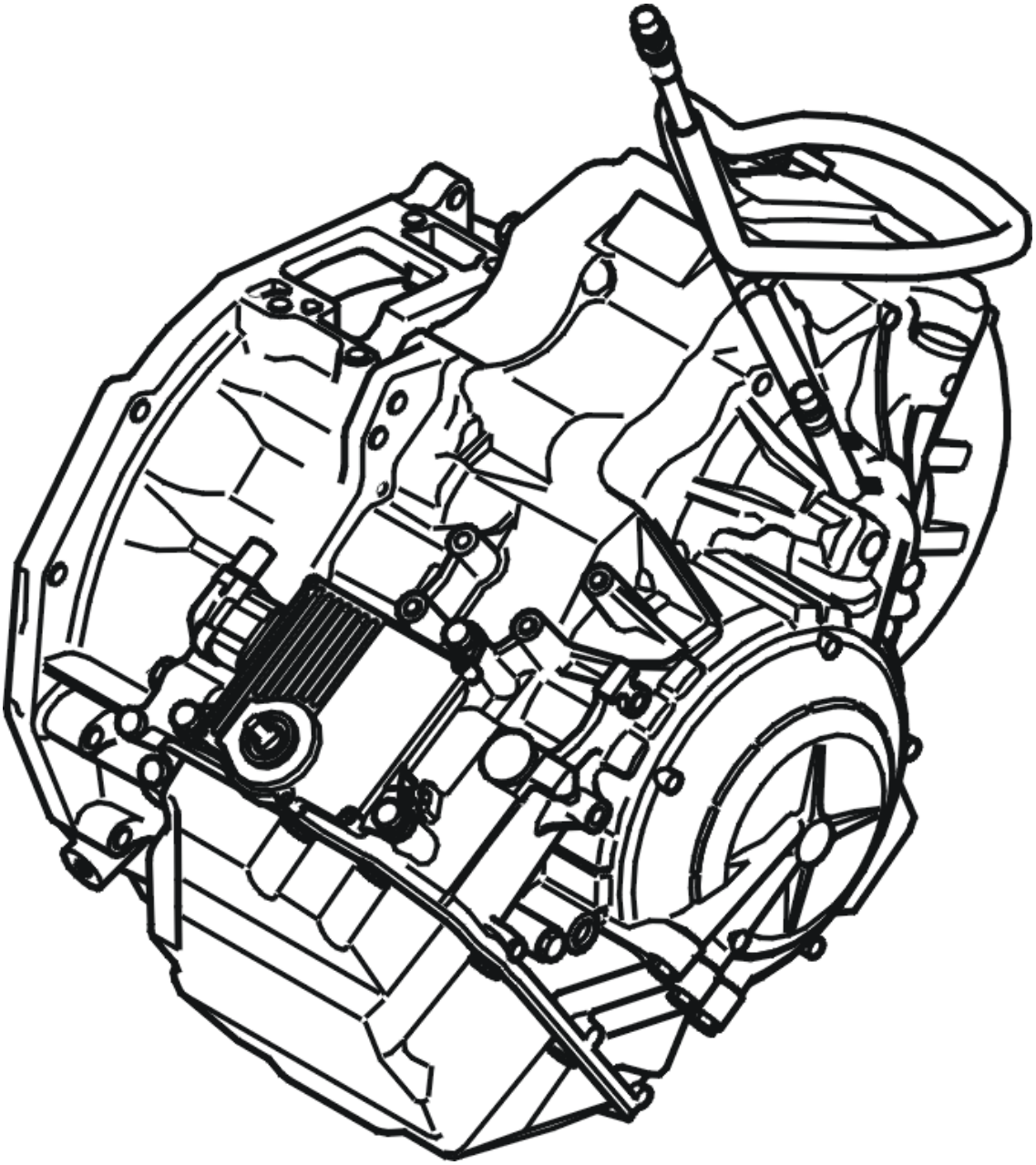

Fig. 352: Identifying Transmission
Courtesy of VOLVO CARS CORPORATION

- **Continue**

  Refer to **RESETTING ADAPTATION**

REPLACING THE CONTROL SYSTEM

Replace control system as follows:**CONTROL SYSTEM, REPLACING**

- **Continue**

  Refer to **RESETTING ADAPTATION**

RESETTING ADAPTATION

RESETTING ADAPTATION AND COUNTER FOR "TRANSMISSION OIL, CHANGING"

HINT: The transmission has torque-controlled, adaptive pressure control. The pressure control means that the transmission itself controls the pressure during each shift sequence in order to avoid harsh shifting. Each shift is assessed by the transmission control module (TCM) and is stored in the internal memory, which results in compensation for wear in the transmission and clutch. In order for the transmission to function correctly after repair, it is important to reset the adaptation in the memory. Since the oil is changed during the repair, the counter for "Transmission oil, change" shall also be reset. If the counter is not reset when draining/changing oil, there is a risk that a diagnostic trouble code may be generated under incorrect conditions.

NOTE: This applies only if the transmission or one of the components in the transmission have been replaced.

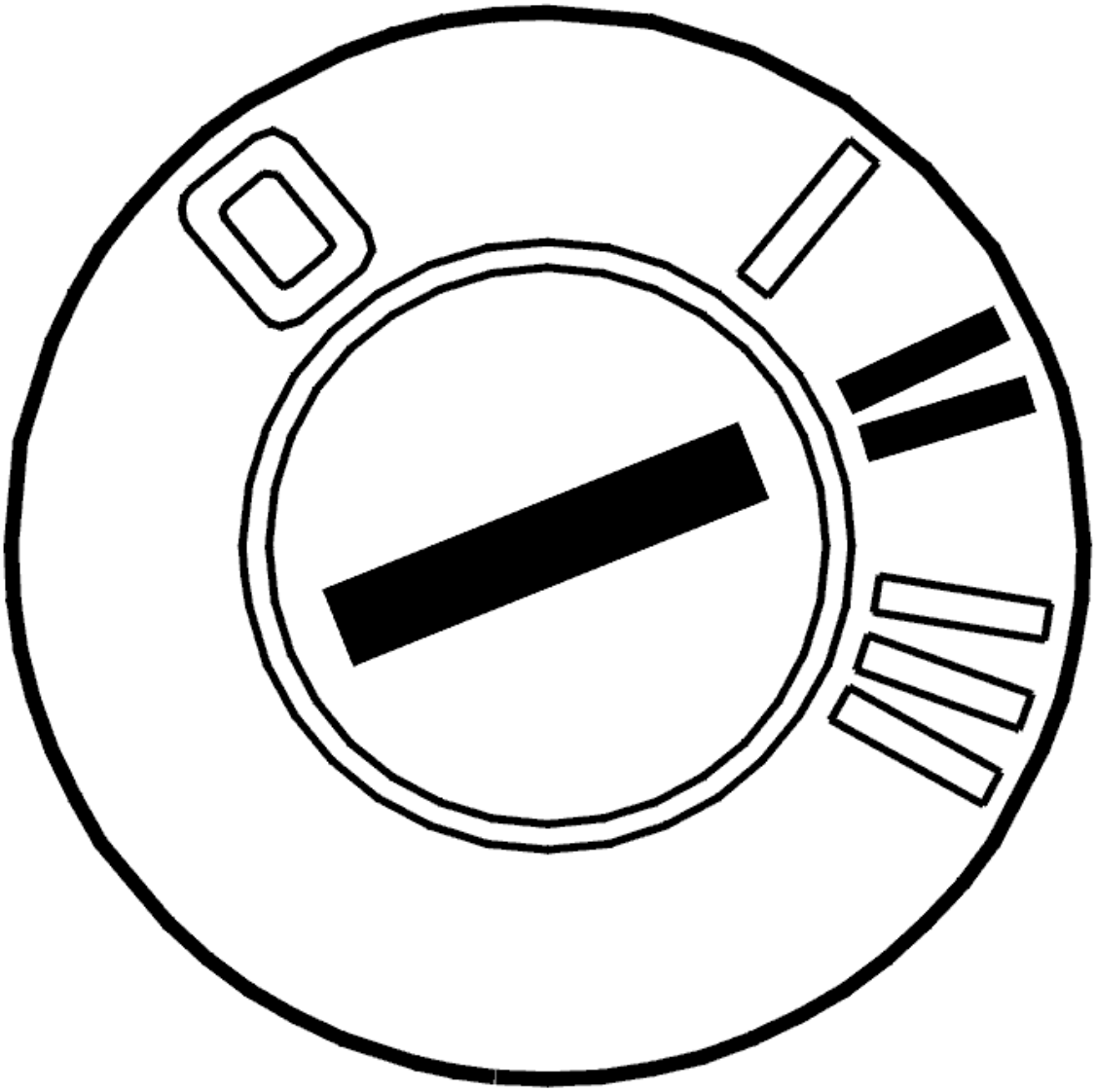

Fig. 353: Identifying Ignition ON
Courtesy of VOLVO CARS CORPORATION

- Ignition on

  Activate reset of the adaptation and the counter by clicking on the symbol for VCT2000.

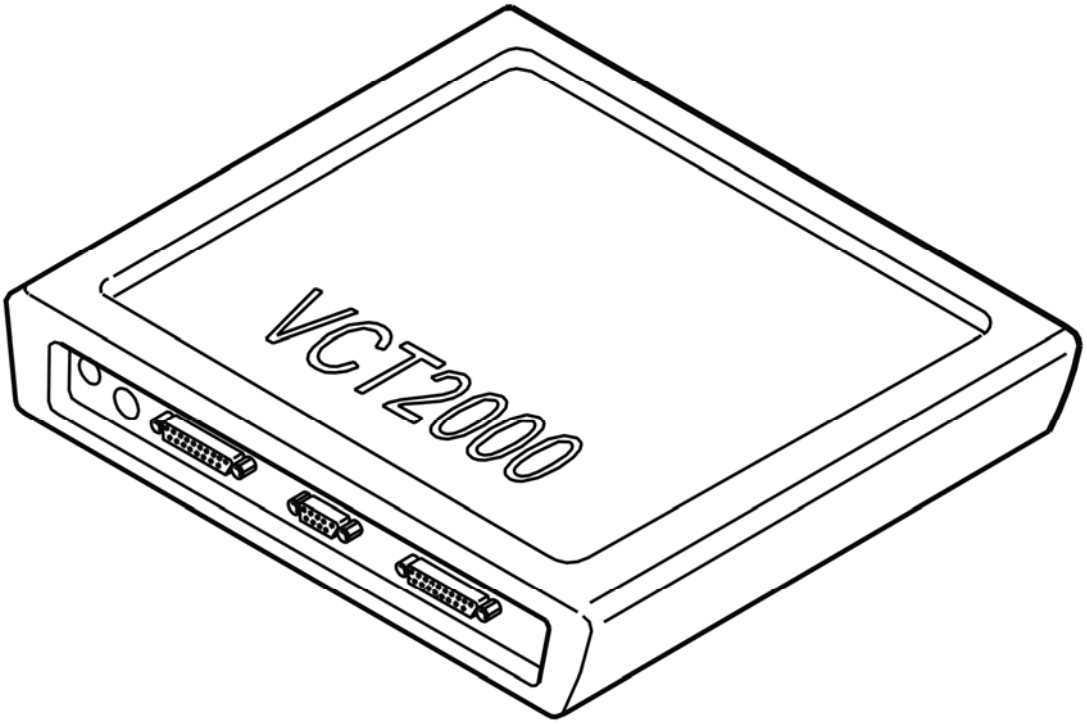

Fig. 354: Identifying VCT2000 Diagnostic Tool Symbol In VIDA
Courtesy of VOLVO CARS CORPORATION

- **Continue**

  Refer to **VERIFICATION**

VERIFICATION

VERIFICATION

HINT: After carrying out the repair, check that the fault has been remedied.

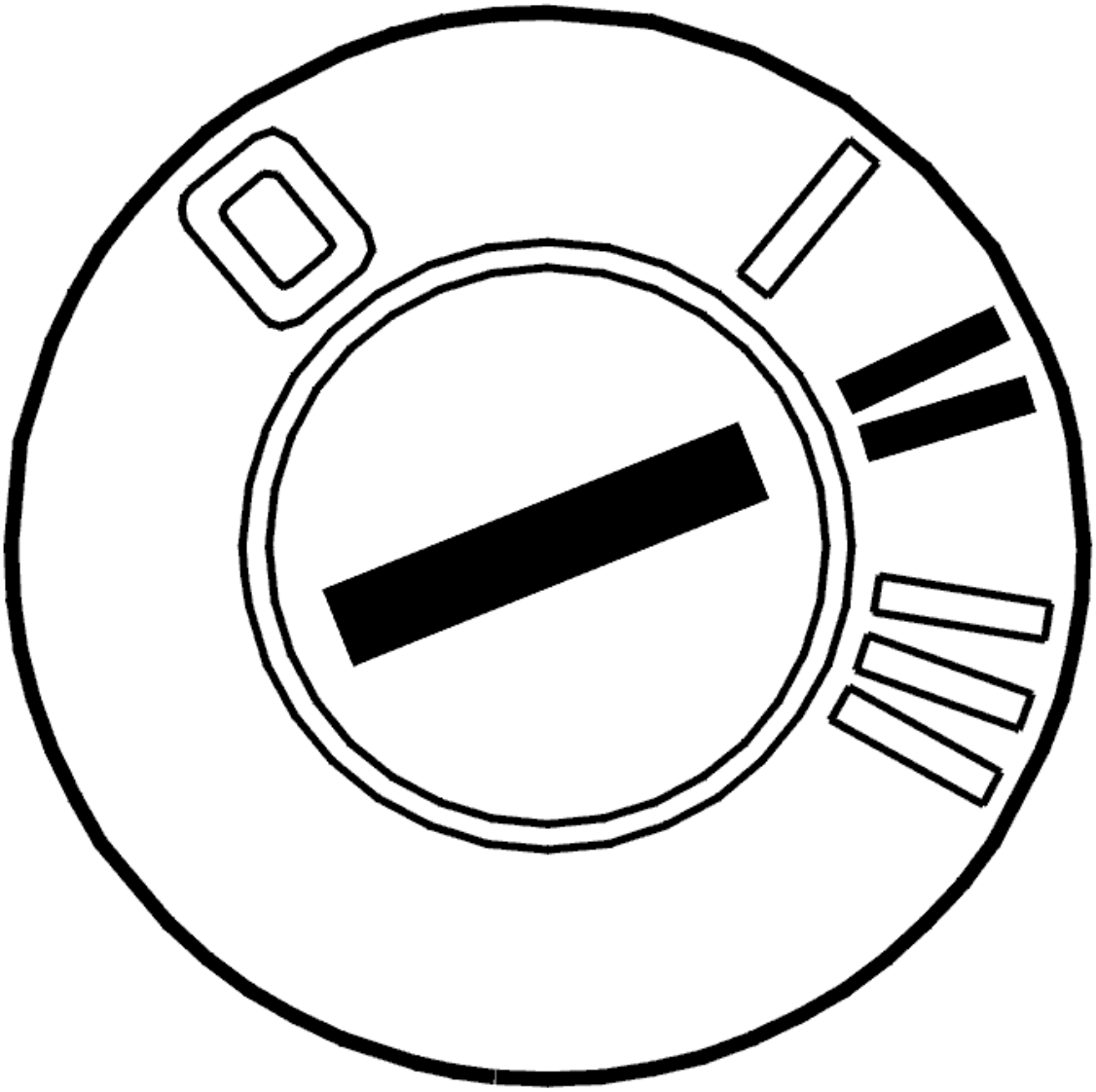

Fig. 355: Identifying Ignition ON
Courtesy of VOLVO CARS CORPORATION

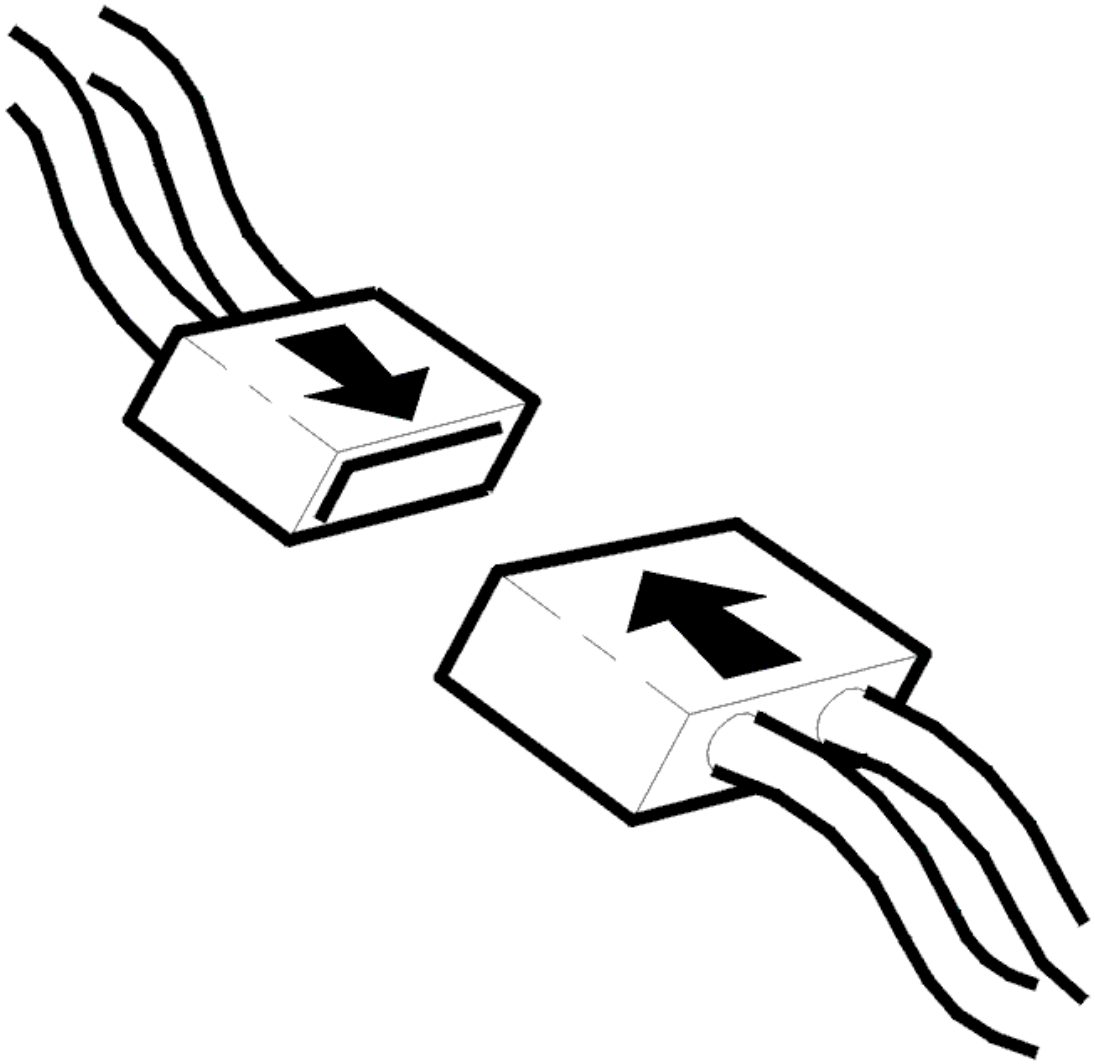

Fig. 356: Identifying Connector(s) Reinstallation
Courtesy of VOLVO CARS CORPORATION

- Ignition off
- Reinstall the components, reconnect the connectors etc.
- The gear shift position sensor for the transmission must be calibrated if the control module has been disconnected.

  HINT: Save a bookmark. Cancel fault-tracing and select Vehicle communication.

- Start the engine.

  Test drive the vehicle following: **TEST DRIVE SCHEDULE, DESCRIPTION**

  Check that the transmission does not display any **obvious** function faults.

NOTE: When test driving, the oil temperature must be above 20 °C.

Is the function OK?

- **YES**

  VERIFIED: Troubleshooting has been completed.

- **NO**

  Refer to **INFORMATION**

INFORMATION

FAULT-TRACING INFORMATION

The fault should have been detected and remedied. As this is not the case fault-tracing has failed.

Exit fault-tracing for this diagnostic trouble code (DTC) or make another attempt.

RESETTING ADAPTATION

RESETTING ADAPTATION AND COUNTER FOR "TRANSMISSION OIL, CHANGING"

HINT: The transmission has torque-controlled, adaptive pressure control. The pressure control means that the transmission itself controls the pressure during each shift sequence in order to avoid harsh shifting. Each shift is assessed by the transmission control module (TCM) and is stored in the internal memory, which results in compensation for wear in the transmission and clutch. In order for the transmission to function correctly after repair, it is important to reset the adaptation in the memory. Since the oil is changed during the repair, the counter for "Transmission oil, change" shall also be reset. If the counter is not reset when draining/changing oil, there is a risk that a diagnostic trouble code may be generated under incorrect conditions.

NOTE: This applies only if the transmission or one of the components in the transmission have been replaced.

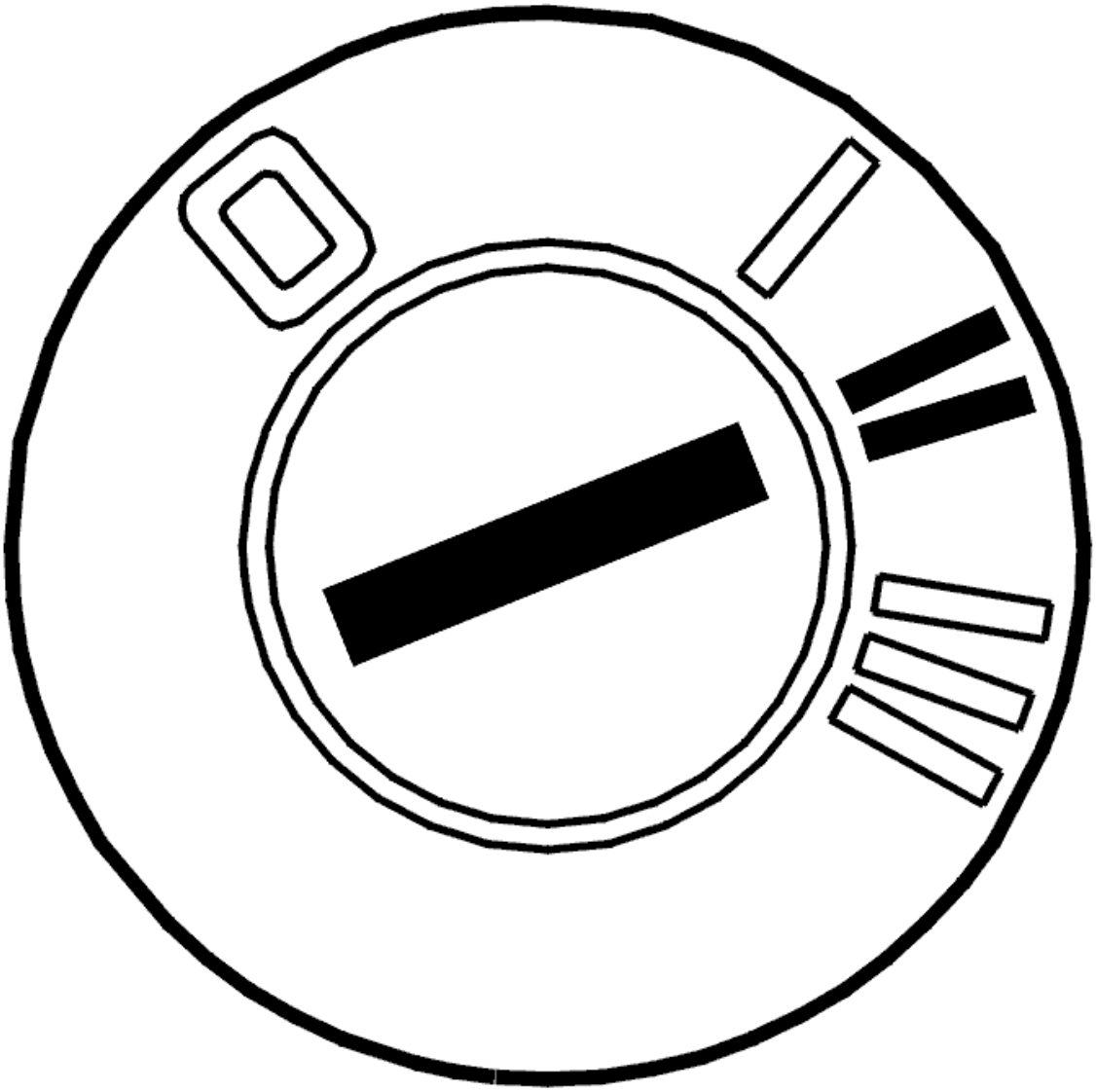

Fig. 357: Identifying Ignition ON
Courtesy of VOLVO CARS CORPORATION

- Ignition on

  Activate reset of the adaptation and the counter by clicking on the symbol for VCT2000.

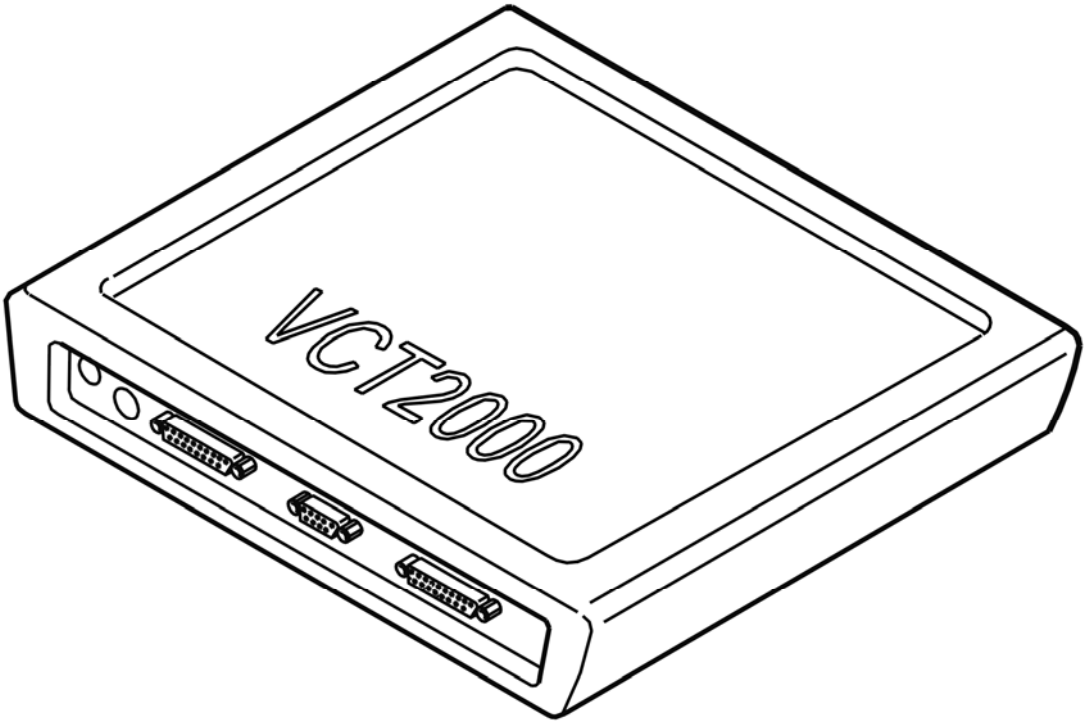

Fig. 358: Identifying VCT2000 Diagnostic Tool Symbol In VIDA
Courtesy of VOLVO CARS CORPORATION

- **Continue**

  Refer to **VERIFICATION**

TCM-P073000: INCORRECT GEAR RATIO. GENERAL MALFUNCTION INFORMATION. NO INFORMATION ON MALFUNCTION TYPE (TF-80SC AWD; 2005)

DIAGNOSTIC TROUBLE CODE (DTC) INFORMATION TCM-P073000

see **DIAGNOSTIC TROUBLE CODE (DTC) INFORMATION TCM-P073000**

FAULT TRACING

see **FAULT TRACING**

TCM-P073095: INCORRECT GEAR RATIO. COMPONENT FAILURES. INCORRECT ASSEMBLY (B6324S, TF-80SC AWD; 2007-2010)

DIAGNOSTIC TROUBLE CODE (DTC) INFORMATION TCM-P073095

Condition

Transmission control module (TCM) calculates the vehicle's speed using the signal from the transmission's speed sensor, output rpm. The calculated speed signal is compared with the speed signal that the Brake control module (BCM) transmits on the CAN network. Both signals should have approximately the same value.

The diagnostic trouble code (DTC) is stored if the control module detects that:

- The calculated speed between the transmission output speed signal and the speed signal from the brake control module (BCM) differ.

The control module's test for the diagnostic trouble code (DTC) starts in the event of:

- Normal driving.

NOTE: The control module can only detect the fault once the test has been started and the diagnostic trouble code (DTC) is stored when the conditions are met.

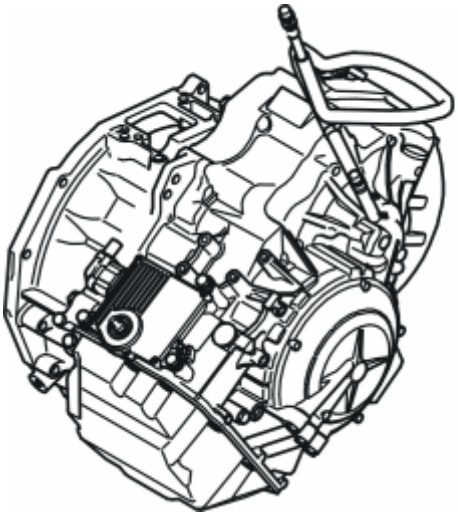

Fig. 359: Identifying Transmission
Courtesy of VOLVO CARS CORPORATION

Substitute Value

- None.

Possible Source

- Incorrect final drive installed.

Fault symptom[s]

- General warning lamp lit
- Irregular gear shift

FAULT-TRACING

FAULT-TRACING INFORMATION

The diagnostic trouble code is generated if a final drive not designed for the vehicle has been installed. Check the part number of the final drive. Replace the final drive if it is not the right one.

TCM-P073095: INCORRECT GEAR RATIO. COMPONENT FAILURES. INCORRECT ASSEMBLY (B6324S5, TF-80SC; B6324S5, TF-80SC AWD; 2011-2012)

DIAGNOSTIC TROUBLE CODE (DTC) INFORMATION TCM-P073095

see **DIAGNOSTIC TROUBLE CODE (DTC) INFORMATION TCM-P073095**

FAULT-TRACING

see **FAULT-TRACING**

TCM-P073100: GEAR 1 INCORRECT RATIO. GENERAL FAILURE INFORMATION. NO SUB TYPE INFORMATION (B6324S, TF-80SC; B6324S, TF-80SC AWD; 2007-2010)

DIAGNOSTIC TROUBLE CODE (DTC) INFORMATION TCM-P073100

Condition

The transmission control module (TCM) receives a signal about input and output speed from the transmission's two speed sensors. There is a determined ratio for each gear and the signals help calculate the transmission control module (TCM) gear ratio.

The diagnostic trouble code (DTC) is stored if the control module detects that:

- Gear ratio differs by more than 10%.

The control module's test for the diagnostic trouble code (DTC) starts in the event of:

- Fluid temperature over +20 °C (68 °F).
- 1st gear is engaged, engine speed is between 250 and 1350 rpm, accelerator pedal position is greater than 10% and the gear ratio is 4.148 +/- 20%.

NOTE: The control module can only detect the fault once the test has been started and

the diagnostic trouble code (DTC) is stored when the conditions are met.

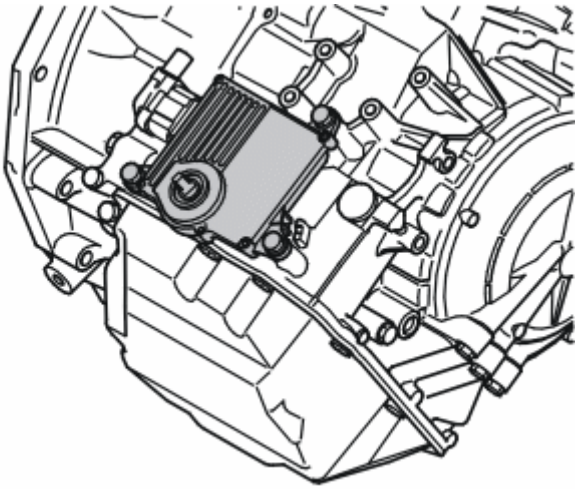

Fig. 360: Identifying Transmission Control Module (TCM)
Courtesy of VOLVO CARS CORPORATION

Substitute Value

- Auxiliary program **Emergency mode 2** in the transmission control module (TCM) has started.

HINT: EMERGENCY MODE IN THE EVENT OF A FAULT

Possible Source

- Contact resistance or one of the solenoids controlling in an incorrect manner.
  - Circuit for the solenoid:SLT, SLC2, SLC3, SLB1
- Mechanical fault in the transmission. Worn components in the transmission causing slippage or too low line pressure.

Fault symptom[s]

- Malfunction indicator light (MIL), on
- General warning lamp lit
- Abnormal slipping gearshifts
- Rough gear shift
- No gear shift

FAULT-TRACING

FAULT-TRACING INFORMATION

CHECKING THE GEAR SYSTEM

Problems that the customer may experience are hard shifts or slipping shifts. The following test-drive contains several different driving situations that may provoke these symptoms if the transmission is damaged.

NOTE: It is important that the transmission oil is above 70 °C before the test-drive starts

Test 1

1. Driving at 100 km/h, 6th gear.
2. Perform a kickdown to 4th gear.
3. Let the transmission automatically shift up to 5th gear.
4. Let up the accelerator pedal and let the transmission shift up to 6th gear.

Test 2

1. Driving at 100 km/h, 6th gear.
2. Slight uphill grade, press accelerator pedal until you obtain shifting 6-5, not kickdown.

Test 3

1. Driving at 80 km/h.
2. Move the gear selector to position M and engage 6th gear.
3. Perform a kickdown and shift 6-5, 5-4, 4-3 at the same time.
4. Then upshift immediately to 6th gear.

Test 4

1. Stationary vehicle, engine running, parking brake applied, brake activated with left foot, gear selector in position R.
2. Press down the accelerator pedal (brake still activated).

NOTE: Let up the accelerator pedal in case of noise or slipping.

Test 5

1. Stationary vehicle, engine running, parking brake applied, brake activated with left foot, gear selector in position D.
2. Press down the accelerator pedal (brake still activated).

NOTE: Let up the accelerator pedal in case of noise or slipping.

If the symptoms hard shifts or slipping shifts arise during the test-drive, the transmission's control system must be replaced.

Other information

- see **CONTROL SYSTEMS**

Is the function OK?

- **YES**

  Refer to **CHECKING SOLENOIDS**

- **NO**

  Refer to **RESETTING ADAPTATION**

CHECKS

CHECKING SOLENOIDS

Fig. 361: Identifying Ignition ON
Courtesy of VOLVO CARS CORPORATION

- Ignition on.
- Activate the solenoids by clicking on the symbol for VCT2000.

  Select a solenoid and read off the current through the solenoid's circuit. The current should shift between approx. 100 and 950 mA.

  Solenoid SLT, SLC2, SLC3, SLB1.

Fig. 362: Identifying VCT2000 Diagnostic Tool Symbol In VIDA
Courtesy of VOLVO CARS CORPORATION

Is the function OK?

- **YES**

Refer to **CHECKING THE OIL QUALITY AND THE OIL LEVEL IN THE TRANSMISSION**

- **NO**

  Refer to **CHECKING THE COMPONENTS AND WIRING**

CHECKING THE COMPONENTS AND WIRING

Fig. 363: Identifying Ignition In Off Position
Courtesy of VOLVO CARS CORPORATION

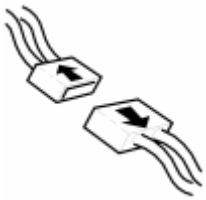

Fig. 364: Identifying Connectors Disconnected
Courtesy of VOLVO CARS CORPORATION

- Ignition off.
- Open the transmission control system.

  Check connector B (22-pin) for the transmission control module (TCM). Check for damaged or pressed in pins. Check for contact resistance and oxidation.

  HINT: Check solenoids SLT, SLC2, SLC3, SLB1 as described in:CHECKING INTERNAL COMPONENTS OF THE TRANSMISSION

  If no defects were found on connectors or cables, replace the transmission.

  Remedy as necessary.

  Other information

  - see **TRANSMISSION** (B6324S, TF-80SC; 2007-2010) or **TRANSMISSION** (B6324S, TF-80SC AWD; 2007-2010)
  - see **COVER CONTROL SYSTEM, REPLACING**
  - see **TRANSMISSION CONTROL UNIT WIRING HARNESS**
  - To access connector B:**TRANSMISSION CONTROL MODULE (TCM)**
  - see **CHECKING WIRING AND TERMINALS**

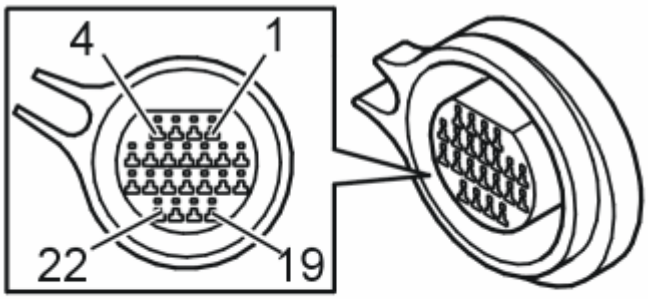

Fig. 365: Identifying Connector B Terminals
Courtesy of VOLVO CARS CORPORATION

- **Continue**

  Refer to **RESETTING ADAPTATION**

CHECKING THE OIL QUALITY AND THE OIL LEVEL IN THE TRANSMISSION

NOTE: Transmission fluid quality and level are extremely important for the function of the transmission. Therefore it is imperative that these are correct. In addition the oil level is dependent on oil temperature.

Fig. 366: Identifying Ignition ON
Courtesy of VOLVO CARS CORPORATION

- Ignition on.
- Read off the oil temperature.

  Check the transmission oil level. If the oil level is low, check the transmission for leakage, then top up with oil.

  Check the quality of the oil.

  Replace the transmission fluid if the fluid smells burnt.

  Other information

- see **OIL LEVEL, CHECKING**
- see **OIL GRADE, CHECKING**
- see **TRANSAXLE OIL**

Select an alternative:

1. No fault detected.

   Refer to **CHECKING THE COMPONENTS AND WIRING**

2. Transmission fluid replaced, low level or poor quality.

   Refer to **RESETTING ADAPTATION**

Fig. 367: Identifying VCT2000 Diagnostic Tool Symbol In VIDA
Courtesy of VOLVO CARS CORPORATION

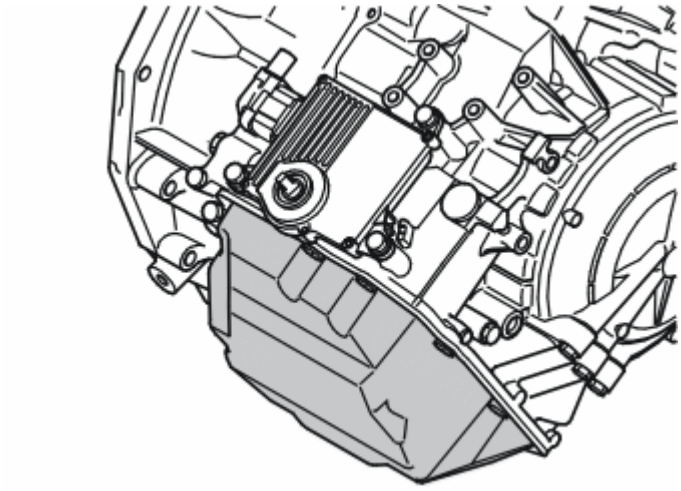

Fig. 368: Identifying Transmission Fluid Pan
Courtesy of VOLVO CARS CORPORATION

RESETTING ADAPTATION

RESETTING THE ADAPTATION AND THE COUNTER FOR "TRANSMISSION OIL, REPLACE"

HINT: The transmission has torque-regulated, adaptive pressure regulation. The pressure regulator enables the transmission to regulate pressure during each shift to prevent hard shifting. Each shift is assessed by the transmission control module (TCM) and is stored in the internal memory. This makes it

possible to compensate for transmission and clutch wear. It is important that the adaptation in the memory is reset so that the transmission works normally after the repair. Because the fluid was changed during the repair, the counter for transmission fluid change must also be reset. If the counter is not reset during draining/replacement, a diagnostic trouble code may be generated under the wrong conditions.

NOTE: This applies only if the transmission or one of the components in the transmission have been replaced.

Fig. 369: Identifying Ignition ON
Courtesy of VOLVO CARS CORPORATION

- Ignition on.

  Click on the VCT2000 symbol to reset the adaptation and counter.

  Fig. 370: Identifying VCT2000 Diagnostic Tool Symbol In VIDA
  Courtesy of VOLVO CARS CORPORATION

- **Continue**

  Refer to **VERIFICATION**

VERIFICATION

VERIFICATION

NOTE: When the transmission's control module has been removed and reinstalled, it is important that the gear position sensor is calibrated. Select Pause and create a bookmark. Then select Vehicle communication using Volvo Scantool (VIDA).

HINT: After carrying out the repair, check that the fault has been remedied.

Fig. 371: Identifying Ignition ON
Courtesy of VOLVO CARS CORPORATION

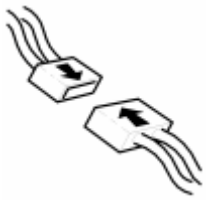

Fig. 372: Identifying Connector(s) Reinstallation
Courtesy of VOLVO CARS CORPORATION

- Ignition off.
- Reinstall the connectors, components etc.
- Test drive the vehicle following:**TEST DRIVE SCHEDULE, DESCRIPTION**

  Check that the transmission does not display any **obvious** function faults.

  NOTE: When test driving, the oil temperature must be above 20 °C.

Is the function OK?

- **YES**

  VERIFIED: Troubleshooting has been completed.

- **NO**

  Refer to **INFORMATION**

INFORMATION

FAULT-TRACING INFORMATION

The fault should have been detected and remedied. As this is not the case fault-tracing has failed.

Exit fault-tracing for this diagnostic trouble code (DTC) or make another attempt.

TRANSMISSION

Transmission - Diagnostic Trouble Codes and Associated Procedures

TCM-P073100: GEAR 1 INCORRECT RATIO. GENERAL FAILURE INFORMATION. NO SUB TYPE INFORMATION (B6324S5, TF-80SC; B6324S5, TF-80SC AWD; 2011)

DIAGNOSTIC TROUBLE CODE (DTC) INFORMATION TCM-P073100

see **DIAGNOSTIC TROUBLE CODE (DTC) INFORMATION TCM-P073100**

FAULT-TRACING

see **FAULT-TRACING**

TCM-P073200: GEAR 2 INCORRECT RATIO. GENERAL FAILURE INFORMATION. NO SUB TYPE INFORMATION (B6324S, TF-80SC; B6324S, TF-80SC AWD; 2007-2010)

DIAGNOSTIC TROUBLE CODE (DTC) INFORMATION TCM-P073200

Condition

The transmission control module (TCM) receives a signal about input and output speed from the transmission's two speed sensors. There is a determined ratio for each gear and the signals help calculate the transmission control module (TCM) gear ratio.

The diagnostic trouble code (DTC) is stored if the control module detects that:

- Gear ratio differs by more than 10%.

The control module's test for the diagnostic trouble code (DTC) starts in the event of:

- Fluid temperature over +20 °C (68 °F).
- 2nd gear is engaged, engine speed is greater than 500 rpm, accelerator pedal position is greater than 10% and the gear ratio is 2.370 +/- 20%.

NOTE: The control module can only detect the fault once the test has been started and the diagnostic trouble code (DTC) is stored when the conditions are met.

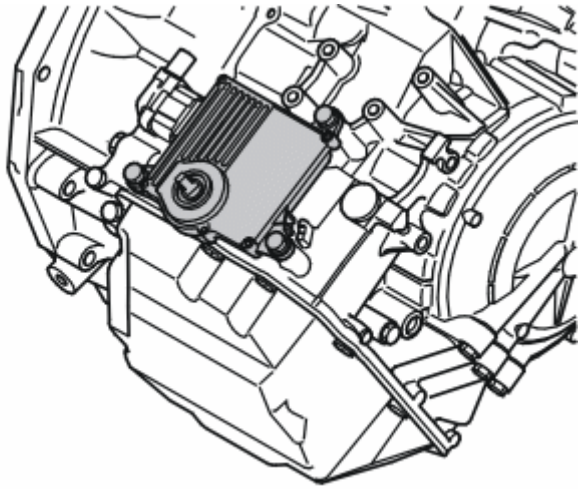

Fig. 1: Identifying Transmission Control Module (TCM)
Courtesy of VOLVO CARS CORPORATION

Substitute Value

- Auxiliary program **Emergency mode 2** in the transmission control module (TCM) has started.

HINT: EMERGENCY MODE IN THE EVENT OF A FAULT

Possible Source

- Contact resistance or one of the solenoids controlling in an incorrect manner.
  - Circuit for the solenoid:SLT, SLC2, SLC3
- Mechanical fault in the transmission. Worn components in the transmission causing slippage or too low line pressure.

Fault symptom[s]

- Malfunction indicator light (MIL), on
- General warning lamp lit
- Abnormal slipping gearshifts
- Rough gear shift
- No gear shift

FAULT-TRACING

FAULT-TRACING INFORMATION

CHECKING THE GEAR SYSTEM

Problems that the customer may experience are hard shifts or slipping shifts. The following test-drive contains several different driving situations that may provoke these symptoms if the transmission is damaged.

NOTE: It is important that the transmission oil is above 70 °C before the test-drive starts

Test 1

1. Driving at 100 km/h, 6th gear.
2. Perform a kickdown to 4th gear.
3. Let the transmission automatically shift up to 5th gear.
4. Let up the accelerator pedal and let the transmission shift up to 6th gear.

Test 2

1. Driving at 100 km/h, 6th gear.
2. Slight uphill grade, press accelerator pedal until you obtain shifting 6-5, not kickdown.

Test 3

1. Driving at 80 km/h.
2. Move the gear selector to position M and engage 6th gear.
3. Perform a kickdown and shift 6-5, 5-4, 4-3 at the same time.
4. Then upshift immediately to 6th gear.

Test 4

1. Stationary vehicle, engine running, parking brake applied, brake activated with left foot, gear selector in position R.
2. Press down the accelerator pedal (brake still activated).

NOTE: Let up the accelerator pedal in case of noise or slipping.

Test 5

1. Stationary vehicle, engine running, parking brake applied, brake activated with left foot, gear selector in position D.
2. Press down the accelerator pedal (brake still activated).

NOTE: Let up the accelerator pedal in case of noise or slipping.

If the symptoms hard shifts or slipping shifts arise during the test-drive, the transmission's control system must be replaced.

Other information

- see **CONTROL SYSTEMS**

Is the function OK?

- **YES**

  Refer to **CHECKING SOLENOIDS**

- **NO**

  Refer to **RESETTING ADAPTATION**

CHECKING SOLENOIDS

Fig. 2: Identifying Ignition ON
Courtesy of VOLVO CARS CORPORATION

- Ignition on.
- Activate the solenoids by clicking on the symbol for VCT2000.

  Select a solenoid and read off the current through the solenoid's circuit. The current should shift between approx. 100 and 950 mA.

  Solenoid SLT, SLC2, SLC3.

Fig. 3: Identifying VCT2000 Diagnostic Tool Symbol In VIDA
Courtesy of VOLVO CARS CORPORATION

Is the function OK?

- **YES**

  Refer to **CHECKING THE OIL QUALITY AND THE OIL LEVEL IN THE TRANSMISSION**

- **NO**

  Refer to **CHECKING THE COMPONENTS AND WIRING**

CHECKING THE COMPONENTS AND WIRING

Fig. 4: Identifying Ignition OFF
Courtesy of VOLVO CARS CORPORATION

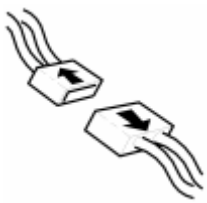

Fig. 5: Identifying Connectors Disconnected
Courtesy of VOLVO CARS CORPORATION

- Ignition off.
- Open the transmission control system.

  Check connector B (22-pin) for the transmission control module (TCM). Check for damaged or pressed in pins. Check for contact resistance and oxidation.

  HINT: Check solenoids SLT, SLC2, SLC3 as described in:CHECKING INTERNAL COMPONENTS OF THE TRANSMISSION

  If no defects were found on connectors or cables, replace the transmission.

  Remedy as necessary.

  Other information

  - see **TRANSMISSION** or **TRANSMISSION** (AWD)
  - see **COVER CONTROL SYSTEM, REPLACING**
  - see **TRANSMISSION CONTROL UNIT WIRING HARNESS**
  - To access connector B: **TRANSMISSION CONTROL MODULE (TCM)**
  - see **CHECKING WIRING AND TERMINALS**

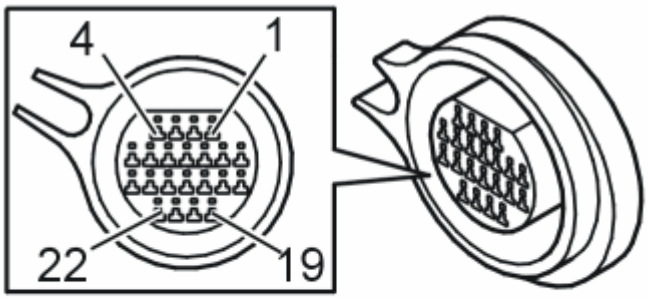

Fig. 6: Identifying 22--Pin Connector
Courtesy of VOLVO CARS CORPORATION

- **Continue**

  Refer to **RESETTING ADAPTATION**

CHECKING THE OIL QUALITY AND THE OIL LEVEL IN THE TRANSMISSION

NOTE: **Transmission fluid quality and level are extremely important for the function of the transmission. Therefore it is imperative that these are correct. In addition the oil level is dependent on oil temperature.**

Fig. 7: Identifying Ignition ON
Courtesy of VOLVO CARS CORPORATION

- Ignition on.
- Read off the oil temperature.

  Check the transmission oil level. If the oil level is low, check the transmission for leakage, then top up with oil.

  Check the quality of the oil.

  Replace the transmission fluid if the fluid smells burnt.

  Other information

- see **OIL LEVEL, CHECKING**
- see **OIL GRADE, CHECKING**
- see **TRANSAXLE OIL**

Select an alternative below

1. No fault detected.

   Refer to **CHECKING THE COMPONENTS AND WIRING**

2. Transmission fluid replaced, low level or poor quality.

   Refer to **RESETTING ADAPTATION**

Fig. 8: Identifying VCT2000 Diagnostic Tool Symbol In VIDA
Courtesy of VOLVO CARS CORPORATION

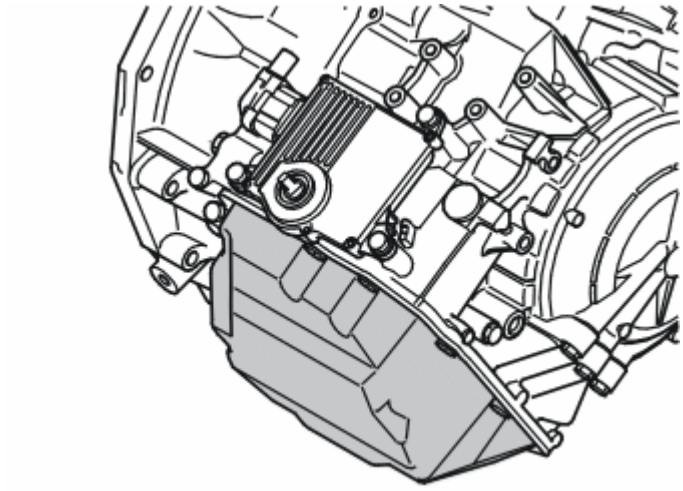

Fig. 9: Identifying Transmission Fluid Pan
Courtesy of VOLVO CARS CORPORATION

VERIFICATION

VERIFICATION

NOTE: **When the transmission's control module has been removed and reinstalled, it is important that the gear position sensor is calibrated. Select Pause and create a**

bookmark. Then select Vehicle communication.

HINT: After carrying out the repair, check that the fault has been remedied.

Fig. 10: Identifying Ignition ON
Courtesy of VOLVO CARS CORPORATION

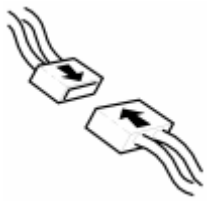

Fig. 11: Identifying Connector(s) Reinstallation
Courtesy of VOLVO CARS CORPORATION

- Ignition off.
- Reinstall the connectors, components etc.
- Test drive the vehicle following:**TEST DRIVE SCHEDULE, DESCRIPTION**

  Check that the transmission does not display any **obvious** function faults.

  NOTE: When test driving, the oil temperature must be above 20 °C.

Is the function OK?

- **YES**

  VERIFIED: Troubleshooting has been completed.

- **NO**

  Refer to **INFORMATION**

INFORMATION

FAULT-TRACING INFORMATION

The fault should have been detected and remedied. As this is not the case fault-tracing has failed.

Exit fault-tracing for this diagnostic trouble code (DTC) or make another attempt.

RESETTING ADAPTATION

RESETTING THE ADAPTATION AND THE COUNTER FOR "TRANSMISSION OIL, REPLACE"

HINT: The transmission has torque-regulated, adaptive pressure regulation. The pressure regulator enables the transmission to regulate pressure during each shift to prevent hard shifting. Each shift is assessed by the transmission control module (TCM) and is stored in the internal memory. This makes it possible to compensate for transmission and clutch wear. It is important that the adaptation in the memory is reset so that the transmission works normally after the repair. Because the fluid was changed during the repair, the counter for transmission fluid change must also be reset. If the counter is not reset during draining/replacement, a diagnostic trouble code may be generated under the wrong conditions.

NOTE: This applies only if the transmission or one of the components in the transmission have been replaced.

Fig. 12: Identifying Ignition ON
Courtesy of VOLVO CARS CORPORATION

- Ignition on.

  Click on the VCT2000 symbol to reset the adaptation and counter.

  Fig. 13: Identifying VCT2000 Diagnostic Tool Symbol In VIDA
  Courtesy of VOLVO CARS CORPORATION

- **Continue**

  Refer to **VERIFICATION**

TCM-P073200: GEAR 2 INCORRECT RATIO. GENERAL FAILURE INFORMATION. NO SUB TYPE INFORMATION (B6324S5, TF-80SC; B6324S5, TF-80SC AWD; 2011)

DIAGNOSTIC TROUBLE CODE (DTC) INFORMATION TCM-P073200

see **DIAGNOSTIC TROUBLE CODE (DTC) INFORMATION TCM-P073200**

FAULT-TRACING

see **FAULT-TRACING**

TCM-P073300: GEAR 3 INCORRECT RATIO. GENERAL FAILURE INFORMATION. NO SUB TYPE INFORMATION (B6324S, TF-80SC; B6324S, TF-80SC AWD; 2007-2010)

DIAGNOSTIC TROUBLE CODE (DTC) INFORMATION TCM-P073300

Condition

The transmission control module (TCM) receives a signal about input and output speed from the transmission's two speed sensors. There is a determined ratio for each gear and the signals help calculate the transmission control module (TCM) gear ratio.

The diagnostic trouble code (DTC) is stored if the control module detects that:

- Gear ratio differs by more than 10%.

The control module's test for the diagnostic trouble code (DTC) starts in the event of:

- Fluid temperature over +20 °C (68 °F).
- 3rd gear is engaged, engine speed is greater than 500 rpm, accelerator pedal position is greater than 10% and the gear ratio is 1.556 +/- 20%.

NOTE: The control module can only detect the fault once the test has been started and the diagnostic trouble code (DTC) is stored when the conditions are met.

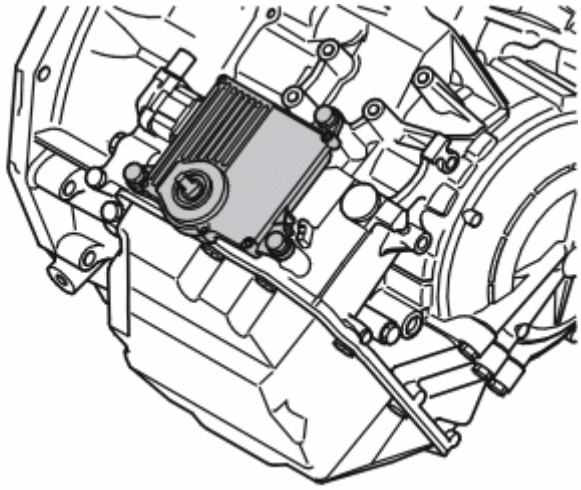

Fig. 14: Identifying Transmission Control Module (TCM)

Courtesy of VOLVO CARS CORPORATION

Substitute Value

- Auxiliary program **Emergency mode 2** in the transmission control module (TCM) has started.

HINT: EMERGENCY MODE IN THE EVENT OF A FAULT

Possible Source

- Contact resistance or one of the solenoids controlling in an incorrect manner.
    - Circuit for the solenoid:SLT, SLC2, SLB1
- Mechanical fault in the transmission. Worn components in the transmission causing slippage or too low line pressure.

Fault symptom[s]

- Malfunction indicator light (MIL), on
- General warning lamp lit
- Abnormal slipping gearshifts
- Rough gear shift
- No gear shift

FAULT-TRACING

FAULT-TRACING INFORMATION

CHECKING THE GEAR SYSTEM

Problems that the customer may experience are hard shifts or slipping shifts. The following test-drive contains several different driving situations that may provoke these symptoms if the transmission is damaged.

NOTE: It is important that the transmission oil is above 70 °C before the test-drive starts

Test 1

1. Driving at 100 km/h, 6th gear.
2. Perform a kickdown to 4th gear.
3. Let the transmission automatically shift up to 5th gear.
4. Let up the accelerator pedal and let the transmission shift up to 6th gear.

Test 2

1. Driving at 100 km/h, 6th gear.

2. Slight uphill grade, press accelerator pedal until you obtain shifting 6-5, not kickdown.

Test 3

1. Driving at 80 km/h.
2. Move the gear selector to position M and engage 6th gear.
3. Perform a kickdown and shift 6-5, 5-4, 4-3 at the same time.
4. Then upshift immediately to 6th gear.

Test 4

1. Stationary vehicle, engine running, parking brake applied, brake activated with left foot, gear selector in position R.
2. Press down the accelerator pedal (brake still activated).

NOTE: Let up the accelerator pedal in case of noise or slipping.

Test 5

1. Stationary vehicle, engine running, parking brake applied, brake activated with left foot, gear selector in position D.
2. Press down the accelerator pedal (brake still activated).

NOTE: Let up the accelerator pedal in case of noise or slipping.

If the symptoms hard shifts or slipping shifts arise during the test-drive, the transmission's control system must be replaced.

Other information

- see **CONTROL SYSTEMS**

Is the function OK?

- **YES**

  Refer to **CHECKING SOLENOIDS**

- **NO**

  Refer to **RESETTING ADAPTATION**

CHECKING SOLENOIDS

Fig. 15: Identifying Ignition ON
Courtesy of VOLVO CARS CORPORATION

- Ignition on.
- Activate the solenoids by clicking on the symbol for VCT2000.

  Select a solenoid and read off the current through the solenoid's circuit. The current should shift between approx. 100 and 950 mA.

  Solenoid SLT, SLC2, SLB1.

Fig. 16: Identifying VCT2000 Diagnostic Tool Symbol In VIDA
Courtesy of VOLVO CARS CORPORATION

Is the function OK?

- **YES**

  Refer to **CHECKING THE OIL QUALITY AND THE OIL LEVEL IN THE TRANSMISSION**

- **NO**

  Refer to **CHECKING THE COMPONENTS AND WIRING**

CHECKING THE COMPONENTS AND WIRING

Fig. 17: Identifying Ignition OFF
Courtesy of VOLVO CARS CORPORATION

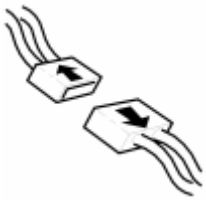

Fig. 18: Identifying Connectors Disconnected
Courtesy of VOLVO CARS CORPORATION

- Ignition off.
- Open the transmission control system.

  Check connector B (22-pin) for the transmission control module (TCM). Check for damaged or pressed in pins. Check for contact resistance and oxidation.

  HINT: Check solenoids SLT, SLC2, SLB1 as described in:CHECKING INTERNAL COMPONENTS OF THE TRANSMISSION

  If no defects were found on connectors or cables, replace the transmission.

  Remedy as necessary.

  Other information

  - see **TRANSMISSION** or **TRANSMISSION** (AWD)
  - see **COVER CONTROL SYSTEM, REPLACING**
  - see **TRANSMISSION CONTROL UNIT WIRING HARNESS**
  - To access connector B: **TRANSMISSION CONTROL MODULE (TCM)**
  - see **CHECKING WIRING AND TERMINALS**

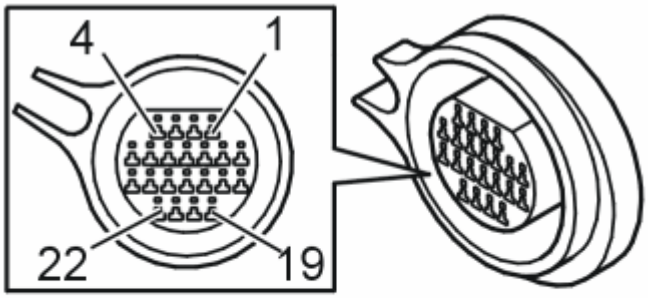

Fig. 19: Identifying 22--Pin Connector
Courtesy of VOLVO CARS CORPORATION

- **Continue**

  Refer to **RESETTING ADAPTATION**

CHECKING THE OIL QUALITY AND THE OIL LEVEL IN THE TRANSMISSION

NOTE: Transmission fluid quality and level are extremely important for the function of the transmission. Therefore it is imperative that these are correct. In addition the oil level is dependent on oil temperature.

Fig. 20: Identifying Ignition ON
Courtesy of VOLVO CARS CORPORATION

- Ignition on.
- Read off the oil temperature.

  Check the transmission oil level. If the oil level is low, check the transmission for leakage, then top up with oil.

  Check the quality of the oil.

  Replace the transmission fluid if the fluid smells burnt.

  Other information

  - see **OIL LEVEL, CHECKING**
  - see **OIL GRADE, CHECKING**
  - see **TRANSAXLE OIL**

  Select an alternative below

  1. No fault detected.

     Refer to **CHECKING THE COMPONENTS AND WIRING**

  2. Transmission fluid replaced, low level or poor quality.

     Refer to **RESETTING ADAPTATION**

Fig. 21: Identifying VCT2000 Diagnostic Tool Symbol In VIDA
Courtesy of VOLVO CARS CORPORATION

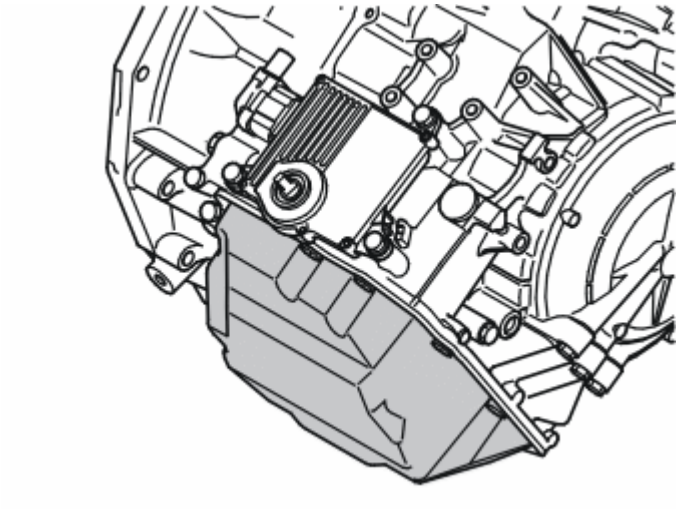

Fig. 22: Identifying Transmission Fluid Pan
Courtesy of VOLVO CARS CORPORATION

VERIFICATION

VERIFICATION

NOTE: **When the transmission's control module has been removed and reinstalled, it is important that the gear position sensor is calibrated. Select Pause and create a bookmark. Then select Vehicle communication.**

HINT: After carrying out the repair, check that the fault has been remedied.

Fig. 23: Identifying Ignition ON
Courtesy of VOLVO CARS CORPORATION

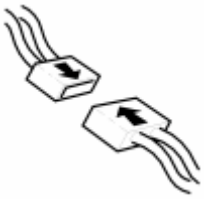

Fig. 24: Identifying Connector(s) Reinstallation
Courtesy of VOLVO CARS CORPORATION

- Ignition off.
- Reinstall the connectors, components etc.
- Test drive the vehicle following:**TEST DRIVE SCHEDULE, DESCRIPTION**

  Check that the transmission does not display any **obvious** function faults.

  NOTE: When test driving, the oil temperature must be above 20 °C.

Is the function OK?

- **YES**

  VERIFIED: Troubleshooting has been completed.

- **NO**

  Refer to **INFORMATION**

INFORMATION

FAULT-TRACING INFORMATION

The fault should have been detected and remedied. As this is not the case fault-tracing has failed.

Exit fault-tracing for this diagnostic trouble code (DTC) or make another attempt.

RESETTING ADAPTATION

RESETTING THE ADAPTATION AND THE COUNTER FOR "TRANSMISSION OIL, REPLACE"

HINT: The transmission has torque-regulated, adaptive pressure regulation. The pressure regulator enables the transmission to regulate pressure during each shift to prevent hard shifting. Each shift is assessed by the transmission control module (TCM) and is stored in the internal memory. This makes it possible to compensate for transmission and clutch wear. It is important that the adaptation in the memory is reset so that the transmission works normally after the repair. Because the fluid was changed during the repair, the counter for transmission fluid change must also be reset. If the counter is not reset during draining/replacement, a diagnostic trouble code may be generated under the wrong conditions.

NOTE: **This applies only if the transmission or one of the components in the transmission have been replaced.**

Fig. 25: Identifying Ignition ON
Courtesy of VOLVO CARS CORPORATION

- Ignition on.

  Click on the VCT2000 symbol to reset the adaptation and counter.

  Fig. 26: Identifying VCT2000 Diagnostic Tool Symbol In VIDA
  Courtesy of VOLVO CARS CORPORATION

- **Continue**

  Refer to **VERIFICATION**

TCM-P073300: GEAR 3 INCORRECT RATIO. GENERAL FAILURE INFORMATION. NO SUB TYPE INFORMATION (B6324S5, TF-80SC; B6324S5, TF-80SC AWD; 2011)

DIAGNOSTIC TROUBLE CODE (DTC) INFORMATION TCM-P073300

see **DIAGNOSTIC TROUBLE CODE (DTC) INFORMATION TCM-P073300**

FAULT-TRACING

see **FAULT-TRACING**

TCM-P073400: GEAR 4 INCORRECT RATIO. GENERAL FAILURE INFORMATION. NO SUB TYPE INFORMATION (B6324S, TF-80SC; B6324S, TF-80SC AWD; 2007-2010)

DIAGNOSTIC TROUBLE CODE (DTC) INFORMATION TCM-P073400

Condition

The transmission control module (TCM) receives a signal about input and output speed from the transmission's two speed sensors. There is a determined ratio for each gear and the signals help calculate the transmission control module (TCM) gear ratio.

The diagnostic trouble code (DTC) is stored if the control module detects that:

- Gear ratio differs by more than 10%.

The control module's test for the diagnostic trouble code (DTC) starts in the event of:

- Fluid temperature over +20 °C (68 °F).
- 4th gear is engaged, engine speed is greater than 500 rpm, accelerator pedal position is greater than 10% and the gear ratio is 1.155 +/- 20%.

NOTE: The control module can only detect the fault once the test has been started and the diagnostic trouble code (DTC) is stored when the conditions are met.

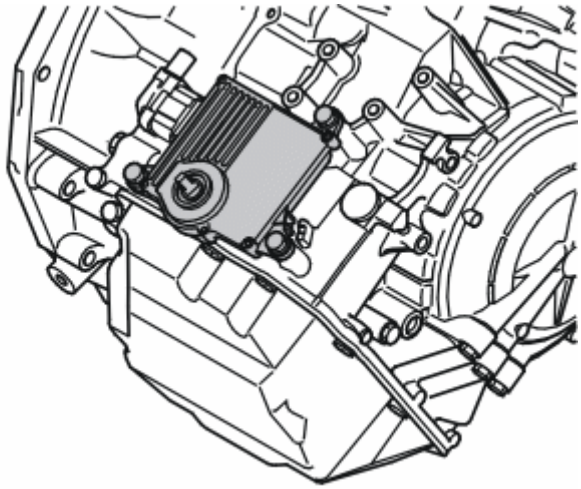

Fig. 27: Identifying Transmission Control Module (TCM)
Courtesy of VOLVO CARS CORPORATION

Substitute Value

- Auxiliary program **Emergency mode 2** in the transmission control module (TCM) has started.

HINT: EMERGENCY MODE IN THE EVENT OF A FAULT

Possible Source

- Contact resistance or one of the solenoids controlling in an incorrect manner.
  - Circuit for the solenoid:SLT, SLC2, SLC3, SLB1

- Mechanical fault in the transmission. Worn components in the transmission causing slippage or too low line pressure.

Fault symptom[s]

- Malfunction indicator light (MIL), on
- General warning lamp lit
- Abnormal slipping gearshifts
- Rough gear shift
- No gear shift

FAULT-TRACING

FAULT-TRACING INFORMATION

CHECKING THE GEAR SYSTEM

Problems that the customer may experience are hard shifts or slipping shifts. The following test-drive contains several different driving situations that may provoke these symptoms if the transmission is damaged.

NOTE: It is important that the transmission oil is above 70 °C before the test-drive starts

Test 1

1. Driving at 100 km/h, 6th gear.
2. Perform a kickdown to 4th gear.
3. Let the transmission automatically shift up to 5th gear.
4. Let up the accelerator pedal and let the transmission shift up to 6th gear.

Test 2

1. Driving at 100 km/h, 6th gear.
2. Slight uphill grade, press accelerator pedal until you obtain shifting 6-5, not kickdown.

Test 3

1. Driving at 80 km/h.
2. Move the gear selector to position M and engage 6th gear.
3. Perform a kickdown and shift 6-5, 5-4, 4-3 at the same time.
4. Then upshift immediately to 6th gear.

Test 4

1. Stationary vehicle, engine running, parking brake applied, brake activated with left foot, gear selector in position R.
2. Press down the accelerator pedal (brake still activated).

NOTE: Let up the accelerator pedal in case of noise or slipping.

Test 5

1. Stationary vehicle, engine running, parking brake applied, brake activated with left foot, gear selector in position D.
2. Press down the accelerator pedal (brake still activated).

NOTE: Let up the accelerator pedal in case of noise or slipping.

If the symptoms hard shifts or slipping shifts arise during the test-drive, the transmission's control system must be replaced.

Other information

- see **CONTROL SYSTEMS**

Is the function OK?

- **YES**

  Refer to **CHECKING SOLENOIDS**

- **NO**

  Refer to **RESETTING ADAPTATION**

CHECKING SOLENOIDS

Fig. 28: Identifying Ignition ON
Courtesy of VOLVO CARS CORPORATION

- Ignition on.
- Activate the solenoids by clicking on the symbol for VCT2000.

  Select a solenoid and read off the current through the solenoid's circuit. The current should shift between

approx. 100 and 950 mA.

Solenoid SLT, SLC3, SLB1.

Fig. 29: Identifying VCT2000 Diagnostic Tool Symbol In VIDA
Courtesy of VOLVO CARS CORPORATION

Is the function OK?

- **YES**

  Refer to **CHECKING THE OIL QUALITY AND THE OIL LEVEL IN THE TRANSMISSION**

- **NO**

  Refer to **CHECKING THE COMPONENTS AND WIRING**

CHECKING THE COMPONENTS AND WIRING

Fig. 30: Identifying Ignition OFF
Courtesy of VOLVO CARS CORPORATION

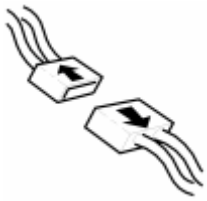

Fig. 31: Identifying Connectors Disconnected
Courtesy of VOLVO CARS CORPORATION

- Ignition off.
- Open the transmission control system.

  Check connector B (22-pin) for the transmission control module (TCM). Check for damaged or pressed in pins. Check for contact resistance and oxidation.

HINT: Check solenoids SLT, SLC3, SLB1 as described in:CHECKING INTERNAL COMPONENTS OF THE TRANSMISSION

If no defects were found on connectors or cables, replace the transmission.

Remedy as necessary.

Other information

- see **TRANSMISSION** (AWD) or **TRANSMISSION**
- see **COVER CONTROL SYSTEM, REPLACING**
- see **TRANSMISSION CONTROL UNIT WIRING HARNESS**
- To access connector B: **TRANSMISSION CONTROL MODULE (TCM)**
- see **CHECKING WIRING AND TERMINALS**

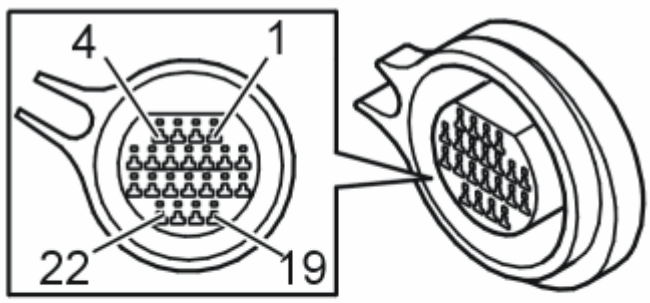

Fig. 32: Identifying 22--Pin Connector
Courtesy of VOLVO CARS CORPORATION

- **Continue**

Refer to **RESETTING ADAPTATION**

CHECKING THE OIL QUALITY AND THE OIL LEVEL IN THE TRANSMISSION

NOTE: **Transmission fluid quality and level are extremely important for the function of the transmission. Therefore it is imperative that these are correct. In addition the oil level is dependent on oil temperature.**

Fig. 33: Identifying Ignition ON
Courtesy of VOLVO CARS CORPORATION

- Ignition on.
- Read off the oil temperature.

  Check the transmission oil level. If the oil level is low, check the transmission for leakage, then top up with oil.

  Check the quality of the oil.

  Replace the transmission fluid if the fluid smells burnt.

  Other information

  - see **OIL LEVEL, CHECKING**
  - see **OIL GRADE, CHECKING**
  - see **TRANSAXLE OIL**

  Select an alternative below

  1. No fault detected.

     Refer to **CHECKING THE COMPONENTS AND WIRING**

  2. Transmission fluid replaced, low level or poor quality.

     Refer to **RESETTING ADAPTATION**

Fig. 34: Identifying VCT2000 Diagnostic Tool Symbol In VIDA
Courtesy of VOLVO CARS CORPORATION

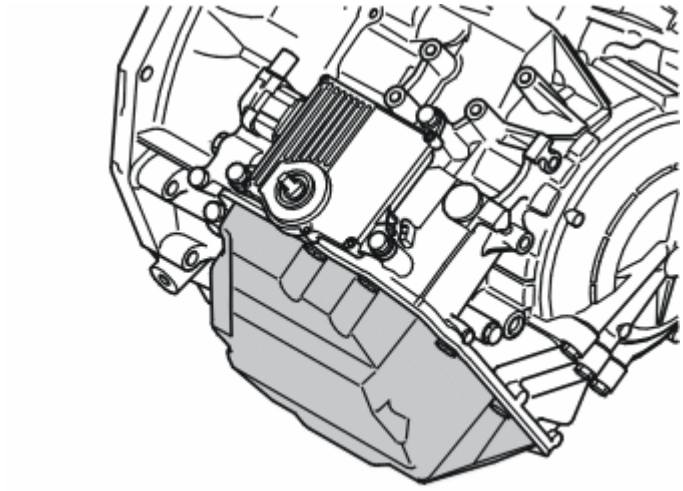

Fig. 35: Identifying Transmission Fluid Pan
Courtesy of VOLVO CARS CORPORATION

VERIFICATION

VERIFICATION

NOTE: **When the transmission's control module has been removed and reinstalled, it is important that the gear position sensor is calibrated. Select Pause and create a bookmark. Then select Vehicle communication.**

HINT: After carrying out the repair, check that the fault has been remedied.

Fig. 36: Identifying Ignition ON
Courtesy of VOLVO CARS CORPORATION

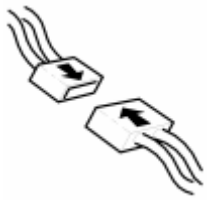

Fig. 37: Identifying Connector(s) Reinstallation
Courtesy of VOLVO CARS CORPORATION

- Ignition off.
- Reinstall the connectors, components etc.

- Test drive the vehicle following:**TEST DRIVE SCHEDULE, DESCRIPTION**

  Check that the transmission does not display any **obvious** function faults.

  NOTE: When test driving, the oil temperature must be above 20 °C.

Is the function OK?

- **YES**

  VERIFIED: Troubleshooting has been completed.

- **NO**

  Refer to **INFORMATION**

INFORMATION

FAULT-TRACING INFORMATION

The fault should have been detected and remedied. As this is not the case fault-tracing has failed.

Exit fault-tracing for this diagnostic trouble code (DTC) or make another attempt.

RESETTING ADAPTATION

RESETTING THE ADAPTATION AND THE COUNTER FOR "TRANSMISSION OIL, REPLACE"

HINT: The transmission has torque-regulated, adaptive pressure regulation. The pressure regulator enables the transmission to regulate pressure during each shift to prevent hard shifting. Each shift is assessed by the transmission control module (TCM) and is stored in the internal memory. This makes it possible to compensate for transmission and clutch wear. It is important that the adaptation in the memory is reset so that the transmission works normally after the repair. Because the fluid was changed during the repair, the counter for transmission fluid change must also be reset. If the counter is not reset during draining/replacement, a diagnostic trouble code may be generated under the wrong conditions.

NOTE: This applies only if the transmission or one of the components in the transmission have been replaced.

Fig. 38: Identifying Ignition ON
Courtesy of VOLVO CARS CORPORATION

- Ignition on.

  Click on the VCT2000 symbol to reset the adaptation and counter.

Fig. 39: Identifying VCT2000 Diagnostic Tool Symbol In VIDA
Courtesy of VOLVO CARS CORPORATION

- **Continue**

  Refer to **VERIFICATION**

TCM-P073400: GEAR 4 INCORRECT RATIO. GENERAL FAILURE INFORMATION. NO SUB TYPE INFORMATION (B6324S5, TF-80SC; B6324S5, TF-80SC AWD; 2011)

DIAGNOSTIC TROUBLE CODE (DTC) INFORMATION TCM-P073400

see **DIAGNOSTIC TROUBLE CODE (DTC) INFORMATION TCM-P073400**

FAULT-TRACING

see **FAULT-TRACING**

TCM-P073500: GEAR 5 INCORRECT RATIO. GENERAL FAILURE INFORMATION. NO SUB TYPE INFORMATION (B6324S, TF-80SC; B6324S, TF-80SC AWD; 2007-2010)

DIAGNOSTIC TROUBLE CODE (DTC) INFORMATION TCM-P073500

Condition

The transmission control module (TCM) receives a signal about input and output speed from the transmission's two speed sensors. There is a determined ratio for each gear and the signals help calculate the transmission control module (TCM) gear ratio.

The diagnostic trouble code (DTC) is stored if the control module detects that:

- Gear ratio differs by more than 10%.

The control module's test for the diagnostic trouble code (DTC) starts in the event of:

- Fluid temperature over +20 °C (68 °F).
- 5th gear is engaged, engine speed is greater than 500 rpm, accelerator pedal position is greater than 10% and the gear ratio is 0.859 +/- 20%.

NOTE: The control module can only detect the fault once the test has been started and the diagnostic trouble code (DTC) is stored when the conditions are met.

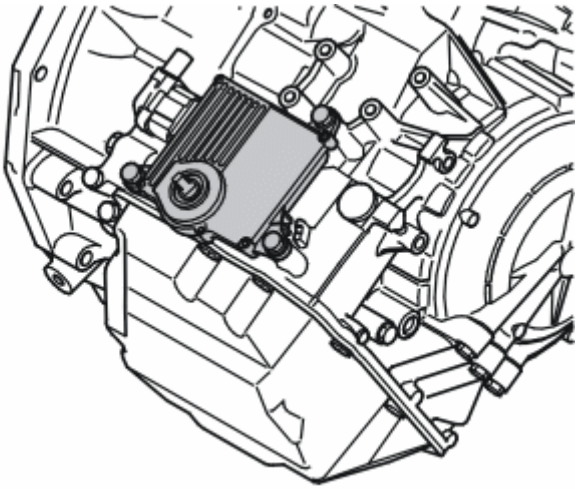

Fig. 40: Identifying Transmission Control Module (TCM)
Courtesy of VOLVO CARS CORPORATION

Substitute Value

- Auxiliary program **Emergency mode 2** in the transmission control module (TCM) has started.

HINT: EMERGENCY MODE IN THE EVENT OF A FAULT

Possible Source

- Contact resistance or one of the solenoids controlling in an incorrect manner.
  - Circuit for the solenoid:SLT, SLC1, SLB1
- Mechanical fault in the transmission. Worn components in the transmission causing slippage or too low line pressure.

Fault symptom[s]

- Malfunction indicator light (MIL), on
- General warning lamp lit
- Abnormal slipping gearshifts
- Rough gear shift
- No gear shift

FAULT-TRACING

FAULT-TRACING INFORMATION

CHECKING THE GEAR SYSTEM

Problems that the customer may experience are hard shifts or slipping shifts. The following test-drive contains several different driving situations that may provoke these symptoms if the transmission is damaged.

NOTE: It is important that the transmission oil is above 70 °C before the test-drive starts

Test 1

1. Driving at 100 km/h, 6th gear.
2. Perform a kickdown to 4th gear.
3. Let the transmission automatically shift up to 5th gear.
4. Let up the accelerator pedal and let the transmission shift up to 6th gear.

Test 2

1. Driving at 100 km/h, 6th gear.
2. Slight uphill grade, press accelerator pedal until you obtain shifting 6-5, not kickdown.

Test 3

1. Driving at 80 km/h.
2. Move the gear selector to position M and engage 6th gear.
3. Perform a kickdown and shift 6-5, 5-4, 4-3 at the same time.
4. Then upshift immediately to 6th gear.

Test 4

1. Stationary vehicle, engine running, parking brake applied, brake activated with left foot, gear selector in position R.
2. Press down the accelerator pedal (brake still activated).

NOTE: Let up the accelerator pedal in case of noise or slipping.

Test 5

1. Stationary vehicle, engine running, parking brake applied, brake activated with left foot, gear selector in position D.
2. Press down the accelerator pedal (brake still activated).

NOTE: Let up the accelerator pedal in case of noise or slipping.

If the symptoms hard shifts or slipping shifts arise during the test-drive, the transmission's control system must be replaced.

Other information

- see **CONTROL SYSTEMS**

Is the function OK?

- **YES**

  Refer to **CHECKING SOLENOIDS**

- **NO**

  Refer to **RESETTING ADAPTATION**

CHECKING SOLENOIDS

Fig. 41: Identifying Ignition ON
Courtesy of VOLVO CARS CORPORATION

- Ignition on.
- Activate the solenoids by clicking on the symbol for VCT2000.

  Select a solenoid and read off the current through the solenoid's circuit. The current should shift between approx. 100 and 950 mA.

  Solenoid SLT, SLC1, SLB1.

Fig. 42: Identifying VCT2000 Diagnostic Tool Symbol In VIDA
Courtesy of VOLVO CARS CORPORATION

Is the function OK?

- **YES**

  Refer to **CHECKING THE OIL QUALITY AND THE OIL LEVEL IN THE TRANSMISSION**

- **NO**

  Refer to **CHECKING THE COMPONENTS AND WIRING**

CHECKING THE COMPONENTS AND WIRING

Fig. 43: Identifying Ignition OFF
Courtesy of VOLVO CARS CORPORATION

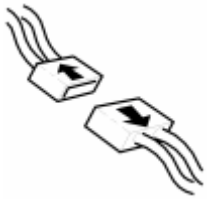

Fig. 44: Identifying Connectors Disconnected
Courtesy of VOLVO CARS CORPORATION

- Ignition off.
- Open the transmission control system.

  Check connector B (22-pin) for the transmission control module (TCM). Check for damaged or pressed in pins. Check for contact resistance and oxidation.

  HINT: Check solenoids SLT, SLC1, SLB1 as described in:CHECKING INTERNAL COMPONENTS OF THE TRANSMISSION

  If no defects were found on connectors or cables, replace the transmission.

  Remedy as necessary.

  Other information

  - see **TRANSMISSION** (AWD) or **TRANSMISSION**
  - see **COVER CONTROL SYSTEM, REPLACING**

- see **TRANSMISSION CONTROL UNIT WIRING HARNESS**
- To access connector B: **TRANSMISSION CONTROL MODULE (TCM)**
- see **CHECKING WIRING AND TERMINALS**

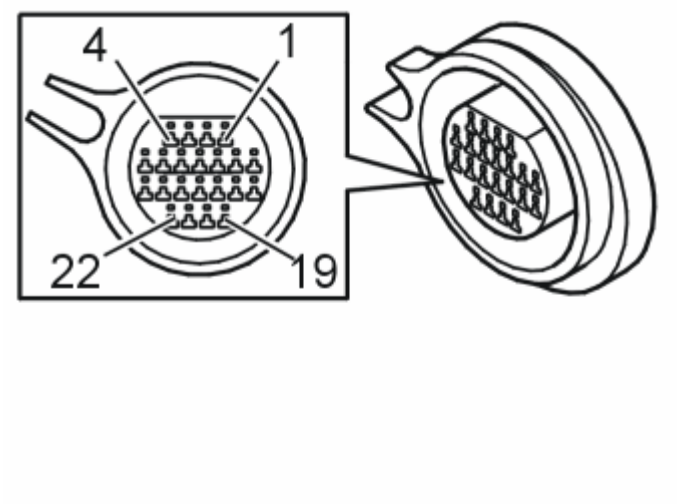

Fig. 45: Identifying 22--Pin Connector
Courtesy of VOLVO CARS CORPORATION

- **Continue**

  Refer to **RESETTING ADAPTATION**

CHECKING THE OIL QUALITY AND THE OIL LEVEL IN THE TRANSMISSION

NOTE: Transmission fluid quality and level are extremely important for the function of the transmission. Therefore it is imperative that these are correct. In addition the oil level is dependent on oil temperature.

Fig. 46: Identifying Ignition ON
Courtesy of VOLVO CARS CORPORATION

- Ignition on.
- Read off the oil temperature.

  Check the transmission oil level. If the oil level is low, check the transmission for leakage, then top up with oil.

Check the quality of the oil.

Replace the transmission fluid if the fluid smells burnt.

Other information

- see **OIL LEVEL, CHECKING**
- see **OIL GRADE, CHECKING**
- see **TRANSAXLE OIL**

Select an alternative below

1. No fault detected.

   Refer to **CHECKING THE COMPONENTS AND WIRING**

2. Transmission fluid replaced, low level or poor quality.

   Refer to **RESETTING ADAPTATION**

Fig. 47: Identifying VCT2000 Diagnostic Tool Symbol In VIDA
Courtesy of VOLVO CARS CORPORATION

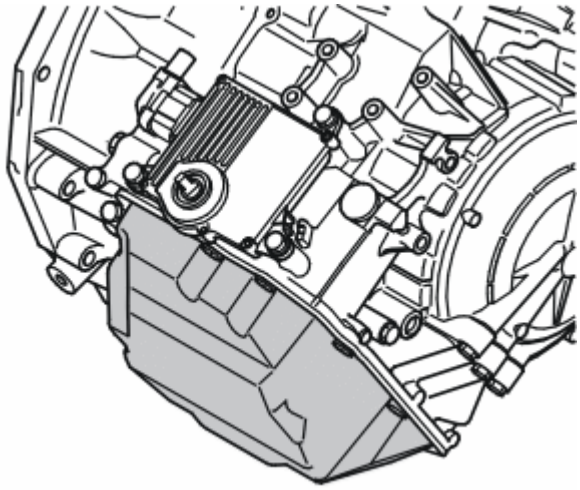

Fig. 48: Identifying Transmission Fluid Pan
Courtesy of VOLVO CARS CORPORATION

VERIFICATION

VERIFICATION

NOTE: When the transmission's control module has been removed and reinstalled, it is important that the gear position sensor is calibrated. Select Pause and create a bookmark. Then select Vehicle communication.

HINT: After carrying out the repair, check that the fault has been remedied.

Fig. 49: Identifying Ignition ON
Courtesy of VOLVO CARS CORPORATION

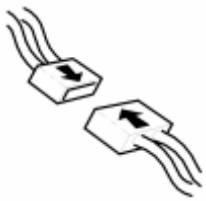

Fig. 50: Identifying Connector(s) Reinstallation
Courtesy of VOLVO CARS CORPORATION

- Ignition off.
- Reinstall the connectors, components etc.
- Test drive the vehicle following:**TEST DRIVE SCHEDULE, DESCRIPTION**

  Check that the transmission does not display any **obvious** function faults.

  NOTE: When test driving, the oil temperature must be above 20 °C.

Is the function OK?

- **YES**

  VERIFIED: Troubleshooting has been completed.

- **NO**

  Refer to **INFORMATION**

INFORMATION

FAULT-TRACING INFORMATION

The fault should have been detected and remedied. As this is not the case fault-tracing has failed.

Exit fault-tracing for this diagnostic trouble code (DTC) or make another attempt.

RESETTING ADAPTATION

RESETTING THE ADAPTATION AND THE COUNTER FOR "TRANSMISSION OIL, REPLACE"

HINT: The transmission has torque-regulated, adaptive pressure regulation. The pressure regulator enables the transmission to regulate pressure during each shift to prevent hard shifting. Each shift is assessed by the transmission control module (TCM) and is stored in the internal memory. This makes it possible to compensate for transmission and clutch wear. It is important that the adaptation in the memory is reset so that the transmission works normally after the repair. Because the fluid was changed during the repair, the counter for transmission fluid change must also be reset. If the counter is not reset during draining/replacement, a diagnostic trouble code may be generated under the wrong conditions.

NOTE: This applies only if the transmission or one of the components in the transmission have been replaced.

Fig. 51: Identifying Ignition ON
Courtesy of VOLVO CARS CORPORATION

- Ignition on.

  Click on the VCT2000 symbol to reset the adaptation and counter.

  Fig. 52: Identifying VCT2000 Diagnostic Tool Symbol In VIDA
  Courtesy of VOLVO CARS CORPORATION

- **Continue**

  Refer to **VERIFICATION**

TCM-P073500: GEAR 5 INCORRECT RATIO. GENERAL FAILURE INFORMATION. NO SUB TYPE INFORMATION (B6324S5, TF-80SC;

B6324S5, TF-80SC AWD; 2011)

DIAGNOSTIC TROUBLE CODE (DTC) INFORMATION TCM-P073500

see **DIAGNOSTIC TROUBLE CODE (DTC) INFORMATION TCM-P073500**

FAULT-TRACING

see **FAULT-TRACING**

TCM-P073600: REVERSE INCORRECT RATIO. GENERAL FAILURE INFORMATION. NO SUB TYPE INFORMATION (B6324S, TF-80SC; B6324S, TF-80SC AWD; 2007-2010)

DIAGNOSTIC TROUBLE CODE (DTC) INFORMATION TCM-P073600

Condition

The transmission control module (TCM) receives a signal about input and output speed from the transmission's two speed sensors. There is a determined ratio for each gear and the signals help calculate the transmission control module (TCM) gear ratio.

The diagnostic trouble code (DTC) is stored if the control module detects that:

- Transmission is in mechanical neutral position despite the gear selector being moved to **R** .

The control module's test for the diagnostic trouble code (DTC) starts in the event of:

- Driving reverse (gear position **R**).
- The engine speed is above 600 rpm.
- Throttle angle open more than 10%.
- Transmission's oil temperature exceeds +0 °C.
- Brake pedal unaffected.

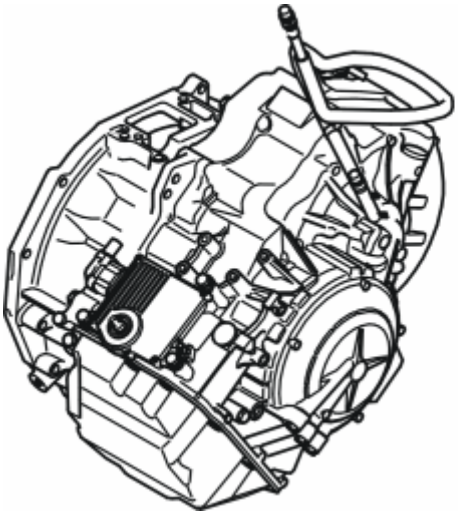

Fig. 53: Identifying Transmission
Courtesy of VOLVO CARS CORPORATION

Substitute Value

- Auxiliary program **Emergency mode 1** in the transmission control module (TCM) has started.

  HINT: EMERGENCY MODE IN THE EVENT OF A FAULT

Possible Source

- Internal malfunction in the transmission

Fault symptom[s]

- General warning lamp lit
- Malfunction indicator light (MIL), on
- No gear shift

FAULT-TRACING

CHECKING SOLENOIDS

Fig. 54: Identifying Ignition ON
Courtesy of VOLVO CARS CORPORATION

- Ignition on.

- Activate the solenoids by clicking on the symbol for VCT2000.

  Select a solenoid and read off the current through the solenoid's circuit. The current should shift between approx. 100 and 950 mA.

  Solenoid SLT, SLC1, SLC2, SLC3, SLB1.

Fig. 55: Identifying VCT2000 Diagnostic Tool Symbol In VIDA
Courtesy of VOLVO CARS CORPORATION

Is the function OK?

- **YES**

  Refer to **CHECKING THE OIL QUALITY AND THE OIL LEVEL IN THE TRANSMISSION**

- **NO**

  Refer to **CHECKING THE COMPONENTS AND WIRING**

CHECKING THE COMPONENTS AND WIRING

Fig. 56: Identifying Ignition OFF
Courtesy of VOLVO CARS CORPORATION

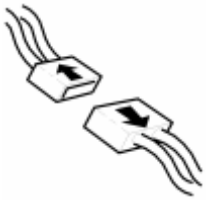

Fig. 57: Identifying Connectors Disconnected
Courtesy of VOLVO CARS CORPORATION

- Ignition off.

- Open the transmission control system.

  Check connector B (22-pin) for the transmission control module (TCM). Check for damaged or pressed in pins. Check for contact resistance and oxidation.

  HINT: Check solenoid SLT, SLC1, SLC2, SLC3 and SLB1 according to:CHECKING INTERNAL COMPONENTS OF THE TRANSMISSION

  If no defects were found on connectors or cables, replace the transmission.

  Remedy as necessary.

  Other information

  - see **TRANSMISSION** (AWD) or **TRANSMISSION**
  - see **COVER CONTROL SYSTEM, REPLACING**
  - see **TRANSMISSION CONTROL UNIT WIRING HARNESS**
  - To access connector B: **TRANSMISSION CONTROL MODULE (TCM)**
  - see **CHECKING WIRING AND TERMINALS**

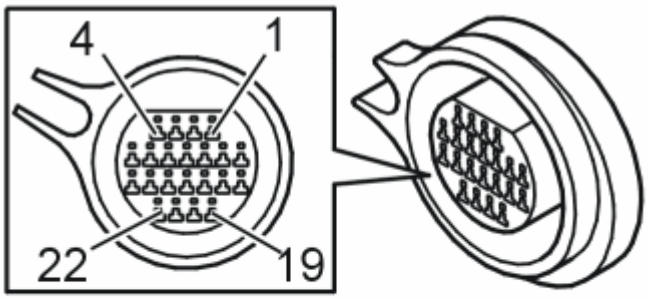

Fig. 58: Identifying 22--Pin Connector
Courtesy of VOLVO CARS CORPORATION

- **Continue**

  Refer to **RESETTING ADAPTATION**

CHECKING THE OIL QUALITY AND THE OIL LEVEL IN THE TRANSMISSION

NOTE: Transmission fluid quality and level are extremely important for the function of the transmission. Therefore it is imperative that these are correct. In addition the oil level is dependent on oil temperature.

Fig. 59: Identifying Ignition ON
Courtesy of VOLVO CARS CORPORATION

- Ignition on.
- Read off the oil temperature.

  Check the transmission oil level. If the oil level is low, check the transmission for leakage, then top up with oil.

  Check the quality of the oil.

  Replace the transmission fluid if the fluid smells burnt.

  Other information

  - see **OIL LEVEL, CHECKING**
  - see **OIL GRADE, CHECKING**
  - see **TRANSAXLE OIL**

  Select an alternative below

  1. No fault detected.
  2. Transmission fluid replaced, low level or poor quality.

Fig. 60: Identifying VCT2000 Diagnostic Tool Symbol In VIDA
Courtesy of VOLVO CARS CORPORATION

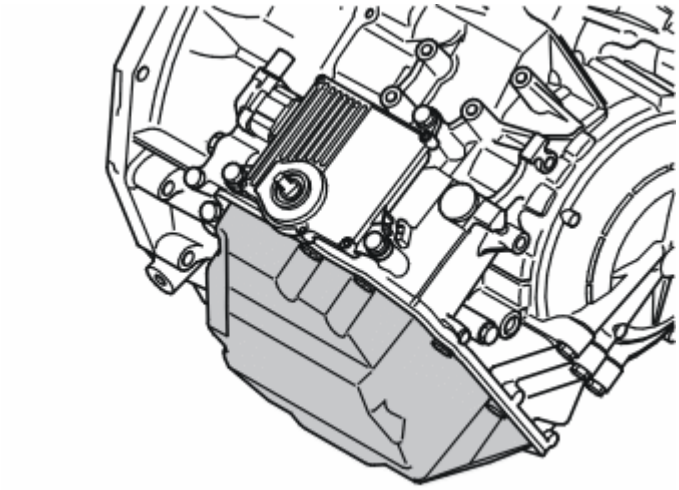

Fig. 61: Identifying Transmission Fluid Pan
Courtesy of VOLVO CARS CORPORATION

- **1**

  Refer to **CHECKING THE COMPONENTS AND WIRING**

- **2**

  Refer to **RESETTING ADAPTATION**

VERIFICATION

VERIFICATION

NOTE: **When the transmission's control module has been removed and reinstalled, it is important that the gear position sensor is calibrated. Select Pause and create a bookmark. Then select Vehicle communication.**

HINT: After carrying out the repair, check that the fault has been remedied.

Fig. 62: Identifying Ignition ON
Courtesy of VOLVO CARS CORPORATION

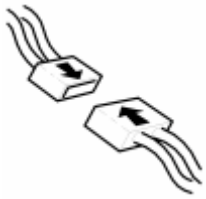

Fig. 63: Identifying Connector(s) Reinstallation
Courtesy of VOLVO CARS CORPORATION

- Ignition off.
- Reinstall the connectors, components etc.
- Test drive the vehicle following:**TEST DRIVE SCHEDULE, DESCRIPTION**

  Check that the transmission does not display any **obvious** function faults.

  NOTE: When test driving, the oil temperature must be above 20 °C.

Is the function OK?

- **YES**

  VERIFIED: Troubleshooting has been completed.

- **NO**

  Refer to **INFORMATION**

INFORMATION

FAULT-TRACING INFORMATION

The fault should have been detected and remedied. As this is not the case fault-tracing has failed.

Exit fault-tracing for this diagnostic trouble code (DTC) or make another attempt.

RESETTING ADAPTATION

RESETTING THE ADAPTATION AND THE COUNTER FOR "TRANSMISSION OIL, REPLACE"

HINT: The transmission has torque-regulated, adaptive pressure regulation. The pressure regulator enables the transmission to regulate pressure during each shift to prevent hard shifting. Each shift is assessed by the transmission control module (TCM) and is stored in the internal memory. This makes it possible to compensate for transmission and clutch wear. It is important that the adaptation in the memory is reset so that the transmission works normally after the repair. Because the fluid was changed during the repair, the counter for transmission fluid change must also be reset. If the counter is not reset during draining/replacement, a diagnostic trouble code may be generated under the wrong conditions.

NOTE: **This applies only if the transmission or one of the components in the transmission have been replaced.**

Fig. 64: Identifying Ignition ON
Courtesy of VOLVO CARS CORPORATION

- Ignition on.

  Click on the VCT2000 symbol to reset the adaptation and counter.

  Fig. 65: Identifying VCT2000 Diagnostic Tool Symbol In VIDA
  Courtesy of VOLVO CARS CORPORATION

- **Continue**

  Refer to **VERIFICATION**

TCM-P073600: REVERSE INCORRECT RATIO. GENERAL FAILURE INFORMATION. NO SUB TYPE INFORMATION (B6324S5, TF-80SC; B6324S5, TF-80SC AWD; 2011)

DIAGNOSTIC TROUBLE CODE (DTC) INFORMATION TCM-P073600

see **DIAGNOSTIC TROUBLE CODE (DTC) INFORMATION TCM-P073600**

FAULT-TRACING

see **FAULT-TRACING**

TCM-P073600: REVERSE INCORRECT RATIO. GENERAL FAULT INFORMATION. NO INFORMATION ON FAULT TYPE (B8444S, TF-80SC AWD; 2006-2011)

DIAGNOSTIC TROUBLE CODE (DTC) INFORMATION TCM-P073600

Condition

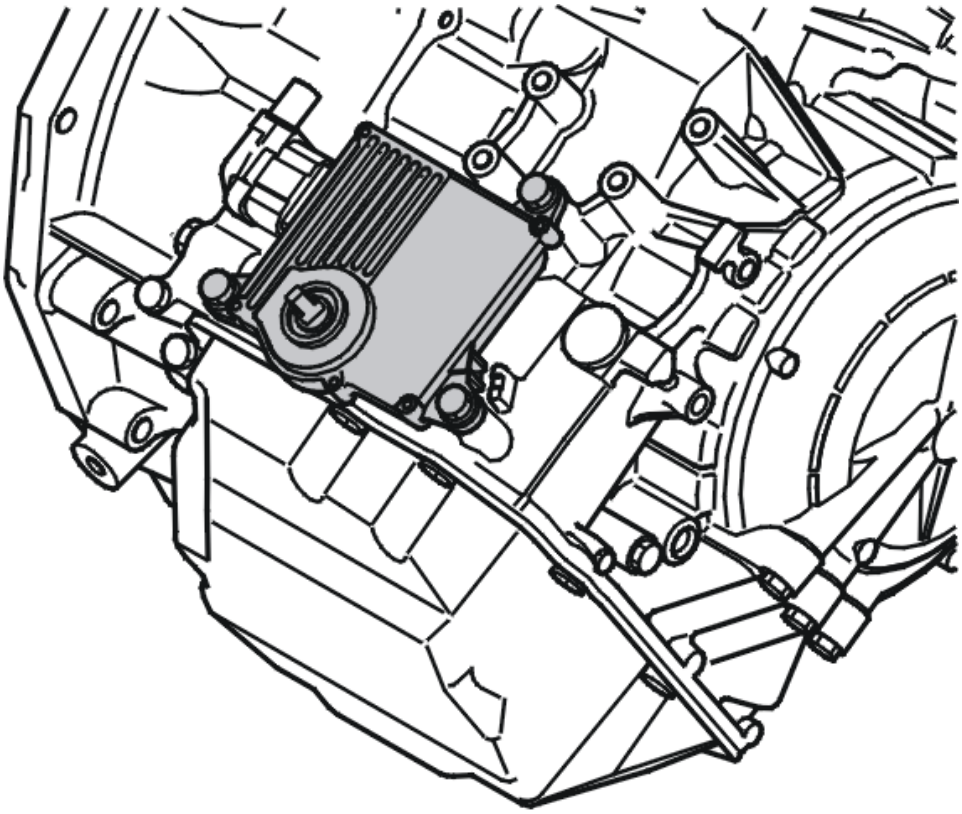

Fig. 66: Identifying Transmission Control Module (TCM)
Courtesy of VOLVO CARS CORPORATION

The transmission control module (TCM) receives signal about input and output rpm from the transmission's two rpm sensors. For each gear there is a determined ratio and, using the signals, the control module calculates the transmission's gear ratio. If the transmission control module (TCM) registers that the transmission is mechanically in neutral position but the gear selector has been moved to "D" or "R", diagnostic trouble code TCM-P073000 or TCM-P073600 is generated, depending on the cause of the malfunction.

TCM-P073000

The diagnostic trouble code can be diagnosed when driving forward (gear position "D"), engine rpm above 600 rpm, throttle damper angle open more than 10%, transmission's oil temperature above +0 °C and brake pedal unaffected.

TCM-P073600

The diagnostic trouble code can be diagnosed when reversing (gear position "R"), engine rpm above 600 rpm, throttle damper angle open more than 10%, transmission's oil temperature above +0 °C and brake pedal unaffected.

Substitute Value

- Auxiliary program **Emergency mode 1** in the transmission control module (TCM) has started.

  HINT: EMERGENCY MODE IN CASE OF MALFUNCTION

Possible Source

- Internal malfunction in the transmission's control system.
- Mechanical fault in gearbox. Gearbox components worn and causing slip or system pressure too low.

Fault symptom[s]

- General warning lamp lit
- Malfunction indicator lamp (MIL) lit.
- Abnormally slipping gears.
- Harsh gear changing
- No gear changing.

FAULT TRACING

CHECKING SOLENOIDS

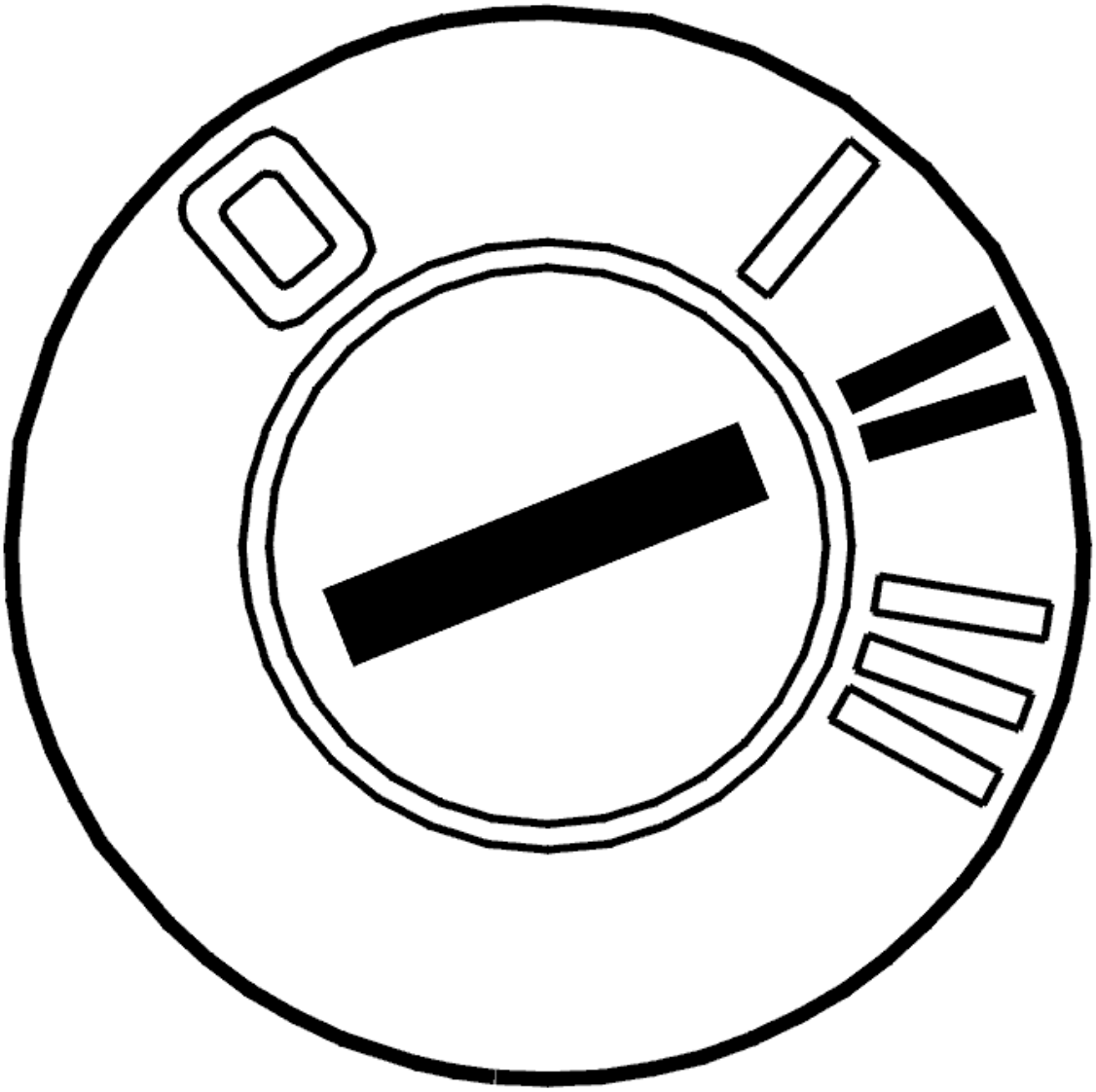

Fig. 67: Identifying Ignition ON
Courtesy of VOLVO CARS CORPORATION

- Ignition on
- Activate the solenoids by clicking on the symbol for VCT2000.

  Select a solenoid and read off the current through the solenoid's circuit. The current should shift between approx. 0 and 1000 mA.

Gear selector position/diagnostic trouble code	Solenoid
D/TCM-P073000	SLT, SLC2, SLC3, SLB1
R/TCM-P073600	SLT, SLC1, SLC2, SLC3, SLB1

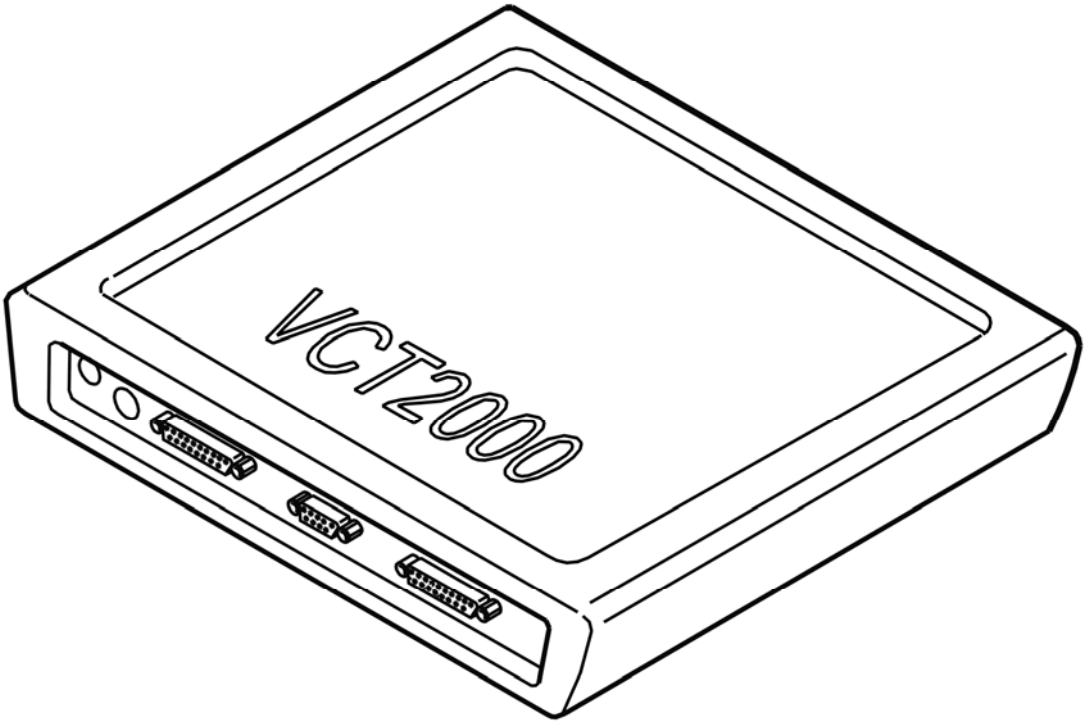

Fig. 68: Identifying VCT2000 Diagnostic Tool Symbol In VIDA
Courtesy of VOLVO CARS CORPORATION

Is the function OK?

- **YES**

  Refer to **CHECKING OIL QUALITY AND OIL LEVEL IN TRANSMISSION**

- **NO**

  Refer to **CHECKING THE WIRING AND COMPONENT**

CHECKING OIL QUALITY AND OIL LEVEL IN TRANSMISSION

NOTE: **The transmission oil's quality and level are extremely important for the function of the transmission. Therefore it is important that these values are correct. In addition, the oil level is dependent on oil temperature.**

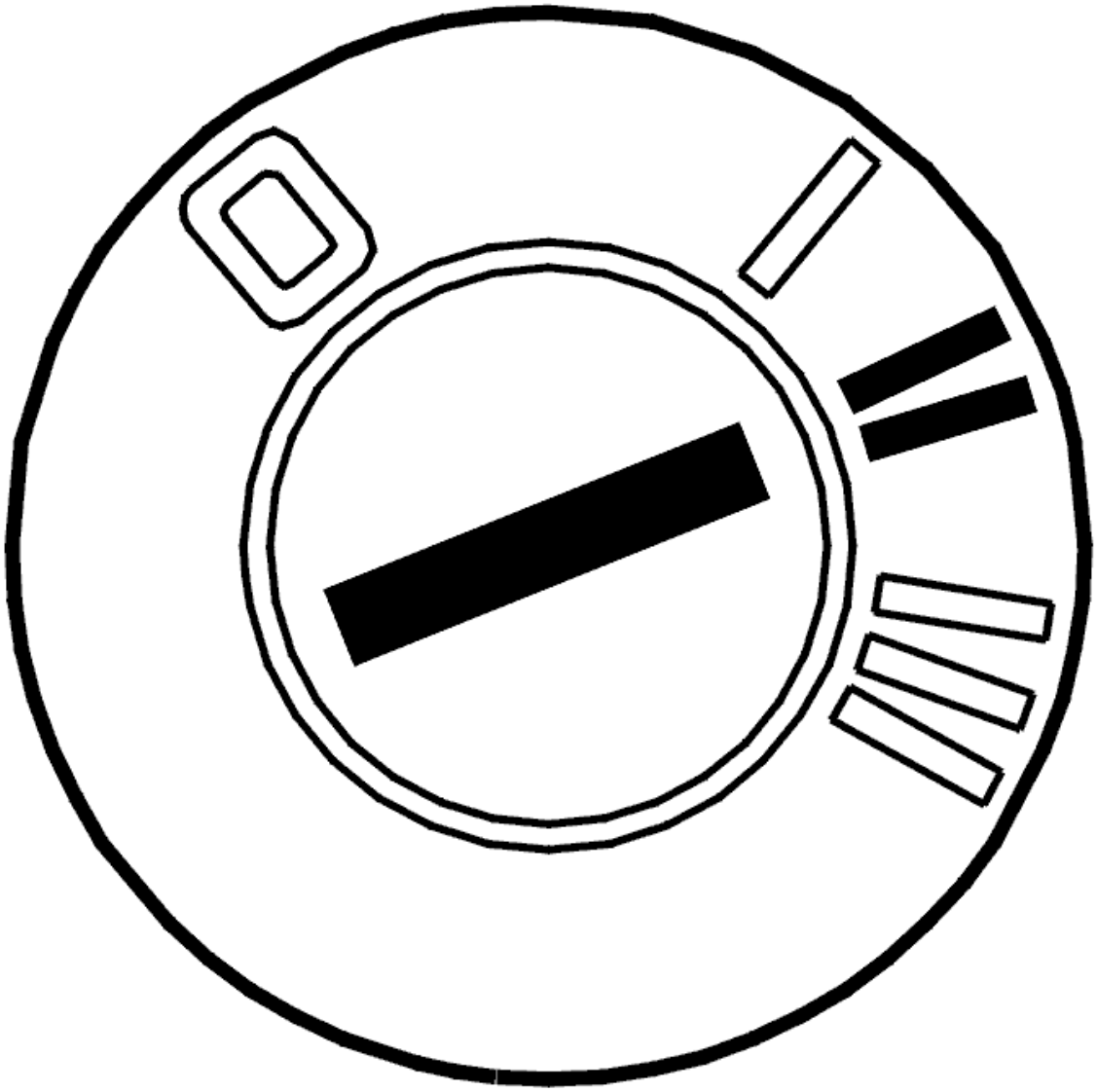

Fig. 69: Identifying Ignition ON
Courtesy of VOLVO CARS CORPORATION

- Ignition on
- Read off the oil's temperature.

  Check the transmission's oil level. If it is low, check the transmission for leaks and then top off the oil.

  Check the oil's quality.

  If the oil smells burnt, change transmission oil.

  Other information

  - see **OIL LEVEL, CHECKING**

- see **OIL GRADE, CHECKING (2007-2011)**
- see **TRANSMISSION FLUID, CHANGING**

Select an alternative below

1. No defect found.

   Refer to **CHECKING THE WIRING AND COMPONENT**

2. Transmission oil changed, level low or quality poor.

   Refer to **RESETTING ADAPTATION**

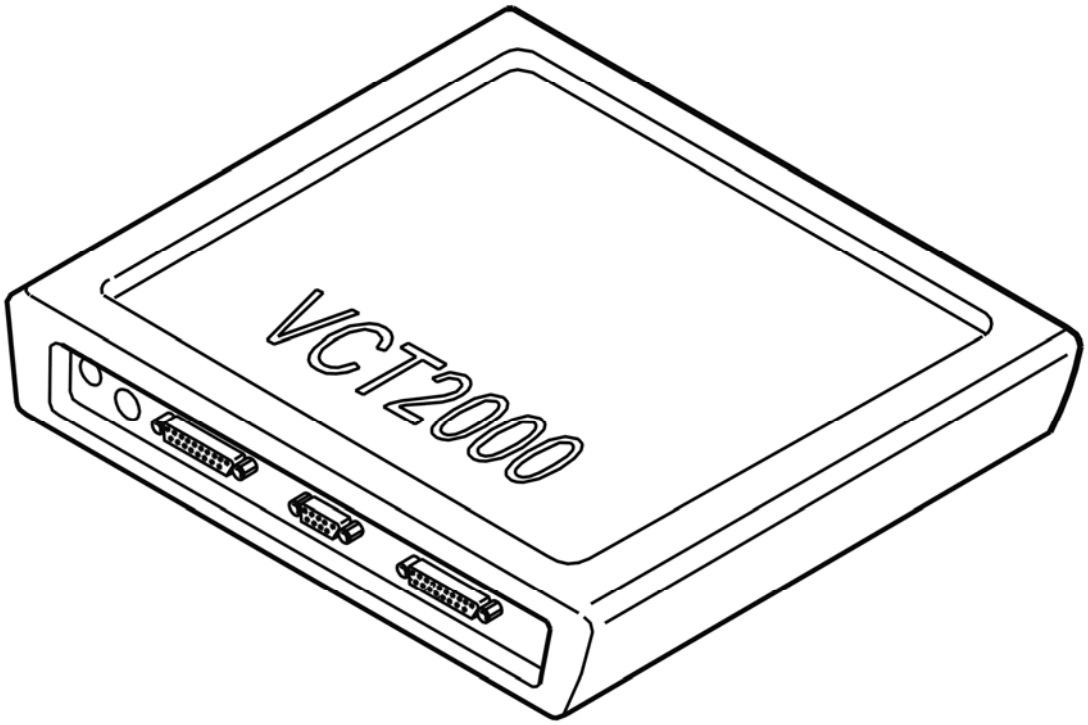

Fig. 70: Identifying VCT2000 Diagnostic Tool Symbol In VIDA
Courtesy of VOLVO CARS CORPORATION

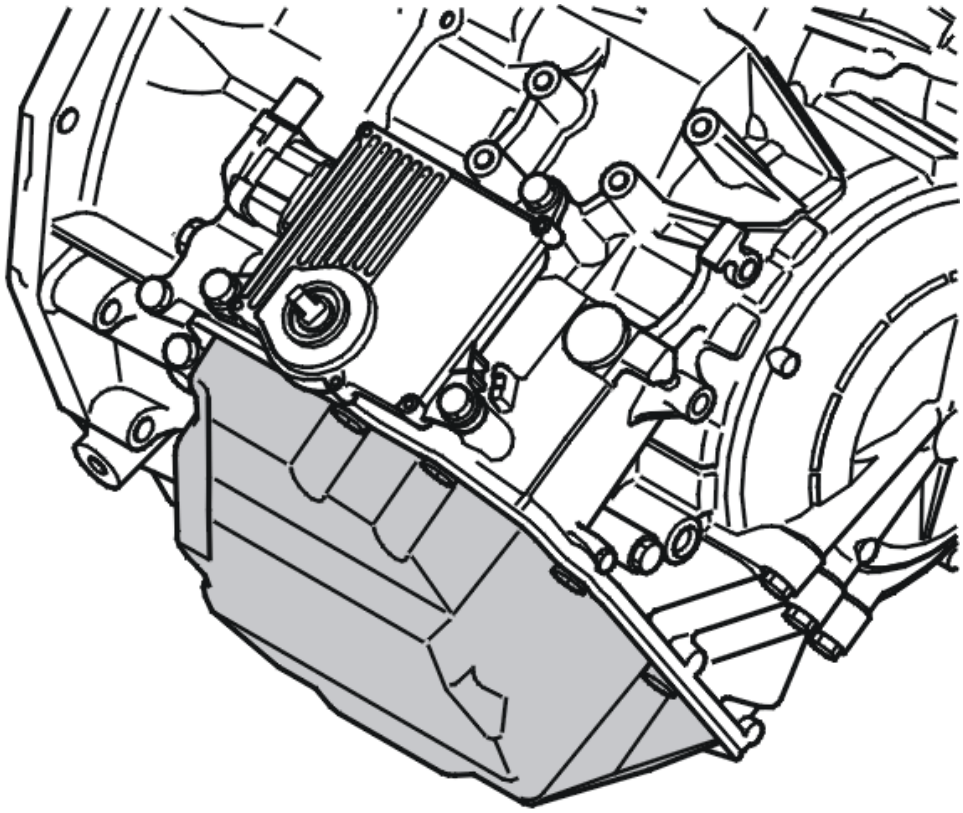

Fig. 71: Identifying Transmission Oil Pan
Courtesy of VOLVO CARS CORPORATION

CHECKING THE WIRING AND COMPONENT

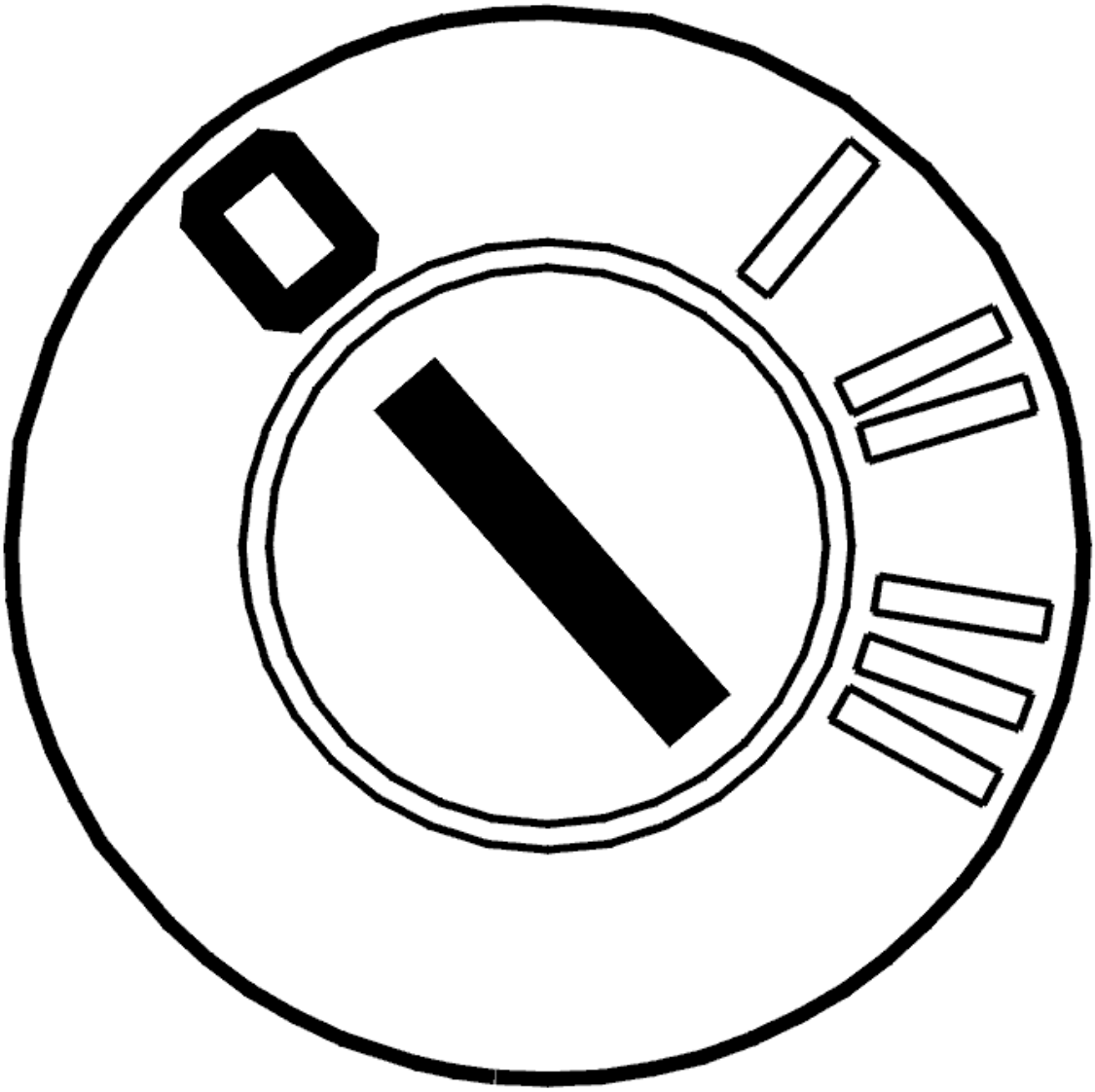

Fig. 72: Identifying Ignition OFF
Courtesy of VOLVO CARS CORPORATION

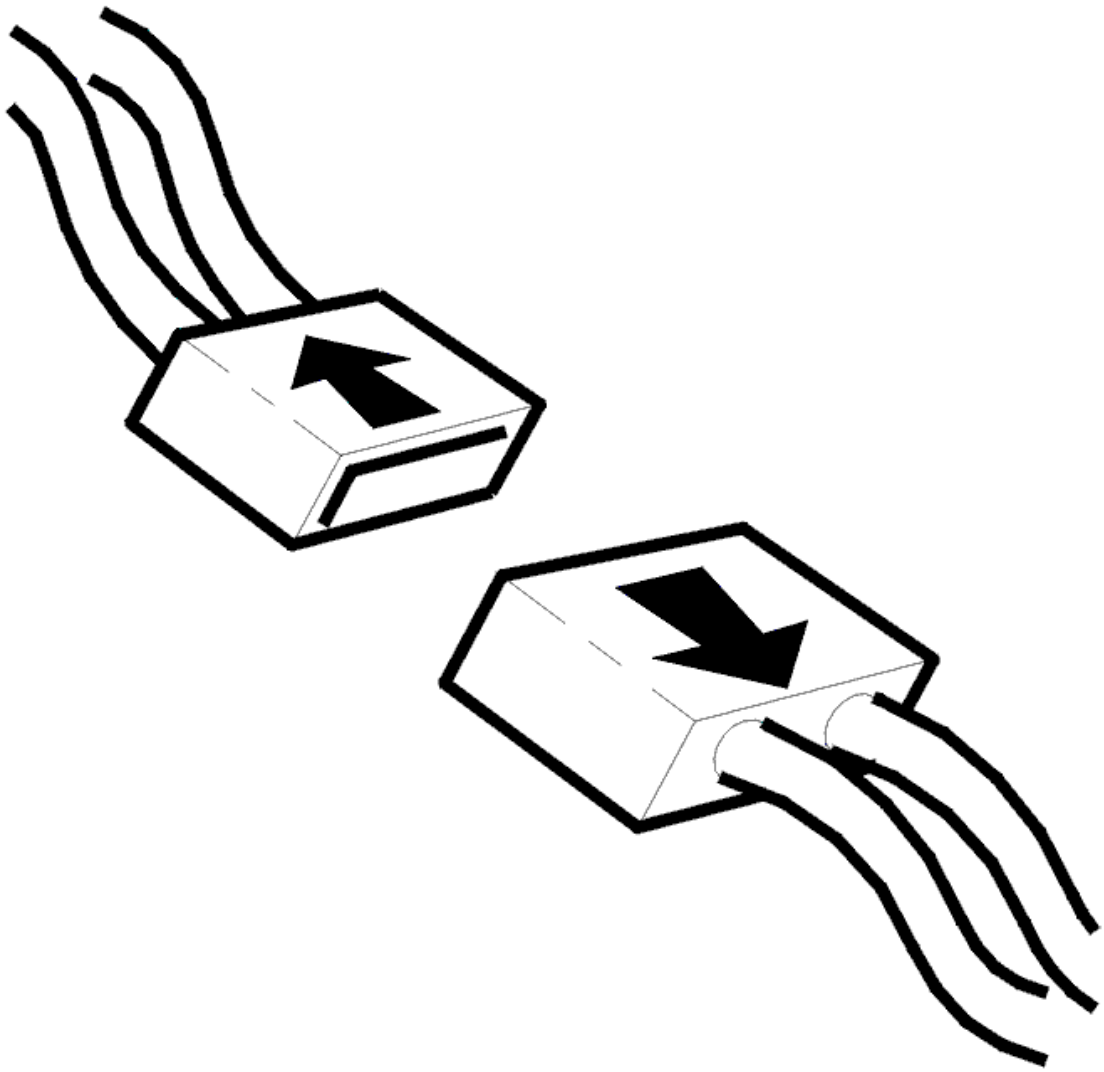

Fig. 73: Identifying Connector(s) Disconnected
Courtesy of VOLVO CARS CORPORATION

- Ignition off
- Open the gearbox control system

Check connector B (22-pin) for the transmission control module (TCM). Check for damaged or pressed in pins. Check for contact resistance and oxidation.

HINT: Check solenoid SLT, SLC1, SLC2, SLC3 and SLB1 according to: CHECKING THE LINE PRESSURE SOLENOID SLT, SLC1, SLC2, SLC3, SLB1 AND LOCK-UP SOLENOID SLU

Gear selector position/diagnostic trouble code	Solenoid
D/TCM-P073000	SLT, SLC2, SLC3, SLB1

R/TCM-P073600	SLT, SLC1, SLC2, SLC3, SLB1

If no defects were found on connectors or cables, replace the transmission.

Remedy as necessary.

Other information

- see **REPLACING THE GEARBOX**
- see **CONTROL SYSTEM, REPLACING**
- see **CABLE HARNESS, CONTROL SYSTEM, GEARBOX, REPLACING**
- To access connector B: **TRANSMISSION CONTROL MODULE (TCM), REPLACING**
- see **CONTENTS**

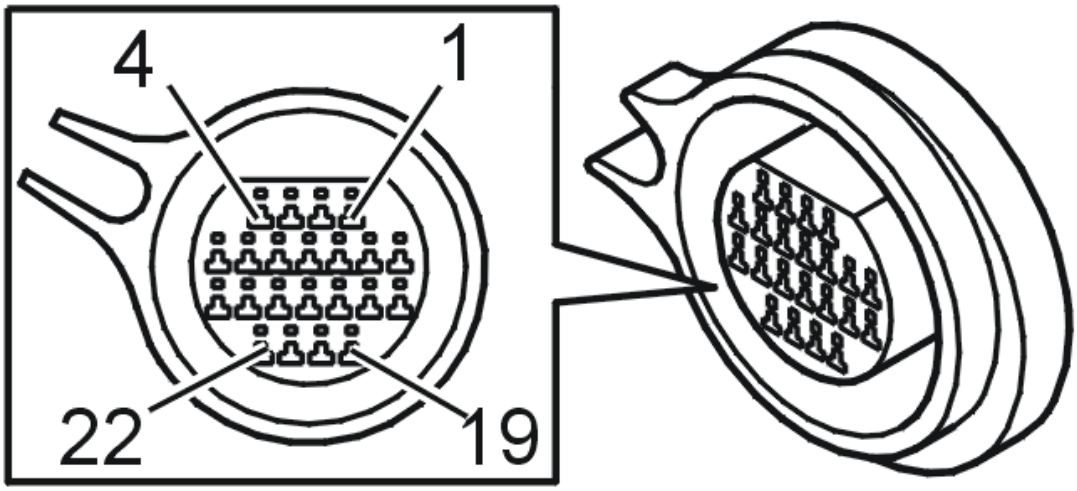

Fig. 74: Identifying Connector B Terminals
Courtesy of VOLVO CARS CORPORATION

- **Continue**

  Refer to **RESETTING ADAPTATION**

REPLACING THE TRANSMISSION

Previous tests indicate an internal malfunction in the transmission.

Other information

- see **REPLACING THE GEARBOX**

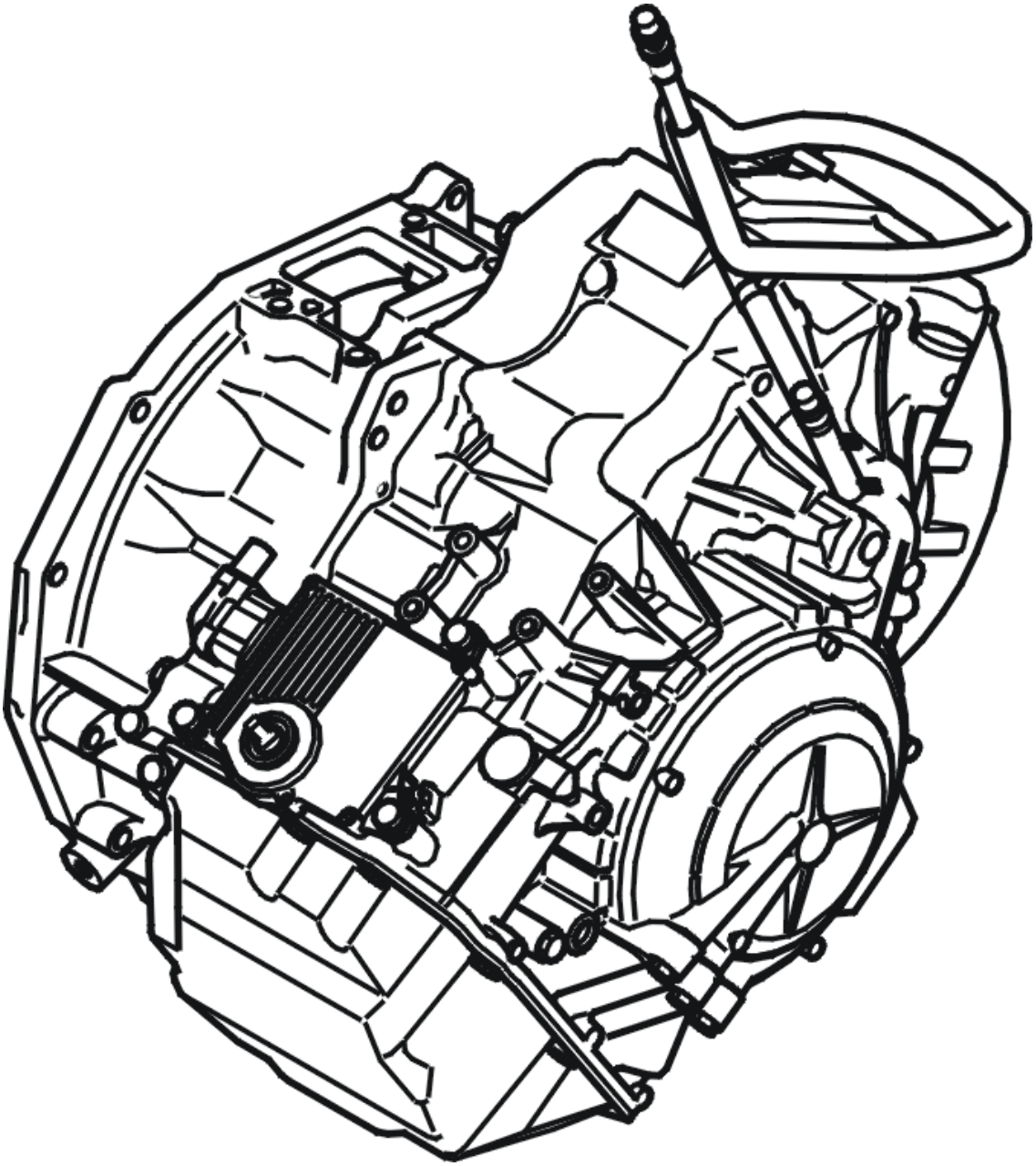

Fig. 75: Identifying Transmission
Courtesy of VOLVO CARS CORPORATION

- **Continue**

  Refer to **RESETTING ADAPTATION**

RESETTING ADAPTATION

RESETTING ADAPTATION AND COUNTER FOR "TRANSMISSION OIL, CHANGING"

HINT: The transmission has torque-controlled, adaptive pressure control. The pressure control means

that the transmission itself controls the pressure during each shift sequence in order to avoid harsh shifting. Each shift is assessed by the transmission control module (TCM) and is stored in the internal memory, which results in compensation for wear in the transmission and clutch. In order for the transmission to function correctly after repair, it is important to reset the adaptation in the memory. Since the oil is changed during the repair, the counter for "Transmission oil, change" shall also be reset. If the counter is not reset when draining/changing oil, there is a risk that a diagnostic trouble code may be generated under incorrect conditions.

NOTE: **This applies only if the transmission or one of the components in the transmission have been replaced.**

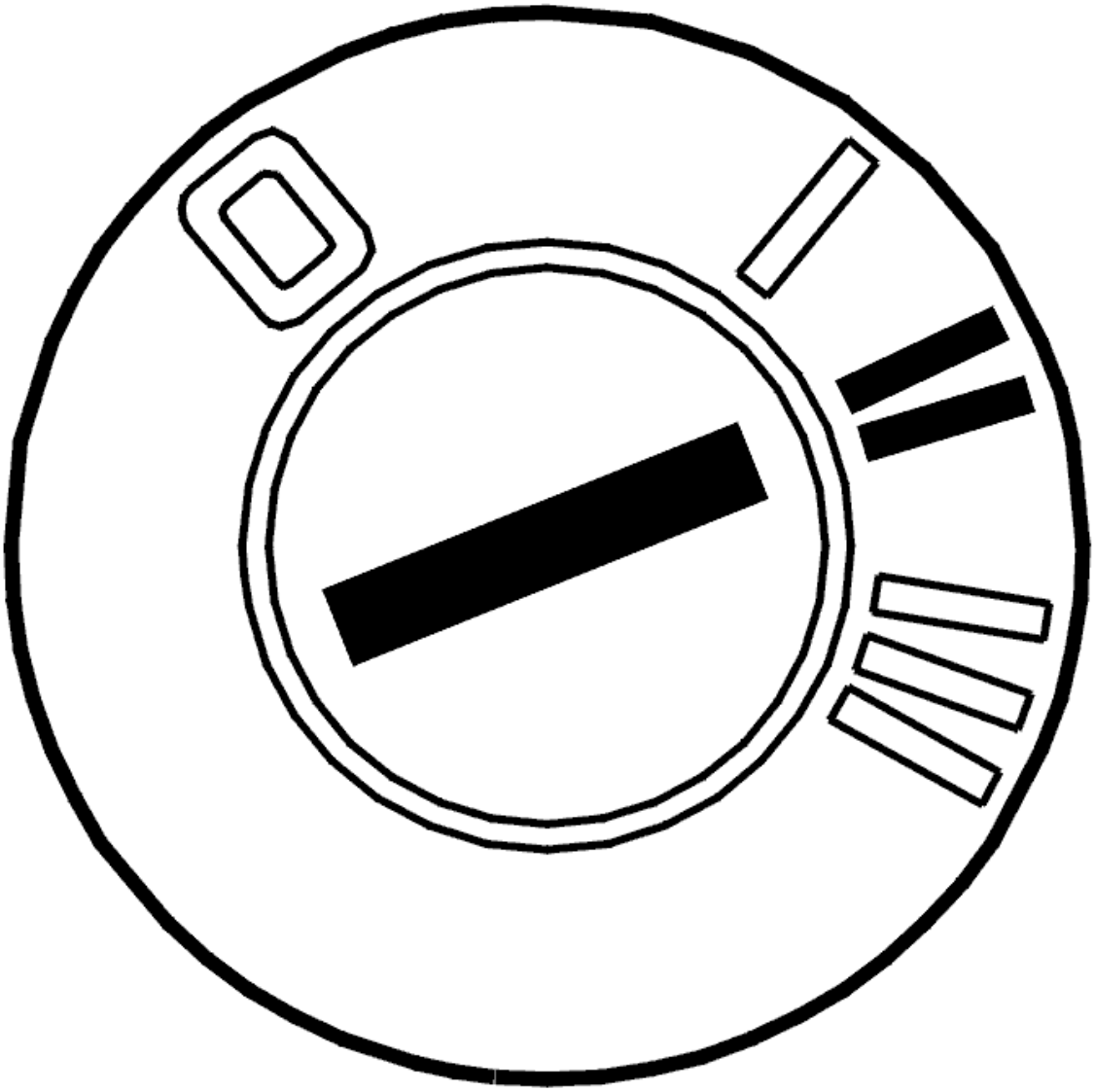

Fig. 76: Identifying Ignition ON
Courtesy of VOLVO CARS CORPORATION

- Ignition on

Activate reset of the adaptation and the counter by clicking on the symbol for VCT2000.

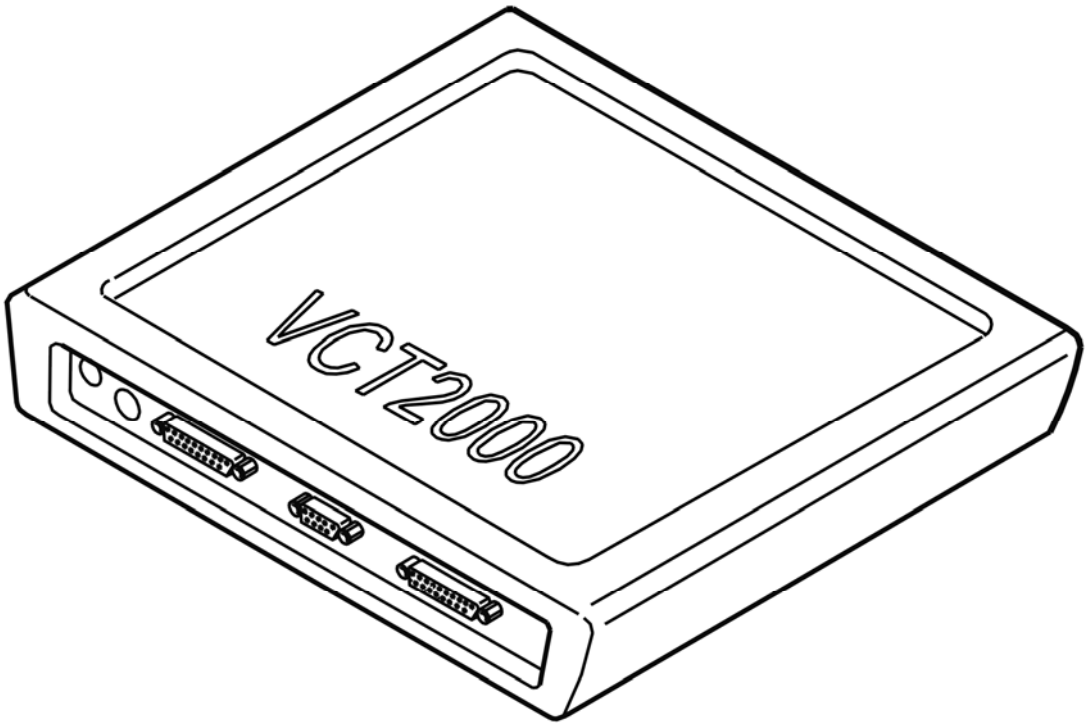

Fig. 77: Identifying VCT2000 Diagnostic Tool Symbol In VIDA
Courtesy of VOLVO CARS CORPORATION

- **Continue**

  Refer to **VERIFICATION**

VERIFICATION

VERIFICATION

NOTE: **When the transmission's control module has been removed and reinstalled, it is important that the gear position sensor is calibrated. Select "Pause" and save a bookmark, then select Vehicle communication**

HINT: After carrying out the repair, check that the fault has been remedied.

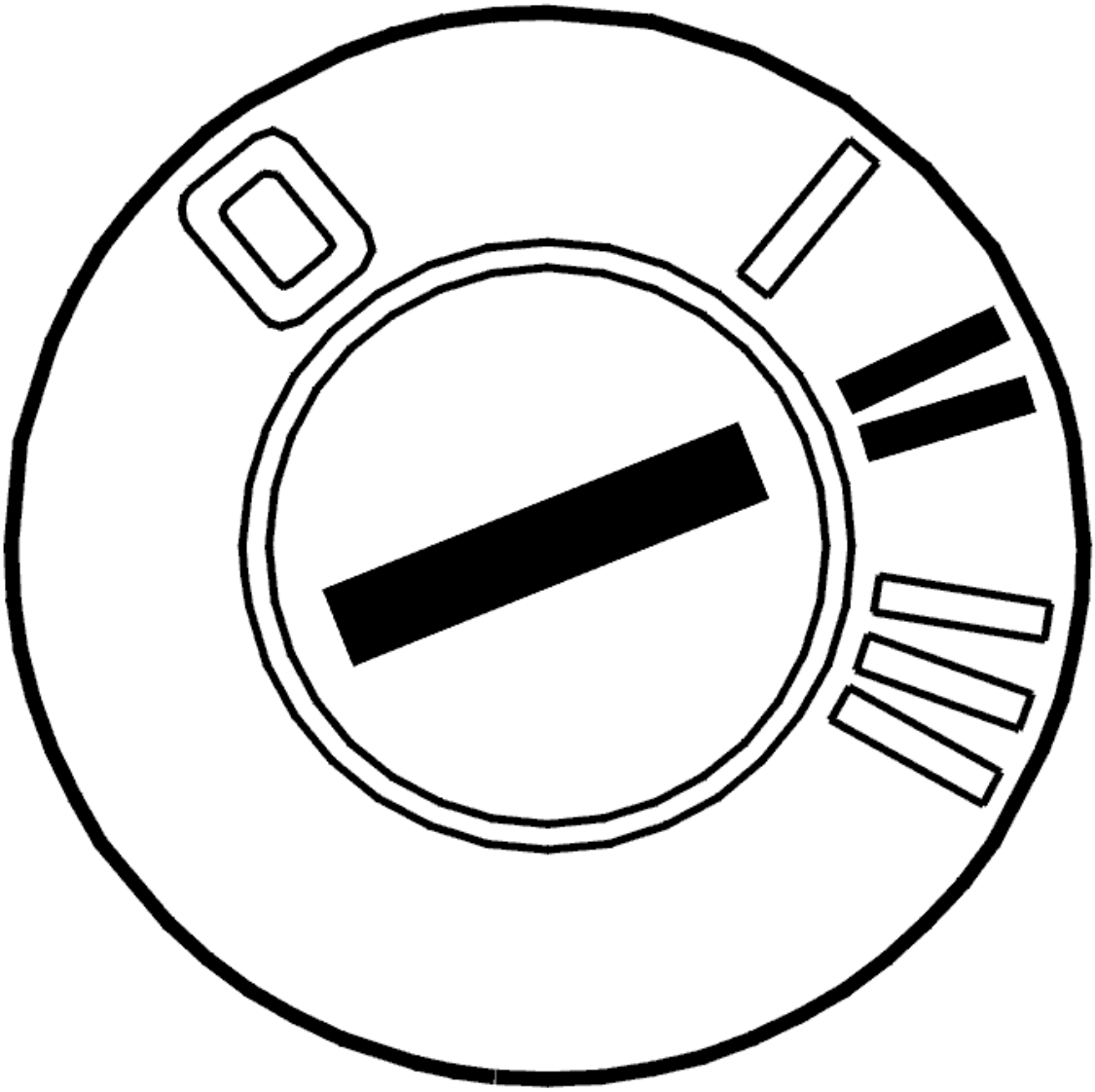

Fig. 78: Identifying Ignition ON
Courtesy of VOLVO CARS CORPORATION

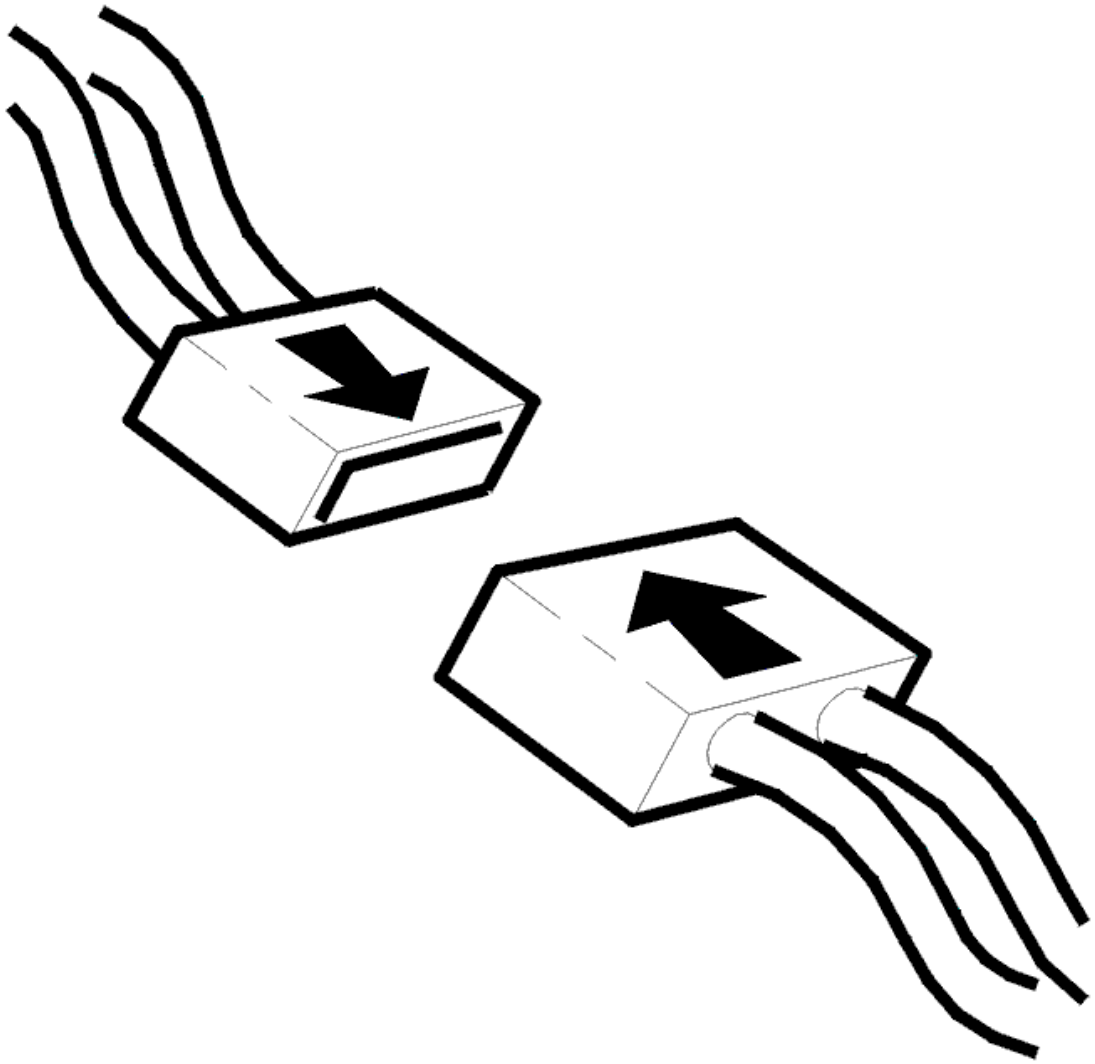

Fig. 79: Identifying Connector(s) Reinstallation
Courtesy of VOLVO CARS CORPORATION

- Ignition off
- Reinstall the components, reconnect the connectors etc.

  Test drive the vehicle following: **TEST DRIVE SCHEDULE, DESCRIPTION**

  Check that the transmission does not display any **obvious** function faults.

  NOTE: When test driving, the oil temperature must be above 20 °C.

Is the function OK?

- **YES**

VERIFIED: Troubleshooting has been completed.

- **NO**

  Refer to **INFORMATION**

INFORMATION

FAULT-TRACING INFORMATION

The fault should have been detected and remedied. As this is not the case fault-tracing has failed.

Exit fault-tracing for this diagnostic trouble code (DTC) or make another attempt.

TCM-P073600: REVERSE INCORRECT RATIO. GENERAL FAULT INFORMATION. NO INFORMATION ON FAULT TYPE (TF-80SC AWD; 2005)

DIAGNOSTIC TROUBLE CODE (DTC) INFORMATION TCM-P073600

see **DIAGNOSTIC TROUBLE CODE (DTC) INFORMATION TCM-P073600**

FAULT TRACING

see **FAULT TRACING TCM-P073600**

TCM-P073F00 UNABLE TO ENGAGE GEAR 1. GENERAL FAILURE INFORMATION. NO SUB TYPE INFORMATION (B6324S, TF-80SC; B6324S, TF-80SC AWD; 2007-2010)

DIAGNOSTIC TROUBLE CODE (DTC) INFORMATION

Condition

The transmission control module (TCM) receives a signal about input and output speed from the transmission's two speed sensors. There is a determined ratio for each gear and the signals help calculate the transmission control module (TCM) gear ratio.

The diagnostic trouble code (DTC) is stored if the control module detects that:

- Gear ratio for the gear selected by the control module is close to (4%) another gear's ratio.

The control module's test for the diagnostic trouble code (DTC) starts in the event of:

- Transmission fluid temperature over +20 °C (68 °F).
- Approx. 4% outside of current gear's normal work area.

NOTE: **The control module can only detect the fault once the test has been started and the diagnostic trouble code (DTC) is stored when the conditions are met.**

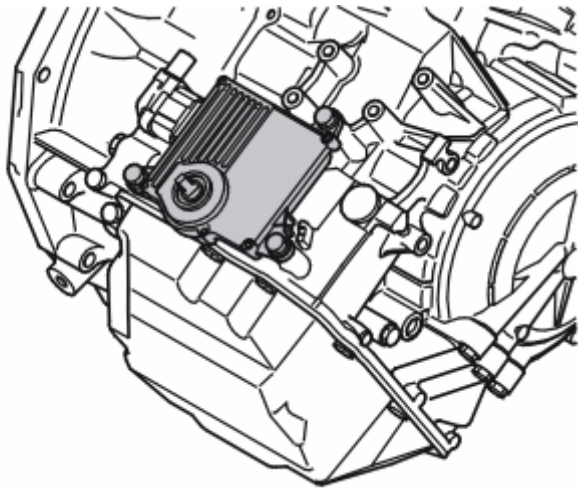

Fig. 80: Identifying Transmission Control Module (TCM)
Courtesy of VOLVO CARS CORPORATION

Substitute Value

- Auxiliary program **Emergency mode 2** in the transmission control module (TCM) has started.

HINT: EMERGENCY MODE IN THE EVENT OF A FAULT

Possible Source

- Contact resistance or one of the solenoids has stuck in OFF or ON position.
- Mechanical fault in the transmission.

Fault symptom[s]

- Malfunction indicator light (MIL), on
- General warning lamp lit
- Abnormal slipping gearshifts
- No gear shift

FAULT-TRACING

CHECKING SOLENOIDS

Fig. 81: Identifying Ignition ON
Courtesy of VOLVO CARS CORPORATION

- Ignition on.
- Activate the solenoids by clicking on the symbol for VCT2000.

  Select a solenoid and read off the current through the solenoid's circuit. The current should shift between approx. 100 and 950 mA.

  Solenoid SLT, SLC2, SLC3, SLB1.

Fig. 82: Identifying VCT2000 Diagnostic Tool Symbol In VIDA
Courtesy of VOLVO CARS CORPORATION

Is the function OK?

- **YES**

  Refer to **CHECKING THE OIL QUALITY AND THE OIL LEVEL IN THE TRANSMISSION**

- **NO**

  Refer to **CHECKING THE COMPONENTS AND WIRING**

CHECKING THE COMPONENTS AND WIRING

Fig. 83: Identifying Ignition OFF
Courtesy of VOLVO CARS CORPORATION

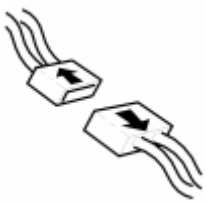

Fig. 84: Identifying Connectors Disconnected
Courtesy of VOLVO CARS CORPORATION

- Ignition off.
- Open the transmission control system.

  Check connector B (22-pin) for the transmission control module (TCM). Check for damaged or pressed in pins. Check for contact resistance and oxidation.

  HINT: Check solenoids SLT, SLC2, SLC3, SLB1 as described in:CHECKING INTERNAL COMPONENTS OF THE TRANSMISSION

  If no defects were found on connectors or cables, replace the control system. If this does not help, replace the transmission.

  Remedy as necessary.

  Other information

  - see **TRANSMISSION - REMOVAL, REPLACEMENT AND INSTALLATION**
  - see **VALVE HOUSING** .
  - see **TRANSMISSION CONTROL UNIT WIRING HARNESS**
  - To access connector B, see **TRANSMISSION CONTROL MODULE (TCM)**
  - see **CHECKING WIRING AND TERMINALS**

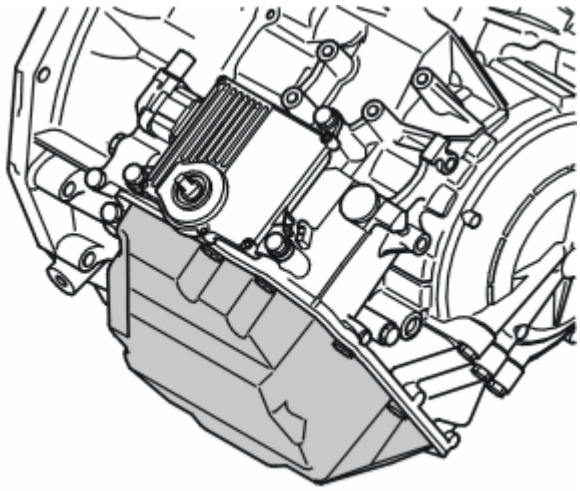

Fig. 85: Identifying Transmission Fluid Pan

Courtesy of VOLVO CARS CORPORATION

- **Continue**

  Refer to **RESETTING ADAPTATION**

CHECKING THE OIL QUALITY AND THE OIL LEVEL IN THE TRANSMISSION

NOTE: **Transmission fluid quality and level are extremely important for the function of the transmission. Therefore it is imperative that these are correct. In addition the oil level is dependent on oil temperature.**

Fig. 86: Identifying Ignition ON
Courtesy of VOLVO CARS CORPORATION

- Ignition on.
- Read off the oil temperature.

  Check the transmission oil level. If the oil level is low, check the transmission for leakage, then top up with oil.

  Check the quality of the oil.

  Replace the transmission fluid if the fluid smells burnt.

  Other information

  - see **TRANSMISSION OIL LEVEL - CHECKING**
  - see **OIL GRADE, CHECKING**
  - see **TRANSAXLE OIL**

  Select an alternative below

  1. No fault detected.

     Refer to **CHECKING THE COMPONENTS AND WIRING**

  2. Transmission fluid replaced, low level or poor quality.

     Refer to **RESETTING THE "TRANSMISSION FLUID CHANGE" COUNTER**

Fig. 87: Identifying VCT2000 Diagnostic Tool Symbol In VIDA
Courtesy of VOLVO CARS CORPORATION

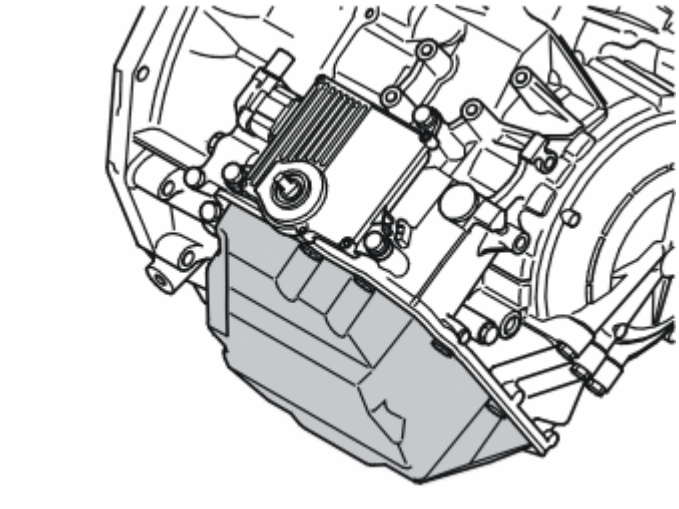

Fig. 88: Identifying Transmission Fluid Pan
Courtesy of VOLVO CARS CORPORATION

VERIFICATION

VERIFICATION

NOTE: **When the transmission's control module has been removed and reinstalled, it is important that the gear position sensor is calibrated. Select Pause and create a bookmark. Then select Vehicle communication.**

HINT: After carrying out the repair, check that the fault has been remedied.

Fig. 89: Identifying Ignition ON
Courtesy of VOLVO CARS CORPORATION

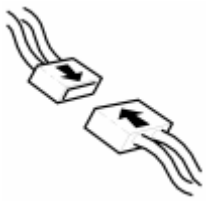

Fig. 90: Identifying Connector(s) Reinstallation
Courtesy of VOLVO CARS CORPORATION

- Ignition off.
- Reinstall the connectors, components etc.
- Test drive the vehicle following:**TEST DRIVE SCHEDULE, DESCRIPTION**

  Check that the transmission does not display any **obvious** function faults.

  NOTE: When test driving, the oil temperature must be above 20 °C.

Is the function OK?

- **YES**

  VERIFIED: Troubleshooting has been completed.

- **NO**

  Refer to **INFORMATION**

INFORMATION

FAULT-TRACING INFORMATION

The fault should have been detected and remedied. As this is not the case fault-tracing has failed.

Exit fault-tracing for this diagnostic trouble code (DTC) or make another attempt.

RESETTING ADAPTATION

RESETTING THE ADAPTATION AND THE COUNTER FOR "TRANSMISSION OIL, REPLACE"

HINT: The transmission has torque-regulated, adaptive pressure regulation. The pressure regulator enables the transmission to regulate pressure during each shift to prevent hard shifting. Each shift is assessed by the transmission control module (TCM) and is stored in the internal memory. This makes it possible to compensate for transmission and clutch wear. It is important that the adaptation in the memory is reset so that the transmission works normally after the repair. Because the fluid was changed during the repair, the counter for transmission fluid change must also be reset. If the counter is not reset during draining/replacement, a diagnostic trouble code may be generated under the wrong conditions.

NOTE: **This applies only if the transmission or one of the components in the transmission have been replaced.**

Fig. 91: Identifying Ignition ON
Courtesy of VOLVO CARS CORPORATION

- Ignition on.

  Click on the VCT2000 symbol to reset the adaptation and counter.

  Fig. 92: Identifying VCT2000 Diagnostic Tool Symbol In VIDA
  Courtesy of VOLVO CARS CORPORATION

- **Continue**

  Refer to **VERIFICATION**

RESETTING THE "TRANSMISSION FLUID CHANGE" COUNTER

CHECKING THE FUNCTION

HINT: The transmission control module (TCM) has a counter for fluid quality that counts the number of times the transmission is subjected to too hard a load or too high an ambient temperature. If the counter is not reset during draining/replacement, there is a risk that a diagnostic trouble code will be set under the wrong conditions. Thus, it is important that the counter for transmission fluid change be reset.

NOTE: **This only applies when the transmission oil is changed and when the oil is changed during repairs to the transmission's temperature sensor.**

Fig. 93: Identifying Ignition ON

Courtesy of VOLVO CARS CORPORATION

- Ignition on.

  Click on the VCT2000 symbol to reset the counter.

Fig. 94: Identifying VCT2000 Diagnostic Tool Symbol In VIDA
Courtesy of VOLVO CARS CORPORATION

- **Continue**

  Refer to **VERIFICATION**

TCM-P073F00 UNABLE TO ENGAGE GEAR 1. GENERAL FAILURE INFORMATION. NO SUB TYPE INFORMATION (B6324S5, TF-80SC; B6324S5, TF-80SC AWD; 2011)

DIAGNOSTIC TROUBLE CODE (DTC) INFORMATION

see **DIAGNOSTIC TROUBLE CODE (DTC) INFORMATION**

FAULT-TRACING

see **FAULT-TRACING**

TCM-P073F00 UNABLE TO SELECT GEAR 1. GENERAL MALFUNCTION INFORMATION. NO INFORMATION ON MALFUNCTION TYPE (B8444S, TF-80SC AWD; 2007-2011)

DIAGNOSTIC TROUBLE CODE (DTC) INFORMATION

Condition

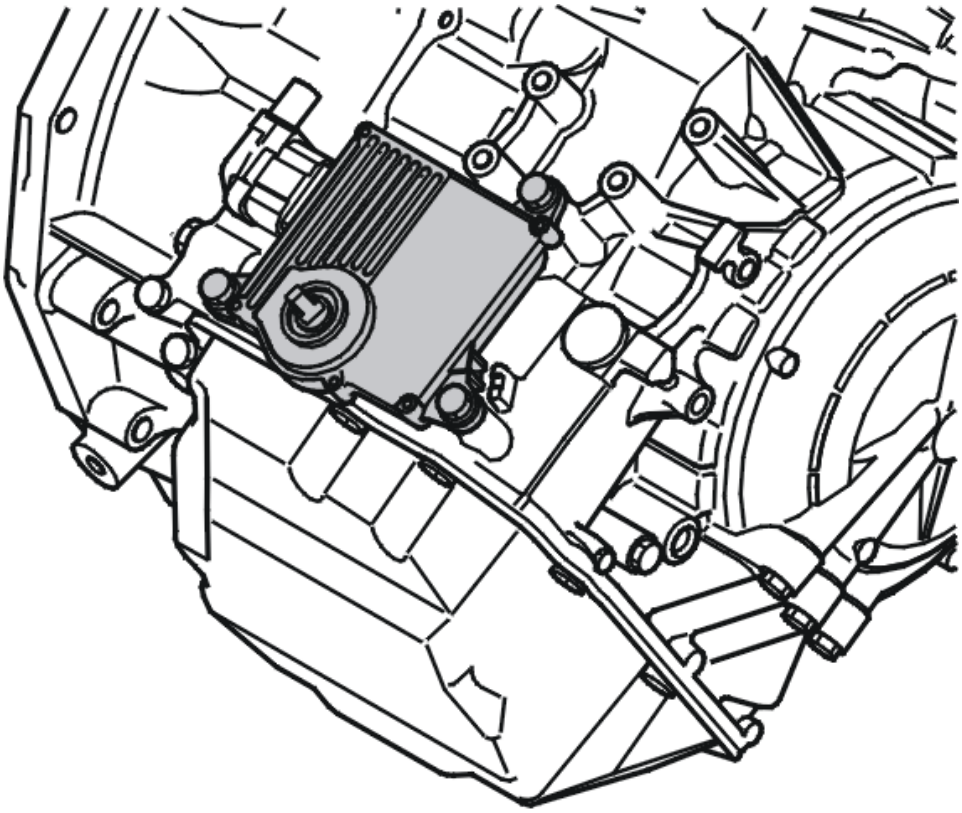

Fig. 95: Identifying Transmission Control Module (TCM)
Courtesy of VOLVO CARS CORPORATION

The transmission control module (TCM) receives signal about input and output rpm from the transmission's two rpm sensors. For each gear there is a determined ratio and, using the signals, the control module calculates the transmission's gear ratio. If the transmission control module (TCM) registers that the gear ratio is in a gear ratio that is near (4%) that of any other gear than the gear selected by the control module, then diagnostic trouble code TCM-P073F00 is generated, or any of the diagnostic trouble codes TCM-P074x00, depending on the cause of the malfunction.

The diagnostic trouble code can be diagnosed at an oil temperature above +20 °C in the transmission as well as approx. 4% outside normal operating range of the gear in question.

Substitute Value

- Auxiliary program **Emergency mode 2** in the transmission control module (TCM) has started.

  HINT: EMERGENCY MODE IN CASE OF MALFUNCTION

Possible Source

- Contact resistance or one of the solenoids has stuck in OFF or ON position.
- Mechanical faults in gearbox.

Fault symptom[s]

- Malfunction indicator lamp (MIL) lit.
- General warning lamp lit
- Abnormally slipping gears.
- No gear changing.

FAULT TRACING

CHECKING SOLENOIDS

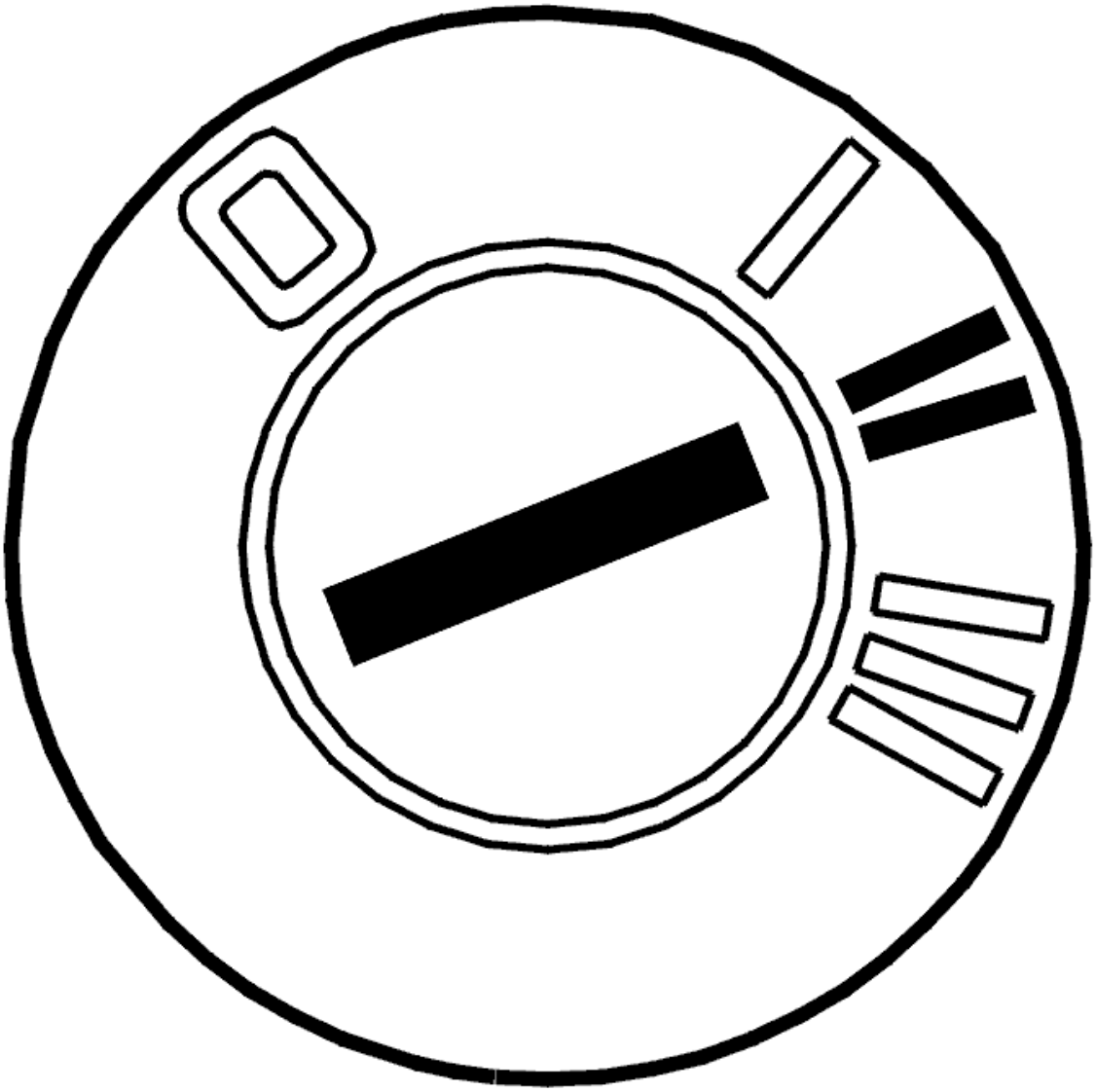

Fig. 96: Identifying Ignition ON
Courtesy of VOLVO CARS CORPORATION

- Ignition on

- Activate the solenoids by clicking on the symbol for VCT2000.

  Select a solenoid and read off the current through the solenoid's circuit. The current should shift between approx. 0 and 1000 mA.

Gear/DTC	Solenoid
1/TCM-P073F00	SLT, SLC2, SLC3, SLB1
2/TCM-P074A00	SLT, SLC2, SLC3
3/TCM-P074B00	SLT, SLC2, SLB1
4/TCM-P074C00	SLT, SLC3, SLB1
5/TCM-P074D00	SLT, SLC1, SLB1
6/TCM-P074E00	SLT, SLC3

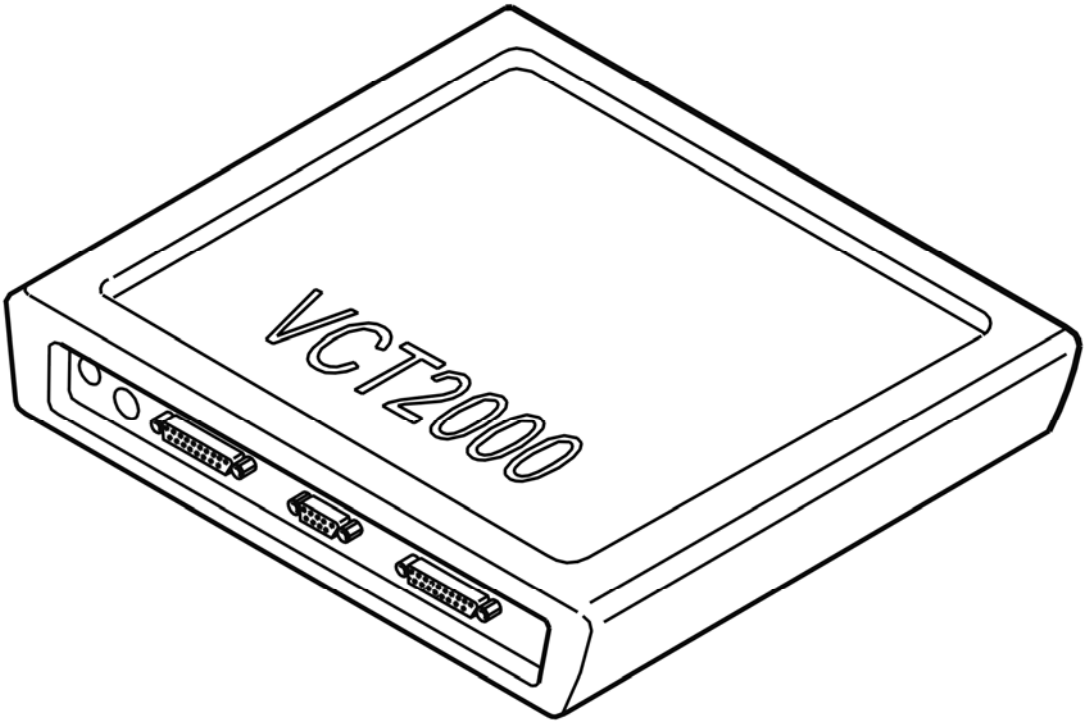

Fig. 97: Identifying VCT2000 Diagnostic Tool Symbol In VIDA
Courtesy of VOLVO CARS CORPORATION

Is the function OK?

- **YES**

  Refer to **CHECKING OIL QUALITY AND OIL LEVEL IN TRANSMISSION**

- **NO**

  Refer to **CHECKING THE WIRING AND COMPONENT**

CHECKING OIL QUALITY AND OIL LEVEL IN TRANSMISSION

NOTE: **The transmission oil's quality and level are extremely important for the function of the transmission. Therefore it is important that these values are correct. In addition, the oil level is dependent on oil temperature.**

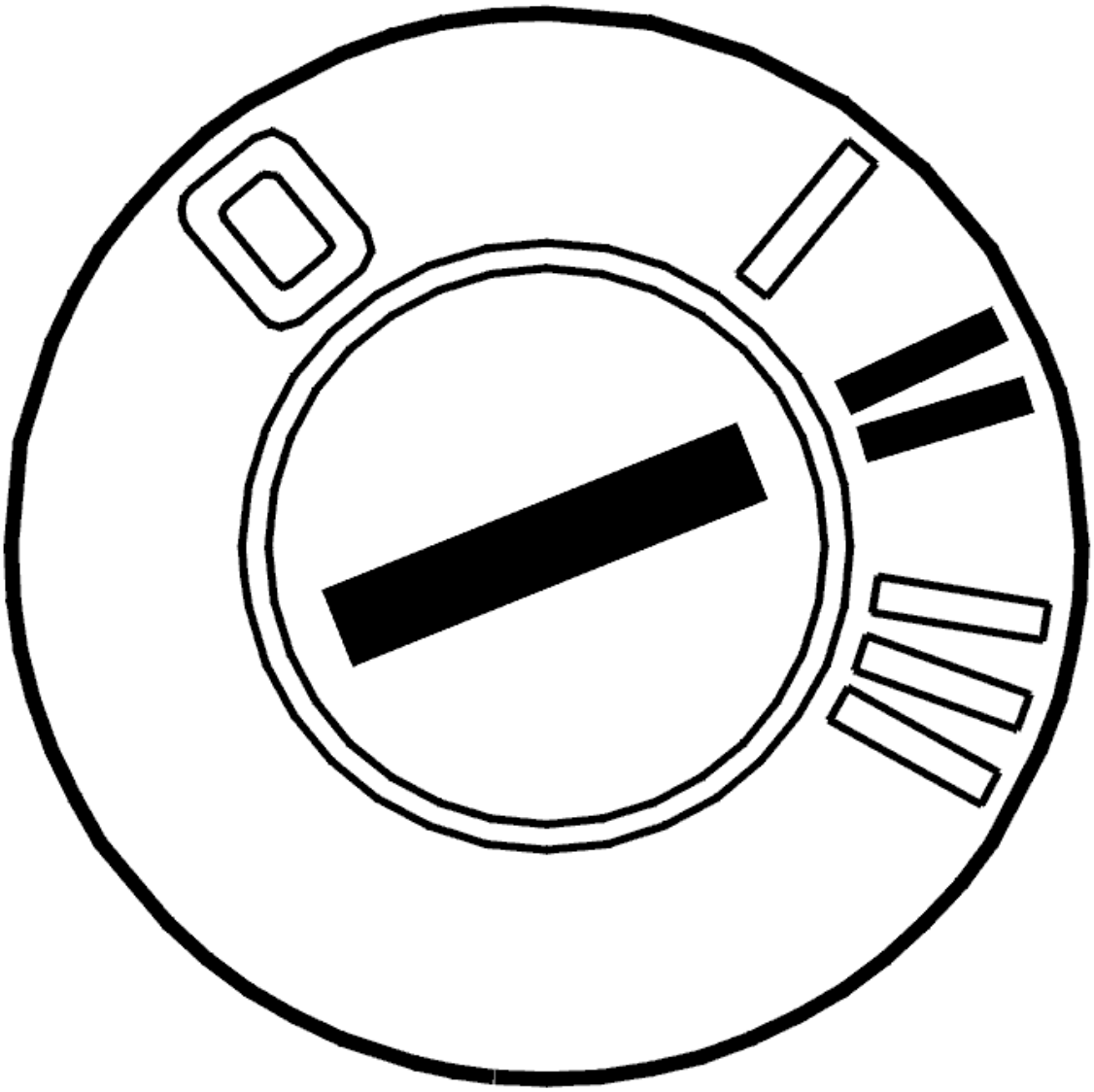

Fig. 98: Identifying Ignition ON
Courtesy of VOLVO CARS CORPORATION

- Ignition on
- Read off the oil's temperature.

Check the transmission's oil level. If it is low, check the transmission for leaks and then top off the oil.

Check the oil's quality.

If the oil smells burnt, change transmission oil.

Other information

- see **OIL LEVEL, CHECKING**
- see **OIL GRADE, CHECKING (2007-2011)**
- see **TRANSMISSION FLUID, CHANGING**

Select an alternative below

1. No defect found.

   Refer to **CHECKING THE WIRING AND COMPONENT**

2. Transmission oil changed, level low or quality poor.

   Refer to **RESETTING ADAPTATION**

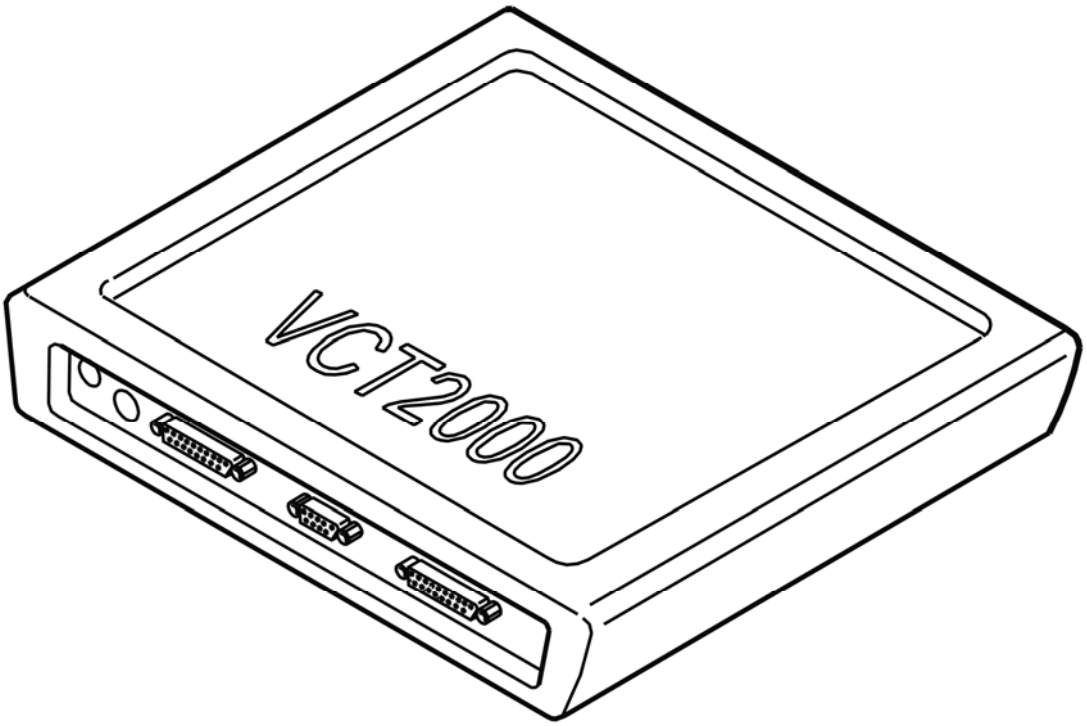

Fig. 99: Identifying VCT2000 Diagnostic Tool Symbol In VIDA

Courtesy of VOLVO CARS CORPORATION

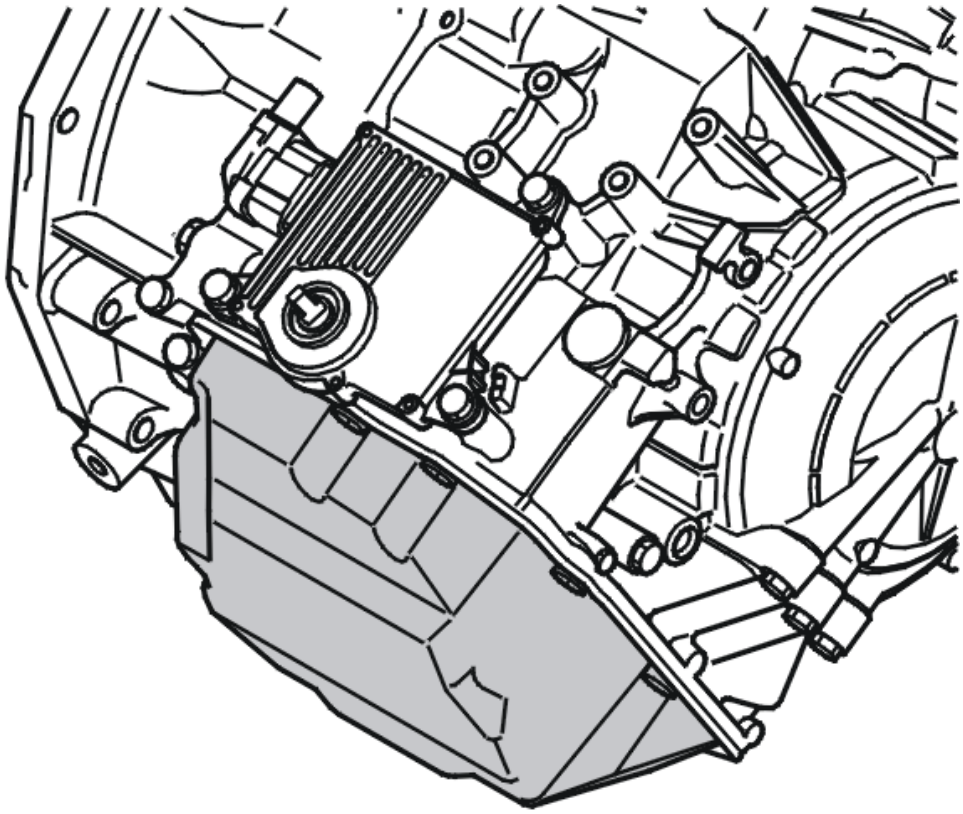

Fig. 100: Identifying Transmission Oil Pan
Courtesy of VOLVO CARS CORPORATION

CHECKING THE WIRING AND COMPONENT

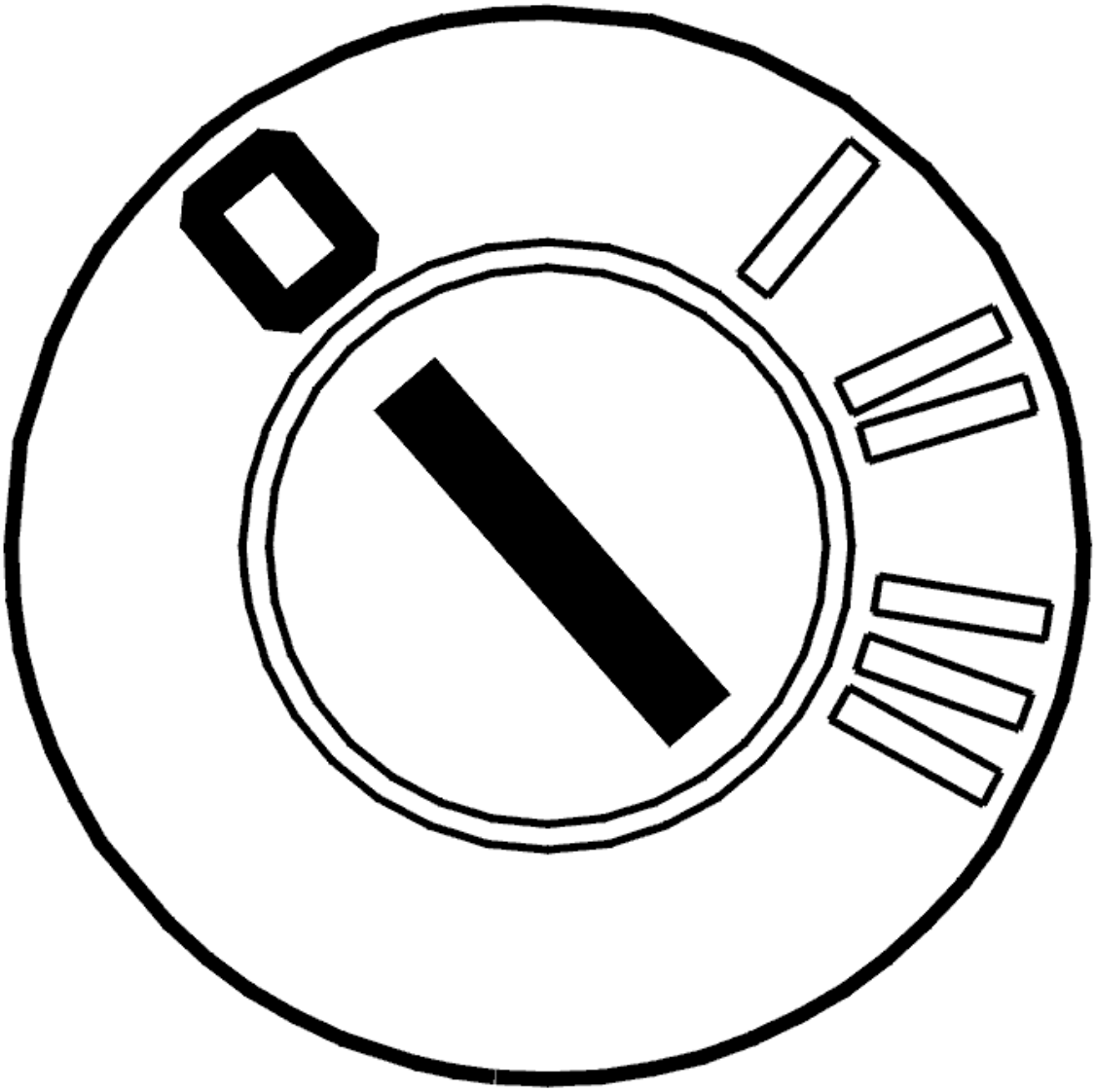

Fig. 101: Identifying Ignition OFF
Courtesy of VOLVO CARS CORPORATION

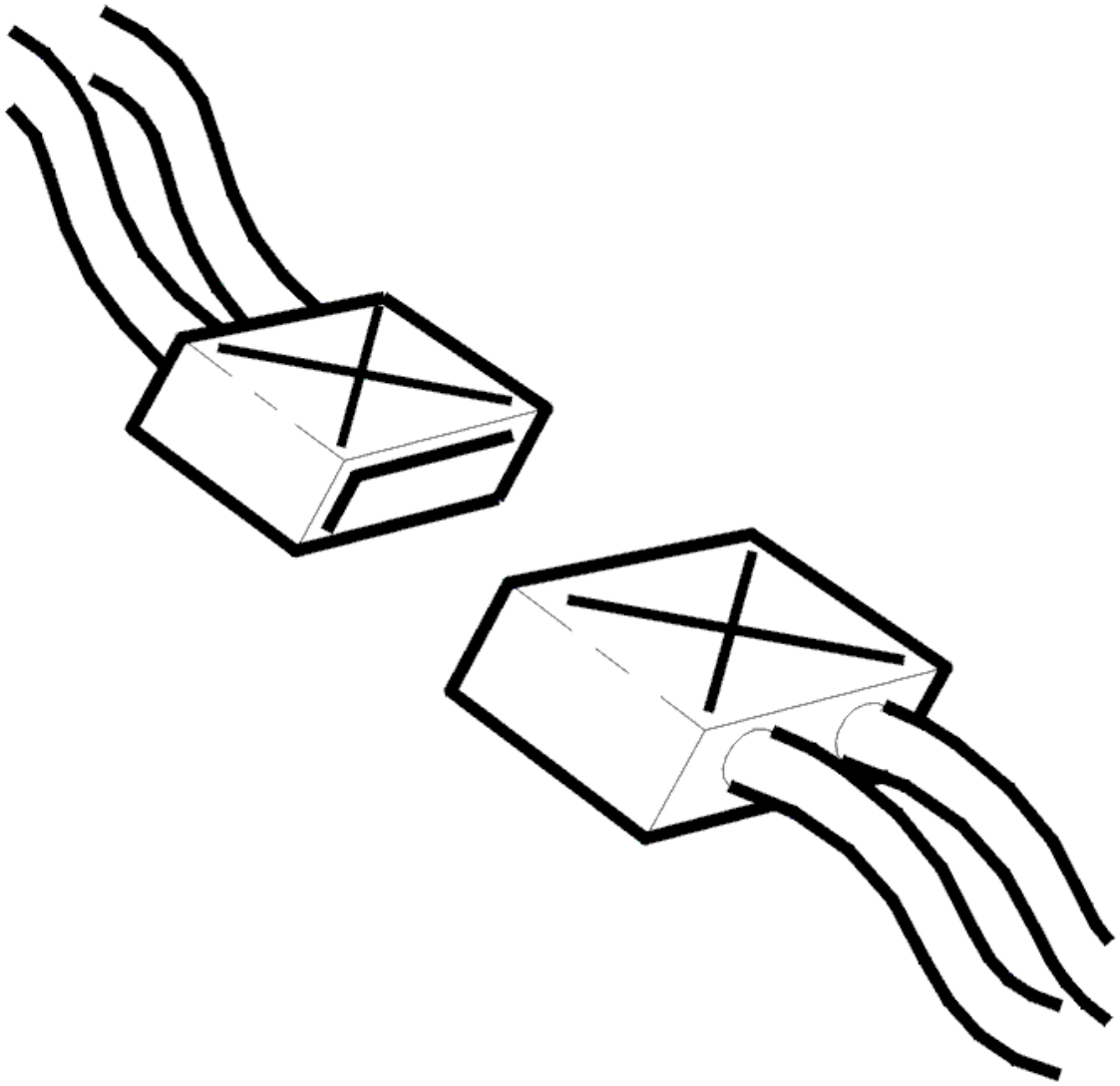

Fig. 102: Identifying Connector
Courtesy of VOLVO CARS CORPORATION

- Ignition off
- Open the gearbox control system

Check connector B (22-pin) for the transmission control module (TCM). Check for damaged or pressed in pins. Check for contact resistance and oxidation.

HINT: Check solenoid SLT, SLC1, SLC2, SLC3 and SLB1 according to: CHECKING THE LINE PRESSURE SOLENOID SLT, SLC1, SLC2, SLC3, SLB1 AND LOCK-UP SOLENOID SLU

Gear/DTC	Solenoid
1/TCM-P073F00	SLT, SLC2, SLC3, SLB1
2/TCM-P074A00	SLT, SLC2, SLC3

3/TCM-P074B00	SLT, SLC2, SLB1
4/TCM-P074C00	SLT, SLC3, SLB1
5/TCM-P074D00	SLT, SLC1, SLB1
6/TCM-P074E00	SLT, SLC3

If no defects were found on connectors or cables, replace the control system. If this does not help, replace transmission.

Remedy as necessary.

Other information

- see **REPLACING THE GEARBOX**
- see **CONTROL SYSTEM, REPLACING**
- see **CABLE HARNESS, CONTROL SYSTEM, GEARBOX, REPLACING**
- For access to connector B: **TRANSMISSION CONTROL MODULE (TCM), REPLACING**
- see **CONTENTS**

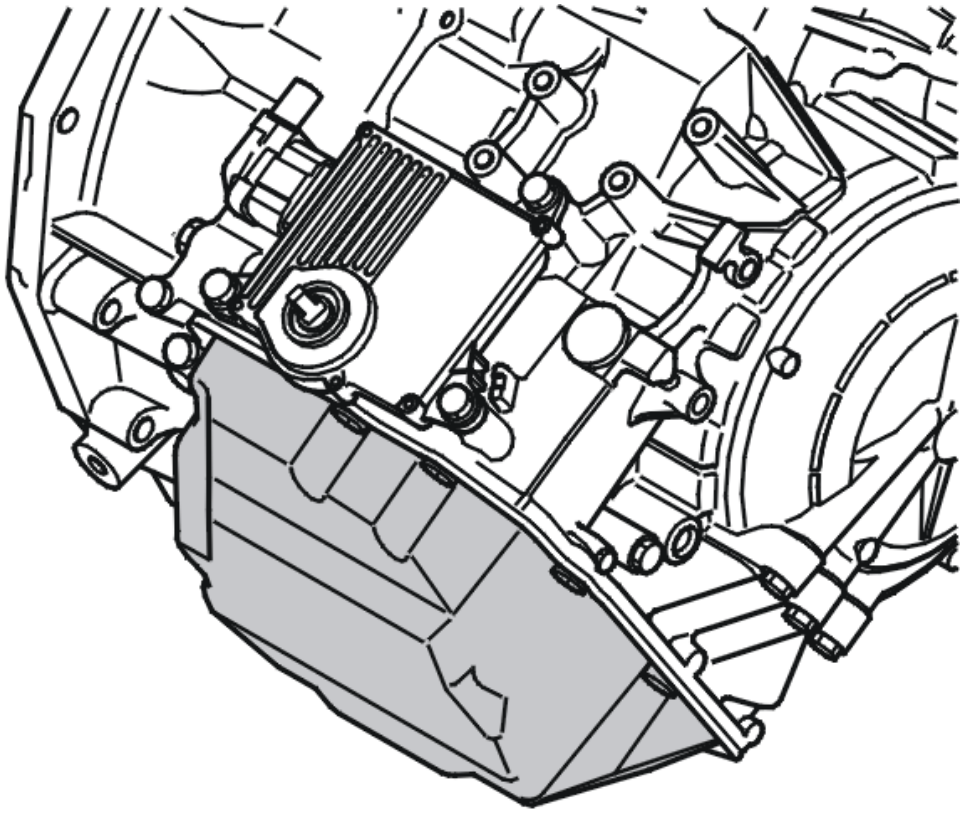

Fig. 103: Identifying Transmission Oil Pan
Courtesy of VOLVO CARS CORPORATION

- **Continue**

Refer to **RESETTING ADAPTATION**

REPLACING THE TRANSMISSION

Previous tests indicate an internal malfunction in the transmission.

Other information

- see **REPLACING THE GEARBOX**

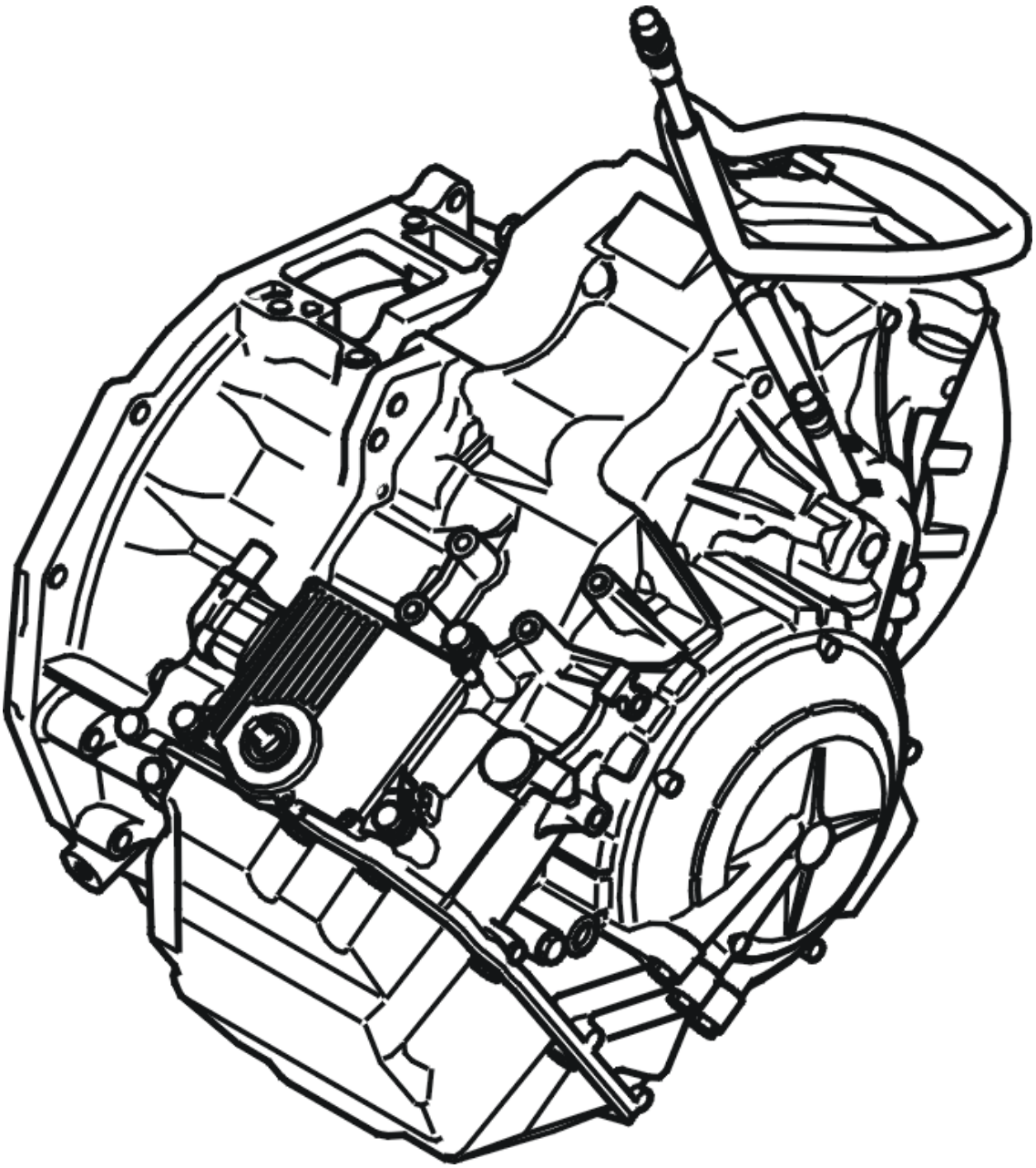

Fig. 104: Identifying Transmission
Courtesy of VOLVO CARS CORPORATION

- **Continue**

  Refer to **RESETTING ADAPTATION**

RESETTING ADAPTATION

RESETTING ADAPTATION AND COUNTER FOR "TRANSMISSION OIL, CHANGING"

HINT: The transmission has torque-controlled, adaptive pressure control. The pressure control means that the transmission itself controls the pressure during each shift sequence in order to avoid harsh shifting. Each shift is assessed by the transmission control module (TCM) and is stored in the internal memory, which results in compensation for wear in the transmission and clutch. In order for the transmission to function correctly after repair, it is important to reset the adaptation in the memory. Since the oil is changed during the repair, the counter for "Transmission oil, change" shall also be reset. If the counter is not reset when draining/changing oil, there is a risk that a diagnostic trouble code may be generated under incorrect conditions.

NOTE: This applies only if the transmission or one of the components in the transmission have been replaced.

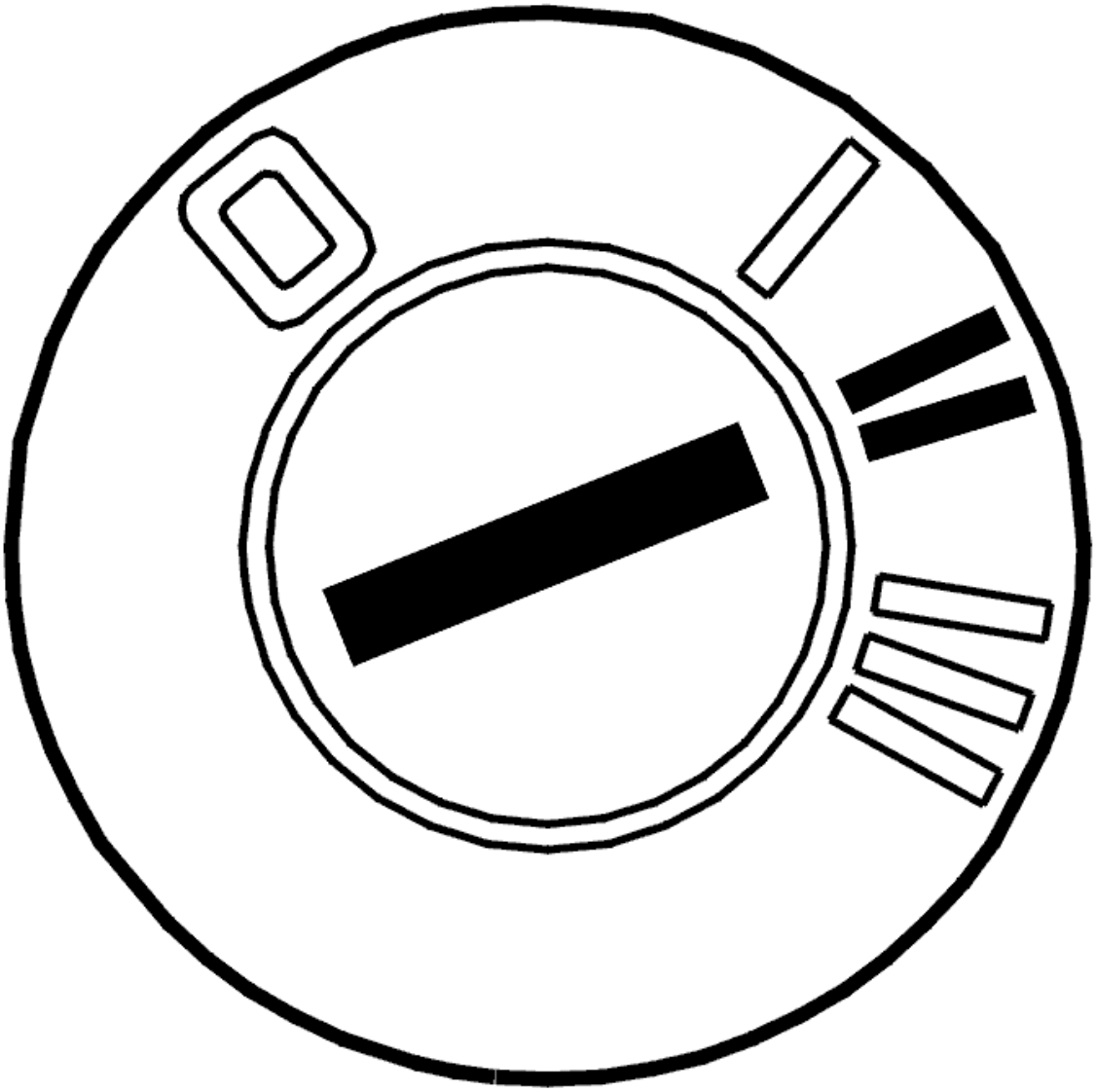

Fig. 105: Identifying Ignition ON
Courtesy of VOLVO CARS CORPORATION

- Ignition on

  Activate reset of the adaptation and the counter by clicking on the symbol for VCT2000.

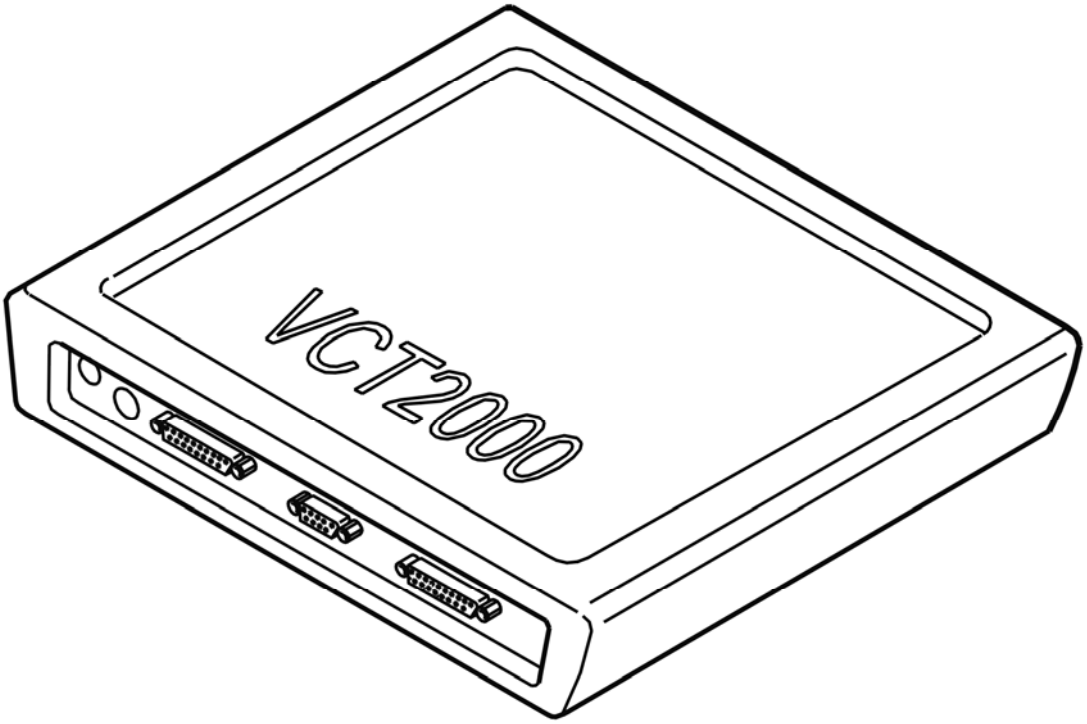

Fig. 106: Identifying VCT2000 Diagnostic Tool Symbol In VIDA
Courtesy of VOLVO CARS CORPORATION

- **Continue**

  Refer to **VERIFICATION**

VERIFICATION

VERIFICATION

NOTE: **When the transmission's control module has been removed and reinstalled, it is important that the gear position sensor is calibrated. Select "Pause" and save a bookmark, then select Vehicle communication**

HINT: After carrying out the repair, check that the fault has been remedied.

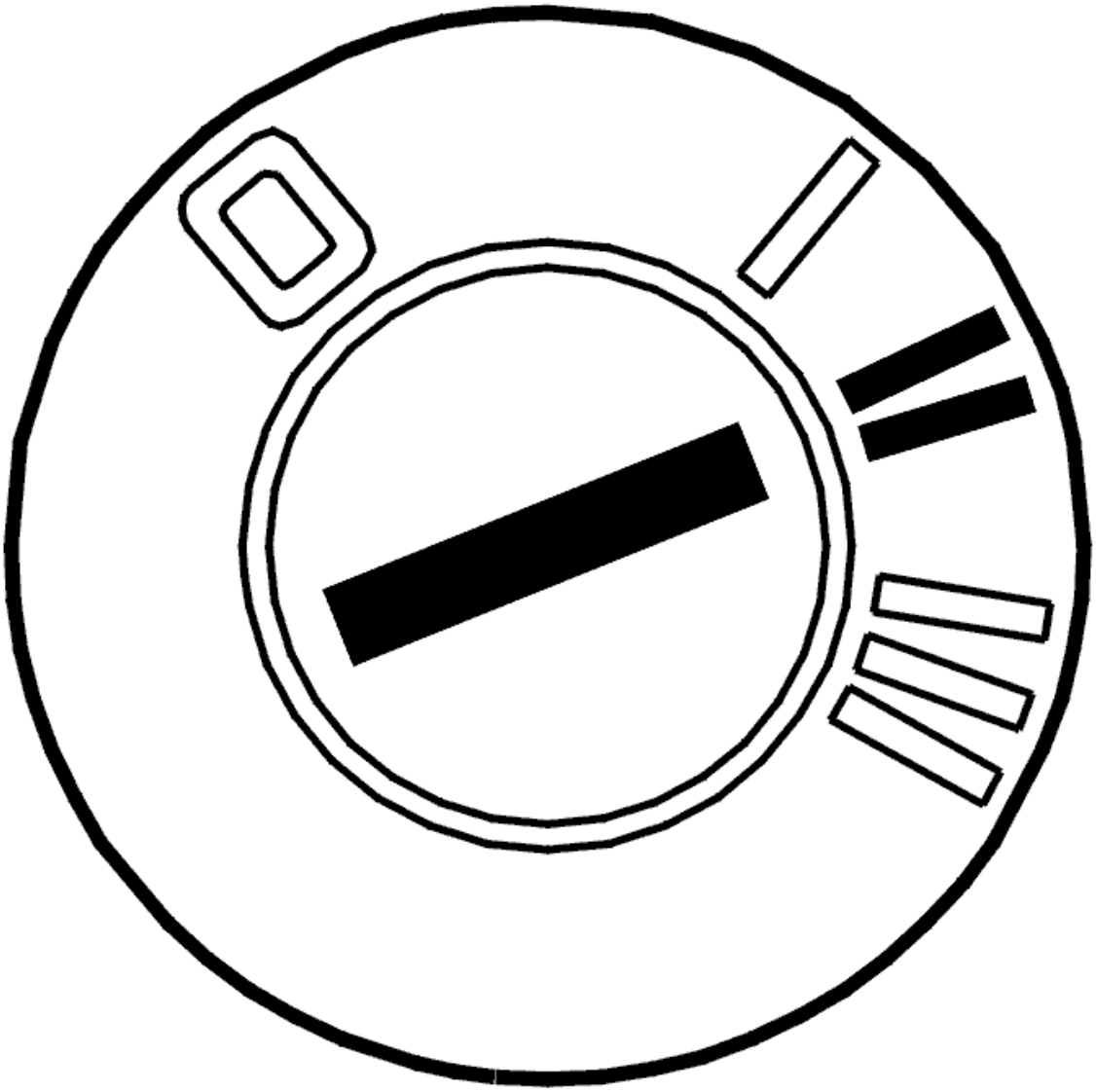

Fig. 107: Identifying Ignition ON
Courtesy of VOLVO CARS CORPORATION

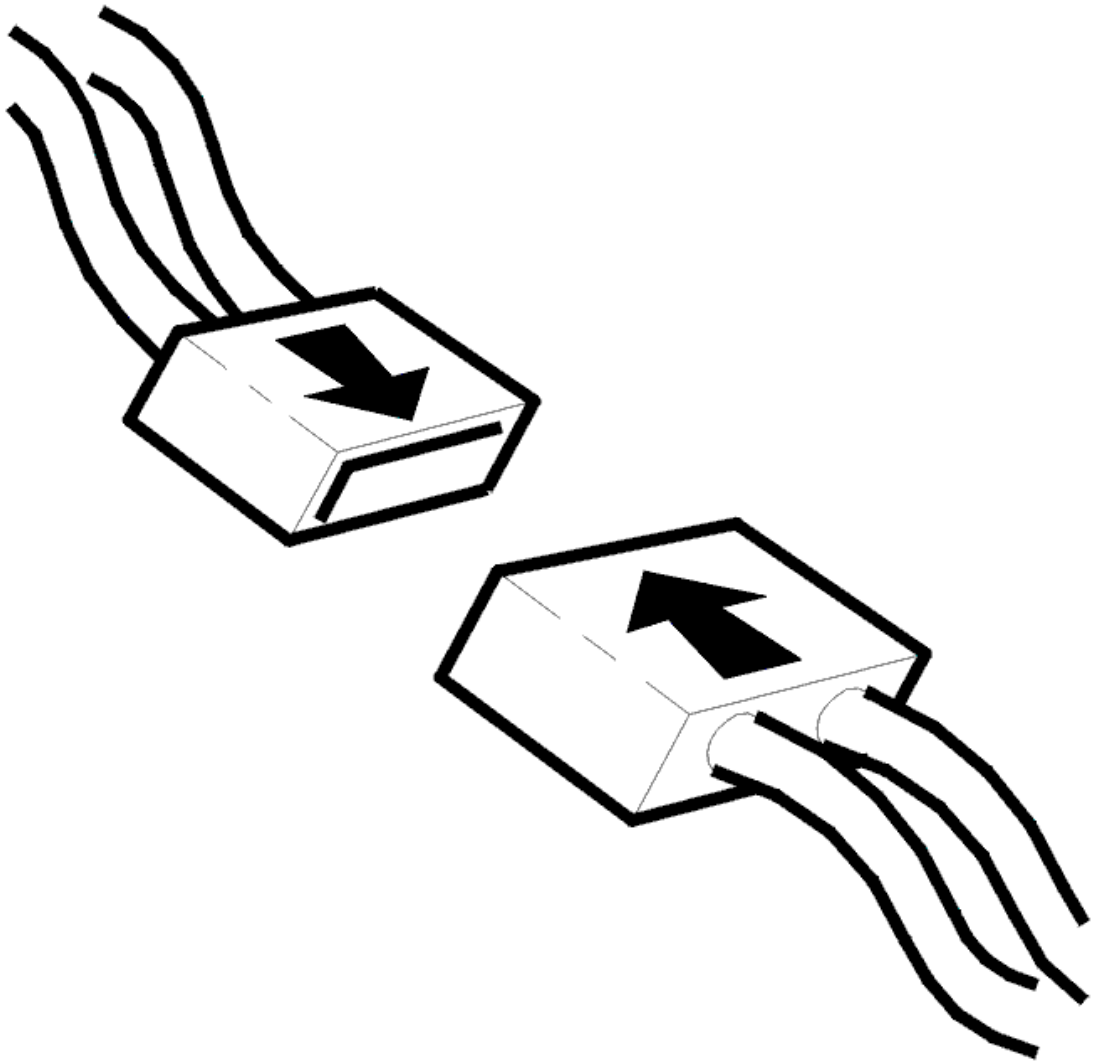

Fig. 108: Identifying Connector(s) Reinstallation
Courtesy of VOLVO CARS CORPORATION

- Ignition off
- Reinstall the components, reconnect the connectors etc.

  Test drive the vehicle following: **TEST DRIVE SCHEDULE, DESCRIPTION**

  Check that the transmission does not display any **obvious** function faults.

  NOTE: When test driving, the oil temperature must be above 20 °C.

Is the function OK?

- **YES**

VERIFIED: Troubleshooting has been completed.

- **NO**

  Refer to **INFORMATION**

INFORMATION

FAULT-TRACING INFORMATION

The fault should have been detected and remedied. As this is not the case fault-tracing has failed.

Exit fault-tracing for this diagnostic trouble code (DTC) or make another attempt.

TCM-P073F00 UNABLE TO SELECT GEAR 1. GENERAL MALFUNCTION INFORMATION. NO INFORMATION ON MALFUNCTION TYPE (B8444S, TF-80SC AWD; 2006)

DIAGNOSTIC TROUBLE CODE (DTC) INFORMATION

Condition

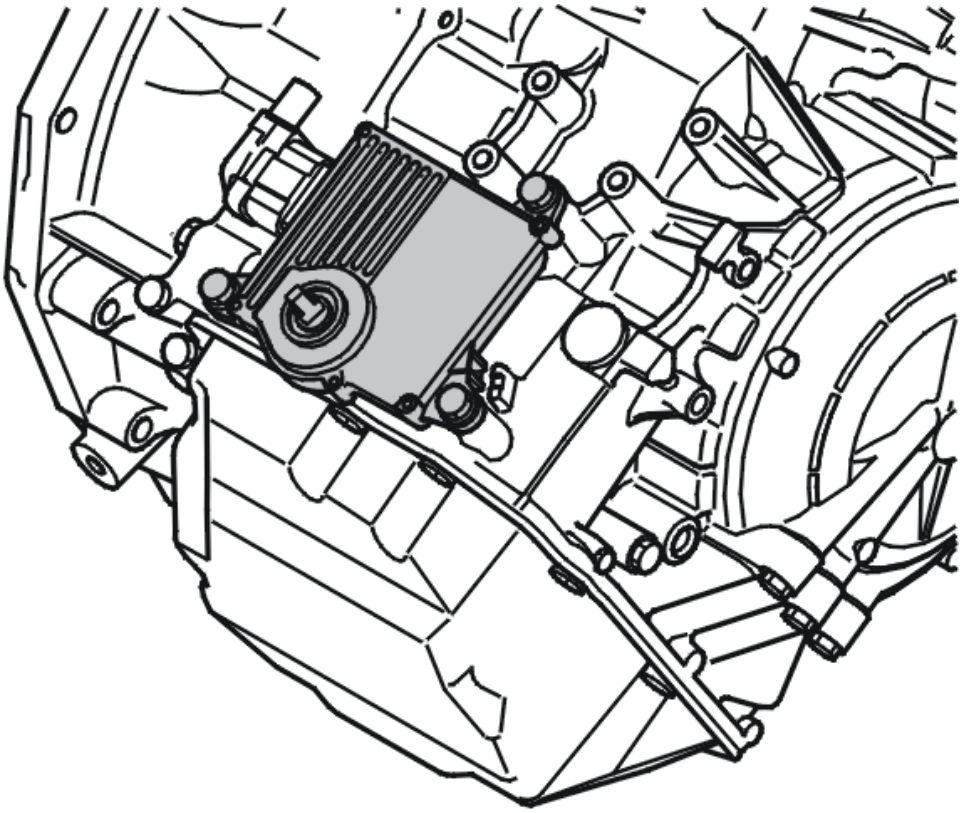

Fig. 109: Identifying Transmission Control Module (TCM)

Courtesy of VOLVO CARS CORPORATION

The transmission control module (TCM) receives signal about input and output rpm from the transmission's two rpm sensors. For each gear there is a determined ratio and, using the signals, the control module calculates the transmission's gear ratio. If the transmission control module (TCM) registers that the gear ratio is in a gear ratio that is near (4%) that of any other gear than the gear selected by the control module, then diagnostic trouble code TCM-P073F00 is generated, or any of the diagnostic trouble codes TCM-P074x00, depending on the cause of the malfunction.

The diagnostic trouble code can be diagnosed at an oil temperature above +20 °C in the transmission as well as approx. 4% outside normal operating range of the gear in question.

Substitute Value

- Auxiliary program **Emergency mode 1** in the transmission control module (TCM) has started.

  HINT: EMERGENCY MODE IN CASE OF MALFUNCTION

Possible Source

- Contact resistance or one of the solenoids has stuck in OFF or ON position.
- Mechanical faults in gearbox.

Fault symptom[s]

- Malfunction indicator lamp (MIL) lit.
- General warning lamp lit
- Abnormally slipping gears.
- No gear changing.

FAULT TRACING

see **FAULT TRACING**

TCM-P073F00 UNABLE TO SELECT GEAR 1. GENERAL MALFUNCTION INFORMATION. NO INFORMATION ON MALFUNCTION TYPE (TF-80SC AWD; 2005)

DIAGNOSTIC TROUBLE CODE (DTC) INFORMATION

see **DIAGNOSTIC TROUBLE CODE (DTC) INFORMATION**

FAULT TRACING

see **FAULT TRACING**

TCM-P074100: TORQUE CONVERTER CLUTCH SOLENOID CIRCUIT PERFORMANCE OR STUCK OFF. GENERAL FAILURE INFORMATION. NO SUB TYPE INFORMATION (B6324S, TF-80SC; B6324S, TF-80SC AWD; 2007-2010)

DIAGNOSTIC TROUBLE CODE (DTC) INFORMATION TCM-P074100

Condition

The transmission control module (TCM) checks the function of the lock-up solenoid by comparing the speed signal from the transmission speed sensor with the speed (rpm) signal from the transmission speed (rpm) sensor. The signals must then "show" the same calculated speed (rpm). The transmission control module (TCM) also compares the speed from the transmission speed sensor with the engine speed (RPM). Rpm should be greater than or less than transmission speed depending on which gear is engaged.

The diagnostic trouble code (DTC) is stored if the control module detects that:

- Speed and rpm signals do not match calculated values. This indicates that the lock-up solenoid (SLU) is spinning or is not engaged.

The control module's test for the diagnostic trouble code (DTC) starts in the event of:

- Normal driving.

NOTE: **The control module can only detect the fault once the test has been started and the diagnostic trouble code is stored when the conditions are met.**

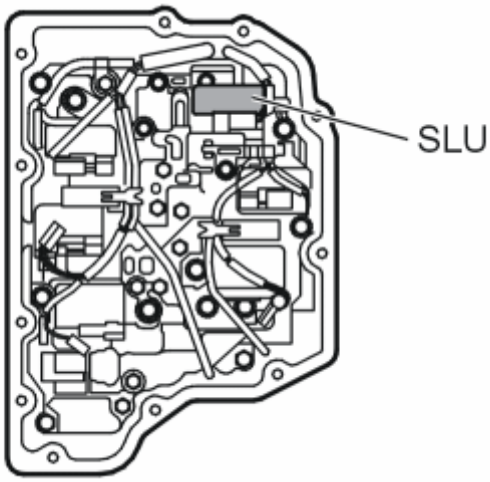

Fig. 110: Identifying Solenoid SLU
Courtesy of VOLVO CARS CORPORATION

Substitute Value

- Adaptation function is blocked.
- function is blocked.
- Slip lock-up function is blocked.

Possible Source

- Contact resistance in the terminals.
- Open-circuit in the cable for the control signal or signal ground.
- Solenoid not working.
- Solenoid stuck in closed position.
- Internal fault in the transmission control module (TCM).

Fault symptom[s]

- Malfunction indicator light (MIL), on
- General warning lamp lit
- Rough gear shift
- No gear shift
- Abnormal slipping gearshifts

FAULT-TRACING

CHECKING THE OIL QUALITY AND THE OIL LEVEL IN THE TRANSMISSION

NOTE: **Transmission fluid quality and level are extremely important for the function of the transmission. Therefore it is imperative that these are correct. In addition the oil level is dependent on oil temperature.**

Fig. 111: Identifying Ignition ON
Courtesy of VOLVO CARS CORPORATION

- Ignition on.
- Read off the oil temperature.

  Check the transmission oil level. If the oil level is low, check the transmission for leakage, then top up with oil.

  Check the quality of the oil.

Replace the transmission fluid if the fluid smells burnt.

Other information

- see **TRANSMISSION OIL LEVEL - CHECKING**
- see **OIL GRADE, CHECKING**
- see **TRANSAXLE OIL**

Select an alternative below

1. No fault detected.

   Refer to **CHECKING THE COMPONENTS AND WIRING**

2. Transmission fluid replaced, low level or poor quality.

   Refer to **RESETTING THE "TRANSMISSION FLUID CHANGE" COUNTER**

Fig. 112: Identifying VCT2000 Diagnostic Tool Symbol In VIDA
Courtesy of VOLVO CARS CORPORATION

CHECKING THE COMPONENTS AND WIRING

Fig. 113: Identifying Ignition OFF
Courtesy of VOLVO CARS CORPORATION

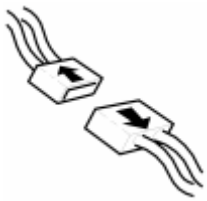

Fig. 114: Identifying Connectors Disconnected
Courtesy of VOLVO CARS CORPORATION

- Ignition off.
- Open the transmission control system.

  Check connector B (22-pin) for the transmission control module (TCM). Check for damaged or pressed in pins. Check for contact resistance and oxidation.

  HINT: Check solenoids SLT, SLC3 as described in:CHECKING INTERNAL COMPONENTS OF THE TRANSMISSION

  If no defects were found on connectors or cables, replace the transmission.

  Remedy as necessary.

  Other information

  - see **TRANSMISSION - REMOVAL, REPLACEMENT AND INSTALLATION**
  - see **VALVE HOUSING** .
  - see **TRANSMISSION CONTROL UNIT WIRING HARNESS**
  - To access connector B: **TRANSMISSION CONTROL MODULE (TCM)**
  - see **CHECKING WIRING AND TERMINALS**

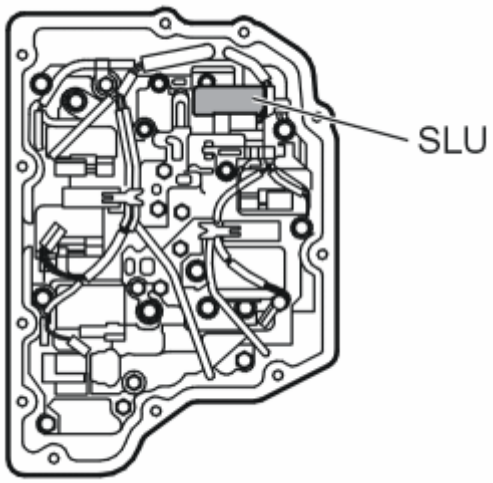

Fig. 115: Identifying Solenoid SLU
Courtesy of VOLVO CARS CORPORATION

- **Continue**

  Refer to **RESETTING ADAPTATION**

VERIFICATION

VERIFICATION

NOTE: **When the transmission's control module has been removed and reinstalled, it is important that the gear position sensor is calibrated. Select Pause and create a bookmark. Then select Vehicle communication.**

HINT: After carrying out the repair, check that the fault has been remedied.

Fig. 116: Identifying Ignition ON
Courtesy of VOLVO CARS CORPORATION

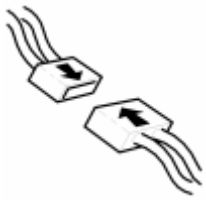

Fig. 117: Identifying Connector(s) Reinstallation
Courtesy of VOLVO CARS CORPORATION

- Ignition off.
- Reinstall the connectors, components etc.
- Test drive the vehicle following:**TEST DRIVE SCHEDULE, DESCRIPTION**

  Check that the transmission does not display any **obvious** function faults.

  NOTE: **When test driving, the oil temperature must be above 20 °C.**

Is the function OK?

- **YES**

  VERIFIED: Troubleshooting has been completed.

- **NO**

  Refer to **INFORMATION**

INFORMATION

FAULT-TRACING INFORMATION

The fault should have been detected and remedied. As this is not the case fault-tracing has failed.

Exit fault-tracing for this diagnostic trouble code (DTC) or make another attempt.

RESETTING ADAPTATION

RESETTING THE ADAPTATION AND THE COUNTER FOR "TRANSMISSION OIL, REPLACE"

HINT: The transmission has torque-regulated, adaptive pressure regulation. The pressure regulator enables the transmission to regulate pressure during each shift to prevent hard shifting. Each shift is assessed by the transmission control module (TCM) and is stored in the internal memory. This makes it possible to compensate for transmission and clutch wear. It is important that the adaptation in the memory is reset so that the transmission works normally after the repair. Because the fluid was changed during the repair, the counter for transmission fluid change must also be reset. If the counter is not reset during draining/replacement, a diagnostic trouble code may be generated under the wrong conditions.

NOTE: This applies only if the transmission or one of the components in the transmission have been replaced.

Fig. 118: Identifying Ignition ON
Courtesy of VOLVO CARS CORPORATION

- Ignition on.

  Click on the VCT2000 symbol to reset the adaptation and counter.

  Fig. 119: Identifying VCT2000 Diagnostic Tool Symbol In VIDA
  Courtesy of VOLVO CARS CORPORATION

- **Continue**

  Refer to **VERIFICATION**

RESETTING THE "TRANSMISSION FLUID CHANGE" COUNTER

CHECKING THE FUNCTION

HINT: The transmission control module (TCM) has a counter for fluid quality that counts the number of

times the transmission is subjected to too hard a load or too high an ambient temperature. If the counter is not reset during draining/replacement, there is a risk that a diagnostic trouble code will be set under the wrong conditions. Thus, it is important that the counter for transmission fluid change be reset.

NOTE: This only applies when the transmission oil is changed and when the oil is changed during repairs to the transmission's temperature sensor.

Fig. 120: Identifying Ignition ON
Courtesy of VOLVO CARS CORPORATION

- Ignition on.

  Click on the VCT2000 symbol to reset the counter.

Fig. 121: Identifying VCT2000 Diagnostic Tool Symbol In VIDA
Courtesy of VOLVO CARS CORPORATION

- **Continue**

  Refer to **VERIFICATION**

TCM-P074100: TORQUE CONVERTER CLUTCH SOLENOID CIRCUIT PERFORMANCE OR STUCK OFF. GENERAL FAILURE INFORMATION. NO SUB TYPE INFORMATION (B6324S5, TF-80SC; B6324S5, TF-80SC AWD; 2011)

DIAGNOSTIC TROUBLE CODE (DTC) INFORMATION TCM-P074100

see **DIAGNOSTIC TROUBLE CODE (DTC) INFORMATION TCM-P074100**

FAULT-TRACING

see **FAULT-TRACING**

TCM-P074100: TORQUE CONVERTER CLUTCH SOLENOID CIRCUIT PERFORMANCE OR STUCK IN OFF POSITION. GENERAL FAULT INFORMATION. NO INFORMATION ON FAULT TYPE (B8444S, TF-80SC AWD; 2006-2011)

DIAGNOSTIC TROUBLE CODE (DTC) INFORMATION TCM-P074100

Condition

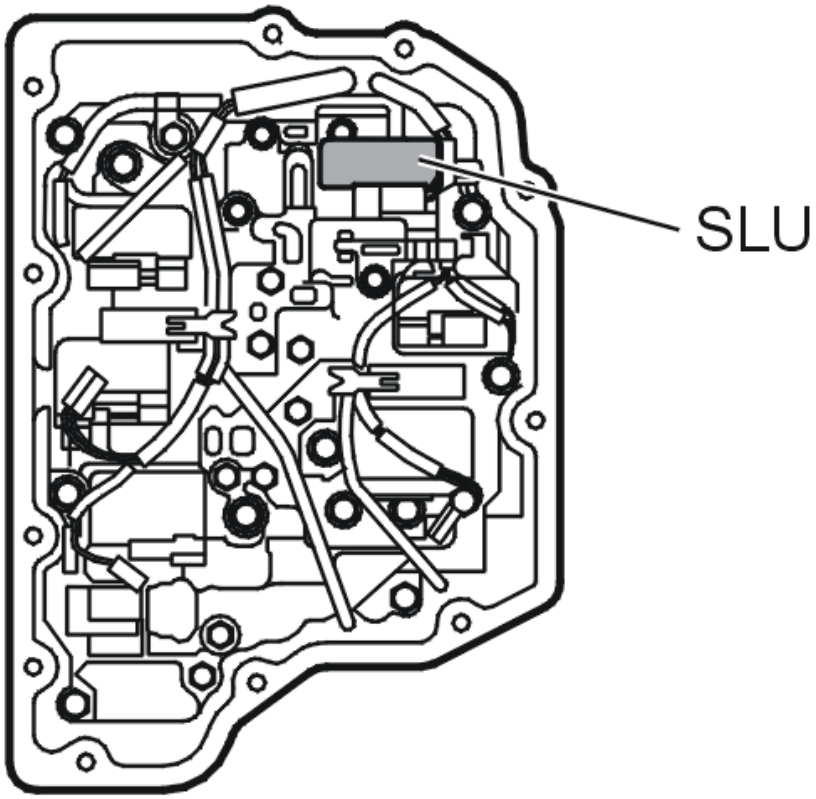

Fig. 122: Identifying Solenoid SLU
Courtesy of VOLVO CARS CORPORATION

The transmission control module (TCM) checks the lockup solenoid function by comparing the speed signal from the gearbox speed sensor with the rpm signal from the gearbox rpm sensor. The signals should then "show" the same calculated rpm. The transmission control module (TCM) also compares the rpm from the gearbox speed sensor with the engine rpm. The rpm should then be greater or lower than the gearbox speed depending on the gear that is selected. If the transmission control module (TCM) detects that the speed and rpm signals do not agree with the calculated values, it means that the lock-up solenoid SLU is slipping or is not engaged and the diagnostic trouble code (DTC) is generated.

The diagnostic trouble code (DTC) can be diagnosed when driving normally.

Substitute Value

- Adaptation function is blocked.
- Lock-up function is blocked.
- Slip lock-up function is blocked.

Possible Source

- Contact resistance in the terminals
- Open circuit in lead for control signal or signal ground.
- Solenoid not working.
- Solenoid stuck in closed position.
- Internal fault in transmission control module (TCM).

Fault symptom[s]

- General warning lamp lit
- Malfunction indicator lamp (MIL) lit.
- Harsh gear changing
- No gear changing.
- Abnormally slipping gears.

FAULT TRACING

CHECKING OIL QUALITY AND OIL LEVEL IN TRANSMISSION

NOTE: **The transmission oil's quality and level are extremely important for the function of the transmission. Therefore it is important that these are correct. In addition, the oil level is dependent on oil temperature.**

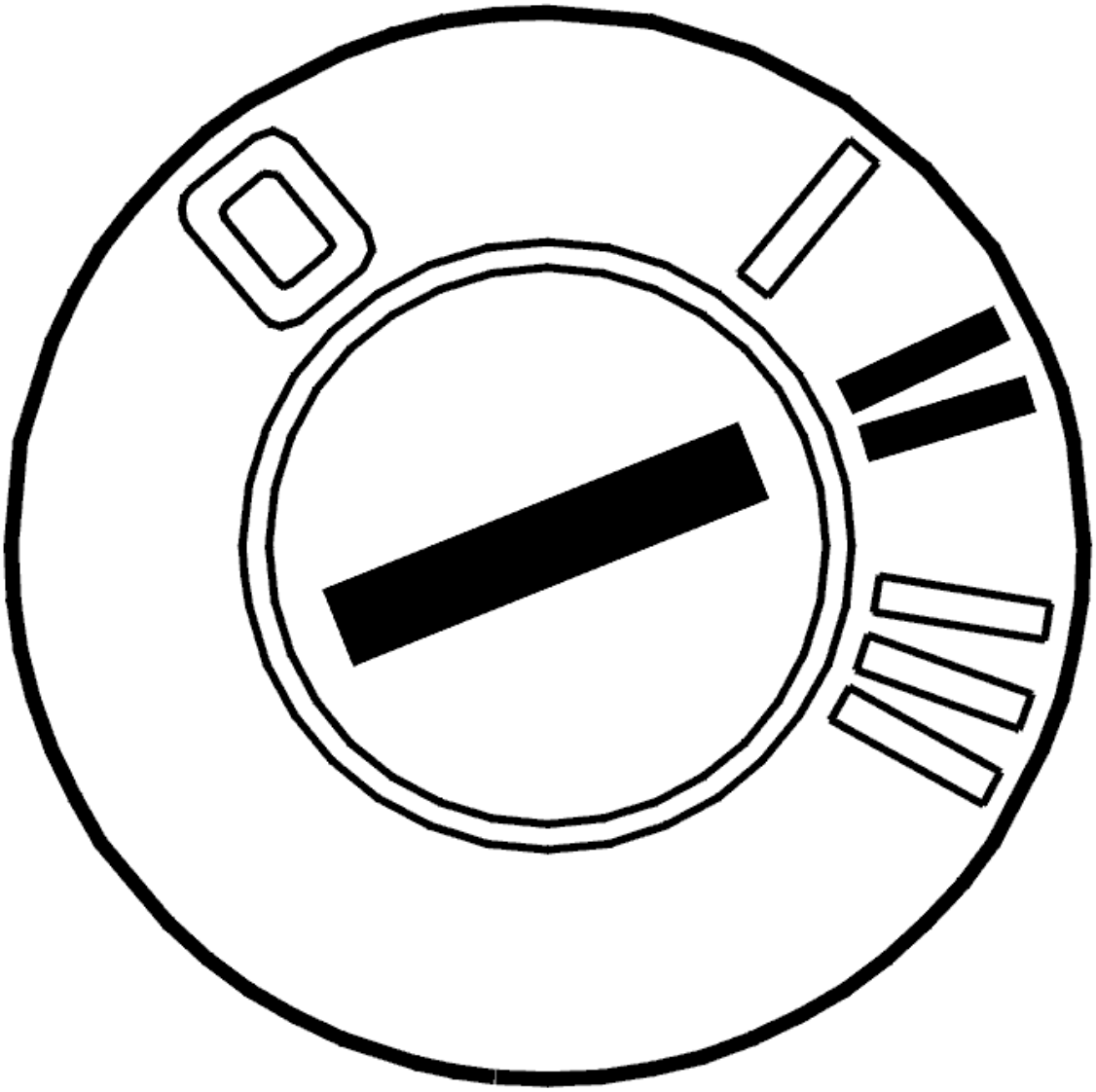

Fig. 123: Identifying Ignition ON
Courtesy of VOLVO CARS CORPORATION

- Ignition on
- Read off the oil's temperature.

  Check the transmission's oil level. If it is low, check the transmission for leaks and then top off the oil.

  Check the oil's quality.

  If the oil smells burnt, change transmission oil.

  Other information

  - see **OIL LEVEL, CHECKING**

- see **OIL GRADE, CHECKING (2007-2011)**
- see **TRANSMISSION FLUID, CHANGING**

Select an alternative below

1. No defect found.

   Refer to **CHECKING THE WIRING AND COMPONENT**

2. Transmission oil changed, level low or quality poor.

   Refer to **RESETTING THE COUNTER FOR TRANSMISSION OIL, CHANGE**

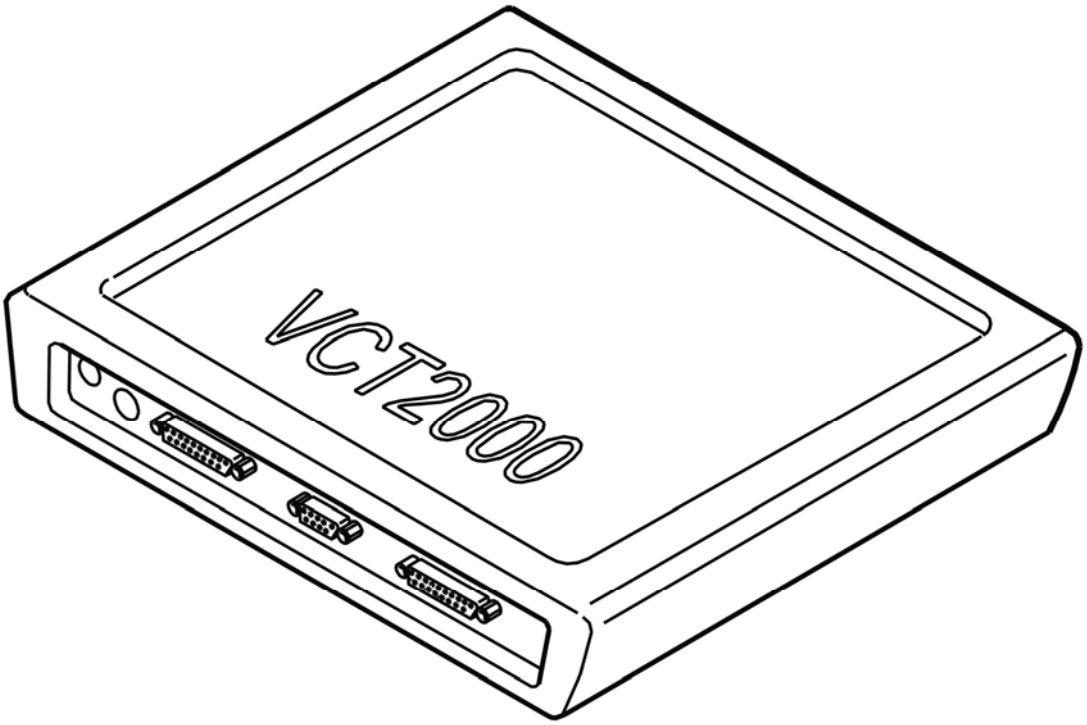

Fig. 124: Identifying VCT2000 Diagnostic Tool Symbol In VIDA
Courtesy of VOLVO CARS CORPORATION

CHECKING THE WIRING AND COMPONENT

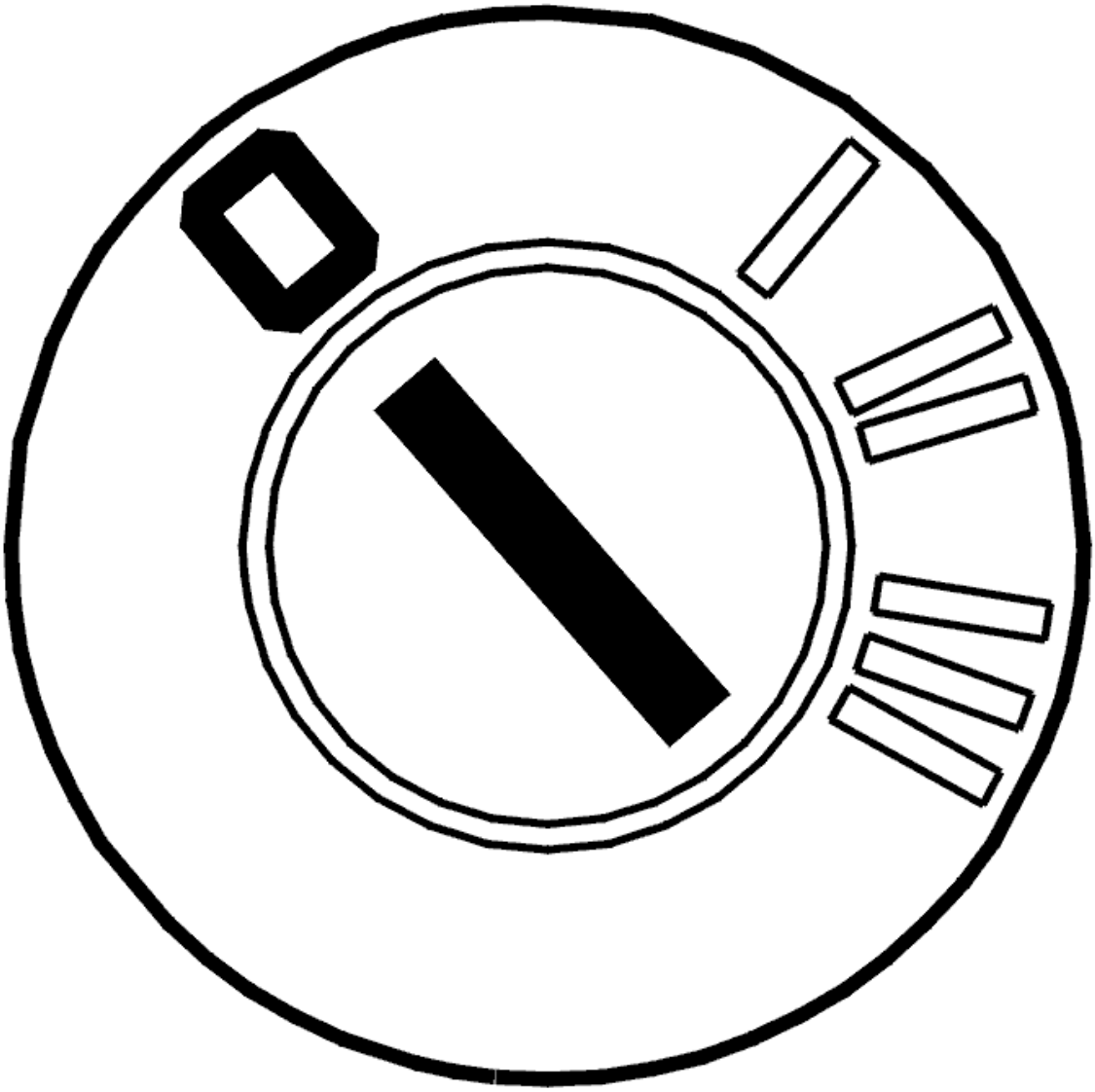

Fig. 125: Identifying Ignition OFF
Courtesy of VOLVO CARS CORPORATION

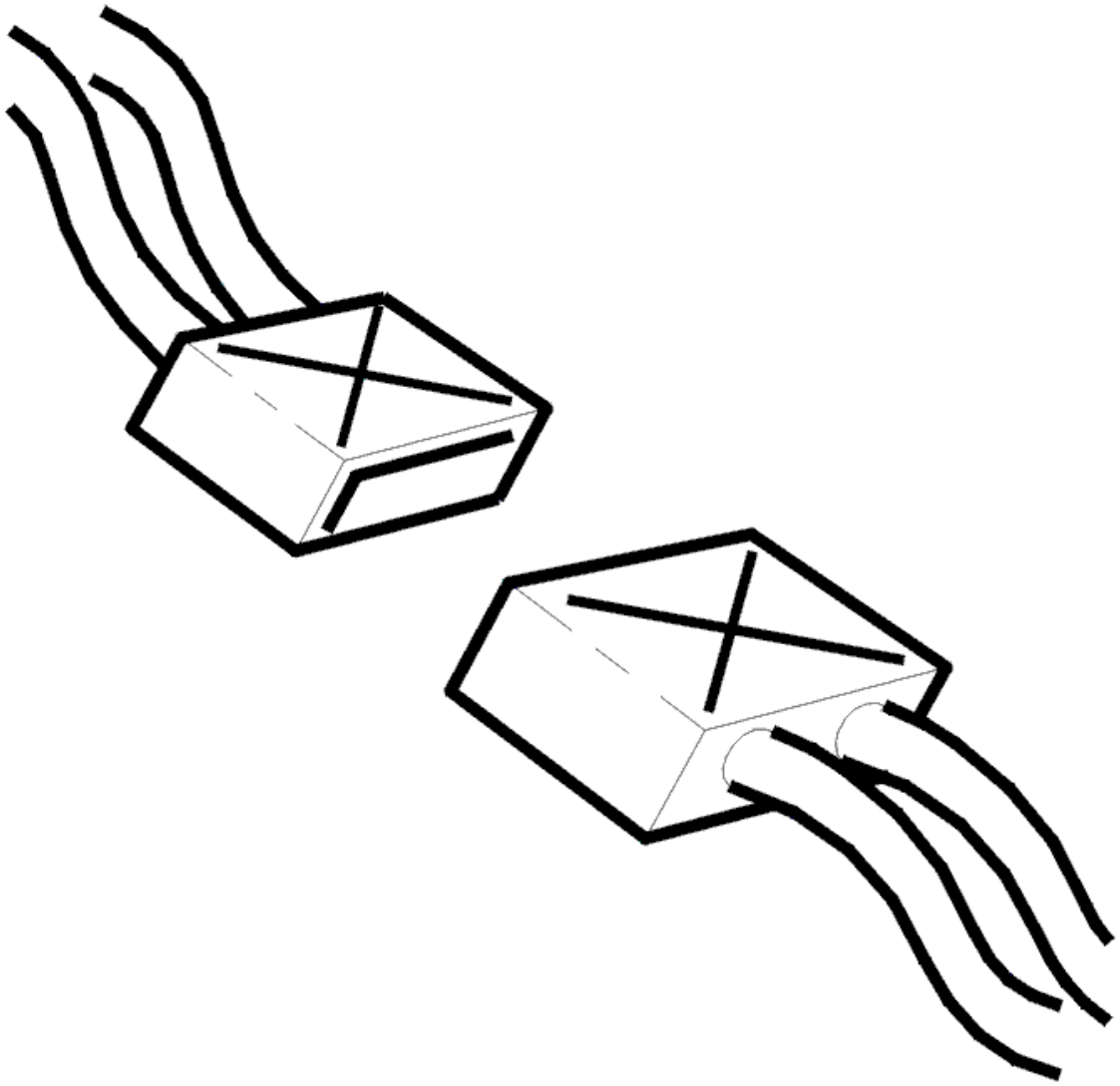

Fig. 126: Identifying Connector
Courtesy of VOLVO CARS CORPORATION

- Ignition off

  Check connector B (22-pin) for the transmission control module (TCM). Check for damaged or pressed in pins. Check for contact resistance and oxidation.

  Check the cables between the transmission's and the solenoid's connector for open circuit

  HINT: Check linear pressure solenoid SLU according to: CHECKING THE LINE PRESSURE SOLENOID SLT, SLC1, SLC2, SLC3, SLB1 AND LOCK-UP SOLENOID SLU

  If no defects were found on connectors or cables, replace the transmission.

  Remedy as necessary.

Other information

- see **REPLACING THE GEARBOX**
- see **CONTROL SYSTEM, REPLACING**
- see **CABLE HARNESS, CONTROL SYSTEM, GEARBOX, REPLACING**
- To access connector B: **TRANSMISSION CONTROL MODULE (TCM), REPLACING**
- see **CONTENTS**

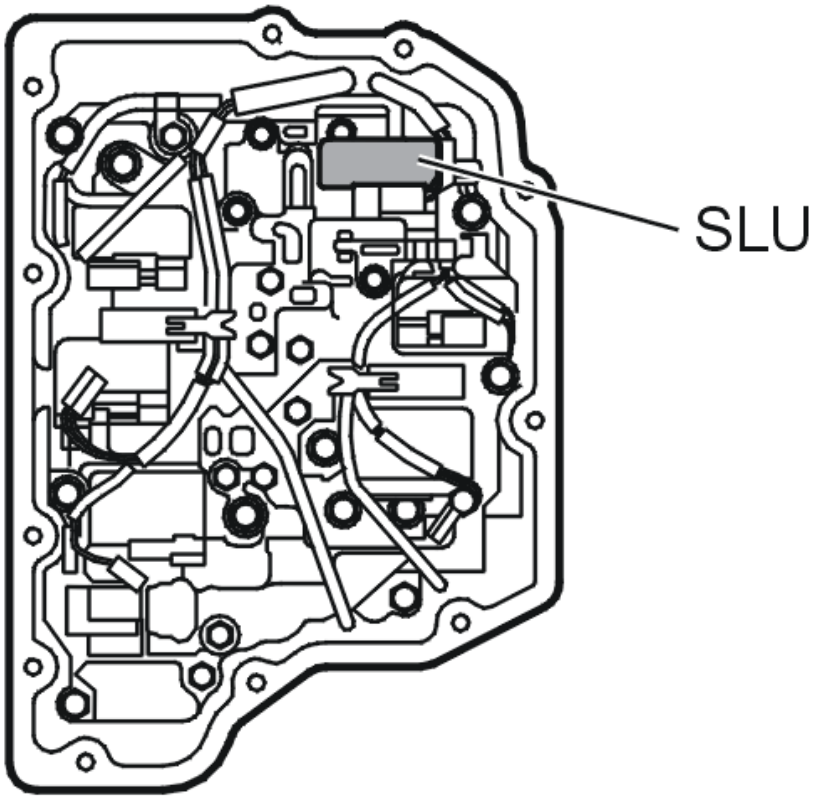

Fig. 127: Identifying Solenoid SLU
Courtesy of VOLVO CARS CORPORATION

- **Continue**

  Refer to **RESETTING ADAPTATION**

REPLACING THE TRANSMISSION

Previous tests indicate an internal malfunction in the transmission.

Other information

- see **REPLACING THE GEARBOX**

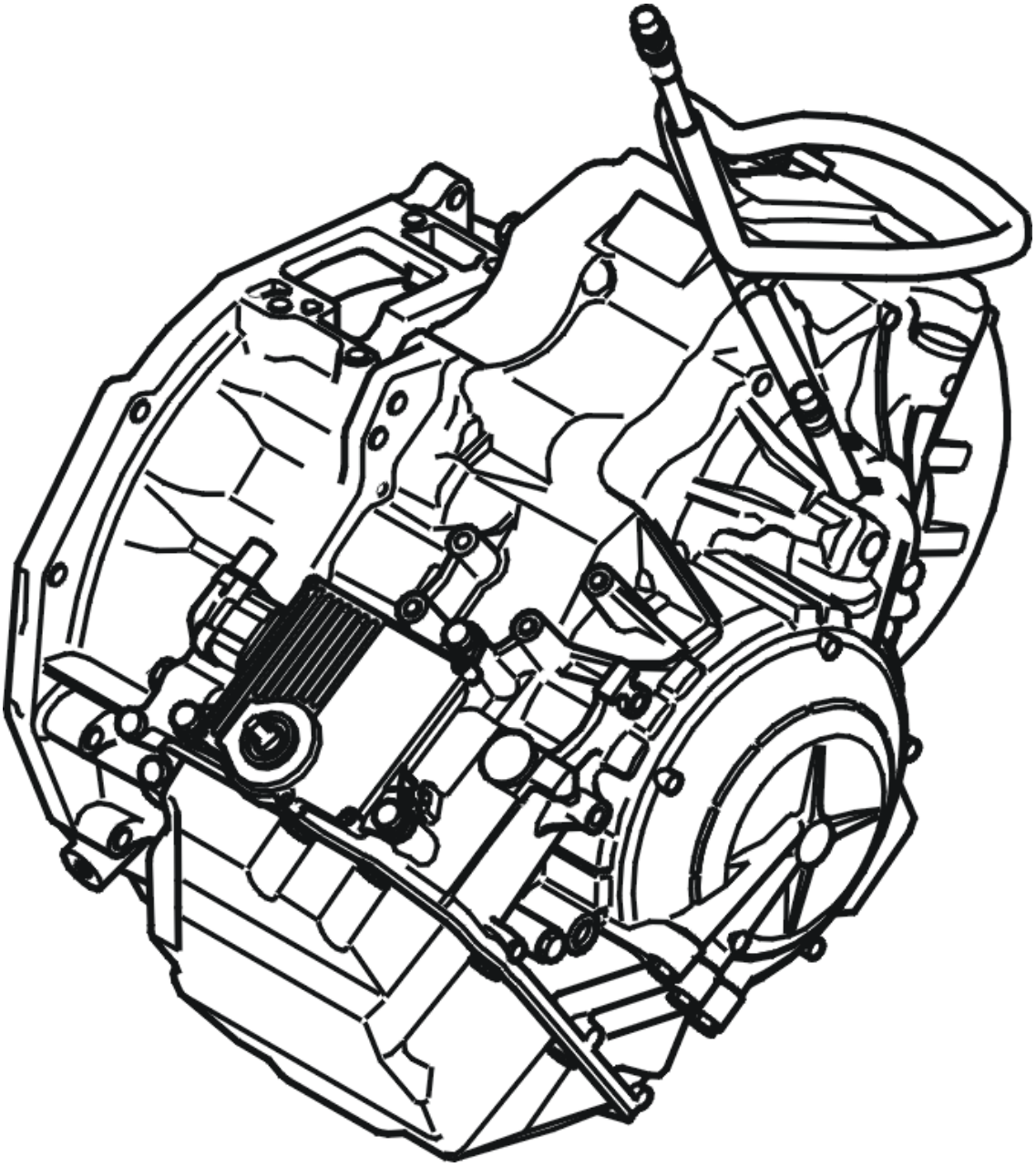

Fig. 128: Identifying Transmission
Courtesy of VOLVO CARS CORPORATION

- **Continue**

  Refer to **RESETTING ADAPTATION**

RESETTING THE COUNTER FOR TRANSMISSION OIL, CHANGE

RESETTING THE COUNTER FOR TRANSMISSION OIL, CHANGE

HINT: The transmission control module (TCM) has a counter for the oil's quality that counts up when

the transmission is exposed to very heavy loads or high ambient temperature. If the counter is not reset when draining/changing oil, there is a risk that a diagnostic trouble code may be generated under incorrect conditions. That is why it is important that the counter for Transmission oil, change is reset.

NOTE: **This only applies when the transmission oil is changed and when the oil is changed during repairs to the transmission's temperature sensor.**

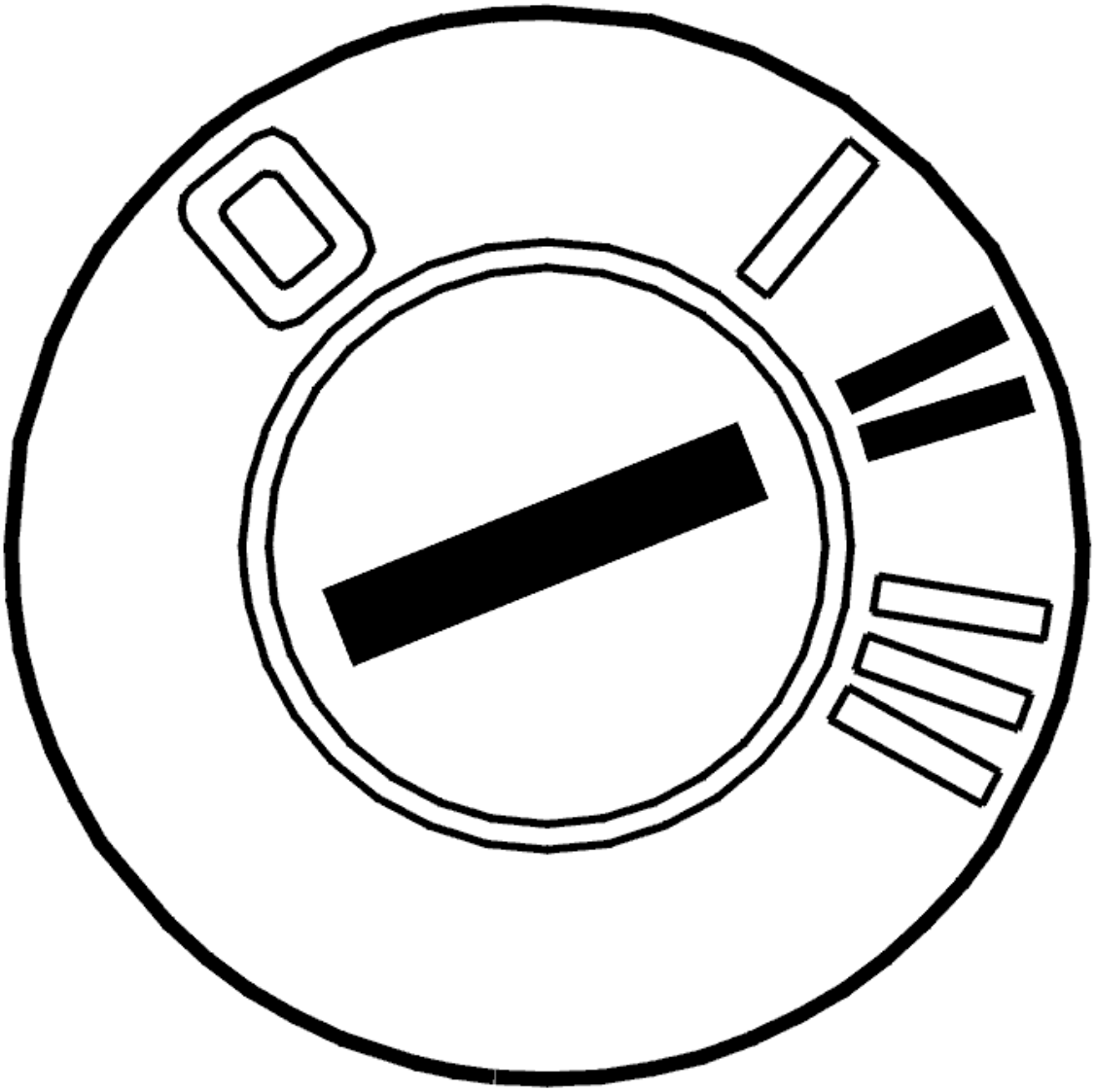

Fig. 129: Identifying Ignition ON
Courtesy of VOLVO CARS CORPORATION

- Ignition on

  Activate reset of the counter by clicking on the symbol for VCT2000.

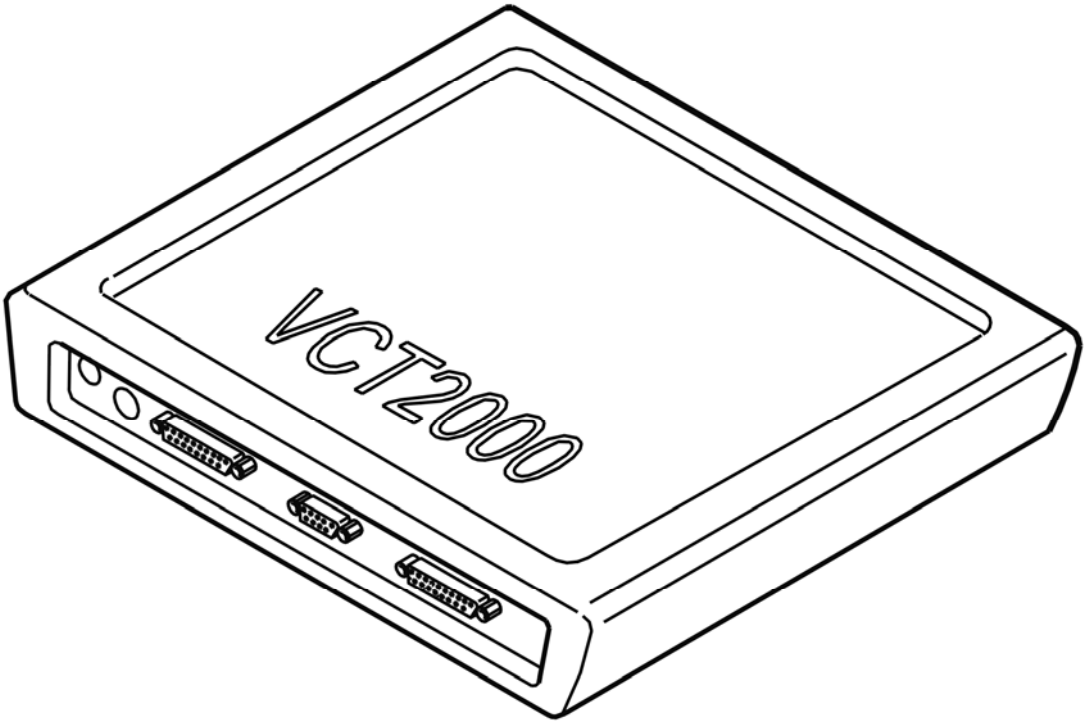

Fig. 130: Identifying VCT2000 Diagnostic Tool Symbol In VIDA
Courtesy of VOLVO CARS CORPORATION

- **Continue**

  Refer to **VERIFICATION**

RESETTING ADAPTATION

RESETTING ADAPTATION AND COUNTER FOR "TRANSMISSION OIL, CHANGING"

HINT: The transmission has torque-controlled, adaptive pressure control. The pressure control means that the transmission itself controls the pressure during each shift sequence in order to avoid harsh shifting. Each shift is assessed by the transmission control module (TCM) and is stored in the internal memory, which results in compensation for wear in the transmission and clutch. In order for the transmission to function correctly after repair, it is important to reset the adaptation in the memory. Since the oil is changed during the repair, the counter for "Transmission oil, change" shall also be reset. If the counter is not reset when draining/changing oil, there is a risk that a diagnostic trouble code may be generated under incorrect conditions.

NOTE: **This applies only if the transmission or one of the components in the transmission have been replaced.**

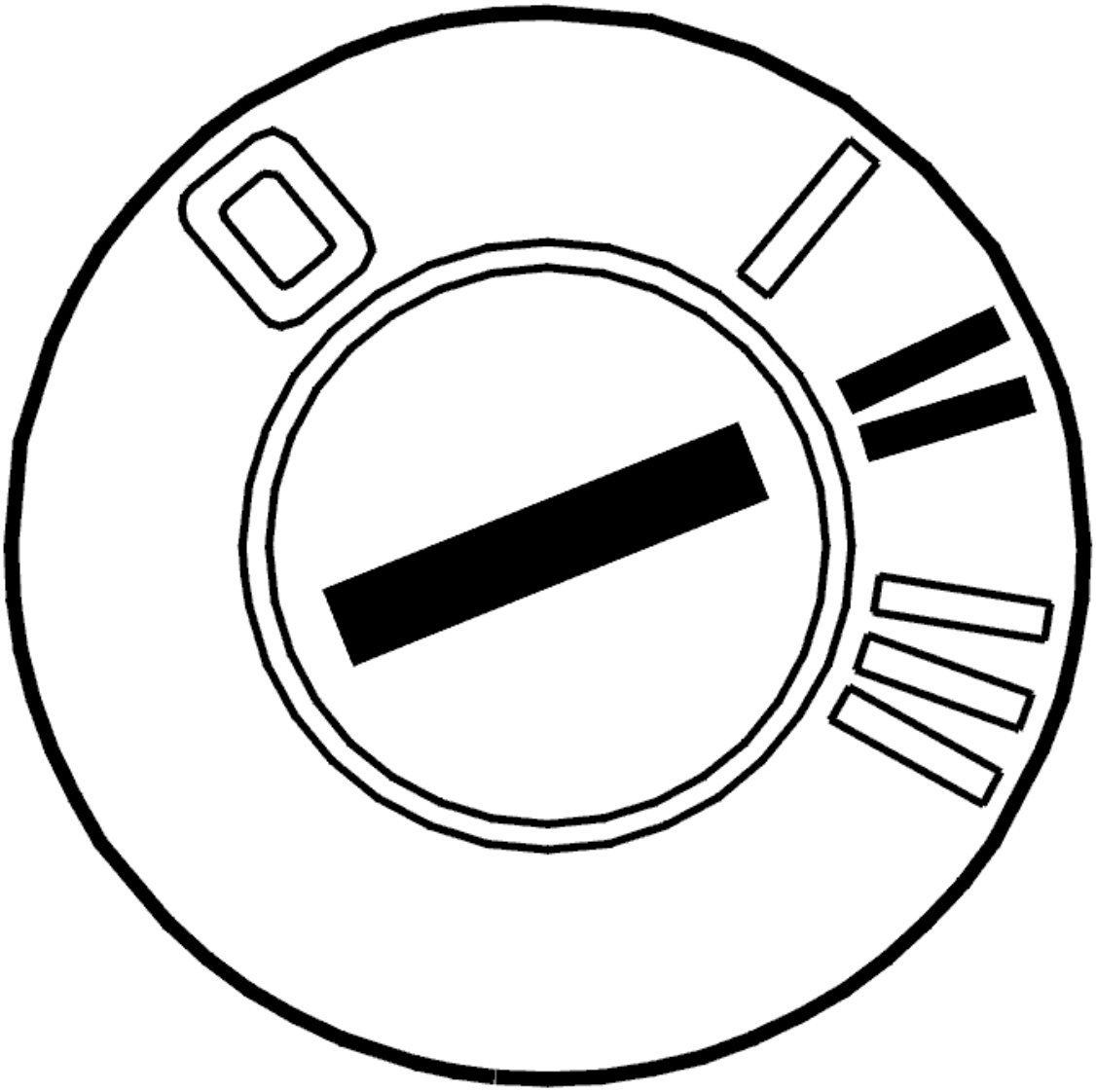

Fig. 131: Identifying Ignition ON
Courtesy of VOLVO CARS CORPORATION

- Ignition on

  Activate reset of the adaptation and the counter by clicking on the symbol for VCT2000.

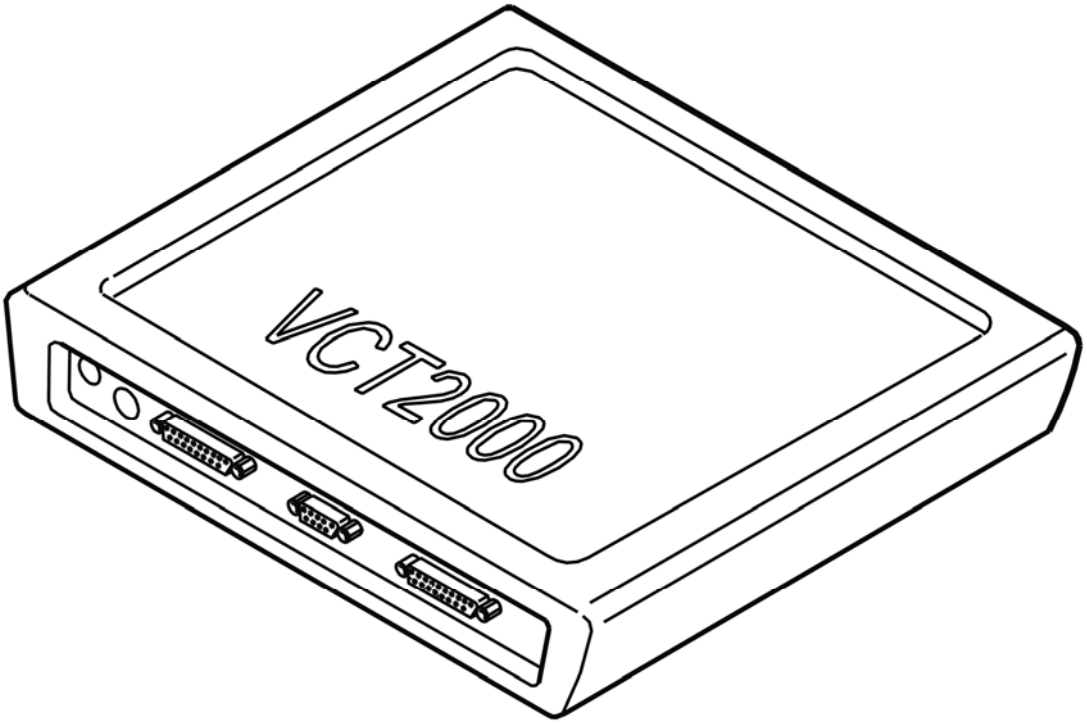

Fig. 132: Identifying VCT2000 Diagnostic Tool Symbol In VIDA
Courtesy of VOLVO CARS CORPORATION

- **Continue**

  Refer to **VERIFICATION**

VERIFICATION

VERIFICATION

NOTE: **When the transmission's control module has been removed and reinstalled, it is important that the gear position sensor is calibrated. Select "Pause" and save a bookmark, then select Vehicle communication**

HINT: After carrying out the repair, check that the fault has been remedied.

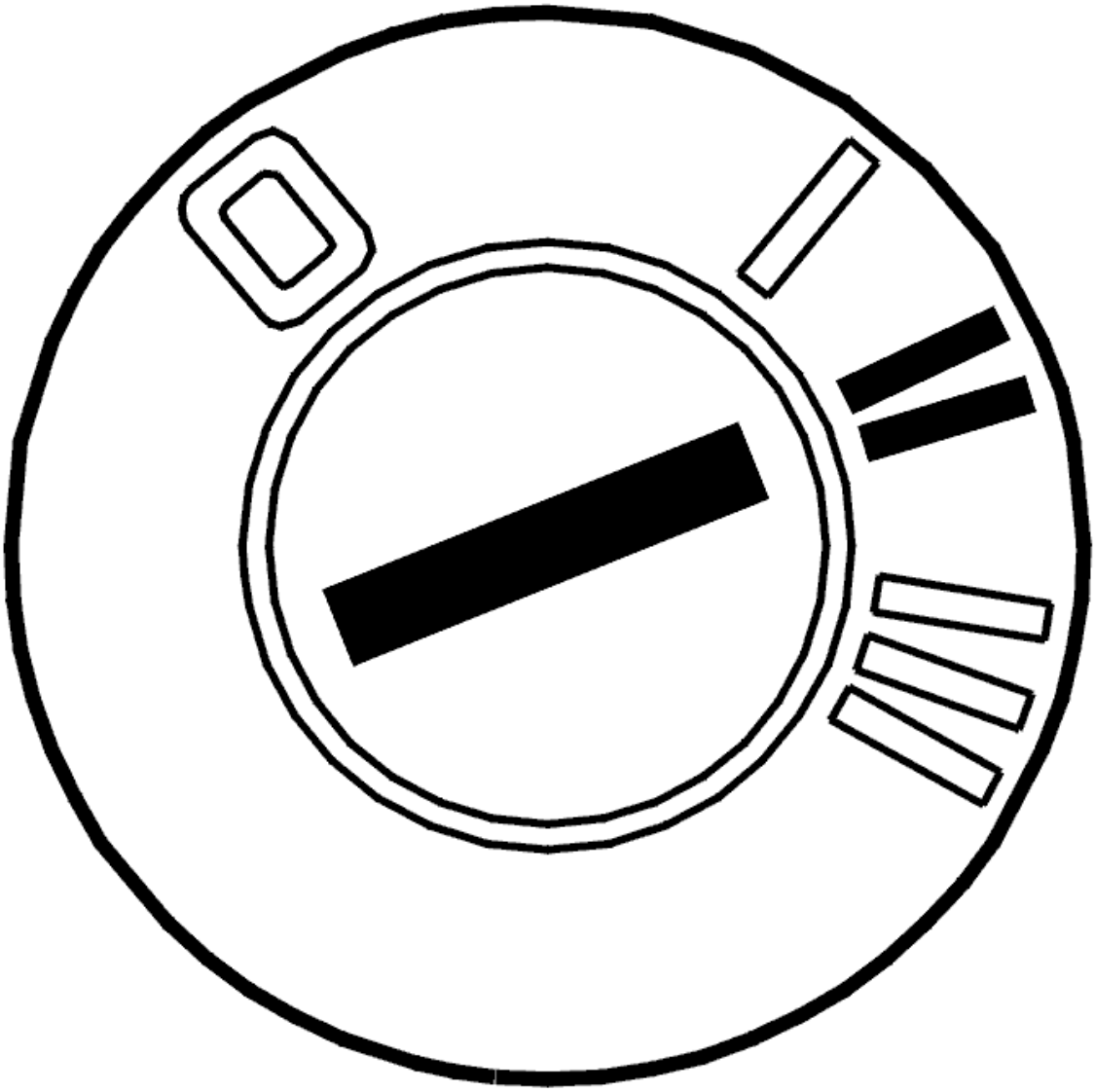

Fig. 133: Identifying Ignition ON
Courtesy of VOLVO CARS CORPORATION

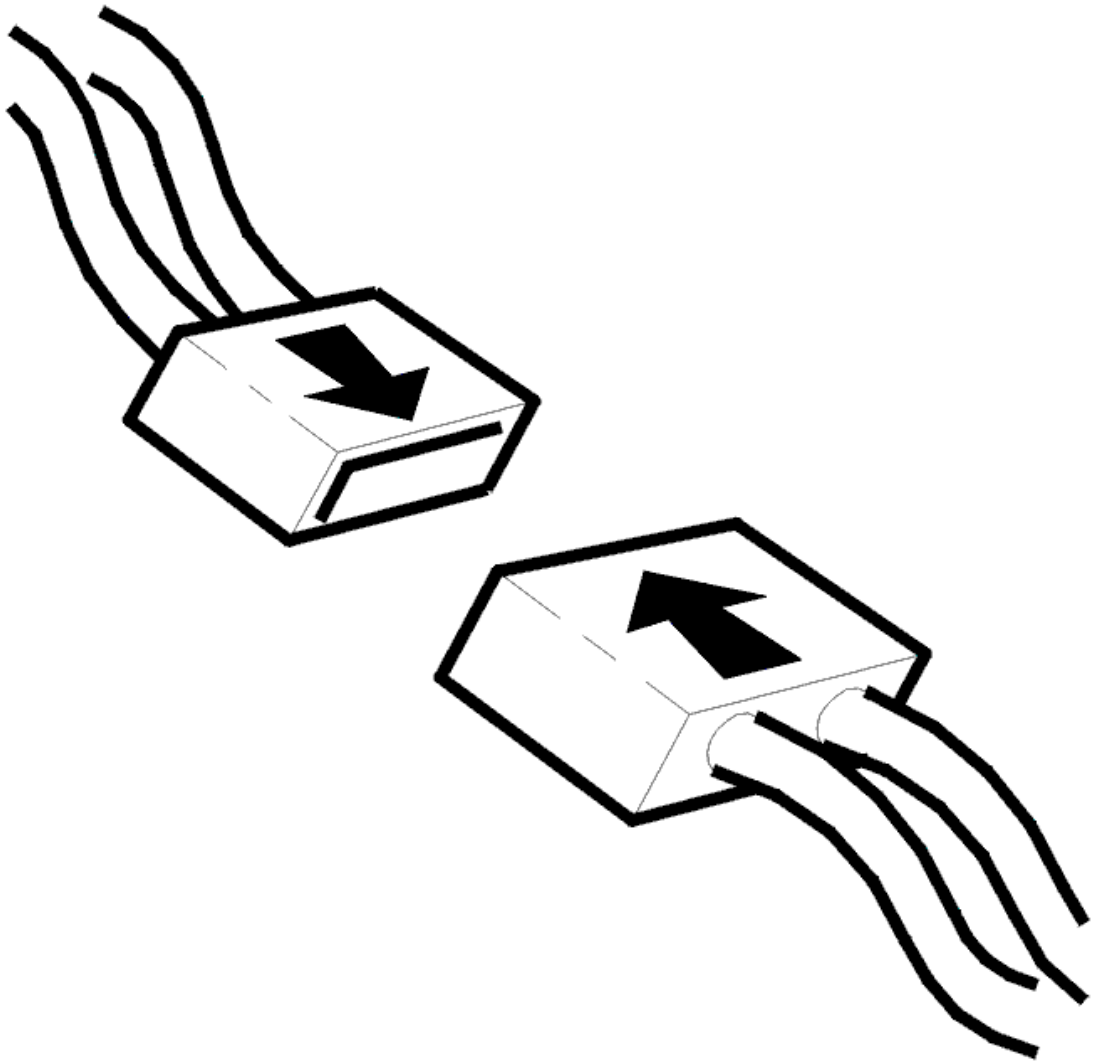

Fig. 134: Identifying Connector(s) Reinstallation
Courtesy of VOLVO CARS CORPORATION

- Ignition off
- Reinstall the components, reconnect the connectors etc.

  Test drive the vehicle following: **TEST DRIVE SCHEDULE, DESCRIPTION**

  Check that the transmission does not display any **obvious** function faults.

  NOTE: When test driving, the oil temperature must be above 20 °C.

Is the function OK?

- **YES**

VERIFIED: Troubleshooting has been completed.

- **NO**

  Refer to **INFORMATION**

INFORMATION

FAULT-TRACING INFORMATION

The fault should have been detected and remedied. As this is not the case fault-tracing has failed.

Exit fault-tracing for this diagnostic trouble code (DTC) or make another attempt.

TCM-P074100: TORQUE CONVERTER CLUTCH SOLENOID CIRCUIT PERFORMANCE OR STUCK IN OFF POSITION. GENERAL FAULT INFORMATION. NO INFORMATION ON FAULT TYPE (TF-80SC AWD; 2005)

DIAGNOSTIC TROUBLE CODE (DTC) INFORMATION TCM-P074100

see **DIAGNOSTIC TROUBLE CODE (DTC) INFORMATION TCM-P074100**

FAULT TRACING

see **FAULT TRACING**

TCM-P074200: TORQUE CONVERTER CLUTCH SOLENOID CIRCUIT STUCK ON. GENERAL FAILURE INFORMATION. NO SUB TYPE INFORMATION (B6324S, TF-80SC; B6324S, TF-80SC AWD; 2007-2010)

DIAGNOSTIC TROUBLE CODE (DTC) INFORMATION TCM-P074200

Condition

The transmission control module (TCM) checks the function of the lock-up solenoid by comparing the speed signal from the transmission speed sensor with the speed (rpm) signal from the transmission speed (rpm) sensor. The signals must then show the same calculated speed (rpm). The transmission control module (TCM) also compares the speed from the transmission speed sensor with the engine speed (RPM). The RPM should then be greater or less than the transmission output RPM or speed depending on the gear selected.

The diagnostic trouble code (DTC) is stored if the control module detects that:

- Lock-up function is constantly engaged or if the transmission jerks at lock-up.

The control module's test for the diagnostic trouble code (DTC) starts in the event of:

- Normal driving.

NOTE: **The control module can only detect the fault once the test has been started and the diagnostic trouble code is stored when the conditions are met.**

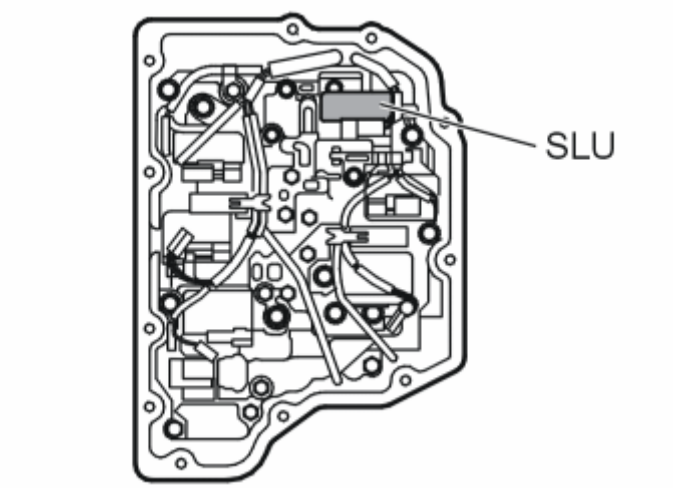

Fig. 135: Identifying Solenoid SLU
Courtesy of VOLVO CARS CORPORATION

Substitute Value

- Adaptation function is blocked.
- function is blocked.
- Slip lock-up function is blocked.

Possible Source

- Contact resistance in the terminals.
- Open-circuit in the cable for the control signal or signal ground.
- Solenoid not working.
- Internal fault in the transmission control module (TCM).

Fault symptom[s]

- Malfunction indicator light (MIL), on
- General warning lamp lit
- Rough gear shift
- No gear shift
- Abnormal slipping gearshifts

FAULT-TRACING

see **FAULT-TRACING**

TCM-P074200: TORQUE CONVERTER CLUTCH SOLENOID CIRCUIT STUCK ON. GENERAL FAILURE INFORMATION. NO SUB TYPE INFORMATION (B6324S5, TF-80SC; B6324S5, TF-80SC AWD; 2011)

DIAGNOSTIC TROUBLE CODE (DTC) INFORMATION TCM-P074200

see **DIAGNOSTIC TROUBLE CODE (DTC) INFORMATION TCM-P074200**

FAULT-TRACING

see **FAULT-TRACING**

TCM-P074200: TORQUE CONVERTER CLUTCH SOLENOID CIRCUIT STUCK IN ON POSITION. GENERAL FAULT INFORMATION. NO INFORMATION ON FAULT TYPE (B8444S, TF-80SC AWD; 2006-2011)

DIAGNOSTIC TROUBLE CODE (DTC) INFORMATION TCM-P074200

Condition

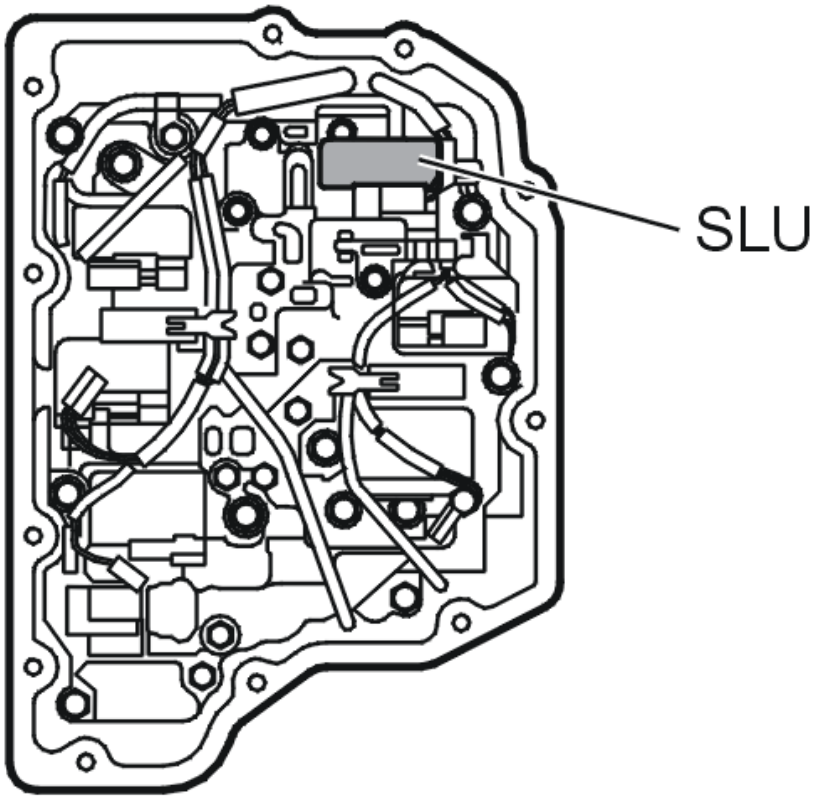

Fig. 136: Identifying Solenoid SLU
Courtesy of VOLVO CARS CORPORATION

The transmission control module (TCM) checks the lockup solenoid function by comparing the speed signal from the gearbox speed sensor with the rpm signal from the gearbox rpm sensor. When lockup is engaged, the signals should "show" the same calculated rpm. The transmission control module (TCM) also compares the rpm from the gearbox speed sensor with the engine rpm. The rpm should then be greater or lower than the gearbox output rpm or speed depending on the gear that is selected. If the control module registers that the lock-up function is engaged constantly or if the transmission is jerky when lock-up is engaged, the diagnostic trouble code (DTC) is generated.

The diagnostic trouble code (DTC) can be diagnosed when driving normally.

Substitute Value

- Adaptation function is blocked.
- Lock-up function is blocked.
- Slip lock-up function is blocked.

Possible Source

- Contact resistance in the terminals
- Open circuit in lead for control signal or signal ground.
- Solenoid not working.
- Internal fault in transmission control module (TCM).

Fault symptom[s]

- General warning lamp lit
- Malfunction indicator lamp (MIL) lit.
- Harsh gear changing
- No gear changing.
- Abnormally slipping gears.

FAULT TRACING

see **FAULT TRACING**

TCM-P074200: TORQUE CONVERTER CLUTCH SOLENOID CIRCUIT STUCK IN ON POSITION. GENERAL FAULT INFORMATION. NO INFORMATION ON FAULT TYPE (TF-80SC AWD; 2005)

DIAGNOSTIC TROUBLE CODE (DTC) INFORMATION TCM-P074200

see **DIAGNOSTIC TROUBLE CODE (DTC) INFORMATION TCM-P074200**

FAULT TRACING

see **FAULT TRACING**

TCM-P074400: TORQUE CONVERTER CLUTCH SOLENOID CIRCUIT INTERMITTENT. GENERAL FAILURE INFORMATION. NO SUB TYPE INFORMATION (B6324S, TF-80SC; B6324S, TF-80SC AWD; 2007-2010)

DIAGNOSTIC TROUBLE CODE (DTC) INFORMATION TCM-P074400

Condition

The transmission control module (TCM) checks the function of the lock-up solenoid by comparing the speed signal from the transmission speed sensor with the speed (rpm) signal from the transmission speed (rpm) sensor. The signals must then "show" the same calculated speed (rpm). The transmission control module (TCM) also compares the speed from the transmission speed sensor with the engine speed (RPM). The RPM should then be greater or less than the transmission output RPM or speed depending on the gear selected.

The diagnostic trouble code (DTC) is stored if the control module detects that:

- Engine suddenly stopped because lock-up function was engaged, but no error registered in lock-up solenoid circuit.

The control module's test for the diagnostic trouble code (DTC) starts in the event of:

- Normal driving.

NOTE: The control module can only detect the fault once the test has been started and the diagnostic trouble code (DTC) is stored when the conditions are met.

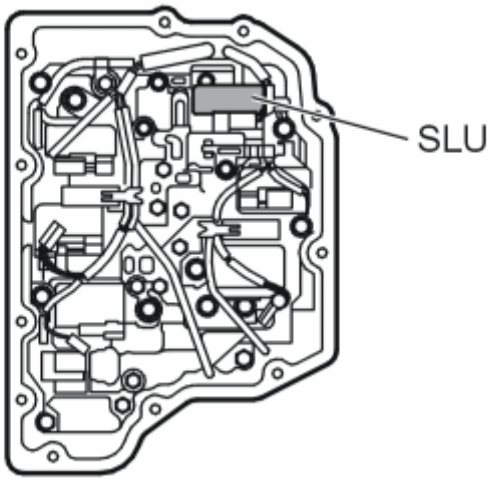

Fig. 137: Identifying Solenoid SLU
Courtesy of VOLVO CARS CORPORATION

Substitute Value

- Adaptation function is blocked.
- Neutral check function is blocked.

Possible Source

- Engine stopped due to lack of gasoline.
- Mechanical fault in engine.
- Lock-up function incorrectly engaged when the vehicle is stopped.

Fault symptom[s]

- Automatic gear shift; Delayed; From 1:st to 2:nd
- Drive ability, engine; Stops/not running; When braking
- No lock-up

FAULT-TRACING

FAULT-TRACING INFORMATION

The diagnostic trouble code indicates that the malfunction is in the engine management system.

Read the diagnostic trouble codes from the engine control module (ECM) and troubleshoot as described in relevant information.

TCM-P074400: TORQUE CONVERTER CLUTCH SOLENOID CIRCUIT INTERMITTENT. GENERAL FAILURE INFORMATION. NO SUB TYPE INFORMATION (B6324S5, TF-80SC; B6324S5, TF-80SC AWD; 2011)

DIAGNOSTIC TROUBLE CODE (DTC) INFORMATION TCM-P074400

see **DIAGNOSTIC TROUBLE CODE (DTC) INFORMATION TCM-P074400**

FAULT-TRACING

see **FAULT-TRACING**

TCM-P074400: TORQUE CONVERTER CLUTCH SOLENOID CIRCUIT INTERMITTENT. GENERAL FAULT INFORMATION. NO INFORMATION ON FAULT TYPE (B8444S, TF-80SC AWD; 2006-2011)

DIAGNOSTIC TROUBLE CODE (DTC) INFORMATION TCM-P074400

Condition

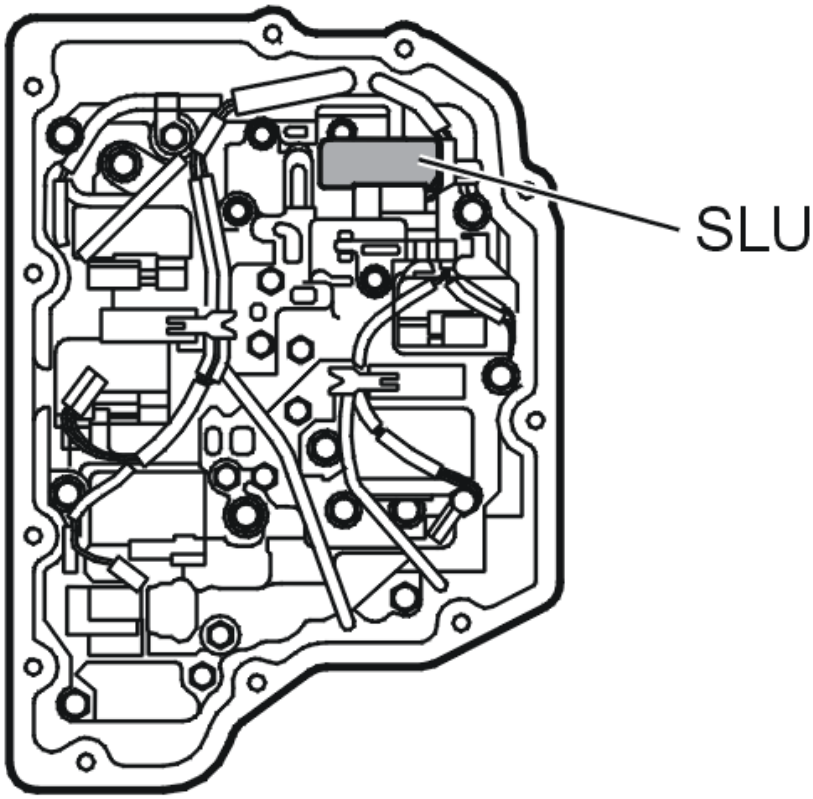

Fig. 138: Identifying Solenoid SLU
Courtesy of VOLVO CARS CORPORATION

The transmission control module (TCM) checks the lockup solenoid function by comparing the speed signal from the gearbox speed sensor with the rpm signal from the gearbox rpm sensor. The signals should then "show" the same calculated rpm. The transmission control module (TCM) also compares the rpm from the gearbox speed sensor with the engine rpm. The rpm should then be greater or lower than the gearbox output rpm or speed depending on the gear that is selected. If the control module registers that the engine has suddenly stopped when the lock-up function was engaged but not registered a fault in the lock-up solenoid circuit, the diagnostic trouble code (DTC) is generated.

The diagnostic trouble code (DTC) can be diagnosed when driving normally.

Substitute Value

- Adaptation function is blocked.
- Neutral check function is blocked.

Possible Source

- Engine stopped due to lack of petrol.
- Mechanical fault in engine.

Fault symptom[s]

- General warning lamp lit
- Malfunction indicator lamp (MIL) lit.
- Harsh gear changing
- No gear changing.
- Abnormally slipping gears.

TROUBLESHOOTING INFORMATION TCM-074400

FAULT-TRACING INFORMATION

The diagnostic trouble code indicates that the malfunction is in the engine management system.

Read the diagnostic trouble codes from the engine control module (ECM) and troubleshoot as described in relevant information.

TCM-P074400: TORQUE CONVERTER CLUTCH SOLENOID CIRCUIT INTERMITTENT. GENERAL FAULT INFORMATION. NO INFORMATION ON FAULT TYPE (TF-80SC AWD; 2005)

DIAGNOSTIC TROUBLE CODE (DTC) INFORMATION TCM-P074400

see **DIAGNOSTIC TROUBLE CODE (DTC) INFORMATION TCM-P074400**

TROUBLESHOOTING INFORMATION TCM-074400

see **TROUBLESHOOTING INFORMATION TCM-074400**

TCM-P074468: TORQUE CONVERTER CLUTCH SOLENOID CIRCUIT INTERMITTENT. ALGORITHM BASED FAILURES. EVENT INFORMATION (B6324S, TF-80SC; B6324S, TF-80SC AWD; 2007-2010)

DIAGNOSTIC TROUBLE CODE (DTC) INFORMATION TCM-P074468

Condition

NOTE: **This diagnostic trouble code (DTC) status is an event controlled diagnostic trouble code (DTC). An event controlled diagnostic trouble code (DTC) does not mean that there is a fault in the control module when it is active, but is designed as information.**

The transmission control module (TCM) checks the function of the lock-up solenoid by comparing the speed signal from the transmission speed sensor with the speed (rpm) signal from the transmission speed (rpm) sensor. The signals must then "show" the same calculated speed (rpm). The transmission control module (TCM) also compares the speed from the transmission speed sensor with the engine speed (RPM). The RPM should then be greater or less than the transmission output RPM or speed depending on the gear selected.

The diagnostic trouble code (DTC) is stored if the control module detects that:

- The engine has suddenly stopped when the lock-up function was engaged, without an electrical fault being registered in the lock-up solenoid's circuit.

The control module's test for the diagnostic trouble code (DTC) starts in the event of:

- Normal driving.

NOTE: The control module can only detect the fault once the test has been started and the diagnostic trouble code (DTC) is stored when the conditions are met.

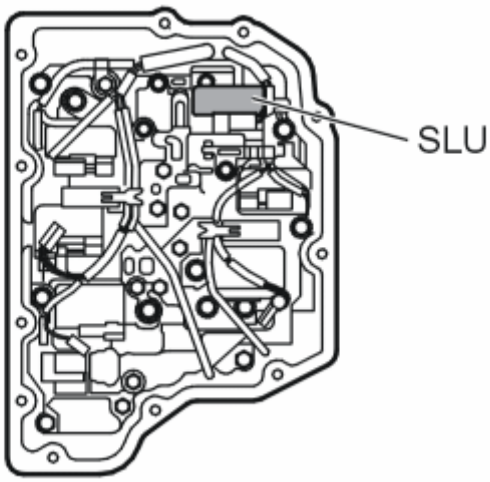

Fig. 139: Identifying Solenoid SLU
Courtesy of VOLVO CARS CORPORATION

Substitute Value

- The lock-up function is blocked until the Transmission control module (TCM) has registered there are no longer any electrical faults stored for the function.

Possible Source

- Engine stopped due to lack of gasoline.
- Mechanical fault in engine.
- Lock-up function incorrectly engaged when the vehicle is stopped.

Fault symptom[s]

- Automatic gear shift; Delayed; From 1:st to 2:nd
- Drive ability, engine; Stops/not running; When braking
- No lock-up

FAULT-TRACING INFORMATION

INFORMATION

There is no fault-tracing for this diagnostic fault code (DTC).

For further information on this diagnostic trouble code, see Diagnostic trouble code (DTC) information.

TCM-P074468: TORQUE CONVERTER CLUTCH SOLENOID CIRCUIT INTERMITTENT. ALGORITHM BASED FAILURES. EVENT INFORMATION (B6324S5, TF-80SC; B6324S5, TF-80SC AWD; 2011)

DIAGNOSTIC TROUBLE CODE (DTC) INFORMATION TCM-P074468

see **DIAGNOSTIC TROUBLE CODE (DTC) INFORMATION TCM-P074468**

FAULT-TRACING INFORMATION

see **FAULT-TRACING INFORMATION**

TCM-P074A00 UNABLE TO ENGAGE GEAR 2. GENERAL FAILURE INFORMATION. NO SUB TYPE INFORMATION (B6324S, TF-80SC; B6324S, TF-80SC AWD; 2007-2010)

DIAGNOSTIC TROUBLE CODE (DTC) INFORMATION

see **DIAGNOSTIC TROUBLE CODE (DTC) INFORMATION**

FAULT-TRACING

CHECKING SOLENOIDS

Fig. 140: Identifying Ignition ON
Courtesy of VOLVO CARS CORPORATION

- Ignition on.
- Activate the solenoids by clicking on the symbol for VCT2000.

  Select a solenoid and read off the current through the solenoid's circuit. The current should shift between approx. 100 and 950 mA.

  Solenoid SLT, SLC2, SLC3.

Fig. 141: Identifying VCT2000 Diagnostic Tool Symbol In VIDA
Courtesy of VOLVO CARS CORPORATION

Is the function OK?

- **YES**

  Refer to **CHECKING THE OIL QUALITY AND THE OIL LEVEL IN THE TRANSMISSION**

- **NO**

  Refer to **CHECKING THE COMPONENTS AND WIRING**

CHECKING THE COMPONENTS AND WIRING

Fig. 142: Identifying Ignition OFF
Courtesy of VOLVO CARS CORPORATION

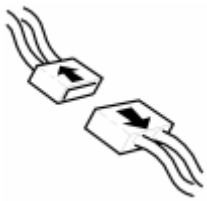

Fig. 143: Identifying Connectors Disconnected
Courtesy of VOLVO CARS CORPORATION

- Ignition off.
- Open the transmission control system.

  Check connector B (22-pin) for the transmission control module (TCM). Check for damaged or pressed in pins. Check for contact resistance and oxidation.

  HINT: Check solenoids SLT, SLC2, SLC3 as described in:CHECKING INTERNAL COMPONENTS OF THE TRANSMISSION

  If no defects were found on connectors or cables, replace the control system. If this does not help, replace the transmission.

  Remedy as necessary.

  Other information

  - see **TRANSMISSION - REMOVAL, REPLACEMENT AND INSTALLATION**
  - see **VALVE HOUSING** .
  - see **TRANSMISSION CONTROL UNIT WIRING HARNESS**
  - To access connector B: **TRANSMISSION CONTROL MODULE (TCM)**
  - see **CHECKING WIRING AND TERMINALS**

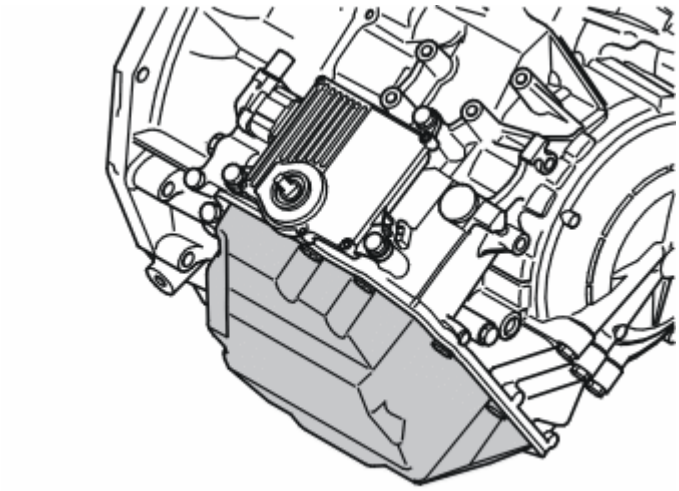

Fig. 144: Identifying Transmission Fluid Pan
Courtesy of VOLVO CARS CORPORATION

- **Continue**

  Refer to **RESETTING ADAPTATION**

CHECKING THE OIL QUALITY AND THE OIL LEVEL IN THE TRANSMISSION

NOTE: **Transmission fluid quality and level are extremely important for the function of the transmission. Therefore it is imperative that these are correct. In addition the oil level is dependent on oil temperature.**

Fig. 145: Identifying Ignition ON
Courtesy of VOLVO CARS CORPORATION

- Ignition on.
- Read off the oil temperature.

  Check the transmission oil level. If the oil level is low, check the transmission for leakage, then top up with oil.

  Check the quality of the oil.

  Replace the transmission fluid if the fluid smells burnt.

  Other information

  - see **TRANSMISSION OIL LEVEL - CHECKING**
  - see **OIL GRADE, CHECKING**
  - see **TRANSAXLE OIL**

  Select an alternative below

  1. No fault detected.

     Refer to **CHECKING THE COMPONENTS AND WIRING**

  2. Transmission fluid replaced, low level or poor quality.

     Refer to **RESETTING THE "TRANSMISSION FLUID CHANGE" COUNTER**

Fig. 146: Identifying VCT2000 Diagnostic Tool Symbol In VIDA
Courtesy of VOLVO CARS CORPORATION

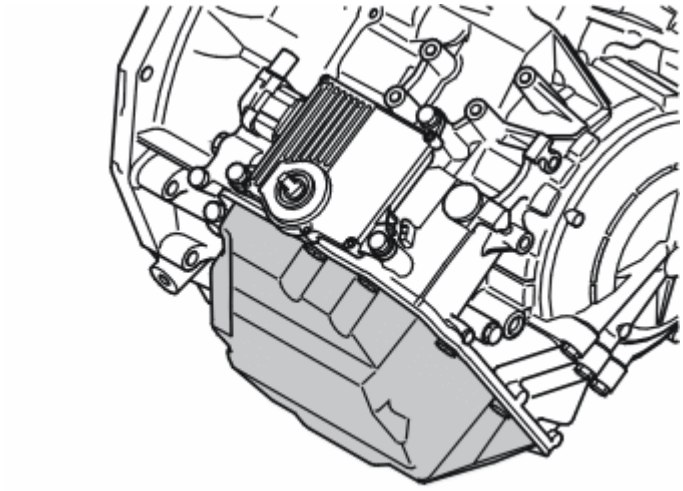

Fig. 147: Identifying Transmission Fluid Pan
Courtesy of VOLVO CARS CORPORATION

VERIFICATION

VERIFICATION

NOTE: **When the transmission's control module has been removed and reinstalled, it is important that the gear position sensor is calibrated. Select Pause and create a bookmark. Then select Vehicle communication.**

HINT: After carrying out the repair, check that the fault has been remedied.

Fig. 148: Identifying Ignition ON
Courtesy of VOLVO CARS CORPORATION

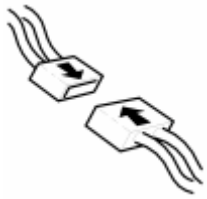

Fig. 149: Identifying Connector(s) Reinstallation
Courtesy of VOLVO CARS CORPORATION

- Ignition off.
- Reinstall the connectors, components etc.

- Test drive the vehicle following:**TEST DRIVE SCHEDULE, DESCRIPTION**

  Check that the transmission does not display any **obvious** function faults.

  NOTE: When test driving, the oil temperature must be above 20 °C.

Is the function OK?

- **YES**

  VERIFIED: Troubleshooting has been completed.

- **NO**

  Refer to **INFORMATION**

INFORMATION

FAULT-TRACING INFORMATION

The fault should have been detected and remedied. As this is not the case fault-tracing has failed.

Exit fault-tracing for this diagnostic trouble code (DTC) or make another attempt.

RESETTING ADAPTATION

RESETTING THE ADAPTATION AND THE COUNTER FOR "TRANSMISSION OIL, REPLACE"

HINT: The transmission has torque-regulated, adaptive pressure regulation. The pressure regulator enables the transmission to regulate pressure during each shift to prevent hard shifting. Each shift is assessed by the transmission control module (TCM) and is stored in the internal memory. This makes it possible to compensate for transmission and clutch wear. It is important that the adaptation in the memory is reset so that the transmission works normally after the repair. Because the fluid was changed during the repair, the counter for transmission fluid change must also be reset. If the counter is not reset during draining/replacement, a diagnostic trouble code may be generated under the wrong conditions.

NOTE: This applies only if the transmission or one of the components in the transmission have been replaced.

Fig. 150: Identifying Ignition ON
Courtesy of VOLVO CARS CORPORATION

- Ignition on.

  Click on the VCT2000 symbol to reset the adaptation and counter.

Fig. 151: Identifying VCT2000 Diagnostic Tool Symbol In VIDA
Courtesy of VOLVO CARS CORPORATION

- **Continue**

  Refer to **VERIFICATION**

RESETTING THE "TRANSMISSION FLUID CHANGE" COUNTER

CHECKING THE FUNCTION

HINT: The transmission control module (TCM) has a counter for fluid quality that counts the number of times the transmission is subjected to too hard a load or too high an ambient temperature. If the counter is not reset during draining/replacement, there is a risk that a diagnostic trouble code will be set under the wrong conditions. Thus, it is important that the counter for transmission fluid change be reset.

NOTE: This only applies when the transmission oil is changed and when the oil is changed during repairs to the transmission's temperature sensor.

Fig. 152: Identifying Ignition ON
Courtesy of VOLVO CARS CORPORATION

- Ignition on.

  Click on the VCT2000 symbol to reset the counter.

Fig. 153: Identifying VCT2000 Diagnostic Tool Symbol In VIDA
Courtesy of VOLVO CARS CORPORATION

- **Continue**

  Refer to **VERIFICATION**

TCM-P074A00 UNABLE TO ENGAGE GEAR 2. GENERAL FAILURE INFORMATION. NO SUB TYPE INFORMATION (B6324S5, TF-80SC; B6324S5, TF-80SC AWD; 2011)

DIAGNOSTIC TROUBLE CODE (DTC) INFORMATION

see **DIAGNOSTIC TROUBLE CODE (DTC) INFORMATION**

FAULT-TRACING

see **FAULT-TRACING**

TCM-P074B00 UNABLE TO ENGAGE GEAR 3. GENERAL FAILURE INFORMATION. NO SUB TYPE INFORMATION (B6324S, TF-80SC; B6324S, TF-80SC AWD; 2007-2010)

DIAGNOSTIC TROUBLE CODE (DTC) INFORMATION

see **DIAGNOSTIC TROUBLE CODE (DTC) INFORMATION**

FAULT-TRACING

CHECKING SOLENOIDS

Fig. 154: Identifying Ignition ON
Courtesy of VOLVO CARS CORPORATION

- Ignition on.
- Activate the solenoids by clicking on the symbol for VCT2000.

  Select a solenoid and read off the current through the solenoid's circuit. The current should shift between approx. 100 and 950 mA.

Solenoid SLT, SLC2, SLB1.

Fig. 155: Identifying VCT2000 Diagnostic Tool Symbol In VIDA
Courtesy of VOLVO CARS CORPORATION

Is the function OK?

- **YES**

  Refer to **CHECKING THE OIL QUALITY AND THE OIL LEVEL IN THE TRANSMISSION**

- **NO**

  Refer to **CHECKING THE COMPONENTS AND WIRING**

CHECKING THE COMPONENTS AND WIRING

Fig. 156: Identifying Ignition OFF
Courtesy of VOLVO CARS CORPORATION

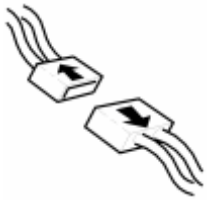

Fig. 157: Identifying Connectors Disconnected
Courtesy of VOLVO CARS CORPORATION

- Ignition off.
- Open the transmission control system.

  Check connector B (22-pin) for the transmission control module (TCM). Check for damaged or pressed in pins. Check for contact resistance and oxidation.

  HINT: Check solenoids SLT, SLC2, SLB1 as described in:CHECKING INTERNAL

COMPONENTS OF THE TRANSMISSION

If no defects were found on connectors or cables, replace the control system. If this does not help, replace the transmission.

Remedy as necessary.

Other information

- see **TRANSMISSION - REMOVAL, REPLACEMENT AND INSTALLATION**
- see **VALVE HOUSING** .
- see **TRANSMISSION CONTROL UNIT WIRING HARNESS**
- To access connector B: **TRANSMISSION CONTROL MODULE (TCM)**
- see **CHECKING WIRING AND TERMINALS**

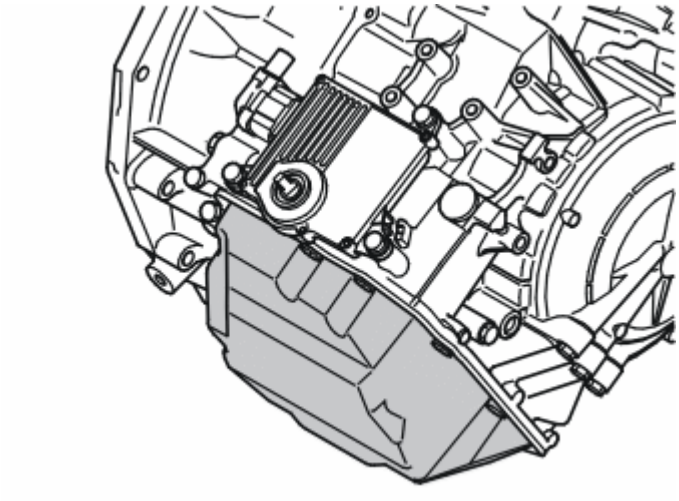

Fig. 158: Identifying Transmission Fluid Pan
Courtesy of VOLVO CARS CORPORATION

- **Continue**

Refer to **RESETTING ADAPTATION**

CHECKING THE OIL QUALITY AND THE OIL LEVEL IN THE TRANSMISSION

NOTE: **Transmission fluid quality and level are extremely important for the function of the transmission. Therefore it is imperative that these are correct. In addition the oil level is dependent on oil temperature.**

Fig. 159: Identifying Ignition ON
Courtesy of VOLVO CARS CORPORATION

- Ignition on.
- Read off the oil temperature.

  Check the transmission oil level. If the oil level is low, check the transmission for leakage, then top up with oil.

  Check the quality of the oil.

  Replace the transmission fluid if the fluid smells burnt.

  Other information

  - see **TRANSMISSION OIL LEVEL - CHECKING**
  - see **OIL GRADE, CHECKING**
  - see **TRANSAXLE OIL**

  Select an alternative below

  1. No fault detected.

     Refer to **CHECKING THE COMPONENTS AND WIRING**

  2. Transmission fluid replaced, low level or poor quality.

     Refer to **RESETTING THE "TRANSMISSION FLUID CHANGE" COUNTER**

Fig. 160: Identifying VCT2000 Diagnostic Tool Symbol In VIDA
Courtesy of VOLVO CARS CORPORATION

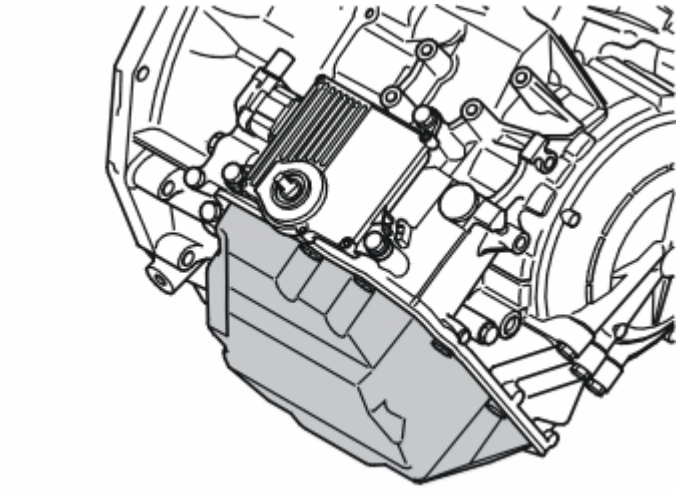

Fig. 161: Identifying Transmission Fluid Pan
Courtesy of VOLVO CARS CORPORATION

VERIFICATION

VERIFICATION

NOTE: **When the transmission's control module has been removed and reinstalled, it is important that the gear position sensor is calibrated. Select Pause and create a bookmark. Then select Vehicle communication.**

HINT: After carrying out the repair, check that the fault has been remedied.

Fig. 162: Identifying Ignition ON
Courtesy of VOLVO CARS CORPORATION

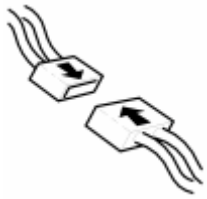

Fig. 163: Identifying Connector(s) Reinstallation
Courtesy of VOLVO CARS CORPORATION

- Ignition off.
- Reinstall the connectors, components etc.

- Test drive the vehicle following:**TEST DRIVE SCHEDULE, DESCRIPTION**

  Check that the transmission does not display any **obvious** function faults.

  NOTE: When test driving, the oil temperature must be above 20 °C.

Is the function OK?

- **YES**

  VERIFIED: Troubleshooting has been completed.

- **NO**

  Refer to **INFORMATION**

INFORMATION

FAULT-TRACING INFORMATION

The fault should have been detected and remedied. As this is not the case fault-tracing has failed.

Exit fault-tracing for this diagnostic trouble code (DTC) or make another attempt.

RESETTING ADAPTATION

RESETTING THE ADAPTATION AND THE COUNTER FOR "TRANSMISSION OIL, REPLACE"

HINT: The transmission has torque-regulated, adaptive pressure regulation. The pressure regulator enables the transmission to regulate pressure during each shift to prevent hard shifting. Each shift is assessed by the transmission control module (TCM) and is stored in the internal memory. This makes it possible to compensate for transmission and clutch wear. It is important that the adaptation in the memory is reset so that the transmission works normally after the repair. Because the fluid was changed during the repair, the counter for transmission fluid change must also be reset. If the counter is not reset during draining/replacement, a diagnostic trouble code may be generated under the wrong conditions.

NOTE: This applies only if the transmission or one of the components in the transmission have been replaced.

Fig. 164: Identifying Ignition ON
Courtesy of VOLVO CARS CORPORATION

- Ignition on.

  Click on the VCT2000 symbol to reset the adaptation and counter.

Fig. 165: Identifying VCT2000 Diagnostic Tool Symbol In VIDA
Courtesy of VOLVO CARS CORPORATION

- **Continue**

  Refer to **VERIFICATION**

RESETTING THE "TRANSMISSION FLUID CHANGE" COUNTER

CHECKING THE FUNCTION

HINT: The transmission control module (TCM) has a counter for fluid quality that counts the number of times the transmission is subjected to too hard a load or too high an ambient temperature. If the counter is not reset during draining/replacement, there is a risk that a diagnostic trouble code will be set under the wrong conditions. Thus, it is important that the counter for transmission fluid change be reset.

NOTE: This only applies when the transmission oil is changed and when the oil is changed during repairs to the transmission's temperature sensor.

Fig. 166: Identifying Ignition ON
Courtesy of VOLVO CARS CORPORATION

- Ignition on.

  Click on the VCT2000 symbol to reset the counter.

Fig. 167: Identifying VCT2000 Diagnostic Tool Symbol In VIDA
Courtesy of VOLVO CARS CORPORATION

- **Continue**

  Refer to **VERIFICATION**

TCM-P074B00 UNABLE TO ENGAGE GEAR 3. GENERAL FAILURE INFORMATION. NO SUB TYPE INFORMATION (B6324S5, TF-80SC; B6324S5, TF-80SC AWD; 2011)

DIAGNOSTIC TROUBLE CODE (DTC) INFORMATION

see **DIAGNOSTIC TROUBLE CODE (DTC) INFORMATION**

FAULT-TRACING

see **FAULT-TRACING**

TCM-P074C00 UNABLE TO ENGAGE GEAR 4. GENERAL FAILURE INFORMATION. NO SUB TYPE INFORMATION (B6324S, TF-80SC; B6324S, TF-80SC AWD; 2007-2010)

DIAGNOSTIC TROUBLE CODE (DTC) INFORMATION

see **DIAGNOSTIC TROUBLE CODE (DTC) INFORMATION**

FAULT-TRACING

CHECKING SOLENOIDS

Fig. 168: Identifying Ignition ON
Courtesy of VOLVO CARS CORPORATION

- Ignition on.
- Activate the solenoids by clicking on the symbol for VCT2000.

  Select a solenoid and read off the current through the solenoid's circuit. The current should shift between approx. 100 and 950 mA.

Solenoid SLT, SLC3, SLB1.

Fig. 169: Identifying VCT2000 Diagnostic Tool Symbol In VIDA
Courtesy of VOLVO CARS CORPORATION

Is the function OK?

- **YES**

  Refer to **CHECKING THE OIL QUALITY AND THE OIL LEVEL IN THE TRANSMISSION**

- **NO**

  Refer to **CHECKING THE COMPONENTS AND WIRING**

CHECKING THE COMPONENTS AND WIRING

Fig. 170: Identifying Ignition OFF
Courtesy of VOLVO CARS CORPORATION

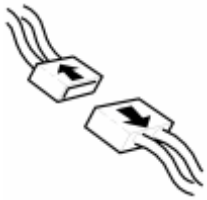

Fig. 171: Identifying Connectors Disconnected
Courtesy of VOLVO CARS CORPORATION

- Ignition off.
- Open the transmission control system.

  Check connector B (22-pin) for the transmission control module (TCM). Check for damaged or pressed in pins. Check for contact resistance and oxidation.

  HINT: Check solenoids SLT, SLC3, SLB1 as described in:CHECKING INTERNAL

COMPONENTS OF THE TRANSMISSION

If no defects were found on connectors or cables, replace the control system. If this does not help, replace the transmission.

Remedy as necessary.

Other information

- see **TRANSMISSION - REMOVAL, REPLACEMENT AND INSTALLATION**
- see **VALVE HOUSING** .
- see **TRANSMISSION CONTROL UNIT WIRING HARNESS**
- To access connector B: **TRANSMISSION CONTROL MODULE (TCM)**
- see **CHECKING WIRING AND TERMINALS**

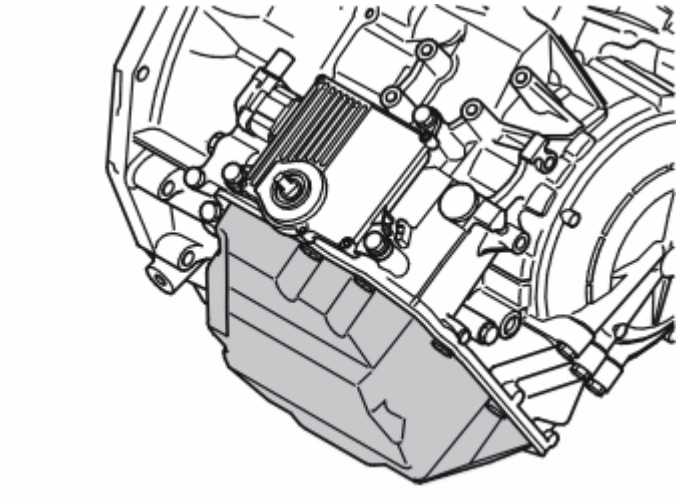

Fig. 172: Identifying Transmission Fluid Pan
Courtesy of VOLVO CARS CORPORATION

- **Continue**

Refer to **RESETTING ADAPTATION**

CHECKING THE OIL QUALITY AND THE OIL LEVEL IN THE TRANSMISSION

NOTE: **Transmission fluid quality and level are extremely important for the function of the transmission. Therefore it is imperative that these are correct. In addition the oil level is dependent on oil temperature.**

Fig. 173: Identifying Ignition ON
Courtesy of VOLVO CARS CORPORATION

- Ignition on.
- Read off the oil temperature.

  Check the transmission oil level. If the oil level is low, check the transmission for leakage, then top up with oil.

  Check the quality of the oil.

  Replace the transmission fluid if the fluid smells burnt.

  Other information

  - see **TRANSMISSION OIL LEVEL - CHECKING**
  - see **OIL GRADE, CHECKING**
  - see **TRANSAXLE OIL**

  Select an alternative below

  1. No fault detected.

     Refer to **CHECKING THE COMPONENTS AND WIRING**

  2. Transmission fluid replaced, low level or poor quality.

     Refer to **RESETTING THE "TRANSMISSION FLUID CHANGE" COUNTER**

Fig. 174: Identifying VCT2000 Diagnostic Tool Symbol In VIDA
Courtesy of VOLVO CARS CORPORATION

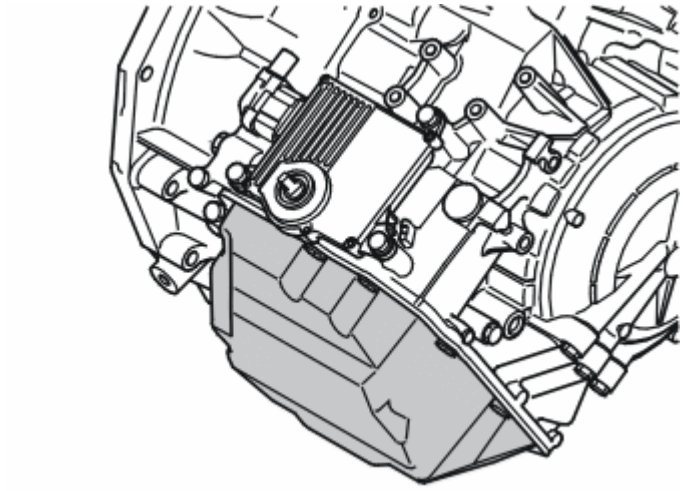

Fig. 175: Identifying Transmission Fluid Pan
Courtesy of VOLVO CARS CORPORATION

VERIFICATION

VERIFICATION

NOTE: **When the transmission's control module has been removed and reinstalled, it is important that the gear position sensor is calibrated. Select Pause and create a bookmark. Then select Vehicle communication.**

HINT: After carrying out the repair, check that the fault has been remedied.

Fig. 176: Identifying Ignition ON
Courtesy of VOLVO CARS CORPORATION

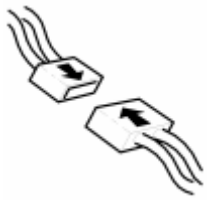

Fig. 177: Identifying Connector(s) Reinstallation
Courtesy of VOLVO CARS CORPORATION

- Ignition off.
- Reinstall the connectors, components etc.

- Test drive the vehicle following:**TEST DRIVE SCHEDULE, DESCRIPTION**

  Check that the transmission does not display any **obvious** function faults.

  NOTE: When test driving, the oil temperature must be above 20 °C.

Is the function OK?

- **YES**

  VERIFIED: Troubleshooting has been completed.

- **NO**

  Refer to **INFORMATION**

INFORMATION

FAULT-TRACING INFORMATION

The fault should have been detected and remedied. As this is not the case fault-tracing has failed.

Exit fault-tracing for this diagnostic trouble code (DTC) or make another attempt.

RESETTING ADAPTATION

RESETTING THE ADAPTATION AND THE COUNTER FOR "TRANSMISSION OIL, REPLACE"

HINT: The transmission has torque-regulated, adaptive pressure regulation. The pressure regulator enables the transmission to regulate pressure during each shift to prevent hard shifting. Each shift is assessed by the transmission control module (TCM) and is stored in the internal memory. This makes it possible to compensate for transmission and clutch wear. It is important that the adaptation in the memory is reset so that the transmission works normally after the repair. Because the fluid was changed during the repair, the counter for transmission fluid change must also be reset. If the counter is not reset during draining/replacement, a diagnostic trouble code may be generated under the wrong conditions.

NOTE: This applies only if the transmission or one of the components in the transmission have been replaced.

Fig. 178: Identifying Ignition ON
Courtesy of VOLVO CARS CORPORATION

- Ignition on.

  Click on the VCT2000 symbol to reset the adaptation and counter.

Fig. 179: Identifying VCT2000 Diagnostic Tool Symbol In VIDA
Courtesy of VOLVO CARS CORPORATION

- **Continue**

  Refer to **VERIFICATION**

RESETTING THE "TRANSMISSION FLUID CHANGE" COUNTER

CHECKING THE FUNCTION

HINT: The transmission control module (TCM) has a counter for fluid quality that counts the number of times the transmission is subjected to too hard a load or too high an ambient temperature. If the counter is not reset during draining/replacement, there is a risk that a diagnostic trouble code will be set under the wrong conditions. Thus, it is important that the counter for transmission fluid change be reset.

NOTE: This only applies when the transmission oil is changed and when the oil is changed during repairs to the transmission's temperature sensor.

Fig. 180: Identifying Ignition ON
Courtesy of VOLVO CARS CORPORATION

- Ignition on.

  Click on the VCT2000 symbol to reset the counter.

Fig. 181: Identifying VCT2000 Diagnostic Tool Symbol In VIDA
Courtesy of VOLVO CARS CORPORATION

- **Continue**

  Refer to **VERIFICATION**

TCM-P074C00 UNABLE TO ENGAGE GEAR 4. GENERAL FAILURE INFORMATION. NO SUB TYPE INFORMATION (B6324S5, TF-80SC; B6324S5, TF-80SC AWD; 2011)

DIAGNOSTIC TROUBLE CODE (DTC) INFORMATION

see **DIAGNOSTIC TROUBLE CODE (DTC) INFORMATION**

FAULT-TRACING

see **FAULT-TRACING**

TCM-P074D00 UNABLE TO ENGAGE GEAR 5. GENERAL FAILURE INFORMATION. NO SUB TYPE INFORMATION (B6324S, TF-80SC; B6324S, TF-80SC AWD; 2007-2010)

DIAGNOSTIC TROUBLE CODE (DTC) INFORMATION

see **DIAGNOSTIC TROUBLE CODE (DTC) INFORMATION**

FAULT-TRACING

CHECKING SOLENOIDS

Fig. 182: Identifying Ignition ON
Courtesy of VOLVO CARS CORPORATION

- Ignition on.
- Activate the solenoids by clicking on the symbol for VCT2000.

  Select a solenoid and read off the current through the solenoid's circuit. The current should shift between approx. 100 and 950 mA.

Solenoid SLT, SLC1, SLB1.

Fig. 183: Identifying VCT2000 Diagnostic Tool Symbol In VIDA
Courtesy of VOLVO CARS CORPORATION

Is the function OK?

- **YES**

  Refer to **CHECKING THE OIL QUALITY AND THE OIL LEVEL IN THE TRANSMISSION**

- **NO**

  Refer to **CHECKING THE COMPONENTS AND WIRING**

CHECKING THE COMPONENTS AND WIRING

Fig. 184: Identifying Ignition OFF
Courtesy of VOLVO CARS CORPORATION

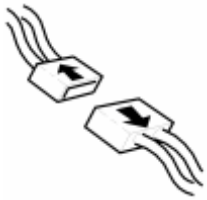

Fig. 185: Identifying Connectors Disconnected
Courtesy of VOLVO CARS CORPORATION

- Ignition off.
- Open the transmission control system.

  Check connector B (22-pin) for the transmission control module (TCM). Check for damaged or pressed in pins. Check for contact resistance and oxidation.

  HINT: Check solenoids SLT, SLC1, SLB1 as described in:CHECKING INTERNAL

COMPONENTS OF THE TRANSMISSION

If no defects were found on connectors or cables, replace the control system. If this does not help, replace the transmission.

Remedy as necessary.

Other information

- see **TRANSMISSION - REMOVAL, REPLACEMENT AND INSTALLATION**
- see **VALVE HOUSING** .
- see **TRANSMISSION CONTROL UNIT WIRING HARNESS**
- To access connector B: **TRANSMISSION CONTROL MODULE (TCM)**
- see **CHECKING WIRING AND TERMINALS**

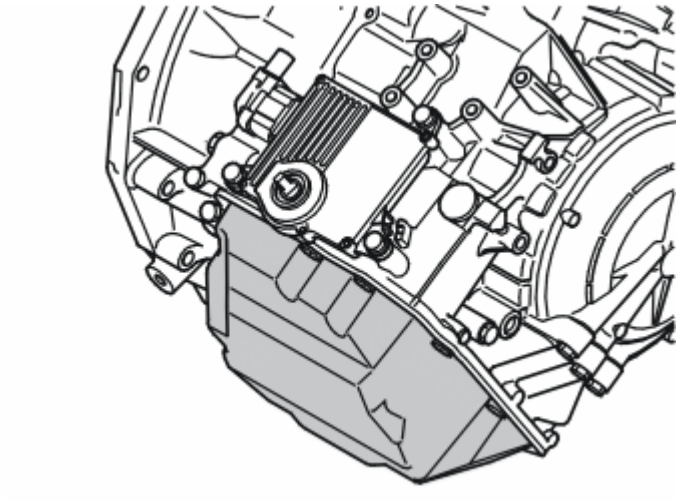

Fig. 186: Identifying Transmission Fluid Pan
Courtesy of VOLVO CARS CORPORATION

- **Continue**

Refer to **RESETTING ADAPTATION**

CHECKING THE OIL QUALITY AND THE OIL LEVEL IN THE TRANSMISSION

NOTE: **Transmission fluid quality and level are extremely important for the function of the transmission. Therefore it is imperative that these are correct. In addition the oil level is dependent on oil temperature.**

Fig. 187: Identifying Ignition ON
Courtesy of VOLVO CARS CORPORATION

- Ignition on.
- Read off the oil temperature.

  Check the transmission oil level. If the oil level is low, check the transmission for leakage, then top up with oil.

  Check the quality of the oil.

  Replace the transmission fluid if the fluid smells burnt.

  Other information

  - see **TRANSMISSION OIL LEVEL - CHECKING**
  - see **OIL GRADE, CHECKING**
  - see **TRANSAXLE OIL**

  Select an alternative below

  1. No fault detected.

     Refer to **CHECKING THE COMPONENTS AND WIRING**

  2. Transmission fluid replaced, low level or poor quality.

     Refer to **RESETTING THE "TRANSMISSION FLUID CHANGE" COUNTER**

Fig. 188: Identifying VCT2000 Diagnostic Tool Symbol In VIDA
Courtesy of VOLVO CARS CORPORATION

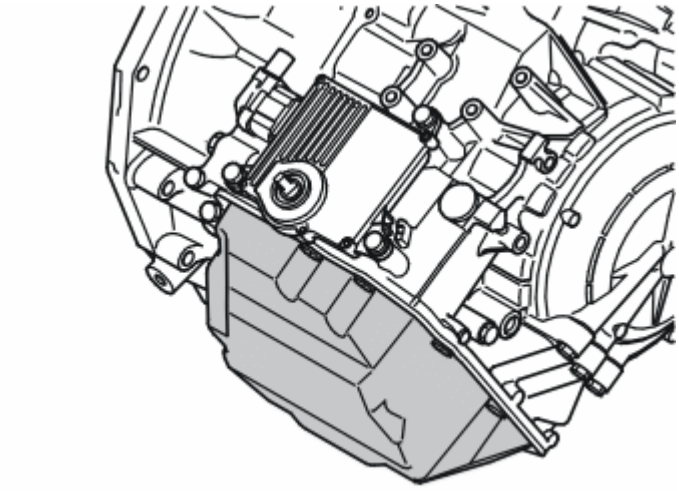

Fig. 189: Identifying Transmission Fluid Pan
Courtesy of VOLVO CARS CORPORATION

VERIFICATION

VERIFICATION

NOTE: **When the transmission's control module has been removed and reinstalled, it is important that the gear position sensor is calibrated. Select Pause and create a bookmark. Then select Vehicle communication.**

HINT: After carrying out the repair, check that the fault has been remedied.

Fig. 190: Identifying Ignition ON
Courtesy of VOLVO CARS CORPORATION

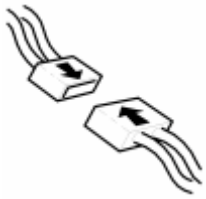

Fig. 191: Identifying Connector(s) Reinstallation
Courtesy of VOLVO CARS CORPORATION

- Ignition off.
- Reinstall the connectors, components etc.

- Test drive the vehicle following:**TEST DRIVE SCHEDULE, DESCRIPTION**

  Check that the transmission does not display any **obvious** function faults.

  NOTE: When test driving, the oil temperature must be above 20 °C.

Is the function OK?

- **YES**

  VERIFIED: Troubleshooting has been completed.

- **NO**

  Refer to **INFORMATION**

INFORMATION

FAULT-TRACING INFORMATION

The fault should have been detected and remedied. As this is not the case fault-tracing has failed.

Exit fault-tracing for this diagnostic trouble code (DTC) or make another attempt.

RESETTING ADAPTATION

RESETTING THE ADAPTATION AND THE COUNTER FOR "TRANSMISSION OIL, REPLACE"

HINT: The transmission has torque-regulated, adaptive pressure regulation. The pressure regulator enables the transmission to regulate pressure during each shift to prevent hard shifting. Each shift is assessed by the transmission control module (TCM) and is stored in the internal memory. This makes it possible to compensate for transmission and clutch wear. It is important that the adaptation in the memory is reset so that the transmission works normally after the repair. Because the fluid was changed during the repair, the counter for transmission fluid change must also be reset. If the counter is not reset during draining/replacement, a diagnostic trouble code may be generated under the wrong conditions.

NOTE: This applies only if the transmission or one of the components in the transmission have been replaced.

Fig. 192: Identifying Ignition ON
Courtesy of VOLVO CARS CORPORATION

- Ignition on.

  Click on the VCT2000 symbol to reset the adaptation and counter.

Fig. 193: Identifying VCT2000 Diagnostic Tool Symbol In VIDA
Courtesy of VOLVO CARS CORPORATION

- **Continue**

  Refer to **VERIFICATION**

RESETTING THE "TRANSMISSION FLUID CHANGE" COUNTER

CHECKING THE FUNCTION

HINT: The transmission control module (TCM) has a counter for fluid quality that counts the number of times the transmission is subjected to too hard a load or too high an ambient temperature. If the counter is not reset during draining/replacement, there is a risk that a diagnostic trouble code will be set under the wrong conditions. Thus, it is important that the counter for transmission fluid change be reset.

NOTE: This only applies when the transmission oil is changed and when the oil is changed during repairs to the transmission's temperature sensor.

Fig. 194: Identifying Ignition ON
Courtesy of VOLVO CARS CORPORATION

- Ignition on.

  Click on the VCT2000 symbol to reset the counter.

Fig. 195: Identifying VCT2000 Diagnostic Tool Symbol In VIDA
Courtesy of VOLVO CARS CORPORATION

- **Continue**

  Refer to **VERIFICATION**

TCM-P074D00 UNABLE TO ENGAGE GEAR 5. GENERAL FAILURE INFORMATION. NO SUB TYPE INFORMATION (B6324S5, TF-80SC; B6324S5, TF-80SC AWD; 2011)

DIAGNOSTIC TROUBLE CODE (DTC) INFORMATION

see **DIAGNOSTIC TROUBLE CODE (DTC) INFORMATION**

FAULT-TRACING

see **FAULT-TRACING**

TCM-P074E00 UNABLE TO ENGAGE GEAR 6. GENERAL FAILURE INFORMATION. NO SUB TYPE INFORMATION (B6324S, TF-80SC; B6324S, TF-80SC AWD; 2007-2010)

DIAGNOSTIC TROUBLE CODE (DTC) INFORMATION

see **DIAGNOSTIC TROUBLE CODE (DTC) INFORMATION**

FAULT-TRACING

CHECKING SOLENOIDS

Fig. 196: Identifying Ignition ON
Courtesy of VOLVO CARS CORPORATION

- Ignition on.
- Activate the solenoids by clicking on the symbol for VCT2000.

  Select a solenoid and read off the current through the solenoid's circuit. The current should shift between approx. 100 and 950 mA.

Solenoid SLT, SLC3.

Fig. 197: Identifying VCT2000 Diagnostic Tool Symbol In VIDA
Courtesy of VOLVO CARS CORPORATION

Is the function OK?

- **YES**

  Refer to **CHECKING THE OIL QUALITY AND THE OIL LEVEL IN THE TRANSMISSION**

- **NO**

  Refer to **CHECKING THE COMPONENTS AND WIRING**

CHECKING THE COMPONENTS AND WIRING

Fig. 198: Identifying Ignition OFF
Courtesy of VOLVO CARS CORPORATION

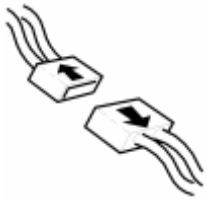

Fig. 199: Identifying Connectors Disconnected
Courtesy of VOLVO CARS CORPORATION

- Ignition off.
- Open the transmission control system.

  Check connector B (22-pin) for the transmission control module (TCM). Check for damaged or pressed in pins. Check for contact resistance and oxidation.

  HINT: Check solenoids SLT, SLC3 as described in:CHECKING INTERNAL COMPONENTS OF

THE TRANSMISSION

If no defects were found on connectors or cables, replace the control system. If this does not help, replace the transmission.

Remedy as necessary.

Other information

- see **TRANSMISSION - REMOVAL, REPLACEMENT AND INSTALLATION**
- see **VALVE HOUSING** .
- see **TRANSMISSION CONTROL UNIT WIRING HARNESS**
- To access connector B: **TRANSMISSION CONTROL MODULE (TCM)**
- see **CHECKING WIRING AND TERMINALS**

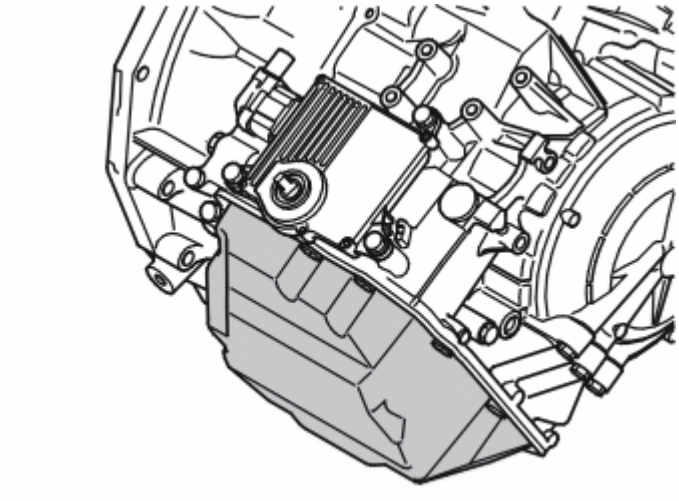

Fig. 200: Identifying Transmission Fluid Pan
Courtesy of VOLVO CARS CORPORATION

- **Continue**

Refer to **RESETTING ADAPTATION**

CHECKING THE OIL QUALITY AND THE OIL LEVEL IN THE TRANSMISSION

NOTE: **Transmission fluid quality and level are extremely important for the function of the transmission. Therefore it is imperative that these are correct. In addition the oil level is dependent on oil temperature.**

Fig. 201: Identifying Ignition ON
Courtesy of VOLVO CARS CORPORATION

- Ignition on.
- Read off the oil temperature.

  Check the transmission oil level. If the oil level is low, check the transmission for leakage, then top up with oil.

  Check the quality of the oil.

  Replace the transmission fluid if the fluid smells burnt.

  Other information

  - see **TRANSMISSION OIL LEVEL - CHECKING**
  - see **OIL GRADE, CHECKING**
  - see **TRANSAXLE OIL**

  Select an alternative below

  1. No fault detected.

     Refer to **CHECKING THE COMPONENTS AND WIRING**

  2. Transmission fluid replaced, low level or poor quality.

     Refer to **RESETTING THE "TRANSMISSION FLUID CHANGE" COUNTER**

Fig. 202: Identifying VCT2000 Diagnostic Tool Symbol In VIDA
Courtesy of VOLVO CARS CORPORATION

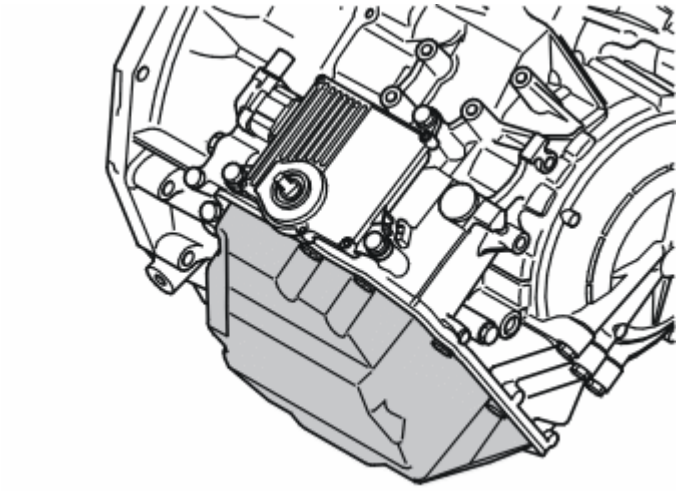

Fig. 203: Identifying Transmission Fluid Pan
Courtesy of VOLVO CARS CORPORATION

VERIFICATION

VERIFICATION

NOTE: **When the transmission's control module has been removed and reinstalled, it is important that the gear position sensor is calibrated. Select Pause and create a bookmark. Then select Vehicle communication.**

HINT: After carrying out the repair, check that the fault has been remedied.

Fig. 204: Identifying Ignition ON
Courtesy of VOLVO CARS CORPORATION

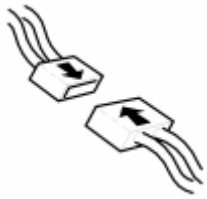

Fig. 205: Identifying Connector(s) Reinstallation
Courtesy of VOLVO CARS CORPORATION

- Ignition off.
- Reinstall the connectors, components etc.

- Test drive the vehicle following:**TEST DRIVE SCHEDULE, DESCRIPTION**

  Check that the transmission does not display any **obvious** function faults.

  NOTE: When test driving, the oil temperature must be above 20 °C.

Is the function OK?

- **YES**

  VERIFIED: Troubleshooting has been completed.

- **NO**

  Refer to **INFORMATION**

INFORMATION

FAULT-TRACING INFORMATION

The fault should have been detected and remedied. As this is not the case fault-tracing has failed.

Exit fault-tracing for this diagnostic trouble code (DTC) or make another attempt.

RESETTING ADAPTATION

RESETTING THE ADAPTATION AND THE COUNTER FOR "TRANSMISSION OIL, REPLACE"

HINT: The transmission has torque-regulated, adaptive pressure regulation. The pressure regulator enables the transmission to regulate pressure during each shift to prevent hard shifting. Each shift is assessed by the transmission control module (TCM) and is stored in the internal memory. This makes it possible to compensate for transmission and clutch wear. It is important that the adaptation in the memory is reset so that the transmission works normally after the repair. Because the fluid was changed during the repair, the counter for transmission fluid change must also be reset. If the counter is not reset during draining/replacement, a diagnostic trouble code may be generated under the wrong conditions.

NOTE: This applies only if the transmission or one of the components in the transmission have been replaced.

Fig. 206: Identifying Ignition ON
Courtesy of VOLVO CARS CORPORATION

- Ignition on.

  Click on the VCT2000 symbol to reset the adaptation and counter.

Fig. 207: Identifying VCT2000 Diagnostic Tool Symbol In VIDA
Courtesy of VOLVO CARS CORPORATION

- **Continue**

  Refer to **VERIFICATION**

RESETTING THE "TRANSMISSION FLUID CHANGE" COUNTER

CHECKING THE FUNCTION

HINT: The transmission control module (TCM) has a counter for fluid quality that counts the number of times the transmission is subjected to too hard a load or too high an ambient temperature. If the counter is not reset during draining/replacement, there is a risk that a diagnostic trouble code will be set under the wrong conditions. Thus, it is important that the counter for transmission fluid change be reset.

NOTE: This only applies when the transmission oil is changed and when the oil is changed during repairs to the transmission's temperature sensor.

Fig. 208: Identifying Ignition ON
Courtesy of VOLVO CARS CORPORATION

- Ignition on.

  Click on the VCT2000 symbol to reset the counter.

Fig. 209: Identifying VCT2000 Diagnostic Tool Symbol In VIDA
Courtesy of VOLVO CARS CORPORATION

- **Continue**

  Refer to **VERIFICATION**

TCM-P074E00 UNABLE TO ENGAGE GEAR 6. GENERAL FAILURE INFORMATION. NO SUB TYPE INFORMATION (B6324S5, TF-80SC; B6324S5, TF-80SC AWD; 2011)

DIAGNOSTIC TROUBLE CODE (DTC) INFORMATION

see **DIAGNOSTIC TROUBLE CODE (DTC) INFORMATION**

FAULT-TRACING

see **FAULT-TRACING**

TCM-P077700: PRESSURE CONTROL SOLENOID B STUCK ON. GENERAL FAILURE INFORMATION. NO SUB TYPE INFORMATION (B6324S, TF-80SC; B6324S, TF-80SC AWD; 2007-2010)

DIAGNOSTIC TROUBLE CODE (DTC) INFORMATION TCM-P077700

Condition

Transmission control module (TCM) activates solenoids S1 and S2 when 1st gear is engaged and at engine braking.

The diagnostic trouble code (DTC) is stored if the control module detects that:

- The wheels lock when downshifting from 4th to 3rd gear.

The control module's test for the diagnostic trouble code (DTC) starts in the event of:

- Normal driving.

NOTE: **The control module can only detect the fault once the test has been started and the diagnostic trouble code (DTC) is stored when the conditions are met.**

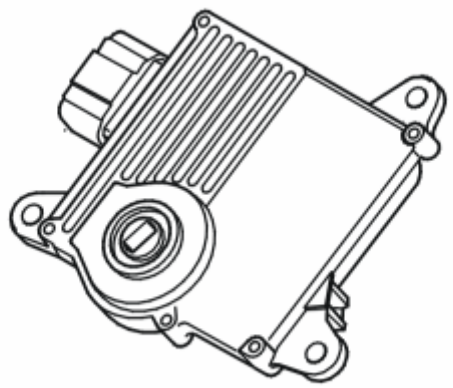

Fig. 210: Identifying Transmission Control Module (TCM)
Courtesy of VOLVO CARS CORPORATION

Substitute Value

- Auxiliary program **Emergency mode 1** in the transmission control module (TCM) has started.

  HINT: EMERGENCY MODE IN THE EVENT OF A FAULT

Possible Source

- Solenoid S2 has jammed in the ON position.
- Hydraulic fault in the transmission.

Fault symptom[s]

- General warning lamp lit

FAULT-TRACING

TEST DRIVING THE TRANSMISSION

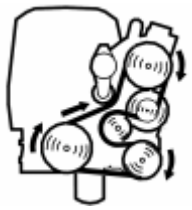

Fig. 211: Identifying Drive Belt Routing
Courtesy of VOLVO CARS CORPORATION

- Start the engine.
- Activate the service gear indication.

Test drive the vehicle and especially check the downshift from 3rd to 2nd gear.

- Move the gear selector to position D.
- Accelerate until 3rd gear is activated.
- Release the accelerator pedal so that it is unaffected.

If the front wheels lock-up slightly when downshifting from 3rd to 2nd, the fault is permanent and currently active.

If the transmission function is Ok, this indicates an intermittent fault, i. e. the fault was present previously but is not active at the moment.

Fig. 212: Identifying VCT2000 Diagnostic Tool Symbol In VIDA
Courtesy of VOLVO CARS CORPORATION

Fig. 213: Identifying Test Drive
Courtesy of VOLVO CARS CORPORATION

- **Continue**

Refer to **CHECKING THE STATUS**

CHECKING THE STATUS

Fig. 214: Identifying Ignition ON
Courtesy of VOLVO CARS CORPORATION

- Ignition on.
- Activate solenoid S2.

  Check the status for solenoid S2. The status must switch between OFF and ON.

  The valve must click. Listen using a stethoscope or a screwdriver pressed to your ear.

  There is a mechanical fault if the solenoid does not click. Replace solenoid S2.

  If the solenoid clicks clearly, this means that there is an internal fault in the transmission.

  Replace the transmission.

  Other information

  - see **TRANSMISSION CONTROL UNIT SOLENOIDS**
  - see **TRANSMISSION** or **TRANSMISSION** (AWD)

Fig. 215: Identifying VCT2000 Diagnostic Tool Symbol In VIDA
Courtesy of VOLVO CARS CORPORATION

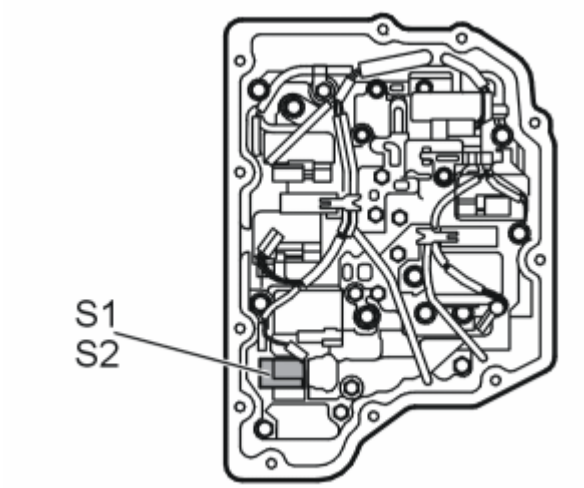

Fig. 216: Locating S1 And S2 Solenoids
Courtesy of VOLVO CARS CORPORATION

- **Continue**

  Refer to **RESETTING ADAPTATION**

VERIFICATION

VERIFICATION

Fig. 217: Identifying Drive Belt Routing
Courtesy of VOLVO CARS CORPORATION

- Ignition off.
- Reinstall the connectors, components etc.
- Test drive the vehicle following:**TEST DRIVE SCHEDULE, DESCRIPTION**

  Especially check the downshift from 3rd to 2nd gear.

Fig. 218: Identifying Test Drive
Courtesy of VOLVO CARS CORPORATION

Was the function OK?

- **YES**

  VERIFIED: Troubleshooting has been completed.

- **NO**

  Refer to **INFORMATION**

INFORMATION

FAULT-TRACING INFORMATION

The fault should have been detected and remedied. As this is not the case fault-tracing has failed.

Exit fault-tracing for this diagnostic trouble code (DTC) or make another attempt.

RESETTING ADAPTATION

RESETTING THE ADAPTATION AND THE COUNTER FOR "TRANSMISSION OIL, REPLACE"

HINT: The transmission has torque-regulated, adaptive pressure regulation. The pressure regulator enables the transmission to regulate pressure during each shift to prevent hard shifting. Each shift is assessed by the transmission control module (TCM) and is stored in the internal memory. This makes it possible to compensate for transmission and clutch wear. It is important that the adaptation in the memory is reset so that the transmission works normally after the repair. Because the fluid was changed during the repair, the counter for transmission fluid change must also be reset. If the counter is not reset during draining/replacement, a diagnostic trouble code may be generated under the wrong conditions.

NOTE: **This applies only if the transmission or one of the components in the transmission have been replaced.**

Fig. 219: Identifying Ignition ON
Courtesy of VOLVO CARS CORPORATION

- Ignition on.

  Click on the VCT2000 symbol to reset the adaptation and counter.

  Fig. 220: Identifying VCT2000 Diagnostic Tool Symbol In VIDA
  Courtesy of VOLVO CARS CORPORATION

- **Continue**

  Refer to **VERIFICATION**

TCM-P077700: PRESSURE CONTROL SOLENOID B STUCK ON. GENERAL FAILURE INFORMATION. NO SUB TYPE INFORMATION (B6324S5, TF-80SC; B6324S5, TF-80SC AWD; 2011)

DIAGNOSTIC TROUBLE CODE (DTC) INFORMATION TCM-P077700

see **DIAGNOSTIC TROUBLE CODE (DTC) INFORMATION TCM-P077700**

FAULT-TRACING

see **FAULT-TRACING**

TCM-P081711: STARTER DISABLE CIRCUIT. GENERAL ELECTRICAL FAILURES. CIRCUIT SHORT TO GROUND (B6324S, TF-80SC; B6324S, TF-80SC AWD; 2007-2010)

DIAGNOSTIC TROUBLE CODE (DTC) INFORMATION TCM-P081711

Condition

To prevent the engine from starting with a gear engaged, which would cause the vehicle to move as soon as it starts, the vehicle is equipped with a immobilizer function. Two Hall sensors integrated in the transmission control module (TCM) detect whether the selector lever is in position. Start is permitted in transmission position P or N. The transmission control module (TCM) has a directly connected signal cable to the engine control module (ECM). The signal notifies the engine control module (ECM) whether it is possible to start the engine or not. When the voltage level on the signal cable is grounded it is permitted to start.

The diagnostic trouble code (DTC) is stored if the control module detects that:

- Signal is always grounded.

The control module's test for the diagnostic trouble code (DTC) starts in the event of:

- Ignition on.

NOTE: The control module can only detect the fault once the test has been started and the diagnostic trouble code (DTC) is stored when the conditions are met.

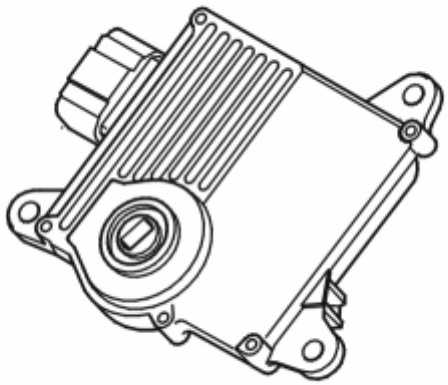

Fig. 221: Identifying Transmission Control Module (TCM)
Courtesy of VOLVO CARS CORPORATION

Substitute Value

- None.

Possible Source

- Contact resistance in the terminals.
- Short-circuit to ground in the signal cable.
- Internal fault in the transmission control module (TCM).

Fault symptom[s]

- Engine fails to start
- Engine starts with gear lever in position R and D

FAULT-TRACING

CHECKING THE START INHIBITOR STATUS

Fig. 222: Identifying Ignition ON
Courtesy of VOLVO CARS CORPORATION

- Ignition on.
- Depress the brake pedal.
- Read off the status of the start inhibitor.

  Move the gear selector between the positions P, R, N and D.

  In positions P and N, the status must be "Start permitted"; in other positions the status must be "Start not permitted".

  If the function is correct, this is an indication that the fault was present previously but is not active at the moment, i. e. an intermittent fault.

Fig. 223: Identifying VCT2000 Diagnostic Tool Symbol In VIDA
Courtesy of VOLVO CARS CORPORATION

Fig. 224: Identifying Automatic Transmission Gear Shifter With Manual Gear Changer
Courtesy of VOLVO CARS CORPORATION

- **Continue**

  Refer to **CHECKING THE WIRING AND SENSORS**

CHECKING THE WIRING AND SENSORS

Fig. 225: Identifying Ignition OFF
Courtesy of VOLVO CARS CORPORATION

- Ignition off.

  Check connector A (16-pin) for the transmission control module (TCM). Check for contact resistance and oxidation.

  Check the cable for short-circuit to ground.

  Take readings between:

  - Transmission control module (TCM) terminal #A5 (#A35) and engine control module (ECM) terminal #B15.

  Remedy as necessary.

  Other information

- see **CONNECTING THE BREAKOUT BOX**
- see **SIGNAL SPECIFICATION**
- To access connector A:**TRANSMISSION CONTROL MODULE (TCM)**
- see **CHECKING WIRING AND TERMINALS**

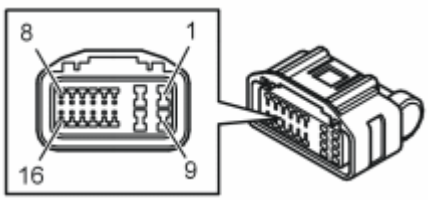

Fig. 226: Identifying Connector Terminals
Courtesy of VOLVO CARS CORPORATION

- **Continue**

  Refer to **VERIFICATION**

VERIFICATION

VERIFICATION

HINT: After carrying out the repair, check that the fault has been remedied.

Fig. 227: Identifying Ignition ON
Courtesy of VOLVO CARS CORPORATION

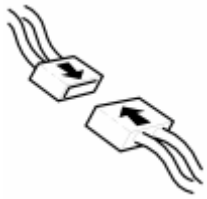

Fig. 228: Identifying Connector(s) Reinstallation
Courtesy of VOLVO CARS CORPORATION

- Ignition off.
- Reinstall the connectors, components etc.
- Ignition on.
- Read off the status of the start inhibitor.

Move the gear selector between the positions P, R, N and D.

In positions P and N, the status must be "Start permitted"; in other positions the status must be "Start not permitted".

Fig. 229: Identifying VCT2000 Diagnostic Tool Symbol In VIDA
Courtesy of VOLVO CARS CORPORATION

Is the function OK?

- **YES**

  VERIFIED: Troubleshooting has been completed.

- **NO**

  Refer to **INFORMATION**

INFORMATION

FAULT-TRACING INFORMATION

The fault should have been detected and remedied. As this is not the case fault-tracing has failed.

Exit fault-tracing for this diagnostic trouble code (DTC) or make another attempt.

TCM-P081711: STARTER DISABLE CIRCUIT. GENERAL ELECTRICAL FAILURES. CIRCUIT SHORT TO GROUND (B6324S5, TF-80SC; B6324S5, TF-80SC AWD; 2011)

DIAGNOSTIC TROUBLE CODE (DTC) INFORMATION TCM-P081711

see **DIAGNOSTIC TROUBLE CODE (DTC) INFORMATION TCM-P081711**

FAULT-TRACING

see **FAULT-TRACING**

TCM-P081711: STARTER INHIBITOR CIRCUIT. GENERAL ELECTRIC FAULT. SHORT-CIRCUIT TO GROUND (B8444S, TF-80SC AWD; 2006-2011)

DIAGNOSTIC TROUBLE CODE (DTC) INFORMATION TCM-P081711

Condition

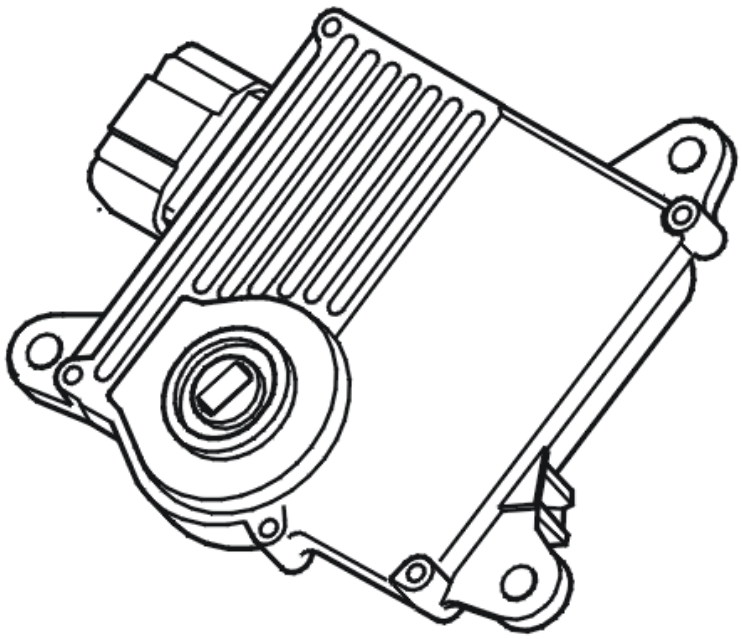

Fig. 230: Identifying Transmission Control Module (TCM)
Courtesy of VOLVO CARS CORPORATION

To prevent the engine being started when a gear is engaged, which could cause the vehicle to move immediately it is started, the vehicle is equipped with a starter inhibitor function. Integrated in the transmission control module (TCM) are two Hall sensors used to detect whether the gear selector is in position. Starting is allowed in gear positions P or N. The transmission control module (TCM) has a signal lead connected directly to the engine control module (ECM). This signal informs the engine control module (ECM) whether or not it is possible to start the engine. When the voltage level of the signal lead is grounded, it will be possible to start. If the transmission control module (TCM) detects that the signal is constantly grounded, the diagnostic trouble code (DTC) is generated.

The diagnostic trouble code can be diagnosed when the ignition is on.

Substitute Value

- Nothing.

Possible Source

- Contact resistance in the terminals
- The signal cable is short-circuited to ground.
- Internal fault in transmission control module (TCM).

Fault symptom[s]

- The engine does not start.
- Engine starts with gear selector in positions R and D.

FAULT TRACING TCM-P081711

CHECK THE PARK NEUTRAL POSITION (PNP) SWITCH STATUS

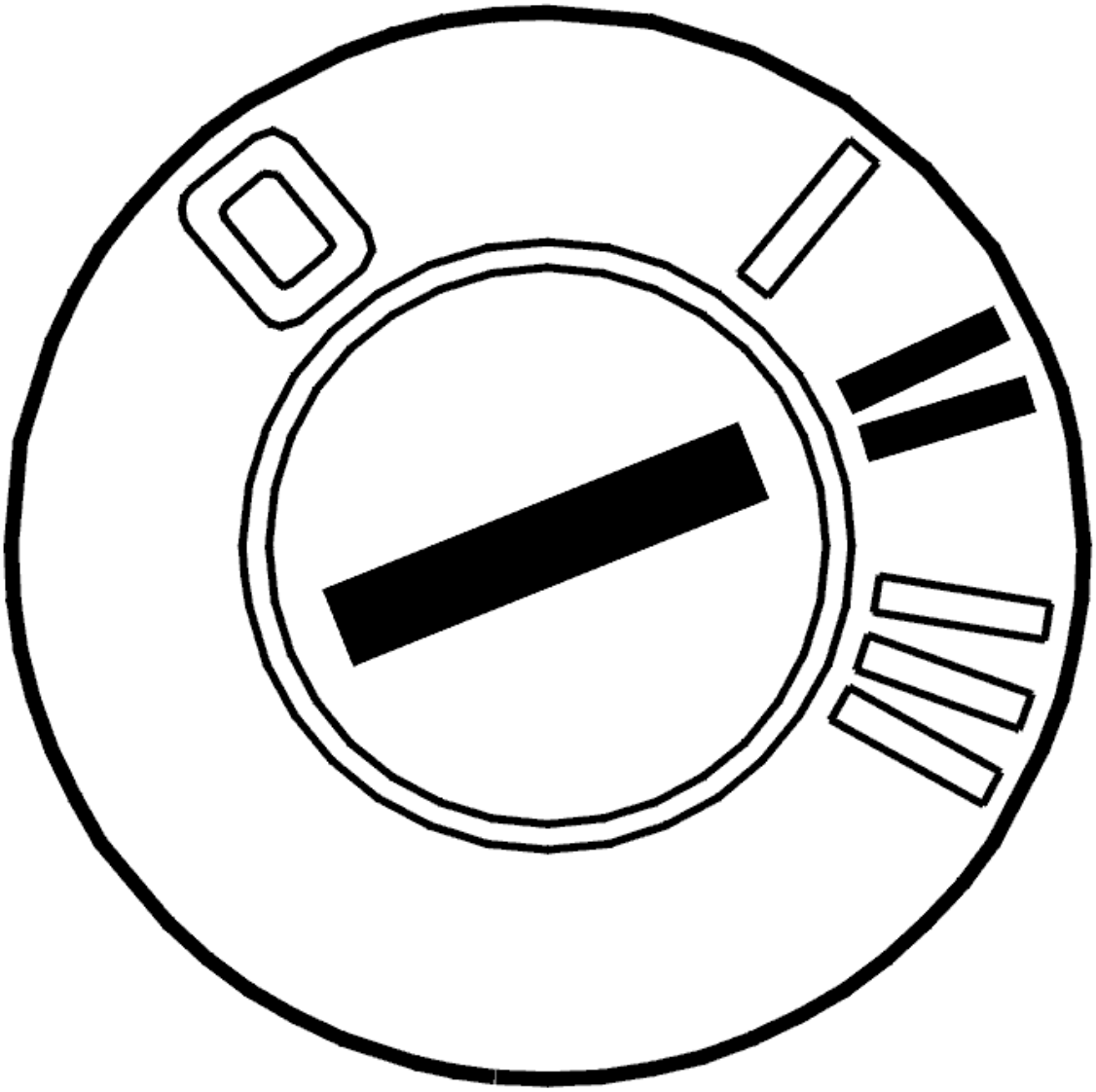

Fig. 231: Identifying Ignition ON
Courtesy of VOLVO CARS CORPORATION

- Ignition on
- Push down the brake pedal.
- Read off the park neutral position (PNP) switch status

  Move the gear selector lever between positions P, R, N and D.

  In positions P and N the status must be "Start permitted", in other positions the status must be "Start not permitted".

  When the function is not correct this indicates that the fault is permanent.

  When the function is correct it means that the fault was present previously but is not active now. There is an intermittent fault.

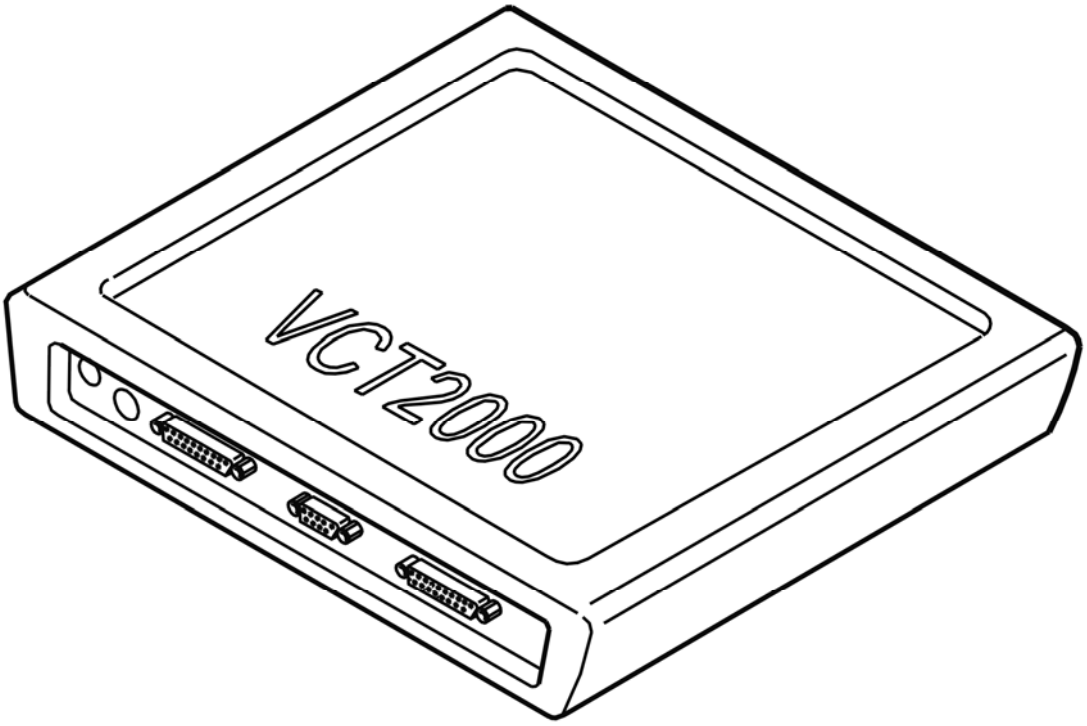

Fig. 232: Identifying VCT2000 Diagnostic Tool Symbol In VIDA
Courtesy of VOLVO CARS CORPORATION

Fig. 233: Identifying Automatic Transmission Gear Shifter With Manual Gear Changer
Courtesy of VOLVO CARS CORPORATION

- **Continue**

  Refer to **CHECKING WIRING AND SENSORS**

CHECKING WIRING AND SENSORS

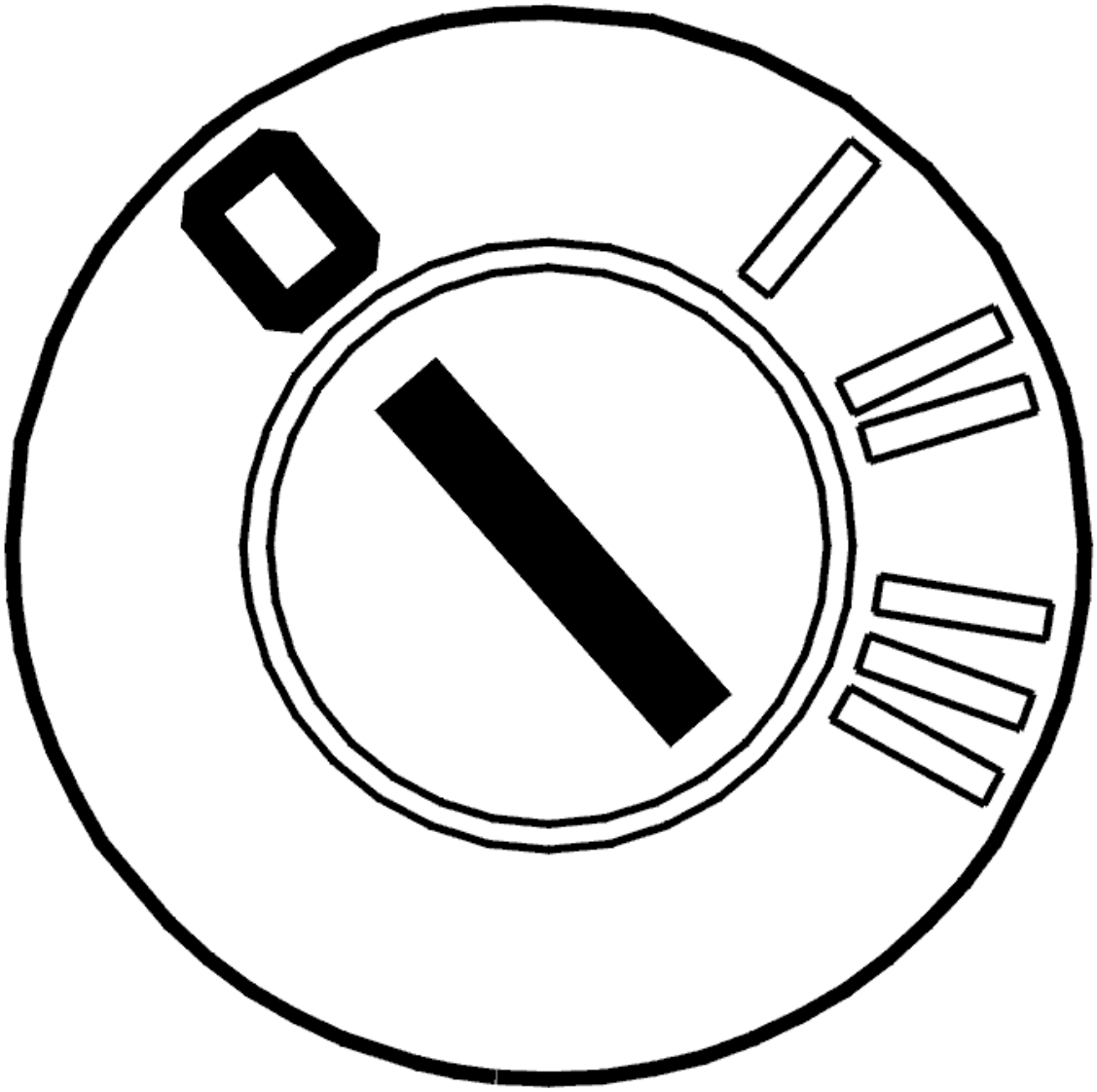

Fig. 234: Identifying Ignition OFF
Courtesy of VOLVO CARS CORPORATION

- Ignition off

  Check connector A (16-pin) for the transmission control module (TCM). Check for contact resistance and oxidation.

  Check the cable between the transmission control module (TCM) terminal #A5 (#A35) and engine control module (ECM) terminal #B15. Check for a short circuit to ground.

  Remedy as necessary.

  Other information

  - see **CONNECTING THE BREAKOUT BOX**

- see **SIGNAL DESCRIPTION**
- For access to connector A: **TRANSMISSION CONTROL MODULE (TCM), REPLACING**
- see **CONTENTS**

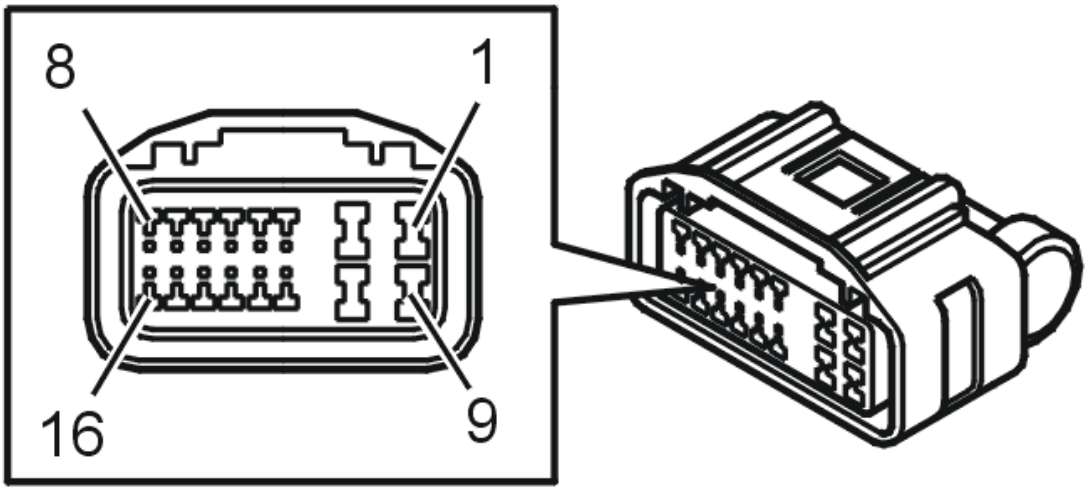

Fig. 235: Identifying Connector A Terminals
Courtesy of VOLVO CARS CORPORATION

- **Continue**

  Refer to **VERIFICATION**

VERIFICATION

HINT: After carrying out the repair, check that the fault has been remedied.

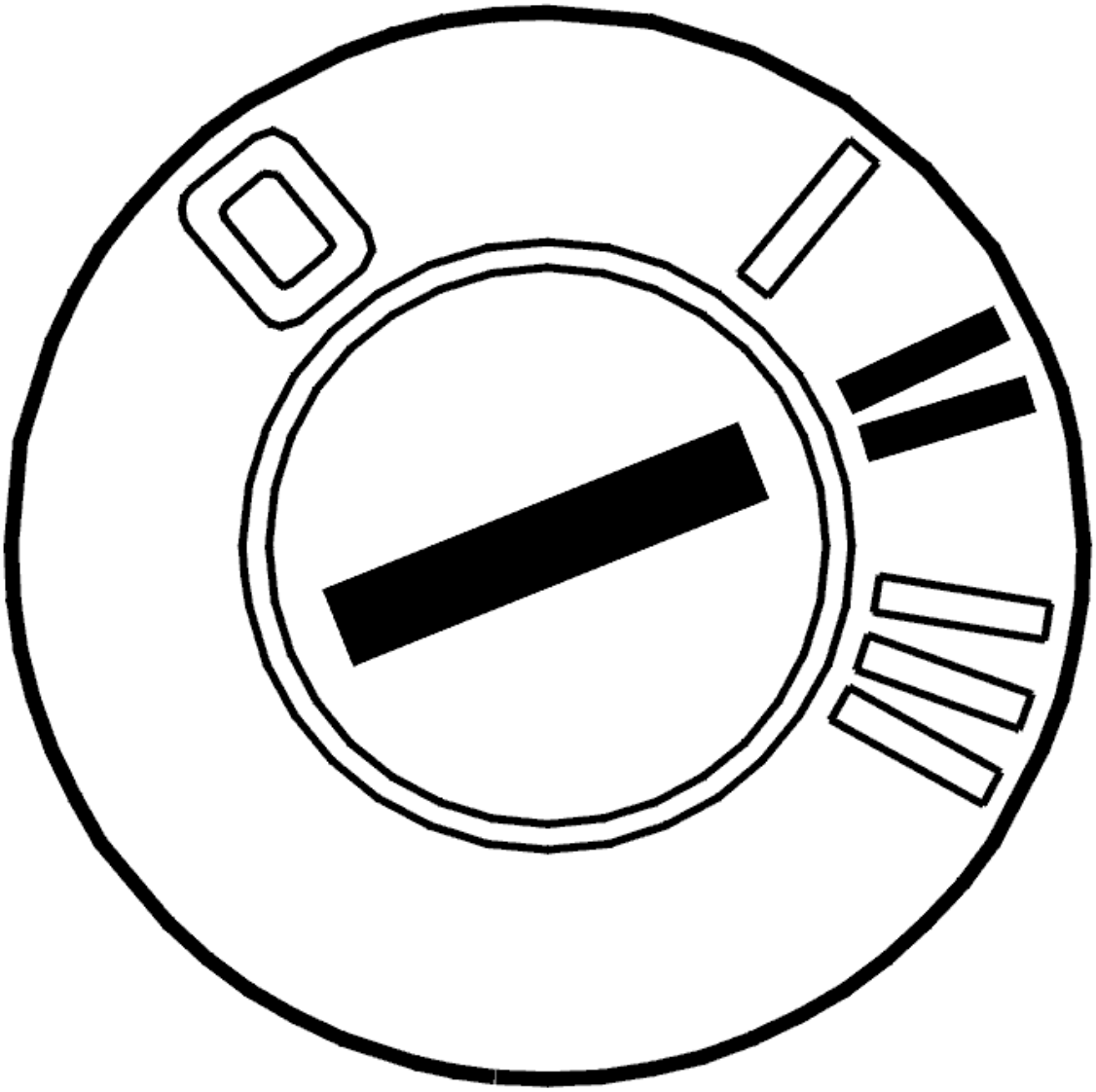

Fig. 236: Identifying Ignition ON
Courtesy of VOLVO CARS CORPORATION

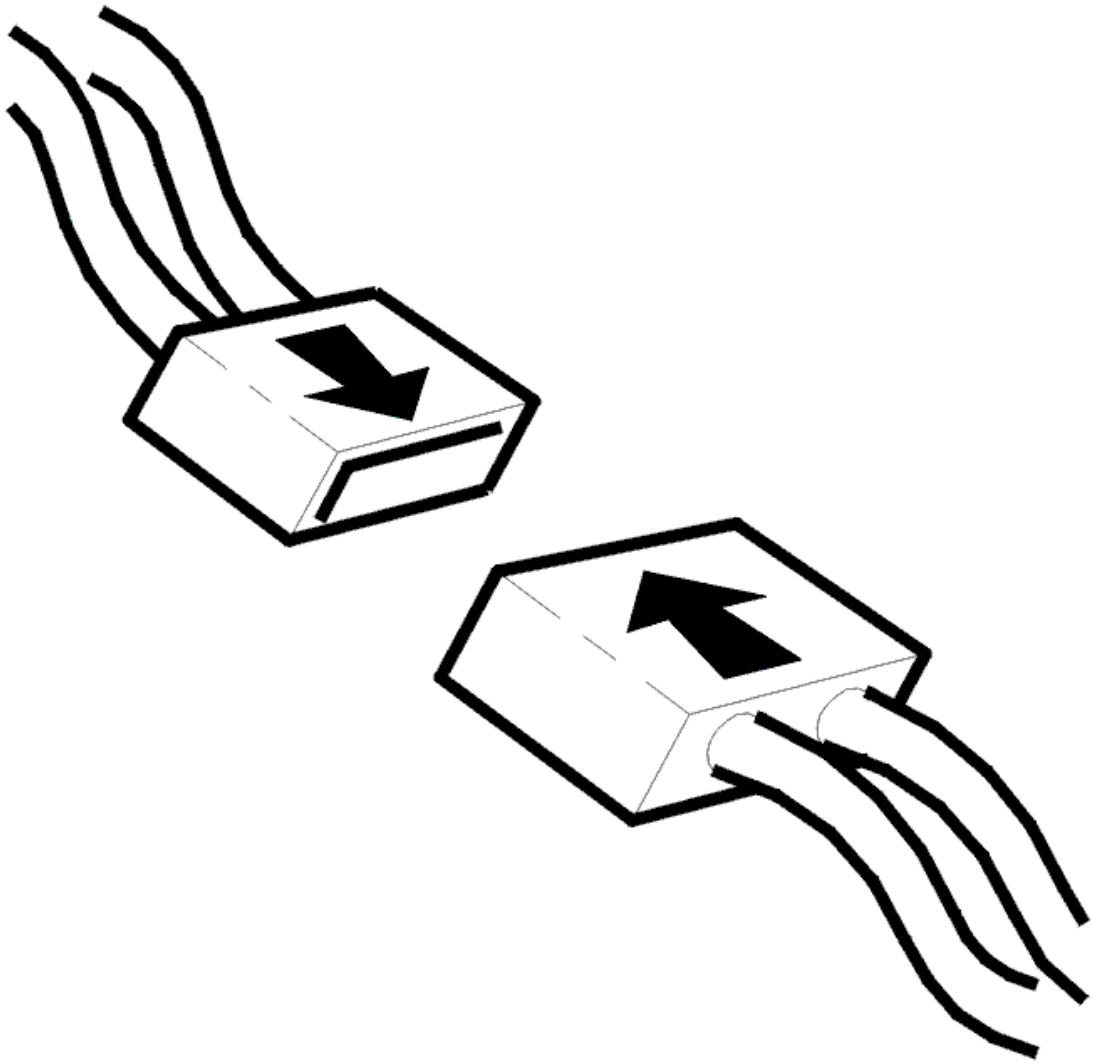

Fig. 237: Identifying Connector(s) Reinstallation
Courtesy of VOLVO CARS CORPORATION

- Ignition off
- Reinstall the connectors, components etc.
- Ignition on
- Read off the park neutral position (PNP) switch status

  Move the gear selector lever between positions P, R, N and D.

  In positions P and N the status must be "Start permitted", in other positions the status must be "Start not permitted".

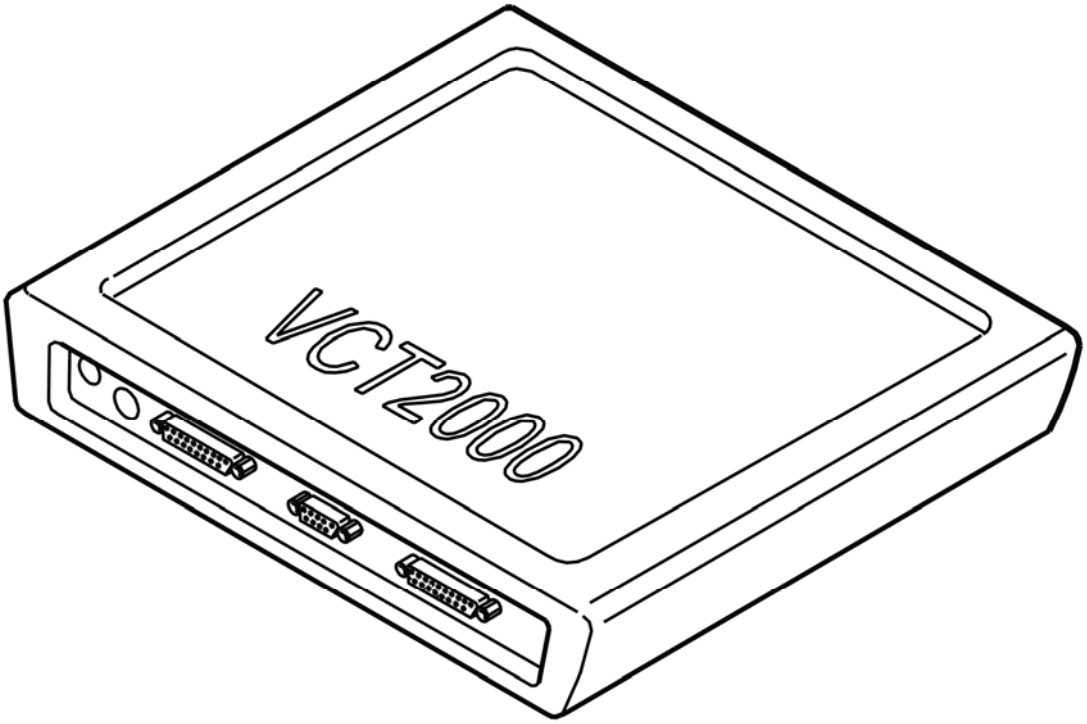

Fig. 238: Identifying VCT2000 Diagnostic Tool Symbol In VIDA
Courtesy of VOLVO CARS CORPORATION

Is the function OK?

- **YES**

  VERIFIED: Troubleshooting has been completed.

- **NO**

  Refer to **INFORMATION**

INFORMATION

FAULT-TRACING INFORMATION

The fault should have been detected and remedied. As this is not the case fault-tracing has failed.

Exit fault-tracing for this diagnostic trouble code (DTC) or make another attempt.

TCM-P081711: STARTER INHIBITOR CIRCUIT. GENERAL ELECTRIC FAULT. SHORT-CIRCUIT TO GROUND (TF-80SC AWD; 2005)

DIAGNOSTIC TROUBLE CODE (DTC) INFORMATION TCM-P081711

see **DIAGNOSTIC TROUBLE CODE (DTC) INFORMATION TCM-P081711**

FAULT TRACING TCM-P081711

see **FAULT TRACING TCM-P081711**

TCM-P081712: STARTER DISABLE CIRCUIT. GENERAL ELECTRICAL FAILURES. CIRCUIT SHORT TO BATTERY (B6324S, TF-80SC; B6324S, TF-80SC AWD; 2007-2010)

DIAGNOSTIC TROUBLE CODE (DTC) INFORMATION TCM-P081712

Condition

To prevent the engine from starting with a gear engaged, which would cause the vehicle to move as soon as it starts, the vehicle is equipped with a immobilizer function. Two Hall sensors integrated in the transmission control module (TCM) detect whether the selector lever is in position. Start is permitted in transmission position P or N. The transmission control module (TCM) has a directly connected signal cable to the engine control module (ECM). The signal notifies the engine control module (ECM) whether it is possible to start the engine or not. When the voltage level on the signal cable is grounded it is permitted to start.

The diagnostic trouble code (DTC) is stored if the control module detects that:

- Signal cannot be grounded.

The control module's test for the diagnostic trouble code (DTC) starts in the event of:

- Ignition on.

NOTE: **The control module can only detect the fault once the test has been started and the diagnostic trouble code (DTC) is stored when the conditions are met.**

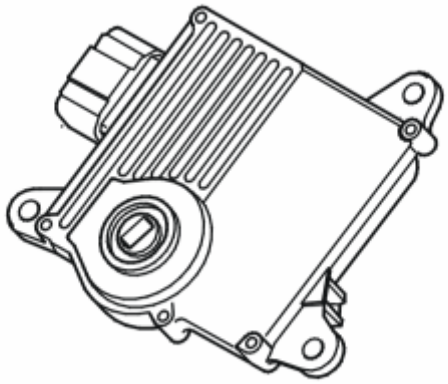

Fig. 239: Identifying Transmission Control Module (TCM)
Courtesy of VOLVO CARS CORPORATION

Substitute Value

- None.

Possible Source

- Short-circuit to supply voltage in the signal cable.
- Internal fault in the transmission control module (TCM).

Fault symptom[s]

- Engine fails to start

FAULT-TRACING

CHECKING THE START INHIBITOR STATUS

Fig. 240: Identifying Ignition ON
Courtesy of VOLVO CARS CORPORATION

- Ignition on.
- Depress the brake pedal.
- Read off the status of the start inhibitor.

Move the gear selector between the positions P, R, N and D.

In positions P and N, the status must be "Start permitted"; in other positions the status must be "Start not permitted".

The fault is permanent if the function is faulty.

If the function is correct, this is an indication that the fault was present previously but is not active at the moment, i. e. an intermittent fault.

Fig. 241: Identifying VCT2000 Diagnostic Tool Symbol In VIDA
Courtesy of VOLVO CARS CORPORATION

Fig. 242: Identifying Automatic Transmission Gear Shifter With Manual Gear Changer
Courtesy of VOLVO CARS CORPORATION

- **Continue**

  Refer to **CHECKING THE WIRING AND SENSORS**

CHECKING THE WIRING AND SENSORS

Fig. 243: Identifying Ignition OFF
Courtesy of VOLVO CARS CORPORATION

- Ignition off.

  Check the cable for a short-circuit to supply voltage.

  Take readings between:

  - Transmission control module (TCM) terminal #A5 (#A35) and engine control module (ECM) terminal #B15.

  Remedy as necessary.

  Other information

  - see **CONNECTING THE BREAKOUT BOX**
  - see **SIGNAL SPECIFICATION**
  - To access connector A:**TRANSMISSION CONTROL MODULE (TCM)**
  - see **CHECKING WIRING AND TERMINALS**

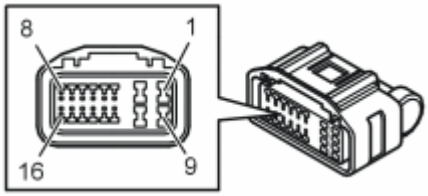

Fig. 244: Identifying Connector Terminals
Courtesy of VOLVO CARS CORPORATION

- **Continue**

  Refer to **VERIFICATION**

VERIFICATION

VERIFICATION

HINT: After carrying out the repair, check that the fault has been remedied.

Fig. 245: Identifying Ignition ON

Courtesy of VOLVO CARS CORPORATION

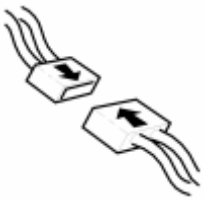

Fig. 246: Identifying Connector(s) Reinstallation
Courtesy of VOLVO CARS CORPORATION

- Ignition off.
- Reinstall the connectors, components etc.
- Ignition on.
- Read off the status of the start inhibitor.

  Move the gear selector between the positions P, R, N and D.

  In positions P and N, the status must be "Start permitted"; in other positions the status must be "Start not permitted".

Fig. 247: Identifying VCT2000 Diagnostic Tool Symbol In VIDA
Courtesy of VOLVO CARS CORPORATION

Is the function OK?

- **YES**

  VERIFIED: Troubleshooting has been completed.

- **NO**

  Refer to **INFORMATION**

INFORMATION

FAULT-TRACING INFORMATION

The fault should have been detected and remedied. As this is not the case fault-tracing has failed.

Exit fault-tracing for this diagnostic trouble code (DTC) or make another attempt.

TCM-P081712: STARTER DISABLE CIRCUIT. GENERAL ELECTRICAL FAILURES. CIRCUIT SHORT TO BATTERY (B6324S5, TF-80SC; B6324S5, TF-80SC AWD; 2011)

DIAGNOSTIC TROUBLE CODE (DTC) INFORMATION TCM-P081712

see **DIAGNOSTIC TROUBLE CODE (DTC) INFORMATION TCM-P081712**

FAULT-TRACING

see **FAULT-TRACING**

TCM-P081712: STARTER INHIBITOR CIRCUIT. GENERAL ELECTRICAL FAULT. SHORT-CIRCUIT TO VOLTAGE (B8444S, TF-80SC AWD; 2006-2011)

DIAGNOSTIC TROUBLE CODE (DTC) INFORMATION TCM-P081712

Condition

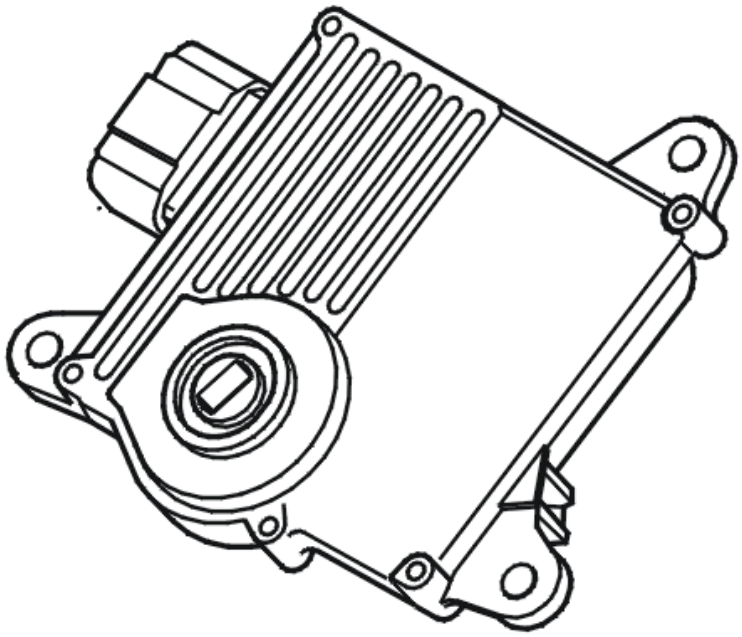

Fig. 248: Identifying Transmission Control Module (TCM)
Courtesy of VOLVO CARS CORPORATION

To prevent the engine being started when a gear is engaged, which could cause the vehicle to move immediately it is started, the vehicle is equipped with a starter inhibitor function. Integrated in the transmission control module (TCM) are two Hall sensors used to detect whether the gear selector is in position. Starting is allowed in gear positions P or N. The transmission control module (TCM) has a signal lead connected directly to the engine control module (ECM). This signal informs the engine control module (ECM) whether or not it is possible to start the engine. When the voltage level of the signal lead is grounded, it will be possible to start. If the transmission control module (TCM) detects that the signal cannot be grounded, the diagnostic trouble code (DTC) is generated.

The diagnostic trouble code can be diagnosed when the ignition is on.

Substitute Value

- Nothing.

Possible Source

- The signal cable is short-circuited to voltage.
- Internal fault in transmission control module (TCM).

Fault symptom[s]

- The engine does not start.

FAULT TRACING TCM-P081712

CHECK THE PARK NEUTRAL POSITION (PNP) SWITCH STATUS

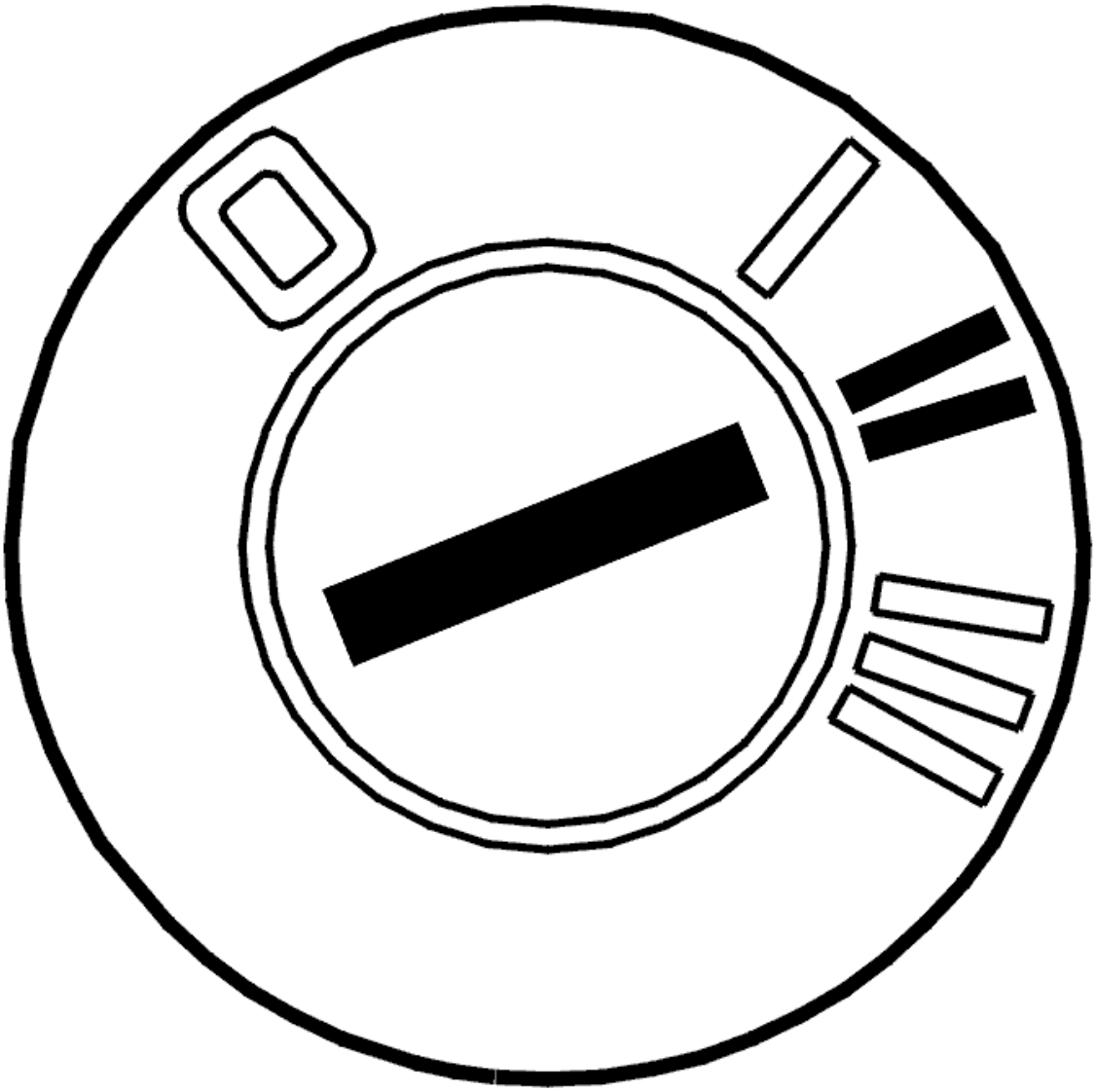

Fig. 249: Identifying Ignition ON
Courtesy of VOLVO CARS CORPORATION

- Ignition on
- Push down the brake pedal.
- Read off the park neutral position (PNP) switch status

  Move the gear selector lever between positions P, R, N and D.

  In positions P and N the status must be "Start permitted", in other positions the status must be "Start not permitted".

  When the function is not correct this indicates that the fault is permanent.

  When the function is correct it means that the fault was present previously but is not active now. There is

an intermittent fault.

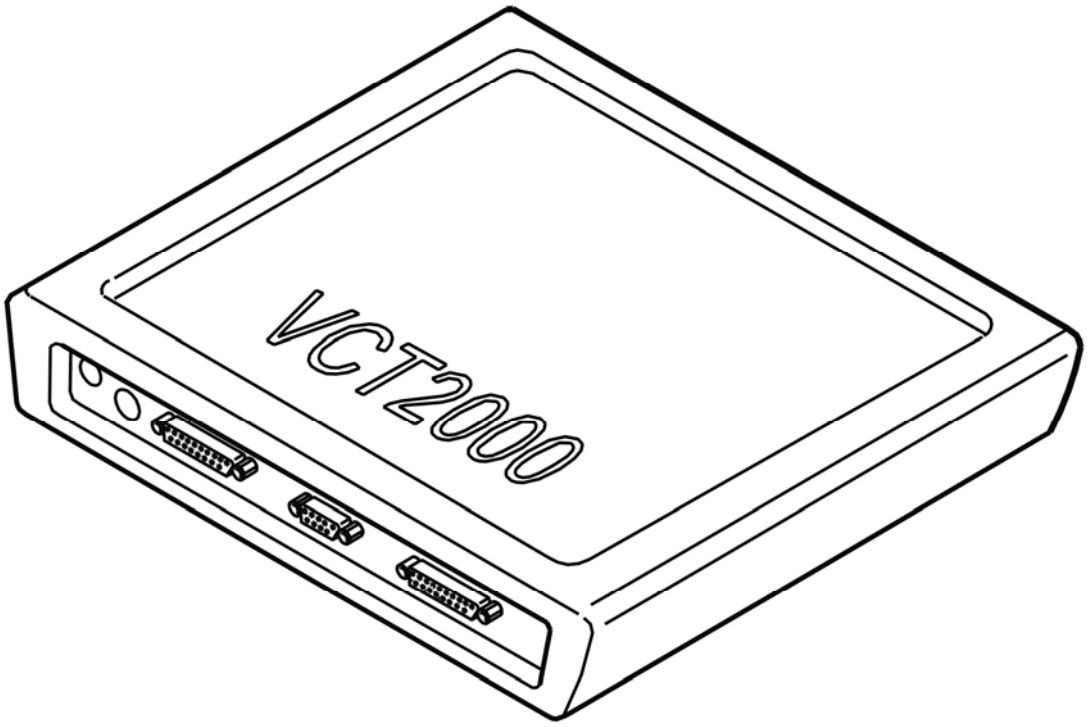

Fig. 250: Identifying VCT2000 Diagnostic Tool Symbol In VIDA
Courtesy of VOLVO CARS CORPORATION

Fig. 251: Identifying Automatic Transmission Gear Shifter With Manual Gear Changer
Courtesy of VOLVO CARS CORPORATION

- **Continue**

  Refer to **CHECKING WIRING AND SENSORS**

CHECKING WIRING AND SENSORS

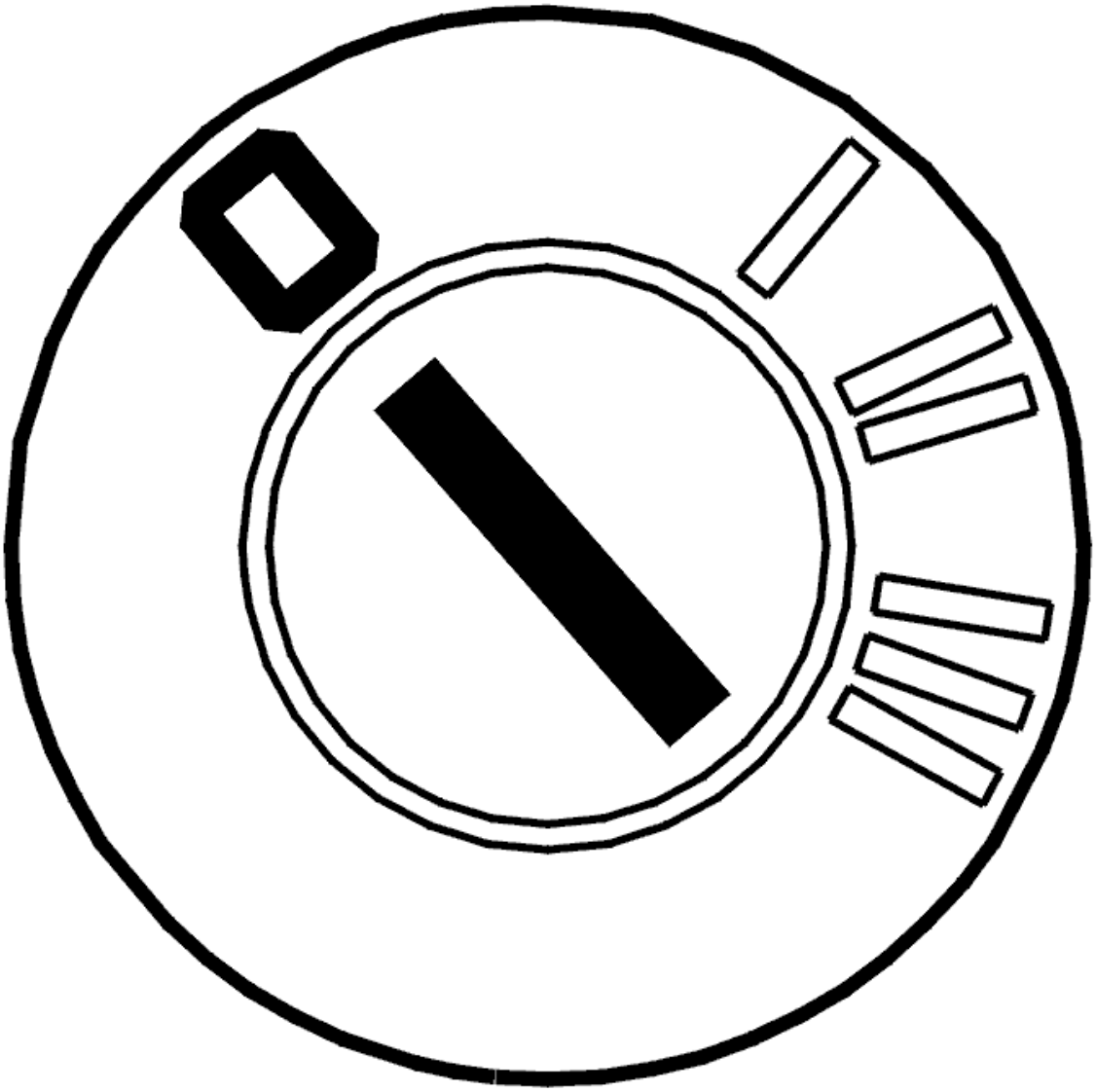

Fig. 252: Identifying Ignition OFF
Courtesy of VOLVO CARS CORPORATION

- Ignition off

  Check the cable between the transmission control module (TCM) terminal #A5 (#A35) and engine control module (ECM) terminal #B15. Check for a short circuit to supply.

  Remedy as necessary.

  Other information

  - see **CONNECTING THE BREAKOUT BOX**
  - see **SIGNAL DESCRIPTION**
  - For access to connector A: **TRANSMISSION CONTROL MODULE (TCM), REPLACING**

- see **CONTENTS**

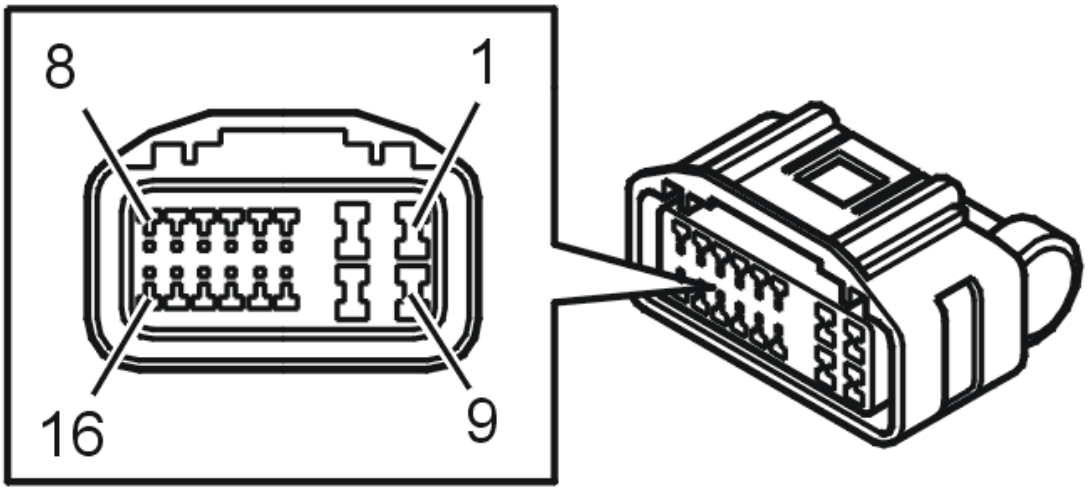

Fig. 253: Identifying Connector A Terminals
Courtesy of VOLVO CARS CORPORATION

- **Continue**

  Refer to **VERIFICATION**

VERIFICATION

HINT: After carrying out the repair, check that the fault has been remedied.

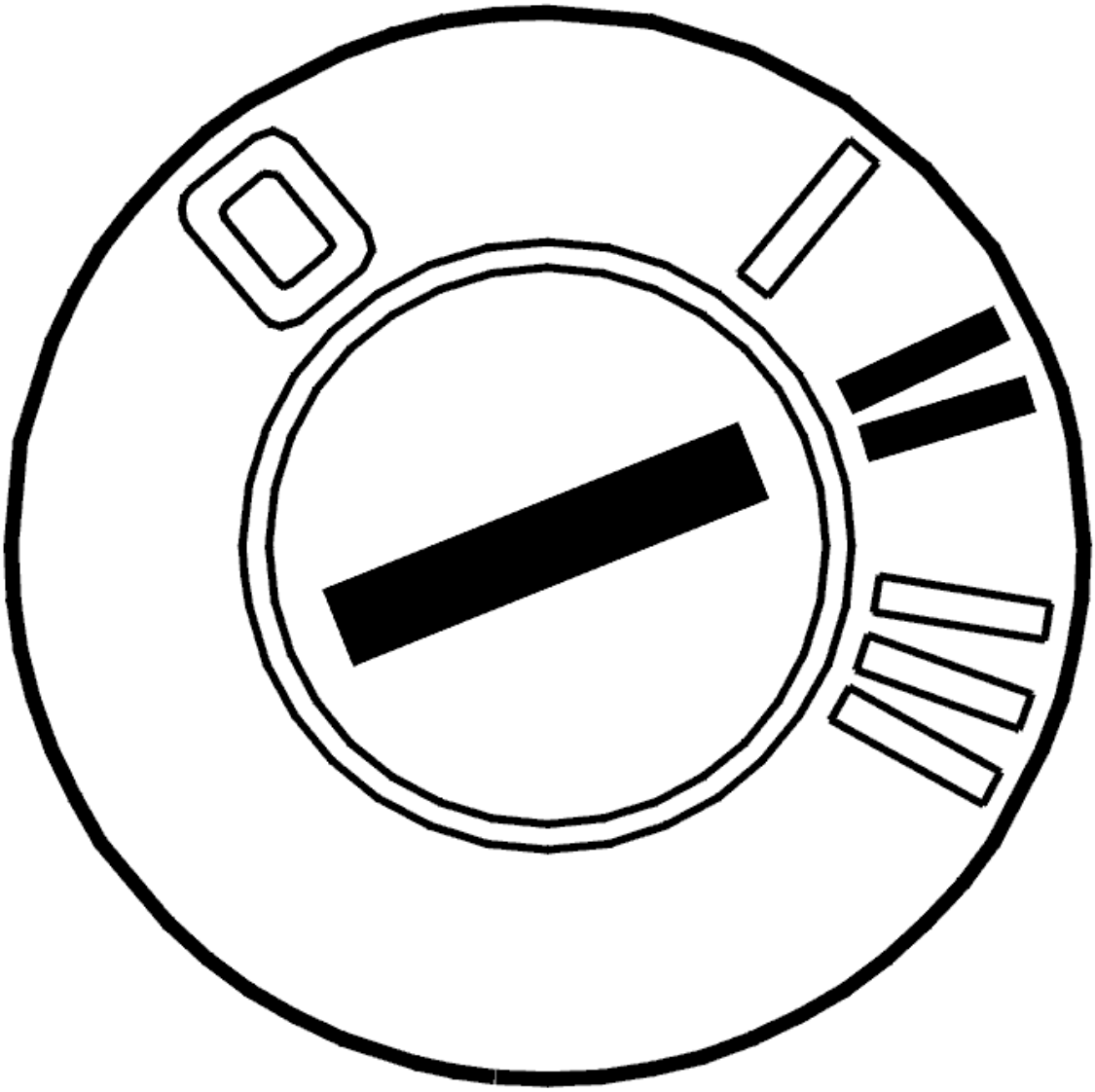

Fig. 254: Identifying Ignition ON
Courtesy of VOLVO CARS CORPORATION

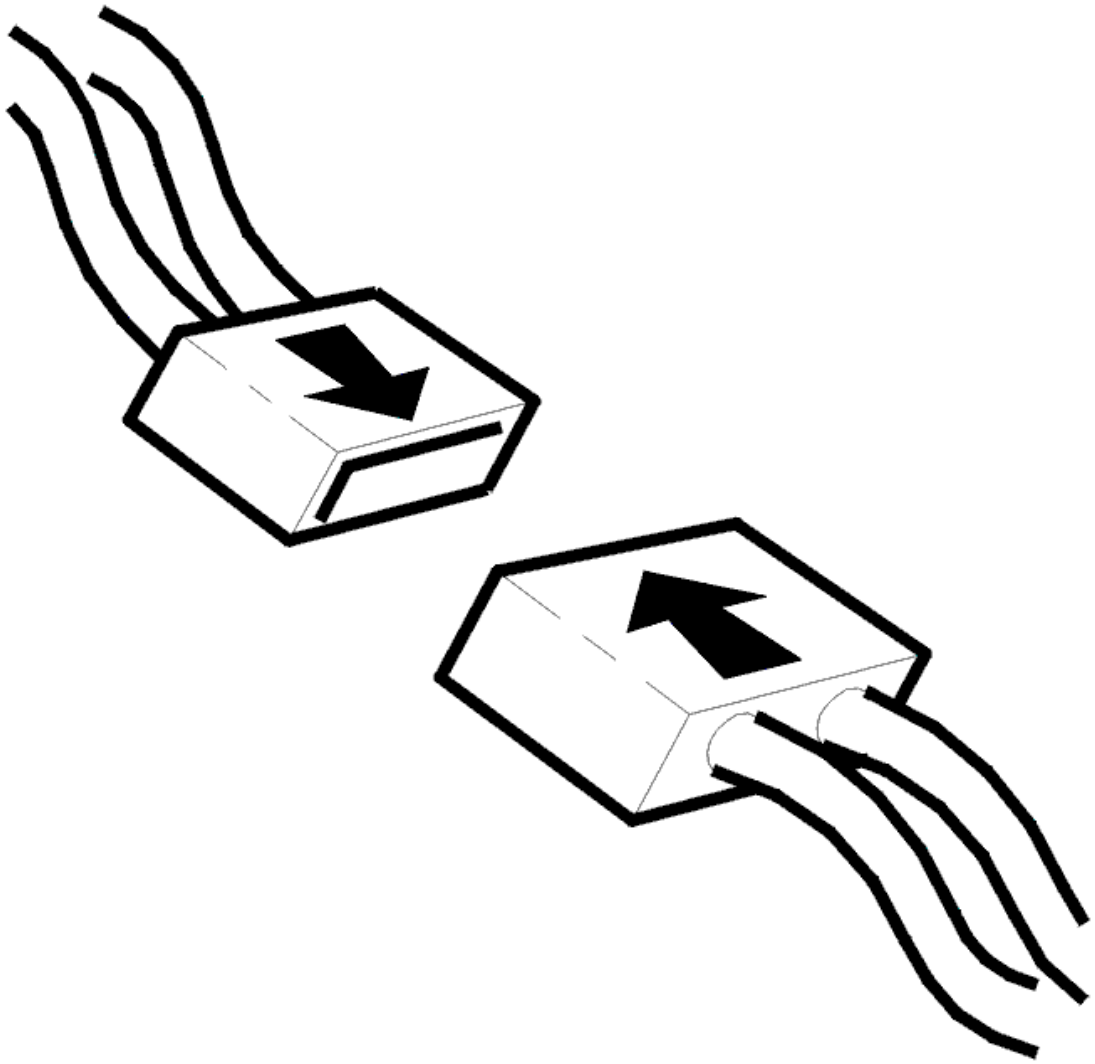

Fig. 255: Identifying Connector(s) Reinstallation
Courtesy of VOLVO CARS CORPORATION

- Ignition off
- Reinstall the connectors, components etc.
- Ignition on
- Read off the park neutral position (PNP) switch status

  Move the gear selector lever between positions P, R, N and D.

  In positions P and N the status must be "Start permitted", in other positions the status must be "Start not permitted".

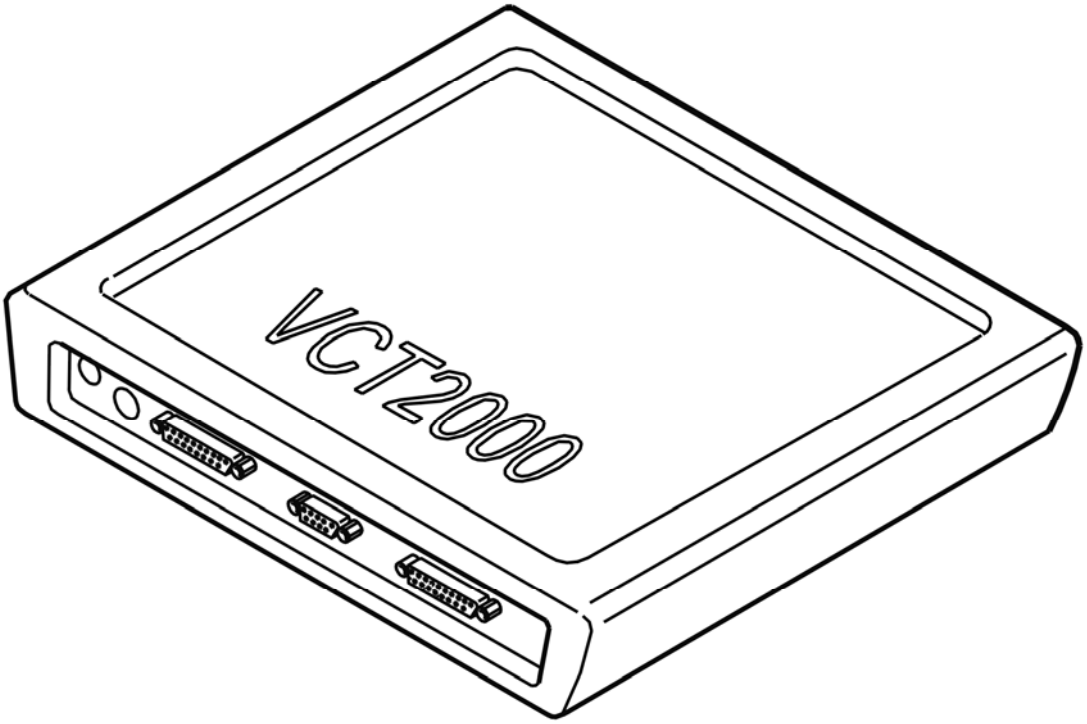

Fig. 256: Identifying VCT2000 Diagnostic Tool Symbol In VIDA
Courtesy of VOLVO CARS CORPORATION

Is the function OK?

- **YES**

  VERIFIED: Troubleshooting has been completed.

- **NO**

  Refer to **INFORMATION**

INFORMATION

FAULT-TRACING INFORMATION

The fault should have been detected and remedied. As this is not the case fault-tracing has failed.

Exit fault-tracing for this diagnostic trouble code (DTC) or make another attempt.

TCM-P081712: STARTER INHIBITOR CIRCUIT. GENERAL ELECTRICAL FAULT. SHORT-CIRCUIT TO VOLTAGE (TF-80SC AWD; 2005)

DIAGNOSTIC TROUBLE CODE (DTC) INFORMATION TCM-P081712

see **DIAGNOSTIC TROUBLE CODE (DTC) INFORMATION TCM-P081712**

FAULT TRACING TCM-P081712

see **FAULT TRACING TCM-P081712**

TCM-P082601: UP AND DOWN SWITCH INPUT CIRCUIT. GENERAL FAILURE INFORMATION. GENERAL ELECTRICAL FAILURE (B6324S, TF-80SC; B6324S, TF-80SC AWD; 2007-2010)

DIAGNOSTIC TROUBLE CODE (DTC) INFORMATION TCM-P082601

Condition

The circuit board of the gear selector module (GSM) houses three Hall sensors. A permanent magnet on the gear selector lever influences the output signals from the sensors to the gear selector module (GSM). The automatic transmission remains in position D hydraulically when the gear selector is moved to the manual shifting position (+/-). When the gear selector is moved up (+), the gear selector module (GSM) sends a signal to the transmission control module (TCM) to upshift. If the manual selector lever is moved down (-), the gear selector module (GSM) sends a signal to the transmission control module (TCM) to downshift.

The diagnostic trouble code (DTC) is stored if the control module detects that:

- The signals from the gear selector are not accurate for manual mode (+/-).

The control module's test for the diagnostic trouble code (DTC) starts in the event of:

- Ignition on.

NOTE: **The control module can only detect the fault once the test has been started and the diagnostic trouble code (DTC) is stored when the conditions are met.**

Fig. 257: Identifying Automatic Transmission Gear Shifter With Manual Gear Changer
Courtesy of VOLVO CARS CORPORATION

Substitute Value

- No manual gear shift

Possible Source

- Gear selector module (GSM) not working.

Fault symptom[s]

- Changes gear as in position D in position MAN
- No gear shift

FAULT-TRACING

CHECKING FUNCTION OF THE GEAR POSITION SENSOR

Fig. 258: Identifying Ignition ON
Courtesy of VOLVO CARS CORPORATION

- Ignition on.
- Read off the Geartronic status by clicking on the VCT2000 symbol.
- Depress the brake pedal. Move the gear selector to the position for manual shifting and check that the status changes.

- Move the gear selector lever to +. Check that gear selection is updated in the display in the diagnostic tool as well as the display in the combined instrument panel.
- Then move the gearshift selector toward both + and -, and check that the value has been updated in the driver information module's display window.

  If the value is updated in the driver information module display, the fault is intermittent. That is to say, it occurred earlier but is not active right now.

  If gear selector position is not updated, replace the gear selector module (GSM).

  Other information

  - see **TOP PANEL GEARTRONIC, REPLACING**

Fig. 259: Identifying VCT2000 Diagnostic Tool Symbol In VIDA
Courtesy of VOLVO CARS CORPORATION

Fig. 260: Identifying Geartronic Operation
Courtesy of VOLVO CARS CORPORATION

- **Continue**

  Refer to **VERIFICATION**

VERIFICATION

VERIFICATION

HINT: After carrying out the repair, check that the fault has been remedied.

Fig. 261: Identifying Ignition ON
Courtesy of VOLVO CARS CORPORATION

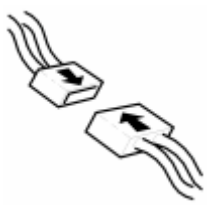

Fig. 262: Identifying Connector(s) Reinstallation
Courtesy of VOLVO CARS CORPORATION

- Ignition off.
- Reinstall the connectors, components etc.
- Ignition on.
- Depress the brake pedal. Move the gear selector to the position for manual shifting and check that the status changes.
- Move the gear selector to + and check that the gear selection is updated in the display on the driver information module (DIM).
- Move the gear selector to -. Check that the gear selection is updated.

Fig. 263: Identifying VCT2000 Diagnostic Tool Symbol In VIDA
Courtesy of VOLVO CARS CORPORATION

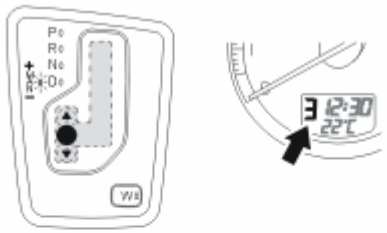

Fig. 264: Identifying Geartronic Operation
Courtesy of VOLVO CARS CORPORATION

Is the function OK?

- **YES**

  VERIFIED: Troubleshooting has been completed.

- **NO**

  Refer to **INFORMATION**

INFORMATION

FAULT-TRACING INFORMATION

The fault should have been detected and remedied. As this is not the case fault-tracing has failed.

Exit fault-tracing for this diagnostic trouble code (DTC) or make another attempt.

TCM-P082601: UP AND DOWN SWITCH INPUT CIRCUIT. GENERAL FAILURE INFORMATION. GENERAL ELECTRICAL FAILURE (B6324S5, TF-80SC; B6324S5, TF-80SC AWD; 2011)

DIAGNOSTIC TROUBLE CODE (DTC) INFORMATION TCM-P082601

see **DIAGNOSTIC TROUBLE CODE (DTC) INFORMATION TCM-P082601**

FAULT-TRACING

see **FAULT-TRACING**

TCM-P082601: UP AND DOWN SWITCH INPUT CIRCUIT. GENERAL FAULT INFORMATION. GENERAL ELECTRICAL FAULT (B8444S, TF-80SC AWD; 2006-2011)

DIAGNOSTIC TROUBLE CODE (DTC) INFORMATION TCM-P082601

Condition

Fig. 265: Identifying Automatic Transmission Gear Shifter With Manual Gear Changer
Courtesy of VOLVO CARS CORPORATION

On the circuit board for the gear selector module (GSM) three Hall sensors. A permanent magnet on the gear lever affects the sensor output signals to the gear selector module (GSM). When the gear selector is moved to manual position "**Man** ", the automatic transmission will still be hydraulic in position D, but by moving the gear selector upwards (+) the gear selector module (GSM) will send a signal to the transmission control module (TCM) to engage a higher gear. Moving the gear selector downwards (-) sends a signal from the gear selector module (GSM) to the transmission control module (TCM) to engage a lower gear. If the gear selector module (GSM) registers that the signals from the gear selector do not agree with the "**Man** " position, the diagnostic travel code (DTC) is generated.

The diagnostic trouble code can be diagnosed when the ignition is on.

Substitute Value

- No manual "**Man** " gear changing.

Possible Source

- Gear selector module (GSM) not working.

Fault symptom[s]

- Changes gear according to D in "**Man** " position.
- No gear changing.

FAULT TRACING TCM-P082601

CHECKING THE FUNCTION OF THE GEAR-SHIFT POSITION SENSOR

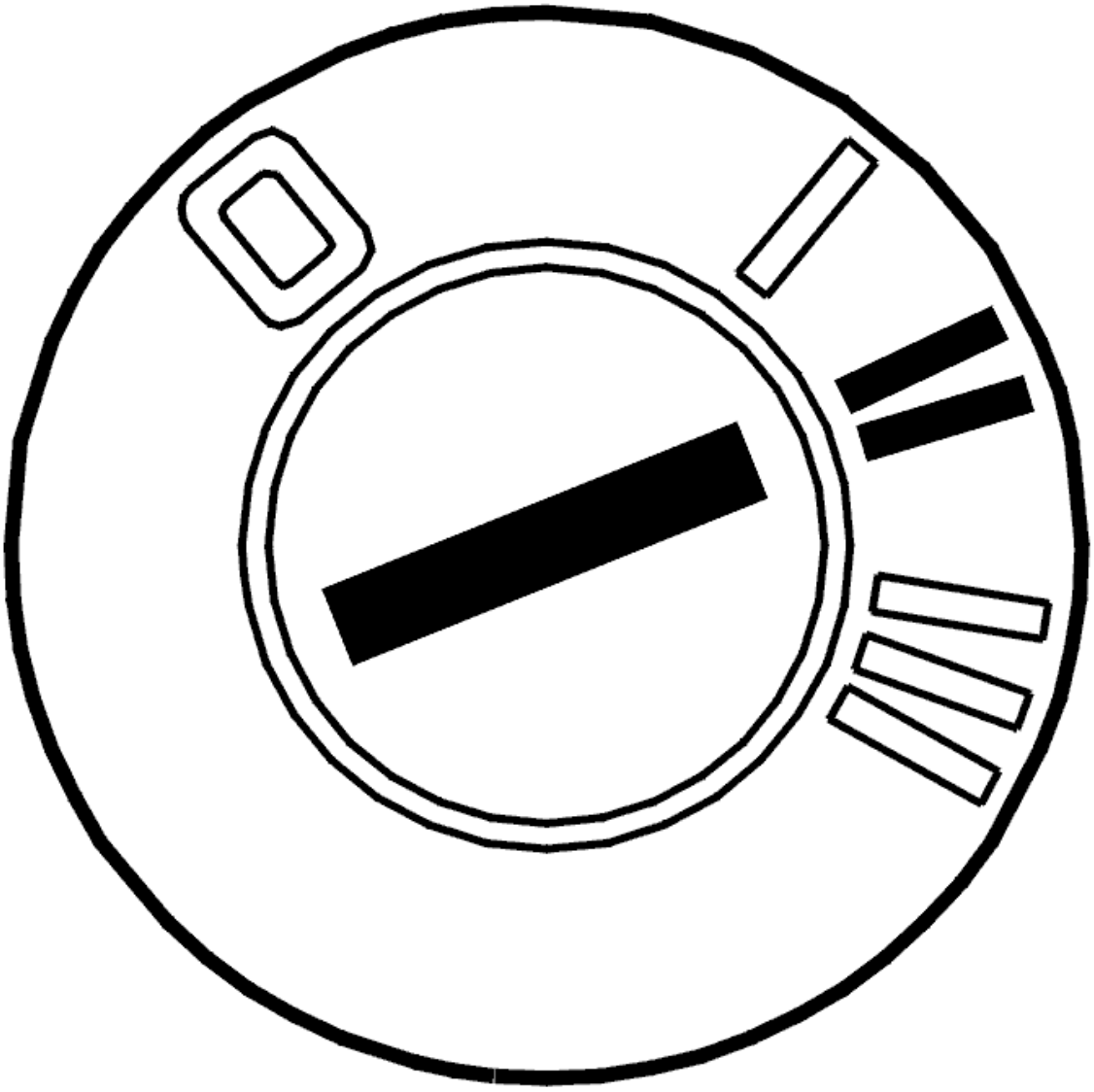

Fig. 266: Identifying Ignition ON
Courtesy of VOLVO CARS CORPORATION

- Ignition on
- Read Geartronic status by clicking on the symbol for VCT2000.
- Depress the brake pedal. Move the gear selector lever to "**MAN** " (manual) and check that the status changes.
- Move the gear selector lever to +. Check that gear selection is updated in the display in the diagnostic tool as well as the display in the combined instrument panel.
- Move the gear selector lever to -. Check that the gear selection is updated.

  If the gear selector lever position is not updated, replace the gear selector module (GSM).

  Other information

  - see **TOP PANEL GEARTRONIC, REPLACING**

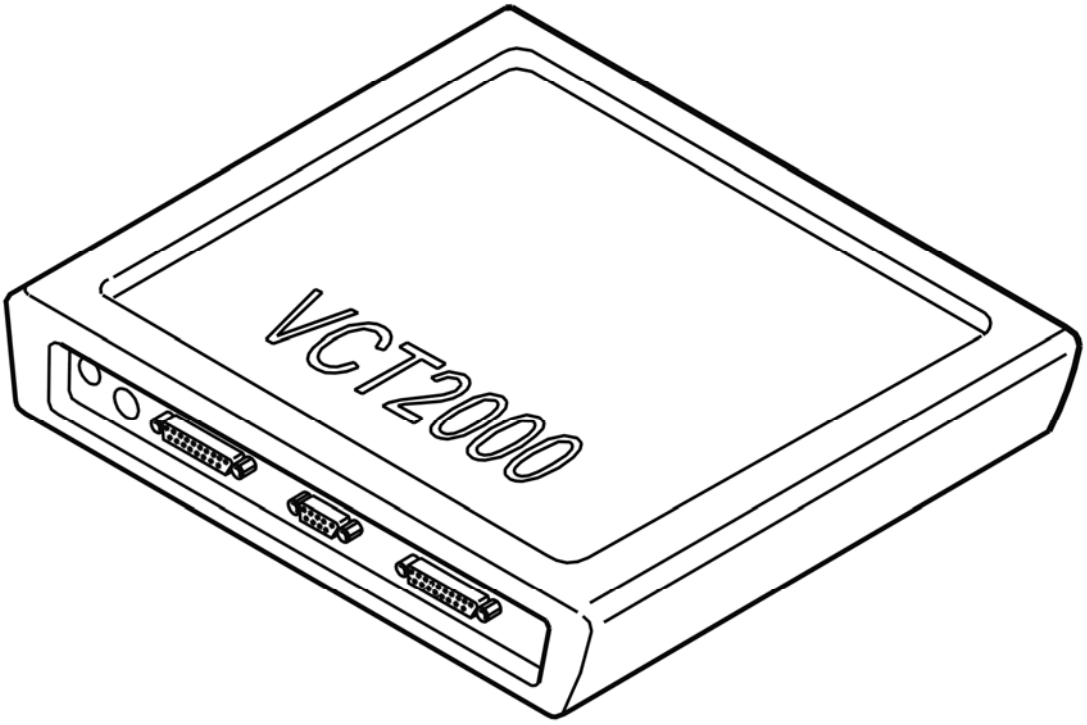

Fig. 267: Identifying VCT2000 Diagnostic Tool Symbol In VIDA
Courtesy of VOLVO CARS CORPORATION

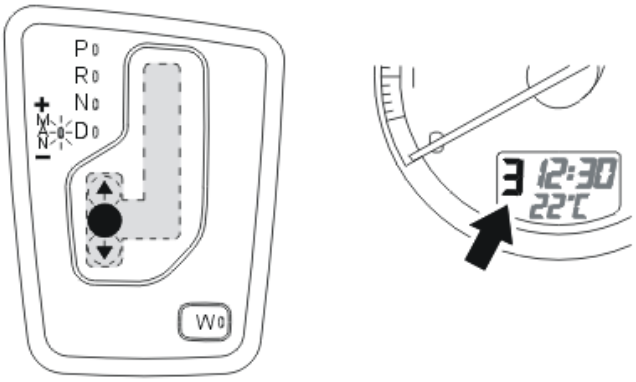

Fig. 268: Locating Geartronic Gearshift Indicator
Courtesy of VOLVO CARS CORPORATION

Is the function OK?

- **YES**

  OKAY: Troubleshooting has been completed.

- **NO**

  Refer to **VERIFICATION**

VERIFICATION

VERIFICATION

HINT: After carrying out the repair, check that the fault has been remedied.

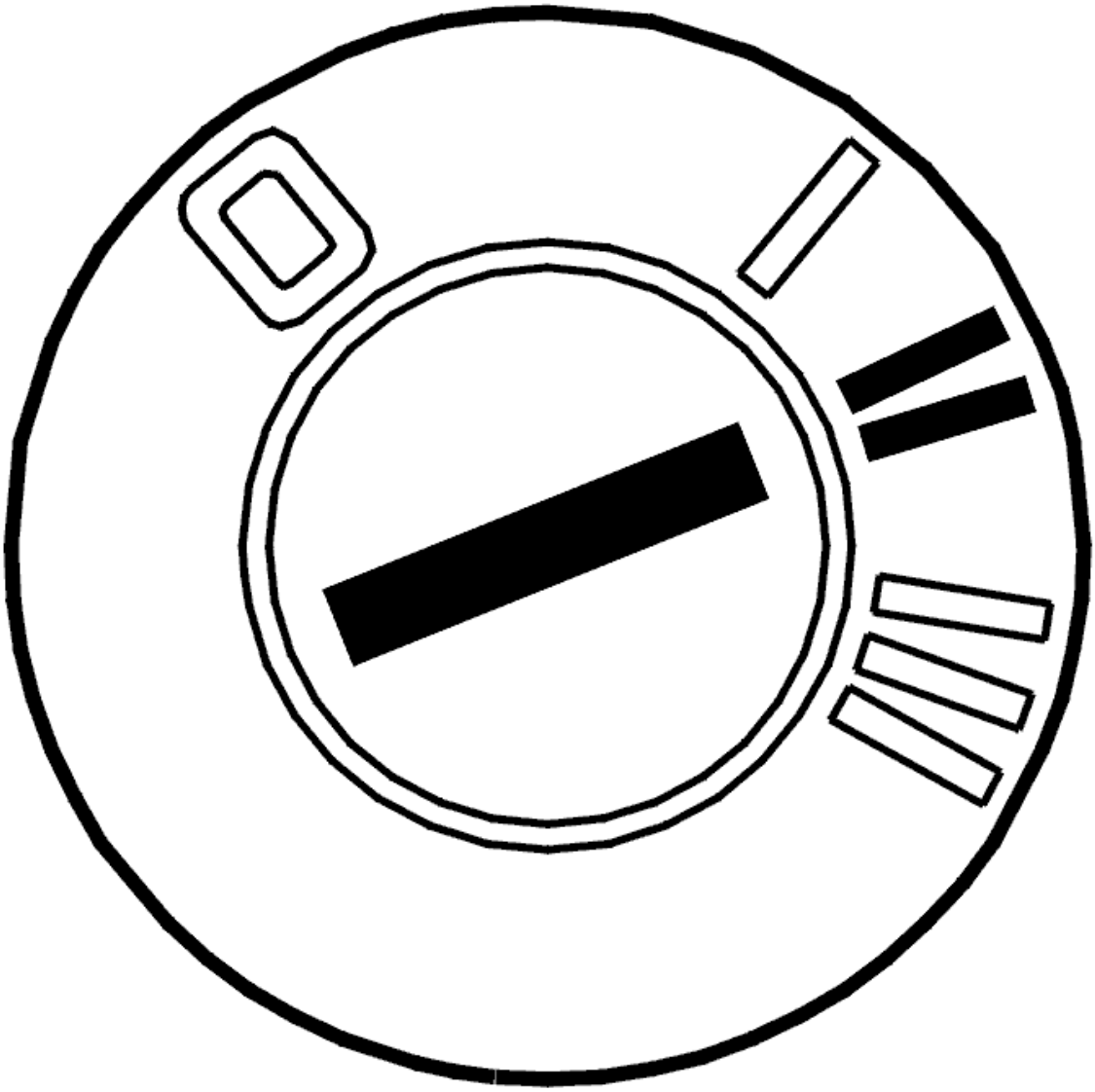

Fig. 269: Identifying Ignition ON
Courtesy of VOLVO CARS CORPORATION

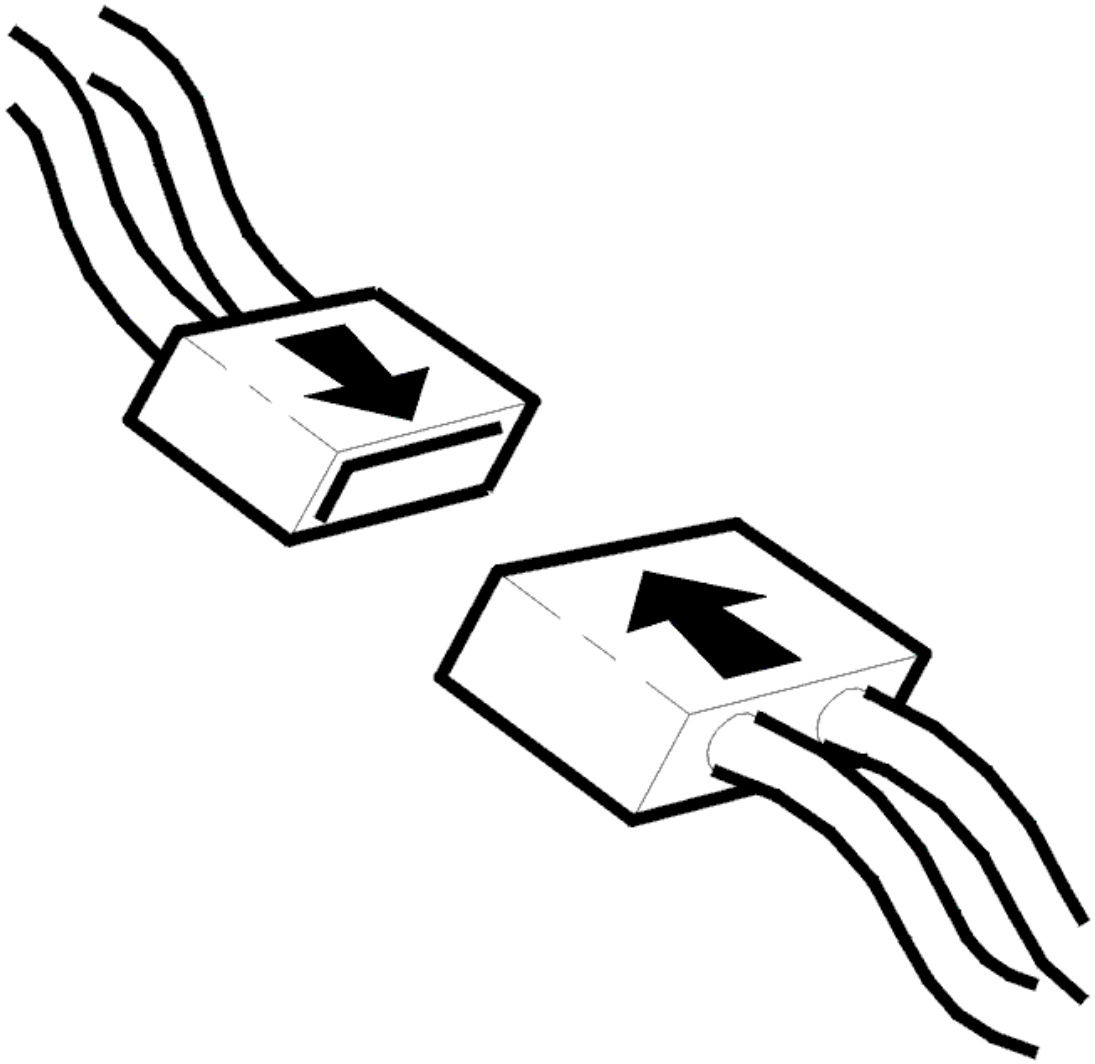

Fig. 270: Identifying Connector(s) Reinstallation
Courtesy of VOLVO CARS CORPORATION

- Ignition off
- Reinstall the components, reconnect the connectors etc.
- Ignition on
- Depress the brake pedal. Move the gear selector lever to "**MAN** " (manual).
- Move the gear selector lever to +. Check that gear selection is updated in the display in the combined instrument panel.
- Move the gear selector lever to -. Check that the gear selection is updated.

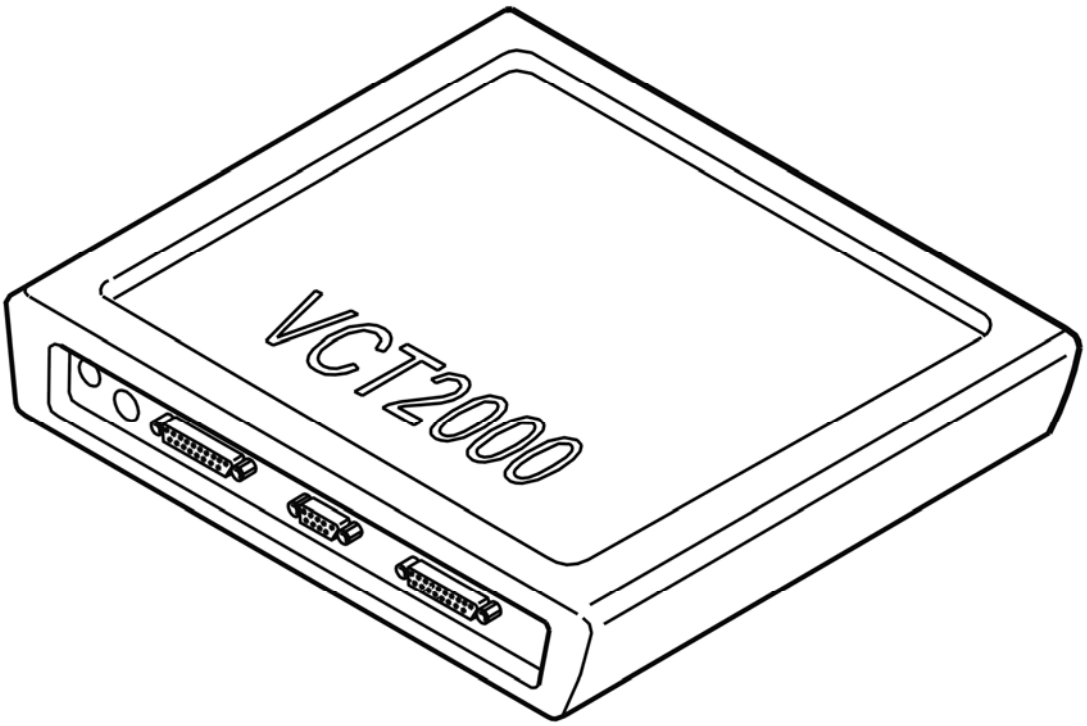

Fig. 271: Identifying VCT2000 Diagnostic Tool Symbol In VIDA
Courtesy of VOLVO CARS CORPORATION

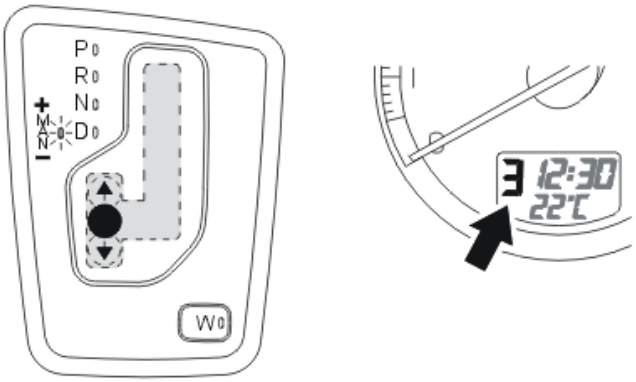

Fig. 272: Locating Geartronic Gearshift Indicator
Courtesy of VOLVO CARS CORPORATION

Is the function OK?

- **YES**

  VERIFIED: Troubleshooting has been completed.

- **NO**

  Refer to **INFORMATION**

INFORMATION

FAULT-TRACING INFORMATION

The fault should have been detected and remedied. As this is not the case fault-tracing has failed.

Exit fault-tracing for this diagnostic trouble code (DTC) or make another attempt.

TCM-P082601: UP AND DOWN SWITCH INPUT CIRCUIT. GENERAL FAULT INFORMATION. GENERAL ELECTRICAL FAULT (TF-80SC AWD; 2005)

DIAGNOSTIC TROUBLE CODE (DTC) INFORMATION TCM-P082601

see **DIAGNOSTIC TROUBLE CODE (DTC) INFORMATION TCM-P082601**

FAULT TRACING TCM-P082601

see **FAULT TRACING TCM-P082601**

TCM-P086011: GEAR SHIFT MODULE A COMMUNICATION CIRCUIT. GENERAL ELECTRICAL FAILURES. CIRCUIT SHORT TO GROUND (B6324S, TF-80SC; B6324S, TF-80SC AWD; 2007-2010)

DIAGNOSTIC TROUBLE CODE (DTC) INFORMATION TCM-P086011

Condition

The transmission control module (TCM) and gear selector module (GSM) communicate with each other in a network via standardized serial communication - local interconnect network (LIN). The control modules transmit and receive information.

The diagnostic trouble code (DTC) is stored if the control module detects that:

- The signal from the Gear selector module (GSM) is too low.

The control module's test for the diagnostic trouble code (DTC) starts in the event of:

- Ignition on.

NOTE: The control module can only detect the fault once the test has been started and the diagnostic trouble code (DTC) is stored when the conditions are met.

Fig. 273: Identifying Automatic Transmission Gear Shifter With Manual Gear Changer
Courtesy of VOLVO CARS CORPORATION

Substitute Value

- Manual gear shift position (+/-) function is blocked.

Possible Source

- Short-circuit to ground in the communication cable.

Fault symptom[s]

- General warning lamp lit
- Gear selector indicator does not function

FAULT-TRACING

CHECKING COMMUNICATION WITH THE GEAR SELECTOR MODULE (GSM)

Fig. 274: Identifying Ignition ON
Courtesy of VOLVO CARS CORPORATION

- Ignition on.
- Read off the position of the gear selector.
- Depress the brake pedal. Move the gear selector to the position for manual shifting and check that the status changes.

- Then move the gearshift selector toward both + and -, and check that the value has been updated in the driver information module's display window.

  If the value is updated in the driver information module display, the fault is intermittent. That is to say, it occurred earlier but is not active right now.

Fig. 275: Identifying VCT2000 Diagnostic Tool Symbol In VIDA
Courtesy of VOLVO CARS CORPORATION

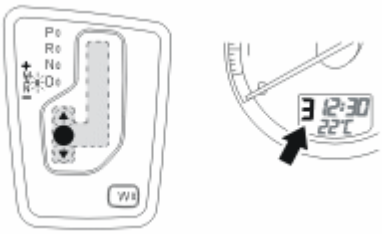

Fig. 276: Identifying Geartronic Operation
Courtesy of VOLVO CARS CORPORATION

- **Continue**

  Refer to **CHECKING THE WIRING**

CHECKING THE WIRING

Fig. 277: Identifying Ignition OFF
Courtesy of VOLVO CARS CORPORATION

- Ignition off.

  Check if there are any external sources of interference near the communication cable (LIN) between the transmission control module (TCM) terminal #A7 and gear selector module (GSM) terminal #2 which can disturb communication.

  Check the communication cable (LIN) for intermittent short circuits or open circuit.

  Take readings between:

  - Transmission control module (TCM) terminal #A7 and gear selector module (GSM) terminal #2.

  Other information

  - see **CONNECTING THE BREAKOUT BOX**
  - see **SIGNAL SPECIFICATION**
  - For access to connector:**TOP PANEL GEARTRONIC, REPLACING**
  - For access to connector:**TRANSMISSION CONTROL MODULE (TCM)**
  - see **CHECKING WIRING AND TERMINALS**

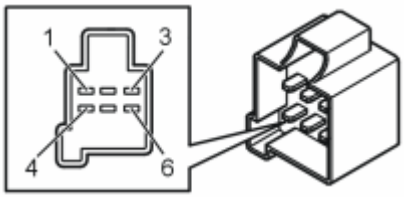

Fig. 278: Identifying Connector Terminals
Courtesy of VOLVO CARS CORPORATION

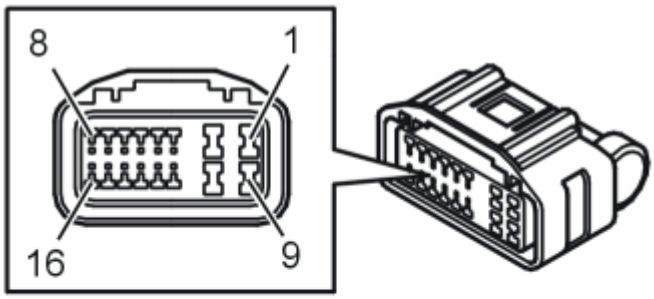

Fig. 279: Identifying Connector A Terminals
Courtesy of VOLVO CARS CORPORATION

- **Continue**

  Refer to **VERIFICATION**

VERIFICATION

VERIFICATION

HINT: After carrying out the repair, check that the fault has been remedied.

Fig. 280: Identifying Ignition ON
Courtesy of VOLVO CARS CORPORATION

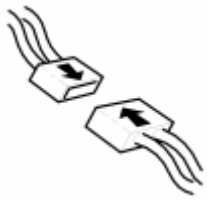

Fig. 281: Identifying Connector(s) Reinstallation
Courtesy of VOLVO CARS CORPORATION

- Ignition off.
- Reinstall the connectors, components etc.
- Ignition on.
- Read off the position of the gear selector.
- Depress the brake pedal. Move the gear selector to the position for manual shifting and check that the status changes.
- Then move the gearshift selector toward both + and -, and check that the value has been updated in the driver information module's display window.

Fig. 282: Identifying VCT2000 Diagnostic Tool Symbol In VIDA
Courtesy of VOLVO CARS CORPORATION

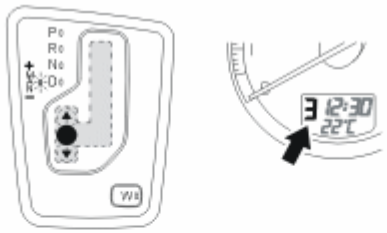

Fig. 283: Identifying Geartronic Operation
Courtesy of VOLVO CARS CORPORATION

Does the value change?

- **YES**

  VERIFIED: Troubleshooting has been completed.

- **NO**

  Refer to **INFORMATION**

INFORMATION

FAULT-TRACING INFORMATION

The fault should have been detected and remedied. As this is not the case fault-tracing has failed.

Exit fault-tracing for this diagnostic trouble code (DTC) or make another attempt.

TCM-P086011: GEAR SHIFT MODULE A COMMUNICATION CIRCUIT. GENERAL ELECTRICAL FAILURES. CIRCUIT SHORT TO GROUND (B6324S5, TF-80SC; B6324S5, TF-80SC AWD; 2011)

DIAGNOSTIC TROUBLE CODE (DTC) INFORMATION TCM-P086011

see **DIAGNOSTIC TROUBLE CODE (DTC) INFORMATION TCM-P086011**

FAULT-TRACING

see **FAULT-TRACING**

TCM-P086011: TRANSMISSION CONTROL MODULE A COMMUNICATION CIRCUIT. GENERAL ELECTRICAL FAULT. SHORT-CIRCUIT TO GROUND (B8444S, TF-80SC AWD; 2006-2011)

DIAGNOSTIC TROUBLE CODE (DTC) INFORMATION TCM-P086011

Condition

Fig. 284: Identifying Automatic Transmission Gear Shifter With Manual Gear Changer
Courtesy of VOLVO CARS CORPORATION

The transmission control module (TCM) and the gear selector module (GSM) communicate with each other over a network via a standardized serial communication protocol, Local Interconnect Network (LIN), to exchange information. The control modules both send and receive information.

If the transmission control module (TCM) registers the signal from the gear selector module (GSM) is too high or too low, the diagnostic trouble code (DTC) is generated.

The diagnostic trouble code can be diagnosed when the ignition is on.

Substitute Value

- Manual gearchange "**Man** " function block.

- The winter program "**W** " function blocked.

Possible Source

- The communication lead between the gear selector module (GSM) and the transmission control module (TCM) short-circuited to voltage or ground.

Fault symptom[s]

- General warning lamp lit
- Gear selector indicator not working.

FAULT TRACING TCM-P086011

CHECKING COMMUNICATION WITH THE GEAR SELECTOR (GSM)

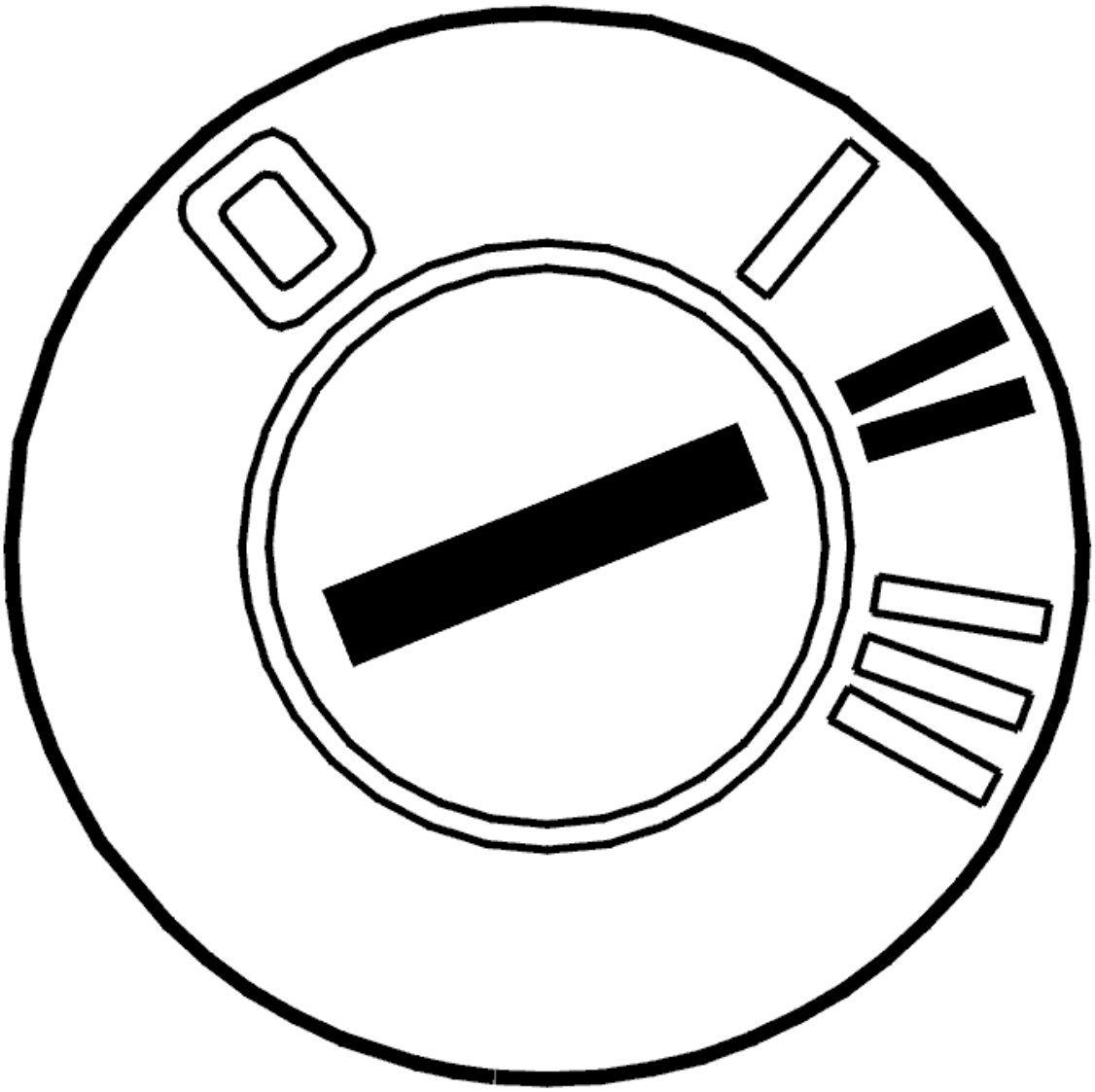

Fig. 285: Identifying Ignition ON
Courtesy of VOLVO CARS CORPORATION

- Ignition on
- Gear selector in position P
- Check if communication with the gear selector module (GSM) functions by reading the status for the Winter program selector (**W**).
- Activate and deactivate the function by pressing the switch. The status must change.

  The fault is permanent if the value does not change.

  If the value changes it means that the fault was present previously but is not active now. There is an intermittent fault.

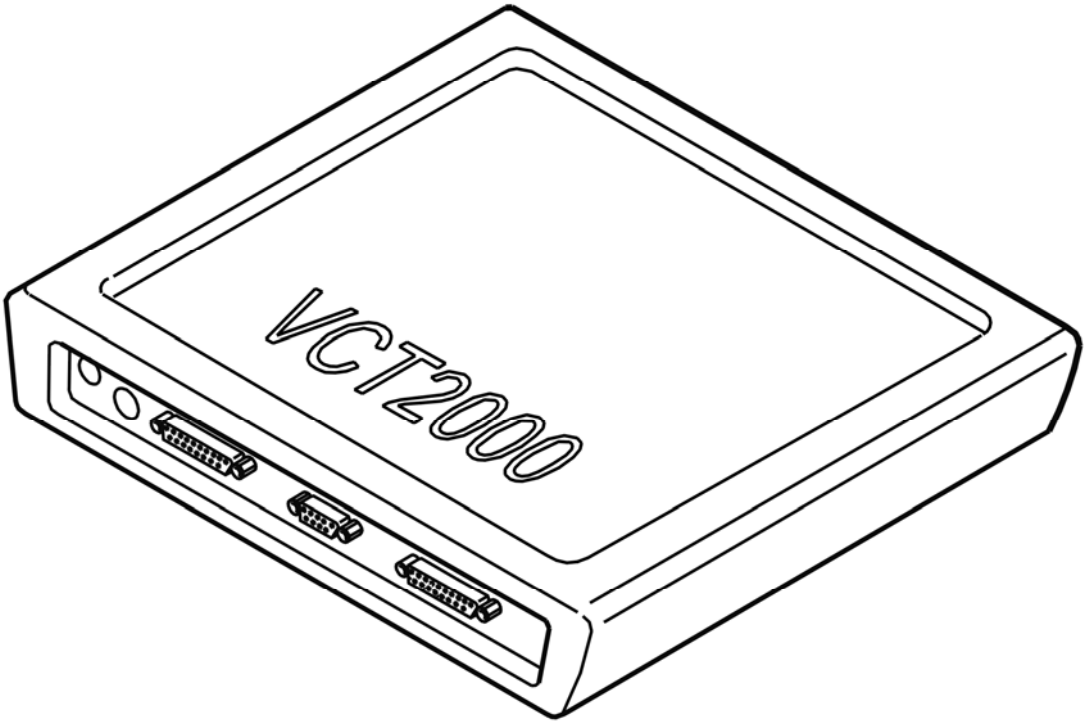

Fig. 286: Identifying VCT2000 Diagnostic Tool Symbol In VIDA
Courtesy of VOLVO CARS CORPORATION

Fig. 287: Identifying Automatic Transmission Gear Shifter With Manual Gear Changer
Courtesy of VOLVO CARS CORPORATION

- **Continue**

  Refer to **CHECKING THE WIRING**

CHECKING THE WIRING

Check if there are any external sources of interference near the communication cable (LIN) between the transmission control module (TCM) terminal #A7 and gear selector module (GSM) terminal #2 which can disturb communication.

Check the communication cable (LIN) between the transmission control module (TCM) terminal #A7 and gear selector module (GSM) terminal #2. Check for intermittent short circuits. Check for intermittent open-circuits.

Other information

- see **CONNECTING THE BREAKOUT BOX**
- see **SIGNAL DESCRIPTION**
- For access to connector: **TOP PANEL GEARTRONIC, REPLACING**
- see **CONTENTS**

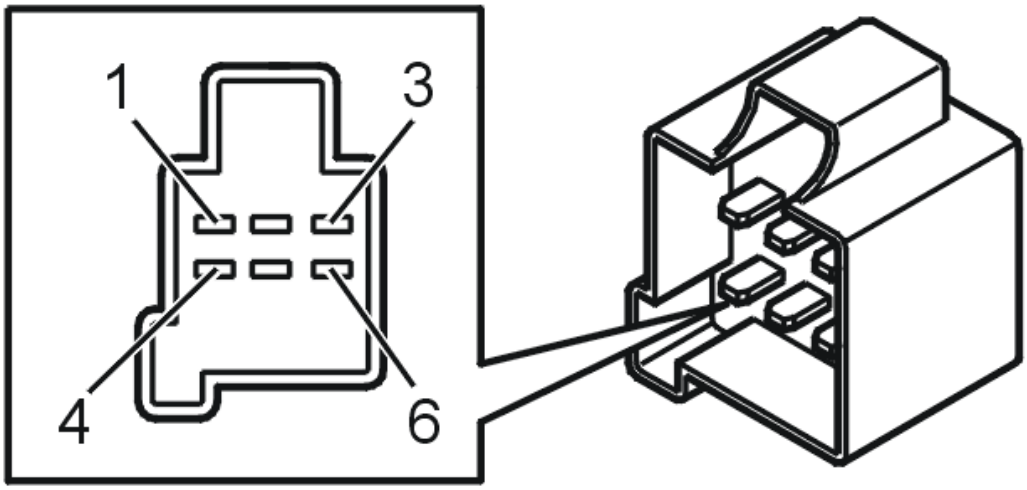

Fig. 288: Identifying Transmission Control Module (TCM) Connector Terminals
Courtesy of VOLVO CARS CORPORATION

Fig. 289: Identifying Automatic Transmission Gear Shifter With Manual Gear Changer
Courtesy of VOLVO CARS CORPORATION

- **Continue**

  Refer to **VERIFICATION**

VERIFICATION

VERIFICATION

HINT: After carrying out the repair, check that the fault has been remedied.

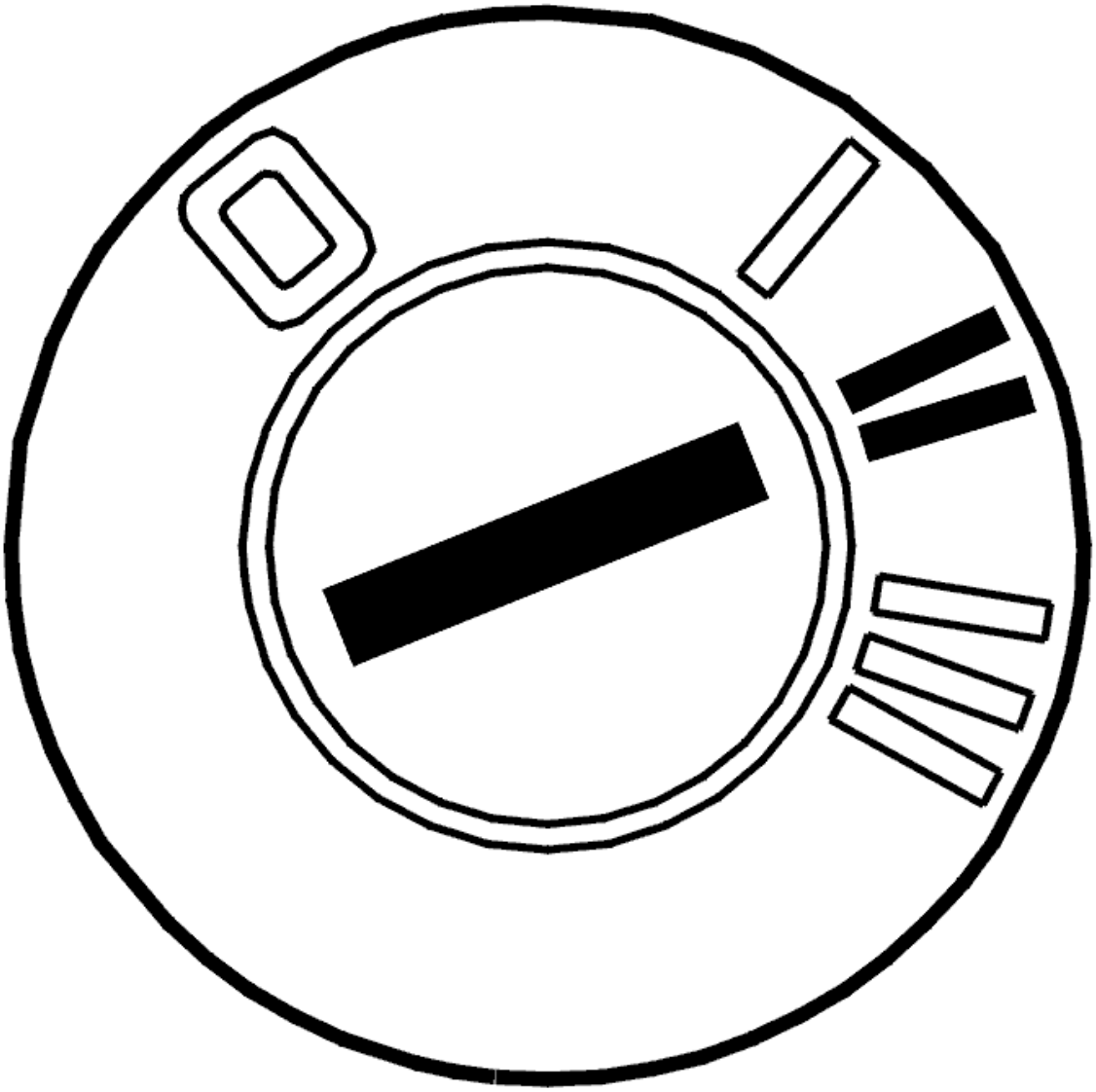

Fig. 290: Identifying Ignition ON
Courtesy of VOLVO CARS CORPORATION

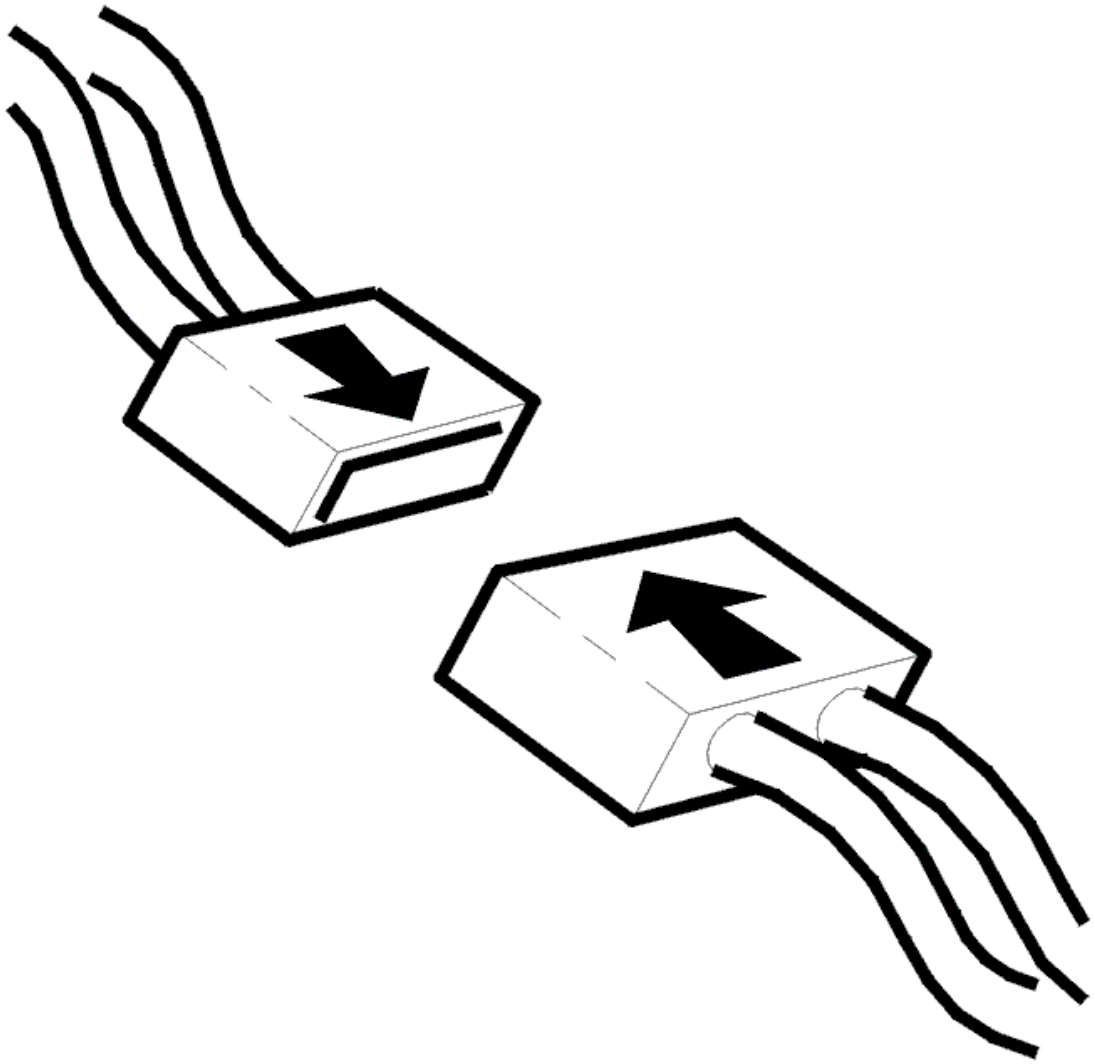

Fig. 291: Identifying Connector(s) Reinstallation
Courtesy of VOLVO CARS CORPORATION

- Ignition off.
- Reinstall the connectors, components etc.
- Ignition on.
- Gear selector in position P.
- Check whether communication with the gear selector module (GSM) works by reading off the winter mode selector (W) status.

  Connect and disconnect the function by pressing the switch. The status should change.

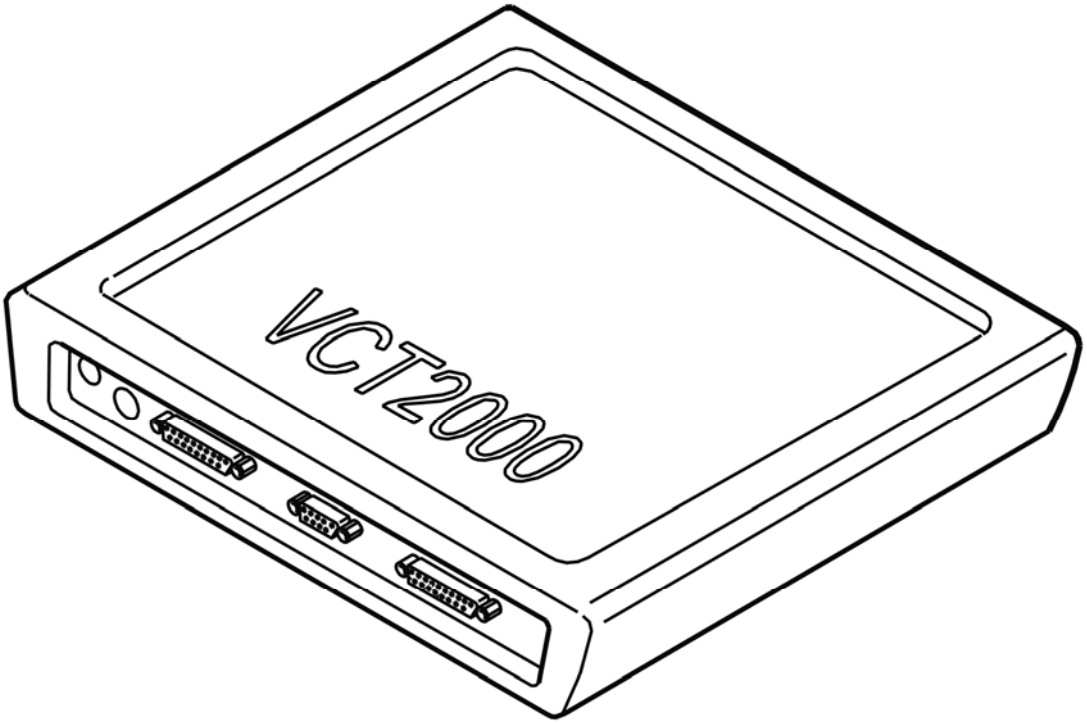

Fig. 292: Identifying VCT2000 Diagnostic Tool Symbol In VIDA
Courtesy of VOLVO CARS CORPORATION

Does the status change?

- **YES**

  VERIFIED: Troubleshooting has been completed.

- **NO**

  Refer to **INFORMATION**

INFORMATION

FAULT-TRACING INFORMATION

The fault should have been detected and remedied. As this is not the case fault-tracing has failed.

Exit fault-tracing for this diagnostic trouble code (DTC) or make another attempt.

TCM-P086011: TRANSMISSION CONTROL MODULE A COMMUNICATION CIRCUIT. GENERAL ELECTRICAL FAULT. SHORT-CIRCUIT TO GROUND

(TF-80SC AWD; 2005)

DIAGNOSTIC TROUBLE CODE (DTC) INFORMATION TCM-P086011

see **DIAGNOSTIC TROUBLE CODE (DTC) INFORMATION TCM-P086011**

FAULT TRACING TCM-P086011

see **FAULT TRACING TCM-P086011**

TCM-P086012: GEAR SHIFT MODULE A COMMUNICATION CIRCUIT. GENERAL ELECTRICAL FAILURES. CIRCUIT SHORT TO BATTERY (B6324S, TF-80SC; B6324S, TF-80SC AWD; 2007-2010)

DIAGNOSTIC TROUBLE CODE (DTC) INFORMATION TCM-P086012

Condition

The transmission control module (TCM) and gear selector module (GSM) communicate with each other in a network via standardized serial communication - local interconnect network (LIN). The control modules transmit and receive information.

The diagnostic trouble code (DTC) is stored if the control module detects that:

- The signal from the Gear selector module (GSM) is too high.

The control module's test for the diagnostic trouble code (DTC) starts in the event of:

- Ignition on.

NOTE: **The control module can only detect the fault once the test has been started and the diagnostic trouble code (DTC) is stored when the conditions are met.**

Fig. 293: Identifying Automatic Transmission Gear Shifter With Manual Gear Changer
Courtesy of VOLVO CARS CORPORATION

Substitute Value

- Manual gear shift position (+/-) function is blocked.

Possible Source

- Short-circuit to supply voltage in the communication cable.

Fault symptom[s]

- General warning lamp lit
- Gear selector indicator does not function

FAULT-TRACING

CHECKING COMMUNICATION WITH THE GEAR SELECTOR MODULE (GSM)

Fig. 294: Identifying Ignition ON
Courtesy of VOLVO CARS CORPORATION

- Ignition on.
- Read off the position of the gear selector.
- Depress the brake pedal. Move the gear selector to the position for manual shifting and check that the status changes.

- Then move the gearshift selector toward both + and -, and check that the value has been updated in the driver information module's display window.

  If the value is updated in the driver information module display, the fault is intermittent. That is to say, it occurred earlier but is not active right now.

Fig. 295: Identifying VCT2000 Diagnostic Tool Symbol In VIDA
Courtesy of VOLVO CARS CORPORATION

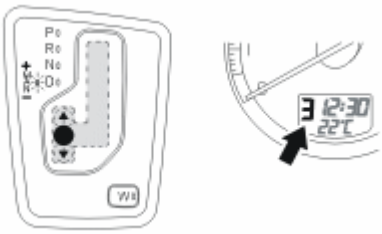

Fig. 296: Identifying Geartronic Operation
Courtesy of VOLVO CARS CORPORATION

- **Continue**

  Refer to **CHECKING THE WIRING**

CHECKING THE WIRING

Fig. 297: Identifying Ignition OFF
Courtesy of VOLVO CARS CORPORATION

- Ignition off.

  Check the communication cable (LIN) for short circuit to supply voltage.

  Take readings between:

  - Transmission control module (TCM) terminal #A7 and gear selector module (GSM) terminal #2.

  If no fault can be found, replace the gear selector module (GSM).

  Other information

  - see **CONNECTING THE BREAKOUT BOX**
  - see **SIGNAL SPECIFICATION**
  - see **CHECKING WIRING AND TERMINALS**
  - For access to connector:**TOP PANEL GEARTRONIC, REPLACING**
  - For access to connector:**TRANSMISSION CONTROL MODULE (TCM)**

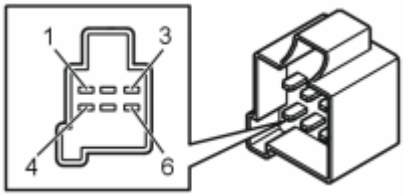

Fig. 298: Identifying Connector Terminals
Courtesy of VOLVO CARS CORPORATION

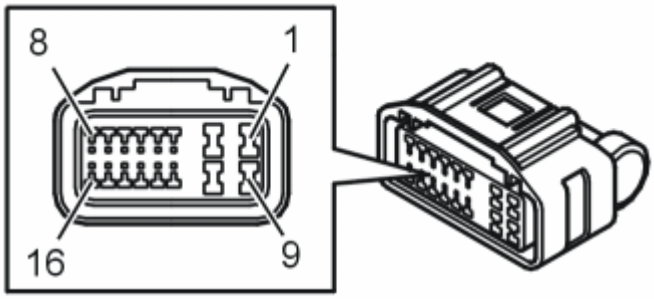

Fig. 299: Identifying Connector A Terminals
Courtesy of VOLVO CARS CORPORATION

- **Continue**

Refer to **VERIFICATION**

VERIFICATION

VERIFICATION

HINT: After carrying out the repair, check that the fault has been remedied.

Fig. 300: Identifying Ignition ON
Courtesy of VOLVO CARS CORPORATION

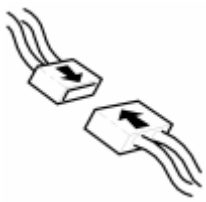

Fig. 301: Identifying Connector(s) Reinstallation
Courtesy of VOLVO CARS CORPORATION

- Ignition off.
- Reinstall the connectors, components etc.
- Ignition on.
- Read off the position of the gear selector.
- Depress the brake pedal. Move the gear selector to the position for manual shifting and check that the status changes.
- Then move the gearshift selector toward both + and -, and check that the value has been updated in the driver information module's display window.

Fig. 302: Identifying VCT2000 Diagnostic Tool Symbol In VIDA
Courtesy of VOLVO CARS CORPORATION

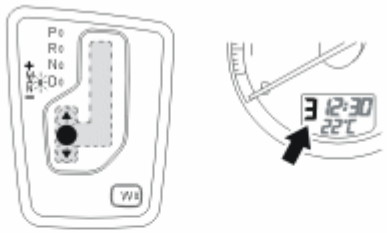

Fig. 303: Identifying Geartronic Operation
Courtesy of VOLVO CARS CORPORATION

Does the value change?

- **YES**

  VERIFIED: Troubleshooting has been completed.

- **NO**

  Refer to **INFORMATION**

INFORMATION

FAULT-TRACING INFORMATION

The fault should have been detected and remedied. As this is not the case fault-tracing has failed.

Exit fault-tracing for this diagnostic trouble code (DTC) or make another attempt.

TCM-P086012: GEAR SHIFT MODULE A COMMUNICATION CIRCUIT. GENERAL ELECTRICAL FAILURES. CIRCUIT SHORT TO BATTERY (B6324S5, TF-80SC; B6324S5, TF-80SC AWD; 2011)

DIAGNOSTIC TROUBLE CODE (DTC) INFORMATION TCM-P086012

see **DIAGNOSTIC TROUBLE CODE (DTC) INFORMATION TCM-P086012**

FAULT-TRACING

see **FAULT-TRACING**

TCM-P086012: TRANSMISSION CONTROL MODULE A COMMUNICATION CIRCUIT. GENERAL ELECTRICAL FAULT. SHORT CIRCUIT TO VOLTAGE (B8444S, TF-80SC AWD; 2006-2011)

DIAGNOSTIC TROUBLE CODE (DTC) INFORMATION TCM-P086012

Condition

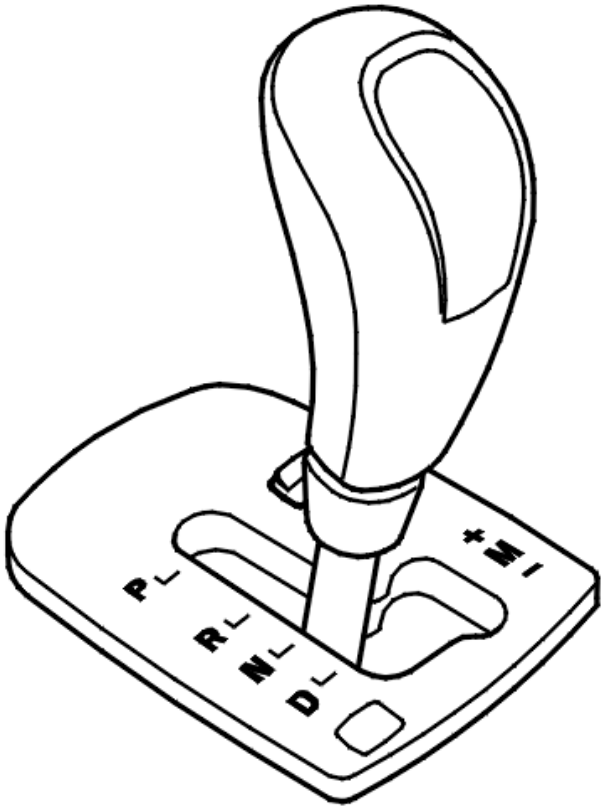

Fig. 304: Identifying Shifter
Courtesy of VOLVO CARS CORPORATION

The transmission control module (TCM) and the gear selector module (GSM) communicate with each other over a network via a standardized serial communication protocol, Local Interconnect Network (LIN), to exchange information. The control modules both send and receive information.

If the transmission control module (TCM) registers the signal from the gear selector module (GSM) is too high, the diagnostic trouble code (DTC) is generated.

The diagnostic trouble code can be diagnosed when the ignition is on.

Substitute Value

- Manual gearchange "**Man** " function block.

- The winter program "**W** " function blocked.

Possible Source

- The communication lead between the gear selector module (GSM) and the transmission control module (TCM) short-circuited to voltage or ground.

Fault symptom[s]

- General warning lamp lit
- Gear selector indicator not working.

FAULT TRACING TCM-P086012

CHECKING COMMUNICATION WITH THE GEAR SELECTOR (GSM)

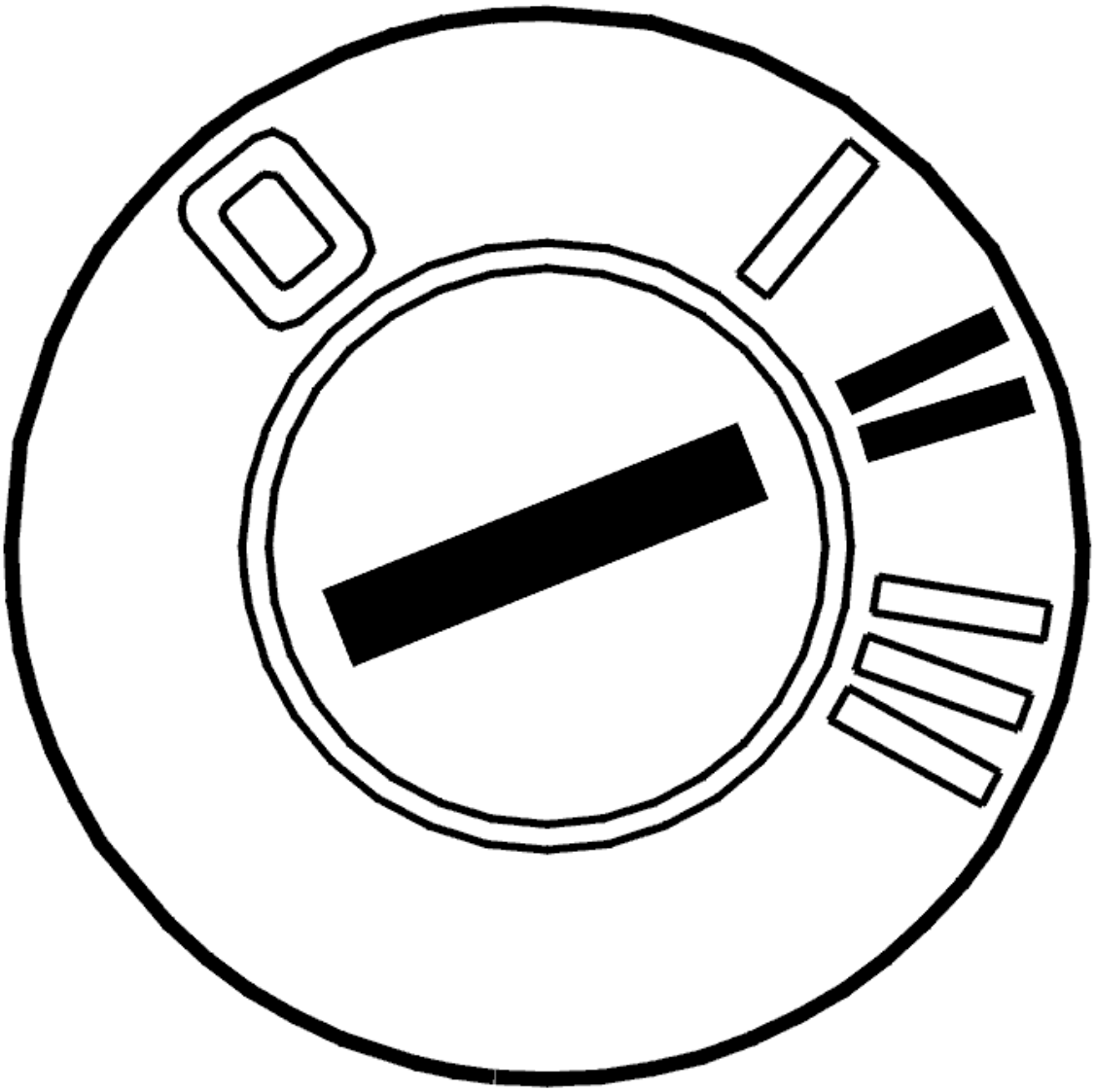

Fig. 305: Identifying Ignition ON
Courtesy of VOLVO CARS CORPORATION

- Ignition on
- Gear selector in position P
- Check if communication with the gear selector module (GSM) functions by reading the status for the Winter program selector (**W**).
- Activate and deactivate the function by pressing the switch. The status must change.

  The fault is permanent if the value does not change.

  If the status switches it means that the fault was present previously but is not active now. There is an intermittent fault.

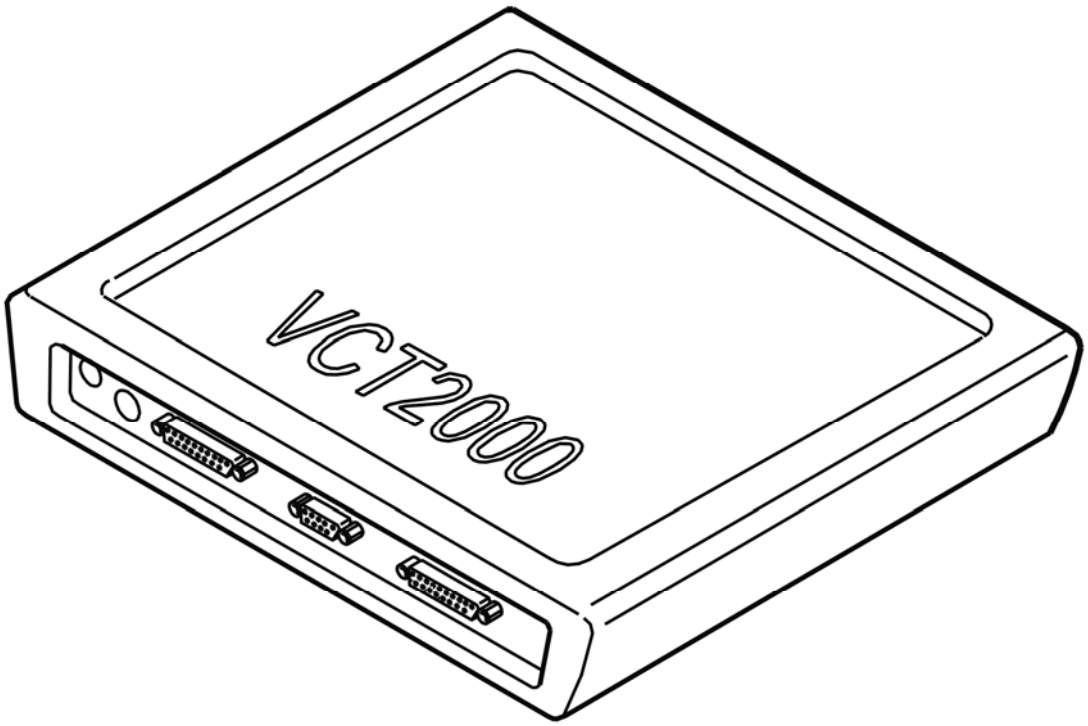

Fig. 306: Identifying VCT2000 Diagnostic Tool Symbol In VIDA
Courtesy of VOLVO CARS CORPORATION

Fig. 307: Identifying Automatic Transmission Gear Shifter With Manual Gear Changer
Courtesy of VOLVO CARS CORPORATION

- **Continue**

  Refer to **CHECKING THE COMPONENTS AND WIRING**

CHECKING THE COMPONENTS AND WIRING

Check the communication cable (LIN) between the transmission control module (TCM) terminal #A7 and gear selector module (GSM) terminal #2. Check for a short circuit to supply voltage.

If no fault can be found in the cable and the fault remains try replacing the printed circuit board (gear selector module (GSM).

Other information

- see **CONNECTING THE BREAKOUT BOX**
- see **SIGNAL DESCRIPTION**
- To access the connector/replace the printed circuit board:**TOP PANEL GEARTRONIC, REPLACING**
- see **CONTENTS**

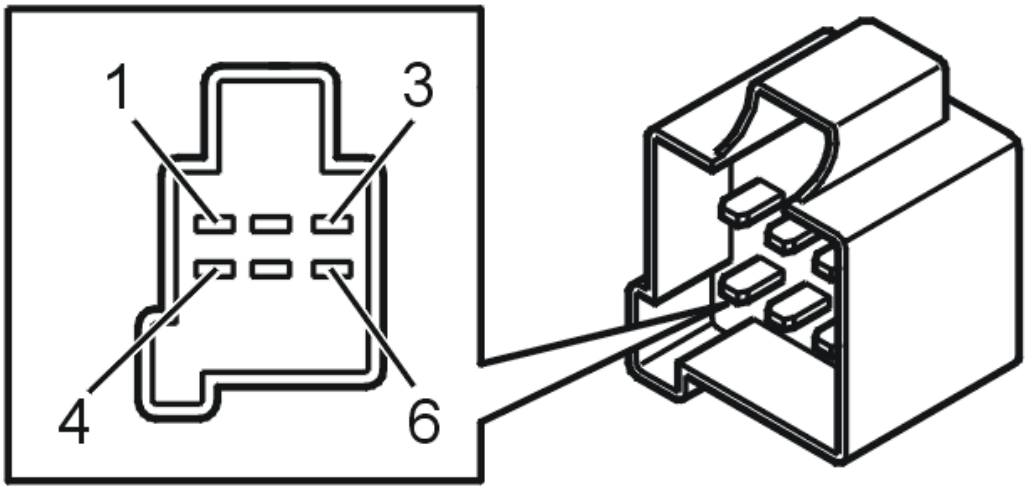

Fig. 308: Identifying Transmission Control Module (TCM) Connector Terminals
Courtesy of VOLVO CARS CORPORATION

Fig. 309: Identifying Automatic Transmission Gear Shifter With Manual Gear Changer
Courtesy of VOLVO CARS CORPORATION

- **Continue**

  Refer to **VERIFICATION**

VERIFICATION

VERIFICATION

HINT: After carrying out the repair, check that the fault has been remedied.

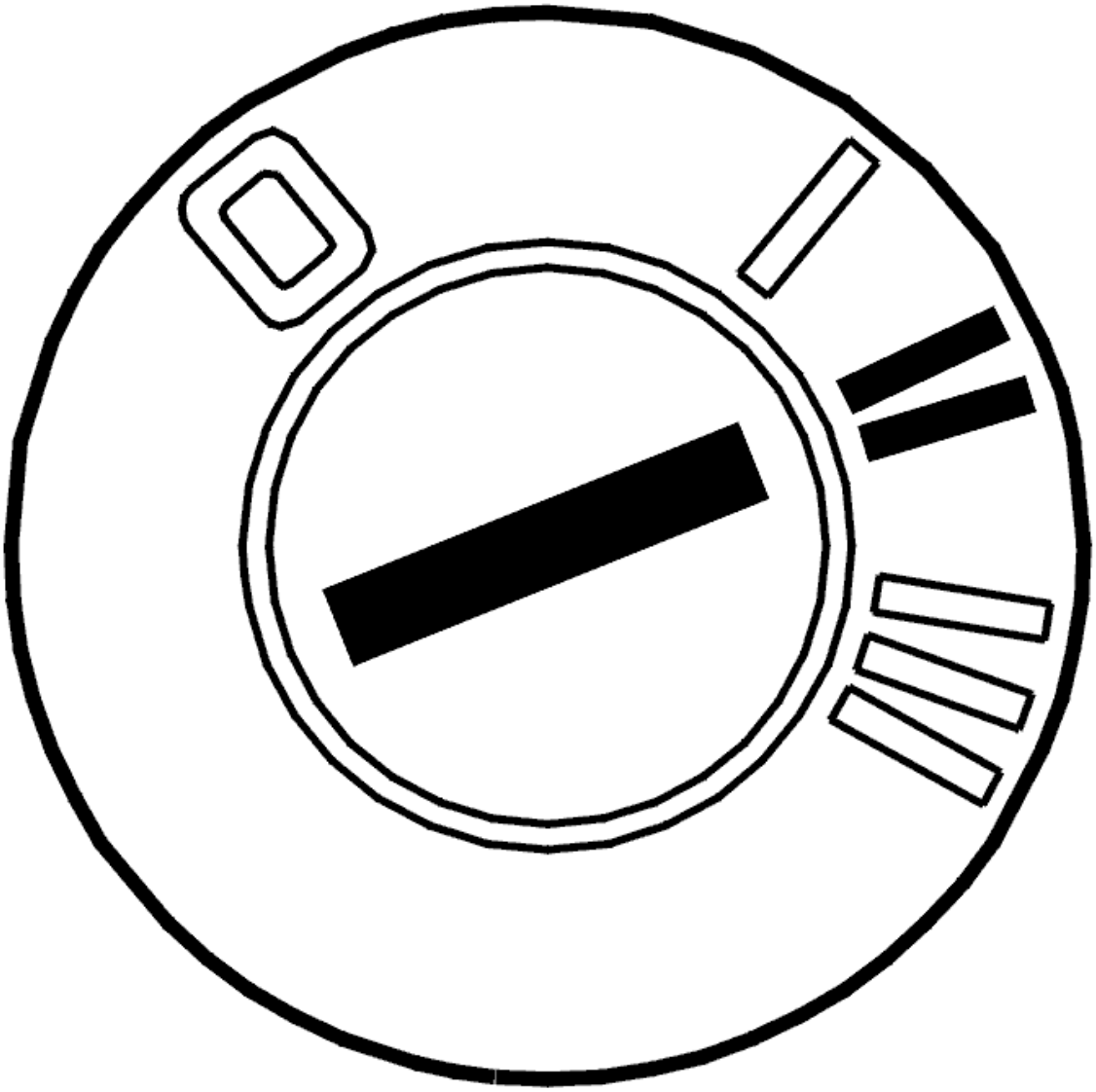

Fig. 310: Identifying Ignition ON
Courtesy of VOLVO CARS CORPORATION

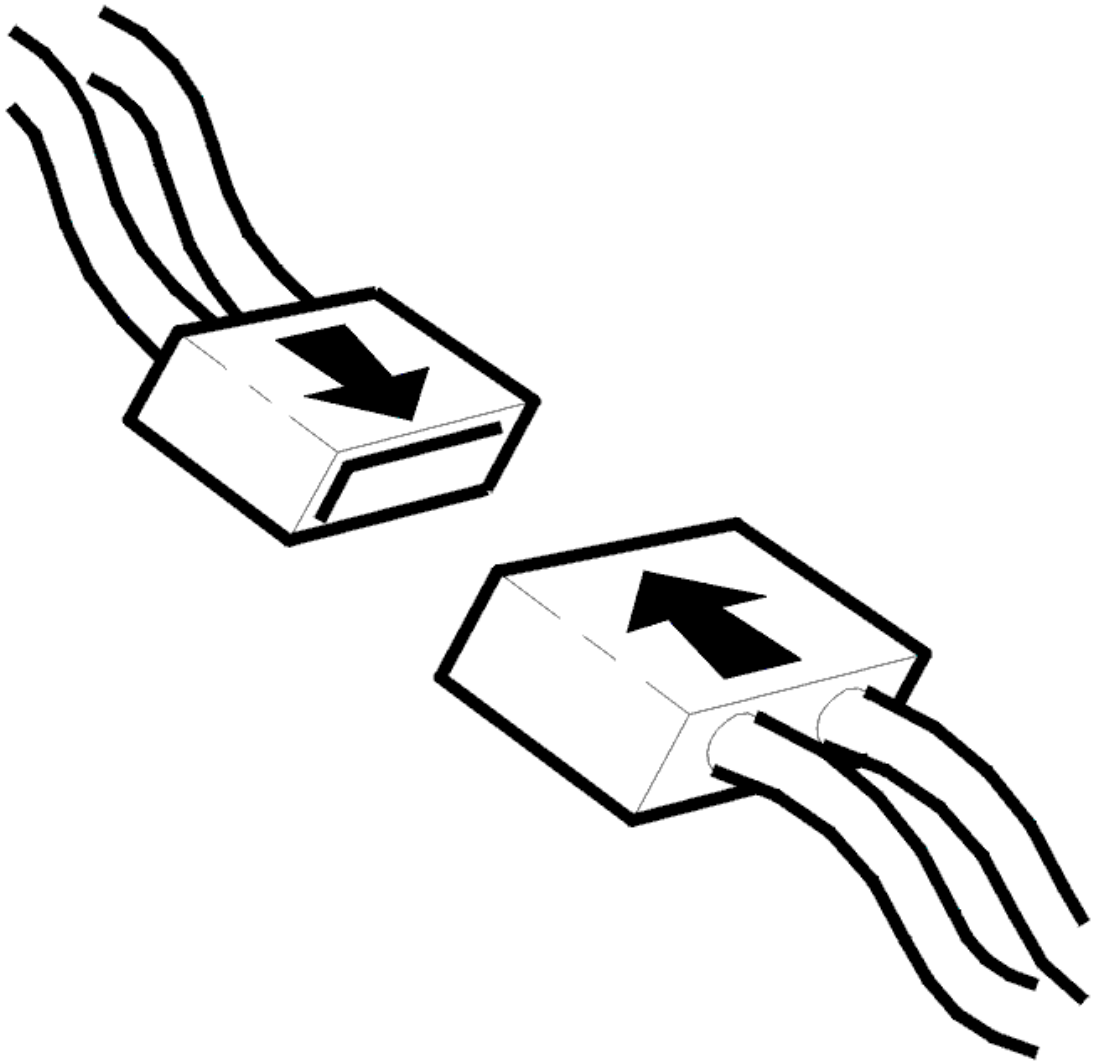

Fig. 311: Identifying Connector(s) Reinstallation
Courtesy of VOLVO CARS CORPORATION

- Ignition off.
- Reinstall the connectors, components etc.
- Ignition on.
- Gear selector in position P.
- Check whether communication with the gear selector module (GSM) works by reading off the winter mode selector (W) status.

  Connect and disconnect the function by pressing the switch. The status should change.

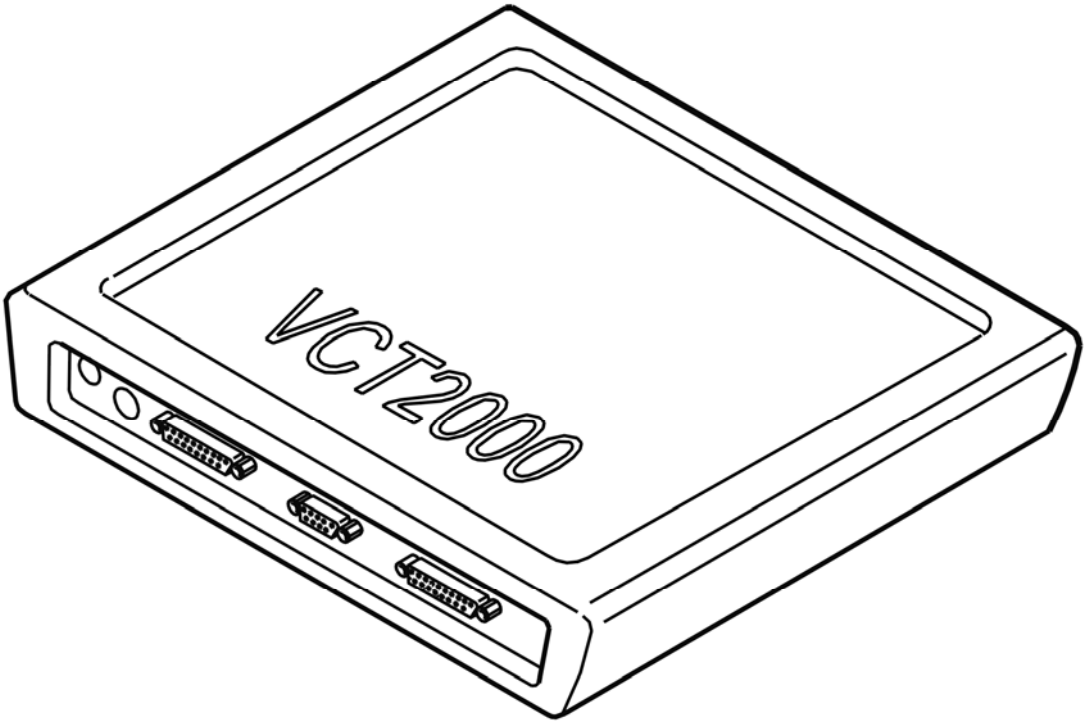

Fig. 312: Identifying VCT2000 Diagnostic Tool Symbol In VIDA
Courtesy of VOLVO CARS CORPORATION

Does the status change?

- **YES**

  VERIFIED: Troubleshooting has been completed.

- **NO**

  Refer to **INFORMATION**

INFORMATION

FAULT-TRACING INFORMATION

The fault should have been detected and remedied. As this is not the case fault-tracing has failed.

Exit fault-tracing for this diagnostic trouble code (DTC) or make another attempt.

TCM-P086012: TRANSMISSION CONTROL MODULE A COMMUNICATION CIRCUIT. GENERAL ELECTRICAL FAULT. SHORT CIRCUIT TO VOLTAGE

(TF-80SC AWD; 2005)

DIAGNOSTIC TROUBLE CODE (DTC) INFORMATION TCM-P086012

see **DIAGNOSTIC TROUBLE CODE (DTC) INFORMATION TCM-P086012**

FAULT TRACING TCM-P086012

see **FAULT TRACING TCM-P086012**

TCM-P086013: GEAR SHIFT MODULE A COMMUNICATION CIRCUIT. GENERAL ELECTRICAL FAILURES. CIRCUIT OPEN (B6324S, TF-80SC; B6324S, TF-80SC AWD; 2007-2010)

DIAGNOSTIC TROUBLE CODE (DTC) INFORMATION TCM-P086013

Condition

The transmission control module (TCM) and gear selector module (GSM) communicate with each other in a network via standardized serial communication - local interconnect network (LIN). The control modules transmit and receive information.

The diagnostic trouble code (DTC) is stored if the control module detects that:

- No signal from the Gear selector module (GSM).

The control module's test for the diagnostic trouble code (DTC) starts in the event of:

- Ignition on.

NOTE: **The control module can only detect the fault once the test has been started and the diagnostic trouble code (DTC) is stored when the conditions are met.**

Fig. 313: Identifying Automatic Transmission Gear Shifter With Manual Gear Changer
Courtesy of VOLVO CARS CORPORATION

Substitute Value

- Manual gear shift position (+/-) function is blocked.

Possible Source

- Contact resistance and oxidation in the terminals.
- Open circuit on the lead for the power supply or the ground lead to the gear selector module (GSM).
- Internal fault in gear selector module (GSM).

Fault symptom[s]

- General warning lamp lit
- Gear selector indicator does not function

FAULT-TRACING

CHECKING COMMUNICATION WITH THE GEAR SELECTOR MODULE (GSM)

Fig. 314: Identifying Ignition ON
Courtesy of VOLVO CARS CORPORATION

- Ignition on.

- Read off the position of the gear selector.
- Depress the brake pedal. Move the gear selector to the position for manual shifting and check that the status changes.
- Then move the gearshift selector toward both + and -, and check that the value has been updated in the driver information module's display window.

  If the value is updated in the driver information module display, the fault is intermittent. That is to say, it occurred earlier but is not active right now.

Fig. 315: Identifying VCT2000 Diagnostic Tool Symbol In VIDA
Courtesy of VOLVO CARS CORPORATION

Fig. 316: Identifying Automatic Transmission Gear Shifter With Manual Gear Changer
Courtesy of VOLVO CARS CORPORATION

- **Continue**

  Refer to **CHECKING THE COMPONENTS AND WIRING**

CHECKING THE COMPONENTS AND WIRING

Fig. 317: Identifying Ignition OFF
Courtesy of VOLVO CARS CORPORATION

- Ignition off.

  Check connector (16 pin) for the transmission control module (TCM) and gear selector module (GSM). Check for contact resistance and oxidation.

  Check the communication cable (LIN) for open circuit.

  Take readings between:

  - Transmission control module (TCM) terminal #A7 and gear selector module (GSM) terminal #2.

  Check for open circuit.

  Take readings between:

  - Transmission control module (TCM) terminal #A16 and gear selector module (GSM) terminal #1.

  HINT: The gear selector module (GSM) is supplied power from the transmission control module (TCM).

  Check the ground lead. Check for an open-circuit.

  Take readings between:

  - Gear selector module (GSM) terminal #6 and the ground connection.

  If no fault can be found, replace the gear selector module (GSM).

  Other information

  - see **CONNECTING THE BREAKOUT BOX**
  - see **SIGNAL SPECIFICATION**
  - see **CHECKING WIRING AND TERMINALS**
  - For access to connector:**TOP PANEL GEARTRONIC, REPLACING**
  - For access to connector:**TRANSMISSION CONTROL MODULE (TCM)**

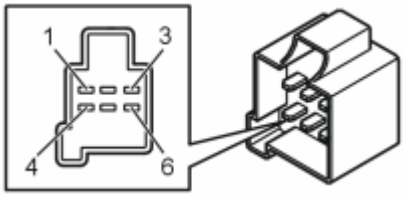

Fig. 318: Identifying Connector Terminals

Courtesy of VOLVO CARS CORPORATION

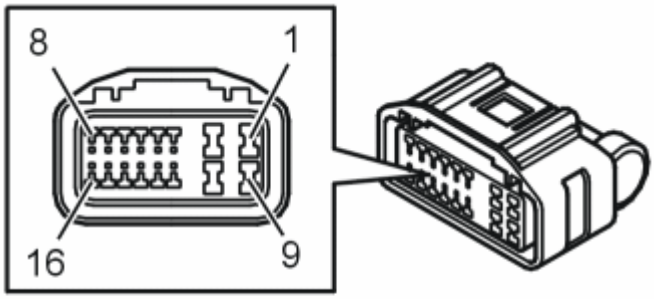

Fig. 319: Identifying Connector A Terminals
Courtesy of VOLVO CARS CORPORATION

- **Continue**

  Refer to **VERIFICATION**

VERIFICATION

VERIFICATION

HINT: After carrying out the repair, check that the fault has been remedied.

Fig. 320: Identifying Ignition ON
Courtesy of VOLVO CARS CORPORATION

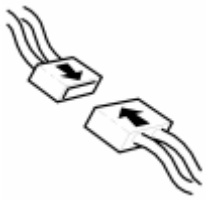

Fig. 321: Identifying Connector(s) Reinstallation
Courtesy of VOLVO CARS CORPORATION

- Ignition off.

- Reinstall the connectors, components etc.
- Ignition on.
- Read off the position of the gear selector.
- Depress the brake pedal. Move the gear selector to the position for manual shifting and check that the status changes.
- Then move the gearshift selector toward both + and -, and check that the value has been updated in the driver information module's display window.

Fig. 322: Identifying VCT2000 Diagnostic Tool Symbol In VIDA
Courtesy of VOLVO CARS CORPORATION

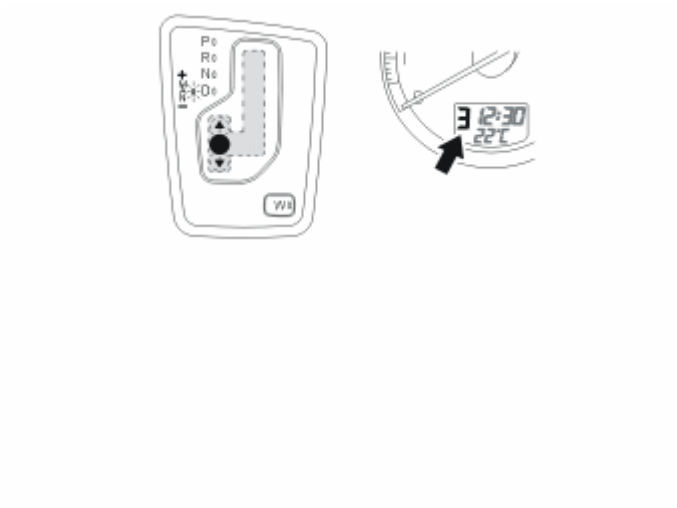

Fig. 323: Identifying Geartronic Operation
Courtesy of VOLVO CARS CORPORATION

Does the value change?

- **YES**

  VERIFIED: Troubleshooting has been completed.

- **NO**

  Refer to **INFORMATION**

INFORMATION

FAULT-TRACING INFORMATION

The fault should have been detected and remedied. As this is not the case fault-tracing has failed.

Exit fault-tracing for this diagnostic trouble code (DTC) or make another attempt.

TCM-P086013: GEAR SHIFT MODULE A COMMUNICATION CIRCUIT. GENERAL ELECTRICAL FAILURES. CIRCUIT OPEN (B6324S5, TF-80SC; B6324S5, TF-80SC AWD; 2011)

DIAGNOSTIC TROUBLE CODE (DTC) INFORMATION TCM-P086013

see **DIAGNOSTIC TROUBLE CODE (DTC) INFORMATION TCM-P086013**

FAULT-TRACING

see **FAULT-TRACING**

TCM-P086013: SHIFTING CONTROL MODULE A COMMUNICATION CIRCUIT. GENERAL ELECTRICAL MALFUNCTION. OPEN CIRCUIT (B8444S, TF-80SC AWD; 2006-2011)

DIAGNOSTIC TROUBLE CODE (DTC) INFORMATION TCM-P086013

Condition

Fig. 324: Identifying Automatic Transmission Gear Shifter With Manual Gear Changer
Courtesy of VOLVO CARS CORPORATION

The transmission control module (TCM) and the gear selector module (GSM) communicate with each other over a network via a standardized serial communication protocol, Local Interconnect Network (LIN), to exchange information. The control modules both send and receive information.

If the transmission control module (TCM) registers that the signal from the gear selector module (GSM) is incorrect, the diagnostic trouble code is generated.

The diagnostic trouble code can be diagnosed when the ignition is on.

Substitute Value

- Manual gearchange "**Man** " function block.
- The winter program "**W** " function blocked.

Possible Source

- The communication lead between the gear selector module (GSM) and the transmission control module (TCM) short-circuited to voltage or ground.

Fault symptom[s]

- General warning lamp lit
- Gear selector indicator not working.

FAULT TRACING TCM-P086013

CHECKING COMMUNICATION WITH THE GEAR SELECTOR (GSM)

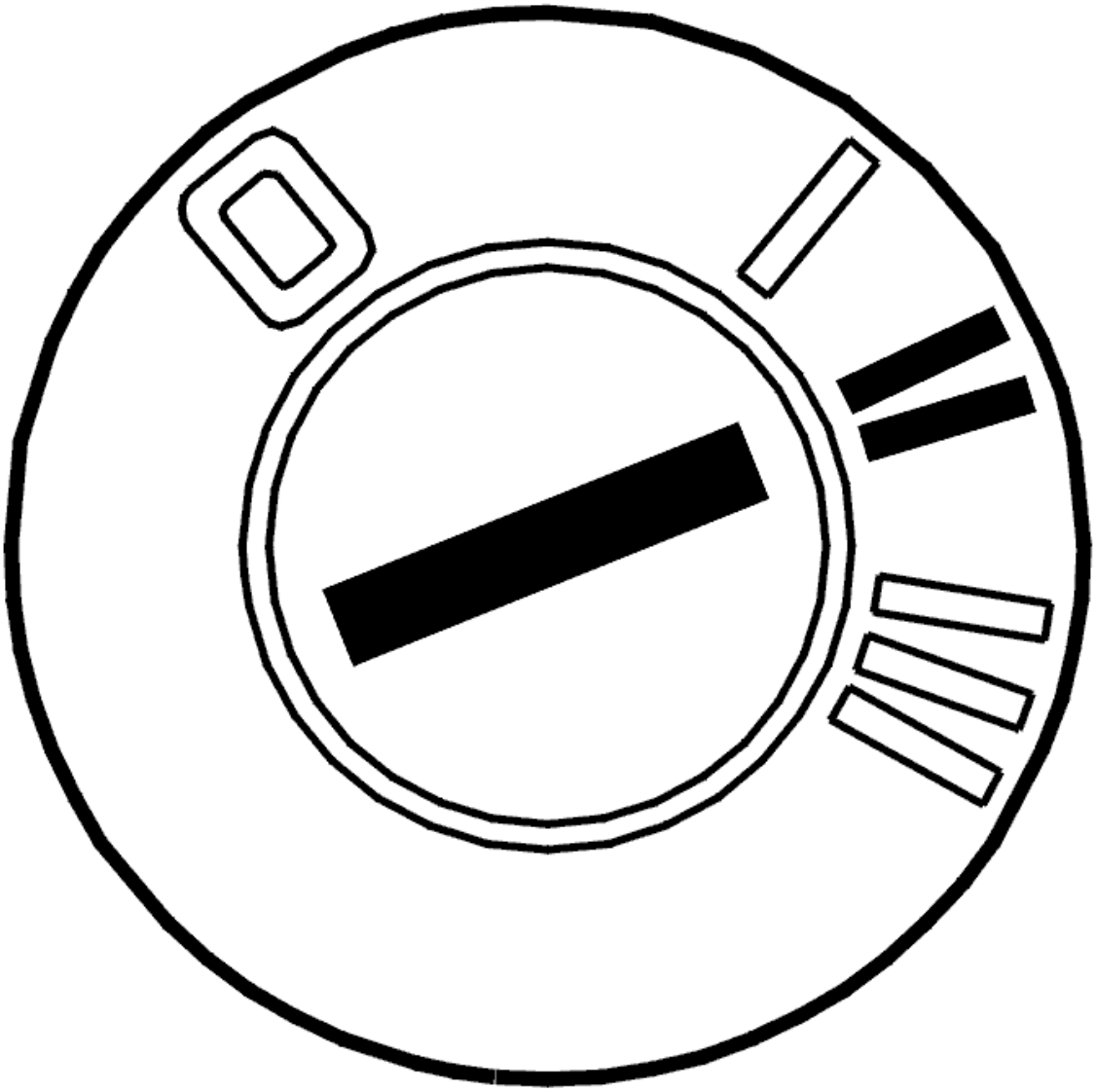

Fig. 325: Identifying Ignition ON
Courtesy of VOLVO CARS CORPORATION

- Ignition on
- Gear selector in position P
- Check if communication with the gear selector module (GSM) functions by reading the status for the Winter program selector (**W**).
- Activate and deactivate the function by pressing the switch. The status must change.

The fault is permanent if the value does not change.

If the status switches it means that the fault was present previously but is not active now. There is an intermittent fault.

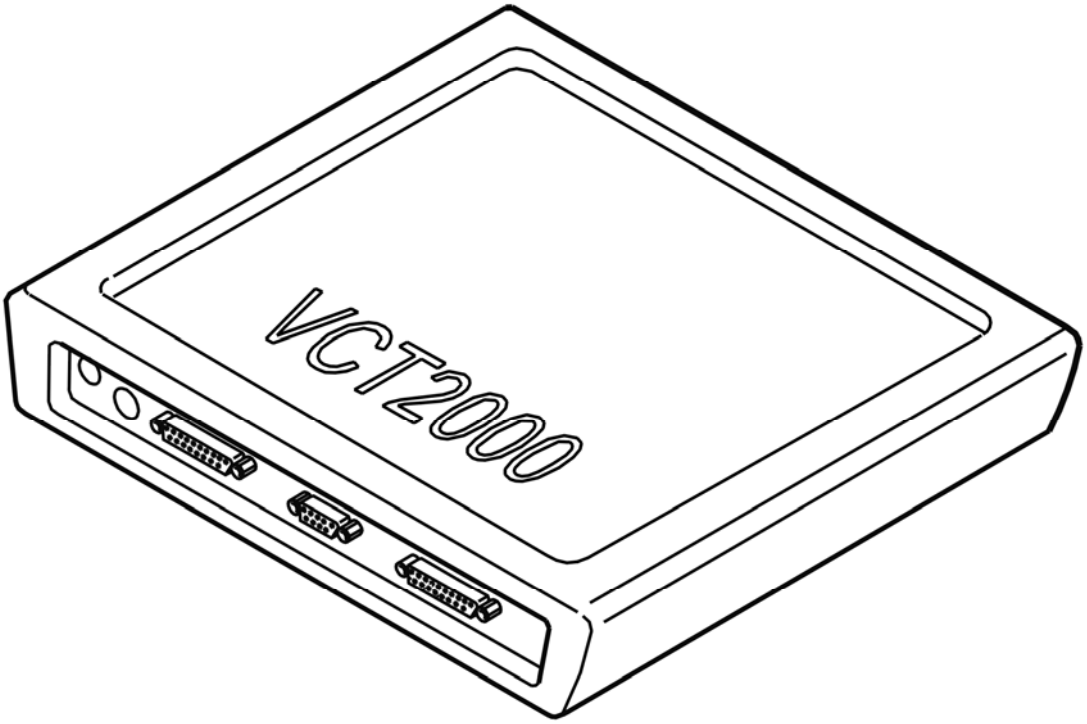

Fig. 326: Identifying VCT2000 Diagnostic Tool Symbol In VIDA
Courtesy of VOLVO CARS CORPORATION

Fig. 327: Identifying Automatic Transmission Gear Shifter With Manual Gear Changer
Courtesy of VOLVO CARS CORPORATION

- **Continue**

  Refer to **CHECKING THE COMPONENTS AND WIRING**

CHECKING THE COMPONENTS AND WIRING

Check the communication cable (LIN) between transmission control module (TCM) #A7 and gear selector module (GSM) #2 for open circuit and short-circuit to ground or voltage.

If no fault can be found in the cable and the fault remains try replacing the printed circuit board (gear selector module (GSM).

Other information

- see **CONNECTING THE BREAKOUT BOX**
- see **SIGNAL DESCRIPTION**
- For access to connector: **TOP PANEL GEARTRONIC, REPLACING**
- see **CONTENTS**

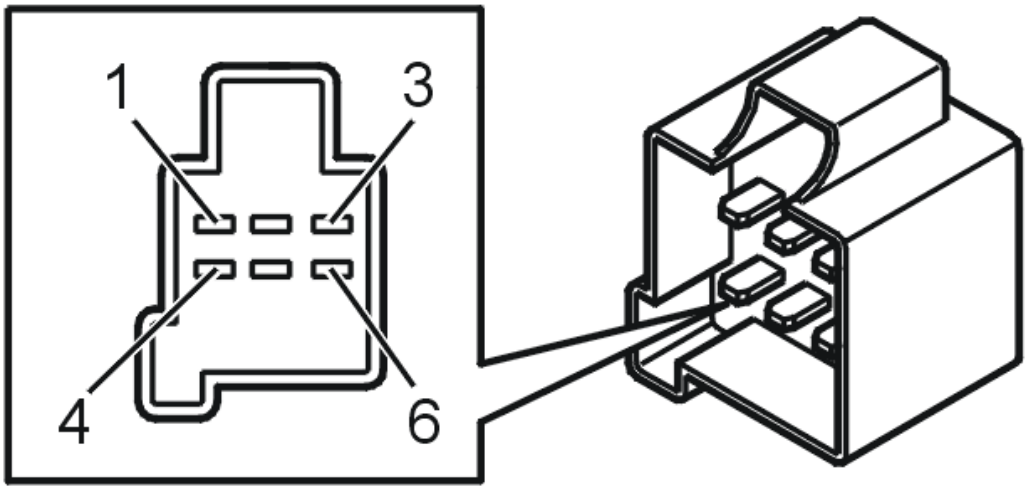

Fig. 328: Identifying Transmission Control Module (TCM) Connector Terminals
Courtesy of VOLVO CARS CORPORATION

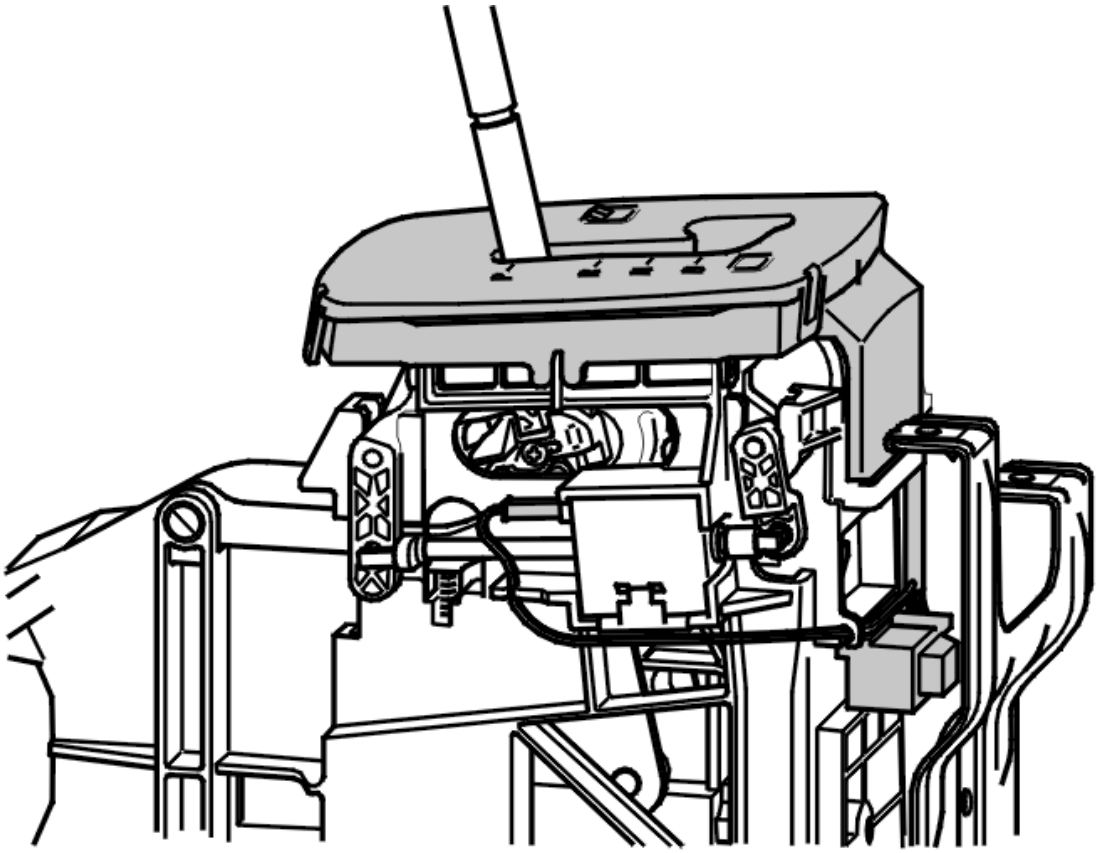

Fig. 329: Identifying Gear Selector Module (GSM)
Courtesy of VOLVO CARS CORPORATION

- **Continue**

  Refer to **VERIFICATION**

VERIFICATION

VERIFICATION

HINT: After carrying out the repair, check that the fault has been remedied.

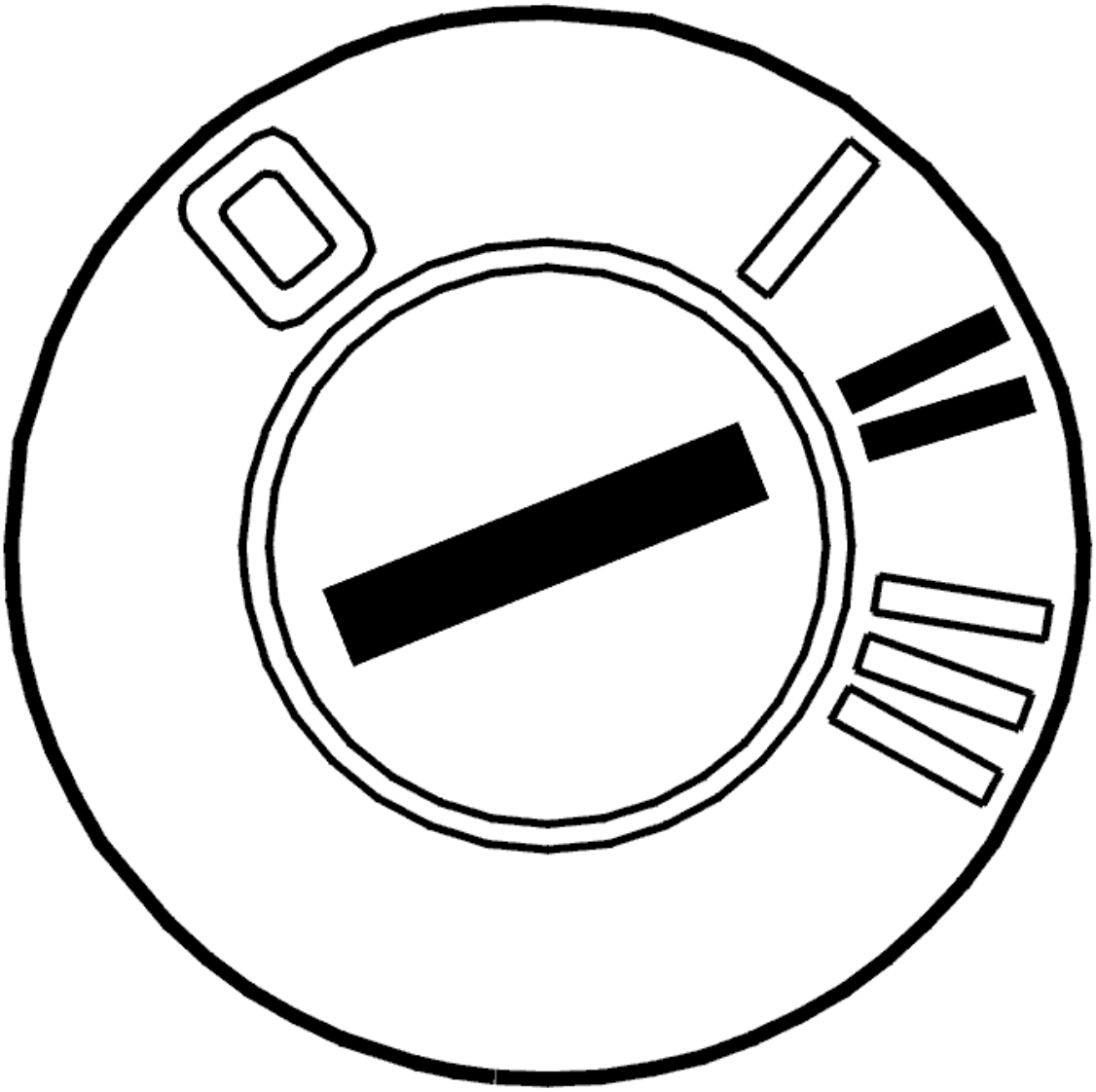

Fig. 330: Identifying Ignition ON
Courtesy of VOLVO CARS CORPORATION

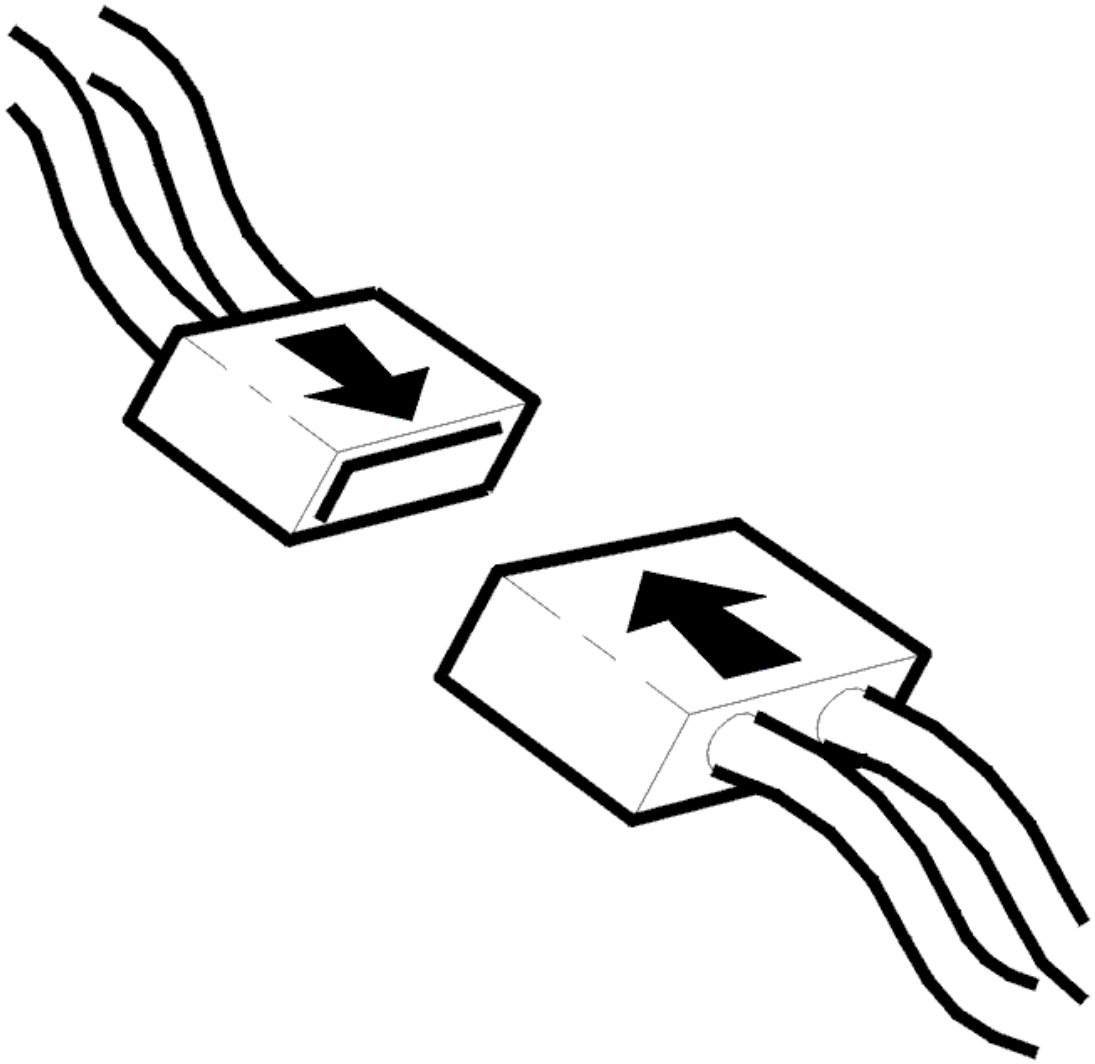

Fig. 331: Identifying Connector(s) Reinstallation
Courtesy of VOLVO CARS CORPORATION

- Ignition off.
- Reinstall the connectors, components etc.
- Ignition on.
- Gear selector in position P.
- Check whether communication with the gear selector module (GSM) works by reading off the winter mode selector (W) status.

  Connect and disconnect the function by pressing the switch. The status should change.

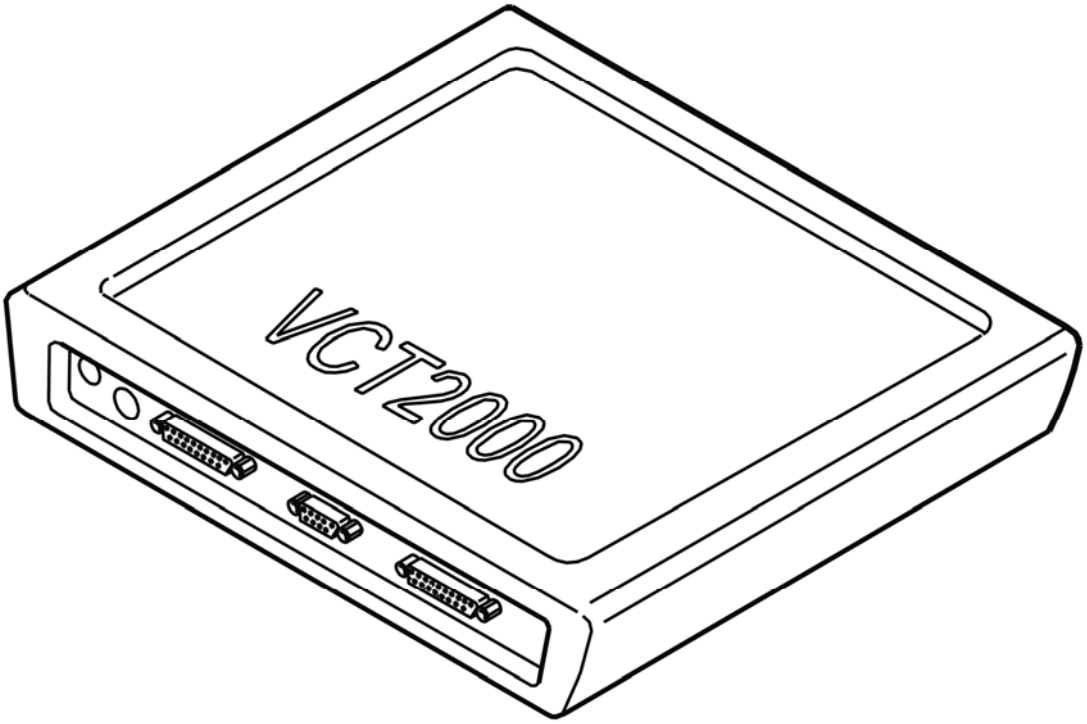

Fig. 332: Identifying VCT2000 Diagnostic Tool Symbol In VIDA
Courtesy of VOLVO CARS CORPORATION

Does the status change?

- **YES**

  VERIFIED: Troubleshooting has been completed.

- **NO**

  Refer to **INFORMATION**

INFORMATION

FAULT-TRACING INFORMATION

The fault should have been detected and remedied. As this is not the case fault-tracing has failed.

Exit fault-tracing for this diagnostic trouble code (DTC) or make another attempt.

TCM-P086013: SHIFTING CONTROL MODULE A COMMUNICATION CIRCUIT. GENERAL ELECTRICAL MALFUNCTION. OPEN CIRCUIT (TF-

80SC AWD; 2005)

DIAGNOSTIC TROUBLE CODE (DTC) INFORMATION TCM-P086013

see **DIAGNOSTIC TROUBLE CODE (DTC) INFORMATION TCM-P086013**

FAULT TRACING TCM-P086013

see **FAULT TRACING TCM-P086013**

TCM-P086087: GEAR SHIFT MODULE A COMMUNICATION CIRCUIT. BUS SIGNAL / MESSAGE FAILURES. MISSING MESSAGE (B6324S, TF-80SC; B6324S, TF-80SC AWD; 2007-2010)

DIAGNOSTIC TROUBLE CODE (DTC) INFORMATION TCM-P086087

Condition

The transmission control module (TCM) and gear selector module (GSM) communicate with each other in a network via standardized serial communication - local interconnect network (LIN). The control modules transmit and receive information.

The diagnostic trouble code (DTC) is stored if the control module detects that:

- No signal from the Gear selector module (GSM).

The control module's test for the diagnostic trouble code (DTC) starts in the event of:

- Ignition on.

NOTE: **The control module can only detect the fault once the test has been started and the diagnostic trouble code (DTC) is stored when the conditions are met.**

Fig. 333: Identifying Automatic Transmission Gear Shifter With Manual Gear Changer
Courtesy of VOLVO CARS CORPORATION

Substitute Value

- Manual gear shift position (+/-) function is blocked.

Possible Source

- Open-circuit in the communication cable.
- Internal fault in gear selector module (GSM).

Fault symptom[s]

- General warning lamp lit
- Gear selector indicator does not function

FAULT-TRACING

CHECKING COMMUNICATION WITH THE GEAR SELECTOR MODULE (GSM)

Fig. 334: Identifying Ignition ON
Courtesy of VOLVO CARS CORPORATION

- Ignition on.
- Read off the position of the gear selector.

- Depress the brake pedal. Move the gear selector to the position for manual shifting and check that the status changes.
- Then move the gearshift selector toward both + and -, and check that the value has been updated in the driver information module's display window.

  If the value is updated in the driver information module display, the fault is intermittent. That is to say, it occurred earlier but is not active right now.

Fig. 335: Identifying VCT2000 Diagnostic Tool Symbol In VIDA
Courtesy of VOLVO CARS CORPORATION

Fig. 336: Identifying Automatic Transmission Gear Shifter With Manual Gear Changer
Courtesy of VOLVO CARS CORPORATION

- **Continue**

  Refer to **CHECKING THE COMPONENTS AND WIRING**

CHECKING THE COMPONENTS AND WIRING

Fig. 337: Identifying Ignition OFF

Courtesy of VOLVO CARS CORPORATION

- Ignition off.
- Remove the gear selector connector.

Check the communication cable (LIN) for open circuit.

Take readings between:

- Transmission control module (TCM) terminal #A7 and gear selector module (GSM) terminal #2.

If no fault can be found, replace the gear selector module (GSM).

Other information

- see **CONNECTING THE BREAKOUT BOX**
- see **CHECKING WIRING AND TERMINALS**
- For access to connector:**TOP PANEL GEARTRONIC, REPLACING**
- For access to connector:**TRANSMISSION CONTROL MODULE (TCM)**
- see **TOP PANEL GEARTRONIC, REPLACING**

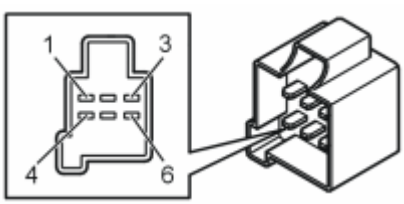

Fig. 338: Identifying Connector Terminals
Courtesy of VOLVO CARS CORPORATION

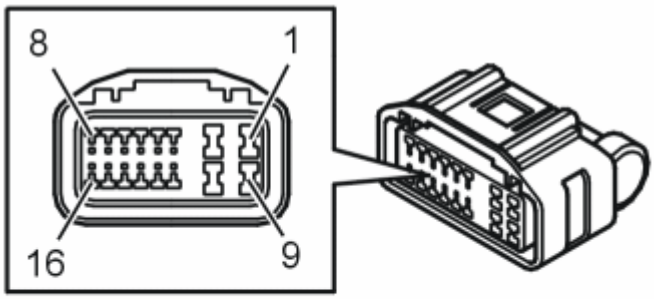

Fig. 339: Identifying Connector A Terminals
Courtesy of VOLVO CARS CORPORATION

- **Continue**

  Refer to **VERIFICATION**

VERIFICATION

VERIFICATION

HINT: After carrying out the repair, check that the fault has been remedied.

Fig. 340: Identifying Ignition ON
Courtesy of VOLVO CARS CORPORATION

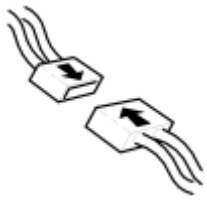

Fig. 341: Identifying Connector(s) Reinstallation
Courtesy of VOLVO CARS CORPORATION

- Ignition off.
- Reinstall the connectors, components etc.
- Ignition on.
- Read off the position of the gear selector.
- Depress the brake pedal. Move the gear selector to the position for manual shifting and check that the status changes.
- Then move the gearshift selector toward both + and -, and check that the value has been updated in the driver information module's display window.

Fig. 342: Identifying VCT2000 Diagnostic Tool Symbol In VIDA
Courtesy of VOLVO CARS CORPORATION

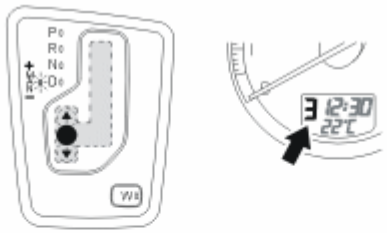

Fig. 343: Identifying Geartronic Operation
Courtesy of VOLVO CARS CORPORATION

Does the value change?

- **YES**

  VERIFIED: Troubleshooting has been completed.

- **NO**

  Refer to **INFORMATION**

INFORMATION

FAULT-TRACING INFORMATION

The fault should have been detected and remedied. As this is not the case fault-tracing has failed.

Exit fault-tracing for this diagnostic trouble code (DTC) or make another attempt.

TCM-P086087: GEAR SHIFT MODULE A COMMUNICATION CIRCUIT. BUS SIGNAL / MESSAGE FAILURES. MISSING MESSAGE (B6324S5, TF-80SC; B6324S5, TF-80SC AWD; 2011)

DIAGNOSTIC TROUBLE CODE (DTC) INFORMATION TCM-P086087

see **DIAGNOSTIC TROUBLE CODE (DTC) INFORMATION TCM-P086087**

FAULT-TRACING

see **FAULT-TRACING**

TCM-P086087: TRANSMISSION CONTROL MODULE A COMMUNICATION CIRCUIT. BUS/MESSAGE ERROR. MESSAGE MISSING (B8444S, TF-80SC AWD; 2006-2011)

DIAGNOSTIC TROUBLE CODE (DTC) INFORMATION TCM-086087

Condition

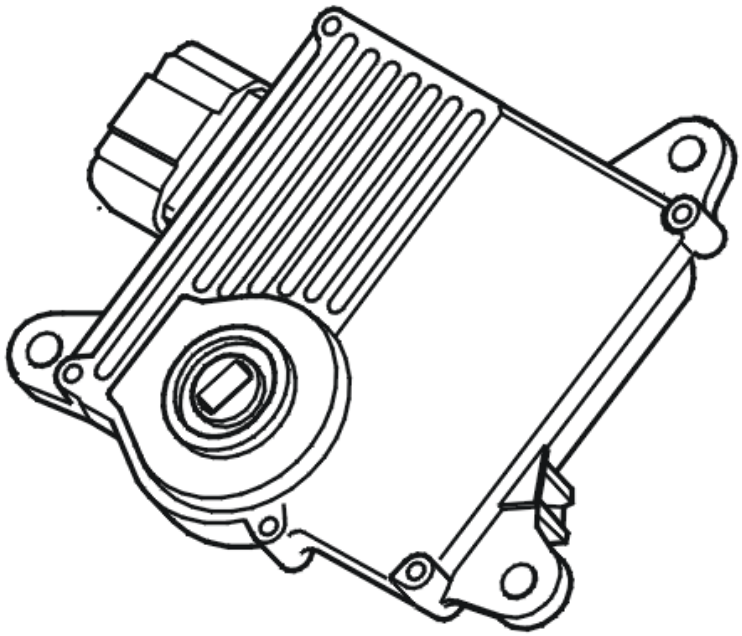

Fig. 344: Identifying Transmission Control Module (TCM)
Courtesy of VOLVO CARS CORPORATION

The transmission control module (TCM) and the gear selector module (GSM) communicate with each other over a network via a standardized serial communication protocol, Local Interconnect Network (LIN), to exchange information. The control modules both send and receive information.

If the transmission control module (TCM) registers that the signal from the gear selector module (GSM) is missing, the diagnostic trouble code (DTC) is generated.

The diagnostic trouble code can be diagnosed when the ignition is on.

Substitute Value

- Manual gearchange "**Man** " function block.

- The winter program "**W** " function blocked.

Possible Source

- Contact resistance or oxidation on connections
- Open circuit on the communication lead (LIN) between the gear selector module (GSM) and the transmission control module (TCM).
- Open circuit on the lead for the power supply or the ground lead to the gear selector module (GSM).
- Internal fault in gear selector module (GSM).

Fault symptom[s]

- General warning lamp lit
- Gear selector indicator not working.

FAULT TRACING TCM-P086087

CHECKING COMMUNICATION WITH THE GEAR SELECTOR MODULE (GSM)

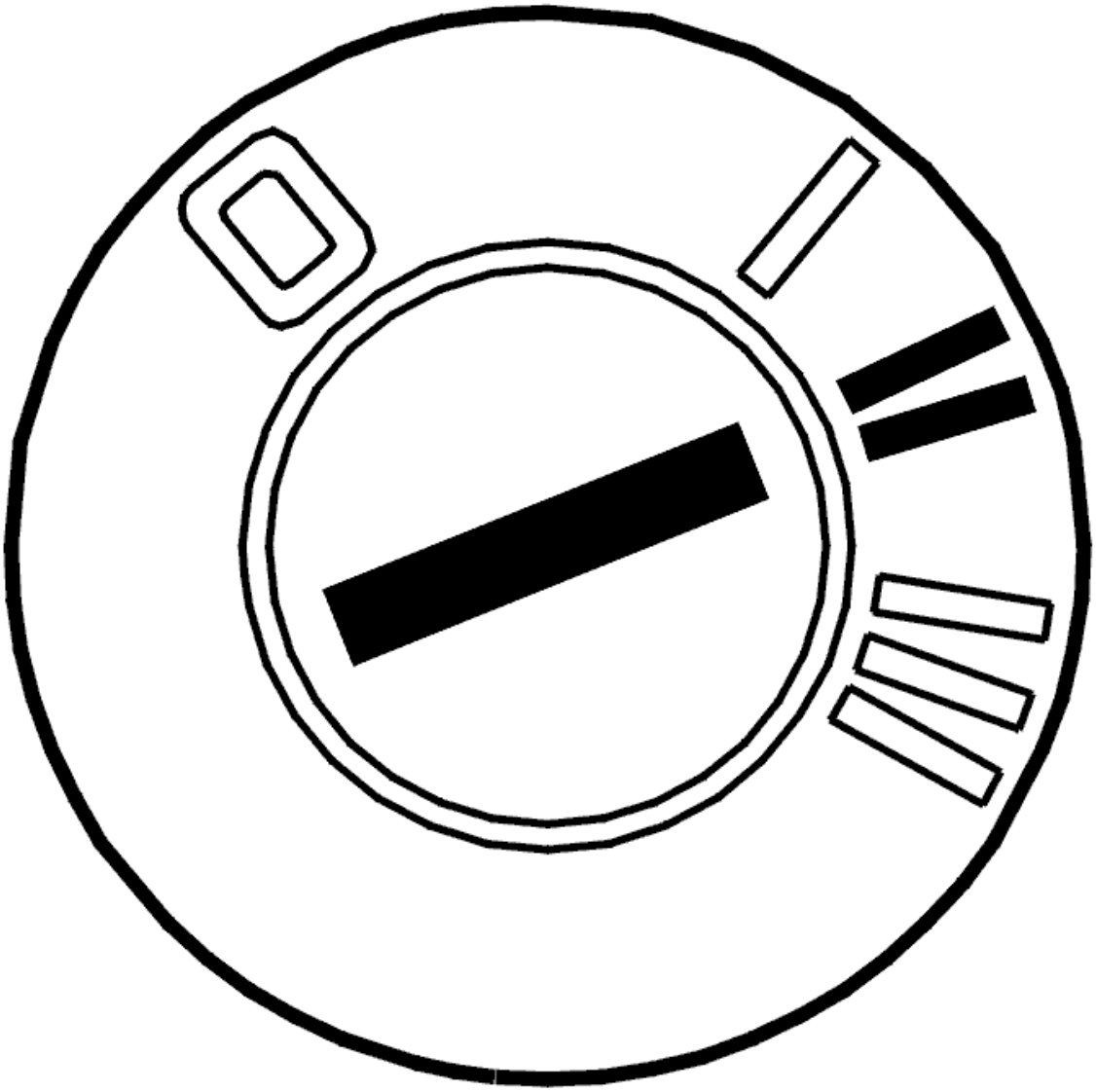

Fig. 345: Identifying Ignition ON
Courtesy of VOLVO CARS CORPORATION

- Ignition on
- Gear selector in position P
- Check if communication with the gear selector module (GSM) functions by reading the status for the Winter program selector (**W**).
- Activate and deactivate the function by pressing the switch. The status must change.

  The fault is permanent if the value does not change.

  If the status switches it means that the fault was present previously but is not active now. There is an intermittent fault.

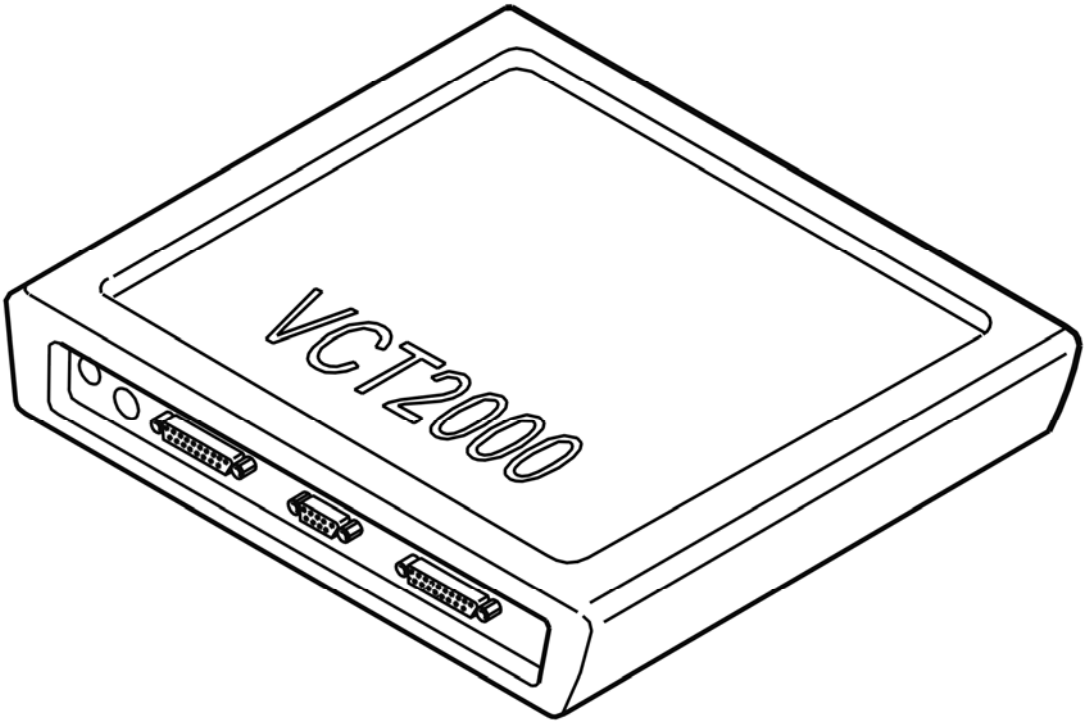

Fig. 346: Identifying VCT2000 Diagnostic Tool Symbol In VIDA
Courtesy of VOLVO CARS CORPORATION

Fig. 347: Identifying Automatic Transmission Gear Shifter With Manual Gear Changer
Courtesy of VOLVO CARS CORPORATION

- **Continue**

  Refer to **CHECKING THE COMPONENTS AND WIRING**

CHECKING THE COMPONENTS AND WIRING

Check connector (16 pin) for the transmission control module (TCM) and gear selector module (GSM). Check for contact resistance and oxidation.

Check the communication cable (LIN) between the transmission control module (TCM) terminal #A7 and gear selector module (GSM) terminal #2. Check for an open-circuit.

Check the voltage supply cable between the transmission control module (TCM) terminal #A16 and the gear selector model (GSM) terminal #1. Check for an open circuit.

HINT: The gear selector module (GSM) is supplied with power by the transmission control module (TCM).

Check the ground cable between the gear selector module (GSM) terminal #6 and ground. Check for an open circuit. Check the ground terminal for the ground cable.

If no fault can be found in the cable and the fault remains try replacing the printed circuit board (gear selector module (GSM).

Other information

- see **CONNECTING THE BREAKOUT BOX**
- see **SIGNAL DESCRIPTION**
- To access the connector/replace the printed circuit board:**TOP PANEL GEARTRONIC, REPLACING**
- see **CONTENTS**

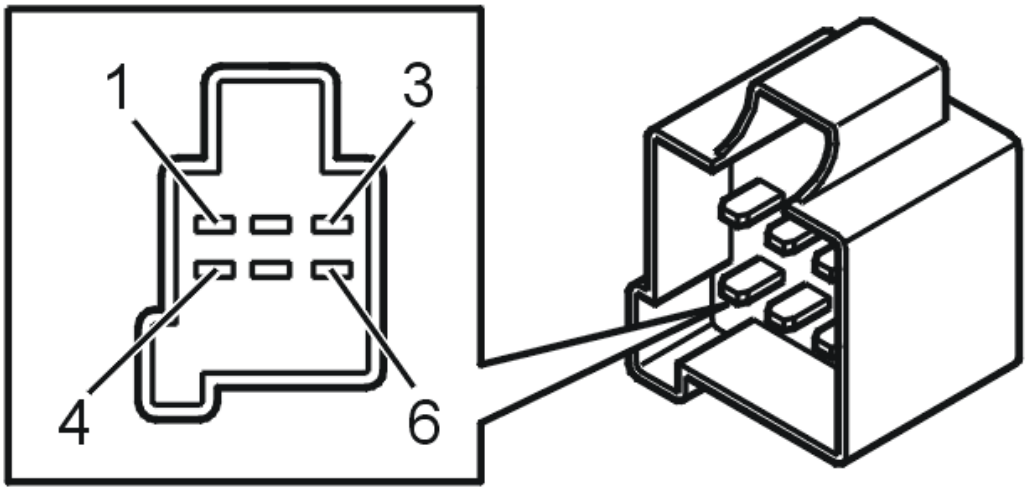

Fig. 348: Identifying Transmission Control Module (TCM) Connector Terminals
Courtesy of VOLVO CARS CORPORATION

Fig. 349: Identifying Automatic Transmission Gear Shifter With Manual Gear Changer
Courtesy of VOLVO CARS CORPORATION

- **Continue**

  Refer to **VERIFICATION**

VERIFICATION

VERIFICATION

HINT: After carrying out the repair, check that the fault has been remedied.

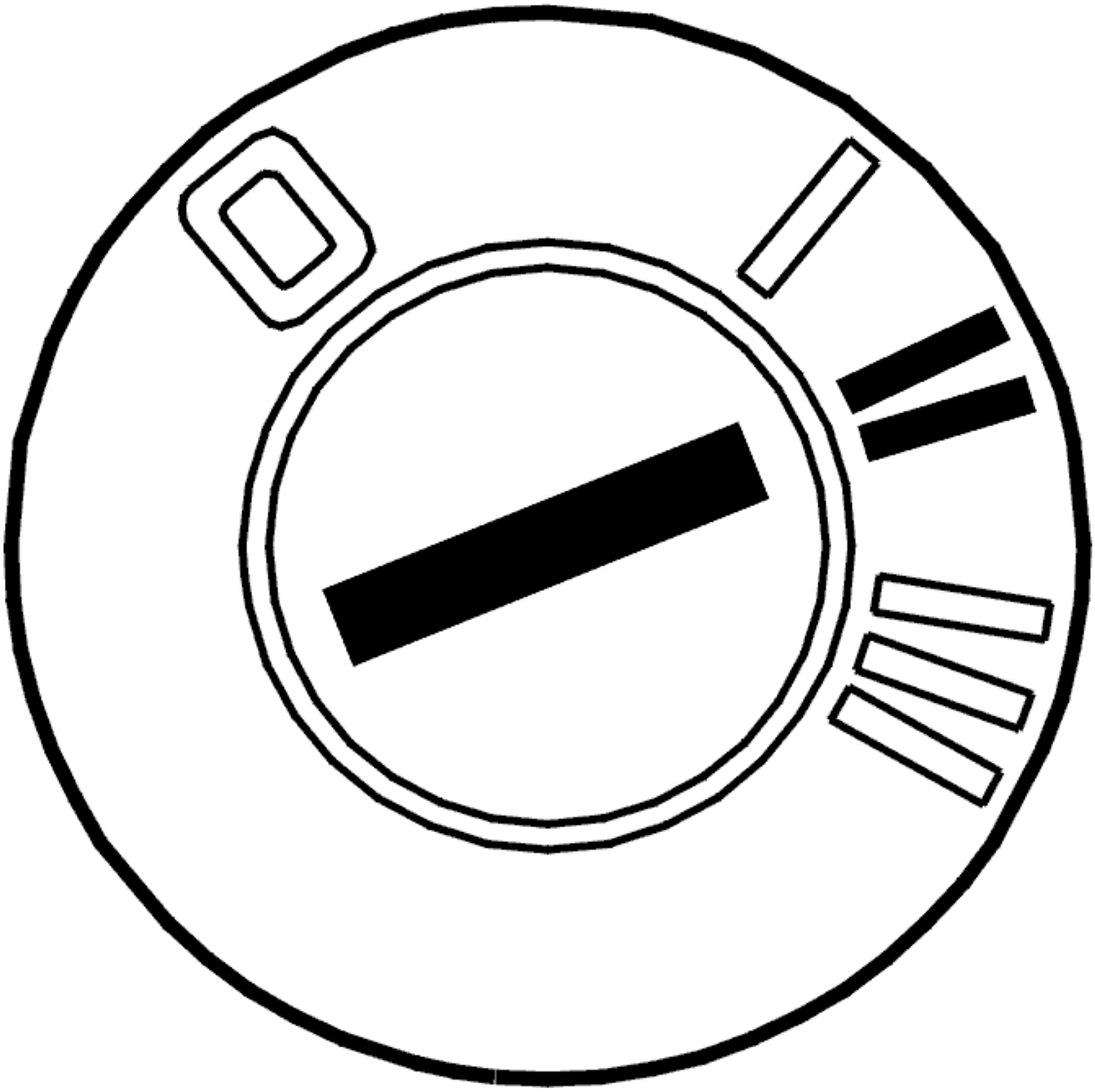

Fig. 350: Identifying Ignition ON
Courtesy of VOLVO CARS CORPORATION

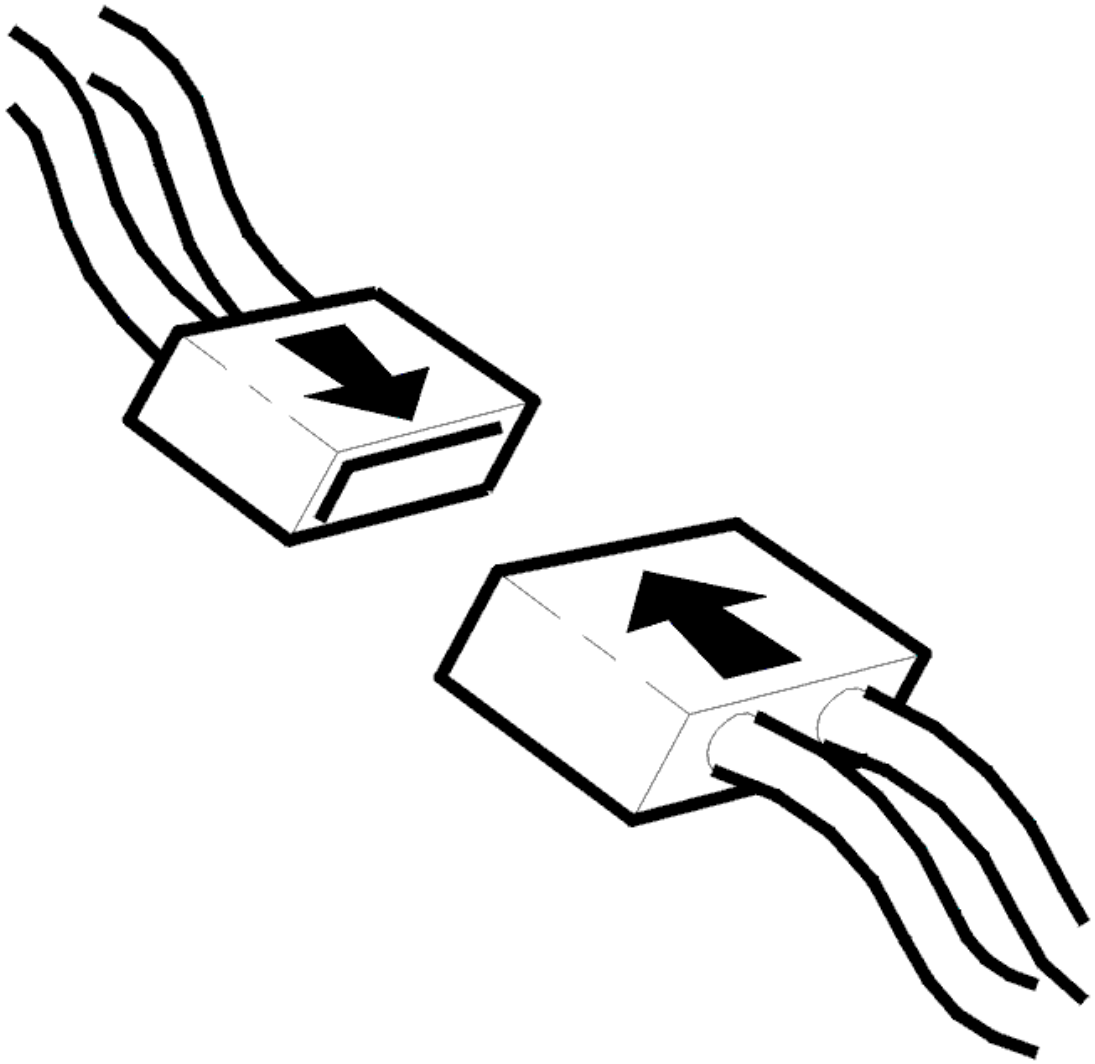

Fig. 351: Identifying Connector(s) Reinstallation
Courtesy of VOLVO CARS CORPORATION

- Ignition off.
- Reinstall the connectors, components etc.
- Ignition on.
- Gear selector in position P.
- Check whether communication with the gear selector module (GSM) works by reading off the winter mode selector (W) status.

  Connect and disconnect the function by pressing the switch. The status should change.

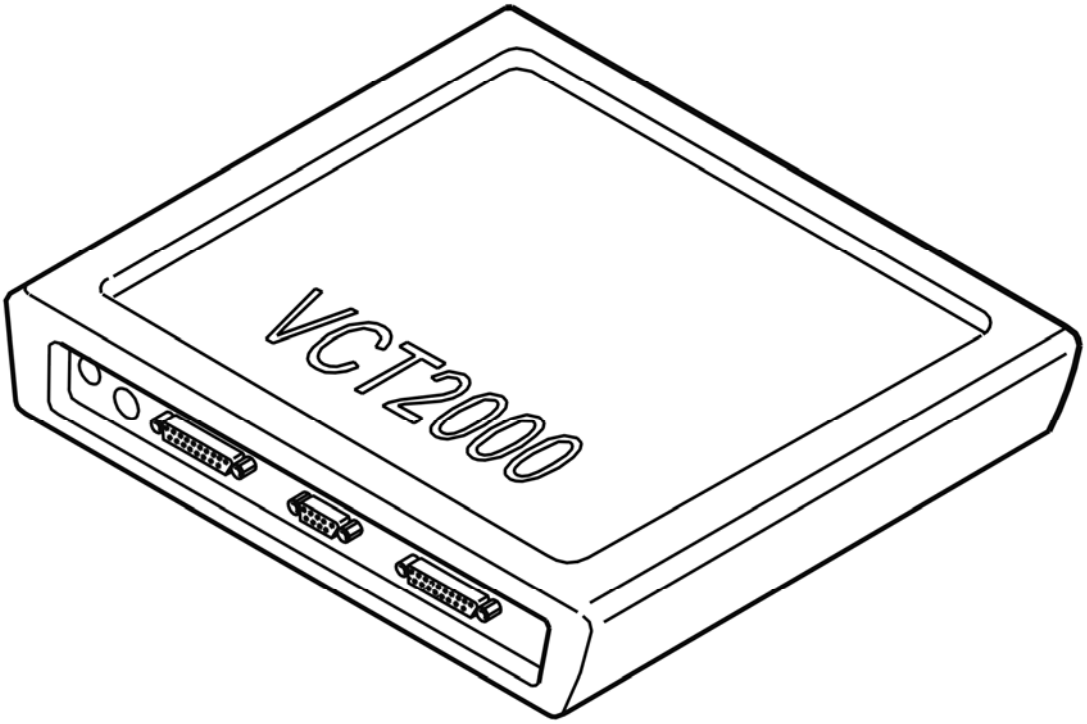

Fig. 352: Identifying VCT2000 Diagnostic Tool Symbol In VIDA
Courtesy of VOLVO CARS CORPORATION

Does the status change?

- **YES**

  VERIFIED: Troubleshooting has been completed.

- **NO**

  Refer to **INFORMATION**

INFORMATION

FAULT-TRACING INFORMATION

The fault should have been detected and remedied. As this is not the case fault-tracing has failed.

Exit fault-tracing for this diagnostic trouble code (DTC) or make another attempt.

TRANSMISSION

Transmission - Diagnostic Trouble Codes and Associated Procedures

TCM-P086087: TRANSMISSION CONTROL MODULE A COMMUNICATION CIRCUIT. BUS/MESSAGE ERROR. MESSAGE MISSING (TF-80SC AWD; 2005)

DIAGNOSTIC TROUBLE CODE (DTC) INFORMATION TCM-086087

Condition

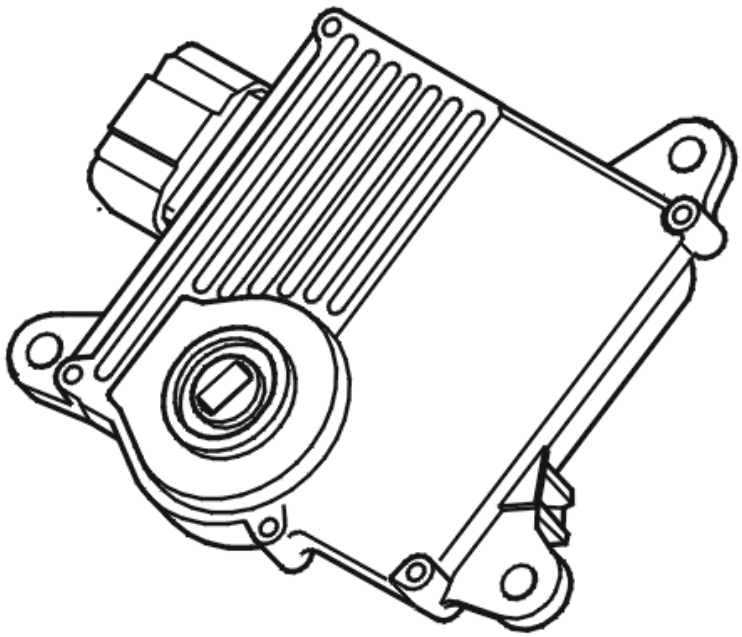

Fig. 1: Identifying Transmission Control Module (TCM)
Courtesy of VOLVO CARS CORPORATION

The transmission control module (TCM) and the gear selector module (GSM) communicate with each other over a network via a standardized serial communication protocol, Local Interconnect Network (LIN), to exchange information. The control modules both send and receive information.

If the transmission control module (TCM) registers that the signal from the gear selector module (GSM) is missing, the diagnostic trouble code (DTC) is generated.

The diagnostic trouble code can be diagnosed when the ignition is on.

Substitute Value

- Manual gearchange "**Man** " function block.
- The winter program "**W** " function blocked.

Possible Source

- Contact resistance or oxidation on connections
- Open circuit on the communication lead (LIN) between the gear selector module (GSM) and the transmission control module (TCM).
- Open circuit on the lead for the power supply or the ground lead to the gear selector module (GSM).
- Internal fault in gear selector module (GSM).

Fault symptom[s]

- General warning lamp lit
- Gear selector indicator not working.

FAULT TRACING TCM-P086087

see **FAULT TRACING TCM-P086087**

TCM-P089500: SHIFT TIME TOO SHORT. GENERAL FAILURE INFORMATION. NO SUB TYPE INFORMATION (B6324S, TF-80SC; B6324S, TF-80SC AWD; 2007-2010)

DIAGNOSTIC TROUBLE CODE (DTC) INFORMATION TCM-P089500

Condition

Transmission shifting and the lock-up function are controlled by the transmission control module (TCM) activating the solenoids in a specific pattern. Shift solenoids S1-S2 are activated depending on which gear the control module has chosen. The control module then adjusts how engagement occurs by controlling the hydraulic pressure linearly via linear solenoids SLT, SLU, SLC1, SLC2, SLC3 and SLB1. The basic parameters for the various gear shifting points are the position of the accelerator pedal (AP) and the vehicle speed, while the shifting quality is determined with the aid of the torque control. By reading off the changes in engine speed (RPM) on the transmission input shaft during the shifting process and comparing with the values calculated in the transmission control module (TCM), the pressurization of clutches and brakes can be adapted.

The diagnostic trouble code (DTC) is stored if the control module detects that:

- Too little time between shifts.

The control module's test for the diagnostic trouble code (DTC) starts in the event of:

- Normal driving.

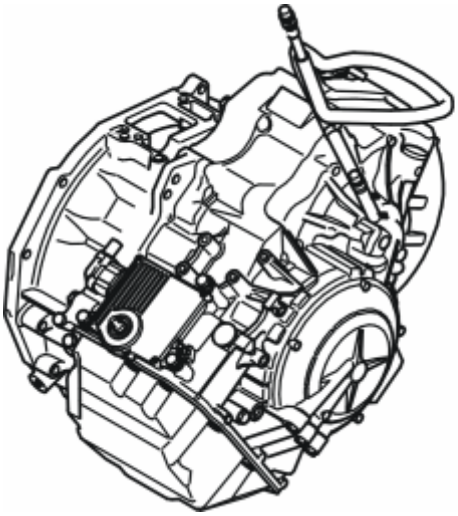

Fig. 2: Identifying Transmission
Courtesy of VOLVO CARS CORPORATION

Substitute Value

- Auxiliary program **Emergency mode 1** in the transmission control module (TCM) has started.

  HINT: EMERGENCY MODE IN THE EVENT OF A FAULT

Possible Source

- Mechanical fault in the transmission.
- Hydraulic fault in the transmission.

Fault symptom[s]

- General warning lamp lit
- Vibration and jerking when shifting
- Rough gear shift
- Abnormal slipping gearshifts

FAULT-TRACING

CHECKS

CHECKING THE DIAGNOSTIC TROUBLE CODES (DTCS)

Any other diagnostic trouble codes for the transmission control module (TCM) must be remedied first because one of them may have caused diagnostic trouble code TCM-089500 or TCM-P089600 to be stored.

Are other diagnostic trouble codes stored?

- **YES**

  OKAY: Troubleshooting has been completed.

- **NO**

  Refer to **FAULT-TRACING INFORMATION**

CHECKING FOR CONTACT RESISTANCE AND OXIDATION

Fig. 3: Identifying Ignition OFF
Courtesy of VOLVO CARS CORPORATION

- Ignition off.
- Check the connectors of the transmission and the connector for the transmission control module (TCM). Check for contact resistance and oxidation.
- Reconnect the connectors, reinstall components etc.
- Calibrate the gear shift position sensor for the transmission.

  HINT: Select Diagnostics/car communication in VIDA (Volvo scan tool).

- Test drive the vehicle following:**TEST DRIVE SCHEDULE, DESCRIPTION**

  Check for any clearly audible noises from the transmission. Check for malfunctions.

  Other information

  - To access transmission connectors, see **TRANSMISSION CONTROL MODULE (TCM)**

Fig. 4: Identifying Test Drive
Courtesy of VOLVO CARS CORPORATION

Is the function of the transmission OK?

- **YES**

  OKAY: Troubleshooting has been completed.

- **NO**

  Refer to **REPLACING THE CONTROL SYSTEM**

REPLACING THE CONTROL SYSTEM

Troubleshooting indicates an internal fault in the transmission.

Other information

- see **VALVE HOUSING**

- **Continue**

  Refer to **RESETTING ADAPTATION**

RESETTING ADAPTATION

RESETTING THE ADAPTATION AND THE COUNTER FOR "TRANSMISSION OIL, REPLACE"

HINT: The transmission has torque-regulated, adaptive pressure regulation. The pressure regulator enables the transmission to regulate pressure during each shift to prevent hard shifting. Each shift is assessed by the transmission control module (TCM) and is stored in the internal memory. This makes it possible to compensate for transmission and clutch wear. It is important that the adaptation in the memory is reset so that the transmission works normally after the repair. Because the fluid was changed

during the repair, the counter for transmission fluid change must also be reset. If the counter is not reset during draining/replacement, a diagnostic trouble code may be generated under the wrong conditions.

NOTE: This applies only if the transmission or one of the components in the transmission have been replaced.

Fig. 5: Identifying Ignition ON
Courtesy of VOLVO CARS CORPORATION

- Ignition on.

  Click on the VCT2000 symbol to reset the adaptation and counter.

  Fig. 6: Identifying VCT2000 Diagnostic Tool Symbol In VIDA
  Courtesy of VOLVO CARS CORPORATION

- **Continue**

  Refer to **VERIFICATION**

VERIFICATION

VERIFICATION

HINT: After carrying out the repair, check that the fault has been remedied.

Fig. 7: Identifying Ignition ON
Courtesy of VOLVO CARS CORPORATION

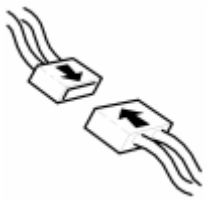

Fig. 8: Identifying Connector(s) Reinstallation
Courtesy of VOLVO CARS CORPORATION

- Ignition off.
- Reinstall the connectors, components etc.
- The gear shift position sensor for the transmission must be calibrated if the control module has been disconnected.

  HINT: Select Diagnostics/car communication in VIDA (Volvo scan tool).

- Start the engine.

  Test drive the vehicle following:**TEST DRIVE SCHEDULE, DESCRIPTION**

  Check that the transmission does not display any **obvious** function faults.

  NOTE: When test driving, the oil temperature must be above 20 °C.

Fig. 9: Identifying Test Drive
Courtesy of VOLVO CARS CORPORATION

Is the function OK?

- **YES**

  VERIFIED: Troubleshooting has been completed.

- **NO**

  Refer to **INFORMATION**

INFORMATION

FAULT-TRACING INFORMATION

The fault should have been detected and remedied. As this is not the case fault-tracing has failed.

Exit fault-tracing for this diagnostic trouble code (DTC) or make another attempt.

FAULT-TRACING INFORMATION

CHECKING THE GEAR SYSTEM

Problems that the customer may experience are hard shifts or slipping shifts. The following test-drive contains several different driving situations that may provoke these symptoms if the transmission is damaged.

NOTE: It is important that the transmission oil is above 70 °C before the test-drive starts

Test 1

1. Driving at 100 km/h, 6th gear.
2. Perform a kickdown to 4th gear.
3. Let the transmission automatically shift up to 5th gear.
4. Let up the accelerator pedal and let the transmission shift up to 6th gear.

Test 2

1. Driving at 100 km/h, 6th gear.
2. Slight uphill grade, press accelerator pedal until you obtain shifting 6-5, not kickdown.

Test 3

1. Driving at 80 km/h.
2. Move the gear selector to position M and engage 6th gear.
3. Perform a kickdown and shift 6-5, 5-4, 4-3 at the same time.
4. Then upshift immediately to 6th gear.

Test 4

1. Stationary vehicle, engine running, parking brake applied, brake activated with left foot, gear selector in position R.

2. Press down the accelerator pedal (brake still activated).

NOTE: Let up the accelerator pedal in case of noise or slipping.

Test 5

1. Stationary vehicle, engine running, parking brake applied, brake activated with left foot, gear selector in position D.
2. Press down the accelerator pedal (brake still activated).

NOTE: Let up the accelerator pedal in case of noise or slipping.

If the symptoms hard shifts or slipping shifts arise during the test-drive, the transmission's control system must be replaced.

Other information

- see **CONTROL SYSTEMS**

Is the function OK?

- **YES**

  Refer to **CHECKING FOR CONTACT RESISTANCE AND OXIDATION**

- **NO**

  Refer to **REPLACING THE CONTROL SYSTEM**

TCM-P089500: SHIFT TIME TOO SHORT. GENERAL FAILURE INFORMATION. NO SUB TYPE INFORMATION (B6324S5, TF-80SC; B6324S5, TF-80SC AWD; 2011-2012)

DIAGNOSTIC TROUBLE CODE (DTC) INFORMATION TCM-P089500

see **DIAGNOSTIC TROUBLE CODE (DTC) INFORMATION TCM-P089500**

FAULT-TRACING

see **FAULT-TRACING**

TCM-P089500: GEAR CHANGE TIME TOO SHORT. GENERAL FAULT INFORMATION. NO INFORMATION ON FAULT TYPE (B8444S, TF-80SC AWD; 2006-2011)

DIAGNOSTIC TROUBLE CODE (DTC) INFORMATION TCM-P089500

Condition

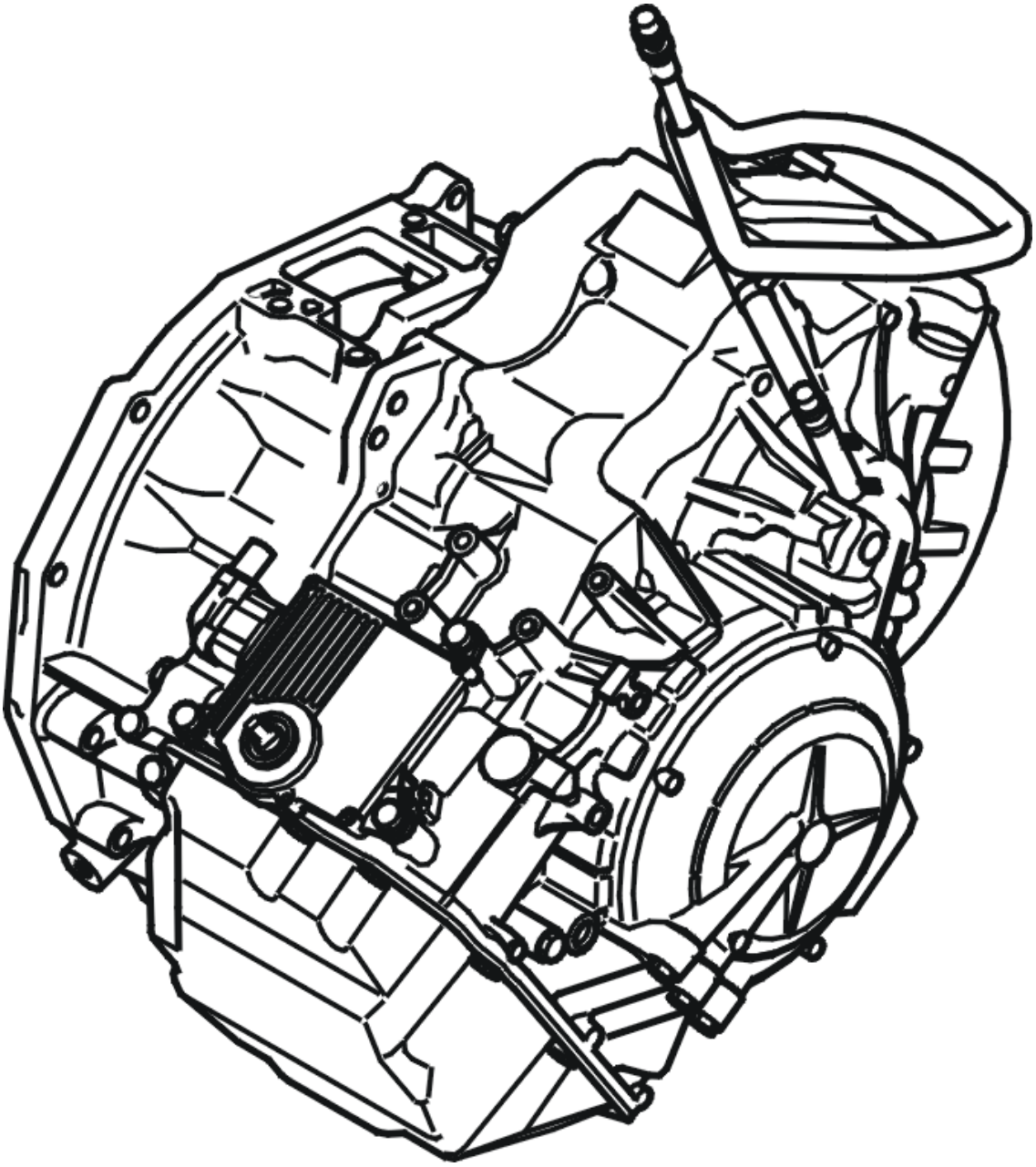

Fig. 10: Identifying Transmission
Courtesy of VOLVO CARS CORPORATION

The transmission gear changes and the lock-up function are regulated by the transmission control module (TCM) activating solenoids in specific patterns. Depending on the gear the control module has selected, the shift solenoids S1-S2activated. The control module then adapts the engagement by controlling the hydraulic pressure linearly using the linear solenoids SLT, SLU, SLC1, SLC2, SLC3 and SLB1. The basic parameters for the different shifting points are the accelerator pedal position and the vehicle speed, while the shifting quality is

determined by the torque control. By reading off the changes in gearbox input shafts speed while the gear is being changed and compared with the calculated values in the transmission control module (TCM), the pressure application of the clutches and breaks can be adapted.

If the transmission control module (TCM) registers that the time between gear changes is too short, the diagnostic trouble code (DTC) is generated.

The diagnostic trouble code (DTC) can be diagnosed when driving normally.

Substitute Value

- Auxiliary program **Emergency mode 1** in the transmission control module (TCM) has started.

  HINT: EMERGENCY MODE IN CASE OF MALFUNCTION

Possible Source

- Mechanical fault in gearbox.
- Hydraulic fault in gearbox.

Fault symptom[s]

- General warning lamp lit
- Vibration or jerkiness when changing gear.
- Harsh gear changing
- Abnormal slipping gearshifts

FAULT TRACING

CHECKS

CHECKING THE DIAGNOSTIC TROUBLE CODES (DTCS)

Any other diagnostic trouble codes (DTCs) for the transmission control module (TCM) must be remedied first because one of them may have caused diagnostic trouble code (DTC) TCM-089500 or TCM-P089600 to be stored.

Were other diagnostic trouble codes (DTCs) stored?

- **YES**

  OKAY: Troubleshooting has been completed.

- **NO**

  Refer to **FAULT-TRACING INFORMATION**

CHECK CONTACT RESISTANCE AND OXIDATION

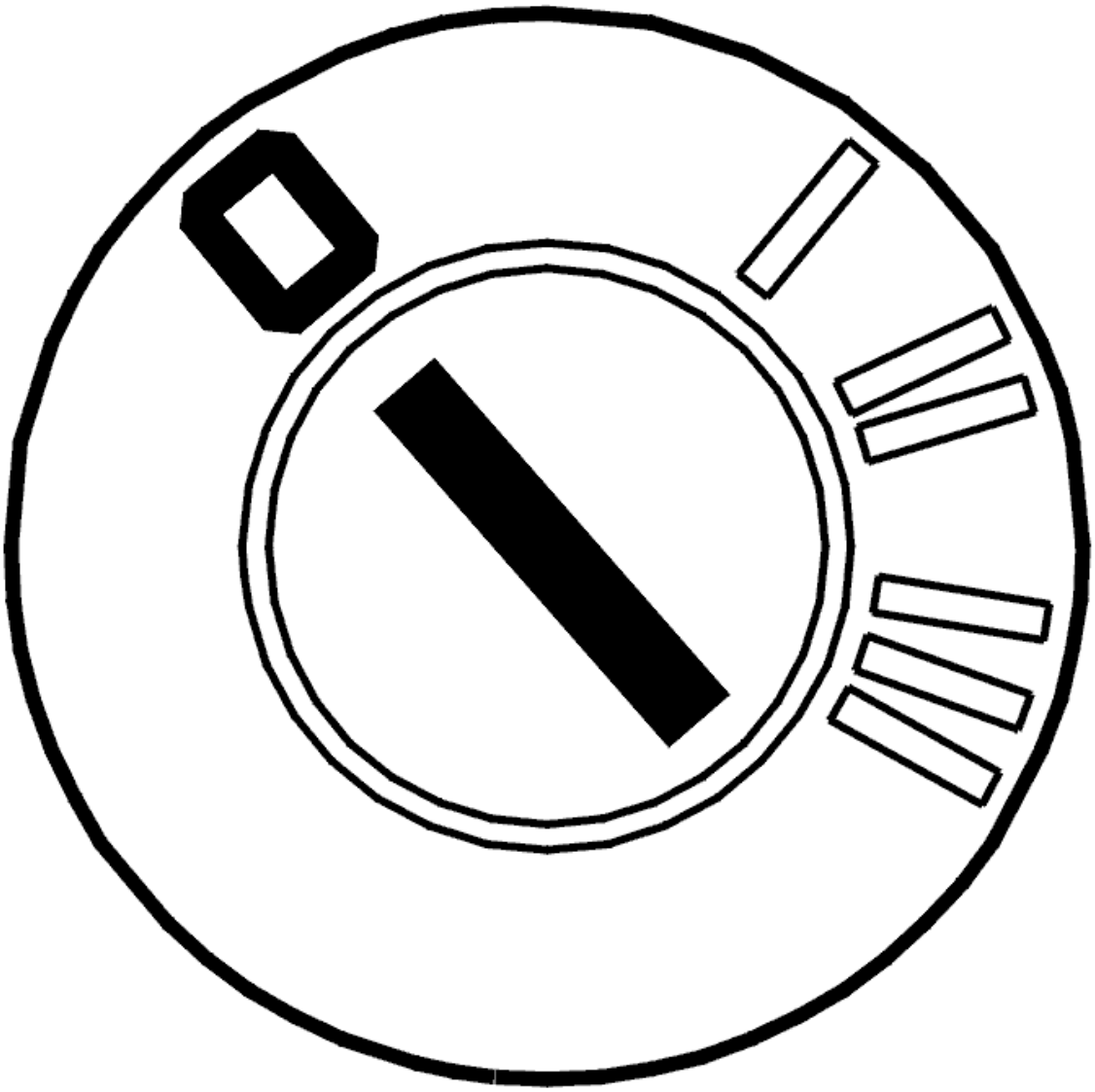

Fig. 11: Identifying Ignition OFF
Courtesy of VOLVO CARS CORPORATION

- Ignition off
- Check the connectors of the transmission and the connector for the transmission control module (TCM). Check for contact resistance and oxidation.
- Reconnect the connectors, components, etc.
- Calibrate the gear shift position sensor for the transmission.

  HINT: Save a bookmark. Cancel fault-tracing and select car communication in VIDA (Volvo scan tool).

- Test drive the vehicle following: **TEST DRIVE SCHEDULE, DESCRIPTION**

Check for any clearly audible noises from the gearbox. Check for malfunctions.

Other information

- To access transmission connectors: **TRANSMISSION CONTROL MODULE (TCM), REPLACING**

Is the transmission function OK?

- **YES**

  OKAY: Troubleshooting has been completed.

- **NO**

  Refer to **REPLACING THE CONTROL SYSTEM**

REPLACING THE CONTROL SYSTEM

Fault-tracing indicates an internal fault in the transmission.

Other information

- see **CONTROL SYSTEM, REPLACING**

- **Continue**

  Refer to **RESETTING ADAPTATION**

RESETTING ADAPTATION

RESETTING ADAPTATION AND COUNTER FOR "TRANSMISSION OIL, CHANGING"

HINT: The transmission has torque-controlled, adaptive pressure control. The pressure control means that the transmission itself controls the pressure during each shift sequence in order to avoid harsh shifting. Each shift is assessed by the transmission control module (TCM) and is stored in the internal memory, which results in compensation for wear in the transmission and clutch. In order for the transmission to function correctly after repair, it is important to reset the adaptation in the memory. Since the oil is changed during the repair, the counter for "Transmission oil, change" shall also be reset. If the counter is not reset when draining/changing oil, there is a risk that a diagnostic trouble code may be generated under incorrect conditions.

NOTE: **This applies only if the transmission or one of the components in the transmission have been replaced.**

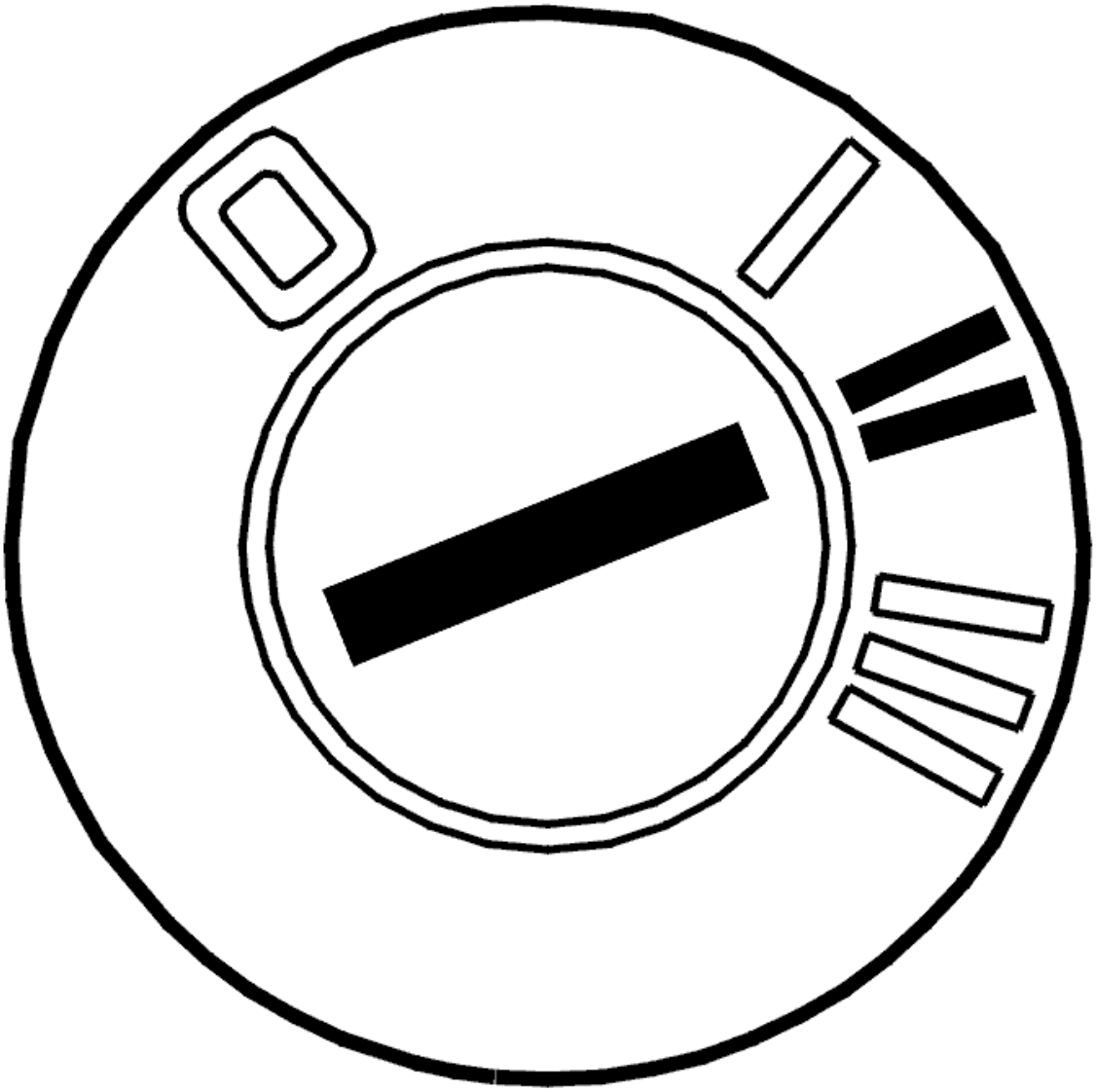

Fig. 12: Identifying Ignition ON
Courtesy of VOLVO CARS CORPORATION

- Ignition on

  Activate reset of the adaptation and the counter by clicking on the symbol for VCT2000.

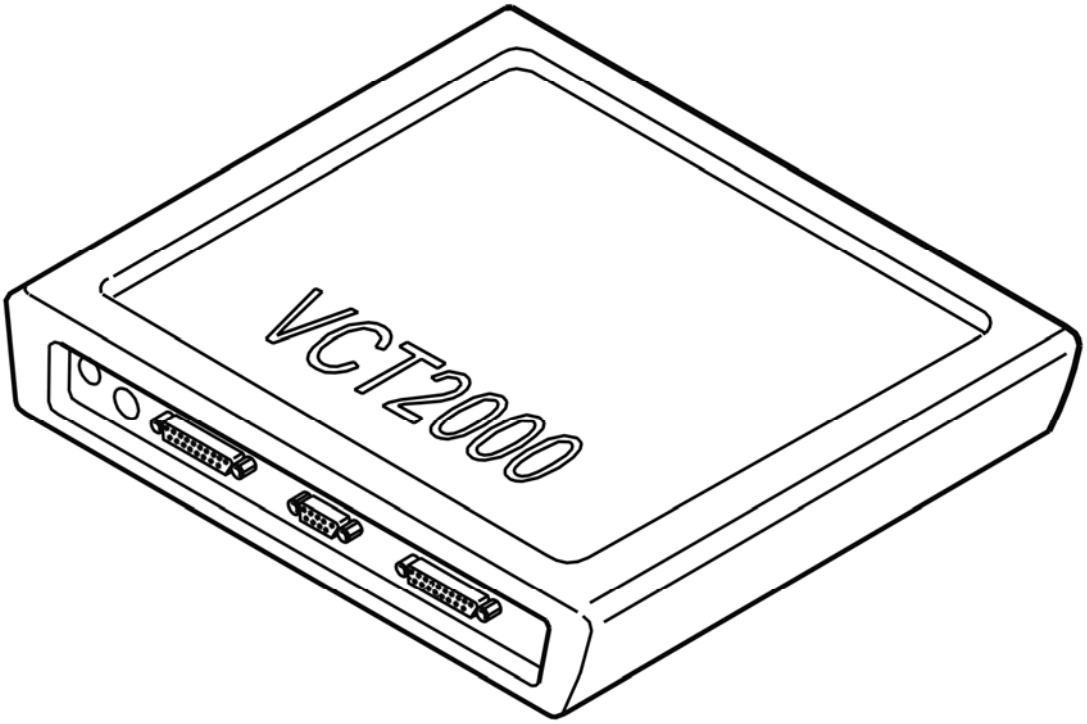

Fig. 13: Identifying VCT2000 Diagnostic Tool Symbol In VIDA
Courtesy of VOLVO CARS CORPORATION

- **Continue**

  Refer to **VERIFICATION**

VERIFICATION

VERIFICATION

HINT: After carrying out the repair, check that the fault has been remedied.

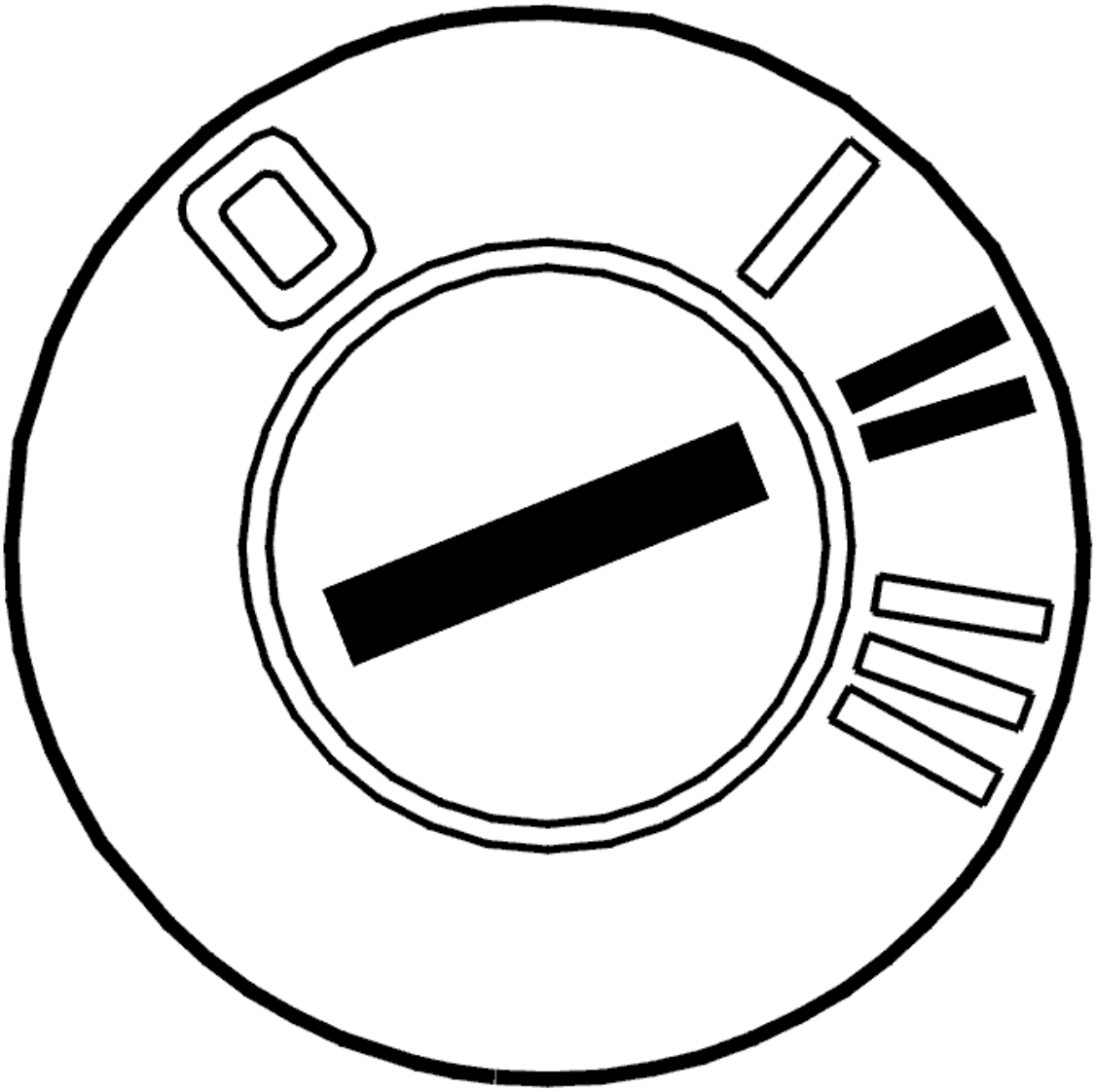

Fig. 14: Identifying Ignition ON
Courtesy of VOLVO CARS CORPORATION

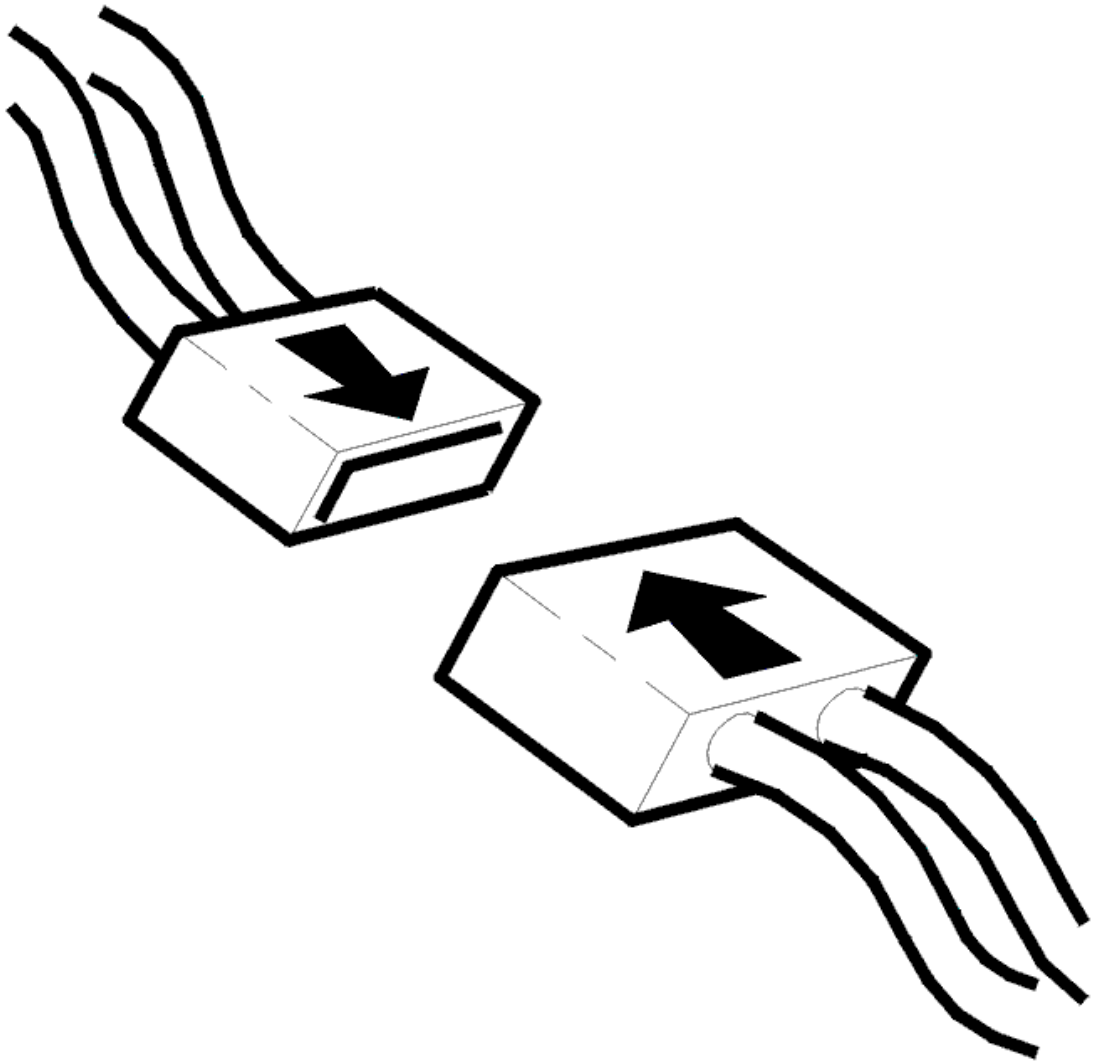

Fig. 15: Identifying Connector(s) Reinstallation
Courtesy of VOLVO CARS CORPORATION

- Ignition off
- Reinstall the components, reconnect the connectors etc.
- The gear shift position sensor for the transmission must be calibrated if the control module has been disconnected.

  HINT: Save a bookmark. Cancel fault-tracing and select Vehicle communication in VIDA (Volvo scan tool).

- Start the engine.

  Test drive the vehicle following: **TEST DRIVE SCHEDULE, DESCRIPTION**

Check that the transmission does not display any **obvious** function faults.

NOTE: When test driving, the oil temperature must be above 20 °C.

Is the function OK?

- **YES**

  VERIFIED: Troubleshooting has been completed.

- **NO**

  Refer to **INFORMATION**

INFORMATION

FAULT-TRACING INFORMATION

The fault should have been detected and remedied. As this is not the case fault-tracing has failed.

Exit fault-tracing for this diagnostic trouble code (DTC) or make another attempt.

FAULT-TRACING INFORMATION

CHECKING THE GEAR SYSTEM

Problems that the customer may experience are hard shifts or slipping shifts. The following test-drive contains several different driving situations that may provoke these symptoms if the transmission is damaged.

NOTE: It is important that the transmission oil is above 70 °C before the test-drive starts

Test 1

1. Driving at 100 km/h, 6th gear.
2. Perform a kickdown to 4th gear.
3. Let the transmission automatically shift up to 5th gear.
4. Let up the accelerator pedal and let the transmission shift up to 6th gear.

Test 2

1. Driving at 100 km/h, 6th gear.
2. Slight uphill grade, press accelerator pedal until you obtain shifting 6-5, not kickdown.

Test 3

1. Driving at 80 km/h.
2. Move the gear selector to position M and engage 6th gear.
3. Perform a kickdown and shift 6-5, 5-4, 4-3 at the same time.
4. Then upshift immediately to 6th gear.

Test 4

1. Stationary vehicle, engine running, parking brake applied, brake activated with left foot, gear selector in position R.
2. Press down the accelerator pedal (brake still activated).

NOTE: Let up the accelerator pedal in case of noise or slipping.

Test 5

1. Stationary vehicle, engine running, parking brake applied, brake activated with left foot, gear selector in position D.
2. Press down the accelerator pedal (brake still activated).

NOTE: Let up the accelerator pedal in case of noise or slipping.

If the symptoms hard shifts or slipping shifts arise during the test-drive, the transmission's control system must be replaced.

Other information

- see **CONTROL SYSTEM, REPLACING**

Is the function OK?

- **YES**

  Refer to **CHECK CONTACT RESISTANCE AND OXIDATION**

- **NO**

  Refer to **REPLACING THE CONTROL SYSTEM**

TCM-P089500: GEAR CHANGE TIME TOO SHORT. GENERAL FAULT INFORMATION. NO INFORMATION ON FAULT TYPE (TF-80SC AWD; 2005)

DIAGNOSTIC TROUBLE CODE (DTC) INFORMATION TCM-P089500

see **DIAGNOSTIC TROUBLE CODE (DTC) INFORMATION TCM-P089500**

FAULT TRACING

see **FAULT TRACING**

TCM-P089600: SHIFT TIME TOO LONG. GENERAL FAILURE INFORMATION. NO SUB TYPE INFORMATION (B6324S, TF-80SC; B6324S, TF-80SC AWD; 2007-2010)

DIAGNOSTIC TROUBLE CODE (DTC) INFORMATION TCM-P089600

Condition

Transmission shifting and the lock-up function are controlled by the transmission control module (TCM) activating the solenoids in a specific pattern. Shift solenoids S1-S2 are activated depending on which gear the control module has chosen. The control module then adjusts how engagement occurs by controlling the hydraulic pressure linearly via linear solenoids SLT, SLU, SLC1, SLC2, SLC3 and SLB1. The basic parameters for the various gear shifting points are the position of the accelerator pedal (AP) and the vehicle speed, while the shifting quality is determined with the aid of the torque control. By reading off the changes in engine speed (RPM) on the transmission input shaft during the shifting process and comparing with the values calculated in the transmission control module (TCM), the pressurization of clutches and brakes can be adapted.

The diagnostic trouble code (DTC) is stored if the control module detects that:

- Too much time between shifts.

The control module's test for the diagnostic trouble code (DTC) starts in the event of:

- Normal driving.

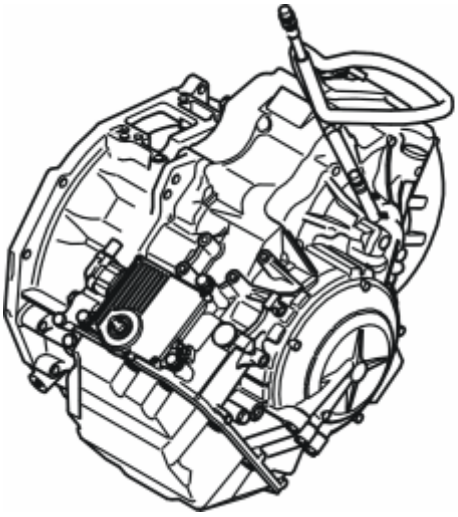

Fig. 16: Identifying Transmission
Courtesy of VOLVO CARS CORPORATION

Substitute Value

- Auxiliary program **Emergency mode 1** in the transmission control module (TCM) has started.

  HINT: EMERGENCY MODE IN THE EVENT OF A FAULT

Possible Source

- Mechanical fault in the transmission.
- Hydraulic fault in the transmission.

Fault symptom[s]

- General warning lamp lit
- Vibration and jerking when shifting
- Rough gear shift
- Abnormal slipping gearshifts

FAULT-TRACING

see **FAULT-TRACING**

TCM-P089600: SHIFT TIME TOO LONG. GENERAL FAILURE INFORMATION. NO SUB TYPE INFORMATION (B6324S5, TF-80SC; B6324S5, TF-80SC AWD; 2011-2012)

DIAGNOSTIC TROUBLE CODE (DTC) INFORMATION TCM-P089600

see **DIAGNOSTIC TROUBLE CODE (DTC) INFORMATION TCM-P089600**

FAULT-TRACING

see **FAULT-TRACING**

TCM-P089600: GEAR CHANGE TIMES TOO LONG. GENERAL FAULT INFORMATION. NO INFORMATION ON FAULT TYPE (B8444S, TF-80SC AWD; 2006-2011)

DIAGNOSTIC TROUBLE CODE (DTC) INFORMATION TCM-P089600

Condition

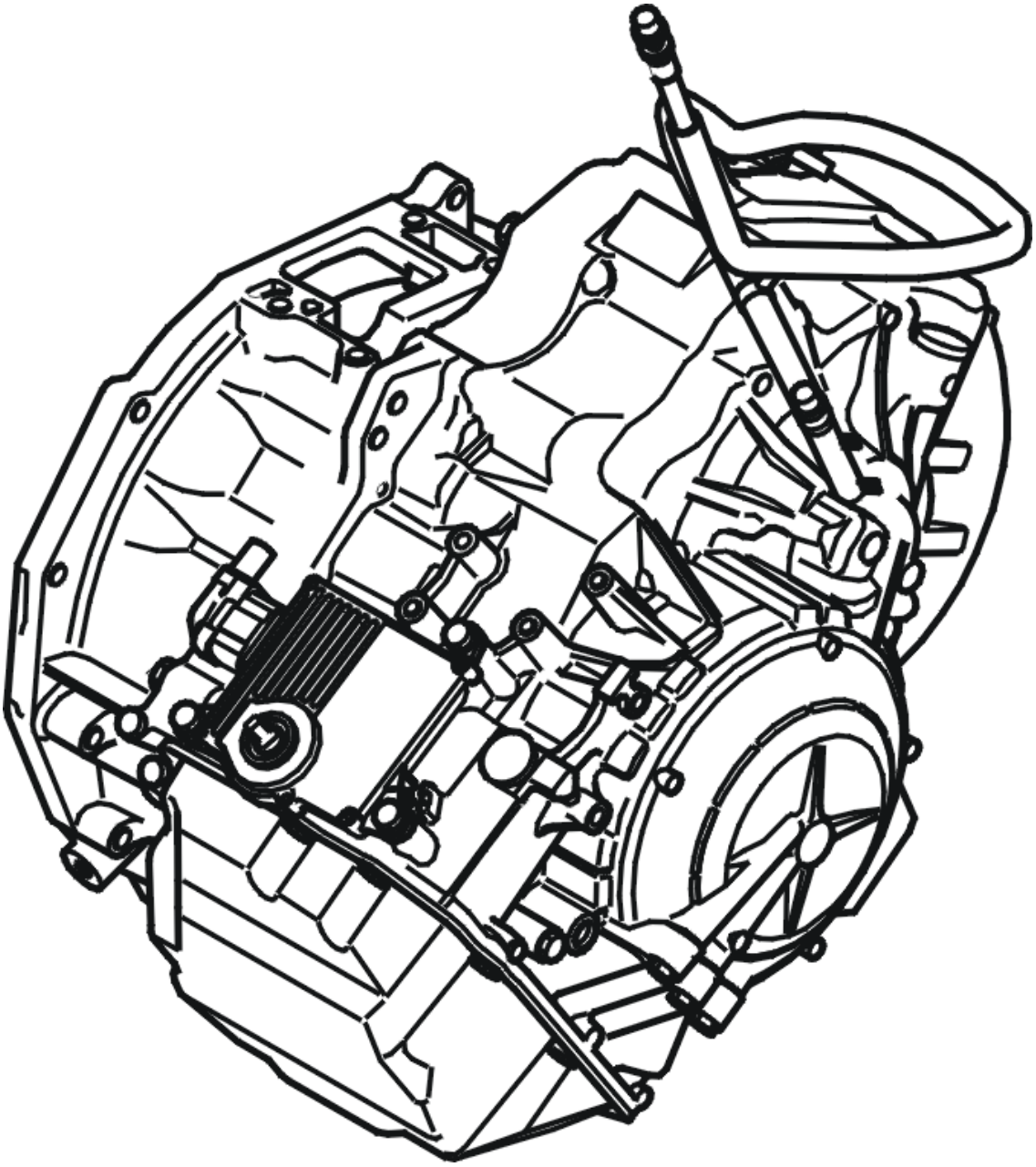

Fig. 17: Identifying Transmission
Courtesy of VOLVO CARS CORPORATION

The transmission gear changes and the lock-up function are regulated by the transmission control module (TCM) activating solenoids in specific patterns. Depending on the gear the control module has selected, the shift solenoids S1-S2activated. The control module then adapts the engagement by controlling the hydraulic pressure linearly using the linear solenoids SLT, SLU, SLC1, SLC2, SLC3 and SLB1. The basic parameters for the different shifting points are the accelerator pedal position and the vehicle speed, while the shifting quality is determined by the torque control. By reading off the changes in gearbox input shafts speed while the gear is being changed and compared with the calculated values in the transmission control module (TCM), the pressure application of the clutches and breaks can be adapted.

If the transmission control module (TCM) registers that the time between gear changes is too long, the diagnostic trouble code (DTC) is generated.

The diagnostic trouble code (DTC) can be diagnosed when driving normally.

Substitute Value

- Auxiliary program **Emergency mode 1** in the transmission control module (TCM) has started.

  HINT: EMERGENCY MODE IN CASE OF MALFUNCTION

Possible Source

- Mechanical fault in gearbox.
- Hydraulic fault in gearbox.

Fault symptom[s]

- General warning lamp lit
- Vibration or jerkiness when changing gear.
- Harsh gear changing
- Abnormal slipping gearshifts

FAULT TRACING

see **FAULT TRACING**

TCM-P089600: GEAR CHANGE TIMES TOO LONG. GENERAL FAULT INFORMATION. NO INFORMATION ON FAULT TYPE (TF-80SC AWD; 2005)

DIAGNOSTIC TROUBLE CODE (DTC) INFORMATION TCM-P089600

see **DIAGNOSTIC TROUBLE CODE (DTC) INFORMATION TCM-P089600**

FAULT TRACING

see **FAULT TRACING**

TCM-P089709: TRANSMISSION FLUID DETERIORATED. GENERAL FAILURE INFORMATION. COMPONENT FAILURES (B6324S, TF-80SC; B6324S, TF-80SC AWD; 2007-2010)

DIAGNOSTIC TROUBLE CODE (DTC) INFORMATION TCM-P089709

Condition

The oil temperature sensor provides the Transmission control module (TCM) with a signal that is used, among other things, for the temperature controlled lock-up and engagement high temperature program functions. The sensor has an NTC (negative temperature coefficient) resistor. The signal (voltage) decreases with increasing oil temperature.

The diagnostic trouble code (DTC) is stored if the control module detects that:

- The transmission is subjected to a very hard load for a long period of time.

The time that is required to store the diagnostic trouble code (DTC) is greatly temperature-dependent, and only oil temperatures above 100 °C will affect this diagnostic trouble code (DTC).

The control module's test for the diagnostic trouble code (DTC) starts in the event of:

- Ignition on.

NOTE: The control module can only detect the fault once the test has been started and the diagnostic trouble code (DTC) is stored when the conditions are met.

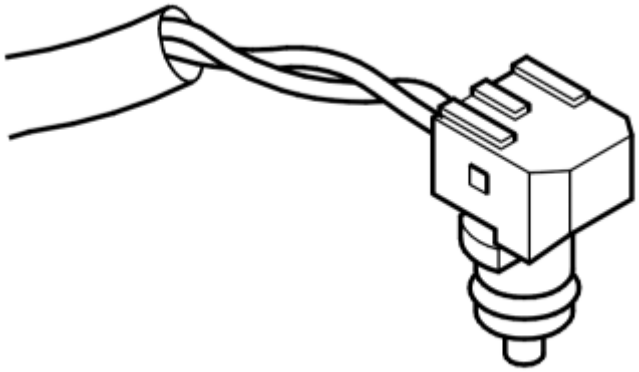

Fig. 18: Identifying The Transmission Oil Temperature Sensor
Courtesy of VOLVO CARS CORPORATION

Substitute Value

- Transmission control module (TCM) assumes an oil temperature of 80 °C.

Possible Source

- Short-circuit to ground in the signal cable.
- Transmission fluid temperature sensor not working.
- The transmission has been exposed to extreme load and high ambient temperature.

Fault symptom[s]

- General warning lamp lit

FAULT-TRACING

CHECKS

CHECKING OIL TEMPERATURE

Fig. 19: Identifying Ignition ON
Courtesy of VOLVO CARS CORPORATION

- Ignition on.
- Read off the oil temperature.

  Check that the oil temperature is within its permitted range. Compare it to the automatic transmission temperature.

  NOTE: The transmission temperature sensor is inside the control system and may be affected by the heat given off by the solenoids.

Fig. 20: Identifying VCT2000 Diagnostic Tool Symbol In VIDA
Courtesy of VOLVO CARS CORPORATION

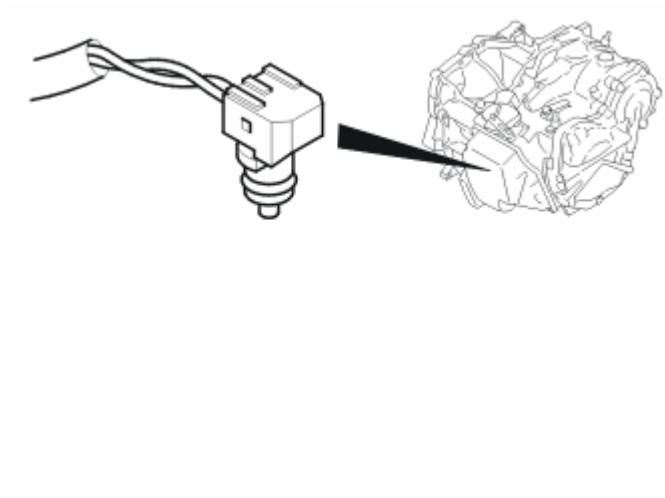

Fig. 21: Locating Oil Temperature Sensor
Courtesy of VOLVO CARS CORPORATION

Is the temperature reading OK?

- **YES**

  Refer to **CHECKING THE WIRING AND COMPONENT**

- **NO**

  Refer to **CHECKING THE COMPONENTS AND WIRING**

CHECKING THE COMPONENTS AND WIRING

Fig. 22: Identifying Ignition OFF
Courtesy of VOLVO CARS CORPORATION

- Open the transmission control system.

  Check the signal cable between the oil temperature sensor in the transmission and transmission control module (TCM) terminal #B8 (#B8). Check for a short circuit to ground.

  Remedy as necessary.

  Other information

- see **CONNECTING THE BREAKOUT BOX**
- see **SIGNAL SPECIFICATION**
- see **COVER CONTROL SYSTEM, REPLACING**
- see **CHECKING WIRING AND TERMINALS**

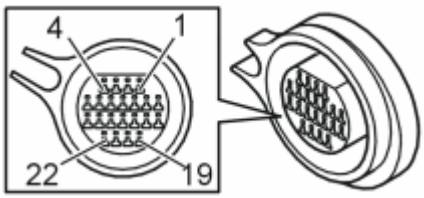

Fig. 23: Identifying Connector B Terminals
Courtesy of VOLVO CARS CORPORATION

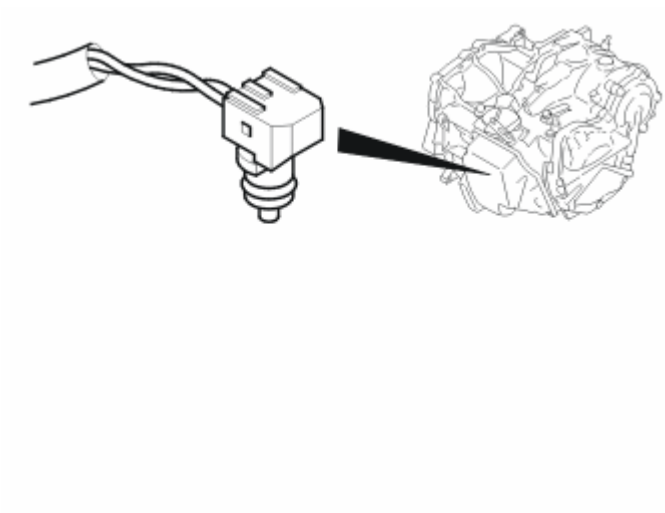

Fig. 24: Locating Oil Temperature Sensor
Courtesy of VOLVO CARS CORPORATION

- **Continue**

  Refer to **VERIFICATION**

CHECKING THE WIRING AND COMPONENT

The probable cause of the diagnostic trouble code (DTC) was the transmission being subjected to high loads and high temperatures. It is therefore important to change transmission fluid and to check the function of the transmission.

HINT: If no fault is found check the oil temperature sensor. See CHECKING INTERNAL COMPONENTS OF THE TRANSMISSION

Other information

- see **TRANSAXLE OIL**

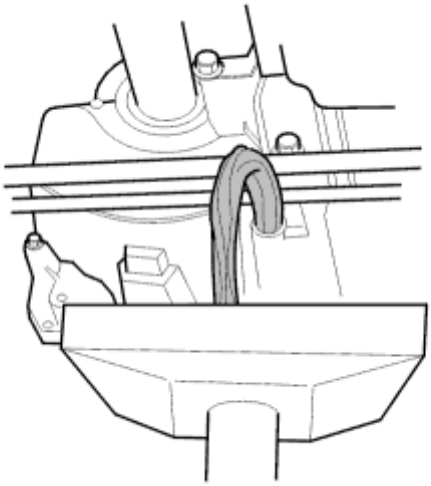

Fig. 25: Draining Off Oil
Courtesy of VOLVO CARS CORPORATION

- **Continue**

  Refer to **RESETTING THE "TRANSMISSION FLUID CHANGE" COUNTER**

TEST DRIVING

Test drive the vehicle following:**TEST DRIVE SCHEDULE, DESCRIPTION**

Are there any mechanical faults in the transmission?

- **YES**

  Refer to **FAULT-TRACING INFORMATION**

- **NO**

  OKAY: Troubleshooting has been completed.

FAULT-TRACING INFORMATION

Exit the current fault-tracing. Add mechanical symptoms to the symptoms list. Fault-trace the symptoms.

VERIFICATION

VERIFICATION

HINT: After carrying out the repair, check that the fault has been remedied.

Fig. 26: Identifying Ignition ON
Courtesy of VOLVO CARS CORPORATION

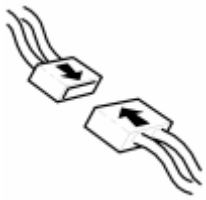

Fig. 27: Identifying Connector(s) Reinstallation
Courtesy of VOLVO CARS CORPORATION

- Ignition off.
- Reinstall the connectors, components etc.
- Ignition on.
- Start the engine. Allow the engine to idle.
- Read off the oil temperature.

  Check that the oil temperature is within its permitted range. Compare it to the automatic transmission temperature.

  NOTE: The transmission temperature sensor is inside the control system and may be affected by the heat given off by the solenoids.

Fig. 28: Identifying VCT2000 Diagnostic Tool Symbol In VIDA
Courtesy of VOLVO CARS CORPORATION

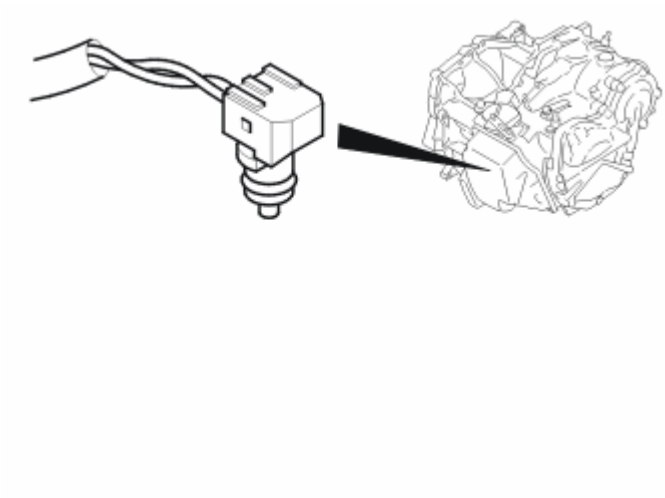

Fig. 29: Locating Oil Temperature Sensor
Courtesy of VOLVO CARS CORPORATION

Is the temperature reading OK?

- **YES**

  VERIFIED: Troubleshooting has been completed.

- **NO**

  Refer to **INFORMATION**

INFORMATION

FAULT-TRACING INFORMATION

The fault should have been detected and remedied. As this is not the case fault-tracing has failed.

Exit fault-tracing for this diagnostic trouble code (DTC) or make another attempt.

RESETTING THE "TRANSMISSION FLUID CHANGE" COUNTER

CHECKING THE FUNCTION

HINT: The transmission control module (TCM) has a counter for fluid quality that counts the number of times the transmission is subjected to too hard a load or too high an ambient temperature. If the counter is not reset during draining/replacement, there is a risk that a diagnostic trouble code will be set under the wrong conditions. Thus, it is important that the counter for transmission fluid change be reset.

NOTE: **This only applies when the transmission oil is changed and when the oil is changed during repairs to the transmission's temperature sensor.**

Fig. 30: Identifying Ignition ON
Courtesy of VOLVO CARS CORPORATION

- Ignition on.

  Click on the VCT2000 symbol to reset the counter.

  Fig. 31: Identifying VCT2000 Diagnostic Tool Symbol In VIDA
  Courtesy of VOLVO CARS CORPORATION

- **Continue**

  Refer to **TEST DRIVING**

TEMPERATURE SENSOR FLUID, TRANSAXLE, (TFT)

The temperature sensor is a part of the control system's cable harness.

Replace the control system's wiring harness. See **TRANSMISSION CONTROL UNIT WIRING HARNESS** .

To install, reverse the removal procedure

TCM-P089709: TRANSMISSION FLUID DETERIORATED. GENERAL FAILURE INFORMATION. COMPONENT FAILURES (B6324S5, TF-80SC; B6324S5, TF-80SC AWD; 2011-2012)

DIAGNOSTIC TROUBLE CODE (DTC) INFORMATION TCM-P089709

see **DIAGNOSTIC TROUBLE CODE (DTC) INFORMATION TCM-P089709**

FAULT-TRACING

see **FAULT-TRACING**

TCM-P089709: TRANSMISSION FLUID EXPENDED. GENERAL FAULT INFORMATION. COMPONENT DEFECT (B8444S, TF-80SC AWD; 2006-2011)

DIAGNOSTIC TROUBLE CODE (DTC) INFORMATION TCM-P089709

Condition

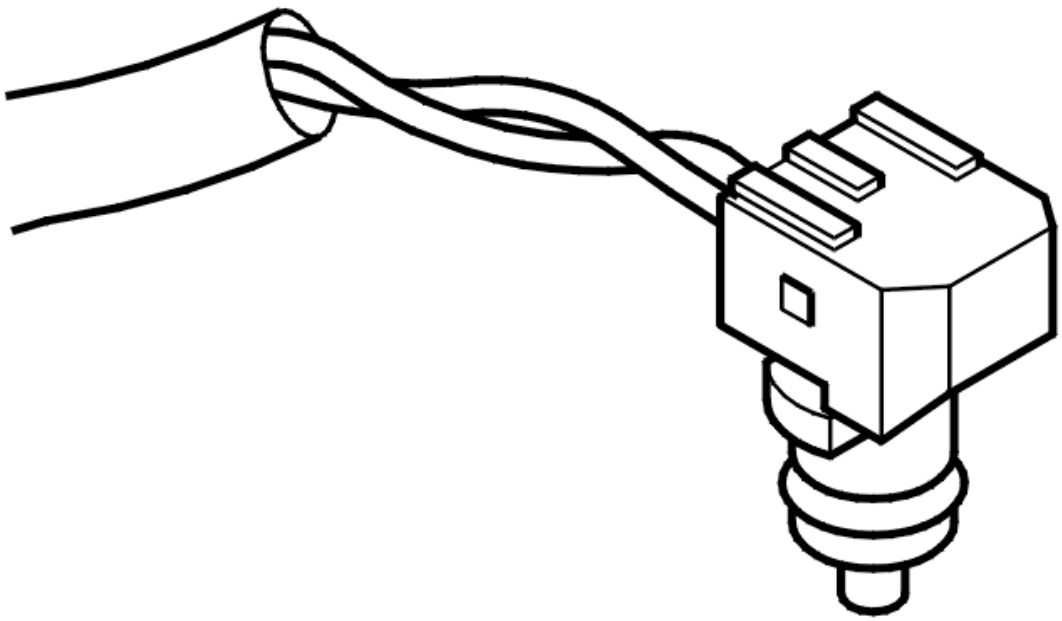

Fig. 32: Identifying Oil Temperature Sensor
Courtesy of VOLVO CARS CORPORATION

The oil temperature sensor gives the transmission control module (TCM) a signal used for the temperature controlled lock-up function and for engaging the high-temperature program. The sensor has a temperature sensitive resistor with negative temperature coefficient (NTC). The signal (voltage) drops as the oil temperature increases.

If the transmission is exerted to very hard strain for long periods, the diagnostic trouble code (DTC) is generated. The time it takes to generate the diagnostic trouble code (DTC) is greatly temperature dependent and only a fluid temperature above 100 °C will have an impact on the quality of the transmission fluid.

The diagnostic trouble code can be diagnosed when the ignition is on.

Substitute Value

- Transmission control module (TCM) assumes an oil temperature of 80 °C.

Possible Source

- The signal cable is short-circuited to ground.
- Transmission fluid temperature sensor not working.
- The transmission has been exerted to very hard strain and high ambient temperatures.

Fault symptom[s]

- General warning lamp lit

FAULT TRACING TCM-P089709

CHECKS

CHECKING THE OIL TEMPERATURE

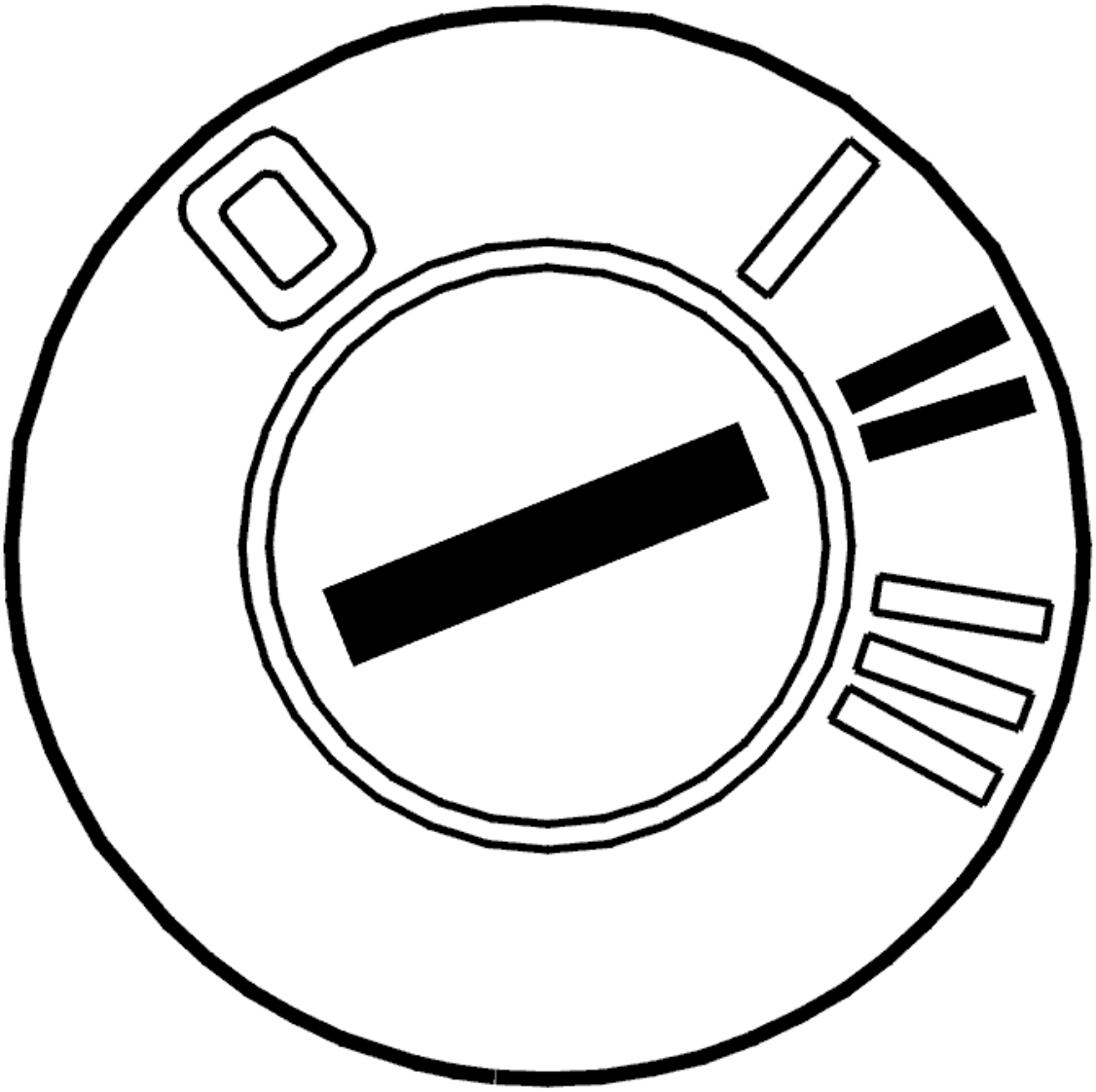

Fig. 33: Identifying Ignition ON
Courtesy of VOLVO CARS CORPORATION

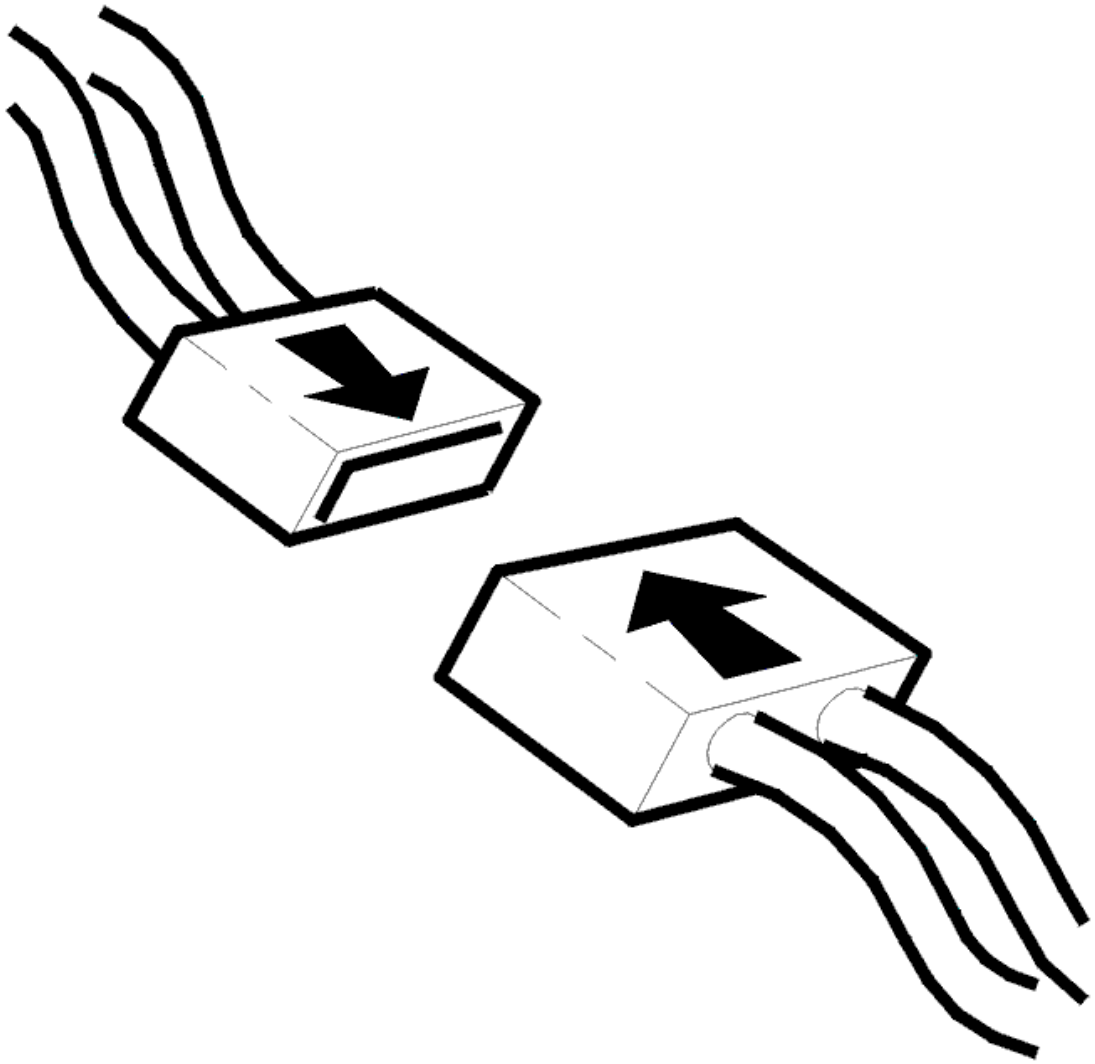

Fig. 34: Identifying Connector(s) Reinstallation
Courtesy of VOLVO CARS CORPORATION

- Ignition on
- Read the oil temperature for the transmission control module (TCM).

  Check that oil temperature is within the permitted range. Compare with the temperature of the automatic transmission.

  NOTE: The transmission temperature sensor is located inside the control system and may be affected by the heat given off by the solenoids.

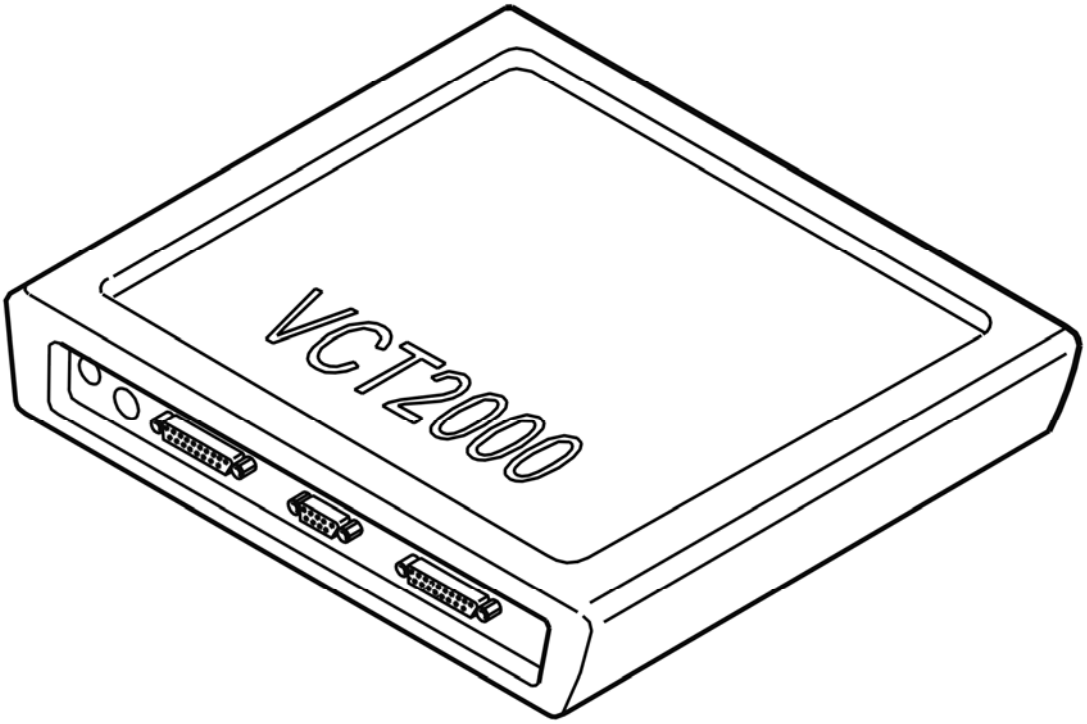

Fig. 35: Identifying VCT2000 Diagnostic Tool Symbol In VIDA
Courtesy of VOLVO CARS CORPORATION

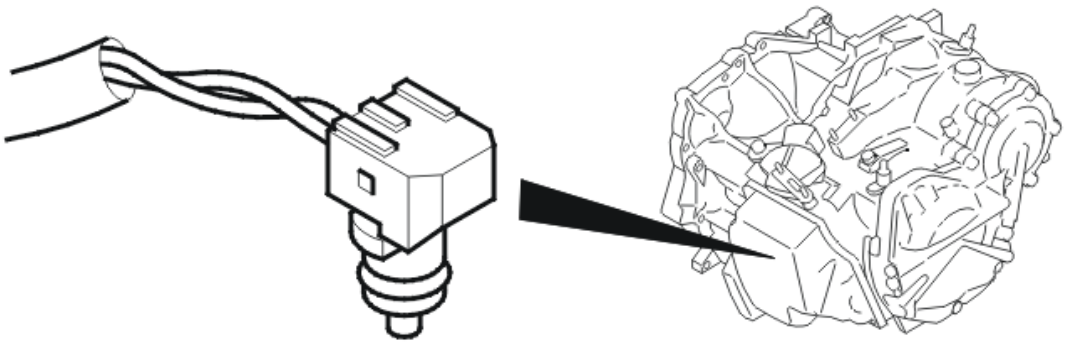

Fig. 36: Identifying Oil Temperature Sensor
Courtesy of VOLVO CARS CORPORATION

Is the temperature OK?

- **YES**

  Refer to **CHECKING THE WIRING AND COMPONENT**

- **NO**

  Refer to **CHECKING THE WIRING AND COMPONENT**

CHECKING THE WIRING AND COMPONENT

The diagnostic trouble code (DTC) has probably been caused by the transmission being put under very high load and high ambient temperature. It is important that the oil is replaced and that the transmission function is tested.

HINT: If no fault is found check the oil temperature sensor. See CHECKING THE OIL TEMPERATURE SENSOR

Other information

- see **TRANSMISSION FLUID, CHANGING**

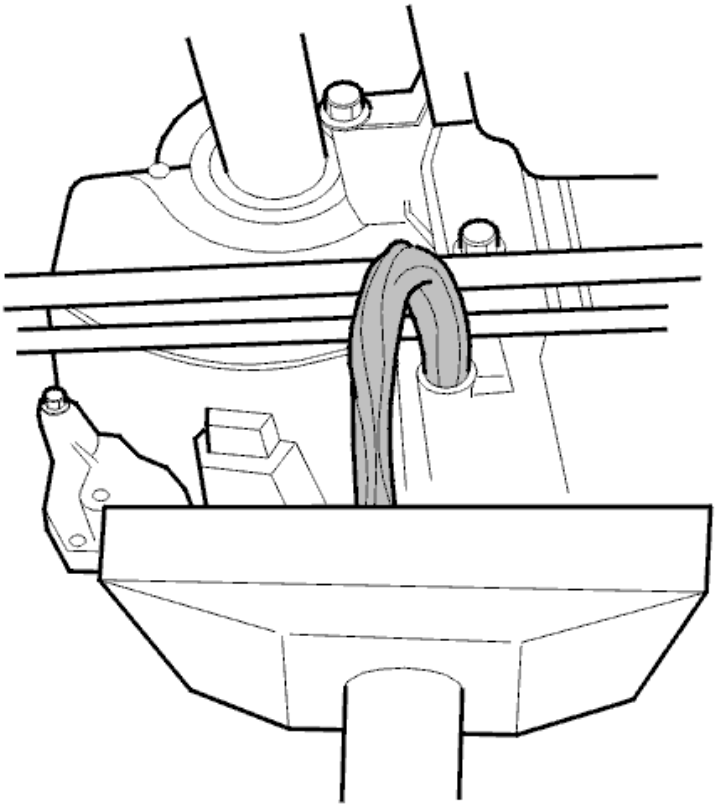

Fig. 37: Draining Off Oil
Courtesy of VOLVO CARS CORPORATION

- **Continue**

  Refer to **RESETTING THE COUNTER FOR TRANSMISSION OIL, CHANGE**

TEST DRIVING

Test drive the vehicle following: **TEST DRIVE SCHEDULE, DESCRIPTION**

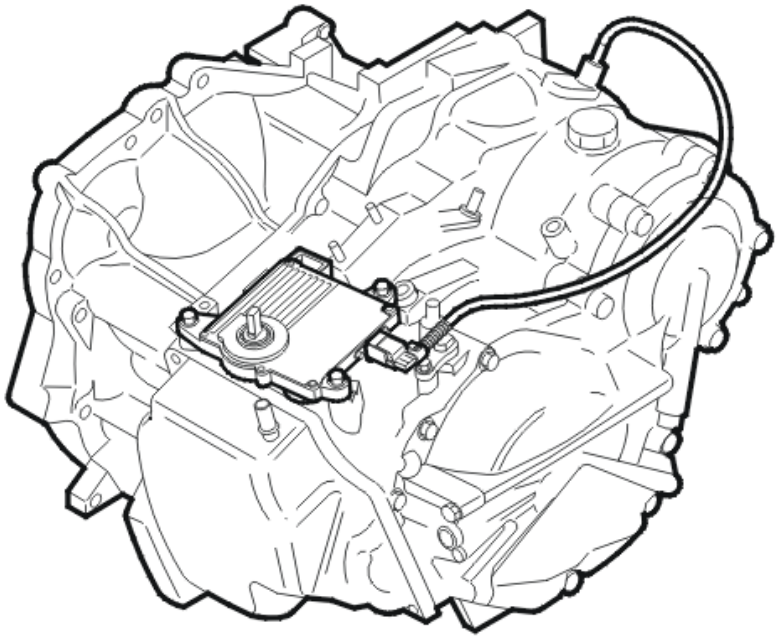

Fig. 38: Identifying Transmission Control Module
Courtesy of VOLVO CARS CORPORATION

Has the transmission displayed any mechanical faults?

- **YES**

  Refer to **FAULT-TRACING INFORMATION**

- **NO**

  OKAY: Troubleshooting has been completed.

FAULT-TRACING INFORMATION

Cancel the fault tracing in progress. Add the mechanical symptoms to the symptom list and fault trace the symptoms.

CHECKING THE WIRING AND COMPONENT

- Open the gearbox control system

  Check the signal cable between the oil temperature sensor in the transmission and transmission control module (TCM) terminal #B8 (#B8). Check for a short circuit to ground.

  Remedy as necessary

  Other information:

  - see **CONNECTING THE BREAKOUT BOX**
  - see **SIGNAL DESCRIPTION**
  - see **COVER CONTROL SYSTEM, REPLACING (2007-2011)**
  - see **CONTENTS**

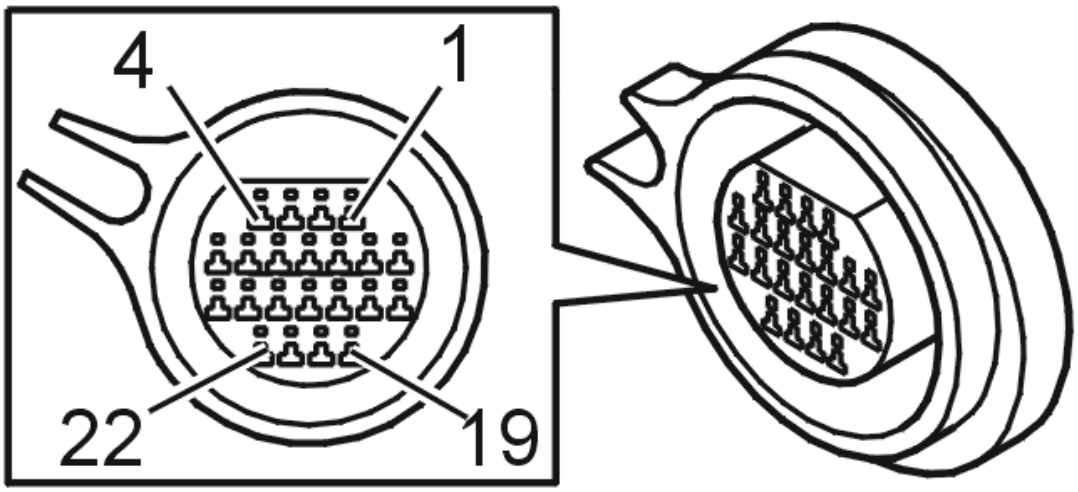

Fig. 39: Identifying Connector B Terminals
Courtesy of VOLVO CARS CORPORATION

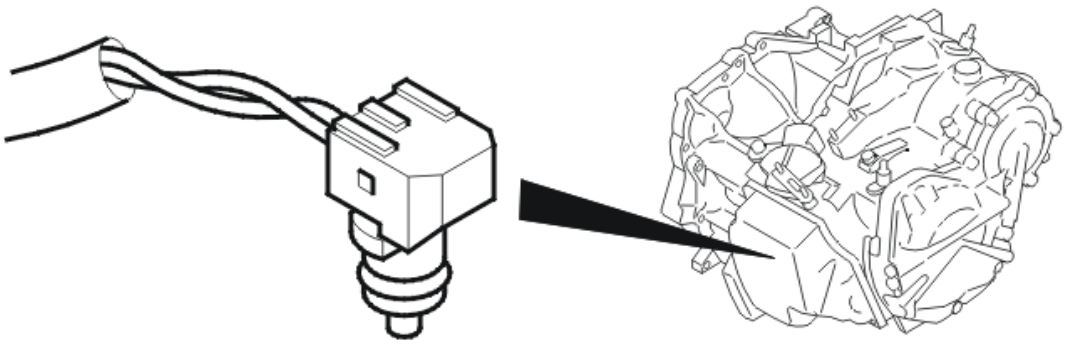

Fig. 40: Identifying Oil Temperature Sensor
Courtesy of VOLVO CARS CORPORATION

- **Continue**

  Refer to **VERIFICATION**

RESETTING THE COUNTER FOR TRANSMISSION OIL, CHANGE

RESETTING THE COUNTER FOR TRANSMISSION OIL, CHANGE

HINT: The transmission control module (TCM) has a counter for the oil's quality that counts up when the transmission is exposed to very heavy loads or high ambient temperature. If the counter is not reset when draining/changing oil, there is a risk that a diagnostic trouble code may be generated under incorrect conditions. That is why it is important that the counter for Transmission oil, change is reset.

NOTE: **This only applies when the transmission oil is changed and when the oil is changed during repairs to the transmission's temperature sensor.**

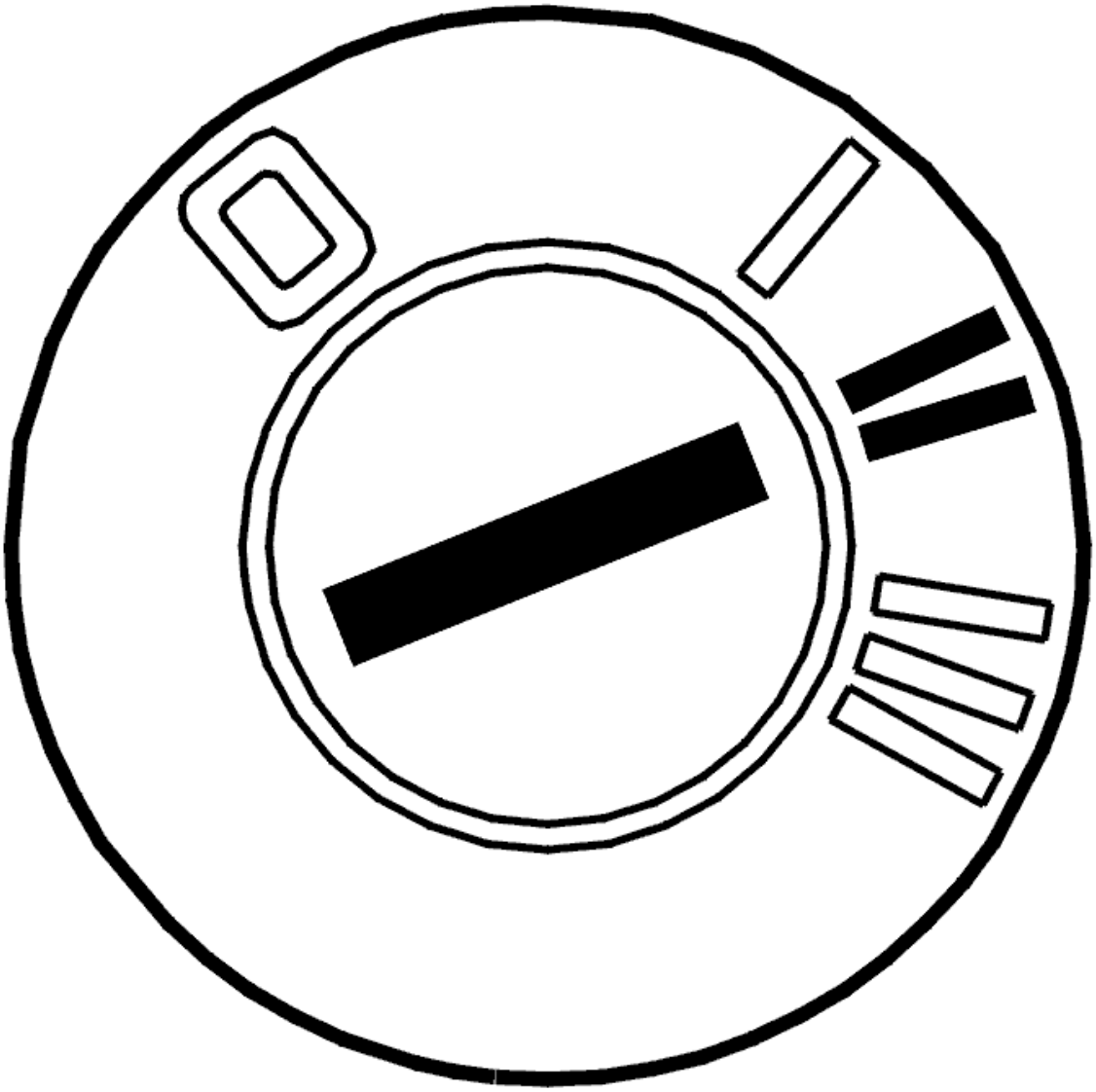

Fig. 41: Identifying Ignition ON
Courtesy of VOLVO CARS CORPORATION

- Ignition on

  Activate reset of the counter by clicking on the symbol for VCT2000.

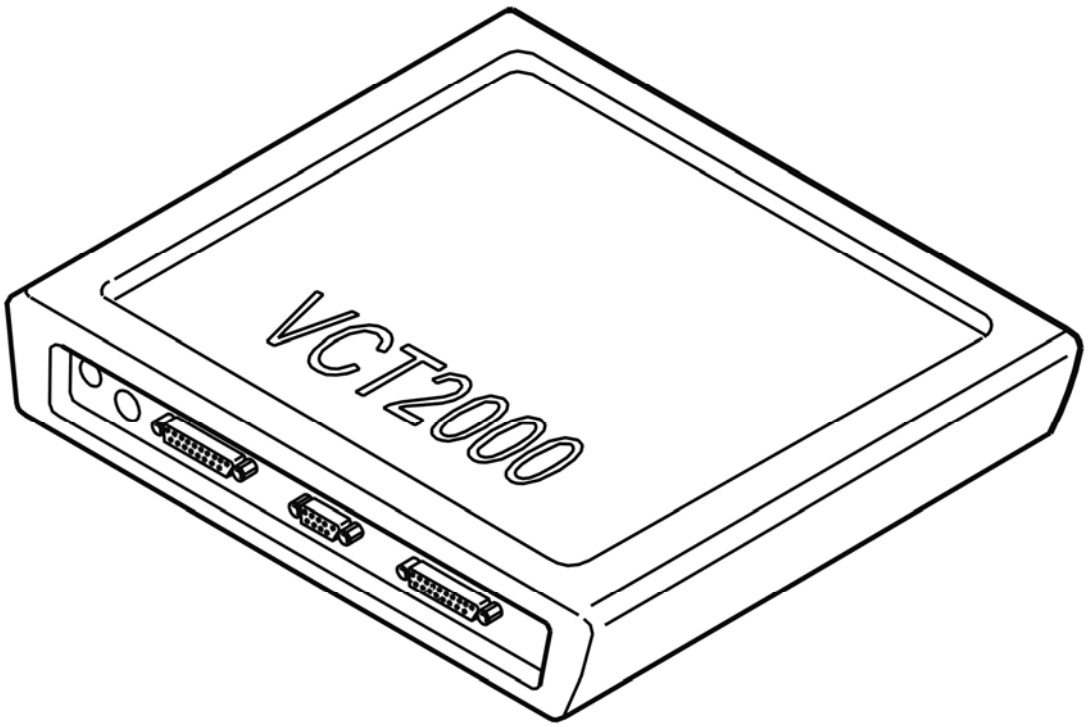

Fig. 42: Identifying VCT2000 Diagnostic Tool Symbol In VIDA
Courtesy of VOLVO CARS CORPORATION

- **Continue**

  Refer to **TEST DRIVING**

VERIFICATION

VERIFICATION

HINT: After carrying out the repair, check that the fault has been remedied.

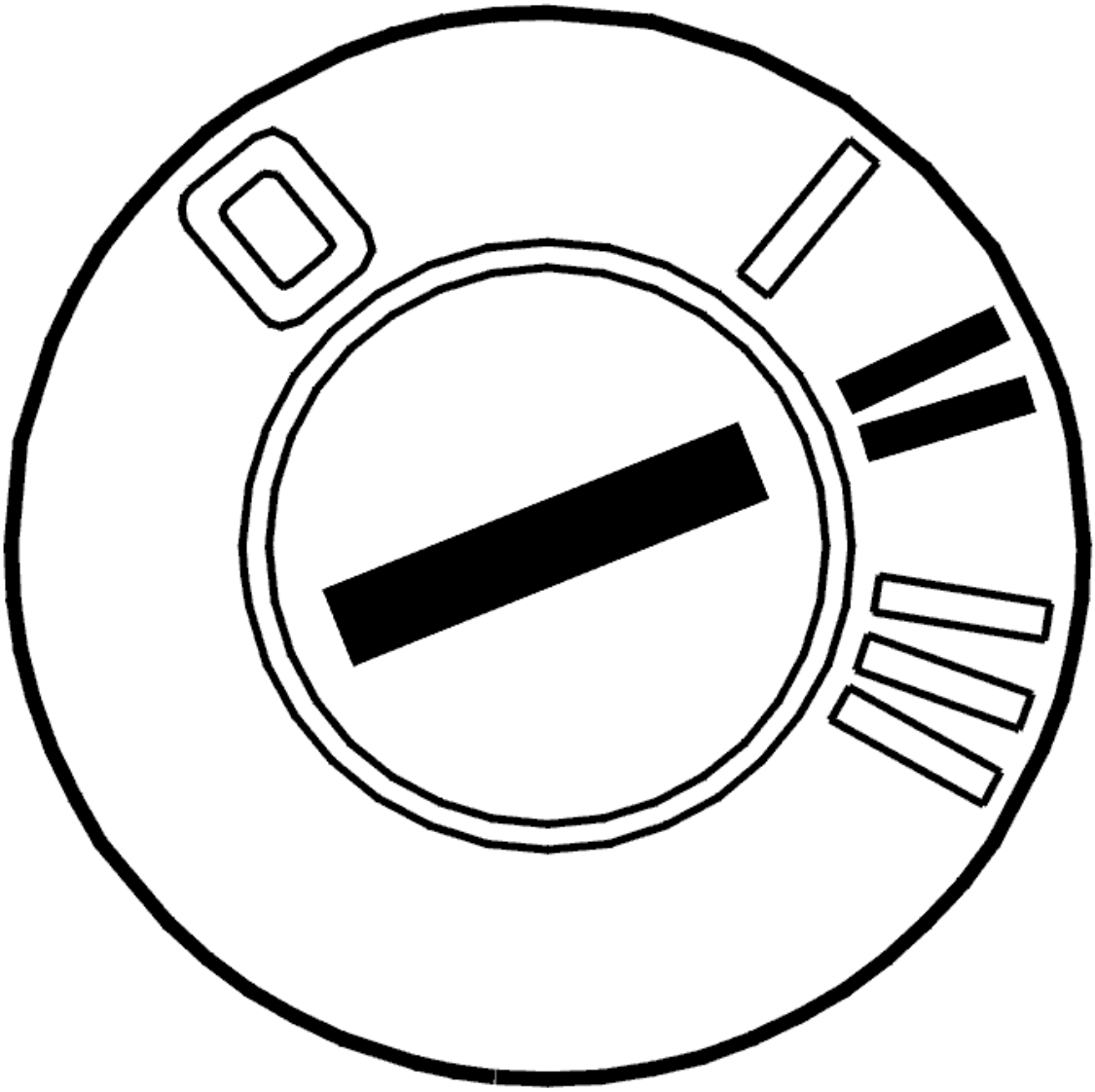

Fig. 43: Identifying Ignition ON
Courtesy of VOLVO CARS CORPORATION

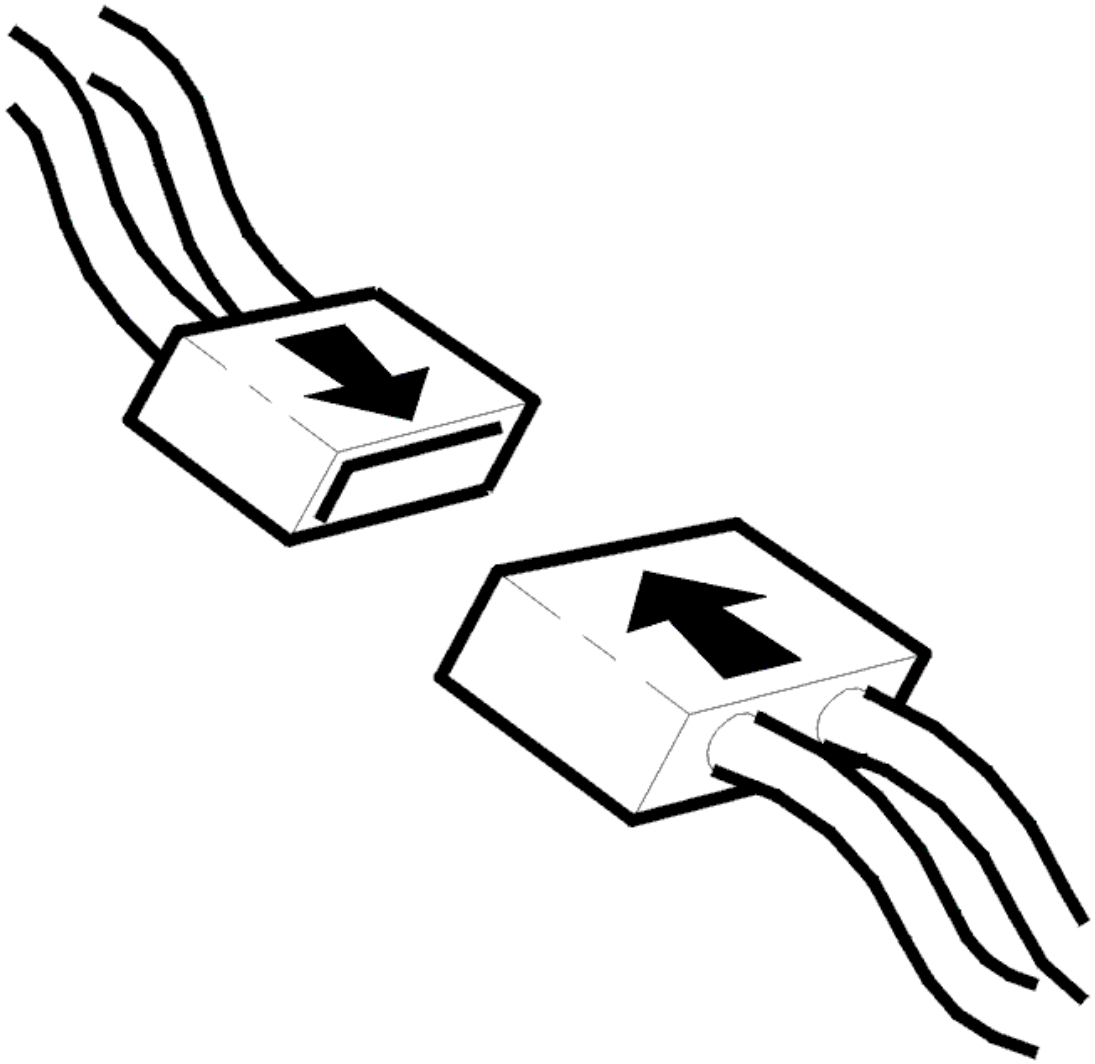

Fig. 44: Identifying Connector(s) Reinstallation
Courtesy of VOLVO CARS CORPORATION

- Ignition off
- Reinstall the connectors, components etc.
- Ignition on
- Start the engine and allow it to idle.
- Read the oil temperature for the transmission control module (TCM).

  Check that oil temperature is within the permitted range. Compare with the external temperature of the transmission.

NOTE: **The transmission temperature sensor is located inside the control system and may be affected by the heat given off by the solenoids.**

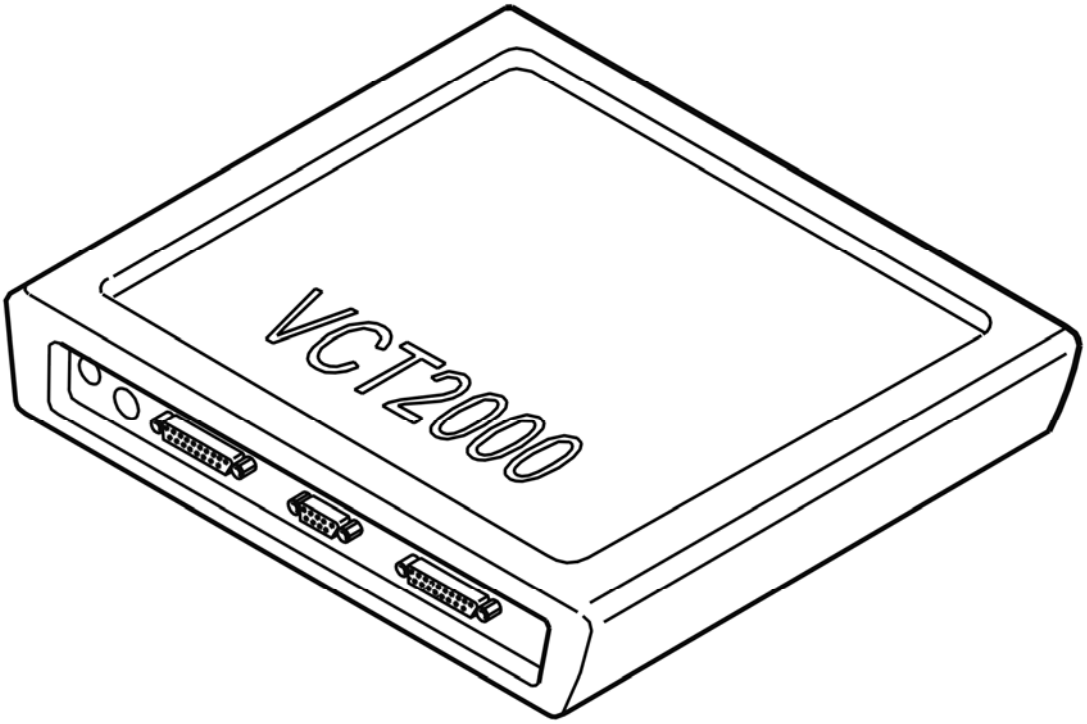

Fig. 45: Identifying VCT2000 Diagnostic Tool Symbol In VIDA
Courtesy of VOLVO CARS CORPORATION

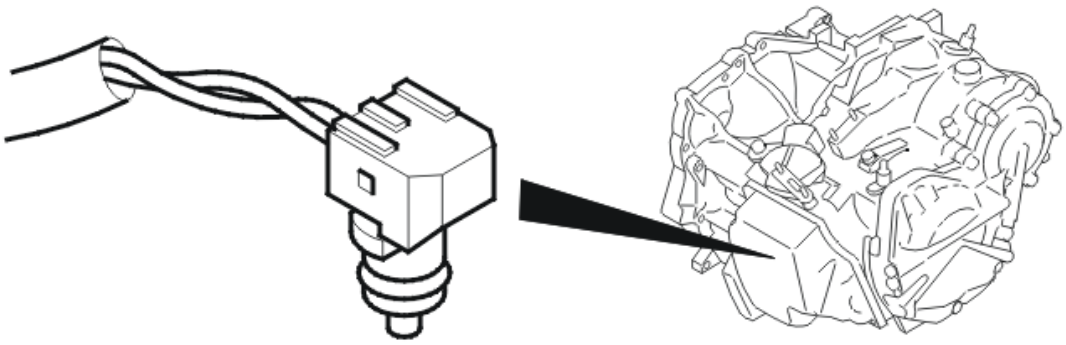

Fig. 46: Identifying Oil Temperature Sensor
Courtesy of VOLVO CARS CORPORATION

Is the temperature OK?

- **YES**

  VERIFIED: Troubleshooting has been completed.

- **NO**

  Refer to **INFORMATION**

INFORMATION

FAULT-TRACING INFORMATION

The fault should have been detected and remedied. As this is not the case fault-tracing has failed.

Exit fault-tracing for this diagnostic trouble code (DTC) or make another attempt.

TCM-P089709: TRANSMISSION FLUID EXPENDED. GENERAL FAULT INFORMATION. COMPONENT DEFECT (TF-80SC AWD; 2005)

DIAGNOSTIC TROUBLE CODE (DTC) INFORMATION TCM-P089709

see **DIAGNOSTIC TROUBLE CODE (DTC) INFORMATION TCM-P089709**

FAULT TRACING TCM-P089709

see **FAULT TRACING TCM-P089709**

TCM-P092813: GEAR SHIFT LOCK SOLENOID CIRCUIT / OPEN. GENERAL ELECTRICAL FAILURES. CIRCUIT OPEN (B6324S, TF-80SC; B6324S, TF-80SC AWD; 2007-2010)

DIAGNOSTIC TROUBLE CODE (DTC) INFORMATION TCM-P092813

Condition

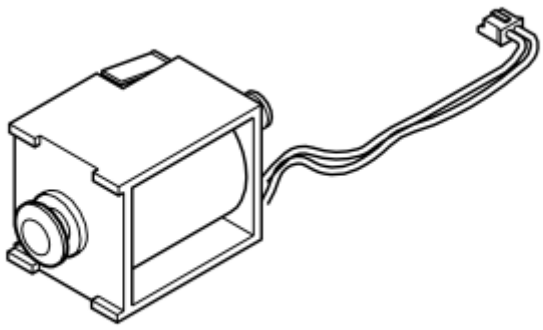

Fig. 47: Identifying Gear Selector Module (GSM)

Courtesy of VOLVO CARS CORPORATION

The gear selector module (GSM) is located at the rear edge of the gear shift assembly's left side. The Gear selector module (GSM) communicates with the Transmission control module (TCM) via an internal network, Local Interconnect Network (LIN), to activate the shift-lock function among other things.

The diagnostic trouble code (DTC) is stored if the control module detects that:

- The circuit to solenoid P-position inhibitor is open when the output on the solenoid's drive step is active.

The control module's test for the diagnostic trouble code (DTC) starts in the event of:

- Ignition on.

NOTE: The control module can only detect the fault once the test has been started and the diagnostic trouble code (DTC) is stored when the conditions are met.

Substitute Value

- Gear selector blocked.

Possible Source

- Contact resistance in the terminals.
- Open-circuit in the signal cable.
- Open-circuit in the ground lead.
- Internal fault in gear selector module (GSM).

Fault symptom[s]

- Gear selector stuck in position P

FAULT-TRACING

CHECKS

CHECKING THE STATUS

Fig. 48: Identifying Ignition ON
Courtesy of VOLVO CARS CORPORATION

- Ignition on.
- Gear selector in position P.

  Try moving the gear selector to another position without depressing the brake pedal. It should not be possible to move the gear selector.

  Depress the brake pedal and try moving the gear selector to another position. It should now be possible to move the gear selector.

  If the gear selector function is OK, this is an indication that the fault was present previously but is not active at the moment, i. e. an intermittent fault.

- **Continue**

  Refer to **CHECKING THE COMPONENT**

CHECKING THE COMPONENT

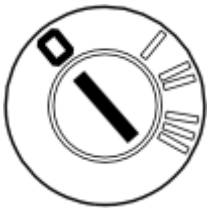

Fig. 49: Identifying Ignition OFF
Courtesy of VOLVO CARS CORPORATION

Check the cable for short-circuit to ground.

Take readings between:

- Solenoid for P-position lockout and Gear selector module (GSM).

Check the solenoid's resistance by connecting an ohmmeter between terminals #1 and #2 on the solenoid's connector.

For the resistance values, see below. Replace the solenoid if the resistance is incorrect.

Other information

- see **CHECKING WIRING AND TERMINALS**
- see **SOLENOID SHIFT LOCK, REPLACE**
- see **COMPONENT SPECIFICATIONS**

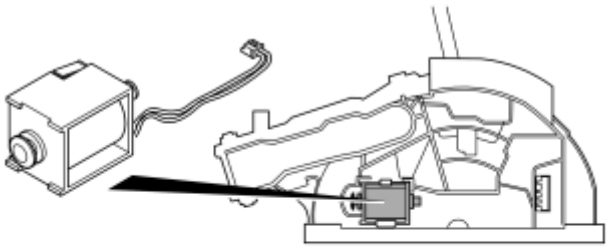

Fig. 50: Locating Gear Selector Module (GSM)
Courtesy of VOLVO CARS CORPORATION

- **Continue**

  Refer to **VERIFICATION**

INFORMATION

FAULT-TRACING INFORMATION

The fault should have been detected and remedied. As this is not the case fault-tracing has failed.

Exit fault-tracing for this diagnostic trouble code (DTC) or make another attempt.

VERIFICATION

VERIFICATION

HINT: After carrying out the repair, check that the fault has been remedied.

Fig. 51: Identifying Ignition ON
Courtesy of VOLVO CARS CORPORATION

- Ignition off.
- Reinstall the connectors, components etc.
- Ignition on.

- Gear selector in position P.

  Try moving the gear selector to another position without depressing the brake pedal. It should not be possible to move the gear selector.

  Depress the brake pedal and try moving the gear selector to another position. It should now be possible to move the gear selector.

Was the function OK?

- **YES**

  VERIFIED: Troubleshooting has been completed.

- **NO**

  Refer to **INFORMATION**

TCM-P092813: GEAR SHIFT LOCK SOLENOID CIRCUIT / OPEN. GENERAL ELECTRICAL FAILURES. CIRCUIT OPEN (B6324S5, TF-80SC; B6324S5, TF-80SC AWD; 2011-2012)

DIAGNOSTIC TROUBLE CODE (DTC) INFORMATION TCM-P092813

see **DIAGNOSTIC TROUBLE CODE (DTC) INFORMATION TCM-P092813**

FAULT-TRACING

see **FAULT-TRACING**

TCM-P092813: GEAR SHIFT LOCK SOLENOID CIRCUIT / OPEN. GENERAL ELECTRICAL FAILURES. CIRCUIT OPEN (B8444S, TF-80SC AWD; 2006-2011)

DIAGNOSTIC TROUBLE CODE (DTC) INFORMATION TCM-P092813

Condition

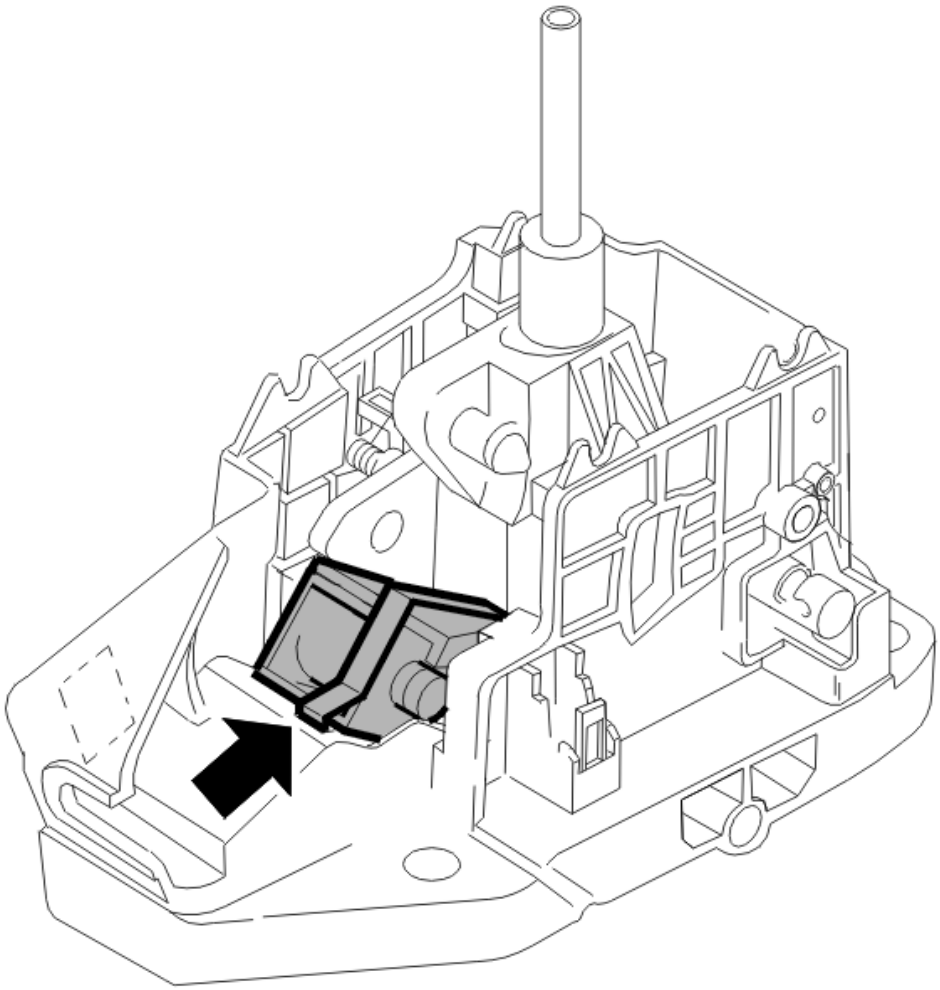

Fig. 52: Identifying Shift-Lock
Courtesy of VOLVO CARS CORPORATION

The gear selector module (GSM) is located under the top panel of the lever carrier. The gear selector module (GSM) communicates with the transmission control module (TCM) via an internal network, Local Interconnect Network (LIN), for activating the gear inhibitor function (shift lock). If the gear selector module (GSM) registers that the circuit to solenoid P-detent is open when the output on the solenoid power stage is inactive, the diagnostic trouble code (DTC) is generated.

The diagnostic trouble code can be diagnosed when the ignition is on.

Substitute Value

- Gear selector blocked.

Possible Source

- Contact resistance in the terminals
- Open circuit in signal or ground lead.
- Internal fault in gear selector module (GSM).

Fault symptom[s]

- Malfunction indicator lamp (MIL) lit.
- General warning lamp lit
- Gear selector stuck in position P.

FAULT-TRACING TCM-P092813

CHECKS

CHECK THE FUNCTION SOLENOID FOR THE SHIFT LOCK

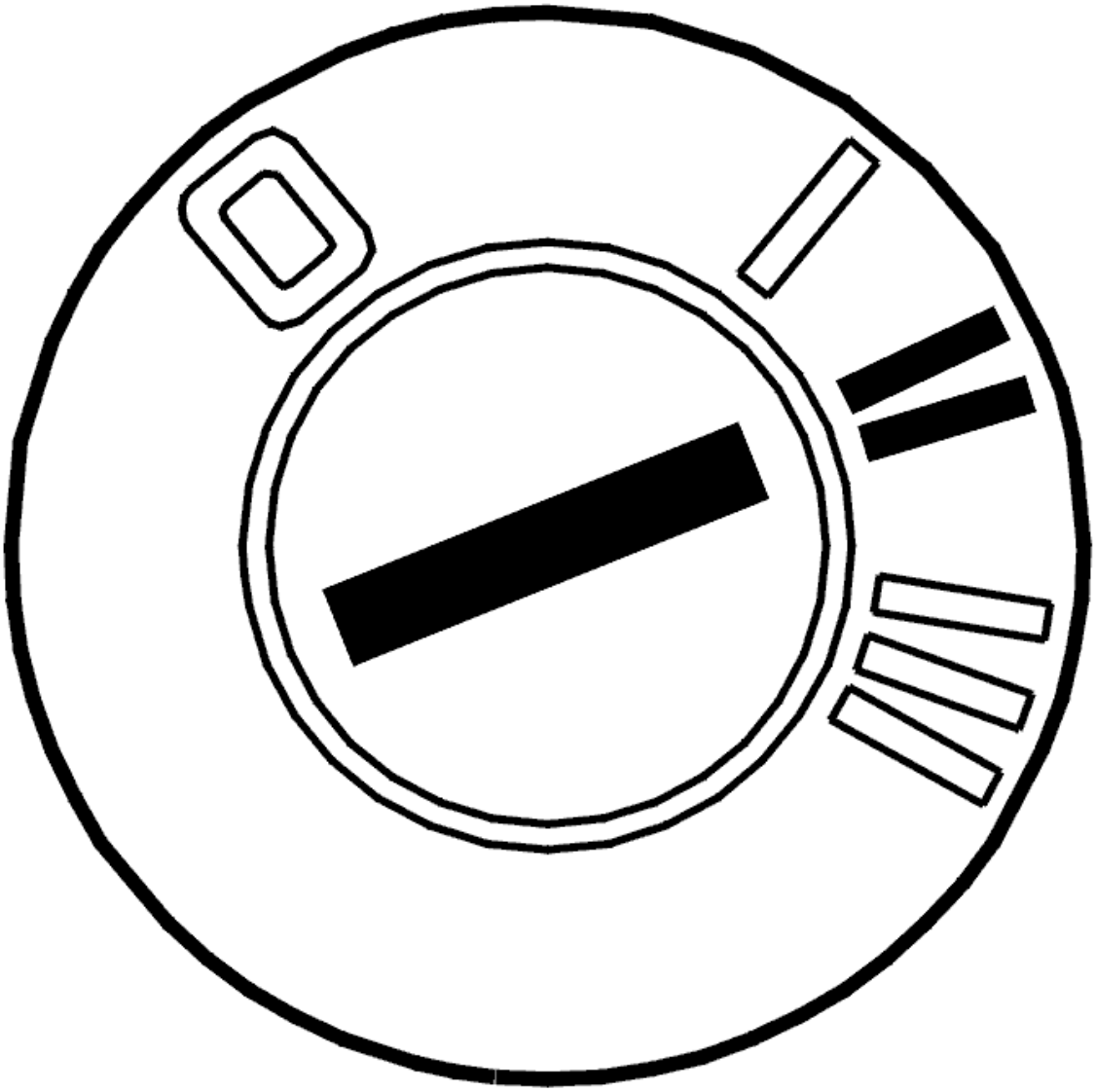

Fig. 53: Identifying Ignition ON
Courtesy of VOLVO CARS CORPORATION

- Ignition on
- Gear selector in position P.
- Try to move the gear selector lever without depressing the brake pedal. It should not be possible to move the gear selector lever.
- Try to move the gear selector lever with the brake pedal depressed. It should now be possible to move the gear selector lever.

  If the gear selector lever function is **not** OK it indicates that the fault is permanent.

  If the gear selector lever function is OK it means that the fault was present previously but is not active now. There is an intermittent fault.

- **Continue**

  Refer to **CHECKING THE WIRING AND COMPONENT**

CHECKING THE WIRING AND COMPONENT

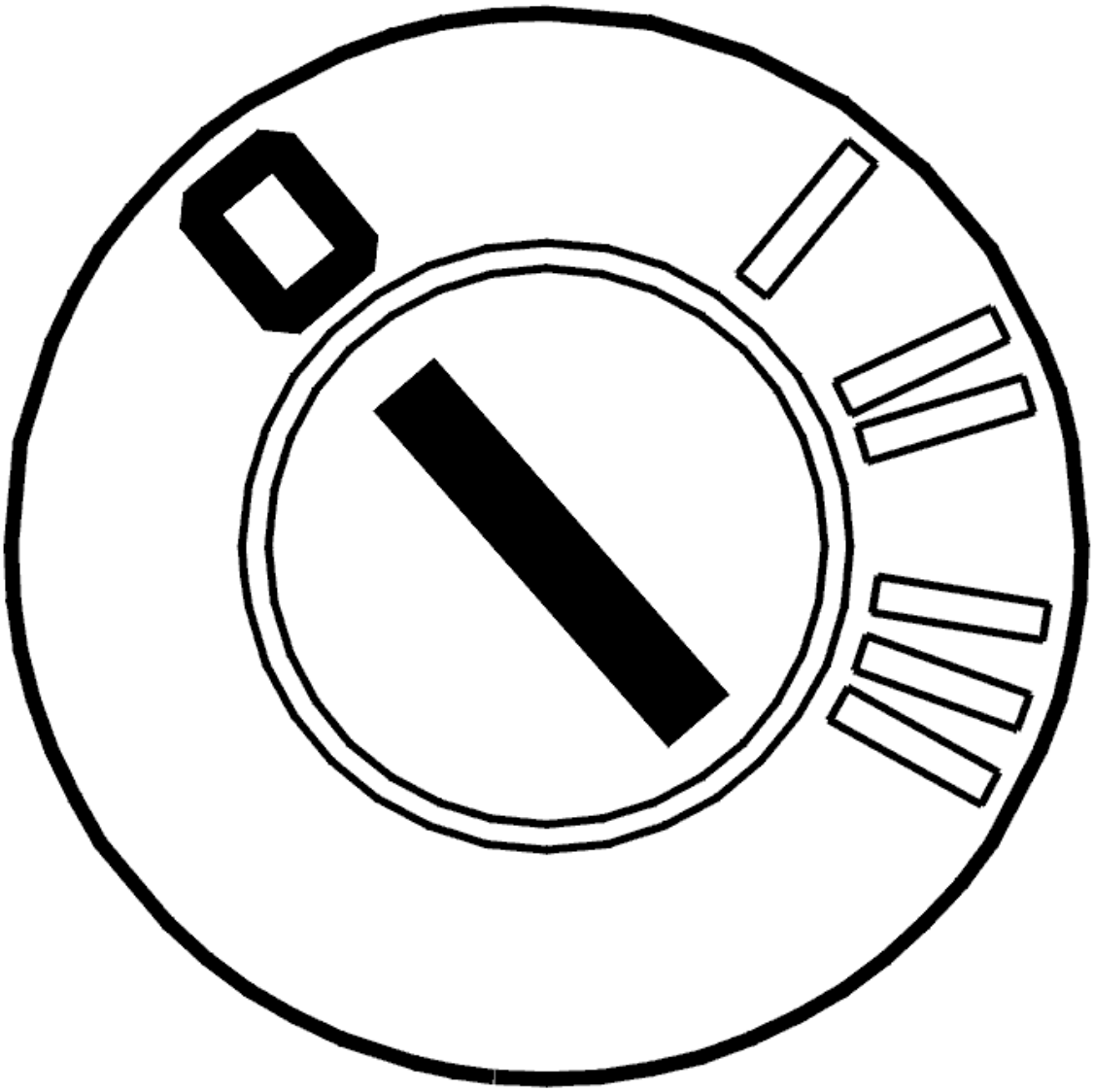

Fig. 54: Identifying Ignition OFF
Courtesy of VOLVO CARS CORPORATION

Check the cable between the connector on the transmission control module (TCM) #13 (#A43), gear selector module (GSM) terminal #3 and the shift lock solenoid connector terminal #2. Check for an open circuit.

Remedy as necessary.

Check the resistance of the solenoid between terminals #1 and #2 on the connector. If the resistance is not correct, replace the solenoid.

Other information

- see **SOLENOID SHIFT LOCK, REPLACE**
- For resistance values: **COMPONENT SPECIFICATIONS**
- see **CONTENTS**

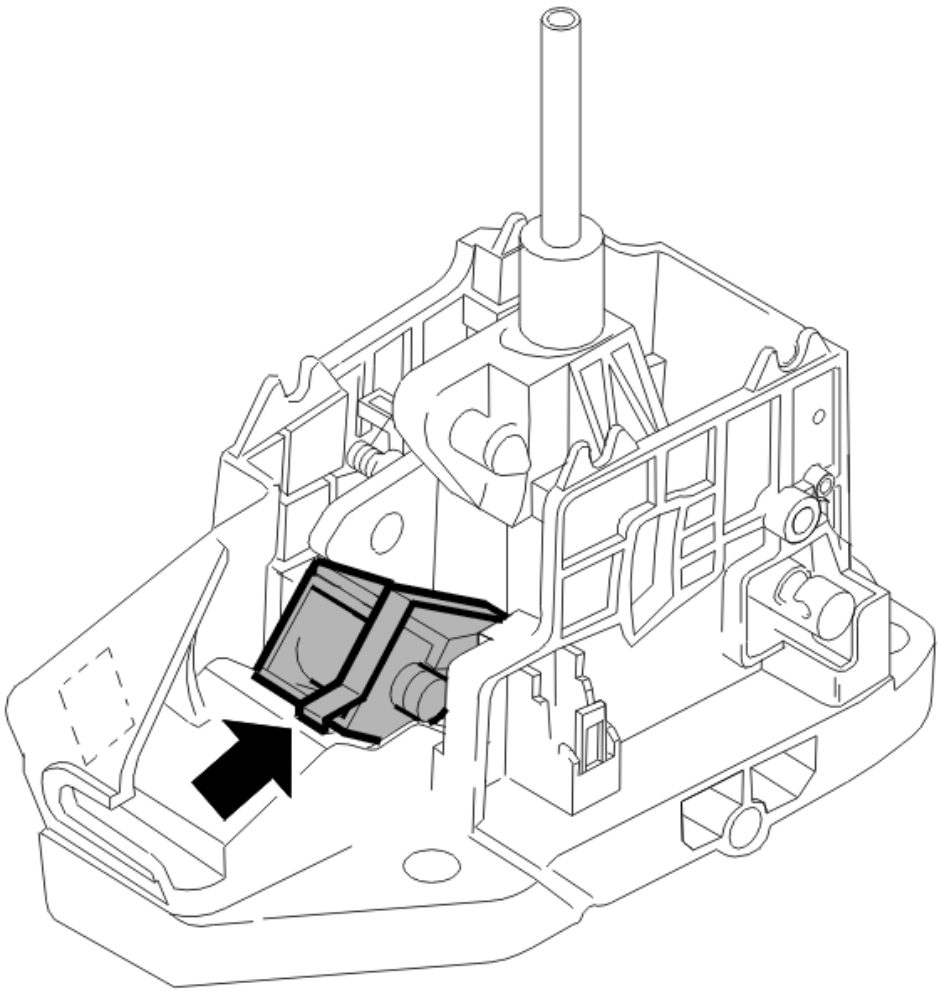

Fig. 55: Identifying Shift-Lock
Courtesy of VOLVO CARS CORPORATION

- **Continue**

  Refer to **VERIFICATION**

VERIFICATION

VERIFICATION

HINT: After carrying out the repair, check that the fault has been remedied.

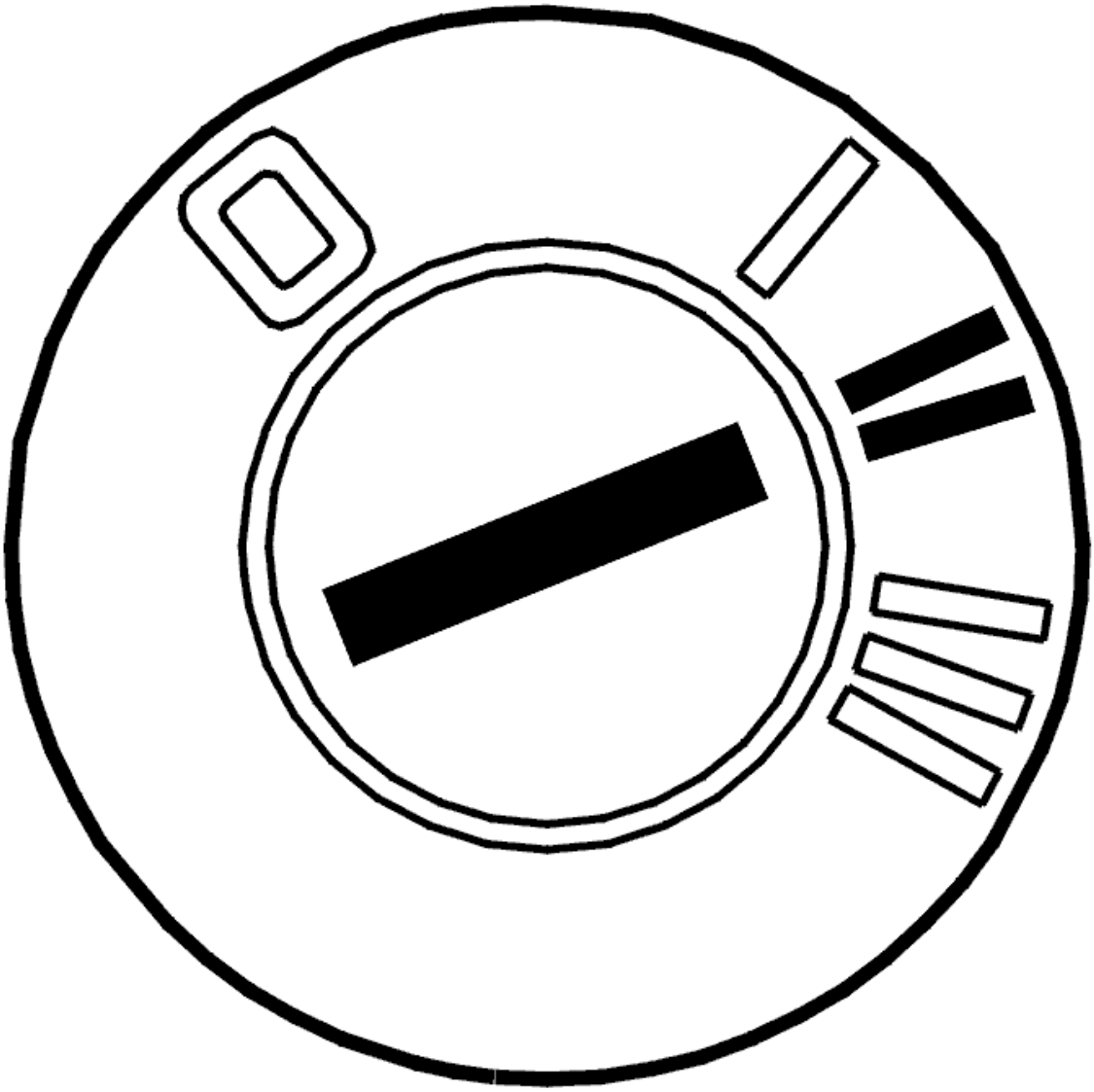

Fig. 56: Identifying Ignition ON
Courtesy of VOLVO CARS CORPORATION

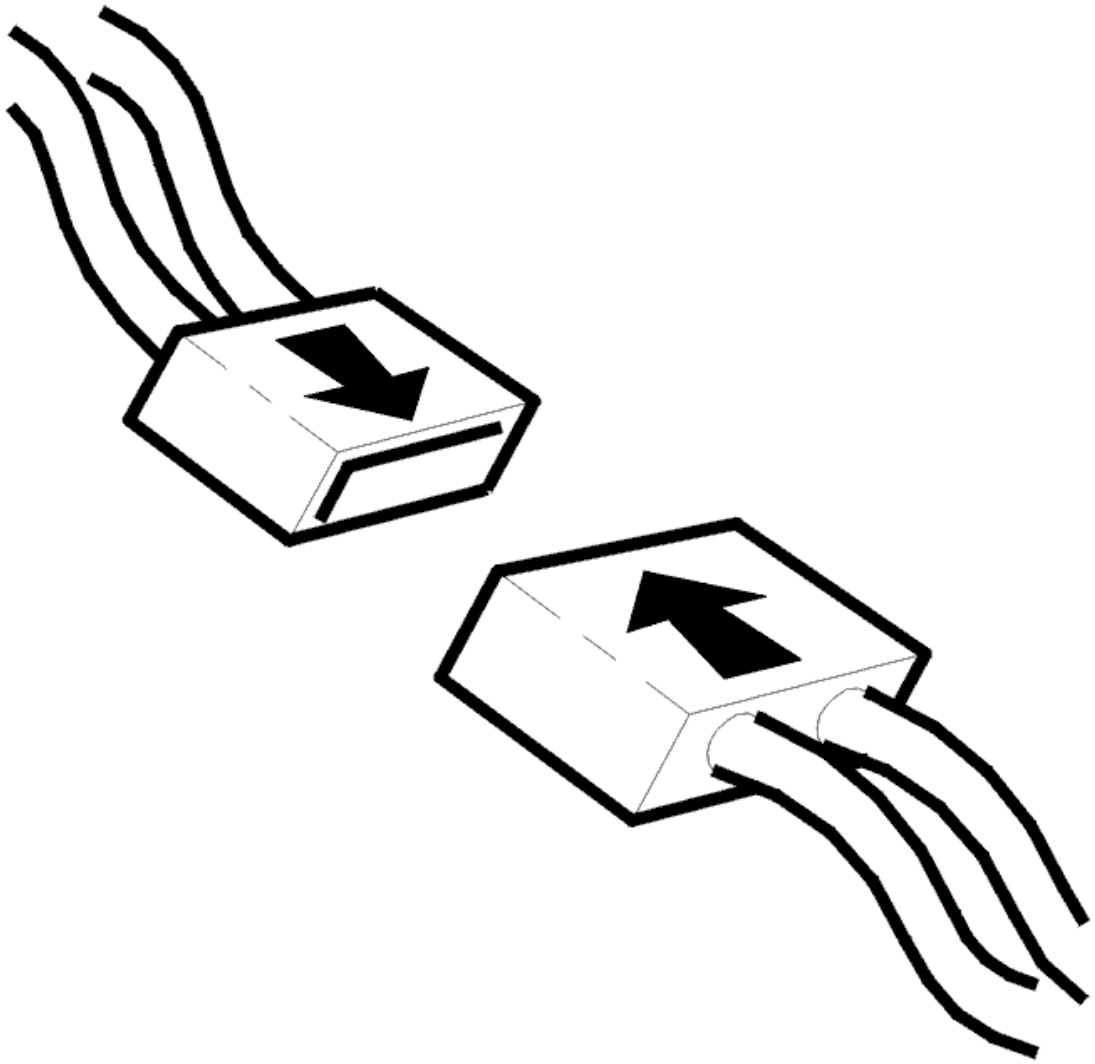

Fig. 57: Identifying Connector(s) Reinstallation
Courtesy of VOLVO CARS CORPORATION

- Ignition off
- Reinstall the components, reconnect the connectors etc.
- Ignition on
- Gear selector in position P.
- Try to move the gear selector lever without depressing the brake pedal. It should not be possible to move the gear selector lever.
- Try to move the gear selector lever with the brake pedal depressed. It should now be possible to move the gear selector lever.

Is the function OK?

- **YES**

VERIFIED: Troubleshooting has been completed.

- **NO**

  Refer to **INFORMATION**

INFORMATION

FAULT-TRACING INFORMATION

The fault should have been detected and remedied. As this is not the case fault-tracing has failed.

Exit fault-tracing for this diagnostic trouble code (DTC) or make another attempt.

TCM-P092813: GEAR SHIFT LOCK SOLENOID CIRCUIT / OPEN. GENERAL ELECTRICAL FAILURES. CIRCUIT OPEN (TF-80SC AWD; 2005)

DIAGNOSTIC TROUBLE CODE (DTC) INFORMATION TCM-P092813

see **DIAGNOSTIC TROUBLE CODE (DTC) INFORMATION TCM-P092813**

FAULT-TRACING TCM-P092813

see **FAULT-TRACING TCM-P092813**

TCM-P093011: GEAR SHIFT LOCK SOLENOID CIRCUIT LOW. GENERAL ELECTRICAL FAILURES. CIRCUIT SHORT TO GROUND (B6324S, TF-80SC; B6324S, TF-80SC AWD; 2007-2010)

DIAGNOSTIC TROUBLE CODE (DTC) INFORMATION TCM-P093011

Condition

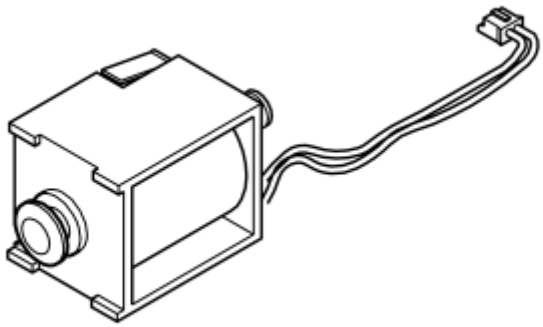

Fig. 58: Identifying Gear Selector Module (GSM)
Courtesy of VOLVO CARS CORPORATION

The gear selector module (GSM) is located at the rear edge of the gear shift assembly's left side. The Gear selector module (GSM) communicates with the Transmission control module (TCM) via an internal network, Local Interconnect Network (LIN), to activate the shift-lock function among other things.

The diagnostic trouble code (DTC) is stored if the control module detects that:

- Too great a current through the shift lock solenoid when the output on the solenoid's diver stage is active.

The control module's test for the diagnostic trouble code (DTC) starts in the event of:

- Ignition on.

NOTE: The control module can only detect the fault once the test has been started and the diagnostic trouble code (DTC) is stored when the conditions are met.

Substitute Value

- Gear selector blocked.

Possible Source

- Short-circuit to ground in the signal cable.
- Shift-lock solenoid does not work.
- Internal fault in gear selector module (GSM).

Fault symptom[s]

- Gear selector cannot be moved

FAULT-TRACING

see **FAULT-TRACING**

TCM-P093011: GEAR SHIFT LOCK SOLENOID CIRCUIT LOW. GENERAL ELECTRICAL FAILURES. CIRCUIT SHORT TO GROUND (B6324S5, TF-80SC; B6324S5, TF-80SC AWD; 2011-2012)

DIAGNOSTIC TROUBLE CODE (DTC) INFORMATION TCM-P093011

see **DIAGNOSTIC TROUBLE CODE (DTC) INFORMATION TCM-P093011**

FAULT-TRACING

see **FAULT-TRACING**

TCM-P093011: GEAR SHIFT LOCK SOLENOID CIRCUIT LOW. GENERAL ELECTRICAL FAILURES. CIRCUIT SHORT TO GROUND (B8444S, TF-80SC AWD; 2006-2011)

DIAGNOSTIC TROUBLE CODE (DTC) INFORMATION TCM-P093011

Condition

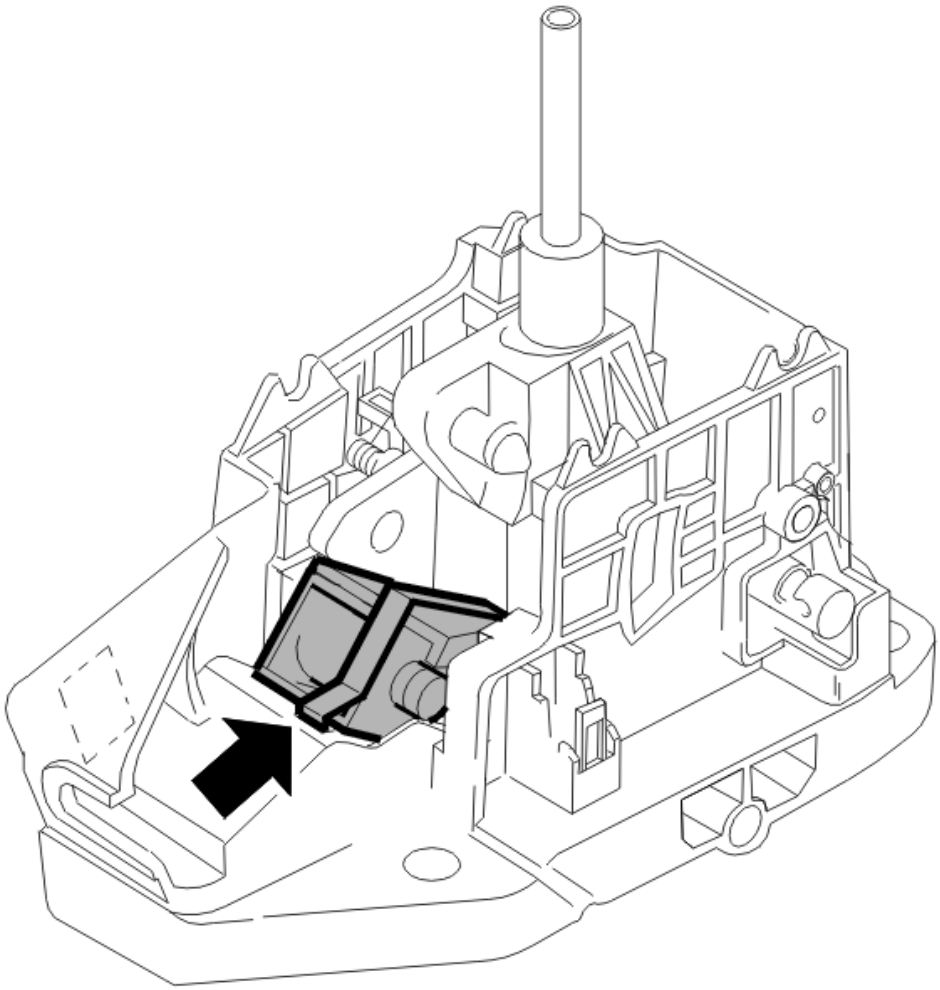

Fig. 59: Identifying Shift-Lock
Courtesy of VOLVO CARS CORPORATION

The gear selector module (GSM) is located under the top panel of the lever carrier. The gear selector module (GSM) communicates with the transmission control module (TCM) via an internal network, Local Interconnect Network (LIN), for activating the gear inhibitor function (shift lock).

If the gear selector module (GSM) registers that the current passing through the solenoid for the P-detent is too high when the output on the solenoid power stage is active, the diagnostic trouble code (DTC) is generated.

The diagnostic trouble code can be diagnosed when the ignition is on.

Substitute Value

- Gear selector blocked.

Possible Source

- Contact resistance in the terminals
- The signal cable is short-circuited to ground.
- Solenoid for P-detent not working.
- Internal fault in gear selector module (GSM).

Fault symptom[s]

- Malfunction indicator lamp (MIL) lit.
- General warning lamp lit
- Gear selector cannot be moved.

FAULT-TRACING TCM-P093011

CHECKS

CHECK THE FUNCTION SOLENOID FOR THE SHIFT LOCK

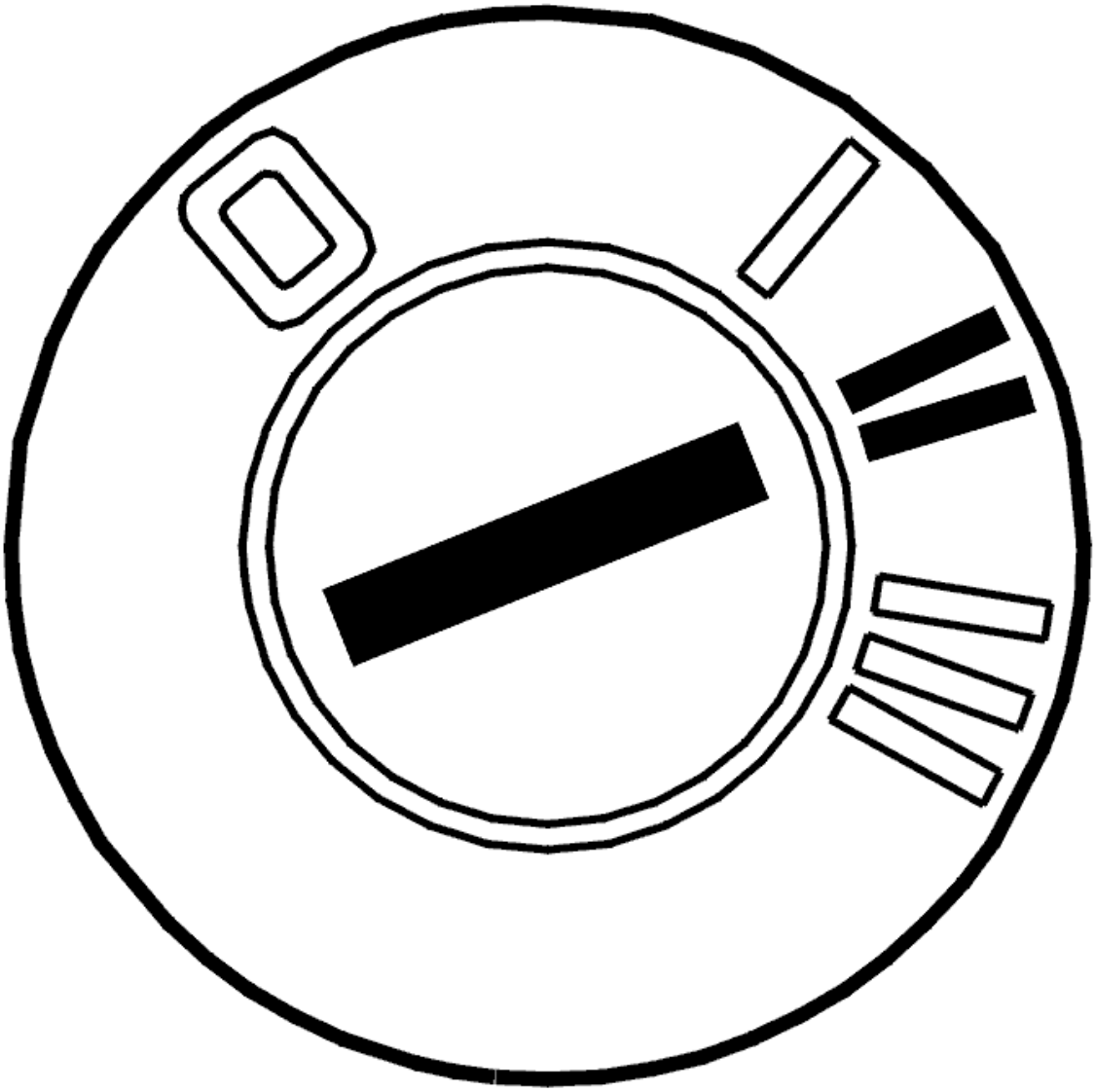

Fig. 60: Identifying Ignition ON
Courtesy of VOLVO CARS CORPORATION

- Ignition on
- Gear selector in position P.
- Try to move the gear selector lever without depressing the brake pedal. It should not be possible to move the gear selector lever.
- Try to move the gear selector lever with the brake pedal depressed. It should now be possible to move the gear selector lever.

  If the gear selector lever function is **not** OK it indicates that the fault is permanent.

  If the gear selector lever function is OK it means that the fault was present previously but is not active now. There is an intermittent fault.

- **Continue**

  Refer to **CHECKING THE WIRING AND COMPONENT**

CHECKING THE WIRING AND COMPONENT

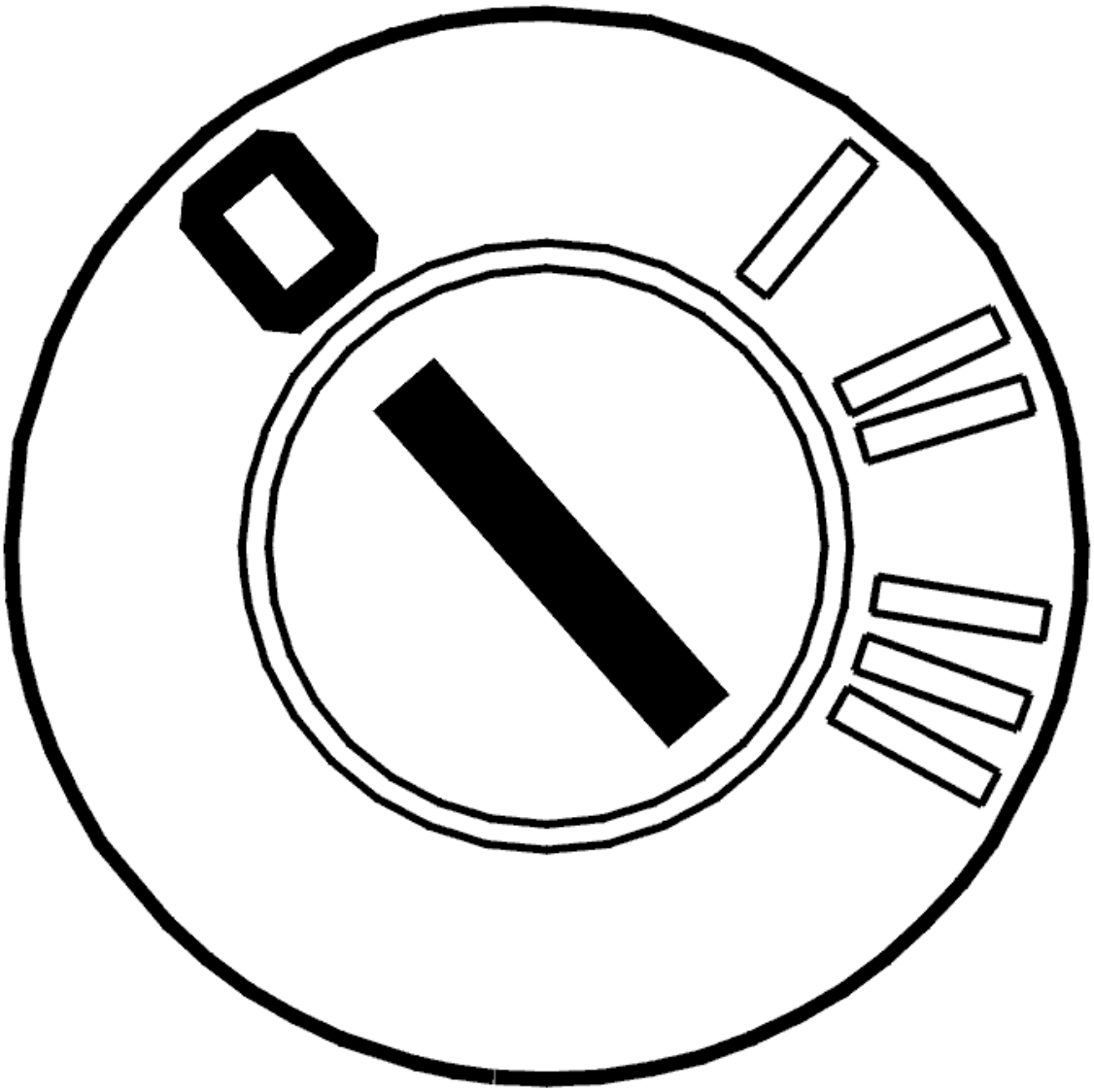

Fig. 61: Identifying Ignition OFF
Courtesy of VOLVO CARS CORPORATION

Check the cable between the connector on the transmission control module (TCM) # 13 (#A43), gear selector module (GSM) #3 and the solenoid for P-lockout connector #2 for short-circuit to ground.

Check the resistance of the solenoid between terminals #1 and #2 on the connector. If the resistance is not correct, replace the solenoid.

Remedy as necessary.

Other information

- see **SOLENOID SHIFT LOCK, REPLACE**
- For resistance values: **COMPONENT SPECIFICATIONS**
- see **CONTENTS**

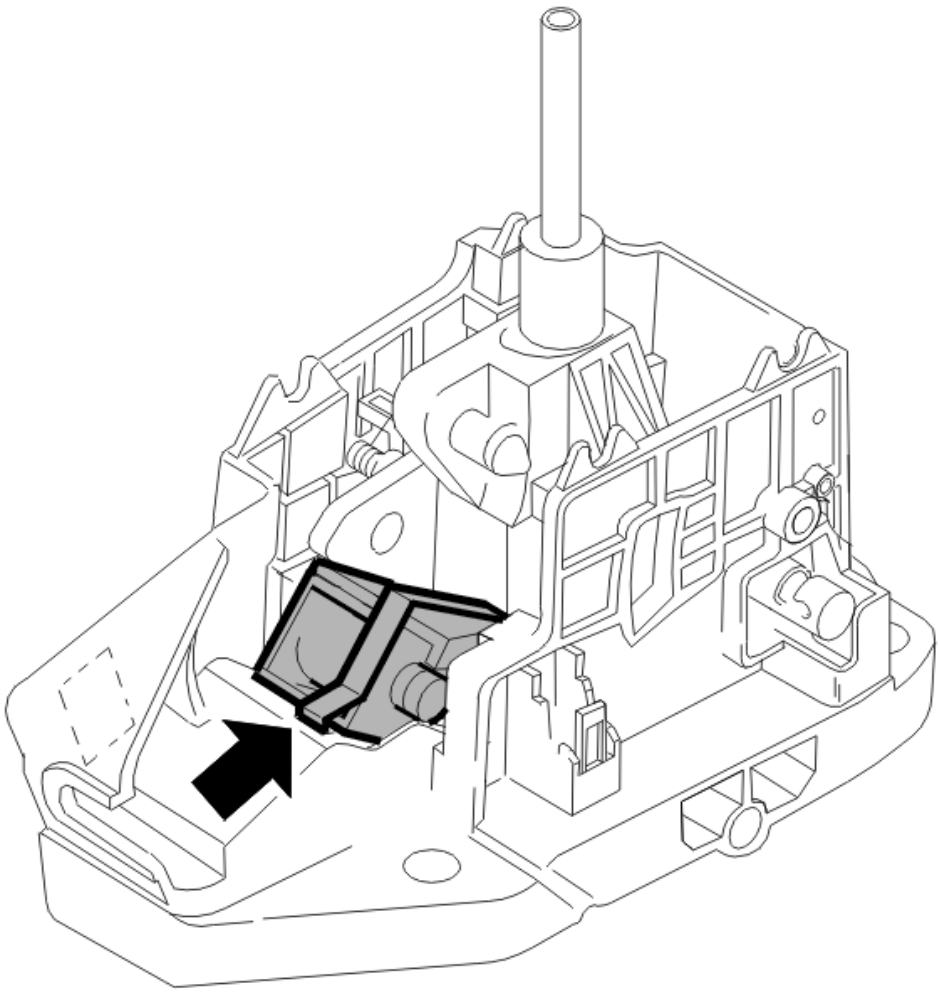

Fig. 62: Identifying Shift-Lock
Courtesy of VOLVO CARS CORPORATION

- **Continue**

  Refer to **VERIFICATION**

VERIFICATION

VERIFICATION

HINT: After carrying out the repair, check that the fault has been remedied.

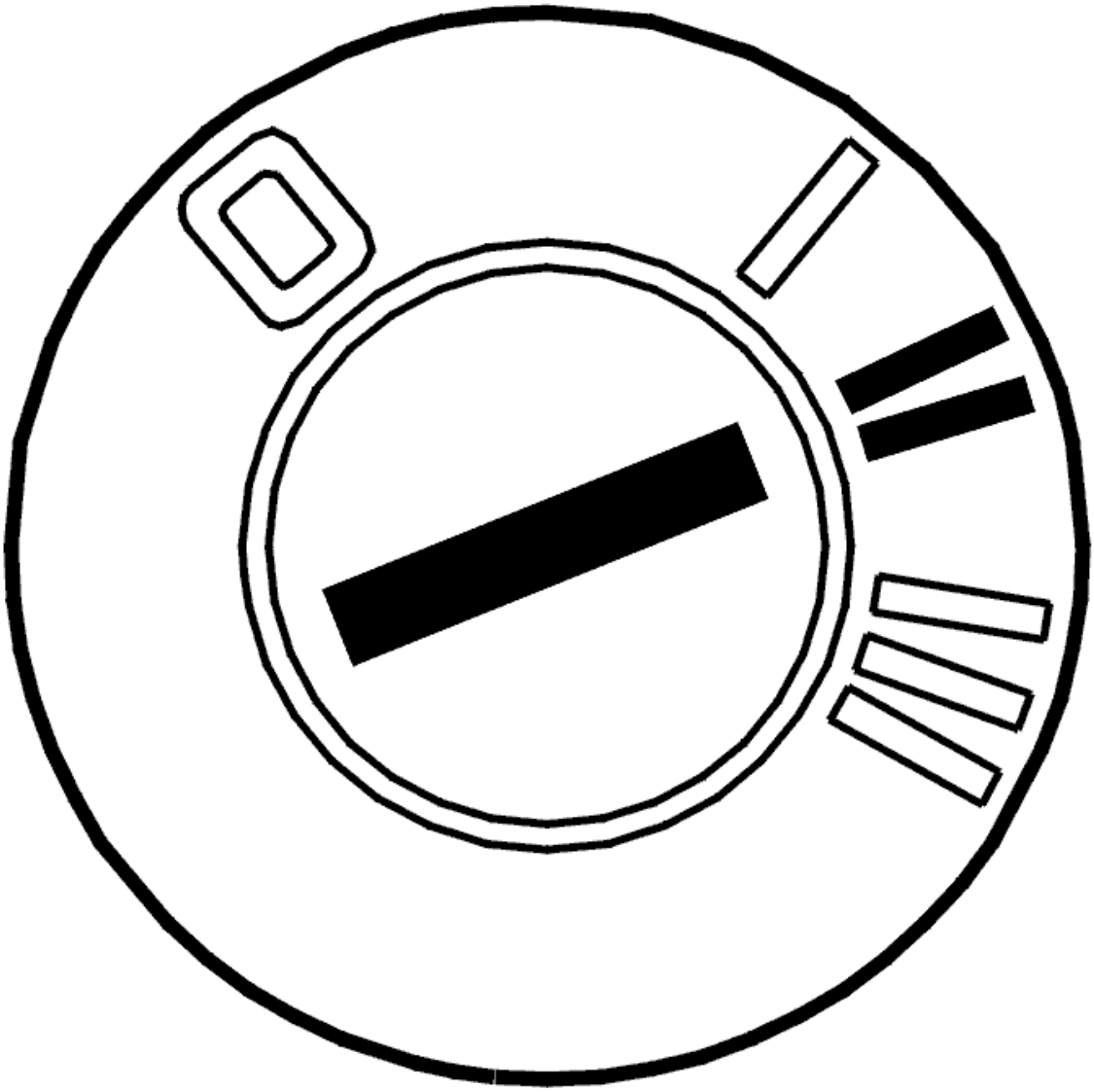

Fig. 63: Identifying Ignition ON
Courtesy of VOLVO CARS CORPORATION

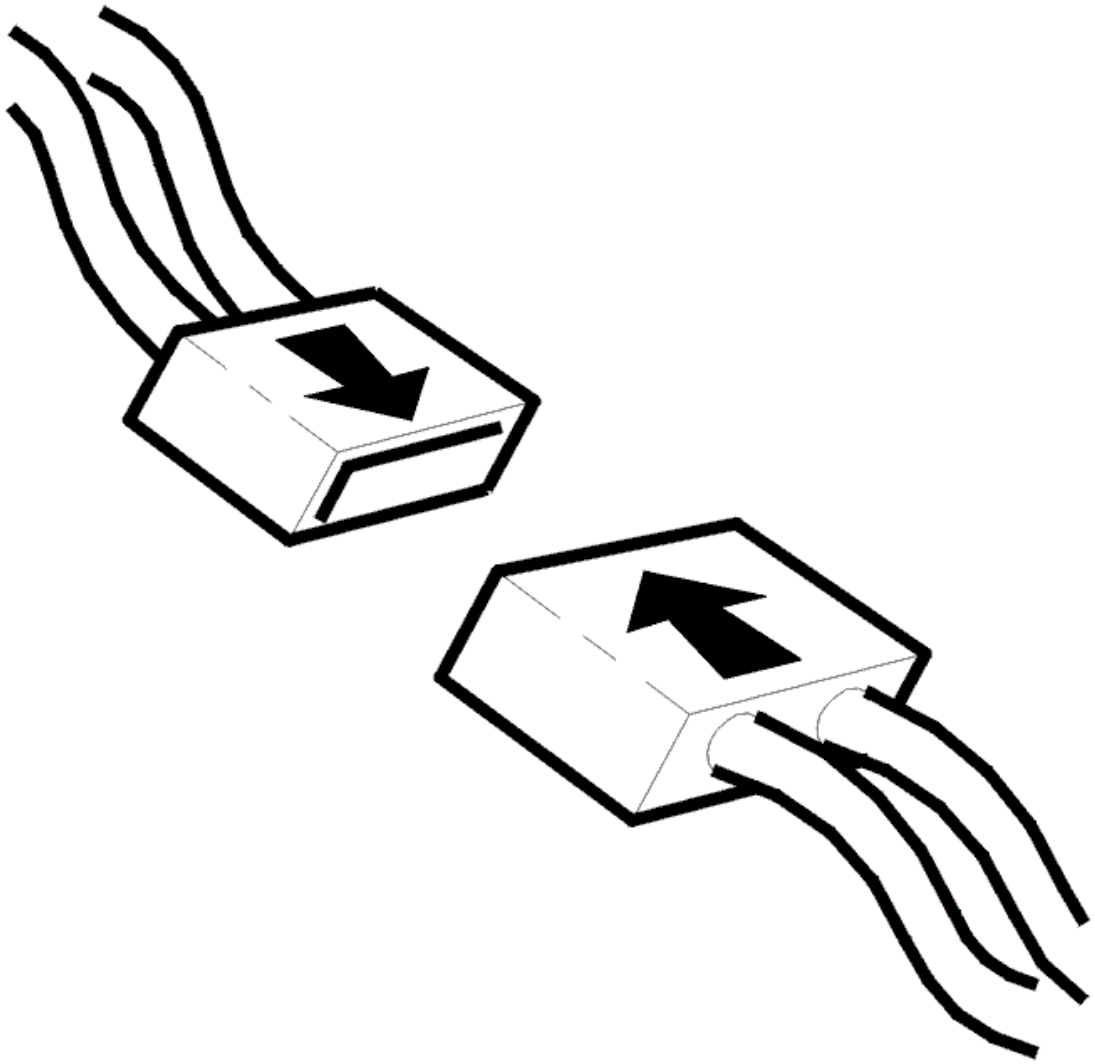

Fig. 64: Identifying Connector(s) Reinstallation
Courtesy of VOLVO CARS CORPORATION

- Ignition off
- Reinstall the components, reconnect the connectors etc.
- Ignition on
- Gear selector in position P.
- Try to move the gear selector lever without depressing the brake pedal. It should not be possible to move the gear selector lever.
- Try to move the gear selector lever with the brake pedal depressed. It should now be possible to move the gear selector lever.

Is the function OK?

- **YES**

VERIFIED: Troubleshooting has been completed.

- **NO**

  Refer to **INFORMATION**

INFORMATION

FAULT-TRACING INFORMATION

The fault should have been detected and remedied. As this is not the case fault-tracing has failed.

Exit fault-tracing for this diagnostic trouble code (DTC) or make another attempt.

TCM-P093011: GEAR SHIFT LOCK SOLENOID CIRCUIT LOW. GENERAL ELECTRICAL FAILURES. CIRCUIT SHORT TO GROUND (TF-80SC AWD; 2005)

DIAGNOSTIC TROUBLE CODE (DTC) INFORMATION TCM-P093011

see **DIAGNOSTIC TROUBLE CODE (DTC) INFORMATION TCM-P093011**

FAULT-TRACING TCM-P093011

see **FAULT-TRACING TCM-P093011**

TCM-P093112: GEAR SHIFT LOCK SOLENOID CIRCUIT HIGH. GENERAL ELECTRICAL FAILURES. CIRCUIT SHORT TO BATTERY (B6324S, TF-80SC; B6324S, TF-80SC AWD; 2007-2010)

DIAGNOSTIC TROUBLE CODE (DTC) INFORMATION TCM-P093112

Condition

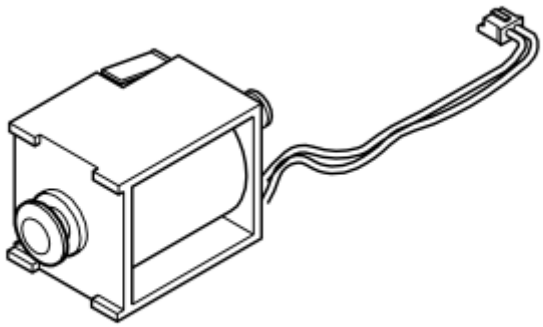

Fig. 65: Identifying Gear Selector Module (GSM)
Courtesy of VOLVO CARS CORPORATION

The gear selector module (GSM) is located at the rear edge of the gear shift assembly's left side. The Gear selector module (GSM) communicates with the Transmission control module (TCM) via an internal network, Local Interconnect Network (LIN), to activate the shift-lock function among other things.

The diagnostic trouble code (DTC) is stored if the control module detects that:

- The solenoid's driver stage is active when it should be inactive.

The control module's test for the diagnostic trouble code (DTC) starts in the event of:

- Ignition on.

NOTE: The control module can only detect the fault once the test has been started and the diagnostic trouble code (DTC) is stored when the conditions are met.

Substitute Value

- No blocking of the gear selector.

Possible Source

- Short-circuit to ground in the signal cable.
- Internal fault in gear selector module (GSM).

Fault symptom[s]

- Gear lever movable with ignition off

FAULT-TRACING

CHECKS

CHECKING THE STATUS

Fig. 66: Identifying Ignition ON
Courtesy of VOLVO CARS CORPORATION

- Ignition on.
- Gear selector in position P.

  Try moving the gear selector to another position without depressing the brake pedal. It should not be possible to move the gear selector.

  Depress the brake pedal and try moving the gear selector to another position. It should now be possible to move the gear selector.

  If the gear selector function is OK, this is an indication that the fault was present previously but is not active at the moment, i. e. an intermittent fault.

- **Continue**

  Refer to **CHECKING THE COMPONENT**

CHECKING THE COMPONENT

Fig. 67: Identifying Ignition OFF
Courtesy of VOLVO CARS CORPORATION

Check the cable for a short-circuit to supply voltage.

Take readings between:

- Transmission control module (TCM) #A13 (#A43) and gear selector module (GSM) #3.

Check the solenoid's resistance by connecting an ohmmeter between terminals #1 and #2 on the solenoid's connector.

For the resistance values, see below. Replace the solenoid if the resistance is incorrect.

Other information

- see **CHECKING WIRING AND TERMINALS**
- see **SOLENOID SHIFT LOCK, REPLACE**
- see **COMPONENT SPECIFICATIONS**

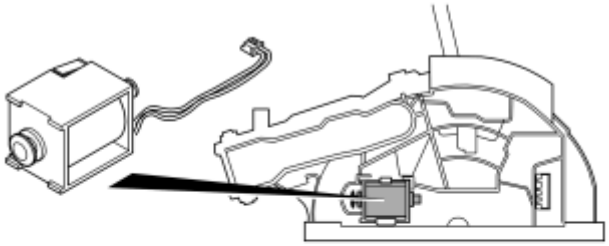

Fig. 68: Locating Gear Selector Module (GSM)
Courtesy of VOLVO CARS CORPORATION

- **Continue**

  Refer to **VERIFICATION**

INFORMATION

FAULT-TRACING INFORMATION

The fault should have been detected and remedied. As this is not the case fault-tracing has failed.

Exit fault-tracing for this diagnostic trouble code (DTC) or make another attempt.

VERIFICATION

VERIFICATION

HINT: After carrying out the repair, check that the fault has been remedied.

Fig. 69: Identifying Ignition ON
Courtesy of VOLVO CARS CORPORATION

- Ignition off.
- Reinstall the connectors, components etc.
- Ignition on.
- Gear selector in position P.

  Try moving the gear selector to another position without depressing the brake pedal. It should not be possible to move the gear selector.

  Depress the brake pedal and try moving the gear selector to another position. It should now be possible to move the gear selector.

Was the function OK?

- **YES**

  VERIFIED: Troubleshooting has been completed.

- **NO**

  Refer to **INFORMATION**

TCM-P093112: GEAR SHIFT LOCK SOLENOID CIRCUIT HIGH. GENERAL ELECTRICAL FAILURES. CIRCUIT SHORT TO BATTERY (B6324S5, TF-80SC; B6324S5, TF-80SC AWD; 2011-2012)

DIAGNOSTIC TROUBLE CODE (DTC) INFORMATION TCM-P093112

see **DIAGNOSTIC TROUBLE CODE (DTC) INFORMATION TCM-P093112**

FAULT-TRACING

see **FAULT-TRACING**

TCM-P093112: GEAR SHIFT LOCK SOLENOID CIRCUIT HIGH. GENERAL ELECTRICAL FAILURES. CIRCUIT SHORT TO BATTERY (B8444S, TF-80SC AWD; 2006-2011)

DIAGNOSTIC TROUBLE CODE (DTC) INFORMATION TCM-P093112

Condition

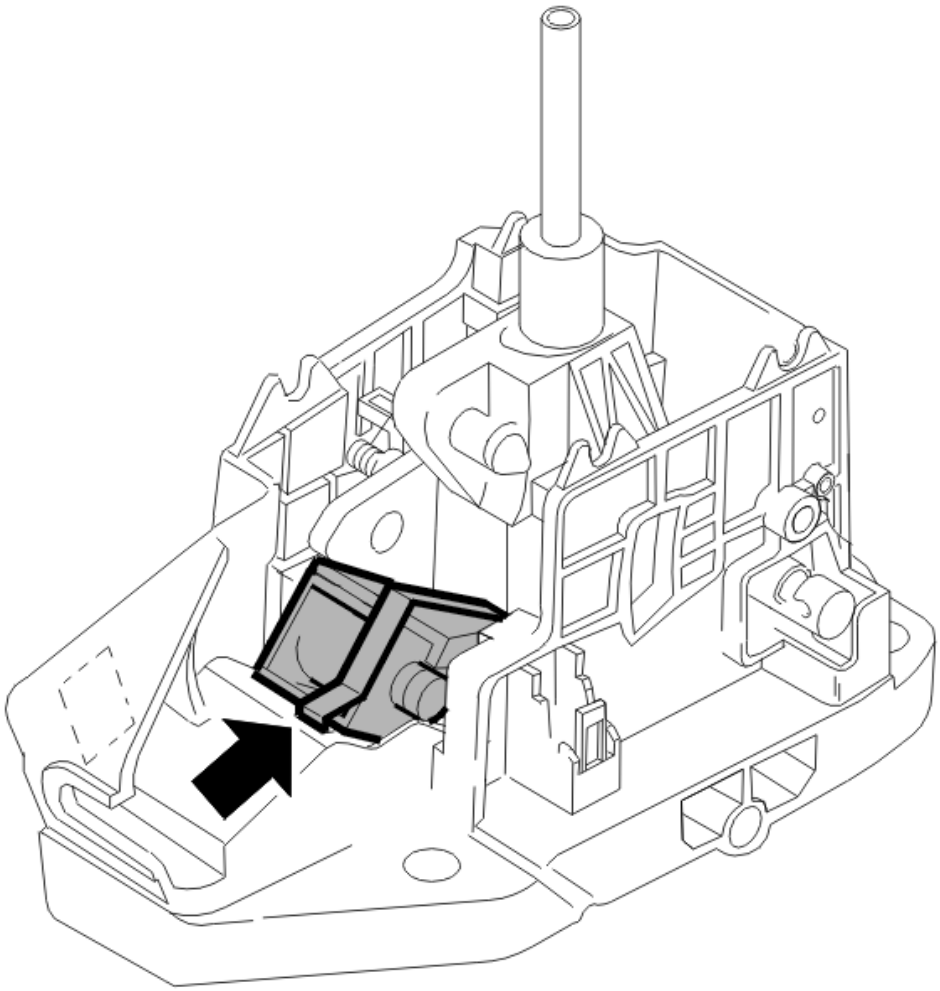

Fig. 70: Identifying Shift-Lock
Courtesy of VOLVO CARS CORPORATION

The gear selector module (GSM) is located under the top panel of the lever carrier. The gear selector module (GSM) communicates with the transmission control module (TCM) via an internal network, Local Interconnect Network (LIN), for activating the gear inhibitor function (shift lock).

If the gear selector module (GSM) registers that the solenoid power stage is active when it should be inactive, the diagnostic trouble code (DTC) is generated.

The diagnostic trouble code can be diagnosed when the ignition is on.

Substitute Value

- Gear selector not blocked.

Possible Source

- The signal cable is short-circuited to voltage.
- Solenoid not working.
- Internal fault in gear selector module (GSM).

Fault symptom[s]

- General warning lamp lit
- Gear selector can be moved when ignition off.

FAULT-TRACING TCM-P093112

CHECKS

CHECK THE FUNCTION SOLENOID FOR THE SHIFT LOCK

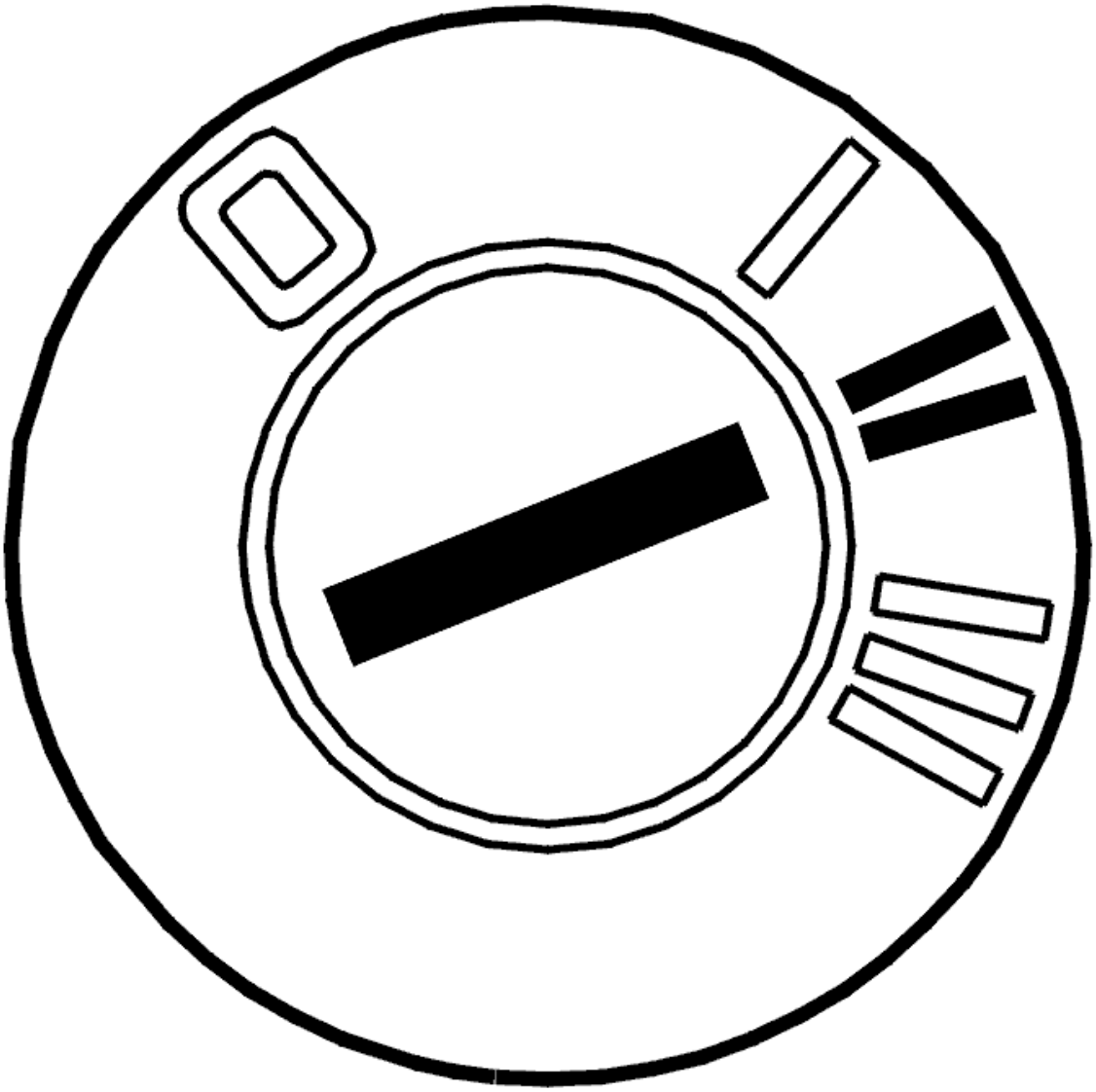

Fig. 71: Identifying Ignition ON
Courtesy of VOLVO CARS CORPORATION

- Ignition on
- Gear selector in position P.
- Try to move the gear selector lever without depressing the brake pedal. It should not be possible to move the gear selector lever.
- Press down the brake pedal and try to move the gear selector to another position. Now it shall be possible to move the gear selector.

  If the gear selector lever function is **not** OK it indicates that the fault is permanent.

  If the gear selector lever function is OK it means that the fault was present previously but is not active now. There is an intermittent fault.

- **Continue**

  Refer to **CHECKING THE WIRING AND COMPONENT**

CHECKING THE WIRING AND COMPONENT

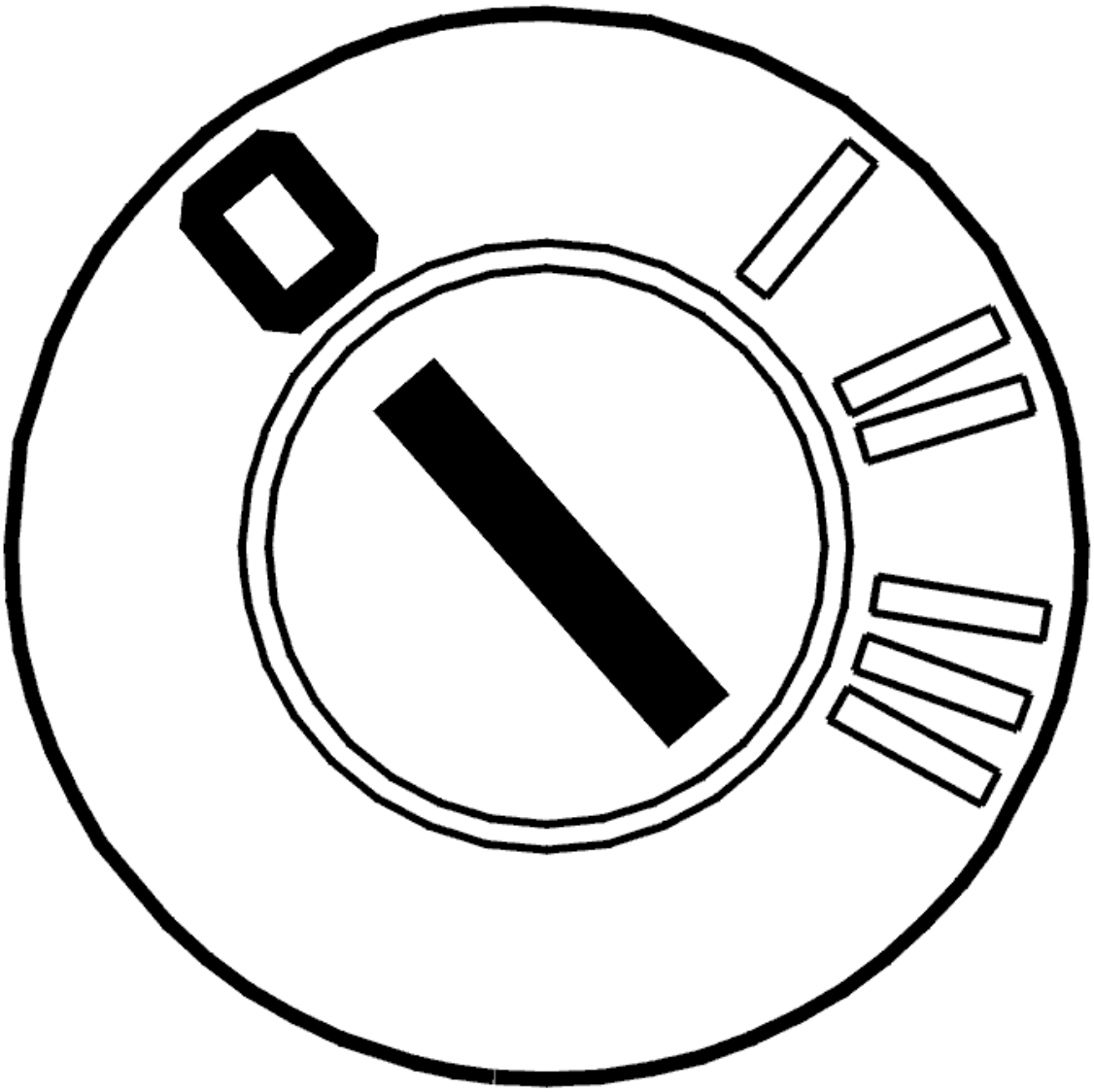

Fig. 72: Identifying Ignition OFF
Courtesy of VOLVO CARS CORPORATION

Check the cable between the connector on the transmission control module (TCM) #13 (#A43), gear selector module (GSM) #3 and the solenoid for P-lockout connector #2 for short-circuit to voltage.

Remedy as necessary.

Check the resistance of the solenoid between terminals #1 and #2 on the connector. If the resistance is not correct, replace the solenoid.

Other information

- see **SOLENOID SHIFT LOCK, REPLACE**
- For resistance values: **COMPONENT SPECIFICATIONS**
- see **CONTENTS**

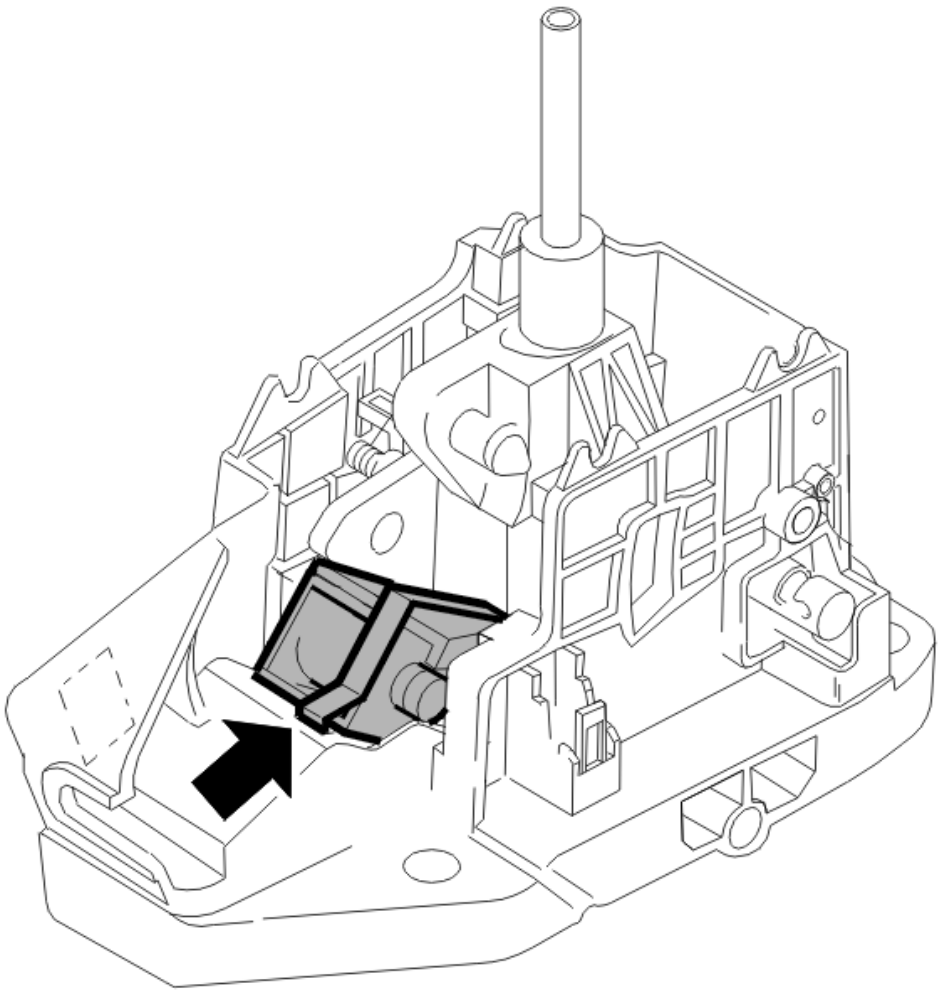

Fig. 73: Identifying Shift-Lock
Courtesy of VOLVO CARS CORPORATION

- **Continue**

  Refer to **VERIFICATION**

VERIFICATION

VERIFICATION

HINT: After carrying out the repair, check that the fault has been remedied.

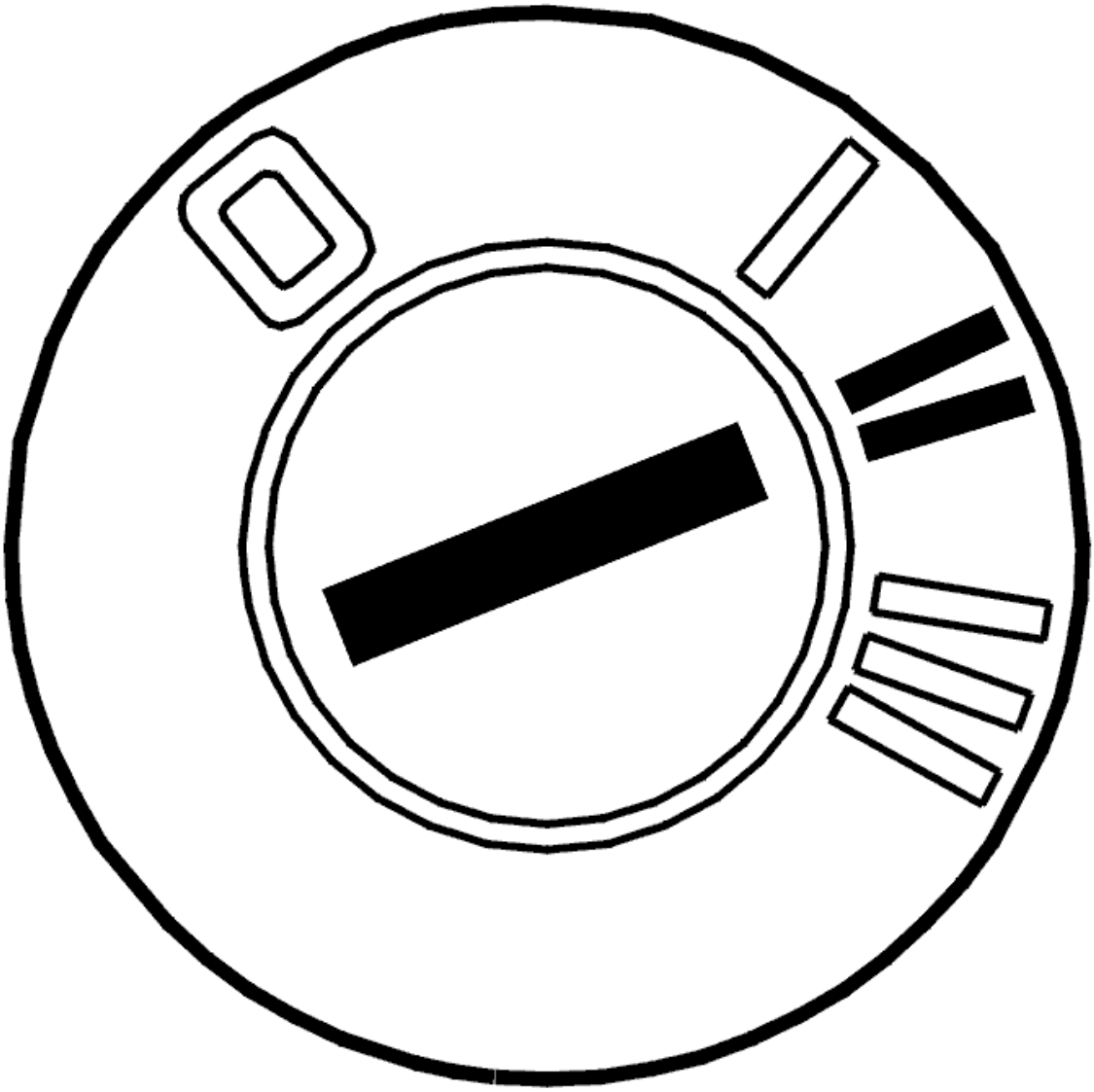

Fig. 74: Identifying Ignition ON
Courtesy of VOLVO CARS CORPORATION

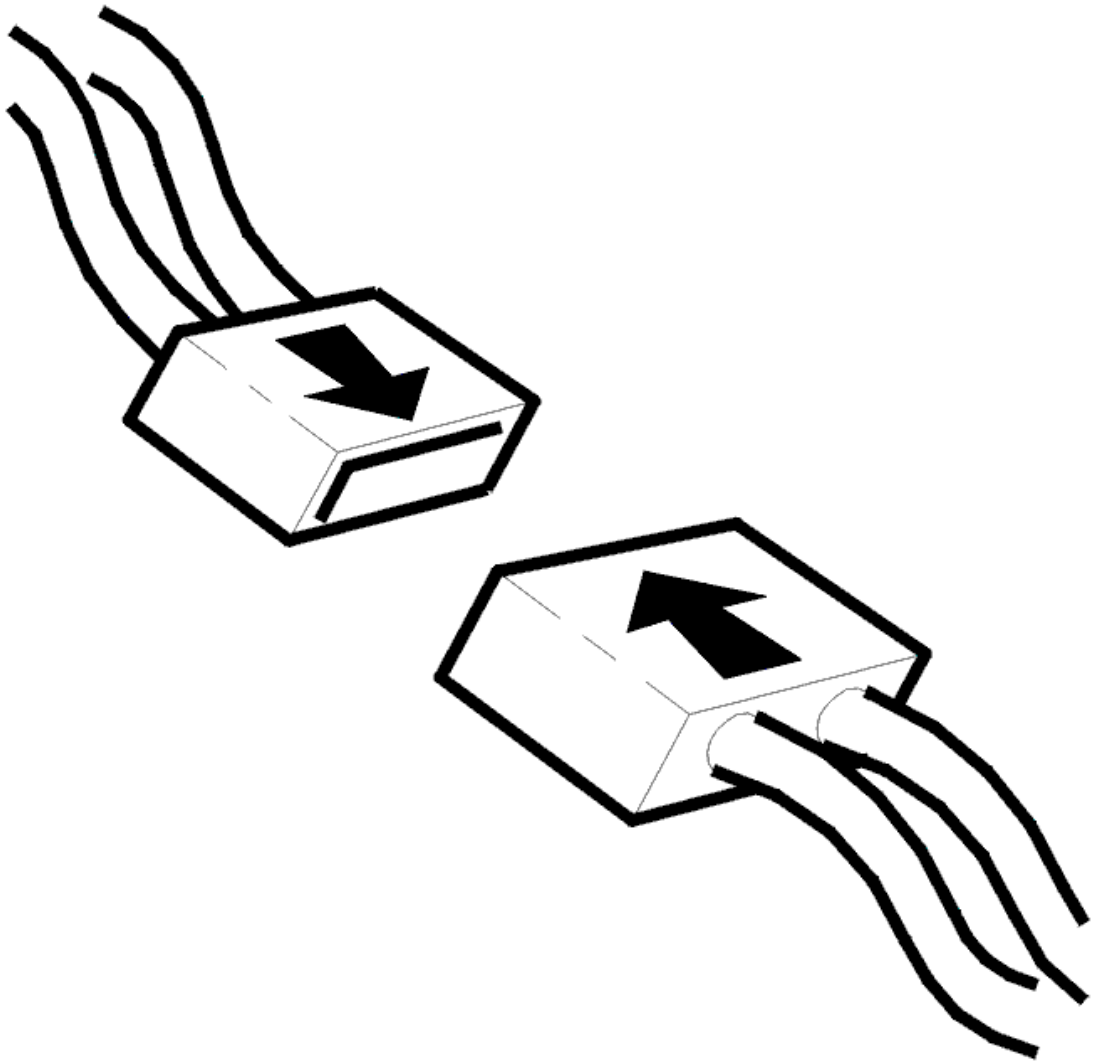

Fig. 75: Identifying Connector(s) Reinstallation
Courtesy of VOLVO CARS CORPORATION

- Ignition off
- Reinstall the components, reconnect the connectors etc.
- Ignition on
- Gear selector in position P.
- Try to move the gear selector lever without depressing the brake pedal. It should not be possible to move the gear selector lever.
- Try to move the gear selector lever with the brake pedal depressed. It should now be possible to move the gear selector lever.

Is the function OK?

- **YES**

VERIFIED: Troubleshooting has been completed.

- **NO**

  Refer to **INFORMATION**

INFORMATION

FAULT-TRACING INFORMATION

The fault should have been detected and remedied. As this is not the case fault-tracing has failed.

Exit fault-tracing for this diagnostic trouble code (DTC) or make another attempt.

TCM-P093112: GEAR SHIFT LOCK SOLENOID CIRCUIT HIGH. GENERAL ELECTRICAL FAILURES. CIRCUIT SHORT TO BATTERY (TF-80SC AWD; 2005)

DIAGNOSTIC TROUBLE CODE (DTC) INFORMATION TCM-P093112

see **DIAGNOSTIC TROUBLE CODE (DTC) INFORMATION TCM-P093112**

FAULT-TRACING TCM-P093112

see **FAULT-TRACING TCM-P093112**

TCM-P096000: PRESSURE CONTROL SOLENOID A CONTROL CIRCUIT / OPEN. GENERAL FAILURE INFORMATION. NO SUB TYPE INFORMATION (B6324S, TF-80SC; B6324S, TF-80SC AWD; 2007-2010)

DIAGNOSTIC TROUBLE CODE (DTC) INFORMATION TCM-P096000

Condition

Linear pressure solenoid SLT controls system pressure in the transmission. The solenoid is controlled by power stages at the output of the transmission control module (TCM).

The transmission control module (TCM) uses the power stage to control the current to the solenoid. A low amperage results in a high line pressure. A high amperage (approximately 1 A) gives a low line pressure. The amperage is primarily affected by the throttle position.

The diagnostic trouble code (DTC) is stored if the control module detects that:

- Open circuit in solenoid SLT circuit.

Solenoid SLT cannot then control the line pressure.

The control module's test for the diagnostic trouble code (DTC) starts in the event of:

- Ignition on.

NOTE: The control module can only detect the fault once the test has been started and the diagnostic trouble code (DTC) is stored when the conditions are met.

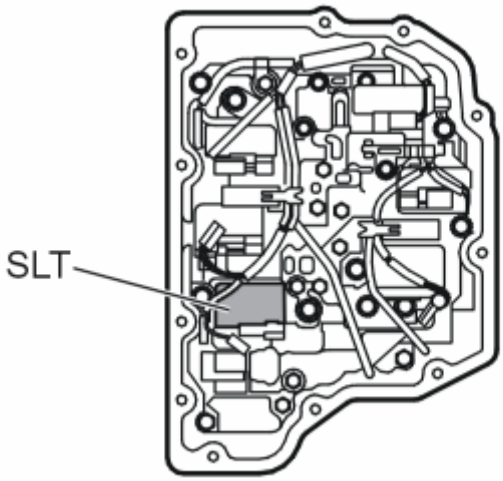

Fig. 76: Identifying Solenoid SLT
Courtesy of VOLVO CARS CORPORATION

Substitute Value

- Auxiliary program **Emergency mode 1** in the transmission control module (TCM) has started. See **EMERGENCY MODE IN THE EVENT OF A FAULT**

Possible Source

- Contact resistance in the terminals.
- Open-circuit in the cable for the control signal or signal ground.
- Linear pressure solenoid SLT not working.

Fault symptom[s]

- General warning lamp lit
- Malfunction indicator light (MIL), on
- No lock-up
- Rough gear shift

FAULT-TRACING

CHECKS

CHECKING LINE PRESSURE SOLENOID SLT

Fig. 77: Identifying Ignition ON
Courtesy of VOLVO CARS CORPORATION

- Ignition on.
- Activate solenoid SLT by clicking on the VCT2000 symbol.

  Read off the current through the solenoid SLT circuit. The current should oscillate between 100 and 950 mA.

  The fault is permanent if the current does not change.

  If the current changes, this is an indication that the fault was present previously but is not active at the moment, i. e. an intermittent fault.

Fig. 78: Identifying VCT2000 Diagnostic Tool Symbol In VIDA
Courtesy of VOLVO CARS CORPORATION

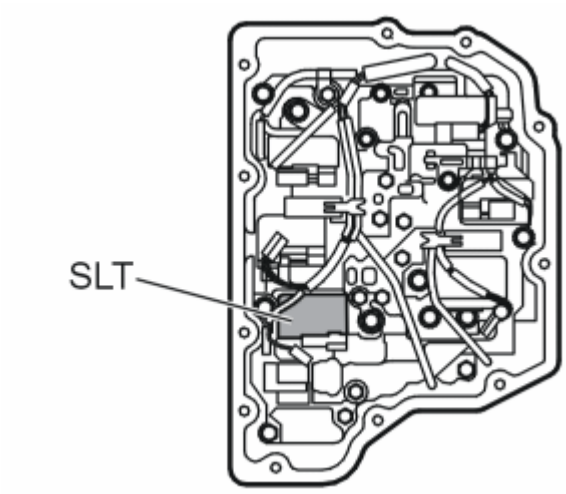

Fig. 79: Identifying Solenoid SLT
Courtesy of VOLVO CARS CORPORATION

- **Continue**

  Refer to **CHECKING THE COMPONENTS AND WIRING**

CHECKING THE COMPONENTS AND WIRING

Fig. 80: Identifying Ignition OFF
Courtesy of VOLVO CARS CORPORATION

- Ignition off.
- Open the transmission control system.

  Check connector B (22-pin) for the transmission control module (TCM). Check for damaged or pressed in pins. Check for contact resistance and oxidation.

  Check the cables for open circuit and short circuit to ground.

  Take readings between:

  - Transmission connector #B3 and the connector for solenoid SLT #1.
  - Transmission connector #B1 and the connector for solenoid SLT #2.

  HINT: If no fault is found in the wiring, check solenoid SLT. See CHECKING INTERNAL COMPONENTS OF THE TRANSMISSION

  If no fault is found in the wiring or the component replace the control system.

  Remedy as necessary.

  Other information

  - see **CONNECTING THE BREAKOUT BOX**
  - see **SIGNAL SPECIFICATION**
  - see **VALVE HOUSING**
  - see **TRANSMISSION CONTROL UNIT WIRING HARNESS**
  - To access the transmission control system:**COVER CONTROL SYSTEM, REPLACING (2007-2011)**
  - see **CHECKING WIRING AND TERMINALS**

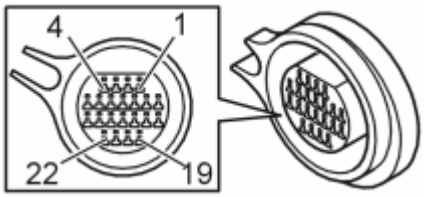

Fig. 81: Identifying Connector B Terminals
Courtesy of VOLVO CARS CORPORATION

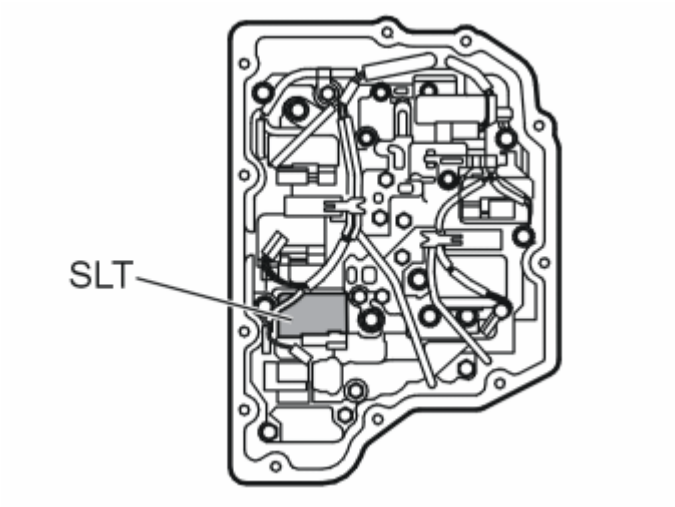

Fig. 82: Identifying Solenoid SLT
Courtesy of VOLVO CARS CORPORATION

- **Continue**

  Refer to **RESETTING ADAPTATION**

VERIFICATION

VERIFICATION

HINT: After carrying out the repair, check that the fault has been remedied.

Fig. 83: Identifying Ignition ON
Courtesy of VOLVO CARS CORPORATION

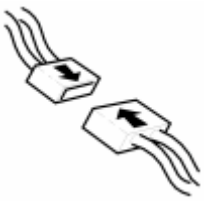

Fig. 84: Identifying Connector(s) Reinstallation
Courtesy of VOLVO CARS CORPORATION

- Ignition off.
- Reinstall the connectors, components etc.
- Ignition on.
- Activate solenoid SLT by clicking on the VCT2000 symbol.

  Read off the current through the solenoid SLT circuit. The current should oscillate between 100 and 950 mA.

Fig. 85: Identifying VCT2000 Diagnostic Tool Symbol In VIDA
Courtesy of VOLVO CARS CORPORATION

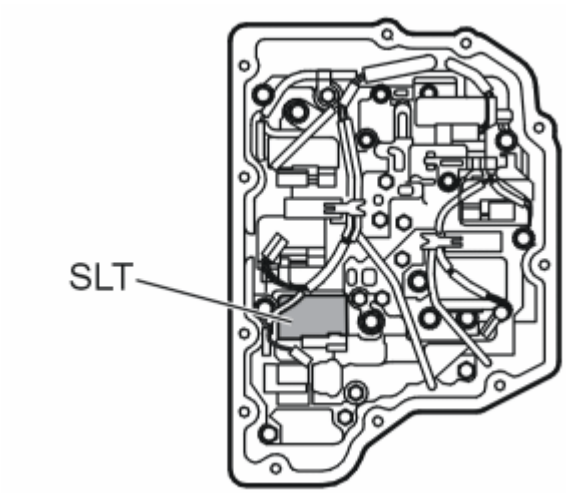

Fig. 86: Identifying Solenoid SLT
Courtesy of VOLVO CARS CORPORATION

Is the function OK?

- **YES**

VERIFIED: Troubleshooting has been completed.

- **NO**

  Refer to **INFORMATION**

INFORMATION

FAULT-TRACING INFORMATION

The fault should have been detected and remedied. As this is not the case fault-tracing has failed.

Exit fault-tracing for this diagnostic trouble code (DTC) or make another attempt.

RESETTING ADAPTATION

RESETTING THE ADAPTATION AND THE COUNTER FOR "TRANSMISSION OIL, REPLACE"

HINT: The transmission has torque-regulated, adaptive pressure regulation. The pressure regulator enables the transmission to regulate pressure during each shift to prevent hard shifting. Each shift is assessed by the transmission control module (TCM) and is stored in the internal memory. This makes it possible to compensate for transmission and clutch wear. It is important that the adaptation in the memory is reset so that the transmission works normally after the repair. Because the fluid was changed during the repair, the counter for transmission fluid change must also be reset. If the counter is not reset during draining/replacement, a diagnostic trouble code may be generated under the wrong conditions.

NOTE: This applies only if the transmission or one of the components in the transmission have been replaced.

Fig. 87: Identifying Ignition ON
Courtesy of VOLVO CARS CORPORATION

- Ignition on.

  Click on the VCT2000 symbol to reset the adaptation and counter.

Fig. 88: Identifying VCT2000 Diagnostic Tool Symbol In VIDA
Courtesy of VOLVO CARS CORPORATION

- **Continue**

  Refer to **VERIFICATION**

TCM-P096000: PRESSURE CONTROL SOLENOID A CONTROL CIRCUIT / OPEN. GENERAL FAILURE INFORMATION. NO SUB TYPE INFORMATION (B6324S5, TF-80SC; B6324S5, TF-80SC AWD; 2011-2012)

DIAGNOSTIC TROUBLE CODE (DTC) INFORMATION TCM-P096000

see **DIAGNOSTIC TROUBLE CODE (DTC) INFORMATION TCM-P096000**

FAULT-TRACING

see **FAULT-TRACING**

TCM-P096000: PRESSURE REGULATOR SOLENOID A CONTROL CIRCUIT/BROKEN CIRCUIT. GENERAL FAULT INFORMATION. NO INFORMATION ON FAULT TYPE (B8444S, TF-80SC AWD; 2006-2011)

DIAGNOSTIC TROUBLE CODE (DTC) INFORMATION TCM-P096000

Condition

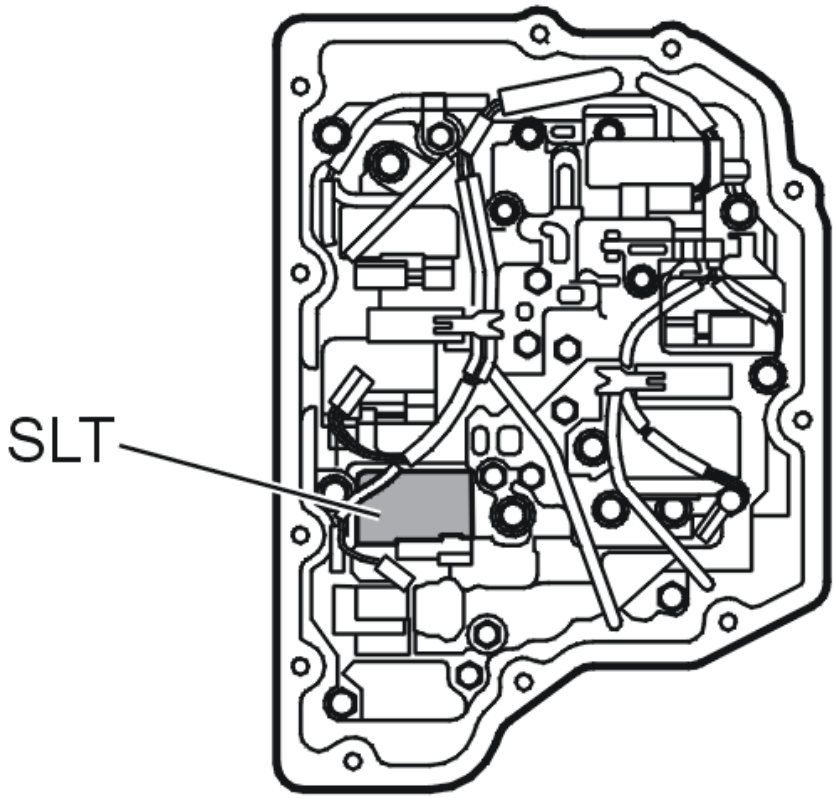

Fig. 89: Identifying Solenoid SLT
Courtesy of VOLVO CARS CORPORATION

Linear pressure solenoid SLT regulates the system pressure in the gearbox. The solenoid is controlled using a power stage on the output of the transmission control module (TCM).

The transmission control module (TCM) regulates the current to the solenoid with the help of the power stage. Low current gives high system pressure and high current (approx. 1A) gives low system pressure. The current strength is affected principally by the position of the accelerator throttle.

If they transmission control module (TCM) registers that there is a break in the circuit to the SLT solenoid, the diagnostic trouble code (DTC) is generated.

Substitute Value

- Auxiliary program **Emergency mode 1** in the transmission control module (TCM) has started.

  HINT: EMERGENCY MODE IN CASE OF MALFUNCTION

Possible Source

- Contact resistance in the terminals
- Open circuit in lead for control signal or signal ground.

- Linear pressure solenoid SLT not working.

Fault symptom[s]

- General warning lamp lit
- Malfunction indicator lamp (MIL) lit.
- No lock-up function.
- Harsh gear changing

FAULT TRACING TCM-P096000

CHECKS

CHECKING THE LINE PRESSURE SOLENOID SLT

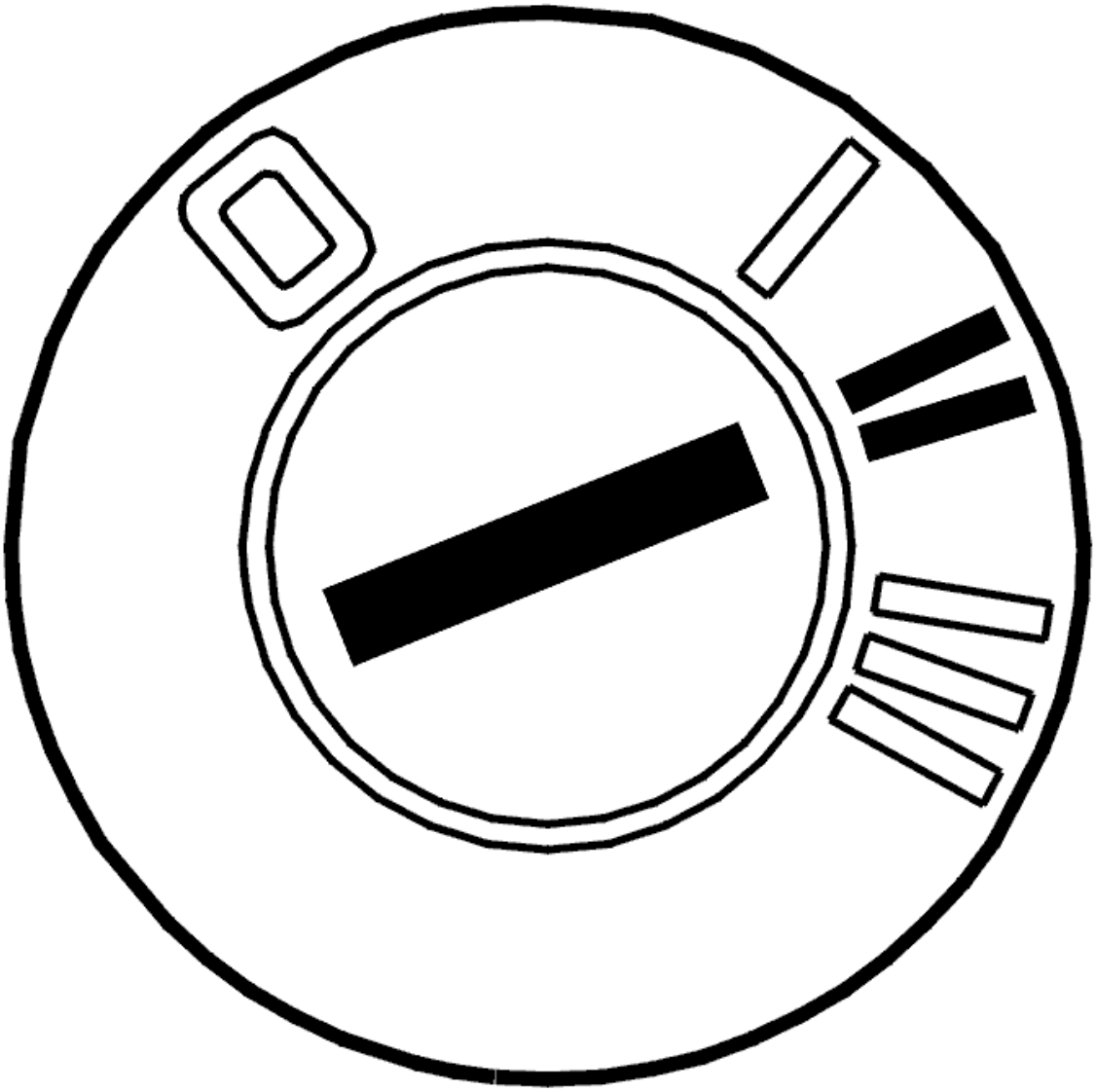

Fig. 90: Identifying Ignition ON
Courtesy of VOLVO CARS CORPORATION

- Ignition on
- Activate solenoid SLT by clicking the VCT2000 symbol.

  Read the current though the circuit for solenoid SLT. The current must oscillate between approximately 100 and 950 mA.

  The fault is permanent if the current does not change.

  If the current oscillates then this would suggest that the fault has previously been present but is no longer active. The fault is intermittent.

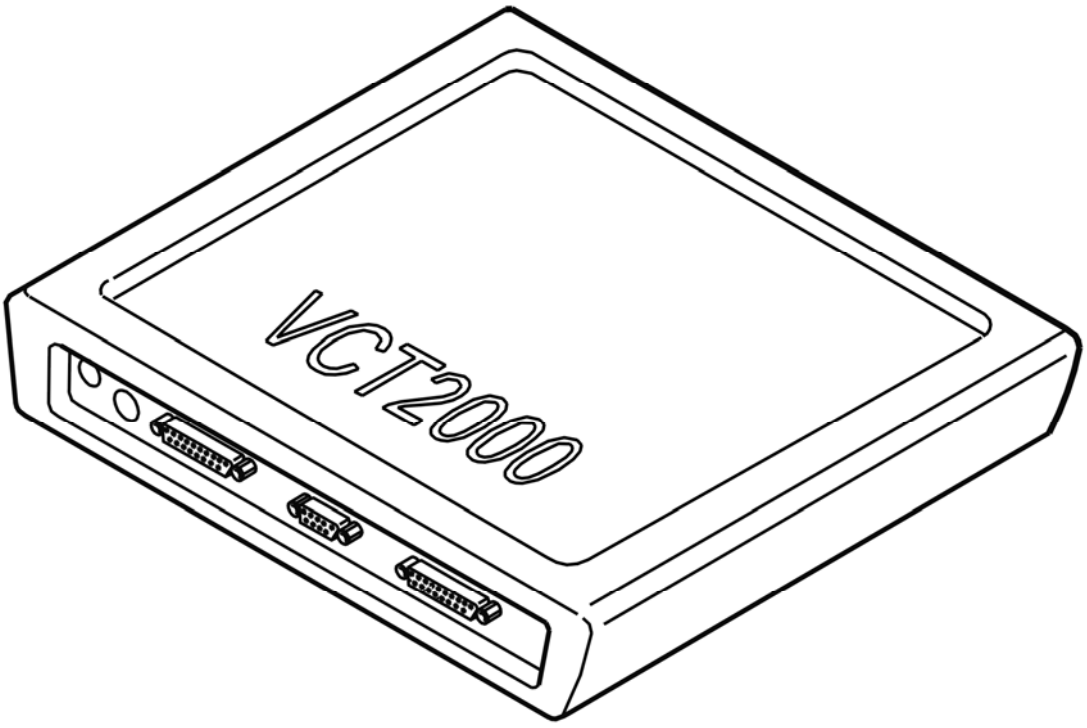

Fig. 91: Identifying VCT2000 Diagnostic Tool Symbol In VIDA
Courtesy of VOLVO CARS CORPORATION

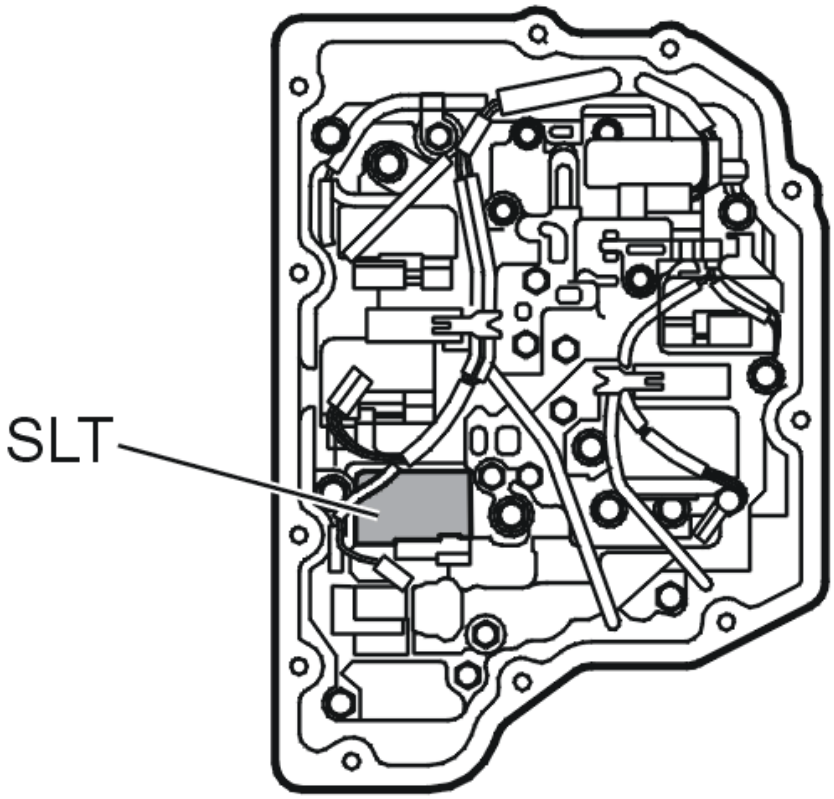

Fig. 92: Identifying Solenoid SLT
Courtesy of VOLVO CARS CORPORATION

- **Continue**

  Refer to **CHECKING THE COMPONENTS AND WIRING**

CHECKING THE COMPONENTS AND WIRING

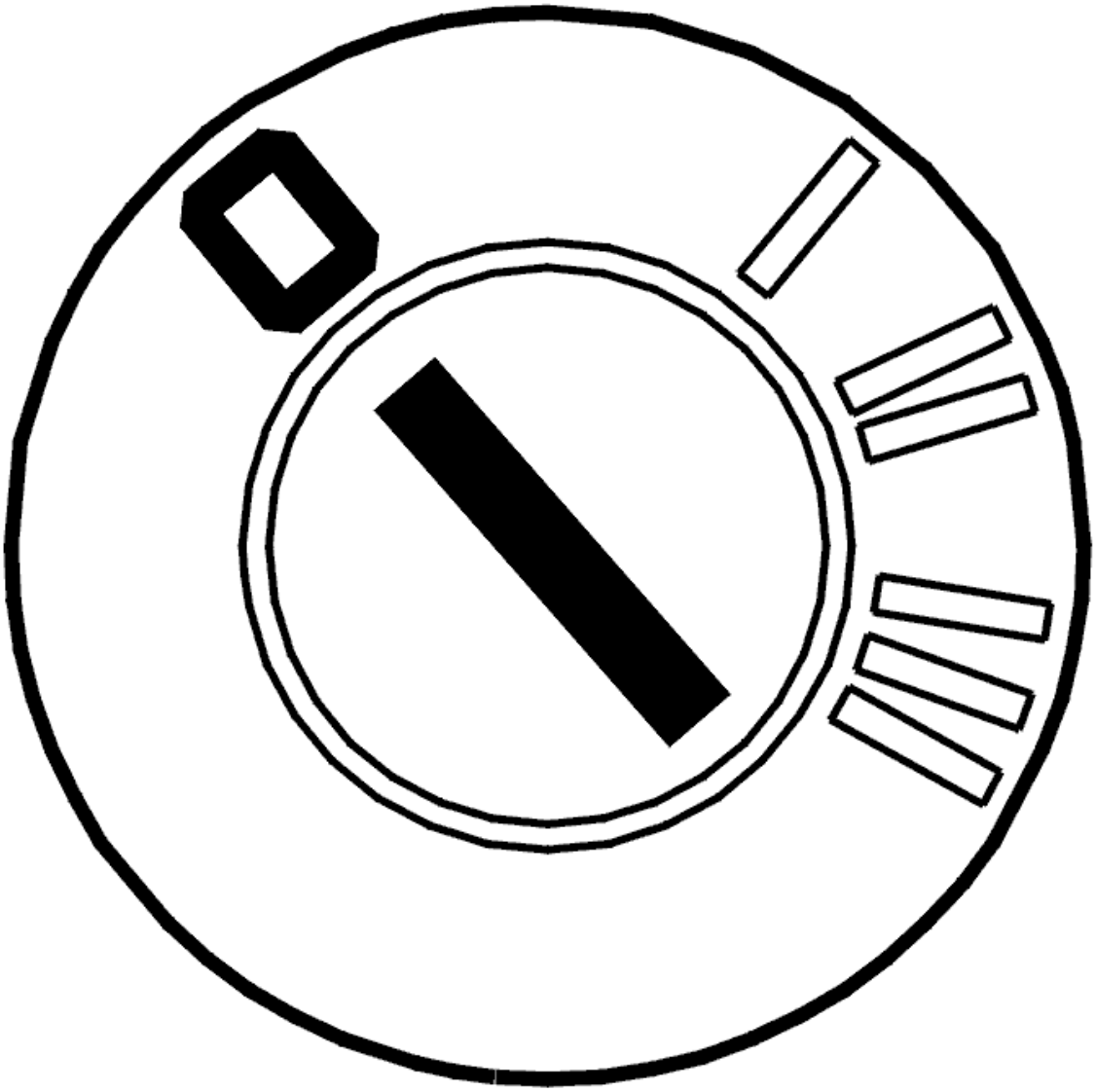

Fig. 93: Identifying Ignition OFF
Courtesy of VOLVO CARS CORPORATION

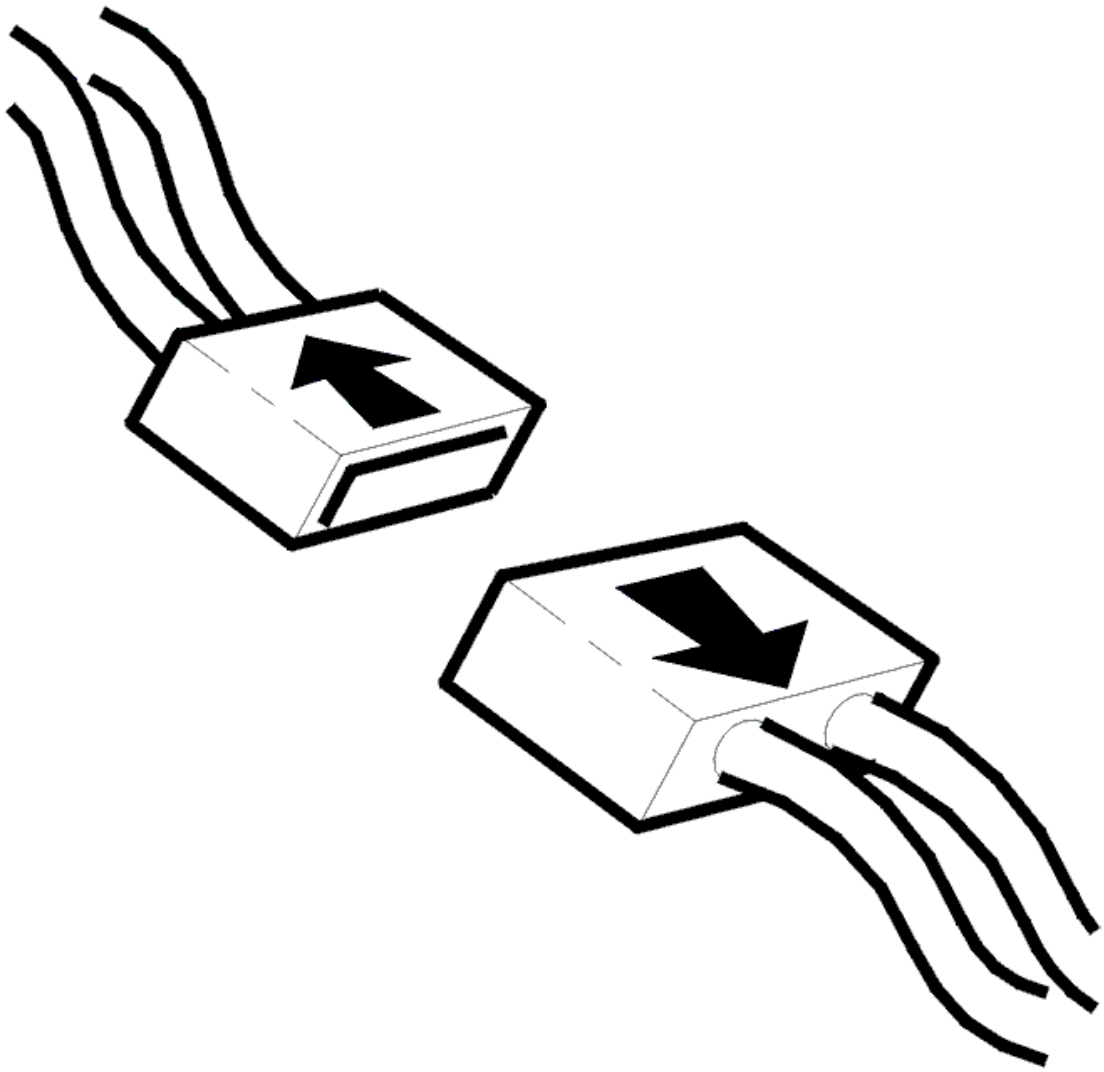

Fig. 94: Identifying Connector(s) Disconnected
Courtesy of VOLVO CARS CORPORATION

- Ignition off
- Open the gearbox control system

  Check connector B (22-pin) for the transmission control module (TCM). Check for damage and pressed in terminal pins. Check for contact resistance and oxidation.

  Check the wiring between the transmission connector terminal #B3 and the connector for solenoid SLT terminal #1. Check the wiring between the transmission connector terminal #B1 and the connector for solenoid SLT terminal #2. Check for an open circuit. Check for a short-circuit to ground.

  HINT: If no fault is found in the wiring check solenoid SLT. See CHECKING THE LINE PRESSURE SOLENOID SLT, SLC1, SLC2, SLC3, SLB1 AND LOCK-UP SOLENOID SLU

If no fault is found in the wiring or the component replace the control system.

Remedy as necessary.

Other information

- see **SIGNAL DESCRIPTION**
- see **CONNECTING THE BREAKOUT BOX**
- see **CONTROL SYSTEM, REPLACING**
- see **CABLE HARNESS, CONTROL SYSTEM, GEARBOX, REPLACING**
- To access the transmission control system: **COVER CONTROL SYSTEM, REPLACING (2007-2011)**
- see **CONTENTS**

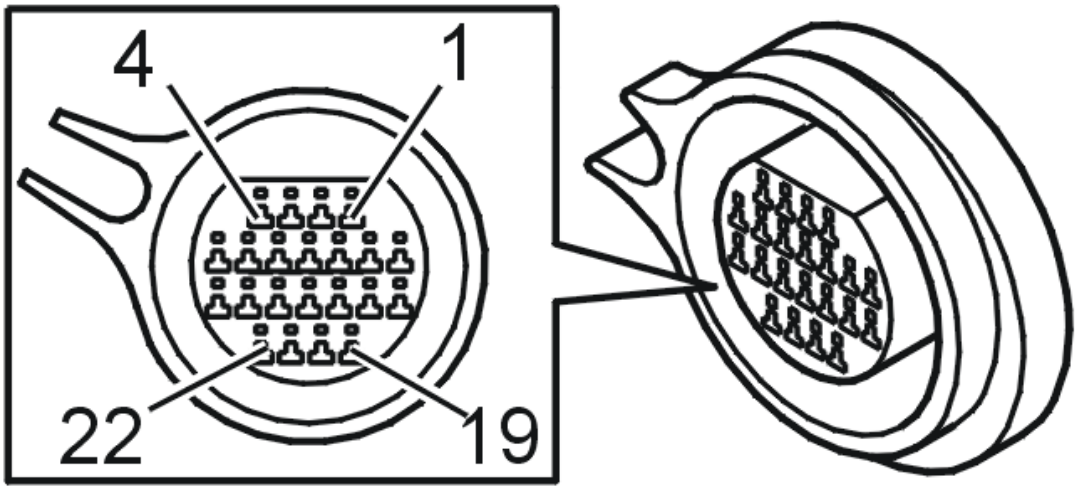

Fig. 95: Identifying Connector B Terminals
Courtesy of VOLVO CARS CORPORATION

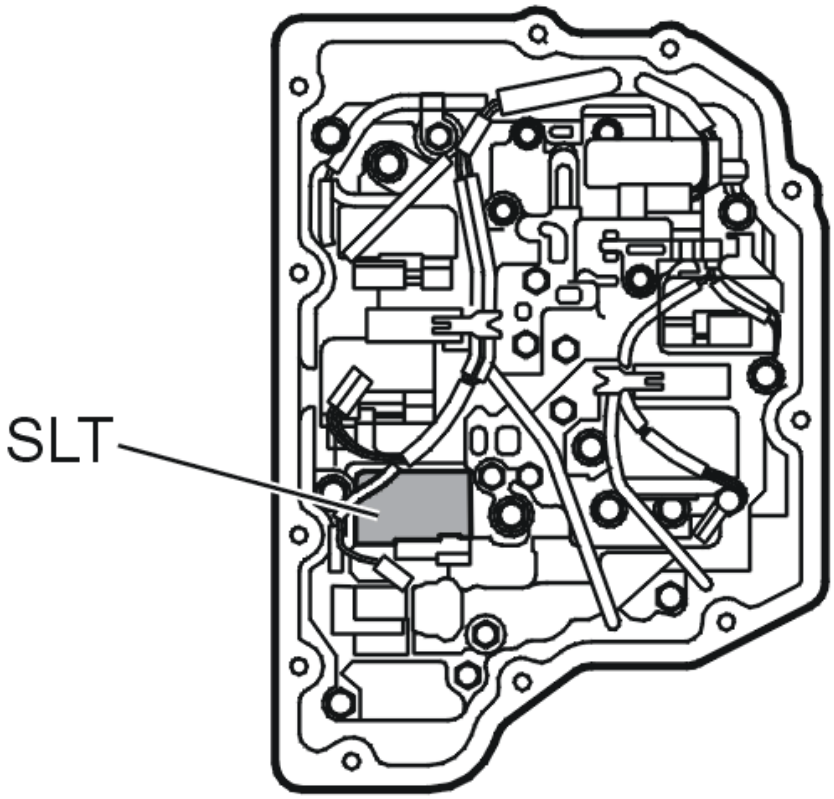

Fig. 96: Identifying Solenoid SLT
Courtesy of VOLVO CARS CORPORATION

- **Continue**

  Refer to **RESETTING ADAPTATION**

RESETTING ADAPTATION

RESETTING ADAPTATION AND COUNTER FOR "TRANSMISSION OIL, CHANGING"

HINT: The transmission has torque-controlled, adaptive pressure control. The pressure control means that the transmission itself controls the pressure during each shift sequence in order to avoid harsh shifting. Each shift is assessed by the transmission control module (TCM) and is stored in the internal memory, which results in compensation for wear in the transmission and clutch. In order for the transmission to function correctly after repair, it is important to reset the adaptation in the memory. Since the oil is changed during the repair, the counter for "Transmission oil, change" shall also be reset. If the counter is not reset when draining/changing oil, there is a risk that a diagnostic trouble code may be generated under incorrect conditions.

NOTE: **This applies only if the transmission or one of the components in the transmission have been replaced.**

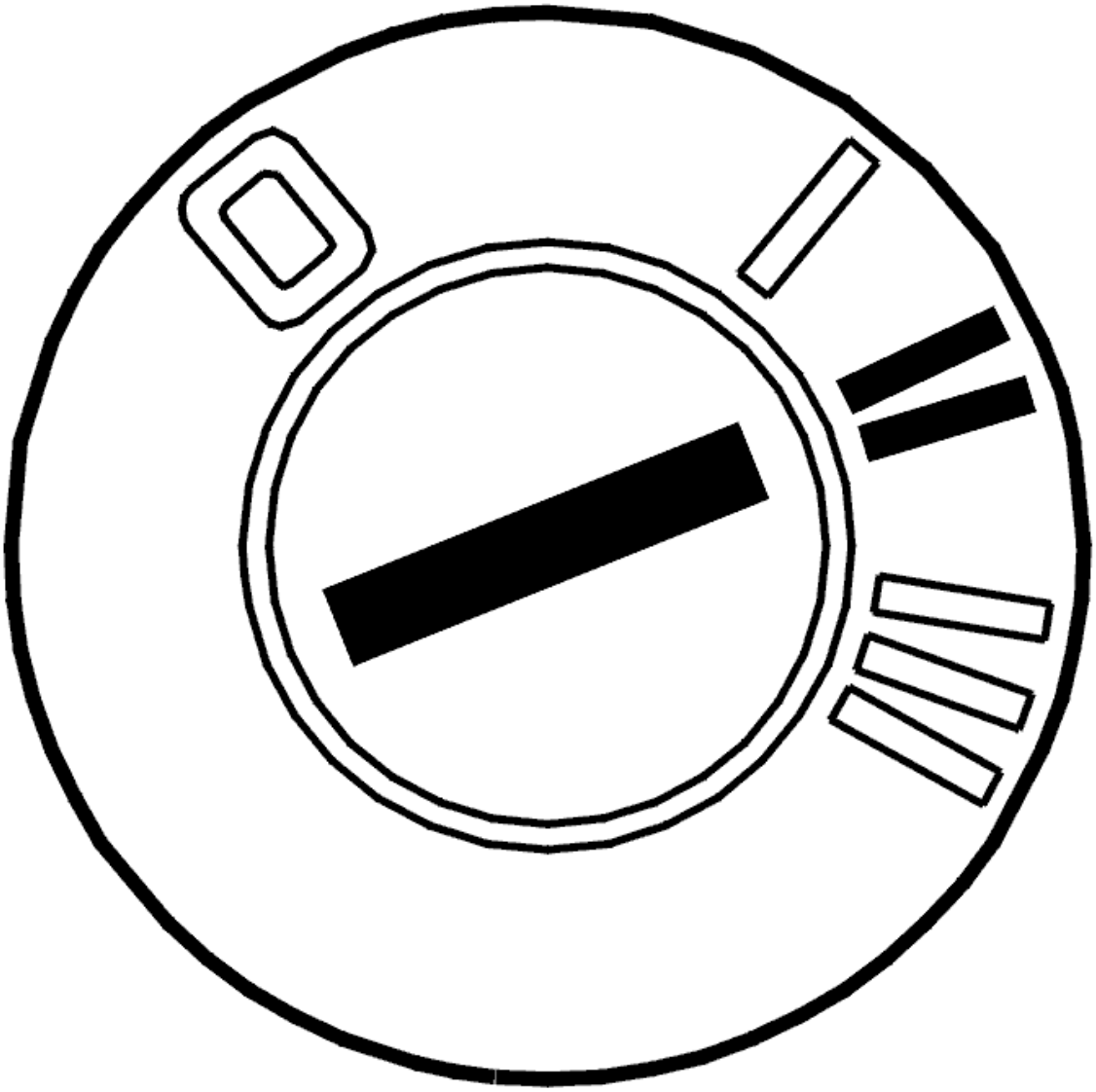

Fig. 97: Identifying Ignition ON
Courtesy of VOLVO CARS CORPORATION

- Ignition on

  Activate reset of the adaptation and the counter by clicking on the symbol for VCT2000.

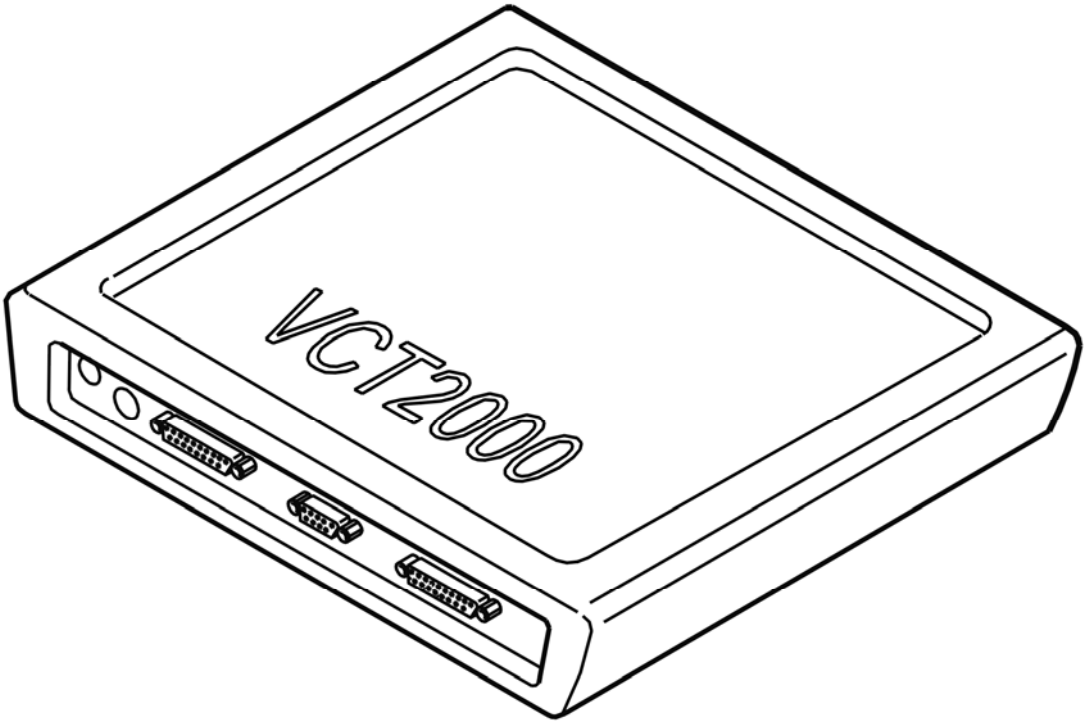

Fig. 98: Identifying VCT2000 Diagnostic Tool Symbol In VIDA
Courtesy of VOLVO CARS CORPORATION

- **Continue**

  Refer to **VERIFICATION**

VERIFICATION

VERIFICATION

HINT: After carrying out the repair, check that the fault has been remedied.

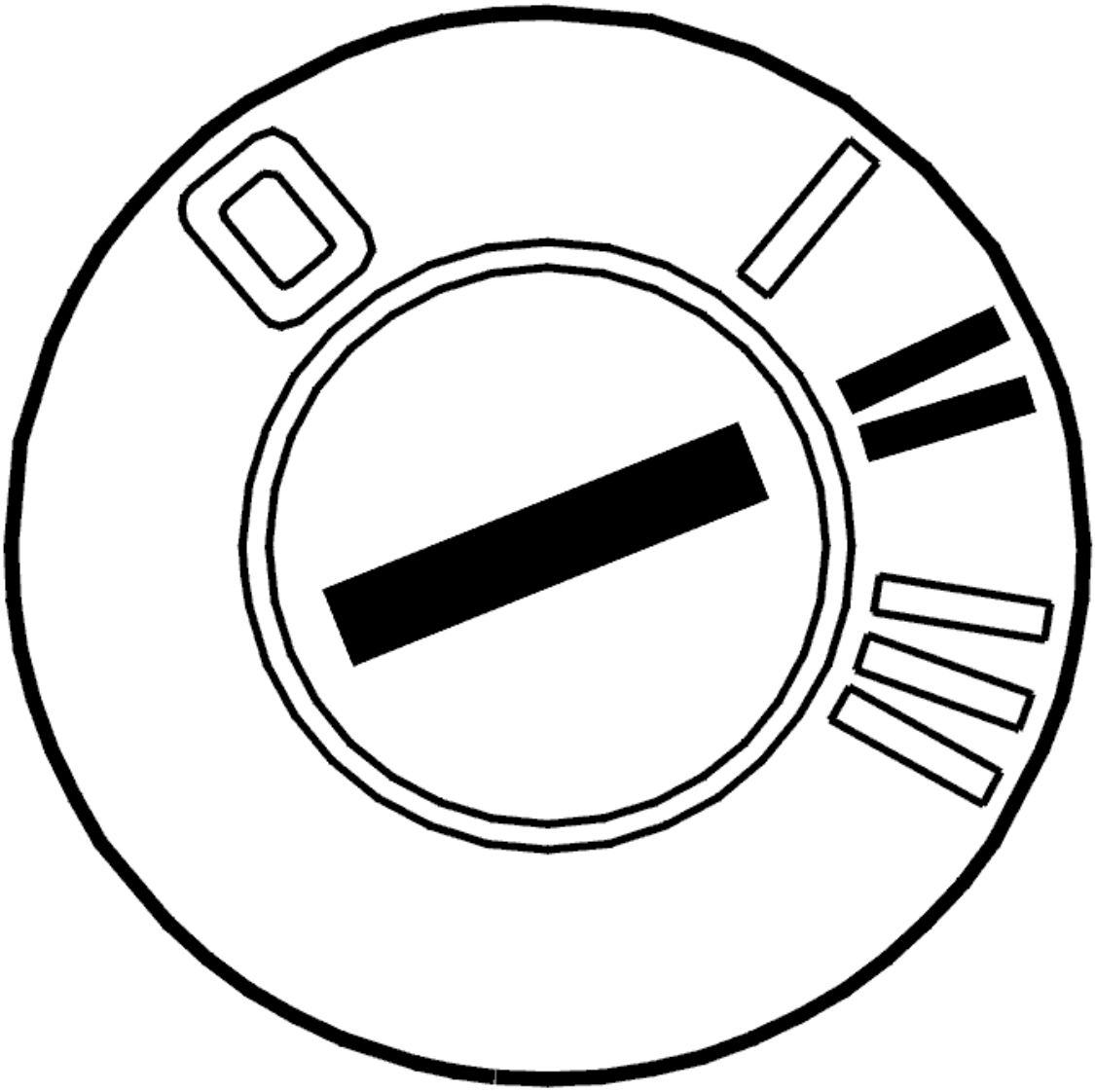

Fig. 99: Identifying Ignition ON
Courtesy of VOLVO CARS CORPORATION

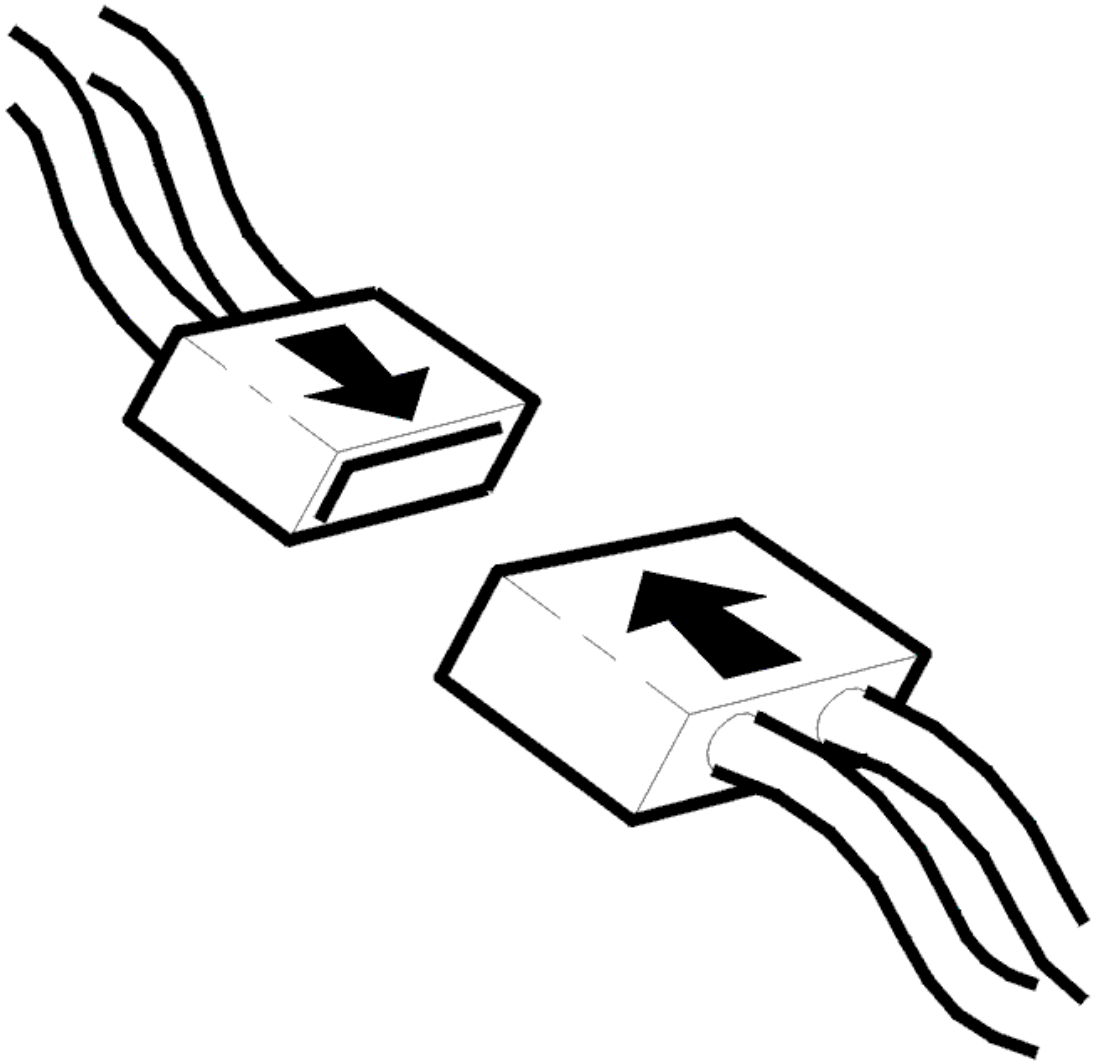

Fig. 100: Identifying Connector(s) Reinstallation
Courtesy of VOLVO CARS CORPORATION

- Ignition off
- Reinstall the components, reconnect the connectors etc.
- Ignition on
- Activate solenoid SLT by clicking the symbol for VCT2000.

  Read off the current through the circuit for solenoid SLT. The current must oscillate between approximately 0 and 1000 mA.

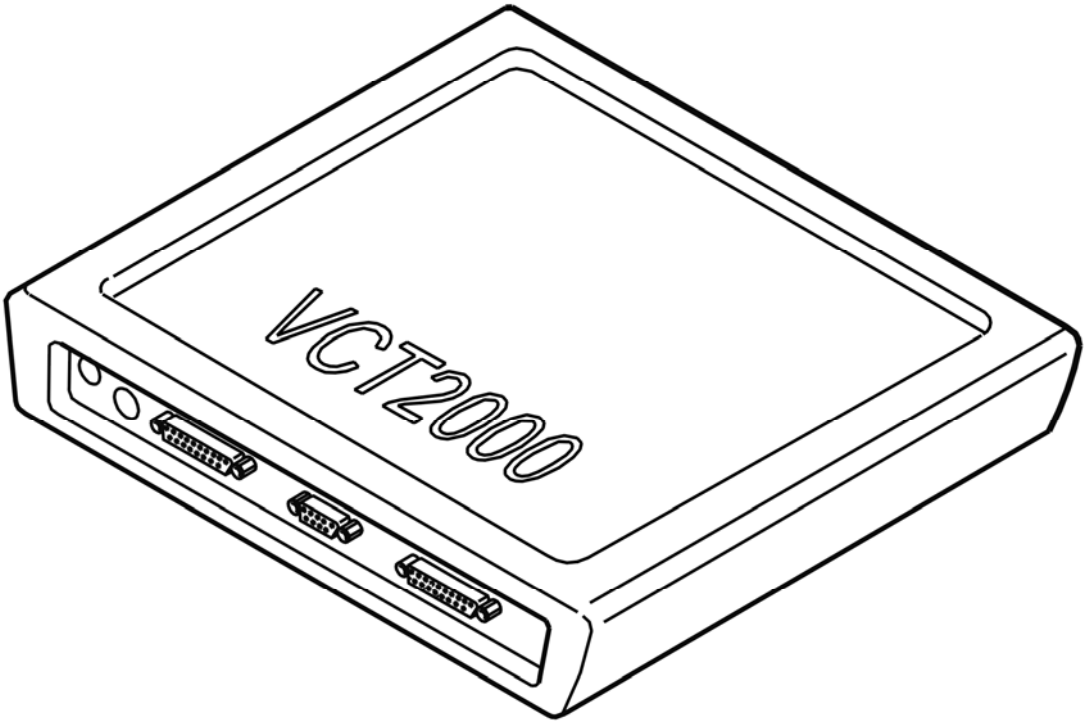

Fig. 101: Identifying VCT2000 Diagnostic Tool Symbol In VIDA
Courtesy of VOLVO CARS CORPORATION

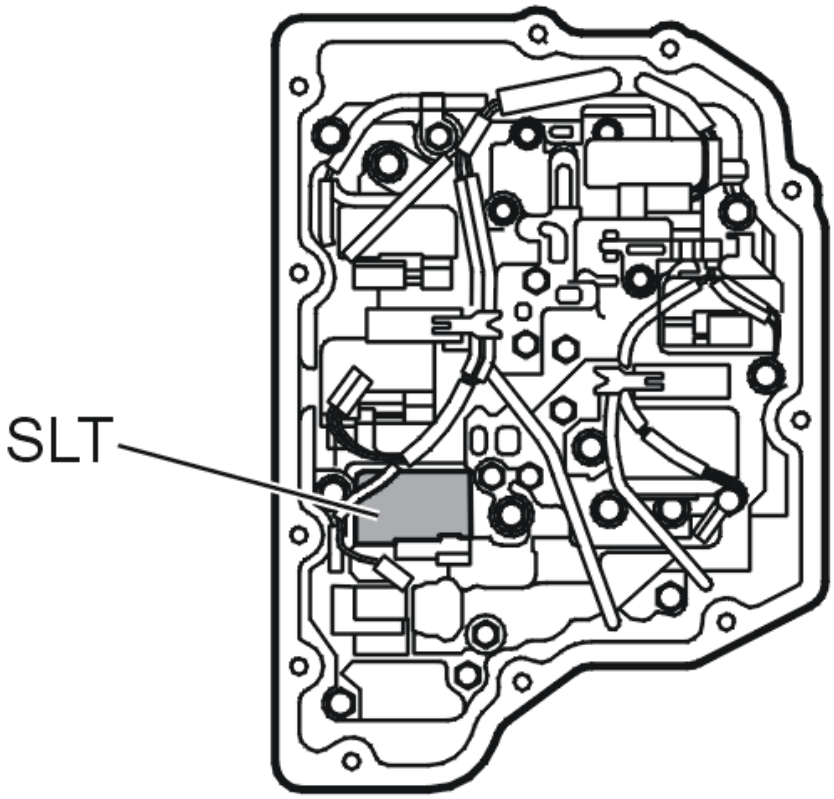

Fig. 102: Identifying Solenoid SLT
Courtesy of VOLVO CARS CORPORATION

Is the function OK?

- **YES**

  VERIFIED: Troubleshooting has been completed.

- **NO**

  Refer to **INFORMATION**

INFORMATION

FAULT-TRACING INFORMATION

The fault should have been detected and remedied. As this is not the case fault-tracing has failed.

Exit fault-tracing for this diagnostic trouble code (DTC) or make another attempt.

TCM-P096000: PRESSURE REGULATOR SOLENOID A CONTROL CIRCUIT/BROKEN CIRCUIT. GENERAL FAULT INFORMATION. NO

INFORMATION ON FAULT TYPE (TF-80SC AWD; 2005)

DIAGNOSTIC TROUBLE CODE (DTC) INFORMATION TCM-P096000

see **DIAGNOSTIC TROUBLE CODE (DTC) INFORMATION TCM-P096000**

FAULT TRACING TCM-P096000

see **FAULT TRACING TCM-P096000**

TCM-P096100: PRESSURE CONTROL SOLENOID A CONTROL CIRCUIT RANGE/PERFORMANCE. GENERAL FAILURE INFORMATION. NO SUB TYPE INFORMATION (B6324S, TF-80SC; B6324S, TF-80SC AWD; 2007-2010)

DIAGNOSTIC TROUBLE CODE (DTC) INFORMATION TCM-P096100

Condition

Linear pressure solenoid SLT controls system pressure in the transmission. The solenoid is controlled by power stages at the output of the transmission control module (TCM).

The transmission control module (TCM) uses the power stage to control the current to the solenoid. A low amperage results in a high line pressure. A high amperage (approximately 1 A) gives a low line pressure. The amperage is primarily affected by the throttle position.

The diagnostic trouble code (DTC) is stored if the control module detects that:

- The measured current in the solenoid circuit is incorrect.

Solenoid SLT cannot then control the line pressure.

The control module's test for the diagnostic trouble code (DTC) starts in the event of:

- Ignition on.

NOTE: **The control module can only detect the fault once the test has been started and the diagnostic trouble code (DTC) is stored when the conditions are met.**

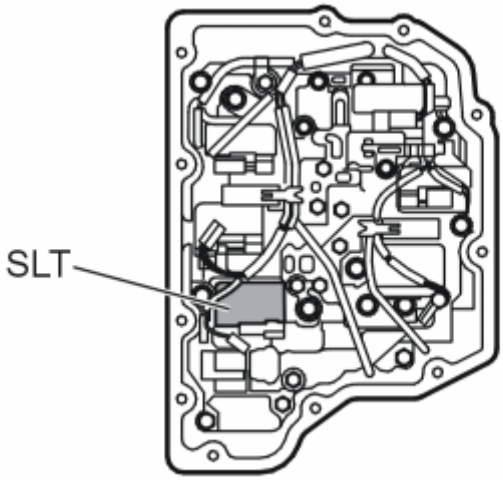

Fig. 103: Identifying Solenoid SLT
Courtesy of VOLVO CARS CORPORATION

Substitute Value

- Auxiliary program **Emergency mode 1** in the transmission control module (TCM) has started. See **EMERGENCY MODE IN THE EVENT OF A FAULT**

Possible Source

- Contact resistance in the terminals.
- Open-circuit in the cable for the control signal or signal ground.
- Linear pressure solenoid SLT is stuck.
- Linear pressure solenoid SLT not working.

Fault symptom[s]

- General warning lamp lit
- Malfunction indicator light (MIL), on
- No lock-up
- Rough gear shift

FAULT-TRACING TCM-P096000

CHECKS

CHECKING LINE PRESSURE SOLENOID SLT

Fig. 104: Identifying Ignition ON
Courtesy of VOLVO CARS CORPORATION

- Ignition on.
- Activate solenoid SLT by clicking on the VCT2000 symbol.

  Read off the current through the solenoid SLT circuit. The current should oscillate between 100 and 950 mA.

  The fault is permanent if the current does not change.

  If the current changes, this is an indication that the fault was present previously but is not active at the moment, i. e. an intermittent fault.

Fig. 105: Identifying VCT2000 Diagnostic Tool Symbol In VIDA
Courtesy of VOLVO CARS CORPORATION

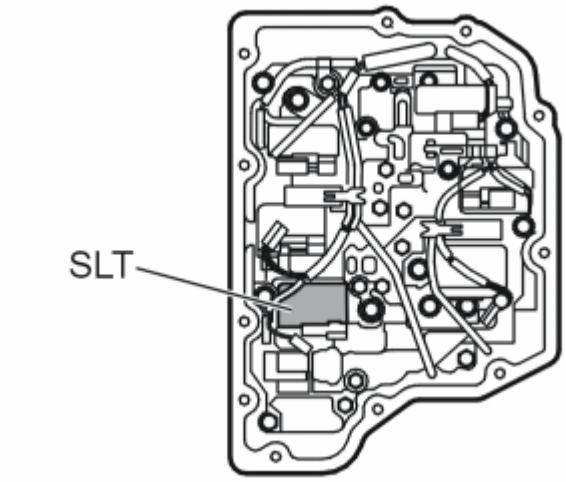

Fig. 106: Identifying Solenoid SLT
Courtesy of VOLVO CARS CORPORATION

- **Continue**

Refer to **CHECKING THE COMPONENTS AND WIRING**

CHECKING THE COMPONENTS AND WIRING

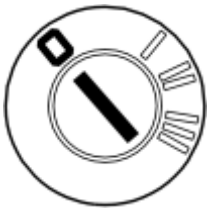

Fig. 107: Identifying Ignition OFF
Courtesy of VOLVO CARS CORPORATION

- Ignition off.
- Open the transmission control system.

  Check connector B (22-pin) for the transmission control module (TCM). Check for damaged or pressed in pins. Check for contact resistance and oxidation.

  Check the cables for open circuit, short circuit to ground and short circuit to supply voltage.

  Take readings between:

  - Transmission connector #B3 and the connector for solenoid SLT #1.
  - Transmission connector #B1 and the connector for solenoid SLT #2.

  HINT: If no fault is found in the wiring, check solenoid SLT. See CHECKING INTERNAL COMPONENTS OF THE TRANSMISSION

  Remedy as necessary.

  Other information

  - see **CONNECTING THE BREAKOUT BOX**
  - see **SIGNAL SPECIFICATION**
  - see **VALVE HOUSING**
  - see **TRANSMISSION CONTROL UNIT WIRING HARNESS**
  - To access the transmission control system:**COVER CONTROL SYSTEM, REPLACING (2007-2011)**
  - see **CHECKING WIRING AND TERMINALS**

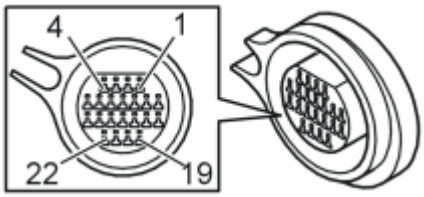

Fig. 108: Identifying Connector B Terminals
Courtesy of VOLVO CARS CORPORATION

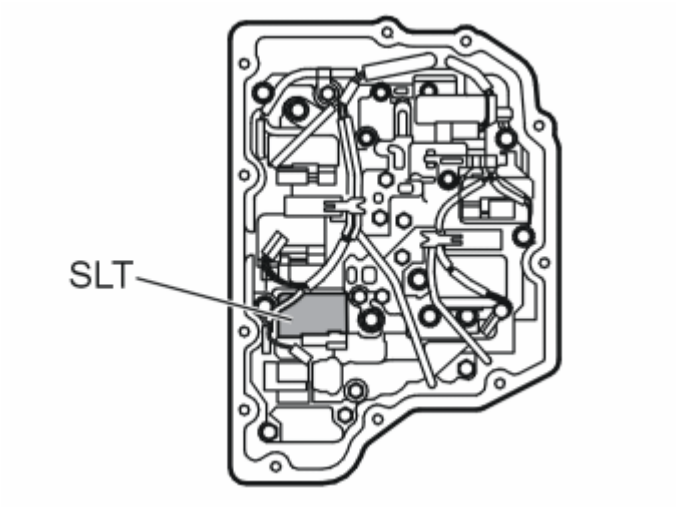

Fig. 109: Identifying Solenoid SLT
Courtesy of VOLVO CARS CORPORATION

- **Continue**

  Refer to **RESETTING ADAPTATION**

VERIFICATION

VERIFICATION

HINT: After carrying out the repair, check that the fault has been remedied.

Fig. 110: Identifying Ignition ON
Courtesy of VOLVO CARS CORPORATION

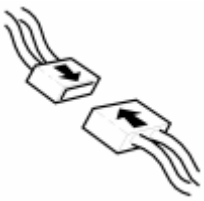

Fig. 111: Identifying Connector(s) Reinstallation
Courtesy of VOLVO CARS CORPORATION

- Ignition off.
- Reinstall the connectors, components etc.
- Ignition on.
- Activate solenoid SLT by clicking on the VCT2000 symbol.

  Read off the current through the solenoid SLT circuit. The current should oscillate between 100 and 950 mA.

Fig. 112: Identifying VCT2000 Diagnostic Tool Symbol In VIDA
Courtesy of VOLVO CARS CORPORATION

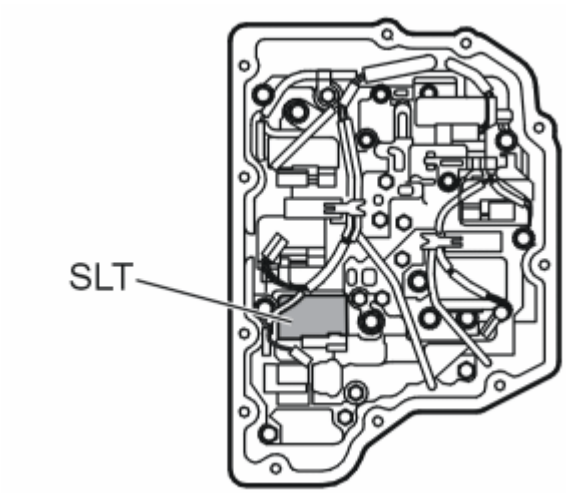

Fig. 113: Identifying Solenoid SLT
Courtesy of VOLVO CARS CORPORATION

Is the function OK?

- **YES**

VERIFIED: Troubleshooting has been completed.

- **NO**

  Refer to **INFORMATION**

INFORMATION

FAULT-TRACING INFORMATION

The fault should have been detected and remedied. As this is not the case fault-tracing has failed.

Exit fault-tracing for this diagnostic trouble code (DTC) or make another attempt.

RESETTING ADAPTATION

RESETTING THE ADAPTATION AND THE COUNTER FOR "TRANSMISSION OIL, REPLACE"

HINT: The transmission has torque-regulated, adaptive pressure regulation. The pressure regulator enables the transmission to regulate pressure during each shift to prevent hard shifting. Each shift is assessed by the transmission control module (TCM) and is stored in the internal memory. This makes it possible to compensate for transmission and clutch wear. It is important that the adaptation in the memory is reset so that the transmission works normally after the repair. Because the fluid was changed during the repair, the counter for transmission fluid change must also be reset. If the counter is not reset during draining/replacement, a diagnostic trouble code may be generated under the wrong conditions.

NOTE: This applies only if the transmission or one of the components in the transmission have been replaced.

Fig. 114: Identifying Ignition ON
Courtesy of VOLVO CARS CORPORATION

- Ignition on.

  Click on the VCT2000 symbol to reset the adaptation and counter.

Fig. 115: Identifying VCT2000 Diagnostic Tool Symbol In VIDA
Courtesy of VOLVO CARS CORPORATION

- **Continue**

  Refer to **VERIFICATION**

TCM-P096100: PRESSURE CONTROL SOLENOID A CONTROL CIRCUIT RANGE/PERFORMANCE. GENERAL FAILURE INFORMATION. NO SUB TYPE INFORMATION (B6324S5, TF-80SC; B6324S5, TF-80SC AWD; 2011-2012)

DIAGNOSTIC TROUBLE CODE (DTC) INFORMATION TCM-P096100

see **DIAGNOSTIC TROUBLE CODE (DTC) INFORMATION TCM-P096100**

FAULT-TRACING TCM-P096000

see **FAULT-TRACING TCM-P096000**

TCM-P096100: PRESSURE REGULATOR SOLENOID A CONTROL CIRCUIT INSIDE/OUTSIDE TOLERANCE. GENERAL FAULT INFORMATION. NO INFORMATION ON FAULT TYPE (B8444S, TF-80SC AWD; 2006-2011)

DIAGNOSTIC TROUBLE CODE (DTC) INFORMATION TCM-P096100

Condition

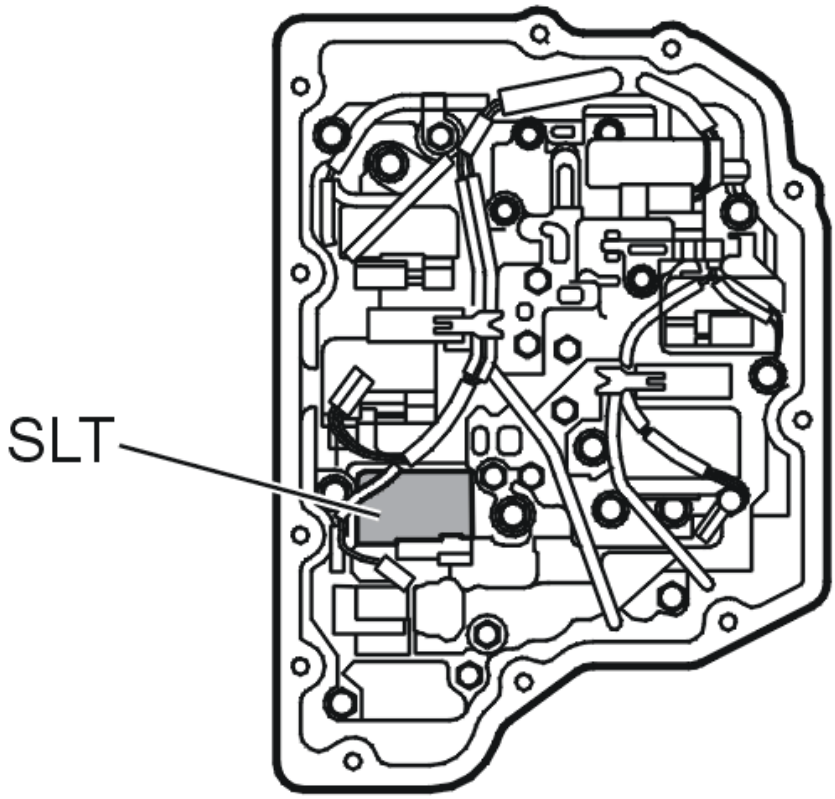

Fig. 116: Identifying Solenoid SLT
Courtesy of VOLVO CARS CORPORATION

Linear pressure solenoid SLT regulates the system pressure in the gearbox. The solenoid is controlled using a power stage on the output of the transmission control module (TCM).

The transmission control module (TCM) regulates the current to the solenoid with the help of the power stage. Low current gives high system pressure and high current (approx. 1A) gives low system pressure. The current strength is affected principally by the position of the accelerator pedal.

If the transmission control module (TCM) registers that the measured current in the solenoid circuit is incorrect, the diagnostic trouble code (DTC) is generated. The SLT solenoid is then not able to regulate the system pressure.

Substitute Value

- Auxiliary program **Emergency mode 1** in the transmission control module (TCM) has started.

  HINT: EMERGENCY MODE IN CASE OF MALFUNCTION

Possible Source

- Contact resistance in the terminals

- Open circuit in lead for control signal or signal ground.
- Linear pressure solenoid SLT stuck.
- Linear pressure solenoid SLT not working.

Fault symptom[s]

- General warning lamp lit
- Malfunction indicator lamp (MIL) lit.
- No lock-up function.
- Harsh gear changing

FAULT TRACING TCM-P096100

CHECKS

CHECKING THE LINE PRESSURE SOLENOID SLT

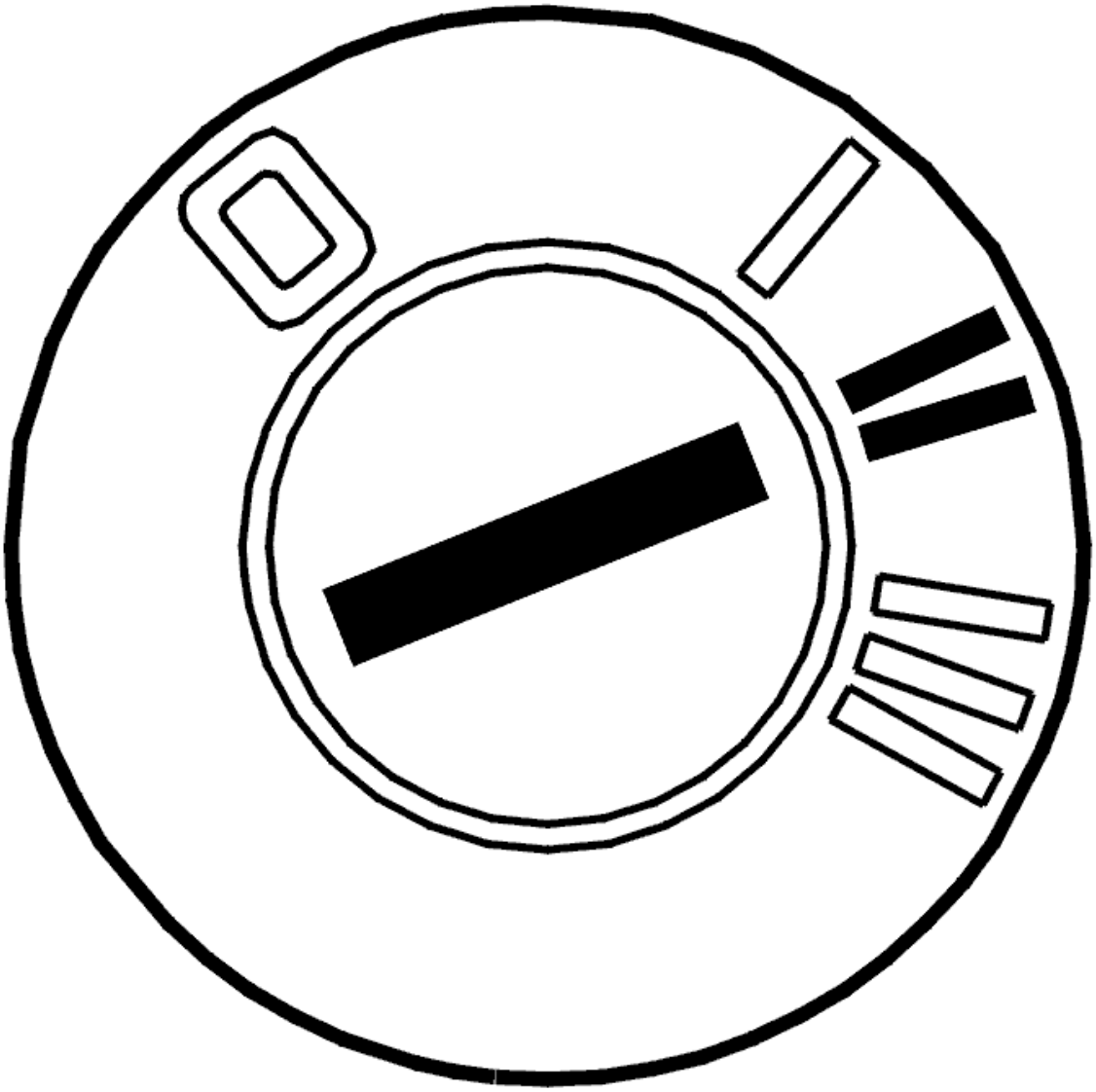

Fig. 117: Identifying Ignition ON
Courtesy of VOLVO CARS CORPORATION

- Ignition on
- Activate solenoid SLT by clicking the VCT2000 symbol.

  Read the current though the circuit for solenoid SLT. The current must oscillate between approximately 100 and 950 mA.

  The fault is permanent if the current does not change.

  If the current oscillates then this would suggest that the fault has previously been present but is no longer active. The fault is intermittent.

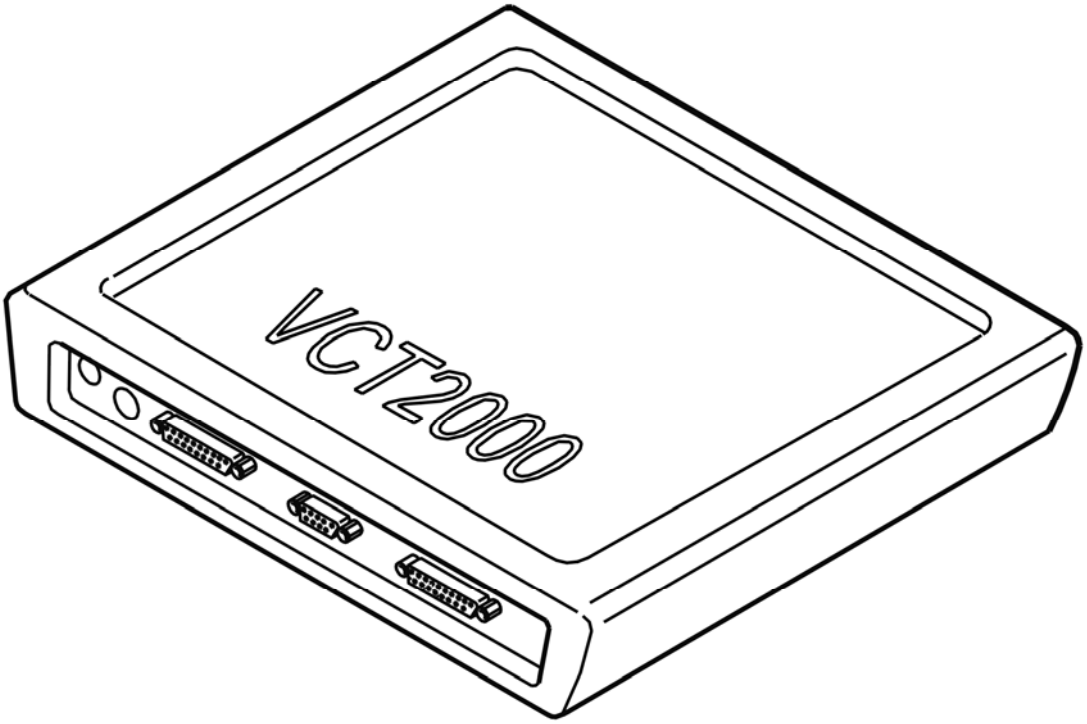

Fig. 118: Identifying VCT2000 Diagnostic Tool Symbol In VIDA
Courtesy of VOLVO CARS CORPORATION

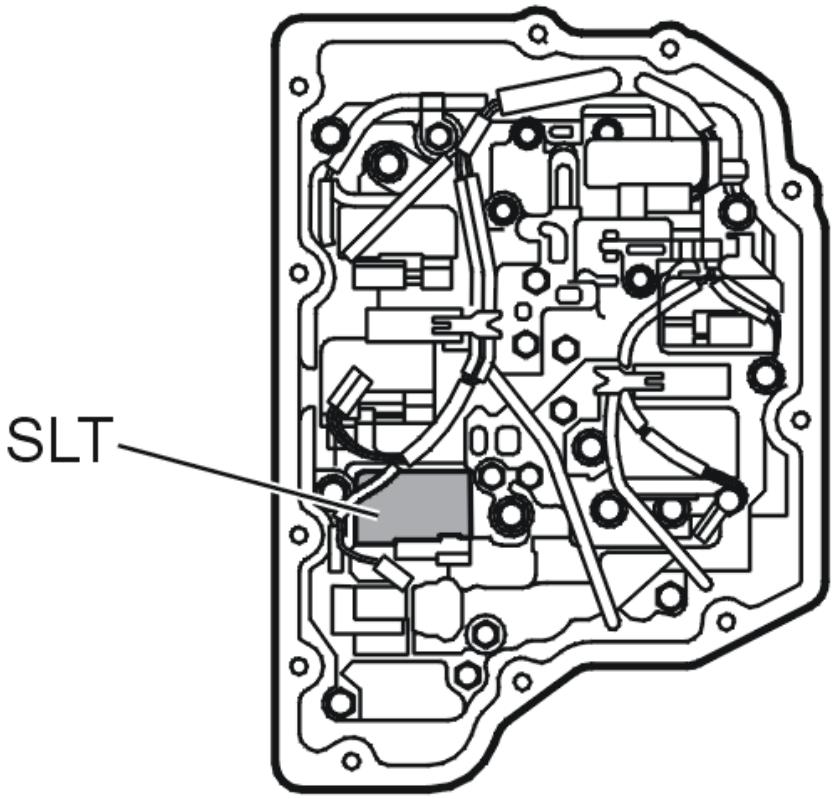

Fig. 119: Identifying Solenoid SLT
Courtesy of VOLVO CARS CORPORATION

- **Continue**

Refer to **CHECKING THE COMPONENTS AND WIRING**

CHECKING THE COMPONENTS AND WIRING

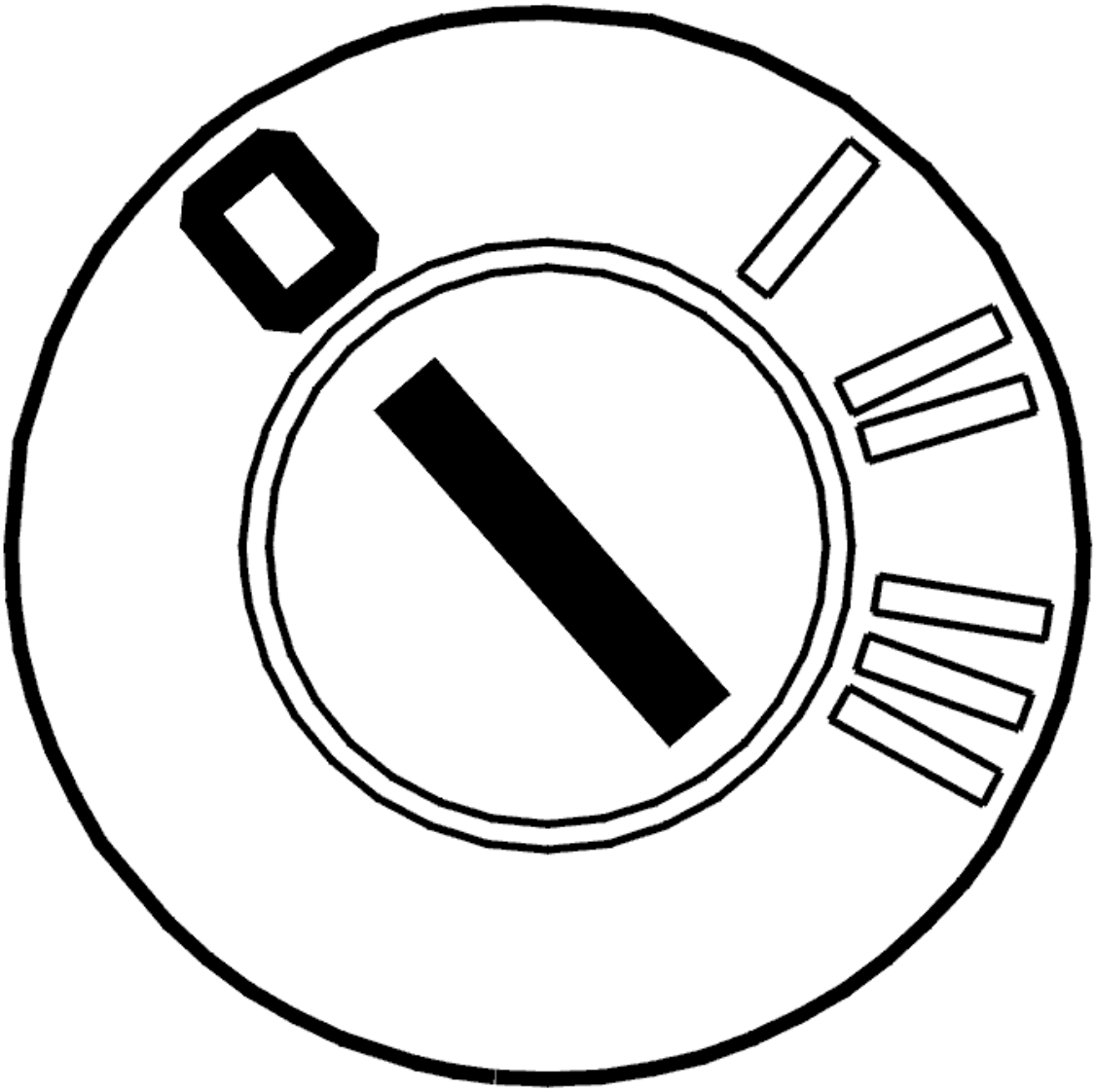

Fig. 120: Identifying Ignition OFF
Courtesy of VOLVO CARS CORPORATION

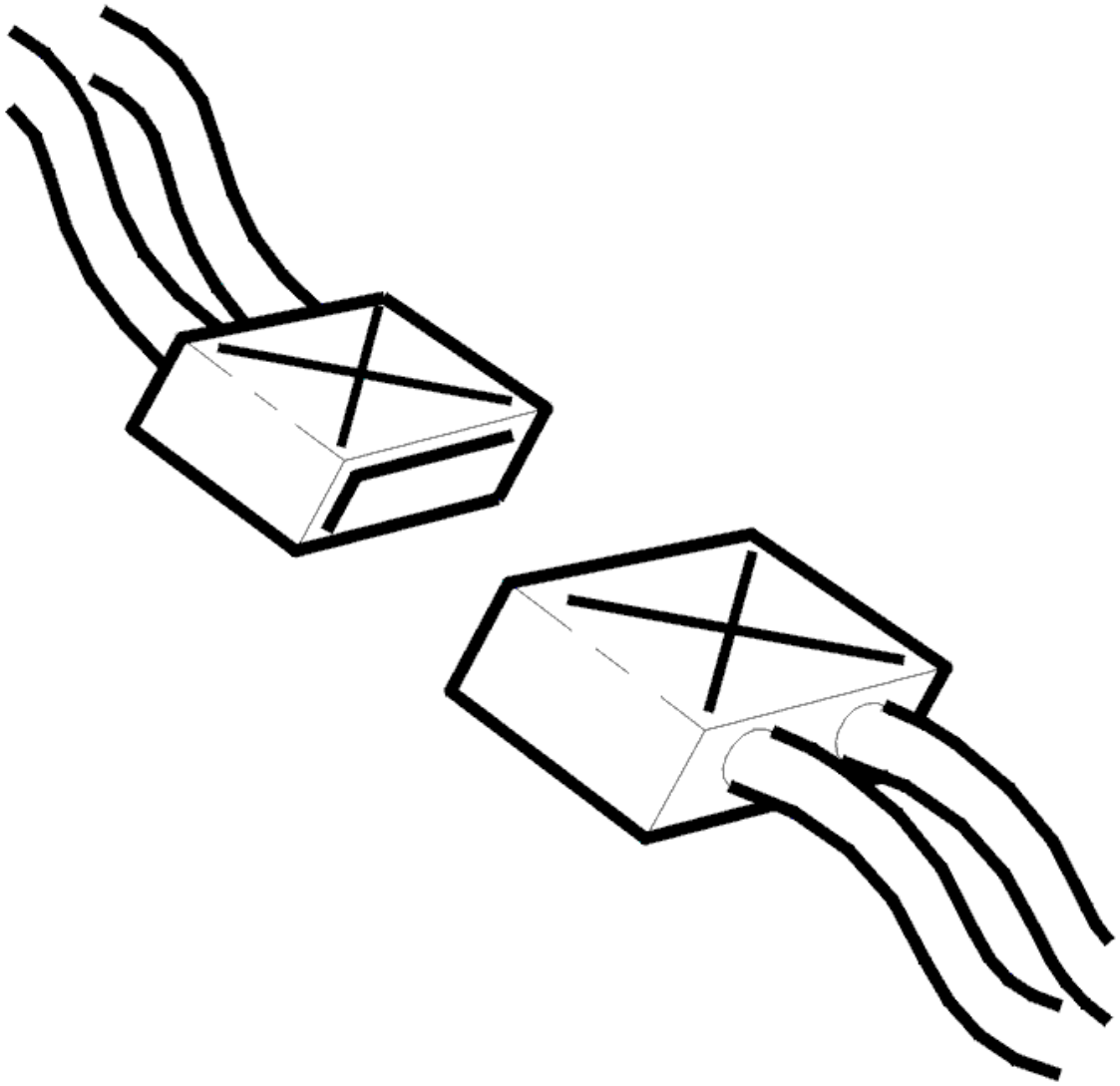

Fig. 121: Identifying Connector
Courtesy of VOLVO CARS CORPORATION

- Ignition off
- Open the gearbox control system

  Check connector B (22-pin) for the transmission control module (TCM). Check for damage and pressed in terminal pins. Check for contact resistance and oxidation.

  Check the wiring between the transmission connector terminal #B3 and the connector for solenoid SLT terminal #1. Check the wiring between the transmission connector terminal #B1 and the connector for solenoid SLT terminal #2. Check for an open circuit. Check for a short-circuit to supply voltage. Check for a short-circuit to ground.

  HINT: If no fault is found in the wiring check solenoid SLT. See CHECKING THE LINE PRESSURE SOLENOID SLT, SLC1, SLC2, SLC3, SLB1 AND LOCK-UP SOLENOID SLU

Remedy as necessary.

Other information

- see **SIGNAL DESCRIPTION**
- see **CONNECTING THE BREAKOUT BOX**
- see **CONTROL SYSTEM, REPLACING**
- see **CABLE HARNESS, CONTROL SYSTEM, GEARBOX, REPLACING**
- To access the transmission control system: **COVER CONTROL SYSTEM, REPLACING (2007-2011)**
- see **CONTENTS**

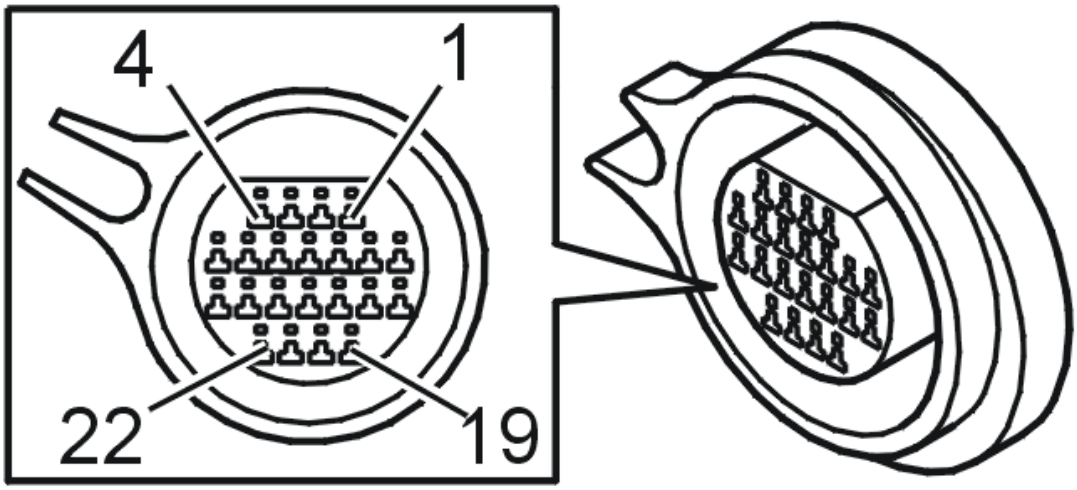

Fig. 122: Identifying Connector B Terminals
Courtesy of VOLVO CARS CORPORATION

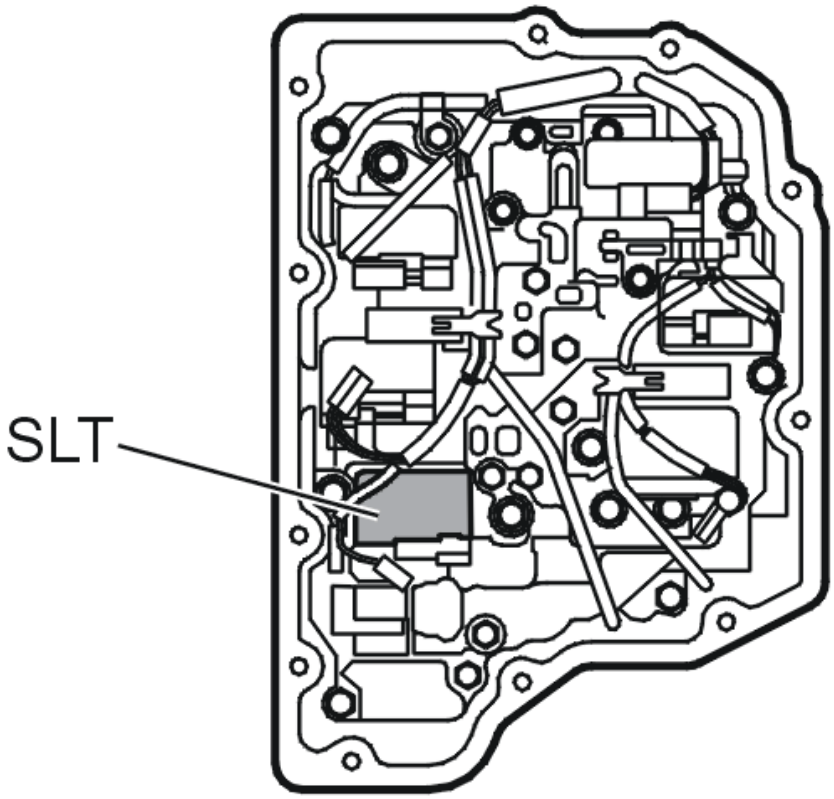

Fig. 123: Identifying Solenoid SLT
Courtesy of VOLVO CARS CORPORATION

- **Continue**

  Refer to **RESETTING ADAPTATION**

RESETTING ADAPTATION

RESETTING ADAPTATION AND COUNTER FOR "TRANSMISSION OIL, CHANGING"

HINT: The transmission has torque-controlled, adaptive pressure control. The pressure control means that the transmission itself controls the pressure during each shift sequence in order to avoid harsh shifting. Each shift is assessed by the transmission control module (TCM) and is stored in the internal memory, which results in compensation for wear in the transmission and clutch. In order for the transmission to function correctly after repair, it is important to reset the adaptation in the memory. Since the oil is changed during the repair, the counter for "Transmission oil, change" shall also be reset. If the counter is not reset when draining/changing oil, there is a risk that a diagnostic trouble code may be generated under incorrect conditions.

NOTE: **This applies only if the transmission or one of the components in the transmission have been replaced.**

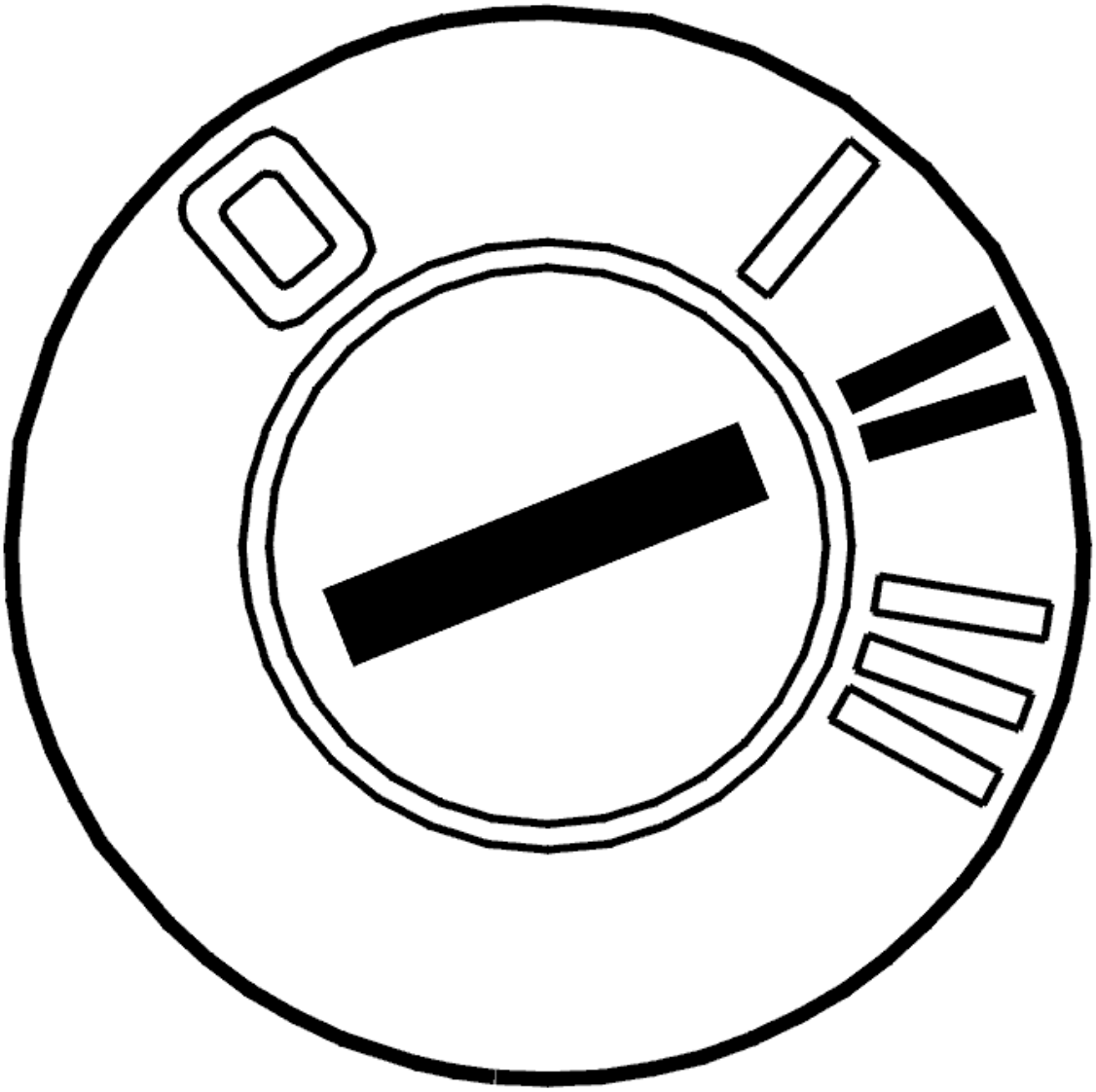

Fig. 124: Identifying Ignition ON
Courtesy of VOLVO CARS CORPORATION

- Ignition on

  Activate reset of the adaptation and the counter by clicking on the symbol for VCT2000.

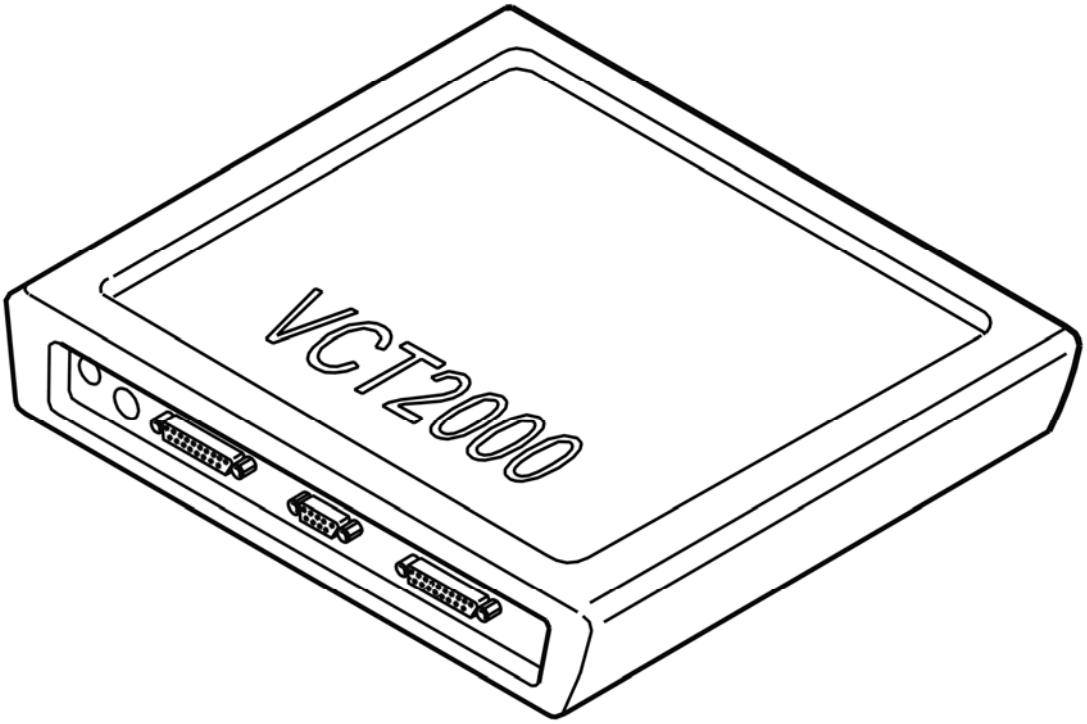

Fig. 125: Identifying VCT2000 Diagnostic Tool Symbol In VIDA
Courtesy of VOLVO CARS CORPORATION

- **Continue**

  Refer to **VERIFICATION**

VERIFICATION

VERIFICATION

HINT: After carrying out the repair, check that the fault has been remedied.

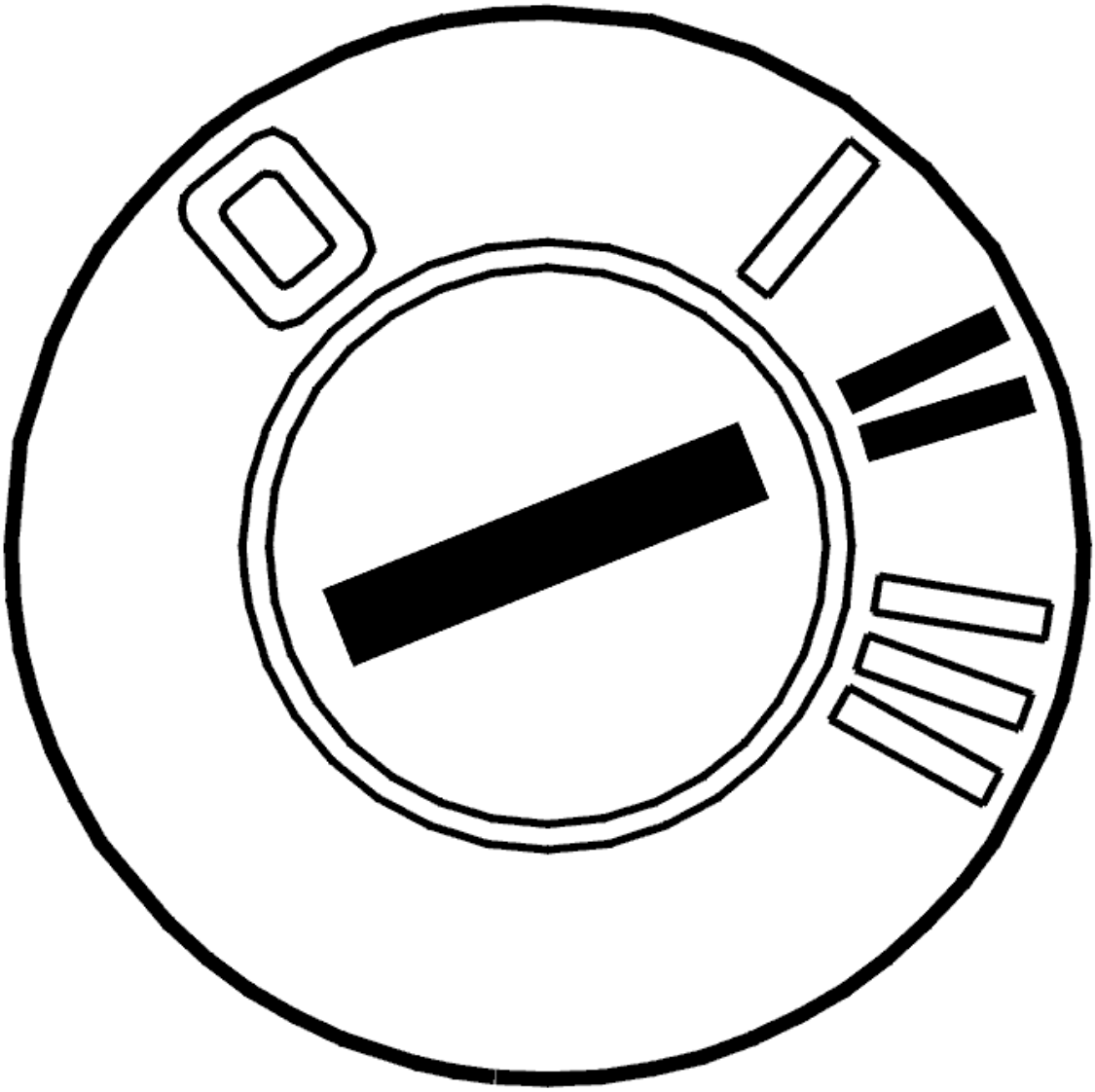

Fig. 126: Identifying Ignition ON
Courtesy of VOLVO CARS CORPORATION

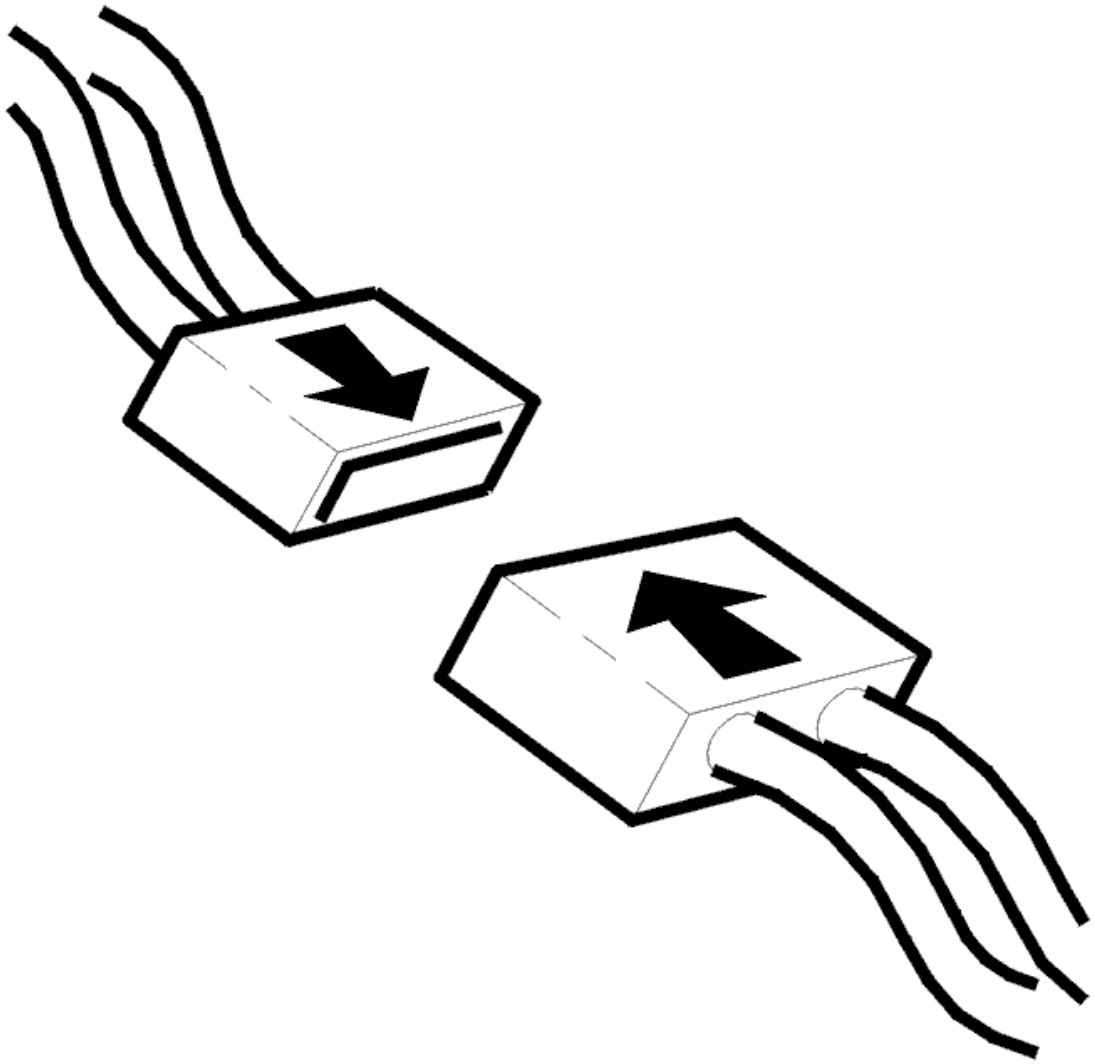

Fig. 127: Identifying Connector(s) Reinstallation
Courtesy of VOLVO CARS CORPORATION

- Ignition off
- Reinstall the components, reconnect the connectors etc.
- Ignition on
- Activate solenoid SLT by clicking the symbol for VCT2000.

  Read off the current through the circuit for solenoid SLT. The current must oscillate between approximately 0 and 1000 mA.

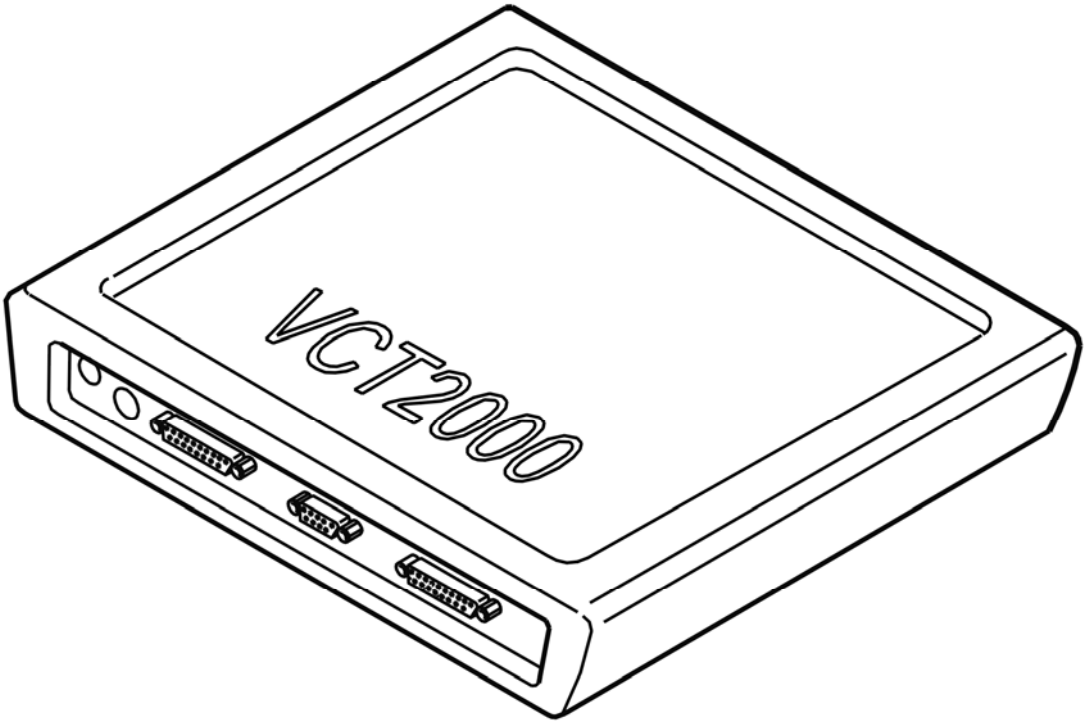

Fig. 128: Identifying VCT2000 Diagnostic Tool Symbol In VIDA
Courtesy of VOLVO CARS CORPORATION

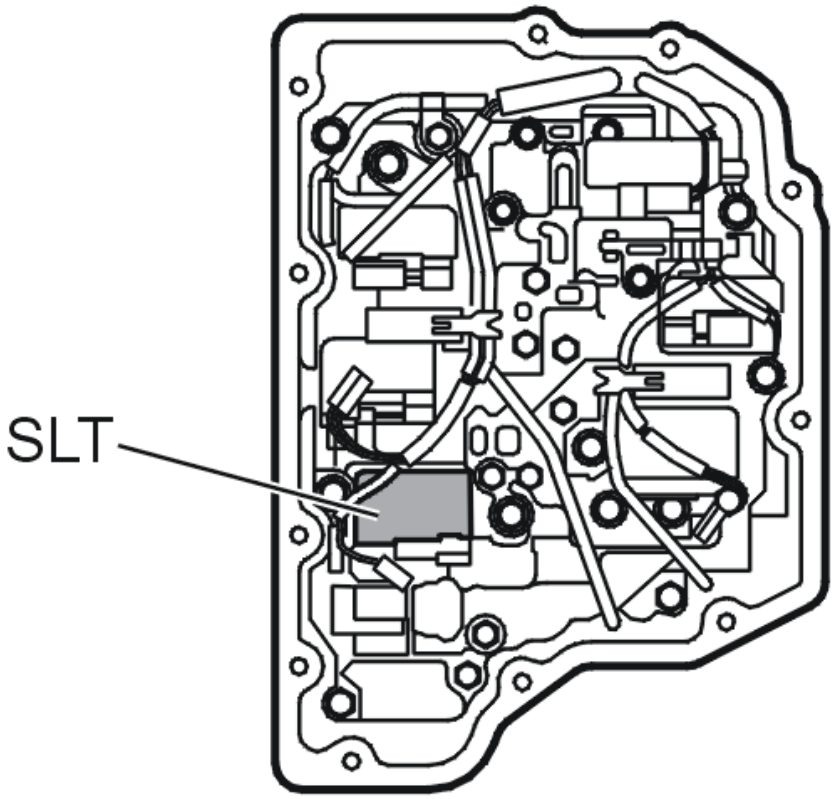

Fig. 129: Identifying Solenoid SLT
Courtesy of VOLVO CARS CORPORATION

Is the function OK?

- **YES**

  VERIFIED: Troubleshooting has been completed.

- **NO**

  Refer to **INFORMATION**

INFORMATION

FAULT-TRACING INFORMATION

The fault should have been detected and remedied. As this is not the case fault-tracing has failed.

Exit fault-tracing for this diagnostic trouble code (DTC) or make another attempt.

TCM-P096100: PRESSURE REGULATOR SOLENOID A CONTROL CIRCUIT INSIDE/OUTSIDE TOLERANCE. GENERAL FAULT INFORMATION. NO

INFORMATION ON FAULT TYPE (TF-80SC AWD; 2005)

DIAGNOSTIC TROUBLE CODE (DTC) INFORMATION TCM-P096100

see **DIAGNOSTIC TROUBLE CODE (DTC) INFORMATION TCM-P096100**

FAULT TRACING TCM-P096100

see **FAULT TRACING TCM-P096100**

TCM-P096300: PRESSURE CONTROL SOLENOID A CONTROL CIRCUIT HIGH. GENERAL FAILURE INFORMATION. NO SUB TYPE INFORMATION (B6324S, TF-80SC; B6324S, TF-80SC AWD; 2007-2010)

DIAGNOSTIC TROUBLE CODE (DTC) INFORMATION TCM-P096300

Condition

The solenoid is controlled by power stages at the output of the transmission control module (TCM).

The transmission control module (TCM) opens the power stages to activate the solenoids and sends a voltage through the circuit.

The diagnostic trouble code (DTC) is stored if the control module detects that:

- The measured current value is higher than permitted in the circuit for solenoid SLT.

The control module's test for the diagnostic trouble code (DTC) starts in the event of:

- Ignition on.

NOTE: **The control module can only detect the fault once the test has been started and the diagnostic trouble code (DTC) is stored when the conditions are met.**

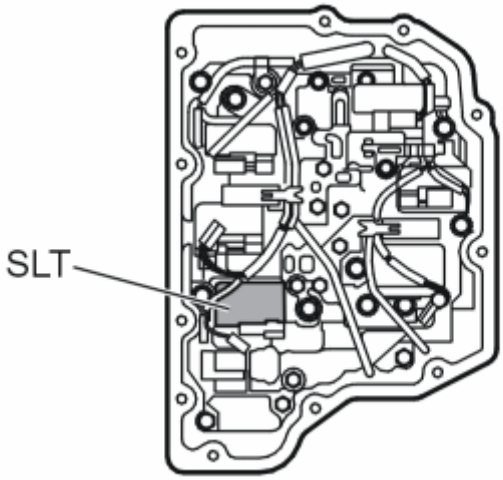

Fig. 130: Identifying Solenoid SLT
Courtesy of VOLVO CARS CORPORATION

Substitute Value

- Auxiliary program **Emergency mode 1** in the transmission control module (TCM) has started. See **EMERGENCY MODE IN THE EVENT OF A FAULT**

Possible Source

- Control signal lead short-circuited to voltage.
- Linear pressure solenoid not working.
- Internal fault in the transmission control module (TCM).

Fault symptom[s]

- General warning lamp lit
- Malfunction indicator light (MIL), on
- Abnormal slipping gearshifts
- Rough gear shift
- No gear shift

FAULT-TRACING

CHECKS

CHECKING LINE PRESSURE SOLENOID SLT

Fig. 131: Identifying Ignition ON
Courtesy of VOLVO CARS CORPORATION

- Ignition on.
- Activate solenoid SLT by clicking on the VCT2000 symbol.

  Read off the current through the solenoid SLT circuit. The current should oscillate between 100 and 950 mA.

  The fault is permanent if the current does not change.

  If the current changes, this is an indication that the fault was present previously but is not active at the moment, i. e. an intermittent fault.

Fig. 132: Identifying VCT2000 Diagnostic Tool Symbol In VIDA
Courtesy of VOLVO CARS CORPORATION

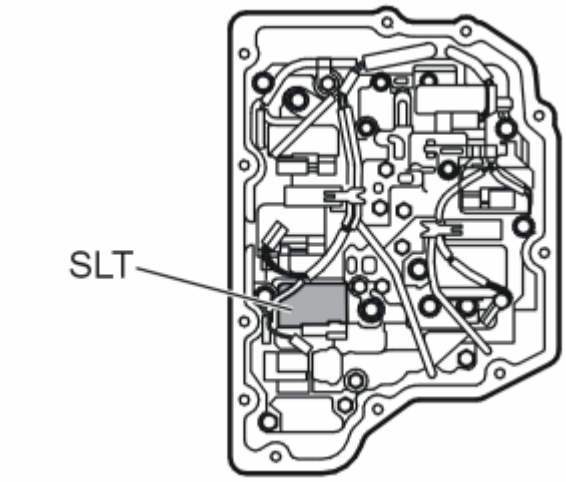

Fig. 133: Identifying Solenoid SLT
Courtesy of VOLVO CARS CORPORATION

- **Continue**

Refer to **CHECKING THE COMPONENTS AND WIRING**

CHECKING THE COMPONENTS AND WIRING

Fig. 134: Identifying Ignition OFF
Courtesy of VOLVO CARS CORPORATION

- Ignition off.
- Open the transmission control system.

Check the cables for short-circuit to voltage, short-circuit to ground and open circuit.

Take readings between:

- Transmission connector #B3 and the connector for solenoid SLT #1.
- Transmission connector #B1 and the connector for solenoid SLT #2.

Also check the cables for a short-circuit to each other.

HINT: If no fault is found in the wiring, check solenoid SLT. See CHECKING INTERNAL COMPONENTS OF THE TRANSMISSION

If no fault is found in the wiring replace the control system.

Remedy as necessary.

Other information

- see **CONNECTING THE BREAKOUT BOX**
- see **VALVE HOUSING**
- see **TRANSMISSION CONTROL UNIT WIRING HARNESS**
- To access the transmission control system:**COVER CONTROL SYSTEM, REPLACING (2007-2011)**
- see **CHECKING WIRING AND TERMINALS**

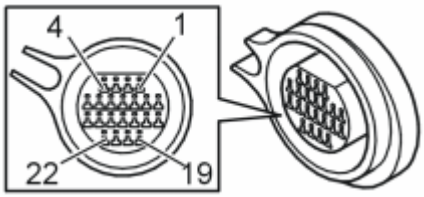

Fig. 135: Identifying Connector B Terminals
Courtesy of VOLVO CARS CORPORATION

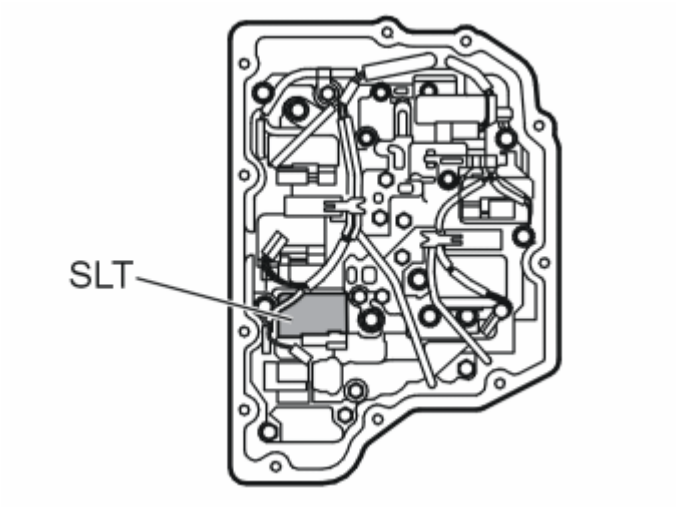

Fig. 136: Identifying Solenoid SLT
Courtesy of VOLVO CARS CORPORATION

- **Continue**

  Refer to **RESETTING ADAPTATION**

VERIFICATION

VERIFICATION

HINT: After carrying out the repair, check that the fault has been remedied.

Fig. 137: Identifying Ignition ON
Courtesy of VOLVO CARS CORPORATION

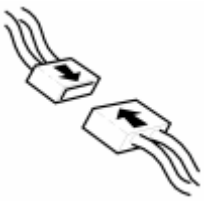

Fig. 138: Identifying Connector(s) Reinstallation
Courtesy of VOLVO CARS CORPORATION

- Ignition off.
- Reinstall the connectors, components etc.
- Ignition on.
- Activate solenoid SLT by clicking on the VCT2000 symbol.

  Read off the current through the solenoid SLT circuit. The current should oscillate between 100 and 950 mA.

Fig. 139: Identifying VCT2000 Diagnostic Tool Symbol In VIDA
Courtesy of VOLVO CARS CORPORATION

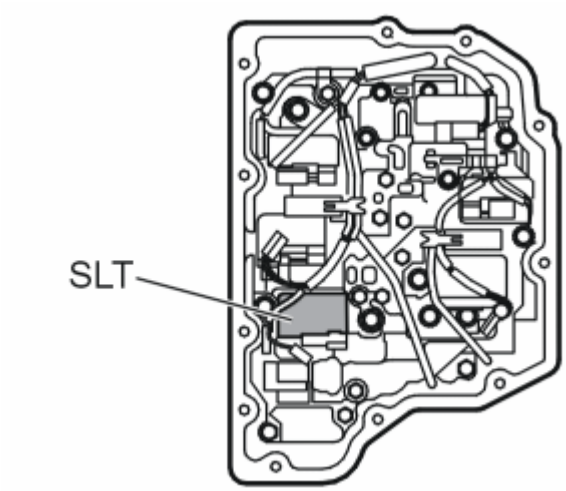

Fig. 140: Identifying Solenoid SLT
Courtesy of VOLVO CARS CORPORATION

Is the function OK?

- **YES**

VERIFIED: Troubleshooting has been completed.

- **NO**

  Refer to **INFORMATION**

INFORMATION

FAULT-TRACING INFORMATION

The fault should have been detected and remedied. As this is not the case fault-tracing has failed.

Exit fault-tracing for this diagnostic trouble code (DTC) or make another attempt.

RESETTING ADAPTATION

RESETTING THE ADAPTATION AND THE COUNTER FOR "TRANSMISSION OIL, REPLACE"

HINT: The transmission has torque-regulated, adaptive pressure regulation. The pressure regulator enables the transmission to regulate pressure during each shift to prevent hard shifting. Each shift is assessed by the transmission control module (TCM) and is stored in the internal memory. This makes it possible to compensate for transmission and clutch wear. It is important that the adaptation in the memory is reset so that the transmission works normally after the repair. Because the fluid was changed during the repair, the counter for transmission fluid change must also be reset. If the counter is not reset during draining/replacement, a diagnostic trouble code may be generated under the wrong conditions.

NOTE: This applies only if the transmission or one of the components in the transmission have been replaced.

Fig. 141: Identifying Ignition ON
Courtesy of VOLVO CARS CORPORATION

- Ignition on.

  Click on the VCT2000 symbol to reset the adaptation and counter.

Fig. 142: Identifying VCT2000 Diagnostic Tool Symbol In VIDA
Courtesy of VOLVO CARS CORPORATION

- **Continue**

  Refer to **VERIFICATION**

TCM-P096300: PRESSURE CONTROL SOLENOID A CONTROL CIRCUIT HIGH. GENERAL FAILURE INFORMATION. NO SUB TYPE INFORMATION (B6324S5, TF-80SC; B6324S5, TF-80SC AWD; 2011-2012)

DIAGNOSTIC TROUBLE CODE (DTC) INFORMATION TCM-P096300

see **DIAGNOSTIC TROUBLE CODE (DTC) INFORMATION TCM-P096300**

FAULT-TRACING

see **FAULT-TRACING**

TCM-P096300: PRESSURE REGULATOR SOLENOID A CONTROL CIRCUIT HIGH. GENERAL FAULT INFORMATION. NO INFORMATION ON FAULT TYPE (B8444S, TF-80SC AWD; 2006-2011)

DIAGNOSTIC TROUBLE CODE (DTC) INFORMATION TCM-P096300

Condition

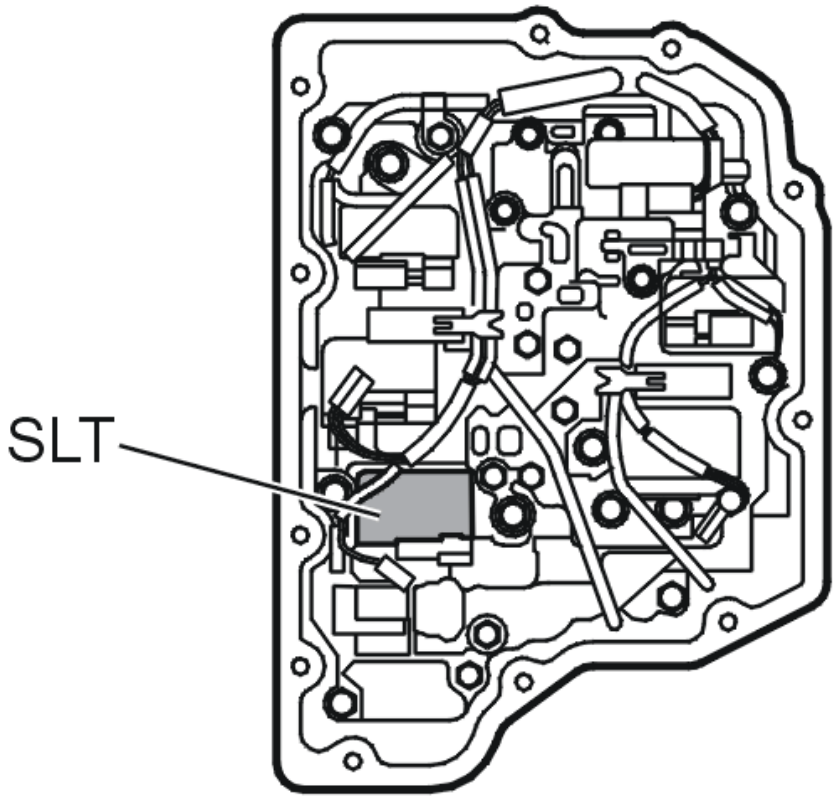

Fig. 143: Identifying Solenoid SLT
Courtesy of VOLVO CARS CORPORATION

The solenoids are controlled using the power stage in the transmission control module (TCM). The transmission control module (TCM) opens the power stage when the solenoids are to be activated so that the circuit receives a voltage.

If the transmission control module (TCM) registers that the measured current is higher than the circuit for the SLT solenoid allows, the diagnostic trouble code (DTC) is generated.

The diagnostic trouble code can be diagnosed when the ignition is on.

Substitute Value

- Auxiliary program **Emergency mode 1** in the transmission control module (TCM) has started.

  HINT: EMERGENCY MODE IN CASE OF MALFUNCTION

Possible Source

- Control signal lead short-circuited to voltage.
- Linear pressure solenoid not working.
- Internal fault in transmission control module (TCM).

Fault symptom[s]

- General warning lamp lit
- Malfunction indicator lamp (MIL) lit.
- Abnormally slipping gears.
- Harsh gear changing
- No gear changing.

FAULT TRACING TCM-P096300

CHECKS

CHECKING THE LINE PRESSURE SOLENOID SLT

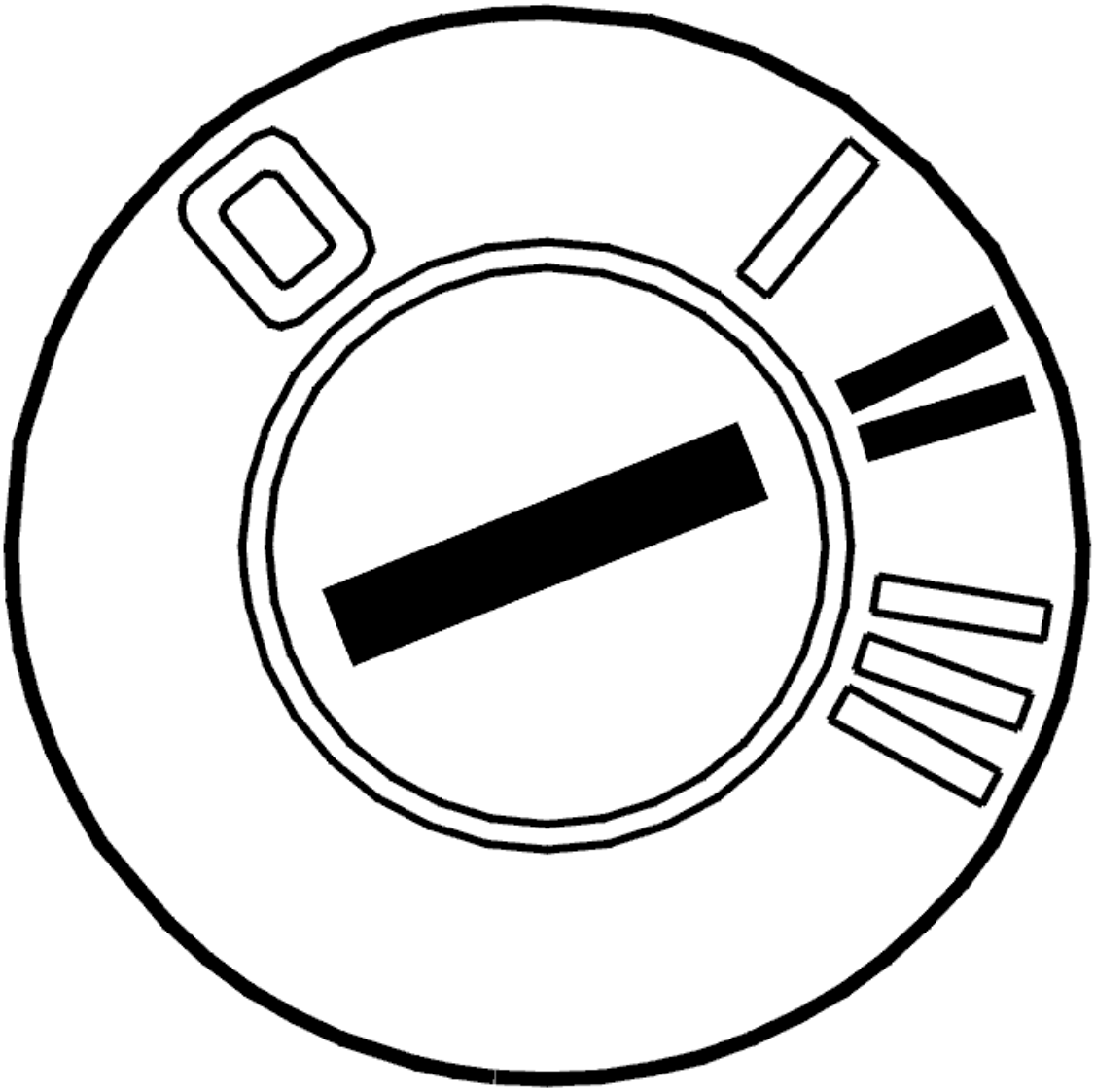

Fig. 144: Identifying Ignition ON

Courtesy of VOLVO CARS CORPORATION

- Ignition on
- Activate solenoid SLT by clicking the VCT2000 symbol.

  Read the current though the circuit for solenoid SLT. The current must oscillate between approximately 100 and 950 mA.

  The fault is permanent if the current does not change.

  If the current oscillates then this would suggest that the fault has previously been present but is no longer active. The fault is intermittent.

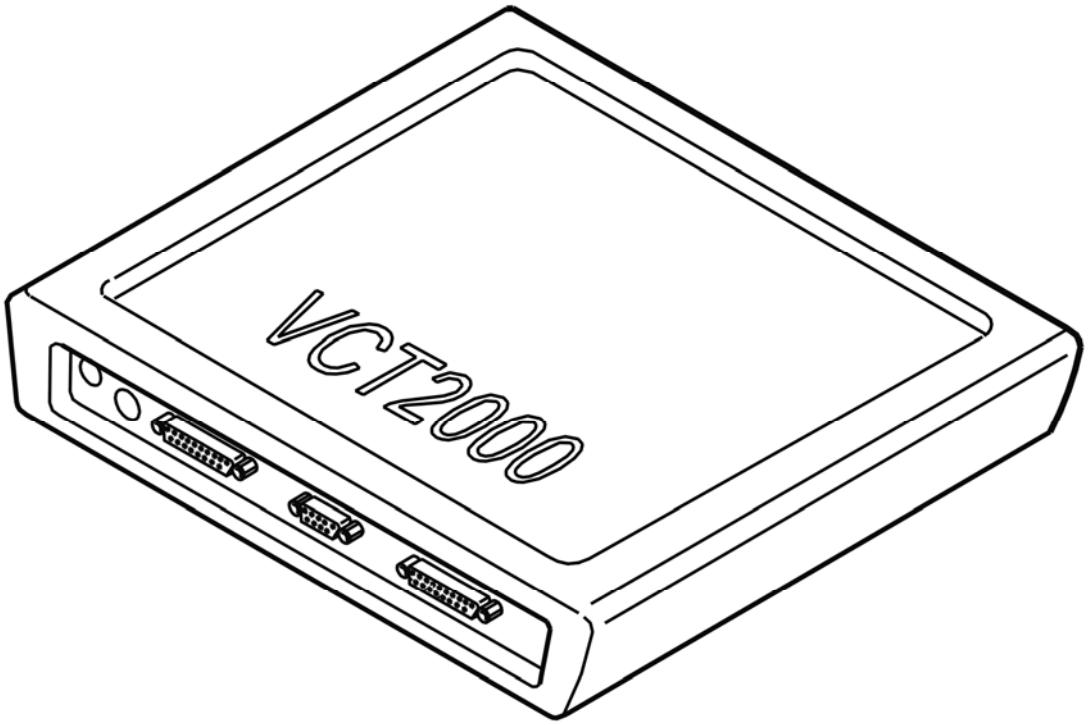

Fig. 145: Identifying VCT2000 Diagnostic Tool Symbol In VIDA
Courtesy of VOLVO CARS CORPORATION

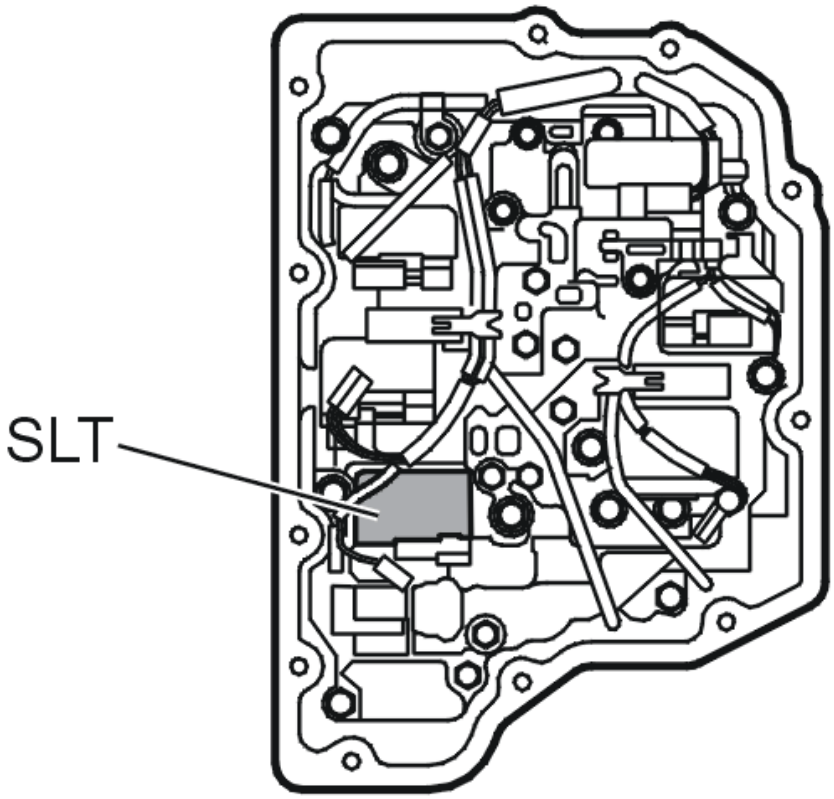

Fig. 146: Identifying Solenoid SLT
Courtesy of VOLVO CARS CORPORATION

- **Continue**

  Refer to **CHECKING THE COMPONENTS AND WIRING**

CHECKING THE COMPONENTS AND WIRING

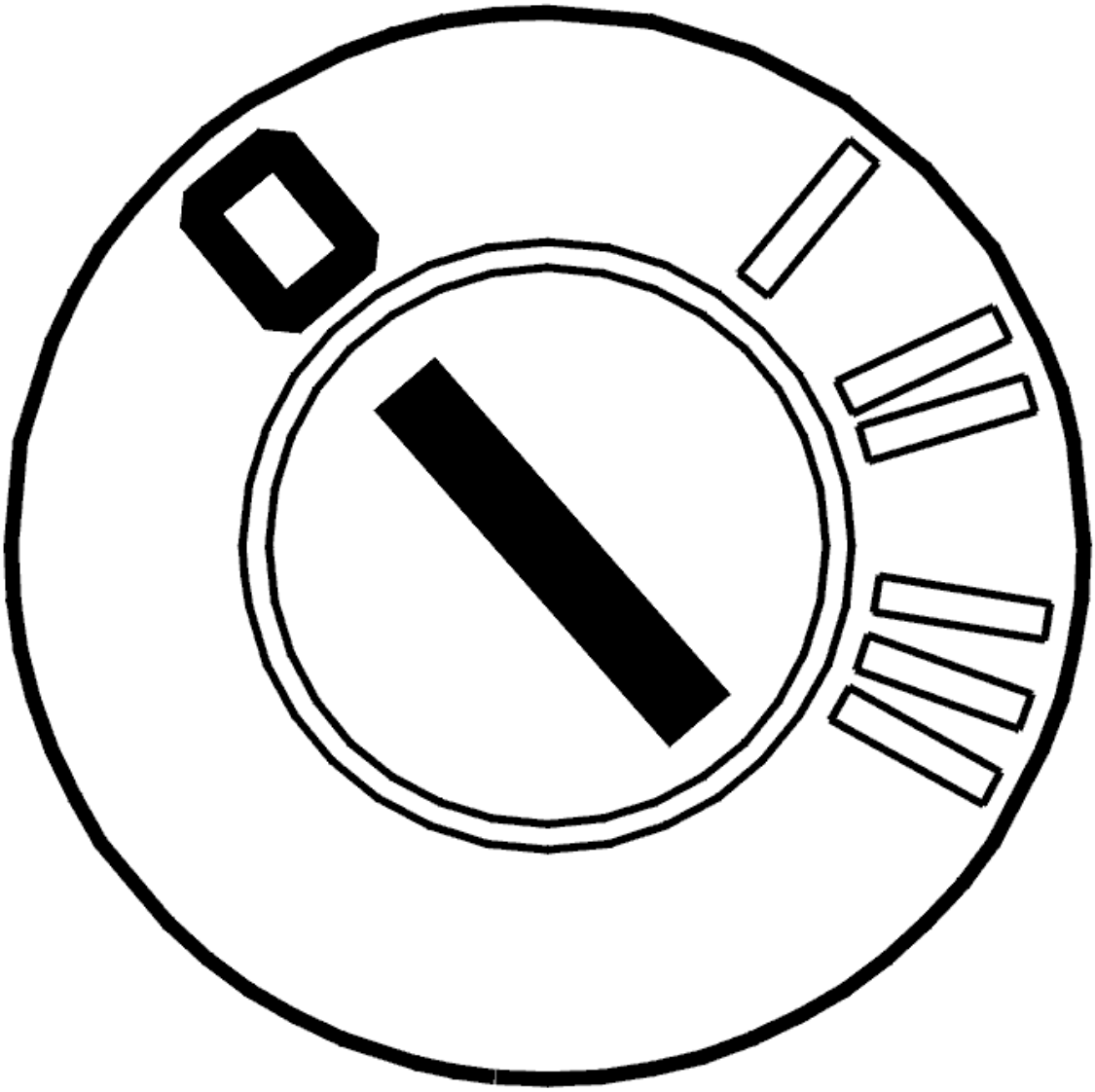

Fig. 147: Identifying Ignition OFF
Courtesy of VOLVO CARS CORPORATION

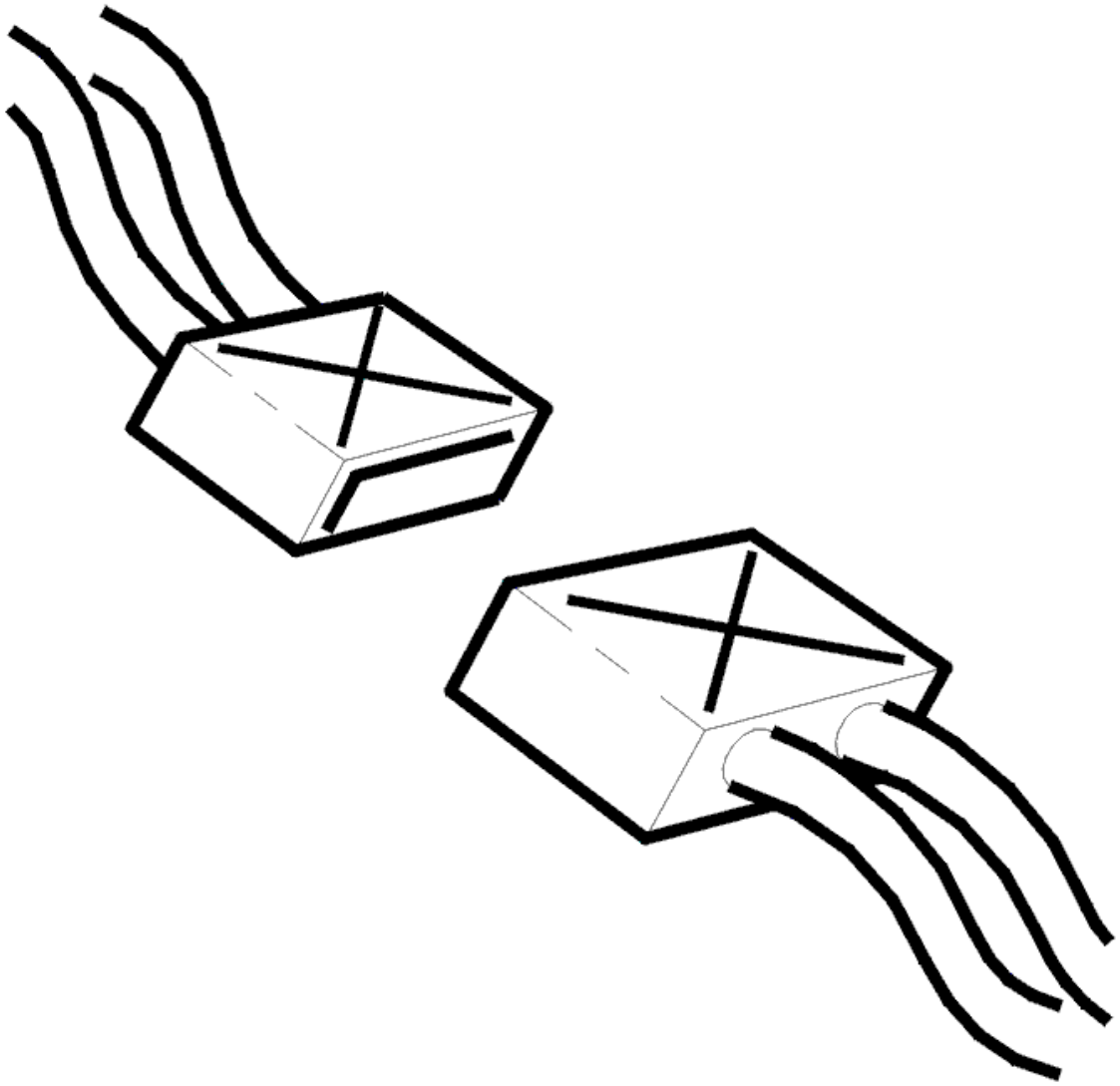

Fig. 148: Identifying Connector
Courtesy of VOLVO CARS CORPORATION

- Ignition off
- Open the gearbox control system

  Check the wiring between transmission connector terminal #B3 and solenoid SLT connector terminal #1.
  Check the wiring between transmission connector terminal #B1 and solenoid SLT connector terminal #2.
  Check for a short-circuit to supply voltage. Check the wiring for short-circuits to each other.

  HINT: If no fault is found in the wiring check solenoid SLT. See CHECKING THE LINE PRESSURE SOLENOID SLT, SLC1, SLC2, SLC3, SLB1 AND LOCK-UP SOLENOID SLU

  If no fault is found in the wiring replace the control system.

  Remedy as necessary.

Other information

- see **SIGNAL DESCRIPTION**
- see **CONTROL SYSTEM, REPLACING**
- see **CABLE HARNESS, CONTROL SYSTEM, GEARBOX, REPLACING**
- To access the transmission control system: **COVER CONTROL SYSTEM, REPLACING (2007-2011)**
- see **CONTENTS**

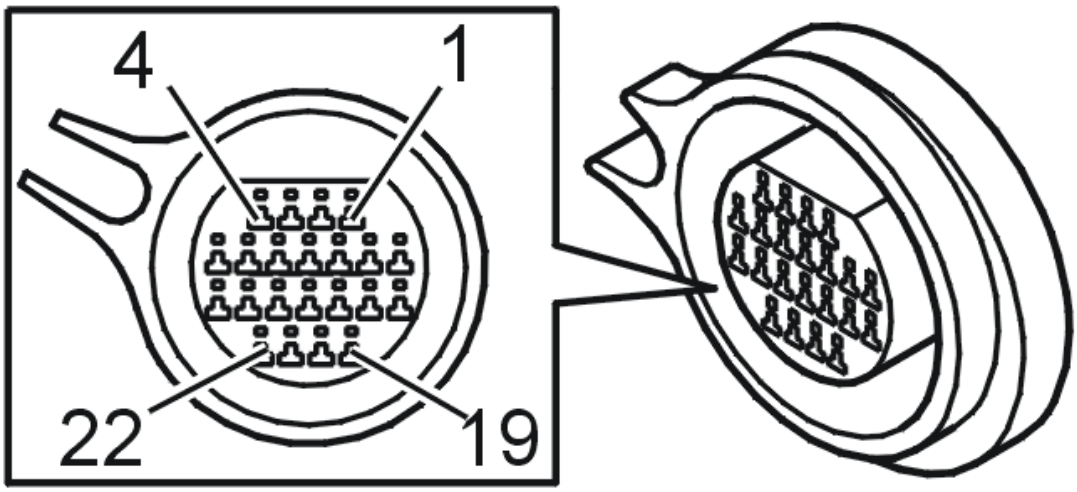

Fig. 149: Identifying Connector B Terminals
Courtesy of VOLVO CARS CORPORATION

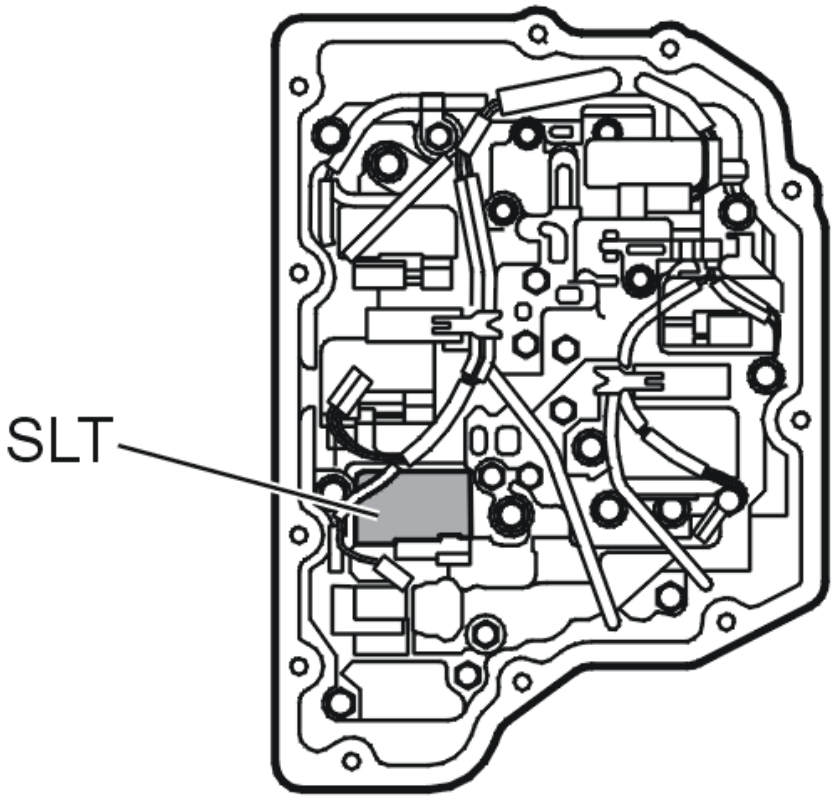

Fig. 150: Identifying Solenoid SLT
Courtesy of VOLVO CARS CORPORATION

- **Continue**

  Refer to **RESETTING ADAPTATION**

RESETTING ADAPTATION

RESETTING ADAPTATION AND COUNTER FOR "TRANSMISSION OIL, CHANGING"

HINT: The transmission has torque-controlled, adaptive pressure control. The pressure control means that the transmission itself controls the pressure during each shift sequence in order to avoid harsh shifting. Each shift is assessed by the transmission control module (TCM) and is stored in the internal memory, which results in compensation for wear in the transmission and clutch. In order for the transmission to function correctly after repair, it is important to reset the adaptation in the memory. Since the oil is changed during the repair, the counter for "Transmission oil, change" shall also be reset. If the counter is not reset when draining/changing oil, there is a risk that a diagnostic trouble code may be generated under incorrect conditions.

NOTE: **This applies only if the transmission or one of the components in the transmission have been replaced.**

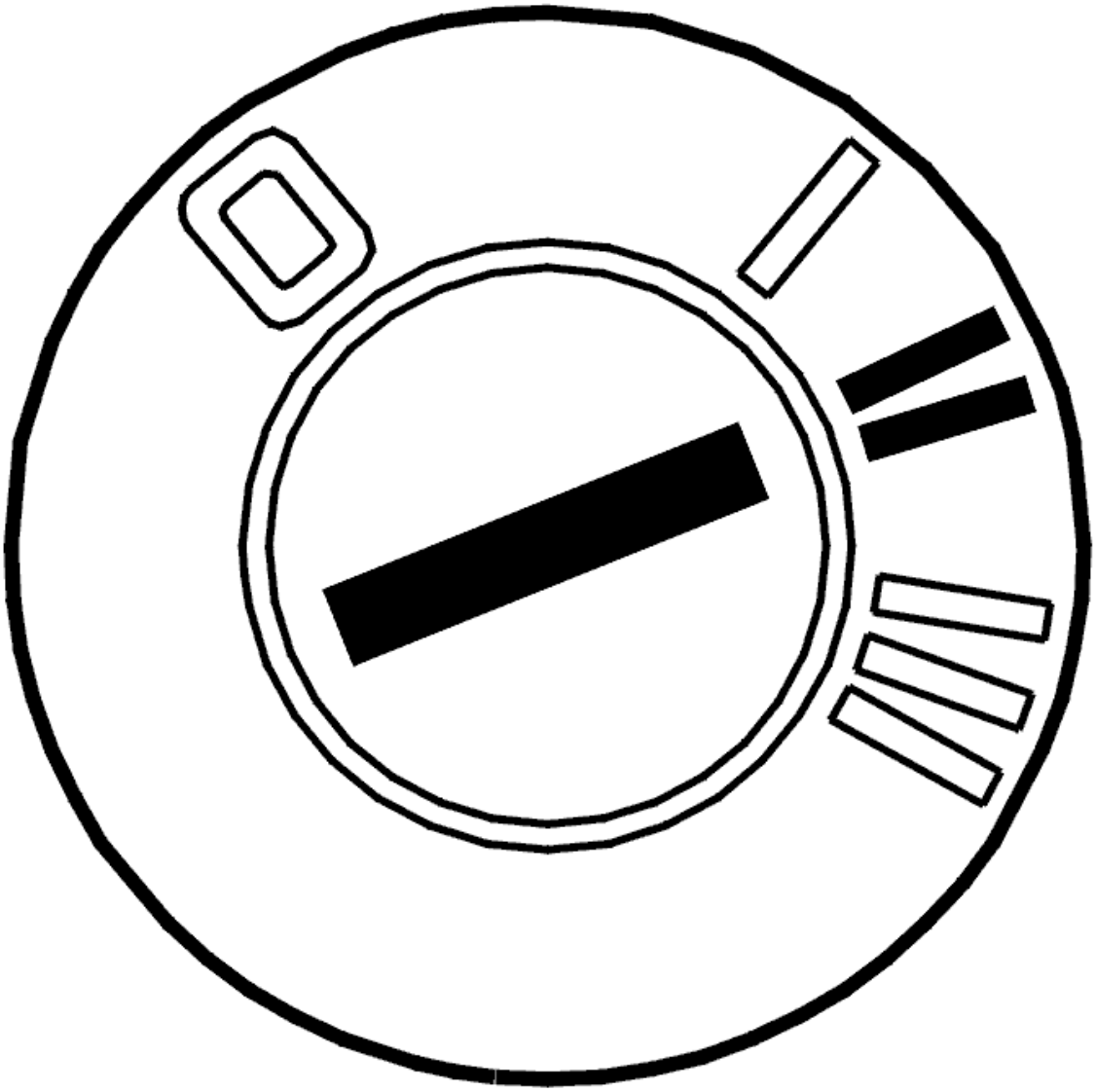

Fig. 151: Identifying Ignition ON
Courtesy of VOLVO CARS CORPORATION

- Ignition on

  Activate reset of the adaptation and the counter by clicking on the symbol for VCT2000.

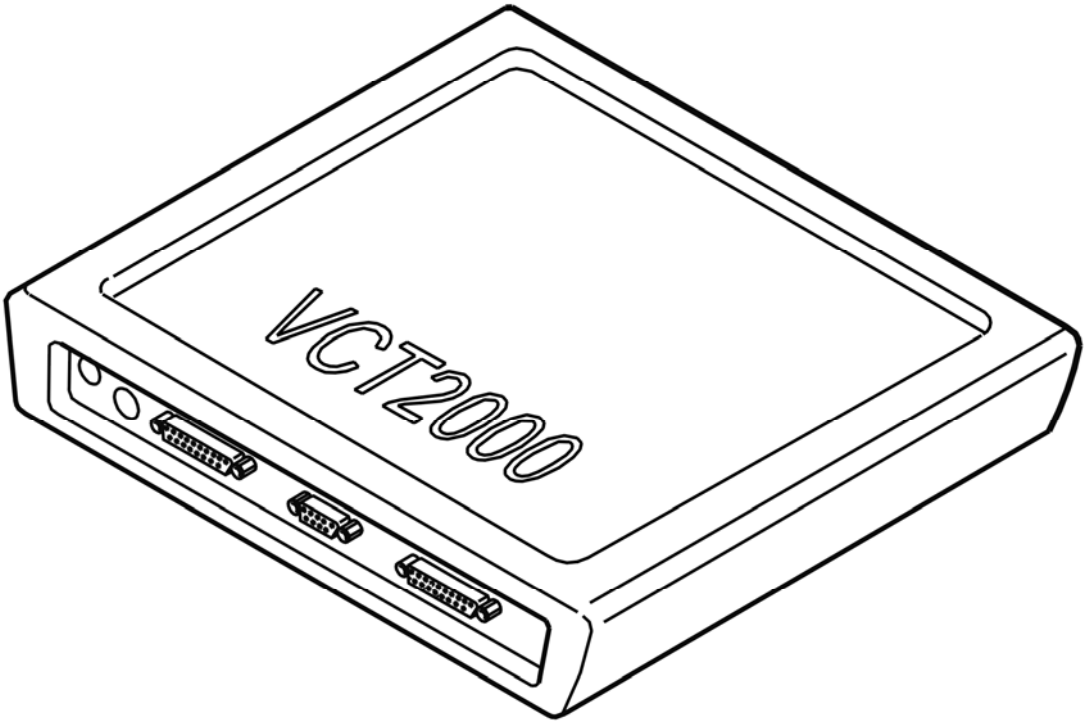

Fig. 152: Identifying VCT2000 Diagnostic Tool Symbol In VIDA
Courtesy of VOLVO CARS CORPORATION

- **Continue**

  Refer to **VERIFICATION**

VERIFICATION

VERIFICATION

HINT: After carrying out the repair, check that the fault has been remedied.

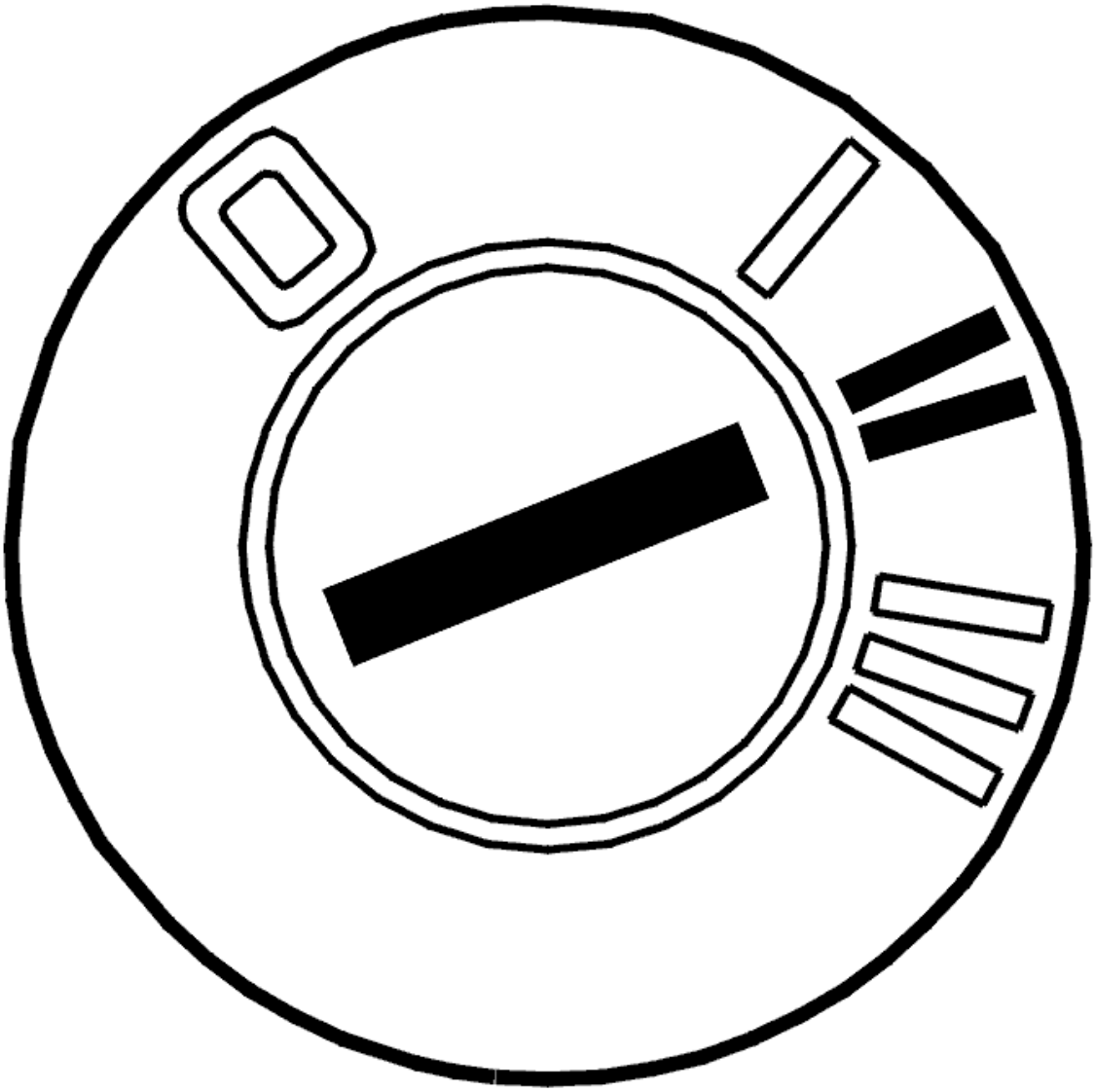

Fig. 153: Identifying Ignition ON
Courtesy of VOLVO CARS CORPORATION

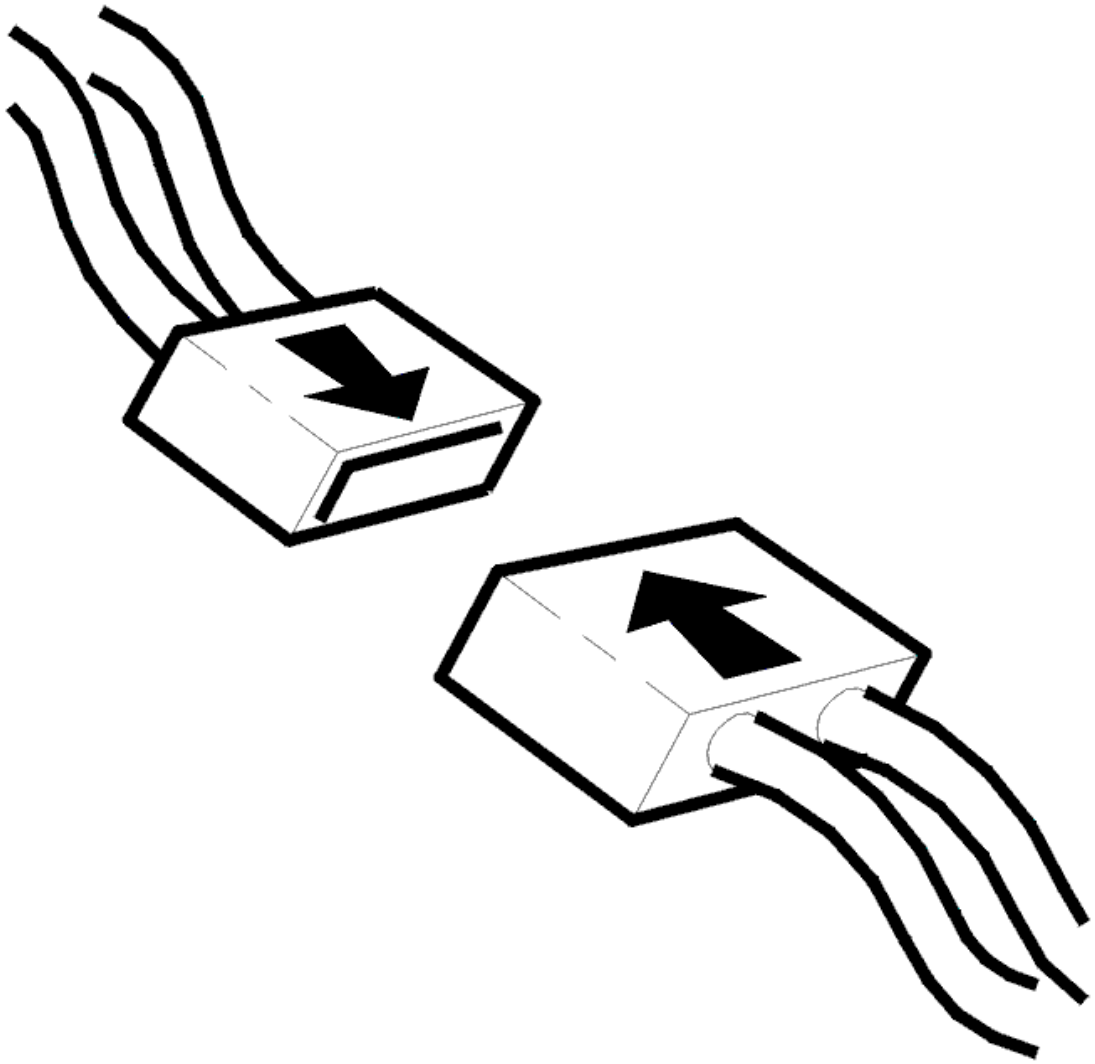

Fig. 154: Identifying Connector(s) Reinstallation
Courtesy of VOLVO CARS CORPORATION

- Ignition off
- Reinstall the components, reconnect the connectors etc.
- Ignition on
- Activate solenoid SLT by clicking the symbol for VCT2000.

  Read off the current through the circuit for solenoid SLT. The current must oscillate between approximately 0 and 1000 mA.

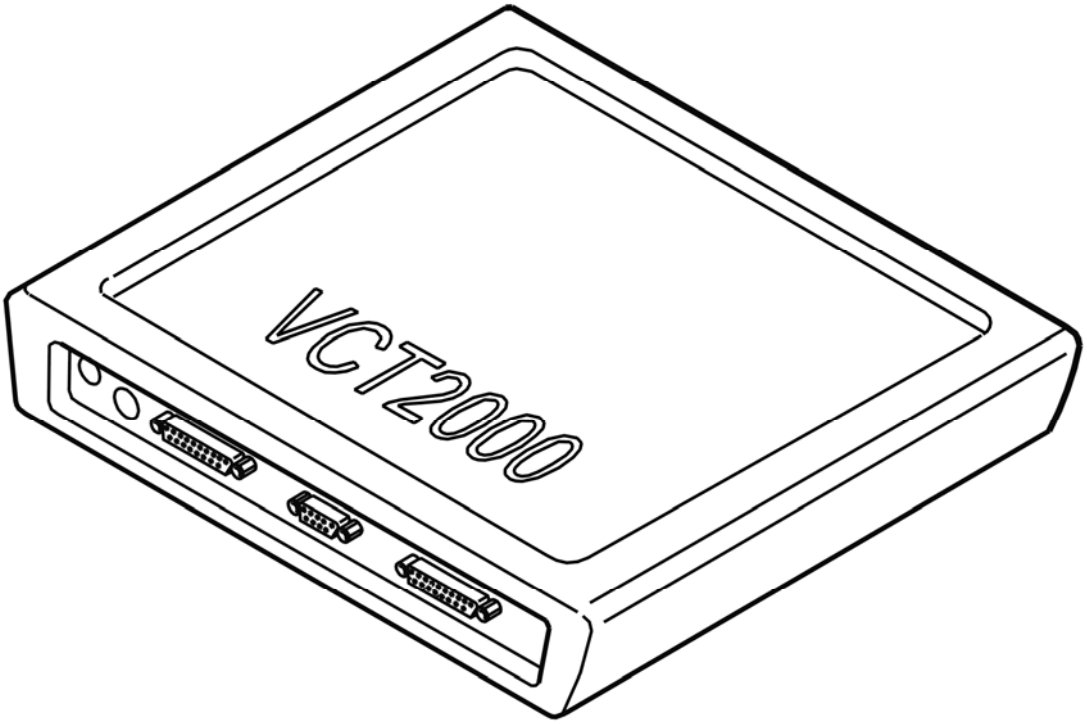

Fig. 155: Identifying VCT2000 Diagnostic Tool Symbol In VIDA
Courtesy of VOLVO CARS CORPORATION

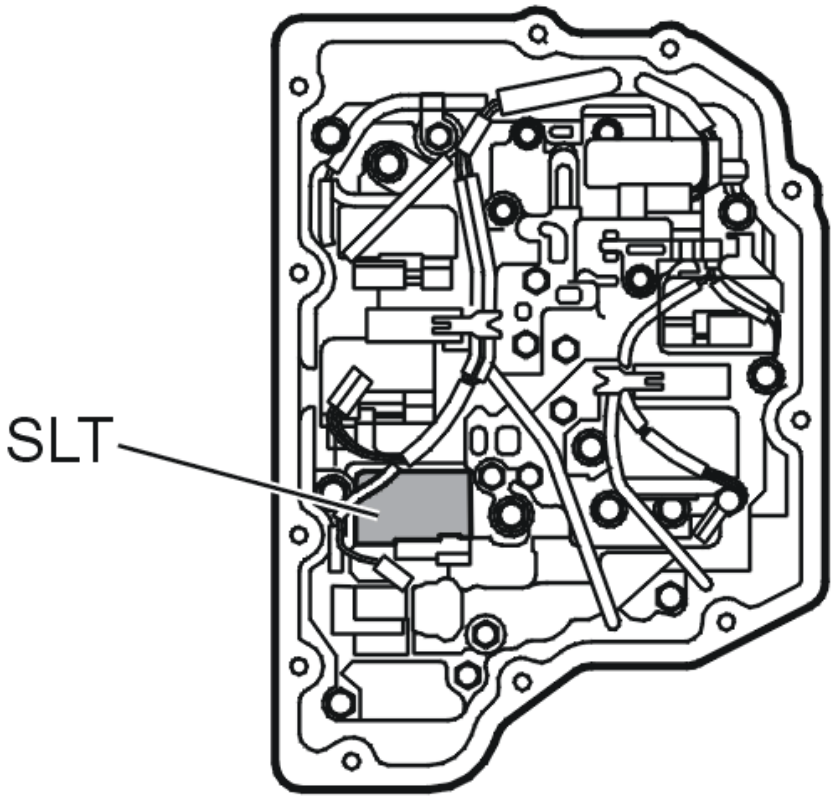

Fig. 156: Identifying Solenoid SLT
Courtesy of VOLVO CARS CORPORATION

Is the function OK?

- **YES**

  VERIFIED: Troubleshooting has been completed.

- **NO**

  Refer to **INFORMATION**

INFORMATION

FAULT-TRACING INFORMATION

The fault should have been detected and remedied. As this is not the case fault-tracing has failed.

Exit fault-tracing for this diagnostic trouble code (DTC) or make another attempt.

TCM-P096300: PRESSURE REGULATOR SOLENOID A CONTROL CIRCUIT HIGH. GENERAL FAULT INFORMATION. NO INFORMATION ON FAULT

TYPE (TF-80SC AWD; 2005)

DIAGNOSTIC TROUBLE CODE (DTC) INFORMATION TCM-P096300

see **DIAGNOSTIC TROUBLE CODE (DTC) INFORMATION TCM-P096300**

FAULT TRACING TCM-P096300

see **FAULT TRACING TCM-P096300**

TCM-P096400: PRESSURE CONTROL SOLENOID B CONTROL CIRCUIT / OPEN. GENERAL FAILURE INFORMATION. NO SUB TYPE INFORMATION (B6324S, TF-80SC; B6324S, TF-80SC AWD; 2007-2010)

DIAGNOSTIC TROUBLE CODE (DTC) INFORMATION TCM-P096400

Condition

Lock-up solenoid SLU controls the transmission lock-up function. Solenoid SLU works when it receives voltage from the transmission control module (TCM). The solenoid is activated during various driving conditions based on speed, throttle position and set driving program.

The diagnostic trouble code (DTC) is stored if the control module detects that:

- The current through the circuit of solenoid SLU is too low when the solenoid is being activated.

Solenoid SLU cannot then be activated.

The control module's test for the diagnostic trouble code (DTC) starts in the event of:

- Shifting when the lock-up function is activated.

NOTE: The control module can only detect the fault once the test has been started and the diagnostic trouble code (DTC) is stored when the conditions are met.

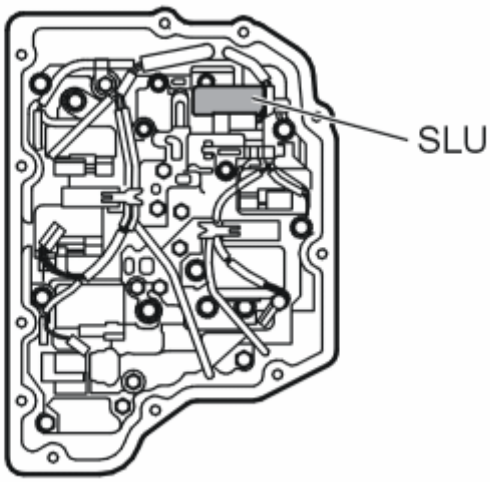

Fig. 157: Identifying Solenoid SLU
Courtesy of VOLVO CARS CORPORATION

Substitute Value

- Blocking adaptation.
- Blocking of lock-up function.

Possible Source

- Contact resistance in the terminals.
- Open-circuit in the cable for the control signal or signal ground.
- Solenoid does not function.
- Internal fault in the transmission control module (TCM).

Fault symptom[s]

- General warning lamp lit
- Malfunction indicator light (MIL), on
- Abnormal slipping gearshifts
- No lock-up

FAULT-TRACING

CHECKS

CHECKING LOCK-UP SOLENOID SLU

Fig. 158: Identifying Ignition ON
Courtesy of VOLVO CARS CORPORATION

- Ignition on.
- Activate solenoid SLU by clicking on the VCT2000 symbol.

  Read off the current through the solenoid SLU circuit. The current should oscillate between 100 and 950 mA.

  The fault is permanent if the current does not change.

  If the current changes, this is an indication that the fault was present previously but is not active at the moment, i. e. an intermittent fault.

Fig. 159: Identifying VCT2000 Diagnostic Tool Symbol In VIDA
Courtesy of VOLVO CARS CORPORATION

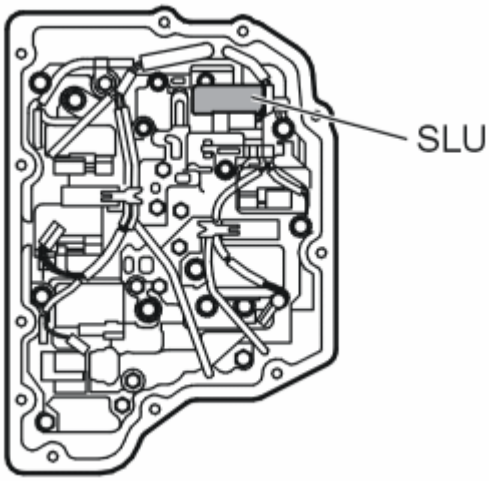

Fig. 160: Identifying Solenoid SLU
Courtesy of VOLVO CARS CORPORATION

- **Continue**

Refer to **CHECKING THE COMPONENTS AND WIRING**

CHECKING THE COMPONENTS AND WIRING

Fig. 161: Identifying Ignition OFF
Courtesy of VOLVO CARS CORPORATION

- Ignition off.
- Open the transmission control system.

  Check connector B (22-pin) for the transmission control module (TCM). Check for damaged or pressed in pins. Check for contact resistance and oxidation.

  Check the cables for open circuit and short circuit to ground.

  Take readings between:

  - Transmission connector #B9 and the connector for solenoid SLU #1.
  - Transmission connector #B4 and the connector for solenoid SLU #2.

  HINT: If no fault is found in the wiring, check solenoid SLU. See CHECKING INTERNAL COMPONENTS OF THE TRANSMISSION

  If no fault is found in the wiring or the component replace the control system.

  Remedy as necessary.

  Other information

  - see **CONNECTING THE BREAKOUT BOX**
  - see **SIGNAL SPECIFICATION**
  - see **TRANSMISSION CONTROL UNIT WIRING HARNESS**
  - To access the transmission control system see: **COVER CONTROL SYSTEM, REPLACING (2007-2011)**
  - see **CHECKING WIRING AND TERMINALS**

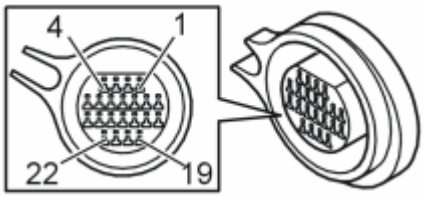

Fig. 162: Identifying Connector B Terminals
Courtesy of VOLVO CARS CORPORATION

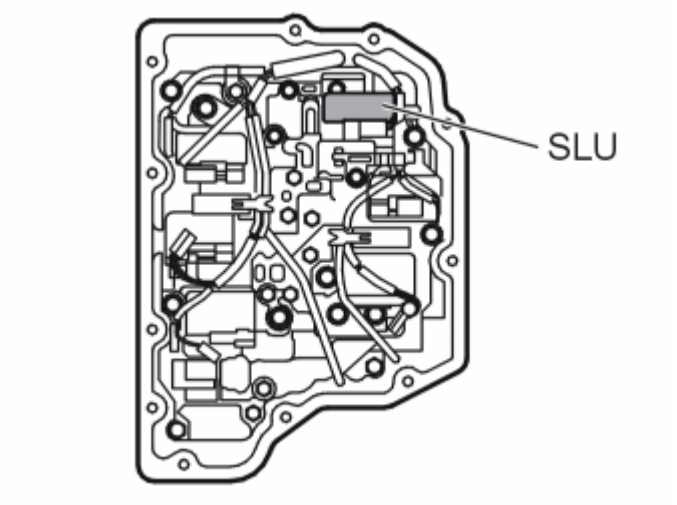

Fig. 163: Identifying Solenoid SLU
Courtesy of VOLVO CARS CORPORATION

- **Continue**

  Refer to **RESETTING ADAPTATION**

VERIFICATION

VERIFICATION

HINT: After carrying out the repair, check that the fault has been remedied.

Fig. 164: Identifying Ignition ON
Courtesy of VOLVO CARS CORPORATION

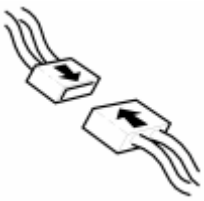

Fig. 165: Identifying Connector(s) Reinstallation
Courtesy of VOLVO CARS CORPORATION

- Ignition off.
- Reinstall the connectors, components etc.
- Ignition on.
- Activate solenoid SLU by clicking on the VCT2000 symbol.

  Read off the current through the solenoid SLU circuit. The current should oscillate between 100 and 950 mA.

Fig. 166: Identifying VCT2000 Diagnostic Tool Symbol In VIDA
Courtesy of VOLVO CARS CORPORATION

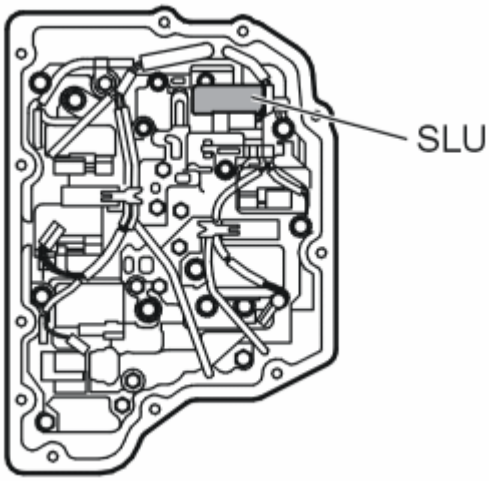

Fig. 167: Identifying Solenoid SLU
Courtesy of VOLVO CARS CORPORATION

Is the function OK?

- **YES**

VERIFIED: Troubleshooting has been completed.

- **NO**

  Refer to **INFORMATION**

INFORMATION

FAULT-TRACING INFORMATION

The fault should have been detected and remedied. As this is not the case fault-tracing has failed.

Exit fault-tracing for this diagnostic trouble code (DTC) or make another attempt.

RESETTING ADAPTATION

RESETTING THE ADAPTATION AND THE COUNTER FOR "TRANSMISSION OIL, REPLACE"

HINT: The transmission has torque-regulated, adaptive pressure regulation. The pressure regulator enables the transmission to regulate pressure during each shift to prevent hard shifting. Each shift is assessed by the transmission control module (TCM) and is stored in the internal memory. This makes it possible to compensate for transmission and clutch wear. It is important that the adaptation in the memory is reset so that the transmission works normally after the repair. Because the fluid was changed during the repair, the counter for transmission fluid change must also be reset. If the counter is not reset during draining/replacement, a diagnostic trouble code may be generated under the wrong conditions.

NOTE: This applies only if the transmission or one of the components in the transmission have been replaced.

Fig. 168: Identifying Ignition ON
Courtesy of VOLVO CARS CORPORATION

- Ignition on.

  Click on the VCT2000 symbol to reset the adaptation and counter.

Fig. 169: Identifying VCT2000 Diagnostic Tool Symbol In VIDA
Courtesy of VOLVO CARS CORPORATION

- **Continue**

  Refer to **VERIFICATION**

TCM-P096400: PRESSURE CONTROL SOLENOID B CONTROL CIRCUIT / OPEN. GENERAL FAILURE INFORMATION. NO SUB TYPE INFORMATION (B6324S5, TF-80SC; B6324S5, TF-80SC AWD; 2011-2012)

DIAGNOSTIC TROUBLE CODE (DTC) INFORMATION TCM-P096400

see **DIAGNOSTIC TROUBLE CODE (DTC) INFORMATION TCM-P096400**

FAULT-TRACING

see **FAULT-TRACING**

TCM-P096400: PRESSURE REGULATOR SOLENOID B CONTROL CIRCUIT/BROKEN CIRCUIT. GENERAL FAULT INFORMATION. NO INFORMATION ON FAULT TYPE (B8444S, TF-80SC AWD; 2006-2011)

DIAGNOSTIC TROUBLE CODE (DTC) INFORMATION TCM-P096400

Condition

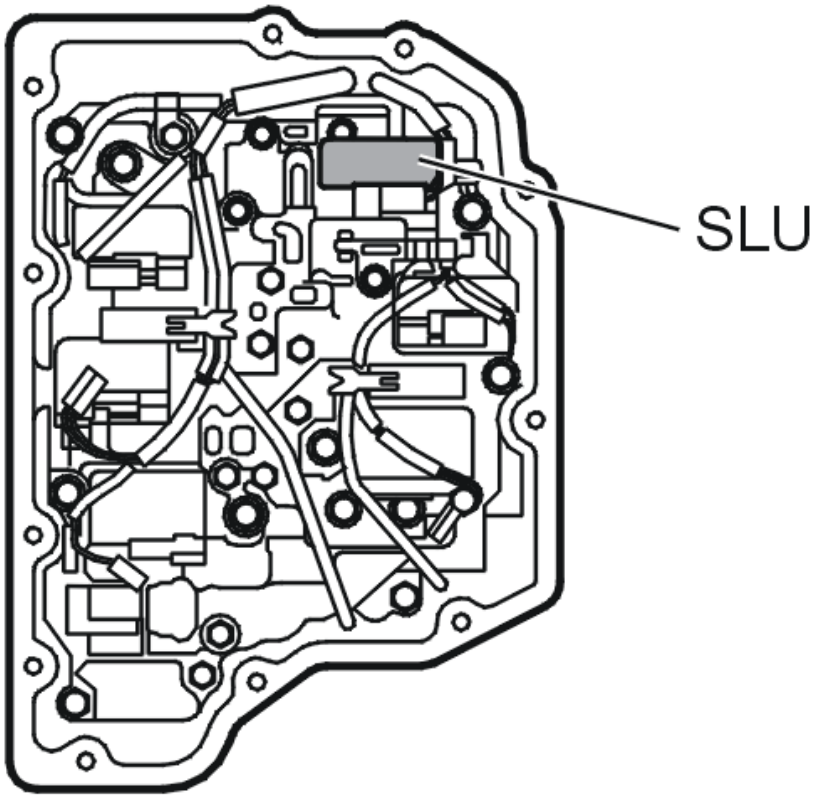

Fig. 170: Identifying Solenoid SLU
Courtesy of VOLVO CARS CORPORATION

The lock-up solenoid SLU controls the lock-up function in the gearbox. The SLU solenoid works when it receives power from the transmission control module (TCM) and depending on the speed, accelerator position and driving program setting, the solenoid will be activated for different driving conditions.

If the transmission control module (TCM) registers that the current through the circuit to the SLU solenoid is too low when the solenoid should be activated, the diagnostic trouble code (DTC) is generated. The SLU solenoid can then not be activated.

The diagnostic trouble code (DTC) can be diagnosed when changing gear while the lock-up function is activated.

Substitute Value

- Blocking an adaptation.
- Blocking of lock-up function.

Possible Source

- Contact resistance in the terminals
- Open circuit in lead for control signal or signal ground.

- Solenoid not working.
- Internal fault in transmission control module (TCM).

Fault symptom[s]

- General warning lamp lit
- Malfunction indicator lamp (MIL) lit.
- Abnormally slipping gears.
- No lock-up function.

FAULT TRACING TCM-P096400

CHECKS

CHECKING THE LOCK-UP SOLENOID SLU

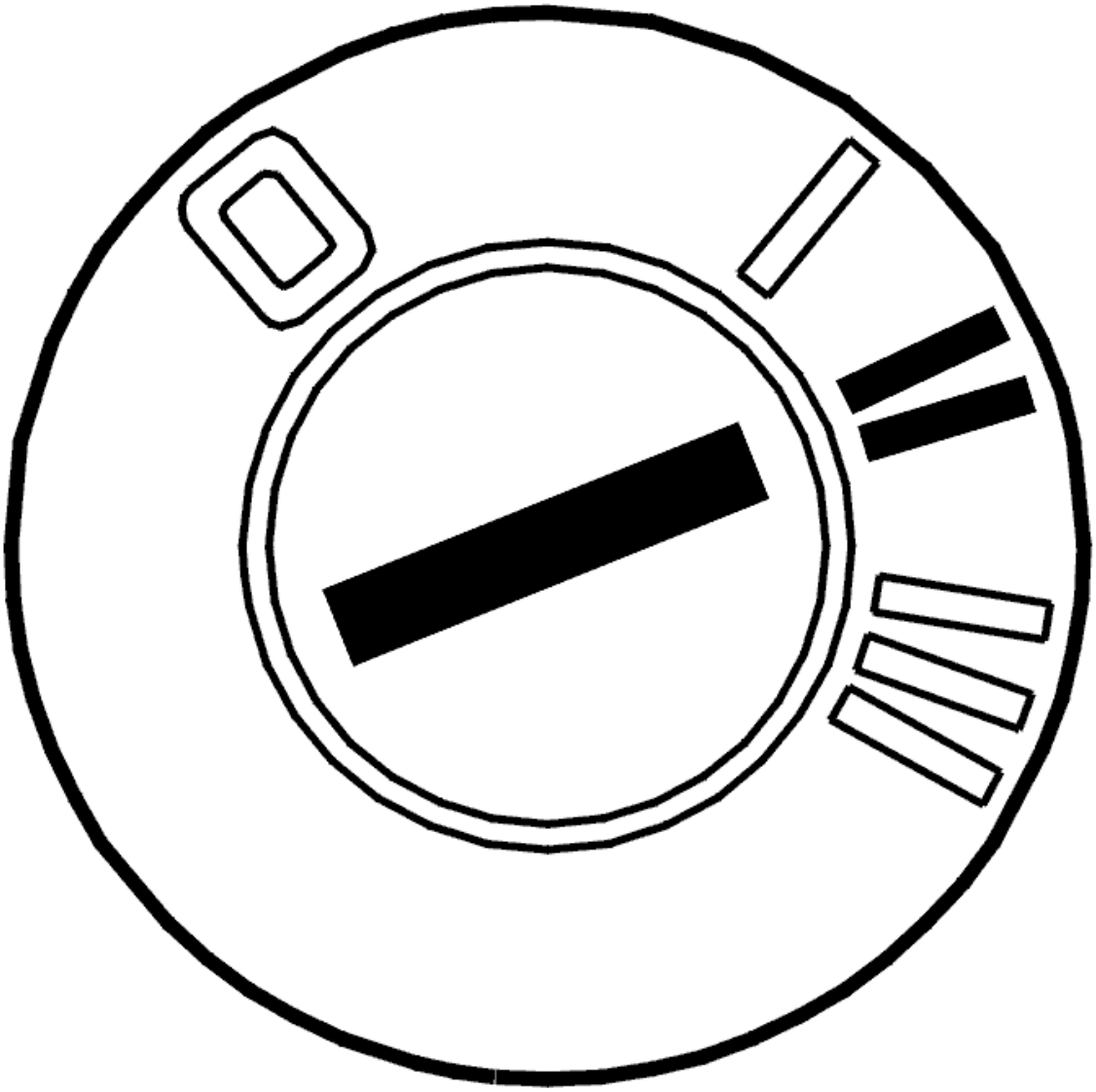

Fig. 171: Identifying Ignition ON
Courtesy of VOLVO CARS CORPORATION

- Ignition on
- Activate solenoid SLU by clicking the VCT2000 symbol.

  Read the current though the circuit for solenoid SLU. The current must oscillate between approximately 100 and 950 mA.

  The fault is permanent if the current does not change.

  If the current oscillates then this would suggest that the fault has previously been present but is no longer active. The fault is intermittent.

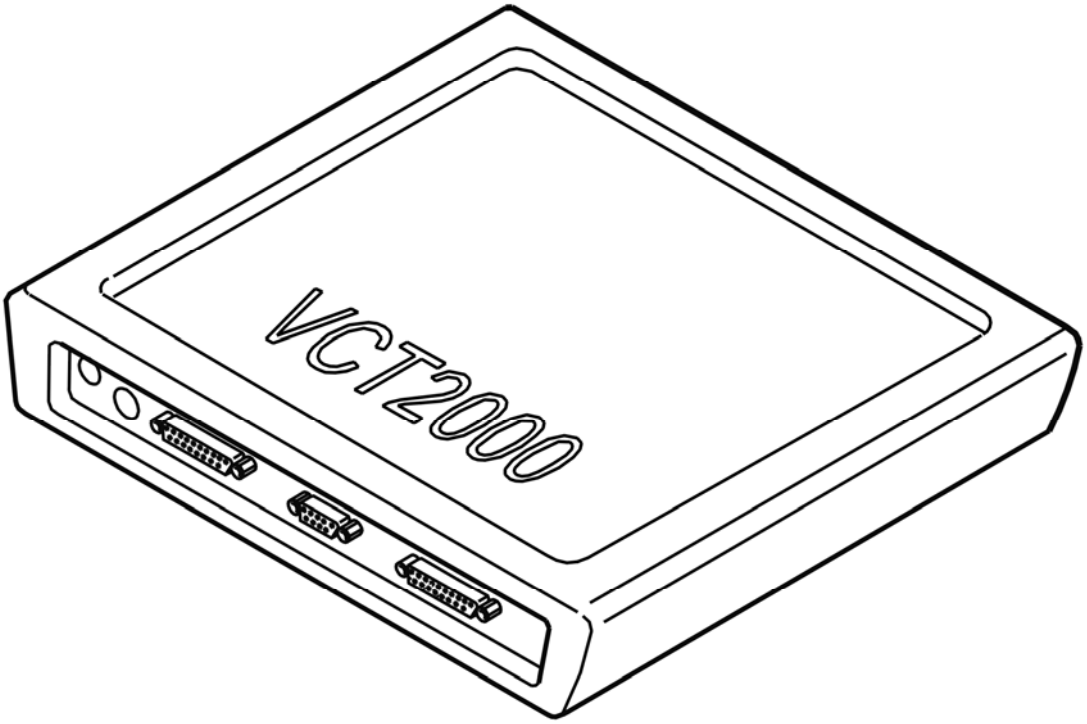

Fig. 172: Identifying VCT2000 Diagnostic Tool Symbol In VIDA
Courtesy of VOLVO CARS CORPORATION

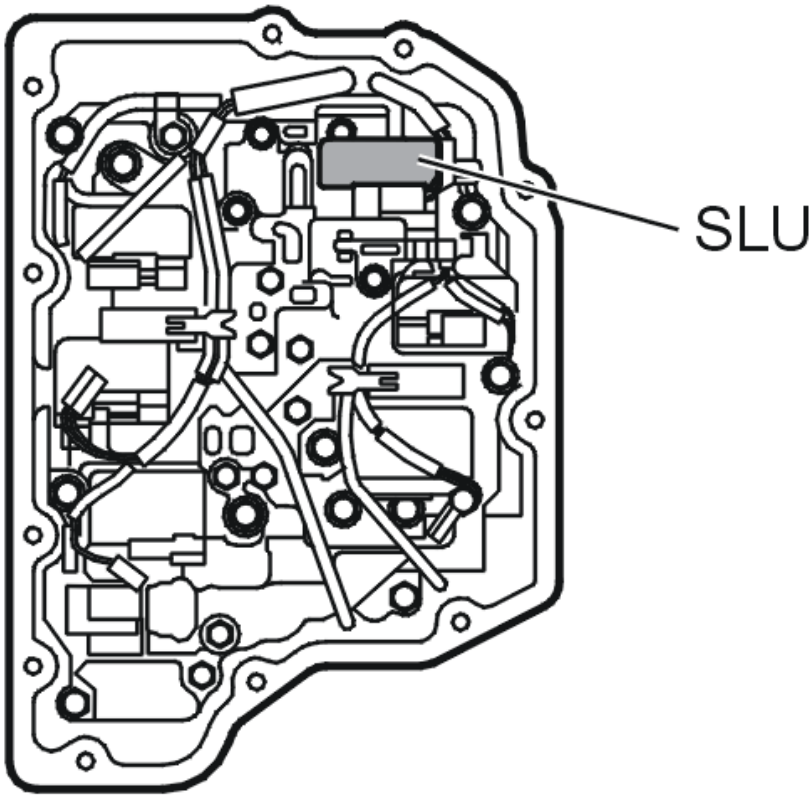

Fig. 173: Identifying Solenoid SLU
Courtesy of VOLVO CARS CORPORATION

- **Continue**

  Refer to **CHECKING THE COMPONENTS AND WIRING**

CHECKING THE COMPONENTS AND WIRING

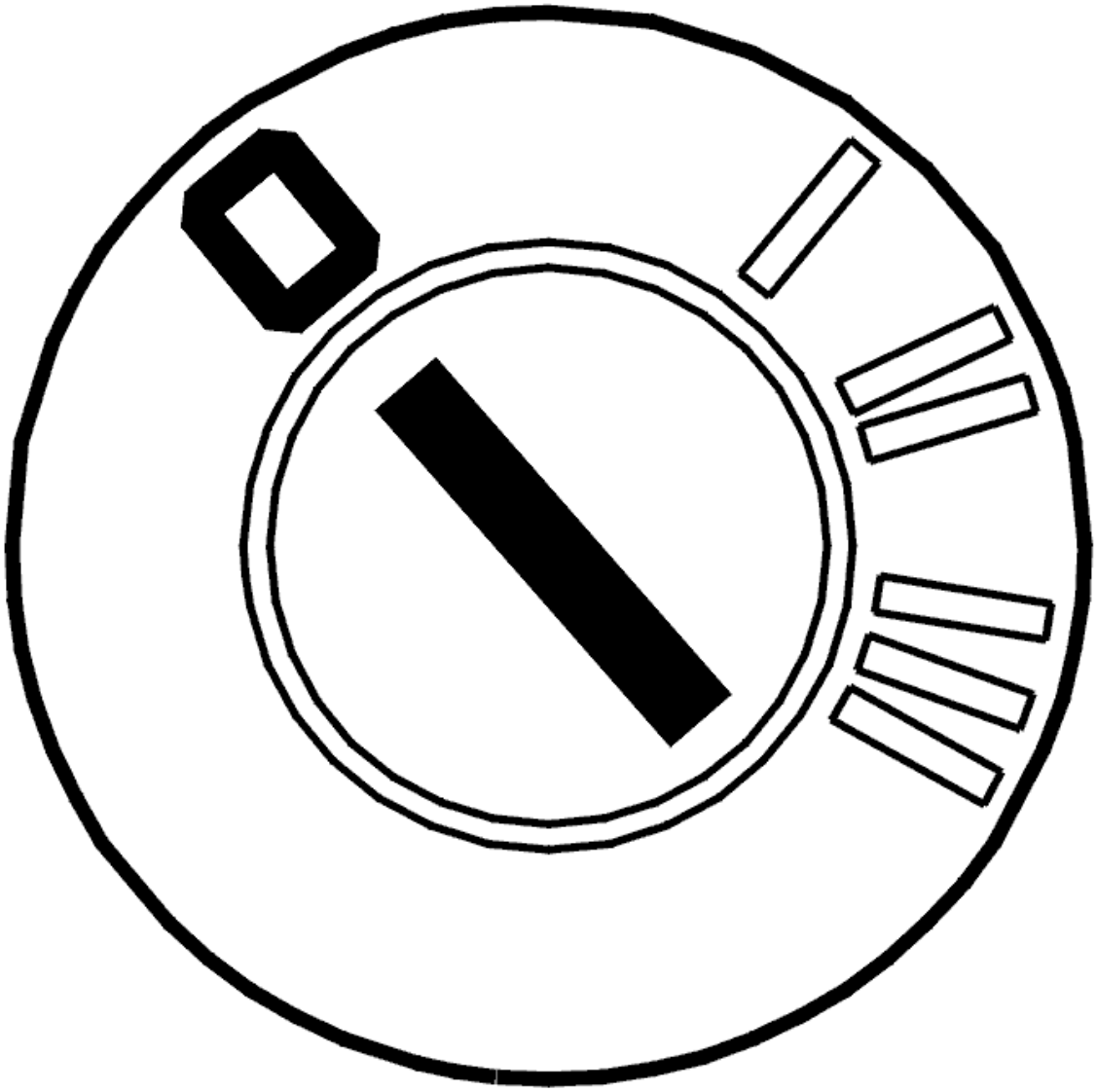

Fig. 174: Identifying Ignition OFF
Courtesy of VOLVO CARS CORPORATION

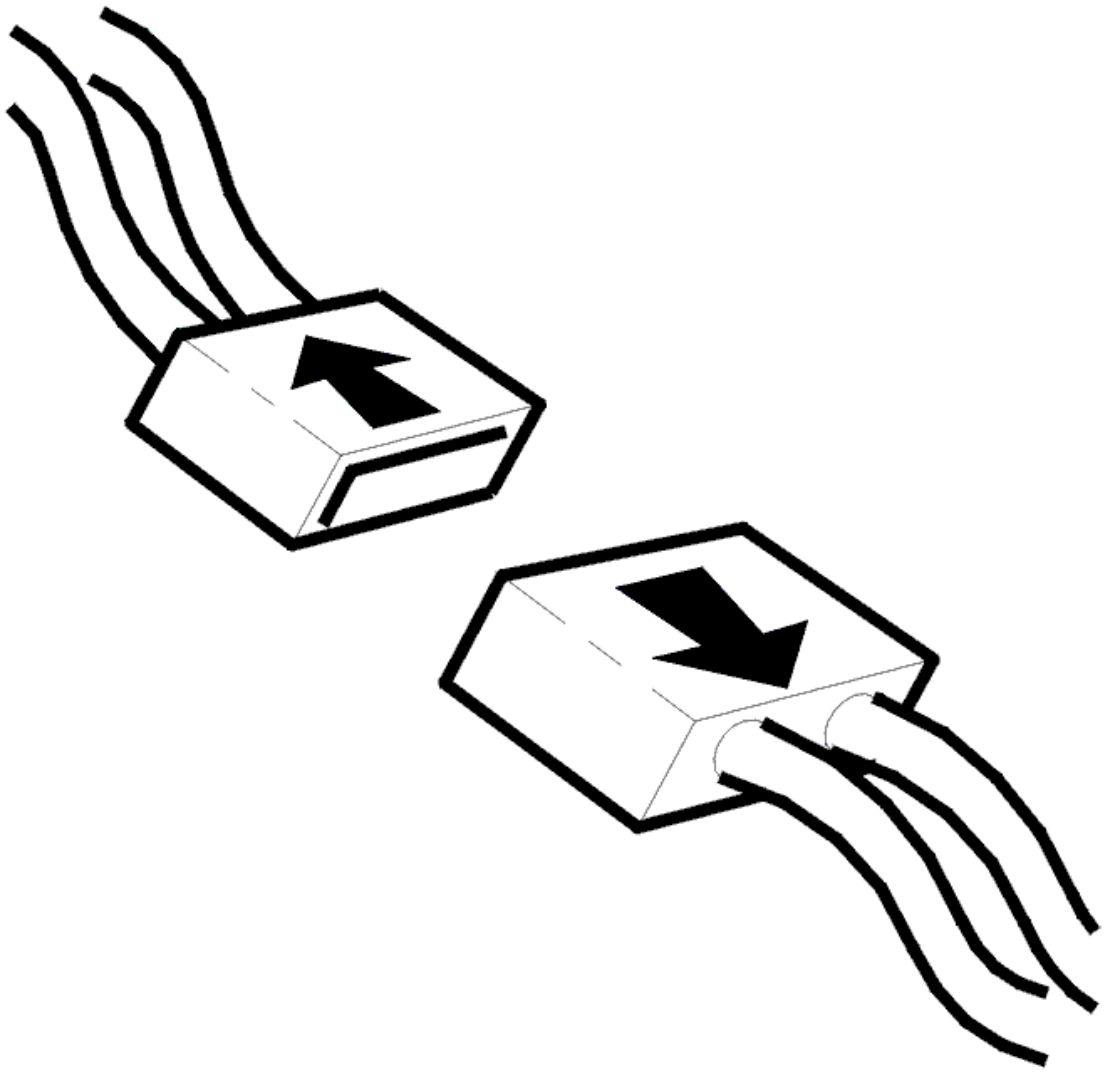

Fig. 175: Identifying Connector(s) Disconnected
Courtesy of VOLVO CARS CORPORATION

- Ignition off
- Open the gearbox control system

  Check connector B (22-pin) for the transmission control module (TCM). Check for damage and pressed in terminal pins. Check for contact resistance and oxidation.

  Check the wiring between transmission connector terminal #B9 and solenoid SLU connector terminal #1. Check the wiring between transmission connector terminal #B4 and solenoid SLT connector terminal #2. Check for an open circuit. Check for a short-circuit to ground.

  HINT: If no fault is found in the wiring check solenoid SLU. See CHECKING THE LINE PRESSURE SOLENOID SLT, SLC1, SLC2, SLC3, SLB1 AND LOCK-UP SOLENOID SLU

If no fault is found in the wiring or the component replace the control system.

Remedy as necessary.

Other information

- see **CONNECTING THE BREAKOUT BOX**
- see **SIGNAL DESCRIPTION**
- see **CABLE HARNESS, CONTROL SYSTEM, GEARBOX, REPLACING**
- To access the transmission control system: **COVER CONTROL SYSTEM, REPLACING (2007-2011)**
- see **CONTENTS**

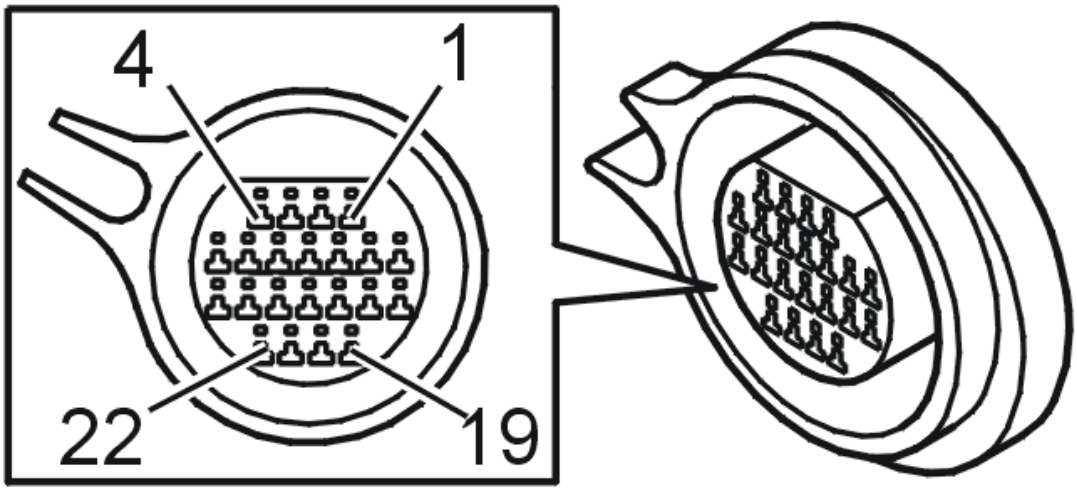

Fig. 176: Identifying Connector B Terminals
Courtesy of VOLVO CARS CORPORATION

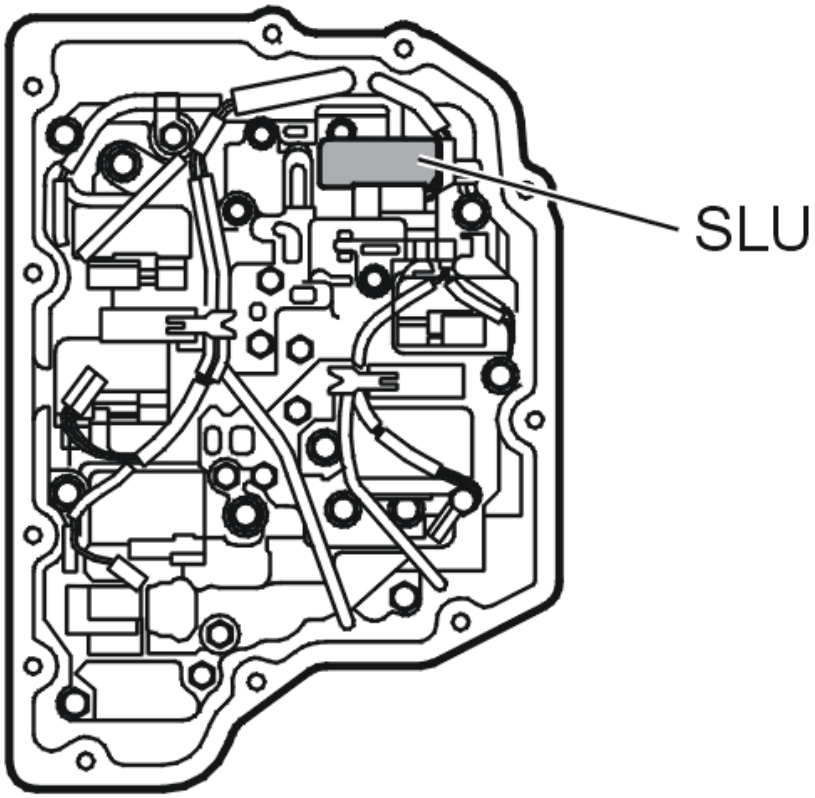

Fig. 177: Identifying Solenoid SLU
Courtesy of VOLVO CARS CORPORATION

- **Continue**

  Refer to **RESETTING ADAPTATION**

RESETTING ADAPTATION

RESETTING ADAPTATION AND COUNTER FOR "TRANSMISSION OIL, CHANGING"

HINT: The transmission has torque-controlled, adaptive pressure control. The pressure control means that the transmission itself controls the pressure during each shift sequence in order to avoid harsh shifting. Each shift is assessed by the transmission control module (TCM) and is stored in the internal memory, which results in compensation for wear in the transmission and clutch. In order for the transmission to function correctly after repair, it is important to reset the adaptation in the memory. Since the oil is changed during the repair, the counter for "Transmission oil, change" shall also be reset. If the counter is not reset when draining/changing oil, there is a risk that a diagnostic trouble code may be generated under incorrect conditions.

NOTE: **This applies only if the transmission or one of the components in the transmission have been replaced.**

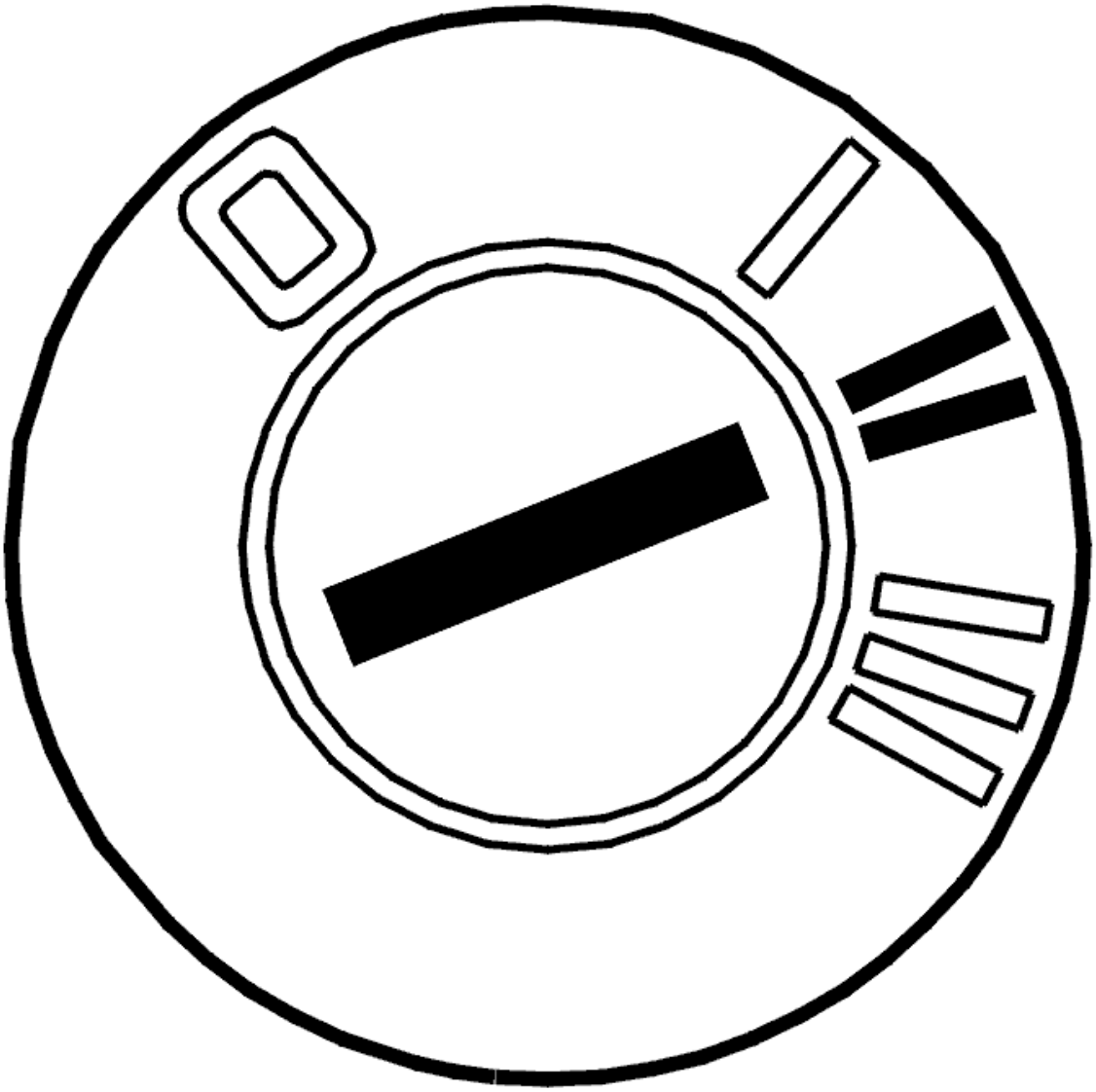

Fig. 178: Identifying Ignition ON
Courtesy of VOLVO CARS CORPORATION

- Ignition on

  Activate reset of the adaptation and the counter by clicking on the symbol for VCT2000.

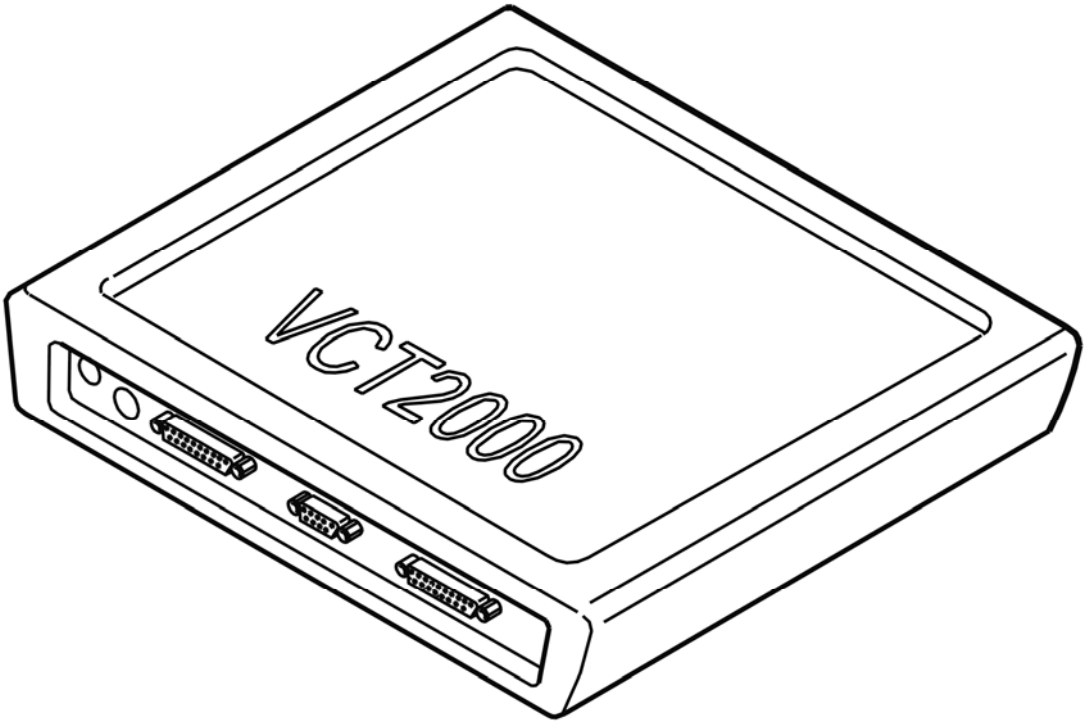

Fig. 179: Identifying VCT2000 Diagnostic Tool Symbol In VIDA
Courtesy of VOLVO CARS CORPORATION

- **Continue**

  Refer to **VERIFICATION**

VERIFICATION

VERIFICATION

HINT: After carrying out the repair, check that the fault has been remedied.

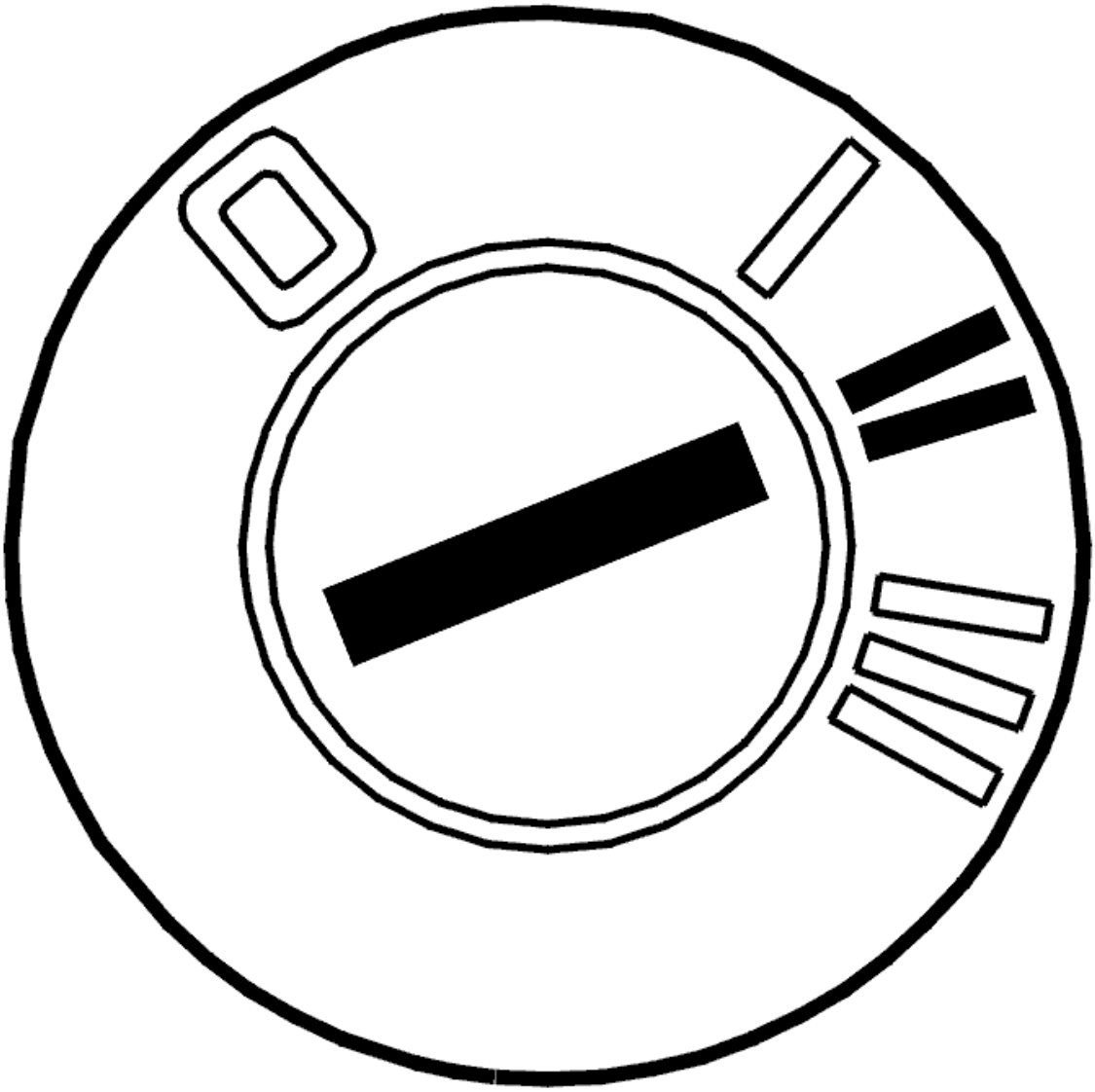

Fig. 180: Identifying Ignition ON
Courtesy of VOLVO CARS CORPORATION

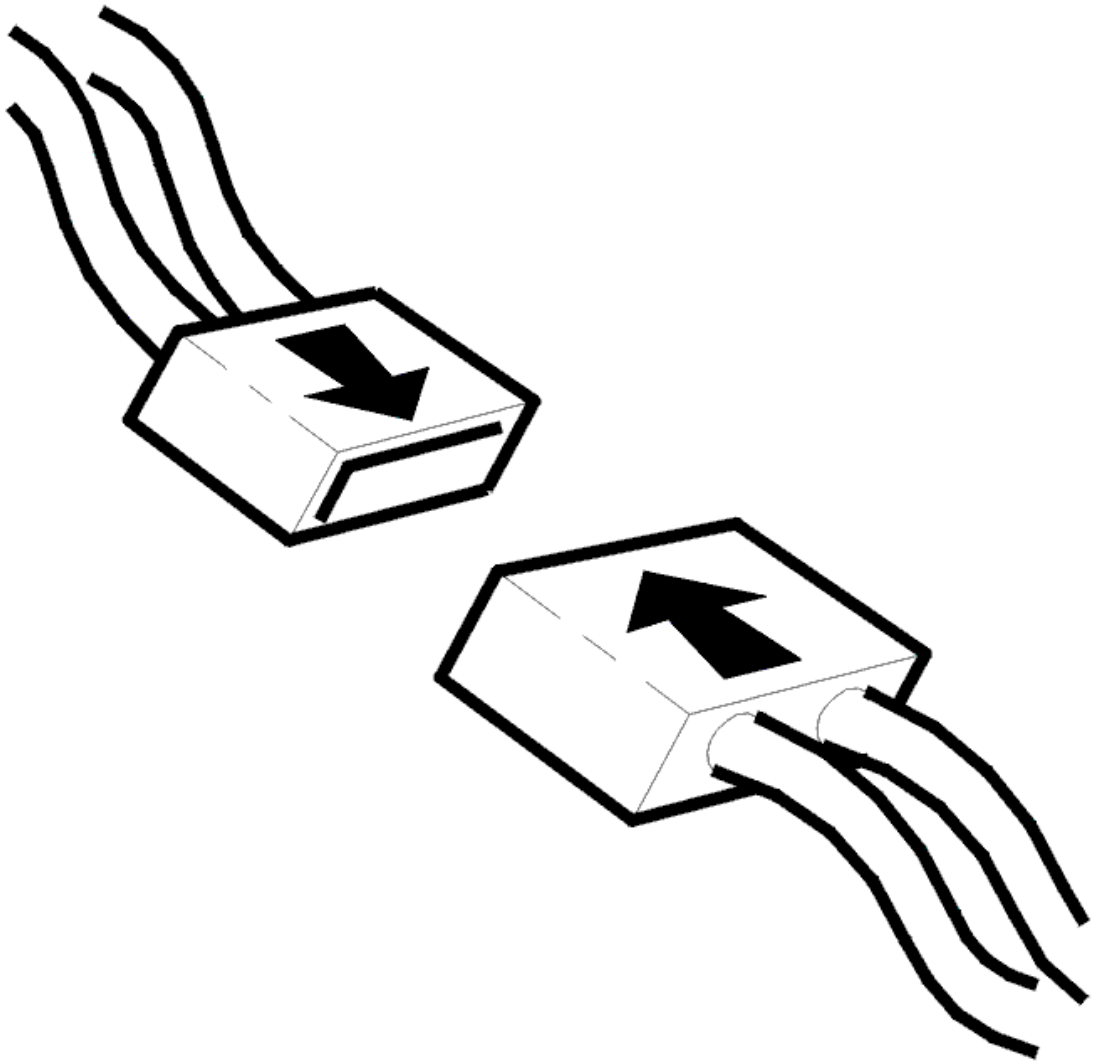

Fig. 181: Identifying Connector(s) Reinstallation
Courtesy of VOLVO CARS CORPORATION

- Ignition off
- Reinstall the components, reconnect the connectors etc.
- Ignition on
- Activate solenoid SLU by clicking the symbol for VCT2000.

  Read off the current through the circuit for solenoid SLU. The current must oscillate between approximately 0 and 1000 mA.

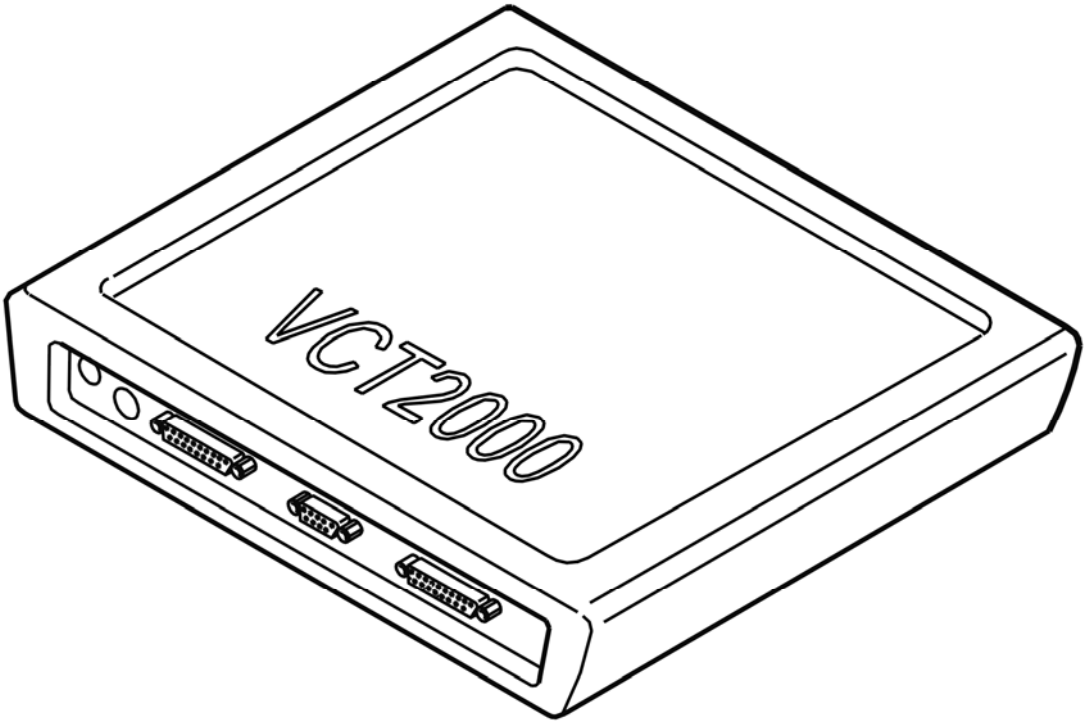

Fig. 182: Identifying VCT2000 Diagnostic Tool Symbol In VIDA
Courtesy of VOLVO CARS CORPORATION

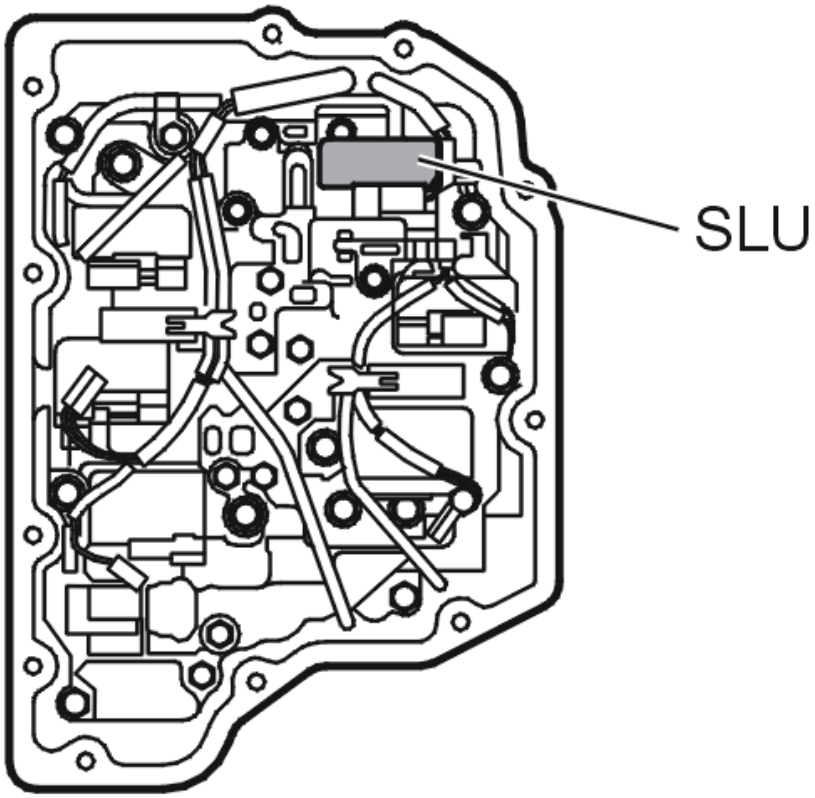

Fig. 183: Identifying Solenoid SLU
Courtesy of VOLVO CARS CORPORATION

Is the function OK?

- **YES**

  VERIFIED: Troubleshooting has been completed.

- **NO**

  Refer to **INFORMATION**

INFORMATION

FAULT-TRACING INFORMATION

The fault should have been detected and remedied. As this is not the case fault-tracing has failed.

Exit fault-tracing for this diagnostic trouble code (DTC) or make another attempt.

TCM-P096400: PRESSURE REGULATOR SOLENOID B CONTROL CIRCUIT/BROKEN CIRCUIT. GENERAL FAULT INFORMATION. NO

INFORMATION ON FAULT TYPE (TF-80SC AWD; 2005)

DIAGNOSTIC TROUBLE CODE (DTC) INFORMATION TCM-P096400

see **DIAGNOSTIC TROUBLE CODE (DTC) INFORMATION TCM-P096400**

FAULT TRACING TCM-P096400

see **FAULT TRACING TCM-P096400**

TCM-P096500: PRESSURE CONTROL SOLENOID B CONTROL CIRCUIT RANGE/PERFORMANCE. GENERAL FAILURE INFORMATION. NO SUB TYPE INFORMATION (B6324S, TF-80SC; B6324S, TF-80SC AWD; 2007-2010)

DIAGNOSTIC TROUBLE CODE (DTC) INFORMATION TCM-P096500

Condition

Lock-up solenoid SLU controls the transmission lock-up function. Solenoid SLU works when it receives voltage from the transmission control module (TCM). The solenoid is activated during various driving conditions based on speed, throttle position and set driving program.

The diagnostic trouble code (DTC) is stored if the control module detects that:

- The measured current in the solenoid circuit is incorrect.

Solenoid SLU can then not regulate system pressure.

The control module's test for the diagnostic trouble code (DTC) starts in the event of:

- Shifting when the lock-up function is activated.

NOTE: The control module can only detect the fault once the test has been started and the diagnostic trouble code (DTC) is stored when the conditions are met.

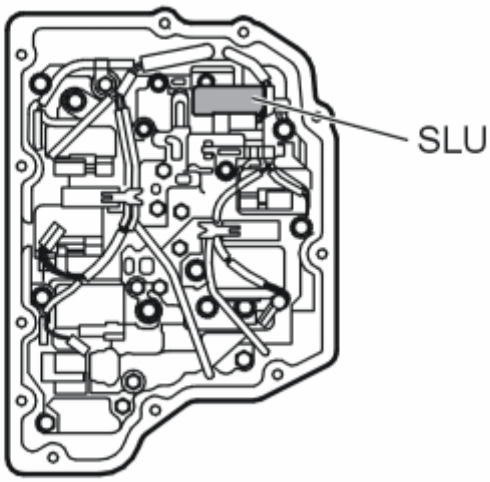

Fig. 184: Identifying Solenoid SLU
Courtesy of VOLVO CARS CORPORATION

Substitute Value

- Auxiliary program **Emergency mode 1** in the transmission control module (TCM) has started.

  HINT: EMERGENCY MODE IN THE EVENT OF A FAULT

Possible Source

- Contact resistance in the terminals.
- Open-circuit in the cable for the control signal or signal ground.
- Lock-up solenoid SLU is stuck.
- Lock-up solenoid SLU not working.

Fault symptom[s]

- General warning lamp lit
- Malfunction indicator light (MIL), on
- Rough gear shift
- No gear shift
- Abnormal slipping gearshifts

FAULT-TRACING

CHECKS

CHECKING LOCK-UP SOLENOID SLU

Fig. 185: Identifying Ignition ON
Courtesy of VOLVO CARS CORPORATION

- Ignition on.
- Activate solenoid SLU by clicking on the VCT2000 symbol.

  Read off the current through the solenoid SLU circuit. The current should oscillate between 100 and 950 mA.

  The fault is permanent if the current does not change.

  If the current changes, this is an indication that the fault was present previously but is not active at the moment, i. e. an intermittent fault.

Fig. 186: Identifying VCT2000 Diagnostic Tool Symbol In VIDA
Courtesy of VOLVO CARS CORPORATION

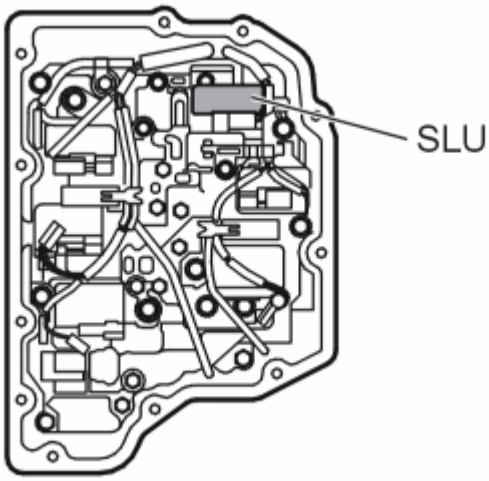

Fig. 187: Identifying Solenoid SLU
Courtesy of VOLVO CARS CORPORATION

- **Continue**

Refer to **CHECKING THE COMPONENTS AND WIRING**

CHECKING THE COMPONENTS AND WIRING

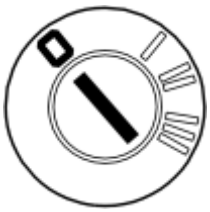

Fig. 188: Identifying Ignition OFF
Courtesy of VOLVO CARS CORPORATION

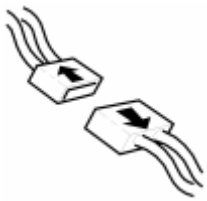

Fig. 189: Identifying Connectors
Courtesy of VOLVO CARS CORPORATION

- Ignition off.
- Open the transmission control system.

  Check connector B (22-pin) for the transmission control module (TCM). Check for damaged or pressed in pins. Check for contact resistance and oxidation.

  Check the cables for open circuit and short circuit to ground.

  Take readings between:

  - Transmission connector #B9 and the connector for solenoid SLU #1.
  - Transmission connector #B4 and the connector for solenoid SLU #2.

  HINT: If no fault is found in the wiring, check solenoid SLU. See CHECKING INTERNAL COMPONENTS OF THE TRANSMISSION

  If no fault is found in the wiring or the component replace the control system.

  Remedy as necessary.

  Other information

  - see **CONNECTING THE BREAKOUT BOX**
  - see **SIGNAL SPECIFICATION**
  - see **TRANSMISSION CONTROL UNIT WIRING HARNESS**

- To access the transmission control system:**COVER CONTROL SYSTEM, REPLACING (2007-2011)**
- see **CHECKING WIRING AND TERMINALS**

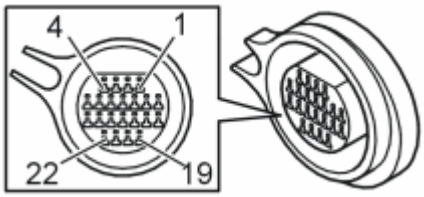

Fig. 190: Identifying Connector B Terminals
Courtesy of VOLVO CARS CORPORATION

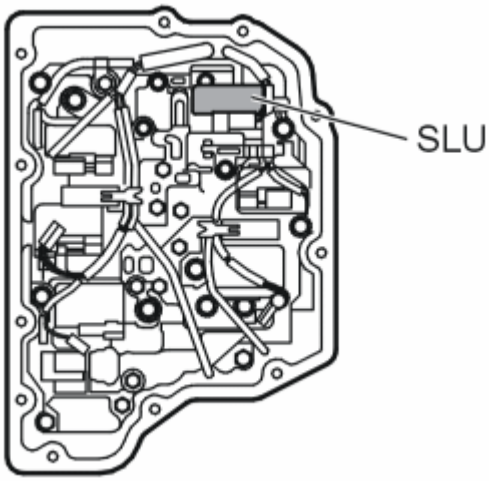

Fig. 191: Identifying Solenoid SLU
Courtesy of VOLVO CARS CORPORATION

- **Continue**

  Refer to **RESETTING ADAPTATION**

VERIFICATION

VERIFICATION

HINT: After carrying out the repair, check that the fault has been remedied.

Fig. 192: Identifying Ignition ON

Courtesy of VOLVO CARS CORPORATION

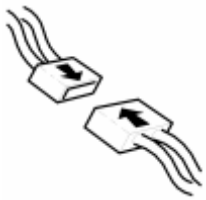

Fig. 193: Identifying Connector(s) Reinstallation
Courtesy of VOLVO CARS CORPORATION

- Ignition off.
- Reinstall the connectors, components etc.
- Ignition on.
- Activate solenoid SLU by clicking on the VCT2000 symbol.

  Read off the current through the solenoid SLU circuit. The current should oscillate between 100 and 950 mA.

Fig. 194: Identifying VCT2000 Diagnostic Tool Symbol In VIDA
Courtesy of VOLVO CARS CORPORATION

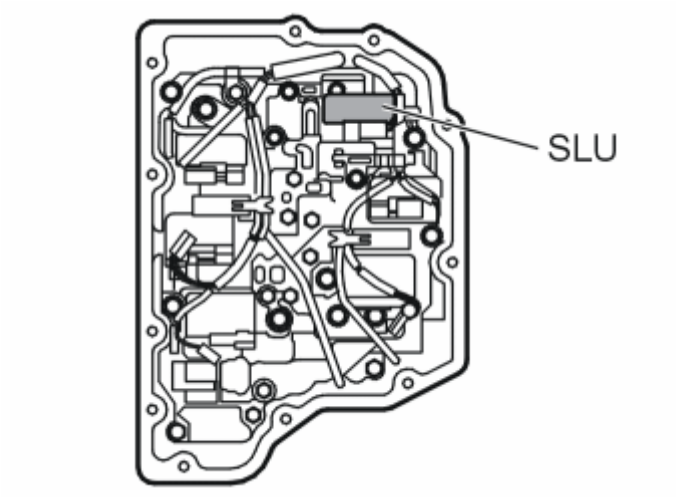

Fig. 195: Identifying Solenoid SLU
Courtesy of VOLVO CARS CORPORATION

Is the function OK?

- **YES**

  VERIFIED: Troubleshooting has been completed.

- **NO**

  Refer to **INFORMATION**

INFORMATION

FAULT-TRACING INFORMATION

The fault should have been detected and remedied. As this is not the case fault-tracing has failed.

Exit fault-tracing for this diagnostic trouble code (DTC) or make another attempt.

RESETTING ADAPTATION

RESETTING THE ADAPTATION AND THE COUNTER FOR "TRANSMISSION OIL, REPLACE"

HINT: The transmission has torque-regulated, adaptive pressure regulation. The pressure regulator enables the transmission to regulate pressure during each shift to prevent hard shifting. Each shift is assessed by the transmission control module (TCM) and is stored in the internal memory. This makes it possible to compensate for transmission and clutch wear. It is important that the adaptation in the memory is reset so that the transmission works normally after the repair. Because the fluid was changed during the repair, the counter for transmission fluid change must also be reset. If the counter is not reset during draining/replacement, a diagnostic trouble code may be generated under the wrong conditions.

NOTE: This applies only if the transmission or one of the components in the transmission have been replaced.

Fig. 196: Identifying Ignition ON
Courtesy of VOLVO CARS CORPORATION

- Ignition on.

  Click on the VCT2000 symbol to reset the adaptation and counter.

Fig. 197: Identifying VCT2000 Diagnostic Tool Symbol In VIDA
Courtesy of VOLVO CARS CORPORATION

- **Continue**

  Refer to **VERIFICATION**

TCM-P096500: PRESSURE CONTROL SOLENOID B CONTROL CIRCUIT RANGE/PERFORMANCE. GENERAL FAILURE INFORMATION. NO SUB TYPE INFORMATION (B6324S5, TF-80SC; B6324S5, TF-80SC AWD; 2011-2012)

DIAGNOSTIC TROUBLE CODE (DTC) INFORMATION TCM-P096500

see **DIAGNOSTIC TROUBLE CODE (DTC) INFORMATION TCM-P096500**

FAULT-TRACING

see **FAULT-TRACING**

TCM-P096500: PRESSURE REGULATOR SOLENOID B CONTROL CIRCUIT INSIDE/OUTSIDE TOLERANCE. GENERAL FAULT INFORMATION. NO INFORMATION ON FAULT TYPE (B8444S, TF-80SC AWD; 2006-2011)

DIAGNOSTIC TROUBLE CODE (DTC) INFORMATION TCM-P096500

Condition

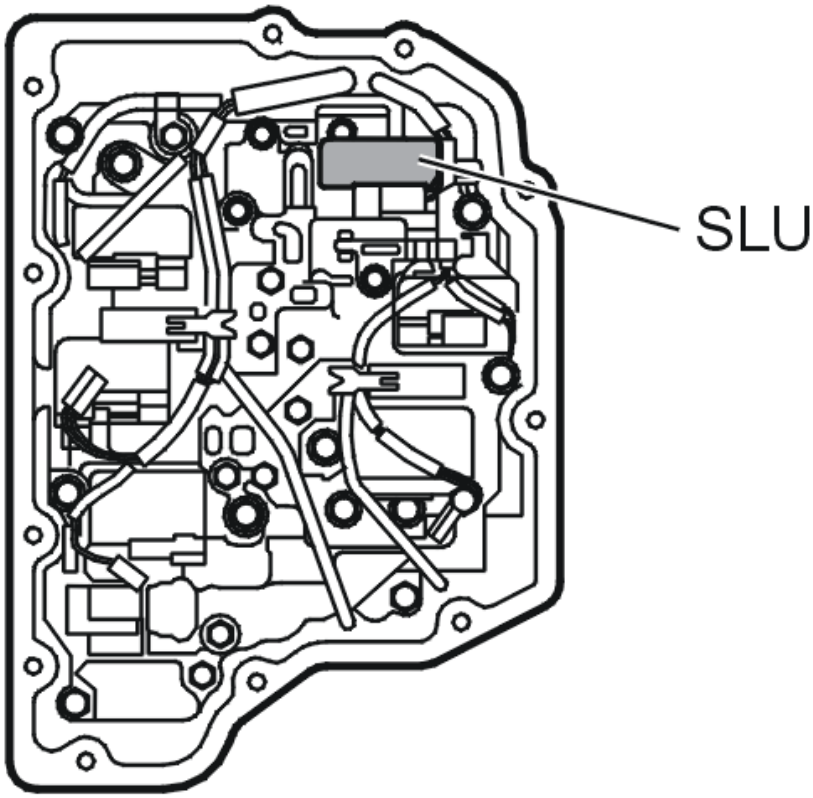

Fig. 198: Identifying Solenoid SLU
Courtesy of VOLVO CARS CORPORATION

The lock-up solenoid SLU controls the lock-up function in the gearbox. The SLU solenoid works when it receives power from the transmission control module (TCM) and depending on the speed, accelerator position and driving program setting, the solenoid will be activated for different driving conditions.

If the transmission control module (TCM) registers that the measured current in the solenoid circuit is incorrect, the diagnostic trouble code (DTC) is generated. The SLU solenoid is then not able to regulate system pressure.

The diagnostic trouble code (DTC) can be diagnosed when changing gear while the lock-up function is activated.

Substitute Value

- Auxiliary program **Emergency mode 1** in the transmission control module (TCM) has started.

  HINT: EMERGENCY MODE IN CASE OF MALFUNCTION

Possible Source

- Contact resistance in the terminals
- Open circuit in lead for control signal or signal ground.

- Lock-up solenoid SLU stuck.
- Lock-up solenoid SLU not working.

Fault symptom[s]

- General warning lamp lit
- Malfunction indicator lamp (MIL) lit.
- Harsh gear changing
- No gear changing.
- Abnormally slipping gears.

FAULT TRACING TCM-P096500

CHECKS

CHECKING THE LOCK-UP SOLENOID SLU

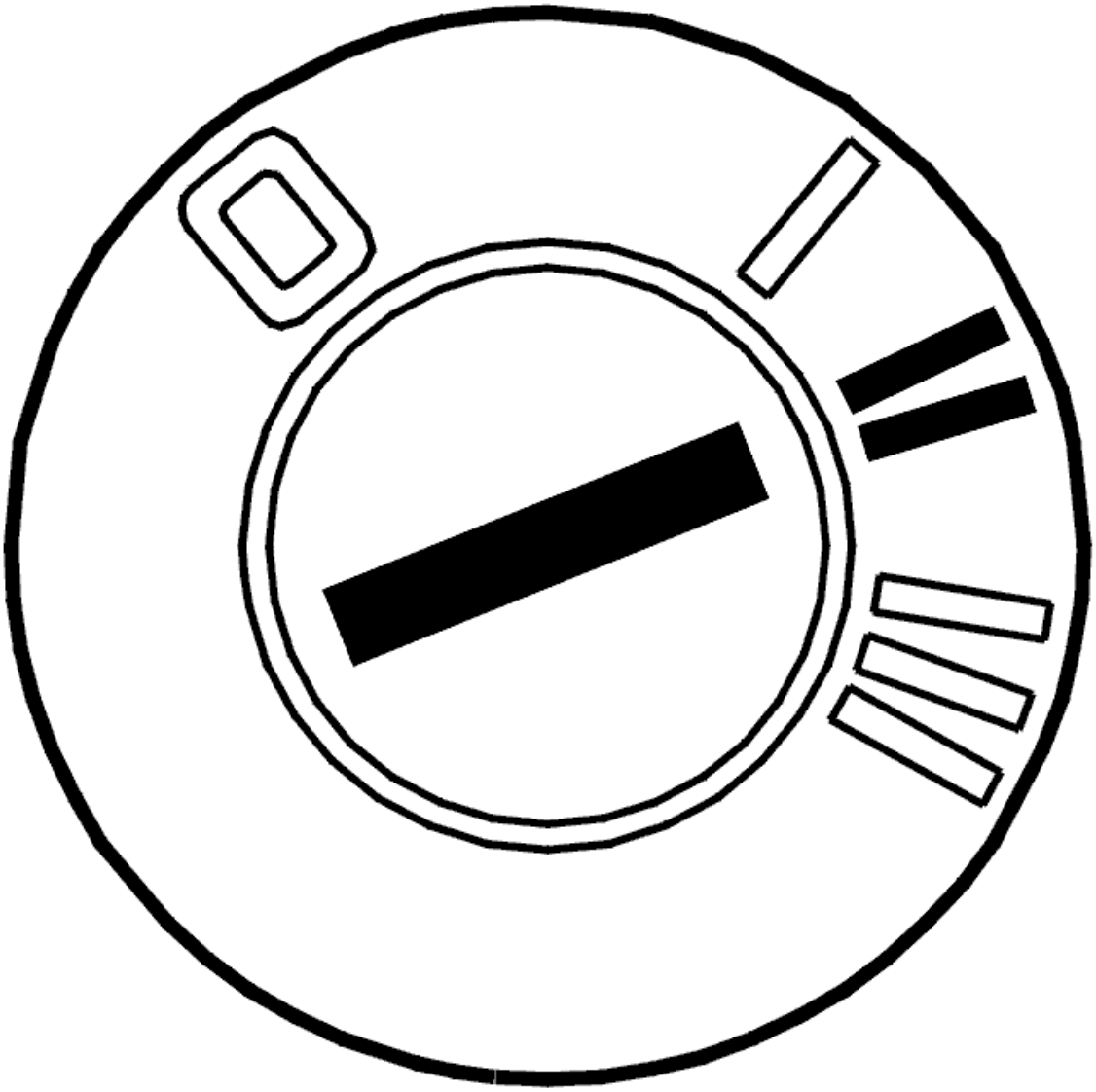

Fig. 199: Identifying Ignition ON
Courtesy of VOLVO CARS CORPORATION

- Ignition on
- Activate solenoid SLU by clicking the VCT2000 symbol.

  Read the current though the circuit for solenoid SLU. The current must oscillate between approximately 100 and 950 mA.

  The fault is permanent if the current does not change.

  If the current oscillates then this would suggest that the fault has previously been present but is no longer active. The fault is intermittent.

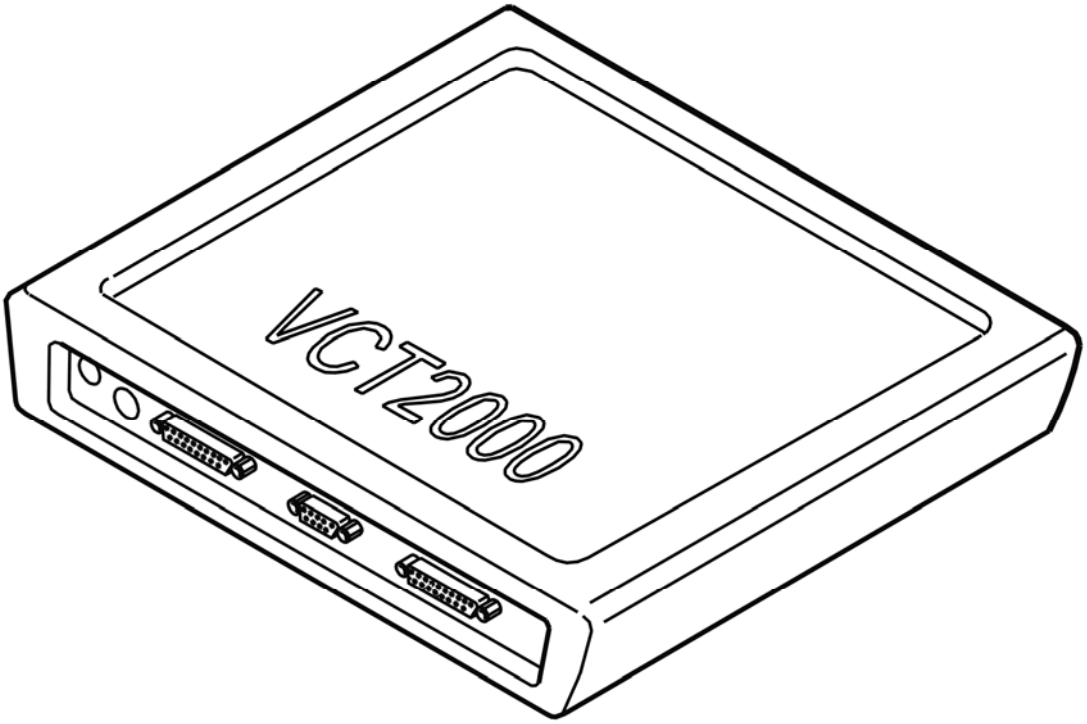

Fig. 200: Identifying VCT2000 Diagnostic Tool Symbol In VIDA
Courtesy of VOLVO CARS CORPORATION

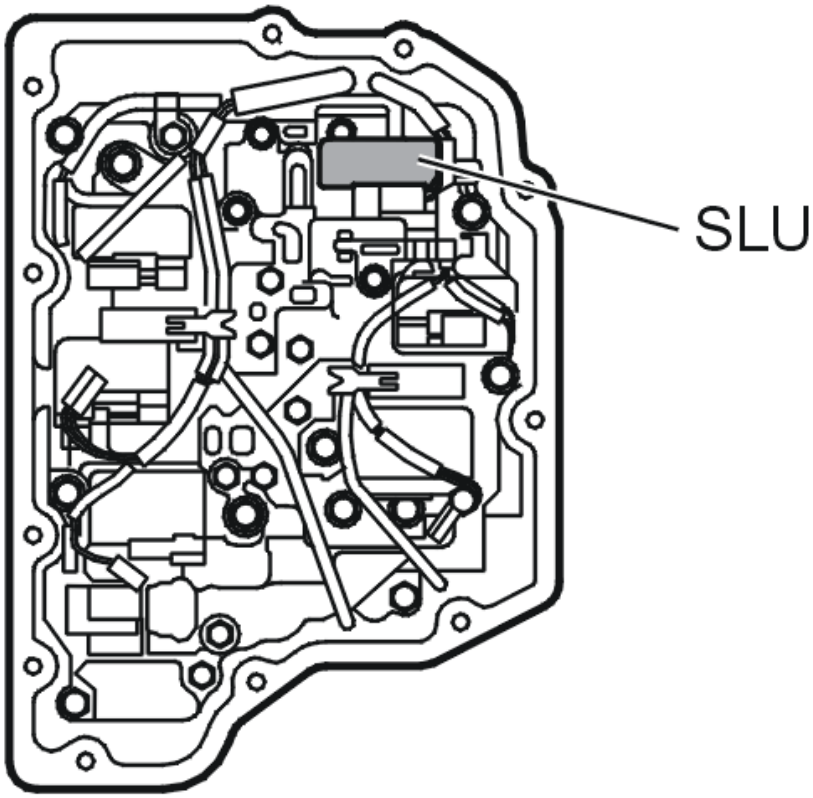

Fig. 201: Identifying Solenoid SLU
Courtesy of VOLVO CARS CORPORATION

- **Continue**

  Refer to **CHECKING THE COMPONENTS AND WIRING**

CHECKING THE COMPONENTS AND WIRING

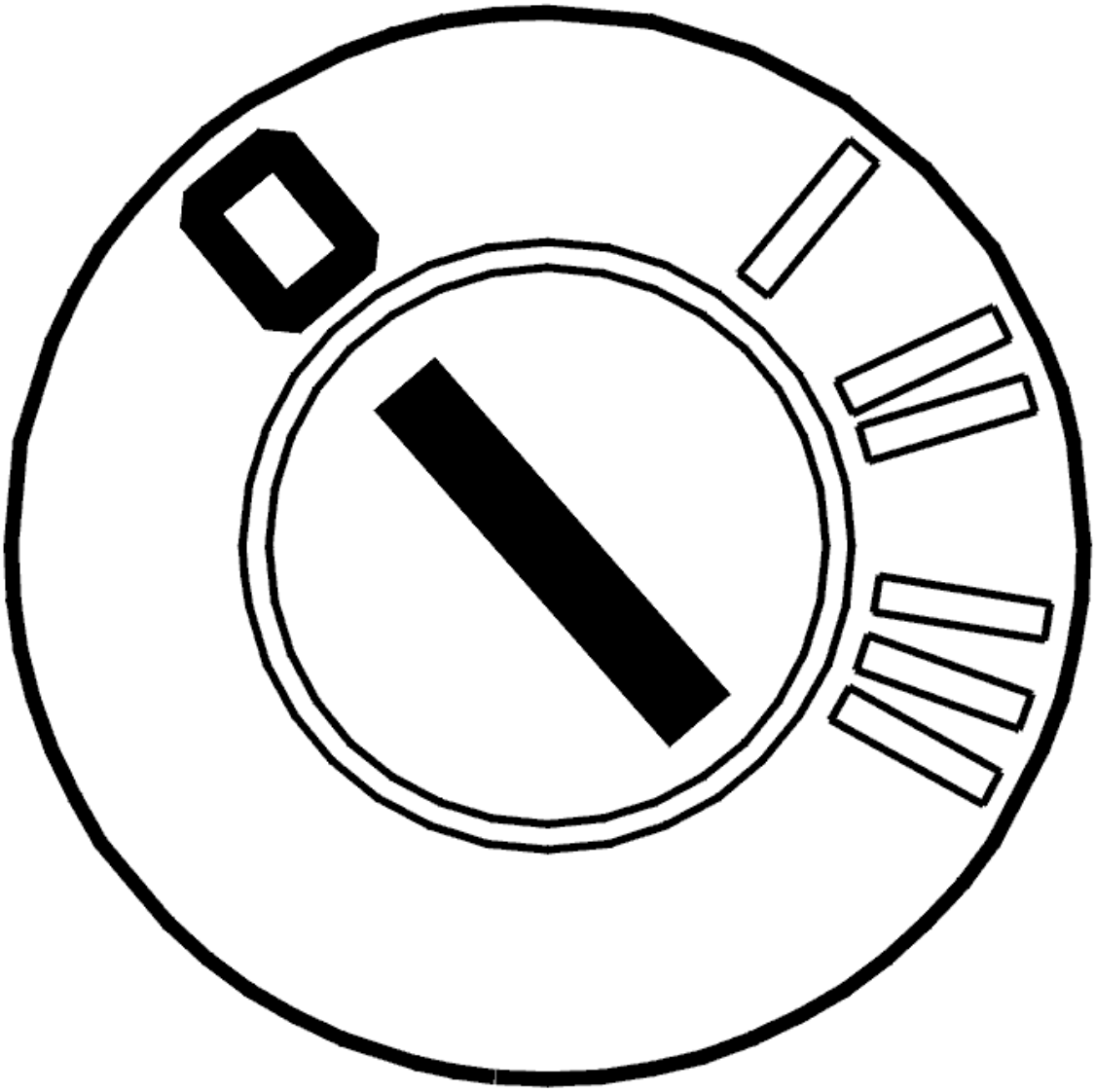

Fig. 202: Identifying Ignition OFF
Courtesy of VOLVO CARS CORPORATION

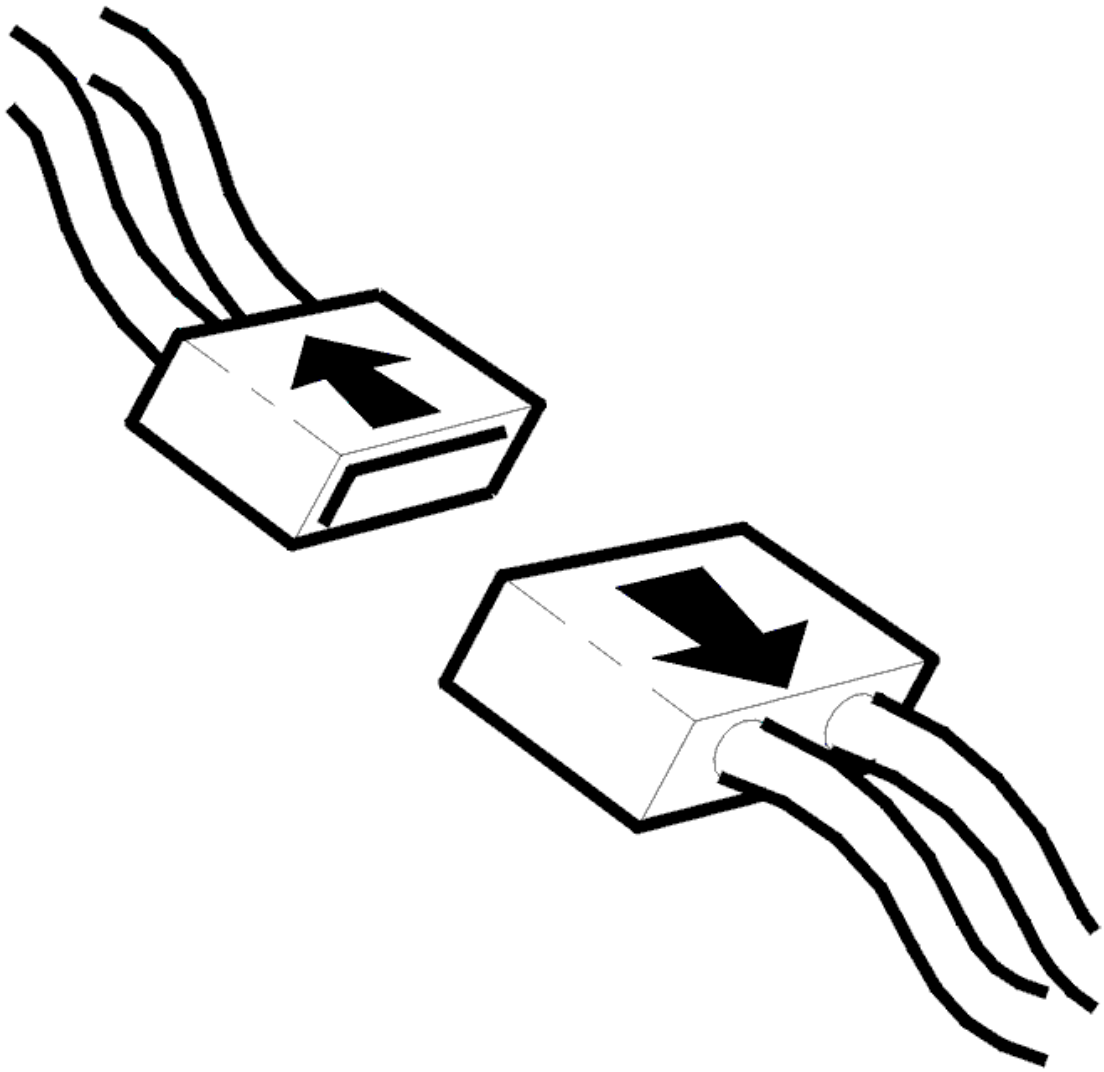

Fig. 203: Identifying Connector(s) Disconnected
Courtesy of VOLVO CARS CORPORATION

- Ignition off
- Open the gearbox control system

  Check connector B (22-pin) for the transmission control module (TCM). Check for damage and pressed in terminal pins. Check for contact resistance and oxidation.

  Check the wiring between the transmission connector terminal #B9 and the connector for solenoid SLU terminal #1. Check the wiring between the transmission connector terminal #B4 and the connector for solenoid SLU terminal #2. Check for an open circuit. Check for a short-circuit to supply voltage. Check for a short-circuit to ground.

  HINT: If no fault is found in the wiring check solenoid SLU. See CHECKING THE LINE PRESSURE SOLENOID SLT, SLC1, SLC2, SLC3, SLB1 AND LOCK-UP SOLENOID SLU

If no fault is found in the wiring or the component replace the control system.

Remedy as necessary.

Other information

- see **CONNECTING THE BREAKOUT BOX**
- see **SIGNAL DESCRIPTION**
- see **CABLE HARNESS, CONTROL SYSTEM, GEARBOX, REPLACING**
- To access the transmission control system: **COVER CONTROL SYSTEM, REPLACING (2007-2011)**
- see **CONTENTS**

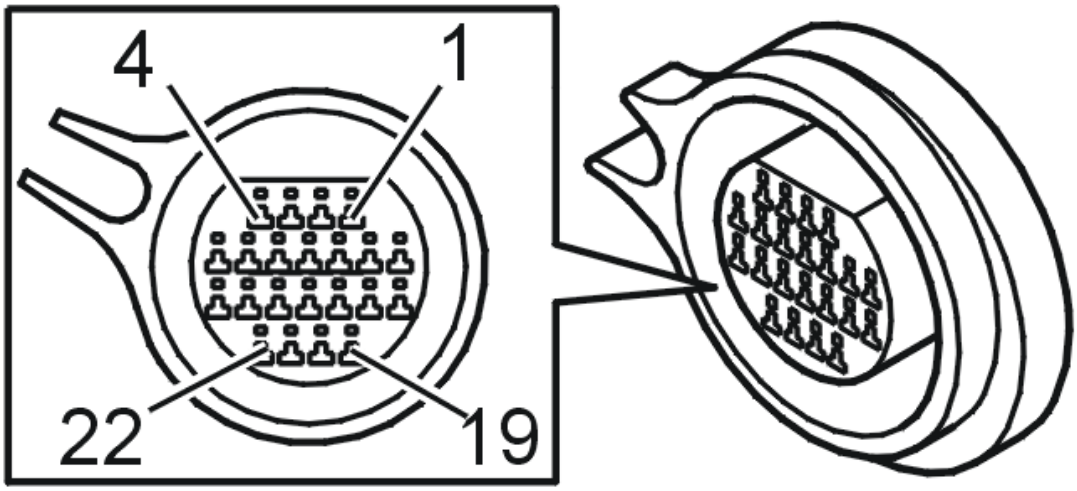

Fig. 204: Identifying Connector B Terminals
Courtesy of VOLVO CARS CORPORATION

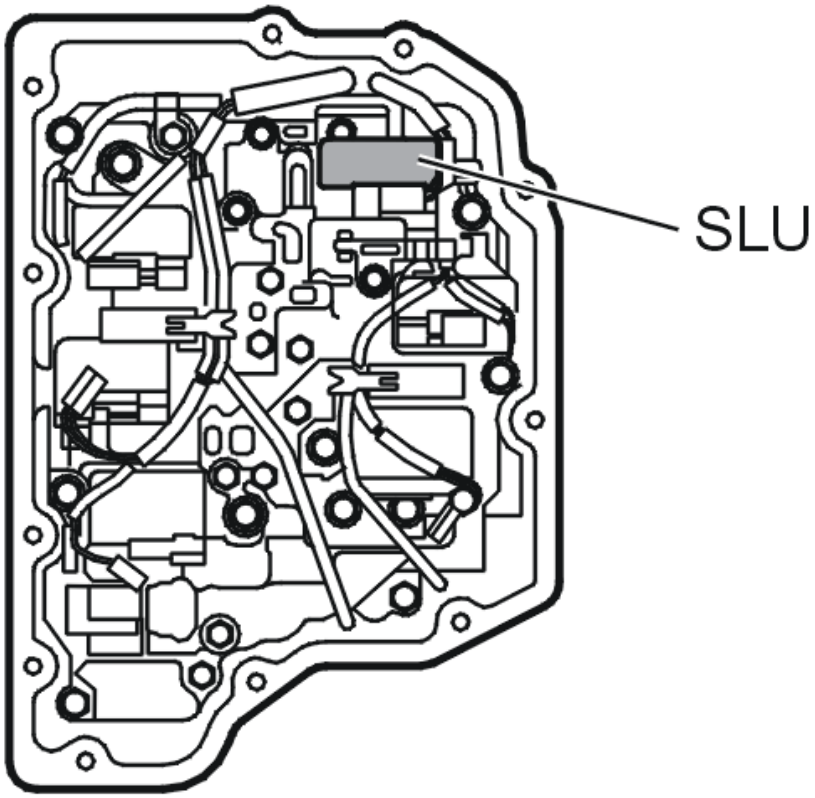

Fig. 205: Identifying Solenoid SLU
Courtesy of VOLVO CARS CORPORATION

- **Continue**

  Refer to **RESETTING ADAPTATION**

RESETTING ADAPTATION

RESETTING ADAPTATION AND COUNTER FOR "TRANSMISSION OIL, CHANGING"

HINT: The transmission has torque-controlled, adaptive pressure control. The pressure control means that the transmission itself controls the pressure during each shift sequence in order to avoid harsh shifting. Each shift is assessed by the transmission control module (TCM) and is stored in the internal memory, which results in compensation for wear in the transmission and clutch. In order for the transmission to function correctly after repair, it is important to reset the adaptation in the memory. Since the oil is changed during the repair, the counter for "Transmission oil, change" shall also be reset. If the counter is not reset when draining/changing oil, there is a risk that a diagnostic trouble code may be generated under incorrect conditions.

NOTE: **This applies only if the transmission or one of the components in the transmission have been replaced.**

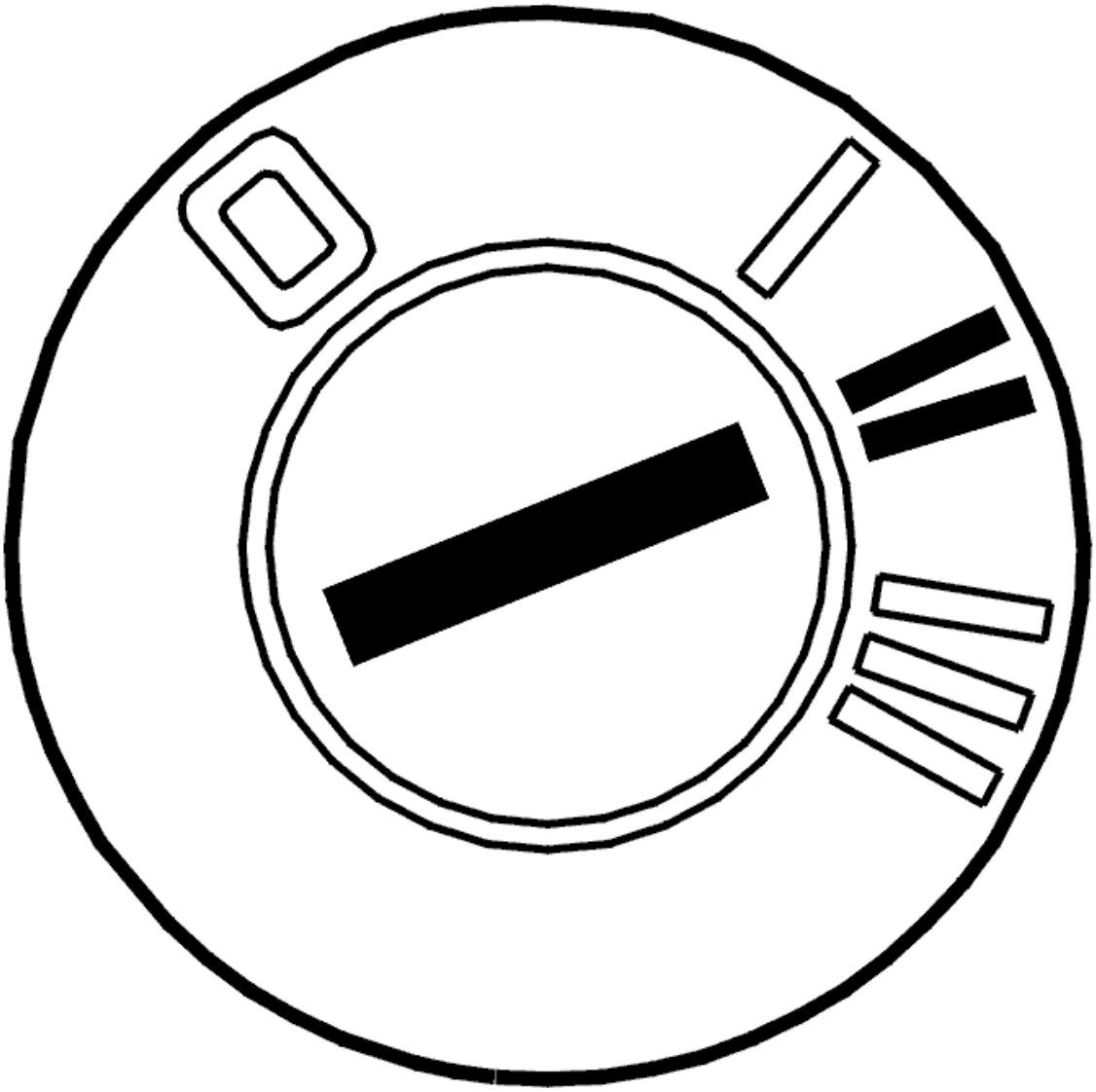

Fig. 206: Identifying Ignition ON
Courtesy of VOLVO CARS CORPORATION

- Ignition on

  Activate reset of the adaptation and the counter by clicking on the symbol for VCT2000.

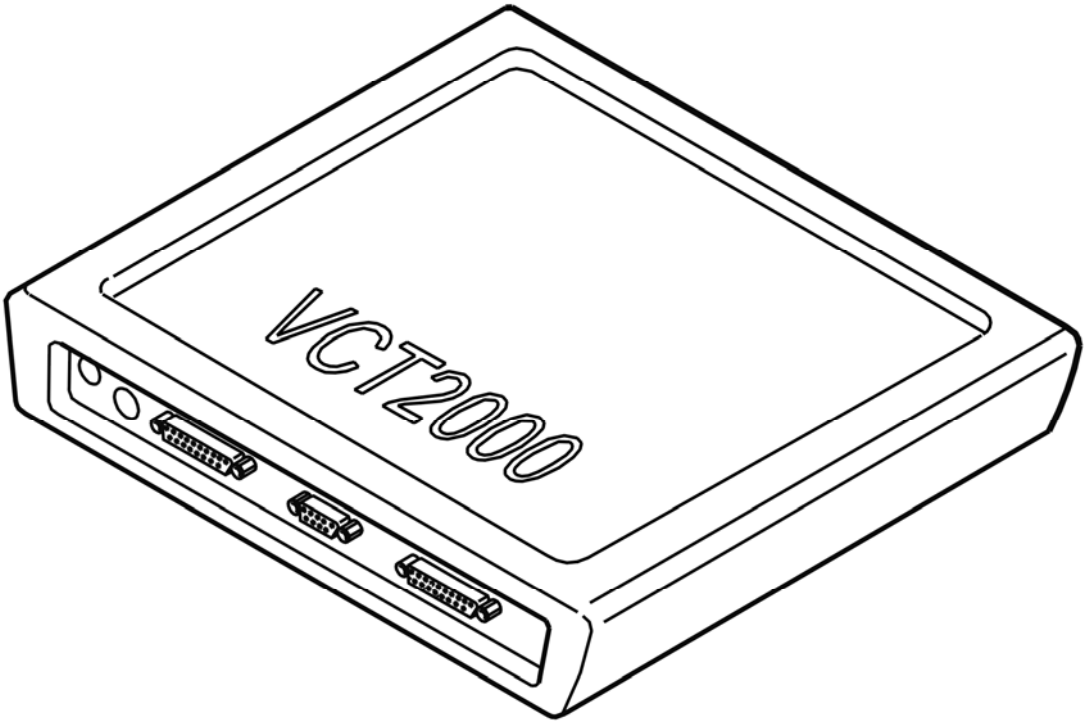

Fig. 207: Identifying VCT2000 Diagnostic Tool Symbol In VIDA
Courtesy of VOLVO CARS CORPORATION

- **Continue**

  Refer to **VERIFICATION**

VERIFICATION

VERIFICATION

HINT: After carrying out the repair, check that the fault has been remedied.

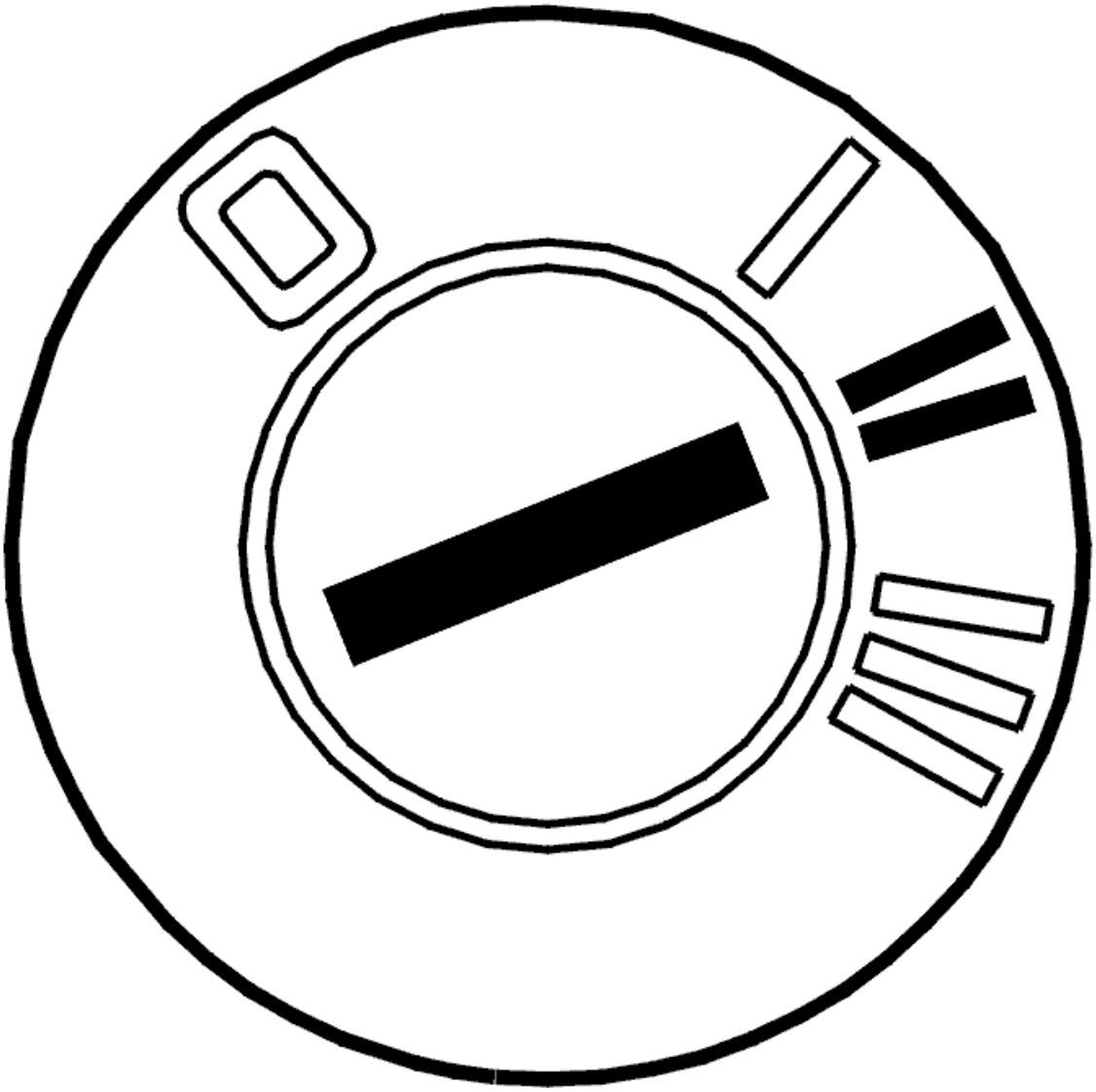

Fig. 208: Identifying Ignition ON
Courtesy of VOLVO CARS CORPORATION

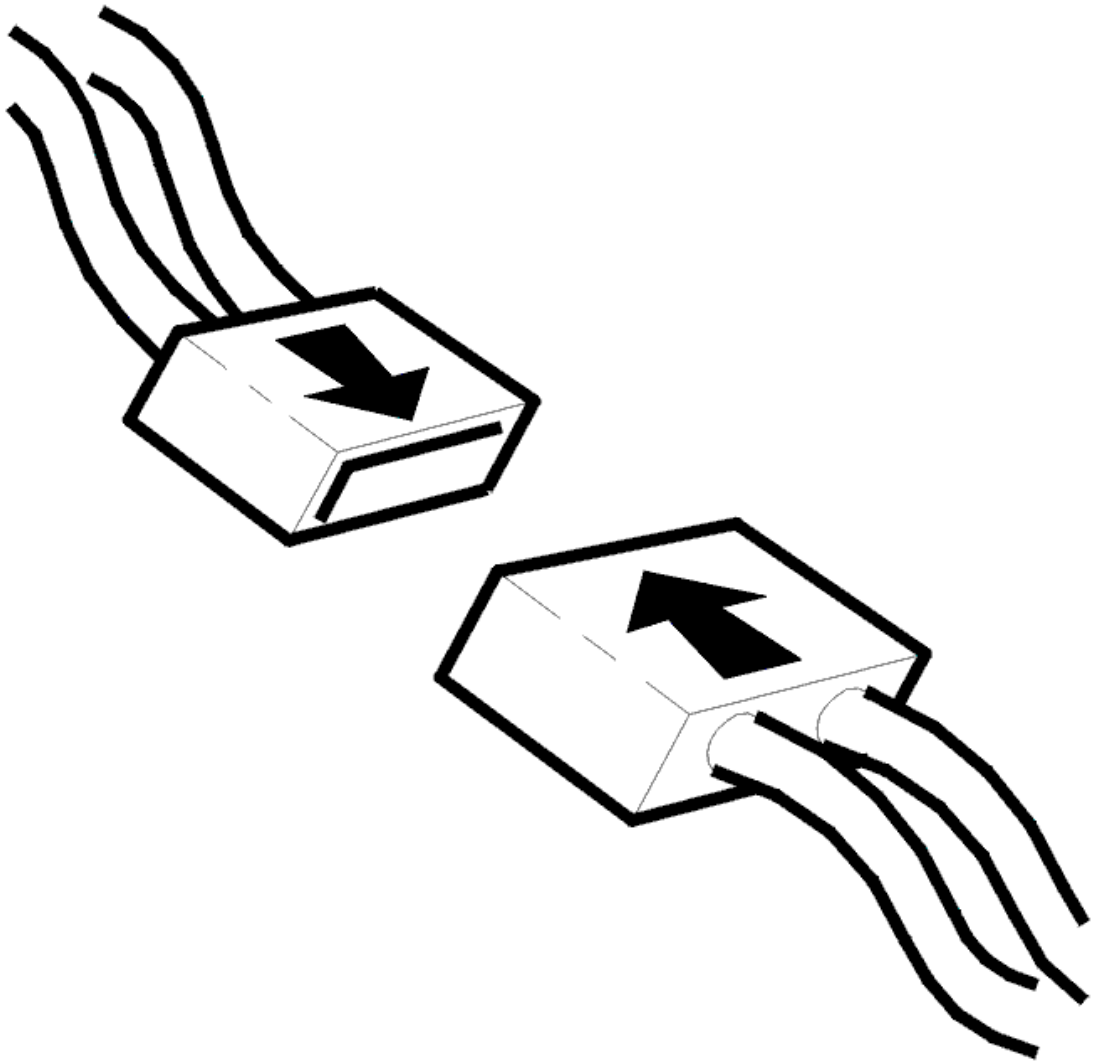

Fig. 209: Identifying Connector(s) Reinstallation
Courtesy of VOLVO CARS CORPORATION

- Ignition off
- Reinstall the components, reconnect the connectors etc.
- Ignition on
- Activate solenoid SLU by clicking the symbol for VCT2000.

  Read off the current through the circuit for solenoid SLU. The current must oscillate between approximately 0 and 1000 mA.

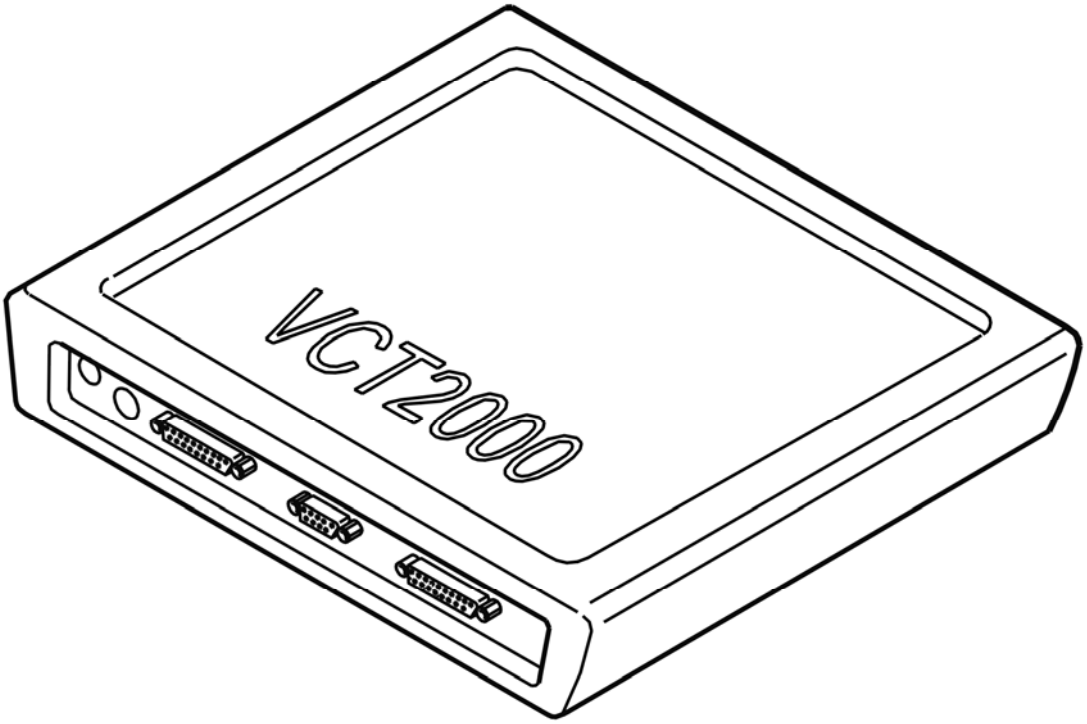

Fig. 210: Identifying VCT2000 Diagnostic Tool Symbol In VIDA
Courtesy of VOLVO CARS CORPORATION

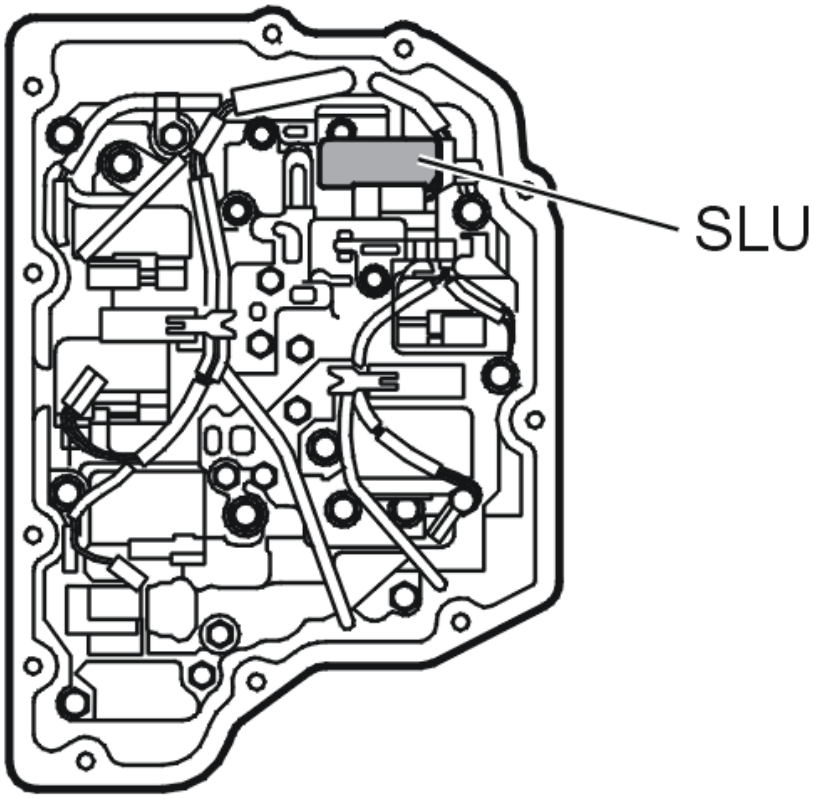

Fig. 211: Identifying Solenoid SLU
Courtesy of VOLVO CARS CORPORATION

Is the function OK?

- **YES**

  VERIFIED: Troubleshooting has been completed.

- **NO**

  Refer to **INFORMATION**

INFORMATION

FAULT-TRACING INFORMATION

The fault should have been detected and remedied. As this is not the case fault-tracing has failed.

Exit fault-tracing for this diagnostic trouble code (DTC) or make another attempt.

TCM-P096500: PRESSURE REGULATOR SOLENOID B CONTROL CIRCUIT INSIDE/OUTSIDE TOLERANCE. GENERAL FAULT INFORMATION. NO

INFORMATION ON FAULT TYPE (TF-80SC AWD; 2005)

DIAGNOSTIC TROUBLE CODE (DTC) INFORMATION TCM-P096500

see **DIAGNOSTIC TROUBLE CODE (DTC) INFORMATION TCM-P096500**

FAULT TRACING TCM-P096500

see **FAULT TRACING TCM-P096500**

TCM-P096700: PRESSURE CONTROL SOLENOID B CONTROL CIRCUIT HIGH. GENERAL FAILURE INFORMATION. NO SUB TYPE INFORMATION (B6324S, TF-80SC; B6324S, TF-80SC AWD; 2007-2010)

DIAGNOSTIC TROUBLE CODE (DTC) INFORMATION TCM-P096700

Condition

The solenoids are controlled by power stages in the transmission control module (TCM). The transmission control module (TCM) opens the power stages to activate the solenoids and sends a voltage through the circuit.

The diagnostic trouble code (DTC) is stored if the control module detects that:

- The measured current value is higher than permitted in the circuit for solenoid SLU.

The control module's test for the diagnostic trouble code (DTC) starts in the event of:

- Ignition on.

NOTE: **The control module can only detect the fault once the test has been started and the diagnostic trouble code (DTC) is stored when the conditions are met.**

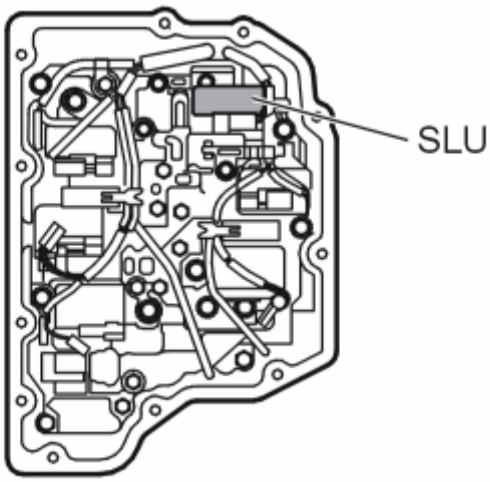

Fig. 212: Identifying Solenoid SLU
Courtesy of VOLVO CARS CORPORATION

Substitute Value

- Auxiliary program **Emergency mode 1** in the transmission control module (TCM) has started.

  HINT: EMERGENCY MODE IN THE EVENT OF A FAULT

Possible Source

- Control signal lead short-circuited to voltage.
- Linear pressure solenoid not working.
- Internal fault in the transmission control module (TCM).

Fault symptom[s]

- General warning lamp lit
- Malfunction indicator light (MIL), on
- Abnormal slipping gearshifts
- Rough gear shift
- No gear shift

FAULT-TRACING

CHECKS

CHECKING LOCK-UP SOLENOID SLU

Fig. 213: Identifying Ignition ON
Courtesy of VOLVO CARS CORPORATION

- Ignition on.
- Activate solenoid SLU by clicking on the VCT2000 symbol.

  Read off the current through the solenoid SLU circuit. The current should oscillate between 100 and 950 mA.

  The fault is permanent if the current does not change.

If the current changes, this is an indication that the fault was present previously but is not active at the moment, i. e. an intermittent fault.

Fig. 214: Identifying VCT2000 Diagnostic Tool Symbol In VIDA
Courtesy of VOLVO CARS CORPORATION

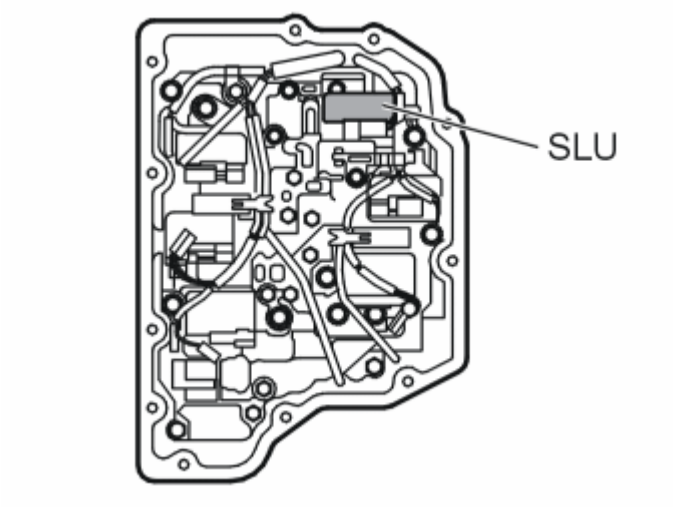

Fig. 215: Identifying Solenoid SLU
Courtesy of VOLVO CARS CORPORATION

- **Continue**

  Refer to **CHECKING THE COMPONENTS AND WIRING**

CHECKING THE COMPONENTS AND WIRING

Fig. 216: Identifying Ignition OFF
Courtesy of VOLVO CARS CORPORATION

- Ignition off.
- Open the transmission control system.

Check the cables for short circuit to voltage.

Take readings between:

- Transmission connector #B9 and the connector for solenoid SLU #1.
- Transmission connector #B4 and the connector for solenoid SLU #2.

Also check the cables for a short-circuit to each other.

HINT: If no fault is found in the wiring, check solenoid SLU. See CHECKING INTERNAL COMPONENTS OF THE TRANSMISSION

If no fault is found in the wiring or the component replace the control system.

Remedy as necessary.

Other information

- see **CONNECTING THE BREAKOUT BOX**
- see **SIGNAL SPECIFICATION**
- see **VALVE HOUSING**
- see **TRANSMISSION CONTROL UNIT WIRING HARNESS**
- To access the transmission control system:**COVER CONTROL SYSTEM, REPLACING (2007-2011)**
- see **CHECKING WIRING AND TERMINALS**

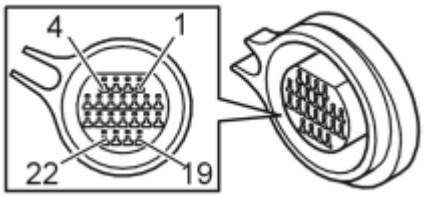

Fig. 217: Identifying Connector B Terminals
Courtesy of VOLVO CARS CORPORATION

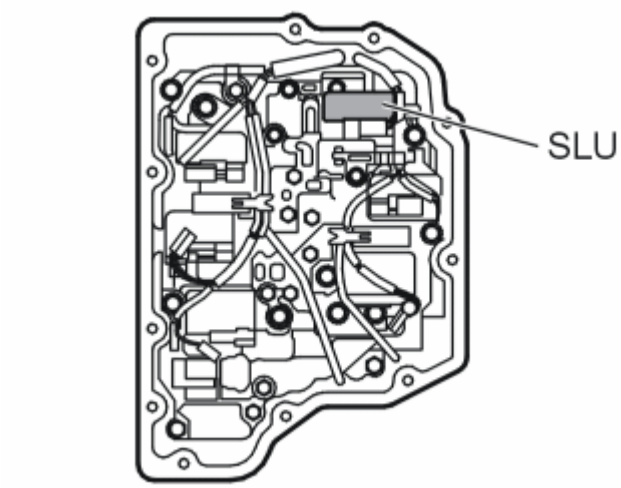

Fig. 218: Identifying Solenoid SLU
Courtesy of VOLVO CARS CORPORATION

- **Continue**

  Refer to **RESETTING ADAPTATION**

VERIFICATION

VERIFICATION

HINT: After carrying out the repair, check that the fault has been remedied.

Fig. 219: Identifying Ignition ON
Courtesy of VOLVO CARS CORPORATION

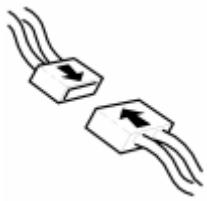

Fig. 220: Identifying Connector(s) Reinstallation
Courtesy of VOLVO CARS CORPORATION

- Ignition off.
- Reinstall the connectors, components etc.

- Ignition on.
- Activate solenoid SLU by clicking on the VCT2000 symbol.

  Read off the current through the solenoid SLU circuit. The current should oscillate between 100 and 950 mA.

Fig. 221: Identifying VCT2000 Diagnostic Tool Symbol In VIDA
Courtesy of VOLVO CARS CORPORATION

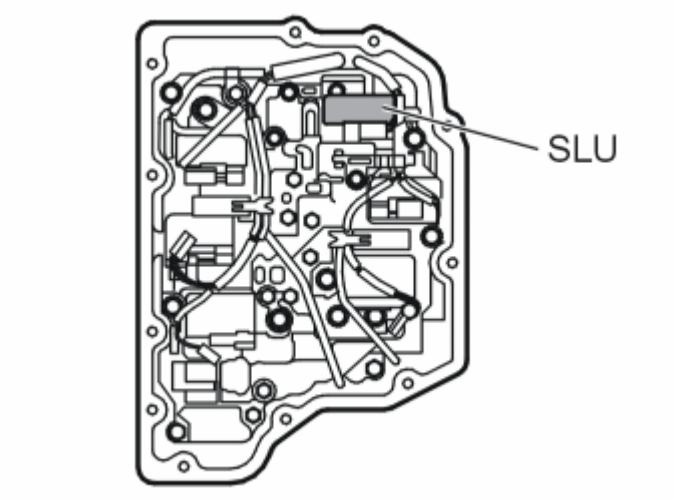

Fig. 222: Identifying Solenoid SLU
Courtesy of VOLVO CARS CORPORATION

Is the function OK?

- **YES**

  VERIFIED: Troubleshooting has been completed.

- **NO**

  Refer to **INFORMATION**

INFORMATION

FAULT-TRACING INFORMATION

The fault should have been detected and remedied. As this is not the case fault-tracing has failed.

Exit fault-tracing for this diagnostic trouble code (DTC) or make another attempt.

RESETTING ADAPTATION

RESETTING THE ADAPTATION AND THE COUNTER FOR "TRANSMISSION OIL, REPLACE"

HINT: The transmission has torque-regulated, adaptive pressure regulation. The pressure regulator enables the transmission to regulate pressure during each shift to prevent hard shifting. Each shift is assessed by the transmission control module (TCM) and is stored in the internal memory. This makes it possible to compensate for transmission and clutch wear. It is important that the adaptation in the memory is reset so that the transmission works normally after the repair. Because the fluid was changed during the repair, the counter for transmission fluid change must also be reset. If the counter is not reset during draining/replacement, a diagnostic trouble code may be generated under the wrong conditions.

NOTE: This applies only if the transmission or one of the components in the transmission have been replaced.

Fig. 223: Identifying Ignition ON
Courtesy of VOLVO CARS CORPORATION

- Ignition on.

  Click on the VCT2000 symbol to reset the adaptation and counter.

  Fig. 224: Identifying VCT2000 Diagnostic Tool Symbol In VIDA
  Courtesy of VOLVO CARS CORPORATION

- **Continue**

  Refer to **VERIFICATION**

TCM-P096700: PRESSURE CONTROL SOLENOID B CONTROL CIRCUIT HIGH. GENERAL FAILURE INFORMATION. NO SUB TYPE INFORMATION (B6324S5, TF-80SC; B6324S5, TF-80SC AWD; 2011-2012)

DIAGNOSTIC TROUBLE CODE (DTC) INFORMATION TCM-P096700

see **DIAGNOSTIC TROUBLE CODE (DTC) INFORMATION TCM-P096700**

FAULT-TRACING

see **FAULT-TRACING**

TCM-P096700: PRESSURE REGULATOR SOLENOID B CONTROL CIRCUIT HIGH. GENERAL FAULT INFORMATION. NO INFORMATION ON FAULT TYPE (B8444S, TF-80SC AWD; 2006-2011)

DIAGNOSTIC TROUBLE CODE (DTC) INFORMATION TCM-P096700

Condition

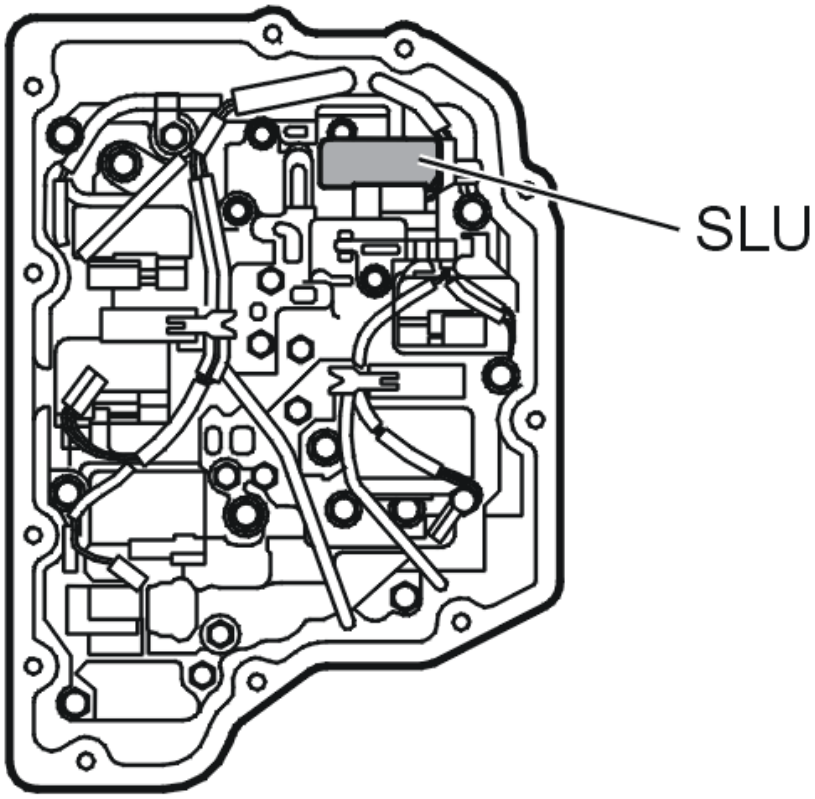

Fig. 225: Identifying Solenoid SLU
Courtesy of VOLVO CARS CORPORATION

The solenoids are controlled using the power stage in the transmission control module (TCM). The transmission control module (TCM) opens the power stage when the solenoids are to be activated so that the circuit receives a voltage.

If the transmission control module (TCM) registers that the measured current is higher than the circuit for the SLU solenoid allows, the diagnostic trouble code (DTC) is generated.

The diagnostic trouble code can be diagnosed when the ignition is on.

Substitute Value

- Auxiliary program **Emergency mode 1** in the transmission control module (TCM) has started.

  HINT: EMERGENCY MODE IN CASE OF MALFUNCTION

Possible Source

- Control signal lead short-circuited to voltage.
- Linear pressure solenoid not working.
- Internal fault in transmission control module (TCM).

Fault symptom[s]

- General warning lamp lit
- Malfunction indicator lamp (MIL) lit.
- Abnormally slipping gears.
- Harsh gear changing
- No gear changing.

FAULT TRACING TCM-P096700

CHECKS

CHECKING THE LOCK-UP SOLENOID SLU

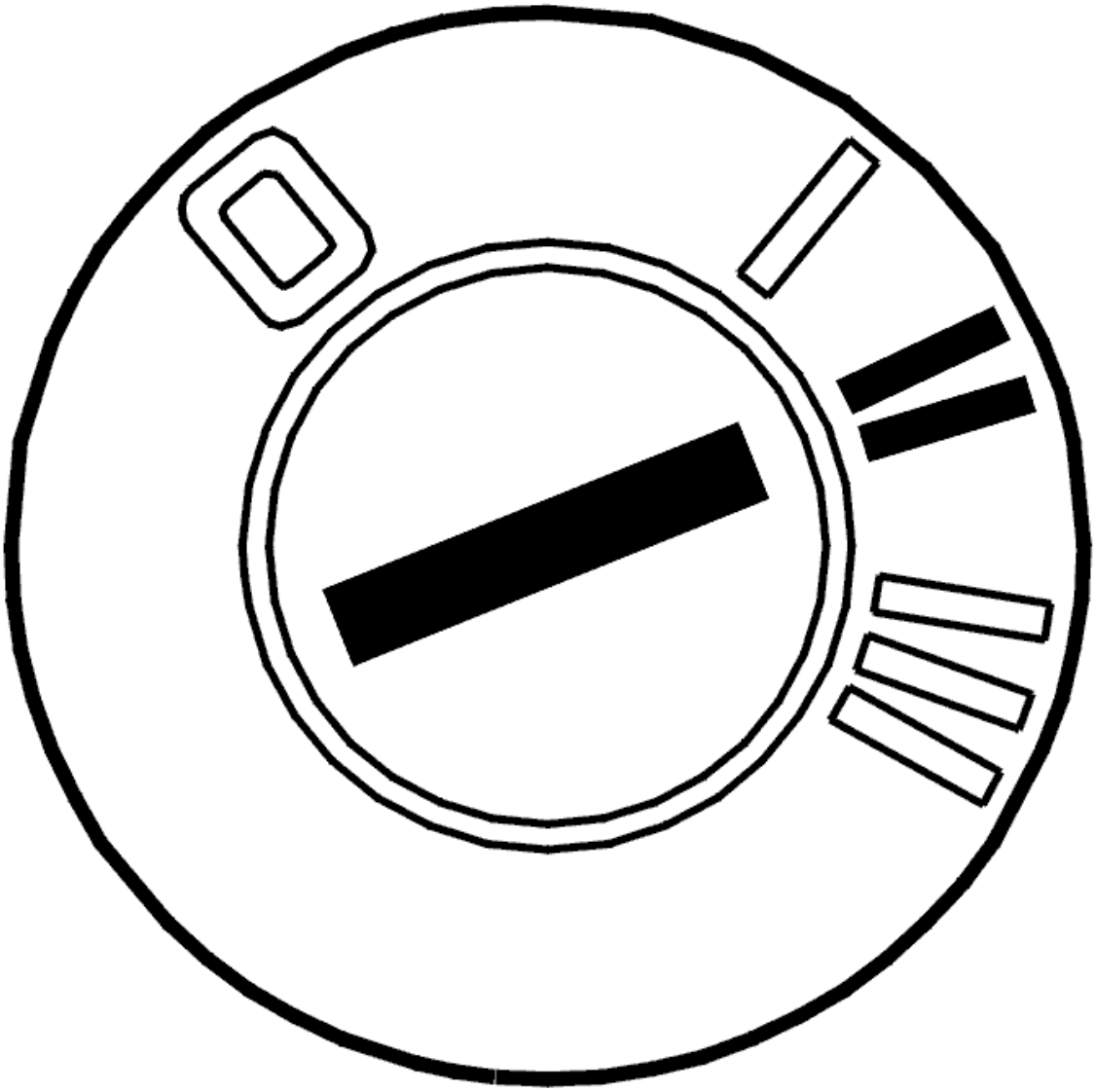

Fig. 226: Identifying Ignition ON
Courtesy of VOLVO CARS CORPORATION

- Ignition on
- Activate solenoid SLU by clicking the VCT2000 symbol.

  Read the current though the circuit for solenoid SLU. The current must oscillate between approximately 100 and 950 mA.

  The fault is permanent if the current does not change.

  If the current oscillates then this would suggest that the fault has previously been present but is no longer active. The fault is intermittent.

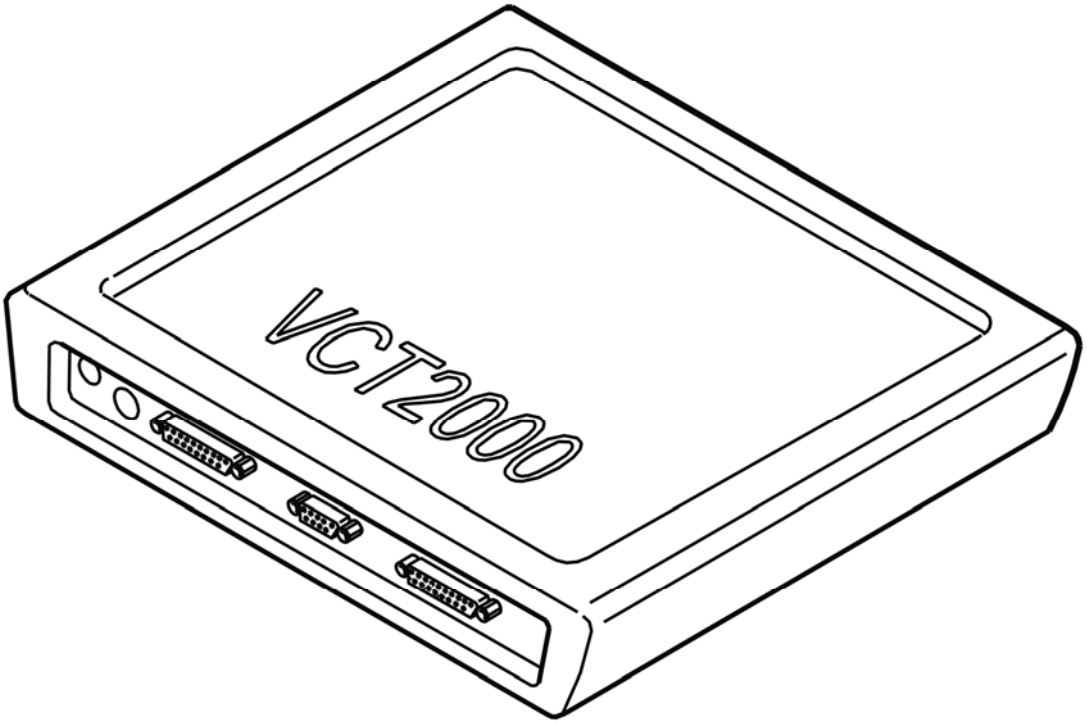

Fig. 227: Identifying VCT2000 Diagnostic Tool Symbol In VIDA
Courtesy of VOLVO CARS CORPORATION

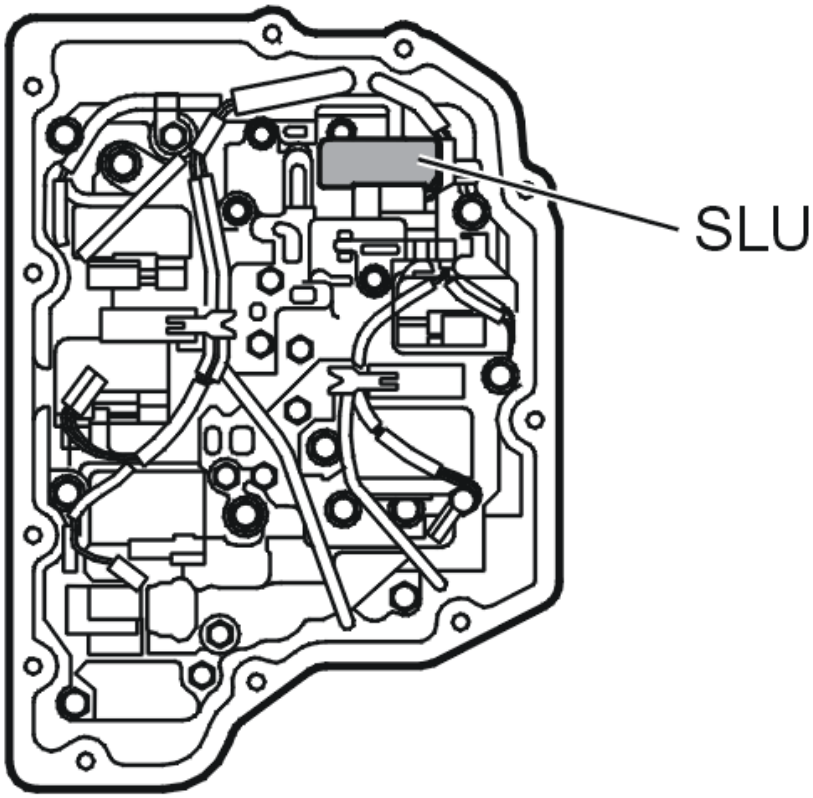

Fig. 228: Identifying Solenoid SLU
Courtesy of VOLVO CARS CORPORATION

- **Continue**

  Refer to **CHECKING THE COMPONENTS AND WIRING**

CHECKING THE COMPONENTS AND WIRING

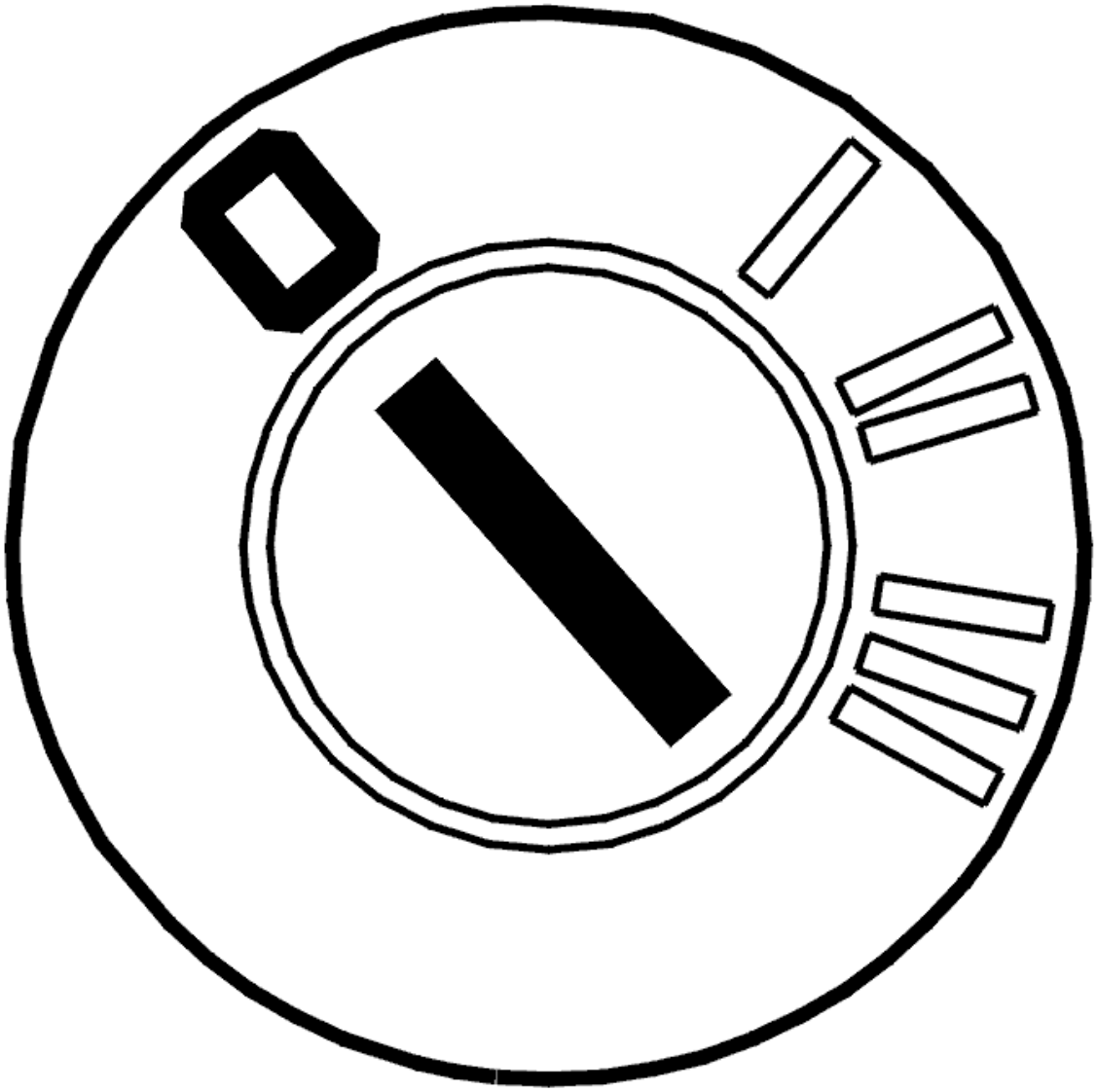

Fig. 229: Identifying Ignition OFF
Courtesy of VOLVO CARS CORPORATION

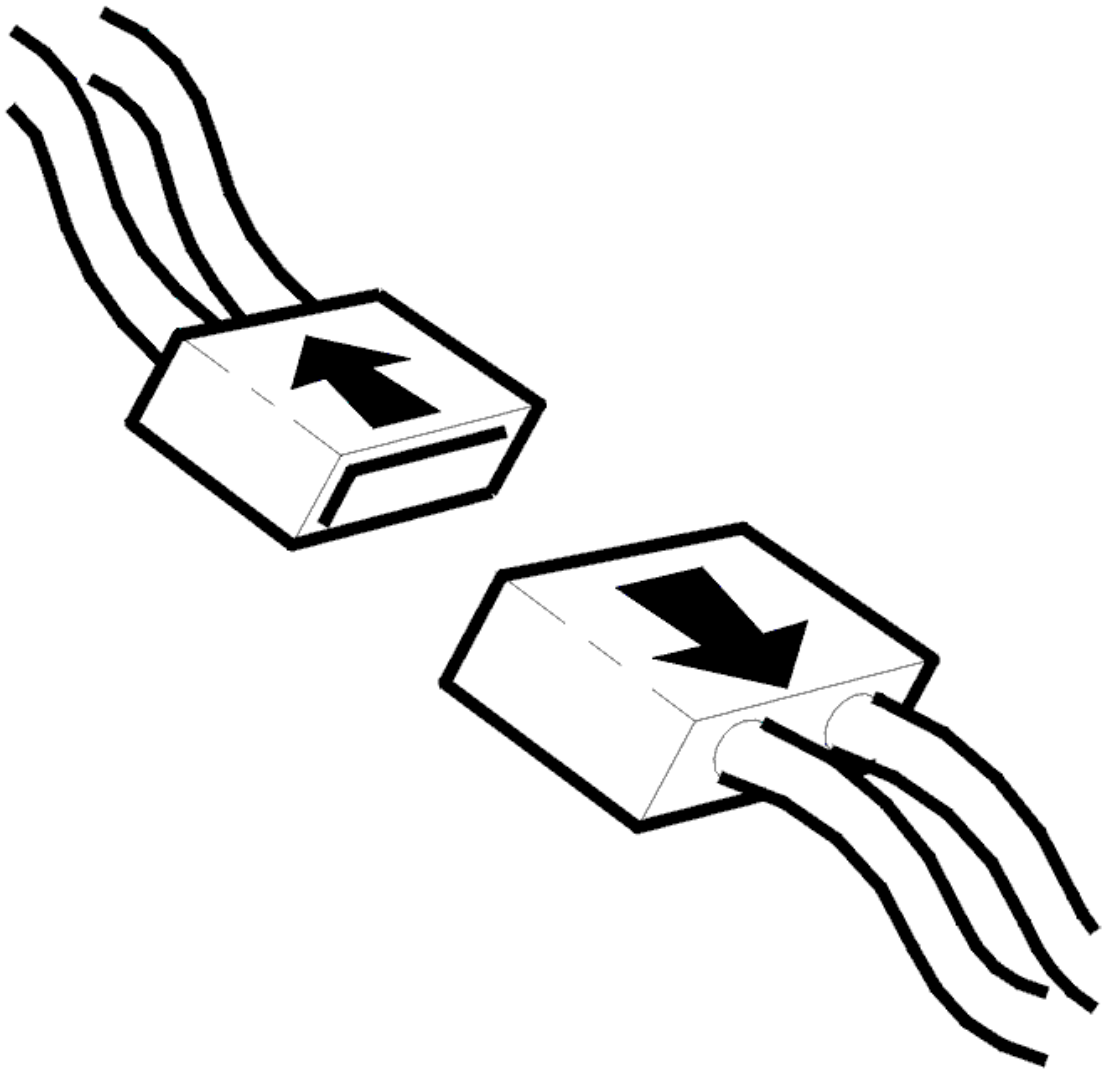

Fig. 230: Identifying Connector(s) Disconnected
Courtesy of VOLVO CARS CORPORATION

- Ignition off
- Open the gearbox control system

  Check the wiring between transmission connector terminal #B9 and solenoid SLU connector terminal #1.
  Check the wiring between transmission connector terminal #B4 and solenoid SLU connector terminal #2.
  Check for a short-circuit to supply voltage. Check the wiring for short-circuits to each other.

  HINT: If no fault is found in the wiring check solenoid SLU. See CHECKING THE LINE PRESSURE SOLENOID SLT, SLC1, SLC2, SLC3, SLB1 AND LOCK-UP SOLENOID SLU

  If no fault is found in the wiring or the component replace the control system.

  Remedy as necessary.

Other information

- see **CONNECTING THE BREAKOUT BOX**
- see **SIGNAL DESCRIPTION**
- see **CONTROL SYSTEM, REPLACING**
- see **CABLE HARNESS, CONTROL SYSTEM, GEARBOX, REPLACING**
- To access the transmission control system: **COVER CONTROL SYSTEM, REPLACING (2007-2011)**
- see **CONTENTS**

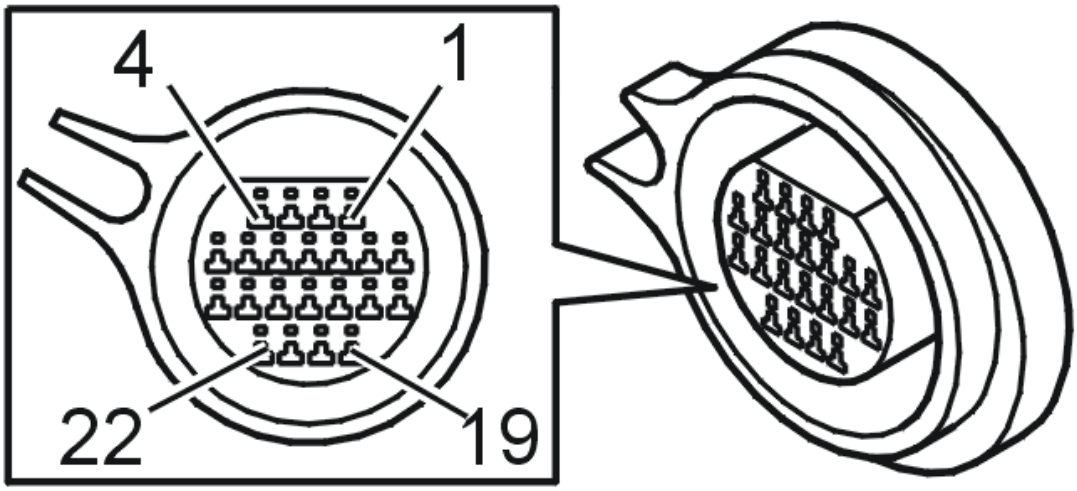

Fig. 231: Identifying Connector B Terminals
Courtesy of VOLVO CARS CORPORATION

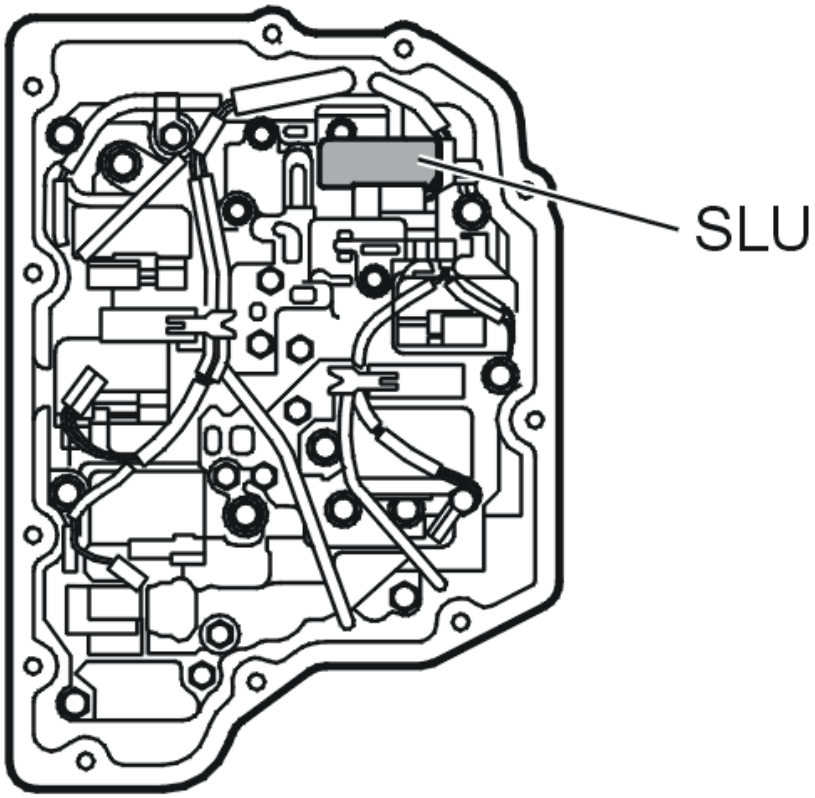

Fig. 232: Identifying Solenoid SLU
Courtesy of VOLVO CARS CORPORATION

- **Continue**

  Refer to **RESETTING ADAPTATION**

RESETTING ADAPTATION

RESETTING ADAPTATION AND COUNTER FOR "TRANSMISSION OIL, CHANGING"

HINT: The transmission has torque-controlled, adaptive pressure control. The pressure control means that the transmission itself controls the pressure during each shift sequence in order to avoid harsh shifting. Each shift is assessed by the transmission control module (TCM) and is stored in the internal memory, which results in compensation for wear in the transmission and clutch. In order for the transmission to function correctly after repair, it is important to reset the adaptation in the memory. Since the oil is changed during the repair, the counter for "Transmission oil, change" shall also be reset. If the counter is not reset when draining/changing oil, there is a risk that a diagnostic trouble code may be generated under incorrect conditions.

NOTE: **This applies only if the transmission or one of the components in the transmission have been replaced.**

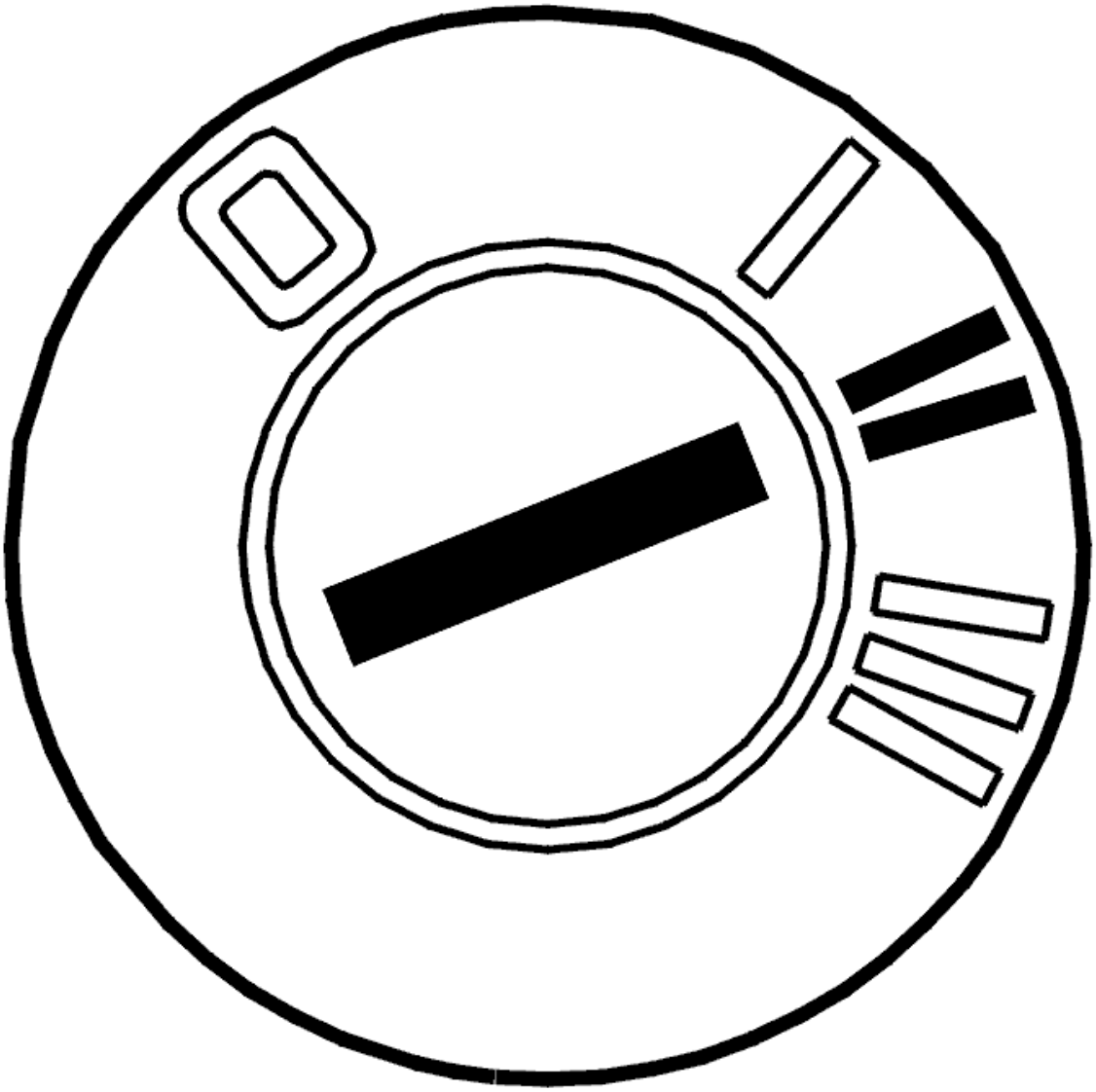

Fig. 233: Identifying Ignition ON
Courtesy of VOLVO CARS CORPORATION

- Ignition on

  Activate reset of the adaptation and the counter by clicking on the symbol for VCT2000.

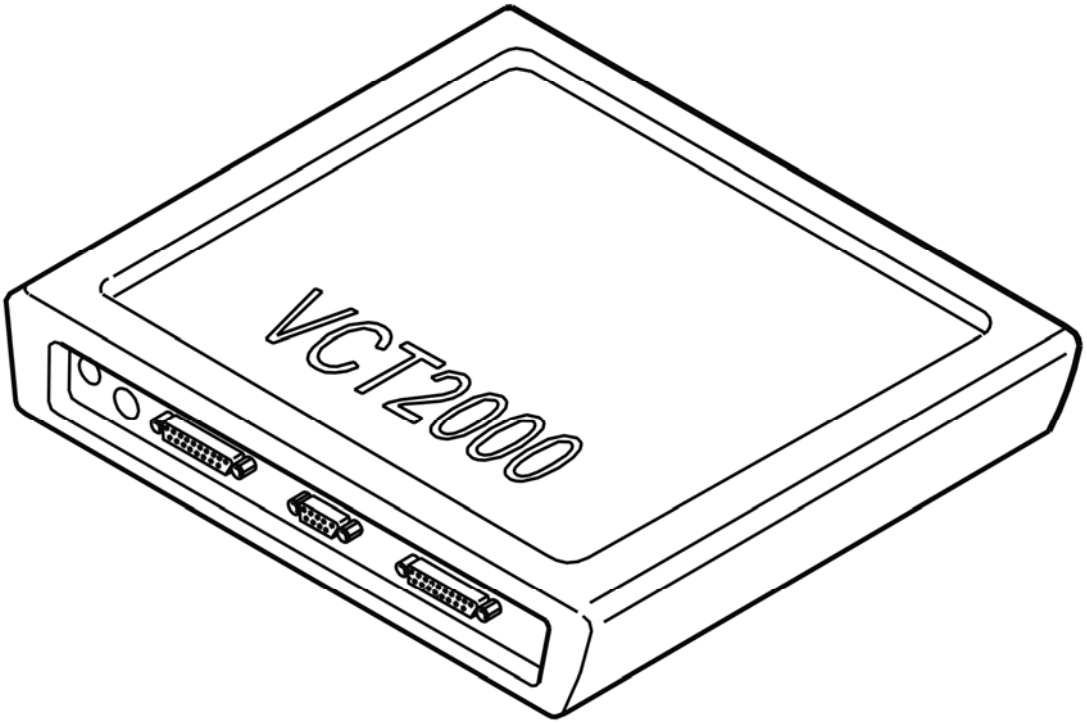

Fig. 234: Identifying VCT2000 Diagnostic Tool Symbol In VIDA
Courtesy of VOLVO CARS CORPORATION

- **Continue**

  Refer to **VERIFICATION**

VERIFICATION

VERIFICATION

HINT: After carrying out the repair, check that the fault has been remedied.

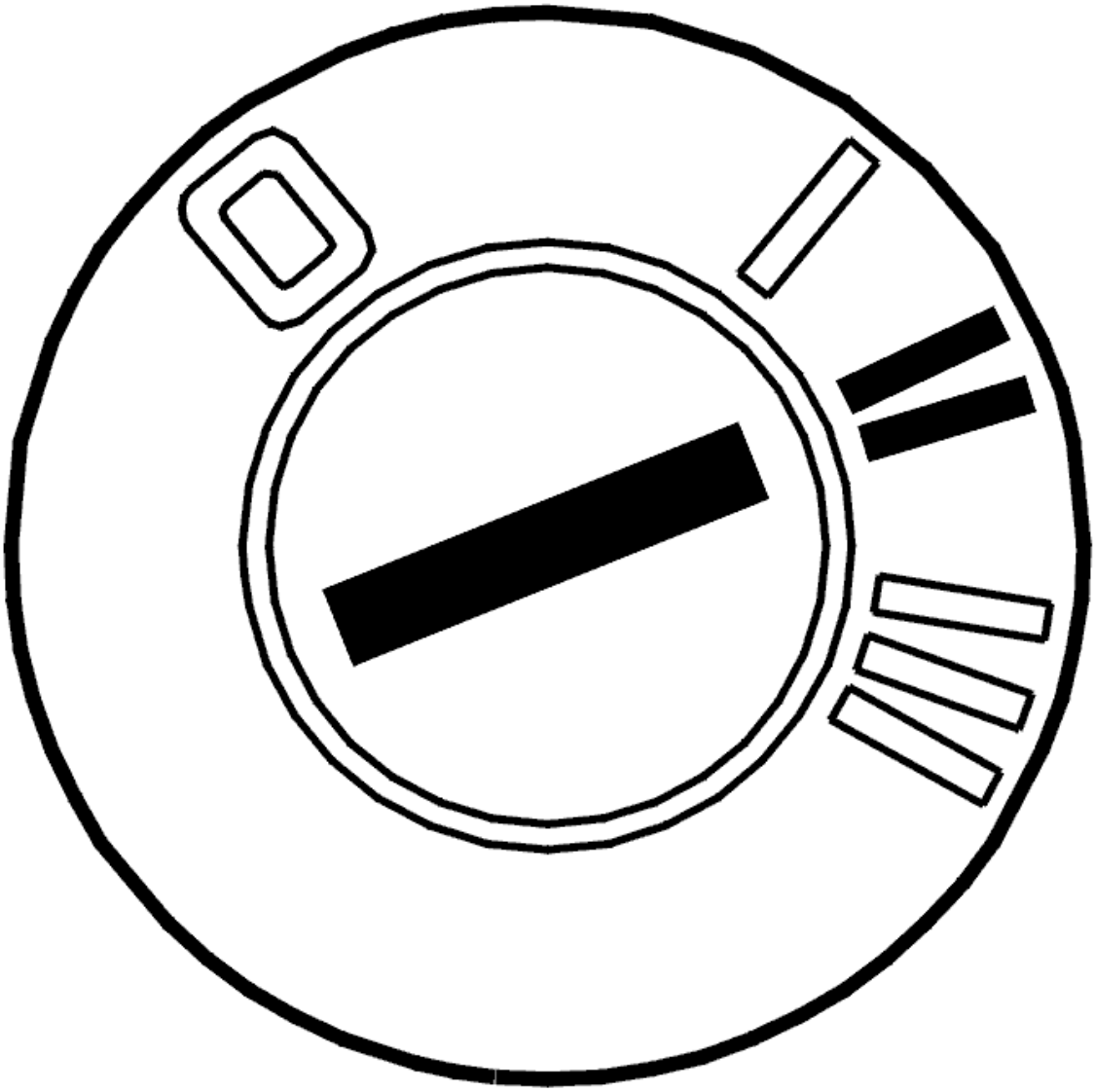

Fig. 235: Identifying Ignition ON
Courtesy of VOLVO CARS CORPORATION

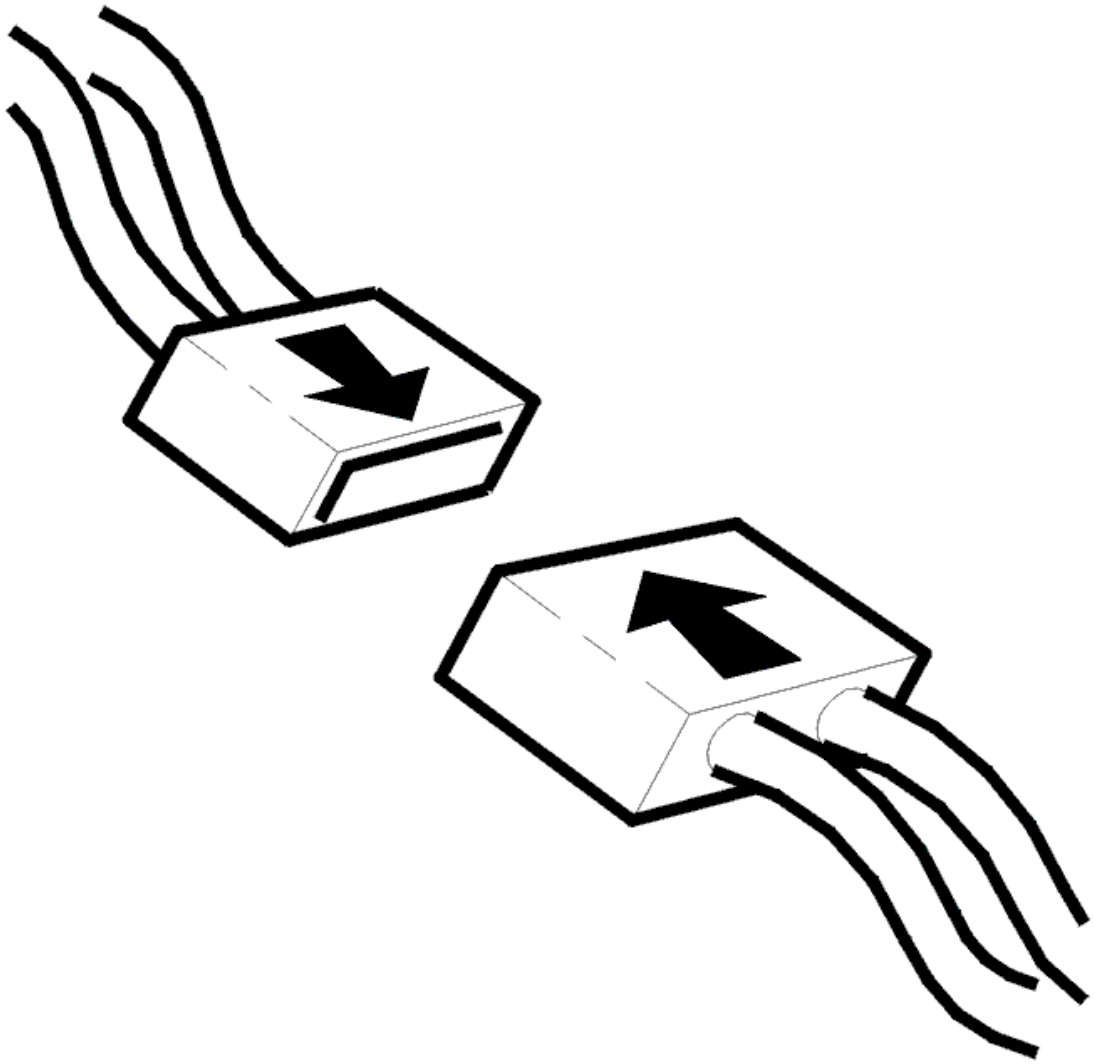

Fig. 236: Identifying Connector(s) Reinstallation
Courtesy of VOLVO CARS CORPORATION

- Ignition off
- Reinstall the components, reconnect the connectors etc.
- Ignition on
- Activate solenoid SLU by clicking the symbol for VCT2000.

  Read off the current through the circuit for solenoid SLU. The current must oscillate between approximately 0 and 1000 mA.

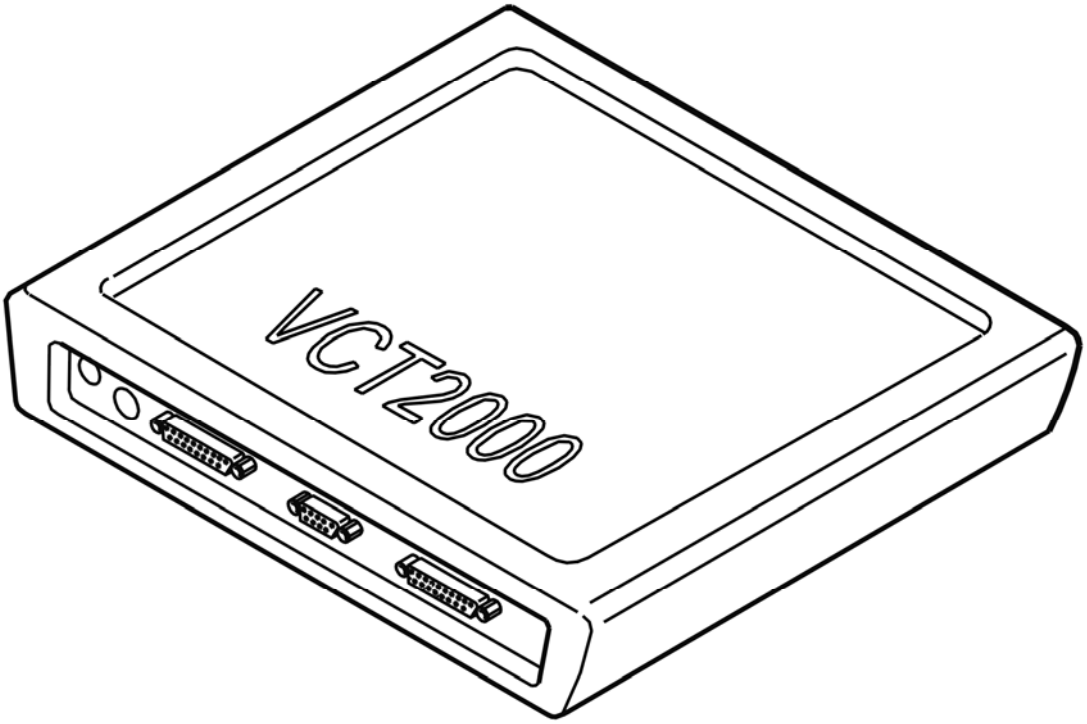

Fig. 237: Identifying VCT2000 Diagnostic Tool Symbol In VIDA
Courtesy of VOLVO CARS CORPORATION

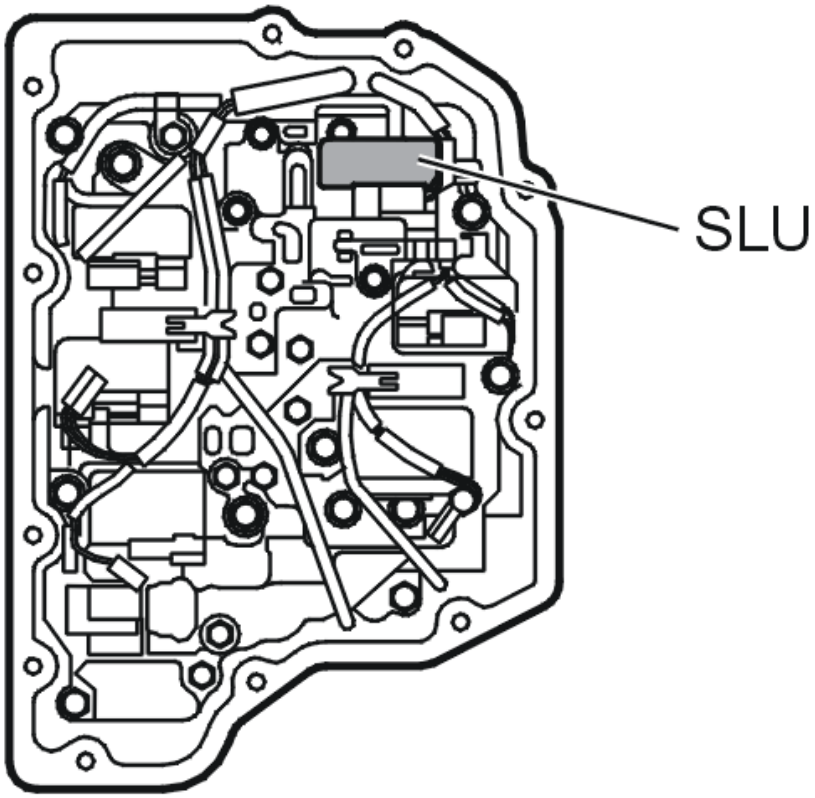

Fig. 238: Identifying Solenoid SLU
Courtesy of VOLVO CARS CORPORATION

Is the function OK?

- **YES**

  VERIFIED: Troubleshooting has been completed.

- **NO**

  Refer to **INFORMATION**

INFORMATION

FAULT-TRACING INFORMATION

The fault should have been detected and remedied. As this is not the case fault-tracing has failed.

Exit fault-tracing for this diagnostic trouble code (DTC) or make another attempt.

TCM-P096700: PRESSURE REGULATOR SOLENOID B CONTROL CIRCUIT HIGH. GENERAL FAULT INFORMATION. NO INFORMATION ON FAULT

TYPE (TF-80SC AWD; 2005)

DIAGNOSTIC TROUBLE CODE (DTC) INFORMATION TCM-P096700

see **DIAGNOSTIC TROUBLE CODE (DTC) INFORMATION TCM-P096700**

FAULT TRACING TCM-P096700

see **FAULT TRACING TCM-P096700**

TCM-P096900: PRESSURE CONTROL SOLENOID C CONTROL CIRCUIT RANGE/PERFORMANCE. GENERAL FAILURE INFORMATION. NO SUB TYPE INFORMATION (B6324S, TF-80SC; B6324S, TF-80SC AWD; 2007-2010)

DIAGNOSTIC TROUBLE CODE (DTC) INFORMATION TCM-P096900

Condition

Linear pressure solenoid SLC2 controls shifting in the transmission. Solenoid SLC2 works when it receives voltage from the transmission control module (TCM). The solenoid is activated during various driving conditions based on speed, throttle position and set driving program.

The diagnostic trouble code (DTC) is stored if the control module detects that:

- The measured current in the solenoid circuit is incorrect.

Solenoid SLC2 can then not regulate system pressure.

The control module's test for the diagnostic trouble code (DTC) starts in the event of:

- Shifting when linear pressure solenoid SLC2 is activated.

NOTE: The control module can only detect the fault once the test has been started and the diagnostic trouble code (DTC) is stored when the conditions are met.

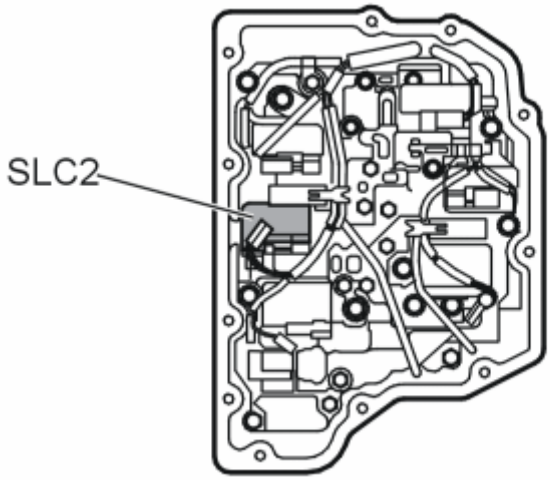

Fig. 239: Identifying SLC2 Solenoid
Courtesy of VOLVO CARS CORPORATION

Substitute Value

- Auxiliary program **Emergency mode 1** in the transmission control module (TCM) has started.

  HINT: EMERGENCY MODE IN THE EVENT OF A FAULT

Possible Source

- Contact resistance in the terminals.
- Open-circuit in the cable for the control signal or signal ground.
- Linear pressure solenoid SLC2 is stuck.
- Linear pressure solenoid SLC2 not working.

Fault symptom[s]

- General warning lamp lit
- Malfunction indicator light (MIL), on
- Rough gear shift
- No gear shift
- Abnormal slipping gearshifts

FAULT-TRACING

CHECKS

CHECKING LINEAR PRESSURE SOLENOID SLC2

Fig. 240: Identifying Ignition ON
Courtesy of VOLVO CARS CORPORATION

- Ignition on.
- Activate solenoid SLC2 by clicking the VCT2000 symbol.

  Read the current through the circuit for solenoid SLC2. The current should oscillate between 100 and 950 mA.

  The fault is permanent if the current does not change.

  If the current changes, this is an indication that the fault was present previously but is not active at the moment, i. e. an intermittent fault.

Fig. 241: Identifying VCT2000 Diagnostic Tool Symbol In VIDA
Courtesy of VOLVO CARS CORPORATION

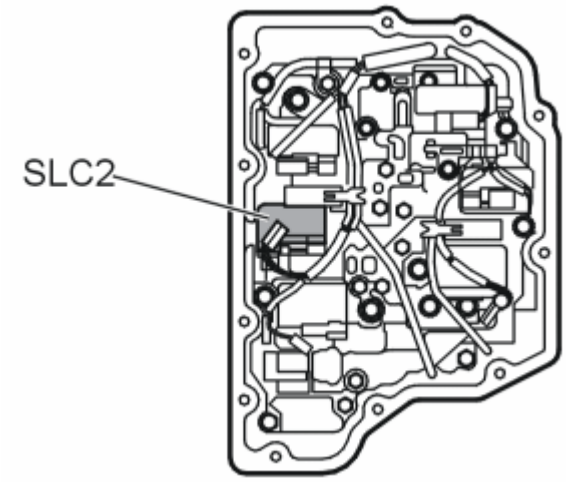

Fig. 242: Identifying SLC2 Solenoid
Courtesy of VOLVO CARS CORPORATION

- **Continue**

Refer to **CHECKING THE COMPONENTS AND WIRING**

CHECKING THE COMPONENTS AND WIRING

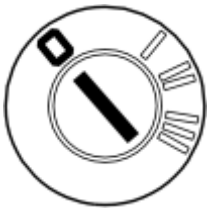

Fig. 243: Identifying Ignition OFF
Courtesy of VOLVO CARS CORPORATION

- Ignition off.
- Open the transmission control system.

  Check connector B (22-pin) for the transmission control module (TCM). Check for damaged or pressed in pins. Check for contact resistance and oxidation.

  Check the cables for open circuit, short circuit to ground and short circuit to supply voltage.

  Take readings between:

  - Transmission connector #B17 and the connector for solenoid SLC2 #1.
  - Transmission connector #B18 and the connector for solenoid SLC2 #2.

  HINT: If no fault is found in the wiring, check solenoid SLC2. See CHECKING INTERNAL COMPONENTS OF THE TRANSMISSION

  If no fault is found in the wiring or the component replace the control system.

  Remedy as necessary.

  Other information

  - see **CONNECTING THE BREAKOUT BOX**
  - see **SIGNAL SPECIFICATION**
  - see **VALVE HOUSING**
  - see **TRANSMISSION CONTROL UNIT WIRING HARNESS**
  - To access the transmission control system:**COVER CONTROL SYSTEM, REPLACING (2007-2011)**
  - see **CHECKING WIRING AND TERMINALS**

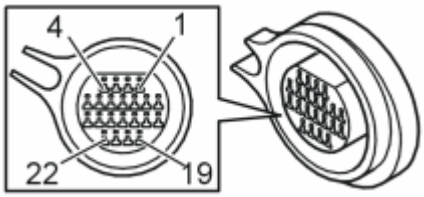

Fig. 244: Identifying Connector B Terminals
Courtesy of VOLVO CARS CORPORATION

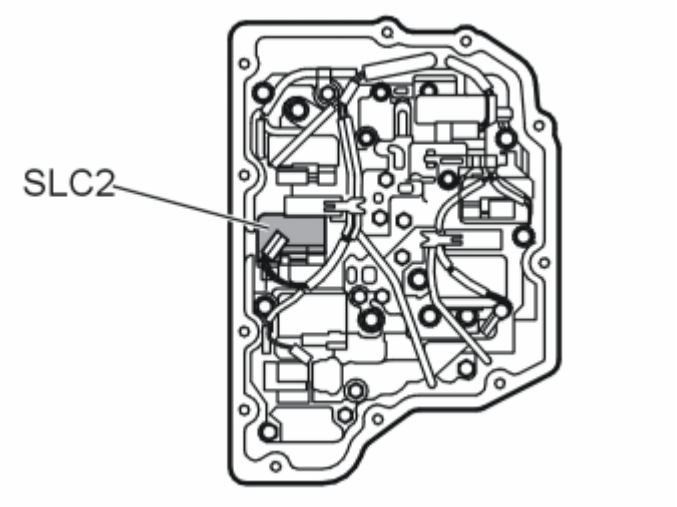

Fig. 245: Identifying SLC2 Solenoid
Courtesy of VOLVO CARS CORPORATION

- **Continue**

  Refer to **RESETTING ADAPTATION**

VERIFICATION

VERIFICATION

HINT: After carrying out the repair, check that the fault has been remedied.

Fig. 246: Identifying Ignition ON
Courtesy of VOLVO CARS CORPORATION

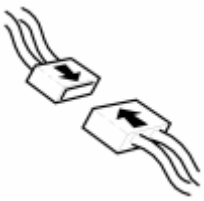

Fig. 247: Identifying Connector(s) Reinstallation
Courtesy of VOLVO CARS CORPORATION

- Ignition off.
- Reinstall the connectors, components etc.
- Ignition on.
- Activate solenoid SLC2 by clicking the VCT2000 symbol.

  Read the current through the circuit for solenoid SLC2. The current should oscillate between 100 and 950 mA.

Fig. 248: Identifying VCT2000 Diagnostic Tool Symbol In VIDA
Courtesy of VOLVO CARS CORPORATION

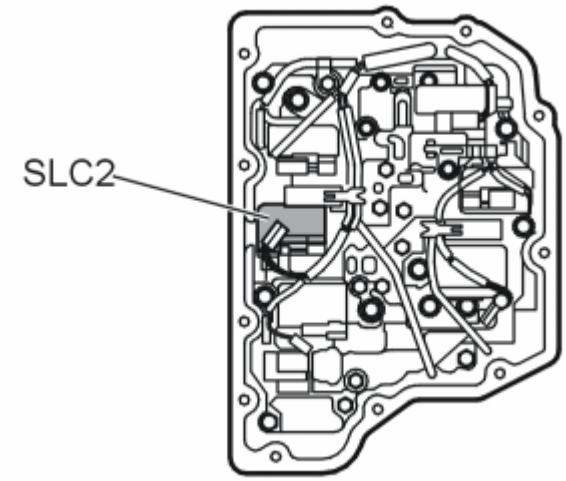

Fig. 249: Identifying SLC2 Solenoid
Courtesy of VOLVO CARS CORPORATION

Is the function OK?

- **YES**

VERIFIED: Troubleshooting has been completed.

- **NO**

  Refer to **INFORMATION**

INFORMATION

FAULT-TRACING INFORMATION

The fault should have been detected and remedied. As this is not the case fault-tracing has failed.

Exit fault-tracing for this diagnostic trouble code (DTC) or make another attempt.

RESETTING ADAPTATION

RESETTING THE ADAPTATION AND THE COUNTER FOR "TRANSMISSION OIL, REPLACE"

HINT: The transmission has torque-regulated, adaptive pressure regulation. The pressure regulator enables the transmission to regulate pressure during each shift to prevent hard shifting. Each shift is assessed by the transmission control module (TCM) and is stored in the internal memory. This makes it possible to compensate for transmission and clutch wear. It is important that the adaptation in the memory is reset so that the transmission works normally after the repair. Because the fluid was changed during the repair, the counter for transmission fluid change must also be reset. If the counter is not reset during draining/replacement, a diagnostic trouble code may be generated under the wrong conditions.

NOTE: This applies only if the transmission or one of the components in the transmission have been replaced.

Fig. 250: Identifying Ignition ON
Courtesy of VOLVO CARS CORPORATION

- Ignition on.

  Click on the VCT2000 symbol to reset the adaptation and counter.

Fig. 251: Identifying VCT2000 Diagnostic Tool Symbol In VIDA
Courtesy of VOLVO CARS CORPORATION

- **Continue**

  Refer to **VERIFICATION**

TCM-P096900: PRESSURE CONTROL SOLENOID C CONTROL CIRCUIT RANGE/PERFORMANCE. GENERAL FAILURE INFORMATION. NO SUB TYPE INFORMATION (B6324S5, TF-80SC; B6324S5, TF-80SC AWD; 2011-2012)

DIAGNOSTIC TROUBLE CODE (DTC) INFORMATION TCM-P096900

see **DIAGNOSTIC TROUBLE CODE (DTC) INFORMATION TCM-P096900**

FAULT-TRACING

see **FAULT-TRACING**

TCM-P096900: PRESSURE REGULATOR SOLENOID B CONTROL CIRCUIT INSIDE/OUTSIDE TOLERANCE. GENERAL FAULT INFORMATION. NO INFORMATION ON FAULT TYPE (B8444S, TF-80SC AWD; 2006-2011)

DIAGNOSTIC TROUBLE CODE (DTC) INFORMATION TCM-P096900

Condition

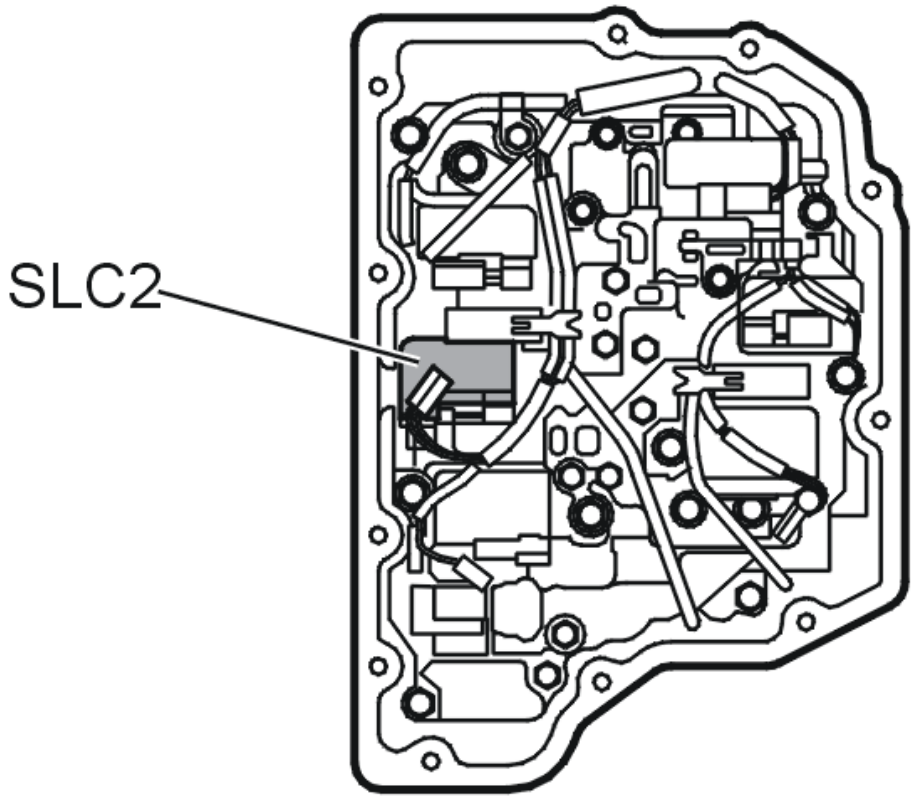

Fig. 252: Identifying Solenoid SLC2
Courtesy of VOLVO CARS CORPORATION

The lock-up solenoid SLC2 controls the lock-up function in the gearbox. The SLC2 solenoid works when it receives power from the transmission control module (TCM) and depending on the speed, accelerator position and driving program setting, the solenoid will be activated for different driving conditions.

If the transmission control module (TCM) registers that the measured current in the solenoid circuit is incorrect, the diagnostic trouble code (DTC) is generated. The SLC2 solenoid is then not able to regulate system pressure.

The diagnostic trouble code (DTC) can be diagnosed when changing gear while the linear pressure solenoid SLC2 is activated.

Substitute Value

- Auxiliary program **Emergency mode 1** in the transmission control module (TCM) has started.

  HINT: EMERGENCY MODE IN CASE OF MALFUNCTION

Possible Source

- Contact resistance in the terminals
- Open circuit in lead for control signal or signal ground.

- Linear pressure solenoid SLC2 stuck.
- Linear pressure solenoid SLC2 not working.

Fault symptom[s]

- General warning lamp lit
- Malfunction indicator lamp (MIL) lit.
- Harsh gear changing
- No gear changing.
- Abnormally slipping gears.

FAULT TRACING TCM-P096900

CHECKS

CHECKING THE LINE PRESSURE SOLENOID SLC2

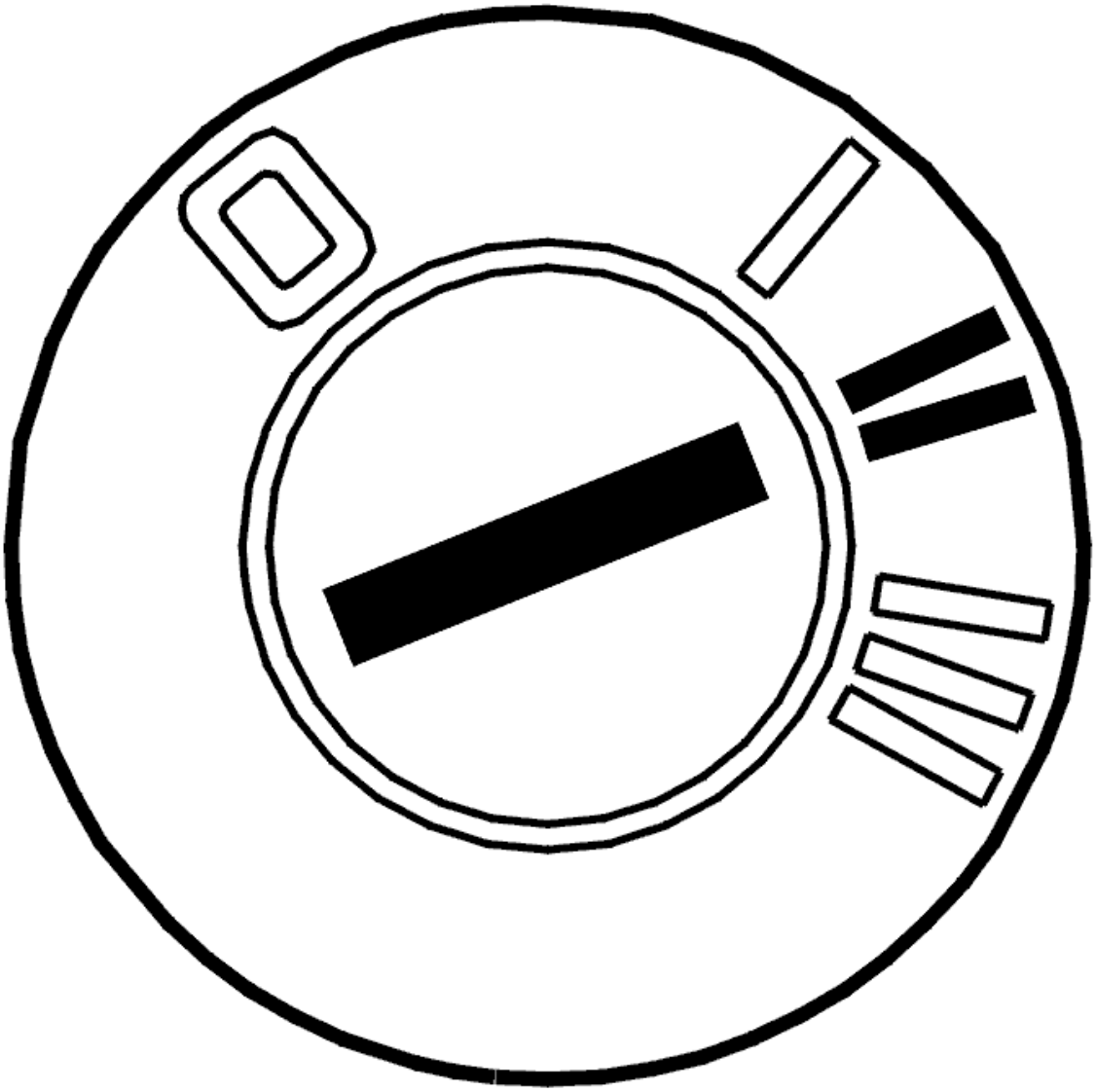

Fig. 253: Identifying Ignition ON
Courtesy of VOLVO CARS CORPORATION

- Ignition on
- Activate solenoid SLC2 by clicking the VCT2000 symbol.

  Read the current though the circuit for solenoid SLC2. The current must oscillate between approximately 100 and 950 mA.

  The fault is permanent if the current does not change.

  If the current oscillates then this would suggest that the fault has previously been present but is no longer active. The fault is intermittent.

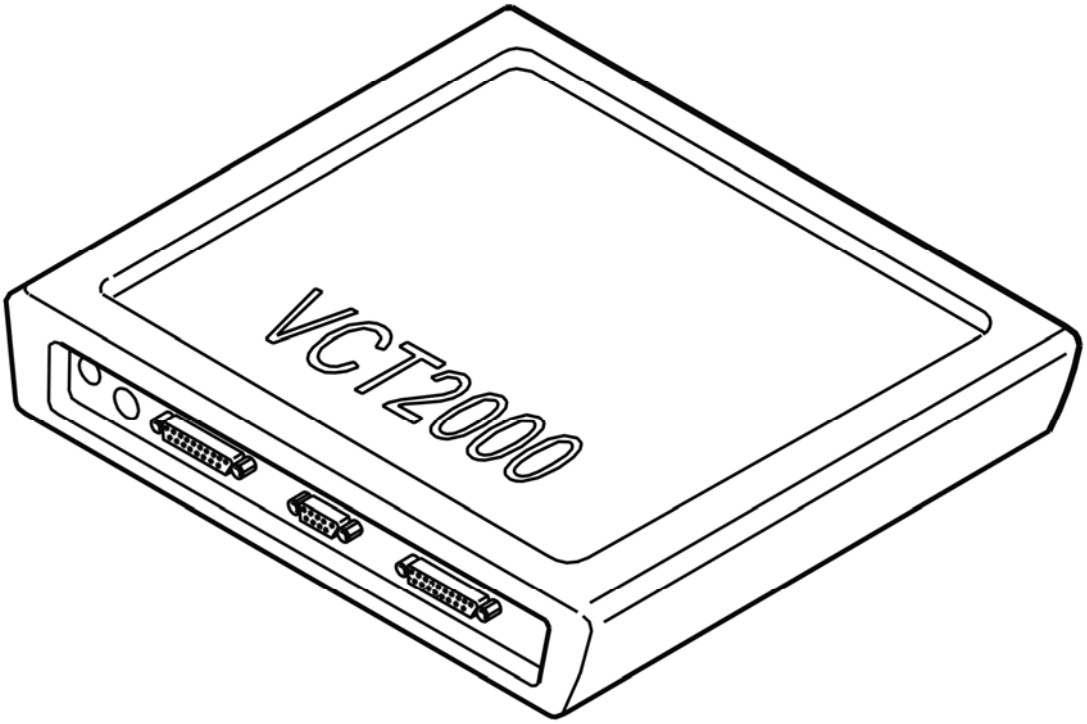

Fig. 254: Identifying VCT2000 Diagnostic Tool Symbol In VIDA
Courtesy of VOLVO CARS CORPORATION

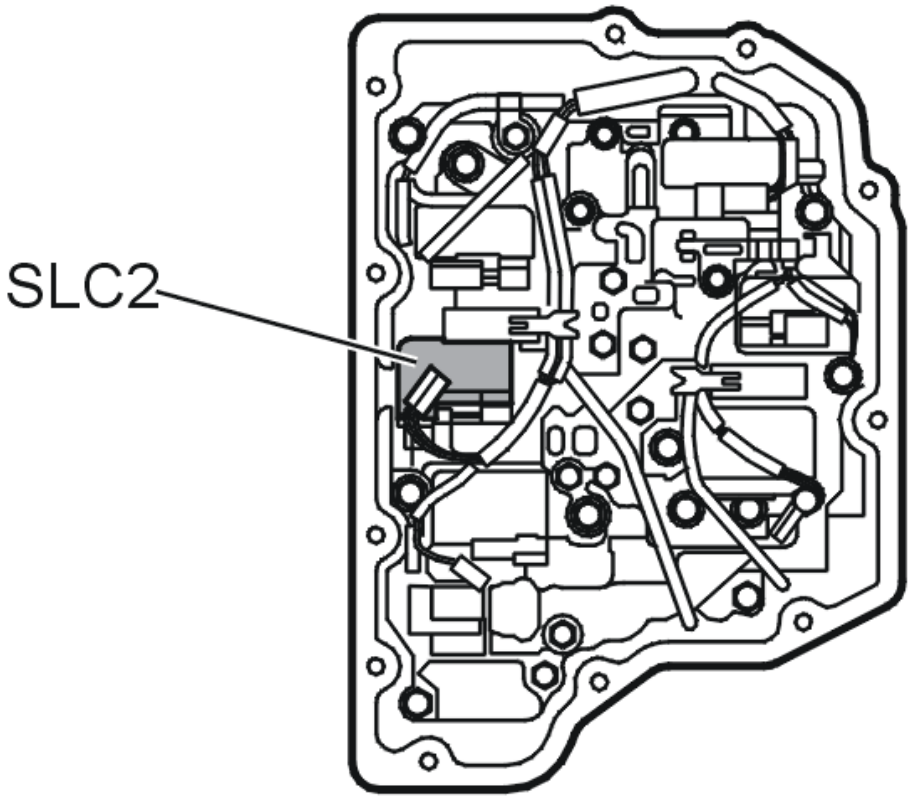

Fig. 255: Identifying Solenoid SLC2
Courtesy of VOLVO CARS CORPORATION

- **Continue**

Refer to **CHECKING THE COMPONENTS AND WIRING**

CHECKING THE COMPONENTS AND WIRING

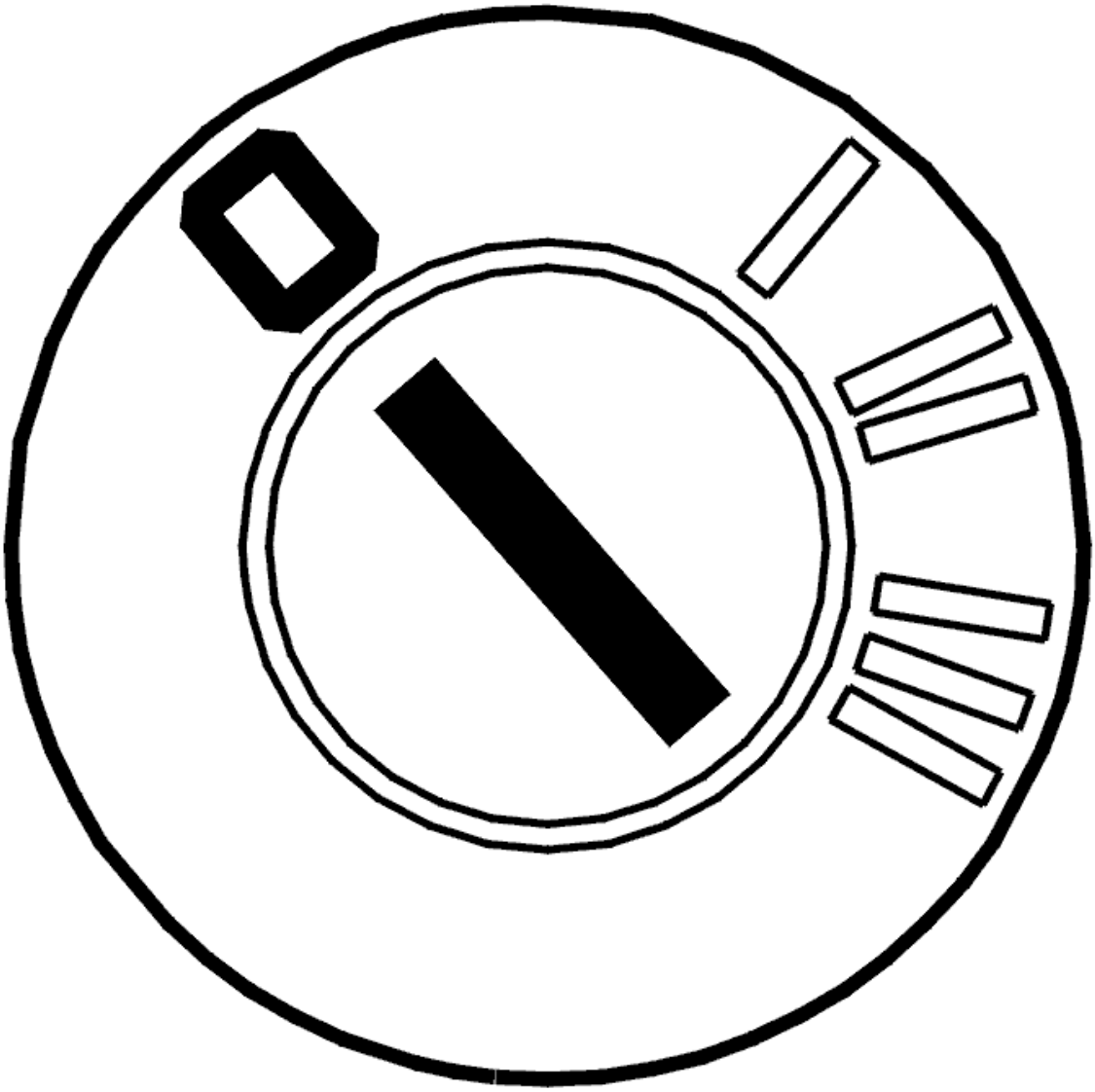

Fig. 256: Identifying Ignition OFF
Courtesy of VOLVO CARS CORPORATION

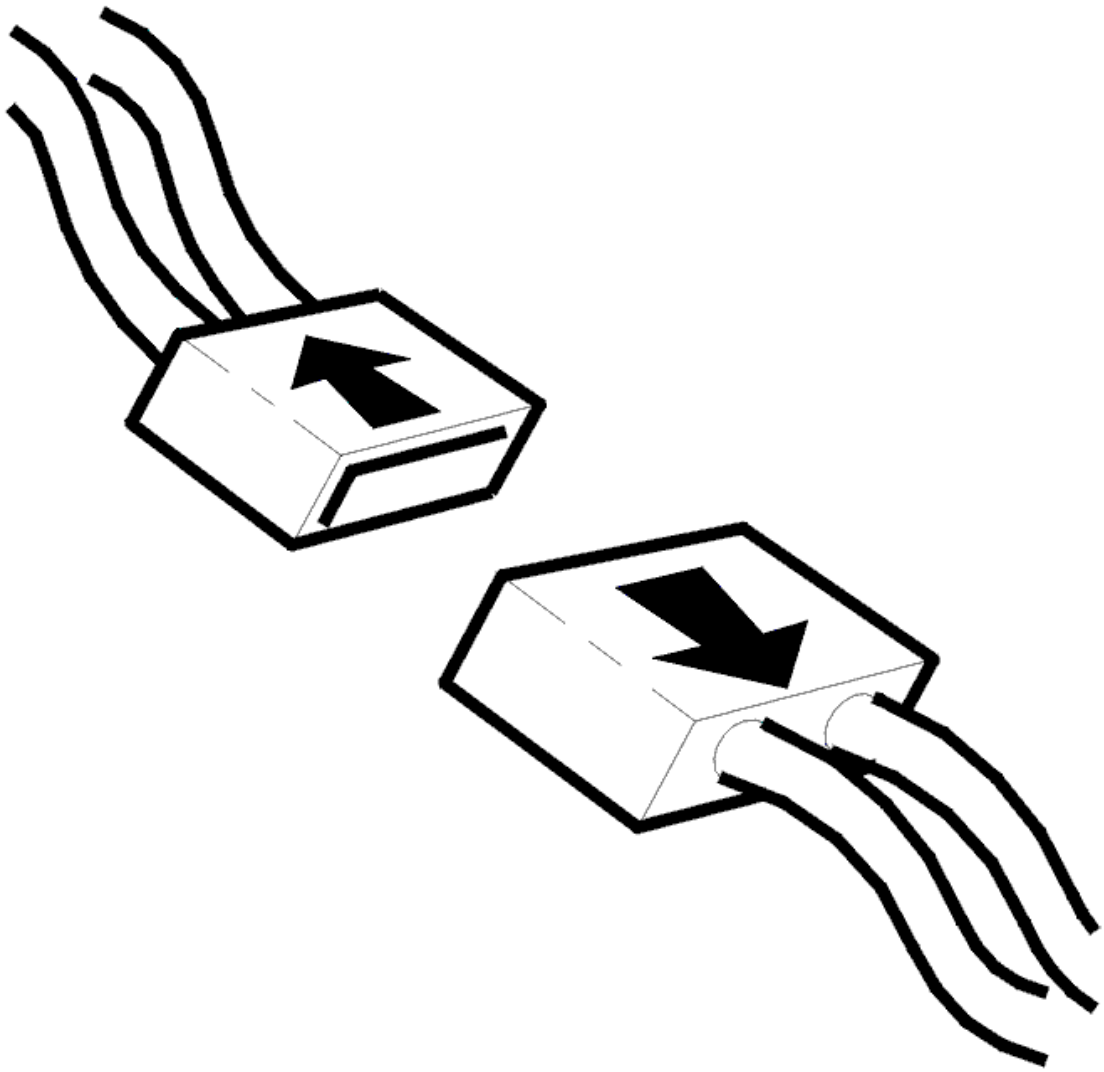

Fig. 257: Identifying Connector(s) Disconnected
Courtesy of VOLVO CARS CORPORATION

- Ignition off
- Open the gearbox control system

  Check connector B (22-pin) for the transmission control module (TCM). Check for damage and pressed in terminal pins. Check for contact resistance and oxidation.

  Check the wiring between the transmission connector terminal #B17 and the connector for solenoid SLC2 terminal #1. Check the wiring between the transmission connector terminal #B18 and the connector for solenoid SLC2 terminal #2. Check for an open circuit. Check for a short-circuit to supply voltage. Check for a short-circuit to ground.

  HINT: If no fault is found in the wiring check solenoid SLC2. See CHECKING THE LINE PRESSURE SOLENOID SLT, SLC1, SLC2, SLC3, SLB1 AND LOCK-UP SOLENOID SLU

If no fault is found in the wiring or the component replace the control system.

Remedy as necessary.

Other information

- see **CONNECTING THE BREAKOUT BOX**
- see **SIGNAL DESCRIPTION**
- see **CONTROL SYSTEM, REPLACING**
- see **CABLE HARNESS, CONTROL SYSTEM, GEARBOX, REPLACING**
- To access the transmission control system: **COVER CONTROL SYSTEM, REPLACING (2007-2011)**
- see **CONTENTS**

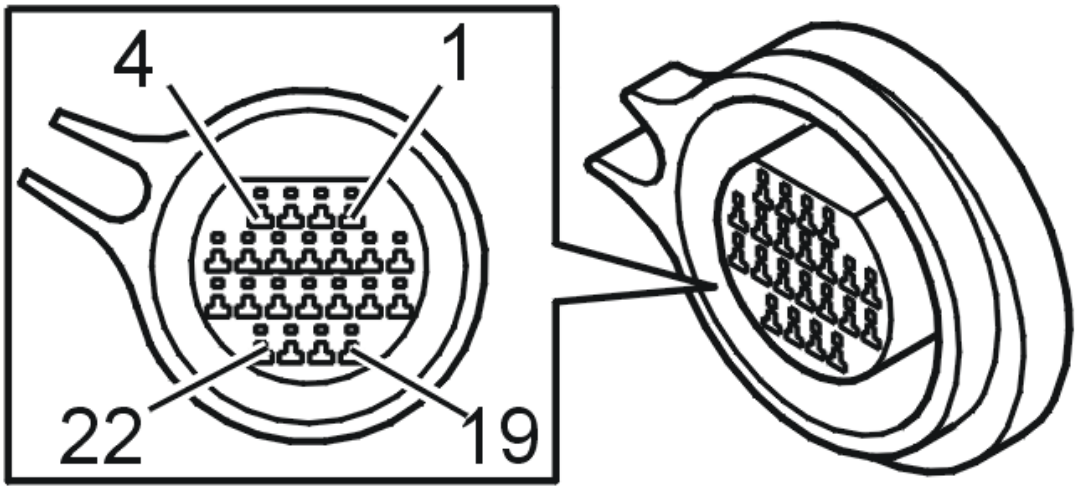

Fig. 258: Identifying Connector B Terminals
Courtesy of VOLVO CARS CORPORATION

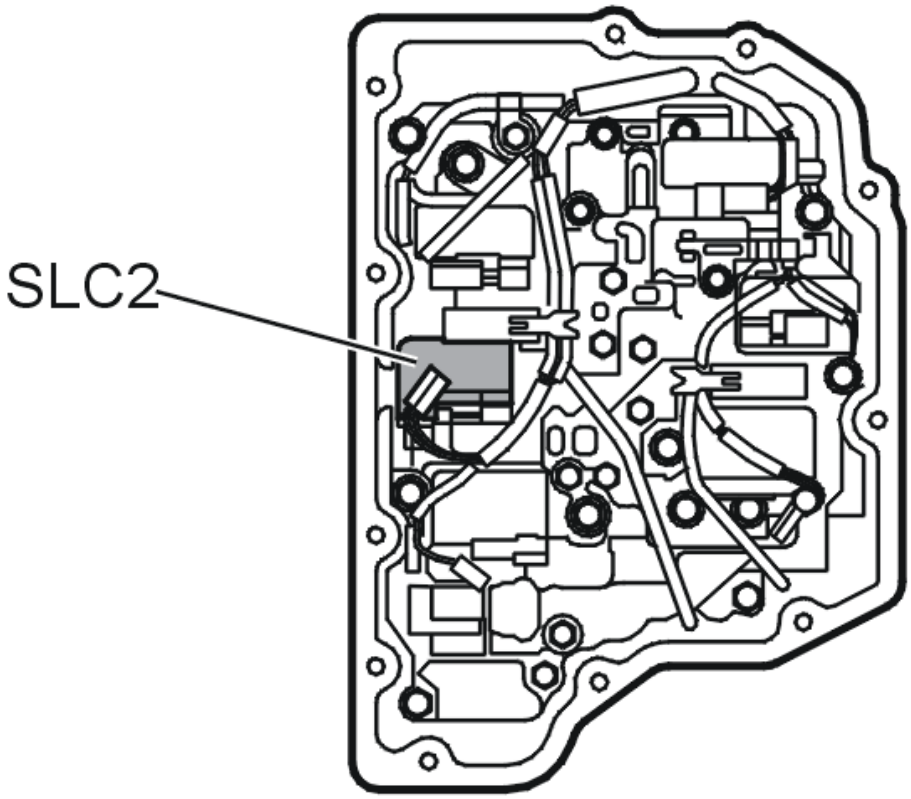

Fig. 259: Identifying Solenoid SLC2
Courtesy of VOLVO CARS CORPORATION

- **Continue**

  Refer to **RESETTING ADAPTATION**

RESETTING ADAPTATION

RESETTING ADAPTATION AND COUNTER FOR "TRANSMISSION OIL, CHANGING"

HINT: The transmission has torque-controlled, adaptive pressure control. The pressure control means that the transmission itself controls the pressure during each shift sequence in order to avoid harsh shifting. Each shift is assessed by the transmission control module (TCM) and is stored in the internal memory, which results in compensation for wear in the transmission and clutch. In order for the transmission to function correctly after repair, it is important to reset the adaptation in the memory. Since the oil is changed during the repair, the counter for "Transmission oil, change" shall also be reset. If the counter is not reset when draining/changing oil, there is a risk that a diagnostic trouble code may be generated under incorrect conditions.

NOTE: **This applies only if the transmission or one of the components in the transmission have been replaced.**

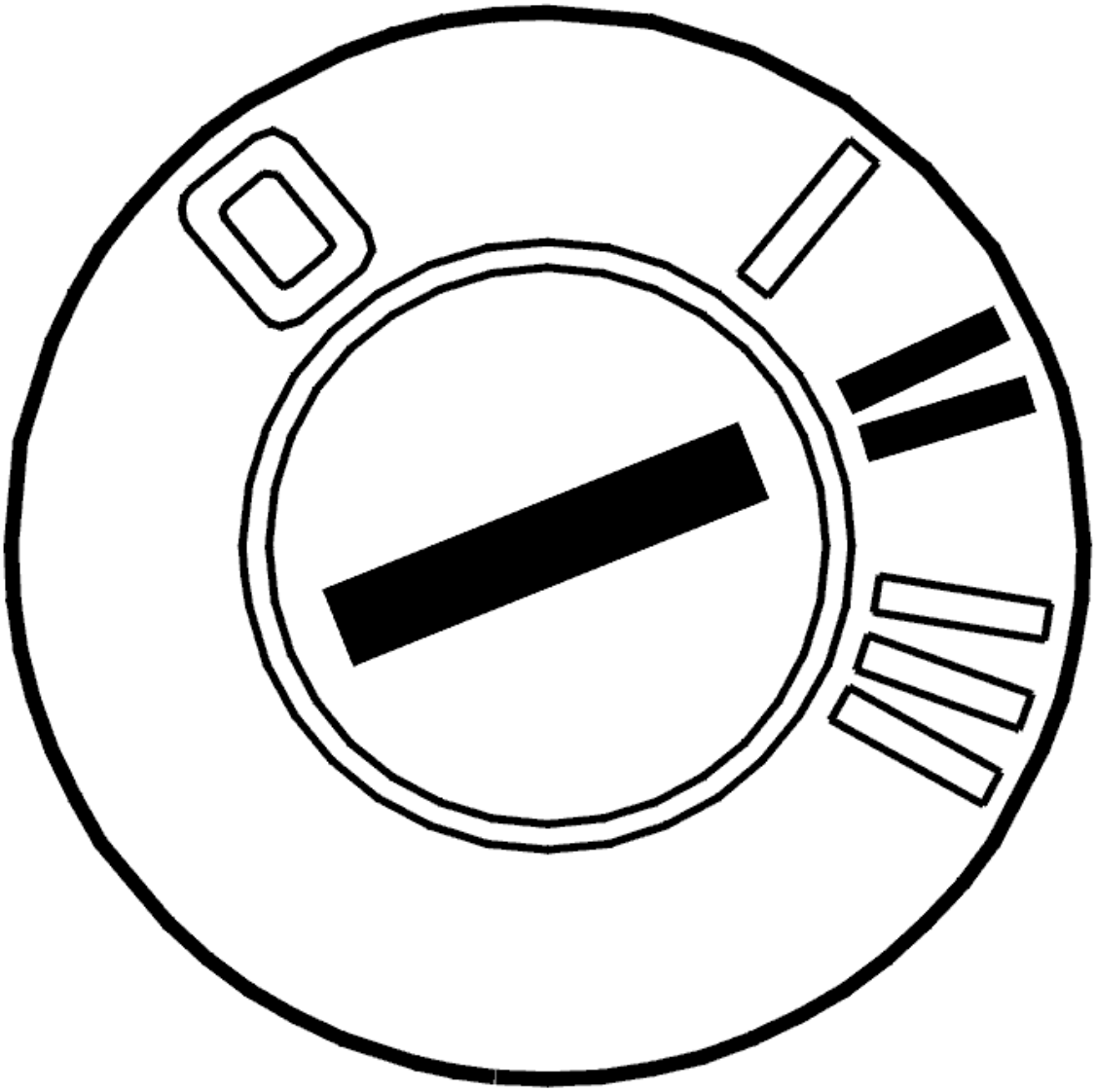

Fig. 260: Identifying Ignition ON
Courtesy of VOLVO CARS CORPORATION

- Ignition on

  Activate reset of the adaptation and the counter by clicking on the symbol for VCT2000.

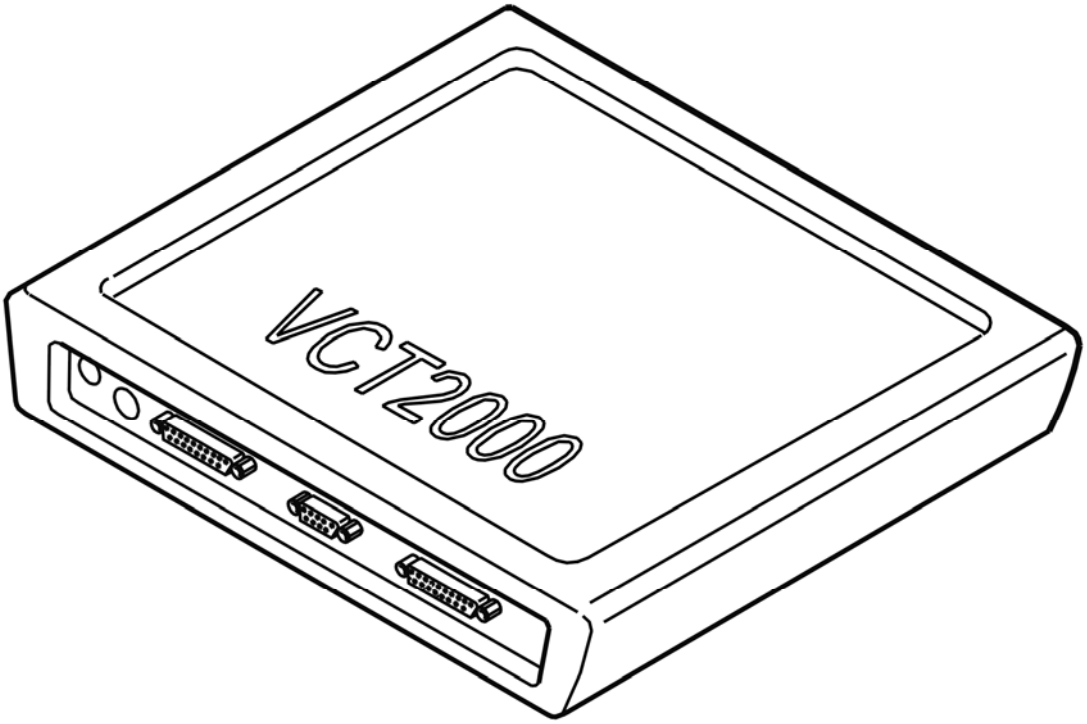

Fig. 261: Identifying VCT2000 Diagnostic Tool Symbol In VIDA
Courtesy of VOLVO CARS CORPORATION

- **Continue**

  Refer to **VERIFICATION**

VERIFICATION

VERIFICATION

HINT: After carrying out the repair, check that the fault has been remedied.

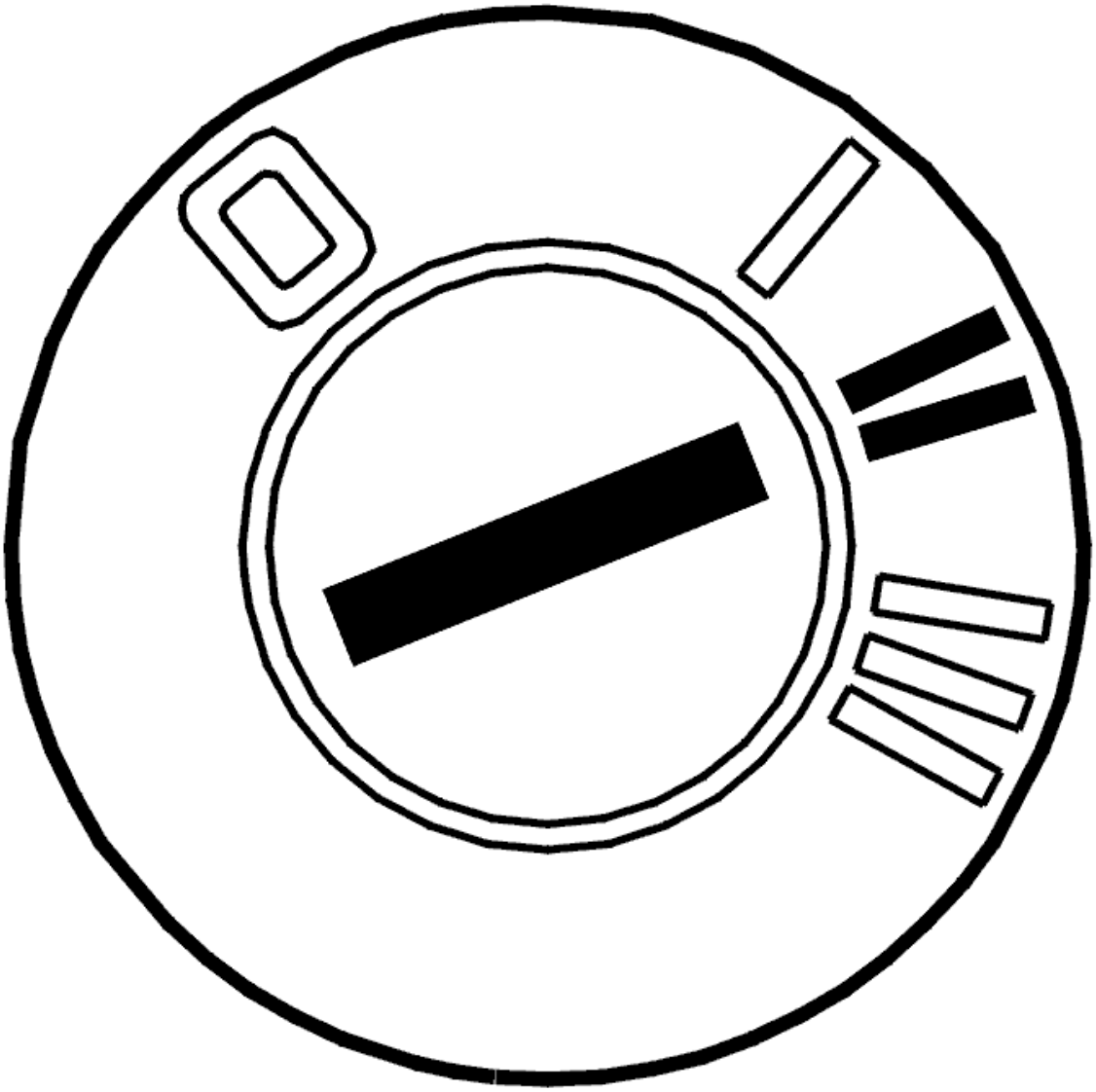

Fig. 262: Identifying Ignition ON
Courtesy of VOLVO CARS CORPORATION

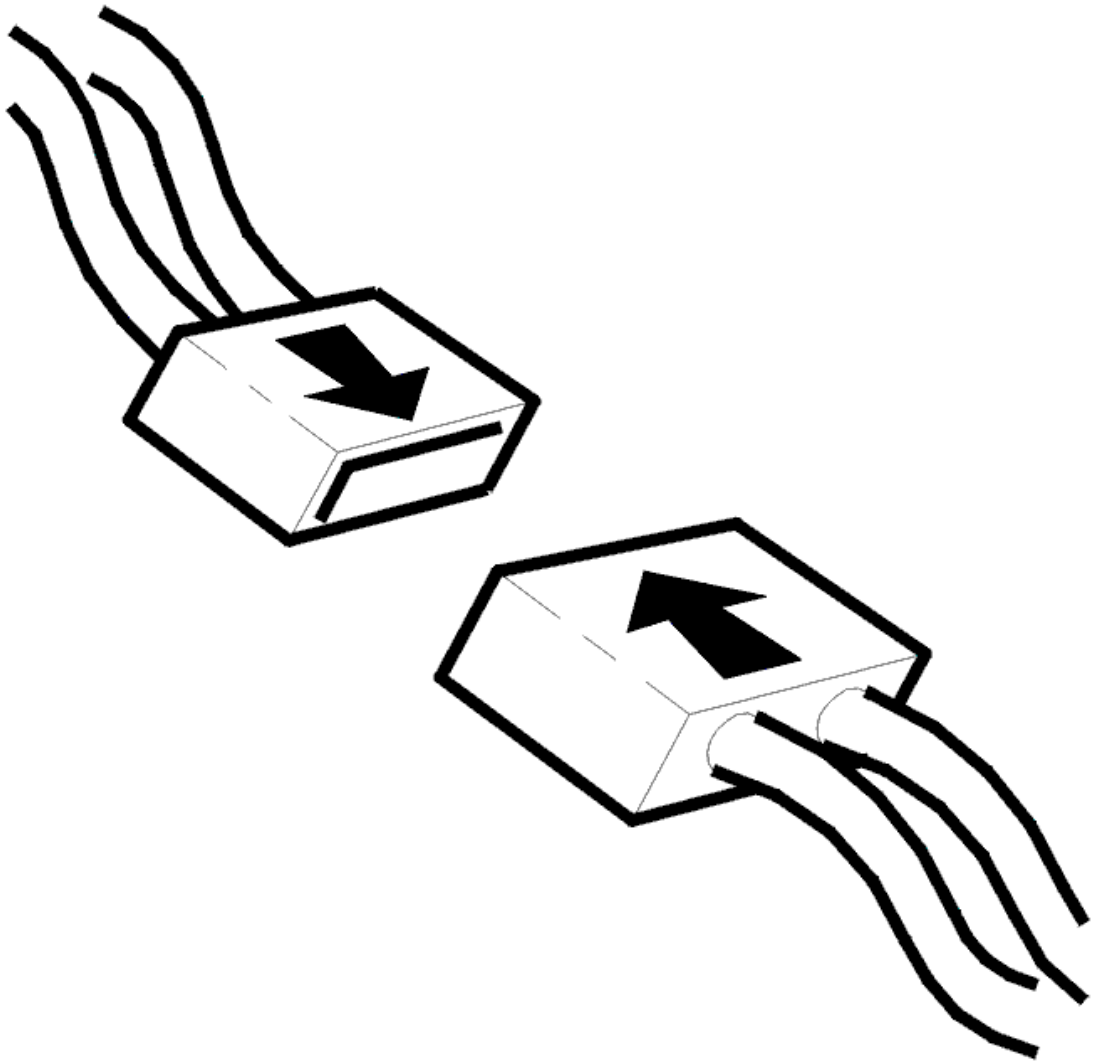

Fig. 263: Identifying Connector(s) Reinstallation
Courtesy of VOLVO CARS CORPORATION

- Ignition off
- Reinstall the components, reconnect the connectors etc.
- Ignition on
- Activate solenoid SLC2 by clicking on the symbol for VCT2000.

  Read off the current through the circuit for solenoid SLC2. The current must oscillate between approximately 0 and 1000 mA.

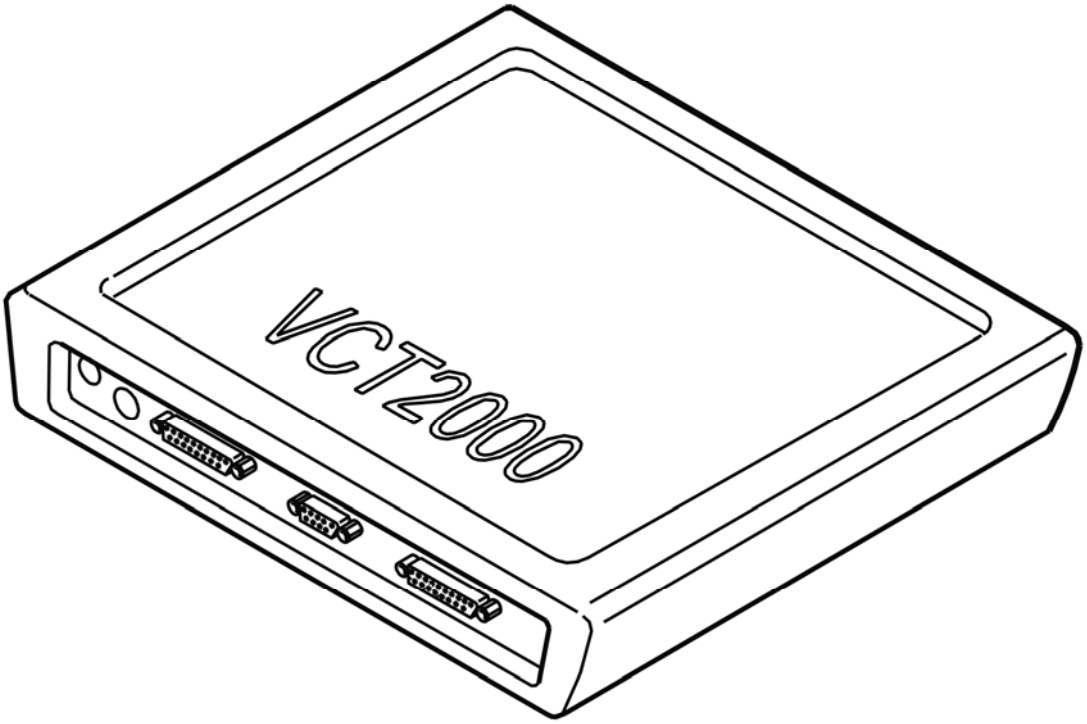

Fig. 264: Identifying VCT2000 Diagnostic Tool Symbol In VIDA
Courtesy of VOLVO CARS CORPORATION

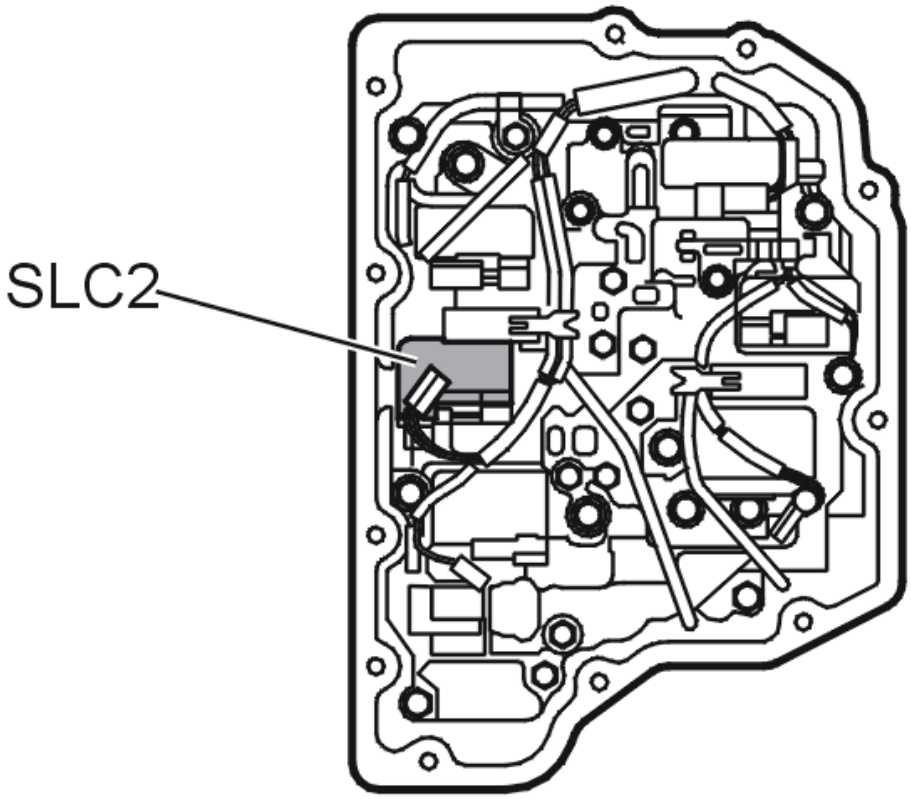

Fig. 265: Identifying Solenoid SLC2
Courtesy of VOLVO CARS CORPORATION

Is the function OK?

- **YES**

  VERIFIED: Troubleshooting has been completed.

- **NO**

  Refer to **INFORMATION**

INFORMATION

FAULT-TRACING INFORMATION

The fault should have been detected and remedied. As this is not the case fault-tracing has failed.

Exit fault-tracing for this diagnostic trouble code (DTC) or make another attempt.

TCM-P096900: PRESSURE REGULATOR SOLENOID B CONTROL CIRCUIT INSIDE/OUTSIDE TOLERANCE. GENERAL FAULT INFORMATION. NO

INFORMATION ON FAULT TYPE (TF-80SC AWD; 2005)

DIAGNOSTIC TROUBLE CODE (DTC) INFORMATION TCM-P096900

see **DIAGNOSTIC TROUBLE CODE (DTC) INFORMATION TCM-P096900**

FAULT TRACING TCM-P096900

see **FAULT TRACING TCM-P096900**

TCM-P097000: PRESSURE CONTROL SOLENOID C CONTROL CIRCUIT LOW. GENERAL FAILURE INFORMATION. NO SUB TYPE INFORMATION (B6324S, TF-80SC; B6324S, TF-80SC AWD; 2007-2010)

DIAGNOSTIC TROUBLE CODE (DTC) INFORMATION TCM-P097000

Condition

The solenoids are controlled by power stages in the transmission control module (TCM). The transmission control module (TCM) opens the power stages to activate the solenoids and sends a voltage through the circuit.

The diagnostic trouble code (DTC) is stored if the control module detects that:

- The measured current value is higher than permitted in the circuit for solenoid SLC2.

The control module's test for the diagnostic trouble code (DTC) starts in the event of:

- Ignition on.

NOTE: **The control module can only detect the fault once the test has been started and the diagnostic trouble code (DTC) is stored when the conditions are met.**

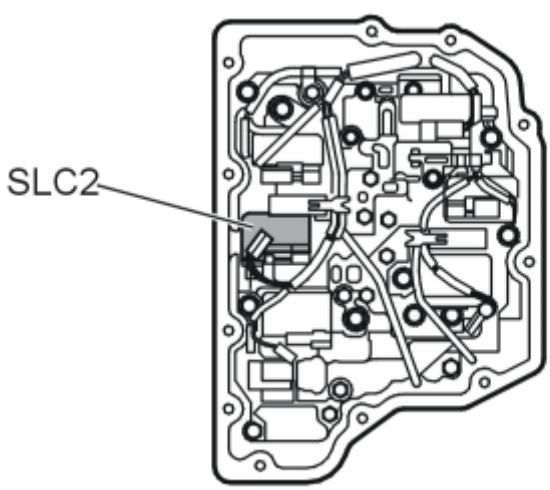

Fig. 266: Identifying SLC2 Solenoid
Courtesy of VOLVO CARS CORPORATION

Substitute Value

- Auxiliary program **Emergency mode 1** in the transmission control module (TCM) has started.

  HINT: EMERGENCY MODE IN THE EVENT OF A FAULT

Possible Source

- Control signal lead short-circuited to voltage.
- Linear pressure solenoid not working.
- Internal fault in the transmission control module (TCM).

Fault symptom[s]

- General warning lamp lit
- Malfunction indicator light (MIL), on
- Abnormal slipping gearshifts
- Rough gear shift
- No gear shift

FAULT-TRACING

CHECKS

CHECKING LINEAR PRESSURE SOLENOID SLC2

Fig. 267: Identifying Ignition ON
Courtesy of VOLVO CARS CORPORATION

- Ignition on.
- Activate solenoid SLC2 by clicking the VCT2000 symbol.

  Read the current through the circuit for solenoid SLC2. The current should oscillate between 100 and 950 mA.

  The fault is permanent if the current does not change.

If the current changes, this is an indication that the fault was present previously but is not active at the moment, i. e. an intermittent fault.

Fig. 268: Identifying VCT2000 Diagnostic Tool Symbol In VIDA
Courtesy of VOLVO CARS CORPORATION

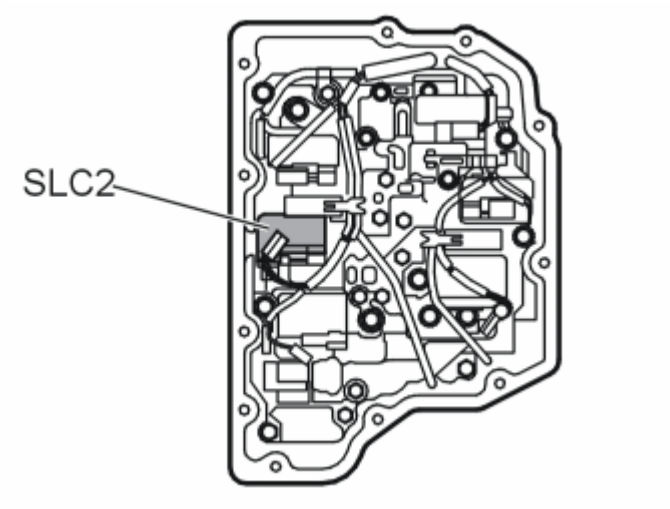

Fig. 269: Identifying SLC2 Solenoid
Courtesy of VOLVO CARS CORPORATION

- **Continue**

  Refer to **CHECKING THE COMPONENTS AND WIRING**

CHECKING THE COMPONENTS AND WIRING

Fig. 270: Identifying Ignition OFF
Courtesy of VOLVO CARS CORPORATION

- Ignition off.
- Open the transmission control system.

Check connector B (22-pin) for the transmission control module (TCM). Check for damaged or pressed in pins. Check for contact resistance and oxidation.

Check the cables for open circuit and short circuit to ground.

Take readings between:

- Transmission connector #B17 and the connector for solenoid SLC2 #1.
- Transmission connector #B18 and the connector for solenoid SLC2 #2.

HINT: If no fault is found in the wiring, check solenoid SLC2. See CHECKING INTERNAL COMPONENTS OF THE TRANSMISSION

If no fault is found in the wiring or the component replace the control system.

Remedy as necessary.

Other information

- see **CONNECTING THE BREAKOUT BOX**
- see **SIGNAL SPECIFICATION**
- see **TRANSMISSION CONTROL UNIT WIRING HARNESS**
- To access the transmission control system:**COVER CONTROL SYSTEM, REPLACING (2007-2011)**
- see **CHECKING WIRING AND TERMINALS**

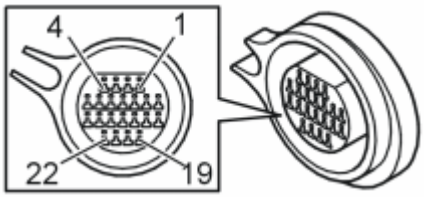

Fig. 271: Identifying Connector B Terminals
Courtesy of VOLVO CARS CORPORATION

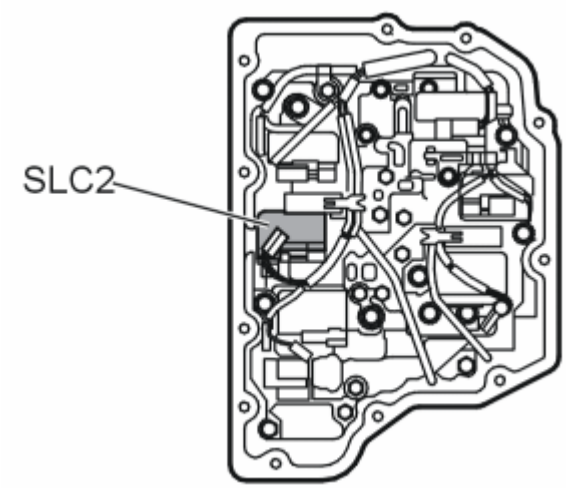

Fig. 272: Identifying SLC2 Solenoid
Courtesy of VOLVO CARS CORPORATION

- **Continue**

  Refer to **RESETTING ADAPTATION**

VERIFICATION

VERIFICATION

HINT: After carrying out the repair, check that the fault has been remedied.

Fig. 273: Identifying Ignition ON
Courtesy of VOLVO CARS CORPORATION

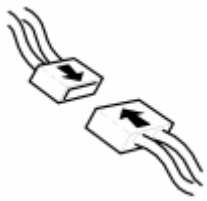

Fig. 274: Identifying Connector(s) Reinstallation
Courtesy of VOLVO CARS CORPORATION

- Ignition off.
- Reinstall the connectors, components etc.

- Ignition on.
- Activate solenoid SLC2 by clicking the VCT2000 symbol.

  Read the current through the circuit for solenoid SLC2. The current should oscillate between 100 and 950 mA.

Fig. 275: Identifying VCT2000 Diagnostic Tool Symbol In VIDA
Courtesy of VOLVO CARS CORPORATION

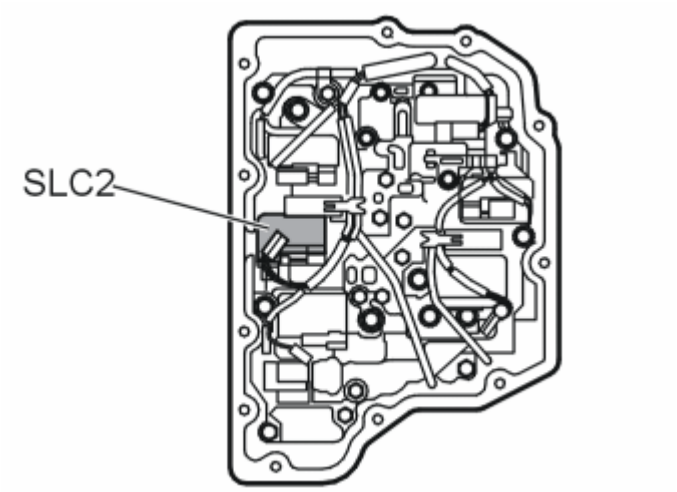

Fig. 276: Identifying SLC2 Solenoid
Courtesy of VOLVO CARS CORPORATION

Is the function OK?

- **YES**

  VERIFIED: Troubleshooting has been completed.

- **NO**

  Refer to **INFORMATION**

INFORMATION

FAULT-TRACING INFORMATION

The fault should have been detected and remedied. As this is not the case fault-tracing has failed.

Exit fault-tracing for this diagnostic trouble code (DTC) or make another attempt.

RESETTING ADAPTATION

RESETTING THE ADAPTATION AND THE COUNTER FOR "TRANSMISSION OIL, REPLACE"

HINT: The transmission has torque-regulated, adaptive pressure regulation. The pressure regulator enables the transmission to regulate pressure during each shift to prevent hard shifting. Each shift is assessed by the transmission control module (TCM) and is stored in the internal memory. This makes it possible to compensate for transmission and clutch wear. It is important that the adaptation in the memory is reset so that the transmission works normally after the repair. Because the fluid was changed during the repair, the counter for transmission fluid change must also be reset. If the counter is not reset during draining/replacement, a diagnostic trouble code may be generated under the wrong conditions.

NOTE: This applies only if the transmission or one of the components in the transmission have been replaced.

Fig. 277: Identifying Ignition ON
Courtesy of VOLVO CARS CORPORATION

- Ignition on.

  Click on the VCT2000 symbol to reset the adaptation and counter.

  Fig. 278: Identifying VCT2000 Diagnostic Tool Symbol In VIDA
  Courtesy of VOLVO CARS CORPORATION

- **Continue**

  Refer to **VERIFICATION**

TCM-P097000: PRESSURE CONTROL SOLENOID C CONTROL CIRCUIT LOW. GENERAL FAILURE INFORMATION. NO SUB TYPE INFORMATION (B6324S5, TF-80SC; B6324S5, TF-80SC AWD; 2011-2012)

DIAGNOSTIC TROUBLE CODE (DTC) INFORMATION TCM-P097000

see **DIAGNOSTIC TROUBLE CODE (DTC) INFORMATION TCM-P097000**

FAULT-TRACING

see **FAULT-TRACING**

TCM-P097000: PRESSURE REGULATOR SOLENOID C CONTROL CIRCUIT LOW. GENERAL FAULT INFORMATION. NO INFORMATION ON FAULT TYPE (B8444S, TF-80SC AWD; 2006-2011)

DIAGNOSTIC TROUBLE CODE (DTC) INFORMATION TCM-P097000

Condition

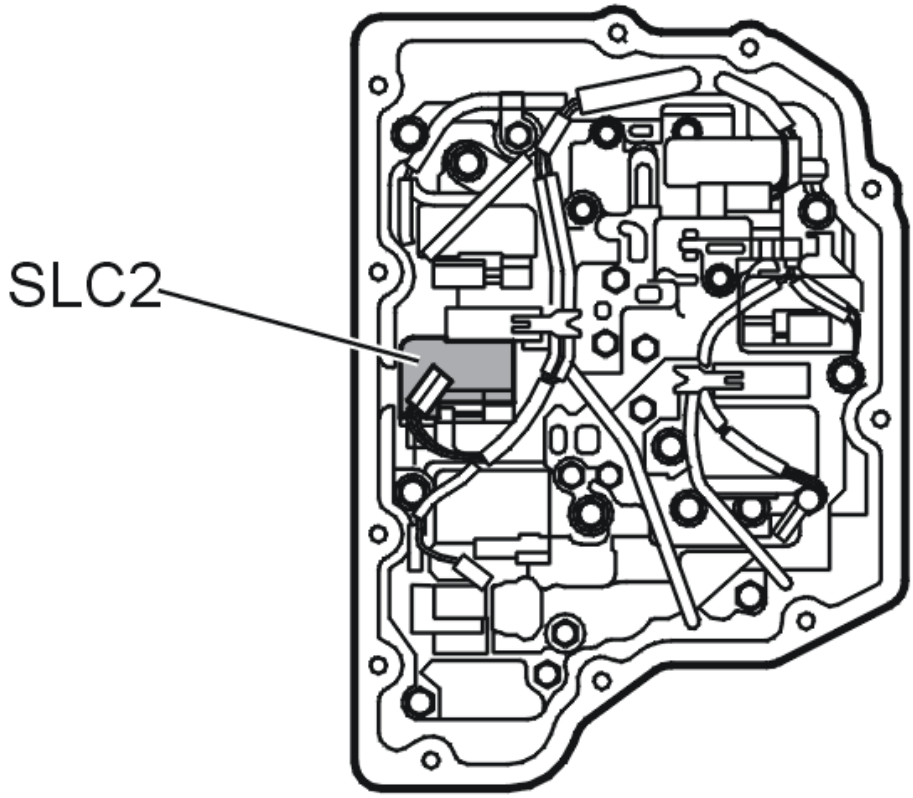

Fig. 279: Identifying Solenoid SLC2
Courtesy of VOLVO CARS CORPORATION

The solenoids are controlled using the power stage in the transmission control module (TCM). The transmission control module (TCM) opens the power stage when the solenoids are to be activated so that the circuit receives a voltage.

If the transmission control module (TCM) registers that the measured current is higher than the circuit for the SLC2 solenoid allows, the diagnostic trouble code (DTC) is generated.

The diagnostic trouble code can be diagnosed when the ignition is on.

Substitute Value

- Auxiliary program **Emergency mode 1** in the transmission control module (TCM) has started.

  HINT: EMERGENCY MODE IN CASE OF MALFUNCTION

Possible Source

- Control signal lead short-circuited to voltage.
- Linear pressure solenoid not working.
- Internal fault in transmission control module (TCM).

Fault symptom[s]

- General warning lamp lit
- Malfunction indicator lamp (MIL) lit.
- Abnormally slipping gears.
- Harsh gear changing
- No gear changing.

FAULT TRACING TCM-P097000

CHECKS

CHECKING THE LOCK-UP SOLENOID SLC2

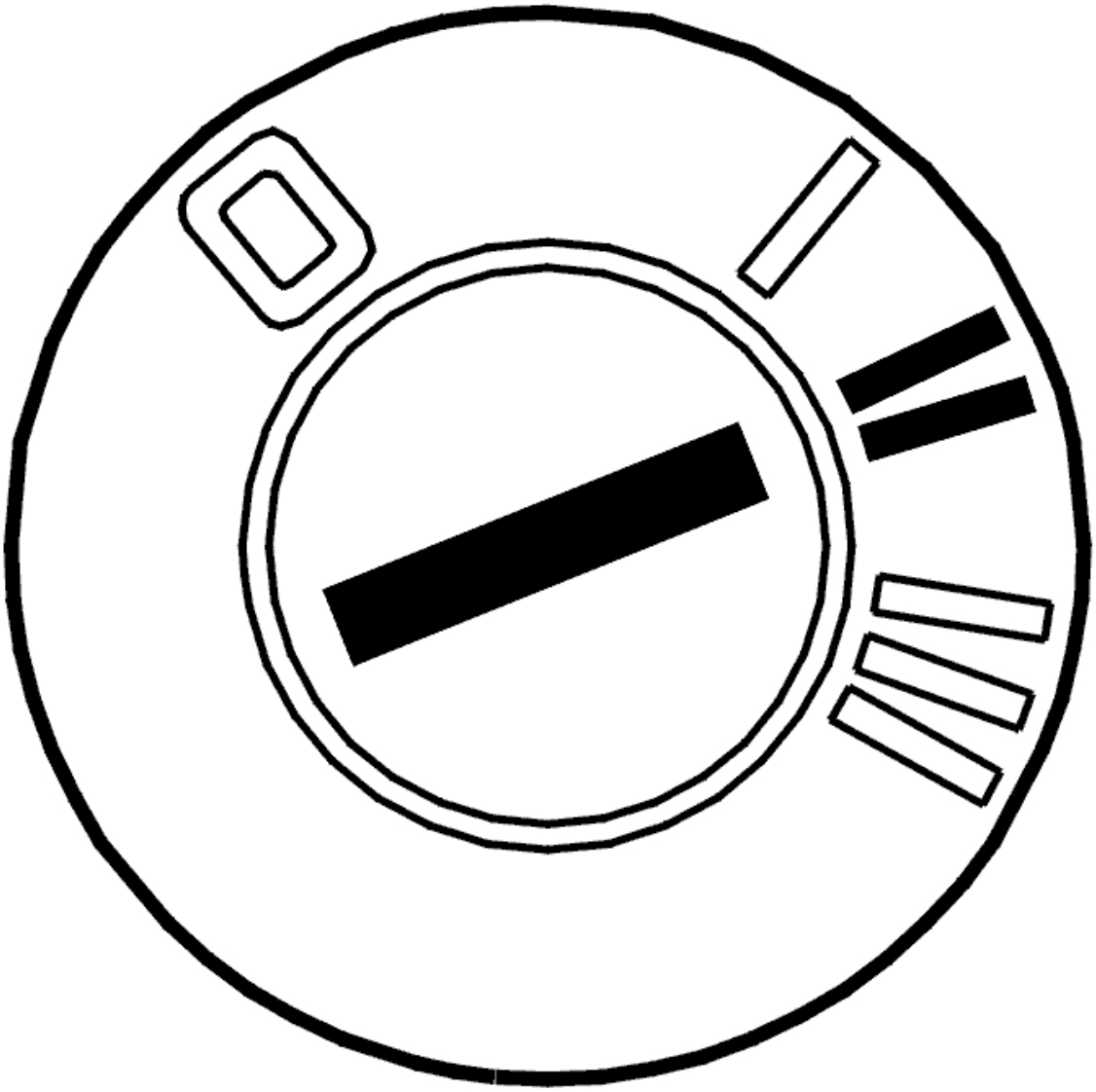

Fig. 280: Identifying Ignition ON
Courtesy of VOLVO CARS CORPORATION

- Ignition on
- Activate solenoid SLC2 by clicking the VCT2000 symbol.

  Read the current though the circuit for solenoid SLC2. The current must oscillate between approximately 100 and 950 mA.

  The fault is permanent if the current does not change.

  If the current oscillates then this would suggest that the fault has previously been present but is no longer active. The fault is intermittent.

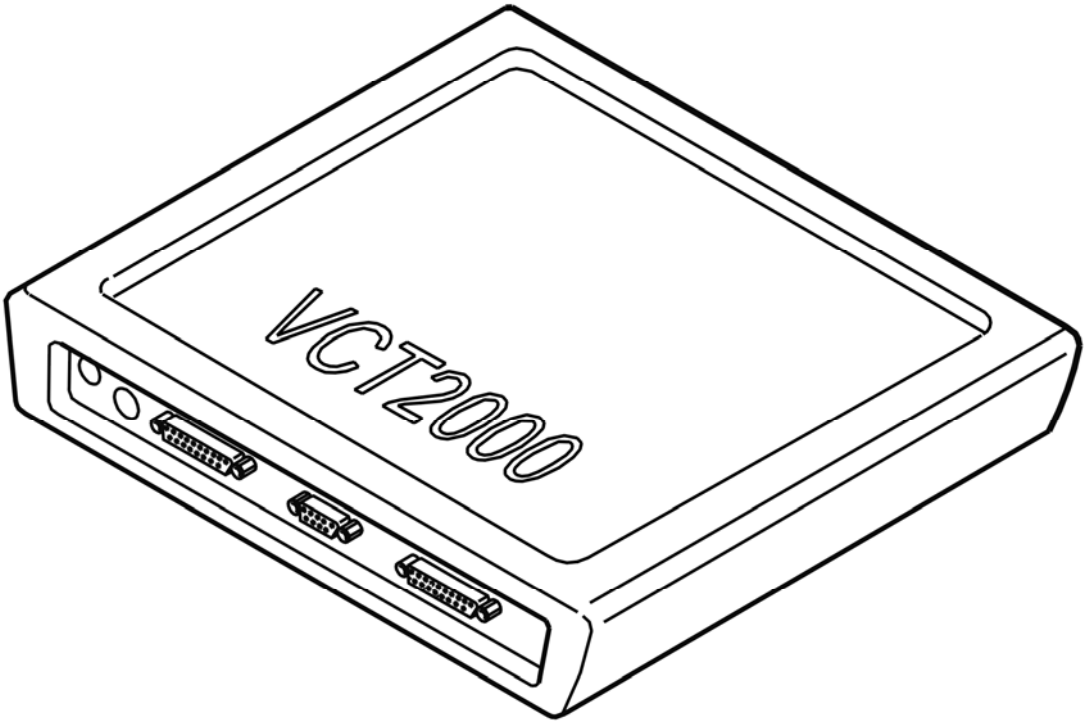

Fig. 281: Identifying VCT2000 Diagnostic Tool Symbol In VIDA
Courtesy of VOLVO CARS CORPORATION

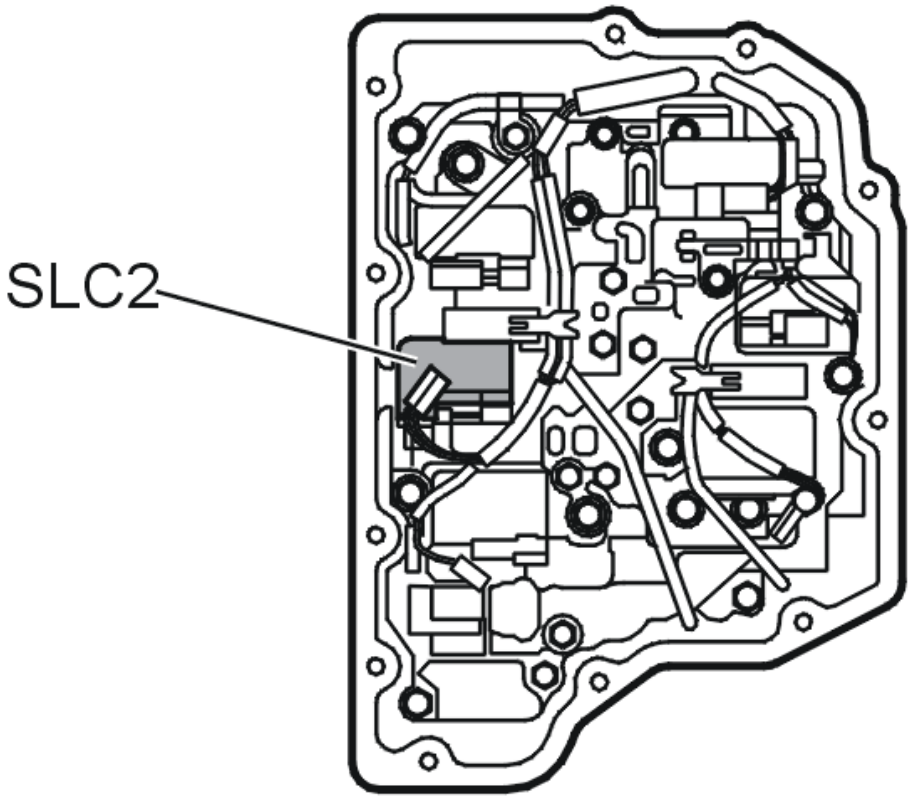

Fig. 282: Identifying Solenoid SLC2
Courtesy of VOLVO CARS CORPORATION

- **Continue**

  Refer to **CHECKING THE COMPONENTS AND WIRING**

CHECKING THE COMPONENTS AND WIRING

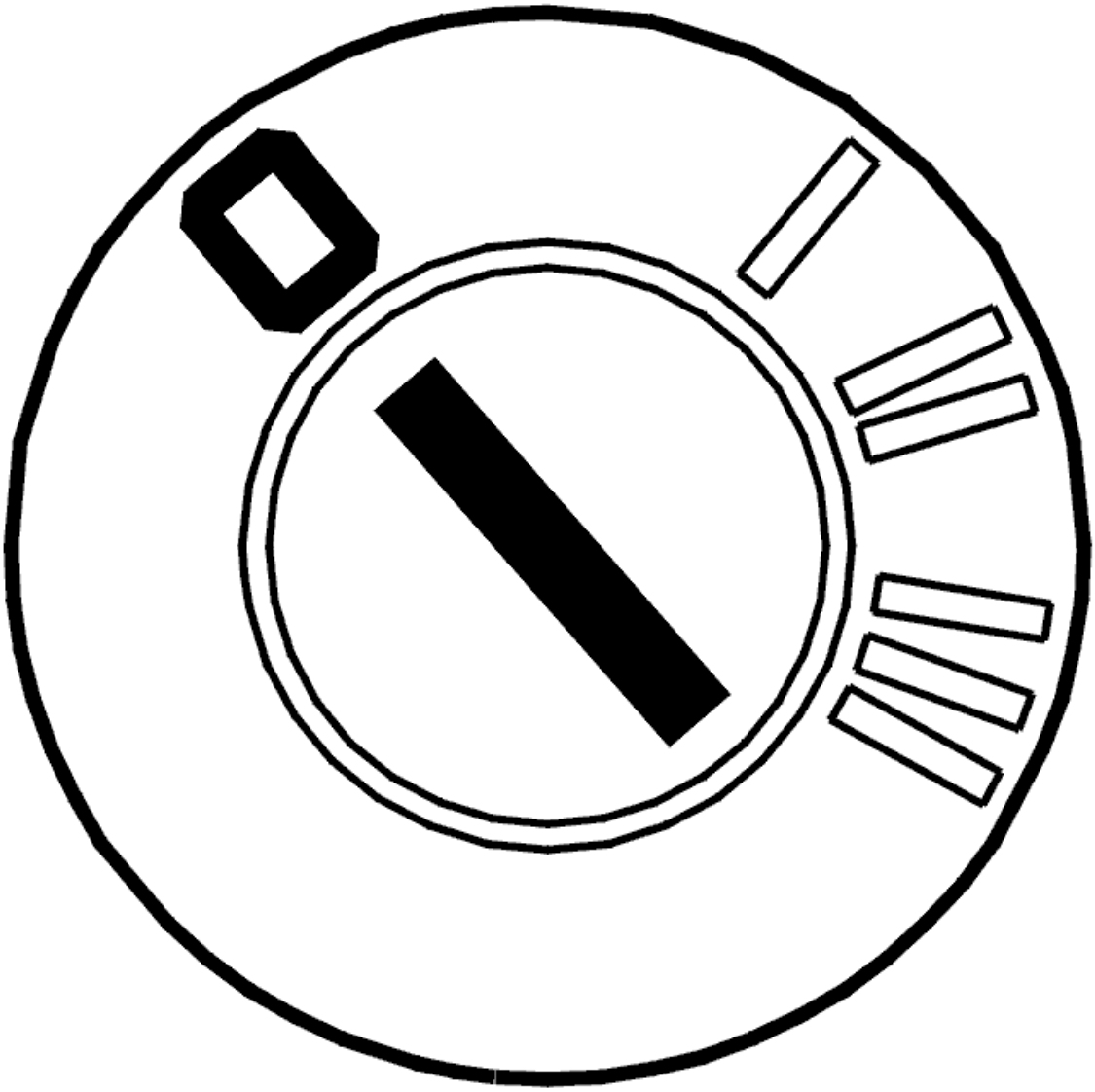

Fig. 283: Identifying Ignition OFF
Courtesy of VOLVO CARS CORPORATION

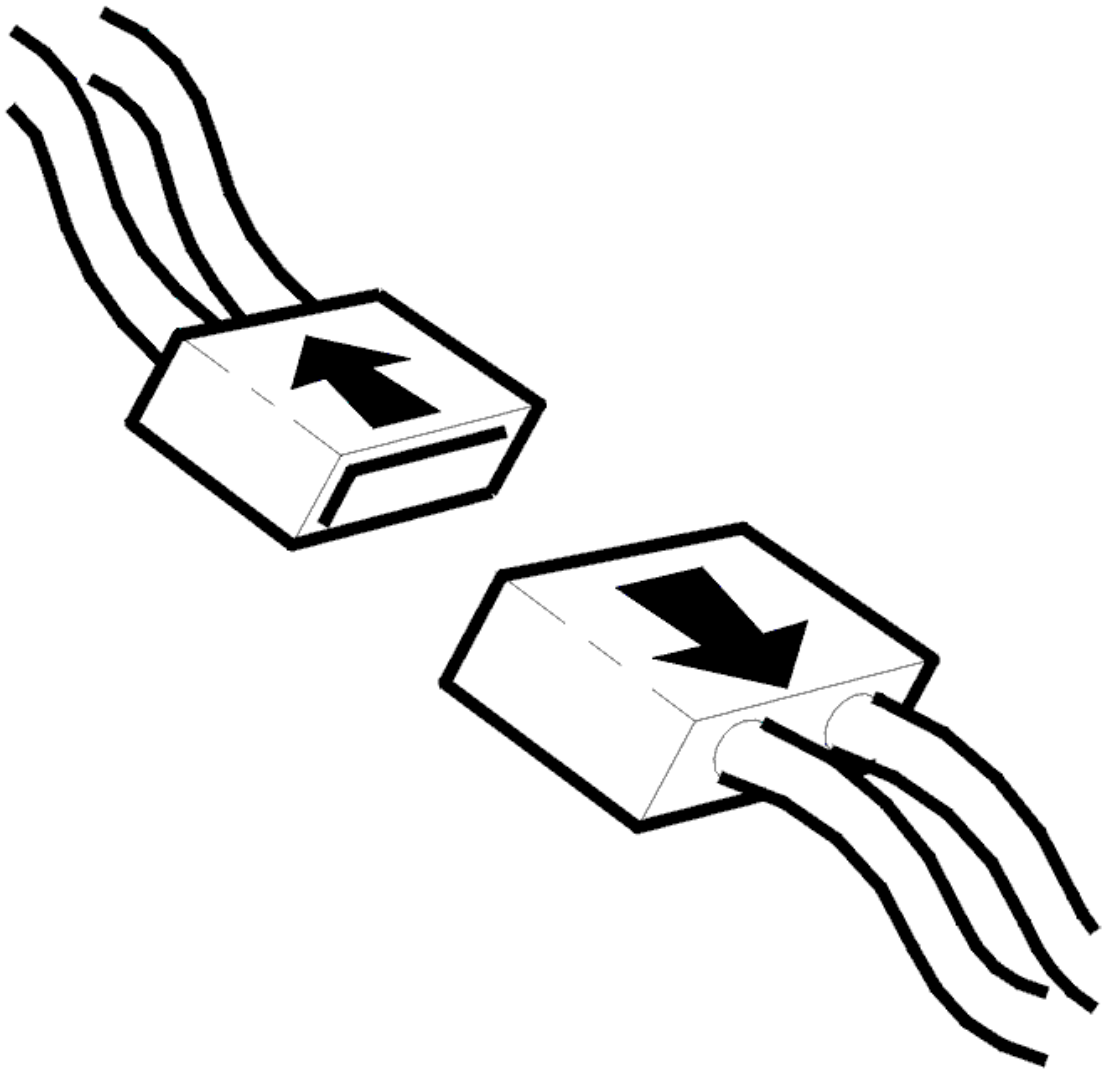

Fig. 284: Identifying Connector(s) Disconnected
Courtesy of VOLVO CARS CORPORATION

- Ignition off
- Open the gearbox control system

  Check connector B (22-pin) for the transmission control module (TCM). Check for damage and pressed in terminal pins. Check for contact resistance and oxidation.

  Check the wiring between the transmission connector terminal #B17 and the connector for solenoid SLC2 terminal #1. Check the wiring between the transmission connector terminal #B18 and the connector for solenoid SLC2 terminal #2. Check for an open circuit. Check for a short-circuit to ground.

  HINT: If no fault is found in the wiring check solenoid SLC2. See CHECKING THE LINE PRESSURE SOLENOID SLT, SLC1, SLC2, SLC3, SLB1 AND LOCK-UP SOLENOID SLU

If no fault is found in the wiring or the component replace the control system.

Remedy as necessary.

Other information

- see **CONNECTING THE BREAKOUT BOX**
- see **SIGNAL DESCRIPTION**
- see **CABLE HARNESS, CONTROL SYSTEM, GEARBOX, REPLACING**
- To access the transmission control system: **COVER CONTROL SYSTEM, REPLACING (2007-2011)**
- see **CONTENTS**

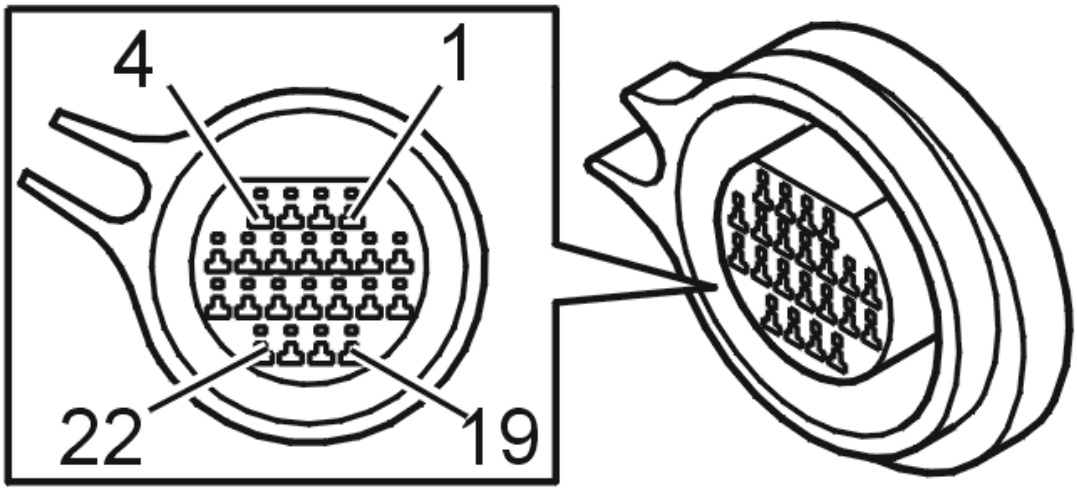

Fig. 285: Identifying Connector B Terminals
Courtesy of VOLVO CARS CORPORATION

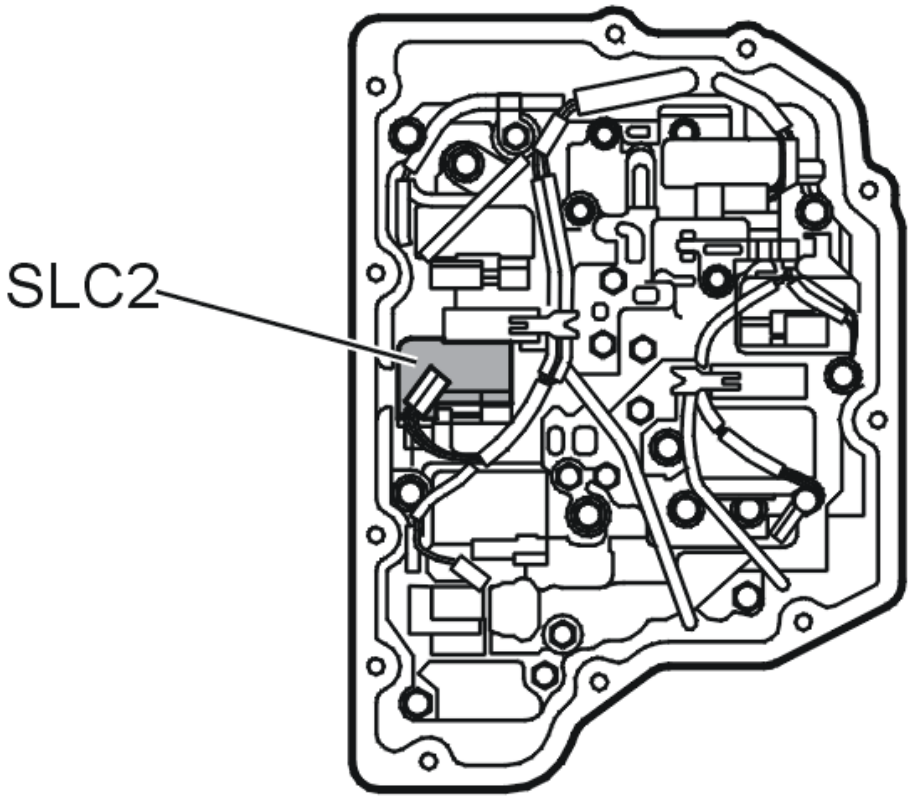

Fig. 286: Identifying Solenoid SLC2
Courtesy of VOLVO CARS CORPORATION

- **Continue**

  Refer to **RESETTING ADAPTATION**

RESETTING ADAPTATION

RESETTING ADAPTATION AND COUNTER FOR "TRANSMISSION OIL, CHANGING"

HINT: The transmission has torque-controlled, adaptive pressure control. The pressure control means that the transmission itself controls the pressure during each shift sequence in order to avoid harsh shifting. Each shift is assessed by the transmission control module (TCM) and is stored in the internal memory, which results in compensation for wear in the transmission and clutch. In order for the transmission to function correctly after repair, it is important to reset the adaptation in the memory. Since the oil is changed during the repair, the counter for "Transmission oil, change" shall also be reset. If the counter is not reset when draining/changing oil, there is a risk that a diagnostic trouble code may be generated under incorrect conditions.

NOTE: **This applies only if the transmission or one of the components in the transmission have been replaced.**

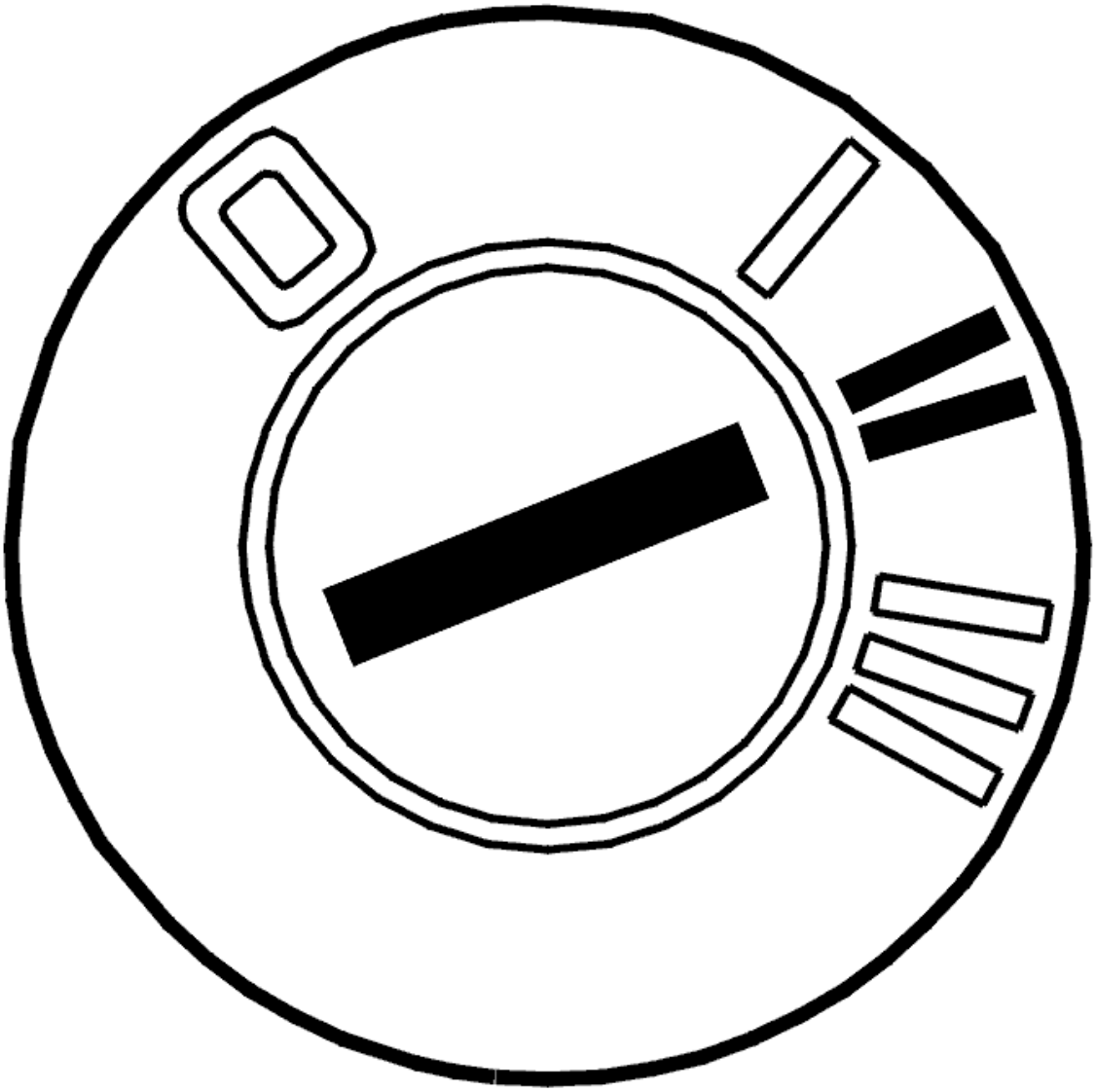

Fig. 287: Identifying Ignition ON
Courtesy of VOLVO CARS CORPORATION

- Ignition on

  Activate reset of the adaptation and the counter by clicking on the symbol for VCT2000.

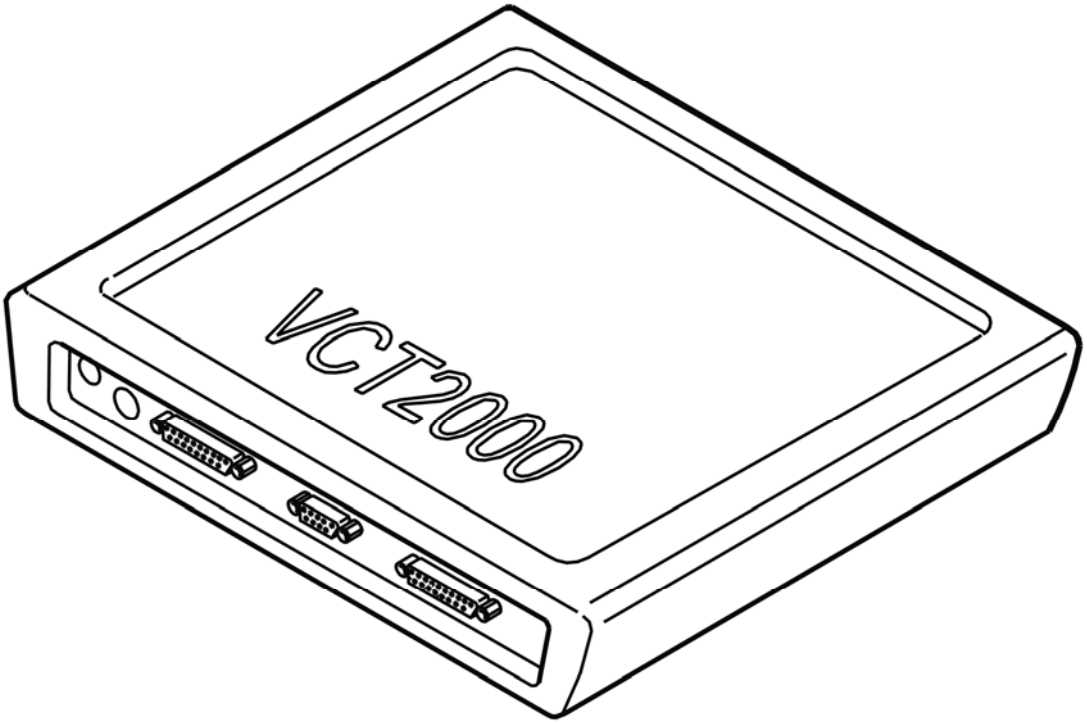

Fig. 288: Identifying VCT2000 Diagnostic Tool Symbol In VIDA
Courtesy of VOLVO CARS CORPORATION

- **Continue**

  Refer to **VERIFICATION**

VERIFICATION

VERIFICATION

HINT: After carrying out the repair, check that the fault has been remedied.

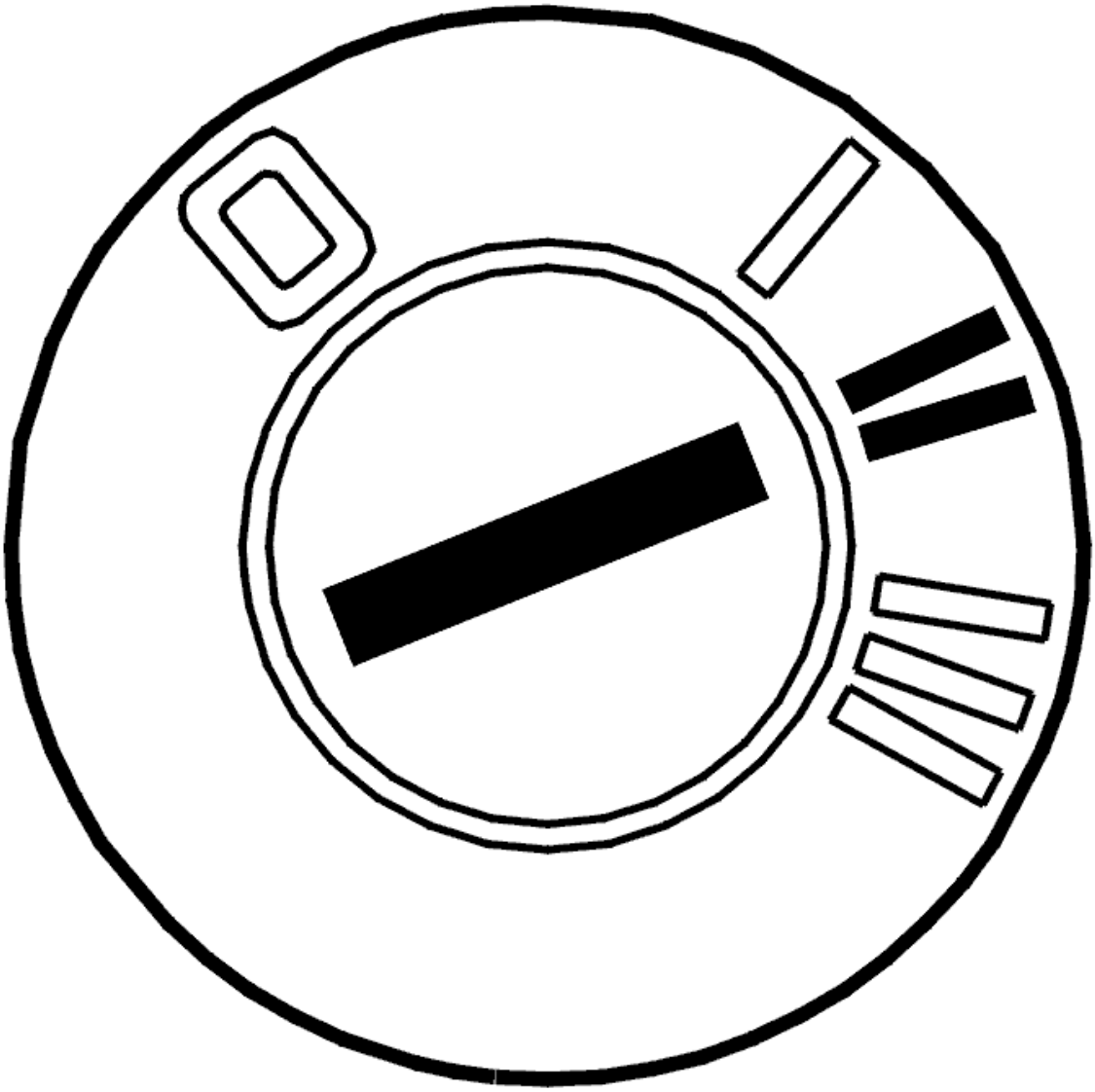

Fig. 289: Identifying Ignition ON
Courtesy of VOLVO CARS CORPORATION

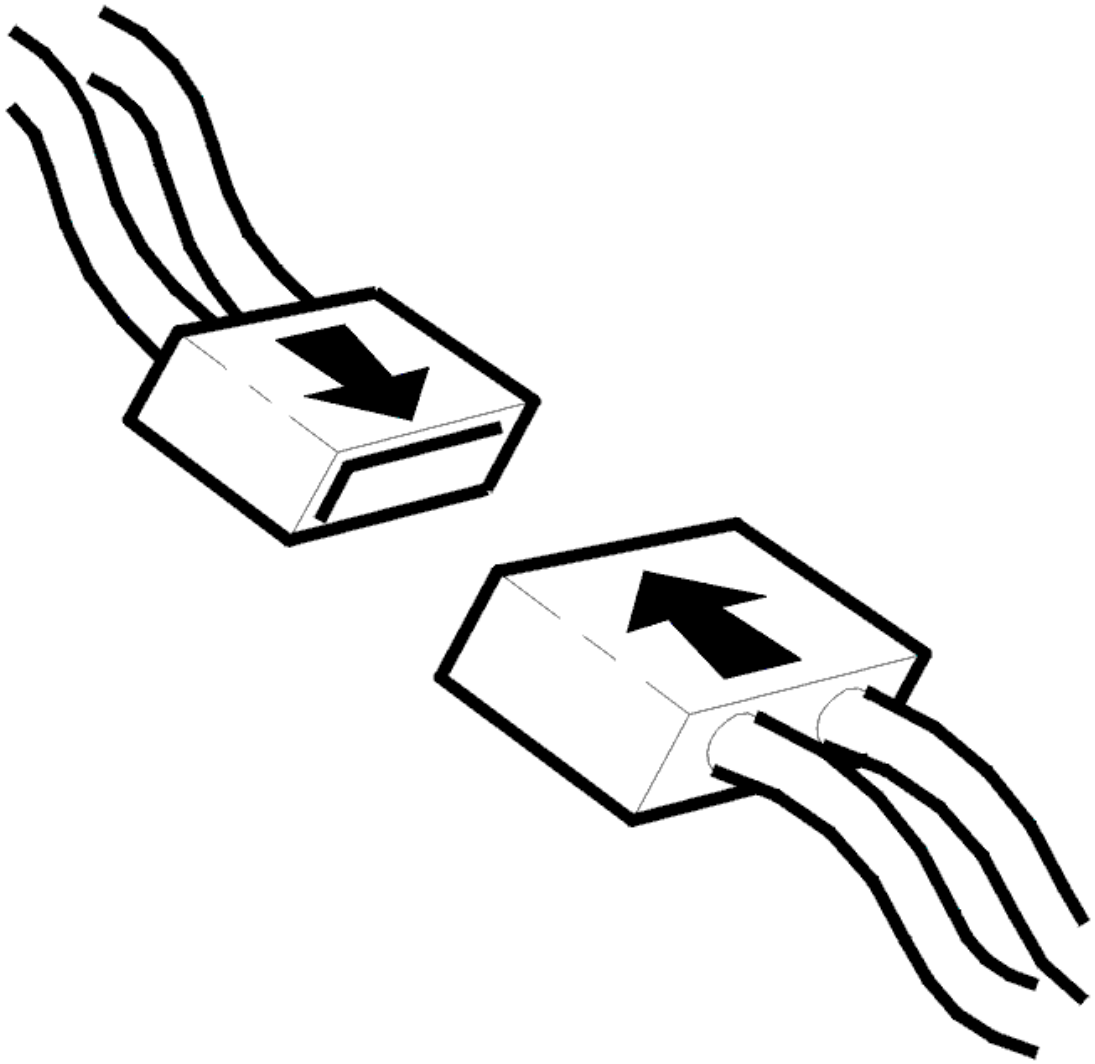

Fig. 290: Identifying Connector(s) Reinstallation
Courtesy of VOLVO CARS CORPORATION

- Ignition off
- Reinstall the components, reconnect the connectors etc.
- Ignition on
- Activate solenoid SLC2 by clicking on the symbol for VCT2000.

  Read off the current through the circuit for solenoid SLC2. The current must oscillate between approximately 0 and 1000 mA.

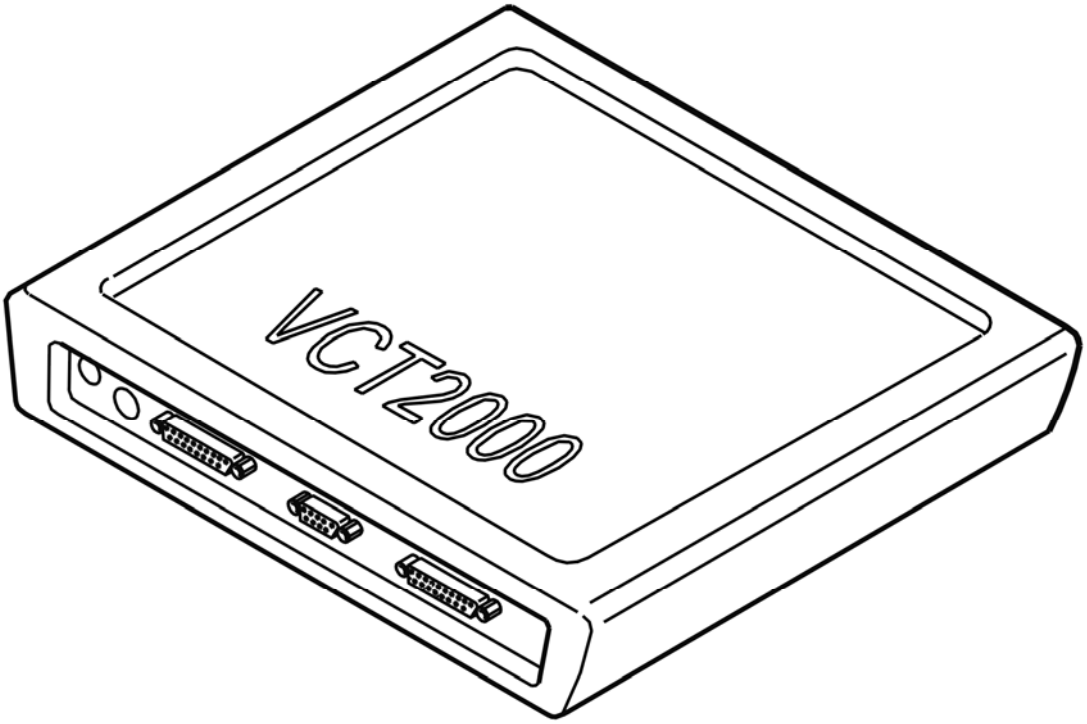

Fig. 291: Identifying VCT2000 Diagnostic Tool Symbol In VIDA
Courtesy of VOLVO CARS CORPORATION

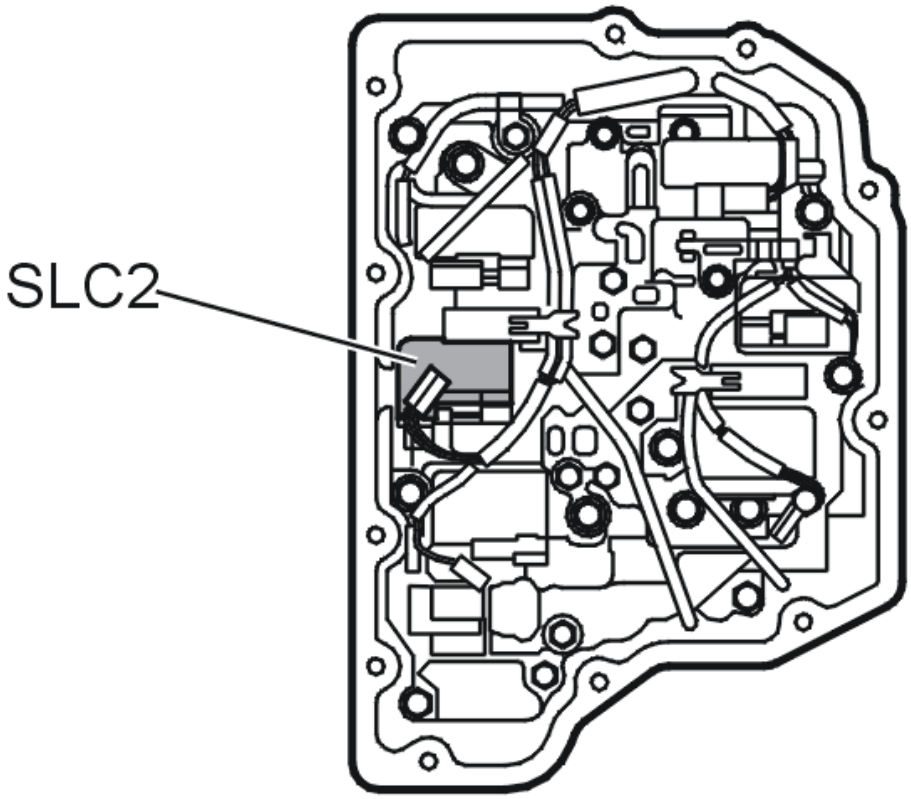

Fig. 292: Identifying Solenoid SLC2
Courtesy of VOLVO CARS CORPORATION

Is the function OK?

- **YES**

  VERIFIED: Troubleshooting has been completed.

- **NO**

  Refer to **INFORMATION**

INFORMATION

FAULT-TRACING INFORMATION

The fault should have been detected and remedied. As this is not the case fault-tracing has failed.

Exit fault-tracing for this diagnostic trouble code (DTC) or make another attempt.

TCM-P097000: PRESSURE REGULATOR SOLENOID C CONTROL CIRCUIT LOW. GENERAL FAULT INFORMATION. NO INFORMATION ON FAULT

TYPE (TF-80SC AWD; 2005)

DIAGNOSTIC TROUBLE CODE (DTC) INFORMATION TCM-P097000

see **DIAGNOSTIC TROUBLE CODE (DTC) INFORMATION TCM-P097000**

FAULT TRACING TCM-P097000

see **FAULT TRACING TCM-P097000**

TCM-P097100: PRESSURE CONTROL SOLENOID C CONTROL CIRCUIT HIGH. GENERAL FAILURE INFORMATION. NO SUB TYPE INFORMATION (B6324S, TF-80SC; B6324S, TF-80SC AWD; 2007-2010)

DIAGNOSTIC TROUBLE CODE (DTC) INFORMATION TCM-P097100

Condition

The solenoids are controlled by power stages in the transmission control module (TCM). The transmission control module (TCM) opens the power stages to activate the solenoids and sends a voltage through the circuit.

The diagnostic trouble code (DTC) is stored if the control module detects that:

- The measured current value is higher than permitted in the circuit for solenoid SLC2.

The control module's test for the diagnostic trouble code (DTC) starts in the event of:

- Ignition on.

NOTE: **The control module can only detect the fault once the test has been started and the diagnostic trouble code (DTC) is stored when the conditions are met.**

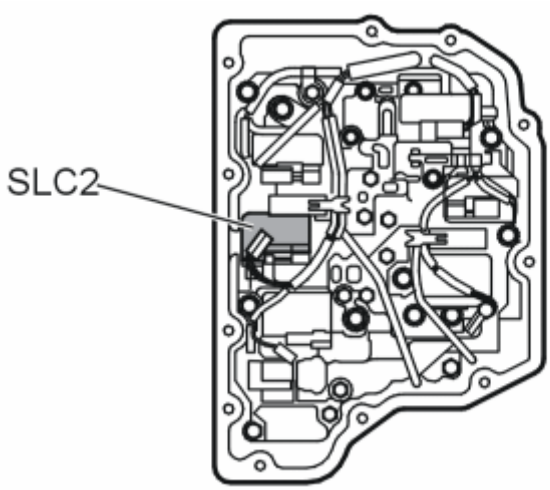

Fig. 293: Identifying SLC2 Solenoid
Courtesy of VOLVO CARS CORPORATION

Substitute Value

- Auxiliary program **Emergency mode 1** in the transmission control module (TCM) has started.

  HINT: EMERGENCY MODE IN THE EVENT OF A FAULT

Possible Source

- Short-circuit to supply voltage in the signal cable.
- Linear pressure solenoid not working.
- Internal fault in the transmission control module (TCM).

Fault symptom[s]

- General warning lamp lit
- Malfunction indicator light (MIL), on
- Abnormal slipping gearshifts
- Rough gear shift
- No gear shift

FAULT-TRACING

CHECKS

CHECKING LINEAR PRESSURE SOLENOID SLC2

Fig. 294: Identifying Ignition ON
Courtesy of VOLVO CARS CORPORATION

- Ignition on.
- Activate solenoid SLC2 by clicking the VCT2000 symbol.

  Read the current through the circuit for solenoid SLC2. The current should oscillate between 100 and 950 mA.

  The fault is permanent if the current does not change.

If the current changes, this is an indication that the fault was present previously but is not active at the moment, i. e. an intermittent fault.

Fig. 295: Identifying VCT2000 Diagnostic Tool Symbol In VIDA
Courtesy of VOLVO CARS CORPORATION

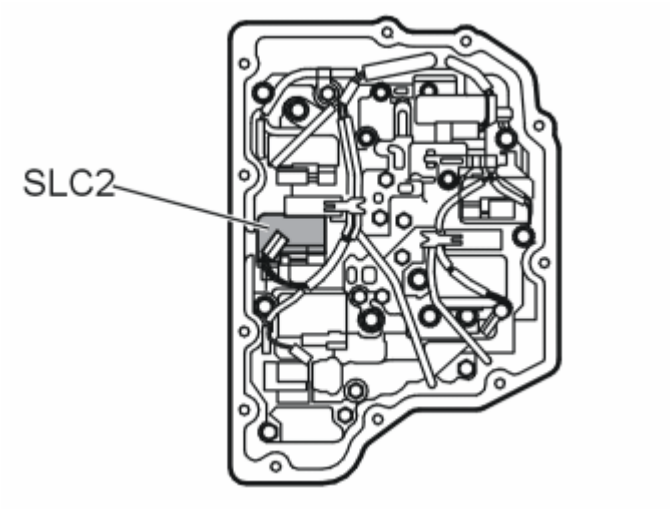

Fig. 296: Identifying SLC2 Solenoid
Courtesy of VOLVO CARS CORPORATION

- **Continue**

  Refer to **CHECKING THE COMPONENTS AND WIRING**

CHECKING THE COMPONENTS AND WIRING

Fig. 297: Identifying Ignition OFF
Courtesy of VOLVO CARS CORPORATION

- Ignition off.
- Open the transmission control system.

Check the cable for a short-circuit to supply voltage.

Take readings between:

- Transmission connector #B17 and the connector for solenoid SLC2 #1.
- Transmission connector #B18 and the connector for solenoid SLC2 #2.

Also check the cables for a short-circuit to each other.

HINT: If no fault is found in the wiring, check solenoid SLC2. See CHECKING INTERNAL COMPONENTS OF THE TRANSMISSION

If no fault is found in the wiring or the component replace the control system.

Remedy as necessary.

Other information

- see **CONNECTING THE BREAKOUT BOX**
- see **SIGNAL SPECIFICATION**
- see **VALVE HOUSING**
- see **TRANSMISSION CONTROL UNIT WIRING HARNESS**
- To access the transmission control system:**COVER CONTROL SYSTEM, REPLACING (2007-2011)**
- see **CHECKING WIRING AND TERMINALS**

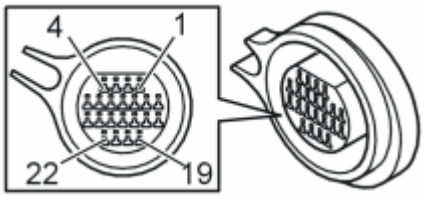

Fig. 298: Identifying Connector B Terminals
Courtesy of VOLVO CARS CORPORATION

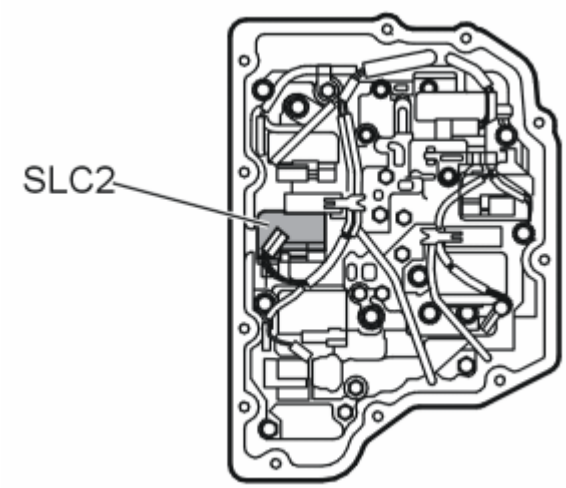

Fig. 299: Identifying SLC2 Solenoid
Courtesy of VOLVO CARS CORPORATION

- **Continue**

  Refer to **RESETTING ADAPTATION**

VERIFICATION

VERIFICATION

HINT: After carrying out the repair, check that the fault has been remedied.

Fig. 300: Identifying Ignition ON
Courtesy of VOLVO CARS CORPORATION

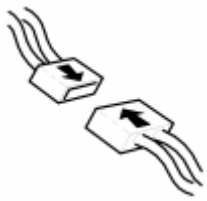

Fig. 301: Identifying Connector(s) Reinstallation
Courtesy of VOLVO CARS CORPORATION

- Ignition off.
- Reinstall the connectors, components etc.

- Ignition on.
- Activate solenoid SLC2 by clicking the VCT2000 symbol.

  Read the current through the circuit for solenoid SLC2. The current should oscillate between 100 and 950 mA.

Fig. 302: Identifying VCT2000 Diagnostic Tool Symbol In VIDA
Courtesy of VOLVO CARS CORPORATION

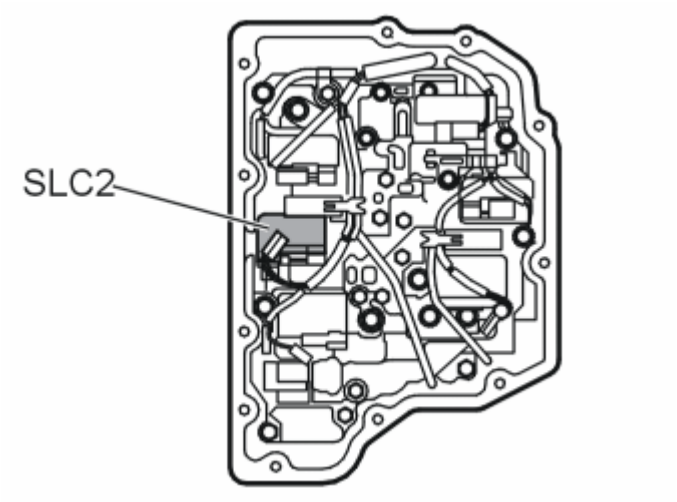

Fig. 303: Identifying SLC2 Solenoid
Courtesy of VOLVO CARS CORPORATION

Is the function OK?

- **YES**

  VERIFIED: Troubleshooting has been completed.

- **NO**

  Refer to **INFORMATION**

INFORMATION

FAULT-TRACING INFORMATION

The fault should have been detected and remedied. As this is not the case fault-tracing has failed.

Exit fault-tracing for this diagnostic trouble code (DTC) or make another attempt.

RESETTING ADAPTATION

RESETTING THE ADAPTATION AND THE COUNTER FOR "TRANSMISSION OIL, REPLACE"

HINT: The transmission has torque-regulated, adaptive pressure regulation. The pressure regulator enables the transmission to regulate pressure during each shift to prevent hard shifting. Each shift is assessed by the transmission control module (TCM) and is stored in the internal memory. This makes it possible to compensate for transmission and clutch wear. It is important that the adaptation in the memory is reset so that the transmission works normally after the repair. Because the fluid was changed during the repair, the counter for transmission fluid change must also be reset. If the counter is not reset during draining/replacement, a diagnostic trouble code may be generated under the wrong conditions.

NOTE: This applies only if the transmission or one of the components in the transmission have been replaced.

Fig. 304: Identifying Ignition ON
Courtesy of VOLVO CARS CORPORATION

- Ignition on.

  Click on the VCT2000 symbol to reset the adaptation and counter.

  Fig. 305: Identifying VCT2000 Diagnostic Tool Symbol In VIDA
  Courtesy of VOLVO CARS CORPORATION

- **Continue**

  Refer to **VERIFICATION**

TCM-P097100: PRESSURE CONTROL SOLENOID C CONTROL CIRCUIT HIGH. GENERAL FAILURE INFORMATION. NO SUB TYPE INFORMATION (B6324S5, TF-80SC; B6324S5, TF-80SC AWD; 2011-2012)

DIAGNOSTIC TROUBLE CODE (DTC) INFORMATION TCM-P097100

see **DIAGNOSTIC TROUBLE CODE (DTC) INFORMATION TCM-P097100**

FAULT-TRACING

see **FAULT-TRACING**

TCM-P097100: PRESSURE REGULATOR SOLENOID C CONTROL CIRCUIT HIGH. GENERAL FAULT INFORMATION. NO INFORMATION ON FAULT TYPE (B8444S, TF-80SC AWD; 2006-2011)

DIAGNOSTIC TROUBLE CODE (DTC) INFORMATION TCM-P097100

Condition

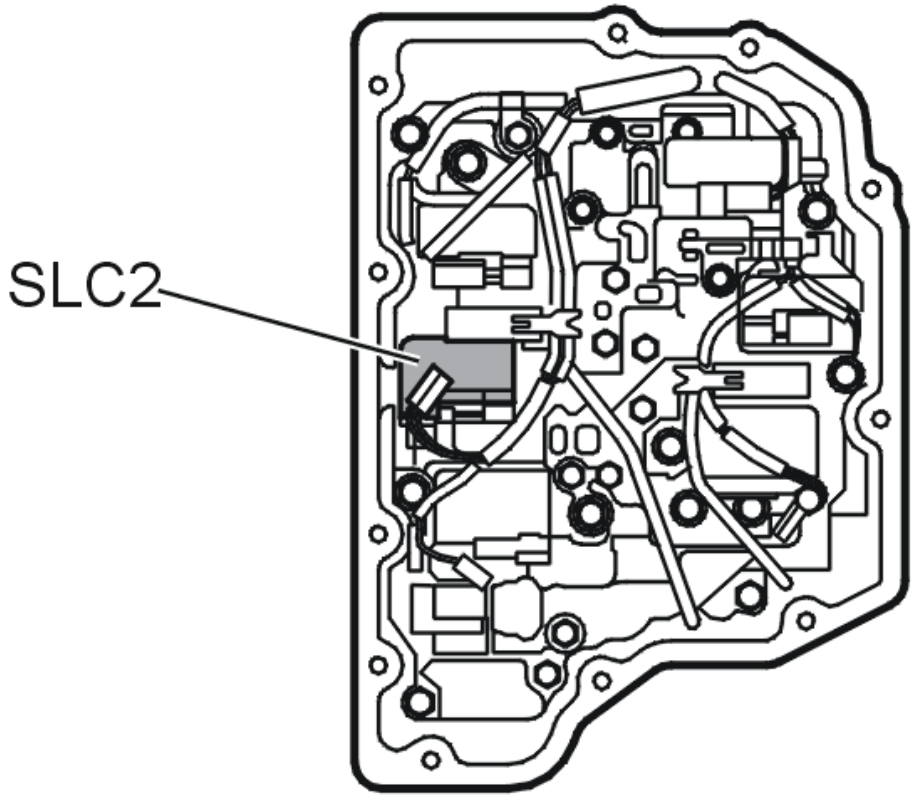

Fig. 306: Identifying Solenoid SLC2
Courtesy of VOLVO CARS CORPORATION

The solenoids are controlled using the power stage in the transmission control module (TCM). The transmission control module (TCM) opens the power stage when the solenoids are to be activated so that the circuit receives a voltage.

If the transmission control module (TCM) registers that the measured current is higher than the circuit for the SLC2 solenoid allows, the diagnostic trouble code (DTC) is generated.

The diagnostic trouble code can be diagnosed when the ignition is on.

Substitute Value

- Auxiliary program **Emergency mode 1** in the transmission control module (TCM) has started.

  HINT: EMERGENCY MODE IN CASE OF MALFUNCTION

Possible Source

- The signal cable is short-circuited to voltage.
- Linear pressure solenoid not working.
- Internal fault in transmission control module (TCM).

Fault symptom[s]

- General warning lamp lit
- Malfunction indicator lamp (MIL) lit.
- Abnormally slipping gears.
- Harsh gear changing
- No gear changing.

FAULT TRACING TCM-P097100

CHECKS

CHECKING THE LOCK-UP SOLENOID SLC2

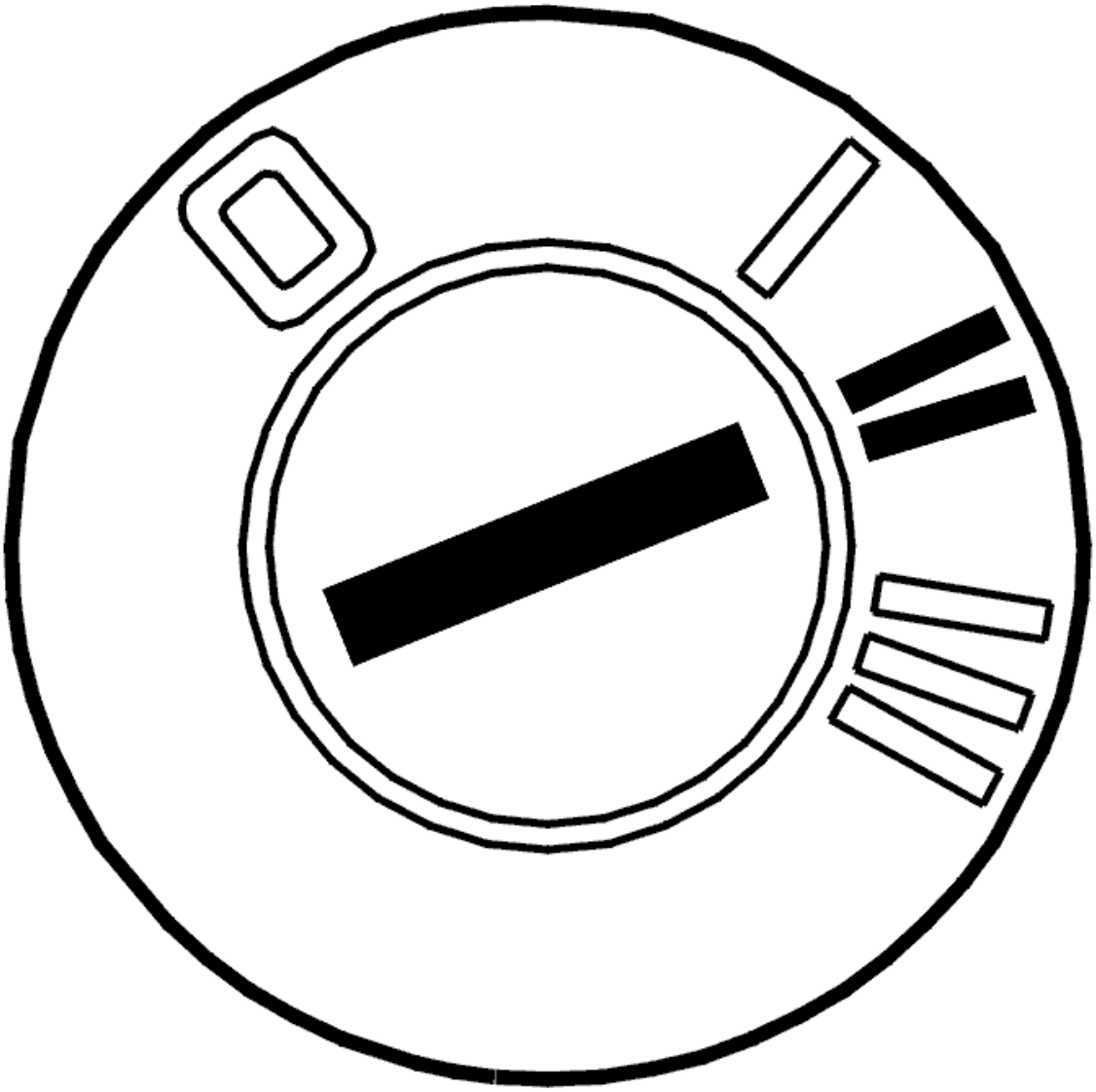

Fig. 307: Identifying Ignition ON
Courtesy of VOLVO CARS CORPORATION

- Ignition on
- Activate solenoid SLC2 by clicking the VCT2000 symbol.

  Read the current though the circuit for solenoid SLC2. The current must oscillate between approximately 100 and 950 mA.

  The fault is permanent if the current does not change.

  If the current oscillates then this would suggest that the fault has previously been present but is no longer active. The fault is intermittent.

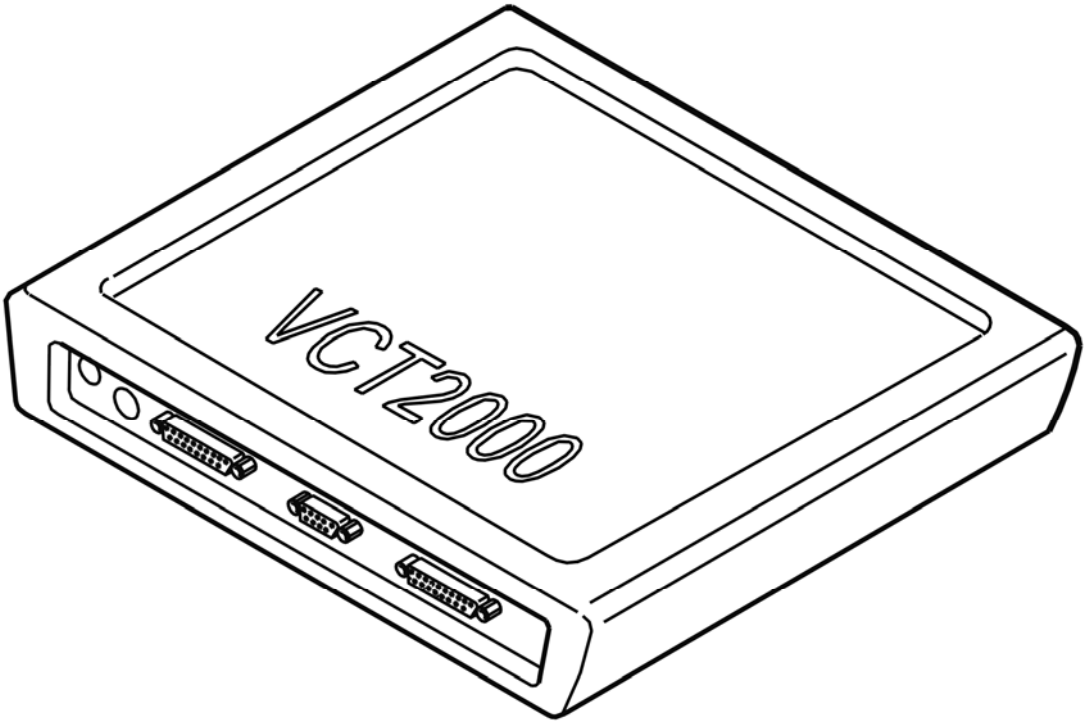

Fig. 308: Identifying VCT2000 Diagnostic Tool Symbol In VIDA
Courtesy of VOLVO CARS CORPORATION

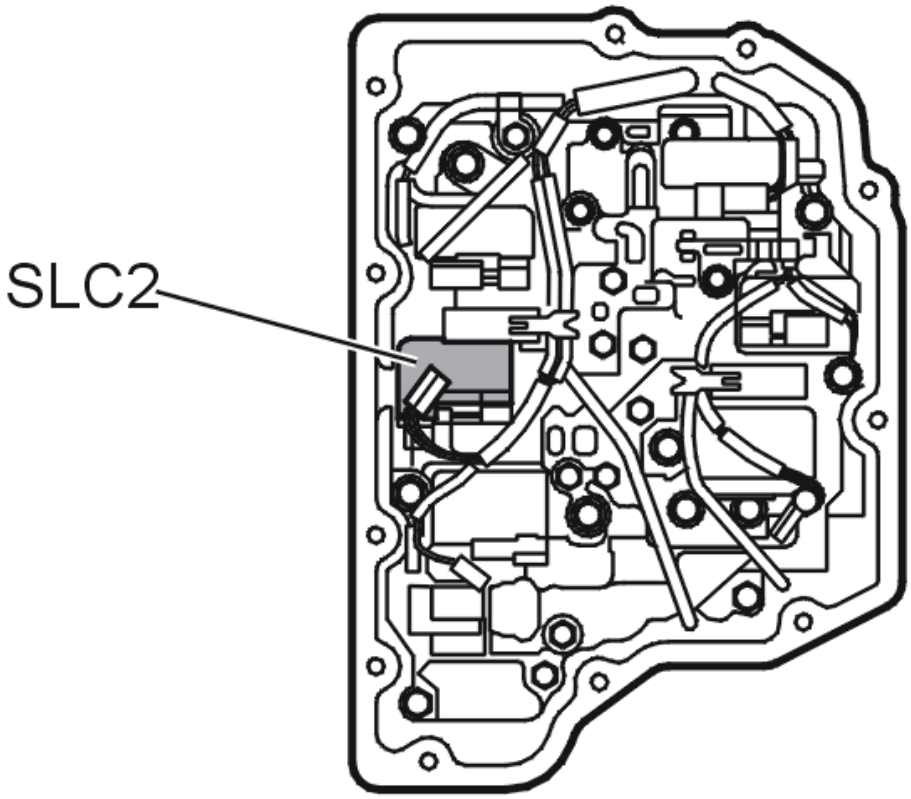

Fig. 309: Identifying Solenoid SLC2
Courtesy of VOLVO CARS CORPORATION

- **Continue**

  Refer to **CHECKING THE COMPONENTS AND WIRING**

CHECKING THE COMPONENTS AND WIRING

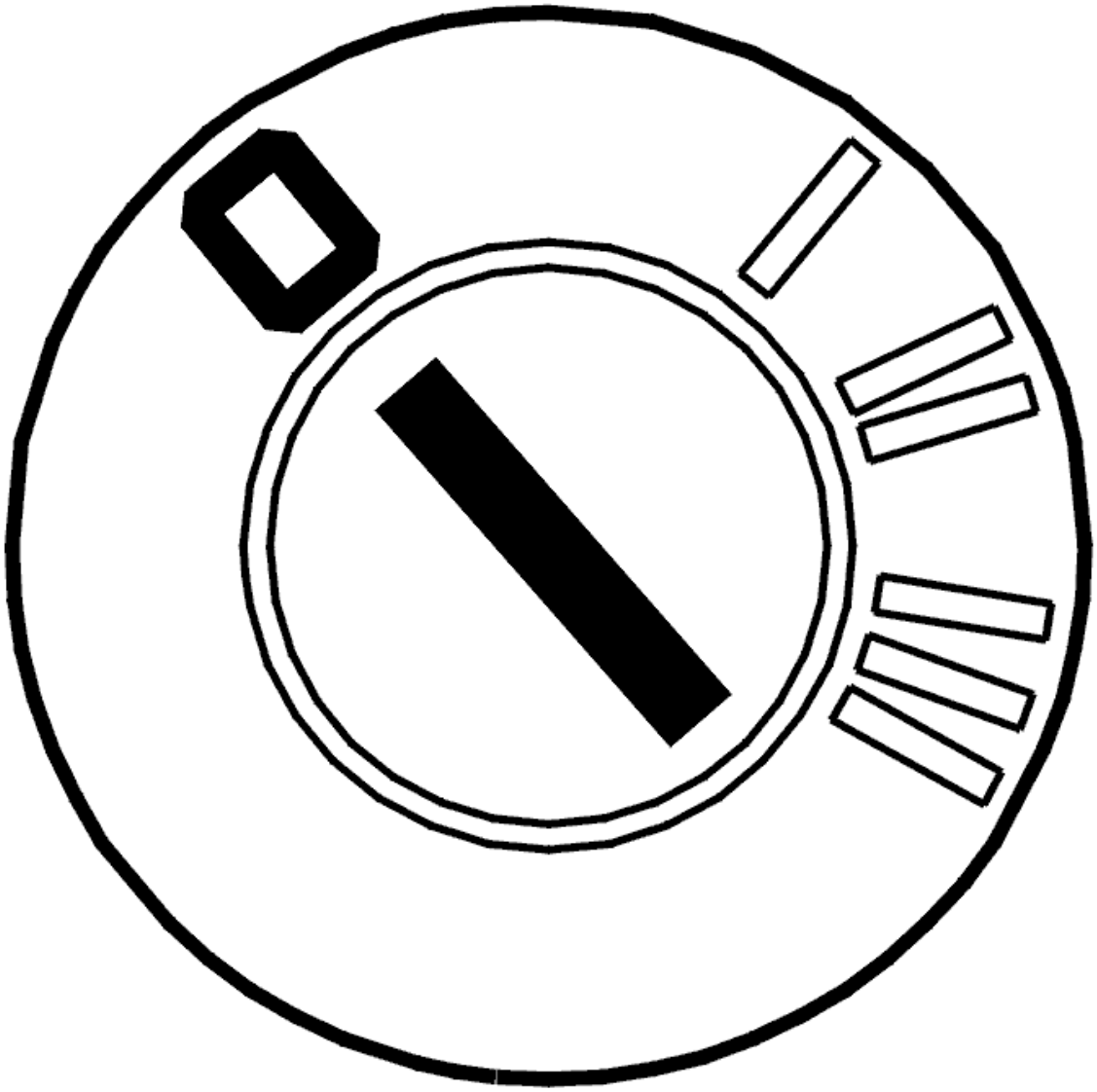

Fig. 310: Identifying Ignition OFF
Courtesy of VOLVO CARS CORPORATION

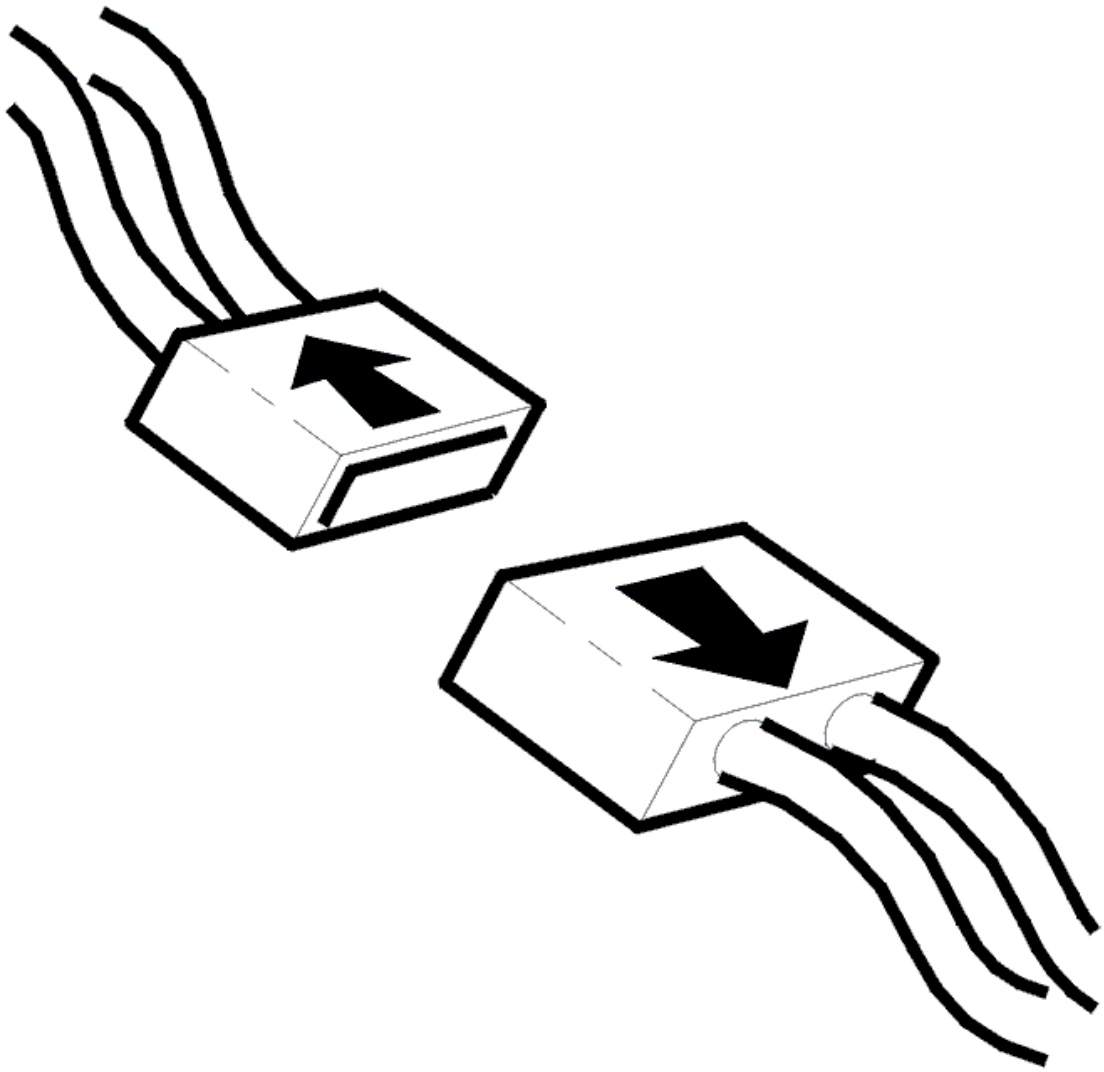

Fig. 311: Identifying Connector(s) Disconnected
Courtesy of VOLVO CARS CORPORATION

- Ignition off
- Open the gearbox control system

  Check the wiring between transmission connector terminal #B17 and solenoid SLC2 connector terminal #1. Check the wiring between transmission connector terminal #B18 and solenoid SLC2 connector terminal #2. Check for a short-circuit to supply voltage. Check the wiring for short-circuits to each other.

  HINT: If no fault is found in the wiring check solenoid SLC2. See CHECKING THE LINE PRESSURE SOLENOID SLT, SLC1, SLC2, SLC3, SLB1 AND LOCK-UP SOLENOID SLU

  If no fault is found in the wiring or the component replace the control system.

  Remedy as necessary.

Other information

- see **CONNECTING THE BREAKOUT BOX**
- see **SIGNAL DESCRIPTION**
- see **CONTROL SYSTEM, REPLACING**
- see **CABLE HARNESS, CONTROL SYSTEM, GEARBOX, REPLACING**
- To access the transmission control system: **COVER CONTROL SYSTEM, REPLACING (2007-2011)**
- see **CONTENTS**

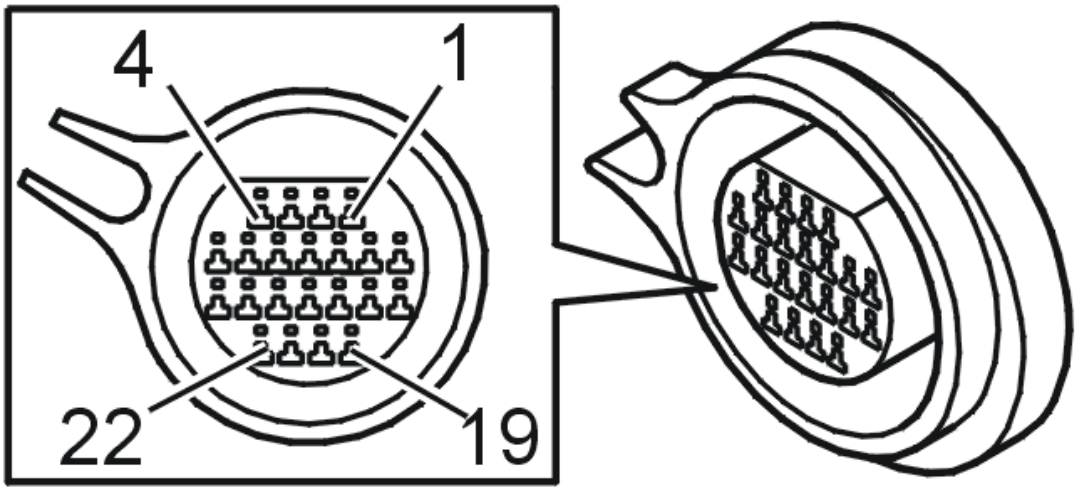

Fig. 312: Identifying Connector B Terminals
Courtesy of VOLVO CARS CORPORATION

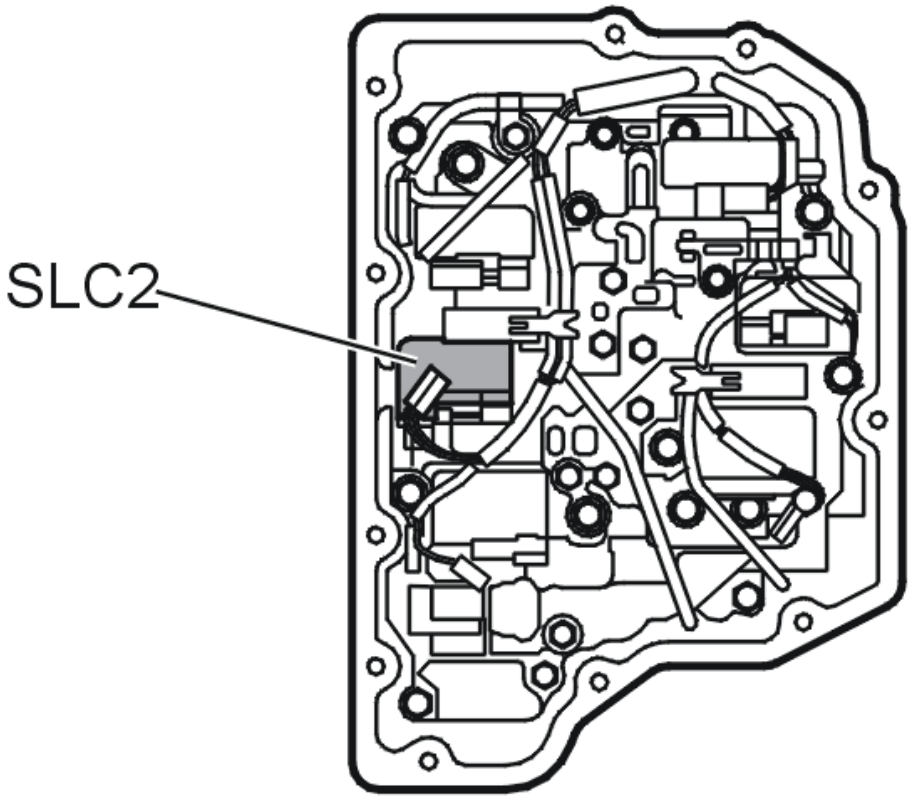

Fig. 313: Identifying Solenoid SLC2
Courtesy of VOLVO CARS CORPORATION

- **Continue**

  Refer to **RESETTING ADAPTATION**

RESETTING ADAPTATION

RESETTING ADAPTATION AND COUNTER FOR "TRANSMISSION OIL, CHANGING"

HINT: The transmission has torque-controlled, adaptive pressure control. The pressure control means that the transmission itself controls the pressure during each shift sequence in order to avoid harsh shifting. Each shift is assessed by the transmission control module (TCM) and is stored in the internal memory, which results in compensation for wear in the transmission and clutch. In order for the transmission to function correctly after repair, it is important to reset the adaptation in the memory. Since the oil is changed during the repair, the counter for "Transmission oil, change" shall also be reset. If the counter is not reset when draining/changing oil, there is a risk that a diagnostic trouble code may be generated under incorrect conditions.

NOTE: **This applies only if the transmission or one of the components in the transmission have been replaced.**

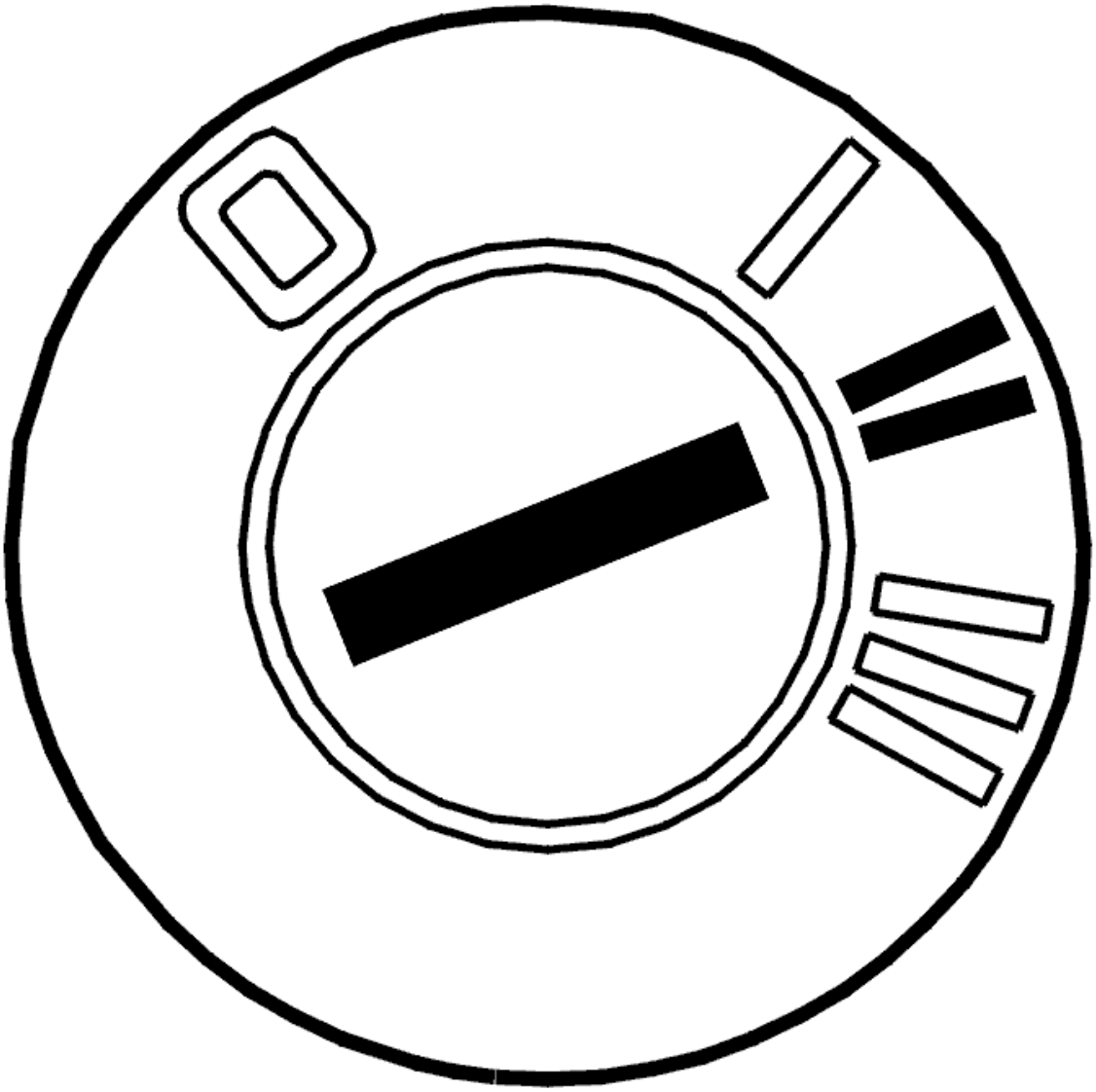

Fig. 314: Identifying Ignition ON
Courtesy of VOLVO CARS CORPORATION

- Ignition on

  Activate reset of the adaptation and the counter by clicking on the symbol for VCT2000.

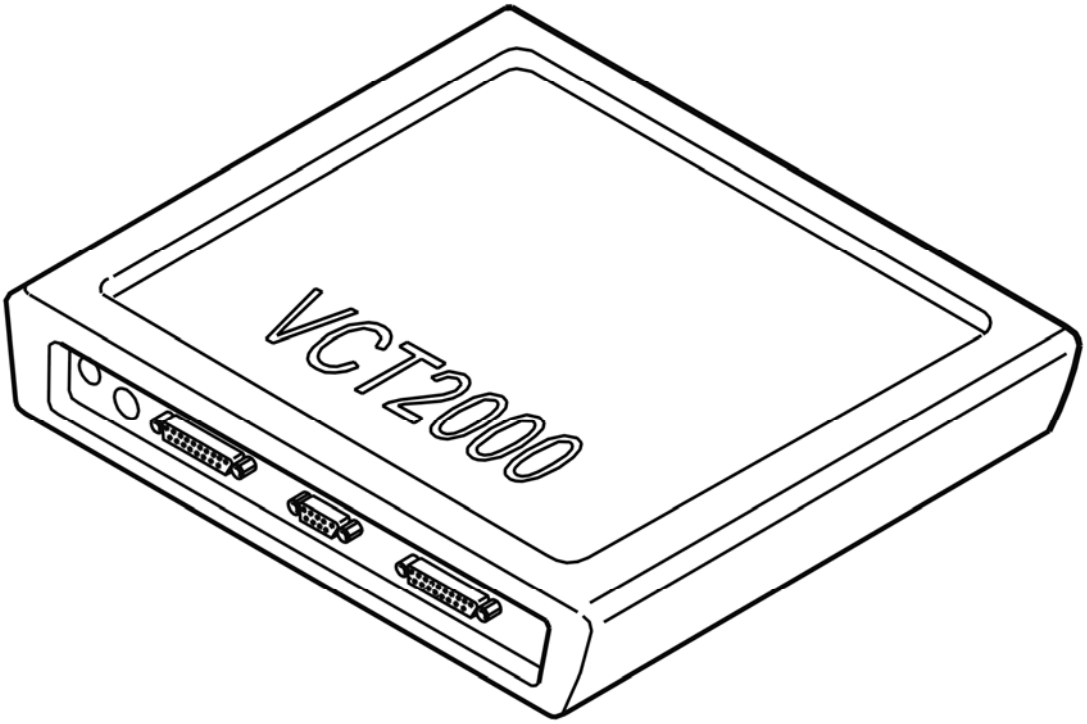

Fig. 315: Identifying VCT2000 Diagnostic Tool Symbol In VIDA
Courtesy of VOLVO CARS CORPORATION

- **Continue**

  Refer to **VERIFICATION**

VERIFICATION

VERIFICATION

HINT: After carrying out the repair, check that the fault has been remedied.

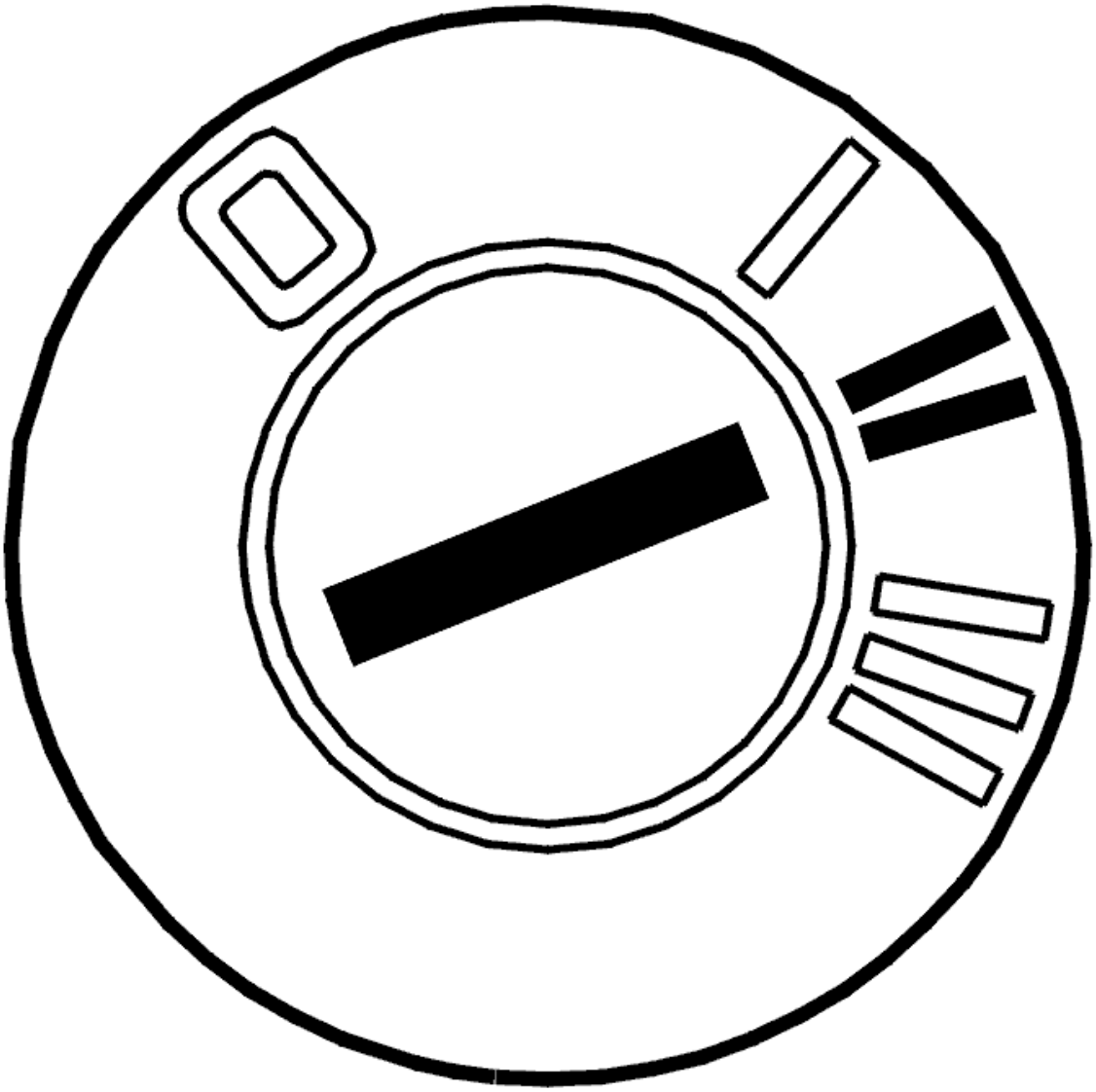

Fig. 316: Identifying Ignition ON
Courtesy of VOLVO CARS CORPORATION

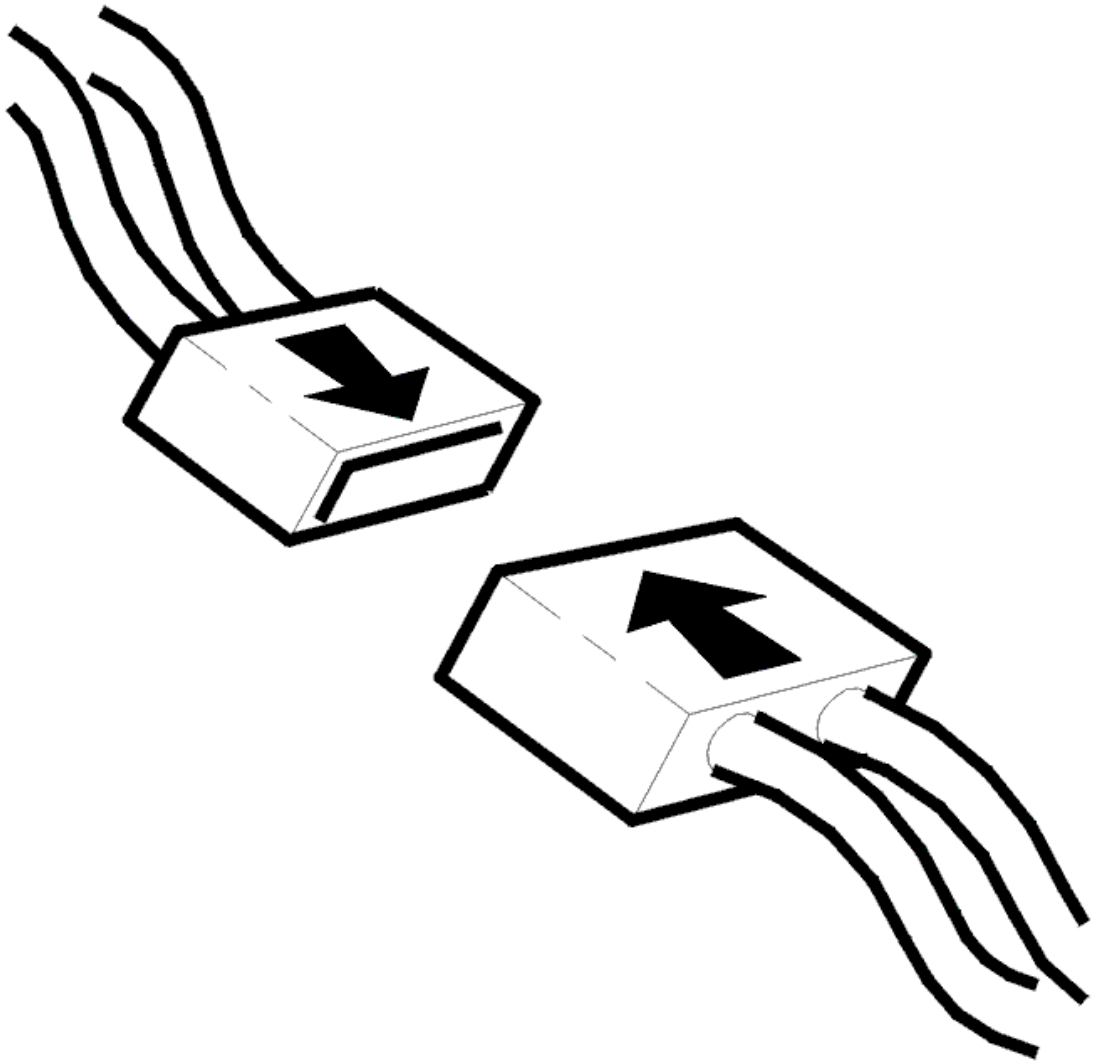

Fig. 317: Identifying Connector(s) Reinstallation
Courtesy of VOLVO CARS CORPORATION

- Ignition off
- Reinstall the components, reconnect the connectors etc.
- Ignition on
- Activate solenoid SLC2 by clicking on the symbol for VCT2000.

  Read off the current through the circuit for solenoid SLC2. The current must oscillate between approximately 0 and 1000 mA.

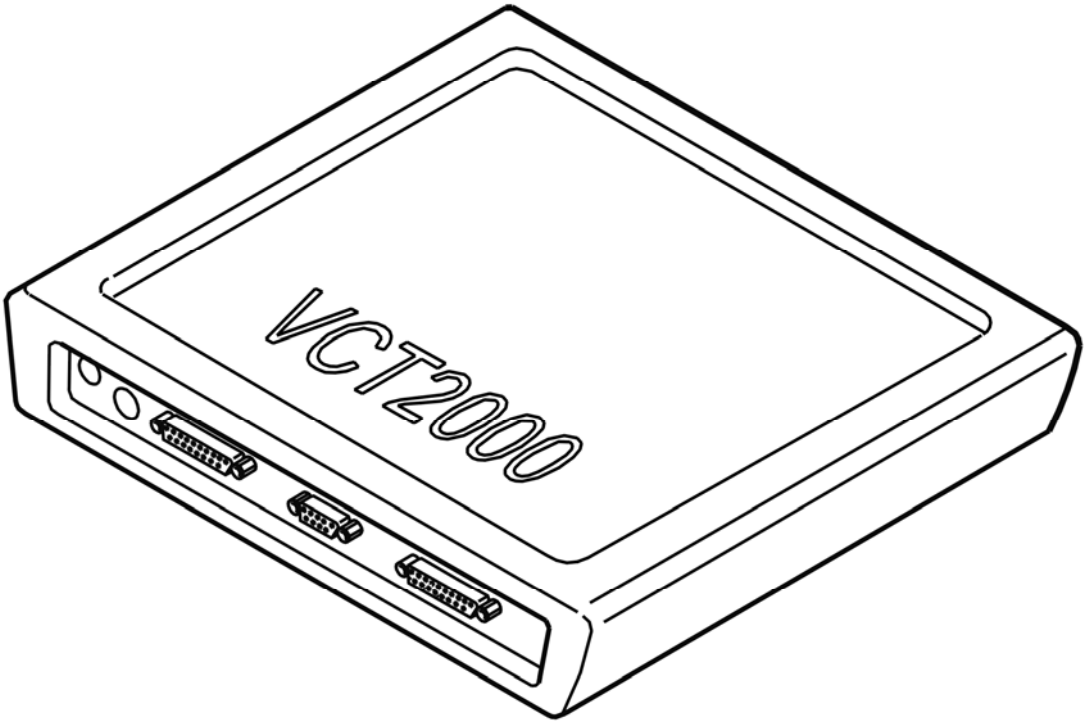

Fig. 318: Identifying VCT2000 Diagnostic Tool Symbol In VIDA
Courtesy of VOLVO CARS CORPORATION

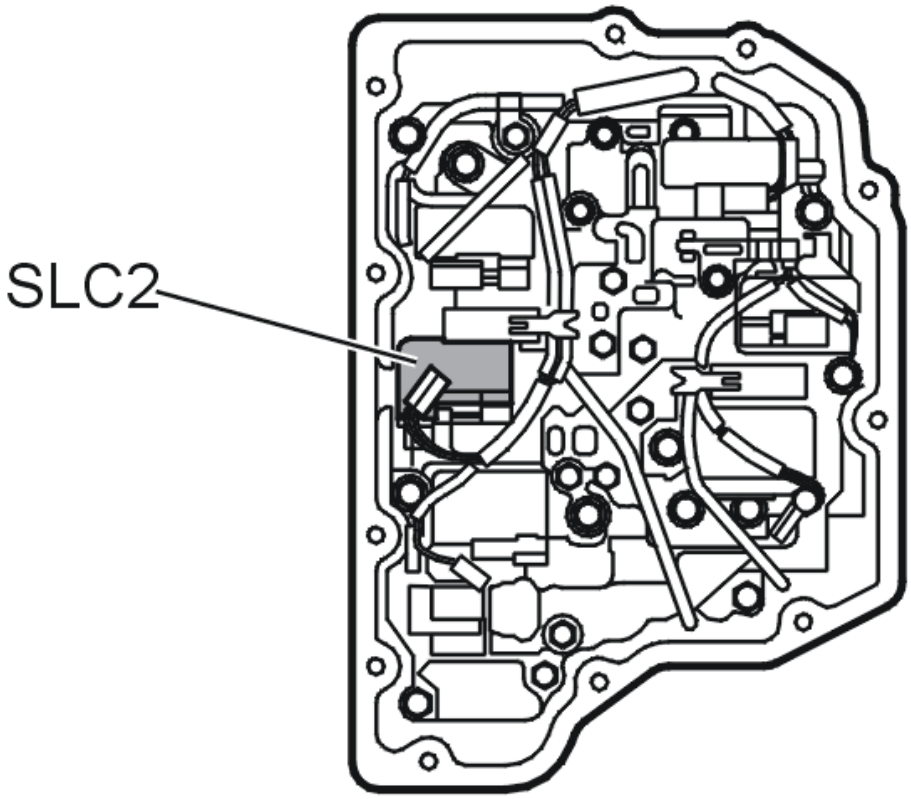

Fig. 319: Identifying Solenoid SLC2
Courtesy of VOLVO CARS CORPORATION

Is the function OK?

- **YES**

  VERIFIED: Troubleshooting has been completed.

- **NO**

  Refer to **INFORMATION**

INFORMATION

FAULT-TRACING INFORMATION

The fault should have been detected and remedied. As this is not the case fault-tracing has failed.

Exit fault-tracing for this diagnostic trouble code (DTC) or make another attempt.

TCM-P097100: PRESSURE REGULATOR SOLENOID C CONTROL CIRCUIT HIGH. GENERAL FAULT INFORMATION. NO INFORMATION ON FAULT

TYPE (TF-80SC AWD; 2005)

DIAGNOSTIC TROUBLE CODE (DTC) INFORMATION TCM-P097100

see **DIAGNOSTIC TROUBLE CODE (DTC) INFORMATION TCM-P097100**

FAULT TRACING TCM-P097100

see **FAULT TRACING TCM-P097100**

TCM-P097300: SHIFT SOLENOID A CONTROL CIRCUIT LOW. GENERAL FAILURE INFORMATION. NO SUB TYPE INFORMATION (B6324S, TF-80SC; B6324S, TF-80SC AWD; 2007-2010)

DIAGNOSTIC TROUBLE CODE (DTC) INFORMATION

Condition

Shift solenoids S1 and S2 work with the linear solenoids to handle shifting in the transmission. The solenoids are controlled by power stages in the transmission control module (TCM). The transmission control module (TCM) opens the power stages to activate the solenoids and sends a voltage through the circuit.

The diagnostic trouble code (DTC) is stored if the control module detects that:

- The circuit of solenoid S1 receives too low of a signal when the solenoid is activated.

The control module's test for the diagnostic trouble code (DTC) starts in the event of:

- Ignition on.

NOTE: **The control module can only detect the fault once the test has been started and the diagnostic trouble code (DTC) is stored when the conditions are met.**

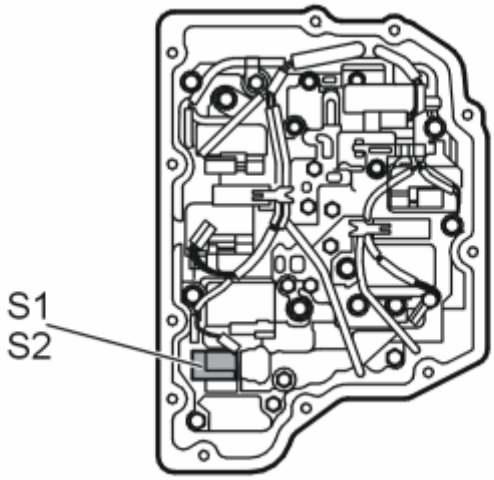

Fig. 320: Identifying S1 And S2 Solenoids
Courtesy of VOLVO CARS CORPORATION

Substitute Value

- Auxiliary program **Emergency mode 1** in the transmission control module (TCM) has started.

  HINT: EMERGENCY MODE IN THE EVENT OF A FAULT

Possible Source

- Short-circuit to ground in the signal cable.
- Solenoid not working.
- Internal fault in the transmission control module (TCM).

Fault symptom[s]

- General warning lamp lit
- Malfunction indicator light (MIL), on
- Rough gear shift
- No gear shift

FAULT-TRACING

CHECKS

CHECKING SHIFT SOLENOID S1

Fig. 321: Identifying Ignition ON
Courtesy of VOLVO CARS CORPORATION

- Ignition on.
- Activate solenoid S1.

  Check the status for solenoid S1. The status must switch between OFF and ON.

  The fault is permanent if the status does not change.

  If the status switches it means that the fault was present previously but is not active now. There is an intermittent fault.

Fig. 322: Identifying VCT2000 Diagnostic Tool Symbol In VIDA
Courtesy of VOLVO CARS CORPORATION

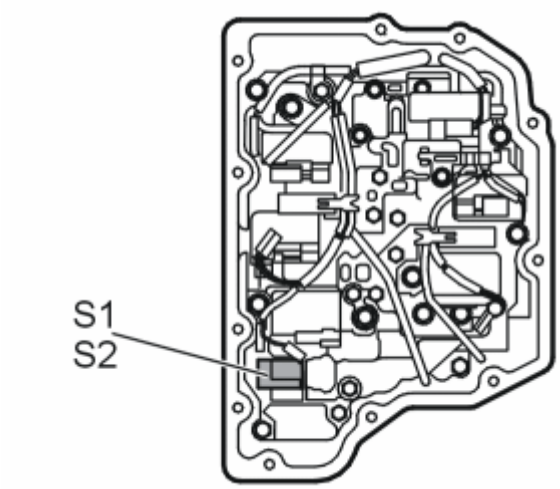

Fig. 323: Identifying S1 And S2 Solenoids
Courtesy of VOLVO CARS CORPORATION

- **Continue**

Refer to **CHECKING THE COMPONENTS AND WIRING**

CHECKING THE COMPONENTS AND WIRING

Fig. 324: Identifying Ignition OFF
Courtesy of VOLVO CARS CORPORATION

- Ignition off.
- Open the transmission control system.

  Check connector B (22-pin) for the transmission control module (TCM). Check for damaged or pressed in pins. Check for contact resistance and oxidation.

  Check the cable for short-circuit to ground.

  Take readings between:

  - Transmission connector #B5 and the connector for solenoid S1.

  HINT: If no fault is found in the wiring check solenoid S1. See CHECKING INTERNAL COMPONENTS OF THE TRANSMISSION

  Remedy as necessary.

  Other information

  - see **CONNECTING THE BREAKOUT BOX**
  - see **SIGNAL SPECIFICATION**
  - see **TRANSMISSION CONTROL UNIT WIRING HARNESS**
  - To access the transmission control system:**COVER CONTROL SYSTEM, REPLACING (2007-2011)**
  - To access connector B/replace the solenoid:**TRANSMISSION - REMOVAL, REPLACEMENT AND INSTALLATION**
  - see **CHECKING WIRING AND TERMINALS**

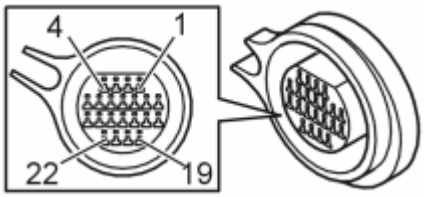

Fig. 325: Identifying Connector B Terminals
Courtesy of VOLVO CARS CORPORATION

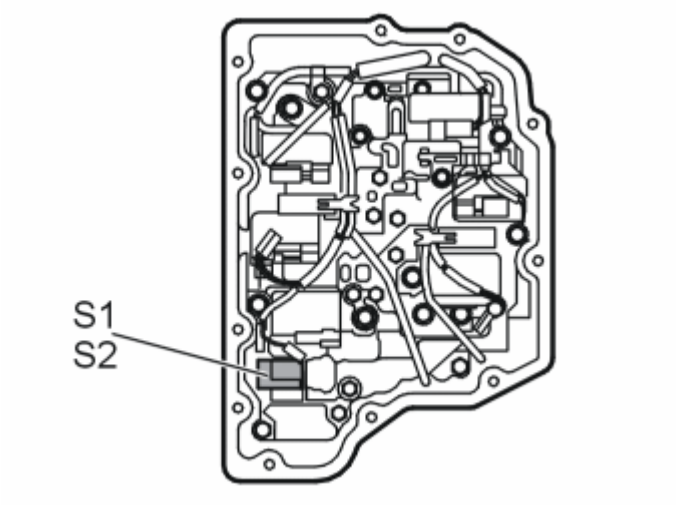

Fig. 326: Identifying S1 And S2 Solenoids
Courtesy of VOLVO CARS CORPORATION

- **Continue**

  Refer to **RESETTING ADAPTATION**

VERIFICATION

VERIFICATION

HINT: After carrying out the repair, check that the fault has been remedied.

Fig. 327: Identifying Ignition ON
Courtesy of VOLVO CARS CORPORATION

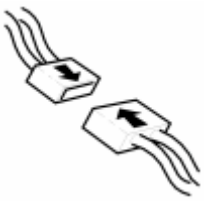

Fig. 328: Identifying Connector(s) Reinstallation
Courtesy of VOLVO CARS CORPORATION

- Ignition off.
- Reinstall the connectors, components etc.
- Ignition on.
- Activate solenoid S1 by clicking the symbol for VCT2000.

  Read the status of solenoid S1. The status must switch between OFF and ON.

Fig. 329: Identifying VCT2000 Diagnostic Tool Symbol In VIDA
Courtesy of VOLVO CARS CORPORATION

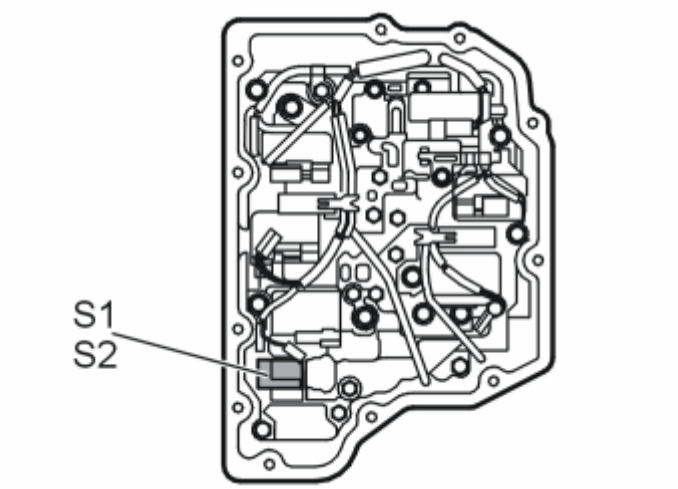

Fig. 330: Identifying S1 And S2 Solenoids
Courtesy of VOLVO CARS CORPORATION

Is the function OK?

- **YES**

  VERIFIED: Troubleshooting has been completed.

- **NO**

  Refer to **INFORMATION**

INFORMATION

FAULT-TRACING INFORMATION

The fault should have been detected and remedied. As this is not the case fault-tracing has failed.

Exit fault-tracing for this diagnostic trouble code (DTC) or make another attempt.

RESETTING ADAPTATION

RESETTING THE ADAPTATION AND THE COUNTER FOR "TRANSMISSION OIL, REPLACE"

HINT: The transmission has torque-regulated, adaptive pressure regulation. The pressure regulator enables the transmission to regulate pressure during each shift to prevent hard shifting. Each shift is assessed by the transmission control module (TCM) and is stored in the internal memory. This makes it possible to compensate for transmission and clutch wear. It is important that the adaptation in the memory is reset so that the transmission works normally after the repair. Because the fluid was changed during the repair, the counter for transmission fluid change must also be reset. If the counter is not reset during draining/replacement, a diagnostic trouble code may be generated under the wrong conditions.

NOTE: This applies only if the transmission or one of the components in the transmission have been replaced.

Fig. 331: Identifying Ignition ON
Courtesy of VOLVO CARS CORPORATION

- Ignition on.

  Click on the VCT2000 symbol to reset the adaptation and counter.

Fig. 332: Identifying VCT2000 Diagnostic Tool Symbol In VIDA
Courtesy of VOLVO CARS CORPORATION

- **Continue**

  Refer to **VERIFICATION**

TCM-P097300: SHIFT SOLENOID A CONTROL CIRCUIT LOW. GENERAL FAILURE INFORMATION. NO SUB TYPE INFORMATION (B6324S5, TF-80SC; B6324S5, TF-80SC AWD; 2011-2012)

DIAGNOSTIC TROUBLE CODE (DTC) INFORMATION

see **DIAGNOSTIC TROUBLE CODE (DTC) INFORMATION**

FAULT-TRACING

see **FAULT-TRACING**

TCM-P097300: SHIFT SOLENOID A CONTROL CIRCUIT LOW. GENERAL FAULT INFORMATION. NO INFORMATION ON FAULT TYPE (B8444S, TF-80SC AWD; 2006-2011)

DIAGNOSTIC TROUBLE CODE (DTC) INFORMATION

Condition

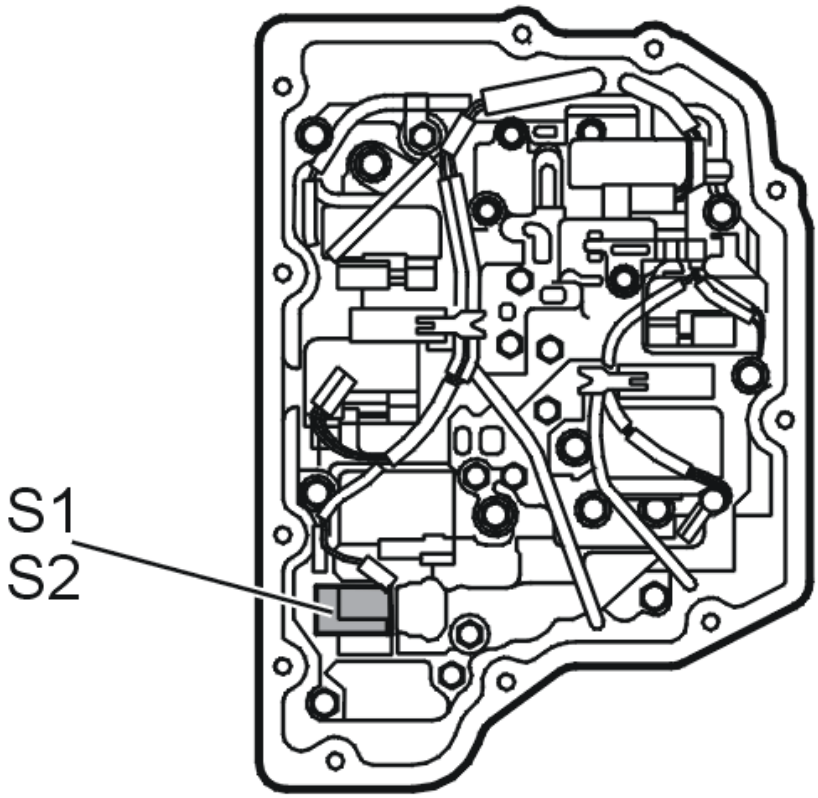

Fig. 333: Locating Shift Solenoids S1 & S2
Courtesy of VOLVO CARS CORPORATION

The shift solenoids S1, S2 manage the gear changing in the gearbox together with the linear solenoids. The solenoids are controlled using the power stage in the transmission control module (TCM). The control unit activates the power stage when the solenoids are to be activated and the circuit receives power.

If the transmission control module (TCM) registers that the circuit to solenoid S1 or S2 receives a signal that is too low while the solenoid is activated, diagnostic trouble code (DTC) TCM-P097300 or TCM-P097600will be activated. The diagnostic trouble code (DTC) that is generated depends on which circuit is defective.

The diagnostic trouble code can be diagnosed when the ignition is on.

Substitute Value

- Auxiliary program **Emergency mode 1** in the transmission control module (TCM) has started.

  HINT: EMERGENCY MODE IN CASE OF MALFUNCTION

Possible Source

- The signal cable is short-circuited to ground.
- Solenoid not working.

- Internal fault in transmission control module (TCM).

Fault symptom[s]

- General warning lamp lit
- Malfunction indicator lamp (MIL) lit.
- Harsh gear changing
- No gear changing.

FAULT TRACING TCM-P097300

CHECKS

CHECKING SHIFT SOLENOID S1

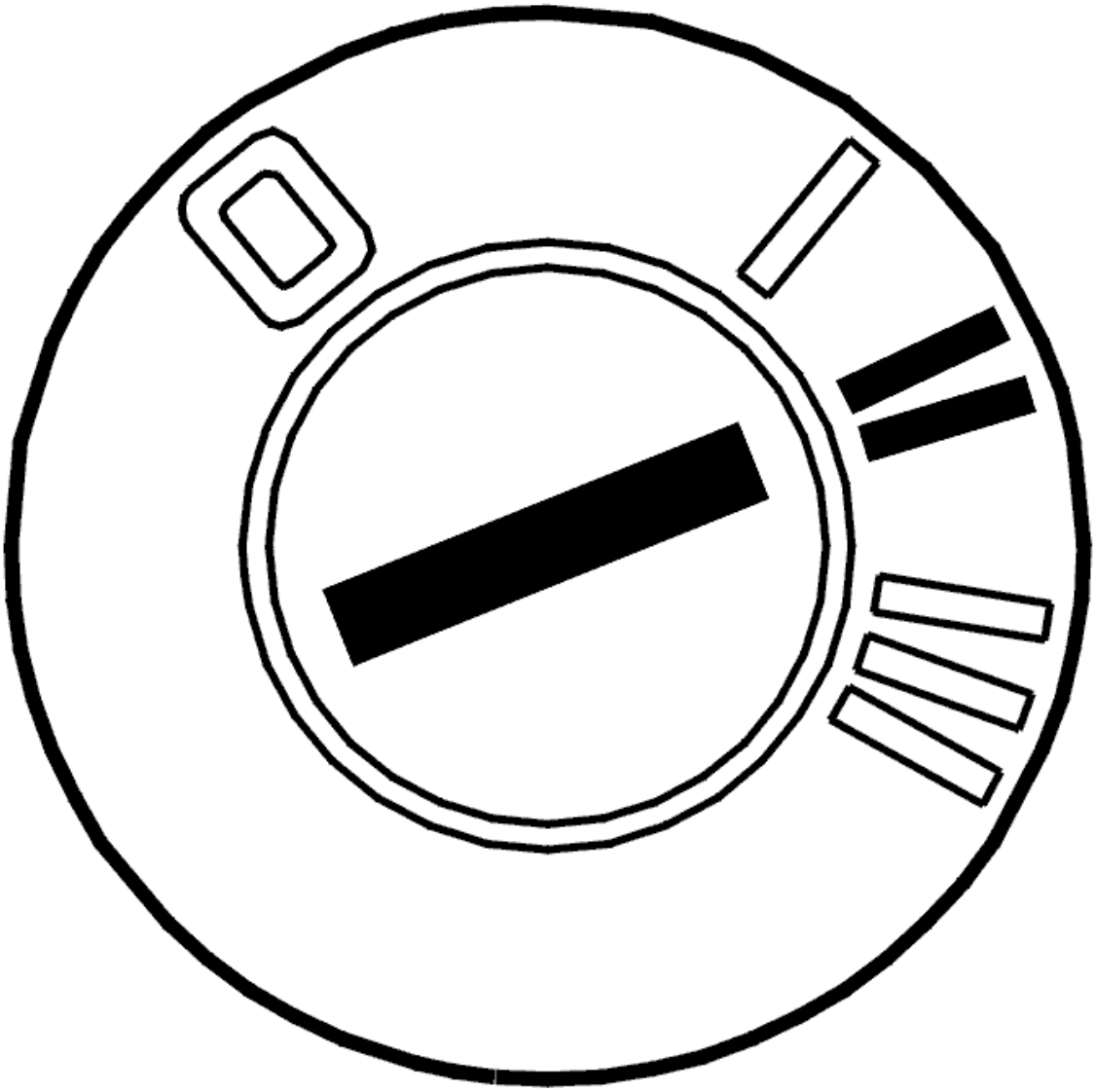

Fig. 334: Identifying Ignition ON
Courtesy of VOLVO CARS CORPORATION

- Ignition on
- Activate solenoid S1.

  Check the status of solenoid S1. The status must switch between OFF and ON.

  The fault is permanent if the status does not change.

  If the status switches it means that the fault was present previously but is not active now. There is an intermittent fault.

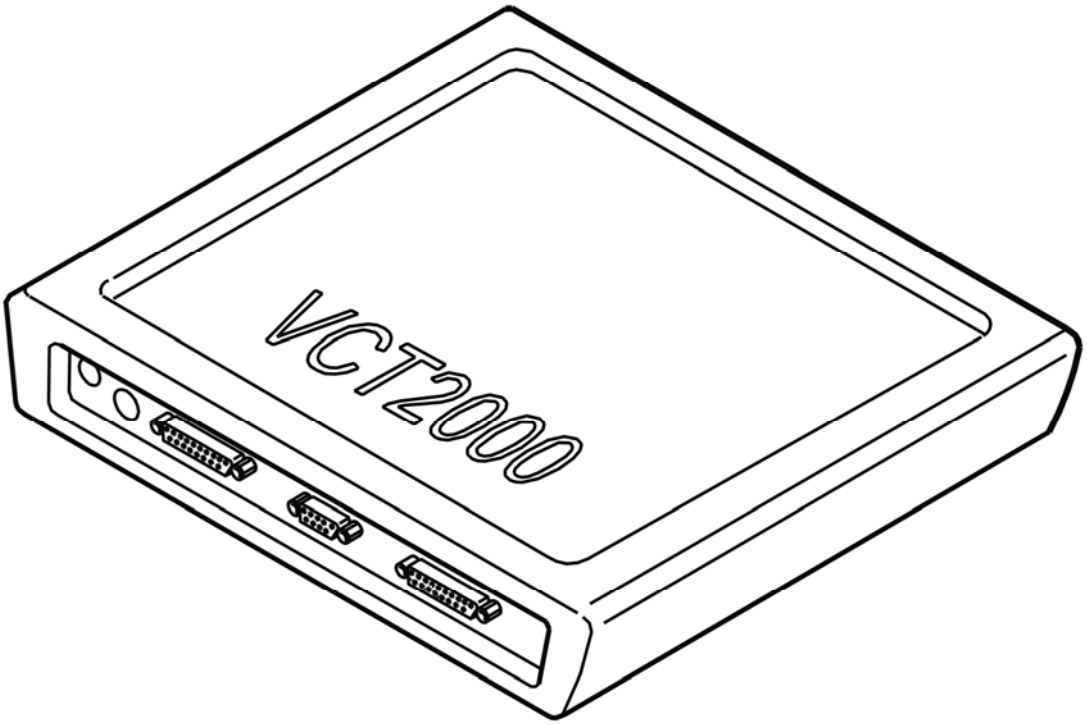

Fig. 335: Identifying VCT2000 Diagnostic Tool Symbol In VIDA
Courtesy of VOLVO CARS CORPORATION

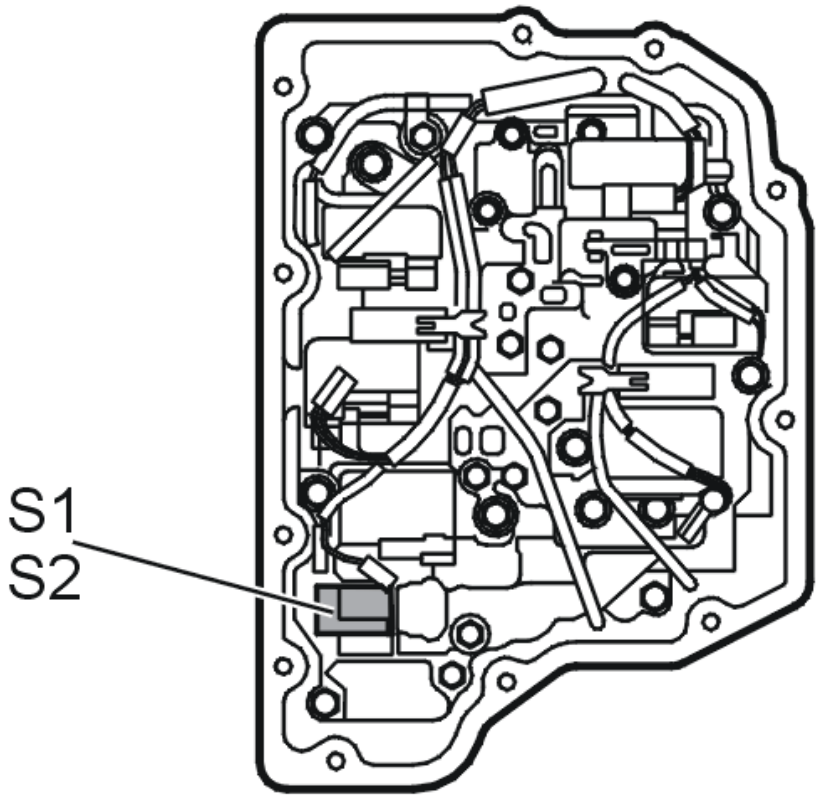

Fig. 336: Locating Shift Solenoids S1 & S2
Courtesy of VOLVO CARS CORPORATION

- **Continue**

Refer to **CHECKING THE COMPONENTS AND WIRING**

CHECKING THE COMPONENTS AND WIRING

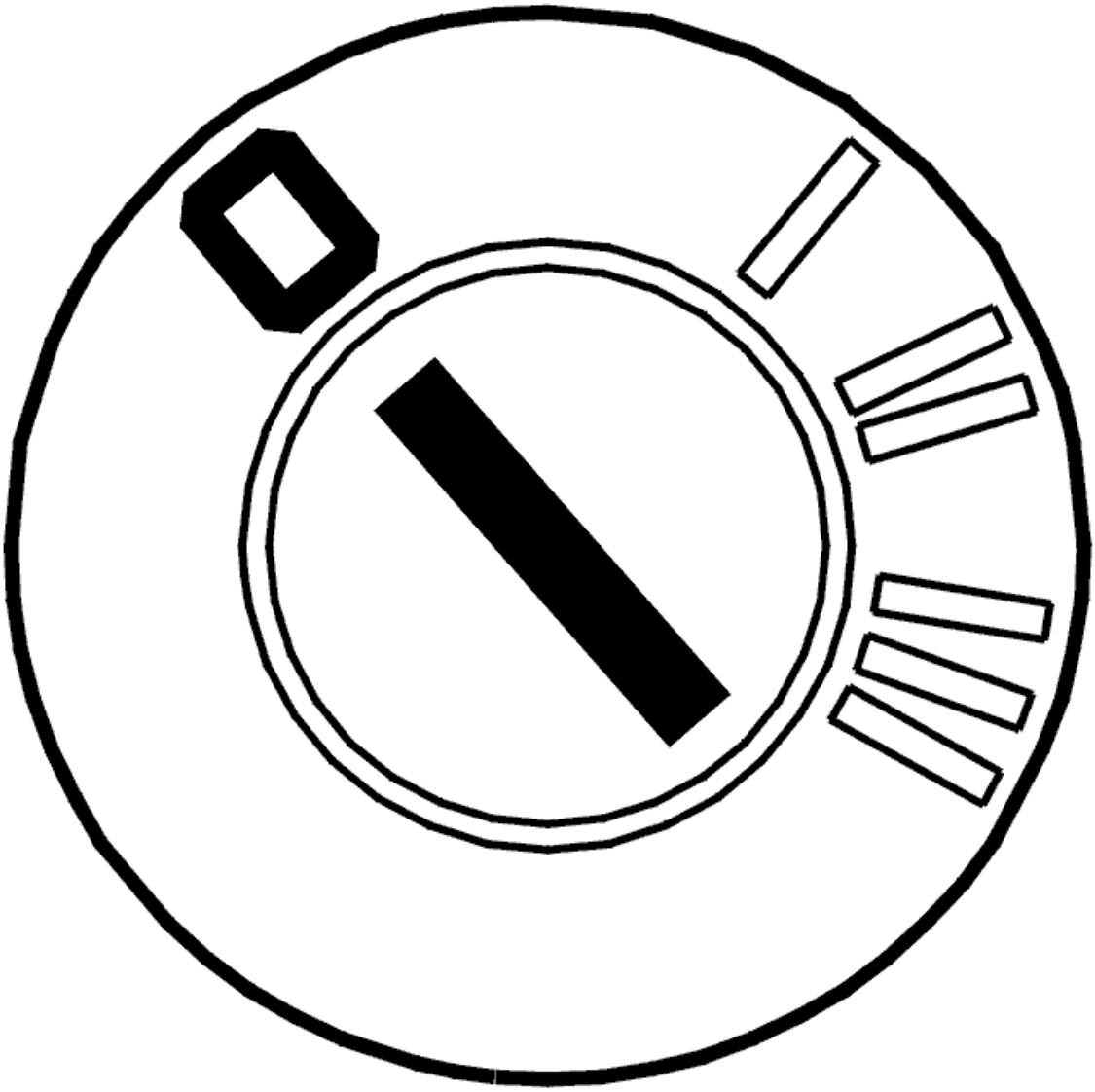

Fig. 337: Identifying Ignition OFF
Courtesy of VOLVO CARS CORPORATION

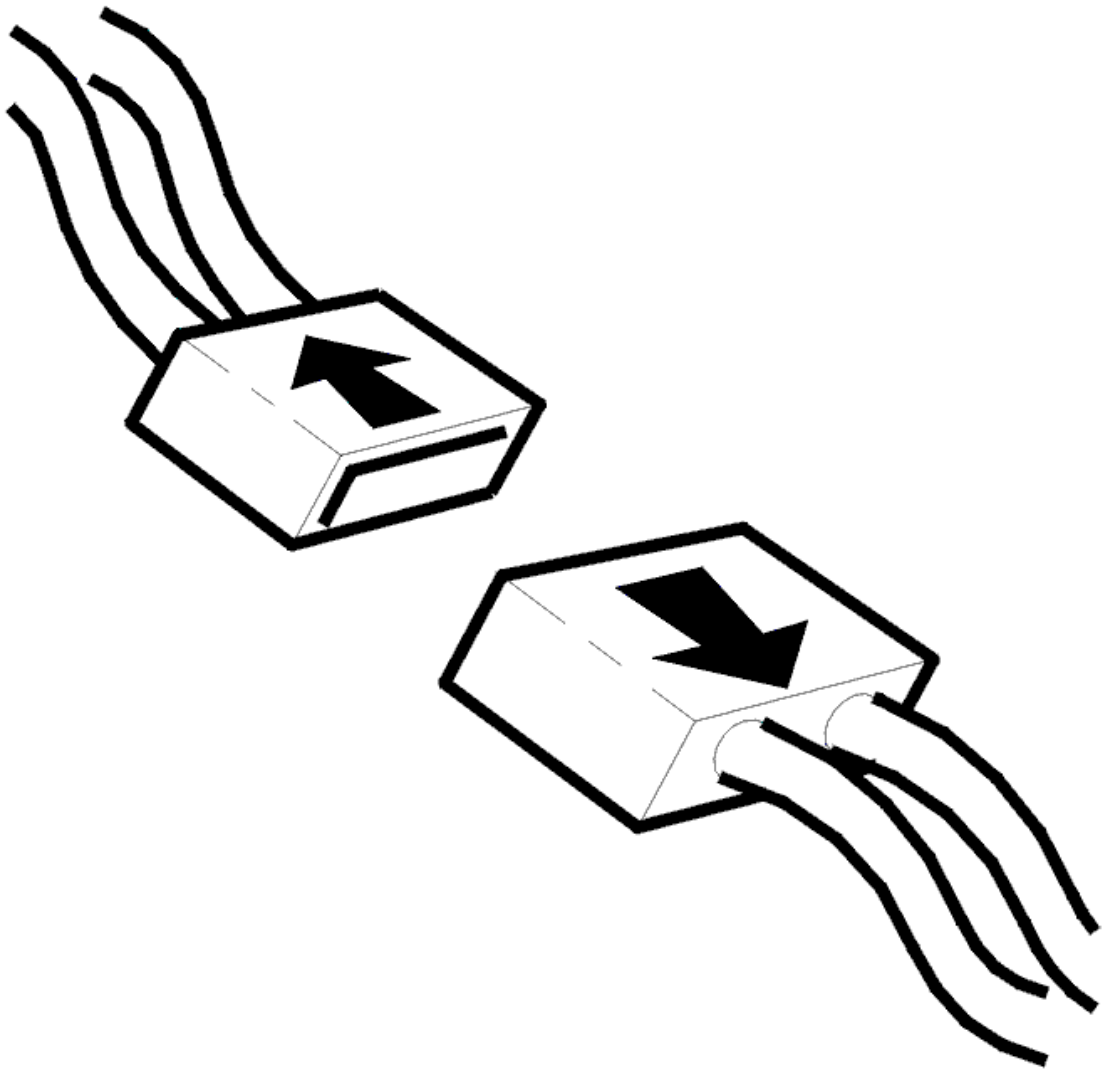

Fig. 338: Identifying Connector(s) Disconnected
Courtesy of VOLVO CARS CORPORATION

- Ignition off
- Open the gearbox control system

  Check connector B (22-pin) for the transmission control module (TCM). Check for damaged or pressed in pins. Check for contact resistance and oxidation.

  Check the cable between transmission connector terminal #B5 and the connector for solenoid S1. Check for a short-circuit to ground.

  HINT: If no fault is found in the wiring check solenoid S1. See CHECKING SHIFT SOLENOIDS

  Remedy as necessary.

Other information

- see **CONNECTING THE BREAKOUT BOX**
- see **SIGNAL DESCRIPTION**
- see **CABLE HARNESS, CONTROL SYSTEM, GEARBOX, REPLACING**
- To access the transmission control system: **COVER CONTROL SYSTEM, REPLACING (2007-2011)**
- To access connector B/replace the solenoid: **SOLENOID CONTROL SYSTEM, REPLACING (2007-2011)**
- see **CONTENTS**

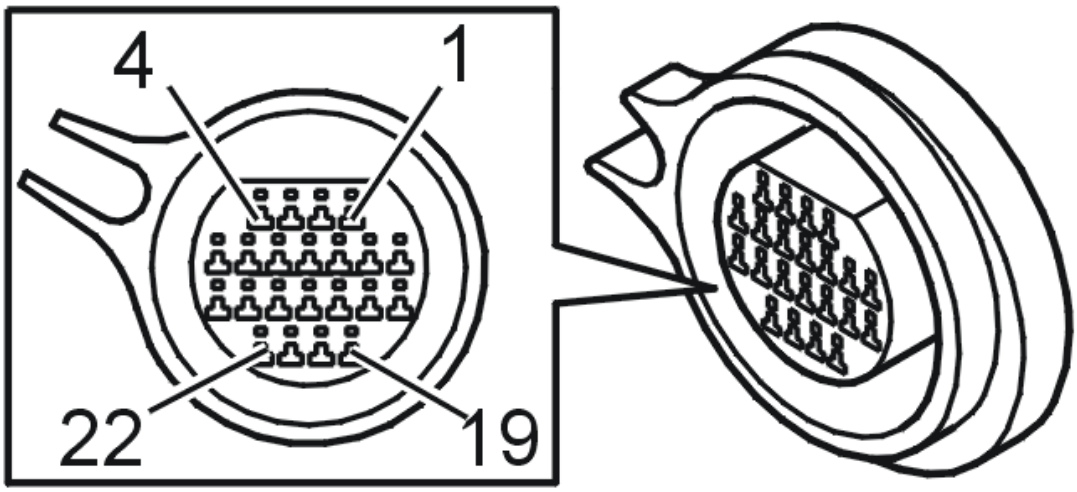

Fig. 339: Identifying Connector B Terminals
Courtesy of VOLVO CARS CORPORATION

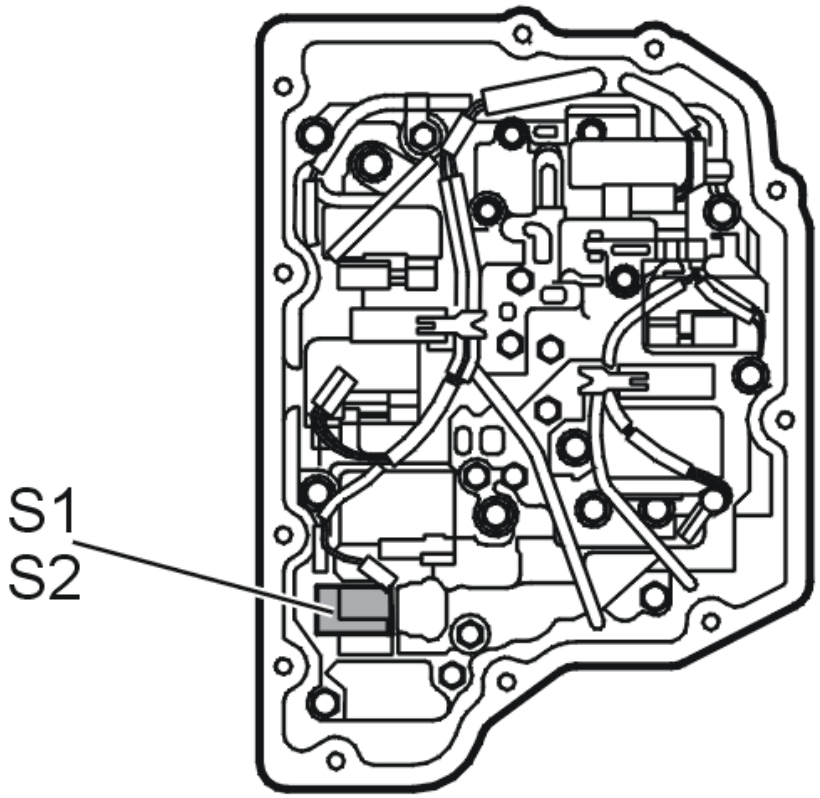

Fig. 340: Locating Shift Solenoids S1 & S2
Courtesy of VOLVO CARS CORPORATION

- **Continue**

Refer to **RESETTING ADAPTATION**

RESETTING ADAPTATION

RESETTING ADAPTATION AND COUNTER FOR "TRANSMISSION OIL, CHANGING"

HINT: The transmission has torque-controlled, adaptive pressure control. The pressure control means that the transmission itself controls the pressure during each shift sequence in order to avoid harsh shifting. Each shift is assessed by the transmission control module (TCM) and is stored in the internal memory, which results in compensation for wear in the transmission and clutch. In order for the transmission to function correctly after repair, it is important to reset the adaptation in the memory. Since the oil is changed during the repair, the counter for "Transmission oil, change" shall also be reset. If the counter is not reset when draining/changing oil, there is a risk that a diagnostic trouble code may be generated under incorrect conditions.

NOTE: **This applies only if the transmission or one of the components in the transmission have been replaced.**

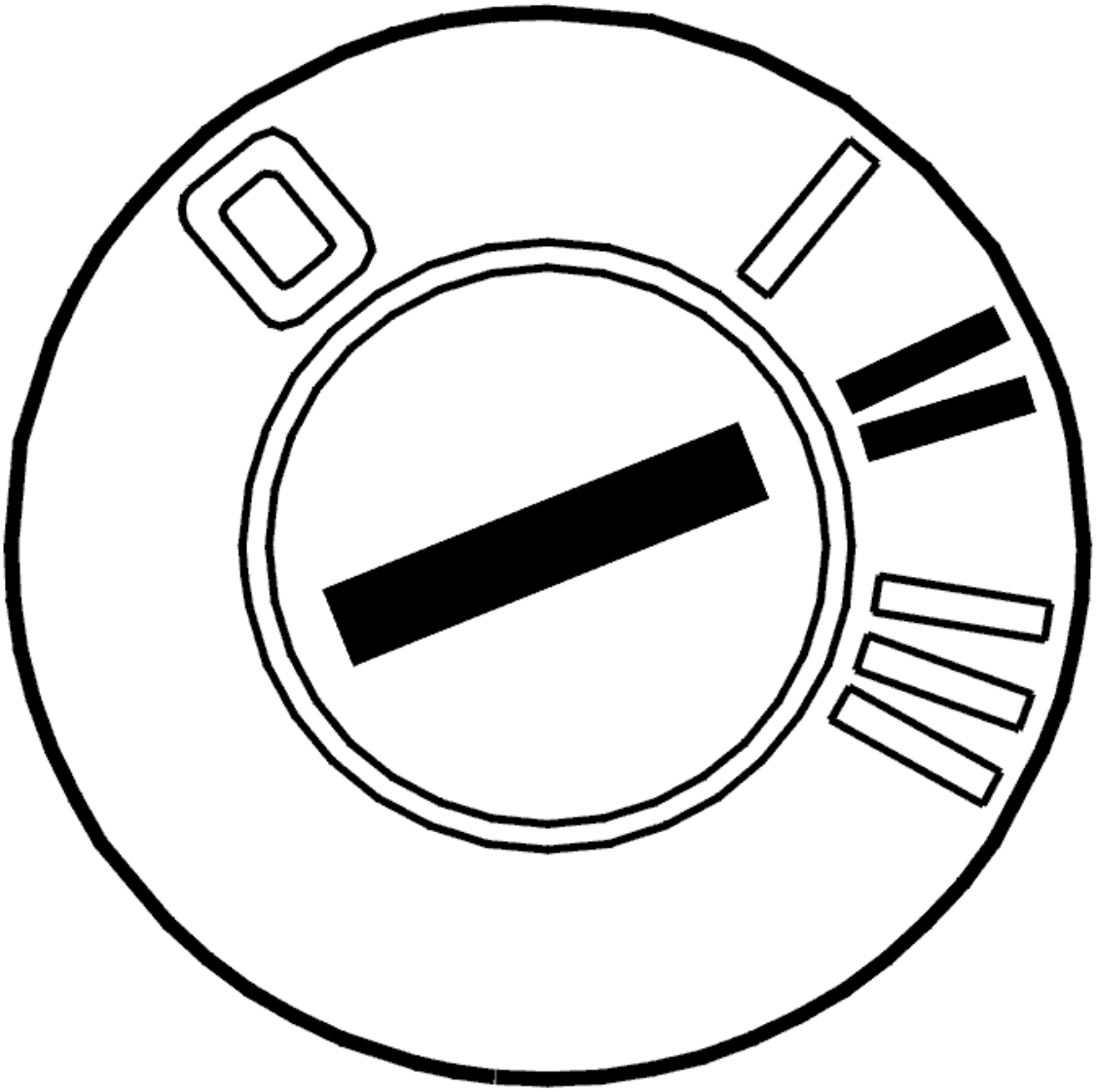

Fig. 341: Identifying Ignition ON
Courtesy of VOLVO CARS CORPORATION

- Ignition on

  Activate reset of the adaptation and the counter by clicking on the symbol for VCT2000.

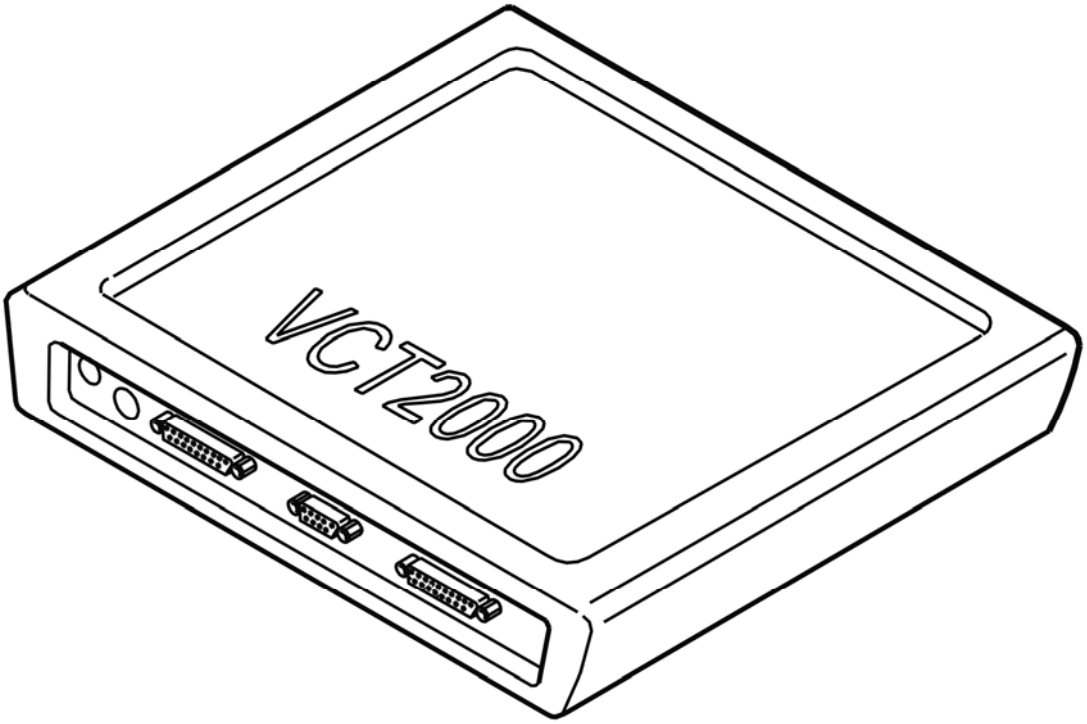

Fig. 342: Identifying VCT2000 Diagnostic Tool Symbol In VIDA
Courtesy of VOLVO CARS CORPORATION

- **Continue**

  Refer to **VERIFICATION**

VERIFICATION

VERIFICATION

HINT: After carrying out the repair, check that the fault has been remedied.

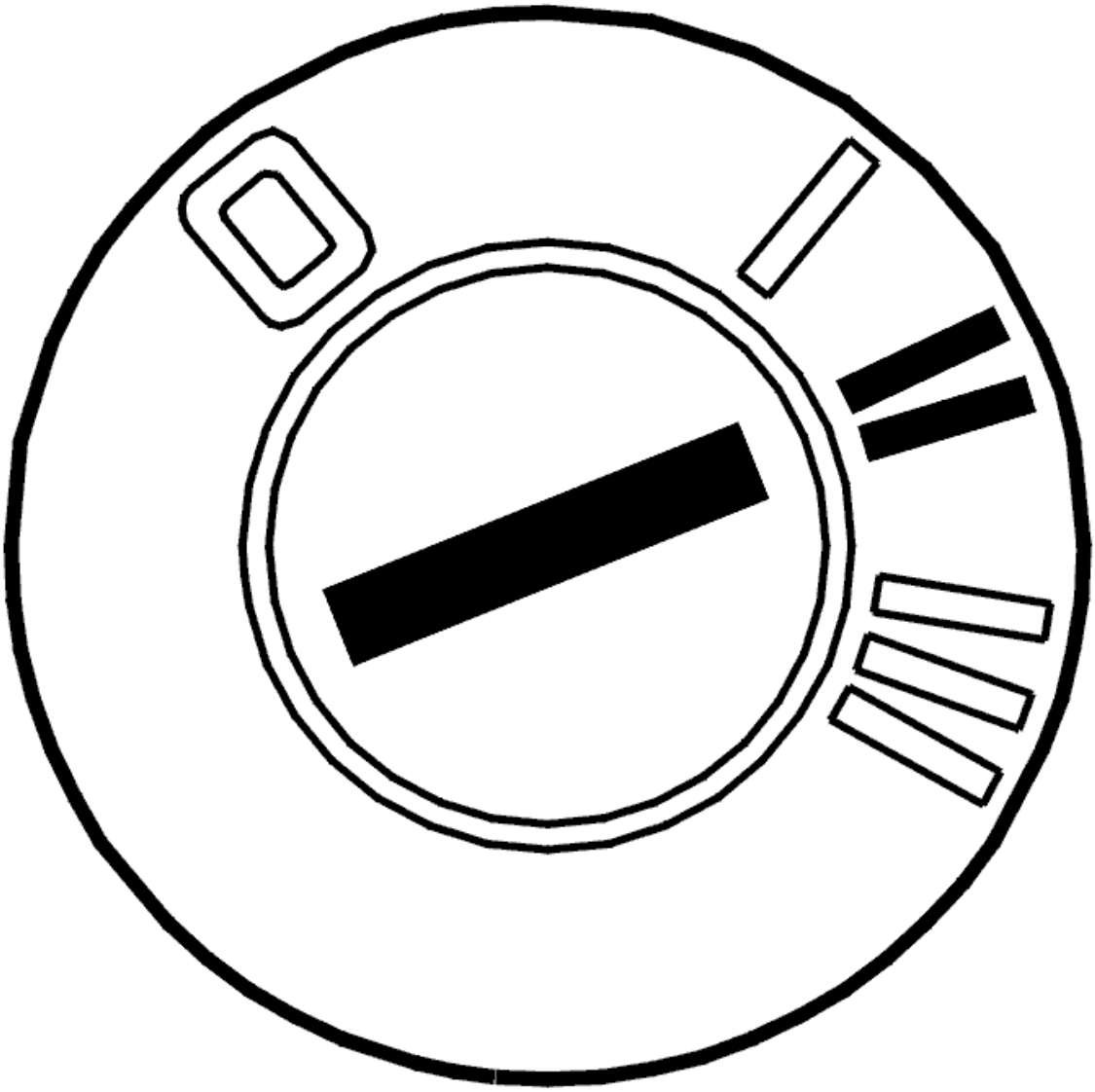

Fig. 343: Identifying Ignition ON
Courtesy of VOLVO CARS CORPORATION

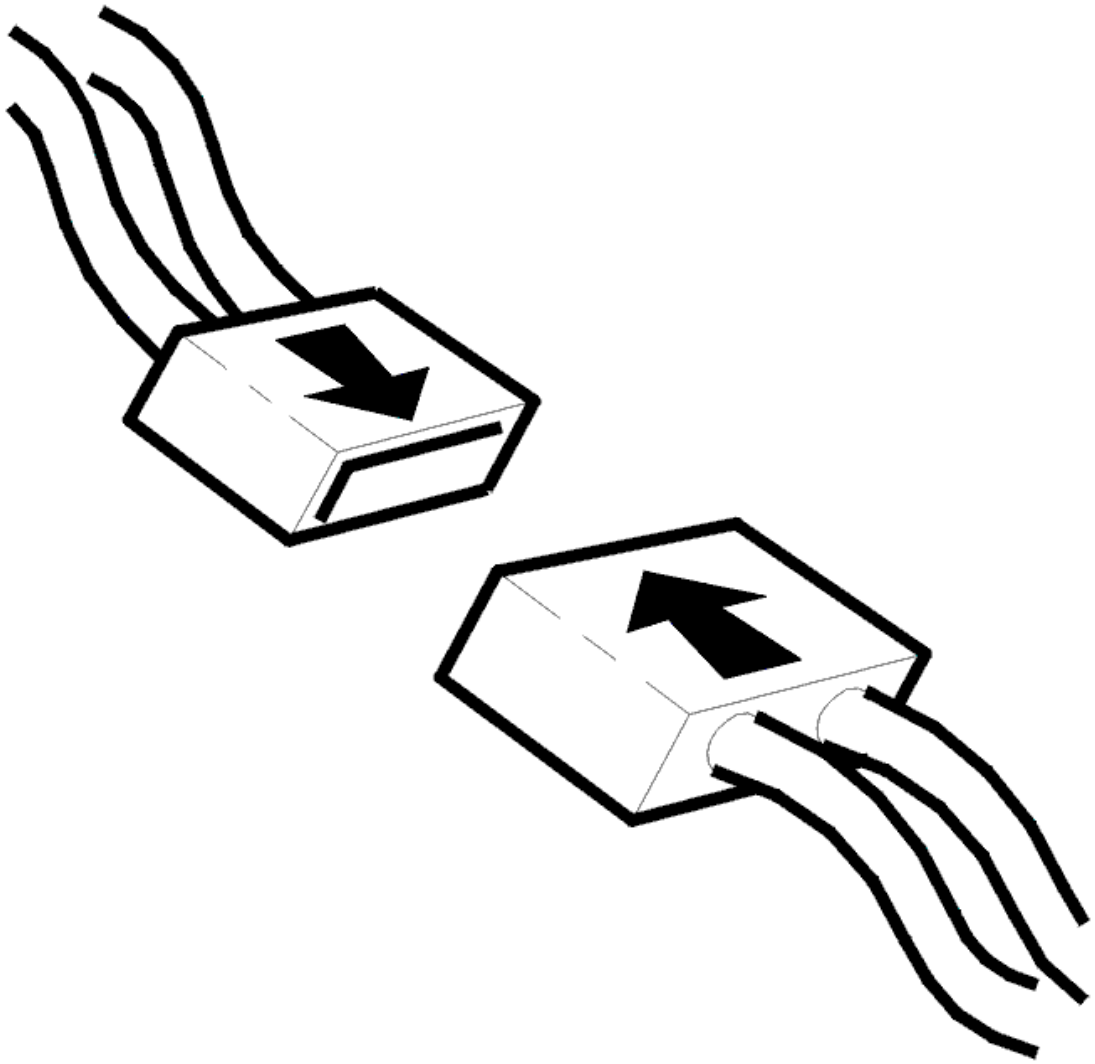

Fig. 344: Identifying Connector(s) Reinstallation
Courtesy of VOLVO CARS CORPORATION

- Ignition off
- Reinstall the components, reconnect the connectors etc.
- Ignition on
- Activate solenoid S1 by clicking the symbol for VCT2000.

  Read the status of solenoid S1. The status must switch between OFF and ON.

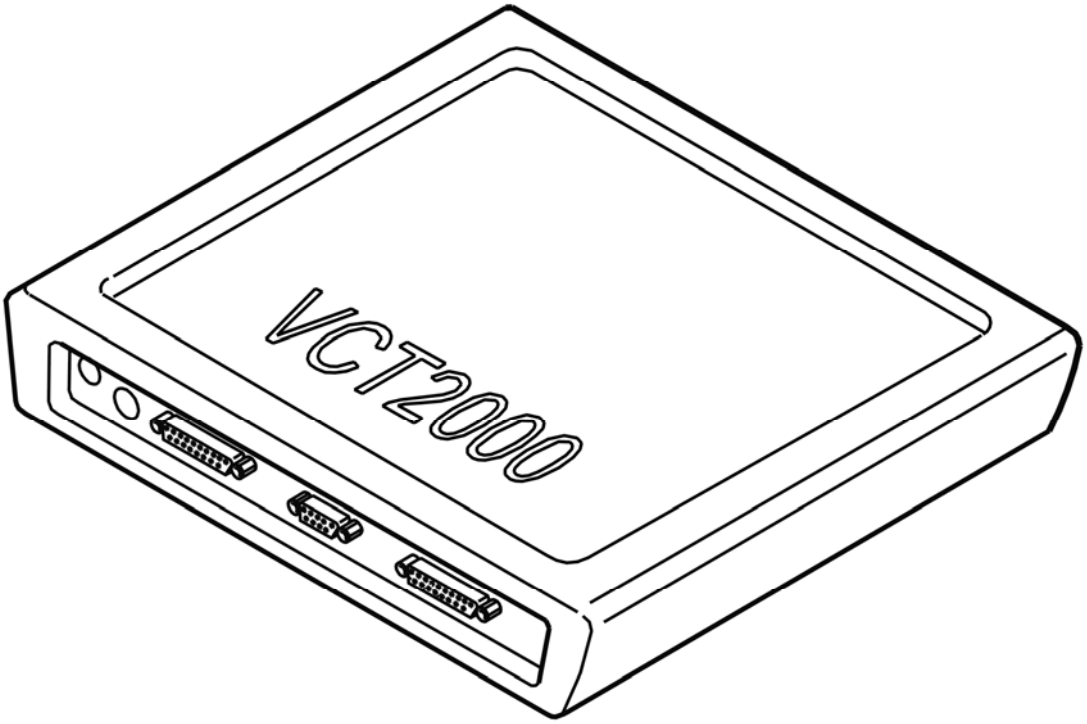

Fig. 345: Identifying VCT2000 Diagnostic Tool Symbol In VIDA
Courtesy of VOLVO CARS CORPORATION

Is the function OK?

- **YES**

  VERIFIED: Troubleshooting has been completed.

- **NO**

  Refer to **INFORMATION**

INFORMATION

FAULT-TRACING INFORMATION

The fault should have been detected and remedied. As this is not the case fault-tracing has failed.

Exit fault-tracing for this diagnostic trouble code (DTC) or make another attempt.

TCM-P097300: SHIFT SOLENOID A CONTROL CIRCUIT LOW. GENERAL FAULT INFORMATION. NO INFORMATION ON FAULT TYPE (TF-80SC AWD;

2005)

DIAGNOSTIC TROUBLE CODE (DTC) INFORMATION

see **DIAGNOSTIC TROUBLE CODE (DTC) INFORMATION**

FAULT TRACING TCM-P097300

see **FAULT TRACING TCM-P097300**

TCM-P097400: SHIFT SOLENOID A CONTROL CIRCUIT HIGH. GENERAL FAILURE INFORMATION. NO SUB TYPE INFORMATION (B6324S, TF-80SC; B6324S, TF-80SC AWD; 2007-2010)

DIAGNOSTIC TROUBLE CODE (DTC) INFORMATION

Condition

Shift solenoids S1 and S2 work with the linear solenoids to handle shifting in the transmission. The solenoids are controlled by power stages in the transmission control module (TCM). The control module activates the power stages to activate the solenoids and sends voltage through the circuit. The control module checks the function of the circuit by sending out a control current when the solenoid is not activated.

The diagnostic trouble code (DTC) is stored if the control module detects that:

- No signal in the circuit of solenoid S1 when the solenoid is not activated.

The control module's test for the diagnostic trouble code (DTC) starts in the event of:

- Ignition on.

NOTE: The control module can only detect the fault once the test has been started and the diagnostic trouble code (DTC) is stored when the conditions are met.

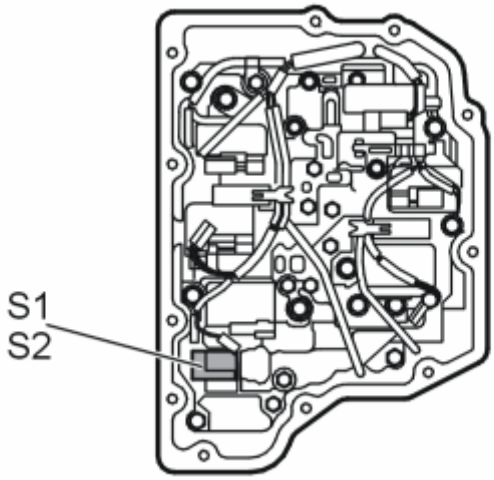

Fig. 346: Identifying S1 And S2 Solenoids
Courtesy of VOLVO CARS CORPORATION

Substitute Value

- Auxiliary program **Emergency mode 1** in the transmission control module (TCM) has started.

  HINT: EMERGENCY MODE IN THE EVENT OF A FAULT

Possible Source

- Contact resistance in the terminals.
- Open circuit on control signal lead.
- Shift solenoid not working.
- Short-circuit to supply voltage in the signal cable.
- Internal fault in the transmission control module (TCM).

Fault symptom[s]

- General warning lamp lit
- Malfunction indicator light (MIL), on
- Rough gear shift
- No gear shift

FAULT-TRACING

CHECKS

CHECKING SHIFT SOLENOID S1

Fig. 347: Identifying Ignition ON
Courtesy of VOLVO CARS CORPORATION

- Ignition on.
- Activate solenoid S1.

  Check the status for solenoid S1. The status must switch between OFF and ON.

  The fault is permanent if the status does not change.

  If the status switches it means that the fault was present previously but is not active now. There is an intermittent fault.

Fig. 348: Identifying VCT2000 Diagnostic Tool Symbol In VIDA
Courtesy of VOLVO CARS CORPORATION

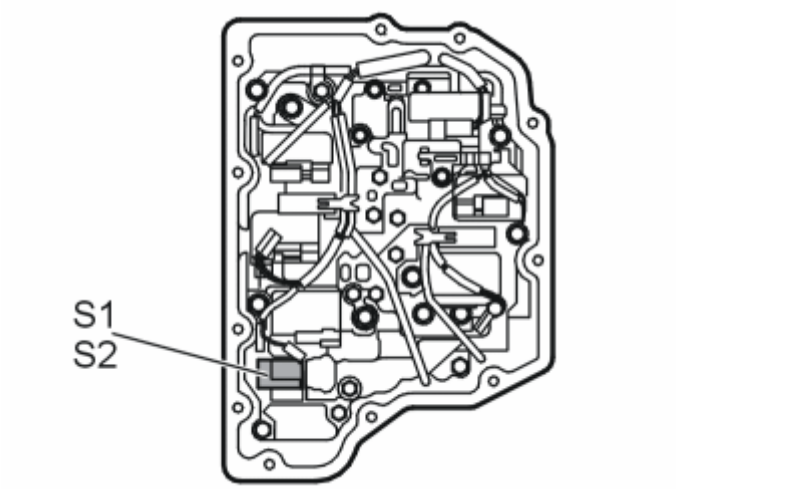

Fig. 349: Identifying S1 And S2 Solenoids
Courtesy of VOLVO CARS CORPORATION

- **Continue**

Refer to **CHECKING THE COMPONENTS AND WIRING**

CHECKING THE COMPONENTS AND WIRING

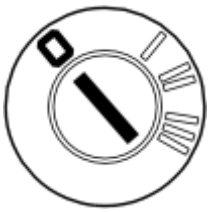

Fig. 350: Identifying Ignition OFF
Courtesy of VOLVO CARS CORPORATION

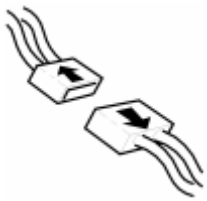

Fig. 351: Identifying Connectors
Courtesy of VOLVO CARS CORPORATION

- Ignition off.
- Open the transmission control system.

  Check the cable. Check for an open-circuit. Check for a short-circuit to supply voltage.

  Take readings between:

  - Transmission connector #B5 and the connector for solenoid S1.

  HINT: If no fault is found in the wiring check solenoid S1. See CHECKING INTERNAL COMPONENTS OF THE TRANSMISSION

  Remedy as necessary.

  Other information

  - see **CONNECTING THE BREAKOUT BOX**
  - see **SIGNAL SPECIFICATION**
  - see **TRANSMISSION CONTROL UNIT WIRING HARNESS**
  - To access the transmission control system:**COVER CONTROL SYSTEM, REPLACING (2007-2011)**
  - To access connector B/replace the solenoid:**TRANSMISSION - REMOVAL, REPLACEMENT AND INSTALLATION**
  - see **CHECKING WIRING AND TERMINALS**

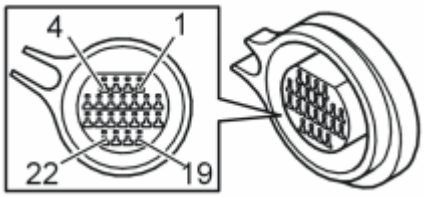

Fig. 352: Identifying Connector B Terminals
Courtesy of VOLVO CARS CORPORATION

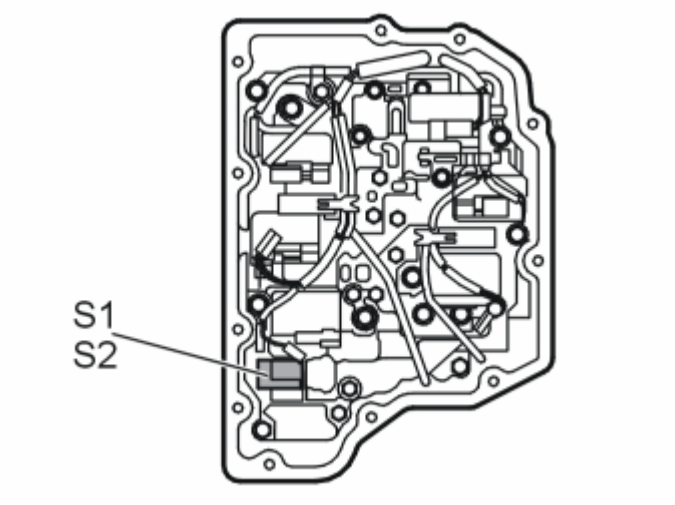

Fig. 353: Identifying S1 And S2 Solenoids
Courtesy of VOLVO CARS CORPORATION

- **Continue**

  Refer to **RESETTING ADAPTATION**

VERIFICATION

VERIFICATION

HINT: After carrying out the repair, check that the fault has been remedied.

Fig. 354: Identifying Ignition ON
Courtesy of VOLVO CARS CORPORATION

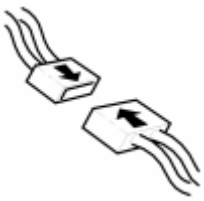

Fig. 355: Identifying Connector(s) Reinstallation
Courtesy of VOLVO CARS CORPORATION

- Ignition off.
- Reinstall the connectors, components etc.
- Ignition on.
- Activate solenoid S1 by clicking the symbol for VCT2000.

  Read the status of solenoid S1. The status must switch between OFF and ON.

Fig. 356: Identifying VCT2000 Diagnostic Tool Symbol In VIDA
Courtesy of VOLVO CARS CORPORATION

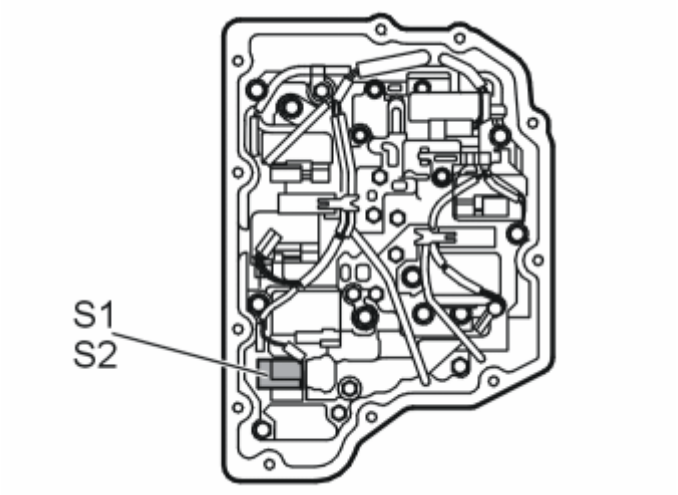

Fig. 357: Identifying S1 And S2 Solenoids
Courtesy of VOLVO CARS CORPORATION

Is the function OK?

- **YES**

  VERIFIED: Troubleshooting has been completed.

- **NO**

  Refer to **INFORMATION**

INFORMATION

FAULT-TRACING INFORMATION

The fault should have been detected and remedied. As this is not the case fault-tracing has failed.

Exit fault-tracing for this diagnostic trouble code (DTC) or make another attempt.

RESETTING ADAPTATION

RESETTING THE ADAPTATION AND THE COUNTER FOR "TRANSMISSION OIL, REPLACE"

HINT: The transmission has torque-regulated, adaptive pressure regulation. The pressure regulator enables the transmission to regulate pressure during each shift to prevent hard shifting. Each shift is assessed by the transmission control module (TCM) and is stored in the internal memory. This makes it possible to compensate for transmission and clutch wear. It is important that the adaptation in the memory is reset so that the transmission works normally after the repair. Because the fluid was changed during the repair, the counter for transmission fluid change must also be reset. If the counter is not reset during draining/replacement, a diagnostic trouble code may be generated under the wrong conditions.

NOTE: This applies only if the transmission or one of the components in the transmission have been replaced.

Fig. 358: Identifying Ignition ON
Courtesy of VOLVO CARS CORPORATION

- Ignition on.

  Click on the VCT2000 symbol to reset the adaptation and counter.

Fig. 359: Identifying VCT2000 Diagnostic Tool Symbol In VIDA
Courtesy of VOLVO CARS CORPORATION

- **Continue**

  Refer to **VERIFICATION**

TCM-P097400: SHIFT SOLENOID A CONTROL CIRCUIT HIGH. GENERAL FAILURE INFORMATION. NO SUB TYPE INFORMATION (B6324S5, TF-80SC; B6324S5, TF-80SC AWD; 2011-2012)

DIAGNOSTIC TROUBLE CODE (DTC) INFORMATION

see **DIAGNOSTIC TROUBLE CODE (DTC) INFORMATION**

FAULT-TRACING

see **FAULT-TRACING**

TCM-P097400: SHIFT SOLENOID A CONTROL CIRCUIT HIGH. GENERAL FAULT INFORMATION. NO INFORMATION ON FAULT TYPE (B8444S, TF-80SC AWD; 2006-2011)

DIAGNOSTIC TROUBLE CODE (DTC) INFORMATION

Condition

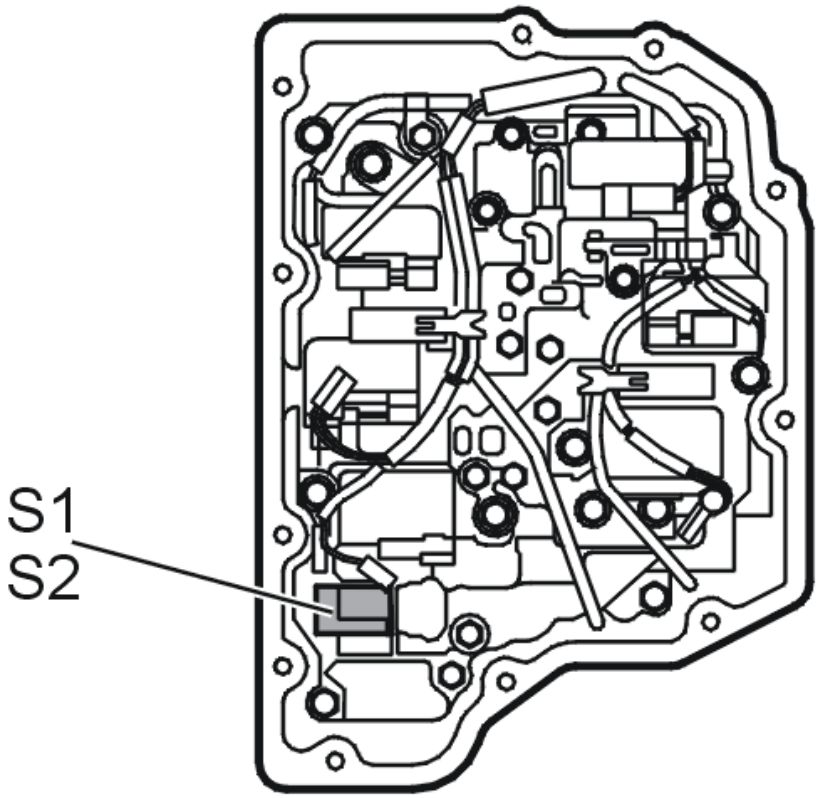

Fig. 360: Locating Shift Solenoids S1 & S2
Courtesy of VOLVO CARS CORPORATION

The shift solenoids S1, S2 manage the gear changing in the gearbox together with the linear solenoids. The solenoids are controlled using the power stage in the transmission control module (TCM). The control unit activates the power stage when the solenoids are to be activated and the circuit receives power. The control module checks the function of the circuit by sending a check current while the solenoid is not activated.

If the transmission control module (TCM) registers that the signal is missing in the circuit to solenoids S1, S2, while the solenoid is not activated, diagnostic trouble code (DTC) TCM-P097400 or TCM-P097700 will be generated. The diagnostic trouble code (DTC) that is generated depends on which circuit is defective.

The diagnostic trouble code can be diagnosed when the ignition is on.

Substitute Value

- Auxiliary program **Emergency mode 1** in the transmission control module (TCM) has started.

  HINT: EMERGENCY MODE IN CASE OF MALFUNCTION

Possible Source

- Contact resistance in the terminals

- Open circuit on control signal lead.
- Shift solenoid not working.
- The signal cable is short-circuited to voltage.
- Internal fault in transmission control module (TCM).

Fault symptom[s]

- General warning lamp lit
- Malfunction indicator lamp (MIL) lit.
- Harsh gear changing
- No gear changing.

FAULT TRACING TCM-P097400

CHECKS

CHECKING SHIFT SOLENOID S1

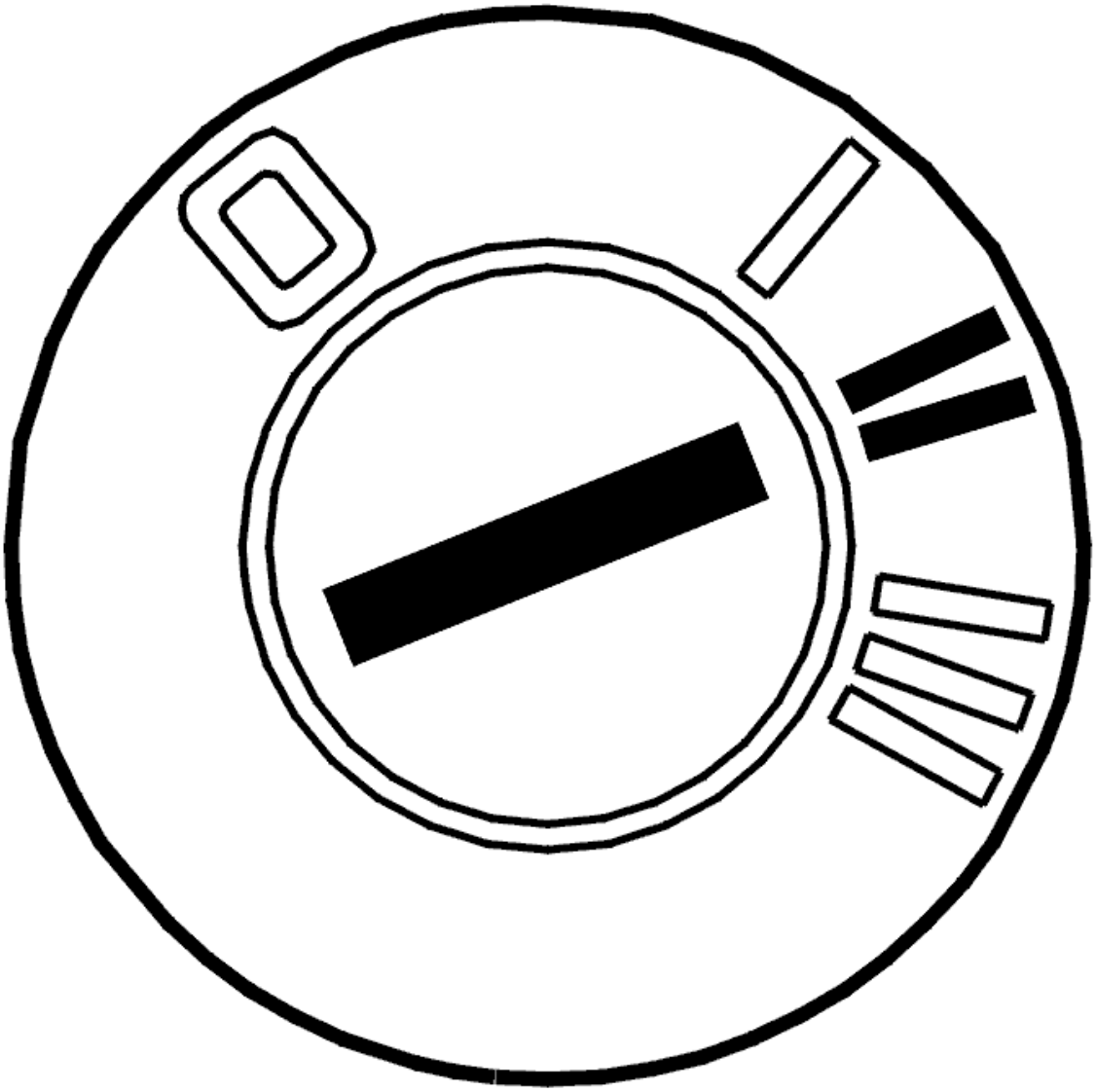

Fig. 361: Identifying Ignition ON
Courtesy of VOLVO CARS CORPORATION

- Ignition on
- Activate solenoid S1.

  Check the status of solenoid S1. The status must switch between OFF and ON.

  The fault is permanent if the status does not change.

  If the status switches it means that the fault was present previously but is not active now. There is an intermittent fault.

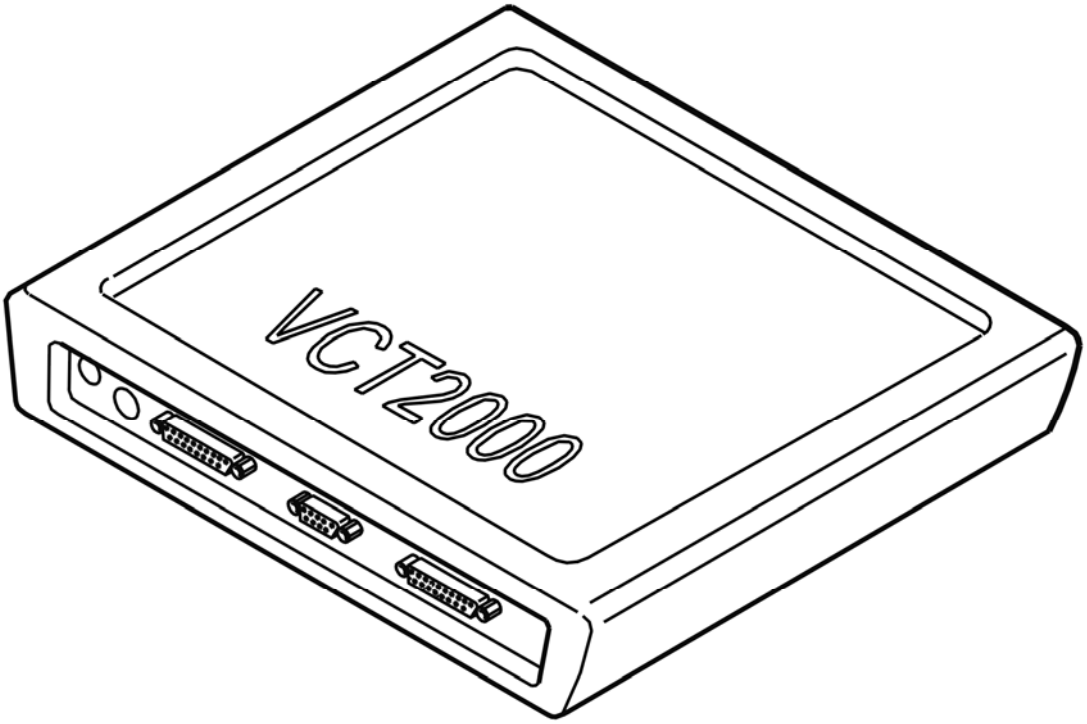

Fig. 362: Identifying VCT2000 Diagnostic Tool Symbol In VIDA
Courtesy of VOLVO CARS CORPORATION

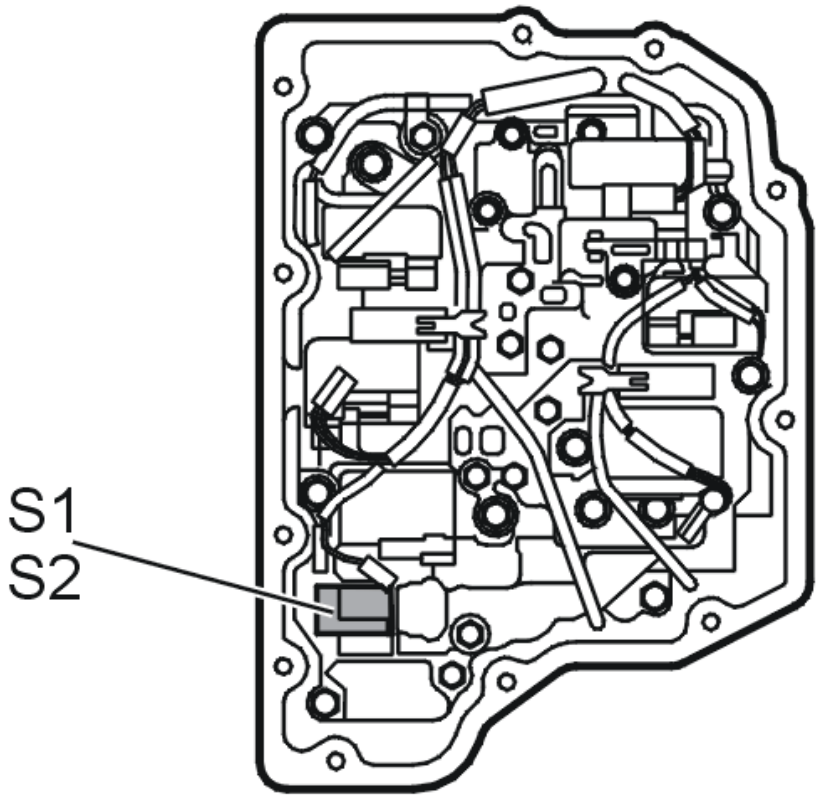

Fig. 363: Locating Shift Solenoids S1 & S2
Courtesy of VOLVO CARS CORPORATION

- **Continue**

Refer to **CHECKING THE COMPONENTS AND WIRING**

CHECKING THE COMPONENTS AND WIRING

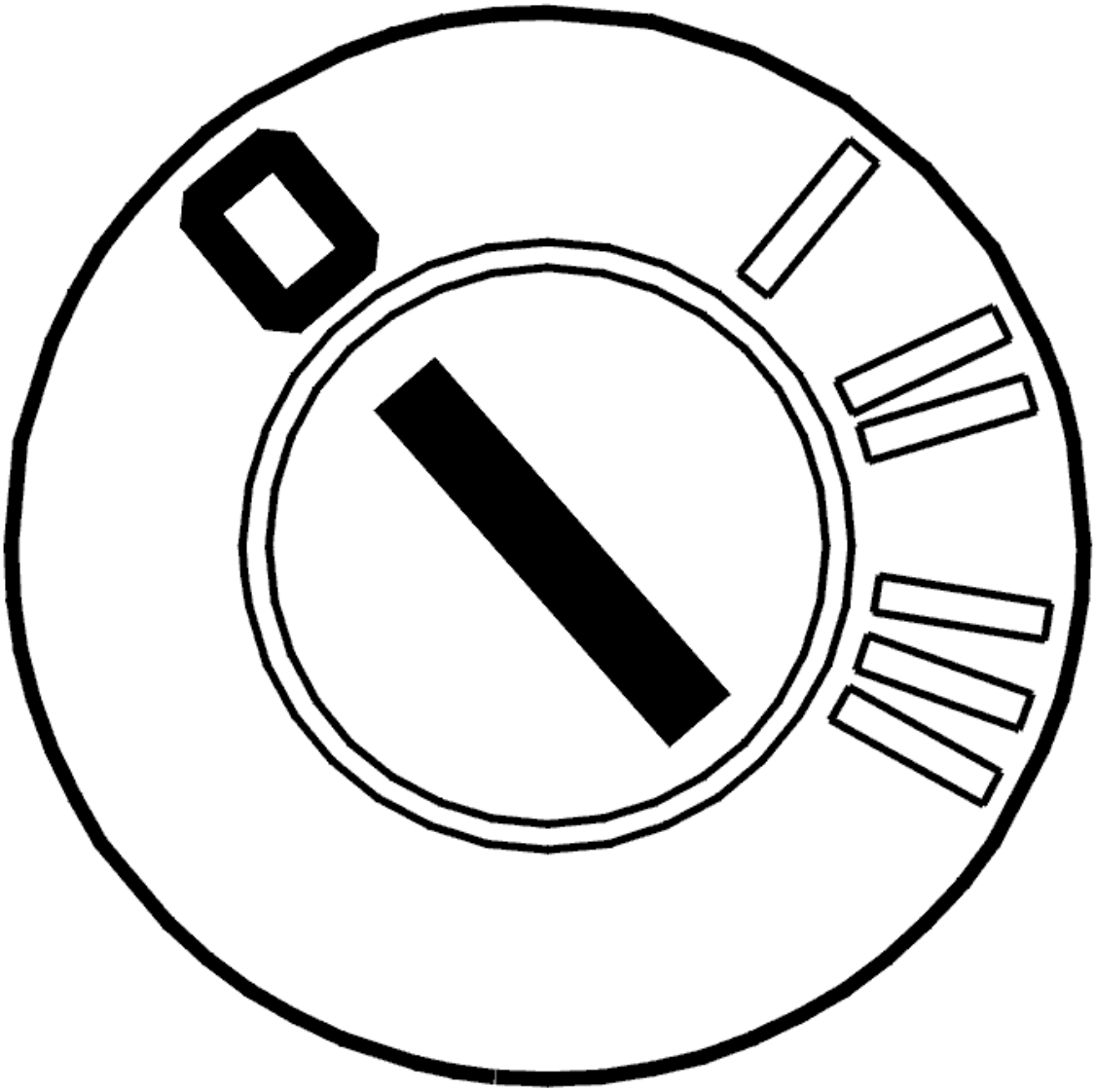

Fig. 364: Identifying Ignition OFF
Courtesy of VOLVO CARS CORPORATION

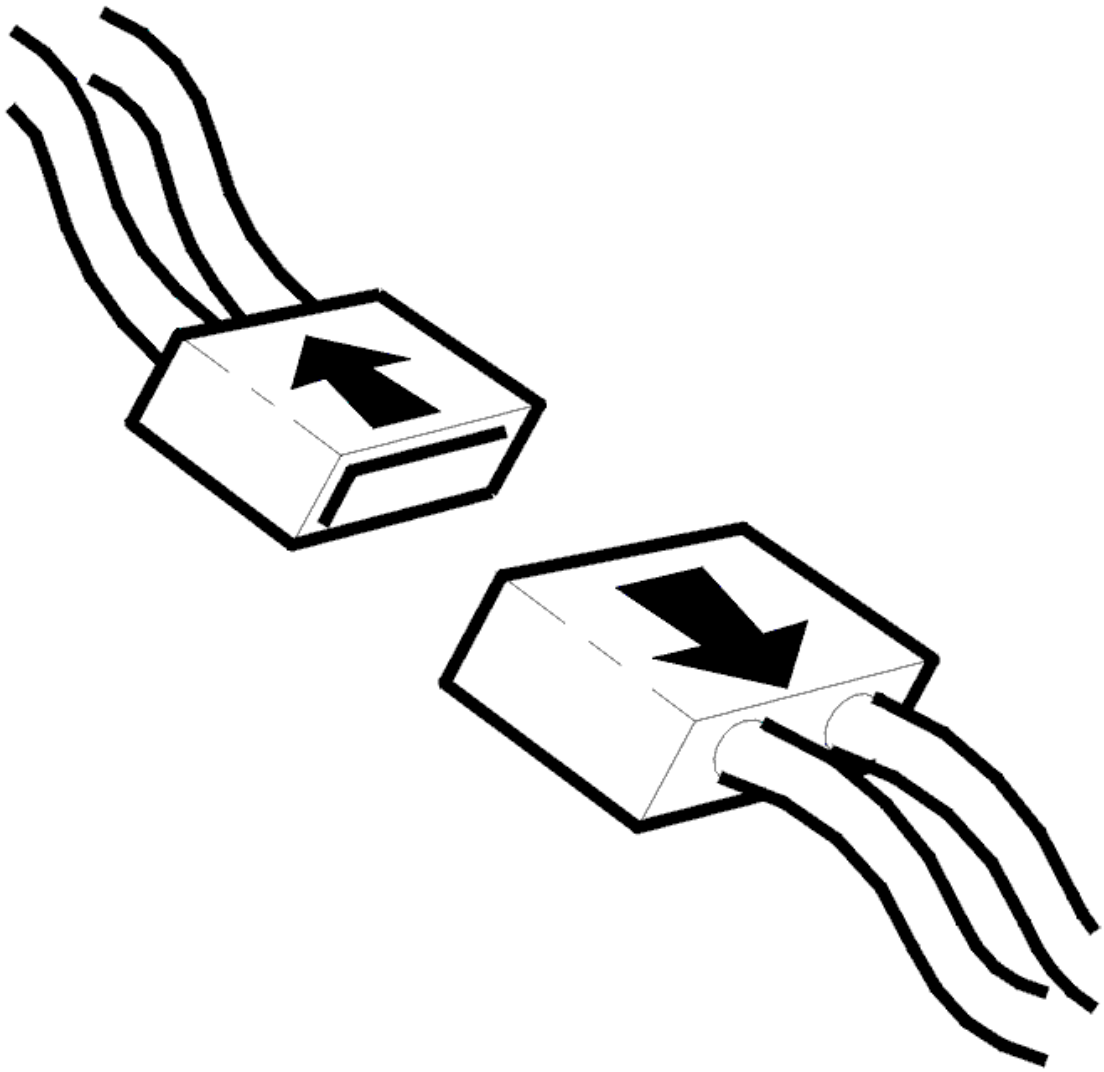

Fig. 365: Identifying Connector(s) Disconnected
Courtesy of VOLVO CARS CORPORATION

- Ignition off
- Open the gearbox control system

  Check the cable between transmission connector terminal #B5 and the connector for solenoid S1. Check for an open-circuit. Check for a short-circuit to supply voltage.

  HINT: If no fault is found in the wiring check solenoid S1. See CHECKING SHIFT SOLENOIDS

  Remedy as necessary.

  Other information

  - see **CONNECTING THE BREAKOUT BOX**

- see **SIGNAL DESCRIPTION**
- see **CABLE HARNESS, CONTROL SYSTEM, GEARBOX, REPLACING**
- To access the transmission control system: **COVER CONTROL SYSTEM, REPLACING (2007-2011)**
- To access connector B/replace the solenoid: **SOLENOID CONTROL SYSTEM, REPLACING (2007-2011)**
- see **CONTENTS**

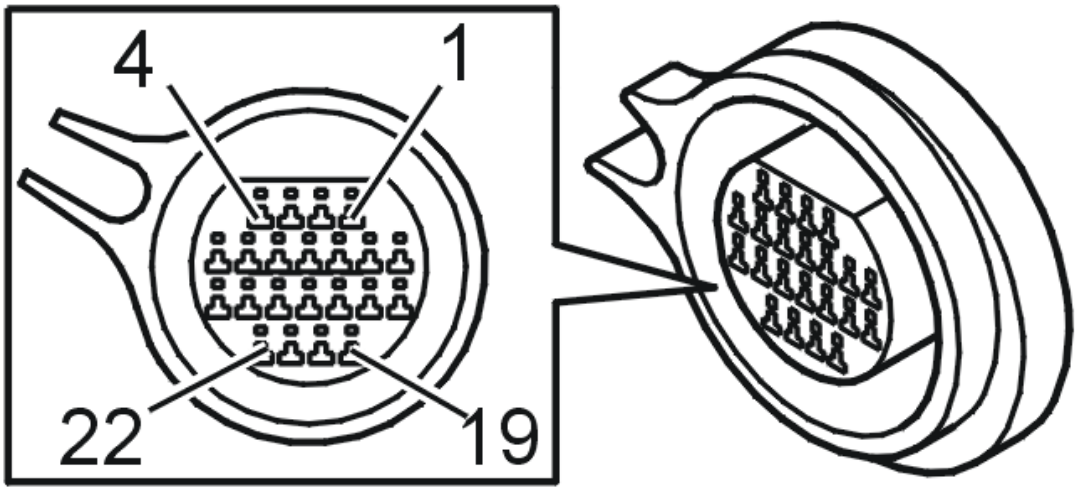

Fig. 366: Identifying Connector B Terminals
Courtesy of VOLVO CARS CORPORATION

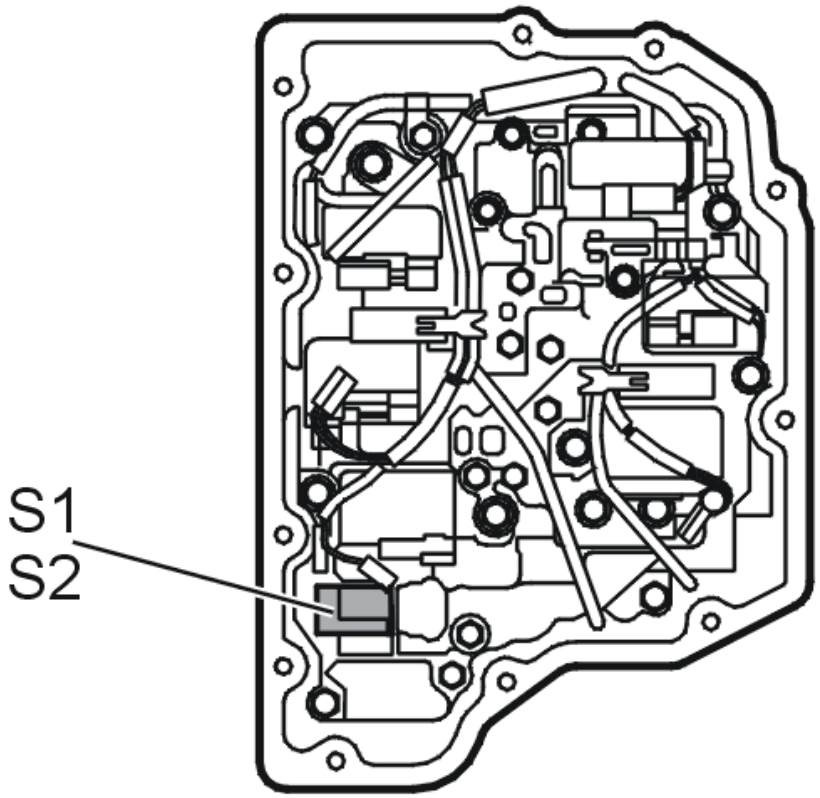

Fig. 367: Locating Shift Solenoids S1 & S2
Courtesy of VOLVO CARS CORPORATION

- **Continue**

Refer to **RESETTING ADAPTATION**

RESETTING ADAPTATION

RESETTING ADAPTATION AND COUNTER FOR "TRANSMISSION OIL, CHANGING"

HINT: The transmission has torque-controlled, adaptive pressure control. The pressure control means that the transmission itself controls the pressure during each shift sequence in order to avoid harsh shifting. Each shift is assessed by the transmission control module (TCM) and is stored in the internal memory, which results in compensation for wear in the transmission and clutch. In order for the transmission to function correctly after repair, it is important to reset the adaptation in the memory. Since the oil is changed during the repair, the counter for "Transmission oil, change" shall also be reset. If the counter is not reset when draining/changing oil, there is a risk that a diagnostic trouble code may be generated under incorrect conditions.

NOTE: **This applies only if the transmission or one of the components in the transmission have been replaced.**

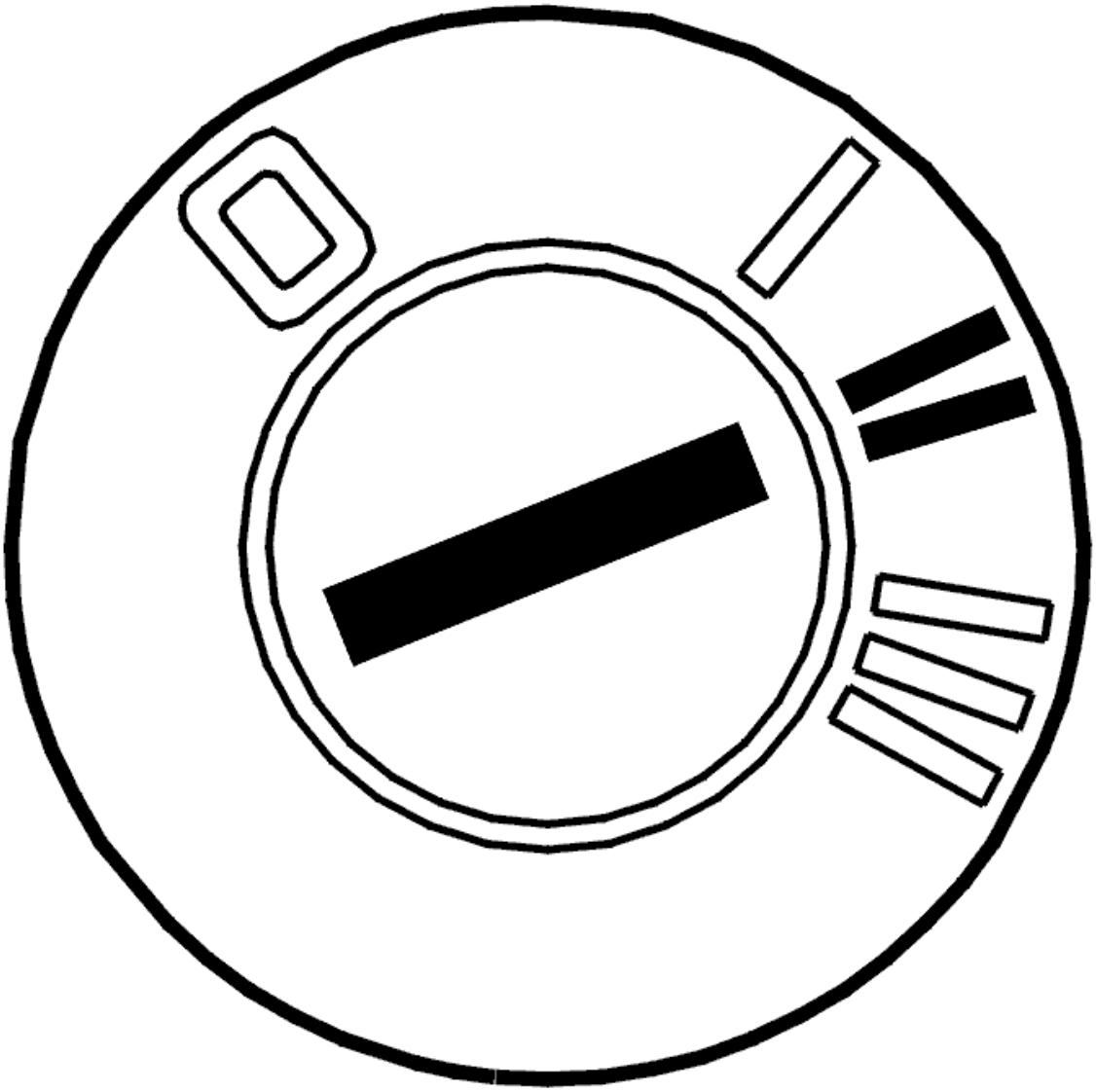

Fig. 368: Identifying Ignition ON
Courtesy of VOLVO CARS CORPORATION

- Ignition on

  Activate reset of the adaptation and the counter by clicking on the symbol for VCT2000.

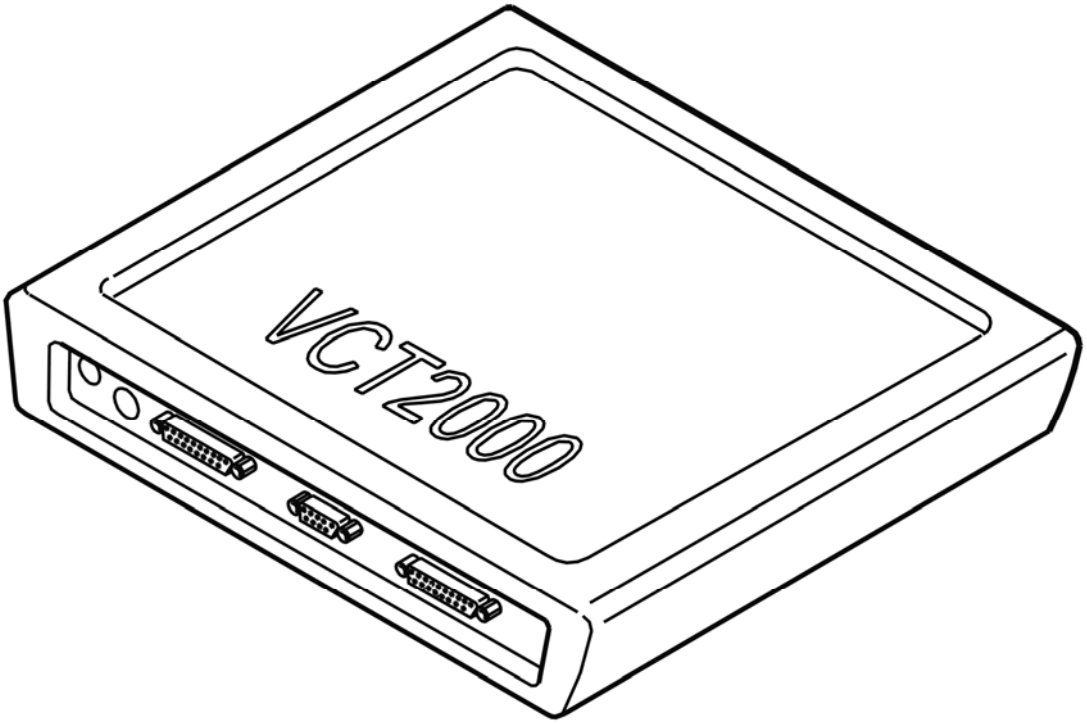

Fig. 369: Identifying VCT2000 Diagnostic Tool Symbol In VIDA
Courtesy of VOLVO CARS CORPORATION

- **Continue**

  Refer to **VERIFICATION**

VERIFICATION

VERIFICATION

HINT: After carrying out the repair, check that the fault has been remedied.

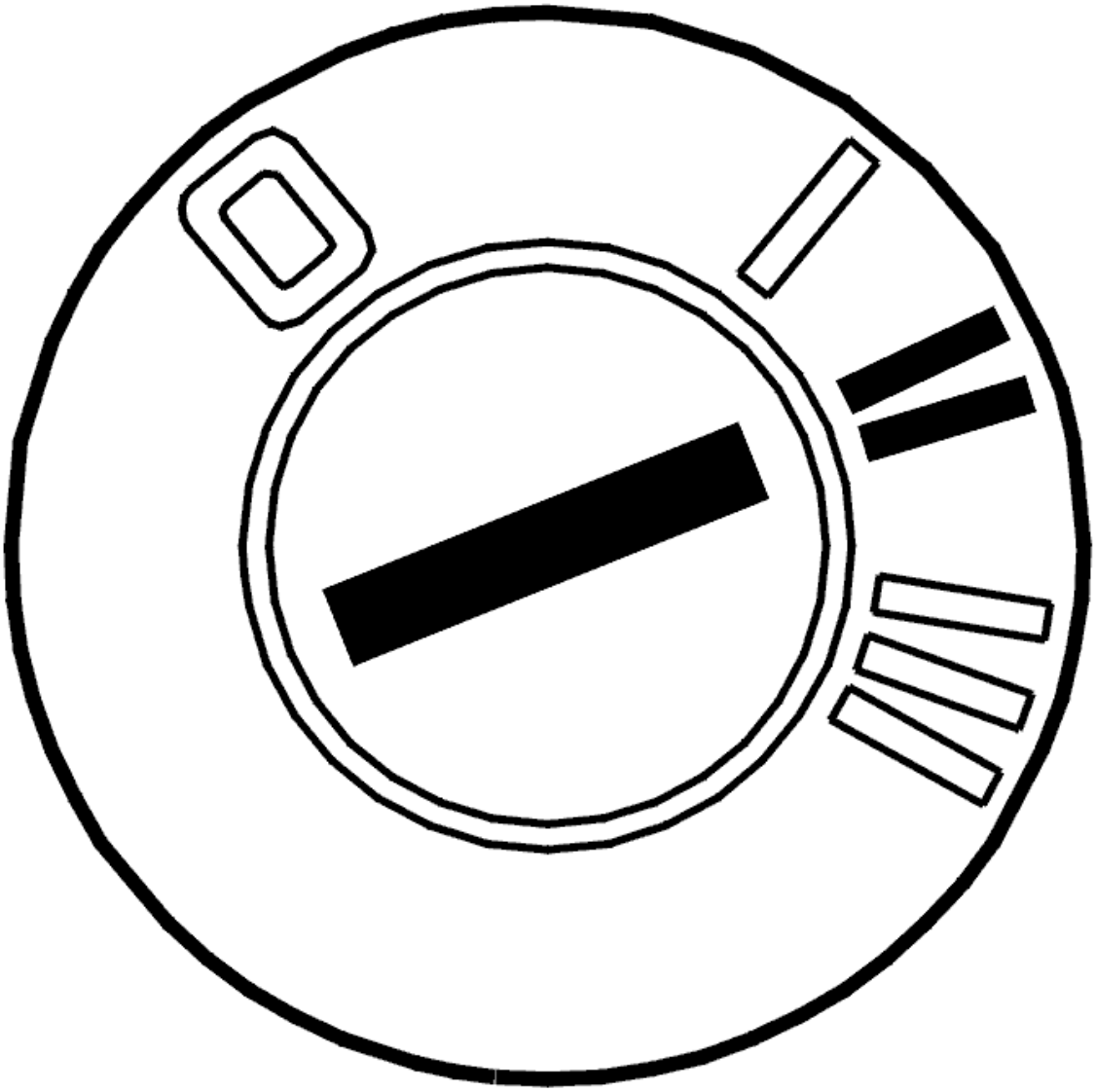

Fig. 370: Identifying Ignition ON
Courtesy of VOLVO CARS CORPORATION

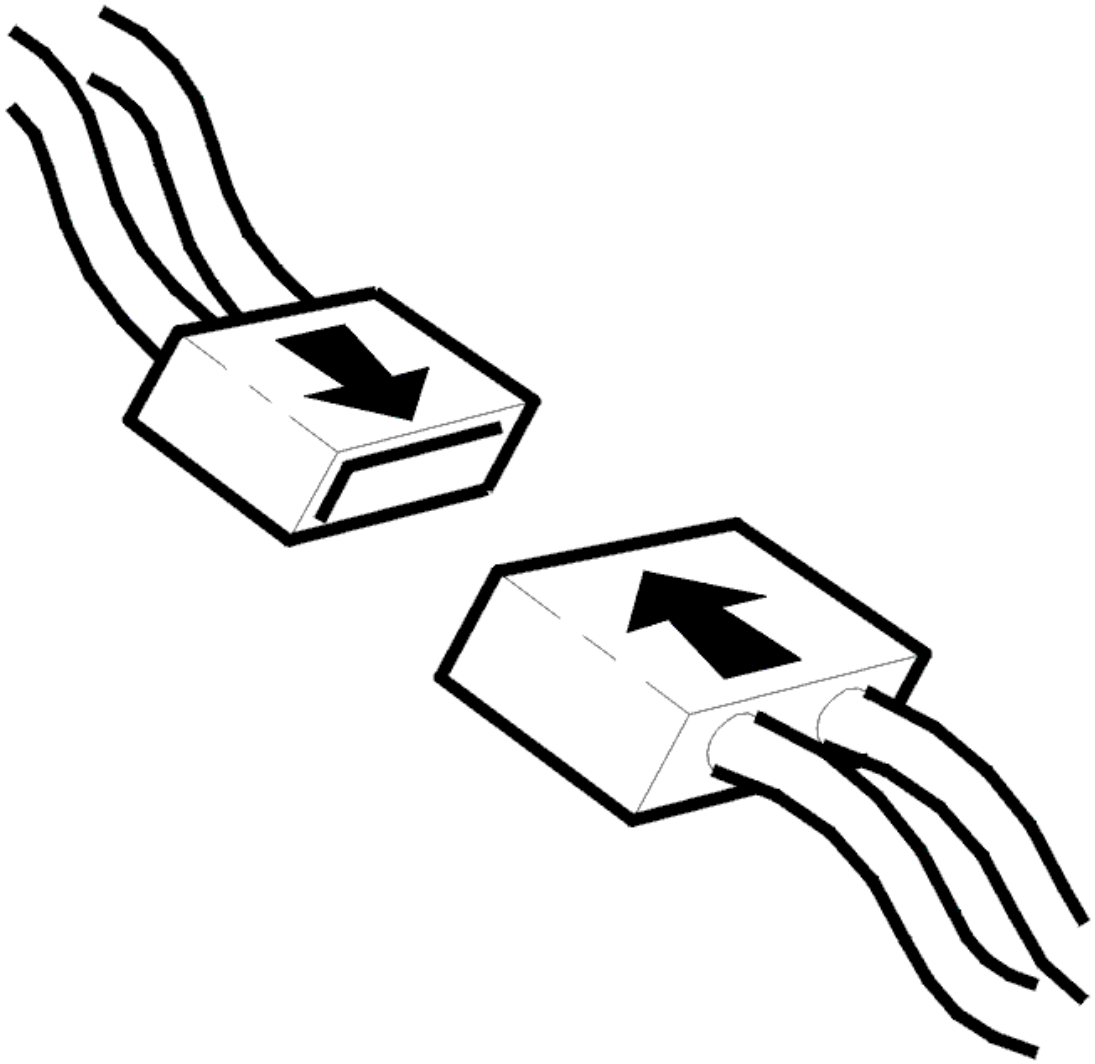

Fig. 371: Identifying Connector(s) Reinstallation
Courtesy of VOLVO CARS CORPORATION

- Ignition off
- Reinstall the components, reconnect the connectors etc.
- Ignition on
- Activate solenoid S1 by clicking the symbol for VCT2000.

  Read the status of solenoid S1. The status must switch between OFF and ON.

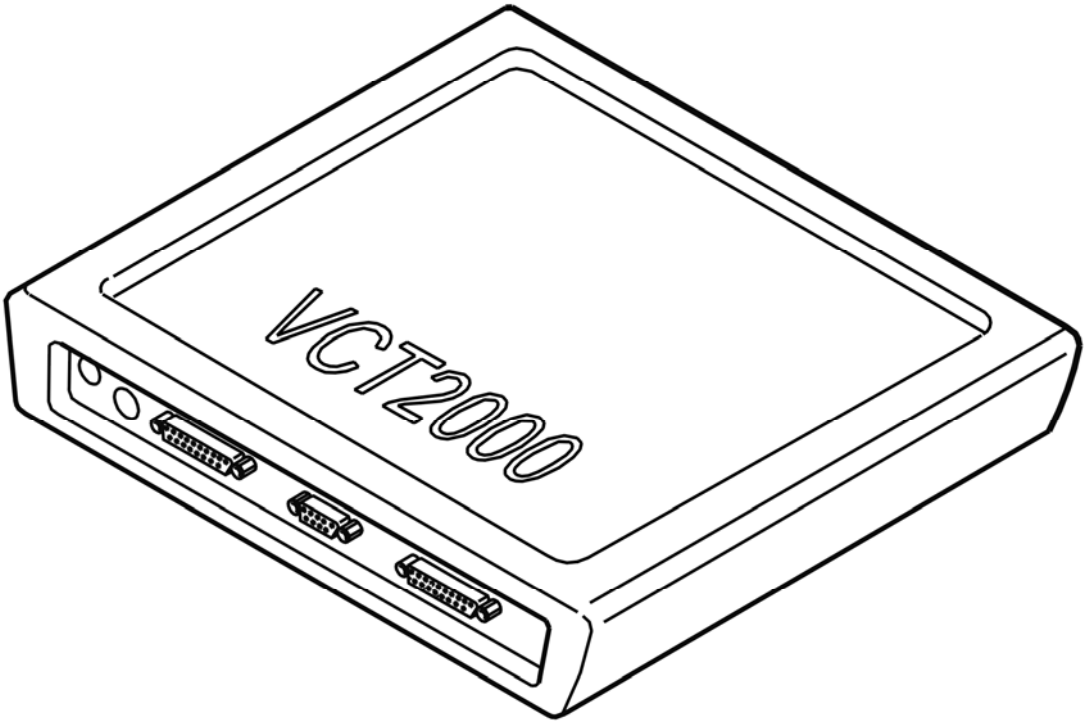

Fig. 372: Identifying VCT2000 Diagnostic Tool Symbol In VIDA
Courtesy of VOLVO CARS CORPORATION

Is the function OK?

- **YES**

  VERIFIED: Troubleshooting has been completed.

- **NO**

  Refer to **INFORMATION**

INFORMATION

FAULT-TRACING INFORMATION

The fault should have been detected and remedied. As this is not the case fault-tracing has failed.

Exit fault-tracing for this diagnostic trouble code (DTC) or make another attempt.

TCM-P097400: SHIFT SOLENOID A CONTROL CIRCUIT HIGH. GENERAL FAULT INFORMATION. NO INFORMATION ON FAULT TYPE (TF-80SC AWD;

2005)

DIAGNOSTIC TROUBLE CODE (DTC) INFORMATION

see **DIAGNOSTIC TROUBLE CODE (DTC) INFORMATION**

FAULT TRACING TCM-P097400

see **FAULT TRACING TCM-P097400**

TCM-P097600: SHIFT SOLENOID B CONTROL CIRCUIT LOW. GENERAL FAILURE INFORMATION. NO SUB TYPE INFORMATION (B6324S, TF-80SC; B6324S, TF-80SC AWD; 2007-2010)

DIAGNOSTIC TROUBLE CODE (DTC) INFORMATION

Condition

Shift solenoids S1 and S2 work with the linear solenoids to handle shifting in the transmission. The solenoids are controlled by power stages in the transmission control module (TCM). The transmission control module (TCM) opens the power stages to activate the solenoids and sends a voltage through the circuit.

The diagnostic trouble code (DTC) is stored if the control module detects that:

- The circuit of solenoid S2 receives too low of a signal when the solenoid is activated.

The control module's test for the diagnostic trouble code (DTC) starts in the event of:

- Ignition on.

NOTE: **The control module can only detect the fault once the test has been started and the diagnostic trouble code (DTC) is stored when the conditions are met.**

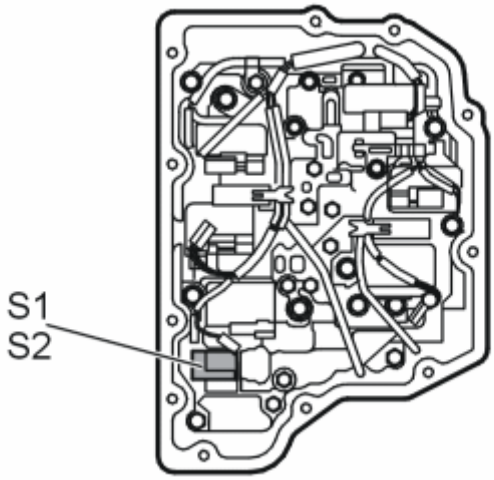

Fig. 373: Identifying S1 And S2 Solenoids
Courtesy of VOLVO CARS CORPORATION

Substitute Value

- Auxiliary program **Emergency mode 1** in the transmission control module (TCM) has started.

  HINT: EMERGENCY MODE IN THE EVENT OF A FAULT

Possible Source

- Short-circuit to ground in the signal cable.
- Solenoid not working.
- Internal fault in the transmission control module (TCM).

Fault symptom[s]

- General warning lamp lit
- Malfunction indicator light (MIL), on
- Rough gear shift
- No gear shift

FAULT-TRACING

CHECKS

CHECKING SHIFT SOLENOID S2

Fig. 374: Identifying Ignition ON
Courtesy of VOLVO CARS CORPORATION

- Ignition on.
- Activate solenoid S2.

  Check the status for solenoid S2. The status must switch between OFF and ON.

  The fault is permanent if the status does not change.

  If the status switches it means that the fault was present previously but is not active now. There is an intermittent fault.

Fig. 375: Identifying VCT2000 Diagnostic Tool Symbol In VIDA
Courtesy of VOLVO CARS CORPORATION

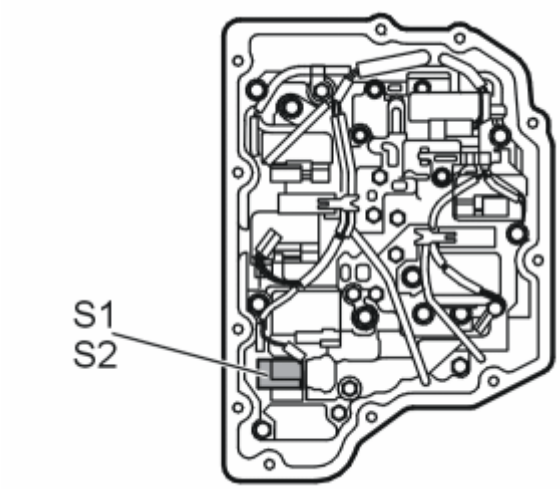

Fig. 376: Identifying S1 And S2 Solenoids
Courtesy of VOLVO CARS CORPORATION

- **Continue**

Refer to **CHECKING THE COMPONENTS AND WIRING**

CHECKING THE COMPONENTS AND WIRING

Fig. 377: Identifying Ignition OFF
Courtesy of VOLVO CARS CORPORATION

- Ignition off.
- Open the transmission control system.

  Check connector B (22-pin) for the transmission control module (TCM). Check for damaged or pressed in pins. Check for contact resistance and oxidation.

  Check the cable for short-circuit to ground.

  Take readings between:

  - Transmission connector #B2 and the connector for solenoid S2.

  HINT: If no fault is found in the wiring check solenoid S2. See CHECKING INTERNAL COMPONENTS OF THE TRANSMISSION

  Remedy as necessary.

  Other information

  - see **CONNECTING THE BREAKOUT BOX**
  - see **SIGNAL SPECIFICATION**
  - see **TRANSMISSION CONTROL UNIT WIRING HARNESS**
  - To access the transmission control system:**COVER CONTROL SYSTEM, REPLACING (2007-2011)**
  - To access connector B/replace the solenoid:**TRANSMISSION - REMOVAL, REPLACEMENT AND INSTALLATION**
  - see **CHECKING WIRING AND TERMINALS**

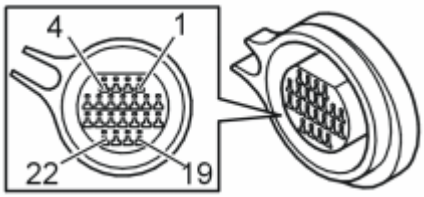

Fig. 378: Identifying Connector B Terminals
Courtesy of VOLVO CARS CORPORATION

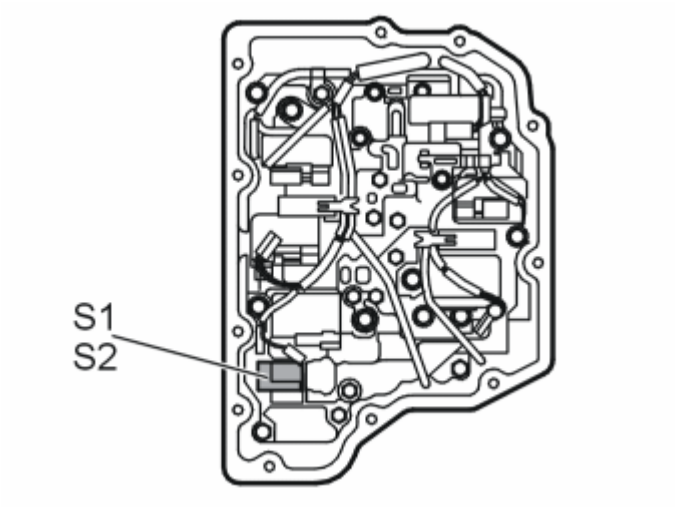

Fig. 379: Identifying S1 And S2 Solenoids
Courtesy of VOLVO CARS CORPORATION

- **Continue**

  Refer to **RESETTING ADAPTATION**

VERIFICATION

VERIFICATION

HINT: After carrying out the repair, check that the fault has been remedied.

Fig. 380: Identifying Ignition ON
Courtesy of VOLVO CARS CORPORATION

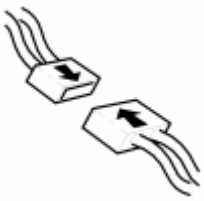

Fig. 381: Identifying Connector(s) Reinstallation
Courtesy of VOLVO CARS CORPORATION

- Ignition off.
- Reinstall the connectors, components etc.
- Ignition on.
- Activate solenoid S2 by clicking the symbol for VCT2000.

  Read the status of solenoid S2. The status must switch between OFF and ON.

Fig. 382: Identifying VCT2000 Diagnostic Tool Symbol In VIDA
Courtesy of VOLVO CARS CORPORATION

Is the function OK?

- **YES**

  VERIFIED: Troubleshooting has been completed.

- **NO**

  Refer to **INFORMATION**

INFORMATION

FAULT-TRACING INFORMATION

The fault should have been detected and remedied. As this is not the case fault-tracing has failed.

Exit fault-tracing for this diagnostic trouble code (DTC) or make another attempt.

RESETTING ADAPTATION

RESETTING THE ADAPTATION AND THE COUNTER FOR "TRANSMISSION OIL, REPLACE"

HINT: The transmission has torque-regulated, adaptive pressure regulation. The pressure regulator enables the transmission to regulate pressure during each shift to prevent hard shifting. Each shift is assessed by the transmission control module (TCM) and is stored in the internal memory. This makes it possible to compensate for transmission and clutch wear. It is important that the adaptation in the memory is reset so that the transmission works normally after the repair. Because the fluid was changed during the repair, the counter for transmission fluid change must also be reset. If the counter is not reset during draining/replacement, a diagnostic trouble code may be generated under the wrong conditions.

NOTE: This applies only if the transmission or one of the components in the transmission have been replaced.

Fig. 383: Identifying Ignition ON
Courtesy of VOLVO CARS CORPORATION

- Ignition on.

  Click on the VCT2000 symbol to reset the adaptation and counter.

  Fig. 384: Identifying VCT2000 Diagnostic Tool Symbol In VIDA
  Courtesy of VOLVO CARS CORPORATION

- **Continue**

  Refer to **VERIFICATION**

TCM-P097600: SHIFT SOLENOID B CONTROL CIRCUIT LOW. GENERAL FAILURE INFORMATION. NO SUB TYPE INFORMATION (B6324S5, TF-80SC; B6324S5, TF-80SC AWD; 2011-2012)

DIAGNOSTIC TROUBLE CODE (DTC) INFORMATION

see **DIAGNOSTIC TROUBLE CODE (DTC) INFORMATION**

FAULT-TRACING

see **FAULT-TRACING**

TCM-P097600: SHIFT SOLENOID B CONTROL CIRCUIT LOW. GENERAL FAULT INFORMATION. NO INFORMATION ON FAULT TYPE (B8444S, TF-80SC AWD; 2006-2011)

DIAGNOSTIC TROUBLE CODE (DTC) INFORMATION

see **DIAGNOSTIC TROUBLE CODE (DTC) INFORMATION**

FAULT TRACING TCM-P097600

CHECKS

CHECKING SHIFT SOLENOID S2

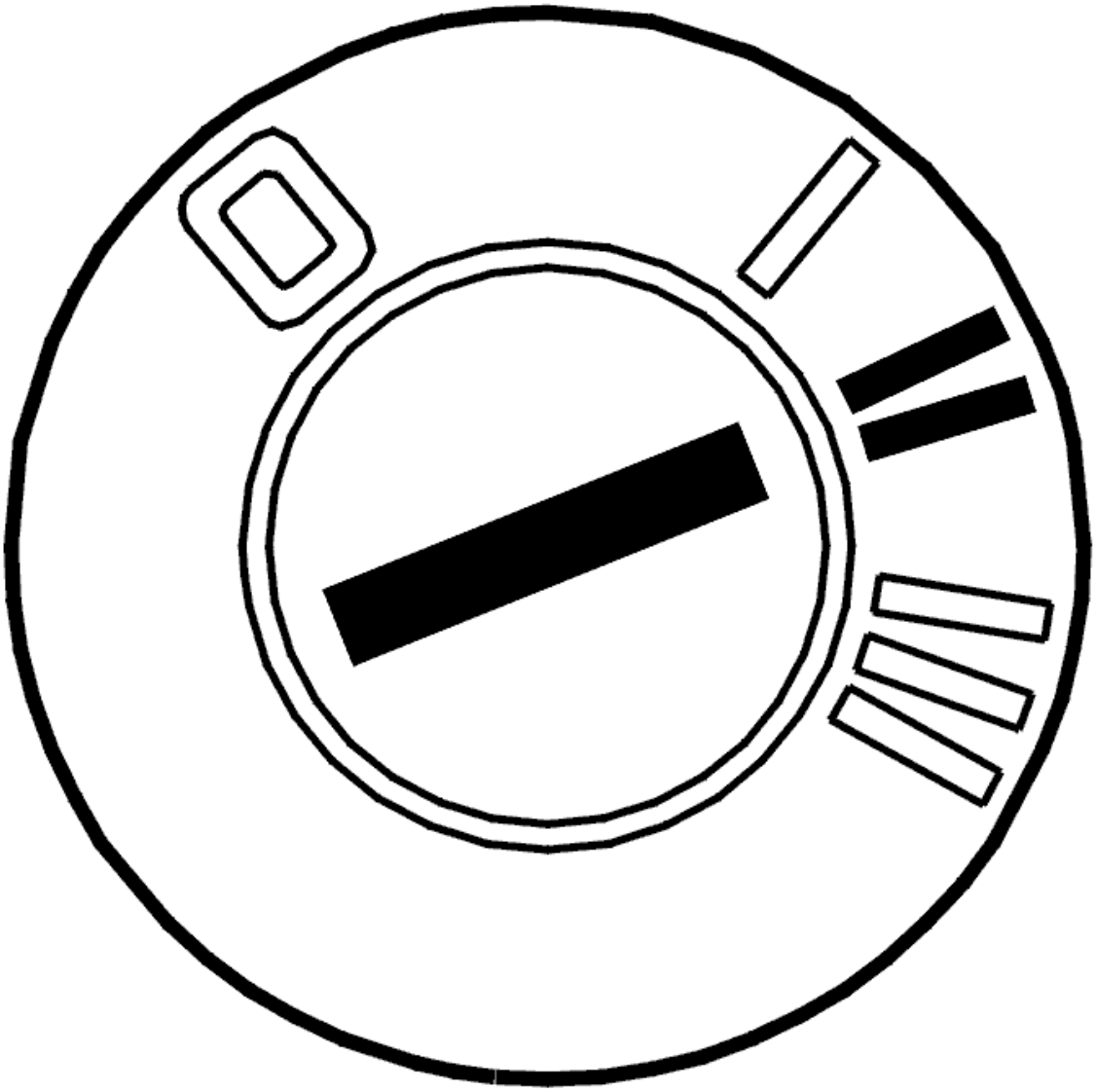

Fig. 385: Identifying Ignition ON
Courtesy of VOLVO CARS CORPORATION

- Ignition on
- Activate solenoid S2.

  Check the status of solenoid S2. The status must switch between OFF and ON.

  The fault is permanent if the status does not change.

  If the status switches it means that the fault was present previously but is not active now. There is an intermittent fault.

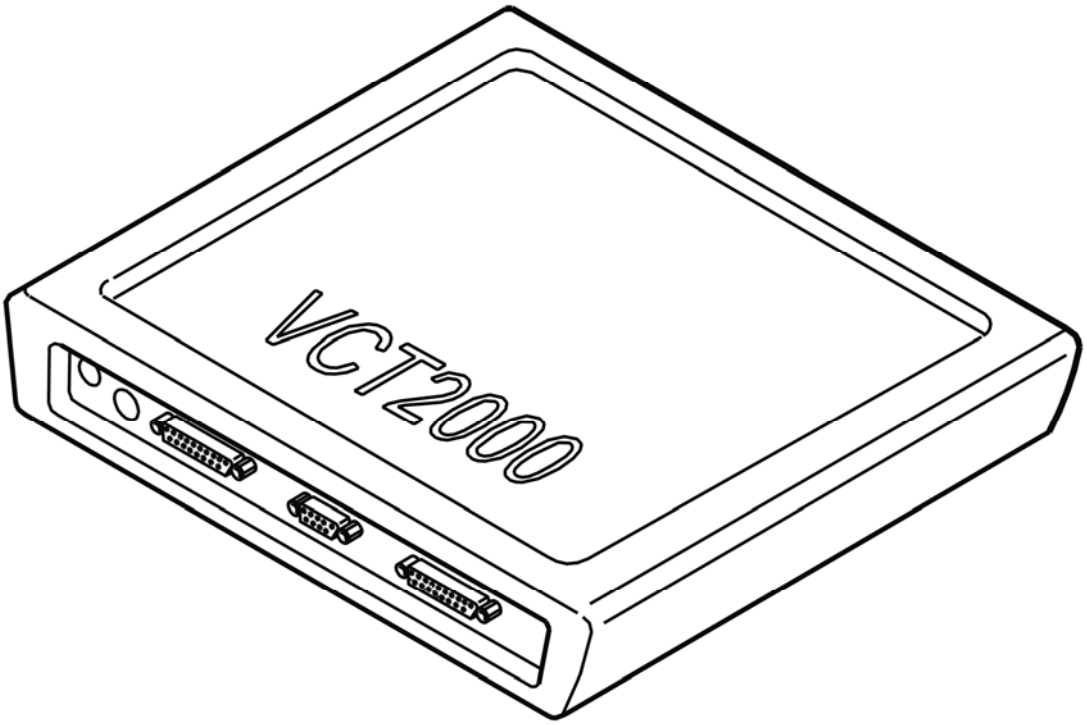

Fig. 386: Identifying VCT2000 Diagnostic Tool Symbol In VIDA
Courtesy of VOLVO CARS CORPORATION

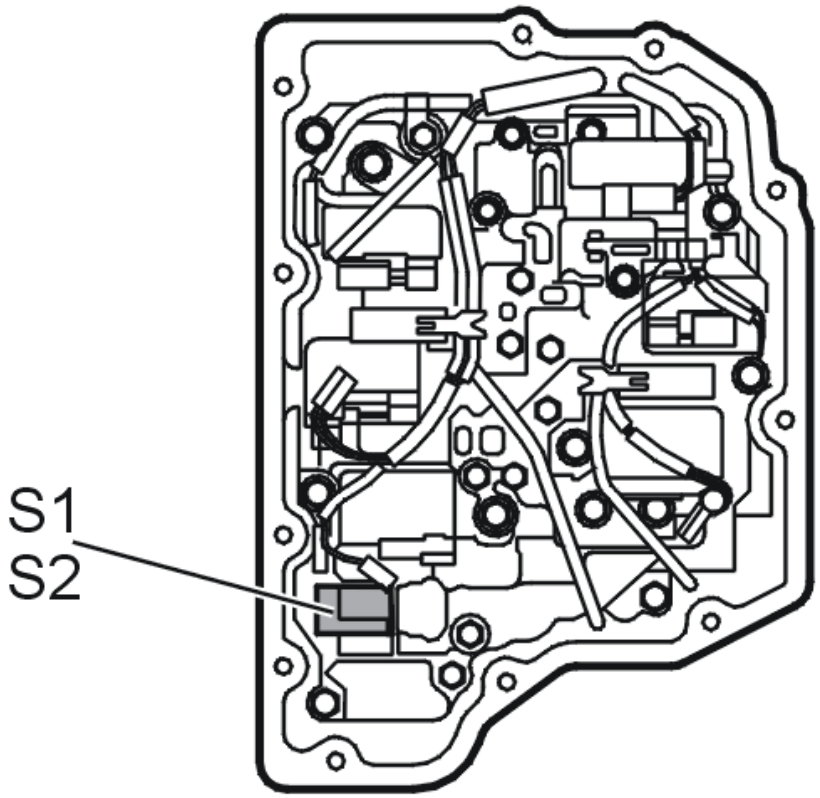

Fig. 387: Locating Shift Solenoids S1 & S2
Courtesy of VOLVO CARS CORPORATION

- **Continue**

Refer to **CHECKING THE COMPONENTS AND WIRING**

CHECKING THE COMPONENTS AND WIRING

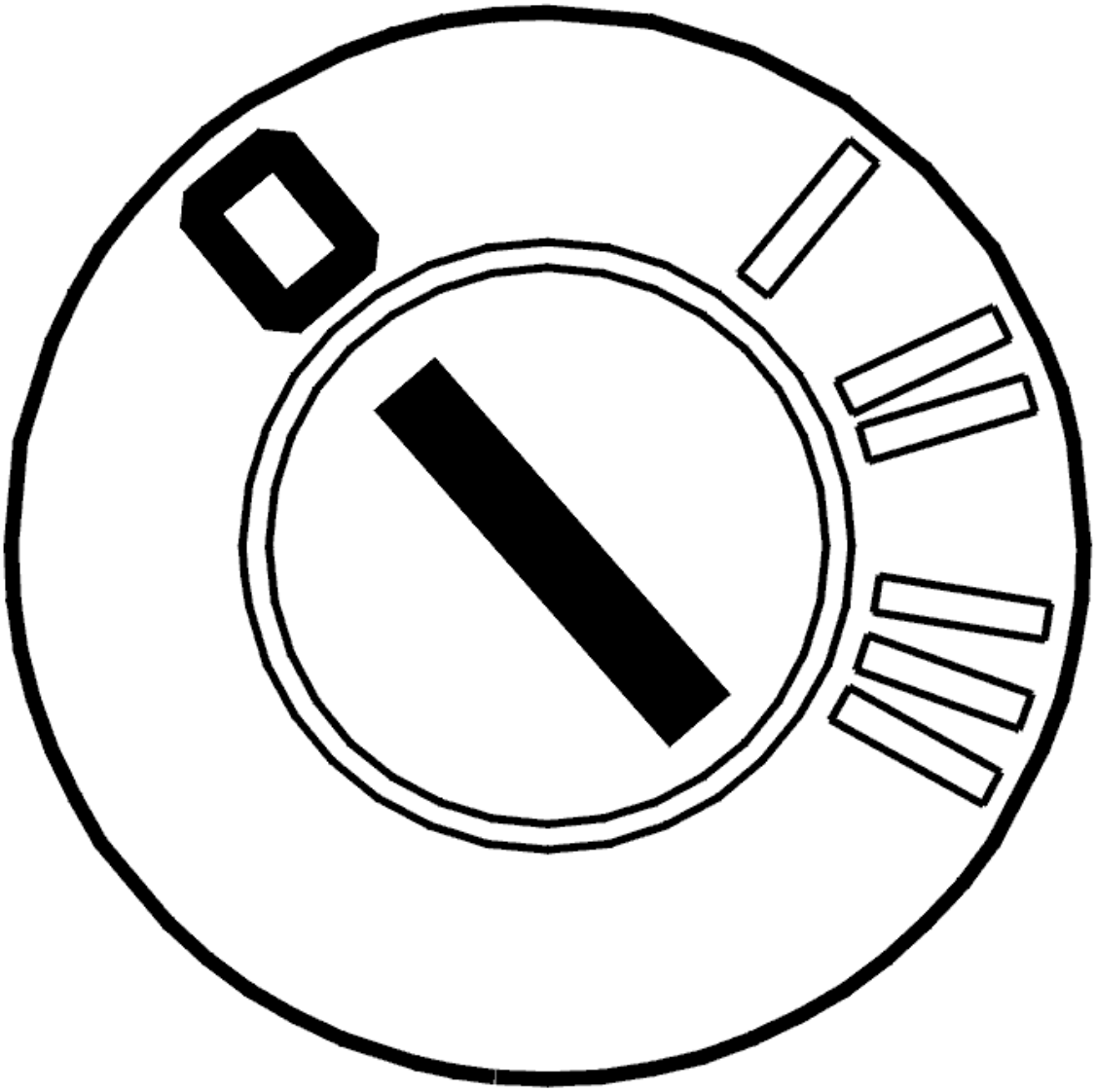

Fig. 388: Identifying Ignition OFF
Courtesy of VOLVO CARS CORPORATION

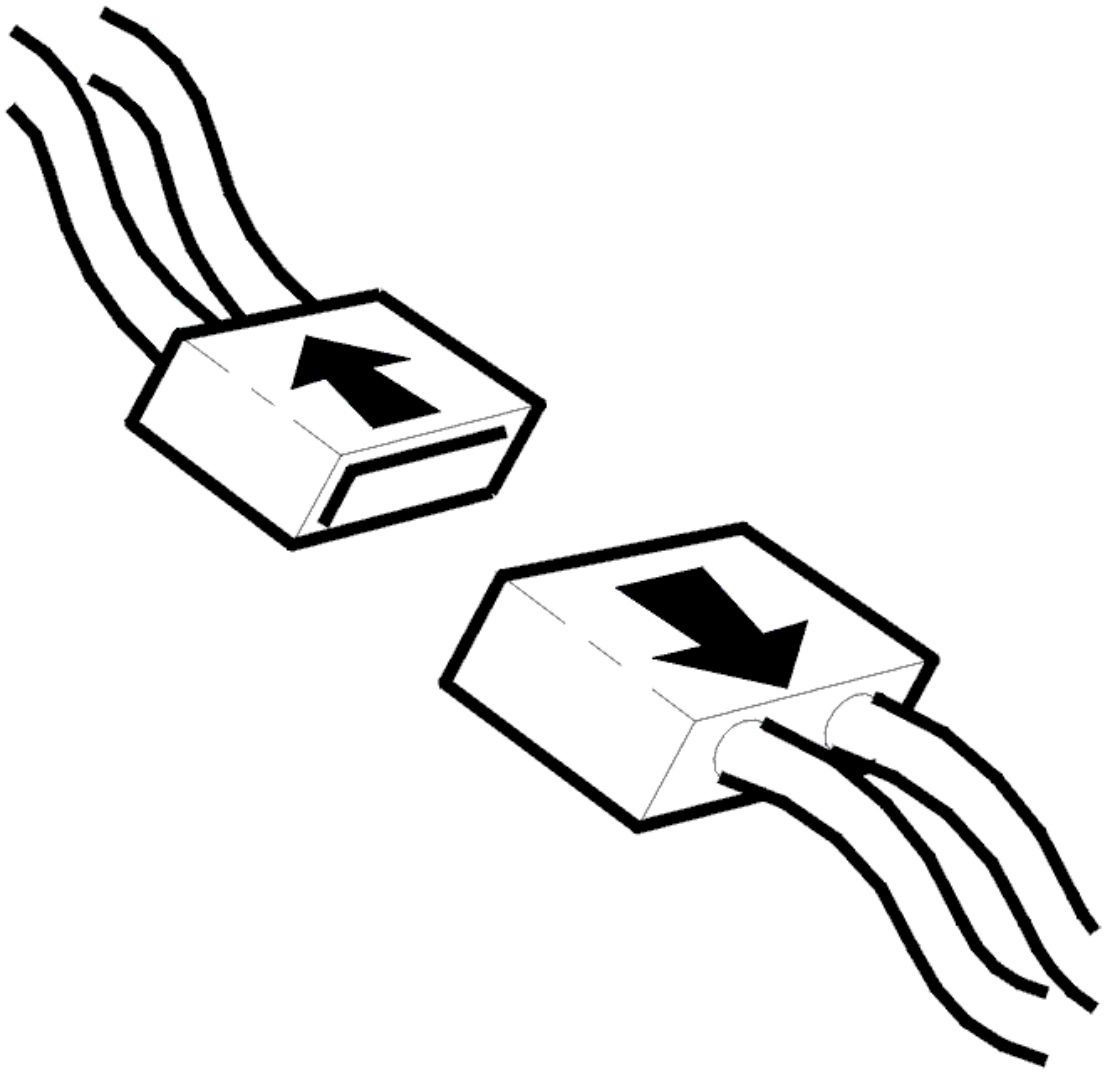

Fig. 389: Identifying Connector(s) Disconnected
Courtesy of VOLVO CARS CORPORATION

- Ignition off
- Open the gearbox control system

  Check connector B (22-pin) for the transmission control module (TCM). Check for damaged or pressed in pins. Check for contact resistance and oxidation.

  Check the cable between transmission connector terminal #B2 and the connector for solenoid S2. Check for a short-circuit to ground.

  If no fault is found in the wiring check solenoid S2. See **CHECKING SHIFT SOLENOIDS**

  Remedy as necessary.

Other information

- see **CONNECTING THE BREAKOUT BOX**
- see **SIGNAL DESCRIPTION**
- see **CABLE HARNESS, CONTROL SYSTEM, GEARBOX, REPLACING**
- To access the transmission control system: **COVER CONTROL SYSTEM, REPLACING (2007-2011)**
- To access connector B/replace the solenoid: **SOLENOID CONTROL SYSTEM, REPLACING (2007-2011)**
- see **CONTENTS**

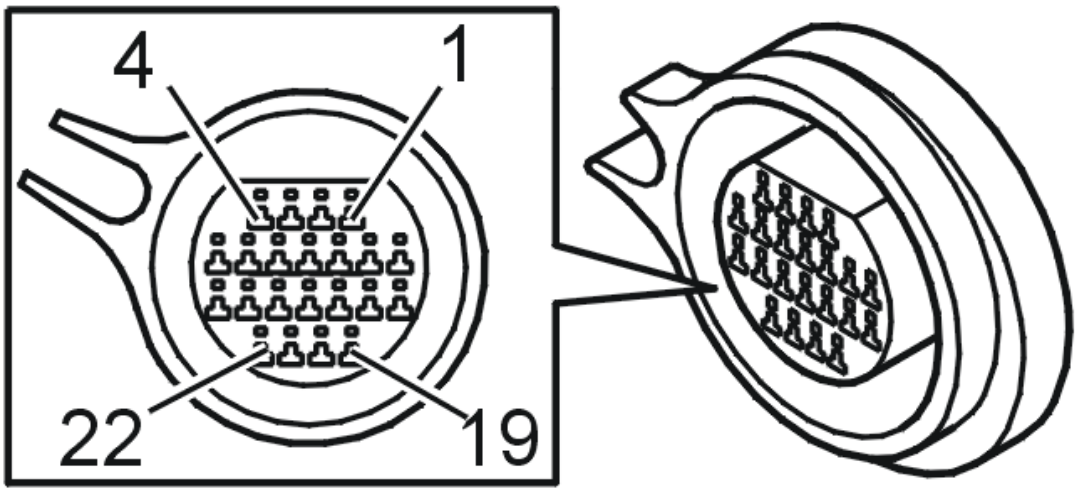

Fig. 390: Identifying Connector B Terminals
Courtesy of VOLVO CARS CORPORATION

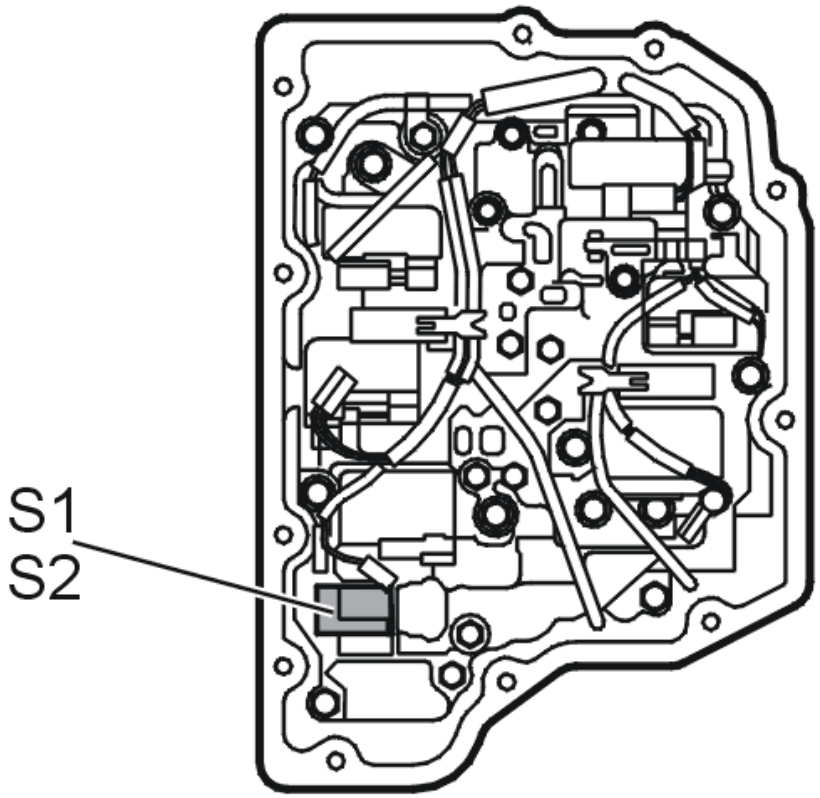

Fig. 391: Locating Shift Solenoids S1 & S2
Courtesy of VOLVO CARS CORPORATION

- **Continue**

Refer to **RESETTING ADAPTATION**

RESETTING ADAPTATION

RESETTING ADAPTATION AND COUNTER FOR "TRANSMISSION OIL, CHANGING"

HINT: The transmission has torque-controlled, adaptive pressure control. The pressure control means that the transmission itself controls the pressure during each shift sequence in order to avoid harsh shifting. Each shift is assessed by the transmission control module (TCM) and is stored in the internal memory, which results in compensation for wear in the transmission and clutch. In order for the transmission to function correctly after repair, it is important to reset the adaptation in the memory. Since the oil is changed during the repair, the counter for "Transmission oil, change" shall also be reset. If the counter is not reset when draining/changing oil, there is a risk that a diagnostic trouble code may be generated under incorrect conditions.

NOTE: **This applies only if the transmission or one of the components in the transmission have been replaced.**

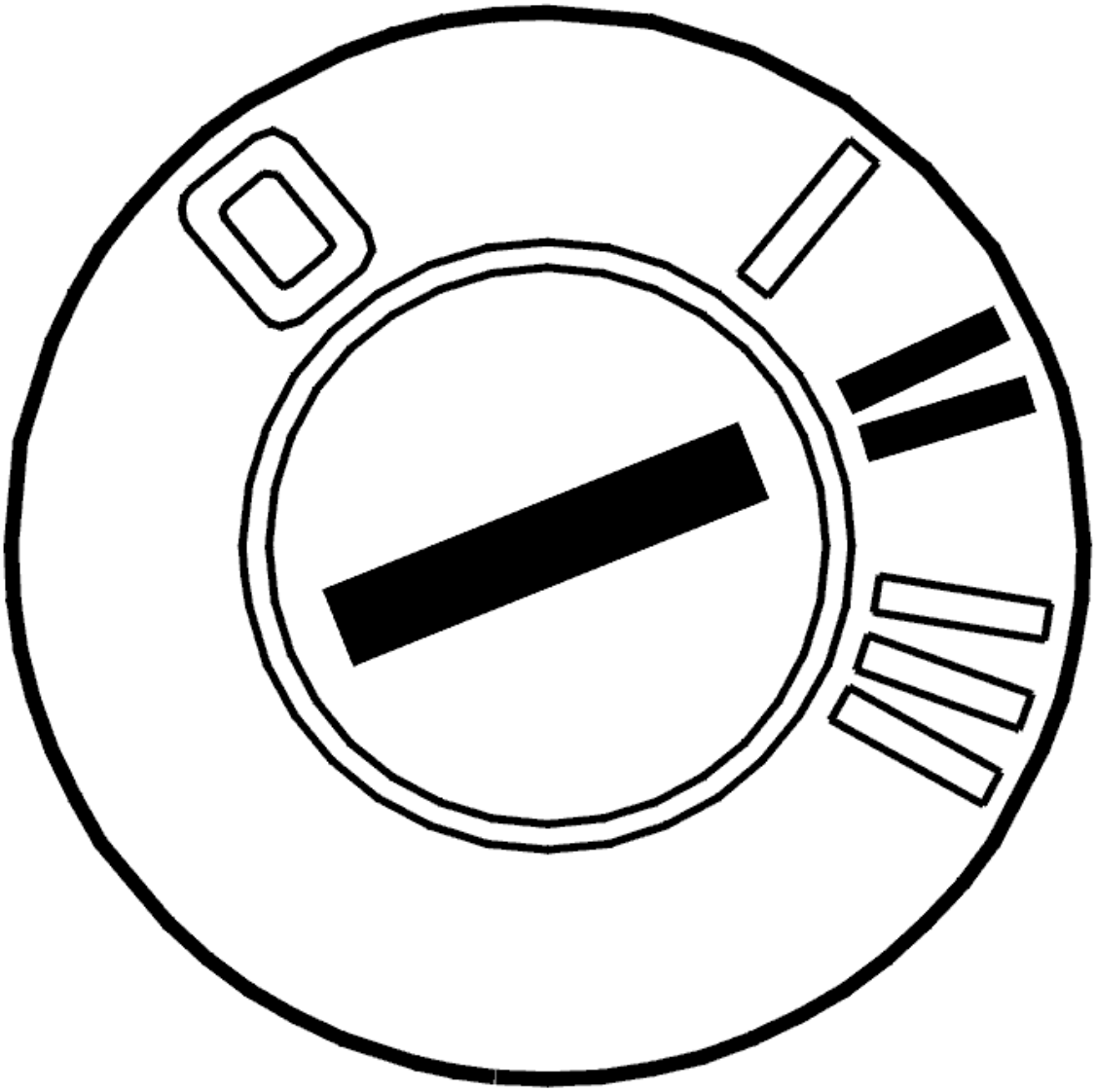

Fig. 392: Identifying Ignition ON
Courtesy of VOLVO CARS CORPORATION

- Ignition on

  Activate reset of the adaptation and the counter by clicking on the symbol for VCT2000.

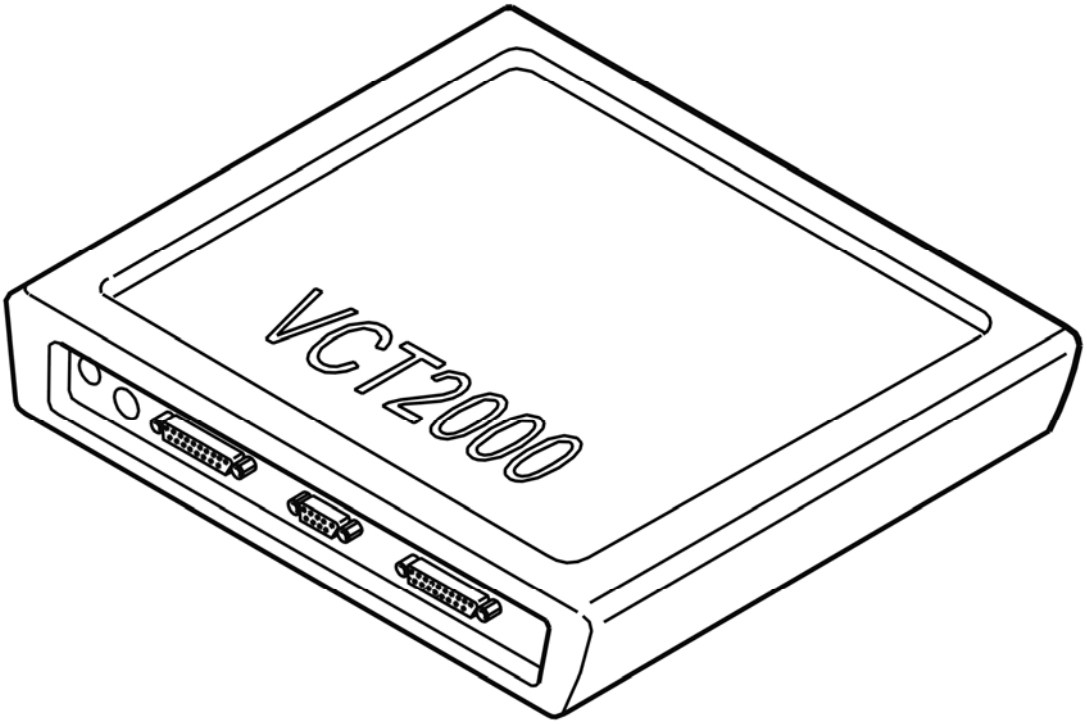

Fig. 393: Identifying VCT2000 Diagnostic Tool Symbol In VIDA
Courtesy of VOLVO CARS CORPORATION

- **Continue**

  Refer to **VERIFICATION**

VERIFICATION

VERIFICATION

HINT: After carrying out the repair, check that the fault has been remedied.

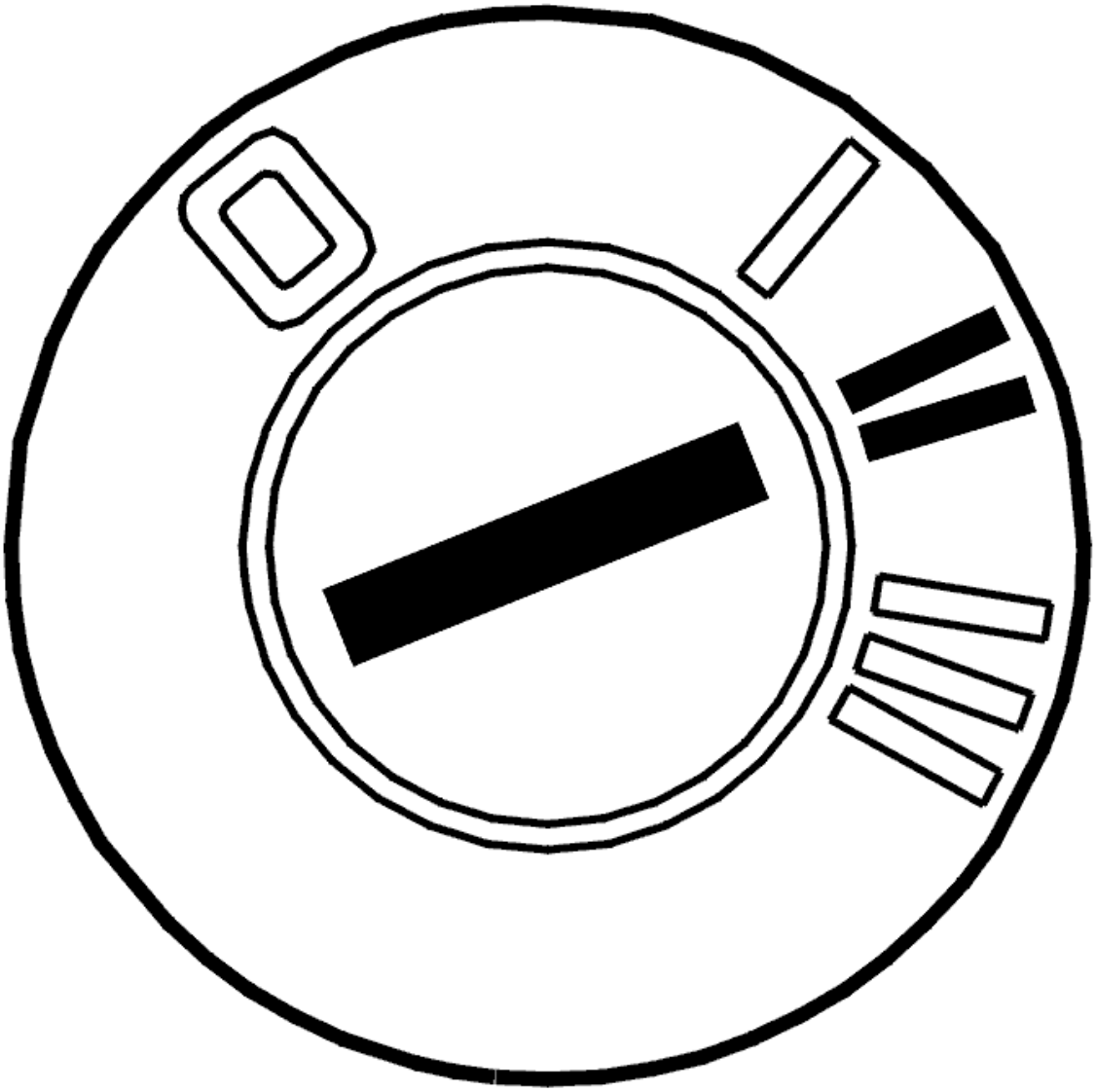

Fig. 394: Identifying Ignition ON
Courtesy of VOLVO CARS CORPORATION

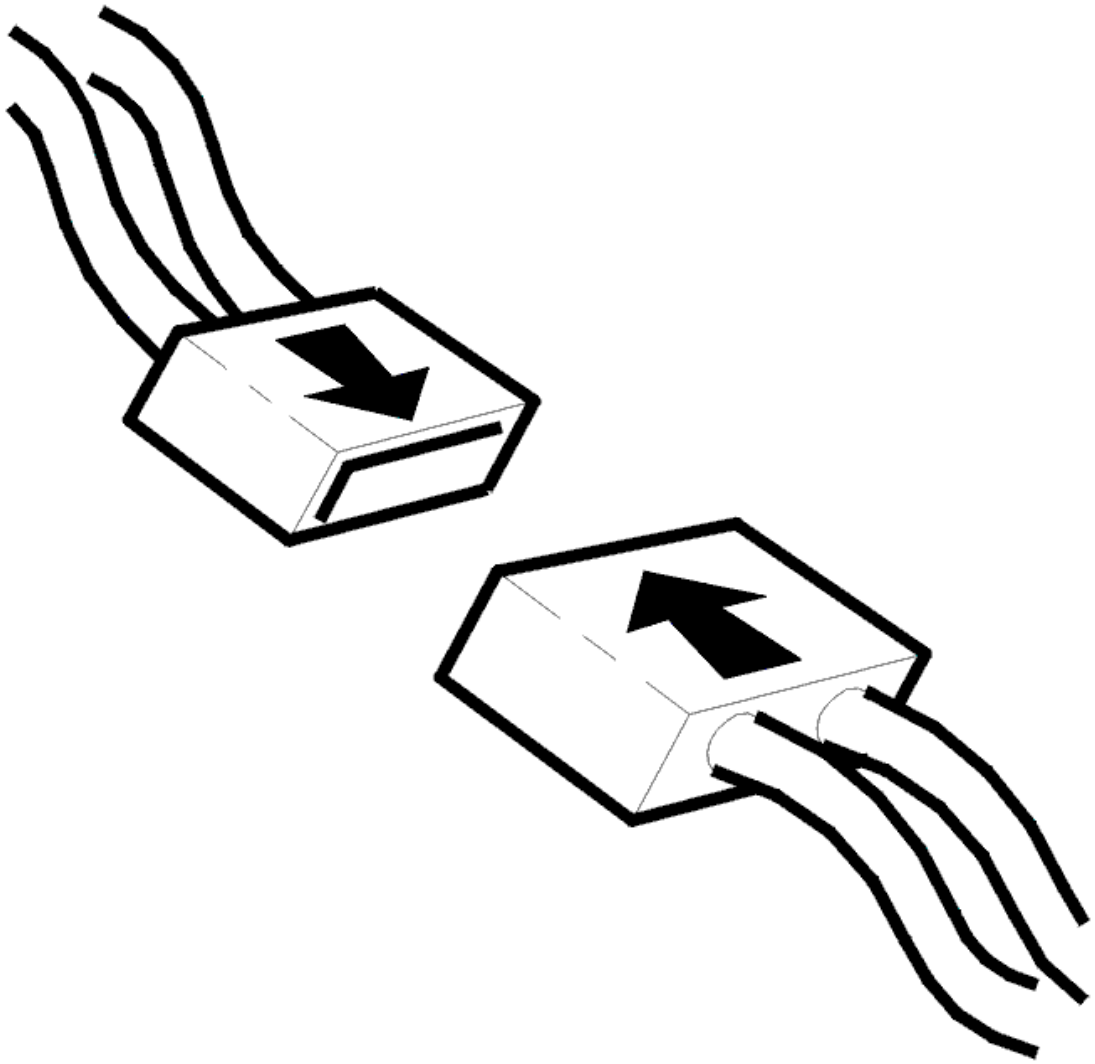

Fig. 395: Identifying Connector(s) Reinstallation
Courtesy of VOLVO CARS CORPORATION

- Ignition off
- Reinstall the components, reconnect the connectors etc.
- Ignition on
- Activate solenoid S2 by clicking the symbol for VCT2000.

  Read the status of solenoid S2. The status must switch between OFF and ON.

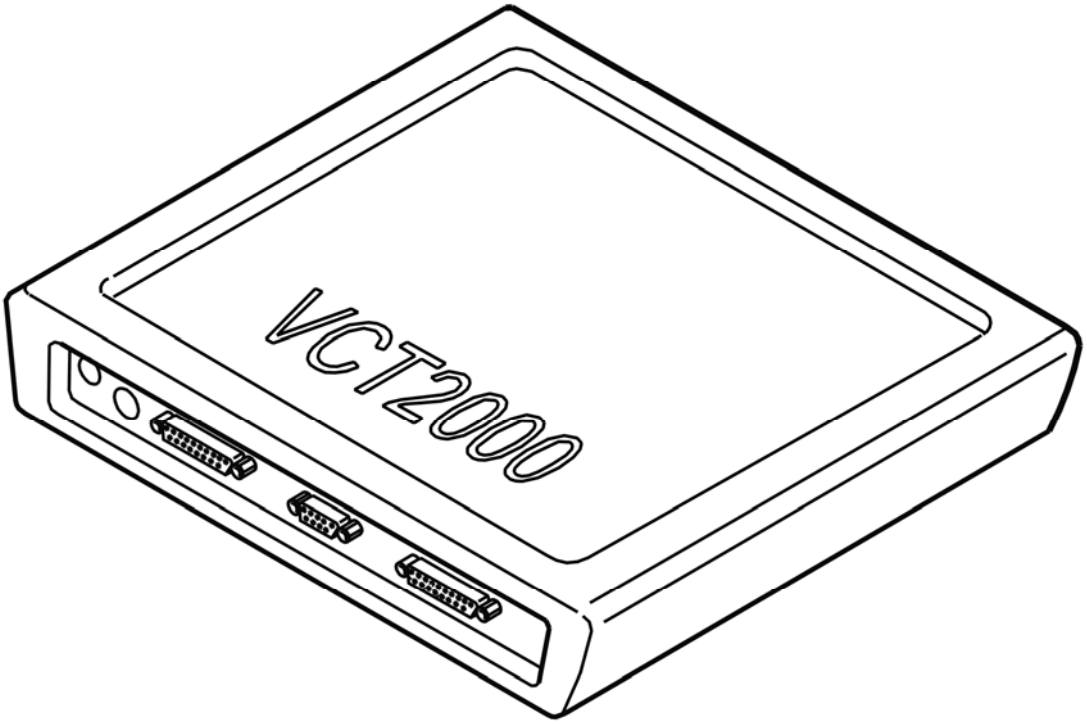

Fig. 396: Identifying VCT2000 Diagnostic Tool Symbol In VIDA
Courtesy of VOLVO CARS CORPORATION

Is the function OK?

- **YES**

  VERIFIED: Troubleshooting has been completed.

- **NO**

  Refer to **INFORMATION**

INFORMATION

FAULT-TRACING INFORMATION

The fault should have been detected and remedied. As this is not the case fault-tracing has failed.

Exit fault-tracing for this diagnostic trouble code (DTC) or make another attempt.

TCM-P097600: SHIFT SOLENOID B CONTROL CIRCUIT LOW. GENERAL FAULT INFORMATION. NO INFORMATION ON FAULT TYPE (TF-80SC AWD;

2005)

DIAGNOSTIC TROUBLE CODE (DTC) INFORMATION

see **DIAGNOSTIC TROUBLE CODE (DTC) INFORMATION**

FAULT TRACING TCM-P097600

see **FAULT TRACING TCM-P097600**

TCM-P097700: SHIFT SOLENOID B CONTROL CIRCUIT HIGH. GENERAL FAILURE INFORMATION. NO SUB TYPE INFORMATION (B6324S, TF-80SC; B6324S, TF-80SC AWD; 2007-2010)

DIAGNOSTIC TROUBLE CODE (DTC) INFORMATION

Condition

Shift solenoids S1 and S2 work with the linear solenoids to handle shifting in the transmission. The solenoids are controlled by power stages in the transmission control module (TCM). The control module activates the power stages to activate the solenoids and sends voltage through the circuit. The control module checks the function of the circuit by sending out a control current when the solenoid is not activated.

The diagnostic trouble code (DTC) is stored if the control module detects that:

- No signal in the circuit of solenoid S2 when the solenoid is not activated.

The control module's test for the diagnostic trouble code (DTC) starts in the event of:

- Ignition on.

NOTE: **The control module can only detect the fault once the test has been started and the diagnostic trouble code (DTC) is stored when the conditions are met.**

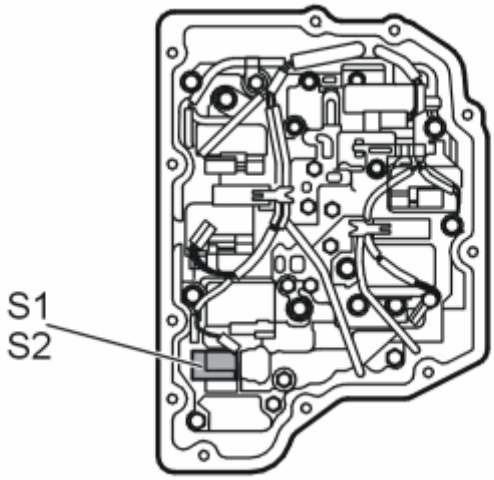

Fig. 397: Identifying S1 And S2 Solenoids
Courtesy of VOLVO CARS CORPORATION

Substitute Value

- Auxiliary program **Emergency mode 1** in the transmission control module (TCM) has started.

  HINT: EMERGENCY MODE IN THE EVENT OF A FAULT

Possible Source

- Contact resistance in the terminals.
- Open circuit on control signal lead.
- Shift solenoid not working.
- Short-circuit to supply voltage in the signal cable.
- Internal fault in the transmission control module (TCM).

Fault symptom[s]

- General warning lamp lit
- Malfunction indicator light (MIL), on
- Rough gear shift
- No gear shift

FAULT-TRACING

CHECKS

CHECKING SHIFT SOLENOID S2

Fig. 398: Identifying Ignition ON
Courtesy of VOLVO CARS CORPORATION

- Ignition on.
- Activate solenoid S2.

  Check the status for solenoid S2. The status must switch between OFF and ON.

  The fault is permanent if the status does not change.

  If the status switches it means that the fault was present previously but is not active now. There is an intermittent fault.

Fig. 399: Identifying VCT2000 Diagnostic Tool Symbol In VIDA
Courtesy of VOLVO CARS CORPORATION

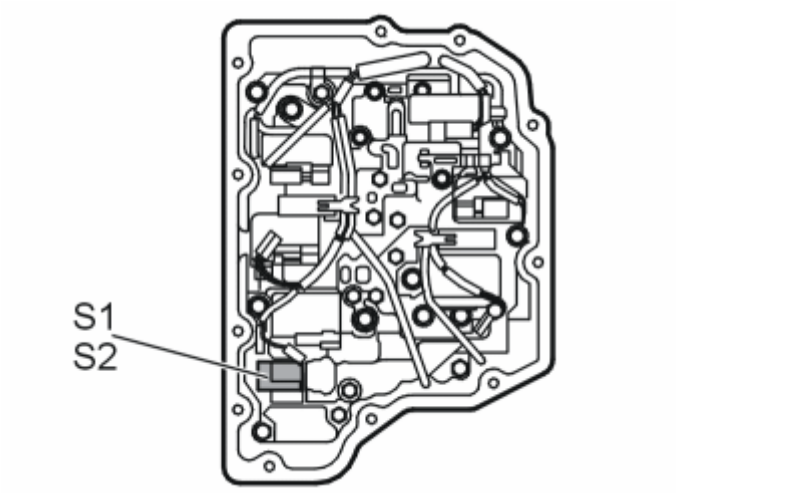

Fig. 400: Identifying S1 And S2 Solenoids
Courtesy of VOLVO CARS CORPORATION

- **Continue**

Refer to **CHECKING THE COMPONENTS AND WIRING**

CHECKING THE COMPONENTS AND WIRING

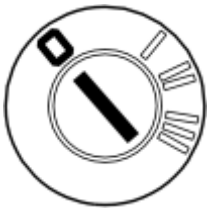

Fig. 401: Identifying Ignition OFF
Courtesy of VOLVO CARS CORPORATION

- Ignition off.
- Open the transmission control system.

Check the cable. Check for an open-circuit. Check for a short-circuit to supply voltage.

Take readings between:

- Transmission connector #B2 and the connector for solenoid S2.

HINT: If no fault is found in the wiring check solenoid S2. See CHECKING INTERNAL COMPONENTS OF THE TRANSMISSION

Remedy as necessary.

Other information

- see **CONNECTING THE BREAKOUT BOX**
- see **SIGNAL SPECIFICATION**
- see **TRANSMISSION CONTROL UNIT WIRING HARNESS**
- To access the transmission control system:**COVER CONTROL SYSTEM, REPLACING (2007-2011)**
- To access connector B/replace the solenoid:**TRANSMISSION - REMOVAL, REPLACEMENT AND INSTALLATION**
- see **CHECKING WIRING AND TERMINALS**

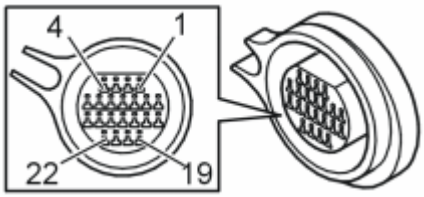

Fig. 402: Identifying Connector B Terminals
Courtesy of VOLVO CARS CORPORATION

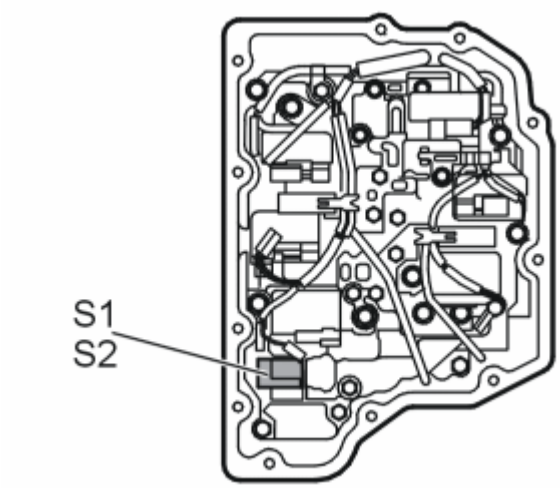

Fig. 403: Identifying S1 And S2 Solenoids
Courtesy of VOLVO CARS CORPORATION

- **Continue**

  Refer to **RESETTING ADAPTATION**

VERIFICATION

VERIFICATION

HINT: After carrying out the repair, check that the fault has been remedied.

Fig. 404: Identifying Ignition ON
Courtesy of VOLVO CARS CORPORATION

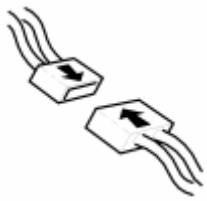

Fig. 405: Identifying Connector(s) Reinstallation
Courtesy of VOLVO CARS CORPORATION

- Ignition off.
- Reinstall the connectors, components etc.

- Ignition on.
- Activate solenoid S2 by clicking the symbol for VCT2000.

  Read the status of solenoid S2. The status must switch between OFF and ON.

Fig. 406: Identifying VCT2000 Diagnostic Tool Symbol In VIDA
Courtesy of VOLVO CARS CORPORATION

Is the function OK?

- **YES**

  VERIFIED: Troubleshooting has been completed.

- **NO**

  Refer to **INFORMATION**

INFORMATION

FAULT-TRACING INFORMATION

The fault should have been detected and remedied. As this is not the case fault-tracing has failed.

Exit fault-tracing for this diagnostic trouble code (DTC) or make another attempt.

RESETTING ADAPTATION

RESETTING THE ADAPTATION AND THE COUNTER FOR "TRANSMISSION OIL, REPLACE"

HINT: The transmission has torque-regulated, adaptive pressure regulation. The pressure regulator enables the transmission to regulate pressure during each shift to prevent hard shifting. Each shift is assessed by the transmission control module (TCM) and is stored in the internal memory. This makes it possible to compensate for transmission and clutch wear. It is important that the adaptation in the memory is reset so that the transmission works normally after the repair. Because the fluid was changed during the repair, the counter for transmission fluid change must also be reset. If the counter is not reset during draining/replacement, a diagnostic trouble code may be generated under the wrong conditions.

NOTE: **This applies only if the transmission or one of the components in the transmission have been replaced.**

Fig. 407: Identifying Ignition ON
Courtesy of VOLVO CARS CORPORATION

- Ignition on.

  Click on the VCT2000 symbol to reset the adaptation and counter.

  Fig. 408: Identifying VCT2000 Diagnostic Tool Symbol In VIDA
  Courtesy of VOLVO CARS CORPORATION

- **Continue**

  Refer to **VERIFICATION**

TCM-P097700: SHIFT SOLENOID B CONTROL CIRCUIT HIGH. GENERAL FAILURE INFORMATION. NO SUB TYPE INFORMATION (B6324S5, TF-80SC; B6324S5, TF-80SC AWD; 2011-2012)

DIAGNOSTIC TROUBLE CODE (DTC) INFORMATION

see **DIAGNOSTIC TROUBLE CODE (DTC) INFORMATION**

FAULT-TRACING

see **FAULT-TRACING**

TCM-P097700: SHIFT SOLENOID B CONTROL CIRCUIT HIGH. GENERAL FAULT INFORMATION. NO INFORMATION ON FAULT TYPE (B8444S, TF-80SC AWD; 2006-2011)

DIAGNOSTIC TROUBLE CODE (DTC) INFORMATION

see **DIAGNOSTIC TROUBLE CODE (DTC) INFORMATION**

FAULT TRACING TCM-P097700

CHECKS

CHECKING SHIFT SOLENOID S2

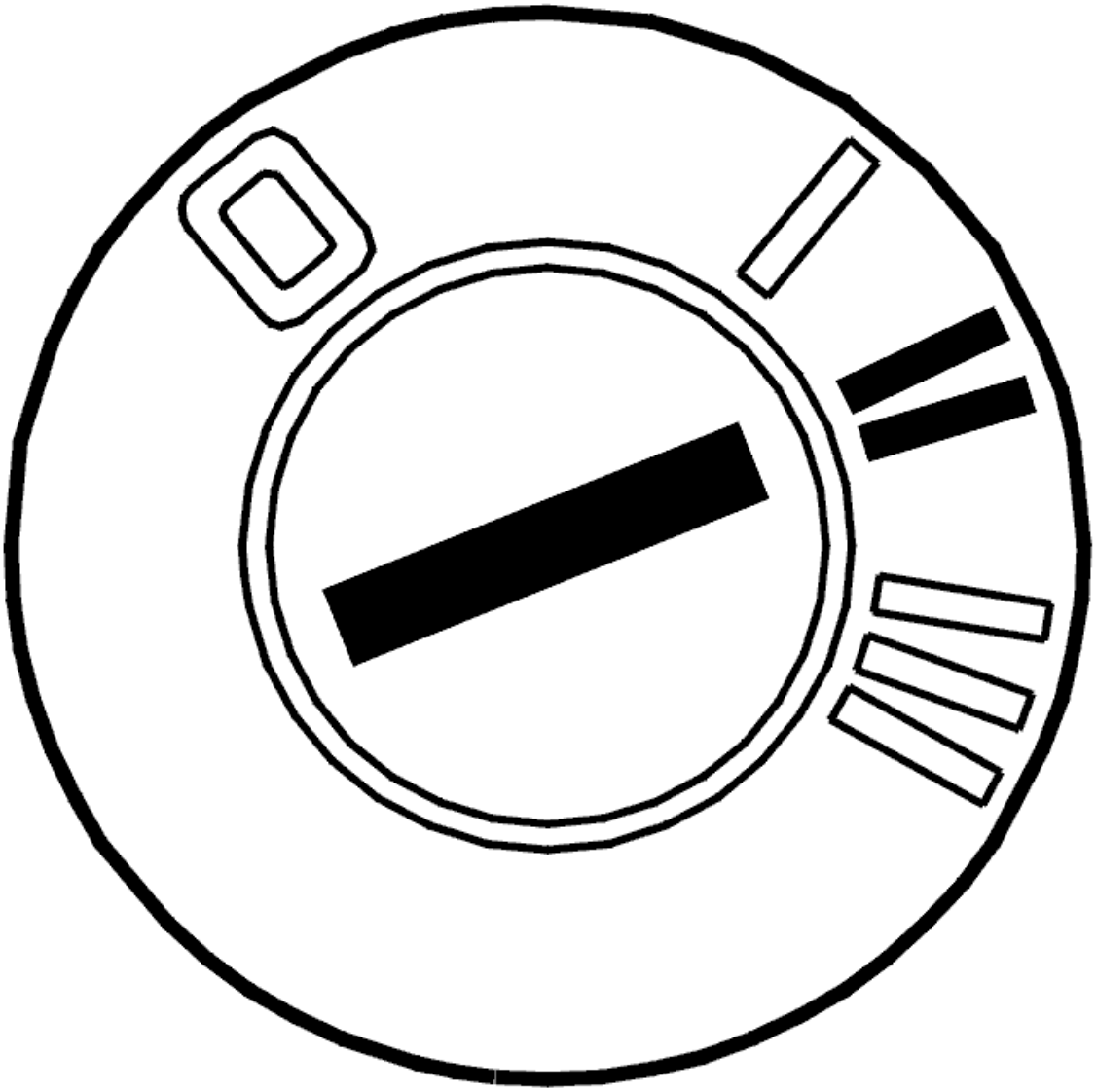

Fig. 409: Identifying Ignition ON
Courtesy of VOLVO CARS CORPORATION

- Ignition on
- Activate solenoid S2.

  Check the status of solenoid S2. The status must switch between OFF and ON.

  The fault is permanent if the status does not change.

If the status switches it means that the fault was present previously but is not active now. There is an intermittent fault.

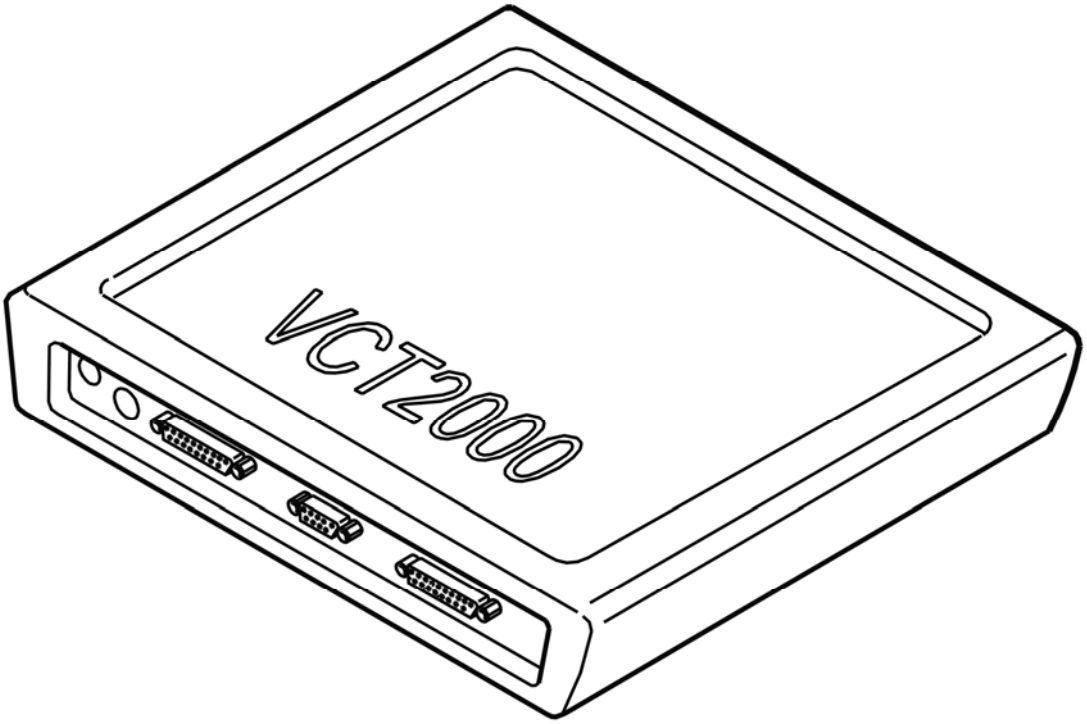

Fig. 410: Identifying VCT2000 Diagnostic Tool Symbol In VIDA
Courtesy of VOLVO CARS CORPORATION

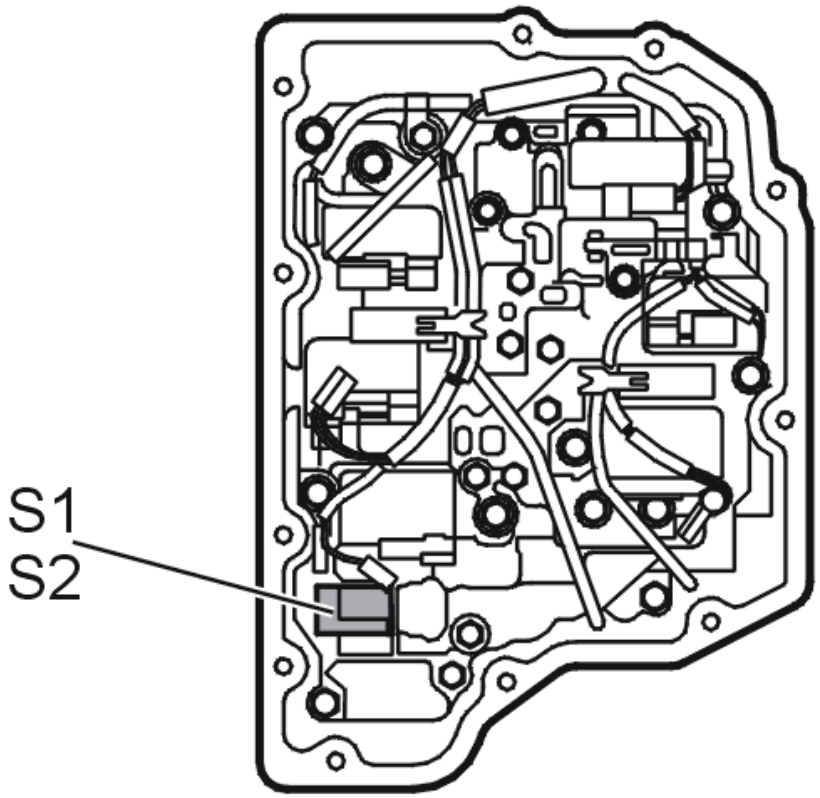

Fig. 411: Locating Shift Solenoids S1 & S2
Courtesy of VOLVO CARS CORPORATION

- **Continue**

Refer to **CHECKING THE COMPONENTS AND WIRING**

CHECKING THE COMPONENTS AND WIRING

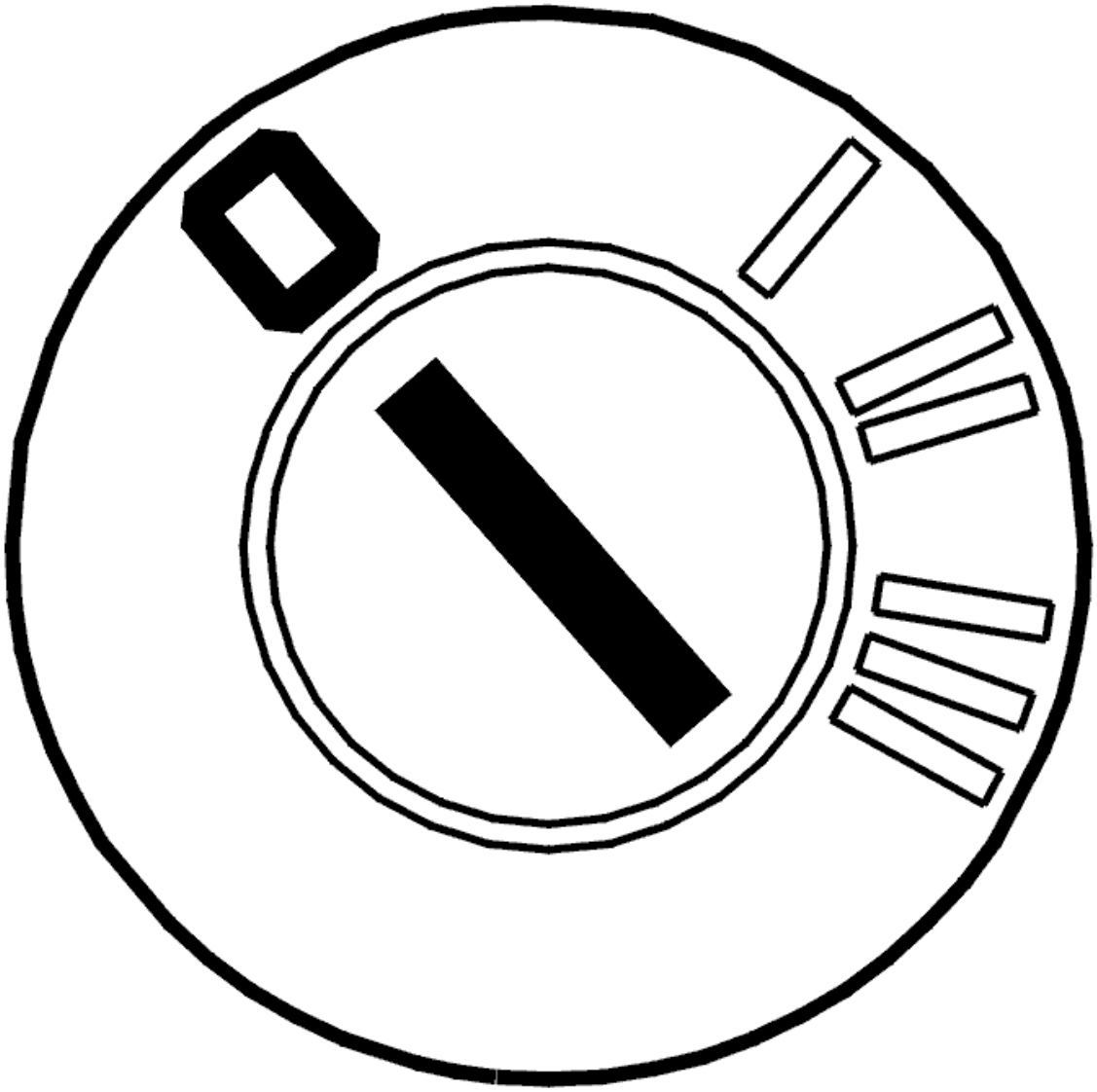

Fig. 412: Identifying Ignition OFF
Courtesy of VOLVO CARS CORPORATION

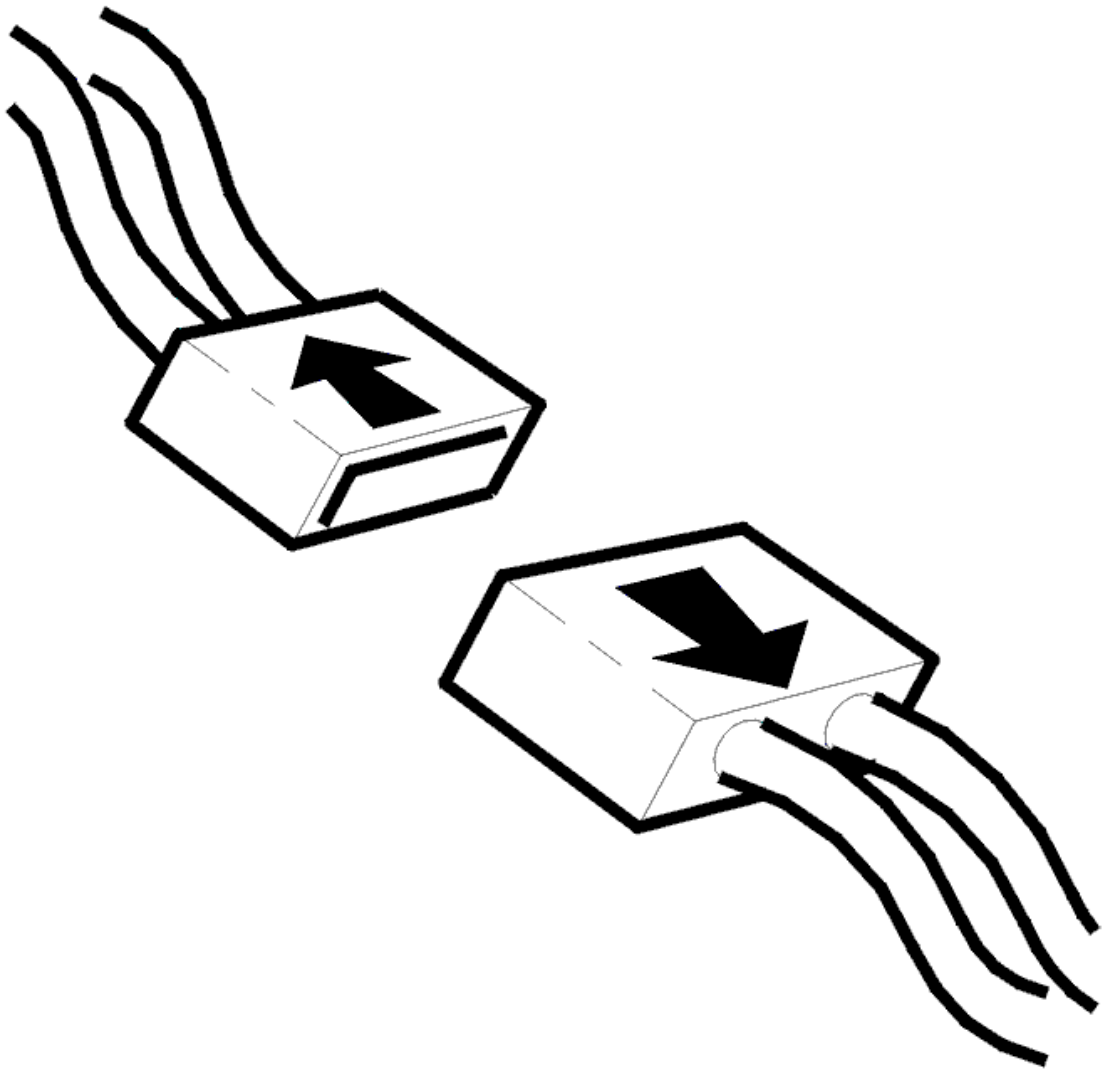

Fig. 413: Identifying Connector(s) Disconnected
Courtesy of VOLVO CARS CORPORATION

- Ignition off
- Open the gearbox control system

  Check the cable between transmission connector terminal #B2 and the connector for solenoid S2. Check for a short-circuit to supply voltage.

  HINT: If no fault is found in the wiring check solenoid S2. See CHECKING SHIFT SOLENOIDS

  Remedy as necessary.

  Other information

  - see **CONNECTING THE BREAKOUT BOX**

- see **SIGNAL DESCRIPTION**
- see **CABLE HARNESS, CONTROL SYSTEM, GEARBOX, REPLACING**
- To access the transmission control system: **COVER CONTROL SYSTEM, REPLACING (2007-2011)**
- To access connector B/replace the solenoid: **SOLENOID CONTROL SYSTEM, REPLACING (2007-2011)**
- see **CONTENTS**

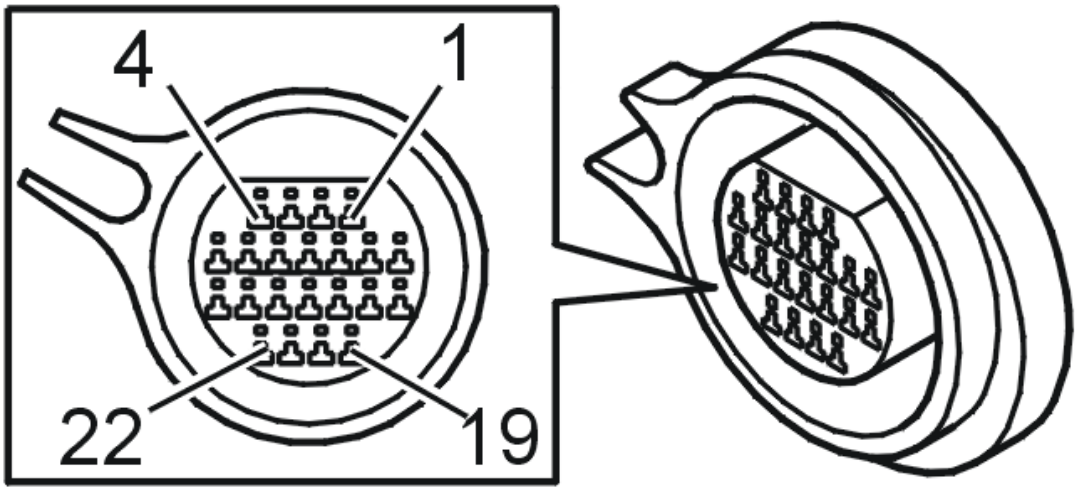

Fig. 414: Identifying Connector B Terminals
Courtesy of VOLVO CARS CORPORATION

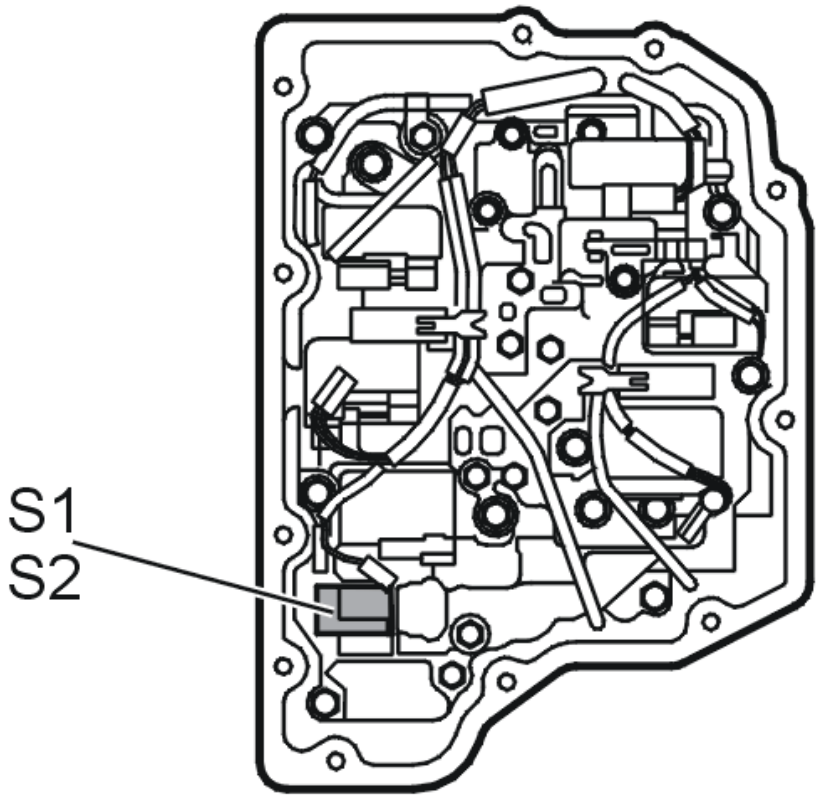

Fig. 415: Locating Shift Solenoids S1 & S2
Courtesy of VOLVO CARS CORPORATION

- **Continue**

  Refer to **RESETTING ADAPTATION**

RESETTING ADAPTATION

RESETTING ADAPTATION AND COUNTER FOR "TRANSMISSION OIL, CHANGING"

HINT: The transmission has torque-controlled, adaptive pressure control. The pressure control means that the transmission itself controls the pressure during each shift sequence in order to avoid harsh shifting. Each shift is assessed by the transmission control module (TCM) and is stored in the internal memory, which results in compensation for wear in the transmission and clutch. In order for the transmission to function correctly after repair, it is important to reset the adaptation in the memory. Since the oil is changed during the repair, the counter for "Transmission oil, change" shall also be reset. If the counter is not reset when draining/changing oil, there is a risk that a diagnostic trouble code may be generated under incorrect conditions.

NOTE: **This applies only if the transmission or one of the components in the transmission have been replaced.**

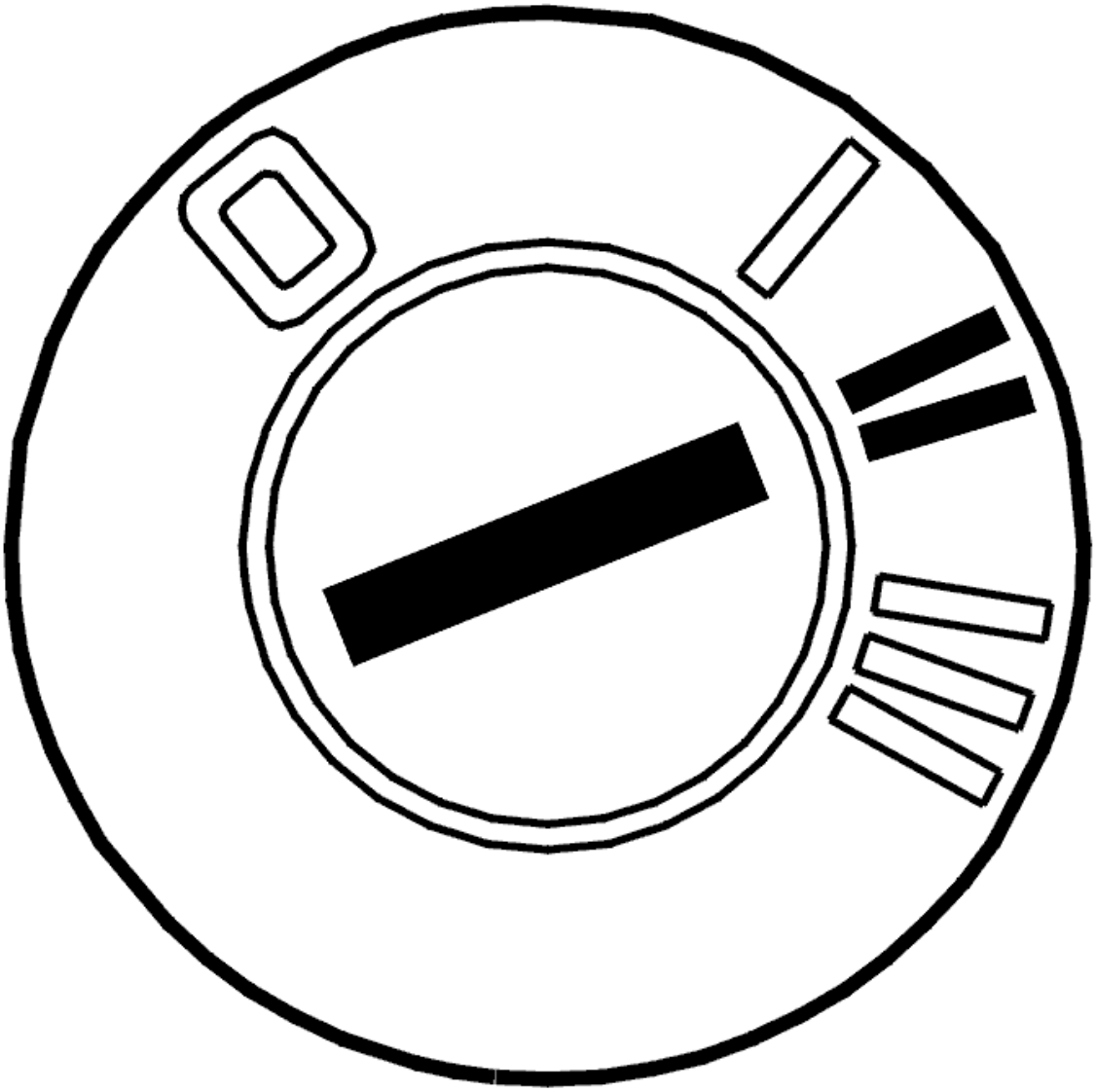

Fig. 416: Identifying Ignition ON
Courtesy of VOLVO CARS CORPORATION

- Ignition on

  Activate reset of the adaptation and the counter by clicking on the symbol for VCT2000.

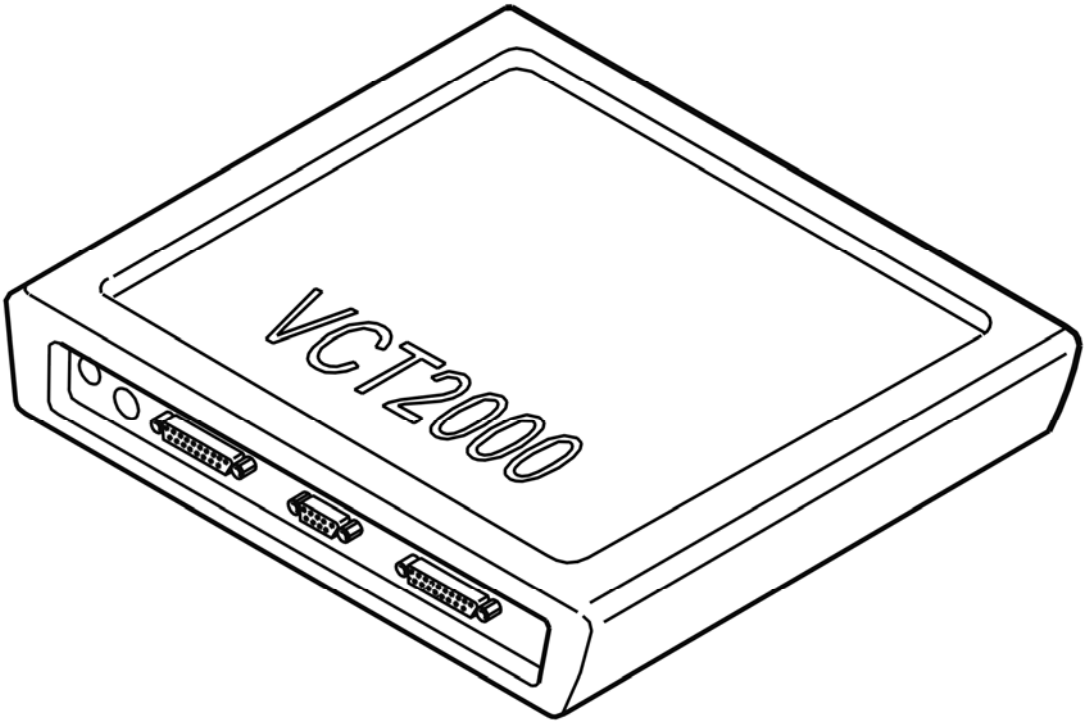

Fig. 417: Identifying VCT2000 Diagnostic Tool Symbol In VIDA
Courtesy of VOLVO CARS CORPORATION

- **Continue**

  Refer to **VERIFICATION**

VERIFICATION

VERIFICATION

HINT: After carrying out the repair, check that the fault has been remedied.

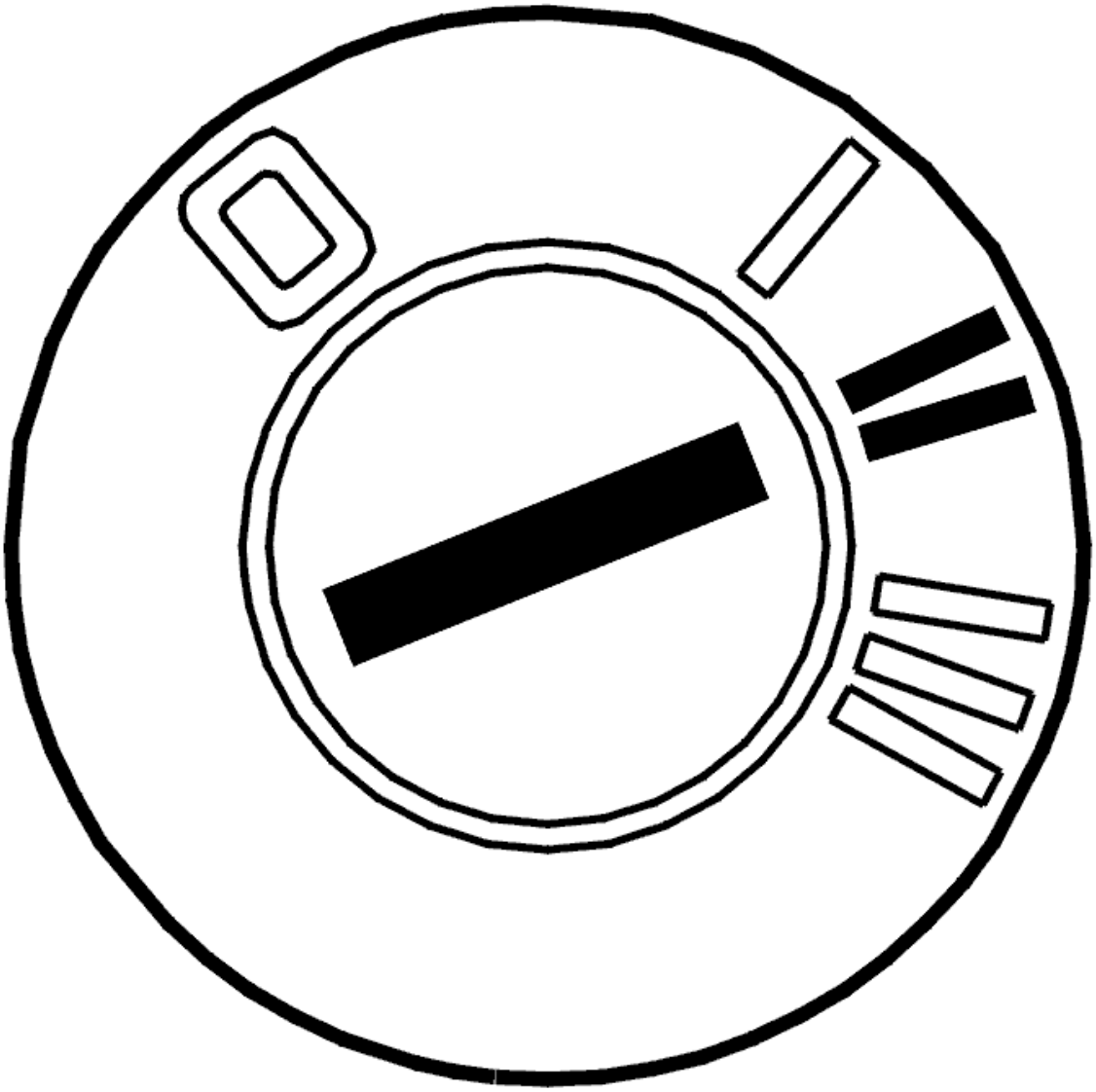

Fig. 418: Identifying Ignition ON
Courtesy of VOLVO CARS CORPORATION

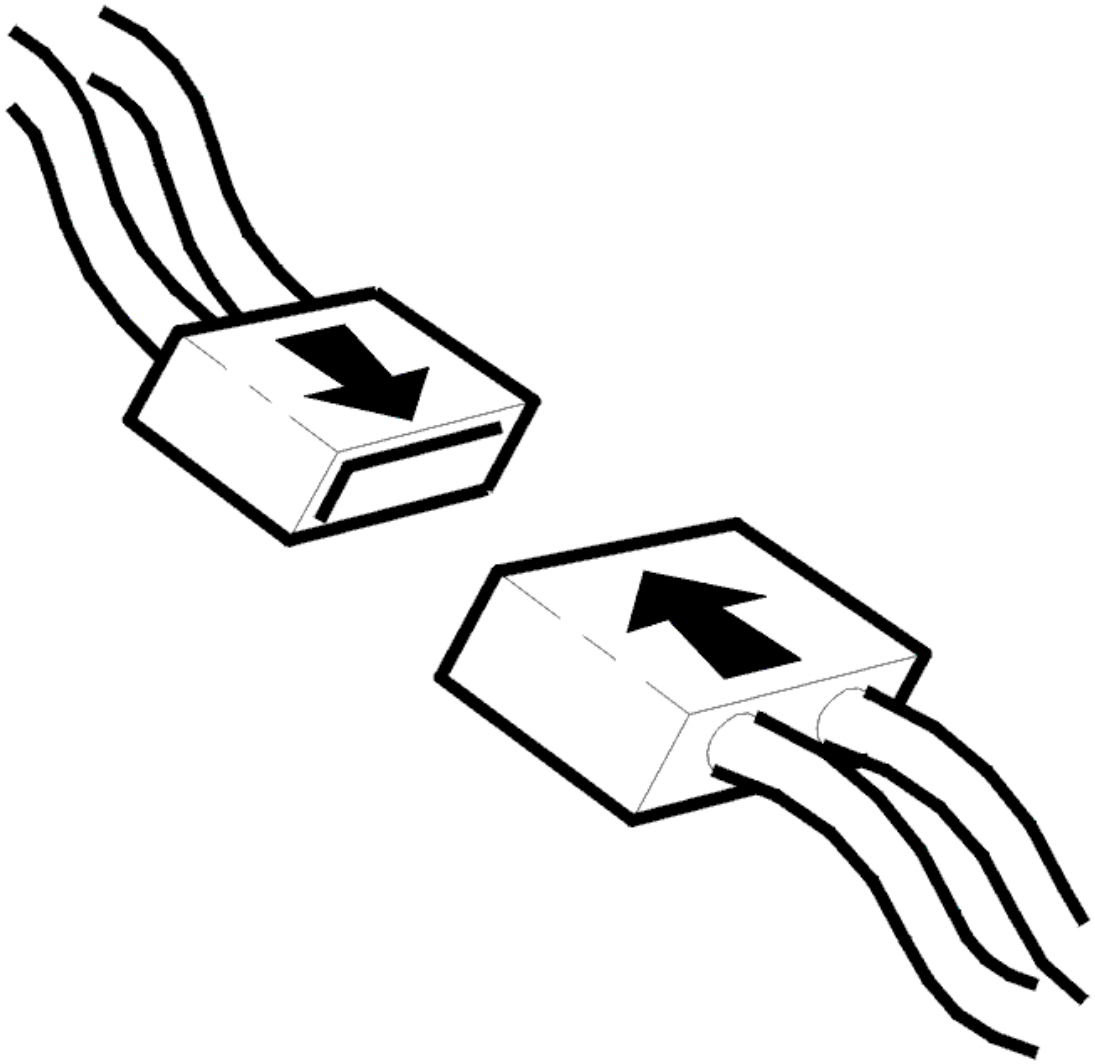

Fig. 419: Identifying Connector(s) Reinstallation
Courtesy of VOLVO CARS CORPORATION

- Ignition off
- Reinstall the components, reconnect the connectors etc.
- Ignition on
- Activate solenoid S2 by clicking the symbol for VCT2000.

  Read the status of solenoid S2. The status must switch between OFF and ON.

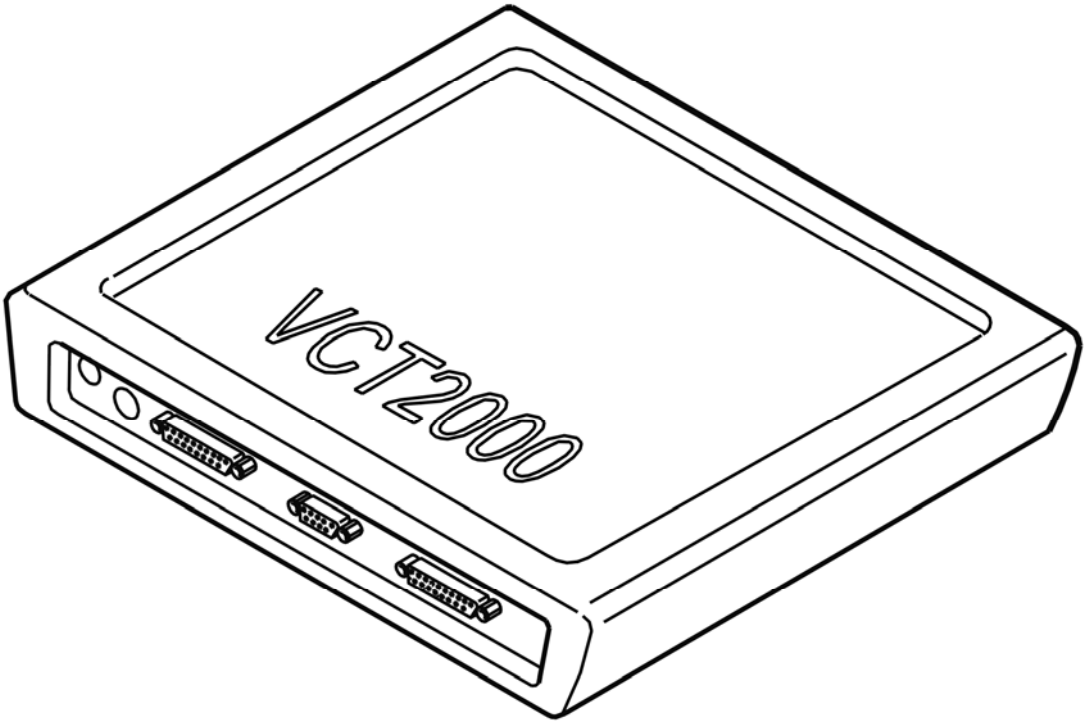

Fig. 420: Identifying VCT2000 Diagnostic Tool Symbol In VIDA
Courtesy of VOLVO CARS CORPORATION

Is the function OK?

- **YES**

  VERIFIED: Troubleshooting has been completed.

- **NO**

  Refer to **INFORMATION**

INFORMATION

FAULT-TRACING INFORMATION

The fault should have been detected and remedied. As this is not the case fault-tracing has failed.

Exit fault-tracing for this diagnostic trouble code (DTC) or make another attempt.

TCM-P097700: SHIFT SOLENOID B CONTROL CIRCUIT HIGH. GENERAL FAULT INFORMATION. NO INFORMATION ON FAULT TYPE (TF-80SC AWD;

2005)

DIAGNOSTIC TROUBLE CODE (DTC) INFORMATION

see **DIAGNOSTIC TROUBLE CODE (DTC) INFORMATION**

FAULT TRACING TCM-P097700

see **FAULT TRACING TCM-P097700**

TCM-P170100: REVERSE ENGAGEMENT ERROR. GENERAL FAILURE INFORMATION. NO SUB TYPE INFORMATION (B8444S, TF-80SC AWD; 2006-2011)

DIAGNOSTIC TROUBLE CODE (DTC) INFORMATION TCM-P170100

Condition

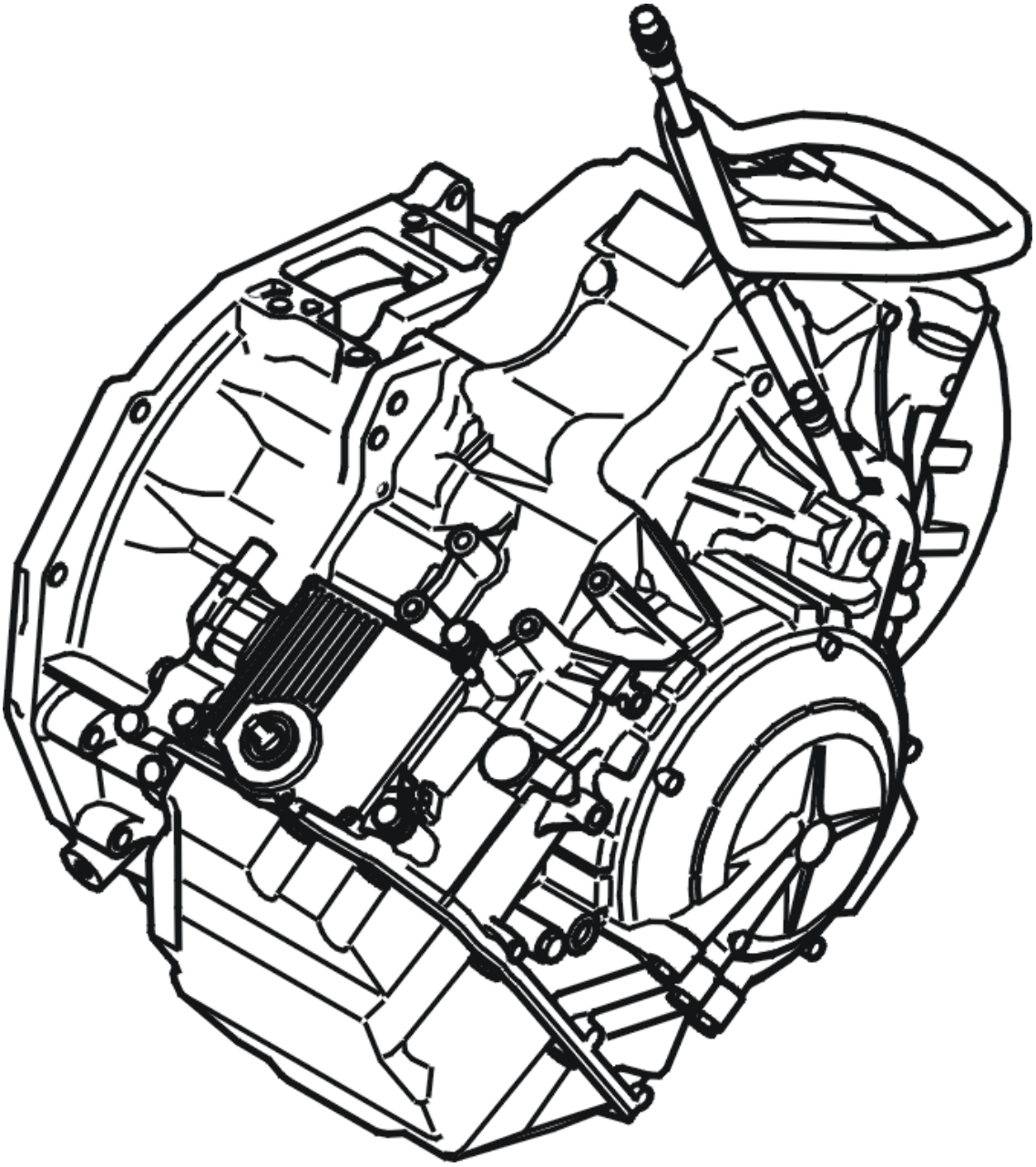

Fig. 421: Identifying Transmission
Courtesy of VOLVO CARS CORPORATION

If the transmission control module (TCM) registers that reverse or forward drive is not engaged when the gear selector is moved to position R or D, diagnostic trouble code (DTC) TCM-P170100 or TCM-P073000 depending on the cause of the fault.

The diagnostic trouble code can be diagnosed when the engine is running.

Substitute Value

- Auxiliary program **Emergency mode 1** in the transmission control module (TCM) has started.

HINT: EMERGENCY MODE IN CASE OF MALFUNCTION

Possible Source

- Contact resistance in connections or one of the solenoids has stuck in OFF or ON position.
- Mechanical faults in gearbox.

Fault symptom[s]

- Warning lights and chimes/Malfunction Indicator Light ("Check engine" light) indication/no indication
- Text window and warning symbol/Red symbol and text message
- Automatic transmission/No automatic gearshift

FAULT TRACING

see **FAULT TRACING**

TCM-P170100: REVERSE ENGAGEMENT ERROR. GENERAL FAILURE INFORMATION. NO SUB TYPE INFORMATION (TF-80SC AWD; 2005)

DIAGNOSTIC TROUBLE CODE (DTC) INFORMATION TCM-P170100

see **DIAGNOSTIC TROUBLE CODE (DTC) INFORMATION TCM-P170100**

FAULT TRACING

see **FAULT TRACING**

TCM-P170164: REVERSE ENGAGEMENT ERROR. ALGORITHM BASED FAILURES. SIGNAL PLAUSIBILITY FAILURE (B6324S, TF-80SC; B6324S, TF-80SC AWD; 2007-2010)

DIAGNOSTIC TROUBLE CODE (DTC) INFORMATION TCM-P170164

Condition

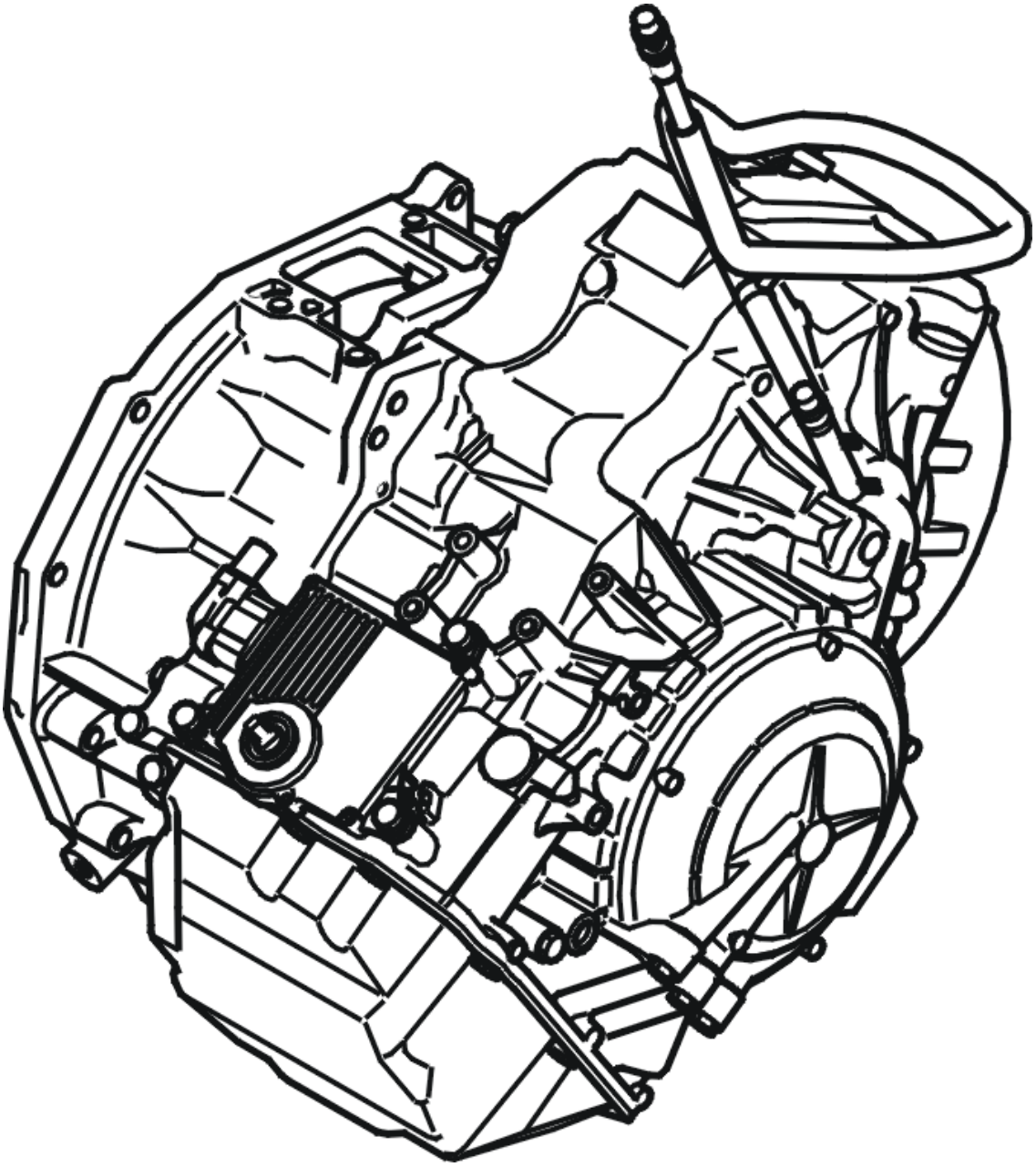

Fig. 422: Identifying Transmission
Courtesy of VOLVO CARS CORPORATION

If the transmission control module (TCM) registers that reverse or forward drive is not engaged when the gear selector is moved to position R or D, diagnostic trouble code (DTC) TCM-P170164 or TCM-P073000 depending on the cause of the fault.

The diagnostic trouble code can be diagnosed when the engine is running.

Substitute Value

- Auxiliary program **Emergency mode 1** in the transmission control module (TCM) has started.

HINT: EMERGENCY MODE IN CASE OF MALFUNCTION

Possible Source

- Contact resistance in connections or one of the solenoids has stuck in OFF or ON position.
- Mechanical faults in gearbox.

Fault symptom[s]

- Warning lights and chimes/Malfunction Indicator Light ("Check engine" light) indication/no indication
- Text window and warning symbol/Red symbol and text message
- Automatic transmission/No automatic gearshift

FAULT TRACING

FAULT-TRACING INFORMATION

CHECKING THE GEAR SYSTEM

Problems that the customer may experience are hard shifts or slipping shifts. The following test-drive contains several different driving situations that may provoke these symptoms if the transmission is damaged.

NOTE: It is important that the transmission oil is above 70 °C before the test-drive starts

Test 1

1. Driving at 100 km/h, 6th gear.
2. Perform a kickdown to 4th gear.
3. Let the transmission automatically shift up to 5th gear.
4. Let up the accelerator pedal and let the transmission shift up to 6th gear.

Test 2

1. Driving at 100 km/h, 6th gear.
2. Slight uphill grade, press accelerator pedal until you obtain shifting 6-5, not kickdown.

Test 3

1. Driving at 80 km/h.
2. Move the gear selector to position M and engage 6th gear.
3. Perform a kickdown and shift 6-5, 5-4, 4-3 at the same time.
4. Then upshift immediately to 6th gear.

Test 4

1. Stationary vehicle, engine running, parking brake applied, brake activated with left foot, gear selector in position R.
2. Press down the accelerator pedal (brake still activated).

NOTE: Let up the accelerator pedal in case of noise or slipping.

Test 5

1. Stationary vehicle, engine running, parking brake applied, brake activated with left foot, gear selector in position D.
2. Press down the accelerator pedal (brake still activated).

NOTE: Let up the accelerator pedal in case of noise or slipping.

If the symptoms hard shifts or slipping shifts arise during the test-drive, the transmission's control system must be replaced.

Other information

- see **CONTROL SYSTEMS**

Is the function OK?

- **YES**

  Refer to **CHECKING SOLENOID SLC1**

- **NO**

  Refer to **REPLACING THE CONTROL SYSTEM**

CHECKING SOLENOID SLC1

Fig. 423: Identifying Ignition ON
Courtesy of VOLVO CARS CORPORATION

- Ignition on.
- Activate solenoid SLC1 by clicking the VCT2000 symbol.

Read the current through the circuit for solenoid SLC1. The current should oscillate between 100 and 950 mA.

The fault is in the control system if the current does not oscillate. If the current varies and a clicking noise is heard, the control signal from the Transmission control module (TCM) and the solenoid's function is OK.

NOTE: **Depending on the transaxle and oil temperature, the noise level from the solenoids may vary considerably. When the transaxle is hot or extremely cold, the noise level may be extremely low. Use a stethoscope.**

HINT: To obtain a "click" more easily, move the gear selector to different positions and then try to activate the solenoid again.

Fig. 424: Identifying VCT2000 Diagnostic Tool Symbol In VIDA
Courtesy of VOLVO CARS CORPORATION

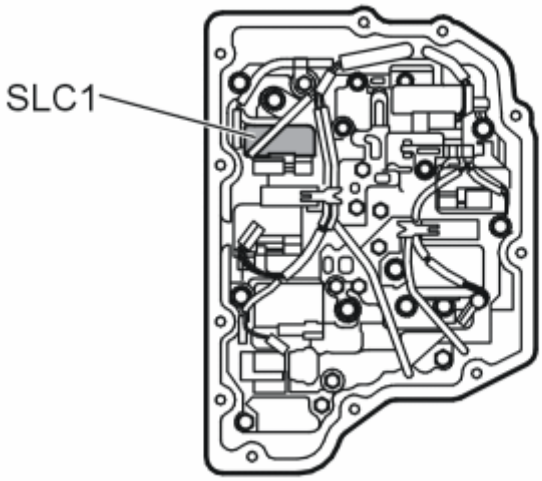

Fig. 425: Identifying Solenoid SLC1
Courtesy of VOLVO CARS CORPORATION

Is the control signal of the solenoid OK?

- **YES**

  Refer to **REPLACING THE TRANSMISSION**

- **NO**

  Refer to **REPLACING THE CONTROL SYSTEM**

REPLACING THE TRANSMISSION

The transmission control module (TCM) has registered an internal malfunction in the transmission. Replace the transmission.

Other information

- see **TRANSMISSION** (B6324S, TF-80SC; 2007-2010)**TRANSMISSION** (B6324S, TF-80SC AWD; 2007-2010)

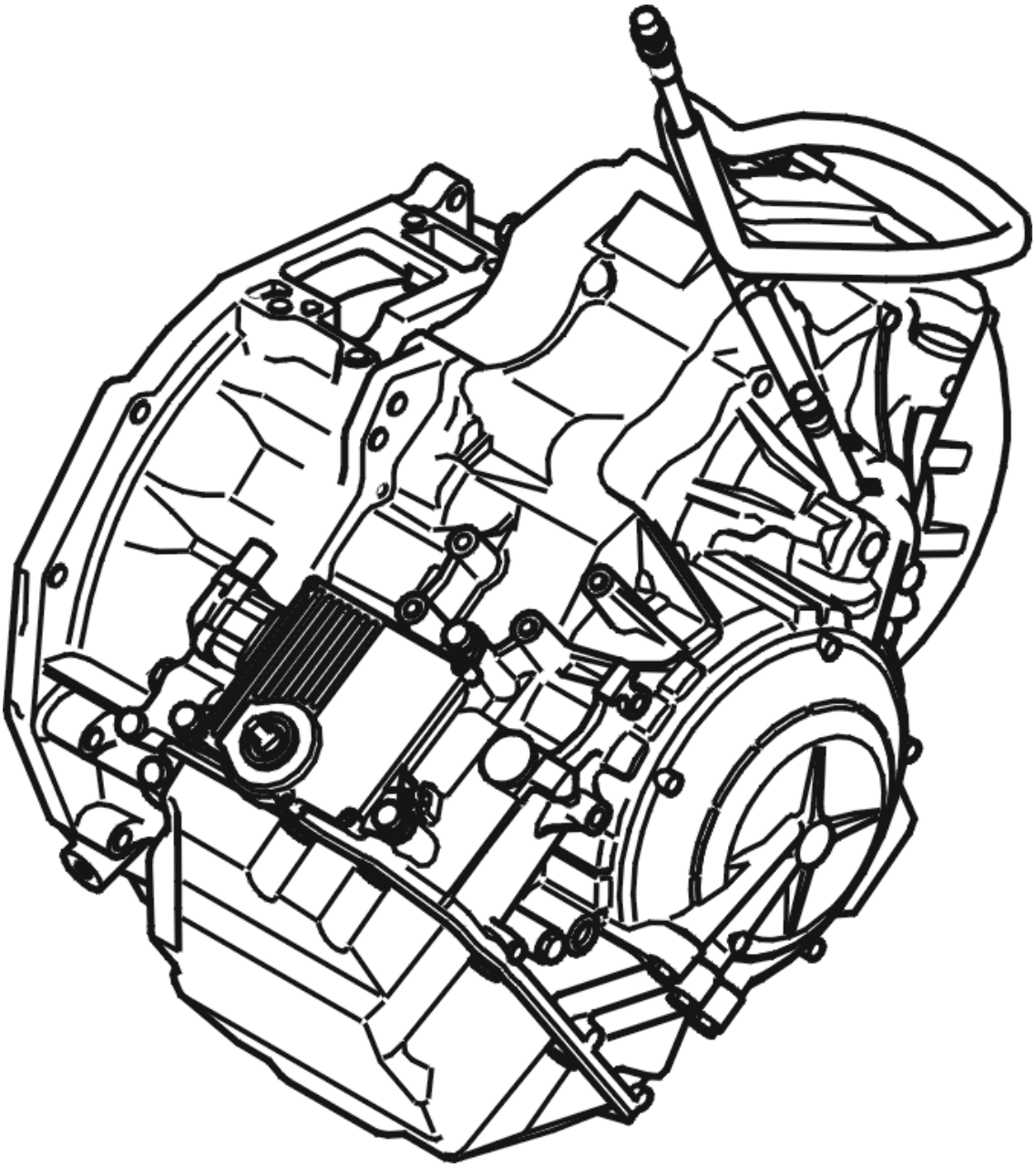

Fig. 426: Identifying Transmission
Courtesy of VOLVO CARS CORPORATION

- **Continue**

Refer to **RESETTING ADAPTATION**

REPLACING THE CONTROL SYSTEM

Replace control system as follows:**CONTROL SYSTEMS**

- **Continue**

  Refer to **RESETTING ADAPTATION**

VERIFICATION

VERIFICATION

HINT: After carrying out the repair, check that the fault has been remedied.

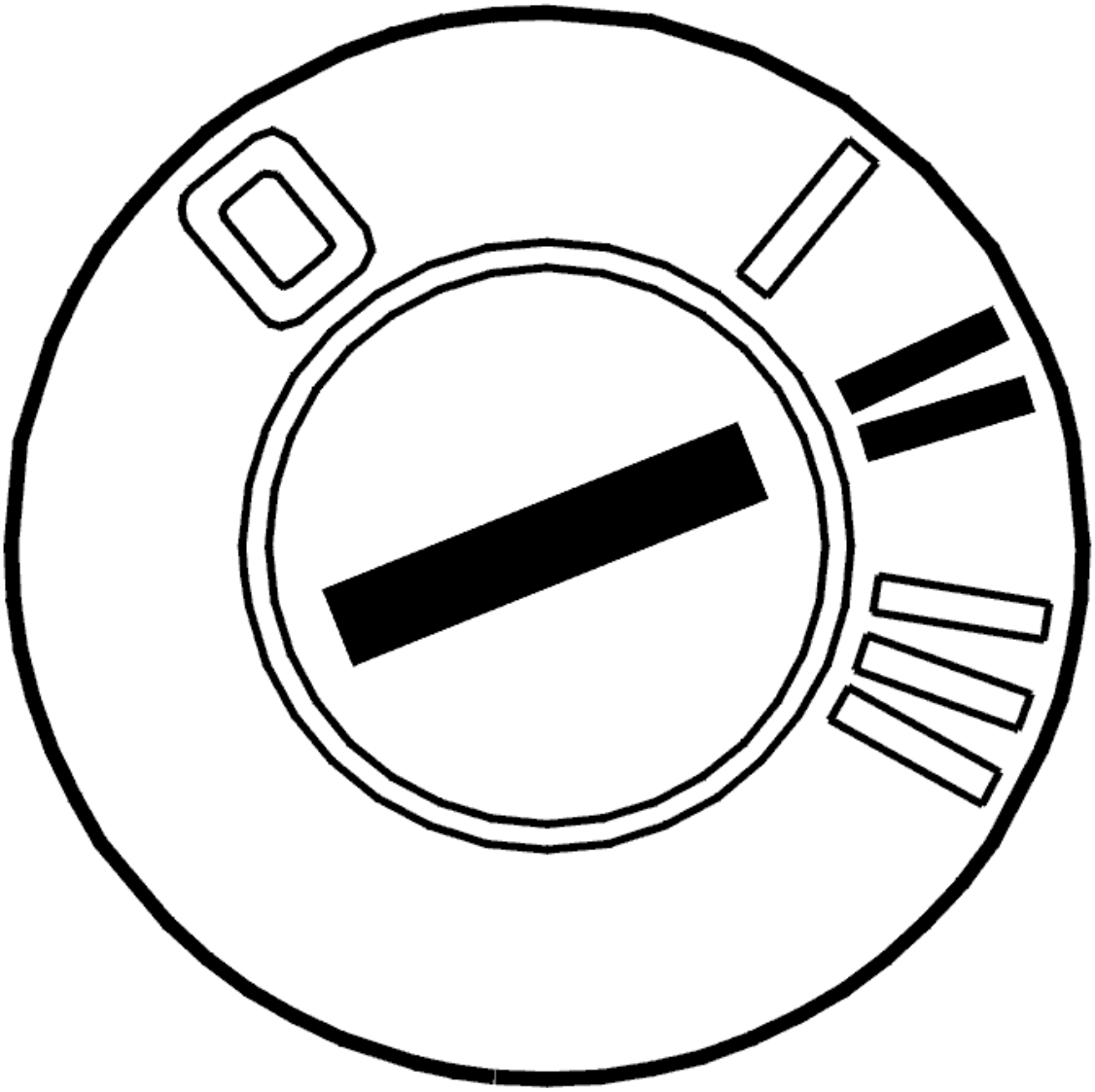

Fig. 427: Identifying Ignition ON
Courtesy of VOLVO CARS CORPORATION

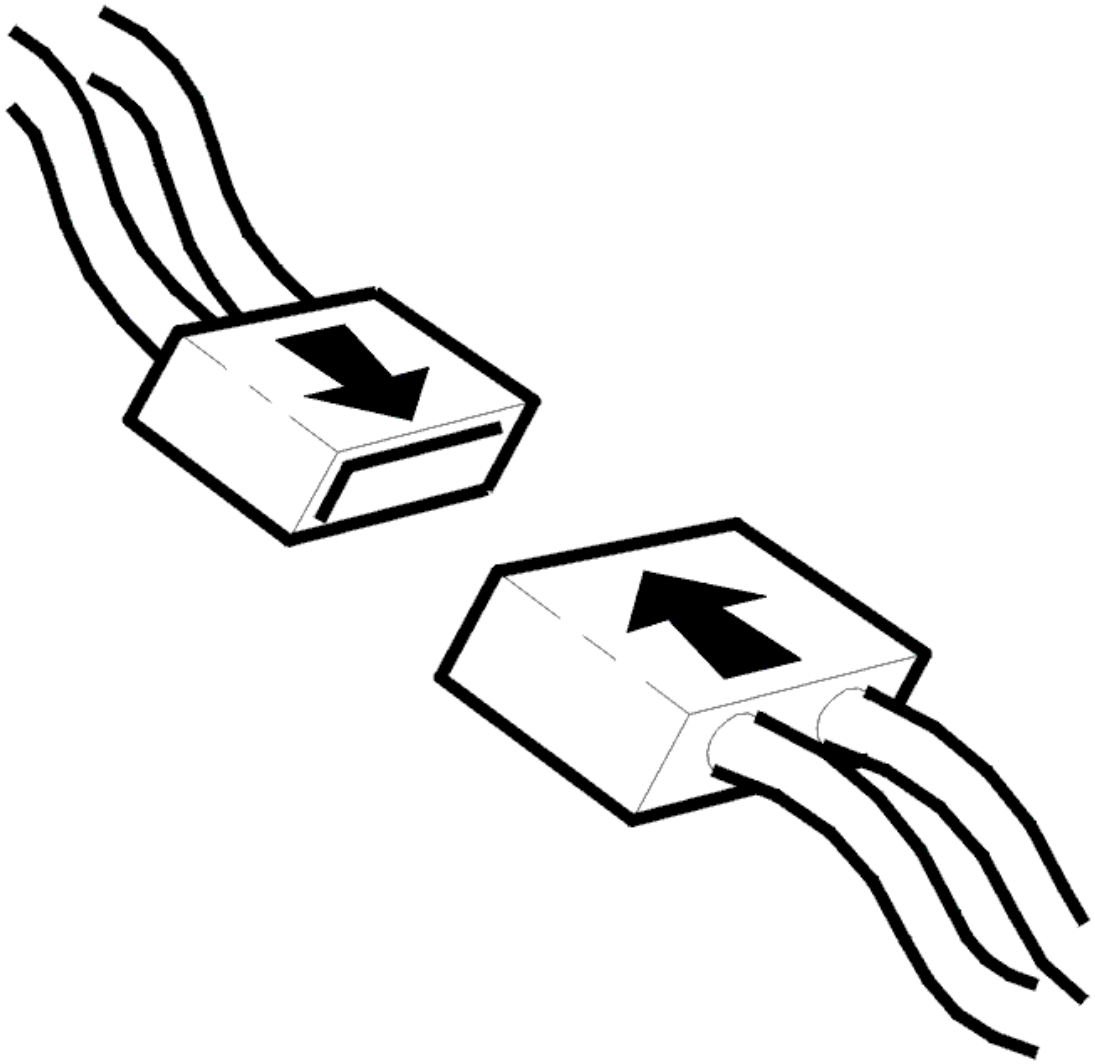

Fig. 428: Identifying Connector(s) Reinstallation
Courtesy of VOLVO CARS CORPORATION

- Ignition off
- Reinstall the components, reconnect the connectors etc.
- The gear shift position sensor for the transmission must be calibrated if the control module has been disconnected.

  HINT: Save a bookmark. Cancel fault-tracing and select Vehicle communication in VIDA (Volvo scan tool).

- Start the engine.

Test drive the vehicle following: **TEST DRIVE SCHEDULE, DESCRIPTION**

Check that the transmission does not display any **obvious** function faults.

NOTE: When test driving, the oil temperature must be above 20 °C.

Is the function OK?

- **YES**

  VERIFIED: Troubleshooting has been completed.

- **NO**

  Refer to **INFORMATION**

INFORMATION

FAULT-TRACING INFORMATION

The fault should have been detected and remedied. As this is not the case fault-tracing has failed.

Exit fault-tracing for this diagnostic trouble code (DTC) or make another attempt.

RESETTING ADAPTATION

RESETTING THE ADAPTATION AND THE COUNTER FOR "TRANSMISSION OIL, REPLACE"

HINT: The transmission has torque-regulated, adaptive pressure regulation. The pressure regulator enables the transmission to regulate pressure during each shift to prevent hard shifting. Each shift is assessed by the transmission control module (TCM) and is stored in the internal memory. This makes it possible to compensate for transmission and clutch wear. It is important that the adaptation in the memory is reset so that the transmission works normally after the repair. Because the fluid was changed during the repair, the counter for transmission fluid change must also be reset. If the counter is not reset during draining/replacement, a diagnostic trouble code may be generated under the wrong conditions.

NOTE: This applies only if the transmission or one of the components in the transmission have been replaced.

Fig. 429: Identifying Ignition ON
Courtesy of VOLVO CARS CORPORATION

- Ignition on.

  Click on the VCT2000 symbol to reset the adaptation and counter.

Fig. 430: Identifying VCT2000 Diagnostic Tool Symbol In VIDA
Courtesy of VOLVO CARS CORPORATION

- **Continue**

  Refer to **VERIFICATION**

TRANSMISSION

Transmission - Diagnostic Trouble Codes and Associated Procedures

TCM-P170164: REVERSE ENGAGEMENT ERROR. ALGORITHM3 BASED FAILURES. SIGNAL PLAUSIBILITY FAILURE (B6324S5, TF-80SC; B6324S5, TF-80SC AWD; 2011-2012)

DIAGNOSTIC TROUBLE CODE (DTC) INFORMATION TCM-P170164

Condition

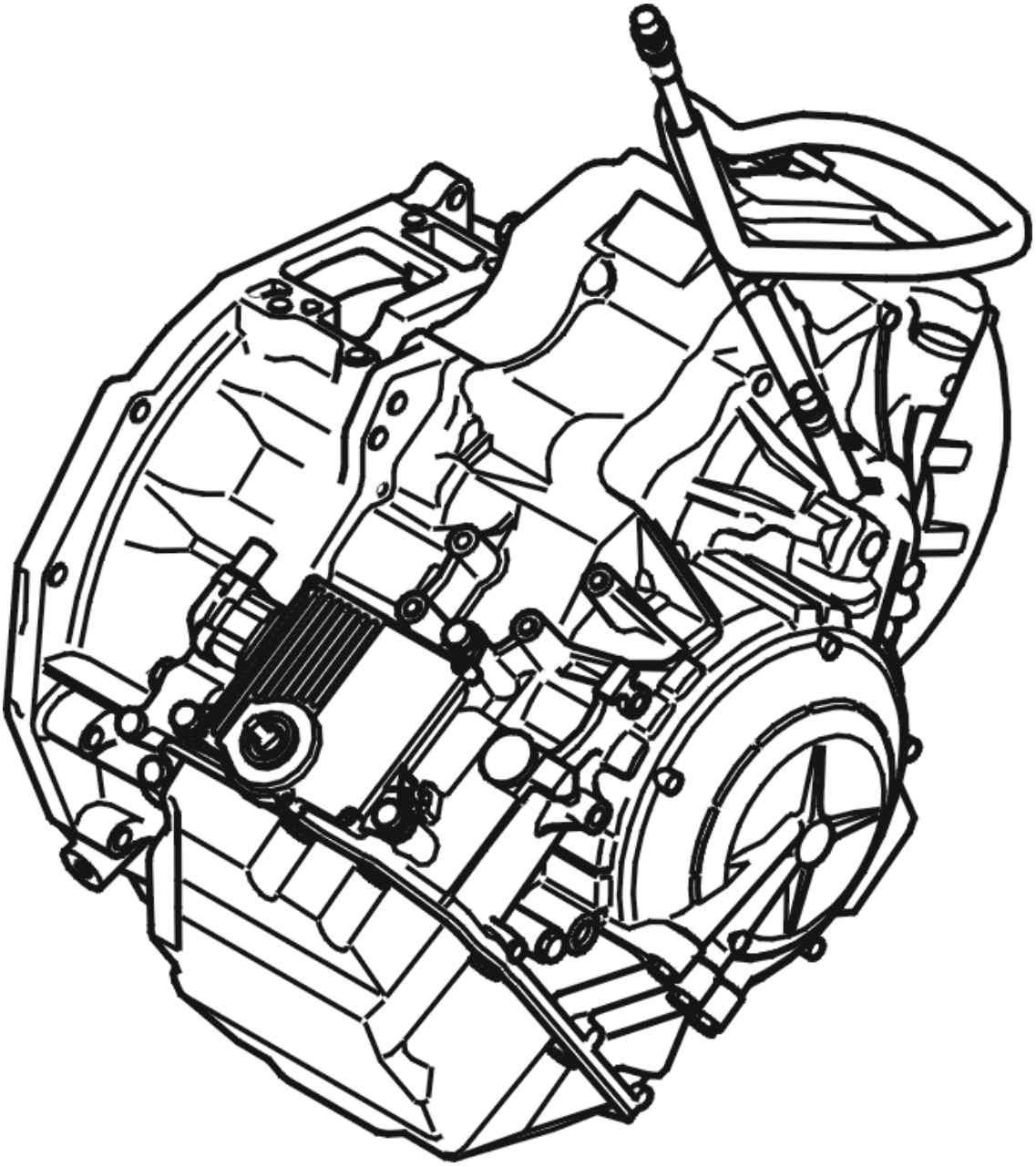

Fig. 1: Identifying Transmission
Courtesy of VOLVO CARS CORPORATION

If the transmission control module (TCM) registers that reverse or forward drive is not engaged when the gear selector is moved to position R or D, diagnostic trouble code (DTC) TCM-P170164 or TCM-P073000 depending on the cause of the fault.

The diagnostic trouble code can be diagnosed when the engine is running.

Substitute Value

- Auxiliary program **Emergency mode 1** in the transmission control module (TCM) has started.

HINT: EMERGENCY MODE IN CASE OF MALFUNCTION

Possible Source

- Contact resistance in connections or one of the solenoids has stuck in OFF or ON position.
- Mechanical faults in gearbox.

Fault symptom[s]

- Warning lights and chimes/Malfunction Indicator Light ("Check engine" light) indication/no indication
- Text window and warning symbol/Red symbol and text message
- Automatic transmission/No automatic gearshift

FAULT TRACING

see **FAULT TRACING**

TCM-P171900: ENGINE TORQUE SIGNAL. GENERAL FAILURE INFORMATION. NO SUB TYPE INFORMATION (B6324S, TF-80SC; B6324S, TF-80SC AWD; 2007-2010)

DIAGNOSTIC TROUBLE CODE (DTC) INFORMATION TCM-P171900

Condition

The engine control module (ECM) puts a signal about the present torque on the control area network (CAN). The transmission control module (TCM) uses the signal to determine shift points and to adjust system pressure in the transmission.

The diagnostic trouble code (DTC) is stored if the control module detects that:

- There is no torque signal from the engine control module (ECM) or the signal is faulty.

The control module's test for the diagnostic trouble code (DTC) starts in the event of:

- Ignition on and CAN network OK.

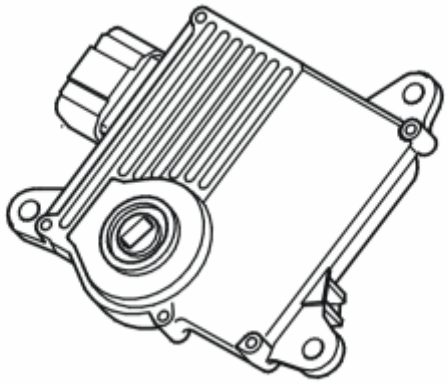

Fig. 2: Identifying Transmission Control Module (TCM)
Courtesy of VOLVO CARS CORPORATION

Substitute Value

- Auxiliary program **Emergency mode 1** in the transmission control module (TCM) has started.

  HINT: EMERGENCY MODE IN THE EVENT OF A FAULT

Possible Source

- Fault-trace the central electronic module (CEM).
- Locate the cause of the fault in the engine control module (ECM).
- Intermittent open circuit or short-circuit on the CAN lead between the engine control module (ECM) and the transmission control module (TCM).

Fault symptom[s]

- General warning lamp lit
- Rough gear shift
- No gear shift
- No lock-up

FAULT-TRACING

INFORMATION

No fault-tracing has been developed for this diagnostic trouble code (DTC).

A diagnostic trouble code for CAN communication can be stored in the central electronic module (CEM). IN some cases, a diagnostic trouble code is stored in other affected control modules. This diagnostic trouble code is not to be erased until any CAN communication trouble codes in the central electronic module (CEM) or engine

control module (ECM) are remedied and erased.

Therefore, first read the diagnostic trouble codes in the central electronic module (CEM) and the engine control module (ECM), perform troubleshooting and remedy as necessary. If no diagnostic trouble codes (DTCs) are stored, fault-trace the controller area network (CAN) as follows. This diagnostic trouble code (DTC) can then be erased.

For further information on this diagnostic trouble code, see Diagnostic trouble code (DTC) information.

Other information

- see **GENERAL INFORMATION ABOUT FAULT-TRACING IN THE CAN NETWORK**

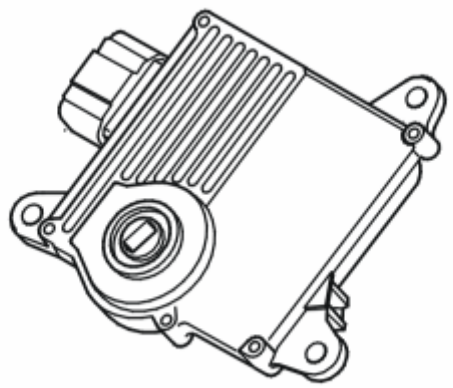

Fig. 3: Identifying Transmission Control Module (TCM)
Courtesy of VOLVO CARS CORPORATION

TCM-P171900: ENGINE TORQUE SIGNAL. GENERAL FAILURE INFORMATION. NO SUB TYPE INFORMATION (B6324S5, TF-80SC; B6324S5, TF-80SC AWD; 2011-2012)

DIAGNOSTIC TROUBLE CODE (DTC) INFORMATION TCM-P171900

see **DIAGNOSTIC TROUBLE CODE (DTC) INFORMATION TCM-P171900**

FAULT-TRACING

see **FAULT-TRACING**

TCM-P171900: ENGINE TORQUE SIGNAL. GENERAL FAULT INFORMATION. NO INFORMATION ON FAULT TYPE (B8444S, TF-80SC AWD; 2006-2011)

DIAGNOSTIC TROUBLE CODE (DTC) INFORMATION TCM-P171900

Condition

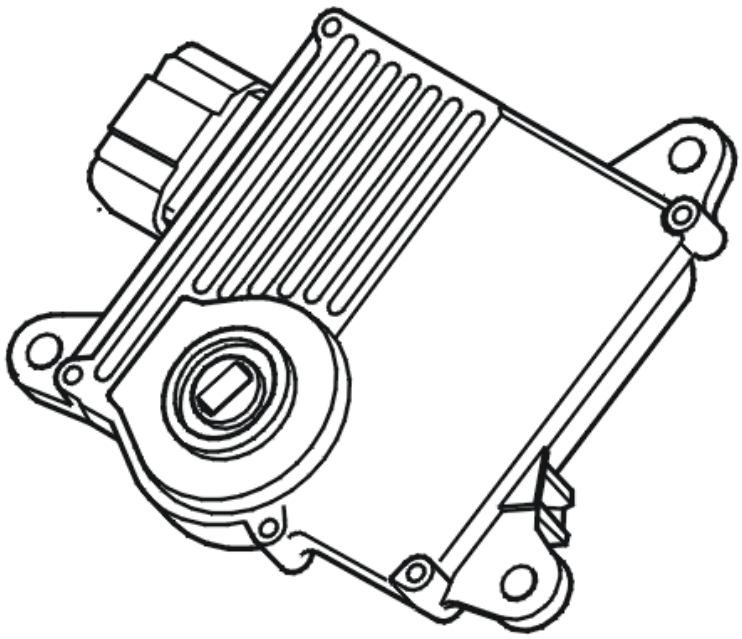

Fig. 4: Identifying Transmission Control Module (TCM)
Courtesy of VOLVO CARS CORPORATION

The engine control module (ECM) puts the signal for the current torque on the CAN network. The transmission control module (TCM) uses the signal to determine the shifting points and to adjust the system pressure in the gearbox.

If the transmission control module (TCM) registers that the torque signal from the engine control module (ECM) is missing or is indicated as incorrect, the diagnostic trouble code (DTC) is generated.

The diagnostic trouble code (DTC) can be diagnosed when the ignition is turned on and the CAN network is OK.

Substitute Value

- Auxiliary program **Emergency mode 1** in the transmission control module (TCM) has started.

  HINT: EMERGENCY MODE IN CASE OF MALFUNCTION

Possible Source

- Seek cause of fault in central electronic module (CEM).
- Locate the cause of the fault in the engine control module (ECM).
- Intermittent open circuit or short-circuit on the CAN lead between the engine control module (ECM) and the transmission control module (TCM).

Fault symptom[s]

- General warning lamp lit
- Harsh gear changing
- No gear changing.
- No lock-up function.

TROUBLESHOOTING INFORMATION TCM-P171900

INFORMATION

No troubleshooting has been developed for this diagnostic trouble code.

The diagnostic trouble code (DTC) for CAN communication can also be stored in the Central Electronic module (CEM). In certain instances the diagnostic trouble code (DTC) is also set in other affected control modules. This diagnostic trouble code (DTC) must not be erased before any diagnostic trouble codes (DTC) in the Central Electronic Module (CEM), for CAN communication, and in the Engine Control Module (ECM) have first been remedied and erased.

First read off the diagnostic trouble codes (DTCs) in the central electronic module (CEM) and the engine control module (ECM). Fault-trace and remedy as necessary. If no diagnostic trouble codes (DTCs) are stored, fault-trace the controller area network (CAN) as follows. This diagnostic trouble code (DTC) can then be erased.

For more information about the diagnostic trouble code (DTC) see diagnostic trouble code (DTC) information.

Other information

- see **TROUBLESHOOTING**

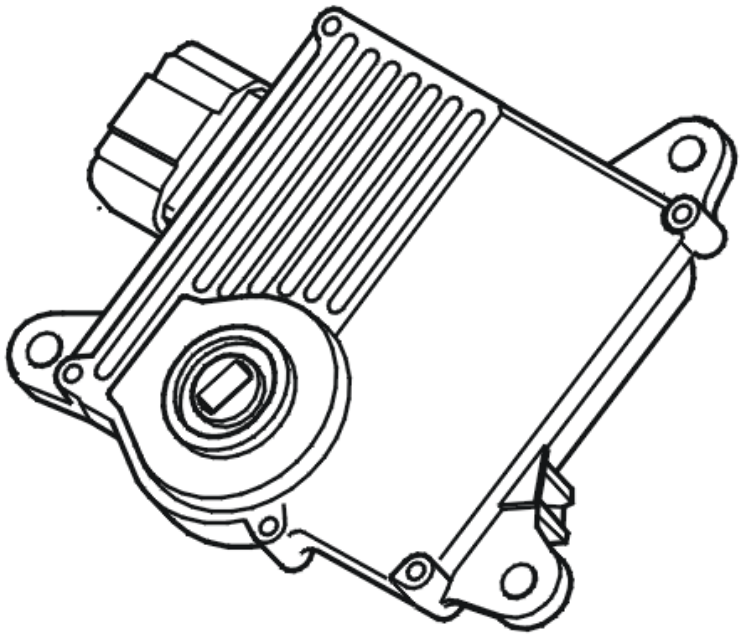

Fig. 5: Identifying Transmission Control Module (TCM)
Courtesy of VOLVO CARS CORPORATION

TCM-P171900: ENGINE TORQUE SIGNAL. GENERAL FAULT INFORMATION. NO INFORMATION ON FAULT TYPE (TF-80SC AWD; 2005)

DIAGNOSTIC TROUBLE CODE (DTC) INFORMATION TCM-P171900

see **DIAGNOSTIC TROUBLE CODE (DTC) INFORMATION TCM-P171900**

TROUBLESHOOTING INFORMATION TCM-P171900

see **TROUBLESHOOTING INFORMATION TCM-P171900**

TCM-P178368: TRANSMISSION OVERTEMPERATURE CONDITION. ALGORITHM BASED FAILURES. EVENT INFORMATION (B6324S, TF-80SC; B6324S, TF-80SC AWD; 2007-2010)

DIAGNOSTIC TROUBLE CODE (DTC) INFORMATION TCM-P178368

Condition

NOTE: **This diagnostic trouble code (DTC) status is an event controlled diagnostic trouble code (DTC). An event controlled diagnostic trouble code (DTC) does not mean that there is a fault in the control module when it is active, but is designed as information.**

The oil temperature sensor provides the Transmission control module (TCM) with a signal that is used, among other things, for the temperature controlled lock-up and engagement high temperature program functions. If the Transmission control module (TCM) registers that oil temperature in the transmission is too high, a signal is transmitted to the Engine control module (ECM) to reduce the engine's torque. This is to protect the gear box from too high load, which can result in internal mechanical faults.

The diagnostic trouble code (DTC) is stored if the control module detects that:

- The gear box oil temperature has been greater than 150 °C.

The control module's test for the diagnostic trouble code (DTC) starts in the event of:

- Normal driving.

NOTE: **The control module can only detect the fault once the test has been started and the diagnostic trouble code (DTC) is stored when the conditions are met.**

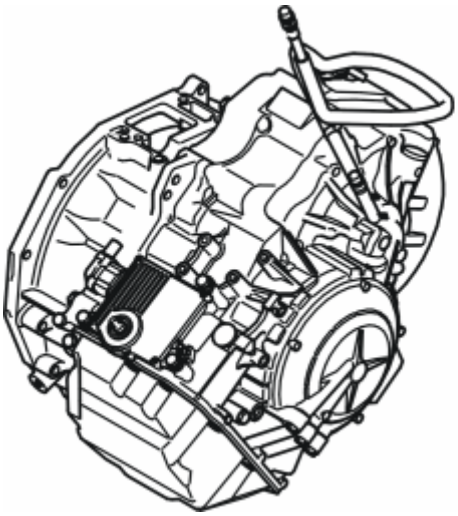

Fig. 6: Identifying Transmission
Courtesy of VOLVO CARS CORPORATION

Substitute Value

- The engine limits the torque until the gear box oil temperature has dropped below a certain level.

Possible Source

- The gear box oil has had too high a temperature for too long.

Fault symptom[s]

- Message in information display
- Poor performance

FAULT-TRACING INFORMATION

There is no fault-tracing for this diagnostic fault code (DTC).

For further information on this diagnostic trouble code, see Diagnostic trouble code (DTC) information.

TCM-P178368: TRANSMISSION OVERTEMPERATURE CONDITION. ALGORITHM BASED FAILURES. EVENT INFORMATION (B6324S5, TF-80SC; B6324S5, TF-80SC AWD; 2011-2012)

DIAGNOSTIC TROUBLE CODE (DTC) INFORMATION TCM-P178368

see **DIAGNOSTIC TROUBLE CODE (DTC) INFORMATION TCM-P178368**

FAULT-TRACING INFORMATION

There is no fault-tracing for this diagnostic fault code (DTC).

For further information on this diagnostic trouble code, see Diagnostic trouble code (DTC) information.

TCM-P179900: CAN TCM/ABS CIRCUIT MALFUNCTION. BUS SIGNAL / MESSAGE FAILURES. MISSING MESSAGE (B6324S, TF-80SC; B6324S, TF-80SC AWD; 2007-2010)

DIAGNOSTIC TROUBLE CODE (DTC) INFORMATION TCM-P179900

Condition

The brake control module (BCM) transmits a vehicle speed signal on the CAN network. The transmission control module (TCM) uses the signal to diagnose the transmission input and output speed sensor.

The diagnostic trouble code (DTC) is stored if the control module detects that:

- There is no signal from the brake control module (BCM) or the signal is faulty.

The control module's test for the diagnostic trouble code (DTC) starts in the event of:

- Engine running.

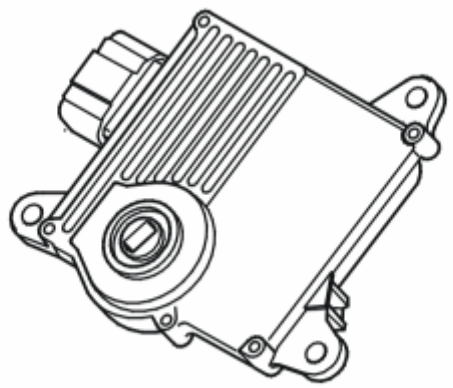

Fig. 7: Identifying Transmission Control Module (TCM)
Courtesy of VOLVO CARS CORPORATION

Substitute Value

- None.

Possible Source

- Internal fault in the brake control module (BCM).
- Fault in the control area network (CAN).

Fault symptom[s]

- General warning lamp lit

FAULT-TRACING

INFORMATION

No fault-tracing has been developed for this diagnostic trouble code (DTC).

A diagnostic trouble code for CAN communication can be stored in the central electronic module (CEM). IN some cases, a diagnostic trouble code is stored in other affected control modules. This diagnostic trouble code is not to be erased until any CAN communication trouble codes in the central electronic module (CEM) and any trouble codes in the brake control module (BCM) are remedied and erased.

Therefore, first read the diagnostic trouble codes in the central electronic module (CEM) and the brake control module (BCM), perform troubleshooting and remedy as necessary. If no diagnostic trouble codes (DTCs) are stored, fault-trace the controller area network (CAN) as follows. This diagnostic trouble code (DTC) can then be erased.

For further information on this diagnostic trouble code, see Diagnostic trouble code (DTC) information.

Other information

- see **GENERAL INFORMATION ABOUT FAULT-TRACING IN THE CAN NETWORK**

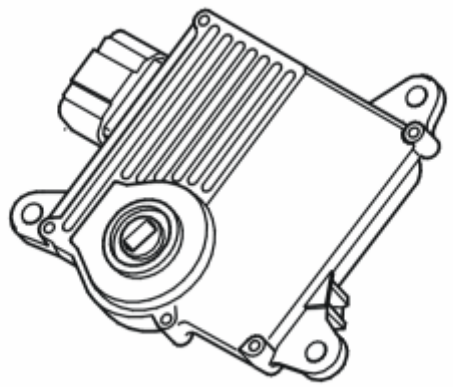

Fig. 8: Identifying Transmission Control Module (TCM)
Courtesy of VOLVO CARS CORPORATION

TCM-P179900: CAN TCM/ABS CIRCUIT MALFUNCTION. BUS SIGNAL / MESSAGE FAILURES. MISSING MESSAGE (B6324S5, TF-80SC; B6324S5, TF-80SC AWD; 2011-2012)

DIAGNOSTIC TROUBLE CODE (DTC) INFORMATION TCM-P179900

see **DIAGNOSTIC TROUBLE CODE (DTC) INFORMATION TCM-P179900**

FAULT-TRACING

see **FAULT-TRACING**

TCM-P179900: CAN TCM/ABS CIRCUIT MALFUNCTION. BUS/MESSAGE ERROR. MESSAGE MISSING (B8444S, TF-80SC AWD; 2006-2011)

DIAGNOSTIC TROUBLE CODE (DTC) INFORMATION TCM-P179900

Condition

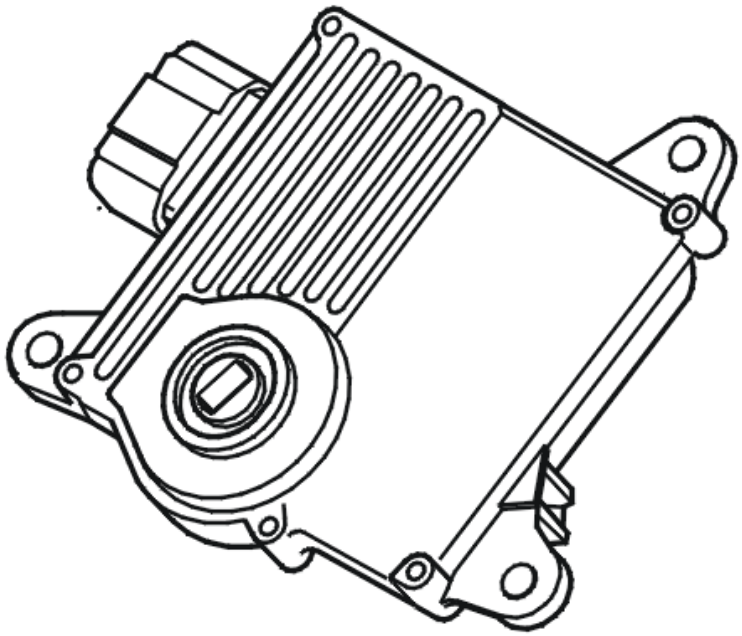

Fig. 9: Identifying Transmission Control Module (TCM)
Courtesy of VOLVO CARS CORPORATION

The brake control module (BCM) puts a signal for the vehicle speed on the CAN network. The transmission control module (TCM) uses the signal to diagnose the gearbox input and output speed sensors.

If the transmission control module (TCM) registers that the signal from the brake control module (BCM) is missing or indicated as incorrect, the diagnostic trouble code (DTC) is generated.

Substitute Value

- Nothing.

Possible Source

- Internal fault in brake control module (BCM).
- Fault on CAN network.

Fault symptom[s]

- General warning lamp lit

FAULT TRACING TCM-P179900

INFORMATION

No troubleshooting has been developed for this diagnostic trouble code.

The diagnostic trouble code (DTC) for CAN communication can also be stored in the Central Electronic module (CEM). In certain instances the diagnostic trouble code (DTC) is also set in other affected control modules. This diagnostic trouble code (DTC) must not be erased before any diagnostic trouble codes (DTC) in the Central Electronic Module (CEM), for CAN communication, and in the brake control (BCM) have first been remedied and erased.

First read off the diagnostic trouble codes (DTCs) in the central electronic module (CEM) and the brake control module (BCM). Troubleshoot and remedy as necessary. If no diagnostic trouble codes (DTCs) are stored, troubleshoot the controller area network (CAN) as follows. Then this diagnostic trouble code (DTC) can be erased.

For more information about the diagnostic trouble code (DTC) see diagnostic trouble code (DTC) information.

Other information

- see **TROUBLESHOOTING**

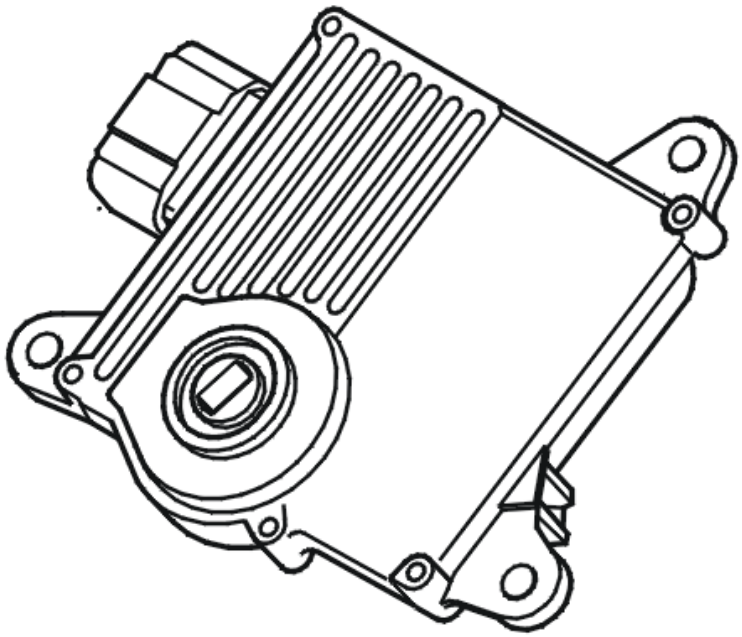

Fig. 10: Identifying Transmission Control Module (TCM)
Courtesy of VOLVO CARS CORPORATION

TCM-P179900: CAN TCM/ABS CIRCUIT MALFUNCTION. BUS/MESSAGE ERROR. MESSAGE MISSING (TF-80SC AWD; 2005)

DIAGNOSTIC TROUBLE CODE (DTC) INFORMATION TCM-P179900

see **DIAGNOSTIC TROUBLE CODE (DTC) INFORMATION TCM-P179900**

FAULT TRACING TCM-P179900

see **FAULT TRACING TCM-P179900**

TCM-P215800: VEHICLE SPEED SENSOR B. GENERAL FAILURE INFORMATION. NO SUB TYPE INFORMATION (B6324S, TF-80SC; B6324S, TF-80SC AWD; 2007-2010)

DIAGNOSTIC TROUBLE CODE (DTC) INFORMATION TCM-P215800

Condition

The signal for input speed comes from a sensor within the transmission control system. The transmission control module (TCM) uses the signal to determine the input shaft speed after the torque converter. This signal is used to compare transmission speed and vehicle speed. The transmission control module uses this comparison to calculate the gear-shift timing. The rpm and vehicle speed data are also used to adjust system pressure and reduce engine torque when shifting. The result is smooth gear-shifting. The information is also used to control the function.

The diagnostic trouble code (DTC) is stored if the control module detects that:

- The circuit to the transmission's speed sensor input speed is missing.

The control module's test for the diagnostic trouble code (DTC) starts in the event of:

- Ignition on.

NOTE: The control module can only detect the fault once the test has been started and the diagnostic trouble code (DTC) is stored when the conditions are met.

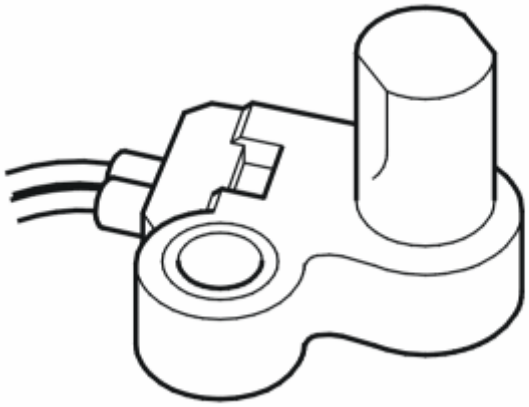

Fig. 11: Identifying Vehicle Speed Sensor
Courtesy of VOLVO CARS CORPORATION

Substitute Value

- Auxiliary program **Emergency mode 1** in the transmission control module (TCM) has started.

  HINT: EMERGENCY MODE IN THE EVENT OF A FAULT

Possible Source

- Open circuit in power supply or signal lead.
- Short-circuit to ground in the signal cable.
- Transmission input speed sensor not working.
- Internal fault in the transmission control module (TCM).

Fault symptom[s]

- Malfunction indicator light (MIL), on
- General warning lamp lit
- No lock-up
- Rough gear shift
- No gear shift

FAULT-TRACING

see **FAULT-TRACING**

TCM-P215800: VEHICLE SPEED SENSOR B. GENERAL FAILURE INFORMATION. NO SUB TYPE INFORMATION (B6324S5, TF-80SC;

B6324S5, TF-80SC AWD; 2011-2012)

DIAGNOSTIC TROUBLE CODE (DTC) INFORMATION TCM-P215800

see **DIAGNOSTIC TROUBLE CODE (DTC) INFORMATION TCM-P215800**

FAULT-TRACING

see **FAULT-TRACING**

TCM-P215800: SPEED SENSOR B. GENERAL FAULT INFORMATION. NO INFORMATION ON FAULT TYPE (B8444S, TF-80SC AWD; 2006-2011)

DIAGNOSTIC TROUBLE CODE (DTC) INFORMATION TCM-P215800

Condition

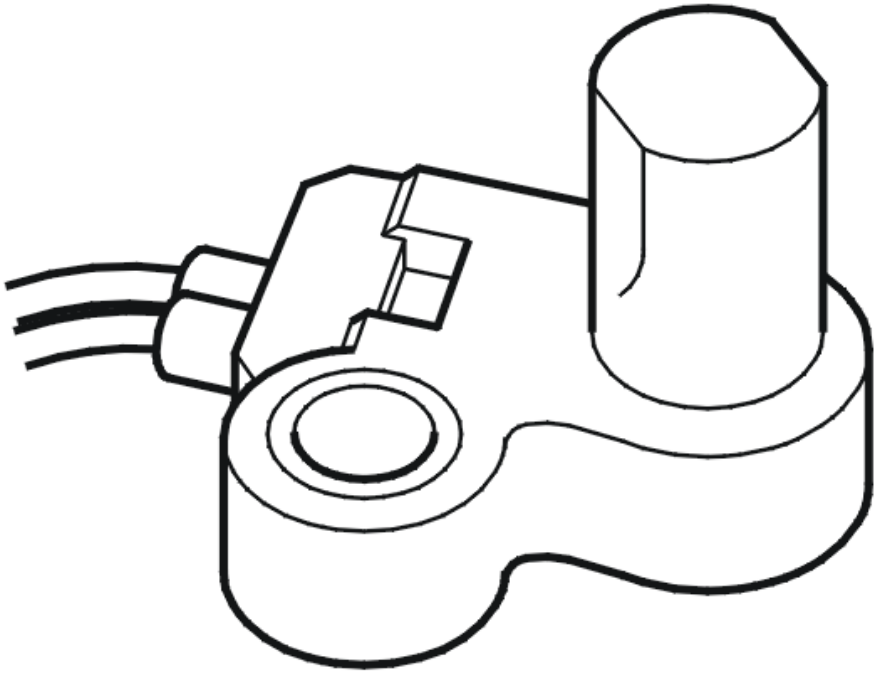

Fig. 12: Identifying Transmission Speed Sensor
Courtesy of VOLVO CARS CORPORATION

The signal for the input speed comes from a sensor inside the transmission control system. The transmission control module (TCM) bases its calculation of the speed of the input shaft after the torque converter on this signal. The signal is used to compare the speed of the gearbox with the vehicle speed. Using this comparison,

the control module can calculate the gear shifting points. The information on RPM and speed affects the adjustment of the system pressure and the reduction of the engine torque when changing gear. This results in smoother gear changes. The information is also used to control the lock-up function.

If the transmission control module (TCM) registers that the circuit to the gearbox input speed sensor is missing, the diagnostic trouble code (DTC) is generated.

The diagnostic trouble code (DTC) can be diagnosed when driving normally.

Substitute Value

- Auxiliary program **Emergency mode 1** in the transmission control module (TCM) has started.

  HINT: EMERGENCY MODE IN CASE OF MALFUNCTION

Possible Source

- Open circuit in power supply or signal lead.
- The signal cable is short-circuited to ground.
- Gearbox input speed sensor not working.
- Internal fault in transmission control module (TCM).

Fault symptom[s]

- Malfunction indicator lamp (MIL) lit.
- General warning lamp lit
- No lock-up function.
- Harsh gear changing
- No gear changing.

FAULT TRACING

see **FAULT TRACING**

TCM-P215800: SPEED SENSOR B. GENERAL FAULT INFORMATION. NO INFORMATION ON FAULT TYPE (TF-80SC AWD; 2005)

DIAGNOSTIC TROUBLE CODE (DTC) INFORMATION TCM-P215800

see **DIAGNOSTIC TROUBLE CODE (DTC) INFORMATION TCM-P215800**

FAULT TRACING

see **FAULT TRACING**

TCM-P271900: PRESSURE CONTROL SOLENOID D CONTROL CIRCUIT RANGE/PERFORMANCE. GENERAL FAILURE INFORMATION. NO SUB TYPE INFORMATION (B6324S, TF-80SC; B6324S, TF-80SC AWD; 2007-2010)

DIAGNOSTIC TROUBLE CODE (DTC) INFORMATION TCM-P271900

Condition

Linear pressure solenoid SLC3 controls shifting in the transmission. Solenoid SLC3 works when it receives voltage from the transmission control module (TCM). The solenoid is activated during various driving conditions based on speed, throttle position and set driving program.

The diagnostic trouble code (DTC) is stored if the control module detects that:

- The measured current in the solenoid circuit is incorrect.

Solenoid SLC3 can then not regulate system pressure.

The control module's test for the diagnostic trouble code (DTC) starts in the event of:

- Shifting when linear pressure solenoid SLC3 is activated.

NOTE: **The control module can only detect the fault once the test has been started and the diagnostic trouble code (DTC) is stored when the conditions are met.**

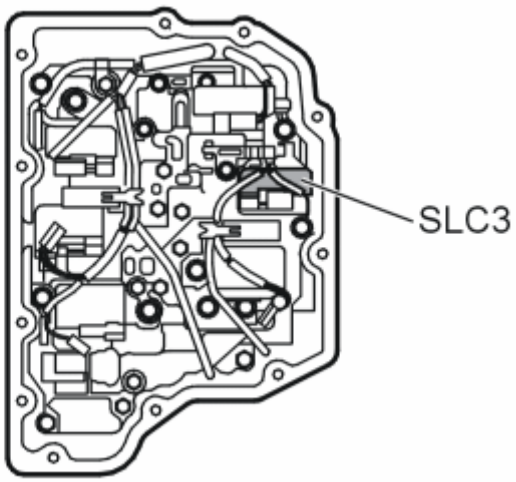

Fig. 13: Identifying Solenoid SLC3
Courtesy of VOLVO CARS CORPORATION

Substitute Value

- Auxiliary program **Emergency mode 1** in the transmission control module (TCM) has started.

HINT: EMERGENCY MODE IN THE EVENT OF A FAULT

Possible Source

- Contact resistance in the terminals.
- Open-circuit in the cable for the control signal or signal ground.
- Linear pressure solenoid SLC3 is stuck.
- Linear pressure solenoid SLC3 not working.

Fault symptom[s]

- General warning lamp lit
- Malfunction indicator light (MIL), on
- Rough gear shift
- No gear shift
- Abnormal slipping gearshifts

FAULT-TRACING

CHECKS

CHECKING LINEAR PRESSURE SOLENOID SLC3

Fig. 14: Identifying Ignition ON
Courtesy of VOLVO CARS CORPORATION

- Ignition on.
- Activate solenoid SLC3 by clicking the VCT2000 symbol.

  Read the current through the circuit for solenoid SLC3. The current should oscillate between 100 and 950 mA.

  The fault is permanent if the current does not change.

  If the current changes, this is an indication that the fault was present previously but is not active at the moment, i. e. an intermittent fault.

Fig. 15: Identifying VCT2000 Diagnostic Tool Symbol In VIDA
Courtesy of VOLVO CARS CORPORATION

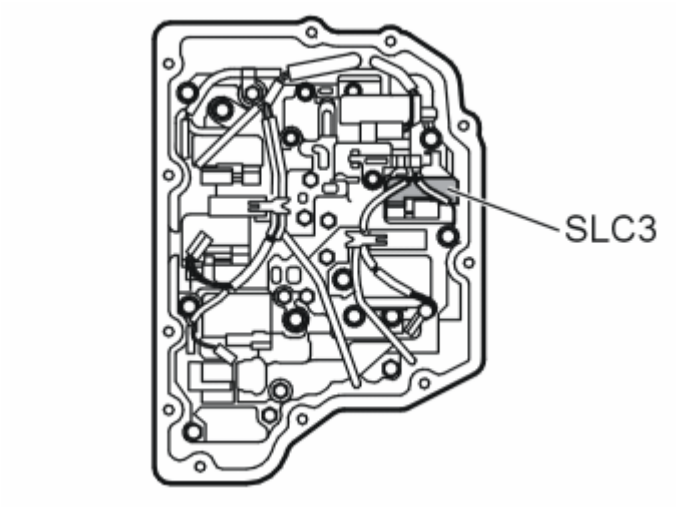

Fig. 16: Identifying Solenoid SLC3
Courtesy of VOLVO CARS CORPORATION

- **Continue**

  Refer to **CHECKING THE COMPONENTS AND WIRING**

CHECKING THE COMPONENTS AND WIRING

Fig. 17: Identifying Ignition OFF
Courtesy of VOLVO CARS CORPORATION

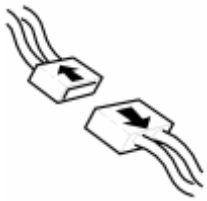

Fig. 18: Identifying Connectors Disconnected

Courtesy of VOLVO CARS CORPORATION

- Ignition off.
- Open the transmission control system.

  Check connector B (22-pin) for the transmission control module (TCM). Check for damaged or pressed in pins. Check for contact resistance and oxidation.

  Check the cables for open circuit, short circuit to ground and short circuit to supply voltage.

  Take readings between:

  - Transmission connector #B14 and the connector for solenoid SLC3 #1.
  - Transmission connector #B22 and the connector for solenoid SLC3 #2.

  HINT: If no fault is found in the wiring, check solenoid SLC3. See CHECKING INTERNAL COMPONENTS OF THE TRANSMISSION

  If no fault is found in the wiring or the component replace the control system.

  Remedy as necessary.

  Other information

  - see **CONNECTING THE BREAKOUT BOX**
  - see **SIGNAL SPECIFICATION**
  - see **VALVE HOUSING**
  - see **TRANSMISSION CONTROL UNIT WIRING HARNESS**
  - To access the transmission control system:**COVER CONTROL SYSTEM, REPLACING (2007-2011)**
  - see **CHECKING WIRING AND TERMINALS**

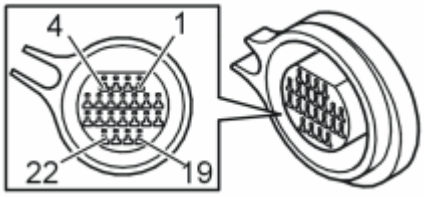

Fig. 19: Identifying Connector B Terminals
Courtesy of VOLVO CARS CORPORATION

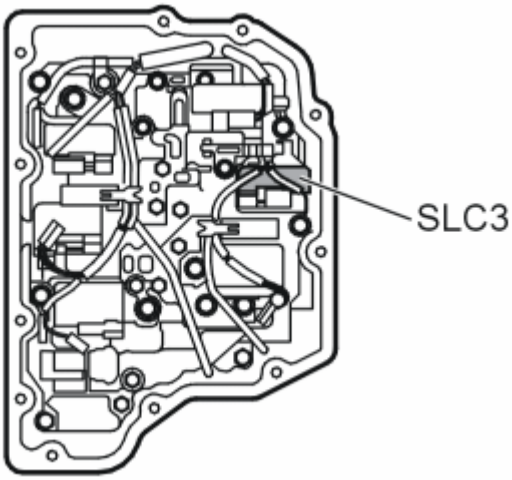

Fig. 20: Identifying Solenoid SLC3
Courtesy of VOLVO CARS CORPORATION

- **Continue**

  Refer to **RESETTING ADAPTATION**

VERIFICATION

VERIFICATION

HINT: After carrying out the repair, check that the fault has been remedied.

Fig. 21: Identifying Ignition ON
Courtesy of VOLVO CARS CORPORATION

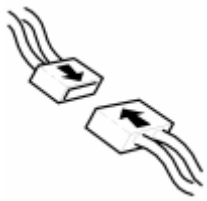

Fig. 22: Identifying Connector(s) Reinstallation
Courtesy of VOLVO CARS CORPORATION

- Ignition off.
- Reinstall the connectors, components etc.

- Ignition on.
- Activate solenoid SLC3 by clicking the VCT2000 symbol.

  Read the current through the circuit for solenoid SLC3. The current should oscillate between 100 and 950 mA.

Fig. 23: Identifying VCT2000 Diagnostic Tool Symbol In VIDA
Courtesy of VOLVO CARS CORPORATION

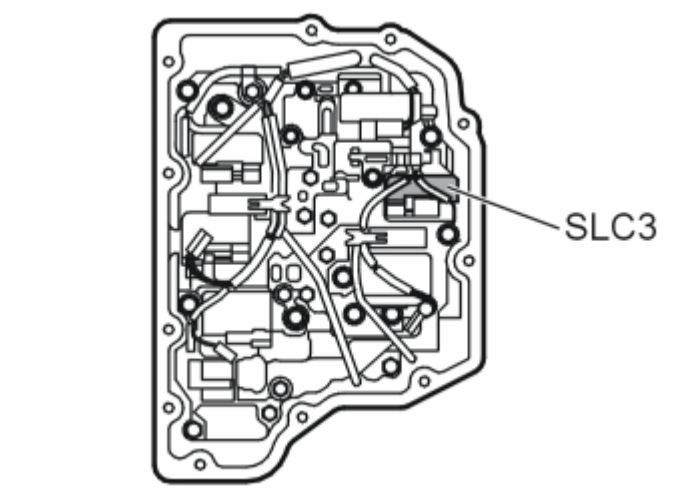

Fig. 24: Identifying Solenoid SLC3
Courtesy of VOLVO CARS CORPORATION

Is the function OK?

- **YES**

  VERIFIED: Troubleshooting has been completed.

- **NO**

  Refer to **INFORMATION**

INFORMATION

FAULT-TRACING INFORMATION

The fault should have been detected and remedied. As this is not the case fault-tracing has failed.

Exit fault-tracing for this diagnostic trouble code (DTC) or make another attempt.

RESETTING ADAPTATION

RESETTING THE ADAPTATION AND THE COUNTER FOR "TRANSMISSION OIL, REPLACE"

HINT: The transmission has torque-regulated, adaptive pressure regulation. The pressure regulator enables the transmission to regulate pressure during each shift to prevent hard shifting. Each shift is assessed by the transmission control module (TCM) and is stored in the internal memory. This makes it possible to compensate for transmission and clutch wear. It is important that the adaptation in the memory is reset so that the transmission works normally after the repair. Because the fluid was changed during the repair, the counter for transmission fluid change must also be reset. If the counter is not reset during draining/replacement, a diagnostic trouble code may be generated under the wrong conditions.

NOTE: This applies only if the transmission or one of the components in the transmission have been replaced.

Fig. 25: Identifying Ignition ON
Courtesy of VOLVO CARS CORPORATION

- Ignition on.

  Click on the VCT2000 symbol to reset the adaptation and counter.

  Fig. 26: Identifying VCT2000 Diagnostic Tool Symbol In VIDA
  Courtesy of VOLVO CARS CORPORATION

- **Continue**

  Refer to **VERIFICATION**

TCM-P271900: PRESSURE CONTROL SOLENOID D CONTROL CIRCUIT RANGE/PERFORMANCE. GENERAL FAILURE INFORMATION. NO SUB TYPE INFORMATION (B6324S5, TF-80SC; B6324S5, TF-80SC AWD; 2011-2012)

DIAGNOSTIC TROUBLE CODE (DTC) INFORMATION TCM-P271900

see **DIAGNOSTIC TROUBLE CODE (DTC) INFORMATION TCM-P271900**

FAULT-TRACING

see **FAULT-TRACING**

TCM-P271900: PRESSURE REGULATOR SOLENOID D CONTROL CIRCUIT INSIDE/OUTSIDE TOLERANCE. GENERAL FAULT INFORMATION. NO INFORMATION ON FAULT TYPE (B8444S, TF-80SC AWD; 2006-2011)

DIAGNOSTIC TROUBLE CODE (DTC) INFORMATION TCM-P271900

Condition

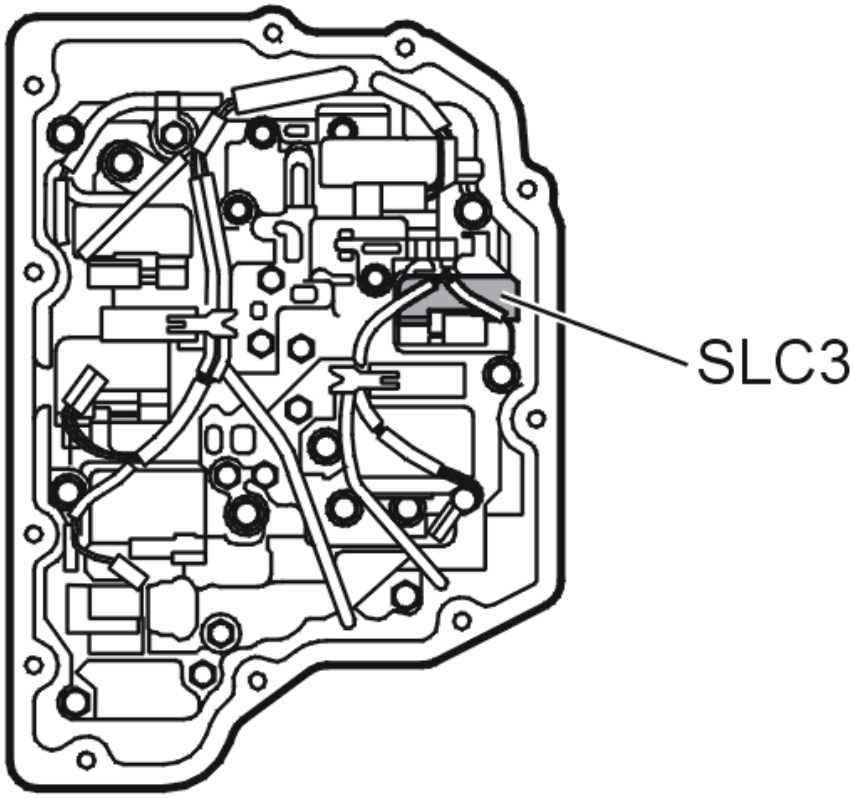

Fig. 27: Identifying Solenoid SLC3
Courtesy of VOLVO CARS CORPORATION

The lock-up solenoid SLC3 controls the lock-up function in the gearbox. The SLC3 solenoid works when it receives power from the transmission control module (TCM) and depending on the speed, accelerator position and driving program setting, the solenoid will be activated for different driving conditions.

If the transmission control module (TCM) registers that the measured current in the solenoid circuit is incorrect, the diagnostic trouble code (DTC) is generated. The SLC3 solenoid is then not able to regulate the system pressure.

The diagnostic trouble code (DTC) can be diagnosed when changing gear while the linear pressure solenoid SLC3 is activated.

Substitute Value

- Auxiliary program **Emergency mode 1** in the transmission control module (TCM) has started.

  HINT: EMERGENCY MODE IN CASE OF MALFUNCTION

Possible Source

- Contact resistance in the terminals
- Open circuit in lead for control signal or signal ground.
- Linear pressure solenoid SLC3 stuck.
- Linear pressure solenoid SLC3 not working.

Fault symptom[s]

- General warning lamp lit
- Malfunction indicator lamp (MIL) lit.
- Harsh gear changing
- No gear changing.
- Abnormally slipping gears.

FAULT TRACING TCM-P271900

CHECKS

CHECKING THE LOCK-UP SOLENOID SLC3

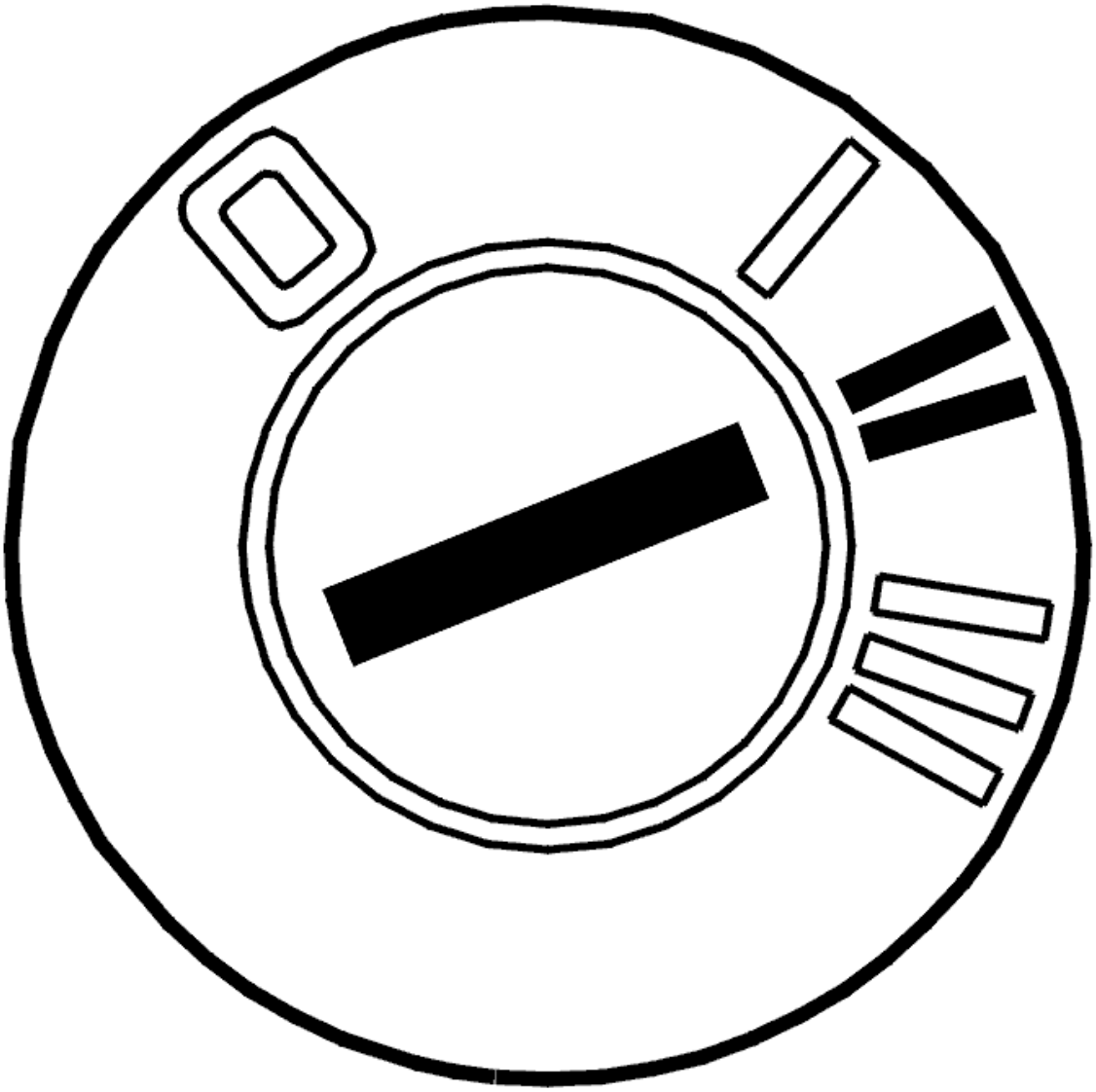

Fig. 28: Identifying Ignition ON
Courtesy of VOLVO CARS CORPORATION

- Ignition on
- Activate solenoid SLC3 by clicking the VCT2000 symbol.

  Read the current though the circuit for solenoid SLC3. The current must oscillate between approximately 100 and 950 mA.

  The fault is permanent if the current does not change.

  If the current oscillates then this would suggest that the fault has previously been present but is no longer active. The fault is intermittent.

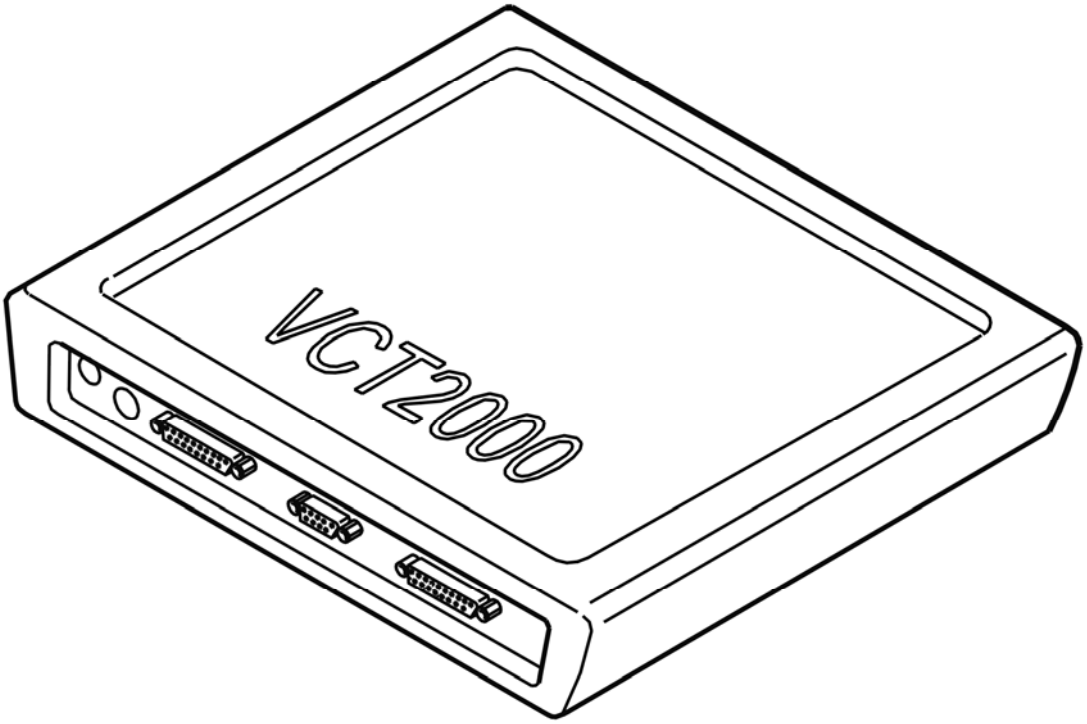

Fig. 29: Identifying VCT2000 Diagnostic Tool Symbol In VIDA
Courtesy of VOLVO CARS CORPORATION

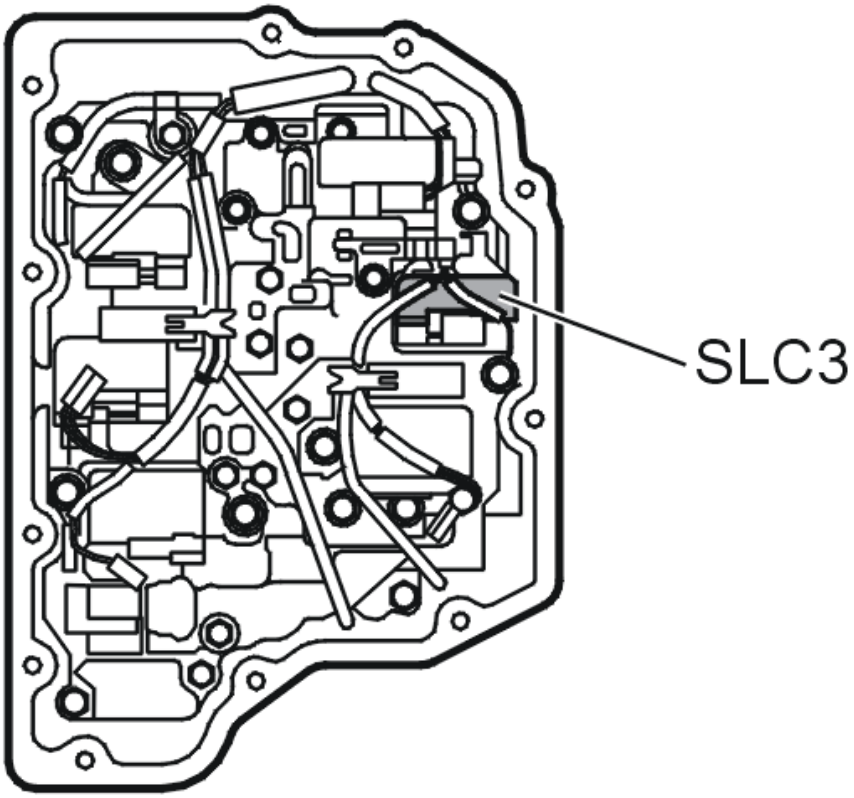

Fig. 30: Identifying Solenoid SLC3
Courtesy of VOLVO CARS CORPORATION

- **Continue**

  Refer to **CHECKING THE COMPONENTS AND WIRING**

CHECKING THE COMPONENTS AND WIRING

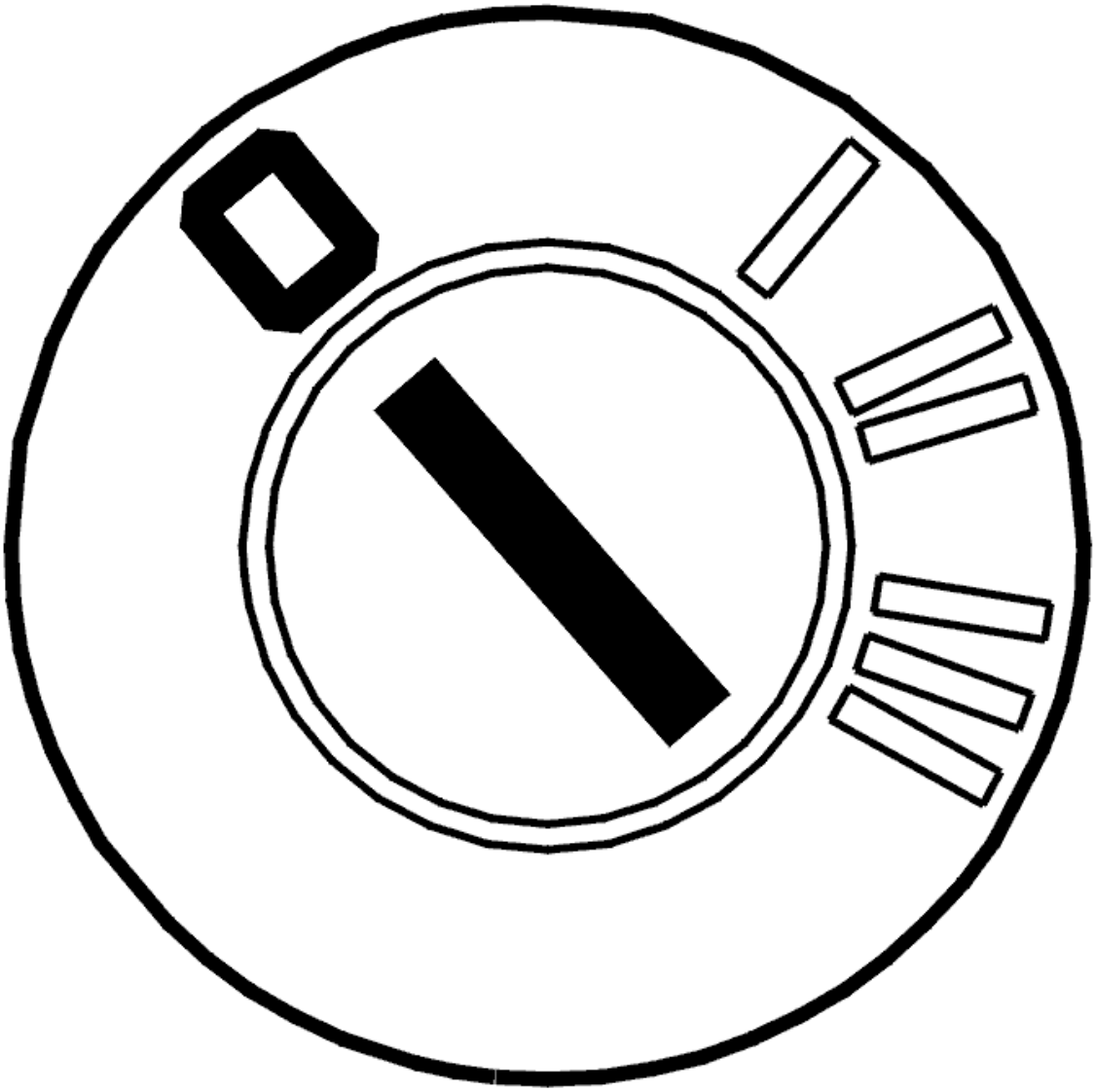

Fig. 31: Identifying Ignition OFF
Courtesy of VOLVO CARS CORPORATION

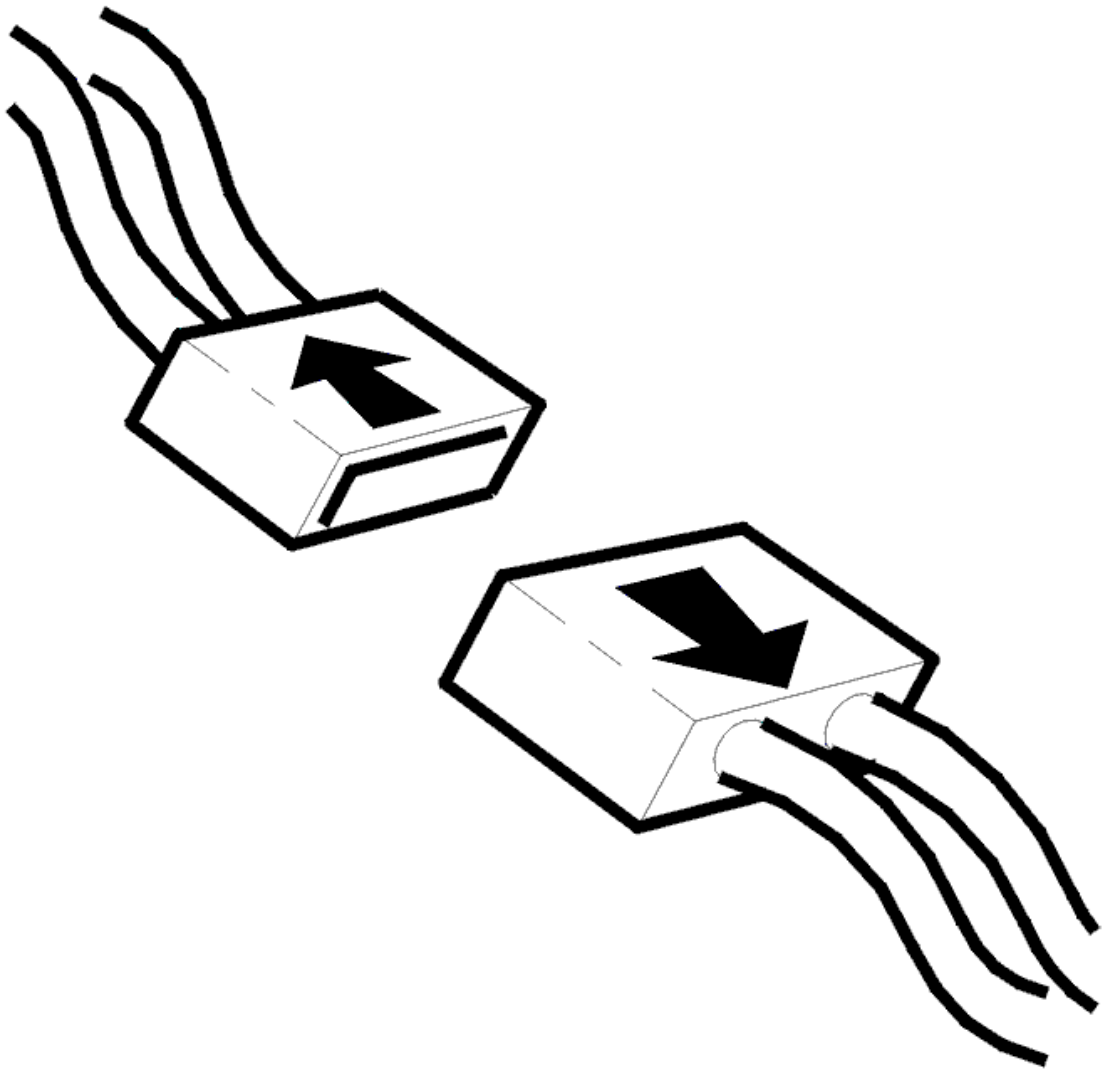

Fig. 32: Identifying Connector(s) Disconnected
Courtesy of VOLVO CARS CORPORATION

- Ignition off
- Open the gearbox control system

  Check connector B (22-pin) for the transmission control module (TCM). Check for damage and pressed in terminal pins. Check for contact resistance and oxidation.

  Check the wiring between the transmission connector terminal #B14 and the connector for solenoid SLC3 terminal #1. Check the wiring between the transmission connector terminal #B22 and the connector for solenoid SLC3 terminal #2. Check for an open circuit. Check for a short-circuit to supply voltage. Check for a short-circuit to ground.

  HINT: If no fault is found in the wiring check solenoid SLC3. See CHECKING THE LINE PRESSURE SOLENOID SLT, SLC1, SLC2, SLC3, SLB1 AND LOCK-UP SOLENOID SLU

If no fault is found in the wiring or the component replace the control system.

Remedy as necessary.

Other information

- see **CONNECTING THE BREAKOUT BOX**
- see **SIGNAL DESCRIPTION**
- see **CONTROL SYSTEM, REPLACING**
- see **CABLE HARNESS, CONTROL SYSTEM, GEARBOX, REPLACING**
- To access the transmission control system: **COVER CONTROL SYSTEM, REPLACING (2007-2011)**
- see **CONTENTS**

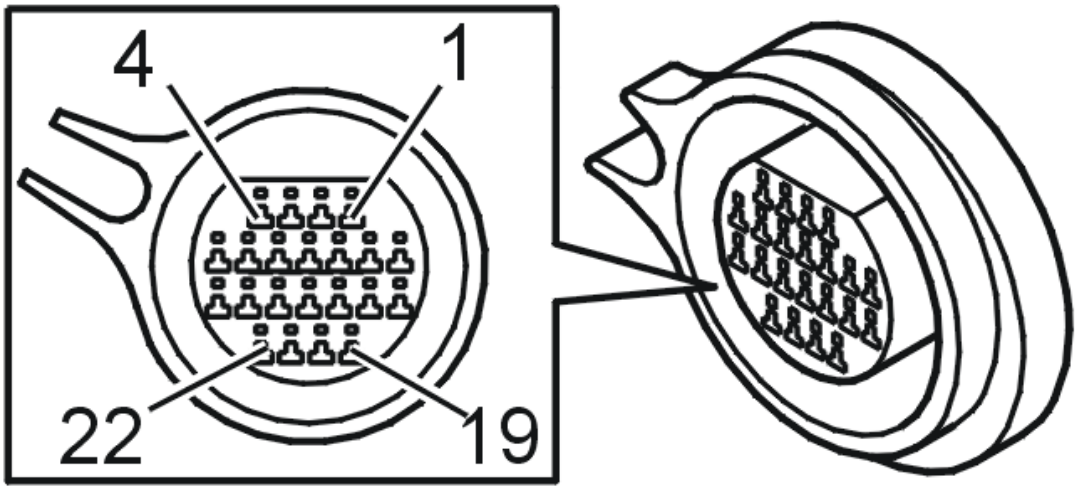

Fig. 33: Identifying Connector B Terminals
Courtesy of VOLVO CARS CORPORATION

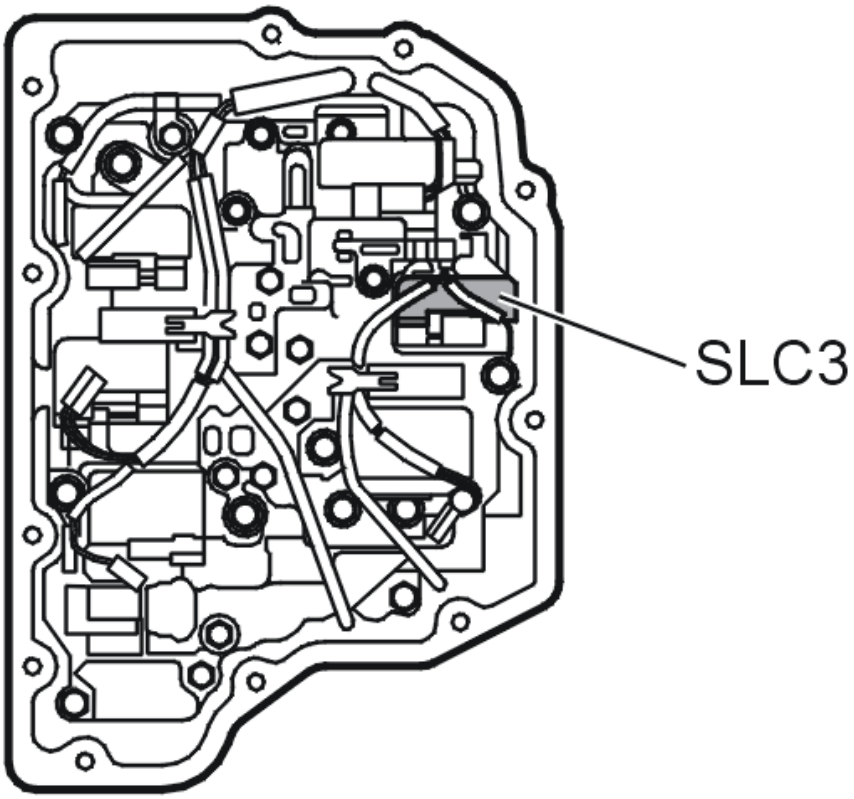

Fig. 34: Identifying Solenoid SLC3
Courtesy of VOLVO CARS CORPORATION

- **Continue**

  Refer to **RESETTING ADAPTATION**

RESETTING ADAPTATION

RESETTING ADAPTATION AND COUNTER FOR "TRANSMISSION OIL, CHANGING"

HINT: The transmission has torque-controlled, adaptive pressure control. The pressure control means that the transmission itself controls the pressure during each shift sequence in order to avoid harsh shifting. Each shift is assessed by the transmission control module (TCM) and is stored in the internal memory, which results in compensation for wear in the transmission and clutch. In order for the transmission to function correctly after repair, it is important to reset the adaptation in the memory. Since the oil is changed during the repair, the counter for "Transmission oil, change" shall also be reset. If the counter is not reset when draining/changing oil, there is a risk that a diagnostic trouble code may be generated under incorrect conditions.

NOTE: **This applies only if the transmission or one of the components in the transmission have been replaced.**

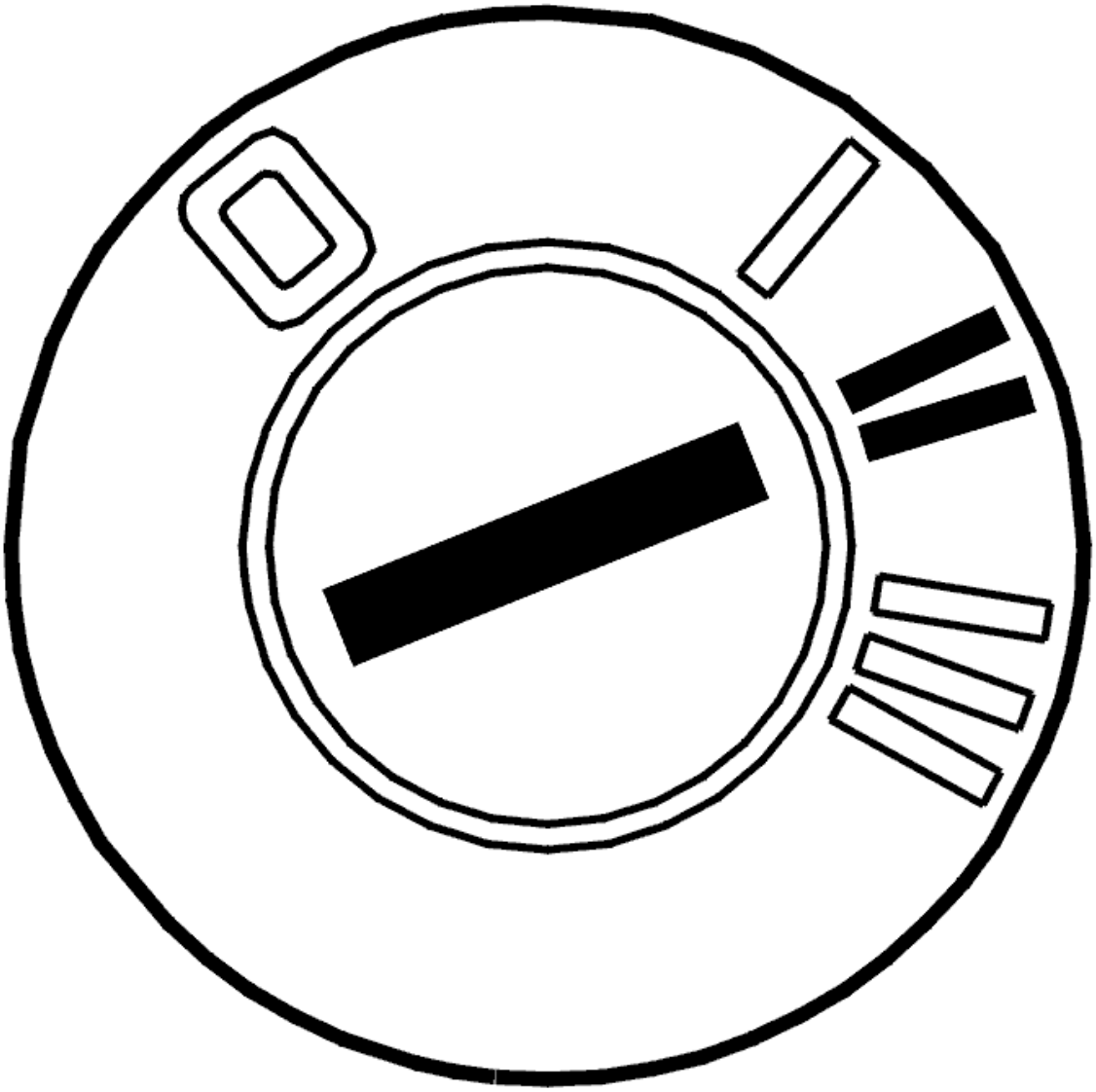

Fig. 35: Identifying Ignition ON
Courtesy of VOLVO CARS CORPORATION

- Ignition on

  Activate reset of the adaptation and the counter by clicking on the symbol for VCT2000.

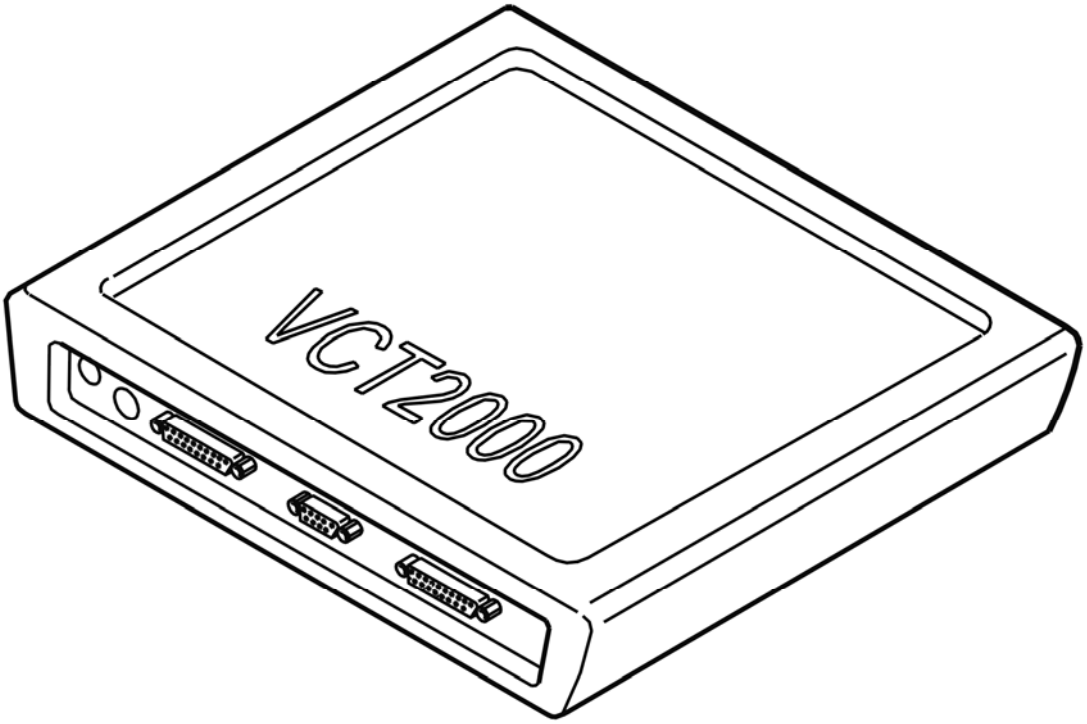

Fig. 36: Identifying VCT2000 Diagnostic Tool Symbol In VIDA
Courtesy of VOLVO CARS CORPORATION

- **Continue**

  Refer to **VERIFICATION**

VERIFICATION

VERIFICATION

HINT: After carrying out the repair, check that the fault has been remedied.

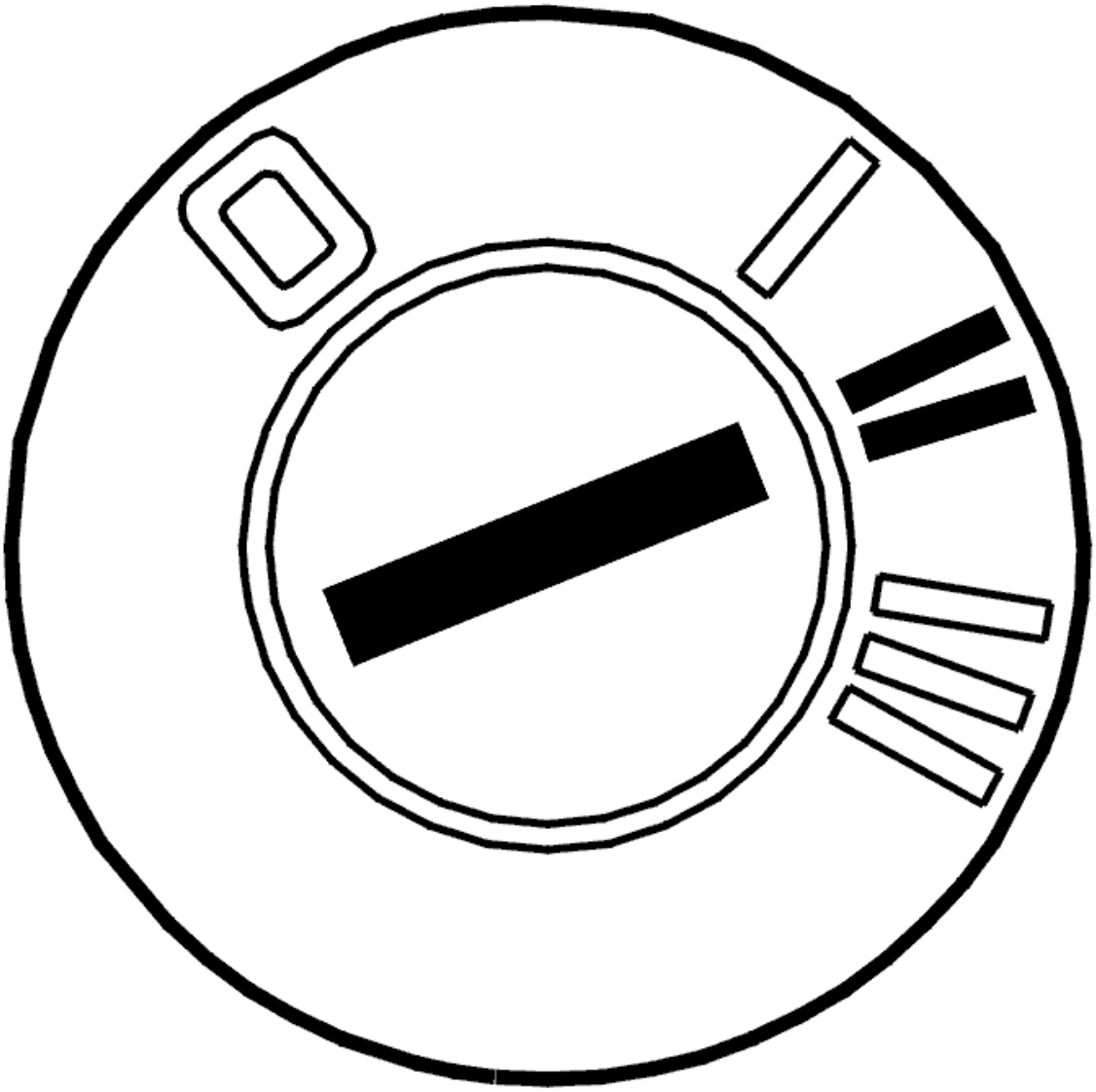

Fig. 37: Identifying Ignition ON
Courtesy of VOLVO CARS CORPORATION

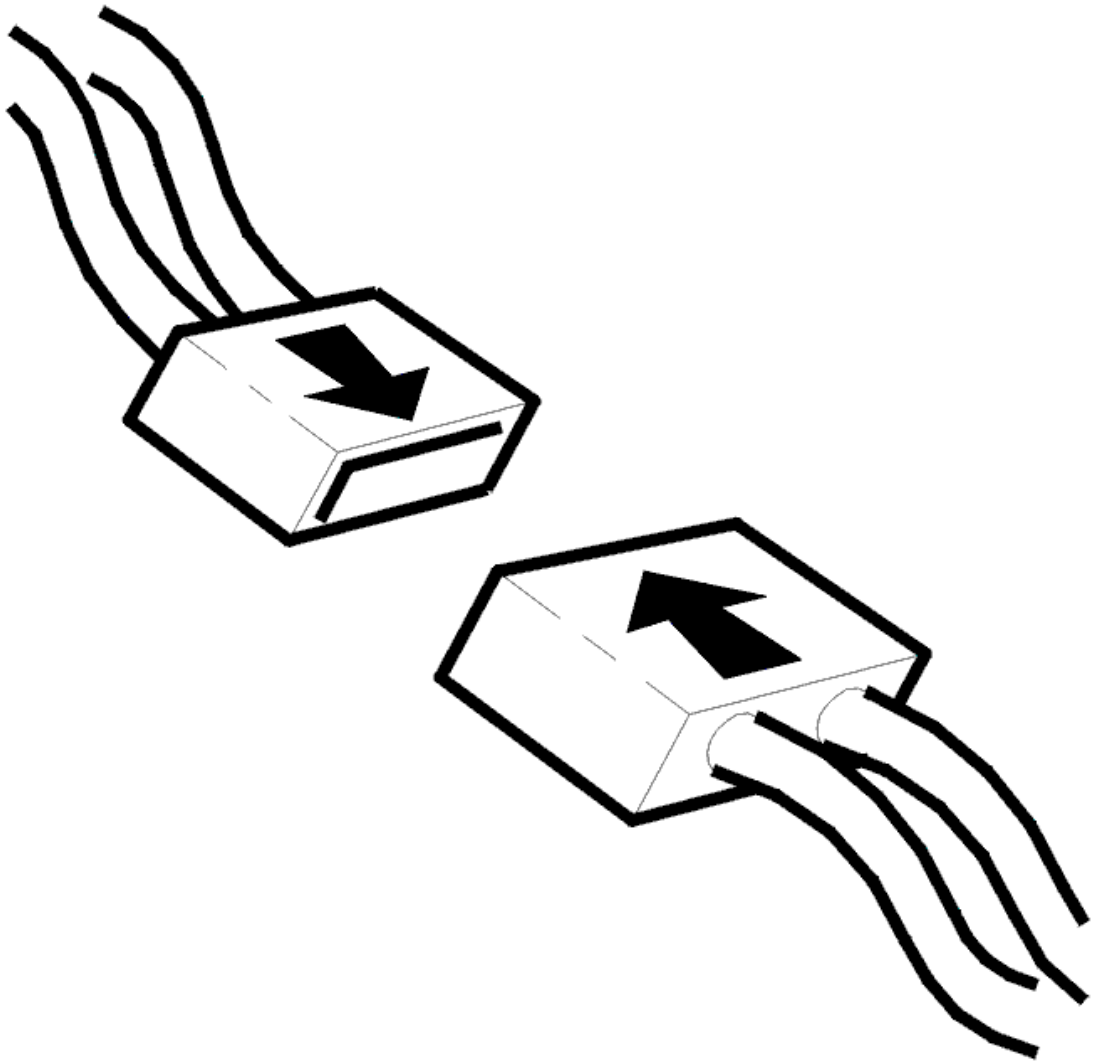

Fig. 38: Identifying Connector(s) Reinstallation
Courtesy of VOLVO CARS CORPORATION

- Ignition off
- Reinstall the components, reconnect the connectors etc.
- Ignition on
- Activate solenoid SLC3 by clicking on the symbol for VCT2000.

  Read off the current through the circuit for solenoid SLC3. The current must oscillate between approximately 0 and 1000 mA.

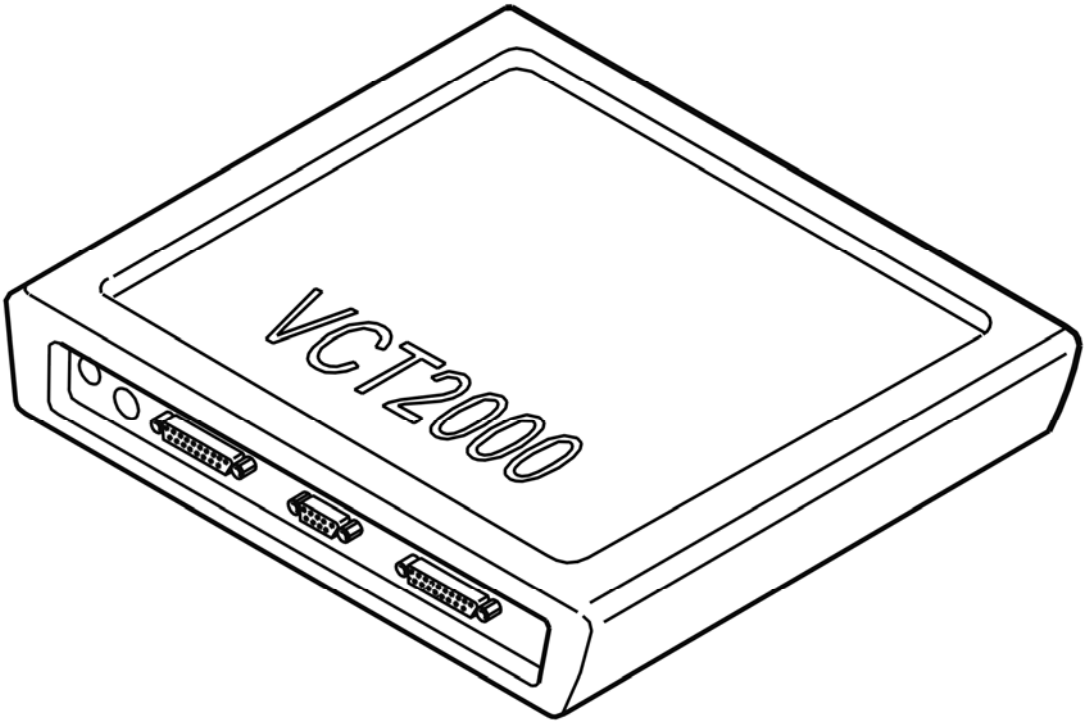

Fig. 39: Identifying VCT2000 Diagnostic Tool Symbol In VIDA
Courtesy of VOLVO CARS CORPORATION

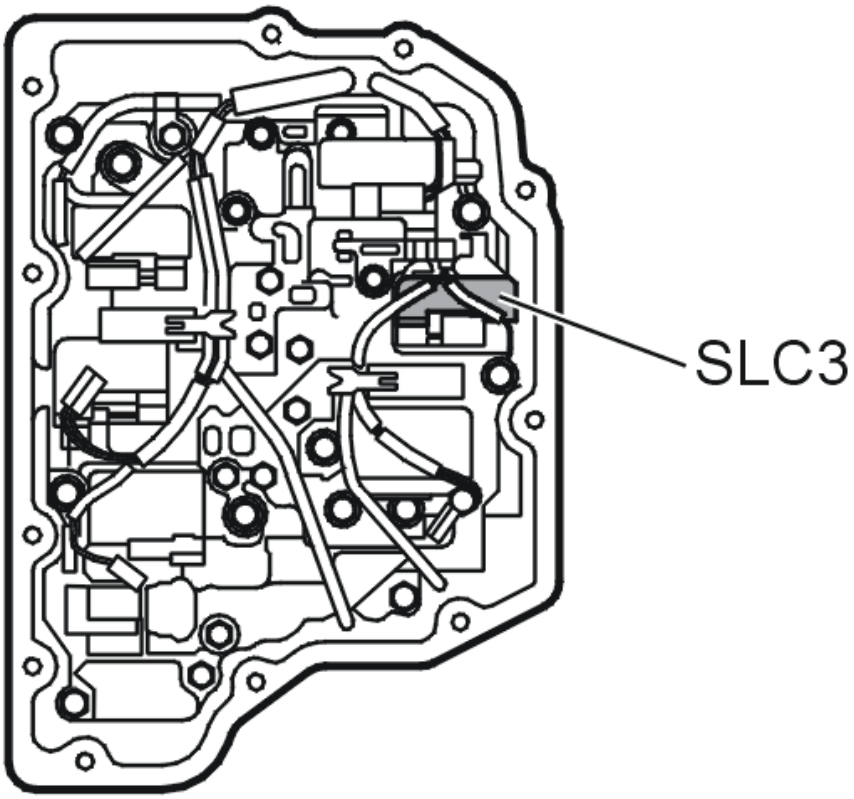

Fig. 40: Identifying Solenoid SLC3
Courtesy of VOLVO CARS CORPORATION

Is the function OK?

- **YES**

  VERIFIED: Troubleshooting has been completed.

- **NO**

  Refer to **INFORMATION**

INFORMATION

FAULT-TRACING INFORMATION

The fault should have been detected and remedied. As this is not the case fault-tracing has failed.

Exit fault-tracing for this diagnostic trouble code (DTC) or make another attempt.

TCM-P271900: PRESSURE REGULATOR SOLENOID D CONTROL CIRCUIT INSIDE/OUTSIDE TOLERANCE. GENERAL FAULT INFORMATION. NO

INFORMATION ON FAULT TYPE (TF-80SC AWD; 2005)

DIAGNOSTIC TROUBLE CODE (DTC) INFORMATION TCM-P271900

see **DIAGNOSTIC TROUBLE CODE (DTC) INFORMATION TCM-P271900**

FAULT TRACING TCM-P271900

see **FAULT TRACING TCM-P271900**

TCM-P272000: PRESSURE CONTROL SOLENOID D CONTROL CIRCUIT LOW. GENERAL FAILURE INFORMATION. NO SUB TYPE INFORMATION (B6324S, TF-80SC; B6324S, TF-80SC AWD; 2007-2010)

DIAGNOSTIC TROUBLE CODE (DTC) INFORMATION TCM-P272000

Condition

Linear pressure solenoid SLC3 controls system pressure in the transmission. The solenoid is controlled by a power amplifier at the output of the transmission control module (TCM). The control module uses the power stage to control the current to the solenoid. A low amperage results in a high system pressure. A high amperage (approximately 1A) results in a low system pressure. The amperage is primarily affected by the throttle position.

The diagnostic trouble code is stored if the control module detects:

- An open circuit in solenoid SLC3 circuit.

Solenoid SLC3 can then not regulate system pressure.

The control module's test for the diagnostic trouble code (DTC) starts in the event of:

- Normal driving.

NOTE: **The control module can only detect the fault once the test has been started and the diagnostic trouble code (DTC) is stored when the conditions are met.**

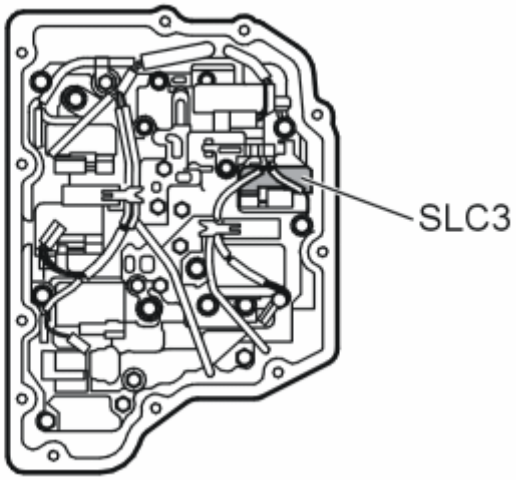

Fig. 41: Identifying Solenoid SLC3
Courtesy of VOLVO CARS CORPORATION

Substitute Value

- Auxiliary program **Emergency mode 1** in the transmission control module (TCM) has started.

  HINT: EMERGENCY MODE IN THE EVENT OF A FAULT

Possible Source

- Contact resistance in the terminals.
- Open-circuit in the cable for the control signal or signal ground.
- Solenoid not working.
- The transmission control module (TCM) does not function.

Fault symptom[s]

- General warning lamp lit
- Malfunction indicator light (MIL), on
- No lock-up
- Rough gear shift

FAULT-TRACING

CHECKS

CHECKING LINEAR PRESSURE SOLENOID SLC3

Fig. 42: Identifying Ignition ON
Courtesy of VOLVO CARS CORPORATION

- Ignition on.
- Activate solenoid SLC3 by clicking the VCT2000 symbol.

  Read the current through the circuit for solenoid SLC3. The current should oscillate between 100 and 950 mA.

  The fault is permanent if the current does not change.

  If the current changes, this is an indication that the fault was present previously but is not active at the moment, i. e. an intermittent fault.

Fig. 43: Identifying VCT2000 Diagnostic Tool Symbol In VIDA
Courtesy of VOLVO CARS CORPORATION

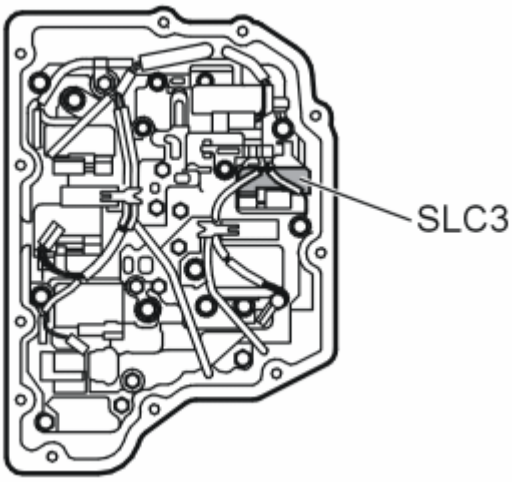

Fig. 44: Identifying Solenoid SLC3
Courtesy of VOLVO CARS CORPORATION

- **Continue**

Refer to **CHECKING THE COMPONENTS AND WIRING**

CHECKING THE COMPONENTS AND WIRING

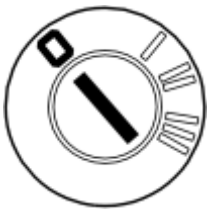

Fig. 45: Identifying Ignition OFF
Courtesy of VOLVO CARS CORPORATION

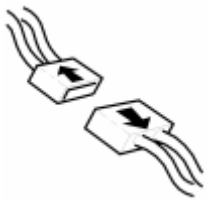

Fig. 46: Identifying Connectors Disconnected
Courtesy of VOLVO CARS CORPORATION

- Ignition off.
- Open the transmission control system.

  Check connector B (22-pin) for the transmission control module (TCM). Check for damaged or pressed in pins. Check for contact resistance and oxidation.

  Check the cables for open circuit and short circuit to ground.

  Take readings between:

  - Transmission connector #B14 and the connector for solenoid SLC3 #1.
  - Transmission connector #B22 and the connector for solenoid SLC3 #2.

  HINT: If no fault is found in the wiring, check solenoid SLC3. See CHECKING INTERNAL COMPONENTS OF THE TRANSMISSION

  If no fault is found in the wiring or the component replace the control system.

  Remedy as necessary.

  Other information

  - see **CONNECTING THE BREAKOUT BOX**
  - see **SIGNAL SPECIFICATION**
  - see **VALVE HOUSING**

- see **TRANSMISSION CONTROL UNIT WIRING HARNESS**
- To access the transmission control system:**COVER CONTROL SYSTEM, REPLACING (2007-2011)**
- see **CHECKING WIRING AND TERMINALS**

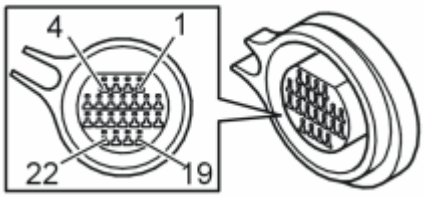

Fig. 47: Identifying Connector B Terminals
Courtesy of VOLVO CARS CORPORATION

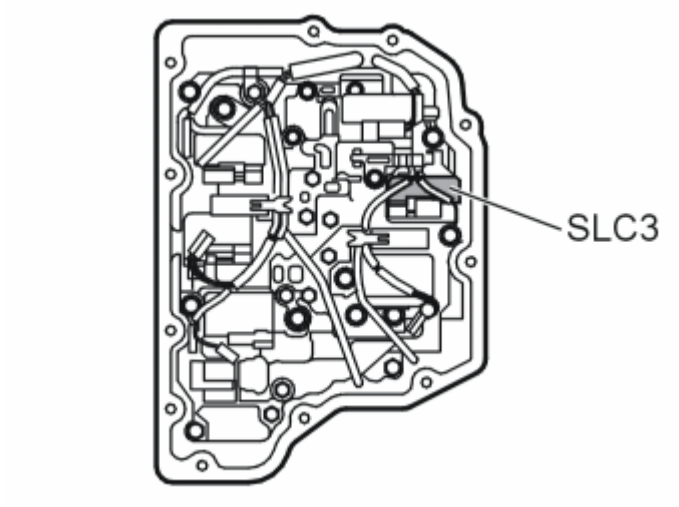

Fig. 48: Identifying Solenoid SLC3
Courtesy of VOLVO CARS CORPORATION

- **Continue**

  Refer to **RESETTING ADAPTATION**

VERIFICATION

VERIFICATION

HINT: After carrying out the repair, check that the fault has been remedied.

Fig. 49: Identifying Ignition ON
Courtesy of VOLVO CARS CORPORATION

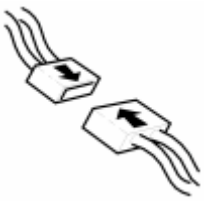

Fig. 50: Identifying Connector(s) Reinstallation
Courtesy of VOLVO CARS CORPORATION

- Ignition off.
- Reinstall the connectors, components etc.
- Ignition on.
- Activate solenoid SLC3 by clicking the VCT2000 symbol.

  Read the current through the circuit for solenoid SLC3. The current should oscillate between 100 and 950 mA.

Fig. 51: Identifying VCT2000 Diagnostic Tool Symbol In VIDA
Courtesy of VOLVO CARS CORPORATION

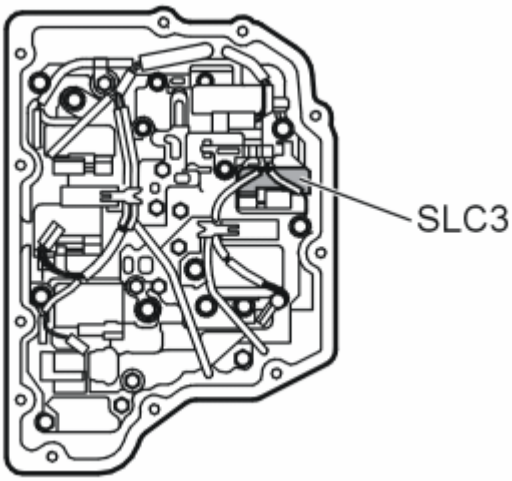

Fig. 52: Identifying Solenoid SLC3
Courtesy of VOLVO CARS CORPORATION

Is the function OK?

- **YES**

  VERIFIED: Troubleshooting has been completed.

- **NO**

  Refer to **INFORMATION**

INFORMATION

FAULT-TRACING INFORMATION

The fault should have been detected and remedied. As this is not the case fault-tracing has failed.

Exit fault-tracing for this diagnostic trouble code (DTC) or make another attempt.

RESETTING ADAPTATION

RESETTING THE ADAPTATION AND THE COUNTER FOR "TRANSMISSION OIL, REPLACE"

HINT: The transmission has torque-regulated, adaptive pressure regulation. The pressure regulator enables the transmission to regulate pressure during each shift to prevent hard shifting. Each shift is assessed by the transmission control module (TCM) and is stored in the internal memory. This makes it possible to compensate for transmission and clutch wear. It is important that the adaptation in the memory is reset so that the transmission works normally after the repair. Because the fluid was changed during the repair, the counter for transmission fluid change must also be reset. If the counter is not reset during draining/replacement, a diagnostic trouble code may be generated under the wrong conditions.

NOTE: This applies only if the transmission or one of the components in the transmission have been replaced.

Fig. 53: Identifying Ignition ON
Courtesy of VOLVO CARS CORPORATION

- Ignition on.

  Click on the VCT2000 symbol to reset the adaptation and counter.

Fig. 54: Identifying VCT2000 Diagnostic Tool Symbol In VIDA
Courtesy of VOLVO CARS CORPORATION

- **Continue**

  Refer to **VERIFICATION**

TCM-P272000: PRESSURE CONTROL SOLENOID D CONTROL CIRCUIT LOW. GENERAL FAILURE INFORMATION. NO SUB TYPE INFORMATION (B6324S5, TF-80SC; B6324S5, TF-80SC AWD; 2011-2012)

DIAGNOSTIC TROUBLE CODE (DTC) INFORMATION TCM-P272000

see **DIAGNOSTIC TROUBLE CODE (DTC) INFORMATION TCM-P272000**

FAULT-TRACING

see **FAULT-TRACING**

TCM-P272000: PRESSURE REGULATING SOLENOID D CONTROL CIRCUIT LOW. GENERAL FAULT INFORMATION. NO INFORMATION ABOUT FAULT TYPE (B8444S, TF-80SC AWD; 2006-2011)

DIAGNOSTIC TROUBLE CODE (DTC) INFORMATION TCM-P272000

Condition

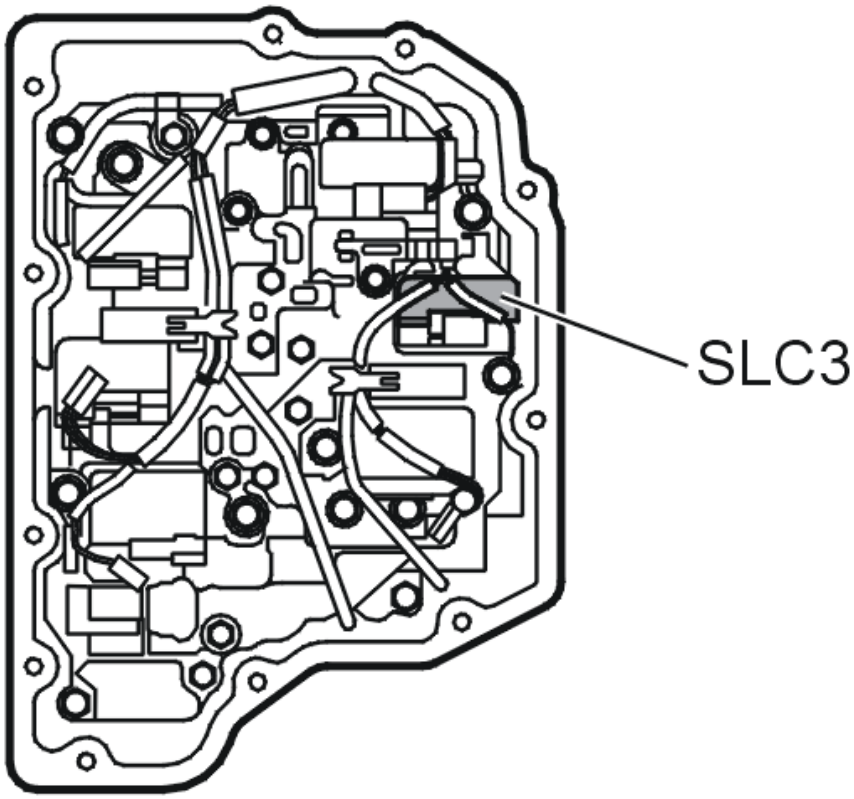

Fig. 55: Identifying Solenoid SLC3
Courtesy of VOLVO CARS CORPORATION

System pressure solenoid SLC3 controls the line pressure in the transmission. The solenoid is controlled by a power stage located on the output of the transmission control module (TCM). The control module uses the power stage to control the current to the solenoid. Low current gives high line pressure and high current (approximately 1A) gives a low line pressure. The current strength is affected by the throttle position.

The diagnostic trouble code (DTC) is stored if the transmission control module (TCM) registers an open circuit in the circuit for solenoid SLC3. Solenoid SLC3 cannot control the line pressure.

The diagnostic trouble code (DTC) can be diagnosed when driving normally.

Substitute Value

- Auxiliary program **Emergency mode 1** in the transmission control module (TCM) has started.

  HINT: EMERGENCY MODE IN CASE OF MALFUNCTION

Possible Source

- Contact resistance in the terminals
- Open circuit in lead for control signal or signal ground.

- Solenoid not working.
- The transmission control module (TCM) does not function.

Fault symptom[s]

- General warning lamp lit
- Malfunction indicator lamp (MIL) lit.
- No lock-up function.
- Harsh gear changing

FAULT TRACING TCM-P272000

CHECKS

CHECKING THE LOCK-UP SOLENOID SLC3

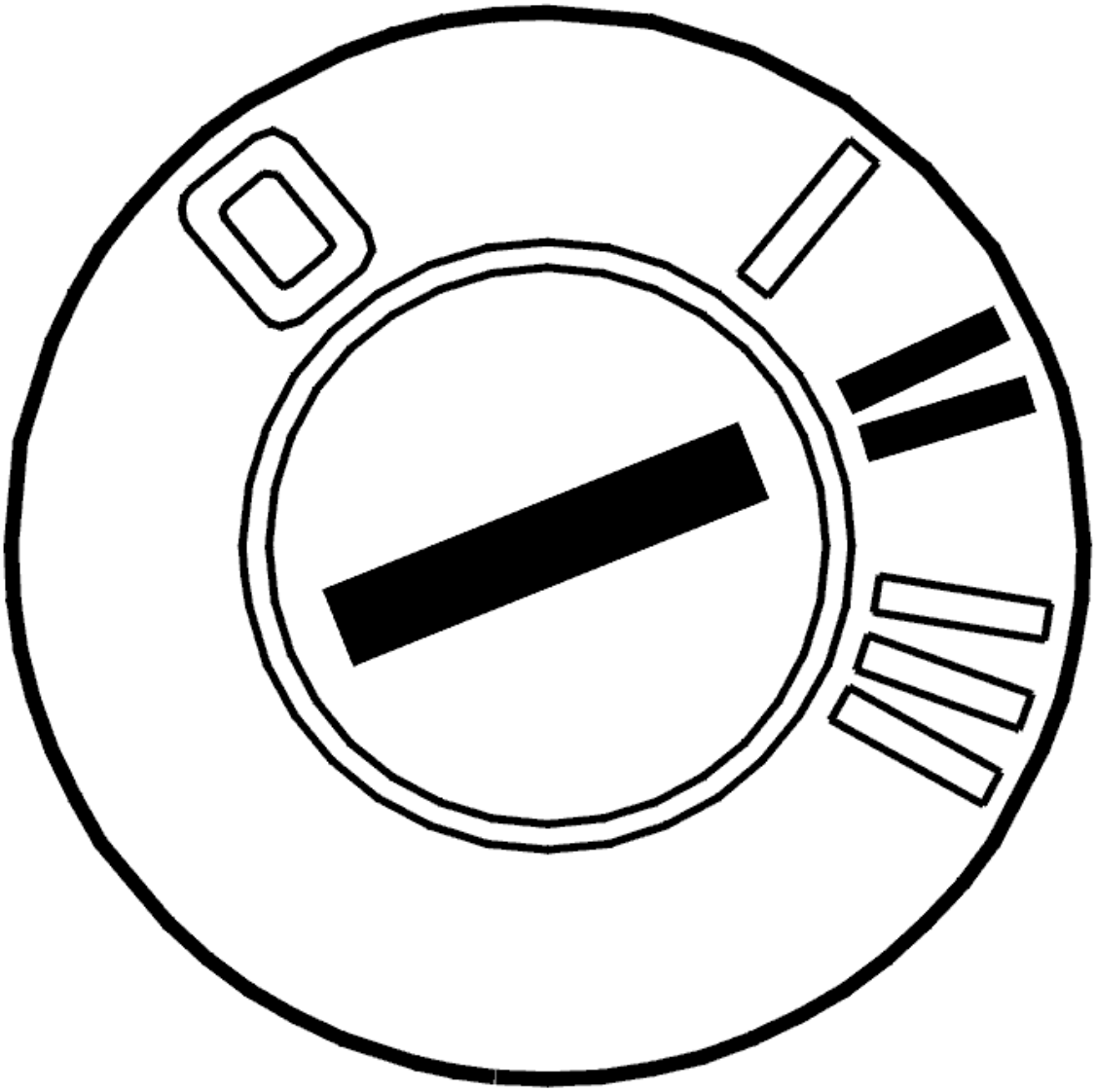

Fig. 56: Identifying Ignition ON
Courtesy of VOLVO CARS CORPORATION

- Ignition on
- Activate solenoid SLC3 by clicking the VCT2000 symbol.

  Read the current though the circuit for solenoid SLC3. The current must oscillate between approximately 100 and 950 mA.

  The fault is permanent if the current does not change.

  If the current oscillates then this would suggest that the fault has previously been present but is no longer active. The fault is intermittent.

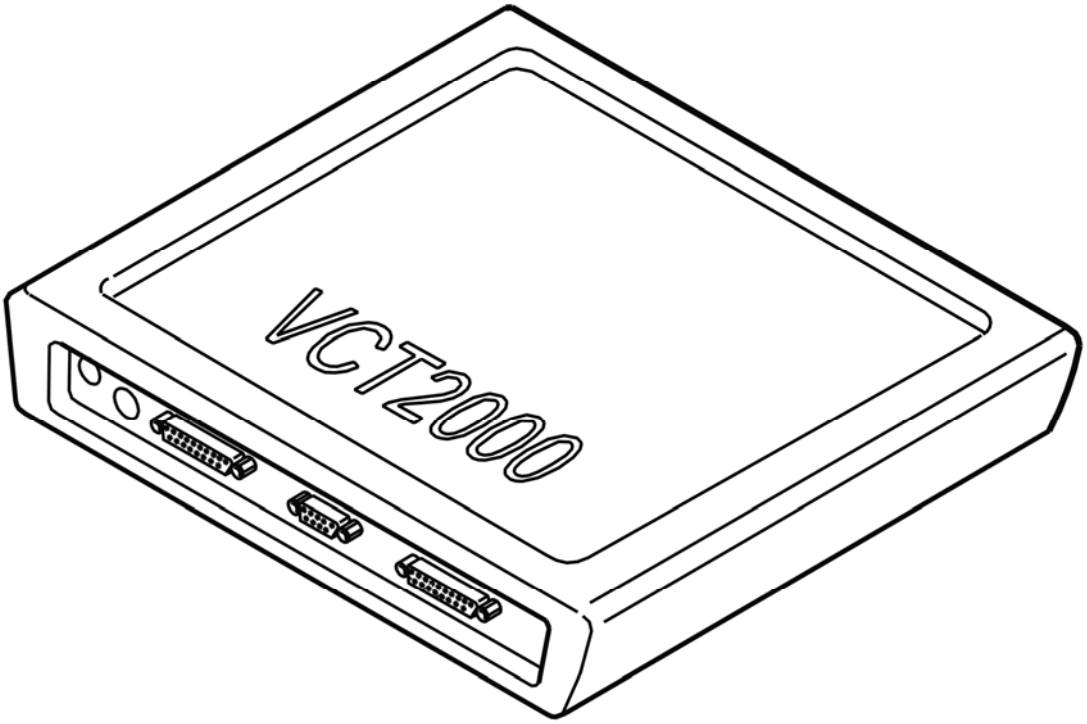

Fig. 57: Identifying VCT2000 Diagnostic Tool Symbol In VIDA
Courtesy of VOLVO CARS CORPORATION

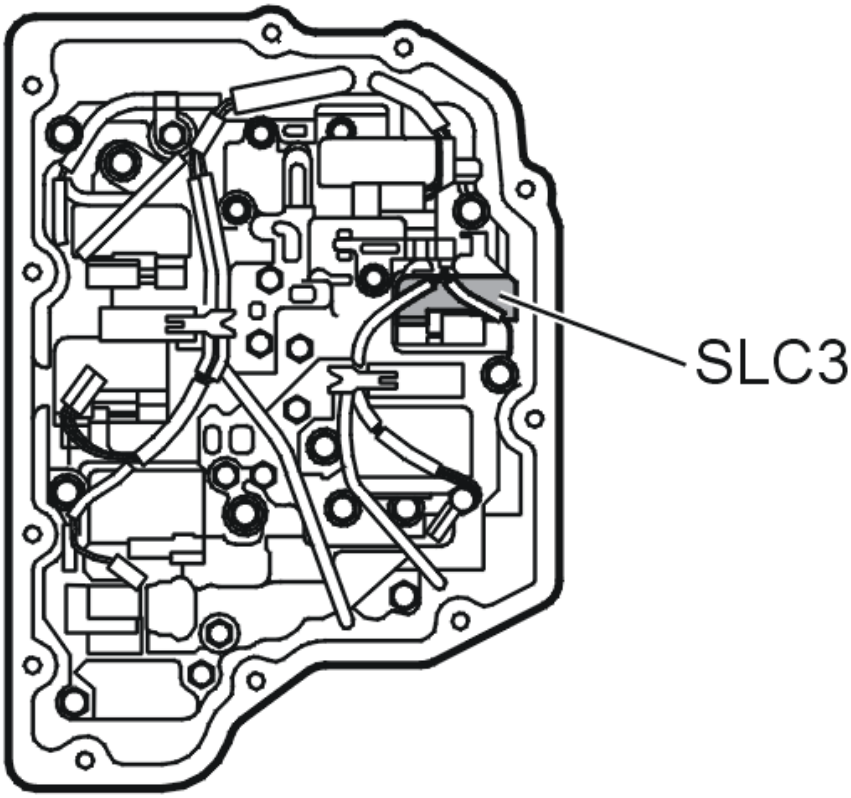

Fig. 58: Identifying Solenoid SLC3
Courtesy of VOLVO CARS CORPORATION

- **Continue**

  Refer to **CHECKING THE COMPONENTS AND WIRING**

CHECKING THE COMPONENTS AND WIRING

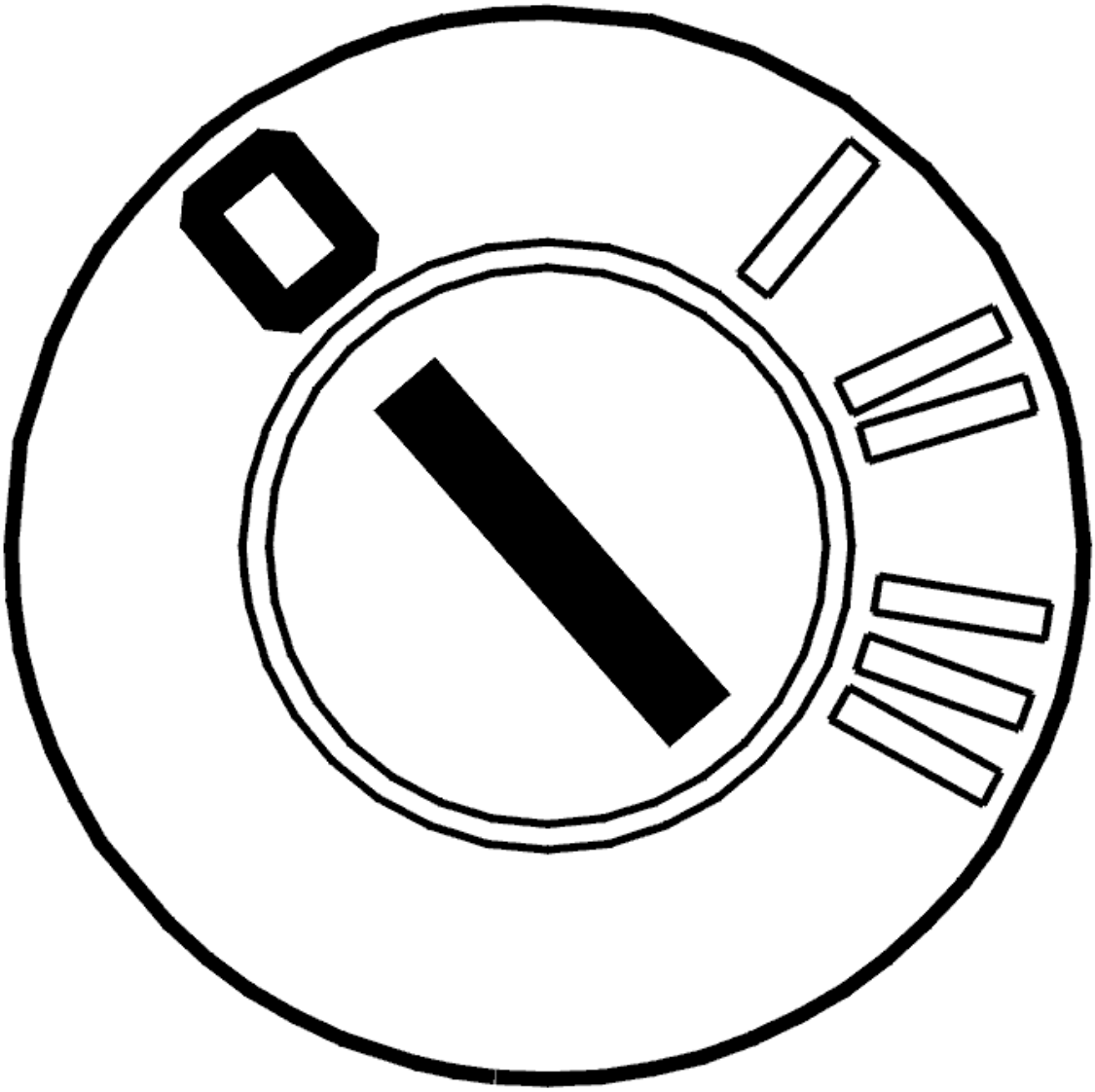

Fig. 59: Identifying Ignition OFF
Courtesy of VOLVO CARS CORPORATION

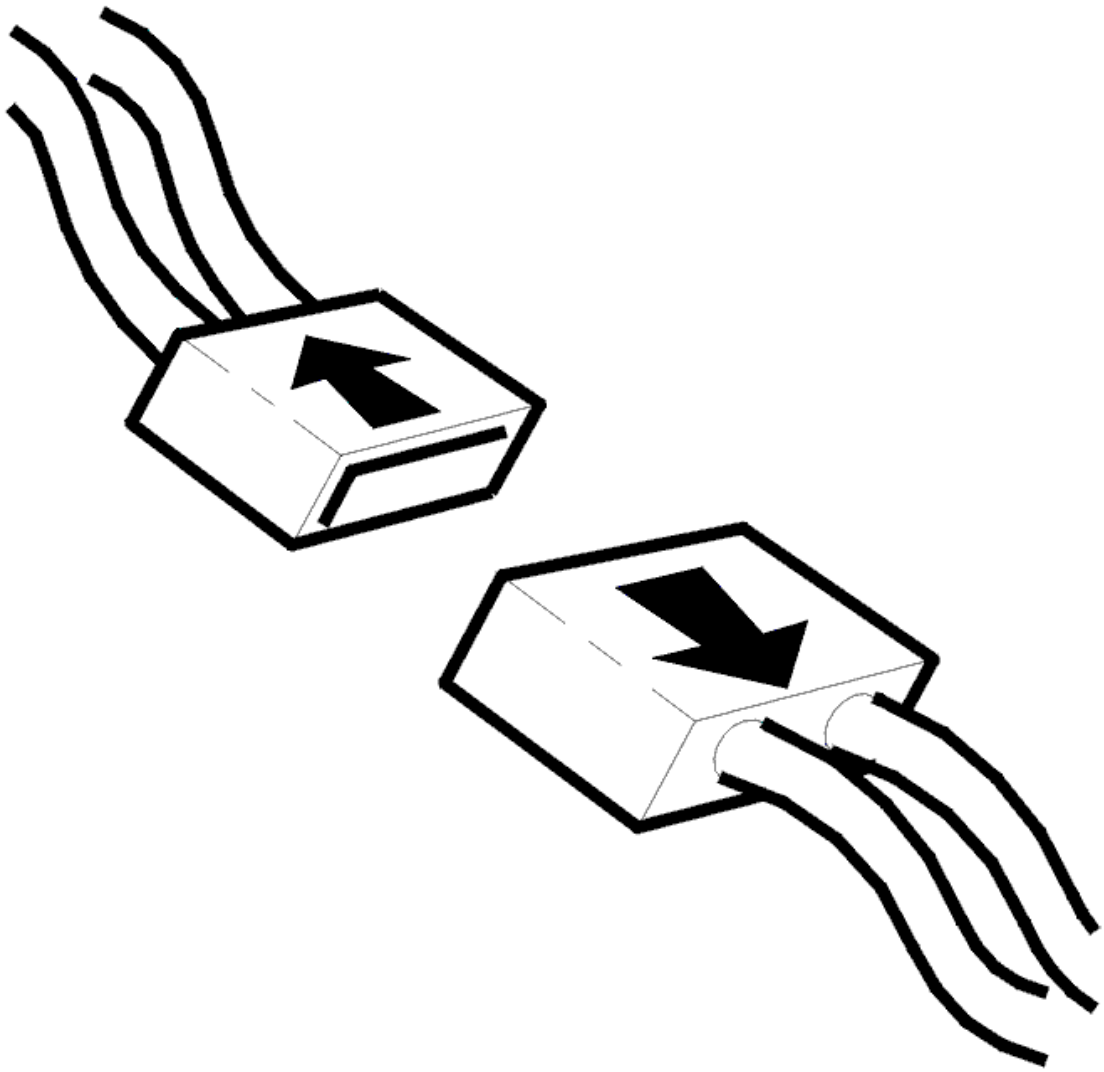

Fig. 60: Identifying Connector(s) Disconnected
Courtesy of VOLVO CARS CORPORATION

- Ignition off
- Open the gearbox control system

  Check connector B (22-pin) for the transmission control module (TCM). Check for damage and pressed in terminal pins. Check for contact resistance and oxidation.

  Check the wiring between the transmission connector terminal #B14 and the connector for solenoid SLC3 terminal #1. Check the wiring between the transmission connector terminal #B22 and the connector for solenoid SLC3 terminal #2. Check for an open circuit. Check for a short-circuit to ground.

  HINT: If no fault is found in the wiring check solenoid SLC3. See CHECKING THE LINE PRESSURE SOLENOID SLT, SLC1, SLC2, SLC3, SLB1 AND LOCK-UP SOLENOID SLU

If no fault is found in the wiring or the component replace the control system.

Remedy as necessary.

Other information

- see **CONNECTING THE BREAKOUT BOX**
- see **SIGNAL DESCRIPTION**
- see **CONTROL SYSTEM, REPLACING**
- see **CABLE HARNESS, CONTROL SYSTEM, GEARBOX, REPLACING**
- To access the transmission control system: **COVER CONTROL SYSTEM, REPLACING (2007-2011)**
- see **CONTENTS**

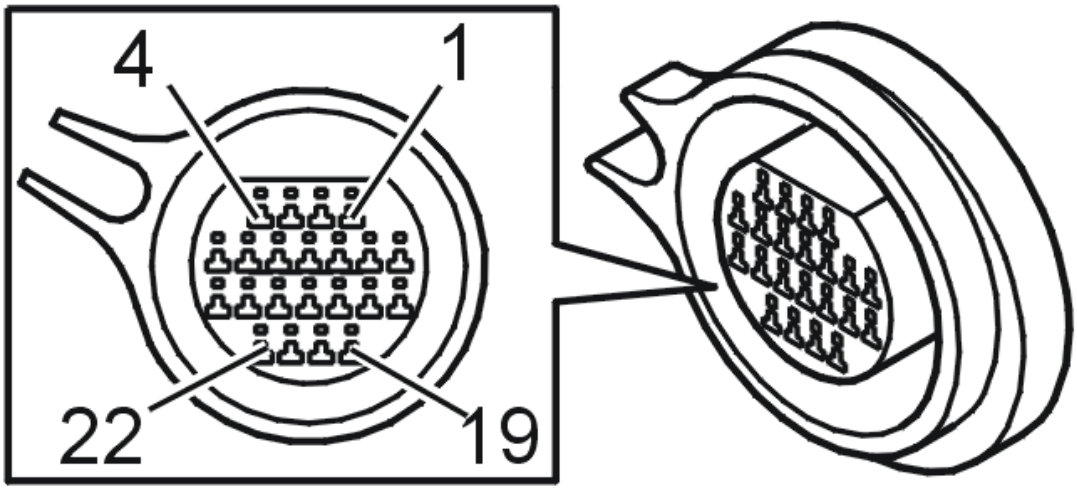

Fig. 61: Identifying Connector B Terminals
Courtesy of VOLVO CARS CORPORATION

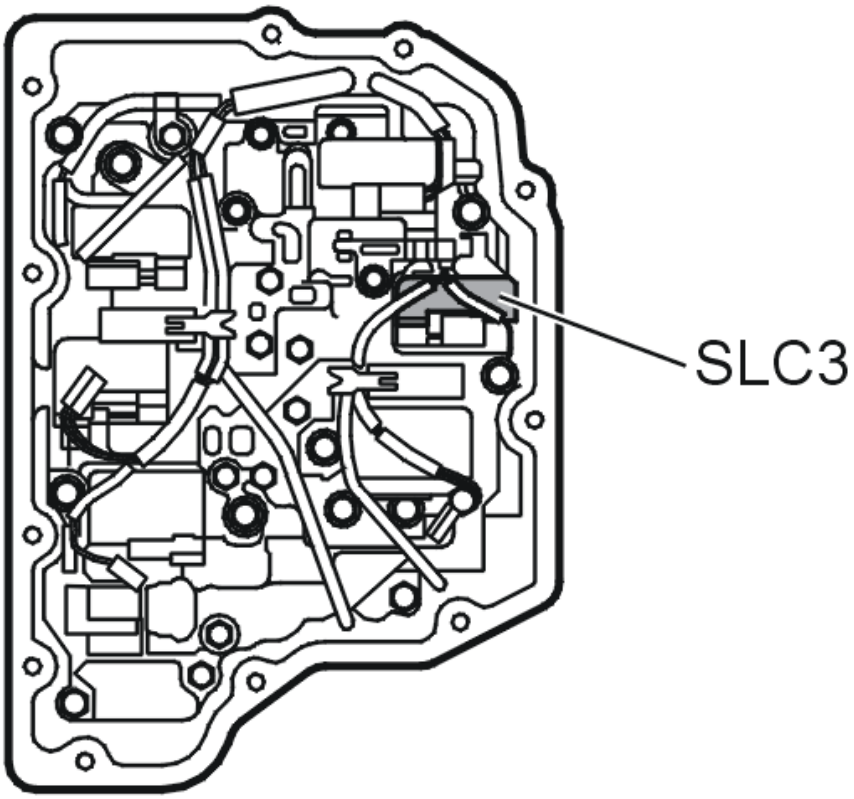

Fig. 62: Identifying Solenoid SLC3
Courtesy of VOLVO CARS CORPORATION

- **Continue**

  Refer to **RESETTING ADAPTATION**

RESETTING ADAPTATION

RESETTING ADAPTATION AND COUNTER FOR "TRANSMISSION OIL, CHANGING"

HINT: The transmission has torque-controlled, adaptive pressure control. The pressure control means that the transmission itself controls the pressure during each shift sequence in order to avoid harsh shifting. Each shift is assessed by the transmission control module (TCM) and is stored in the internal memory, which results in compensation for wear in the transmission and clutch. In order for the transmission to function correctly after repair, it is important to reset the adaptation in the memory. Since the oil is changed during the repair, the counter for "Transmission oil, change" shall also be reset. If the counter is not reset when draining/changing oil, there is a risk that a diagnostic trouble code may be generated under incorrect conditions.

NOTE: **This applies only if the transmission or one of the components in the transmission have been replaced.**

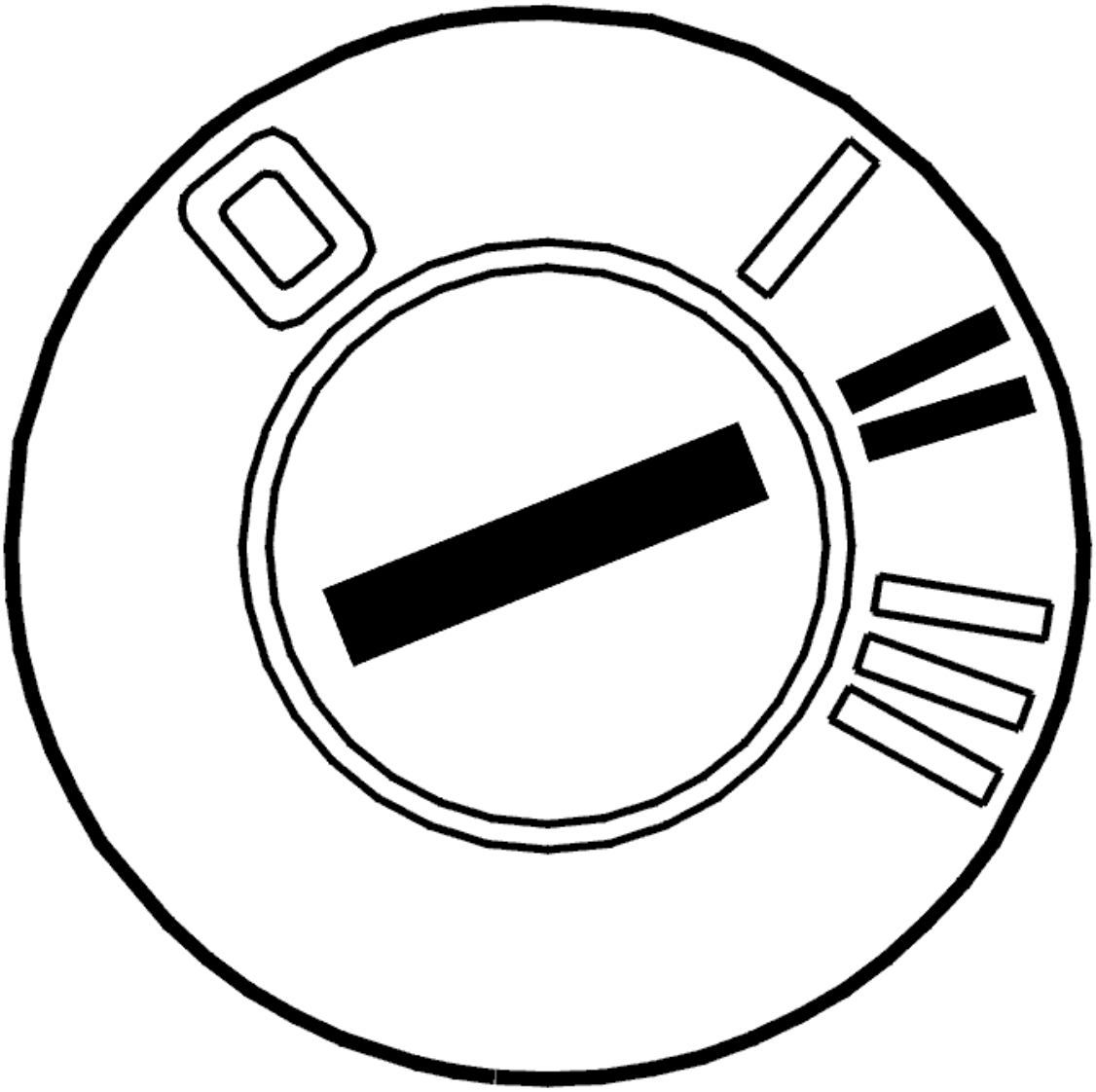

Fig. 63: Identifying Ignition ON
Courtesy of VOLVO CARS CORPORATION

- Ignition on

  Activate reset of the adaptation and the counter by clicking on the symbol for VCT2000.

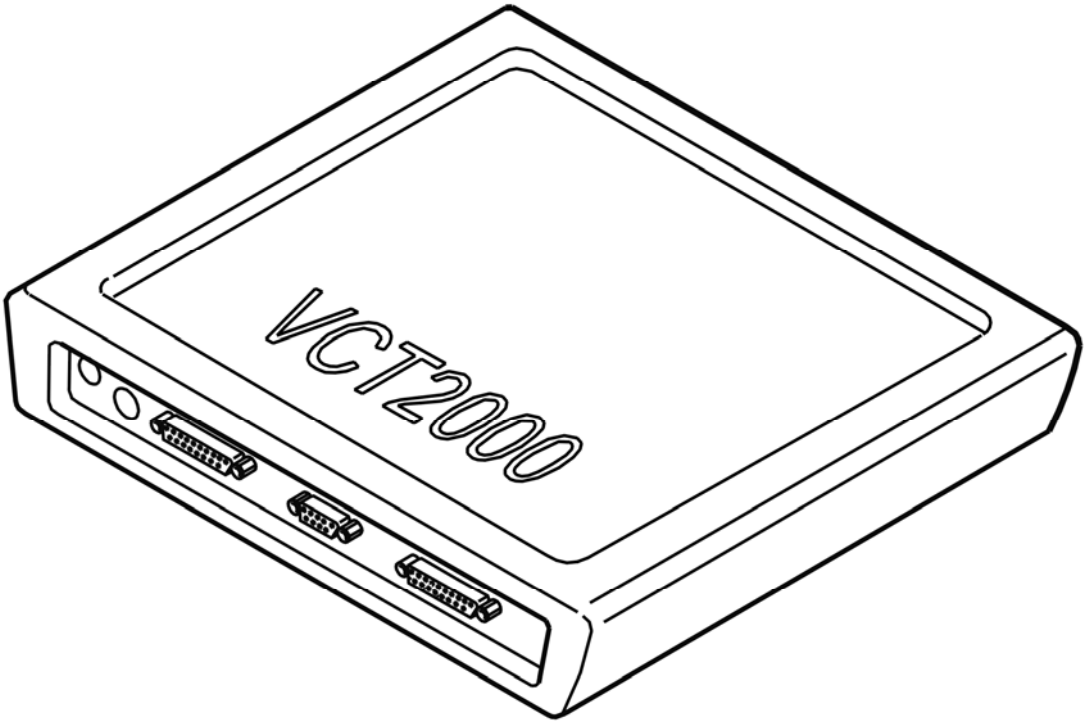

Fig. 64: Identifying VCT2000 Diagnostic Tool Symbol In VIDA
Courtesy of VOLVO CARS CORPORATION

- **Continue**

  Refer to **VERIFICATION**

VERIFICATION

VERIFICATION

HINT: After carrying out the repair, check that the fault has been remedied.

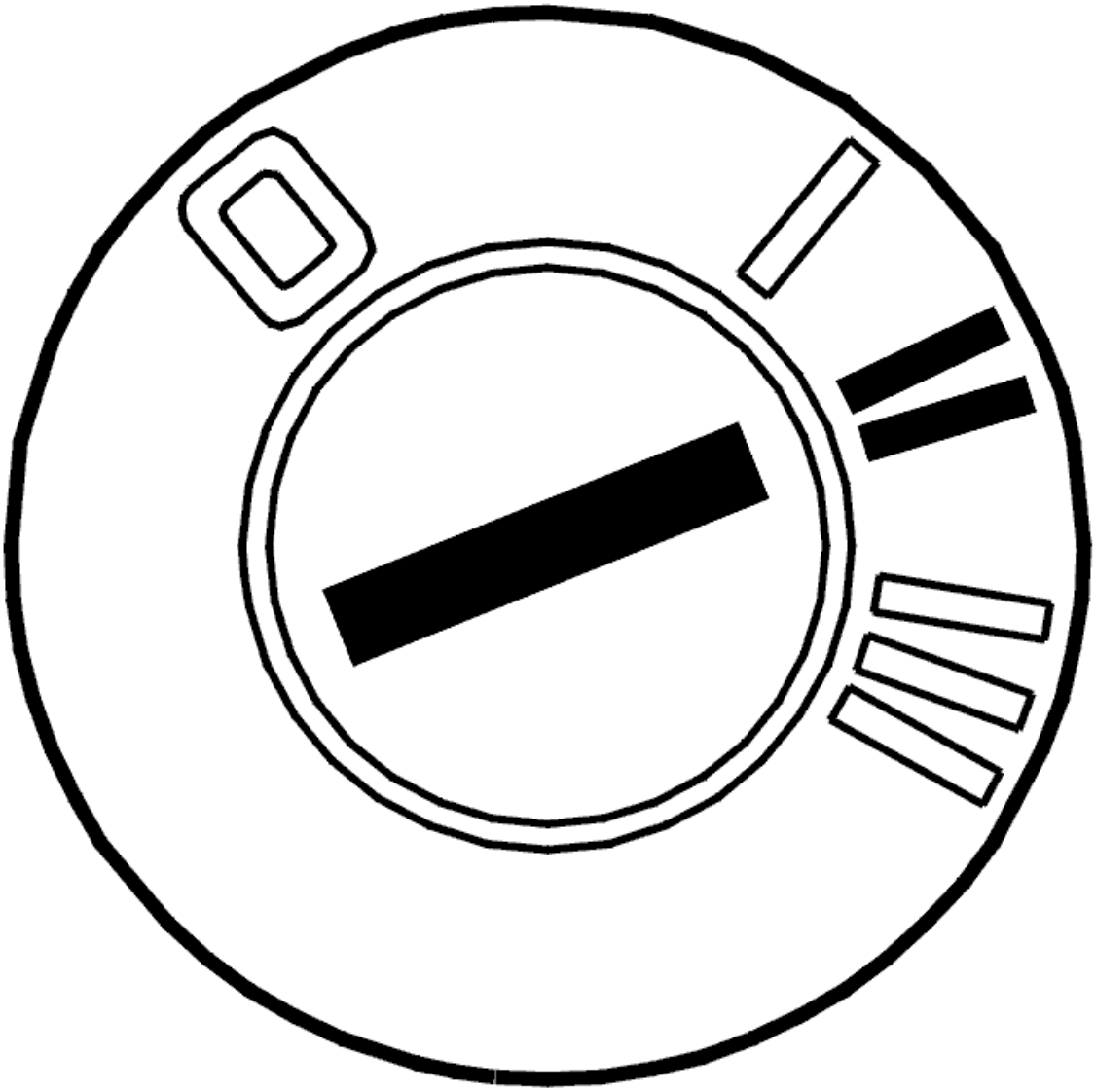

Fig. 65: Identifying Ignition ON
Courtesy of VOLVO CARS CORPORATION

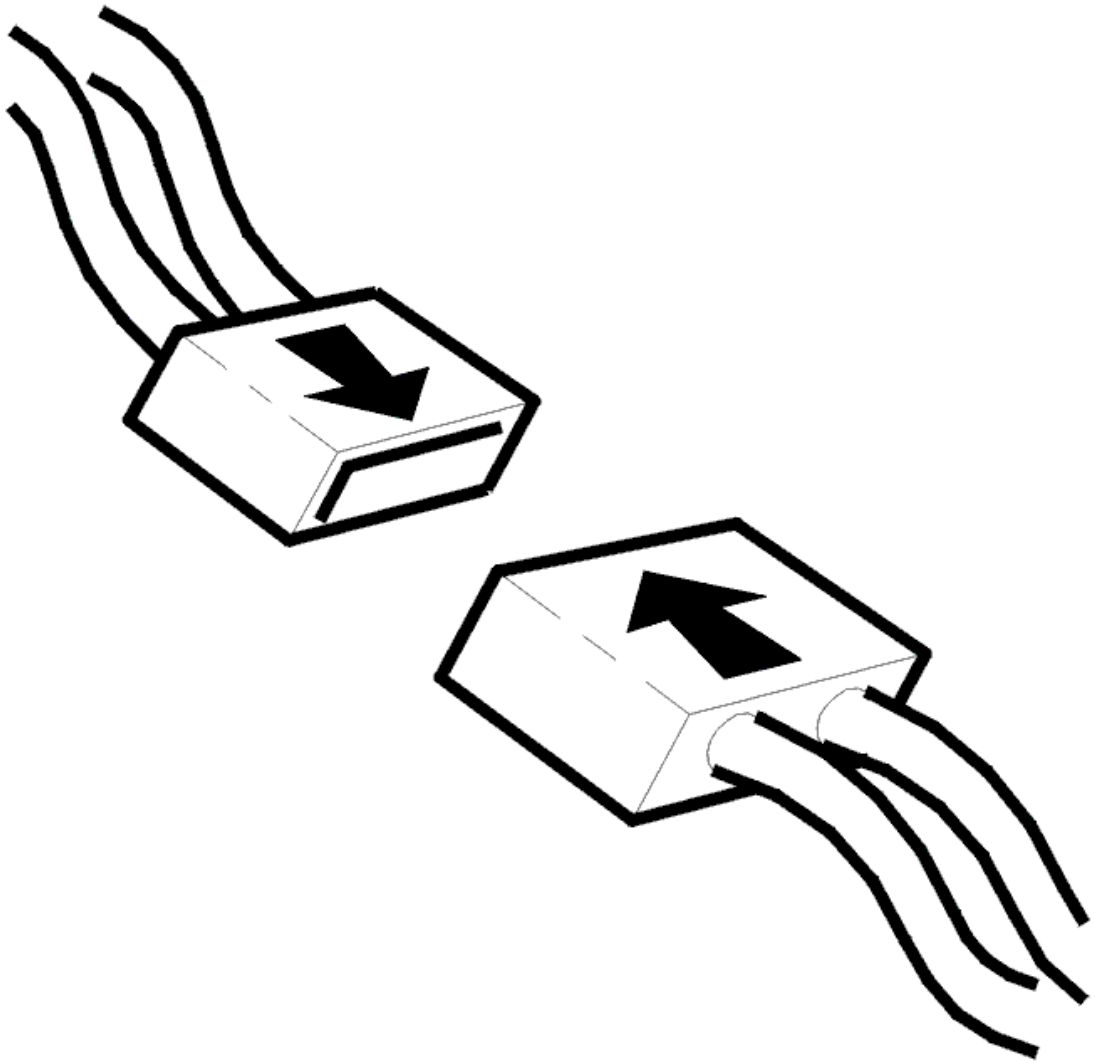

Fig. 66: Identifying Connector(s) Reinstallation
Courtesy of VOLVO CARS CORPORATION

- Ignition off
- Reinstall the components, reconnect the connectors etc.
- Ignition on
- Activate solenoid SLC3 by clicking on the symbol for VCT2000.

  Read off the current through the circuit for solenoid SLC3. The current must oscillate between approximately 0 and 1000 mA.

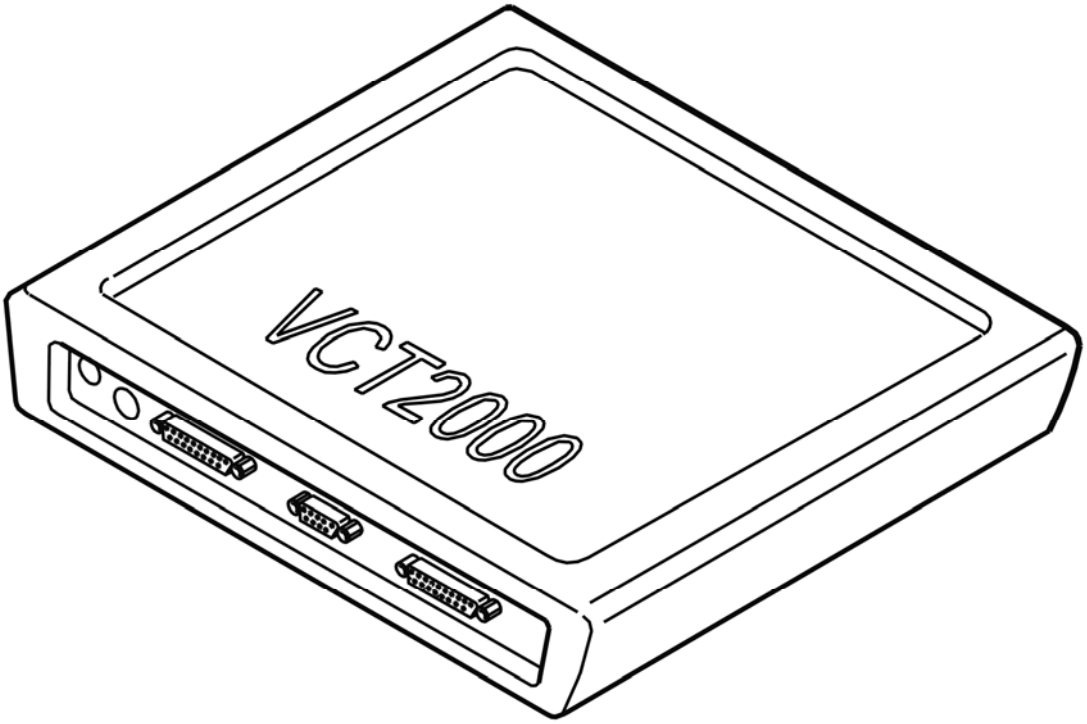

Fig. 67: Identifying VCT2000 Diagnostic Tool Symbol In VIDA
Courtesy of VOLVO CARS CORPORATION

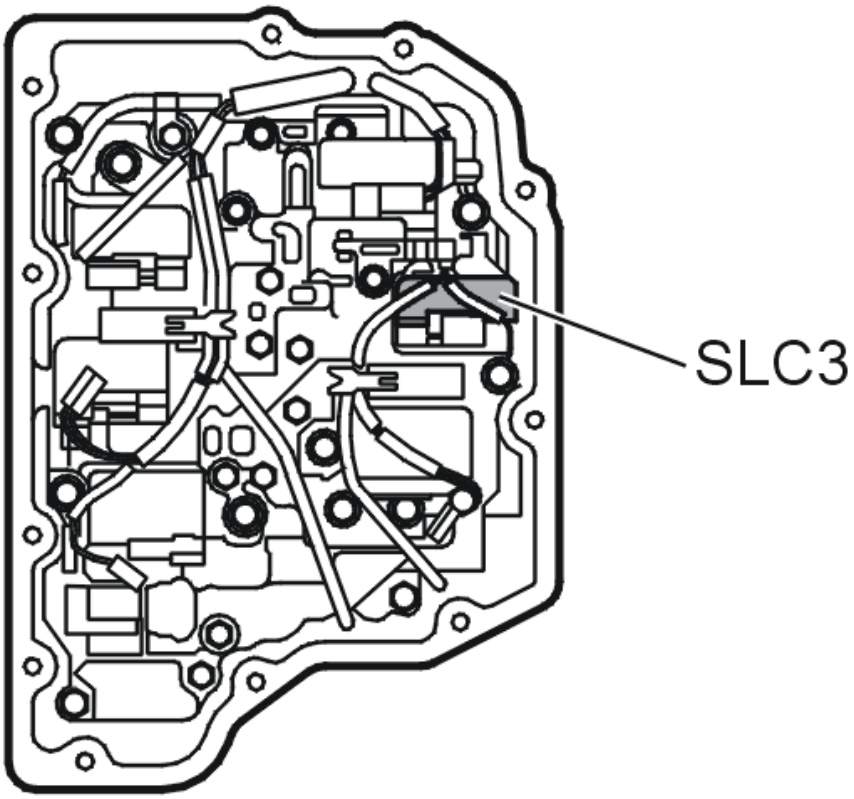

Fig. 68: Identifying Solenoid SLC3
Courtesy of VOLVO CARS CORPORATION

Is the function OK?

- **YES**

  VERIFIED: Troubleshooting has been completed.

- **NO**

  Refer to **INFORMATION**

INFORMATION

FAULT-TRACING INFORMATION

The fault should have been detected and remedied. As this is not the case fault-tracing has failed.

Exit fault-tracing for this diagnostic trouble code (DTC) or make another attempt.

TCM-P272000: PRESSURE REGULATING SOLENOID D CONTROL CIRCUIT LOW. GENERAL FAULT INFORMATION. NO INFORMATION ABOUT FAULT

TYPE (TF-80SC AWD; 2005)

DIAGNOSTIC TROUBLE CODE (DTC) INFORMATION TCM-P272000

see **DIAGNOSTIC TROUBLE CODE (DTC) INFORMATION TCM-P272000**

FAULT TRACING TCM-P272000

see **FAULT TRACING TCM-P272000**

TCM-P272100: PRESSURE CONTROL SOLENOID D CONTROL CIRCUIT HIGH. GENERAL FAILURE INFORMATION. NO SUB TYPE INFORMATION (B6324S, TF-80SC; B6324S, TF-80SC AWD; 2007-2010)

DIAGNOSTIC TROUBLE CODE (DTC) INFORMATION TCM-P272100

Condition

The solenoids are controlled by power stages in the transmission control module (TCM). The transmission control module (TCM) opens the power stages to activate the solenoids and sends a voltage through the circuit.

The diagnostic trouble code (DTC) is stored if the control module detects that:

- The measured current value is higher than permitted in the circuit for solenoid SLC3.

The control module's test for the diagnostic trouble code (DTC) starts in the event of:

- Ignition on.

NOTE: **The control module can only detect the fault once the test has been started and the diagnostic trouble code (DTC) is stored when the conditions are met.**

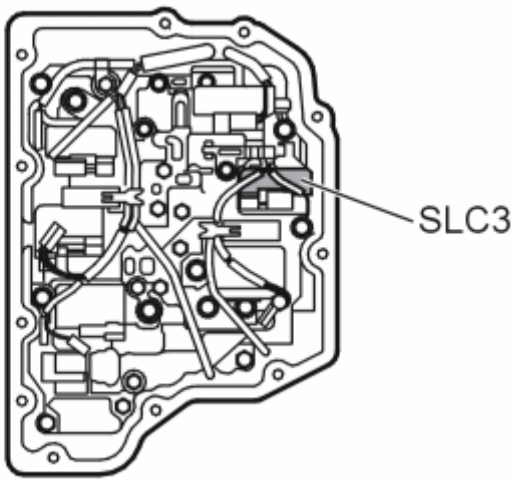

Fig. 69: Identifying Solenoid SLC3
Courtesy of VOLVO CARS CORPORATION

Substitute Value

- Auxiliary program **Emergency mode 1** in the transmission control module (TCM) has started.

  HINT: EMERGENCY MODE IN THE EVENT OF A FAULT

Possible Source

- Control signal lead short-circuited to voltage.
- Linear pressure solenoid not working.
- Internal fault in the transmission control module (TCM).

Fault symptom[s]

- General warning lamp lit
- Malfunction indicator light (MIL), on
- Abnormal slipping gearshifts
- Rough gear shift
- No gear shift

FAULT-TRACING

CHECKS

CHECKING LINEAR PRESSURE SOLENOID SLC3

Fig. 70: Identifying Ignition ON
Courtesy of VOLVO CARS CORPORATION

- Ignition on.
- Activate solenoid SLC3 by clicking the VCT2000 symbol.

  Read the current through the circuit for solenoid SLC3. The current should oscillate between 100 and 950 mA.

  The fault is permanent if the current does not change.

If the current changes, this is an indication that the fault was present previously but is not active at the moment, i. e. an intermittent fault.

Fig. 71: Identifying VCT2000 Diagnostic Tool Symbol In VIDA
Courtesy of VOLVO CARS CORPORATION

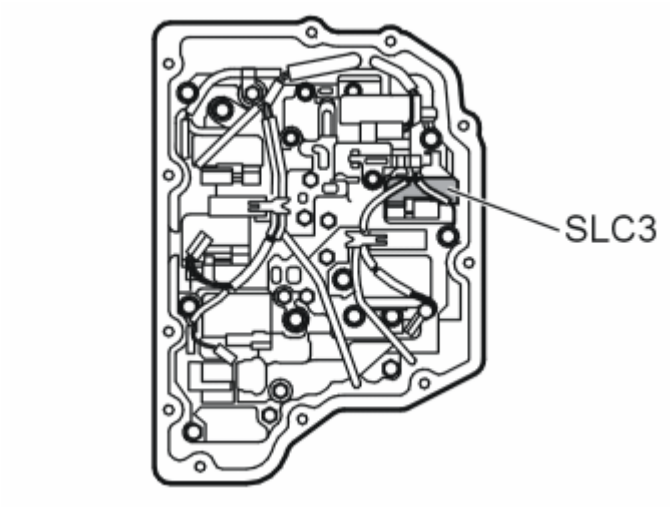

Fig. 72: Identifying Solenoid SLC3
Courtesy of VOLVO CARS CORPORATION

- **Continue**

  Refer to **CHECKING THE COMPONENTS AND WIRING**

CHECKING THE COMPONENTS AND WIRING

Fig. 73: Identifying Ignition OFF
Courtesy of VOLVO CARS CORPORATION

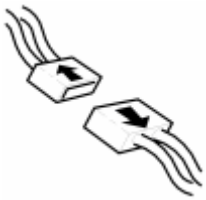

Fig. 74: Identifying Connectors Disconnected
Courtesy of VOLVO CARS CORPORATION

- Ignition off.
- Open the transmission control system.

  Check connector B (22-pin) for the transmission control module (TCM). Check for damaged or pressed in pins. Check for contact resistance and oxidation.

  Check the cables for short circuit to voltage.

  Take readings between:

  - Transmission connector #B14 and the connector for solenoid SLC3 #1.
  - Transmission connector #B22 and the connector for solenoid SLC3 #2.

  Also check the cables for a short-circuit to each other.

  HINT: If no fault is found in the wiring, check solenoid SLC3. See CHECKING INTERNAL COMPONENTS OF THE TRANSMISSION

  If no fault is found in the wiring or the component replace the control system.

  Remedy as necessary.

  Other information

  - see **SIGNAL SPECIFICATION**
  - see **CONNECTING THE BREAKOUT BOX**
  - see **VALVE HOUSING**
  - see **TRANSMISSION CONTROL UNIT WIRING HARNESS**
  - To access the transmission control system:**COVER CONTROL SYSTEM, REPLACING (2007-2011)**
  - see **CHECKING WIRING AND TERMINALS**

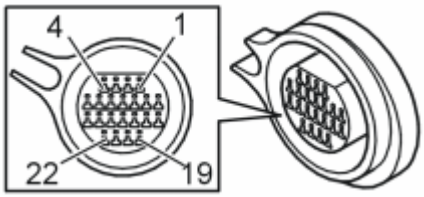

Fig. 75: Identifying Connector B Terminals
Courtesy of VOLVO CARS CORPORATION

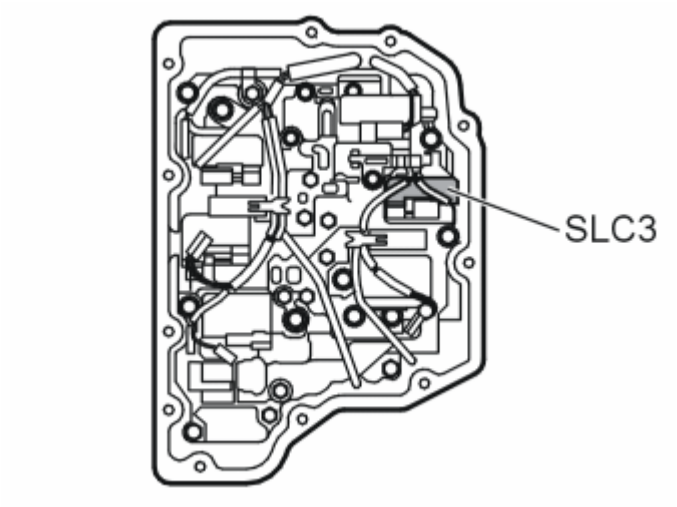

Fig. 76: Identifying Solenoid SLC3
Courtesy of VOLVO CARS CORPORATION

- **Continue**

  Refer to **RESETTING ADAPTATION**

VERIFICATION

VERIFICATION

HINT: After carrying out the repair, check that the fault has been remedied.

Fig. 77: Identifying Ignition ON
Courtesy of VOLVO CARS CORPORATION

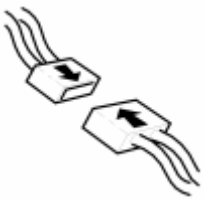

Fig. 78: Identifying Connector(s) Reinstallation
Courtesy of VOLVO CARS CORPORATION

- Ignition off.
- Reinstall the connectors, components etc.
- Ignition on.
- Activate solenoid SLC3 by clicking the VCT2000 symbol.

  Read the current through the circuit for solenoid SLC3. The current should oscillate between 100 and 950 mA.

Fig. 79: Identifying VCT2000 Diagnostic Tool Symbol In VIDA
Courtesy of VOLVO CARS CORPORATION

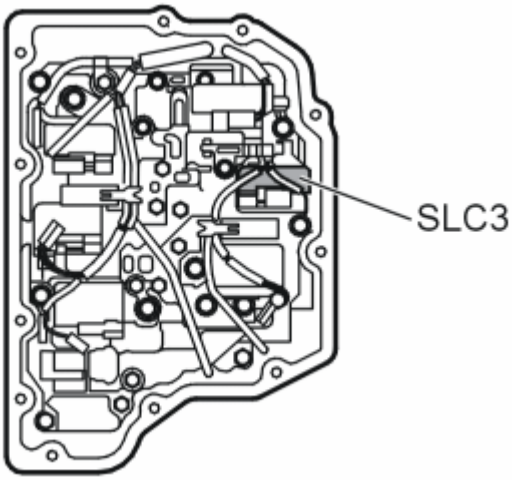

Fig. 80: Identifying Solenoid SLC3
Courtesy of VOLVO CARS CORPORATION

Is the function OK?

- **YES**

VERIFIED: Troubleshooting has been completed.

- **NO**

  Refer to **INFORMATION**

INFORMATION

FAULT-TRACING INFORMATION

The fault should have been detected and remedied. As this is not the case fault-tracing has failed.

Exit fault-tracing for this diagnostic trouble code (DTC) or make another attempt.

RESETTING ADAPTATION

RESETTING THE ADAPTATION AND THE COUNTER FOR "TRANSMISSION OIL, REPLACE"

HINT: The transmission has torque-regulated, adaptive pressure regulation. The pressure regulator enables the transmission to regulate pressure during each shift to prevent hard shifting. Each shift is assessed by the transmission control module (TCM) and is stored in the internal memory. This makes it possible to compensate for transmission and clutch wear. It is important that the adaptation in the memory is reset so that the transmission works normally after the repair. Because the fluid was changed during the repair, the counter for transmission fluid change must also be reset. If the counter is not reset during draining/replacement, a diagnostic trouble code may be generated under the wrong conditions.

NOTE: This applies only if the transmission or one of the components in the transmission have been replaced.

Fig. 81: Identifying Ignition ON
Courtesy of VOLVO CARS CORPORATION

- Ignition on.

  Click on the VCT2000 symbol to reset the adaptation and counter.

Fig. 82: Identifying VCT2000 Diagnostic Tool Symbol In VIDA
Courtesy of VOLVO CARS CORPORATION

- **Continue**

  Refer to **VERIFICATION**

TCM-P272100: PRESSURE CONTROL SOLENOID D CONTROL CIRCUIT HIGH. GENERAL FAILURE INFORMATION. NO SUB TYPE INFORMATION (B6324S5, TF-80SC; B6324S5, TF-80SC AWD; 2011-2012)

DIAGNOSTIC TROUBLE CODE (DTC) INFORMATION TCM-P272100

see **DIAGNOSTIC TROUBLE CODE (DTC) INFORMATION TCM-P272100**

FAULT-TRACING

see **FAULT-TRACING**

TCM-P272100: PRESSURE REGULATING SOLENOID D CONTROL CIRCUIT HIGH. GENERAL FAULT INFORMATION. NO INFORMATION ABOUT FAULT TYPE (B8444S, TF-80SC AWD; 2006-2011)

DIAGNOSTIC TROUBLE CODE (DTC) INFORMATION TCM-P272100

Condition

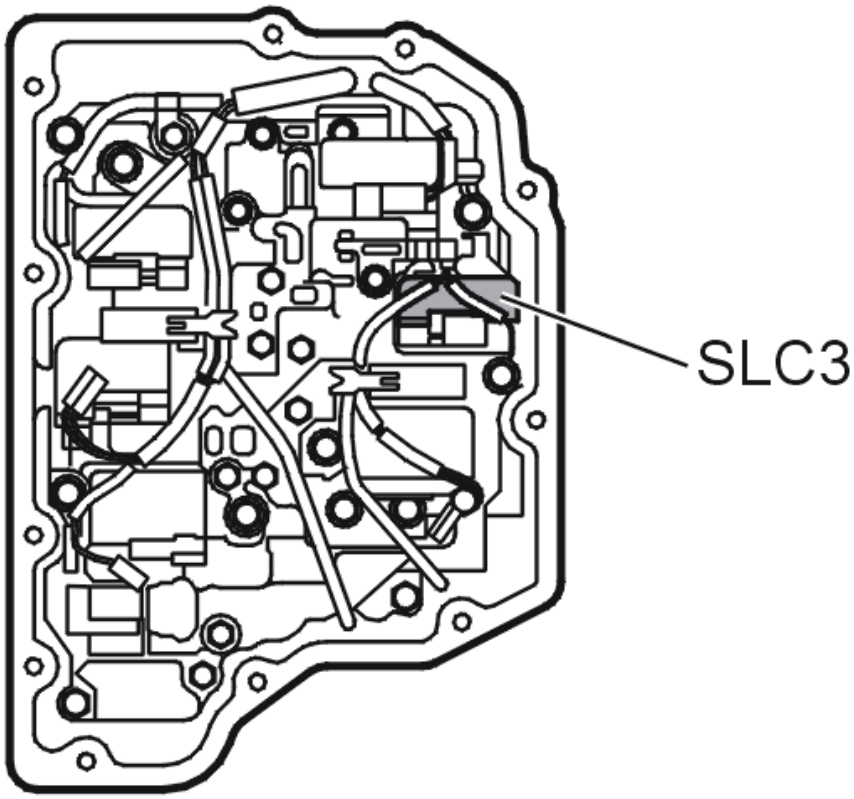

Fig. 83: Identifying Solenoid SLC3
Courtesy of VOLVO CARS CORPORATION

The solenoids are controlled using the power stage in the transmission control module (TCM). The transmission control module (TCM) opens the power stage when the solenoids are to be activated so that the circuit receives a voltage.

If the transmission control module (TCM) registers that the measured current is higher than the circuit for the SLC3 solenoid allows, the diagnostic trouble code (DTC) is generated.

The diagnostic trouble code can be diagnosed when the ignition is on.

Substitute Value

- Auxiliary program **Emergency mode 1** in the transmission control module (TCM) has started.

  HINT: EMERGENCY MODE IN CASE OF MALFUNCTION

Possible Source

- Control signal lead short-circuited to voltage.
- Linear pressure solenoid not working.
- Internal fault in transmission control module (TCM).

Fault symptom[s]

- General warning lamp lit
- Malfunction indicator lamp (MIL) lit.
- Abnormally slipping gears.
- Harsh gear changing
- No gear changing.

FAULT TRACING TCM-P272100

CHECKS

CHECKING THE LOCK-UP SOLENOID SLC3

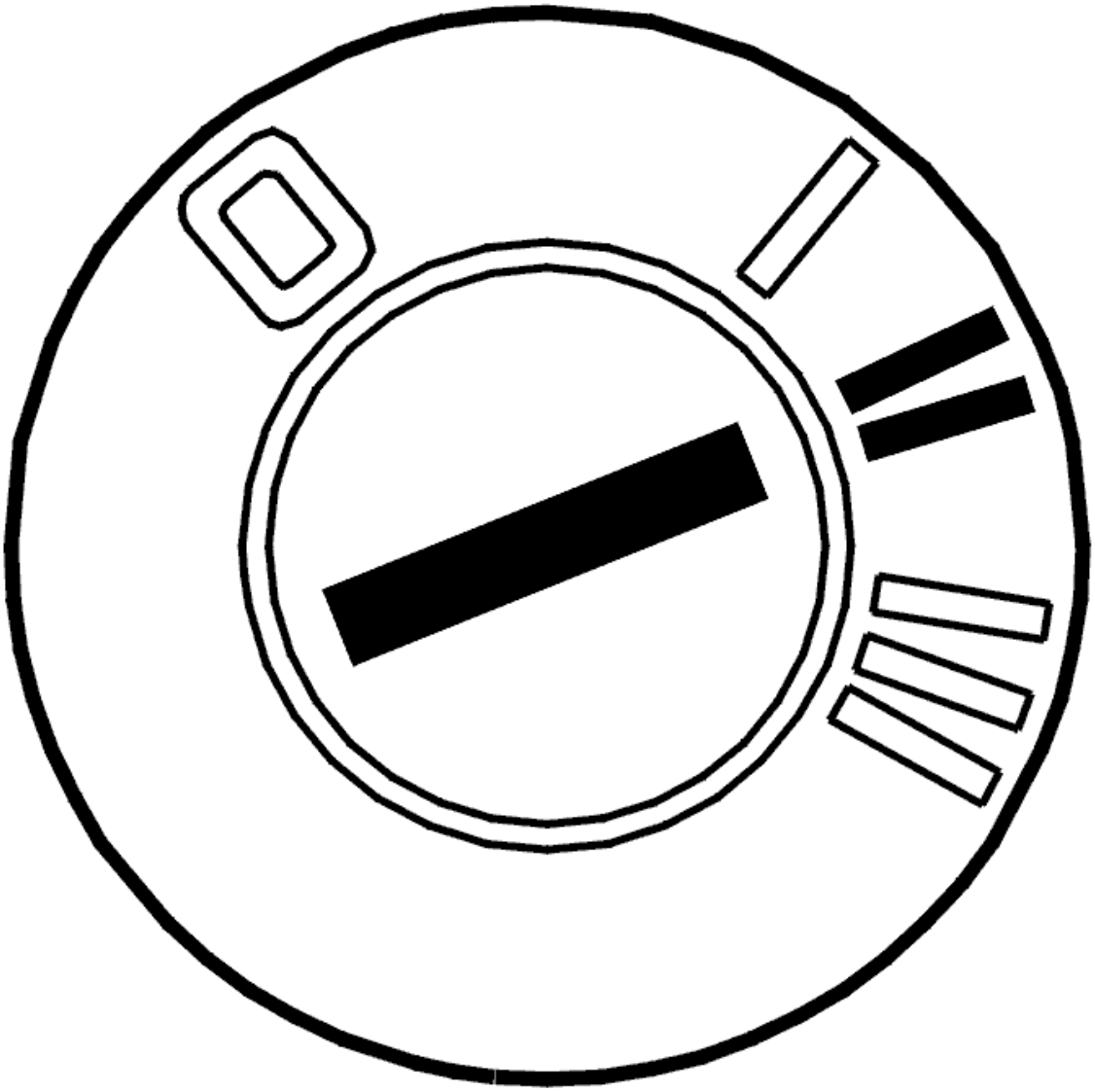

Fig. 84: Identifying Ignition ON

Courtesy of VOLVO CARS CORPORATION

- Ignition on
- Activate solenoid SLC3 by clicking the VCT2000 symbol.

  Read the current though the circuit for solenoid SLC3. The current must oscillate between approximately 100 and 950 mA.

  The fault is permanent if the current does not change.

  If the current oscillates then this would suggest that the fault has previously been present but is no longer active. The fault is intermittent.

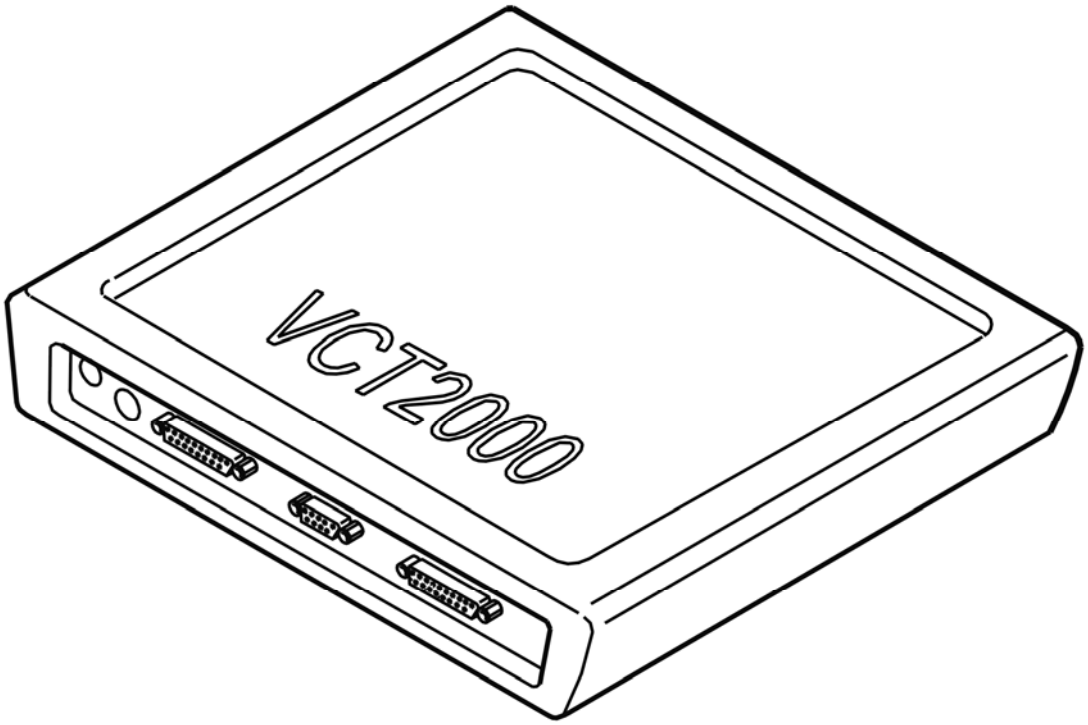

Fig. 85: Identifying VCT2000 Diagnostic Tool Symbol In VIDA
Courtesy of VOLVO CARS CORPORATION

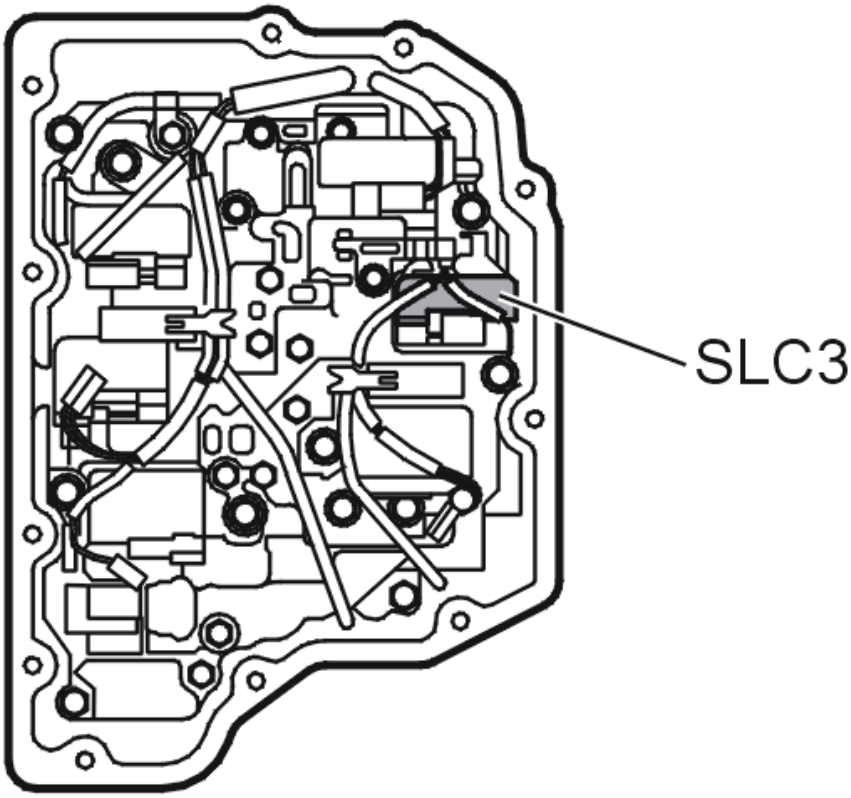

Fig. 86: Identifying Solenoid SLC3
Courtesy of VOLVO CARS CORPORATION

- **Continue**

  Refer to **CHECKING THE COMPONENTS AND WIRING**

CHECKING THE COMPONENTS AND WIRING

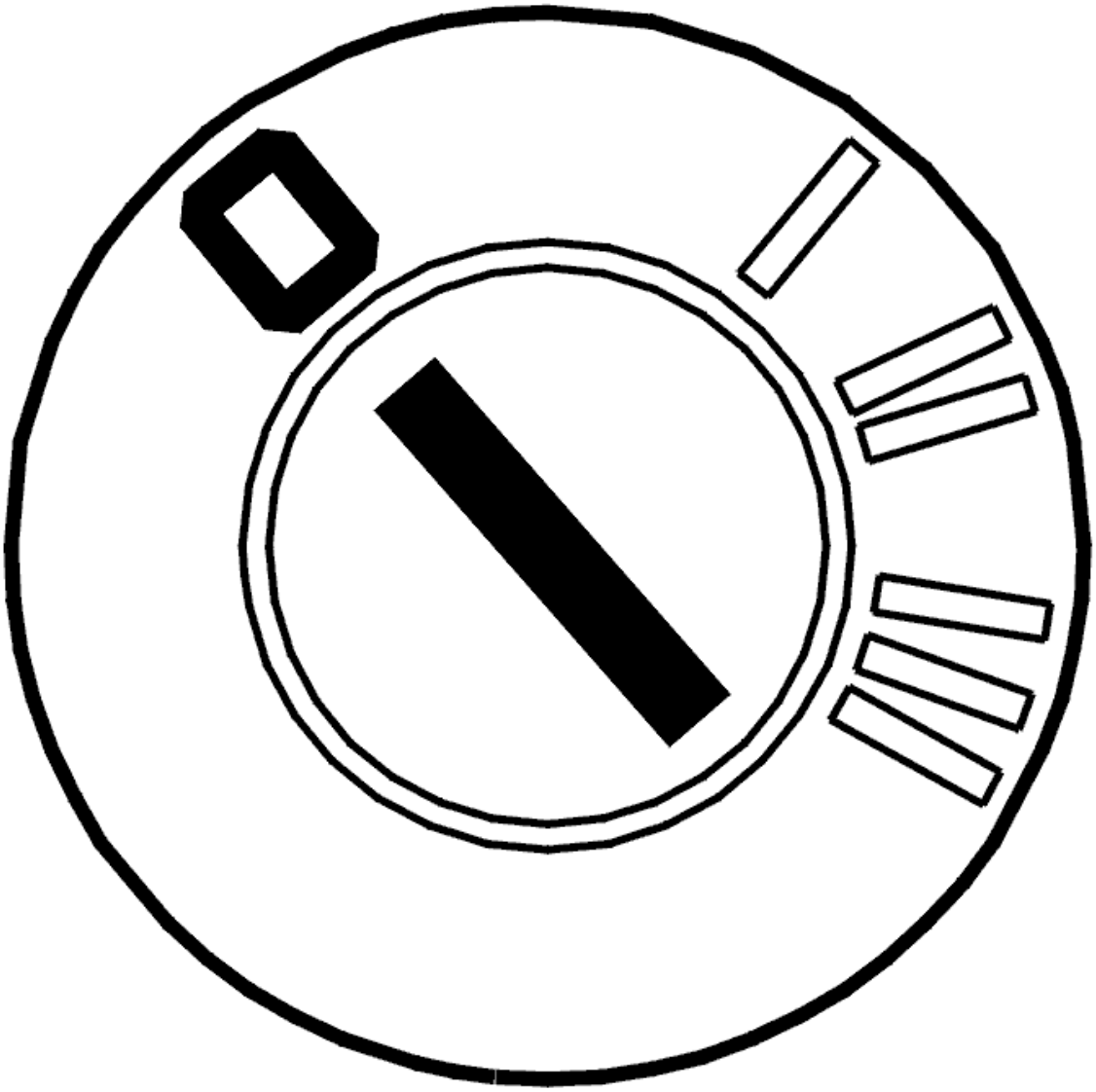

Fig. 87: Identifying Ignition OFF
Courtesy of VOLVO CARS CORPORATION

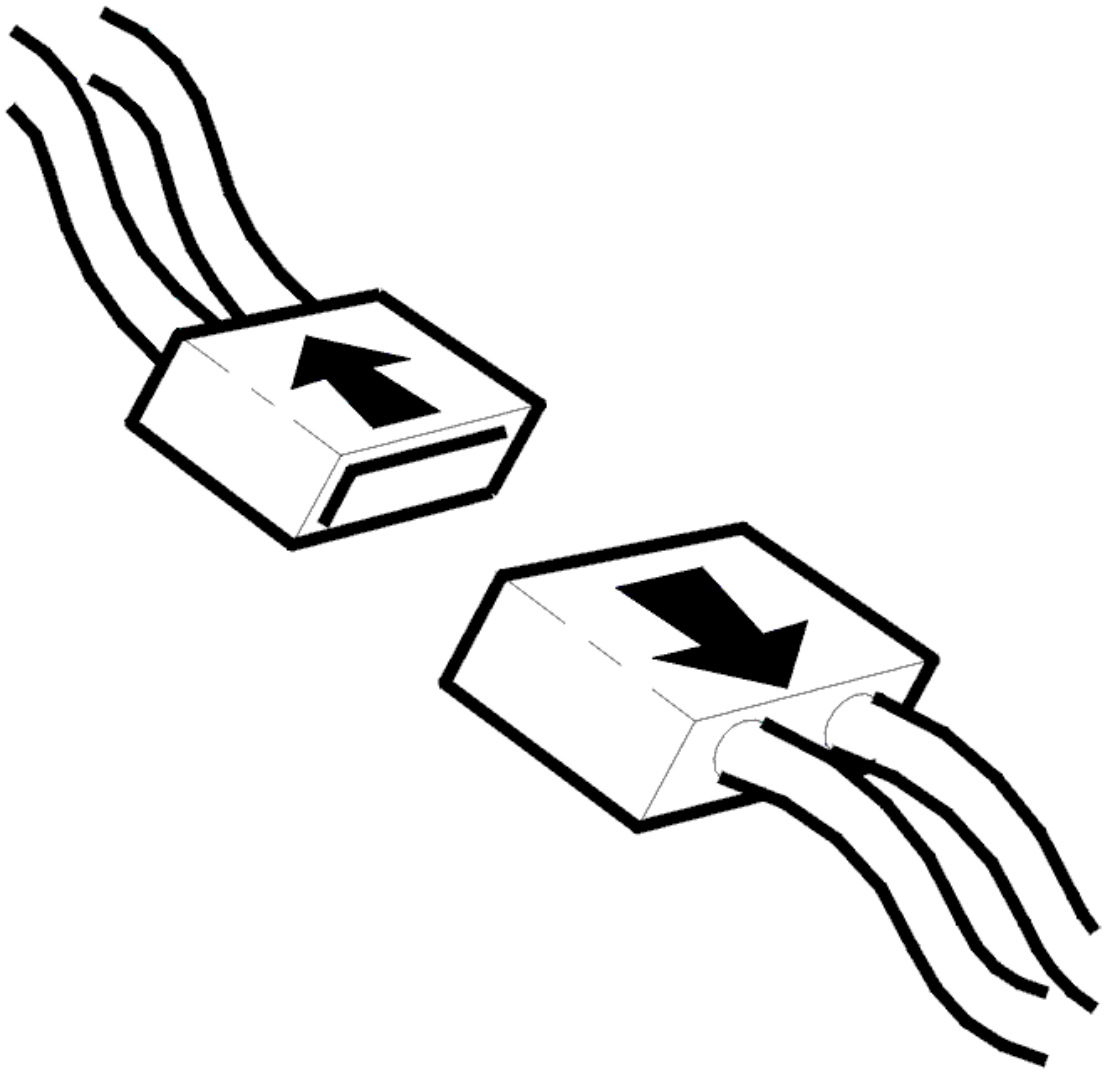

Fig. 88: Identifying Connector(s) Disconnected
Courtesy of VOLVO CARS CORPORATION

- Ignition off
- Open the gearbox control system

  Check the wiring between transmission connector terminal #B14 and solenoid SLC3 connector terminal #1. Check the wiring between transmission connector terminal #B22 and solenoid SLC3 connector terminal #2. Check for a short-circuit to supply voltage. Check the wiring for short-circuits to each other.

  HINT: If no fault is found in the wiring check solenoid SLC3. See CHECKING SHIFT SOLENOIDS

  If no fault is found in the wiring or the component replace the control system.

  Remedy as necessary.

Other information

- see **CONNECTING THE BREAKOUT BOX**
- see **SIGNAL DESCRIPTION**
- see **CONTROL SYSTEM, REPLACING**
- see **CABLE HARNESS, CONTROL SYSTEM, GEARBOX, REPLACING**
- To access the transmission control system: **COVER CONTROL SYSTEM, REPLACING (2007-2011)**
- see **CONTENTS**

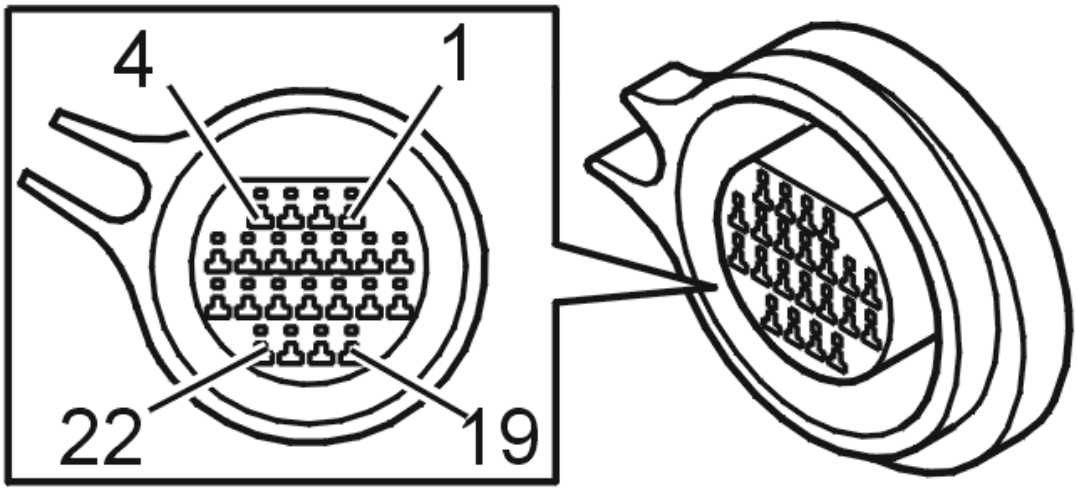

Fig. 89: Identifying Connector B Terminals
Courtesy of VOLVO CARS CORPORATION

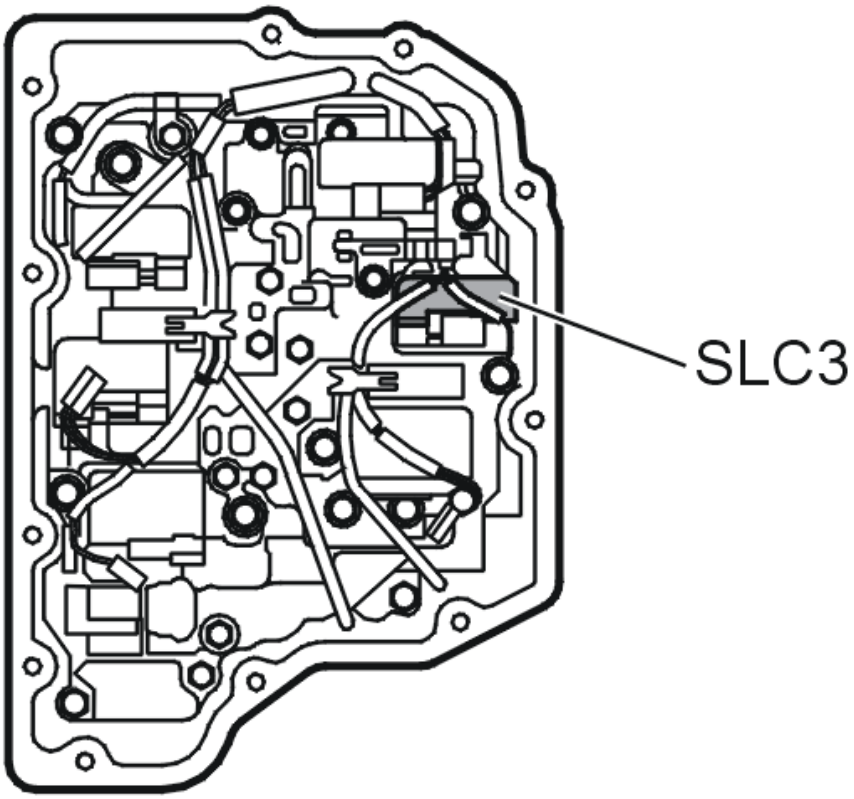

Fig. 90: Identifying Solenoid SLC3
Courtesy of VOLVO CARS CORPORATION

- **Continue**

  Refer to **RESETTING ADAPTATION**

RESETTING ADAPTATION

RESETTING ADAPTATION AND COUNTER FOR "TRANSMISSION OIL, CHANGING"

HINT: The transmission has torque-controlled, adaptive pressure control. The pressure control means that the transmission itself controls the pressure during each shift sequence in order to avoid harsh shifting. Each shift is assessed by the transmission control module (TCM) and is stored in the internal memory, which results in compensation for wear in the transmission and clutch. In order for the transmission to function correctly after repair, it is important to reset the adaptation in the memory. Since the oil is changed during the repair, the counter for "Transmission oil, change" shall also be reset. If the counter is not reset when draining/changing oil, there is a risk that a diagnostic trouble code may be generated under incorrect conditions.

NOTE: **This applies only if the transmission or one of the components in the transmission have been replaced.**

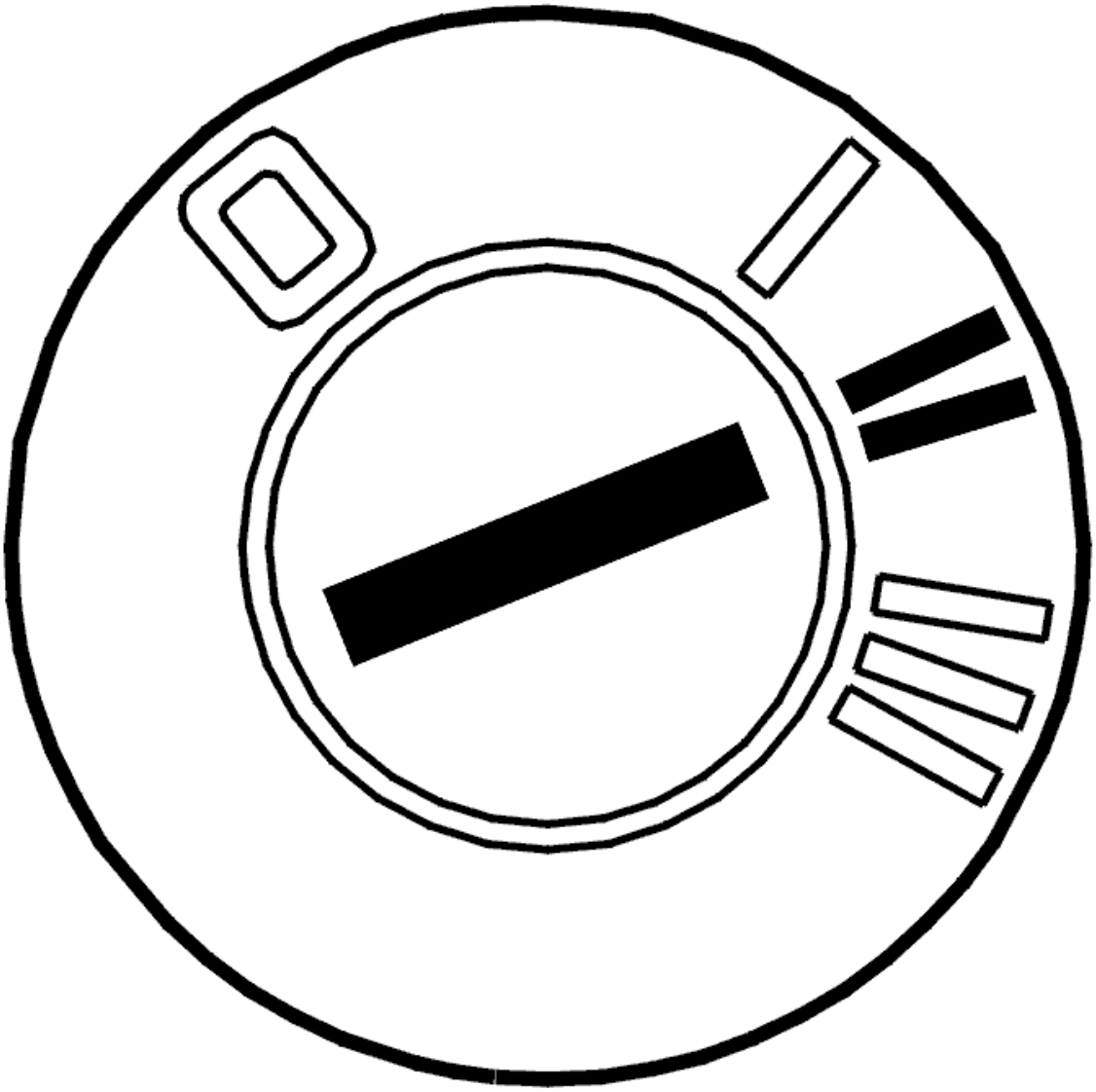

Fig. 91: Identifying Ignition ON
Courtesy of VOLVO CARS CORPORATION

- Ignition on

  Activate reset of the adaptation and the counter by clicking on the symbol for VCT2000.

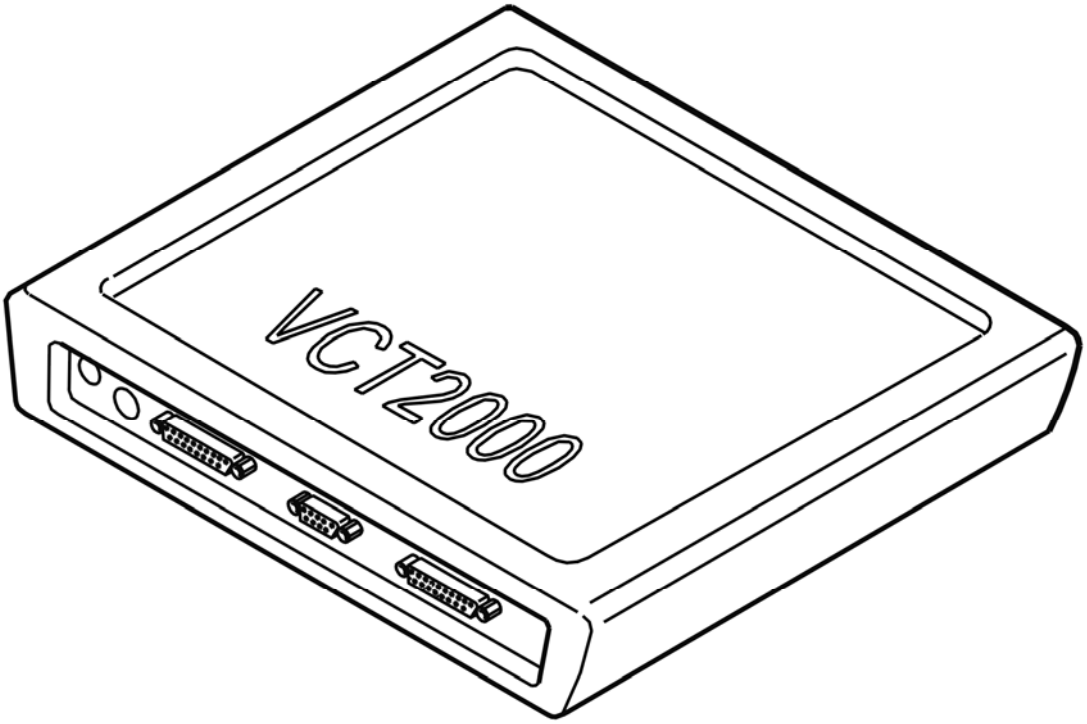

Fig. 92: Identifying VCT2000 Diagnostic Tool Symbol In VIDA
Courtesy of VOLVO CARS CORPORATION

- **Continue**

  Refer to **VERIFICATION**

VERIFICATION

VERIFICATION

HINT: After carrying out the repair, check that the fault has been remedied.

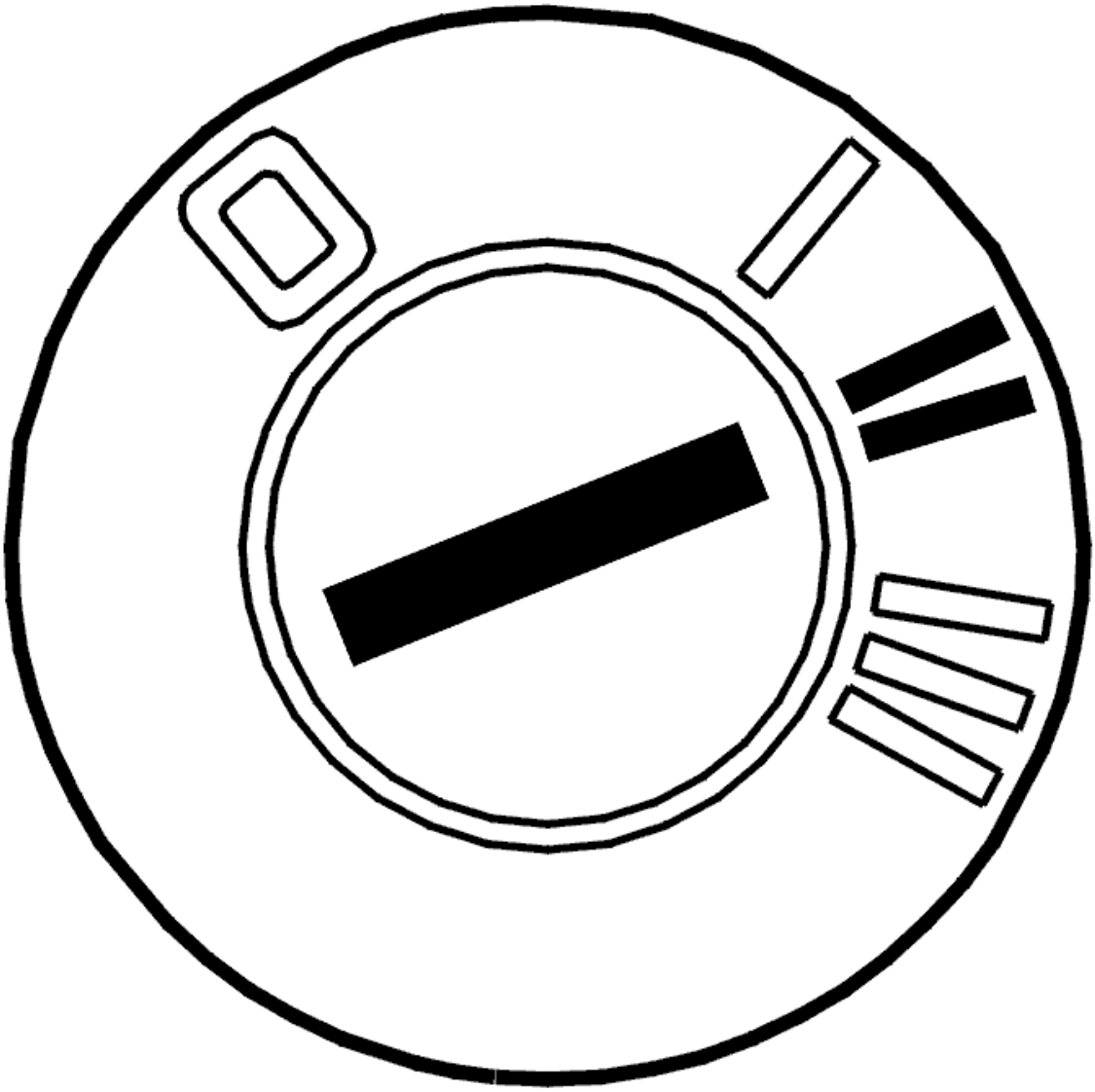

Fig. 93: Identifying Ignition ON
Courtesy of VOLVO CARS CORPORATION

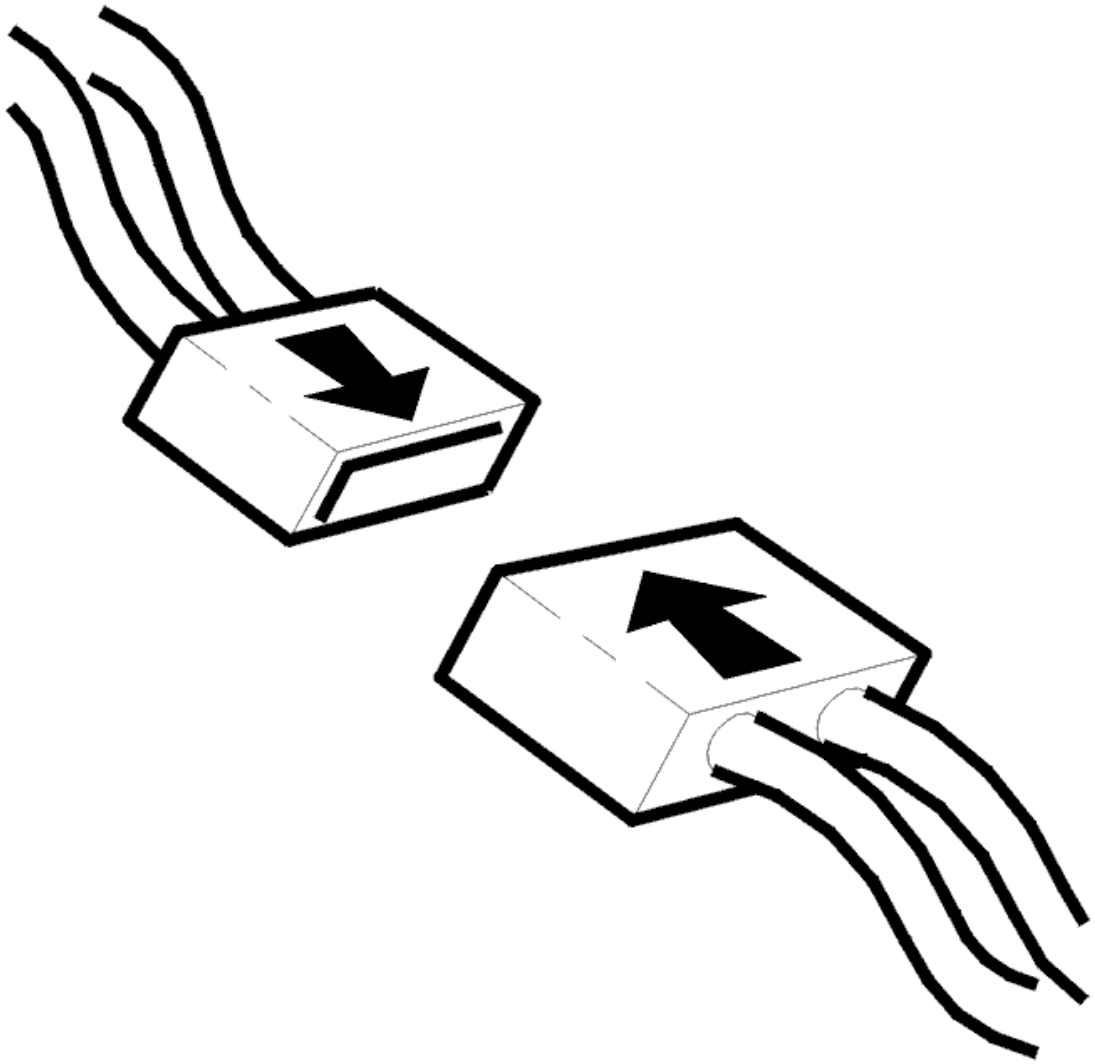

Fig. 94: Identifying Connector(s) Reinstallation
Courtesy of VOLVO CARS CORPORATION

- Ignition off
- Reinstall the components, reconnect the connectors etc.
- Ignition on
- Activate solenoid SLC3 by clicking on the symbol for VCT2000.

  Read off the current through the circuit for solenoid SLC3. The current must oscillate between approximately 0 and 1000 mA.

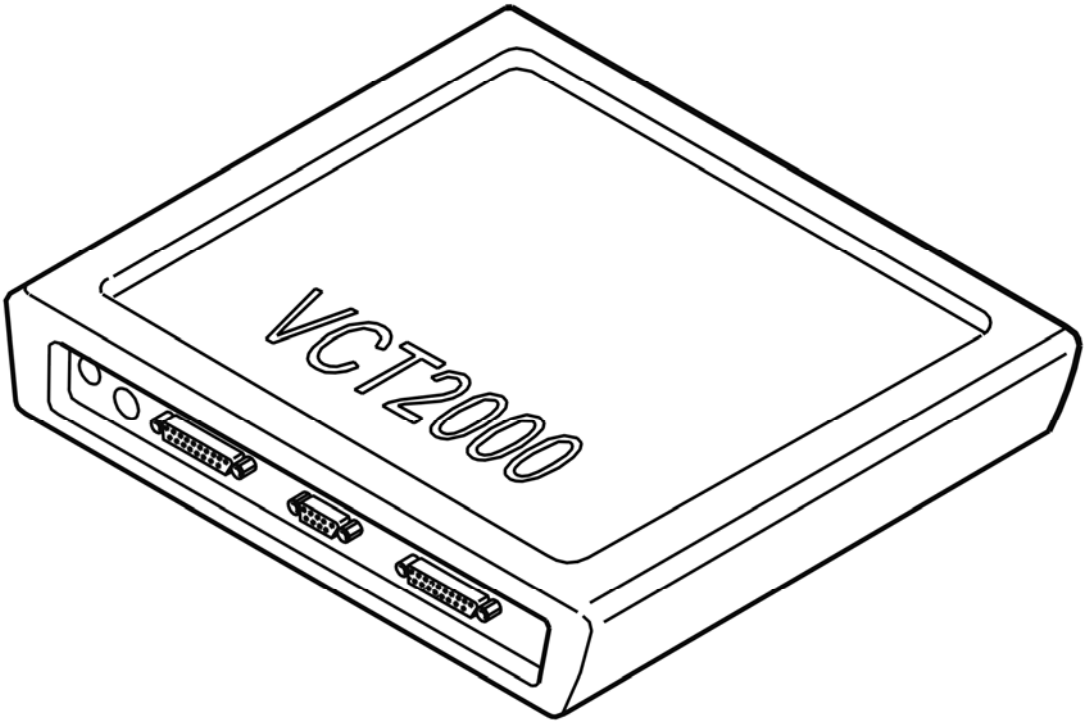

Fig. 95: Identifying VCT2000 Diagnostic Tool Symbol In VIDA
Courtesy of VOLVO CARS CORPORATION

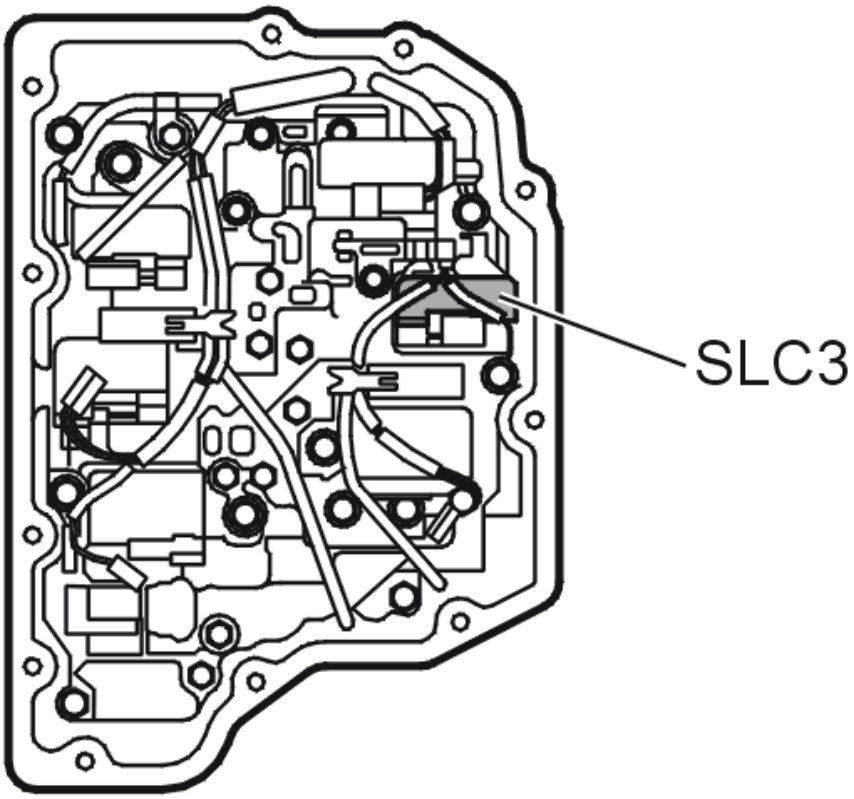

Fig. 96: Identifying Solenoid SLC3
Courtesy of VOLVO CARS CORPORATION

Is the function OK?

- **YES**

  VERIFIED: Troubleshooting has been completed.

- **NO**

  Refer to **INFORMATION**

INFORMATION

FAULT-TRACING INFORMATION

The fault should have been detected and remedied. As this is not the case fault-tracing has failed.

Exit fault-tracing for this diagnostic trouble code (DTC) or make another attempt.

TCM-P272100: PRESSURE REGULATING SOLENOID D CONTROL CIRCUIT HIGH. GENERAL FAULT INFORMATION. NO INFORMATION ABOUT FAULT

TYPE (TF-80SC AWD; 2005)

DIAGNOSTIC TROUBLE CODE (DTC) INFORMATION TCM-P272100

see **DIAGNOSTIC TROUBLE CODE (DTC) INFORMATION TCM-P272100**

FAULT TRACING TCM-P272100

see **FAULT TRACING TCM-P272100**

TCM-P272800: PRESSURE CONTROL SOLENOID E CONTROL CIRCUIT RANGE/PERFORMANCE. GENERAL FAILURE INFORMATION. NO SUB TYPE INFORMATION (B6324S, TF-80SC; B6324S, TF-80SC AWD; 2007-2010)

DIAGNOSTIC TROUBLE CODE (DTC) INFORMATION TCM-P272800

Condition

Linear pressure solenoid SLB1 controls shifting in the transmission. Solenoid SLB1 works when it receives voltage from the transmission control module (TCM). The solenoid is activated during various driving conditions based on speed, throttle position and set driving program.

The diagnostic trouble code (DTC) is stored if the control module detects that:

- The measured current in the solenoid circuit is incorrect.

Then Solenoid SLB1 cannot control the system pressure.

The control module's test for the diagnostic trouble code (DTC) starts in the event of:

- Shifting when linear pressure solenoid SLB1 is activated.

NOTE: The control module can only detect the fault once the test has been started and the diagnostic trouble code (DTC) is stored when the conditions are met.

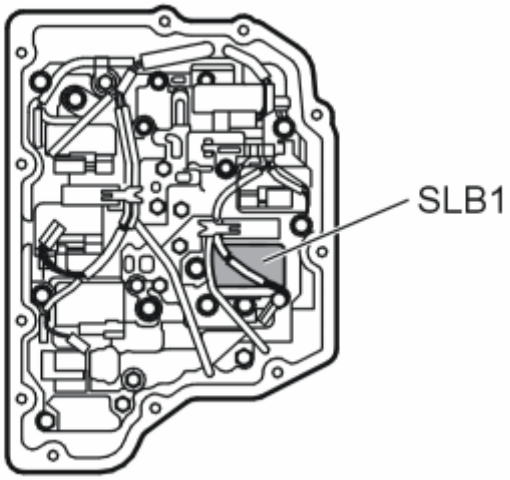

Fig. 97: Identifying Solenoid SLB1
Courtesy of VOLVO CARS CORPORATION

Substitute Value

- Auxiliary program **Emergency mode 1** in the transmission control module (TCM) has started.

  HINT: EMERGENCY MODE IN THE EVENT OF A FAULT

Possible Source

- Contact resistance in the terminals.
- Open-circuit in the cable for the control signal or signal ground.
- Line pressure solenoid SLB1 has jammed.
- Line pressure solenoid SLB1 does not work.

Fault symptom[s]

- General warning lamp lit
- Malfunction indicator light (MIL), on
- Rough gear shift
- No gear shift
- Abnormal slipping gearshifts

FAULT-TRACING

CHECKS

CHECK LINE PRESSURE SOLENOID SLB1

Fig. 98: Identifying Ignition ON
Courtesy of VOLVO CARS CORPORATION

- Ignition on.
- Activate solenoid SLB1 by clicking the VCT2000 symbol.

  Read the current through the circuit for solenoid SLB1. The current should oscillate between 100 and 950 mA.

  The fault is permanent if the current does not change.

  If the current changes, this is an indication that the fault was present previously but is not active at the moment, i. e. an intermittent fault.

Fig. 99: Identifying VCT2000 Diagnostic Tool Symbol In VIDA
Courtesy of VOLVO CARS CORPORATION

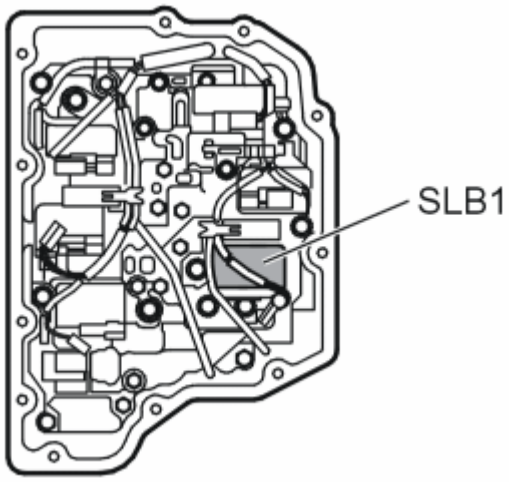

Fig. 100: Identifying Solenoid SLB1
Courtesy of VOLVO CARS CORPORATION

- **Continue**

Refer to **CHECKING THE COMPONENTS AND WIRING**

CHECKING THE COMPONENTS AND WIRING

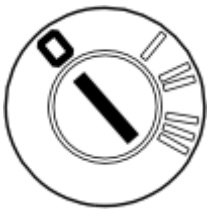

Fig. 101: Identifying Ignition OFF
Courtesy of VOLVO CARS CORPORATION

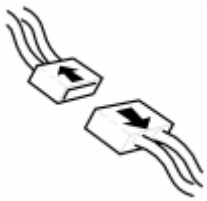

Fig. 102: Identifying Connectors Disconnected
Courtesy of VOLVO CARS CORPORATION

- Ignition off.
- Open the transmission control system.

  Check connector B (22-pin) for the transmission control module (TCM). Check for damaged or pressed in pins. Check for contact resistance and oxidation.

  Check the cables for short-circuit to voltage, short-circuit to ground and open circuit.

  Take readings between:

  - Transmission connector #B21 and the connector for solenoid SLB1 #1.
  - Transmission connector #B16 and the connector for solenoid SLB1 #2.

  HINT: If no fault is found in the wiring, check solenoid SLB1. See CHECKING INTERNAL COMPONENTS OF THE TRANSMISSION

  If no fault is found in the wiring or the component replace the control system.

  Remedy as necessary.

  Other information

  - see **CONNECTING THE BREAKOUT BOX**
  - see **SIGNAL SPECIFICATION**
  - see **VALVE HOUSING**

- see **TRANSMISSION CONTROL UNIT WIRING HARNESS**
- To access the transmission control system:**COVER CONTROL SYSTEM, REPLACING (2007-2011)**
- see **CHECKING WIRING AND TERMINALS**

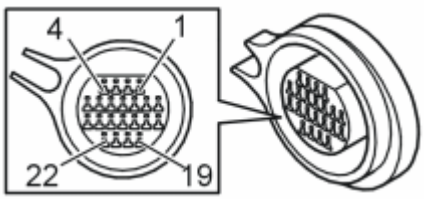

Fig. 103: Identifying Connector B Terminals
Courtesy of VOLVO CARS CORPORATION

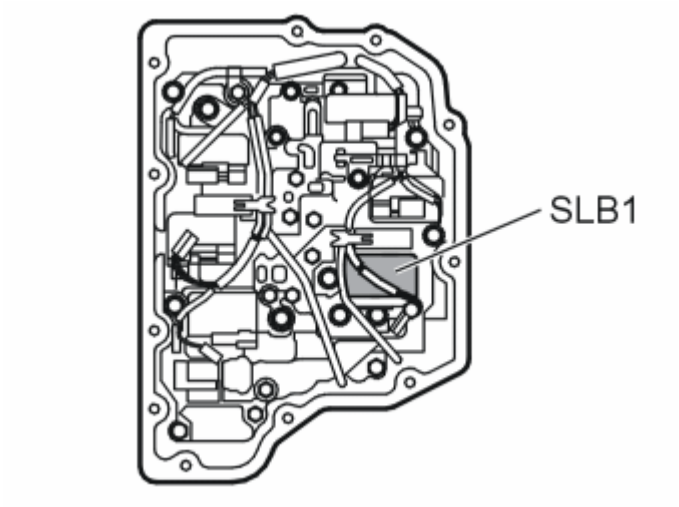

Fig. 104: Identifying Solenoid SLB1
Courtesy of VOLVO CARS CORPORATION

- **Continue**

  Refer to **RESETTING ADAPTATION**

VERIFICATION

VERIFICATION

HINT: After carrying out the repair, check that the fault has been remedied.

Fig. 105: Identifying Ignition ON
Courtesy of VOLVO CARS CORPORATION

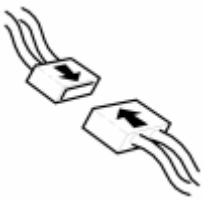

Fig. 106: Identifying Connector(s) Reinstallation
Courtesy of VOLVO CARS CORPORATION

- Ignition off.
- Reinstall the connectors, components etc.
- Ignition on.
- Activate solenoid SLB1 by clicking the VCT2000 symbol.

  Read the current through the circuit for solenoid SLB1. The current should oscillate between 100 and 950 mA.

Fig. 107: Identifying VCT2000 Diagnostic Tool Symbol In VIDA
Courtesy of VOLVO CARS CORPORATION

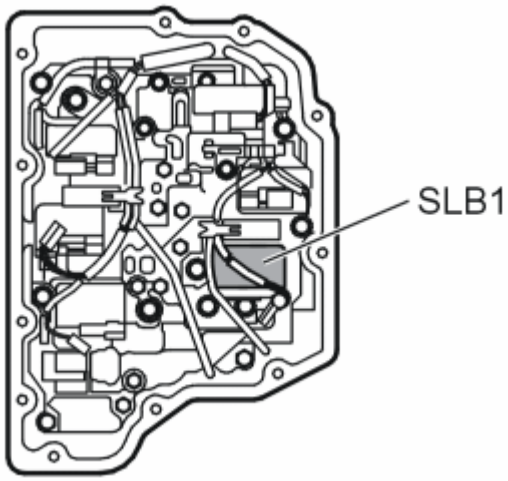

Fig. 108: Identifying Solenoid SLB1
Courtesy of VOLVO CARS CORPORATION

Is the function OK?

- **YES**

  VERIFIED: Troubleshooting has been completed.

- **NO**

  Refer to **INFORMATION**

INFORMATION

FAULT-TRACING INFORMATION

The fault should have been detected and remedied. As this is not the case fault-tracing has failed.

Exit fault-tracing for this diagnostic trouble code (DTC) or make another attempt.

RESETTING ADAPTATION

RESETTING THE ADAPTATION AND THE COUNTER FOR "TRANSMISSION OIL, REPLACE"

HINT: The transmission has torque-regulated, adaptive pressure regulation. The pressure regulator enables the transmission to regulate pressure during each shift to prevent hard shifting. Each shift is assessed by the transmission control module (TCM) and is stored in the internal memory. This makes it possible to compensate for transmission and clutch wear. It is important that the adaptation in the memory is reset so that the transmission works normally after the repair. Because the fluid was changed during the repair, the counter for transmission fluid change must also be reset. If the counter is not reset during draining/replacement, a diagnostic trouble code may be generated under the wrong conditions.

NOTE: This applies only if the transmission or one of the components in the transmission have been replaced.

Fig. 109: Identifying Ignition ON
Courtesy of VOLVO CARS CORPORATION

- Ignition on.

  Click on the VCT2000 symbol to reset the adaptation and counter.

Fig. 110: Identifying VCT2000 Diagnostic Tool Symbol In VIDA
Courtesy of VOLVO CARS CORPORATION

- **Continue**

  Refer to **VERIFICATION**

TCM-P272800: PRESSURE CONTROL SOLENOID E CONTROL CIRCUIT RANGE/PERFORMANCE. GENERAL FAILURE INFORMATION. NO SUB TYPE INFORMATION (B6324S5, TF-80SC; B6324S5, TF-80SC AWD; 2011-2012)

DIAGNOSTIC TROUBLE CODE (DTC) INFORMATION TCM-P272800

see **DIAGNOSTIC TROUBLE CODE (DTC) INFORMATION TCM-P272800**

FAULT-TRACING

see **FAULT-TRACING**

TCM-P272800: PRESSURE REGULATING SOLENOID E CONTROL CIRCUIT INSIDE/OUTSIDE PARAMETER VALUES. GENERAL FAULT INFORMATION. NO INFORMATION ABOUT FAULT TYPE (B8444S, TF-80SC AWD; 2006-2011)

DIAGNOSTIC TROUBLE CODE (DTC) INFORMATION TCM-P272800

Condition

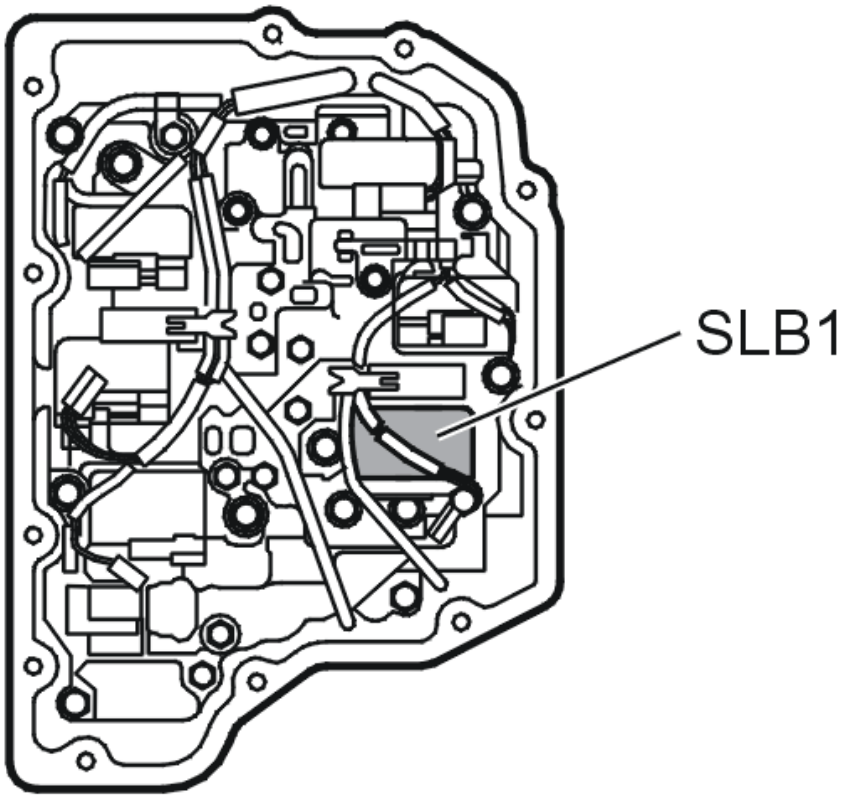

Fig. 111: Identifying Solenoid SLB1
Courtesy of VOLVO CARS CORPORATION

Linear pressure solenoid SLB1 controls the shifts in the transmission. Solenoid SLB1 operates when it receives power from the transmission control module (TCM). Depending on the vehicle speed, throttle position and selected driving program the solenoid is operated in different driving conditions.

If the transmission control module (TCM) registers that the measured current in the solenoid circuit is incorrect, the diagnostic trouble code (DTC) is generated. The SLB1 solenoid is then not able to regulate the system pressure.

The diagnostic trouble codes (DTCs) can be diagnosed during shifting when the line pressure solenoid SLB1 is activated.

Substitute Value

- Auxiliary program **Emergency mode 1** in the transmission control module (TCM) has started.

  HINT: EMERGENCY MODE IN CASE OF MALFUNCTION

Possible Source

- Contact resistance in the terminals

- Open circuit in lead for control signal or signal ground.
- Line pressure solenoid SLB1 jammed.
- Line pressure solenoid SLB1 does not work.

Fault symptom[s]

- General warning lamp lit
- Malfunction indicator lamp (MIL) lit.
- Harsh gear changing
- No gear changing.
- Abnormally slipping gears.

FAULT TRACING TCM-P272800

CHECKS

CHECKING THE LOCK-UP SOLENOID SLB1

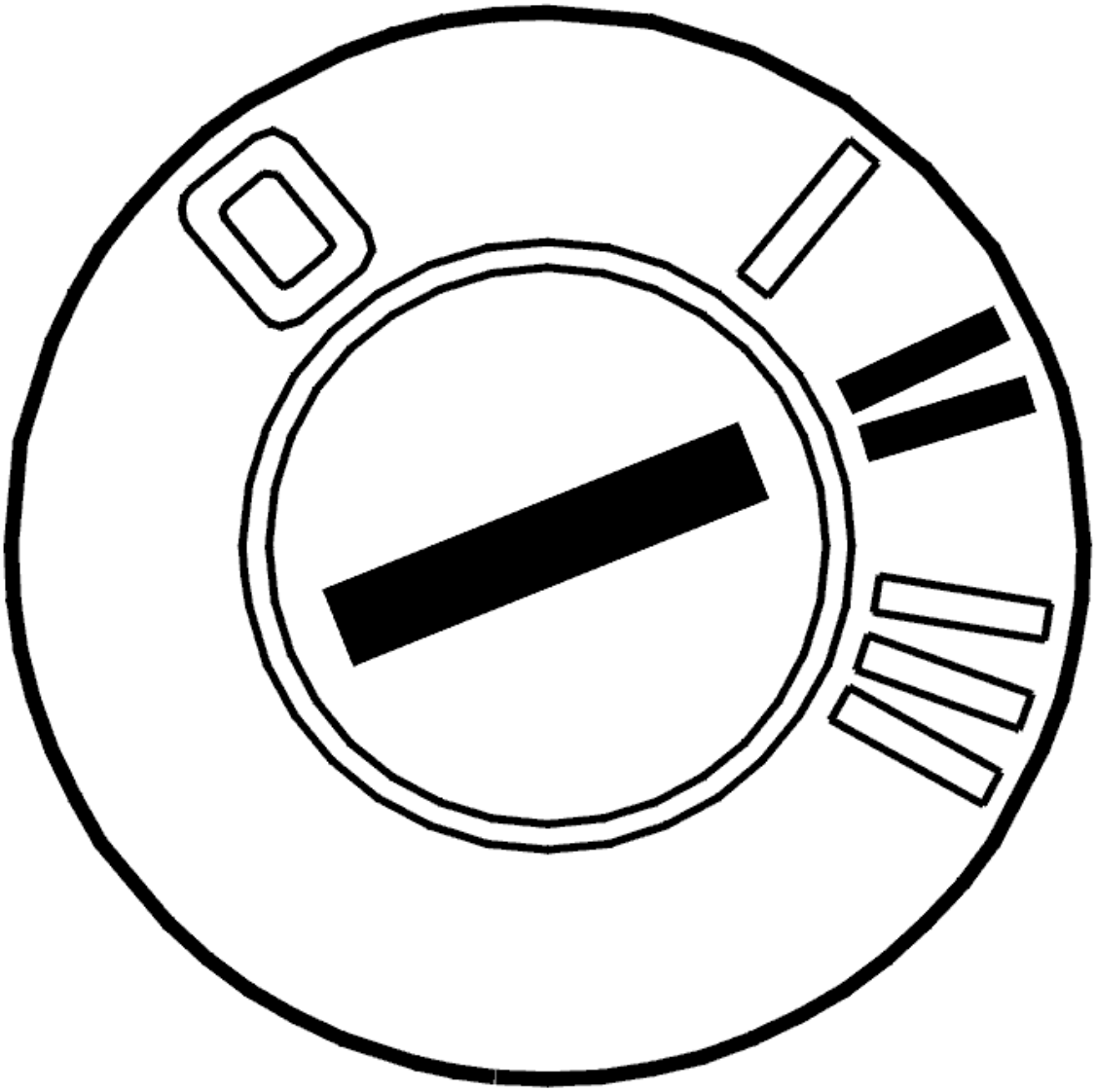

Fig. 112: Identifying Ignition ON
Courtesy of VOLVO CARS CORPORATION

- Ignition on
- Activate solenoid SLB1 by clicking the VCT2000 symbol.

  Read the current though the circuit for solenoid SLB1. The current must oscillate between approximately 100 and 950 mA.

  The fault is permanent if the current does not change.

  If the current oscillates then this would suggest that the fault has previously been present but is no longer active. The fault is intermittent.

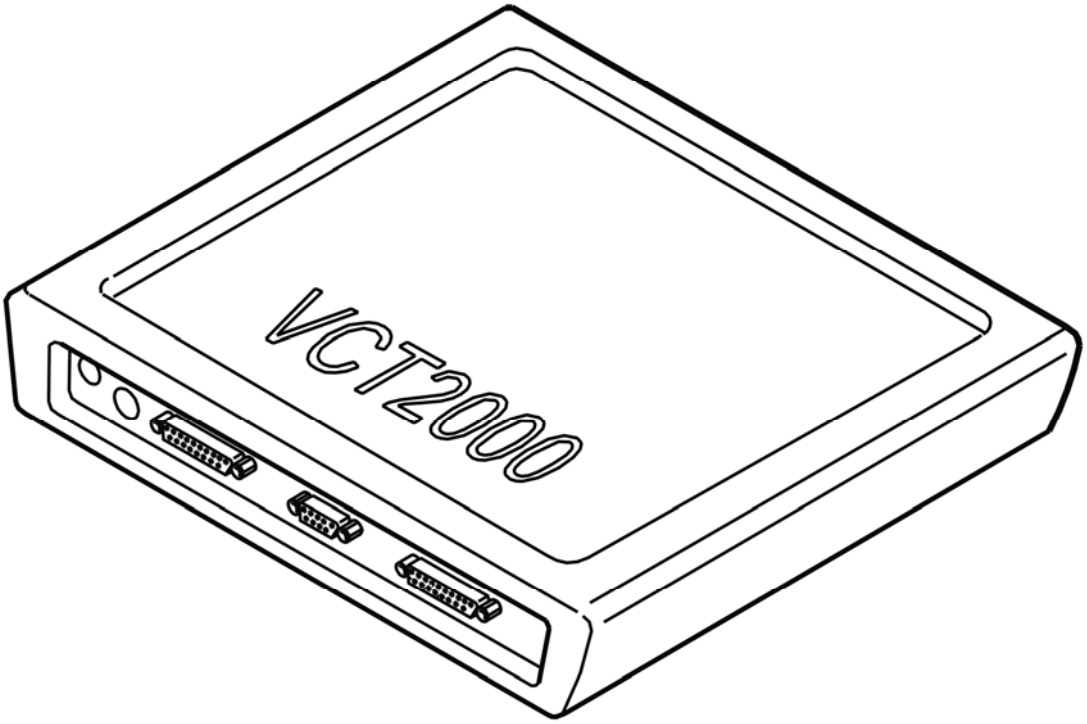

Fig. 113: Identifying VCT2000 Diagnostic Tool Symbol In VIDA
Courtesy of VOLVO CARS CORPORATION

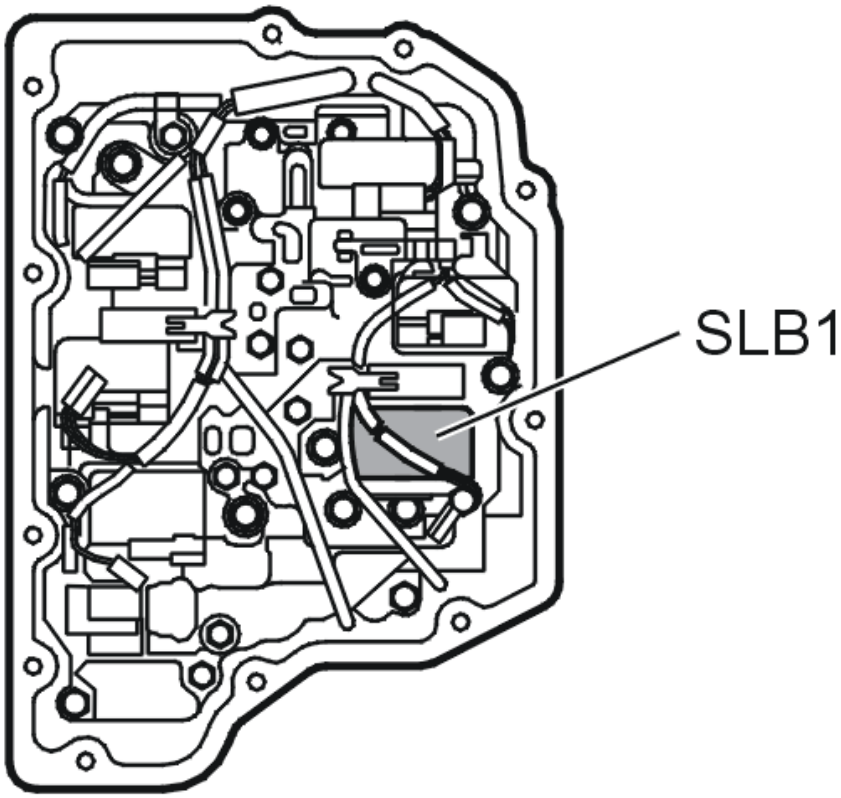

Fig. 114: Identifying Solenoid SLB1
Courtesy of VOLVO CARS CORPORATION

- **Continue**

  Refer to **CHECKING THE COMPONENTS AND WIRING**

CHECKING THE COMPONENTS AND WIRING

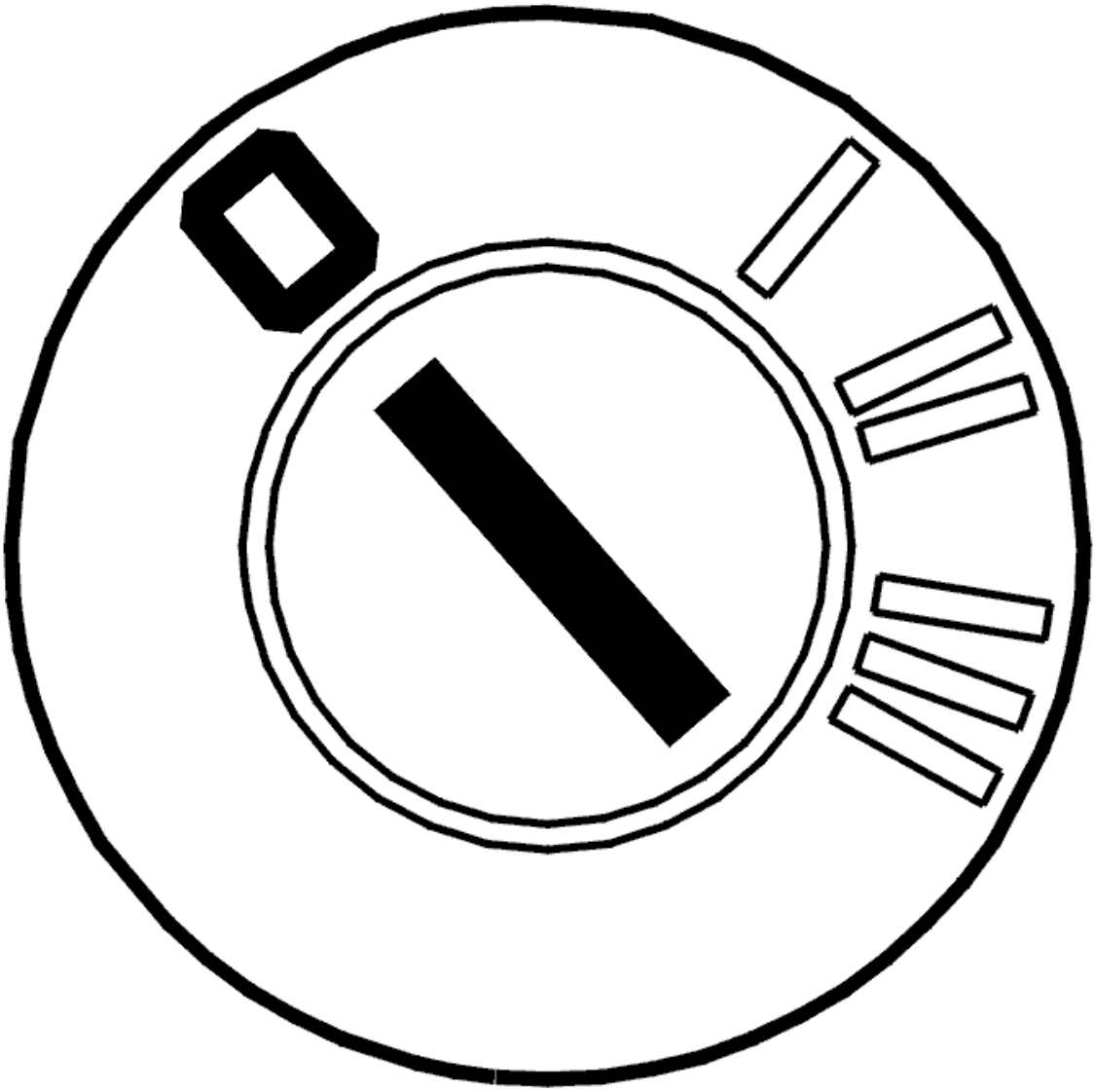

Fig. 115: Identifying Ignition OFF
Courtesy of VOLVO CARS CORPORATION

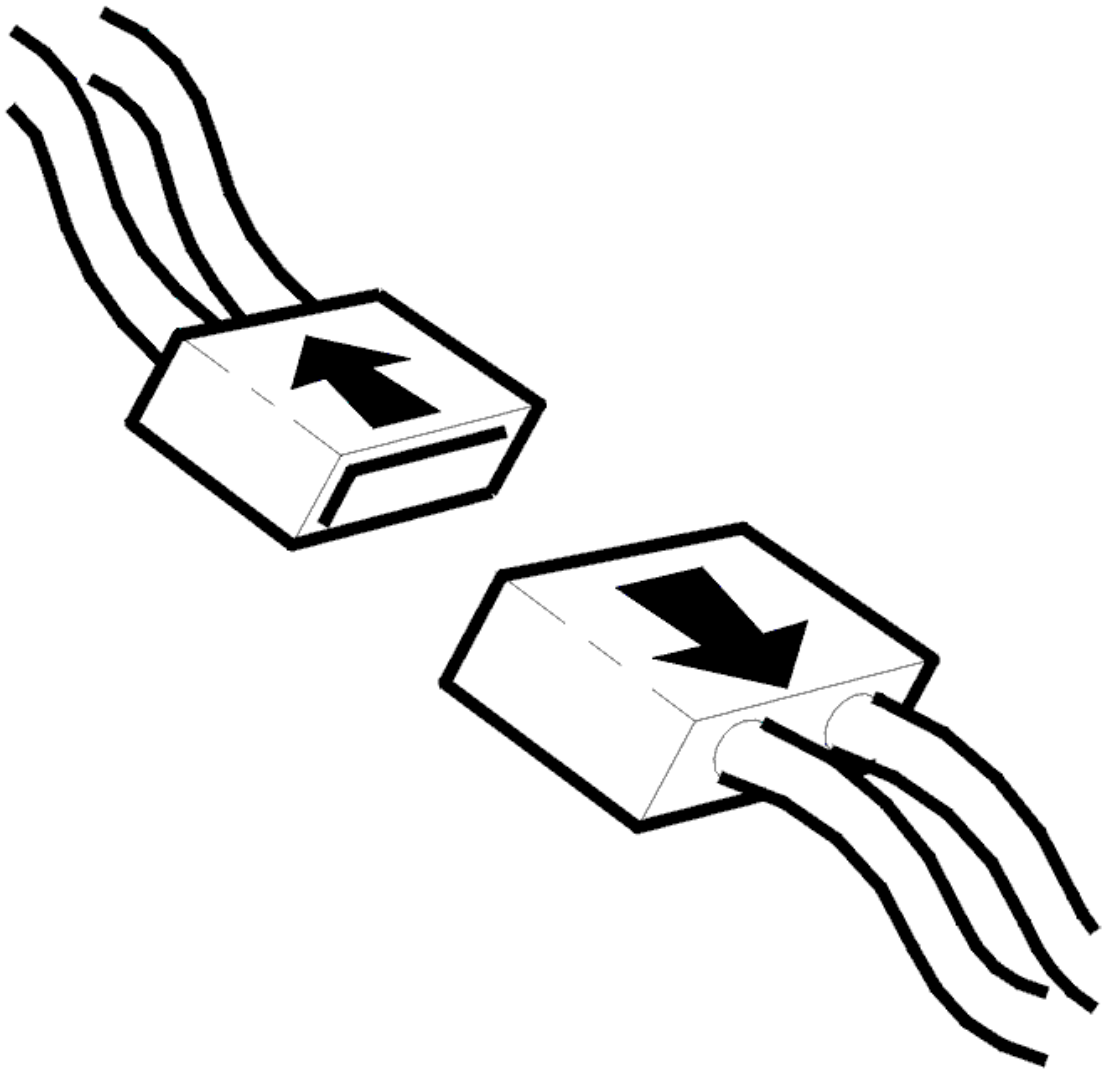

Fig. 116: Identifying Connector(s) Disconnected
Courtesy of VOLVO CARS CORPORATION

- Ignition off
- Open the gearbox control system

  Check connector B (22-pin) for the transmission control module (TCM). Check for damage and pressed in terminal pins. Check for contact resistance and oxidation.

  Check the wiring between the transmission connector terminal #B21 and the connector for solenoid SLB1 terminal #1. Check the wiring between the transmission connector terminal #B16 and the connector for solenoid SLB1 terminal #2. Check for an open circuit. Check for a short-circuit to supply voltage. Check for a short-circuit to ground.

  HINT: If no fault is found in the wiring check solenoid SLB1. See CHECKING THE LINE PRESSURE SOLENOID SLT, SLC1, SLC2, SLC3, SLB1 AND LOCK-UP SOLENOID SLU

If no fault is found in the wiring or the component replace the control system.

Remedy as necessary.

Other information

- see **CONNECTING THE BREAKOUT BOX**
- see **SIGNAL DESCRIPTION**
- see **CONTROL SYSTEM, REPLACING**
- see **CABLE HARNESS, CONTROL SYSTEM, GEARBOX, REPLACING**
- To access the transmission control system: **COVER CONTROL SYSTEM, REPLACING (2007-2011)**
- see **CONTENTS**

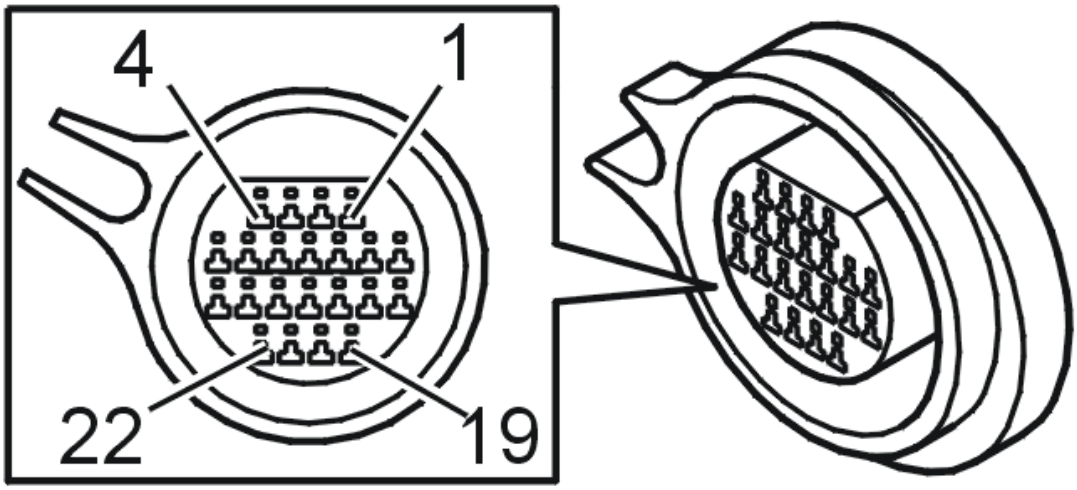

Fig. 117: Identifying Connector B Terminals
Courtesy of VOLVO CARS CORPORATION

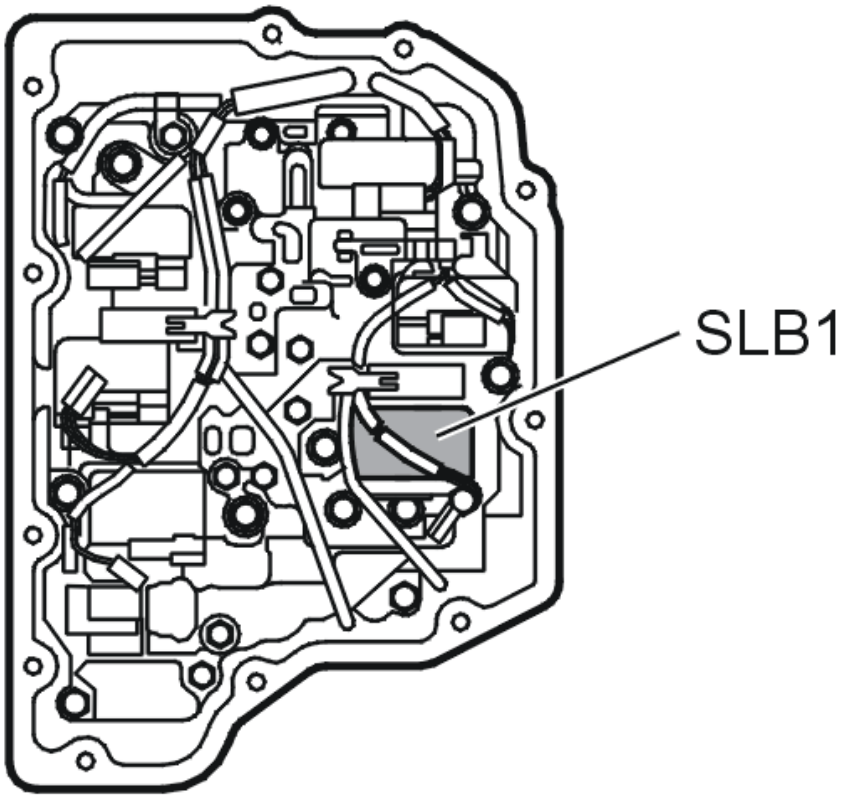

Fig. 118: Identifying Solenoid SLB1
Courtesy of VOLVO CARS CORPORATION

- **Continue**

  Refer to **RESETTING ADAPTATION**

RESETTING ADAPTATION

RESETTING ADAPTATION AND COUNTER FOR "TRANSMISSION OIL, CHANGING"

HINT: The transmission has torque-controlled, adaptive pressure control. The pressure control means that the transmission itself controls the pressure during each shift sequence in order to avoid harsh shifting. Each shift is assessed by the transmission control module (TCM) and is stored in the internal memory, which results in compensation for wear in the transmission and clutch. In order for the transmission to function correctly after repair, it is important to reset the adaptation in the memory. Since the oil is changed during the repair, the counter for "Transmission oil, change" shall also be reset. If the counter is not reset when draining/changing oil, there is a risk that a diagnostic trouble code may be generated under incorrect conditions.

NOTE: **This applies only if the transmission or one of the components in the transmission have been replaced.**

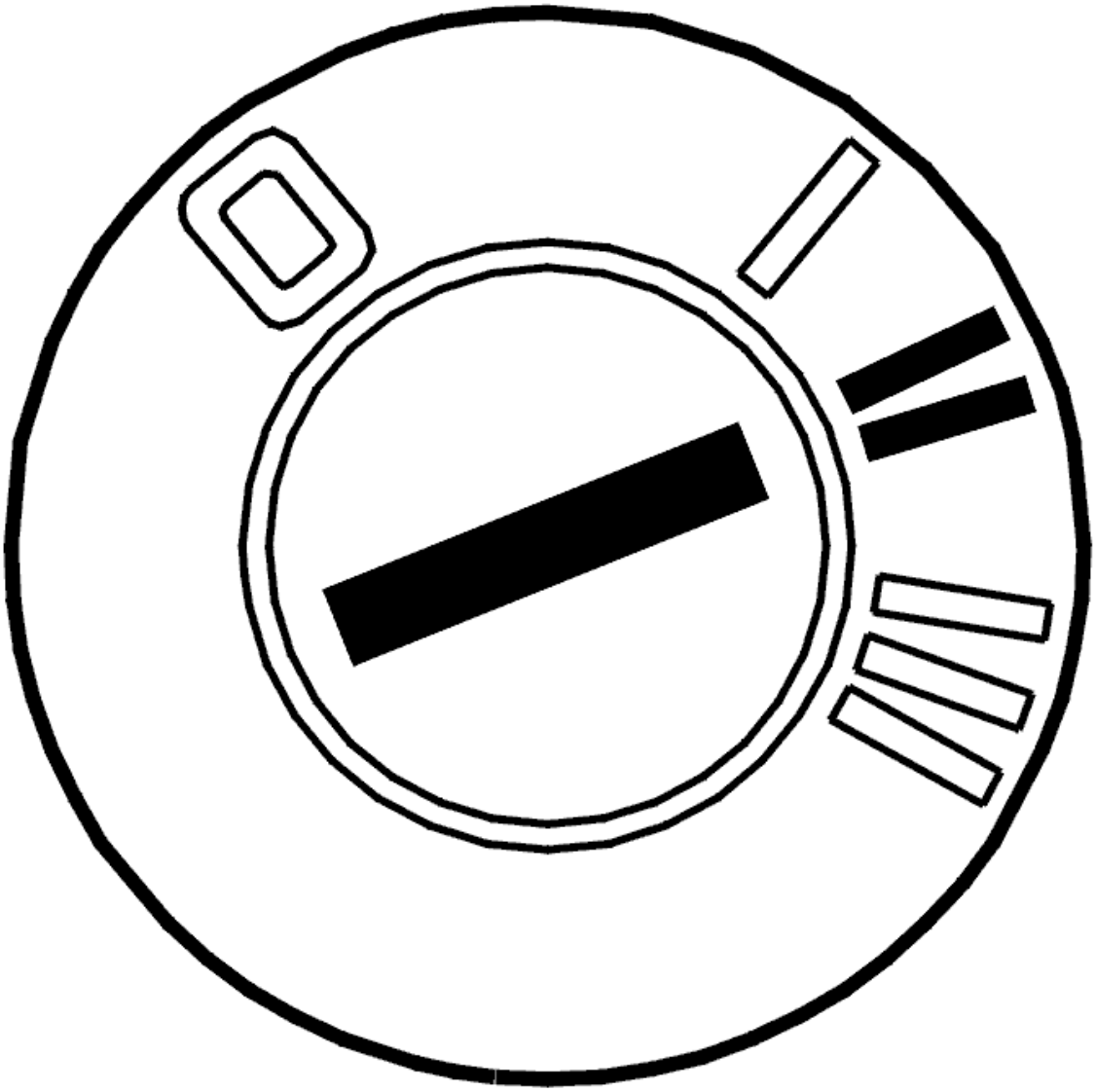

Fig. 119: Identifying Ignition ON
Courtesy of VOLVO CARS CORPORATION

- Ignition on

  Activate reset of the adaptation and the counter by clicking on the symbol for VCT2000.

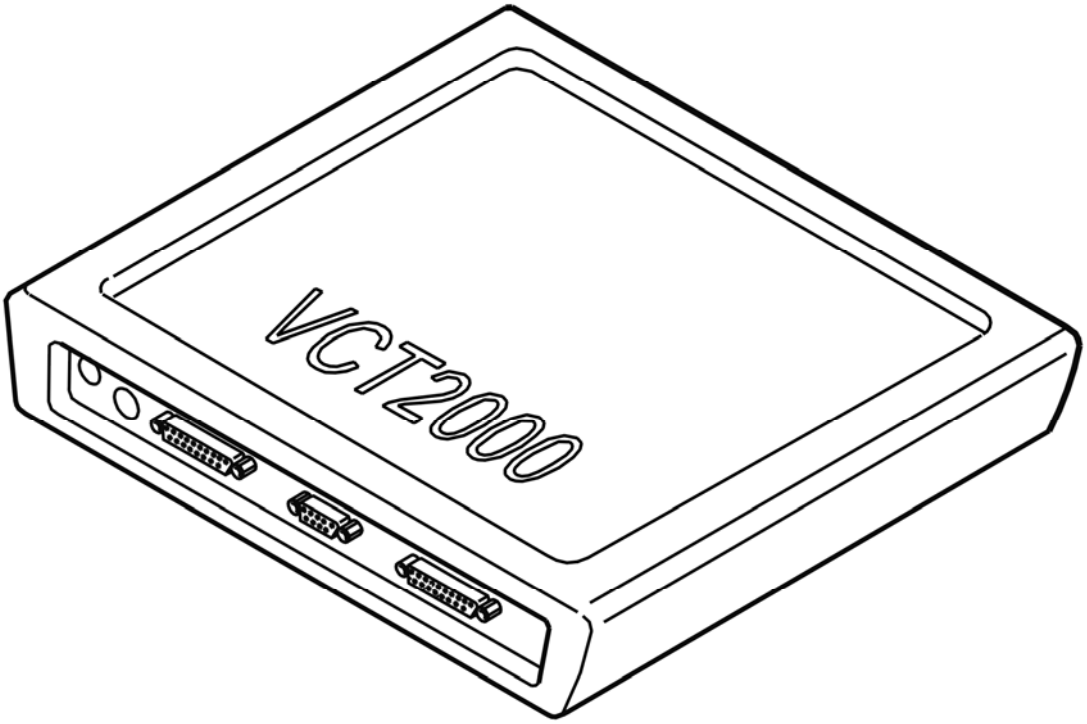

Fig. 120: Identifying VCT2000 Diagnostic Tool Symbol In VIDA
Courtesy of VOLVO CARS CORPORATION

- **Continue**

  Refer to **VERIFICATION**

VERIFICATION

VERIFICATION

HINT: After carrying out the repair, check that the fault has been remedied.

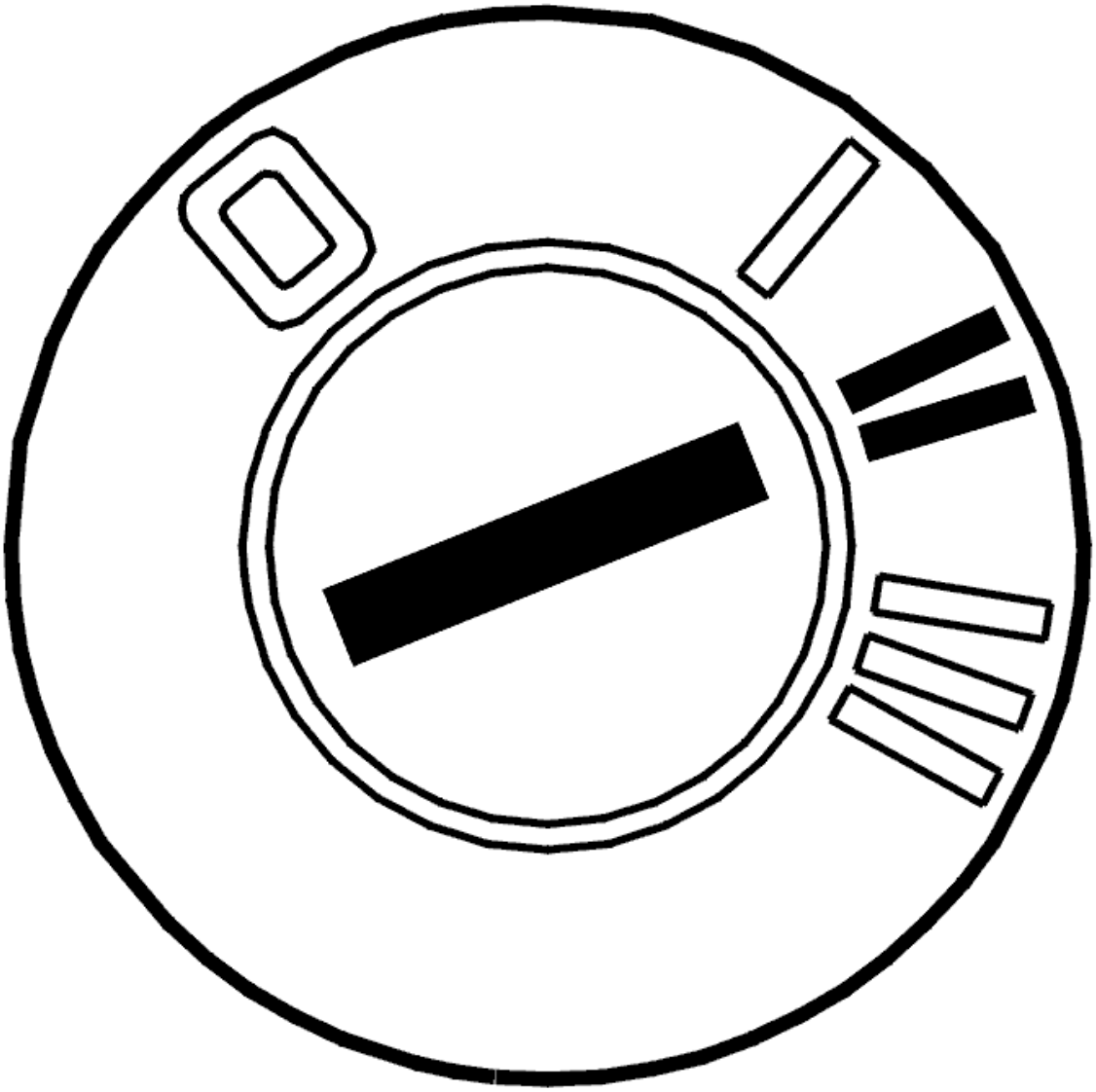

Fig. 121: Identifying Ignition ON
Courtesy of VOLVO CARS CORPORATION

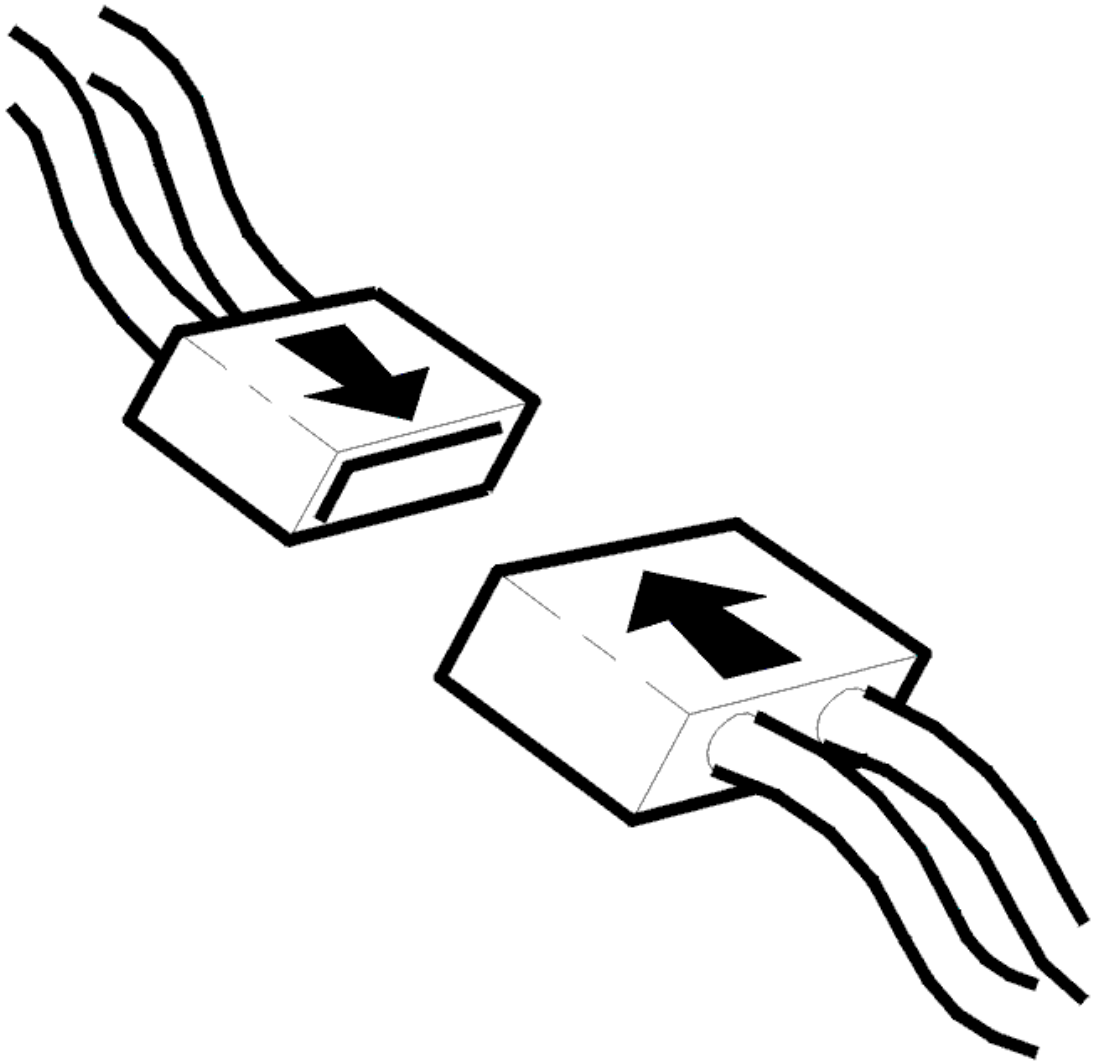

Fig. 122: Identifying Connector(s) Reinstallation
Courtesy of VOLVO CARS CORPORATION

- Ignition off
- Reinstall the components, reconnect the connectors etc.
- Ignition on
- Activate solenoid SLB1 by clicking the symbol for VCT2000.

  Read off the current through the circuit for solenoid SLB1. The current must oscillate between approximately 0 and 1000 mA.

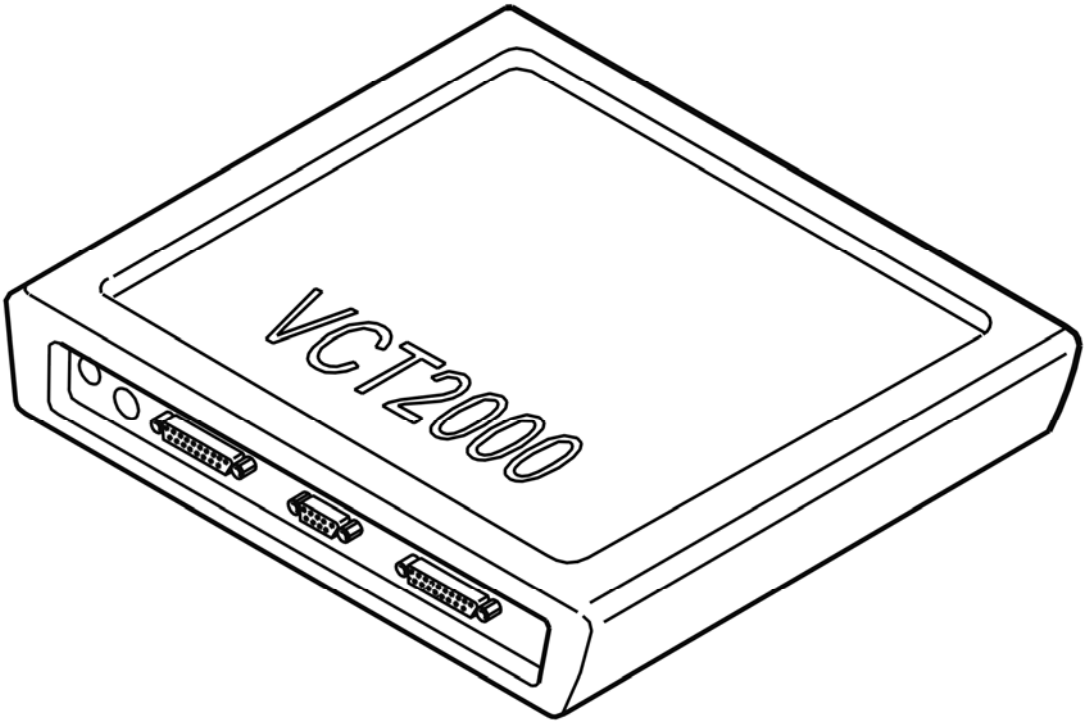

Fig. 123: Identifying VCT2000 Diagnostic Tool Symbol In VIDA
Courtesy of VOLVO CARS CORPORATION

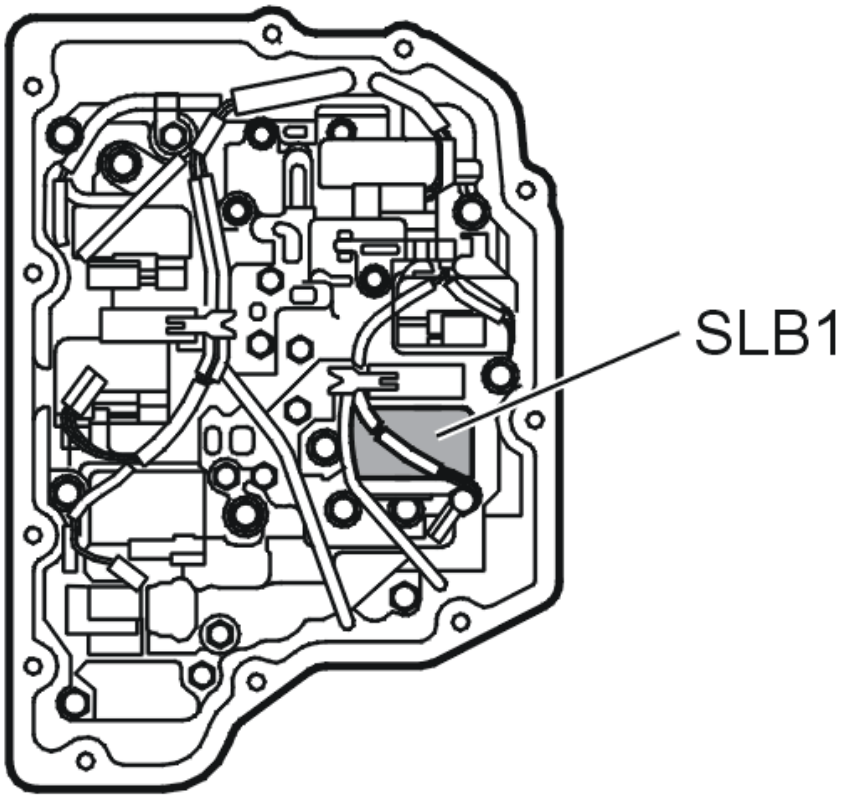

Fig. 124: Identifying Solenoid SLB1
Courtesy of VOLVO CARS CORPORATION

Is the function OK?

- **YES**

  VERIFIED: Troubleshooting has been completed.

- **NO**

  Refer to **INFORMATION**

INFORMATION

FAULT-TRACING INFORMATION

The fault should have been detected and remedied. As this is not the case fault-tracing has failed.

Exit fault-tracing for this diagnostic trouble code (DTC) or make another attempt.

TCM-P272800: PRESSURE REGULATING SOLENOID E CONTROL CIRCUIT INSIDE/OUTSIDE PARAMETER VALUES. GENERAL FAULT INFORMATION.

NO INFORMATION ABOUT FAULT TYPE (TF-80SC AWD; 2005)

DIAGNOSTIC TROUBLE CODE (DTC) INFORMATION TCM-P272800

see **DIAGNOSTIC TROUBLE CODE (DTC) INFORMATION TCM-P272800**

FAULT TRACING TCM-P272800

see **FAULT TRACING TCM-P272800**

TCM-P272900: PRESSURE CONTROL SOLENOID E CONTROL CIRCUIT LOW. GENERAL FAILURE INFORMATION. NO SUB TYPE INFORMATION (B6324S, TF-80SC; B6324S, TF-80SC AWD; 2007-2010)

DIAGNOSTIC TROUBLE CODE (DTC) INFORMATION TCM-P272900

Condition

Linear pressure solenoid SLB1 controls system pressure in the transmission. The solenoid is controlled by a power stage located on the output of the transmission control module (TCM). The control module uses the power stage to control the current to the solenoid. A low amperage results in a high line pressure. A high amperage (approximately 1A) results in a low line pressure. The amperage is primarily affected by the throttle position.

The diagnostic trouble code is stored if the control module detects:

- An open circuit in solenoid SLB1 circuit.

Then Solenoid SLB1 cannot control the system pressure.

The control module's test for the diagnostic trouble code (DTC) starts in the event of:

- Shifting when linear pressure solenoid SLB1 is activated.

NOTE: The control module can only detect the fault once the test has been started and the diagnostic trouble code (DTC) is stored when the conditions are met.

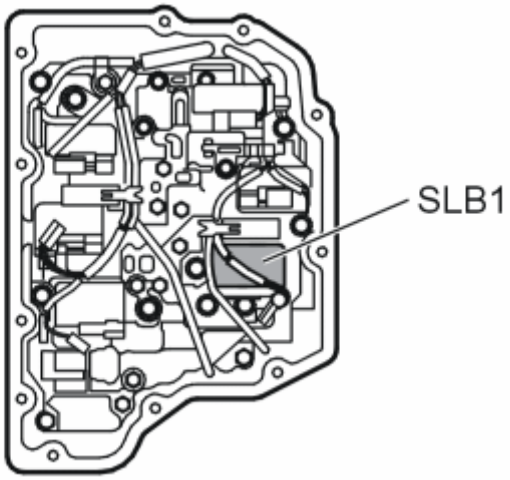

Fig. 125: Identifying Solenoid SLB1
Courtesy of VOLVO CARS CORPORATION

Substitute Value

- Auxiliary program **Emergency mode 1** in the transmission control module (TCM) has started.

  HINT: EMERGENCY MODE IN THE EVENT OF A FAULT

Possible Source

- Contact resistance in the terminals.
- Open-circuit in the cable for the control signal or signal ground.
- Line pressure solenoid SLB1 does not work.
- The transmission control module (TCM) does not function.

Fault symptom[s]

- General warning lamp lit
- Malfunction indicator light (MIL), on
- No lock-up
- Rough gear shift

FAULT-TRACING

CHECKS

CHECK LINE PRESSURE SOLENOID SLB1

Fig. 126: Identifying Ignition ON
Courtesy of VOLVO CARS CORPORATION

- Ignition on.
- Activate solenoid SLB1 by clicking the VCT2000 symbol.

  Read the current through the circuit for solenoid SLB1. The current should oscillate between 100 and 950 mA.

  The fault is permanent if the current does not change.

  If the current changes, this is an indication that the fault was present previously but is not active at the moment, i. e. an intermittent fault.

Fig. 127: Identifying VCT2000 Diagnostic Tool Symbol In VIDA
Courtesy of VOLVO CARS CORPORATION

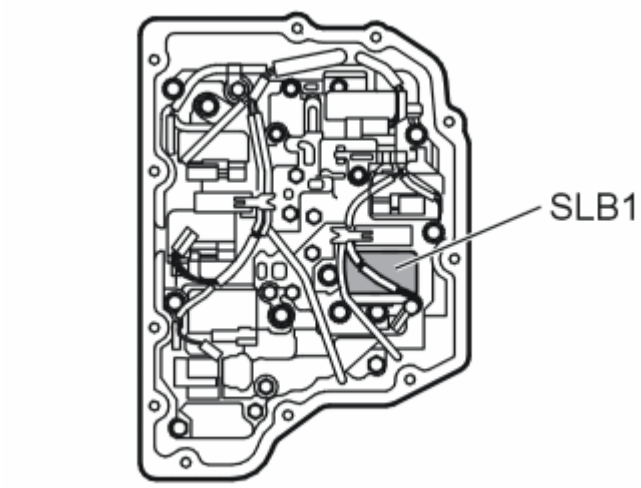

Fig. 128: Identifying Solenoid SLB1
Courtesy of VOLVO CARS CORPORATION

- **Continue**

Refer to **CHECKING THE COMPONENTS AND WIRING**

CHECKING THE COMPONENTS AND WIRING

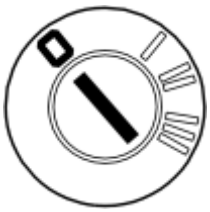

Fig. 129: Identifying Ignition OFF
Courtesy of VOLVO CARS CORPORATION

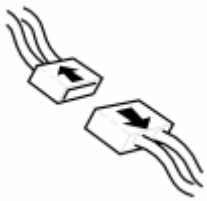

Fig. 130: Identifying Connectors Disconnected
Courtesy of VOLVO CARS CORPORATION

- Ignition off.
- Open the transmission control system.

  Check connector B (22-pin) for the transmission control module (TCM). Check for damaged or pressed in pins. Check for contact resistance and oxidation.

  Check the cables for open circuit and short circuit to ground.

  Take readings between:

  - Transmission connector #B21 and the connector for solenoid SLB1 #1.
  - Transmission connector #B16 and the connector for solenoid SLB1 #2.

  HINT: If no fault is found in the wiring, check solenoid SLB1. See CHECKING INTERNAL COMPONENTS OF THE TRANSMISSION

  If no fault is found in the wiring or the component replace the control system.

  Remedy as necessary.

  Other information

  - see **CONNECTING THE BREAKOUT BOX**
  - see **SIGNAL SPECIFICATION**
  - see **VALVE HOUSING**

- see **TRANSMISSION CONTROL UNIT WIRING HARNESS**
- To access the transmission control system:**COVER CONTROL SYSTEM, REPLACING (2007-2011)**
- see **CHECKING WIRING AND TERMINALS**

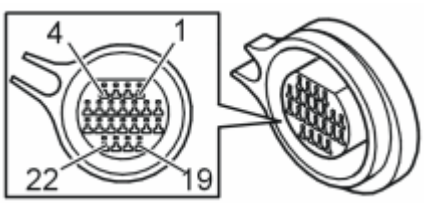

Fig. 131: Identifying Connector B Terminals
Courtesy of VOLVO CARS CORPORATION

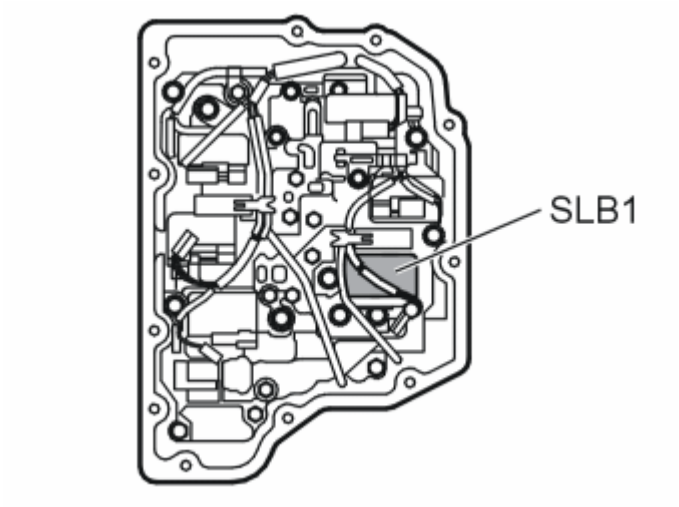

Fig. 132: Identifying Solenoid SLB1
Courtesy of VOLVO CARS CORPORATION

- **Continue**

  Refer to **RESETTING ADAPTATION**

VERIFICATION

VERIFICATION

HINT: After carrying out the repair, check that the fault has been remedied.

Fig. 133: Identifying Ignition ON
Courtesy of VOLVO CARS CORPORATION

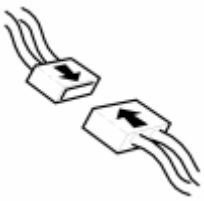

Fig. 134: Identifying Connector(s) Reinstallation
Courtesy of VOLVO CARS CORPORATION

- Ignition off.
- Reinstall the connectors, components etc.
- Ignition on.
- Activate solenoid SLB1 by clicking the VCT2000 symbol.

  Read the current through the circuit for solenoid SLB1. The current should oscillate between 100 and 950 mA.

Fig. 135: Identifying VCT2000 Diagnostic Tool Symbol In VIDA
Courtesy of VOLVO CARS CORPORATION

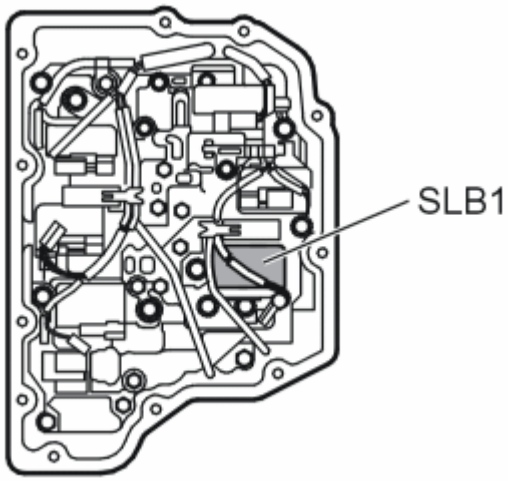

Fig. 136: Identifying Solenoid SLB1
Courtesy of VOLVO CARS CORPORATION

Is the function OK?

- **YES**

  VERIFIED: Troubleshooting has been completed.

- **NO**

  Refer to **INFORMATION**

INFORMATION

FAULT-TRACING INFORMATION

The fault should have been detected and remedied. As this is not the case fault-tracing has failed.

Exit fault-tracing for this diagnostic trouble code (DTC) or make another attempt.

RESETTING ADAPTATION

RESETTING THE ADAPTATION AND THE COUNTER FOR "TRANSMISSION OIL, REPLACE"

HINT: The transmission has torque-regulated, adaptive pressure regulation. The pressure regulator enables the transmission to regulate pressure during each shift to prevent hard shifting. Each shift is assessed by the transmission control module (TCM) and is stored in the internal memory. This makes it possible to compensate for transmission and clutch wear. It is important that the adaptation in the memory is reset so that the transmission works normally after the repair. Because the fluid was changed during the repair, the counter for transmission fluid change must also be reset. If the counter is not reset during draining/replacement, a diagnostic trouble code may be generated under the wrong conditions.

NOTE: This applies only if the transmission or one of the components in the transmission have been replaced.

Fig. 137: Identifying Ignition ON
Courtesy of VOLVO CARS CORPORATION

- Ignition on.

  Click on the VCT2000 symbol to reset the adaptation and counter.

Fig. 138: Identifying VCT2000 Diagnostic Tool Symbol In VIDA
Courtesy of VOLVO CARS CORPORATION

- **Continue**

  Refer to **VERIFICATION**

TCM-P272900: PRESSURE CONTROL SOLENOID E CONTROL CIRCUIT LOW. GENERAL FAILURE INFORMATION. NO SUB TYPE INFORMATION (B6324S5, TF-80SC; B6324S5, TF-80SC AWD; 2011-2012)

DIAGNOSTIC TROUBLE CODE (DTC) INFORMATION TCM-P272900

see **DIAGNOSTIC TROUBLE CODE (DTC) INFORMATION TCM-P272900**

FAULT-TRACING

see **FAULT-TRACING**

TCM-P272900: PRESSURE REGULATING SOLENOID E CONTROL CIRCUIT LOW. GENERAL FAULT INFORMATION. NO INFORMATION ABOUT FAULT TYPE (B8444S, TF-80SC AWD; 2006-2011)

DIAGNOSTIC TROUBLE CODE (DTC) INFORMATION TCM-P272900

Condition

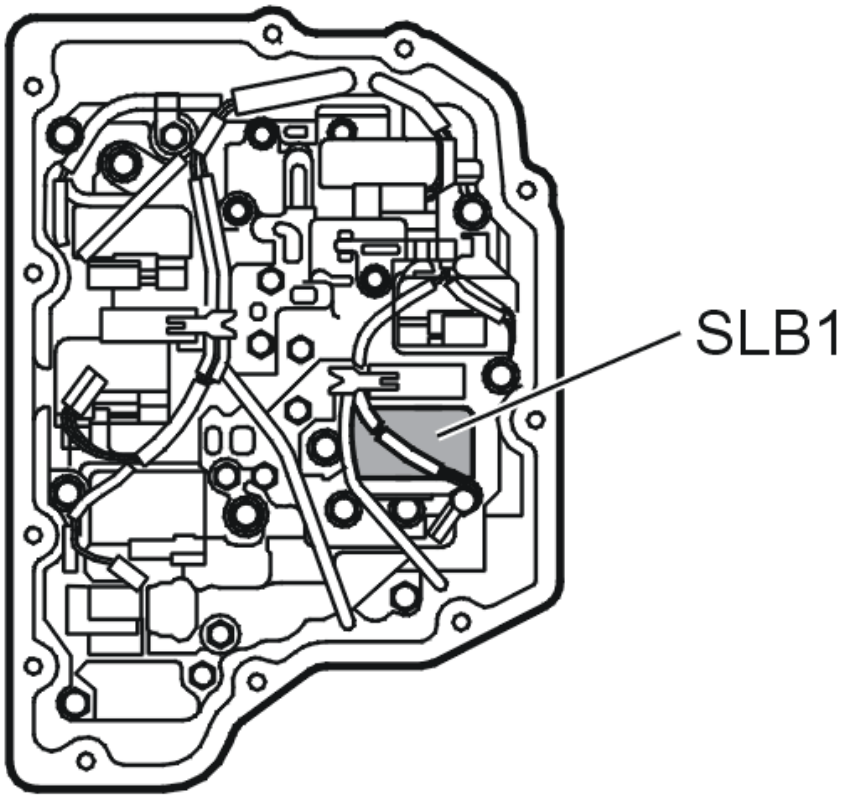

Fig. 139: Identifying Solenoid SLB1
Courtesy of VOLVO CARS CORPORATION

Line pressure solenoid SLB1 controls the line pressure in the transmission. The solenoid is controlled by a power stage located on the output of the transmission control module (TCM). The control module uses the power stage to control the current to the solenoid. Low current gives high line pressure and high current (approximately 1 A) gives a low line pressure. The current strength is affected by the throttle position.

The diagnostic trouble code (DTC) is stored if the transmission control module (TCM) registers an open circuit in the circuit for solenoid SLB1. Solenoid SLB1 cannot control the line pressure.

The diagnostic trouble codes (DTCs) can be diagnosed during shifting when the line pressure solenoid SLB1 is activated.

Substitute Value

- Auxiliary program **Emergency mode 1** in the transmission control module (TCM) has started.

  HINT: EMERGENCY MODE IN CASE OF MALFUNCTION

Possible Source

- Contact resistance in the terminals

- Open circuit in lead for control signal or signal ground.
- Line pressure solenoid SLB1 does not work.
- The transmission control module (TCM) does not function.

Fault symptom[s]

- General warning lamp lit
- Malfunction indicator lamp (MIL) lit.
- No lock-up function.
- Harsh gear changing

FAULT TRACING TCM-P272900

CHECKS

CHECKING THE LOCK-UP SOLENOID SLB1

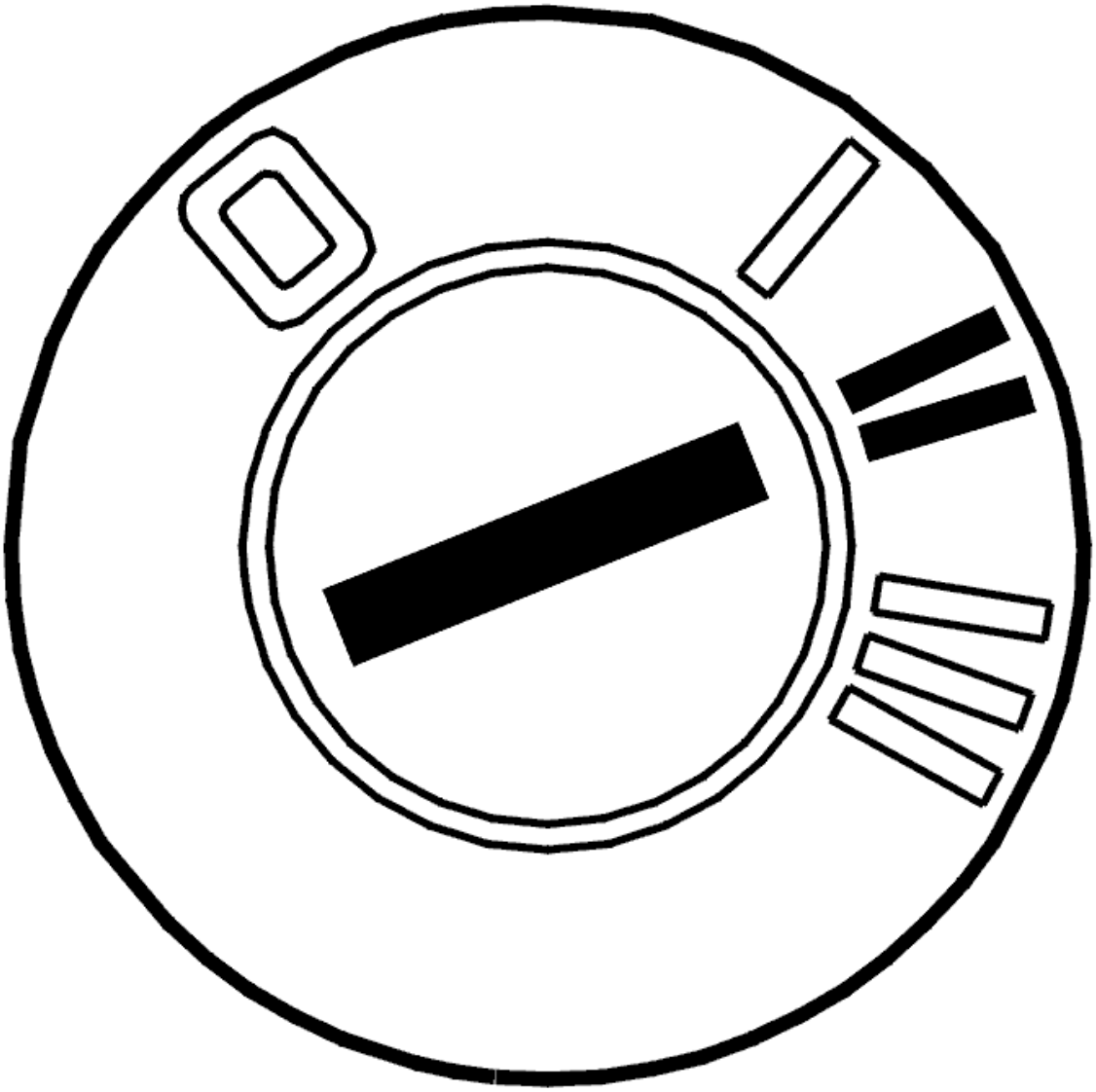

Fig. 140: Identifying Ignition ON
Courtesy of VOLVO CARS CORPORATION

- Ignition on
- Activate solenoid SLB1 by clicking the VCT2000 symbol.

  Read the current though the circuit for solenoid SLB1. The current must oscillate between approximately 100 and 950 mA.

  The fault is permanent if the current does not change.

  If the current oscillates then this would suggest that the fault has previously been present but is no longer active. The fault is intermittent.

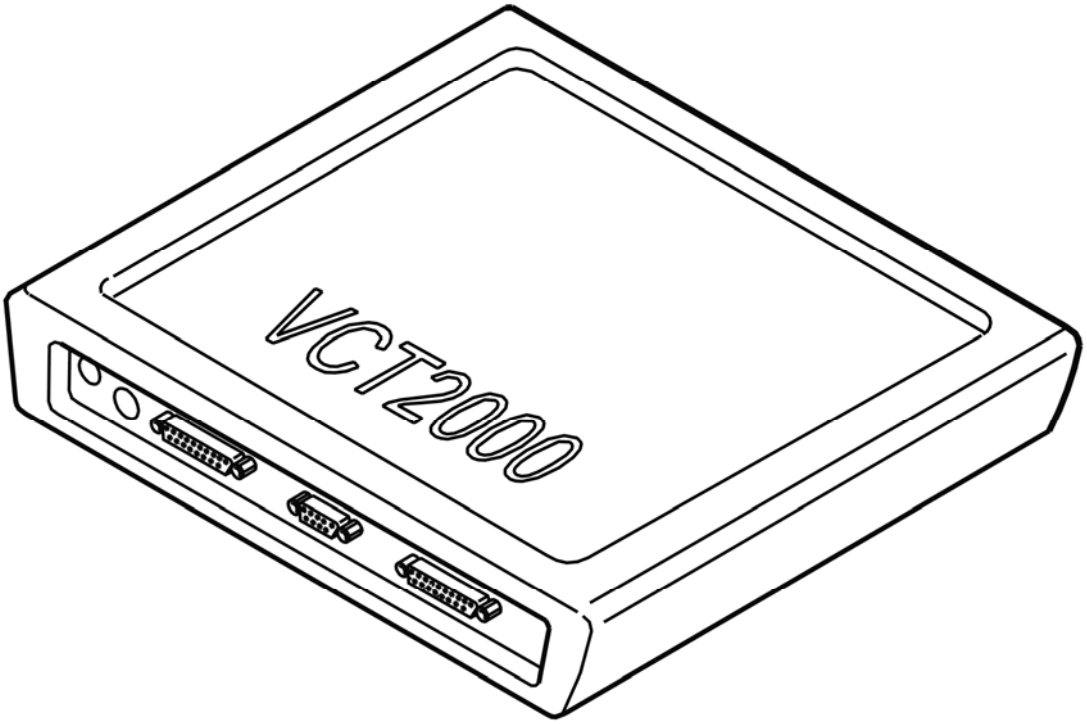

Fig. 141: Identifying VCT2000 Diagnostic Tool Symbol In VIDA
Courtesy of VOLVO CARS CORPORATION

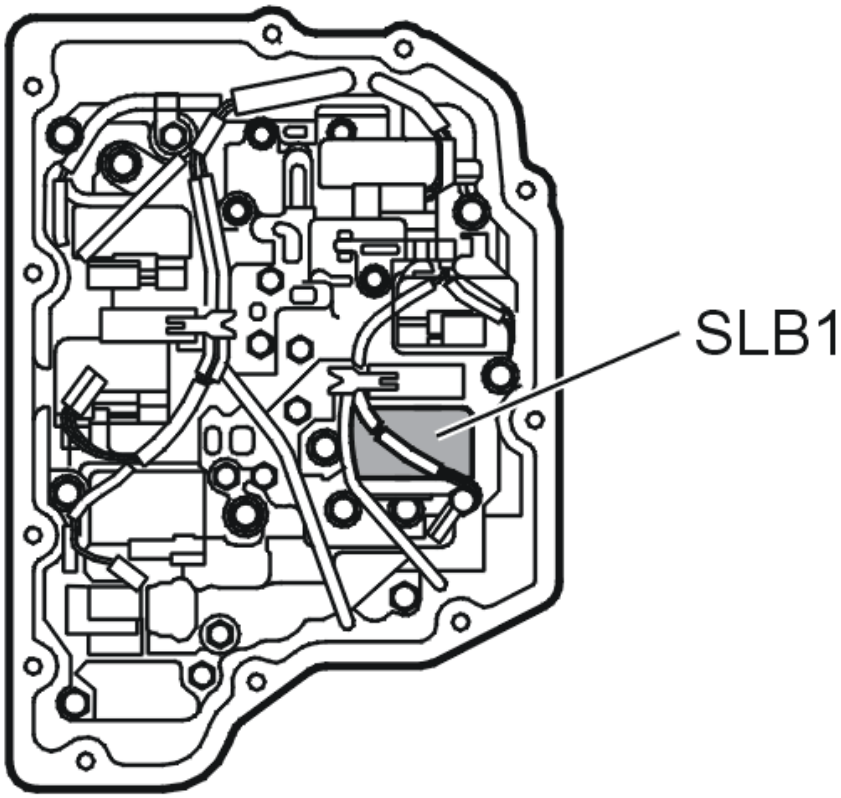

Fig. 142: Identifying Solenoid SLB1
Courtesy of VOLVO CARS CORPORATION

- **Continue**

  Refer to **CHECKING THE COMPONENTS AND WIRING**

CHECKING THE COMPONENTS AND WIRING

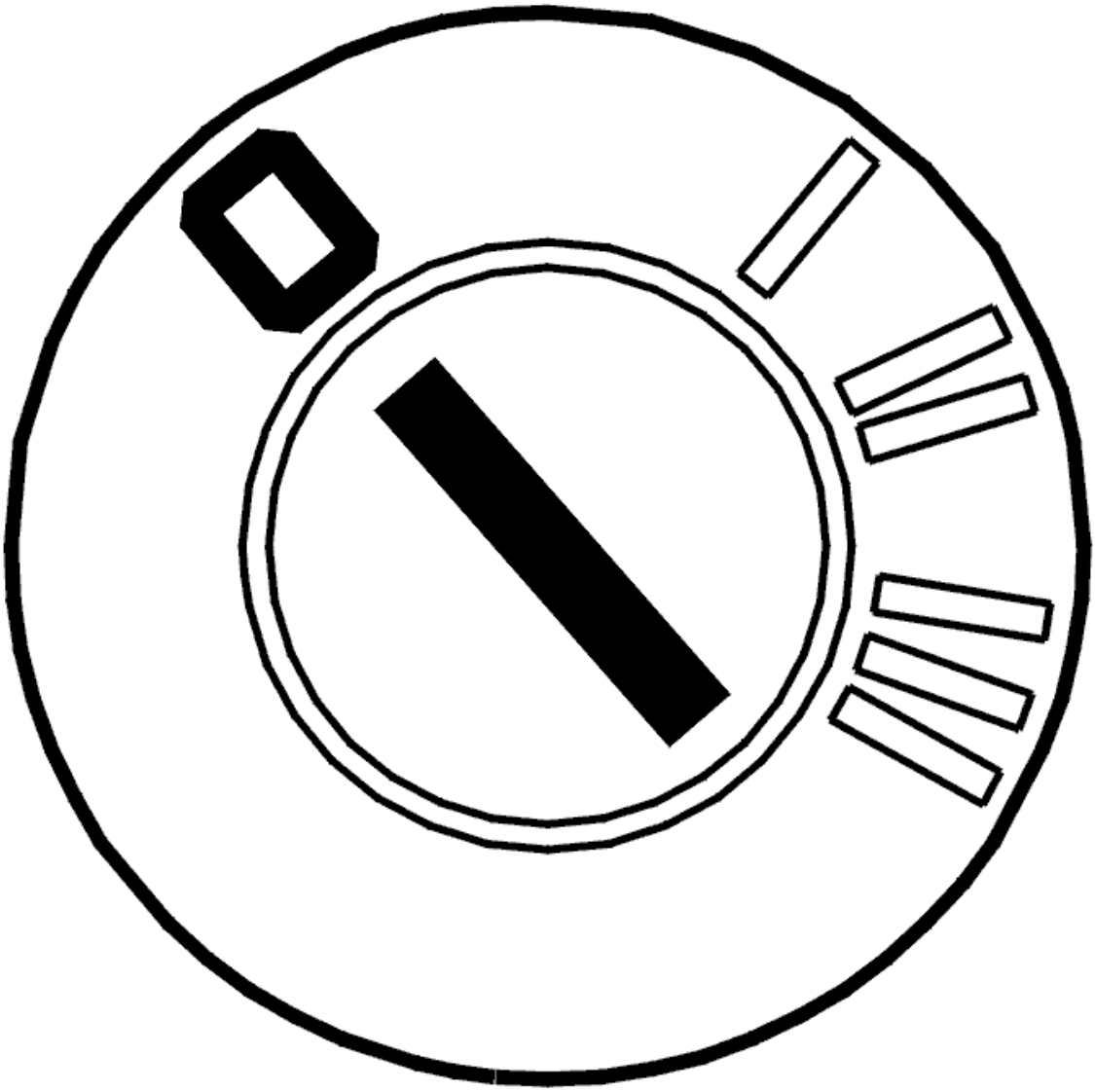

Fig. 143: Identifying Ignition OFF
Courtesy of VOLVO CARS CORPORATION

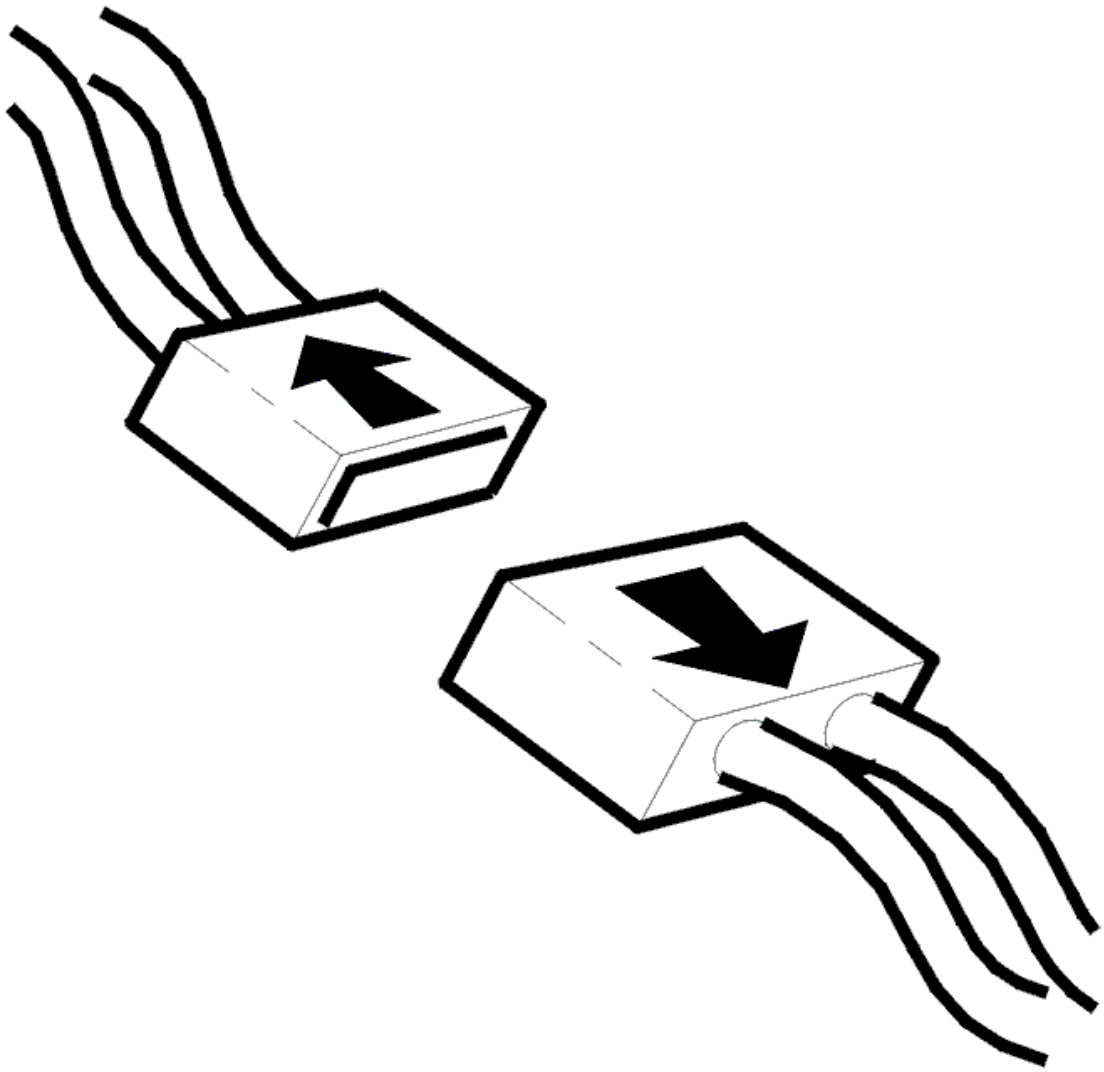

Fig. 144: Identifying Connector(s) Disconnected
Courtesy of VOLVO CARS CORPORATION

- Ignition off
- Open the gearbox control system

  Check connector B (22-pin) for the transmission control module (TCM). Check for damage and pressed in terminal pins. Check for contact resistance and oxidation.

  Check the wiring between the transmission connector #B21 and the connector for solenoid SLB1 #1. Check the wiring between the transmission connector #B16 and the connector for solenoid SLB1 #2. Check for an open circuit. Check for a short-circuit to ground.

  HINT: If no fault is found in the wiring check solenoid SLB1. See CHECKING THE LINE PRESSURE SOLENOID SLT, SLC1, SLC2, SLC3, SLB1 AND LOCK-UP SOLENOID SLU

If no fault is found in the wiring or the component replace the control system.

Remedy as necessary.

Other information

- see **CONNECTING THE BREAKOUT BOX**
- see **SIGNAL DESCRIPTION**
- see **CONTROL SYSTEM, REPLACING**
- see **CABLE HARNESS, CONTROL SYSTEM, GEARBOX, REPLACING**
- To access the transmission control system: **COVER CONTROL SYSTEM, REPLACING (2007-2011)**
- see **CONTENTS**

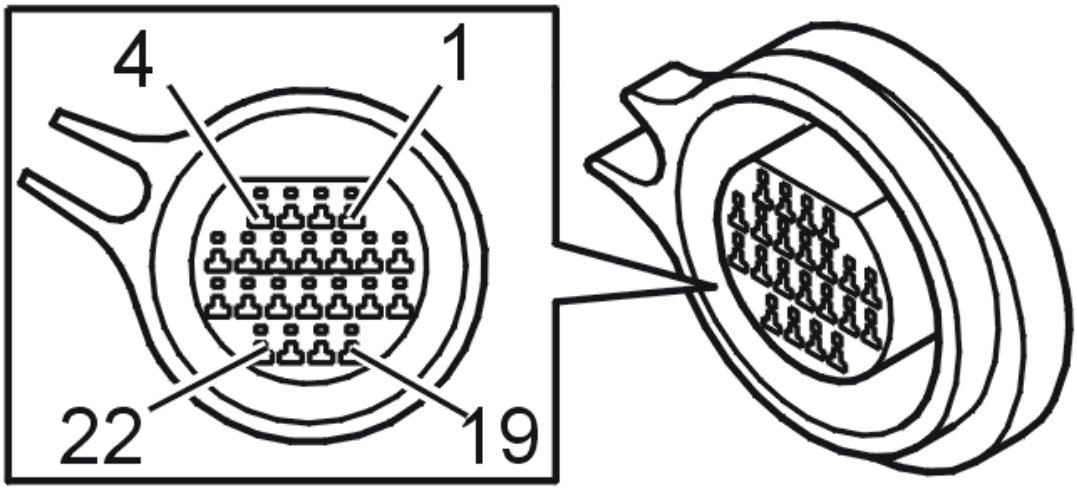

Fig. 145: Identifying Connector B Terminals
Courtesy of VOLVO CARS CORPORATION

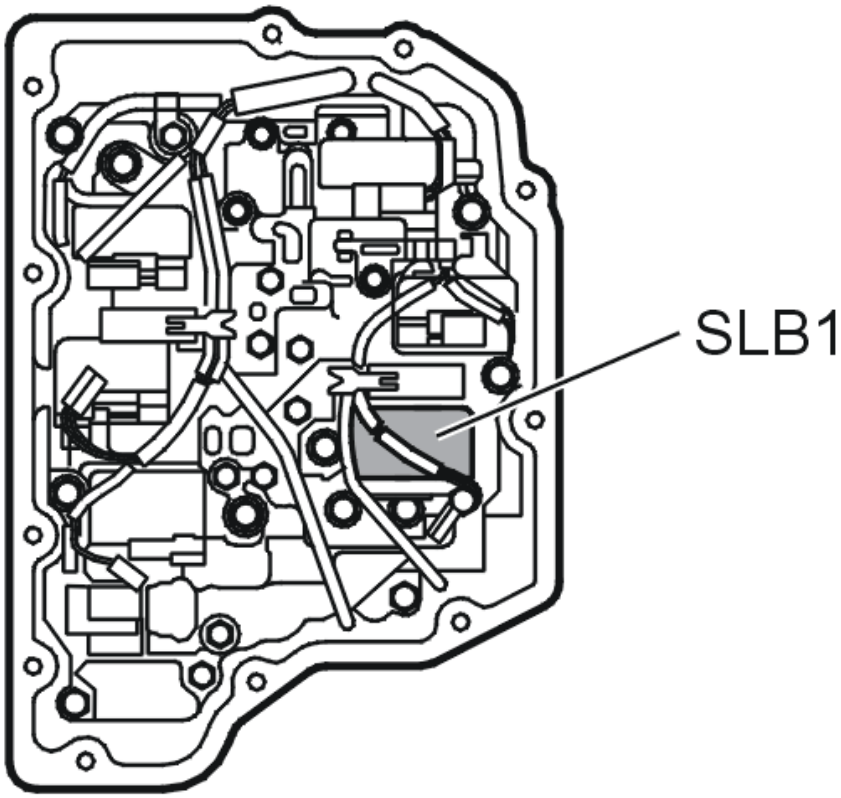

Fig. 146: Identifying Solenoid SLB1
Courtesy of VOLVO CARS CORPORATION

- **Continue**

  Refer to **RESETTING ADAPTATION**

RESETTING ADAPTATION

RESETTING ADAPTATION AND COUNTER FOR "TRANSMISSION OIL, CHANGING"

HINT: The transmission has torque-controlled, adaptive pressure control. The pressure control means that the transmission itself controls the pressure during each shift sequence in order to avoid harsh shifting. Each shift is assessed by the transmission control module (TCM) and is stored in the internal memory, which results in compensation for wear in the transmission and clutch. In order for the transmission to function correctly after repair, it is important to reset the adaptation in the memory. Since the oil is changed during the repair, the counter for "Transmission oil, change" shall also be reset. If the counter is not reset when draining/changing oil, there is a risk that a diagnostic trouble code may be generated under incorrect conditions.

NOTE: **This applies only if the transmission or one of the components in the transmission have been replaced.**

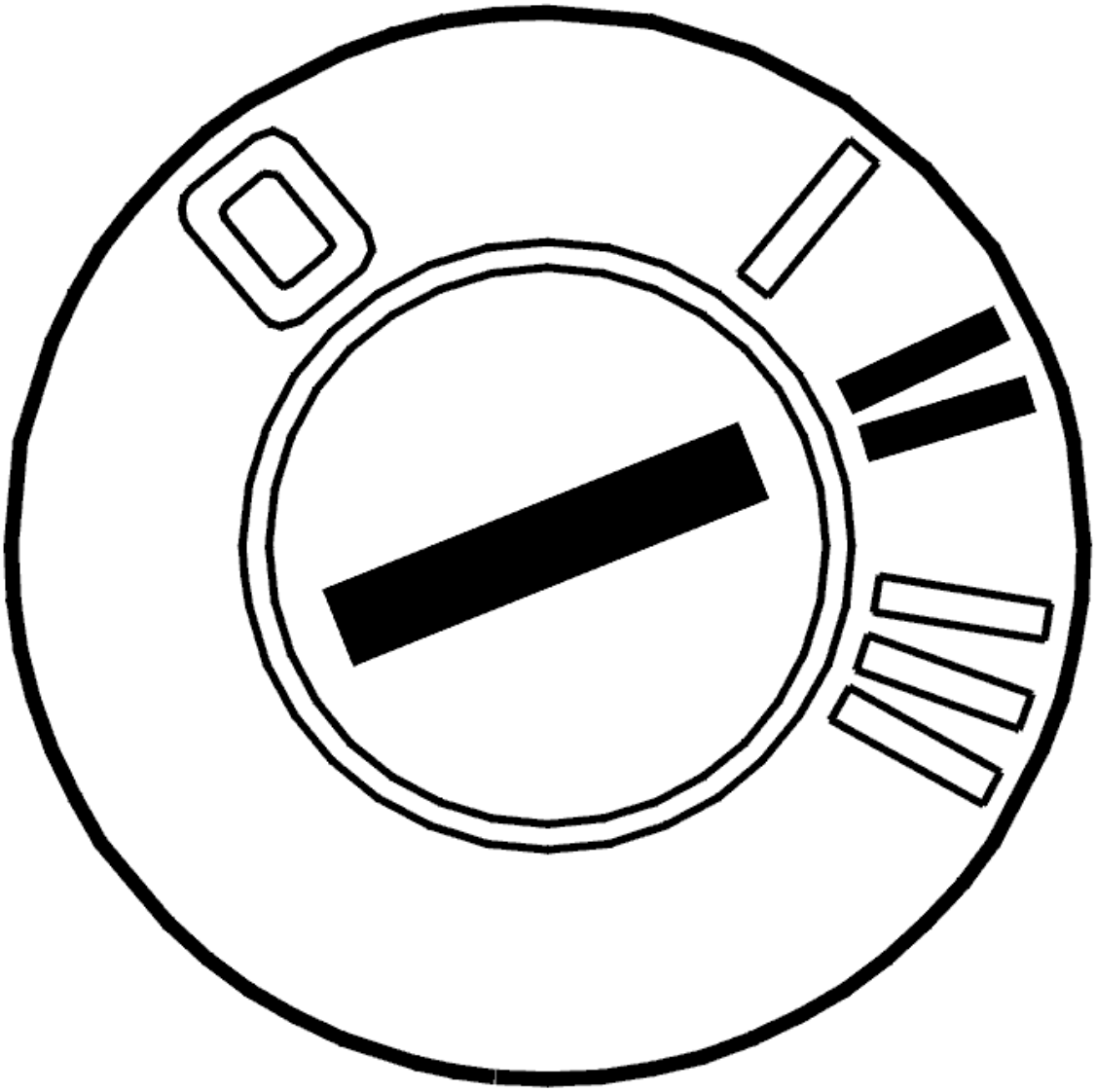

Fig. 147: Identifying Ignition ON
Courtesy of VOLVO CARS CORPORATION

- Ignition on

  Activate reset of the adaptation and the counter by clicking on the symbol for VCT2000.

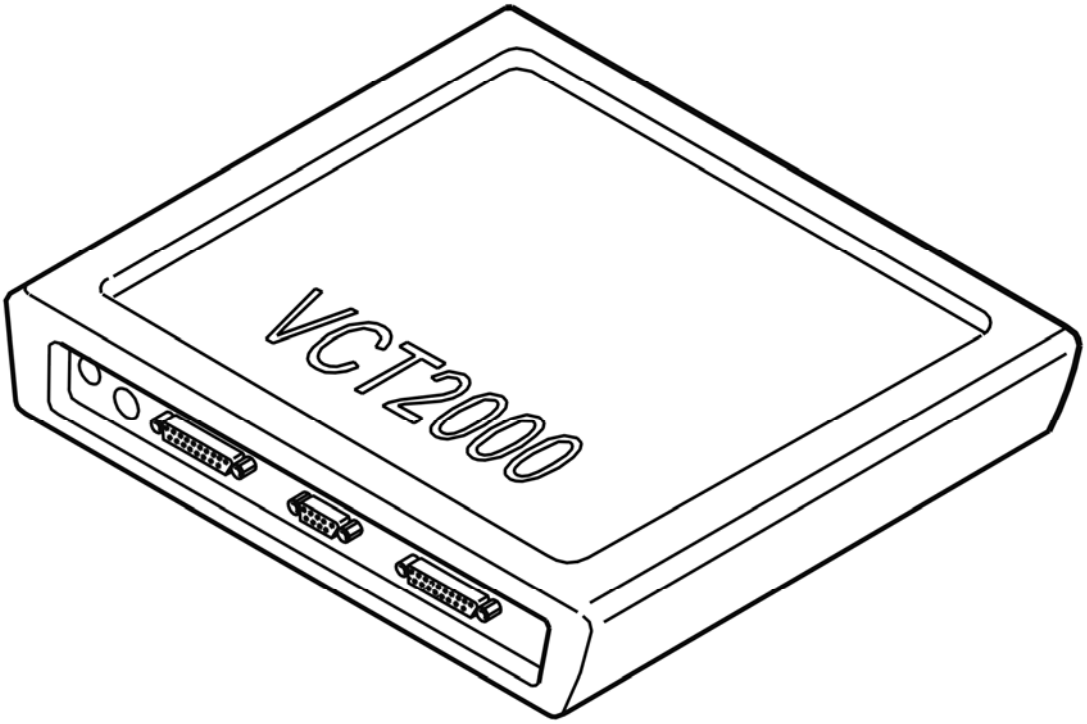

Fig. 148: Identifying VCT2000 Diagnostic Tool Symbol In VIDA
Courtesy of VOLVO CARS CORPORATION

- **Continue**

  Refer to **VERIFICATION**

VERIFICATION

VERIFICATION

HINT: After carrying out the repair, check that the fault has been remedied.

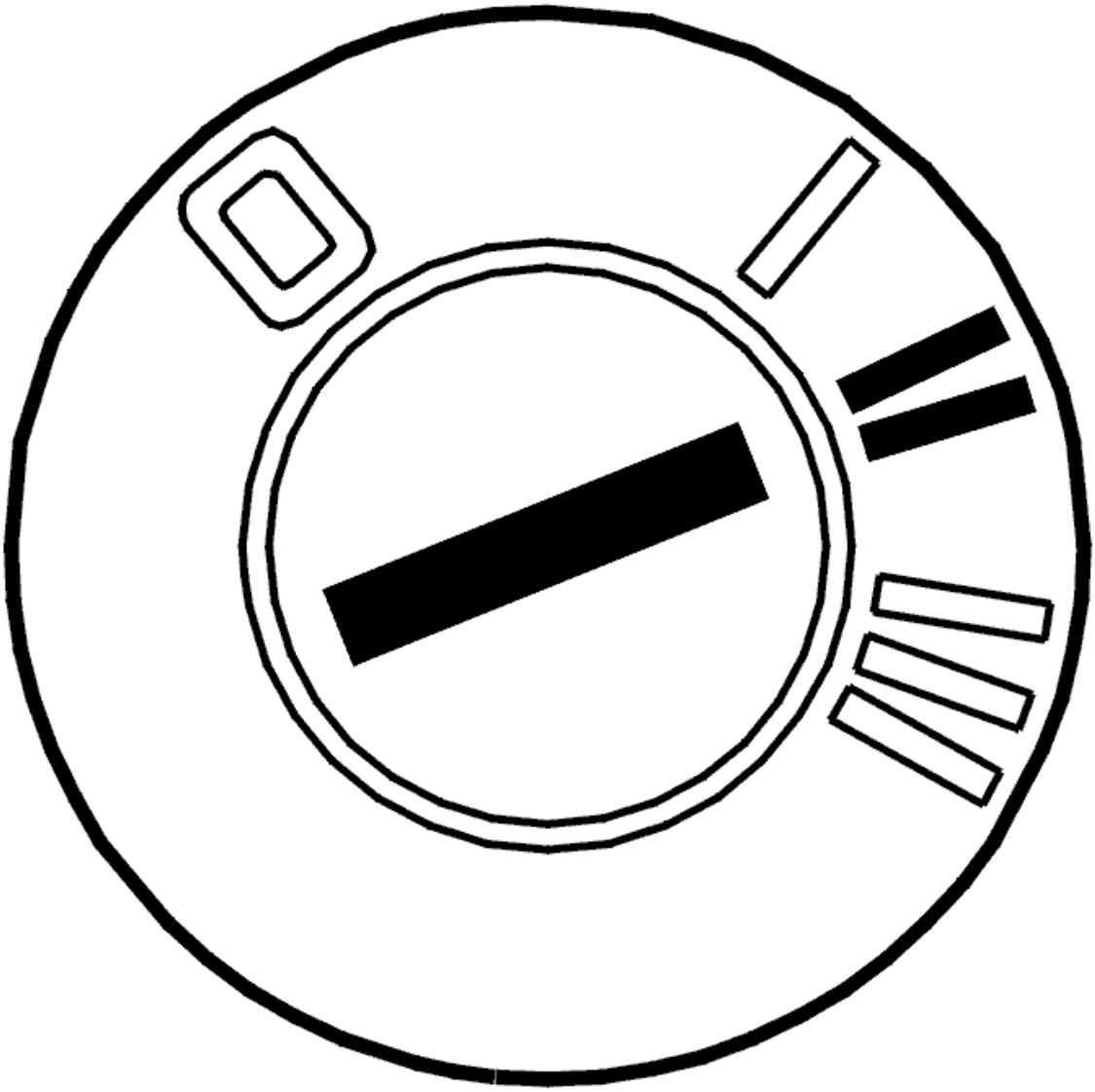

Fig. 149: Identifying Ignition ON
Courtesy of VOLVO CARS CORPORATION

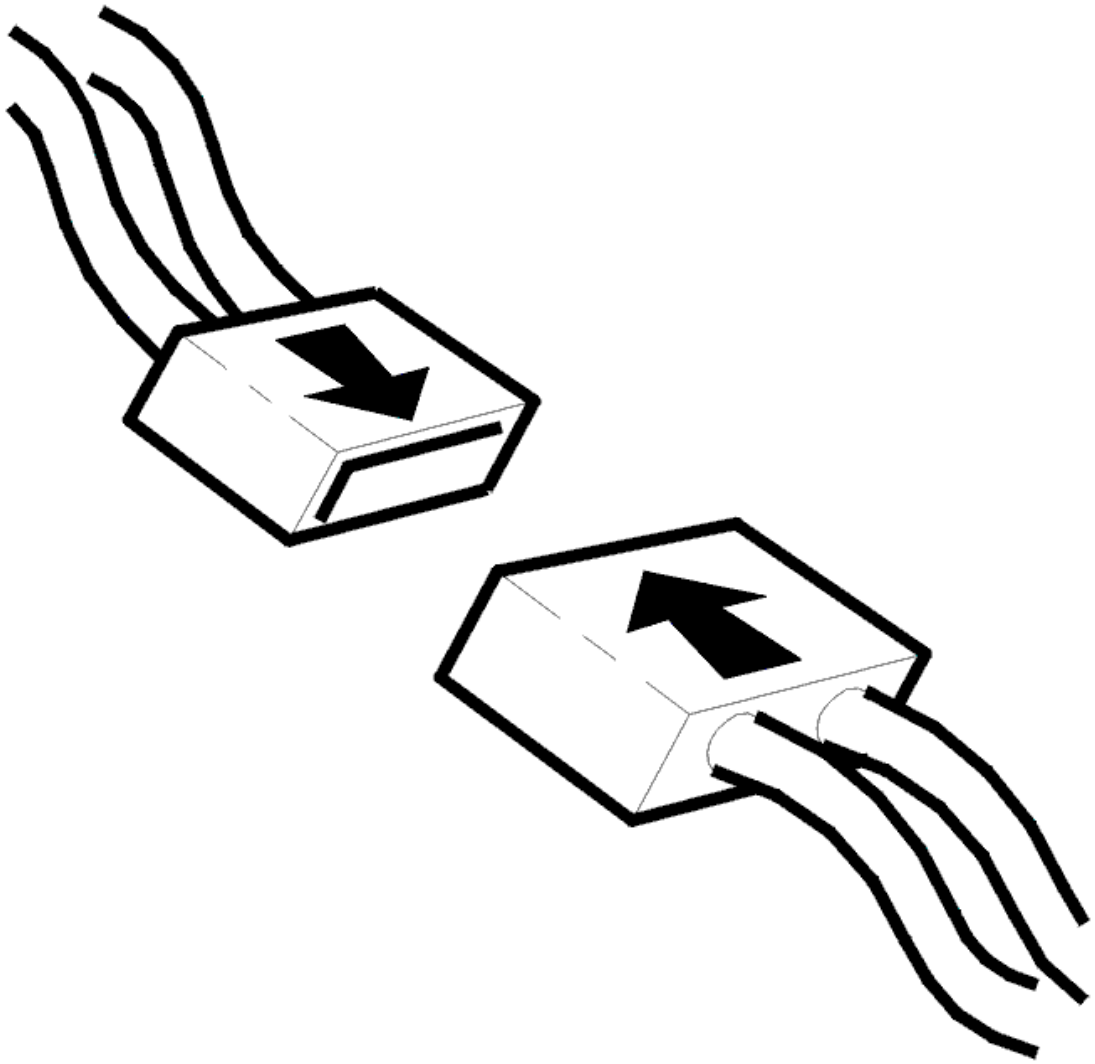

Fig. 150: Identifying Connector(s) Reinstallation
Courtesy of VOLVO CARS CORPORATION

- Ignition off
- Reinstall the components, reconnect the connectors etc.
- Ignition on
- Activate solenoid SLB1 by clicking the symbol for VCT2000.

  Read off the current through the circuit for solenoid SLB1. The current must oscillate between approximately 0 and 1000 mA.

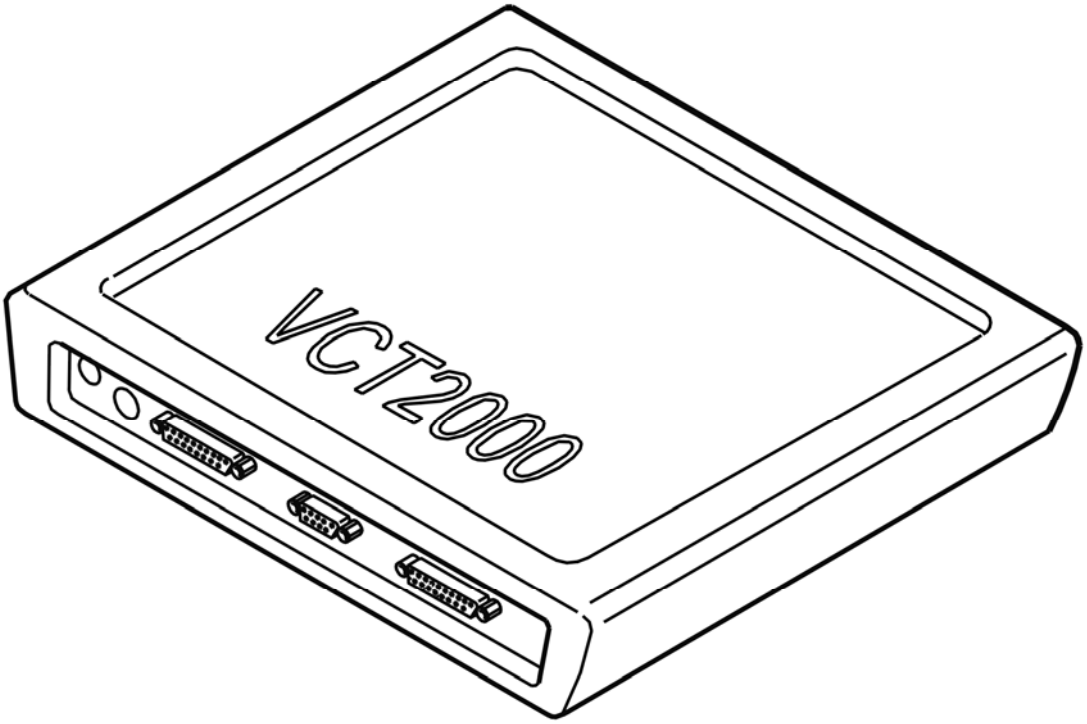

Fig. 151: Identifying VCT2000 Diagnostic Tool Symbol In VIDA
Courtesy of VOLVO CARS CORPORATION

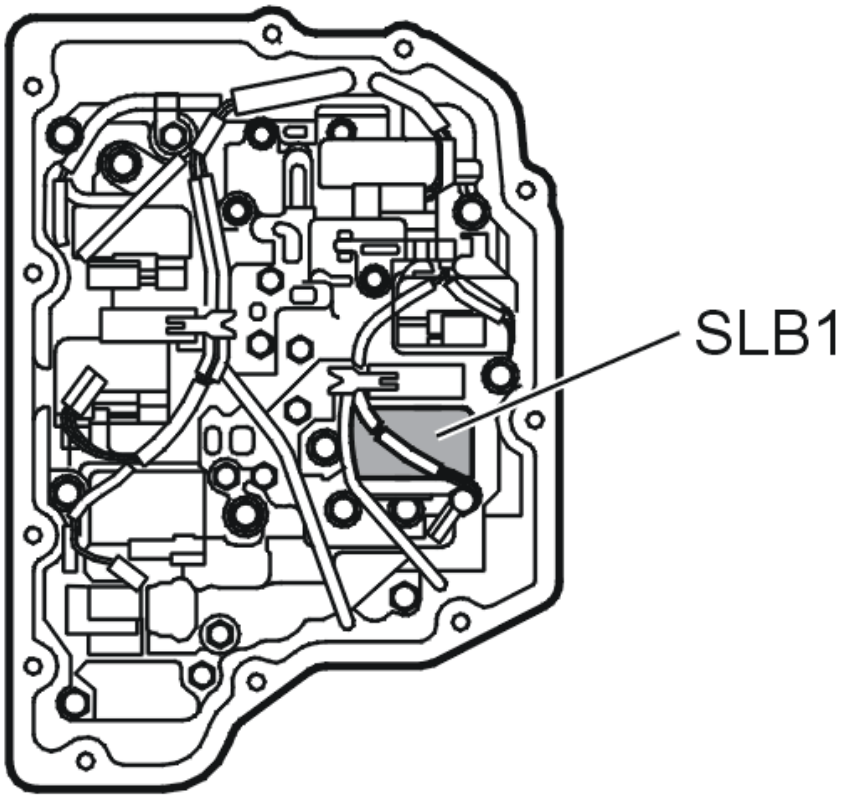

Fig. 152: Identifying Solenoid SLB1
Courtesy of VOLVO CARS CORPORATION

Is the function OK?

- **YES**

  VERIFIED: Troubleshooting has been completed.

- **NO**

  Refer to **INFORMATION**

INFORMATION

FAULT-TRACING INFORMATION

The fault should have been detected and remedied. As this is not the case fault-tracing has failed.

Exit fault-tracing for this diagnostic trouble code (DTC) or make another attempt.

TCM-P272900: PRESSURE REGULATING SOLENOID E CONTROL CIRCUIT LOW. GENERAL FAULT INFORMATION. NO INFORMATION ABOUT FAULT

TYPE (TF-80SC AWD; 2005)

DIAGNOSTIC TROUBLE CODE (DTC) INFORMATION TCM-P272900

see **DIAGNOSTIC TROUBLE CODE (DTC) INFORMATION TCM-P272900**

FAULT TRACING TCM-P272900

see **FAULT TRACING TCM-P272900**

TCM-P273000: PRESSURE CONTROL SOLENOID E CONTROL CIRCUIT HIGH. GENERAL FAILURE INFORMATION. NO SUB TYPE INFORMATION (B6324S, TF-80SC; B6324S, TF-80SC AWD; 2007-2010)

DIAGNOSTIC TROUBLE CODE (DTC) INFORMATION TCM-P273000

Condition

The solenoids are controlled by power stages in the transmission control module (TCM). The transmission control module (TCM) opens the power stages to activate the solenoids and sends a voltage through the circuit.

The diagnostic trouble code (DTC) is stored if the control module detects that:

- The measured current value is higher than permitted in the circuit for solenoid SLB1.

The control module's test for the diagnostic trouble code (DTC) starts in the event of:

- Ignition on.

NOTE: **The control module can only detect the fault once the test has been started and the diagnostic trouble code (DTC) is stored when the conditions are met.**

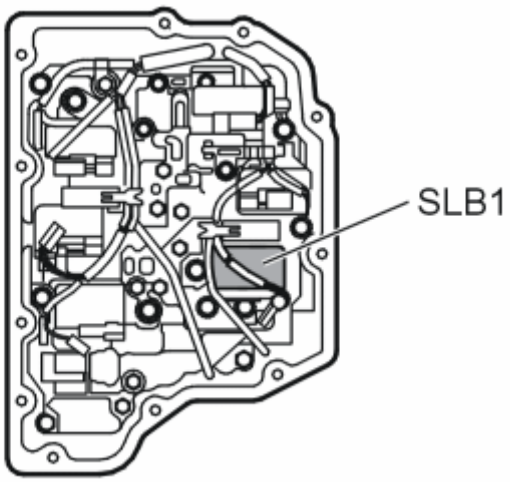

Fig. 153: Identifying Solenoid SLB1
Courtesy of VOLVO CARS CORPORATION

Substitute Value

- Auxiliary program **Emergency mode 1** in the transmission control module (TCM) has started.

  HINT: EMERGENCY MODE IN THE EVENT OF A FAULT

Possible Source

- Control signal lead short-circuited to voltage.
- Line pressure solenoid SLB1 does not work.
- Internal fault in the transmission control module (TCM).

Fault symptom[s]

- General warning lamp lit
- Malfunction indicator light (MIL), on
- Abnormal slipping gearshifts
- Rough gear shift
- No gear shift

FAULT-TRACING

CHECKS

CHECK LINE PRESSURE SOLENOID SLB1

Fig. 154: Identifying Ignition ON
Courtesy of VOLVO CARS CORPORATION

- Ignition on.
- Activate solenoid SLB1 by clicking the VCT2000 symbol.

  Read the current through the circuit for solenoid SLB1. The current should oscillate between 100 and 950 mA.

  The fault is permanent if the current does not change.

If the current changes, this is an indication that the fault was present previously but is not active at the moment, i. e. an intermittent fault.

Fig. 155: Identifying VCT2000 Diagnostic Tool Symbol In VIDA
Courtesy of VOLVO CARS CORPORATION

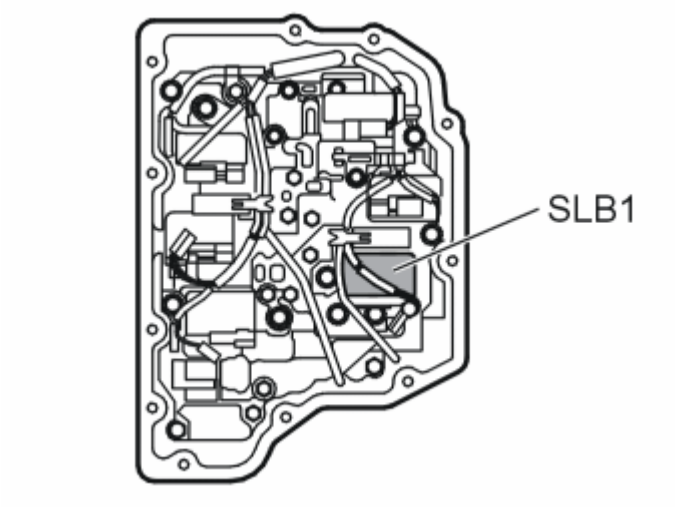

Fig. 156: Identifying Solenoid SLB1
Courtesy of VOLVO CARS CORPORATION

- **Continue**

  Refer to **CHECKING THE COMPONENTS AND WIRING**

CHECKING THE COMPONENTS AND WIRING

Fig. 157: Identifying Ignition OFF
Courtesy of VOLVO CARS CORPORATION

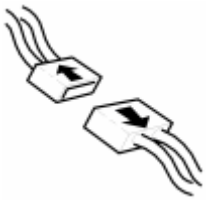

Fig. 158: Identifying Connectors Disconnected
Courtesy of VOLVO CARS CORPORATION

- Ignition off.
- Open the transmission control system.

  Check the cables for short circuit to voltage.

  Take readings between:

  - Transmission connector #B21 and the connector for solenoid SLB1 #1.
  - Transmission connector #B16 and the connector for solenoid SLB1 #2.

  Also check the cables for a short-circuit to each other.

  HINT: If no fault is found in the wiring, check solenoid SLB1. See CHECKING INTERNAL COMPONENTS OF THE TRANSMISSION

  If no fault is found in the wiring or the component replace the control system.

  Remedy as necessary.

  Other information

  - see **CONNECTING THE BREAKOUT BOX**
  - see **SIGNAL SPECIFICATION**
  - see **VALVE HOUSING**
  - see **TRANSMISSION CONTROL UNIT WIRING HARNESS**
  - To access the transmission control system:**COVER CONTROL SYSTEM, REPLACING (2007-2011)**
  - see **CHECKING WIRING AND TERMINALS**

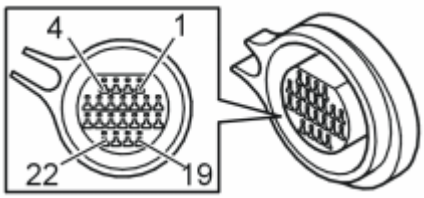

Fig. 159: Identifying Connector B Terminals
Courtesy of VOLVO CARS CORPORATION

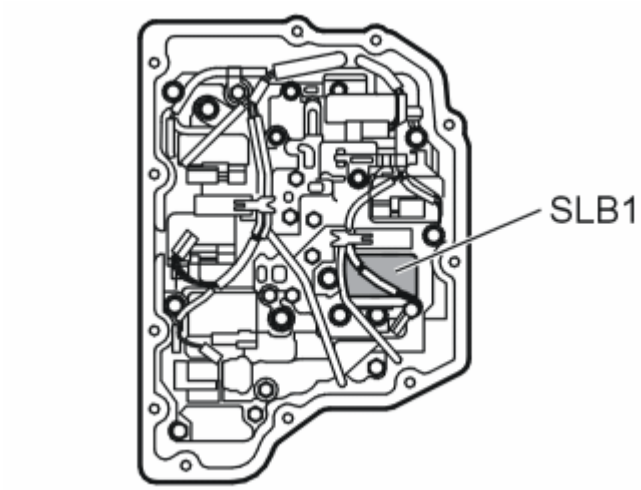

Fig. 160: Identifying Solenoid SLB1
Courtesy of VOLVO CARS CORPORATION

- **Continue**

  Refer to **RESETTING ADAPTATION**

VERIFICATION

VERIFICATION

HINT: After carrying out the repair, check that the fault has been remedied.

Fig. 161: Identifying Ignition ON
Courtesy of VOLVO CARS CORPORATION

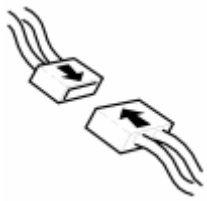

Fig. 162: Identifying Connector(s) Reinstallation
Courtesy of VOLVO CARS CORPORATION

- Ignition off.
- Reinstall the connectors, components etc.

- Ignition on.
- Activate solenoid SLB1 by clicking the VCT2000 symbol.

  Read the current through the circuit for solenoid SLB1. The current should oscillate between 100 and 950 mA.

Fig. 163: Identifying VCT2000 Diagnostic Tool Symbol In VIDA
Courtesy of VOLVO CARS CORPORATION

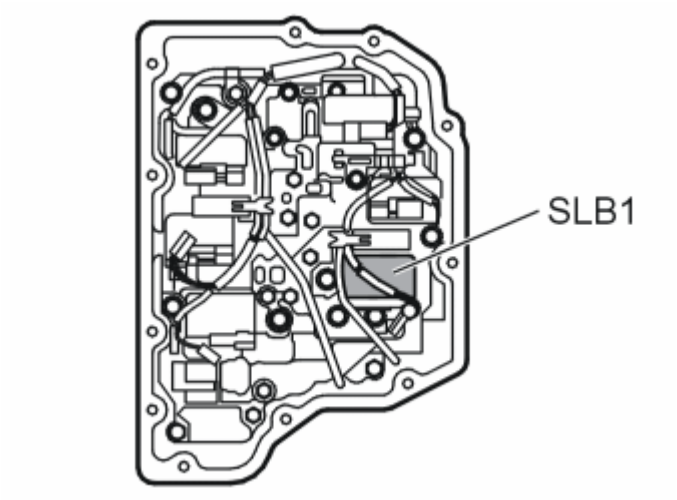

Fig. 164: Identifying Solenoid SLB1
Courtesy of VOLVO CARS CORPORATION

Is the function OK?

- **YES**

  VERIFIED: Troubleshooting has been completed.

- **NO**

  Refer to **INFORMATION**

INFORMATION

FAULT-TRACING INFORMATION

The fault should have been detected and remedied. As this is not the case fault-tracing has failed.

Exit fault-tracing for this diagnostic trouble code (DTC) or make another attempt.

RESETTING ADAPTATION

RESETTING THE ADAPTATION AND THE COUNTER FOR "TRANSMISSION OIL, REPLACE"

HINT: The transmission has torque-regulated, adaptive pressure regulation. The pressure regulator enables the transmission to regulate pressure during each shift to prevent hard shifting. Each shift is assessed by the transmission control module (TCM) and is stored in the internal memory. This makes it possible to compensate for transmission and clutch wear. It is important that the adaptation in the memory is reset so that the transmission works normally after the repair. Because the fluid was changed during the repair, the counter for transmission fluid change must also be reset. If the counter is not reset during draining/replacement, a diagnostic trouble code may be generated under the wrong conditions.

NOTE: This applies only if the transmission or one of the components in the transmission have been replaced.

Fig. 165: Identifying Ignition ON
Courtesy of VOLVO CARS CORPORATION

- Ignition on.

  Click on the VCT2000 symbol to reset the adaptation and counter.

  Fig. 166: Identifying VCT2000 Diagnostic Tool Symbol In VIDA
  Courtesy of VOLVO CARS CORPORATION

- **Continue**

  Refer to **VERIFICATION**

TCM-P273000: PRESSURE CONTROL SOLENOID E CONTROL CIRCUIT HIGH. GENERAL FAILURE INFORMATION. NO SUB TYPE INFORMATION (B6324S5, TF-80SC; B6324S5, TF-80SC AWD; 2011-2012)

DIAGNOSTIC TROUBLE CODE (DTC) INFORMATION TCM-P273000

see **DIAGNOSTIC TROUBLE CODE (DTC) INFORMATION TCM-P273000**

FAULT-TRACING

see **FAULT-TRACING**

TCM-P273000: PRESSURE REGULATING SOLENOID E CONTROL CIRCUIT HIGH. GENERAL FAULT INFORMATION. NO INFORMATION ABOUT FAULT TYPE (B8444S, TF-80SC AWD; 2006-2011)

DIAGNOSTIC TROUBLE CODE (DTC) INFORMATION TCM-P273000

Condition

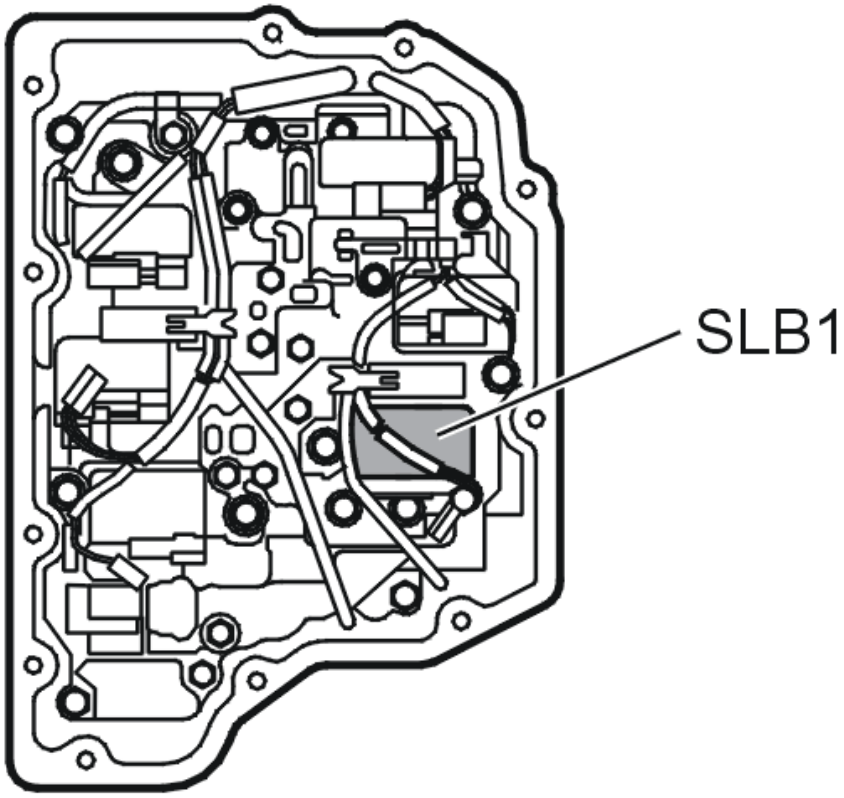

Fig. 167: Identifying Solenoid SLB1
Courtesy of VOLVO CARS CORPORATION

The solenoids are controlled using the power stage in the transmission control module (TCM). The transmission control module (TCM) opens the power stage when the solenoids are to be activated so that the circuit receives a voltage.

If the transmission control module (TCM) registers that the measured current is higher than the circuit for the SLB1 solenoid allows, the diagnostic trouble code (DTC) is generated.

The diagnostic trouble code can be diagnosed when the ignition is on.

Substitute Value

- Auxiliary program **Emergency mode 1** in the transmission control module (TCM) has started.

  HINT: EMERGENCY MODE IN CASE OF MALFUNCTION

Possible Source

- Control signal lead short-circuited to voltage.
- Line pressure solenoid does not work.
- Internal fault in transmission control module (TCM).

Fault symptom[s]

- General warning lamp lit
- Malfunction indicator lamp (MIL) lit.
- Abnormally slipping gears.
- Harsh gear changing
- No gear changing.

FAULT TRACING TCM-P273000

CHECKS

CHECKING THE LOCK-UP SOLENOID SLB1

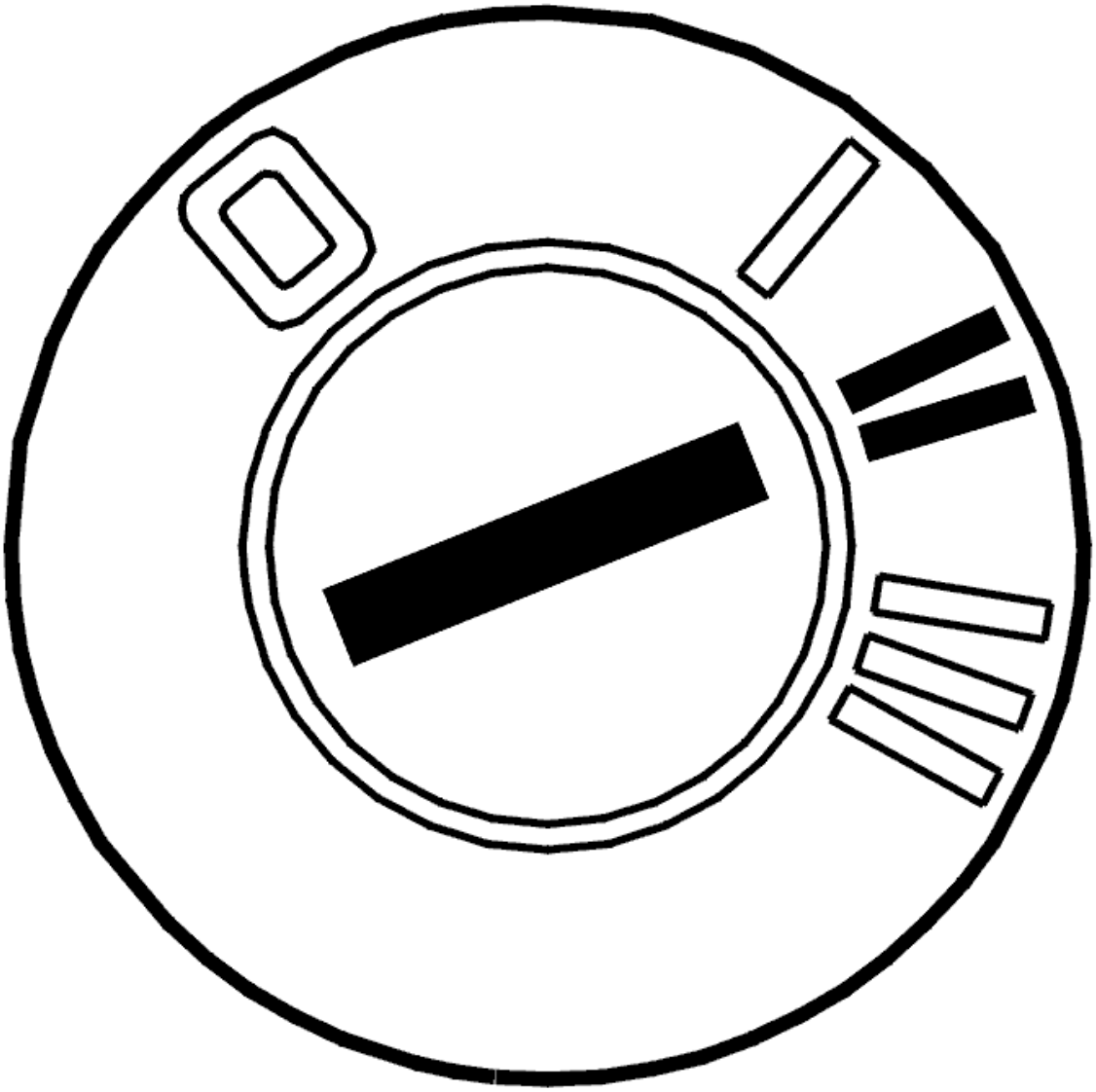

Fig. 168: Identifying Ignition ON
Courtesy of VOLVO CARS CORPORATION

- Ignition on
- Activate solenoid SLB1 by clicking the VCT2000 symbol.

  Read the current though the circuit for solenoid SLB1. The current must oscillate between approximately 100 and 950 mA.

  The fault is permanent if the current does not change.

  If the current oscillates then this would suggest that the fault has previously been present but is no longer active. The fault is intermittent.

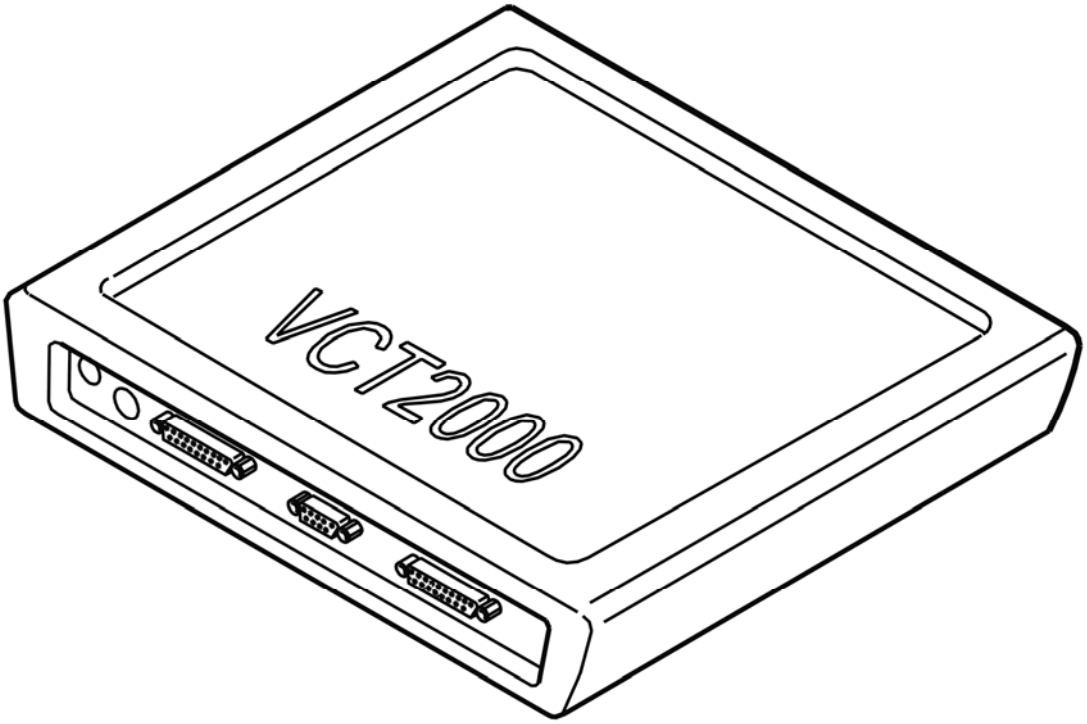

Fig. 169: Identifying VCT2000 Diagnostic Tool Symbol In VIDA
Courtesy of VOLVO CARS CORPORATION

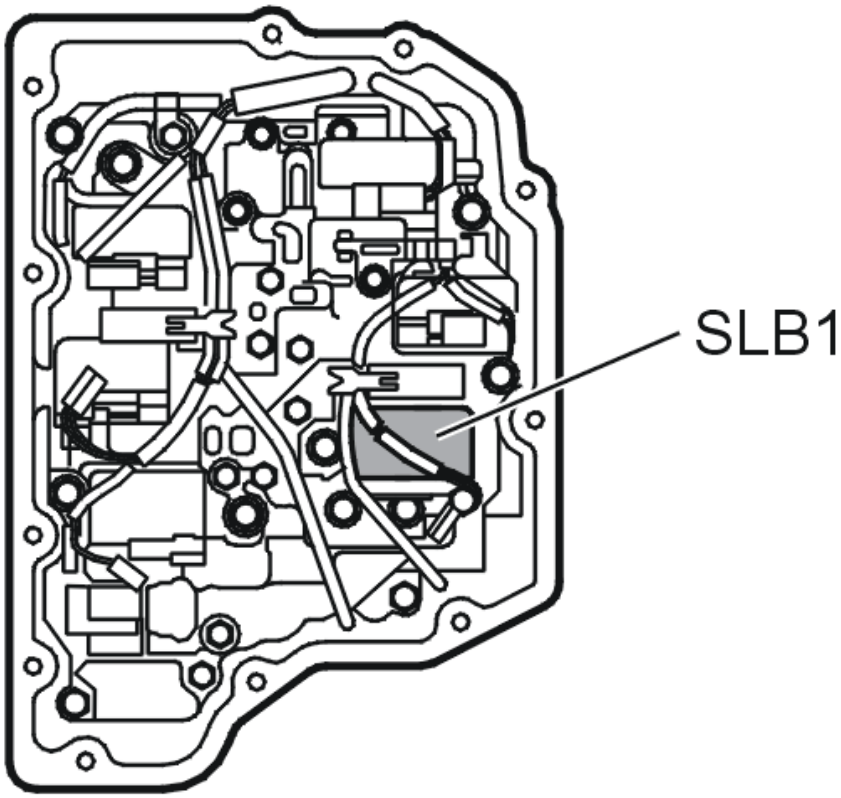

Fig. 170: Identifying Solenoid SLB1
Courtesy of VOLVO CARS CORPORATION

- **Continue**

  Refer to **CHECKING THE COMPONENTS AND WIRING**

CHECKING THE COMPONENTS AND WIRING

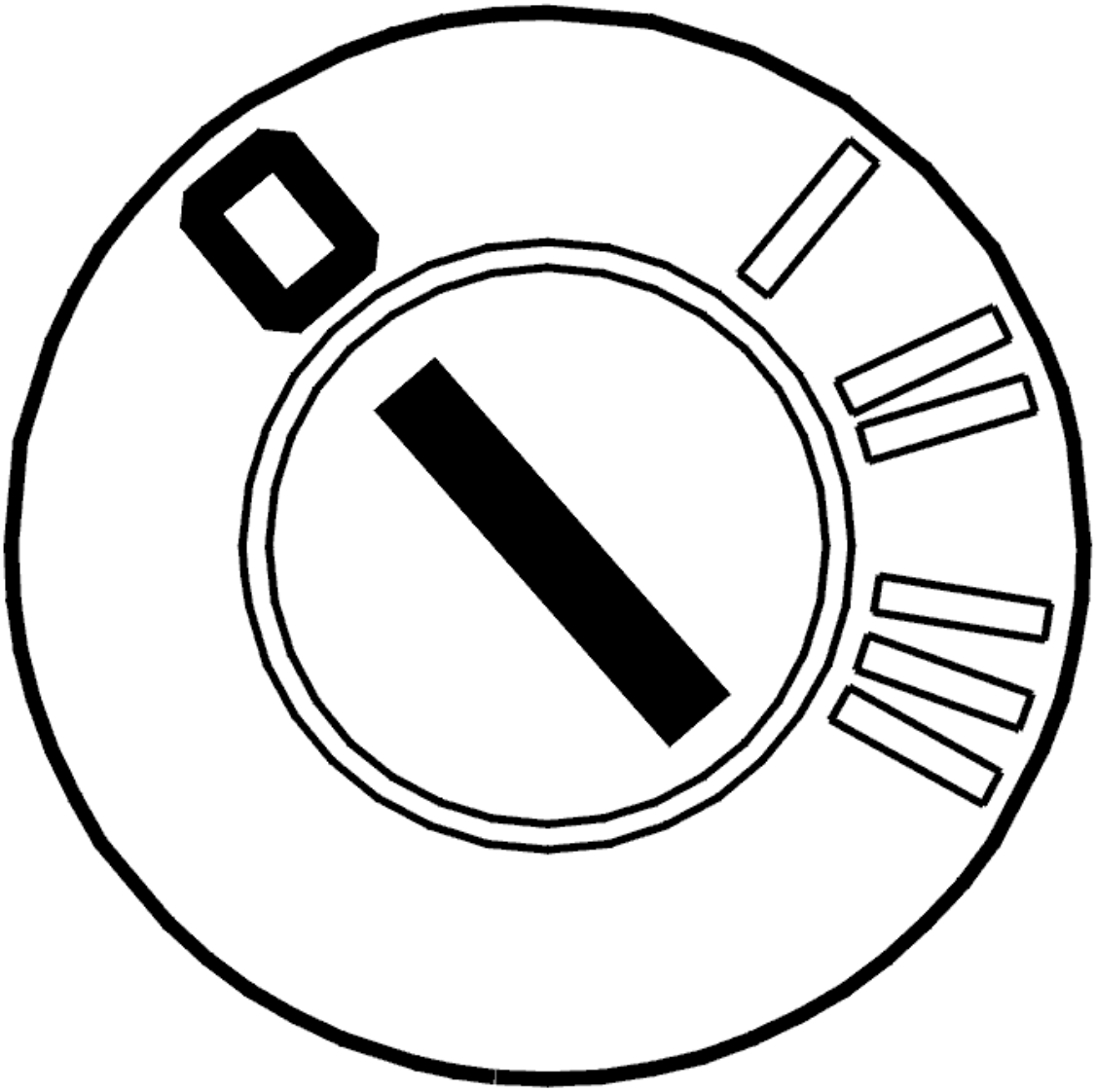

Fig. 171: Identifying Ignition OFF
Courtesy of VOLVO CARS CORPORATION

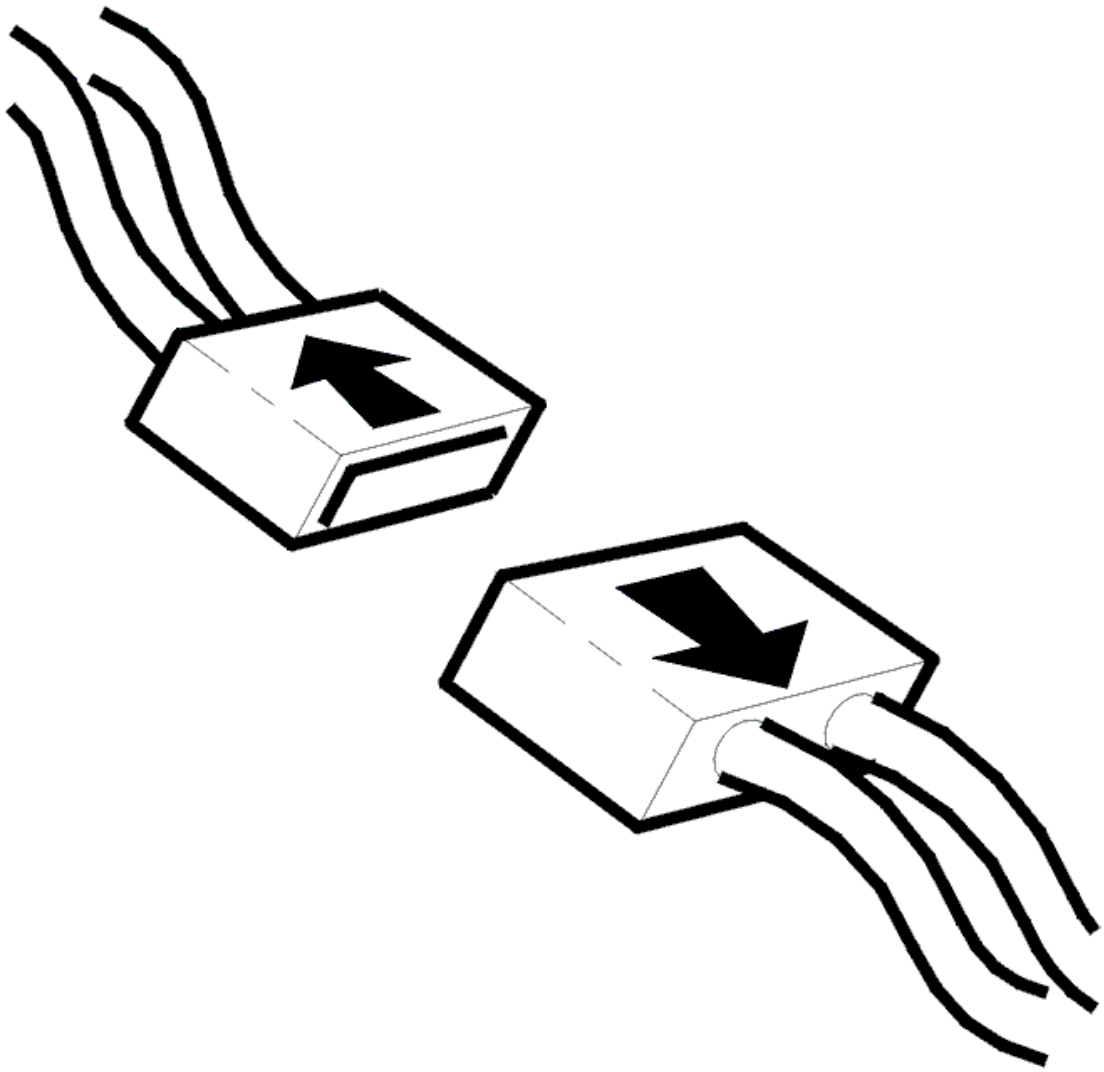

Fig. 172: Identifying Connector(s) Disconnected
Courtesy of VOLVO CARS CORPORATION

- Ignition off
- Open the gearbox control system

  Check the wiring between transmission connector terminal #B21 and solenoid SLB1 connector terminal #1. Check the wiring between transmission connector terminal #B16 and solenoid SLB1 connector terminal #2. Check for a short-circuit to supply voltage. Check the wiring for short-circuits to each other.

  HINT: If no fault is found in the wiring check solenoid SLB1. See CHECKING THE LINE PRESSURE SOLENOID SLT, SLC1, SLC2, SLC3, SLB1 AND LOCK-UP SOLENOID SLU

  If no fault is found in the wiring or the component replace the control system.

  Remedy as necessary.

Other information

- see **CONNECTING THE BREAKOUT BOX**
- see **SIGNAL DESCRIPTION**
- see **CONTROL SYSTEM, REPLACING**
- see **CABLE HARNESS, CONTROL SYSTEM, GEARBOX, REPLACING**
- To access the transmission control system: **COVER CONTROL SYSTEM, REPLACING (2007-2011)**
- see **CONTENTS**

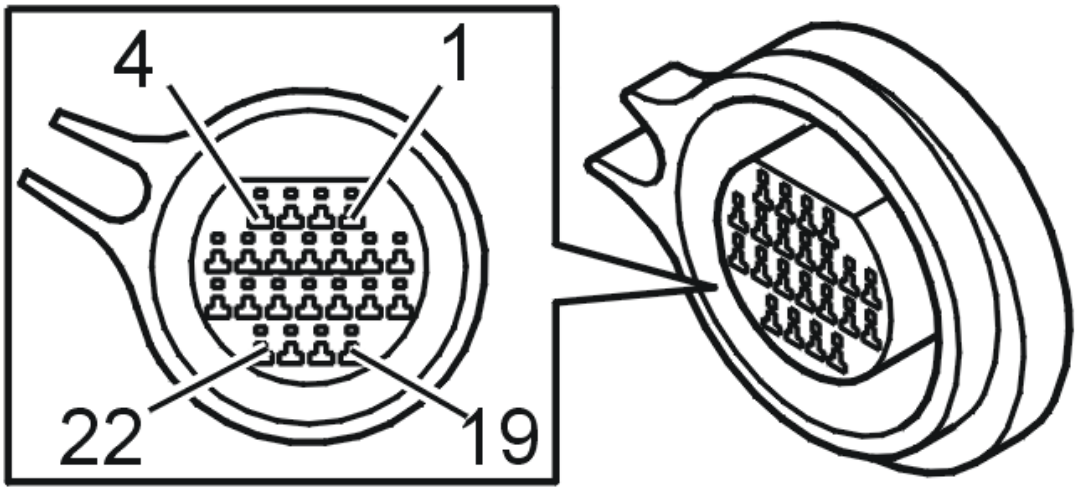

Fig. 173: Identifying Connector B Terminals
Courtesy of VOLVO CARS CORPORATION

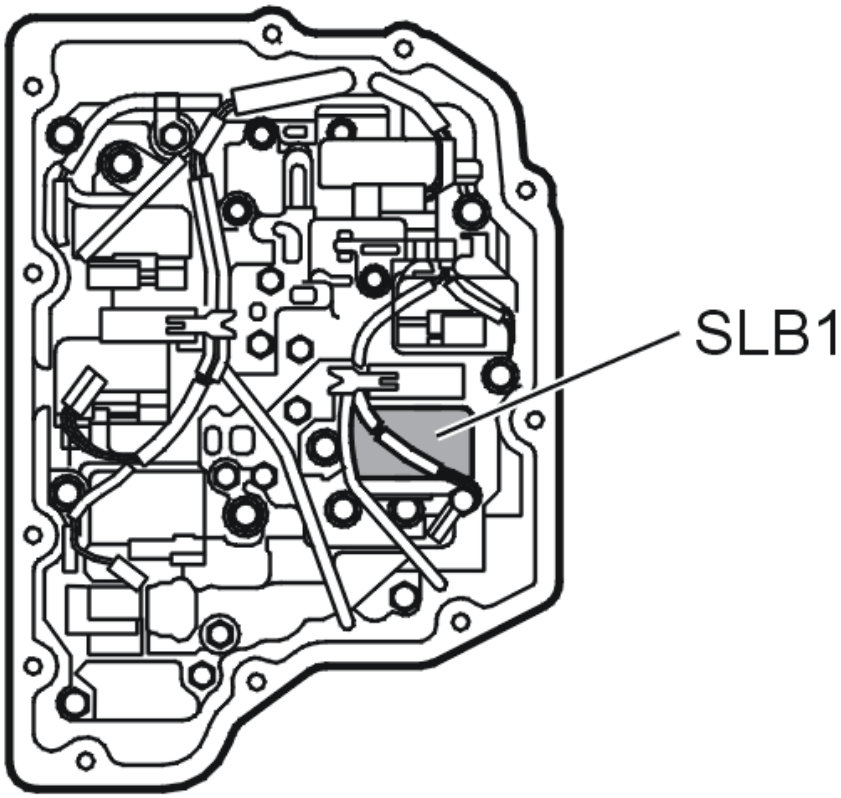

Fig. 174: Identifying Solenoid SLB1
Courtesy of VOLVO CARS CORPORATION

- **Continue**

  Refer to **RESETTING ADAPTATION**

RESETTING ADAPTATION

RESETTING ADAPTATION AND COUNTER FOR "TRANSMISSION OIL, CHANGING"

HINT: The transmission has torque-controlled, adaptive pressure control. The pressure control means that the transmission itself controls the pressure during each shift sequence in order to avoid harsh shifting. Each shift is assessed by the transmission control module (TCM) and is stored in the internal memory, which results in compensation for wear in the transmission and clutch. In order for the transmission to function correctly after repair, it is important to reset the adaptation in the memory. Since the oil is changed during the repair, the counter for "Transmission oil, change" shall also be reset. If the counter is not reset when draining/changing oil, there is a risk that a diagnostic trouble code may be generated under incorrect conditions.

NOTE: **This applies only if the transmission or one of the components in the transmission have been replaced.**

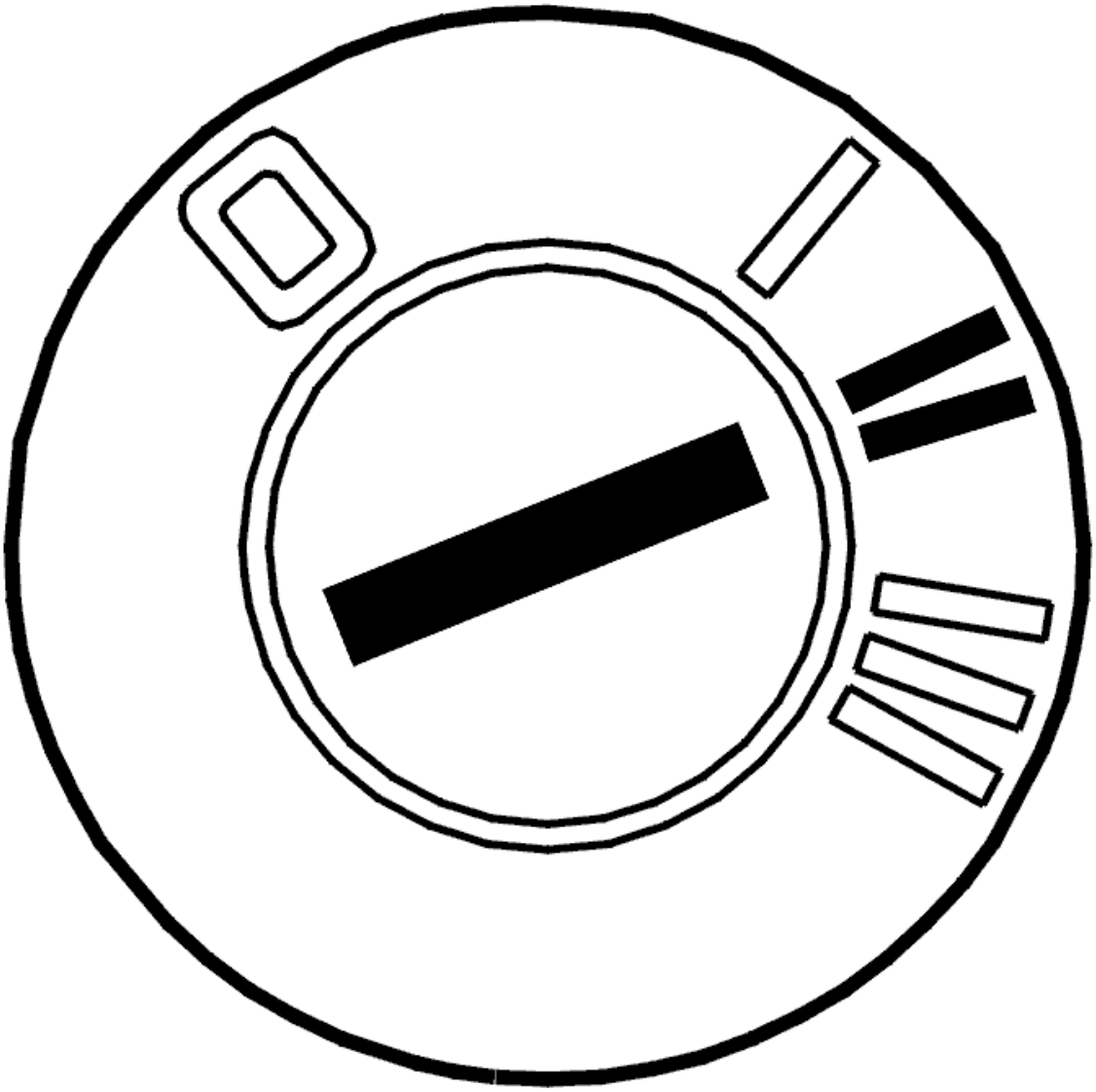

Fig. 175: Identifying Ignition ON
Courtesy of VOLVO CARS CORPORATION

- Ignition on

  Activate reset of the adaptation and the counter by clicking on the symbol for VCT2000.

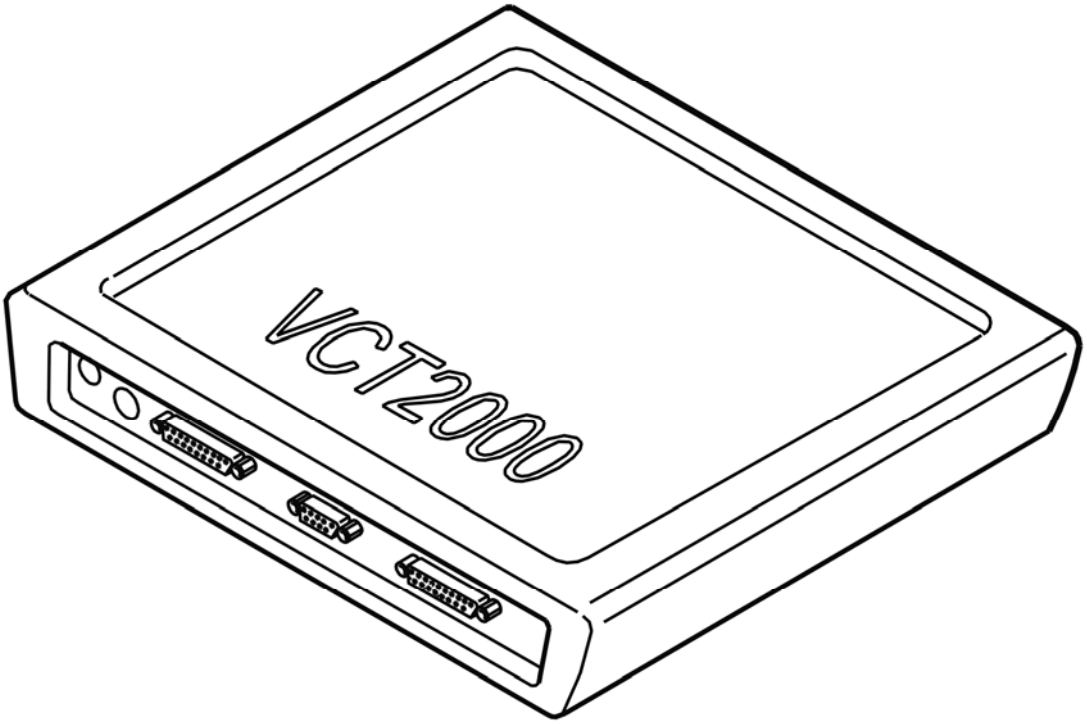

Fig. 176: Identifying VCT2000 Diagnostic Tool Symbol In VIDA
Courtesy of VOLVO CARS CORPORATION

- **Continue**

  Refer to **VERIFICATION**

VERIFICATION

VERIFICATION

HINT: After carrying out the repair, check that the fault has been remedied.

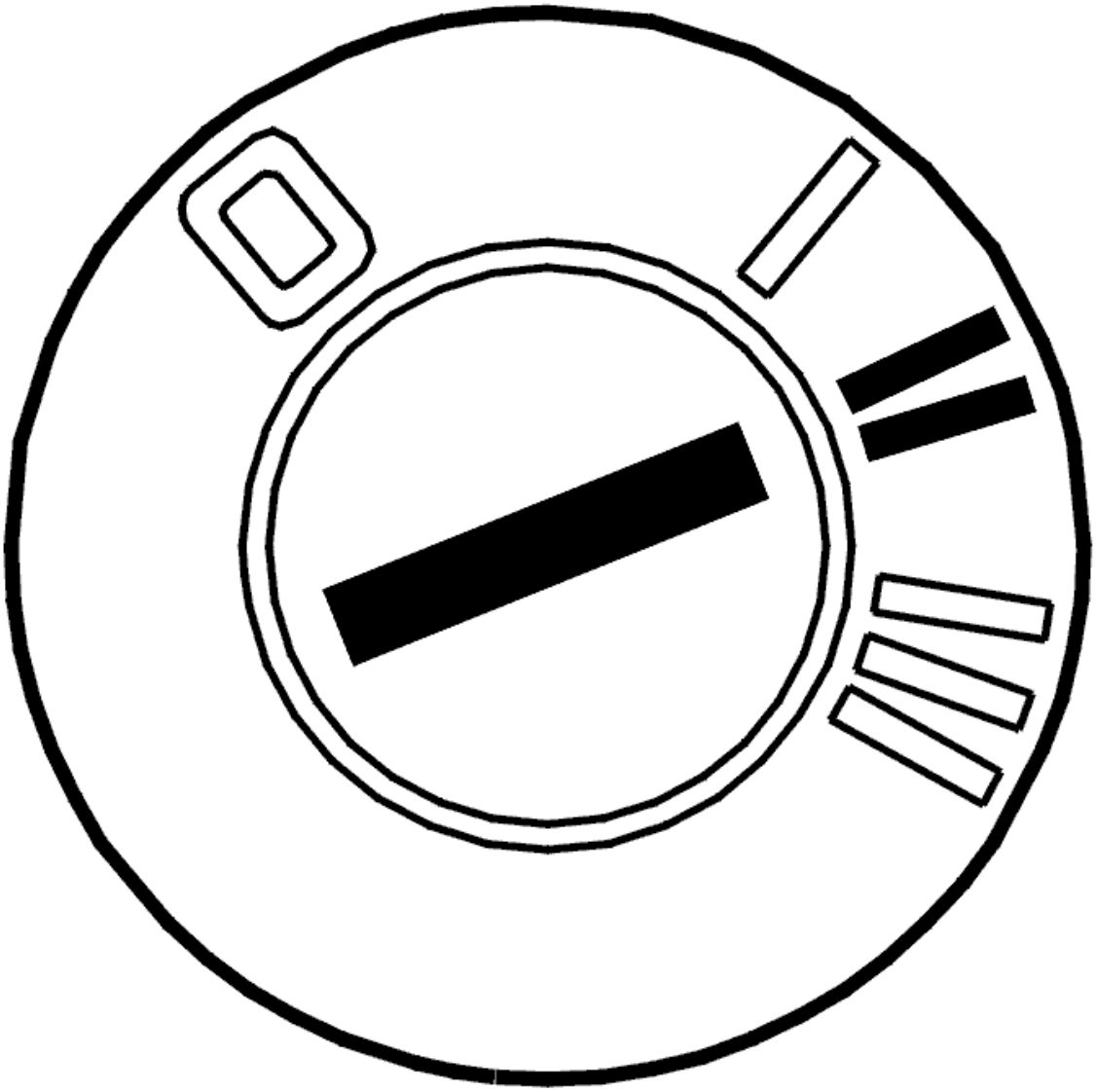

Fig. 177: Identifying Ignition ON
Courtesy of VOLVO CARS CORPORATION

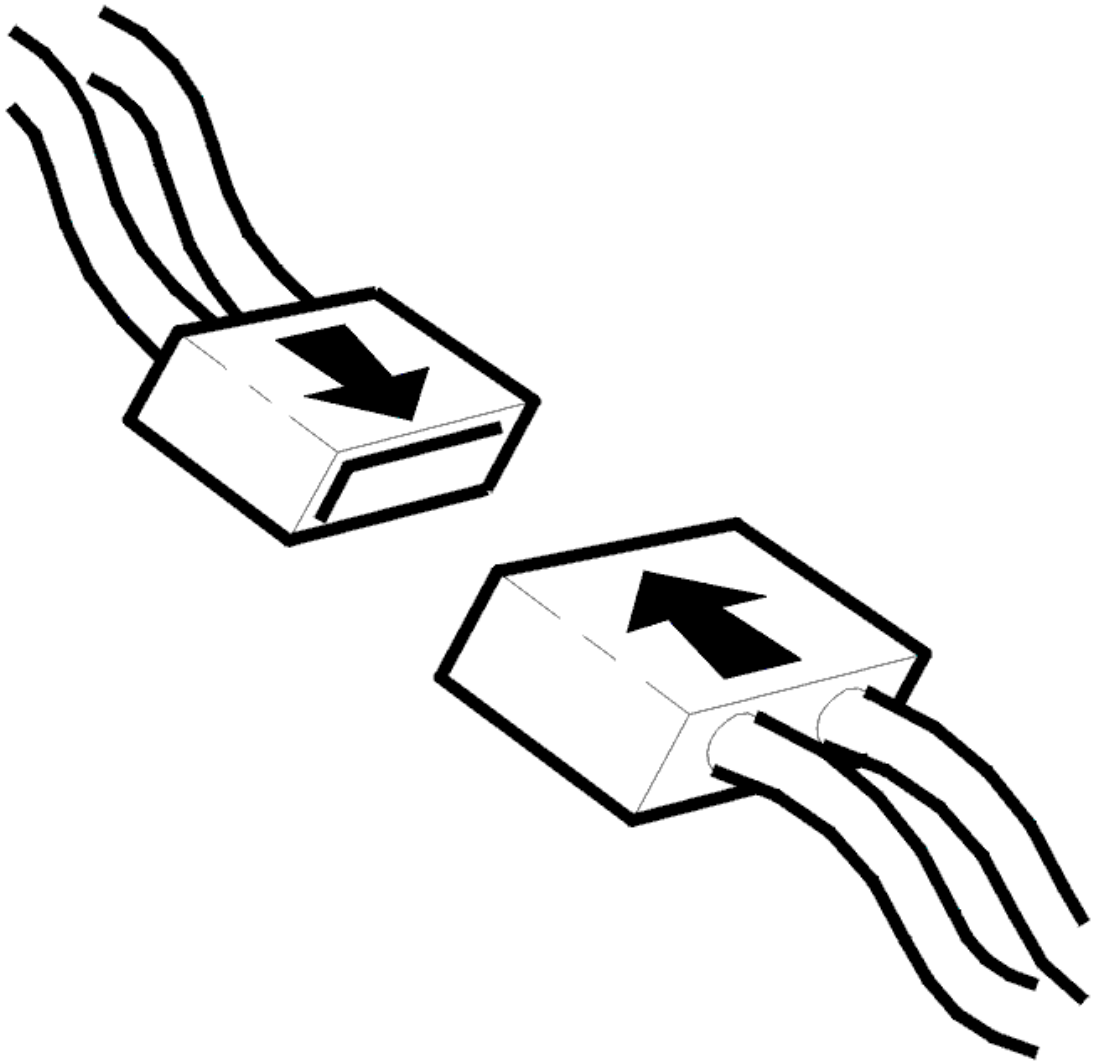

Fig. 178: Identifying Connector(s) Reinstallation
Courtesy of VOLVO CARS CORPORATION

- Ignition off
- Reinstall the components, reconnect the connectors etc.
- Ignition on
- Activate solenoid SLB1 by clicking the symbol for VCT2000.

  Read off the current through the circuit for solenoid SLB1. The current must oscillate between approximately 0 and 1000 mA.

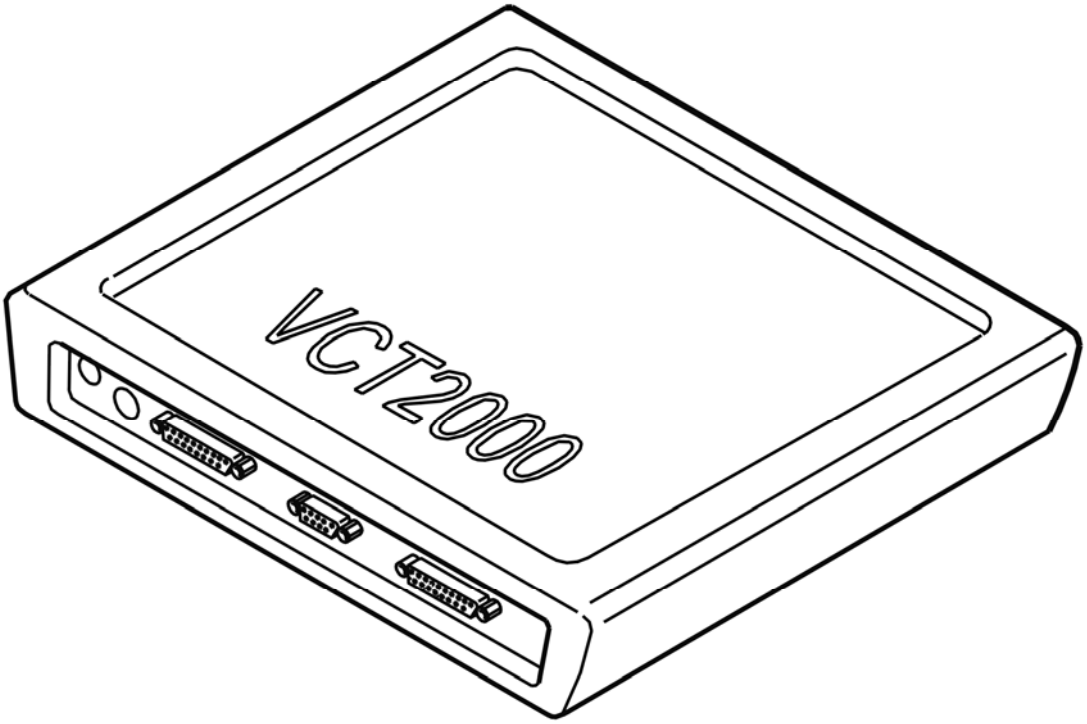

Fig. 179: Identifying VCT2000 Diagnostic Tool Symbol In VIDA
Courtesy of VOLVO CARS CORPORATION

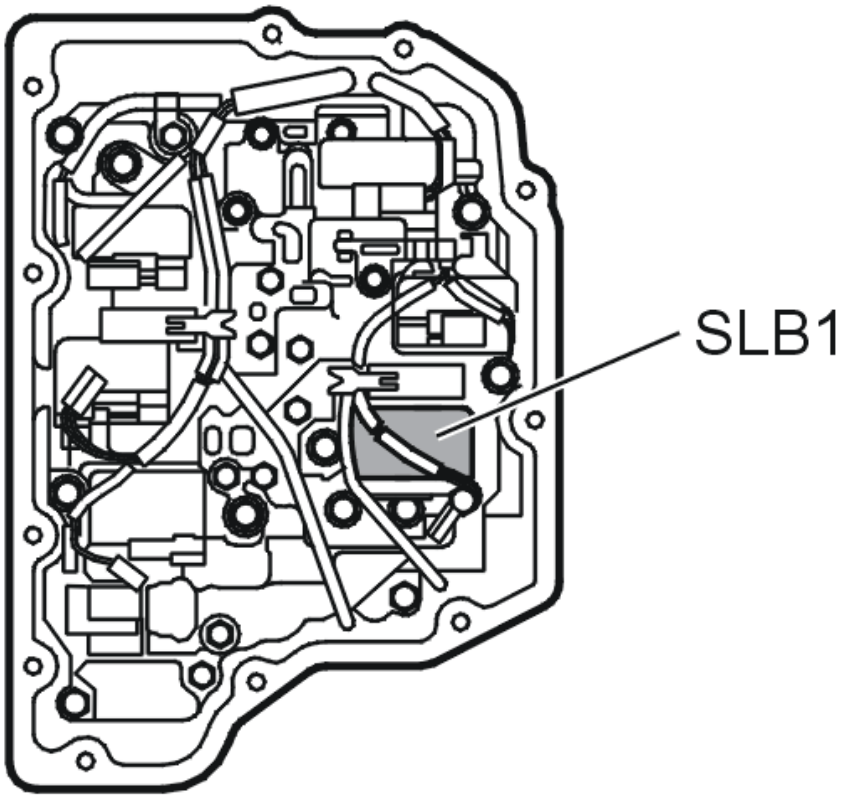

Fig. 180: Identifying Solenoid SLB1
Courtesy of VOLVO CARS CORPORATION

Is the function OK?

- **YES**

  VERIFIED: Troubleshooting has been completed.

- **NO**

  Refer to **INFORMATION**

INFORMATION

FAULT-TRACING INFORMATION

The fault should have been detected and remedied. As this is not the case fault-tracing has failed.

Exit fault-tracing for this diagnostic trouble code (DTC) or make another attempt.

TCM-P273000: PRESSURE REGULATING SOLENOID E CONTROL CIRCUIT HIGH. GENERAL FAULT INFORMATION. NO INFORMATION ABOUT FAULT

TYPE (TF-80SC AWD; 2005)

DIAGNOSTIC TROUBLE CODE (DTC) INFORMATION TCM-P273000

see **DIAGNOSTIC TROUBLE CODE (DTC) INFORMATION TCM-P273000**

FAULT TRACING TCM-P273000

see **FAULT TRACING TCM-P273000**

TCM-P273300: PRESSURE CONTROL SOLENOID F STUCK ON. GENERAL FAILURE INFORMATION. NO SUB TYPE INFORMATION (B6324S, TF-80SC; B6324S, TF-80SC AWD; 2007-2010)

DIAGNOSTIC TROUBLE CODE (DTC) INFORMATION TCM-P273300

Condition

The driving part of the transmission (clutch C1) is disengaged when the following conditions are fulfilled:

- The vehicle is stationary.
- The engine is idling.
- The brake pedal depressed.
- Gear selector is in position D.

The diagnostic trouble code (DTC) is stored if the control module detects that:

- Transmission does not have drive in gear 1, 2, 3, or 4.

The control module's test for the diagnostic trouble code (DTC) starts in the event of:

- Normal driving.

NOTE: **The control module can only detect the fault once the test has been started and the diagnostic trouble code (DTC) is stored when the conditions are met.**

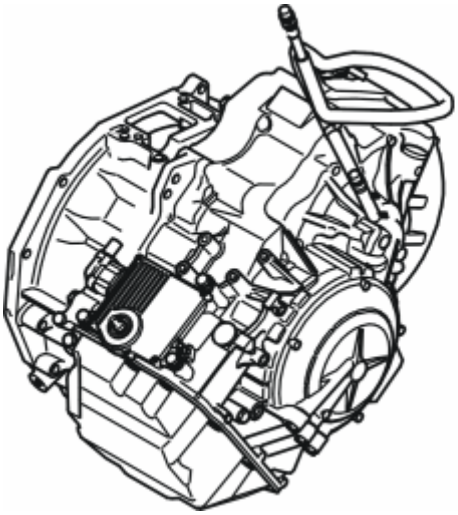

Fig. 181: Identifying Transmission
Courtesy of VOLVO CARS CORPORATION

Substitute Value

- None.

Possible Source

- Solenoid SLC1 has jammed.
- Mechanical fault in the transmission.

Fault symptom[s]

- General warning lamp lit
- Malfunction indicator light (MIL), on
- No lock-up

FAULT-TRACING

CHECKS

CHECKING THE LINE PRESSURE SOLENOID SLC1

Fig. 182: Identifying Ignition ON
Courtesy of VOLVO CARS CORPORATION

- Ignition on.
- Activate solenoid SLC1 by clicking the VCT2000 symbol.

  Read the current through the circuit for solenoid SLC1. The current should oscillate between 100 and 950 mA.

  If the current changes, this is an indication that the fault was present previously but is not active at the moment, i. e. an intermittent fault.

Fig. 183: Identifying VCT2000 Diagnostic Tool Symbol In VIDA
Courtesy of VOLVO CARS CORPORATION

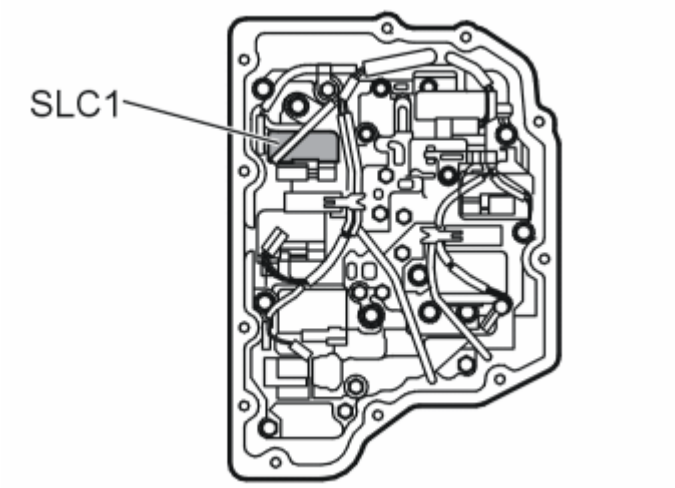

Fig. 184: Identifying Solenoid SLC1
Courtesy of VOLVO CARS CORPORATION

- **Continue**

  Refer to **CHECKING THE COMPONENTS AND WIRING**

CHECKING THE COMPONENTS AND WIRING

Fig. 185: Identifying Ignition OFF
Courtesy of VOLVO CARS CORPORATION

- Ignition off.

  Check connector B (22-pin) for the transmission control module (TCM). Check for damaged or pressed in pins. Check for contact resistance and oxidation.

  Check solenoid SLC1, see **CHECKING INTERNAL COMPONENTS OF THE TRANSMISSION**

  No fault detected. Replace the transmission control system.

  Other information

  - see **CONNECTING THE BREAKOUT BOX**
  - see **SIGNAL SPECIFICATION**
  - see **CHECKING WIRING AND TERMINALS**
  - see **CONTROL SYSTEMS**

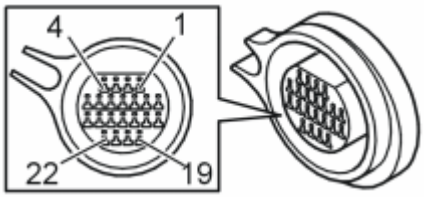

Fig. 186: Identifying Connector B Terminals
Courtesy of VOLVO CARS CORPORATION

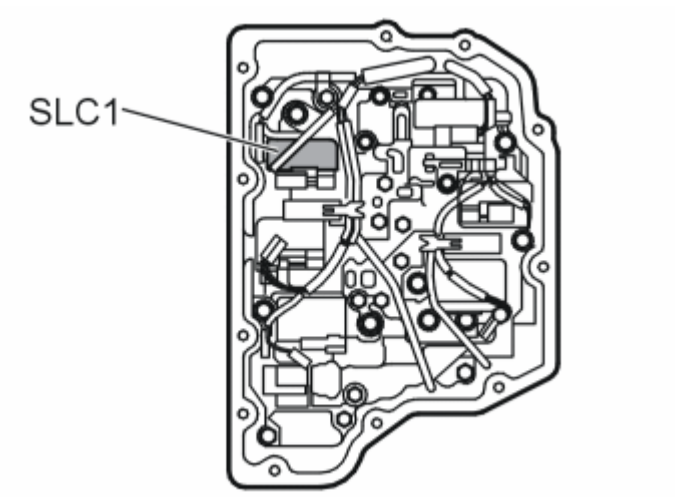

Fig. 187: Identifying Solenoid SLC1
Courtesy of VOLVO CARS CORPORATION

- **Continue**

Refer to **VERIFICATION**

VERIFICATION

VERIFICATION

HINT: After carrying out the repair, check that the fault has been remedied.

Fig. 188: Identifying Ignition ON
Courtesy of VOLVO CARS CORPORATION

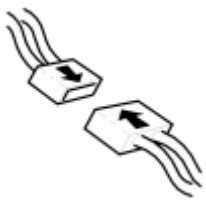

Fig. 189: Identifying Connector(s) Reinstallation
Courtesy of VOLVO CARS CORPORATION

- Ignition off.
- Reinstall the connectors, components etc.
- Ignition on.
- Activate solenoid SLC1 by clicking the VCT2000 symbol.

  The current should oscillate between 100 and 950 mA.

Fig. 190: Identifying VCT2000 Diagnostic Tool Symbol In VIDA
Courtesy of VOLVO CARS CORPORATION

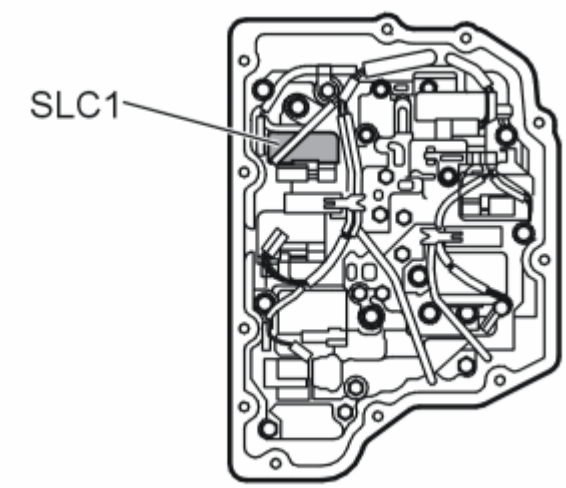

Fig. 191: Identifying Solenoid SLC1
Courtesy of VOLVO CARS CORPORATION

Is the function OK?

- **YES**

  VERIFIED: Troubleshooting has been completed.

- **NO**

  Refer to **INFORMATION**

INFORMATION

FAULT-TRACING INFORMATION

The fault should have been detected and remedied. As this is not the case fault-tracing has failed.

Exit fault-tracing for this diagnostic trouble code (DTC) or make another attempt.

TCM-P273300: PRESSURE CONTROL SOLENOID F STUCK ON. GENERAL FAILURE INFORMATION. NO SUB TYPE INFORMATION (B6324S5, TF-80SC; B6324S5, TF-80SC AWD; 2011-2012)

DIAGNOSTIC TROUBLE CODE (DTC) INFORMATION TCM-P273300

see **DIAGNOSTIC TROUBLE CODE (DTC) INFORMATION TCM-P273300**

FAULT-TRACING

see **FAULT-TRACING**

TCM-P273700: PRESSURE CONTROL SOLENOID F CONTROL CIRCUIT RANGE/PERFORMANCE. GENERAL FAILURE INFORMATION. NO SUB TYPE INFORMATION (B6324S, TF-80SC; B6324S, TF-80SC AWD; 2007-2010)

DIAGNOSTIC TROUBLE CODE (DTC) INFORMATION TCM-P273700

Condition

Linear pressure solenoid SLC1 controls shifting in the transmission. Solenoid SLC1 works when it receives voltage from the transmission control module (TCM). The solenoid is activated during various driving conditions based on speed, throttle position and set driving program.

The diagnostic trouble code (DTC) is stored if the control module detects that:

- The measured current in the solenoid circuit is incorrect.

Then Solenoid SLC1 cannot control the system pressure.

The control module's test for the diagnostic trouble code (DTC) starts in the event of:

- Shifting when linear pressure solenoid SLC1 is activated.

NOTE: The control module can only detect the fault once the test has been started and the diagnostic trouble code (DTC) is stored when the conditions are met.

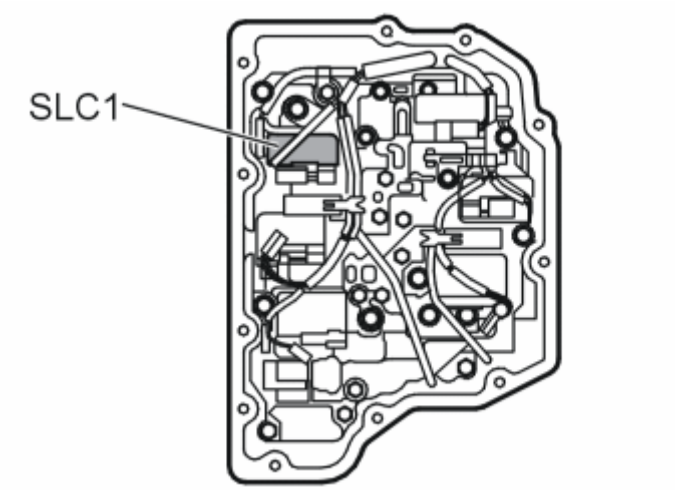

Fig. 192: Identifying Solenoid SLC1
Courtesy of VOLVO CARS CORPORATION

Substitute Value

- Auxiliary program **Emergency mode 1** in the transmission control module (TCM) has started.

HINT: EMERGENCY MODE IN THE EVENT OF A FAULT

Possible Source

- Contact resistance in the terminals.
- Open-circuit in the cable for the control signal or signal ground.
- Linear pressure solenoid SLC1 has jammed.
- Linear pressure solenoid SLC1 not working.

Fault symptom[s]

- General warning lamp lit
- Malfunction indicator light (MIL), on
- Rough gear shift
- No gear shift
- Abnormal slipping gearshifts

FAULT-TRACING

CHECKS

CHECKING THE LINE PRESSURE SOLENOID SLC1

Fig. 193: Identifying Ignition ON
Courtesy of VOLVO CARS CORPORATION

- Ignition on.
- Activate solenoid SLC1 by clicking the VCT2000 symbol.

  Read the current through the circuit for solenoid SLC1. The current should oscillate between 100 and 950 mA.

  The fault is permanent if the current does not change.

  If the current changes, this is an indication that the fault was present previously but is not active at the moment, i. e. an intermittent fault.

Fig. 194: Identifying VCT2000 Diagnostic Tool Symbol In VIDA
Courtesy of VOLVO CARS CORPORATION

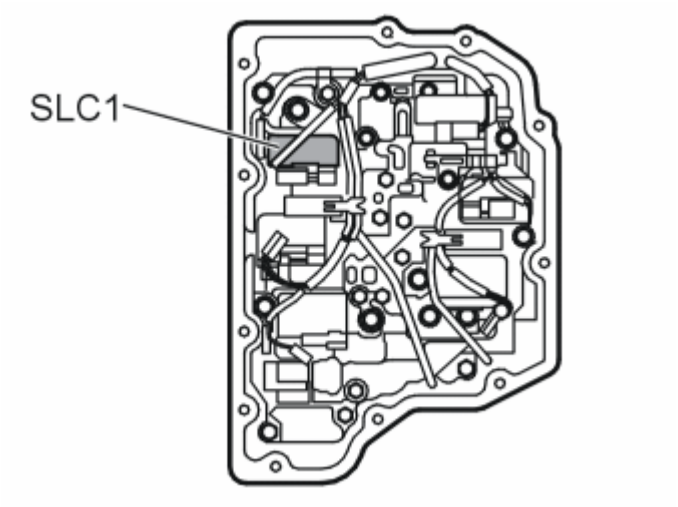

Fig. 195: Identifying Solenoid SLC1
Courtesy of VOLVO CARS CORPORATION

- **Continue**

  Refer to **CHECKING THE COMPONENTS AND WIRING**

CHECKING THE COMPONENTS AND WIRING

Fig. 196: Identifying Ignition OFF
Courtesy of VOLVO CARS CORPORATION

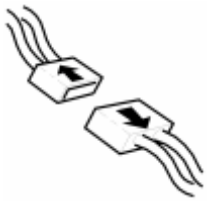

Fig. 197: Identifying Connectors Disconnected

Courtesy of VOLVO CARS CORPORATION

- Ignition off.
- Open the transmission control system.

  Check connector B (22-pin) for the transmission control module (TCM). Check for damaged or pressed in pins. Check for contact resistance and oxidation.

  Check the cables for short-circuit to voltage, short-circuit to ground and open circuit.

  Take readings between:

  - Transmission connector #B11 and the connector for solenoid SLC1 #1.
  - Transmission connector #B10 and the connector for solenoid SLC1 #1.

  HINT: If no fault is found in the wiring, check solenoid SLC1. See CHECKING INTERNAL COMPONENTS OF THE TRANSMISSION

  If no fault is found in the wiring or the component replace the control system.

  Remedy as necessary.

  Other information

  - see **CONNECTING THE BREAKOUT BOX**
  - see **SIGNAL SPECIFICATION**
  - see **VALVE HOUSING**
  - see **TRANSMISSION CONTROL UNIT WIRING HARNESS**
  - To access the transmission control system:**COVER CONTROL SYSTEM, REPLACING (2007-2011)**
  - see **CHECKING WIRING AND TERMINALS**

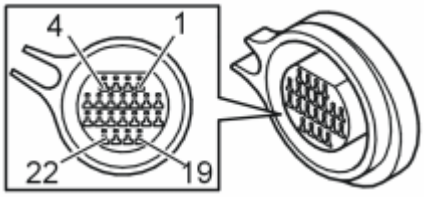

Fig. 198: Identifying Connector B Terminals
Courtesy of VOLVO CARS CORPORATION

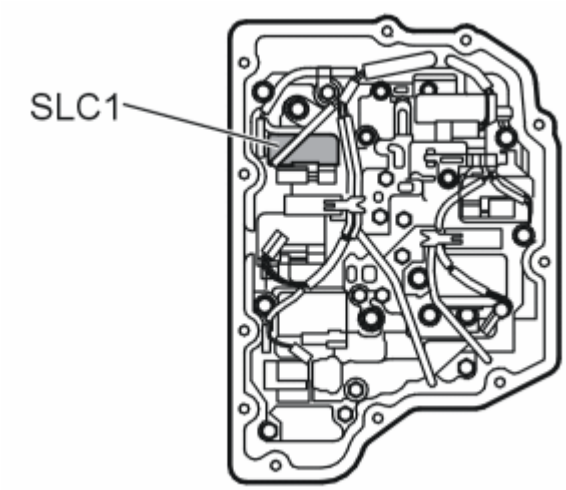

Fig. 199: Identifying Solenoid SLC1
Courtesy of VOLVO CARS CORPORATION

- **Continue**

  Refer to **RESETTING ADAPTATION**

VERIFICATION

VERIFICATION

HINT: After carrying out the repair, check that the fault has been remedied.

Fig. 200: Identifying Ignition ON
Courtesy of VOLVO CARS CORPORATION

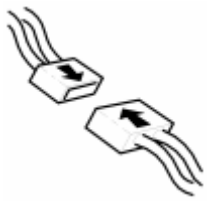

Fig. 201: Identifying Connector(s) Reinstallation
Courtesy of VOLVO CARS CORPORATION

- Ignition off.
- Reinstall the connectors, components etc.

- Ignition on.
- Activate solenoid SLC1 by clicking the VCT2000 symbol.

  The current should oscillate between 100 and 950 mA.

Fig. 202: Identifying VCT2000 Diagnostic Tool Symbol In VIDA
Courtesy of VOLVO CARS CORPORATION

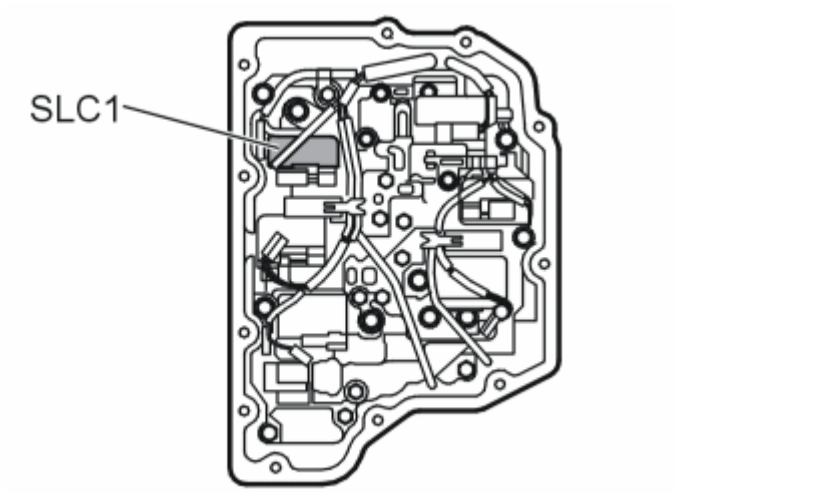

Fig. 203: Identifying Solenoid SLC1
Courtesy of VOLVO CARS CORPORATION

Is the function OK?

- **YES**

  VERIFIED: Troubleshooting has been completed.

- **NO**

  Refer to **INFORMATION**

INFORMATION

FAULT-TRACING INFORMATION

The fault should have been detected and remedied. As this is not the case fault-tracing has failed.

Exit fault-tracing for this diagnostic trouble code (DTC) or make another attempt.

RESETTING ADAPTATION

RESETTING THE ADAPTATION AND THE COUNTER FOR "TRANSMISSION OIL, REPLACE"

HINT: The transmission has torque-regulated, adaptive pressure regulation. The pressure regulator enables the transmission to regulate pressure during each shift to prevent hard shifting. Each shift is assessed by the transmission control module (TCM) and is stored in the internal memory. This makes it possible to compensate for transmission and clutch wear. It is important that the adaptation in the memory is reset so that the transmission works normally after the repair. Because the fluid was changed during the repair, the counter for transmission fluid change must also be reset. If the counter is not reset during draining/replacement, a diagnostic trouble code may be generated under the wrong conditions.

NOTE: This applies only if the transmission or one of the components in the transmission have been replaced.

Fig. 204: Identifying Ignition ON
Courtesy of VOLVO CARS CORPORATION

- Ignition on.

  Click on the VCT2000 symbol to reset the adaptation and counter.

  Fig. 205: Identifying VCT2000 Diagnostic Tool Symbol In VIDA
  Courtesy of VOLVO CARS CORPORATION

- **Continue**

  Refer to **VERIFICATION**

TCM-P273700: PRESSURE CONTROL SOLENOID F CONTROL CIRCUIT RANGE/PERFORMANCE. GENERAL FAILURE INFORMATION. NO SUB TYPE INFORMATION (B6324S5, TF-80SC; B6324S5, TF-80SC AWD; 2011-2012)

DIAGNOSTIC TROUBLE CODE (DTC) INFORMATION TCM-P273700

see **DIAGNOSTIC TROUBLE CODE (DTC) INFORMATION TCM-P273700**

FAULT-TRACING

see **FAULT-TRACING**

TCM-P273700: PRESSURE REGULATING SOLENOID F CONTROL CIRCUIT INSIDE/OUTSIDE PARAMETER VALUES. GENERAL FAULT INFORMATION. NO INFORMATION ABOUT FAULT TYPE (B8444S, TF-80SC AWD; 2006-2011)

DIAGNOSTIC TROUBLE CODE (DTC) INFORMATION TCM-P273700

Condition

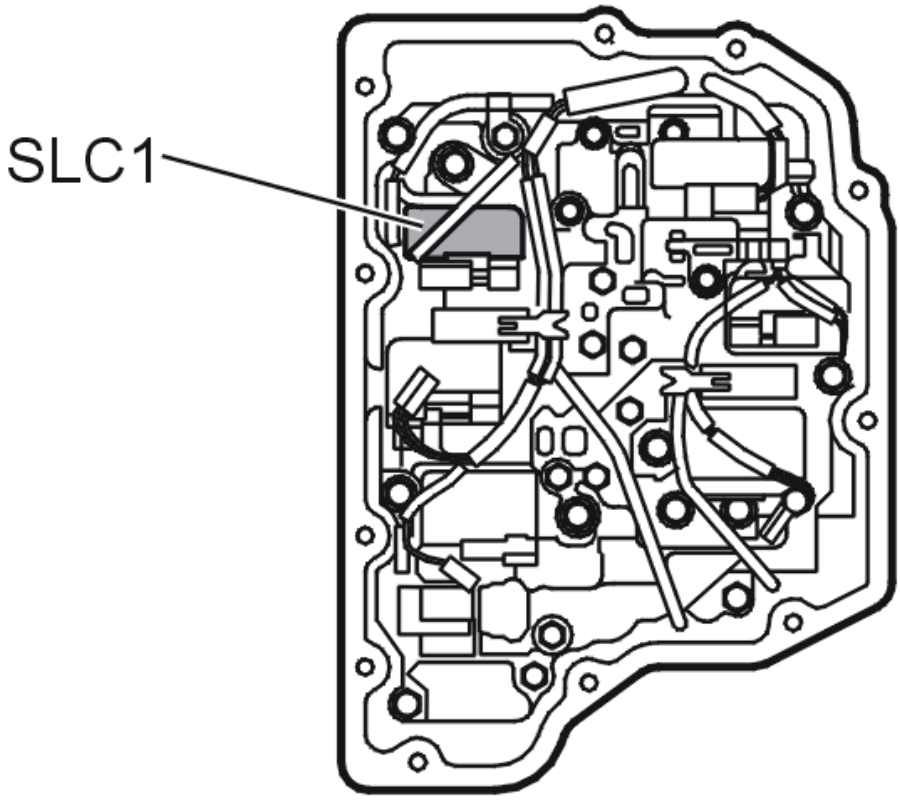

Fig. 206: Identifying Solenoid SLC1
Courtesy of VOLVO CARS CORPORATION

The lock-up solenoid SLC1 controls the lock-up function in the gearbox. The SLC1 solenoid works when it receives power from the transmission control module (TCM) and depending on the speed, accelerator position and driving program setting, the solenoid will be activated for different driving conditions.

If the transmission control module (TCM) registers that the measured current in the solenoid circuit is incorrect, the diagnostic trouble code (DTC) is generated. The SLC1 solenoid is then not able to regulate the system pressure.

The diagnostic trouble codes (DTCs) can be diagnosed during shifting when the line pressure solenoid SLC1 is activated.

Substitute Value

- Auxiliary program **Emergency mode 1** in the transmission control module (TCM) has started.

  HINT: EMERGENCY MODE IN CASE OF MALFUNCTION

Possible Source

- Contact resistance in the terminals
- Open circuit in lead for control signal or signal ground.
- Linear pressure solenoid SLC1 stuck.
- Linear pressure solenoid SLC1 not working.

Fault symptom[s]

- General warning lamp lit
- Malfunction indicator lamp (MIL) lit.
- Harsh gear changing
- No gear changing.
- Abnormally slipping gears.

FAULT TRACING TCM-P273700

CHECKS

CHECKING THE LOCK-UP SOLENOID SLC1

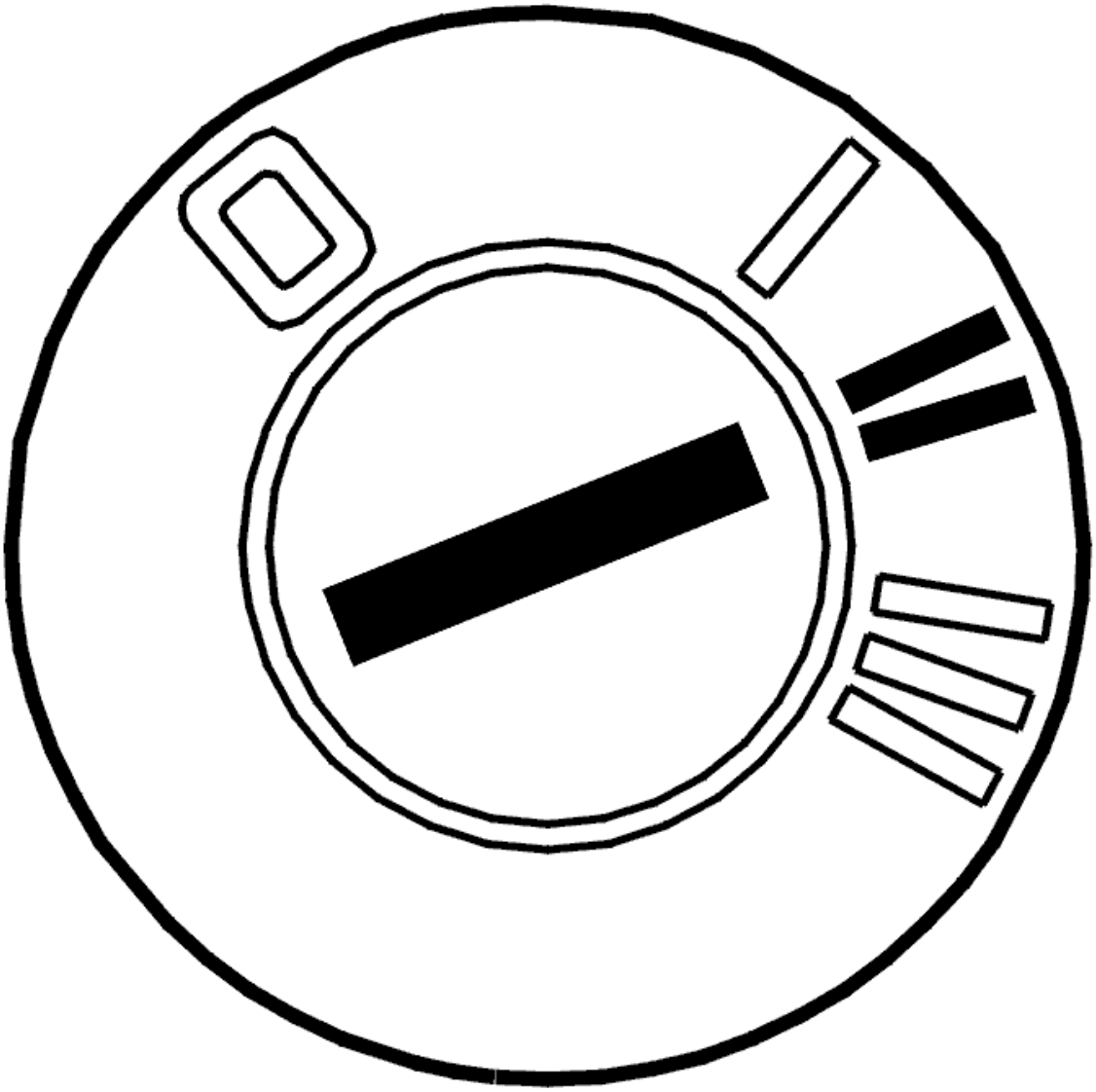

Fig. 207: Identifying Ignition ON
Courtesy of VOLVO CARS CORPORATION

- Ignition on
- Activate solenoid SLC1 by clicking the VCT2000 symbol.

  Read the current though the circuit for solenoid SLC1. The current must oscillate between approximately 100 and 950 mA.

  The fault is permanent if the current does not change.

  If the current oscillates then this would suggest that the fault has previously been present but is no longer active. The fault is intermittent.

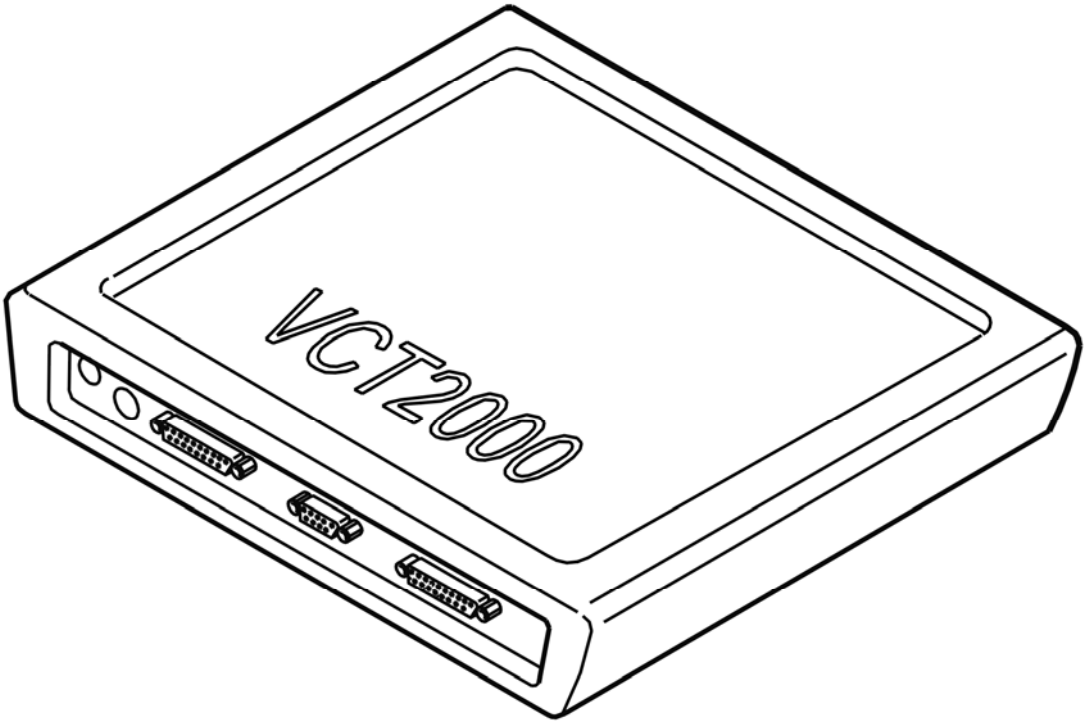

Fig. 208: Identifying VCT2000 Diagnostic Tool Symbol In VIDA
Courtesy of VOLVO CARS CORPORATION

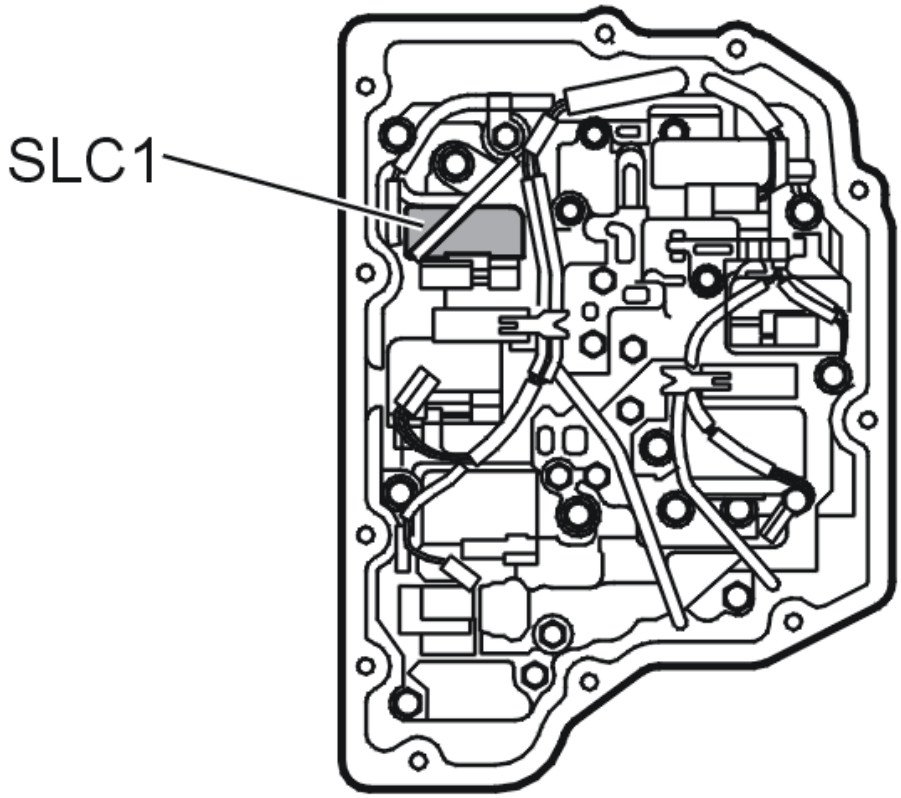

Fig. 209: Identifying Solenoid SLC1
Courtesy of VOLVO CARS CORPORATION

- **Continue**

Refer to **CHECKING THE COMPONENTS AND WIRING**

CHECKING THE COMPONENTS AND WIRING

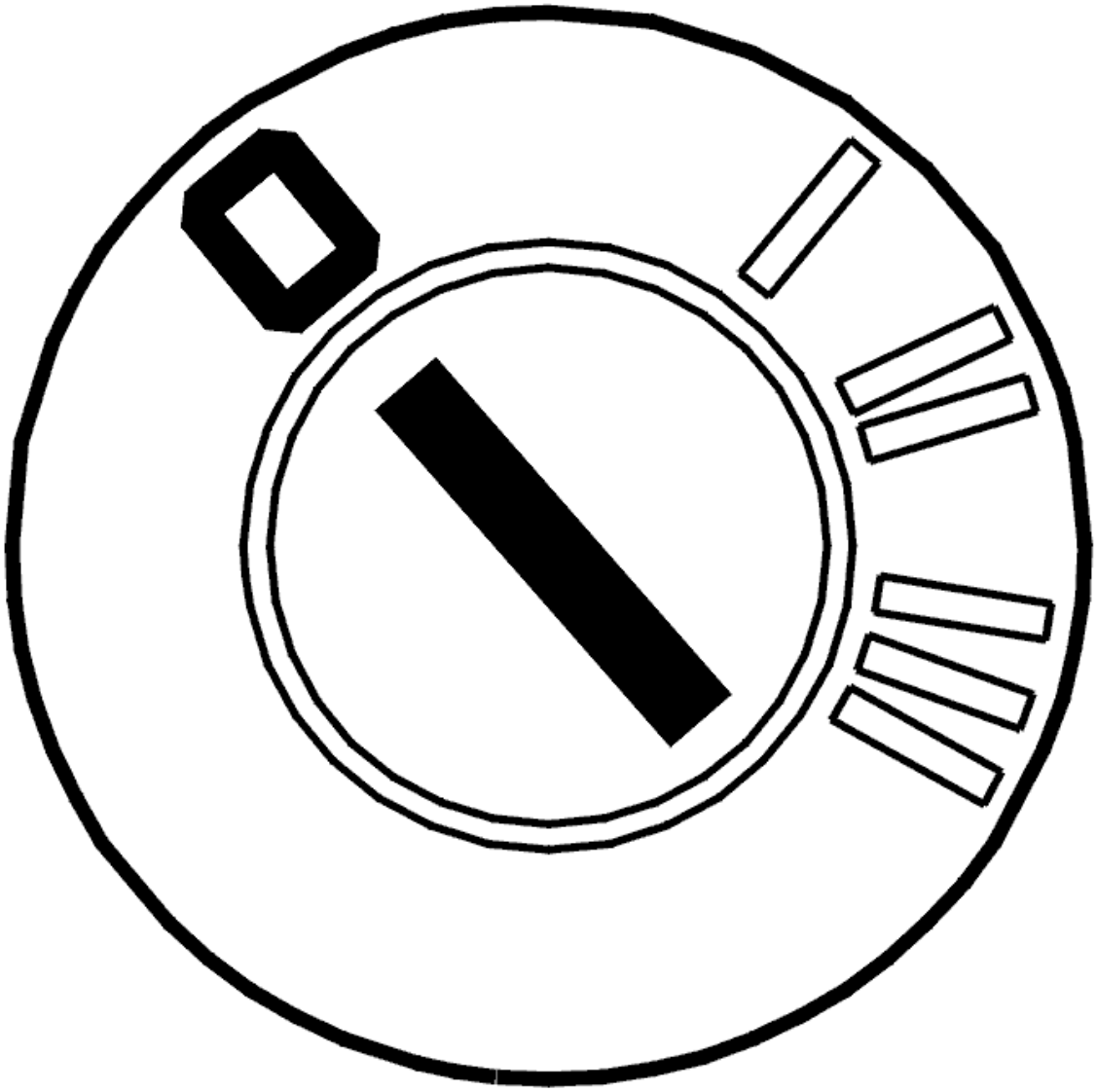

Fig. 210: Identifying Ignition OFF
Courtesy of VOLVO CARS CORPORATION

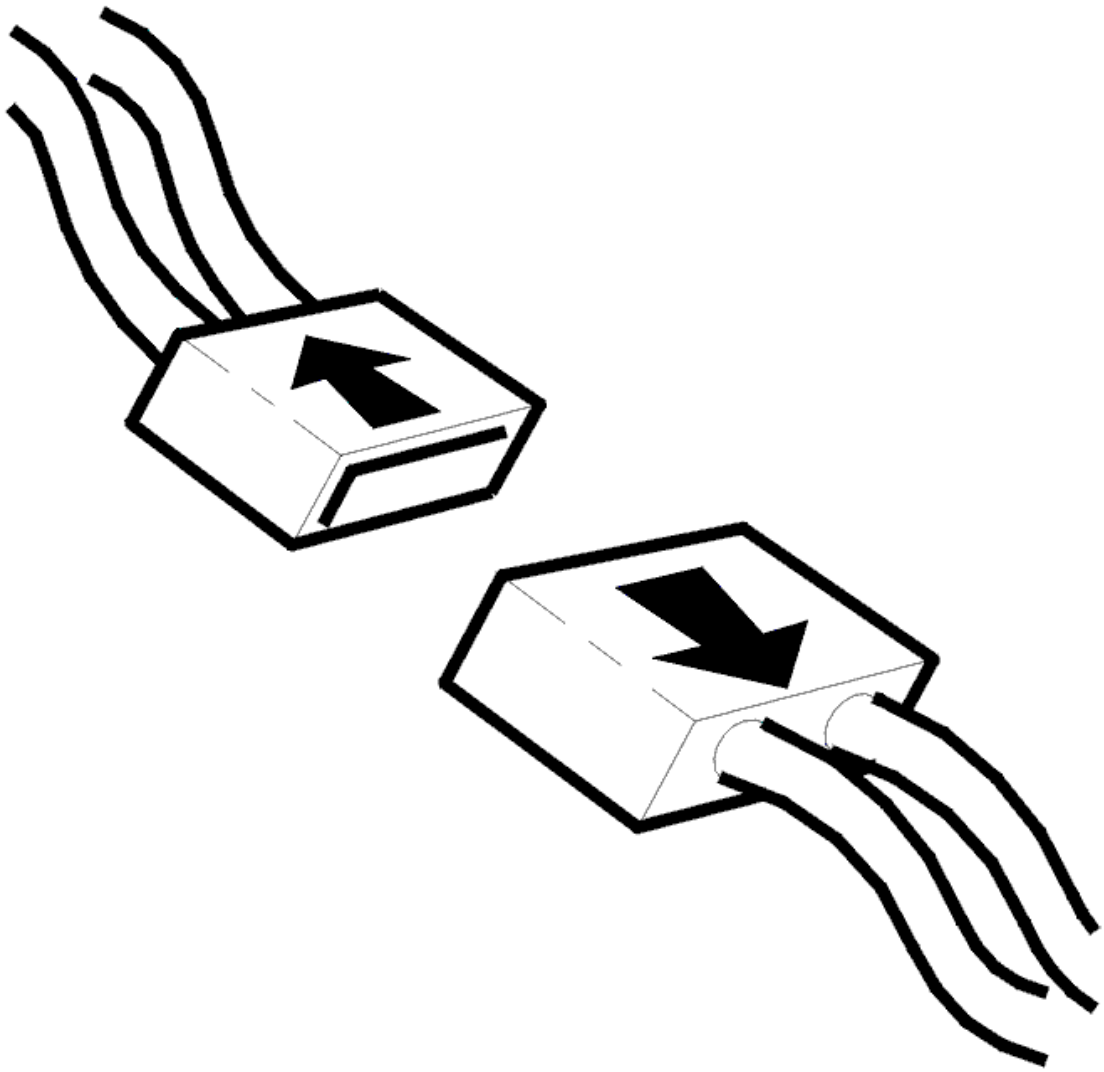

Fig. 211: Identifying Connector(s) Disconnected
Courtesy of VOLVO CARS CORPORATION

- Ignition off
- Open the gearbox control system

  Check connector B (22-pin) for the transmission control module (TCM). Check for damage and pressed in terminal pins. Check for contact resistance and oxidation.

  Check the wiring between the transmission connector terminal #B11 and the connector for solenoid SLC1 terminal #1. Check the wiring between the transmission connector terminal #B10 and the connector for solenoid SLC1 terminal #2. Check for an open circuit. Check for a short-circuit to supply voltage. Check for a short-circuit to ground.

  HINT: If no fault is found in the wiring check solenoid SLC1. See CHECKING THE LINE PRESSURE SOLENOID SLT, SLC1, SLC2, SLC3, SLB1 AND LOCK-UP SOLENOID SLU

If no fault is found in the wiring or the component replace the control system.

Remedy as necessary.

Other information

- see **CONNECTING THE BREAKOUT BOX**
- see **SIGNAL DESCRIPTION**
- see **CONTROL SYSTEM, REPLACING**
- see **CABLE HARNESS, CONTROL SYSTEM, GEARBOX, REPLACING**
- To access the transmission control system: **COVER CONTROL SYSTEM, REPLACING (2007-2011)**
- see **CONTENTS**

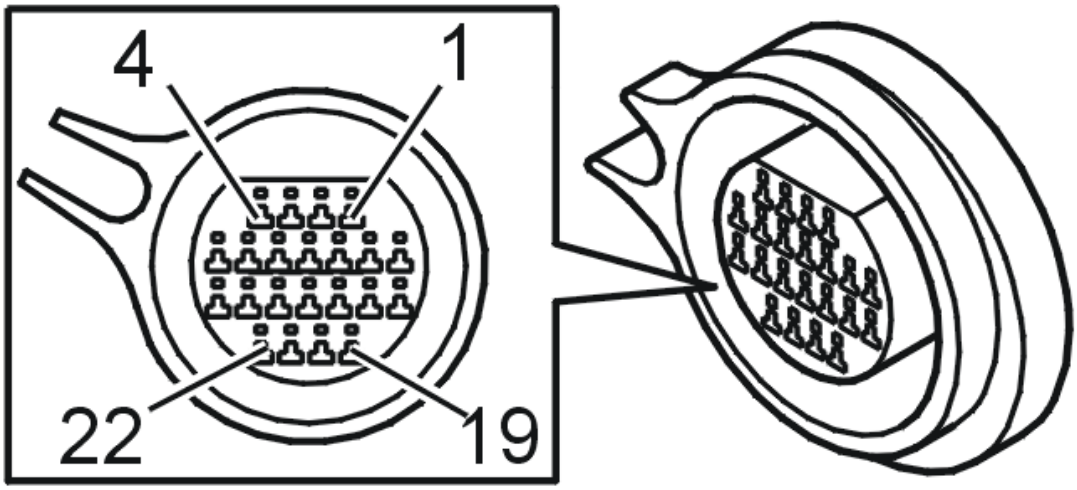

Fig. 212: Identifying Connector B Terminals
Courtesy of VOLVO CARS CORPORATION

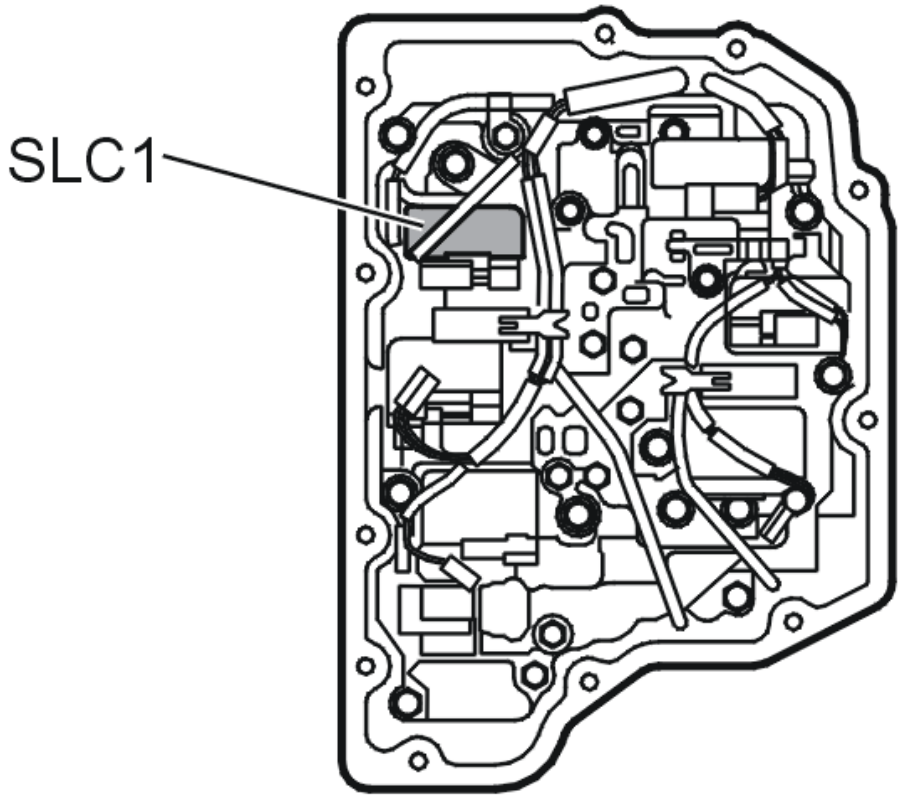

Fig. 213: Identifying Solenoid SLC1
Courtesy of VOLVO CARS CORPORATION

- **Continue**

  Refer to **RESETTING ADAPTATION**

RESETTING ADAPTATION

RESETTING ADAPTATION AND COUNTER FOR "TRANSMISSION OIL, CHANGING"

HINT: The transmission has torque-controlled, adaptive pressure control. The pressure control means that the transmission itself controls the pressure during each shift sequence in order to avoid harsh shifting. Each shift is assessed by the transmission control module (TCM) and is stored in the internal memory, which results in compensation for wear in the transmission and clutch. In order for the transmission to function correctly after repair, it is important to reset the adaptation in the memory. Since the oil is changed during the repair, the counter for "Transmission oil, change" shall also be reset. If the counter is not reset when draining/changing oil, there is a risk that a diagnostic trouble code may be generated under incorrect conditions.

NOTE: **This applies only if the transmission or one of the components in the transmission have been replaced.**

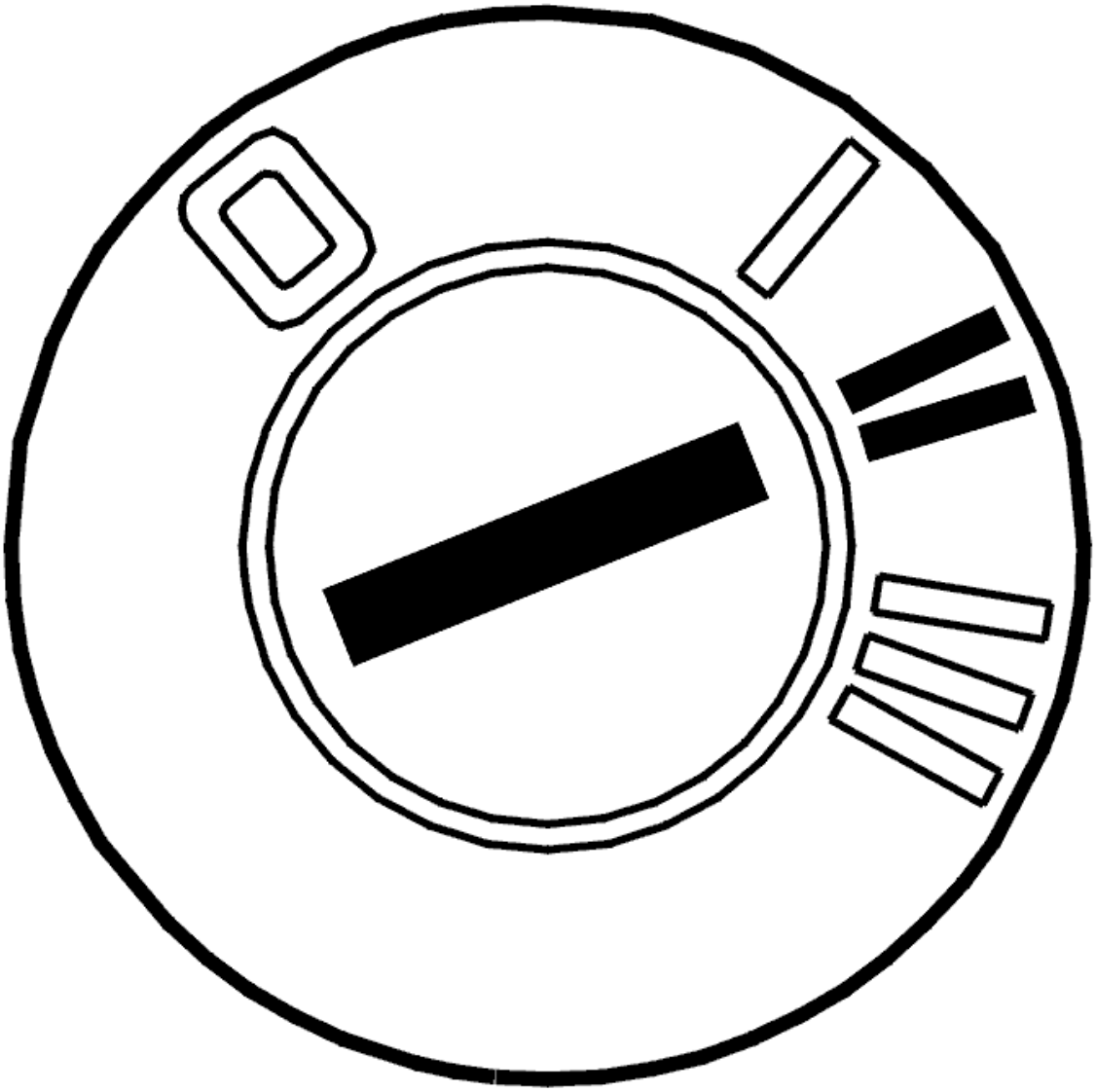

Fig. 214: Identifying Ignition ON
Courtesy of VOLVO CARS CORPORATION

- Ignition on

  Activate reset of the adaptation and the counter by clicking on the symbol for VCT2000.

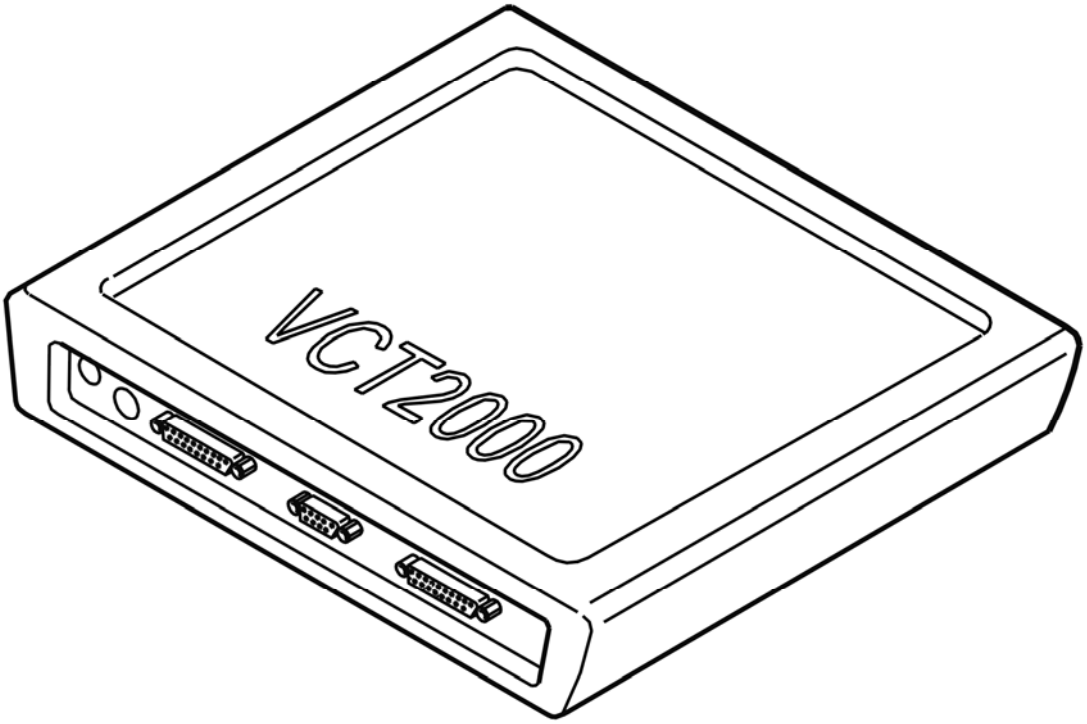

Fig. 215: Identifying VCT2000 Diagnostic Tool Symbol In VIDA
Courtesy of VOLVO CARS CORPORATION

- **Continue**

  Refer to **VERIFICATION**

VERIFICATION

VERIFICATION

HINT: After carrying out the repair, check that the fault has been remedied.

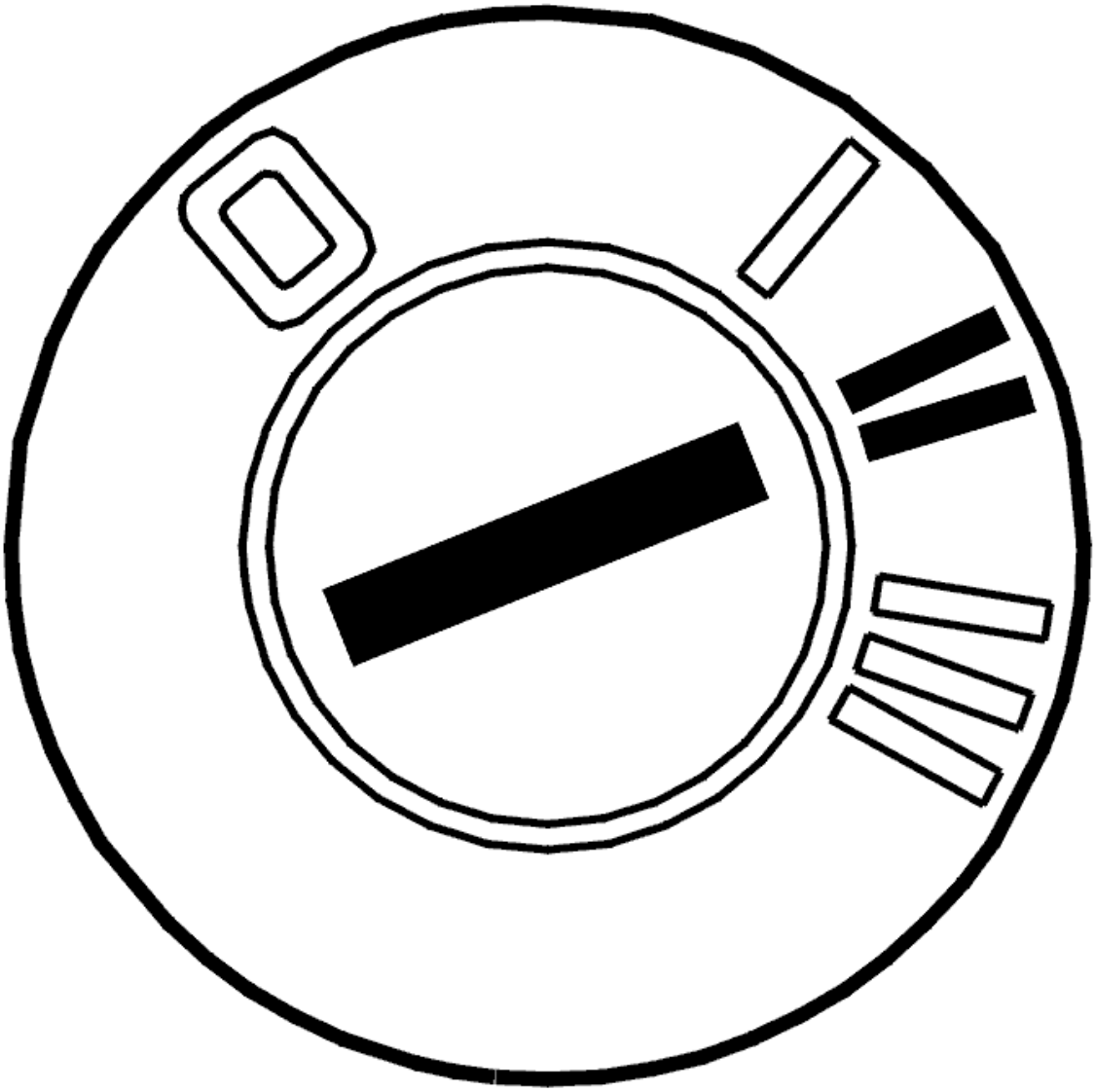

Fig. 216: Identifying Ignition ON
Courtesy of VOLVO CARS CORPORATION

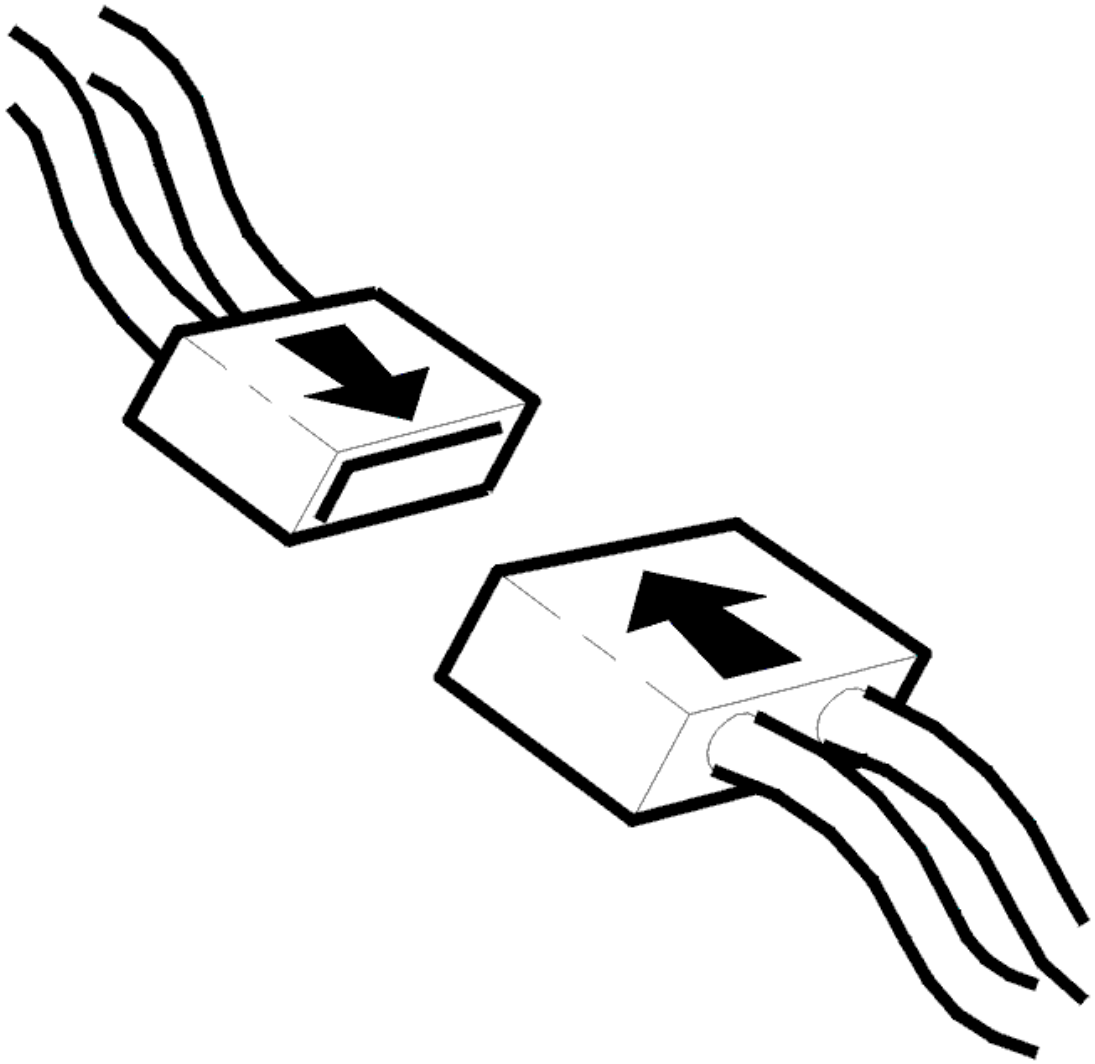

Fig. 217: Identifying Connector(s) Reinstallation
Courtesy of VOLVO CARS CORPORATION

- Ignition off
- Reinstall the components, reconnect the connectors etc.
- Ignition on
- Activate solenoid SLC1 by clicking on the symbol for VCT2000.

  Read off the current through the circuit for solenoid SLC1. The current must oscillate between approximately 0 and 1000 mA.

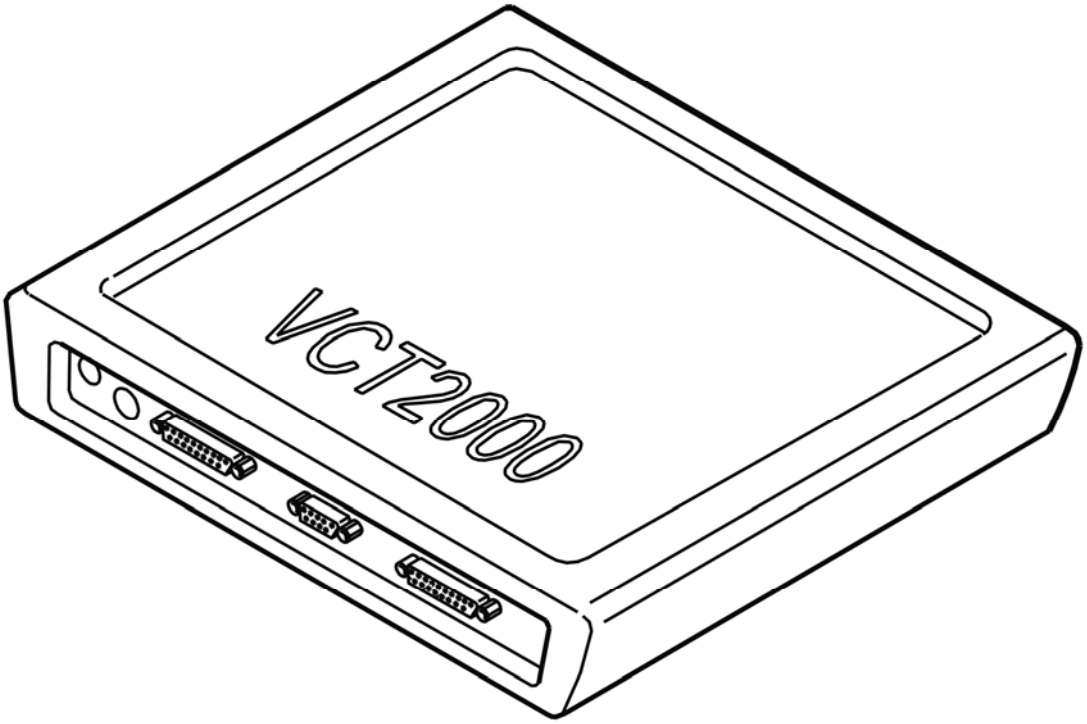

Fig. 218: Identifying VCT2000 Diagnostic Tool Symbol In VIDA
Courtesy of VOLVO CARS CORPORATION

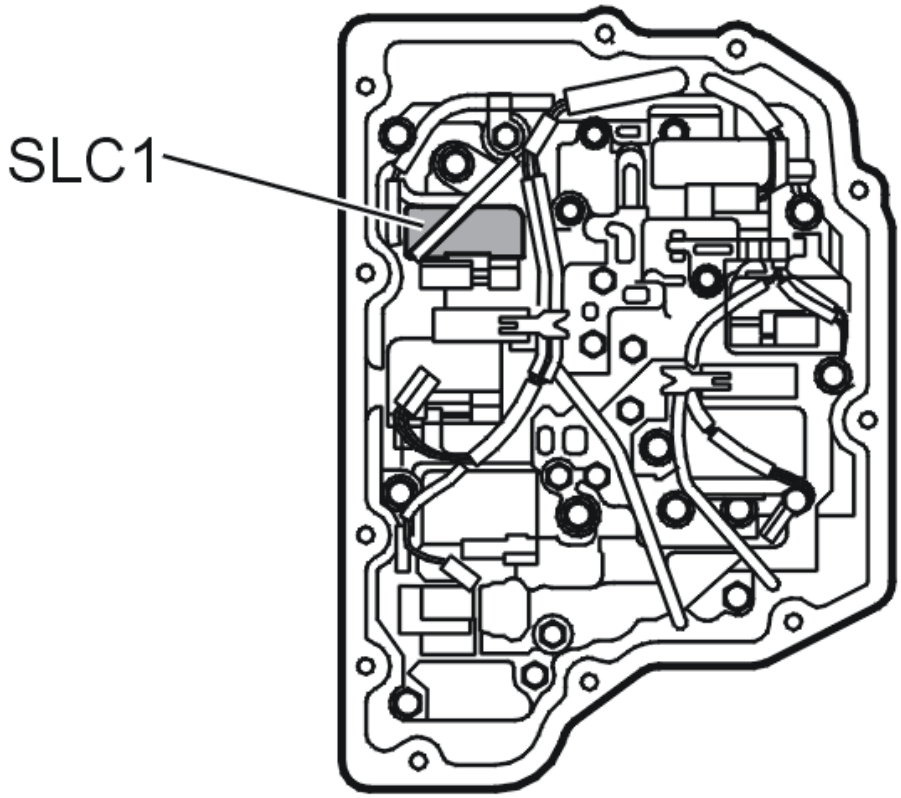

Fig. 219: Identifying Solenoid SLC1
Courtesy of VOLVO CARS CORPORATION

Is the function OK?

- **YES**

  VERIFIED: Troubleshooting has been completed.

- **NO**

  Refer to **INFORMATION**

INFORMATION

FAULT-TRACING INFORMATION

The fault should have been detected and remedied. As this is not the case fault-tracing has failed.

Exit fault-tracing for this diagnostic trouble code (DTC) or make another attempt.

TCM-P273700: PRESSURE REGULATING SOLENOID F CONTROL CIRCUIT INSIDE/OUTSIDE PARAMETER VALUES. GENERAL FAULT INFORMATION.

NO INFORMATION ABOUT FAULT TYPE (TF-80SC AWD; 2005)

DIAGNOSTIC TROUBLE CODE (DTC) INFORMATION TCM-P273700

see **DIAGNOSTIC TROUBLE CODE (DTC) INFORMATION TCM-P273700**

FAULT TRACING TCM-P273700

see **FAULT TRACING TCM-P273700**

TCM-P273800: PRESSURE CONTROL SOLENOID F CONTROL CIRCUIT LOW. GENERAL FAILURE INFORMATION. NO SUB TYPE INFORMATION (B6324S, TF-80SC; B6324S, TF-80SC AWD; 2007-2010)

DIAGNOSTIC TROUBLE CODE (DTC) INFORMATION TCM-P273800

Condition

Linear pressure solenoid SLC1 controls system pressure in the transmission. The solenoid is controlled by power stages at the output of the transmission control module (TCM). The control module uses the power stage to control the current to the solenoid. A low amperage results in a high line pressure. A high amperage (approximately 1A) results in a low line pressure. The amperage is primarily affected by the throttle position.

The diagnostic trouble code is stored if the control module detects:

- An open circuit in solenoid SLC1 circuit.

Then Solenoid SLC1 cannot control the system pressure.

The control module's test for the diagnostic trouble code (DTC) starts in the event of:

- Shifting when linear pressure solenoid SLC1 is activated.

NOTE: **The control module can only detect the fault once the test has been started and the diagnostic trouble code (DTC) is stored when the conditions are met.**

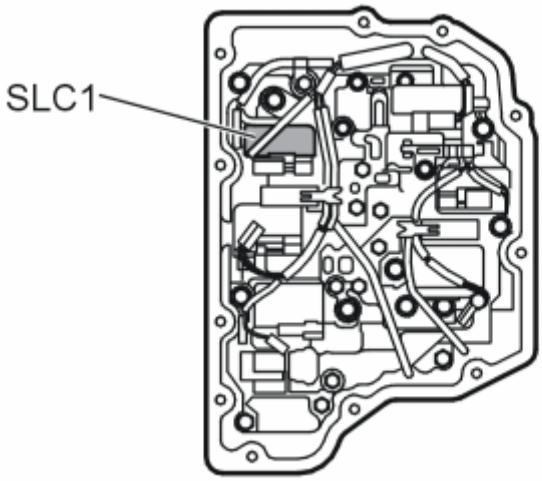

Fig. 220: Identifying Solenoid SLC1
Courtesy of VOLVO CARS CORPORATION

Substitute Value

- Auxiliary program **Emergency mode 1** in the transmission control module (TCM) has started.

  HINT: EMERGENCY MODE IN THE EVENT OF A FAULT

Possible Source

- Contact resistance in the terminals.
- Open-circuit in the cable for the control signal or signal ground.
- Linear pressure solenoid SLC1 not working.
- The transmission control module (TCM) does not function.

Fault symptom[s]

- General warning lamp lit
- Malfunction indicator light (MIL), on
- Rough gear shift
- No gear shift

FAULT-TRACING

CHECKS

CHECKING THE LINE PRESSURE SOLENOID SLC1

Fig. 221: Identifying Ignition ON
Courtesy of VOLVO CARS CORPORATION

- Ignition on.
- Activate solenoid SLC1 by clicking the VCT2000 symbol.

  Read the current through the circuit for solenoid SLC1. The current should oscillate between 100 and 950 mA.

  The fault is permanent if the current does not change.

  If the current changes, this is an indication that the fault was present previously but is not active at the moment, i. e. an intermittent fault.

Fig. 222: Identifying VCT2000 Diagnostic Tool Symbol In VIDA
Courtesy of VOLVO CARS CORPORATION

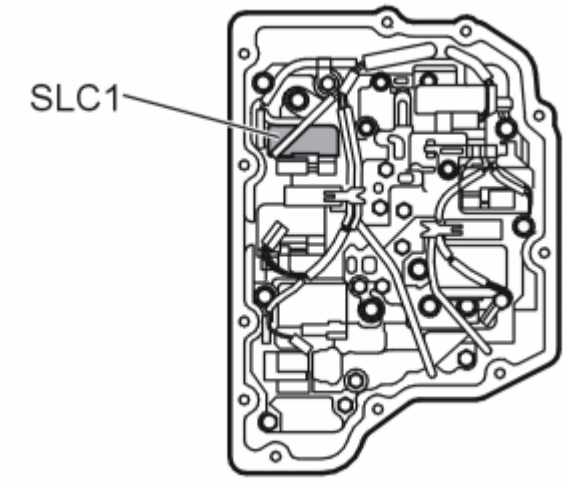

Fig. 223: Identifying Solenoid SLC1
Courtesy of VOLVO CARS CORPORATION

- **Continue**

Refer to **CHECKING THE COMPONENTS AND WIRING**

CHECKING THE COMPONENTS AND WIRING

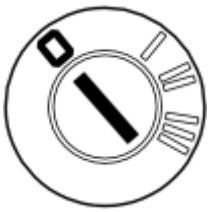

Fig. 224: Identifying Ignition OFF
Courtesy of VOLVO CARS CORPORATION

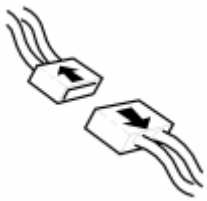

Fig. 225: Identifying Connectors Disconnected
Courtesy of VOLVO CARS CORPORATION

- Ignition off.
- Open the transmission control system.

  Check connector B (22-pin) for the transmission control module (TCM). Check for damaged or pressed in pins. Check for contact resistance and oxidation.

  Check the cables for open circuit and short circuit to ground.

  Take readings between:

  - Transmission connector #B11 and the connector for solenoid SLC1 #1.
  - Transmission connector #B10 and the connector for solenoid SLC1 #1.

  HINT: If no fault is found in the wiring, check solenoid SLC1. See CHECKING INTERNAL COMPONENTS OF THE TRANSMISSION

  If no fault is found in the wiring or the component replace the control system.

  Remedy as necessary.

  Other information

  - see **CONNECTING THE BREAKOUT BOX**
  - see **SIGNAL SPECIFICATION**
  - see **VALVE HOUSING**

- see **TRANSMISSION CONTROL UNIT WIRING HARNESS**
- To access the transmission control system:**COVER CONTROL SYSTEM, REPLACING (2007-2011)**
- see **CHECKING WIRING AND TERMINALS**

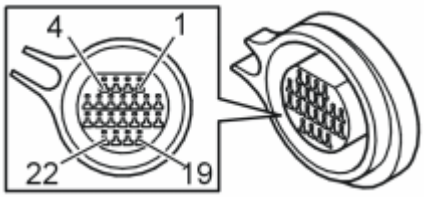

Fig. 226: Identifying Connector B Terminals
Courtesy of VOLVO CARS CORPORATION

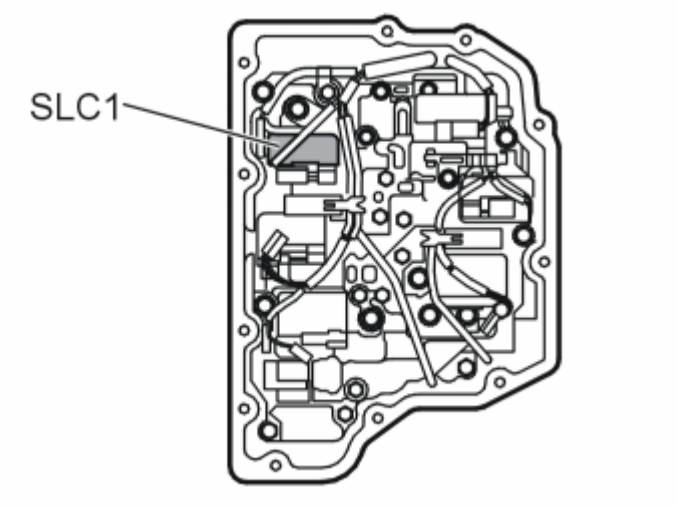

Fig. 227: Identifying Solenoid SLC1
Courtesy of VOLVO CARS CORPORATION

- **Continue**

  Refer to **RESETTING ADAPTATION**

VERIFICATION

VERIFICATION

HINT: After carrying out the repair, check that the fault has been remedied.

Fig. 228: Identifying Ignition ON
Courtesy of VOLVO CARS CORPORATION

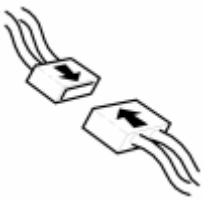

Fig. 229: Identifying Connector(s) Reinstallation
Courtesy of VOLVO CARS CORPORATION

- Ignition off.
- Reinstall the connectors, components etc.
- Ignition on.
- Activate solenoid SLC1 by clicking the VCT2000 symbol.

  The current should oscillate between 100 and 950 mA.

Fig. 230: Identifying VCT2000 Diagnostic Tool Symbol In VIDA
Courtesy of VOLVO CARS CORPORATION

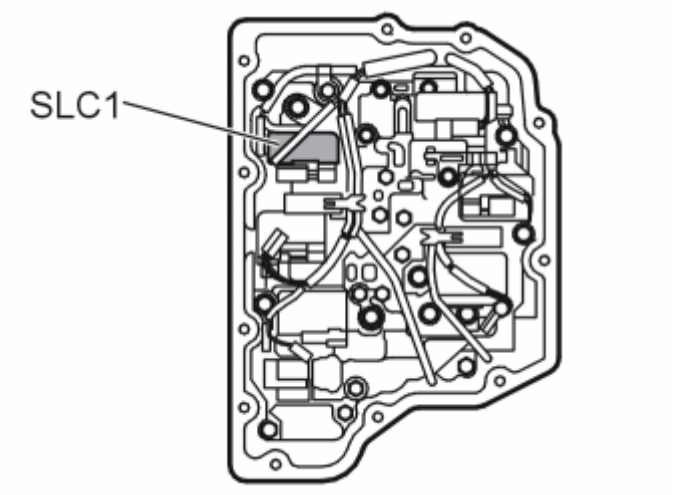

Fig. 231: Identifying Solenoid SLC1
Courtesy of VOLVO CARS CORPORATION

Is the function OK?

- **YES**

  VERIFIED: Troubleshooting has been completed.

- **NO**

  Refer to **INFORMATION**

INFORMATION

FAULT-TRACING INFORMATION

The fault should have been detected and remedied. As this is not the case fault-tracing has failed.

Exit fault-tracing for this diagnostic trouble code (DTC) or make another attempt.

RESETTING ADAPTATION

RESETTING THE ADAPTATION AND THE COUNTER FOR "TRANSMISSION OIL, REPLACE"

HINT: The transmission has torque-regulated, adaptive pressure regulation. The pressure regulator enables the transmission to regulate pressure during each shift to prevent hard shifting. Each shift is assessed by the transmission control module (TCM) and is stored in the internal memory. This makes it possible to compensate for transmission and clutch wear. It is important that the adaptation in the memory is reset so that the transmission works normally after the repair. Because the fluid was changed during the repair, the counter for transmission fluid change must also be reset. If the counter is not reset during draining/replacement, a diagnostic trouble code may be generated under the wrong conditions.

NOTE: This applies only if the transmission or one of the components in the transmission have been replaced.

Fig. 232: Identifying Ignition ON
Courtesy of VOLVO CARS CORPORATION

- Ignition on.

  Click on the VCT2000 symbol to reset the adaptation and counter.

Fig. 233: Identifying VCT2000 Diagnostic Tool Symbol In VIDA
Courtesy of VOLVO CARS CORPORATION

- **Continue**

  Refer to **VERIFICATION**

TCM-P273800: PRESSURE CONTROL SOLENOID F CONTROL CIRCUIT LOW. GENERAL FAILURE INFORMATION. NO SUB TYPE INFORMATION (B6324S5, TF-80SC; B6324S5, TF-80SC AWD; 2011-2012)

DIAGNOSTIC TROUBLE CODE (DTC) INFORMATION TCM-P273800

see **DIAGNOSTIC TROUBLE CODE (DTC) INFORMATION TCM-P273800**

FAULT-TRACING

see **FAULT-TRACING**

TCM-P273800: PRESSURE REGULATING SOLENOID F CONTROL CIRCUIT LOW. GENERAL FAULT INFORMATION. NO INFORMATION ABOUT FAULT TYPE (B8444S, TF-80SC AWD; 2006-2011)

FAULT TRACING TCM-P273800

CHECKS

CHECKING THE LINE PRESSURE SOLENOID SLC1

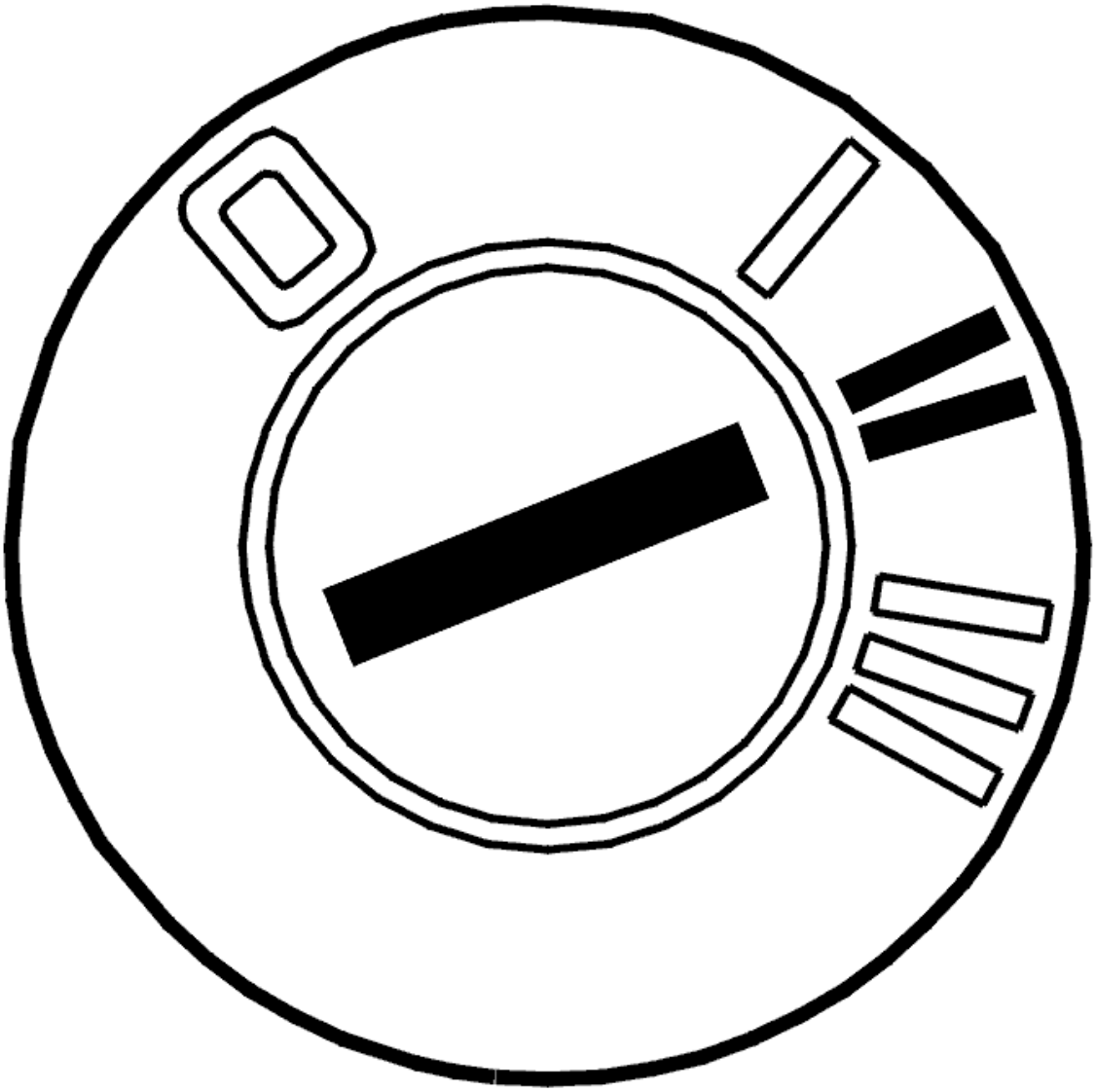

Fig. 234: Identifying Ignition ON
Courtesy of VOLVO CARS CORPORATION

- Ignition on
- Activate solenoid SLC1 by clicking the VCT2000 symbol.

  Read the current though the circuit for solenoid SLC1. The current must oscillate between approximately 100 and 950 mA.

  The fault is permanent if the current does not change.

  If the current oscillates then this would suggest that the fault has previously been present but is no longer active. The fault is intermittent.

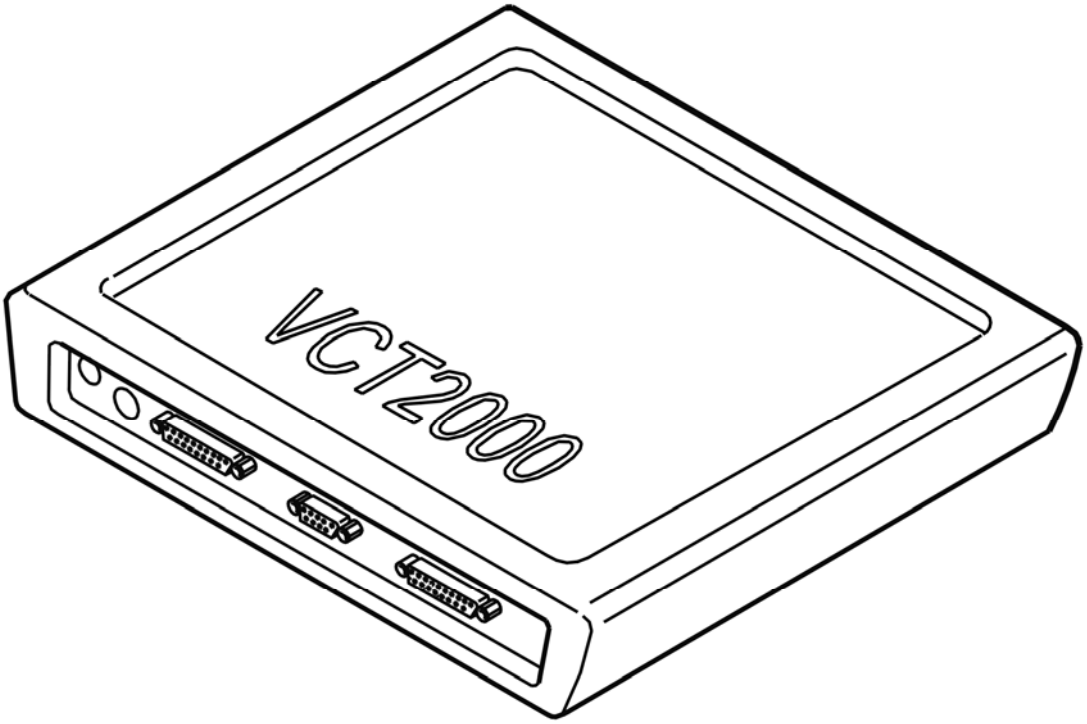

Fig. 235: Identifying VCT2000 Diagnostic Tool Symbol In VIDA
Courtesy of VOLVO CARS CORPORATION

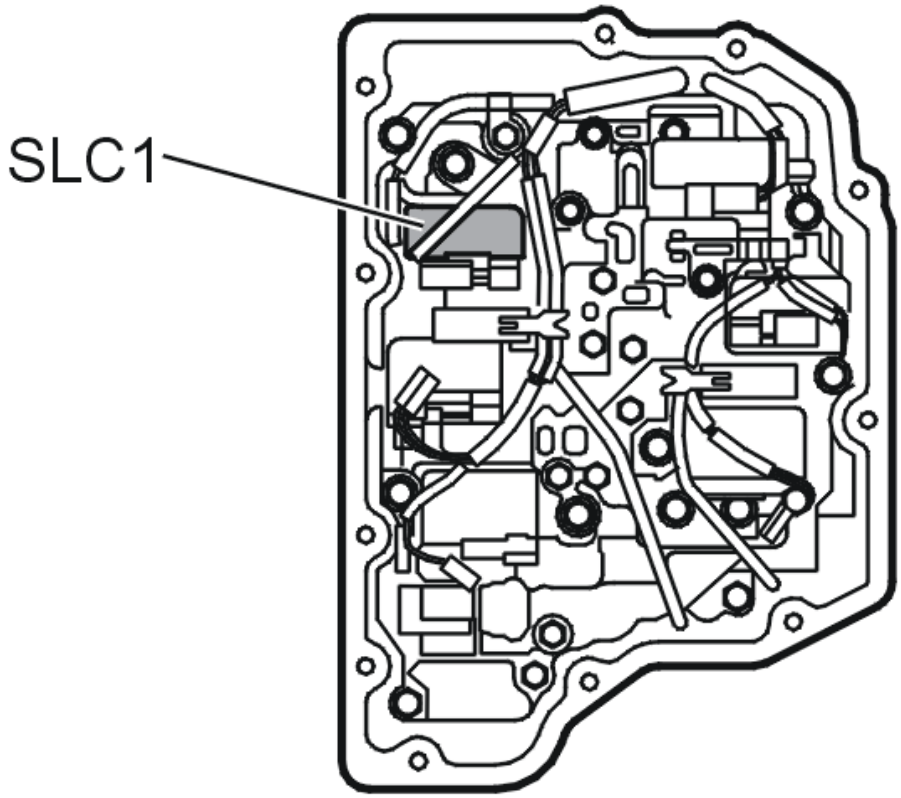

Fig. 236: Identifying Solenoid SLC1
Courtesy of VOLVO CARS CORPORATION

- **Continue**

Refer to **CHECKING THE COMPONENTS AND WIRING**

CHECKING THE COMPONENTS AND WIRING

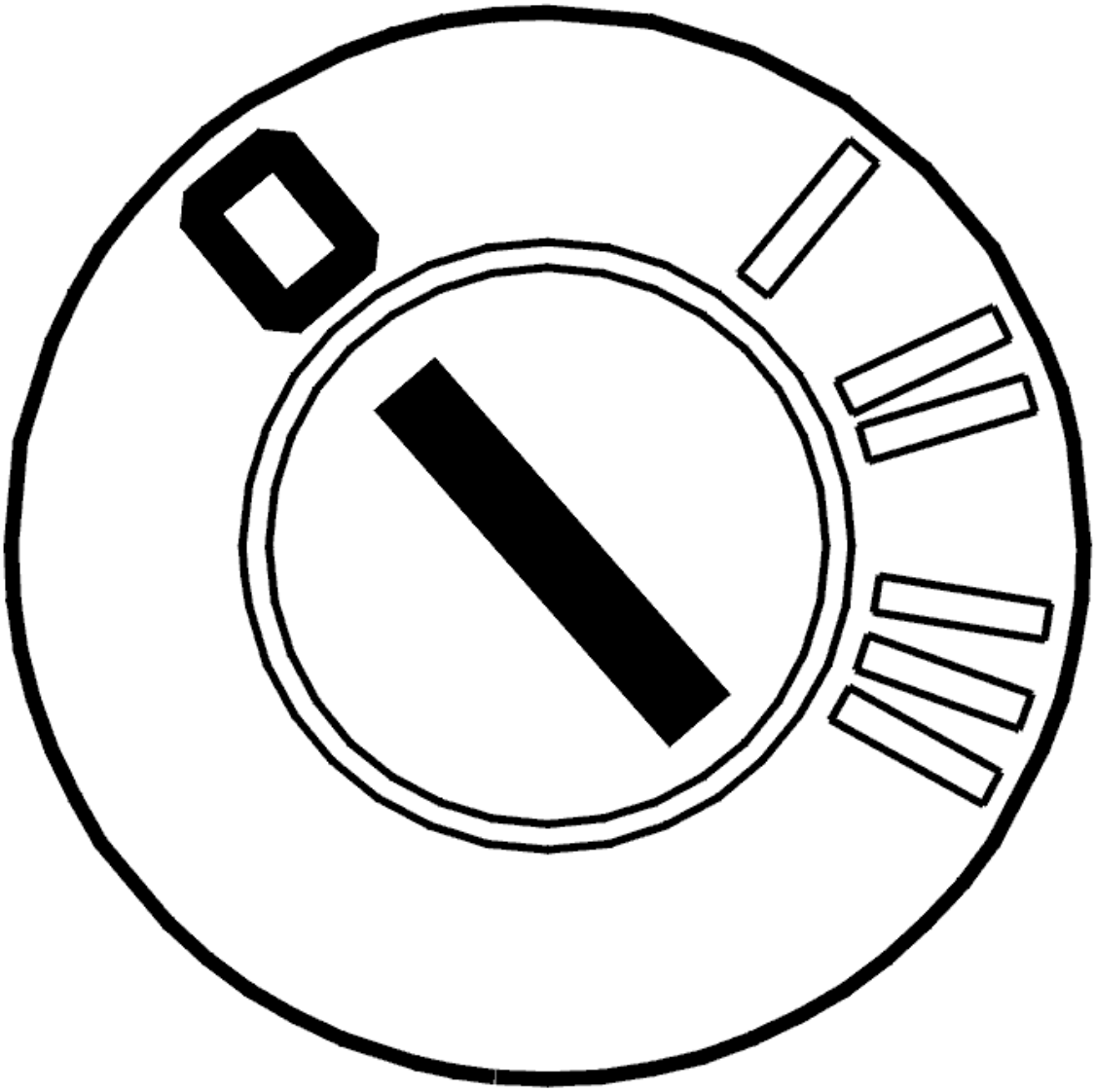

Fig. 237: Identifying Ignition OFF
Courtesy of VOLVO CARS CORPORATION

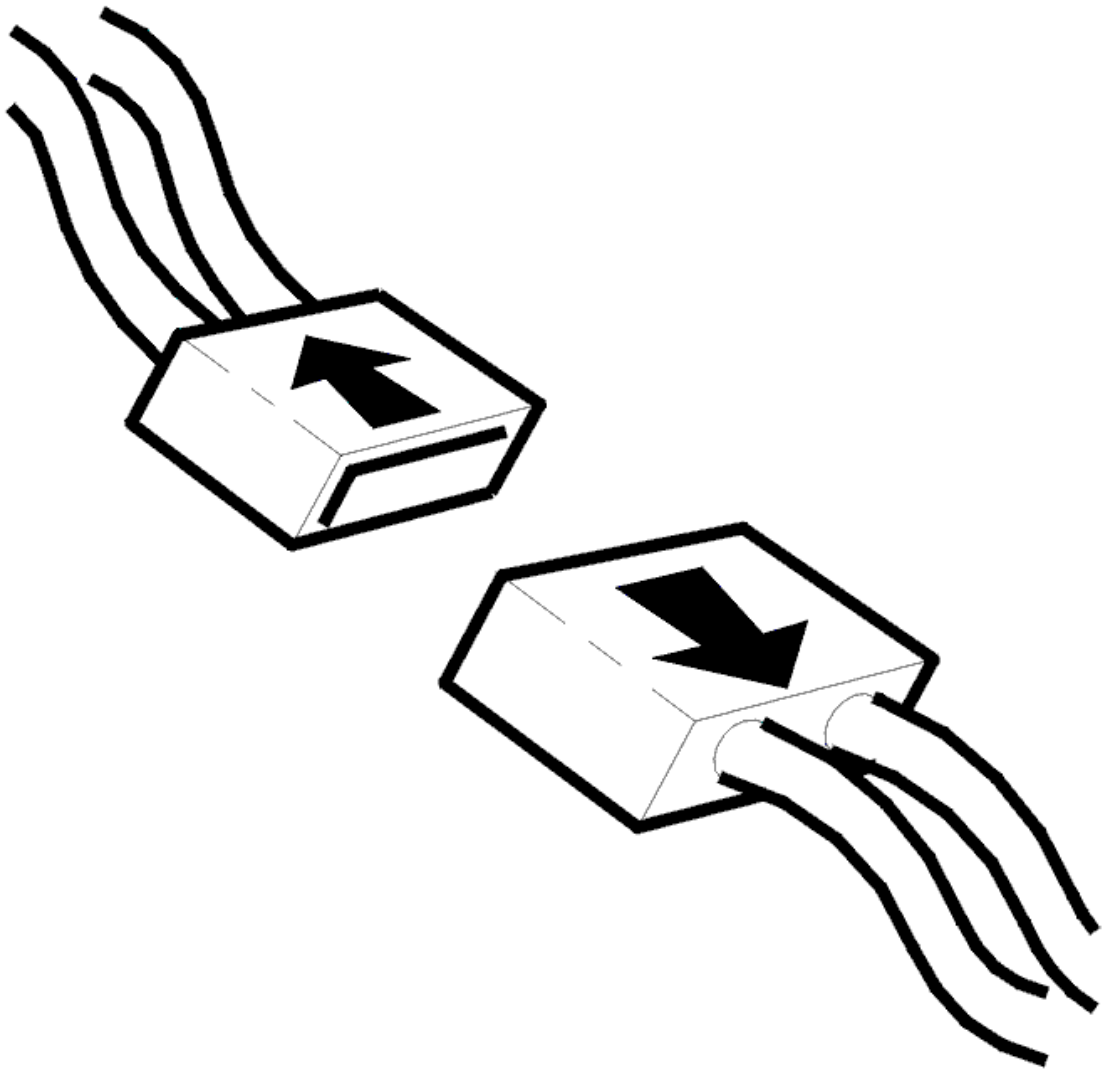

Fig. 238: Identifying Connector(s) Disconnected
Courtesy of VOLVO CARS CORPORATION

- Ignition off
- Open the gearbox control system

  Check connector B (22-pin) for the transmission control module (TCM). Check for damage and pressed in terminal pins. Check for contact resistance and oxidation.

  Check the wiring between the transmission connector terminal #B11 and the connector for solenoid SLC1 terminal #1. Check the wiring between the transmission connector terminal #B10 and the connector for solenoid SLC1 terminal #2. Check for an open circuit. Check for a short-circuit to ground.

  HINT: If no fault is found in the wiring check solenoid SLC1. See CHECKING THE LINE PRESSURE SOLENOID SLT, SLC1, SLC2, SLC3, SLB1 AND LOCK-UP SOLENOID SLU

If no fault is found in the wiring or the component replace the control system.

Remedy as necessary.

Other information

- see **CONNECTING THE BREAKOUT BOX**
- see **SIGNAL DESCRIPTION**
- see **CONTROL SYSTEM, REPLACING**
- see **CABLE HARNESS, CONTROL SYSTEM, GEARBOX, REPLACING**
- To access the transmission control system: **COVER CONTROL SYSTEM, REPLACING (2007-2011)**
- see **CONTENTS**

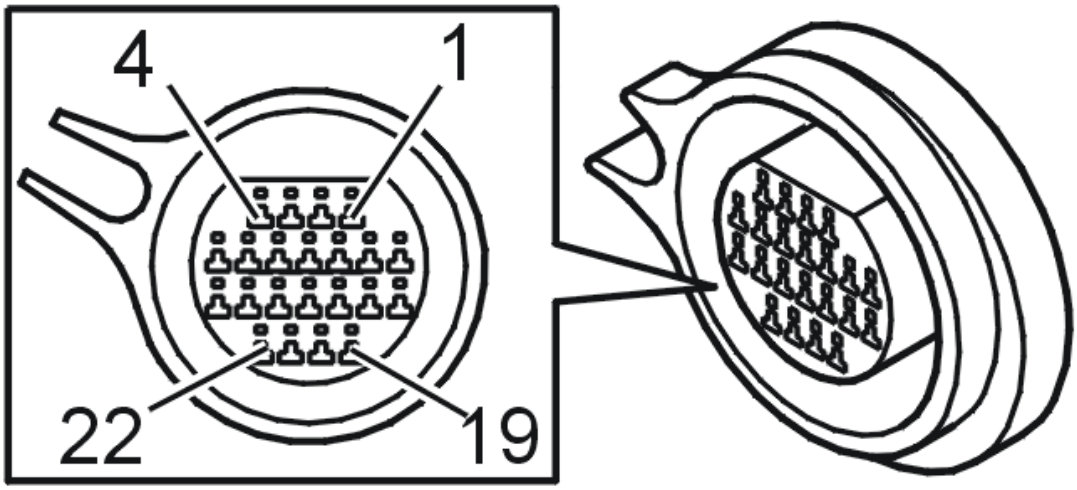

Fig. 239: Identifying Connector B Terminals
Courtesy of VOLVO CARS CORPORATION

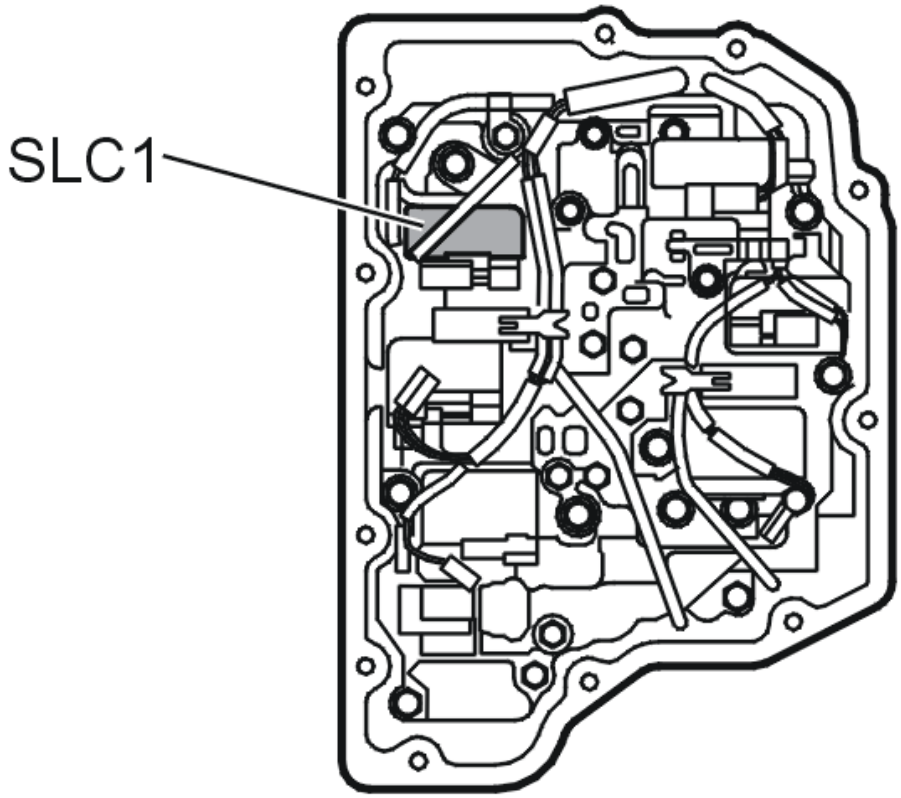

Fig. 240: Identifying Solenoid SLC1
Courtesy of VOLVO CARS CORPORATION

- **Continue**

  Refer to **RESETTING ADAPTATION**

RESETTING ADAPTATION

RESETTING ADAPTATION AND COUNTER FOR "TRANSMISSION OIL, CHANGING"

HINT: The transmission has torque-controlled, adaptive pressure control. The pressure control means that the transmission itself controls the pressure during each shift sequence in order to avoid harsh shifting. Each shift is assessed by the transmission control module (TCM) and is stored in the internal memory, which results in compensation for wear in the transmission and clutch. In order for the transmission to function correctly after repair, it is important to reset the adaptation in the memory. Since the oil is changed during the repair, the counter for "Transmission oil, change" shall also be reset. If the counter is not reset when draining/changing oil, there is a risk that a diagnostic trouble code may be generated under incorrect conditions.

NOTE: **This applies only if the transmission or one of the components in the transmission have been replaced.**

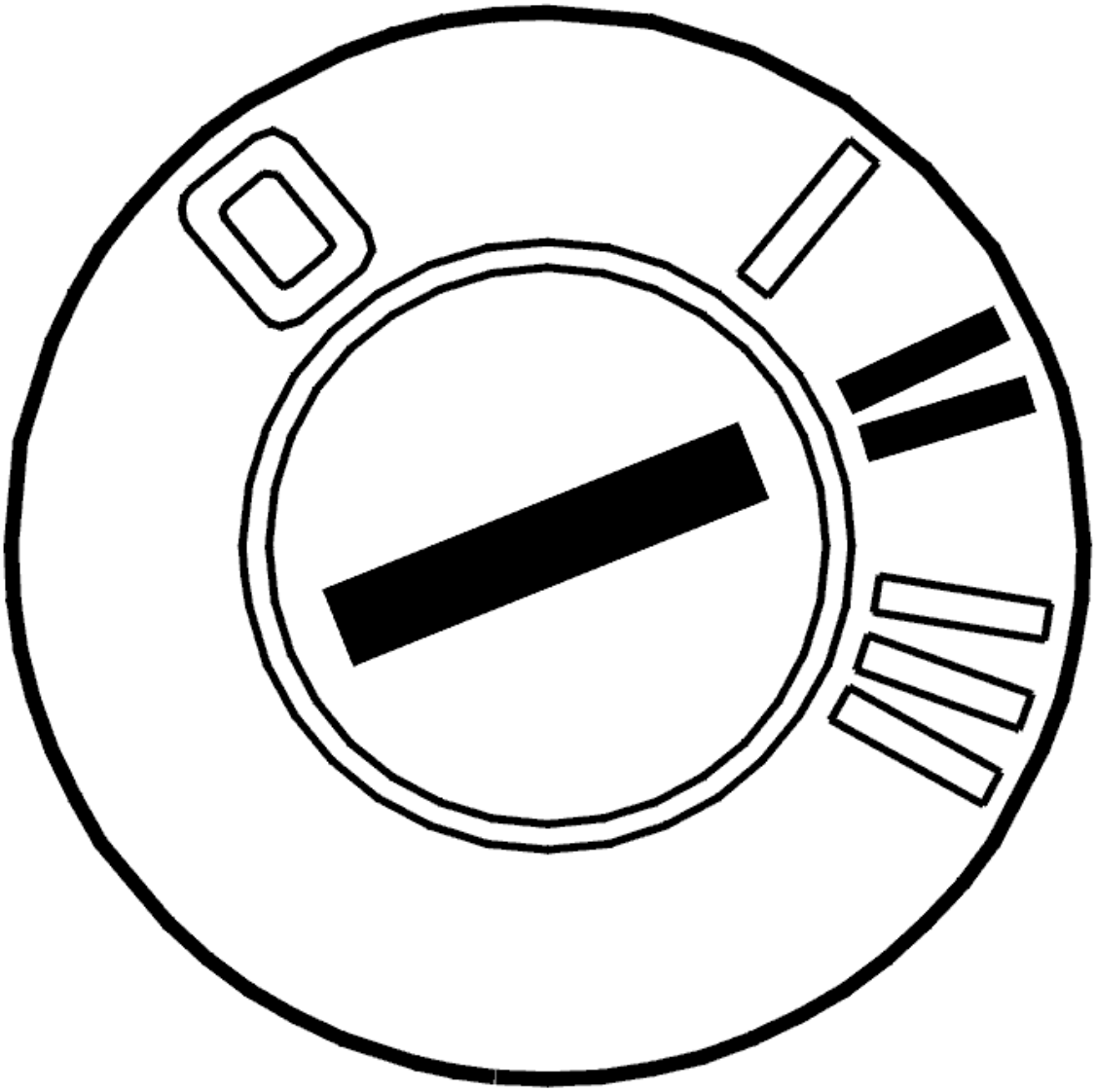

Fig. 241: Identifying Ignition ON
Courtesy of VOLVO CARS CORPORATION

- Ignition on

  Activate reset of the adaptation and the counter by clicking on the symbol for VCT2000.

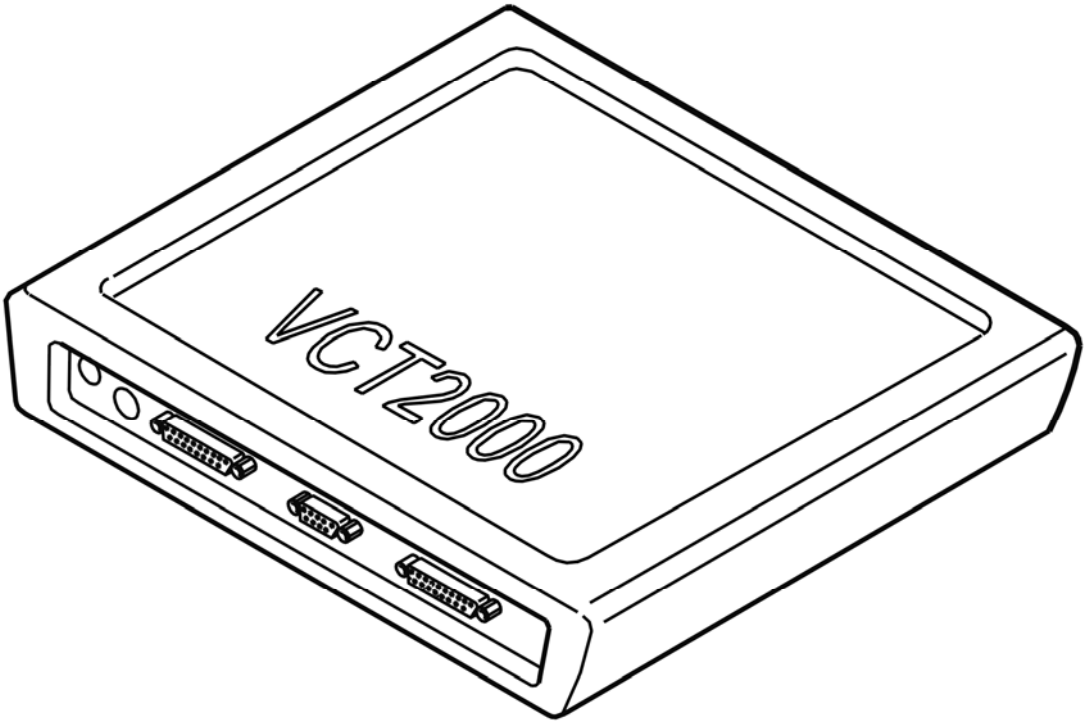

Fig. 242: Identifying VCT2000 Diagnostic Tool Symbol In VIDA
Courtesy of VOLVO CARS CORPORATION

- **Continue**

  Refer to **VERIFICATION**

VERIFICATION

VERIFICATION

HINT: After carrying out the repair, check that the fault has been remedied.

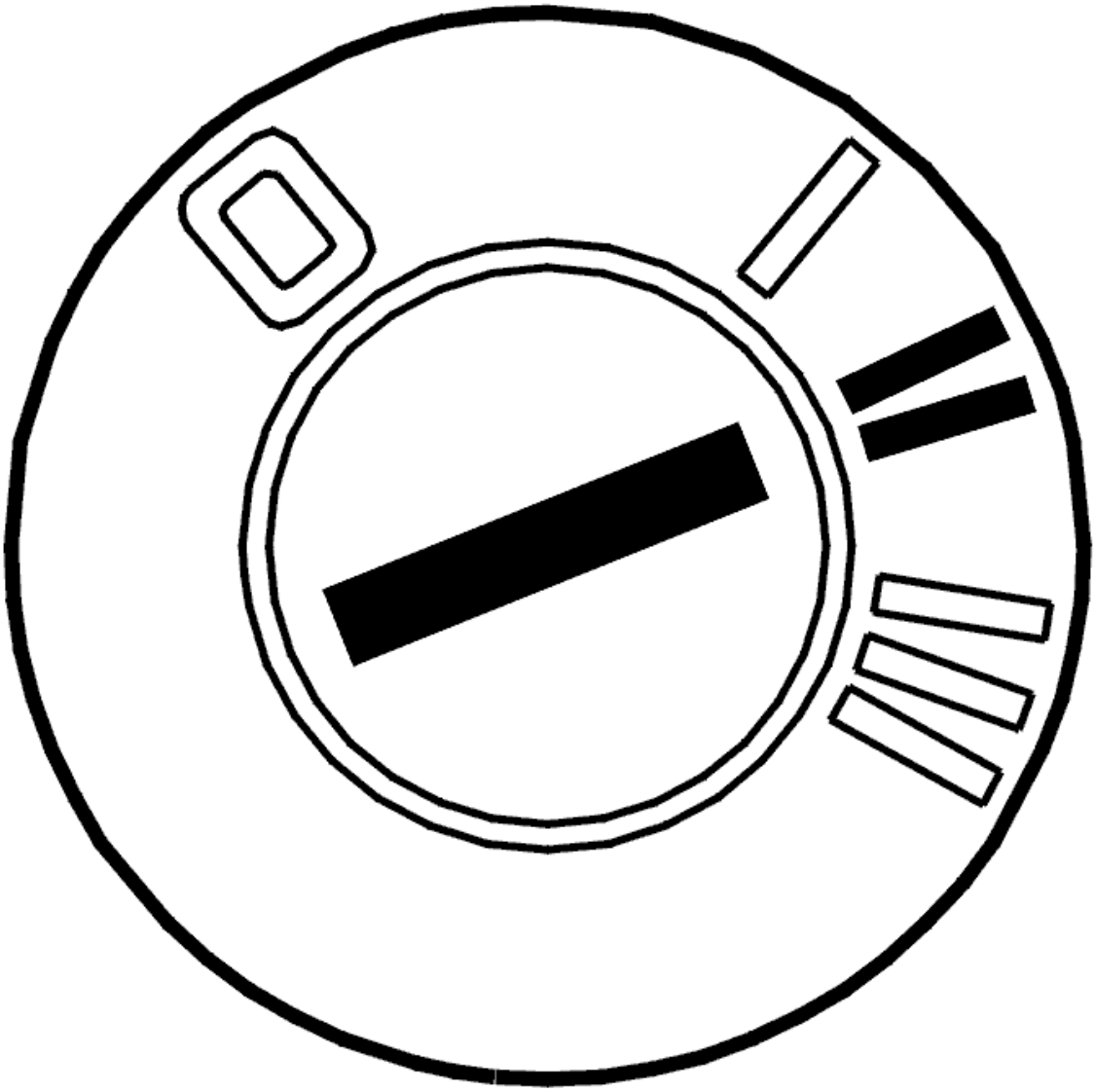

Fig. 243: Identifying Ignition ON
Courtesy of VOLVO CARS CORPORATION

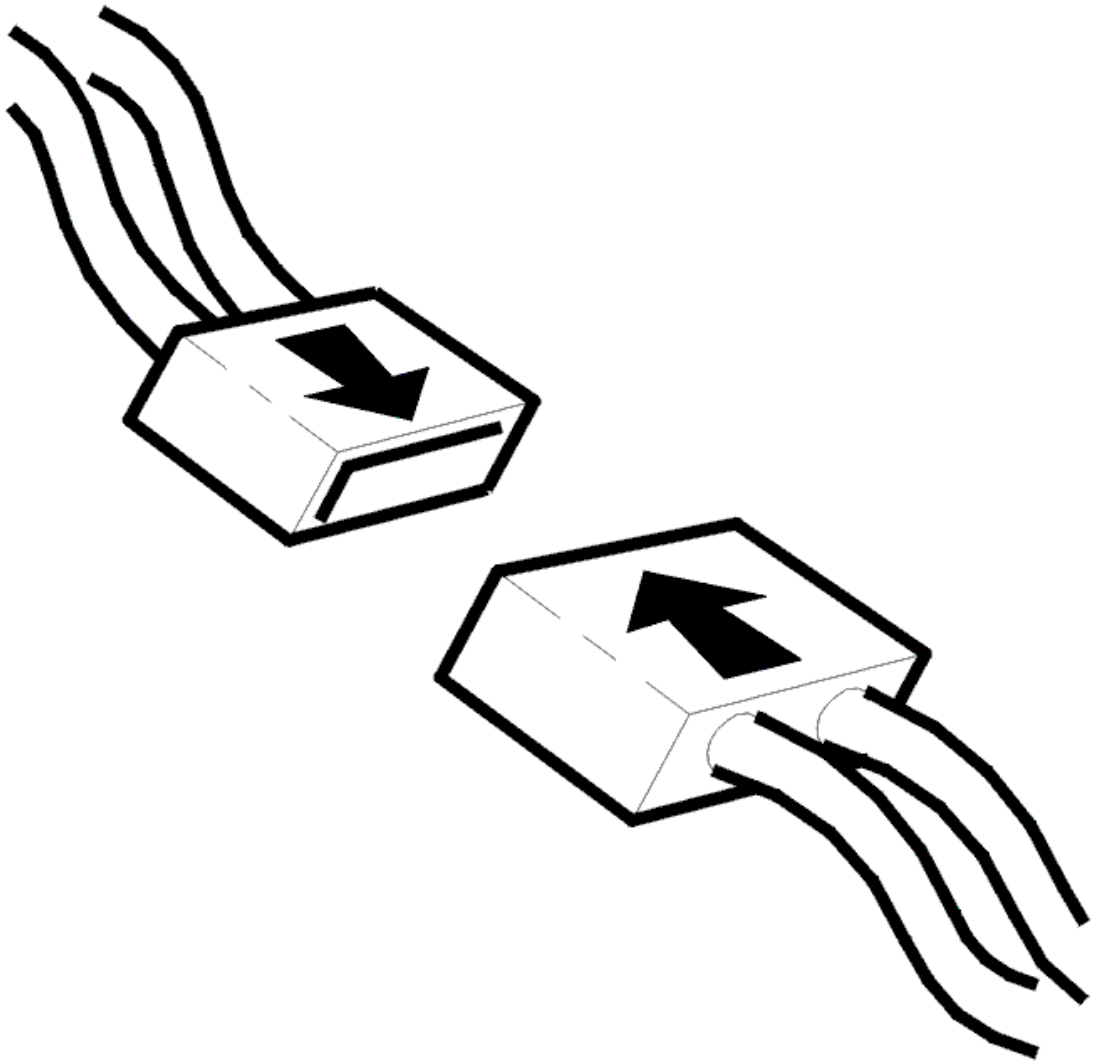

Fig. 244: Identifying Connector(s) Reinstallation
Courtesy of VOLVO CARS CORPORATION

- Ignition off
- Reinstall the components, reconnect the connectors etc.
- Ignition on
- Activate solenoid SLC1 by clicking on the symbol for VCT2000.

  Read off the current through the circuit for solenoid SLC1. The current must oscillate between approximately 0 and 1000 mA.

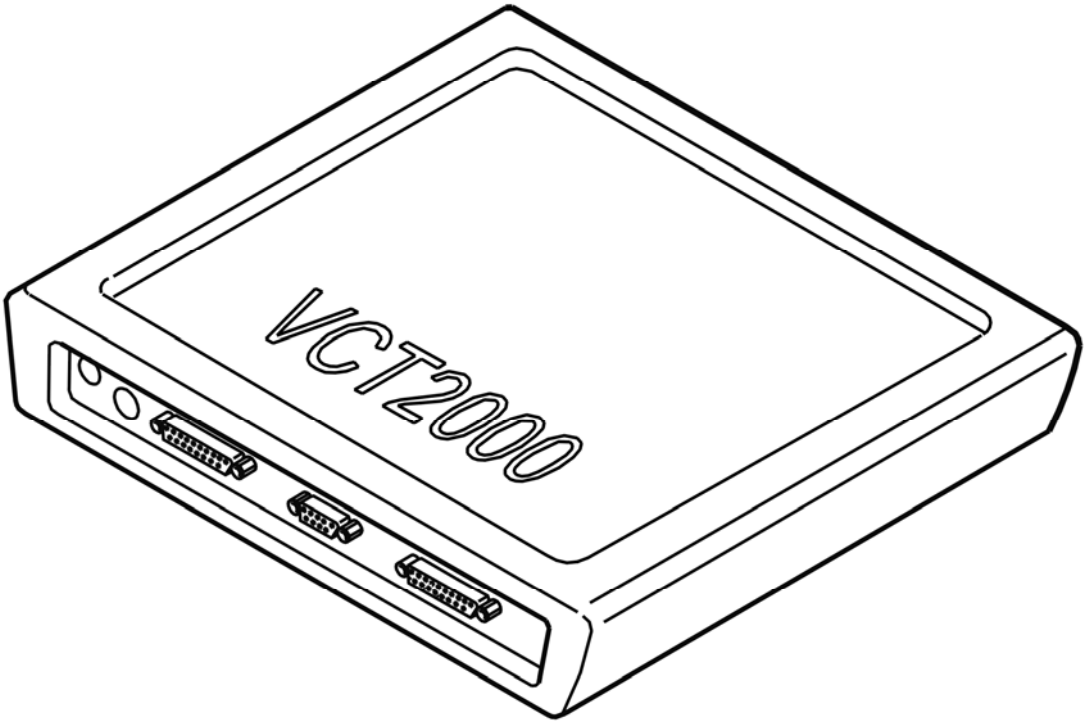

Fig. 245: Identifying VCT2000 Diagnostic Tool Symbol In VIDA
Courtesy of VOLVO CARS CORPORATION

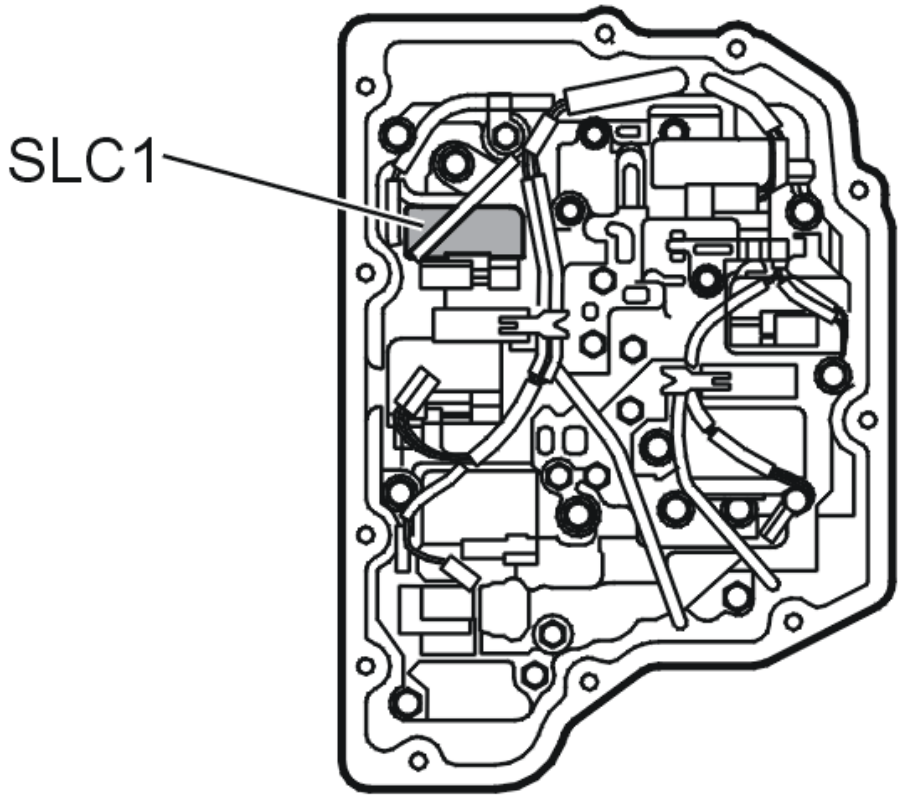

Fig. 246: Identifying Solenoid SLC1
Courtesy of VOLVO CARS CORPORATION

Is the function OK?

- **YES**

  VERIFIED: Troubleshooting has been completed.

- **NO**

  Refer to **INFORMATION**

INFORMATION

FAULT-TRACING INFORMATION

The fault should have been detected and remedied. As this is not the case fault-tracing has failed.

Exit fault-tracing for this diagnostic trouble code (DTC) or make another attempt.

TCM-P273800: PRESSURE REGULATING SOLENOID F CONTROL CIRCUIT LOW. GENERAL FAULT INFORMATION. NO INFORMATION ABOUT FAULT

TYPE (TF-80SC AWD; 2005)

DIAGNOSTIC TROUBLE CODE (DTC) INFORMATION TCM-P273800

Condition

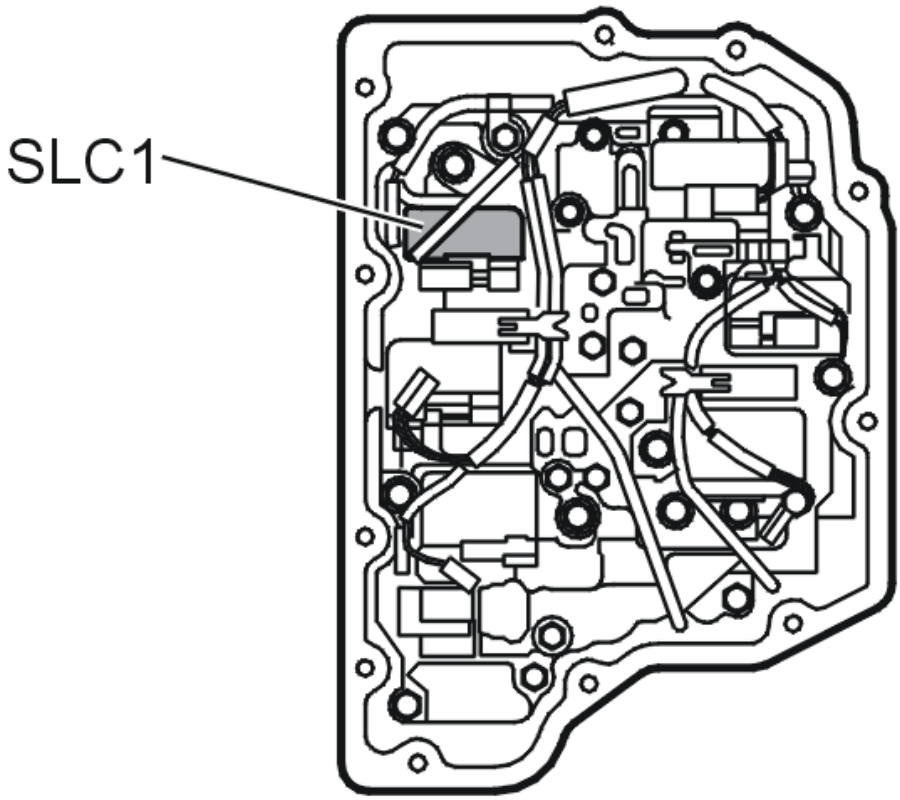

Fig. 247: Identifying Solenoid SLC1
Courtesy of VOLVO CARS CORPORATION

Line pressure solenoid SLC1 controls the line pressure in the transmission. The solenoid is controlled by a power stage located on the output of the transmission control module (TCM). The control module uses the power stage to control the current to the solenoid. Low current gives high line pressure and high current (approximately 1 A) gives a low line pressure. The current strength is affected by the throttle position.

The diagnostic trouble code (DTC) is stored if the transmission control module (TCM) registers an open circuit in the circuit to solenoid SLC1. Solenoid SLC1 cannot control the line pressure.

Substitute Value

- Auxiliary program **Emergency mode 1** in the transmission control module (TCM) has started.

  HINT: EMERGENCY MODE IN CASE OF MALFUNCTION

Possible Source

- Contact resistance in the terminals
- Open circuit in lead for control signal or signal ground.
- Solenoid not working.
- The transmission control module (TCM) does not function.

Fault symptom[s]

- General warning lamp lit
- Malfunction indicator lamp (MIL) lit.
- No lock-up function.
- Harsh gear changing

FAULT TRACING TCM-P273800

see **FAULT TRACING TCM-P273800**

TCM-P273900: PRESSURE CONTROL SOLENOID F CONTROL CIRCUIT HIGH. GENERAL FAILURE INFORMATION. NO SUB TYPE INFORMATION (B6324S, TF-80SC; B6324S, TF-80SC AWD; 2007-2010)

DIAGNOSTIC TROUBLE CODE (DTC) INFORMATION TCM-P273900

Condition

The solenoids are controlled by power stages in the transmission control module (TCM). The transmission control module (TCM) opens the power stages to activate the solenoids and sends a voltage through the circuit.

The diagnostic trouble code (DTC) is stored if the control module detects that:

- The measured current value is higher than permitted in the circuit for solenoid SLC1.

The control module's test for the diagnostic trouble code (DTC) starts in the event of:

- Ignition on.

NOTE: **The control module can only detect the fault once the test has been started and the diagnostic trouble code (DTC) is stored when the conditions are met.**

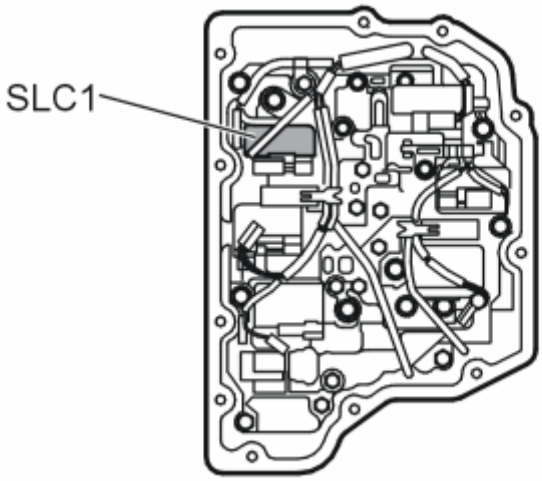

Fig. 248: Identifying Solenoid SLC1
Courtesy of VOLVO CARS CORPORATION

Substitute Value

- Auxiliary program **Emergency mode 1** in the transmission control module (TCM) has started.

  HINT: EMERGENCY MODE IN THE EVENT OF A FAULT

Possible Source

- Control signal lead short-circuited to voltage.
- Linear pressure solenoid SLC1 not working.
- Internal fault in the transmission control module (TCM).

Fault symptom[s]

- General warning lamp lit
- Malfunction indicator light (MIL), on
- Abnormal slipping gearshifts
- Rough gear shift
- No gear shift

FAULT-TRACING

CHECKS

CHECKING THE LINE PRESSURE SOLENOID SLC1

Fig. 249: Identifying Ignition ON
Courtesy of VOLVO CARS CORPORATION

- Ignition on.
- Activate solenoid SLC1 by clicking the VCT2000 symbol.

  Read the current through the circuit for solenoid SLC1. The current should oscillate between 100 and 950 mA.

  The fault is permanent if the current does not change.

  If the current changes, this is an indication that the fault was present previously but is not active at the moment, i. e. an intermittent fault.

Fig. 250: Identifying VCT2000 Diagnostic Tool Symbol In VIDA
Courtesy of VOLVO CARS CORPORATION

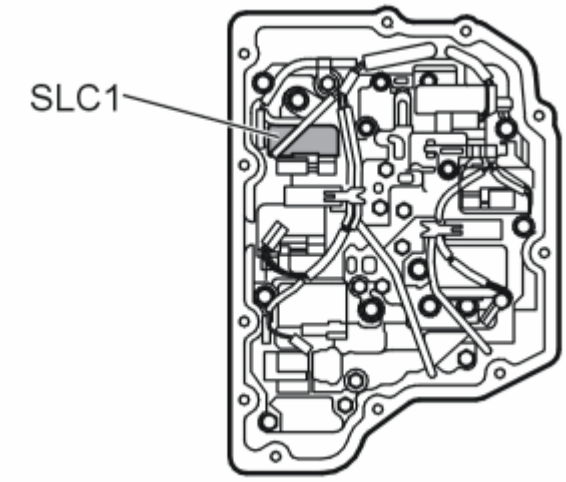

Fig. 251: Identifying Solenoid SLC1
Courtesy of VOLVO CARS CORPORATION

- **Continue**

Refer to **CHECKING THE COMPONENTS AND WIRING**

CHECKING THE COMPONENTS AND WIRING

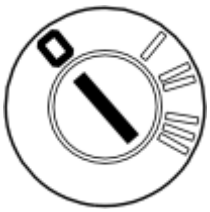

Fig. 252: Identifying Ignition OFF
Courtesy of VOLVO CARS CORPORATION

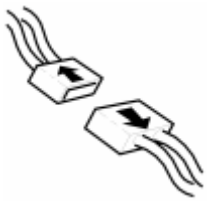

Fig. 253: Identifying Connectors Disconnected
Courtesy of VOLVO CARS CORPORATION

- Ignition off.
- Open the transmission control system.

Check the cables for short circuit to voltage.

Take readings between:

- Transmission connector #B11 and the connector for solenoid SLC1 #1.
- Transmission connector #B10 and the connector for solenoid SLC1 #1.

Also check the cables for a short-circuit to each other.

HINT: If no fault is found in the wiring, check solenoid SLC1. See CHECKING INTERNAL COMPONENTS OF THE TRANSMISSION

If no fault is found in the wiring or the component replace the control system.

Remedy as necessary.

Other information

- see **CONNECTING THE BREAKOUT BOX**
- see **SIGNAL SPECIFICATION**
- see **VALVE HOUSING**

- see **TRANSMISSION CONTROL UNIT WIRING HARNESS**
- To access the transmission control system:**COVER CONTROL SYSTEM, REPLACING (2007-2011)**
- see **CHECKING WIRING AND TERMINALS**

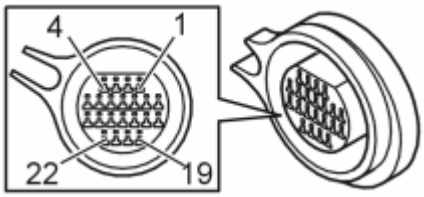

Fig. 254: Identifying Connector B Terminals
Courtesy of VOLVO CARS CORPORATION

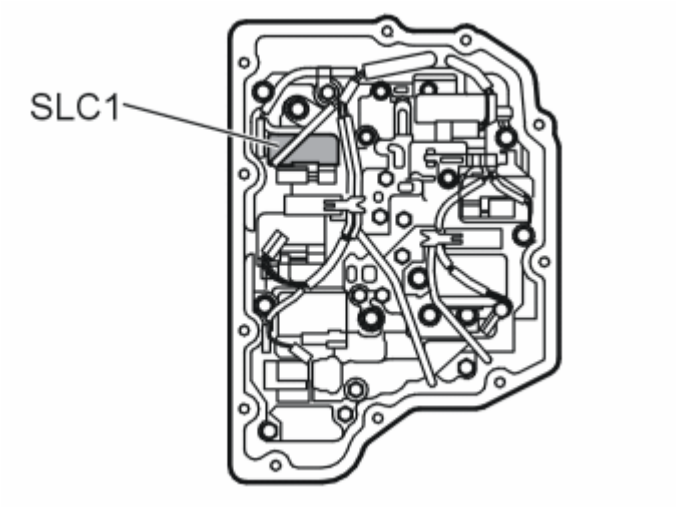

Fig. 255: Identifying Solenoid SLC1
Courtesy of VOLVO CARS CORPORATION

- **Continue**

  Refer to **RESETTING ADAPTATION**

VERIFICATION

VERIFICATION

HINT: After carrying out the repair, check that the fault has been remedied.

Fig. 256: Identifying Ignition ON
Courtesy of VOLVO CARS CORPORATION

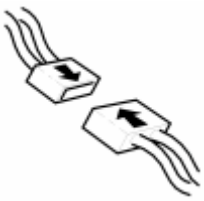

Fig. 257: Identifying Connector(s) Reinstallation
Courtesy of VOLVO CARS CORPORATION

- Ignition off.
- Reinstall the connectors, components etc.
- Ignition on.
- Activate solenoid SLC1 by clicking the VCT2000 symbol.

  The current should oscillate between 100 and 950 mA.

Fig. 258: Identifying VCT2000 Diagnostic Tool Symbol In VIDA
Courtesy of VOLVO CARS CORPORATION

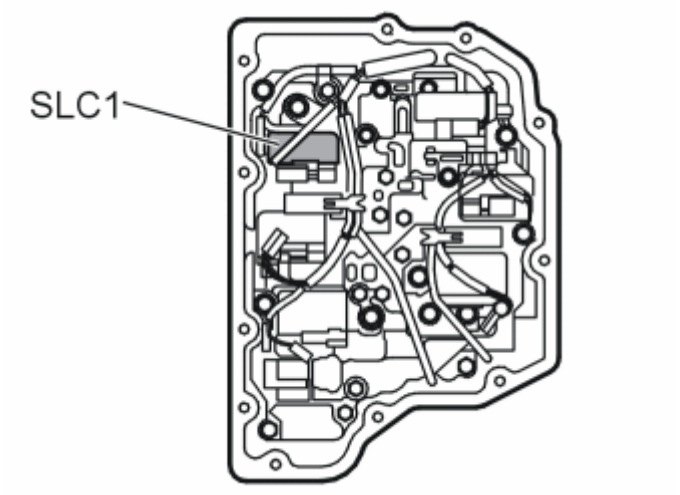

Fig. 259: Identifying Solenoid SLC1
Courtesy of VOLVO CARS CORPORATION

Is the function OK?

- **YES**

  VERIFIED: Troubleshooting has been completed.

- **NO**

  Refer to **INFORMATION**

INFORMATION

FAULT-TRACING INFORMATION

The fault should have been detected and remedied. As this is not the case fault-tracing has failed.

Exit fault-tracing for this diagnostic trouble code (DTC) or make another attempt.

RESETTING ADAPTATION

RESETTING THE ADAPTATION AND THE COUNTER FOR "TRANSMISSION OIL, REPLACE"

HINT: The transmission has torque-regulated, adaptive pressure regulation. The pressure regulator enables the transmission to regulate pressure during each shift to prevent hard shifting. Each shift is assessed by the transmission control module (TCM) and is stored in the internal memory. This makes it possible to compensate for transmission and clutch wear. It is important that the adaptation in the memory is reset so that the transmission works normally after the repair. Because the fluid was changed during the repair, the counter for transmission fluid change must also be reset. If the counter is not reset during draining/replacement, a diagnostic trouble code may be generated under the wrong conditions.

NOTE: This applies only if the transmission or one of the components in the transmission have been replaced.

Fig. 260: Identifying Ignition ON
Courtesy of VOLVO CARS CORPORATION

- Ignition on.

  Click on the VCT2000 symbol to reset the adaptation and counter.

Fig. 261: Identifying VCT2000 Diagnostic Tool Symbol In VIDA
Courtesy of VOLVO CARS CORPORATION

- **Continue**

  Refer to **VERIFICATION**

TCM-P273900: PRESSURE CONTROL SOLENOID F CONTROL CIRCUIT HIGH. GENERAL FAILURE INFORMATION. NO SUB TYPE INFORMATION (B6324S5, TF-80SC; B6324S5, TF-80SC AWD; 2011-2012)

DIAGNOSTIC TROUBLE CODE (DTC) INFORMATION TCM-P273900

see **DIAGNOSTIC TROUBLE CODE (DTC) INFORMATION TCM-P273900**

FAULT-TRACING

see **FAULT-TRACING**

TCM-P273900: PRESSURE REGULATING SOLENOID F CONTROL CIRCUIT HIGH. GENERAL FAULT INFORMATION. NO INFORMATION ABOUT FAULT TYPE (B8444S, TF-80SC AWD; 2006-2011)

DIAGNOSTIC TROUBLE CODE (DTC) INFORMATION TCM-P273900

Condition

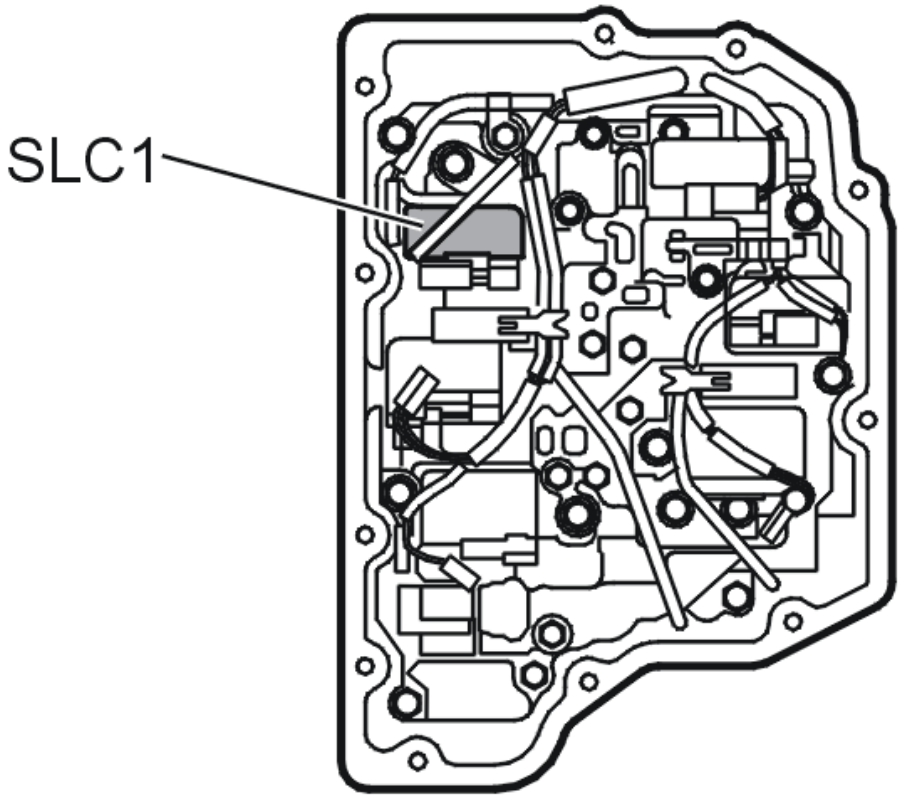

Fig. 262: Identifying Solenoid SLC1
Courtesy of VOLVO CARS CORPORATION

The solenoids are controlled using the power stage in the transmission control module (TCM). The transmission control module (TCM) opens the power stage when the solenoids are to be activated so that the circuit receives a voltage.

If the transmission control module (TCM) registers that the measured current is higher than the circuit for the SLC1 solenoid allows, the diagnostic trouble code (DTC) is generated.

The diagnostic trouble code can be diagnosed when the ignition is on.

Substitute Value

- Auxiliary program **Emergency mode 1** in the transmission control module (TCM) has started.

  HINT: EMERGENCY MODE IN CASE OF MALFUNCTION

Possible Source

- Control signal lead short-circuited to voltage.
- Line pressure solenoid does not work.
- Internal fault in transmission control module (TCM).

Fault symptom[s]

- General warning lamp lit
- Malfunction indicator lamp (MIL) lit.
- Abnormally slipping gears.
- Harsh gear changing
- No gear changing.

FAULT TRACING TCM-P273900

CHECKS

CHECKING THE LOCK-UP SOLENOID SLC1

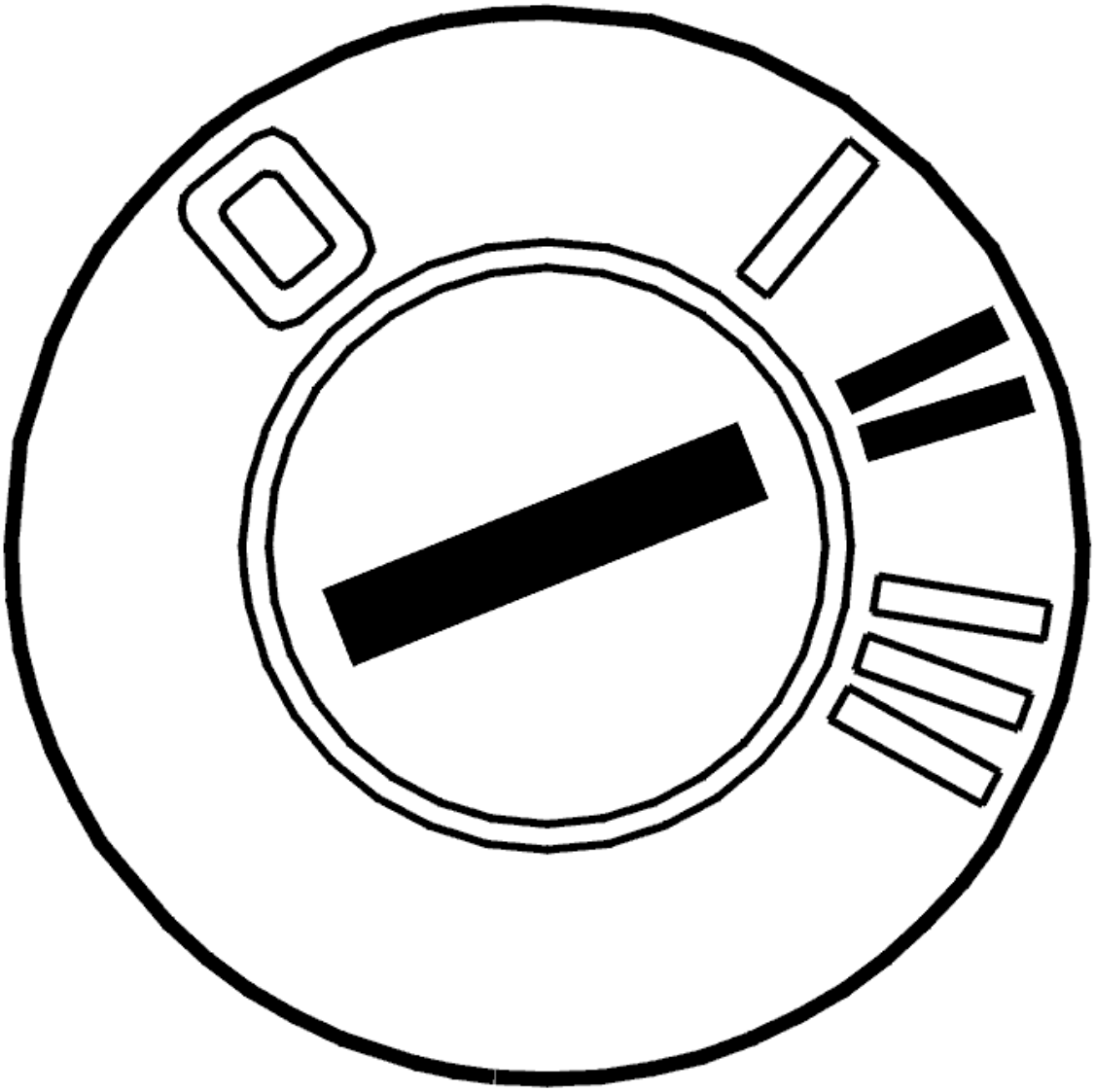

Fig. 263: Identifying Ignition ON

Courtesy of VOLVO CARS CORPORATION

- Ignition on
- Activate solenoid SLC1 by clicking the VCT2000 symbol.

  Read the current though the circuit for solenoid SLC1. The current must oscillate between approximately 100 and 950 mA.

  The fault is permanent if the current does not change.

  If the current oscillates then this would suggest that the fault has previously been present but is no longer active. The fault is intermittent.

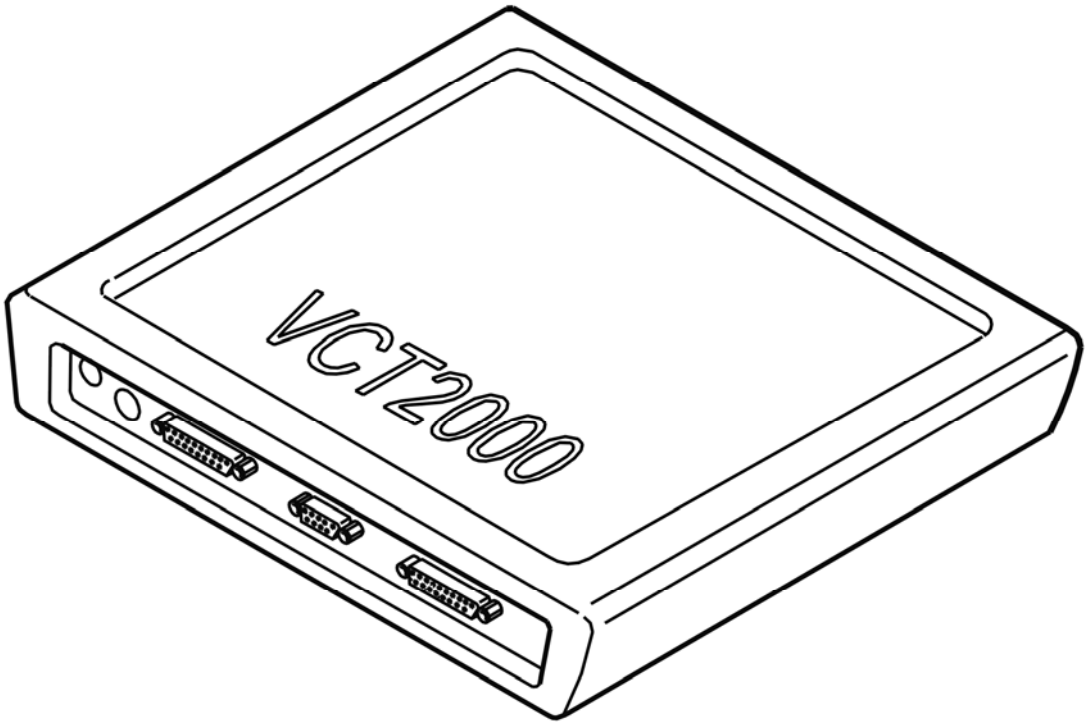

Fig. 264: Identifying VCT2000 Diagnostic Tool Symbol In VIDA
Courtesy of VOLVO CARS CORPORATION

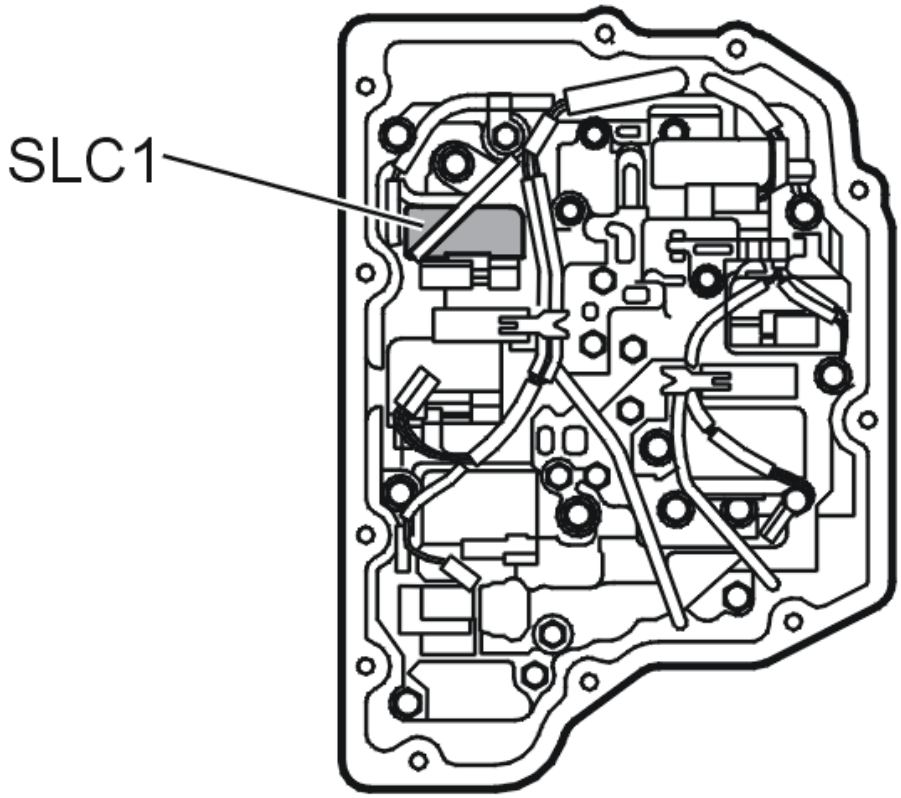

Fig. 265: Identifying Solenoid SLC1
Courtesy of VOLVO CARS CORPORATION

- **Continue**

Refer to **CHECKING THE COMPONENTS AND WIRING**

CHECKING THE COMPONENTS AND WIRING

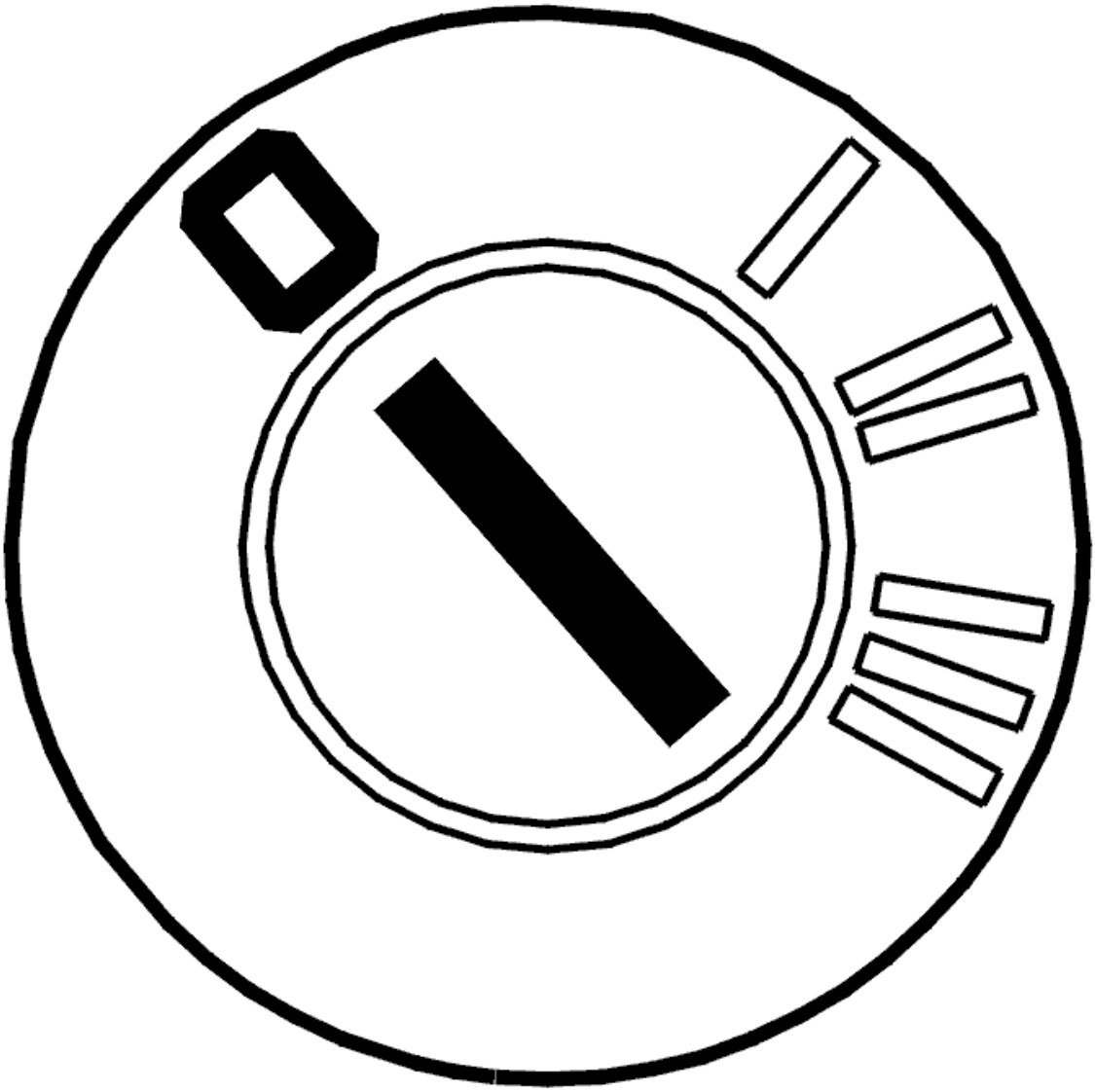

Fig. 266: Identifying Ignition OFF
Courtesy of VOLVO CARS CORPORATION

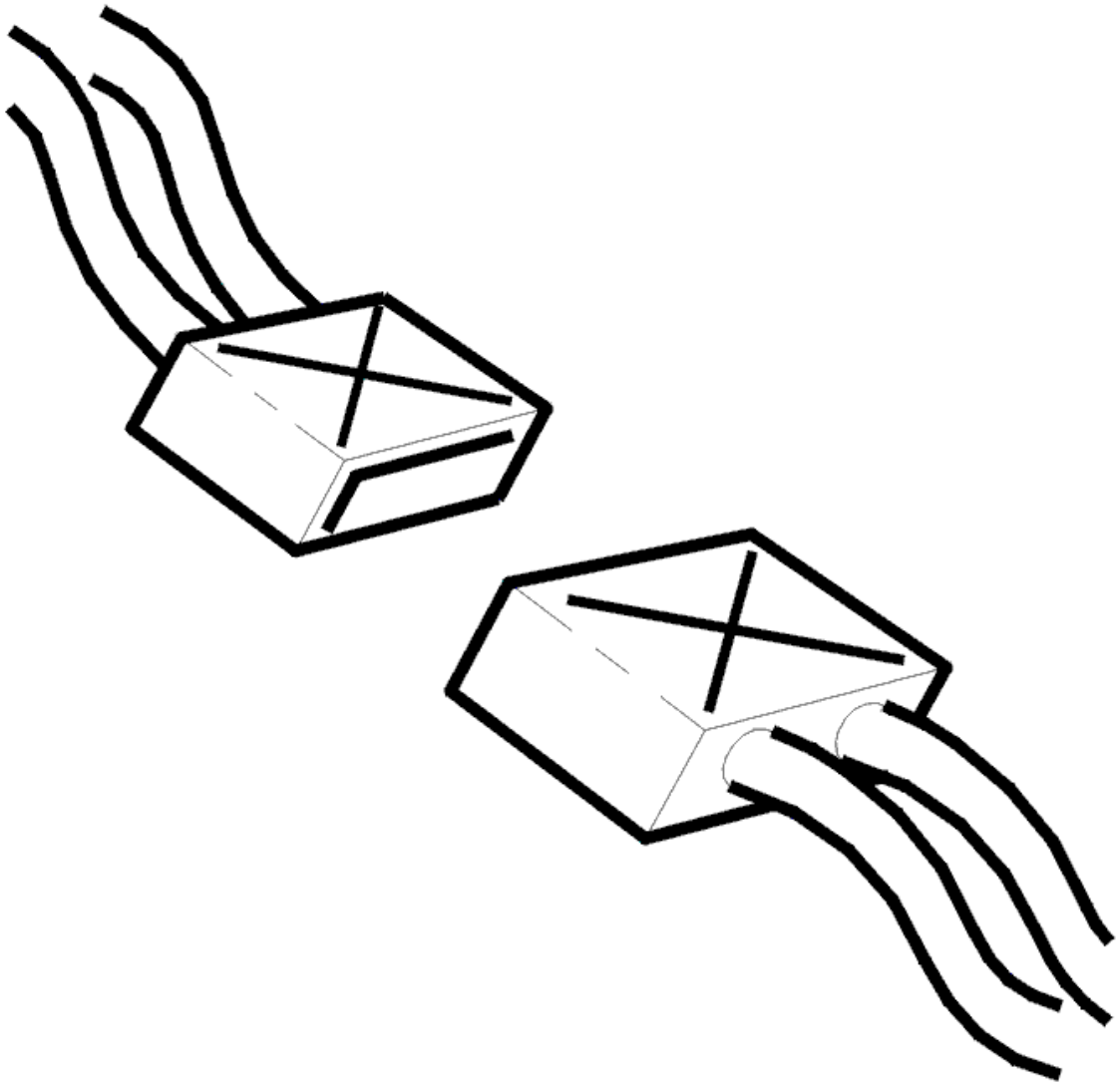

Fig. 267: Identifying Connector
Courtesy of VOLVO CARS CORPORATION

- Ignition off
- Open the gearbox control system

  Check the wiring between transmission connector terminal #B11 and solenoid SLC1 connector terminal #1. Check the wiring between transmission connector terminal #B10 and solenoid SLC1 connector terminal #2. Check for a short-circuit to supply voltage. Check the wiring for short-circuits to each other.

  HINT: If no fault is found in the wiring check solenoid SLC1. See CHECKING THE LINE PRESSURE SOLENOID SLT, SLC1, SLC2, SLC3, SLB1 AND LOCK-UP SOLENOID SLU

  If no fault is found in the wiring or the component replace the control system.

  Remedy as necessary.

Other information

- see **CONNECTING THE BREAKOUT BOX**
- see **SIGNAL DESCRIPTION**
- see **CONTROL SYSTEM, REPLACING**
- see **CABLE HARNESS, CONTROL SYSTEM, GEARBOX, REPLACING**
- To access the transmission control system: **COVER CONTROL SYSTEM, REPLACING (2007-2011)**
- see **CONTENTS**

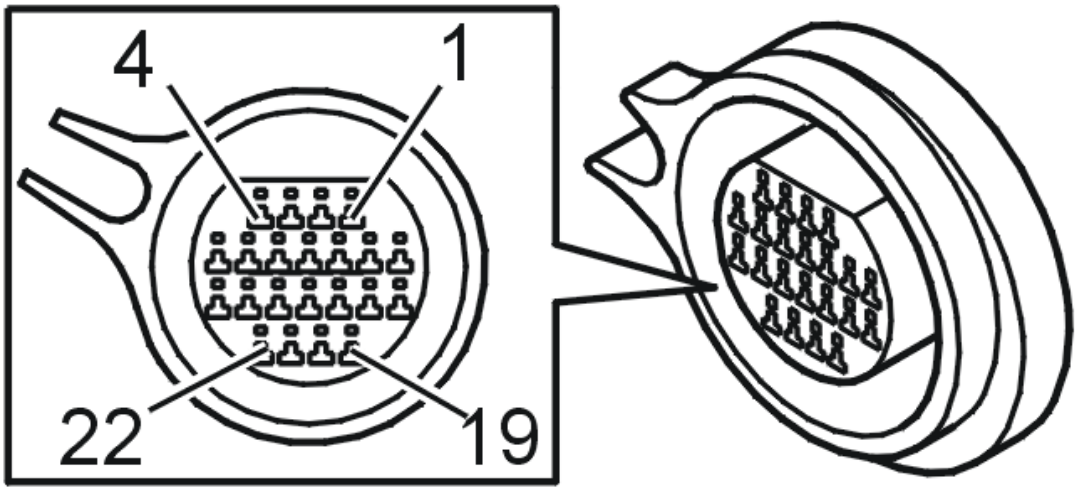

Fig. 268: Identifying Connector B Terminals
Courtesy of VOLVO CARS CORPORATION

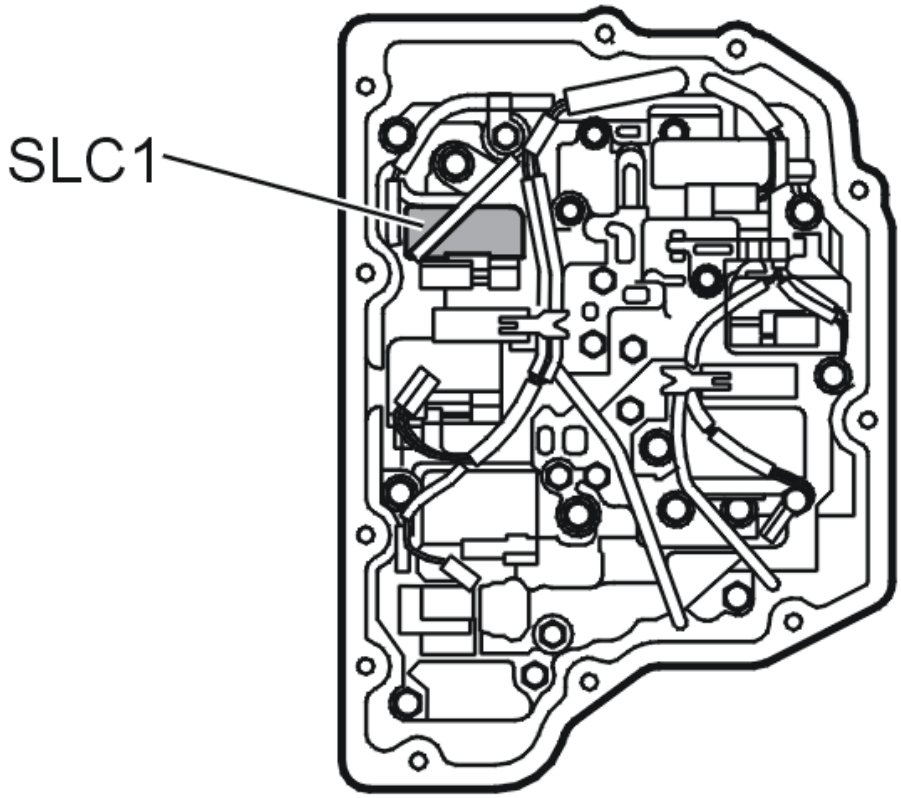

Fig. 269: Identifying Solenoid SLC1
Courtesy of VOLVO CARS CORPORATION

- **Continue**

  Refer to **RESETTING ADAPTATION**

RESETTING ADAPTATION

RESETTING ADAPTATION AND COUNTER FOR "TRANSMISSION OIL, CHANGING"

HINT: The transmission has torque-controlled, adaptive pressure control. The pressure control means that the transmission itself controls the pressure during each shift sequence in order to avoid harsh shifting. Each shift is assessed by the transmission control module (TCM) and is stored in the internal memory, which results in compensation for wear in the transmission and clutch. In order for the transmission to function correctly after repair, it is important to reset the adaptation in the memory. Since the oil is changed during the repair, the counter for "Transmission oil, change" shall also be reset. If the counter is not reset when draining/changing oil, there is a risk that a diagnostic trouble code may be generated under incorrect conditions.

NOTE: **This applies only if the transmission or one of the components in the transmission have been replaced.**

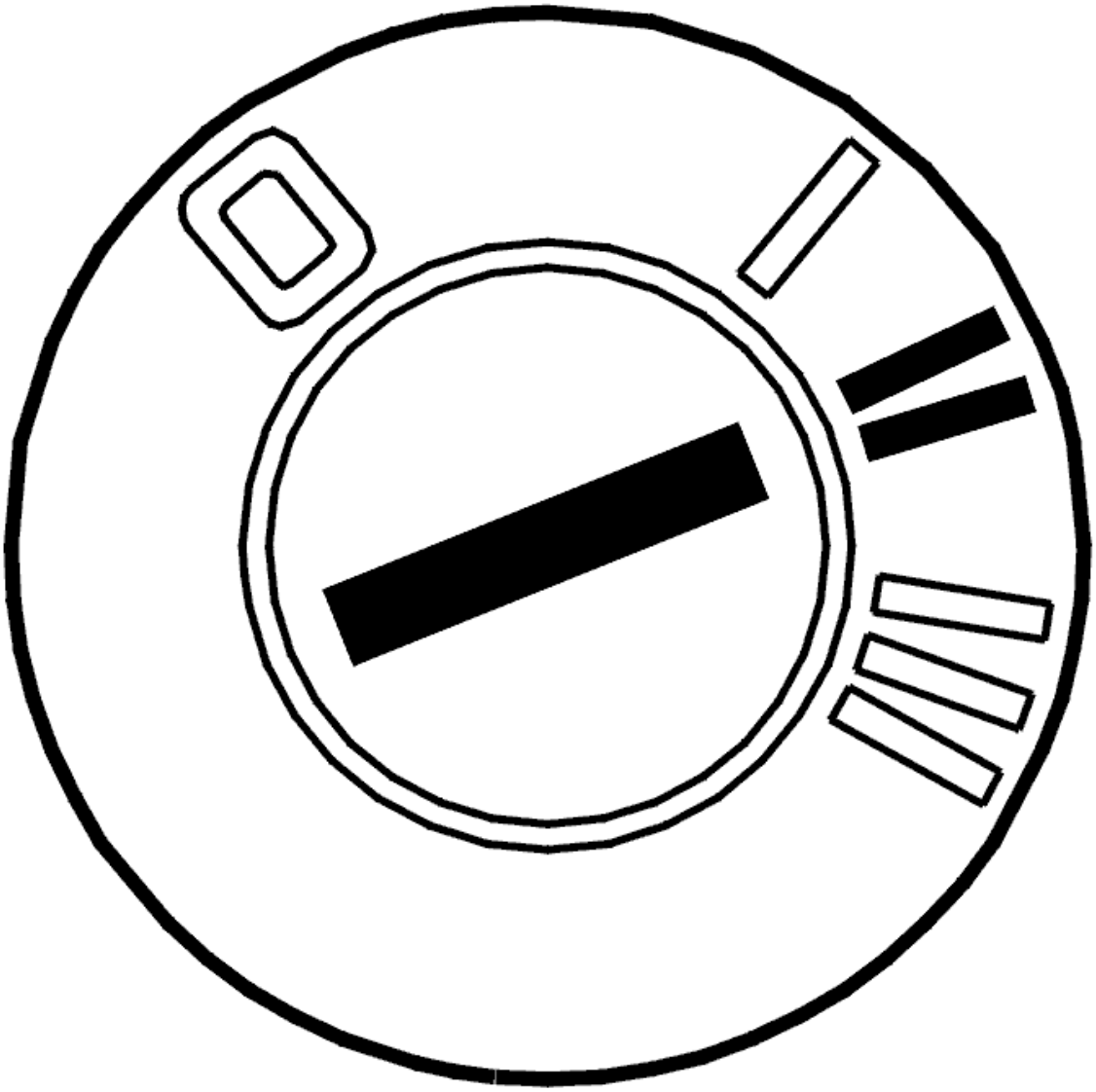

Fig. 270: Identifying Ignition ON
Courtesy of VOLVO CARS CORPORATION

- Ignition on

  Activate reset of the adaptation and the counter by clicking on the symbol for VCT2000.

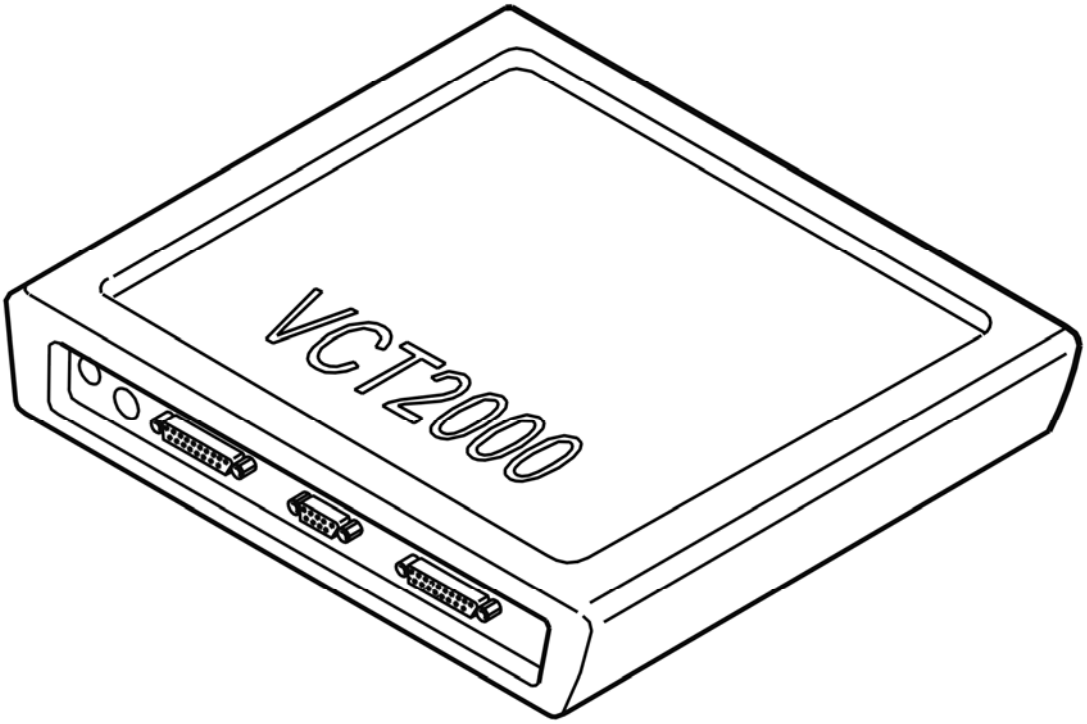

Fig. 271: Identifying VCT2000 Diagnostic Tool Symbol In VIDA
Courtesy of VOLVO CARS CORPORATION

- **Continue**

  Refer to **VERIFICATION**

VERIFICATION

VERIFICATION

HINT: After carrying out the repair, check that the fault has been remedied.

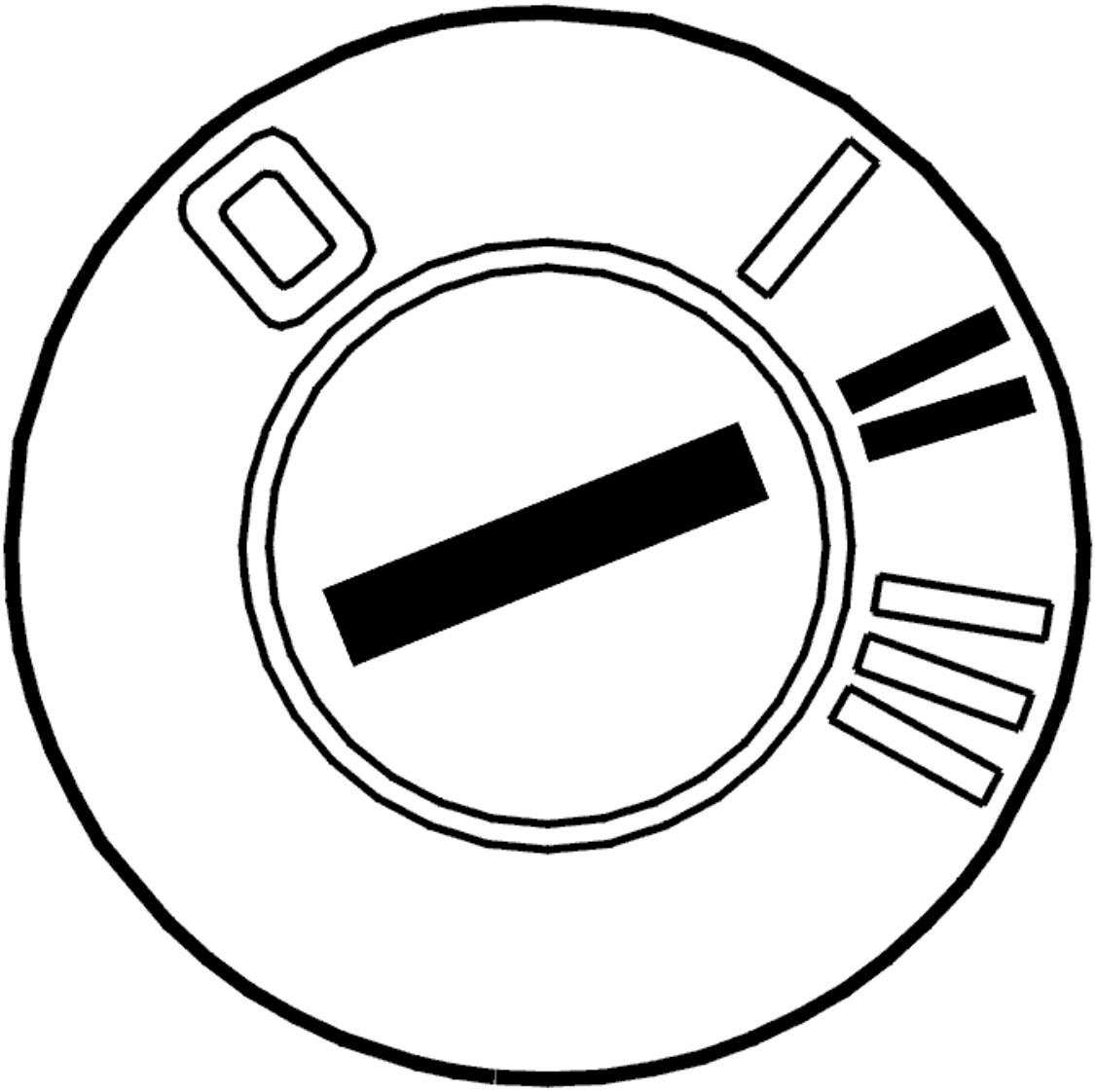

Fig. 272: Identifying Ignition ON
Courtesy of VOLVO CARS CORPORATION

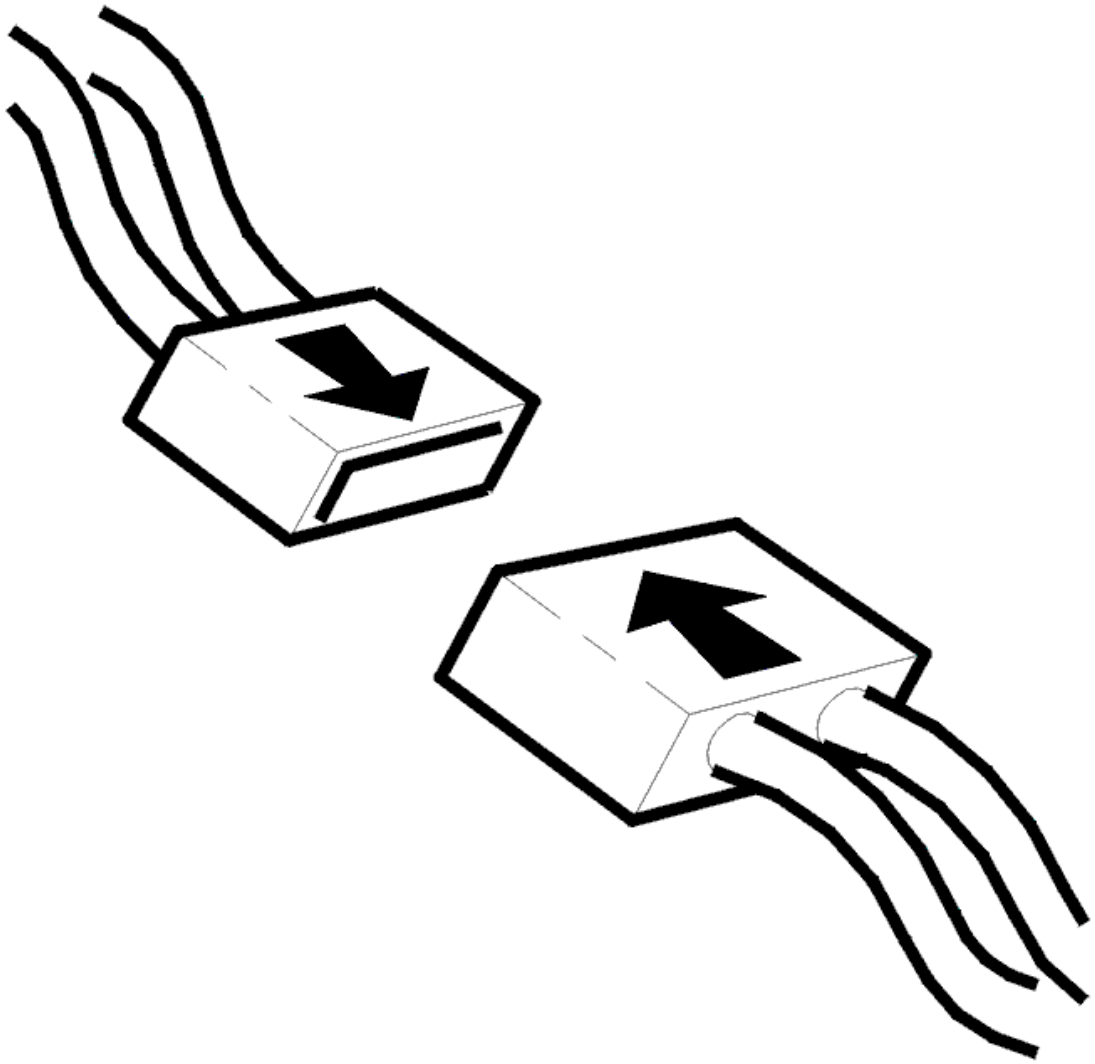

Fig. 273: Identifying Connector(s) Reinstallation
Courtesy of VOLVO CARS CORPORATION

- Ignition off
- Reinstall the components, reconnect the connectors etc.
- Ignition on
- Activate solenoid SLC1 by clicking on the symbol for VCT2000.

  Read off the current through the circuit for solenoid SLC1. The current must oscillate between approximately 0 and 1000 mA.

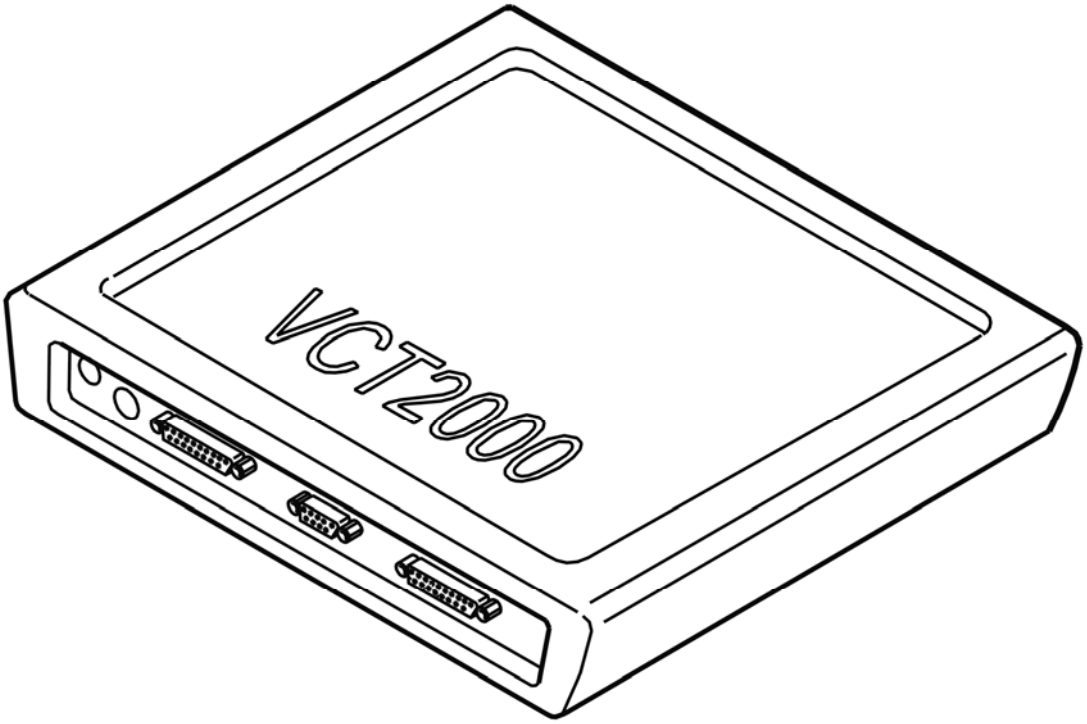

Fig. 274: Identifying VCT2000 Diagnostic Tool Symbol In VIDA
Courtesy of VOLVO CARS CORPORATION

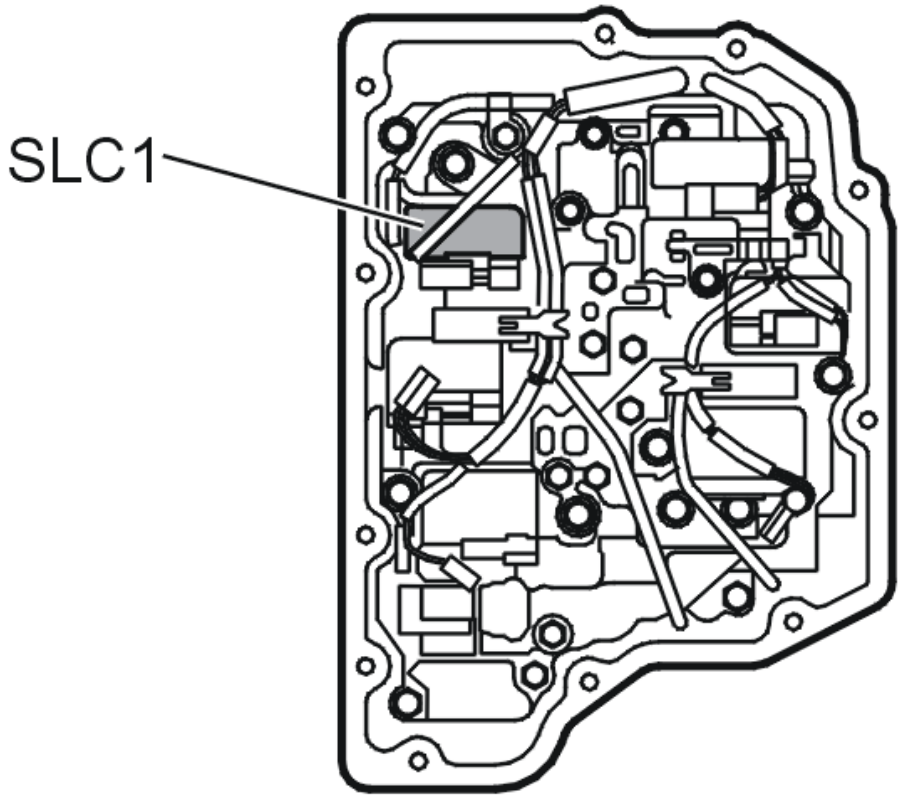

Fig. 275: Identifying Solenoid SLC1
Courtesy of VOLVO CARS CORPORATION

Is the function OK?

- **YES**

  VERIFIED: Troubleshooting has been completed.

- **NO**

  Refer to **INFORMATION**

INFORMATION

FAULT-TRACING INFORMATION

The fault should have been detected and remedied. As this is not the case fault-tracing has failed.

Exit fault-tracing for this diagnostic trouble code (DTC) or make another attempt.

TCM-P273900: PRESSURE REGULATING SOLENOID F CONTROL CIRCUIT HIGH. GENERAL FAULT INFORMATION. NO INFORMATION ABOUT FAULT

TYPE (TF-80SC AWD; 2005)

DIAGNOSTIC TROUBLE CODE (DTC) INFORMATION TCM-P273900

see **DIAGNOSTIC TROUBLE CODE (DTC) INFORMATION TCM-P273900**

FAULT TRACING TCM-P273900

see **FAULT TRACING TCM-P273900**

TCM-P278368: TORQUE CONVERTER TEMPERATURE TOO HIGH. ALGORITHM BASED FAILURES. EVENT INFORMATION (B6324S, TF-80SC; B6324S, TF-80SC AWD; 2007-2010)

DIAGNOSTIC TROUBLE CODE (DTC) INFORMATION TCM-P278368

Condition

NOTE: **This diagnostic trouble code (DTC) status is an event controlled diagnostic trouble code (DTC). An event controlled diagnostic trouble code (DTC) does not mean that there is a fault in the control module when it is active, but is designed as information.**

The Transmission control module (TCM) calculates the temperature of the gear box oil in the torque converter. If the calculated temperature of the gear box oil in the torque converter is too high, the Transmission control module (TCM) transmits a signal to the Engine control module (ECM) to reduce the engine's torque. This is to protect the gear box from too high load, which can result in internal mechanical faults.

The diagnostic trouble code (DTC) is stored if the control module detects that:

- The calculated oil temperature in the torque converter exceeds 170 °C.
- The speed from the incoming speed sensor for the gear box exceeds 800 rpm.

The control module's test for the diagnostic trouble code (DTC) starts in the event of:

- Normal driving.

NOTE: **The control module can only detect the fault once the test has been started and the diagnostic trouble code (DTC) is stored when the conditions are met.**

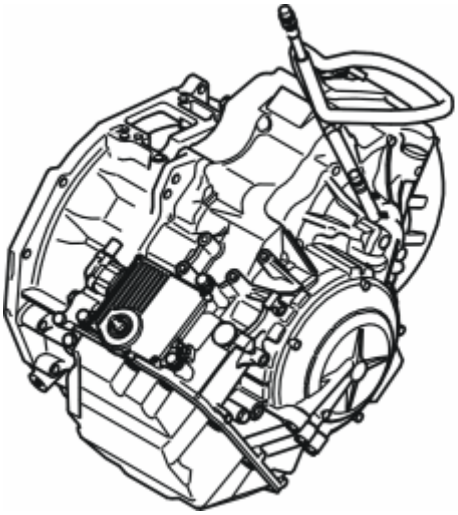

Fig. 276: Identifying Transmission
Courtesy of VOLVO CARS CORPORATION

Substitute Value

- The engine limits the torque until the gear box oil temperature has dropped below a certain level.

Possible Source

- The transmission has been exposed to extreme load and high ambient temperature.

Fault symptom[s]

- Message in information display
- Poor performance

FAULT-TRACING INFORMATION

There is no fault-tracing for this diagnostic fault code (DTC).

For further information on this diagnostic trouble code, see Diagnostic trouble code (DTC) information.

TCM-P278368: TORQUE CONVERTER TEMPERATURE TOO HIGH. ALGORITHM BASED FAILURES. EVENT INFORMATION (B6324S5, TF-80SC; B6324S5, TF-80SC AWD; 2011-2012)

DIAGNOSTIC TROUBLE CODE (DTC) INFORMATION TCM-P278368

see **DIAGNOSTIC TROUBLE CODE (DTC) INFORMATION TCM-P278368**

FAULT-TRACING INFORMATION

There is no fault-tracing for this diagnostic fault code (DTC).

For further information on this diagnostic trouble code, see Diagnostic trouble code (DTC) information.

TCM-P278768: CLUTCH TEMPERATURE TOO HIGH. ALGORITHM BASED FAILURES. EVENT INFORMATION (B6324S, TF-80SC; B6324S, TF-80SC AWD; 2007-2010)

DIAGNOSTIC TROUBLE CODE (DTC) INFORMATION TCM-P278768

Condition

NOTE: **This diagnostic trouble code (DTC) status is an event controlled diagnostic trouble code (DTC). An event controlled diagnostic trouble code (DTC) does not mean that there is a fault in the control module when it is active, but is designed as information.**

If the Transmission control module (TCM) registers that oil temperature in the transmission is too high, a signal is transmitted to the Engine control module (ECM) to reduce the engine's torque. This is to protect the gear box from too high load, which can result in internal mechanical faults.

The diagnostic trouble code (DTC) is stored if the control module detects that:

- The brake pedal depressed.
- The gear box oil temperature is the same as, or greater than, 120 °C for longer than 5 seconds.
- The gear box oil temperature is greater than 120 °C and lower than 150 °C for longer than 4 seconds.
- The gear box oil temperature is greater than 150 °C for longer than 3 seconds.

The control module's test for the diagnostic trouble code (DTC) starts in the event of:

- Ignition switch position II.

NOTE: **The control module can only detect the fault once the test has been started and the diagnostic trouble code (DTC) is stored when the conditions are met.**

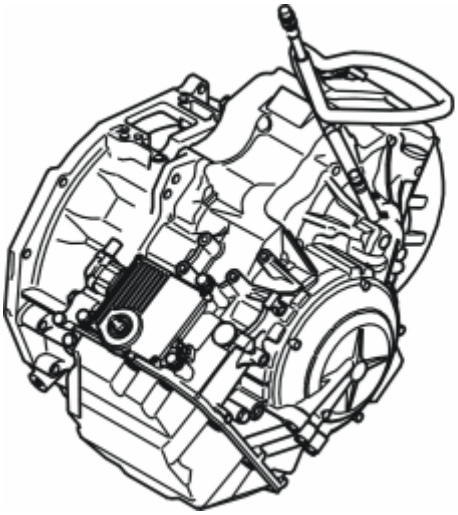

Fig. 277: Identifying Transmission
Courtesy of VOLVO CARS CORPORATION

Substitute Value

- The engine limits the torque until the gear box oil temperature has dropped below a certain level.

Possible Source

- The gear box oil has had too high a temperature for too long.
- Brake signal incorrect (shows brake active) while the vehicle is driven with high load with slipping lock-up.
- Long term revving of the engine with gear selector in position **D** and the brake pedal depressed.

Fault symptom[s]

- Message in information display
- Poor performance

FAULT-TRACING INFORMATION

There is no fault-tracing for this diagnostic fault code (DTC).

For further information on this diagnostic trouble code, see Diagnostic trouble code (DTC) information.

TCM-P278768: CLUTCH TEMPERATURE TOO HIGH. ALGORITHM BASED FAILURES. EVENT INFORMATION (B6324S5, TF-80SC; B6324S5, TF-80SC AWD; 2011-2012)

DIAGNOSTIC TROUBLE CODE (DTC) INFORMATION TCM-P278768

see **DIAGNOSTIC TROUBLE CODE (DTC) INFORMATION TCM-P278768**

FAULT-TRACING INFORMATION

There is no fault-tracing for this diagnostic fault code (DTC).

For further information on this diagnostic trouble code, see Diagnostic trouble code (DTC) information.

TCM-P280000: TRANSMISSION RANGE SENSOR B CIRCUIT (PRNDL INPUT). GENERAL FAILURE INFORMATION. NO SUB TYPE INFORMATION (B6324S, TF-80SC; B6324S, TF-80SC AWD; 2007-2010)

DIAGNOSTIC TROUBLE CODE (DTC) INFORMATION TCM-P280000

Condition

The gear position sensor is integrated in the transmission control module (TCM) and provides information about the selected gear position. Two Hall sensors in the transmission control module (TCM) detect whether the selector lever is in position. For diagnostics, there is a parallel hall sensor (2) that gives a reversed signal characteristic, so that the sum of the signal voltages from hall sensor (1) and (2) are constant. The signal voltage (0 and 5 V) corresponds to the current gear selector position.

The diagnostic trouble code (DTC) is stored if the control module detects:

- Incorrect signal from Hall sensor 2.

The control module's test for the diagnostic trouble code (DTC) starts in the event of:

- Ignition on.

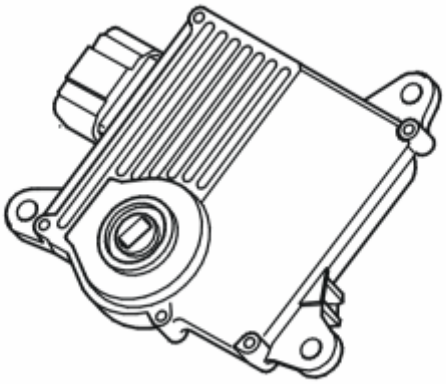

Fig. 278: Identifying Transmission Control Module (TCM)
Courtesy of VOLVO CARS CORPORATION

Substitute Value

- Adaption is blocked.
- The transmission control module (TCM) uses the last selected gear position.

Possible Source

- Incorrectly adjusted gear-shift position sensor.
- Internal fault in the transmission control module (TCM).

Fault symptom[s]

- Malfunction indicator light (MIL), on
- General warning lamp lit
- Engine fails to start

FAULT-TRACING

see **FAULT-TRACING**

TCM-P280000: TRANSMISSION RANGE SENSOR B CIRCUIT (PRNDL INPUT). GENERAL FAILURE INFORMATION. NO SUB TYPE INFORMATION (B6324S5, TF-80SC; B6324S5, TF-80SC AWD; 2011-2012)

DIAGNOSTIC TROUBLE CODE (DTC) INFORMATION TCM-P280000

see **DIAGNOSTIC TROUBLE CODE (DTC) INFORMATION TCM-P280000**

FAULT-TRACING

see **FAULT-TRACING**

TCM-P280000: TRANSMISSION AREA SENSOR B CIRCUIT (PRNDL INPUT). GENERAL FAULT INFORMATION. NO INFORMATION ABOUT FAULT TYPE (B8444S, TF-80SC AWD; 2006-2011)

DIAGNOSTIC TROUBLE CODE (DTC) INFORMATION TCM-P280000

Condition

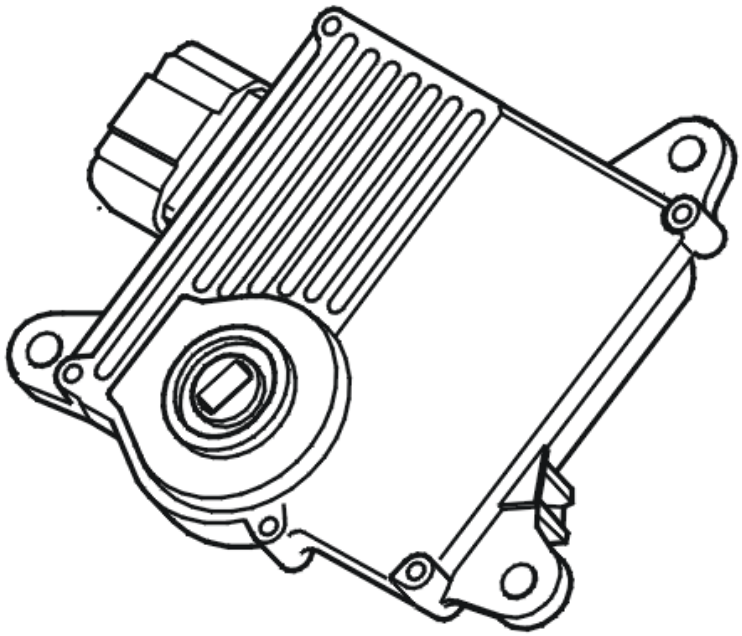

Fig. 279: Identifying Transmission Control Module (TCM)
Courtesy of VOLVO CARS CORPORATION

The gear shift position sensor is integrated into the transmission control module (TCM) and provides information about the selected gear. Inside the transmission control module (TCM) are two hall sensors which have the task of detecting when the gear selector lever is in position. For diagnostics, there is a parallel hall sensor (2) which gives an inverted signal characteristic, so that the sum of the signal voltages from the hall sensors (1) and (2) is constant. The signal voltage (0 and 5 V) corresponds to the present position of gear selector lever.

If the transmission control module (TCM) registers an incorrect signal from Hall sensor 2, the diagnostic trouble code (DTC) is generated.

The diagnostic trouble code can be diagnosed when the ignition is on.

Substitute Value

- Adaption is blocked.
- The transmission control module (TCM) uses the last selected gear position.

Possible Source

- Incorrect adjustment of gear position sensor.

- Internal fault in transmission control module (TCM).

Fault symptom[s]

- Malfunction indicator lamp (MIL) lit.
- General warning lamp lit
- The engine does not start.

FAULT TRACING

see **FAULT TRACING**

TCM-P280000: TRANSMISSION AREA SENSOR B CIRCUIT (PRNDL INPUT). GENERAL FAULT INFORMATION. NO INFORMATION ABOUT FAULT TYPE (TF-80SC AWD; 2005)

DIAGNOSTIC TROUBLE CODE (DTC) INFORMATION TCM-P280000

see **DIAGNOSTIC TROUBLE CODE (DTC) INFORMATION TCM-P280000**

FAULT TRACING

see **FAULT TRACING**

TCM-P280500: TRANSMISSION RANGE SENSOR A/B CORRELATION. GENERAL FAILURE INFORMATION. NO SUB TYPE INFORMATION (B6324S, TF-80SC; B6324S, TF-80SC AWD; 2007-2010)

DIAGNOSTIC TROUBLE CODE (DTC) INFORMATION TCM-P280500

Condition

The gear position sensor is integrated in the transmission control module (TCM) and provides information about the selected gear position. Two Hall sensors in the transmission control module (TCM) detect whether the selector lever is in position. For diagnostics, there is a parallel hall sensor (2) that gives a reversed signal characteristic, so that the sum of the signal voltages from hall sensor (1) and (2) are constant. The signal voltage (0 and 5 V) corresponds to the current gear selector position.

The diagnostic trouble code (DTC) is stored if the control module detects:

- Incorrect signal from Hall sensor 1.

The control module's test for the diagnostic trouble code (DTC) starts in the event of:

- Ignition on.

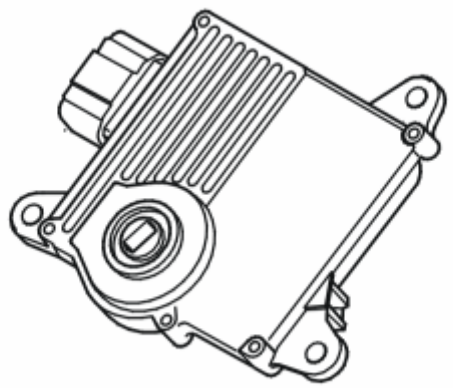

Fig. 280: Identifying Transmission Control Module (TCM)
Courtesy of VOLVO CARS CORPORATION

Substitute Value

- Adaption is blocked.
- The transmission control module (TCM) uses the last selected gear position.

Possible Source

- Incorrectly adjusted gear-shift position sensor.
- Internal fault in the transmission control module (TCM).

Fault symptom[s]

- Malfunction indicator light (MIL), on
- General warning lamp lit
- Engine fails to start

FAULT-TRACING

see **FAULT-TRACING**

TCM-P280500: TRANSMISSION RANGE SENSOR A/B CORRELATION. GENERAL FAILURE INFORMATION. NO SUB TYPE INFORMATION (B6324S5, TF-80SC; B6324S5, TF-80SC AWD; 2011-2012)

DIAGNOSTIC TROUBLE CODE (DTC) INFORMATION TCM-P280500

see **DIAGNOSTIC TROUBLE CODE (DTC) INFORMATION TCM-P280500**

FAULT-TRACING

see **FAULT-TRACING**

TCM-P280500: TRANSMISSION AREA SENSOR A/B CO-OPERATION. GENERAL FAULT INFORMATION. NO INFORMATION ABOUT FAULT TYPE (B8444S, TF-80SC AWD; 2006-2011)

DIAGNOSTIC TROUBLE CODE (DTC) INFORMATION TCM-P280500

Condition

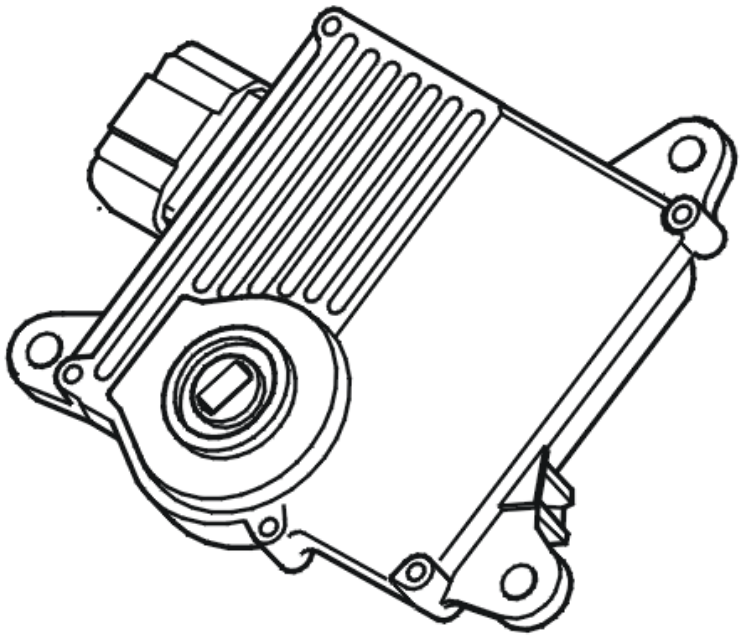

Fig. 281: Identifying Transmission Control Module (TCM)
Courtesy of VOLVO CARS CORPORATION

The gear shift position sensor is integrated into the transmission control module (TCM) and provides information about the selected gear. Inside the transmission control module (TCM) are two hall sensors which have the task of detecting when the gear selector lever is in position. For diagnostics, there is a parallel hall sensor (2) which gives an inverted signal characteristic, so that the sum of the signal voltages from the hall sensors (1) and (2) is constant. The signal voltage (0 and 5 Volts) corresponds to the present position of gear selector lever.

If the transmission control module (TCM) registers an incorrect signal from Hall sensor 1, the diagnostic

trouble code (DTC) is generated.

The diagnostic trouble code can be diagnosed when the ignition is on.

Substitute Value

- Adaption is blocked.
- The transmission control module (TCM) uses the last selected gear position.

Possible Source

- Incorrect adjustment of gear position sensor.
- Internal fault in transmission control module (TCM).

Fault symptom[s]

- Malfunction indicator lamp (MIL) lit.
- General warning lamp lit
- The engine does not start.

FAULT TRACING

see **FAULT TRACING**

TCM-P280500: TRANSMISSION AREA SENSOR A/B CO-OPERATION. GENERAL FAULT INFORMATION. NO INFORMATION ABOUT FAULT TYPE (TF-80SC AWD; 2005)

DIAGNOSTIC TROUBLE CODE (DTC) INFORMATION TCM-P280500

see **DIAGNOSTIC TROUBLE CODE (DTC) INFORMATION TCM-P280500**

FAULT TRACING

see **FAULT TRACING**

TCM-U000100: HIGH SPEED CAN COMMUNICATION BUS. GENERAL FAILURE INFORMATION. NO SUB TYPE INFORMATION (B6324S, TF-80SC; B6324S, TF-80SC AWD; 2007-2010)

DIAGNOSTIC TROUBLE CODE (DTC) INFORMATION TCM-U000100

Condition

The control modules transmit and receive information via a standardized serial communication method - CAN

(Control Area Network).

The diagnostic trouble code (DTC) is stored if the control module detects that:

- Communication on the CAN network affected by another control module.
- The control module's internal messages cause interference on the controller area network (CAN).

The control module's test for the diagnostic trouble code (DTC) starts in the event of:

- Starting the control module's CAN communication.

NOTE: The control module can only detect the fault once the test has been started and the diagnostic trouble code (DTC) is stored when the conditions are met. In the event of system communication problems, it is not possible to communicate with the control module. Therefore it will only be possible to read off the fault if it is intermittent.

HINT: EMERGENCY MODE IN THE EVENT OF A FAULT

HINT: The control module is off until the power supply has been broken. When the power supply is connected the control module will make a new attempt to communicate.

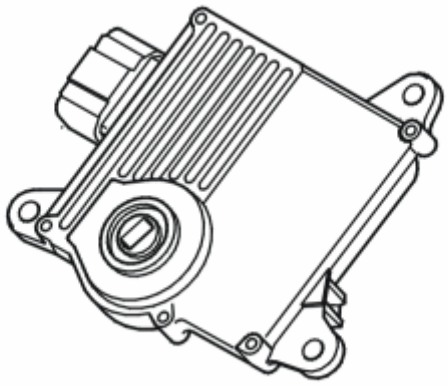

Fig. 282: Identifying Transmission Control Module (TCM)
Courtesy of VOLVO CARS CORPORATION

Substitute Value

- Control module shuts itself off ("bus-off").

Possible Source

- Short-circuit between the control area network (CAN) wiring.

- Open-circuit in the control area network (CAN) wiring.
- Internal fault in another control module in the same part of the control area network (CAN).
- Internal fault in the control module.

Fault symptom[s]

- General warning lamp lit

TCM-U000100: HIGH SPEED CAN COMMUNICATION BUS. GENERAL FAILURE INFORMATION. NO SUB TYPE INFORMATION (B6324S5, TF-80SC; B6324S5, TF-80SC AWD; 2011-2012)

DIAGNOSTIC TROUBLE CODE (DTC) INFORMATION TCM-U000100

see **DIAGNOSTIC TROUBLE CODE (DTC) INFORMATION TCM-U000100**

TCM-U210000: CONTROL MODULE NOT CONFIGURED. GENERAL FAILURE INFORMATION. NO SUB TYPE INFORMATION (B6324S, TF-80SC; B6324S, TF-80SC AWD; 2007-2010)

DIAGNOSTIC TROUBLE CODE (DTC) INFORMATION TCM-U210000

Condition

The Transmission control module (TCM) receives information about current vehicle configuration from Central electronic module (CEM).

The diagnostic trouble code (DTC) is stored if the control module detects that:

- Vehicle configuration from central electronic module (CEM) is lost.

The control module's test for the diagnostic trouble code (DTC) starts in the event of:

- Ignition switch position II.

NOTE: The control module can only detect the fault once the test has been started and the diagnostic trouble code (DTC) is stored when the conditions are met.

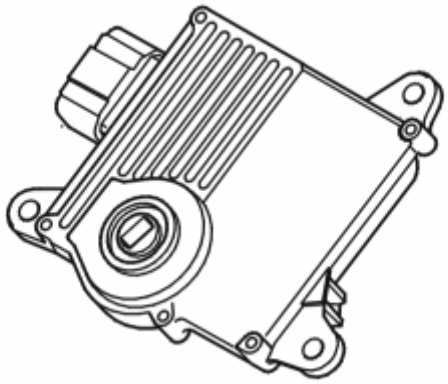

Fig. 283: Identifying Transmission Control Module (TCM)
Courtesy of VOLVO CARS CORPORATION

Substitute Value

- None.

Possible Source

- The diagnostic trouble code (DTC) may be stored after downloading software.
- Fault-trace the central electronic module (CEM).

Fault symptom[s]

- None.

FAULT-TRACING

INFORMATION

The diagnostic trouble code (DTC) may be stored after downloading software. If this is the case, select CONTINUE and erase the diagnostic trouble code (DTC).

If the diagnostic trouble code (DTC) is **not** stored when software is downloaded, the cause is probably in the software for the Central electronic module (CEM). Fault-trace the central electronic module (CEM).

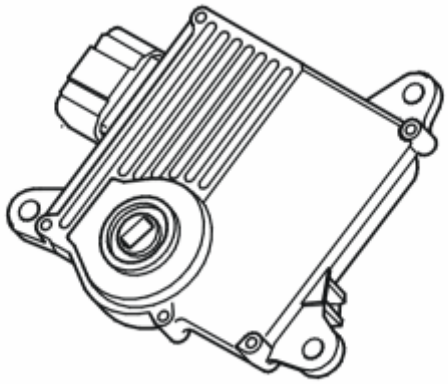

Fig. 284: Identifying Transmission Control Module (TCM)
Courtesy of VOLVO CARS CORPORATION

- **Continue**

  Refer to **ERASING DIAGNOSTIC TROUBLE CODES (DTCS)**

CHECKING THE DIAGNOSTIC TROUBLE CODES (DTCS)

Fig. 285: Identifying Ignition ON
Courtesy of VOLVO CARS CORPORATION

- Ignition off for 10 seconds and then on again.
- Read off diagnostic trouble codes (DTCs).

Fig. 286: Identifying VCT2000 Diagnostic Tool Symbol In VIDA
Courtesy of VOLVO CARS CORPORATION

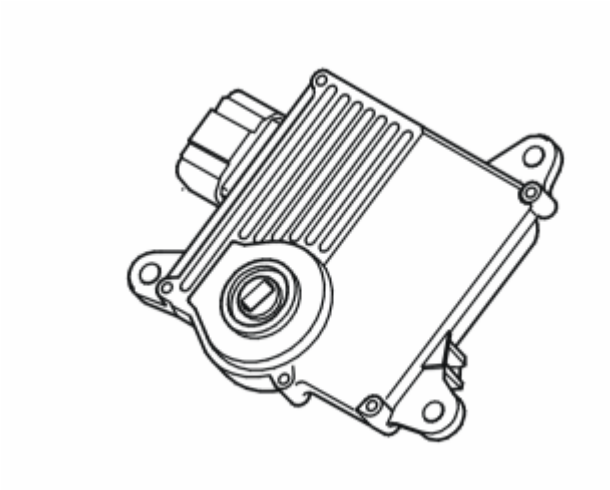

Fig. 287: Identifying Transmission Control Module (TCM)
Courtesy of VOLVO CARS CORPORATION

Was the relevant diagnostic trouble code (DTC) still stored?

- **YES**

  Refer to **INFORMATION**

- **NO**

  OKAY: Troubleshooting has been completed.

ERASING DIAGNOSTIC TROUBLE CODES (DTCS)

Fig. 288: Identifying Ignition ON
Courtesy of VOLVO CARS CORPORATION

- Ignition on.
- Erase diagnostic trouble codes (DTCs).

Fig. 289: Identifying VCT2000 Diagnostic Tool Symbol In VIDA
Courtesy of VOLVO CARS CORPORATION

- **Continue**

  Refer to **CHECKING THE DIAGNOSTIC TROUBLE CODES (DTCS)**

INFORMATION

FAULT-TRACING INFORMATION

The fault should have been detected and remedied. As this is not the case fault-tracing has failed.

Exit fault-tracing for this diagnostic trouble code (DTC) or make another attempt.

TCM-U210000: CONTROL MODULE NOT CONFIGURED. GENERAL FAILURE INFORMATION. NO SUB TYPE INFORMATION (B6324S5, TF-80SC; B6324S5, TF-80SC AWD; 2011-2012)

DIAGNOSTIC TROUBLE CODE (DTC) INFORMATION TCM-U210000

see **DIAGNOSTIC TROUBLE CODE (DTC) INFORMATION TCM-U210000**

FAULT-TRACING

see **FAULT-TRACING**

TCM-U210100: CONTROL MODULE CONFIGURATION INCOMPATIBLE. GENERAL FAILURE INFORMATION. NO SUB TYPE INFORMATION (B6324S, TF-80SC; B6324S, TF-80SC AWD; 2007-2010)

DIAGNOSTIC TROUBLE CODE (DTC) INFORMATION TCM-U210100

Condition

The Transmission control module (TCM) receives information about current vehicle configuration from Central electronic module (CEM).

The diagnostic trouble code (DTC) is stored if the control module detects that:

- Vehicle configuration from Central electronic module (CEM) is incorrect.
- The vehicle configuration from Central electronic module (CEM) is not the same as the one stored in the control module.

The control module's test for the diagnostic trouble code (DTC) starts in the event of:

- Ignition switch position II.

NOTE: **The control module can only detect the fault once the test has been started and the diagnostic trouble code (DTC) is stored when the conditions are met.**

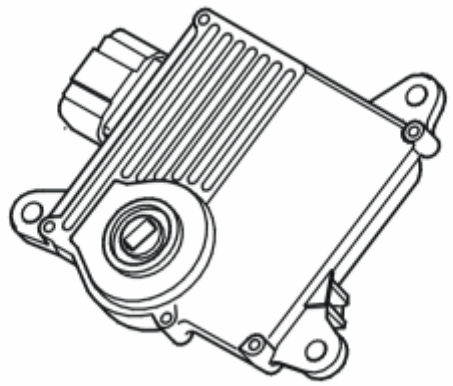

Fig. 290: Identifying Transmission Control Module (TCM)
Courtesy of VOLVO CARS CORPORATION

Substitute Value

- None.

Possible Source

- The control module from another vehicle has been installed.
- Fault trace the central electronic module (CEM).

Fault symptom[s]

- None.

FAULT-TRACING

INFORMATION

Select the DIAGNOSTICS/COMPONENTS tab and check that the vehicle's configuration data corresponds with the vehicle's configuration.

If the vehicle's configuration data corresponds with the vehicle's configuration, this means that the Transmission control module (TCM) may have incorrect configuration data. Select the SOFTWARE tab and reprogram the Transmission control module (TCM) with the latest software.

If the vehicle's configuration data does **not** correspond with the vehicle's configuration, this means that the Central electronic module (CEM) may have the incorrect configuration data. Select the SOFTWARE tab and reprogram the Central electronic module (CEM) with the latest software.

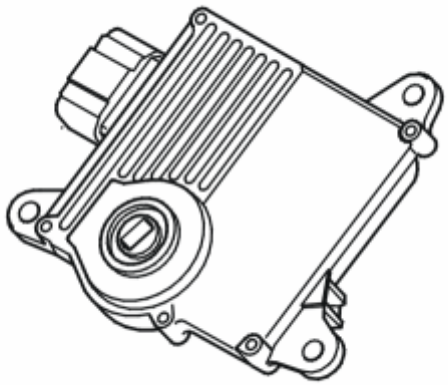

Fig. 291: Identifying Transmission Control Module (TCM)
Courtesy of VOLVO CARS CORPORATION

- **Continue**

  Refer to **CHECKING THE DIAGNOSTIC TROUBLE CODES (DTCS)**

CHECKING THE DIAGNOSTIC TROUBLE CODES (DTCS)

Fig. 292: Identifying Ignition ON
Courtesy of VOLVO CARS CORPORATION

- Ignition off for 10 seconds and then on again.
- Read off diagnostic trouble codes (DTCs).

Fig. 293: Identifying VCT2000 Diagnostic Tool Symbol In VIDA
Courtesy of VOLVO CARS CORPORATION

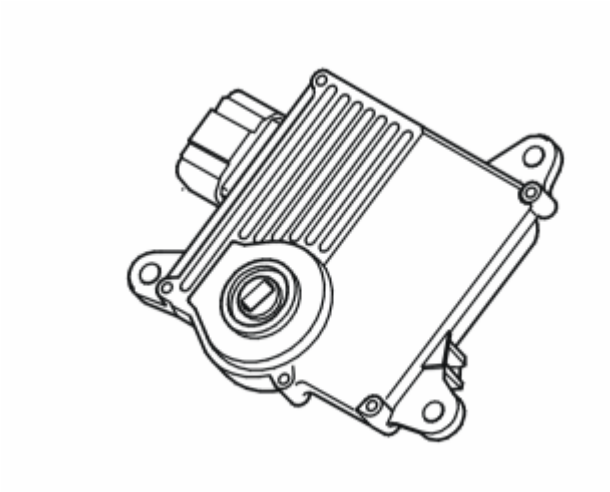

Fig. 294: Identifying Transmission Control Module (TCM)
Courtesy of VOLVO CARS CORPORATION

Was the relevant diagnostic trouble code (DTC) still stored?

- **YES**

  Refer to **INFORMATION**

- **NO**

  OKAY: Troubleshooting has been completed.

INFORMATION

FAULT-TRACING INFORMATION

The fault should have been detected and remedied. As this is not the case fault-tracing has failed.

Exit fault-tracing for this diagnostic trouble code (DTC) or make another attempt.

TCM-U210100: CONTROL MODULE CONFIGURATION INCOMPATIBLE. GENERAL FAILURE INFORMATION. NO SUB TYPE INFORMATION (B6324S5, TF-80SC; B6324S5, TF-80SC AWD; 2011-2012)

DIAGNOSTIC TROUBLE CODE (DTC) INFORMATION TCM-U210100

see **DIAGNOSTIC TROUBLE CODE (DTC) INFORMATION TCM-U210100**

FAULT-TRACING

see **FAULT-TRACING**

TCM-U300362: BATTERY VOLTAGE. ALGORITHM BASED FAILURES. SIGNAL COMPARE FAILURE (B6324S, TF-80SC; B6324S, TF-80SC AWD; 2007-2010)

DIAGNOSTIC TROUBLE CODE (DTC) INFORMATION TCM-U300362

Condition

NOTE: This trouble code is only relevant for troubleshooting and action in the following cases:

- The trouble code is active in the present driving cycle and has been active for a longer period of time.
- The customer experiences malfunction that can be attributed to the trouble code.

The control modules communicate with each other for exchange of information in a network via a standardized serial communication procedure - CAN (Controller Area Network). The Central electronic module (CEM) regularly transmits messages on the CAN network. The Brake control module (BCM) compares the voltage with the Central electronic module (CEM).

The diagnostic trouble code (DTC) is stored if the control module detects that:

- Voltage is 2 V lower than the voltage signal from the Central electronic module (CEM) for 10 seconds.

The control module's test for the diagnostic trouble code (DTC) starts in the event of:

- Ignition on.

NOTE: The control module can only detect the fault once the test has been started and the diagnostic trouble code (DTC) is stored when the conditions are met.

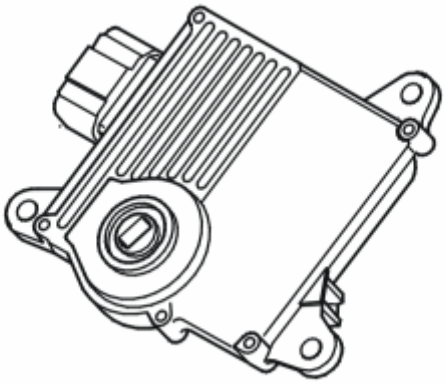

Fig. 295: Identifying Transmission Control Module (TCM)

Courtesy of VOLVO CARS CORPORATION

Substitute Value

- None.

Possible Source

- Contact resistance and oxidation in the terminals.
- Internal fault in the transmission control module (TCM).

Fault symptom[s]

- None.

FAULT-TRACING

INFORMATION

NOTE: This trouble code is only relevant for troubleshooting and action in the following cases:

- The trouble code is active in the present driving cycle and has been active for a longer period of time.
- The customer experiences malfunction that can be attributed to the trouble code.

In other cases, the DTC does not indicate a fault and must therefore be ignored and only erased.

- **CONTINUE**

  Refer to **CHECKING THE BATTERY VOLTAGE**

CHECKING THE BATTERY VOLTAGE

Fig. 296: Identifying Ignition ON
Courtesy of VOLVO CARS CORPORATION

- Ignition on.
- Read off the voltage for the transmission control module (TCM) and the central electronic module (CEM).

The voltage supply for the transmission control module (TCM) and central electronic module (CEM) must be approximately the same.

If the voltage supply to the transmission control module (TCM) differs by more than 2.0 V from that of the central electronic module (CEM), a permanent fault is indicated.

If the voltage is approximately the same, this indicates an intermittent fault, i. e. the fault was present previously but is not active at the moment.

Fig. 297: Identifying VCT2000 Diagnostic Tool Symbol In VIDA
Courtesy of VOLVO CARS CORPORATION

- **Continue**

  Refer to **CHECKING THE POWER SUPPLY**

CHECKING THE POWER SUPPLY

Fig. 298: Identifying Ignition OFF
Courtesy of VOLVO CARS CORPORATION

- Ignition off.

  Check the connector of the transmission control module (TCM) for contact resistance and oxidation.

  Check the power supply cable between the transmission control module (TCM) fuse in the engine compartment relay/fuse box and connection #A1 (#31) for short circuit to ground.

  HINT: With the ignition on and the voltmeter connected between terminals #A1 (#31) and #A9 (#A39) on the breakout box, the voltmeter should read battery voltage.

  Other information

  - see **CONNECTING THE BREAKOUT BOX**
  - see **SIGNAL SPECIFICATION**

- see **CHECKING WIRING AND TERMINALS**

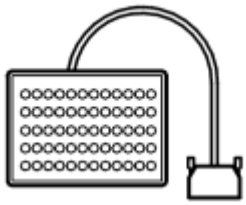

Fig. 299: Identifying Breakout Box
Courtesy of VOLVO CARS CORPORATION

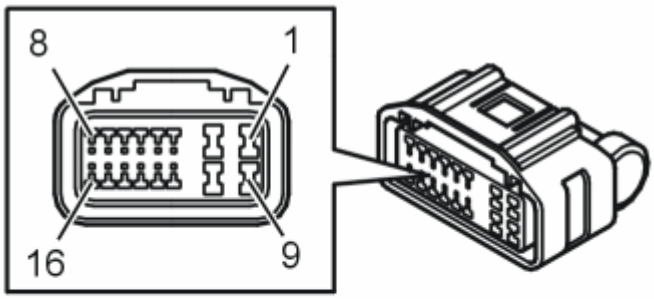

Fig. 300: Identifying Connector A Terminals
Courtesy of VOLVO CARS CORPORATION

- **Continue**

  Refer to **VERIFICATION**

INFORMATION

FAULT-TRACING INFORMATION

The fault should have been detected and remedied. As this is not the case fault-tracing has failed.

Exit fault-tracing for this diagnostic trouble code (DTC) or make another attempt.

VERIFICATION

VERIFICATION

HINT: After carrying out the repair, check that the fault has been remedied.

Fig. 301: Identifying Ignition ON
Courtesy of VOLVO CARS CORPORATION

- Ignition off.
- Reinstall the connectors, components etc.
- Ignition on.
- Read the voltage supply for the transmission control module (TCM) and central electronic module (CEM).

  The voltage must be approximately battery voltage.

  Fig. 302: Identifying VCT2000 Diagnostic Tool Symbol In VIDA
  Courtesy of VOLVO CARS CORPORATION

Was the voltage OK?

- **YES**

  VERIFIED: Troubleshooting has been completed.

- **NO**

  Refer to **INFORMATION**

TCM-U300362: BATTERY VOLTAGE. ALGORITHM BASED FAILURES. SIGNAL COMPARE FAILURE (B6324S5, TF-80SC; B6324S5, TF-80SC AWD; 2011-2012)

DIAGNOSTIC TROUBLE CODE (DTC) INFORMATION TCM-U300362

see **DIAGNOSTIC TROUBLE CODE (DTC) INFORMATION TCM-U300362**

FAULT-TRACING

see **FAULT-TRACING**

TCM-XXXX: UNKNOWN DIAGNOSTIC TROUBLE CODE (DTC) FOR THE CURRENT CONTROL MODULE VERSION (4T65 AWD; 2003-2006)

UNKNOWN DIAGNOSTIC TROUBLE CODE (DTC) FOR THE CURRENT CONTROL MODULE VERSION

READING OFF DIAGNOSTIC TROUBLE CODES (DTCS)

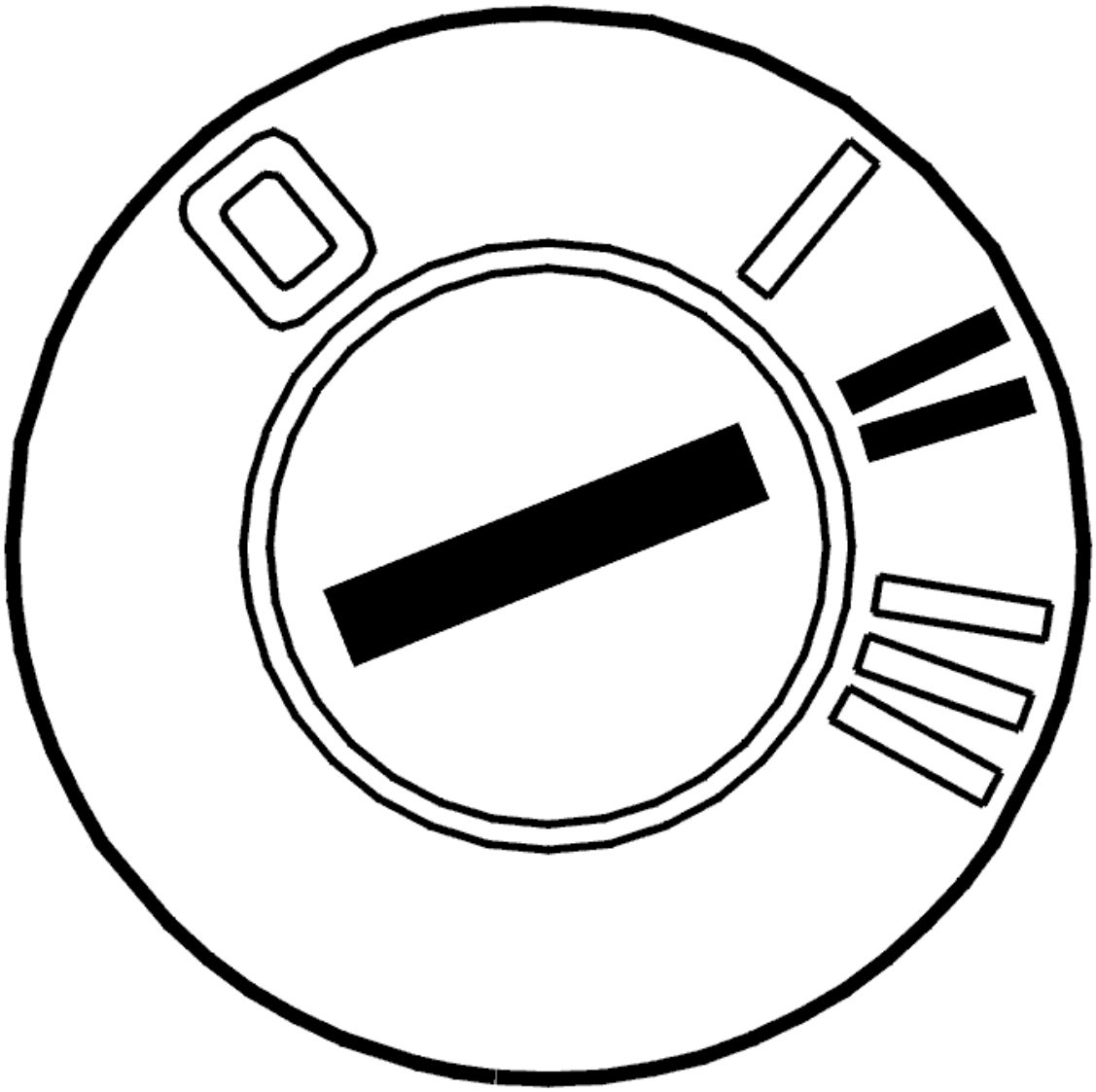

Fig. 303: Identifying Ignition ON
Courtesy of VOLVO CARS CORPORATION

- Ignition on.

Read off the diagnostic trouble code (DTC) that is stored in the car.

Make a note of the code. Report the code to VIDA customer support.

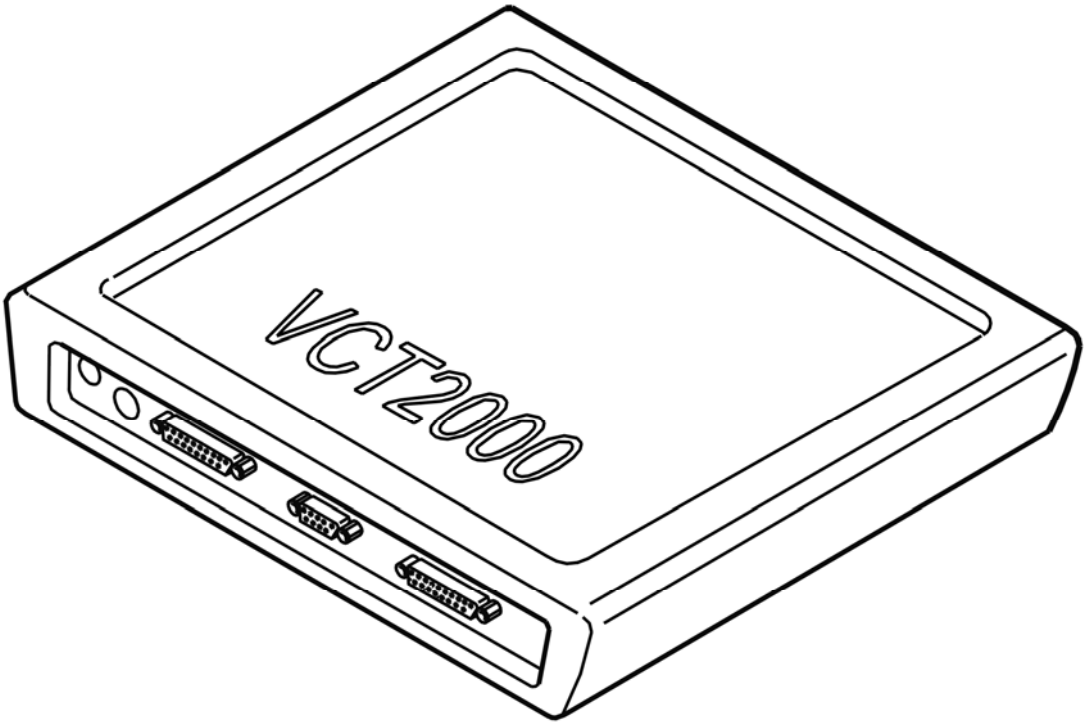

Fig. 304: Identifying VCT2000 Diagnostic Tool Symbol In VIDA
Courtesy of VOLVO CARS CORPORATION

TCM-XXXX: UNKNOWN DIAGNOSTIC TROUBLE CODE (DTC) FOR THE CURRENT CONTROL MODULE VERSION (AW50/51 AWD; AW55-50/51SN; 2003-2007)

UNKNOWN DIAGNOSTIC TROUBLE CODE (DTC) FOR THE CURRENT CONTROL MODULE VERSION

see **UNKNOWN DIAGNOSTIC TROUBLE CODE (DTC) FOR THE CURRENT CONTROL MODULE VERSION**

TCM-XXXXXX: UNKNOWN DIAGNOSTIC TROUBLE CODE (DTC) FOR THE CURRENT CONTROL MODULE VERSION (B8444S, TF-80SC AWD; 2006-2011)

UNKNOWN DIAGNOSTIC TROUBLE CODE (DTC) FOR THE CURRENT CONTROL MODULE

VERSION

READING OUT DIAGNOSTIC TROUBLE CODES (DTC)

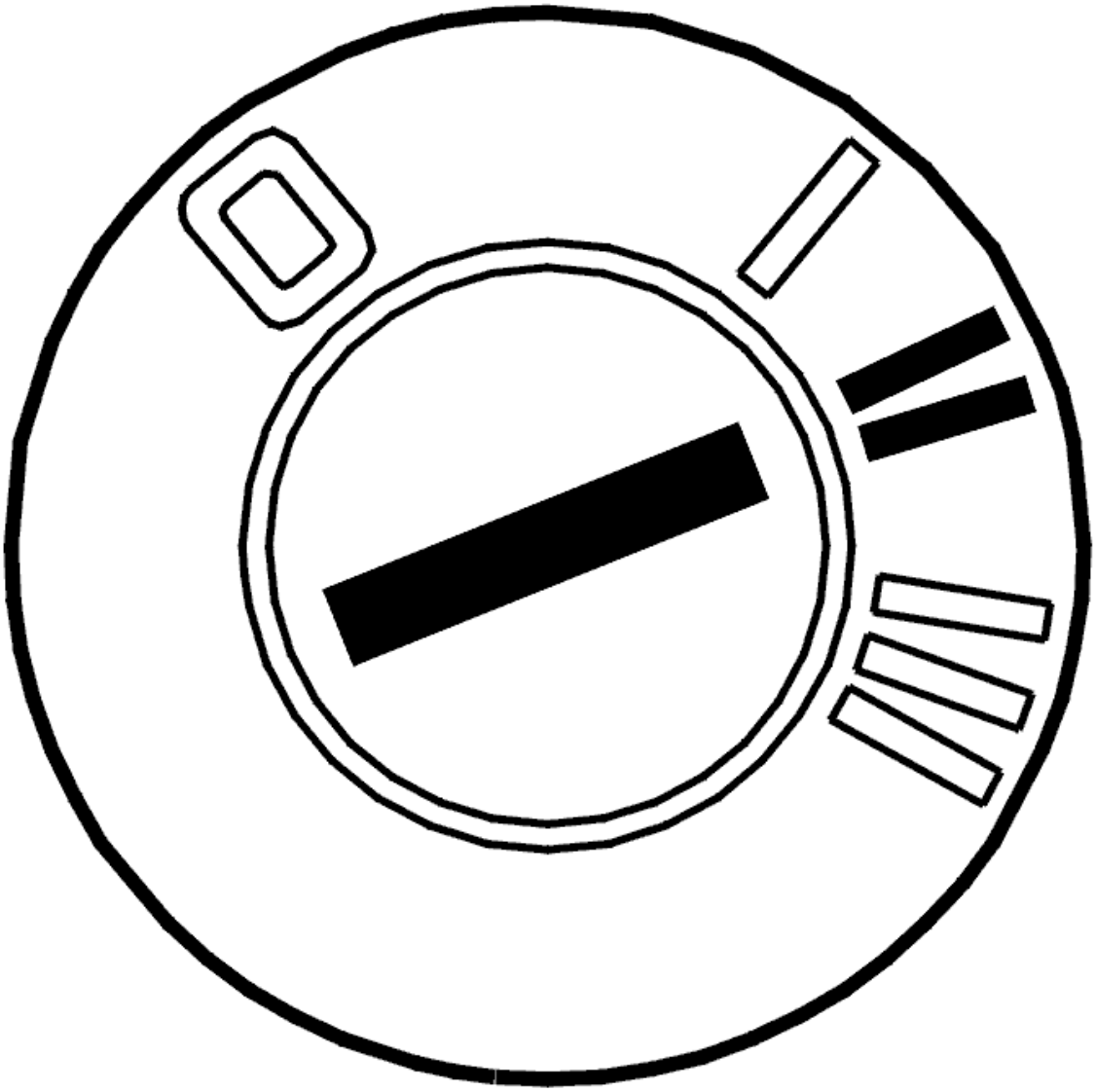

Fig. 305: Identifying Ignition ON
Courtesy of VOLVO CARS CORPORATION

- Ignition on

  Read out the diagnostic trouble code (DTC) stored in the vehicle.

  Note and report the number combination to customer support.

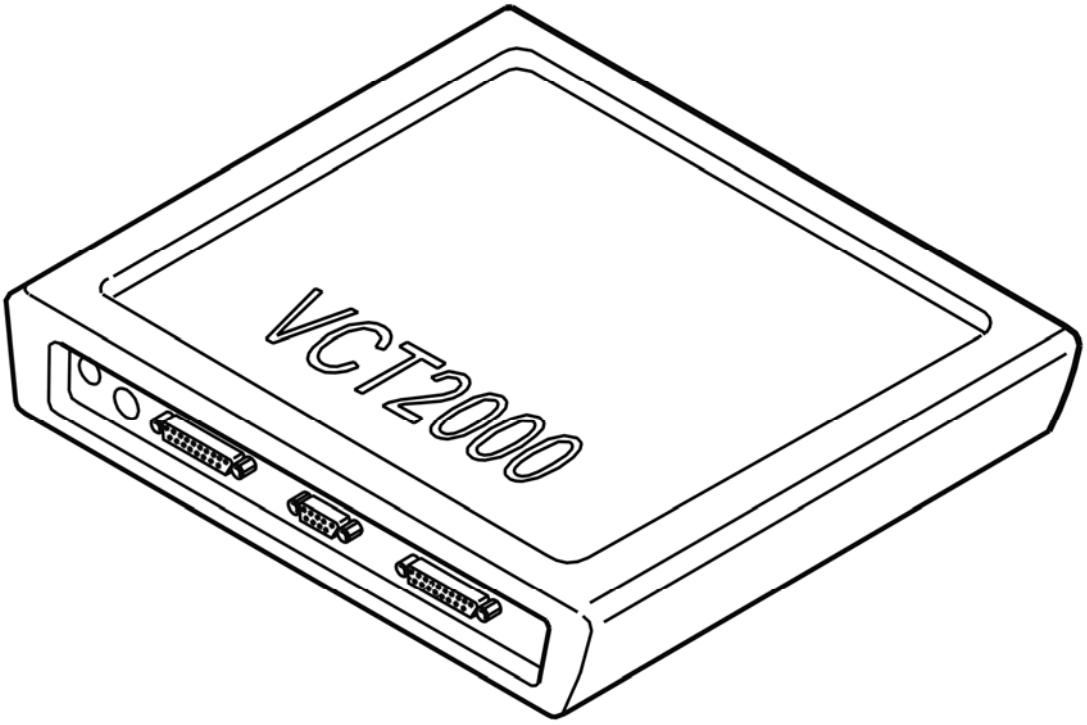

Fig. 306: Identifying VCT2000 Diagnostic Tool Symbol In VIDA
Courtesy of VOLVO CARS CORPORATION

TCM-XXXXXX: UNKNOWN DIAGNOSTIC TROUBLE CODE (DTC) FOR THE CURRENT CONTROL MODULE VERSION (TF-80SC AWD; 2005)

UNKNOWN DIAGNOSTIC TROUBLE CODE (DTC) FOR THE CURRENT CONTROL MODULE VERSION

see **UNKNOWN DIAGNOSTIC TROUBLE CODE (DTC) FOR THE CURRENT CONTROL MODULE VERSION**

TRANSMISSION

Transmission - General Diagnostics and Tests

CHECKING THE POWER SUPPLY AND GROUND TERMINALS FOR THE CONTROL MODULE (AW50/51 AWD; AW55-50/51SN; 2003-2007)

CHECKING THE POWER SUPPLY AND GROUND TERMINALS

CHECKING THE GROUND TERMINALS

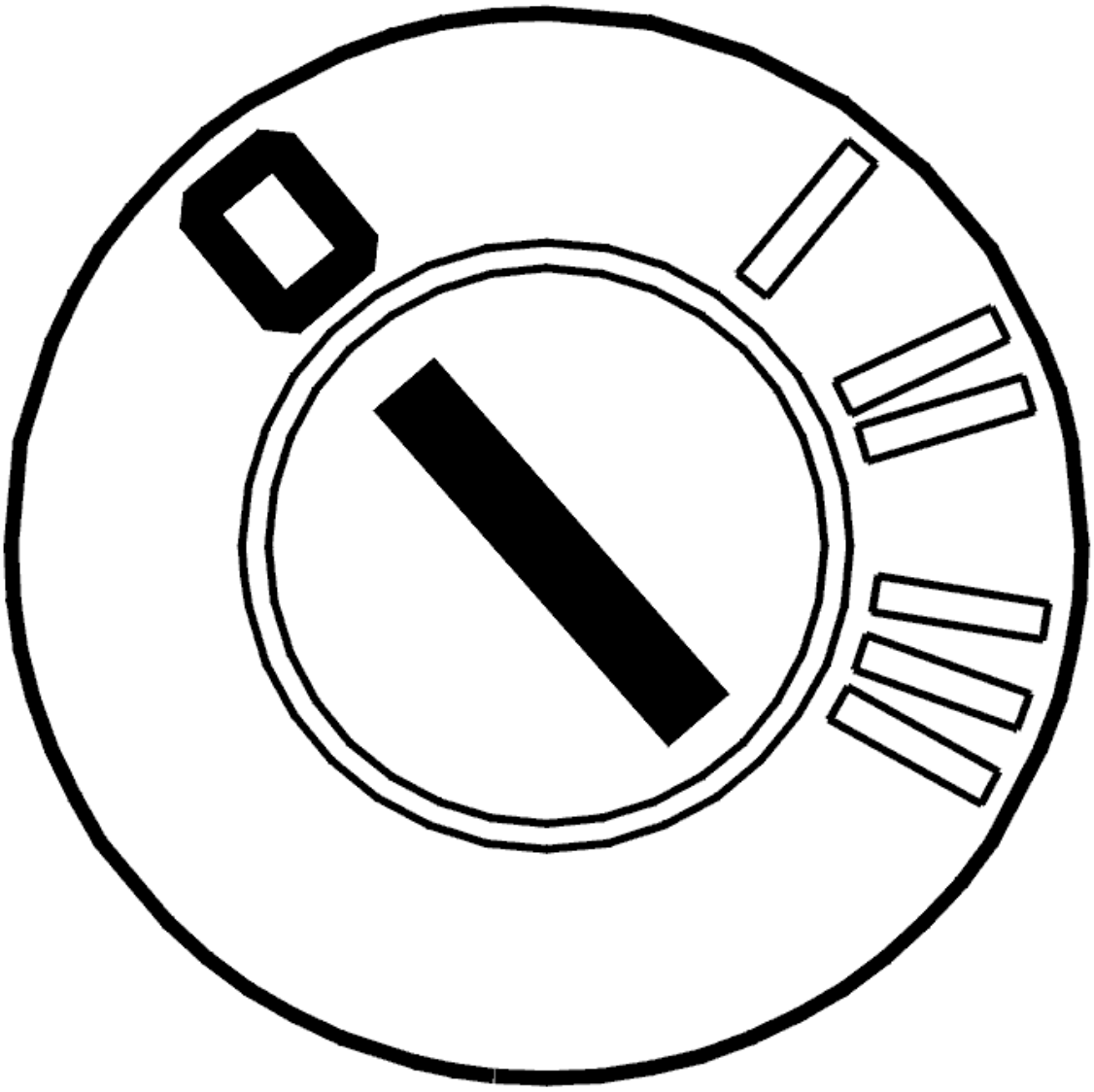

Fig. 1: Identifying Ignition OFF
Courtesy of VOLVO CARS CORPORATION

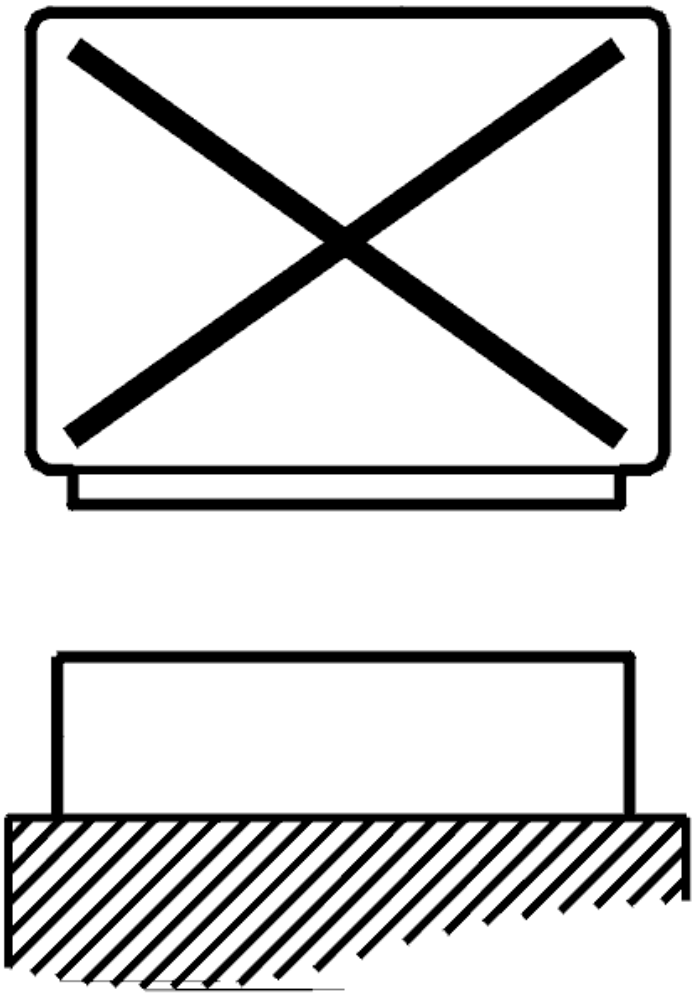

Fig. 2: Identifying Control Module Disconnected
Courtesy of VOLVO CARS CORPORATION

- Ignition off
- Transmission control module (TCM) disconnected.
- Turn of all equipment in the car that takes power from the battery (the interior lighting and radio etc).

  Connect an ohmmeter between the battery negative terminal and:

  terminal #A53 (#A53) on the breakout box.

  Other information:

  - To connect the breakout box, see **CONNECTING THE BREAKOUT BOX** .

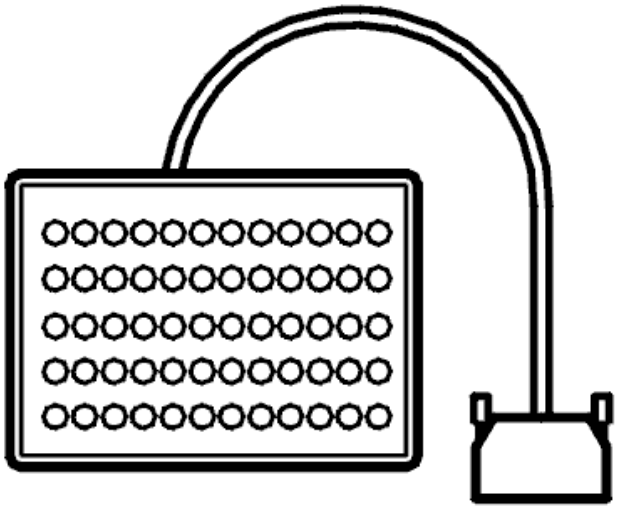

Fig. 3: Identifying Breakout Box
Courtesy of VOLVO CARS CORPORATION

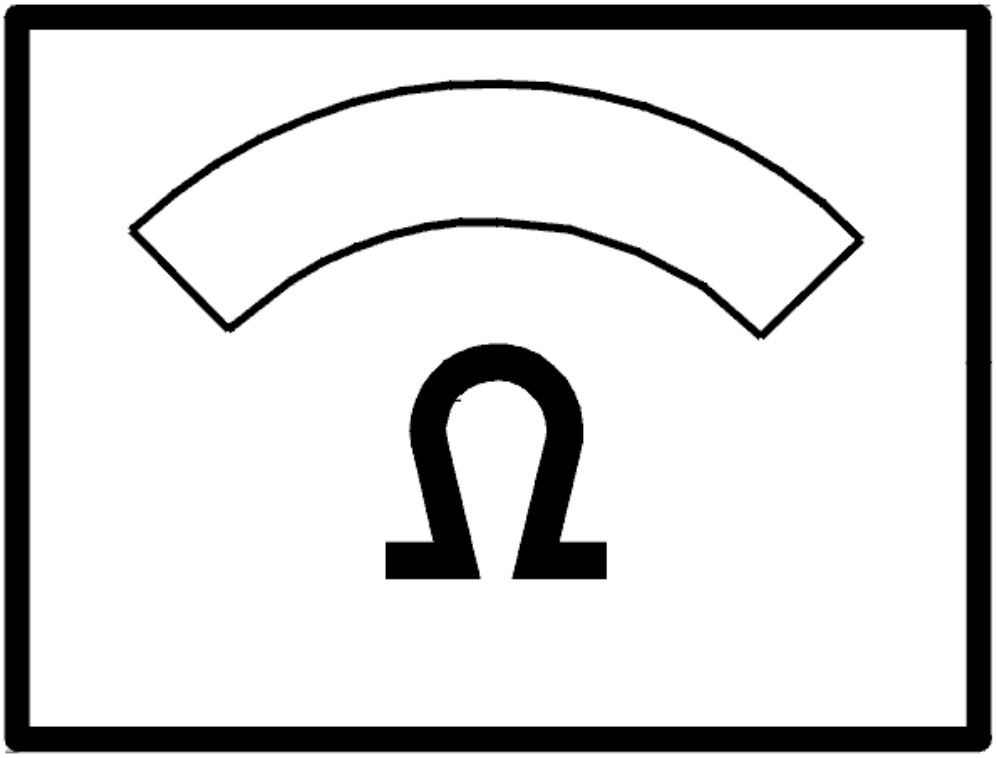

Fig. 4: Identifying Ohms Display
Courtesy of VOLVO CARS CORPORATION

The ohmmeter should read approximately 0 ohms.

- **OK**

  Refer to **CHECKING THE POWER SUPPLY TO THE CONTROL MODULE**

- **NOT OK**

  Refer to **CHECKING FOR OPEN-CIRCUITS, CONTACT RESISTANCE AND OXIDATION**

CHECKING FOR OPEN-CIRCUITS, CONTACT RESISTANCE AND OXIDATION

Check ground terminal 31/96 and the cable between the ground terminal and transmission control module

(TCM) terminal #A53 (#A53). Check for an open-circuit according to **OPEN-CIRCUIT, PERMANENT FAULTS** . Check for contact resistance and oxidation according to **CONTACT RESISTANCE AND OXIDATION** .

Check the ground lead between the battery and the body. Check for an open-circuit according to **OPEN-CIRCUIT, PERMANENT FAULTS** . Check for contact resistance and oxidation according to **CONTACT RESISTANCE AND OXIDATION** .

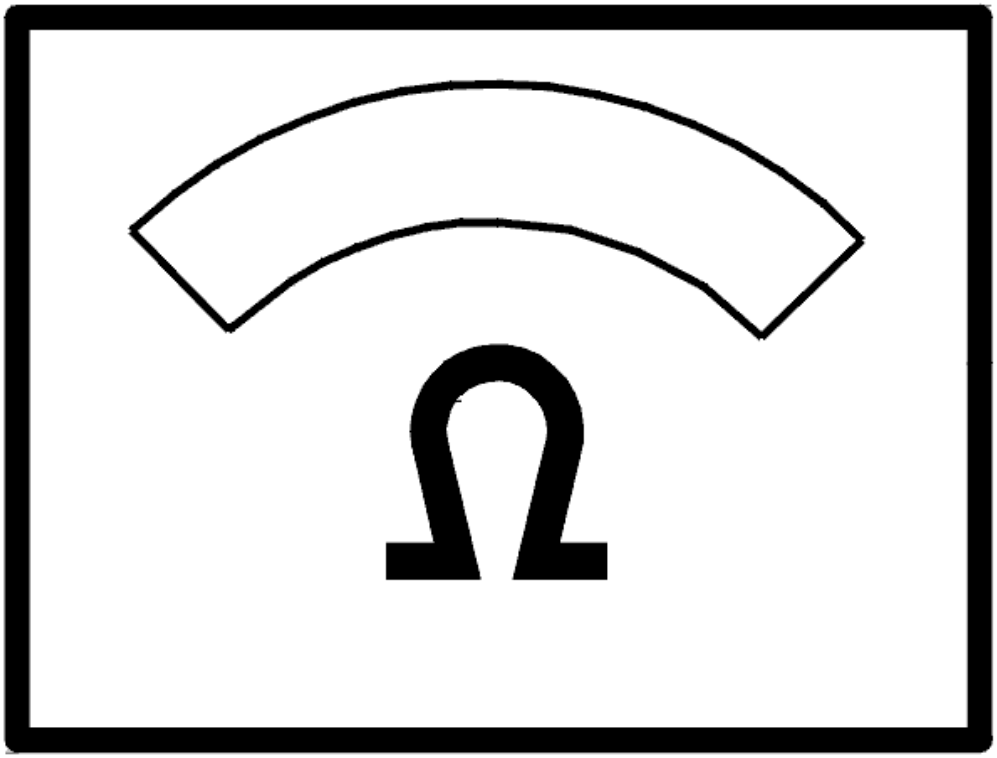

Fig. 5: Identifying Ohms Display
Courtesy of VOLVO CARS CORPORATION

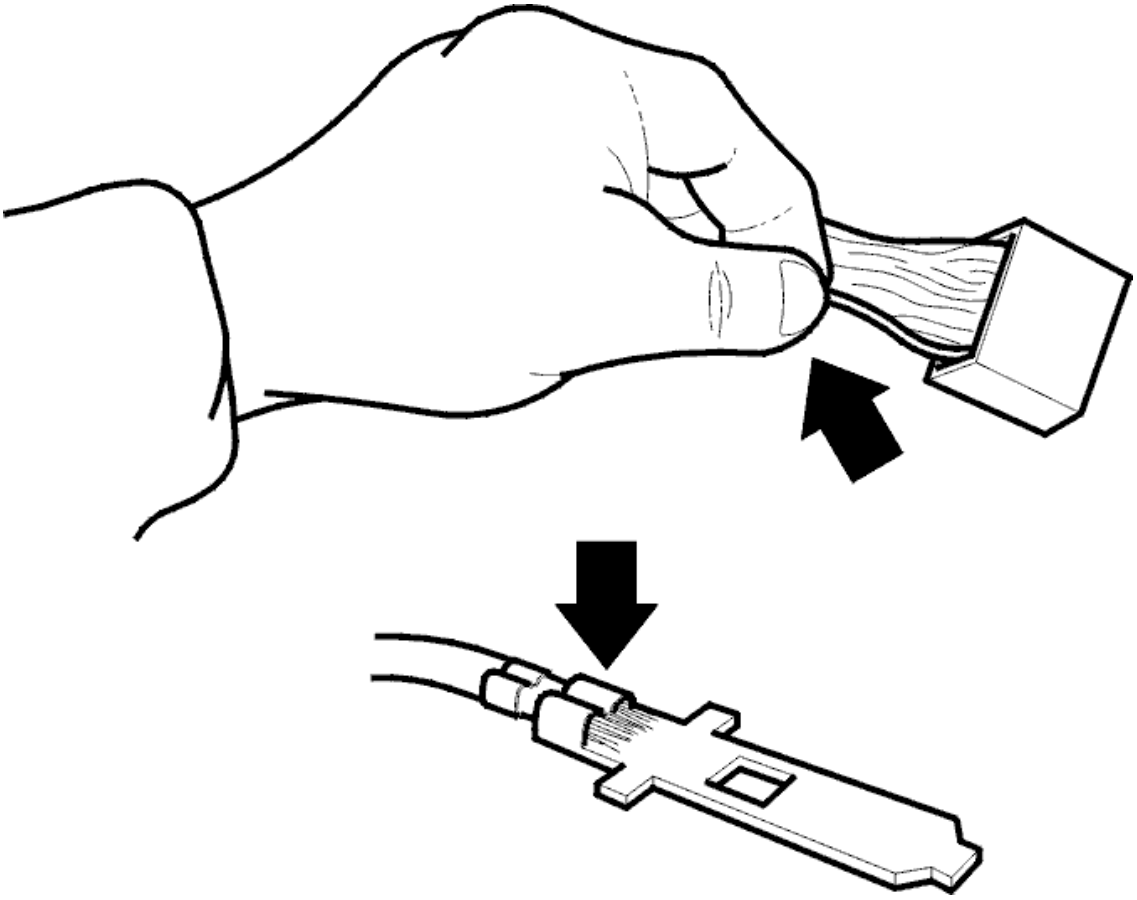

Fig. 6: Checking Contact Resistance And Oxidation
Courtesy of VOLVO CARS CORPORATION

- **Continue**

  Refer to **VERIFICATION**

CHECKING THE POWER SUPPLY TO THE CONTROL MODULE

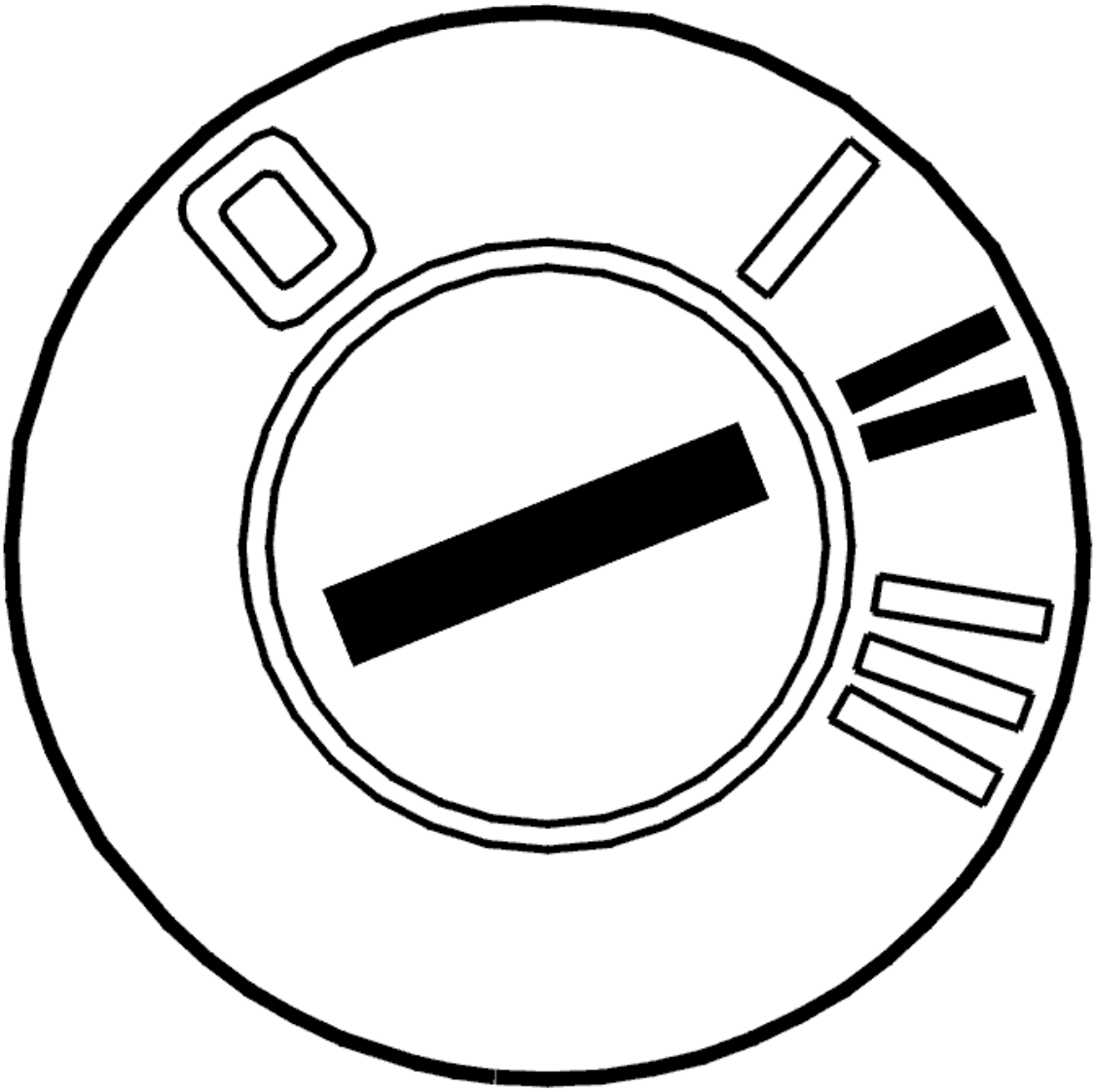

Fig. 7: Identifying Ignition ON
Courtesy of VOLVO CARS CORPORATION

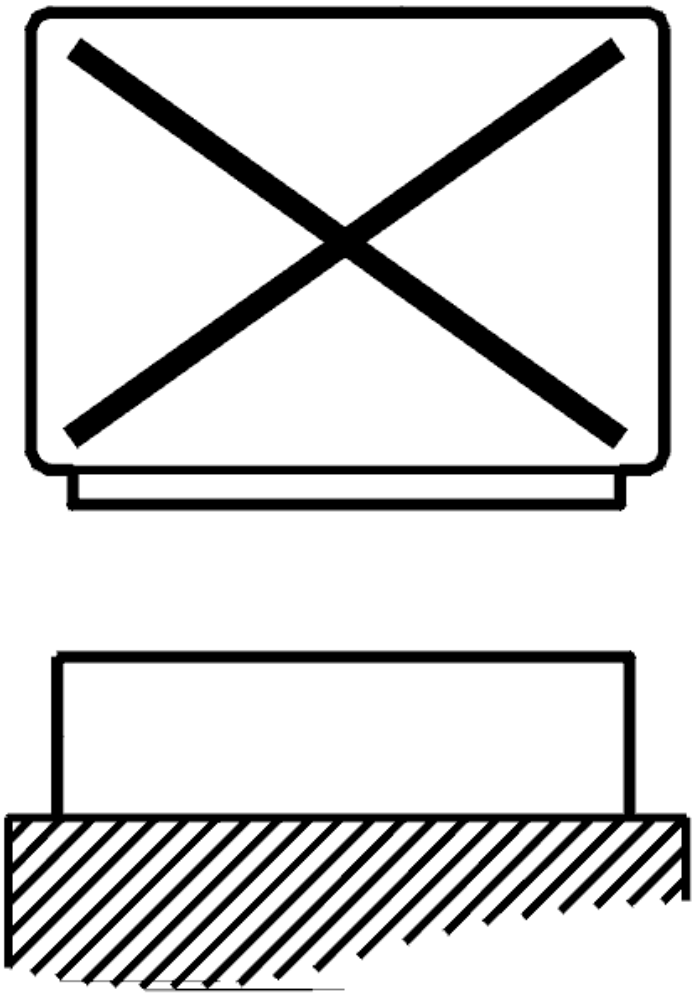

Fig. 8: Identifying Control Module Disconnected
Courtesy of VOLVO CARS CORPORATION

- Ignition off
- Control module disconnected.
- Ignition on.

Connect a voltmeter between terminals #A35 (#A35) and #A53 (#A53) on the breakout box.

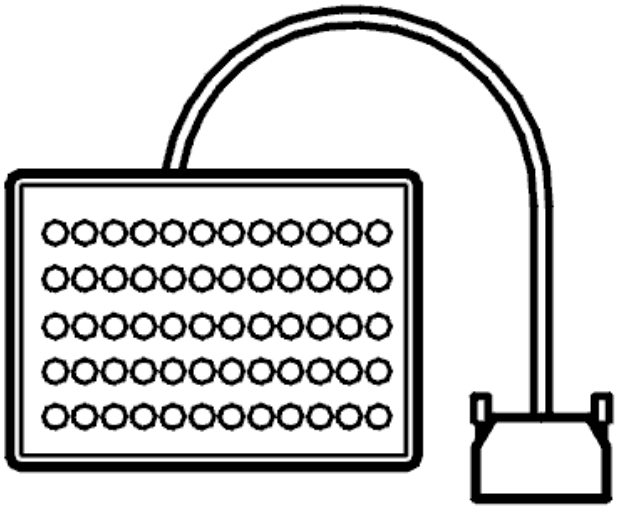

Fig. 9: Identifying Breakout Box
Courtesy of VOLVO CARS CORPORATION

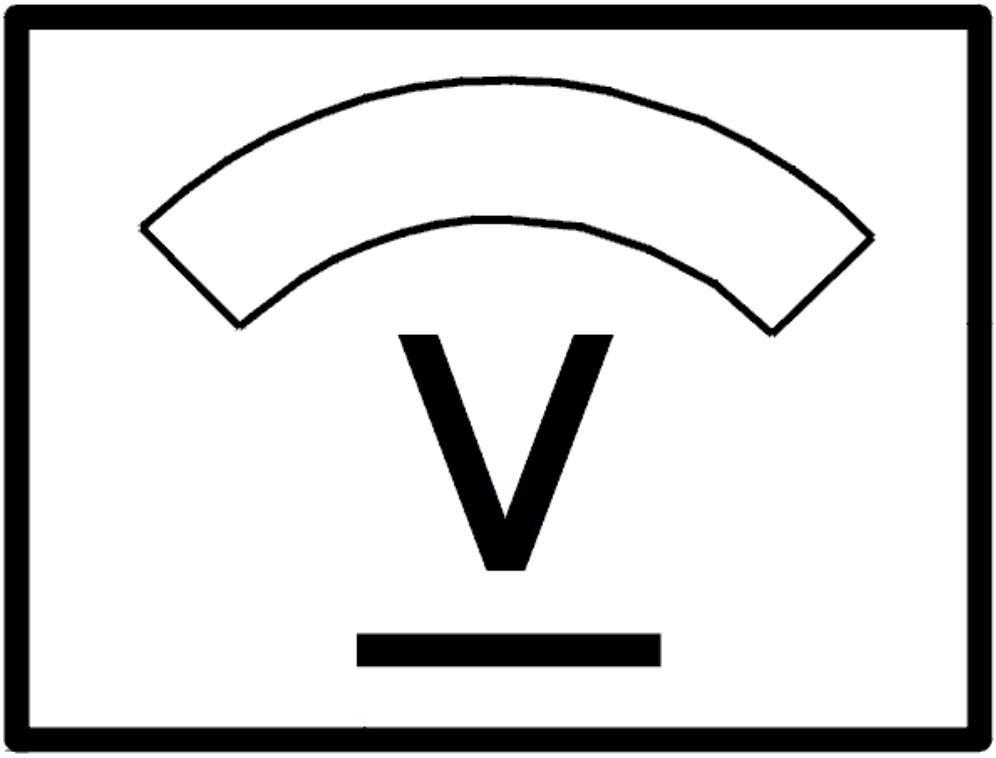

Fig. 10: Identifying Voltage Display
Courtesy of VOLVO CARS CORPORATION

The voltmeter should read battery voltage.

- **OK**

  OKAY: Troubleshooting has been completed.

- **NOT OK**

  Refer to **CHECKING THE FUSE AND RELAY**

CHECKING THE FUSE AND RELAY

Check that fuse 20 in the fusebox in the passenger compartment is intact.

If the fuse has blown, check the cable between control module terminal #A35 (#A35) and the relay for extended X-supply 2/101 terminal #1 (located on the central electronic module (CEM)). Check for a short-circuit to ground.

Other information:

- To connect the breakout box and access the relay, For -2004, see **CENTRAL ELECTRONIC MODULE (CEM), REPLACING** or For 2005-, see **CENTRAL ELECTRONIC MODULE (CEM), REPLACING** .
- see **CHECKING WIRING AND TERMINALS**

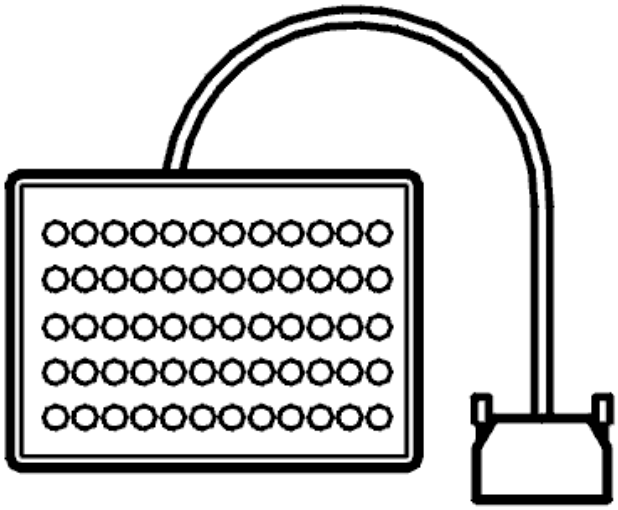

Fig. 11: Identifying Breakout Box
Courtesy of VOLVO CARS CORPORATION

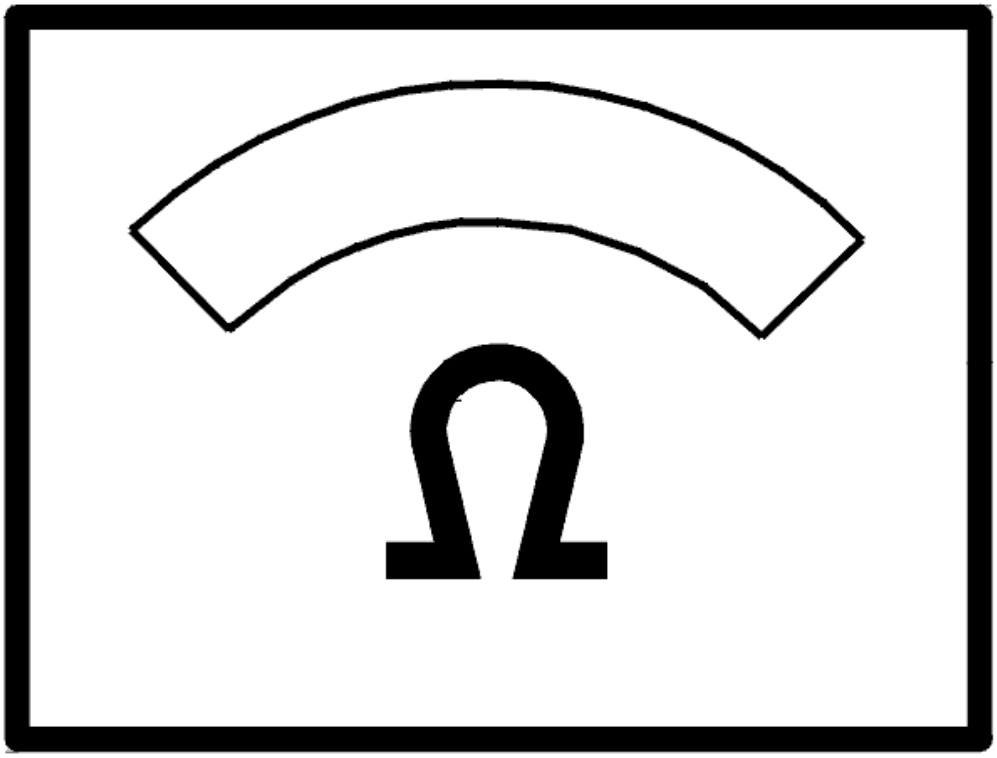

Fig. 12: Identifying Ohms Display
Courtesy of VOLVO CARS CORPORATION

Was a fault detected?

- **YES**

  Refer to **VERIFICATION**

- **NO**

  Refer to **CHECKING THE VOLTAGE BEFORE THE FUSE**

CHECKING THE VOLTAGE BEFORE THE FUSE

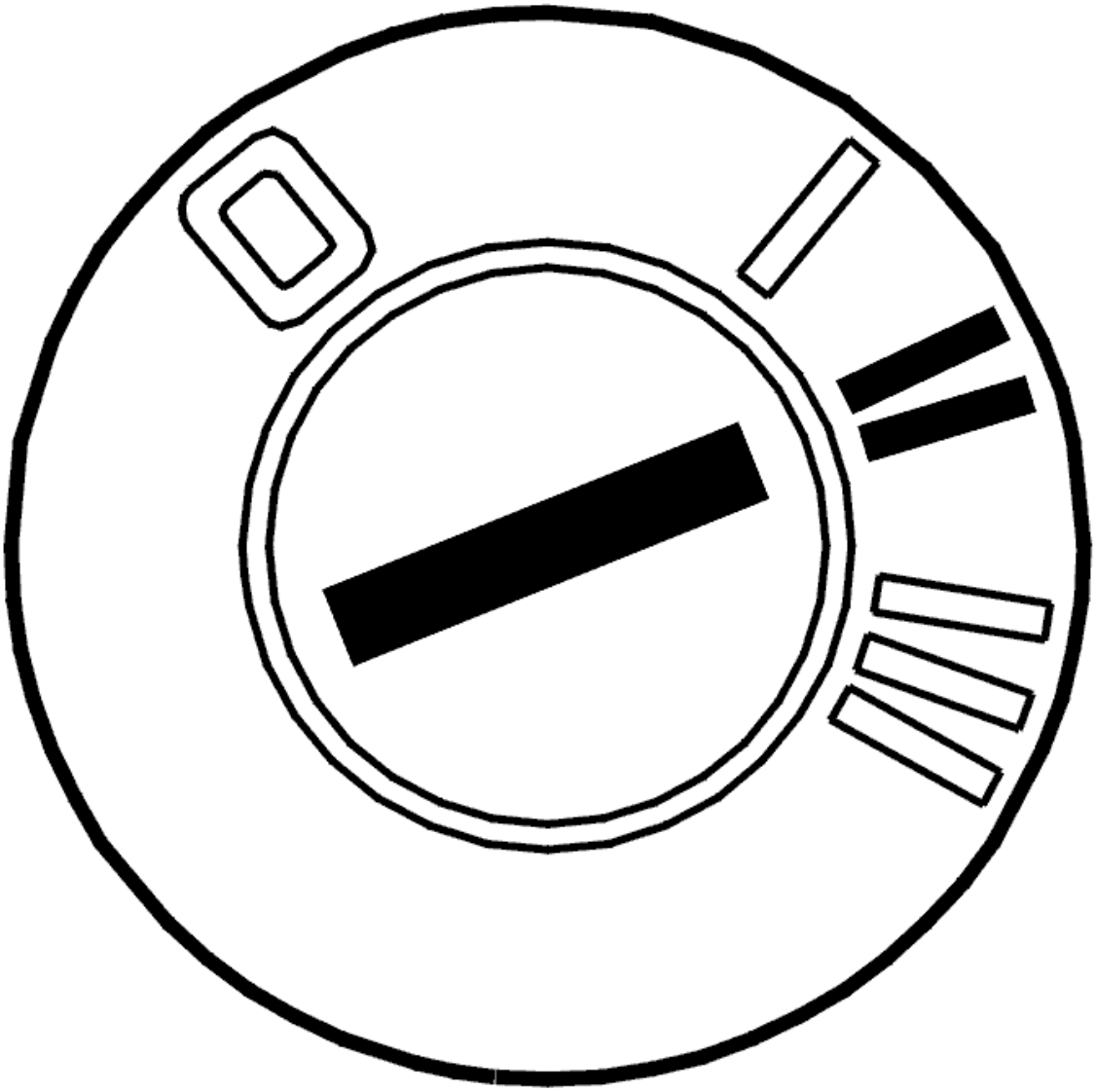

Fig. 13: Identifying Ignition ON
Courtesy of VOLVO CARS CORPORATION

- Ignition on
- Connect a voltmeter between fuse 20 in the fusebox in the passenger compartment and the left socket on the fuse holder for fuse 20 and ground.

  Check the following cables if the voltage is approximately 12 V. Check the cable between the fuse and relay for extended power supply 2/101 (located on the central electronic module (CEM)). Check the cable between the relay and transmission control module (TCM) terminal #A35 (#A35). Check these cables for an open-circuit according to **OPEN-CIRCUIT, PERMANENT FAULTS** .

  If no faults were detected, try a new relay.

  Other information:

- To access the relay, For -2004, see **CENTRAL ELECTRONIC MODULE (CEM), REPLACING** or For 2005-, see **CENTRAL ELECTRONIC MODULE (CEM), REPLACING** .

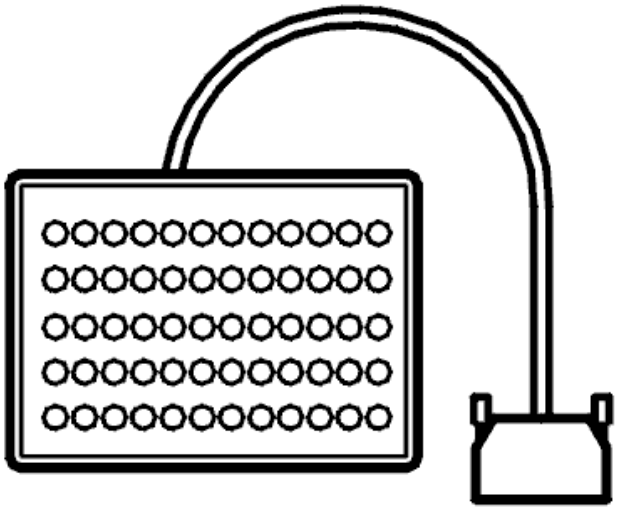

Fig. 14: Identifying Breakout Box
Courtesy of VOLVO CARS CORPORATION

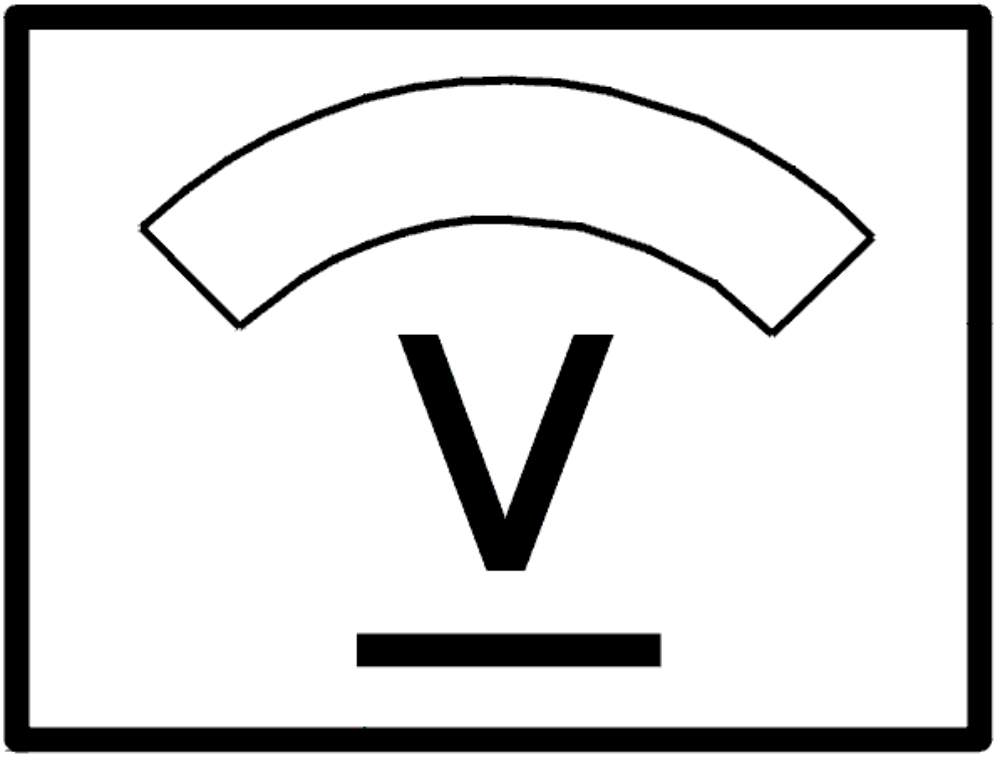

Fig. 15: Identifying Voltage Display
Courtesy of VOLVO CARS CORPORATION

- **Continue**

  Refer to **VERIFICATION**

VERIFICATION

VERIFICATION

HINT: After carrying out the repair, check that the fault has been remedied.

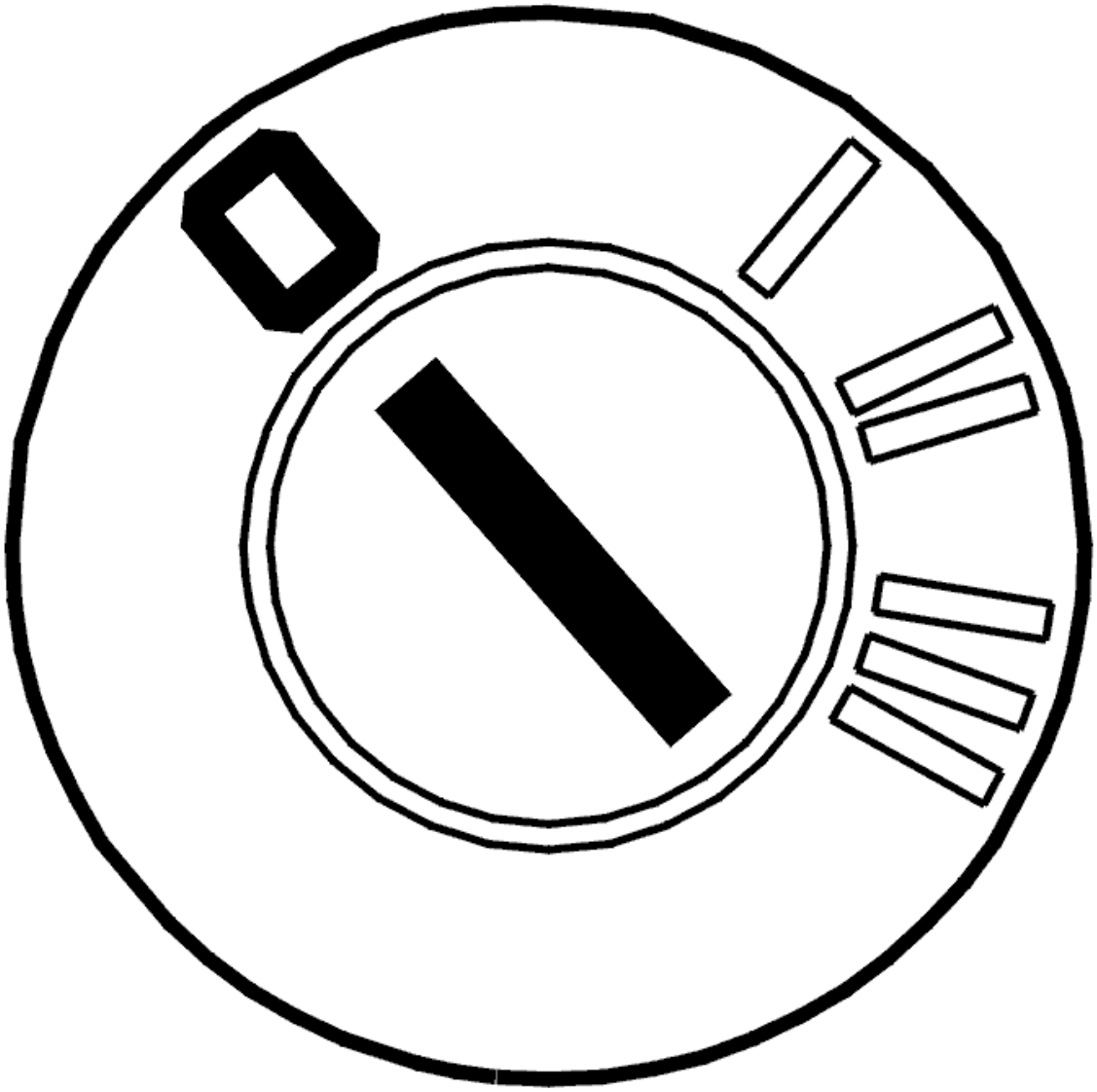

Fig. 16: Identifying Ignition OFF
Courtesy of VOLVO CARS CORPORATION

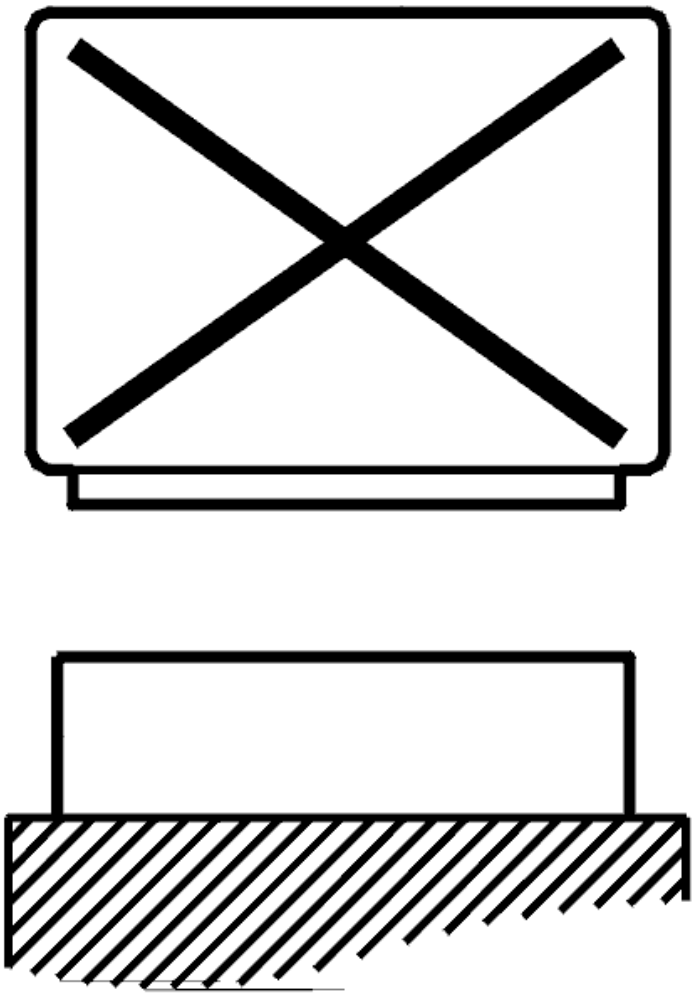

Fig. 17: Identifying Control Module Disconnected
Courtesy of VOLVO CARS CORPORATION

- Ignition off.
- Turn of all equipment in the car that takes power from the battery (the interior lighting and radio etc).
- Control module disconnected.

  Connect an ohmmeter between the battery negative terminal and terminal #A53 (#A53) on the breakout box.

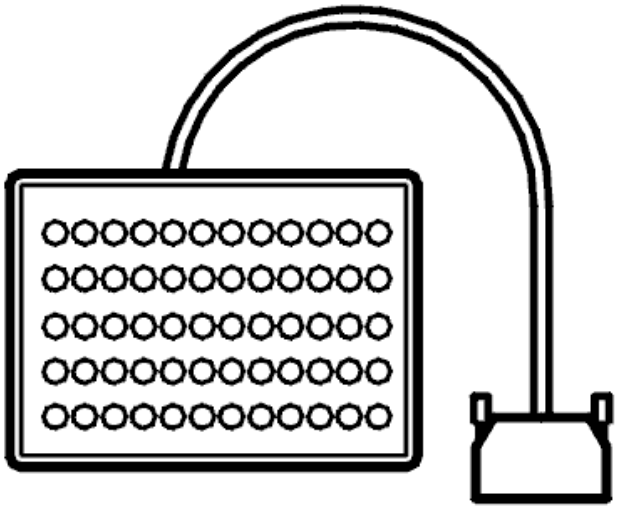

Fig. 18: Identifying Breakout Box
Courtesy of VOLVO CARS CORPORATION

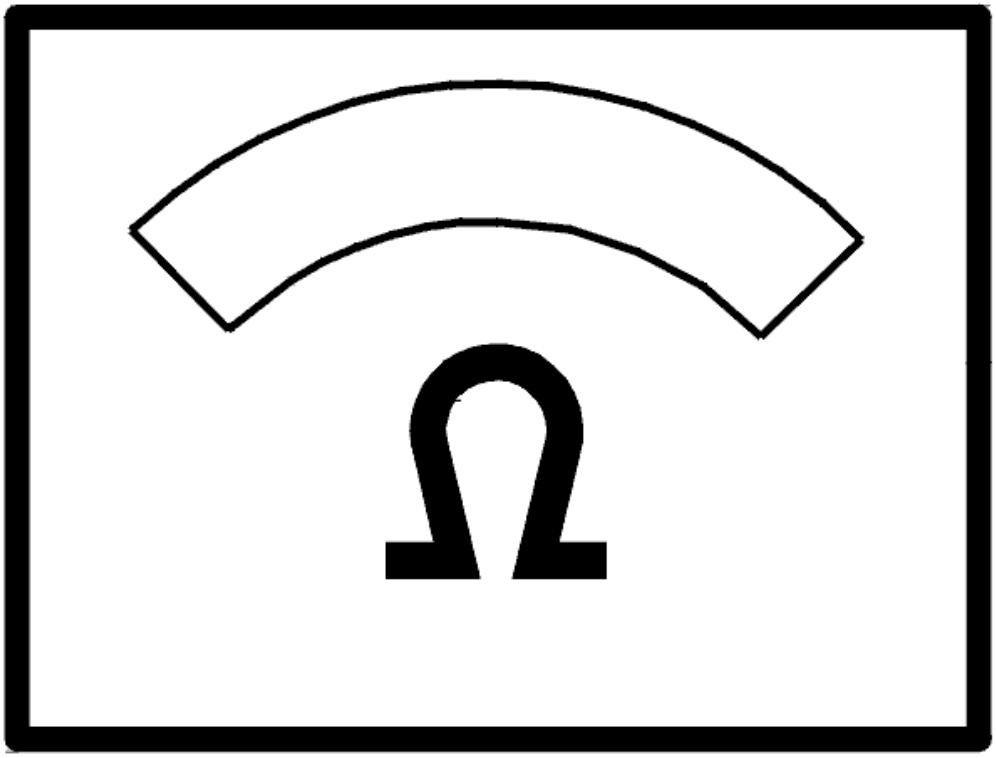

Fig. 19: Identifying Ohms Display
Courtesy of VOLVO CARS CORPORATION

The ohmmeter should read approximately 0 ohms.

- **OK**

  Refer to **VERIFICATION, CONTINUED**

- **NOT OK**

  Refer to **INFORMATION**

VERIFICATION, CONTINUED

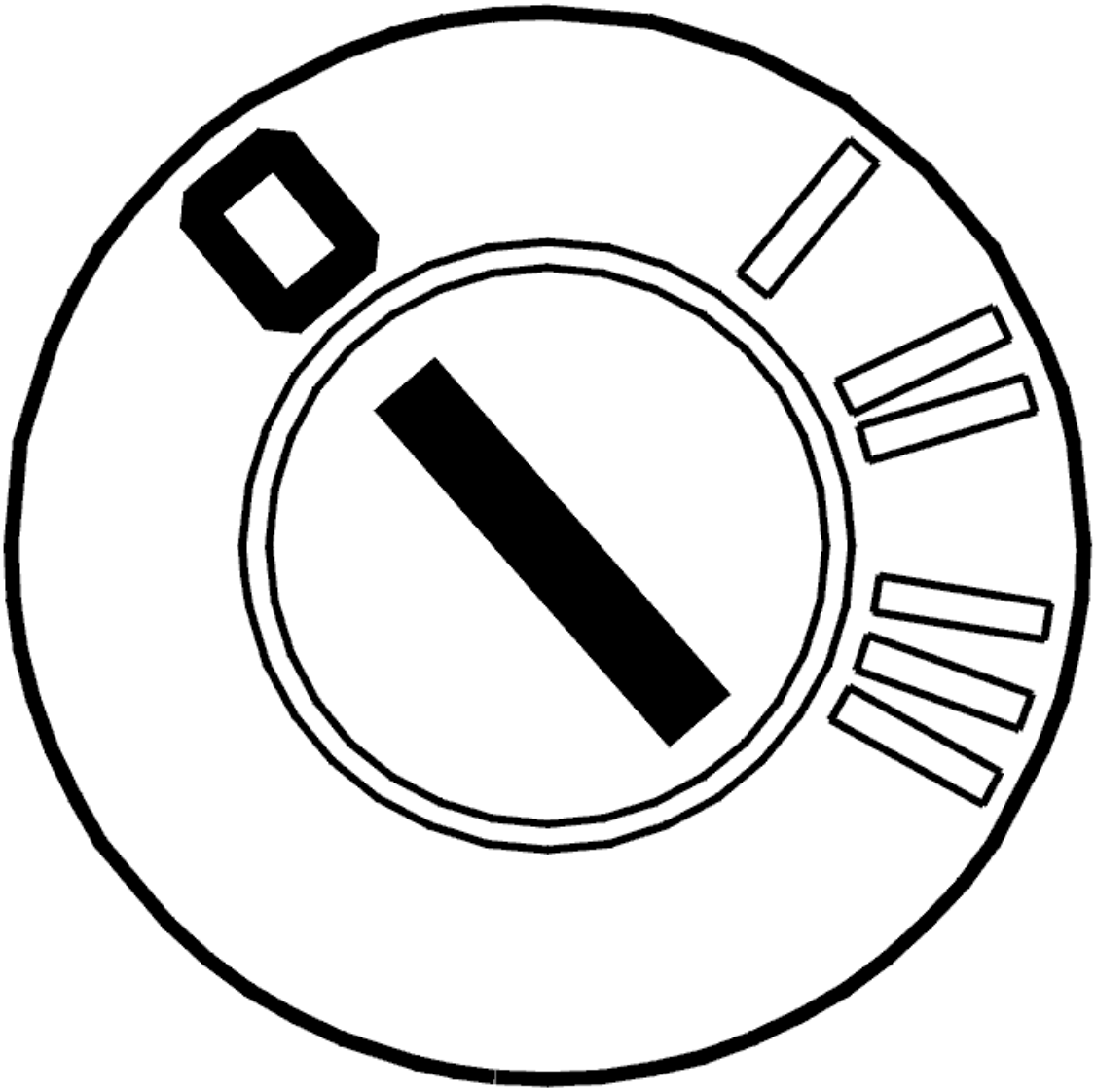

Fig. 20: Identifying Ignition OFF
Courtesy of VOLVO CARS CORPORATION

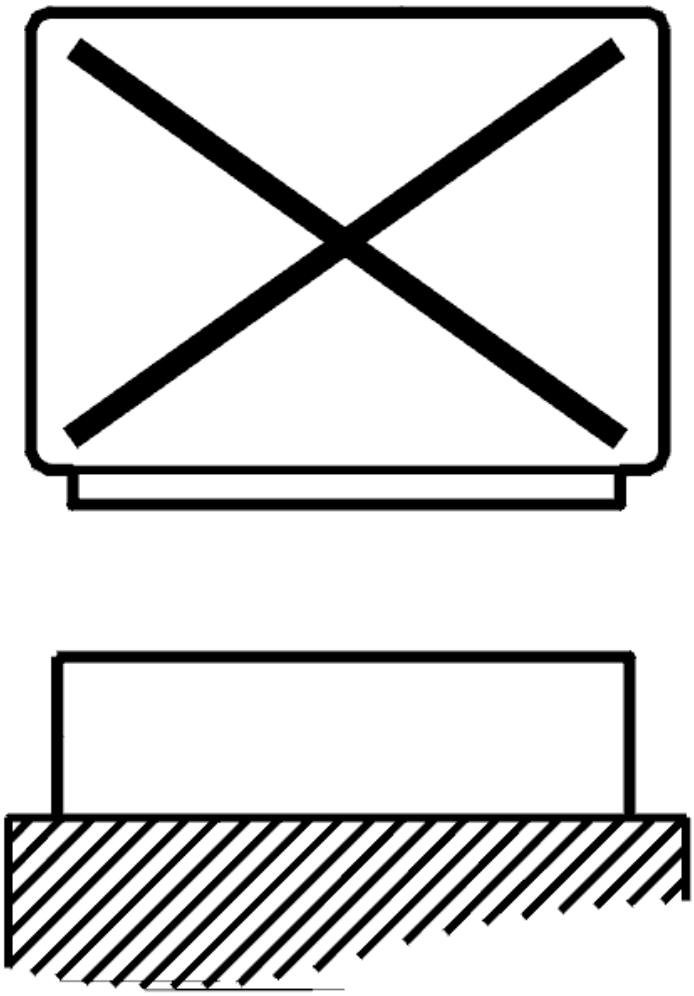

Fig. 21: Identifying Control Module Disconnected
Courtesy of VOLVO CARS CORPORATION

- Ignition off.
- Turn of all equipment in the car that takes power from the battery (the interior lighting and radio etc).
- Control module disconnected.

  Connect a voltmeter between terminals #A35 (#A35) and #A53 (#A53) on the breakout box. The voltmeter should read battery voltage.

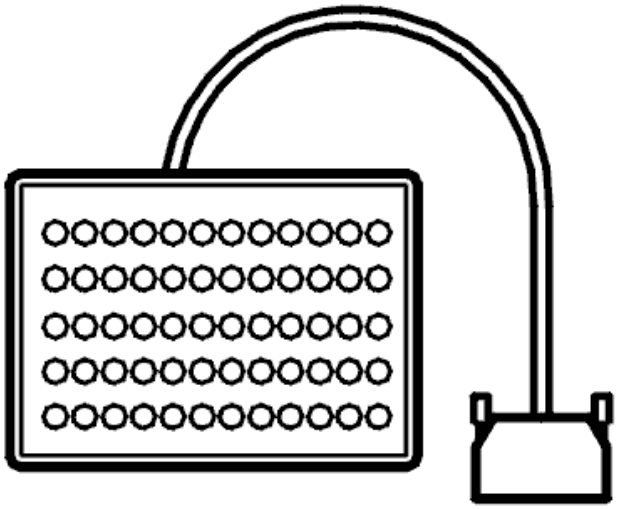

Fig. 22: Identifying Breakout Box
Courtesy of VOLVO CARS CORPORATION

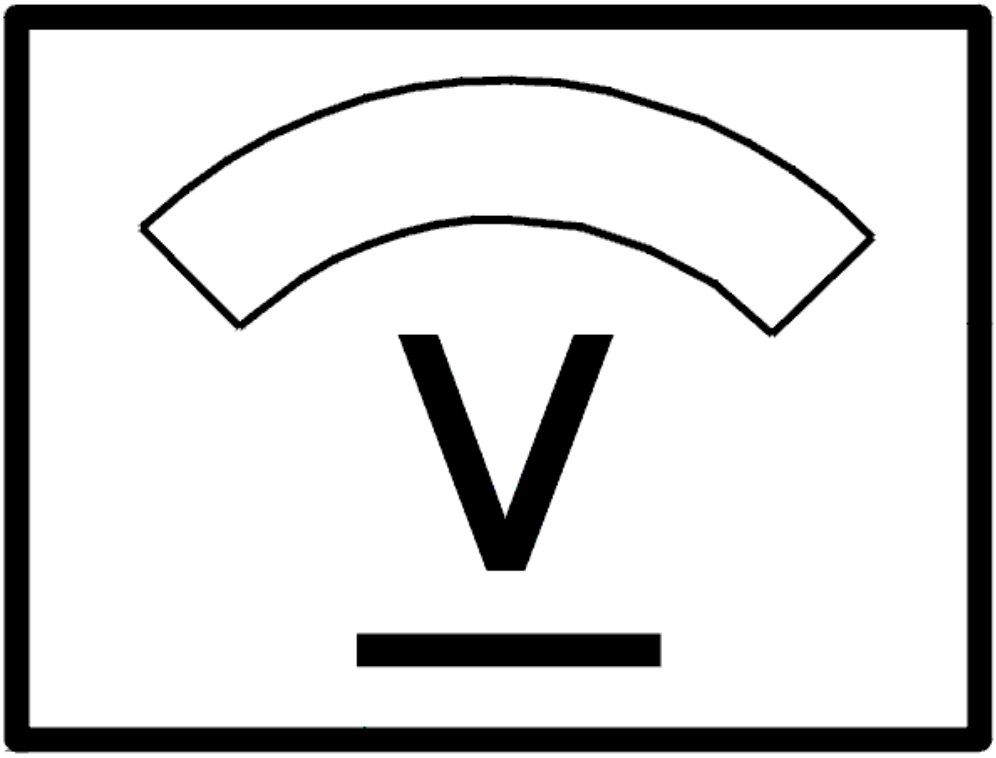

Fig. 23: Identifying Voltage Display
Courtesy of VOLVO CARS CORPORATION

Were the ground terminal and power supply OK?

- **YES**

  VERIFIED: Troubleshooting has been completed.

- **NO**

  Refer to **INFORMATION**

INFORMATION

FAULT-TRACING INFORMATION

The fault should be diagnosed and remedied. Since this is not the case the fault-tracing process has failed.

Complete the fault-tracing for those fault or try again.

CHECKING VOLTAGE/GROUNDING POINT, TRANSMISSION CONTROL MODULE (TCM) (B6324S, TF-80SC; B6324S, TF-80SC AWD; 2007-2010)

CHECKING THE SUPPLY VOLTAGE/GROUND TERMINAL

CHECKING THE POWER SUPPLY AND GROUND TERMINAL

Power supply to the transmission control module (TCM)

The transmission control module (TCM) is supplied power via two voltage inputs.

When the ignition is on, the two voltage inputs are supplied with voltage and the transmission control module (TCM) is in active mode.

1. Voltage input 1 (#A11(#A41)) is supplied power from the ignition switch, position II (KL15, "wake up") via the central electronic module (CEM). This power input is used to activate the transmission control module (TCM). When the power input is supplied with power, the system relay will be activated and power input 11 will be supplied power. The transmission control module (TCM) will not be activated if there is an open circuit.
2. Voltage input 2 #A1(#A31) is supplied power via a fuse from the relay and the engine compartment fuse box. This power input governs the supply of power to the transmission control module (TCM). The transmission control module (TCM) will not be activated if there is an open circuit.

Checking the power supply

Check the power supply cable from the ignition switch to transmission control module (TCM) terminal #A11 (#A41) for open circuit, loose connection, contact resistance and oxidation. Check the fuse. The voltage must be approximately battery voltage when the ignition is on.

Check the power supply from the system relay to transmission control module (TCM) terminal #A1(#A31) for open circuit, loose connection, contact resistance and oxidation. Check the fuse. The voltage must be approximately battery voltage when the ignition is on.

Ground terminal, transmission control module (TCM)

The transmission control module (TCM) has a ground connection.

1. The ground input (#A9 (#A39)) is power ground and is connected to the ground connection in the body.

Checking the ground terminal

Check the ground cable between transmission control module (TCM) terminal #A9 (#A39) and the ground connection in the body for open circuit, loose connection, contact resistance and oxidation. With the ignition on,

the voltage drop between the transmission control module (TCM) ground connection and chassis connection may not be greater than 0.5 V.

Remedy as necessary.

Other information

- see **CONNECTING THE BREAKOUT BOX**
- see **SIGNAL SPECIFICATION**
- see **CHECKING WIRING AND TERMINALS**

CHECKING VOLTAGE/GROUNDING POINT, TRANSMISSION CONTROL MODULE (TCM) (B6324S5, TF-80SC; B6324S5, TF-80SC AWD; 2011)

CHECKING THE SUPPLY VOLTAGE/GROUND TERMINAL

see **CHECKING THE SUPPLY VOLTAGE/GROUND TERMINAL**

CHECKING VOLTAGE/GROUNDING POINT, TRANSMISSION CONTROL MODULE (TCM) (B8444S, TF-80SC AWD; 2006-2011)

CHECKING THE VOLTAGE FEED AND GROUND CONNECTION

CHECKING THE VOLTAGE FEED AND GROUND CONNECTION

Voltage feed transmission control module (TCM)

The transmission control module (TCM) is supplied with voltage via two voltage inputs.

When the ignition is on, the two voltage inputs are supplied with voltage and the transmission control module (TCM) is in active mode.

1. Voltage input 1 (#A11(#A41)) is supplied with voltage from the ignition, ignition position II (KL15, "wake up") via central electronic module (CEM). This voltage input is used to activate the transmission control module (TCM). When the voltage input is supplied with voltage, the system relay will be activated and voltage input 11 is supplied with voltage. In case of open circuit, the transmission control module (TCM) will not be activated.
2. Voltage input 2 (#A1(#A31) is supplied with voltage via a fuse from relay and the fuse box in the engine compartment. This voltage input handles voltage supply to the transmission control module (TCM). In case of open circuit, the transmission control module (TCM) will not be activated.

Checking the power supply

Check the voltage feed cable from the ignition to the transmission control module (TCM) #A11(#A41) for open circuit, loose connection, contact resistance and oxidation. Also check the fuse. The voltage shall be approx. battery voltage when the ignition is on.

Check the voltage feed from the system relay to the transmission control module (TCM) #A1(#A31) for open circuit, loose connection, contact resistance and oxidation. Also check the fuse. The voltage shall be approx. battery voltage when the ignition is on.

Ground connection transmission control module (TCM)

The transmission control module (TCM) has a ground connection.

1. The ground input (#A9 (#A39)) is power ground and is connected to the ground connection in the body.

Checking the ground terminal

Check the ground cable between the transmission control module (TCM) #A9 (#A39) and the ground connection in the body for open circuit, loose connection, contact resistance and oxidation. When the ignition is on, the voltage-drop between the transmission control module (TCM) ground connection and the ground connection may not be greater than 0.5 V.

Remedy as necessary.

Other information

- see **CONNECTING THE BREAKOUT BOX**
- see **SIGNAL DESCRIPTION**
- see **CONTENTS**

CHECKING VOLTAGE/GROUNDING POINT, TRANSMISSION CONTROL MODULE (TCM) (TF-80SC AWD; 2005)

CHECKING THE VOLTAGE FEED AND GROUND CONNECTION

see **CHECKING THE VOLTAGE FEED AND GROUND CONNECTION**

CONNECTING BREAKOUT BOX, TRANSMISSION CONTROL MODULE (TCM) (B8444S, TF-80SC AWD; 2006-2011)

CONNECTING THE BREAKOUT BOX

Special tools:

see **9512904**

see **9511428**

see **9512975**

CONNECTING THE BREAKOUT BOX

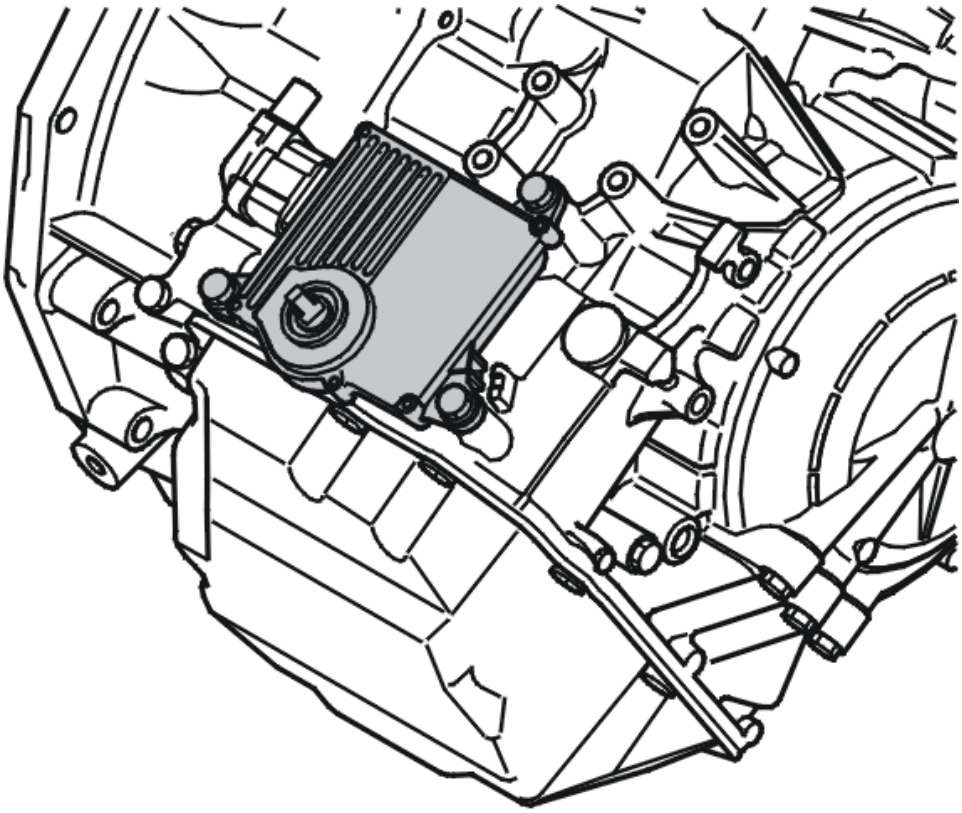

Fig. 24: Identifying Transmission Control Module (TCM)
Courtesy of VOLVO CARS CORPORATION

- Ignition off. Wait until the gear selector's indication or lighting goes off (normally takes approx. 7 seconds). If the gear selector's indication or lighting is not on from the beginning due to some malfunction, wait for 3 minutes from the time that the ignition is turned off.
- Expose the transmission control module (TCM) according to: **TRANSMISSION CONTROL MODULE (TCM), REPLACING**

NOTE: **When measuring on the connector A (not against the transmission itself), then the transmission control module (TCM) does not have to be disconnected from the transmission. If the control module is not disconnected, no calibration is needed.**

- Remove the connectors from the transmission control module (TCM).
- Check that the male and female pins on the control module, the control module's connectors and on the transmission are intact and securely in place (cannot be pressed in). Check that the cables to the female pins are connected securely.
- Especially check the pins that are in question for the diagnostic trouble code/symptom. See also: **SIGNAL DESCRIPTION**
- Connect adapter see **9512904** to connector A and adapter see **9512975** to connector B on the transmission control module (TCM) or transmission, and connect breakout box see **9511428** to the adapter.

- The breakout box is designed to facilitate the reading of control module input and output signals when the control module is connected as well as the resistance of cables and components when the control module is disconnected. Using the breakout box reduces the risk of unintentionally short-circuiting cables or damaging pins in the connectors.

CAUTION: When taking readings with the ignition on, first connect the engine control module (ECM) and its connectors, then switch on the ignition. After taking readings, check diagnostic trouble codes (DTCs) for systems connected to the high speed section.

CONNECTING BREAKOUT BOX, TRANSMISSION CONTROL MODULE (TCM) (TF-80SC AWD; 2005)

CONNECTING THE BREAKOUT BOX

see **CONNECTING THE BREAKOUT BOX**

CONNECTING THE BREAKOUT BOX (4T65 AWD; 2003-2006)

CONNECTING THE BREAKOUT BOX

Special tools:

see **9511504**

see **9511428**

see **9995722**

REMOVING THE CONTROL MODULE

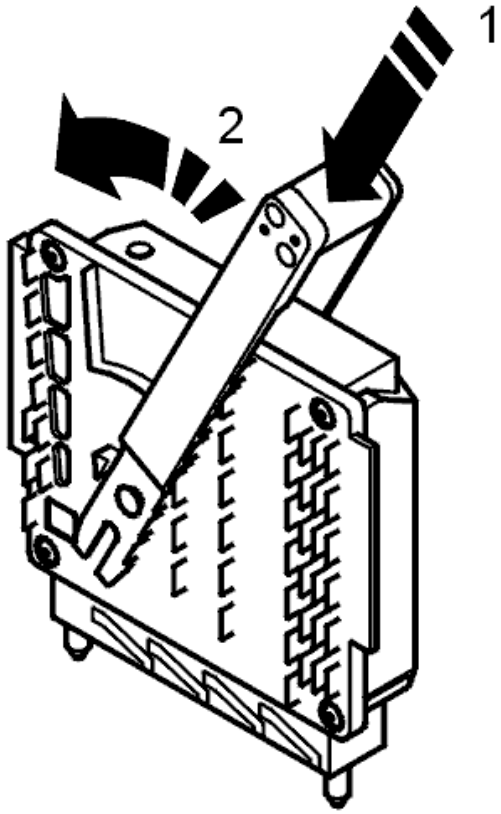

Fig. 25: Identifying Engine Control Module
Courtesy of VOLVO CARS CORPORATION

- Wait 2 minutes after the ignition has been switched off. The main relay must be voltage free **before** the control module can be removed from the car. If the engine cooling fan (FC) runs on after the ignition has been switched off, wait until it stops and then a further 2 minutes.
- Remove control module box cover and put to one side.

NOTE: **Do not touch the control module terminal pins with your fingers. Static electricity can damage control module components.**

- Insert tool see **9995722** around the control module.
- Move the upper section of the tool backwards as far as it will go and pull up the tool.
- Carefully pull up the control module.

ADAPTER CONNECTION

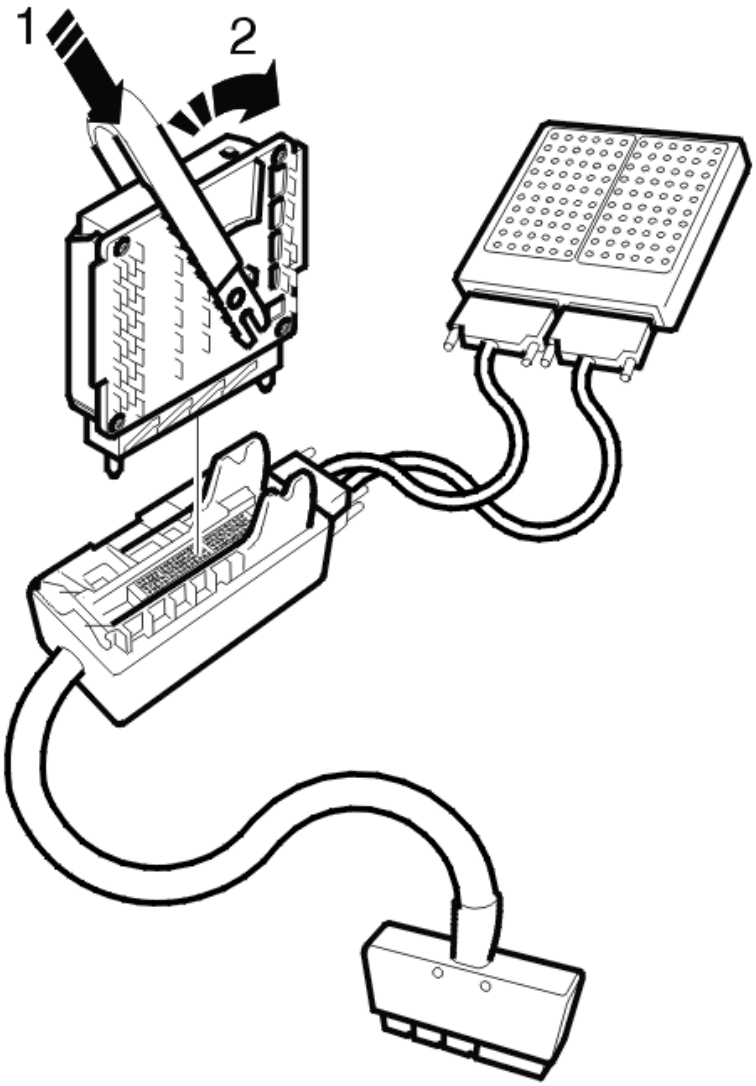

Fig. 26: Identifying Adapter
Courtesy of VOLVO CARS CORPORATION

- Check that no pins or sockets are damaged on the connector.
- Gently press adapter see **9511504** down into the grooves inside the control module box. Press to the limit position!
- Insert tool see **9995722** around the adapter.
- Move the upper section of the tool forwards as far as it will go. Pull the tool up.

CONNECTING THE BREAKOUT BOX

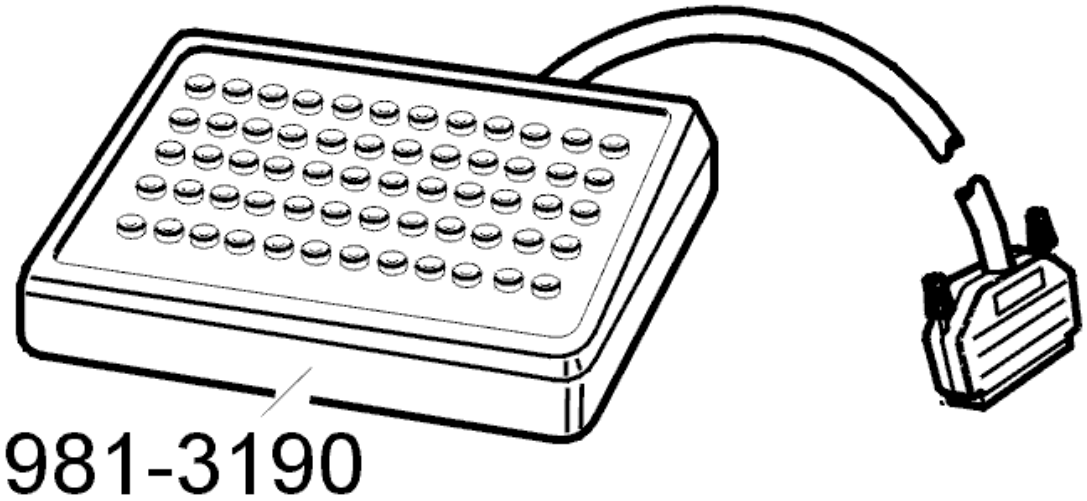

Fig. 27: Identifying Breakout Box
Courtesy of VOLVO CARS CORPORATION

- Check the control module and control module connectors to make sure that the male and female terminals are undamaged and secure (cannot be pressed in). Check that the cables to the female terminals are secured to the terminal pins.
- Connect adapter see **9511504** to the control module connector (wiring side). Connect breakout box see **9511428** to the adapter.
- The breakout box is designed to facilitate reading off the control module input and output signals when the control module is connected; and the cable and component resistance when the control module is disconnected. The use of a breakout box reduces the risk of accidental short-circuits and damage to the connector pins.

REMOVING THE ADAPTER

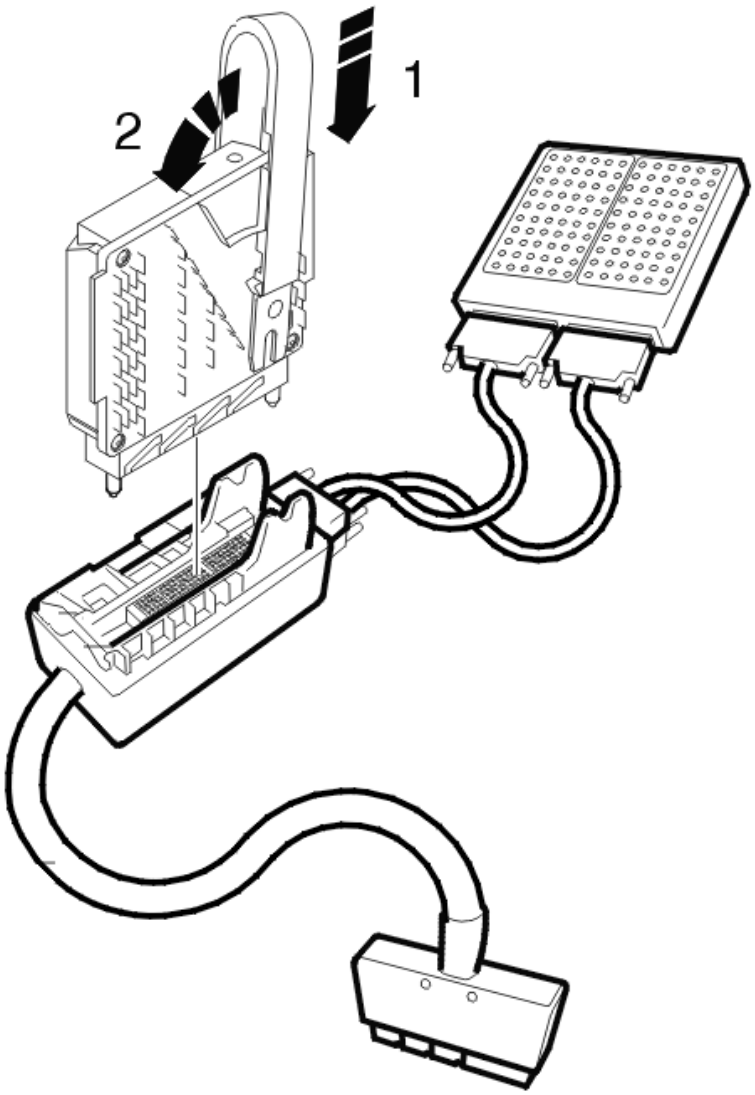

Fig. 28: Identifying Adapter
Courtesy of VOLVO CARS CORPORATION

- Wait 2 minutes after the ignition has been switched off. The main relay must be voltage free **before** the control module can be removed from the car. If the engine cooling fan (FC) runs on after the ignition has been switched off, wait until it stops and then a further 2 minutes.

NOTE: **Do not touch the control module terminal pins with your fingers. Static electricity can damage control module components.**

-
- Insert tool see **9995722** around the adapter.
- Move the upper section of the tool backwards as far as it will go and pull up the tool.
- Carefully pull up the adapter.

INSTALLING THE CONTROL MODULE

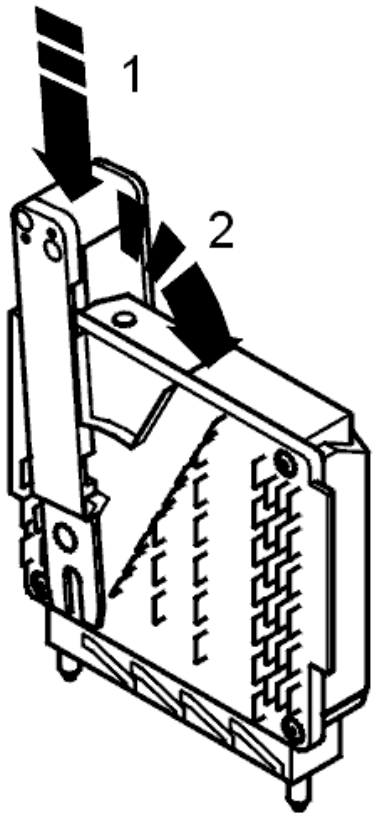

Fig. 29: Identifying Engine Control Module Installation
Courtesy of VOLVO CARS CORPORATION

- Check that no pins or sockets are damaged on the connector.
- Gently press the control module down into the grooves inside the control module box. Press to the limit position!
- Insert tool see **9995722** around the control module.
- Move the upper section of the tool forwards as far as it will go. Pull the tool up.
- Press the cover over the control modules.
- Check that the air ducts are correctly positioned.

CONNECTING THE BREAKOUT BOX (4T65 AWD; 2003-2006)

CONNECTING THE BREAKOUT BOX, GM AUTOMATIC TRANSMISSIONS

Special tools:

see **9511505**

see **9813190**

CONNECTING THE BREAKOUT BOX TO THE AUTOMATIC TRANSMISSION CONNECTOR

- Ignition off
- Remove the air cleaner (ACL) housing. See **BRAKE PIPE MASTER CYLINDER/ABS UNIT, REPLACING** .

  Disconnect the automatic transmission connector by pressing the sides of the connector

- Carefully pull the connector straight out
- Check that the male and female terminals are undamaged and secure (cannot be pressed in). Check that the cables to the female terminals are secured to the terminal pins
- In particular, check the terminal pins relevant to the diagnostic trouble code (DTC) / symptom. See **SIGNAL SPECIFICATION**
- Connect adapter see **9511505** to the automatic transmission connector (transmission side). Connect breakout box see **9813190** to the adapter
- The breakout box is designed to facilitate reading off the control module input and output signals when the control module is connected; and the cable and component resistance when the control module is disconnected. The use of a breakout box reduces the risk of accidental short-circuits and damage to the connector pins.

CONNECTING THE TEST BOX (AW50/51 AWD; AW55-50/51SN; 2003-2004)

CONNECTING THE BREAKOUT BOX

see **CONNECTING THE BREAKOUT BOX**

CONNECTING THE TEST BOX (B5254T2; 2003-2007)

CONNECTING THE BREAKOUT BOX

see **CONNECTING THE BREAKOUT BOX**

CONNECTING THE TEST BOX (B6294T; 2003-2006)

CONNECTING THE BREAKOUT BOX

see **CONNECTING THE BREAKOUT BOX**

CONNECTION OF THE BREAKOUT BOX, TRANSMISSION CONTROL MODULE (TCM) (B6324S, TF-80SC; B6324S, TF-80SC AWD; 2007-2010)

CONNECTING THE BREAKOUT BOX

Special tools:

see **9512904**

see **9511428**

see **9512975**

CONNECTING THE BREAKOUT BOX

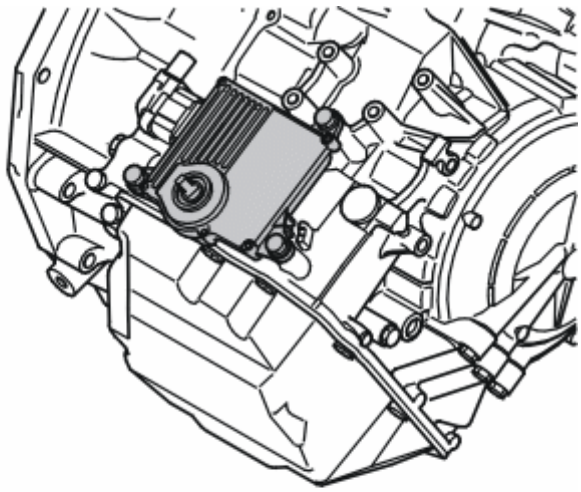

Fig. 30: Identifying Transmission Control Module (TCM)
Courtesy of VOLVO CARS CORPORATION

- Ignition off. Wait until the gear selector's indication or lighting goes off (normally takes approx. 7 seconds). If the gear selector's indication or lighting is not on from the beginning due to some malfunction, wait for 3 minutes from the time that the ignition is turned off.
- Expose the transmission control module (TCM) according to: **TRANSMISSION**

NOTE: When measuring on the connector A (not against the transmission itself), then the transmission control module (TCM) does not have to be disconnected from the transmission. If the control module is not disconnected, no calibration is needed.

- Remove the connectors from the transmission control module (TCM).
- Check that the male and female pins on the control module, the control module's connectors and on the transmission are intact and securely in place (cannot be pressed in). Check that the cables to the female pins are connected securely.
- Especially check the pins that are in question for the diagnostic trouble code/symptom. See also: **SIGNAL SPECIFICATION**

- Connect adapter see **9512904** to connector A and adapter see **9512975** to connector B on the Transmission Control Module (TCM) or transmission, and connect breakout box see **9511428** to the adapter.
- The breakout box is designed to facilitate reading off the control module input and output signals when the control module is connected; and the resistance of the cable and component when the control module is disconnected. The use of a breakout box reduces the risk of accidental short-circuits and damage to the connector pins.

CAUTION: When taking readings with the ignition on, first connect the engine control module (ECM) and its connectors, then switch on the ignition. After taking readings, check diagnostic trouble codes (DTCs) for systems connected to the high speed section.

CONNECTION OF THE BREAKOUT BOX, TRANSMISSION CONTROL MODULE (TCM) (B6324S5, TF-80SC; B6324S5, TF-80SC AWD; 2011)

CONNECTING THE BREAKOUT BOX

see **CONNECTING THE BREAKOUT BOX**

CONVERSION TABLES STANDARDIZED DIAGNOSTIC TROUBLE CODES (DTCS)/VOLVO DIAGNOSTIC TROUBLE CODES (DTCS) (AW55-50/51SN; 2003-2007)

CONVERSION TABLE STANDARDIZED DIAGNOSTIC TROUBLE CODES/VOLVO DIAGNOSTIC TROUBLE CODES

INFORMATION

Background

OBD II is a diagnostics system designed to meet statutory requirements. A standardized instrument for fault-tracing can be plugged in to the data link connector (DLC) (OBD II socket) to read diagnostic trouble codes (DTCs) and system parameters. OBD II contains only emissions related diagnostic trouble codes (DTCs) and parameters. It cannot provide the comprehensive range of information available from the Volvo On-board diagnostics system.

Volvo has its own diagnostic trouble code (DTC) designations that adhere to the in-house Volvo On-board Diagnostics protocol (called DII from model year 1999).

Table explanations

The table below is a conversion table between standardized diagnostic trouble codes (DTCs) (SAE/ISO) and the equivalent Volvo diagnostic trouble codes (DTCs) (DII).

SAE/ISO DTC: Standardized diagnostic trouble code as per SAE J2011/ISO 15031-6. The DTC can be read out from the vehicle using a standardized diagnostics system for emission-related faults certified as per OBD II. The readout is taken with a generic scantool, a fault tracing instrument standardized as per SAE J1978/ISO 15031-4.

Volvo DII DTC: Volvo-specific diagnostic trouble code as per Volvo Onboard Diagnostics protocol. Can be read out using VIDA in vehicles from model year 1999.

DTC designation: Volvo DTC designation. Used in VIDA (Volvo scan tool).

Fault type: Volvo's method of specifying the fault. Used in VIDA (Volvo scan tool).

NOTE: **An SAE/ISO diagnostic trouble code can correspond to several DII diagnostic trouble codes. All of these must therefore by rectified in order for the corresponding SAE/ISO diagnostic trouble code to disappear.**

Several SAE/ISO diagnostic trouble codes may also refer to the same DII diagnostic trouble code.

There are DII diagnostic trouble codes for non emissions-related faults that do not correspond to any SAE/ISO diagnostic trouble code.

NOTE: **SAE/ISO diagnostic trouble codes in bold text apply from model year 2005 and onward.**

TABLE

SAE/ISO diagnostic trouble code (DTC)	Volvo DII diagnostic trouble code (DTC)	Diagnostic trouble code (DTC) designation	Fault type
P0218	TCM-0046	Oil temperature	Too high oil temperature
P0560 **P0561**	TCM-009A	Battery voltage	Signal too low
P0600	TCM-E000	Communication control module	Incorrect communication
P0602 **P0614**	TCM-0048	Control module	Defective software
P0605 **P0601**	TCM-0049	Control module	Internal error. Intermittent error
P0605 **P0601**	TCM-0049	Control module	Internal error. Permanent error
P0605 **P062F**	TCM-0099	Control module	Internal error
P0610	TCM-E003	Configuration error	Incorrect configuration. Intermittent error

P0610	TCM-E003	Configuration error	Incorrect configuration. Permanent error
P0702	TCM-0060	Control module	Internal error
P0702	TCM-0120	Control module	Internal error
P0702	TCM-0121	Control module	Internal error
P0702	TCM-0122	Control module	Internal error
P0702	TCM-0123	Control module	Internal error
P0702	TCM-0124	Control module	Internal error
P0705	TCM-0039	Gear-shift position sensor	Faulty signal
P0711	TCM-0045	Oil temperature sensor	Faulty signal
P0712	TCM-0043	Oil temperature sensor	Signal too low
P0713	TCM-0044	Oil temperature sensor	Signal too high
P0715	TCM-0087	Gearbox input speed sensor	Signal too high
P0715 **P2160**	TCM-0089	Gearbox input speed sensor	Signal too low
P0716	TCM-0024	Gearbox input speed sensor	Incorrect signal. Intermittent error
P0716	TCM-0024	Gearbox input speed sensor	Incorrect signal. Permanent error
P0717	TCM-0023	Gearbox input speed sensor	Signal missing. Intermittent error
P0717	TCM-0023	Gearbox input speed sensor	Signal missing. Permanent error
P0720 **P0502**	TCM-0081	Vehicle speed sensor (VSS)	Signal too high
P720 **P0503**	TCM-0083	Vehicle speed sensor (VSS)	Signal too low
P0721 **P0501**	TCM-0020	Vehicle speed sensor (VSS)	Incorrect signal. Intermittent error
P0721 **P0501**	TCM-0020	Vehicle speed sensor (VSS)	Incorrect signal. Permanent error
P0722 **P0500**	TCM-001F	Vehicle speed sensor (VSS)	Signal missing. Intermittent error
P0722 **P0500**	TCM-001F	Vehicle speed sensor (VSS)	Signal missing. Permanent error
P0731	TCM-0028	Gear 1	Incorrect gear ratio
P0732	TCM-0029	Gear 2	Incorrect gear ratio
P0733	TCM-002A	Gear 3	Incorrect gear ratio
P0734	TCM-002B	Gear 4	Incorrect gear ratio
P0735	TCM-002C	Gear 5	Incorrect gear ratio
P0736	TCM-0027	Reverse gear	Incorrect gear ratio
P0740 **P0811**	TCM-002F	Lock-up function	Slipping or not engaged

P0744	TCM-002E	Lock-up	The transmission jerks when lock-up engages
P0748 **P0963**	TCM-0116	Throttle solenoid SLT	Signal too high. Permanent error
P0749 **P0963**	TCM-0116	Throttle solenoid SLT	Signal too high. Intermittent error
P0750 **P0960**	TCM-0117	Throttle solenoid SLT	Signal missing. Permanent error
P0751 **P0960**	TCM-0117	Throttle solenoid SLT	Signal missing. Intermittent error
P0751	TCM-000B	Shift solenoid S1	Hydraulic malfunction
P0752 **P0962**	TCM-0118	Throttle solenoid SLT	Signal too low. Permanent error
P0753 **P0974**	TCM-0001	Shift solenoid S1	Signal too high
P0753	TCM-0002	Shift solenoid S1	Signal missing
P0753 **P0973**	TCM-0003	Shift solenoid S1	Signal too low
P0753 **P0962**	TCM-0118	Throttle solenoid SLT	Signal too low. Intermittent error
P0756	TCM-000C	Shift solenoid S2	Hydraulic malfunction
P0758 **P0977**	TCM-0007	Shift solenoid S2	Signal too high
P0758	TCM-0008	Shift solenoid S2	Signal missing
P0758	TCM-0009	Shift solenoid S2	Signal too low
P0762	TCM-0115	Shift solenoid S3	Hydraulic malfunction
P0763 **P0980**	TCM-0101	Shift solenoid S3	Signal too high
P0763	TCM-0102	Shift solenoid S3	Signal missing
P0763 **P0979**	TCM-0103	Shift solenoid S3	Signal too low
P0768 **P0983**	TCM-0107	Shift solenoid S4	Signal too high
P0768	TCM-0108	Shift solenoid S4	Signal missing
P0768 **P0982**	TCM-0109	Shift solenoid S4	Signal too low
P0773 **P0986**	TCM-010A	Shift solenoid S5	Signal too high
P0773	TCM-010B	Shift solenoid S5	Signal missing
P0773 **P0985**	TCM-010C	Shift solenoid S5	Signal too low
P0778 **P0967**	TCM-010D	Lock-up solenoid SLU	Signal too high. Intermittent error
P0778			Signal too high. Permanent

P0967	TCM-010D	Lock-up solenoid SLU	error
P0778 **P0964**	TCM-010F	Lock-up solenoid SLU	Signal missing. Intermittent error
P0778 **P0964**	TCM-010F	Lock-up solenoid SLU	Signal missing. Permanent error
P0778 **P0966**	TCM-0110	Lock-up solenoid SLU	Signal too low. Intermittent error
P0778 **P0966**	TCM-0110	Lock-up solenoid SLU	Signal too low. Permanent error
P0785 **P0780**	TCM-0100	Poor gearshifting quality	.
P0798 **P0971**	TCM-0112	System pressure solenoid SLS	Signal too high. Permanent error
P0799 **P0971**	TCM-0112	System pressure solenoid SLS	Signal too high. Intermittent error
P0800 **P0968**	TCM-0113	System pressure solenoid SLS	Signal missing. Permanent error
P0801 **P0968**	TCM-0113	System pressure solenoid SLS	Signal missing. Intermittent error
P0802 **P0970**	TCM-0114	System pressure solenoid SLS	Signal too low. Permanent error
P0803 **P0970**	TCM-0114	System pressure solenoid SLS	Signal too low. Intermittent error
P0810 **P1700**	TCM-012A	Neutral check	Incorrect connection
P0810 **P1516**	TCM-012B	Neutral check	No neutral check
P0811 **P0894**	TCM-012C	Neutral check	The engine rpm oscillates
P0826	TCM-0096	Quickshift sensor	Faulty signal
P0860	TCM-0093	Communication control module gear lever	Signal too high
P0860	TCM-0094	Communication control module gear lever	Signal missing
P0860	TCM-0095	Communication control module gear lever	Signal too low
P0928	TCM-0091	Solenoid P-position shift-lock	Signal missing
P0930	TCM-0092	Solenoid P-position shift-lock	Signal too low
P0931	TCM-0090	Solenoid P-position shift-lock	Signal too high

TRANSMISSION

Transmission - Installation instructions, accessories

GEARSHIFT KNOB, AUTOMATIC (2007-2012)

GEARSHIFT KNOB, AUTOMATIC

REMOVAL

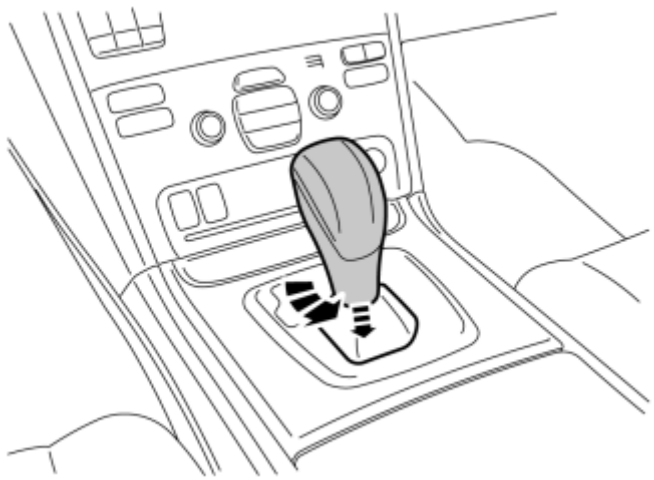

Fig. 1: Removing Gaiter
Courtesy of VOLVO CARS CORPORATION

- Loosen the gaiter from the gear lever knob by turning the lock ring on the inside 1/4 -turn, and pull down the gaiter.

Fig. 2: Pulling Up On The Knob
Courtesy of VOLVO CARS CORPORATION

- Pull loose the gear lever knob by forcefully pulling it straight upward.

NOTE: A lot of force is required to pull it loose.

INSTALLATION

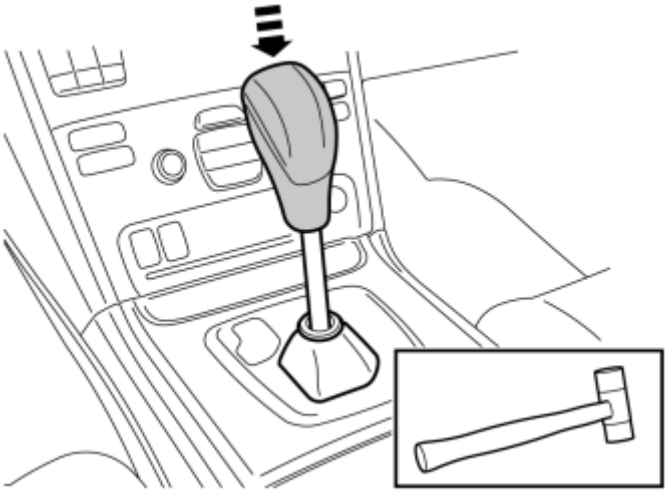

Fig. 3: Installing Knob
Courtesy of VOLVO CARS CORPORATION

- Place the new knob in the correct position on the gear lever.
- Drive down the knob in position.

HINT: Use, e. g., a plastic hammer and a spacer between the knob and hammer to avoid damaging the gear lever knob.

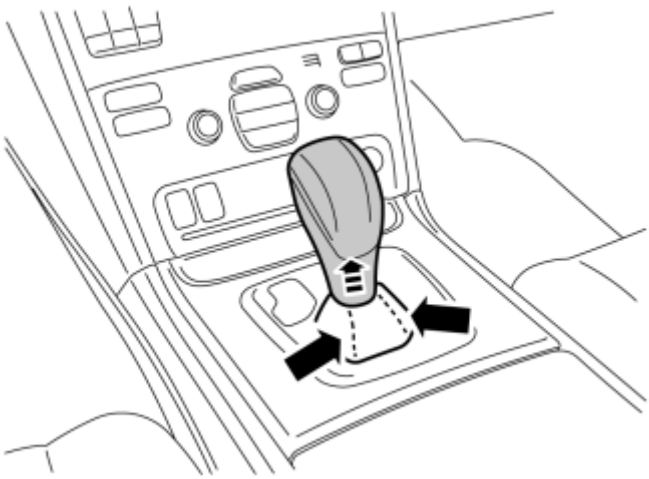

Fig. 4: Installing Gaiter
Courtesy of VOLVO CARS CORPORATION

- Check that the gaiter's seams are straight. Then fix the lock ring by pulling it down and the gaiter straight up against the knob, and secure it by pressing it into place.
- Check that the gear lever knob is fastened securely by pulling on it. Also check that the lockout function works in all its positions.

TRANSMISSION

Transmission - Removal, replacement and installation

AUXILIARY TRANSMISSION, BEVEL GEAR AND OVERDRIVE (B5254T2, AW50/51 AWD; 2003-2007)

BEVEL GEAR, REPLACING

Special tools:

9997057

NOTE: **As the illustrations in this service information are used for different model years and / or models, some variation may occur. However, the essential information is always correct.**

REMOVAL

PREPARATIONS

To remove the drive shaft from the wheel hub, see **REPLACING THE FRONT RIGHT DRIVE SHAFT** .

REMOVING THE SPLASH GUARD

Fig. 1: Identifying Under Engine Splash Guard
Courtesy of VOLVO CARS CORPORATION

Remove the engine splash guard.

REMOVING THE DRIVE SHAFT BEARING CAP

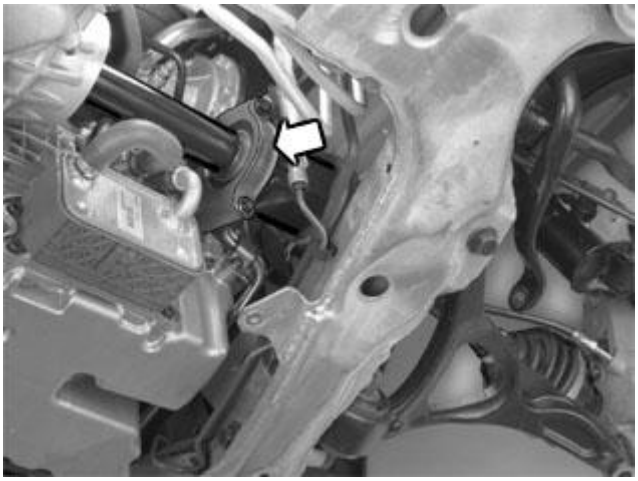

Fig. 2: Drive Shaft Support Bearing Cap
Courtesy of VOLVO CARS CORPORATION

Remove the bearing cap for the drive shaft.

Hold down the spring strut. Pull out the drive shaft.

REMOVING THE PROPELLER SHAFT

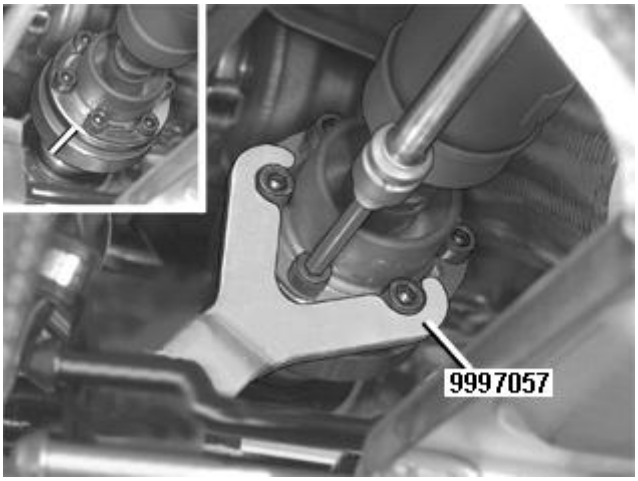

Fig. 3: Identifying Matchmark On Propeller Shaft CV Joint And Special Tool 999 7057
Courtesy of VOLVO CARS CORPORATION

When removing the bevel gear but not replacing:

Mark the propeller shaft CV joint in relation to the bevel gear flange.

Remove the propeller shaft screws. Use counterhold **9997057** .

REMOVING THE MOUNTING FOR THE CENTER BEARING FOR THE PROPELLER SHAFT

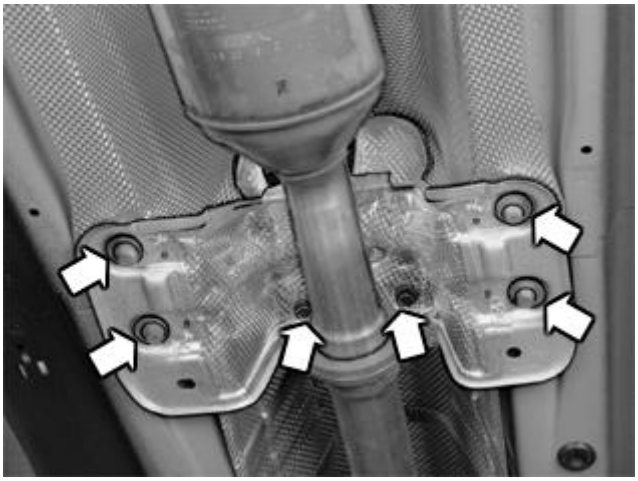

Fig. 4: Identifying Center Bearing Member
Courtesy of VOLVO CARS CORPORATION

Remove:

- the screws for the bearing for the propeller shaft in the center bearing member
- the screws for the center bearing member. Let the member rest on the exhaust system.

Press the propeller shaft CV joints together. Angle the axle so that it can be removed from the bevel gear.

REMOVING BEVEL GEAR

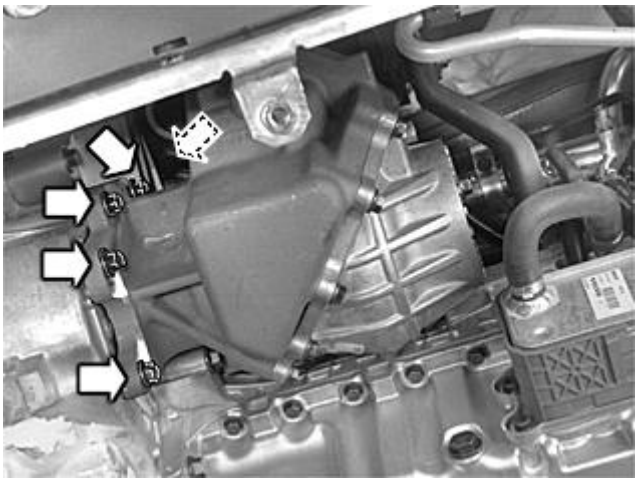

Fig. 5: Angle Gear Screws
Courtesy of VOLVO CARS CORPORATION

Fold down the tab on the sub-frame to create a space to remove the bevel gear.

Remove the 5 bolts holding the bevel gear and pull it straight out from the transmission.

TRANSFERRING COMPONENTS

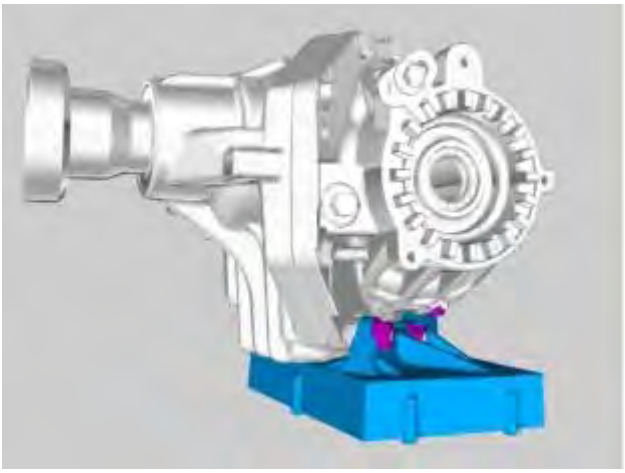

Fig. 6: Identifying Vibration Damper (1 Of 2)
Courtesy of VOLVO CARS CORPORATION

There are two different types of vibration damper (see this and the next step).

When replacing the bevel gear, transfer the vibration damper to the new bevel gear.

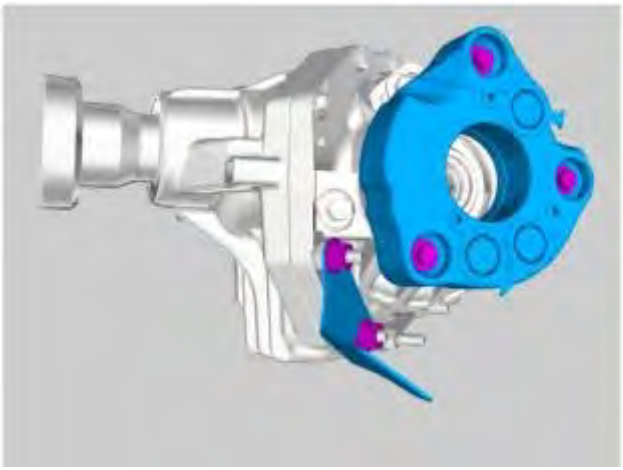

Fig. 7: Identifying Vibration Damper (2 Of 2)
Courtesy of VOLVO CARS CORPORATION

When replacing the bevel gear, transfer the vibration damper to the new bevel gear. In certain markets there is a bracket for an engine block heater. This bracket must also be transferred.

Install two washers between the bevel gear and bracket on the lower stud (see spare parts catalogue).

INSTALLATION

NOTE: **For tightening torques, see: TIGHTENING TORQUE .**

NOTE: **Before installing the bevel gear, lubricate the spline joint between the transmission and the bevel gear using grease. See: SPLINES GREASING .**

INSTALLING THE BEVEL GEAR

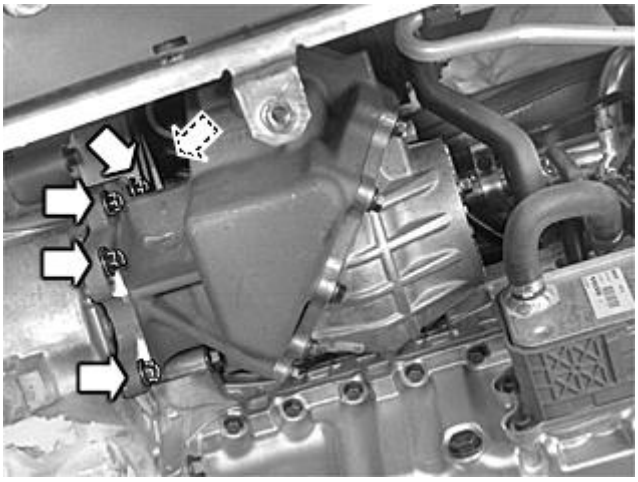

Fig. 8: Angle Gear Screws
Courtesy of VOLVO CARS CORPORATION

Check that there is no oil leakage between the bevel gear's connecting sleeve and the sealing ring on the transmission, and that the sleeve is not generally damaged and is seated correctly.

To replace the connecting sleeve and seal, see: **SEALING RING, CONNECTING SOCKET, DRIVE SHAFT/DIFFERENTIAL, REPLACING** .

Make sure that the mating surfaces on the transmission and bevel gear are clean and not damaged.

Install the bevel gear. Use **new** screws. Tighten the screws alternately to light contact. See **TIGHTENING TORQUE** .

Fold the tab back into place on the sub-frame.

INSTALLING THE PROPELLER SHAFT ON THE BEVEL GEAR

Fig. 9: Drive Flange Front Joint

Courtesy of VOLVO CARS CORPORATION

Check carefully that the mating surfaces on the propeller shaft CV joint and flange are clean.

Install the propeller shaft according to the previous marking, only if the bevel gear has been removed for any reason other than for replacement.

Tightening the propeller shaft CV joint

Use new screws. See **SUMMARY OF TIGHTENING TORQUES FOR SPECIFIC COMPONENTS**

Use a counterhold **9997057** .

INSTALLING THE CENTER BEARING AND MEMBER FOR THE PROPELLER SHAFT

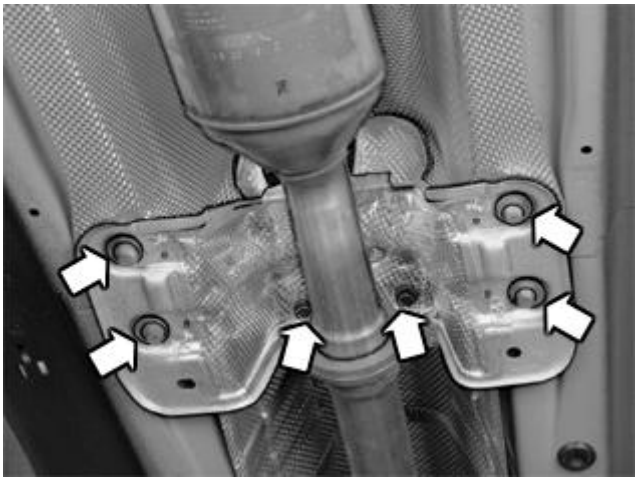

Fig. 10: Identifying Center Bearing Member
Courtesy of VOLVO CARS CORPORATION

Install:

- the 4 M8 screws for the support for the center bearing. Tighten
- the 2 M8 screws for the propeller shaft bearing in the support for the center bearing. Tighten. See **SUMMARY OF TIGHTENING TORQUES FOR SPECIFIC COMPONENTS** .

INSTALLING THE DRIVE SHAFT

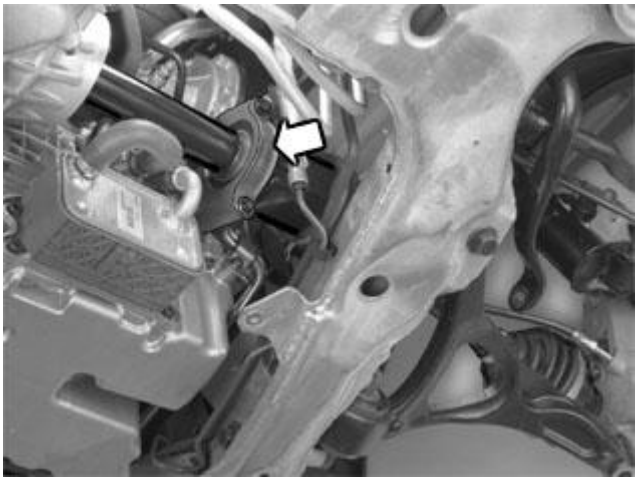

Fig. 11: Drive Shaft Support Bearing Cap
Courtesy of VOLVO CARS CORPORATION

Install the drive shaft on the bevel gear and on the support bearing with the cap, 2 M8 screws. Tighten.

FINISHING

Install the drive shaft to the wheel hub. See **REPLACING THE FRONT RIGHT DRIVE SHAFT** .

Fill the transmission with oil. See **TRANSMISSION FLUID, REPLACING** .

CHECKING THE OIL LEVEL IN THE BEVEL GEAR

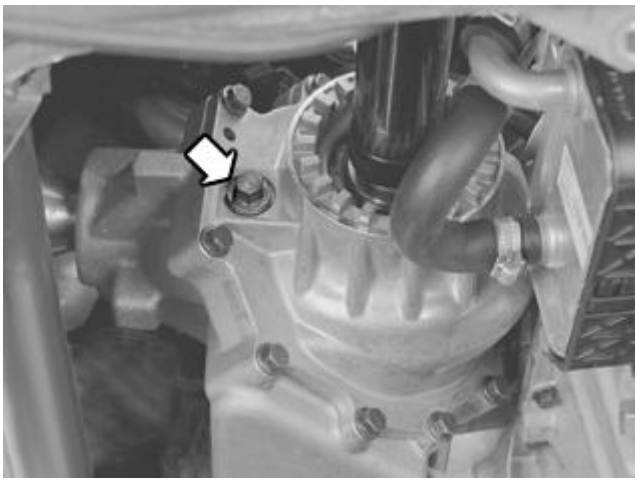

Fig. 12: Bevel Gear Filler Plug
Courtesy of VOLVO CARS CORPORATION

Check the oil level in the bevel gear

Use the right oil. See: **LUBRICATION TRANSMISSION** .

Correct volume 650 ml.

Fill with oil up to the filling plug. Draw out 0.1 l oil.

Tighten the filling plug. See **TIGHTENING TORQUE** .

INSTALLING THE SPLASH GUARD

Fig. 13: Identifying Under Engine Splash Guard
Courtesy of VOLVO CARS CORPORATION

Install the splashguard under the engine.

FITTING THE WHEEL

Install the wheel. See **INSTALLING WHEELS** .

BLEED VALVE BEVEL GEAR, REPLACING

REMOVING THE BRASS PIPE

Remove the bevel gear. See: **BEVEL GEAR, REPLACING**.

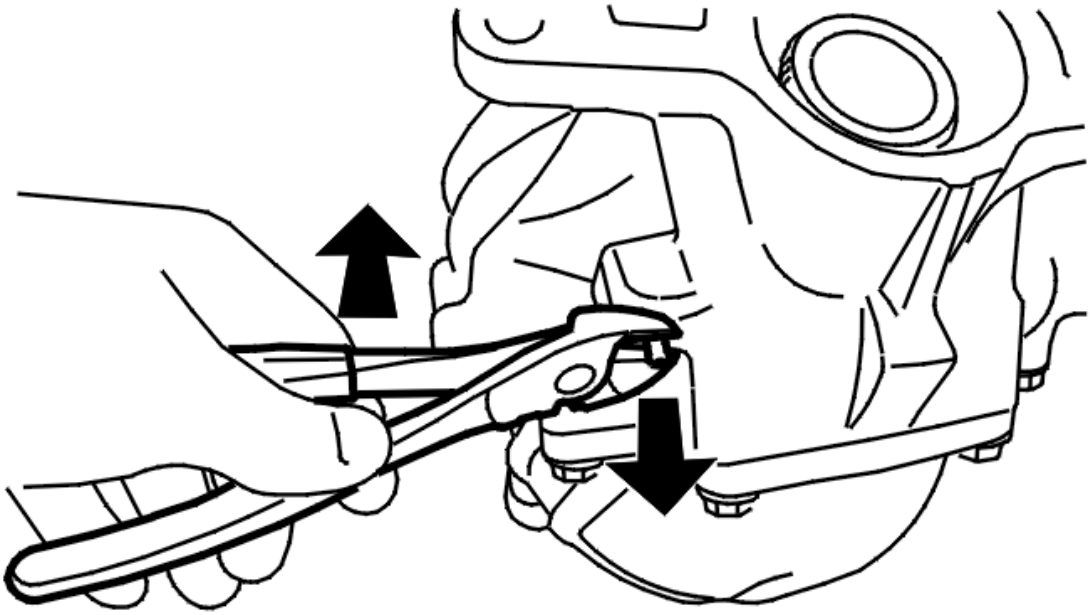

Fig. 14: Removing/Installing Brass Pipe Using Cutting Nippers
Courtesy of VOLVO CARS CORPORATION

Pull out the brass pipe using cutting nippers.

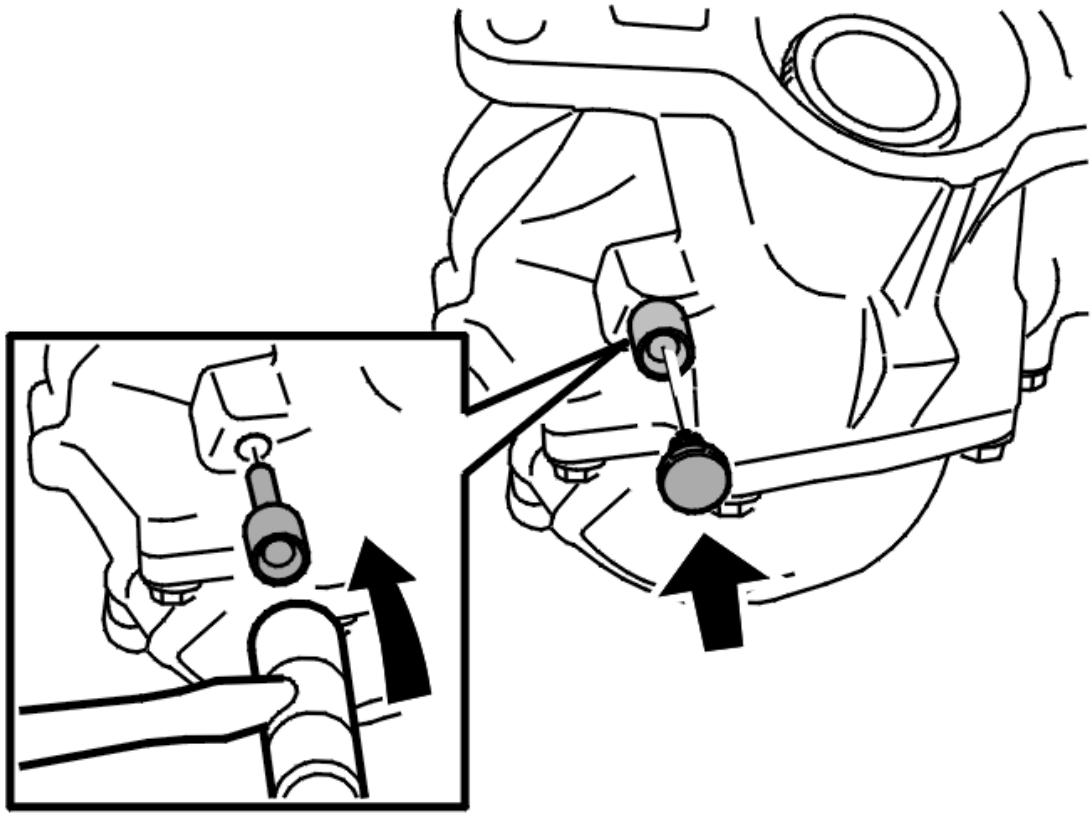

Fig. 15: Identifying Tapping In Nipple Using A Rubber Mallet And Installing Filter
Courtesy of VOLVO CARS CORPORATION

Tap in the nipple using a rubber mallet.

Install the filter on the nipple.

FILLING WITH OIL

Position the bevel gear so that it is standing on the oil pan (as it is located in the car).

Remove the level plug. Fill with oil (P/N 1161648) until the oil runs out of the level plug hole.

CAUTION: Then drain 0.2 l of oil.

Install the level plug. Tighten to: **TIGHTENING TORQUE** .

Install the bevel gear. See: **BEVEL GEAR, REPLACING**.

REPLACING THE PINION SEAL FOR THE BEVEL GEAR

Special tools:

9995069

9995504

9995652

9995653

9995682

9995893

9997057

9997058

NOTE: **As the illustrations in this service information are used for different model years and / or models, some variation may occur. However, the essential information in the illustrations is always correct.**

NOTE: **Check that the parking brake is not applied or that a gear/position P is engaged.**

REMOVAL

REMOVING THE THREE-WAY CATALYTIC CONVERTER (TWC)

Remove the catalytic converter. See **THREE-WAY CATALYTIC CONVERTER (TWC), REPLACING** .

NOTE: **The rear pipe must be supported at the front.**

Tensioner band 9995682 can be used to support the pipe.

MARKING THE PROPELLER SHAFT / CARRIER PLATE

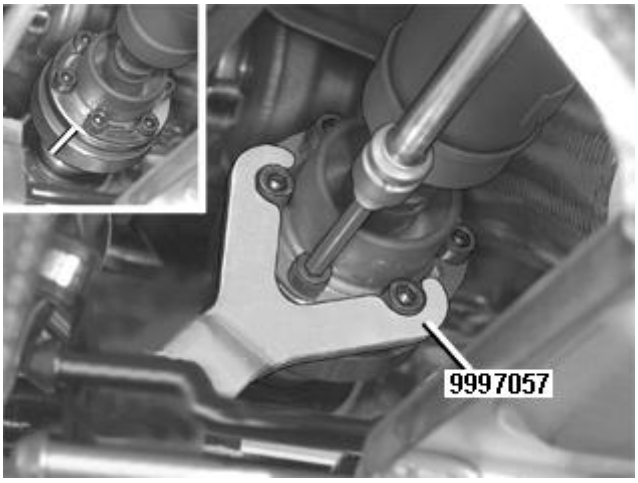

Fig. 16: Identifying Matchmark On Propeller Shaft CV Joint And Special Tool 999 7057
Courtesy of VOLVO CARS CORPORATION

Mark the propeller shaft CV joint in relation to the bevel gear flange

Remove the screws from the propeller shaft.

Use counterhold **9997057** .

REMOVING THE PROPELLER SHAFT

Fig. 17: Identifying Propeller Shaft And Exhaust Secured Using Strap
Courtesy of VOLVO CARS CORPORATION

Slacken off the support for the centre bearing from the propeller shaft and body.Turn the support upside down. Let the propeller shaft rest on the support.

Press the shaft nuts together. Move the shaft to one side and tie it up.

REMOVING THE NUTS FOR THE BEVEL GEAR FLANGE

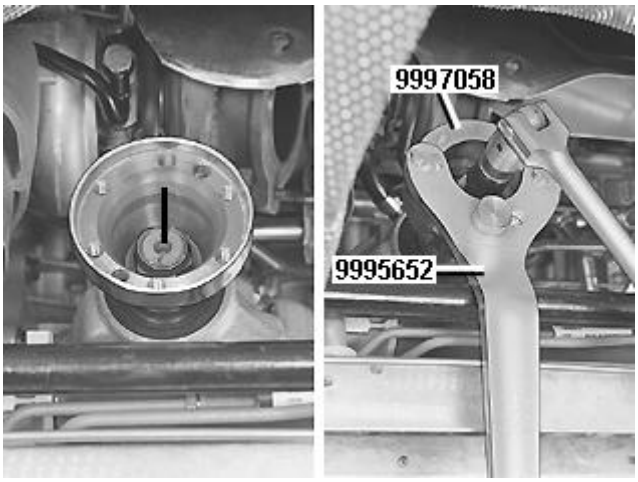

Fig. 18: Identifying Flange Position & Nut Marked In Relation To Pinion Shaft End And Bevel Gear Flange Nuts, Tool 9995652 & Tool 9997058
Courtesy of VOLVO CARS CORPORATION

Mark the position of the flange and nut in relation to the pinion shaft end

Remove the nut.

Use counterhold **9995652** with adapter **9997058** .

REMOVING THE FLANGE

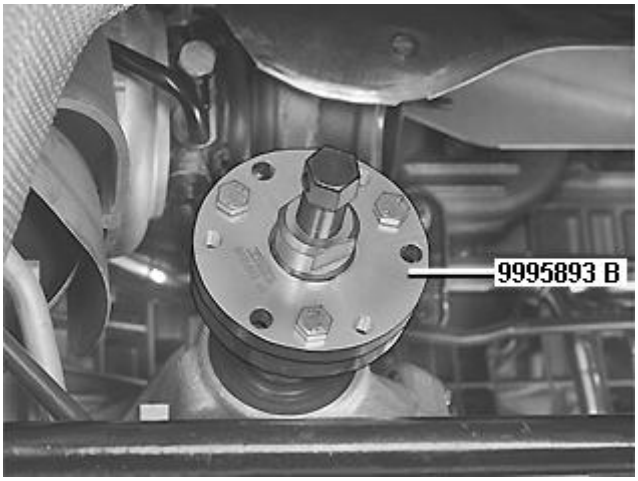

Fig. 19: Identifying Flange Removed Using Puller 999 5893
Courtesy of VOLVO CARS CORPORATION

Remove the flange. Use puller **9995893** .

Check the seal face on the flange.

Replace the flange if it is damaged.

REMOVING THE SEAL

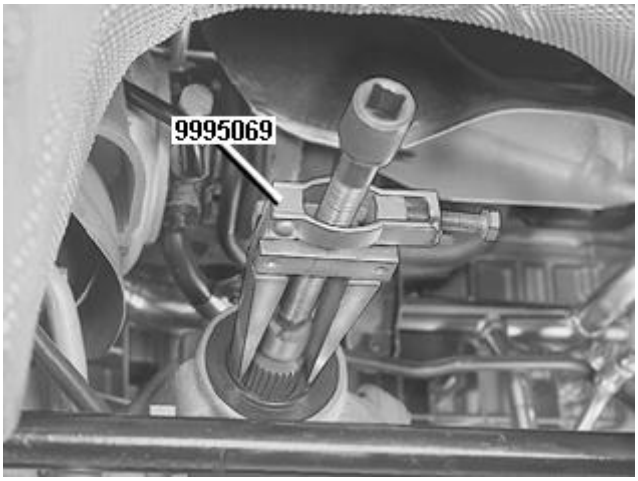

Fig. 20: Identifying Pinion Seal Removed Using Puller 999 5069
Courtesy of VOLVO CARS CORPORATION

Remove the seal.

Use puller **9995069** .

NOTE: Carefully check that no seal residue is left.

INSTALLATION

INSTALLING THE SEAL

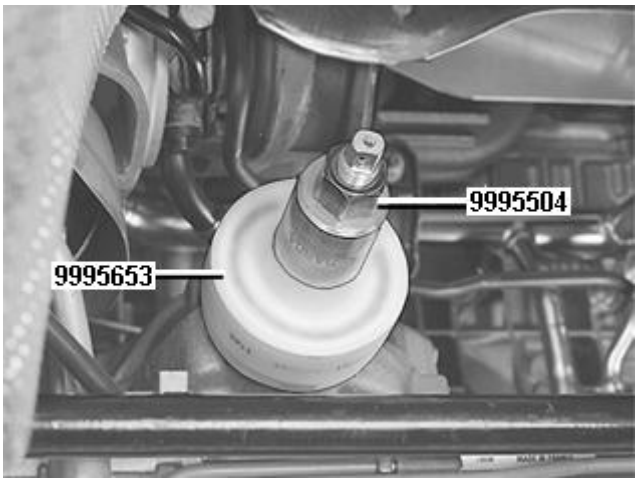

Fig. 21: Identifying Pressing In Seal Using 999 5653 And 999 5504
Courtesy of VOLVO CARS CORPORATION

Install the seal.

Lubricate the lip of the sealing ring with wheel bearing grease, P/N 116 1241-3. Install the seal on drift **9995653** against the side of the tool marked 1155.

Press in the seal.

Use press tool **9995504** .

INSTALLING THE FLANGE ON THE PINION

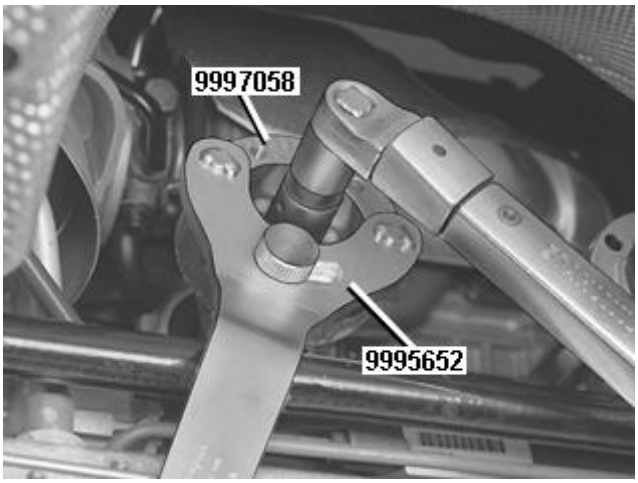

Fig. 22: Identifying Pinion Flange, Tool 999 7058 And 999 5652
Courtesy of VOLVO CARS CORPORATION

Install the flange as marked, see **REMOVING THE NUTS FOR THE BEVEL GEAR FLANGE**.

If necessary, use press tool **9995504** .

Installing a new nut in the carrier

Install a **new lubricated nut** .

NOTE: There must be no axial play.

Tighten to **180-200 Nm** . Use counterhold **9995652** with adapter **9997058** .

NOTE: Do not exceed a tightening torque of 200Nm. The forces on the pinion bearing may become too great, causing it to seize.

INSTALLING THE PROPELLER SHAFT

Fig. 23: Center Bearing Support
Courtesy of VOLVO CARS CORPORATION

Check that the mating surfaces on the propeller shaft CV joint and flange are clean.

Align the propeller shaft CV joint against the flange.

Install the screws loosely in the support for the centre bearing and the propeller shaft.

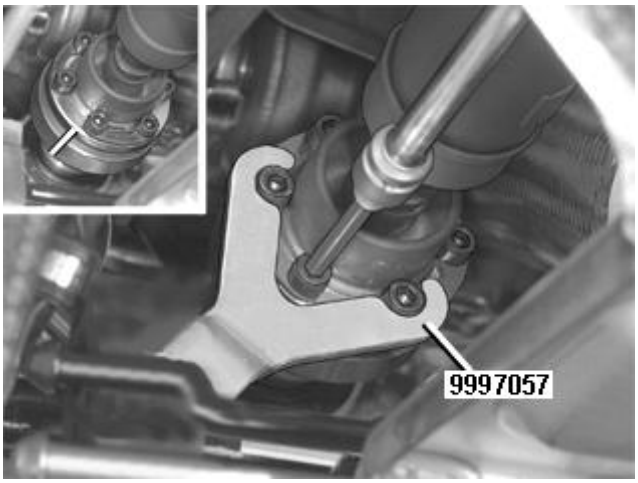

Fig. 24: Identifying Matchmark On Propeller Shaft CV Joint And Special Tool 999 7057
Courtesy of VOLVO CARS CORPORATION

Install the propeller shaft using the marking made earlier

Tightening the propeller shaft CV joint

Use **new** screws.

First tighten the screws crosswise. Tighten to **8 Nm** . Then tighten to **30 Nm** .

Use counterhold **9997057** .

Tighten the screws for the support for the center bearing. Tighten to **25 Nm** .

Tighten the screws for the propeller shaft center bearing. Tighten to **25 Nm** .

INSTALLING THE THREE-WAY CATALYTIC CONVERTER (TWC)

Install the catalytic converter, see **THREE-WAY CATALYTIC CONVERTER (TWC), REPLACING** .

CHECKING THE OIL LEVEL IN THE BEVEL GEAR

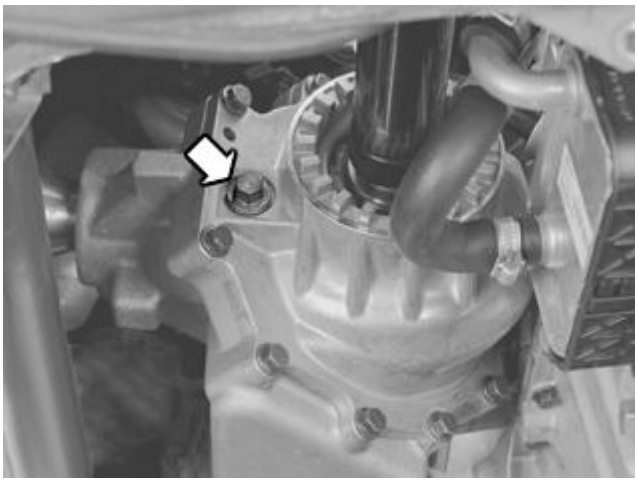

Fig. 25: Bevel Gear Filler Plug
Courtesy of VOLVO CARS CORPORATION

The bevel gear is supplied filled with oil, however, always check the oil level.

Use the right oil. See: **LUBRICANT TRANSMISSION** .

Correct volume 650 ml

Fill with oil up to the filling plug. Draw out 0.1 l oil.

Tighten the level plug. See **SUMMARY OF TIGHTENING TORQUES FOR SPECIFIC COMPONENTS** .

SEALING RING, CROWN WHEEL SHAFT, LEFT-HAND SIDE, REPLACE

Special tools:

9997086

9997087

NOTE: **As the illustrations in this service information are used for different model years and / or models, some variation may occur. However, the essential information**

is always correct.

PREPARATORY WORK

REMOVING BEVEL GEAR

Remove the bevel gear. See **BEVEL GEAR, REPLACING**.

REMOVAL

REMOVING THE SEALING RING

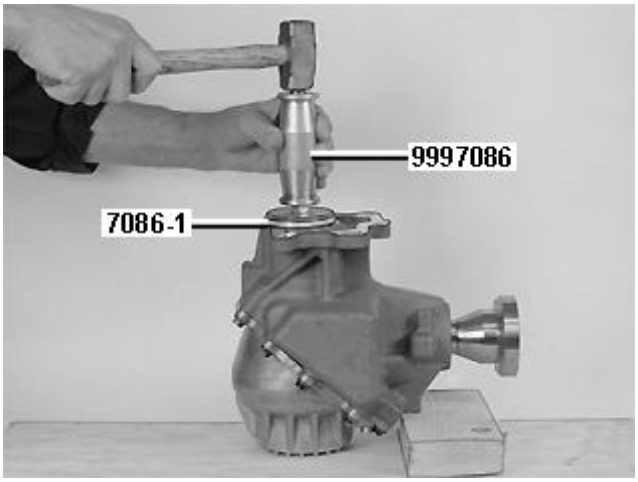

Fig. 26: Removing Left-Hand Side Crown Wheel Shaft Sealing Ring
Courtesy of VOLVO CARS CORPORATION

Position the bevel gear on a workbench. Support the gear using a wooden block.

Use extractor **9997086** together with spacer ring 7086-1. Knock the seal towards the housing using the extractor sleeve.

Remove the seal using the impact driver handle of the extractor.

Check thoroughly that no seal residue remains.

DRAINING THE BEVEL GEAR OIL

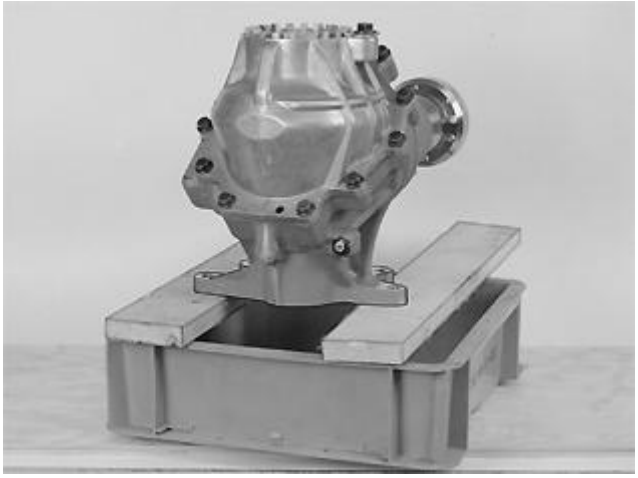

Fig. 27: Identifying Bevel Gear
Courtesy of VOLVO CARS CORPORATION

Position the bevel gear over a container. Remove the level plug. Allow the oil to run out through the bearing. Wipe away spilt oil from the sealing ring seat on the bevel gear. Use a lint-free rag.

INSTALLATION

INSTALLING THE SEALING RING

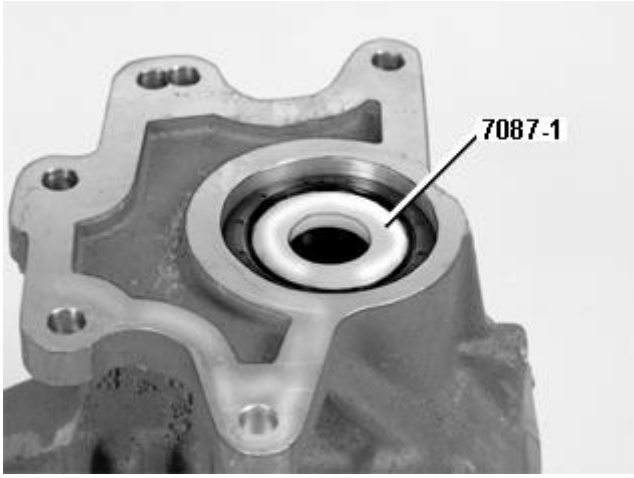

Fig. 28: Identifying Sleeve 7087-1 Installed In End Of Shaft
Courtesy of VOLVO CARS CORPORATION

Install sleeve 7087-1 in the end of the shaft. Lubricate the lip of the new sealing ring. Use grease 116 1241-3 (80g). Position the seal on the sleeve.

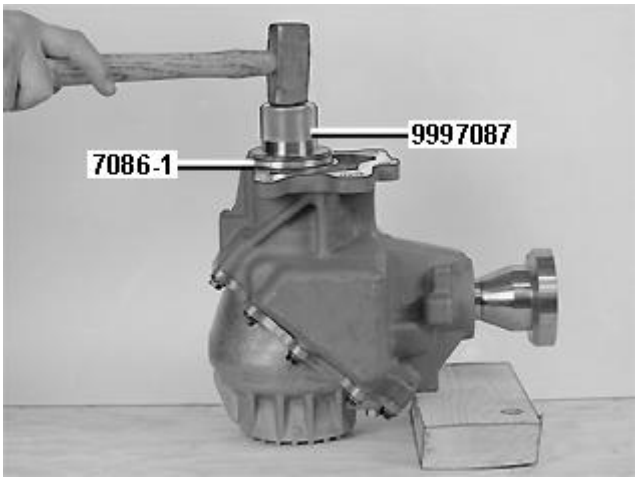

Fig. 29: Installing The Seal Into The Bevel Gear Using Drift 999 7087 Together With Spacer Ring 7086-1
Courtesy of VOLVO CARS CORPORATION

Knock the seal into the bevel gear. Use drift **9997087** together with spacer ring 7086-1. Ensure that the tool goes towards the bevel gear housing. Check that sleeve 7087-1 is removed with the tool.

FINISHING

INSTALLING THE BEVEL GEAR

Install the bevel gear. See **BEVEL GEAR, REPLACING**.

FILLING WITH OIL

Top up with new oil. See **REPLACING THE PINION SEAL FOR THE BEVEL GEAR**.

SEALING RINGS BEVEL GEAR, REPLACING

Special tools:

9995371

9995654

9995655

NOTE: To remove the drive shaft, see REPLACING THE FRONT RIGHT DRIVE SHAFT .

SEALING RING FOR DRIVE SHAFT FRONT RIGHT SIDE, REPLACING

REMOVING THE SEALING RING

Fig. 30: Identifying Removing The Sealing Ring
Courtesy of VOLVO CARS CORPORATION

Lever the sealing ring off the crown wheel shaft.

Use a screwdriver or a jimmy bar.

INSTALLING A NEW SEALING RING

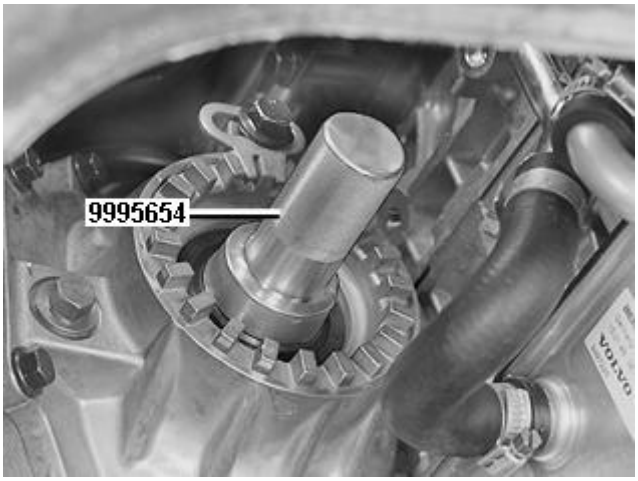

Fig. 31: Identifying Installing A New Sealing Ring
Courtesy of VOLVO CARS CORPORATION

Install the new sealing ring for the drive shaft.

Lubricate the seal using wheel bearing grease, P/N 116 1241-3.

Use drift **9995654** . Tap in sealing ring to its stop.

If also replacing the seal for the crown wheel shaft, proceed to **SEALING RING FOR CROWN WHEEL SHAFT FOR BEVEL GEAR, REPLACING**.

NOTE: To install the drive shaft, see REPLACING THE FRONT RIGHT DRIVE SHAFT .

SEALING RING FOR CROWN WHEEL SHAFT FOR BEVEL GEAR, REPLACING

MARKING THE POSITION OF THE ADJUSTMENT NUT

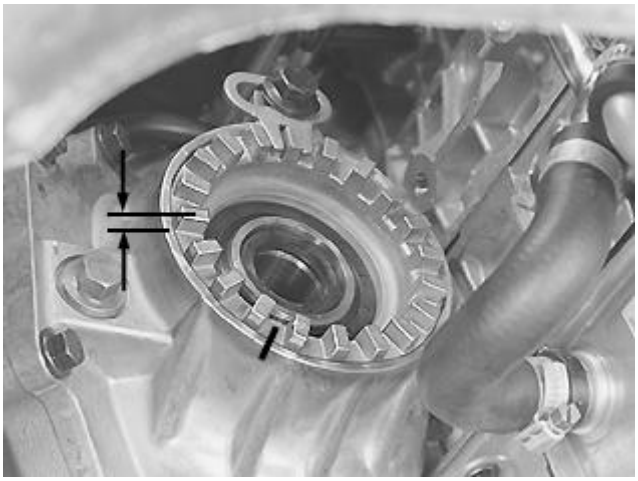

Fig. 32: Identifying Position Of The Adjustment Nut Mark
Courtesy of VOLVO CARS CORPORATION

Mark the position of the adjustment nut in relation to the housing with a scriber.

Measure the height between the nut and housing. Make a note of the measurement.

Remove screw and split pin.

REMOVING THE ADJUSTMENT NUT

Fig. 33: Identifying Removing/Installing Adjustment Nut
Courtesy of VOLVO CARS CORPORATION

Remove the adjustment nut.

Use wrench **9995371** .

REMOVING THE SEALING RING

Fig. 34: Identifying Sealing Ring
Courtesy of VOLVO CARS CORPORATION

Tap out the sealing ring.

Use a screwdriver.

INSTALLING THE SEALING RING

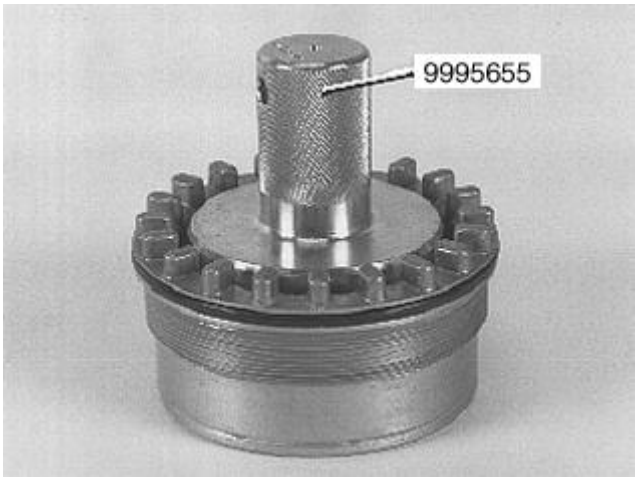

Fig. 35: Identifying Installation Of Sealing Ring
Courtesy of VOLVO CARS CORPORATION

Install the sealing ring for the adjustment nut.

Lubricate the sealing ring lip using wheel bearing grease, P/N 116 1241-3.

Use drift **9995655** . Tap in the seal until the drift bottoms on its stop against the nut.

Install a new O-ring on the nut. Lubricate the O-ring and threads with wheel bearing grease as above.

INSTALLING THE ADJUSTMENT NUT

Fig. 36: Identifying Removing/Installing Adjustment Nut
Courtesy of VOLVO CARS CORPORATION

Install the adjustment nut.

Use wrench **9995371** Turn the propeller shaft when the nut is tightened to its previously measured position.

CHECKING THE MARKING

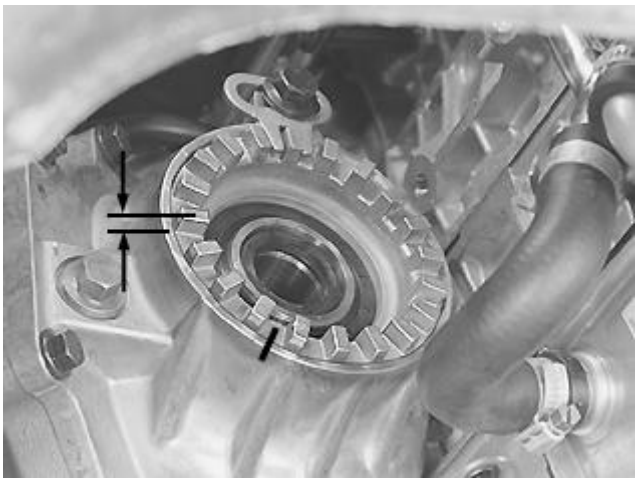

Fig. 37: Identifying Position Of The Adjustment Nut Mark
Courtesy of VOLVO CARS CORPORATION

Check that the marking corresponds exactly. Check the height. See **MARKING THE POSITION OF THE ADJUSTMENT NUT**.

Install the split pin. Tighten the screw. Tighten to **50 Nm** .

Checking the oil level in the bevel gear

Check the oil level in the bevel gear. See **CHECKING THE OIL LEVEL IN THE BEVEL GEAR**

NOTE: To install the drive shaft, see REPLACING THE FRONT RIGHT DRIVE SHAFT .

AUXILIARY TRANSMISSION, BEVEL GEAR AND OVERDRIVE (B6294T; 2003-2006)

REPLACING THE BEVEL GEAR/CHAIN HOUSING

Special tools:

9995462

9997057

9997063

NOTE: Since illustrations in this service information are used for different model years and/or models, some variation may occur. However, the essential information is always correct.

REMOVAL

PREPARATIONS

Fig. 38: Identifying Dip Stick Pipe & Oil Suction Device
Courtesy of VOLVO CARS CORPORATION

Drain the gearbox fluid.

Use an oil suction device to drain approximately 4 liters of gearbox fluid.

Remove the sub-frame. See: **SUB-FRAME FRONT, REPLACING** .

REMOVING THE RIGHT DRIVE SHAFT

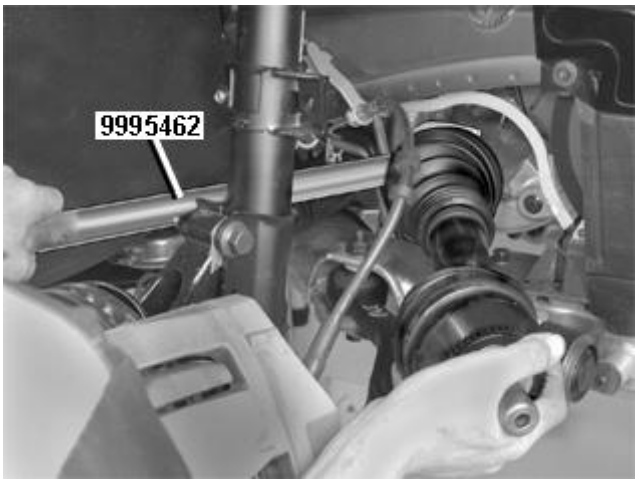

Fig. 39: Detach The Drive Shaft With Jimmy Bar
Courtesy of VOLVO CARS CORPORATION

Angle the wheel hub out. Remove the drive shaft from the hub. Use a tensioner band to pull the stub axle - wheel hub backwards.

Remove the drive shaft from the gearbox. Use Jimmy bar B **9995462**

Install sealing plug **9997063** .

PAY ATTENTION TO THE FOLLOWING WHEN REMOVING PROPELLER SHAFT

Follow instructions. **PROPELLER SHAFT, SPECIAL INFORMATION**

REMOVING THE PROPELLER SHAFT

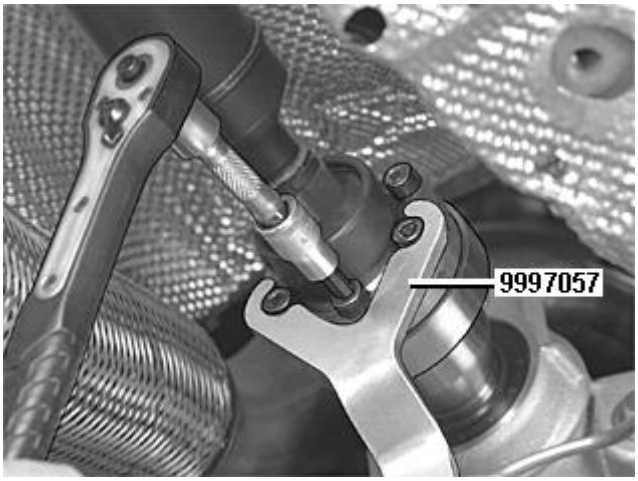

Fig. 40: Identifying Removal Of Propeller Shaft Using Counterhold

Courtesy of VOLVO CARS CORPORATION

Mark the propeller shaft CV joint in relation to the bevel gear flange.

Remove:

- the 2 screws for the centre bearing mounting
- the propeller shaft screws. Use counterhold **9997057** . Press the propeller shaft joints together. Move the propeller shaft to one side and tie it up.

DISCONNECTING THE STEERING GEAR FROM THE ENGINE PAD

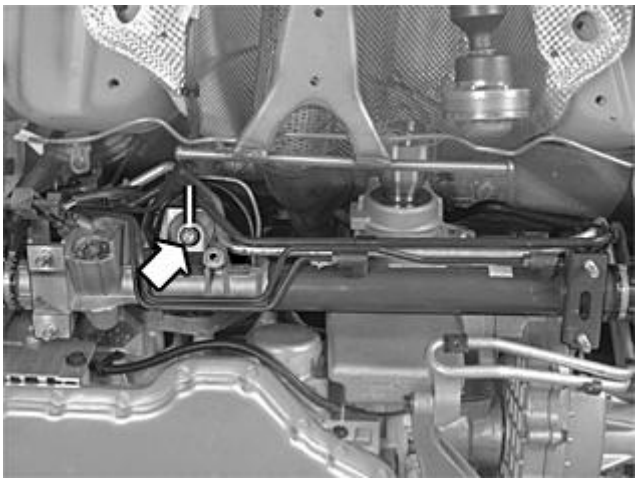

Fig. 41: Identifying Mark For Steering Gear Position
Courtesy of VOLVO CARS CORPORATION

Mark up the position of the steering gear in relation to the engine pad.

Remove the screw for the steering gear and engine pad.

Move the steering gear towards the bulkhead. Hold it up using tie straps.

REMOVING THE CHAIN HOUSING BRACKET

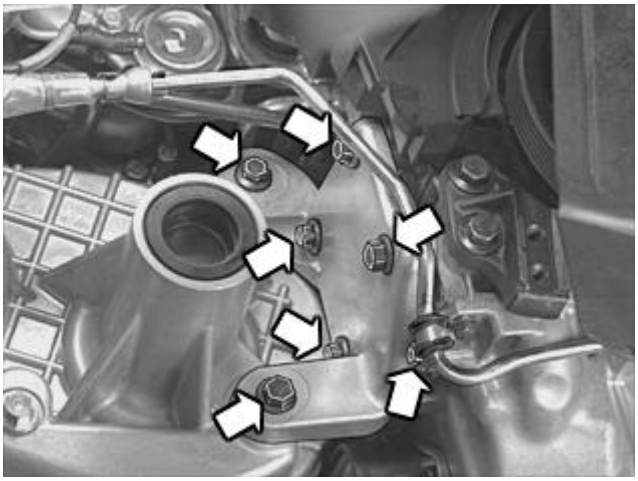

Fig. 42: Identifying Chain Housing Bracket Screws
Courtesy of VOLVO CARS CORPORATION

Remove:

- the screw in the clamp for the fuel line
- the bracket for the chain housing/engine.

REMOVING THE BEVEL GEAR/CHAIN HOUSING

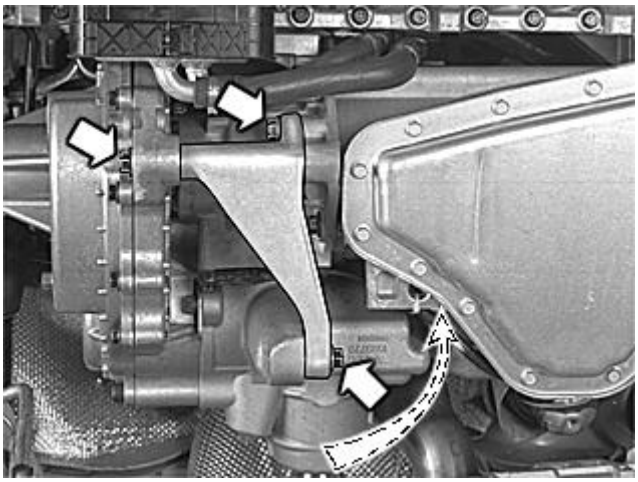

Fig. 43: Locating Screw For The Bevel Gear/Engine
Courtesy of VOLVO CARS CORPORATION

Remove:

- the screw for the bevel gear/engine. The screw is positioned on top of the bevel gear. The screw can be accessed from the centre
- the screw between the chain housing/bracket and the other screws in the bracket.

Pull the chain housing/bevel gear 5-10 mm out from the gearbox. Then remove the bracket. The bracket is

upturned with a guide sleeve in the gearbox end.

NOTE: Two people are required to carry out the following procedure as the bevel gear - chain housing is relatively large.

Remove the bevel gear/chain housing by first pulling it straight out from the gearbox.

NOTE: Do not damage the seal ring in the transmission end.

Then turn the unit so that it can be removed to the side and downwards.

CHECKING THE SEALING RING

Fig. 44: Identifying The Sealing Ring
Courtesy of VOLVO CARS CORPORATION

Check that the sealing ring in the gearbox end is undamaged.

Replace the sealing ring with a new sealing ring if damaged, see **REMOVE THE DRIVE SHAFT SEAL** and /or **INSTALL THE DRIVE SHAFT SEAL**.

SEPARATING THE BEVEL GEAR/CHAIN HOUSING

Fig. 45: Identifying Chain Housing Screws
Courtesy of VOLVO CARS CORPORATION

Remove the 4 screws. Pull the chain housing straight out from the bevel gear.

NOTE: Do not place the chain housing with the opening for the bevel gear facing down, oil will run out.

CHECKING THE CHAIN HOUSING

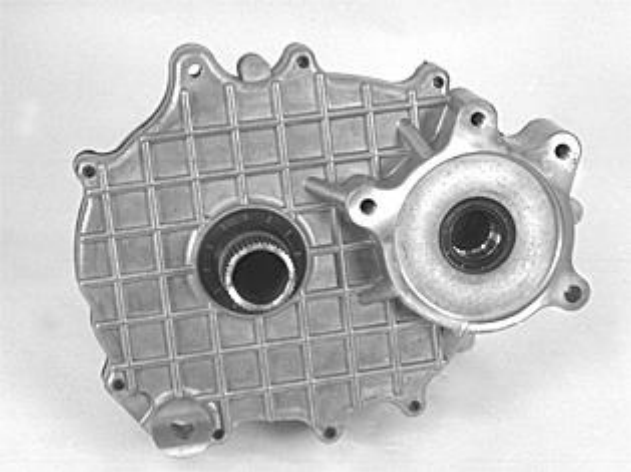

Fig. 46: Checking The Chain Housing
Courtesy of VOLVO CARS CORPORATION

Check that the sealing rings and mating surfaces are not damaged. Check for leakage. Replace the chain housing in the event of leakage.

HINT: A new chain housing is not filled with oil.

CHECKING THE BEVEL GEAR

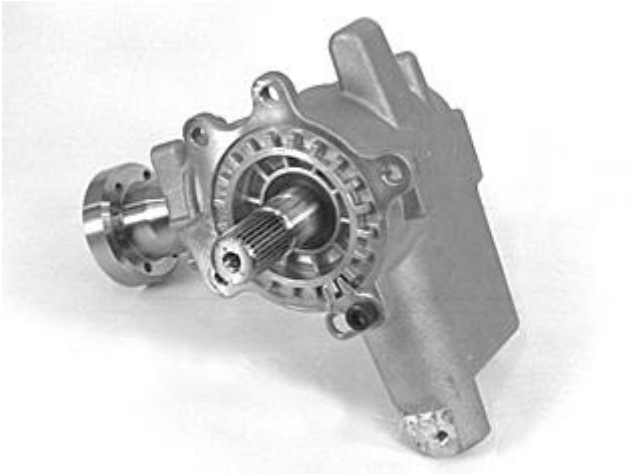

Fig. 47: Identifying The Sealing Rings And Mating Surfaces
Courtesy of VOLVO CARS CORPORATION

Check that the sealing rings and mating surfaces are not damaged. Check for leakage. Replace the bevel gear in the event of leakage or damage.

HINT: A new bevel gear is filled with oil, however, always check the oil level before test driving.

REMOVE THE DRIVE SHAFT SEAL

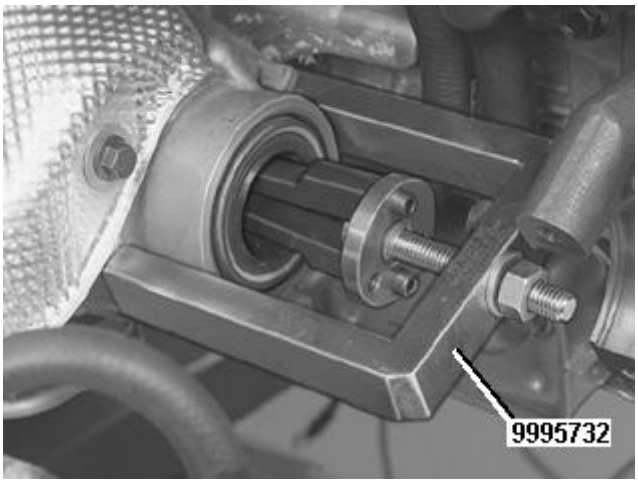

Fig. 48: Removing Drive Shaft Seal Using Puller 999 5732

Use puller **9995732** .

Unscrew the puller. Install a hook gradually between the shaft and sealing ring.

Secure the hooks to the puller. Tighten them using the screws.

Install the mounting bracket and the nut.

Extract the sealing ring.

INSTALL THE DRIVE SHAFT SEAL

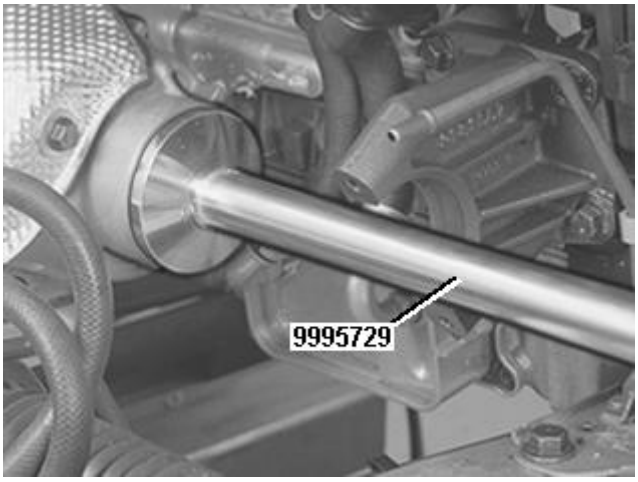

Fig. 49: Installing Drive Shaft Seal Using Drift 999 5729

NOTE: Clean thoroughly before installing the new seal

Apply a small amount of grease to the sealing lip.

Use drift **9995729** .

Carefully tap the drive shaft seal in until the drift is in contact with the transmission housing.

INSTALLATION

NOTE: For tightening torques, see TIGHTENING TORQUE .

ASSEMBLING THE BEVEL GEAR/CHAIN HOUSING

Fig. 50: Identifying Chain Housing Screws
Courtesy of VOLVO CARS CORPORATION

Lubricate the seal using gearbox fluid, P/N 116 1745-3 (1 liter container) when replacing the chain housing.

Do not damage the sealing ring when installing the chain housing on the bevel gear.

Install the 4x M10 screws. Tighten crosswise lightly. Then tighten the screws.

INSTALLING THE BEVEL GEAR / CHAIN HOUSING

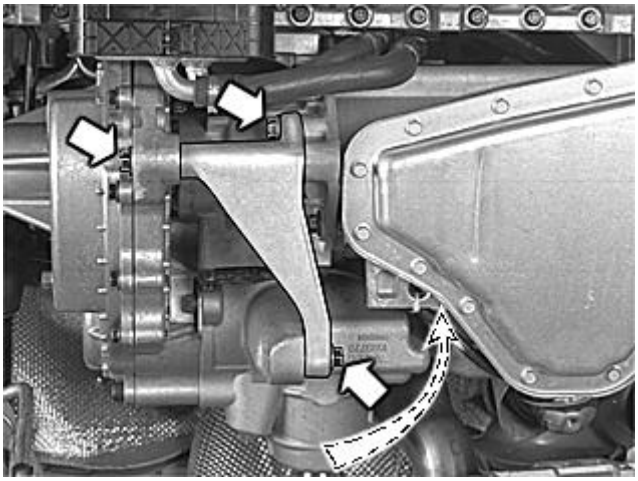

Fig. 51: Locating Screw For The Bevel Gear/Engine
Courtesy of VOLVO CARS CORPORATION

NOTE: Two people are required to carry out the following procedure as the bevel gear/chain housing is relatively large.

NOTE: Make sure that the chain housing's shaft journal does not damage the seal in the transmission end.

Lift up the unit and align the shaft journal in the gearbox. Do not press the unit end in.

Install the bracket and guide sleeve in the gearbox. Press in the unit.

Install all 4x M10 screws loosely. Tighten crosswise lightly. Then tighten the screws.

INSTALLING THE BRACKET

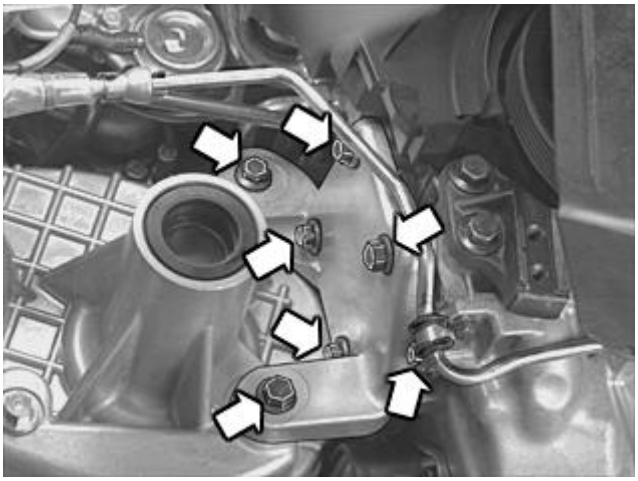

Fig. 52: Identifying Chain Housing Bracket Screws
Courtesy of VOLVO CARS CORPORATION

Install the bracket on the cylinder block and chain housing using 6x M10 screws.

First tighten the screws for the bracket/cylinder block so that the bracket can moves slightly.

Then tighten the two screws to the bracket - chain housing alternately lightly.

Then tighten all the screws.

Install the screws for the fuel line clamp. Tighten.

INSTALLING THE PROPELLER SHAFT

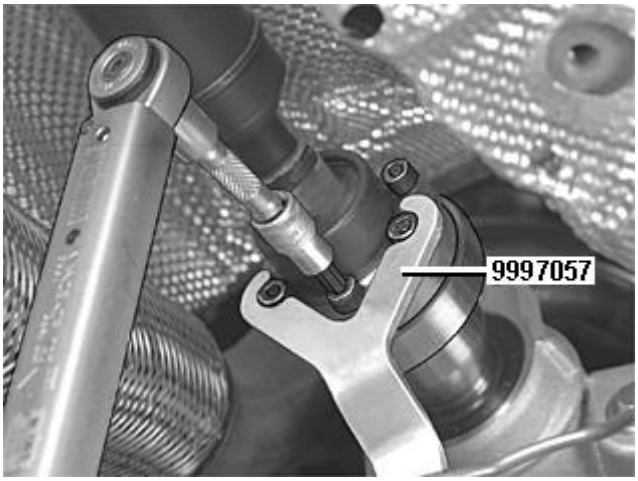

Fig. 53: Identifying Front Propeller Shaft And Special Tool 999 7057
Courtesy of VOLVO CARS CORPORATION

Install the propeller shaft using the marking made earlier.

Check carefully that the mating surfaces on the propeller shaft and flange are clean. Install the 6x M8 screws

and washers. Tighten. See **SUMMARY OF TIGHTENING TORQUES FOR SPECIFIC COMPONENTS** . Use counterhold **9997057** .

Install the 2x M8 screws to the propeller shaft centre bearing. Tighten.

INSTALLING THE STEERING GEAR TO THE ENGINE PAD

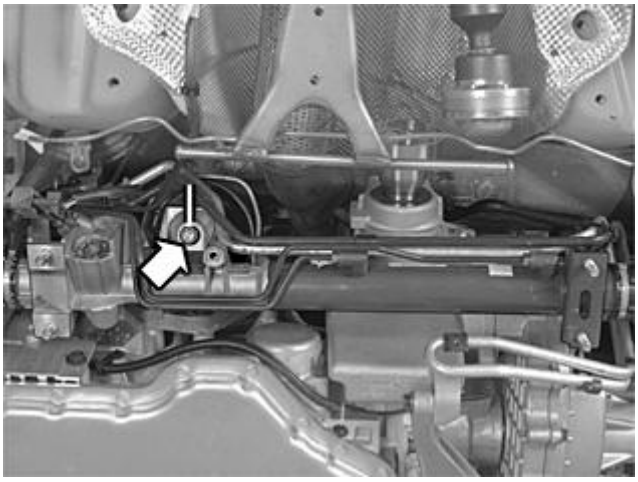

Fig. 54: Identifying Mark For Steering Gear Position
Courtesy of VOLVO CARS CORPORATION

Install the 1 M10 screw for the steering gear and engine pad. Align the steering gear in relation to the engine pad, using the marking made earlier. Tighten.

INSTALLING THE RIGHT DRIVE SHAFT

Fig. 55: Identifying Mating Surface Of The Drive Shaft
Courtesy of VOLVO CARS CORPORATION

Lubricate the seal using gearbox fluid, P/N 116 1745-3 (1 liter container) if the chain housing or its sealing ring has been replaced.

Press the drive shaft into the gearbox. Check that the snap ring is in its groove by carefully pulling it in the inner constant velocity joint.

Locate the drive shaft in the wheel hub.

FILLING AND CHECKING OIL

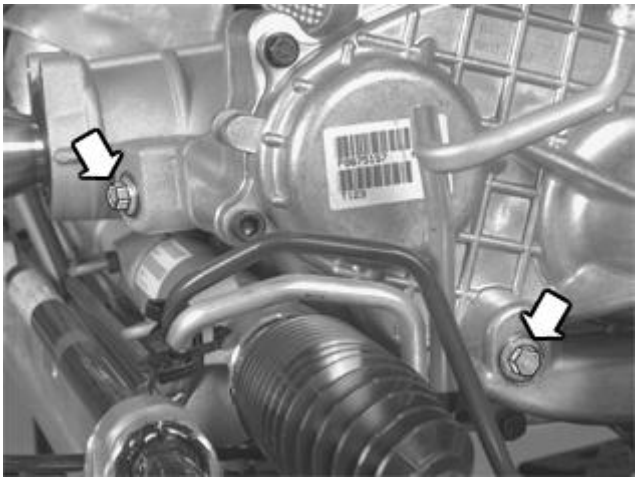

Fig. 56: Locating Chain Housing Bolts
Courtesy of VOLVO CARS CORPORATION

Fill and check the oil in:

- bevel gear. Use the right oil. See: **LUBRICATION TRANSMISSION** .

  Correct volume 650 ml.

  Fill with oil up to the filling plug. Draw out 0.1 l oil.

  Tighten the filling plug. See **TIGHTENING TORQUE** .

- chain housing. Only use oil with P/N 116 1745-3 (1 liter). Tighten according to **TIGHTENING TORQUE**

FINISHING

Install the sub-frame. See **SUB-FRAME FRONT, REPLACING** .

Fill the gearbox with exactly the same amount of new oil as was drained off. Only use automatic gearbox fluid, P/N 116 1521 (1 liter container) or 116 1621 (4-litre container).

Check the gearbox oil. See **OIL LEVEL, CHECKING** .

SEAL, DRIVE SHAFT, REPLACING

Special tools:

9991801

9995729

9995730

9995731

9995732

LEFT-HAND SIDE

PREPARATIONS

See **REAR AXLE, DRIVE SHAFTS - REMOVAL, REPLACEMENT AND INSTALLATION**

REMOVE THE DRIVE SHAFT SEAL

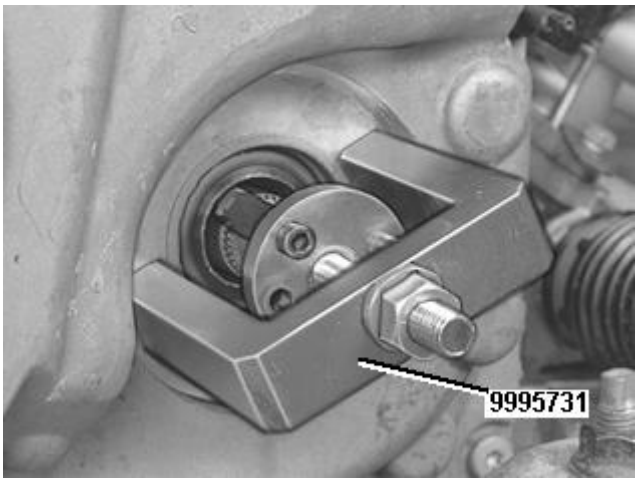

Fig. 57: Removing Drive Shaft Seal Using Puller 999 5731
Courtesy of VOLVO CARS CORPORATION

Use puller **9995731** .

Unscrew the puller. Install a hook gradually between the shaft and sealing ring.

Secure the hooks to the puller. Tighten them using the screws.

Install the mounting bracket and the nut.

Extract the sealing ring.

INSTALL THE DRIVE SHAFT SEAL

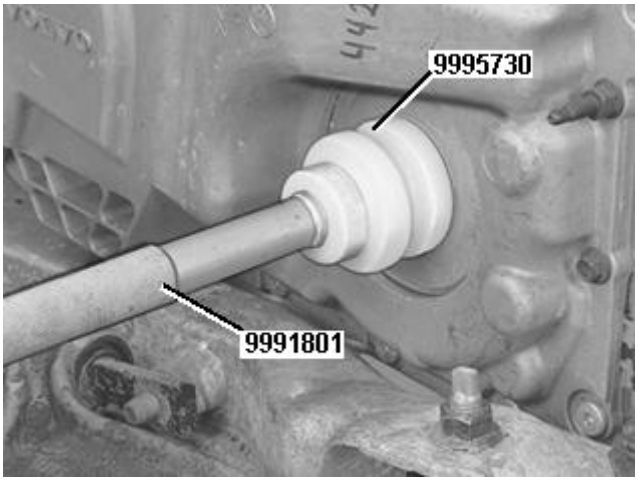

Fig. 58: Installing Drive Shaft Seal Using Drift 999 5730 And Shaft 999 1801
Courtesy of VOLVO CARS CORPORATION

NOTE: Clean thoroughly before installing the new seal

Apply a small amount of grease to the sealing lip.

Use drift **9995730** and shaft **9991801** .

Carefully tap the drive shaft seal in until the drift is in contact with the transmission housing.

INSTALL THE DRIVE SHAFT IN THE TRANSMISSION

See **REAR AXLE, DRIVE SHAFTS - REMOVAL, REPLACEMENT AND INSTALLATION**

RIGHT-HAND SIDE

PREPARATIONS

See **REAR AXLE, DRIVE SHAFTS - REMOVAL, REPLACEMENT AND INSTALLATION**

REMOVE THE DRIVE SHAFT SEAL

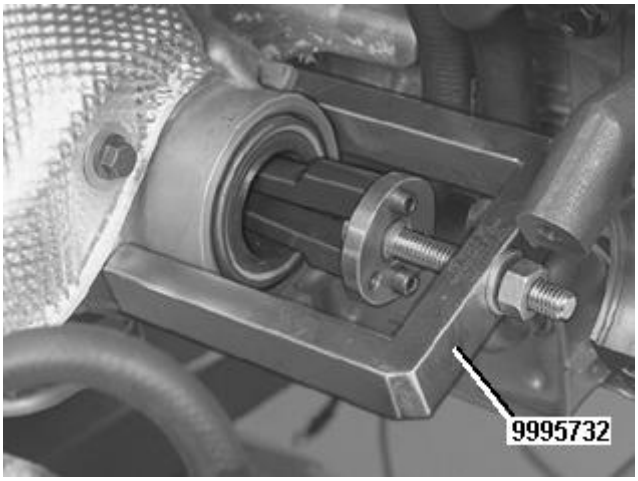

Fig. 59: Removing Drive Shaft Seal Using Puller 999 5732
Courtesy of VOLVO CARS CORPORATION

Use puller **9995732** .

Unscrew the puller. Install a hook gradually between the shaft and sealing ring.

Secure the hooks to the puller. Tighten them using the screws.

Install the mounting bracket and the nut.

Extract the sealing ring.

INSTALL THE DRIVE SHAFT SEAL

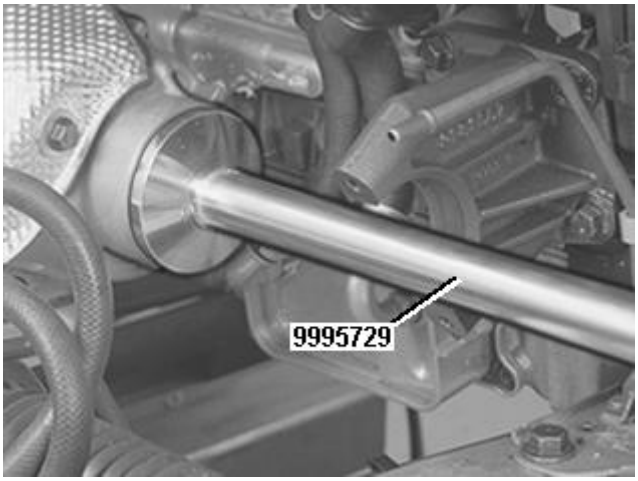

Fig. 60: Installing Drive Shaft Seal Using Drift 999 5729
Courtesy of VOLVO CARS CORPORATION

NOTE: Clean thoroughly before installing the new seal

Apply a small amount of grease to the sealing lip.

Use drift **9995729** .

Carefully tap the drive shaft seal in until the drift is in contact with the transmission housing.

INSTALL THE DRIVE SHAFT IN THE TRANSMISSION

See **REAR AXLE, DRIVE SHAFTS - REMOVAL, REPLACEMENT AND INSTALLATION** .

AUXILIARY TRANSMISSION, BEVEL GEAR AND OVERDRIVE (B6294T, L.H.D; 2003-2006)

PINION SEAL BEVEL GEAR, REPLACING

Special tools:

9995069

9995504

9995652

9995653

9995893

9997058

NOTE: The illustrations in this service information are used for different model years and/or models. Some variation may occur. However, the essential information in the illustrations is always correct.

PREPARATORY WORK

Remove the propeller shaft see **PROPELLER SHAFT, REPLACING** .

REMOVAL

REMOVING THE NUTS FOR THE BEVEL GEAR FLANGE

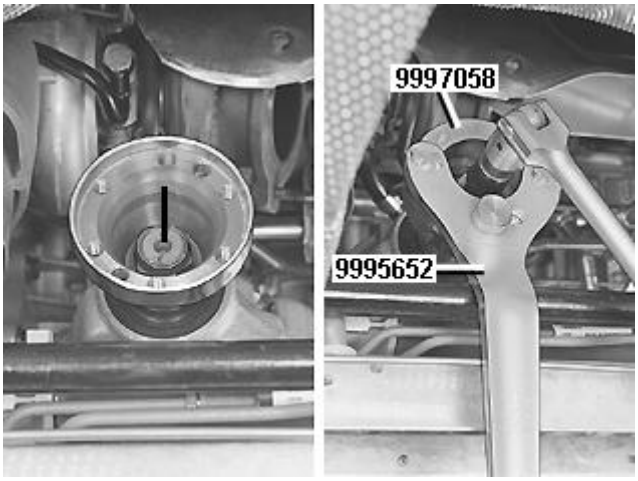

Fig. 61: Identifying Flange Position & Nut Marked In Relation To Pinion Shaft End And Bevel Gear Flange Nuts, Tool 9995652 & Tool 9997058
Courtesy of VOLVO CARS CORPORATION

Mark the position of the flange and nut in relation to the pinion shaft's end.

Remove the nut.

Use counterhold: **9995652** together with adapter: **9997058** .

REMOVING THE FLANGE

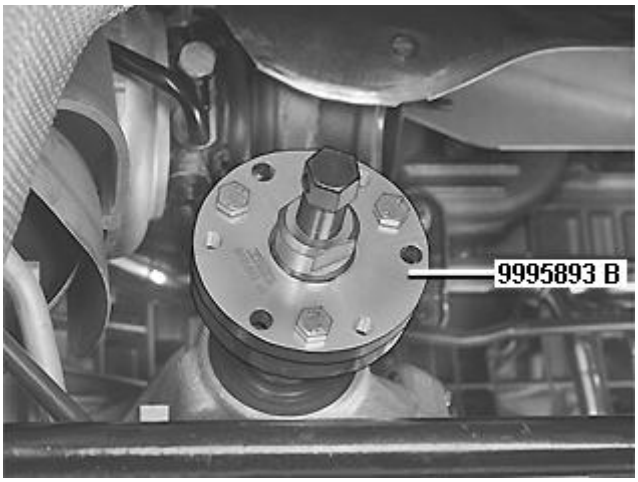

Fig. 62: Identifying Flange Removed Using Puller 999 5893
Courtesy of VOLVO CARS CORPORATION

Remove the flange. Use: **9995893** .

Check the seal face on the flange.

Replace the flange if it is damaged.

REMOVING THE SEAL

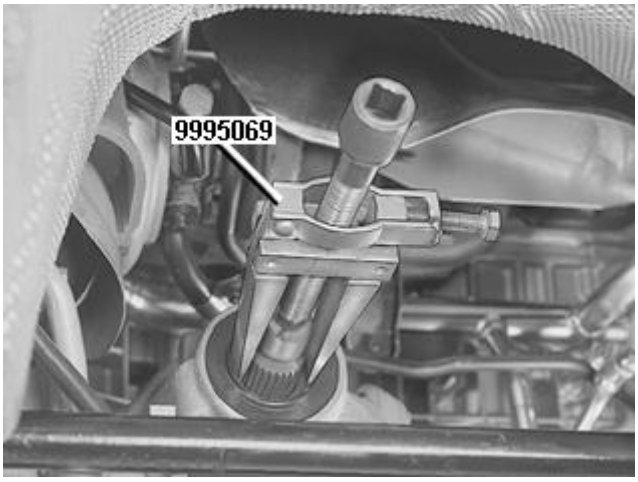

Fig. 63: Identifying Pinion Seal Removed Using Puller 999 5069
Courtesy of VOLVO CARS CORPORATION

CAUTION: Check thoroughly that there are no remains of the old seal.

Remove the seal.

Use: **9995069** .

INSTALLATION

NOTE: For tightening torques, see: TIGHTENING TORQUE .

INSTALLING THE SEAL

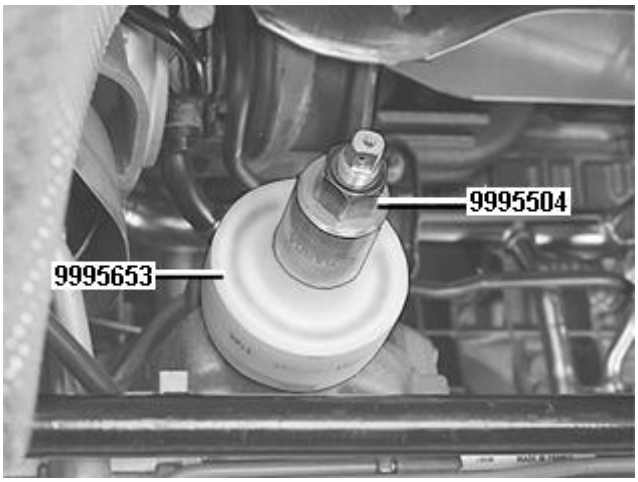

Fig. 64: Identifying Pressing In Seal Using 999 5653 And 999 5504
Courtesy of VOLVO CARS CORPORATION

Install the seal.

Lubricate the lip of the seal ring. Use wheel bearing grease, part number 116 1241-3. Install the seal on drift: **9995653** against the side of the tool marked 1155.

Press in the seal.

Use press tool: **9995504** .

INSTALLING THE FLANGE ON THE PINION

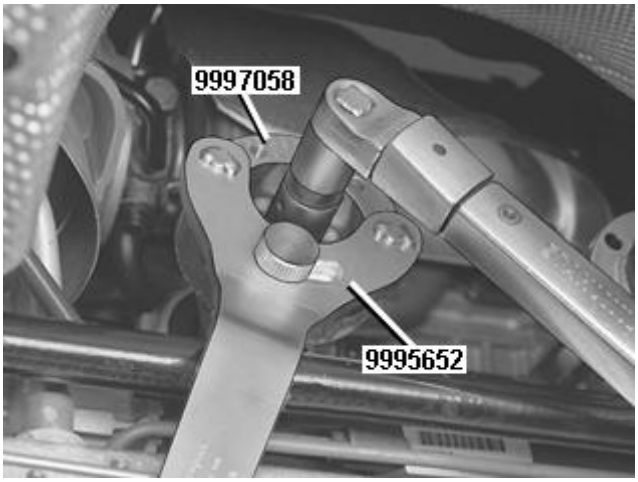

Fig. 65: Identifying Pinion Flange, Tool 999 7058 And 999 5652
Courtesy of VOLVO CARS CORPORATION

Install the flange according to earlier marking, see: **REMOVING THE NUTS FOR THE BEVEL GEAR FLANGE**.

If necessary, use press tool: **9995504** .

Installing a new nut in the carrier

Install a **new lubricated nut** .

NOTE: There must be no axial play.

CAUTION: 200 Nm must not be exceeded. The forces on the pinion bearing may become too great, causing it to seize.

Tighten to **180-200 Nm** . Use counterhold: **9995652** together with adapter: **9997058** .

FILLING AND CHECKING OIL

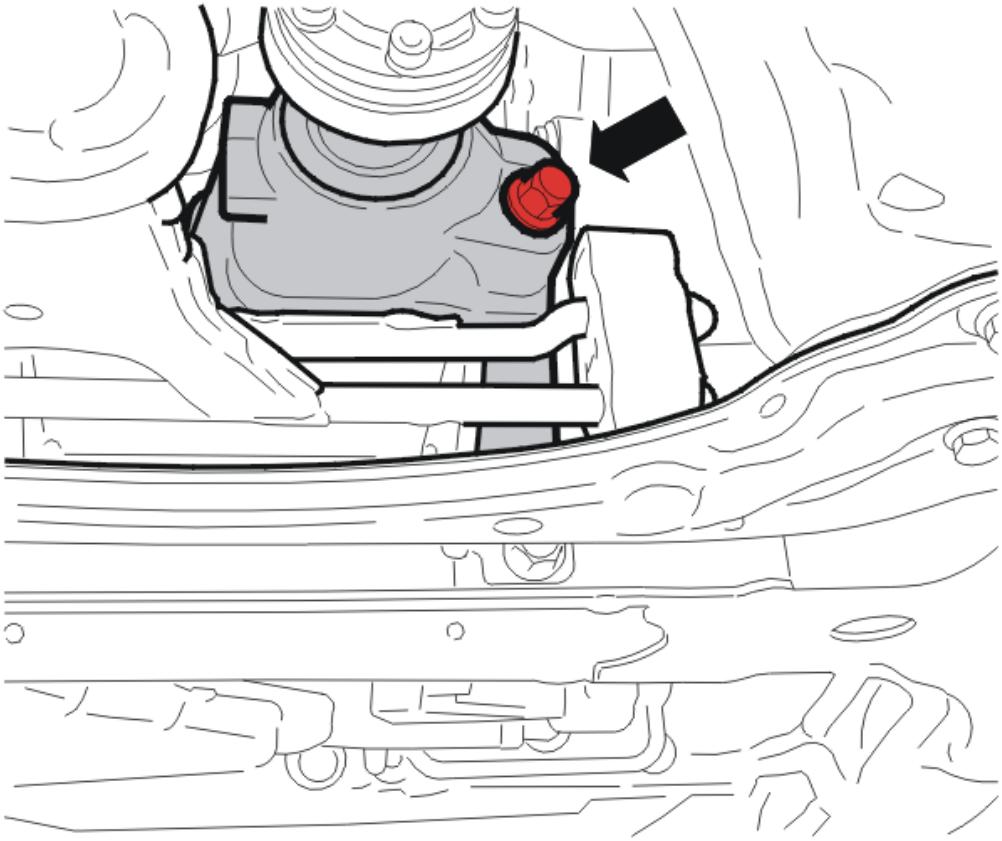

Fig. 66: Locating Fill Plug
Courtesy of VOLVO CARS CORPORATION

Fill and check the oil level in the bevel gear.

Use transmission oil 1161648 (1 liter).

Tighten the level plug see **SUMMARY OF TIGHTENING TORQUES FOR SPECIFIC COMPONENTS** .

FINISHING

Install the propeller shaft, see **PROPELLER SHAFT, REPLACING** .

SEALS BEVEL GEAR/CHAIN HOUSING, REPLACING

Special tools	
	T9997290 WRENCH **Tool number:** T9997290 **Tool description:** WRENCH **Tool boards:**
	T9997289 DRIFT **Tool number:** T9997289 **Tool description:** DRIFT

	Tool boards:
	T9997286 DRIFT **Tool number:** T9997286 **Tool description:** DRIFT **Tool boards:**
	T9991801 STANDARD SHAFT **Tool number:** T9991801 **Tool description:** STANDARD SHAFT **Tool boards:**
	T9997291 PLUG **Tool number:** T9997291 **Tool description:** PLUG **Tool boards:**
	T9997287 DRIFT **Tool number:** T9997287 **Tool description:** DRIFT **Tool boards:**
	T9997288 DRIFT **Tool number:** T9997288 **Tool description:** DRIFT **Tool boards:**

Materials:	
Designation	**Part number**
Wheel bearing grease	1161241-3

NOTE: Removal steps in this procedure may contain installation details.

Remove the angle gear/chain housing and separate them. See **REPLACING THE BEVEL GEAR/CHAIN HOUSING**

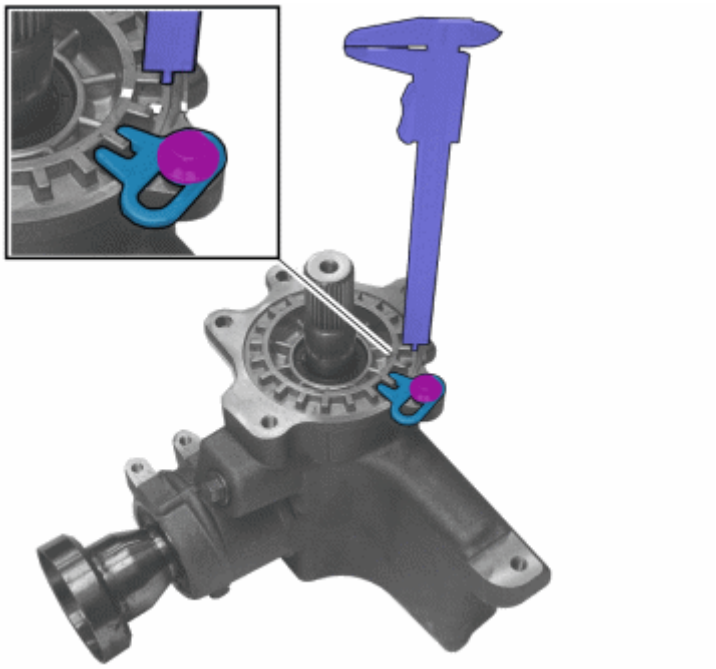

Fig. 67: Measuring The Height Of The Setting Nut
Courtesy of VOLVO CARS CORPORATION

Mark up the position of the setting nut in relation to the housing with a scriber.

Measure and note the height between the nut and the housing.

Remove the screw and catch of the nut.

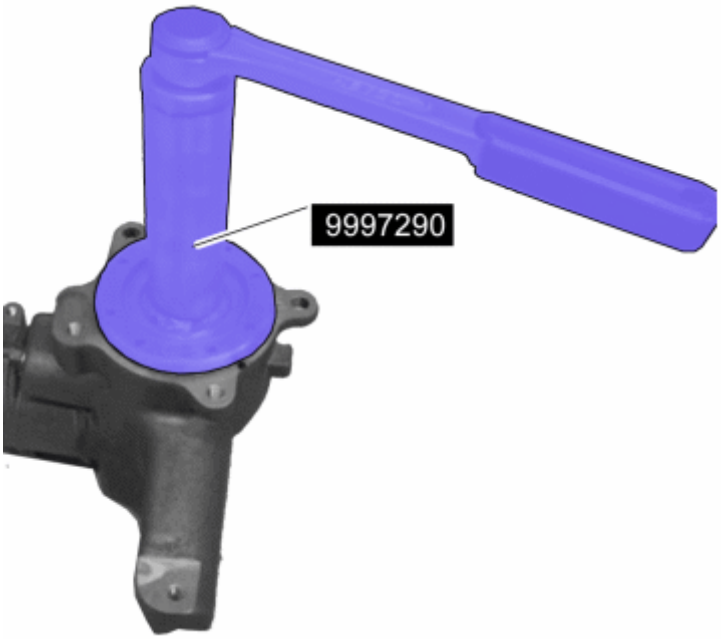

Fig. 68: Identifying Tool 9997290

Courtesy of VOLVO CARS CORPORATION

Remove the setting nut. **9997290**

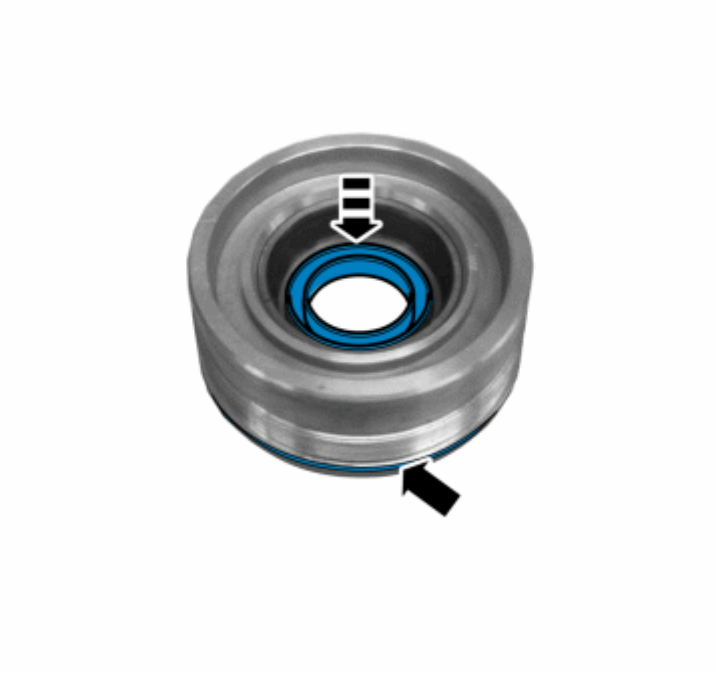

Fig. 69: Removing The O-Ring and The Seal Ring
Courtesy of VOLVO CARS CORPORATION

Tap out the seal ring.

Use a screwdriver.

Remove the O-ring.

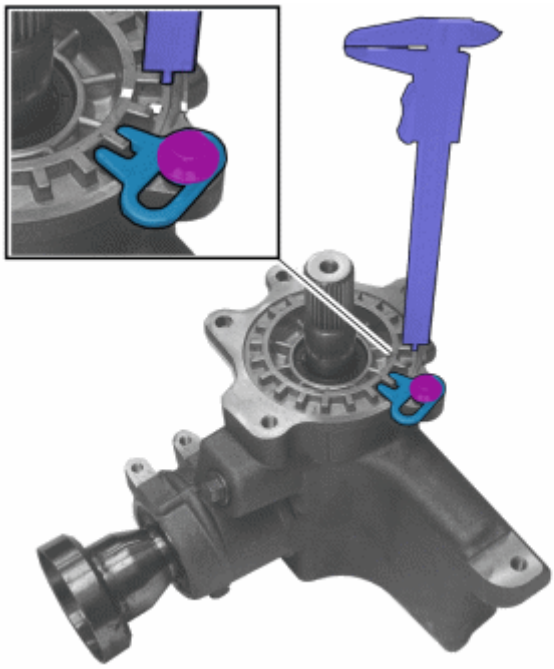

Fig. 70: Measuring The Height Of The Setting Nut
Courtesy of VOLVO CARS CORPORATION

Insert a new O-ring on the setting nut. Lubricate the O-ring and threads with wheel bearing grease.

Install the setting nut to the previously marked position. Fit the lock.

Tightening torque M10, 50 Nm.

Turn the pinion on the bevel gear when the nut is drawn in to its previously marked position. **9997290**

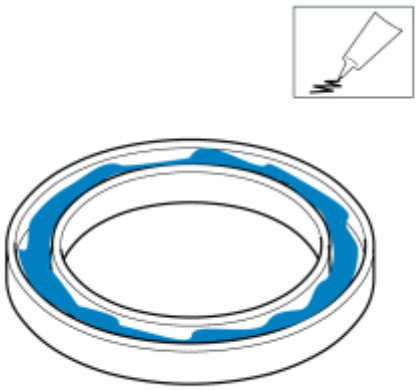

Fig. 71: Wheel bearing grease, 1161241-3
Courtesy of VOLVO CARS CORPORATION

NOTE: Applies to all sealing rings.

Lubricates the lips of the sealing rings. **Use:** Wheel bearing grease, 1161241-3 Also apply grease to the spring.

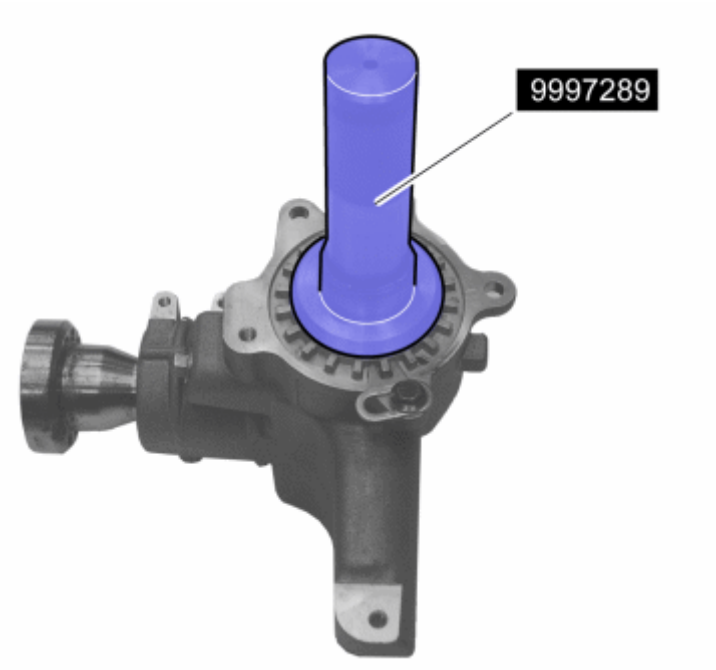

Fig. 72: Identifying Tool 9997289
Courtesy of VOLVO CARS CORPORATION

Knock in the sealing ring until the punch rests against the nut. **9997289**

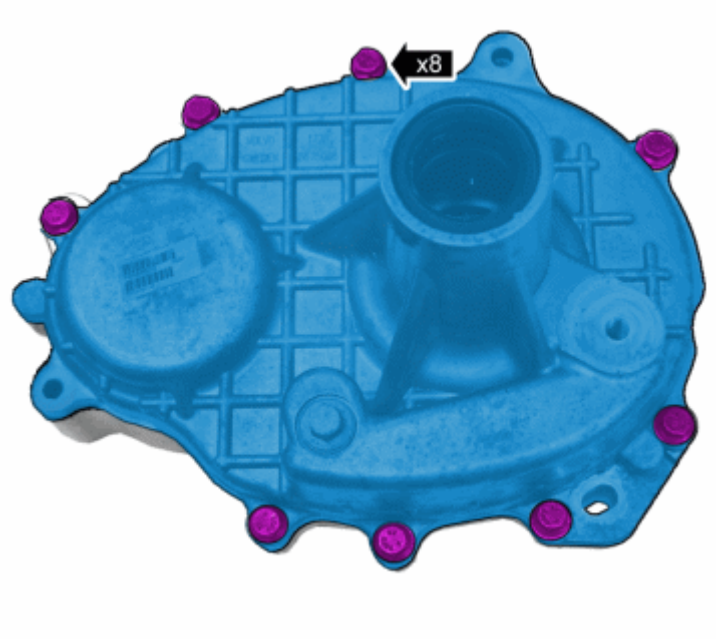

Fig. 73: Identifying Cover Screws
Courtesy of VOLVO CARS CORPORATION

Remove the screws and cover on the chain housing.

Fig. 74: Identifying the Side Up
Courtesy of VOLVO CARS CORPORATION

NOTE: Note which side should be up on the chain.

Remove the wheel and chain.

Fig. 75: Removing The Sealing Ring
Courtesy of VOLVO CARS CORPORATION

Remove the sealing ring.

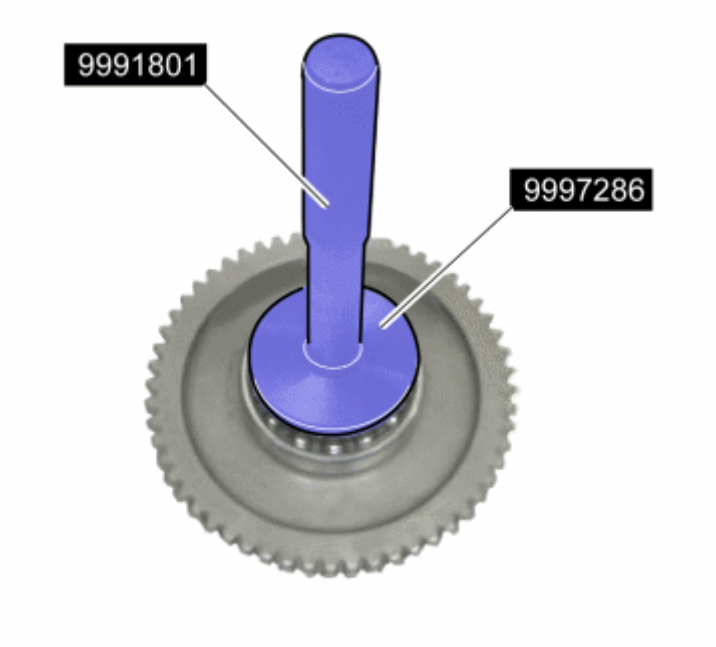

Fig. 76: Installing The Seal With Tools 9997286, 9991801
Courtesy of VOLVO CARS CORPORATION

Install the seal.

9997286

9991801

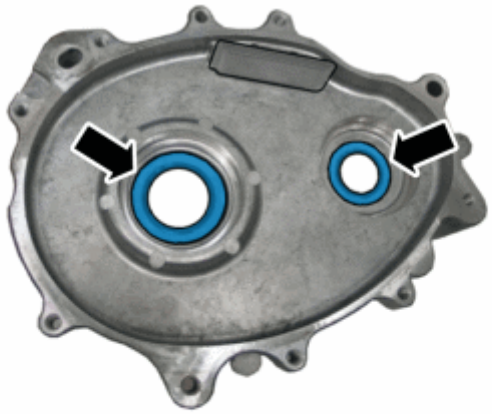

Fig. 77: Identifying The Seals
Courtesy of VOLVO CARS CORPORATION

Remove the sealing rings.

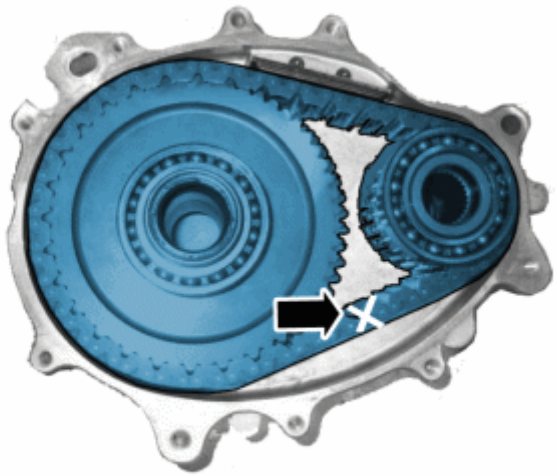

Fig. 78: Identifying the Side Up
Courtesy of VOLVO CARS CORPORATION

Fit the wheel in the bevel gear.

NOTE: Make sure the chain is positioned with the same side upward as earlier.

Install a new seal.

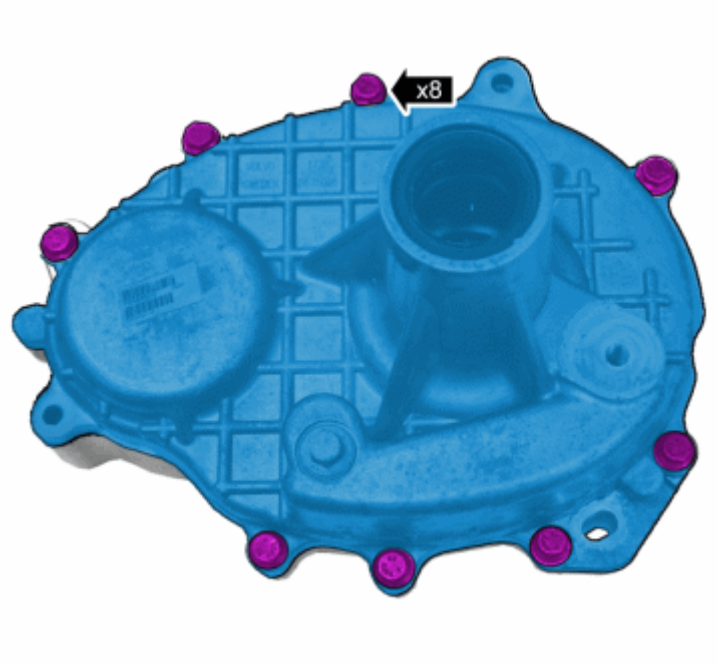

Fig. 79: Identifying Cover Screws
Courtesy of VOLVO CARS CORPORATION

Install the cover.

Torque: M8

24 Nm

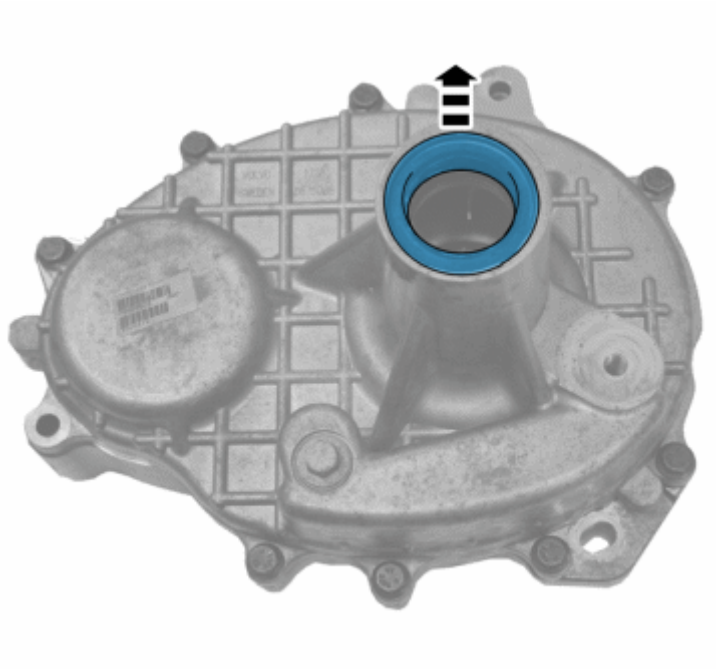

Fig. 80: Removing The Sealing Ring
Courtesy of VOLVO CARS CORPORATION

Remove the sealing ring.

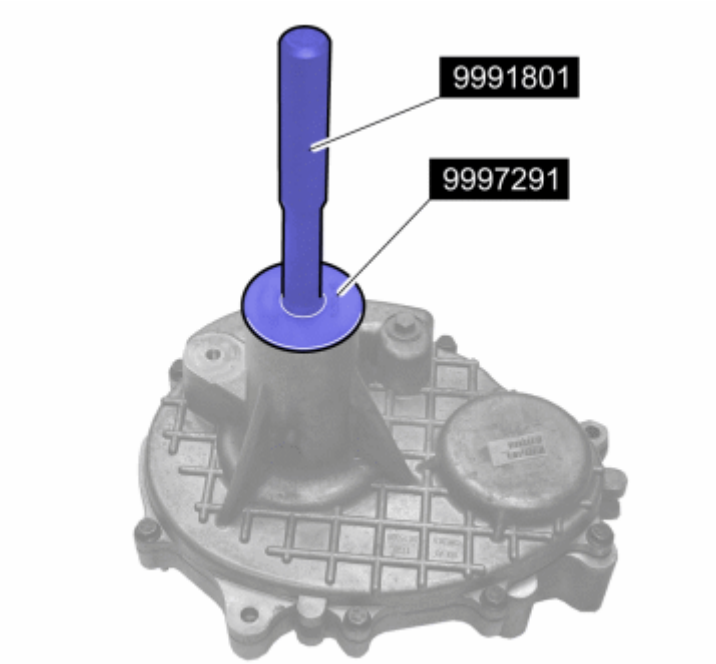

Fig. 81: Installing The Seal With Tools 9997291, 9991801
Courtesy of VOLVO CARS CORPORATION

Install the sealing ring.

9997291

9991801

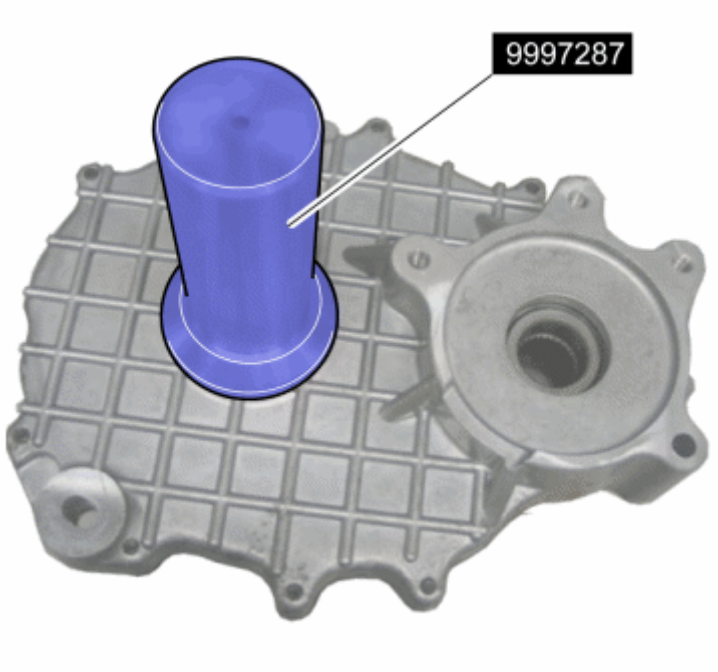

Fig. 82: Identifying Installer 9997287
Courtesy of VOLVO CARS CORPORATION

Install the sealing ring.

9997287

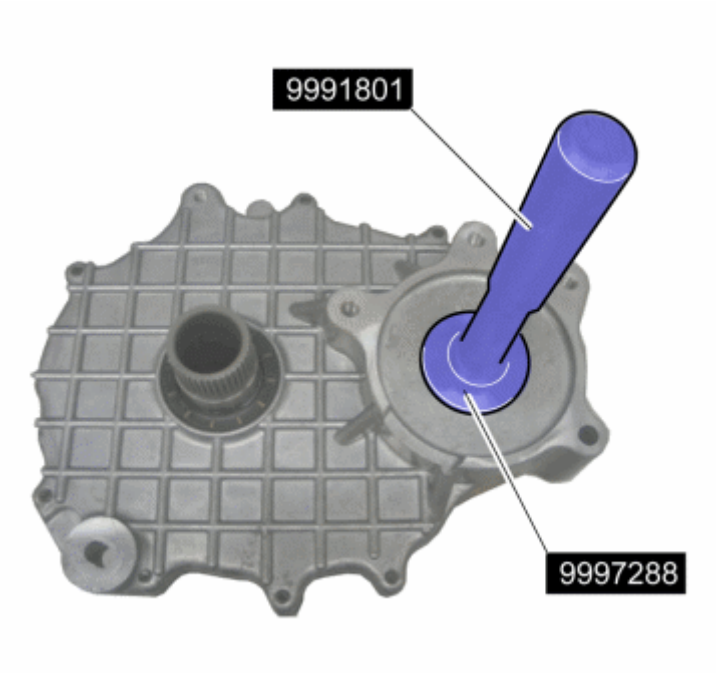

Fig. 83: Identifying Installer 9997288, 9991801
Courtesy of VOLVO CARS CORPORATION

Install the sealing ring.

9997288

9991801

Install the bevel gear/chain housing **REPLACING THE BEVEL GEAR/CHAIN HOUSING**.

AUXILIARY TRANSMISSION, BEVEL GEAR AND OVERDRIVE (B8444S, TF-80SC AWD; 2009-2011)

SEALING RING, BEVEL GEAR, RIGHT

Special tools:

9995919

9992943

9997190

9991801

REMOVAL

REMOVING DRIVE SHAFT RIGHT-HAND SIDE

Remove the right drive shaft. See: **DRIVE SHAFT RIGHT, REPLACING** .

REMOVING THE SEALING RING

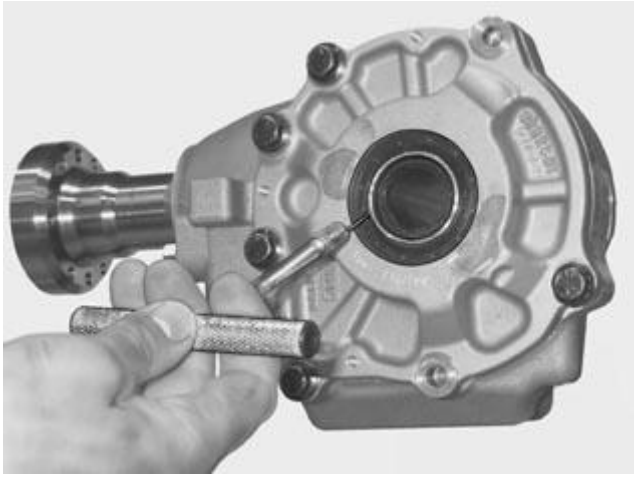

Fig. 84: Removing The Seal With Tool 9995919
Courtesy of VOLVO CARS CORPORATION

Outer sealing ring. Use: **9995919** .

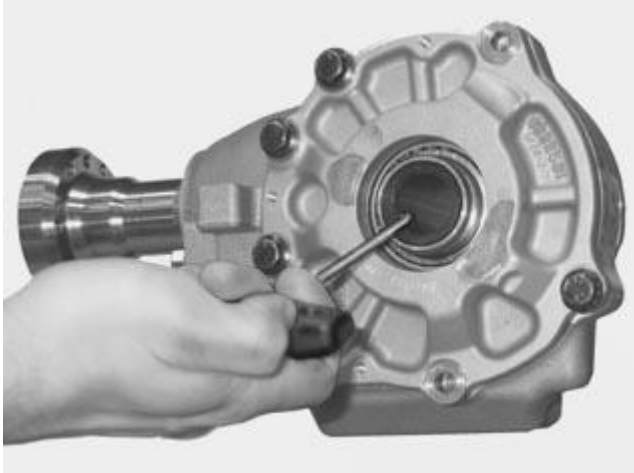

Fig. 85: Using Puller 9992943
Courtesy of VOLVO CARS CORPORATION

Use: **9992943** .

INSTALLATION

INSTALLING A NEW SEALING RING

Fig. 86: Installing A New Seal with Tools 9997190, 9991801
Courtesy of VOLVO CARS CORPORATION

Use **9997190** , extend if necessary using **9991801** .

Fig. 87: Identifying Installing
Courtesy of VOLVO CARS CORPORATION

Use **9997190** , extend if necessary using **9991801** .

FINISHING

CHECKING THE OIL LEVEL IN THE BEVEL GEAR

Check the oil level in the bevel gear. See **REPLACING THE PINION SEAL FOR THE BEVEL GEAR**.

Install the right driveshaft. See **DRIVE SHAFT RIGHT, REPLACING** .

AUXILIARY TRANSMISSION, BEVEL GEAR AND OVERDRIVE (B8444S, TF-80SC AWD; 2007-2008)

SEALING RING, BEVEL GEAR, RIGHT

SEALING RING, BEVEL GEAR, RIGHT

AUXILIARY TRANSMISSION, BEVEL GEAR AND OVERDRIVE (TF-80SC AWD; 2009-2012)

BEVEL GEAR, REPLACING

REMOVAL

REMOVE:

- the front manifold. See **EXHAUST MANIFOLD/GASKET, CYLINDER 1, 3, 5 AND 7 (BANK 1), REPLACING**
- the rear manifold. See **EXHAUST MANIFOLD/GASKET, CYLINDER 2, 4, 6 AND 8 (BANK 2), REPLACING**
- the propeller shaft from the bevel gear's drive flange. See **PROPELLER SHAFT, REPLACING**

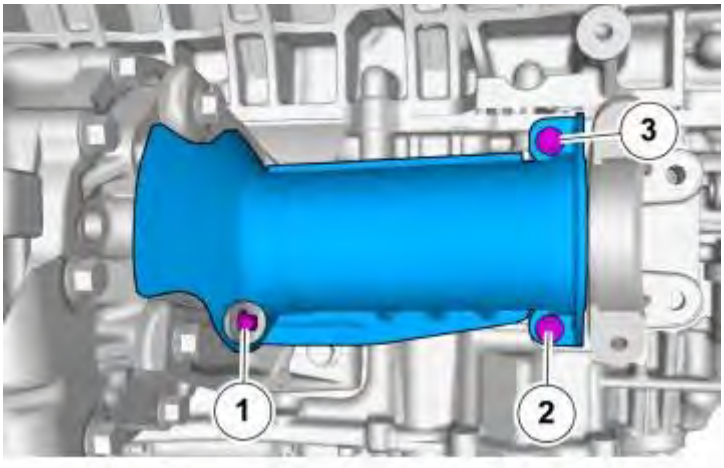

Fig. 88: Identifying Cover
Courtesy of VOLVO CARS CORPORATION

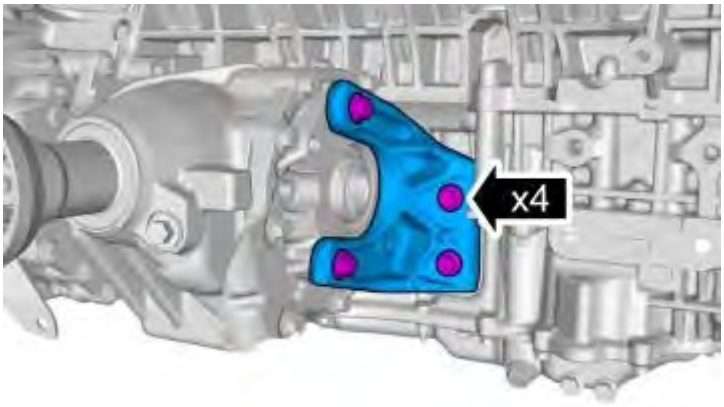

Fig. 89: Locating 4 Bolts
Courtesy of VOLVO CARS CORPORATION

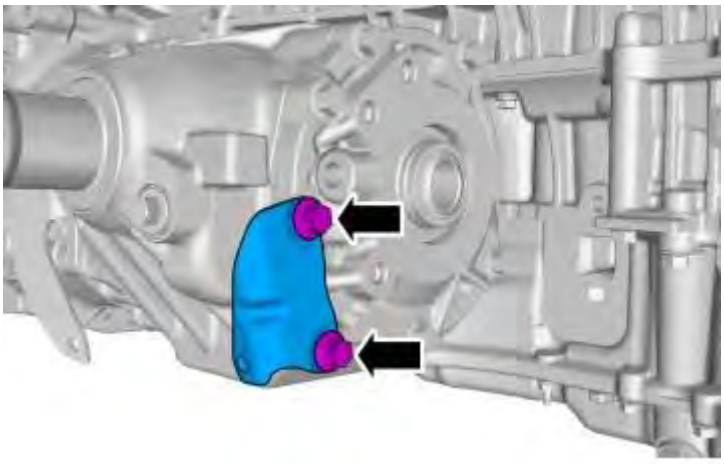

Fig. 90: Identifying Bracket Bolts
Courtesy of VOLVO CARS CORPORATION

When changing to new bevel gear, this part shall be transferred.

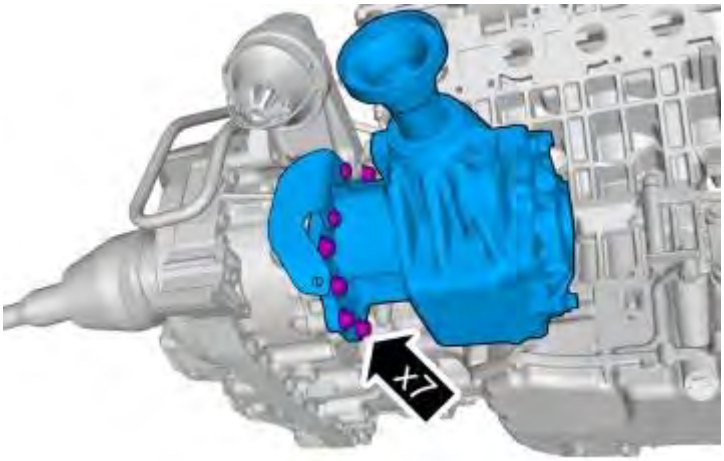

Fig. 91: Locating Bolts
Courtesy of VOLVO CARS CORPORATION

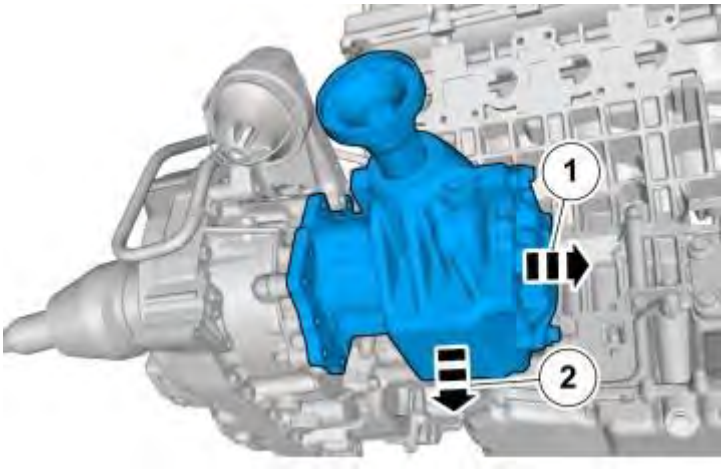

Fig. 92: Remoing Gear Housing
Courtesy of VOLVO CARS CORPORATION

INSTALLATION

Grease according to **SPLINES GREASING**

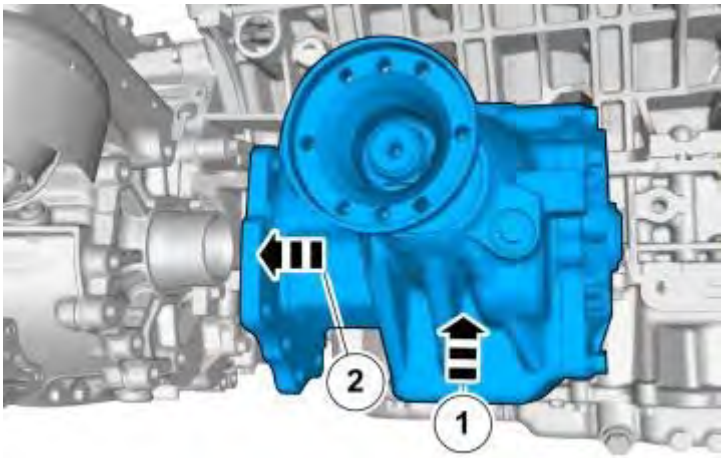

Fig. 93: Installing Gear Housing
Courtesy of VOLVO CARS CORPORATION

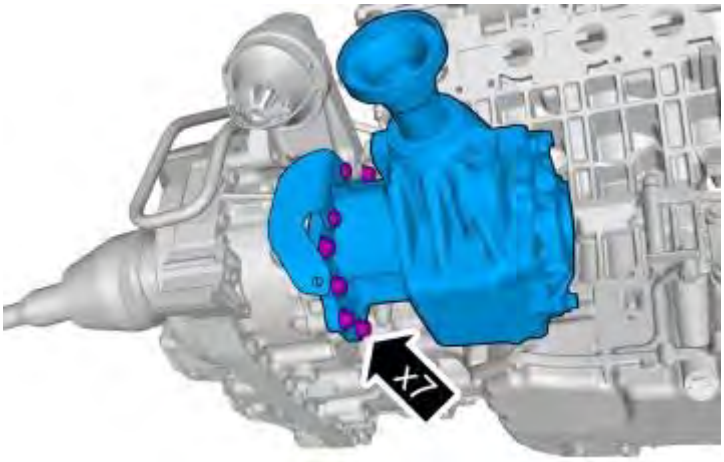

Fig. 94: Locating Bolts
Courtesy of VOLVO CARS CORPORATION

Tighten bevel gear to transmission acc. to **TIGHTENING TORQUE**

ONLY APPLIES WHEN CHANGING TO NEW PART

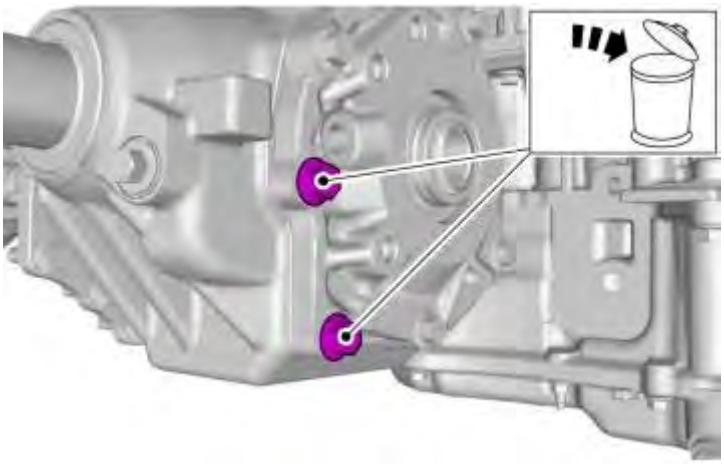

Fig. 95: Identifying Screws
Courtesy of VOLVO CARS CORPORATION

When changing to new bevel gear, these screws shall be removed and discarded.

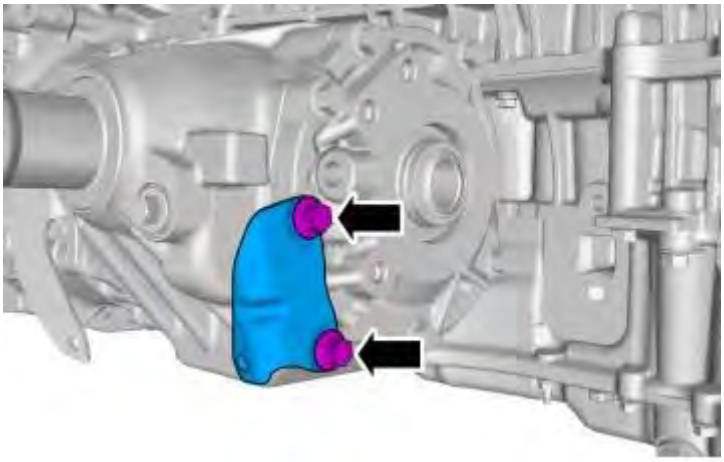

Fig. 96: Identifying Bracket Bolts
Courtesy of VOLVO CARS CORPORATION

Tighten manifold bracket for bevel gear acc. to **TIGHTENING TORQUE**

APPLIES TO ALL

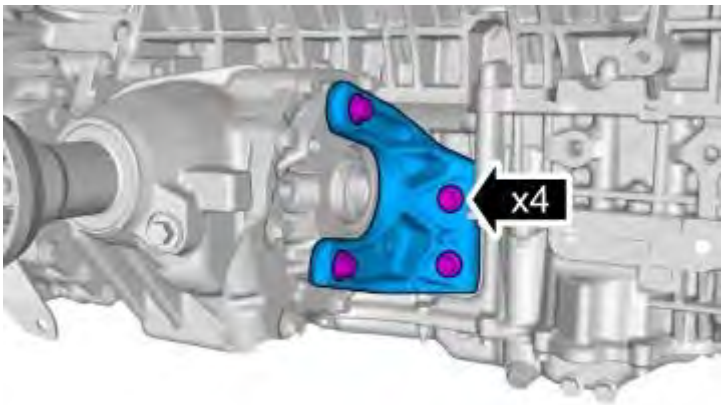

Fig. 97: Locating 4 Bolts
Courtesy of VOLVO CARS CORPORATION

Tighten bracket bevel gear acc. to **TIGHTENING TORQUE**

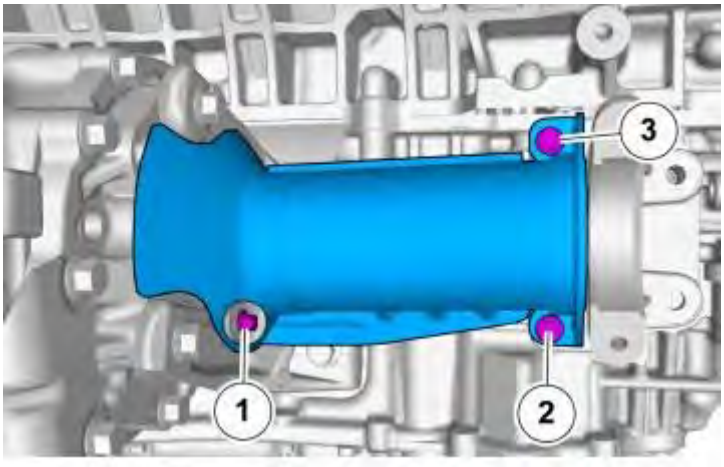

Fig. 98: Identifying Cover
Courtesy of VOLVO CARS CORPORATION

Tightening torque: M6 acc. to **TIGHTENING TORQUE**

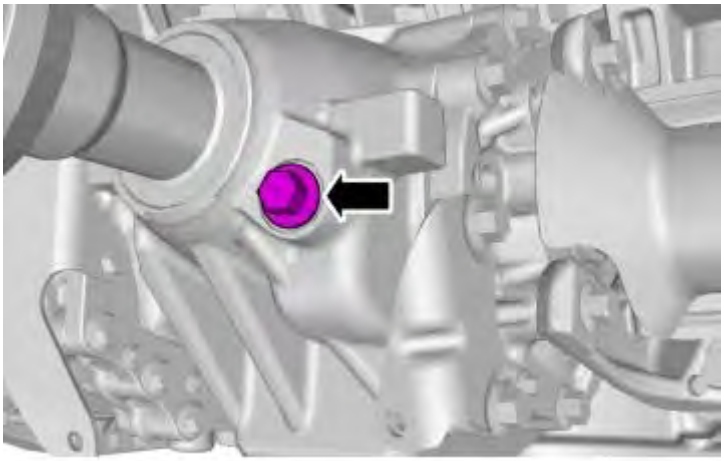

Fig. 99: Identifying Fill Plug
Courtesy of VOLVO CARS CORPORATION

The bevel gear is supplied filled with oil, however, always check the oil level.

Warning. Be prepared to collect draining fluid.

Check the oil level. See **TRANSMISSION, AUTOMATIC**

Tightening torque: level plug acc. to **TIGHTENING TORQUE**

TO INSTALL, REVERSE THE REMOVAL PROCEDURE

AUXILIARY TRANSMISSION, BEVEL GEAR AND OVERDRIVE (TF-80SC AWD; 2005-2006)

BEVEL GEAR, REPLACING

REMOVAL

REMOVE:

- the front manifold. See **EXHAUST MANIFOLD/GASKET, CYLINDER 1, 3, 5 AND 7 (BANK 1), REPLACING**
- the rear manifold See **EXHAUST MANIFOLD/GASKET, CYLINDER 2, 4, 6 AND 8 (BANK 2), REPLACING**
- the propeller shaft from the bevel gear's drive flange. See **PROPELLER SHAFT, REPLACING**

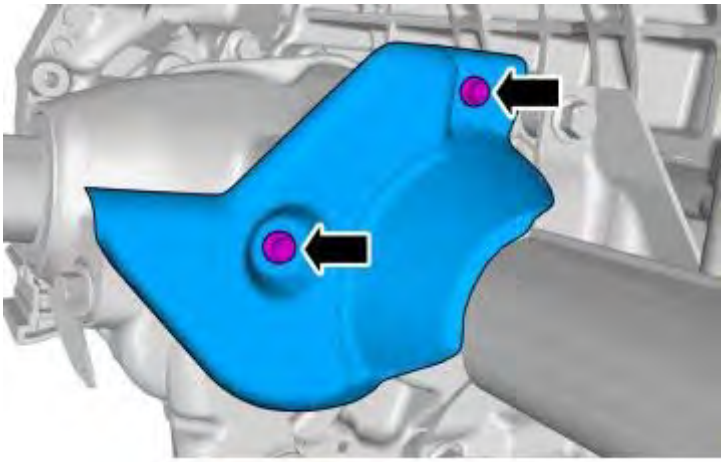

Fig. 100: Removing Cover
Courtesy of VOLVO CARS CORPORATION

When changing to new bevel gear, this part shall be scrapped.

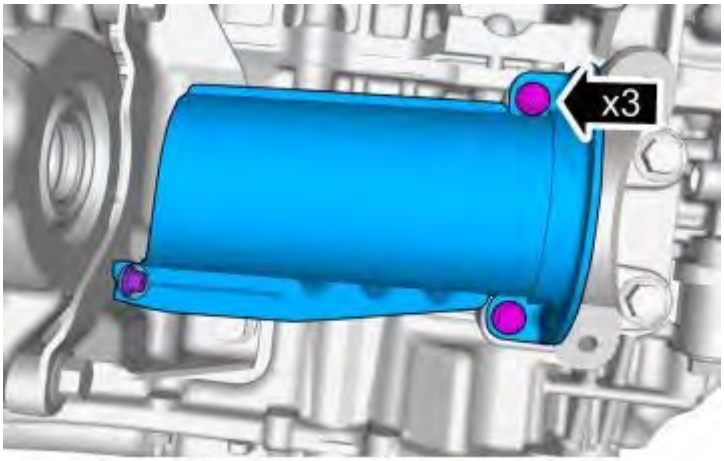

Fig. 101: Removing Cover
Courtesy of VOLVO CARS CORPORATION

When changing to new bevel gear, this part shall be scrapped.

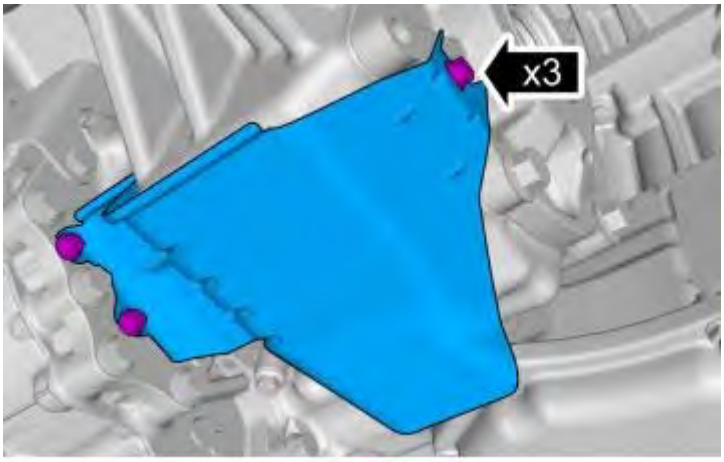

Fig. 102: Removing Cover
Courtesy of VOLVO CARS CORPORATION

When changing to new bevel gear, this part shall be scrapped.

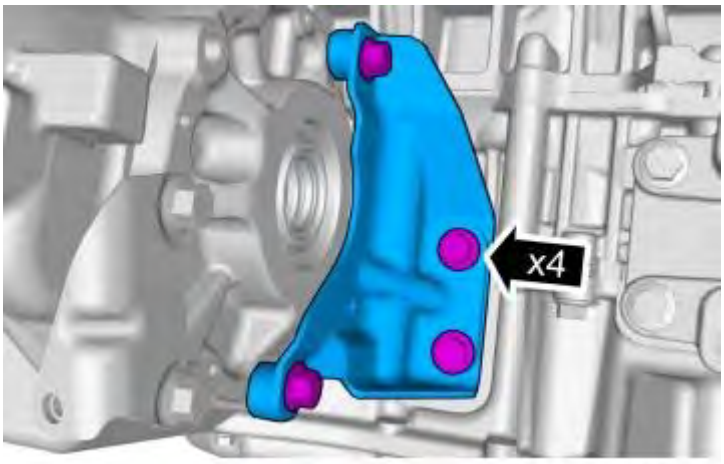

Fig. 103: Removing Brace
Courtesy of VOLVO CARS CORPORATION

When changing to new bevel gear, this part shall be scrapped.

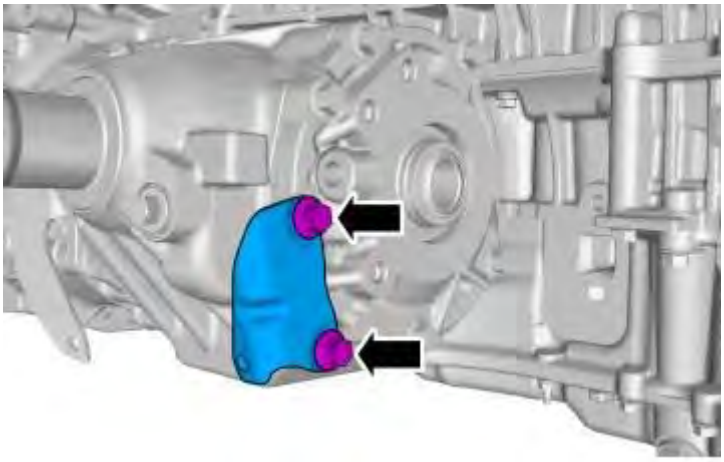

Fig. 104: Identifying Bracket Bolts
Courtesy of VOLVO CARS CORPORATION

When changing to new bevel gear, this part shall be transferred.

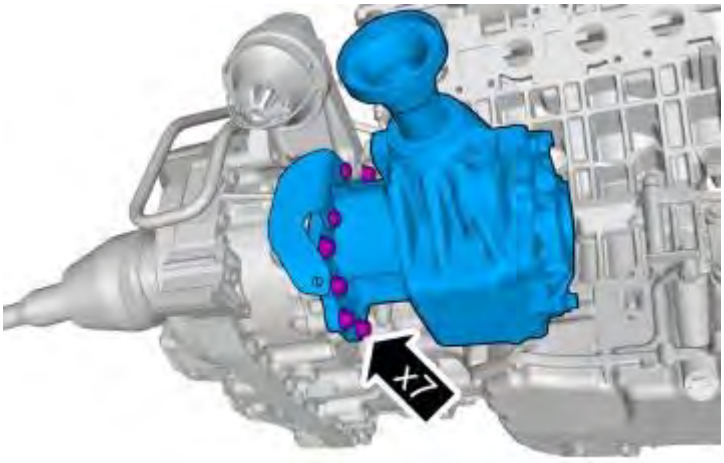

Fig. 105: Locating Bolts
Courtesy of VOLVO CARS CORPORATION

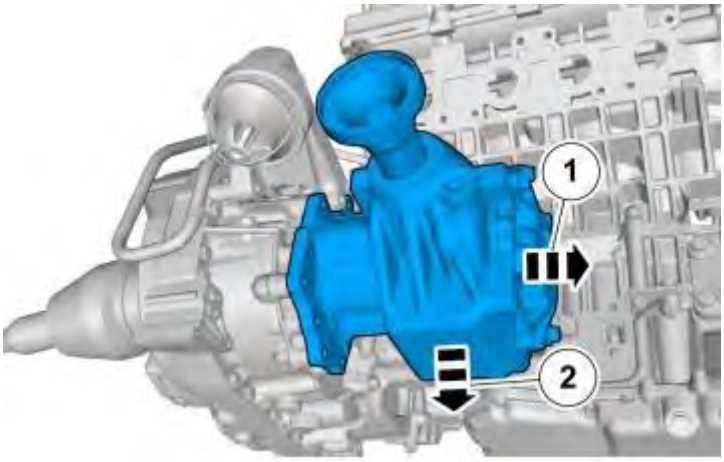

Fig. 106: Remoing Gear Housing
Courtesy of VOLVO CARS CORPORATION

INSTALLATION

Grease according to **GREASING THE SPLINES**

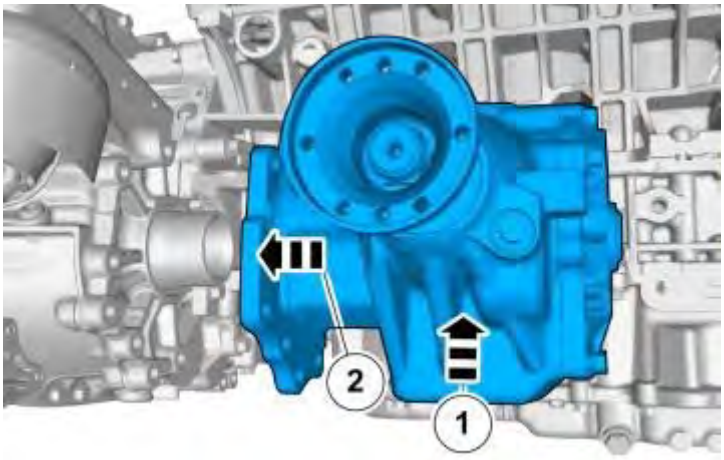

Fig. 107: Installing Gear Housing
Courtesy of VOLVO CARS CORPORATION

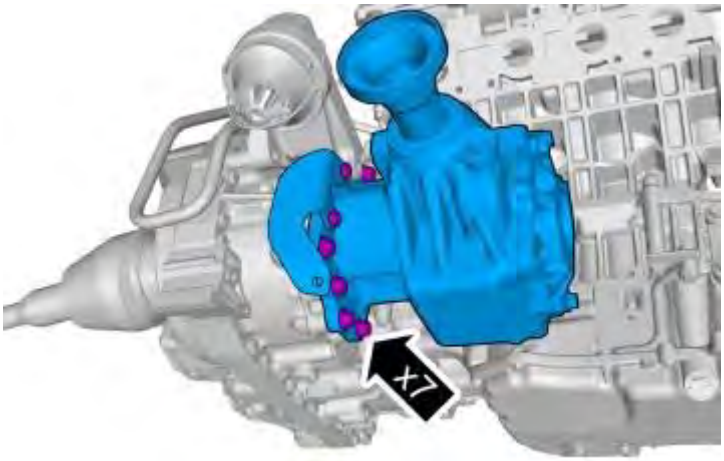

Fig. 108: Locating Bolts
Courtesy of VOLVO CARS CORPORATION

Tighten bevel gear to transmission acc. to **TIGHTENING TORQUE**

ONLY APPLIES WHEN CHANGING TO NEW PART

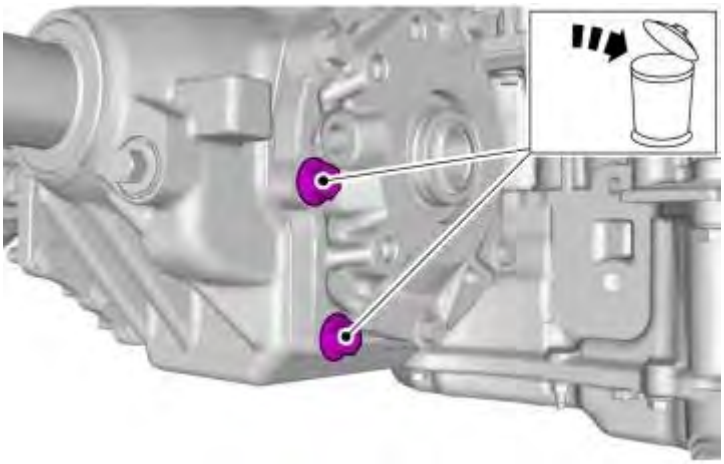

Fig. 109: Identifying Screws
Courtesy of VOLVO CARS CORPORATION

Discard bolts.

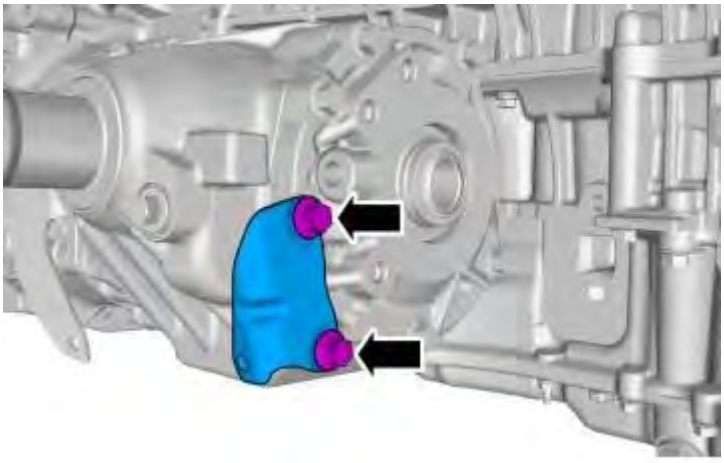

Fig. 110: Identifying Bracket Bolts
Courtesy of VOLVO CARS CORPORATION

Tighten manifold bracket for bevel gear acc. to **TIGHTENING TORQUE**

Important. Use new screws.

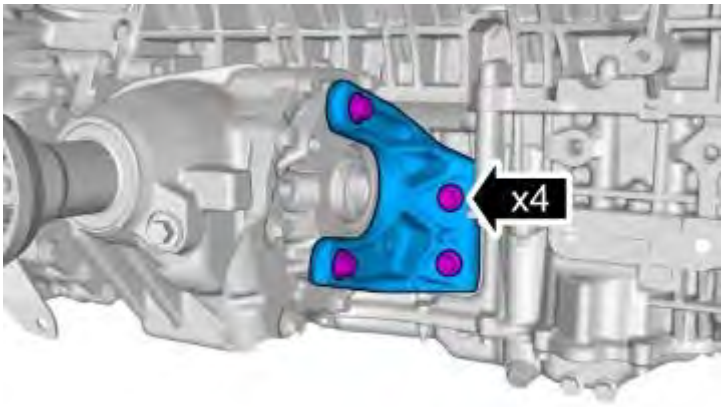

Fig. 111: Locating 4 Bolts
Courtesy of VOLVO CARS CORPORATION

Tighten bracket bevel gear acc. to **TIGHTENING TORQUE**

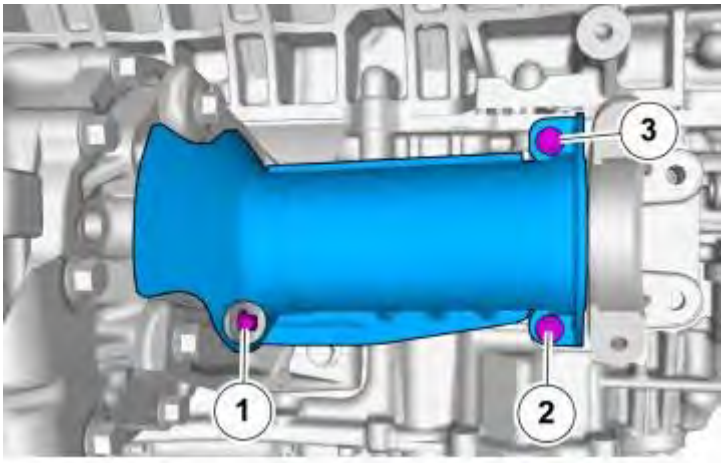

Fig. 112: Identifying Cover
Courtesy of VOLVO CARS CORPORATION

Tightening torque: M6 acc. to **TIGHTENING TORQUE**

ONLY APPLIES IF THE ORIGINAL PART IS TO BE REUSED

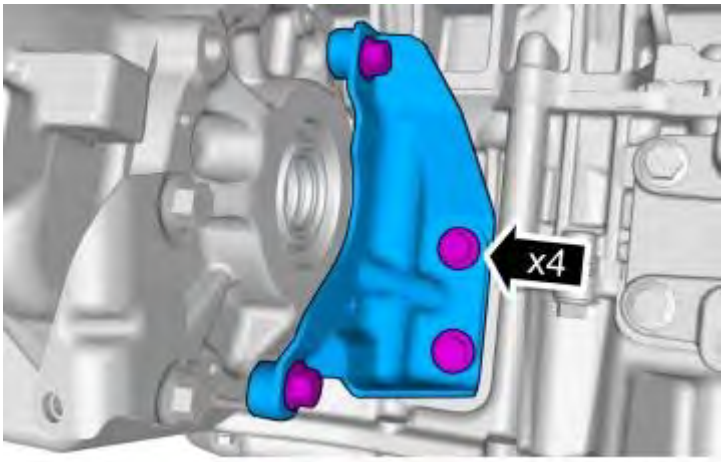

Fig. 113: Removing Brace
Courtesy of VOLVO CARS CORPORATION

Tightening torque: bracket bevel gear acc. to **TIGHTENING TORQUE**

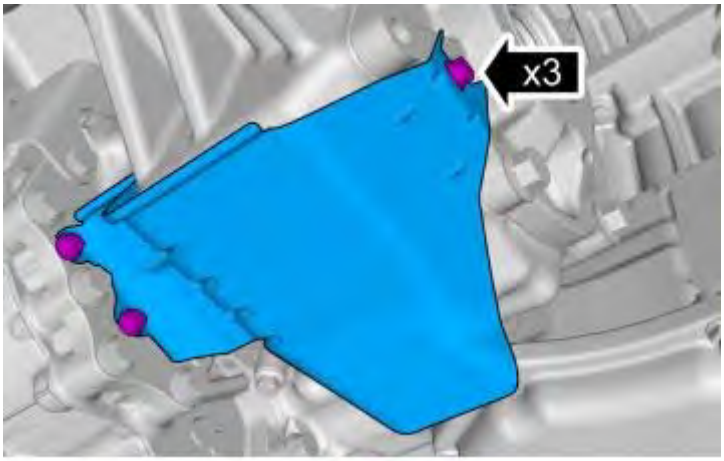

Fig. 114: Removing Cover
Courtesy of VOLVO CARS CORPORATION

Tightening torque: M6 acc. to **TIGHTENING TORQUE**

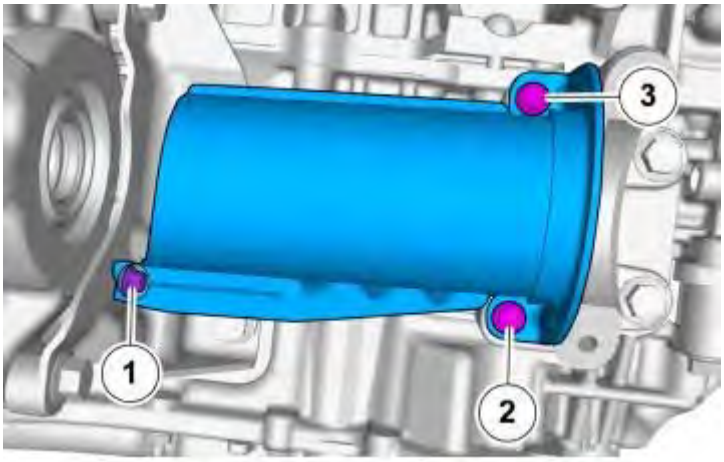

Fig. 115: Remove/Install Cover
Courtesy of VOLVO CARS CORPORATION

Tightening torque: M6 acc. to **TIGHTENING TORQUE**

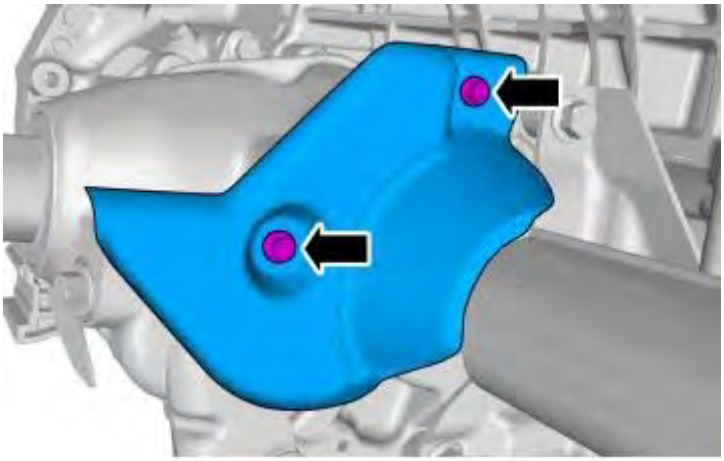

Fig. 116: Removing Cover
Courtesy of VOLVO CARS CORPORATION

Tightening torque: M6 acc. to **TIGHTENING TORQUE**

APPLIES TO ALL

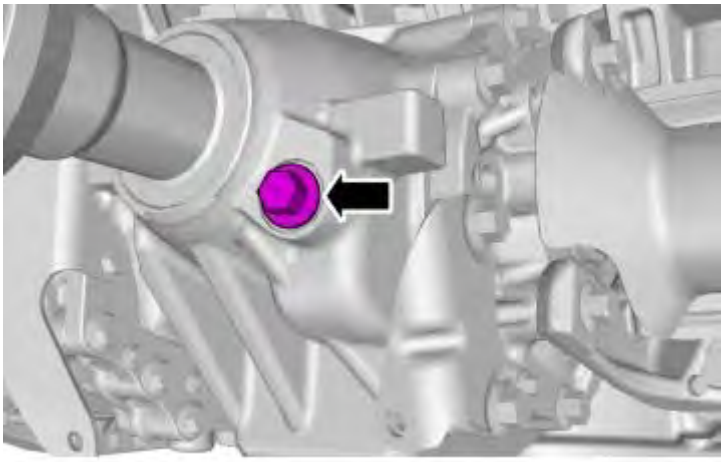

Fig. 117: Identifying Fill Plug
Courtesy of VOLVO CARS CORPORATION

The bevel gear is supplied filled with oil, however, always check the oil level.

Warning. Be prepared to collect draining fluid.

Check the oil level. See **LUBRICANT TRANSMISSION**

Tightening torque: level plug acc. to **TIGHTENING TORQUE**

INSTALL IN THE REVERSE ORDER.

BLEED VALVE BEVEL GEAR, REPLACING

NOTE: **The illustrations in this service information are used for different model years and/or models. Some variation may occur. However, the essential information in the illustrations is always correct.**

PREPARATORY WORK

Remove the bevel gear. See: **BEVEL GEAR, REPLACING** (TF-80SC AWD; 2005-2006) or **BEVEL GEAR, REPLACING** (TF-80SC AWD; 2009-2012).

REMOVING/INSTALLING

Fig. 118: Replacing Vent Nipple
Courtesy of VOLVO CARS CORPORATION

Pull out the brass pipe using cutting nippers.

Tap in the nipple using a rubber mallet.

REPLACING THE PINION SEAL FOR THE BEVEL GEAR

Special tools:

9995893

9995069

9995653

9995504

NOTE: The illustrations in this service information are used for different model years and/or models. Some variation may occur. However, the essential information in the illustrations is always correct.

REMOVAL

NOTE: Move the gear shift lever to the P-position.

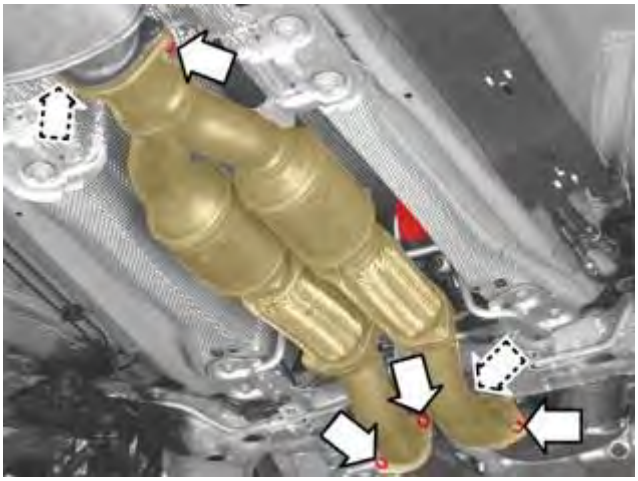

Fig. 119: Locating Exhaust Fasteners
Courtesy of VOLVO CARS CORPORATION

Fig. 120: Identifying The Position Of The Propeller/Flange
Courtesy of VOLVO CARS CORPORATION

NOTE: **Mark the position of the flange against the propeller shaft.**

Fig. 121: Identifying The Position Of The Flange/Pinion
Courtesy of VOLVO CARS CORPORATION

NOTE: Mark the position of the flange against the pinion shaft end.

Fig. 122: Identifying Puller 9995893
Courtesy of VOLVO CARS CORPORATION

Use **9995893** .

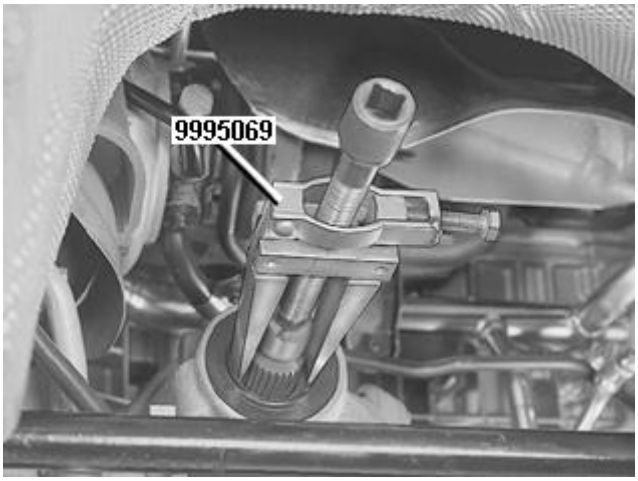

Fig. 123: Identifying Pinion Seal Removed Using Puller 999 5069
Courtesy of VOLVO CARS CORPORATION

NOTE: Place a container under the bevel gear.

Use: **9995069** .

INSTALLATION

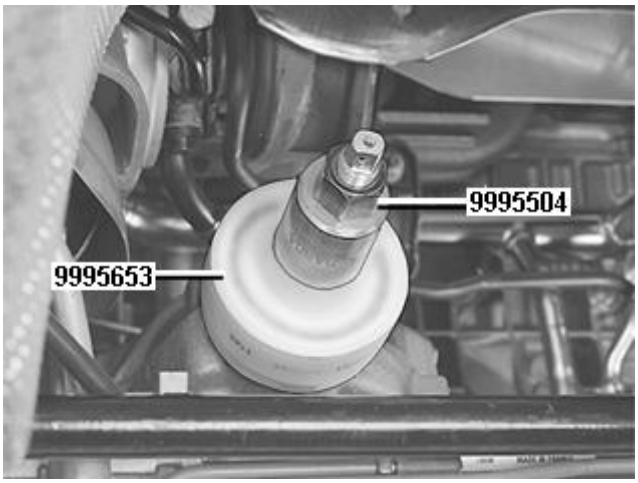

Fig. 124: Identifying Pressing In Seal Using 999 5653 And 999 5504
Courtesy of VOLVO CARS CORPORATION

Use: **9995653** , the end marked 1155. Also use: **9995504** .

Fig. 125: Installing Flange (Observe Marking)
Courtesy of VOLVO CARS CORPORATION

CAUTION: There must be no axial play.

Install the flange according to the previous marking. If necessary use: **9995504** .

Install a **new** lubricated nut. Tighten. See: **SUMMARY OF TIGHTENING TORQUES FOR SPECIFIC COMPONENTS** .

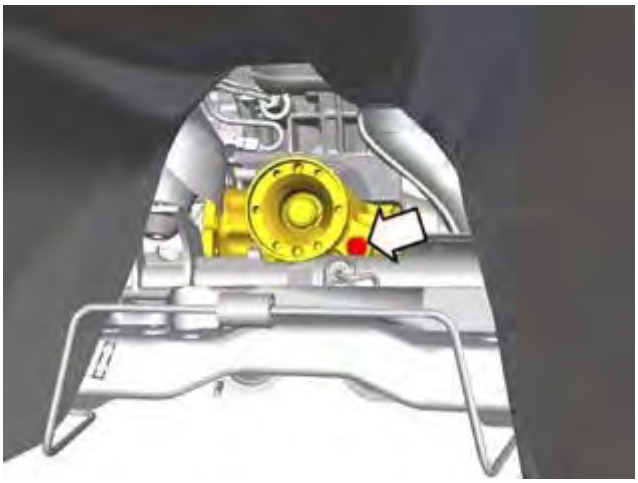

Fig. 126: Tunnel View of Filler
Courtesy of VOLVO CARS CORPORATION

Check the fluid level in the bevel gear. Lubricate. See: **LUBRICATION TRANSMISSION** .

Fig. 127: Identifying The Position Of The Flange
Courtesy of VOLVO CARS CORPORATION

Install the propeller shaft according to the previous mark. Use **new** screws. Tighten. See: **SUMMARY OF TIGHTENING TORQUES FOR SPECIFIC COMPONENTS** .

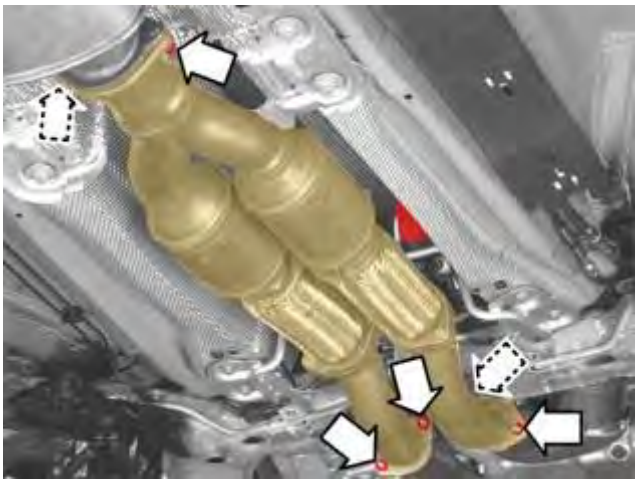

Fig. 128: Locating Exhaust Fasteners
Courtesy of VOLVO CARS CORPORATION

NOTE: **To ensure that there is no exhaust leakage, see: FLANGED JOINT, ASSEMBLING .**

Tighten. See: **TIGHTENING TORQUE** .

SEALING RING, BEVEL GEAR, RIGHT

SEALING RING, BEVEL GEAR, RIGHT

SEALING RING, CROWN WHEEL SHAFT, LEFT SIDE, REPLACE

Special tools:

9997086

9997189

NOTE: **The illustrations in this service information are used for different model years and/or models. Some variation may occur. However, the essential information in the illustrations is always correct.**

REMOVAL

REMOVING BEVEL GEAR

Remove the bevel gear see **BEVEL GEAR, REPLACING** (TF-80SC AWD; 2005-2006) or **BEVEL GEAR, REPLACING** (TF-80SC AWD; 2009-2012).

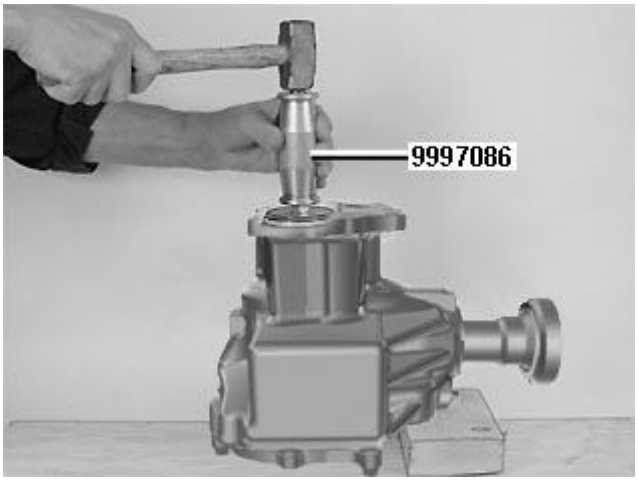

Fig. 129: Identifying Tool 9997086
Courtesy of VOLVO CARS CORPORATION

Use: .

NOTE: **Thoroughly check that no seal residue remains.**

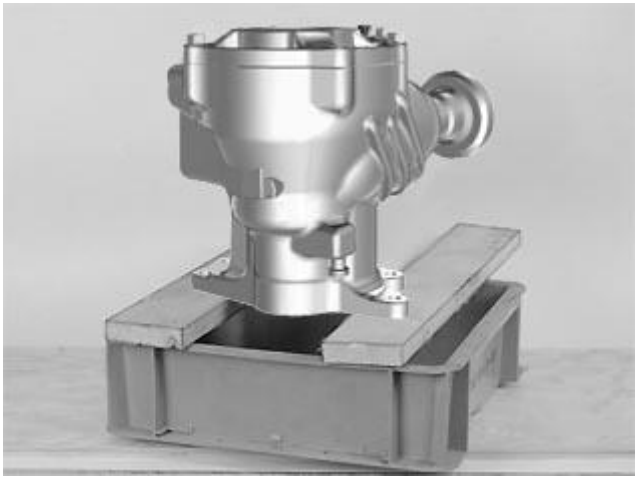

Fig. 130: Draining Oil
Courtesy of VOLVO CARS CORPORATION

Position the bevel gear over a receptacle.

Allow the oil to run out through the bearing.

Clean any spilled oil from the seal ring seat in the bevel gear using a lint-free cloth.

INSTALLATION

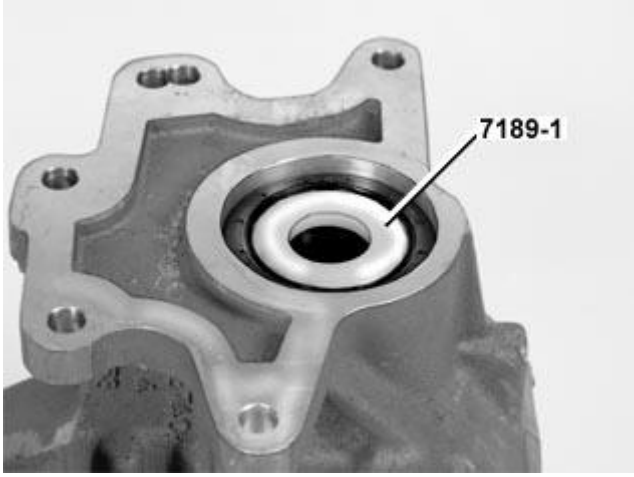

Fig. 131: Identifying Seal Installation Tool 9997086
Courtesy of VOLVO CARS CORPORATION

Install:

- **9997189**
- the gasket.

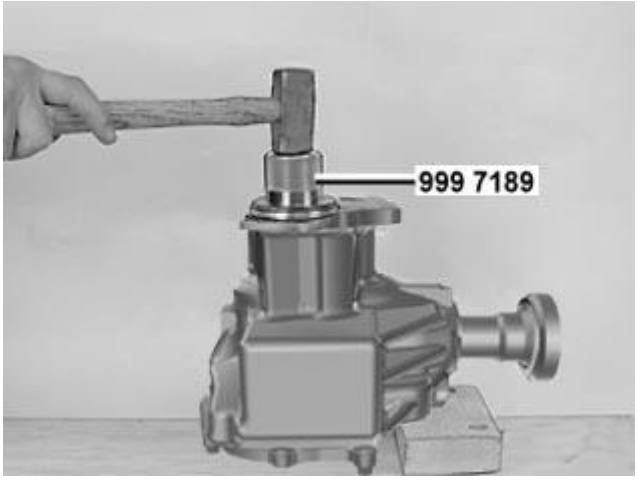

Fig. 132: Driving the Seal
Courtesy of VOLVO CARS CORPORATION

Use: **9997189** .

NOTE: When the tool is removed, check that 9997189 was removed with it.

INSTALLING THE BEVEL GEAR

Fit the bevel gear see **BEVEL GEAR, REPLACING** (TF-80SC AWD; 2005-2006) or **BEVEL GEAR, REPLACING** (TF-80SC AWD; 2009-2012)

FINISHING

CHECKING THE OIL LEVEL

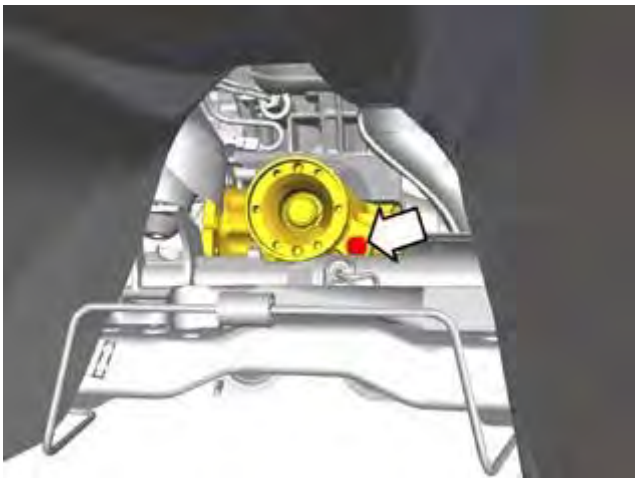

Fig. 133: Tunnel View of Filler
Courtesy of VOLVO CARS CORPORATION

Check the oil level in the bevel gear.

Lubricate. See: **LUBRICATION TRANSMISSION** .

GEAR SELECTOR ASSEMBLY, GEAR SELECTOR (B5254T2, AW50/51 AWD; 2003-2007)

BOOT, GEAR SELECTOR, REPLACING

REMOVAL

REMOVE THE BOOT AND THE GEAR SELECTOR KNOB

See **REMOVING THE BOOT FROM THE GEAR SELECTOR KNOB**.

REMOVE THE PANEL WITH THE GEAR SELECTOR BOOT

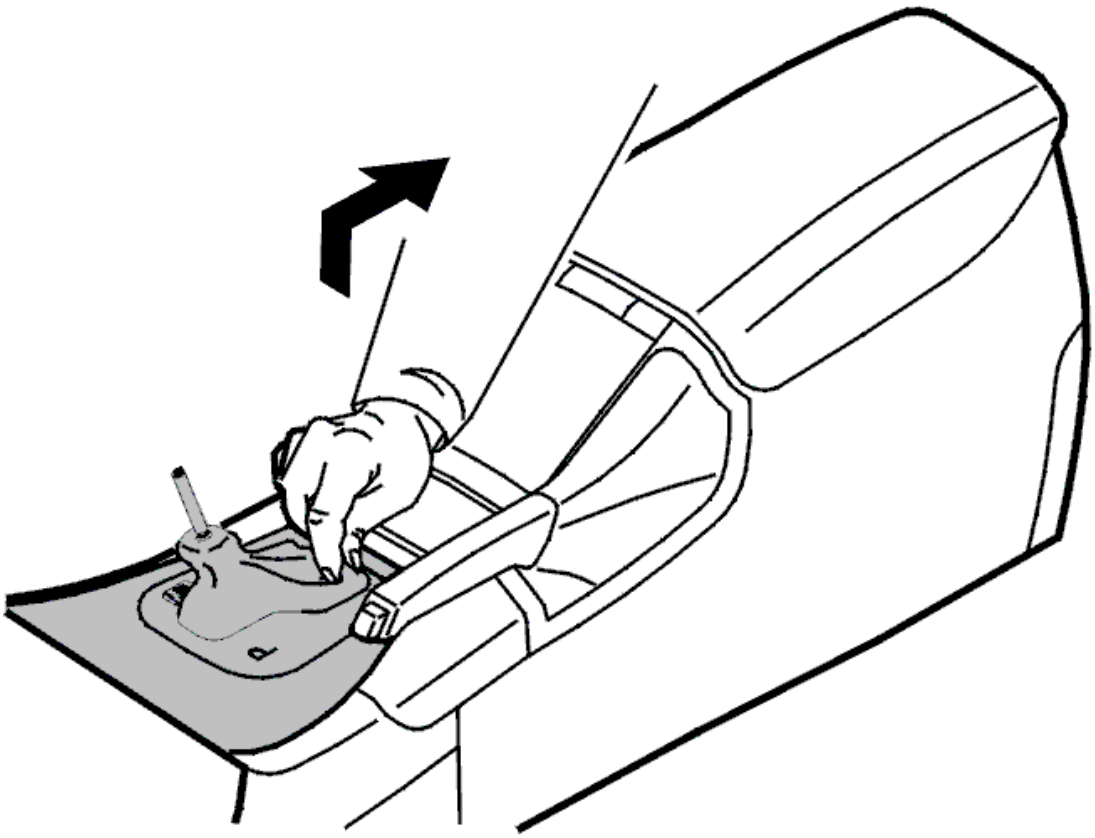

Fig. 134: Removing Panel With Gear Selector Boot
Courtesy of VOLVO CARS CORPORATION

Hold the boot and lift it straight up so the panel releases.

Work the front edge of panel loose. Pull backward.

REPLACE THE GEAR SELECTOR BOOT

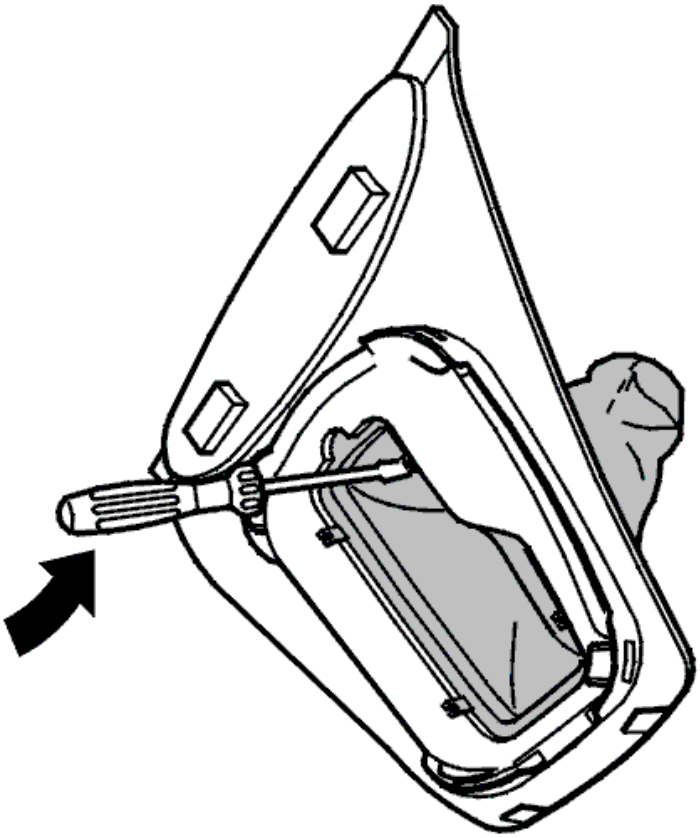

Fig. 135: Pressing Out Catches
Courtesy of VOLVO CARS CORPORATION

Press out catches (4) from the top panel. Remove the boot.

Install the new boot

Press the catches for the boot into place in the top panel.

REINSTALL THE PANEL ON THE CENTRE CONSOLE

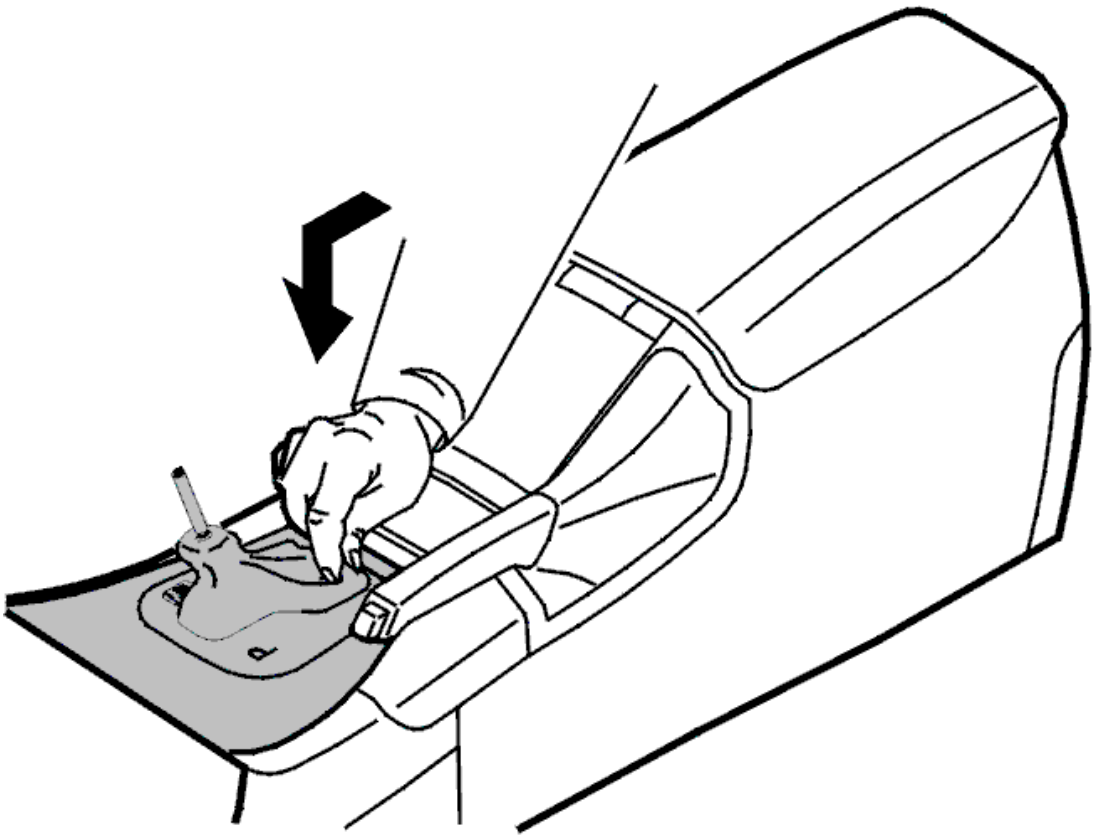

Fig. 136: Installing Center Console Panel
Courtesy of VOLVO CARS CORPORATION

Press down the panel until it locks.

Install the gear selector knob and the boot

See **INSTALLING THE GEAR SELECTOR KNOB**.

CABLE KEY INTERLOCK, REPLACING

NOTE: **As the illustrations in this service information are used for different model years and / or models, some variation may occur. However, the essential information in the illustrations is always correct.**

REMOVAL

PREPARATIONS

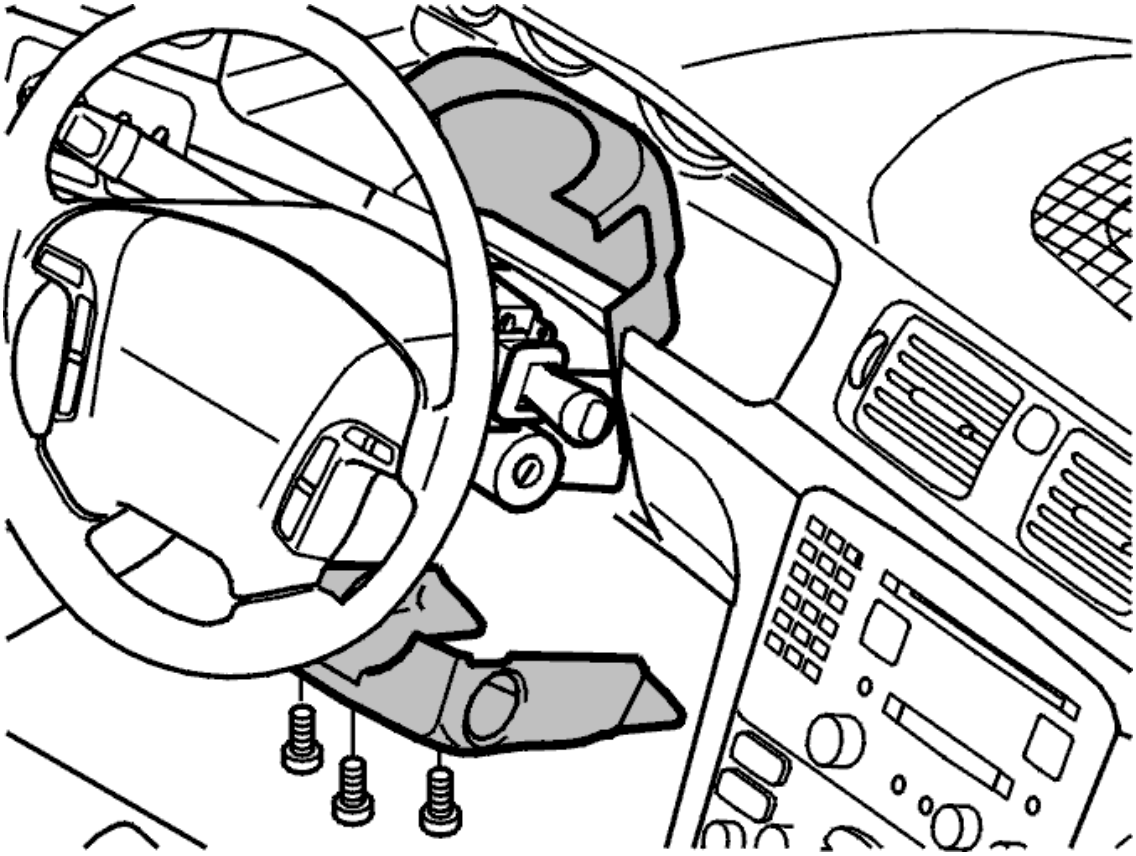

Fig. 137: Identifying Steering Column Covers
Courtesy of VOLVO CARS CORPORATION

Remove:

- the centre console. See **CENTER CONSOLE, REPLACING**
- the steering column covers
- the soundproofing panel. See **REMOVE THE DRIVER'S SIDE SOUNDPROOFING PANEL** .

REMOVING THE GEAR SELECTOR CABLE FROM THE IGNITION SWITCH

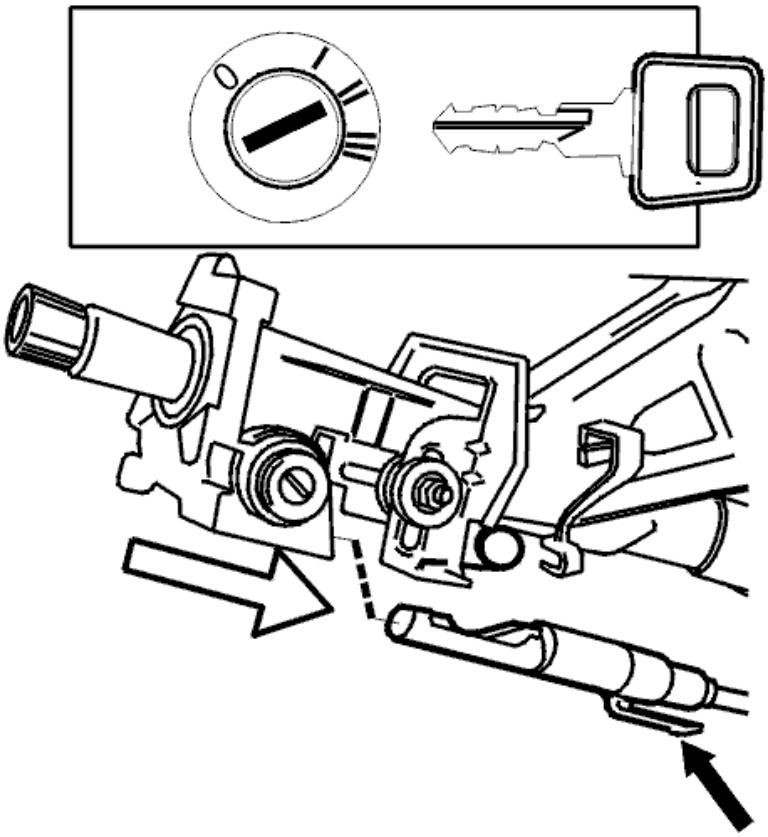

Fig. 138: Identifying Removing/Installing Mechanical Cable From The Ignition Switch
Courtesy of VOLVO CARS CORPORATION

Move the gear shift lever to position P.

Turn the ignition key to position I or II.

Press the lock button and pull the gear selector cable out of the ignition switch.

REMOVING THE GEAR SELECTOR CABLE FROM THE GEAR SELECTOR ASSEMBLY

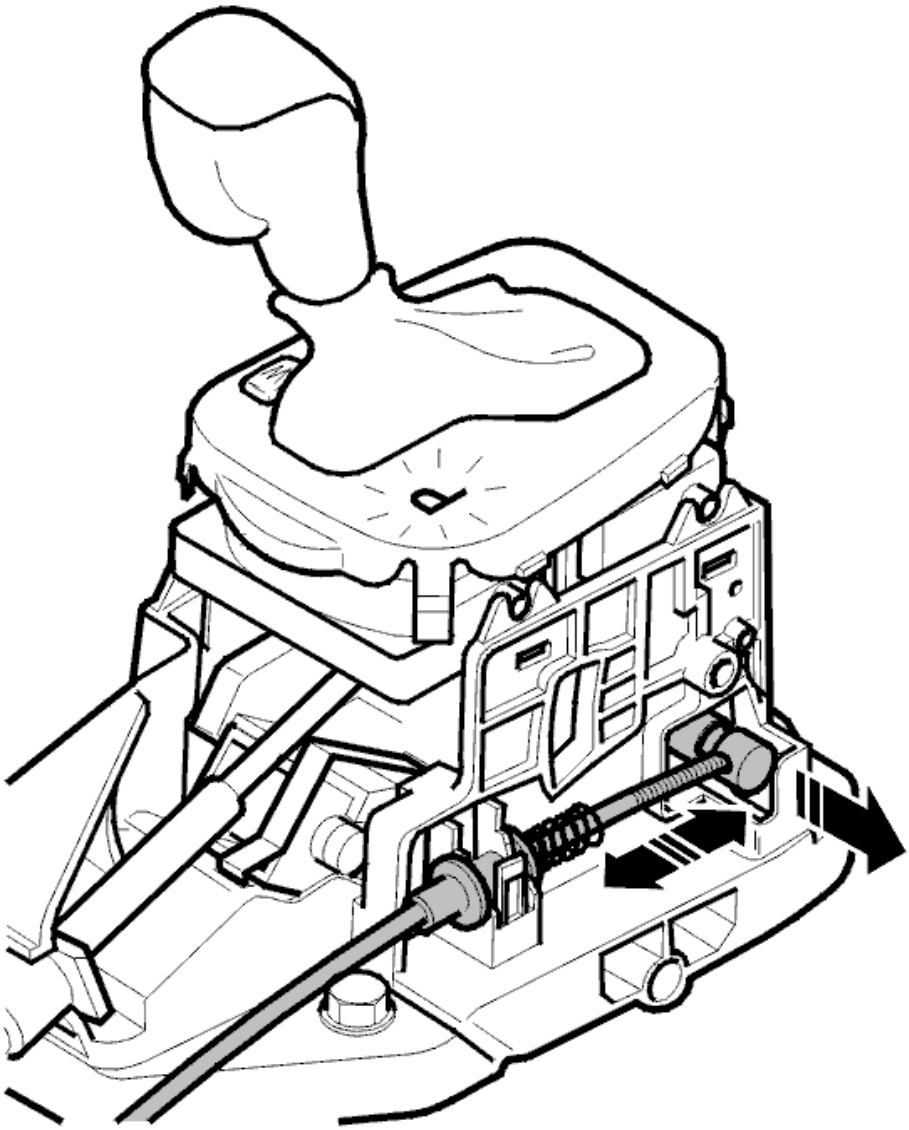

Fig. 139: Identifying Removal Of Mechanical Cable From Gear Selector Assembly
Courtesy of VOLVO CARS CORPORATION

Detach the yellow locking sleeve slightly (use a screwdriver).

NOTE: The yellow locking sleeve must not be reused. A new locking sleeve must be used at installation.

Lift the gear selector cable off the gear selector assembly.

REMOVING THE GEAR SELECTOR CABLE FROM THE STEERING COLUMN

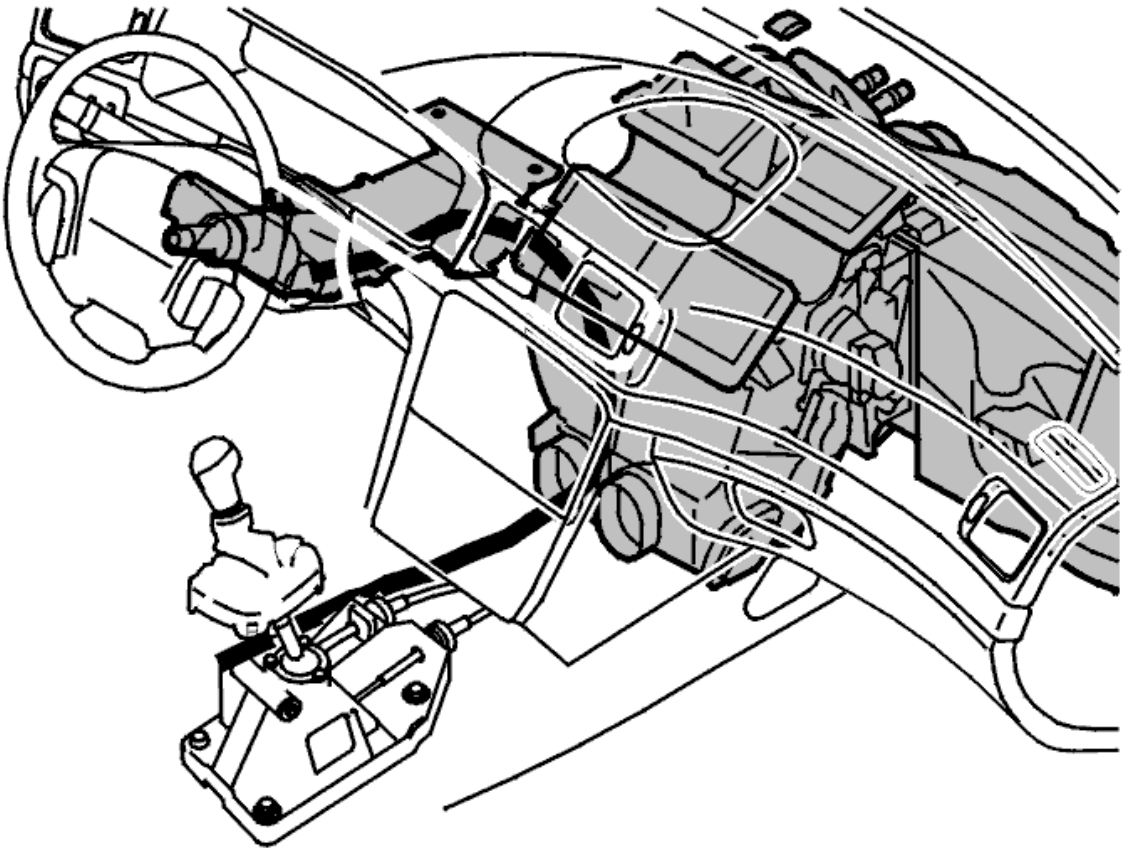

Fig. 140: Identifying Steering Column Mechanical Cable
Courtesy of VOLVO CARS CORPORATION

Disconnect the clip from the bracket located by the steering column. Also disconnect the clip located by the climate control system.

INSTALLATION

INSTALLING THE GEARBOX CABLE

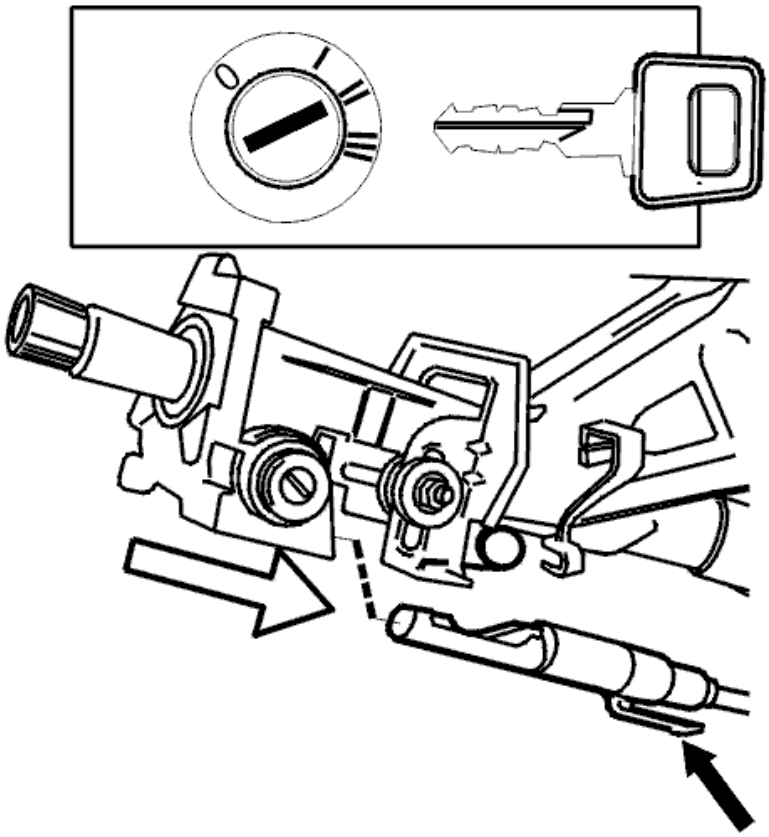

Fig. 141: Identifying Removing/Installing Mechanical Cable From The Ignition Switch
Courtesy of VOLVO CARS CORPORATION

NOTE: Start installation from the ignition switch.

Route the gear selector cable down along the steering wheel bracket and under the climate control unit.

Secure the gear selector cable in its clips at the bracket and climate control unit.

Press the end of the gear selector cable into place in the ignition switch. Ensure that the locking tabs for the gear selector cable are engaged and locked.

CONNECT THE GEAR SELECTOR CABLE TO THE MOUNTING FOR THE GEAR SELECTOR ASSEMBLY

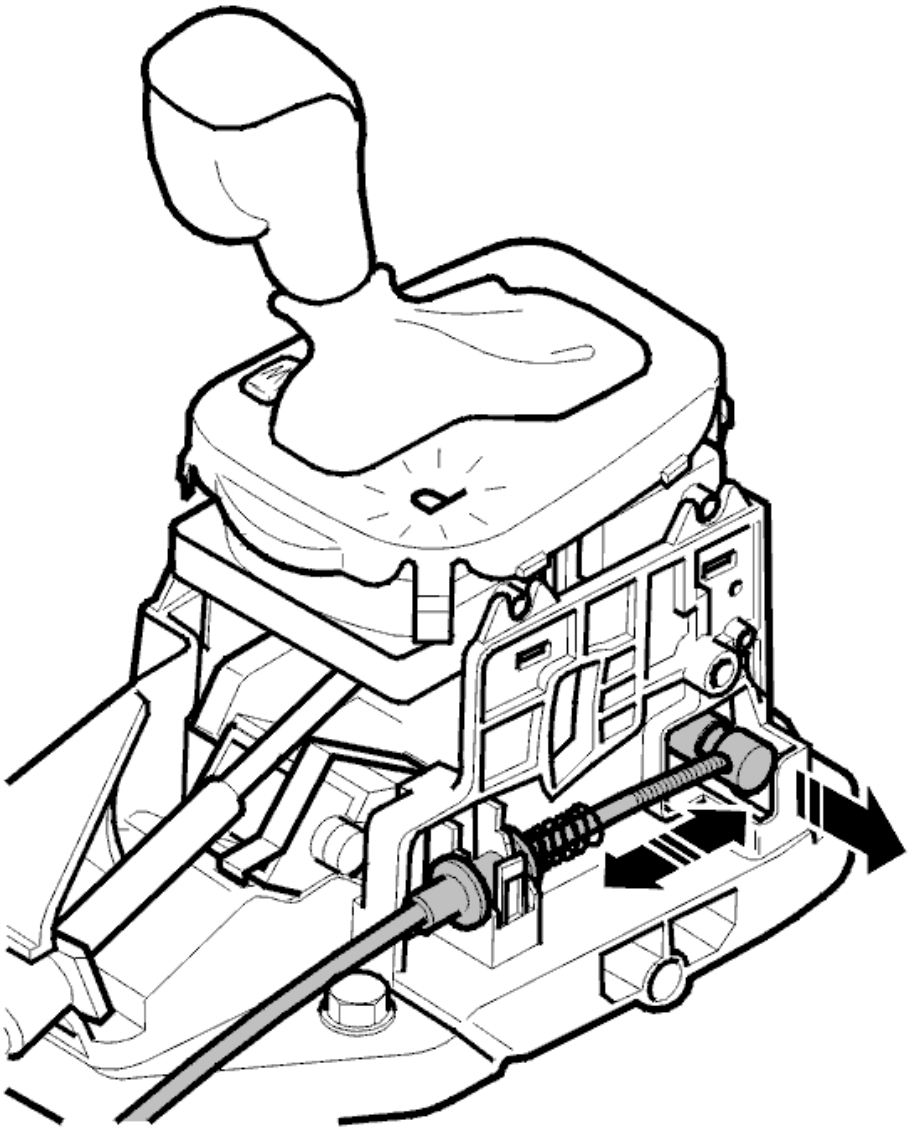

Fig. 142: Identifying Removal Of Mechanical Cable From Gear Selector Assembly
Courtesy of VOLVO CARS CORPORATION

Route the gear selector cable along the gear selector cable to the gear selector assembly.

Connect the cable to the gear selector mounting.

If the guide sleeve on the key interlock wire breaks during removal/installation of the wire to the gear selector assembly, the guide sleeve must be replaced. **GUIDE SLEEVE KEY LOCK CABLE** , and

For connection to the lever adjustment see: **KEY INTERLOCK CABLE, INITIAL SETTING AND ADJUSTMENT** .

INITIAL SETTING OF THE KEY LOCK CABLE (ADJUSTING)

See **INITIAL SETTING OF THE KEY LOCK CABLE (ADJUSTMENT)**.

FINISHING WORK

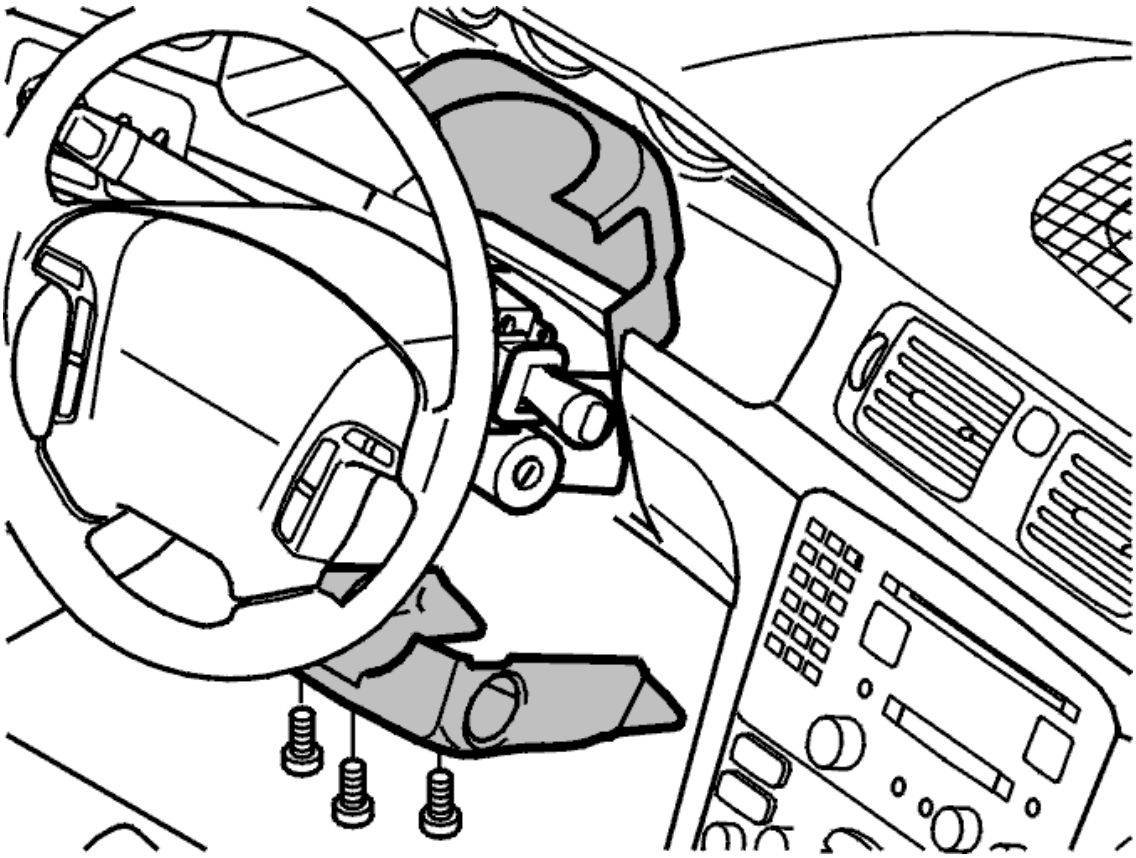

Fig. 143: Identifying Steering Column Covers
Courtesy of VOLVO CARS CORPORATION

Install:

- the steering shaft covers
- the centre console. See **CENTER CONSOLE, REPLACING**
- the soundproofing panel.

BUSHING, BRAKE PEDAL, REPLACING

REMOVE THE DRIVER'S SIDE SOUNDPROOFING PANEL

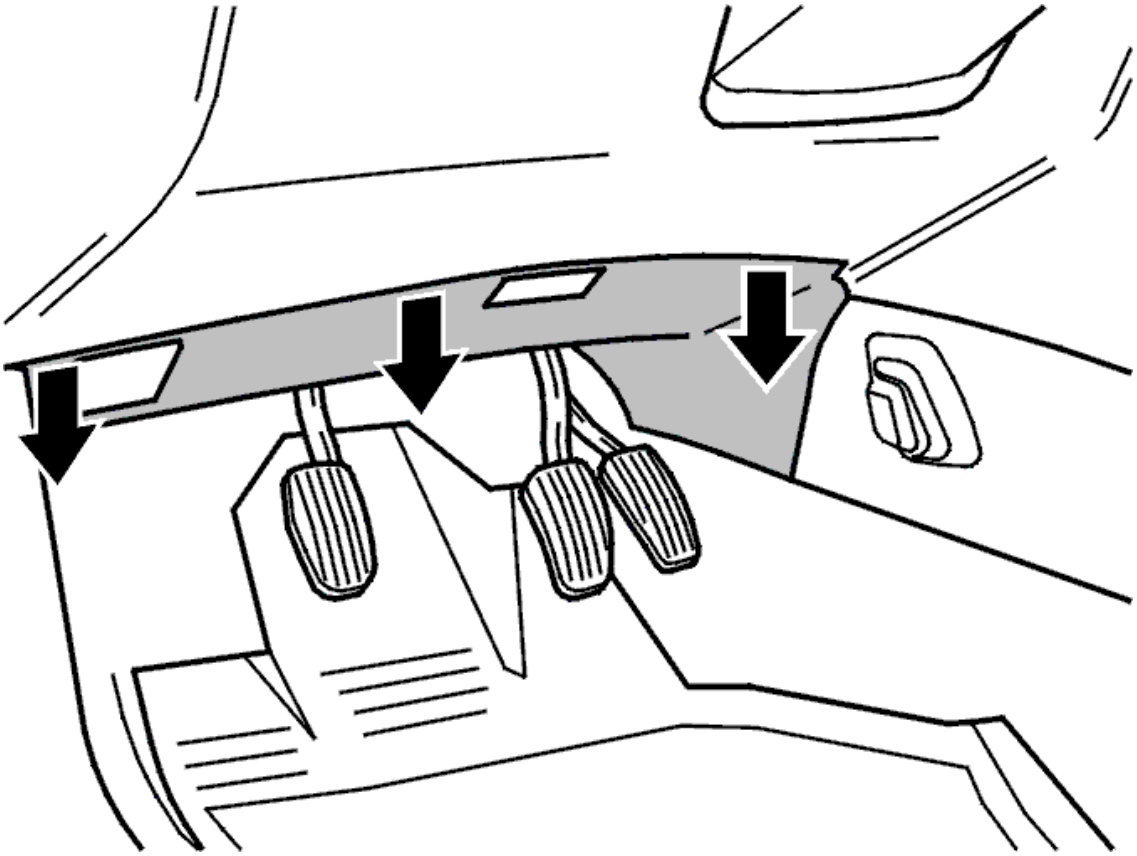

Fig. 144: Identifying Driver Side Soundproofing Panel
Courtesy of VOLVO CARS CORPORATION

Grip the upper edge of the soundproofing panel. Pull down out of its clips.

Remove the soundproofing panel.

PREPARE TO REMOVE THE BRAKE AND CLUTCH PEDALS

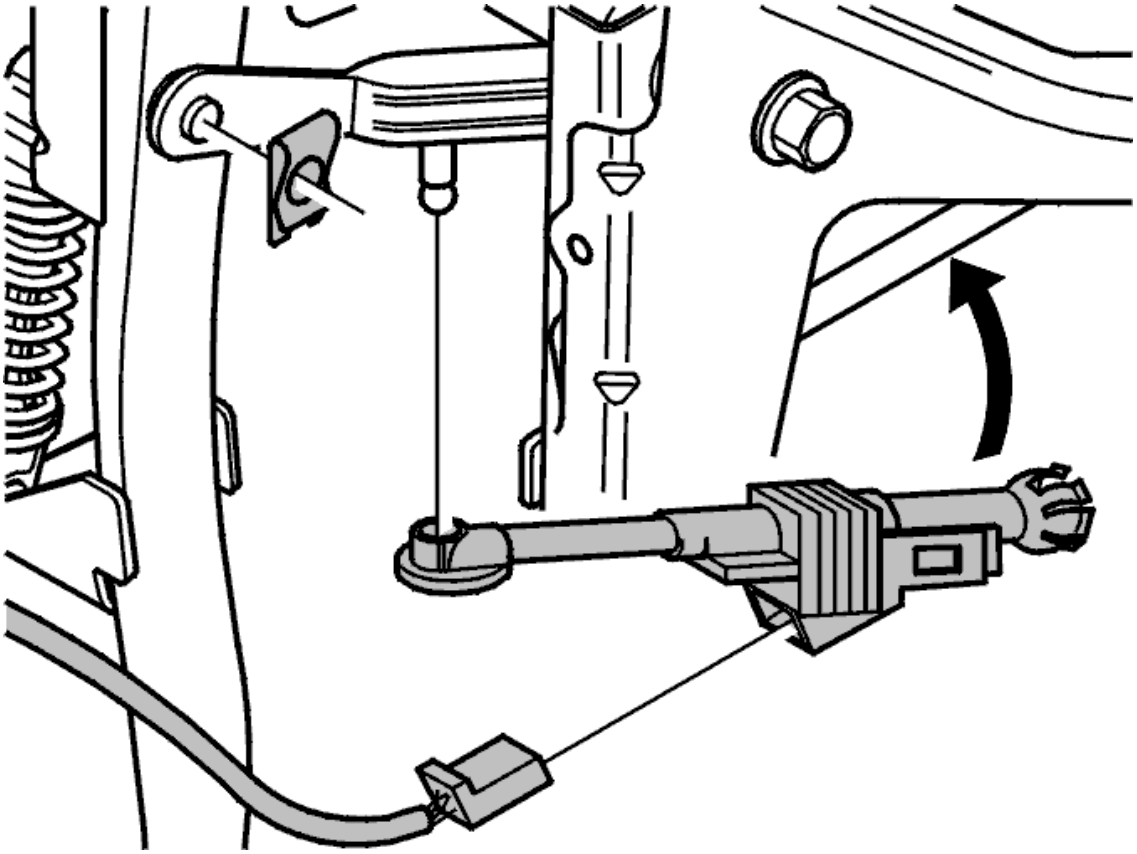

Fig. 145: Identifying Clutch Pedal Push Rod
Courtesy of VOLVO CARS CORPORATION

Remove:

- the clips for the brake and clutch pedal
- the pedal position sensor from the clutch pedal. Disconnect the connector
- the pedal position sensor from the mounting and firewall. Pull it straight out.

CONTINUE DISCONNECTING THE BRAKE AND CLUTCH COMPONENTS

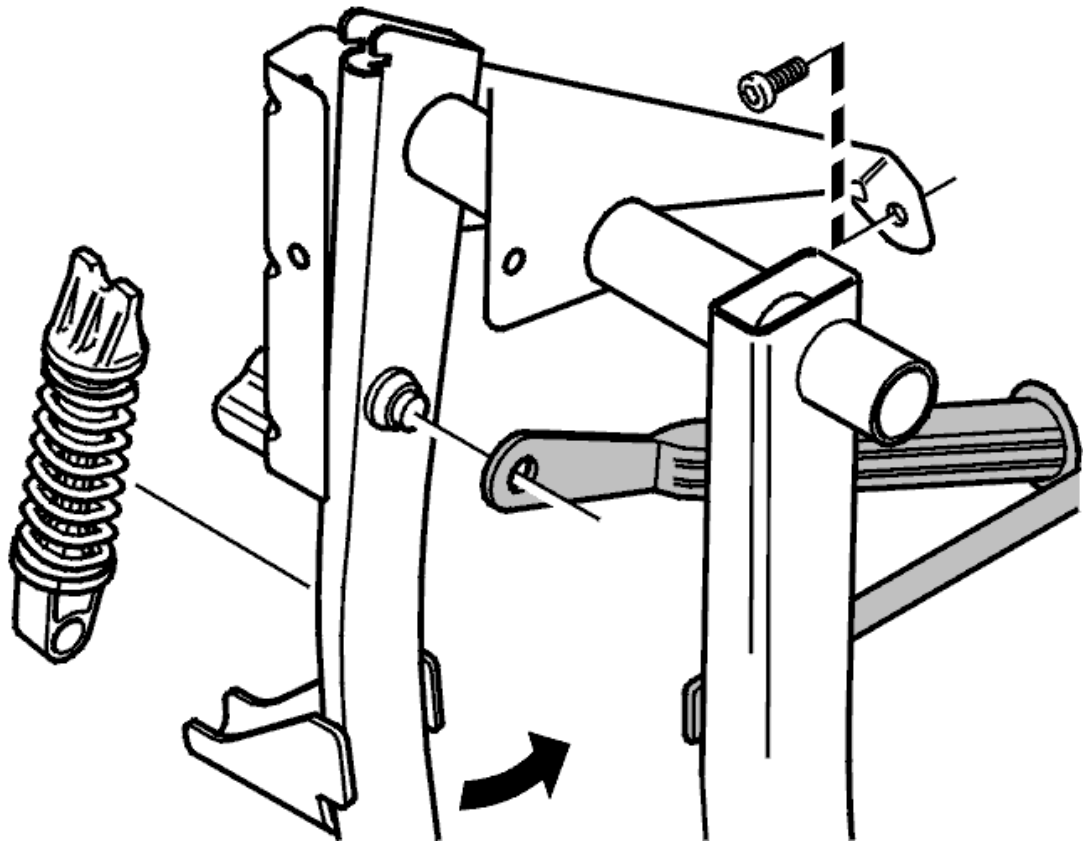

Fig. 146: Clutch Push Rod And Auxiliary Spring
Courtesy of VOLVO CARS CORPORATION

Disconnect the push rod for the clutch and brake pedal.

Depress the clutch pedal. Remove the auxiliary spring.

Remove the screw holding the clutch pedal bracket down at the firewall (Torx).

REMOVE THE CLUTCH PEDAL WITH BRACKET

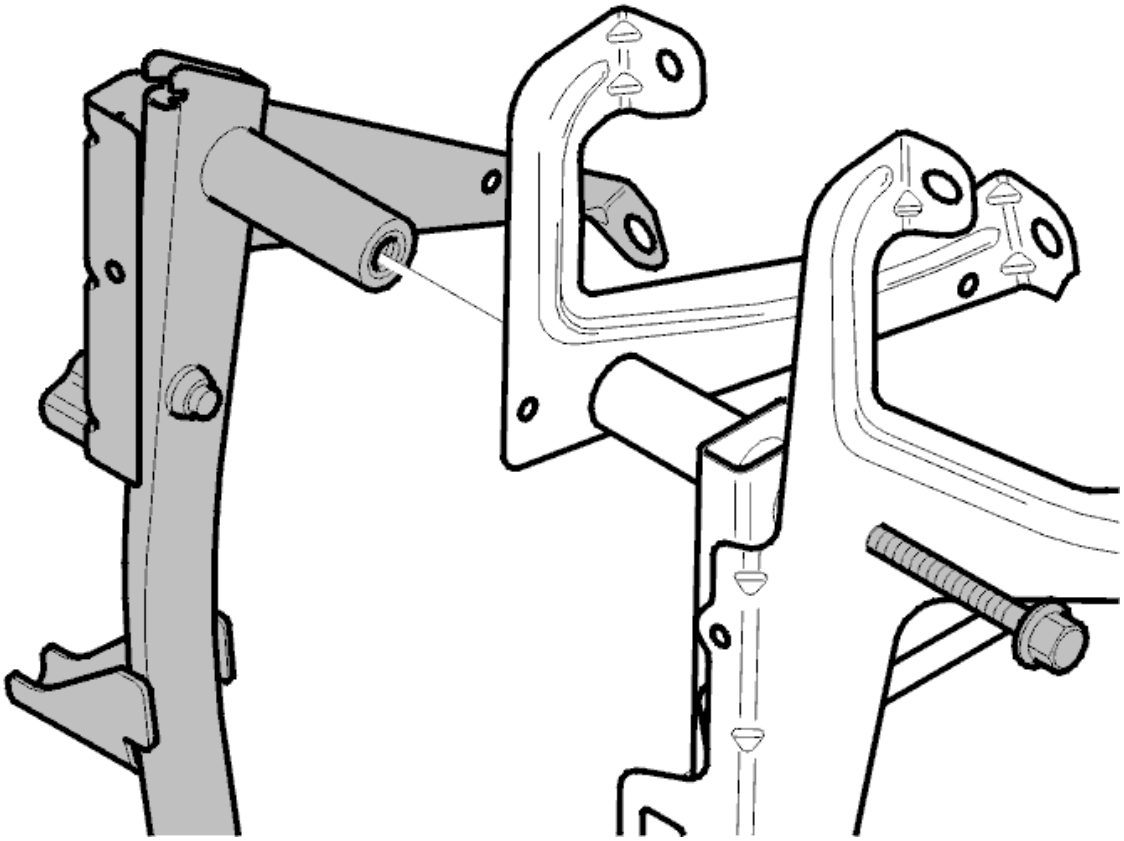

Fig. 147: Clutch Pedal Screw
Courtesy of VOLVO CARS CORPORATION

Remove the screw holding the brake and clutch pedal in bracket.

Remove the clutch pedal with the bracket.

REMOVE THE BRAKE PEDAL

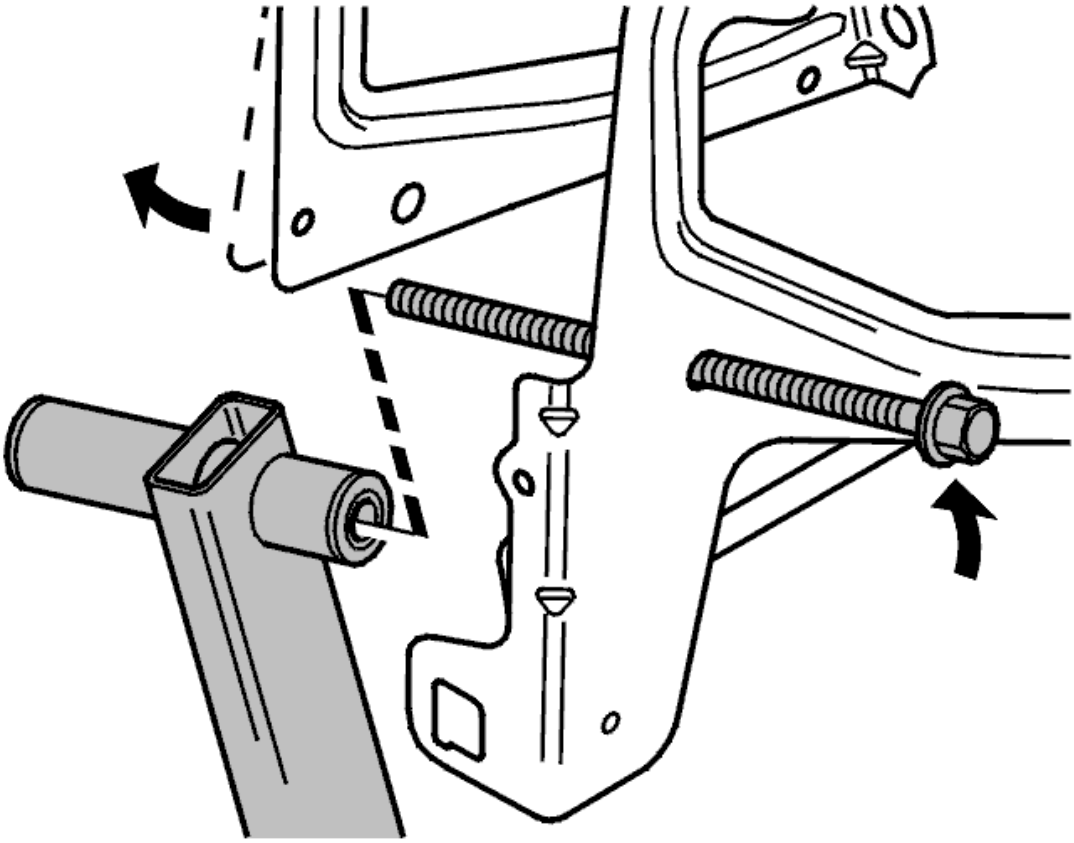

Fig. 148: Identifying Brake Pedal Removal
Courtesy of VOLVO CARS CORPORATION

Pull out the brake pedal screw as far as possible.

Press out the brake pedal bracket a little. Turn the pedal downwards and pull out the screw. The screw remains in the bracket.

NOTE: **Take care that the stop lamp switch is not damaged when removing the brake pedal.**

Check stop lamp switch

See **REMOVING THE BRAKE LAMP SWITCH** .

REMOVE THE BUSHINGS FROM THE BRAKE PEDAL

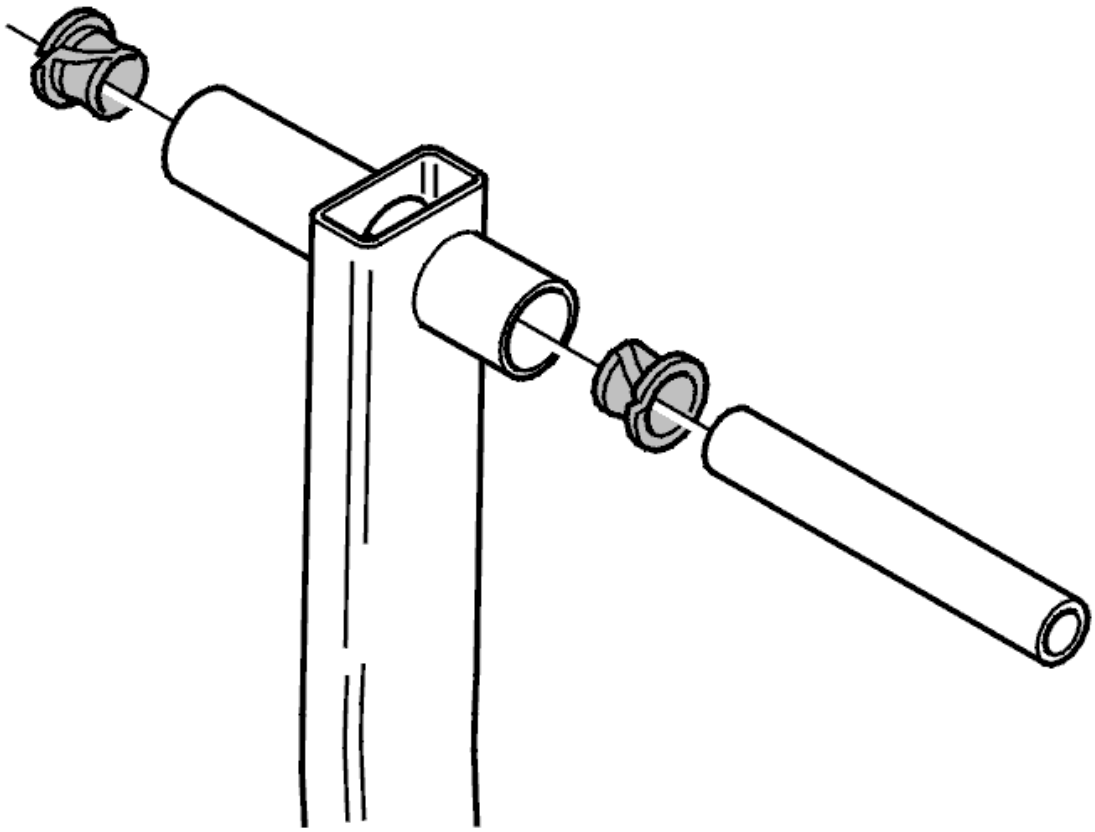

Fig. 149: Brake Pedal Bushings
Courtesy of VOLVO CARS CORPORATION

Push the guide sleeve out of the brake pedal.

Remove the bushings.

INSTALL THE BUSHINGS IN THE BRAKE PEDAL

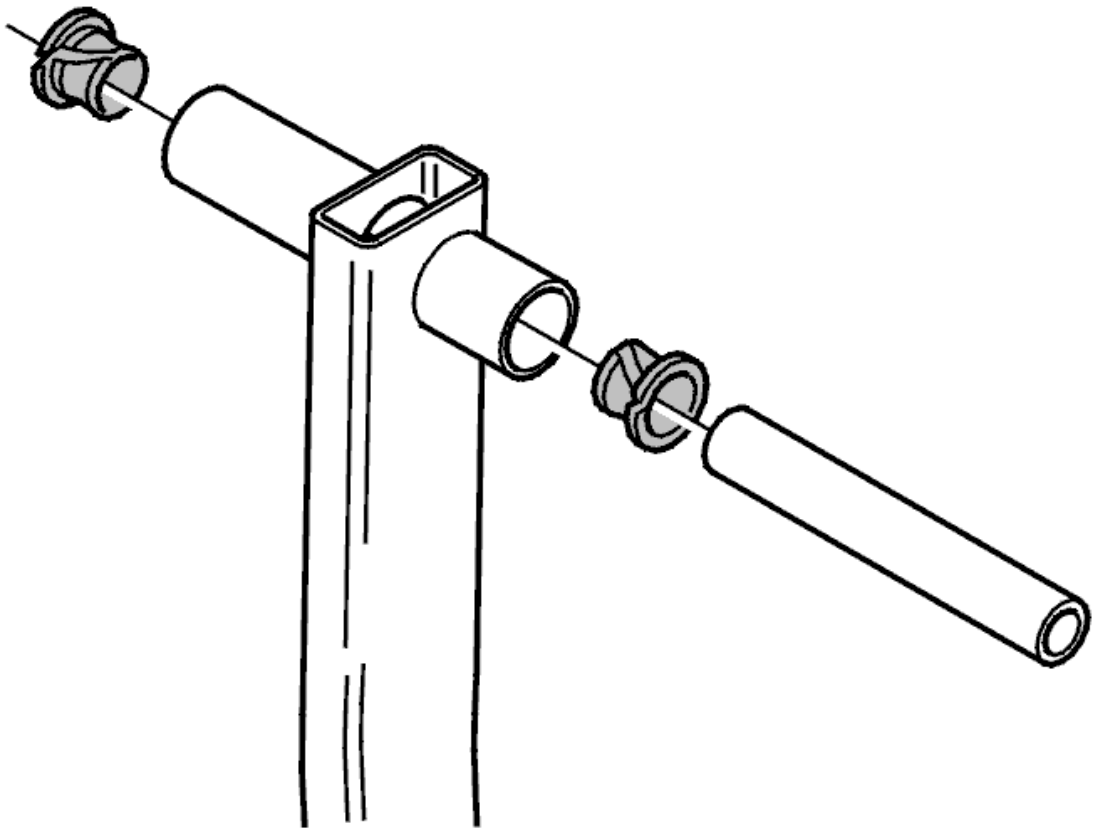

Fig. 150: Brake Pedal Bushings
Courtesy of VOLVO CARS CORPORATION

Lubricate the new bushings using grease, P/N 1161241-3.

Install the bushings and the guide sleeve in the brake pedal.

INSTALL THE BRAKE PEDAL

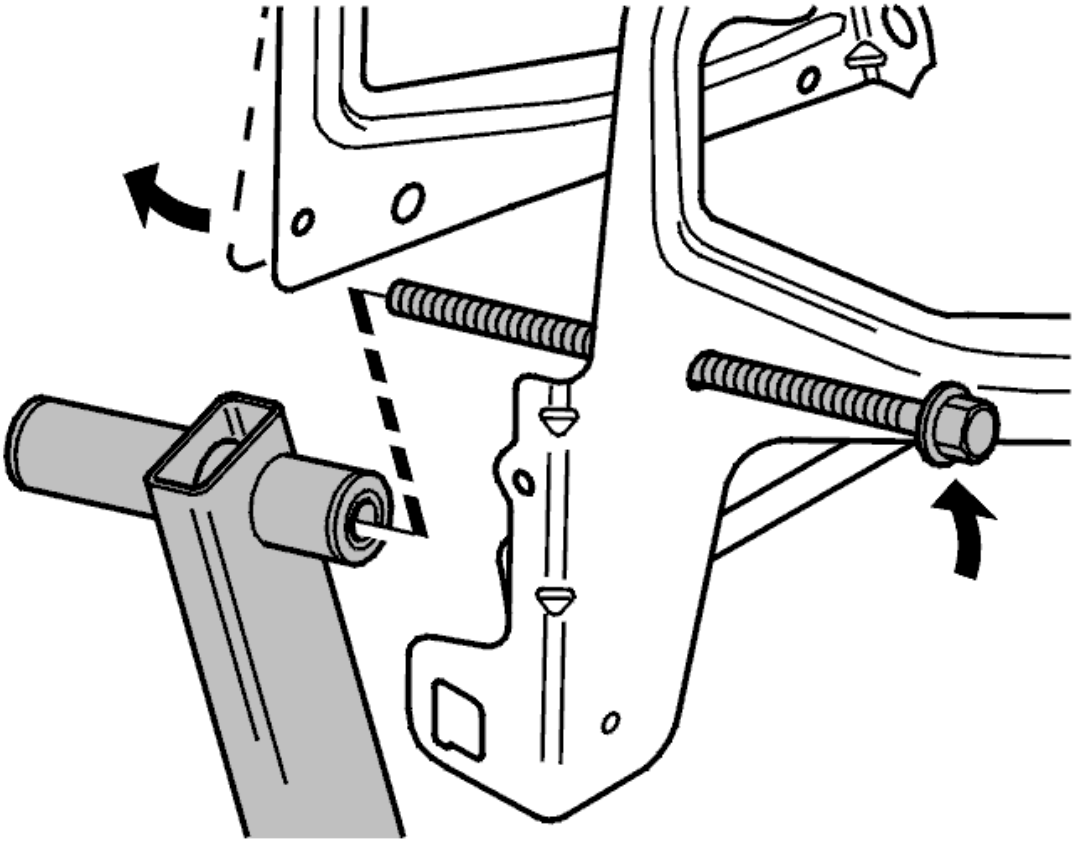

Fig. 151: Identifying Brake Pedal Removal
Courtesy of VOLVO CARS CORPORATION

Angle the screw upwards in the bracket.

Install the brake pedal on the screw. Push the bracket slightly to one side. Fold up the brake pedal in the bracket.

Press the screw into the brake pedal.

INSTALL THE CLUTCH COMPONENTS

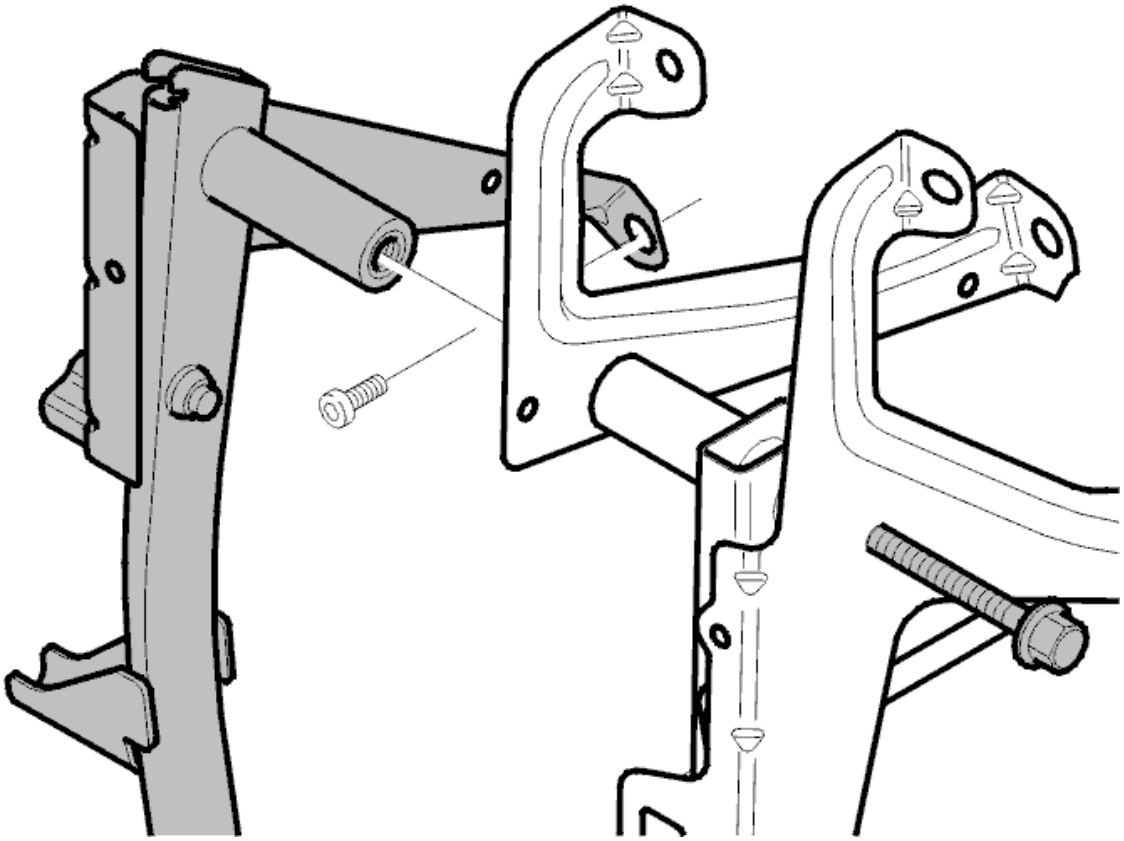

Fig. 152: Clutch Pedal And Mounting Screw
Courtesy of VOLVO CARS CORPORATION

Install:

- the clutch pedal with bracket
- torx screw. Tighten to **10 Nm** .

Tighten the mounting screw. Tighten to **40 Nm** .

INSTALL THE BRAKE AND CLUTCH COMPONENTS

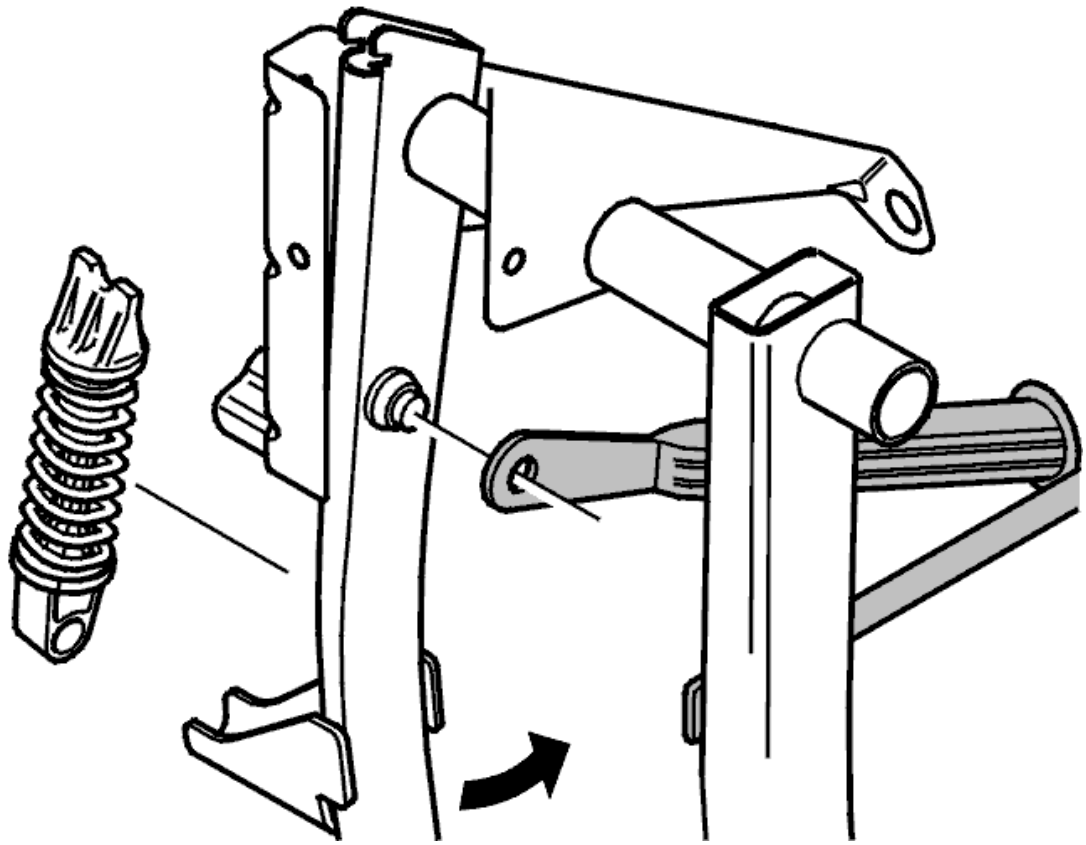

Fig. 153: Identifying Clutch Auxiliary Spring And Push Rod
Courtesy of VOLVO CARS CORPORATION

Install:

- the auxiliary spring for the clutch pedal. Press down the clutch pedal and install the spring
- the push rod on the clutch pedal. Secure it using the retaining clip
- the push rod on the brake pedal. Lock it using the retaining clip.

CONTINUE INSTALLING THE BRAKE AND CLUTCH COMPONENTS

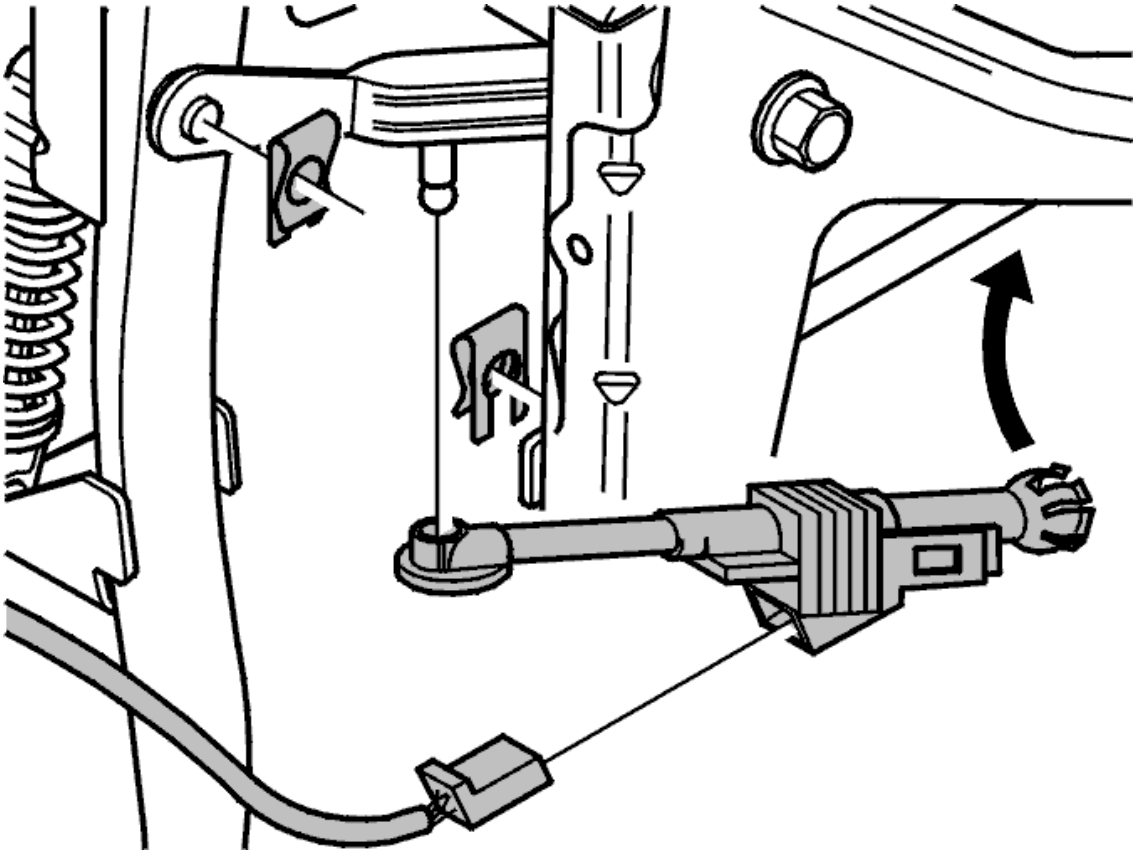

Fig. 154: Identifying Pedal Position Sensor
Courtesy of VOLVO CARS CORPORATION

Install:

- the pedal position sensor (between the clutch pedal and the firewall)
- the clips for brake and the clutch pedal.

Check the function of the brake and clutch pedal and pedal position sensor.

Reinstall the soundproofing panel.

GUIDE SLEEVE KEY LOCK CABLE

Fig. 155: Center Console Assembly
Courtesy of VOLVO CARS CORPORATION

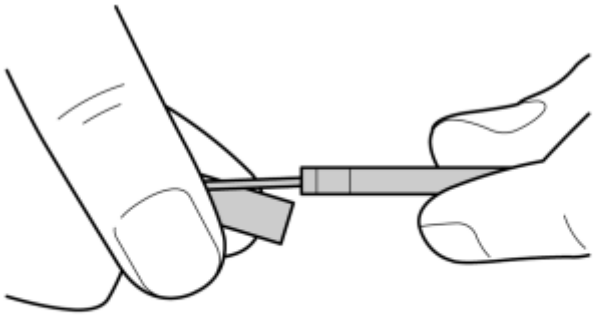

Fig. 156: Identifying Cable Pulled Out Of Cable Sleeve
Courtesy of VOLVO CARS CORPORATION

Press the spring towards the cable sleeve.

Pull the cable out of the cable sleeve (approximately 10 mm).

Remove the guide sleeve.

Remove the spring. Ensure that the broken section of the guide sleeve is removed from the cable sleeve.

Install a new guide sleeve in reverse order.

GEAR SELECTOR CABLES, REPLACE

Special tools:

9997077

NOTE: **As the illustrations in this service information are used for different model years and / or models, some variation may occur. However, the essential information in the illustrations is always correct.**

REMOVAL

REMOVING THE AIR CLEANER (ACL) HOUSING

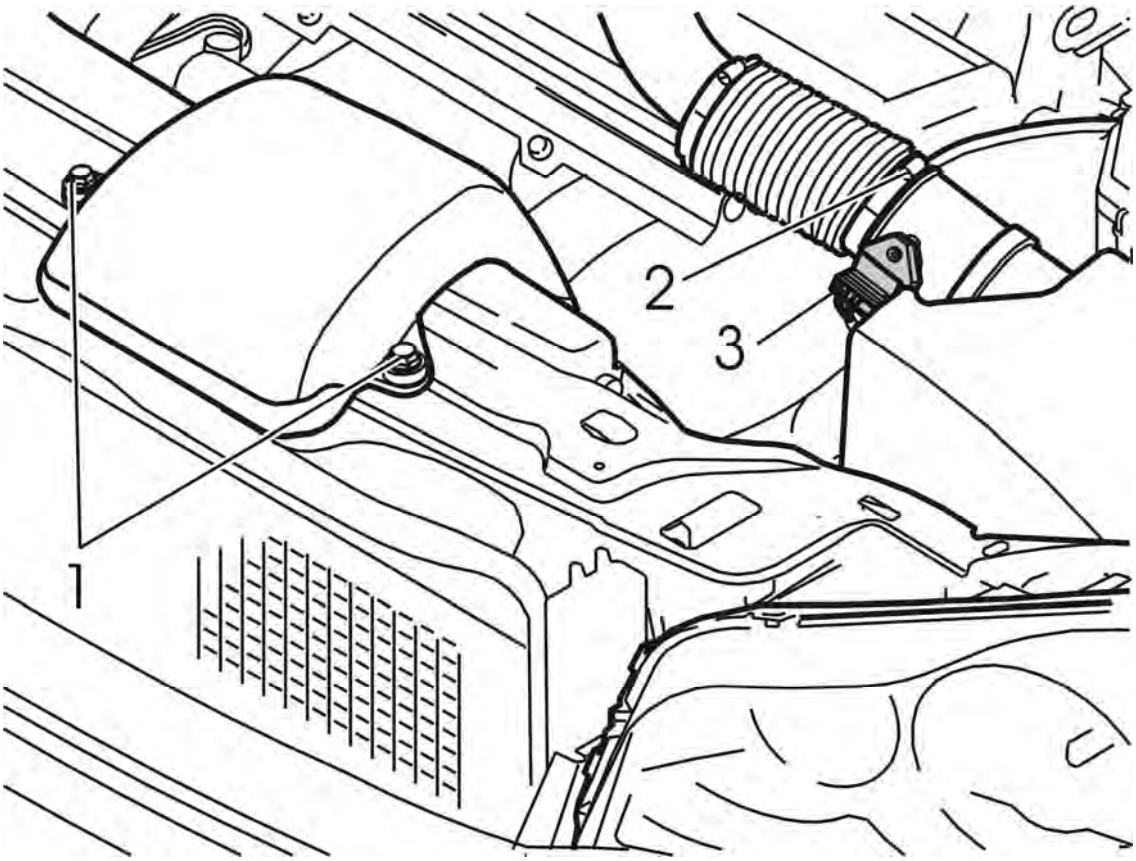

Fig. 157: Air Cleaner (ACL) Housing
Courtesy of VOLVO CARS CORPORATION

Remove the air cleaner (ACL) housing. See **GEAR SELECTOR CABLES, REPLACING**.

REMOVING THE GEAR SELECTOR CABLE FROM THE BRACKET

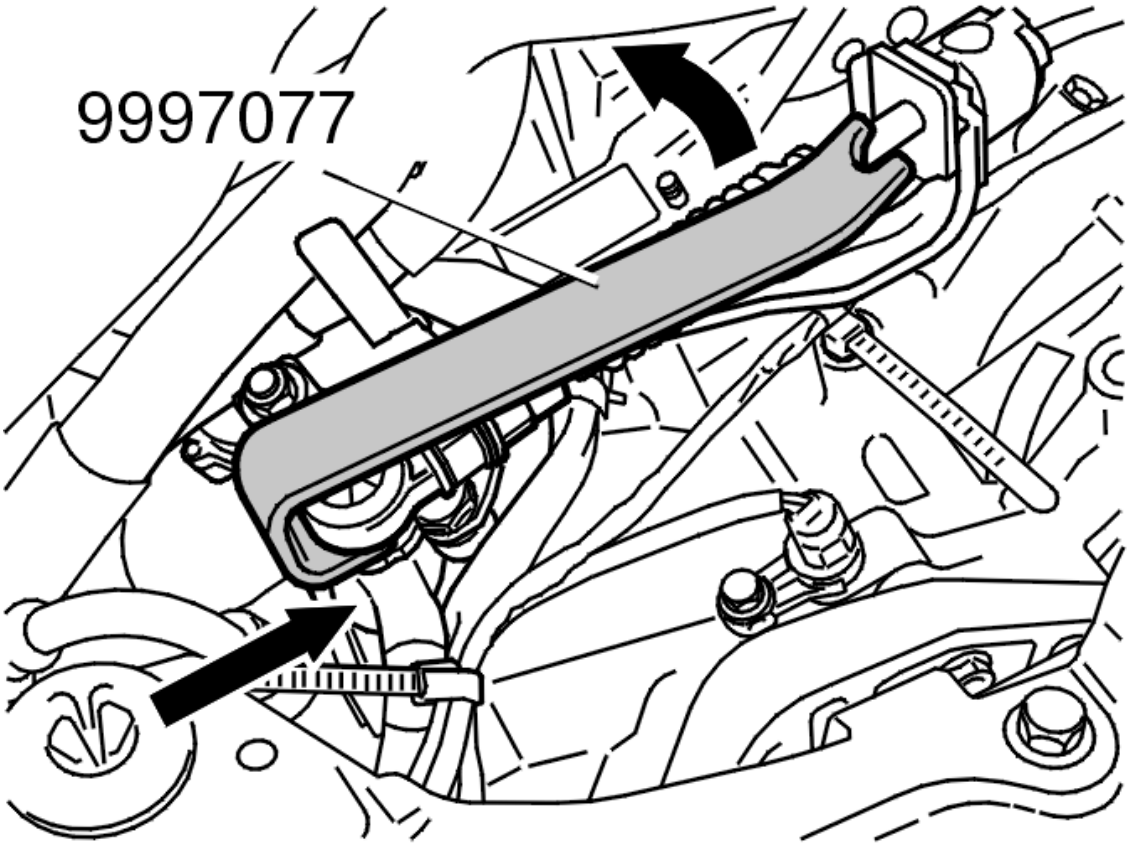

Fig. 158: Detaching Cable From Lever Using Special Tool
Courtesy of VOLVO CARS CORPORATION

Remove the gear selector cable from the bracket on the transaxle. Use special tool **9997077** . Do not damage the ball.

REMOVING SIDE PANELS

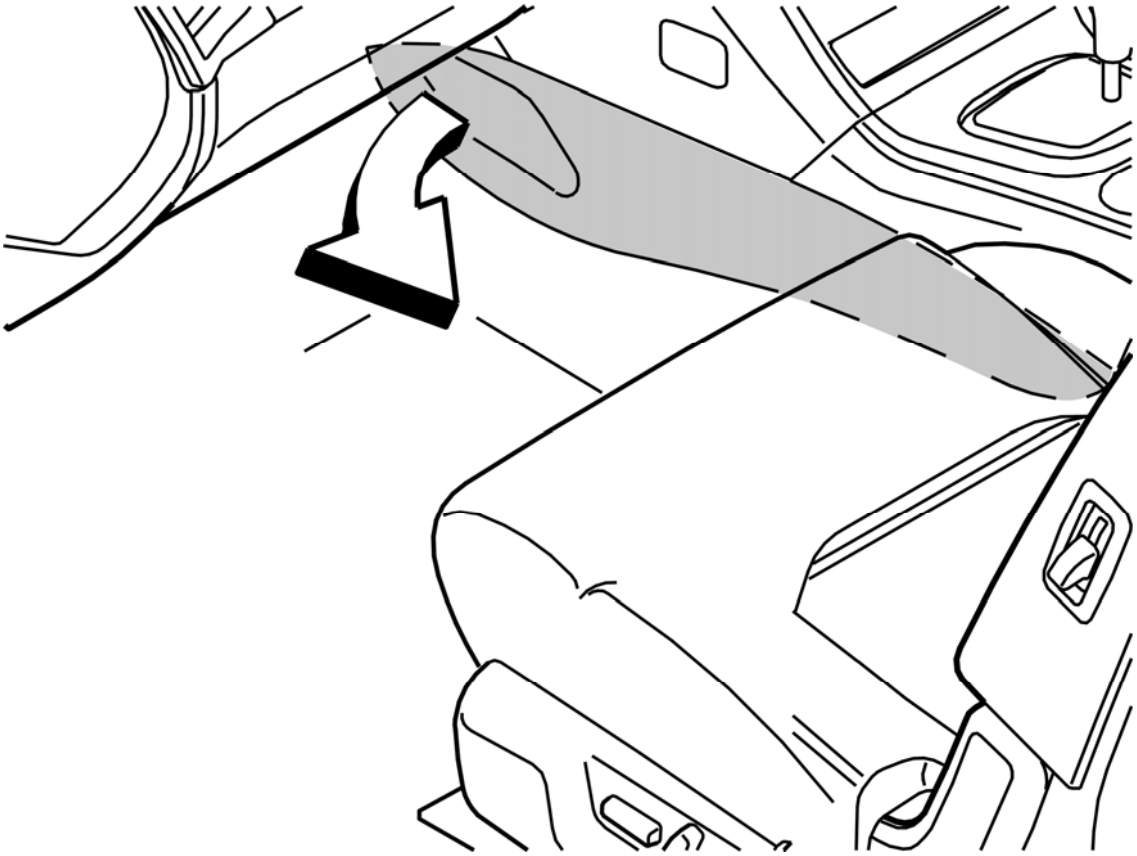

Fig. 159: Identifying Removal Of Center Console Side Panels
Courtesy of VOLVO CARS CORPORATION

Remove the side panels from the centre console.

REMOVING THE PANEL

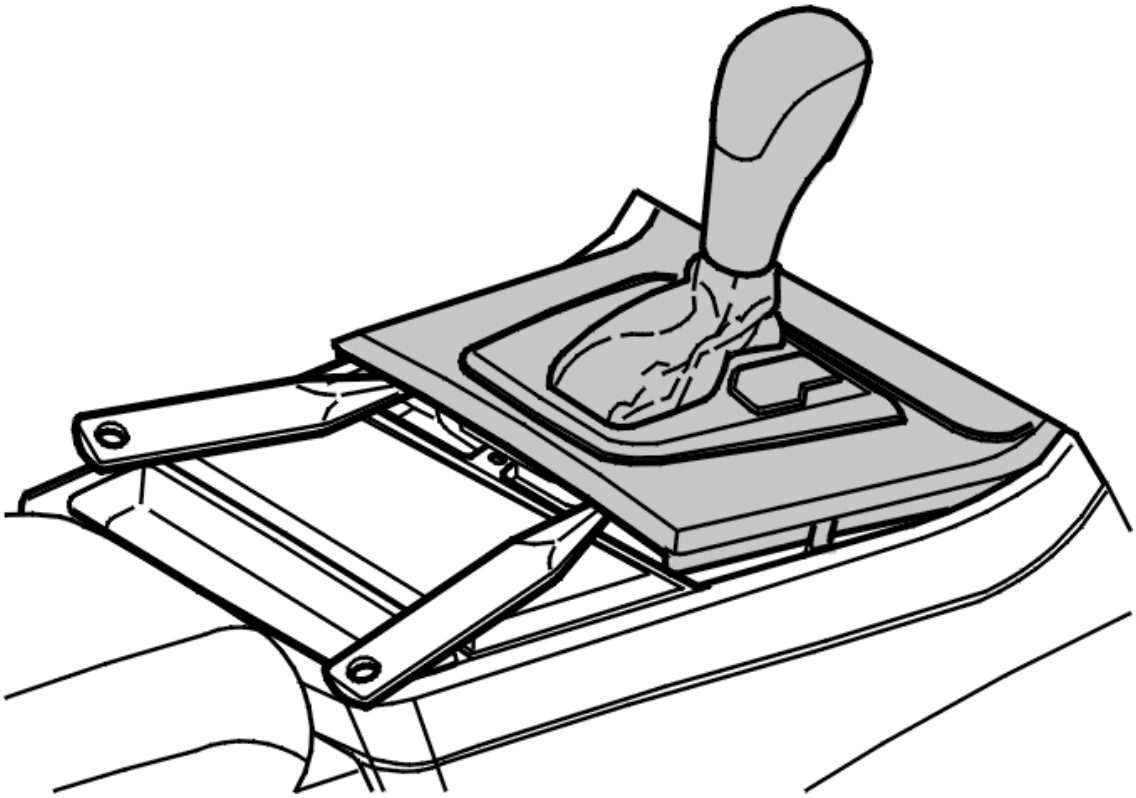

Fig. 160: Lifting Straight Up At The Rear
Courtesy of VOLVO CARS CORPORATION

Detach the panel around the gear selector lever by lifting straight up at the rear edge.

REMOVING THE MECHANICAL CABLE

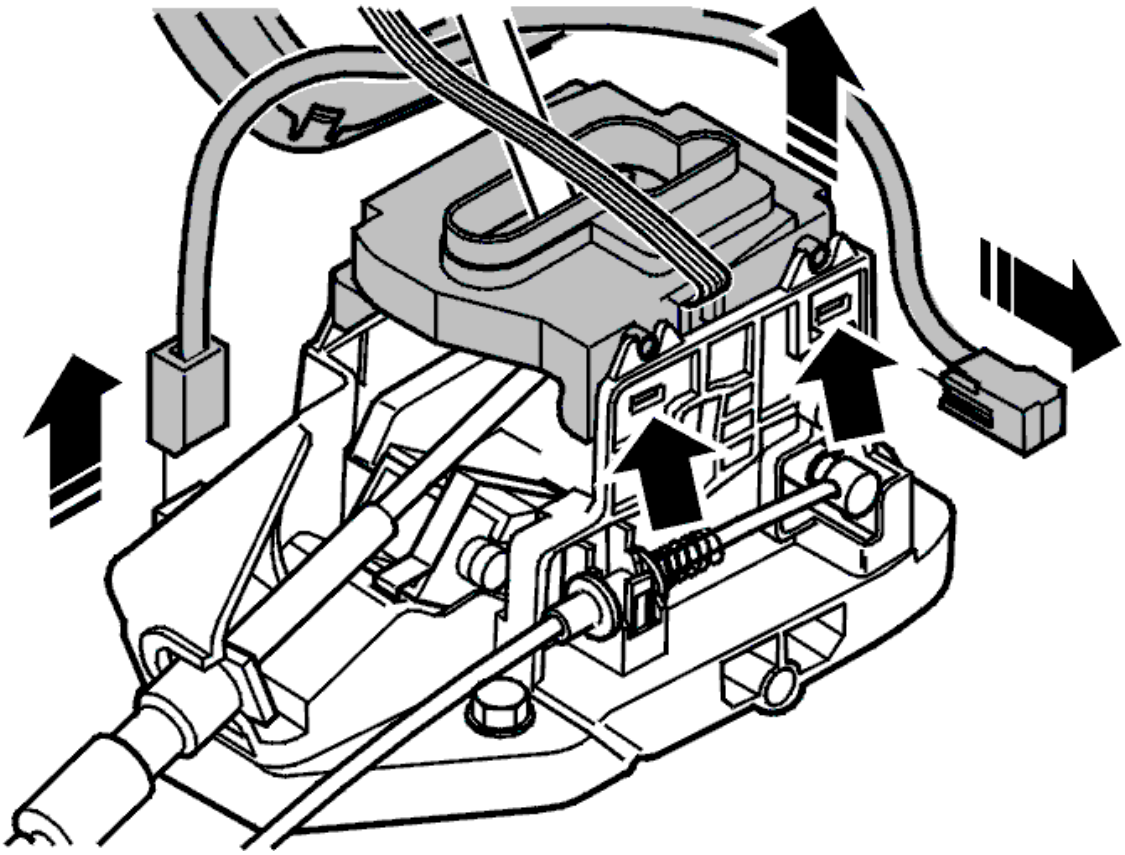

Fig. 161: Removing Stop For Gear Selector Assembly
Courtesy of VOLVO CARS CORPORATION

Detach the gear selector lever stop. See **GEAR SELECTOR LEVER ASSEMBLY GEARTRONIC, REPLACING**.

Remove:

- the catch for the cable on the gear selector
- the cable from the end of the gear selector assembly by pressing the lock facing. Use a screwdriver
- the cable.

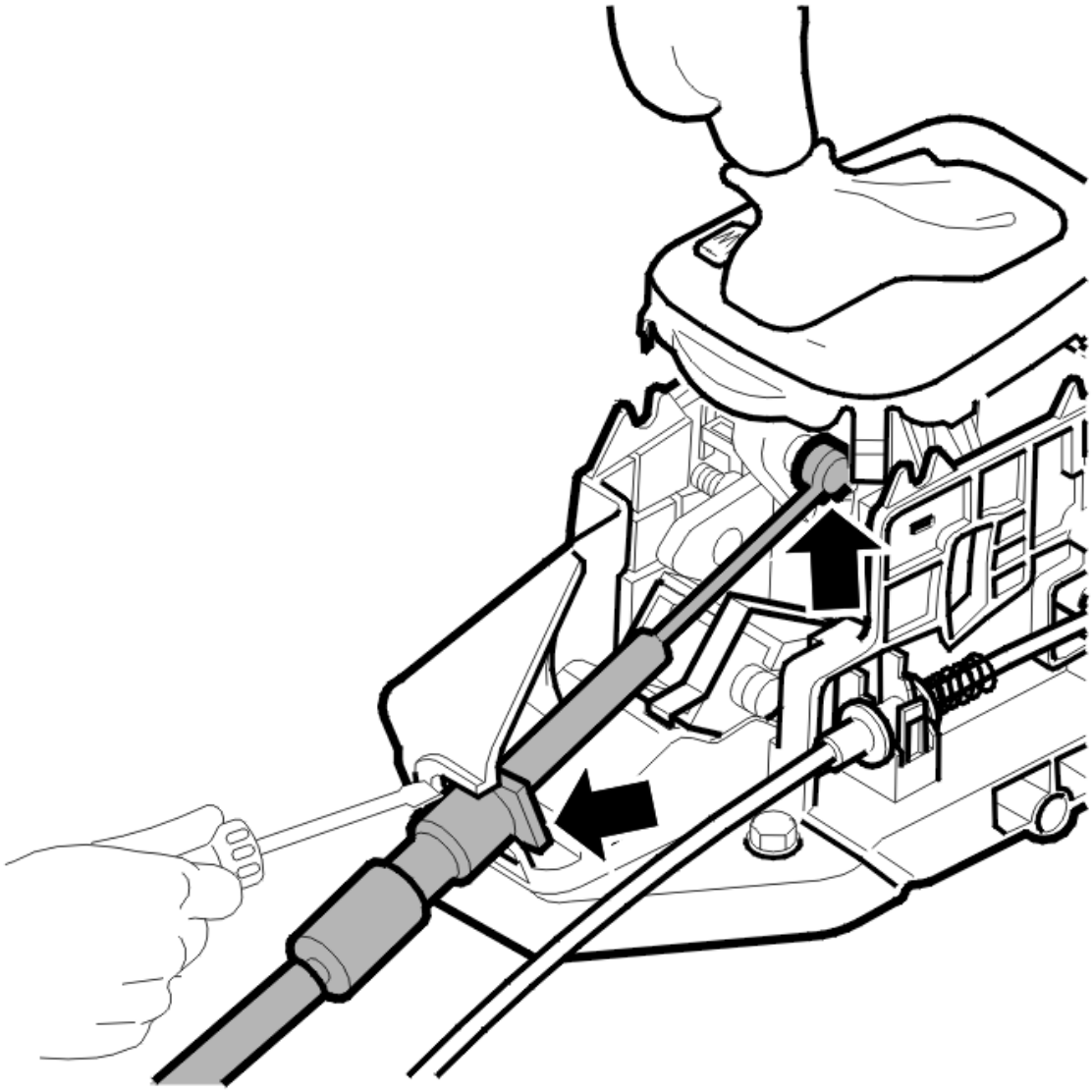

Fig. 162: Removing Gear Selector Cable
Courtesy of VOLVO CARS CORPORATION

REMOVING THE CABLE AT THE FIREWALL

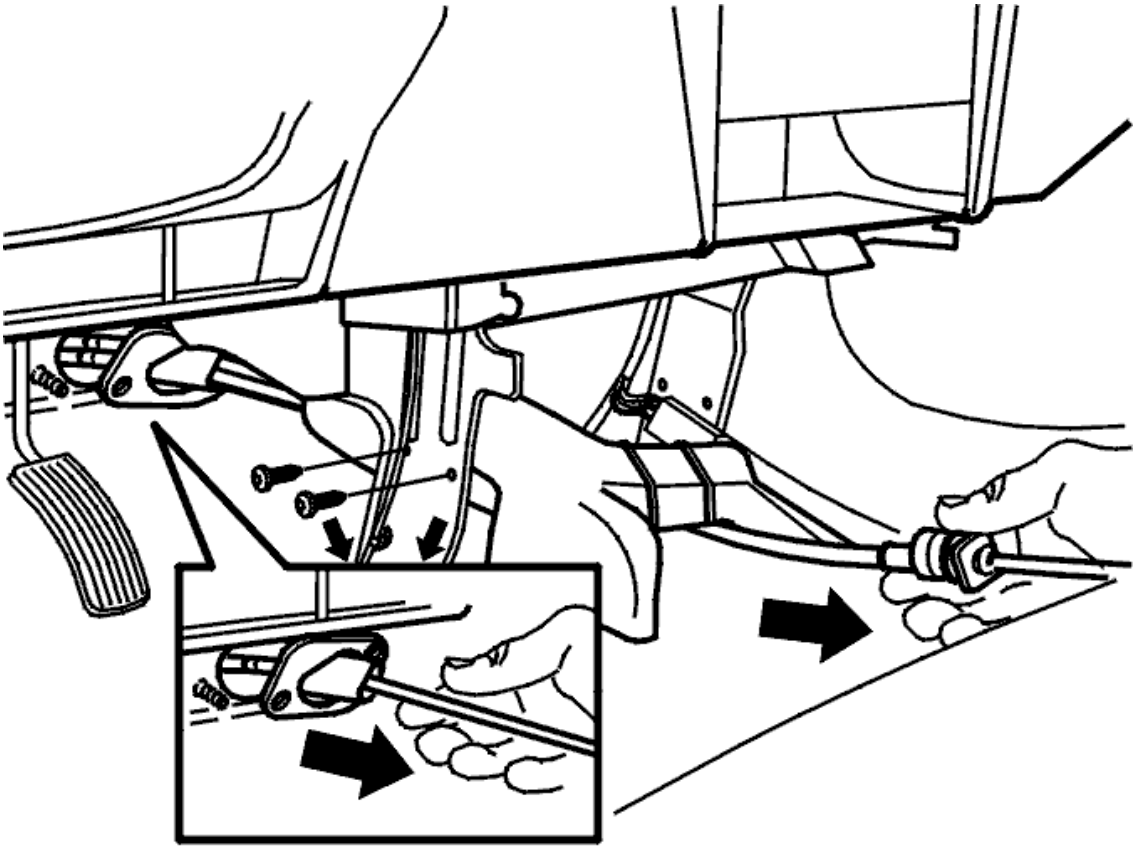

Fig. 163: Identifying Cable At Firewall
Courtesy of VOLVO CARS CORPORATION

Remove:

- the 2 air ducts
- the 4 screws for the stay in the dashboard
- the cable. Pull it inwards into the passenger compartment.

HINT: Secure a cable using tape at the end of the engine compartment on the mechanical cable before pulling it out to make reinstallation easier. Route the cable correctly in the engine compartment with someone to assist you.

INSTALLATION

NOTE: For tightening torques, see TIGHTENING TORQUE .

PREPARATIONS FOR INSTALLATION

Tape the cable to the new cable

NOTE: When installing the mechanical cable: Make sure that there are no sharp bends or kinks, especially in the cable's ends between the inner cable and outer

casing.

HINT: Route the cable correctly in the engine compartment with someone to assist you.

INSTALLING THE CABLE FROM THE INSIDE OF THE PASSENGER COMPARTMENT

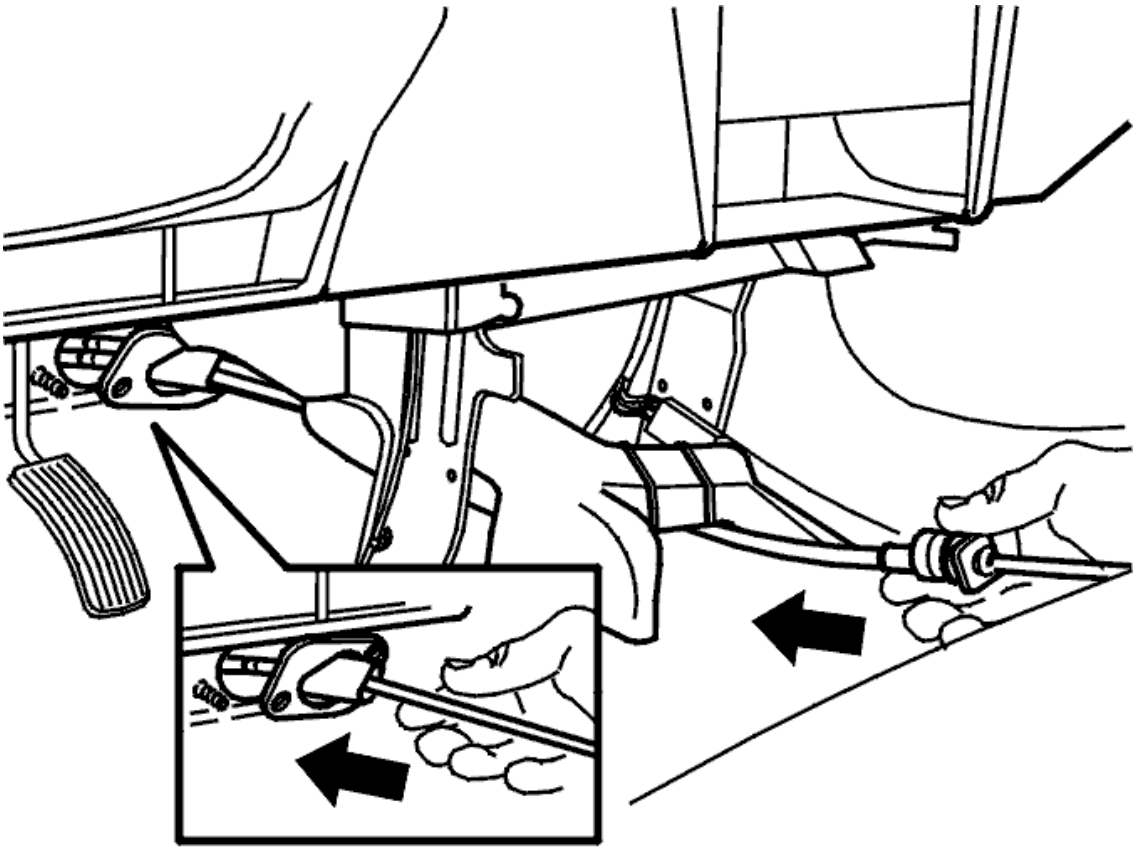

Fig. 164: Identifying Cable At Firewall
Courtesy of VOLVO CARS CORPORATION

Install the cable under the heater unit on left side, down towards the hole.

NOTE: **Take great care when running the rubber bellow for the cable through the hole in the firewall. The cable must not be damaged.**

Feed a small amount of cable through the hole.

HINT: Route the cable correctly in the engine compartment with someone to assist you.

Locate the grommet on the studs

Install:

- the nuts. Tighten. See **SUMMARY OF TIGHTENING TORQUES FOR SPECIFIC**

COMPONENTS

- the air ducts
- the stay and the M6 screws. Tighten.

INSTALLING THE CABLE ON THE GEAR SELECTOR

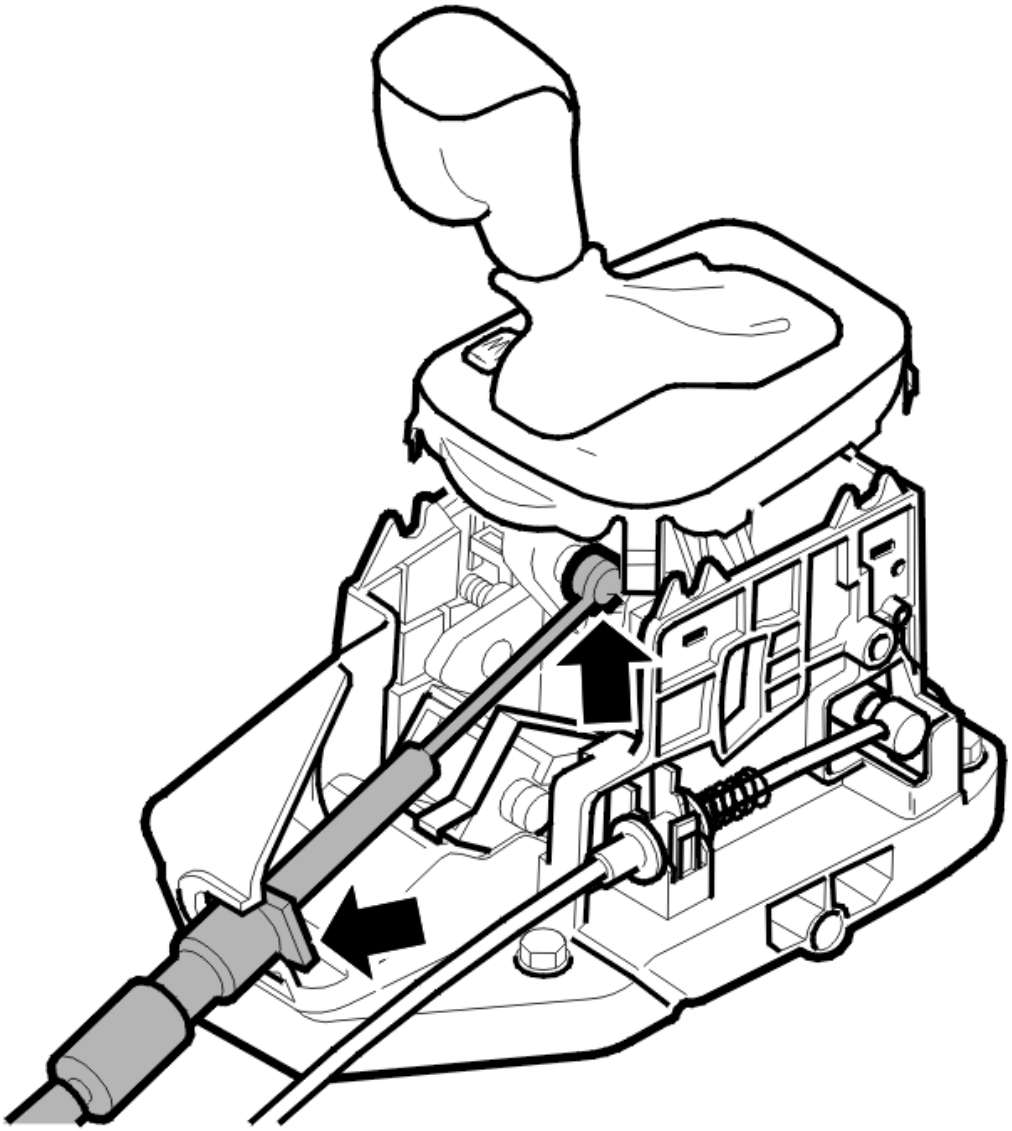

Fig. 165: Installing Gear Selector Cable On Gear Selector
Courtesy of VOLVO CARS CORPORATION

Install:

- the cable on the gear selector. Secure the cable with the catch
- the cable to the end of the gear selector assembly.

Reinstall the gear selector lever stop. See **GEAR SELECTOR LEVER ASSEMBLY GEARTRONIC,**

REPLACING.

INSTALLING SERVICE CLIPS

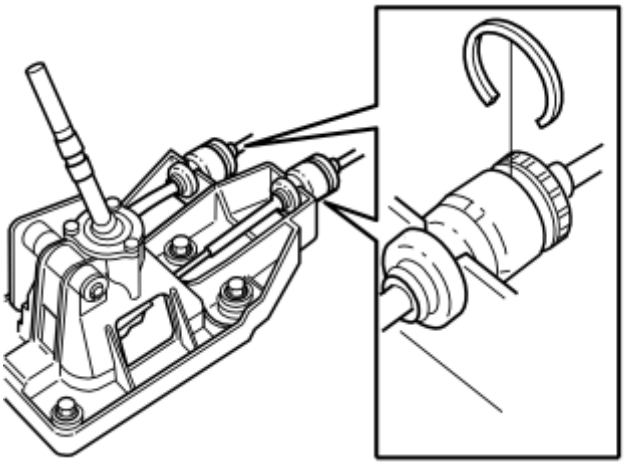

Fig. 166: Gear Selector And Clip
Courtesy of VOLVO CARS CORPORATION

NOTE: The automatic transmission has a gear selector cable while the manual transmission has two gear selector cables.

Ensure that the gear selector cable is engaged before fitting the blue clip. Press the clip into position as illustrated.

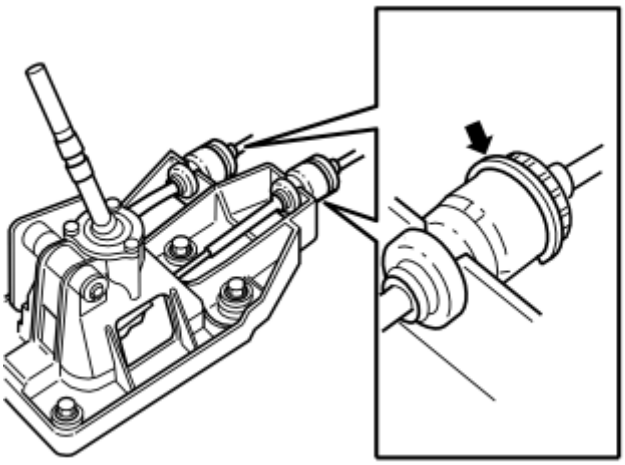

Fig. 167: Clip Positioned In Groove
Courtesy of VOLVO CARS CORPORATION

Check that the clip is positioned in the groove as illustrated.

INSTALLING THE GEAR SELECTOR CABLE ON THE GEARBOX

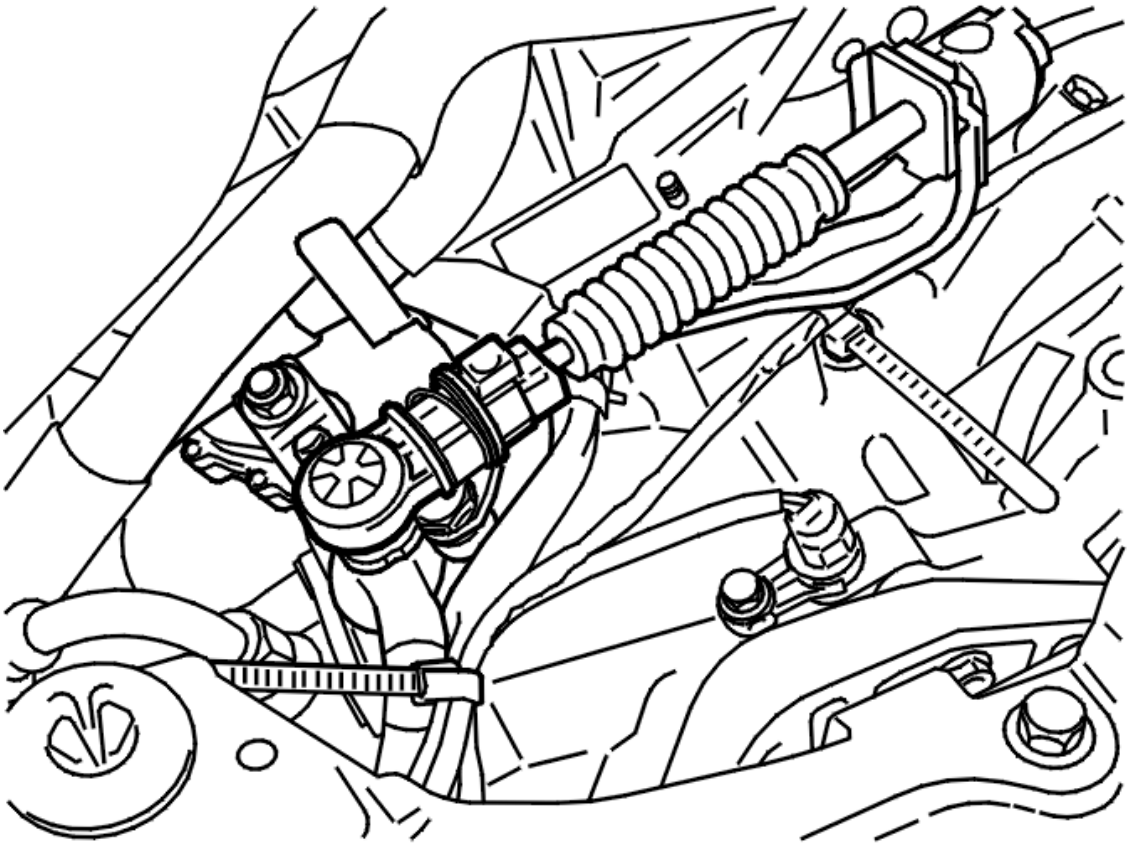

Fig. 168: Identifying The Ball Joint For The Cable
Courtesy of VOLVO CARS CORPORATION

Install:

- the cable on the bracket. Press it so that it locks
- the ball joint for the cable on the lever. Press into place by hand.

NOTE: **The cable must be adjusted after replacement. See GEAR SELECTOR CABLES, ADJUSTING .**

INSTALLING SERVICE CLIPS

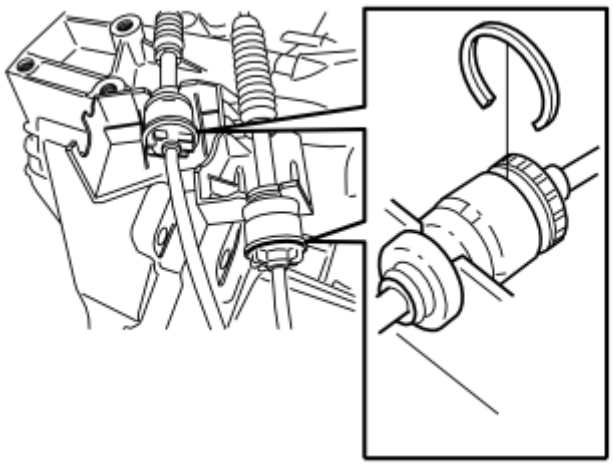

Fig. 169: Gear Selector Cable And Clip
Courtesy of VOLVO CARS CORPORATION

NOTE: The automatic transmission has a gear selector cable while the manual transmission has two gear selector cables.

Ensure that the gear selector cable is engaged before fitting the blue clip. Press the clip into position as illustrated.

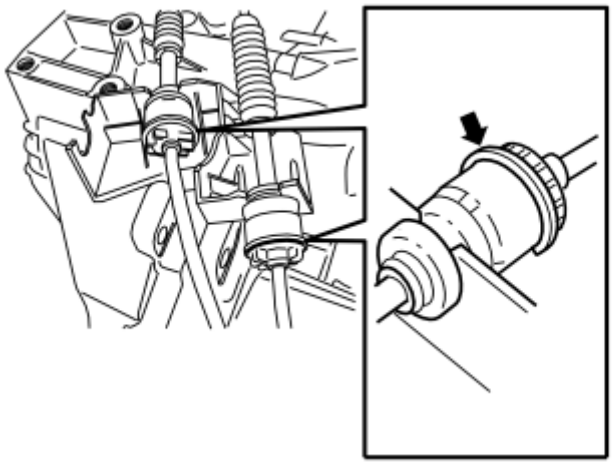

Fig. 170: Clip Positioned In Groove
Courtesy of VOLVO CARS CORPORATION

Check that the clip is positioned in the groove as illustrated.

GEAR SELECTOR KNOB, GEARTRONIC, REPLACING

REMOVAL

REMOVING THE BOOT FROM THE GEAR SELECTOR KNOB

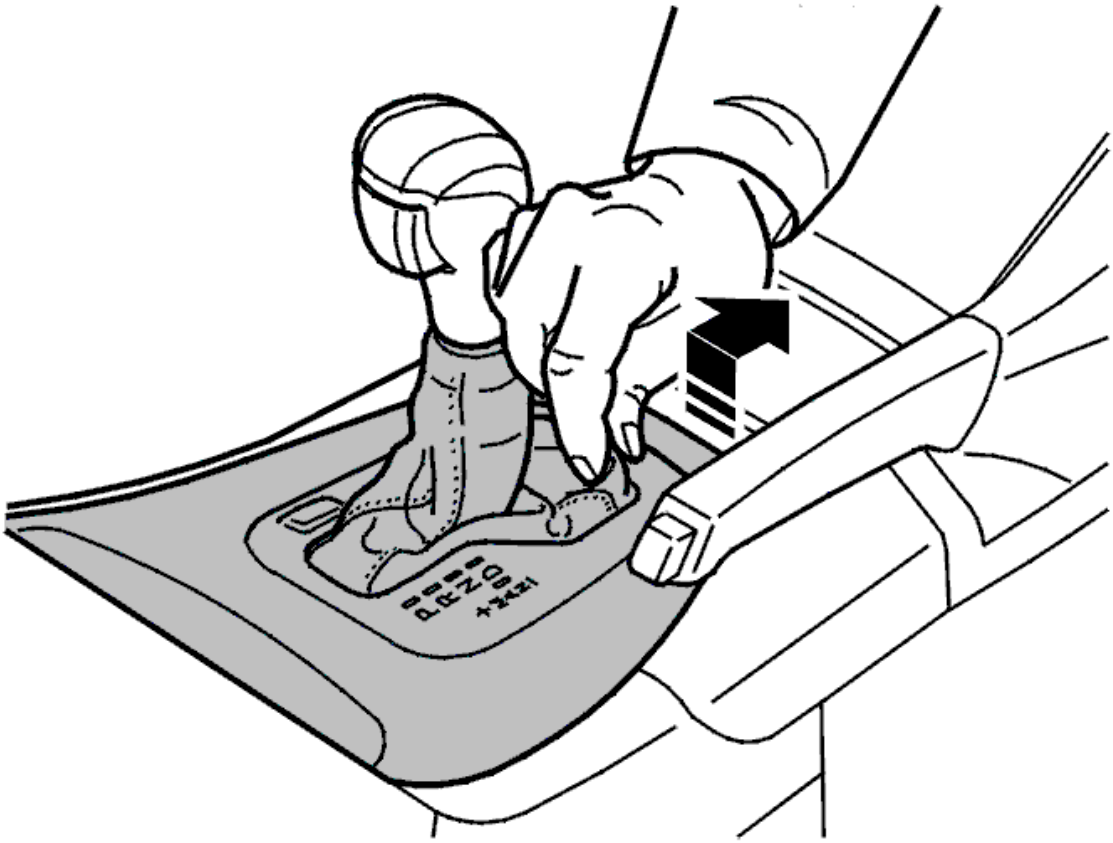

Fig. 171: Removing Boot From Gear Selector Knob
Courtesy of VOLVO CARS CORPORATION

Remove the top panel from the center console.

Grip the boot. Pull the boot upwards.

REMOVING THE LOCK BRACKET FROM THE GEAR SELECTOR KNOB

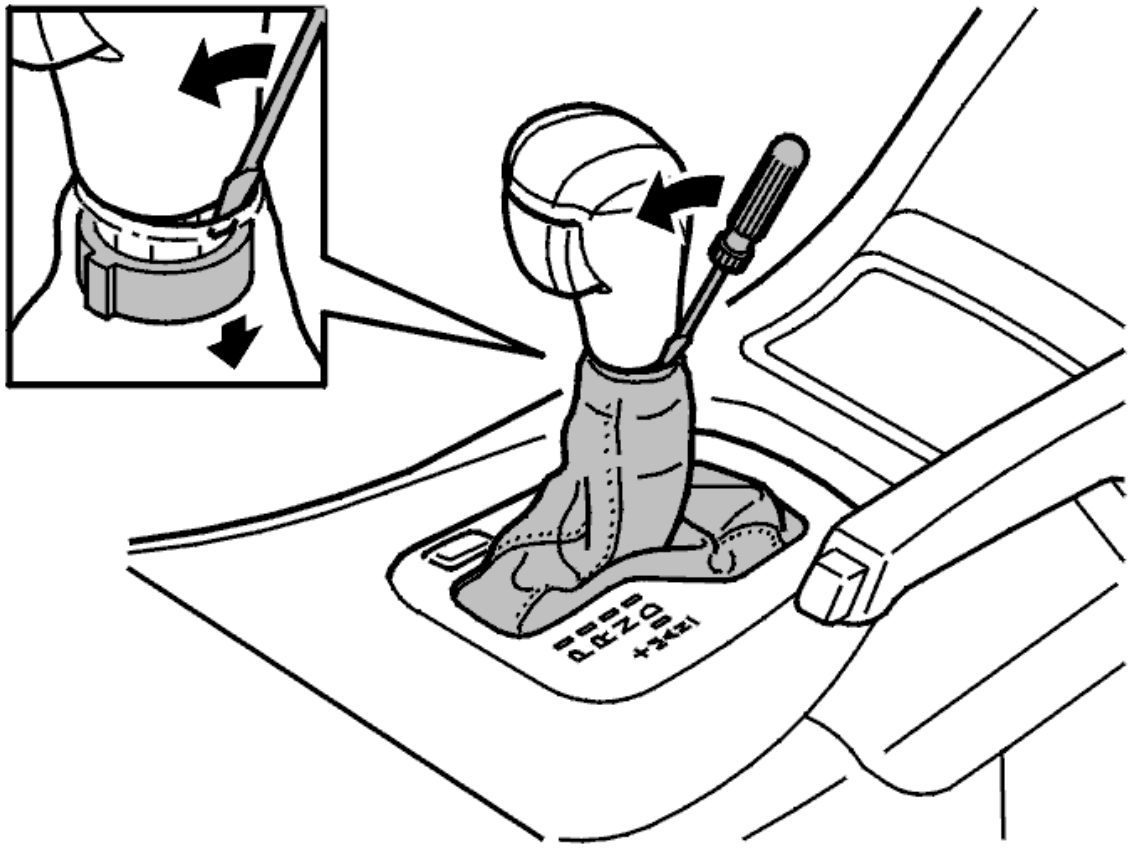

Fig. 172: Identifying Lock Bracket & Gear Selector Knob
Courtesy of VOLVO CARS CORPORATION

Insert a small screwdriver between the boot and the gear selector lever knob to access the lock bracket.

Carefully pry the screwdriver forward so that the lock bracket detaches from the gear selector lever knob.

NOTE: Only undamaged lock brackets can be reused.

REMOVING THE GEAR SELECTOR KNOB

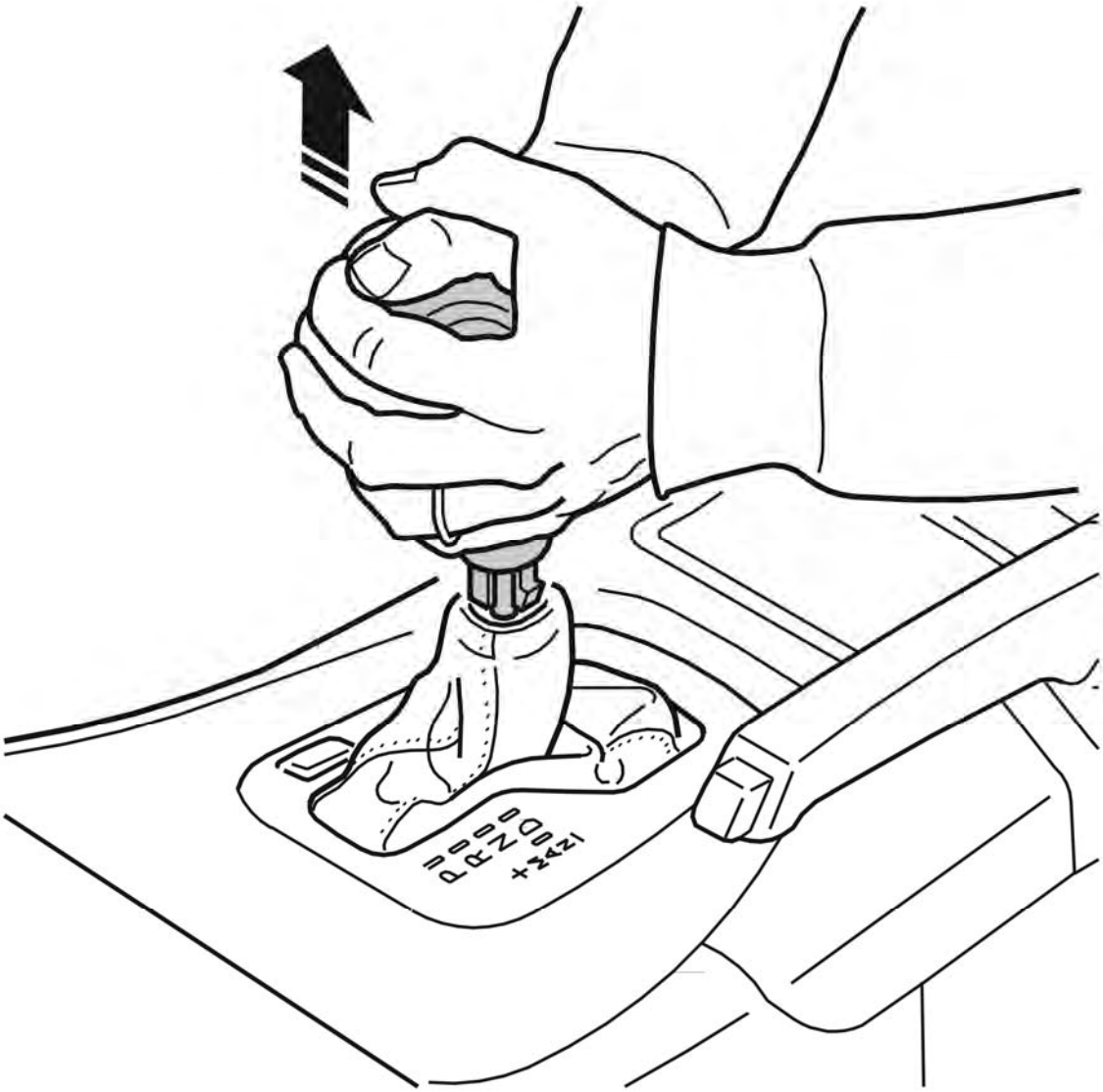

Fig. 173: Removing Gear Selector Knob
Courtesy of VOLVO CARS CORPORATION

Remove the gear selector knob as follows:

Stand astride the center console. Grasp the gear selector lever knob with both hands. Pull it straight upwards with a hard jerk.

INSTALLATION

INSTALLING THE GEAR SELECTOR KNOB

NOTE: The gear selector knob may be reused a maximum of four times

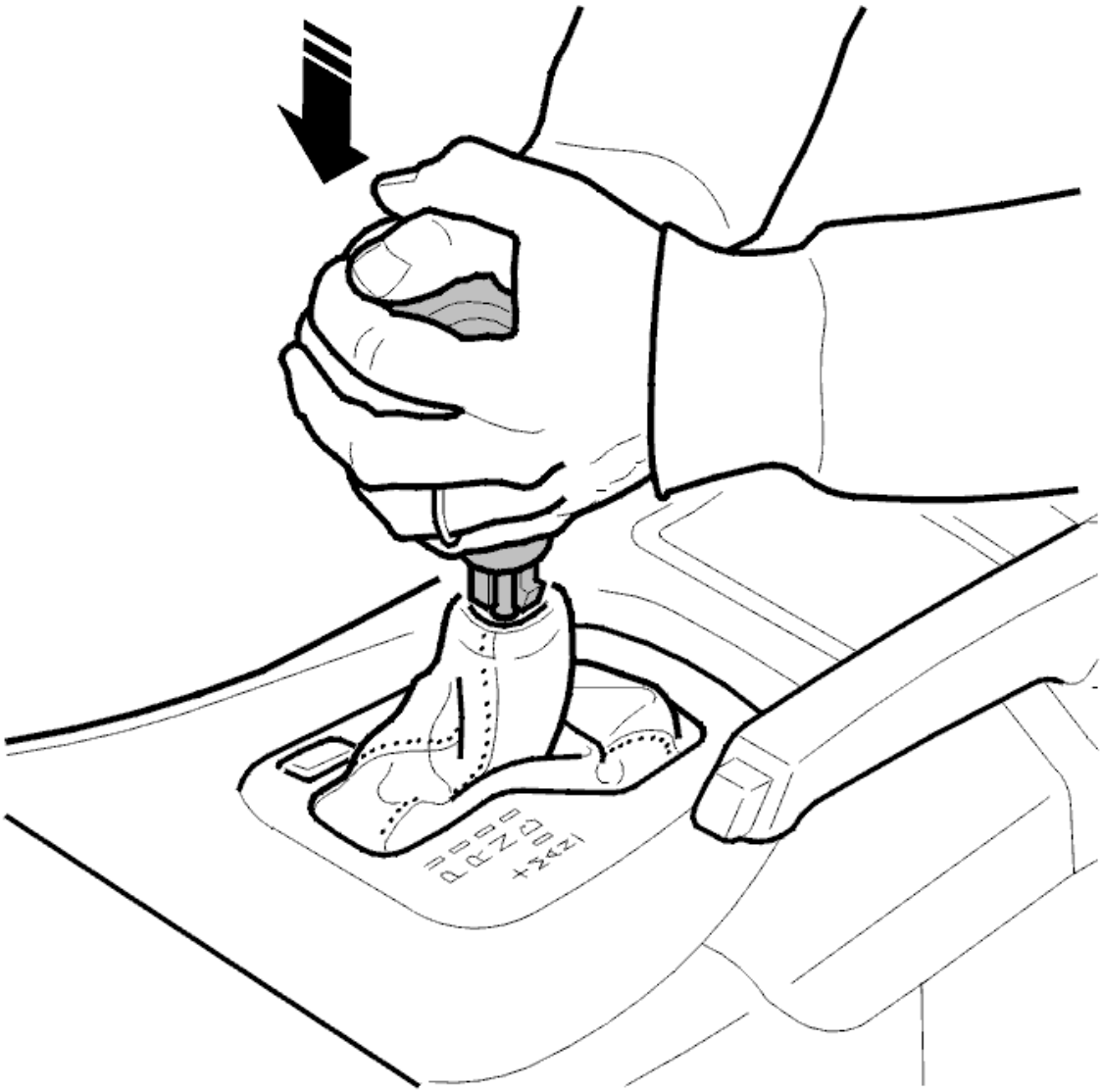

Fig. 174: Installing Gear Selector Knob
Courtesy of VOLVO CARS CORPORATION

Press the gear selector knob so that it locks in the lever.

If necessary: Use a sheet metal hammer and a shim to carefully hit the knob down on to the gear selector lever.

Check

Pull the gear selector knob.

Check that the lock function operates in its positions.

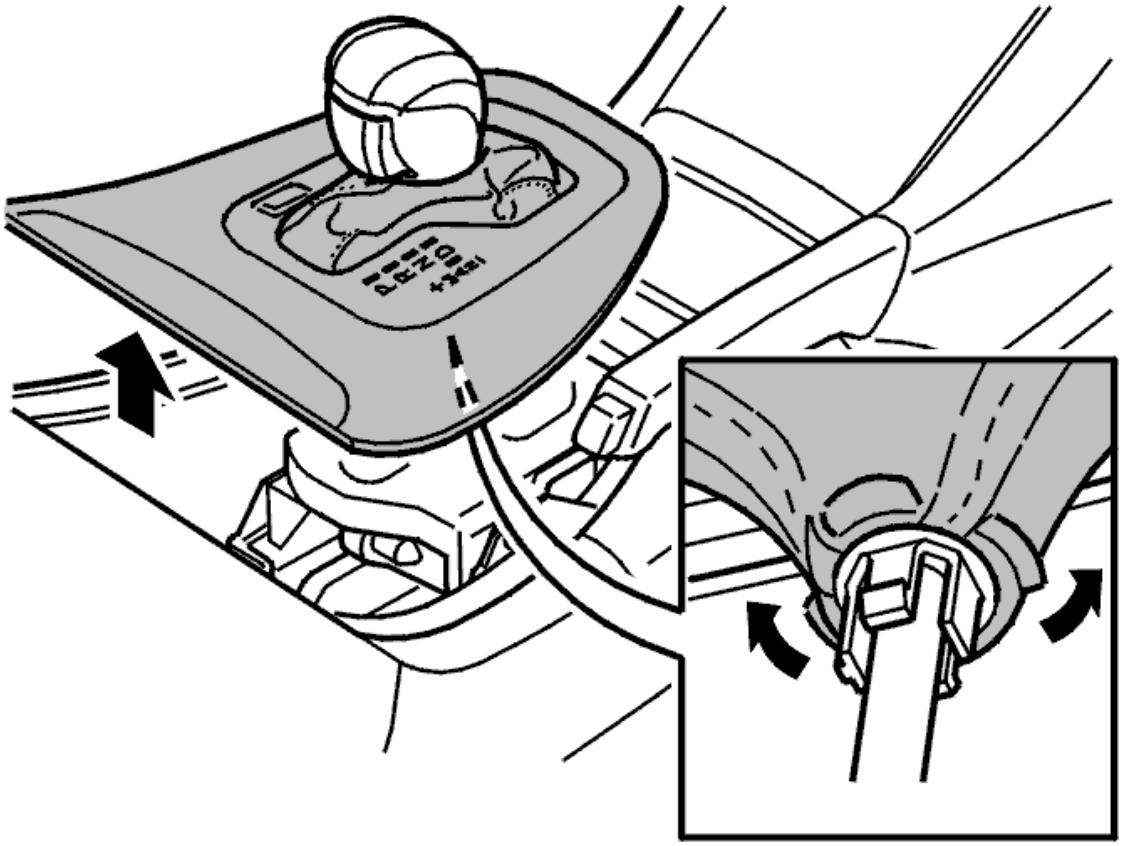

Fig. 175: Identifying Selector Boot Installation
Courtesy of VOLVO CARS CORPORATION

Pull the top panel and the boot up towards the gear selector knob.

Pull the boot down from below so that the locking for gear selector knob is completely free.

INSTALLING THE LOCK BRACKET ON THE GEAR SELECTOR KNOB

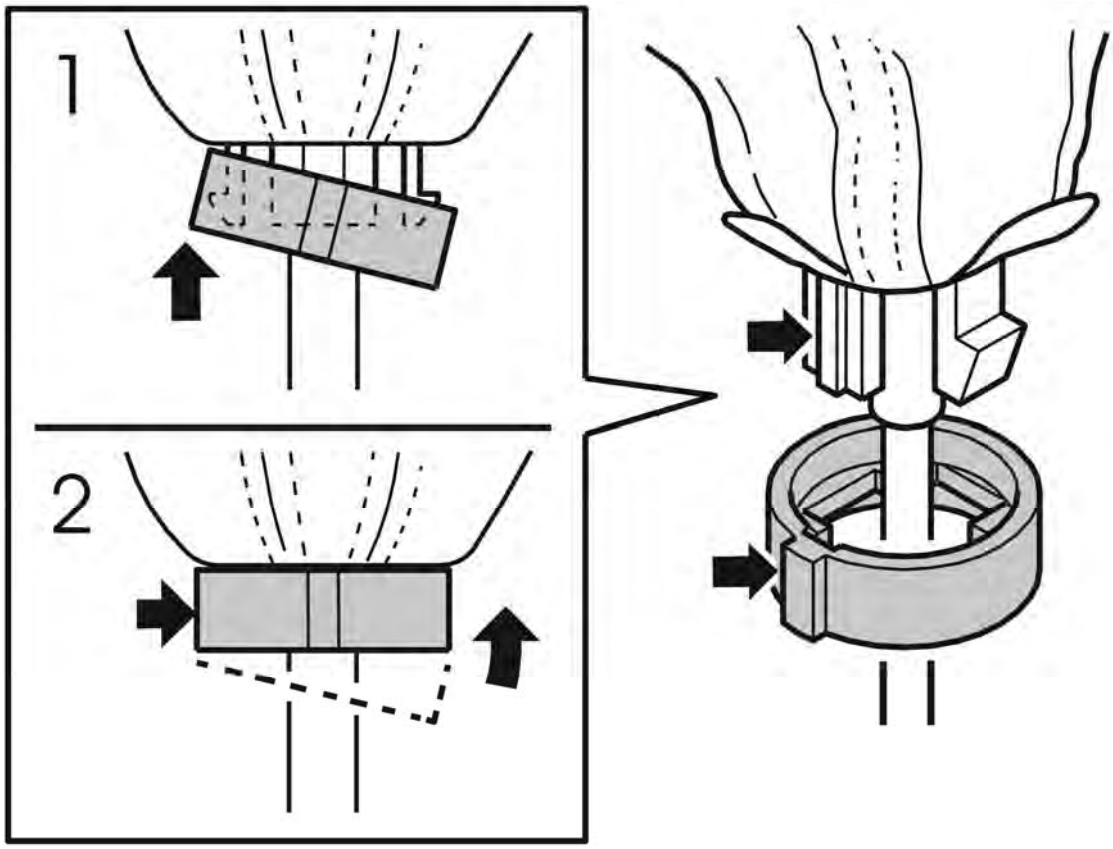

Fig. 176: Identifying Lock Bracket & Gear Selector Knob
Courtesy of VOLVO CARS CORPORATION

NOTE: The locking sleeve cut-out must be forwards so that it passes into the gear selector knob guide.

Slide the locking sleeve and boot up to the knob guide.

Pull up the sleeve so that it locks on one side (1).

Press **hard** on the lock side of the locking sleeve (2). At the same time, pull the locking sleeve up towards the boot so that it locks.

NOTE: Check that the boot is correctly positioned. Adjust if necessary.

INSTALLING THE TOP PANEL

Fig. 177: Identifying Top Panel Installation
Courtesy of VOLVO CARS CORPORATION

Bend the panel downwards. Press the gear selector boot into place in the center console.

Install the panel (the pen holder) between the center console and the dashboard.

GEAR SELECTOR LEVER ASSEMBLY GEARTRONIC, REPLACING

NOTE: **As the illustrations in this service information are used for different model years and / or models, some variation may occur. However, the essential information in the illustrations is always correct.**

REMOVAL

REMOVING CENTRE TUNNEL CONSOLE

See **CENTER CONSOLE, REPLACING** .

DETACHING THE BOOT AND REMOVING THE GEAR SELECTOR KNOB

Detach the boot from the gear selector. Remove the gear selector knob. See **GEAR SELECTOR KNOB, GEARTRONIC, REPLACING**.

Angle the top panel with the boot away from the gear selector lever.

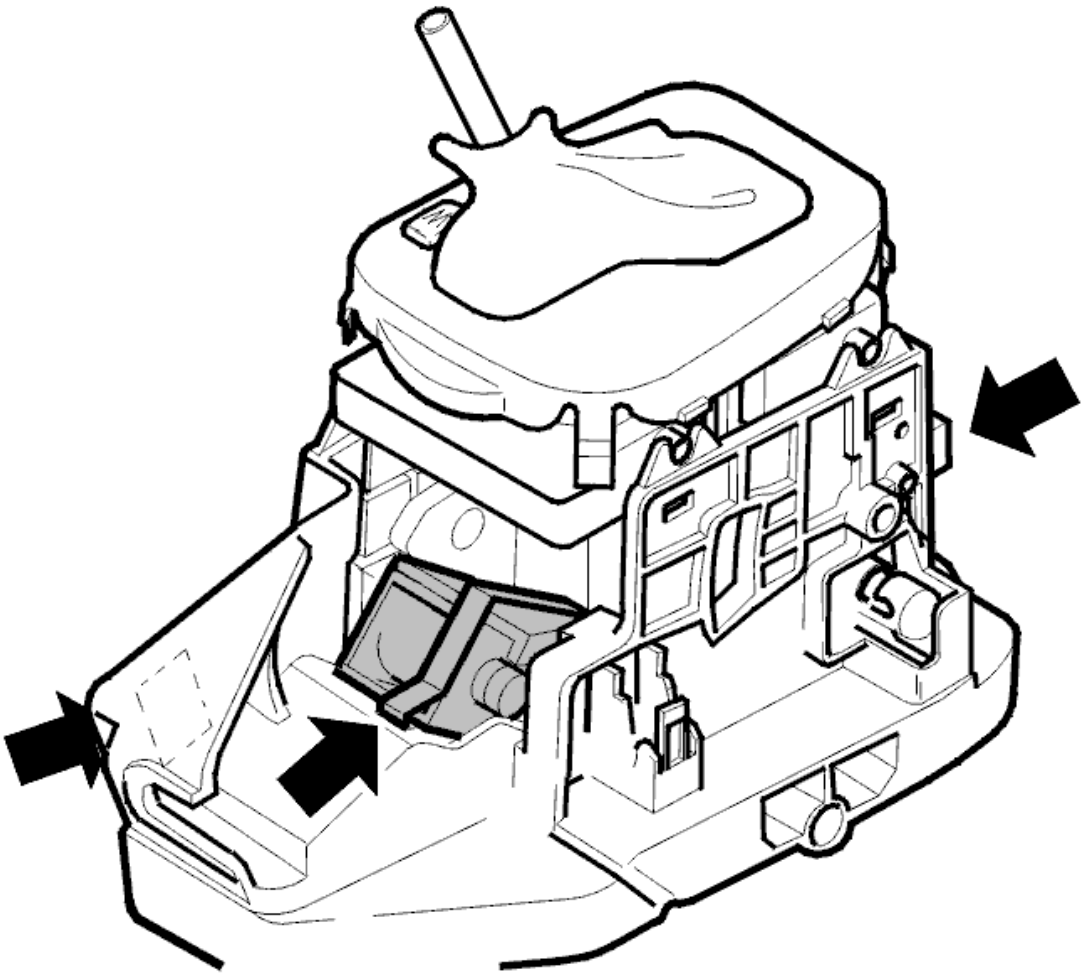

Fig. 178: Folding Top Panel With Boot Away From Gear Selector Lever
Courtesy of VOLVO CARS CORPORATION

Remove the wiring from the clips.

Disconnect the connector from the gear selector assembly.

REMOVING THE GEAR SELECTOR ASSEMBLY STOP

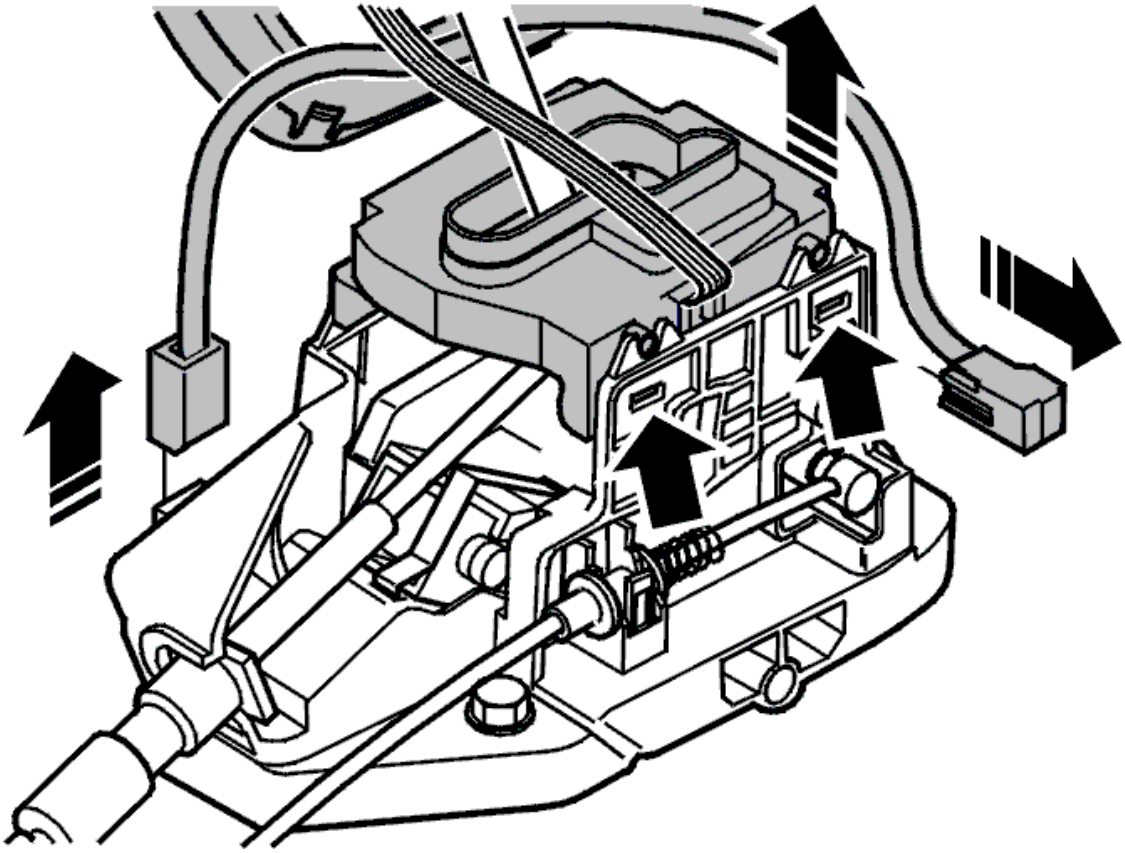

Fig. 179: Removing Stop For Gear Selector Assembly
Courtesy of VOLVO CARS CORPORATION

Press in the 4 catches on the sides. Pull the stop straight up out of the gear selector assembly.

REMOVAL THE GEAR SELECTOR ASSEMBLY AND MECHANICAL CABLES

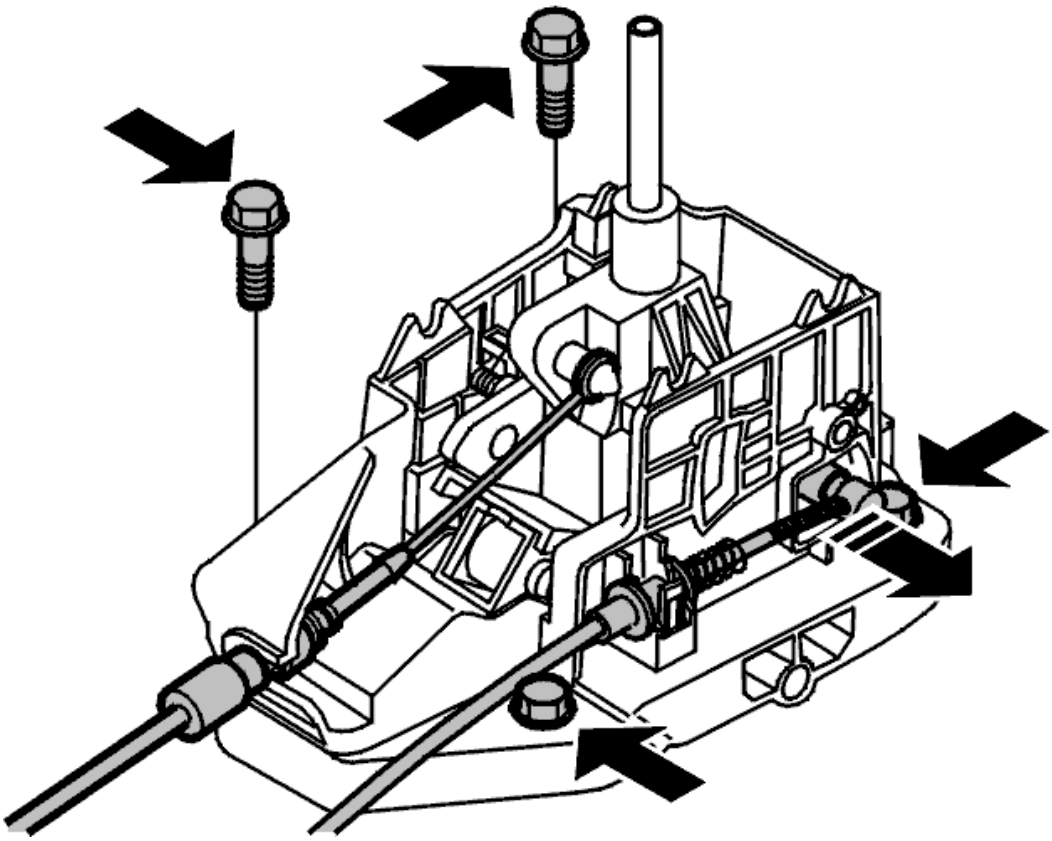

Fig. 180: Gear Selector Assembly Bolts
Courtesy of VOLVO CARS CORPORATION

Remove:

- the catch for the cable at the gear selector lever
- the cable from the end of the gear selector assembly
- the key lock cable. Pry out the locking sleeve slightly and lift up the cable from the gear selector assembly
- the 4 screws for the gear selector assembly.

INSTALLATION

NOTE: For tightening torques, see TIGHTENING TORQUE .

INSTALLING THE GEAR SELECTOR ASSEMBLY AND MECHANICAL CABLES

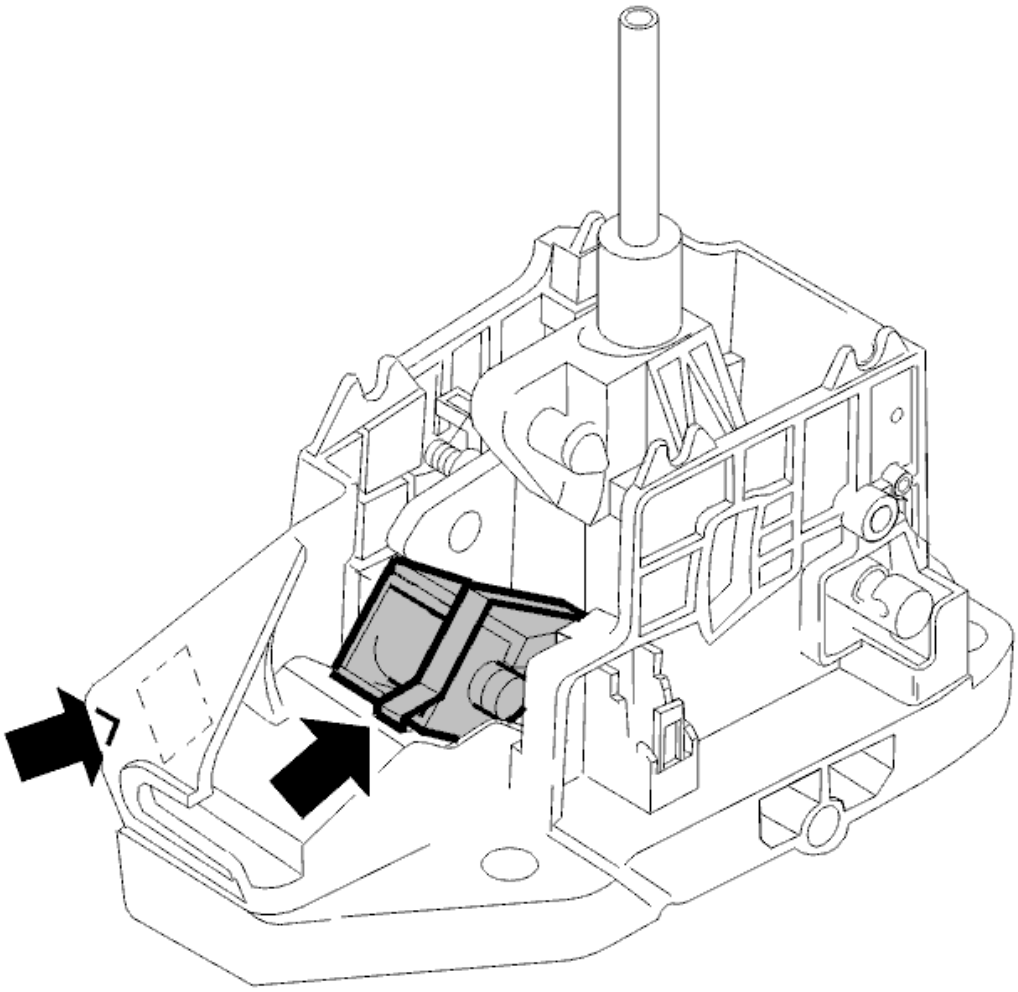

Fig. 181: Identifying Solenoid And Connector
Courtesy of VOLVO CARS CORPORATION

Install:

- the gear selector assembly to the bodywork. Tighten to **25 Nm**
- the cable to the gear selector. Secure the cable with the catch
- cable on the gear selector nose
- the key lock cable to the gear selector assembly. Place the cable in the extracted locking sleeve.

INSTALLING THE GEAR SELECTOR ASSEMBLY STOP

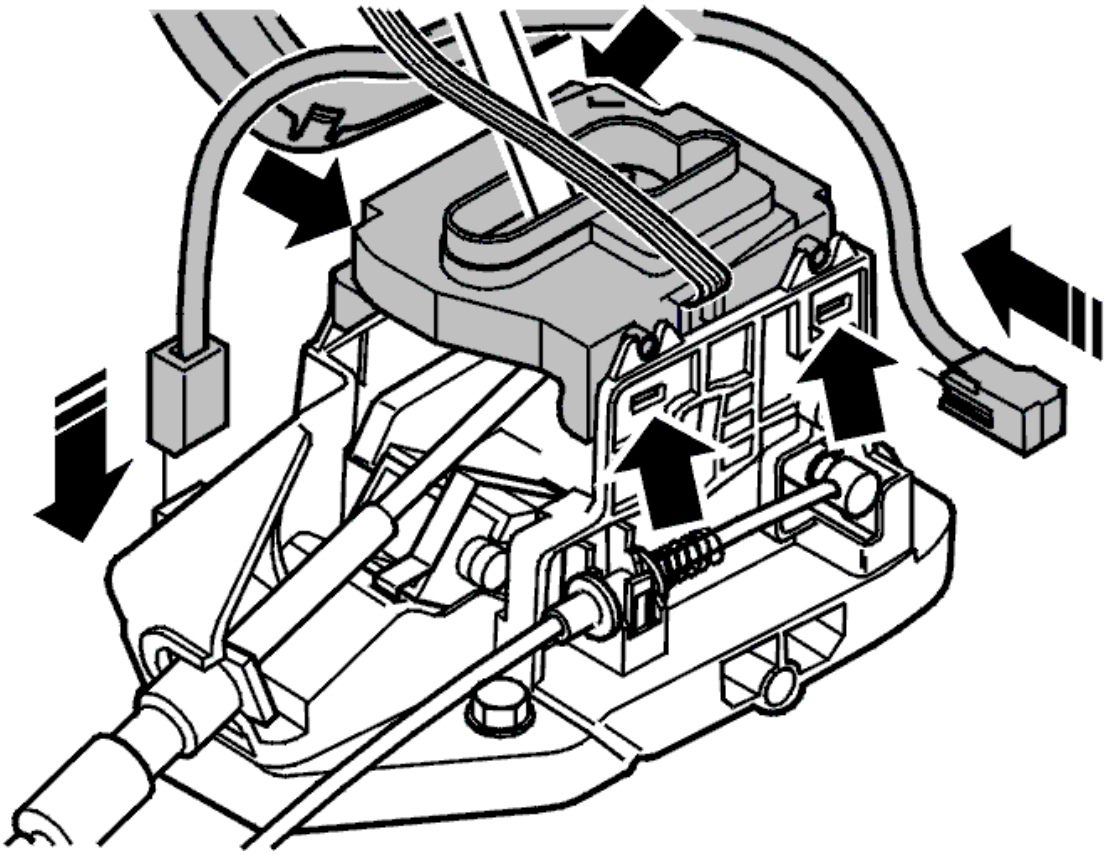

Fig. 182: Installing Stop For Gear Selector Assembly
Courtesy of VOLVO CARS CORPORATION

Install the gear selector assembly stop on the gear selector assembly. Lock it into place in the gear selector assembly.

Secure the rear connector in the gear selector assembly.

INSTALLING GEAR SELECTOR KNOB AND BOOT

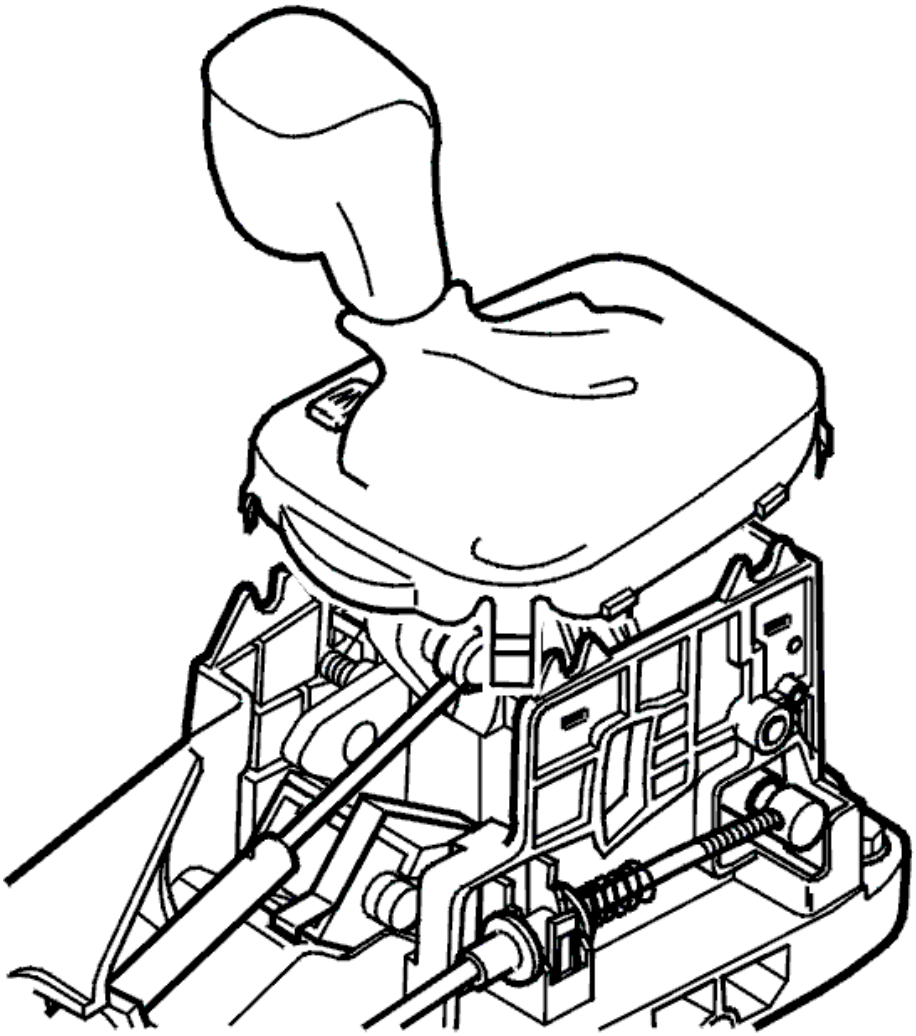

Fig. 183: Installing Gear Selector Knob And Boot
Courtesy of VOLVO CARS CORPORATION

Install:

- the boot and the top panel over the gear selector
- the gear selector knob Press it so that it locks in the gear selector.

Check that the lock function operates in its positions.

INSTALLING THE LOCKING SLEEVE FOR THE BOOT

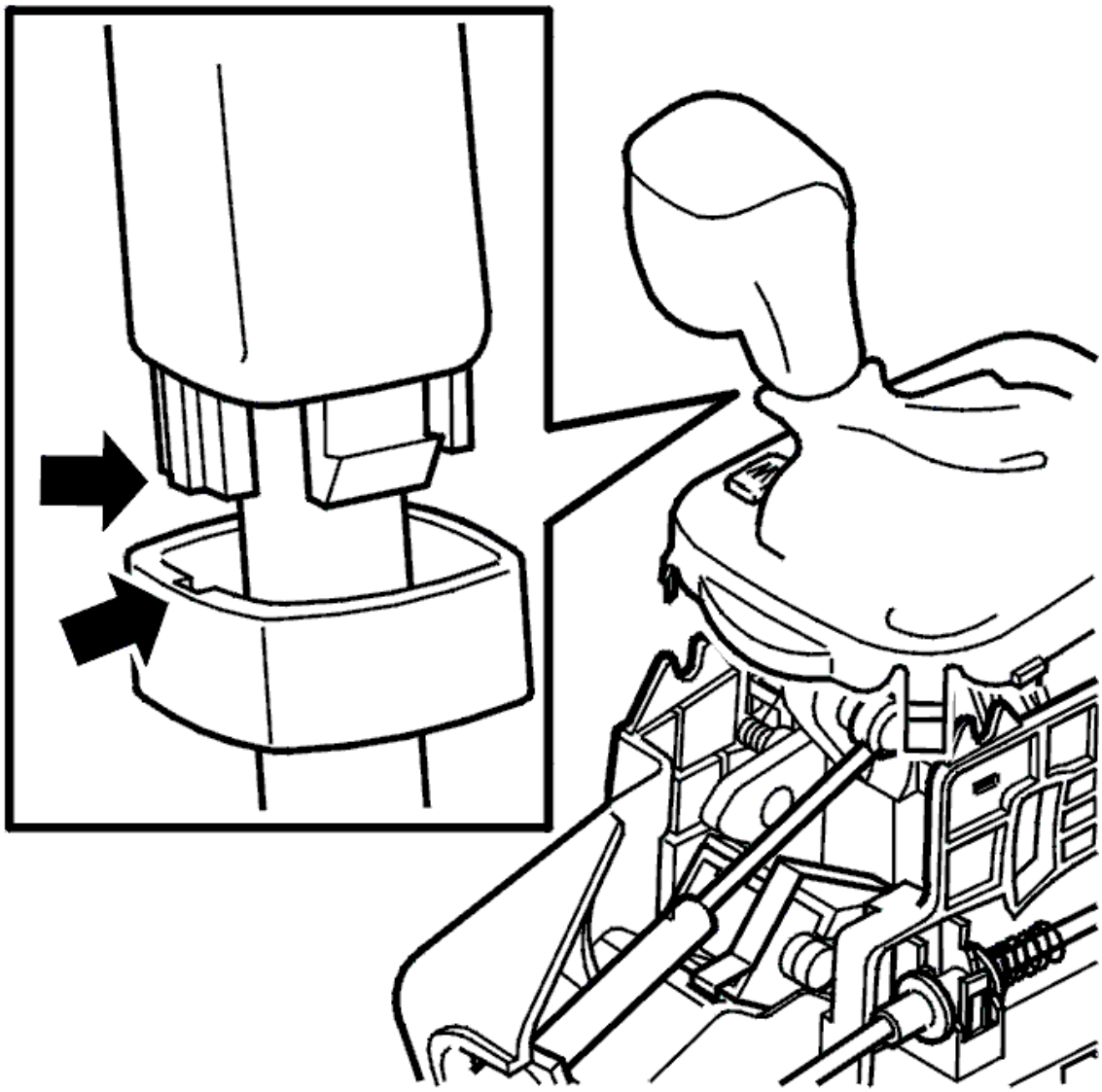

Fig. 184: Installing Locking Sleeve For Boot
Courtesy of VOLVO CARS CORPORATION

NOTE: The locking sleeve cut-out must be forwards so that it passes into the guide for the gear selector knob.

Slide the locking sleeve and boot up to the knob guide. Pull up the sleeve so that it locks the boot.

INITIAL SETTING OF THE KEY LOCK CABLE (ADJUSTMENT)

Adjust the key lock cable. See: **KEY INTERLOCK CABLE, INITIAL SETTING AND ADJUSTMENT** .

INSTALLING THE CENTRE TUNNEL CONSOLE

See **CENTER CONSOLE, REPLACING** .

SOLENOID SHIFT LOCK, REPLACE

NOTE: **As the illustrations in this service information are used for different model years and / or models, some variation may occur. However, the essential information in the illustrations is always correct.**

REMOVAL

REMOVING THE CENTER CONSOLE

Remove the center console. See **REMOVING CENTER TUNNEL CONSOLE** .

REMOVING MECHANICAL CABLE FROM GEAR SELECTOR ASSEMBLY

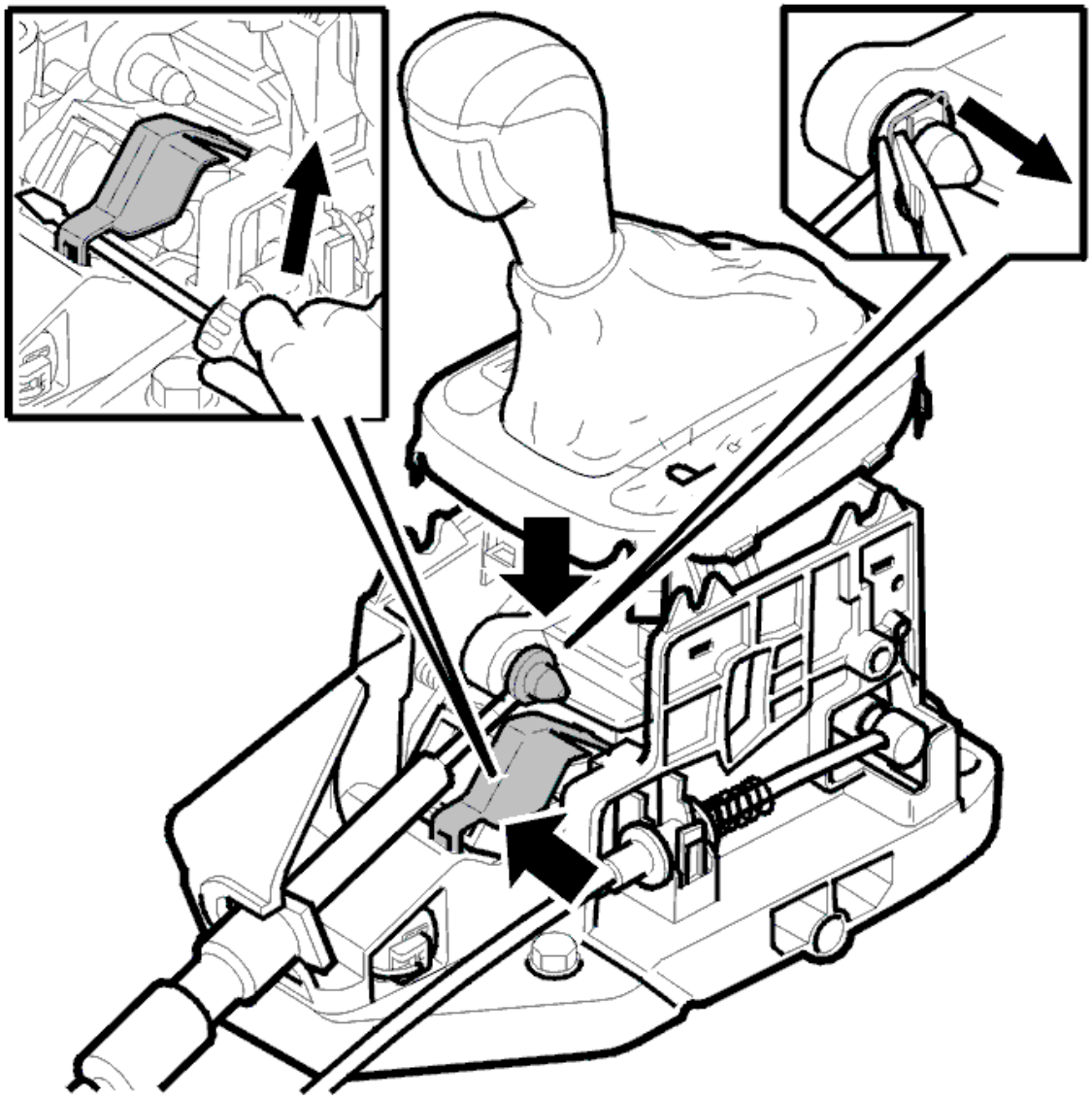

Fig. 185: Removing Mechanical Cable Lock From Gear Selector Lever Using Pliers
Courtesy of VOLVO CARS CORPORATION

Move the gear selector to position P. This is to access the cable locking.

Remove the mechanical cable lock from the gear selector lever, use pliers and pull the lock off bushing. Pull the striker plate straight up out of the mounting which secures the solenoid.

REMOVING THE SOLENOID

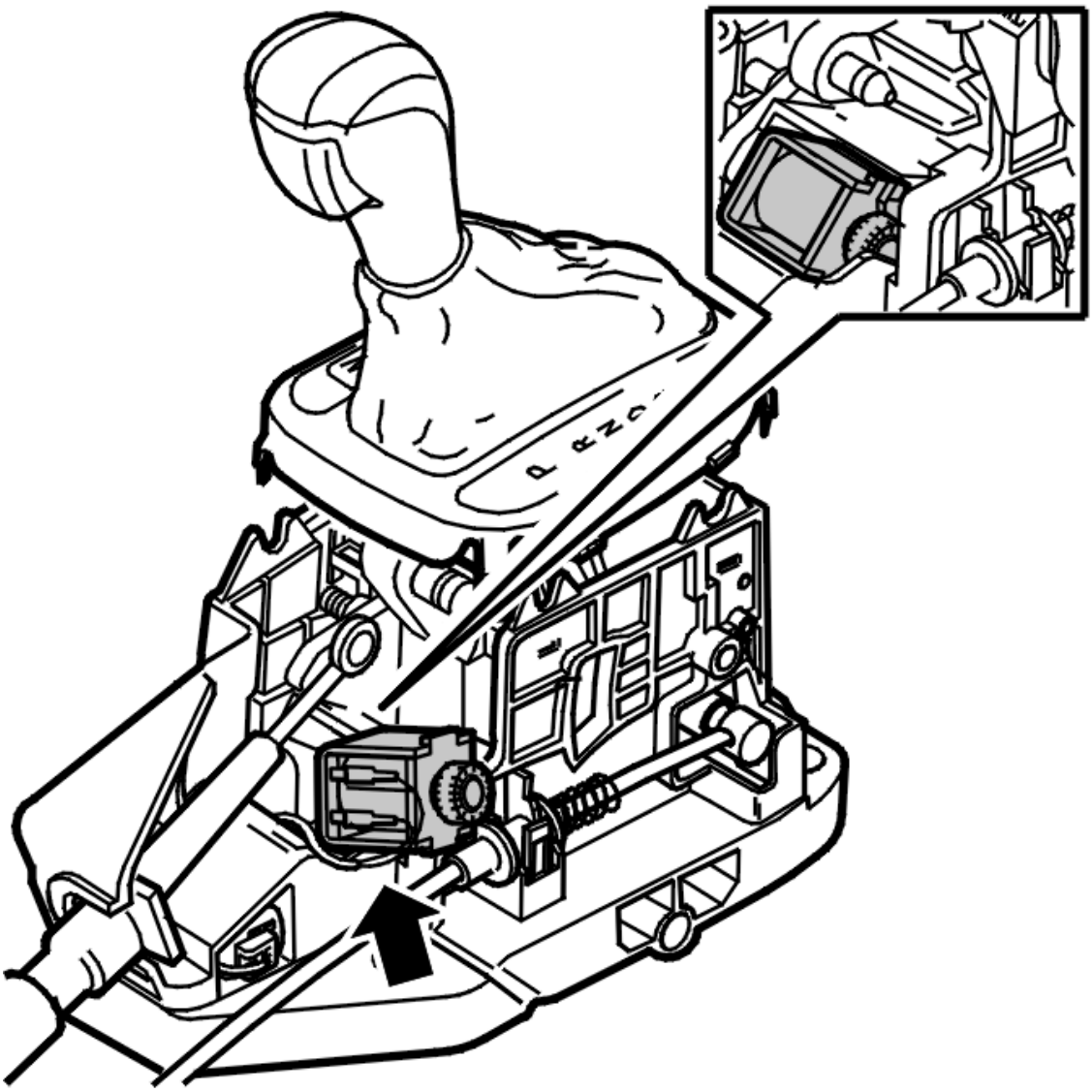

Fig. 186: Locating Solenoid
Courtesy of VOLVO CARS CORPORATION

Carefully pull the solenoid, with its wiring, out of the gear selector assembly.

Disconnect the tab terminals.

HINT: Check that the blade terminal plus (+) and minus (-) are correctly positioned on the solenoid.

INSTALLATION

INSTALLING THE SOLENOID

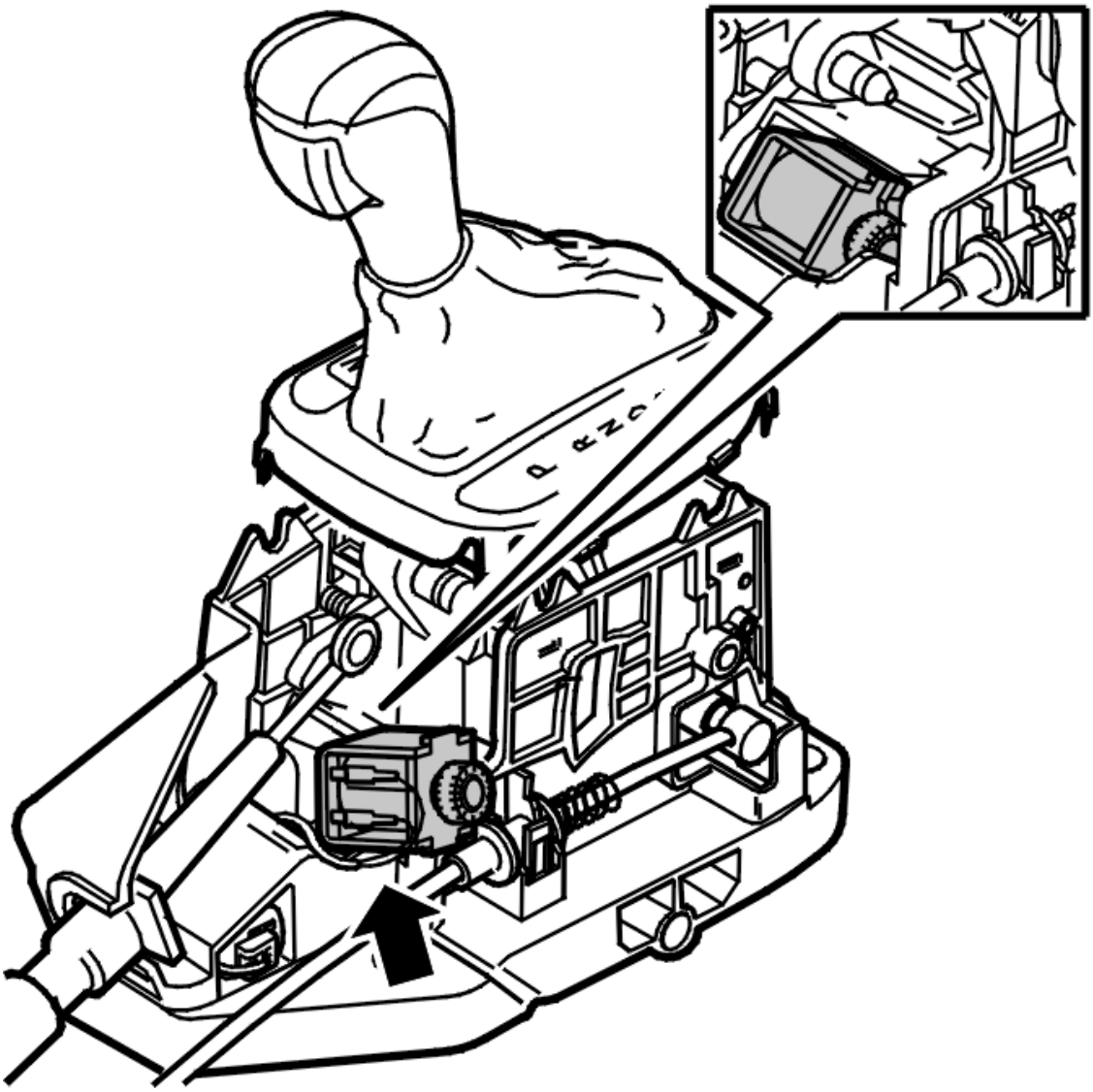

Fig. 187: Locating Solenoid
Courtesy of VOLVO CARS CORPORATION

Connect the tab terminals.

Install the solenoid in the gear selector assembly cut-out. The blade terminal and the cable should be upwards in the gear selector assembly.

Secure the solenoid with the bracket.

INSTALLING MECHANICAL CABLE FOR GEAR SELECTOR ASSEMBLY

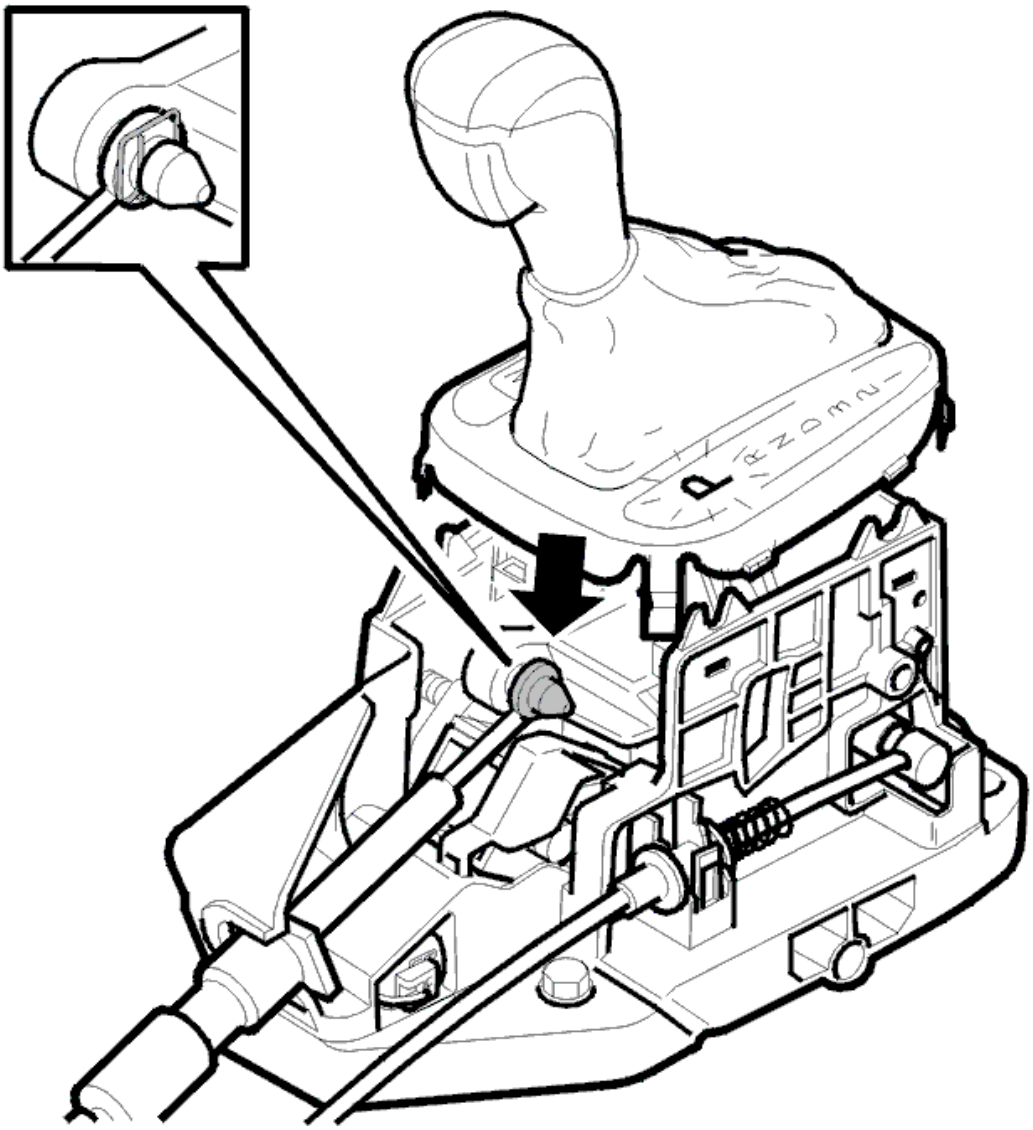

Fig. 188: Identifying Mechanical Cable Lock Installed Onto Bushing On Mechanical Cable
Courtesy of VOLVO CARS CORPORATION

Install the mechanical cable lock onto the bushing on the mechanical cable.

Press the mechanical cable into place on the gear selector assembly.

NOTE: Check that the mechanical cable is secure.

Function test

Move the gear selector to position P.

Ignition on.

Press the brake pedal and check that the solenoid releases the gear selector lever and other gear positions can be selected.

INSTALLING THE CENTER CONSOLE

Install the center console. See **REMOVING CENTER TUNNEL CONSOLE** .

GEAR SELECTOR ASSEMBLY, GEAR SELECTOR (B5254T2, AW55-50/51SN; 2004-2007)

BOOT, GEAR SELECTOR, REPLACING

BOOT, GEAR SELECTOR, REPLACING

CABLE KEY INTERLOCK, REPLACING

CABLE KEY INTERLOCK, REPLACING

GEAR SELECTOR CABLES, REPLACE

GEAR SELECTOR CABLES, REPLACE

GEAR SELECTOR KNOB, GEARTRONIC, REPLACING

GEAR SELECTOR KNOB, GEARTRONIC, REPLACING

GEAR SELECTOR LEVER ASSEMBLY GEARTRONIC, REPLACING

GEAR SELECTOR LEVER ASSEMBLY GEARTRONIC, REPLACING

SOLENOID SHIFT LOCK, REPLACE

SOLENOID SHIFT LOCK, REPLACE

GEAR SELECTOR ASSEMBLY, GEAR SELECTOR (B6294T, 4T65 AWD; 2003-2006)

BOOT, GEAR SELECTOR, REPLACING

BOOT, GEAR SELECTOR, REPLACING

CABLE KEY INTERLOCK, REPLACING

CABLE KEY INTERLOCK, REPLACING

GEAR SELECTOR CABLES, REPLACING

Special tools:

9997077

NOTE: **As the illustrations in this service information are used for different model years and / or models, some variation may occur. However, the essential information in the illustrations is always correct.**

REMOVAL

REMOVING THE AIR CLEANER (ACL) HOUSING

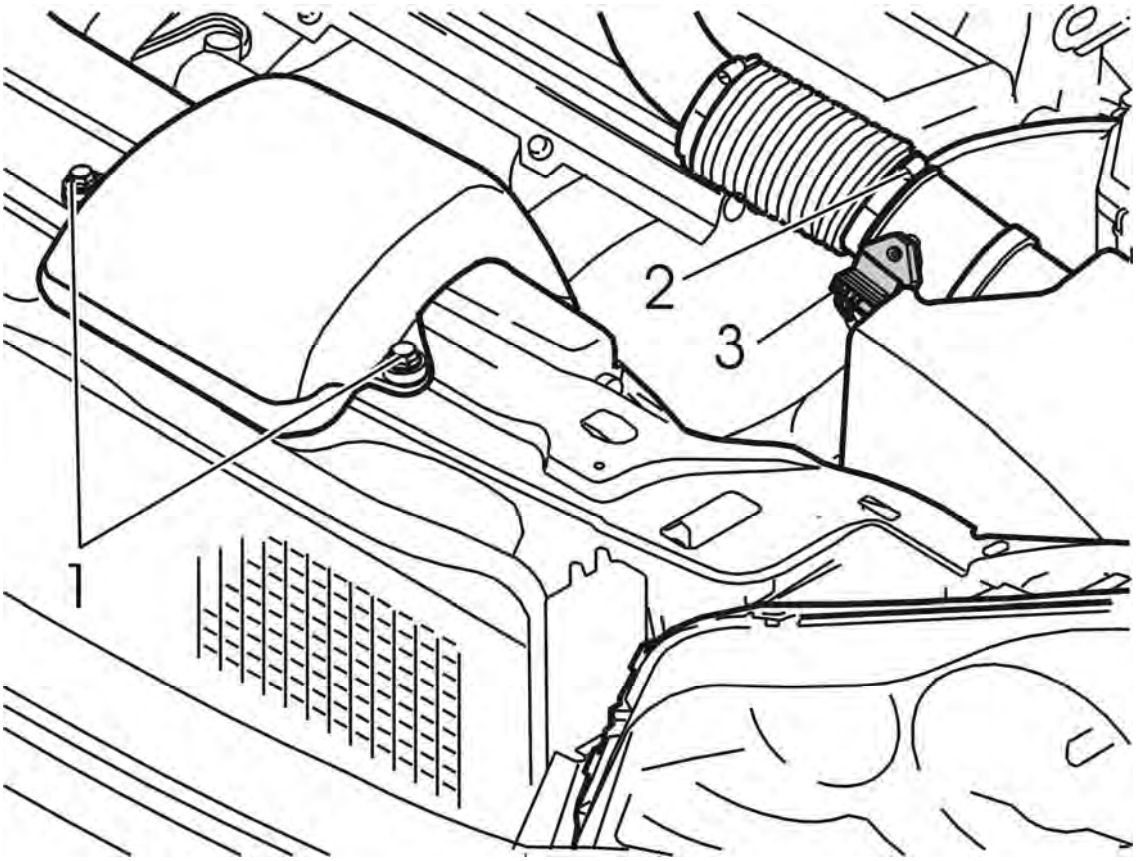

Fig. 189: Air Cleaner (ACL) Housing
Courtesy of VOLVO CARS CORPORATION

Remove the screws (1) for the intake manifold.

Disconnect the hose clamp (2) for the air hose.

Remove the connector (3) from the mass air flow (MAF) sensor.

Remove the air cleaner (ACL) housing from its mountings. Pull it straight up.

REMOVING THE GEAR SELECTOR CABLE AND BALL JOINT

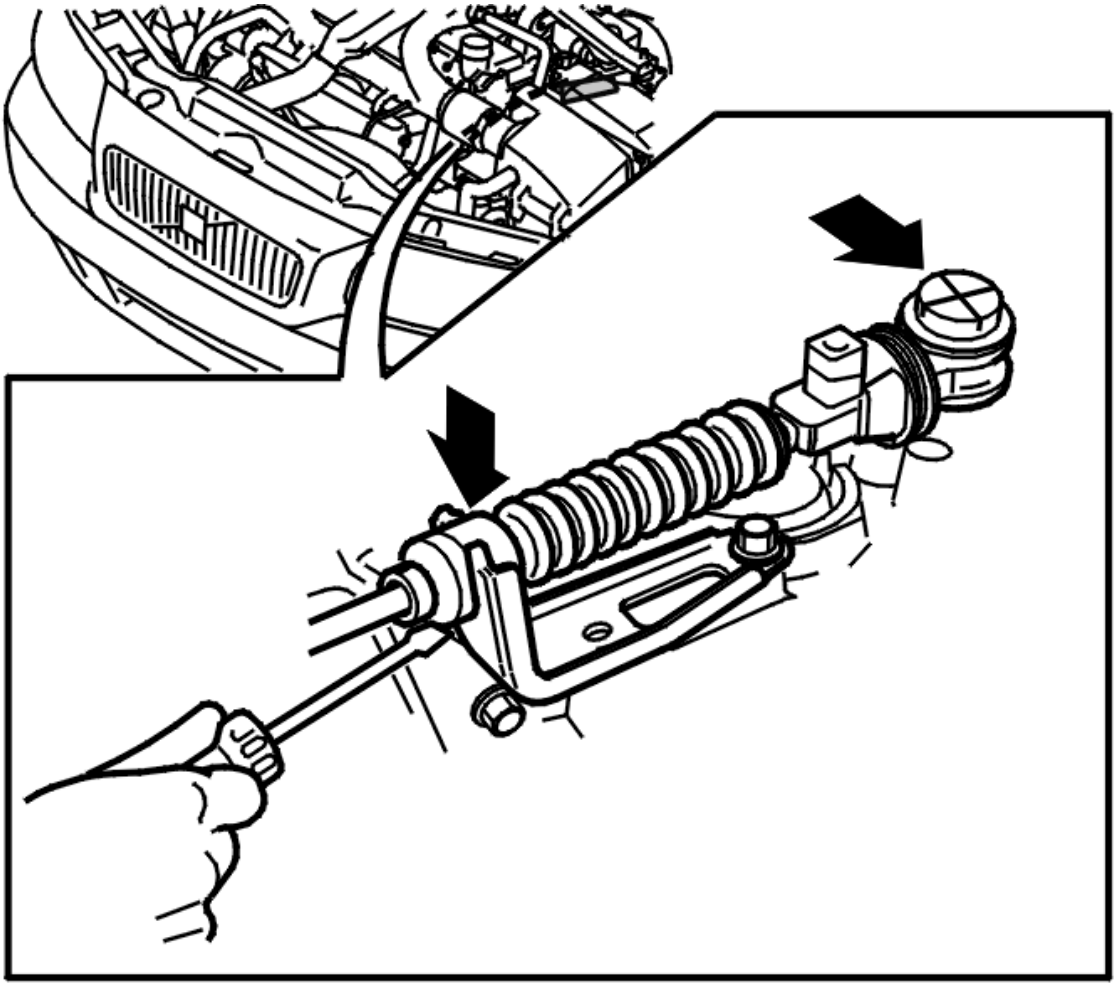

Fig. 190: Removing Gear Selector Cable
Courtesy of VOLVO CARS CORPORATION

Remove the gear selector cable from the bracket on the transmission by pressing the retaining clip in the hole under the gear selector cable. Use jimmy bar **9997077** to detach the ball joint for the gear selector cable from the lever.

REMOVING THE LEFT FRONT WHEEL

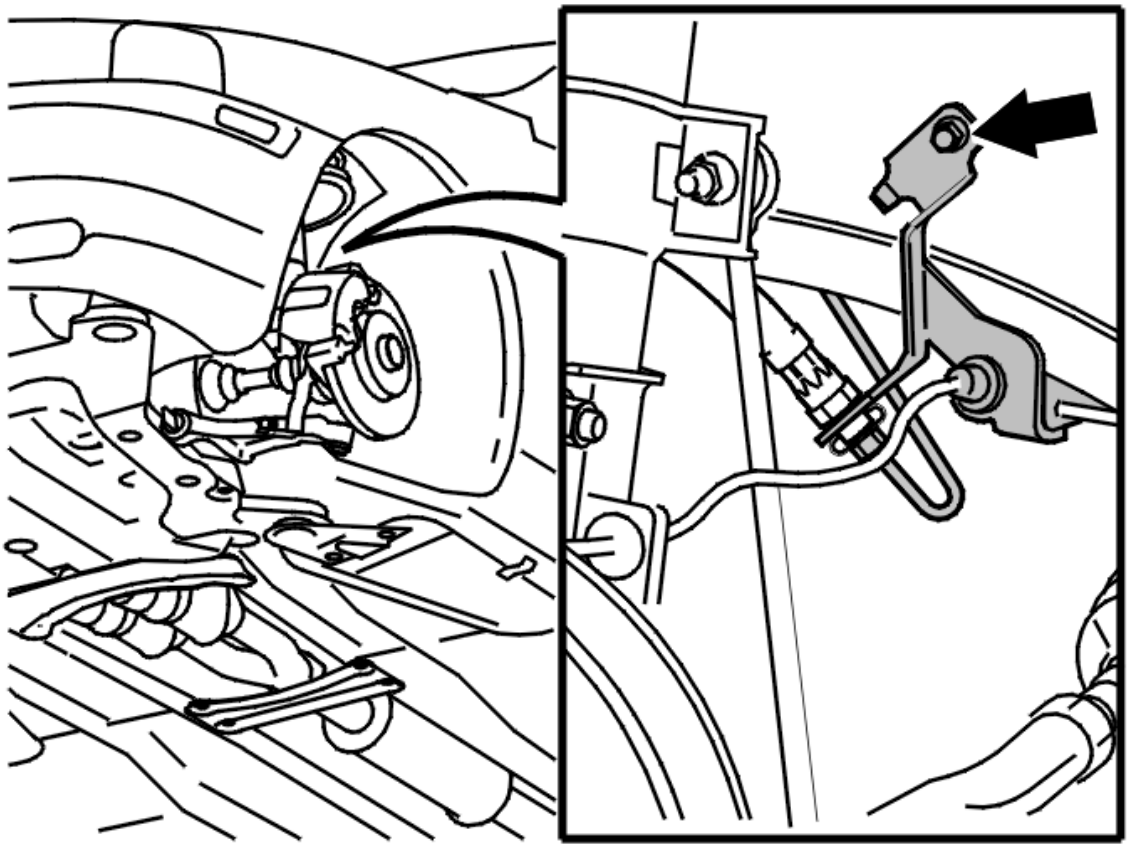

Fig. 191: Identifying Mounting For Brake Hose And Pipe
Courtesy of VOLVO CARS CORPORATION

Remove the left front wheel. Pry the clips apart. Remove the gear selector cable from the clips on the side member.

Remove the mounting for the brake hose and brake pipe.

REMOVING SIDE PANELS

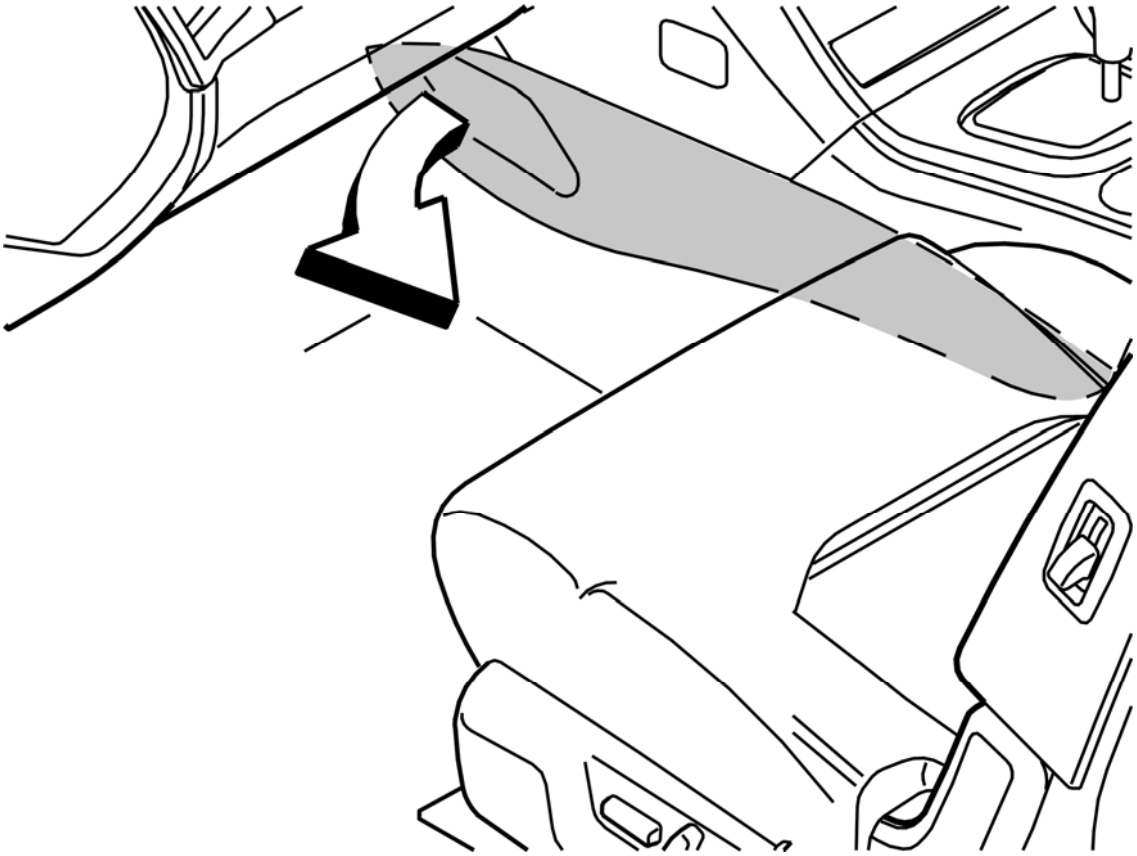

Fig. 192: Identifying Removal Of Center Console Side Panels
Courtesy of VOLVO CARS CORPORATION

Remove the side panels from the center console.

Remove the center console. See **CENTER CONSOLE, REPLACING** .

REMOVING THE GEAR SELECTOR CABLE

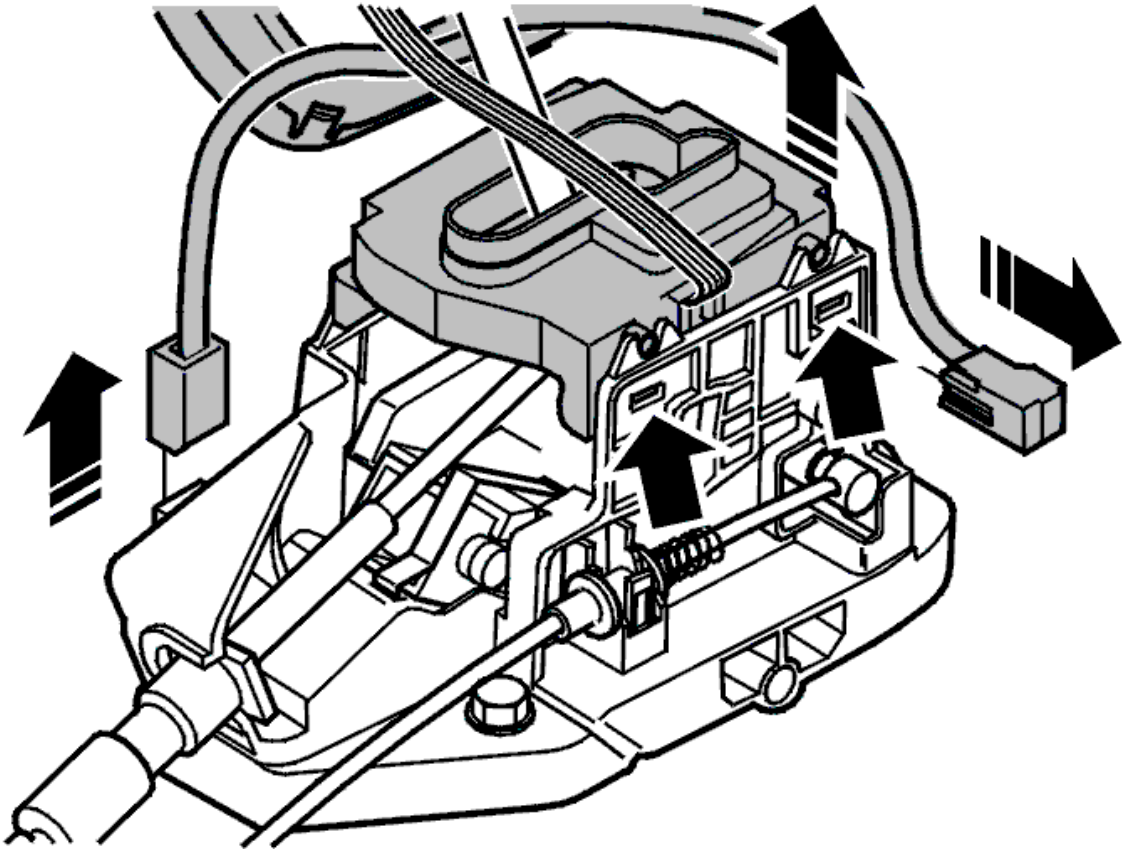

Fig. 193: Removing Stop For Gear Selector Assembly
Courtesy of VOLVO CARS CORPORATION

Detach the gear selector lever stop. See **GEAR SELECTOR LEVER ASSEMBLY GEARTRONIC, REPLACING**.

Remove:

- the catch for the gear selector cable on the gear selector.

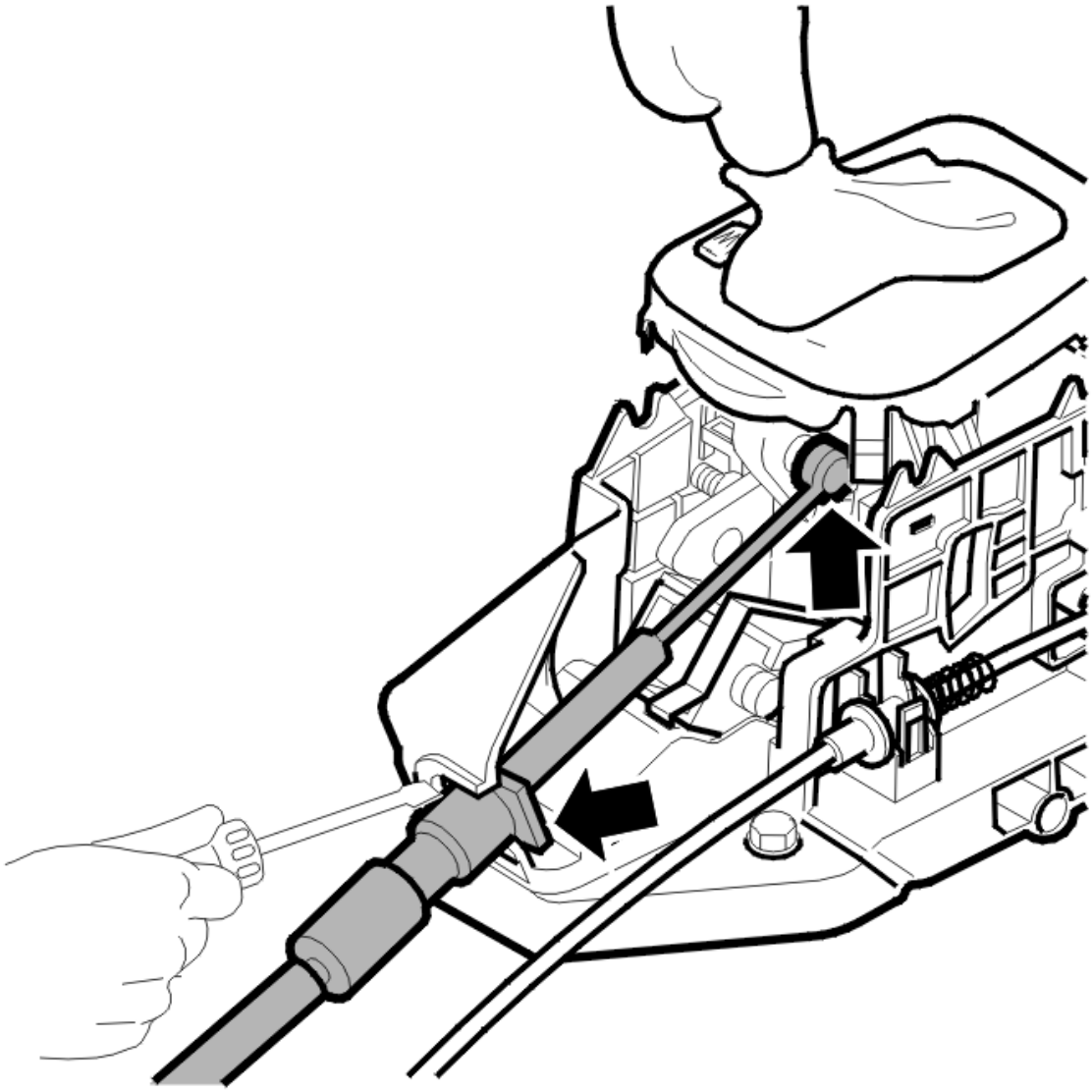

Fig. 194: Removing Gear Selector Cable
Courtesy of VOLVO CARS CORPORATION

- the mechanical transmission cable from the gear selector assembly nose. Press the catches. Use a screwdriver
- the mechanical gear selector cable.

REMOVING THE GEAR SELECTOR CABLE AT THE FIREWALL

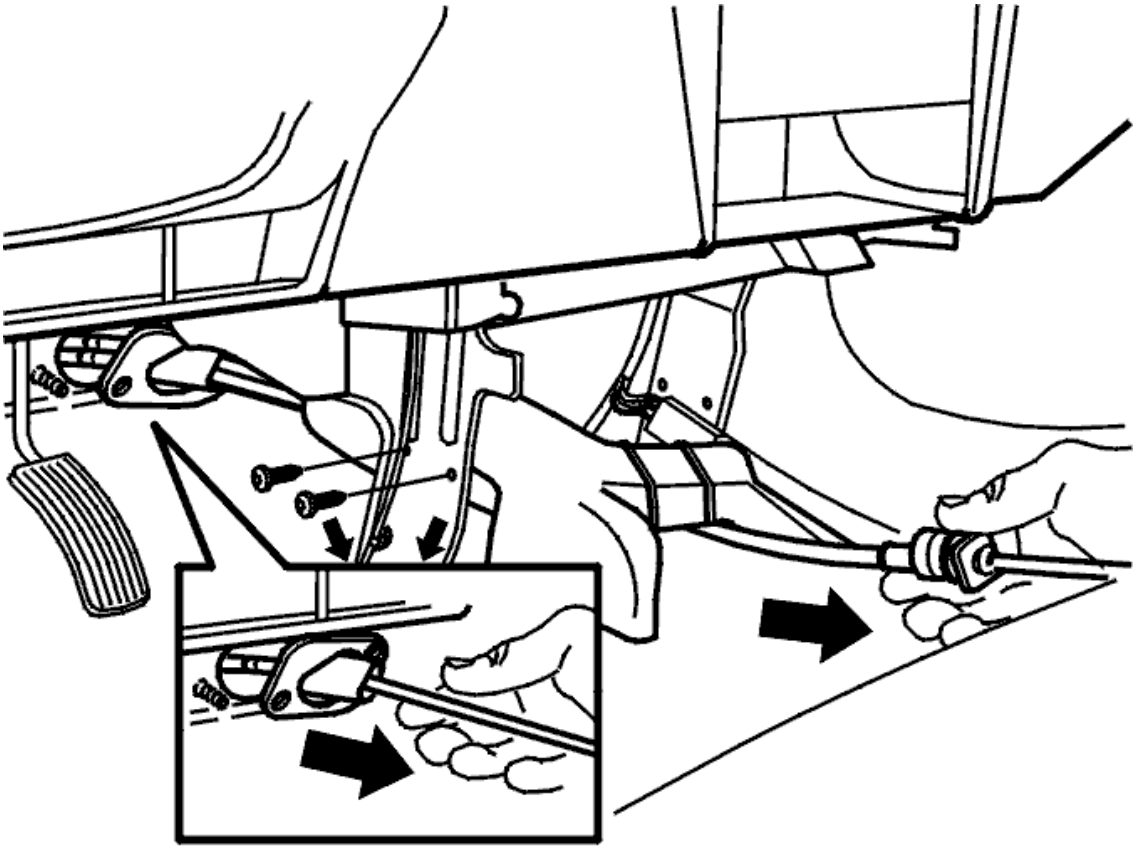

Fig. 195: Identifying Cable At Firewall
Courtesy of VOLVO CARS CORPORATION

Remove:

- the 2 air ducts
- the 4 screws for the strut in the dashboard. Push the carpet to one side
- the 2 nuts for the gear selector cable grommet at the firewall
- the gear selector cable by pulling it inwards into the passenger compartment.

HINT: Secure a cable using tape at the end of the engine compartment on the gear selector cable before pulling it out to make reinstallation easier. Route the gear selector cable correctly in the engine compartment with someone to assist you.

INSTALLATION

NOTE: For tightening torques, see TIGHTENING TORQUE .

PREPARATIONS FOR INSTALLATION

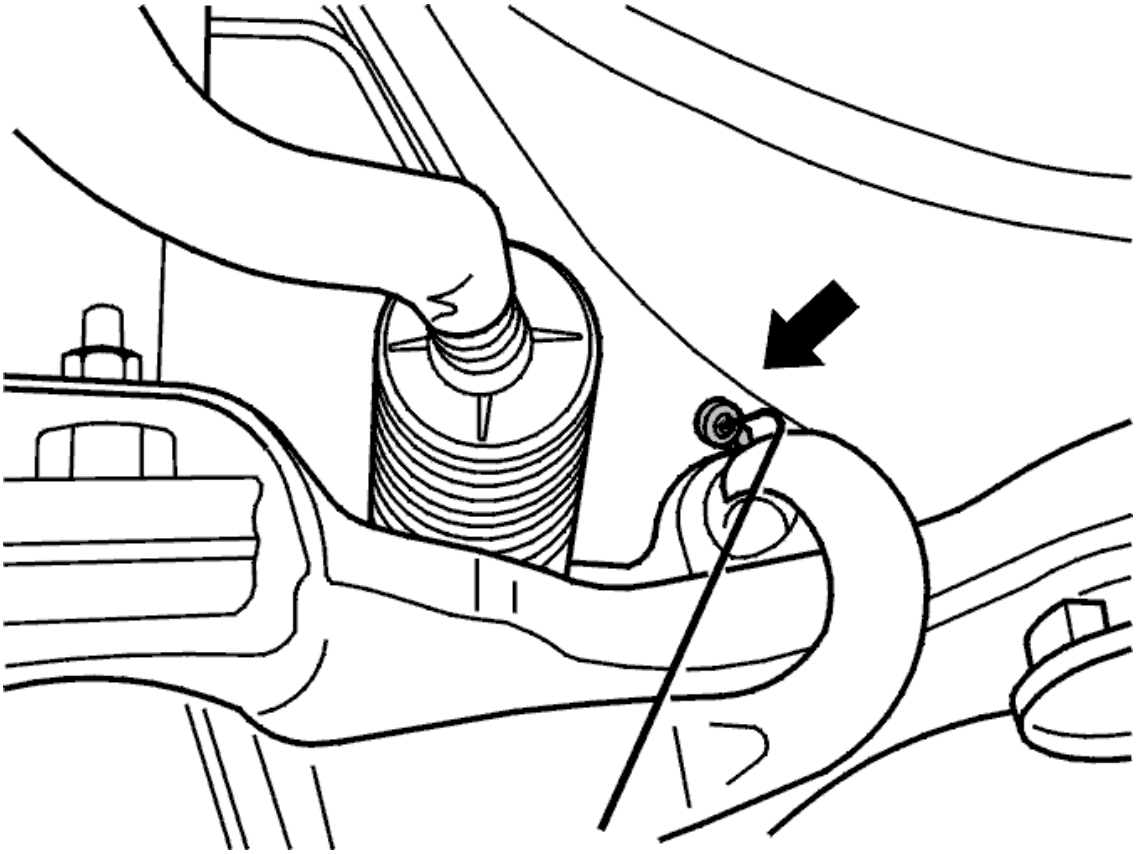

Fig. 196: Identifying Bent Heavy Welding Rod In Engine Compartment
Courtesy of VOLVO CARS CORPORATION

Tape the cable to the new gear selector cable.

NOTE: **When installing the gear selector cable: Be extremely careful to ensure that there are no sharp bends or kinks in the gear selector cable, especially between the inner cable and outer sleeve.**

HINT: Route the gear selector cable correctly in the engine compartment with someone to assist you.

INSTALLING THE GEAR SELECTOR CABLE FROM THE INSIDE OF THE PASSENGER COMPARTMENT

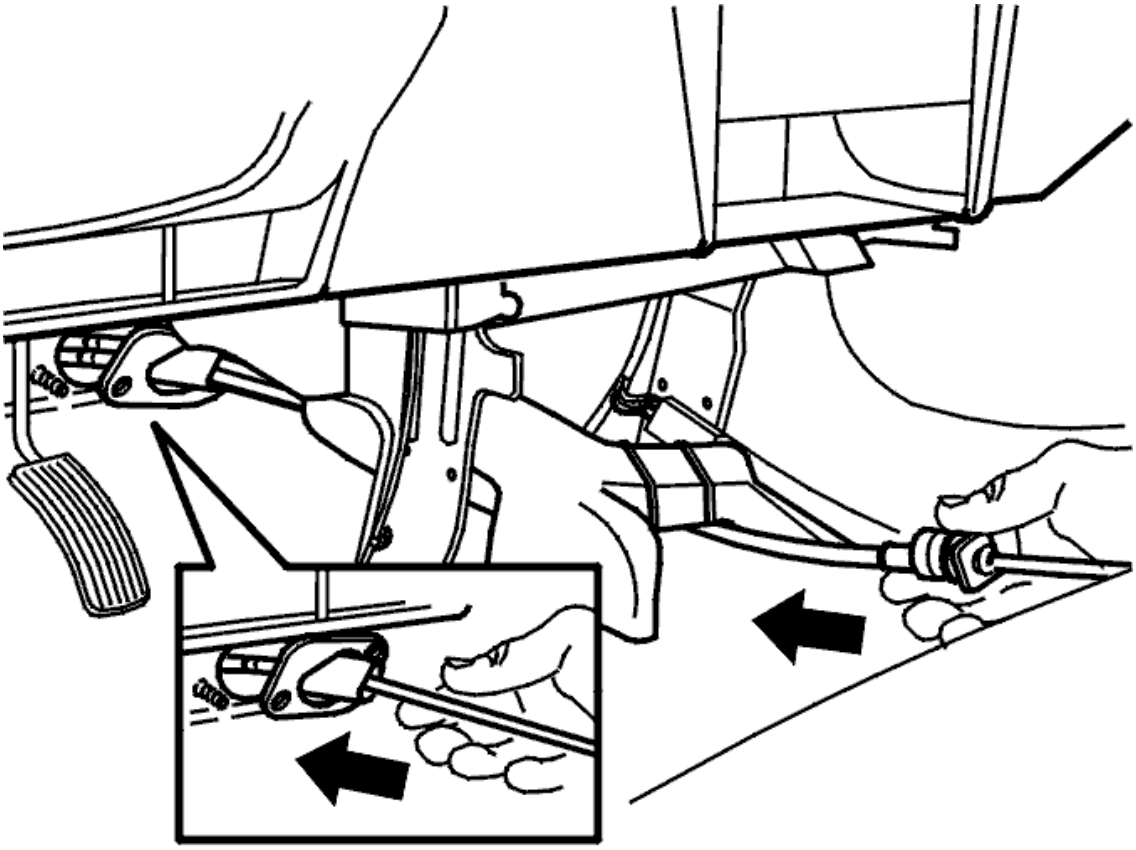

Fig. 197: Identifying Cable At Firewall
Courtesy of VOLVO CARS CORPORATION

Install the gear selector cable under the heater unit on the left side, down towards the hole.

NOTE: **Be very careful when inserting the rubber bellow for the gear selector cable through the hole in the firewall to prevent damage to the cable.**

Feed the gear selector cable through the hole slightly.

HINT: Route the gear selector cable correctly in the engine compartment with someone to assist you.

Locate the grommet on the studs

Install:

- the nuts. Tighten
- the air ducts
- the stay and the screws. Tighten.

FEEDING IN THE GEAR SELECTOR CABLE FROM THE INSIDE

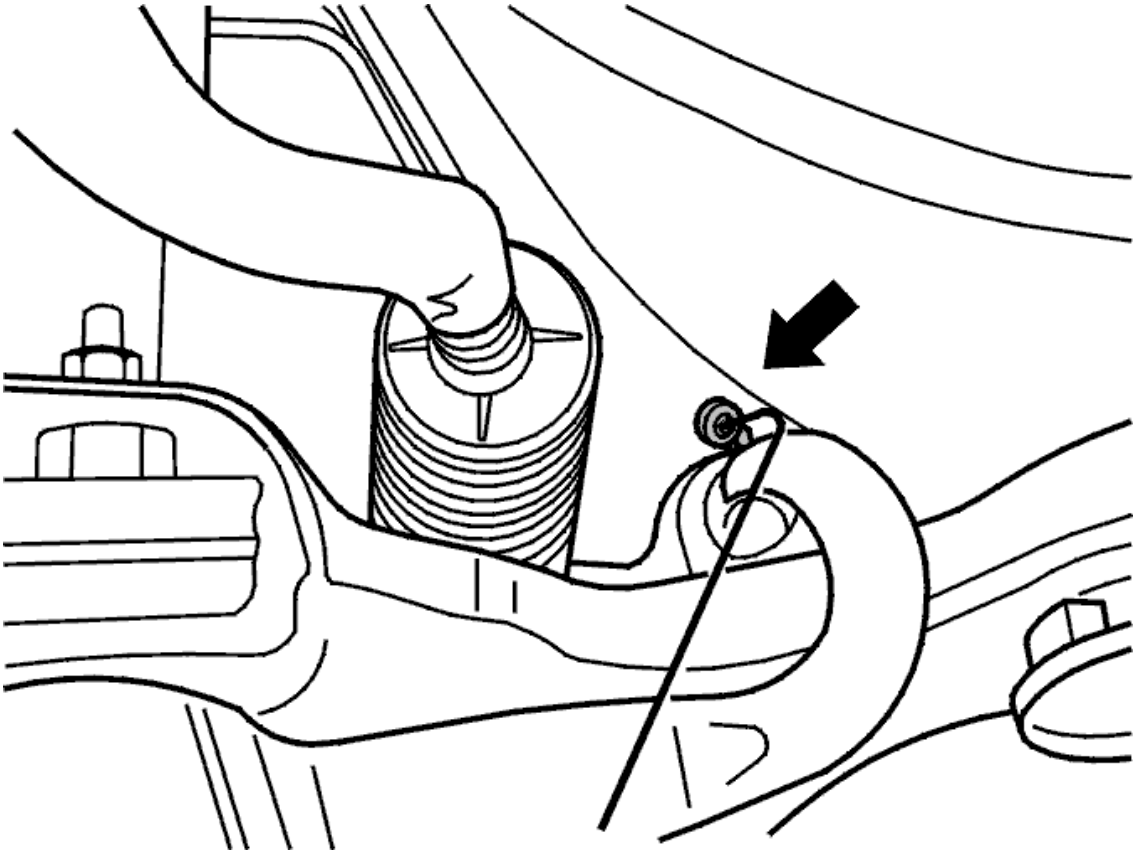

Fig. 198: Identifying Bent Heavy Welding Rod In Engine Compartment
Courtesy of VOLVO CARS CORPORATION

Pull the cable while feeding the gear selector cable in from the inside.

The gear selector cable must be routed past the steering gear and up to the transmission bracket.

Secure the gear selector cable in the clips on the side member.

INSTALLING THE GEAR SELECTOR CABLE ON THE GEAR SELECTOR

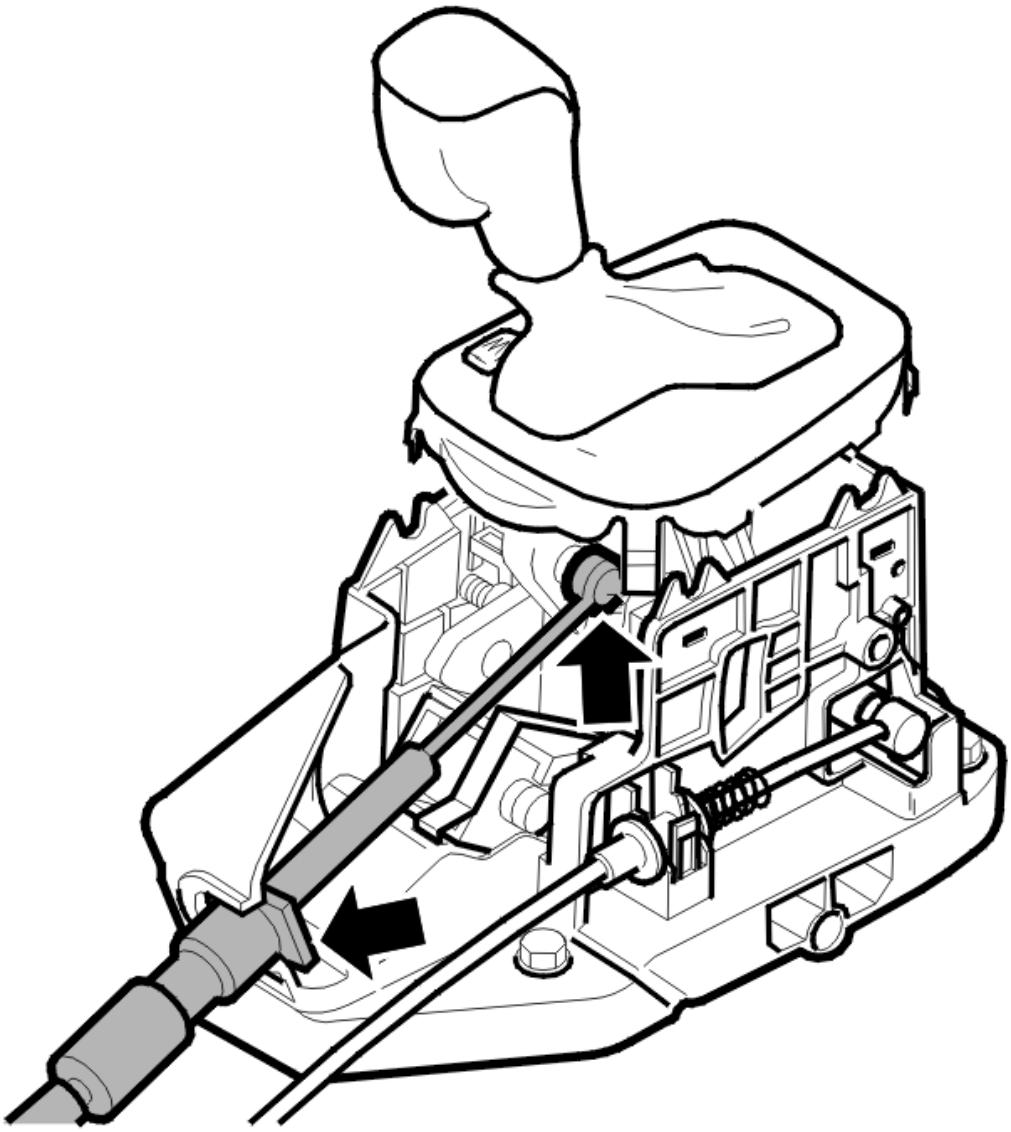

Fig. 199: Installing Gear Selector Cable On Gear Selector
Courtesy of VOLVO CARS CORPORATION

Install:

- the gear selector cable on the gear selector. Secure the cable using the catch
- the gear selector cable on the end of the gear selector assembly.

Reinstall the gear selector lever stop. See **GEAR SELECTOR LEVER ASSEMBLY GEARTRONIC, REPLACING**.

INSTALLING THE GEAR SELECTOR CABLE ON THE TRANSMISSION

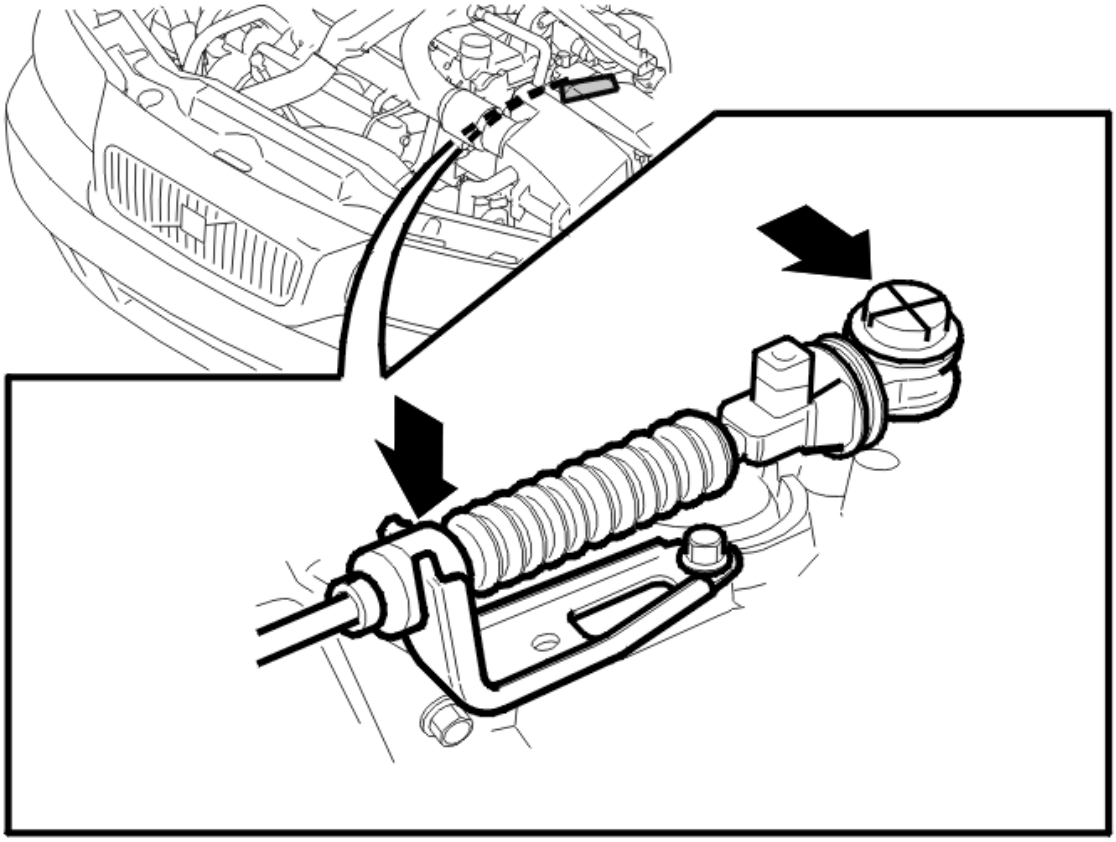

Fig. 200: Installing Gear Selector Cable On Transmission
Courtesy of VOLVO CARS CORPORATION

Install:

- the gear selector cable in the bracket. Press it so that it locks
- the gear selector cable on the lever. Press the ball joint for the gear selector cable into place on the throttle spindle.

NOTE: After the gear selector cable is replaced, it must be adjusted. See GEAR SELECTOR CABLE, ADJUSTING .

GEAR SELECTOR KNOB, GEARTRONIC, REPLACING

GEAR SELECTOR KNOB, GEARTRONIC, REPLACING

GEAR SELECTOR LEVER ASSEMBLY GEARTRONIC, REPLACING

GEAR SELECTOR LEVER ASSEMBLY GEARTRONIC, REPLACING

SOLENOID SHIFT LOCK, REPLACE

SOLENOID SHIFT LOCK, REPLACE

STOP GEAR SELECTOR LEVER ASSEMBLY, REPLACING

NOTE: **As the illustrations in this service information are used for different model years and / or models, some variation may occur. However, the essential information in the illustrations is always correct.**

REMOVAL

REMOVING THE CENTER CONSOLE

Remove the center console. See **REMOVING CENTER TUNNEL CONSOLE** .

DETACHING THE BOOT AND REMOVING THE GEAR SELECTOR KNOB

Detach the boot from the gear selector. Remove the gear selector knob. See **GEAR SELECTOR KNOB, GEARTRONIC, REPLACING**.

Angle the top panel with the boot away from the gear selector lever.

REMOVING THE GEAR SELECTOR ASSEMBLY STOP

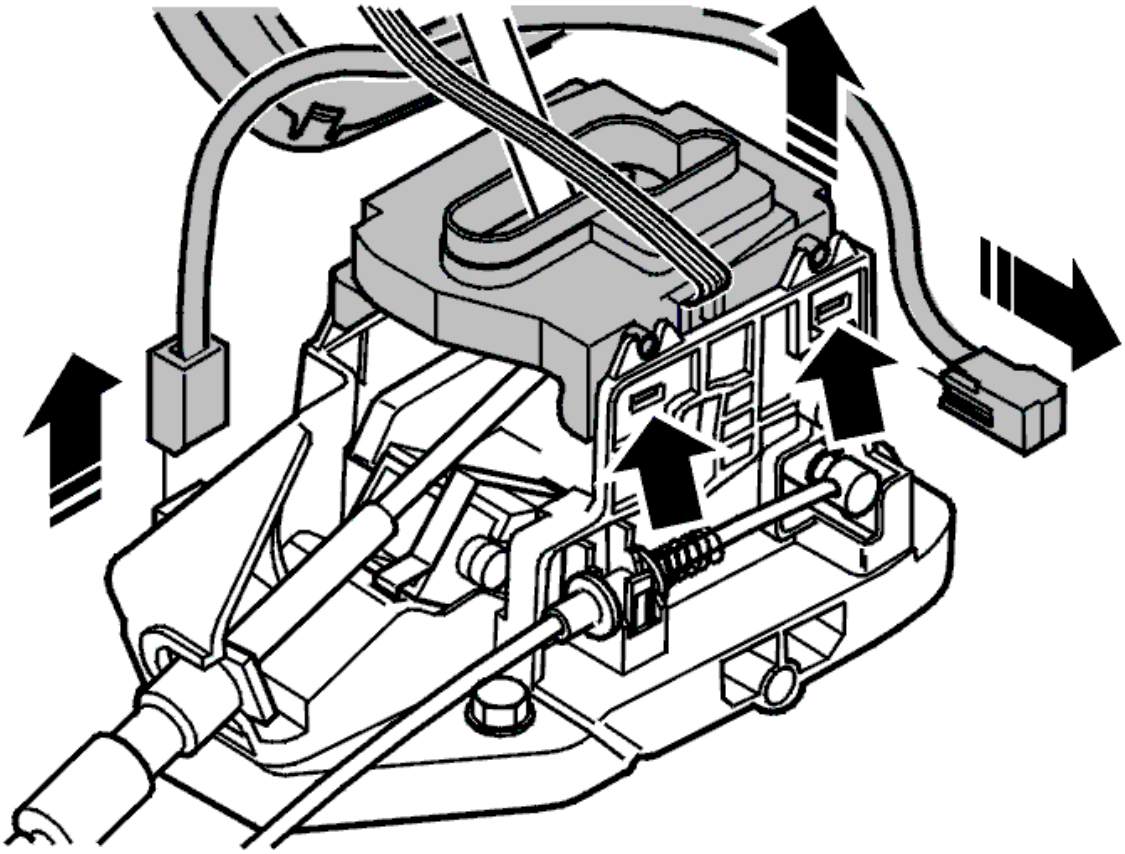

Fig. 201: Removing Stop For Gear Selector Assembly
Courtesy of VOLVO CARS CORPORATION

Press in the 4 catches on the sides. Pull the stop straight up out of the gear selector assembly.

Angle the gear selector assembly stop over the gear selector.

REMOVING THE PRINTED CIRCUIT BOARD FOR THE GEAR SELECTOR ASSEMBLY STOP

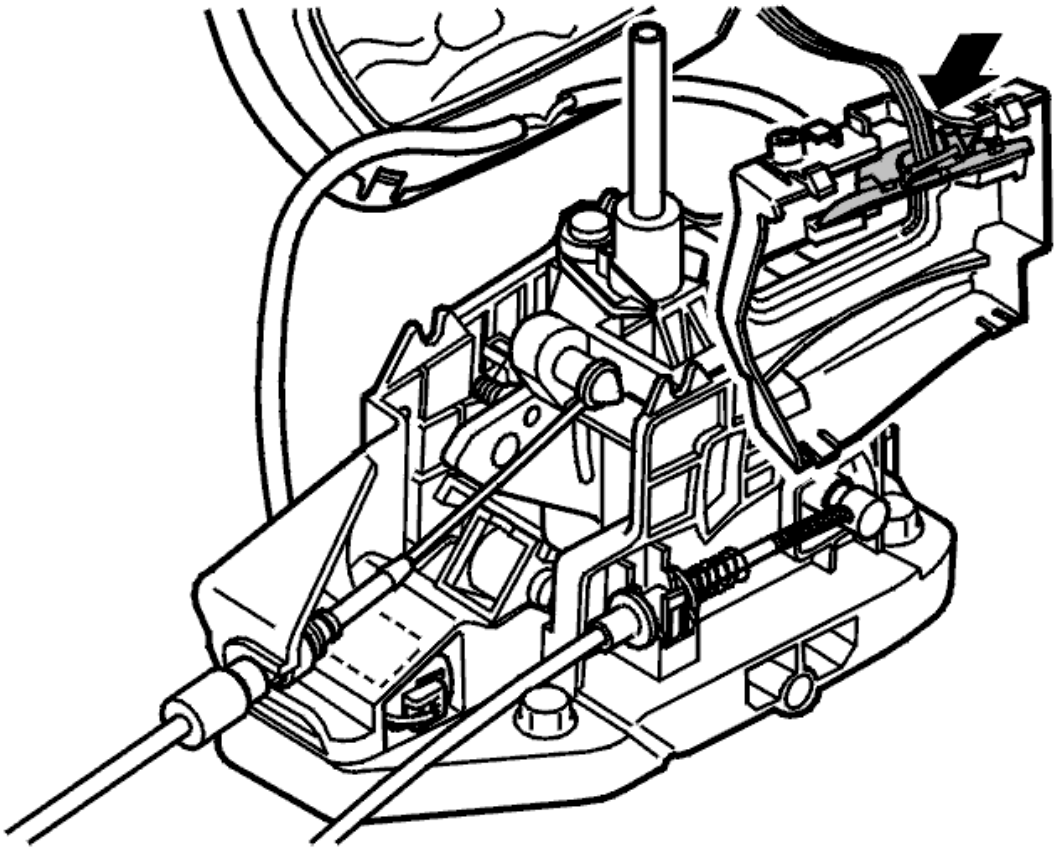

Fig. 202: Removing Printed Circuit Board From Gear Selector Assembly Stop
Courtesy of VOLVO CARS CORPORATION

Press the catches locking the holder for the printed circuit board.

Angle the holder out of the gear selector assembly stop. Transfer the holder to the new gear selector assembly stop (P/N 977 0855).

INSTALLATION

INSTALLING THE GEAR SELECTOR ASSEMBLY STOP

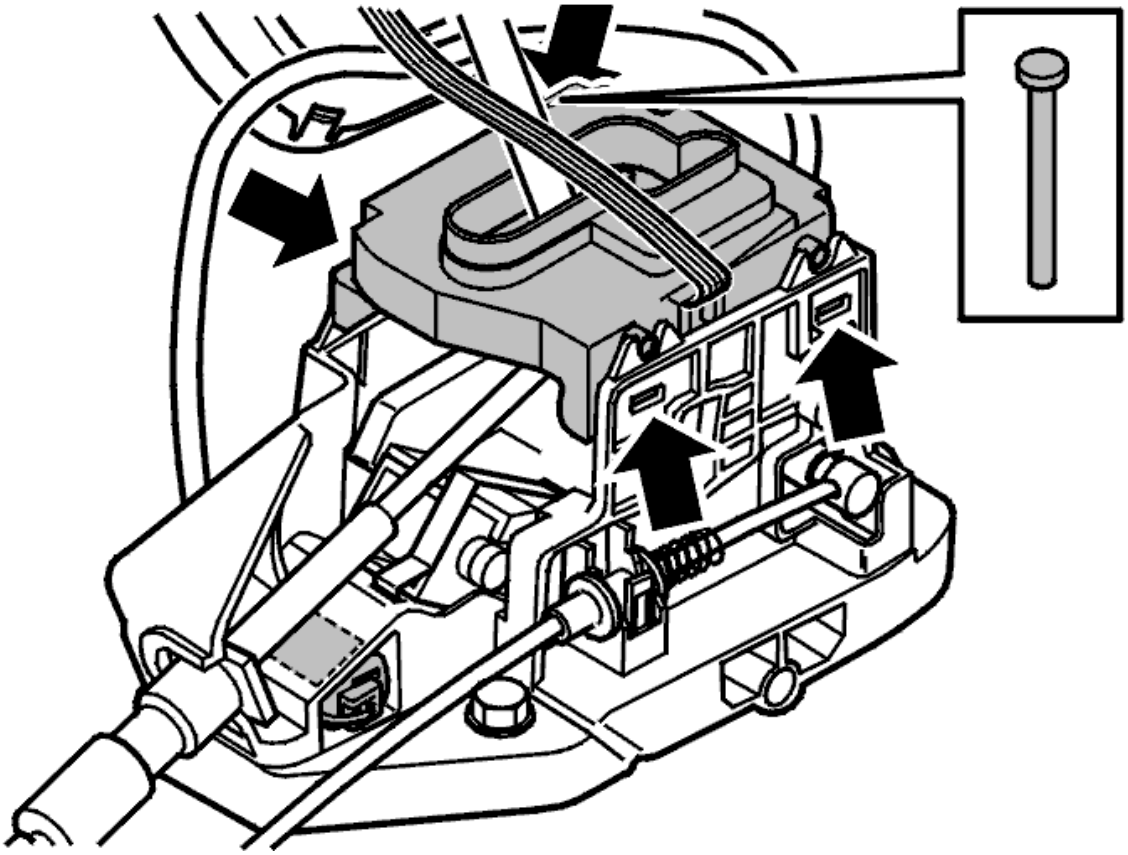

Fig. 203: Installing Gear Selector Assembly Stop On Gear Selector Assembly
Courtesy of VOLVO CARS CORPORATION

Install:

- the stop on the gear selector assembly. Lock into place in the gear selector assembly
- the yellow lock pin.

INSTALLING GEAR SELECTOR KNOB AND BOOT

Install the gear selector knob and boot. See **GEAR SELECTOR KNOB, GEARTRONIC, REPLACING**.

INSTALLING THE CENTER CONSOLE

Install the center console. See **REMOVING CENTER TUNNEL CONSOLE** .

TOP PANEL GEARTRONIC, REPLACING

NOTE: **As the illustrations in this service information are used for different model years and / or models, some variation may occur. However, the essential information in the illustrations is always correct.**

REMOVAL

REMOVING THE TOP PANEL

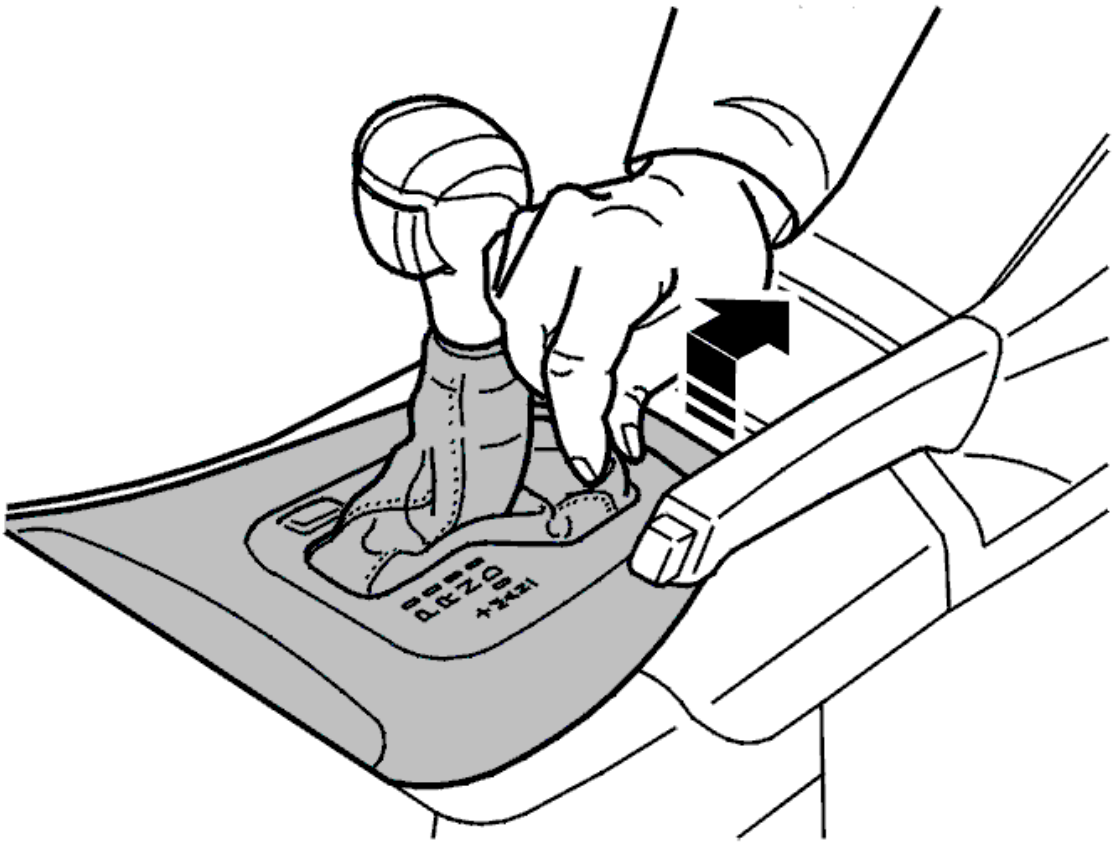

Fig. 204: Removing Boot From Gear Selector Knob
Courtesy of VOLVO CARS CORPORATION

Hold the boot and pull it straight up. Angle the boot backwards.

REMOVING THE GEAR SELECTOR KNOB

Remove the gear selector knob. See **GEAR SELECTOR KNOB, GEARTRONIC, REPLACING**.

REMOVING THE CENTER CONSOLE

Remove the center console. See **REMOVING CENTER TUNNEL CONSOLE** .

REMOVING THE GEAR SELECTOR ASSEMBLY STOP

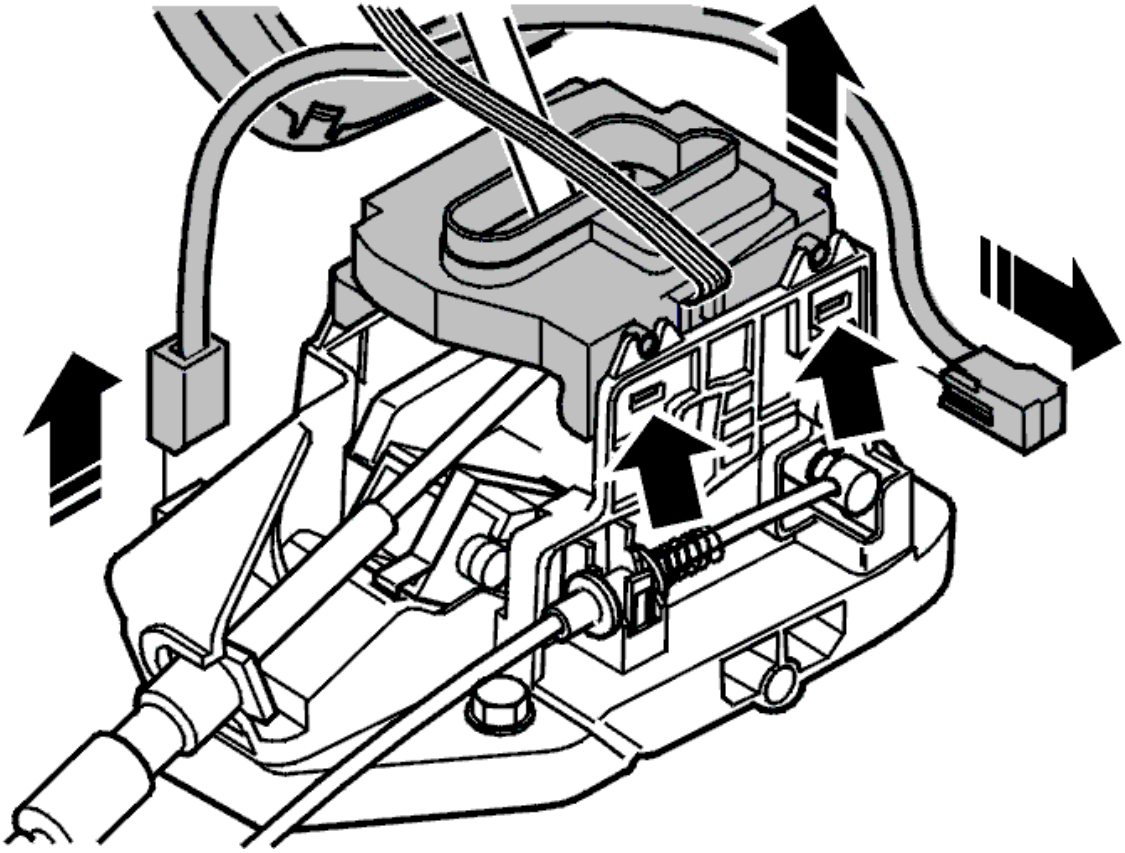

Fig. 205: Removing Stop For Gear Selector Assembly
Courtesy of VOLVO CARS CORPORATION

Press in the four catches on the side. Pull the gear selector assembly stop straight up.

REMOVING THE PRINTED CIRCUIT BOARD FROM THE GEAR SELECTOR ASSEMBLY STOP

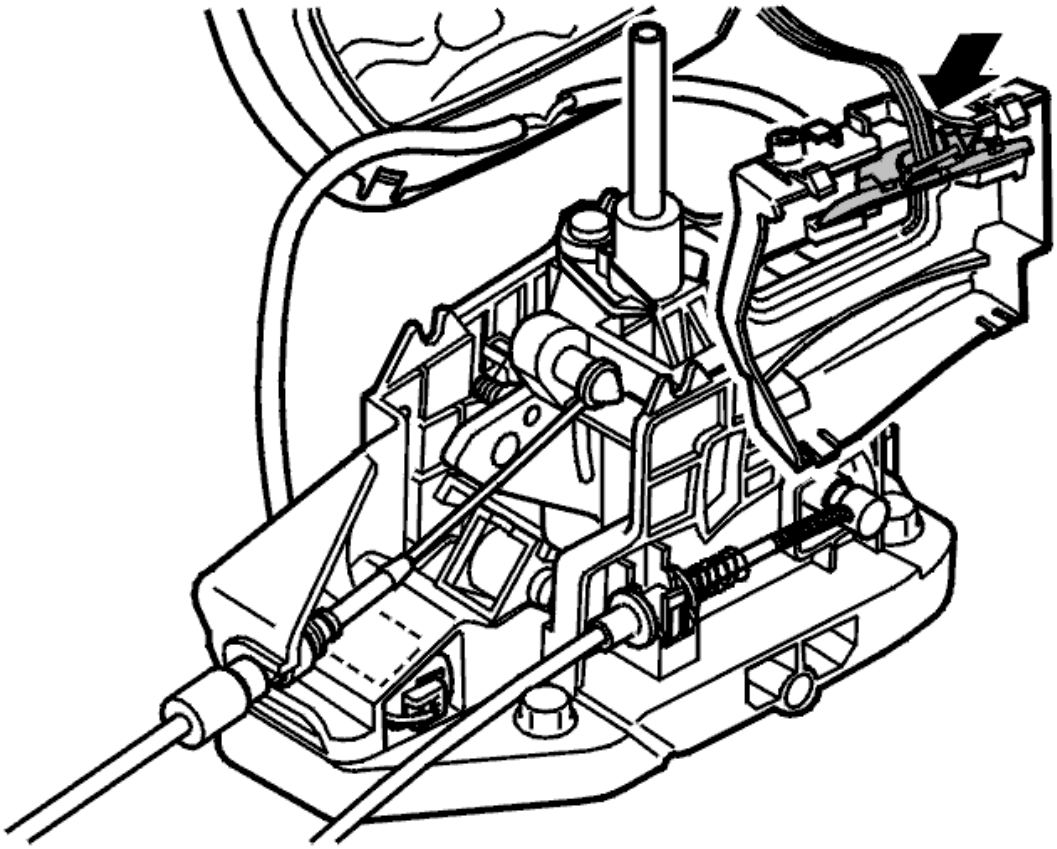

Fig. 206: Removing Printed Circuit Board From Gear Selector Assembly Stop
Courtesy of VOLVO CARS CORPORATION

Press the catches locking the holder for the printed circuit board.

Angle out the holder and the printed circuit board.

Transfer the entire holder when replacing the gear selector assembly stop.

Alternatively: Detach the printed circuit board from the 2 catches on the holder and pull the printed circuit board straight up.

REMOVING THE BOOT AND THE SWITCHES FROM THE GEAR SELECTOR ASSEMBLY

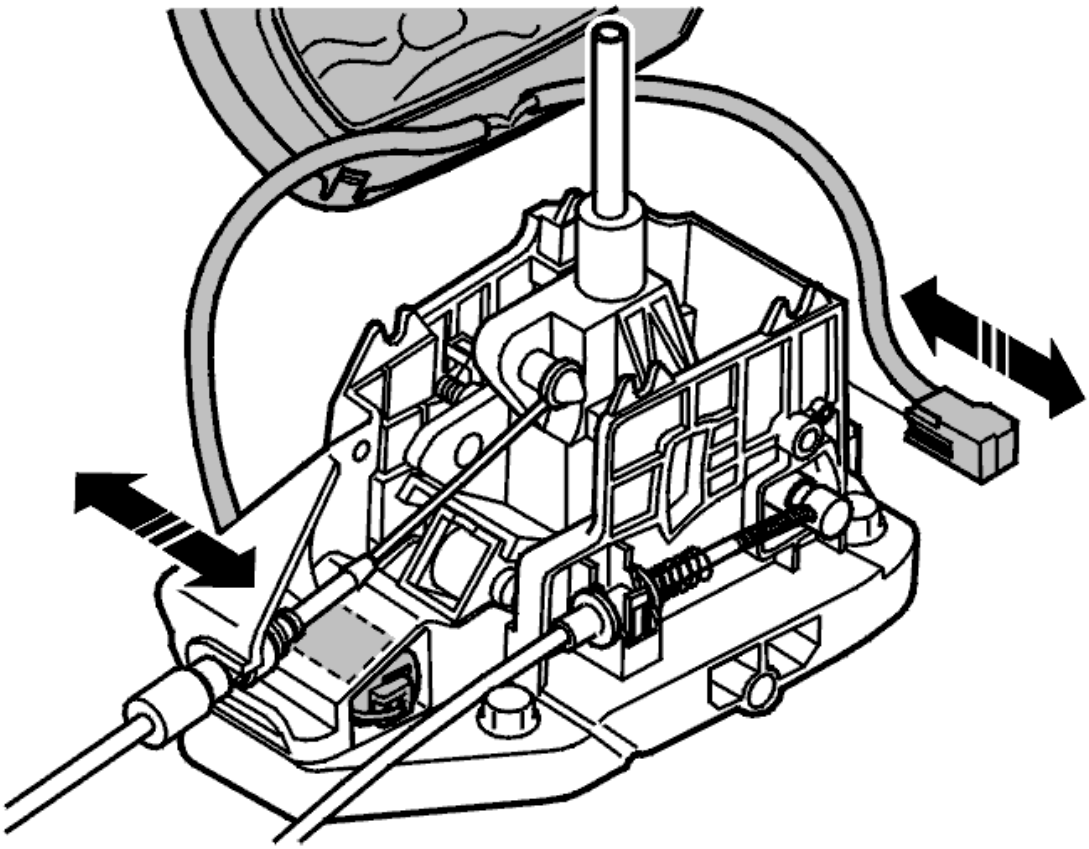

Fig. 207: Removing Boot And Switches From Gear Selector Assembly
Courtesy of VOLVO CARS CORPORATION

Remove the wiring from the clips.

Disconnect the rear connector from the gear selector assembly.

Pull the front connector out of the gear selector assembly.

Separate the connectors.

Angle off the top panel and the boot.

REMOVING AND TRANSFERRING THE BOOT FROM THE TOP PANEL

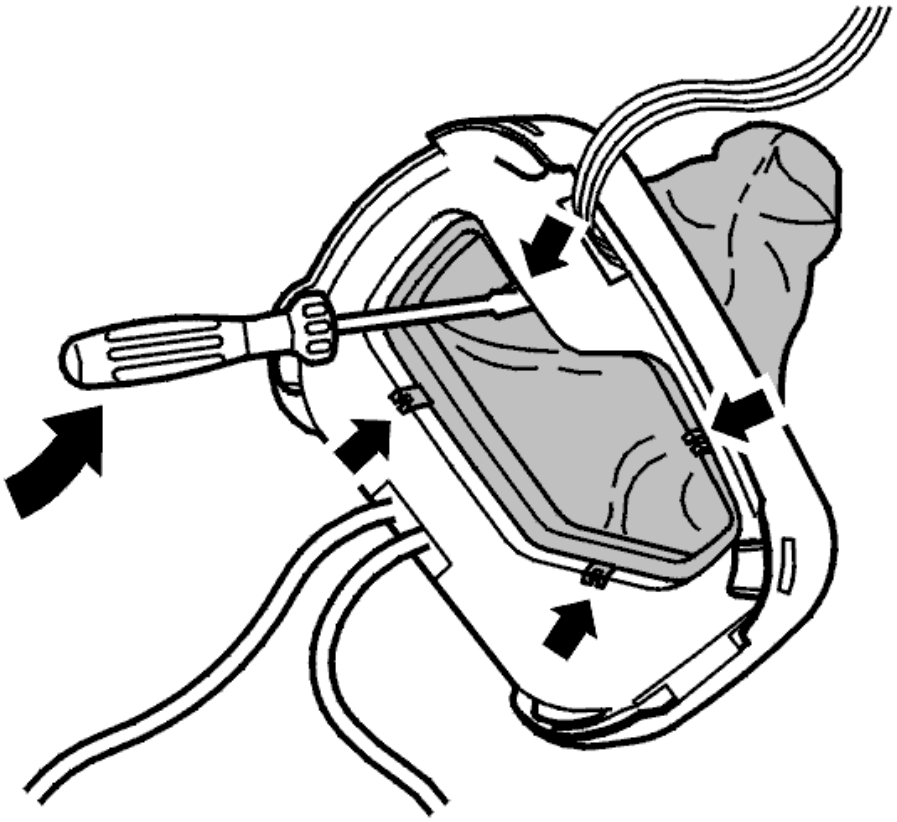

Fig. 208: Removing And Transferring Boot From Top Panel
Courtesy of VOLVO CARS CORPORATION

Press the catches with a screwdriver. At the same time press the top of the boot.

Replace the top panel assembly .

INSTALLATION

INSTALLING THE BOOT

Install the boot on the top panel and press it into place.

INSTALLING THE PRINTED CIRCUIT BOARD ON THE GEAR SELECTOR ASSEMBLY STOP

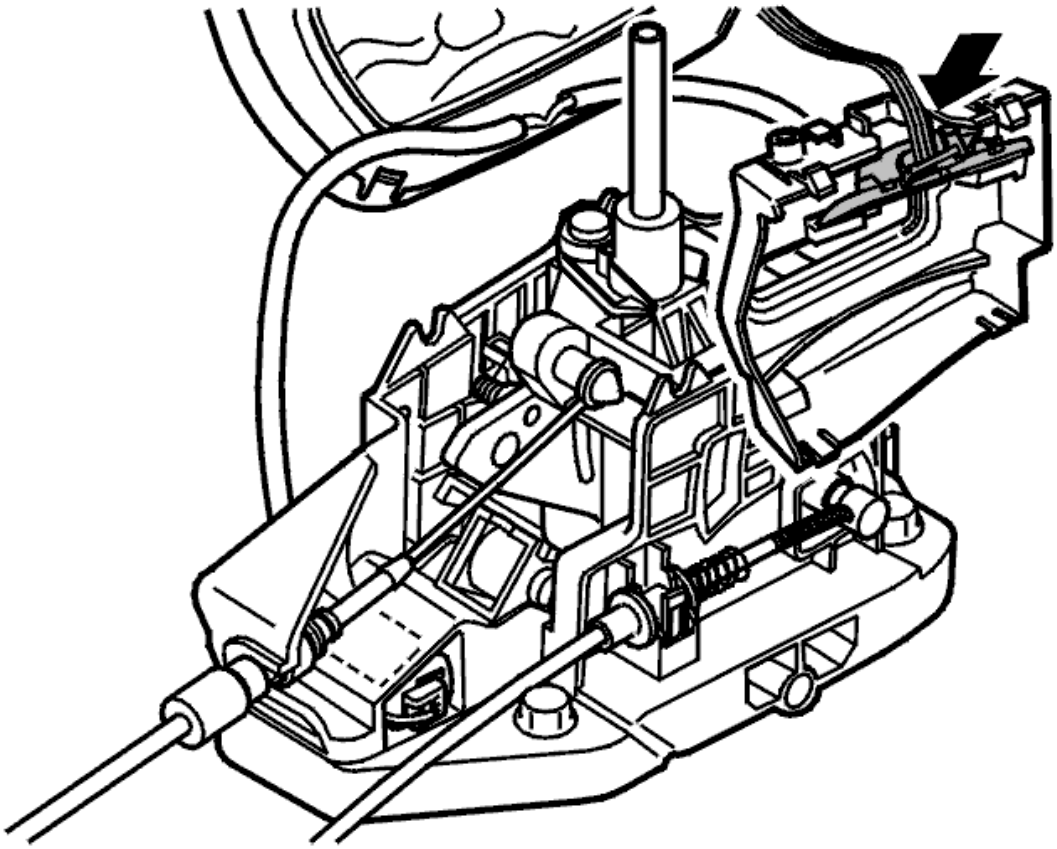

Fig. 209: Removing Printed Circuit Board From Gear Selector Assembly Stop
Courtesy of VOLVO CARS CORPORATION

Angle the holder into the gear selector assembly stop. Lock it into place.

Alternatively: Install the printed circuit board in the cut-out in the holder and lock it into place. Reinstall the holder.

INSTALLING THE GEAR SELECTOR ASSEMBLY STOP ON THE GEAR SELECTOR ASSEMBLY

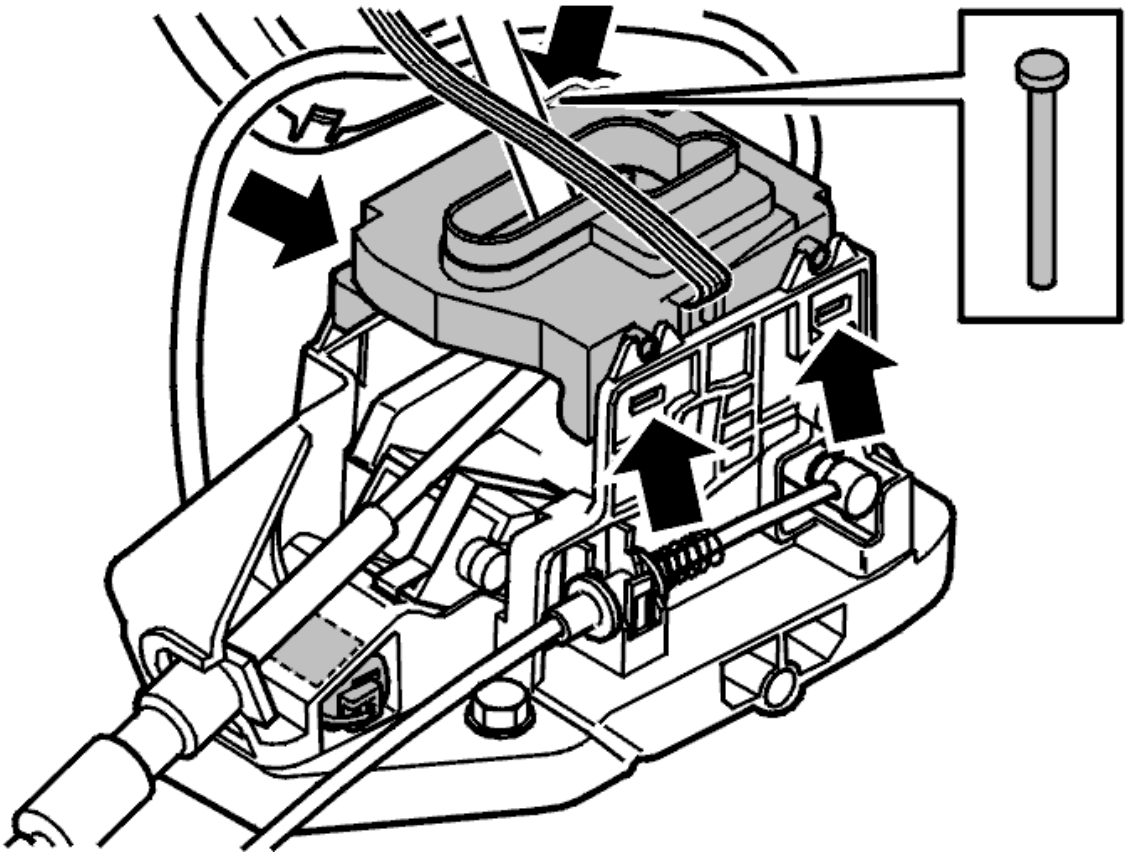

Fig. 210: Installing Gear Selector Assembly Stop On Gear Selector Assembly
Courtesy of VOLVO CARS CORPORATION

Install:

- the gear selector assembly stop and press it into place in the gear selector assembly
- the yellow lock pin.

Check that the gear selector assembly stop is securely in place.

Connect the connectors.

Connect the rear connector to the gear selector assembly. Angle the front connector into the gear selector assembly.

Secure the wiring to the gear selector assembly.

INSTALLING THE TOP PANEL

Install:

- the locking sleeve for the boot above the gear selector
- the top panel.

INSTALLING THE GEAR SELECTOR KNOB AND LOCK BRACKET

Install the gear selector knob. See **INSTALLING THE GEAR SELECTOR KNOB**. Install the lock bracket, and see:**INSTALLING THE LOCK BRACKET ON THE GEAR SELECTOR KNOB**.

INSTALLING THE CENTER CONSOLE

Install the center console. See **REMOVING CENTER TUNNEL CONSOLE** .

GEAR SELECTOR ASSEMBLY, GEAR SELECTOR, AUTOMATIC (B6324S, TF-80SC; B6324S, TF-80SC AWD; 2007-2010)

BOOT, GEAR SELECTOR, REPLACING

BOOT, GEAR SELECTOR, REPLACING

GEAR SELECTOR CABLE

Operation Number(s):

Special tools	
	T9997077 JIMMY BAR **Tool number:** T9997077 **Tool description:** JIMMY BAR **Tool boards:**

Remove the air filter housing. See **AIR CLEANER HOUSING**

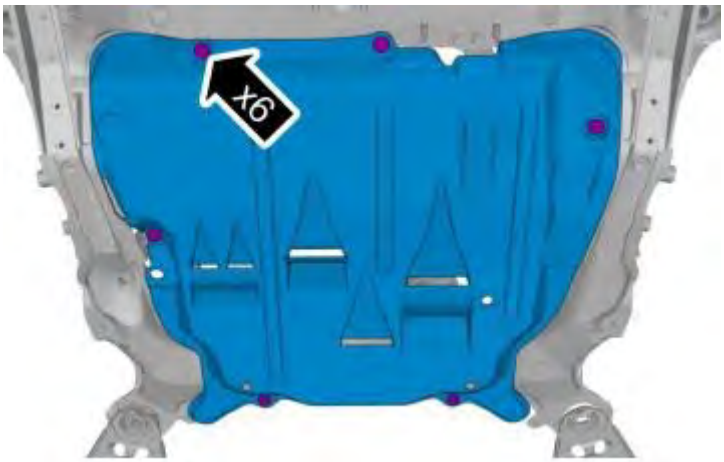

Fig. 211: Removing Splash Panel
Courtesy of VOLVO CARS CORPORATION

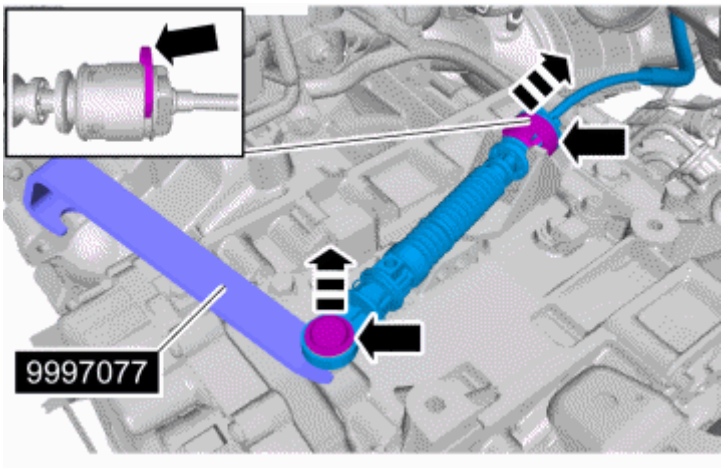

Fig. 212: Using Pry Tool 9997077
Courtesy of VOLVO CARS CORPORATION

Use: **9997077**

Fig. 213: Removing Shifter Console
Courtesy of VOLVO CARS CORPORATION

Fig. 214: Identifying Cover Catches
Courtesy of VOLVO CARS CORPORATION

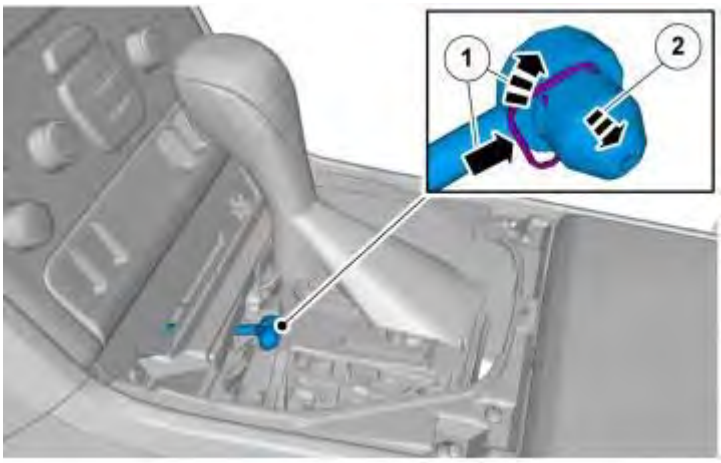

Fig. 215: Identifying Cable End
Courtesy of VOLVO CARS CORPORATION

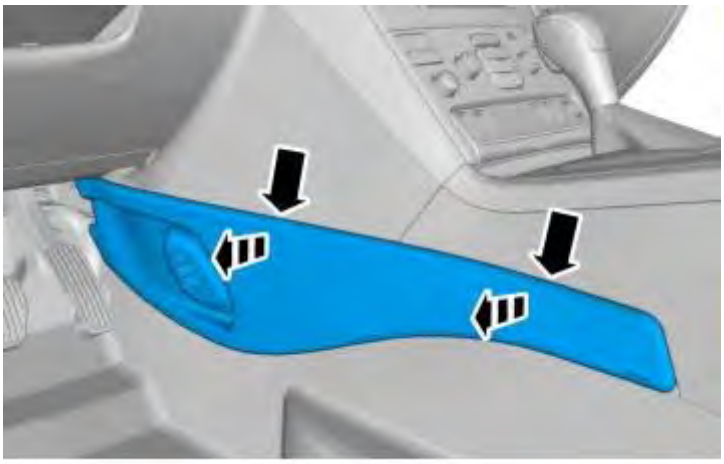

Fig. 216: Removing Left Side Panel
Courtesy of VOLVO CARS CORPORATION

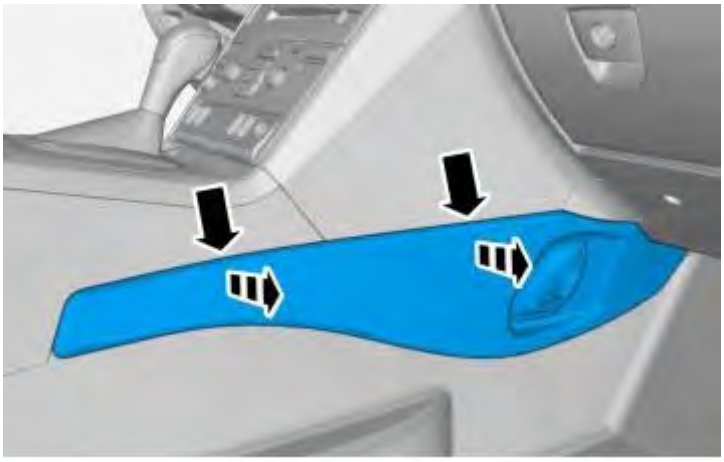

Fig. 217: Removing Right Side Panel
Courtesy of VOLVO CARS CORPORATION

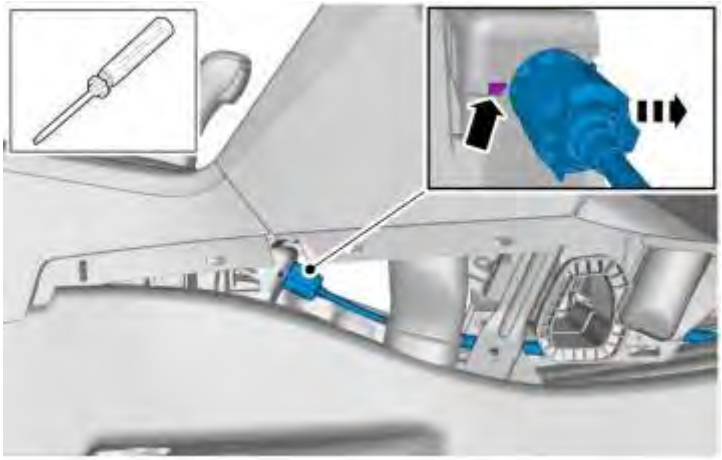

Fig. 218: Identifying Cable Clip
Courtesy of VOLVO CARS CORPORATION

VEHICLE WITHOUT REAR AC

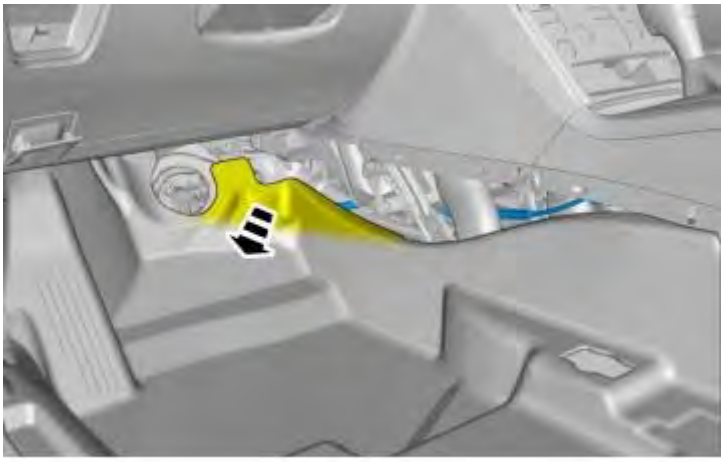

Fig. 219: Folding Back The Floor Covering
Courtesy of VOLVO CARS CORPORATION

Detach and fold back the floor covering.

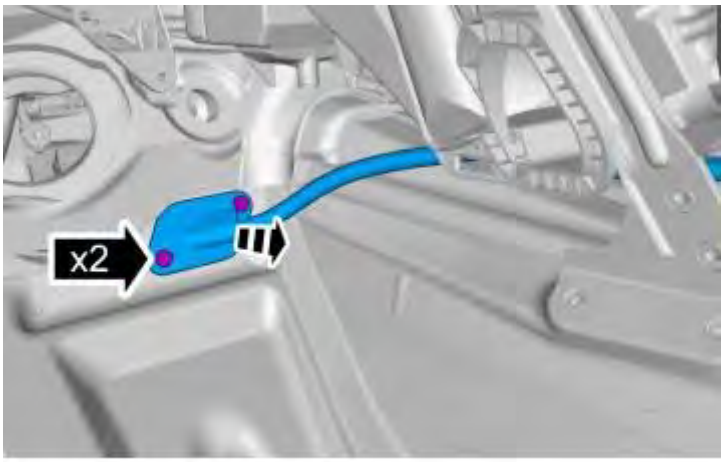

Fig. 220: Remove/Install Screws
Courtesy of VOLVO CARS CORPORATION

Torque: M6

10 Nm

VEHICLE WITH REAR AC

Fig. 221: Removing Floor Covering
Courtesy of VOLVO CARS CORPORATION

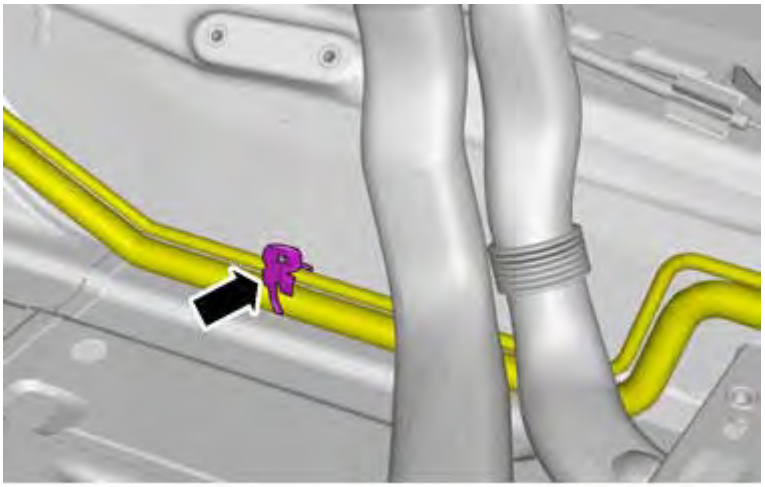

Fig. 222: Identifying Tubing Clip
Courtesy of VOLVO CARS CORPORATION

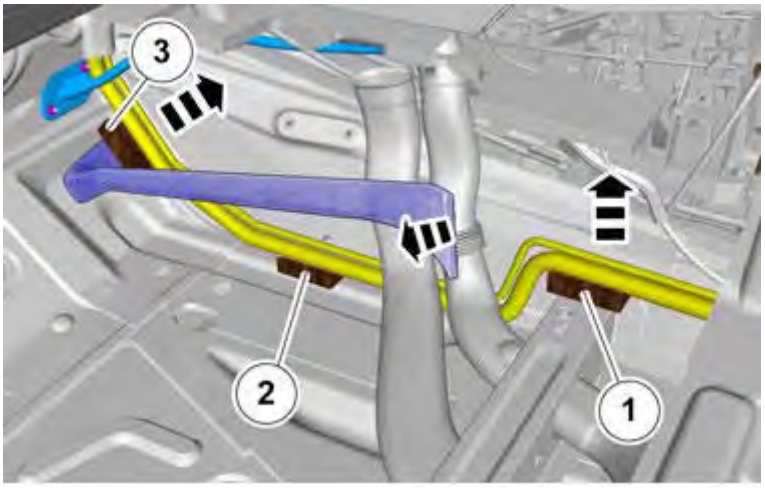

Fig. 223: Repositioning Tubes
Courtesy of VOLVO CARS CORPORATION

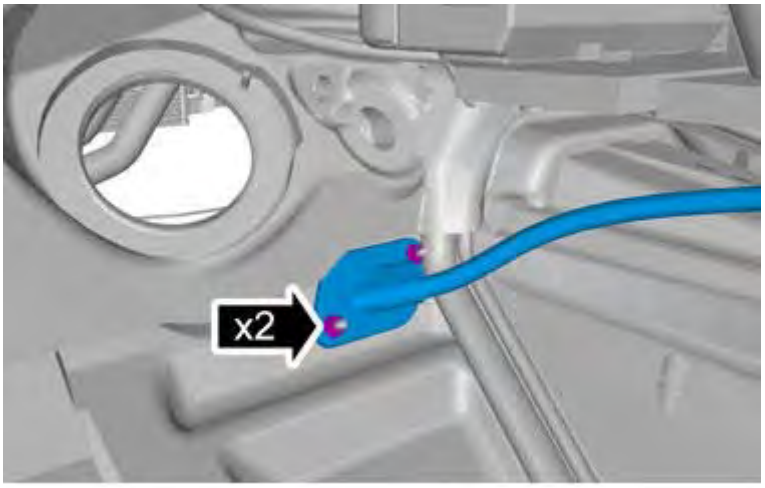

Fig. 224: Remove/Install Fasteners
Courtesy of VOLVO CARS CORPORATION

Torque: M6

10 Nm

To install, reverse the removal procedure.

NOTE: Take extra care when handling selector lever cable.

GEAR SELECTOR KNOB, GEARTRONIC, REPLACING

GEAR SELECTOR KNOB, GEARTRONIC, REPLACING

GEAR SELECTOR LEVER ASSEMBLY GEARTRONIC, REPLACING

GEAR SELECTOR LEVER ASSEMBLY GEARTRONIC, REPLACING

SOLENOID SHIFT LOCK, REPLACE

SOLENOID SHIFT LOCK, REPLACE

TOP PANEL GEARTRONIC, REPLACING

TOP PANEL GEARTRONIC, REPLACING

GEAR SELECTOR ASSEMBLY, GEAR SELECTOR, AUTOMATIC (B6324S5, TF-80SC; B6324S5, TF-80SC AWD; 2011-2012)

BOOT, GEAR SELECTOR, REPLACING

BOOT, GEAR SELECTOR, REPLACING

GEAR SELECTOR CABLE

GEAR SELECTOR CABLE

GEAR SELECTOR KNOB, GEARTRONIC, REPLACING

GEAR SELECTOR KNOB, GEARTRONIC, REPLACING

GEAR SELECTOR LEVER ASSEMBLY GEARTRONIC, REPLACING

GEAR SELECTOR LEVER ASSEMBLY GEARTRONIC, REPLACING

SOLENOID SHIFT LOCK, REPLACE

SOLENOID SHIFT LOCK, REPLACE

TOP PANEL GEARTRONIC, REPLACING

TOP PANEL GEARTRONIC, REPLACING

GEAR SELECTOR ASSEMBLY, GEAR SELECTOR, AUTOMATIC (B8444S, TF-80SC AWD; 2005-2011)

BOOT, GEAR SELECTOR, REPLACING

BOOT, GEAR SELECTOR, REPLACING

CABLE KEY INTERLOCK, REPLACING

CABLE KEY INTERLOCK, REPLACING

GEAR SELECTOR CABLES, REPLACING

Special tools:

9997077

NOTE: **Since the illustrations in this service information are used for different model years and/or models, some variation may occur. However, the essential information is always correct.**

REMOVAL

REMOVING THE AIR CLEANER (ACL) HOUSING

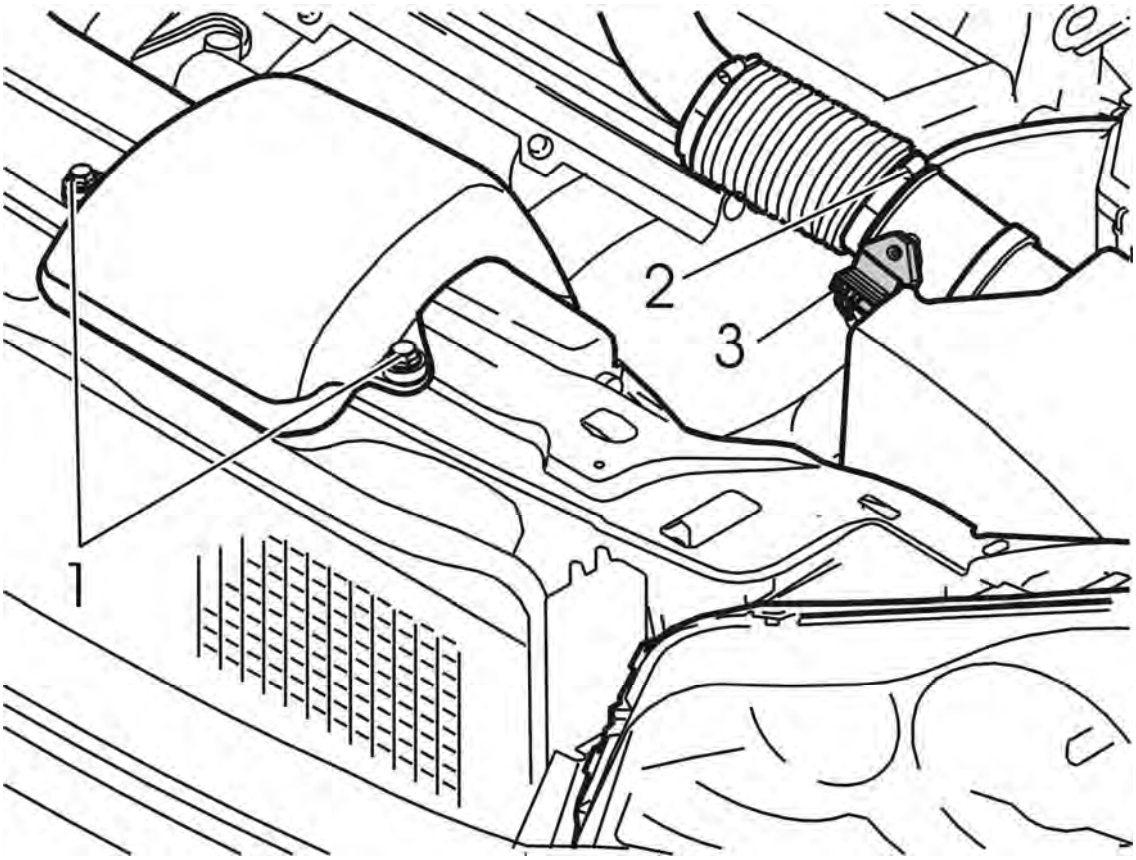

Fig. 225: Air Cleaner (ACL) Housing
Courtesy of VOLVO CARS CORPORATION

Remove the screws (1) for the intake manifold.

Disconnect the hose clamp (2) for the air hose.

Remove the connector (3) from the mass air flow (MAF) sensor.

Remove the air cleaner (ACL) housing from its mountings. Pull it straight up.

REMOVING THE GEAR SELECTOR CABLE AND BALL JOINT

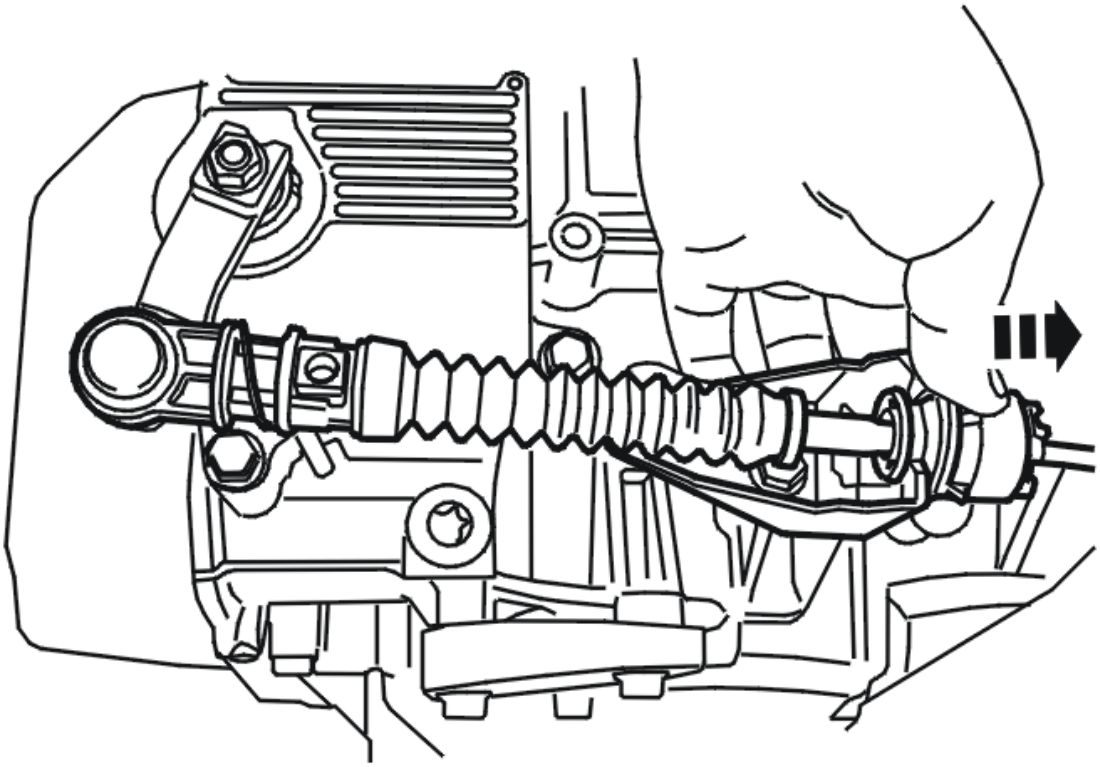

Fig. 226: Removing The Gear Selector Cable
Courtesy of VOLVO CARS CORPORATION

Remove the gear selector cable from the bracket on the transmission by pressing back the lock sleeve around the gear selector cable and lifting upwards. Use: **9997077** to release the ball joint for the gear selector cable from the lever.

REMOVING THE LEFT FRONT WHEEL

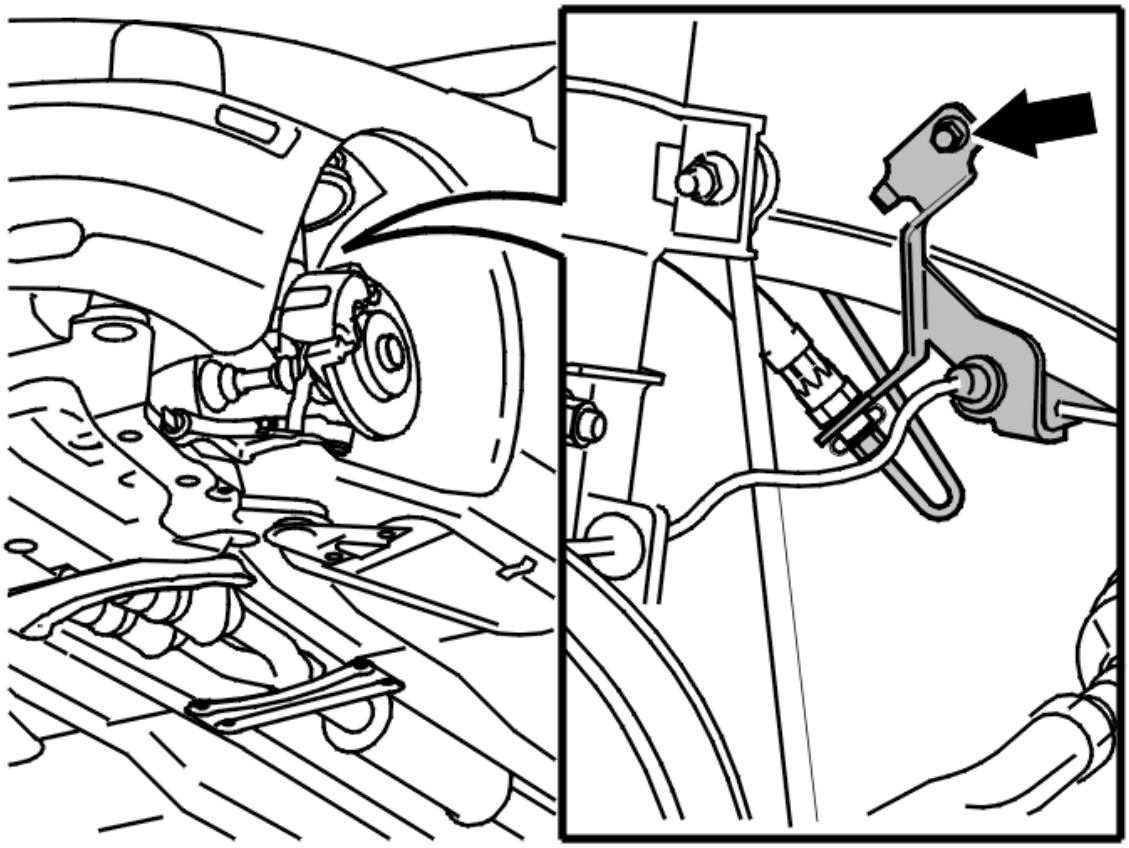

Fig. 227: Identifying Mounting For Brake Hose And Pipe
Courtesy of VOLVO CARS CORPORATION

Remove the left front wheel. Pry the clips apart. Remove the gear selector cable from the clips on the side member.

Remove the mounting for the brake hose and brake pipe.

REMOVING SIDE PANELS

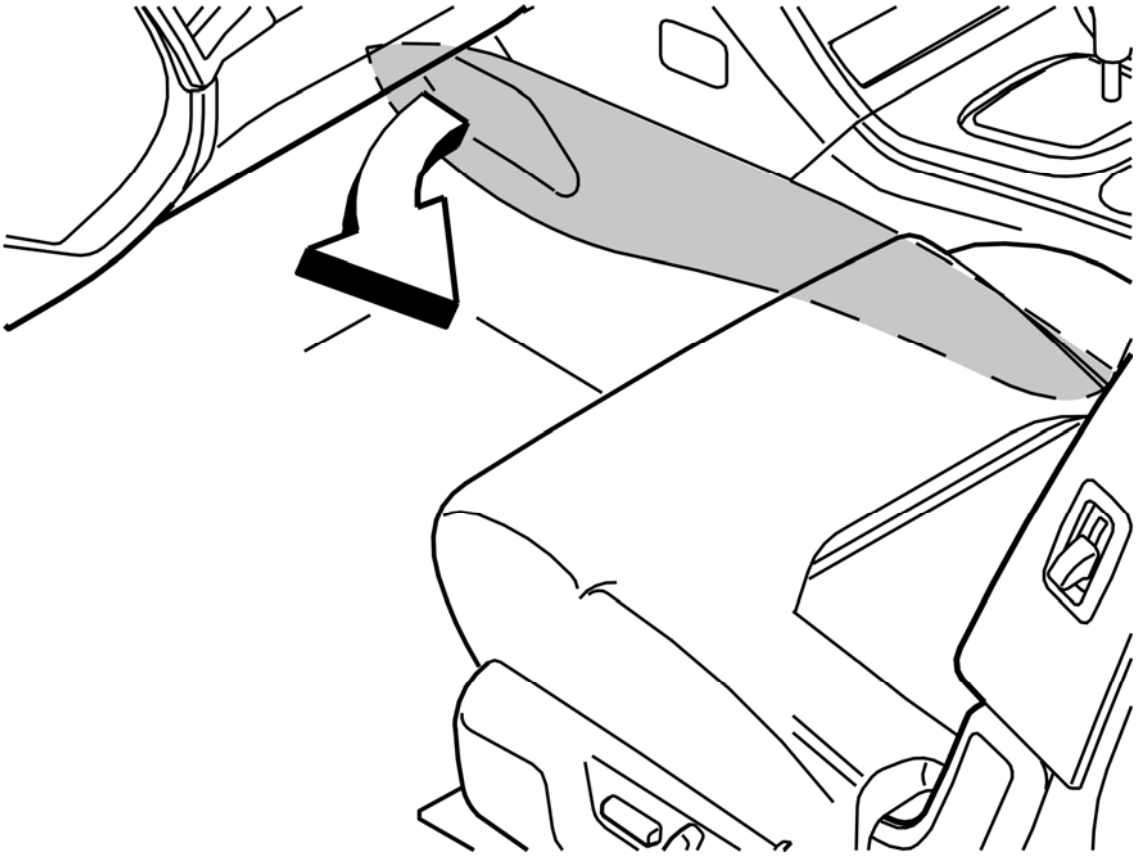

Fig. 228: Identifying Removal Of Center Console Side Panels
Courtesy of VOLVO CARS CORPORATION

Remove the side panels from the centre console.

Remove the center console. See **CENTER CONSOLE, REPLACING** .

REMOVING THE GEAR SELECTOR CABLE

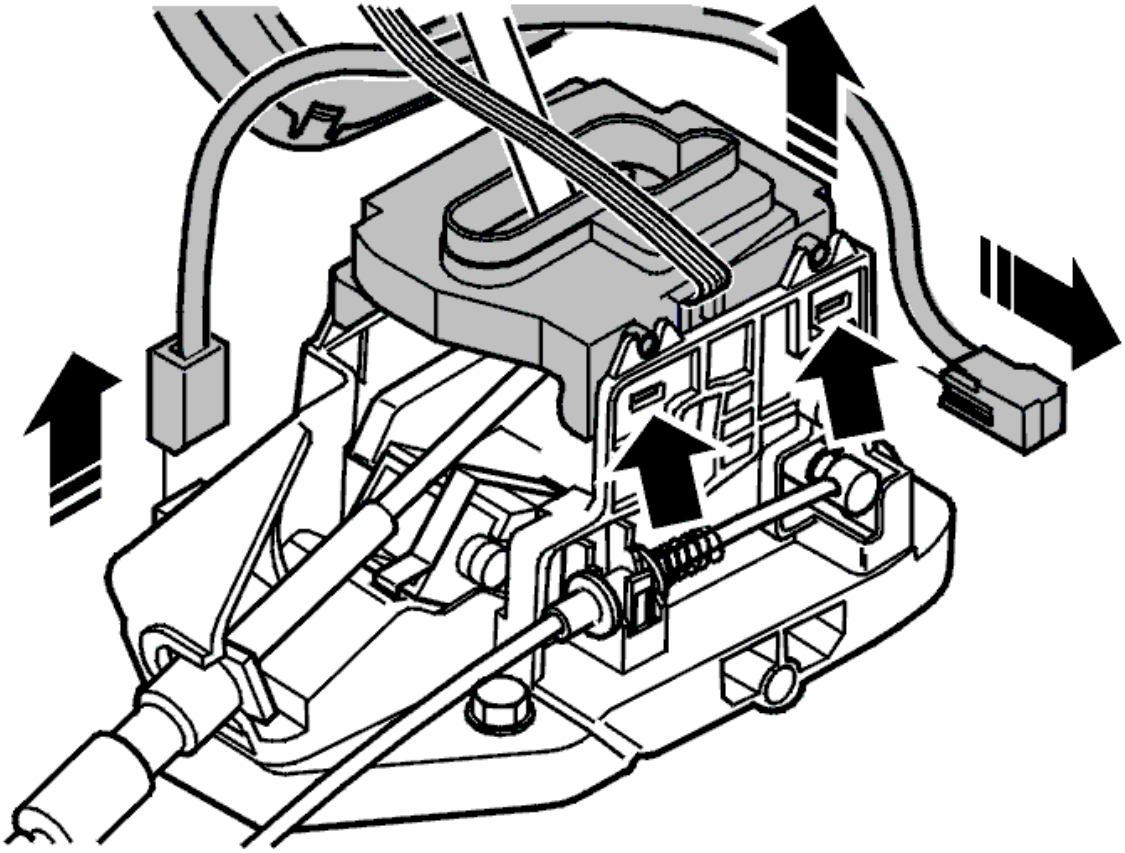

Fig. 229: Removing Stop For Gear Selector Assembly
Courtesy of VOLVO CARS CORPORATION

Detach the gear selector lever stop. See **GEAR SELECTOR LEVER ASSEMBLY GEARTRONIC, REPLACING**.

Remove:

- the catch for the gear selector cable on the gear selector.

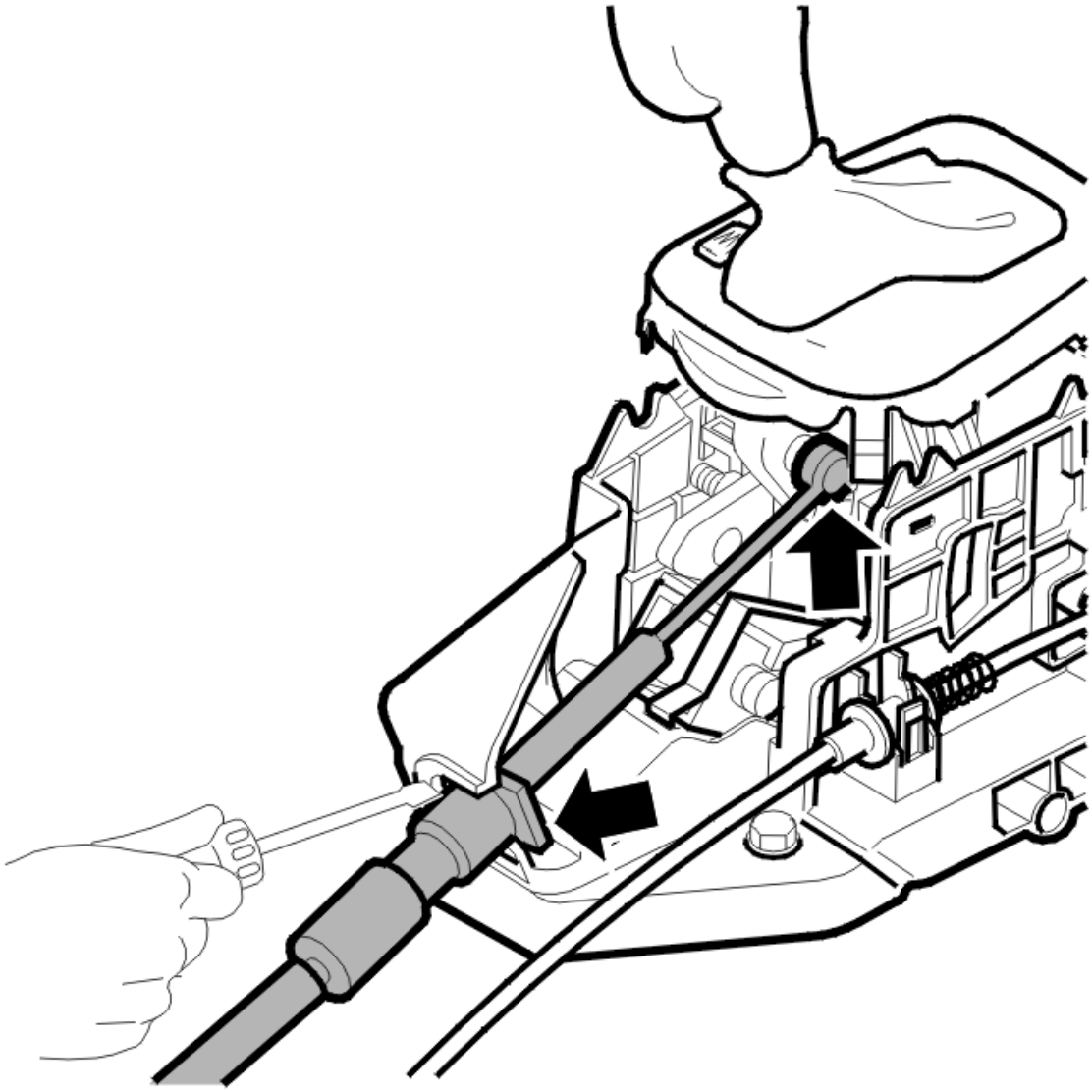

Fig. 230: Removing Gear Selector Cable
Courtesy of VOLVO CARS CORPORATION

- the mechanical gearbox cable from the gear selector assembly nose. Press the catches. Use a screwdriver
- the mechanical gear selector cable.

VEHICLE WITH REAR A/C

Loosen left front seat and move it back. To remove seat, see: **FRONT SEAT, REPLACING**

Fig. 231: Removing Floor Covering
Courtesy of VOLVO CARS CORPORATION

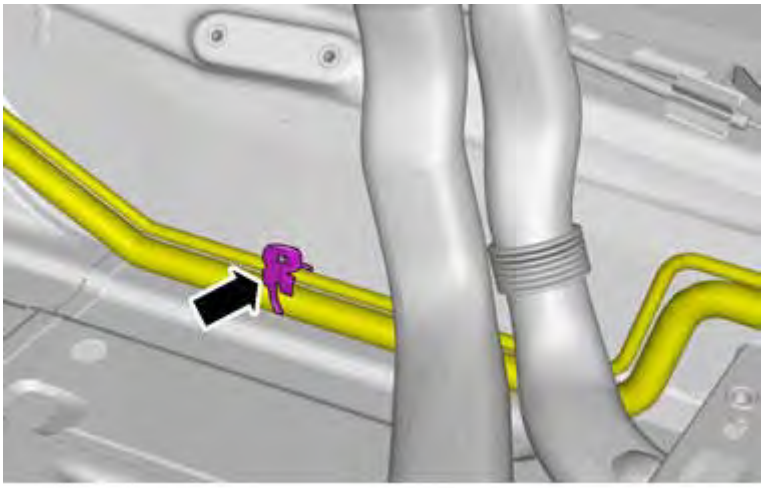

Fig. 232: Identifying Tubing Clip
Courtesy of VOLVO CARS CORPORATION

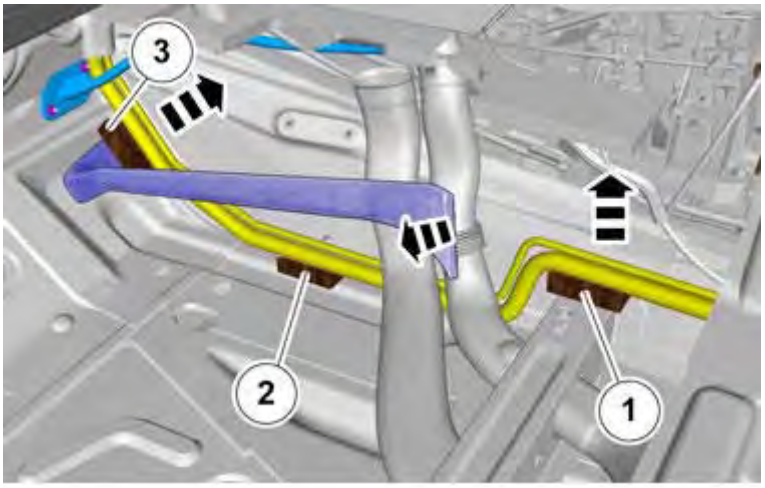

Fig. 233: Repositioning Tubes
Courtesy of VOLVO CARS CORPORATION

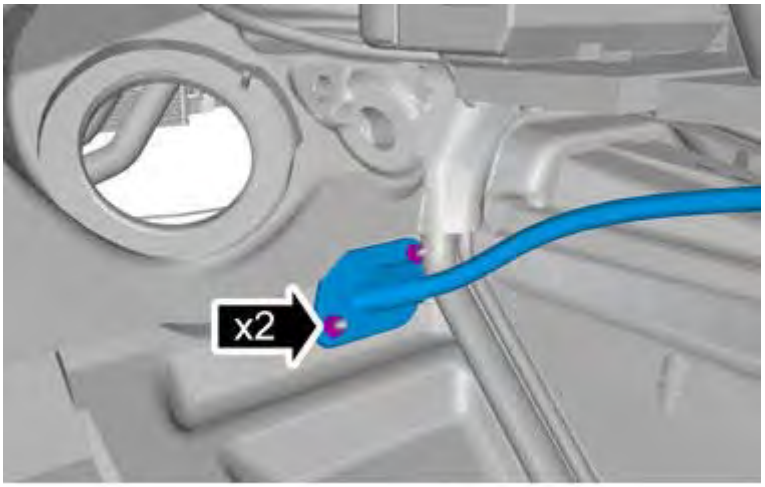

Fig. 234: Remove/Install Fasteners
Courtesy of VOLVO CARS CORPORATION

APPLIES TO ALL VEHICLES.

REMOVING THE GEAR SELECTOR CABLE AT THE BULKHEAD

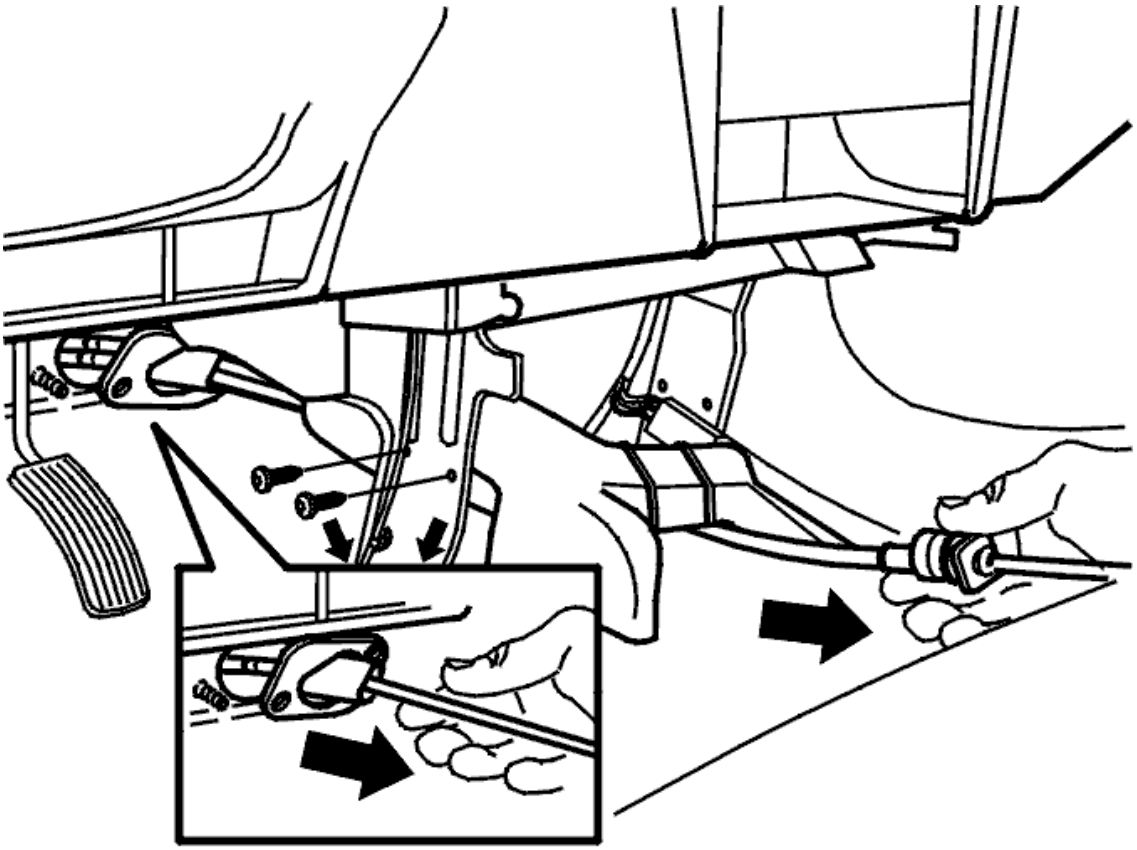

Fig. 235: Identifying Cable At Firewall
Courtesy of VOLVO CARS CORPORATION

Remove:

- the 2 air ducts
- the 4 screws for the strut in the dashboard. Push the carpet to one side
- the 2 nuts for the gear selector cable grommet at the bulkhead
- the gear selector cable by pulling it inwards into the passenger compartment.

HINT: Secure a cable using tape at the end of the engine compartment on the gear selector cable before pulling it out to make reinstallation easier. Route the gear selector cable correctly in the engine compartment with someone to assist you.

INSTALLATION

NOTE: For tightening torques, see: TIGHTENING TORQUE .

PREPARATIONS FOR INSTALLATION

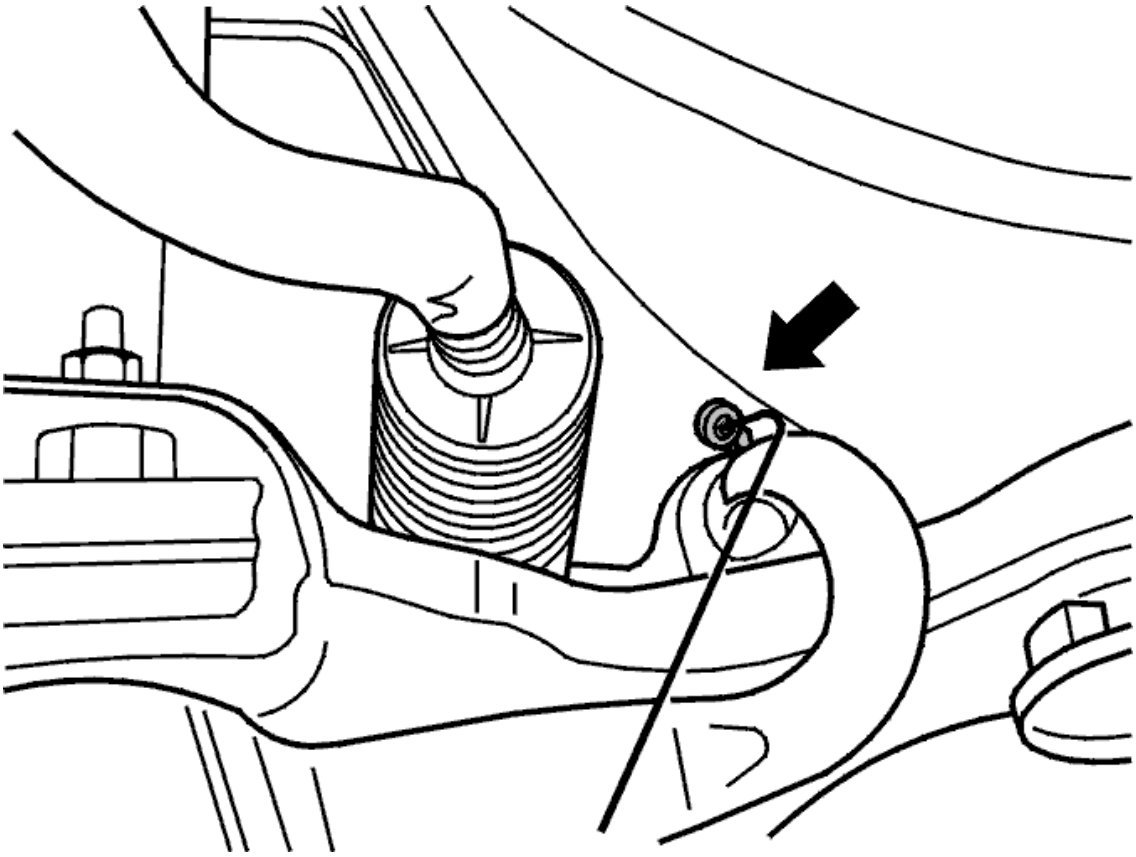

Fig. 236: Identifying Bent Heavy Welding Rod In Engine Compartment
Courtesy of VOLVO CARS CORPORATION

Tape the cable to the new gear selector cable.

CAUTION: Take great care when installing the gear selector cables so that no sharp bends or breaks occur, especially in the ends of the gear selector cables between the inner cable and the outer casing.

HINT: Route the gear selector cable correctly in the engine compartment with someone to assist you.

INSTALLING THE GEAR SELECTOR CABLE FROM THE INSIDE OF THE PASSENGER COMPARTMENT

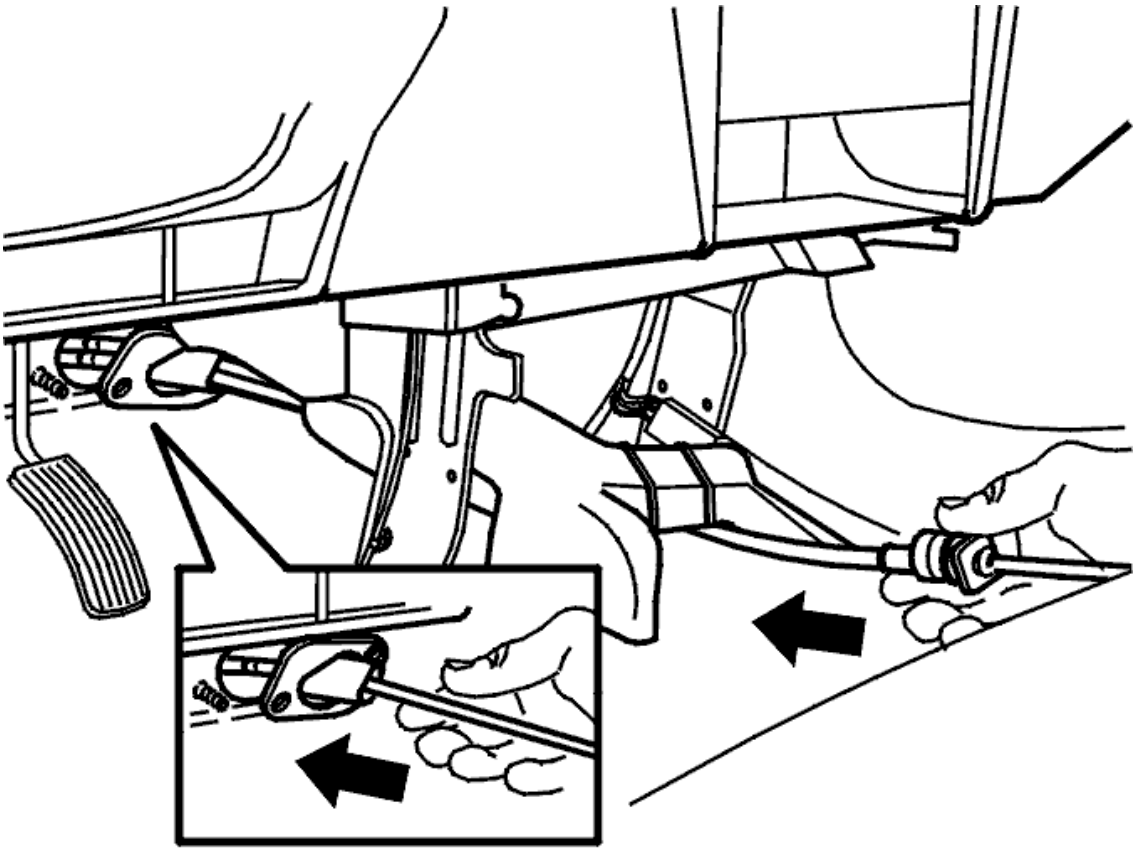

Fig. 237: Identifying Cable At Firewall
Courtesy of VOLVO CARS CORPORATION

Install the gear selector cable under the heater unit on the left side, down towards the hole.

CAUTION: Be very careful when inserting the rubber bellow for the gear selector cable through the hole in the bulkhead. Do not damage the cable.

Feed the gear selector cable through the hole slightly.

HINT: Route the gear selector cable correctly in the engine compartment with someone to assist you.

Locate the lead-in on the studs.

Install:

- the nuts. Tighten
- the air ducts
- the stay and the screws. Tighten.

FEEDING IN THE GEAR SELECTOR CABLE FROM THE INSIDE

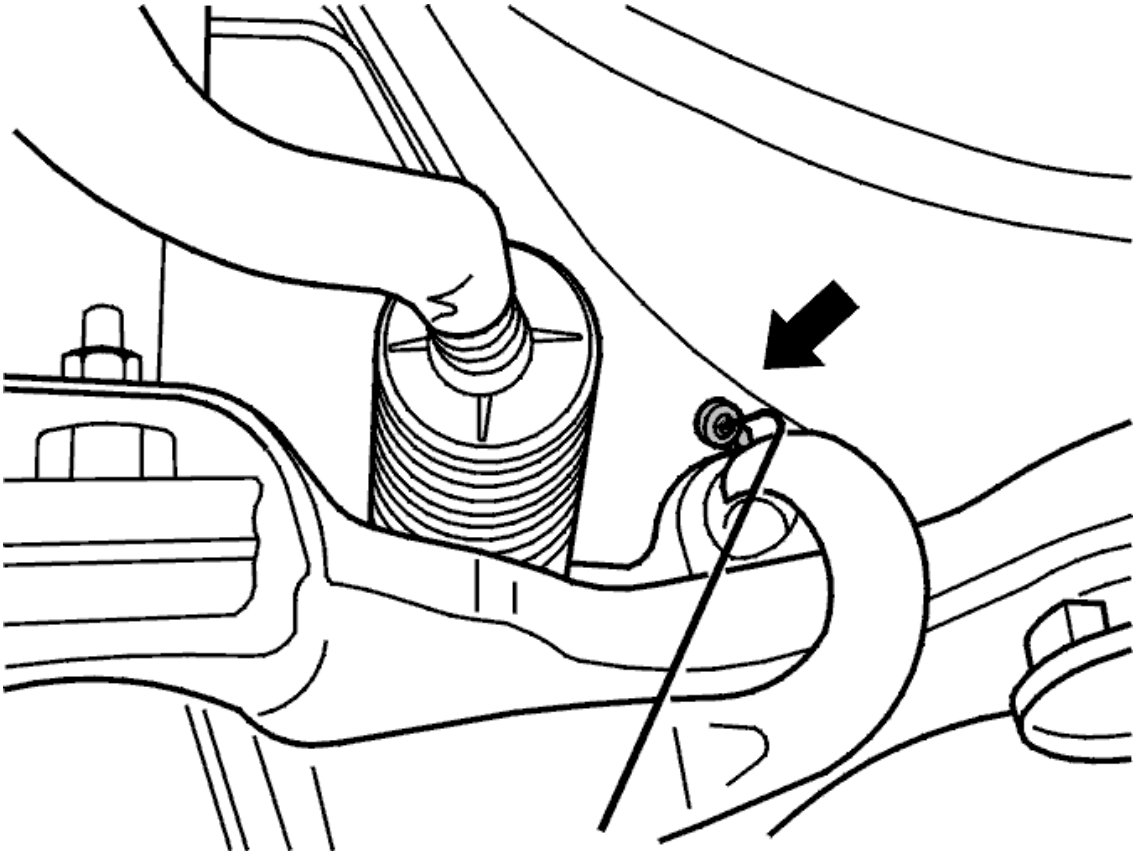

Fig. 238: Identifying Bent Heavy Welding Rod In Engine Compartment
Courtesy of VOLVO CARS CORPORATION

Pull the cable while feeding the gear selector cable in from the inside.

The gear selector cable must be routed past the steering gear and up to the gearbox bracket.

Secure the gear selector cable in the clips on the side member.

INSTALLING THE GEAR SELECTOR CABLE ON THE GEAR SELECTOR

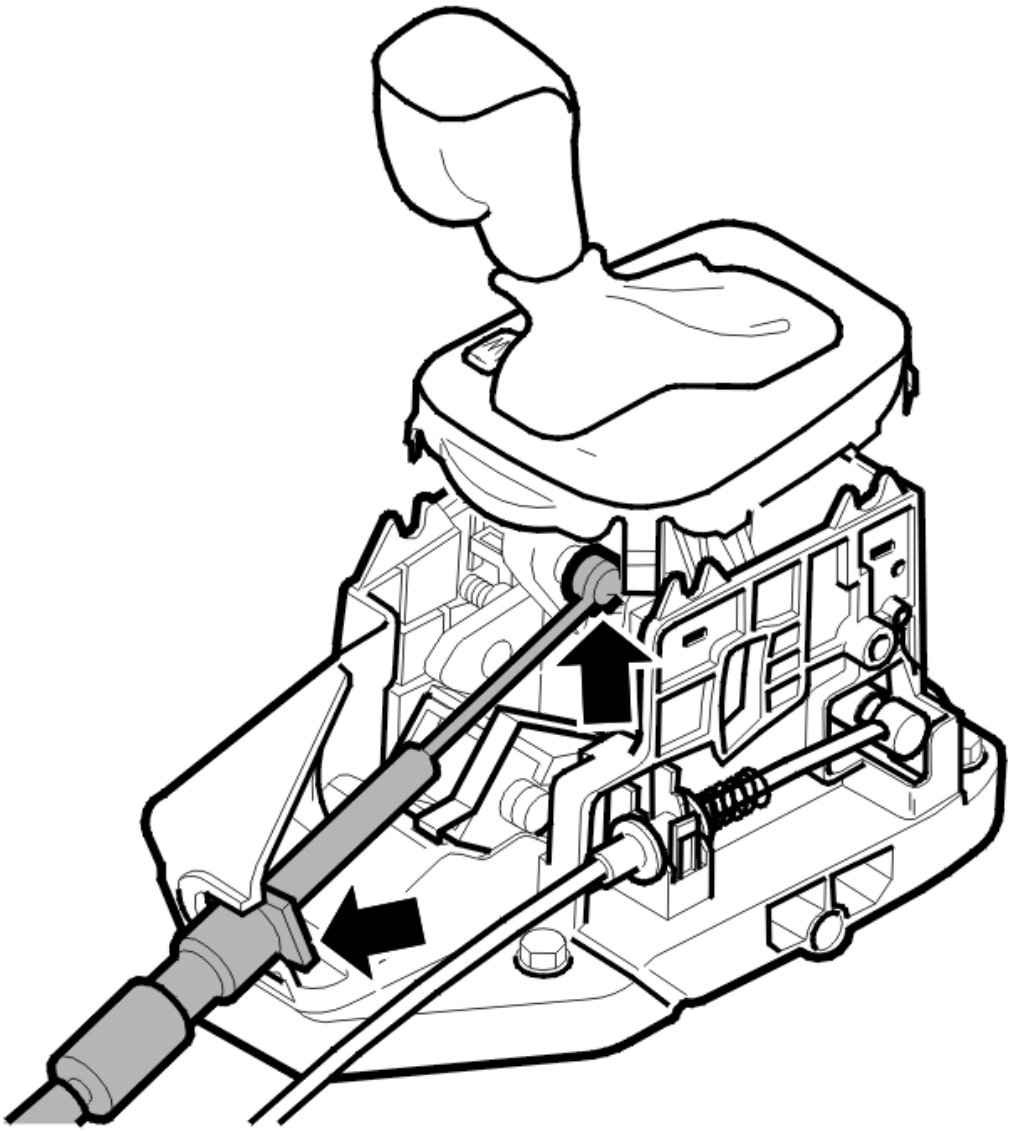

Fig. 239: Installing Gear Selector Cable On Gear Selector
Courtesy of VOLVO CARS CORPORATION

Install:

- the gear selector cable on the gear selector, lock using the snap ring
- the gear selector cable on the end of the gear selector assembly.

Reinstall the gear selector lever stop. See **GEAR SELECTOR LEVER ASSEMBLY GEARTRONIC, REPLACING**.

INSTALLING THE GEAR SELECTOR CABLE ON THE GEARBOX

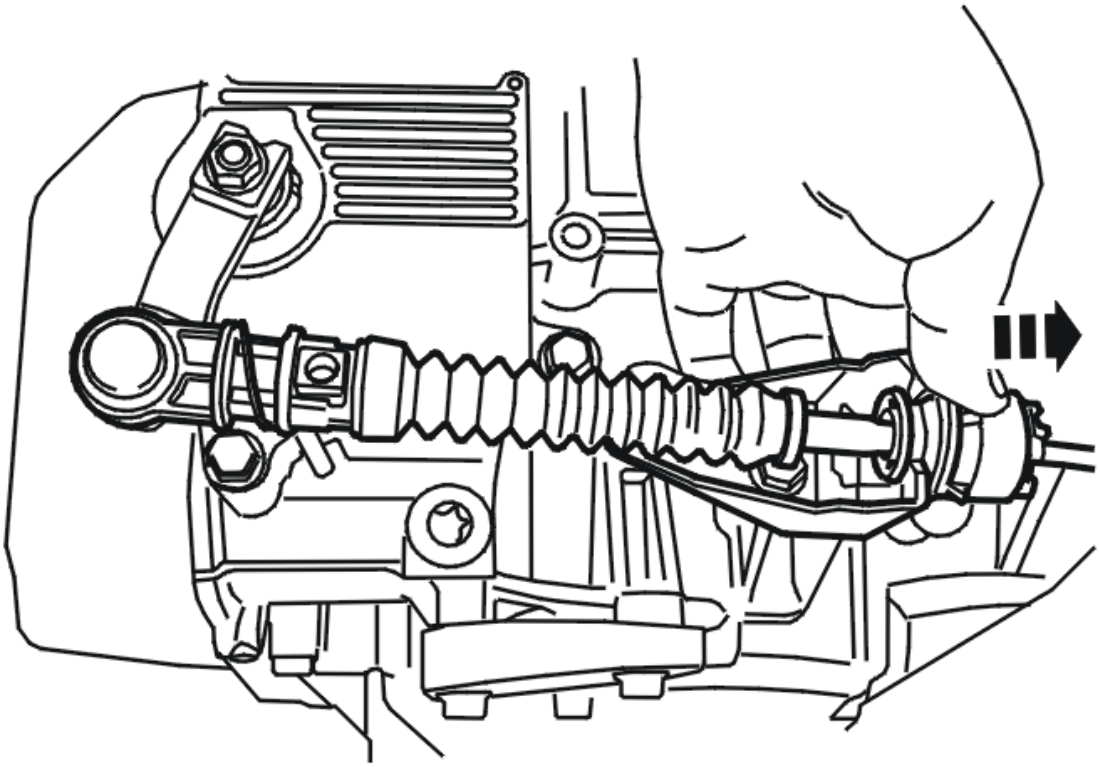

Fig. 240: Removing The Gear Selector Cable
Courtesy of VOLVO CARS CORPORATION

Install:

- the gear selector cable to the bracket by pressing the locking sleeve back around the gear selector cable and inserting the cable in the bottom of the bracket.
- the gear selector cable on the lever. Press the ball joint for the gear selector cable into place on the throttle spindle.

NOTE: After the gear selector cable is replaced, it must be adjusted acc. to: GEAR SELECTOR CABLE, ADJUSTING .

INSTALLING THE AIR CLEANER (ACL) HOUSING

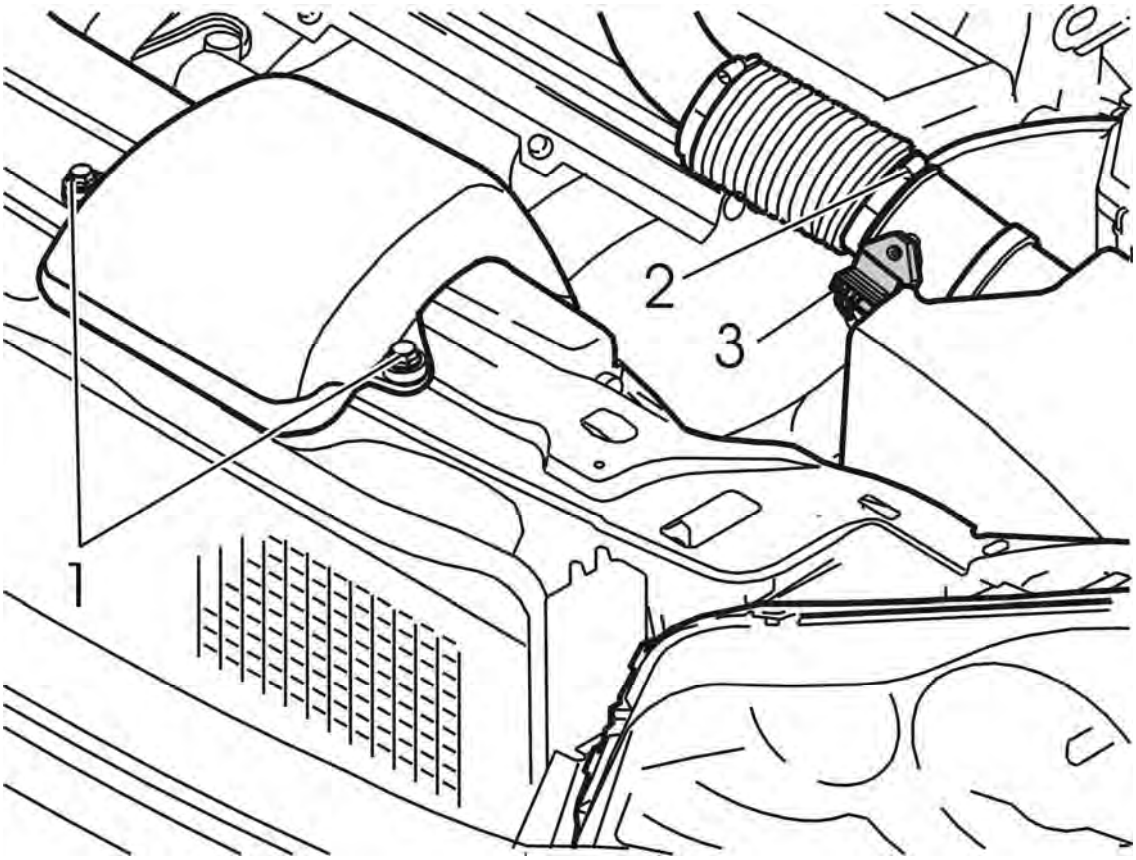

Fig. 241: Air Cleaner (ACL) Housing
Courtesy of VOLVO CARS CORPORATION

Install:

- The air cleaner (ACL) housing
- the connector (3) for the mass air flow (MAF) sensor.
- the hose clamp (2) for the air hose
- the screws (1) for the intake manifold.

GEAR SELECTOR KNOB, GEARTRONIC, REPLACING

GEAR SELECTOR KNOB, GEARTRONIC, REPLACING

GEAR SELECTOR LEVER ASSEMBLY GEARTRONIC, REPLACING

GEAR SELECTOR LEVER ASSEMBLY GEARTRONIC, REPLACING

SOLENOID SHIFT LOCK, REPLACE

SOLENOID SHIFT LOCK, REPLACE

TOP PANEL GEARTRONIC, REPLACING

TOP PANEL GEARTRONIC, REPLACING

TRANSMISSION, AUTOMATIC (B5254T2, AW50/51 AWD; 2003-2007)

CONNECTING SLEEVE

Remove and install connecting sleeve. **SEALING RING CONNECTING SOCKET DRIVE SHAFT/DIFFERENTIAL, REPLACING**

COVER BRAKE CYLINDER B4 AUTOMATIC TRANSMISSION, REPLACING

NOTE: **As the illustrations in this service information are used for different model years and / or models, some variation may occur. However, the essential information is always correct.**

PREPARATORY WORK

REMOVING COMPONENTS

Allow the transmission to cool. It is easier to remove the cover if the transmission is cold.

Remove:

- the left front wheel
- the splash guard under the engine.

CLEANING THE COVER

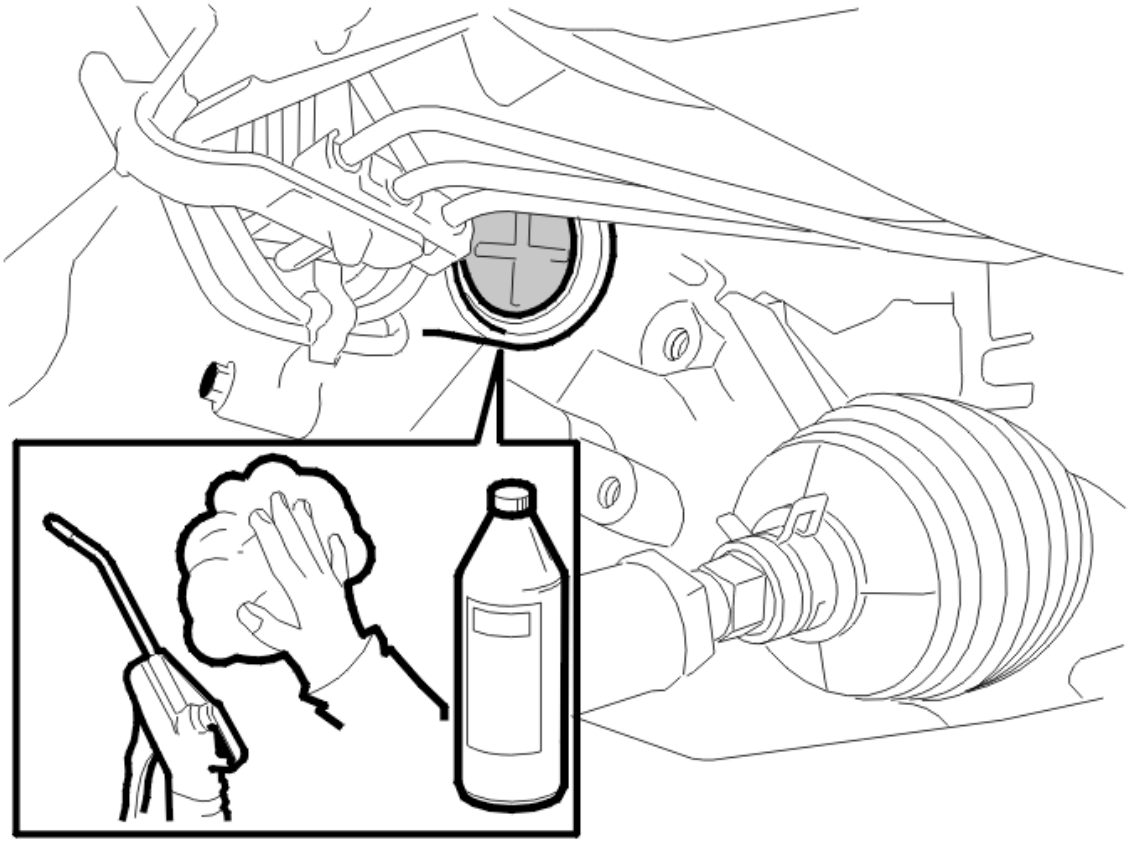

Fig. 242: Identifying Cleaning B4 Brake Cover
Courtesy of VOLVO CARS CORPORATION

Locate the cover for the B4 brake.

Thoroughly wash and blow dry the area around the cover. Use cleaning agent, P/N 116 1721.

REMOVAL

REMOVING COVER

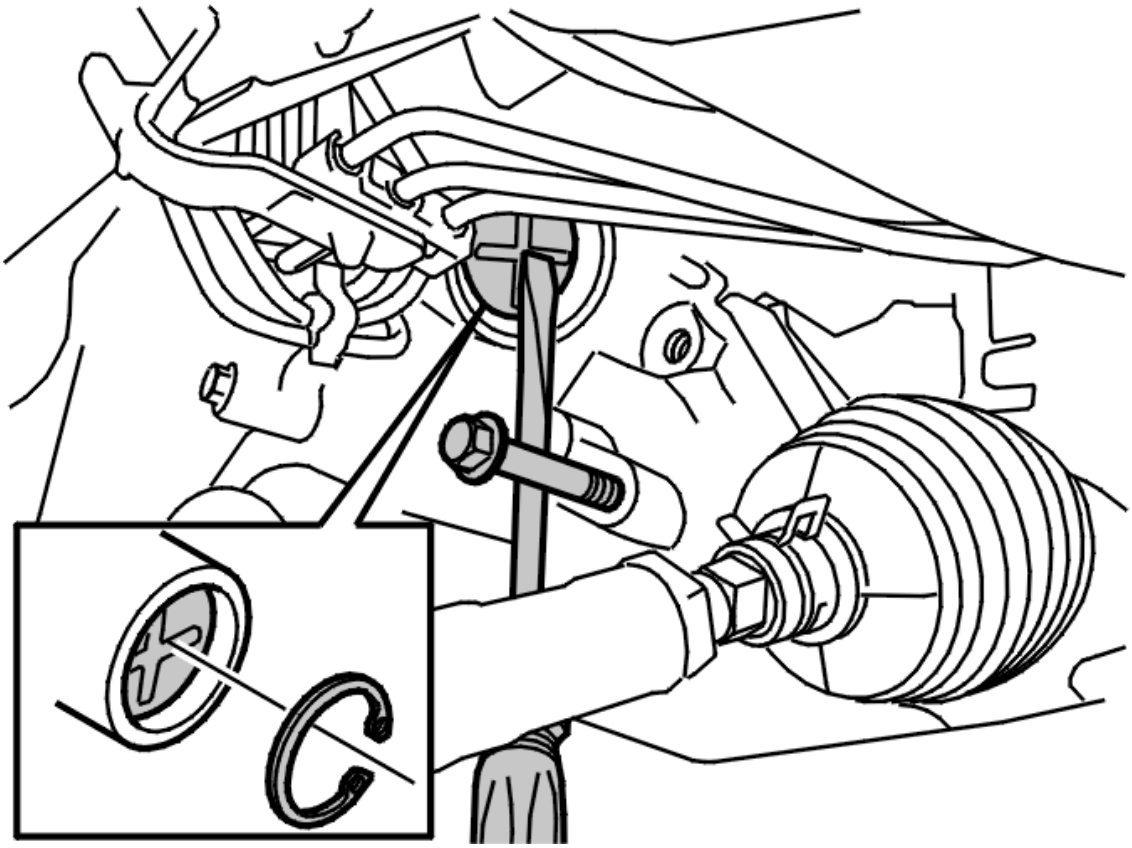

Fig. 243: Identifying Cover Snap Ring
Courtesy of VOLVO CARS CORPORATION

Install a screw (M10x80) as illustrated.

Use a heavy duty screwdriver and the screw as a lever to press the cover in a few times.

Remove the snap ring.

REMOVING COVER, CONTINUED

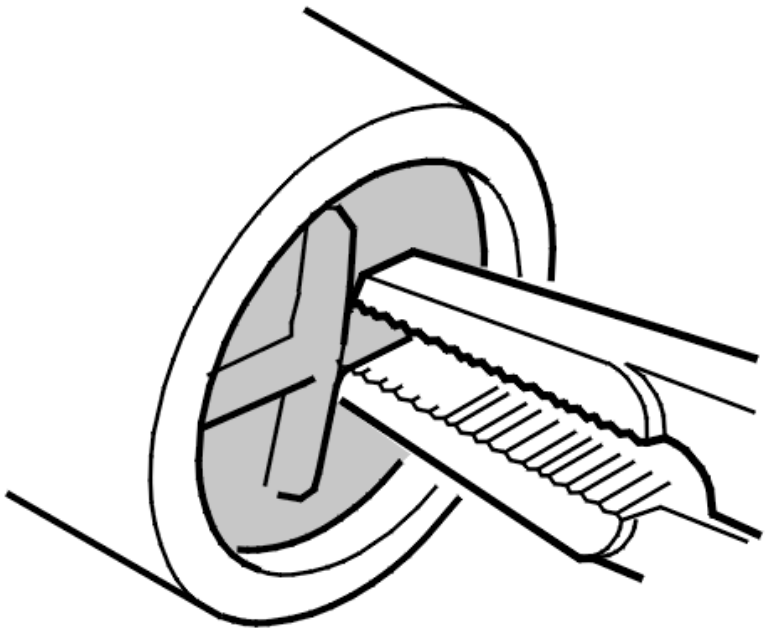

Fig. 244: Identifying Cover & Plier Tip
Courtesy of VOLVO CARS CORPORATION

Place paper on the sub-frame under the cover to absorb any oil and to catch the piston if it slides out of the transmission.

Remove the cover. Carefully work it out using pliers.

NOTE: Take great care when removing the cover so that the piston does not fall out. Then extract the piston.

Check the groove for the snap-ring to ensure that there are no burrs which could damage the O-rings. Remove any burrs using a fine sandpaper. Clean the cylinder thoroughly.

CHECKING THE COVER

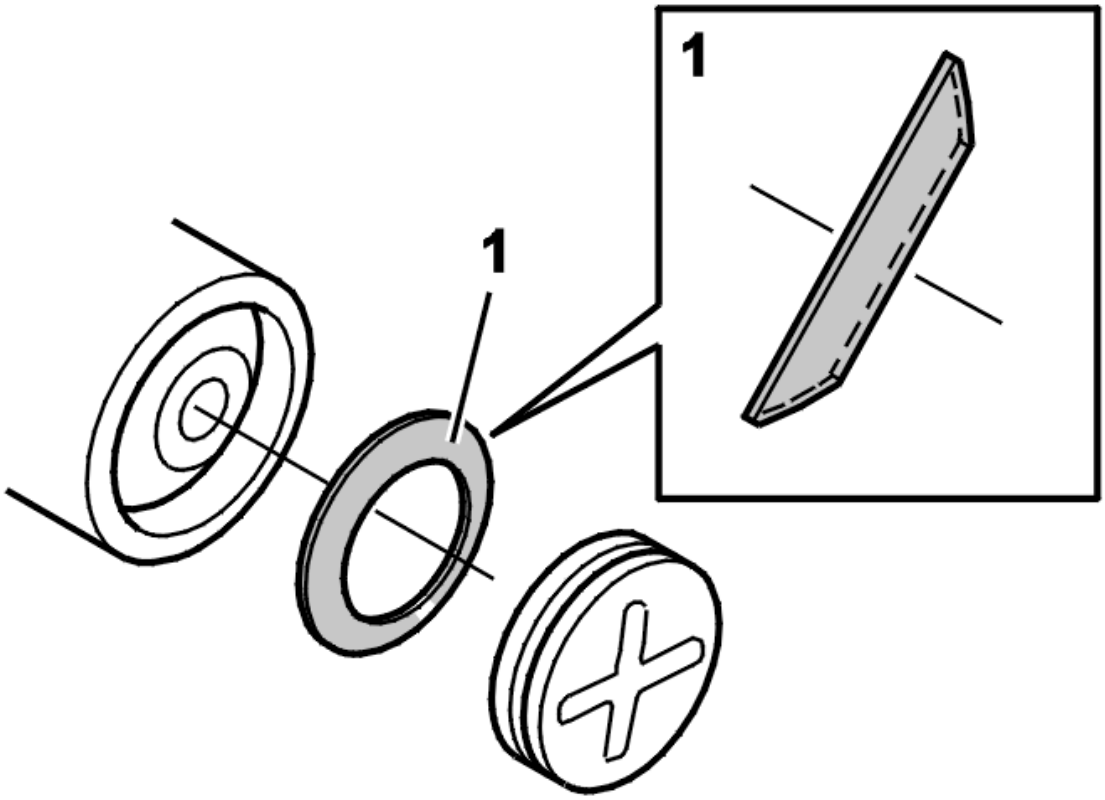

Fig. 245: Identifying Cover Washer
Courtesy of VOLVO CARS CORPORATION

If the washer (1) has come away from the cover, this accounts for the symptoms outlined in the background section.

INSTALLATION

REPLACING THE COVER

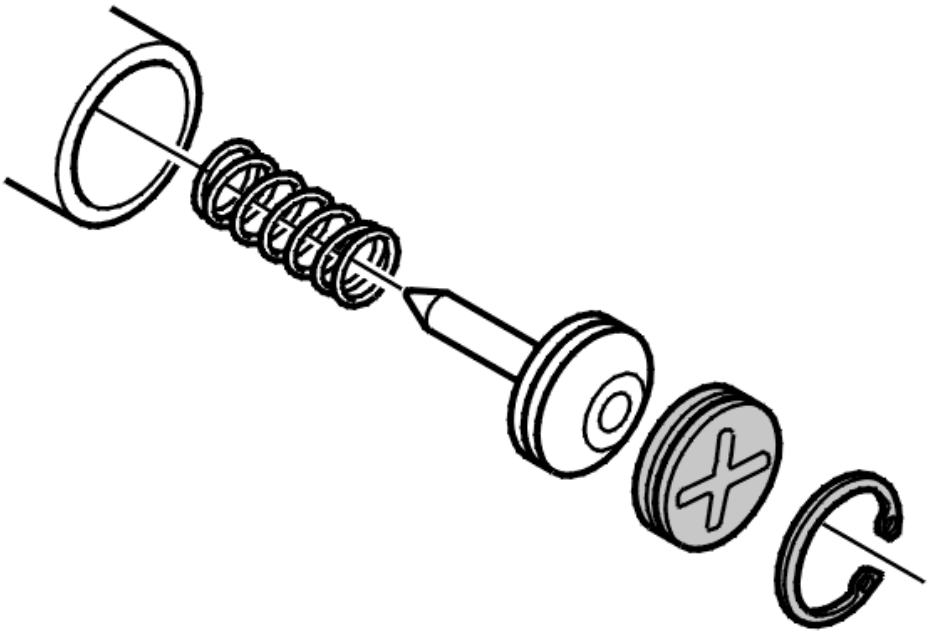

Fig. 246: Identifying Cover & Piston O-Rings
Courtesy of VOLVO CARS CORPORATION

Replace the O-ring on the piston

Install the O-rings on the cover.

The illustration shows the order of installation.

NOTE: **Do not let the piston fall to the floor. If the piston falls to the floor, it must be checked thoroughly for damage.**

CAUTION: The piston cannot be replaced. The transmission is calibrated using this piston. A piston from another transmission cannot be used. The entire transmission must be replaced if the piston is damaged.

INSTALLING THE SNAP RING

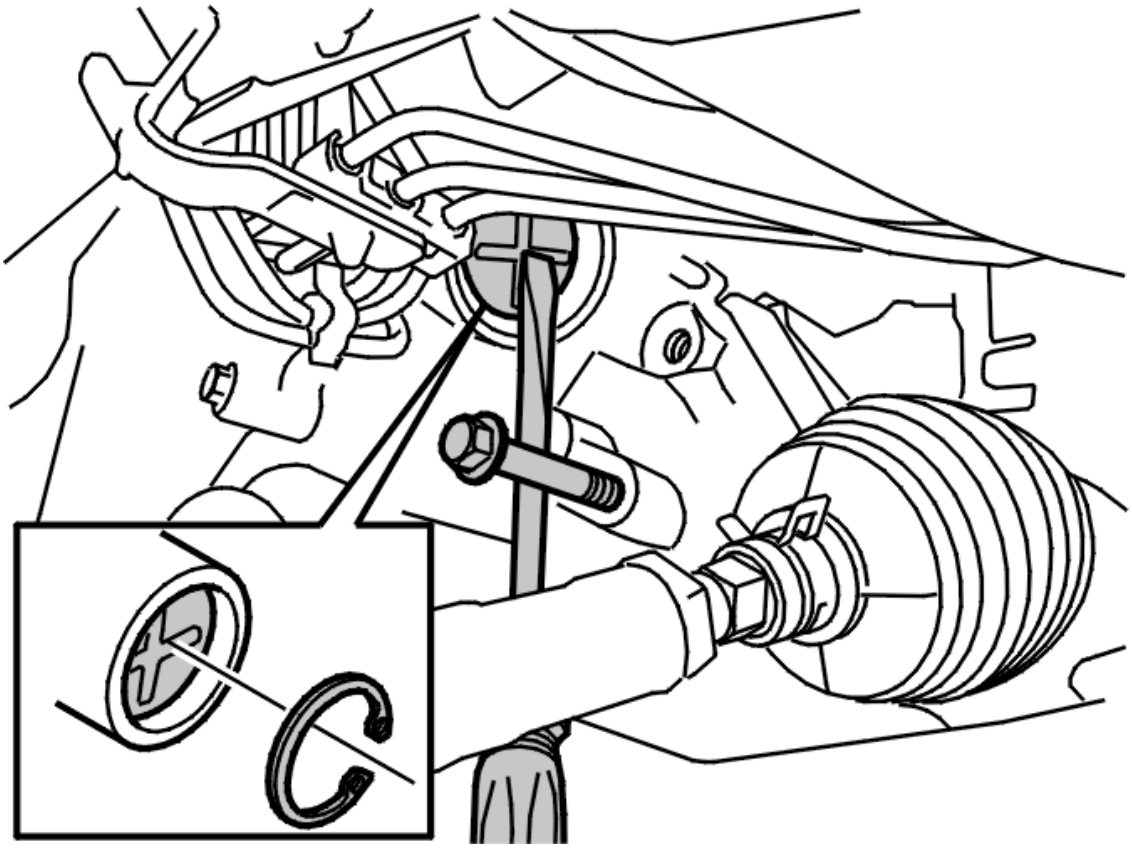

Fig. 247: Identifying Cover Snap Ring
Courtesy of VOLVO CARS CORPORATION

Press in the cover so that it passes the groove for the snap ring.

Install the snap ring.

Check that the snap ring is seated in its groove.

Remove the screw.

ADAPTING THE CONTROL MODULE

Connect VIDA (Volvo Scan Tool) to the car.

Adaptation: Because this repair only affects 3rd and 4th gears, the adaptation does not need to be reset.

Start the engine. Allow the engine to idle.

Activate Adaptation Mode. Ignore the instruction to warm up the transmission first. When "Adaptation Mode" is activated, "Function run" will be displayed in the gray window in VIDA.

NOTE: Do not switch off the engine.

Disconnect VIDA (Volvo Scan Tool). Test drive the car as described below.

"Transmission fluid temperature too high" will not be displayed and the general warning lamp will not light until the temperature has reached 65°C.

FINISHING

CHECKING THE FUNCTION OF THE TRANSMISSION

Start the test drive immediately. Drive at a steady speed, even while the transmission is cold.

Shift from 2nd to 3rd gear at different engine speeds until the quality of the gear shift is satisfactory. This may be difficult in the beginning, because air will have entered the system during the repair work.

Then shift from 4th to 3rd at a steady speed until the shift quality is satisfactory.

To speed up the adaptation, the shifts from 2-3, 3-4, 4-3, 3-2 can be made with the pedal depressed further.

When the transmission temperature reaches 65°C, the warning triangle in the combined instrument panel will light each time an "approved" shift is made.

Check the oil level. Check that there are no oil leaks.

GEAR-SHIFT POSITION SENSOR, POSITION

Special tools:

9997077

NOTE: **As the illustrations in this service information are used for different model years and / or models, some variation may occur. However, the essential information is always correct.**

REMOVAL

REMOVING THE AIR CLEANER (ACL) HOUSING

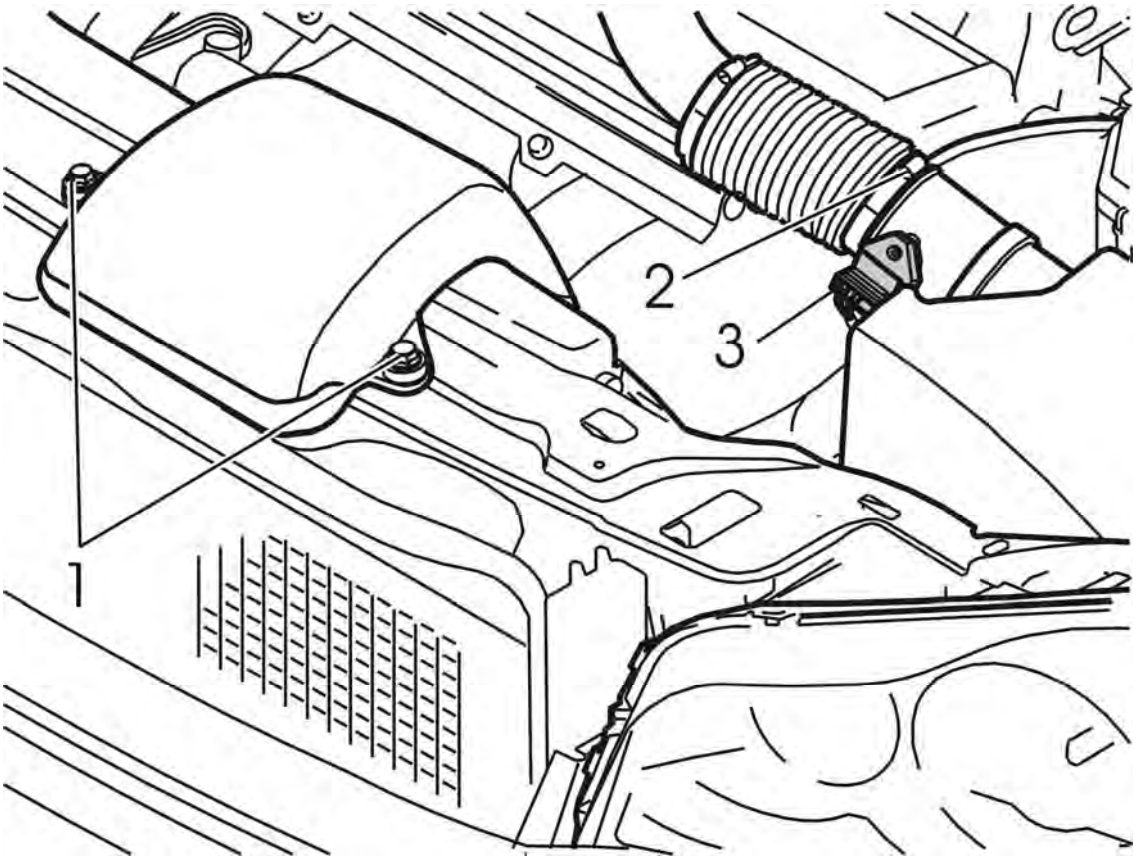

Fig. 248: Air Cleaner (ACL) Housing
Courtesy of VOLVO CARS CORPORATION

Ignition off.

Remove the air cleaner housing ACL assembly with the intake pipe.

REMOVING THE GEAR SELECTOR CABLE AND CONNECTOR

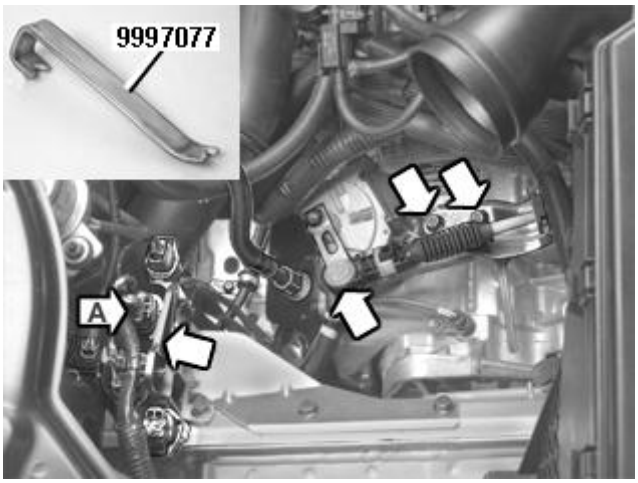

Fig. 249: Identifying Jimmy Bar 9997077

Courtesy of VOLVO CARS CORPORATION

Remove the transmission cable from the lever. Use jimmy bar **9997077** and the cable mounting from the transmission.

Unhook the mounting and the connector for the transmission from the bracket.

Remove the tie straps for the cable harness and the mounting in the cover for the control system.

Separate connector A for the gear-shift position sensor. Remove the gear-shift position sensor from the mounting.

REMOVING THE GEAR-SHIFT POSITION SENSOR

Fig. 250: Gear-Shift Position Sensor Screws
Courtesy of VOLVO CARS CORPORATION

Remove:

- the lever for the gear shift linkage rod
- the nut, locking washer and rubber seal securing the gear-shift position sensor to the gear shift linkage rod
- the 2 screws
- the gear-shift position sensor.

INSTALLATION

NOTE: For tightening torques, see TIGHTENING TORQUE .

INSTALLING THE GEAR-SHIFT POSITION SENSOR

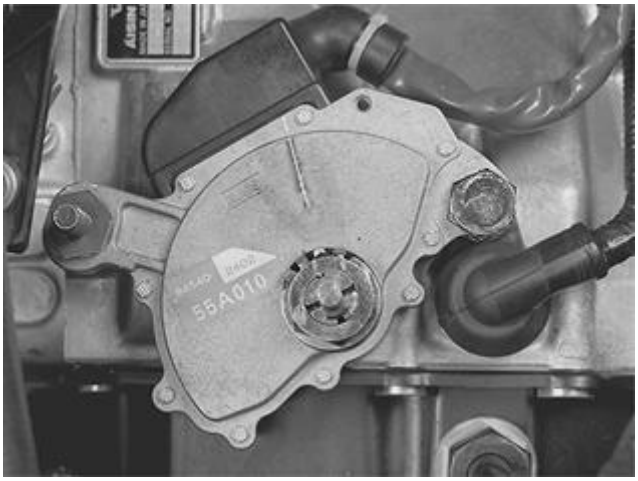

Fig. 251: Gear-Shift Position Sensor
Courtesy of VOLVO CARS CORPORATION

Install:

- the sensor. Lightly tighten the 2 screws
- the rubber washer, the lock washer and the nut on the sensor.

Tighten the nut. Lock the nut with the locking washer.

ADJUSTING THE GEAR-SHIFT POSITION SENSOR

Adjust the gear-shift position sensor. See **GEAR-SHIFT POSITION SENSOR, CHECKING/ADJUSTING** .

INSTALLING THE LEVER AND THE GEAR-SHIFT POSITION SENSOR

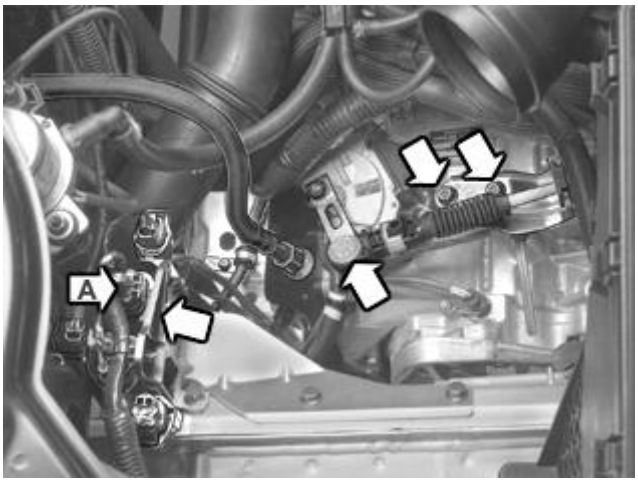

Fig. 252: Gear Selector Cables And Oil Line
Courtesy of VOLVO CARS CORPORATION

Install:

- the lever for the gear shift linkage rod. Tighten the nut. See **SUMMARY OF TIGHTENING TORQUES FOR SPECIFIC COMPONENTS**
- the gear selector cable to the transmission. Use 2 M8 screws. Tighten. Press the ball joint for the cable into place on the lever
- the connector for the gear-shift position sensor on the mounting. Connect the connector.

Assemble the cable harness with tie straps.

Press the mounting for the cable harness into place in the cover for the control system. Install the mounting for the connectors on the bracket.

INSTALLING THE AIR CLEANER (ACL) HOUSING

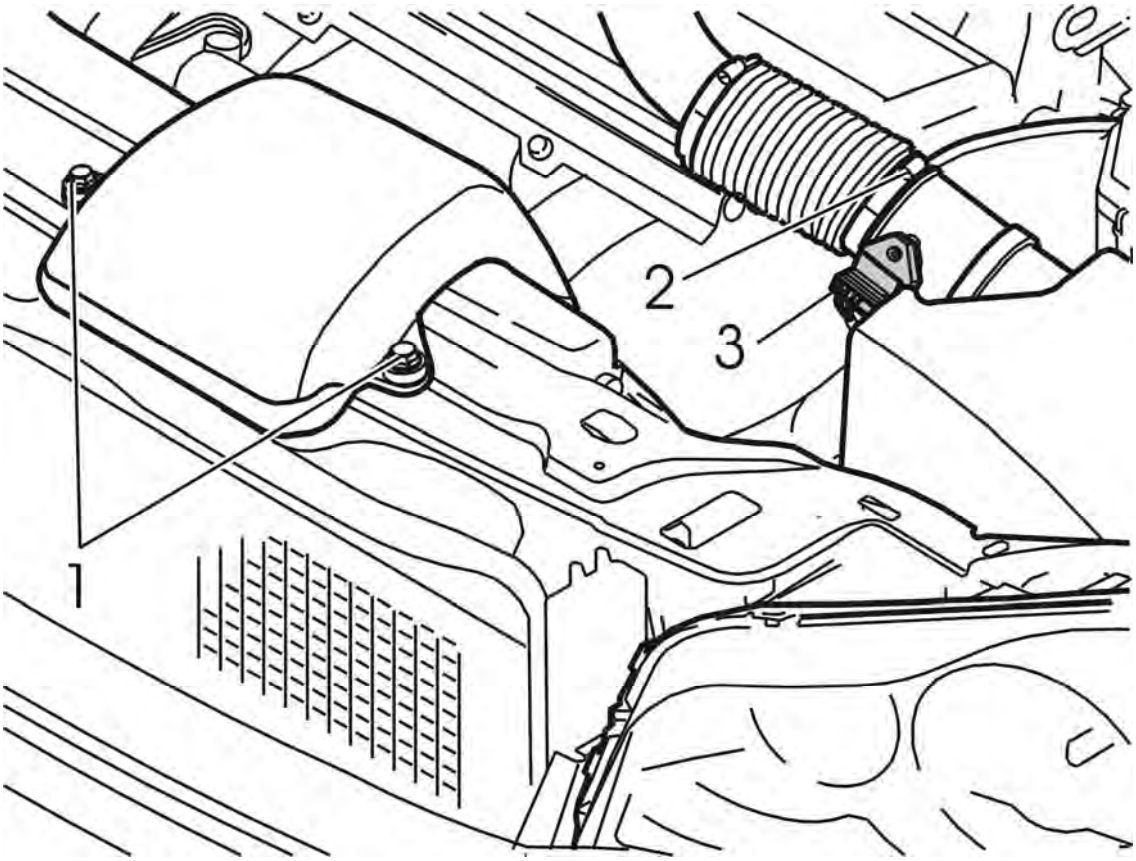

Fig. 253: Air Cleaner (ACL) Housing
Courtesy of VOLVO CARS CORPORATION

Install the air cleaner (ACL) housing with connections.

CHECKING DIAGNOSTIC TROUBLE CODES (DTCS)

Check and erase any diagnostic trouble codes (DTCs).

Check the gear-shift position sensor positions: Use the on-board diagnostic (OBD) system.

SEALING RING GEAR SHIFT LINKAGE ROD, REPLACING

Special tools:

9995476

9997077

NOTE: **As the illustrations in this service information are used for different model years and / or models, some variation may occur. However, the essential information is always correct.**

REMOVAL

REMOVING ENGINE COMPARTMENT COMPONENTS

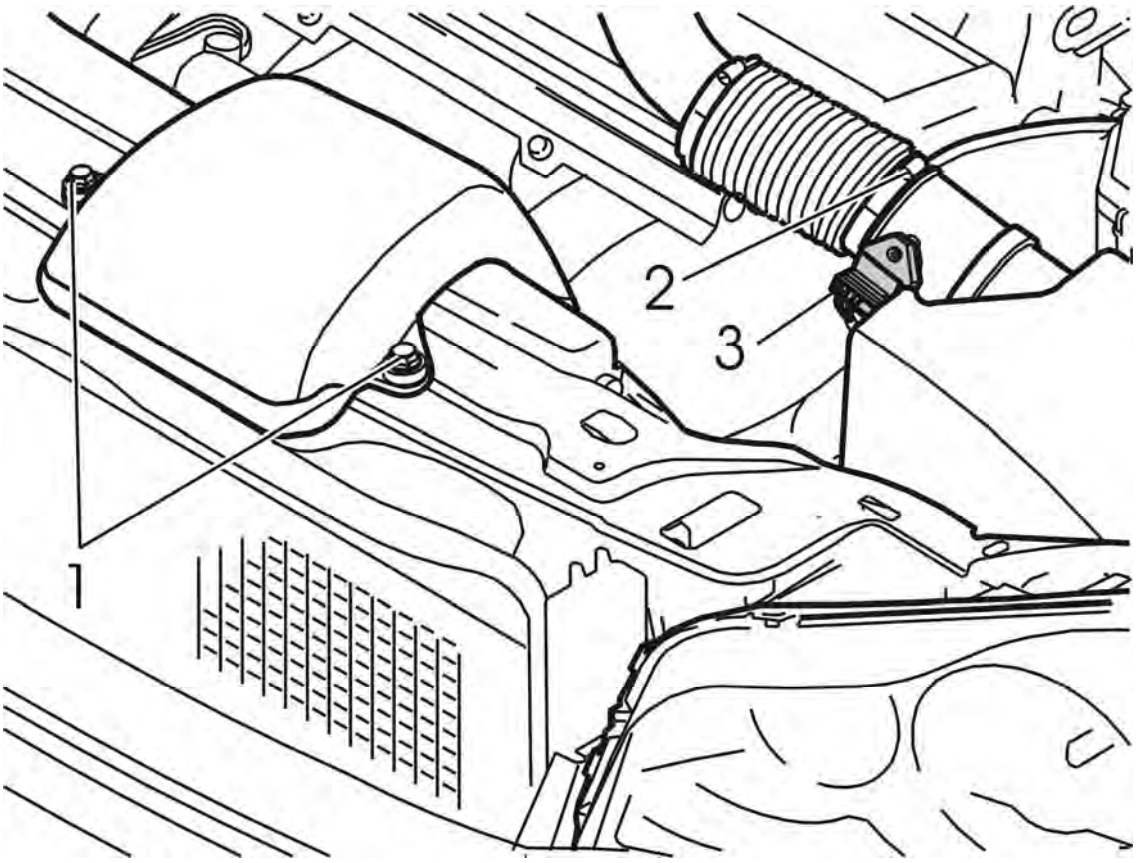

Fig. 254: Air Cleaner (ACL) Housing
Courtesy of VOLVO CARS CORPORATION

Ignition off.

Remove the air cleaner housing ACL assembly with the intake pipe. Pull the air cleaner (ACL) housing out of its mountings.

REMOVING THE GEAR SELECTOR CABLE

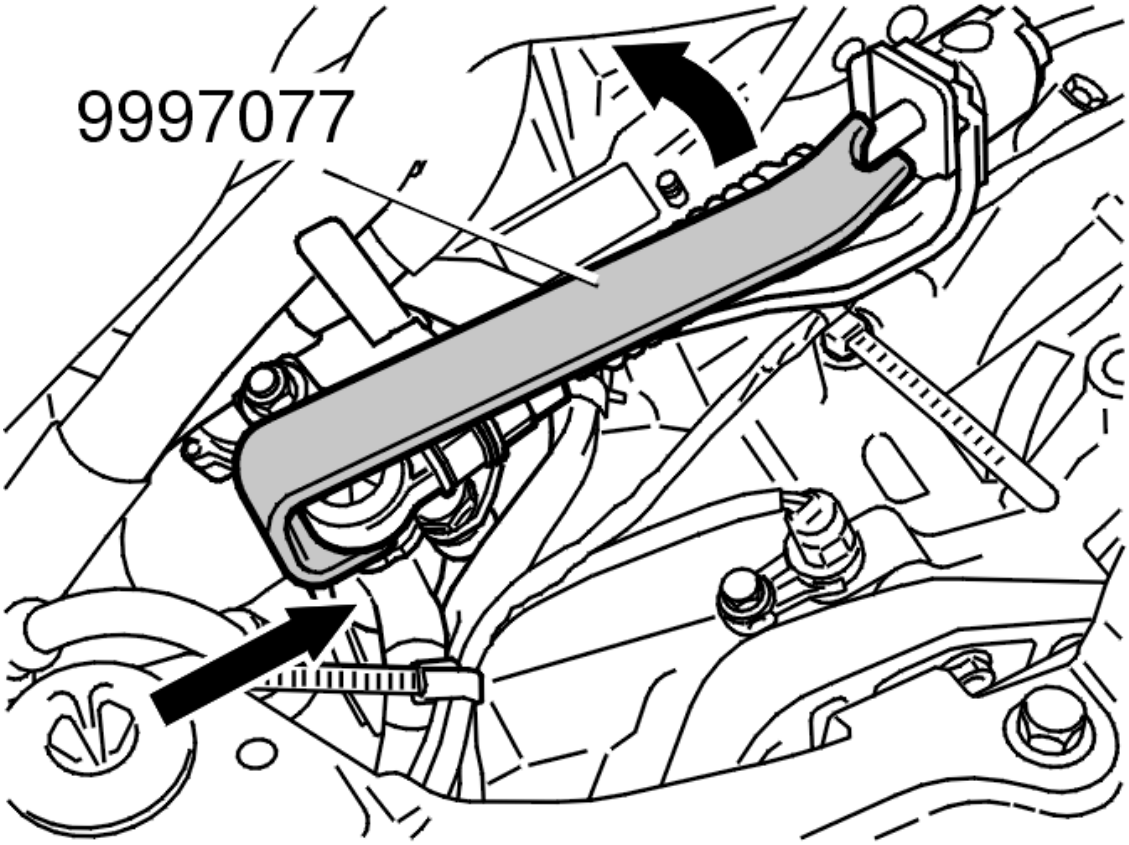

Fig. 255: Detaching Cable From Lever Using Special Tool
Courtesy of VOLVO CARS CORPORATION

Remove:

- the screws from the bracket for the gear selector cable
- the cable from the lever. Use special tool **9997077** . Move the cable to one side.

REMOVING THE GEAR-SHIFT POSITION SENSOR FROM THE GEAR SHIFT LINKAGE ROD

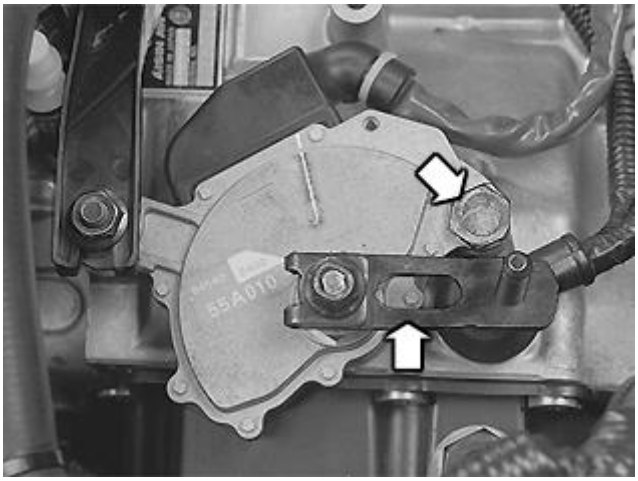

Fig. 256: Gear-Shift Position Sensor
Courtesy of VOLVO CARS CORPORATION

Remove:

- the lever
- the nut, lock washer and rubber seal from the gear-shift position sensor
- the 2 screws for the gear-shift position sensor.

Carefully lift the sensor off the gear shift linkage rod.

INSTALLATION

NOTE: For tightening torques, see TIGHTENING TORQUE .

REPLACING THE SEALING RING FOR THE GEAR-SHIFT LINKAGE ROD

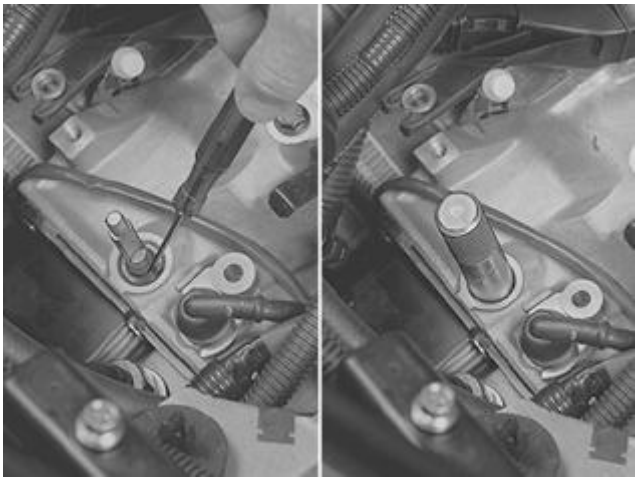

Fig. 257: Identifying Removal Of Sealing Ring Using Small Rounded Off Screwdriver
Courtesy of VOLVO CARS CORPORATION

Remove the old sealing ring. Use a small rounded off screwdriver.

Take care not to damage the rod.

Smear a little automatic transmission fluid on the new sealing ring. Install the ring. Use drift **9995476** .

INSTALLING THE GEAR-SHIFT POSITION SENSOR

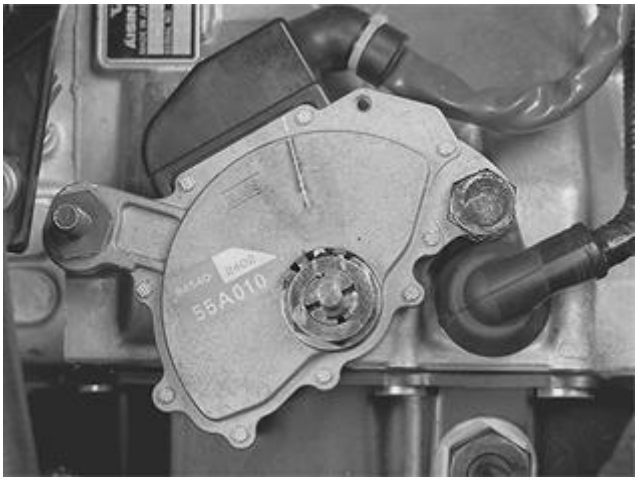

Fig. 258: Gear-Shift Position Sensor
Courtesy of VOLVO CARS CORPORATION

Tighten the sensor screws lightly.

Install the rubber washer, lock washer and the nut on the gear shift linkage rod connection.

Tighten the nut.

Lock the nut with the lock washer.

ADJUSTING GEAR-SHIFT POSITION SENSOR

Adjust the gear-shift position sensor. See **GEAR-SHIFT POSITION SENSOR, CHECKING/ADJUSTING** .

INSTALLING THE GEAR-SHIFT POSITION SENSOR, CONTINUED

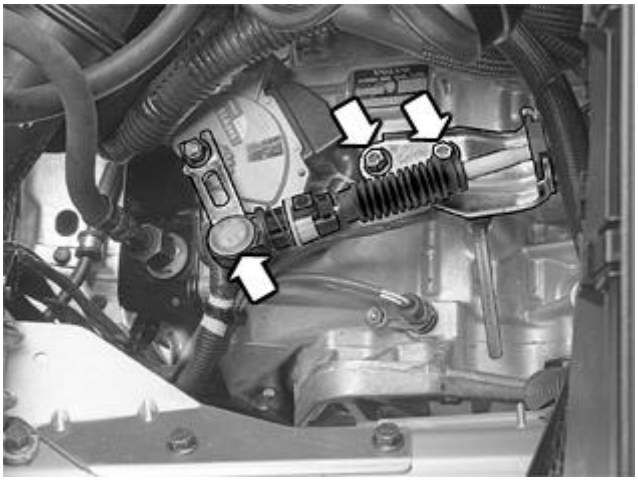

Fig. 259: Identifying Gear Selector Cable And Bracket
Courtesy of VOLVO CARS CORPORATION

Install:

- the lever on the gear shift linkage rod. Tighten. See **SUMMARY OF TIGHTENING TORQUES FOR SPECIFIC COMPONENTS**
- the gear selector cable and bracket on the transmission using 2 M8 screws. Tighten
- the ball joint for the gear selector cable on the lever. Press into place by hand.

INSTALLING ENGINE COMPARTMENT COMPONENTS

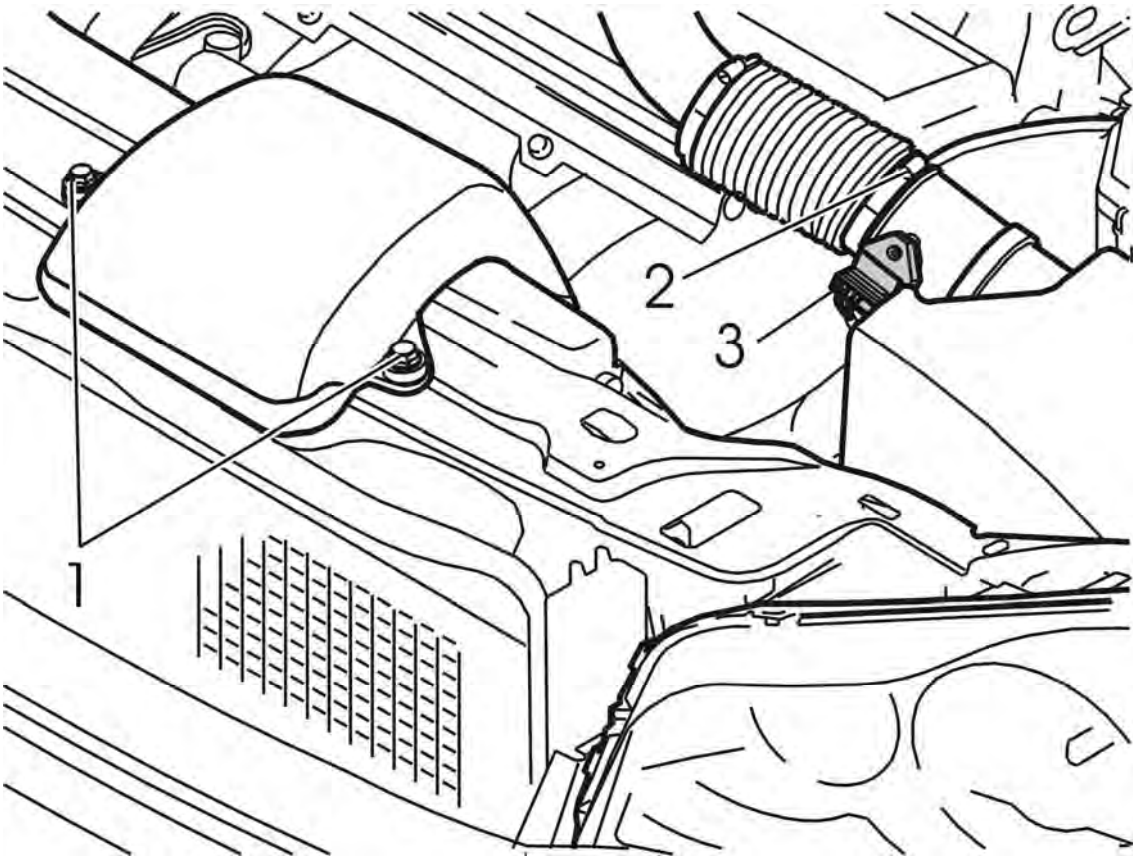

Fig. 260: Air Cleaner (ACL) Housing
Courtesy of VOLVO CARS CORPORATION

Install the air cleaner (ACL) housing, including all hoses and electrical terminals.

CHECKING DIAGNOSTIC TROUBLE CODES (DTCS)

Check and erase any diagnostic trouble codes (DTCs).

SEALING RING OIL PUMP, REPLACING

Special tools:

9995069

9995117

NOTE: As the illustrations in this service information are used for different model years and / or models, some variation may occur. However, the essential information is always correct.

REMOVAL

REMOVING THE TRANSMISSION

FWD

- for gasoline engines, see **TRANSMISSION, REMOVING**.

AWD

- for gasoline engines, see **TRANSMISSION, REMOVING**

REMOVING THE TORQUE CONVERTER

Pull the torque converter straight out of the transmission. Check the torque converter throat for damage.

REMOVING THE SEALING RING FROM THE OIL PUMP

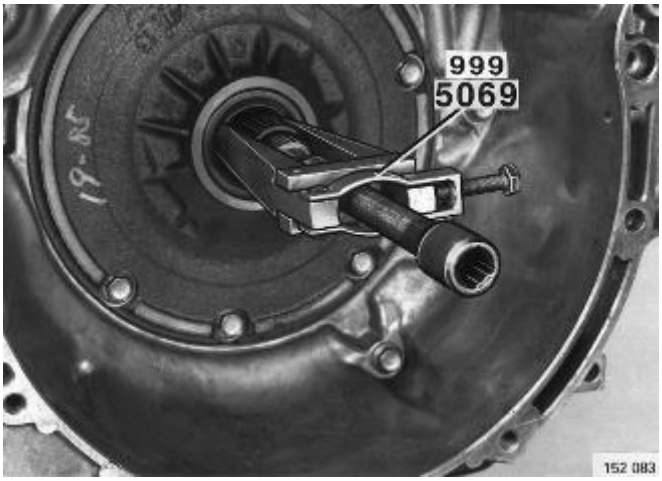

Fig. 261: Identifying Oil Pump Sealing Ring
Courtesy of VOLVO CARS CORPORATION

Use extractor **9995069** .

INSTALLATION

INSTALLING A NEW SEALING RING ON THE OIL PUMP

Fig. 262: Identifying Oil Pump Sealing Ring & Drift Tool 9995117
Courtesy of VOLVO CARS CORPORATION

Use drift **9995117** .

NOTE: Drift 999 5117 modified according to Tool Bulletin.

INSTALLING THE TORQUE CONVERTER

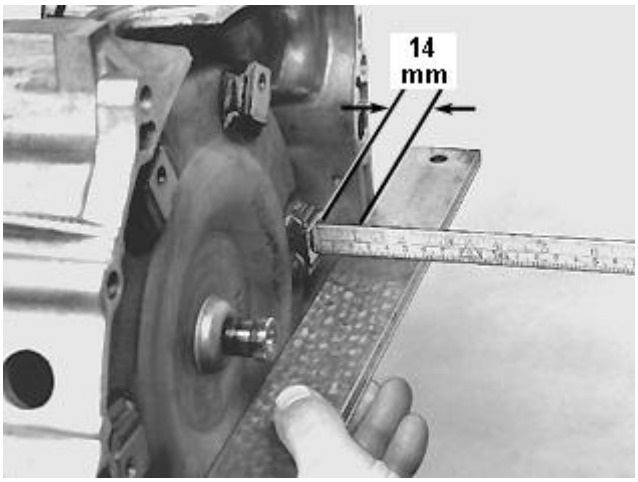

Fig. 263: Checking Distance Between Cover And Mounting Lugs Using Ruler
Courtesy of VOLVO CARS CORPORATION

Lubricate the torque converter throat with ATF oil.

NOTE: Take care not to damage the oil pump during installation.

Make sure torque converter is as far into the transmission as possible. Check with a ruler. The distance between the cover and retaining tabs must be **approximately 14 mm** .

INSTALLING THE TRANSMISSION

FWD

- for gasoline engines, see **TRANSMISSION, INSTALLING**.

AWD

- for gasoline engines, see **TRANSMISSION, INSTALLING**

SOLENOID CONTROL SYSTEM, REPLACING

NOTE: **As the illustrations in this service information are used for different model years and / or models, some variation may occur. However, the essential information is always correct.**

REPLACING AND CHECKING SOLENOIDS

PREPARATIONS

NOTE: **The operations which affect the cable harness and connectors and mountings for the control system solenoids must not be carried out when replacing the solenoids or the control system.**

Remove. See **REMOVAL** .

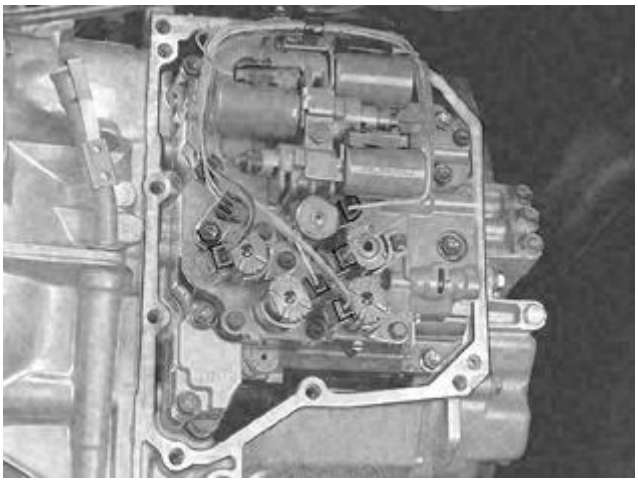

Fig. 264: Disconnecting/Connecting Solenoids Connectors
Courtesy of VOLVO CARS CORPORATION

Disconnect the connectors from the solenoids.

CHECK THE RESISTANCE IN S1-S5

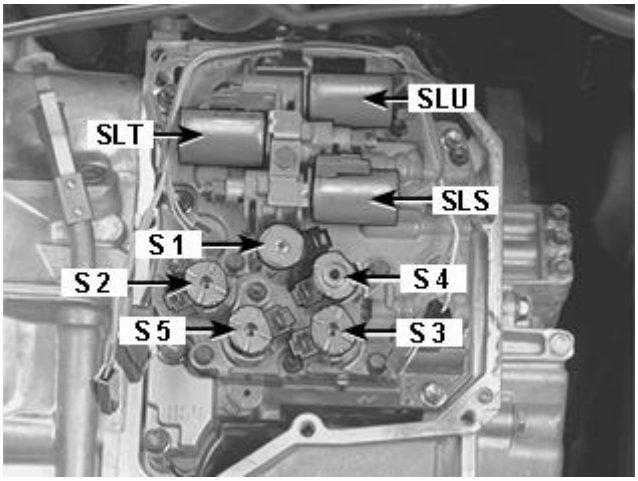

Fig. 265: Checking Resistance In S1-S5
Courtesy of VOLVO CARS CORPORATION

NOTE: Readings should be taken at approximately 20°C.

Solenoid S1

Measure the resistance between the pin in the solenoid connector and the transmission ground terminal.

Correct value: 12-16 ohms.

Solenoids S2-S5

Measure the resistance between the pin in the solenoid connector and the transmission ground terminal.

Correct value: 11-15 ohms.

If the resistance of any of solenoids S1-S5 is incorrect

Replace the solenoid. See **REPLACING SOLENOIDS S1-S5**.

CHECKING THE RESISTANCE OF SLT, SLS AND SLU

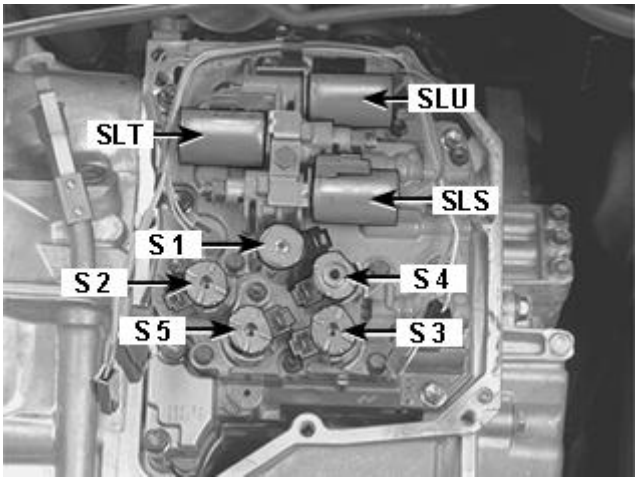

Fig. 266: Checking Resistance In S1-S5
Courtesy of VOLVO CARS CORPORATION

NOTE: Readings should be taken at approximately 20°C.

Solenoid SLT, SLS and SLU

Measure the resistance between both the pins in the solenoid connector.

Correct value: 5.0-5.6 ohms.

If the value of any of solenoids SLT, SLS and SLU is incorrect

Replace the control system. See **REPLACING THE CONTROL SYSTEM**.

The control system is calibrated together with the solenoids.

REPLACING SOLENOIDS S1-S5

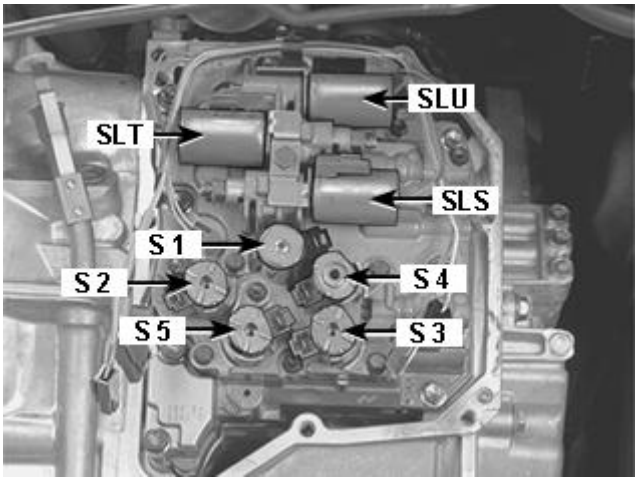

Fig. 267: Checking Resistance In S1-S5
Courtesy of VOLVO CARS CORPORATION

Remove the screw from the solenoid. Remove the solenoid from the control system.

Lubricate the O-ring on the new solenoid. Use automatic transmission fluid.

Install the solenoid. Tighten the screw. Tighten to **7 Nm** .

FINISHING

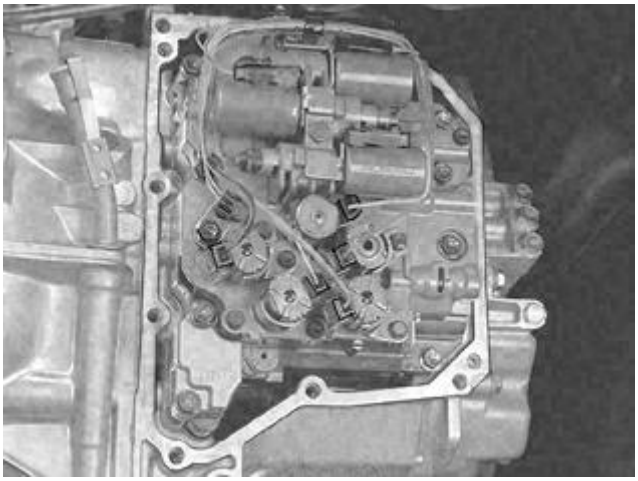

Fig. 268: Disconnecting/Connecting Solenoids Connectors
Courtesy of VOLVO CARS CORPORATION

Connect the connectors to the solenoids.

Reinstall. See **INSTALLATION** .

REPLACING THE CONTROL SYSTEM

PREPARATIONS

Remove. See **TEMPERATURE SENSOR FLUID, TRANSAXLE, (TFT)** .

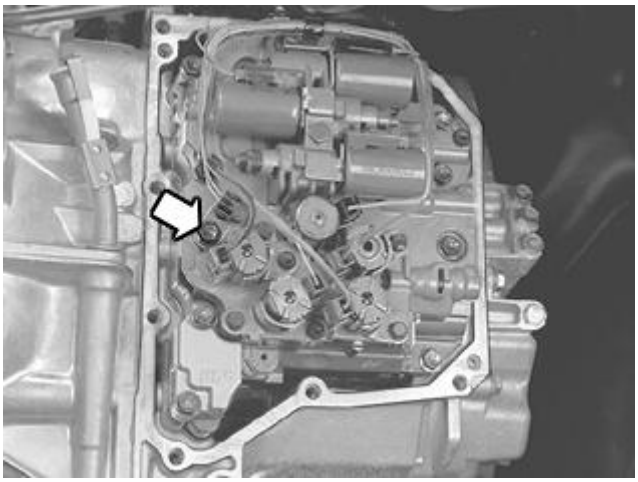

Fig. 269: Identifying Oil Temperature Sensor And Holder Screw
Courtesy of VOLVO CARS CORPORATION

Remove:

- the connectors for the solenoid valves
- the screw for the oil temperature sensor holder. Remove the sensor from the control system
- the cable harness from the holders on the control system.

Push the cable harness to one side.

REMOVING THE CONTROL SYSTEM

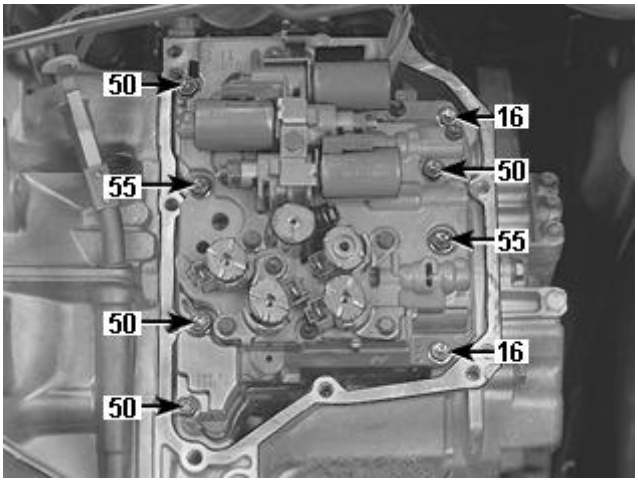

Fig. 270: Control System Screws
Courtesy of VOLVO CARS CORPORATION

Remove the screws from the control system. Remove the cover from the transmission.

NOTE: Ensure that there are no cracks on the top of the lever for the gear selector slider.

REPLACING SEALING RINGS

Fig. 271: Control System Sealing Rings
Courtesy of VOLVO CARS CORPORATION

Remove the sealing rings from the transmission.

NOTE: Ensure that no debris enters the transmission.

Install **new** sealing rings in the transmission

Use petroleum jelly to hold the seals in position.

CHECKING THE GEAR SELECTOR SLIDER

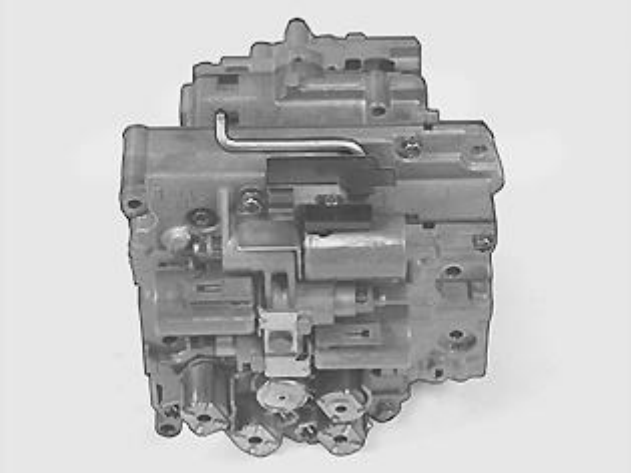

Fig. 272: Checking Gear Selector Slider
Courtesy of VOLVO CARS CORPORATION

Check that the lever for the gear selector slider is correctly positioned.

INSTALLING THE CONTROL SYSTEM

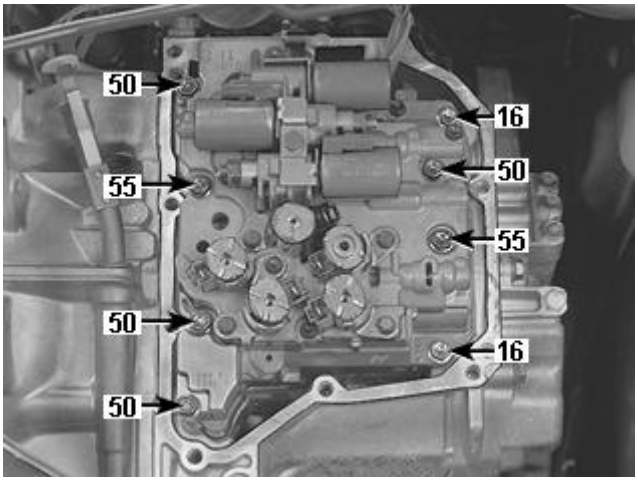

Fig. 273: Control System Screws
Courtesy of VOLVO CARS CORPORATION

NOTE: Ensure the lever for the gear selector is set to neutral.

Align the control system on the lever for the gear selector.

Install:

- the screws for the control system
- a new gasket for the cover on the control system. Note that the screws are of different lengths (measured in mm).

Tighten the screws alternately to light contact. Then tighten alternately. Tighten to **10 Nm** .

FINISHING

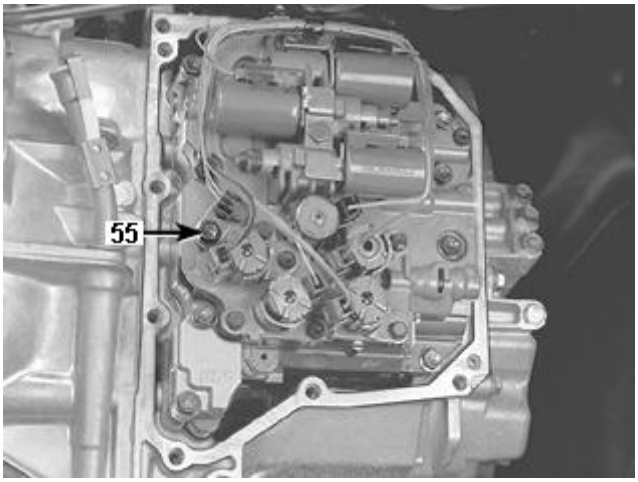

Fig. 274: Identifying Oil Temperature Sensor Screw
Courtesy of VOLVO CARS CORPORATION

Install the cable harness. Connect the connectors to the solenoids.

Install the oil temperature sensor with the holder and the screw. Note that the length of the screw is given in mm. Tighten to **10 Nm** .

Install the cable harness on the holder. Check that the cable harness is correctly positioned.

Reinstall. See **INSTALLATION** .

TRANSMISSION CONTROL MODULE (TCM), REPLACING

POINTS TO OBSERVE WHEN REPLACING THE CONTROL MODULE

CAUTION: Software can only be ordered when the control module is installed in the vehicle. VIDA reads off the new control module identity which is required to order the correct software.

CAUTION: Wait two minutes after the ignition has been switched off. The main relay must be voltage-free before the control module can be removed from the car. If the engine cooling fan runs on after the ignition has been switched off, wait until it stops. Then wait another two minutes.

CAUTION: Always check that the control module and control module box connector pins and sleeves are not bent or damaged. This may have caused the fault.

PREPARATIONS FOR REPLACEMENT

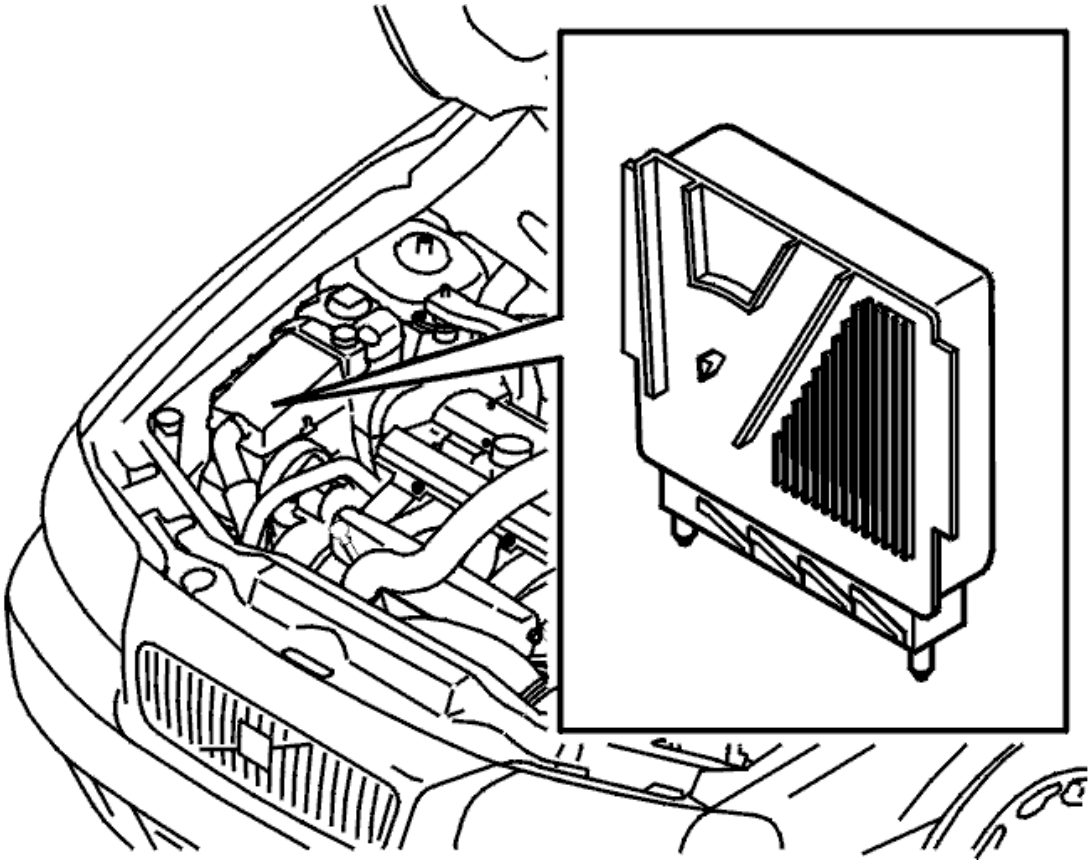

Fig. 275: Identifying Transmission Control Module
Courtesy of VOLVO CARS CORPORATION

Remove:

- the cable from the battery negative terminal. See **BATTERY, DISCONNECTING**
- the cover over the control module.

REMOVING THE CONTROL MODULE

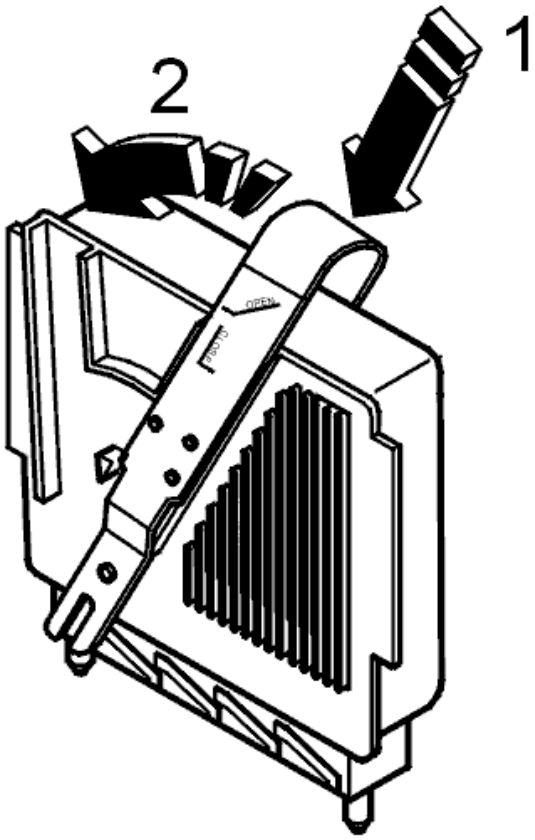

Fig. 276: Identifying Control Module Removal
Courtesy of VOLVO CARS CORPORATION

NOTE: Do not touch the control module terminal pins with your fingers. Static electricity may damage components in the control module.

Insert tool **9995722** (1) in the car around the control module. Move the upper section of the tool backwards as far as it will go (2). Pull up the tool.

Carefully pull up the control module.

INSTALLING THE CONTROL MODULE

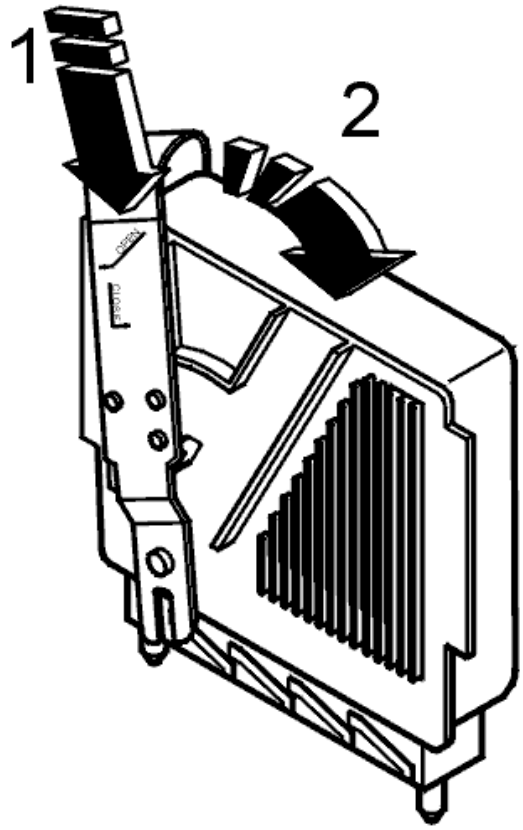

Fig. 277: Identifying Control Module Installation
Courtesy of VOLVO CARS CORPORATION

Carefully press the control module down into the grooves on the inside of the control module box. Press down all the way.

Insert tool **9995722** around the control module.

Move the upper section of the tool forwards to stop and pull it up.

Press the cover into place over the control modules.

Check that the air ducts are correctly positioned.

Connect the battery negative lead. First read **BATTERY, DISCONNECTING** .

ORDERING SOFTWARE

Order software 9438291

FINISHING

Check that no diagnostic trouble codes have been stored during the repair.

TRANSMISSION FLUID, REPLACING

WARNING: Avoid skin contact with the transmission fluid.

NOTE: Use only transmission oil, Volvo P/N 116 1540-8 (1 liter container), 116 1640-6 (4 liter container).

CONDITIONS

The oil should be replaced only in the two following instances:

Where diagnostic trouble codes (DTCs) TCM 0042 and TCM 0046 are stored, in which case the diagnostic function activates the warning lamp in the following circumstances.

The transmission control module (TCM) receives data about the operating temperature of the transmission fluid while the car is being driven. TCM 0042 is stored after an accumulated amount of time.

Diagnostic trouble code (DTC) TCM 0046 is stored if the transmission fluid temperature exceeds 150° C for more than two minutes.

In cars used in continuous taxi service or used for towing a trailer or caravan for most of its mileage, the oil must be replaced at a service interval of 75, 000 km ± 5000 km. This is to conform to the regular service program.

WARNING: The oil may be very hot if the car has just been driven. Avoid skin contact.

DRAINING

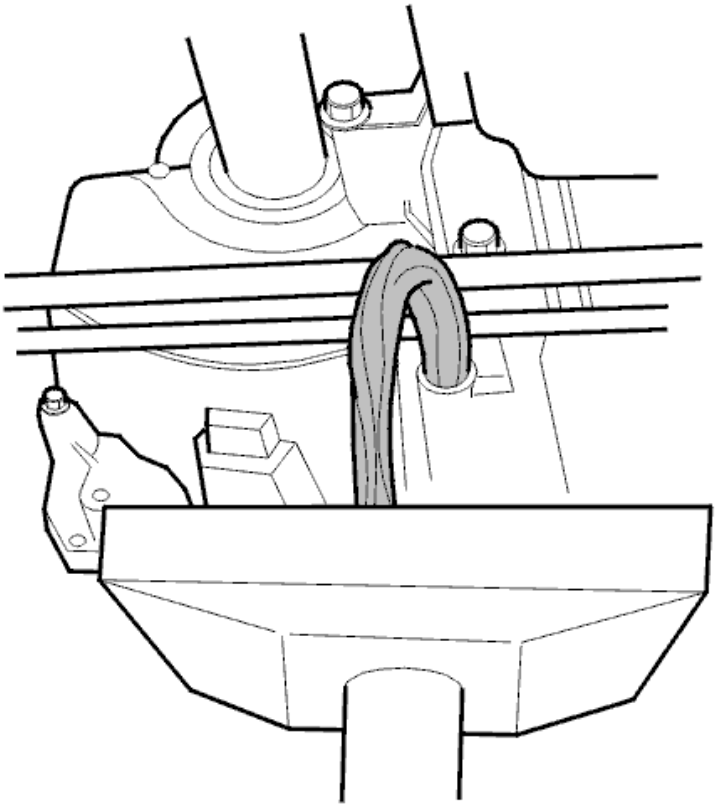

Fig. 278: Draining Off Oil
Courtesy of VOLVO CARS CORPORATION

Remove:

- the splash guard under the engine
- the oil plug. Drain the transmission oil.

INSTALLING THE OIL PLUG

Use a new gasket.

Tighten the plug. Tighten to **40 Nm** .

Install the protective cover.

DRAINING OIL

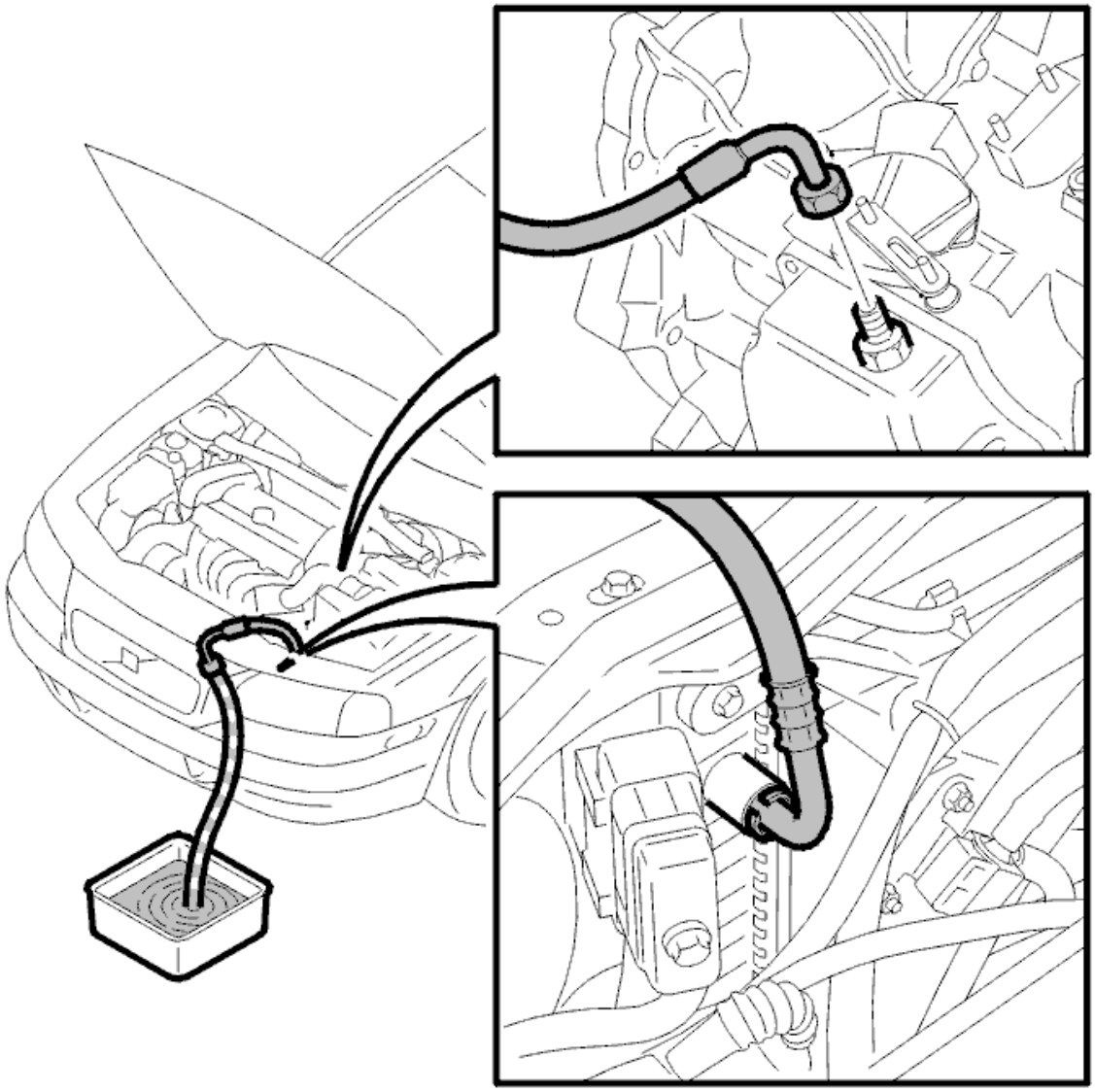

Fig. 279: Draining Cooler
Courtesy of VOLVO CARS CORPORATION

Remove the return hose on the control system cover.

Install a plastic plug in the connection on the cover.

Detach the return hose in the cooler. Align the hose upwards and reconnect it to the cooler.

Install a transparent plastic hose on the oil return hose connection.

Place a container beneath the hose to catch the oil.

REFILLING

Apply the parking brake. Move the gear selector lever to position P.

Fill with approximately 2 liters of oil.

Start the engine. Allow the engine to idle.

Turn the engine off when air bubbles start to become visible in the hose.

Fill with approximately 2 liters of oil.

Start the engine again and let it idle.

Turn the engine off when air bubbles start to become visible in the hose.

Remove the hose from the oil cooler hose. Detach it from the connection to the cooler. Install the hose in the normal position on the cooler and the transmission.

FURTHER FILLING

Fill with approximately 2 liters of oil.

Apply the parking brake.

Start the engine. Allow the engine to idle. Move the gear selector through all the gear positions. Wait 4-5 seconds in each gear.

CHECKING THE OIL LEVEL

See **OIL LEVEL, CHECKING** .

The capacity of the transmission is 7.1± 0.25 liters. (MAX, MIN).

NOTE: After replacing the transmission oil, the "Transmission oil change" counter must be reset. See RESETTING TRANSMISSION FLUID CHANGE COUNTER .

TRANSMISSION, INSTALLING

Special tools:

9512050

9997057

NOTE: As the illustrations in this service information are used for different model years and / or models, some variation may occur. However, the essential information is always correct.

INSTALLATION

NOTE: **For tightening torques, see: TIGHTENING TORQUE .**

INSTALLING THE TRANSMISSION

Before installing the transmission it is very important that the checks and cleaning have been carried out. See **TRANSMISSION, PREPARATIONS BEFORE INSTALLING** .

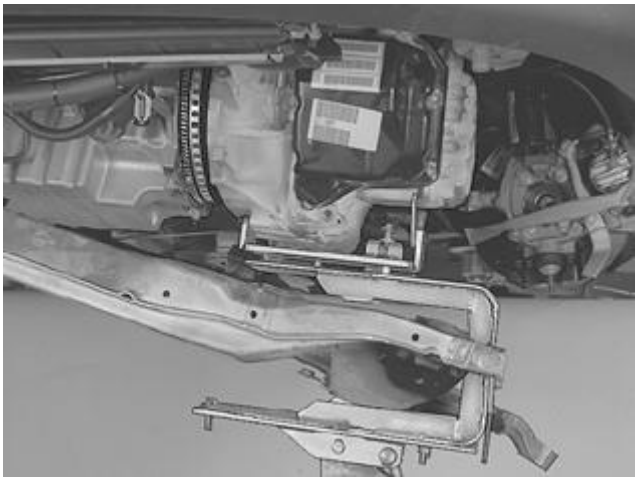

Fig. 280: Adjusting Height & Angle Using Mobile Jack And Gearbox Fixture
Courtesy of VOLVO CARS CORPORATION

Adjust height and angle with the mobile jack and the transmission fixture.

Locate the transmission on the engine.

Ensure that the transmission goes straight in, in relation to the engine, and that the guide sleeves and guide pin for the starter motor align in the guide holes on the transmission.

INSTALLING AND TIGHTENING THE SCREWS FOR THE TRANSMISSION

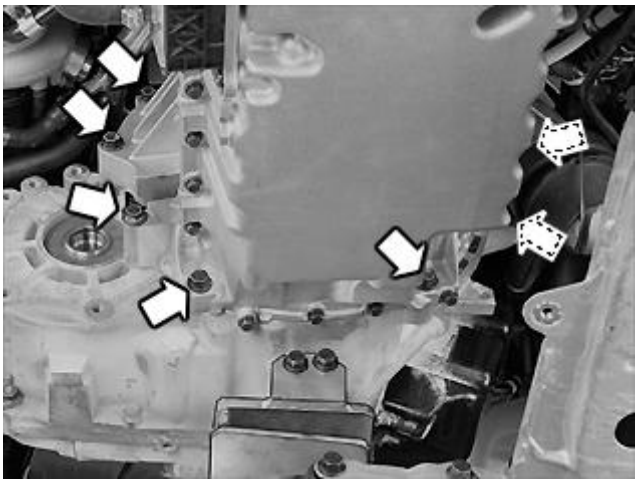

Fig. 281: Gearbox And Engine Screws
Courtesy of VOLVO CARS CORPORATION

Install all 7 x M10 screws securing the transmission to the engine.

First tighten alternately and crosswise to light contact.

At the same time, check that the whole of the transmission is in contact with the engine.

Then tighten the screws crosswise.

Remove the fixture from the transmission.

INSTALLING THE TORQUE CONVERTER SCREWS

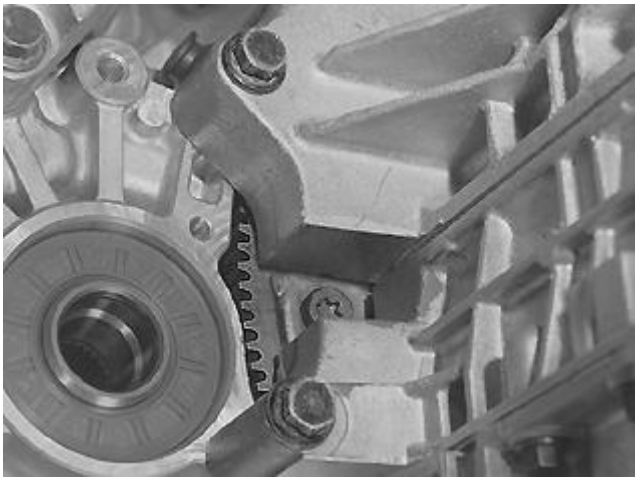

Fig. 282: Identifying Torque Converter Screws
Courtesy of VOLVO CARS CORPORATION

NOTE: Use new screws.

Align the torque converter against the carrier plate. Do this by turning the engine with the nut for the crankshaft pulley and turning the torque converter.

Install all 6 screws loosely. Tighten the screws. Tighten until the heads are almost in contact with the carrier plate. Tighten. See **SUMMARY OF TIGHTENING TORQUES FOR SPECIFIC COMPONENTS** . Use a Torx socket TX50.

NOTE: Remove the socket wrench from the crankshaft.

LIFTING THE ENGINE AND TRANSMISSION

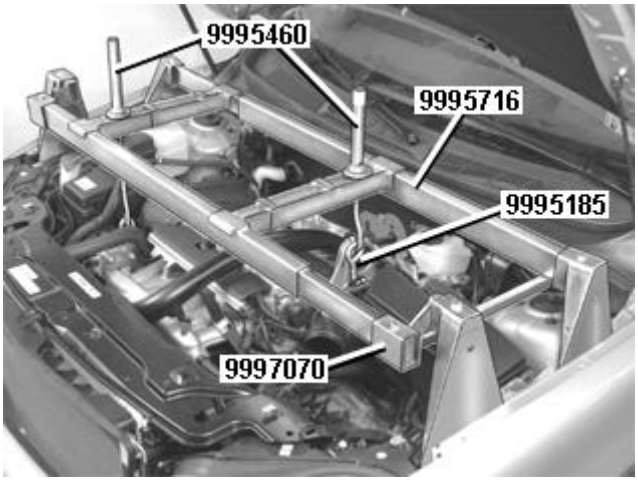

Fig. 283: Identifying Fixture Kit, Lifting Beam And Lifting Hooks
Courtesy of VOLVO CARS CORPORATION

Lift the engine to slightly above the horizontal position to provide better access to the rear engine mounting and engine pad.

NOTE: Check that the connection on the hose for the heater is not trapped between the engine and firewall when the engine is lifted.

Raise the car.

INSTALLING THE REAR ENGINE MOUNTING

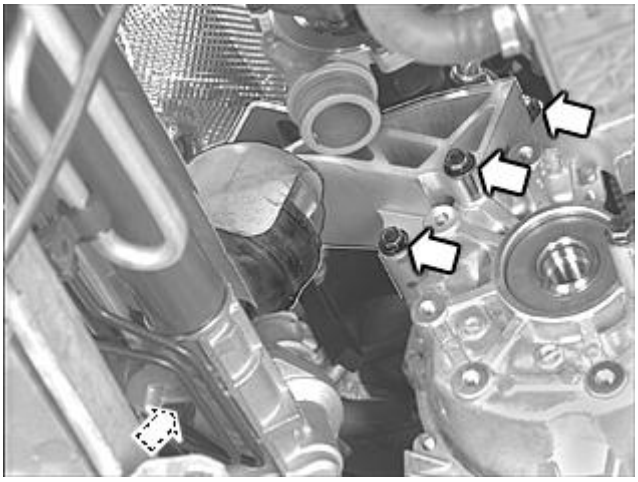

Fig. 284: Identifying Rear Engine Mounting
Courtesy of VOLVO CARS CORPORATION

Install:

- the rear engine mounting on the transmission
- the 3 x M10 screws for the engine mounting. Tighten.

INSTALLING THE BEVEL GEAR

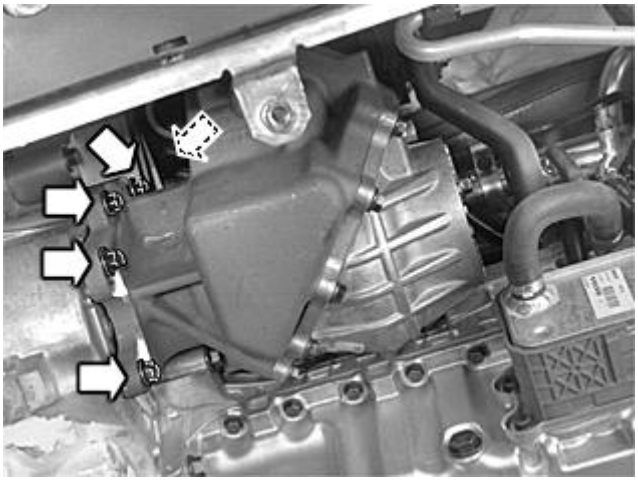

Fig. 285: Angle Gear Screws
Courtesy of VOLVO CARS CORPORATION

NOTE: Before installing the bevel gear, lubricate the spline joint between the transmission and the bevel gear using grease. See: SPLINES GREASING .

Ensure that the mating surfaces on the transmission and bevel gear are clean and not damaged.

Install the bevel gear. Use **new** screws. Tighten the screws alternately to light contact. **TIGHTENING TORQUE** .

INSTALLING THE LOWER OIL PIPE ON THE TRANSMISSION

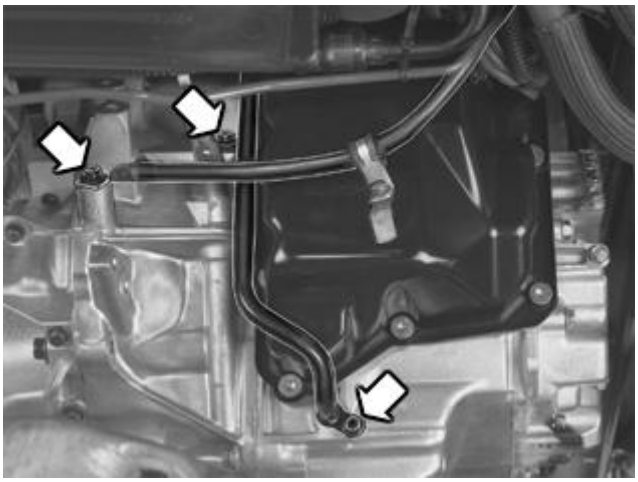

Fig. 286: Identifying Oil Pipe
Courtesy of VOLVO CARS CORPORATION

Use a new O-ring.

Install:

- the oil pipe and dip stick pipe. Use both the screws. Tighten. See **SUMMARY OF TIGHTENING TORQUES FOR SPECIFIC COMPONENTS**
- a tie strap for the cable harness for the oil pipe
- the ground lead to the engine.

INSTALLING THE LEFT DRIVE SHAFT ON THE TRANSMISSION AND THE WHEEL SPINDLE

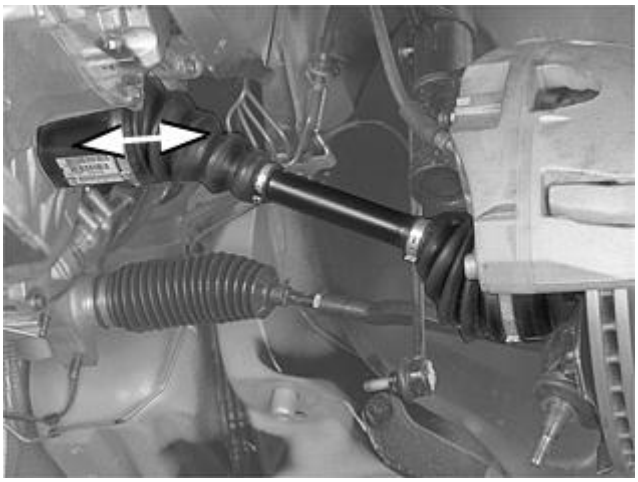

Fig. 287: Identifying Left Drive Shaft On Transmission And Wheel Spindle
Courtesy of VOLVO CARS CORPORATION

Press in the constant velocity joint housing firmly so that the snap ring engages in its groove in the transmission. Pull the constant velocity joint to check that the drive shaft is secure.

Lubricate the drive shaft splines. Use a small amount of thin oil. Locate the drive shaft in the wheel hub.

Install a new screw loosely in the drive shaft.

INSTALLING THE SUB-FRAME ON THE BODYWORK

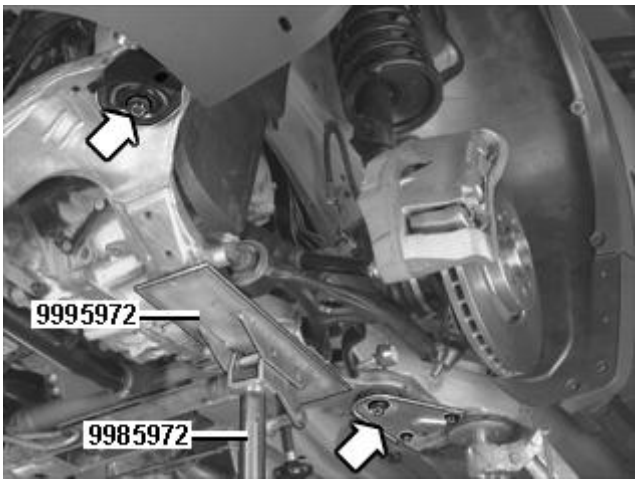

Fig. 288: Identifying Mobile Jack & Sub-Frame

Courtesy of VOLVO CARS CORPORATION

NOTE: Use new screws. Lubricate the screw threads.

Lift up the sub-frame until it is about **150 mm** from the side member.

Secure the power steering pipe at the front edge of the upper side of the sub-frame. Use the rubber covered clamp. Install the screw loosely. Apply a small amount of soap solution so that it glides into the clamp easily.

NOTE: Ensure the following when lifting the sub-frame:

- ensure that the brake pipe passes the bracket for the exhaust pipe
- ensure that the ball joint pinion for the spring strut aligns in the control arm.

Install:

- the new screws and the support bracket at the rear edge
- the screws for the bracket loosely.

Applies only to cars with fuel driven parking heaters:

Align the washer with the mounting lug following the marking on the sub-frame.

Tighten the sub-frame screws. Tighten to light contact.

Remove the mobile jack.

INSTALLING THE RIGHT DRIVE SHAFT ON THE TRANSMISSION, WHEEL SPINDLE AND CONTROL ARM

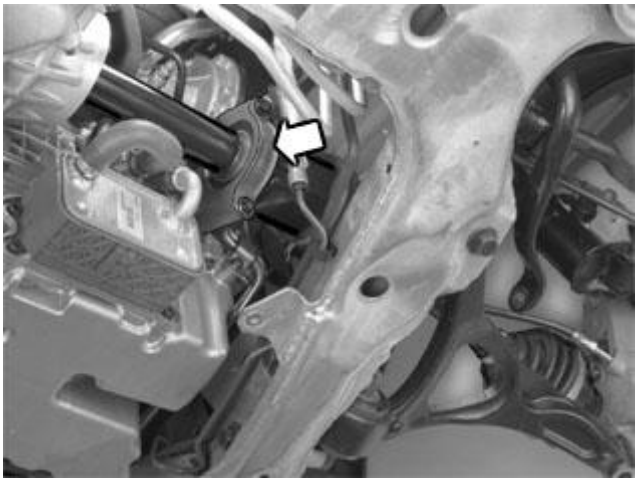

Fig. 289: Drive Shaft Support Bearing Cap
Courtesy of VOLVO CARS CORPORATION

Install the cap for the drive shaft pilot bearing. Use 2 x M8 screws. Tighten.

Lubricate the drive shaft splines. Use a small amount of thin oil. Locate the drive shaft in the wheel hub.

Install a new screw loosely in the drive shaft.

Press down the control arm. Locate the spring strut in the ball joint pinion for the spring strut in the control arm.

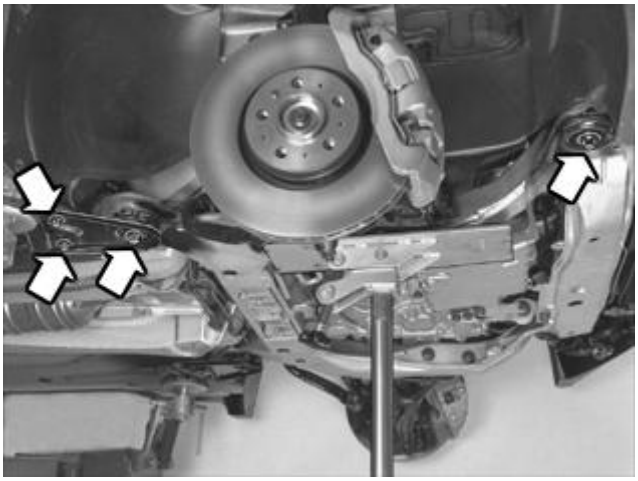

Fig. 290: Identifying Drive Shaft, Wheel Hub And Screws
Courtesy of VOLVO CARS CORPORATION

Position the mobile jack lightly applied under the right side of the sub-frame.

Install:

- new screws in the sub-frame.

  NOTE: Lubricate the screw threads.

- the screws loosely at the rear edge of the support plate.

Tighten the sub-frame screws. Tighten to light contact.

Remove the mobile jack.

Install the four subframe screws together with the subframe brackets and engine heater where appropriate.

Tighten. See **TIGHTENING TORQUE** . First tighten the screws on the left side of the subframe followed by those on the right.

Tighten the bracket screws M10.

INSTALLING COMPONENTS ON THE ENGINE AND SUB-FRAME

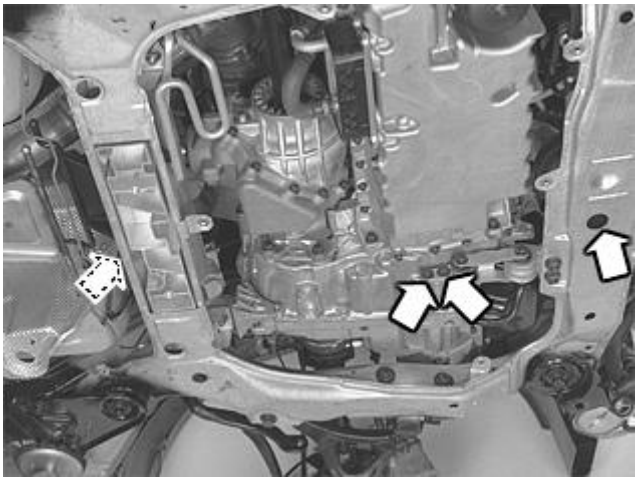

Fig. 291: Engine Pads And Screws
Courtesy of VOLVO CARS CORPORATION

Install the 1 x M10 screw for the front engine pad. Tighten.

Loosely install the screw for the engine pad/steering gear.

Tighten the M10 screw for the rear engine pad.

Install the mounting for the engine stabilizer brace to the transmission. Use new screws. Tighten. See **SUMMARY OF TIGHTENING TORQUES FOR SPECIFIC COMPONENTS** .

INSTALLING THE COLLISION PROTECTION SYSTEM OVER THE STEERING GEAR

NOTE: For tightening torques, see: TIGHTENING TORQUE .

Fig. 292: Collision Protection Over Steering Gear
Courtesy of VOLVO CARS CORPORATION

Applies only to right-hand drive cars

Install the 2 screws. Tighten.

CHECKING THE POSITION OF THE TIE ROD IN THE STEERING GEAR

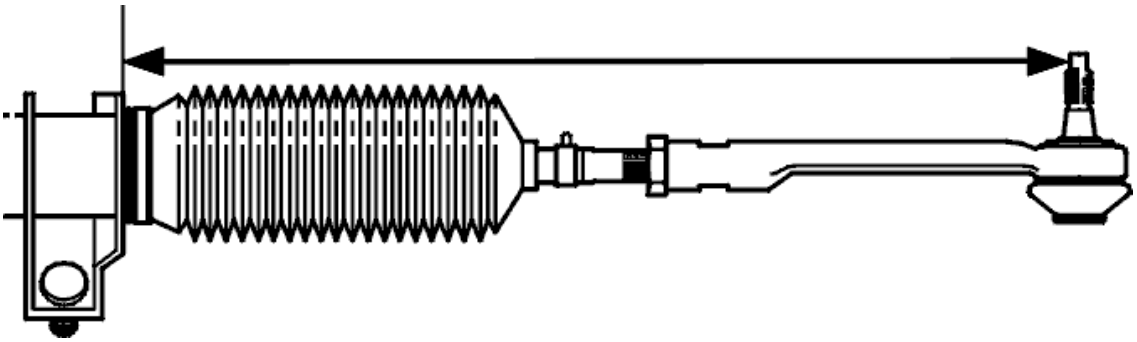

Fig. 293: Identifying Length Of Track Rod In Relation To Steering Gear Housing
Courtesy of VOLVO CARS CORPORATION

Check that tie rod is in the same position as when it was removed.

ASSEMBLING THE LOWER STEERING SHAFT

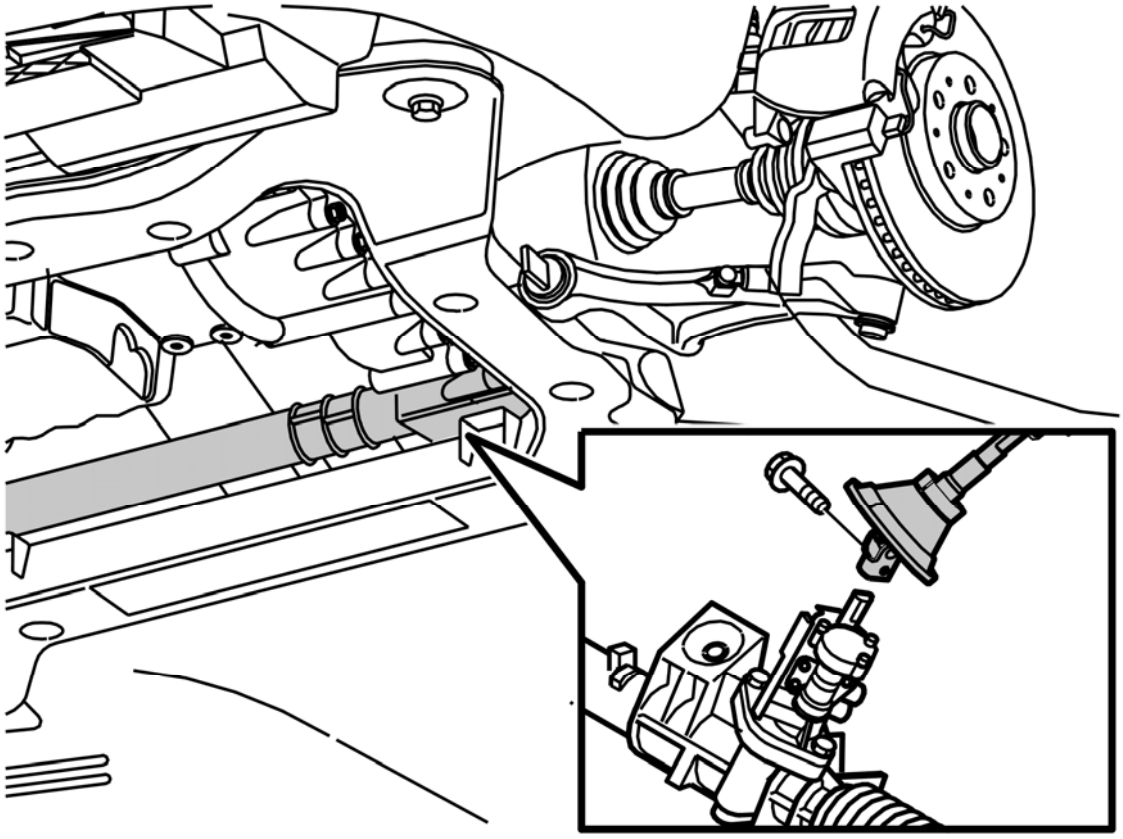

Fig. 294: Identifying Screw For Joint Between Steering Gear And Steering Shaft
Courtesy of VOLVO CARS CORPORATION

Tighten the lower screw on the steering shaft joint mounting in the steering gear from the engine compartment.

Use a **new** screw. Tighten. See: **SUMMARY OF TIGHTENING TORQUES FOR SPECIFIC COMPONENTS** .

INSTALLING THE CROSS MEMBERS ON THE BODY

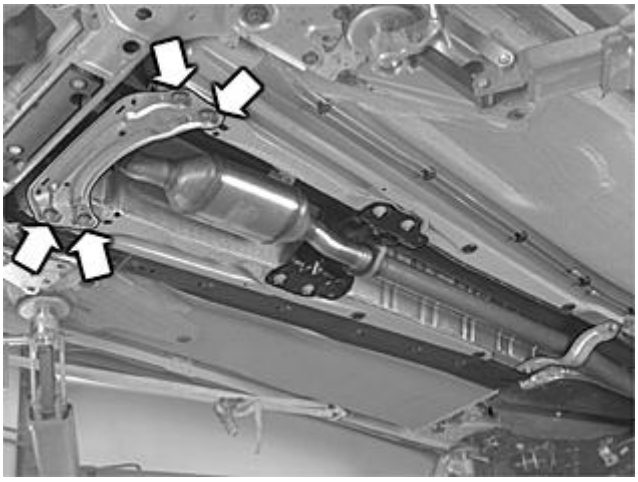

Fig. 295: Identifying Cross Members And Screws
Courtesy of VOLVO CARS CORPORATION

Install:

- the M8 screws for the front member
- the brake pipe in the holders on the member
- the clamp with the heated oxygen sensor (HO2S) cable on the front cross member.

INSTALLING FRONT SUSPENSION COMPONENTS

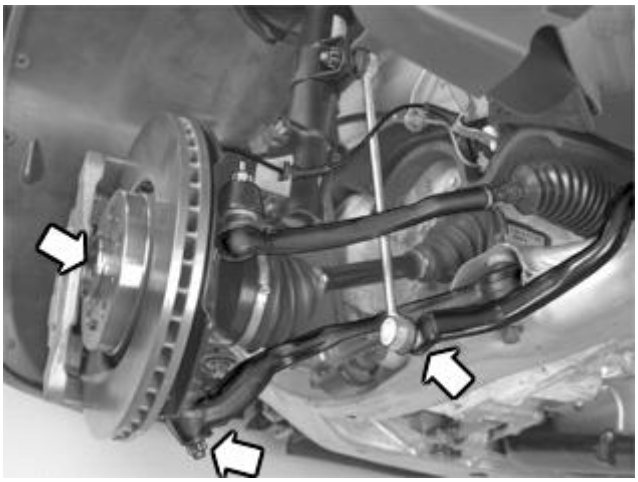

Fig. 296: Front Suspension Components
Courtesy of VOLVO CARS CORPORATION

HINT: Applies when installing front suspension components on both sides.

Install:

- a new M12 lock nut on the ball joint pinion. Counterhold the ball joint pinion while tightening so that the boot cannot turn. Tighten
- the anti-roll bar link. Use a new M10 lock nut. Counterhold the ball joint pinion while tightening so that the boot cannot turn. Tighten. See **SUMMARY OF TIGHTENING TORQUES FOR SPECIFIC COMPONENTS** . Tighten the drive shaft screw. Counterhold using a screwdriver in the brake disc vents. Tighten. See **SUMMARY OF TIGHTENING TORQUES FOR SPECIFIC COMPONENTS**
- the soundproofing over the drive shaft (applies to certain versions).

INSTALLING COMPONENTS FOR THE FENDER LINER

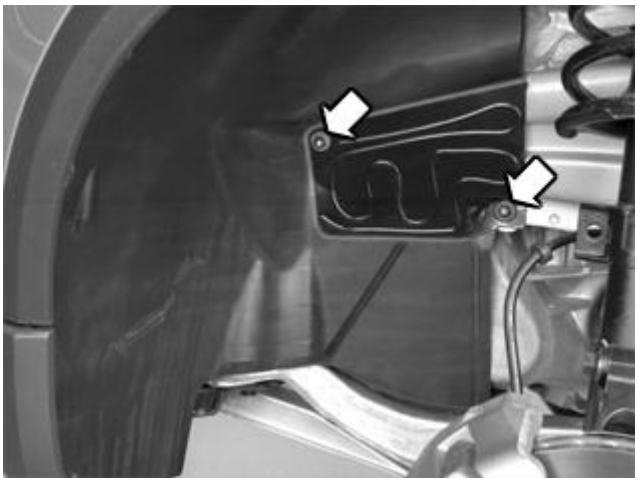

Fig. 297: Identifying Support Plate And Nuts
Courtesy of VOLVO CARS CORPORATION

Install the support plate and the nuts on both sides.

INSTALLING THE CABLE DUCT

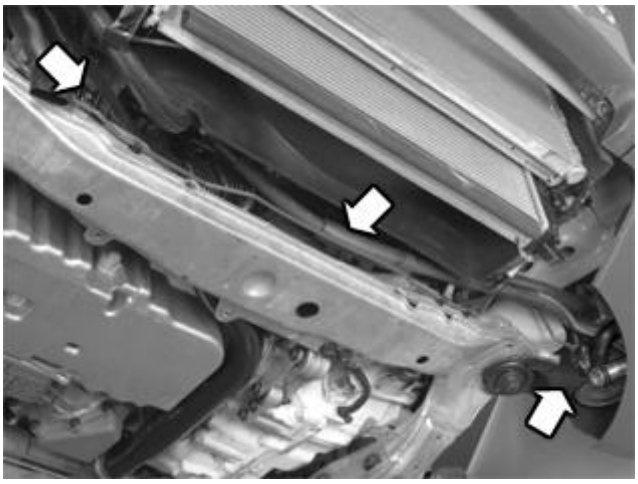

Fig. 298: Cable Duct
Courtesy of VOLVO CARS CORPORATION

Install:

- the cable duct on the sub-frame
- any parking or additional heaters in the mounting in the sub-frame and the fuel line in the mountings.

INSTALLING THE FRONT SPLASH GUARD

Fig. 299: Front Splash Guard
Courtesy of VOLVO CARS CORPORATION

Install:

- the splash guard under the engine
- the wheels. See **INSTALLING WHEELS** .

REMOVING THE LIFTING BEAMS

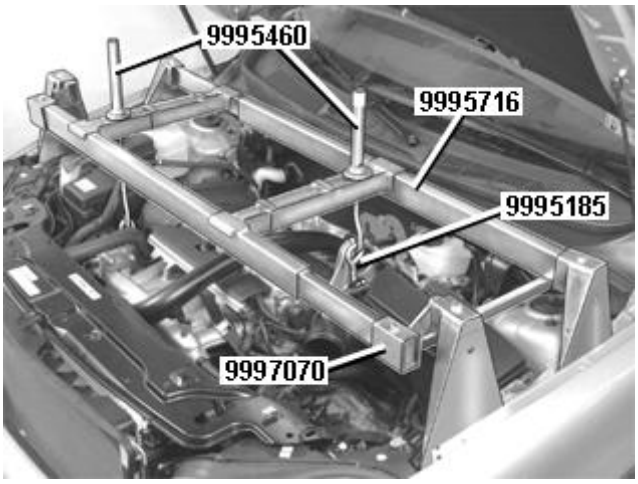

Fig. 300: Identifying Fixture Kit, Lifting Beam And Lifting Hooks
Courtesy of VOLVO CARS CORPORATION

Lower the car.

Remove the lifting beams and hooks from the engine.

INSTALLING THE COOLANT HOSE

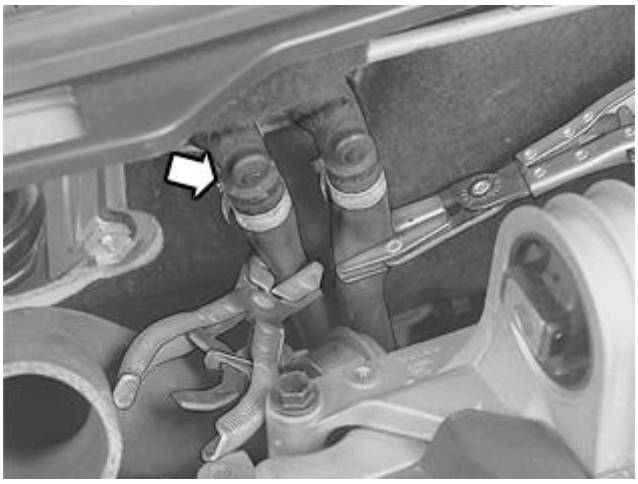

Fig. 301: Coolant Hose In Passenger Compartment
Courtesy of VOLVO CARS CORPORATION

Install the connector securing the engine coolant hose to the heater.

Remove the hose clips.

INSTALLING THE REMAINING SCREWS FOR THE TRANSMISSION AND STARTER MOTOR

Fig. 302: Identifying Screws
Courtesy of VOLVO CARS CORPORATION

Install:

- the 3 x M10 screws for the transmission and engine. Tighten
- the 2 x M10 screws for the starter motor. Tighten. See **SUMMARY OF TIGHTENING TORQUES FOR SPECIFIC COMPONENTS**

- the bracket for the engine coolant hose and cable harness
- the bracket for the cable harness clamp and the mounting for the heated oxygen sensor (HO2S) connector at the rear edge of the transmission
- the clamp for the cable harness at the rear edge of the engine.

INSTALLING THE GEAR SELECTOR CABLE AND OIL PIPE

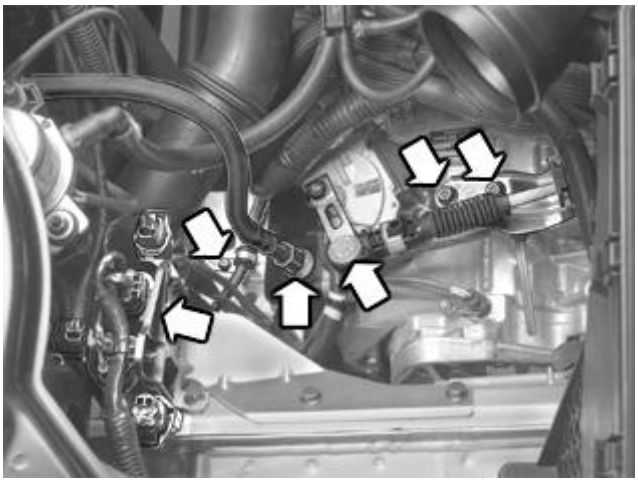

Fig. 303: Identifying Gear Selector Cable, Bracket, Oil Pipe And Connectors
Courtesy of VOLVO CARS CORPORATION

Install:

- the ground lead and mounting on the sub-frame
- the oil pipe on the transmission
- the gear selector cable and bracket. Use 2 x M8 screws. Tighten.

Connect the cable to the lever. Connect the transmission connectors and the mounting for the air cleaner (ACL) housing bracket. Press the cable harness mounting into place on the control system cover.

NOTE: Check that the transmission bleed hose / valve is not trapped. There is a risk of overpressure in the transmission.

INSTALLING THE SERVICE CLIPS

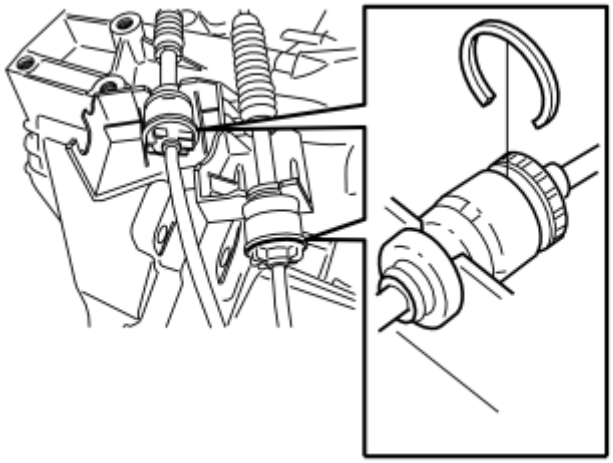

Fig. 304: Gear Selector Cable And Clip
Courtesy of VOLVO CARS CORPORATION

NOTE: The automatic transmission has one gear selector cable while the manual transmission has two cables.

Ensure that the gear selector cable is locked in position before installing the blue clip. Press the clip into place as illustrated.

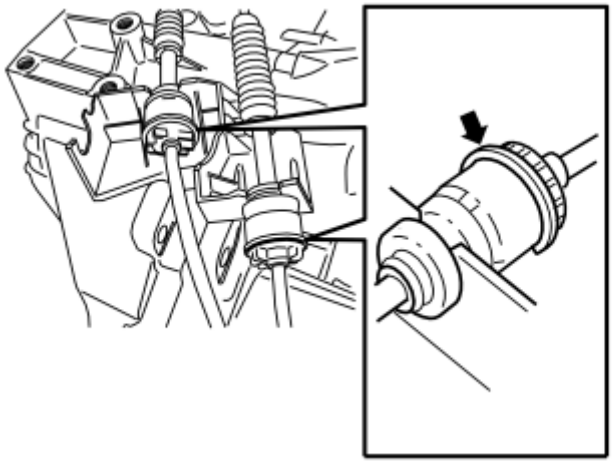

Fig. 305: Clip Positioned In Groove
Courtesy of VOLVO CARS CORPORATION

Check that the clip is positioned in the groove as illustrated.

INSTALLING ENGINE COMPARTMENT COMPONENTS

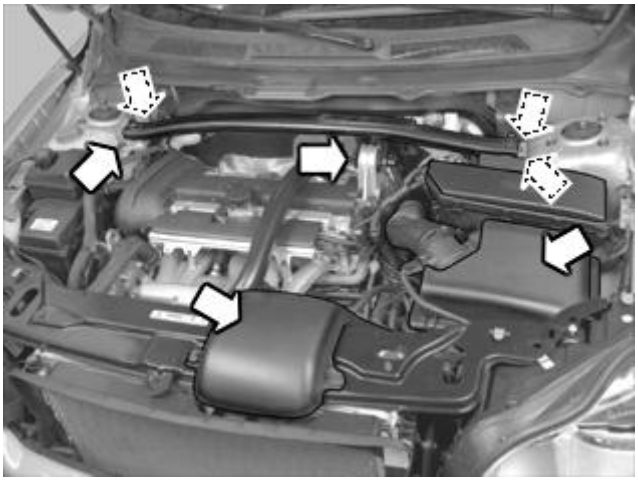

Fig. 306: Identifying Underhood Components
Courtesy of VOLVO CARS CORPORATION

Install:

- the air cleaner (ACL) housing assembly with the intake manifold and connections
- hook the turbocharger (TC) control valve into place in the air cleaner (ACL)
- the upper engine stabilizer brace between the wheel arches. Use 4 x M10 screws. Tighten
- 1 x M12 screw for the engine stabilizer brace/engine mounting. Tighten
- the tie strap for the power steering return line in the mounting lug for the engine stabilizer brace on the right side.

Fill with coolant. Carefully check while reaching operating temperature or test driving that the level remains the same and that there is no leakage.

Also see **TRANSMISSION REPLACEMENT, POST-CHECKING** .

INSTALLING THE BATTERY LEAD

Connect the battery lead.

First read **BATTERY, DISCONNECTING** .

FINISHING

Carry out checks after working on the transmission. See **TRANSMISSION REPLACEMENT, POST-CHECKING** .

TRANSMISSION, REMOVING

Special tools:

9985972

9995185

9995460

9995463

9995562

9995681

9995716

9995972

9997070

NOTE: **As the illustrations in this service information are used for different model years and / or models, some variation may occur. However, the essential information is always correct.**

REMOVAL

DISCONNECTING THE BATTERY LEAD

Disconnect the battery lead. See: **BATTERY, DISCONNECTING** .

REMOVING ENGINE COMPARTMENT COMPONENTS

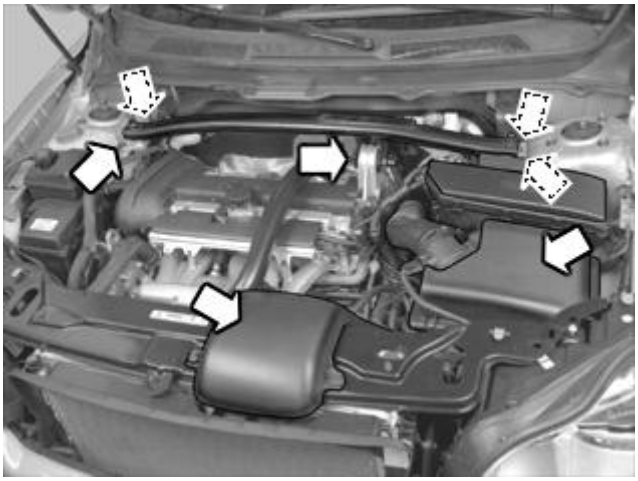

Fig. 307: Identifying Underhood Components
Courtesy of VOLVO CARS CORPORATION

Remove:

- the engine stabilizer brace between the suspension turrets and the engine

- the air cleaner (ACL) housing assembly with the intake pipe.

Unhook the turbocharger (TC) control valve from the air cleaner (ACL) housing.

Pull the air cleaner (ACL) housing out of its mountings.

REMOVING COMPONENTS FROM THE TRANSMISSION

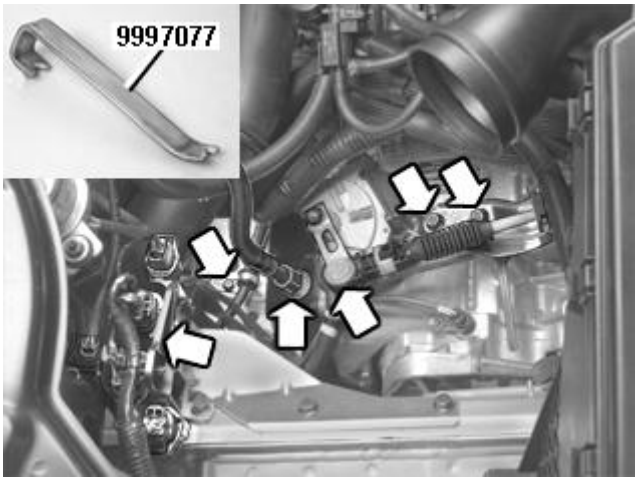

Fig. 308: Gear Selector Cable And 999 7077
Courtesy of VOLVO CARS CORPORATION

Remove:

- the gear selector cable. Use jimmy tool **9997077** to detach the ball joint for the cable from the lever
- the cable mounting from the transmission
- the oil line from the transmission. Plug the line and the connection on the transmission cover
- unhook the mounting with the connector for the transmission from the bracket. Separate all the connectors.

REMOVING THE MOUNTING SCREWS FROM THE TRANSMISSION

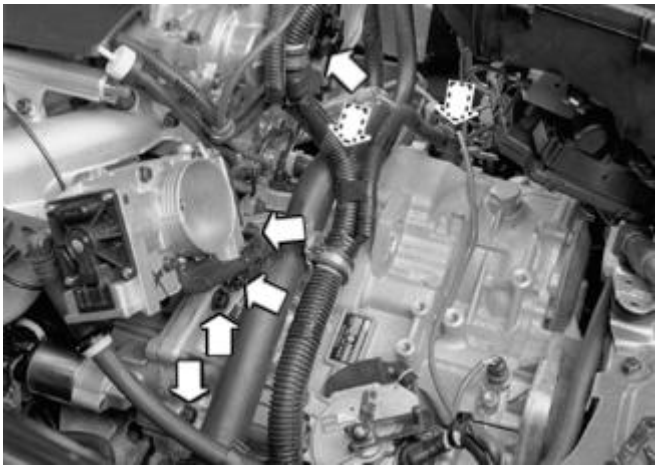

Fig. 309: Identifying Screws
Courtesy of VOLVO CARS CORPORATION

Remove the bracket with the connectors for the heated oxygen sensors (HO2S) and the clamp for the cable harness from the transmission.

Remove:

- the screws for the clamp securing the cable harness at the rear edge of the engine
- the nut for the bracket for the cable harness and the engine coolant hose
- the 3 screws for the transmission and engine and the 2 screws for the starter motor. Tie up the cable harness.

REMOVING THE COOLANT HOSE FROM THE PASSENGER COMPARTMENT HEATER

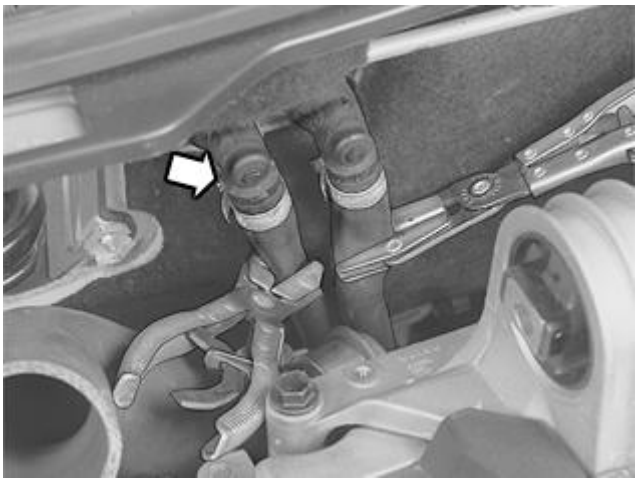

Fig. 310: Coolant Hose In Passenger Compartment
Courtesy of VOLVO CARS CORPORATION

Clamp the hoses with hose clips.

Place some paper under the inner hose connection to collect any spilled coolant.

Turn the quick-release connector (the inner of the 2 hoses) slightly in the direction of the arrow so that the lock opens. At the same time, pull the coolant hose straight out of the coolant pipe.

NOTE: Tie the hose up to the engine so that it does not fall down and trap the hose connector between the firewall during installation.

INSTALLING THE LIFTING BEAMS AND LIFTING HOOKS ON THE ENGINE LIFTING LUGS

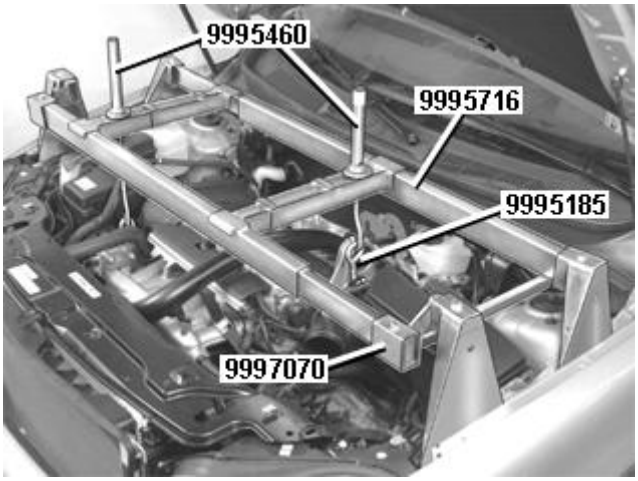

Fig. 311: Identifying Fixture Kit, Lifting Beam And Lifting Hooks
Courtesy of VOLVO CARS CORPORATION

NOTE: The front lifting beam must be equipped with fixture kit 9997070 as illustrated.

Position lifting beam **9995716** on the wheel arch and directly above the engine lifting eyelets on the left and right sides.

Connect the lifting hooks **9995460** on the engine lifting lugs.

On the right side of the engine, the hook must have a clearance of **10 mm** . Also use lifting lug **9995185** on the left side of the engine. Tighten to light contact on the left hand side.

Raise the car

REMOVING BOTH THE FRONT WHEELS

Fig. 312: Front Splash Guard
Courtesy of VOLVO CARS CORPORATION

Remove:

- the front splash guard. See **SUB-FRAME FRONT, REPLACING**
- the splash guard under the engine.

REMOVING COMPONENTS FROM THE SUB-FRAME

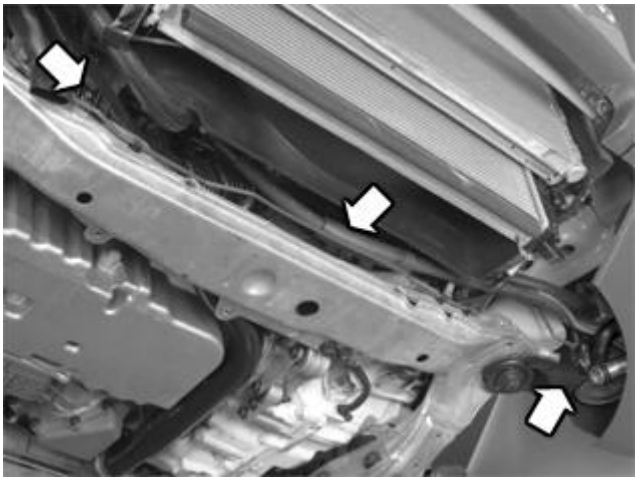

Fig. 313: Cable Duct
Courtesy of VOLVO CARS CORPORATION

Remove the screw for the cable duct. Unhook the cable duct from the sub-frame.

For cars with fuel powered parking heaters:

Remove the 2 screws for the heater.

Unhook the heater from the mounting. Leaving it hanging in its upper mounting.

Detach the fuel line for the heater from the holders on the sub-frame.

REMOVING THE CROSS MEMBERS FROM THE BODY

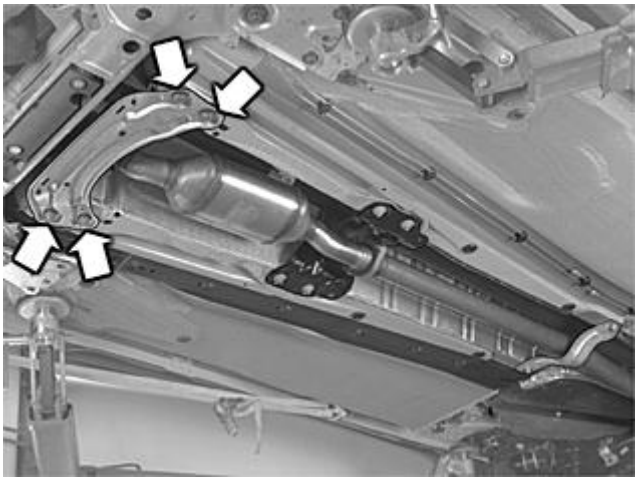

Fig. 314: Identifying Cross Members And Screws

Courtesy of VOLVO CARS CORPORATION

Remove:

- the clamp for the heated oxygen sensor (HO2S) cable and the screws for the front member
- the brake pipe from the holders on the member.

Turn the member to the side so that the exhaust pipe is exposed.

REMOVING THE SCREWS AND NUTS FOR THE ENGINE PAD, ENGINE STABILIZER BRACE AND STEERING GEAR

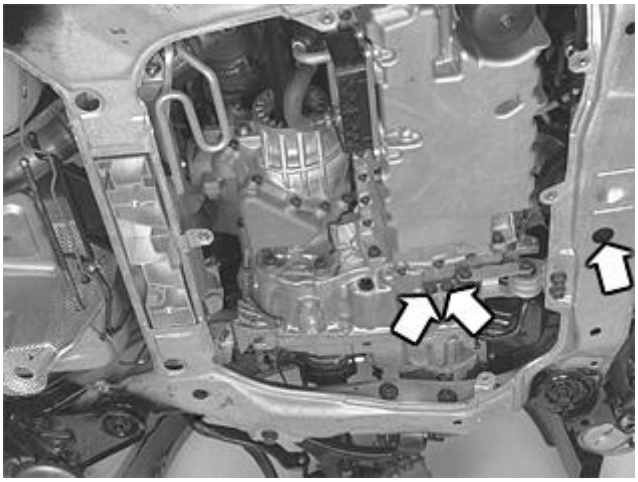

Fig. 315: Identifying Screws
Courtesy of VOLVO CARS CORPORATION

Remove:

- the screw for the engine pad/steering gear
- the screw for the front engine pad
- the screws for the engine stabilizer brace.

MEASURING THE POSITION OF THE TIE ROD IN THE STEERING GEAR

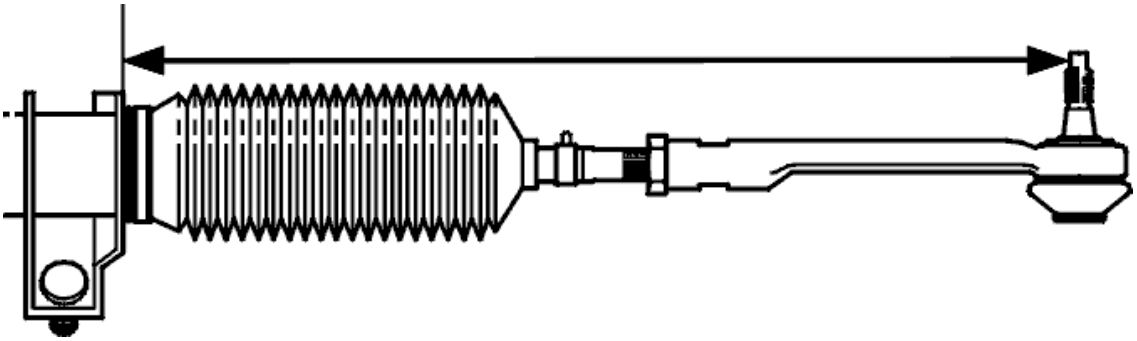

Fig. 316: Identifying Length Of Track Rod In Relation To Steering Gear Housing
Courtesy of VOLVO CARS CORPORATION

Set the front wheels to the straight ahead position.

Lock the steering wheel. On one side, measure the length of the tie rod in relation to the steering gear housing.

Note the measurement.

DISCONNECTING THE STEERING GEAR

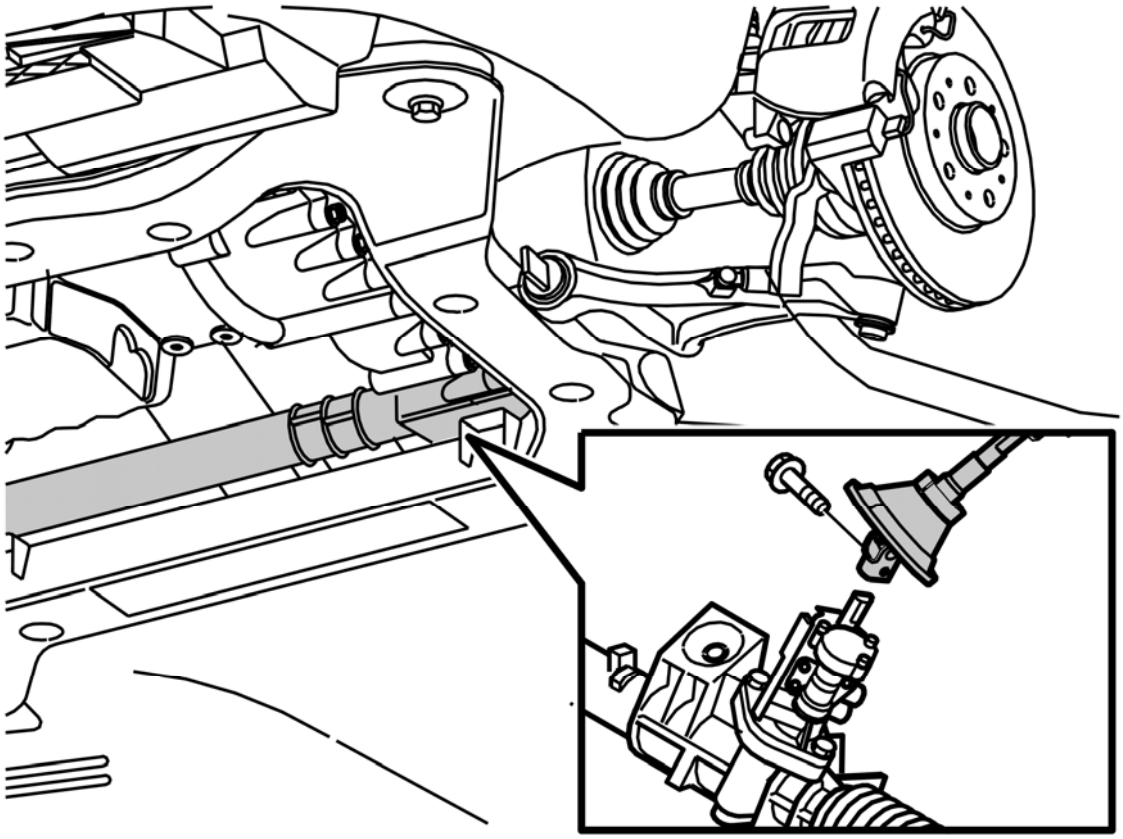

Fig. 317: Identifying Screw For Joint Between Steering Gear And Steering Shaft
Courtesy of VOLVO CARS CORPORATION

Remove the screw for the joint between the steering gear and the steering shaft.

Press up the joint from the steering gear.

REMOVING FRONT SUSPENSION COMPONENTS (BOTH SIDES)

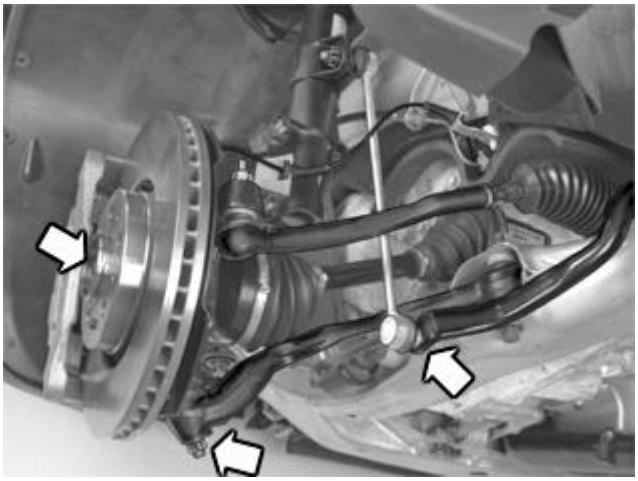

Fig. 318: Front Suspension Components
Courtesy of VOLVO CARS CORPORATION

Remove:

- the soundproofing over the drive shaft (applies to certain versions)
- the screw for the drive shaft. Counterhold using a screwdriver in the brake disc vents. Tap in the end of the drive shaft approximately **20 mm** into the wheel hub
- the link from the anti-roll bar. Counterhold using a Torx wrench in the ball joint pinion to prevent the boot from turning. (Applies to the left side only.)
- the nut for the ball joint / link arm. Clean the exposed threads outside the nut. Spray using rust solvent before removing the nut.

DISCONNECTING THE BALL JOINT PINION FROM THE CONTROL ARM (BOTH SIDES)

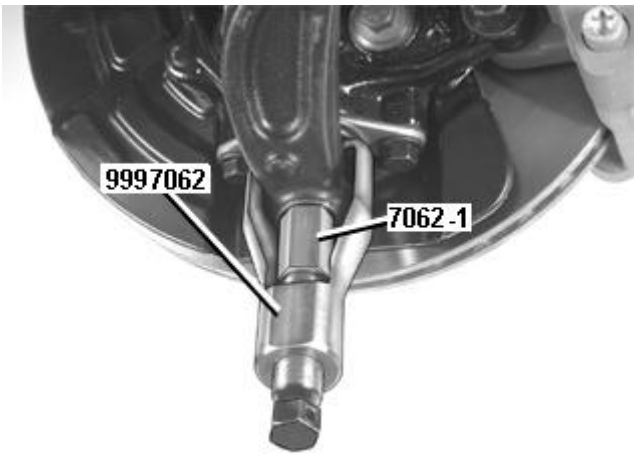

Fig. 319: Disconnecting Ball Joint Pinion From Control Arm Using 999 7062
Courtesy of VOLVO CARS CORPORATION

Use tool **9997062** . Install cap nut **9997062** for the ball joint pinion. Tighten the nut to the control arm. Then slacken off 1 to 2 turns so that there is clearance between the cap nut and the control arm.

Position puller **9997062** on the control arm and detach the ball joint from the control arm.

Remove the tools.

REMOVING FENDER LINER COMPONENTS (BOTH SIDES)

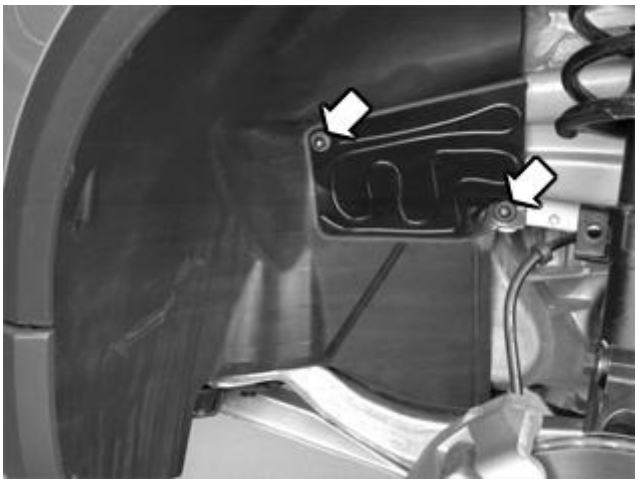

Fig. 320: Identifying Support Plate And Nuts
Courtesy of VOLVO CARS CORPORATION

Slacken off the 2 nuts for the fender liner and the support plate on both sides so that the fender liner can be folded out.

REMOVING THE SCREWS FOR THE SUB-FRAME SUPPORT PLATES (BOTH SIDES)

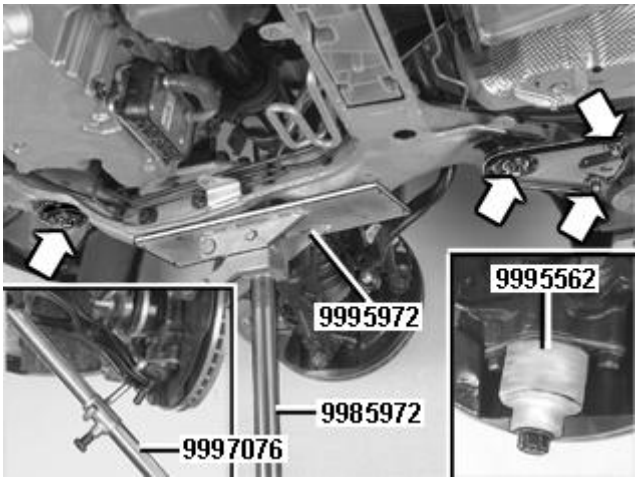

Fig. 321: Identifying Screws And Sub-Frame Support Plates
Courtesy of VOLVO CARS CORPORATION

Remove the screws for the sub-frame support plates in the body (both sides).

Position mobile jack **9985972** with universal plate **9995972** , so that the plate is in light contact under the right side of the sub-frame.

Slacken off the screws for the sub-frame on the right hand side. Ensure that the nuts are still secured by at least 5 threads.

Remove the jack.

Unhook the control arm from the ball joint. Install protective sleeve **9995562** . Hold the sleeve in place using the nut for the ball joint.

Work out the spring strut. Detach the drive shaft from the wheel hub. Do not damage the boot. Hold the spring strut to one side using a retaining strap for more space when removing the drive shaft.

REMOVING THE RIGHT DRIVE SHAFT

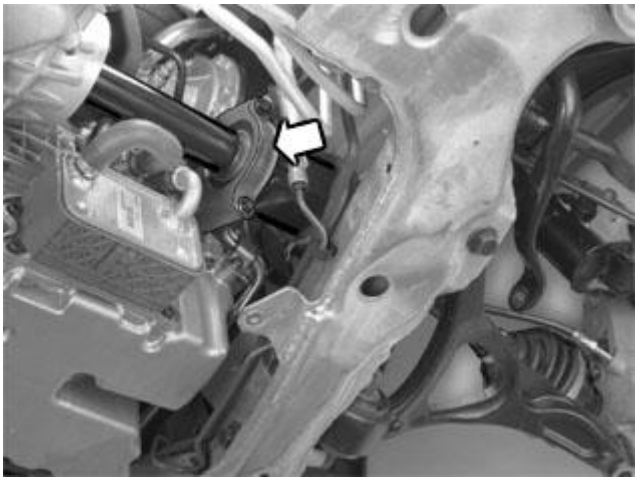

Fig. 322: Drive Shaft Support Bearing Cap
Courtesy of VOLVO CARS CORPORATION

Remove:

- the support bearing cap for the drive shaft
- the drive shaft by pulling it straight out of the transmission.

REMOVING THE COLLISION PROTECTION SYSTEM OVER THE STEERING GEAR

Fig. 323: Collision Protection Over Steering Gear
Courtesy of VOLVO CARS CORPORATION

NOTE: Only applies to right-hand drive cars.

Remove the 2 screws for the collision protection system.

Leave the collision protection system in place on the steering gear.

LOWERING THE SUB-FRAME

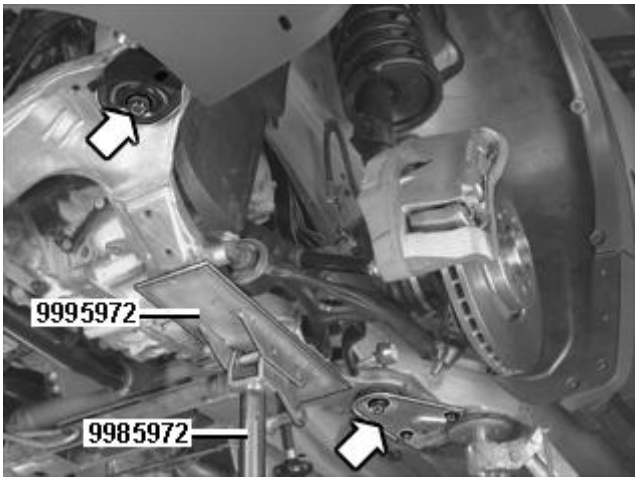

Fig. 324: Identifying Mobile Jack & Sub-Frame
Courtesy of VOLVO CARS CORPORATION

NOTE: Applies only to right-hand drive cars.

Position the mobile jack lightly applied under the left side of the sub-frame. Remove the sub-frame screws.

NOTE: Ensure the following when lowering the sub-frame:

- **that the brake pipe does not catch in the bracket for the exhaust pipe mounting**
- **that the ball joint pinion releases from the control arm.**

Remove the mobile jack and let the frame hang loose.

REMOVING THE DRIVE SHAFT FROM THE WHEEL HUB

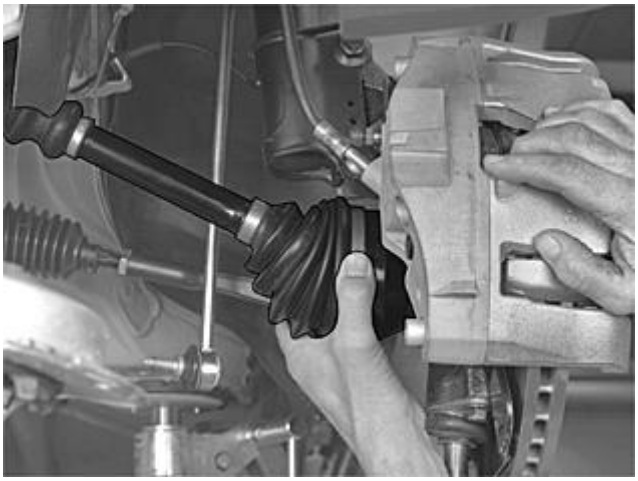

Fig. 325: Identifying Drive Shaft And Wheel Hub
Courtesy of VOLVO CARS CORPORATION

Work out the spring strut. Detach the drive shaft from the wheel hub. Hold the spring strut to one side using a retaining strap to obtain more space when removing the transmission.

REMOVING THE DRIVE SHAFT FROM THE TRANSMISSION

Fig. 326: Identifying Drive Shaft At Gearbox & Tool 999 5681
Courtesy of VOLVO CARS CORPORATION

Remove the drive shaft from the transmission. Use jimmy bar **9995681** .

REMOVING BEVEL GEAR

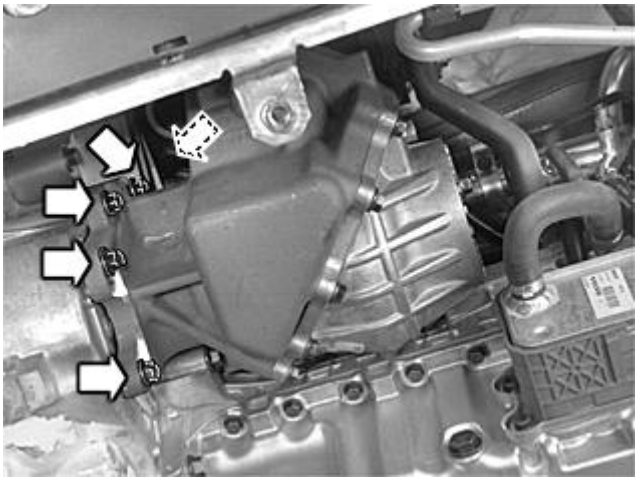

Fig. 327: Angle Gear Screws
Courtesy of VOLVO CARS CORPORATION

Remove the angle gear screws, 5. Pull the angle gear straight out from the gearbox.

Hang the bevel gear from, e.g., an oil pipe for the turbocharger or similar.

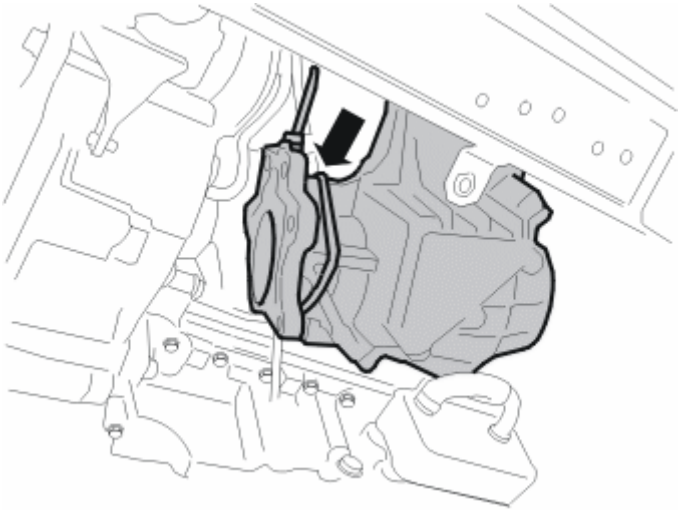

Fig. 328: Bevel Gear Hung Up With A Cable
Courtesy of VOLVO CARS CORPORATION

REMOVING THE REAR ENGINE MOUNTING

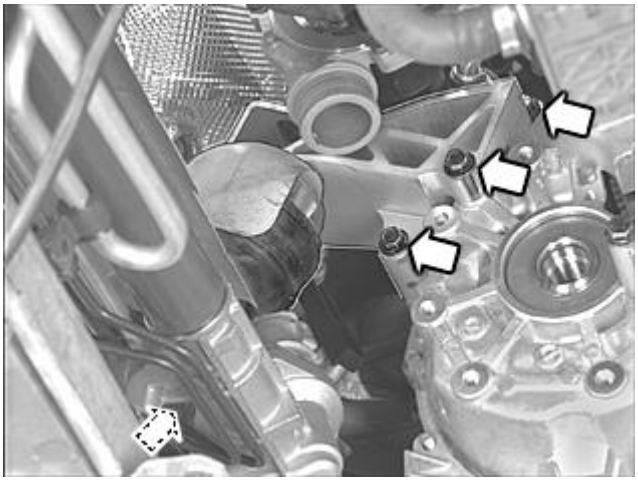

Fig. 329: Identifying Rear Engine Mounting
Courtesy of VOLVO CARS CORPORATION

Remove:

- the 3 x screws
- the mounting and the engine pad.

REMOVING THE SCREWS FROM THE TORQUE CONVERTER

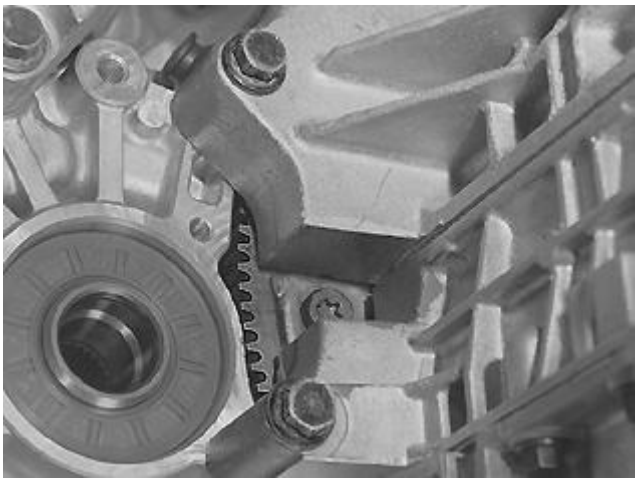

Fig. 330: Identifying Torque Converter Screws
Courtesy of VOLVO CARS CORPORATION

Remove the 6 screws for the torque converter. Turn the engine with a ratchet and socket. Fold out the right fender liner so that the crankshaft nut can be accessed.

Use a Torx TX50 socket on the torque converter screws.

REMOVING THE OIL PIPE FROM THE TRANSMISSION

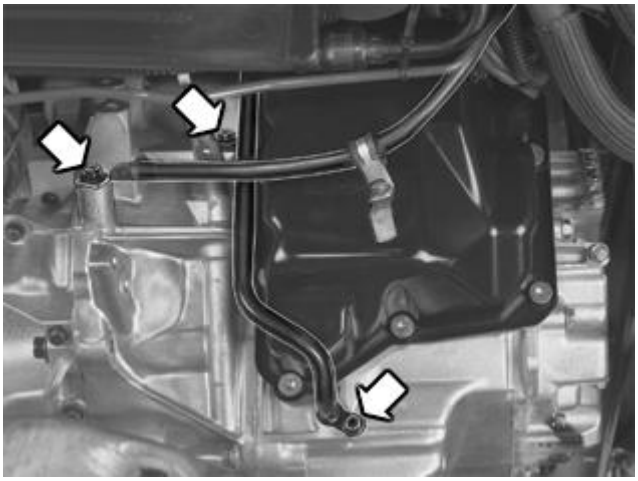

Fig. 331: Identifying Oil Pipe
Courtesy of VOLVO CARS CORPORATION

Position a container under the pipe terminal.

Remove:

- the 2 screws holding the pipe. Disconnect the pipe from the transmission. Install sealing plugs in the pipe and transmission. Carefully fold the hose out of the way
- the ground lead from the transmission.

LOWERING THE ENGINE AND THE TRANSMISSION

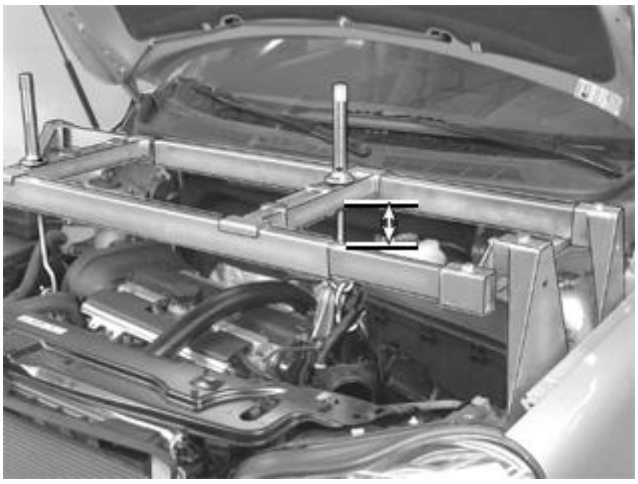

Fig. 332: Identifying Free Threads On Lifting Hook
Courtesy of VOLVO CARS CORPORATION

Lower the engine and transmission on the left side. Use the hook.

Check that no hoses or cables are being stretched or trapped when the engine is lowered.

Lower the engine so that **90-100 mm** of the free threads on the lifting hook can be seen.

Raise the car.

INSTALLING THE FIXTURE ON THE MOBILE JACK AND TRANSMISSION

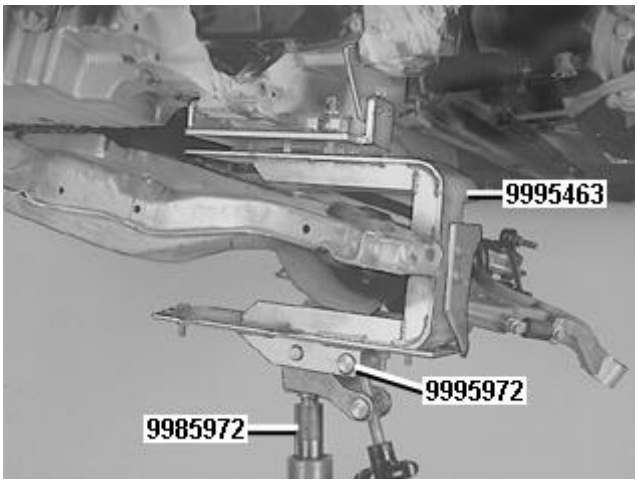

Fig. 333: Fixture Installed On Mobile Jack And Gearbox
Courtesy of VOLVO CARS CORPORATION

Raise the car.

Install fixture **9995463** on fixture **9995972** . Use the fixture and plate together with mobile jack **9985972** . Align support plate 999 5463-2 against the fixture and the transmission.

NOTE: The support plate is installed on the inside of the fixture mounting lug (see the illustration). Tighten the fixture with the two torque rod screws. Apply the mobile jack lightly against the transmission.

REMOVING ALL THE SCREWS FOR THE TRANSMISSION AND ENGINE

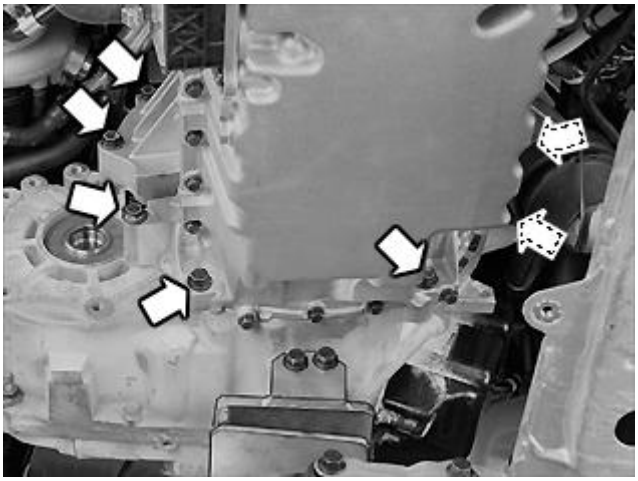

Fig. 334: Gearbox And Engine Screws
Courtesy of VOLVO CARS CORPORATION

Remove the remaining 7 screws for the transmission and engine.

REMOVING THE TRANSMISSION

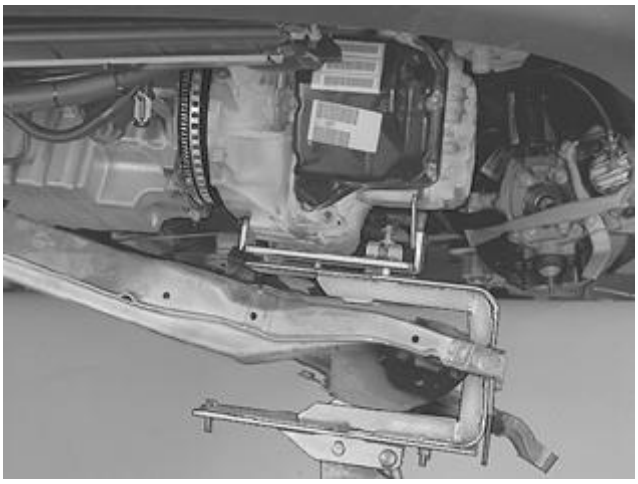

Fig. 335: Adjusting Height & Angle Using Mobile Jack And Gearbox Fixture
Courtesy of VOLVO CARS CORPORATION

Ensure that the transmission is taken straight out in relation to the engine.

Ensure that the torque converter is removed with the transmission and does not slide off the stator shaft.

Press a screwdriver through one of the screw holes in the carrier plate.

NOTE: Do not pry toward the carrier plate rim for the flywheel sensor.

NOTE: Lower the transmission slightly when it is being removed so that it will pass the side member.

Remove the transmission.

TRANSMISSION, AUTOMATIC (B5254T2, AW55-50/51SN; 2004-2007)

GEAR-SHIFT POSITION SENSOR, POSITION

GEAR-SHIFT POSITION SENSOR, POSITION

SEALING RING GEAR SHIFT LINKAGE ROD, REPLACING

SEALING RING GEAR SHIFT LINKAGE ROD, REPLACING

SEALING RING OIL PUMP, REPLACING

SEALING RING OIL PUMP, REPLACING

SOLENOID CONTROL SYSTEM, REPLACING

SOLENOID CONTROL SYSTEM, REPLACING

TRANSMISSION CONTROL MODULE (TCM), REPLACING

TRANSMISSION CONTROL MODULE (TCM), REPLACING

TRANSMISSION FLUID, REPLACING

TRANSMISSION FLUID, REPLACING

TRANSMISSION, INSTALLING

Special tools:

9512050

NOTE: **As the illustrations in this service information are used for different model years and / or models, some variation may occur. However, the essential information is always correct.**

INSTALLATION

NOTE: **For tightening torques, see TIGHTENING TORQUE .**

INSTALLING THE TRANSMISSION

Before installing the transmission it is very important that the checks and cleaning have been carried out. See **TRANSMISSION, PREPARATIONS BEFORE INSTALLING** .

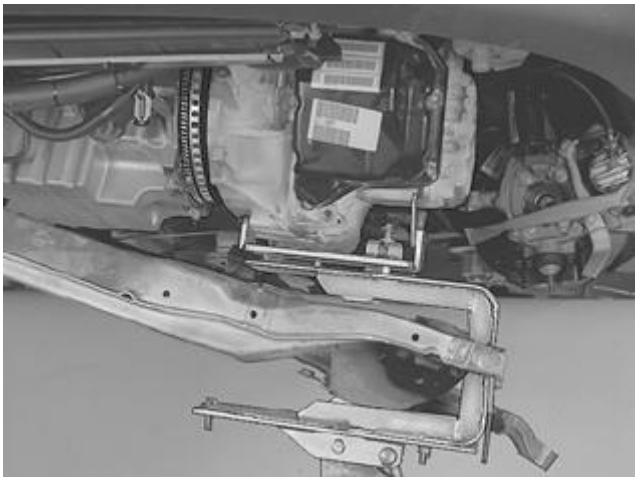

Fig. 336: Adjusting Height & Angle Using Mobile Jack And Gearbox Fixture
Courtesy of VOLVO CARS CORPORATION

Adjust height and angle with the mobile jack and the transmission fixture.

Locate the transmission on the engine.

Ensure that the transmission goes straight in, in relation to the engine, and that the guide sleeves and guide pin for the starter motor align in the guide holes on the transmission.

INSTALLING AND TIGHTENING THE SCREWS FOR THE TRANSMISSION

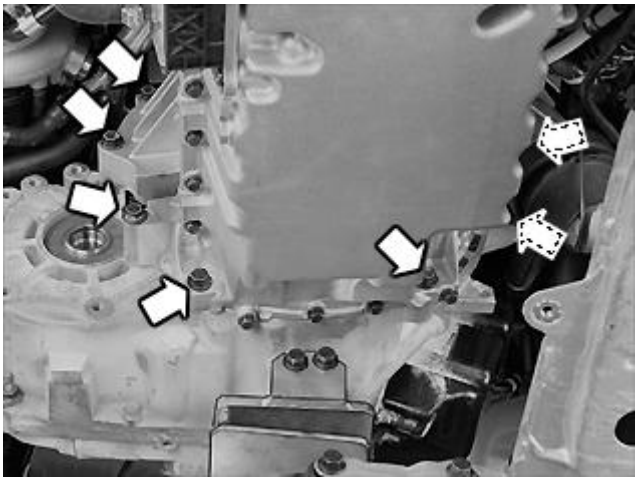

Fig. 337: Gearbox And Engine Screws
Courtesy of VOLVO CARS CORPORATION

Install all 7 x M10 screws securing the transmission to the engine.

First tighten alternately and crosswise to light contact.

At the same time, check that the whole of the transmission is in contact with the engine.

Then tighten the screws crosswise.

Remove the fixture from the transmission.

INSTALLING THE TORQUE CONVERTER SCREWS

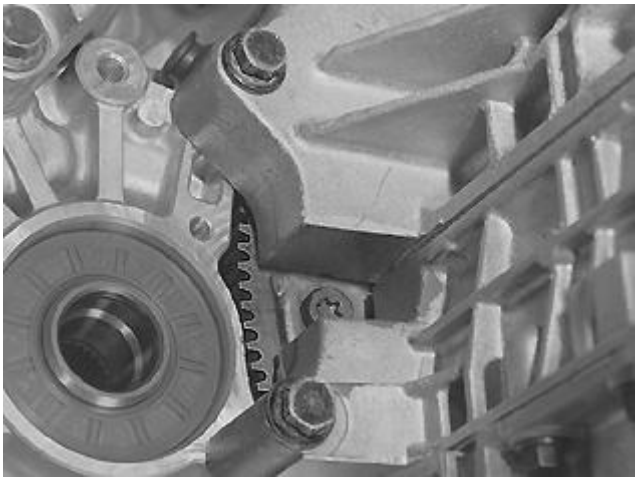

Fig. 338: Identifying Torque Converter Screws
Courtesy of VOLVO CARS CORPORATION

NOTE: Use new screws.

Align the torque converter against the carrier plate. Do this by turning the engine with the nut for the crankshaft pulley and turning the torque converter.

Install all 6 screws loosely. Tighten the screws. Tighten until the heads are almost in contact with the carrier plate. Tighten. See **SUMMARY OF TIGHTENING TORQUES FOR SPECIFIC COMPONENTS** . Use a Torx socket TX50.

NOTE: Remove the socket wrench from the crankshaft.

LIFTING THE ENGINE AND TRANSMISSION

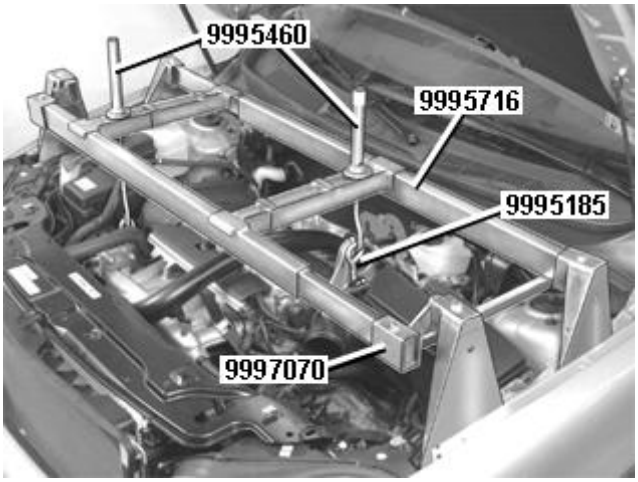

Fig. 339: Identifying Fixture Kit, Lifting Beam And Lifting Hooks
Courtesy of VOLVO CARS CORPORATION

Lift the engine to slightly above the horizontal position to provide better access to the rear engine mounting and

engine pad.

NOTE: Check that the connection on the hose for the heater is not trapped between the engine and firewall when the engine is lifted.

Raise the car.

INSTALLING THE REAR ENGINE MOUNTING

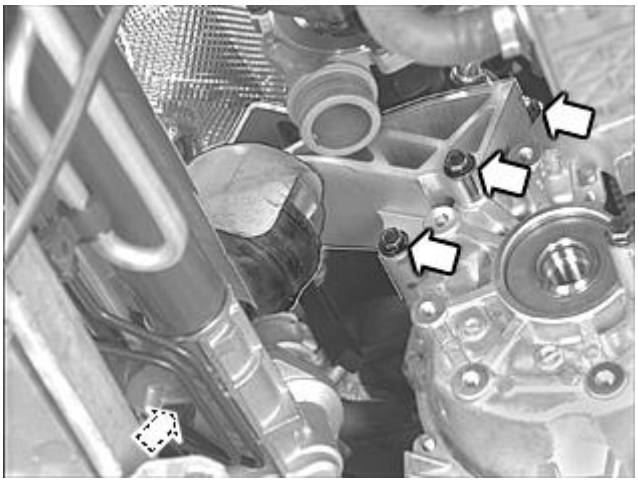

Fig. 340: Identifying Rear Engine Mounting
Courtesy of VOLVO CARS CORPORATION

Remove the tie strap temporarily holding the steering gear.

Install:

- the rear engine mounting on the transmission
- the 3 x M10 screws for the engine mounting. Tighten
- the screw for the steering gear and engine pad loosely.

Check and if necessary align the bearing for the steering shaft in the boot when installing the steering gear. Also see **CHECKING THE BOOT FOR THE STEERING SHAFT/FIREWALL**.

INSTALLING THE LOWER OIL PIPE ON THE TRANSMISSION

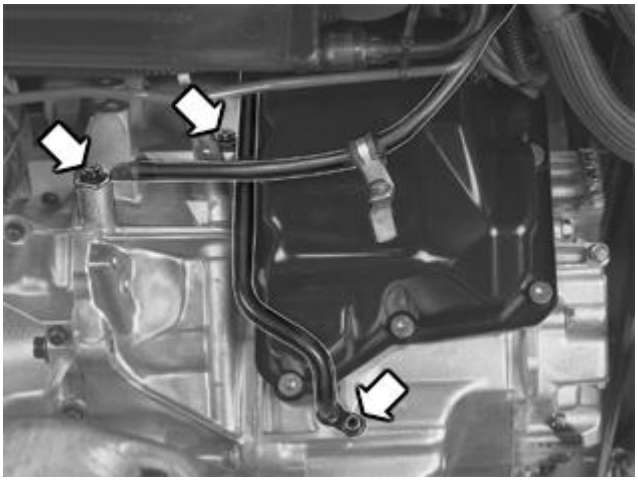

Fig. 341: Identifying Oil Pipe
Courtesy of VOLVO CARS CORPORATION

Use a new O-ring.

Install:

- the oil pipe and dip stick pipe. Use both the screws. Tighten. See **SUMMARY OF TIGHTENING TORQUES FOR SPECIFIC COMPONENTS**
- a tie strap for the cable harness for the oil pipe
- the ground lead to the engine.

INSTALLING THE LEFT DRIVE SHAFT ON THE TRANSMISSION AND THE WHEEL SPINDLE

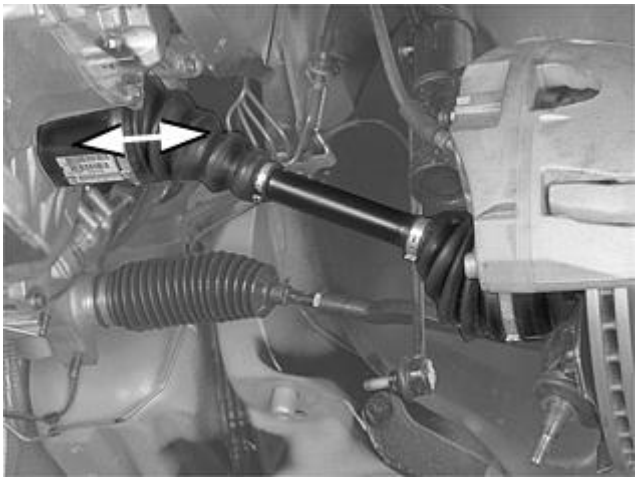

Fig. 342: Identifying Left Drive Shaft On Transmission And Wheel Spindle
Courtesy of VOLVO CARS CORPORATION

Press in the constant velocity joint housing firmly so that the snap ring engages in its groove in the transmission. Pull the constant velocity joint to check that the drive shaft is secure.

Lubricate the drive shaft splines. Use a small amount of thin oil. Locate the drive shaft in the wheel hub.

Install a new screw loosely in the drive shaft.

INSTALLING THE SUBFRAME ON THE BODYWORK

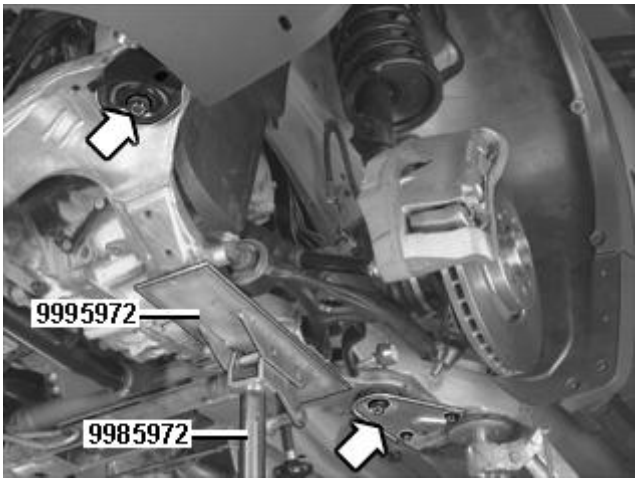

Fig. 343: Identifying Mobile Jack & Sub-Frame
Courtesy of VOLVO CARS CORPORATION

NOTE: Use new screws. Lubricate the screw threads.

Lift the subframe until it is about 150 mm from the side member.

Secure the power steering pipe at the front edge of the upper side of the subframe. Use the rubber covered clamp. Install the screw loosely. Apply a small amount of soap solution so that it glides into the clamp easily. Check the steering gear bearing in the boot at the firewall.

NOTE: Ensure the following when lifting the subframe:

- ensure that the steering gear screws align in the frame
- ensure that the brake pipe passes the bracket for the exhaust pipe
- ensure that the ball joint pinion for the spring strut aligns in the control arm.

Install:

- the new screws and the support bracket at the rear edge
- the screws for the bracket loosely.

Applies only to cars with fuel driven parking heaters:

Align the washer with the mounting lug following the marking on the subframe.

Tighten the subframe screws. Tighten to light contact.

Remove the mobile jack.

INSTALLING THE RIGHT DRIVE SHAFT ON THE TRANSMISSION, WHEEL SPINDLE AND CONTROL ARM

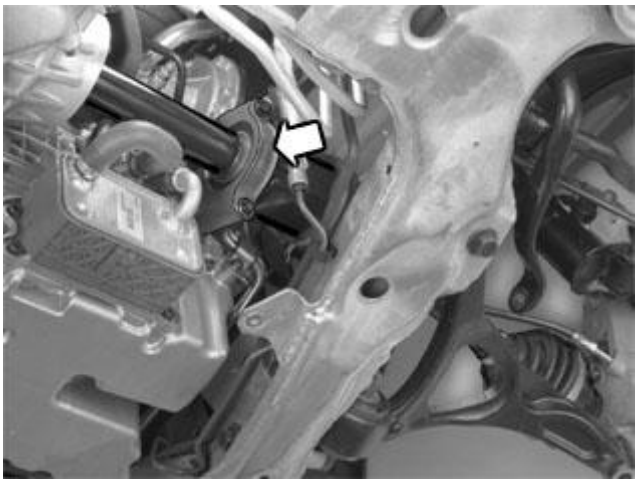

Fig. 344: Drive Shaft Support Bearing Cap
Courtesy of VOLVO CARS CORPORATION

Install the cap for the drive shaft pilot bearing. Use 2 x M8 screws. Tighten.

Lubricate the drive shaft splines. Use a small amount of thin oil. Locate the drive shaft in the wheel hub.

Install a new screw loosely in the drive shaft.

Press down the control arm. Locate the spring strut in the ball joint pinion for the spring strut in the control arm.

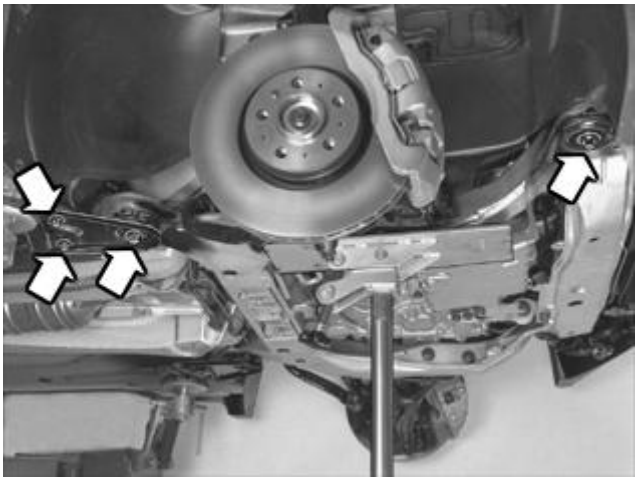

Fig. 345: Identifying Drive Shaft, Wheel Hub And Screws
Courtesy of VOLVO CARS CORPORATION

Position the mobile jack lightly applied under the right side of the subframe.

Install:

- new screws in the subframe

NOTE: Lubricate the screw threads.

- the screws loosely at the rear edge of the support plate.

Tighten the subframe screws. Tighten to light contact.

Remove the mobile jack.

Install the sub-frame's four screws together with the sub-frame's brackets and engine heater, if installed.

Tighten acc. to: **TIGHTENING TORQUE** . First tighten the screws on the sub-frame's left side, then on the right.

Tighten the screws for the brackets M10.

INSTALLING COMPONENTS ON THE ENGINE AND SUBFRAME

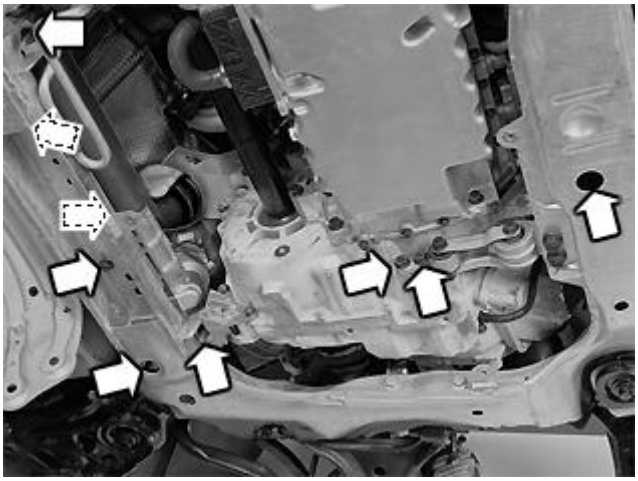

Fig. 346: Identifying Screws And Lock Nuts
Courtesy of VOLVO CARS CORPORATION

Install:

- 4 new M10 lock nuts for the steering gear and 1 M10 screw. Tighten
- 1 M10 screw for the front engine pad. Tighten.

Tighten the M10 screw for the rear engine pad.

Install the mounting for the engine stabilizer brace to the transmission. Use new screws. Tighten. See **SUMMARY OF TIGHTENING TORQUES FOR SPECIFIC COMPONENTS** .

INSTALLING THE COLLISION PROTECTION SYSTEM OVER THE STEERING GEAR

Fig. 347: Collision Protection Over Steering Gear
Courtesy of VOLVO CARS CORPORATION

Applies only to right-hand drive cars

Install the 2 screws. Tighten.

INSTALLING THE SERVO PIPE IN THE HOLDERS

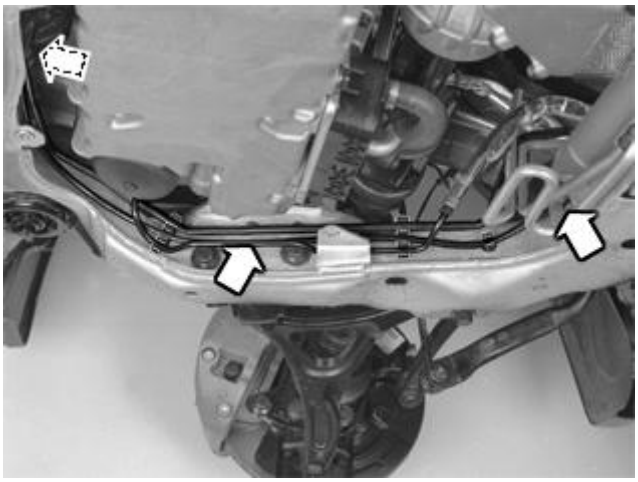

Fig. 348: Identifying Power Steering Line
Courtesy of VOLVO CARS CORPORATION

Press the power steering pipe and the evaporator pipe into the holders on the subframe. (If there is a parking heater, also press its fuel line and the evaporator cable into place)

Install and tighten the clamps for the power steering pipe at the rear of the frame. Tighten the clamp and the clamp for the power steering line at the front edge of the top of the subframe.

INSTALLING THE FRONT MOUNTING FOR THE EXHAUST PIPE

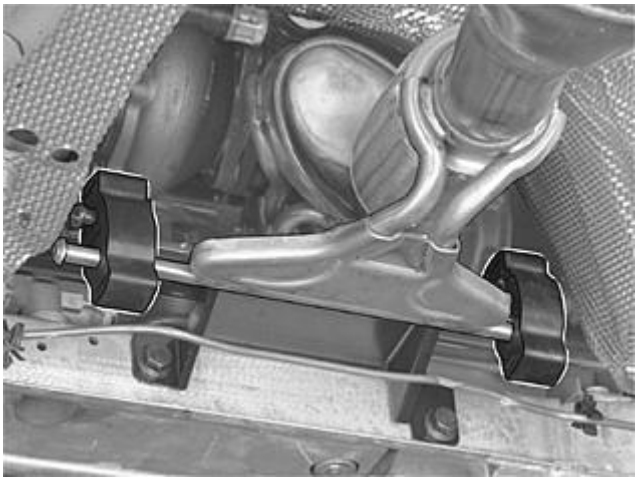

Fig. 349: Identifying Rubber Mounting For The Three-Way Catalytic Converter
Courtesy of VOLVO CARS CORPORATION

Install the rubber mountings for the exhaust system on the brackets on the subframe.

INSTALLING THE CROSS MEMBERS ON THE BODY

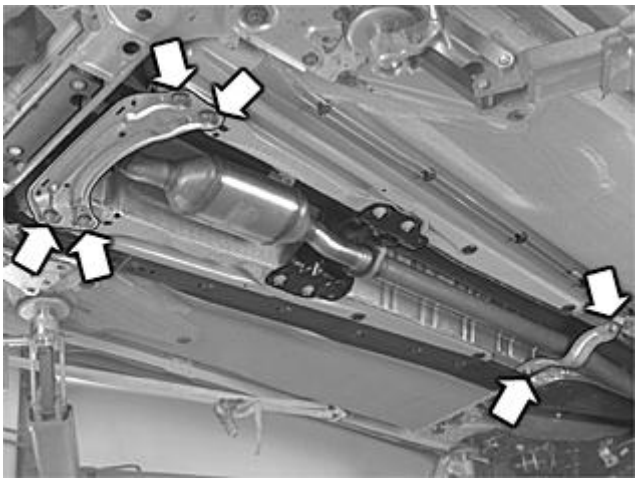

Fig. 350: Identifying Cross Members
Courtesy of VOLVO CARS CORPORATION

Install:

- the M8 screws for the front member
- the brake pipe in the holders on the member
- the M8 screws for the rear member
- the clamp with the heated oxygen sensor (HO2S) cable on the front cross member.

INSTALLING FRONT SUSPENSION COMPONENTS

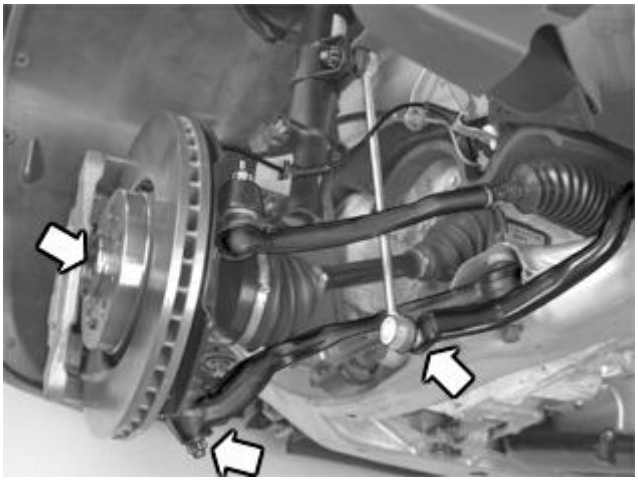

Fig. 351: Front Suspension Components
Courtesy of VOLVO CARS CORPORATION

HINT: Applies when installing front suspension components on both sides.

Install:

- a new M12 lock nut on the ball joint pinion. Counterhold the ball joint pinion while tightening so that the boot cannot turn. Tighten
- the anti-roll bar link. Use a new M10 lock nut. Counterhold the ball joint pinion while tightening so that the boot cannot turn. Tighten. See **SUMMARY OF TIGHTENING TORQUES FOR SPECIFIC COMPONENTS** . Tighten the drive shaft screw. Counterhold using a screwdriver in the brake disc vents. Tighten. See **SUMMARY OF TIGHTENING TORQUES FOR SPECIFIC COMPONENTS**
- the soundproofing over the drive shaft (applies to certain versions).

INSTALLING COMPONENTS FOR THE FENDER LINER

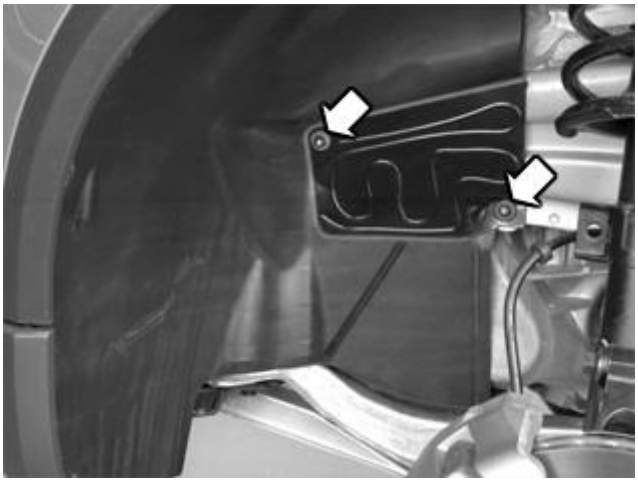

Fig. 352: Identifying Support Plate And Nuts
Courtesy of VOLVO CARS CORPORATION

Install the support plate and the nuts on both sides.

INSTALLING THE CABLE DUCT

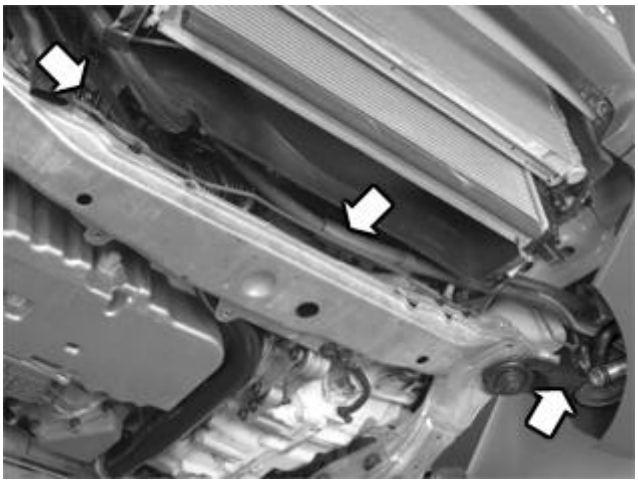

Fig. 353: Cable Duct
Courtesy of VOLVO CARS CORPORATION

Install:

- the cable duct on the subframe
- any parking or additional heaters in the mounting in the subframe and the fuel line in the mountings.

INSTALLING THE FRONT SPLASH GUARD

Fig. 354: Front Splash Guard
Courtesy of VOLVO CARS CORPORATION

Install:

- the splash guard under the engine
- the wheels. See **INSTALLING WHEELS** .

REMOVING THE LIFTING BEAMS

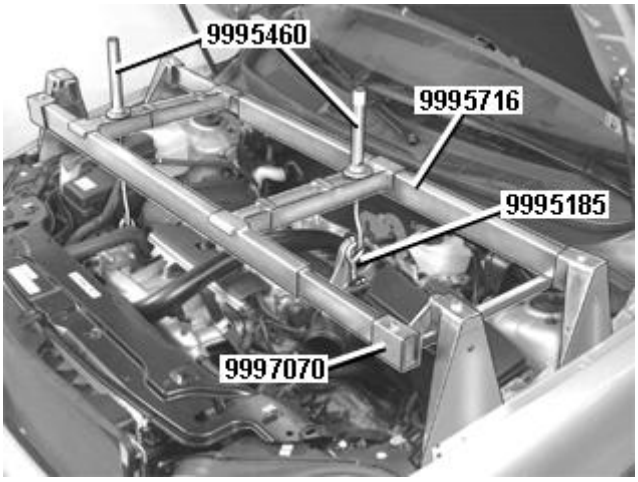

Fig. 355: Identifying Fixture Kit, Lifting Beam And Lifting Hooks
Courtesy of VOLVO CARS CORPORATION

Lower the car.

Remove the lifting beams and hooks from the engine.

INSTALLING THE COOLANT HOSE

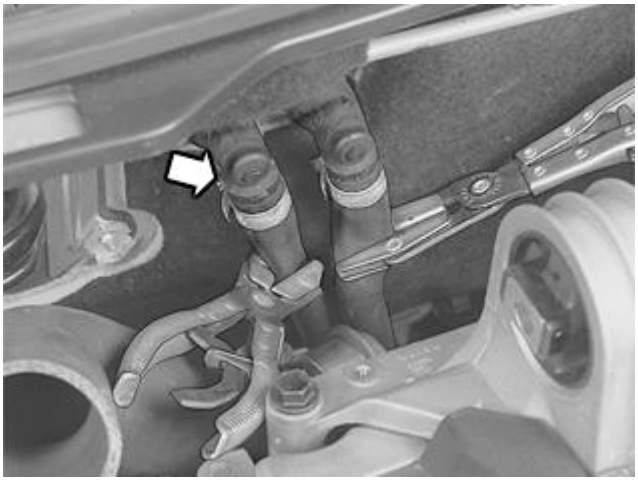

Fig. 356: Coolant Hose In Passenger Compartment
Courtesy of VOLVO CARS CORPORATION

Install the connector securing the engine coolant hose to the heater.

Remove the hose clips.

INSTALLING THE REMAINING SCREWS FOR THE TRANSMISSION AND STARTER MOTOR

Fig. 357: Identifying Screws
Courtesy of VOLVO CARS CORPORATION

Install:

- the 3 x M10 screws for the transmission and engine. Tighten
- the 2 x M10 screws for the starter motor. Tighten. See **SUMMARY OF TIGHTENING TORQUES FOR SPECIFIC COMPONENTS**
- the bracket for the engine coolant hose and cable harness
- the bracket for the cable harness clamp and the mounting for the heated oxygen sensor (HO2S) connector at the rear edge of the transmission
- the clamp for the cable harness at the rear edge of the engine.

INSTALLING THE GEAR SELECTOR CABLE AND OIL PIPE

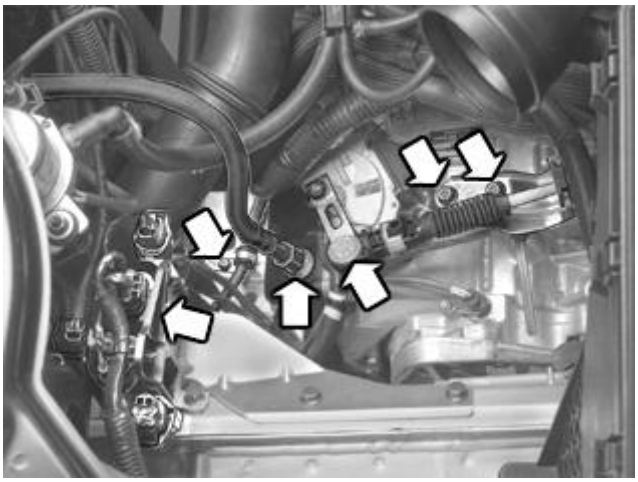

Fig. 358: Identifying Gear Selector Cable, Bracket, Oil Pipe And Connectors
Courtesy of VOLVO CARS CORPORATION

Install:

- the ground lead and mounting on the subframe
- the oil pipe on the transmission
- the gear selector cable and bracket. Use 2 x M8 screws. Tighten.

Connect the cable to the lever. Connect the transmission connectors and the mounting for the air cleaner (ACL) housing bracket. Press the cable harness mounting into place on the control system cover.

NOTE: Check that the transmission bleed hose / valve is not trapped. There is a risk of overpressure in the transmission.

INSTALLING SERVICE CLIPS

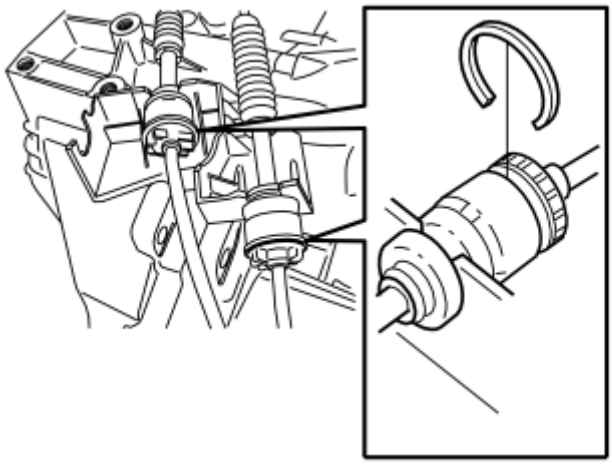

Fig. 359: Gear Selector Cable And Clip
Courtesy of VOLVO CARS CORPORATION

NOTE: The automatic transmission has a gear selector cable while the manual transmission has two gear selector cables.

Ensure that the gear selector cable is engaged before fitting the blue clip. Press the clip into position as illustrated.

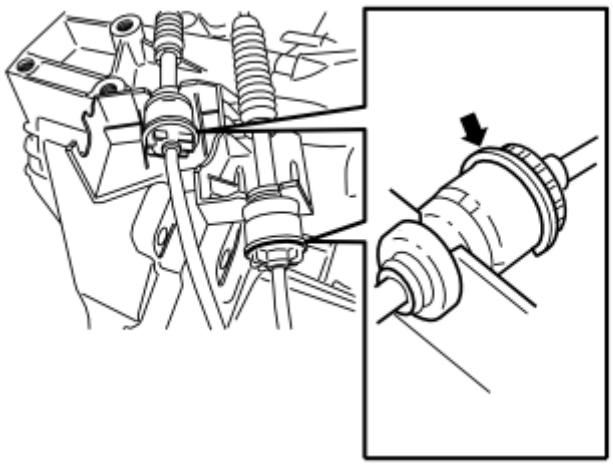

Fig. 360: Clip Positioned In Groove
Courtesy of VOLVO CARS CORPORATION

Check that the clip is positioned in the groove as illustrated.

INSTALLING ENGINE COMPARTMENT COMPONENTS

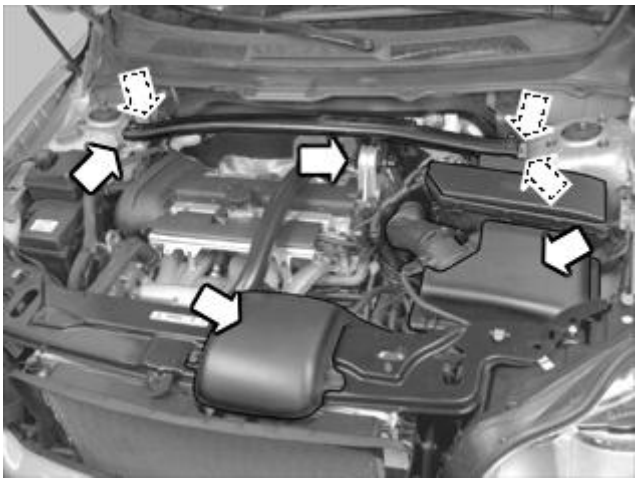

Fig. 361: Identifying Underhood Components
Courtesy of VOLVO CARS CORPORATION

Install:

- the charge air pipe to the charge air cooler (CAC)
- the air cleaner (ACL) housing assembly with the intake manifold and connections
- hook the turbocharger (TC) control valve into place in the air cleaner (ACL)
- the upper engine stabilizer brace between the wheel arches. Use 4 x M10 screws. Tighten
- 1 x M12 screw for the engine stabilizer brace/engine mounting. Tighten
- the tie strap for the power steering return line in the mounting lug for the engine stabilizer brace on the right side.

Fill with coolant. Carefully check while reaching operating temperature or test driving that the level remains the same and that there is no leakage.

Also see **TRANSMISSION REPLACEMENT, POST-CHECKING** .

CHECKING THE BOOT FOR THE STEERING SHAFT/FIREWALL

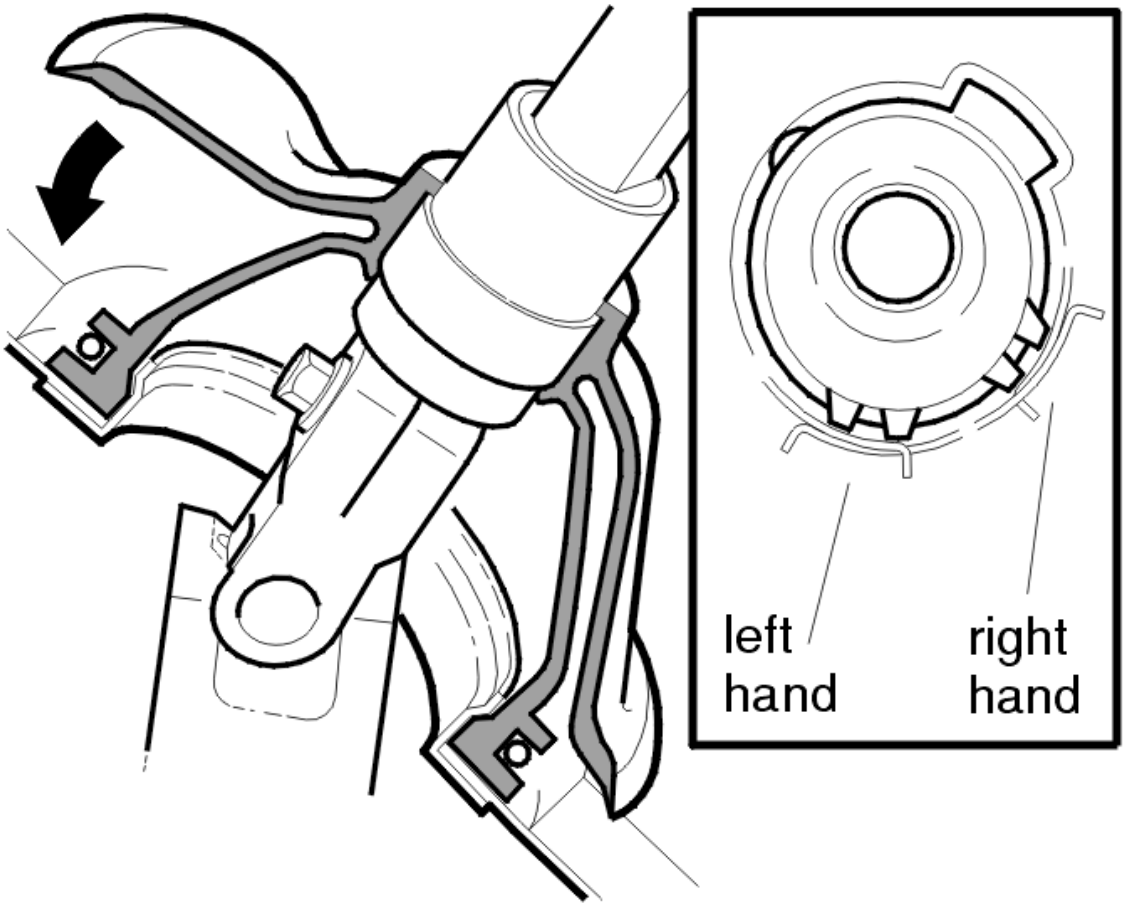

Fig. 362: Identifying Bearing In Boot
Courtesy of VOLVO CARS CORPORATION

Check that the bearing in the boot is in position.

If it has become detached apply a little grease to the edge of the boot (around the hole). Press the bearing back down into the boot.

Check that the boot is correctly positioned against the firewall and that the snap ring is correctly positioned. Adjust if necessary.

NOTE: **It is essential that the above checks are carried out. Otherwise there may be noise from the transmission/engine and road noise in the passenger compartment.**

INSTALLING THE BATTERY LEAD

Connect the battery lead.

First read **BATTERY, DISCONNECTING** .

FINISHING

Carry out checks after working on the transmission. See **TRANSMISSION REPLACEMENT, POST-CHECKING** .

TRANSMISSION, REMOVING

Special tools:

9985972

9995185

9995460

9995463

9995562

9995681

9995716

9995972

9997070

NOTE: As the illustrations in this service information are used for different model years and / or models, some variation may occur. However, the essential information is always correct.

NOTE: Before replacing the transmission, fill in DIAGNOSTICS/CHECK LIST and enclose in the returns box.

REMOVAL

DISCONNECTING THE BATTERY LEAD

Disconnect the battery lead. See **BATTERY, DISCONNECTING** .

REMOVING ENGINE COMPARTMENT COMPONENTS

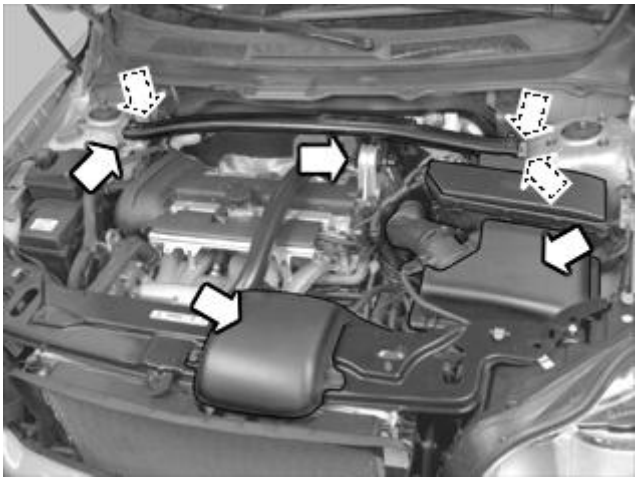

Fig. 363: Identifying Underhood Components
Courtesy of VOLVO CARS CORPORATION

Remove:

- the engine stabilizer brace between the suspension turrets and the engine
- the air cleaner (ACL) housing assembly with the intake pipe.

Unhook the turbocharger (TC) control valve from the air cleaner (ACL) housing.

Pull the air cleaner (ACL) housing out of its mountings.

REMOVING THE CHARGE AIR PIPE

Fig. 364: Heating Around Pipe At Charge Air Cooler
Courtesy of VOLVO CARS CORPORATION

Detach the charge air pipe from the charge air cooler (CAC).

Carefully heat around the pipe at the charge air cooler (CAC). Use a hot air gun. Loosen and remove the pipe.

REMOVING COMPONENTS FROM THE TRANSMISSION

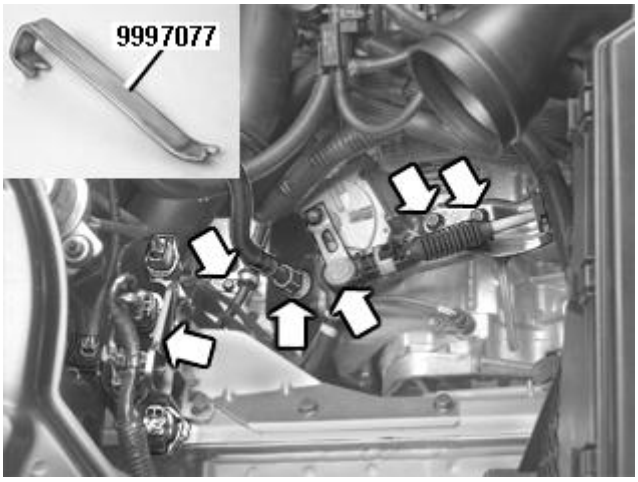

Fig. 365: Gear Selector Cable And 999 7077
Courtesy of VOLVO CARS CORPORATION

Remove:

- the gear selector cable. Use jimmy tool **9997077** to detach the ball joint for the cable from the lever
- the cable mounting from the transmission
- the oil line from the transmission. Plug the line and the connection on the transmission cover
- unhook the mounting with the connector for the transmission from the bracket. Separate all the connectors.

REMOVING THE TRANSMISSION MOUNTING SCREWS

Fig. 366: Identifying Screws
Courtesy of VOLVO CARS CORPORATION

Remove the bracket with the connectors for the heated oxygen sensors (HO2S) and the clamp for the cable harness from the transmission.

Remove:

- the screws for the clamp securing the cable harness at the rear edge of the engine
- the nut for the bracket for the cable harness and the engine coolant hose
- the 3 screws for the transmission and engine and the 2 screws for the starter motor. Tie up the cable harness.

REMOVING THE COOLANT HOSE FROM THE PASSENGER COMPARTMENT HEATER

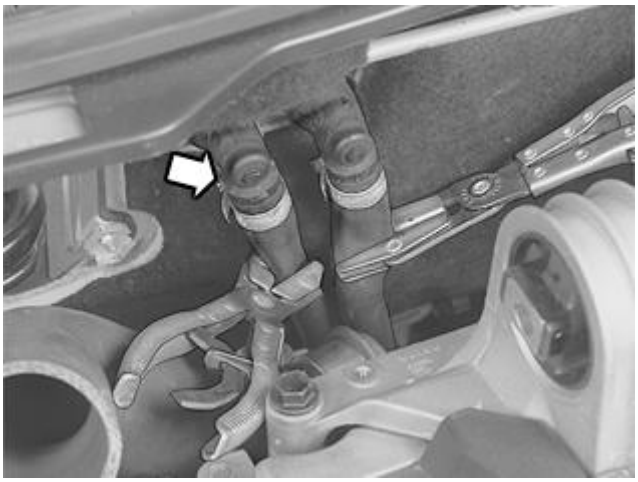

Fig. 367: Coolant Hose In Passenger Compartment
Courtesy of VOLVO CARS CORPORATION

Clamp the hoses with hose clips.

Place some paper under the inner hose connection to collect any spilled coolant.

Turn the quick-release connector (the inner of the two hoses) slightly in the direction of the arrow so that the lock opens. At the same time, pull the coolant hose straight out of the coolant pipe.

NOTE: Tie the hose up to the engine so that it does not fall down and trap the hose connector between the firewall during installation.

INSTALLING THE LIFTING BEAMS AND LIFTING HOOKS ON THE ENGINE LIFTING LUGS

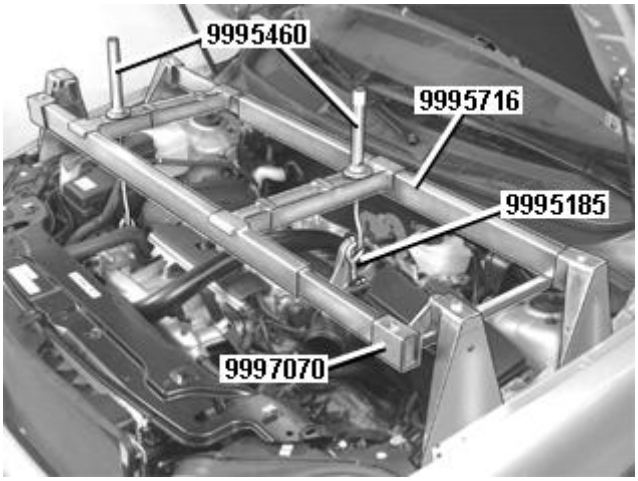

Fig. 368: Identifying Fixture Kit, Lifting Beam And Lifting Hooks
Courtesy of VOLVO CARS CORPORATION

NOTE: The front lifting beam must be equipped with fixture kit 9997070 as illustrated.

Position lifting beam **9995716** on the wheel arch and directly above the engine lifting eyelets on the left and right sides.

Connect the lifting hooks **9995460** on the engine lifting lugs.

On the right side of the engine, the hook must have a clearance of **10 mm** . Also use lifting lug **9995185** on the left side of the engine. Tighten to light contact on the left hand side.

Raise the car

REMOVING BOTH THE FRONT WHEELS

Fig. 369: Front Splash Guard
Courtesy of VOLVO CARS CORPORATION

Remove:

- the front splash guard. See **SUB-FRAME FRONT, REPLACING (2007)** or **SUB-FRAME FRONT, REPLACING (2003-2006)**
- the splash guard under the engine.

REMOVING COMPONENTS FROM THE SUB-FRAME

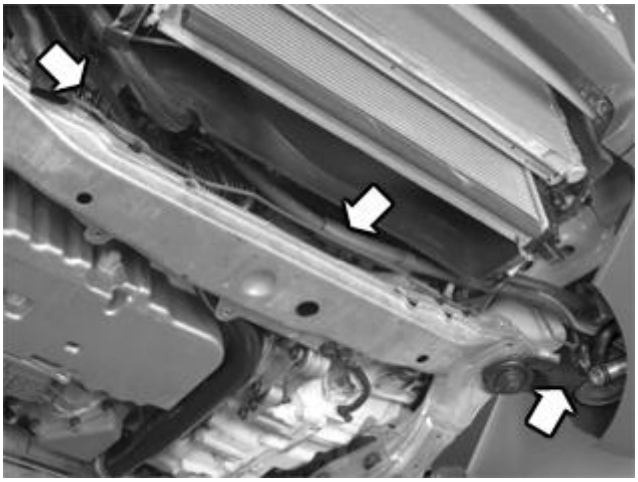

Fig. 370: Cable Duct
Courtesy of VOLVO CARS CORPORATION

Remove the screw for the cable duct. Unhook the cable duct from the sub-frame.

For cars with fuel powered parking heaters:

Remove the 2 screws for the heater.

Unhook the heater from the mounting. Leaving it hanging in its upper mounting.

Detach the fuel line for the heater from the holders on the sub-frame.

REMOVING THE CROSS MEMBERS FROM THE BODY

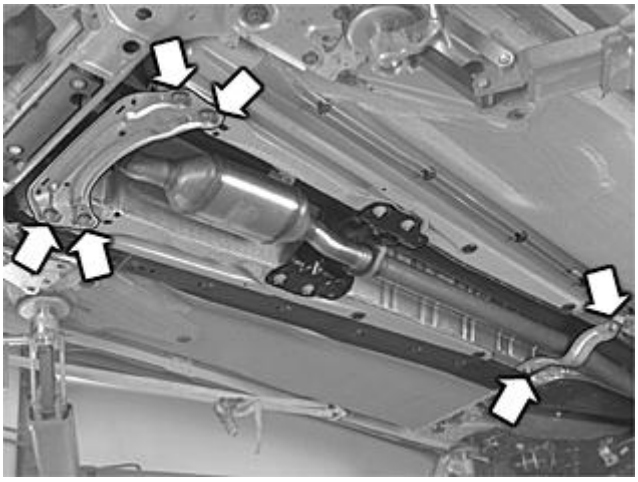

Fig. 371: Identifying Cross Members
Courtesy of VOLVO CARS CORPORATION

Remove:

- the clamp for the heated oxygen sensor (HO2S) cable and the screws for the front member
- the brake pipe from the holders on the member
- the rear member. Remove one screw and slacken off the other.

Turn the member to the side so that the exhaust pipe is exposed.

REMOVING THE FRONT MOUNTING FOR THE EXHAUST PIPE

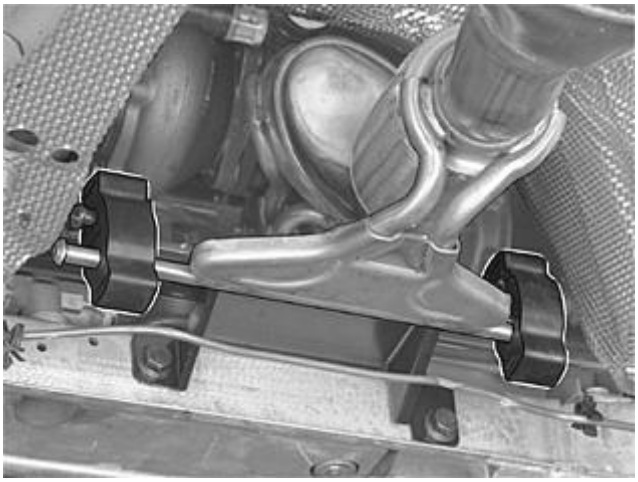

Fig. 372: Identifying Rubber Mounting For The Three-Way Catalytic Converter
Courtesy of VOLVO CARS CORPORATION

Remove rubber mounting for the exhaust system from the brackets.

REMOVING THE SCREWS AND NUTS FOR THE ENGINE PAD, ENGINE STABILIZER BRACE AND STEERING GEAR

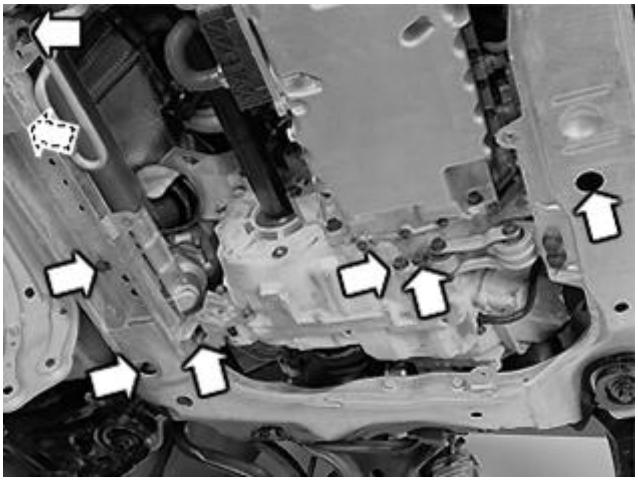

Fig. 373: Identifying Engine Pad And Screws

Courtesy of VOLVO CARS CORPORATION

Remove:

- the screw for the front engine pad
- the screws for the torque rod
- the screw and nuts for the steering gear.

DETACHING THE POWER STEERING LINE

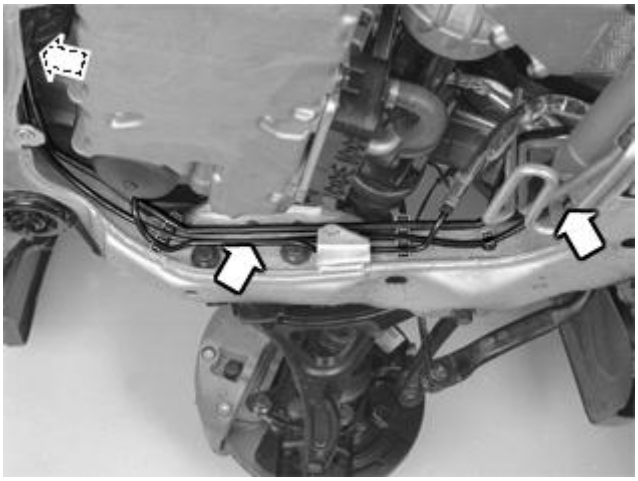

Fig. 374: Identifying Power Steering Line
Courtesy of VOLVO CARS CORPORATION

Remove:

- the screw for the clamp for the power steering line at the front edge of the top of the sub-frame
- the screw for the clamp for the power steering line on the right side at the rear edge of the frame.

Unhook the servo and the evaporator lines from the holders on the right side of the sub-frame.

REMOVING FRONT SUSPENSION COMPONENTS (BOTH SIDES)

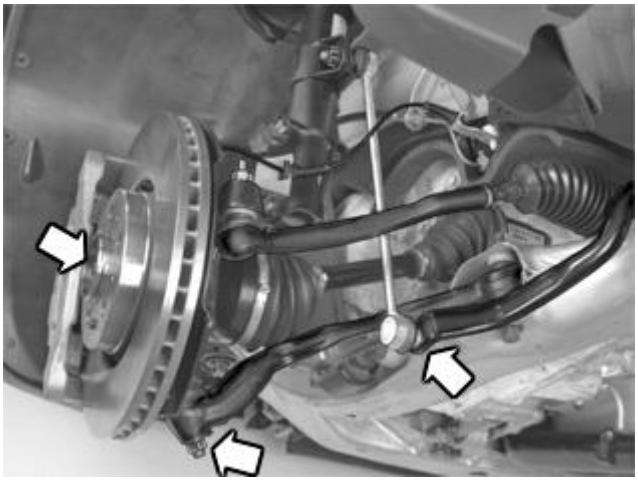

Fig. 375: Front Suspension Components
Courtesy of VOLVO CARS CORPORATION

Remove:

- the soundproofing over the drive shaft (applies to certain versions)
- the screw for the drive shaft. Counterhold using a screwdriver in the brake disc vents. Tap in the end of the drive shaft approximately **20 mm** into the wheel hub
- the link from the anti-roll bar. Counterhold using a Torx wrench in the ball joint pinion to prevent the boot from turning
- the nut for the ball joint / link arm. Clean the exposed threads outside the nut. Spray using rust solvent before removing the nut.

DISCONNECTING THE BALL JOINT PINION FROM THE CONTROL ARM (BOTH SIDES)

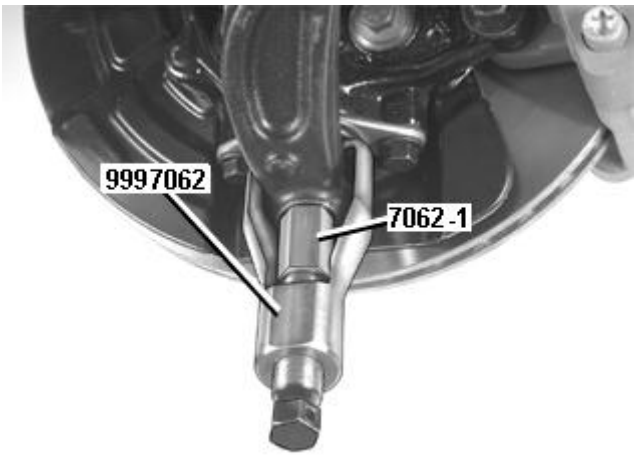

Fig. 376: Disconnecting Ball Joint Pinion From Control Arm Using 999 7062
Courtesy of VOLVO CARS CORPORATION

Use tool **9997062** . Install cap nut **9997062** for the ball joint pinion. Tighten the nut to the control arm. Then slacken off 1 to 2 turns so that there is clearance between the cap nut and the control arm.

Position puller **9997062** on the control arm and detach the ball joint from the control arm.

Remove the tools.

REMOVING FENDER LINER COMPONENTS (BOTH SIDES)

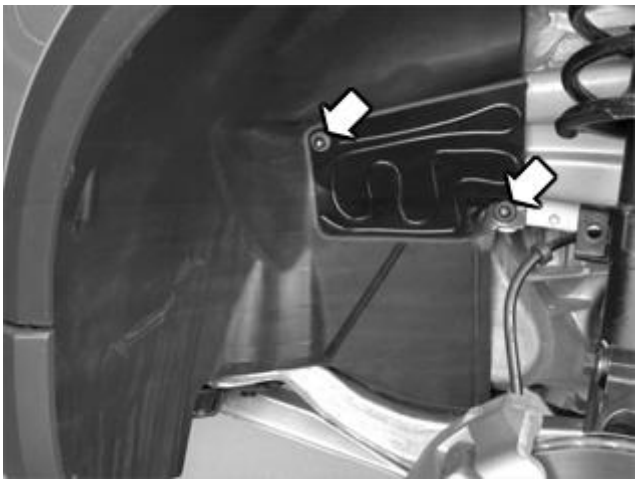

Fig. 377: Identifying Support Plate And Nuts
Courtesy of VOLVO CARS CORPORATION

Slacken off the 2 nuts for the fender liner and the support plate on both sides so that the fender liner can be folded out.

REMOVING THE SCREWS FOR THE SUB-FRAME SUPPORT PLATES (BOTH SIDES)

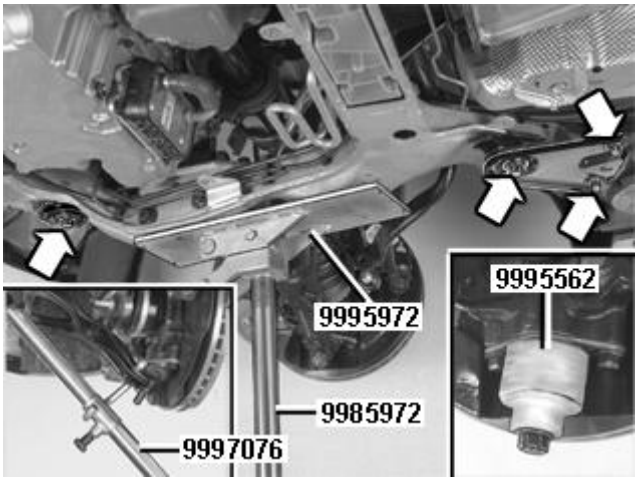

Fig. 378: Identifying Screws And Sub-Frame Support Plates
Courtesy of VOLVO CARS CORPORATION

Remove the screws for the sub-frame support plates in the body (both sides).

Position mobile jack **9985972** with universal plate **9995972** , so that the plate is in light contact under the right side of the sub-frame.

Slacken off the screws for the sub-frame on the right hand side. Ensure that the nuts are still secured by at least 5 threads.

Remove the jack.

Unhook the control arm from the ball joint. Install protective sleeve **9995562** . Hold the sleeve in place using the nut for the ball joint.

Work out the spring strut. Detach the drive shaft from the wheel hub. Do not damage the boot. Hold the spring strut to one side using a retaining strap for more space when removing the drive shaft.

REMOVING THE RIGHT DRIVE SHAFT

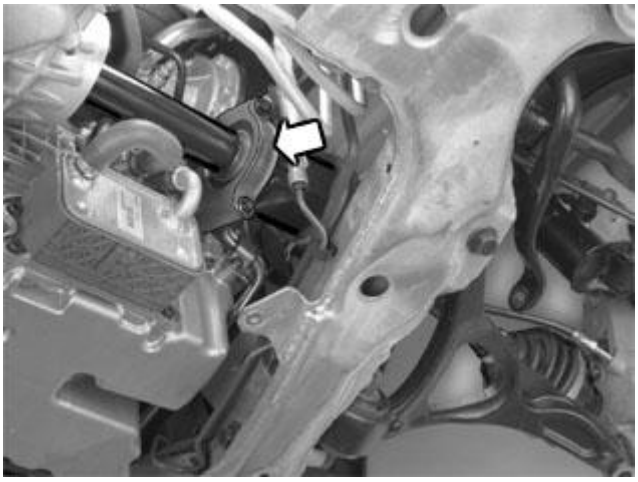

Fig. 379: Drive Shaft Support Bearing Cap
Courtesy of VOLVO CARS CORPORATION

Remove:

- the support bearing cap for the drive shaft
- the drive shaft by pulling it straight out of the transmission.

REMOVING THE COLLISION PROTECTION SYSTEM OVER THE STEERING GEAR

Fig. 380: Collision Protection Over Steering Gear
Courtesy of VOLVO CARS CORPORATION

NOTE: Applies only to right-hand drive cars.

Remove the 2 screws for the collision protection system.

Leave the collision protection system in place on the steering gear.

LOWERING THE SUB-FRAME

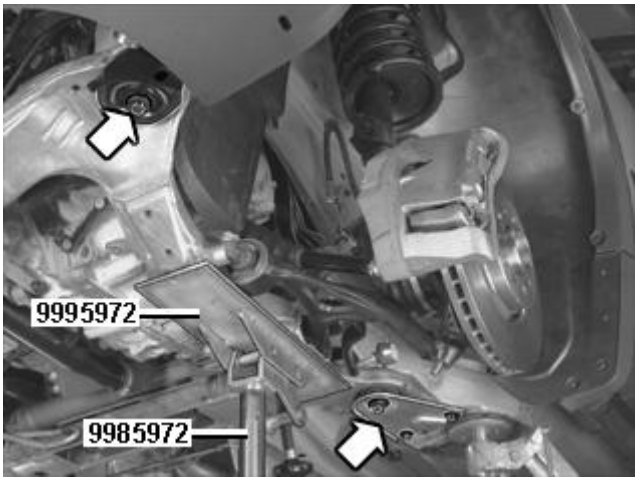

Fig. 381: Identifying Mobile Jack & Sub-Frame
Courtesy of VOLVO CARS CORPORATION

NOTE: For cars with fuel powered parking heaters: mark up the position of the mounting in relation to the sub-frame.

Position the mobile jack lightly applied under the left side of the sub-frame. Remove the sub-frame screws.

NOTE: Ensure the following when lowering the sub-frame:

- **that the steering gear screws release from the sub-frame**
- **that the brake pipe does not catch in the bracket for the exhaust pipe mounting**
- **that the ball joint pinion releases from the control arm.**

Remove the mobile jack and let the frame hang loose.

REMOVING THE DRIVE SHAFT FROM THE WHEEL HUB

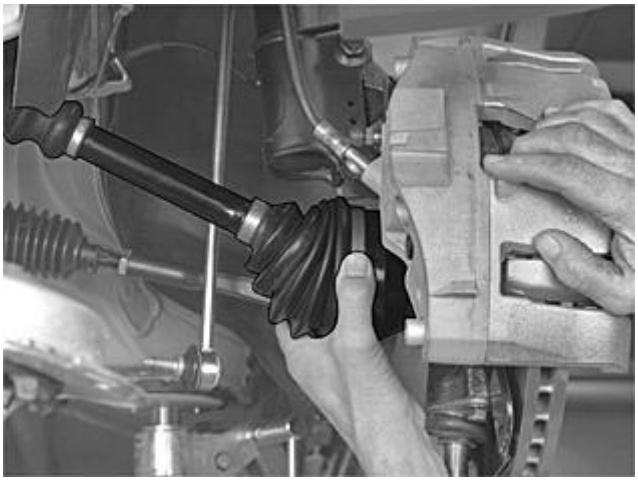

Fig. 382: Identifying Drive Shaft And Wheel Hub
Courtesy of VOLVO CARS CORPORATION

Work out the spring strut. Detach the drive shaft from the wheel hub. Hold the spring strut to one side using a retaining strap to obtain more space when removing the transmission.

REMOVING THE DRIVE SHAFT FROM THE TRANSMISSION

Fig. 383: Identifying Drive Shaft At Gearbox & Tool 999 5681
Courtesy of VOLVO CARS CORPORATION

Remove the drive shaft from the transmission. Use jimmy bar **9995681** .

REMOVING THE REAR ENGINE MOUNTING

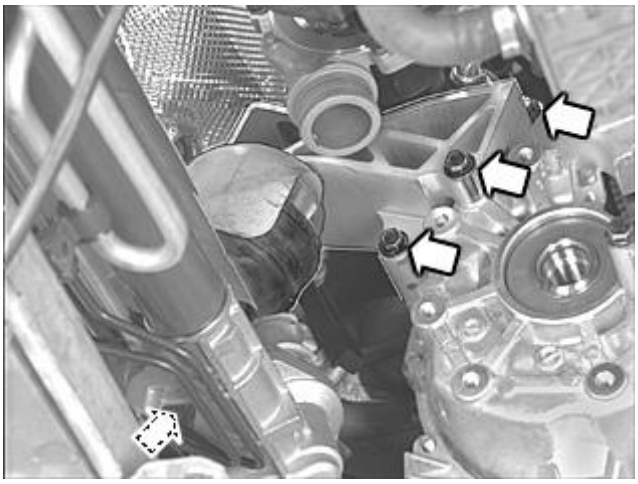

Fig. 384: Identifying Rear Engine Mounting
Courtesy of VOLVO CARS CORPORATION

Remove:

- the screw for the engine pad/steering gear
- the 3 screws
- the mounting and the engine pad.

HANGING UP THE STEERING GEAR

Fig. 385: Identifying Steering Gear & Tie Strap
Courtesy of VOLVO CARS CORPORATION

Hang up the steering gear in a tie strap. Use the hole in the body.

REMOVING THE SCREWS FROM THE TORQUE CONVERTER

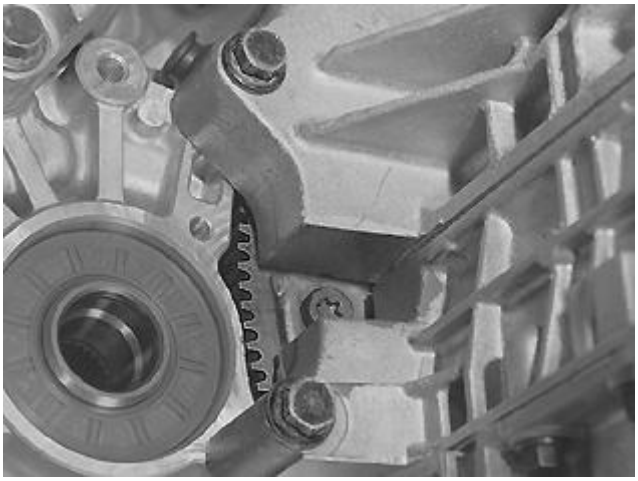

Fig. 386: Identifying Torque Converter Screws
Courtesy of VOLVO CARS CORPORATION

Remove the 6 screws for the torque converter. Turn the engine with a ratchet and socket. Fold out the right fender liner so that the crankshaft nut can be accessed.

Use a Torx TX50 socket on the torque converter screws.

REMOVING THE OIL PIPE FROM THE TRANSMISSION

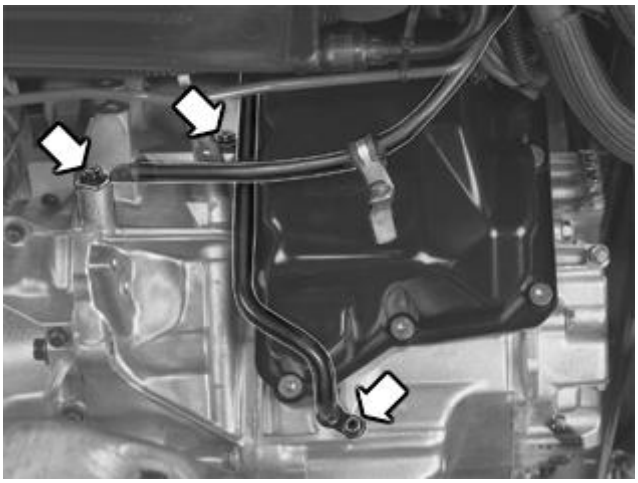

Fig. 387: Identifying Oil Pipe
Courtesy of VOLVO CARS CORPORATION

Position a container under the pipe terminal.

Remove:

- the 2 screws holding the pipe. Disconnect the pipe from the transmission. Install sealing plugs in the pipe and transmission. Carefully fold the hose out of the way
- the ground lead from the transmission.

LOWERING THE ENGINE AND THE TRANSMISSION

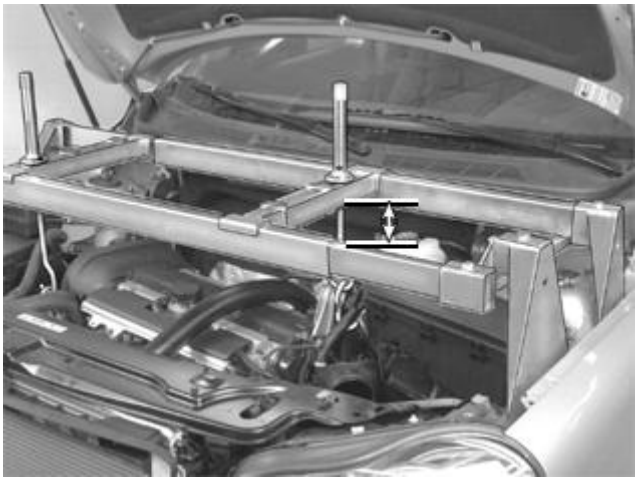

Fig. 388: Identifying Free Threads On Lifting Hook
Courtesy of VOLVO CARS CORPORATION

Lower the engine and transmission on the left side using the hook.

Check that no hoses or cables are being stretched or trapped when the engine is lowered.

Lower the engine so that **90-100 mm** of the free threads on the lifting hook can be seen.

Raise the car.

INSTALLING THE FIXTURE ON THE MOBILE JACK AND TRANSMISSION

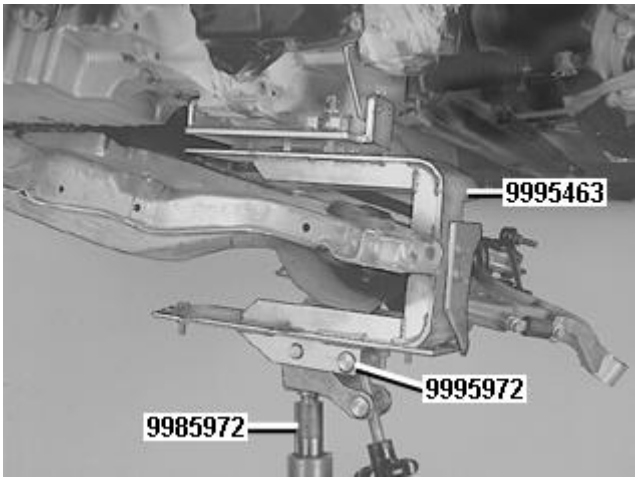

Fig. 389: Fixture Installed On Mobile Jack And Gearbox
Courtesy of VOLVO CARS CORPORATION

Raise the car.

Install fixture **9995463** on fixture **9995972** . Use the fixture and plate together with mobile jack **9985972** . Align

support plate 999 5463-2 against the fixture and the transmission.

NOTE: The support plate is installed on the inside of the fixture mounting lug (see the illustration). Tighten the fixture with the two torque rod screws. Apply the mobile jack lightly against the transmission.

REMOVING ALL THE SCREWS FOR THE TRANSMISSION AND ENGINE

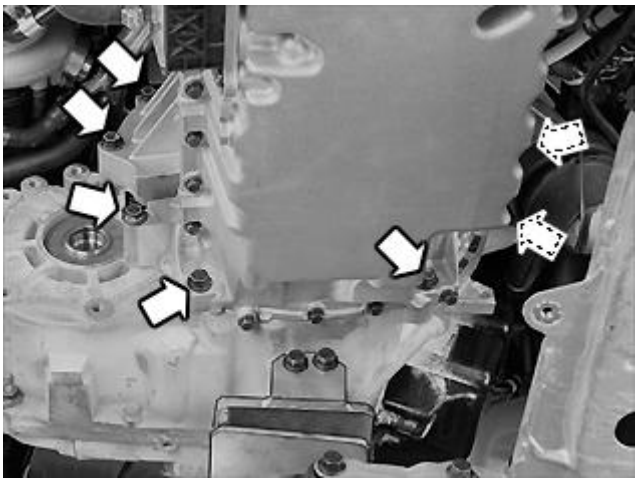

Fig. 390: Gearbox And Engine Screws
Courtesy of VOLVO CARS CORPORATION

Remove the remaining 7 screws for the transmission and engine.

REMOVING THE TRANSMISSION

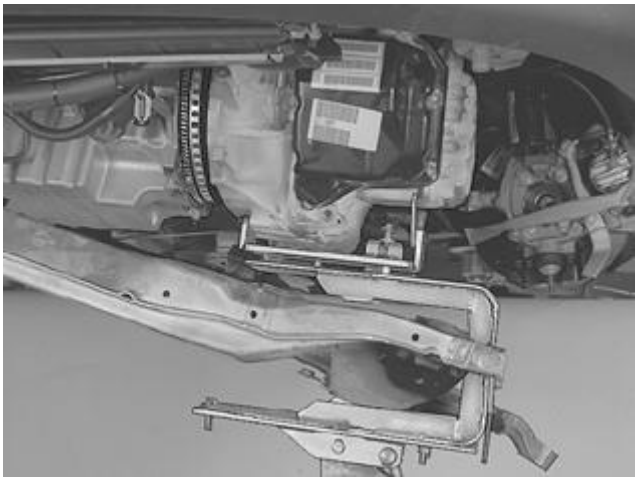

Fig. 391: Adjusting Height & Angle Using Mobile Jack And Gearbox Fixture
Courtesy of VOLVO CARS CORPORATION

Ensure that the transmission is taken straight out in relation to the engine.

Ensure that the torque converter is removed with the transmission and does not slide off the stator shaft.

Press a screwdriver through one of the screw holes in the carrier plate.

NOTE: **Do not pry toward the carrier plate rim for the flywheel sensor.**

NOTE: **Lower the transmission slightly when it is being removed so that it will pass the side member.**

Remove the transmission.

TRANSMISSION, AUTOMATIC (B6294T, 4T65 AWD; 2003-2006)

CONTROL SYSTEM / VALVE HOUSING, INSTALLING

TRANSFERRING THE BALLS TO THE NEW VALVE HOUSING

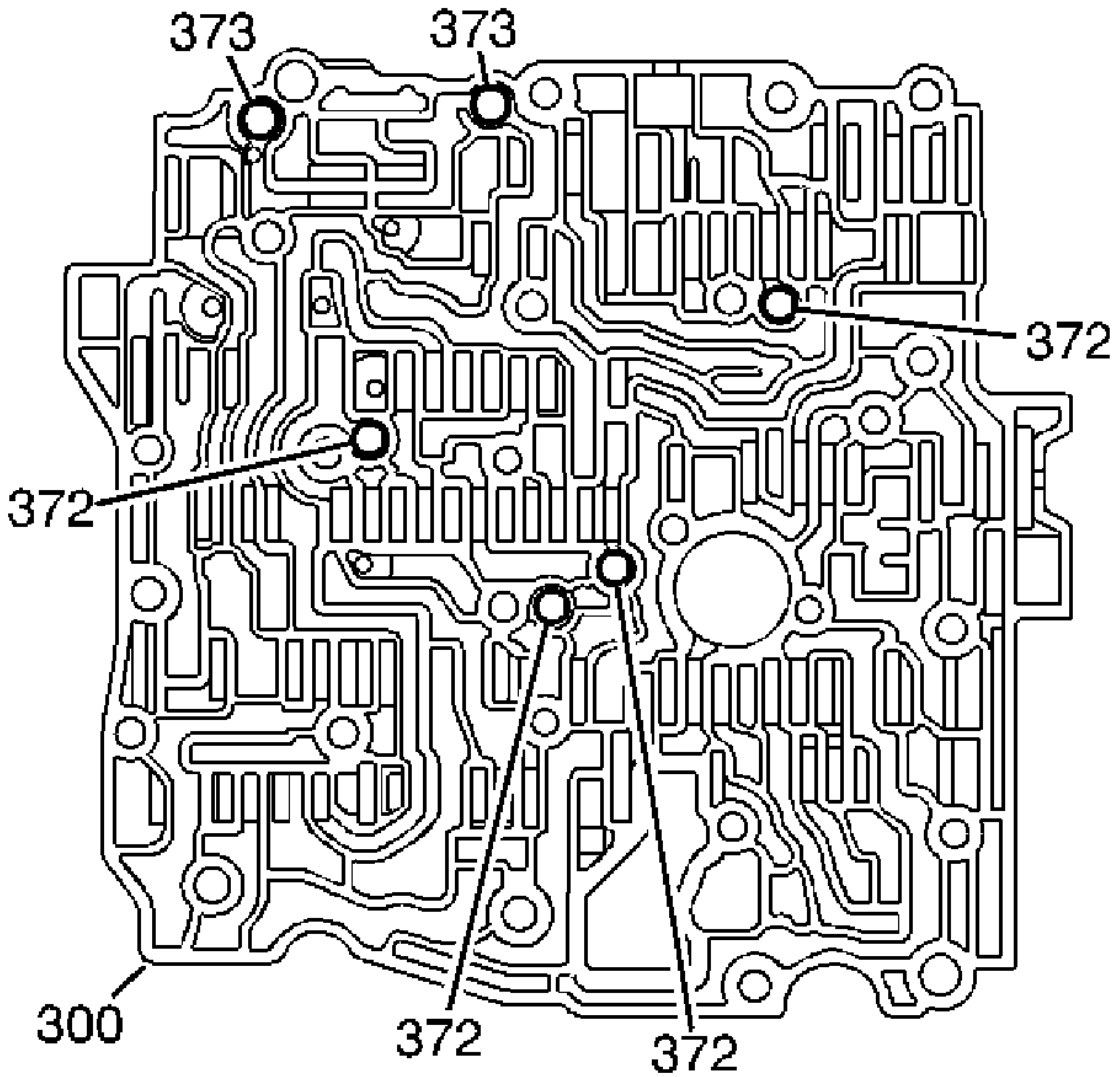

Fig. 392: Locating Balls In Valve Housing
Courtesy of VOLVO CARS CORPORATION

Use Volvo Genuine parts petroleum jelly P/N 116 11 51-4 so that the balls remain in the relevant ducts during the installation of the valve housing.

Transferring

Balls 373 (two). Apply petroleum jelly to each duct. Install the balls (the petroleum jelly should cover the balls).

Balls 372 (four). Apply petroleum jelly to each duct. Install the balls.

CHECKING THE BALLS IN THE VALVE HOUSING

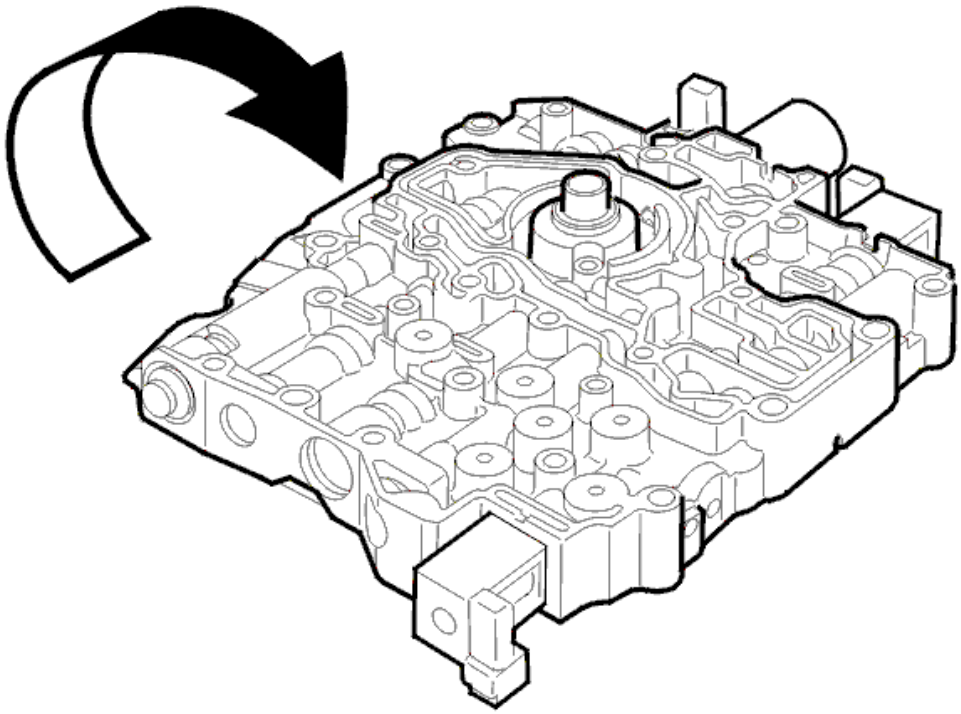

Fig. 393: Identifying Turning The Valve Housing
Courtesy of VOLVO CARS CORPORATION

Turn the valve housing so that the balls are upside down.

The balls should remain position. (If any of the balls fall out, use more petroleum jelly).

Turn the valve housing back again.

INSTALLING NEW GASKETS

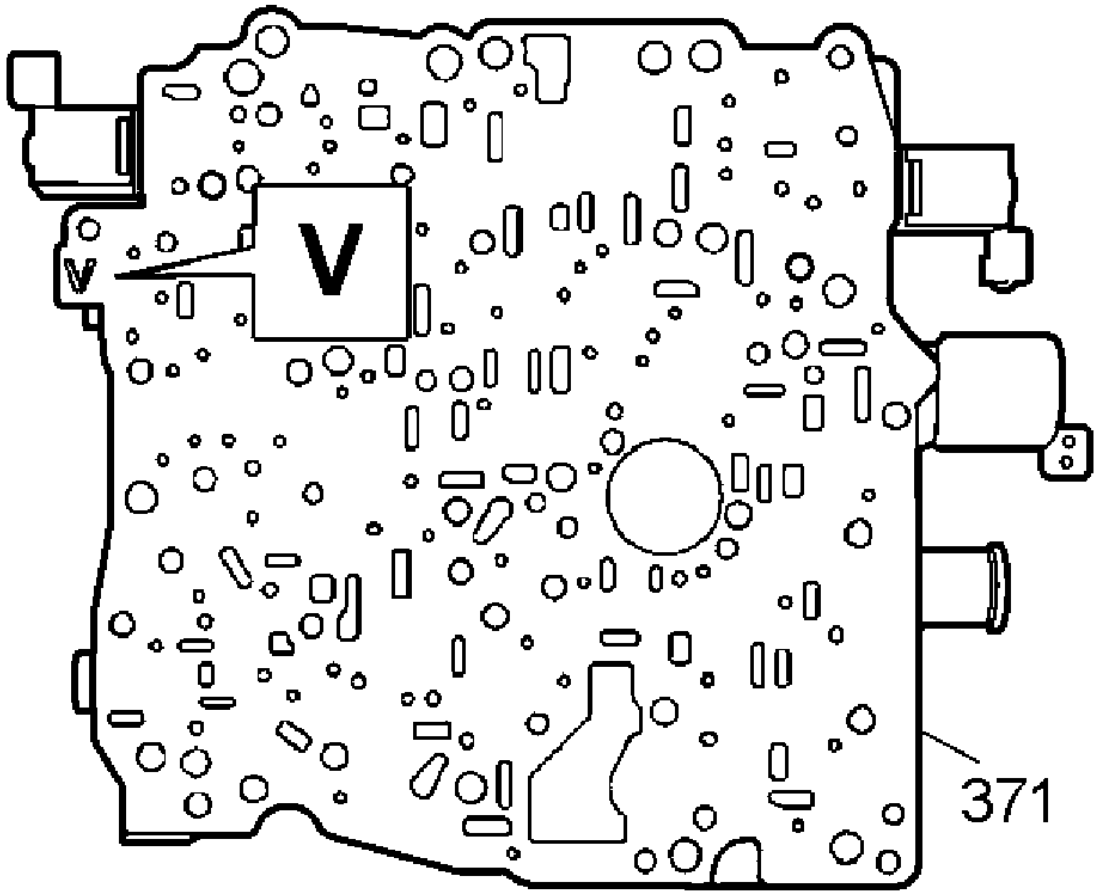

Fig. 394: Identifying Gasket 371
Courtesy of VOLVO CARS CORPORATION

CAUTION: Make sure that the gaskets are correctly positioned.

Install gasket 371 marked V on the valve housing.

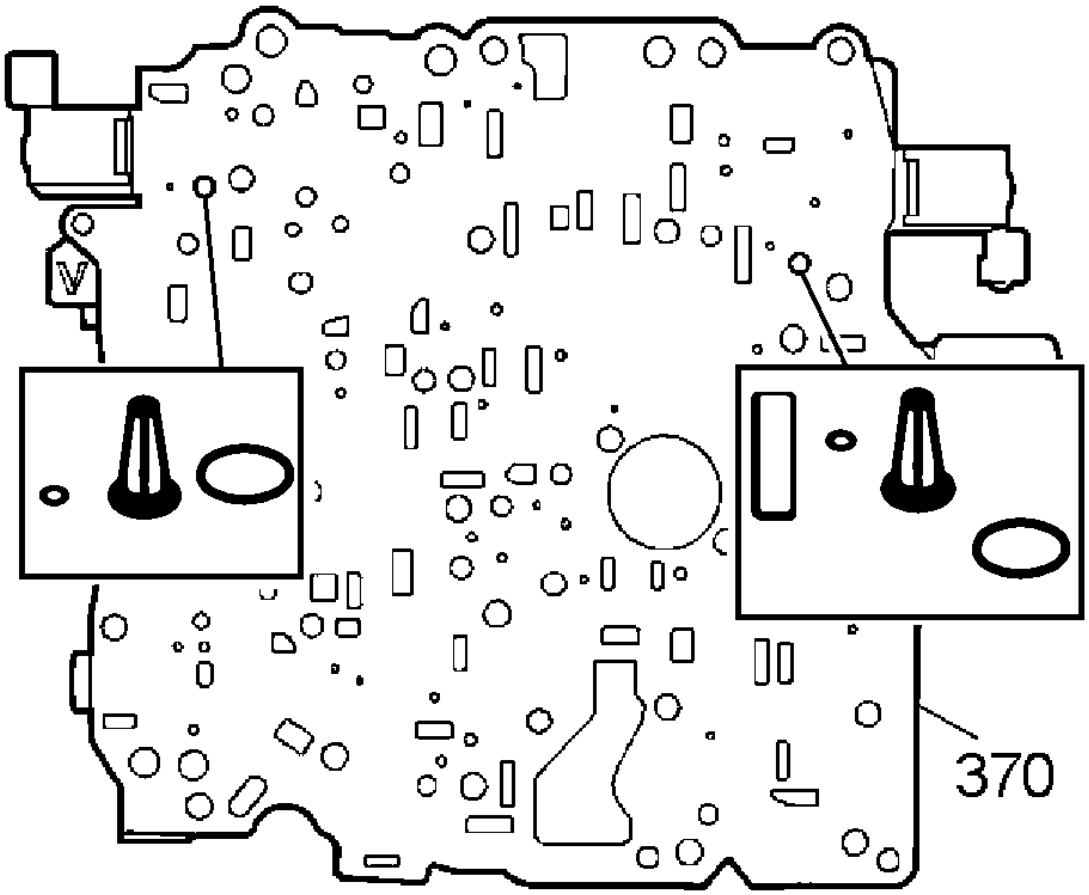

Fig. 395: Identifying Distribution Plate 370
Courtesy of VOLVO CARS CORPORATION

Install the distribution plate 370 on the gasket.

The strainers must be replaced if they are damaged. See the illustration for their positions.

Lock the gasket and the distribution plate in the valve housing using the two plastic plugs. Apply a little petroleum jelly to the outer ends of the distribution plate so that the gasket C does not slide.

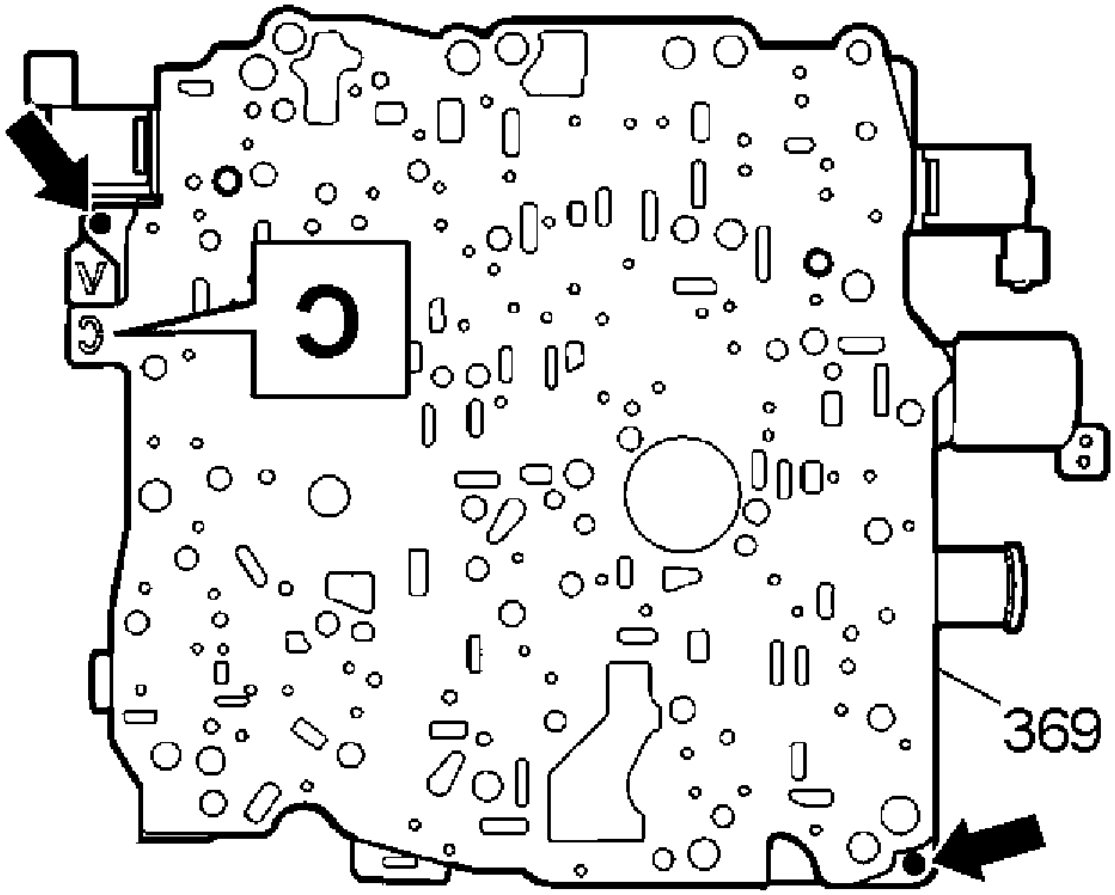

Fig. 396: Identifying Gasket 369
Courtesy of VOLVO CARS CORPORATION

Install gasket 369 marked C on the distribution plate.

REPLACING THE SEAL ON THE PUMP SHAFT

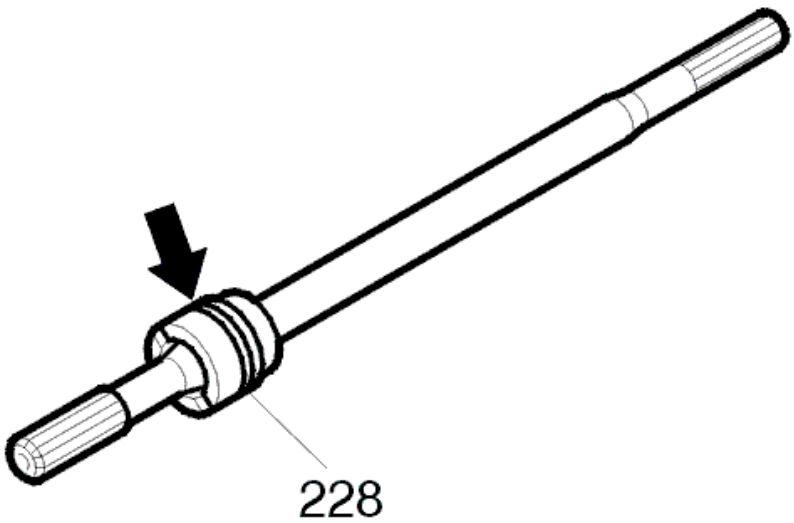

Fig. 397: Identifying Pump Shaft Seal
Courtesy of VOLVO CARS CORPORATION

Pull out the pump shaft.

Replace the seal around the shaft.

Reinstall the pump shaft.

INSTALLING THE BALLS FOR THE CONTROL SYSTEM HOUSING

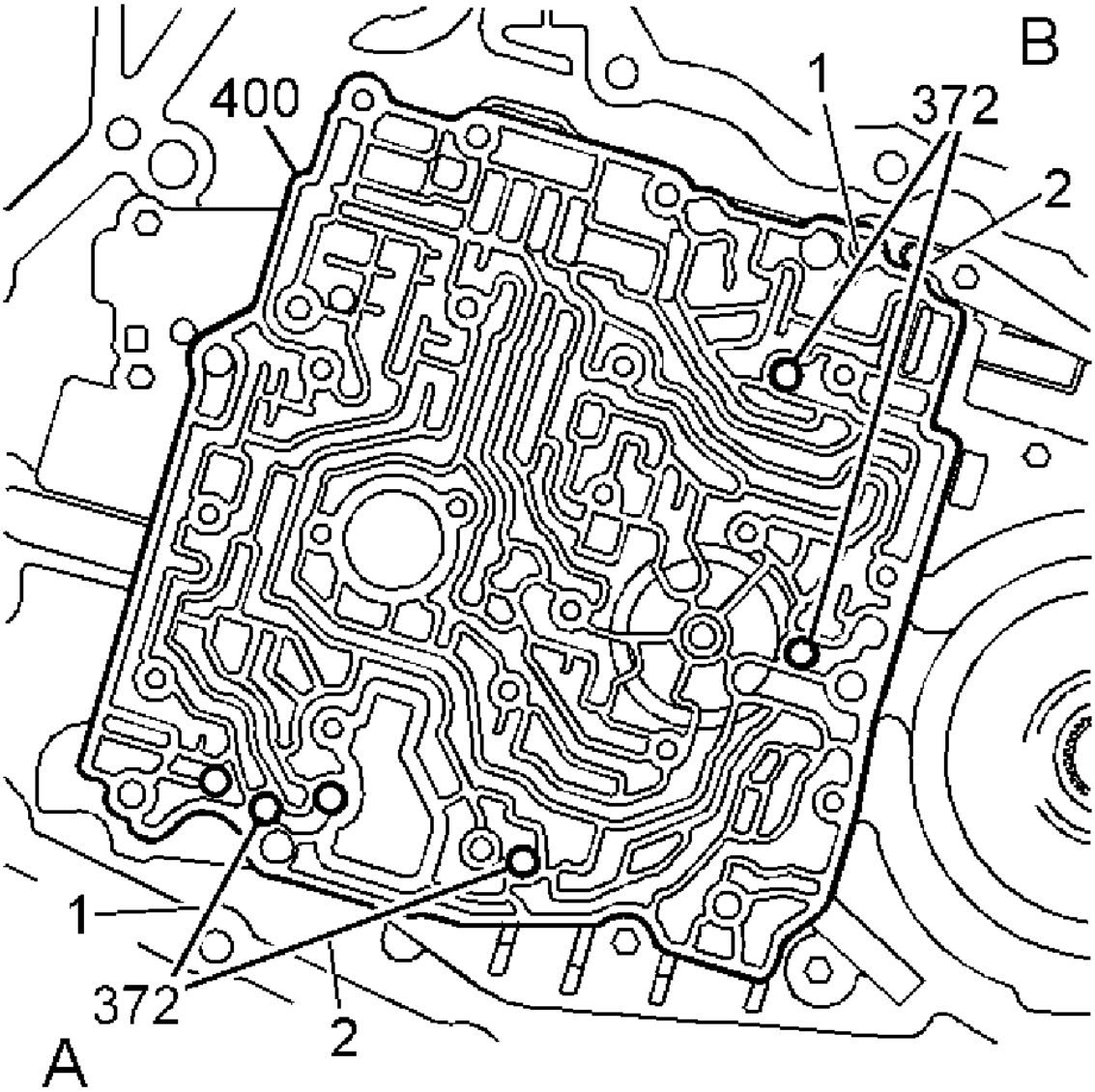

Fig. 398: Locating Control System Housing Balls
Courtesy of VOLVO CARS CORPORATION

Apply petroleum jelly (P/N 116 11 51-4) to each duct (372) for the balls.

Reinstall the balls. Ensure that the petroleum jelly holds the balls in place in the housing.

INSTALLING THE VALVE HOUSING ON THE CONTROL SYSTEM HOUSING

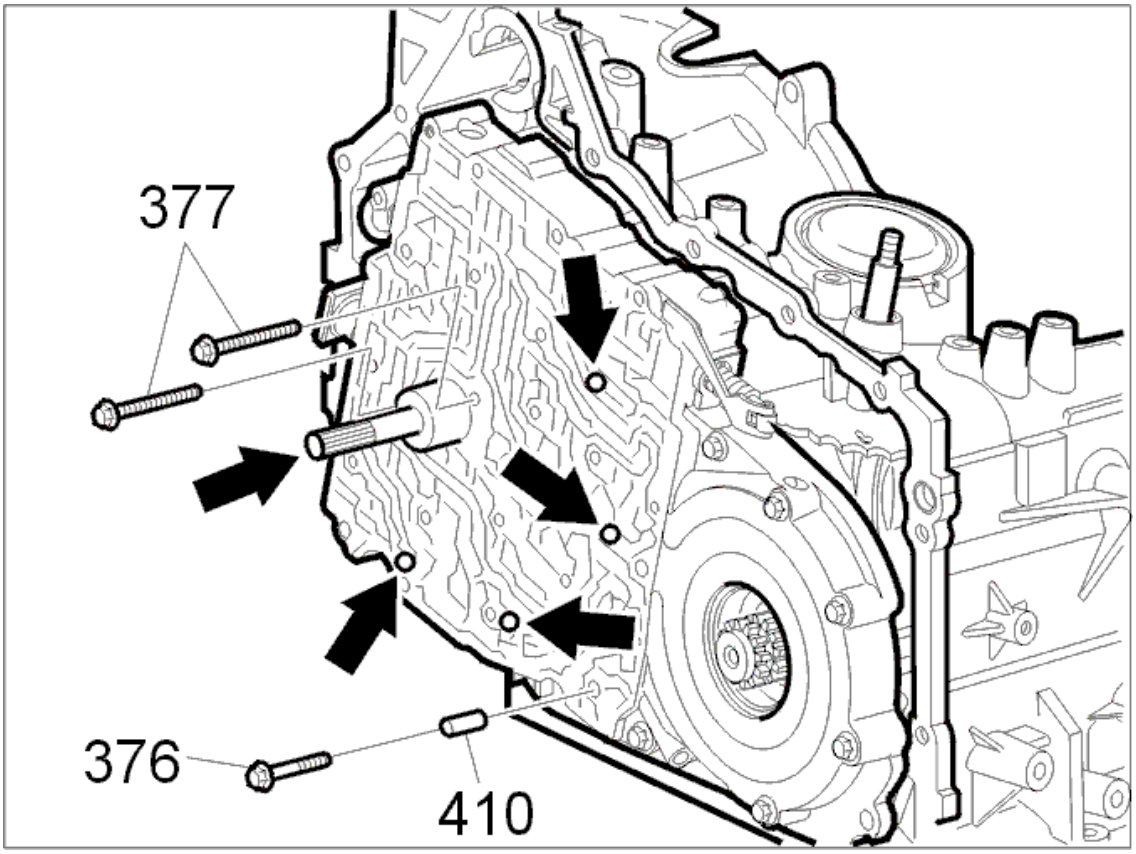

Fig. 399: Identifying Installing Valve Housing To Control System Housing
Courtesy of VOLVO CARS CORPORATION

Preparations

Check that:

- the surface of the valve housing is clean

  NOTE: Use lint-free paper.

- the balls remain in the petroleum jelly
- the pump shaft is in position
- the screws 377 to secure the valve housing are to hand
- the screw 376 and guide sleeve 410 are to hand.

INSTALLING THE VALVE HOUSING

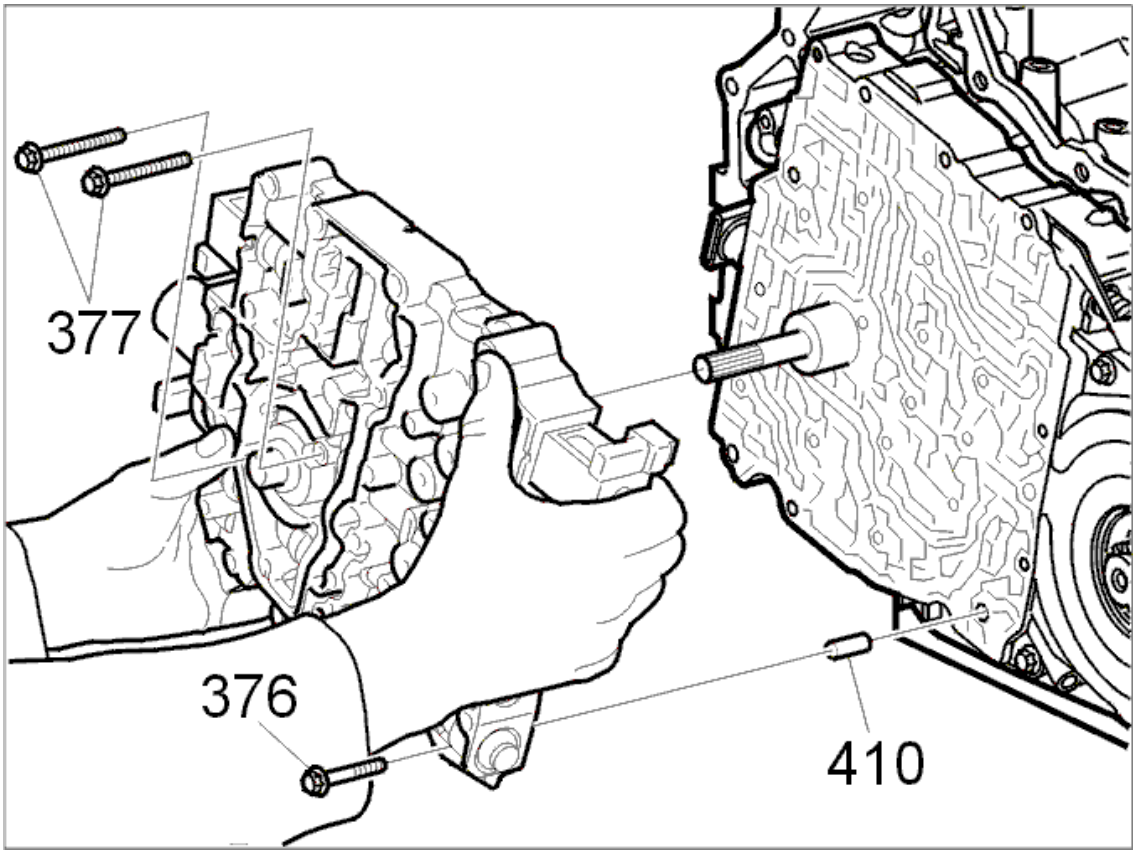

Fig. 400: Identifying Removing/Installing Valve Housing
Courtesy of VOLVO CARS CORPORATION

Carefully install the valve housing over the pump shaft (Be careful with the (2) strainers).

CAUTION: The valve housing may not be twisted.

Hold it in position against the housing and install the screws 377, lightly tightened.

Install **guide sleeve** 410 and the screw 376 on the valve housing tightened lightly.

NOTE: The guide sleeve ensures that the distribution plate/valve housing are positioned correctly.

TRANSFERRING

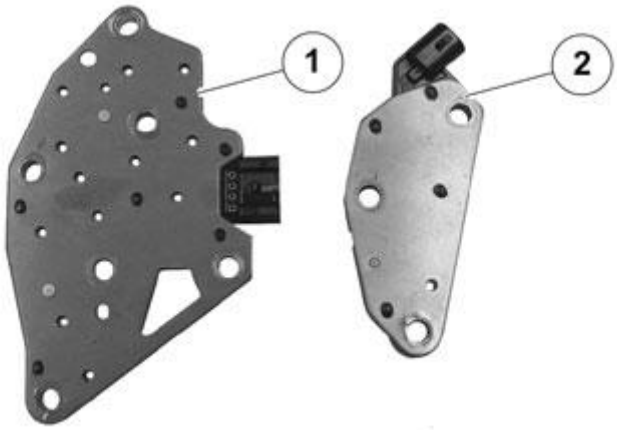

Fig. 401: Identifying Pressure Switch
Courtesy of VOLVO CARS CORPORATION

1. Pressure switch -2002
2. Pressure switch 2003-

CAUTION: The screws are of different lengths. It is important that the screws are installed in the right place.

CONTROL SYSTEM FOR CARS OF MODEL YEAR -2002

Transfer the pressure sensor to the new valve housing.

NOTE: Note the position of screws 381 in the illustration (the screws are self-tapping).

Install the remaining screws for the valve housing.

TIGHTENING TORQUE

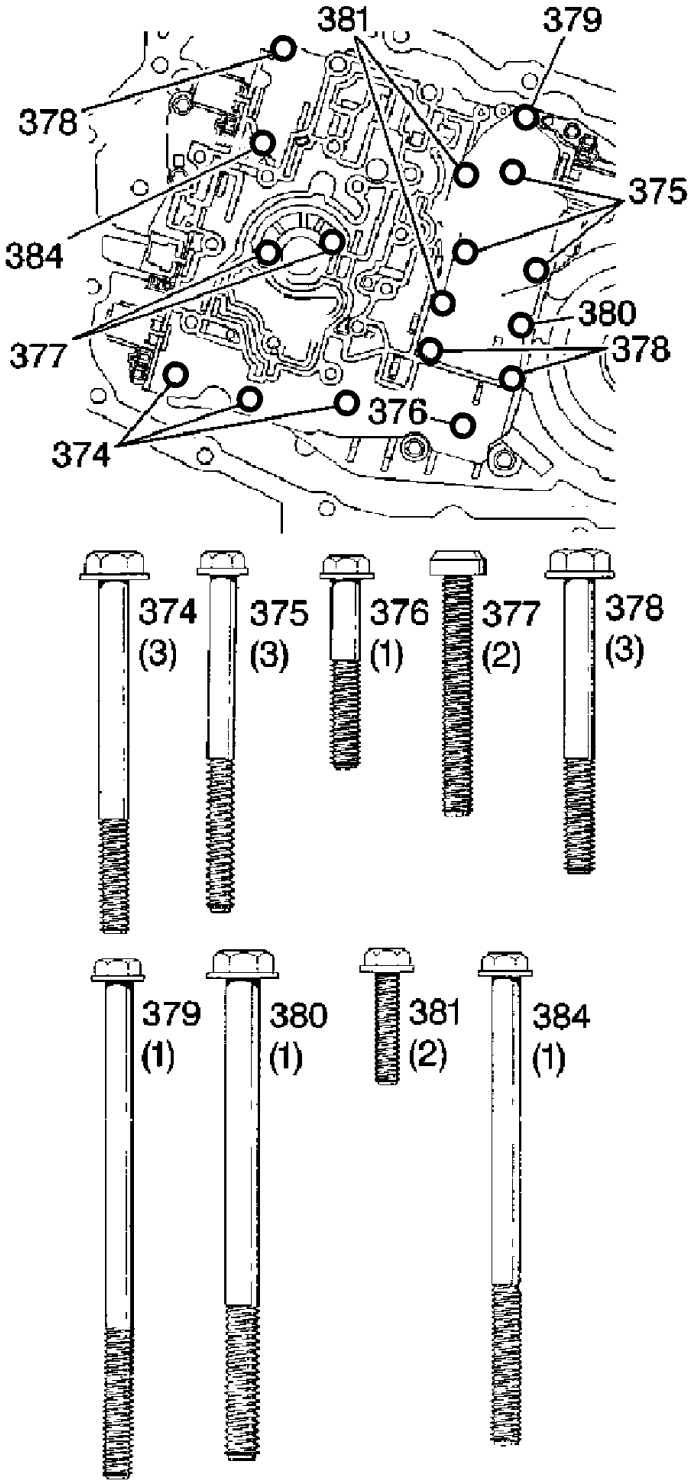

Fig. 402: Identifying Valve Housing And Pressure Sensor And Screws
Courtesy of VOLVO CARS CORPORATION

Tighten the screws in the following order:

- 381 to **8 Nm**
- 376 to **12 Nm**
- 377 to **12 Nm**
- 374 to **12 Nm**
- 375 to **12 Nm**
- 378 to **12 Nm**
- 384 to **12 Nm**
- 379 to **12 Nm**
- 380 to **25 Nm** .

Check tighten all the screws.

CONTROL SYSTEM FOR CARS OF MODEL YEAR 2003-

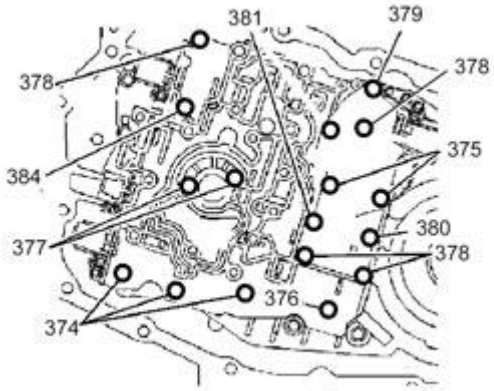

Fig. 403: Identifying Valve Housing And Pressure Sensor And Screws
Courtesy of VOLVO CARS CORPORATION

Tighten the screws in the following order:

- 381 to **8 Nm**
- 376 to **12 Nm**
- 377 to **12 Nm**
- 374 to **12 Nm**
- 375 to **12 Nm**
- 378 to **12 Nm**
- 384 to **12 Nm**
- 379 to **12 Nm**
- 380 to **25 Nm**

Check tighten all the screws.

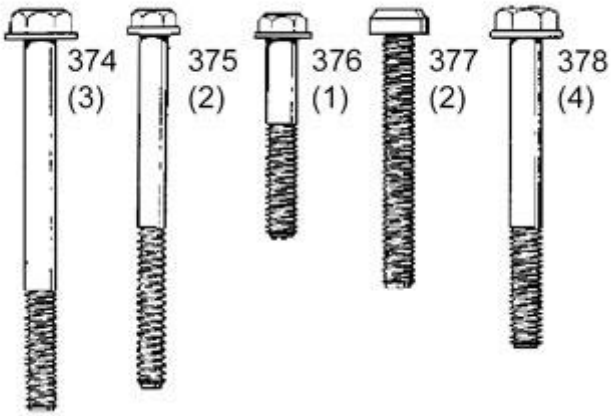

Fig. 404: Identifying Screws
Courtesy of VOLVO CARS CORPORATION

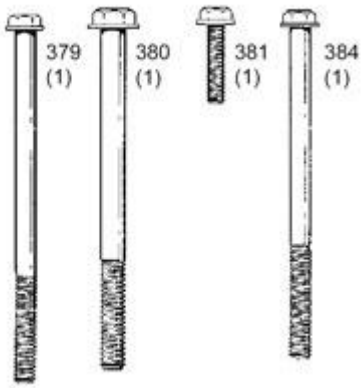

Fig. 405: Identifying Screws
Courtesy of VOLVO CARS CORPORATION

INSTALLING THE OIL PUMP

Install the oil pump according to **INSTALLING THE OIL PUMP**.

INSTALLING THE CABLE HARNESS

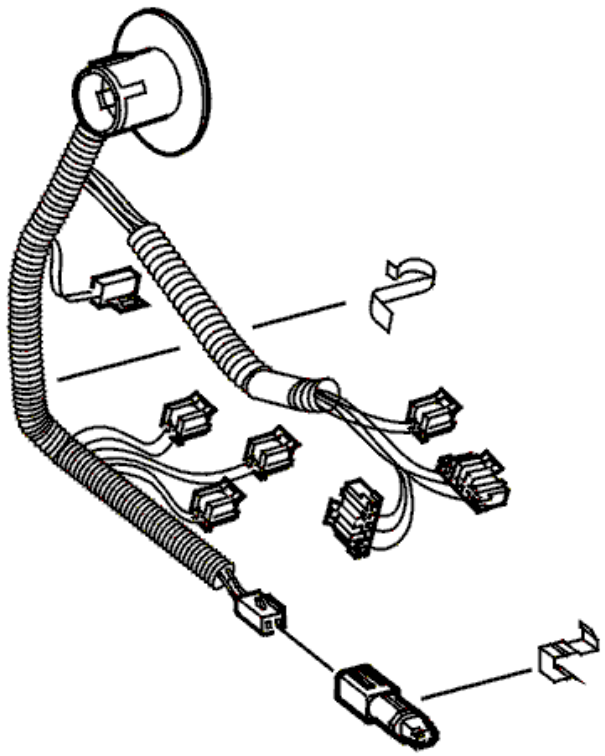

Fig. 406: Identifying Cable Harness
Courtesy of VOLVO CARS CORPORATION

Install:

- all the connectors on the solenoids
- the temperature sensor in the mounting
- the cable in the clamp.

Check that all components are installed correctly.

INSTALLING THE SIDE COVER

Install the side cover. See **SIDE COVER TRANSMISSION, INSTALLING**.

FILLING WITH GEARBOX FLUID

Fill with gearbox fluid. See **TRANSMISSION OIL / OIL FILTER, REPLACING**.

Carry out a road test.

CONTROL SYSTEM/VALVE HOUSING, REMOVING

NOTE: **The illustrations in this service information are used for different model years and/or models. Some variation may occur. However, the essential information in the illustrations is always correct.**

NOTE: **Read through the instructions before beginning to work.**

INFORMATION BEFORE REMOVAL

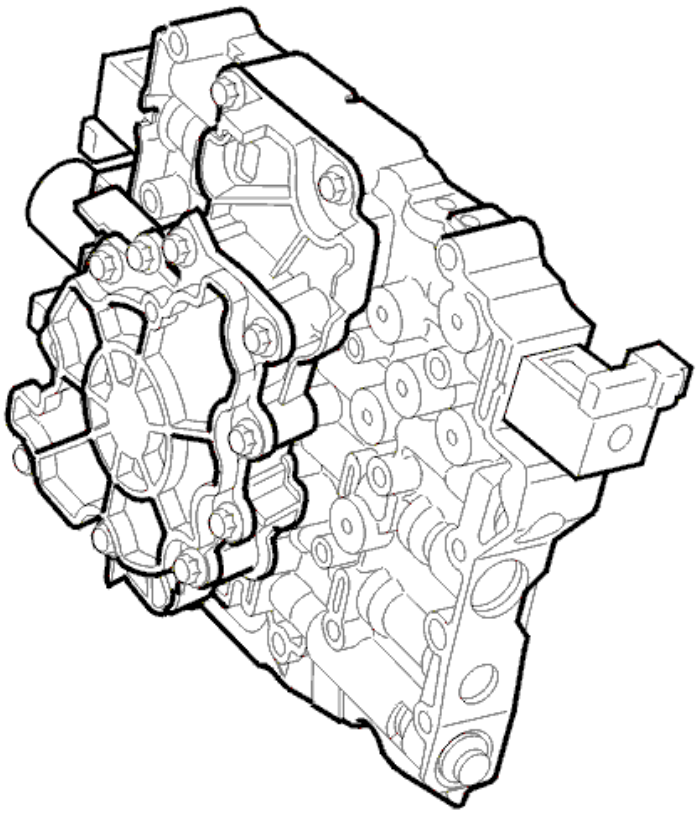

Fig. 407: Identifying Valve Housing
Courtesy of VOLVO CARS CORPORATION

When replacing the valve housing, the distribution plate and all 6 balls (if undamaged) should be transferred to the new valve housing. There are many screws of different lengths. It is important that the different screws are not mixed up. Checks are carried out when replacing the valve housing.

The new valve housing does not have any solenoids installed. The solenoids are loose in the kit and must be installed separately.

REMOVING THE SIDE COVER

Remove the side cover. See **SIDE COVER TRANSMISSION, REMOVING**.

PREPARATIONS FOR REMOVING THE VALVE HOUSING

Remove the cable harness. See **REMOVING THE CABLE HARNESS** .

Remove the oil pump. See **REMOVING THE OIL PUMP**.

AIR VENT HOUSING

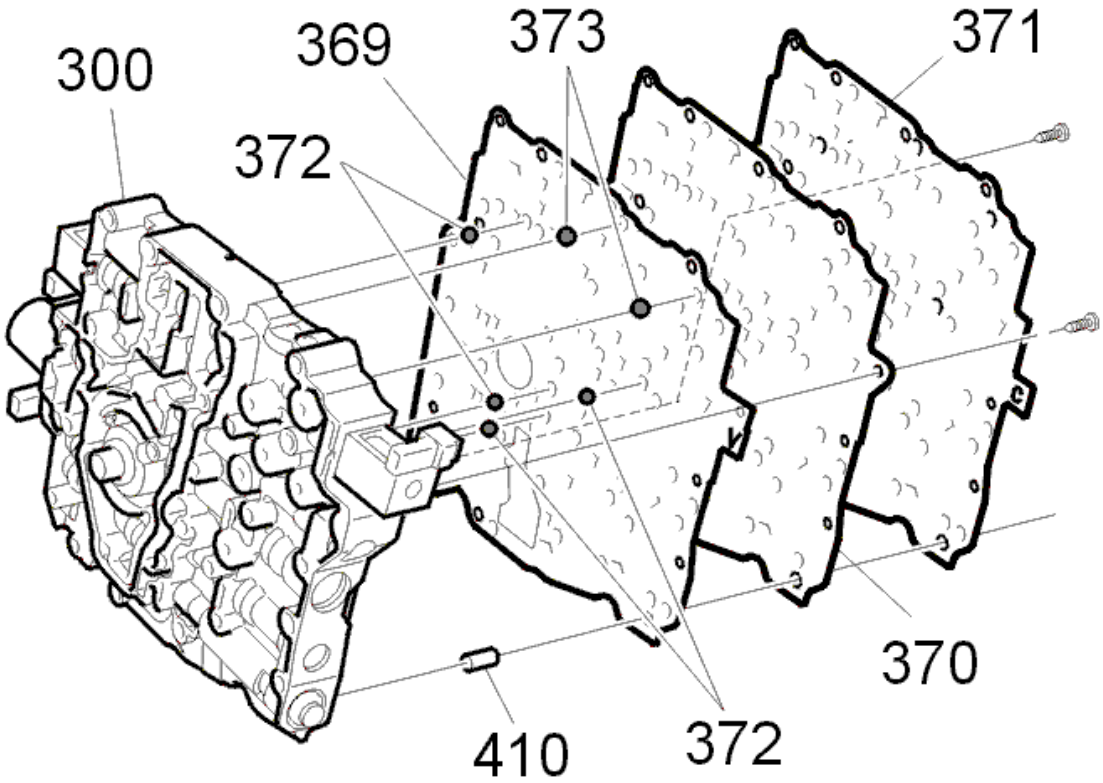

Fig. 408: Identifying Air Vent Housing
Courtesy of VOLVO CARS CORPORATION

The valve housing consists of:

- the valve housing (300)

  Gaskets:

  - 1 marked C (369)
  - 1 marked V (371).
- distribution plate (370)
- guide sleeve (410).

There are 6 balls in the valve housing. 4 small (372) and 2 larger (373).

When separating the valve housing from the control system housing: The gaskets and plate must remain in the

valve housing so that the balls do not fall out of their seats in the valve housing.

There are two small strainers (382) on the distribution plate.

2 plastic plugs (368) hold the gasket and plate in place.

CONTROL SYSTEM HOUSING

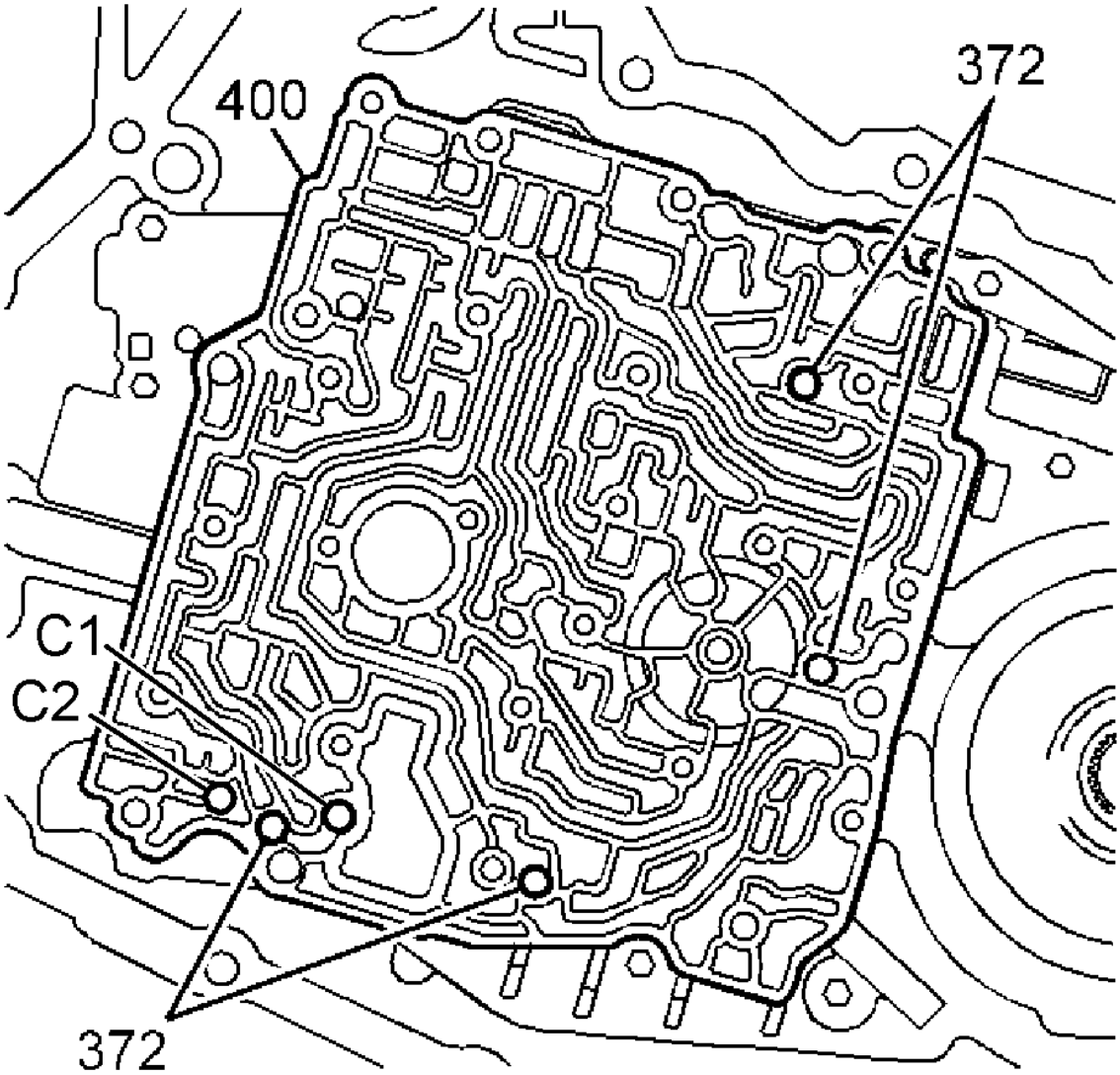

Fig. 409: Identifying Control System Housing
Courtesy of VOLVO CARS CORPORATION

There are 4 more balls in the control system housing. The balls will fall out when the valve housing is removed. Collect the balls in a clean container (the balls will be reinstalled later). There are 2 balls which do not fall out when the valve housing is removed (these are in the control system, C1 and C2).

REMOVING THE SCREWS FOR THE VALVE HOUSING AND PRESSURE SENSOR

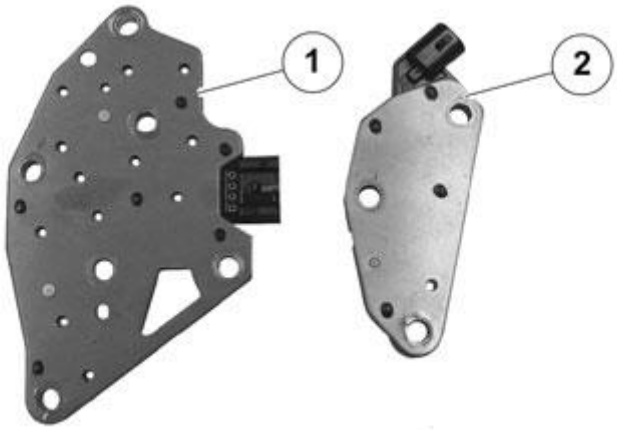

Fig. 410: Identifying Pressure Switch
Courtesy of VOLVO CARS CORPORATION

1. Pressure switch -2002
2. Pressure switch 2003-

CAUTION: The screws are of different length. It is important that the screws are installed in the right place.

CONTROL SYSTEM FOR CARS OF MODEL YEAR -2002

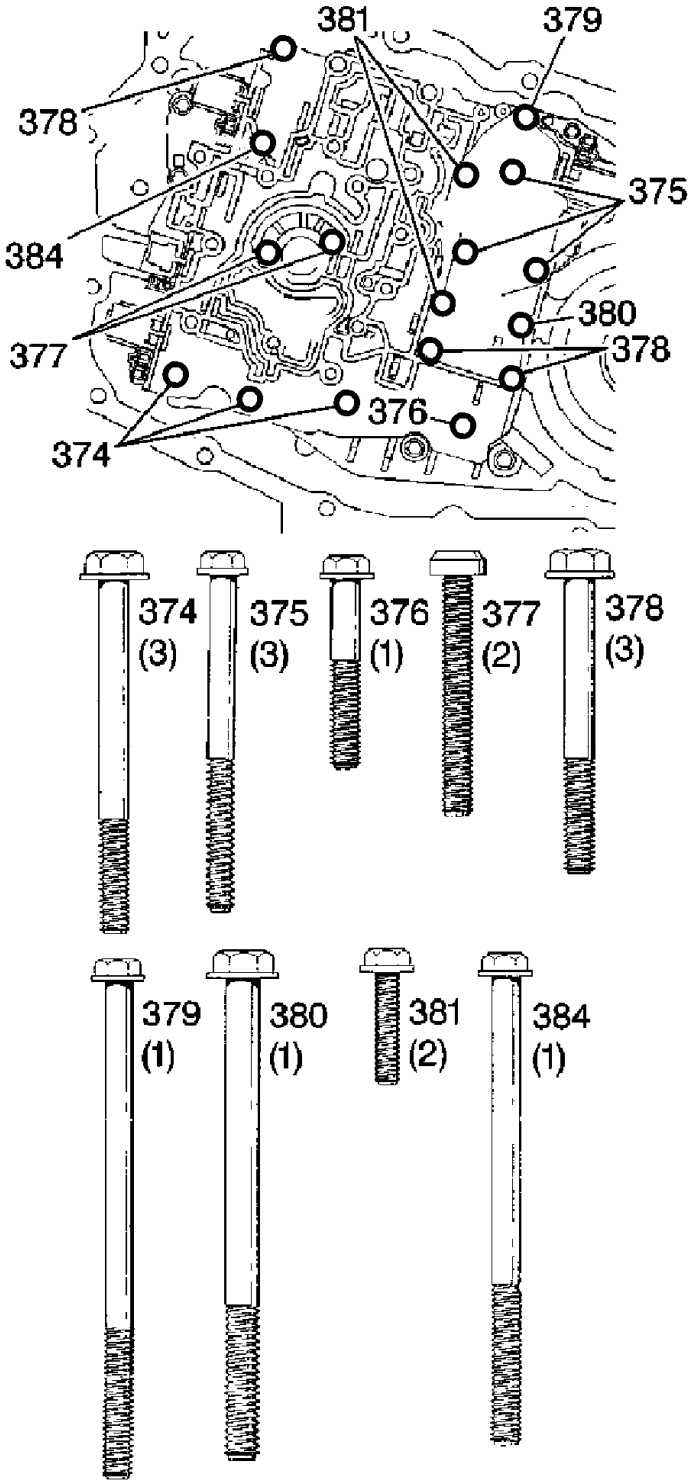

Fig. 411: Identifying Valve Housing And Pressure Sensor And Screws
Courtesy of VOLVO CARS CORPORATION

Remove the following screws:

- 3 screws numbered 374 (64 mm)
- 3 screws numbered 375 (60 mm)
- 1 screw numbered 376 (30 mm). Retain the guide sleeve on the screw or in the valve housing
- 3 screws numbered 378 (55 mm)
- 1 screws numbered 379 (15 mm)
- 1 screws numbered 380 (10 mm)
- 1 screw numbered 384 (85 mm).

Leave the screws numbered 377 (45 mm) in position for the time being.

CONTROL SYSTEM FOR CARS OF MODEL YEAR 2003-

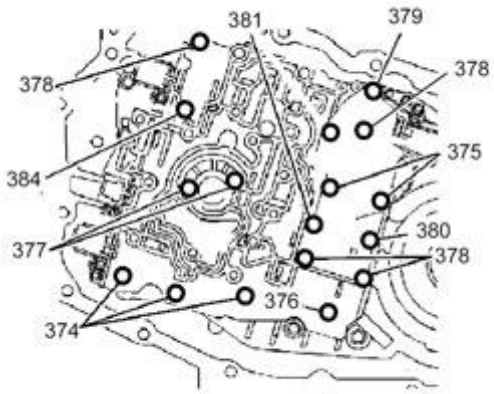

Fig. 412: Identifying Valve Housing And Pressure Sensor And Screws
Courtesy of VOLVO CARS CORPORATION

Remove the following screws:

- 3 screws numbered 374 (64 mm)
- 2 screws numbered 375 (60 mm)
- 1 pc. number 376 (30 mm). Retain the sleeves located on the screw or in the valve housing
- 4 screws numbered 378 (55 mm)
- 1 screws numbered 379 (15 mm)
- 1 screws numbered 380 (10 mm)
- 1 screw numbered 384 (85 mm).

Leave the screws numbered 377 (45 mm) in position for the time being.

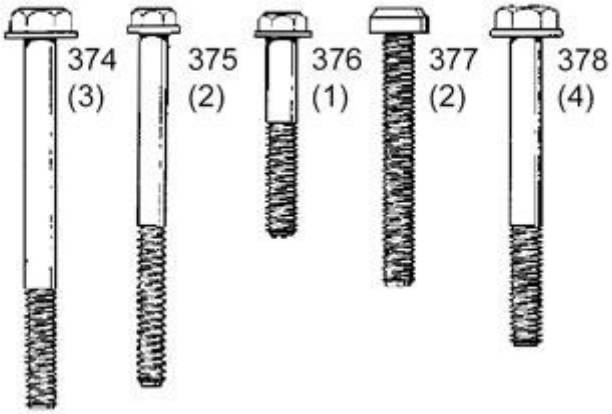

Fig. 413: Identifying Screws
Courtesy of VOLVO CARS CORPORATION

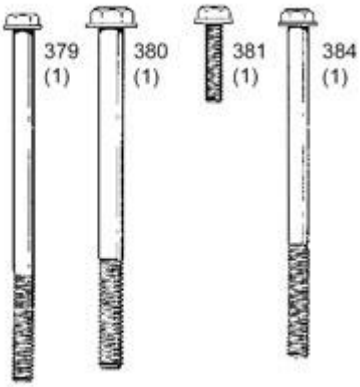

Fig. 414: Identifying Screws
Courtesy of VOLVO CARS CORPORATION

REMOVING AND SEPARATING THE VALVE HOUSING

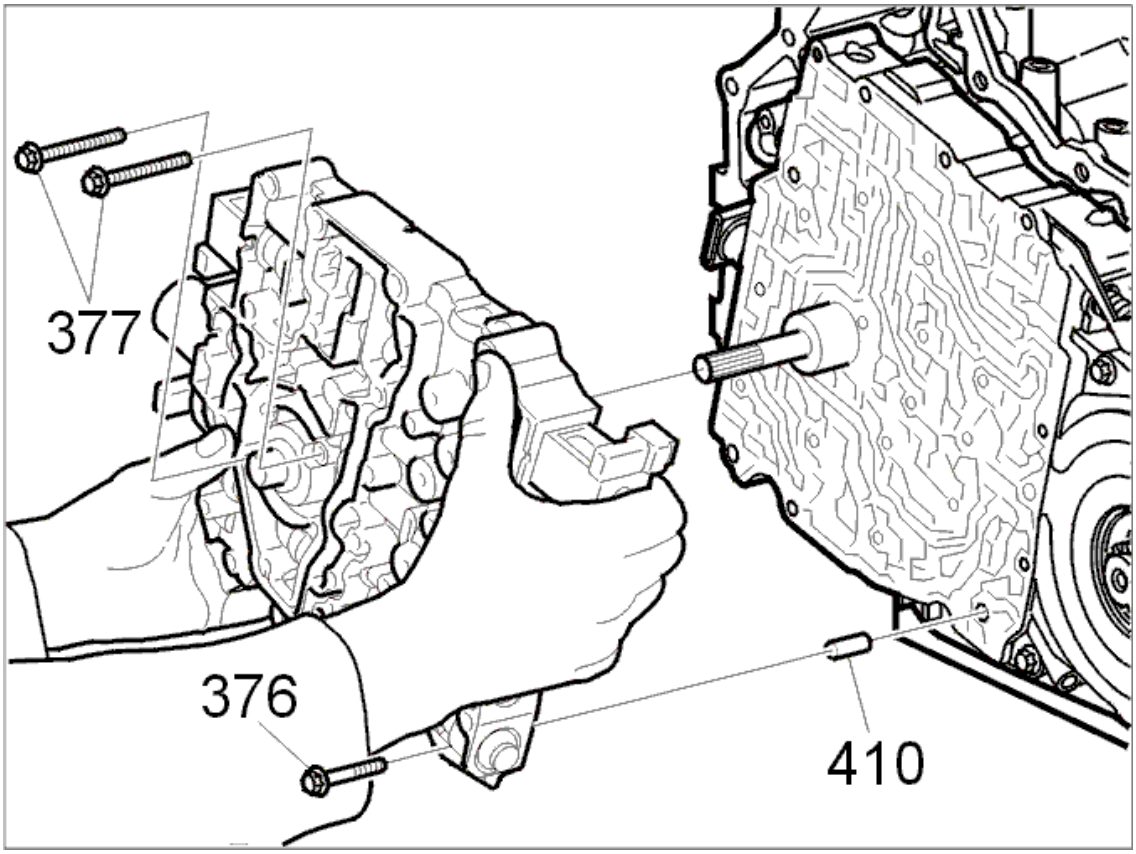

Fig. 415: Identifying Removing/Installing Valve Housing
Courtesy of VOLVO CARS CORPORATION

NOTE: Do not damage the 2 small strainers on the distribution plate. The valve housing must not be twisted during removal.

Position a clean container underneath the gearbox.

Slacken off the 2 torx screws numbered 377. Press the valve housing against the control system housing.

Grip the valve housing (diagonally). Pull it straight out a little (ensure that the gaskets and distribution plate move with it). Continue to withdraw the valve housing so that fingers can be inserted to hold the gaskets and distribution plate in position in the valve housing.

Pull the valve housing out from the control system housing until 4 balls fall out.

NOTE: The oil pump shaft follows slightly.

Place the valve housing on a bench with the gaskets upwards.

NOTE: Do not damage the 2 small strainers on the distribution plate.

Take the balls out of the container. Wipe the balls dry. Check that the balls are round and smooth. Replace any

defective balls.

CHECKING THE MARKINGS AND LOCATION OF THE GASKETS

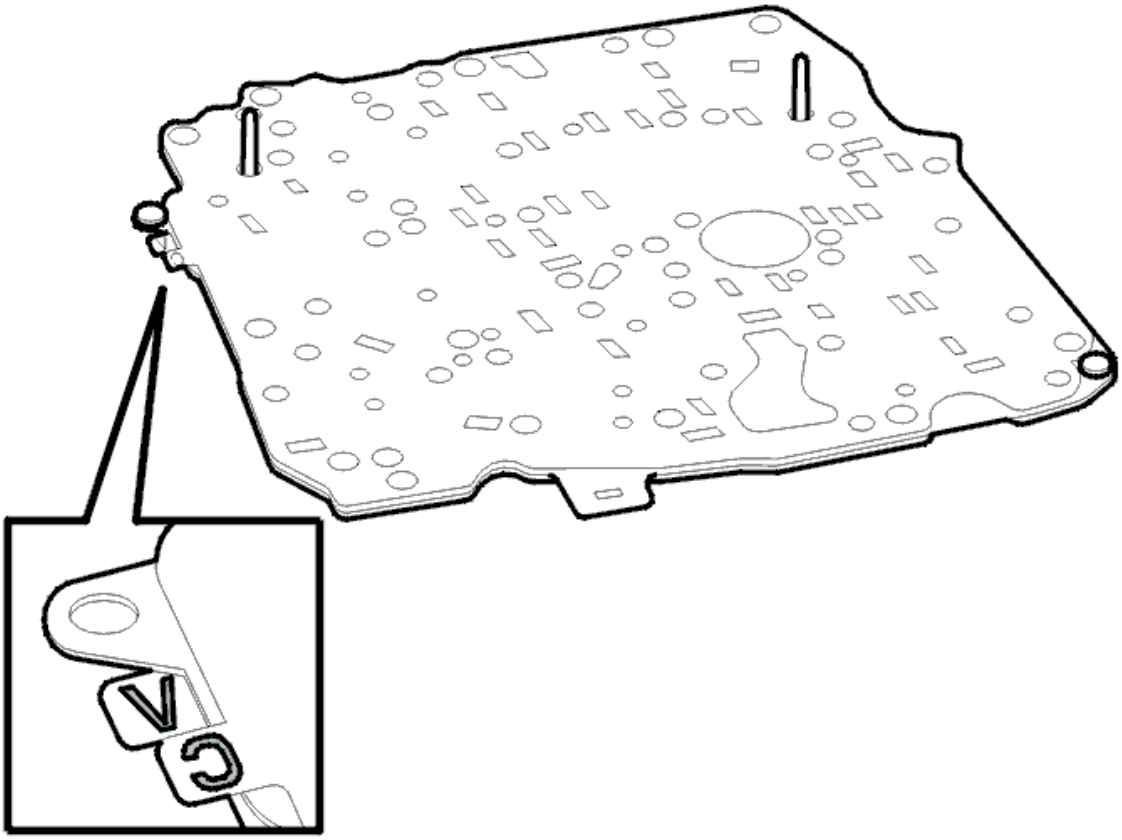

Fig. 416: Identifying Markings And Location Of Gaskets (1 Of 2)
Courtesy of VOLVO CARS CORPORATION

The gaskets are marked C and V.

Gasket C is against the control system housing.

Gasket V is against the valve housing.

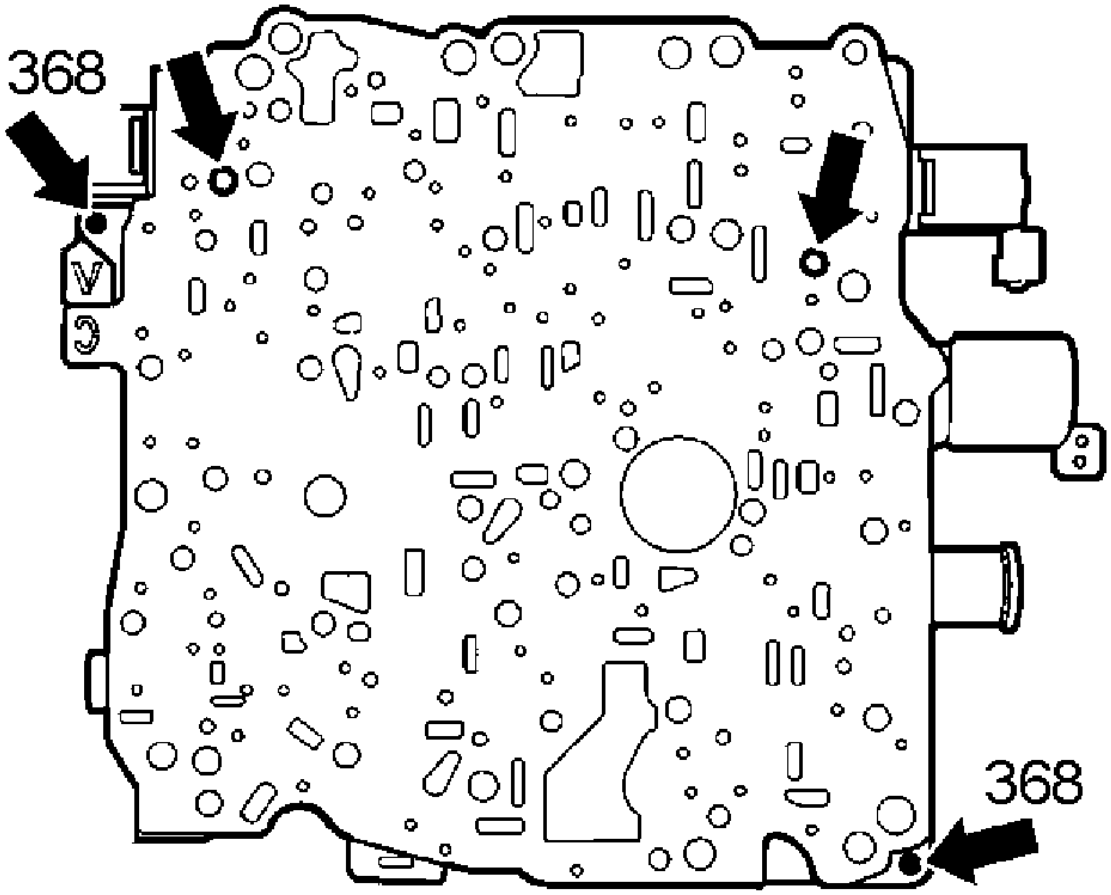

Fig. 417: Identifying Markings And Location Of Gaskets (2 Of 2)
Courtesy of VOLVO CARS CORPORATION

Distribution plate

Remove the locking pin (368) (can be reused).

Lift up the distribution plate together with gasket C.

NOTE: Do not damage the two small strainers on the distribution plate.

Lift out gasket V.

CHECKING AND REINSTALLING THE BALLS IN THE VALVE HOUSING

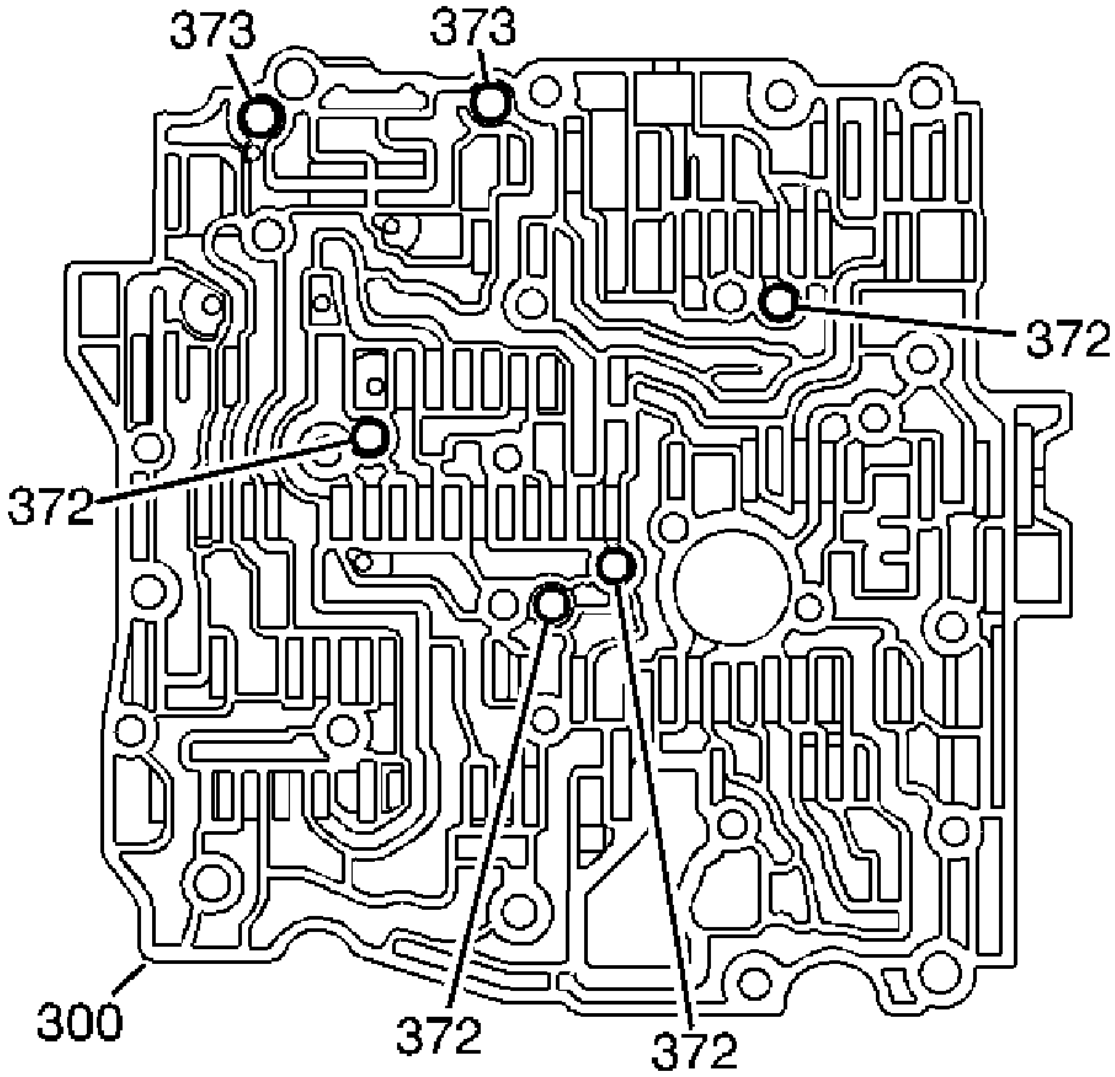

Fig. 418: Locating Balls In Valve Housing
Courtesy of VOLVO CARS CORPORATION

2 large balls (373).

4 smaller balls (372).

Inspect one ball at a time. Ensure that there is no dirt on the ball and that the surfaces are smooth and shiny.

Check the four balls in the control system housing. Follow the same procedure as above.

LOCATION OF BALLS FOR THE CONTROL SYSTEM HOUSING

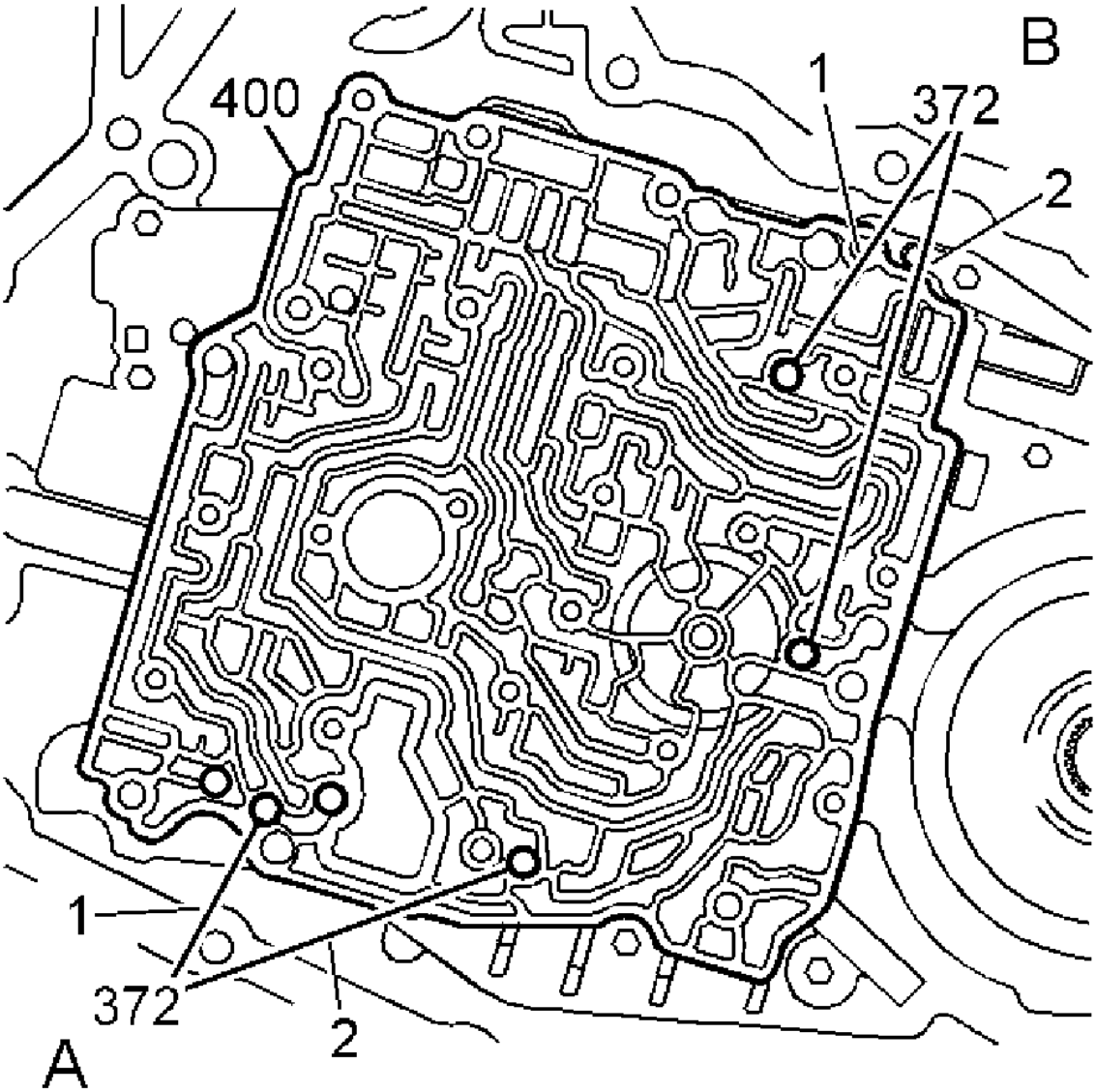

Fig. 419: Locating Control System Housing Balls
Courtesy of VOLVO CARS CORPORATION

Ball (372) A (1) is located between 2 existing balls in the housing (C1 and C2).

Ball (372) A (2) is located next to the hole.

Balls (372) B (1-2) are located in a seat with a holder to the right to prevent the ball moving to the side.

To install the balls, see **MARKING THE LOCATION OF THE CONTROL SYSTEM HOUSING BALLS IN RELATION TO THE DISTRIBUTION PLATE**.

MARKING THE LOCATION OF THE BALLS IN RELATION TO THE DISTRIBUTION PLATE

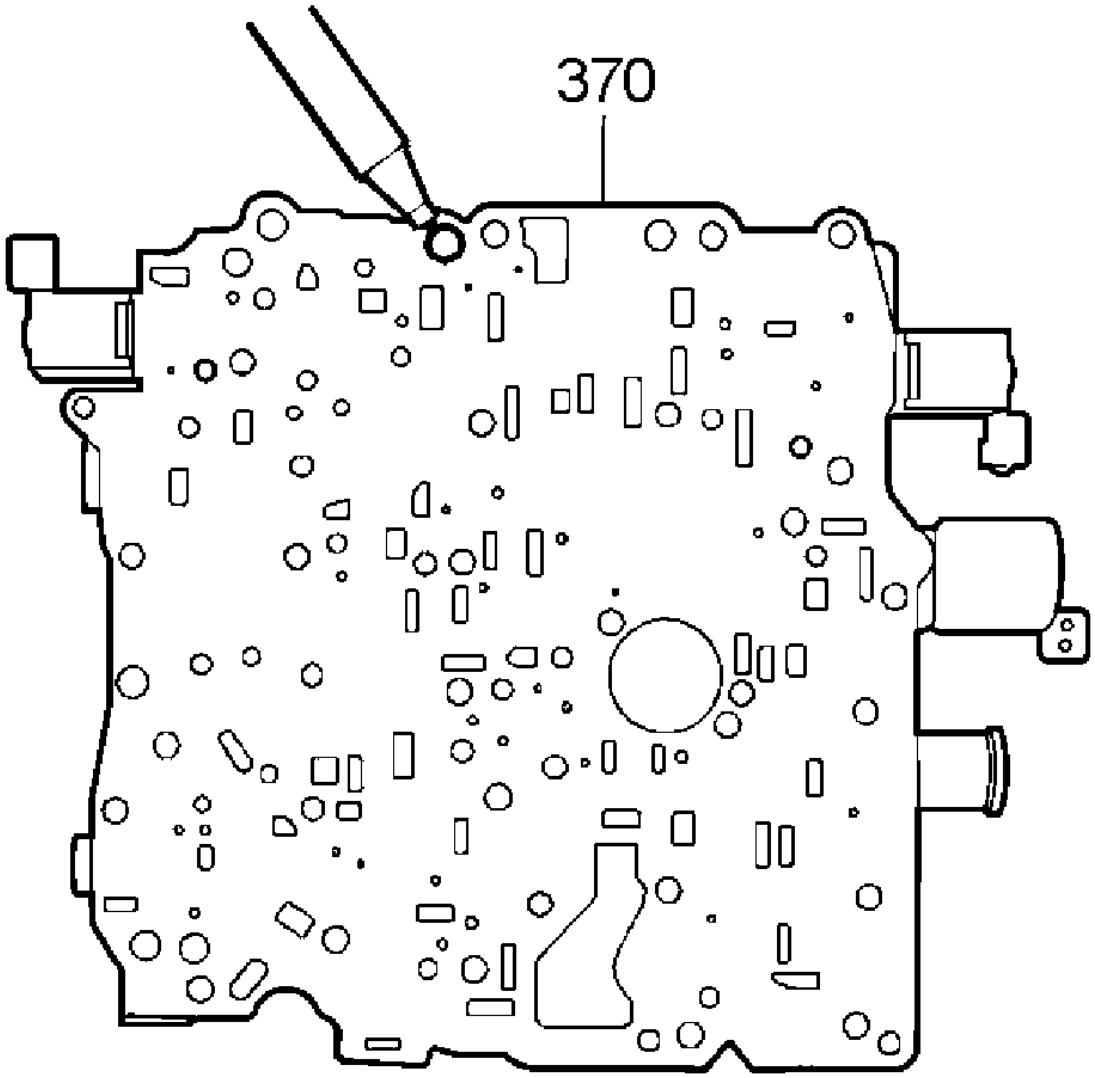

Fig. 420: Identifying Balls In Relation To Distribution Plate
Courtesy of VOLVO CARS CORPORATION

Position the distribution plate on the valve housing (strainers upwards) so that the balls can be seen. Mark the position of each ball beside the hole using a marker pen.

Turn the distribution plate and find each respective marking. Mark the hole. Check this side of the plate for leakage. See **CHECK THE SEALING OF THE BALLS AGAINST THE DISTRIBUTION PLATE**.

MARKING THE LOCATION OF THE CONTROL SYSTEM HOUSING BALLS IN RELATION TO THE DISTRIBUTION PLATE

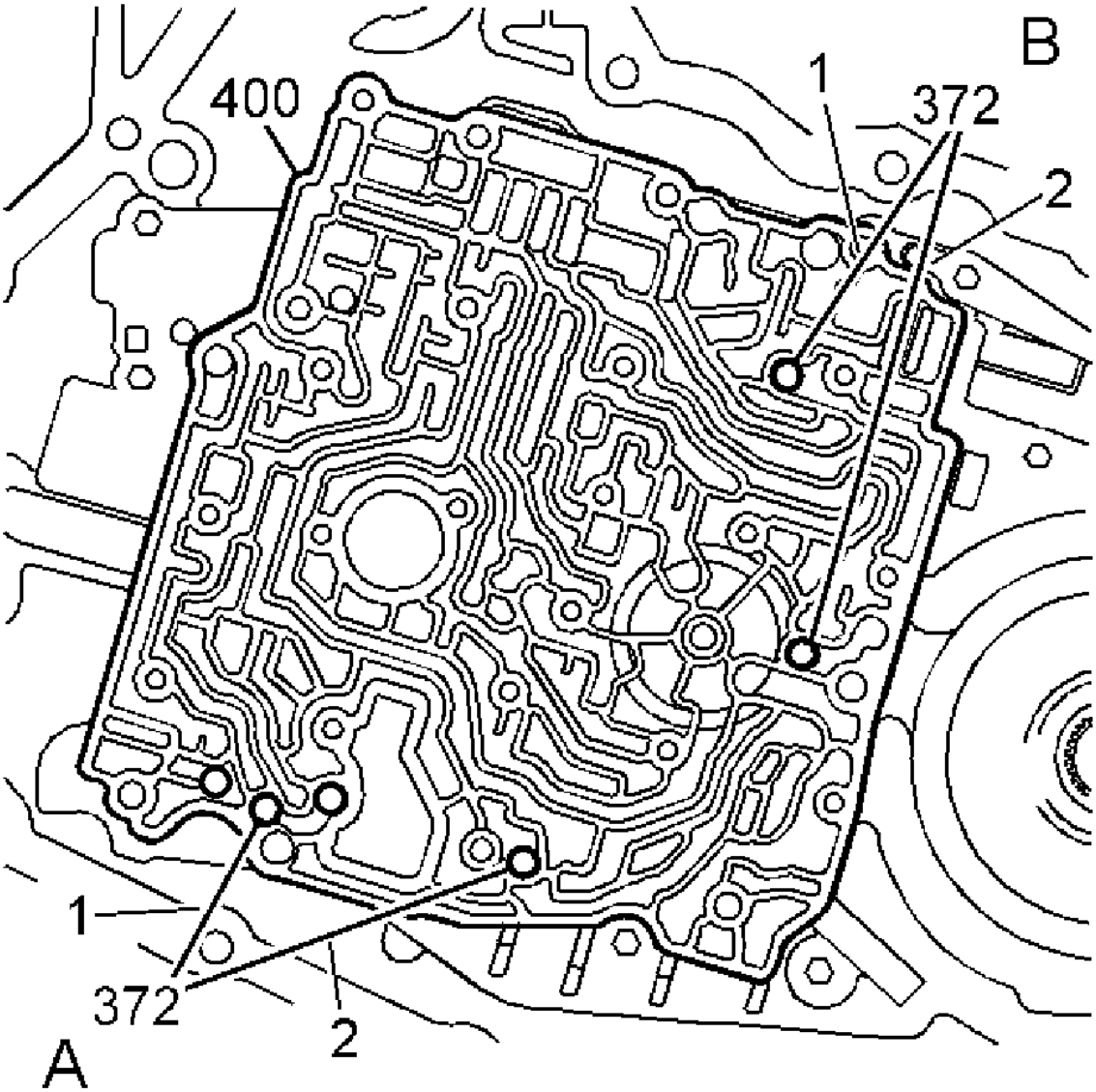

Fig. 421: Locating Control System Housing Balls
Courtesy of VOLVO CARS CORPORATION

Install the balls in the housing. Use Volvo Genuine parts petroleum jelly (P/N 116 1151-40).

Identify where the balls should be located. Press petroleum jelly into the relevant holes and position the balls (the petroleum jelly ensures that the balls stay in the housing). To mark the position of the balls in relation to the distribution plate, see **MARKING THE LOCATION OF THE BALLS IN RELATION TO THE DISTRIBUTION PLATE**.

CHECK THE SEALING OF THE BALLS AGAINST THE DISTRIBUTION PLATE

NOTE: Check that the balls are round and smooth. Replace any defective balls.

Feel the holes for the balls. Check that there is not a rough lip around the hole.

Turn each ball in turn in their hole (to remove dirt or burring).

Place the ball in the hole. Press the ball and turn the ball in the hole to see that the ball seals and that the holes in the plate are not oval.

Check the sealing of the balls against the control system housing

Carry out the same check as above for the 4 balls in the control system housing.

Remove the balls. Wipe off the petroleum jelly.

INSTALLING NEW SOLENOIDS ON THE NEW VALVE HOUSING

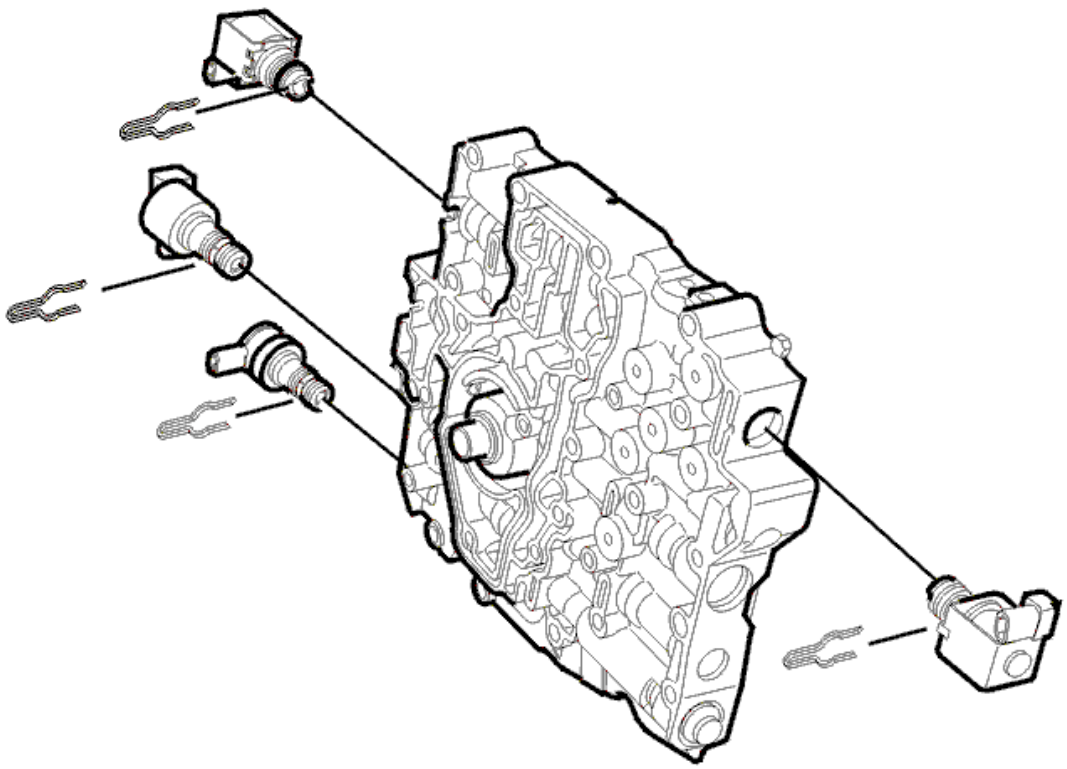

Fig. 422: Identifying Solenoids On Valve Housing
Courtesy of VOLVO CARS CORPORATION

Install the solenoids in the relevant positions on the valve housing.

NOTE: Make sure that the solenoids are secure.

COVER DIFFERENTIAL, REPLACING

NOTE: The illustrations in this service information are used for different model years

and/or models. Some variation may occur. However, the essential information in the illustrations is always correct.

PREPARATORY WORK

DRAINING THE COOLING SYSTEM

Drain the cooling system. See: **RADIATOR AND CONNECTIONS**.

REMOVING THE BEVEL GEAR/CHAIN HOUSING

Remove:

- the bevel gear/chain housing. See: **REPLACING THE PINION SEAL FOR THE BEVEL GEAR**

REMOVAL

DISCONNECTING THE PIPE FROM THE TURBOCHARGER (TC)

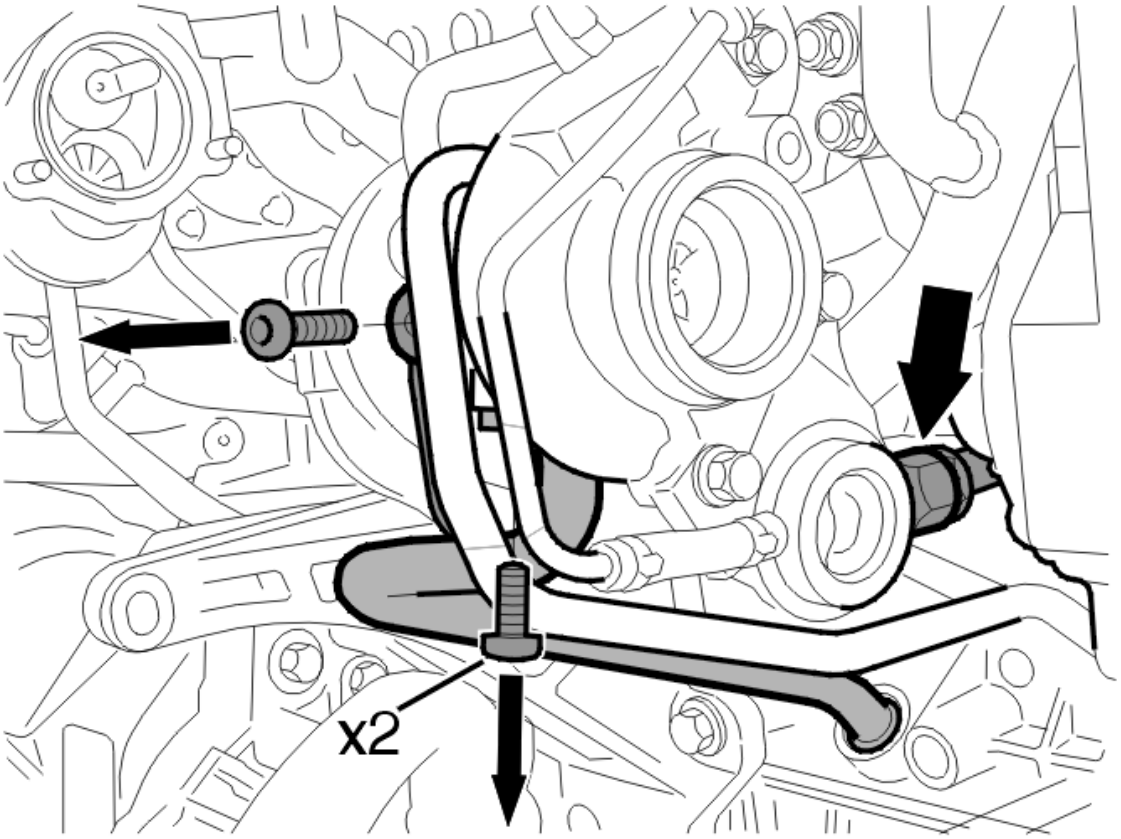

Fig. 423: Disconnecting Pipes From The Turbocharger
Courtesy of VOLVO CARS CORPORATION

Remove the lower of the 2 pipe screws for the turbocharger (TC) water cooling.

Slacken off the cap nut for the cooling pipe for the oil cooler. Remove the 2 screws for the flange on the oil return line for the turbocharger (TC). Remove the pipe and the sealing ring. Install a rubber plug as a seal in the cylinder block.

REMOVING THE BRACKET FOR THE BEVEL GEAR/CHAIN HOUSING

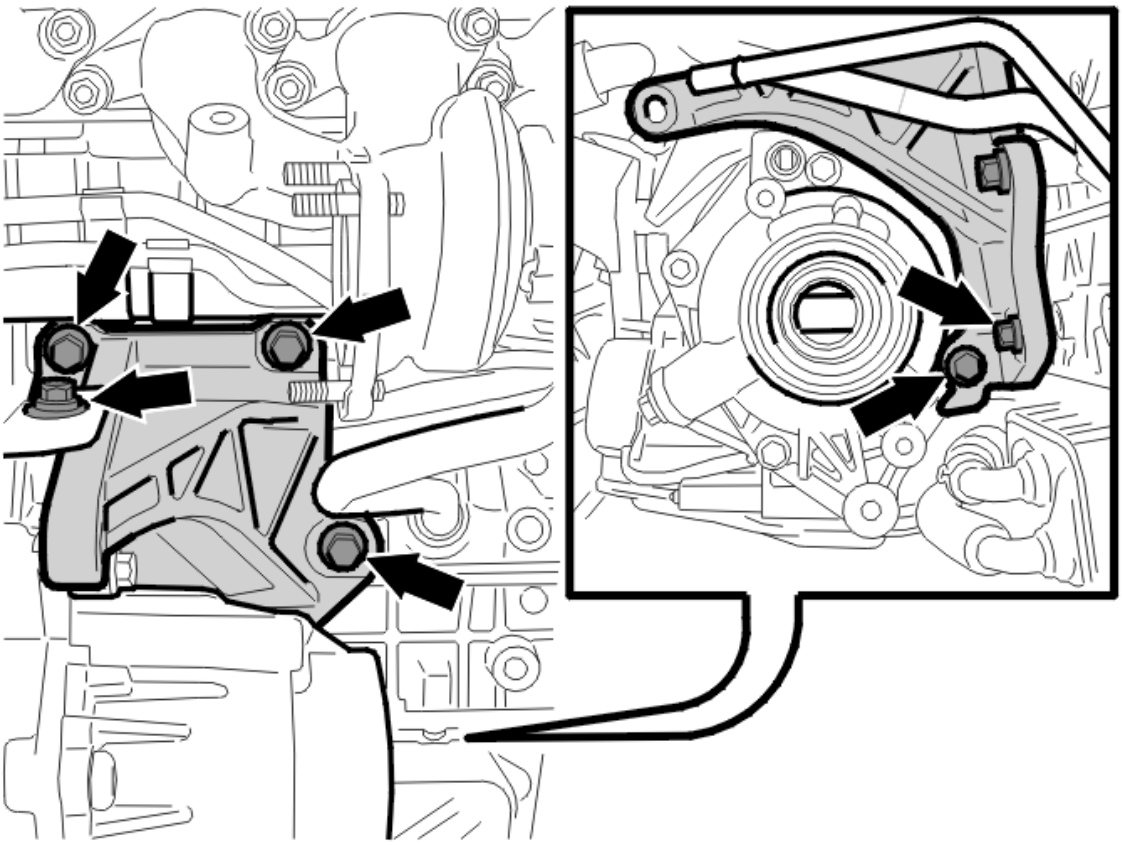

Fig. 424: Identifying Brackets
Courtesy of VOLVO CARS CORPORATION

Remove the bracket from the transmission and the engine.

REMOVING THE TRANSMISSION OUTPUT SPEED SENSOR FROM THE COVER ON THE TRANSMISSION

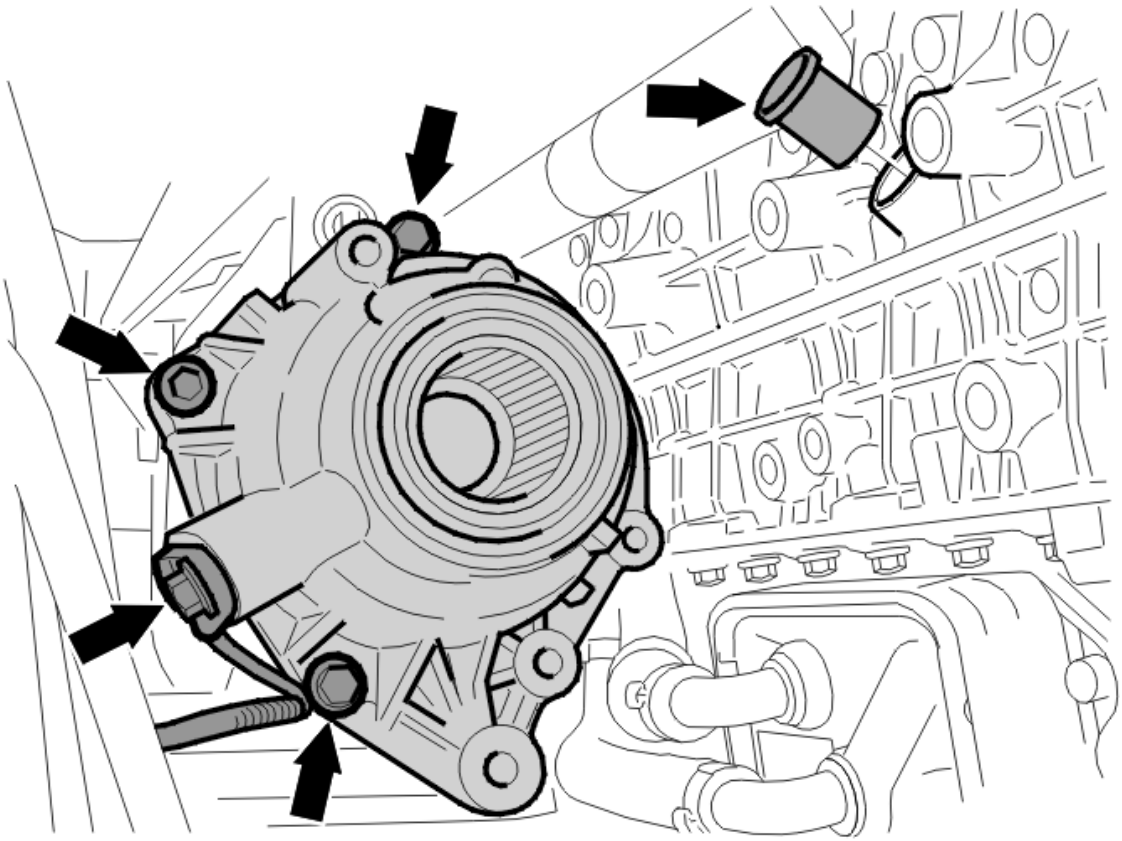

Fig. 425: Removing The Transmission Output Speed Sensor
Courtesy of VOLVO CARS CORPORATION

Place a container underneath the transmission.

Remove:

- the screw that holds the sensor and the tie strap for the cable for the sensor
- the sensor
- the screws for the cover
- the cover.

NOTE: Remove the throw-out bearing from the differential or the cover if it is still in place.

CHECKING THE BEARING SURFACE ON THE DIFFERENTIAL

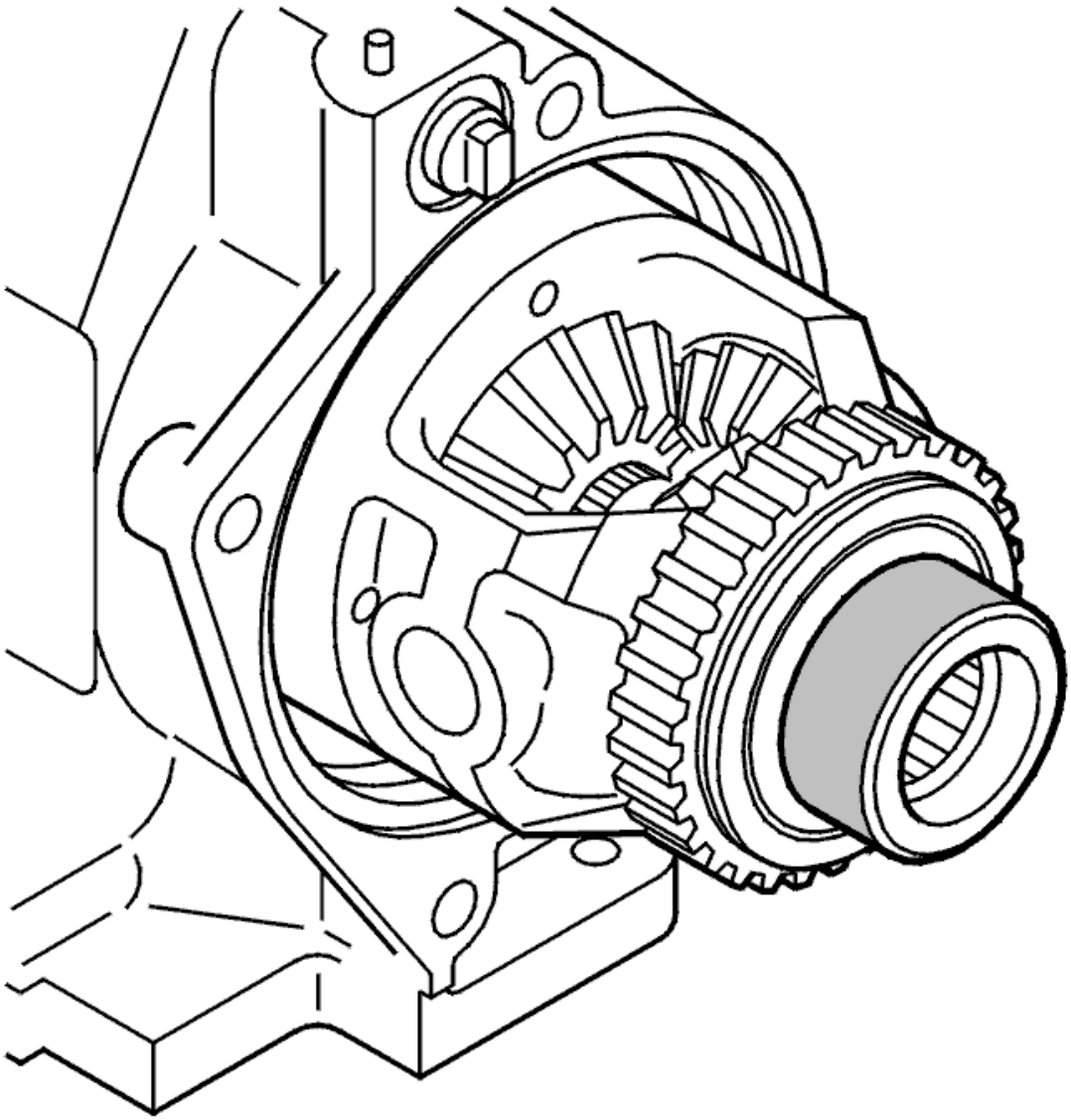

Fig. 426: Identifying Bearing Surface
Courtesy of VOLVO CARS CORPORATION

Check the bearing surface on the differential. There must not be any visible scratches or abnormal wear on the bearing surface.

INSTALLING THE SPACER WASHER AND THROW-OUT BEARING

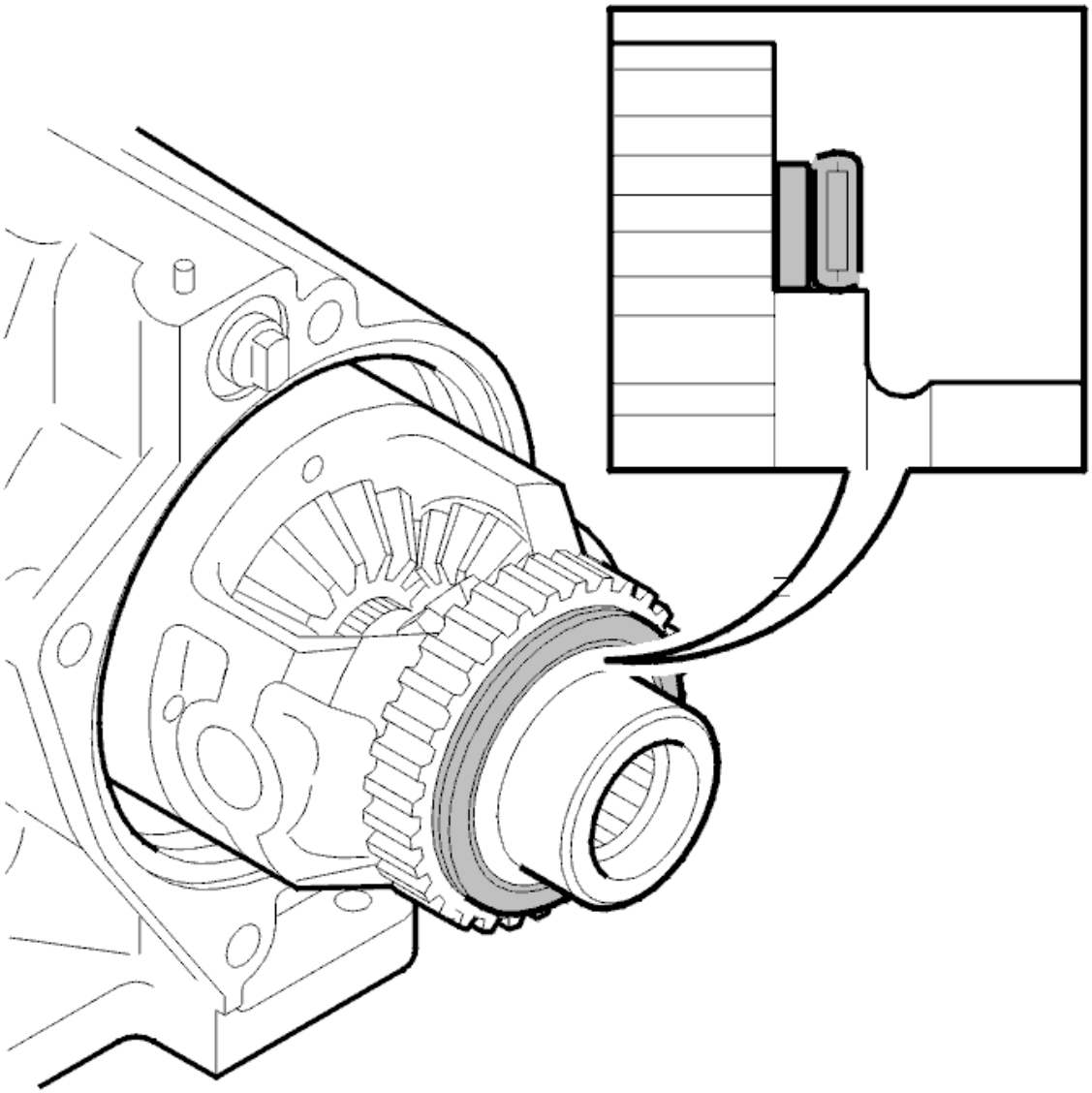

Fig. 427: Identifying Throw-Out (Thrust) Bearing
Courtesy of VOLVO CARS CORPORATION

Install the spacer washer and the throw-out bearing on the differential. Apply a little petroleum jelly on the throw-out bearing so that it secures against the spacer washer.

Install:

- the spacer washer against the pulse wheel
- the throw-out bearing, see the illustration.

INSTALLING THE DIFFERENTIAL HOUSING COVER

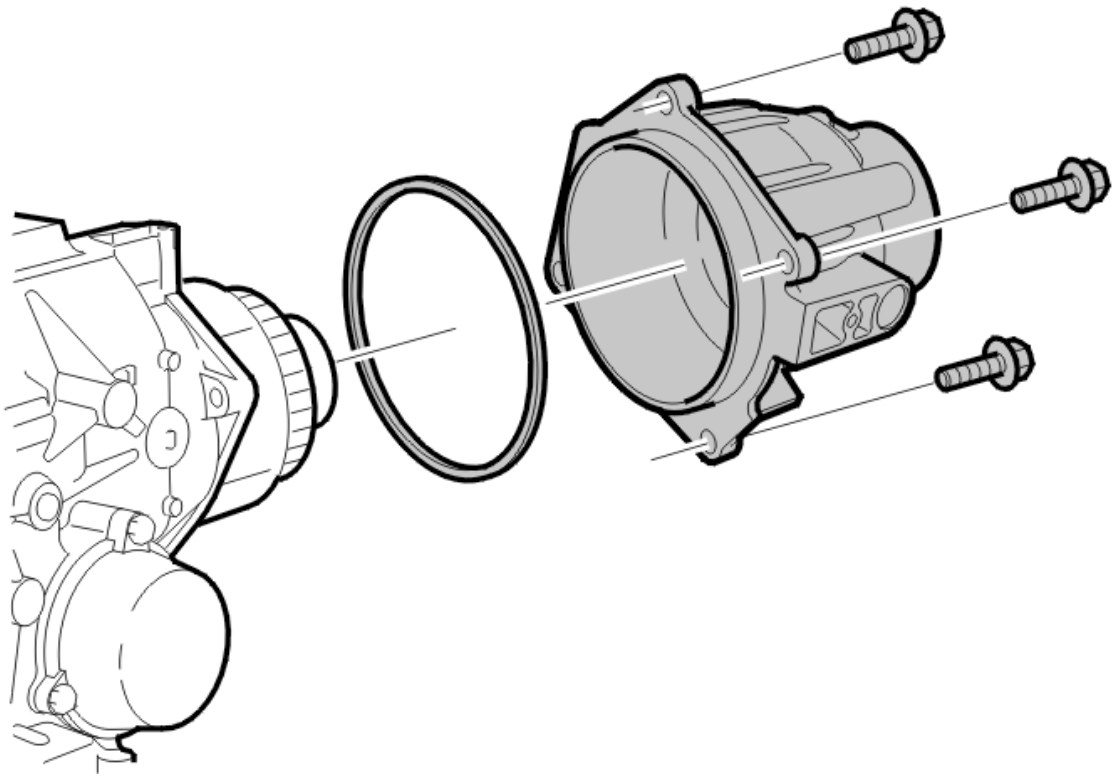

Fig. 428: Installing The Differential Housing Cover
Courtesy of VOLVO CARS CORPORATION

Reinstall the cover on the transmission.

Check that all mating surfaces are clean. Use a new sealing ring. Install the cover using 3 M10 screws. Tighten alternately to light contact. Tighten.

NOTE: There must be axial clearance of 0.12 mm - 0.67nbsp;mm between the differential and the differential housing cover.

INSTALLING THE TRANSMISSION OUTPUT SPEED SENSOR

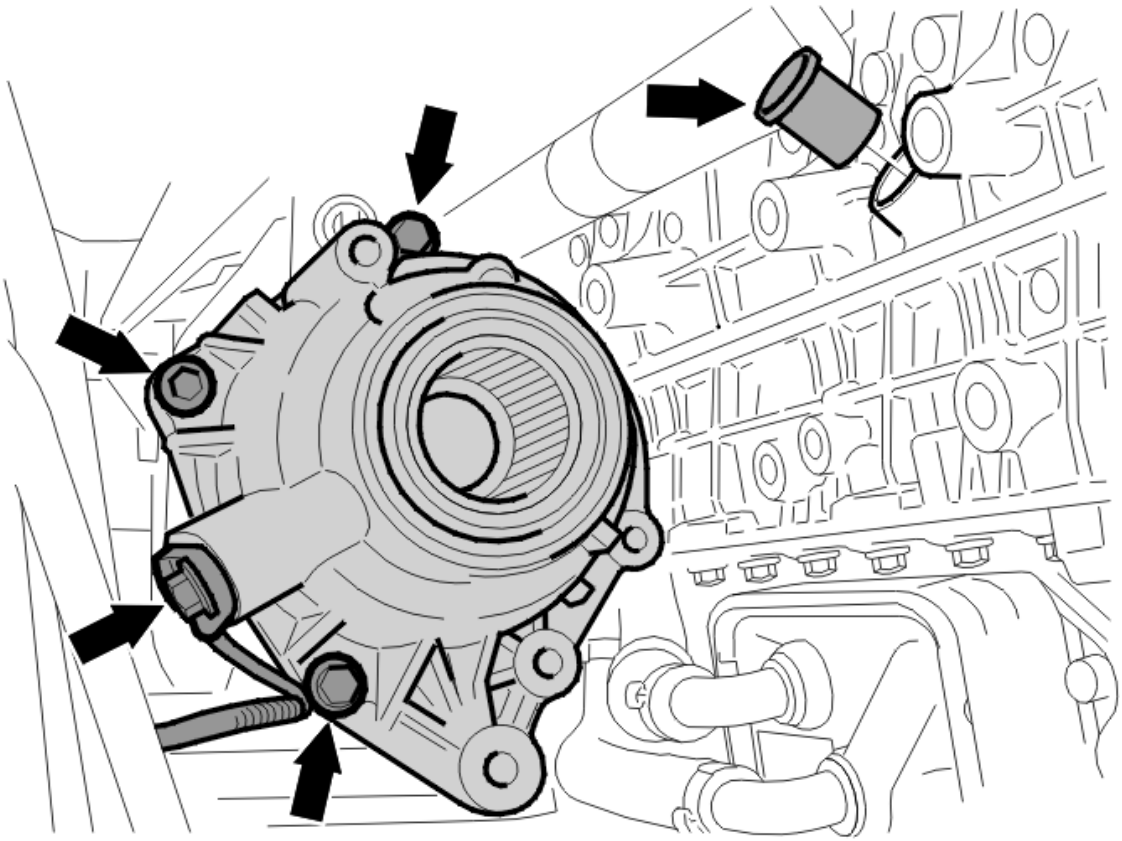

Fig. 429: Removing The Transmission Output Speed Sensor
Courtesy of VOLVO CARS CORPORATION

Check that the O-ring for the sensor is intact. Tighten the M6 screw. Clamp the cable for the sensor to the transmission housing using a tie strap.

INSTALLING THE BRACKET FOR THE BEVEL GEAR/CHAIN HOUSING

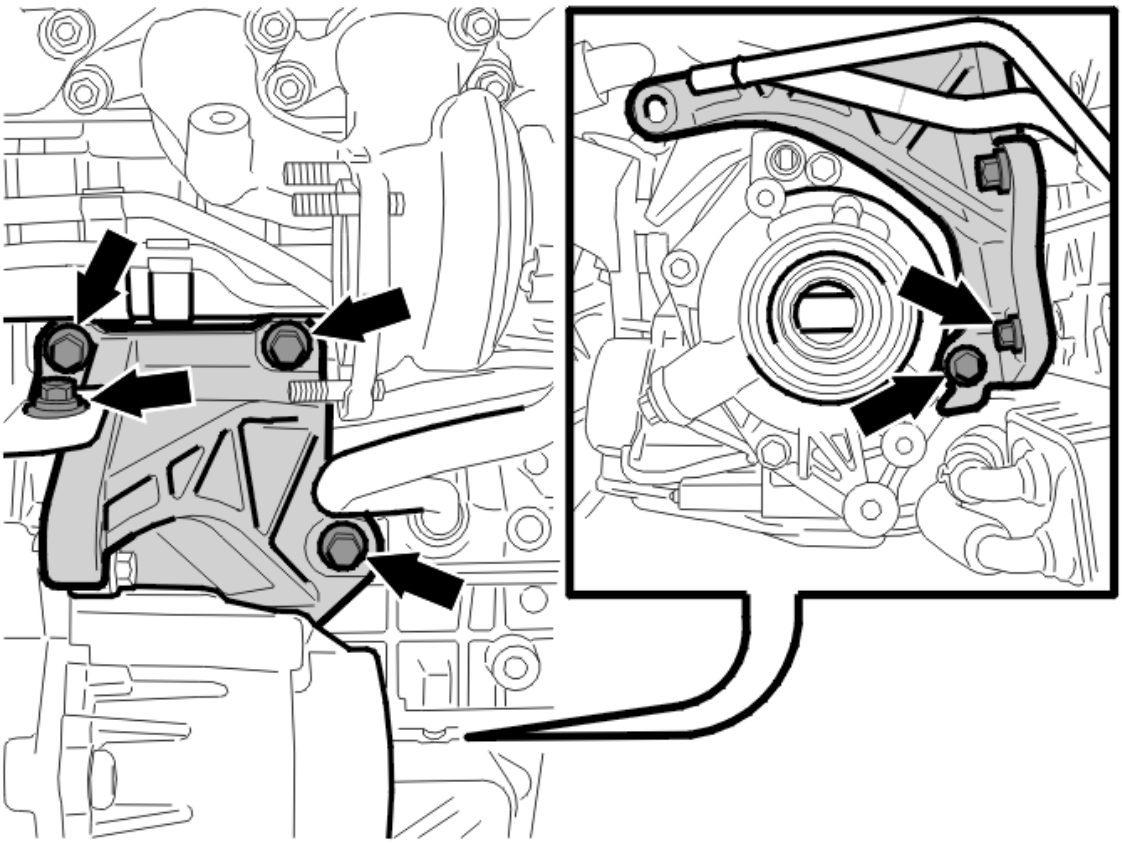

Fig. 430: Identifying Brackets
Courtesy of VOLVO CARS CORPORATION

Install the bracket on the cylinder block using 2 M10 screws and the M8 screw. Tighten the screw so that the bracket can just be moved.

Install the M10 screw for the bracket and transmission. Tighten. Tighten the screws for the bracket. Install the screw for the heat deflector plate

INSTALLING THE PIPE ON THE TURBOCHARGER (TC)

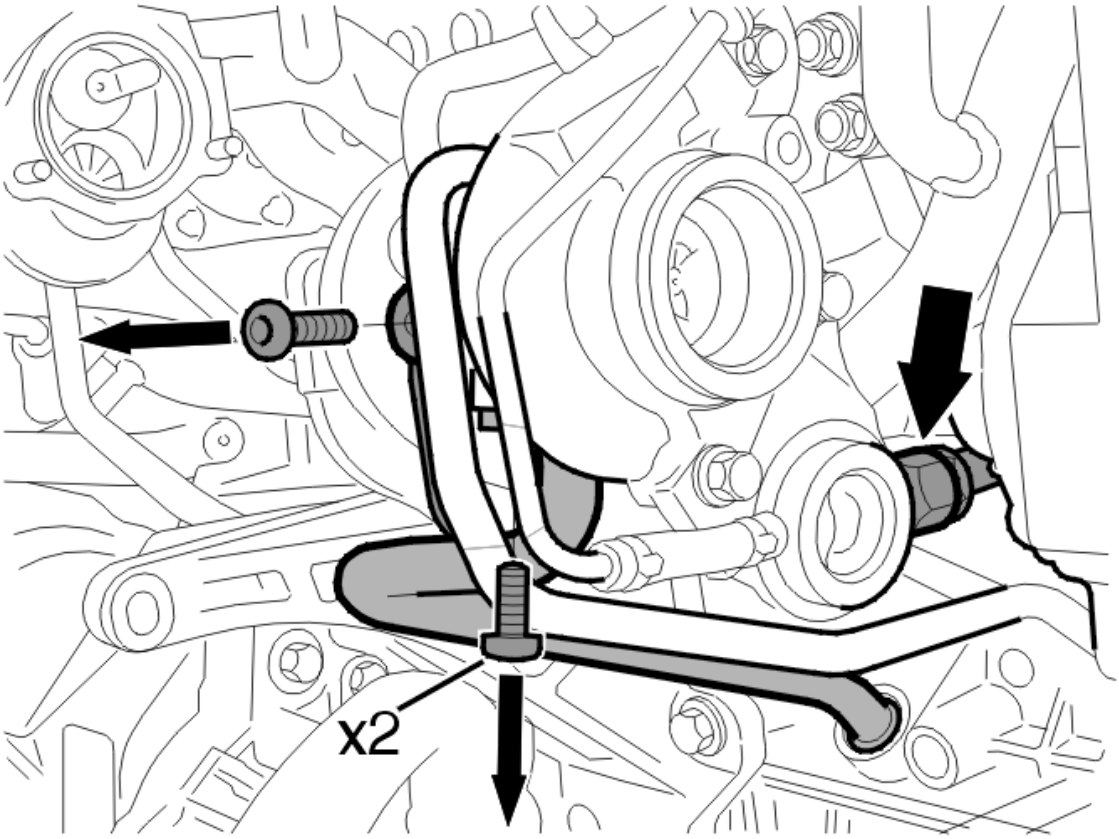

Fig. 431: Disconnecting Pipes From The Turbocharger
Courtesy of VOLVO CARS CORPORATION

Install a new O-ring on the oil return line and press it into the cylinder block. Install a new gasket for the pipe flange and the 2 M6 screws. Tighten.

Tighten the cap nut for the cooling pipe for the oil cooler.

Install the pipe screw and seal washers for the turbocharger (TC) water cooling. Tighten. See **SUMMARY OF TIGHTENING TORQUES FOR SPECIFIC COMPONENTS** .

FINISHING

INSTALLING THE BEVEL GEAR / CHAIN HOUSING

Install:

- the bevel gear/chain housing. See: **REPLACING THE PINION SEAL FOR THE BEVEL GEAR**

FILLING THE COOLING SYSTEM

Fill the cooling system. See: **RADIATOR AND CONNECTIONS**.

BEVEL GEAR/CHAIN HOUSING, REPLACING

Special tools:

9995462

9997057

9997063

NOTE: **As the illustrations in this service information are used for different model years and / or models, some variation may occur. However, the essential information is always correct.**

REMOVAL

PREPARATIONS

Fig. 432: Identifying Dip Stick Pipe & Oil Suction Device
Courtesy of VOLVO CARS CORPORATION

Drain the transmission fluid.

Use an oil suction device to drain approximately 4 liters of transmission fluid.

Remove the sub-frame. See: **SUB-FRAME FRONT, REPLACING** .

REMOVING THE RIGHT DRIVE SHAFT

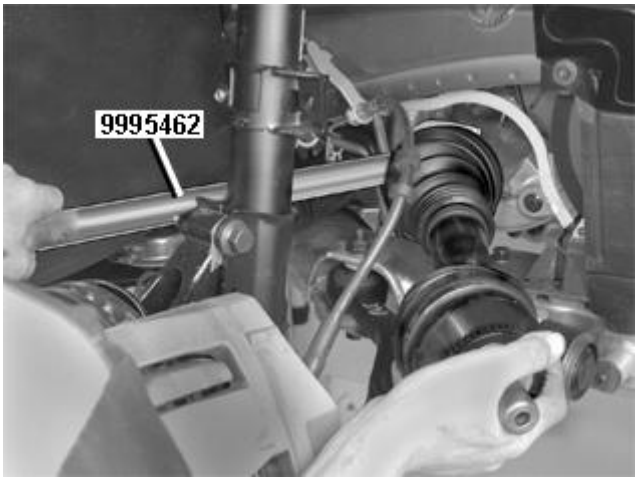

Fig. 433: Detach The Drive Shaft With Jimmy Bar
Courtesy of VOLVO CARS CORPORATION

Angle the wheel hub out. Remove the drive shaft from the hub. Use a tensioner band to pull the wheel spindle and wheel hub backwards.

Remove the drive shaft from the transmission. Use pry bar **9995462** B (modified according to the tool bulletin).

Install seal plug **9997063** .

REMOVING THE PROPELLER SHAFT

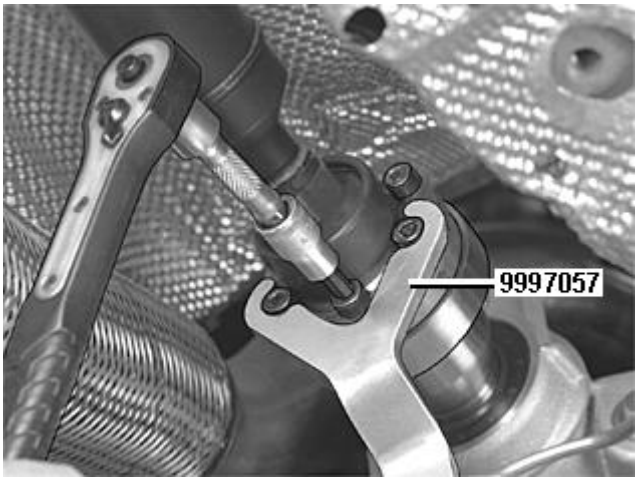

Fig. 434: Identifying Removal Of Propeller Shaft Using Counterhold
Courtesy of VOLVO CARS CORPORATION

HINT: Move the gear selector to position N.

Mark the propeller shaft CV joint in relation to the bevel gear flange.

Remove:

- the 2 screws for the center bearing mounting
- the propeller shaft screws. Use counterhold **9997057** . Press the propeller shaft joints together and move the propeller shaft to one side and tie it up.

DISCONNECTING THE STEERING GEAR FROM THE ENGINE PAD

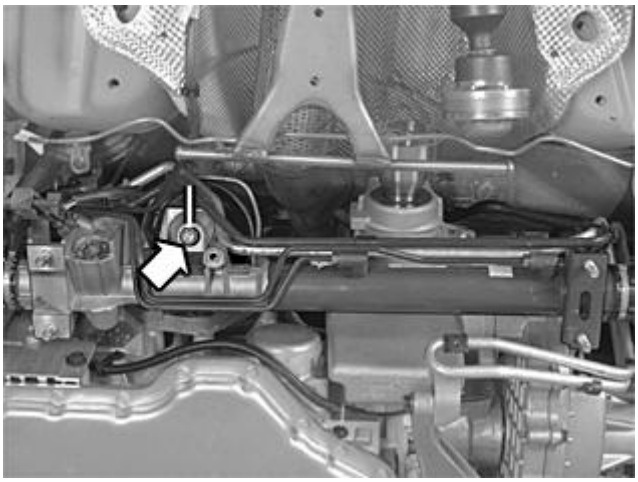

Fig. 435: Identifying Mark For Steering Gear Position
Courtesy of VOLVO CARS CORPORATION

Mark up the position of the steering gear in relation to the engine pad.

Remove the screw for the steering gear and engine pad.

REMOVING THE SCREW ON THE LOWER STEERING SHAFT

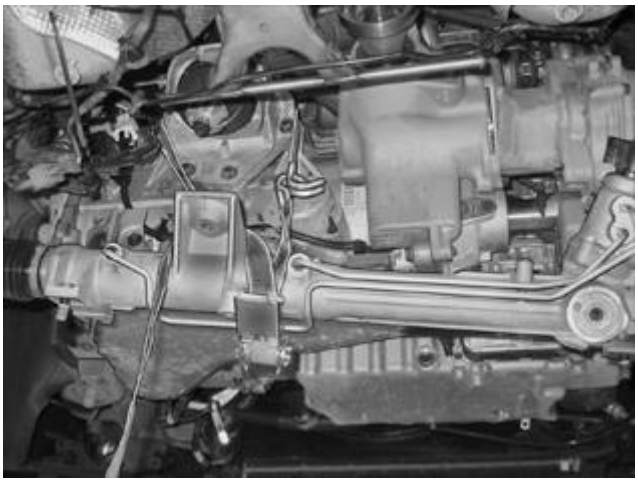

Fig. 436: Hanging The Steering Gear
Courtesy of VOLVO CARS CORPORATION

Set the steering wheel to the "straight ahead" position.

HINT: Turn the steering wheel a 1/2 turn to the right. Remove the key so that the steering wheel lock engages.

Remove the screw on the lower steering shaft. Hang the steering gear as low as the steering arms permit. Use a restraining strap.

REMOVING THE CHAIN HOUSING BRACKET

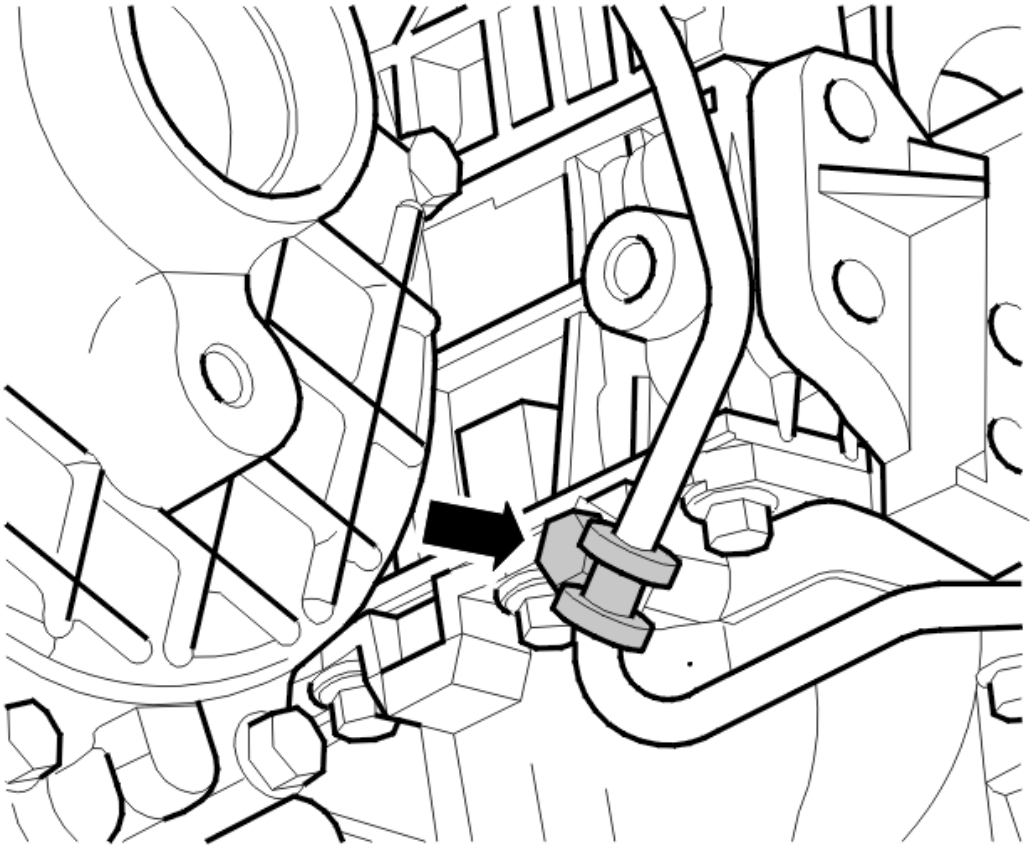

Fig. 437: Identifying Clamp For The Fuel Line
Courtesy of VOLVO CARS CORPORATION

Remove:

- the screw in the clamp for the fuel line.

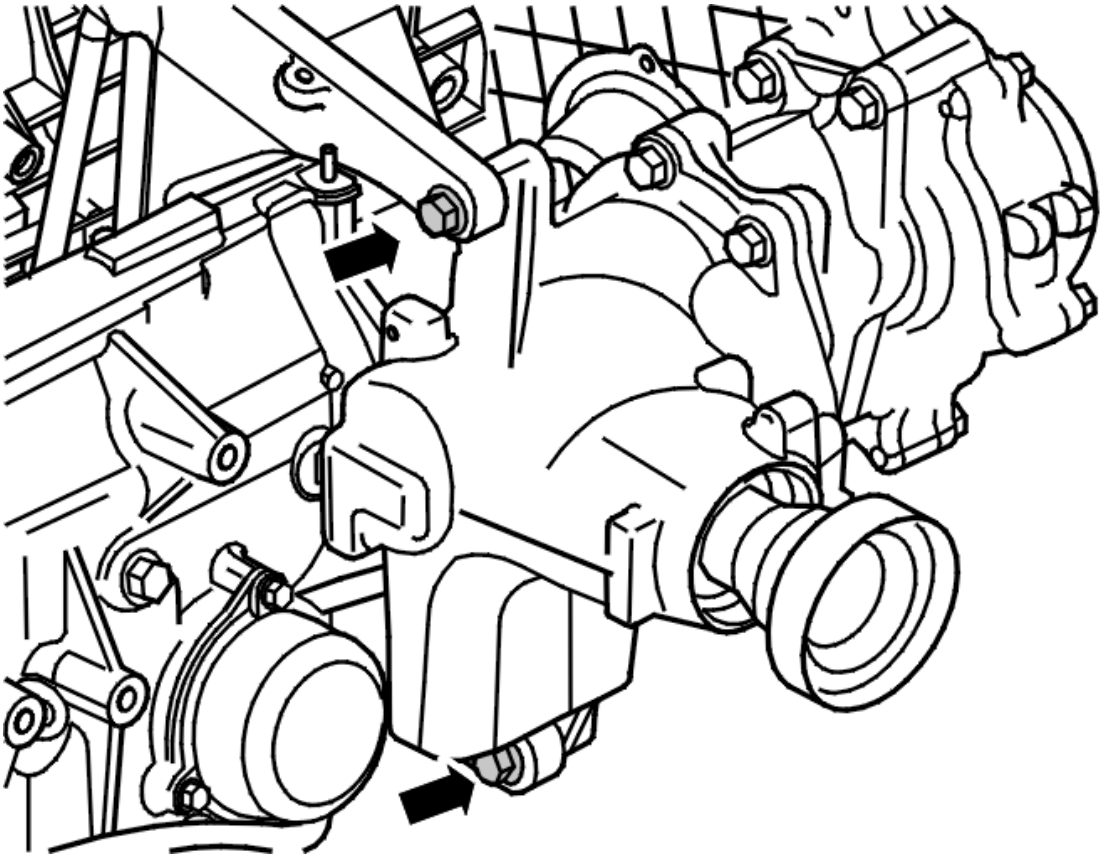

Fig. 438: Installing The Bevel Gear / Chain Housing
Courtesy of VOLVO CARS CORPORATION

- the screw for the bevel gear/engine. The screw is positioned on top of the bevel gear. The screw can be accessed from the center

NOTE: 2 people are required to carry out the following procedure as the bevel gear/chain housing unit is relatively heavy.

- the bevel gear/chain housing by first pulling it straight out from the transmission.

NOTE: Do not damage the seal ring in the transmission end.

Then turn the unit so that it can be removed to the side and downwards.

CHECKING THE SEALING RING

Fig. 439: Identifying The Sealing Ring
Courtesy of VOLVO CARS CORPORATION

Check that the sealing ring in the transmission end is undamaged.

Replace the sealing ring with a new one if it is damaged. See: **SEAL DRIVE SHAFT RIGHT, REPLACING** .

SEPARATING THE BEVEL GEAR/CHAIN HOUSING

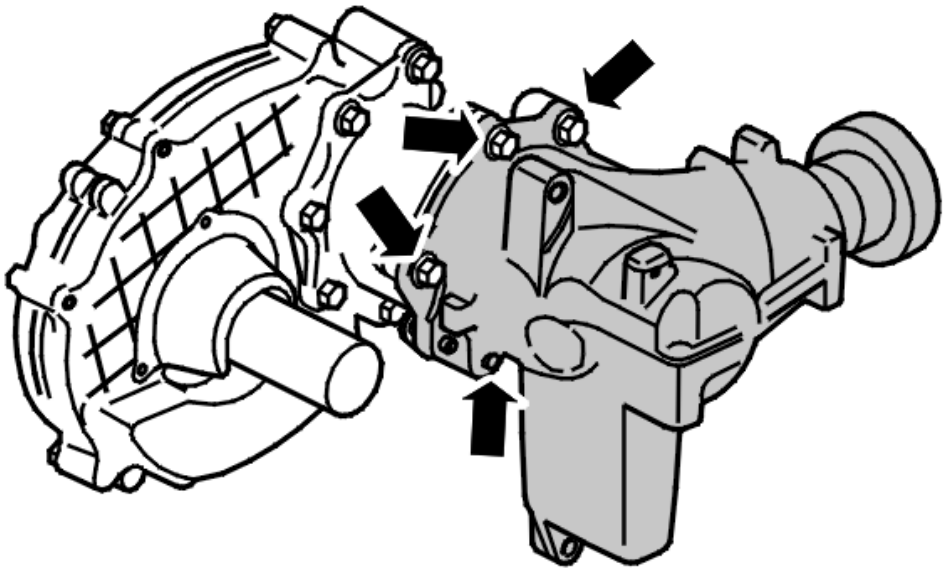

Fig. 440: Identifying Attaching Bolts
Courtesy of VOLVO CARS CORPORATION

Remove the 4 screws. Pull the chain housing straight out from the bevel gear/intermediate section.

NOTE: Do not place the chain housing with the opening for the bevel gear facing down, oil will drain out.

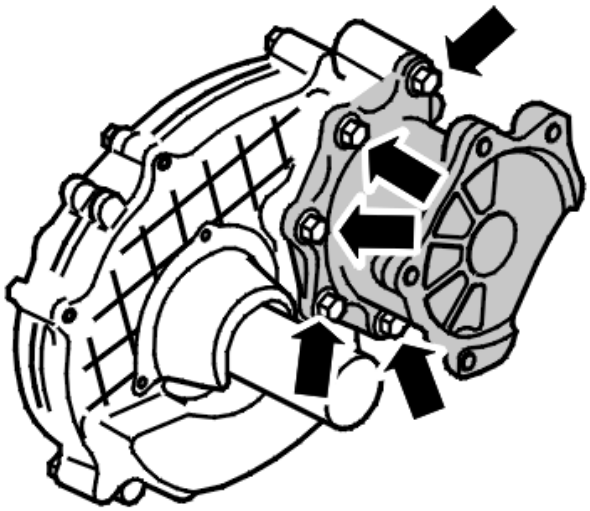

Fig. 441: Identifying Intermediate Section
Courtesy of VOLVO CARS CORPORATION

If necessary, detach and transfer the intermediate section to the new components.

CHECKING THE CHAIN HOUSING

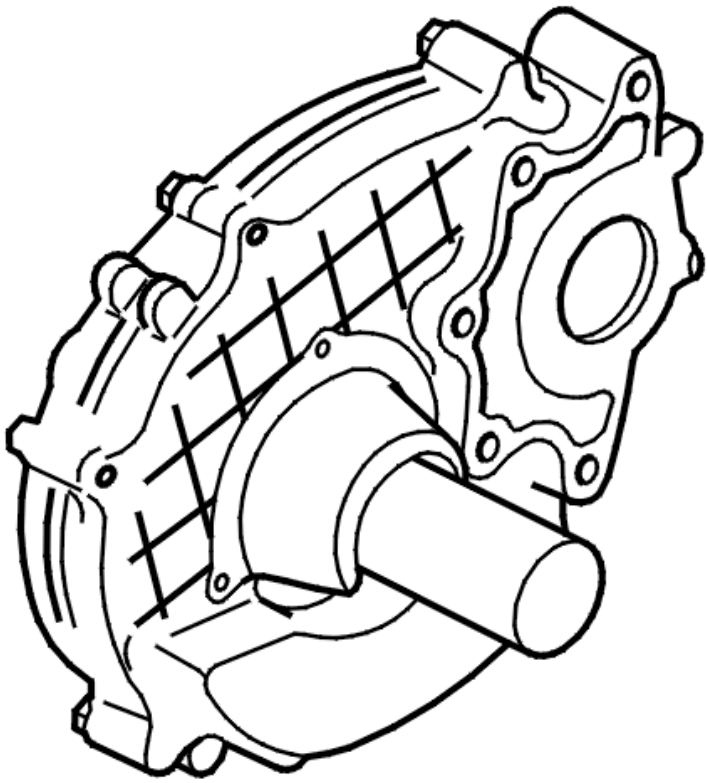

Fig. 442: Checking The Chain Housing
Courtesy of VOLVO CARS CORPORATION

Check that the sealing rings and mating surfaces are not damaged. Check for leakage. Replace the chain housing in the event of leakage.

HINT: A new chain housing is not filled with oil.

CHECKING THE BEVEL GEAR

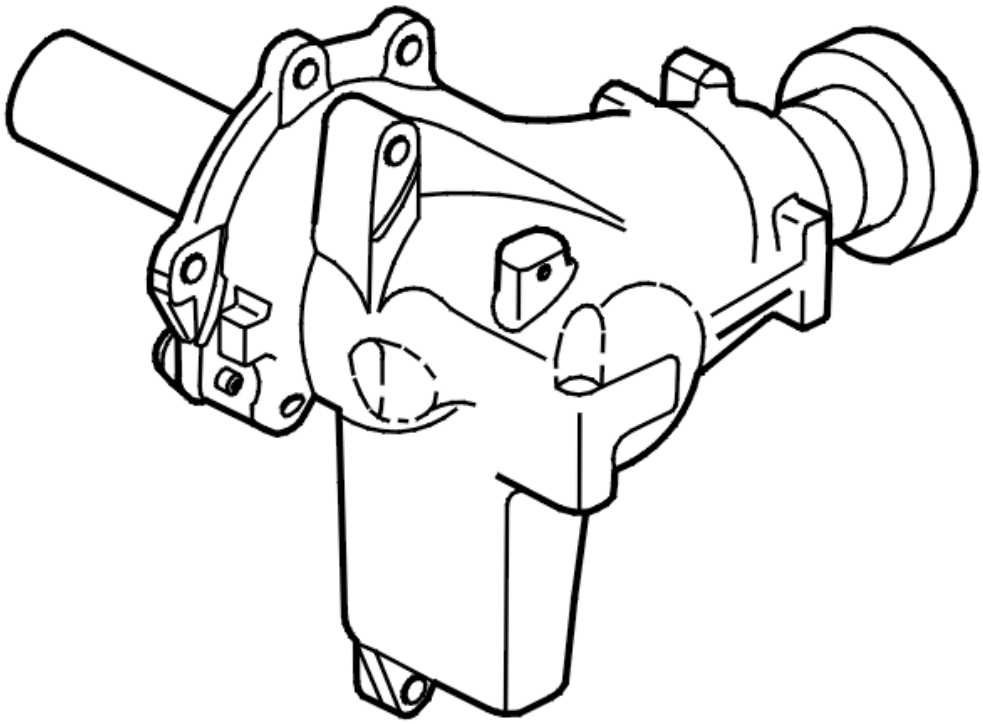

Fig. 443: Checking The Bevel Gear
Courtesy of VOLVO CARS CORPORATION

Check that the sealing rings and mating surfaces are not damaged. Check for leakage. Replace the bevel gear in the event of leakage or damage.

HINT: A new bevel gear is filled with oil, however, always check the oil level before test driving.

INSTALLATION

NOTE: For tightening torques, see: TIGHTENING TORQUE .

ASSEMBLING THE BEVEL GEAR/CHAIN HOUSING

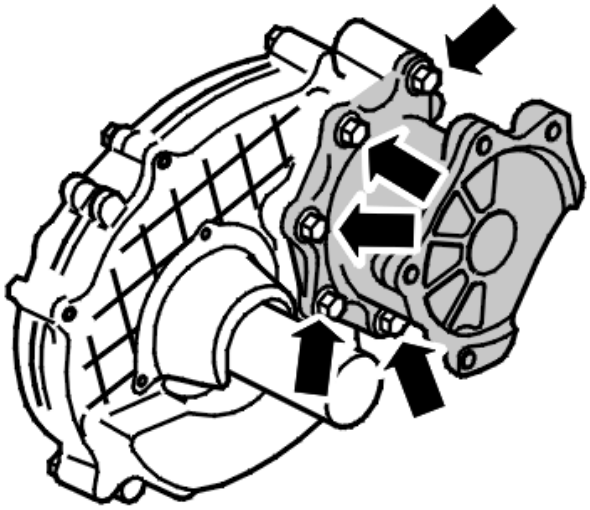

Fig. 444: Identifying Intermediate Section
Courtesy of VOLVO CARS CORPORATION

Lubricate the seal when replacing the chain housing. Use transmission fluid, P/N 116 1745-3 (1 liter).

Do not damage the sealing ring when installing the chain housing on the bevel gear.

If the intermediate section has been removed, first install the intermediate section on the chain gear housing. Use 4 x M10 screws. Tighten crosswise to light contact. Tighten.

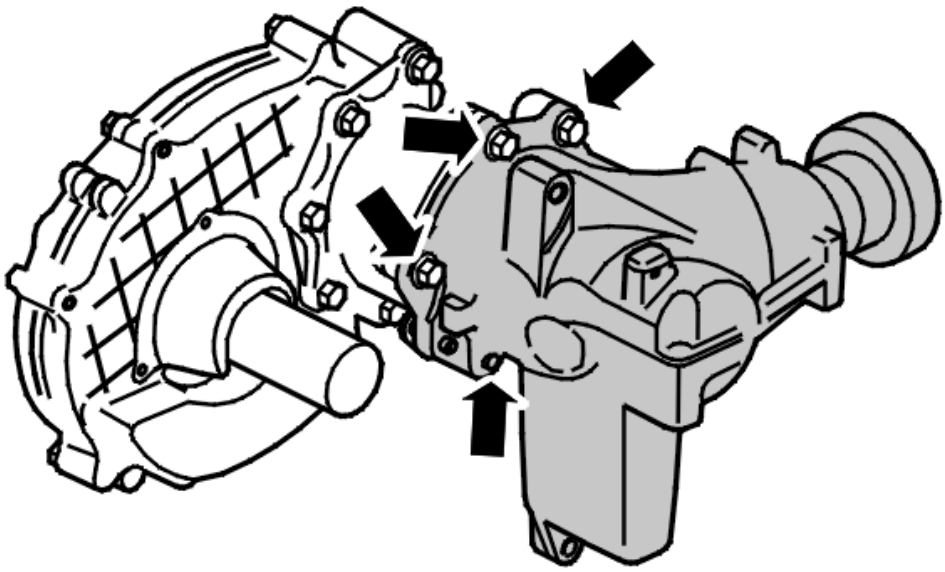

Fig. 445: Identifying Attaching Bolts
Courtesy of VOLVO CARS CORPORATION

Install the 4 x M10 screws. Tighten crosswise to light contact. Tighten.

INSTALLING THE BEVEL GEAR / CHAIN HOUSING

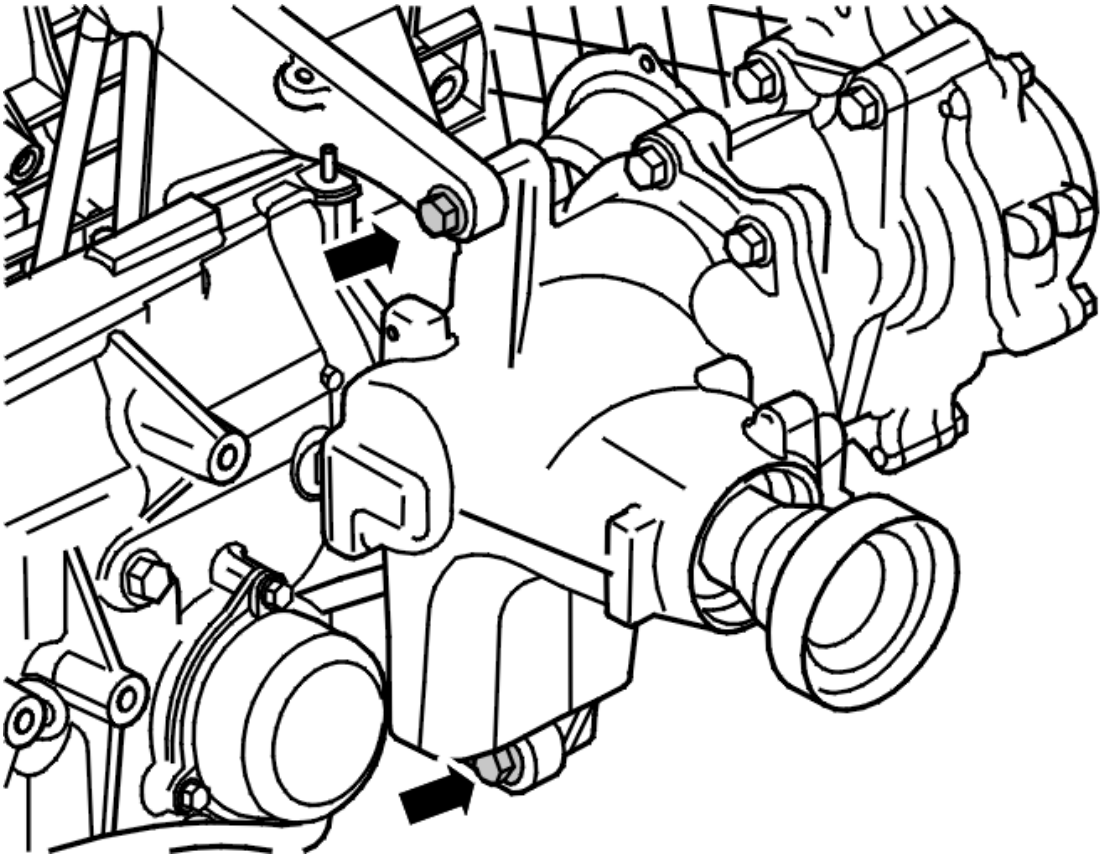

Fig. 446: Installing The Bevel Gear / Chain Housing
Courtesy of VOLVO CARS CORPORATION

NOTE: 2 people are required to carry out the following procedure as the bevel gear/chain housing unit is relatively heavy.

Lift up the unit and align the shaft journal in the transmission. Press the unit in.

NOTE: Make sure that the chain housing's shaft journal does not damage the seal in the transmission end.

Install the 2 x M10 screws loosely. Tighten crosswise to light contact. Tighten.

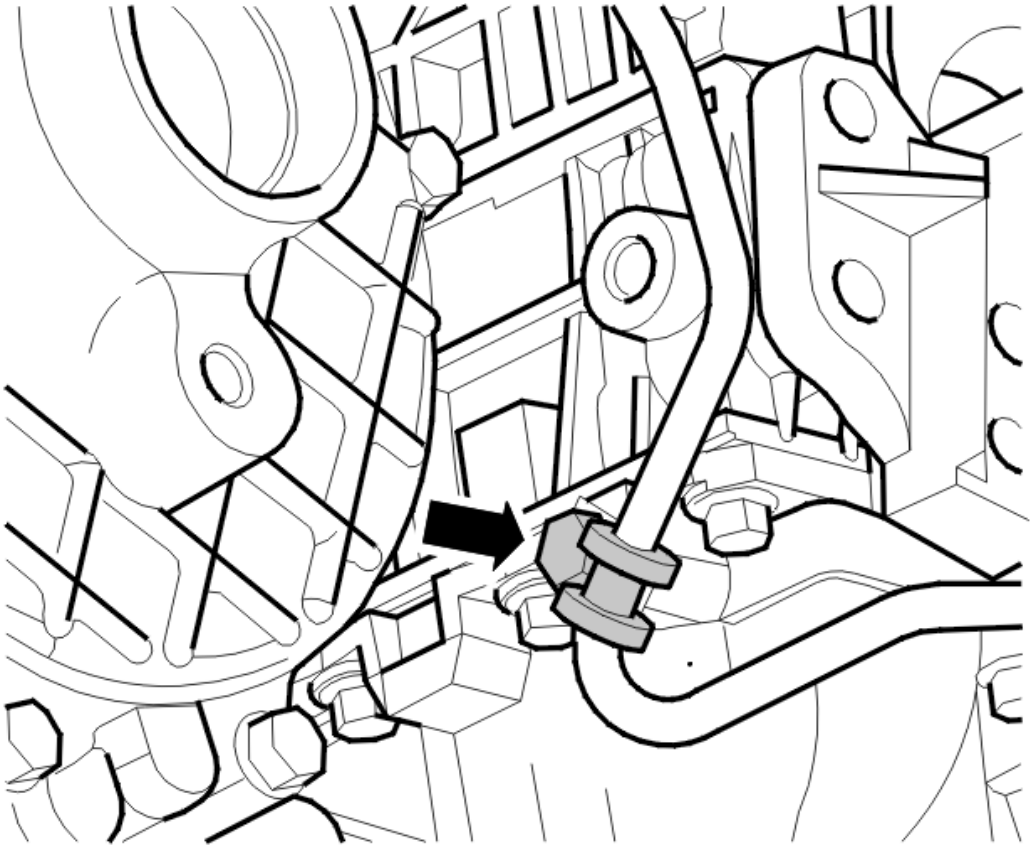

Fig. 447: Identifying Clamp For The Fuel Line
Courtesy of VOLVO CARS CORPORATION

Install the screws for the fuel line clamp. Tighten.

INSTALLING THE SCREW ON THE LOWER STEERING SHAFT

Align the steering gear with the lower steering shaft. Tighten the lower screw on the mounting for the steering shaft joint in the steering gear. Tighten. See: **SUMMARY OF TIGHTENING TORQUES FOR SPECIFIC COMPONENTS** . Use a **new** screw.

Release the steering wheel lock. Turn the steering wheel so that the screw in the mounting for the steering shaft joint points straight ahead. Check that the wheels are pointing straight ahead.

INSTALLING THE PROPELLER SHAFT

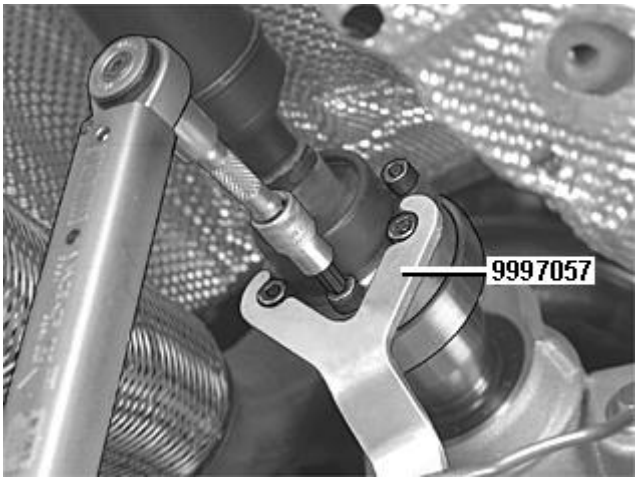

Fig. 448: Identifying Front Propeller Shaft And Special Tool 999 7057
Courtesy of VOLVO CARS CORPORATION

HINT: Move the gear selector to position N.

Install the propeller shaft using the marking made earlier.

Check carefully that the contact faces on the propeller shaft and flange are clean. Install the 6 x M8 screws, 6 pcs. M8, with washers. Tighten acc. to: **SUMMARY OF TIGHTENING TORQUES FOR SPECIFIC COMPONENTS** . Use counterhold **9997057** .

Install the 2 x M8 screws to the propeller shaft center bearing. Tighten.

INSTALLING THE STEERING GEAR TO THE ENGINE PAD

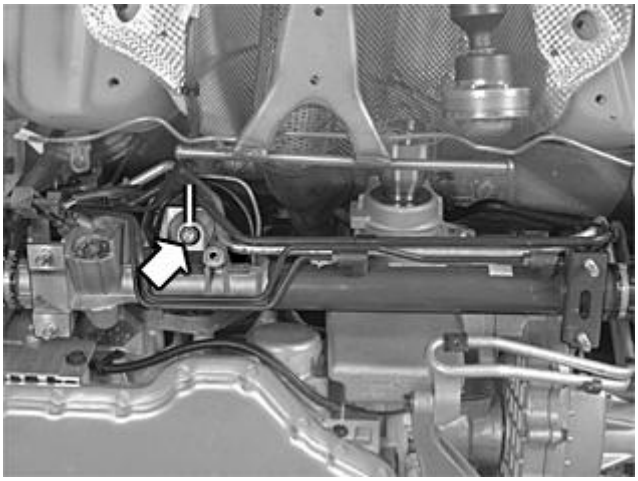

Fig. 449: Identifying Mark For Steering Gear Position
Courtesy of VOLVO CARS CORPORATION

Install the 1 x M10 screw for the steering gear and engine pad. Align the steering gear in relation to the engine pad, using the marking made earlier. Tighten.

INSTALLING THE RIGHT DRIVE SHAFT

Fig. 450: Identifying Mating Surface Of The Drive Shaft
Courtesy of VOLVO CARS CORPORATION

Lubricate the seal. Use transmission fluid, P/N 116 1745-3 (1 liter container) if the chain housing or its sealing ring has been replaced.

Press the drive shaft into the transmission. Check that the snap ring is in its groove by carefully pulling it in the inner constant velocity joint.

Locate the drive shaft in the wheel hub.

FILLING AND CHECKING OIL

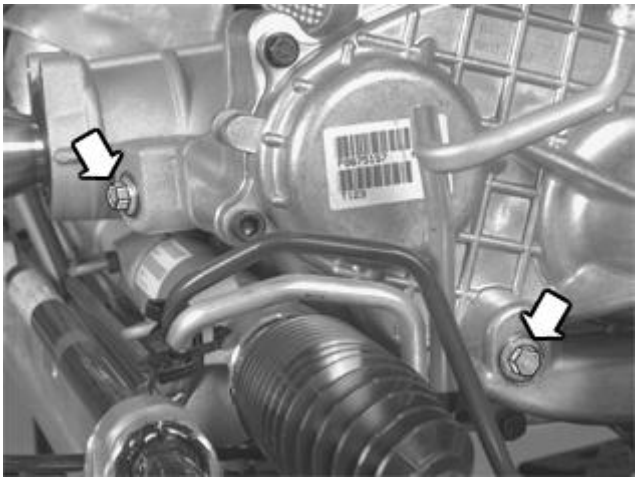

Fig. 451: Locating Chain Housing Bolts
Courtesy of VOLVO CARS CORPORATION

Fill and check the oil in:

- bevel gear. Use correct oil acc. to: **LUBRICANT TRANSMISSION**

Correct volume 650 ml.

oil to the filler plug. Suck out 0.1 l oil.

Tighten, see: **TIGHTENING TORQUE** .

- chain housing. Use only oil with part number 116 1745-3 (1 litre). Tighten acc. to **TIGHTENING TORQUE**

FINISHING

Install the sub-frame. See: **SUB-FRAME FRONT, REPLACING** .

Fill the transmission with exactly the same amount of new oil as was drained off. Only use automatic transmission fluid (ATF), P/N 116 1521 (1 liter container) or 116 1621 (4-liter container).

Check the transmission oil. See: **OIL LEVEL, CHECKING** .

RADIATOR AND CONNECTIONS

RADIATOR, REPLACING

NOTE: **As the illustrations in this service information are used for different model years and / or models, some variation may occur. However, the essential information in the illustrations is always correct.**

PREPARATORY WORK

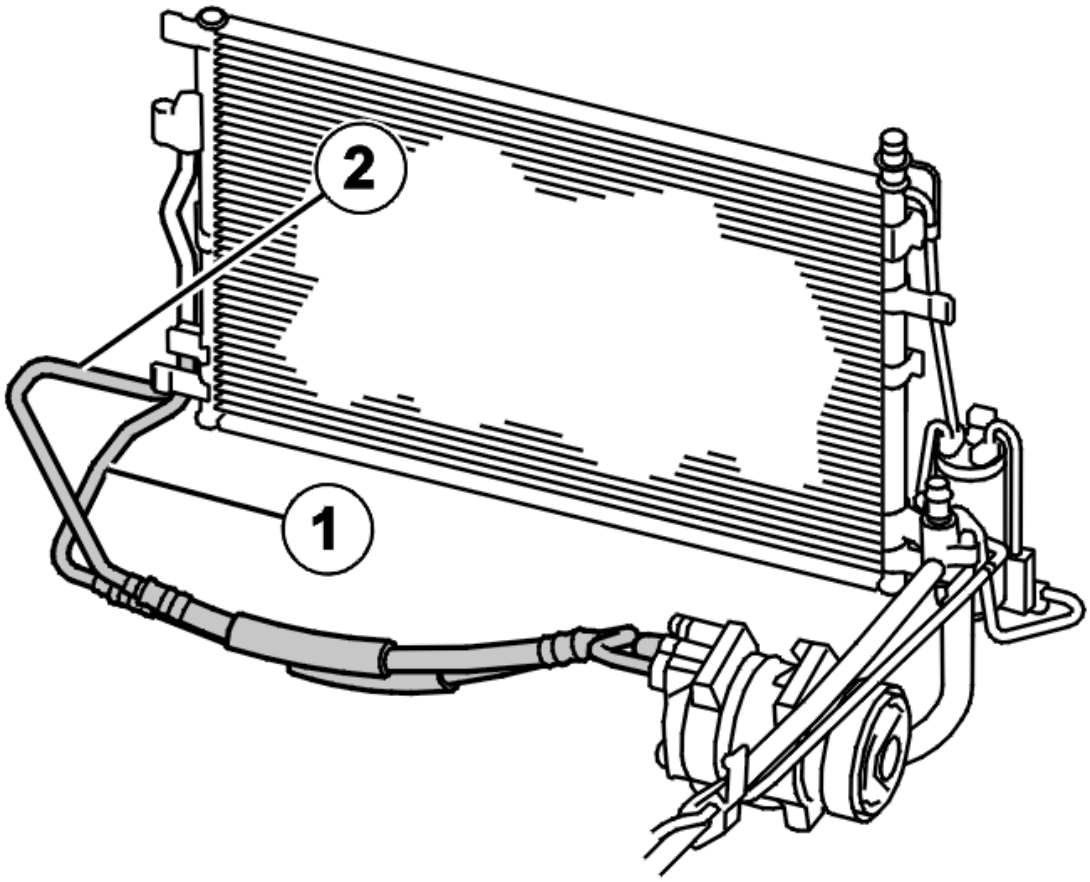

Fig. 452: Identifying Alternate Versions Of The Air Conditioning (AC) Hose
Courtesy of VOLVO CARS CORPORATION

CAUTION: If the car is equipped with an earlier version of the air conditioning (AC) hose (1), continue according to this method.

If the car is equipped with a later version of the air conditioning (AC) hose (2), proceed to the new method. See: RADIATOR, REPLACING.

Remove the battery lead. See **BATTERY, DISCONNECTING** .

Drain the A/C system. See **REFRIGERANT, DRAINING** .

REMOVING THE SKID PLATE

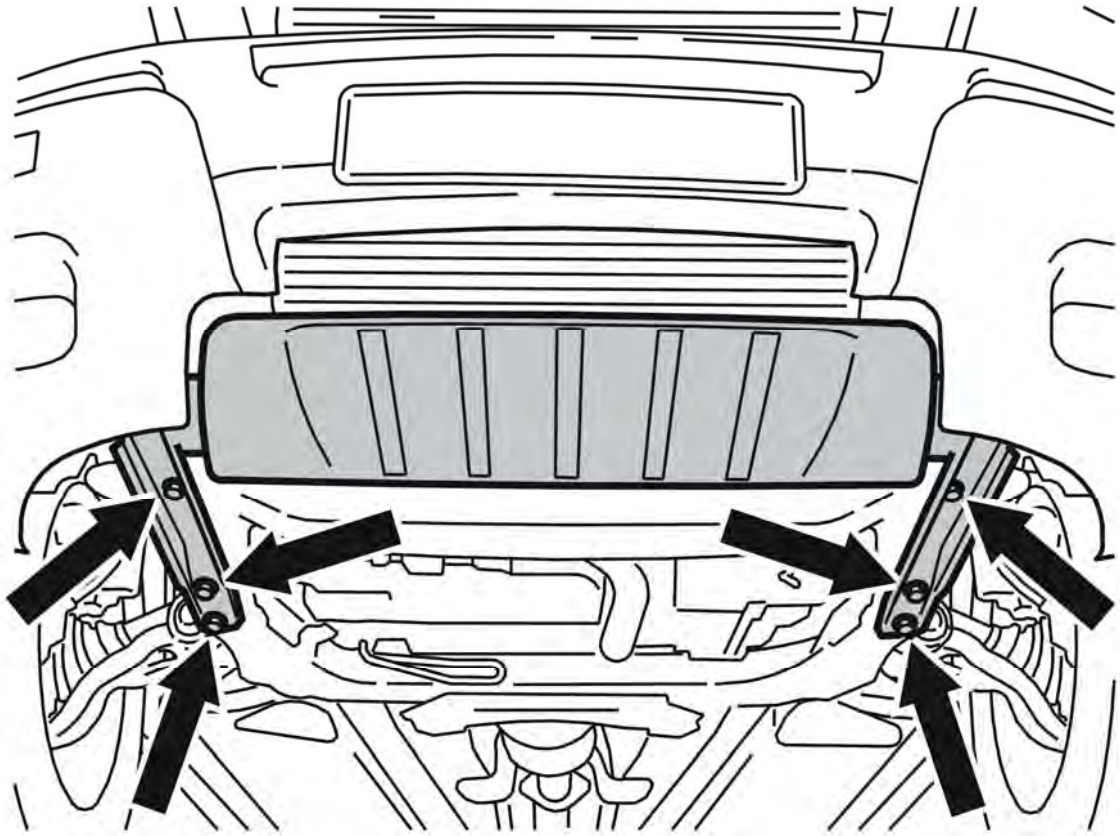

Fig. 453: Splash Guard. Protective Plate And Screws
Courtesy of VOLVO CARS CORPORATION

Remove the 6 screws.

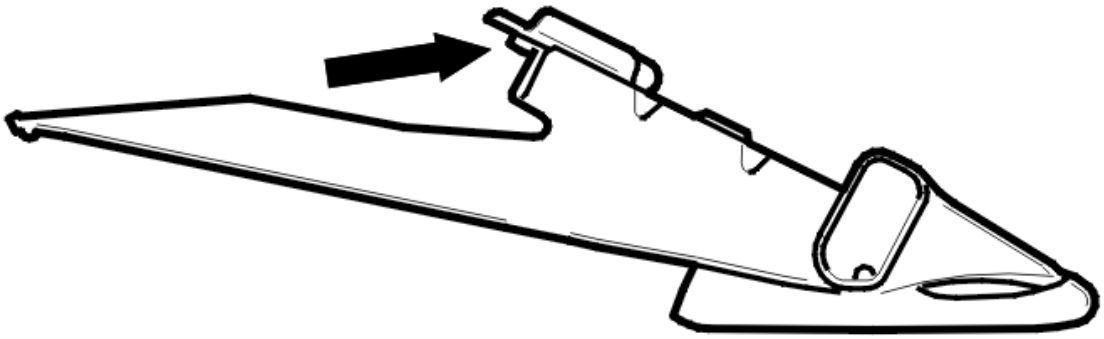

Fig. 454: Identifying Protective Plate
Courtesy of VOLVO CARS CORPORATION

Lift up and slide the plate forward.

Remove the protective plate.

NOTE: There is a guide sleeve on the upper mounting for the plate. This must be lifted slightly so that the panel can be slid forward.

DRAINING COOLANT

Block the lower hose with lock grip pliers.

Install a hose on the nipple at the radiator.

Feed the hose down to a container.

Open the nipple and drain off the coolant.

REMOVING THE CABLE DUCT AND AIR DUCT

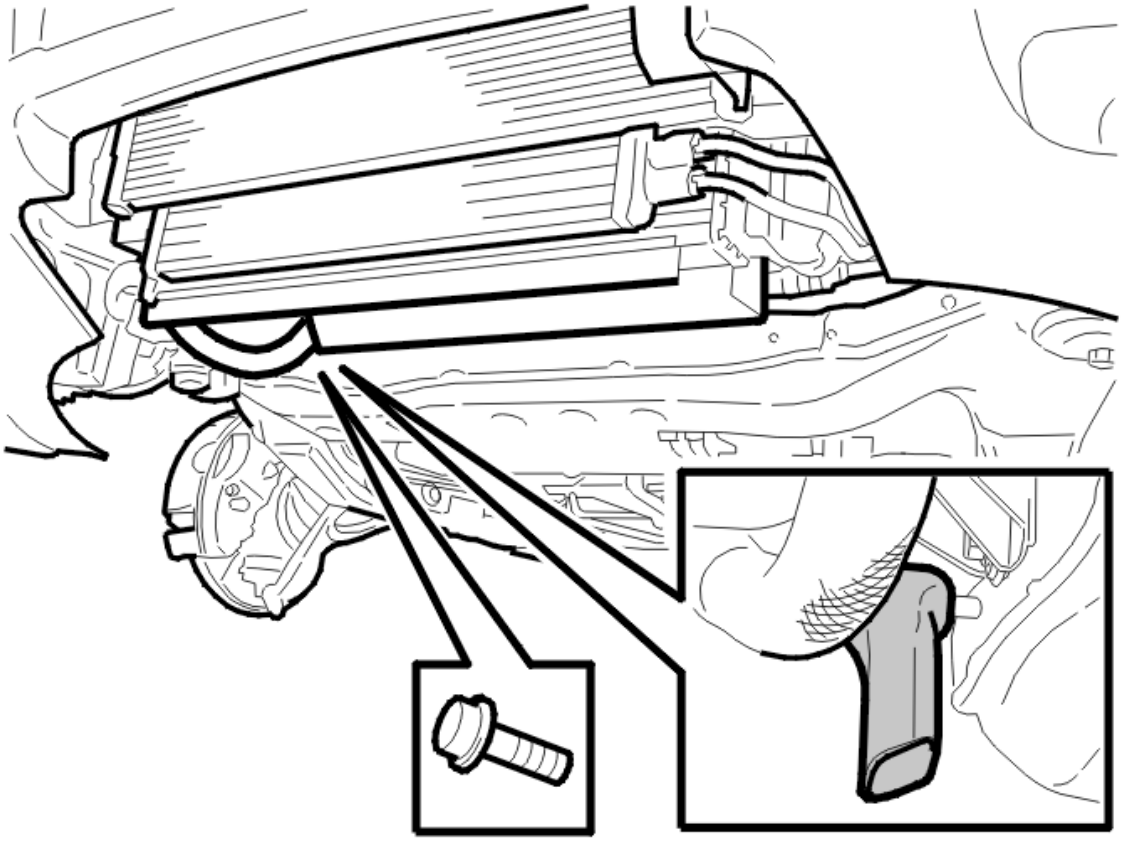

Fig. 455: Identifying Screw For The Cable Duct.
Courtesy of VOLVO CARS CORPORATION

Remove the screw for the cable duct. Place the cable duct on the sub-frame.

Pull the air duct from the clips on the sub-frame.

REMOVING THE OIL COOLER HOSES

Applies only to cars with automatic transmissions:

Remove the lower oil cooler hose from the cooler unit.

Plug the openings in the hose and radiator.

NOTE: Collect the oil from the oil cooler in a container.

Lower the car. Remove the upper oil cooler hose from the cooler unit.

Plug the openings in the hose and radiator.

REMOVING THE UPPER COOLANT HOSES

Remove:

- the evacuation hose from the expansion tank and clip mounting
- the upper radiator hose.

REMOVING THE CHARGE AIR PIPE/HOSE

Applies only to cars with a turbocharger (TC):

Disconnect the charge air pipe from the charge air cooler (CAC) on the left side. If necessary, use a hot air gun to make removal easier.

Remove the clamp. Remove the charge air hose on the right side from the charge air cooler (CAC).

REMOVING THE RIGHT HEADLAMP

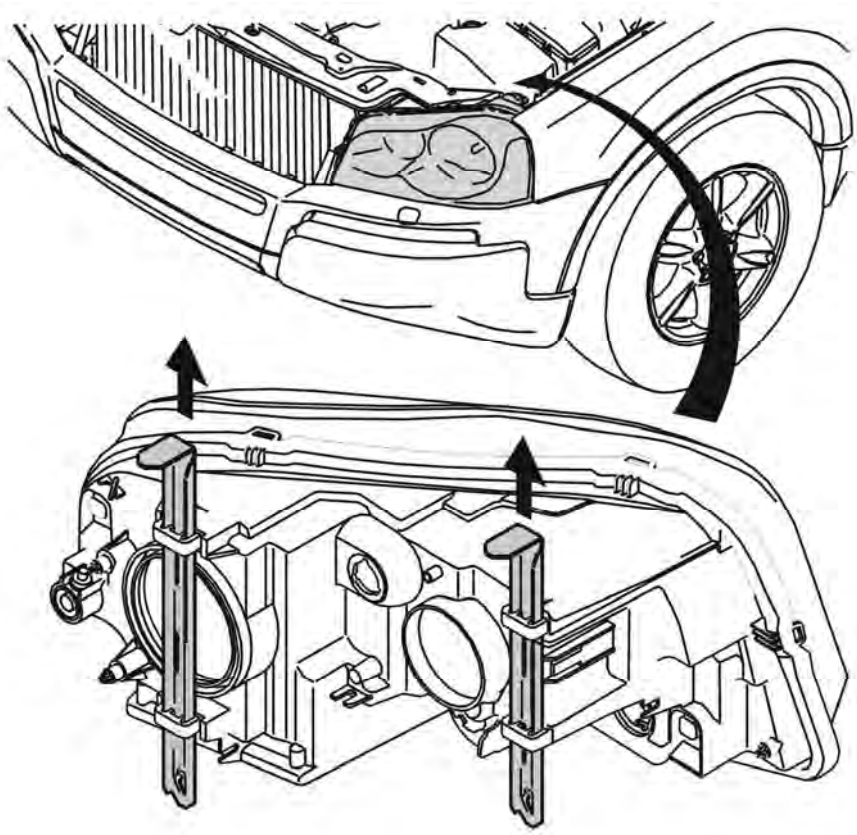

Fig. 456: Pulling Locking Plate Straight Up
Courtesy of VOLVO CARS CORPORATION

Headlamps removing.

Pull the locking plate straight up.

Disconnect the connector.

Remove the headlamp.

REMOVING THE AIR CONDITIONING (A/C) PIPE

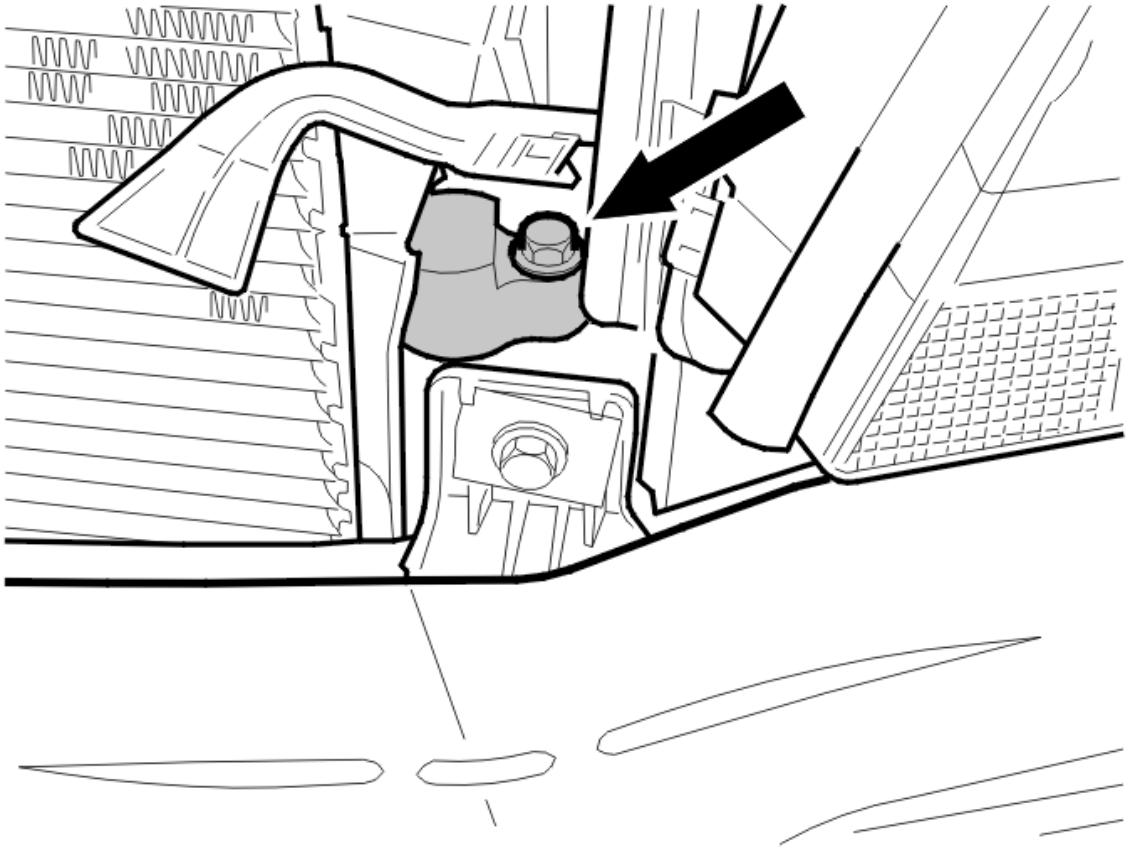

Fig. 457: Locating Air Conditioning Condenser Pipe
Courtesy of VOLVO CARS CORPORATION

Remove from the left side:

- the screw
- the air conditioning (A/C) pipe.

Seal the openings on the pipe and condenser.

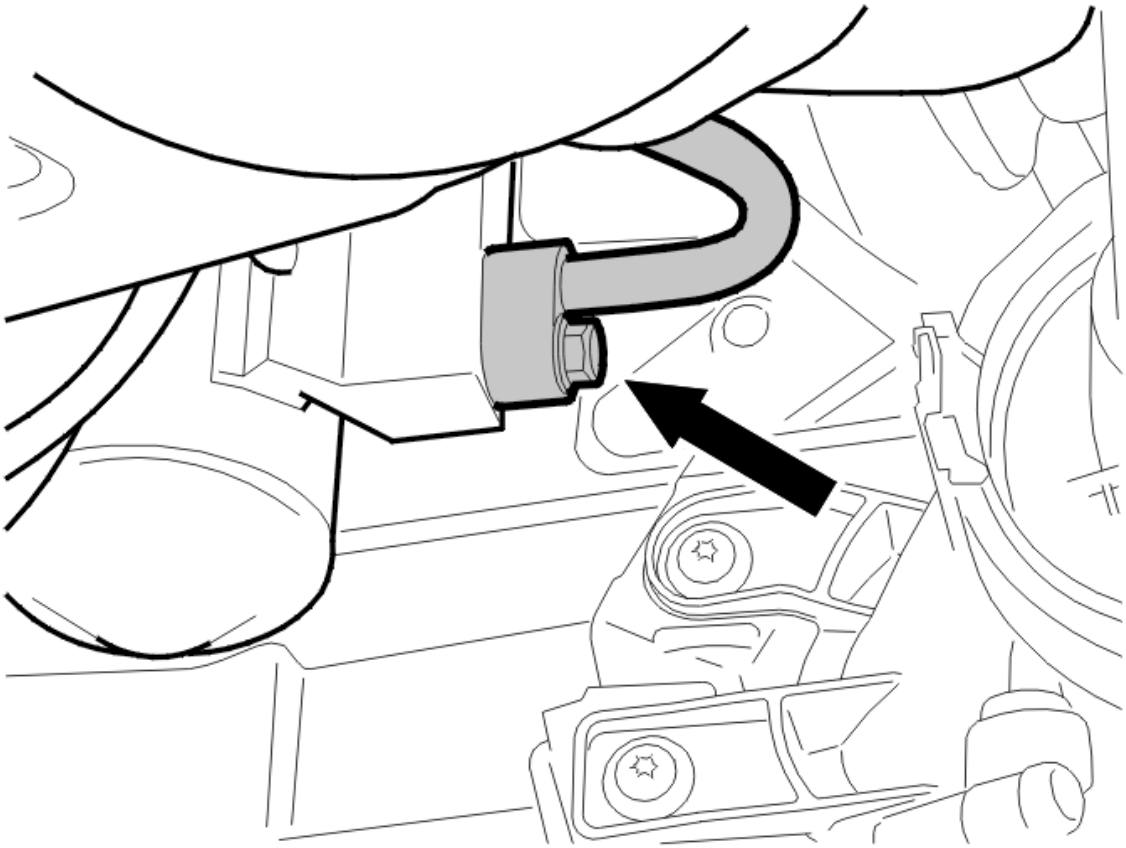

Fig. 458: Locating Air Conditioning Receiver Pipe
Courtesy of VOLVO CARS CORPORATION

Remove from the right side:

- the connector.

Raise the car.

Remove:

- the screw
- the air conditioning (A/C) pipe.

Seal the openings on the pipe and receiver.

HINT: Pull down and hang up the left pipe so that the hose is positioned above the sub-frame.

REMOVING THE LOWER ENGINE COOLANT HOSE

Slacken off the hose clamp. Remove the hose from the radiator.

Fold the hose out of the way.

REMOVING THE RADIATOR ASSEMBLY

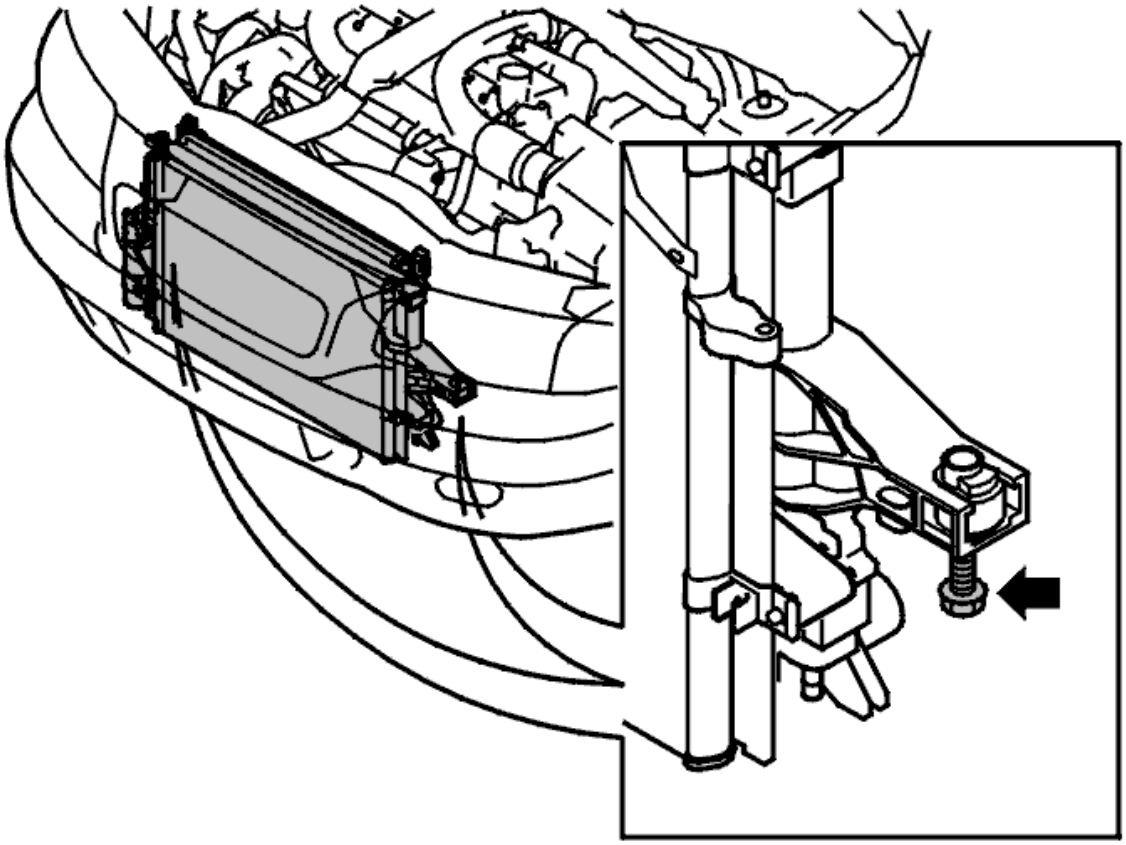

Fig. 459: Identifying Lower Mounting For Air Conditioning Aggregate
Courtesy of VOLVO CARS CORPORATION

NOTE: Two people are required for this procedure.

Hold up the air conditioning aggregate. Slacken off the two mounting screws.

Pull down the air conditioning aggregate carefully.

NOTE: Ensure that no hoses are trapped when removing the air conditioning aggregate.

REMOVING THE ENGINE COOLING FAN (FC)

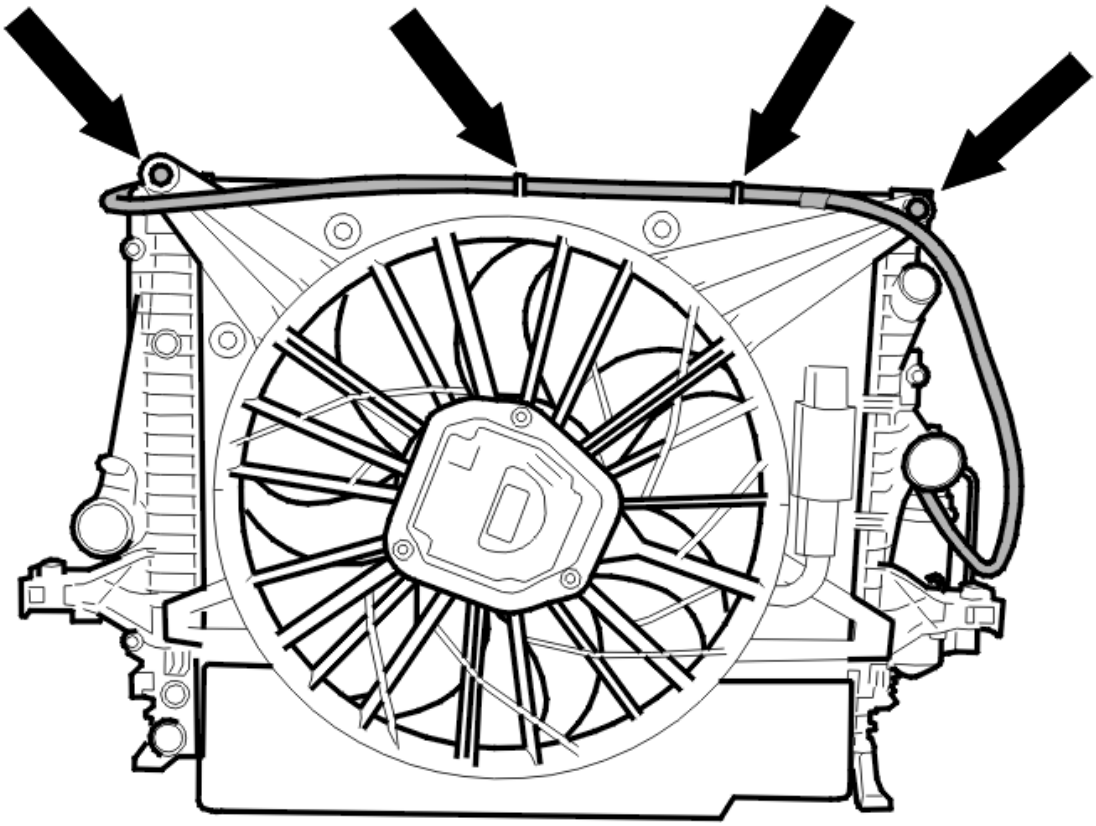

Fig. 460: Identifying Engine Cooling Fan
Courtesy of VOLVO CARS CORPORATION

Remove:

- the screws
- the evacuation hose from the clip mountings
- the engine cooling fan (FC).

REMOVING THE RADIATOR

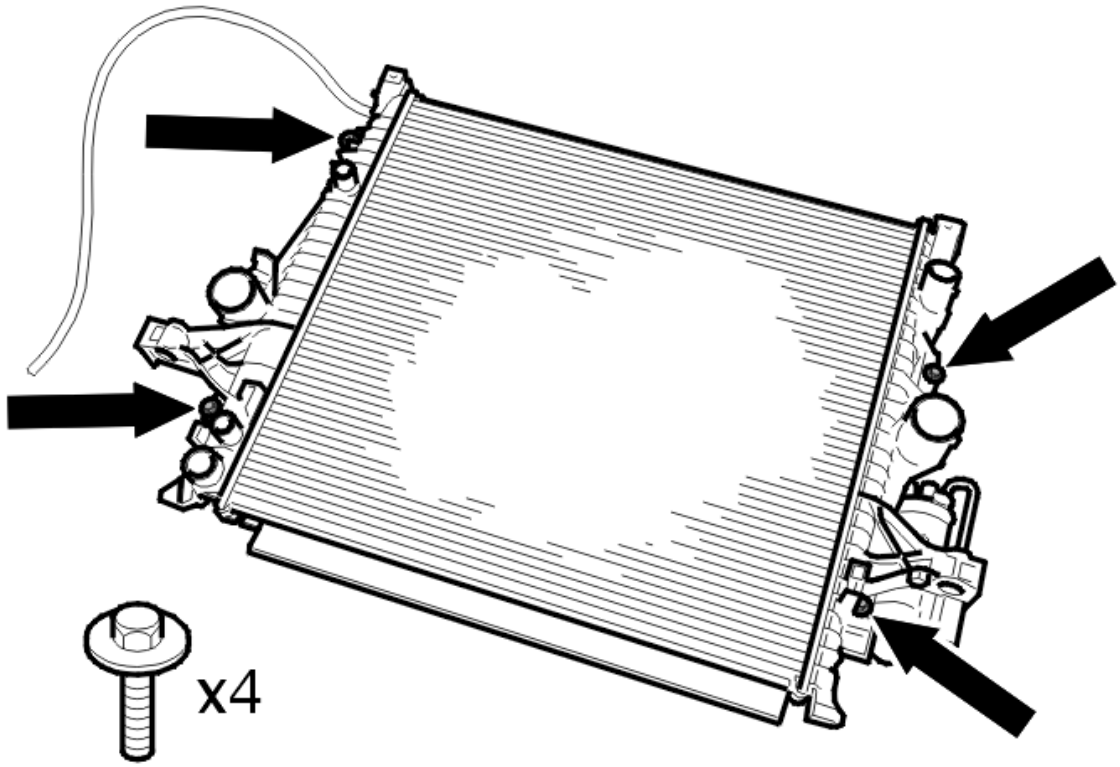

Fig. 461: Identifying The Air Conditioning Aggregate Screws
Courtesy of VOLVO CARS CORPORATION

Remove:

- the screws
- the radiator.

TRANSFERRING COMPONENTS

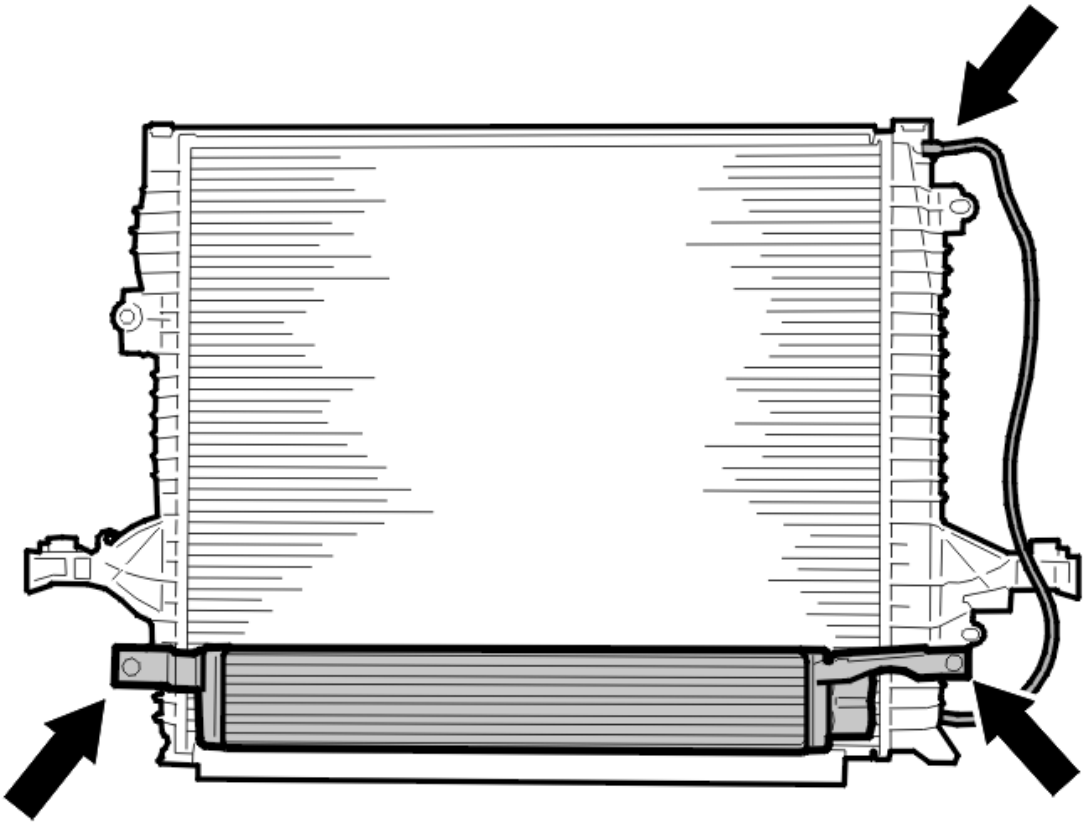

Fig. 462: Identifying Extra Oil Cooler
Courtesy of VOLVO CARS CORPORATION

Transfer the evacuation hose.

Applies to cars equipped with an extra oil cooler:

Transfer the oil cooler.

INSTALLING THE RADIATOR

Position the radiator over the condenser and the charge air cooler (CAC).

Install the screws. Tighten to **10 Nm** .

INSTALLING THE ENGINE COOLANT FAN (FC)

Install:

- the engine cooling fan (FC)
- the screws. Tighten to **10 Nm**
- the evacuation hose in the clip mountings.

INSTALLING THE COOLER UNIT

NOTE: Two people are required for this procedure.

Lift up the air conditioning aggregate. Install the two mounting screws. Tighten to **24 Nm** .

NOTE: Ensure that the air conditioning aggregate is positioned correctly in the locating pins on top of the aggregate.

NOTE: Ensure that no hoses are trapped when installing the air conditioning aggregate.

INSTALLING THE LOWER ENGINE COOLANT HOSE

Install the hose. Tighten the clamp.

Remove the lock grip pliers.

INSTALLING THE AIR CONDITIONING (A/C) PIPE

HINT: Lubricate the O-rings using compressor oil.

Install on the right side:

- the air conditioning (A/C) pipe. Use a new O-ring
- the screw. Tighten to **10 Nm** .

Lower the car.

Connect the connector to the receiver.

Install on the left side:

- the air conditioning (A/C) pipe. Use a new O-ring
- the screw. Tighten to **24 Nm** .

Vacuum pump the air conditioning (A/C) system. See **VACUUM PUMPING** .

INSTALLING THE RIGHT HEADLAMP

Install:

- the connector
- headlamps
- the locking plate.

INSTALLING THE UPPER ENGINE COOLANT HOSES

Install:

- the upper radiator hose
- the evacuation hose on the expansion tank and clip mounting.

INSTALLING THE CHARGE AIR PIPE/HOSE

Install:

- the charge air hose on the right side
- the charge air pipe on left side.

Tighten the clamps.

INSTALLING THE OIL COOLER HOSES

Applies only to cars with automatic transmissions:

Install the upper oil cooler hose.

Use a new O-ring. Raise the car.

Install the lower oil cooler hose.

Use a new O-ring.

INSTALLING THE CABLE DUCT AND AIR DUCT

Position the cable duct.

Install the screw. Tighten to **10 Nm** .

Install the air duct using the clip on the sub-frame.

INSTALLING THE SKID PLATE

Move the skid plate up into the bumper wraparound.

Press forwards until the mounting brackets engage in the sub frame.

Install the screws. Tighten to **50 Nm** .

FINISHING

Fill the A/C system. See **REFRIGERANT, FILLING** .

Check for leaks. See **LEAK TRACING, FLUORESCENT TRACING AGENT / UV LAMP** .

Install the battery lead.

Top up the coolant.

Install the cap on the expansion tank.

Run the engine until the thermostat has opened.

Stop the engine. Top up if necessary.

Check for leaks.

RADIATOR, REPLACING

NOTE: Since the illustrations in this service information are used for different model years and / or models, some variation may occur. However, the essential information in the illustrations is always correct.

REMOVAL

REMOVING THE ENGINE COOLING FAN (FC)

Remove the electric cooling fan. See **ENGINE COOLING FAN (FC), REPLACING** .

DRAINING COOLANT

Block lower hose with lock grip pliers.

Install a hose on the nipple at the radiator.

Feed the hose down to a container.

Open the nipple and drain off the coolant.

REMOVING THE RADIATOR

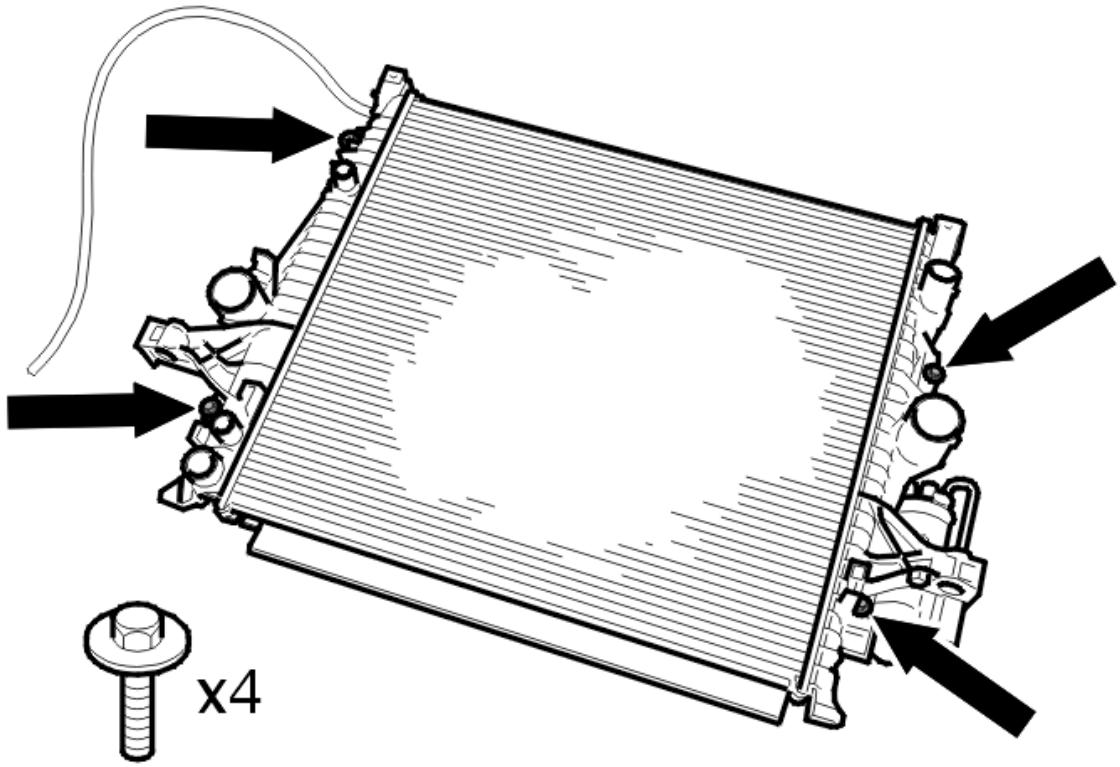

Fig. 463: Identifying The Air Conditioning Aggregate Screws
Courtesy of VOLVO CARS CORPORATION

Remove:

- the evacuation hose from the expansion tank
- the 4 bolts

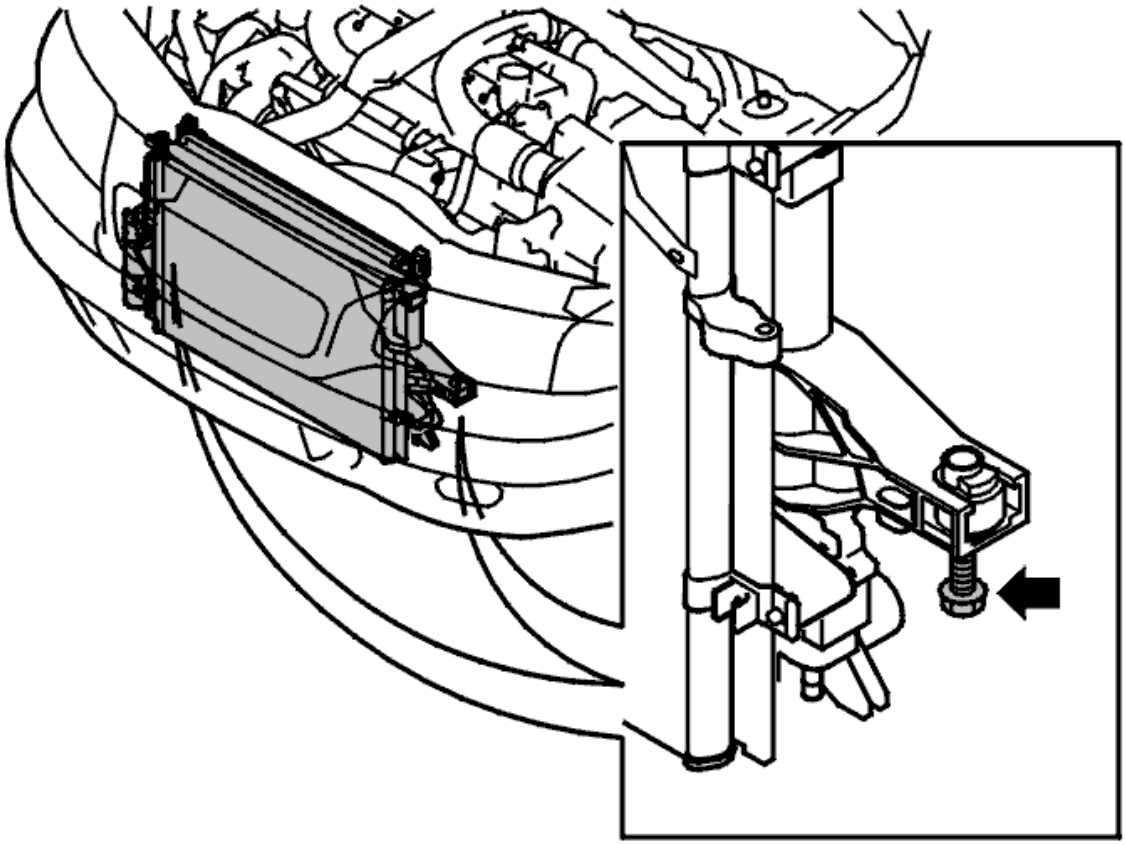

Fig. 464: Identifying Lower Mounting For Air Conditioning Aggregate
Courtesy of VOLVO CARS CORPORATION

Remove:

- the 2 mounting bolts
- the radiator.

INSTALLATION

INSTALLING THE RADIATOR

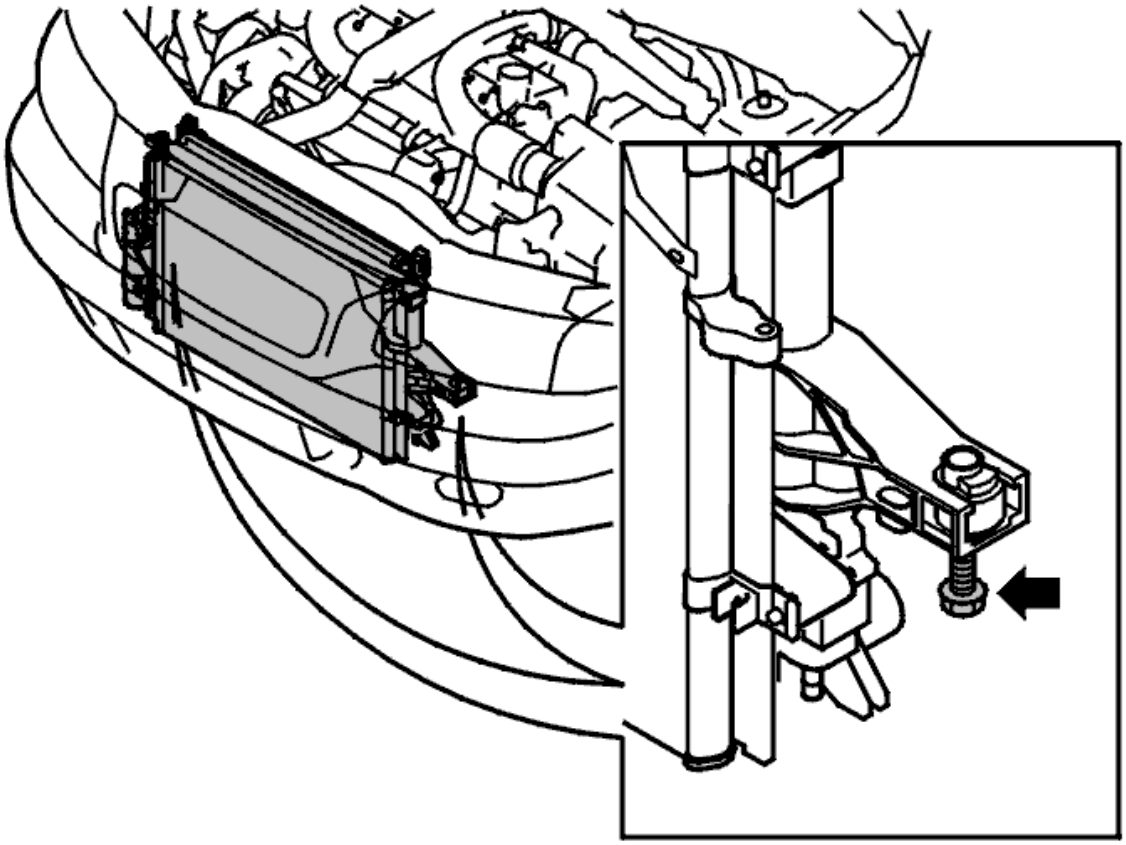

Fig. 465: Identifying Lower Mounting For Air Conditioning Aggregate
Courtesy of VOLVO CARS CORPORATION

Lift the radiator. Install the two M8 mounting bolts.

NOTE: **Make sure that the radiator is positioned correctly in the guide pins on top of the unit.**

NOTE: **Make sure that no hoses are trapped when installing the radiator.**

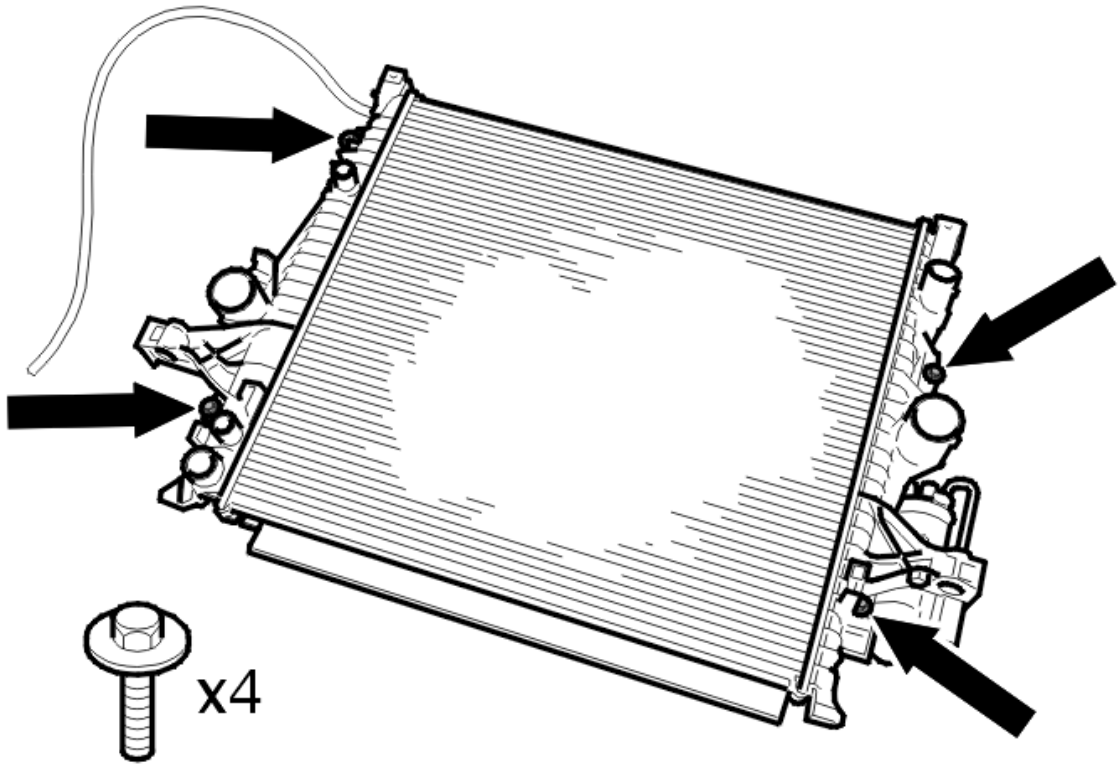

Fig. 466: Identifying The Air Conditioning Aggregate Screws
Courtesy of VOLVO CARS CORPORATION

Install:

- the evacuation hose from the expansion tank
- the 4 x M6 screws.

Install the electric cooling fan. See: **ENGINE COOLING FAN (FC), REPLACING** .

GASKET / PISTON ACCUMULATOR, REPLACING

NOTE: The accumulator housing is located in the transmission.

CAUTION: Cleanliness is extremely important when working on automatic transmissions. Use lint free paper or rags.

CAUTION: Read through the instructions before beginning work.

REMOVAL

PREPARATIONS

Fig. 467: Identifying Oil Pan
Courtesy of VOLVO CARS CORPORATION

Suck up the oil from the transmission using an oil suction device.

Take out a container for the oil.

Raise the car.

Remove:

- the splash guard under the engine. Blow and wipe clean around the transmission oil trough
- the transmission oil trough. See **REMOVE THE OIL PAN AND THE SEAL**.

REMOVING THE ACCUMULATOR HOUSING FROM THE TRANSMISSION

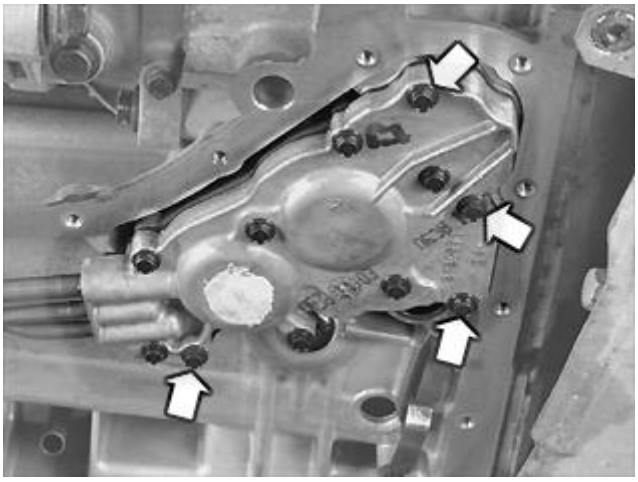

Fig. 468: Identifying Accumulator Housing
Courtesy of VOLVO CARS CORPORATION

NOTE: Check the routing of the oil pipe in the accumulator housing.

Remove the oil filter. See **REMOVE THE OIL FILTER**.

Slacken off the 4 screws holding the accumulator housing in the transmission.

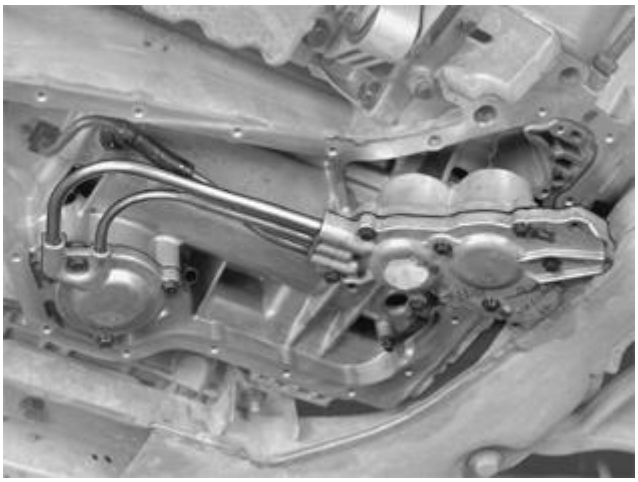

Fig. 469: Identifying Housing With Oil Pipes
Courtesy of VOLVO CARS CORPORATION

Fold down the housing with the oil pipes. Remove the oil pipes from the accumulator.

DISASSEMBLING THE ACCUMULATOR HOUSING

Fig. 470: Identifying Accumulator Housing
Courtesy of VOLVO CARS CORPORATION

CAUTION: Replace one piston at a time so that the springs are correctly installed during installation.

The thinnest spring should be against the terminal pipe.

Slacken off the remainder of the screws on the accumulator housing. Lift off the cover and the gasket.

REMOVING THE PISTONS FROM THE ACCUMULATOR HOUSING

Fig. 471: Identifying Pistons And Accumulator Housing
Courtesy of VOLVO CARS CORPORATION

Press the piston down on the spring so that the locating pin can be gripped.

Pull up the locating pin a little so that it releases from the mounting in the housing.

Work the locating pin with the piston side to side while at the same time pulling the piston up from the housing.

Use the same method for the other piston. Remove the spring from the piston.

Check:

- that there is no dirt or other particles in the housing
- that the springs are intact.

Blow the housing clean.

INSTALLATION

INSTALLING NEW PISTONS FOR THE ACCUMULATOR HOUSING

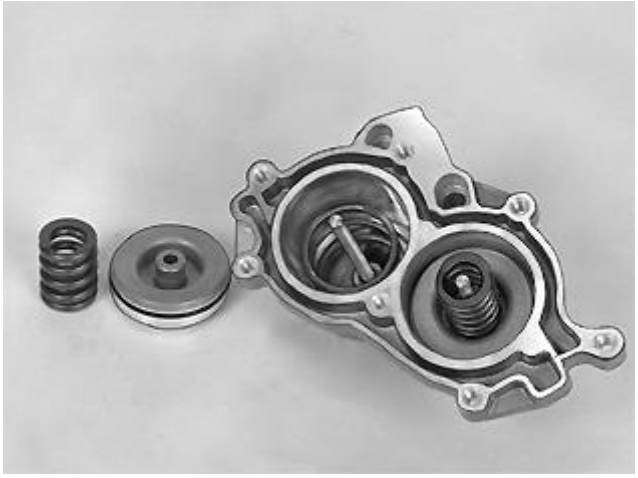

Fig. 472: Identifying Pistons And Accumulator Housing
Courtesy of VOLVO CARS CORPORATION

Install the locating pin and the spring in the housing.

Apply petroleum jelly to the piston gasket. Use Volvo Genuine parts petroleum jelly (P/N 116 1151-4).

Install:

- the piston over the locating pin. Carefully press the piston down into the housing
- the spring on the piston
- the cover and the screws. Tighten the screws. Tighten to **12 Nm** .

INSTALLING THE ACCUMULATOR HOUSING ON THE TRANSMISSION

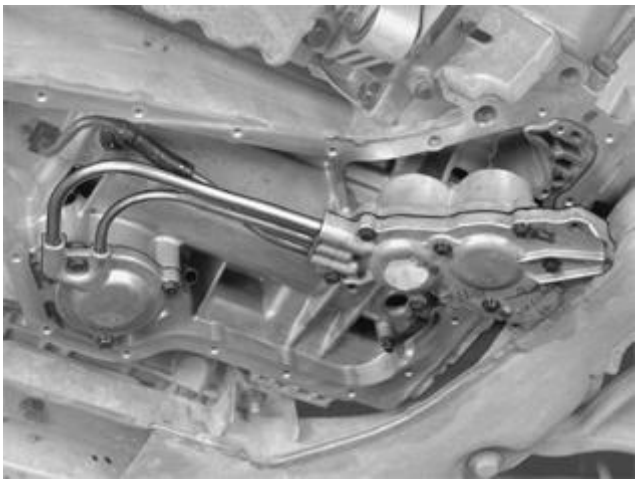

Fig. 473: Identifying Housing With Oil Pipes
Courtesy of VOLVO CARS CORPORATION

Install the oil pipes on the housing (start with the larger pipe).

Twist up the housing to the transmission. Install the screws. Finger tighten the screws. Adjust the oil pipe using the hose in the housing if any of the screws are stiff.

Tighten the screws. Tighten to **12 Nm** .

Install the oil filter. See **INSTALL THE OIL FILTER**. Alternatively: Replace the oil filter (see the mileage)

Check:

- the oil pipes
- that the screws are tightened
- that the oil filter is installed.

FINISHING

Install the oil trough. See **INSTALL THE OIL FILTER**.

Top up with oil. Check the oil level. See **TRANSMISSION OIL / OIL FILTER, REPLACING**.

Test drive the car.

GASKET/O RING SERVO CYLINDER, REPLACING

NOTE: The servo cylinder is located in the transmission.

CAUTION: Cleanliness is extremely important when working on automatic transmissions. Use lint free paper or rags.

CAUTION: Read through the instructions before beginning work.

REMOVAL

PREPARATIONS

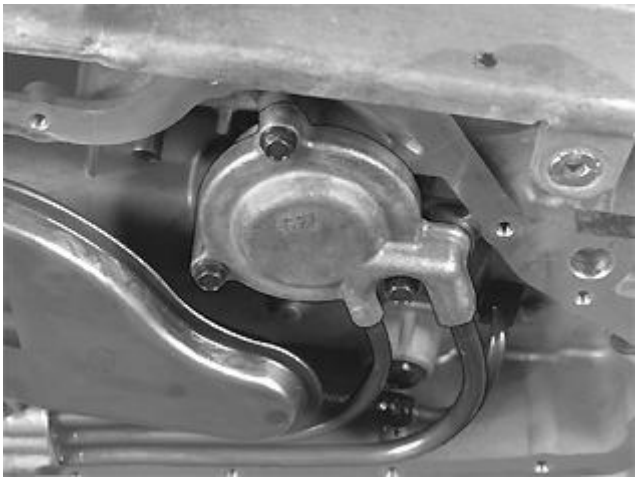

Fig. 474: Identifying Servo Cylinder Installed
Courtesy of VOLVO CARS CORPORATION

Suck up the oil from the transmission using an oil suction device.

Take out a container for the oil.

Raise the car.

Remove:

- the splash guard under the engine. Blow and wipe clean around the transmission oil trough
- the transmission oil trough. See **REMOVE THE OIL PAN AND THE SEAL**.

REMOVING THE SERVO CYLINDER (2-1)

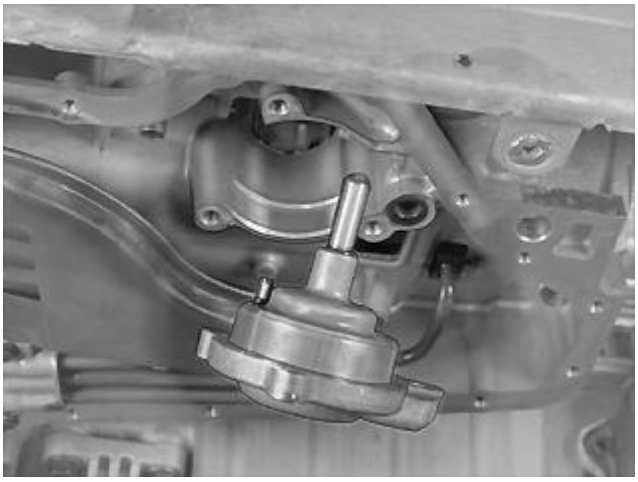

Fig. 475: Identifying Servo Cylinder Removed
Courtesy of VOLVO CARS CORPORATION

Slacken off the 3 screws.

Pull down the cover with the servo cylinder. Check the position of the small strainer on the cylinder.

CAUTION: Note the position of the strainer for reinstallation.

Lift the piston from the cover.

DISASSEMBLING SERVO CYLINDER

Fig. 476: Identifying Disassembling Servo Cylinder
Courtesy of VOLVO CARS CORPORATION

Open the catch on the push rod (press the piston towards the work surface).

Separate the cylinder.

Check:

- that there is no dirt or other particles in the cylinder
- that both the springs are intact.

Blow the cylinder clean.

REPLACING THE GASKET, O-RING AND STRAINER

Fig. 477: Identifying Gasket, O-Ring And Strainer
Courtesy of VOLVO CARS CORPORATION

Replace the O-ring on the piston.

Replace the gasket on the inner piston.

NOTE: Check the position of the gasket on the piston.

Remove the strainer by pulling it straight up. Replace the strainer.

INSTALLATION

ASSEMBLING THE SERVO CYLINDER

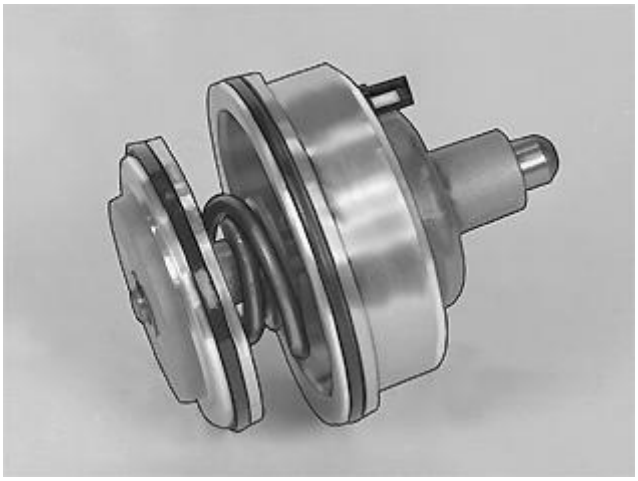

Fig. 478: Identifying Servo Cylinder
Courtesy of VOLVO CARS CORPORATION

Apply a little petroleum jelly to the inner piston gasket. Use Volvo Genuine parts petroleum jelly (P/N 116 1151-4).

Carefully press the piston up into the cylinder.

Install the catch on the push rod.

INSTALLING THE SERVO CYLINDER ON THE TRANSMISSION

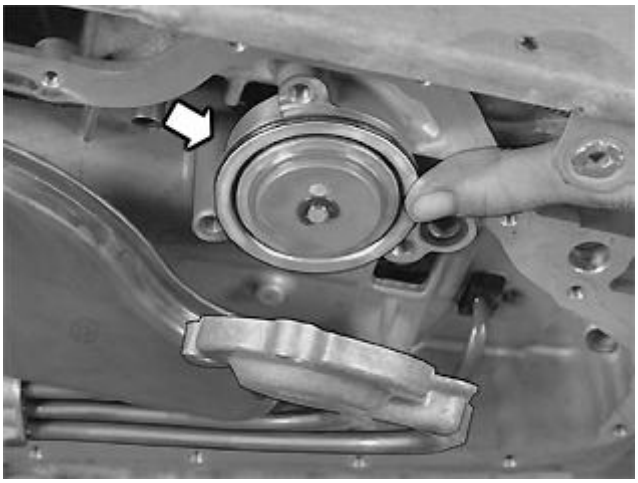

Fig. 479: Installing Servo Cylinder On Transmission
Courtesy of VOLVO CARS CORPORATION

NOTE: The strainer on the piston must come into the opening on the left in the transmission.

Apply petroleum jelly to the O-ring. Use Volvo Genuine parts petroleum jelly (P/N 116 1151-4).

Install the piston in the housing. Hold the piston in position by hand. Check that the strainer is opposite the opening on the left hand side.

Slide the cover up towards the piston. Lower the piston towards the cover. Press the piston down into the cover using your fingers so that the O-ring cannot be seen on the piston.

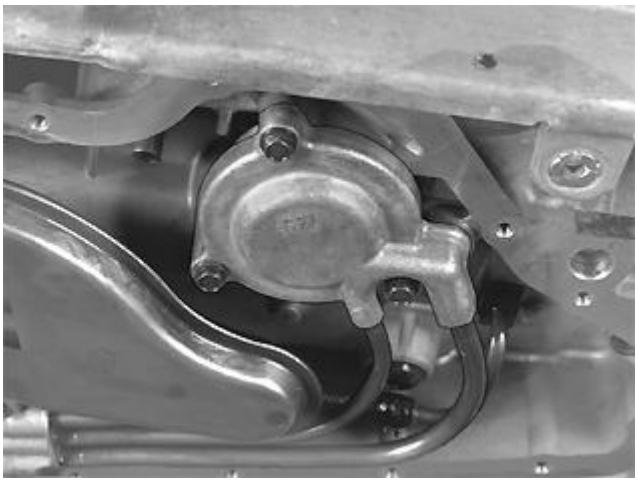

Fig. 480: Identifying Servo Cylinder Installed

Courtesy of VOLVO CARS CORPORATION

Install the screws and tighten by hand. Secure the cover so that all the screws are aligned.

Tighten the screws. Tighten to **25 Nm** .

FINISHING

Install the oil trough. See **INSTALL THE OIL FILTER**.

Top up with oil. Check the oil level. See **TRANSMISSION OIL / OIL FILTER, REPLACING**.

Test drive the car.

OIL PUMP, REPLACING

REMOVAL

REMOVING THE SIDE COVER FROM THE TRANSMISSION

Remove the side cover. See **SIDE COVER TRANSMISSION, REMOVING**.

REMOVING THE OIL PUMP

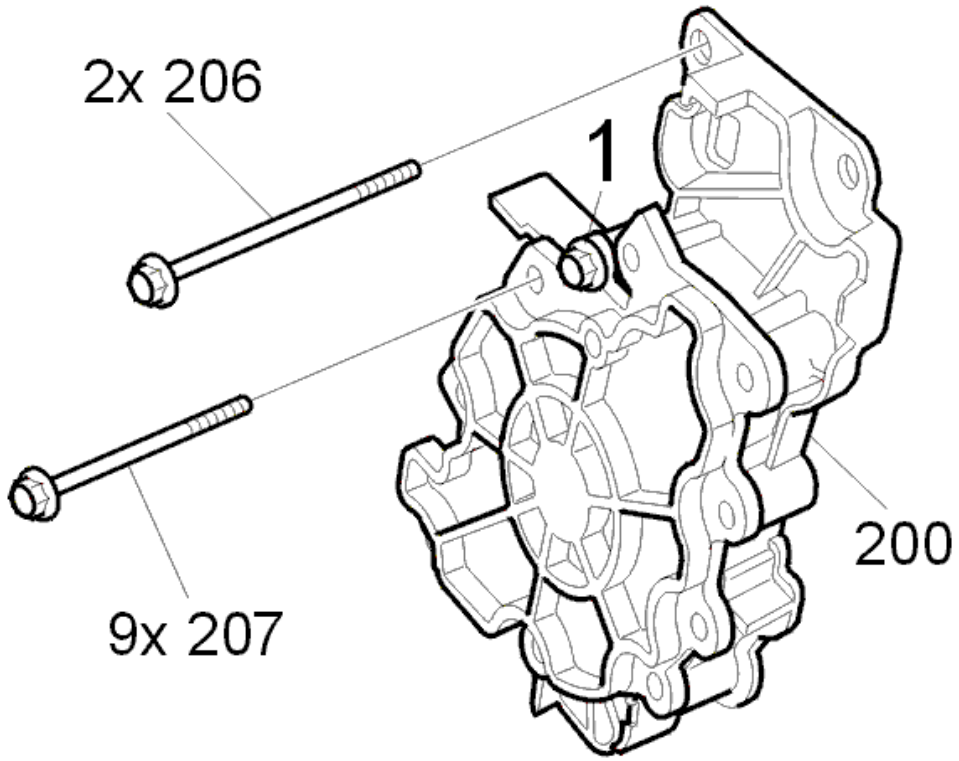

Fig. 481: Identifying Oil Pump Screws
Courtesy of VOLVO CARS CORPORATION

NOTE: **In order to replace the lock-up solenoid, the oil pump must be removed from the control system. This is so that the spring clip holding the solenoid can be accessed.**

The shiny screw (1) must not be removed, it holds the oil pump together.

Remove:

- the temperature sensor with the cable harness from the clip
- the connector from the solenoid. Fold the cable harness out of the way
- the screws,**not** the shiny screws (1).

NOTE: **Note the dimension of the upper screws.**

REMOVING THE OIL PUMP FROM THE PUMP SHAFT

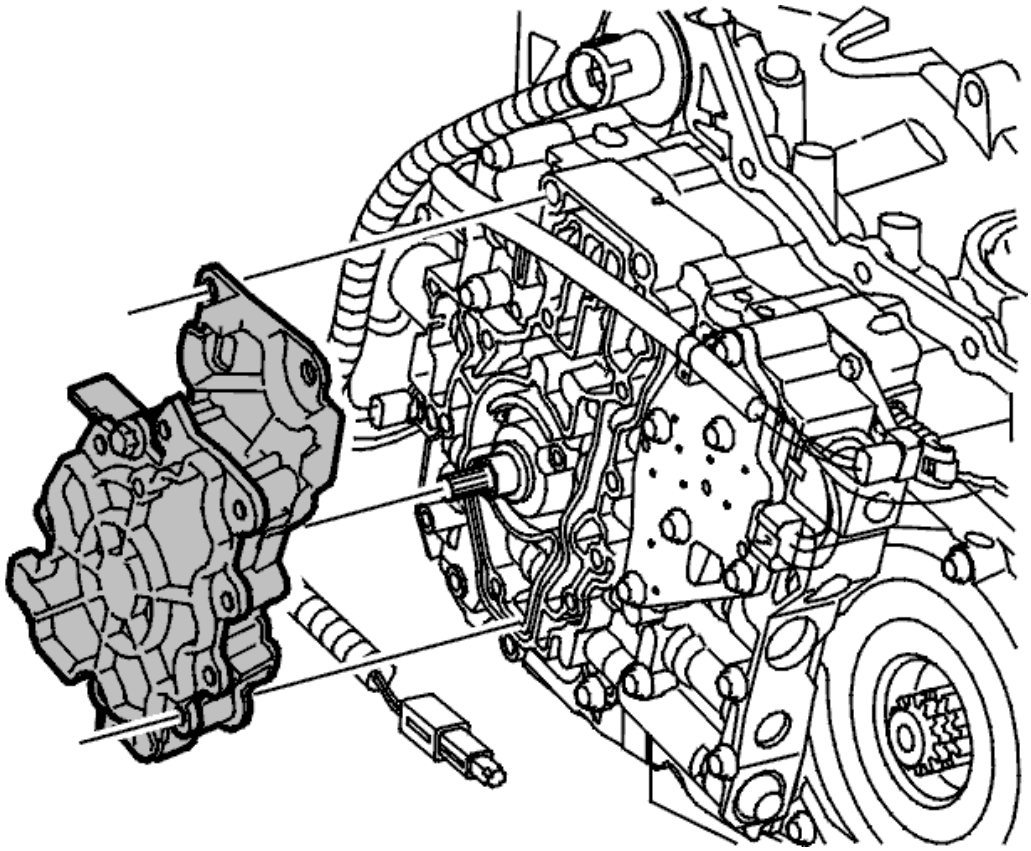

Fig. 482: Identifying Removing Oil Pump From Pump Shaft
Courtesy of VOLVO CARS CORPORATION

Pull the oil pump straight out.

Place the pump on clean paper.

INSTALLATION

INSTALLING THE OIL PUMP

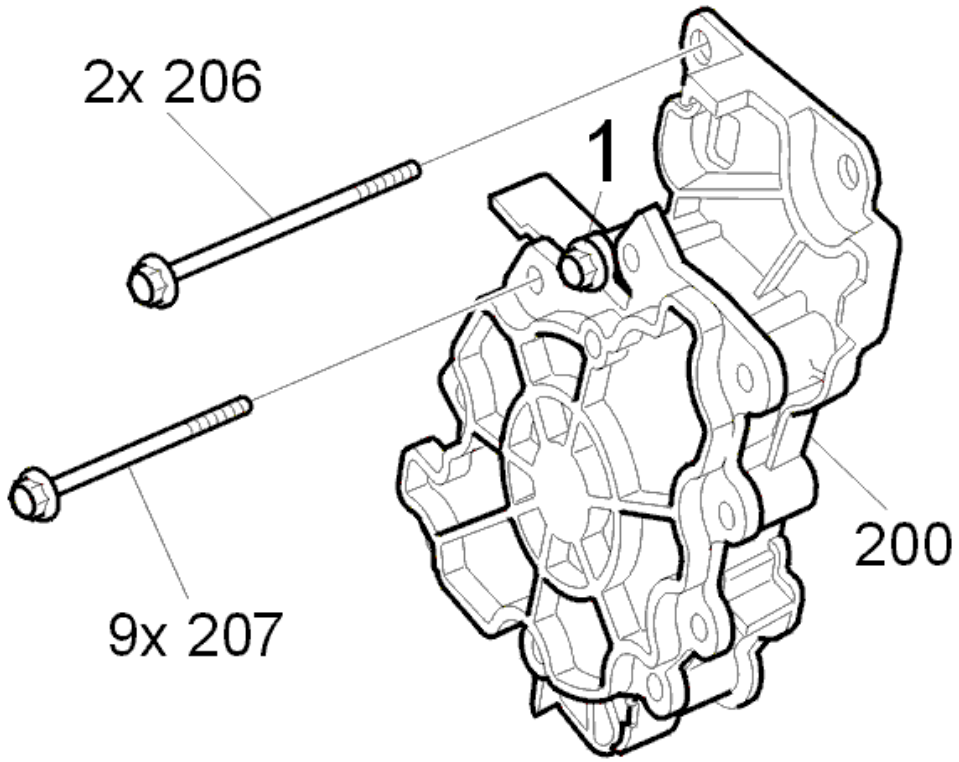

Fig. 483: Identifying Oil Pump Screws
Courtesy of VOLVO CARS CORPORATION

NOTE: Ensure that mating surfaces are clean.

NOTE: Use lint free paper.

Lift and turn the pump slightly so that it is centered on the pump shaft.

Finger-tighten the screws. The two upper screw heads (206) are sized 10 mm. The other screw heads (207) are 8 mm.

First tighten the screws crosswise to light contact.

Tighten the upper screws. Tighten to **16 Nm** . Tighten the other screws. Tighten to **12 Nm** .

INSTALLING THE SIDE COVER ON THE TRANSMISSION

Install the side cover. See **SIDE COVER TRANSMISSION, INSTALLING**.

FILLING WITH TRANSMISSION FLUID

Fill with transmission fluid. See **TRANSMISSION OIL / OIL FILTER, REPLACING**.

Test drive the car.

PISTON / COVER BACK-UP (REVERSE) SERVO, REPLACING

NOTE: The back-up (reverse) servo is located up on the transmission, under the fuel rail and the coolant hose. The transmission must be separated from the engine to access the back-up (reverse) servo.

NOTE: Read through the instructions before beginning work.

CAUTION: Cleanliness is extremely important when working on automatic transmissions. Use lint free paper or rags.

REMOVAL

REMOVING THE TRANSMISSION

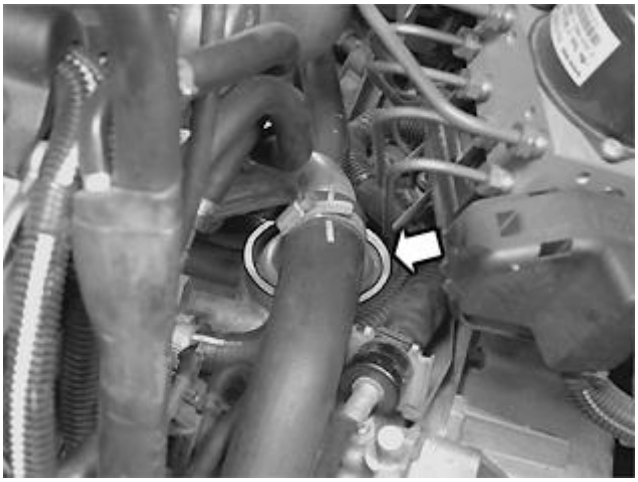

Fig. 484: Identifying Back-Up Servo
Courtesy of VOLVO CARS CORPORATION

Remove the transmission. See **TRANSMISSION, REMOVING**.

Wipe and blow clean around the cover for the back-up servo.

REMOVING THE BACK-UP SERVO

Fig. 485: Identifying Spring Clip And Cut-Out
Courtesy of VOLVO CARS CORPORATION

Push the spring clip (holding the cover) forward, so that the cut-out aligns with the cut-out in the transmission housing.

RELEASING THE SPRING CLIP

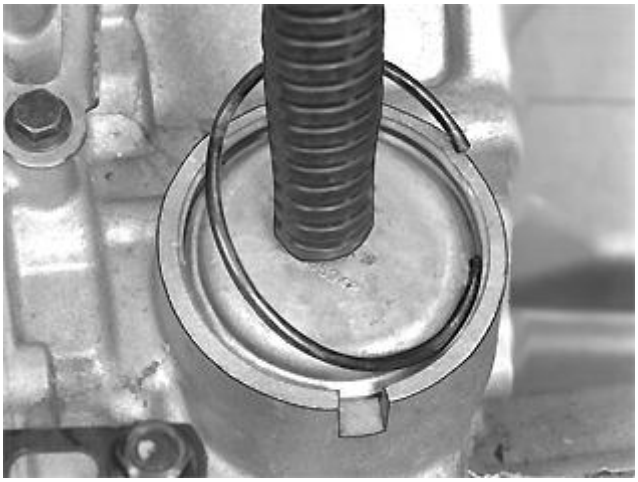

Fig. 486: Identifying Installing Spring Clip
Courtesy of VOLVO CARS CORPORATION

Press the piston down a little using a jointed socket wrench.

Pry up the locking catch using a screwdriver.

Pick up the cover and the piston.

REPLACING THE COVER

Fig. 487: Identifying Piston Cover
Courtesy of VOLVO CARS CORPORATION

Replace the cover.

Install a new O-ring.

INSTALLATION

INSTALLING THE COVER ON THE TRANSMISSION

Fig. 488: Identifying Piston Cover
Courtesy of VOLVO CARS CORPORATION

HINT: Two people are required to install the spring clip.

Apply a little petroleum jelly to the O-ring on the cover. Use Volvo Genuine parts petroleum jelly (P/N 116 1151-4).

Install the cover (carefully) and press it down towards the piston, as far as it will go.

INSTALLING THE SPRING CLIP

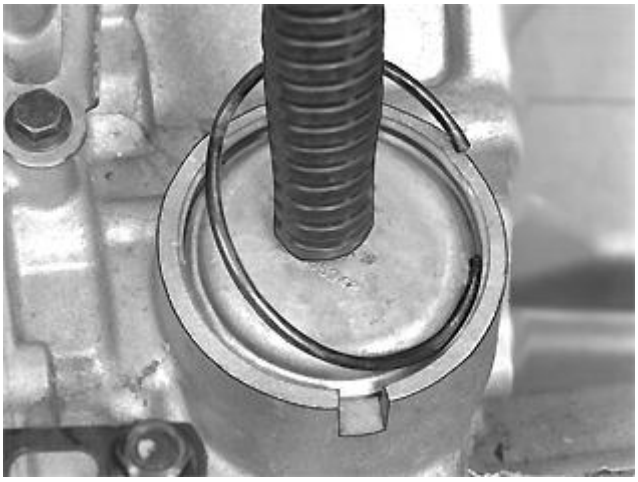

Fig. 489: Identifying Installing Spring Clip
Courtesy of VOLVO CARS CORPORATION

Hold the cover depressed. Install the spring clip end in the groove a little way outside the cut out.

Then press down the spring clip, so that it locks the cover.

INSTALLING THE TRANSMISSION ON THE ENGINE

Install the transmission. See **TRANSMISSION, INSTALLING (2005, 2006)**

PRESSURE SENSOR, REPLACING

REMOVING THE SIDE COVER FROM THE TRANSMISSION

See **SIDE COVER TRANSMISSION, REMOVING**.

DISCONNECTING THE PRESSURE SENSOR

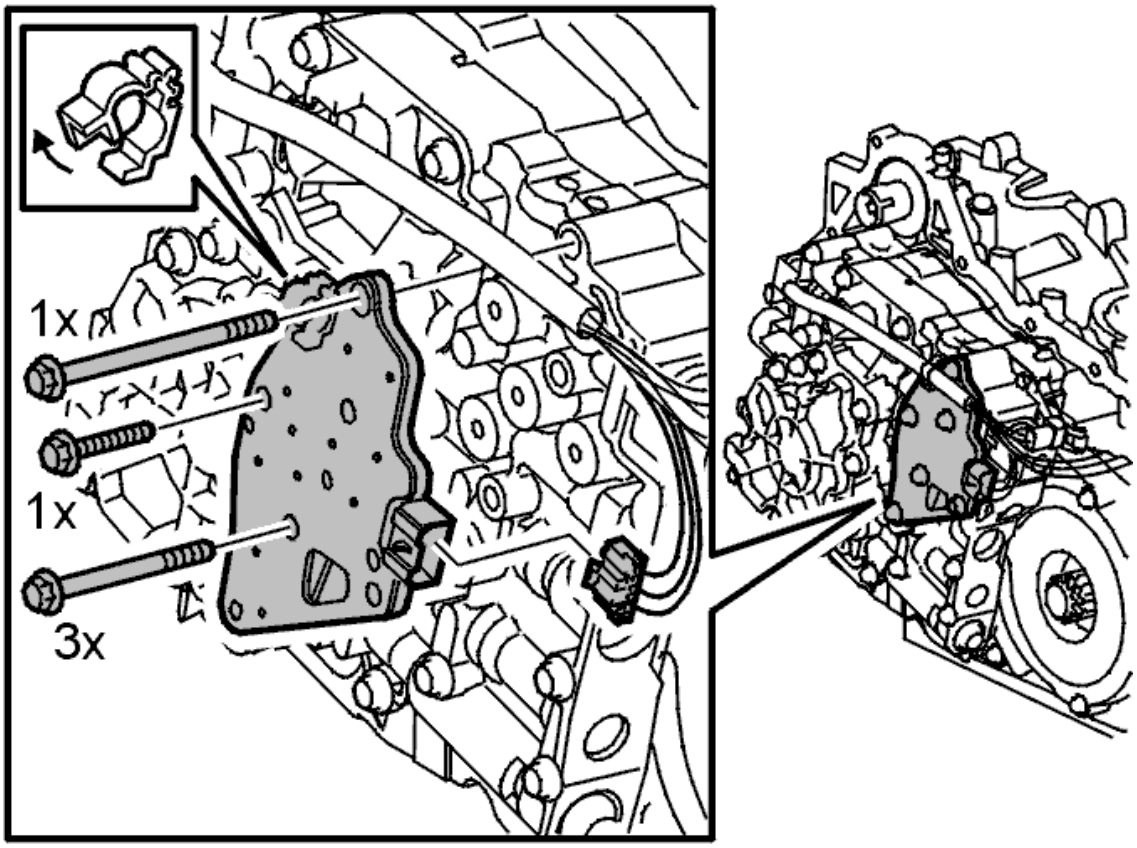

Fig. 490: Identifying Pressure Sensor
Courtesy of VOLVO CARS CORPORATION

Remove:

- the clip for the cable harness from the pressure sensor
- the connector
- the screws.

NOTE: The upper screw is M10. The two shiny screws are self tapping.

Disconnect the pressure sensor.

Check that all 6 O-rings remain on the pressure sensor.

INSTALLING THE PRESSURE SENSOR

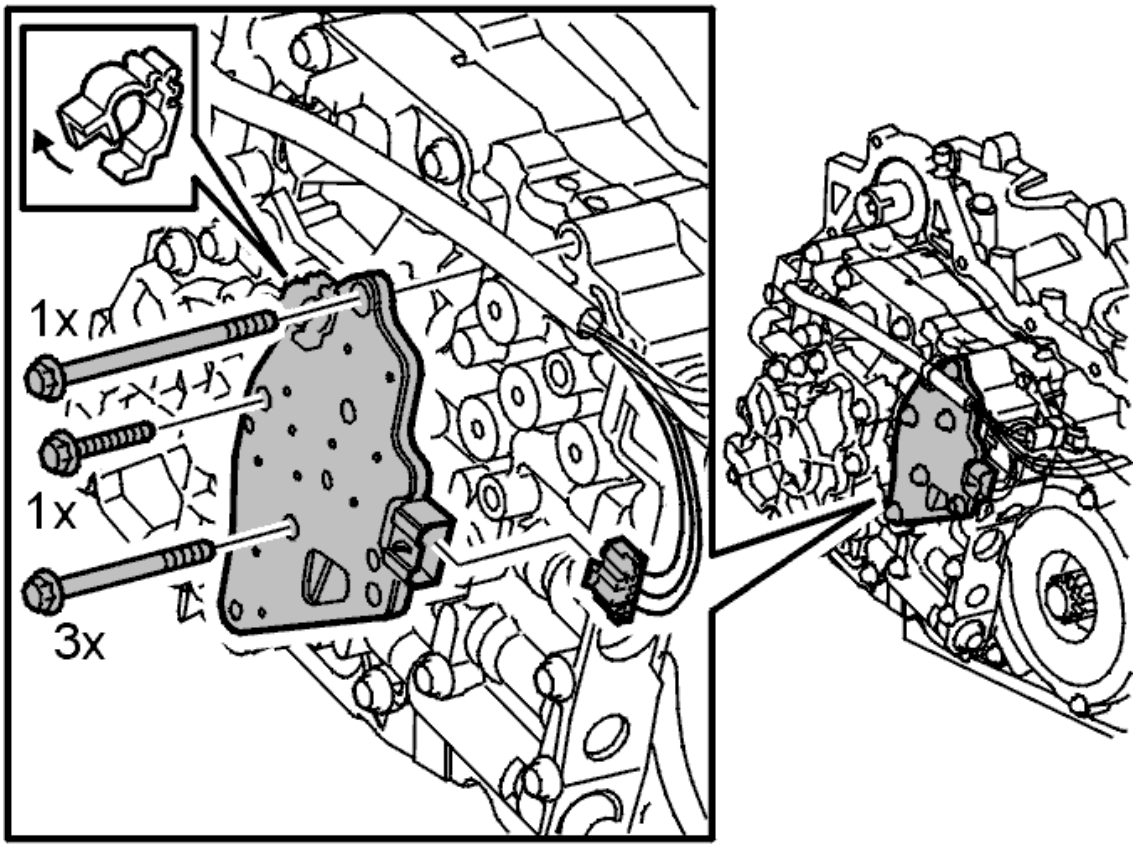

Fig. 491: Identifying Pressure Sensor
Courtesy of VOLVO CARS CORPORATION

Apply a little automatic transmission fluid to the sensor O-rings.

Install:

- the pressure sensor
- the screws loosely (finger tight).

NOTE: **The upper screw is a M10 screw head. The three long screws are M8. The two shiny short screws are self tapping and should go into the same threads as before.**

Tighten the screws lightly crosswise. Then tighten **the black screws** . Tighten to **12 Nm** .

Then tighten the two self tapping screws. Tighten to **8 Nm** .

Install:

- the connector
- the clip for the cable harness for the pressure sensor.

INSTALLING THE SIDE COVER ON THE TRANSMISSION

See **SIDE COVER TRANSMISSION, INSTALLING**.

SEALING RING AND PISTON WITH O-RING FOR FRONT SERVO, INSTALLING

NOTE: **As the illustrations in this service information are used for different model years and / or models, some variation may occur. However, the essential information in the illustrations is always correct.**

INSTALLATION

INSTALLING THE PISTON IN THE TRANSMISSION

Fig. 492: Identifying Piston With O-Ring For Front Servo
Courtesy of VOLVO CARS CORPORATION

Apply a little petroleum jelly to the O-ring for the piston.

Use petroleum jelly, P/N 116 51-4.

Install the piston in the transmission.

INSTALLING THE SERVO CYLINDER COVER

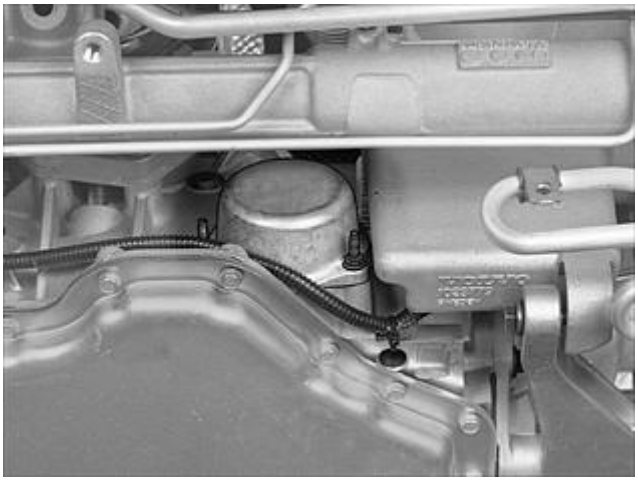

Fig. 493: Identifying Servo Cylinder Cover
Courtesy of VOLVO CARS CORPORATION

Align the servo cylinder cover with the piston and the transmission. Lightly tighten the 3 M6 screws alternately. Tighten.

Install the transmission output speed sensor cable on the transmission using a tie strap.

TIGHTENING THE SCREWS FOR THE BEVEL GEAR/CHAIN HOUSING

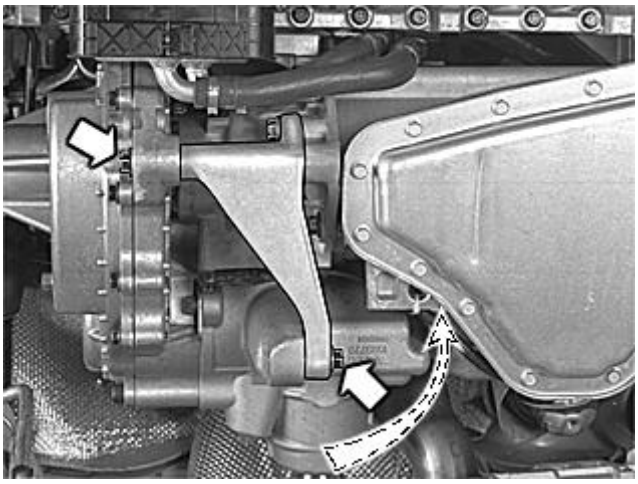

Fig. 494: Identifying Screws For The Bevel Gear/Chain House
Courtesy of VOLVO CARS CORPORATION

Lightly tighten the 3 M10 screws alternately. The screw for the bevel gear/bracket on the engine is on top of the bevel gear and can be accessed from the center. Tighten.

INSTALLING THE BRACKET

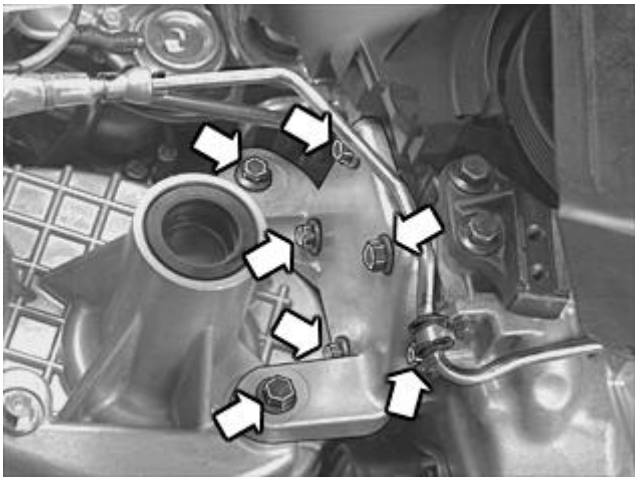

Fig. 495: Identifying Chain Housing Bracket Screws
Courtesy of VOLVO CARS CORPORATION

Install the bracket on the cylinder block and chain housing using 6 M10 screws.

First tighten the screws for the bracket and cylinder block so that the bracket can move slightly. Then tighten the 2 screws for the bracket and chain housing alternately to contact. Then tighten all the screws.

Install and tighten the screw for the fuel line clamp.

INSTALLING THE STEERING GEAR TO THE ENGINE PAD

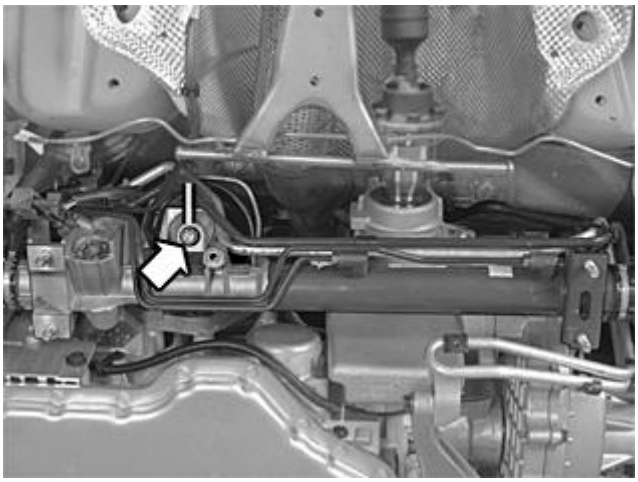

Fig. 496: Installing The Steering Gear To The Engine Pad
Courtesy of VOLVO CARS CORPORATION

Install the 1 M10 screw for the steering gear and engine pad. Align the steering gear in relation to the engine pad, using the marking made earlier. Tighten.

INSTALLING THE DRIVE SHAFT

Fig. 497: Identifying Mating Surface Of The Drive Shaft
Courtesy of VOLVO CARS CORPORATION

Press the drive shaft into the transmission. Check that the snap ring is in its groove by carefully pulling it in the inner constant velocity joint. Locate the drive shaft in the wheel hub.

FINISHING

Install the sub-frame. See **SUB-FRAME FRONT, REPLACING** . Check the boot on the steering shaft/firewall. See **CHECKING THE BOOT FOR THE STEERING SHAFT/FIREWALL** .

Fill the same amount of transmission oil that was drained. Only use automatic transmission fluid P/N 116 1621 (1 liter container) or 116 1621 (4 liter container).

Check the transmission oil. See **OIL LEVEL, CHECKING** .

For information about test driving the car, see **TEST DRIVE FORM, DESCRIPTION** .

SEALING RING AND PISTON WITH O-RING FOR FRONT SERVO, REPLACING

Special tools:

9995462

9997063

NOTE: As the illustrations in this service information are used for different model years and / or models, some variation may occur. However, the essential information in the illustrations is always correct.

REMOVAL

PREPARATIONS

Fig. 498: Identifying Dip Stick Pipe & Oil Suction Device
Courtesy of VOLVO CARS CORPORATION

Drain the transmission fluid. Use an oil suction device to drain approximately 6 liters of transmission fluid. Remove the sub-frame. See **SUB-FRAME FRONT, REPLACING** .

REMOVING THE RIGHT DRIVE SHAFT

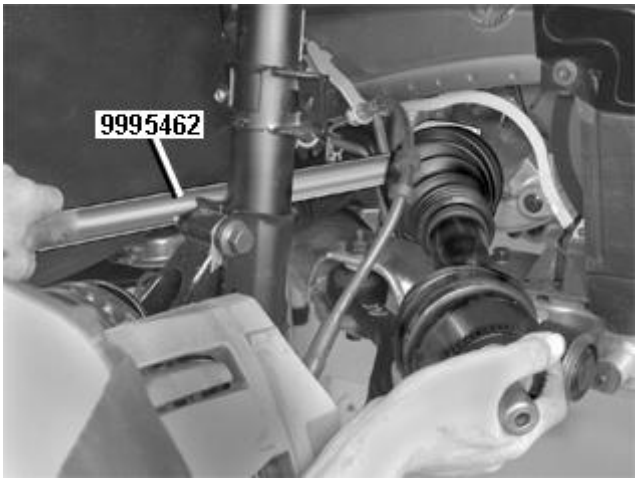

Fig. 499: Detach The Drive Shaft With Jimmy Bar
Courtesy of VOLVO CARS CORPORATION

Angle the wheel hub out. Remove the drive shaft from the hub. Use a tensioner band to pull the wheel spindle and wheel hub backwards. Remove the drive shaft from the transmission. Use jimmy bar **9995462** .

Install sealing plug **9997063** .

DISCONNECTING THE STEERING GEAR FROM THE ENGINE PAD

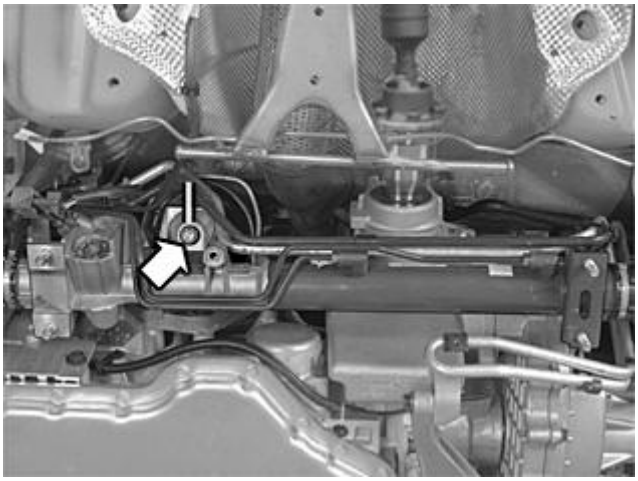

Fig. 500: Installing The Steering Gear To The Engine Pad
Courtesy of VOLVO CARS CORPORATION

Mark up the position of the steering gear in relation to the engine pad.

Remove the screw for the steering gear and engine pad. Move the steering gear towards the firewall. Hold it up using tie straps.

REMOVING THE CHAIN HOUSING BRACKET

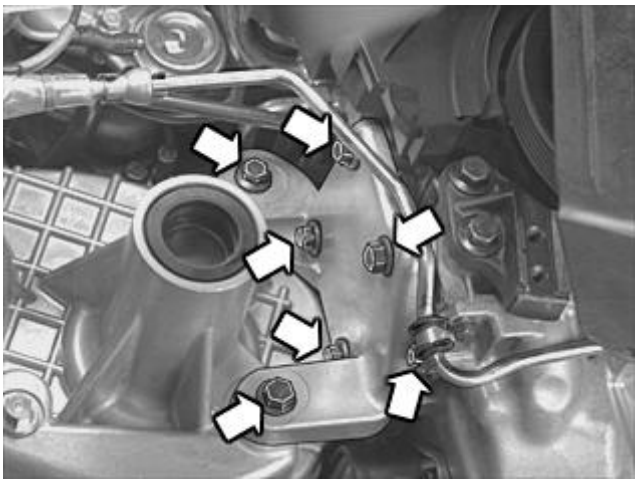

Fig. 501: Identifying Chain Housing Bracket Screws
Courtesy of VOLVO CARS CORPORATION

Remove:

- the screw in the clamp for the fuel line
- the bracket for the chain housing and engine.

REMOVING THE SCREWS FOR THE BEVEL GEAR/CHAIN HOUSING

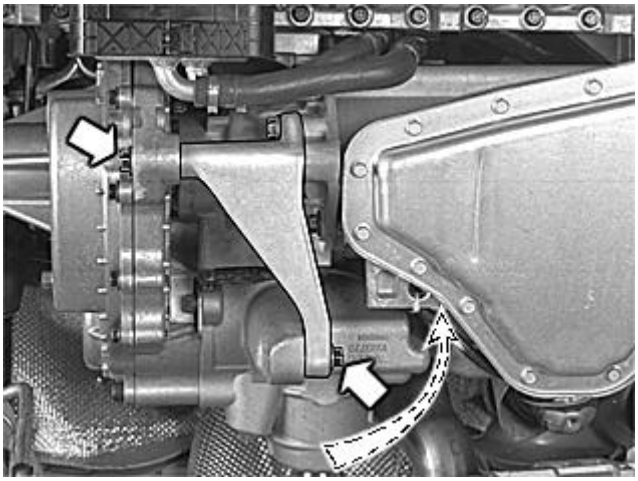

Fig. 502: Identifying Screws For The Bevel Gear/Chain House
Courtesy of VOLVO CARS CORPORATION

Slacken off the screws approximately **5 mm** . The screw for the bevel gear/bracket on the engine is on top of the bevel gear and can be accessed from the center.

Press out the bevel gear/chain housing towards the screw heads. This is done so that the servo cylinder cover can pass the bevel gear.

REMOVING THE SERVO CYLINDER COVER

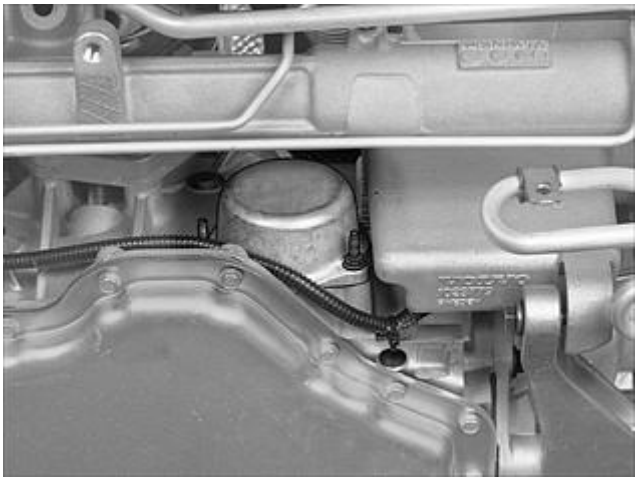

Fig. 503: Identifying Servo Cylinder Cover
Courtesy of VOLVO CARS CORPORATION

Detach the transmission output speed sensor cable from the tie strap on the transmission. Move the cable to one side.

Wipe and blow the servo cylinder cover clean. Take out a container for the oil. Remove the 3 screws. Pull the cover straight out.

REMOVING THE PISTON FROM THE TRANSMISSION

Fig. 504: Identifying Piston With O-Ring For Front Servo
Courtesy of VOLVO CARS CORPORATION

Pull the piston straight out of the transmission.

REPLACING THE PISTON WITH O-RING AND SEALING RING

Fig. 505: Identifying Piston With O-Ring And Sealing Ring
Courtesy of VOLVO CARS CORPORATION

HINT: Press the piston against a bench so that the spring clip is easier to remove.

Replace the piston and the O-ring.

Replace the catch.

Replace the sealing ring for the servo cylinder cover.

SIDE COVER TRANSMISSION, INSTALLING

NOTE: As the illustrations in this service information are used for different model years

and / or models, some variation may occur. However, the essential information is always correct.

WARNING: Avoid skin contact with the transmission oil.

NOTE: Thoroughly clean the transmission and side cover's contact faces before installing the gasket. Paper must not be used for cleaning. Paper fragments can cause running problems. Check the marking on the side cover's gasket. The gasket can be reused once.

INSTALLATION

NOTE: For tightening torques, see TIGHTENING TORQUE .

CHECKING THE GASKET FOR THE SIDE COVER

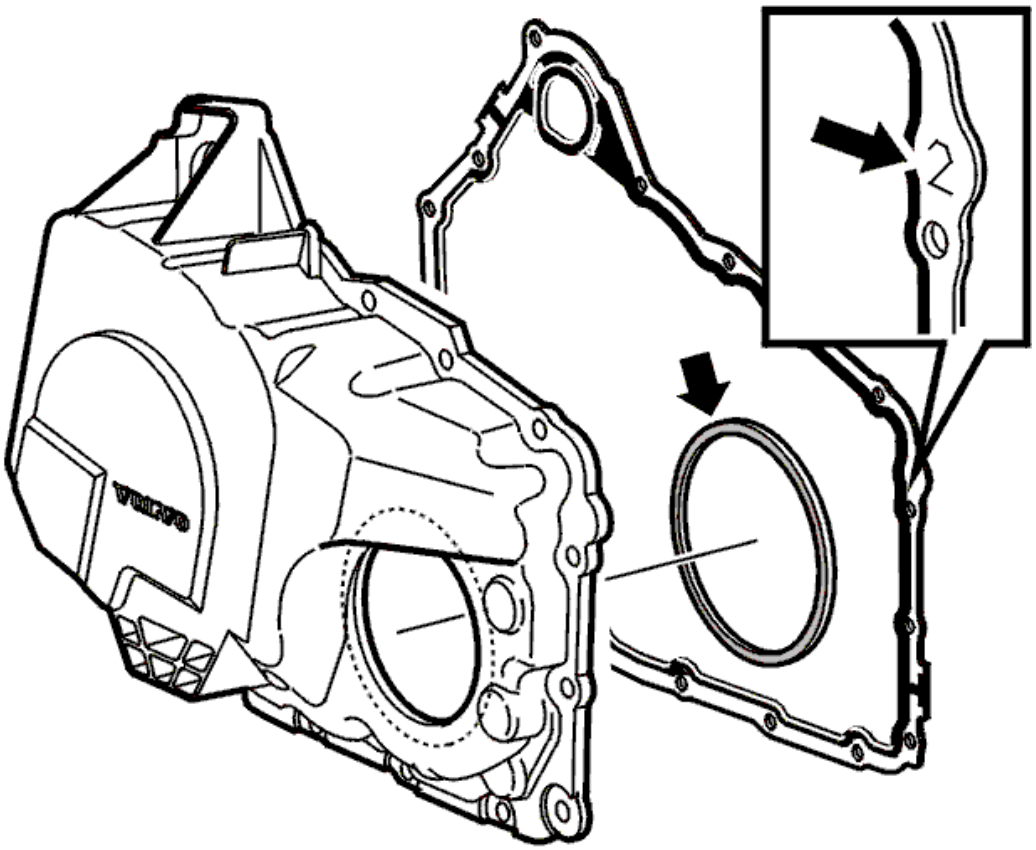

Fig. 506: Checking Side Cover Gasket
Courtesy of VOLVO CARS CORPORATION

NOTE: The gasket may be reused once.

Check whether there is a 2 at the top right corner of the gasket. The gasket must be replaced if there is a 2. If there is no number, mark a 2 on the gasket if it is intact.

The gasket has now been reused once and must be replaced the next time the side cover is removed. Make this mark to assist other mechanics.

Always replace the sealing ring which seals against the drive shaft outlet.

NOTE: Apply some vaseline to the new seal ring so that it remains in the groove in the side cover when installing.

INSTALLING COVER

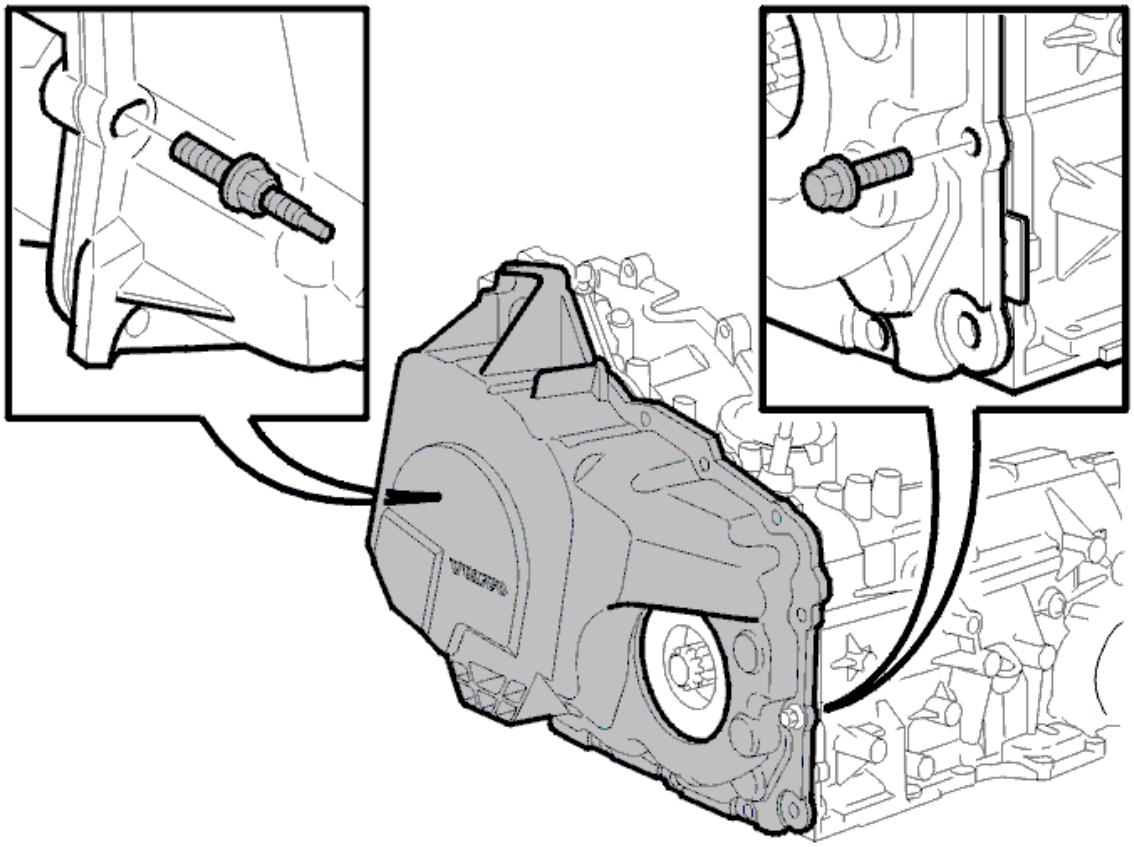

Fig. 507: Installing Side Cover Screws
Courtesy of VOLVO CARS CORPORATION

NOTE: The side cover has 2 different holes. The rear smaller hole and the front rectangular hole. These 2 holes are to guide the gasket for the cover into position during installation. Begin installing the cover by installing the two screws.

Apply a little petroleum jelly to the transmission mating surface.

Install:

- the side cover gasket
- the side cover with the sealing ring
- the remaining screws. Tighten. See **SUMMARY OF TIGHTENING TORQUES FOR SPECIFIC COMPONENTS**
- the bracket for the studs and the screw loosely on the bracket
- the clamp for the stud and the M8 nut. Tighten.

Clamp the wiring up on the bracket. Use new tie straps.

LIFTING THE ENGINE AND TRANSMISSION TO THE HORIZONTAL POSITION

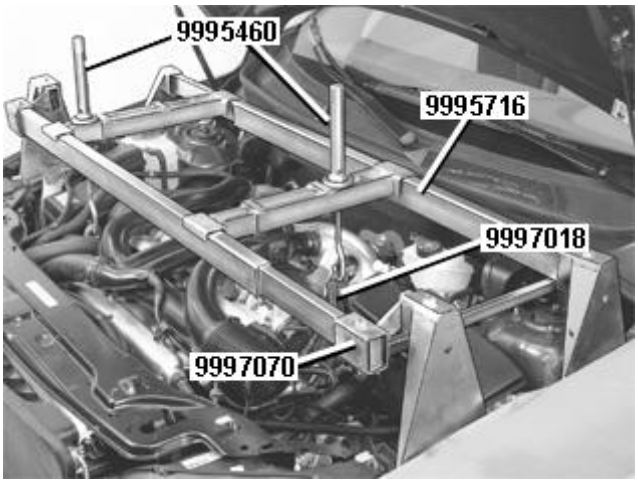

Fig. 508: Engine Lift Installed
Courtesy of VOLVO CARS CORPORATION

Lift the engine to the horizontal position. Check that no hoses or cables are trapped when lifting.

INSTALLING OIL PIPES

Fig. 509: Identifying Transmission Oil Pipes
Courtesy of VOLVO CARS CORPORATION

Install:

- the oil pipes to the connections on the transmission. Counterhold on the connections. Tighten. See **SUMMARY OF TIGHTENING TORQUES FOR SPECIFIC COMPONENTS**
- the M8 nut and the washers for the brackets for the oil pipes. Tighten
- the gear selector cable in the mountings on the side member.

INSTALLING THE LEFT DRIVE SHAFT ON THE TRANSMISSION AND THE WHEEL SPINDLE

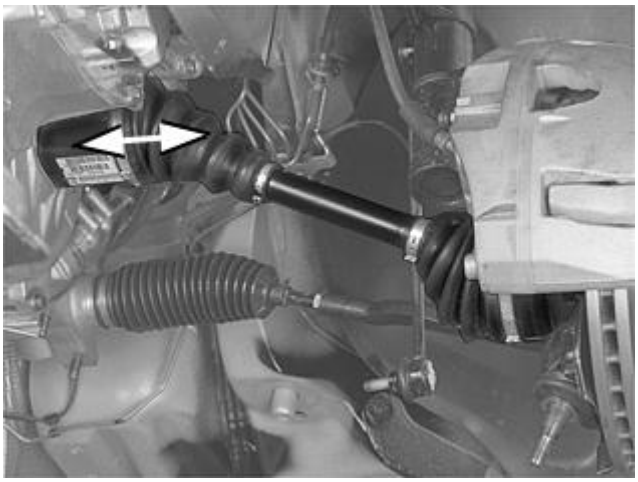

Fig. 510: Identifying Left Drive Shaft On Transmission And Wheel Spindle
Courtesy of VOLVO CARS CORPORATION

Press in the constant velocity joint housing firmly so that the snap ring engages in its groove in the transmission.

Pull the constant velocity joint to check that the drive shaft is secure. Lubricate the drive shaft splines. Use a small amount of thin oil. Locate the drive shaft in the wheel hub. Install a new screw loosely in the drive shaft.

INSTALLING THE SUB-FRAME ON THE BODYWORK

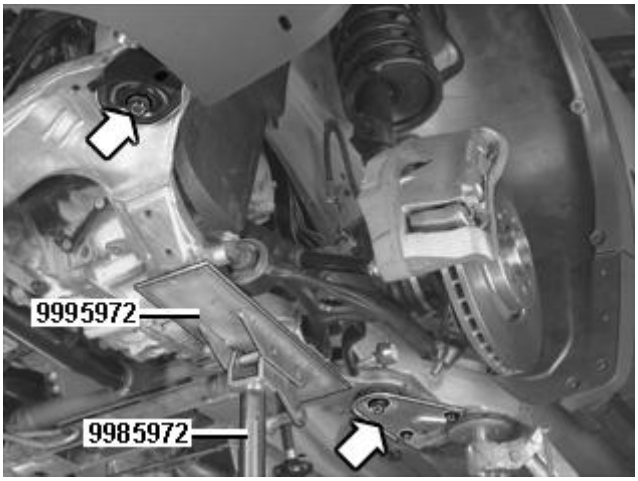

Fig. 511: Identifying Mobile Jack & Sub-Frame
Courtesy of VOLVO CARS CORPORATION

NOTE: Use new screws. Lubricate the screw threads.

Lift up the sub-frame until it is about **150 mm** from the side member. Secure the power steering pipe at the front edge of the upper side of the sub-frame. Use the rubber covered clamp. Install the screw loosely. Apply a small amount of soap solution so that it glides into the clamp easily.

NOTE: Make sure of the following when lifting the sub-frame:

- **that the steering shaft joint on the steering gear goes through the hole in the firewall**
- **that the brake pipe passes the bracket for the exhaust pipe**
- **that the ball joint pinion for the spring strut aligns in the link arm.**

Install the sub-frame's left side with two screws together with the sub-frame's brackets and engine heater, if installed, do not tighten yet.

Use new screws. Lube the screws with oil.

Install the screws for brackets M10, do not tighten yet.

Remove the mobile jack.

INSTALLING THE DRIVE SHAFT ON THE WHEEL HUB

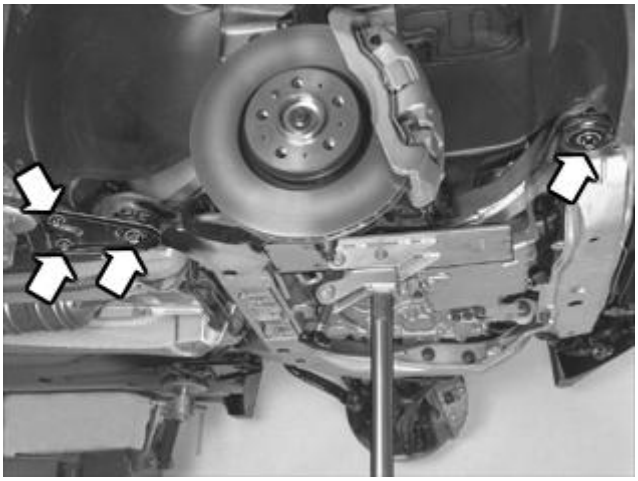

Fig. 512: Identifying Drive Shaft, Wheel Hub And Screws
Courtesy of VOLVO CARS CORPORATION

Lubricate the drive shaft splines. Use a small amount of thin oil.

Locate the drive shaft in the wheel hub.

Install a new screw loosely in the drive shaft.

Align the ball joint pinion for the spring strut in the control arm. If necessary use tools for removal, see **SIDE COVER TRANSMISSION, REMOVING** to hold the control arm down.

Position the mobile jack lightly applied under the right side of the sub-frame.

Install the sub-frame's right side together with the sub-frame's brackets.

Use new screws. Lube the screws with oil.

Tighten acc. to: **TIGHTENING TORQUE** . First tighten the screws on the sub-frame's left side, then on the right.

Tighten the screws for the brackets M10.

Remove the mobile jack.

INSTALLING THE CROSS MEMBERS ON THE BODYWORK

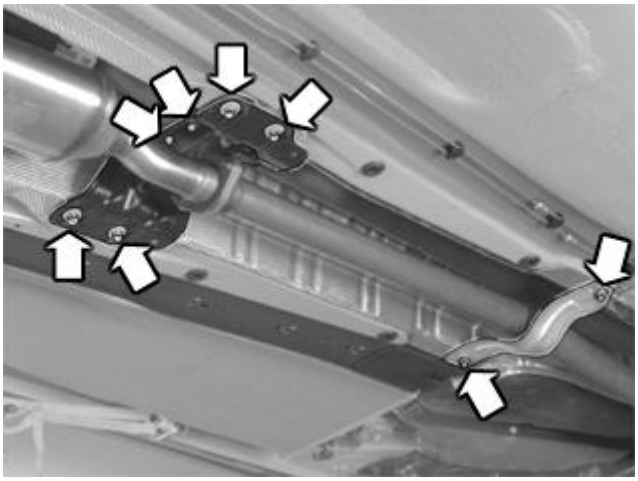

Fig. 513: Locating Cross Members And Bolts
Courtesy of VOLVO CARS CORPORATION

Install the 4 x M8 screws for the support for the center bearing. Tighten.

Tighten the 2 x M8 screws for the propeller shaft center bearing/member.

Install the 2 x M8 screws in the rear member. Tighten.

INSTALLING THE FRONT MOUNTING FOR THE EXHAUST PIPE AND THE CROSS MEMBER

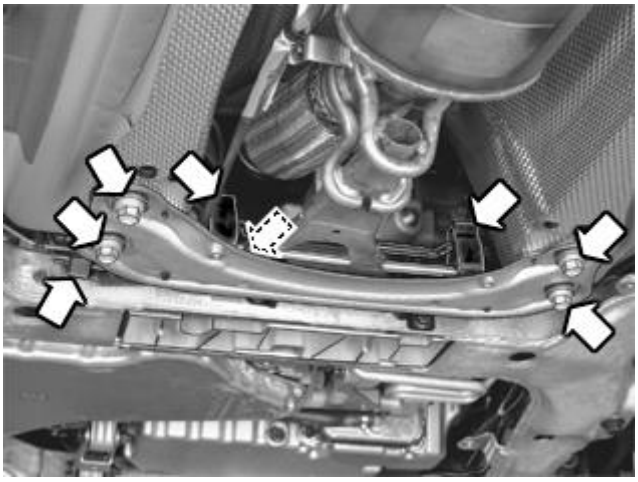

Fig. 514: Locating Front Cross Member And Bolts
Courtesy of VOLVO CARS CORPORATION

Install:

- the rubber mountings for the exhaust system on the bracket on the sub-frame and the exhaust pipe
- the connector for the heated oxygen sensors (HO2S) in the sub-frame
- the member. Use 4 x M8 screws. Tighten
- the brake pipe in the mountings in the member

- the clamp for the heated oxygen sensor (HO2S) wiring in the member.

INSTALLING THE POWER STEERING LINE

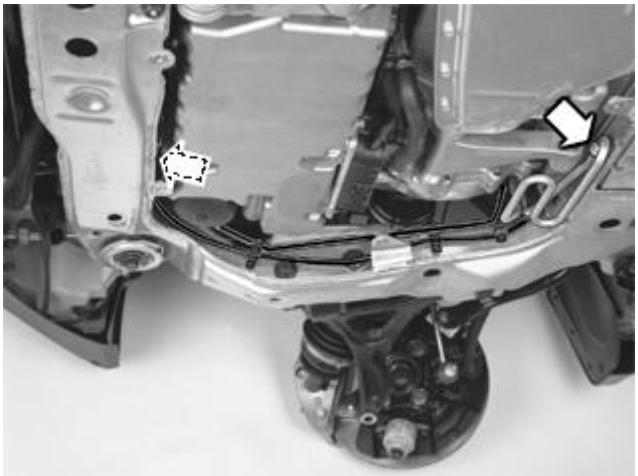

Fig. 515: Locating Power Steering Line
Courtesy of VOLVO CARS CORPORATION

Tighten the screw for the clamp for the power steering line at the front edge of the top of the sub-frame. The screw can be accessed from the front if the cable duct is lifted.

Install the screw for the clamp for the power steering line on the right side at the rear edge of the frame.

Press the power steering pipe and the evaporator pipe into the holders on the right side of the sub-frame.

For cars with fuel powered parking heaters

Press the fuel line into place in the holders.

INSTALLING THE SCREWS FOR THE ENGINE PADS AND ENGINE STABILIZER BRACE

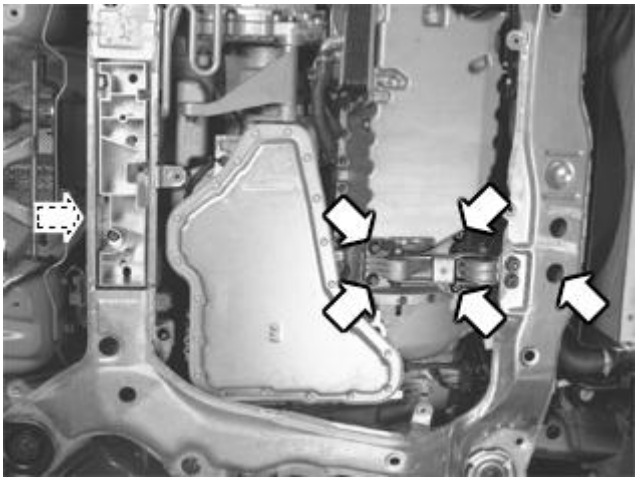

Fig. 516: Identifying Engine Pads And Engine Stabilizer Brace Bolts

Courtesy of VOLVO CARS CORPORATION

Install:

- the M10 screws for the front and rear engine pads. Tighten
- the 4 x M10 screws for the engine stabilizer brace. Tighten.

INSTALLING FRONT SUSPENSION COMPONENTS (BOTH SIDES)

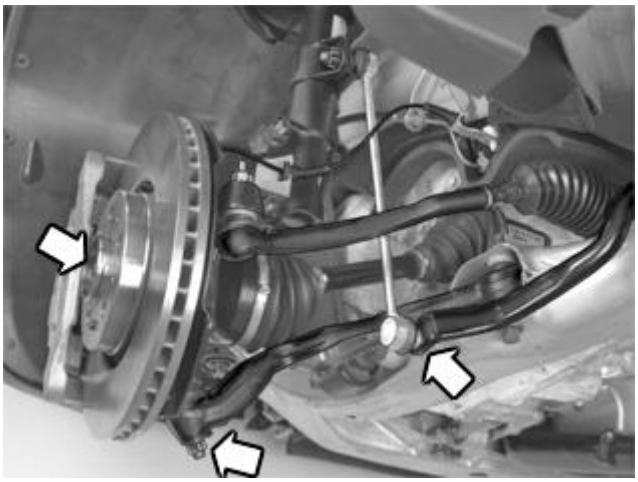

Fig. 517: Front Suspension Components
Courtesy of VOLVO CARS CORPORATION

Install:

- a new M14 lock nut (1 on each side) for the ball joint pinion. Counterhold the ball joint pinion while tightening so that the boot does not turn. Tighten. See **SUMMARY OF TIGHTENING TORQUES FOR SPECIFIC COMPONENTS**
- the link for the anti-roll bar. Use a new M10 lock nut (1 on each side). Counterhold the ball joint pinion while tightening so that the boot does not turn. Tighten. See **SUMMARY OF TIGHTENING TORQUES FOR SPECIFIC COMPONENTS** . Tighten the drive shaft screw. Counterhold using a screwdriver in the brake disc vents. Tighten. See **SUMMARY OF TIGHTENING TORQUES FOR SPECIFIC COMPONENTS**
- the soundproofing over the drive shaft (applies to certain versions)
- a new M12 lock nut for the tie rod/wheel spindle.

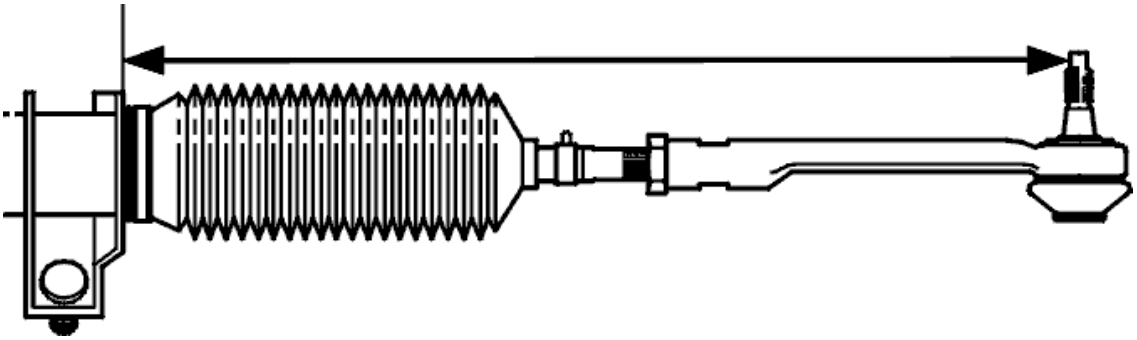

Fig. 518: Identifying Length Of Track Rod In Relation To Steering Gear Housing
Courtesy of VOLVO CARS CORPORATION

NOTE: Check when installing that the track rod is in the same position as noted earlier.

INSTALLING COMPONENTS FOR THE FENDER LINER

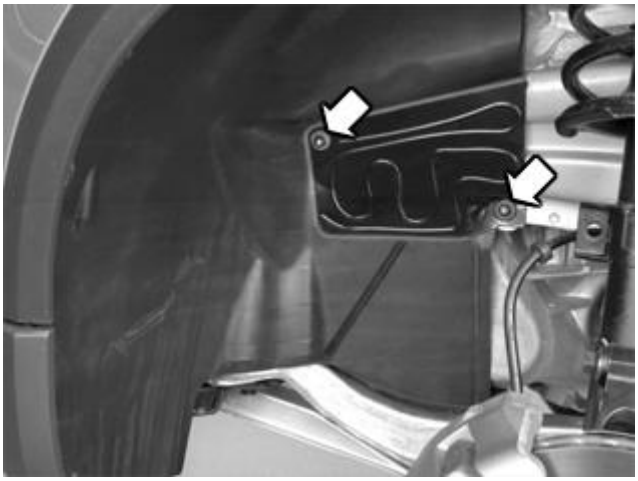

Fig. 519: Identifying Support Plate And Nuts
Courtesy of VOLVO CARS CORPORATION

Install:

- the support plate and nuts (both sides).

INSTALLING THE CABLE DUCT

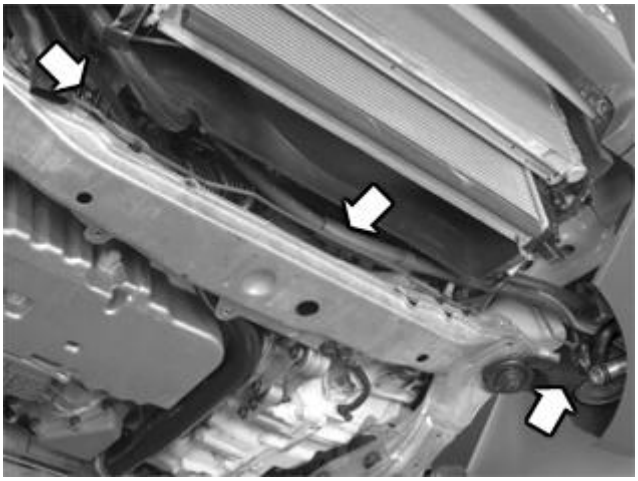

Fig. 520: Cable Duct
Courtesy of VOLVO CARS CORPORATION

Install:

- the cable duct on the sub-frame
- the parking heater (if applicable) in the mounting in the sub-frame and the fuel line in the mountings.

REMOVING THE LIFTING BEAMS

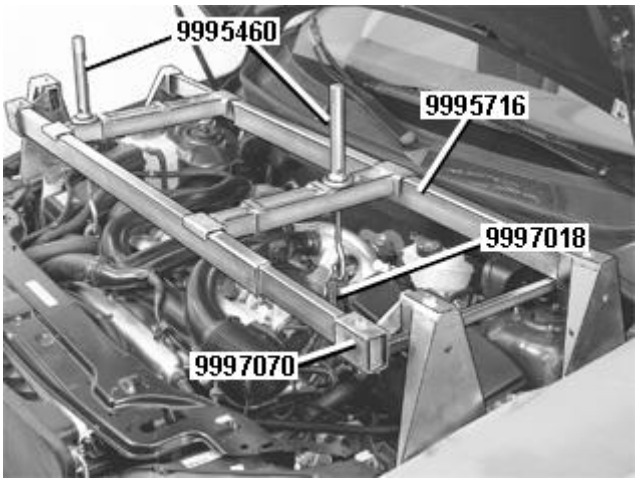

Fig. 521: Engine Lift Installed
Courtesy of VOLVO CARS CORPORATION

Lower the car.

Remove the lifting beams and hooks from the engine.

INSTALLING THE LOWER STEERING SHAFT ON THE STEERING SHAFT JOINT

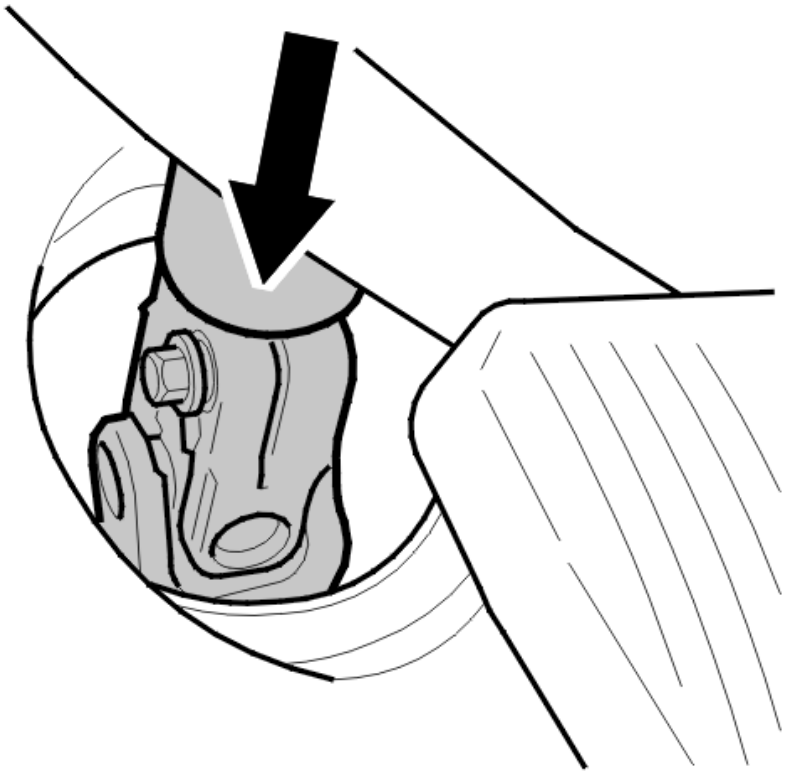

Fig. 522: Identifying Steering Shaft Joint
Courtesy of VOLVO CARS CORPORATION

Align the steering shaft in the joint on the steering gear. Install a new M8 screw. Tighten.

Install the boot and snap ring on the firewall. Check that the bearing in the boot comes into place against the steering shaft.

INSTALLING THE BOOT AND SNAP RING ON THE FIREWALL

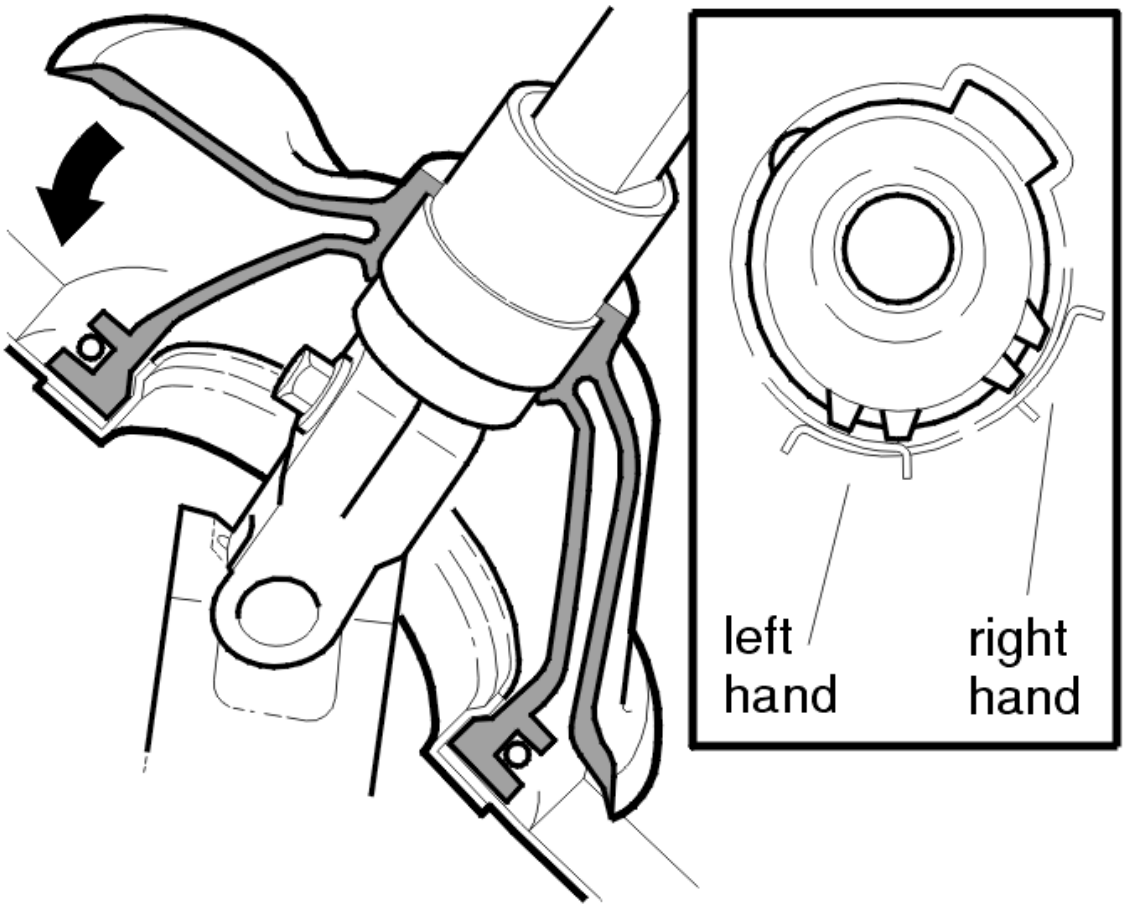

Fig. 523: Identifying Bearing In Boot
Courtesy of VOLVO CARS CORPORATION

Check that the bearing in the boot is in position. If it has become detached apply a little petroleum jelly or grease to the edge of the boot (around the hole). Press the bearing back down into the boot.

Install the boot on the firewall. Check carefully that the boot and snap ring go into the correct position. Adjust if necessary.

NOTE: **It is essential that the above checks are carried out. Otherwise there may be noise from the transmission/engine and road noise in the passenger compartment.**

INSTALLING THE COOLANT HOSE

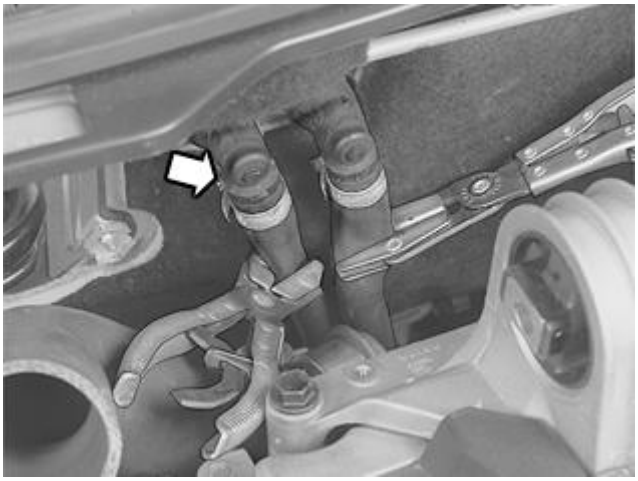

Fig. 524: Coolant Hose In Passenger Compartment
Courtesy of VOLVO CARS CORPORATION

Install the connector securing the engine coolant hose to the heater.

Remove the hose clips.

INSTALLING THE CONNECTOR ON THE TRANSMISSION

Fig. 525: Gearbox And Connector
Courtesy of VOLVO CARS CORPORATION

Install:

- the screw for the clamp holding the positive cable on the engine
- the connector from the transmission (press the connector together). Pull it from the transmission.

INSTALLING ENGINE COMPARTMENT COMPONENTS

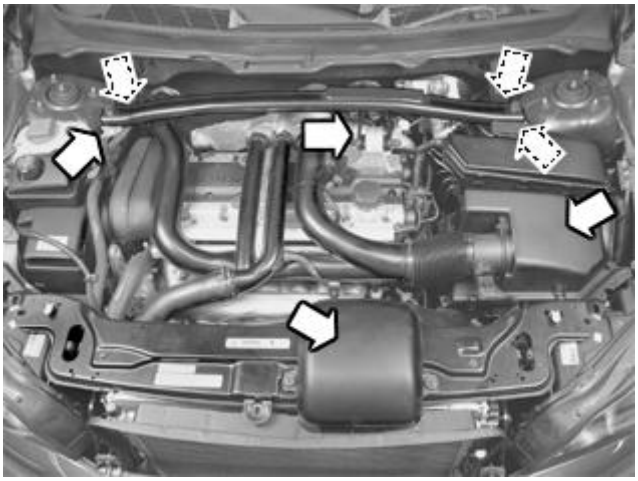

Fig. 526: Identifying Engine Compartment Components
Courtesy of VOLVO CARS CORPORATION

Install:

- the charge air pipe to the charge air cooler (CAC)
- the air cleaner (ACL) housing assembly with the intake manifold and connections
- hook the turbocharger (TC) control valve into place in the air cleaner (ACL)
- the upper engine stabilizer brace between the wheel arches. Use 4 x M10 screws. Tighten
- 1 x M12 screw for the engine stabilizer brace/engine mounting. Tighten
- The tie strap for the power steering return line in the mounting lug for the engine stabilizer brace on the right side.

Fill with coolant. Carefully check while reaching operating temperature or test driving that the level remains the same and that there is no leakage.

TOPPING UP THE TRANSMISSION FLUID

Fig. 527: Filling Transmission With Oil
Courtesy of VOLVO CARS CORPORATION

NOTE: **Oil grade: Only ATF-fluid Dexron III (with G-license).**

Transmission oil, Volvo part number 116 1521-8 (1litre), 116 1621-6 (4 litres).

There are 2 different methods when topping up the transmission fluid.

Method 1:

Start by filling with 5.5 liters of oil. Use a funnel with a plastic hose. Fill through the dipstick pipe. Clear up any oil spillage under the dip stick pipe.

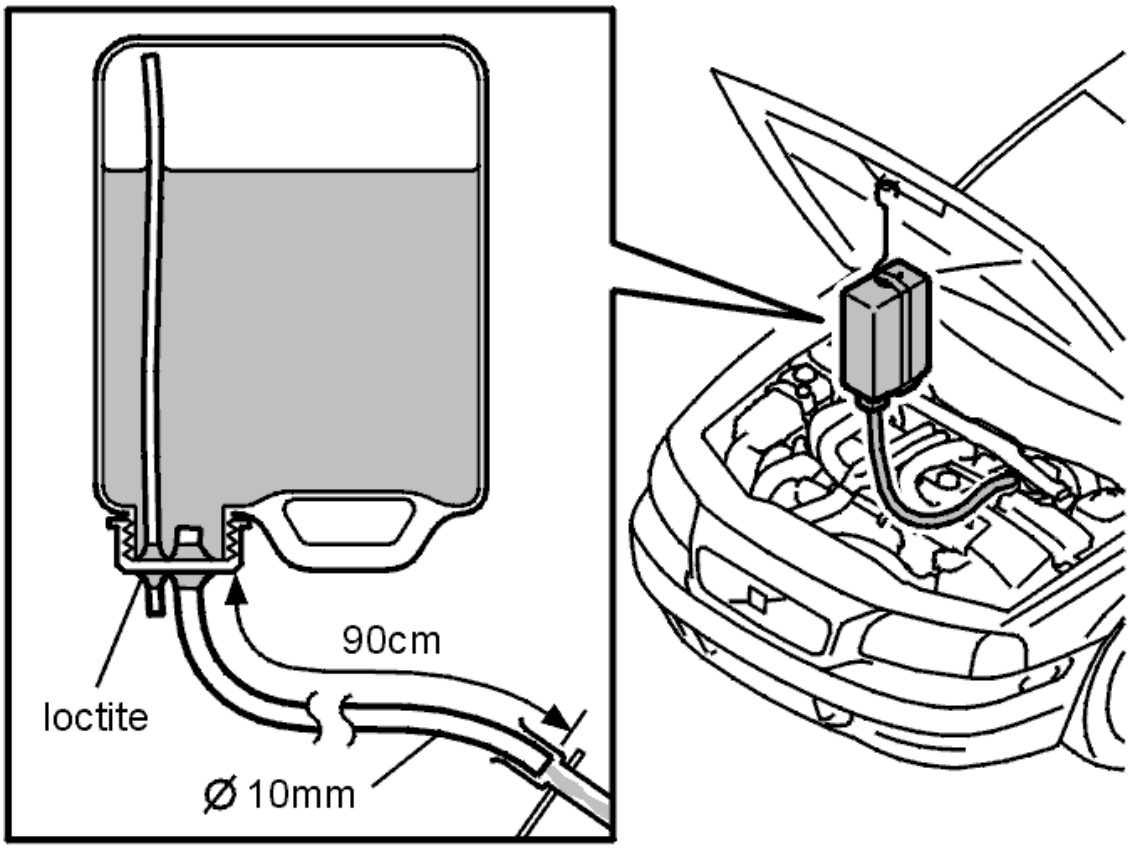

Fig. 528: Filling Transmission With Oil - Method 2
Courtesy of VOLVO CARS CORPORATION

Method 2:

Start by filling with 5.5 liters of oil. Use a converted five liter plastic can (see the illustration) This method avoids oil spillage. It also provides a more regular flow when filling.

NOTE: **After changing transmission oil, the transmission's counter for "Transmission oil, change" shall be reset. Use VIDA (Volvo scan tool) Vehicle communication to reset the counter.**

INSTALLING THE BATTERY LEAD

First read **BATTERY, DISCONNECTING** . Connect the battery lead.

CHECK AFTER ASSEMBLY

To check the oil level, see **OIL LEVEL, CHECKING** .

Fill with coolant. Carefully check while reaching operating temperature or test driving that the level remains the same and that there is no leakage.

Raise the car.

Check that there is no oil leakage at:

- the connections for the oil pipes on the transmission
- -the side cover
- the side cover around the drive shaft.

INSTALLING THE FRONT SPLASH GUARD

Fig. 529: Front Splash Guard
Courtesy of VOLVO CARS CORPORATION

See **SUB-FRAME FRONT, REPLACING** .

Install:

- the splash guard under the engine
- the wheels. See **INSTALLING WHEELS** .

TEST DRIVING THE CAR

NOTE: Test drive the car in the same way as before the repair. See TRANSMISSION

CHECKING/FAULT-TRACING .

For faults other than judder when test driving the car, see **TEST DRIVE FORM, DESCRIPTION** .

SIDE COVER TRANSMISSION, REMOVING

Special tools:

9985972

9995085

9995460

9995462

9995562

9995716

9995972

9997018

9997062

9997070

NOTE: **As the illustrations in this service information are used for different model years and / or models, some variation may occur. However, the essential information is always correct.**

WARNING: **Avoid skin contact with the transmission fluid.**

REMOVAL

DISCONNECTING THE BATTERY LEAD

Remove the battery lead. See **BATTERY, DISCONNECTING** .

REMOVING ENGINE COMPARTMENT COMPONENTS

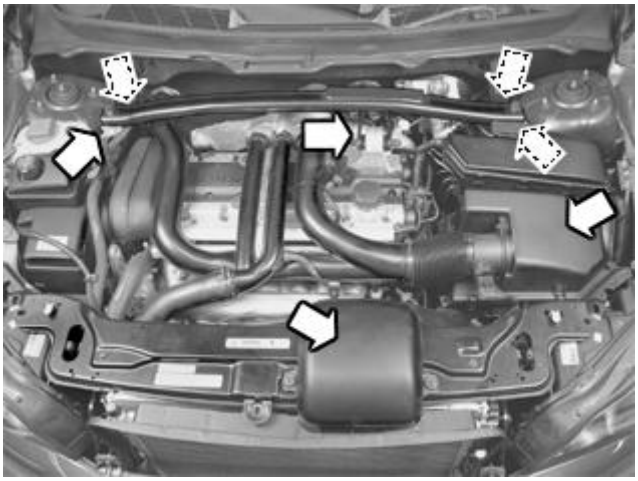

Fig. 530: Identifying Engine Compartment Components
Courtesy of VOLVO CARS CORPORATION

Remove:

- the engine stabilizer brace between the suspension turrets and the engine
- the air cleaner (ACL) housing assembly with the intake pipe.

Unhook the turbocharger (TC) control valve from the air cleaner (ACL) housing. Pull the air cleaner (ACL) housing out of its mountings.

DRAINING OIL

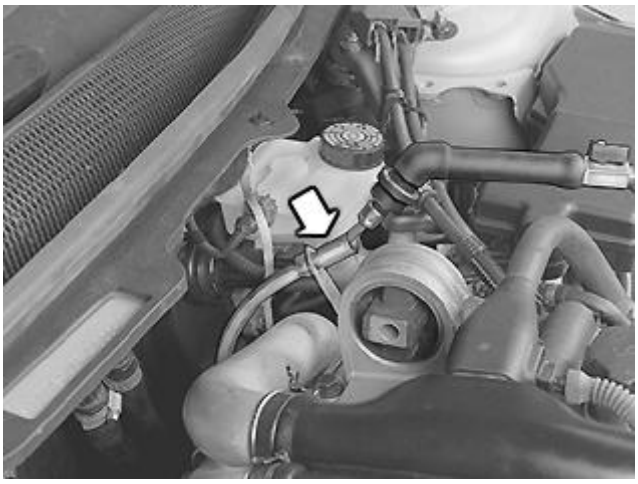

Fig. 531: Identifying Dip Stick Pipe & Oil Suction Device
Courtesy of VOLVO CARS CORPORATION

Use an oil suction unit.

Remove the dip stick. Ensure that the suction pipe reaches down into the transmission.

Extract all the fluid, approximately 6 liters.

REMOVING THE COOLANT HOSE FROM THE PASSENGER COMPARTMENT HEATER

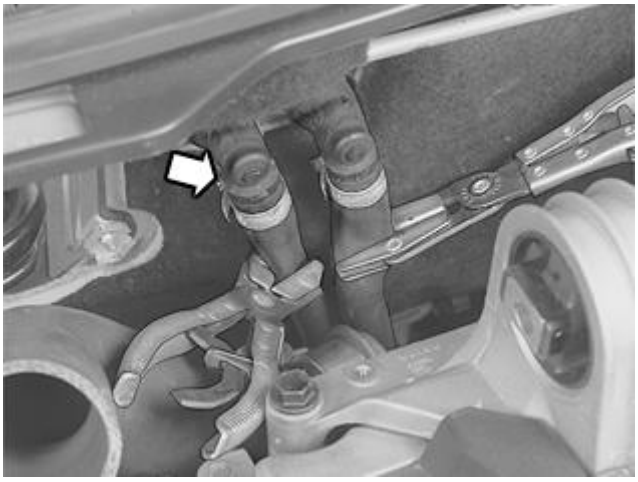

Fig. 532: Coolant Hose In Passenger Compartment
Courtesy of VOLVO CARS CORPORATION

Clamp the hoses with hose clips.

Place some paper under the inner hose connection to collect any spilled coolant.

Turn the quick-release connector (the inner of the 2 hoses) slightly in the direction of the arrow so that the lock opens. At the same time, pull the coolant hose straight out of the coolant pipe.

NOTE: Tie the hose up to the engine so that it does not fall down and trap the hose connector against the firewall during installation.

DISCONNECTING THE CHARGE AIR PIPE

Fig. 533: Heating Around Pipe At Charge Air Cooler
Courtesy of VOLVO CARS CORPORATION

Detach the charge air pipe from the charge air cooler (CAC).

Carefully heat around the pipe at the charge air cooler (CAC). Use a hot air gun. Loosen and remove the pipe.

REMOVING THE CONNECTOR FROM THE TRANSMISSION

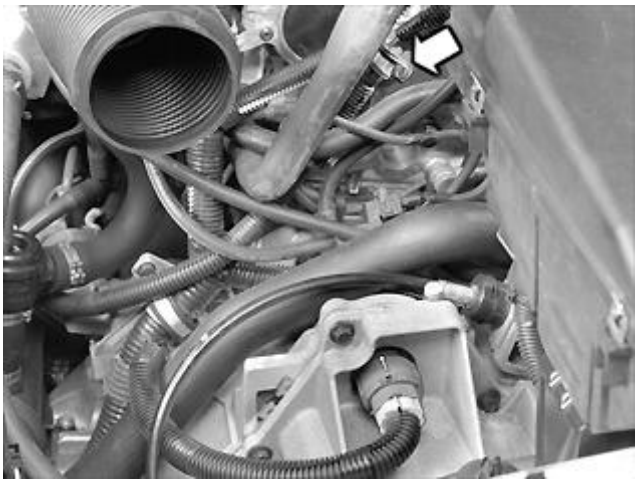

Fig. 534: Gearbox And Connector
Courtesy of VOLVO CARS CORPORATION

Remove:

- the screw for the clamp holding the positive cable on the engine
- the connector from the transmission (press the connector together). Pull it from the transmission.

INSTALLING THE LIFTING BEAMS AND LIFTING HOOKS ON THE ENGINE LIFTING LUGS

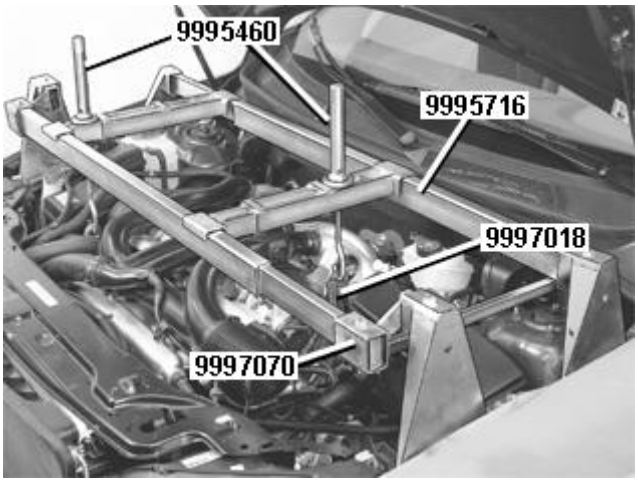

Fig. 535: Engine Lift Installed
Courtesy of VOLVO CARS CORPORATION

NOTE: The front lifting beam must be equipped with fixture kit 9997070 as illustrated.

Position lifting beams **9995716** on the wheel arch and directly above the engine lifting eyelets on the left and

right sides.

Connect the lifting hooks **9995460** on the engine lifting lugs.

On the right side of the engine, the hook must have a clearance of **10 mm** .

On the left side of the engine, lifting lug **9997018** must be used. Connect the tool to the 2 screws at the rear edge of the engine together with lifting hook **9995460** .

Tighten to light contact on the left hand side.

REMOVING THE LOWER STEERING SHAFT FROM THE STEERING SHAFT JOINT

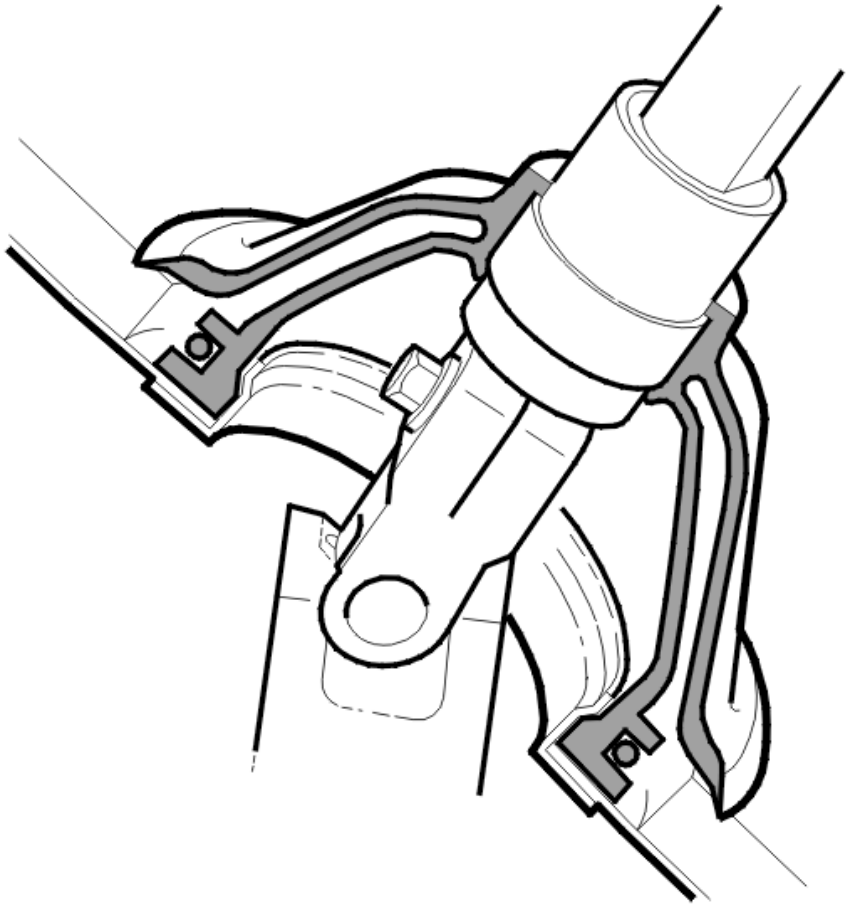

Fig. 536: Identifying Removing Lower Steering Shaft From Steering Shaft Joint
Courtesy of VOLVO CARS CORPORATION

Detach the boot from the firewall and slide it up on the steering shaft.

Turn the steering wheel so that the screw for the steering shaft joint is accessible but with the wheels as straight forward as possible.

Remove the ignition key. Do not turn the steering wheel now.

Remove the screw from the steering shaft joint and slide up the lower steering shaft.

Raise the car.

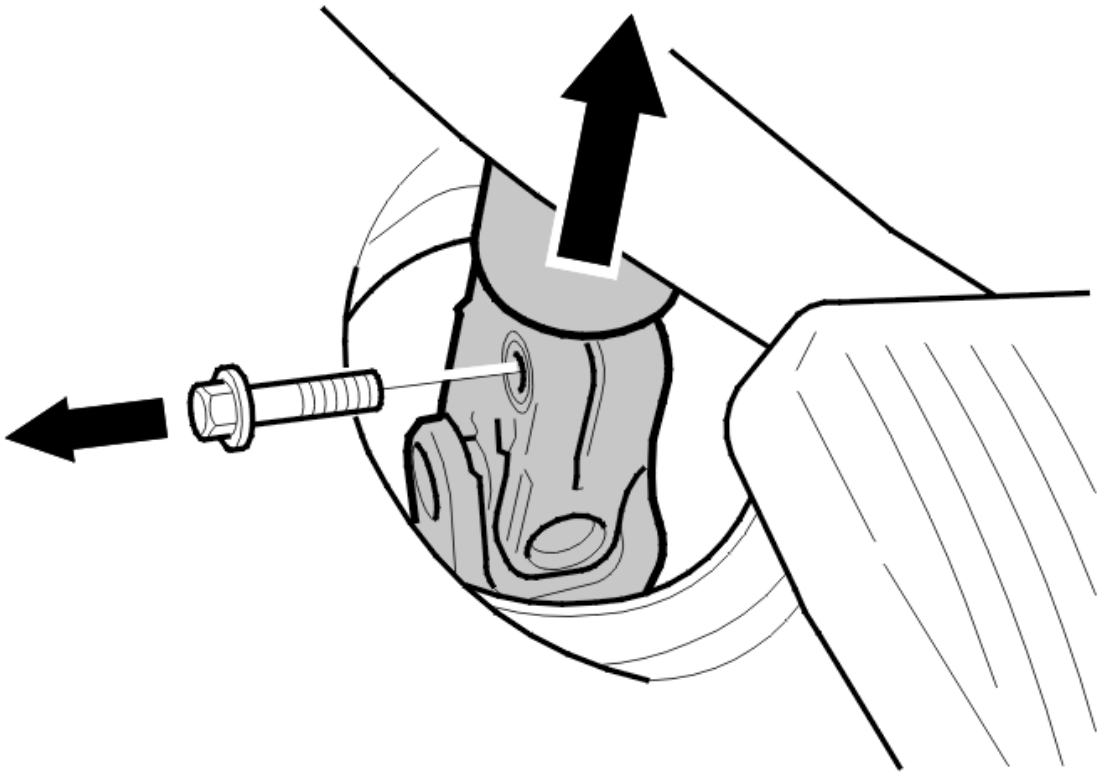

Fig. 537: Identifying Steering Shaft Joint Screw
Courtesy of VOLVO CARS CORPORATION

REMOVING BOTH THE FRONT WHEELS

Fig. 538: Front Splash Guard
Courtesy of VOLVO CARS CORPORATION

Remove:

- both the front wheels
- the front protective panel. See **SUB-FRAME FRONT, REPLACING**
- the splash guard under the engine.

REMOVING COMPONENTS FROM THE SUB-FRAME

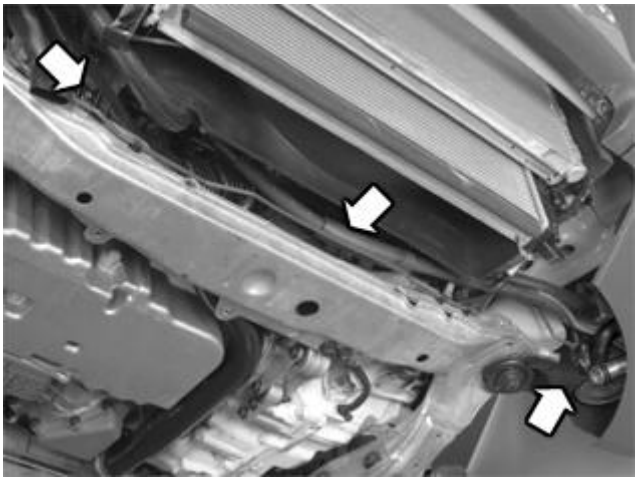

Fig. 539: Cable Duct
Courtesy of VOLVO CARS CORPORATION

Remove the screw for the cable duct. Unhook the cable duct from the sub-frame.

For cars with fuel powered parking heaters:

Remove the 2 screws for the heater.

Unhook the heater from the mounting. Leaving it hanging in its upper mounting.

Detach the fuel line for the heater from the holders on the sub-frame.

REMOVING THE CROSS MEMBERS FROM THE BODY

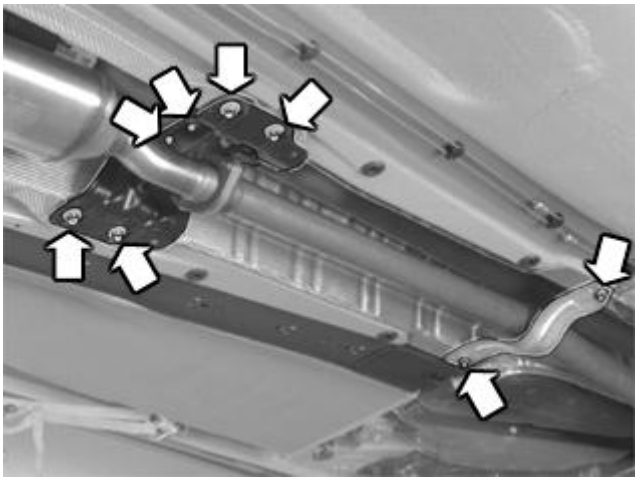

Fig. 540: Locating Cross Members And Bolts
Courtesy of VOLVO CARS CORPORATION

Slacken off the 2 screws in the center bearing/member for the propeller shaft

Remove:

- the screws for the support for the center bearing. Let the propeller shaft rest against the exhaust pipe
- one of the screws and slacken off the other for the rear member. Turn the member to the side so that the exhaust pipe is exposed.

REMOVING THE FRONT CROSS MEMBER

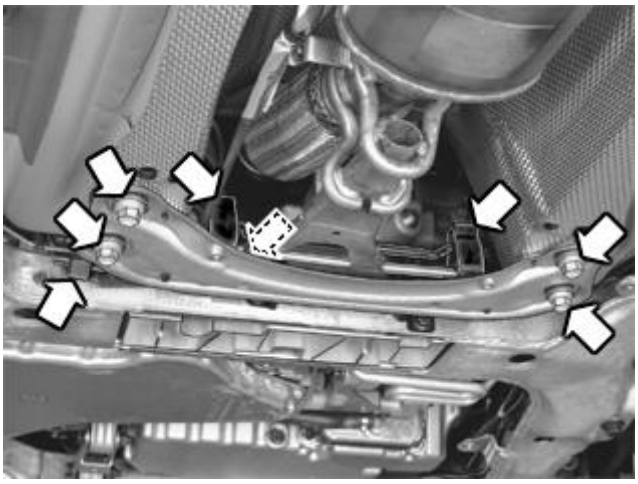

Fig. 541: Locating Front Cross Member And Bolts
Courtesy of VOLVO CARS CORPORATION

Remove:

- the clamp for the heated oxygen sensors (HO2S) from the member
- the member. Remove the brake pipe from the mountings in the member

- the connector for the heated oxygen sensors (HO2S) in the sub-frame
- the rubber mountings from the exhaust pipe and the mounting on the sub-frame.

REMOVING SCREWS AND NUTS FROM THE ENGINE PAD AND ENGINE STABILIZER BRACE

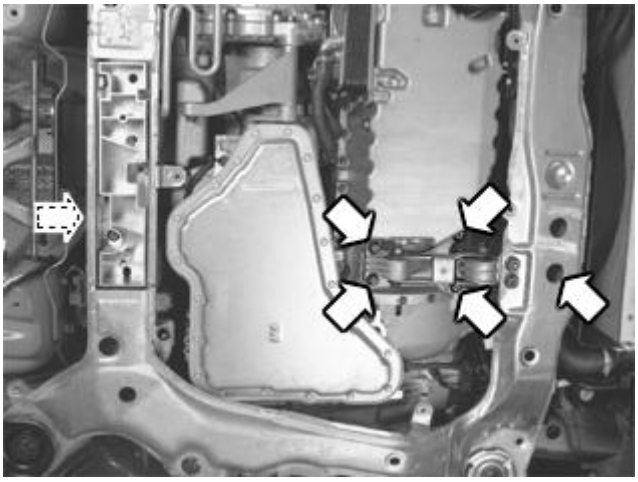

Fig. 542: Identifying Engine Pads And Engine Stabilizer Brace Bolts
Courtesy of VOLVO CARS CORPORATION

Remove:

- the screws for the front and rear engine pads
- the screws for the engine stabilizer brace.

DETACHING THE POWER STEERING LINE

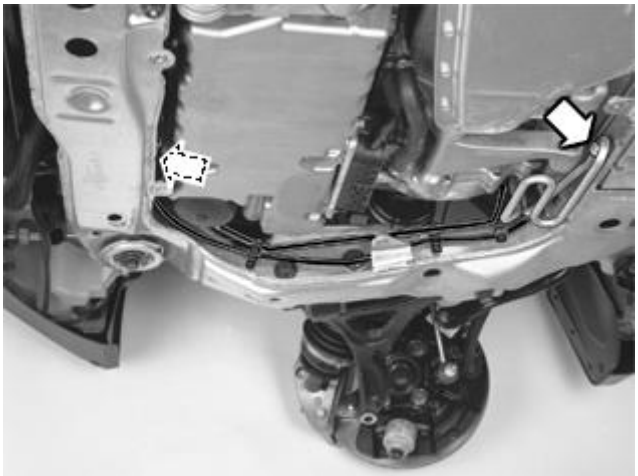

Fig. 543: Locating Power Steering Line
Courtesy of VOLVO CARS CORPORATION

Remove:

- the screw for the clamp for the power steering line at the front edge of the top of the sub-frame. The screw can be accessed from the front if the cable duct is lifted up
- the screw for the clamp for the power steering line on the right side at the rear edge of the frame.

Unhook the servo and the evaporator lines from the holders on the right side of the sub-frame.

For cars with fuel powered parking heaters

Unhook the fuel line from the holders.

REMOVING FRONT SUSPENSION COMPONENTS ON BOTH SIDES

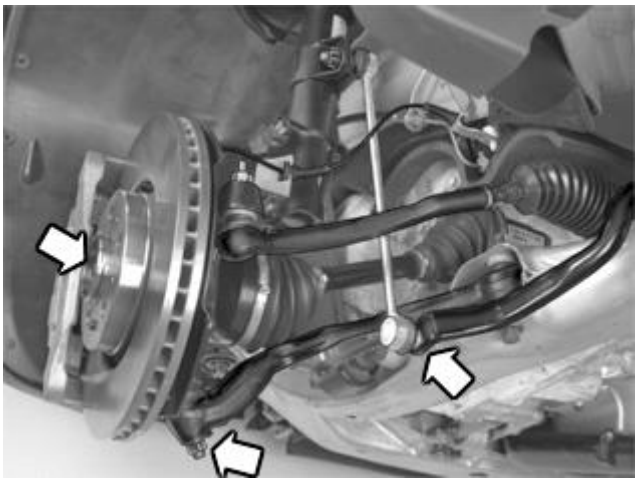

Fig. 544: Front Suspension Components
Courtesy of VOLVO CARS CORPORATION

Remove:

- the soundproofing over the drive shaft (applies to certain versions)
- the screw for the drive shaft. Counterhold using a screwdriver in the brake disc vents. Tap in the end of the drive shaft approximately **20 mm** into the wheel hub
- the link from the anti-roll bar. Counterhold using a Torx wrench in the ball joint pinion to prevent the boot from turning
- the nut for the ball joint / link arm. Clean the exposed threads outside the nut. Spray using rust solvent before removing the nut
- the nut for the tie rod from the wheel spindle.

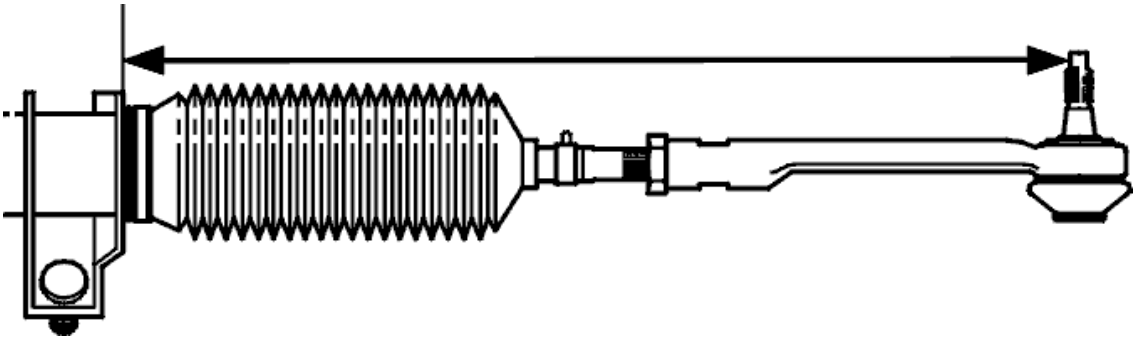

Fig. 545: Identifying Length Of Track Rod In Relation To Steering Gear Housing
Courtesy of VOLVO CARS CORPORATION

NOTE: Before detaching the tie rod, measure and note the distance as illustrated.

DISCONNECTING THE BALL JOINT PINION FROM THE CONTROL ARM (BOTH SIDES)

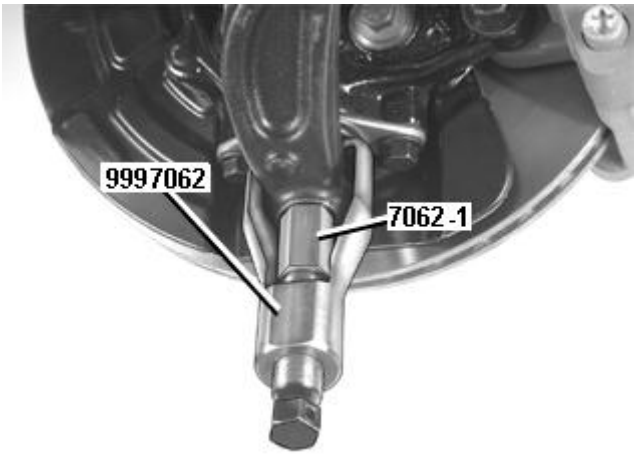

Fig. 546: Disconnecting Ball Joint Pinion From Control Arm Using 999 7062
Courtesy of VOLVO CARS CORPORATION

Use tool **9997062** .

Install cap nut **9997062** on the ball joint pinion. Tighten the nut against the control arm. Then slacken off 1 to 2 turns so that there is clearance between the cap nut and the control arm.

Position puller **9997062** on the control arm and detach the ball joint from the control arm.

Remove the tools.

UNHOOKS THE CONTROL ARM FROM THE BALL JOINT PINION (BOTH SIDES)

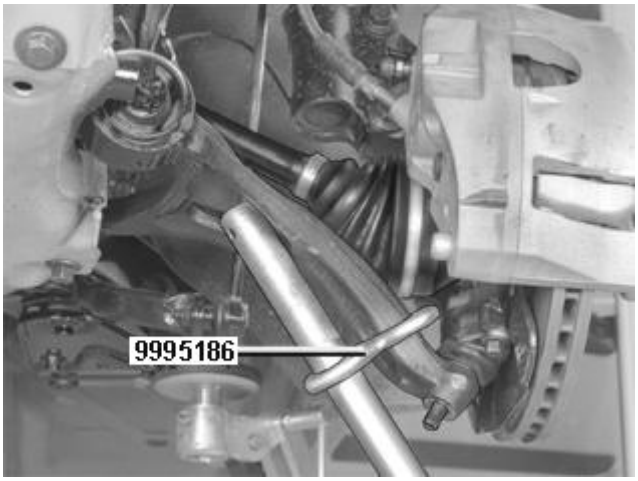

Fig. 547: Identifying Unhooking Control Arm From Ball Joint Pinion
Courtesy of VOLVO CARS CORPORATION

Use lifting lug **9995085** and a longer jimmy bar or the handle of jimmy bar **9995462** .

Position the lifting lug hook in the cast countersink on the control arm. Position a jimmy bar or handle of the jimmy bar through the lug on the hook and against the control arm as illustrated.

Press the control arm down and slide the wheel spindle to one side while installing protective socket **9995562** on the ball joint pinion. Hold it in place with the nut for the ball joint.

REMOVING THE DRIVE SHAFT FROM THE WHEEL HUB (BOTH SIDES)

Fig. 548: Identifying Removing Drive Shaft From Wheel Hub
Courtesy of VOLVO CARS CORPORATION

Hold the control arm as above to facilitate removal of the drive shaft joint from the hub.

Release the control arm to the rest position.

REMOVING THE DRIVE SHAFT FROM THE TRANSMISSION (LEFT SIDE)

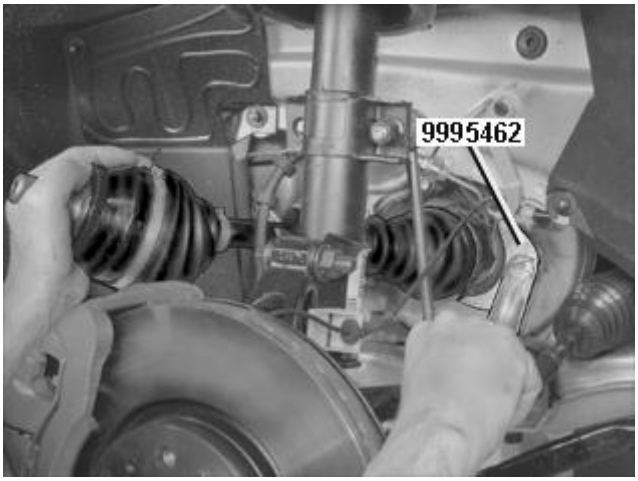

Fig. 549: Identifying Drive Shaft & Transmission
Courtesy of VOLVO CARS CORPORATION

Use counterhold **9995462**

Do not damage the drive shaft seal when removing the end of the drive shaft from the transmission.

Remove the drive shaft.

Hold the spring struts back on both side using a tensioning strap to give more space.

REMOVING THE FENDER LINER AND SUPPORT PLATE

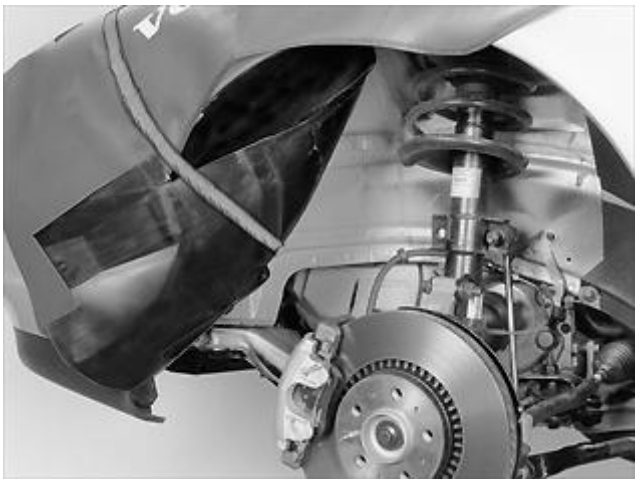

Fig. 550: Fender Liner Tied Up To Lifting Beam Using A Retaining Strap
Courtesy of VOLVO CARS CORPORATION

Remove the 2 nuts from the fender liner and the support plate.

Angle out and tie up the fender liner to the lifting beam. Use a retaining strap.

NOTE: Do not damage the front fender.

REMOVING THE SCREWS FROM THE SUB-FRAME SUPPORT PLATES (BOTH SIDES)

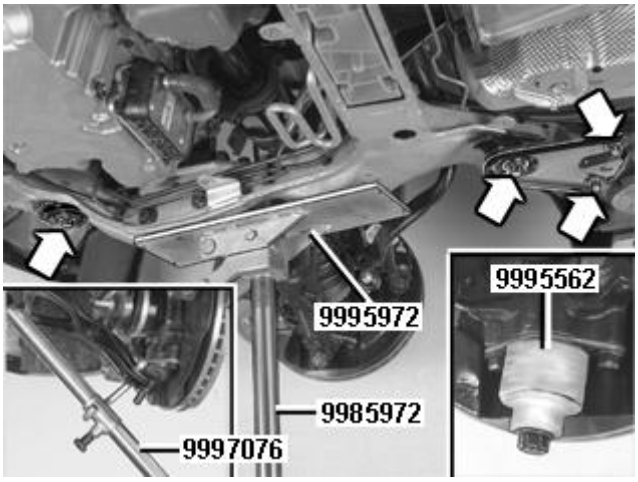

Fig. 551: Identifying Screws And Sub-Frame Support Plates
Courtesy of VOLVO CARS CORPORATION

Remove the screws from the sub-frame support plates (both sides).

Position mobile jack **9985972** with universal plate **9995972** , so that the plate is in light contact under the right side of the sub-frame. Slacken off the screws for the sub-frame on the right hand side. Ensure that the nuts are still secured by at least 5 threads.

Remove the jack.

LOWERING THE SUB-FRAME

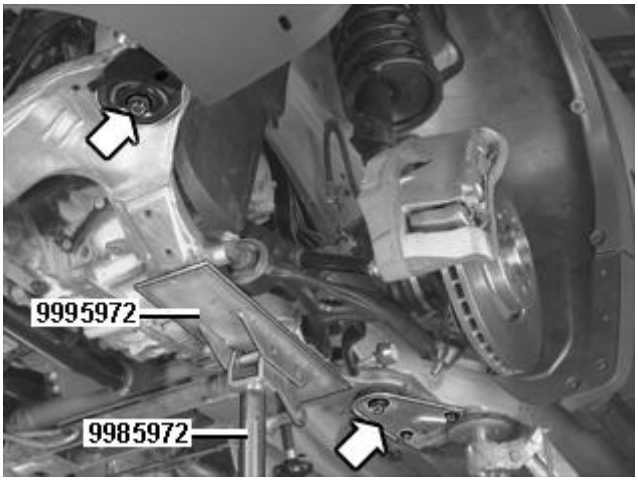

Fig. 552: Identifying Mobile Jack & Sub-Frame
Courtesy of VOLVO CARS CORPORATION

Position the mobile jack lightly applied under the left side of the sub-frame. Remove the sub-frame screws.

NOTE: Ensure the following when lowering the sub-frame:

- **the steering shaft joint on the steering gear runs freely in the bodywork grommet**
- **that the brake pipe does not catch in the bracket for the exhaust pipe mounting.**

Remove the mobile jack and let the frame hang loose.

REMOVING THE OIL PIPE FROM THE TRANSMISSION

Fig. 553: Identifying Transmission Oil Pipes
Courtesy of VOLVO CARS CORPORATION

NOTE: Plug the oil pipes so that no dirt gets in.

Remove the nuts from the brackets for the oil pipes.

Remove the connection nuts from the pipes (counterhold at the connections). Pull out the oil pipes.

Move the oil pipes to one side.

LOWERING THE ENGINE AND TRANSMISSION

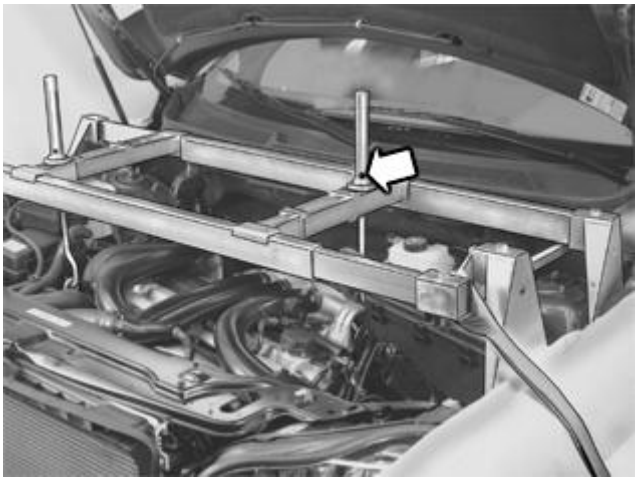

Fig. 554: Identifying Lowering Left Side
Courtesy of VOLVO CARS CORPORATION

Lower:

- the engine and transmission on the left side. Ensure that no cables and hoses are trapped or stretched while lowering
- as much as the lifting hook allows, check through the hole in the lifting hook to see when the stop becomes visible.

PREPARATIONS FOR REMOVAL OF THE TRANSMISSION SIDE COVER

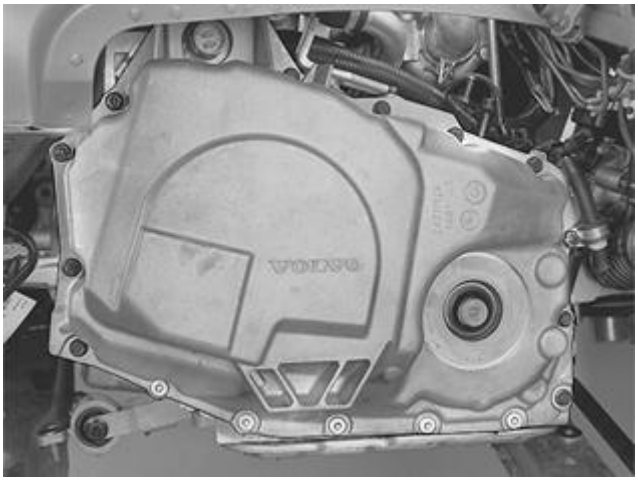

Fig. 555: Gearbox Side Cover
Courtesy of VOLVO CARS CORPORATION

Remove the gear selector cable from its clips on the side member.

Blow clean thoroughly around the cover.

Collect the oil spill when the side cover has been removed.

Remove the nut for the clamp and bracket holding the wiring. Cut off the tie straps holding the cable harness above the bracket. Move the wiring to one side. Remove the screw from the bracket. Unhook the bracket.

Remove all the screws from the side cover. Note the location of the different types of screws.

REMOVING THE SIDE COVER

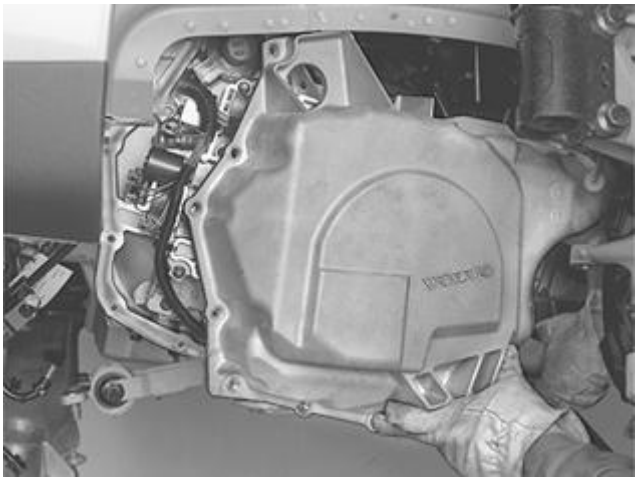

Fig. 556: Identifying Removing/Installing Gearbox Side Cover
Courtesy of VOLVO CARS CORPORATION

Pull out the side cover slightly from the transmission. Angle out the cover at the front on the left side quite a lot.

Pull the cover backwards to the steering gear. Pull out the cover at the bottom edge so that the upper section passes the side member. Keep the seal between the side cover and the transmission.

SOLENOID LINE PRESSURE, REPLACING

REMOVING THE SIDE COVER FROM THE TRANSMISSION

See **SIDE COVER TRANSMISSION, REMOVING**.

REMOVING THE LINE PRESSURE SOLENOID

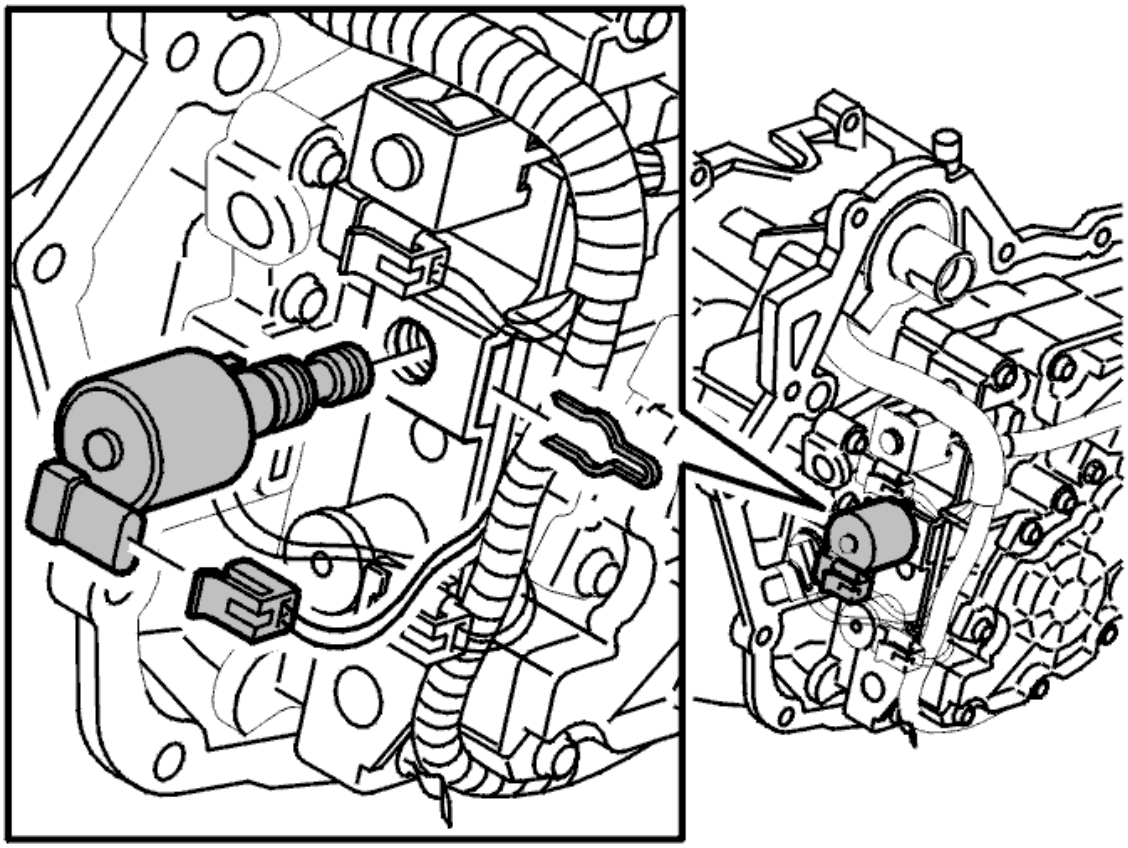

Fig. 557: Identifying Line Pressure Solenoid
Courtesy of VOLVO CARS CORPORATION

Remove:

- the connector
- the spring clamp. Pull it straight out. Use a small screwdriver to bend the clamp out slightly
- the solenoid from the control system. Use a screwdriver. Insert it between the solenoid and the control system. Carefully pry and pull on the solenoid at the same time. Check that the O-rings remain on the solenoid.

INSTALLING THE SOLENOID

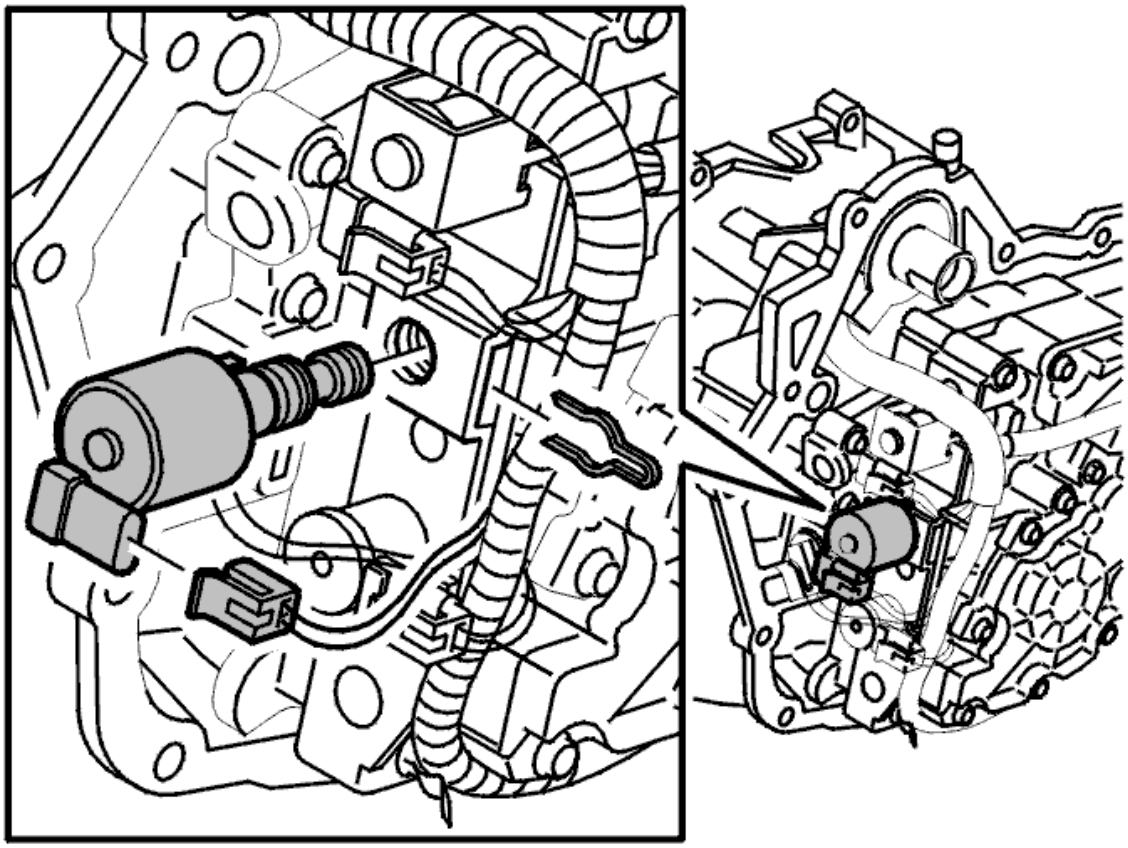

Fig. 558: Identifying Line Pressure Solenoid
Courtesy of VOLVO CARS CORPORATION

Apply a little petroleum jelly to the sensor O-rings.

Install the solenoid.

NOTE: The small guide lug on the solenoid should be upwards on installation.

Twist and press in the solenoid so that it bottoms in the control system.

Install:

- the spring clamp. Check that the spring clamp is locked
- the connector.

INSTALLING THE SIDE COVER ON THE TRANSMISSION

See **SIDE COVER TRANSMISSION, INSTALLING**.

SOLENOID LOCK-UP FUNCTION, REPLACING

NOTE: As the illustrations in this service information are used for different model years

and / or models, some variation may occur. However, the essential information is always correct.

REMOVAL

PREPARATORY WORK

See:**SIDE COVER TRANSMISSION, REMOVING**.

REMOVING THE LOCK-UP SOLENOID

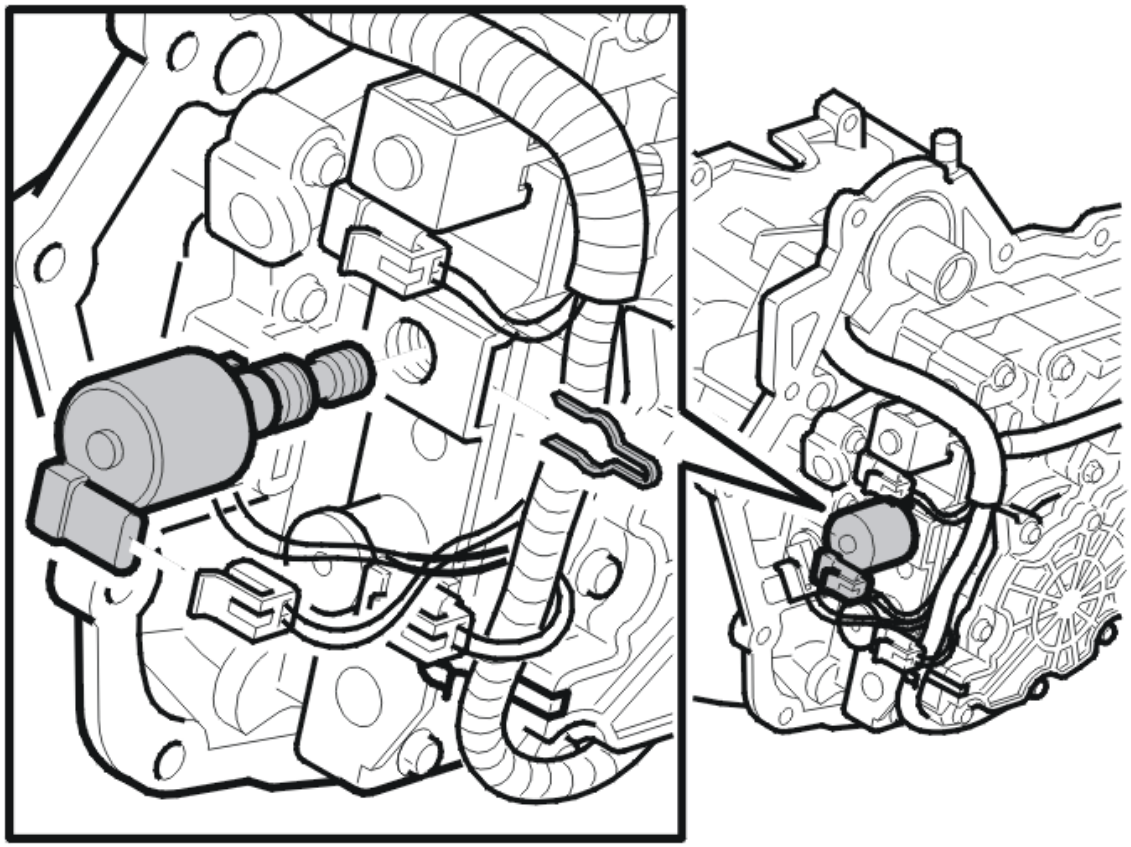

Fig. 559: Identifying Removing/Installing Lock-Up Solenoid
Courtesy of VOLVO CARS CORPORATION

Remove:

- the connector from the solenoid and the cable harness from the holder
- the spring clamp. Pull it straight out. Use a small screwdriver
- the solenoid. Use a screwdriver between the solenoid and the housing. Check that the O-rings remain on the solenoid.

INSTALLATION

INSTALLING THE LOCK-UP SOLENOID

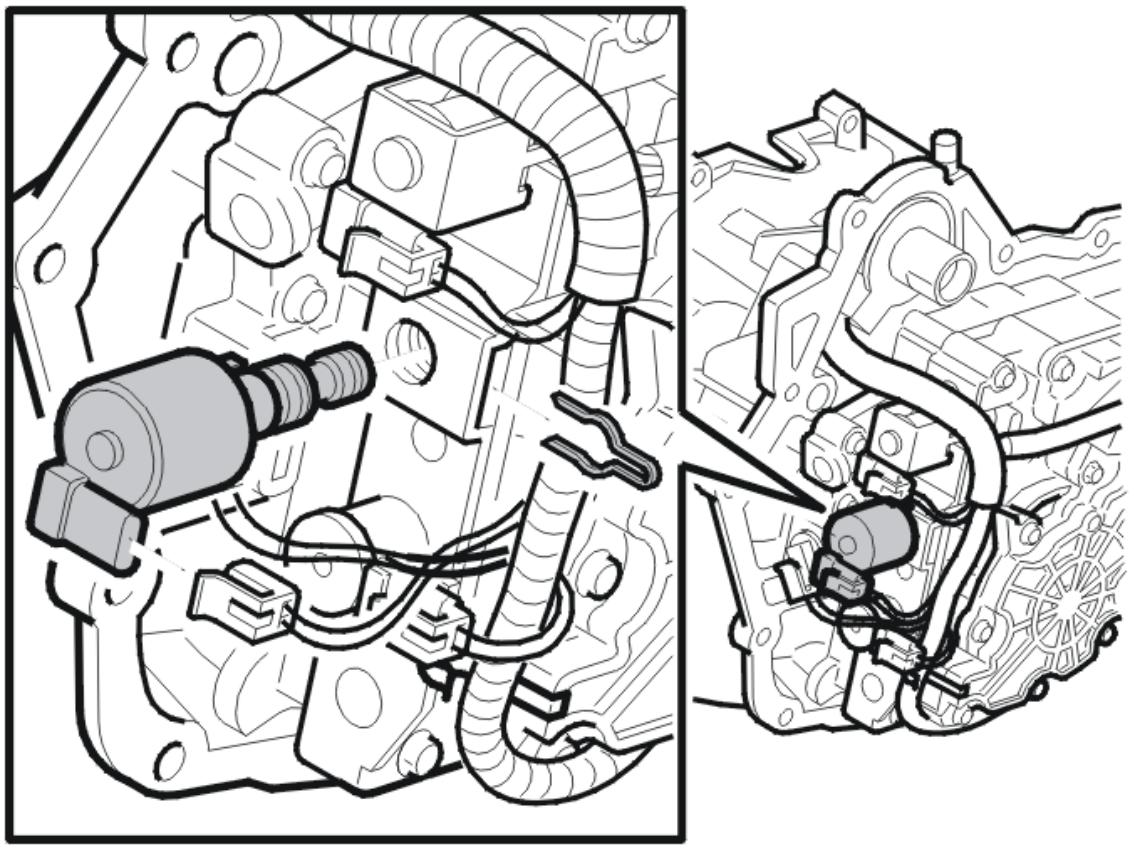

Fig. 560: Identifying Removing/Installing Lock-Up Solenoid
Courtesy of VOLVO CARS CORPORATION

Apply a little petroleum jelly to the O-rings.

Install:

- the solenoid. Turn and press in the solenoid a little so that it bottoms against the control system
- the spring clamp. Check that the spring clamp is locked
- the cable harness to the holder and the connector to the solenoid.

FINISHING

See **SIDE COVER TRANSMISSION, INSTALLING**.

SOLENOID SHIFTING 1-2 AND 3-4, REPLACING

REMOVING THE SIDE COVER FROM THE TRANSMISSION

See **SIDE COVER TRANSMISSION, REMOVING**.

REMOVING SOLENOID S1

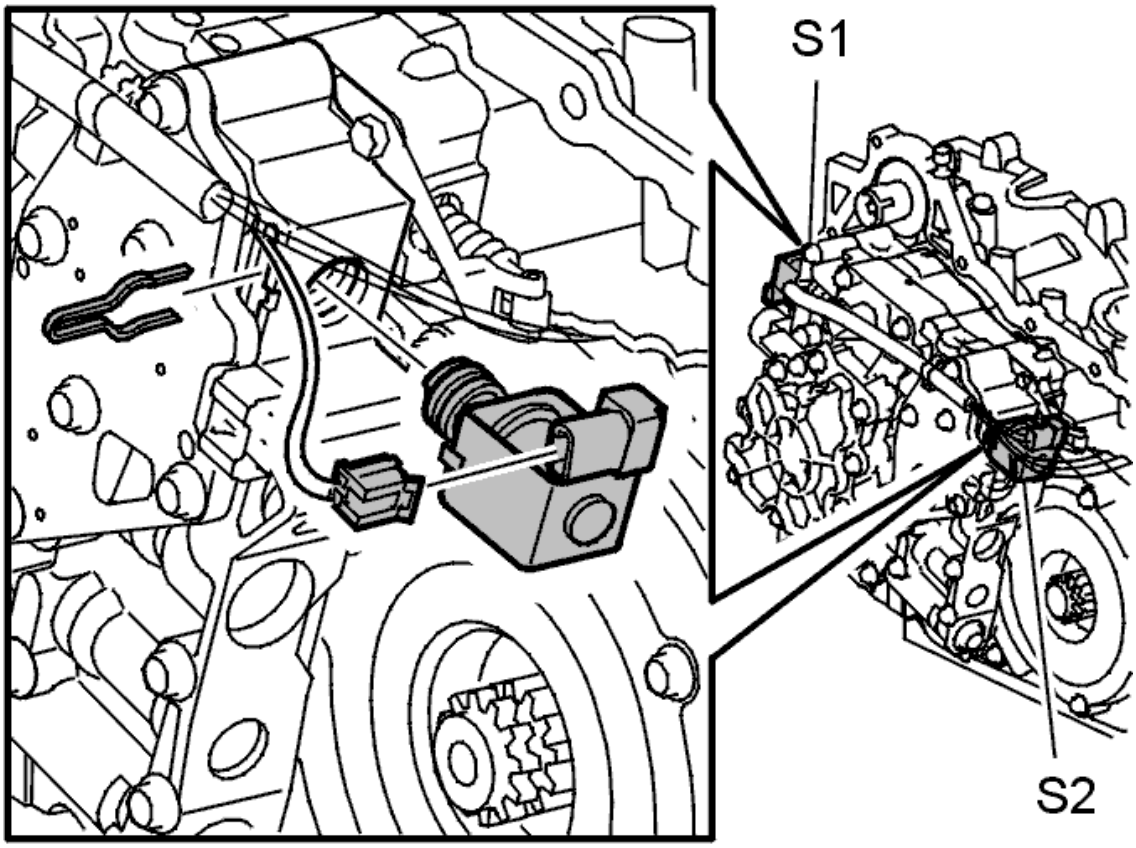

Fig. 561: Identifying Removing/Installing Solenoid S1
Courtesy of VOLVO CARS CORPORATION

Remove:

- the connector
- the spring clamp by pulling it straight out. Use a small screwdriver
- the solenoid. Use a screwdriver between the solenoid and the housing. Carefully pry and pull the solenoid at the same time.

Check that the O-ring remains on the solenoid.

INSTALLING SOLENOID S1

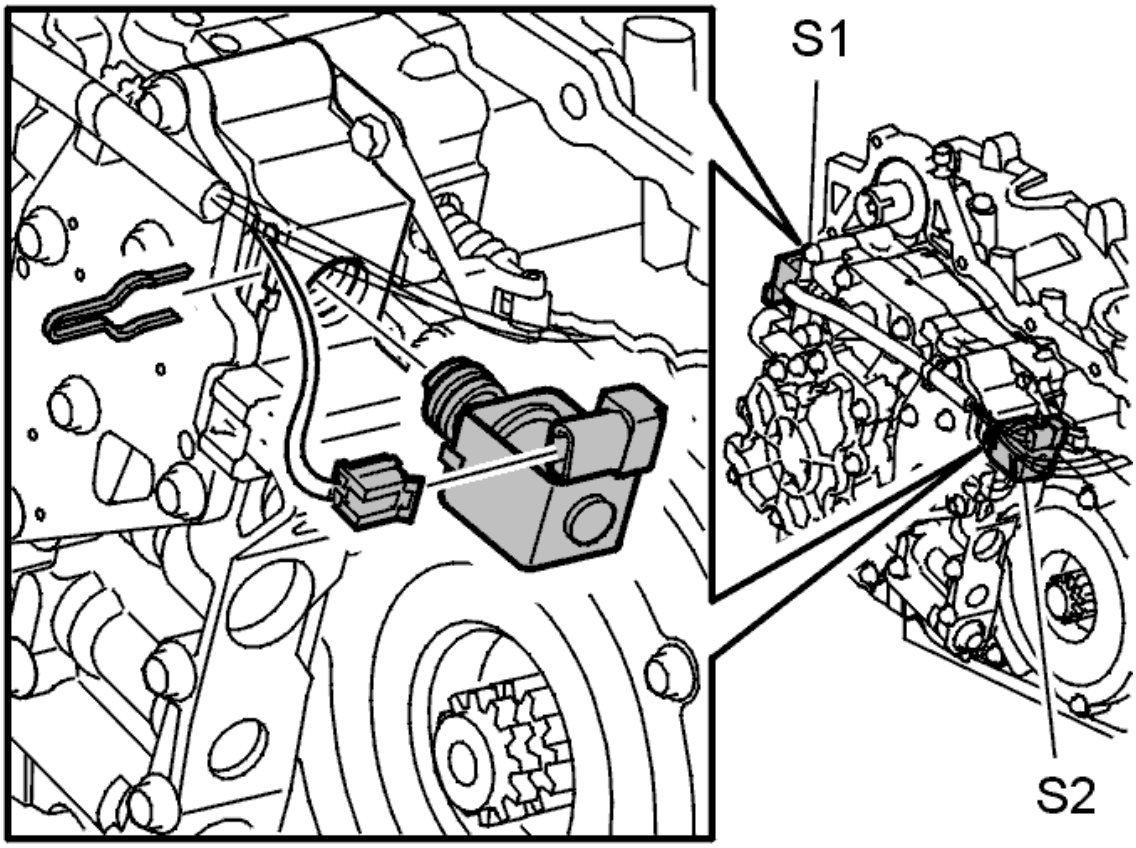

Fig. 562: Identifying Removing/Installing Solenoid S1
Courtesy of VOLVO CARS CORPORATION

Apply a little petroleum jelly to the solenoid O-ring.

Install:

- the solenoid by pressing it. Guide the solenoid in so that the locating pin on the side locates in the cut-out
- the spring clamp. Check that the spring clamp is locked
- the connector.

INSTALLING THE SIDE COVER ON THE TRANSMISSION

See **SIDE COVER TRANSMISSION, INSTALLING**.

SOLENOID SHIFTING 2-3, REPLACING

REMOVING THE SIDE COVER FROM THE TRANSMISSION

See **SIDE COVER TRANSMISSION, REMOVING**.

REMOVING SOLENOID S2

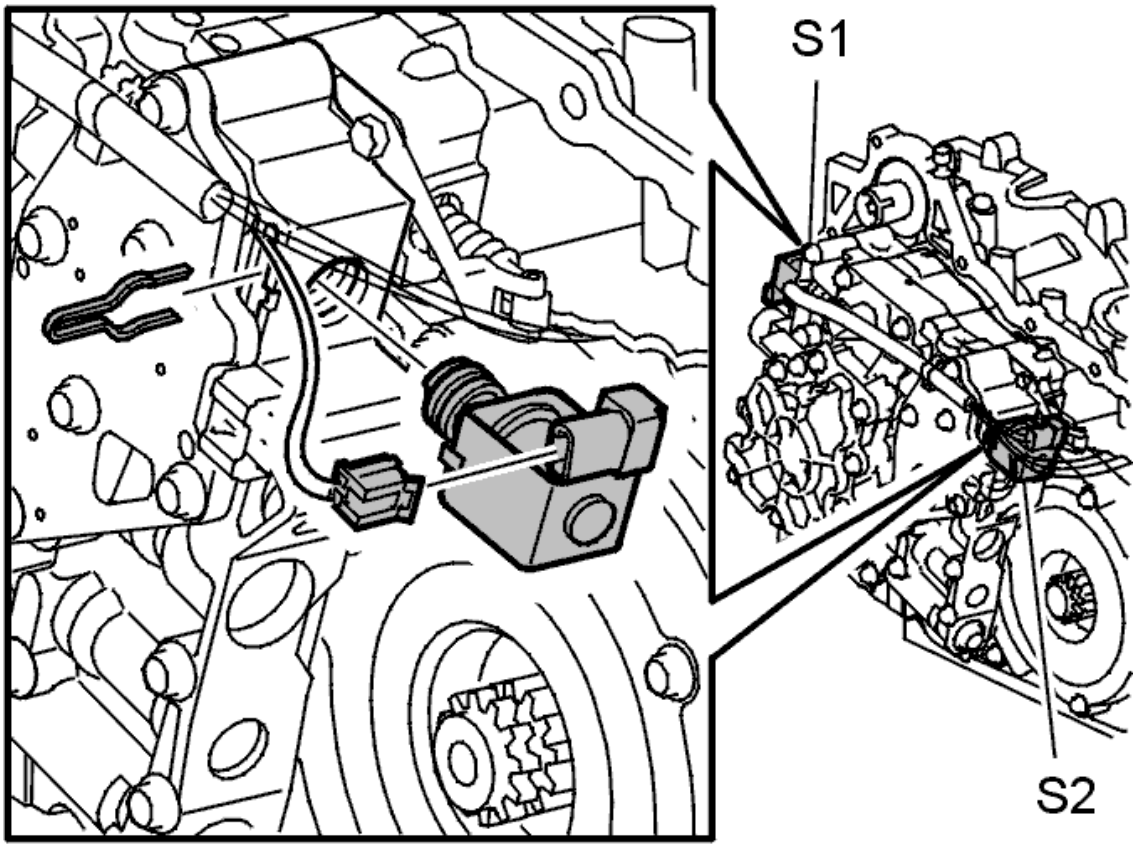

Fig. 563: Identifying Removing/Installing Solenoid S1
Courtesy of VOLVO CARS CORPORATION

Remove:

- the connector
- the spring clamp by pulling it straight out. Use a small screwdriver
- the solenoid. Use a screwdriver between the solenoid and the housing. Carefully pry and pull the solenoid at the same time.

Check that the O-ring remains on the solenoid

INSTALLING SOLENOID S2

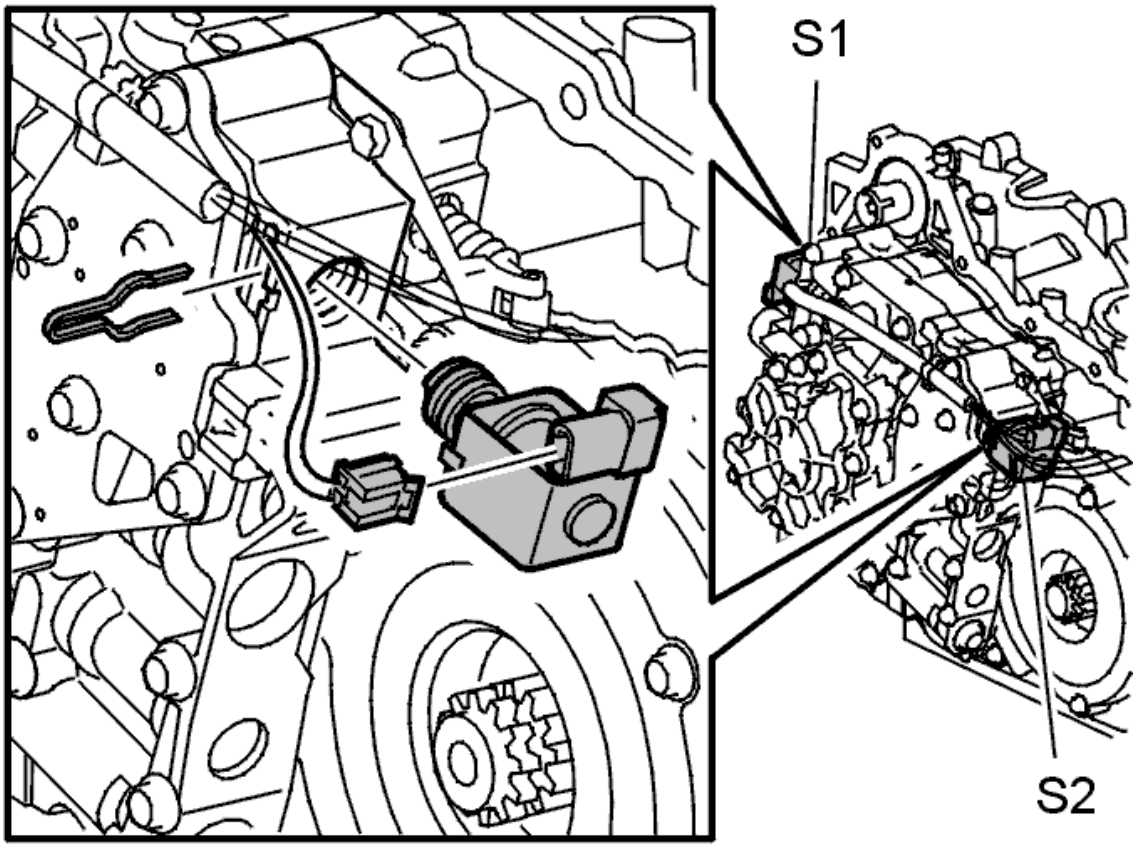

Fig. 564: Identifying Removing/Installing Solenoid S1
Courtesy of VOLVO CARS CORPORATION

Apply a little petroleum jelly to the solenoid O-ring.

Install:

- the solenoid by pressing it. Guide the solenoid in so that the locating pin on the side locates in the cut-out
- the spring clamp (check that it is locked)
- the connector.

INSTALLING THE SIDE COVER ON THE TRANSMISSION

See **SIDE COVER TRANSMISSION, INSTALLING**.

TORQUE CONVERTER/SEAL, REPLACING

Special tools:

9995762

9995763

REMOVAL

REMOVING THE TRANSMISSION

See **TRANSMISSION, REMOVING**.

REMOVING THE TORQUE CONVERTER

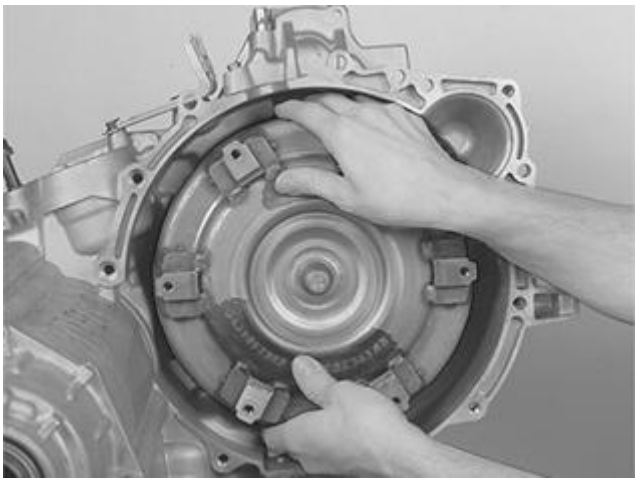

Fig. 565: Identifying Removing/Installing Torque Converter
Courtesy of VOLVO CARS CORPORATION

Grasp the torque converter (it is heavy). Pull it straight out of the transmission shaft.

NOTE: Store it so that the oil does not run out.

REMOVING THE SEALING RING FROM THE TRANSMISSION

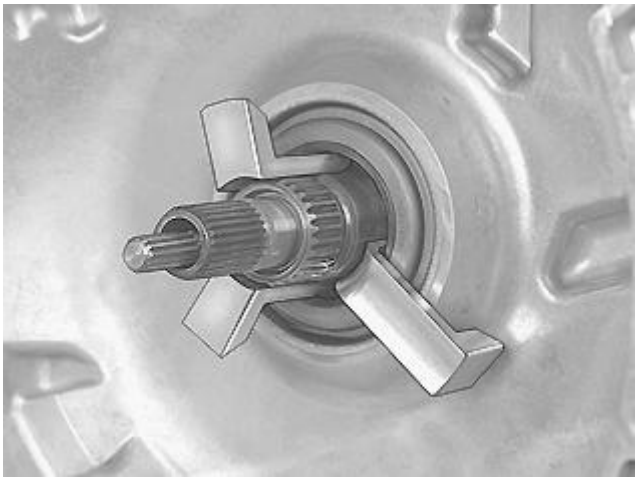

Fig. 566: Identifying Removing Sealing Ring From Transmission
Courtesy of VOLVO CARS CORPORATION

Use puller **9995762** .

Press the three hooks on puller 999 5762-1 into the sealing ring. Fold up the hooks in the sealing ring.

EXTRACTING THE SEALING RING

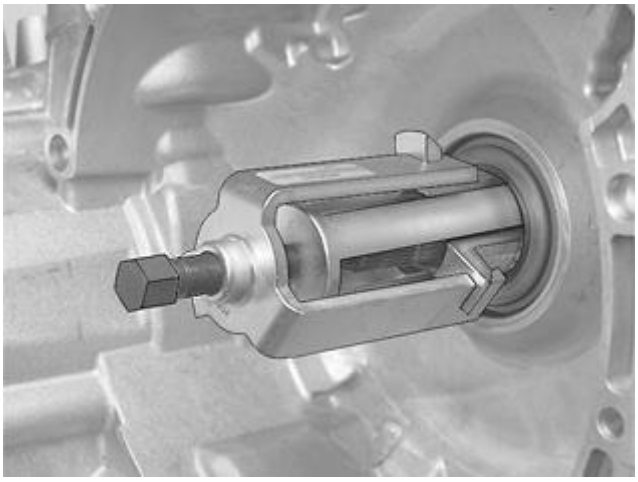

Fig. 567: Identifying Extracting Sealing Ring
Courtesy of VOLVO CARS CORPORATION

Install:

- the counterhold on puller 999 5762-2 between the hooks and in the sealing ring
- puller **9995762** on the hooks.

Extract the sealing ring. It may sit firmly.

INSTALLATION

INSTALLING THE SEALING RING

Fig. 568: Installing Sealing Ring
Courtesy of VOLVO CARS CORPORATION

NOTE: Blow clean before installation.

Use drift **9995763** on the sealing ring.

Tap in the sealing ring to the bottom position.

Check that the sealing ring is correctly positioned against the transmission housing.

INSTALLING THE TORQUE CONVERTER

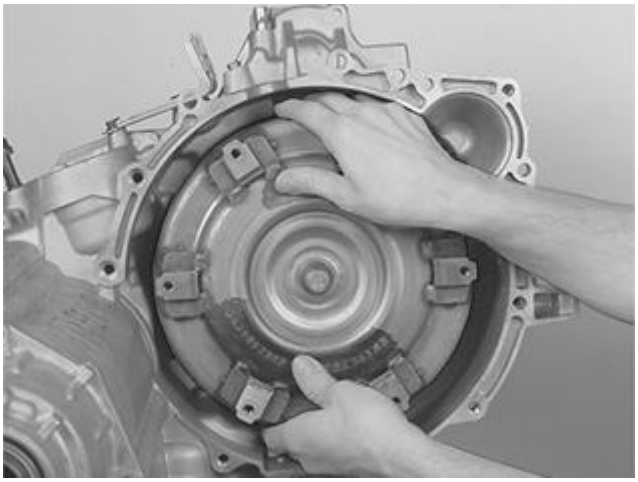

Fig. 569: Identifying Removing/Installing Torque Converter
Courtesy of VOLVO CARS CORPORATION

Install the torque converter on the shaft.

Lift and turn the torque converter slightly so that it positions correctly on the shaft and bottoms out in the transmission.

INSTALLING THE TRANSMISSION

See **TRANSMISSION, INSTALLING (2005, 2006)**.

TRANSMISSION CONTROL MODULE (TCM), REPLACING

TRANSMISSION CONTROL MODULE (TCM), REPLACING

TRANSMISSION OIL / OIL FILTER, REPLACING

Special tools:

9994090

WARNING: Avoid skin contact with the transmission fluid.

NOTE: **Oil grade: Only ATF fluid Dexron III (with G-license).**

Transmission oil, Volvo P/N 116 1521-8 (1 liter container), 116 1621-6 (4 liter container).

PREPARATION

CONDITIONS

Always replace the oil in the following instances:

Where diagnostic trouble codes (DTCs) TCM 0042 and TCM 0046 are stored, in which case the diagnostic function activates the warning lamp in the following circumstances.

The transmission control module (TCM) receives data about the operating temperature of the transmission fluid while the car is being driven. TCM 0042 is stored after an accumulated amount of time.

Diagnostic trouble code (DTC) TCM 0046 is stored if the transmission fluid temperature exceeds 150° C for more than 2 minutes.

On cars used in continuous taxi service and / or used for towing a trailer or caravan for most of its mileage, the oil must be replaced at a service interval of 75, 000 km ± 5000 km. This is to conform to the regular service program.

WARNING: **The oil may be very hot if the car has just been driven. Avoid skin contact.**

DRAIN THE OIL

Fig. 570: Identifying Dip Stick Pipe & Oil Suction Device
Courtesy of VOLVO CARS CORPORATION

Suck up the oil through the dip stick pipe using an oil suction device. There is no drain plug.

SLACKEN OFF THE NUT ON THE RETURN LINE FOR THE OIL PIPE BRACKET A FEW TURNS

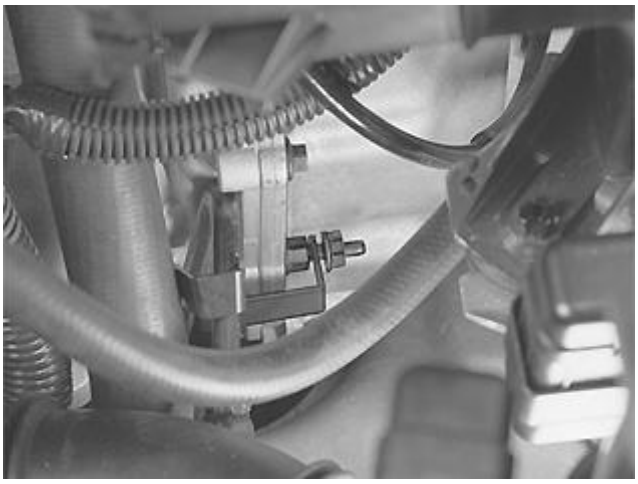

Fig. 571: Identifying Return Line Nut Slackened Off
Courtesy of VOLVO CARS CORPORATION

REMOVE THE SPLASH GUARD UNDER THE ENGINE

Fig. 572: Identifying Splash Guard
Courtesy of VOLVO CARS CORPORATION

Secured with 7 screws.

REMOVE THE OIL PAN AND THE SEAL

Fig. 573: Identifying Oil Pan
Courtesy of VOLVO CARS CORPORATION

WARNING: Avoid skin contact with the oil. There is a risk of burns.

Allow the remaining oil to run out into a container.

Clean the oil pan.

NOTE: The gasket can be reused once.

REMOVE THE OIL FILTER

Fig. 574: Identifying Oil Filter Removal
Courtesy of VOLVO CARS CORPORATION

The filter is only secured to the transmission by a plastic pipe and an O-ring.

Use a jimmy bar.

Position the jimmy bar by the pipe connecting the oil filter to the transmission.

Pry off the oil filter straight downward. Hold the filter.

NOTE: **Use extractor 9994090 if the plastic pipe comes off. Pull out the pipe and the O-ring.**

Replace the O-ring.

INSTALL THE OIL FILTER

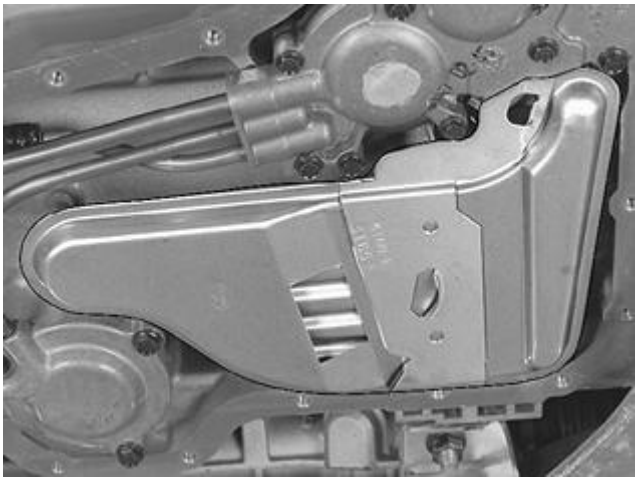

Fig. 575: Identifying Oil Filter Installed
Courtesy of VOLVO CARS CORPORATION

Apply a little oil to the oil filter pipe before installing it.

Press the filter into place in the transmission. **Check that it is secure** .

Install the oil pan

Install the screws. Tighten to **10 Nm** .

NOTE: **The gasket can be reused once.**

DRAIN OFF THE REMAINING OIL IN THE TORQUE CONVERTER AND THE OIL COOLER

NOTE: **Disconnect the oil return line at the transmission and install a plastic hose. Drain off the old oil.**

REMOVE THE SCREW NIPPLE ON THE OIL RETURN LINE FROM THE CONNECTION. COUNTERHOLD IN THE TRANSMISSION

Fig. 576: Gearbox Oil Pipe
Courtesy of VOLVO CARS CORPORATION

Pull out the oil pipe.

INSTALL A PLASTIC HOSE ON THE OIL RETURN LINE

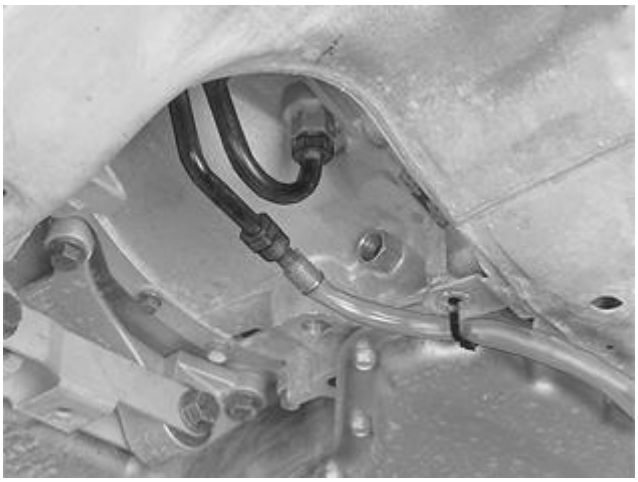

Fig. 577: Identifying Plastic Hose Installed On Oil Return Line
Courtesy of VOLVO CARS CORPORATION

Plug the connection in the transmission.

Install a transparent plastic hose on the oil return line. Clamp the hose into place in the sub-frame.

Place a container beneath the hose to catch the oil.

FILL THE TRANSMISSION WITH OIL. THERE ARE TWO DIFFERENT METHODS. METHOD 1

Fig. 578: Filling Transmission With Oil
Courtesy of VOLVO CARS CORPORATION

Fill the transmission with oil

Use a funnel with a plastic hose. Fill through the dipstick pipe.

Clear up any oil spillage under the dip stick pipe.

FILL THE TRANSMISSION WITH OIL. METHOD 2

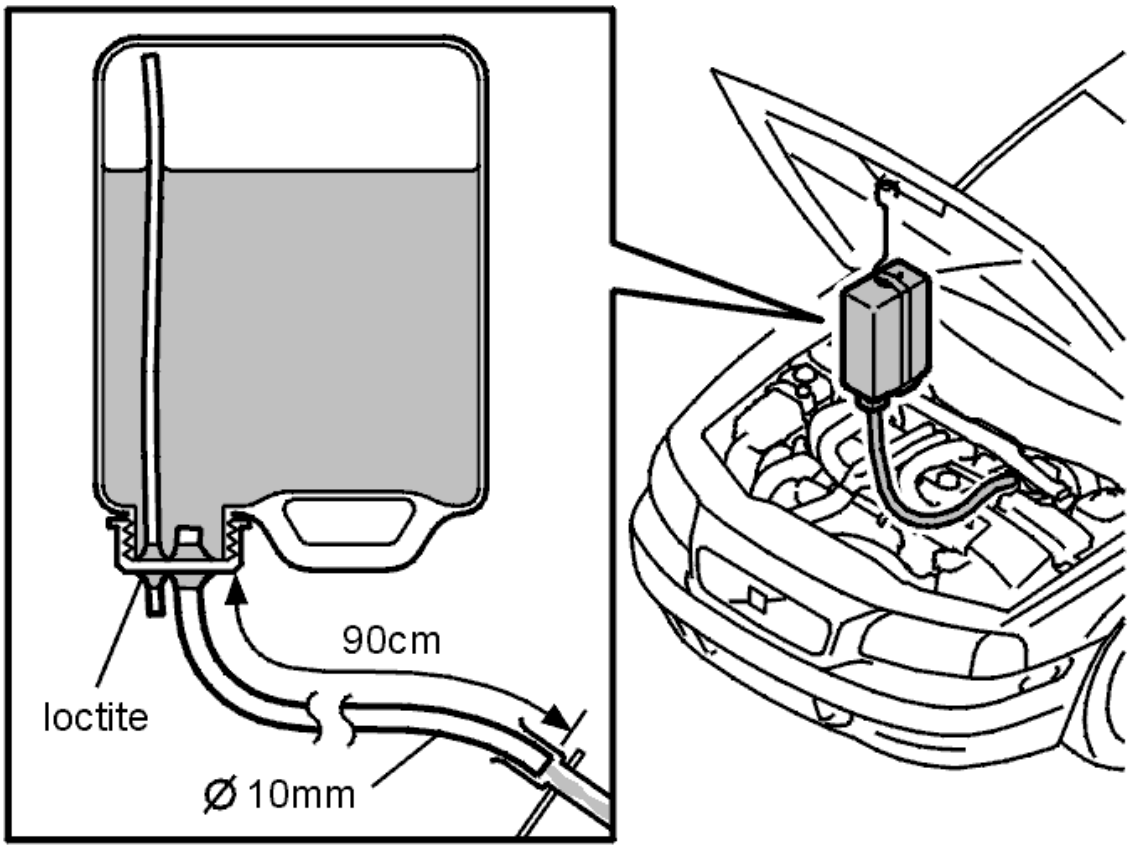

Fig. 579: Filling Transmission With Oil - Method 2
Courtesy of VOLVO CARS CORPORATION

Use a converted five liter plastic can (see the illustration).

This method avoids oil spillage. It also provides a more regular flow when filling.

WHEN FILLING (SELECT METHOD 1 OR 2)

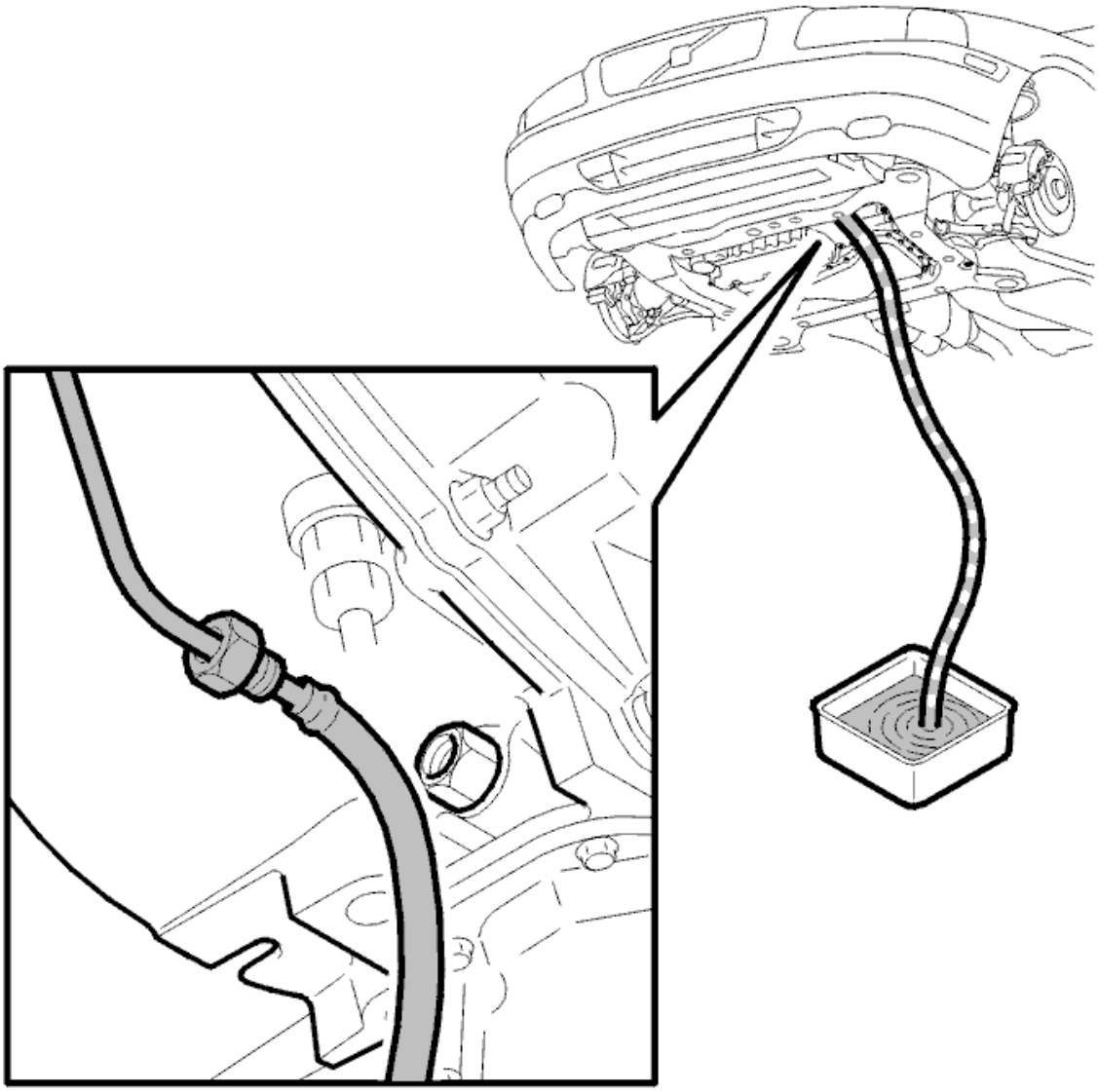

Fig. 580: Collecting Oil
Courtesy of VOLVO CARS CORPORATION

Apply the parking brake. Move the gear selector to position P. Add approximately 2 liters of oil.

Start the engine. Let it idle for a maximum of 40 seconds. Turn the engine off when air bubbles start to become visible in the hose.

Refill with approximately 2 liters of oil.

Start the engine. Let it idle for a maximum of 40 seconds. Turn the engine off when air bubbles start to become visible in the hose.

Remove the plastic hose.

INSTALL THE OIL RETURN LINE ON THE TRANSMISSION

Fig. 581: Gearbox Oil Pipe
Courtesy of VOLVO CARS CORPORATION

Install the oil pipe with the screw nipple on the connection.

Tighten to **30 Nm** .

LOWER THE CAR

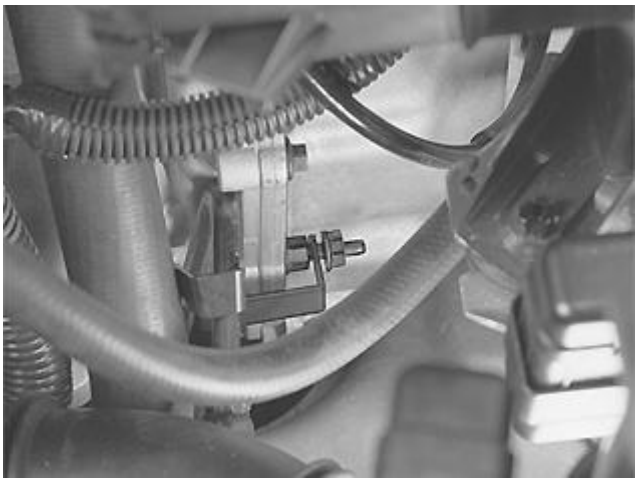

Fig. 582: Identifying Return Line Nut Slackened Off
Courtesy of VOLVO CARS CORPORATION

Tighten the nut for the oil pipe bracket. Tighten to **25 Nm** .

FINISHING WORK

POUR THE REST OF THE OIL INTO THE TRANSMISSION

NOTE: If the transmission is over filled with oil, there may be operational problems. The oil must be filled to the correct level.

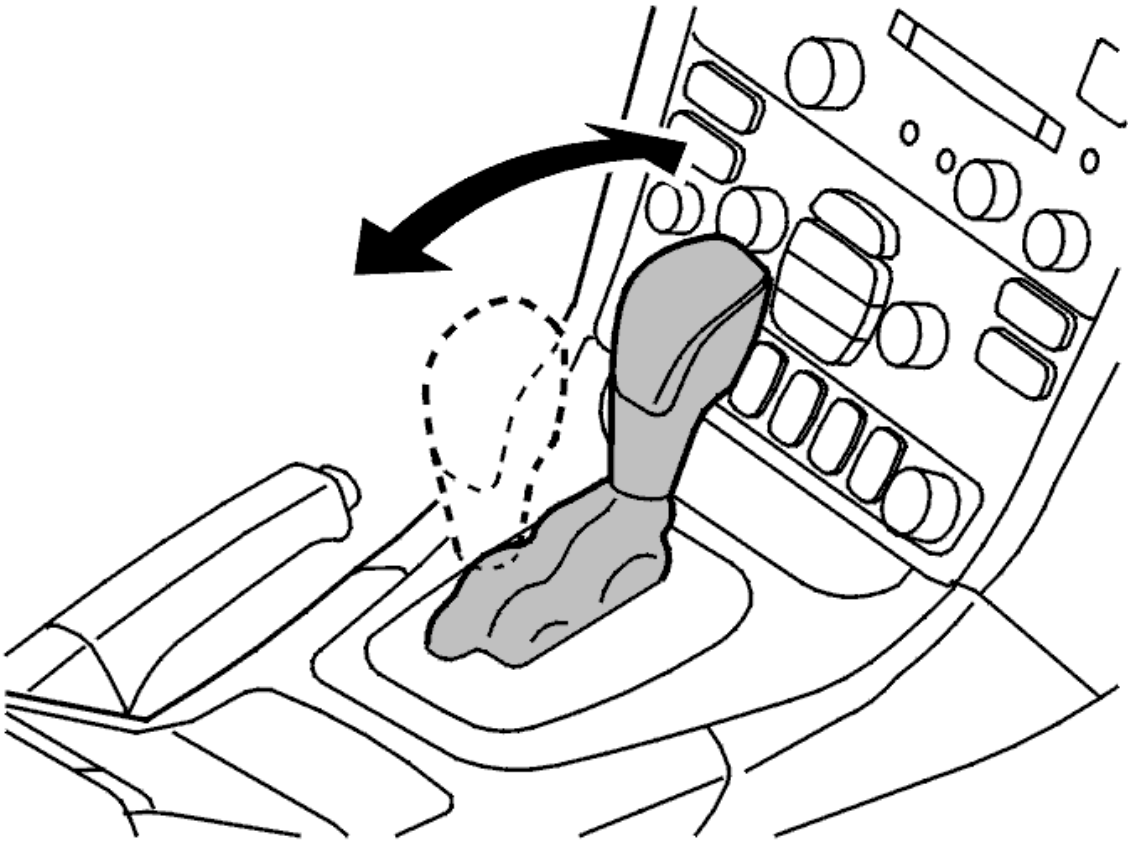

Fig. 583: Identifying Shifting Lever Positions
Courtesy of VOLVO CARS CORPORATION

The total oil volume of the transmission is 11.9 liters.

Measure the amount of oil that was drained. Refill with the same amount of new oil (approximately 11 liters).

Start the engine. Move the gear selector through all the gear positions. Then move the gear selector lever to position P.

NOTE: Carry out the following check at an oil temperature of 85° ± 5°C.

CHECK THE OIL LEVEL

Check the oil level according to **OIL LEVEL, CHECKING** .

Check that there is no oil leakage at the pipe couplings or oil pan

Install the splashguard under the engine

Tighten the screws. Tighten to **25 Nm** .

Test driving the car.

Checking the oil level.

NOTE: **After replacing the transmission oil/filter, the "Transmission oil change" counter must be reset. Use VIDA (Volvo scan tool) vehicle communication to reset the counter.**

TRANSMISSION, INSTALLING (2005, 2006)

Special tools:

9512050

9995395

9997057

9997076

NOTE: **As the illustrations in this service information are used for different model years and/or models, some variation may occur. However, the essential information is always correct.**

NOTE: **For tightening torques, see: TIGHTENING TORQUE .**

WHEN REPLACING WITH A NEW TRANSMISSION

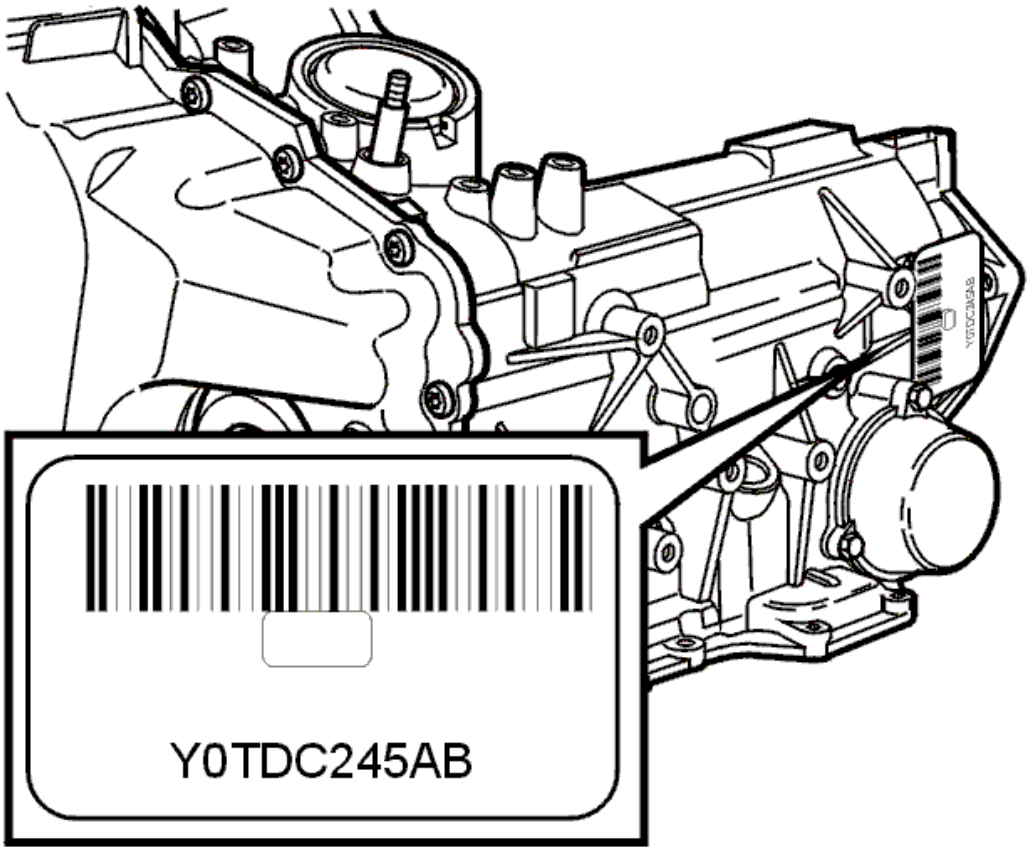

Fig. 584: Identification Plate On Transmission
Courtesy of VOLVO CARS CORPORATION

THESE SCREWS AND NUTS MUST BE REPLACED WHEN REPLACING THE TRANSMISSION

Dimension	Quantity	Designation
M8x12	6	Screw (the torque converter)
M14x100	4	Sems screw (sub-frame)
M14x15.9	2	Flanged lock nut (the ball joints)
M10x65	2	Sems nut (the drive shaft)
M8x8	1	Nut (the steering shaft)
M8x40	6	Allen screw (the propeller shaft)
		Nut, steering gear
		Nut, anti-roll bar link

CHECKING BEFORE INSTALLING

Flushing clean the oil cooler

When replacing the transmission, the oil cooler must always be flushed through because there may be particles in the oil cooler. See: **OIL COOLER, FLUSH CLEANING** .

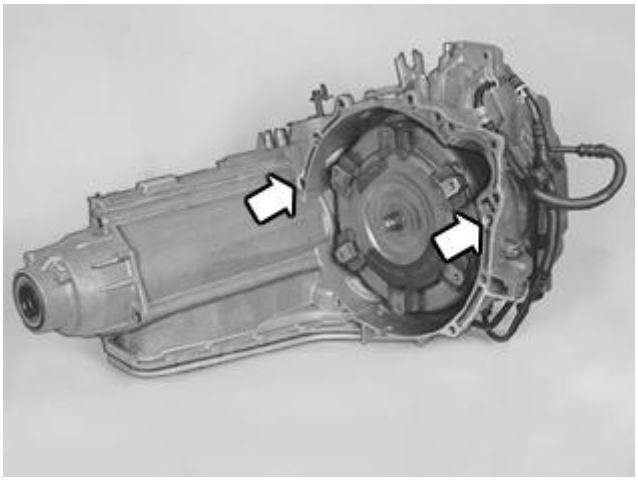

Fig. 585: Identifying Engine Mating Surface On Transmission
Courtesy of VOLVO CARS CORPORATION

Check that the transmission and engine mating surfaces are **absolutely** clean.

Also check that the guide sleeves towards the engine are in position and are free of faults.

Lubricate the holes in the transmission (for the guide pins). Use a little grease.

NOTE: This only applies if replacing the transmission.

Slacken off the bracket screws for the bevel gear - chain housing so that they can be moved slightly. The bracket is on the cylinder block.

ADJUSTING THE POSITION OF THE TRANSMISSION AND ENGINE

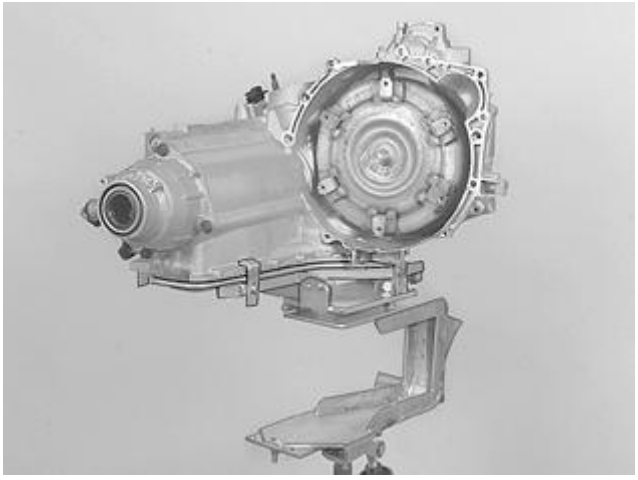

Fig. 586: Identifying Transmission On Mobile Jack
Courtesy of VOLVO CARS CORPORATION

Adjust height and angle with the mobile jack and the transmission fixture.

Locate the transmission on the engine.

Ensure that the transmission goes straight in relation to the engine and that the torque converter is in the correct location.

CHECKING / REPLACING THE TORQUE CONVERTER

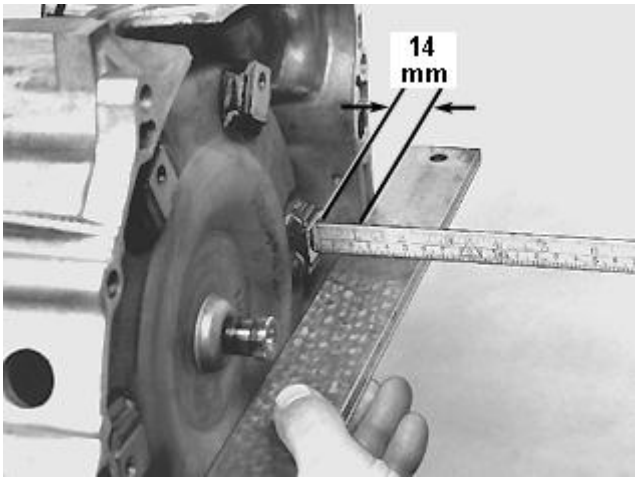

Fig. 587: Checking Distance Between Cover And Mounting Lugs Using Ruler
Courtesy of VOLVO CARS CORPORATION

Ensure that the mating surfaces on the torque converter are clean. Ensure that the torque converter is as far into the transmission as possible. Check with a ruler that the distance between the cover and mounting lugs is approximately 14 mm.

INSTALLING AND TIGHTENING THE SCREWS FOR THE TRANSMISSION

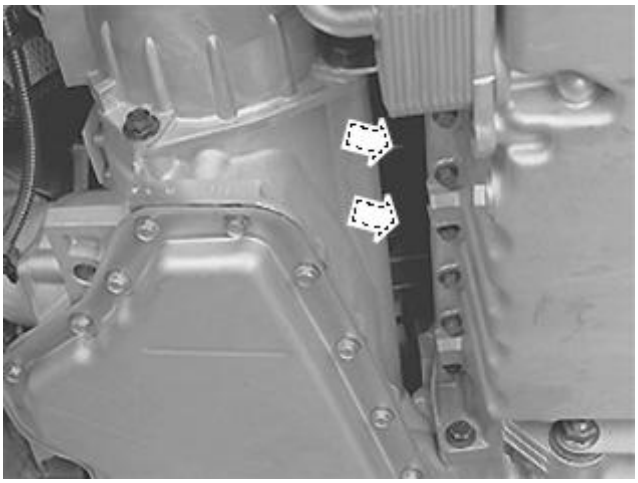

Fig. 588: Differential Housing Screws
Courtesy of VOLVO CARS CORPORATION

Install all 5 screws (apart from the screw for the bracket on the engine mounting) for the transmission / engine.

At the same time, check that the whole of the transmission is in contact with the engine.

Then tighten transmission / engine screws crosswise.

Remove the fixture from the transmission.

Install the 2 screws on the bracket at the cover for the differential housing.

Tighten.

INSTALLING THE BRACKET FOR THE TRANSMISSION END

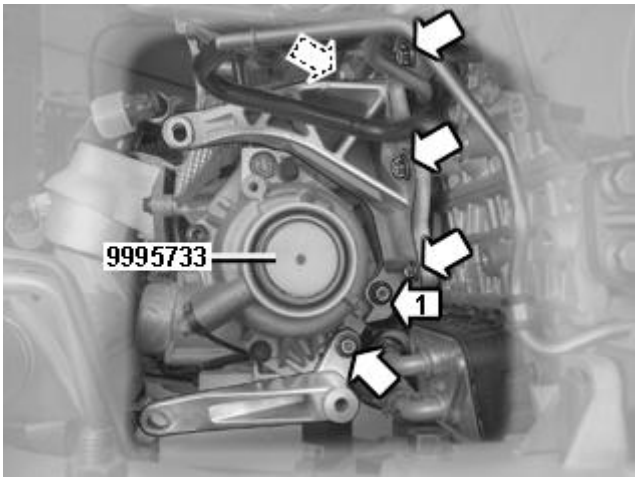

Fig. 589: Identifying Bracket
Courtesy of VOLVO CARS CORPORATION

Install:

- the bracket on the end of the transmission. Tighten
- the screw for the upper bracket. Tighten.

Tighten the screws for the bracket in the cylinder block: 4 x M10 and 1 x M8.

INSTALLING THE CHAIN HOSING AND BEVEL GEAR

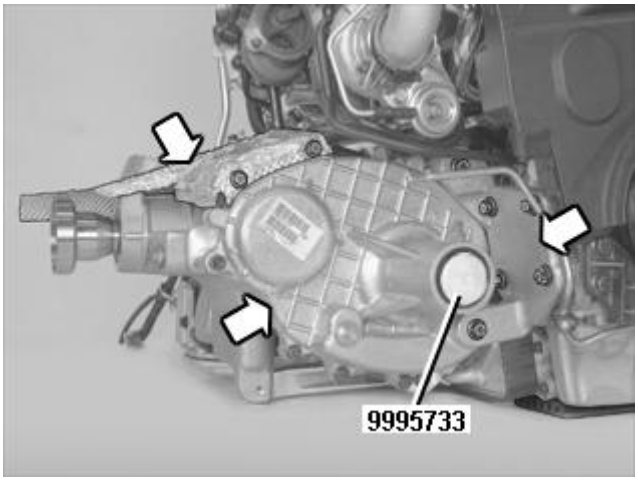

Fig. 590: Identifying Chain Housing
Courtesy of VOLVO CARS CORPORATION

Install:

- the bevel gear - chain housing on the transmission. Lightly tighten the 2 M10 screws alternately. Tighten
- the bracket between the engine and the chain housing. Lightly tighten the 4 M10 screws to the cylinder block
- the 2 M10 screws to the chain housing - bracket. Tighten.

Tighten the 4 M10 screws for the bracket - cylinder block. Tighten.

PAY ATTENTION TO THE FOLLOWING WHEN INSTALLING PROPELLER SHAFT

Follow instructions. **PROPELLER SHAFT, SPECIAL INFORMATION**

INSTALLING THE PROPELLER SHAFT

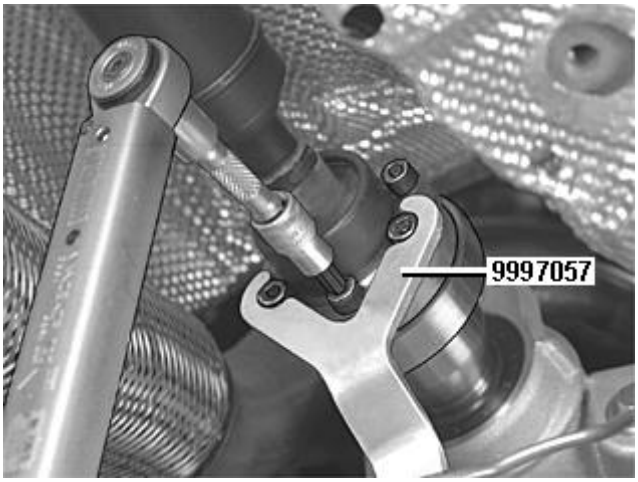

Fig. 591: Identifying Front Propeller Shaft And Special Tool 999 7057
Courtesy of VOLVO CARS CORPORATION

Install the propeller shaft using the marking made earlier. Check carefully that the mating surfaces on the propeller shaft and flange are clean. Install the 6 x M8 screws with washers. Tighten. See: **TIGHTENING TORQUE** . Use: **9997057** .

Install the 2x M8 screws to the propeller shaft center bearing. Tighten.

INSTALLING THE TORQUE CONVERTER SCREWS

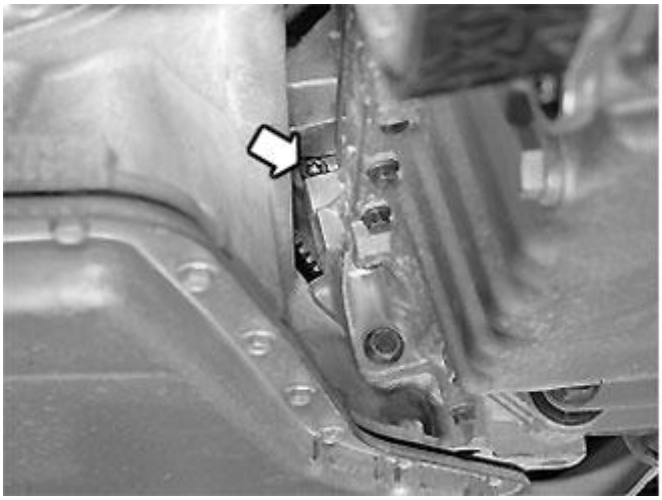

Fig. 592: Locating Torque Converter Screws
Courtesy of VOLVO CARS CORPORATION

NOTE: Always use new screws. The screws can also be installed at a later stage when the vehicle is lowered.

Insert a screw in the cut-out under the transmission and turn the engine.

Tighten the 6 screws. Tighten. See: **TIGHTENING TORQUE** . Use Torx TX50 (see the illustration).

INSTALLING THE HEATED OXYGEN SENSOR (HO2S) CONNECTORS TO THE BRACKET ON THE TRANSMISSION

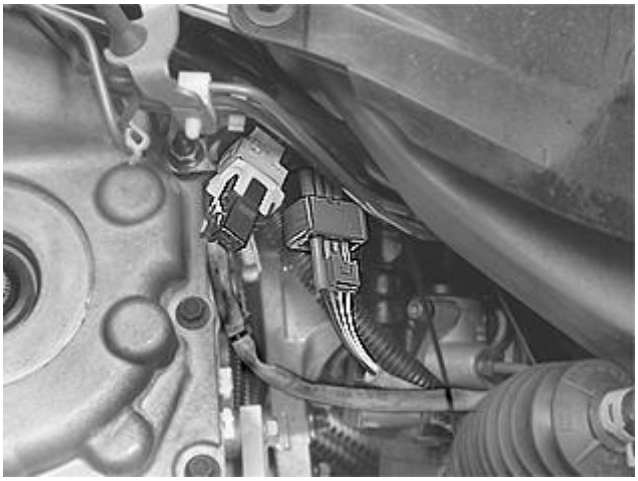

Fig. 593: Heated Oxygen Sensor
Courtesy of VOLVO CARS CORPORATION

Connect the connectors.

Secure the connectors on the bracket.

Install the clamp with the wiring on the transmission. Tighten the nut.

Lower the vehicle.

LIFTING THE ENGINE AND TRANSMISSION TO THE HORIZONTAL POSITION

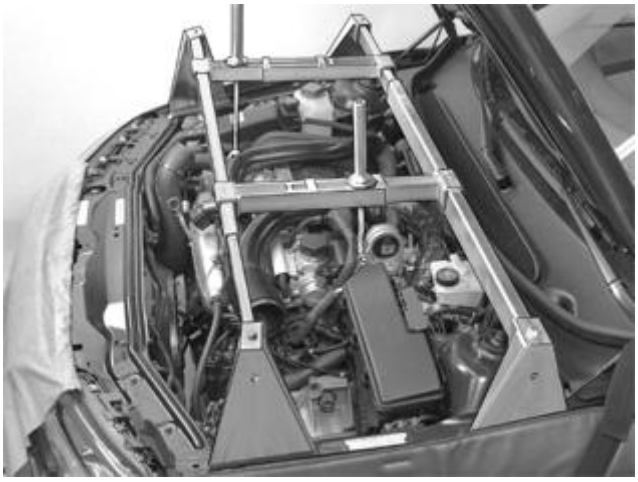

Fig. 594: Identifying Lifting Beam And Lifting Hook Installed
Courtesy of VOLVO CARS CORPORATION

Lift up the engine and transmission to the horizontal position.

Raise the vehicle.

INSTALLING THE OIL PIPE AT THE TRANSMISSION

Fig. 595: Gearbox Oil Pipe
Courtesy of VOLVO CARS CORPORATION

Tighten the screw nipples. Counterhold on the connections.

INSTALLING THE ENGINE MOUNTING TOGETHER WITH THE BRACKET AND THE SPLASH GUARD

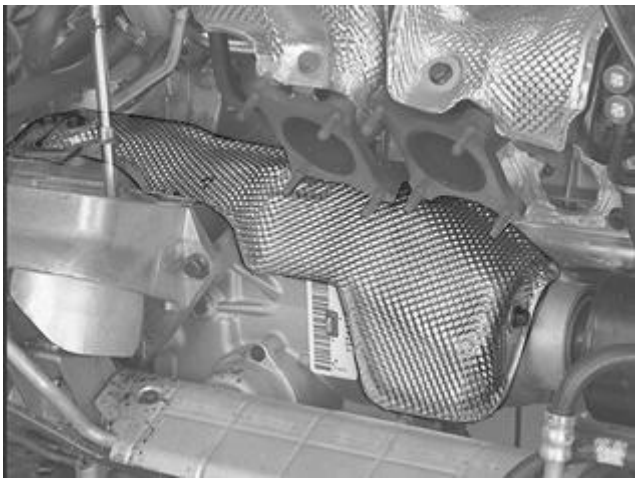

Fig. 596: Identifying Splash Guard Above Transmission
Courtesy of VOLVO CARS CORPORATION

Install:

- the engine mounting together with the splash guard
- the 4 screws for the engine mounting to the transmission
- the screw on the bracket that extends from the top of the engine mounting to the top of the transmission (not the nut on the top of the rubber mounting)
- the screw on the splash guard beside the right drive shaft.

Tighten.

PREPARATIONS FOR INSTALLING THE SUB-FRAME

Fig. 597: Engine Supported with Lifting Table
Courtesy of VOLVO CARS CORPORATION

CAUTION: Ensure that no hoses, wiring or other components catch, or are trapped, when lifting the engine/transmission unit.

CAUTION: Do not damage the brake pipe running to the right front wheel.

Raise the engine / transmission unit. Use a lifting table.

Continue raising the unit until it is only approximately 50 mm from its correct position.

Move the fuel line into place.

Tighten

INSTALLING THE SUB-FRAME

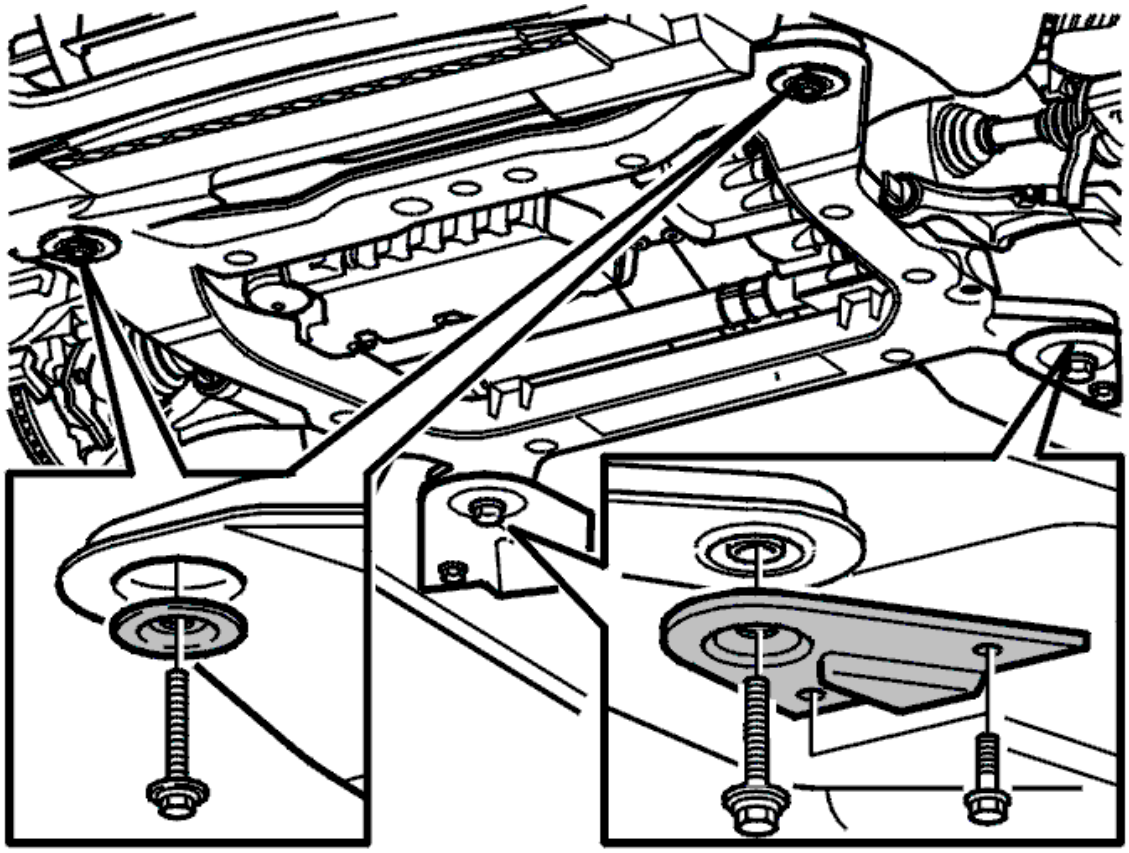

Fig. 598: Identifying Bolts, Washers And Brackets In Sub-Frame
Courtesy of VOLVO CARS CORPORATION

NOTE: Use new screws. Oil the screws.

Lift the sub-frame until it is against the frame members.

Install:

- new screws in the sub-frame
- Install the anti-roll bar
- the washers at the front edge and the support plates at the rear edge of the sub-frame
- the evaporator cable and the oil pipe into place in the sub-frame clips.

Install the four sub-frame screws together with the subframe brackets and engine heater where appropriate.

Tighten to: **TIGHTENING TORQUE** . First tighten the screws on the left side of the sub-frame followed by those on the right.

Tighten the bracket screws M10.

Cars with parking heaters

Install the parking heater in the bracket. Tighten the nuts.

INSTALLING THE RIGHT ENGINE PAD

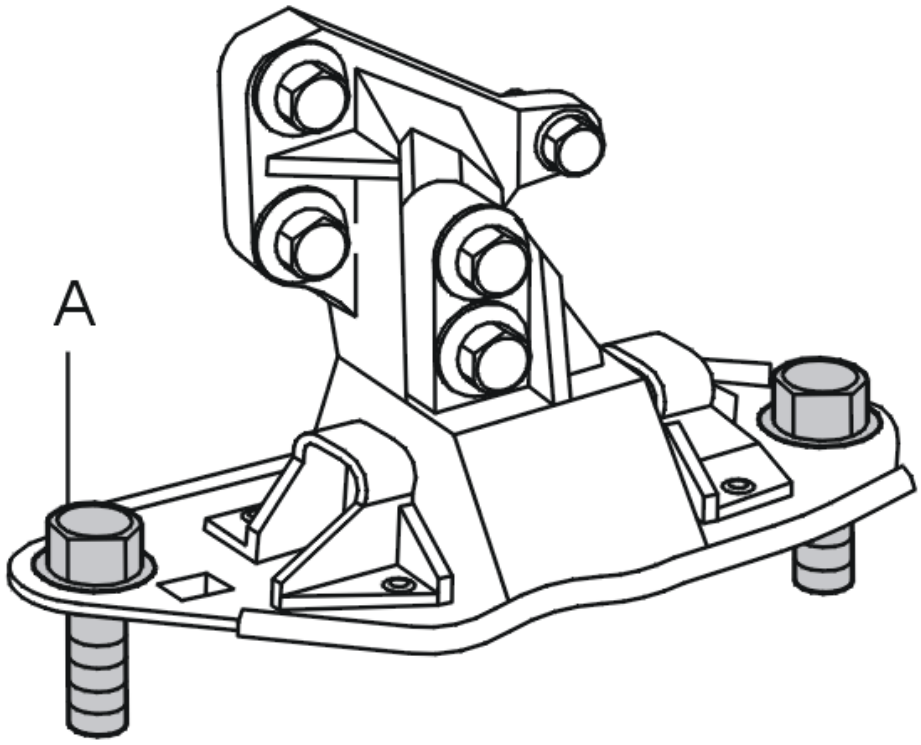

Fig. 599: Identifying Engine Pad And Screws
Courtesy of VOLVO CARS CORPORATION

Install the screws for the mounting in the sub-frame (A).

Tighten screws to the sub-frame. Tighten. See: **TIGHTENING TORQUE** . Use: **9512050** .

HINT: Tighten the screws to the sub-frame. Tighten to 65 Nm. Use a colored pen to mark one corner on the screw head and on the corner.

HINT: Then turn the screw to the next corner. This is equivalent to 60° angle-tightening.

INSTALLING THE SCREW FOR THE REAR ENGINE PAD THROUGH THE STEERING GEAR

Fig. 600: Identifying Rear Engine Pad Screw Removal
Courtesy of VOLVO CARS CORPORATION

Install the screw. Tighten.

INSTALLING THE DRIVE SHAFT IN THE TRANSMISSION, BOTH SIDES

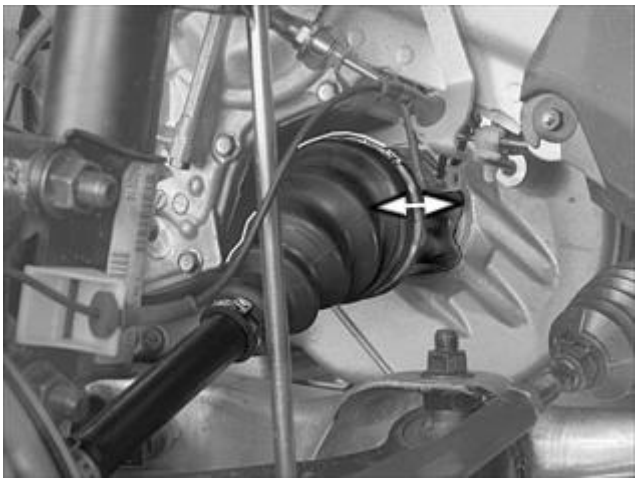

Fig. 601: Drive Shaft Mating Surface
Courtesy of VOLVO CARS CORPORATION

Lubricate the drive shaft mating surface.

Use oil, Volvo P/N 116 1521-8 (1 liter container).

Press the drive shaft into the transmission. Check that the snap ring is in the groove on the transmission by pulling the constant velocity joint.

NOTE: There is no snap ring on the right side.

NOTE: Do not pull the drive shaft as the axial stops cannot support large loads.

Fig. 602: Identifying The Frost Plug Is Fitted Correctly
Courtesy of VOLVO CARS CORPORATION

Applies to chassis no. 690-88951

Make sure that the frost plug is fitted correctly in the left drive shaft.

INSTALLING THE DRIVE SHAFT IN THE WHEEL HUB, BOTH SIDES

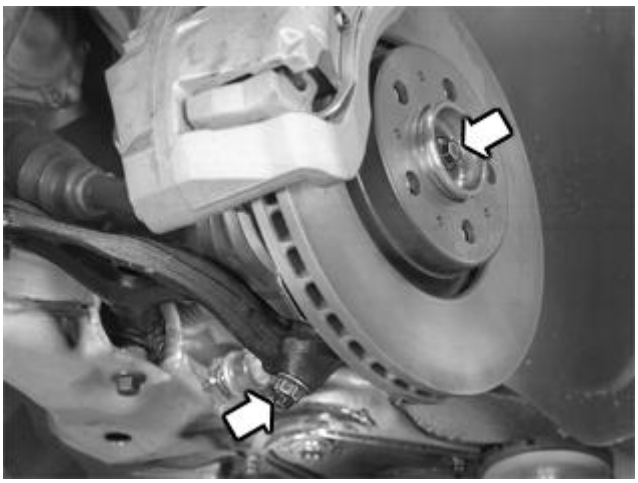

Fig. 603: Locating Drive Shaft Nut And Lower Ball Joint Nut
Courtesy of VOLVO CARS CORPORATION

Lubricate the drive shaft splines for the wheel hub using a small amount of oil.

Hold down the control arm. Align the drive shaft in the hub. Remove the guard from the ball joint. Align the ball joint lug in the control arm. Install a new lock nut on the ball joint. Tighten. See: **TIGHTENING TORQUE** .

NOTE: **Counterhold the end of the ball joint whilst tightening so that the boot does not twist. Use a Torx wrench.**

Install a new screw for the drive shaft / wheel hub. Tighten.

INSTALLING THE ANTI-ROLL BAR LINK TO THE SPRING STRUT

Install:

- the anti-roll bar link to the spring strut. Use a new M12 nut. Counterhold using a Torx wrench so that the boot is not damaged
- the steering arm on the wheel spindle. Use a new nut. Tighten. See **TIGHTENING TORQUE** .

INSTALLING THE SCREWS FOR THE BRACKET FOR THE HEATED OXYGEN SENSOR (HO2S) CABLE

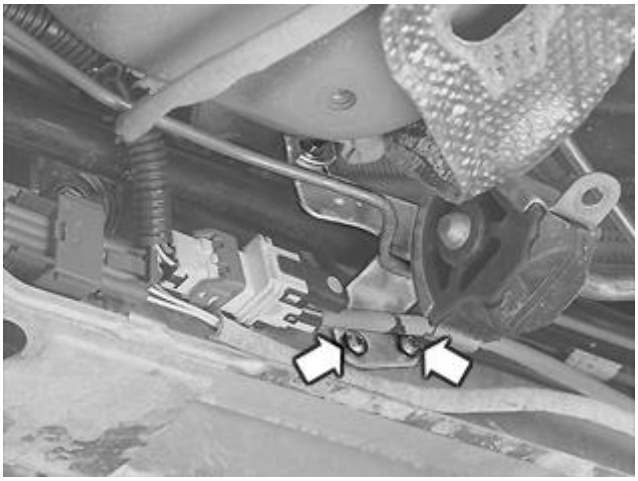

Fig. 604: Heated Oxygen Sensor Cable Bracket
Courtesy of VOLVO CARS CORPORATION

Install the connector for the bracket.

INSTALLING THE FRONT CROSS MEMBER

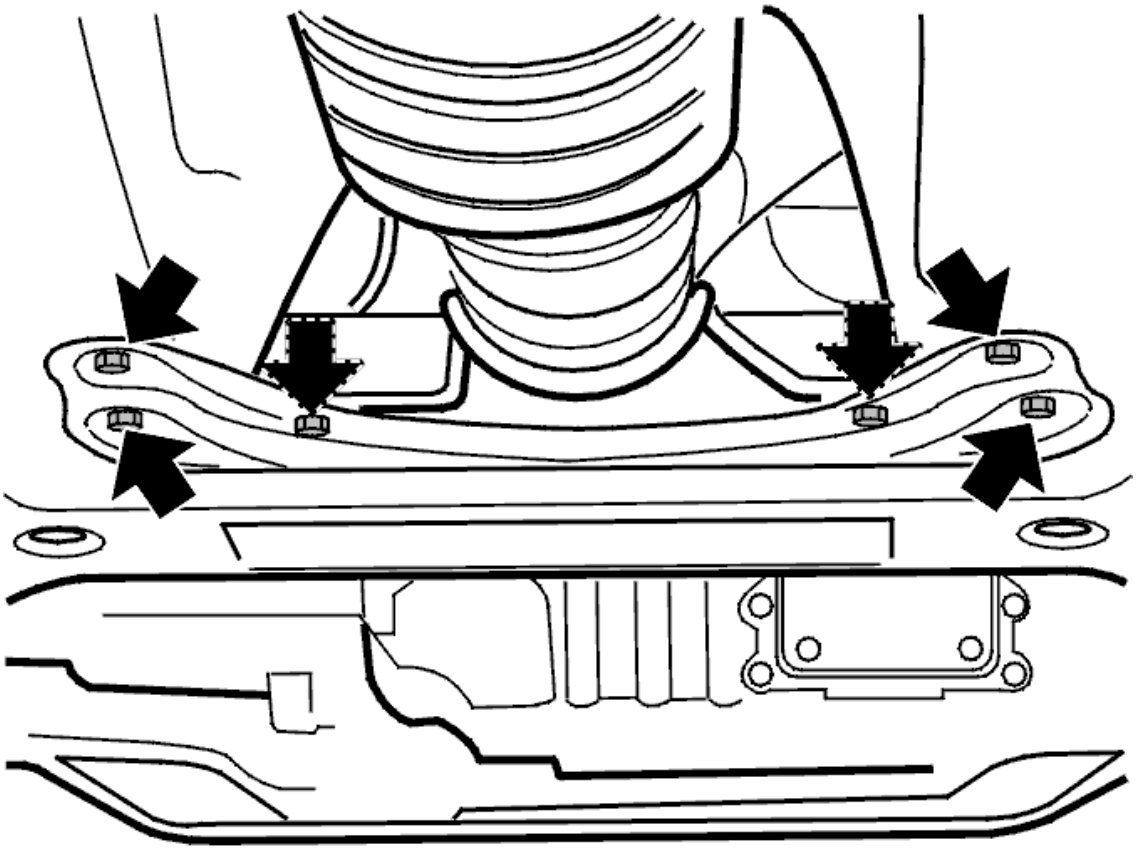

Fig. 605: Exhaust Pipe Bracket Screws
Courtesy of VOLVO CARS CORPORATION

Install the front SIPS member. Press the brake pipe into place in the member.

Install the rubber mounting for the three-way catalytic converter (TWC) in the bracket on the sub-frame.

Fig. 606: Identifying EVAP Cable
Courtesy of VOLVO CARS CORPORATION

Install the EVAP-cable acc. to earlier routing in the sub-frame's clips and press in the cable in the rubber

connection.

INSTALLING NEW LOCK NUTS ON THE STEERING GEAR

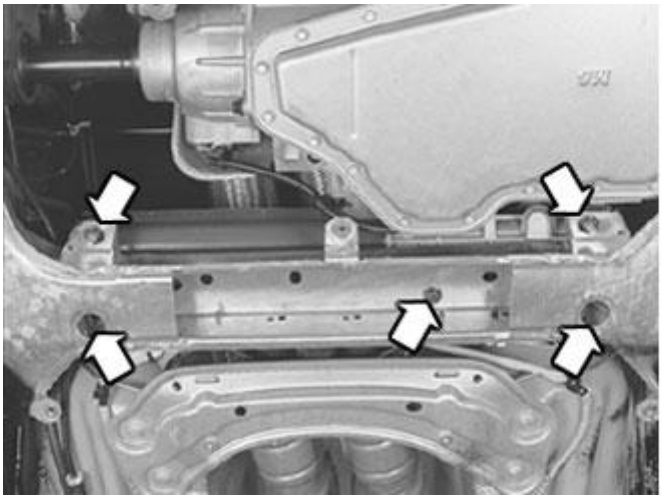

Fig. 607: Installing New Lock Nuts On The Steering Gear
Courtesy of VOLVO CARS CORPORATION

Tighten the nuts and screws. Tighten to **50 Nm** . Tighten the screw and the clamp for the oil pipe.

Remove the steering gear suspension

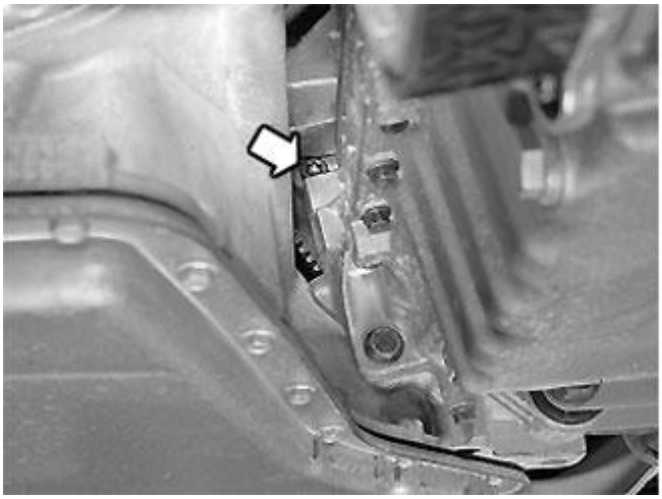

Fig. 608: Locating Torque Converter Screws
Courtesy of VOLVO CARS CORPORATION

NOTE: Use new screws

Insert a screw in the cut-out under the transmission and turn the engine. Tighten the 6 screws to **35 NM** . Use socket Torx TX50 (see the illustration).

INSTALLING THE SCREW FOR THE FRONT ENGINE PAD AND THE TORQUE ROD MOUNTING IN THE

TRANSMISSION

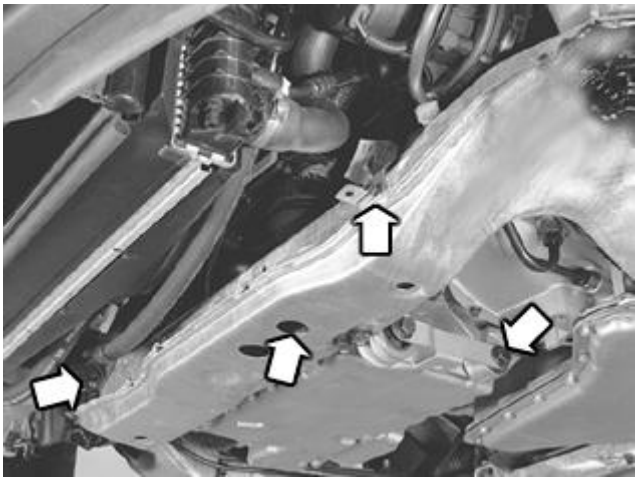

Fig. 609: Identifying Parking Heater Cable Conduit And Screws
Courtesy of VOLVO CARS CORPORATION

Install:

- the screw for the front engine pad. Tighten
- the torque rod mounting on the transmission. Use a new screw
- the screws for the cable duct and the ground lead bracket.

Cars with parking heaters

Install the heater in the bracket. Tighten the nuts.

Reinstall the fuel line in the clips on the sub-frame.

REMOVE THE LIFTING BEAM AND THE LIFTING HOOK FROM THE ENGINE AND THE VEHICLE

Fig. 610: Fixture 999 7018 Installed On Left Hand Side Of Engine At 2 Screws

Courtesy of VOLVO CARS CORPORATION

Lower the vehicle.

Remove the lifting fixture from the motor.

Install the ground strip. Tighten.

INSTALLING THE TORQUE CONVERTER SCREWS

INSTALLING THE CLAMP FOR THE OIL PIPE

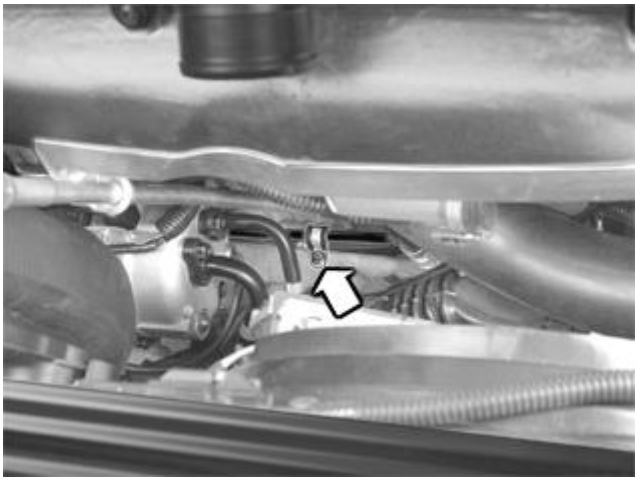

Fig. 611: Identifying Oil Pipe & Power Steering Screw
Courtesy of VOLVO CARS CORPORATION

Install the screw and clamp.

Tighten.

INSTALLING THE SCREWS IN THE TRANSMISSION AND ENGINE

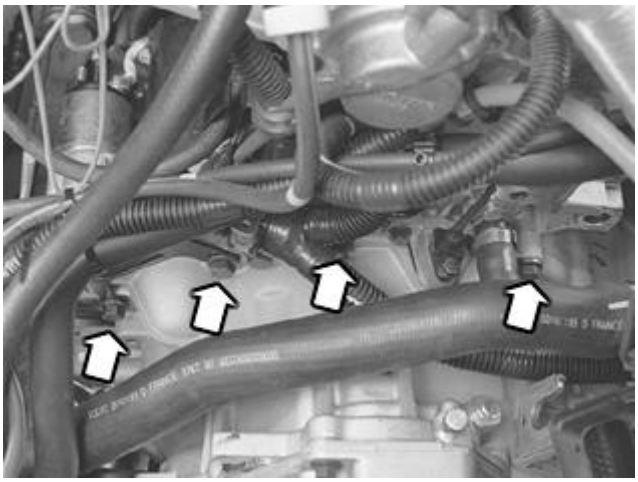

Fig. 612: Identifying Transmission, Starter Motor And Ground Lead Screws
Courtesy of VOLVO CARS CORPORATION

Install:

- the 3 screws for the transmission and engine. Tighten
- the ignition setting sender and the screw. Tighten
- Screws (x 2) to starter motor
- the screw for the clamp for the positive cable. Tighten.

INSTALLING THE DIP STICK PIPE IN THE TRANSMISSION

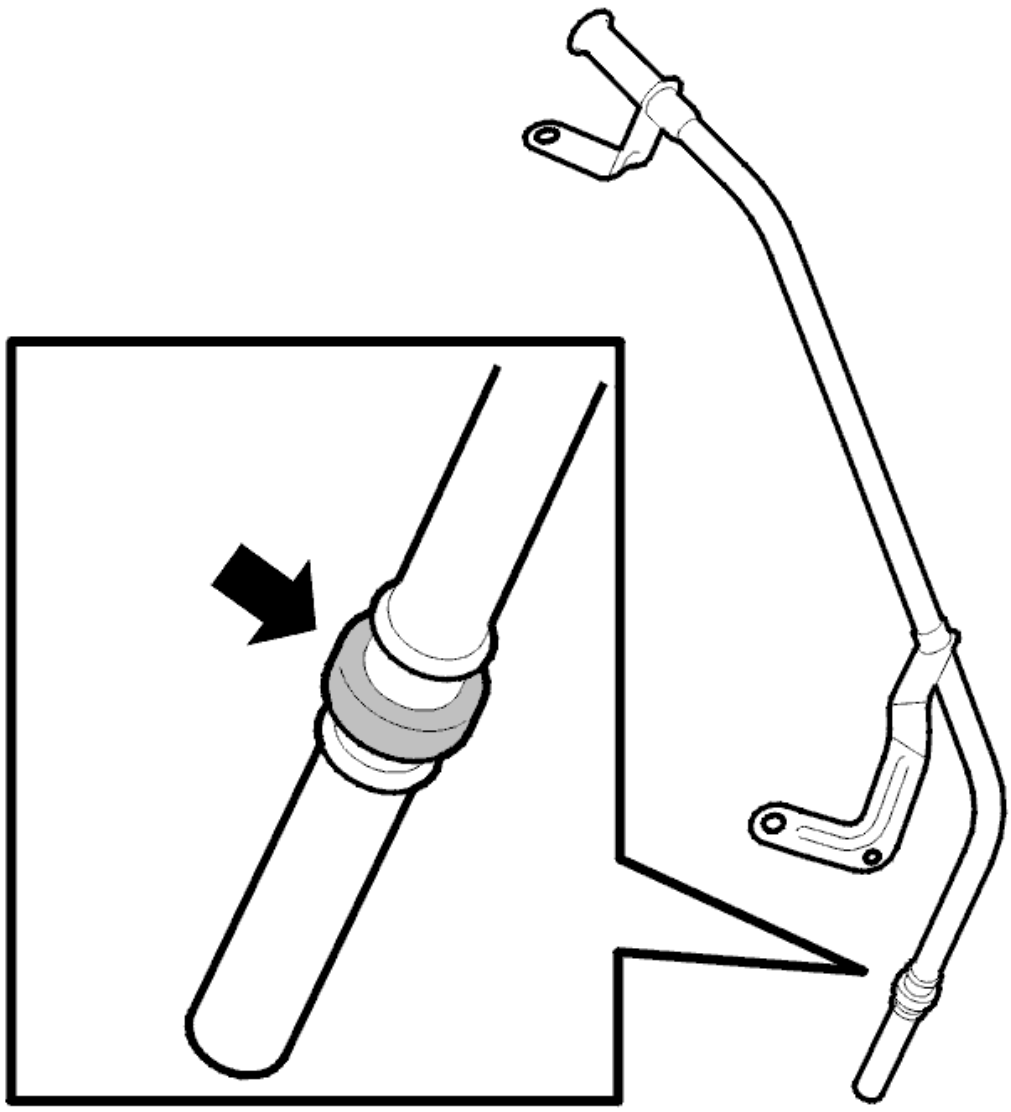

Fig. 613: Dipstick O-Ring
Courtesy of VOLVO CARS CORPORATION

Use a new rubber seal

Apply petroleum jelly on the rubber seal.

NOTE: **Carefully check that the rubber seal is correctly positioned in the transmission. Failure to do so may result in leakage.**

Tighten the screws.

INSTALLING THE HOSE FOR THE HEATER PIPE

Fig. 614: Heater Hoses And Clamp
Courtesy of VOLVO CARS CORPORATION

Install the hose on the heater pipe in the firewall.

Press the radiator hose quick-release connector into place on the heater pipe.

Check: Pull the hose.

INSTALLING THE GEAR SELECTOR CABLE ON THE TRANSMISSION AND LEVER

Fig. 615: Gearbox And Connector
Courtesy of VOLVO CARS CORPORATION

Install:

- the ball joint for the gear selector cable on the lever
- the gear selector cable in the bracket
- the connector for the transmission. Press the connector into place properly

CAUTION: It is important that the connector is pushed into place properly. If it is not correctly connected the gear shift function may stop.

- the connector for the ABS unit.

INSTALLING THE UPPER TORQUE ROD

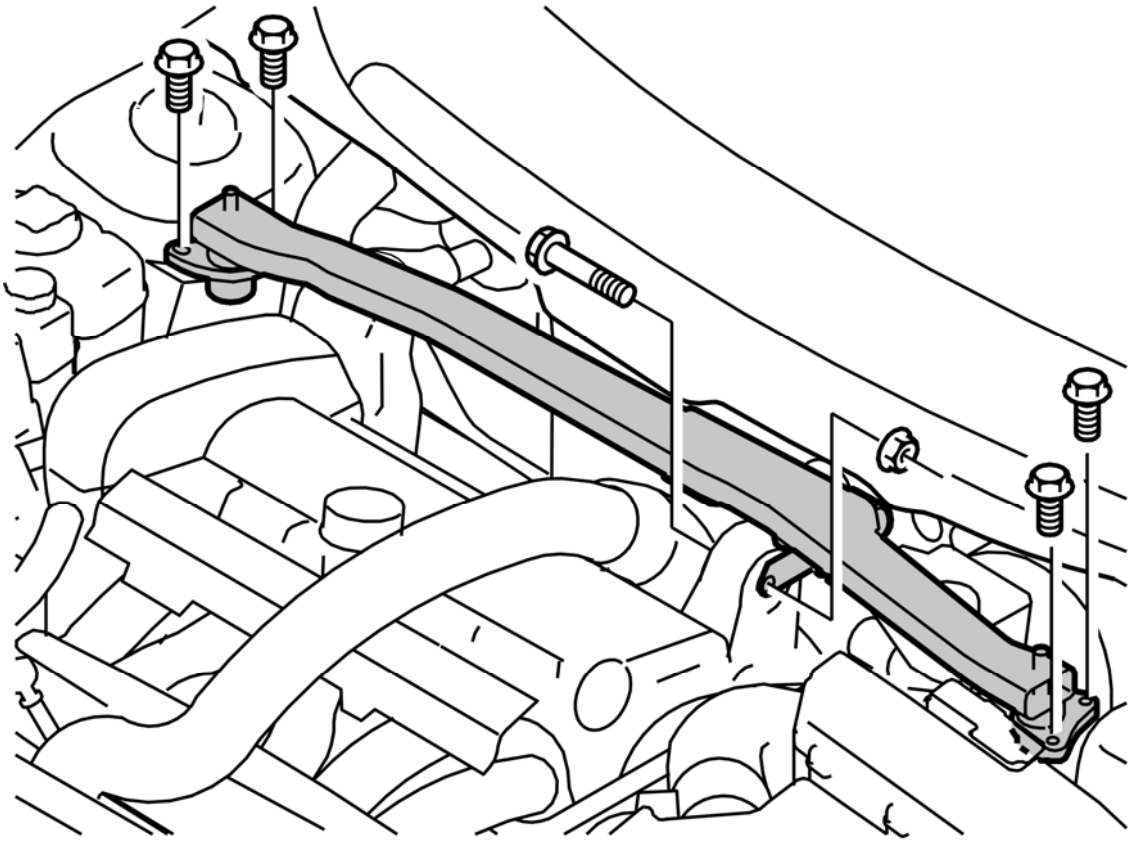

Fig. 616: Identifying Engine Stabilizer Brace And Mounting Screws
Courtesy of VOLVO CARS CORPORATION

Install:

- the engine stabilizer brace. Tighten the mounting screws
- the screw and a new nut for the engine mounting. Tighten
- the plastic guard over the spring strut (if applicable). Tighten the screws.

INSTALLING THE AIR CLEANER (ACL) HOUSING

Install the air cleaner (ACL) housing. See **INSTALL THE AIR CLEANER (ACL) HOUSING** .

FINISHING WORK

FILLING THE TRANSMISSION WITH FLUID

NOTE: **Oil grade: Only ATF fluid Dexron III (with G-license).**

Transmission oil, Volvo P/N 116 1521-8 (1-liter container), 116 1621-6 (4-liter container).

NOTE: **Filling with oil: Start by filling with 5.5 liters of oil.**

FILLING WITH TRANSMISSION OIL. THERE ARE 2 DIFFERENT METHODS. METHOD 1

Fig. 617: Filling Transmission With Oil
Courtesy of VOLVO CARS CORPORATION

NOTE: Filling with oil: Start by filling with 5.5 liters of oil.

Fill the transmission with oil. Use a funnel with a plastic hose. Fill through the dipstick pipe.

Clear up any oil spillage under the dip stick pipe.

FILLING WITH TRANSMISSION OIL. METHOD 2

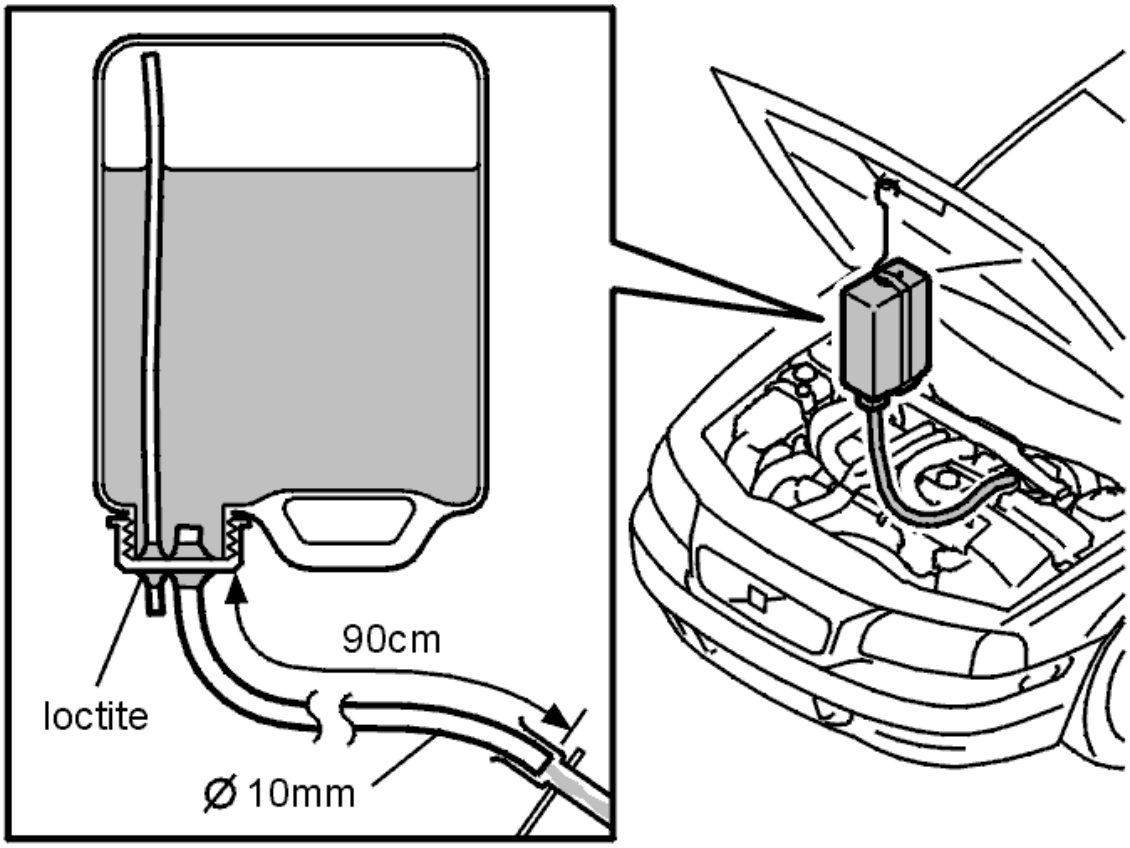

Fig. 618: Filling Transmission With Oil - Method 2
Courtesy of VOLVO CARS CORPORATION

NOTE: Filling with oil: Start by filling with 5.5 liters of oil.

Use a converted five liter plastic can (see the illustration).

This method avoids oil spillage. It also provides a more regular flow when filling.

To check the oil level , see: **OIL LEVEL, CHECKING** .

NOTE: After replacing the transmission, the transmission's adaption as well as the counter for "Transmission oil, change" shall be reset. Use VIDA (Volvo scan tool) Vehicle communication to reset the adaption and the counter.

CHECKING WATER LEVELS

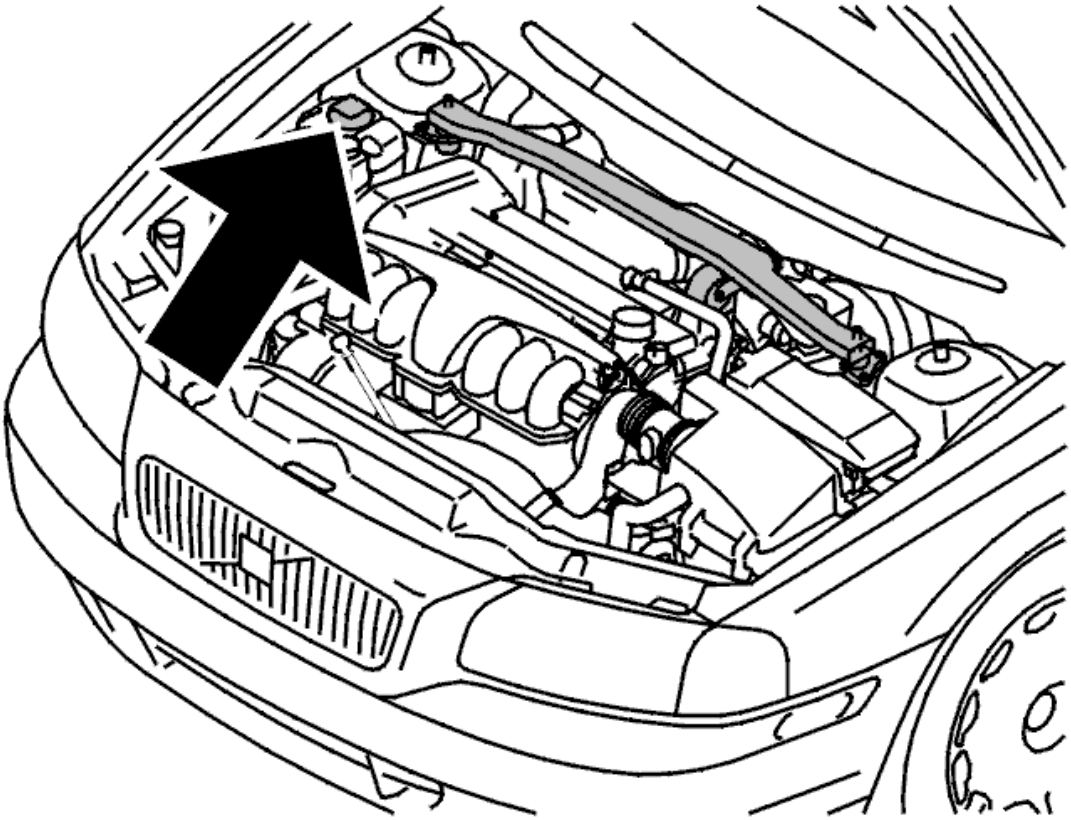

Fig. 619: Identifying Expansion Tank
Courtesy of VOLVO CARS CORPORATION

Top up with water and coolant as necessary (when the engine is at operating temperature).

Check the level in the servo oil reservoir and top up if necessary.

Raise the vehicle.

Check that there is no oil leakage at the transmission, the dip stick or at the steering gear.

INSTALLING THE SPLASH GUARDS AND THE FENDER LINER

Fig. 620: Fender Liner Tied Up To Lifting Beam Using A Retaining Strap
Courtesy of VOLVO CARS CORPORATION

Install:

- The ABS-cable on the mounting
- the splash guard under the engine
- the front splash guard
- the nut for the left fender liner.

Lower the vehicle

INSTALL

- the wheels. See: **INSTALLING WHEELS**
- Lower the vehicle.

INSTALLING THE BATTERY LEAD

See: **BATTERY, DISCONNECTING** . It is essential that the instructions are followed.

PROGRAMMING THE TRANSMISSION CONTROL MODULE (TCM)

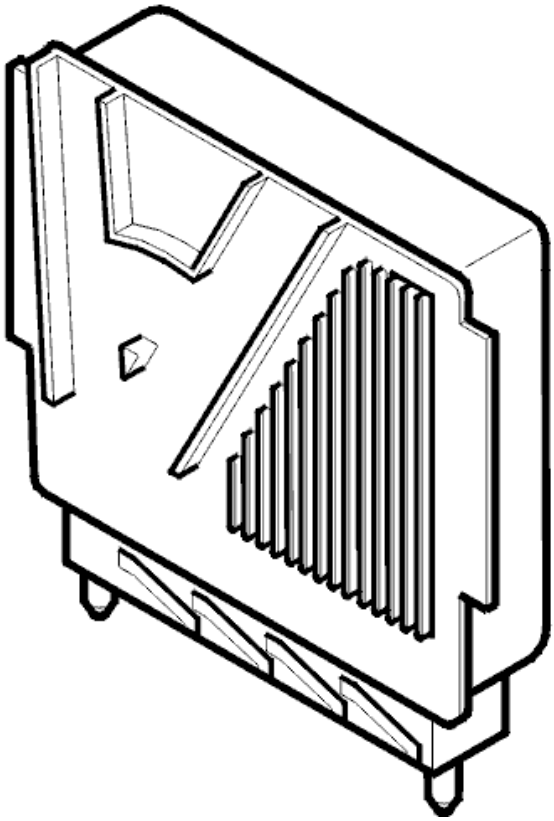

Fig. 621: Identifying Transmission Control Module
Courtesy of VOLVO CARS CORPORATION

After replacing the transmission the latest software must be programmed into the control module.

Top up the oil level in the servo reservoir. Bleed the system. **PRESSURE PIPE/HOSE, STEERING GEAR, REPLACEMENT**

TEST DRIVING THE VEHICLE

Test driving the vehicle, see: **TEST DRIVE FORM, DESCRIPTION** .

NOTE: When changing transmission oil, the transmission's counter for "Transmission oil, change" shall be reset. Use VIDA (Volvo scan tool) Vehicle communication to reset the counter.

NOTE: When changing to a new transmission, the transmission's adaption for "Transmission oil, change" shall be reset. Use VIDA (Volvo scan tool) Vehicle communication to reset the adaption.

PRESSURE PIPE/HOSE, STEERING GEAR, REPLACEMENT

NOTE: **The illustrations in this service information are used for different model years and/or models. Some variation may occur. However, the essential information in the illustrations is always correct.**

REMOVAL

PREPARATORY WORK

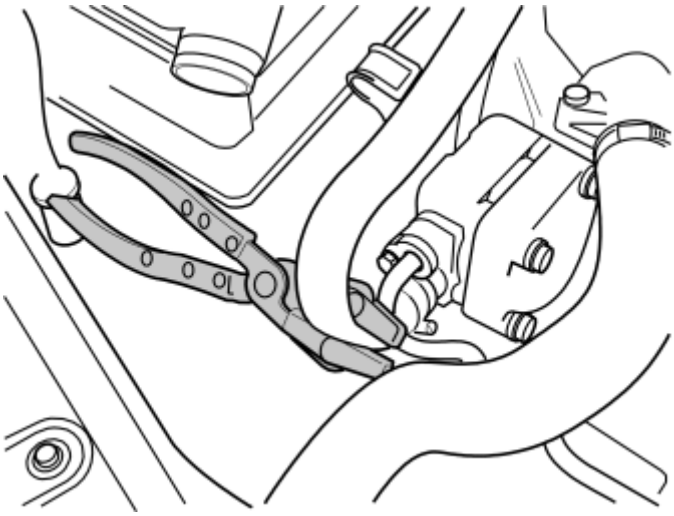

Fig. 622: Identifying Lock Grip / Hose Pliers On Power Steering Pump Feeder Hose
Courtesy of VOLVO CARS CORPORATION

Remove the battery lead. See **BATTERY, DISCONNECTING** .

HINT: Place paper or a rag under the supply pipe to absorb any oil spillage.

Install a hose clip on the feed hose for the power steering pump.

Remove the pressure line from the power steering pump.

REMOVING THE SUB-FRAME

Remove the sub-frame. See: **SUB-FRAME FRONT, REPLACING** .

REMOVING THE DELIVERY LINES

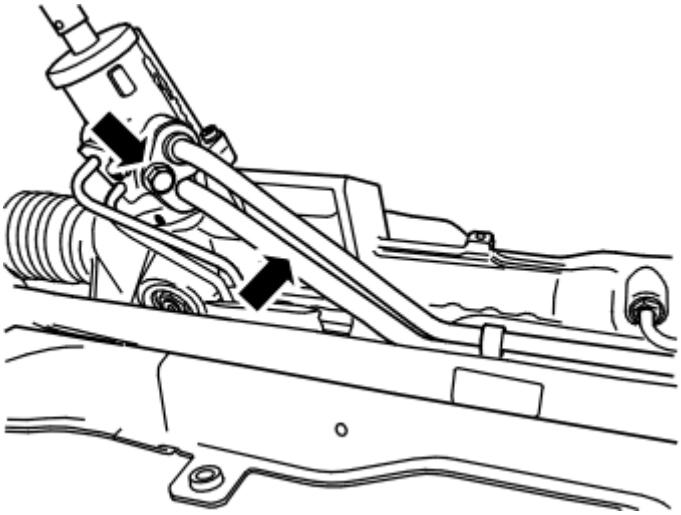

Fig. 623: Identifying Steering Gear Supply Pipe & Nut
Courtesy of VOLVO CARS CORPORATION

Position a container under the steering gear.

Remove:

- the supply pipe from the steering gear. Drain the oil
- release the supply pipe /hose from the clip
- the supply pipe.

NOTE: Note the routing of the supply pipe / hose.

INSTALLATION

NOTE: For tightening torques, see: TIGHTENING TORQUE .

INSTALLING THE SUPPLY PIPE / HOSE

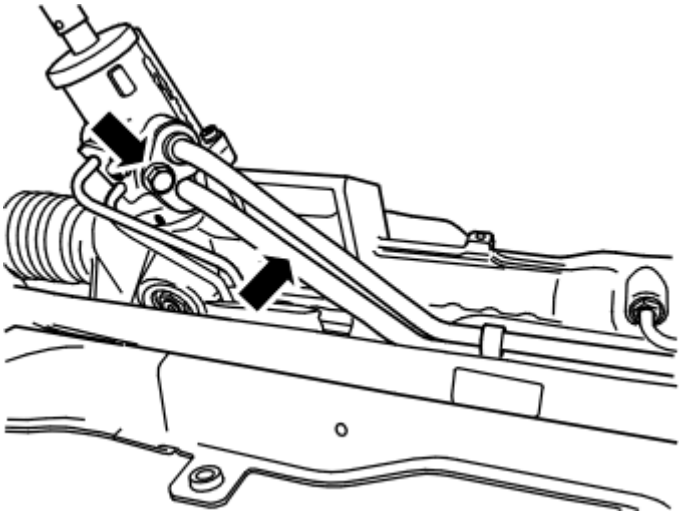

Fig. 624: Identifying Steering Gear Supply Pipe & Nut
Courtesy of VOLVO CARS CORPORATION

Install:

- the supply pipe and return pipe to the steering gear. Tighten
- the supply pipe / hose in the clip for the steering gear.

NOTE: Use a new O-ring.

INSTALLING THE SUB-FRAME

Install the sub-frame. See: **SUB-FRAME FRONT, REPLACING** .

INSTALLING DELIVERY LINES

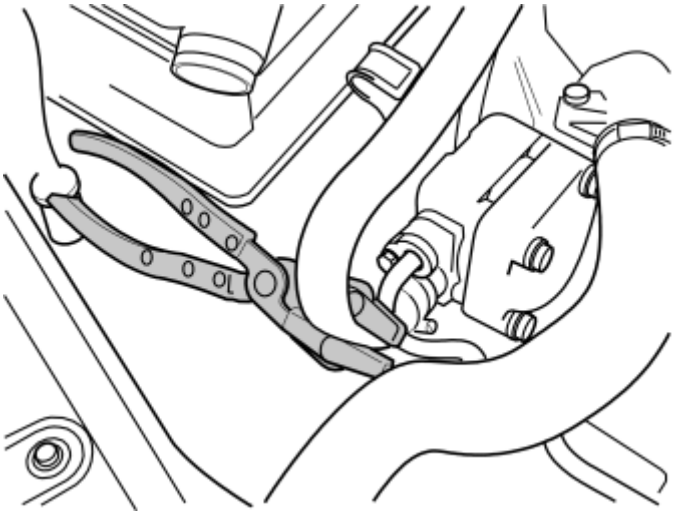

Fig. 625: Identifying Lock Grip / Hose Pliers On Power Steering Pump Feeder Hose
Courtesy of VOLVO CARS CORPORATION

Install the supply pipe on the power steering pump. Tighten to :**TIGHTENING TORQUE**

NOTE: Use a new O-ring.

Remove the hose pliers from the supply line.

FINISHING

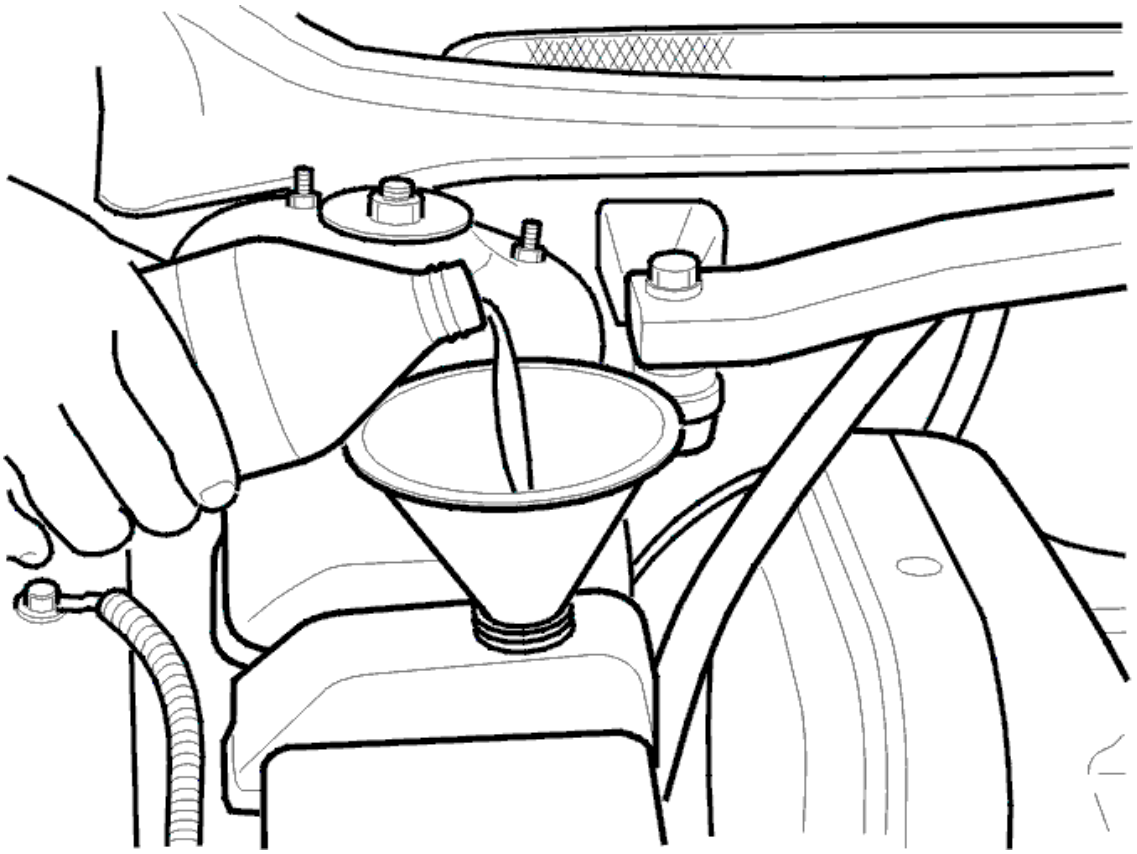

Fig. 626: Filling Servo Reservoir With Oil
Courtesy of VOLVO CARS CORPORATION

Connect the battery lead.

WARNING: Avoid skin contact with the oil.

NOTE: For the correct oil grade use Volvo power steering Fluid P/N 1161529.

Fill the power steering reservoir with oil. Bleed the system.

Turn the steering wheel from lock to lock several times. Top up with oil as necessary.

Lower the vehicle.

Apply the parking brake. Start the engine.

- **A** Turn the steering wheel slowly to the right, keep it at the limit position for two seconds.
- **B** Turn the steering wheel slowly to the left, keep it at the limit position for two seconds.

Repeat steps A and B ten times.

PRESSURE PIPE/HOSE, STEERING GEAR, REPLACEMENT

NOTE: The illustrations in this service information are used for different model years and/or models. Some variation may occur. However, the essential information in the illustrations is always correct.

REMOVAL

PREPARATORY WORK

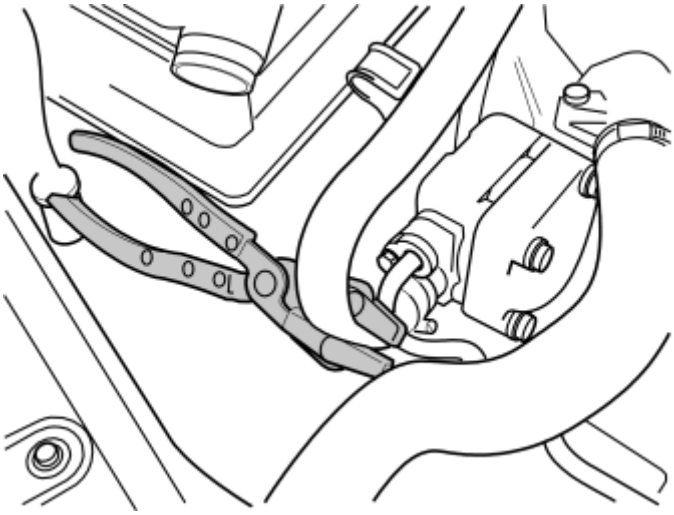

Fig. 627: Identifying Lock Grip / Hose Pliers On Power Steering Pump Feeder Hose
Courtesy of VOLVO CARS CORPORATION

Remove the battery lead. See **BATTERY, DISCONNECTING** .

HINT: Place paper or a rag under the supply pipe to absorb any oil spillage.

Install a hose clip on the feed hose for the power steering pump.

Remove the pressure line from the power steering pump.

REMOVING THE SUB-FRAME

Remove the sub-frame. See: **SUB-FRAME FRONT, REPLACING** .

REMOVING THE DELIVERY LINES

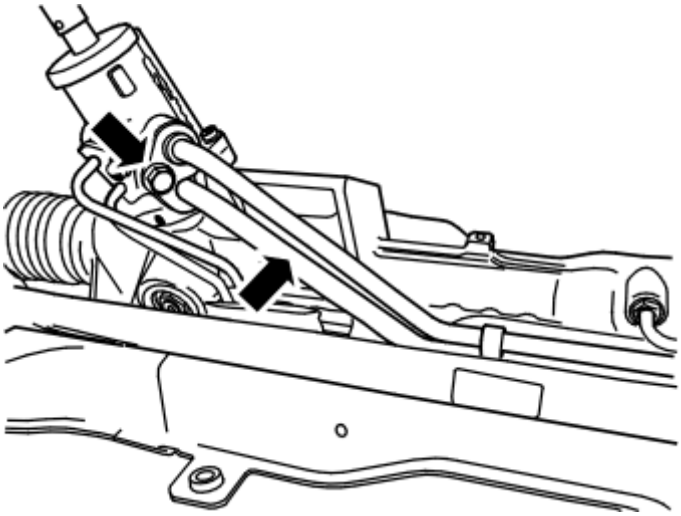

Fig. 628: Identifying Steering Gear Supply Pipe & Nut
Courtesy of VOLVO CARS CORPORATION

Position a container under the steering gear.

Remove:

- the supply pipe from the steering gear. Drain the oil
- release the supply pipe /hose from the clip
- the supply pipe.

NOTE: Note the routing of the supply pipe / hose.

INSTALLATION

NOTE: For tightening torques, see: TIGHTENING TORQUE .

INSTALLING THE SUPPLY PIPE / HOSE

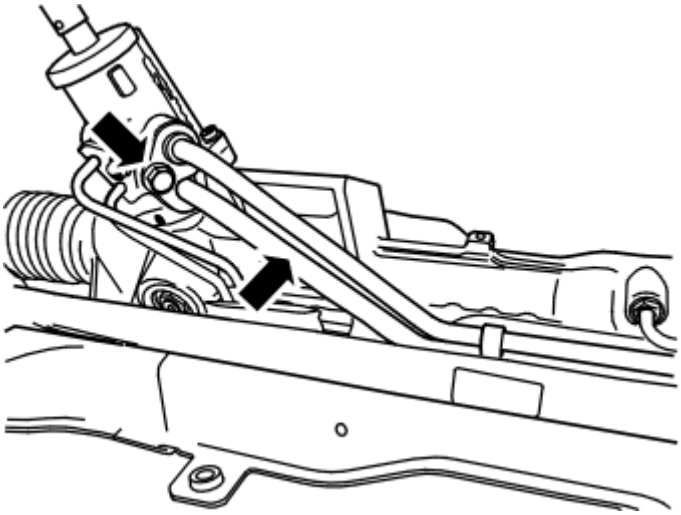

Fig. 629: Identifying Steering Gear Supply Pipe & Nut
Courtesy of VOLVO CARS CORPORATION

Install:

- the supply pipe and return pipe to the steering gear. Tighten
- the supply pipe / hose in the clip for the steering gear.

NOTE: Use a new O-ring.

INSTALLING THE SUB-FRAME

Install the sub-frame. See: **SUB-FRAME FRONT, REPLACING** .

INSTALLING DELIVERY LINES

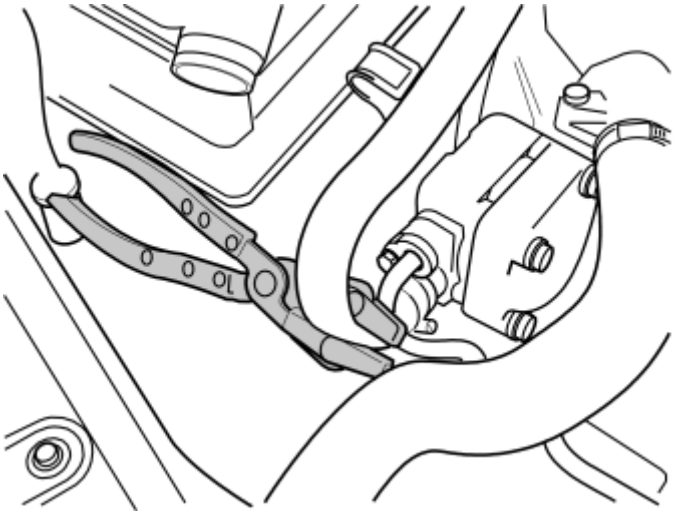

Fig. 630: Identifying Lock Grip / Hose Pliers On Power Steering Pump Feeder Hose
Courtesy of VOLVO CARS CORPORATION

Install the supply pipe on the power steering pump. Tighten to :**TIGHTENING TORQUE**

NOTE: Use a new O-ring.

Remove the hose pliers from the supply line.

FINISHING

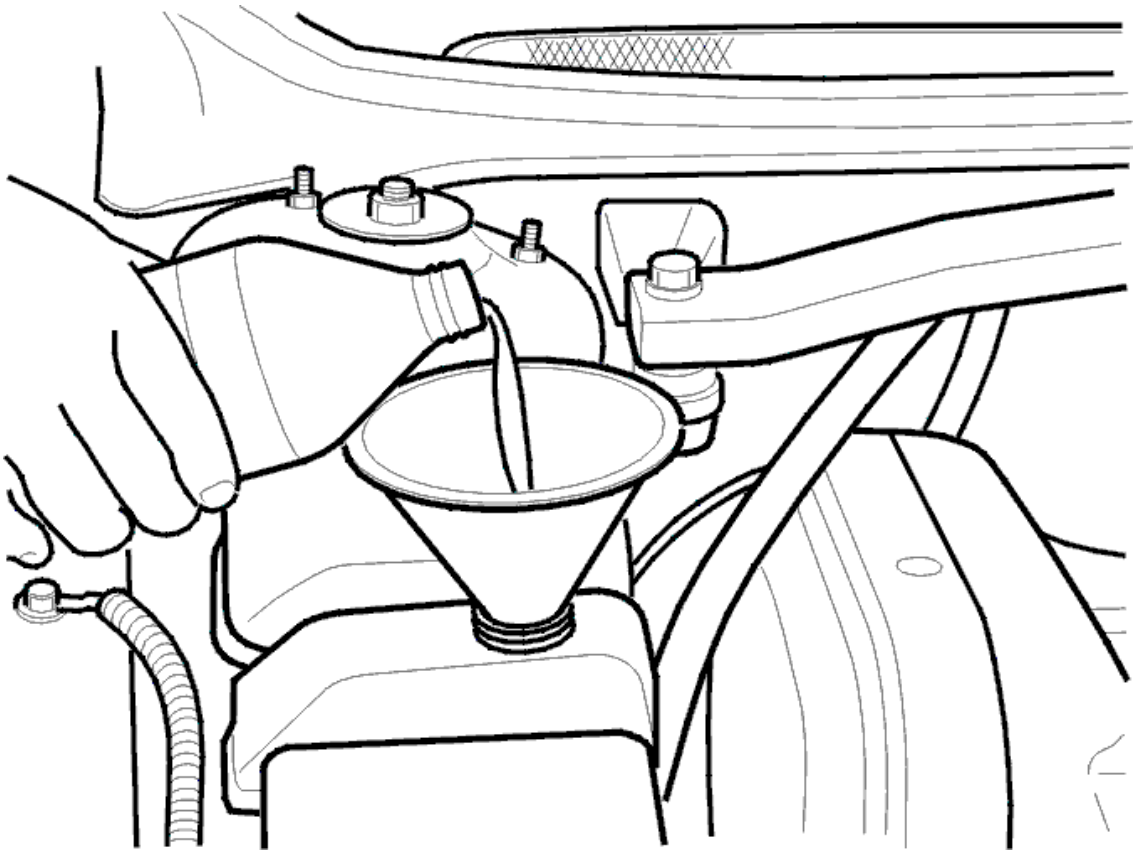

Fig. 631: Filling Servo Reservoir With Oil
Courtesy of VOLVO CARS CORPORATION

Connect the battery lead.

WARNING: Avoid skin contact with the oil.

NOTE: For the correct oil grade use Volvo power steering Fluid P/N 1161529.

Fill the power steering reservoir with oil. Bleed the system.

Turn the steering wheel from lock to lock several times. Top up with oil as necessary.

Lower the vehicle.

Apply the parking brake. Start the engine.

- **A** Turn the steering wheel slowly to the right, keep it at the limit position for two seconds.
- **B** Turn the steering wheel slowly to the left, keep it at the limit position for two seconds.

Repeat steps A and B ten times.

PRESSURE PIPE/HOSE, STEERING GEAR, REPLACEMENT

NOTE: The illustrations in this service information are used for different model years and/or models. Some variation may occur. However, the essential information in the illustrations is always correct.

REMOVAL

PREPARATORY WORK

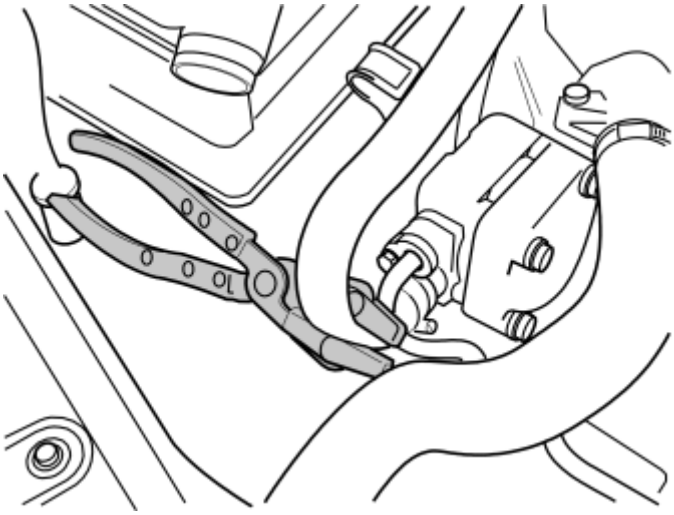

Fig. 632: Identifying Lock Grip / Hose Pliers On Power Steering Pump Feeder Hose
Courtesy of VOLVO CARS CORPORATION

Remove the battery lead. See **BATTERY, DISCONNECTING** .

HINT: Place paper or a rag under the supply pipe to absorb any oil spillage.

Install a hose clip on the feed hose for the power steering pump.

Remove the pressure line from the power steering pump.

REMOVING THE SUB-FRAME

Remove the sub-frame. See: **SUB-FRAME FRONT, REPLACING** .

REMOVING THE DELIVERY LINES

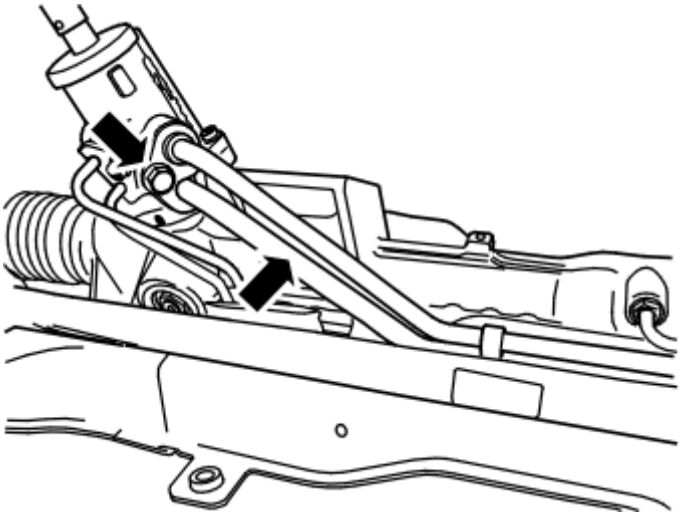

Fig. 633: Identifying Steering Gear Supply Pipe & Nut
Courtesy of VOLVO CARS CORPORATION

Position a container under the steering gear.

Remove:

- the supply pipe from the steering gear. Drain the oil
- release the supply pipe /hose from the clip
- the supply pipe.

NOTE: Note the routing of the supply pipe / hose.

INSTALLATION

NOTE: For tightening torques, see: TIGHTENING TORQUE .

INSTALLING THE SUPPLY PIPE / HOSE

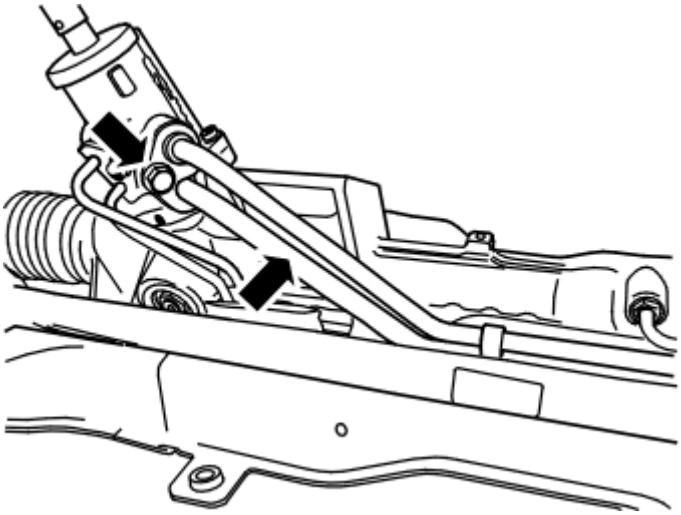

Fig. 634: Identifying Steering Gear Supply Pipe & Nut
Courtesy of VOLVO CARS CORPORATION

Install:

- the supply pipe and return pipe to the steering gear. Tighten
- the supply pipe / hose in the clip for the steering gear.

NOTE: Use a new O-ring.

INSTALLING THE SUB-FRAME

Install the sub-frame. See: **SUB-FRAME FRONT, REPLACING** .

INSTALLING DELIVERY LINES

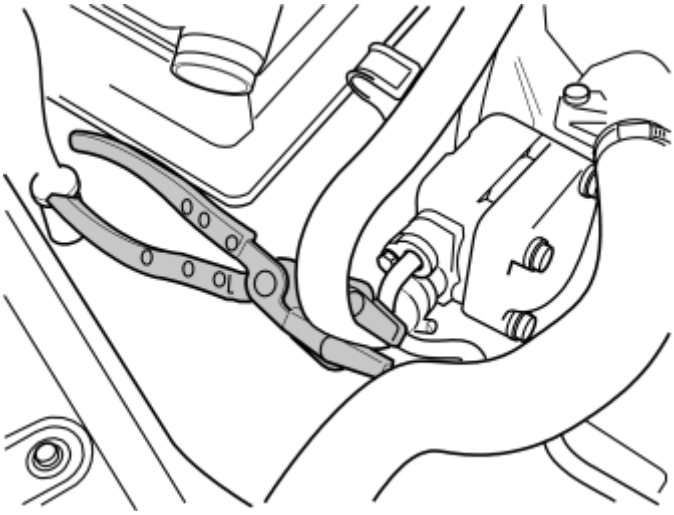

Fig. 635: Identifying Lock Grip / Hose Pliers On Power Steering Pump Feeder Hose
Courtesy of VOLVO CARS CORPORATION

Install the supply pipe on the power steering pump. Tighten to :**TIGHTENING TORQUE**

NOTE: Use a new O-ring.

Remove the hose pliers from the supply line.

FINISHING

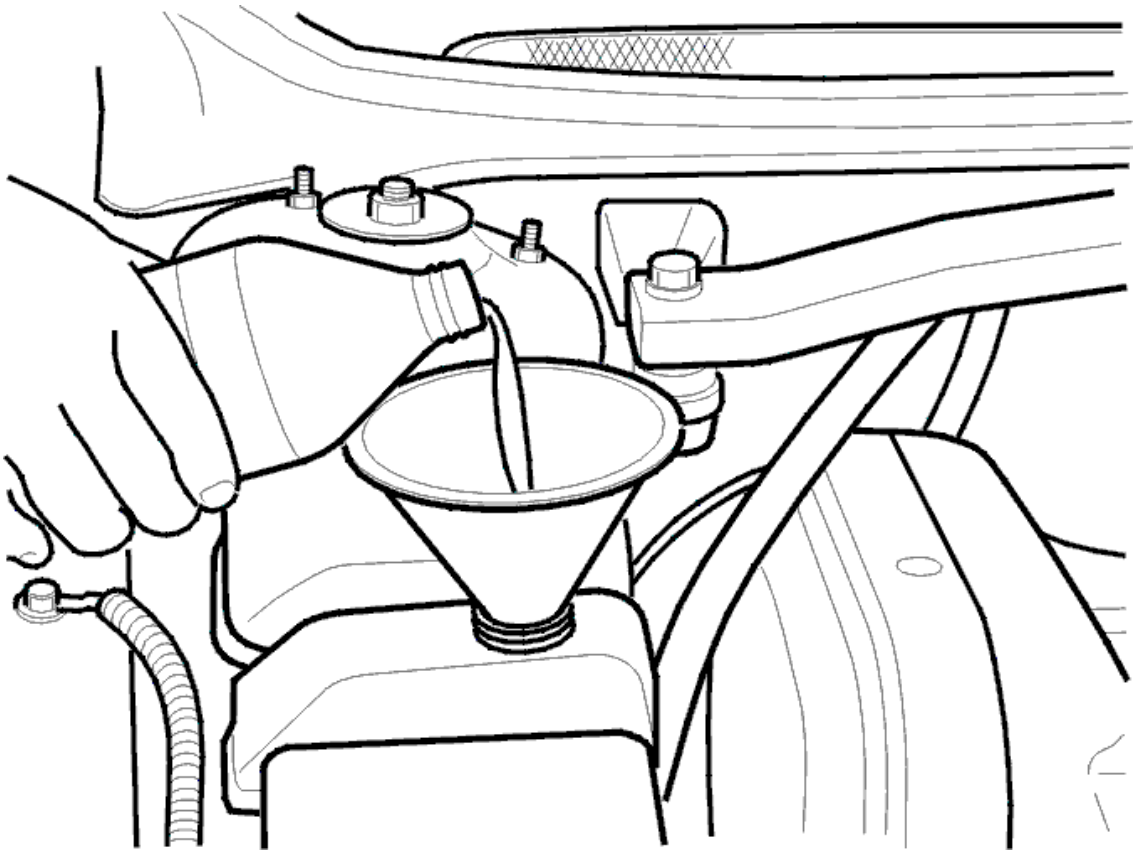

Fig. 636: Filling Servo Reservoir With Oil
Courtesy of VOLVO CARS CORPORATION

Connect the battery lead.

WARNING: Avoid skin contact with the oil.

NOTE: For the correct oil grade use Volvo power steering Fluid P/N 1161529.

Fill the power steering reservoir with oil. Bleed the system.

Turn the steering wheel from lock to lock several times. Top up with oil as necessary.

Lower the vehicle.

Apply the parking brake. Start the engine.

- **A** Turn the steering wheel slowly to the right, keep it at the limit position for two seconds.
- **B** Turn the steering wheel slowly to the left, keep it at the limit position for two seconds.

Repeat steps A and B ten times.

TRANSMISSION, INSTALLING (2003, 2004)

Special tools:

9512050

9995395

9997057

9997076

NOTE: As the illustrations in this service information are used for different model years and/or models, some variation may occur. However, the essential information is always correct.

NOTE: For tightening torques, see: TIGHTENING TORQUE .

WHEN REPLACING WITH A NEW TRANSMISSION

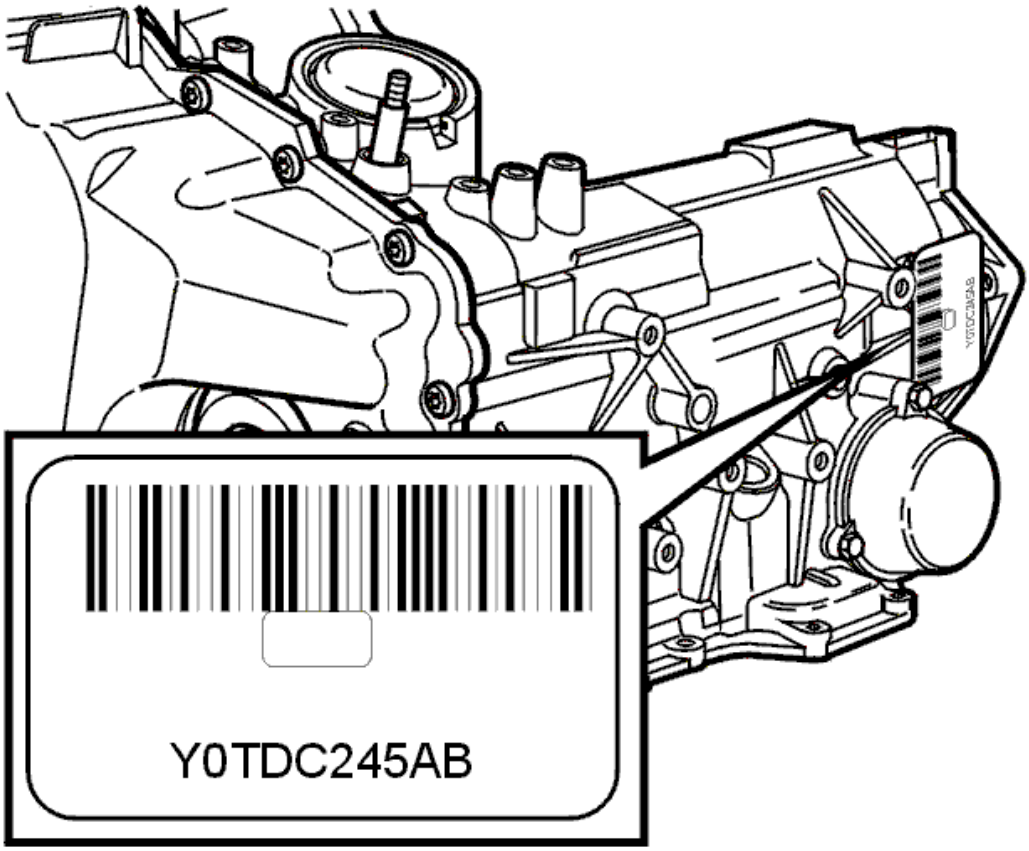

Fig. 637: Identification Plate On Transmission
Courtesy of VOLVO CARS CORPORATION

THESE SCREWS AND NUTS MUST BE REPLACED WHEN REPLACING THE TRANSMISSION

Dimension	Quantity	Designation
M8x12	6	Screw (the torque converter)
M14x100	4	Sems screw (sub-frame)
M14x15.9	2	Flanged lock nut (the ball joints)
M10x65	2	Sems nut (the drive shaft)
M8x8	1	Nut (the steering shaft)
M8x40	6	Allen screw (the propeller shaft)
		Nut, steering gear
		Nut, anti-roll bar link

CHECKING BEFORE INSTALLING

Flushing clean the oil cooler

When replacing the transmission, the oil cooler must always be flushed through because there may be particles in the oil cooler. See: **OIL COOLER, FLUSH CLEANING** .

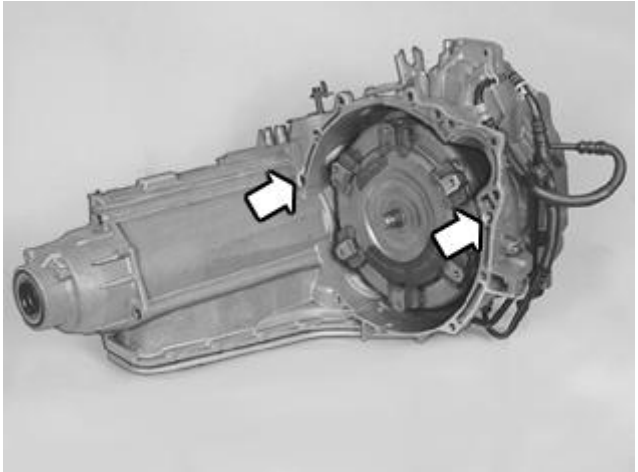

Fig. 638: Identifying Engine Mating Surface On Transmission
Courtesy of VOLVO CARS CORPORATION

Check that the transmission and engine mating surfaces are **absolutely** clean.

Also check that the guide sleeves towards the engine are in position and are free of faults.

Lubricate the holes in the transmission (for the guide pins). Use a little grease.

NOTE: This only applies if replacing the transmission.

Slacken off the bracket screws for the bevel gear - chain housing so that they can be moved slightly. The bracket is on the cylinder block.

ADJUSTING THE POSITION OF THE TRANSMISSION AND ENGINE

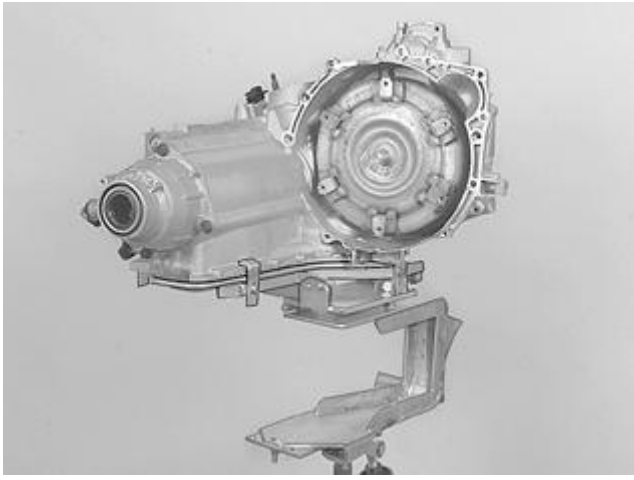

Fig. 639: Identifying Transmission On Mobile Jack
Courtesy of VOLVO CARS CORPORATION

Adjust height and angle with the mobile jack and the transmission fixture.

Locate the transmission on the engine.

Ensure that the transmission goes straight in relation to the engine and that the torque converter is in the correct location.

CHECKING / REPLACING THE TORQUE CONVERTER

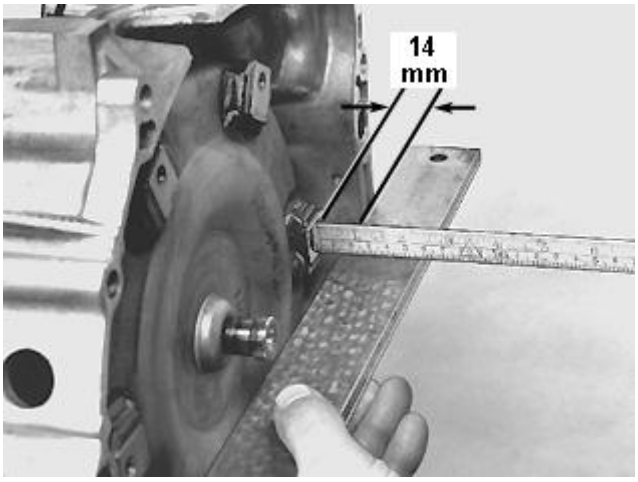

Fig. 640: Checking Distance Between Cover And Mounting Lugs Using Ruler
Courtesy of VOLVO CARS CORPORATION

Ensure that the mating surfaces on the torque converter are clean. Ensure that the torque converter is as far into the transmission as possible. Check with a ruler that the distance between the cover and mounting lugs is approximately 14 mm.

INSTALLING AND TIGHTENING THE SCREWS FOR THE TRANSMISSION

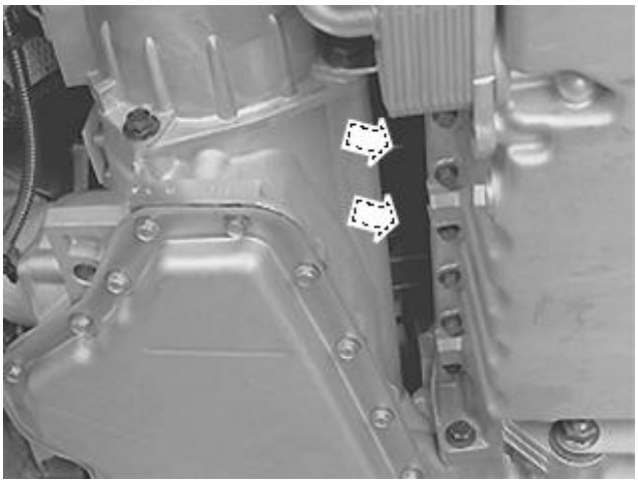

Fig. 641: Differential Housing Screws
Courtesy of VOLVO CARS CORPORATION

Install all 5 screws (apart from the screw for the bracket on the engine mounting) for the transmission / engine.

At the same time, check that the whole of the transmission is in contact with the engine.

Then tighten transmission / engine screws crosswise.

Remove the fixture from the transmission.

Install the 2 screws on the bracket at the cover for the differential housing.

Tighten.

INSTALLING THE BRACKET FOR THE TRANSMISSION END

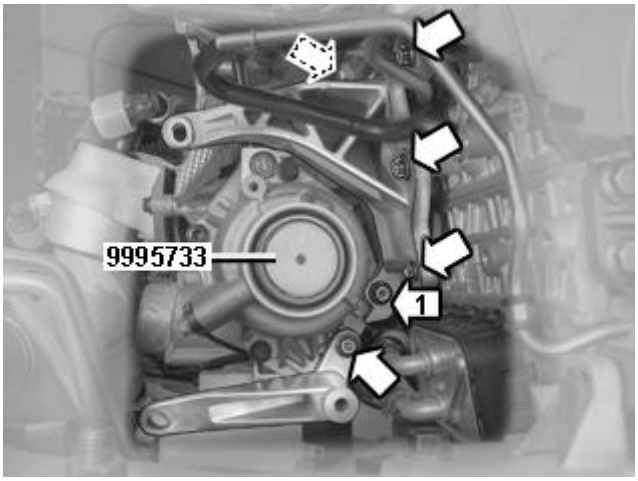

Fig. 642: Identifying Bracket
Courtesy of VOLVO CARS CORPORATION

Install:

- the bracket on the end of the transmission. Tighten
- the screw for the upper bracket. Tighten.

Tighten the screws for the bracket in the cylinder block: 4 x M10 and 1 x M8.

INSTALLING THE CHAIN HOSING AND BEVEL GEAR

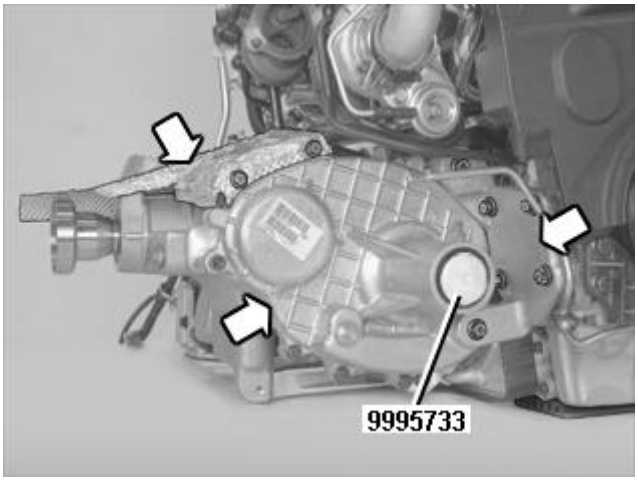

Fig. 643: Identifying Chain Housing
Courtesy of VOLVO CARS CORPORATION

Install:

- the bevel gear - chain housing on the transmission. Lightly tighten the 2 M10 screws alternately. Tighten
- the bracket between the engine and the chain housing. Lightly tighten the 4 M10 screws to the cylinder block
- the 2 M10 screws to the chain housing - bracket. Tighten.

Tighten the 4 M10 screws for the bracket - cylinder block. Tighten.

PAY ATTENTION TO THE FOLLOWING WHEN INSTALLING PROPELLER SHAFT

Follow instructions. See **PROPELLER SHAFT, SPECIAL INFORMATION** .

INSTALLING THE PROPELLER SHAFT

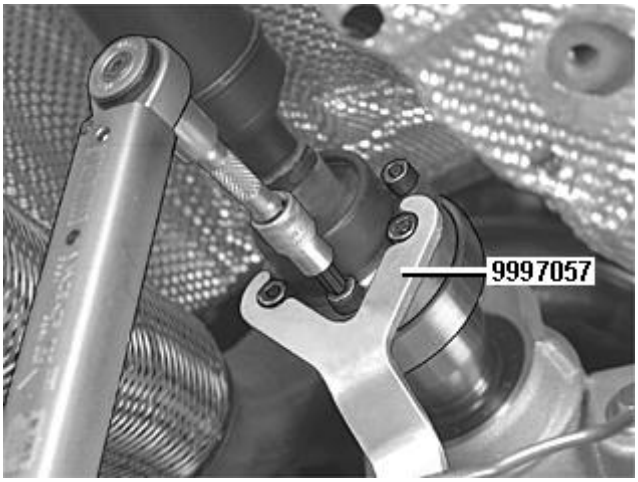

Fig. 644: Identifying Front Propeller Shaft And Special Tool 999 7057
Courtesy of VOLVO CARS CORPORATION

Install the propeller shaft using the marking made earlier. Check carefully that the mating surfaces on the propeller shaft and flange are clean. Install the 6 x M8 screws with washers. Tighten. See: **TIGHTENING TORQUE** . Use: **9997057** .

Install the 2x M8 screws to the propeller shaft center bearing. Tighten.

INSTALLING THE TORQUE CONVERTER SCREWS

Fig. 645: Locating Screw In Cut-Out Between The Engine And The Transaxle
Courtesy of VOLVO CARS CORPORATION

NOTE: Always use new screws. The screws can also be installed at a later stage when the vehicle is lowered.

Insert a screw in the cut-out under the transmission and turn the engine.

Tighten the 6 screws. Tighten. See: **TIGHTENING TORQUE** . Use Torx TX50 (see the illustration).

INSTALLING THE HEATED OXYGEN SENSOR (HO2S) CONNECTORS TO THE BRACKET ON THE TRANSMISSION

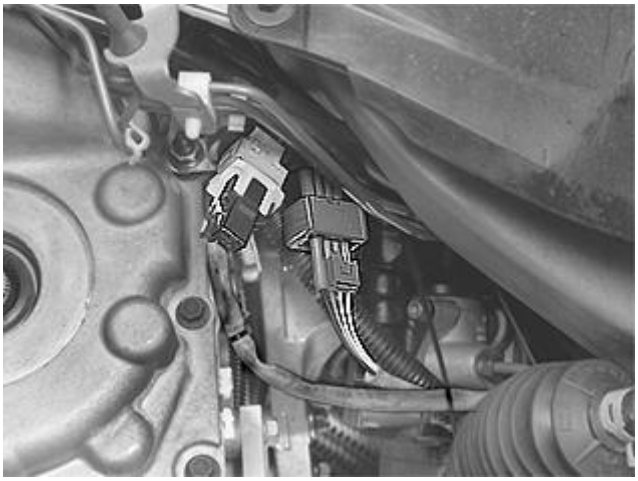

Fig. 646: Heated Oxygen Sensor
Courtesy of VOLVO CARS CORPORATION

Connect the connectors.

Secure the connectors on the bracket.

Install the clamp with the wiring on the transmission. Tighten the nut.

Lower the vehicle.

LIFTING THE ENGINE AND TRANSMISSION TO THE HORIZONTAL POSITION

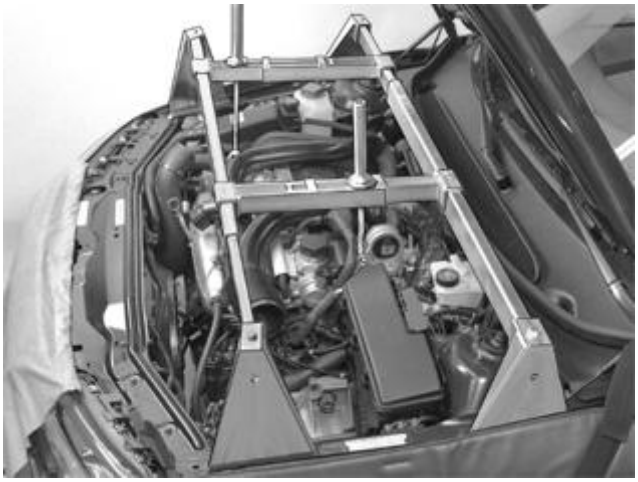

Fig. 647: Identifying Lifting Beam And Lifting Hook Installed
Courtesy of VOLVO CARS CORPORATION

Lift up the engine and transmission to the horizontal position.

Raise the vehicle.

INSTALLING THE OIL PIPE AT THE TRANSMISSION

Fig. 648: Gearbox Oil Pipe
Courtesy of VOLVO CARS CORPORATION

Tighten the screw nipples. Counterhold on the connections.

INSTALLING THE ENGINE MOUNTING TOGETHER WITH THE BRACKET AND THE SPLASH GUARD

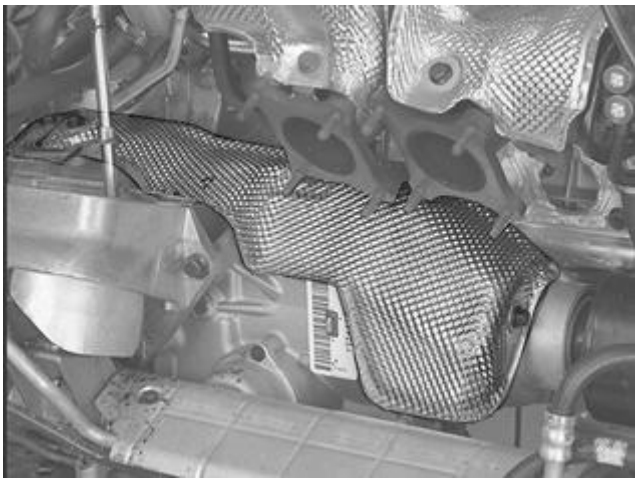

Fig. 649: Identifying Splash Guard Above Transmission
Courtesy of VOLVO CARS CORPORATION

Install:

- the engine mounting together with the splash guard
- the 4 screws for the engine mounting to the transmission
- the screw on the bracket that extends from the top of the engine mounting to the top of the transmission (not the nut on the top of the rubber mounting)
- the screw on the splash guard beside the right drive shaft.

Tighten.

PREPARATIONS FOR INSTALLING THE SUB-FRAME

Fig. 650: Engine Supported with Lifting Table
Courtesy of VOLVO CARS CORPORATION

CAUTION: Ensure that no hoses, wiring or other components catch, or are trapped, when lifting the engine/transmission unit.

CAUTION: Do not damage the brake pipe running to the right front wheel.

Raise the engine / transmission unit. Use a lifting table.

Continue raising the unit until it is only approximately 50 mm from its correct position.

Move the fuel line into place.

Tighten

INSTALLING THE SUB-FRAME

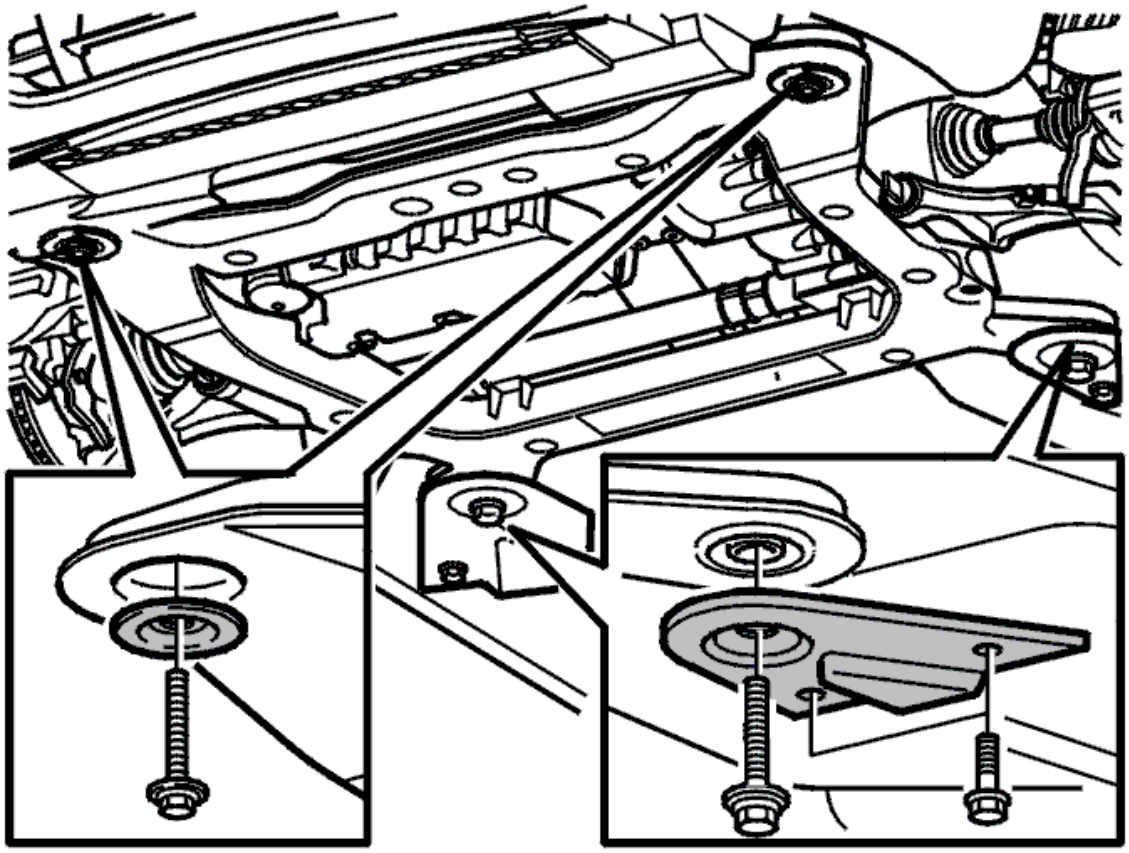

Fig. 651: Identifying Bolts, Washers And Brackets In Sub-Frame
Courtesy of VOLVO CARS CORPORATION

NOTE: Use new screws. Oil the screws.

Lift the sub-frame until it is against the frame members.

Install:

- new screws in the sub-frame
- Install the anti-roll bar
- the washers at the front edge and the support plates at the rear edge of the sub-frame
- the evaporator cable and the oil pipe into place in the sub-frame clips.

Install the four sub-frame screws together with the subframe brackets and engine heater where appropriate.

Tighten to: **TIGHTENING TORQUE** . First tighten the screws on the left side of the sub-frame followed by those on the right.

Tighten the bracket screws M10.

Cars with parking heaters

Install the parking heater in the bracket. Tighten the nuts.

INSTALLING THE RIGHT ENGINE PAD

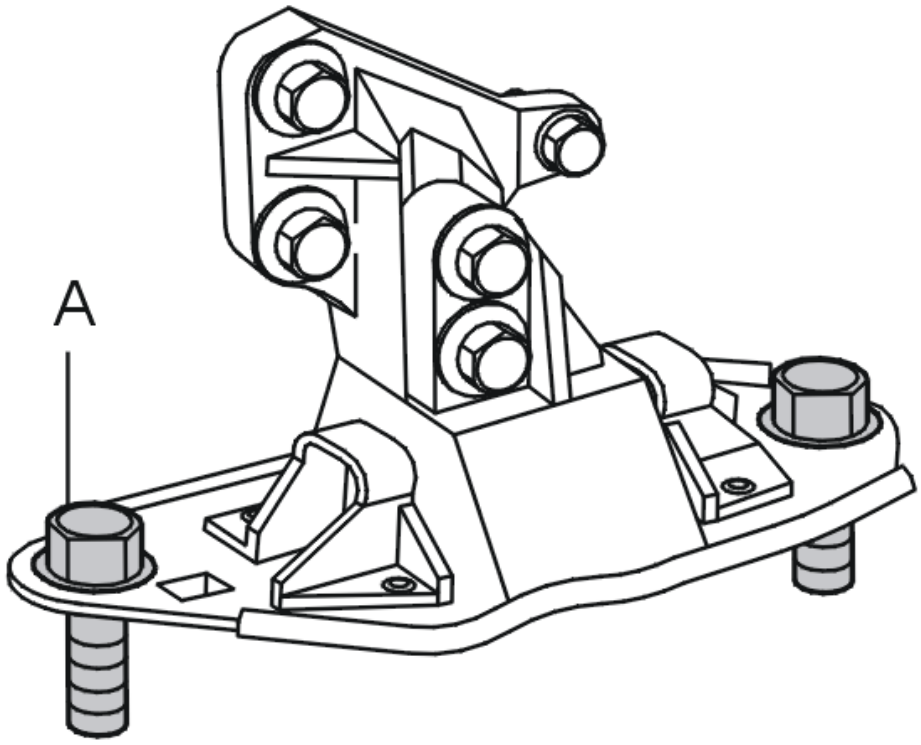

Fig. 652: Identifying Engine Pad And Screws
Courtesy of VOLVO CARS CORPORATION

Install the screws for the mounting in the sub-frame (A).

Tighten screws to the sub-frame. Tighten. See: **TIGHTENING TORQUE** . Use: **9512050** .

HINT: Tighten the screws to the sub-frame. Tighten to 65 Nm. Use a colored pen to mark one corner on the screw head and on the corner.

HINT: Then turn the screw to the next corner. This is equivalent to 60° angle-tightening.

INSTALLING THE SCREW FOR THE REAR ENGINE PAD THROUGH THE STEERING GEAR

Fig. 653: Identifying Rear Engine Pad Screw Removal
Courtesy of VOLVO CARS CORPORATION

Install the screw. Tighten.

INSTALLING THE DRIVE SHAFT IN THE TRANSMISSION, BOTH SIDES

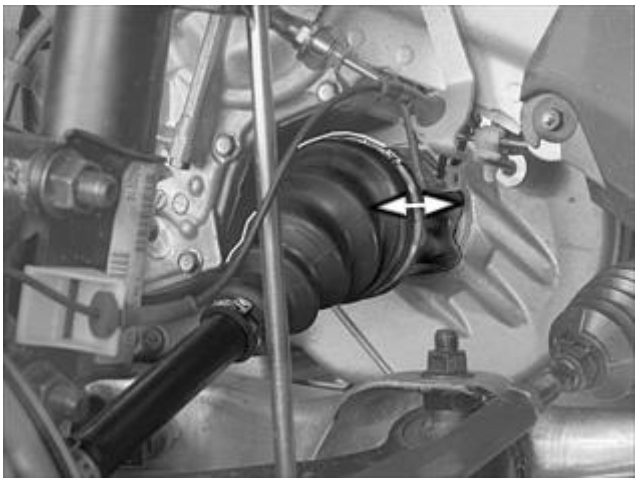

Fig. 654: Drive Shaft Mating Surface
Courtesy of VOLVO CARS CORPORATION

Lubricate the drive shaft mating surface.

Use oil, Volvo P/N 116 1521-8 (1 liter container).

Press the drive shaft into the transmission. Check that the snap ring is in the groove on the transmission by pulling the constant velocity joint.

NOTE: There is no snap ring on the right side.

NOTE: Do not pull the drive shaft as the axial stops cannot support large loads.

Fig. 655: Identifying The Frost Plug Is Fitted Correctly
Courtesy of VOLVO CARS CORPORATION

Applies to chassis no. 690-88951

Make sure that the frost plug is fitted correctly in the left drive shaft.

INSTALLING THE DRIVE SHAFT IN THE WHEEL HUB, BOTH SIDES

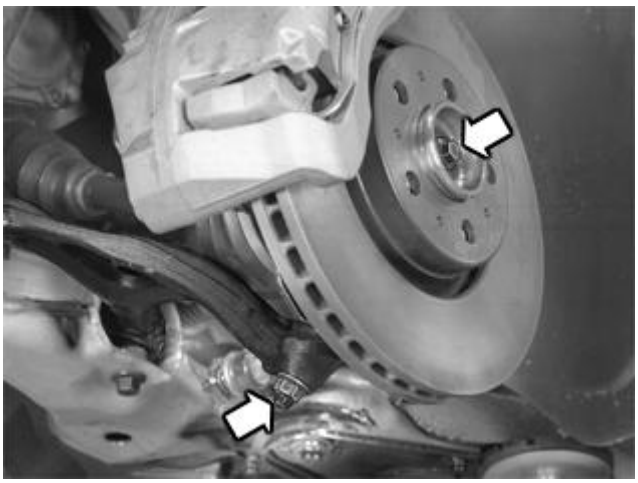

Fig. 656: Locating Drive Shaft Nut And Lower Ball Joint Nut
Courtesy of VOLVO CARS CORPORATION

Lubricate the drive shaft splines for the wheel hub using a small amount of oil.

Hold down the control arm. Align the drive shaft in the hub. Remove the guard from the ball joint. Align the ball joint lug in the control arm. Install a new lock nut on the ball joint. Tighten. See: **TIGHTENING TORQUE** .

NOTE: **Counterhold the end of the ball joint whilst tightening so that the boot does not twist. Use a Torx wrench.**

Install a new screw for the drive shaft / wheel hub. Tighten.

INSTALLING THE ANTI-ROLL BAR LINK TO THE SPRING STRUT

Install:

- the anti-roll bar link to the spring strut. Use a new M12 nut. Counterhold using a Torx wrench so that the boot is not damaged
- the steering arm on the wheel spindle. Use a new nut. Tighten. See **TIGHTENING TORQUE** .

INSTALLING THE SCREWS FOR THE BRACKET FOR THE HEATED OXYGEN SENSOR (HO2S) CABLE

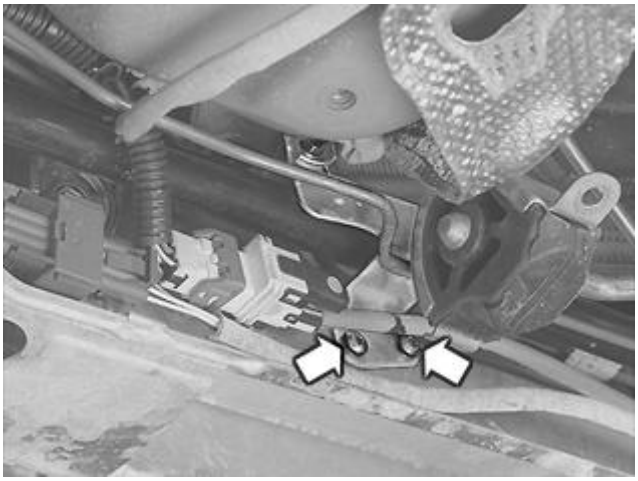

Fig. 657: Heated Oxygen Sensor Cable Bracket
Courtesy of VOLVO CARS CORPORATION

Install the connector for the bracket.

INSTALLING THE FRONT CROSS MEMBER

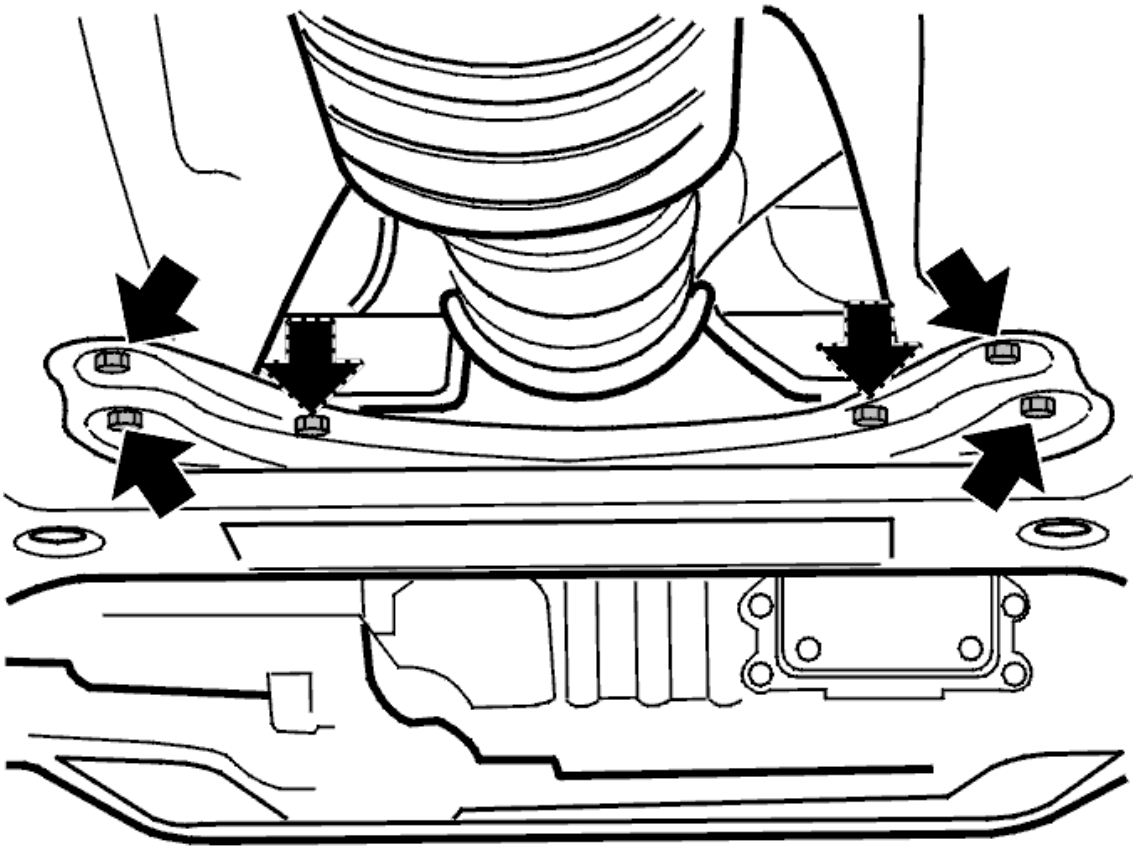

Fig. 658: Exhaust Pipe Bracket Screws
Courtesy of VOLVO CARS CORPORATION

Install the front SIPS member. Press the brake pipe into place in the member.

Install the rubber mounting for the three-way catalytic converter (TWC) in the bracket on the sub-frame.

Fig. 659: Identifying EVAP Cable
Courtesy of VOLVO CARS CORPORATION

Install the EVAP-cable acc. to earlier routing in the sub-frame's clips and press in the cable in the rubber

connection.

INSTALLING NEW LOCK NUTS ON THE STEERING GEAR

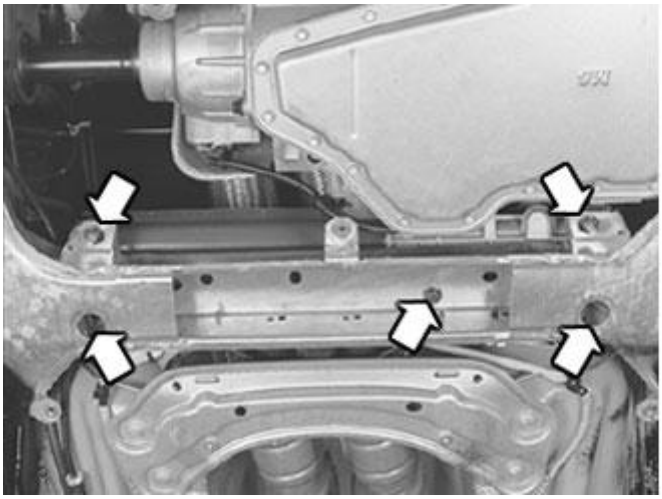

Fig. 660: Installing New Lock Nuts On The Steering Gear
Courtesy of VOLVO CARS CORPORATION

Tighten the nuts and screws. Tighten to **50 Nm** . Tighten the screw and the clamp for the oil pipe.

Remove the steering gear suspension

Fig. 661: Locating Screw In Cut-Out Between The Engine And The Transaxle
Courtesy of VOLVO CARS CORPORATION

NOTE: Use new screws

Insert a screw in the cut-out under the transmission and turn the engine. Tighten the 6 screws to **35 NM** . Use socket Torx TX50 (see the illustration).

INSTALLING THE SCREW FOR THE FRONT ENGINE PAD AND THE TORQUE ROD MOUNTING IN THE

TRANSMISSION

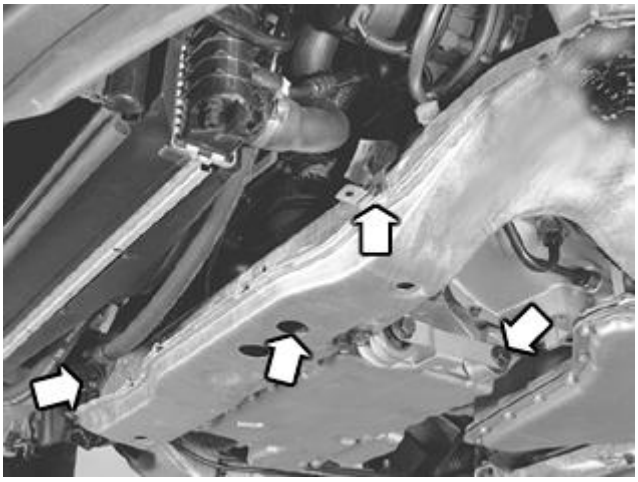

Fig. 662: Identifying Parking Heater Cable Conduit And Screws
Courtesy of VOLVO CARS CORPORATION

Install:

- the screw for the front engine pad. Tighten
- the torque rod mounting on the transmission. Use a new screw
- the screws for the cable duct and the ground lead bracket.

Cars with parking heaters

Install the heater in the bracket. Tighten the nuts.

Reinstall the fuel line in the clips on the sub-frame.

REMOVE THE LIFTING BEAM AND THE LIFTING HOOK FROM THE ENGINE AND THE VEHICLE

Fig. 663: Fixture 999 7018 Installed On Left Hand Side Of Engine At 2 Screws

Courtesy of VOLVO CARS CORPORATION

Lower the vehicle.

Remove the lifting fixture from the motor.

Install the ground strip. Tighten.

INSTALLING THE TORQUE CONVERTER SCREWS

INSTALLING THE CLAMP FOR THE OIL PIPE

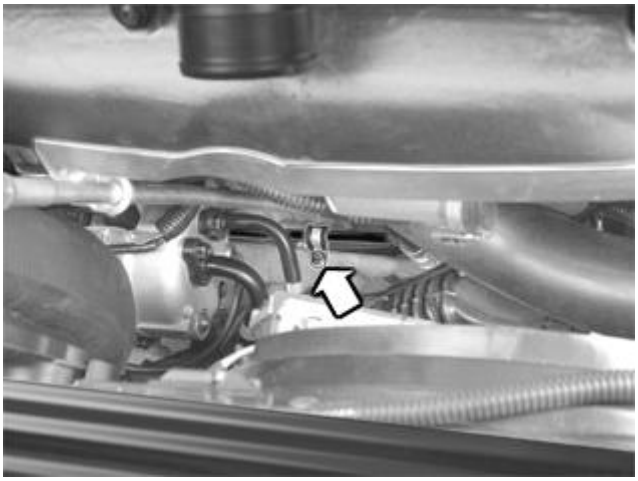

Fig. 664: Identifying Oil Pipe & Power Steering Screw
Courtesy of VOLVO CARS CORPORATION

Install the screw and clamp.

Tighten.

INSTALLING THE SCREWS IN THE TRANSMISSION AND ENGINE

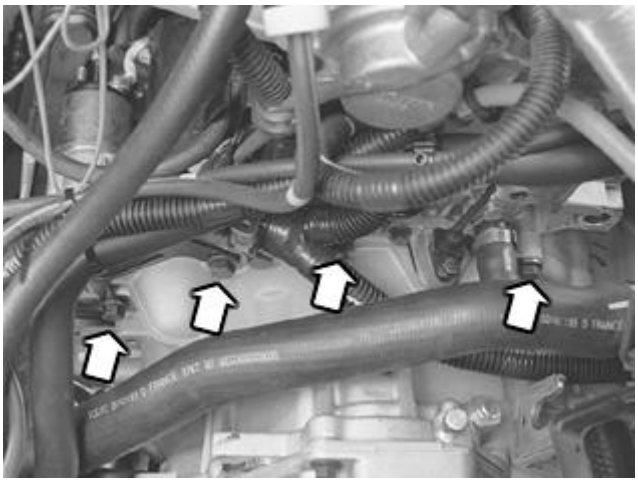

Fig. 665: Identifying Transmission, Starter Motor And Ground Lead Screws
Courtesy of VOLVO CARS CORPORATION

Install:

- the 3 screws for the transmission and engine. Tighten
- the ignition setting sender and the screw. Tighten
- Screws (x 2) to starter motor
- the screw for the clamp for the positive cable. Tighten.

INSTALLING THE DIP STICK PIPE IN THE TRANSMISSION

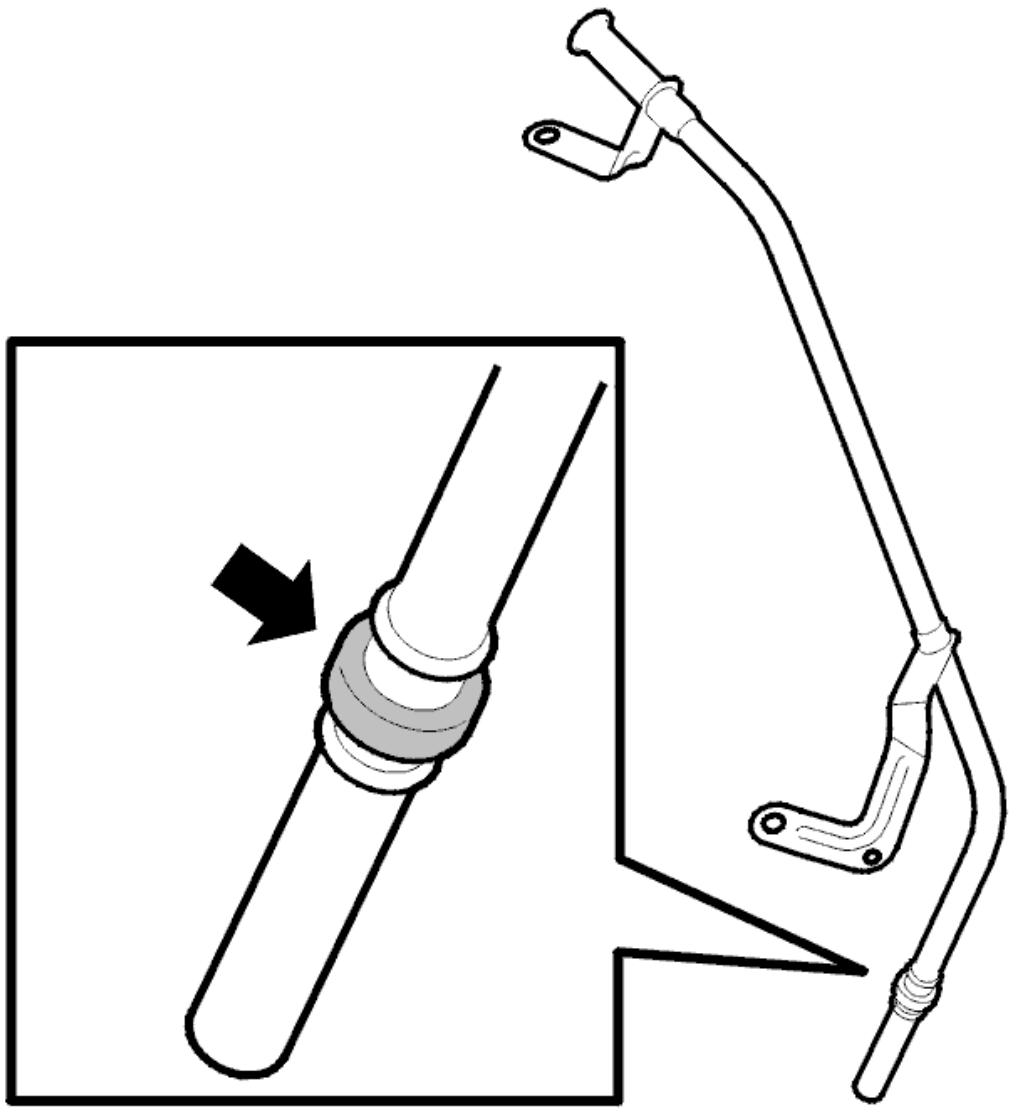

Fig. 666: Dipstick O-Ring
Courtesy of VOLVO CARS CORPORATION

Use a new rubber seal

Apply petroleum jelly on the rubber seal.

NOTE: **Carefully check that the rubber seal is correctly positioned in the transmission. Failure to do so may result in leakage.**

Tighten the screws.

INSTALLING THE HOSE FOR THE HEATER PIPE

Fig. 667: Heater Hoses And Clamp
Courtesy of VOLVO CARS CORPORATION

Install the hose on the heater pipe in the firewall.

Press the radiator hose quick-release connector into place on the heater pipe.

Check: Pull the hose.

INSTALLING THE GEAR SELECTOR CABLE ON THE TRANSMISSION AND LEVER

Fig. 668: Gearbox And Connector
Courtesy of VOLVO CARS CORPORATION

Install:

- the ball joint for the gear selector cable on the lever
- the gear selector cable in the bracket
- the connector for the transmission. Press the connector into place properly

CAUTION: It is important that the connector is pushed into place properly. If it is not correctly connected the gear shift function may stop.

- the connector for the ABS unit.

INSTALLING THE UPPER TORQUE ROD

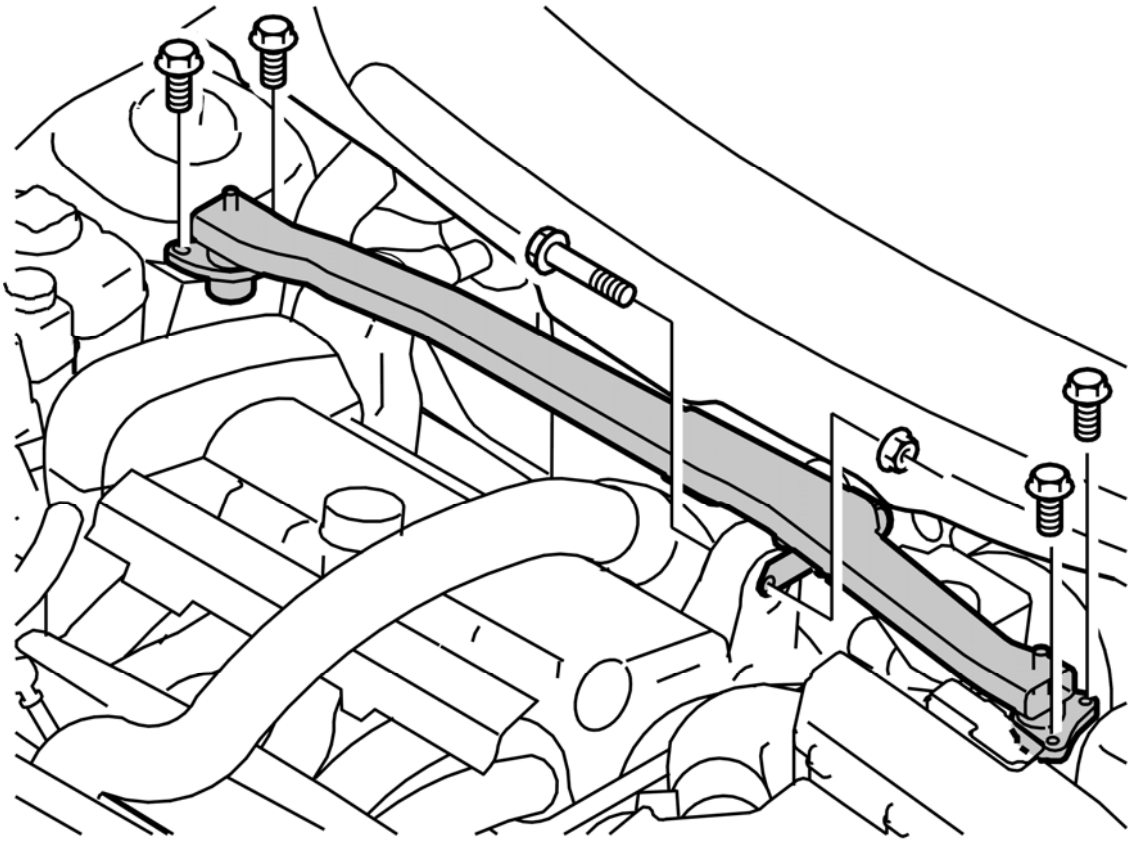

Fig. 669: Identifying Engine Stabilizer Brace And Mounting Screws
Courtesy of VOLVO CARS CORPORATION

Install:

- the engine stabilizer brace. Tighten the mounting screws
- the screw and a new nut for the engine mounting. Tighten
- the plastic guard over the spring strut (if applicable). Tighten the screws.

INSTALLING THE AIR CLEANER (ACL) HOUSING

Install the air cleaner (ACL) housing. See **INSTALL THE AIR CLEANER (ACL) HOUSING** .

FINISHING WORK

FILLING THE TRANSMISSION WITH FLUID

NOTE: **Oil grade: Only ATF fluid Dexron III (with G-license).**

Transmission oil, Volvo P/N 116 1521-8 (1-liter container), 116 1621-6 (4-liter container).

NOTE: **Filling with oil: Start by filling with 5.5 liters of oil.**

FILLING WITH TRANSMISSION OIL. THERE ARE 2 DIFFERENT METHODS. METHOD 1

Fig. 670: Filling Transmission With Oil
Courtesy of VOLVO CARS CORPORATION

NOTE: Filling with oil: Start by filling with 5.5 liters of oil.

Fill the transmission with oil. Use a funnel with a plastic hose. Fill through the dipstick pipe.

Clear up any oil spillage under the dip stick pipe.

FILLING WITH TRANSMISSION OIL. METHOD 2

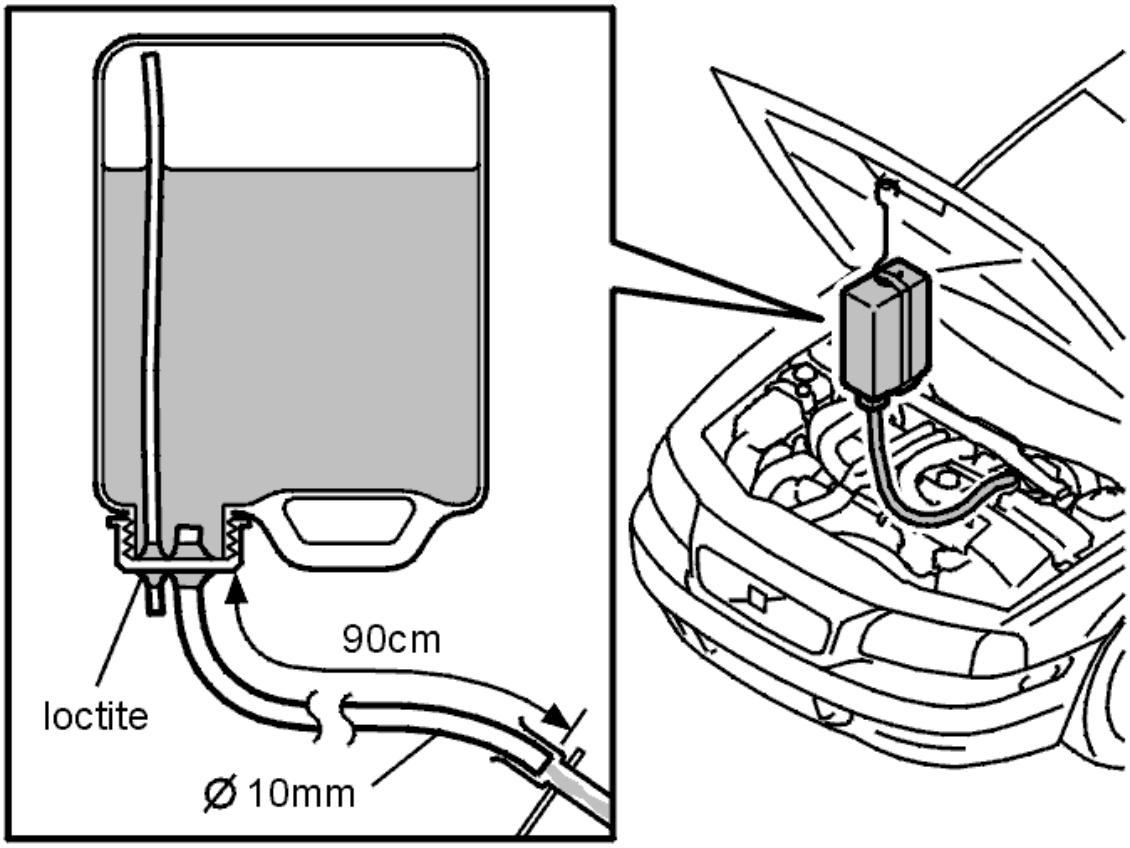

Fig. 671: Filling Transmission With Oil - Method 2
Courtesy of VOLVO CARS CORPORATION

NOTE: Filling with oil: Start by filling with 5.5 liters of oil.

Use a converted five liter plastic can (see the illustration).

This method avoids oil spillage. It also provides a more regular flow when filling.

To check the oil level , see: **OIL LEVEL, CHECKING** .

NOTE: After replacing the transmission, the transmission's adaption as well as the counter for "Transmission oil, change" shall be reset. Use VIDA (Volvo scan tool) Vehicle communication to reset the adaption and the counter.

CHECKING WATER LEVELS

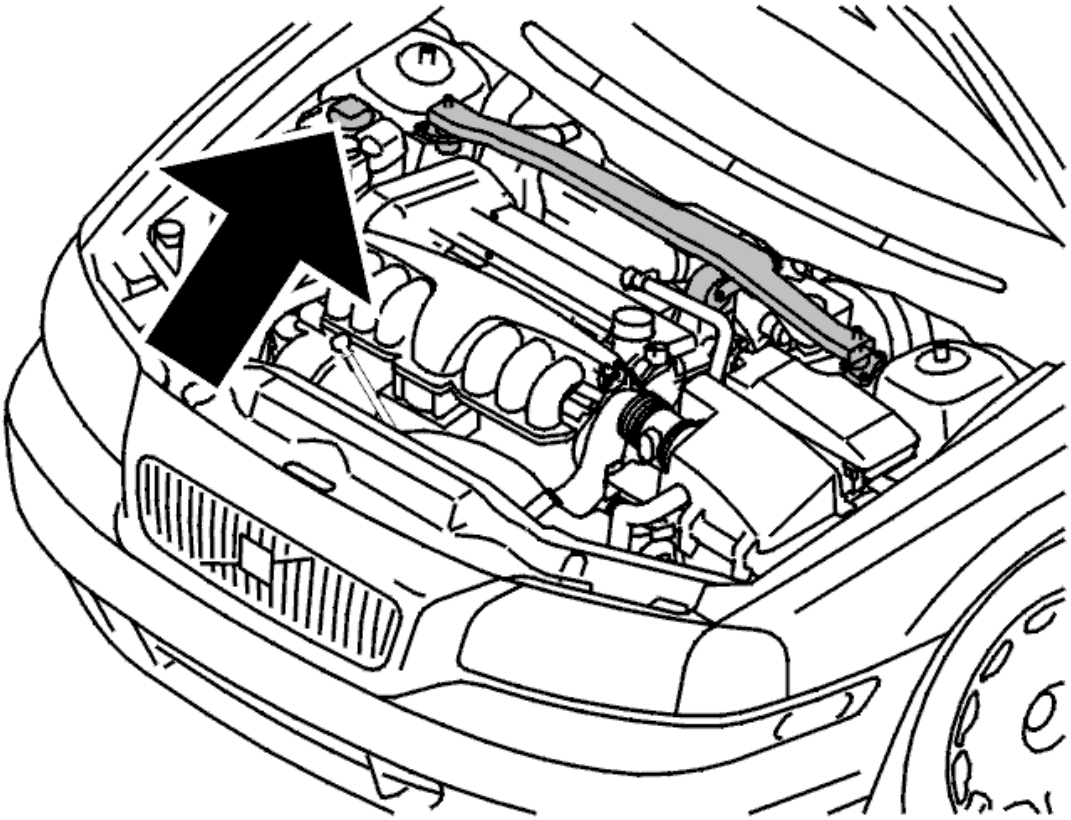

Fig. 672: Identifying Expansion Tank
Courtesy of VOLVO CARS CORPORATION

Top up with water and coolant as necessary (when the engine is at operating temperature).

Check the level in the servo oil reservoir and top up if necessary.

Raise the vehicle.

Check that there is no oil leakage at the transmission, the dip stick or at the steering gear.

INSTALLING THE SPLASH GUARDS AND THE FENDER LINER

Fig. 673: Fender Liner Tied Up To Lifting Beam Using A Retaining Strap
Courtesy of VOLVO CARS CORPORATION

Install:

- The ABS-cable on the mounting
- the splash guard under the engine
- the front splash guard
- the nut for the left fender liner.

Lower the vehicle

INSTALL

- the wheels. See: **INSTALLING WHEELS**
- Lower the vehicle.

INSTALLING THE BATTERY LEAD

See: **BATTERY, DISCONNECTING** . It is essential that the instructions are followed.

PROGRAMMING THE TRANSMISSION CONTROL MODULE (TCM)

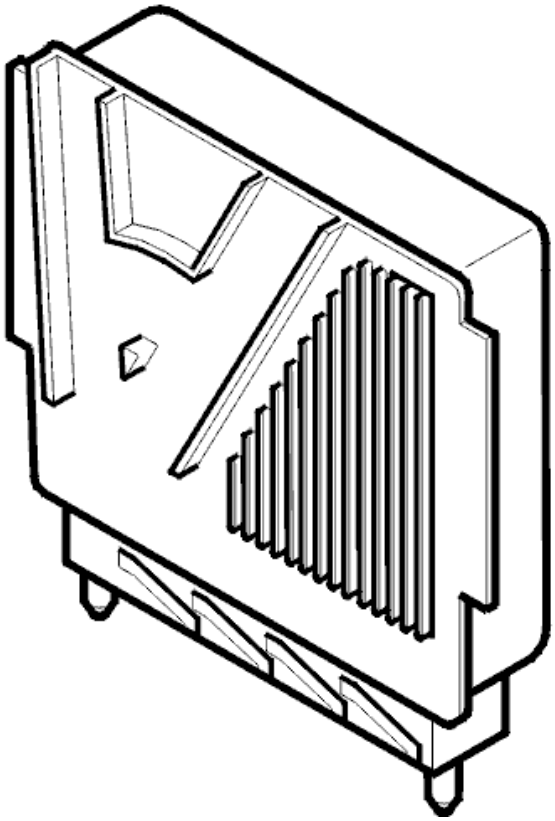

Fig. 674: Identifying Transmission Control Module
Courtesy of VOLVO CARS CORPORATION

After replacing the transmission the latest software must be programmed into the control module.

Top up the oil level in the servo reservoir. Bleed the system. See **HYDRAULIC PIPES/HOSES STEERING GEAR, REPLACING**

TEST DRIVING THE VEHICLE

Test driving the vehicle, see: **TEST DRIVE FORM, DESCRIPTION** .

NOTE: When changing transmission oil, the transmission's counter for "Transmission oil, change" shall be reset. Use VIDA (Volvo scan tool) Vehicle communication to reset the counter.

NOTE: When changing to a new transmission, the transmission's adaption for "Transmission oil, change" shall be reset. Use VIDA (Volvo scan tool) Vehicle communication to reset the adaption.

TRANSMISSION, REMOVING

Special tools:

9995259

9995395

9995460

9995462

9995463

9995562

9995716

9995734

9995735

9995736

9995972

9997077

9997070

9995185

9995463

9997057

9997018

9997063

NOTE: **As the illustrations in this service information are used for different model years and/or models, some variation may occur. However, the essential information is always correct.**

PREPARATORY WORK

CAUTION: Check for coolant in oil. See CHECKING FOR COOLANT IN THE OIL and check for metal particles in the oil pan before installing new transaxle. See the end of the method.

DISCONNECTING THE BATTERY LEAD

Disconnect the battery negative lead. See: **BATTERY, DISCONNECTING** .

REMOVING ENGINE COMPARTMENT COMPONENTS

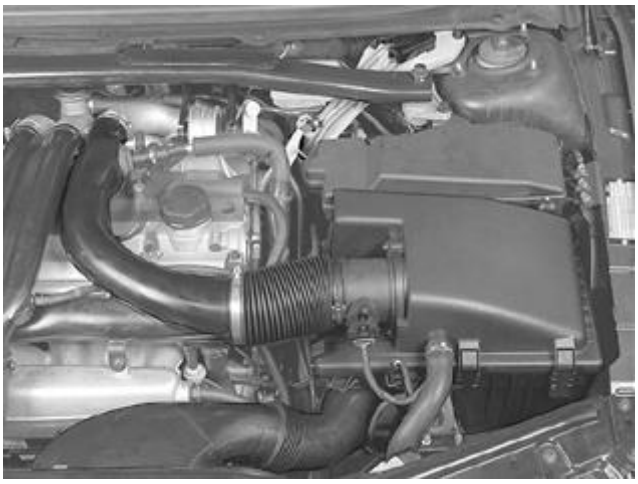

Fig. 675: Air Cleaner Housing Assembly
Courtesy of VOLVO CARS CORPORATION

Remove the air intake between the front plate and the air cleaner (ACL) housing.

Disconnect the hose and the connector from the mass air flow (MAF) sensor.

Slacken off the nut for the air cleaner (ACL) housing. Remove the air cleaner (ACL) housing from its mountings.

REMOVING THE TORQUE ROD

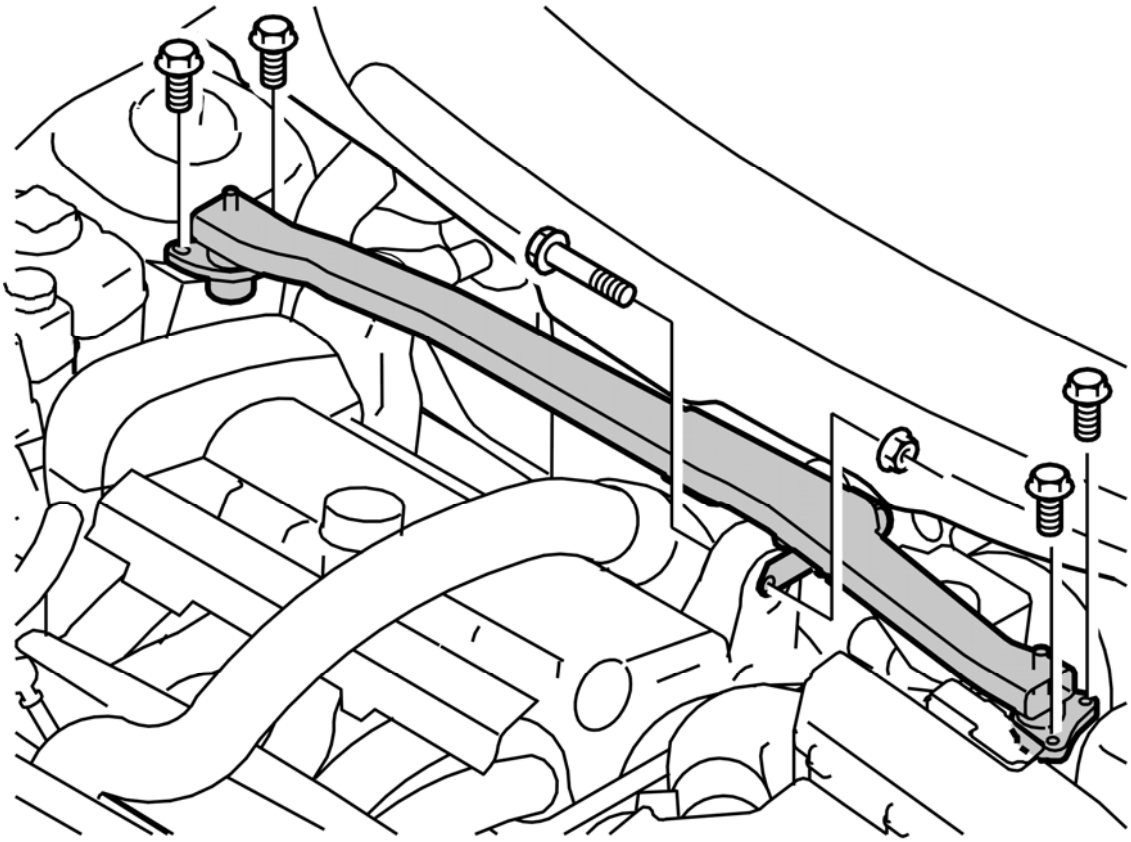

Fig. 676: Identifying Engine Stabilizer Brace And Mounting Screws
Courtesy of VOLVO CARS CORPORATION

Remove the upper torque rod. Remove the screw for the oil hose clamp on the cross member mounting (right side).

Remove:

- the plastic covers over the spring strut mountings (applies only to early versions)
- the screws
- the screw and nut for the engine mounting.

REMOVING THE GEAR SELECTOR CABLE AND LEVER ON THE TRANSMISSION

Fig. 677: Gearbox And Connector
Courtesy of VOLVO CARS CORPORATION

Use: **9997077** to disconnect the ball joint for the gear selector cable from the lever.

Remove:

- the gear selector cable from the bracket. Press the catch under the gear selector cable. Pull the gear selector cable out of the bracket
- the connector from the transmission (press the connector together). Pull it from the transmission.

HINT: Hang the gear selector cable from a tie strap around the brake pipes.

REMOVING THE HOSE FOR THE HEATER PIPE

Fig. 678: Heater Hoses And Clamp
Courtesy of VOLVO CARS CORPORATION

Disconnect the hose from the heater pipes at the firewall so that the pipe in the heater unit is not damaged when lowering the engine (the rubber hose is short).

Install hose clips on the hoses.

Twist the catch (see the arrow) on the hose connection. Pull the quick-release connector straight out.

A small amount of water should run out (tie the hose up).

Clean up any spilled glycol using paper.

NOTE: Avoid skin contact.

COLLECTING TRANSMISSION FLUID

Fig. 679: Identifying Dip Stick Pipe & Oil Suction Device
Courtesy of VOLVO CARS CORPORATION

Remove the dipstick from the dip stick pipe.

Suck up the oil using an oil suction device.

NOTE: The oil must be sucked out when the oil pipe is removed. Otherwise the oil will run out of the transmission.

REMOVING THE DIPSTICK

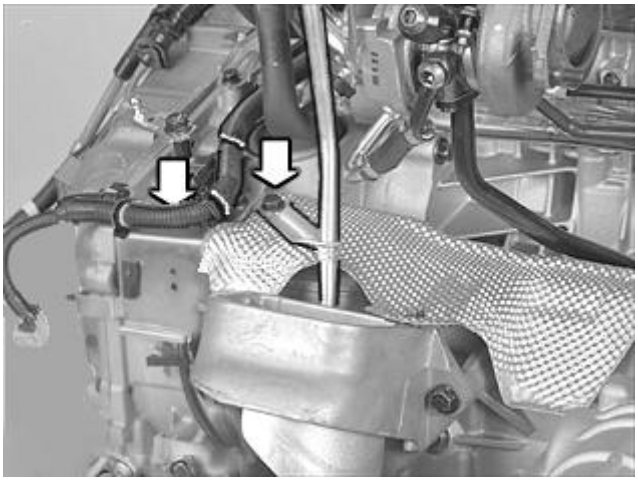

Fig. 680: Identifying Dip Stick Pipe Screws
Courtesy of VOLVO CARS CORPORATION

Remove the 2 screws for the dip stick pipe, one at the engine mounting and one lower down on the pipe.

Cut off the 4 tie straps holding the cable harness on the bracket.

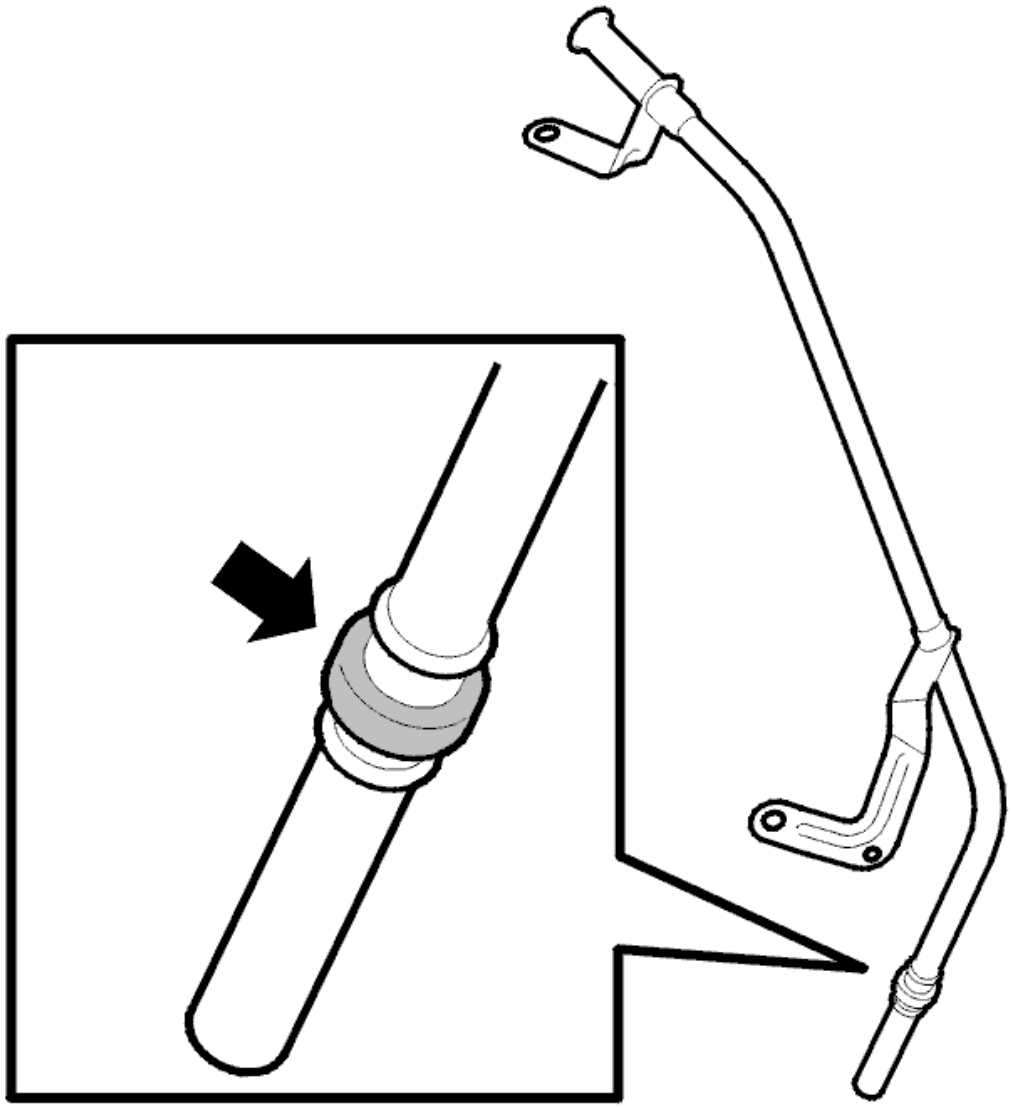

Fig. 681: Dipstick O-Ring
Courtesy of VOLVO CARS CORPORATION

Pull the pipe straight upward out of the transmission. Ensure that the O-ring stays in place on the pipe.

REMOVING THE SCREWS FOR THE TRANSMISSION AND STARTER MOTOR AND THE GROUND LEAD

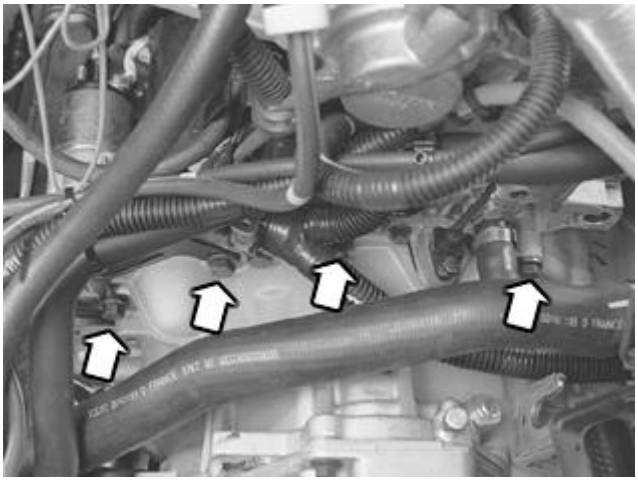

Fig. 682: Identifying Transmission, Starter Motor And Ground Lead Screws
Courtesy of VOLVO CARS CORPORATION

Remove:

- the 3 screws for the transmission/engine
- the screw for the ignition setting sender (lift up the ignition setting sender)
- the ground lead screw under the starter motor
- the screw for the clamp holding the positive cable on the engine.

Tie the hoses and the cable harness to the intake manifold.

Disconnect the speed sensor connector.

INSTALLING THE LIFTING FIXTURE

Fig. 683: Fixture 999 7018 Installed On Left Hand Side Of Engine At 2 Screws
Courtesy of VOLVO CARS CORPORATION

Install: **9997018** on the left side of the engine at the 2 screws.

Lock the fixture using the catch.

INSTALLING THE LIFTING BEAM AND LIFTING HOOK ON THE ENGINE LIFTING EYELET

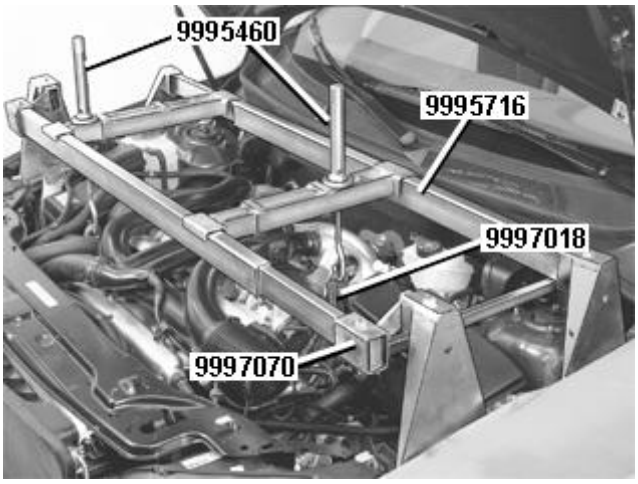

Fig. 684: Engine Lift Installed
Courtesy of VOLVO CARS CORPORATION

NOTE: The front lifting beam must be equipped with: 9997070 .

Position: **9995716** on the wheel arch and directly above the engine lifting eyes on the left and right sides.

Connect: **9995460** to the engine lifting eyelets.

On the right side of the engine, the hook must have a clearance of 10 mm.

On the left side of the engine: **9995185** must be used. Tighten to light contact on the left hand side.

DISCONNECTING THE FRONT SUSPENSION COMPONENTS

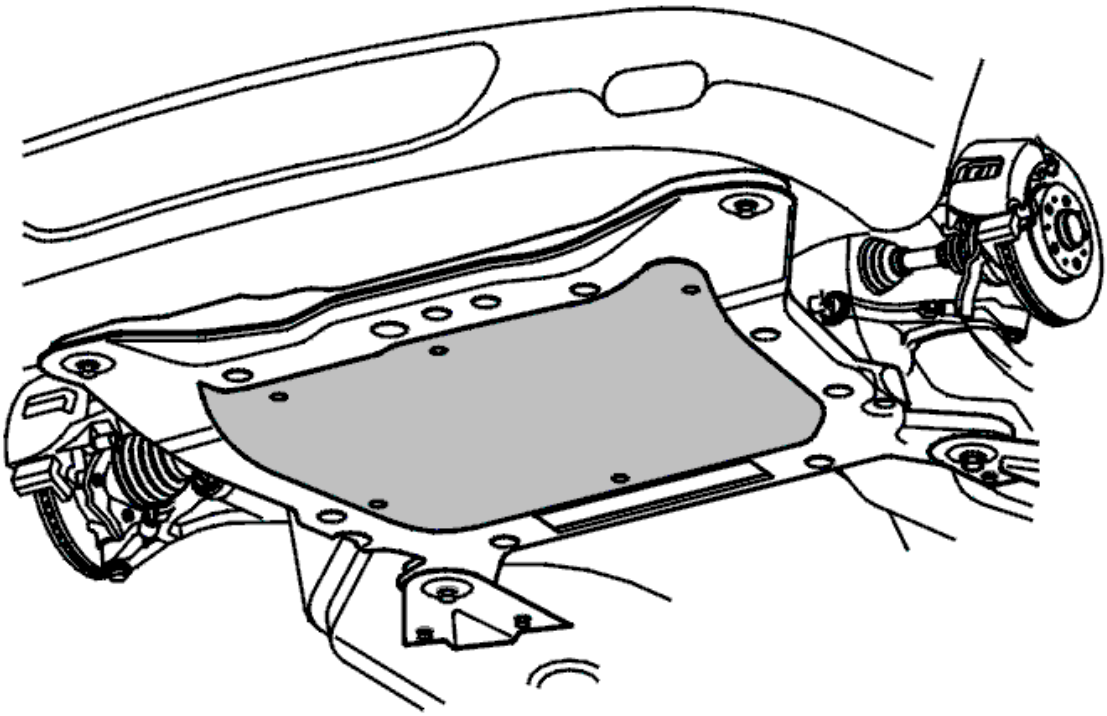

Fig. 685: Identifying Splash Guard Under Engine
Courtesy of VOLVO CARS CORPORATION

Raise the vehicle.

NOTE: **Position the front lift arms so that they do not obstruct the sub-frame support plates.**

Remove:

- the front wheels
- the splash guard under the engine.

REMOVING THE SCREWS FOR THE CABLE CONDUIT AND GROUND LEAD BRACKET ON THE SUB-FRAME

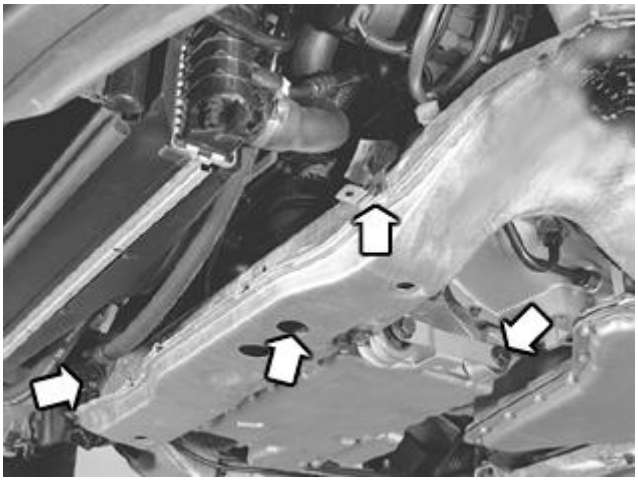

Fig. 686: Identifying Parking Heater Cable Conduit And Screws
Courtesy of VOLVO CARS CORPORATION

Remove:

- the screw for the front engine pad. See the arrow in the illustration
- the screw for the transmission torque rod
- the screw for the cable duct
- the screw for the ground lead.

Remove the nuts for the heater from the sub-frame.

Hang the heater on the left front mudguard.

NOTE: Only applies to cars with parking heater.

REMOVING THE EVAPORATOR LINE

Fig. 687: Identifying EVAP Cable
Courtesy of VOLVO CARS CORPORATION

Loosen EVAP-cable from the rubber connection and pull out the EVAP-cable from the clips on the sub-frame.

REMOVING THE SCREWS FROM THE TORQUE CONVERTER

Fig. 688: Locating Screw In Cut-Out Between The Engine And The Transaxle
Courtesy of VOLVO CARS CORPORATION

NOTE: The screws for the torque converter are only removed if the screws have not been slackened off earlier when the vehicle was lowered.

Slacken off and remove the screws in the cut-out between the engine and the transmission.

Turn the engine using a screwdriver in the cut-out under the transmission.

REMOVING THE SIPS MEMBER

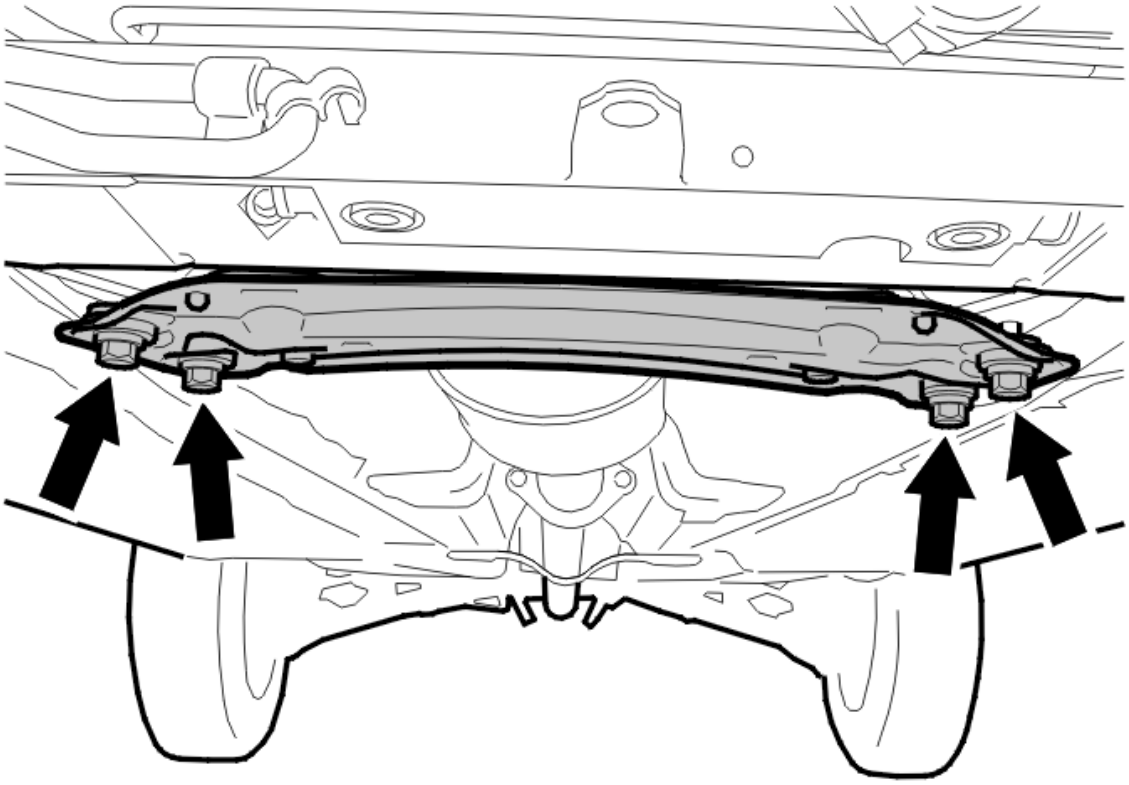

Fig. 689: Identifying SIPS Member
Courtesy of VOLVO CARS CORPORATION

Remove:

- the 4 screws for the SIPS (side impact protection system) member mounting
- the brake pipe from the snap fastener on the member
- The SIPS member.

REMOVING THE RUBBER MOUNTINGS FOR THE EXHAUST PIPE

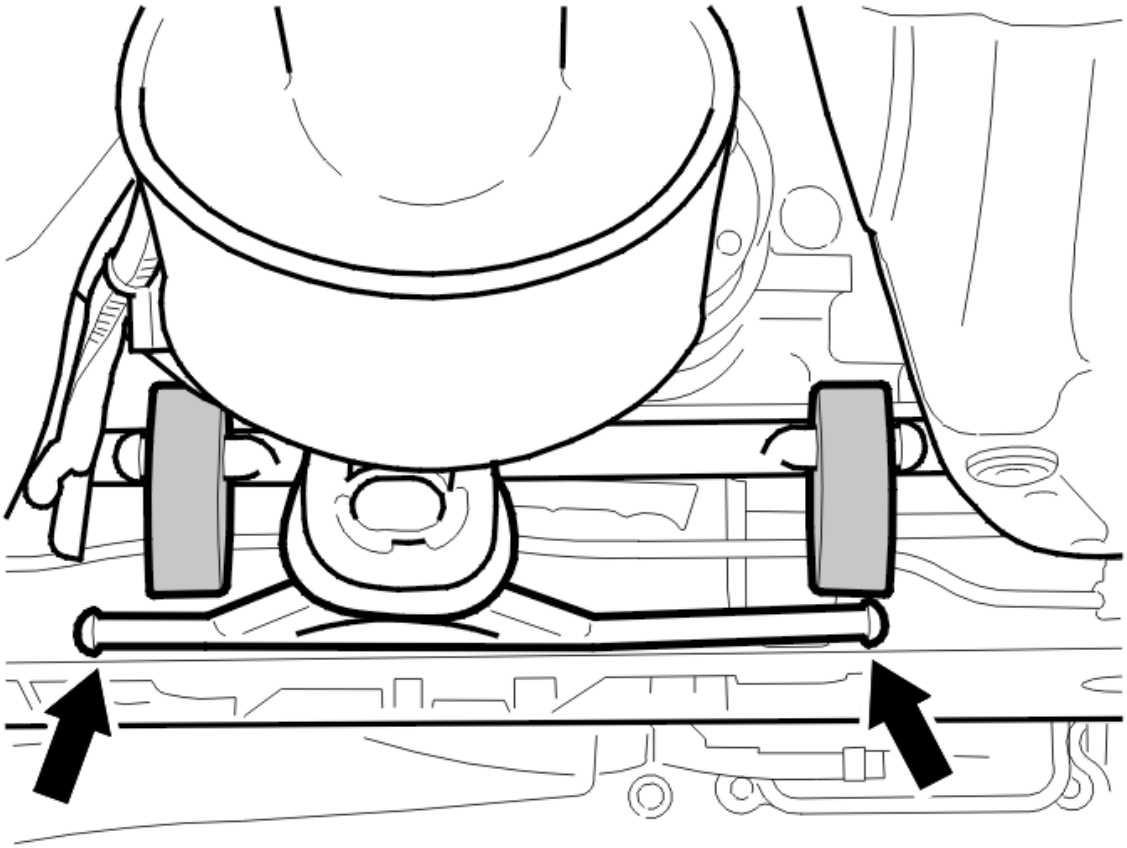

Fig. 690: Identifying Exhaust Pipe Rubber Mountings
Courtesy of VOLVO CARS CORPORATION

Remove the rubber mountings for the exhaust pipe.

REMOVING THE HEATED OXYGEN SENSORS (HO2S) CONNECTOR

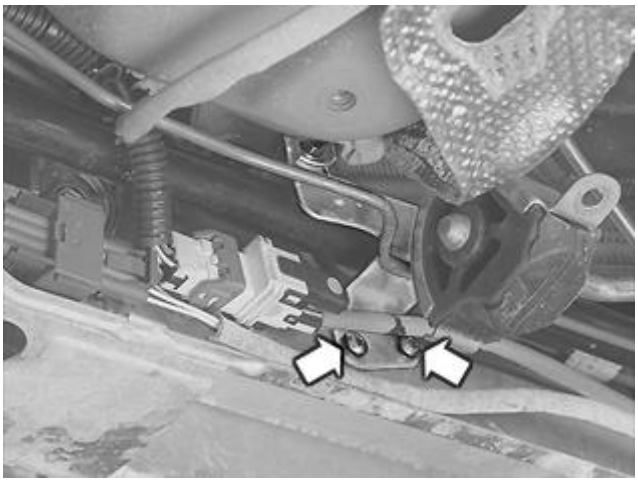

Fig. 691: Heated Oxygen Sensor Cable Bracket
Courtesy of VOLVO CARS CORPORATION

Disconnect the connector from the bracket.

REMOVING THE SCREW FOR THE REAR ENGINE MOUNTING

Fig. 692: Identifying Rear Engine Pad Screw Removal
Courtesy of VOLVO CARS CORPORATION

Remove 1 screw.

REMOVING THE SCREWS FOR THE RIGHT ENGINE PAD

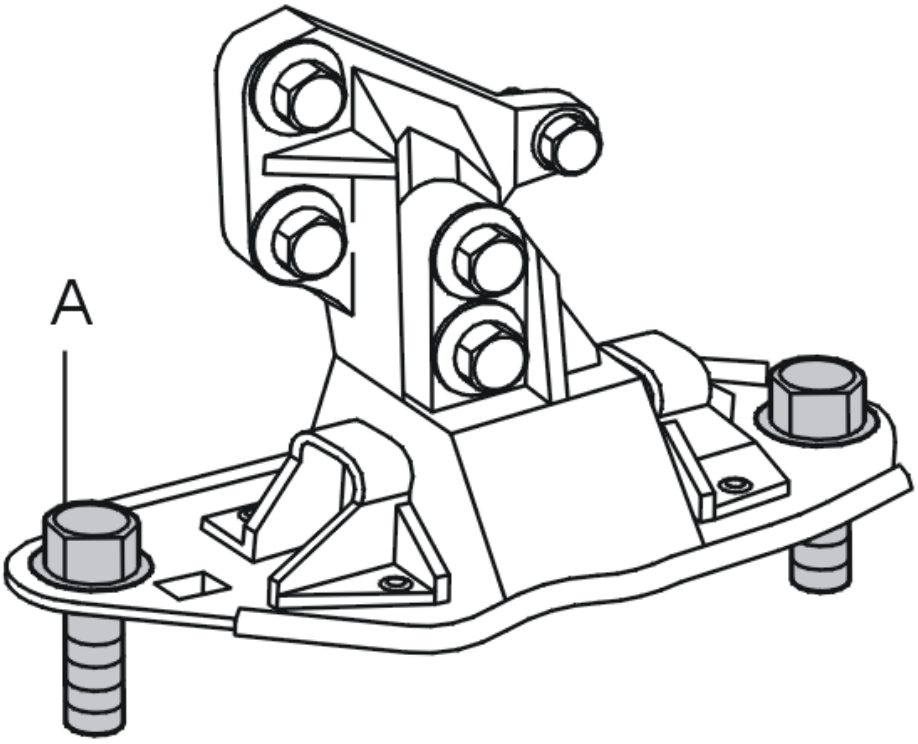

Fig. 693: Identifying Engine Pad And Screws
Courtesy of VOLVO CARS CORPORATION

Remove the 2 screws for the mounting in the sub-frame (A)

REMOVING THE NUT FROM THE BALL JOINT (BOTH SIDES)

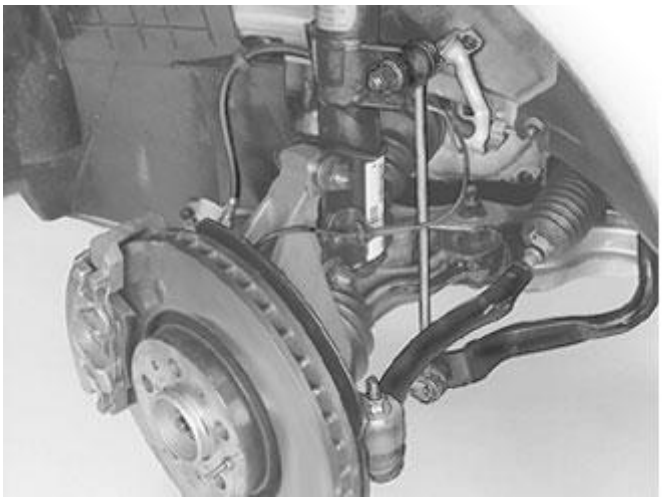

Fig. 694: Identifying Link For The Anti-Roll Bar
Courtesy of VOLVO CARS CORPORATION

See **BALL JOINT, REPLACING**

Removing the control arms for the anti-roll bar and the screw for the drive shaft on both sides

Remove

- The link for the anti-roll bar up on the spring strut. Hold with Torx 30. Do not twist the rubber boot.
- The screw for the drive shaft

REMOVING THE NUTS AND SCREWS FOR THE STEERING GEAR SUB-FRAME

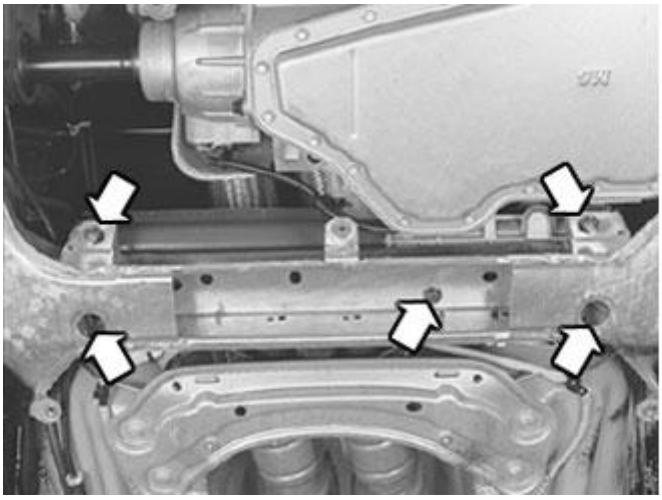

Fig. 695: Installing New Lock Nuts On The Steering Gear
Courtesy of VOLVO CARS CORPORATION

Remove the nuts and the screws from the steering gear sub-frame.

LOWERING THE SUB-FRAME

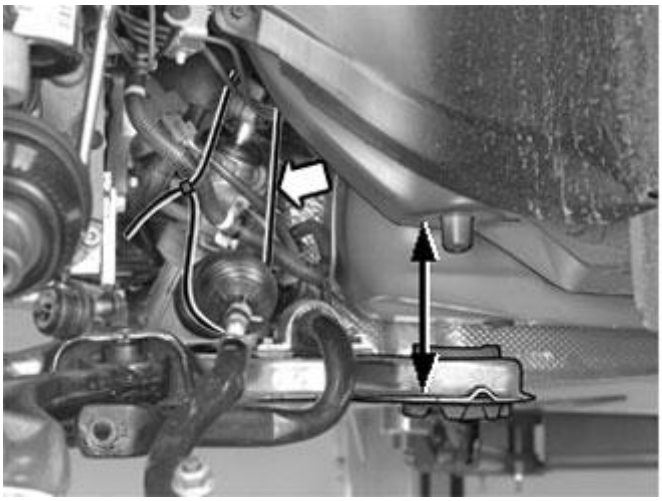

Fig. 696: Hanging The Steering Gear
Courtesy of VOLVO CARS CORPORATION

Hang up the steering gear in a tie strap on both sides

NOTE: Ensure that the screws for the steering gear release from the frame.

LOWERING THE SUB-FRAME WITH THE STEERING GEAR

Fig. 697: Engine Supported with Lifting Table
Courtesy of VOLVO CARS CORPORATION

CAUTION: Ensure that the lifting table is centered under the engine.

Position a lifting table under the sub-frame. Secure the table against the sub-frame.

Slacken off and remove the screws for the sub-frame support plates and for the sub-frame.

Lower the sub-frame approximately 140 mm.

Remove the two screws on the right side of the anti-roll bar. Fold out the fuel line.

Carefully lower and remove the sub-frame.

NOTE: Ensure that the brake pipe clears the exhaust pipe mounting when lowering the frame.

REMOVING THE DRIVE SHAFTS FROM THE WHEEL SPINDLES

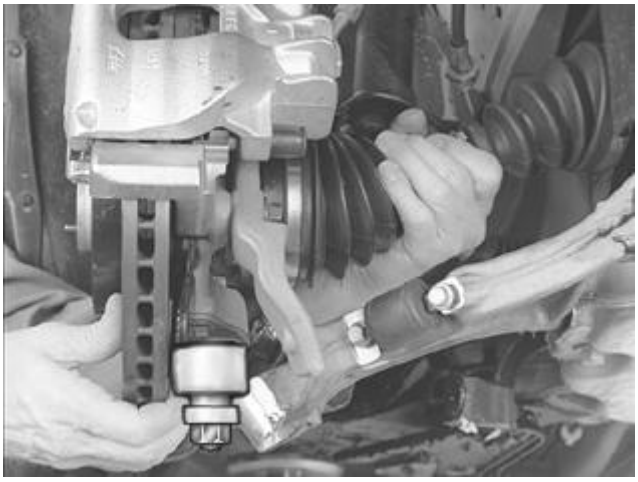

Fig. 698: Identifying Removal Of Wheel Spindle From Control Arm
Courtesy of VOLVO CARS CORPORATION

Grip the drive shafts.

Pull the brake disc outwards. At the same time, pull on the constant velocity joint towards the transmission so that the drive shaft loosens.

REMOVING THE LEFT DRIVE SHAFT FROM THE GEARBOX

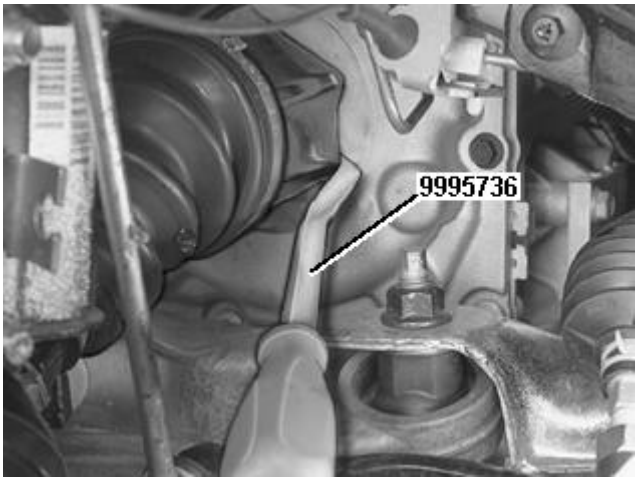

Fig. 699: Identifying Drive Shaft Removal From Transmission Using Jimmy Tool 999 5736
Courtesy of VOLVO CARS CORPORATION

Use: **9995736** .

NOTE: Do not damage the seal.

NOTE: Do not pull the drive shaft in a way that could cause the joints to separate. The joints do not have axial stops.

REMOVING THE DRIVE SHAFT

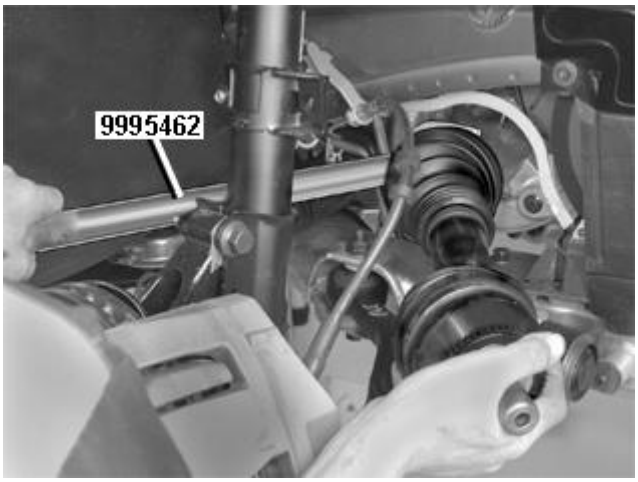

Fig. 700: Detach The Drive Shaft With Jimmy Bar
Courtesy of VOLVO CARS CORPORATION

See: **REMOVING THE GEARBOX**.

Angle the wheel hub out. Remove the drive shaft from the hub.

Use a tensioner band to pull the wheel spindle and wheel hub backwards.

Remove the drive shaft from the transmission. Use: **9995462** .

CAUTION: Do not damage the sealing ring in the chain housing when removing the drive shaft.

Install: **9997063** .

PAY ATTENTION TO THE FOLLOWING WHEN REMOVING PROPELLER SHAFT

Follow instructions. **PROPELLER SHAFT, SPECIAL INFORMATION**

REMOVING THE PROPELLER SHAFT

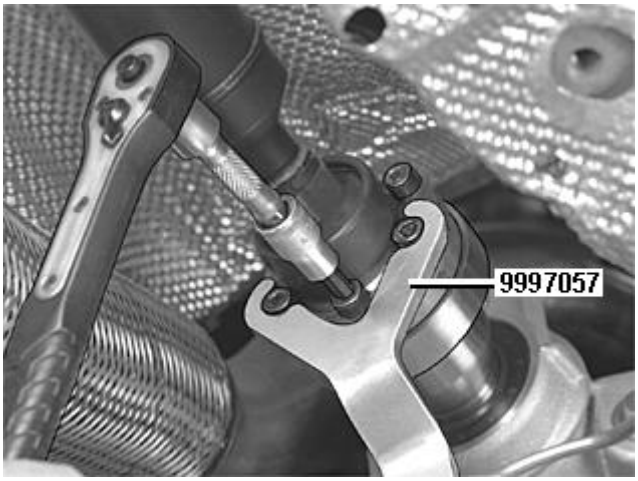

Fig. 701: Identifying Removal Of Propeller Shaft Using Counterhold
Courtesy of VOLVO CARS CORPORATION

Mark the propeller shaft CV joint in relation to the bevel gear flange.

Remove:

- the 2 screws for the center bearing mounting
- the propeller shaft screws. Use: **9997057** .

Press the propeller shaft joints together. Move the propeller shaft to one side and tie it up.

REMOVING THE ENGINE MOUNTING TOGETHER WITH THE BRACKET AND THE SPLASH GUARD

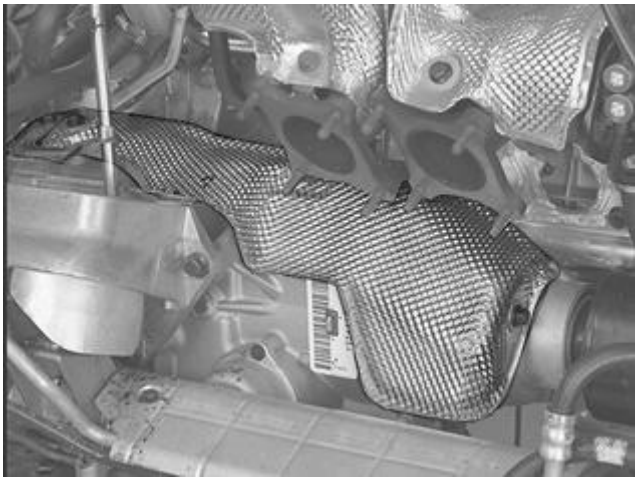

Fig. 702: Identifying Splash Guard Above Transmission
Courtesy of VOLVO CARS CORPORATION

Slacken off the 4 screws on the engine mounting to the transmission. Slacken off the screw on the bracket that extends from the top of the engine mounting to the top of the transmission (not the nut on the top of the rubber mounting).

Slacken off the screw on the splash guard beside the right drive shaft.

Remove the engine mounting together with the splash guard.

REMOVING THE OIL PIPE FROM THE GEARBOX

Fig. 703: Gearbox Oil Pipe
Courtesy of VOLVO CARS CORPORATION

NOTE: Plug the oil pipes so that no dirt gets in.

Remove the nuts from the brackets for the oil pipes.

Undo the screw nipples. Counterhold at the connections.

Pull out the oil pipes.

Move the oil pipes to one side.

Lower the vehicle.

LOWERING THE ENGINE AND TRANSMISSION

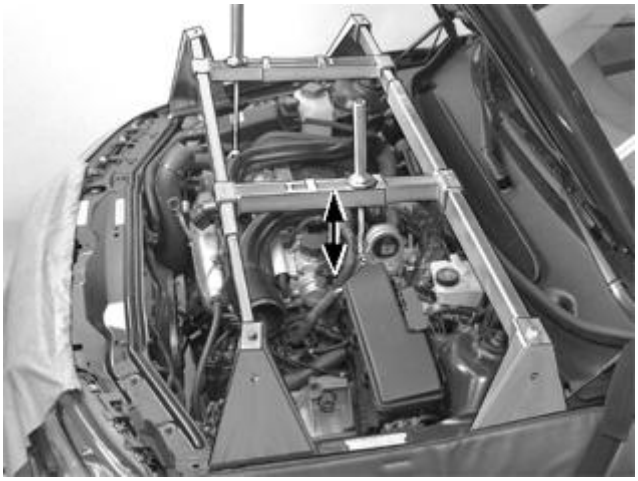

Fig. 704: Identifying Lowering Of Engine And Transmission
Courtesy of VOLVO CARS CORPORATION

Lower the engine / transmission on the left side using the hook.

Lower the engine so that the distance between the upper edge of the mounting bracket and the engine is approximately 350 mm, as illustrated.

Raise the vehicle.

REMOVING THE HEATED OXYGEN SENSOR (HO2S) CONNECTORS FROM THE BRACKET ON THE TRANSMISSION

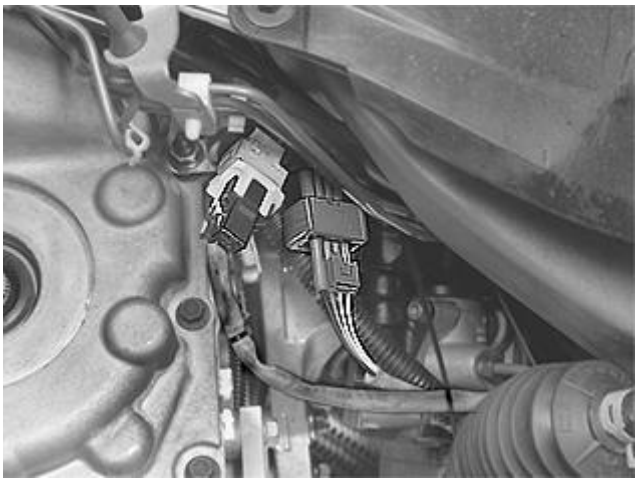

Fig. 705: Heated Oxygen Sensor

Courtesy of VOLVO CARS CORPORATION

Disconnect the connectors from the bracket.

Remove the nut on the bracket and the clamp holding the cable harness.

PREPARATIONS FOR REMOVAL OF THE TRANSMISSION

Fig. 706: Fender Liner Tied Up To Lifting Beam Using A Retaining Strap
Courtesy of VOLVO CARS CORPORATION

Remove:

- the 2 nuts for the wing liner. Angle out and tie up the wing liner to the lifting beam using a retaining strap
- the ABS line from the spring strut.

INSTALLING THE FIXTURE ON THE MOBILE JACK

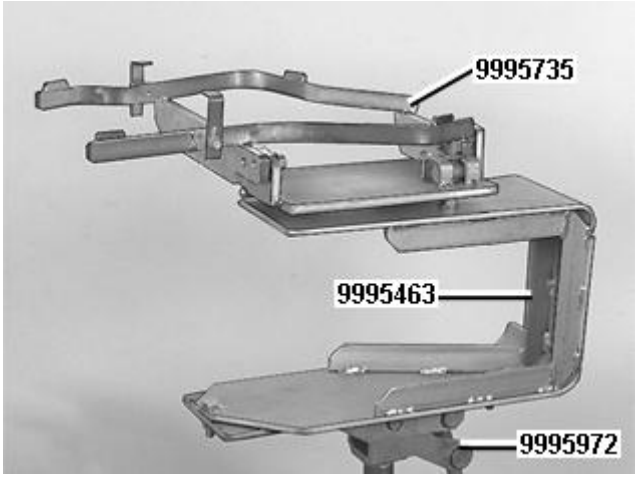

Fig. 707: Identifying Fixture Installed On Mobile Jack
Courtesy of VOLVO CARS CORPORATION

Install:

- **9995463** to **9995972** . Use the fixture and plate together with: **9985972**
- **9995735** to: **9995463** .

ALIGNING THE FIXTURE ON THE TRANSMISSION

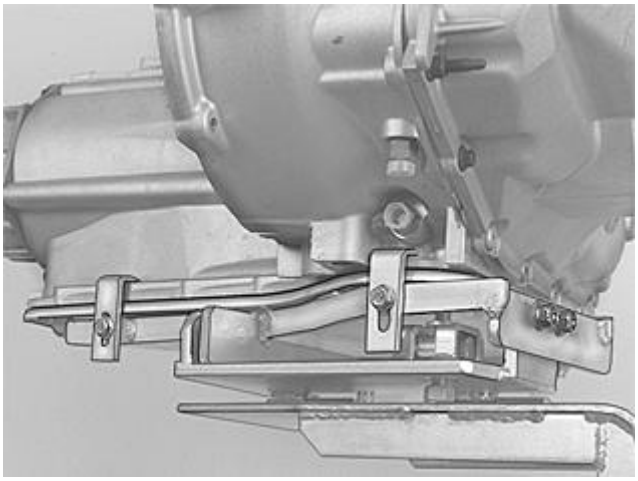

Fig. 708: Aligning Fixture On Transmission
Courtesy of VOLVO CARS CORPORATION

Align: **9995735** under the transmission.

Fold up the side mountings over the edge of the transmission and secure.

REMOVING THE CHAIN HOUSING BRACKET

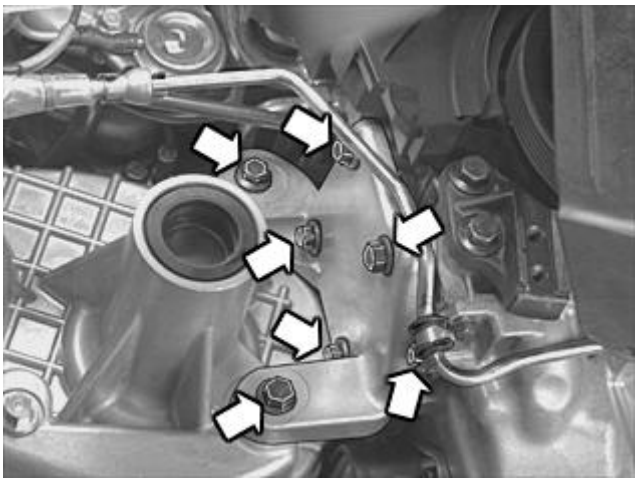

Fig. 709: Identifying Chain Housing Bracket Screws
Courtesy of VOLVO CARS CORPORATION

Remove:

- the screw in the clamp for the fuel line.
- the bracket for the chain housing/engine.

REMOVING THE BEVEL GEAR/CHAIN HOUSING

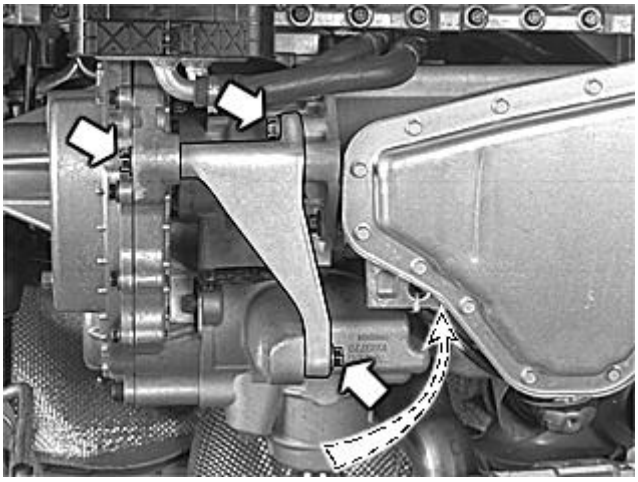

Fig. 710: Locating Screw For The Bevel Gear/Engine
Courtesy of VOLVO CARS CORPORATION

Drain the fluid from the transmission. Use an oil suction device to drain approximately 4 liters of transmission fluid.

Remove:

- the screw for the bevel gear/engine.

HINT: The screw is positioned on top of the bevel gear. The screw can be accessed from the center.

- the screw between the chain housing/bracket and the other screws in the bracket.

Pull the chain housing/bevel gear 5-10 mm out from the gearbox. Then remove the bracket. The bracket is upturned with a guide sleeve in the gearbox end.

NOTE: Two people are required to carry out the following procedure. The bevel gear/chain housing is relatively heavy.

Remove the bevel gear/chain housing by first pulling it straight out from the gearbox.

CAUTION: Do not damage the sealing ring in the transmission end.

Then turn the unit so that it can be removed to the side and downwards.

CHECKING THE SEALING RING

Fig. 711: Identifying The Sealing Ring
Courtesy of VOLVO CARS CORPORATION

Check that the sealing ring in the transmission end is undamaged.

NOTE: **If the sealing ring is damaged, replace with a new one. See: SEAL DRIVE SHAFT RIGHT, REPLACING .**

REMOVING THE GEARBOX

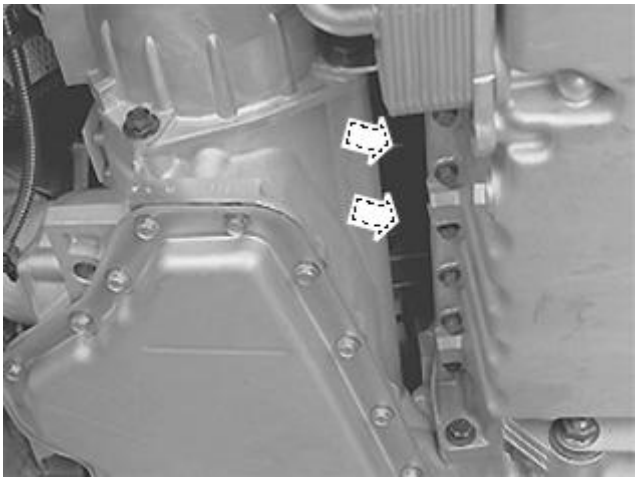

Fig. 712: Differential Housing Screws
Courtesy of VOLVO CARS CORPORATION

Remove:

- the 2 screws on the bracket at the differential housing
- the screw positioned furthest in and highest up at the engine/transmission
- the remaining 4 screws for the engine/transmission.

Pull the transmission straight out in relation to the engine.

NOTE: Lower the transmission slightly when it is being removed so that it will go past the side member.

Continue pulling the transmission straight out.

NOTE: Ensure that the torque converter is also removed.

FLUSHING THE OIL COOLER AND OIL HOSES

The oil cooler and hoses must always be flushed through when replacing the transmission.

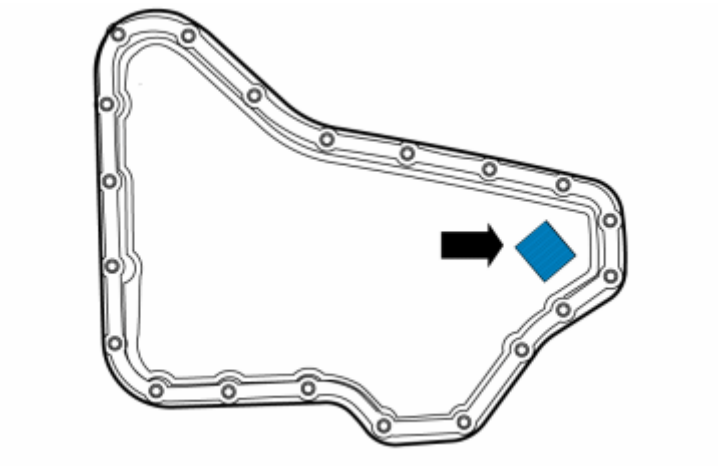

Fig. 713: Locating Magnet In Oil Pan
Courtesy of VOLVO CARS CORPORATION

Remove the oil pan. Check for metal particles on the magnet.

Replace the oil cooler and oil pipes if there is:

- Glycol in the transmission fluid
- Metal particles in the transmission fluid
- Burned or dirty oil.

TRANSMISSION, AUTOMATIC (B6324S, TF-80SC; 2007-2010)

CONTROL SYSTEMS

REMOVING THE CABLE HARNESS

Remove the wiring harness from the control system. **TRANSMISSION CONTROL UNIT WIRING HARNESS** .

Fig. 714: Identifying Cable Harness Protected With Tape
Courtesy of VOLVO CARS CORPORATION

NOTE: Protect the cable harness by taping it to the outside of the transmission.

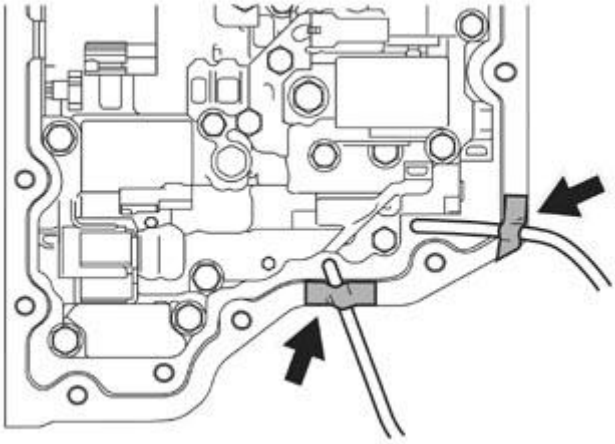

Fig. 715: Identifying Cable Harness Ends Secured To Transmission Case
Courtesy of VOLVO CARS CORPORATION

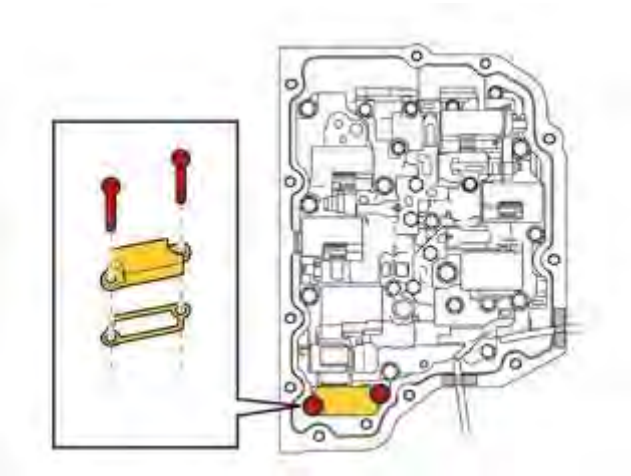

Fig. 716: Identifying Gasket & Bolts
Courtesy of VOLVO CARS CORPORATION

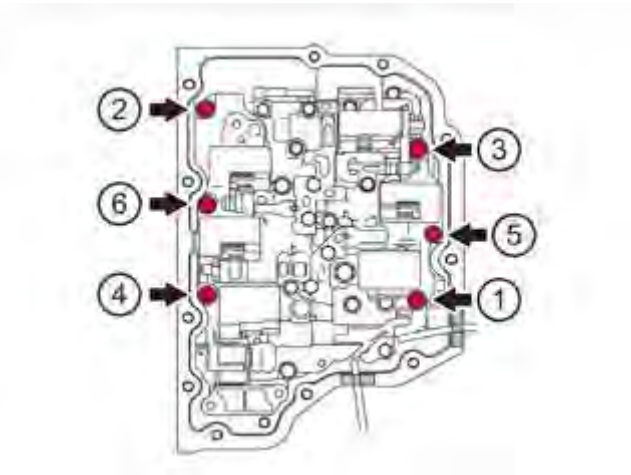

Fig. 717: Identifying Screw Removal Sequence
Courtesy of VOLVO CARS CORPORATION

Fig. 718: Identifying Control System Rod
Courtesy of VOLVO CARS CORPORATION

Fig. 719: Identifying Control System Rod
Courtesy of VOLVO CARS CORPORATION

CAUTION: Ensure that the cable harness is not trapped when the control system is positioned.

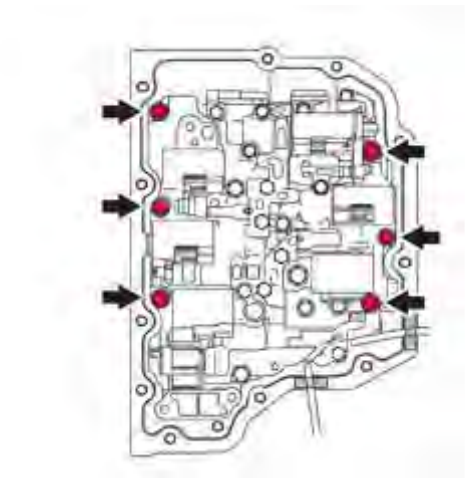

Fig. 720: Identifying Transmission Bolts
Courtesy of VOLVO CARS CORPORATION

Lightly tighten.

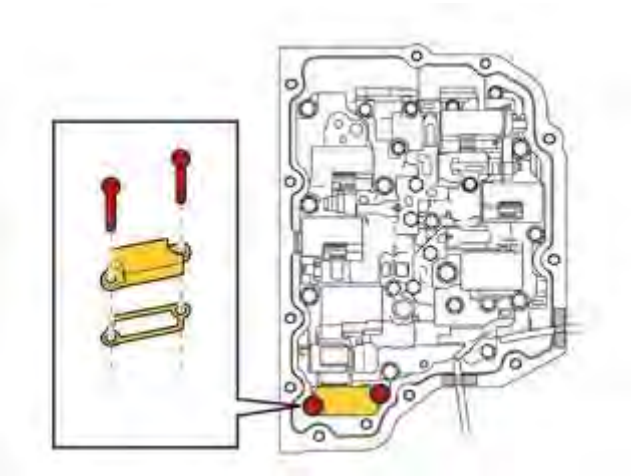

Fig. 721: Identifying Gasket & Bolts
Courtesy of VOLVO CARS CORPORATION

Use **new** screws and a **new** gasket.

Lightly tighten.

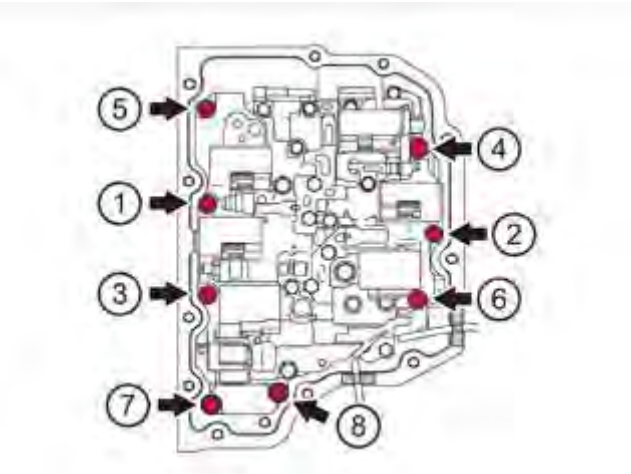

Fig. 722: Identifying Transmission Bolts Installation Sequence
Courtesy of VOLVO CARS CORPORATION

Tighten alternately, M6.

INSTALLING THE CABLE HARNESS

Install the wiring harness to the control system. **TRANSMISSION CONTROL UNIT WIRING HARNESS** .

COVER CONTROL SYSTEM, REPLACING

NOTE: **The illustrations in this service information are used for different model years and/or models. Some variation may occur. However, the essential information in the illustrations is always correct.**

REMOVAL

Remove the auxiliary brackets. See: **AUXILIARY BRACKETS**

Remove the subframe front. See: **SUB-FRAME FRONT, REPLACING** .

NOTE: Leave the container in place for the next few procedures relating to removal.

REMOVING LEVEL PLUG/DRAINING PLUG

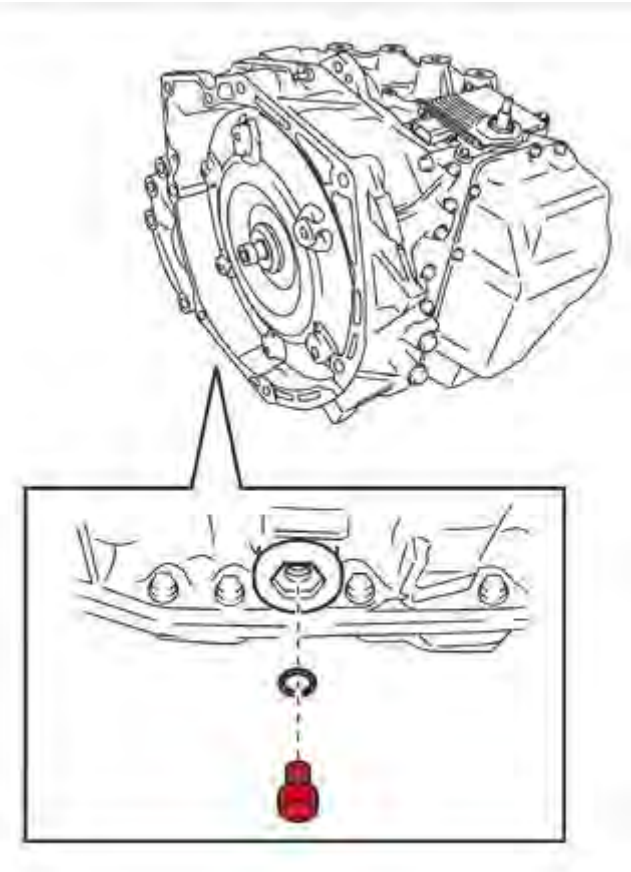

Fig. 723: Identifying Transmission Fluid Level Check
Courtesy of VOLVO CARS CORPORATION

Remove the integrated level plug/Torx.

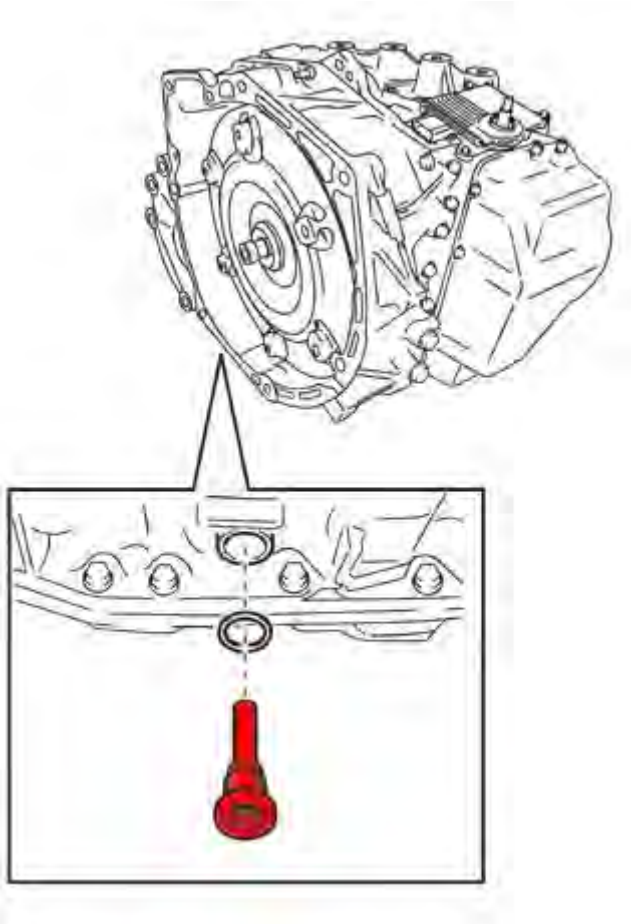

Fig. 724: Identifying Transmission Draining Plug
Courtesy of VOLVO CARS CORPORATION

Remove the draining plug.

When the transmission is empty:

- use **new** gaskets
- lubricate the gaskets. Use ATF-oil
- tighten both. See: **SUMMARY OF TIGHTENING TORQUES FOR SPECIFIC COMPONENTS** .

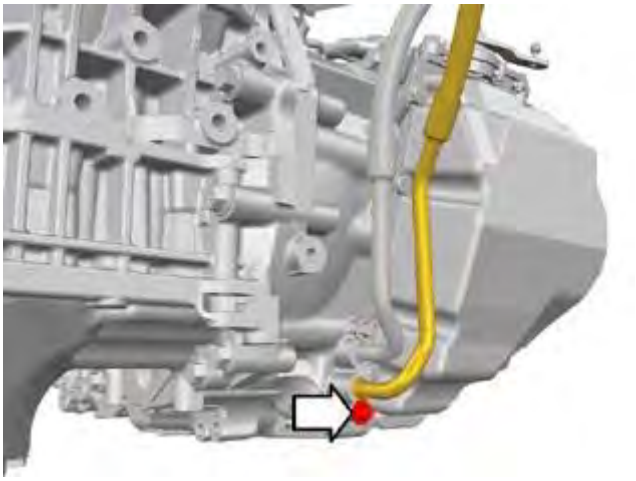

Fig. 725: Locating Plastic Plug In Drain Hole
Courtesy of VOLVO CARS CORPORATION

HINT: To prevent leakage, install a plastic plug in the hole.

REMOVING THE COVER

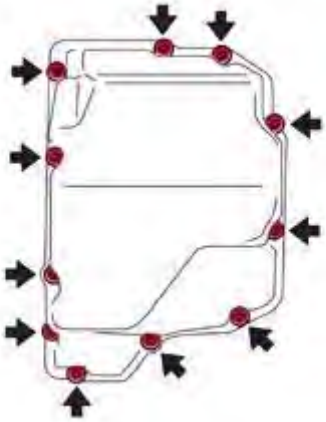

Fig. 726: Identifying Cover Bolts
Courtesy of VOLVO CARS CORPORATION

Remove torx TX40.

Clean off any sealant from the threads. Use thread tap M8 x 1.25.

REMOVING THE CONTROL SYSTEM COVER

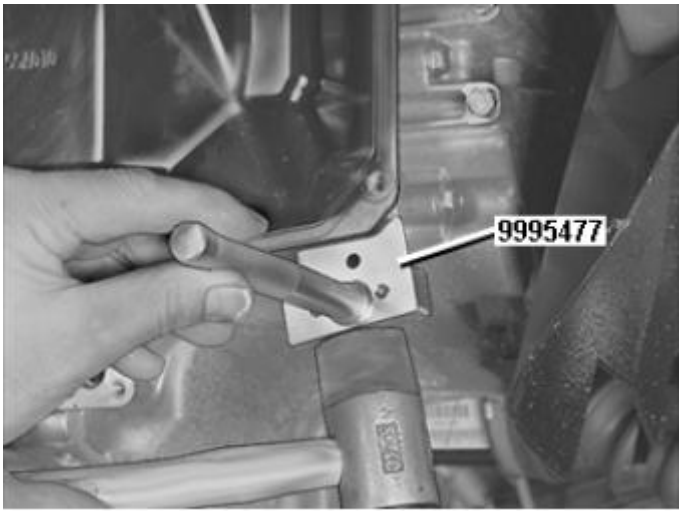

Fig. 727: Identifying Gasket Wedge Tapped Into Joint
Courtesy of VOLVO CARS CORPORATION

Remove the cover.

Use joint wedge **9995477** , which is carefully tapped in between the cover and transmission so that the cover's sealing flange is not warped.

CLEANING THE COVER

CAUTION: Ensure that no debris enters the transmission.

Clean gasket residue from the cover and transmission. Clean the cover thoroughly. Check that the contact surface of the cover is flat.

INSTALLATION

CLEANING COVER

Fig. 728: Applying Sealant To Cover
Courtesy of VOLVO CARS CORPORATION

Wipe the cleaned mating surfaces of the cover and the transmission dry. Use Isopropanol

Apply a bead of sealant, P/N 116 1409-6, approximately 3 mm thick on the cover.

Also apply sealant around the screw holes.

INSTALLING COVER

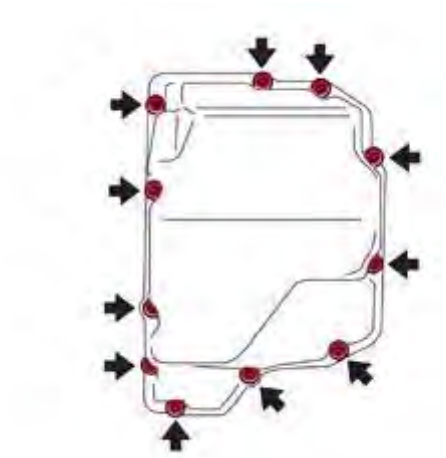

Fig. 729: Identifying Cover Bolts
Courtesy of VOLVO CARS CORPORATION

NOTE: Ensure that the sealant is not rubbed when the cover is installed.

Use **new** screws.

Tighten:

- alternately to light contact
- see: **SUMMARY OF TIGHTENING TORQUES FOR SPECIFIC COMPONENTS** .

INSTALLING THE SUBFRAME

Install the subframe front. See: **SUB-FRAME FRONT, REPLACING** .

Install the auxiliary brackets. See: **AUXILIARY BRACKETS**

FILLING OF OIL

Top up oil. See: **TRANSAXLE OIL**.

SEALING RING, GEAR SHIFT LINKAGE ROD

Special tools	
	T9995919 PULLER (SEAL-DRIVE PINION, CAM-CRANKSHAFT)B200-6304 **Tool number:** T9995919 **Tool description:** PULLER (SEAL-DRIVE PINION, CAM-CRANKSHAFT)B200-6304 **Tool boards:**
	T9995476 DRIFT (INSTALL-SEALING RING, GEAR SHIFT LINKAGE ROD) AW30-40, AW50-42 **Tool number:** T9995476 **Tool description:** DRIFT (INSTALL-SEALING RING, GEAR SHIFT LINKAGE ROD) AW30-40, AW50-42 **Tool boards:**

NOTE: Removal steps in this procedure may contain installation details.

Remove the transmission control module (TCM). **TRANSMISSION CONTROL MODULE (TCM)**.

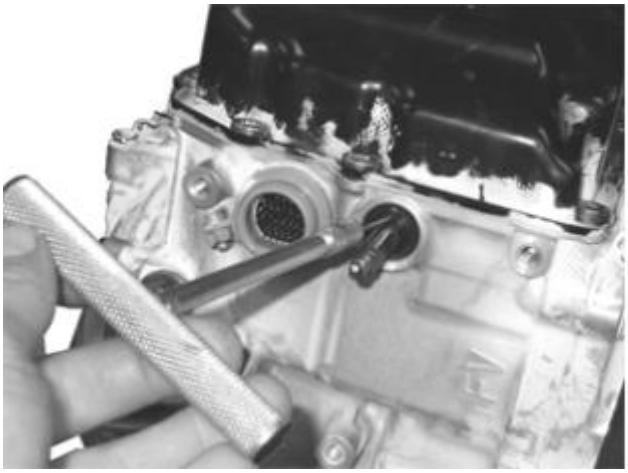

Fig. 730: Identifying Sealing Ring, Gear Shift Linkage Rod and Tool 9995919
Courtesy of VOLVO CARS CORPORATION

9995919 .

Fig. 731: Identifying Seal Installing Tool 9995476
Courtesy of VOLVO CARS CORPORATION

9995476 .

To install, reverse the removal procedure

SEALING RING, TORQUE CONVERTER

Special tools	
	T9995069 PULLER (SEALS) **Tool number:** T9995069 **Tool description:** PULLER (SEALS) **Tool boards:**
	T9997184 DRIFT **Tool number:** T9997184 **Tool description:** DRIFT **Tool boards:**

NOTE: Removal steps in this procedure may contain installation details.

Remove the transaxle. **TRANSMISSION** (B6324S5, TF-80SC AWD, B6324S, TF-80SC AWD; 2007-2012) or **TRANSMISSION** (B6324S5, TF-80SC; 2011-2012).

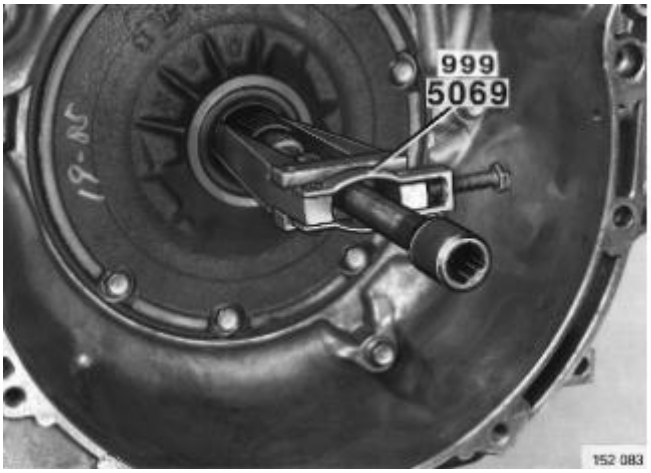

Fig. 732: Identifying Seal Puller 9995069
Courtesy of VOLVO CARS CORPORATION

9995069 .

Fig. 733: Identifying Seal Installer 9997184
Courtesy of VOLVO CARS CORPORATION

9997184 .

To install, reverse the removal procedure

Install the transaxle. **TRANSMISSION** (B6324S, TF-80SC; 2007-2010; B6324S5, TF-80SC; 2011-2010) or **TRANSMISSION** (B6324S5, TF-80SC AWD; B6324S, TF-80SC AWD; 2007-2012).

TRANSAXLE OIL

Special tools	
	T9997278 WRENCH **Tool number:** T9997278 **Tool description:** WRENCH **Tool boards:**
	T9997363 HOSE **Tool number:** T9997363 **Tool description:** HOSE **Tool boards:**

CHANGING TRANSMISSION FLUID

Fig. 734: Identifying Lower Engine Cover
Courtesy of VOLVO CARS CORPORATION

Remove the splash guard.

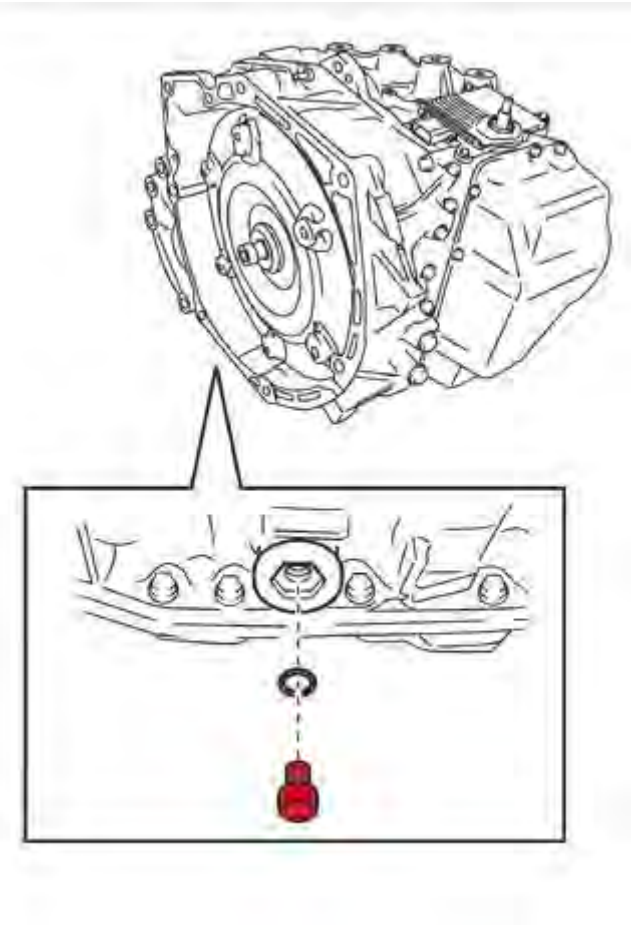

Fig. 735: Identifying Transmission Fluid Level Check
Courtesy of VOLVO CARS CORPORATION

WARNING: Avoid skin contact with the specified material.

WARNING: Be prepared to collect escaping fluid.

Integrated level plug/Torx.

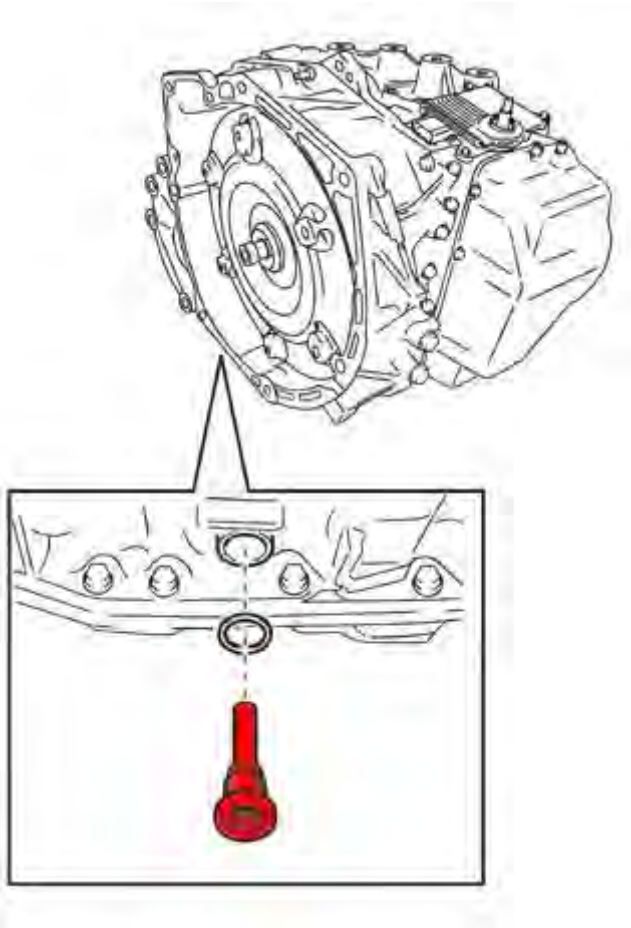

Fig. 736: Identifying Transmission Draining Plug
Courtesy of VOLVO CARS CORPORATION

Remove the draining plug.

Drain the transmission fluid.

Install the drain plug. Use a new gasket, lubricate it with ATF oil. Tighten to: **TIGHTENING TORQUE**

9997278

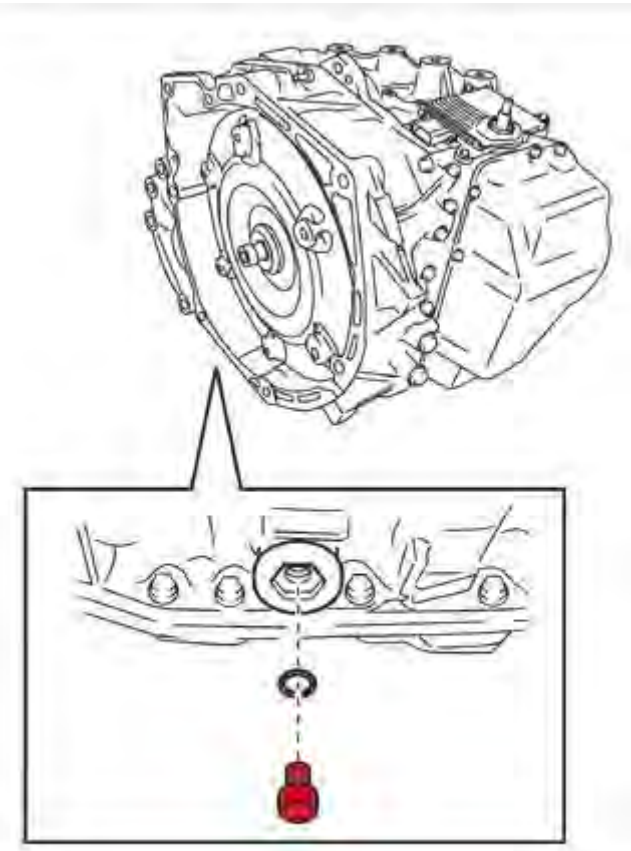

Fig. 737: Identifying Transmission Fluid Level Check
Courtesy of VOLVO CARS CORPORATION

Install the level plug by hand, Reuse the O-ring.

Remove the air cleaner (ACL) housing. **AIR CLEANER HOUSING**

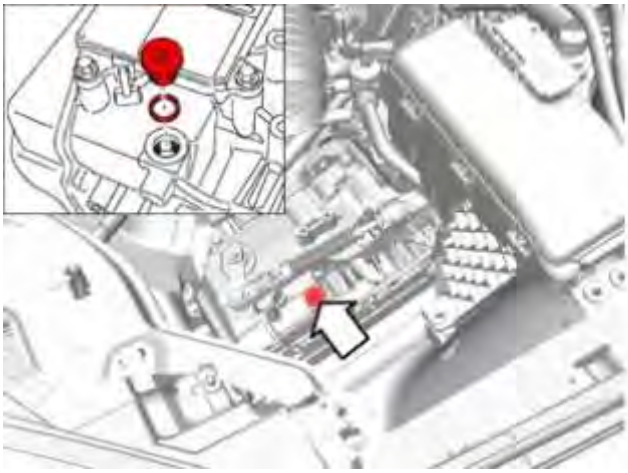

Fig. 738: Locating Transmission Filler Plug

Courtesy of VOLVO CARS CORPORATION

CAUTION: Make sure that tools and equipment are clean, free of foreign material and lubricant.

Remove the filler plug (Torx 55).

Lower a filler nozzle or a hose with funnel into the filler hole.

Install the air cleaner (ACL) housing. **AIR CLEANER HOUSING**

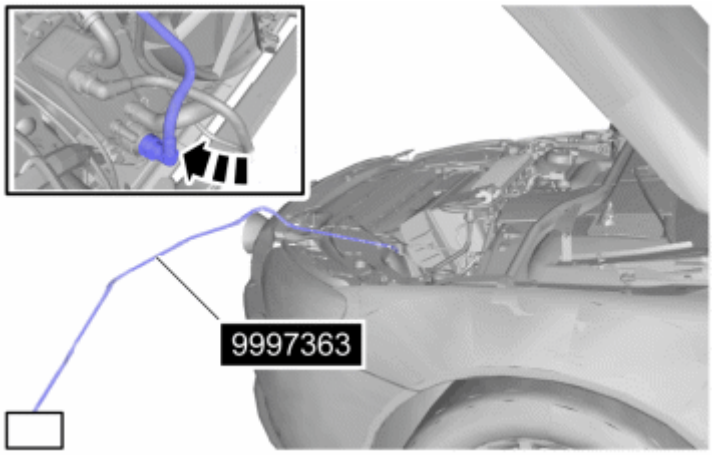

Fig. 739: Identifying Hose 9997363
Courtesy of VOLVO CARS CORPORATION

WARNING: Be prepared to collect escaping fluid.

9997363

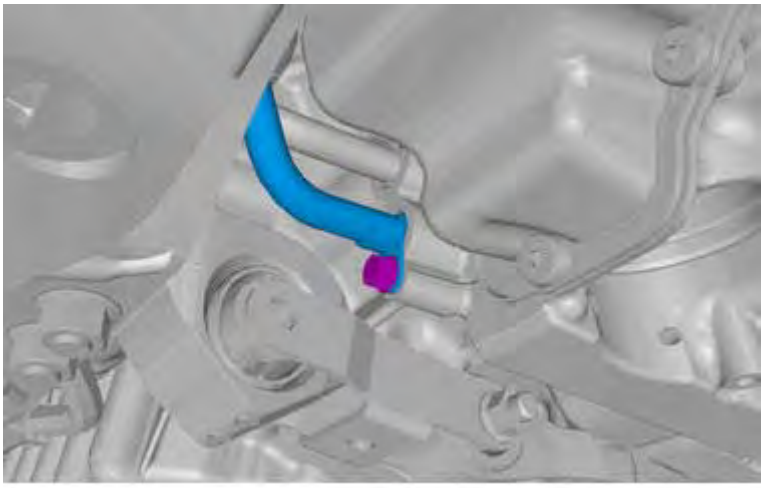

Fig. 740: Identifying Oil Cooler Return Line At Transmission
Courtesy of VOLVO CARS CORPORATION

Remove the oil cooler's return line from the transmission.

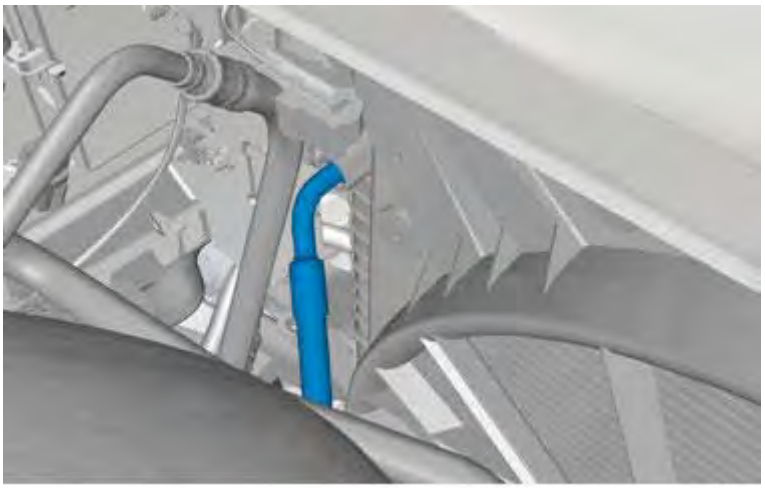

Fig. 741: Identifying Oil Cooler Return Hose At Oil Cooler
Courtesy of VOLVO CARS CORPORATION

Remove the oil cooler's return line from the oil cooler.

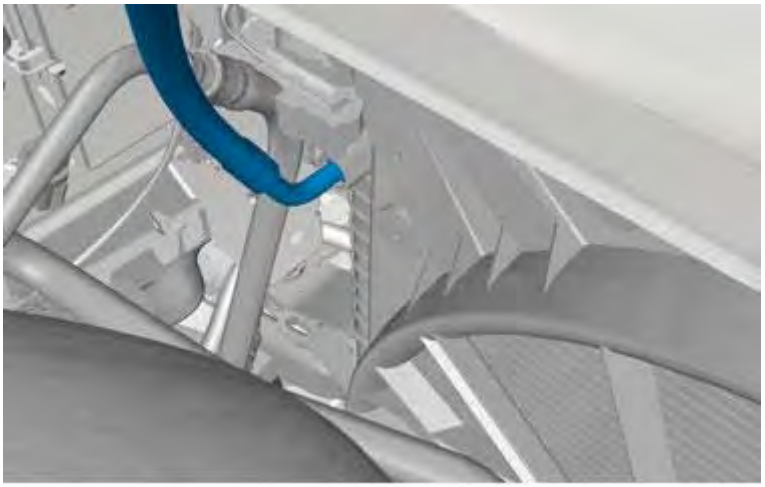

Fig. 742: Identifying Oil Cooler Return Line At Oil Cooler
Courtesy of VOLVO CARS CORPORATION

Install the return line on the oil cooler as shown.

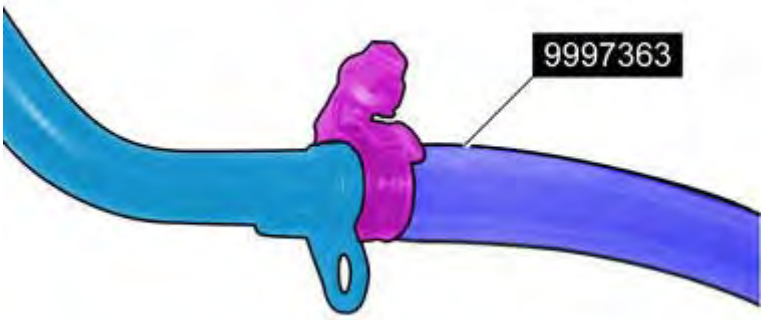

Fig. 743: Identifying Return Line, Hose 9997363, And Hose Clamp
Courtesy of VOLVO CARS CORPORATION

Install hose on the return line with a hose clamp. **9997363**

CAUTION: The plastic hose is quite hard. Tighten the hose clamp hard to avoid leakage in the connection.

WARNING: Be prepared to collect escaping fluid.

Fill with 4l of oil. Use transmission fluid. **LUBRICANT TRANSMISSION**

Apply the parking brake. Move the gear selector lever to position P.

Start and run the engine at idle.

Shift through all the positions between P and D on the gear selector. Stop for 2 seconds per position. Switch off when air bubbles are visible in the hose.

Fill with 2 liters of oil. Start the engine again and allow it to idle. Switch off when air bubbles are visible in the hose.

Fill with 2 liters of oil again. Start the engine and allow it to idle. Switch off when air bubbles are visible in the hose.

Install return hose to transmission and oil cooler.

Remove the integrated level plug.

Top up with oil until it starts to run out of the transmission.

Install the level plug by hand.

Check the oil level. **OIL LEVEL, CHECKING**

Reset the counter when replacing the transmission.

TRANSMISSION

NOTE: Removal steps in this procedure may contain installation details.

Remove the brackets for auxiliary equipment. **AUXILIARY BRACKETS**

Drain the cooling system. **COOLING SYSTEM - DRAINING, CHARGING AND BLEEDING** .

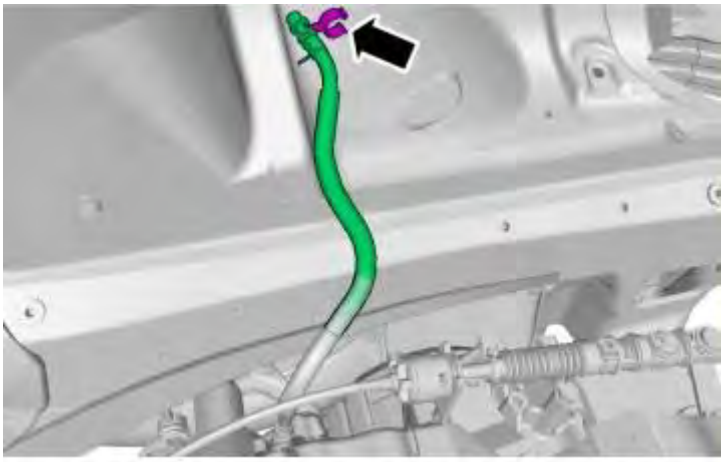

Fig. 744: Identifying Vent Hose Clip
Courtesy of VOLVO CARS CORPORATION

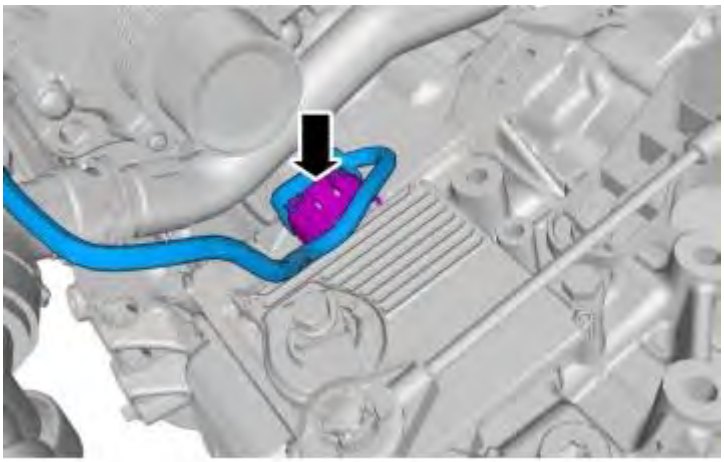

Fig. 745: Identifying Electrical Connector
Courtesy of VOLVO CARS CORPORATION

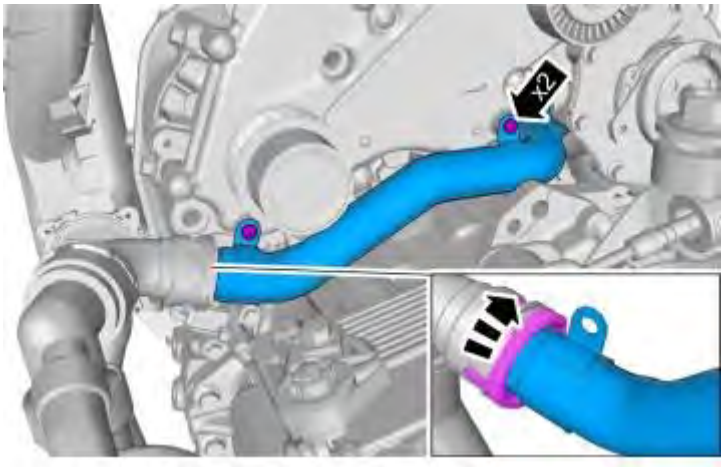

Fig. 746: Identifying Coolant Tube and Connectors
Courtesy of VOLVO CARS CORPORATION

Torque: M6

10 Nm

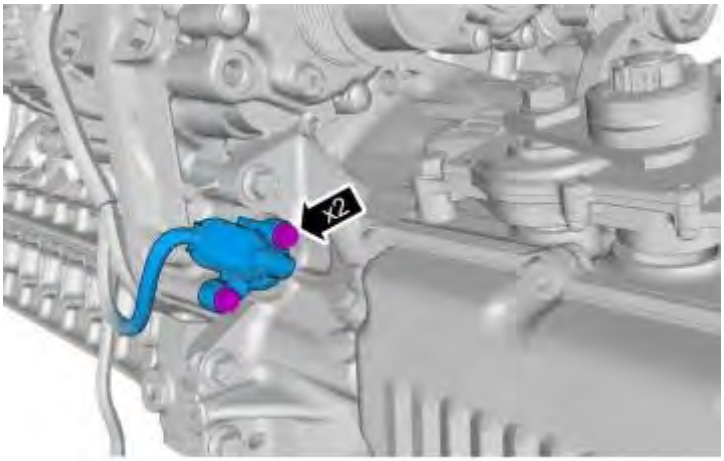

Fig. 747: Identifying Crank Sensor Connector
Courtesy of VOLVO CARS CORPORATION

Torque: M6

10 Nm

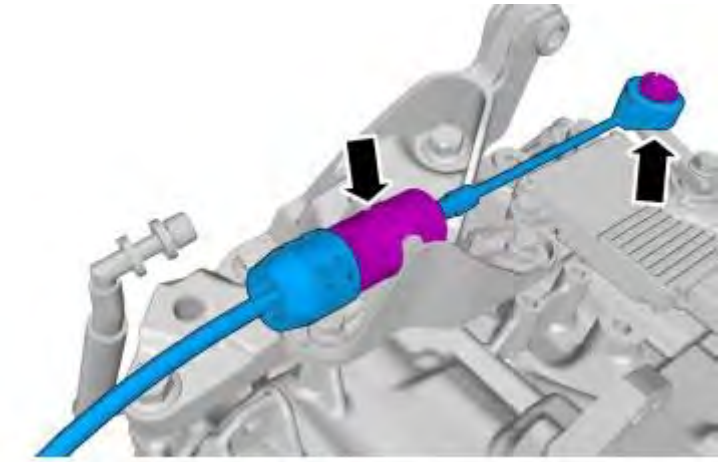

Fig. 748: Identifying Shift Cable And Bracket
Courtesy of VOLVO CARS CORPORATION

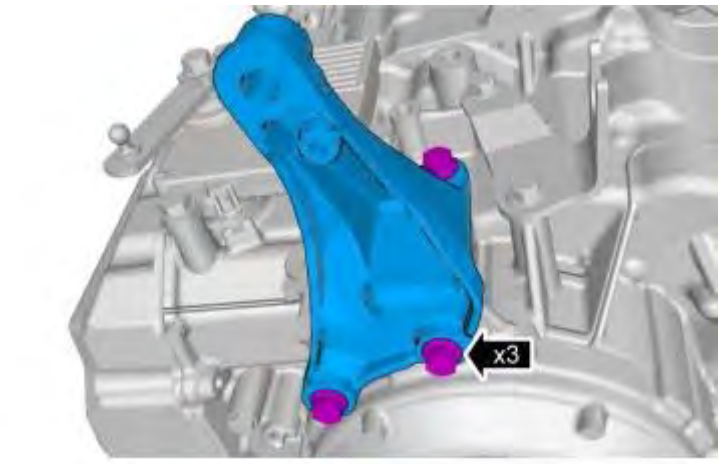

Fig. 749: Identifying 3 Mounting Bracket Bolts
Courtesy of VOLVO CARS CORPORATION

Torque: M8

24 Nm

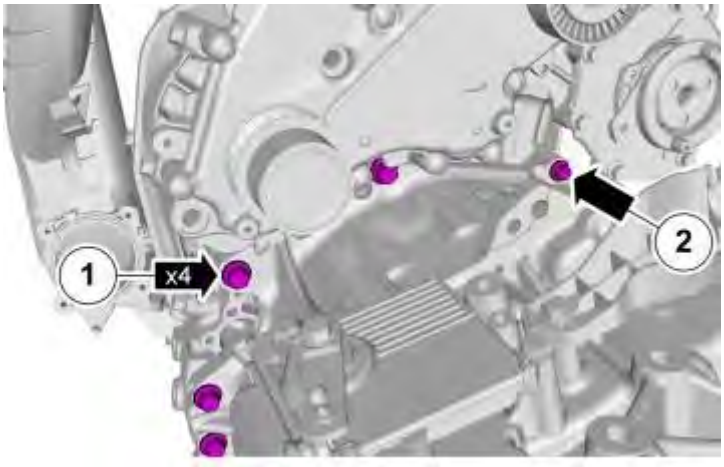

Fig. 750: Locating Upper Bellhouse Bolts
Courtesy of VOLVO CARS CORPORATION

Remove the following items:

1. **Torque:** M10

   50 Nm

2. **Torque:** M8

   24 Nm

Remove the following items:

- Front subframe. **SUB-FRAME FRONT, REPLACING**
- left driveshaft. **DRIVE SHAFT LEFT, REPLACING**
- **DRIVE SHAFT RIGHT, REPLACING** .

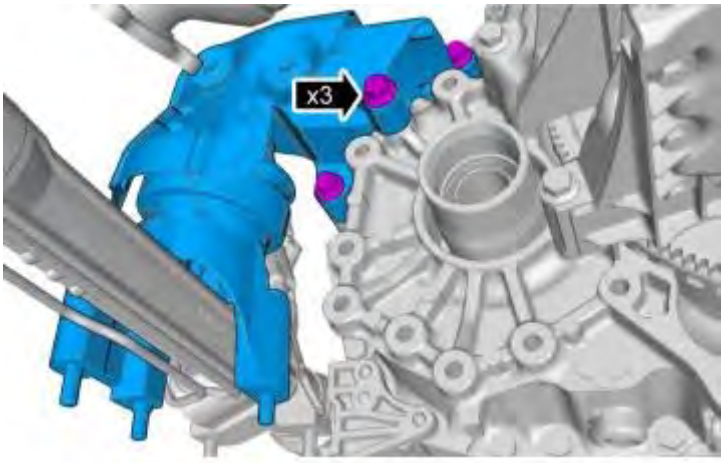

Fig. 751: Identifying Engine Mounting Bracket
Courtesy of VOLVO CARS CORPORATION

Torque: M10

50 Nm

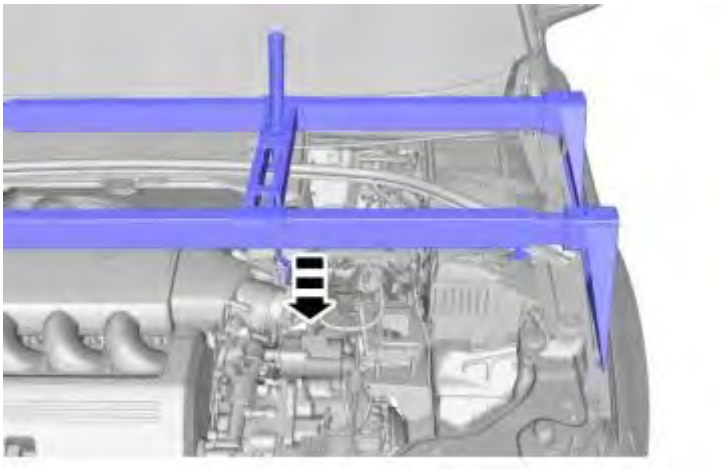

Fig. 752: Identifying Engine Support
Courtesy of VOLVO CARS CORPORATION

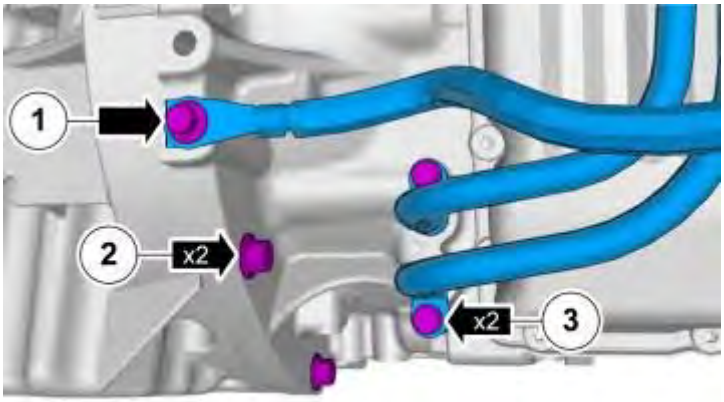

Fig. 753: Remove/Install Tubes and Ground Wire
Courtesy of VOLVO CARS CORPORATION

CAUTION: Make sure that all openings are sealed.

Remove the following items:

1. **Torque:** M8

   24 Nm

2. **Torque:** M10

50 Nm

3. **Torque:** M6

   10 Nm

Remove the following items:

- starter motor. **STARTER MOTOR**
- front crankshaft seal. **CRANKSHAFT FRONT SEAL** .

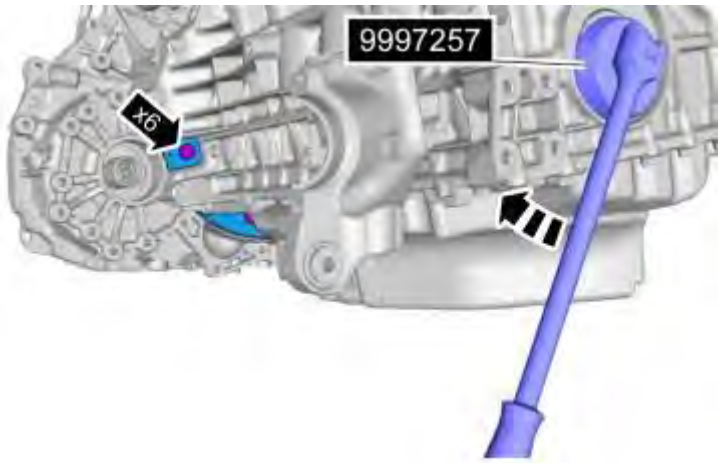

Fig. 754: Locating Torque Converter To Carrier Plate Bolts
Courtesy of VOLVO CARS CORPORATION

9997257 .

Tightening torque: Torque converter to carrier plate. **TIGHTENING TORQUE** .

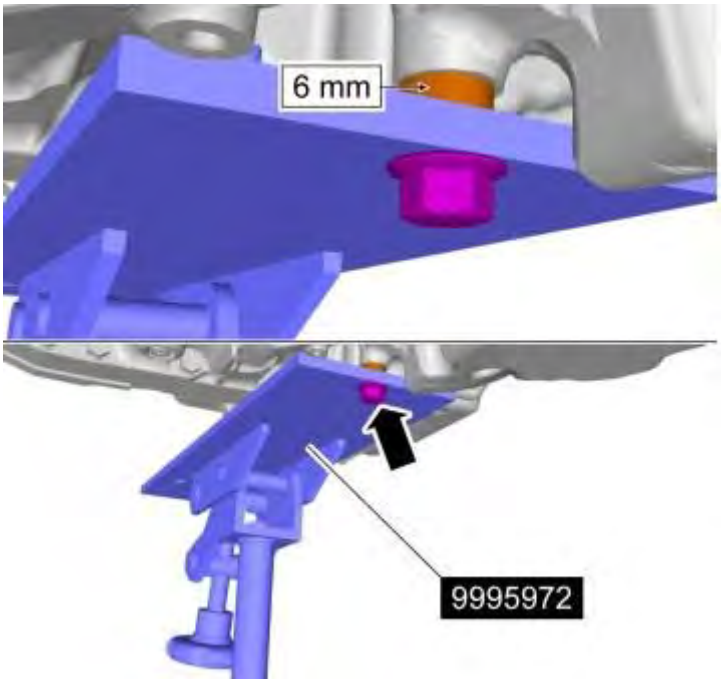

Fig. 755: Installing Transmission Lift
Courtesy of VOLVO CARS CORPORATION

9995972 .

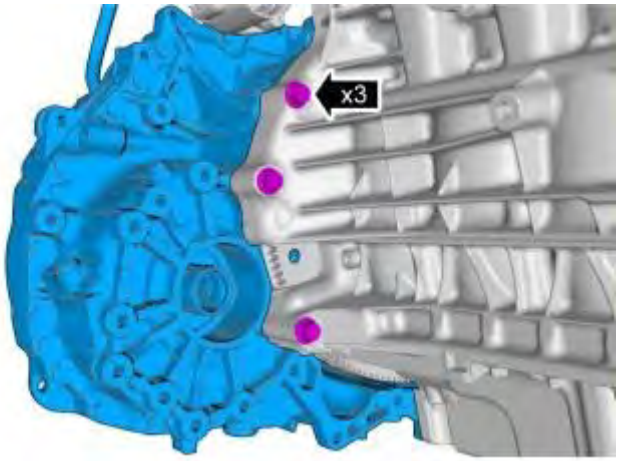

Fig. 756: Identifying Lower Bellhouse Bolts
Courtesy of VOLVO CARS CORPORATION

Torque: M10

50 Nm

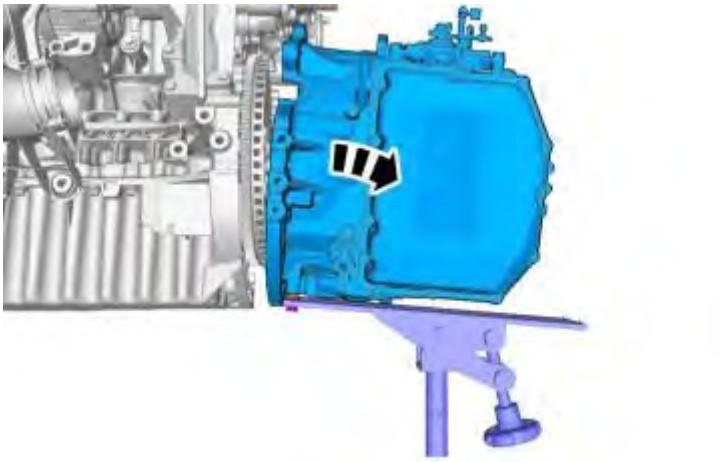

Fig. 757: Removing Transaxle
Courtesy of VOLVO CARS CORPORATION

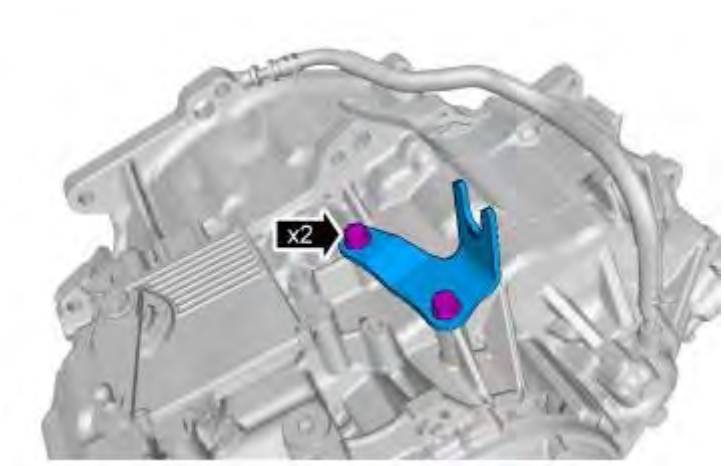

Fig. 758: Transferring Bracket
Courtesy of VOLVO CARS CORPORATION

NOTE: This step is only necessary when installing a new component.

Torque: M8

24 Nm

Prepared transaxle. **TRANSMISSION, PREPARATIONS BEFORE INSTALLING** .

To install, reverse the removal procedure.

NOTE: This step is only necessary when installing a new component.

Order and download software 94382919438291

TRANSMISSION CONTROL MODULE (TCM)

NOTE: Removal steps in this procedure may contain installation details.

NOTE: Make sure that the selector lever is in the neutral (N) position.

Remove the following items:

- battery negative lead. **BATTERY, DISCONNECTING**
- auxiliary bracket. **AUXILIARY BRACKETS**

Fig. 759: Identifying Selector Cable And Arm
Courtesy of VOLVO CARS CORPORATION

CAUTION: Make sure that the terminals or pins/sockets of the transmission control module (TCM) and the connectors are not bent or damaged.

Tighten, gear selector mechanism (nut). **TIGHTENING TORQUE**

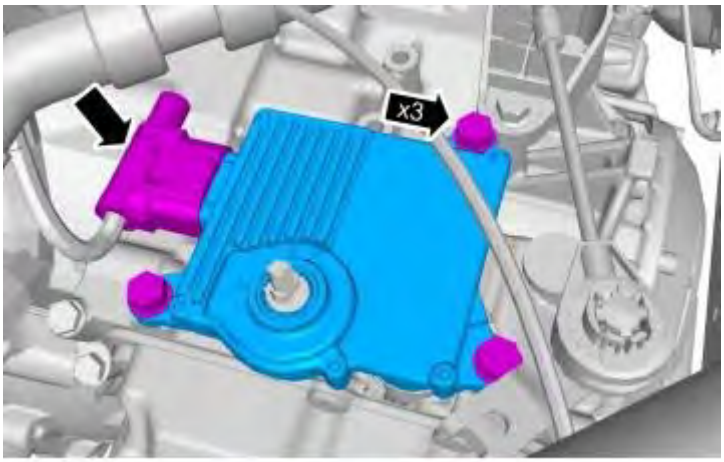

Fig. 760: Locating Transmission Control Module Connector And Bolts
Courtesy of VOLVO CARS CORPORATION

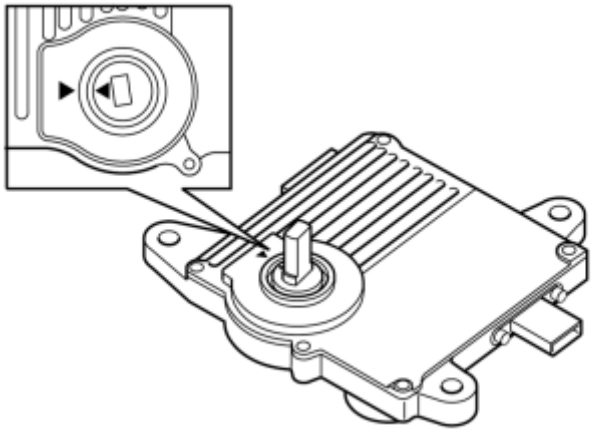

Fig. 761: Locating Installation Marks
Courtesy of VOLVO CARS CORPORATION

NOTE: Make sure that the installation marks are aligned.

To install, reverse the removal procedure.

Order software for the control module: 9438291 .

Calibrate the transmission range sensor. See: VIDA (Volvo scan tool) vehicle information, function group 4.

TRANSMISSION CONTROL UNIT SOLENOIDS

REMOVING COVER CONTROL SYSTEM

Remove the cover over the control system. **COVER CONTROL SYSTEM, REPLACING**.

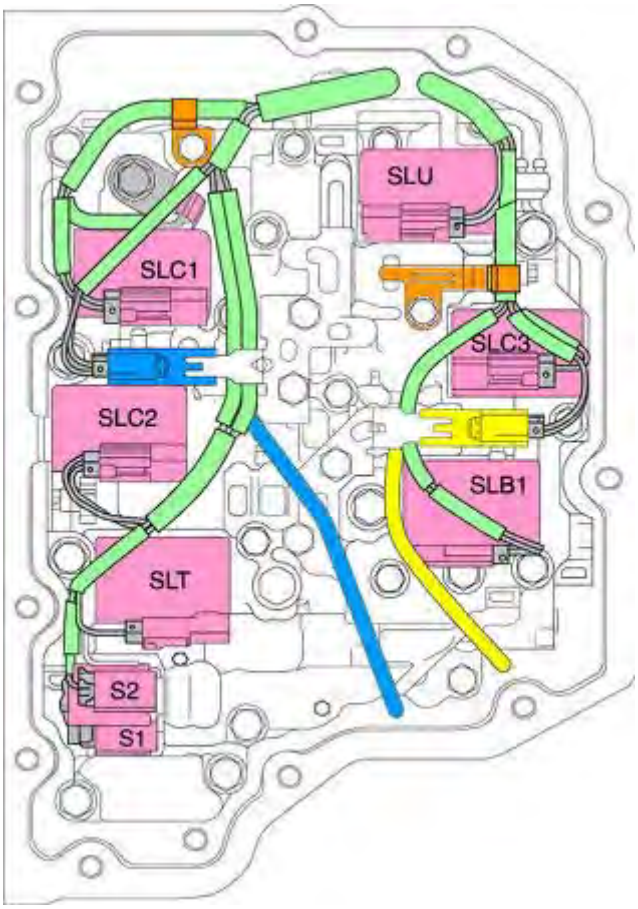

Fig. 762: Identifying Cable Harness
Courtesy of VOLVO CARS CORPORATION

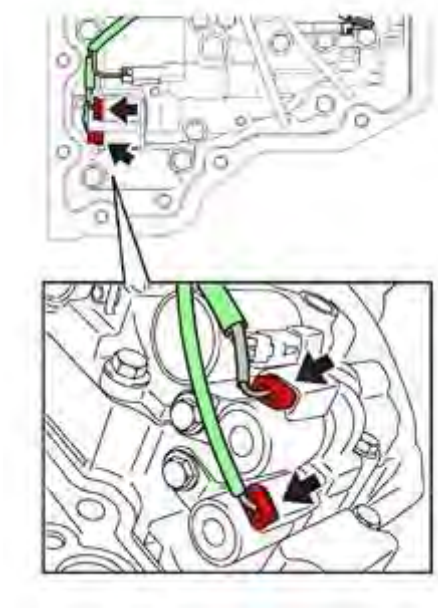

Fig. 763: Identifying Connector
Courtesy of VOLVO CARS CORPORATION

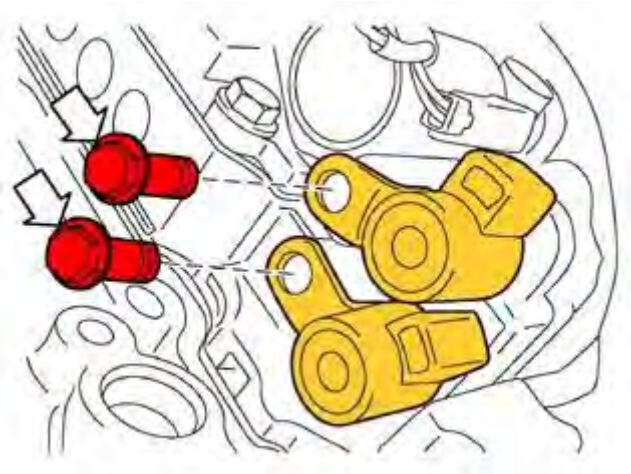

Fig. 764: Identifying Bolts
Courtesy of VOLVO CARS CORPORATION

S1, S2

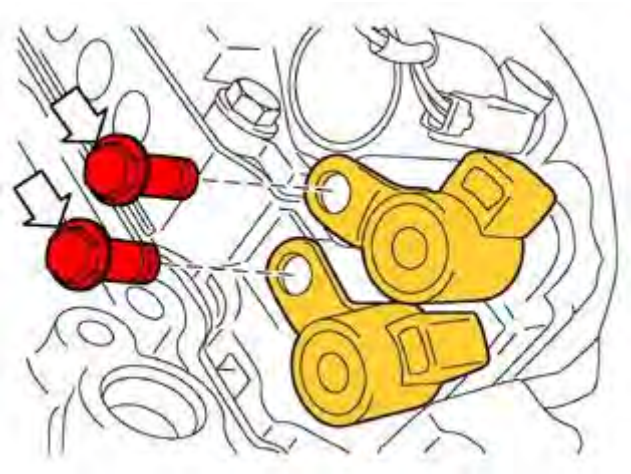

Fig. 765: Identifying Bolts
Courtesy of VOLVO CARS CORPORATION

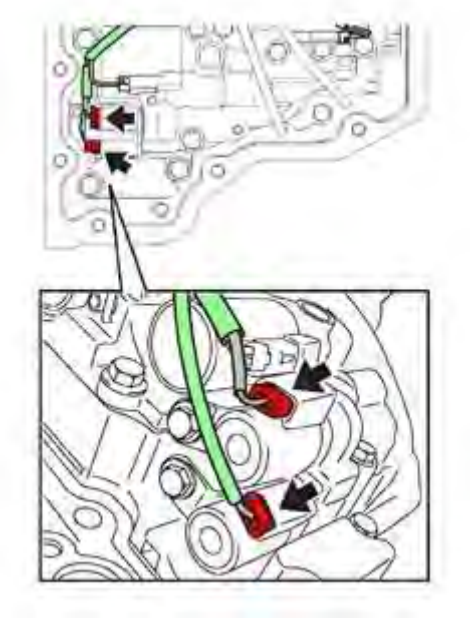

Fig. 766: Identifying Connector
Courtesy of VOLVO CARS CORPORATION

Torque: M6

10 Nm

Install the cover over the control system. **COVER CONTROL SYSTEM, REPLACING**.

TRANSMISSION, AUTOMATIC (B6324S, TF-80SC AWD; 2007-2012)

CONNECTING SLEEVE

Remove and install connecting sleeve. **SEALING RING, CONNECTING SOCKET**

CONTROL SYSTEMS

CONTROL SYSTEMS

COVER CONTROL SYSTEM, REPLACING

COVER CONTROL SYSTEM, REPLACING

SEALING RING, GEAR SHIFT LINKAGE ROD

SEALING RING, GEAR SHIFT LINKAGE ROD

SEALING RING, TORQUE CONVERTER

SEALING RING, TORQUE CONVERTER

TRANSAXLE OIL

TRANSAXLE OIL

TRANSMISSION

NOTE: Removal steps in this procedure may contain installation details.

Remove the brackets for auxiliary equipment. **AUXILIARY BRACKETS**

Drain the cooling system. **COOLING SYSTEM - DRAINING, CHARGING AND BLEEDING** .

Fig. 767: Identifying Vent Hose Clip
Courtesy of VOLVO CARS CORPORATION

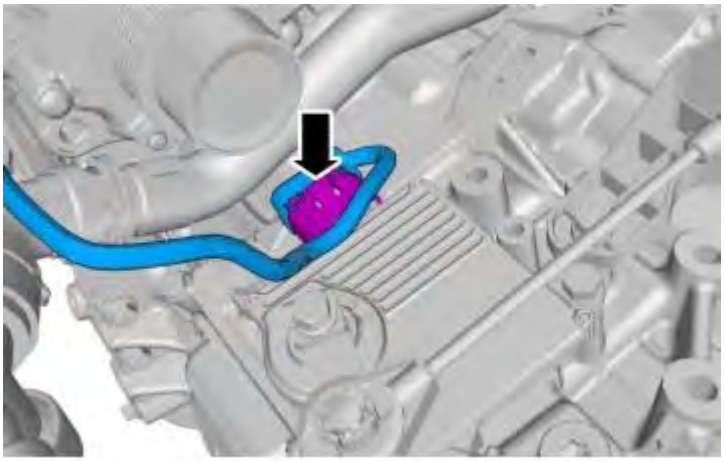

Fig. 768: Identifying Electrical Connector
Courtesy of VOLVO CARS CORPORATION

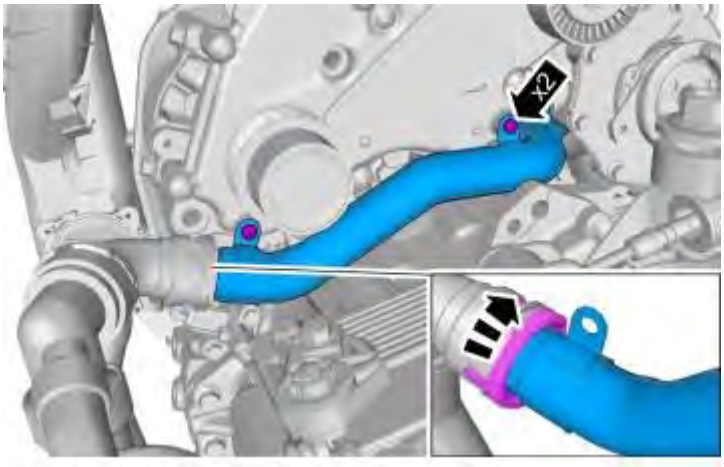

Fig. 769: Identifying Coolant Tube and Connectors
Courtesy of VOLVO CARS CORPORATION

Torque: M6

10 Nm

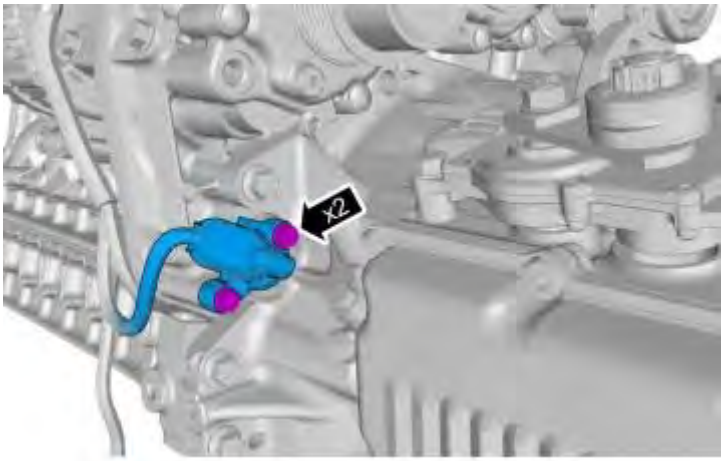

Fig. 770: Identifying Crank Sensor Connector
Courtesy of VOLVO CARS CORPORATION

Torque: M6

10 Nm

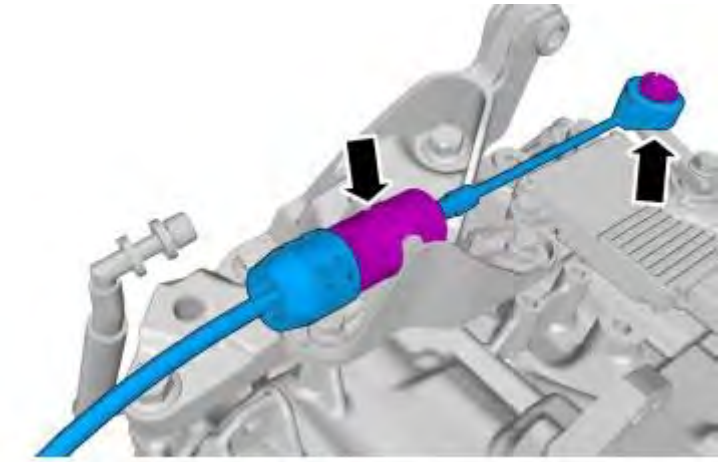

Fig. 771: Identifying Shift Cable And Bracket
Courtesy of VOLVO CARS CORPORATION

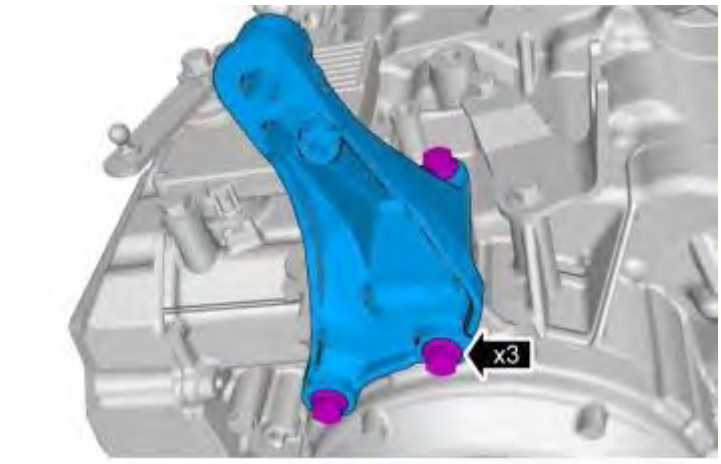

Fig. 772: Identifying 3 Mounting Bracket Bolts
Courtesy of VOLVO CARS CORPORATION

Torque: M8

24 Nm

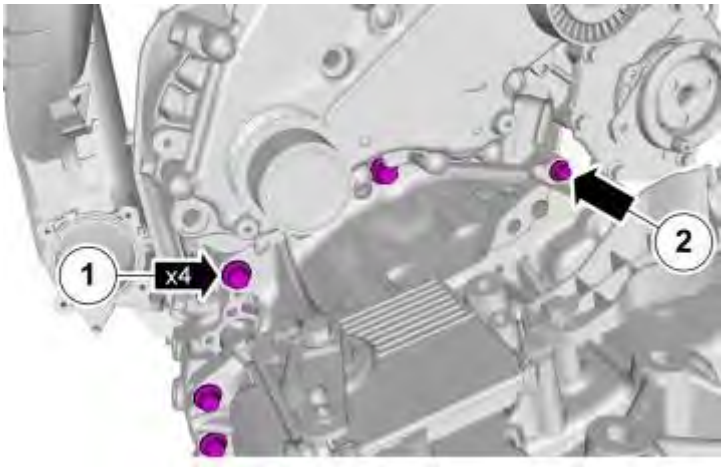

Fig. 773: Locating Upper Bellhouse Bolts
Courtesy of VOLVO CARS CORPORATION

Remove the following items:

1. **Torque:** M10

   50 Nm

2. **Torque:** M8

   24 Nm

Remove the following items:

- Front subframe. **SUB-FRAME FRONT, REPLACING**
- left driveshaft. **DRIVE SHAFT LEFT, REPLACING**
- **BEVEL GEAR**.

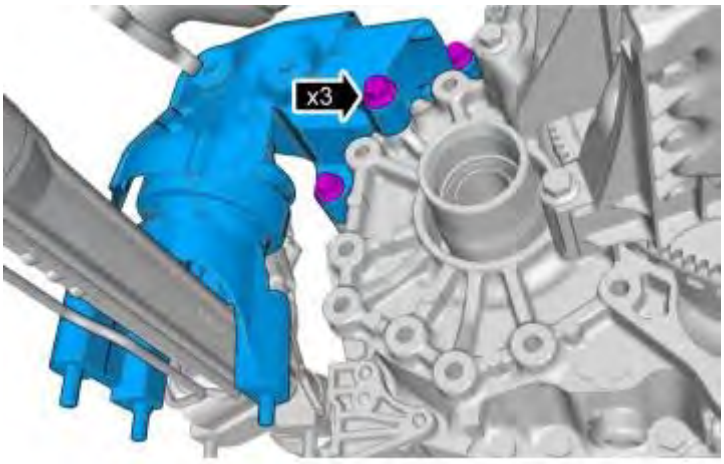

Fig. 774: Identifying Engine Mounting Bracket
Courtesy of VOLVO CARS CORPORATION

Torque: M10

50 Nm

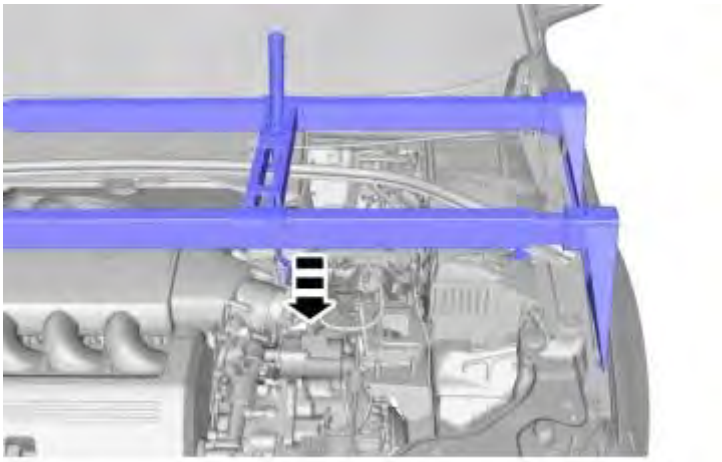

Fig. 775: Identifying Engine Support
Courtesy of VOLVO CARS CORPORATION

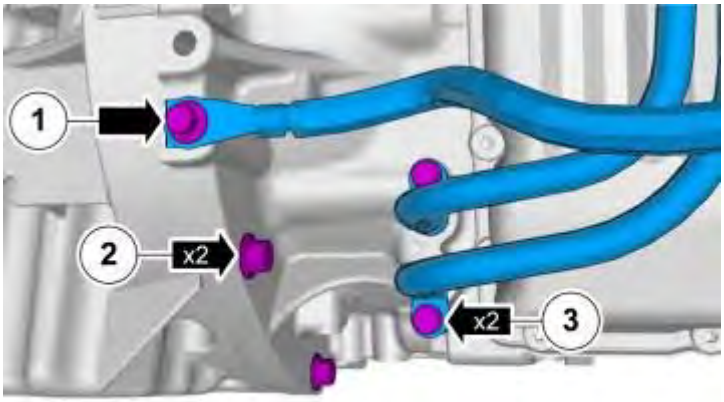

Fig. 776: Remove/Install Tubes and Ground Wire
Courtesy of VOLVO CARS CORPORATION

CAUTION: Make sure that all openings are sealed.

Remove the following items:

1. **Torque:** M8

   24 Nm

2. **Torque:** M10

50 Nm

3. **Torque:** M6

   10 Nm

Remove the following items:

- starter motor. See **STARTER MOTOR**
- front crankshaft seal. See **CRANKSHAFT FRONT SEAL** .

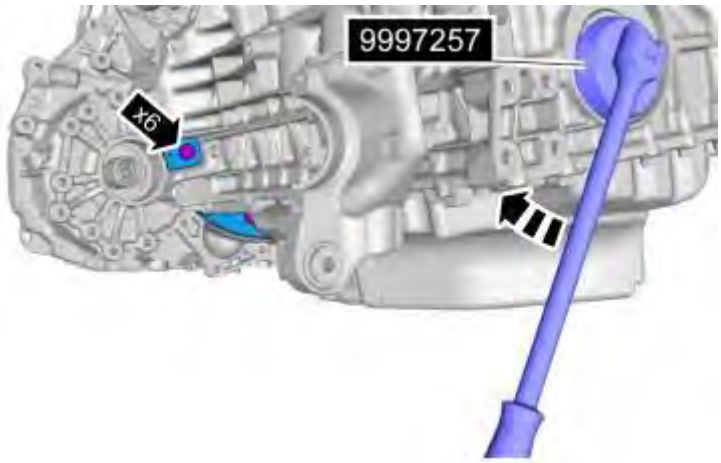

Fig. 777: Locating Torque Converter To Carrier Plate Bolts
Courtesy of VOLVO CARS CORPORATION

9997257 .

Tightening torque: Torque converter to carrier plate. **TIGHTENING TORQUE** .

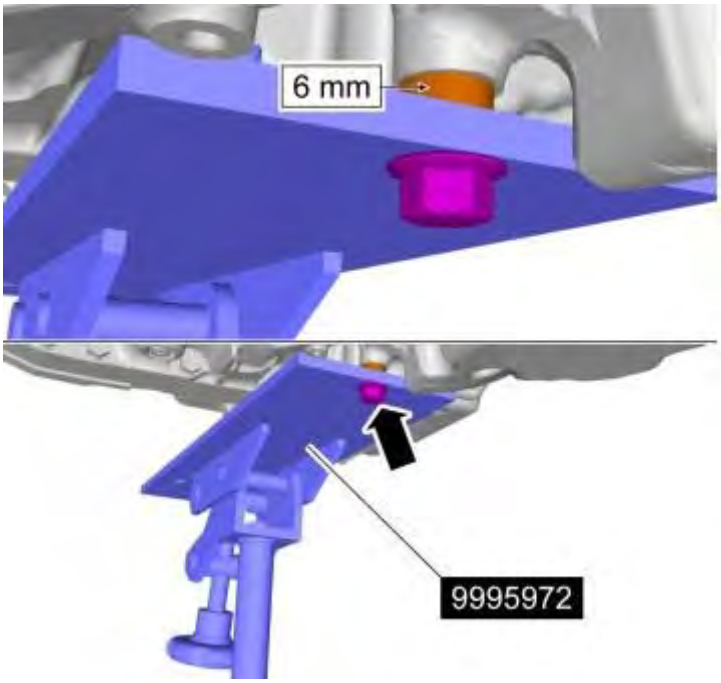

Fig. 778: Installing Transmission Lift
Courtesy of VOLVO CARS CORPORATION

9995972 .

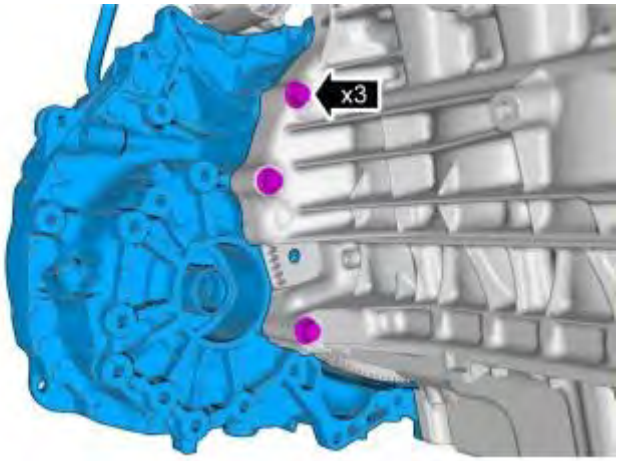

Fig. 779: Identifying Lower Bellhouse Bolts
Courtesy of VOLVO CARS CORPORATION

Torque: M10

50 Nm

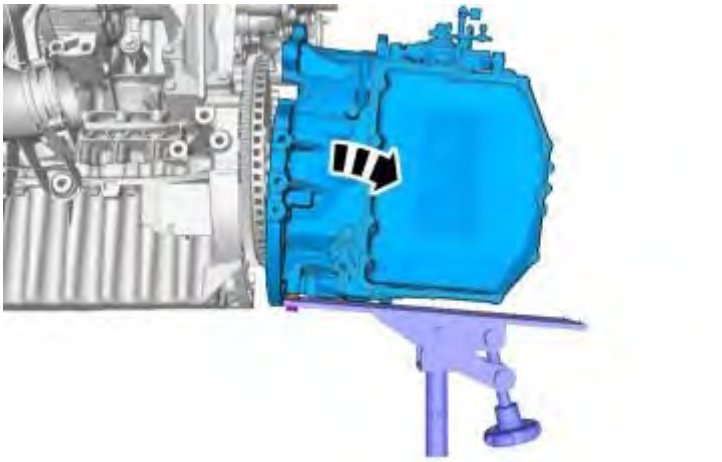

Fig. 780: Removing Transaxle
Courtesy of VOLVO CARS CORPORATION

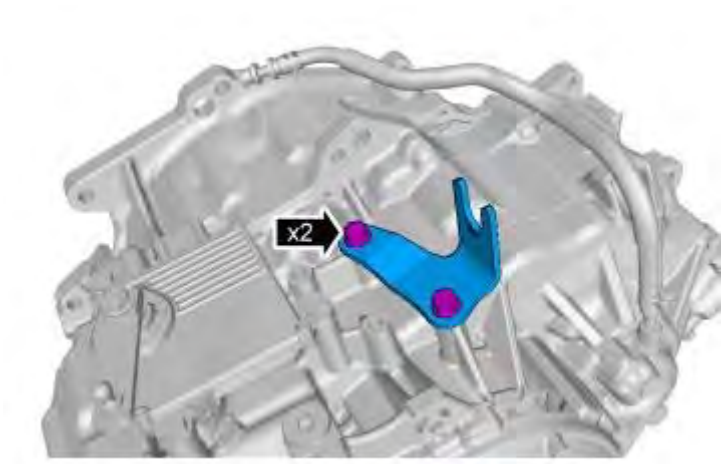

Fig. 781: Transferring Bracket
Courtesy of VOLVO CARS CORPORATION

NOTE: This step is only necessary when installing a new component.

Torque: M8

24 Nm

Prepared transaxle. See **TRANSMISSION, PREPARATIONS BEFORE INSTALLING** .

To install, reverse the removal procedure.

NOTE: This step is only necessary when installing a new component.

Order and download software 94382919438291

TRANSMISSION CONTROL MODULE (TCM)

TRANSMISSION CONTROL MODULE (TCM)

TRANSMISSION CONTROL UNIT SOLENOIDS

TRANSMISSION CONTROL UNIT SOLENOIDS

TRANSMISSION, AUTOMATIC (B6324S5, TF-80SC; 2011-2010)

CONTROL SYSTEMS

CONTROL SYSTEMS

COVER CONTROL SYSTEM, REPLACING

COVER CONTROL SYSTEM, REPLACING

SEALING RING, GEAR SHIFT LINKAGE ROD

SEALING RING, GEAR SHIFT LINKAGE ROD

SEALING RING, TORQUE CONVERTER

SEALING RING, TORQUE CONVERTER

TRANSAXLE OIL

TRANSAXLE OIL

TRANSMISSION

TRANSMISSION

TRANSMISSION CONTROL MODULE (TCM)

TRANSMISSION CONTROL MODULE (TCM)

TRANSMISSION CONTROL UNIT SOLENOIDS

TRANSMISSION CONTROL UNIT SOLENOIDS

TRANSMISSION, AUTOMATIC (B6324S5, TF-80SC AWD; 2011-2012)

CONNECTING SLEEVE

CONNECTING SLEEVE

CONTROL SYSTEMS

CONTROL SYSTEMS

COVER CONTROL SYSTEM, REPLACING

COVER CONTROL SYSTEM, REPLACING

SEALING RING, GEAR SHIFT LINKAGE ROD

SEALING RING, GEAR SHIFT LINKAGE ROD

SEALING RING, TORQUE CONVERTER

SEALING RING, TORQUE CONVERTER

TRANSAXLE OIL

TRANSAXLE OIL

TRANSMISSION

TRANSMISSION

TRANSMISSION CONTROL MODULE (TCM)

TRANSMISSION CONTROL MODULE (TCM)

TRANSMISSION CONTROL UNIT SOLENOIDS

TRANSMISSION CONTROL UNIT SOLENOIDS

TRANSMISSION, AUTOMATIC (B8444S, TF-80SC AWD; 2005-2011)

CONNECTING SLEEVE

Remove and install connecting sleeve. See **TRANSFER CASE CONNECTING SLEEVE SEALS, REPLACING** .

CONTROL SYSTEM, REPLACING

NOTE: **The illustrations in this service information are used for different model years and/or models. Some variation may occur. However, the essential information in the illustrations is always correct.**

REMOVAL

REMOVING THE CABLE HARNESS

Remove the cable harness from the control system. See: **CABLE HARNESS, CONTROL SYSTEM, GEARBOX, REPLACING** .

Fig. 782: Identifying Cable Harness Protected With Tape
Courtesy of VOLVO CARS CORPORATION

NOTE: Protect the cable harness by taping it to the outside of the transmission.

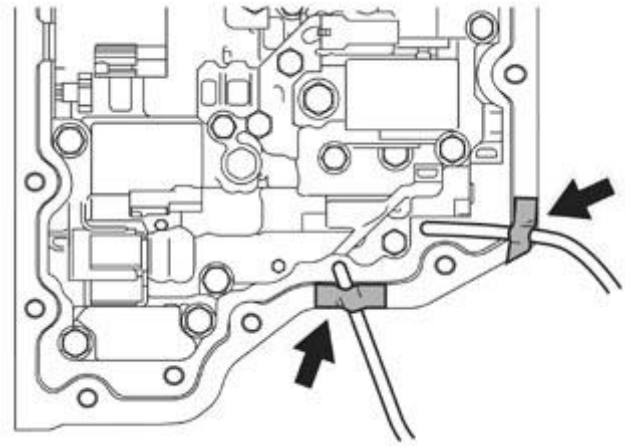

Fig. 783: Identifying Cable Harness Ends Secured To Transmission Case
Courtesy of VOLVO CARS CORPORATION

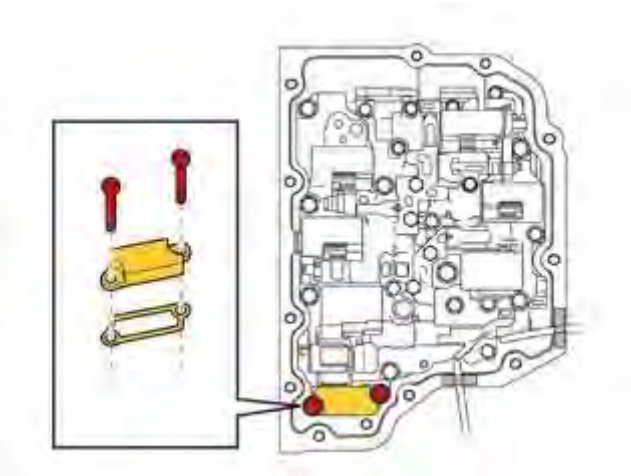

Fig. 784: Identifying Gasket & Bolts
Courtesy of VOLVO CARS CORPORATION

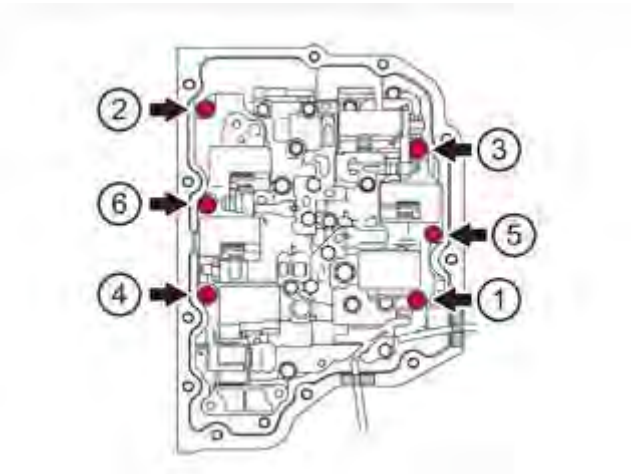

Fig. 785: Identifying Screw Removal Sequence
Courtesy of VOLVO CARS CORPORATION

Fig. 786: Identifying Control System Rod
Courtesy of VOLVO CARS CORPORATION

INSTALLATION

NOTE: For tightening torques, see: TIGHTENING TORQUE .

Fig. 787: Identifying Control System Rod
Courtesy of VOLVO CARS CORPORATION

CAUTION: Ensure that the cable harness is not trapped when the control system is positioned.

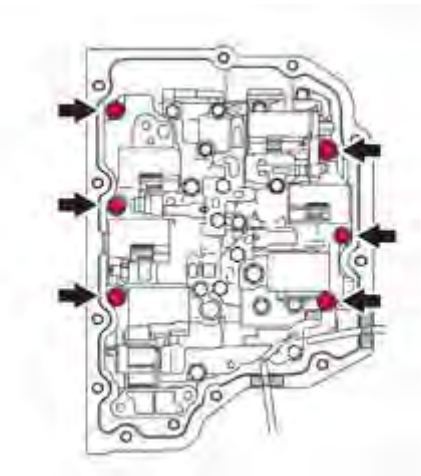

Fig. 788: Identifying Transmission Bolts
Courtesy of VOLVO CARS CORPORATION

Lightly tighten.

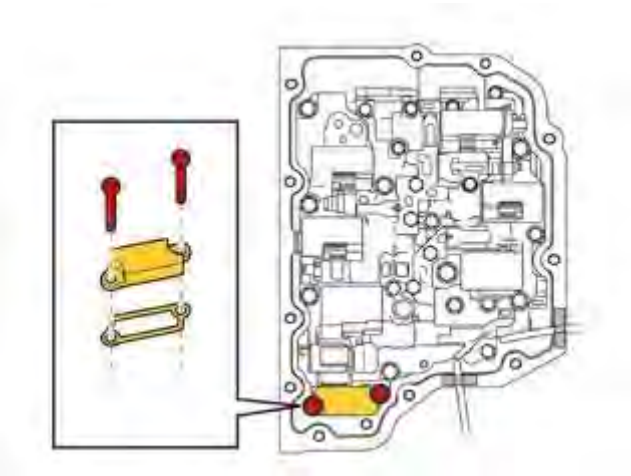

Fig. 789: Identifying Gasket & Bolts
Courtesy of VOLVO CARS CORPORATION

Use **new** screws and a **new** gasket.

Lightly tighten.

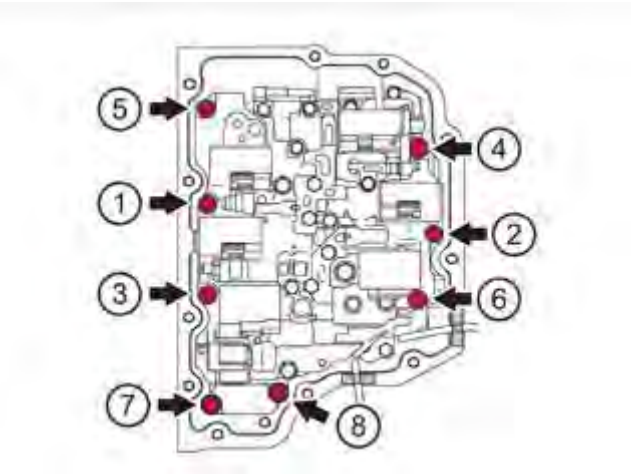

Fig. 790: Identifying Transmission Bolts Installation Sequence
Courtesy of VOLVO CARS CORPORATION

Tighten alternately, M6.

INSTALLING THE CABLE HARNESS

Install the cable harness for the control system. See: **CABLE HARNESS, CONTROL SYSTEM, GEARBOX, REPLACING** .

COVER CONTROL SYSTEM, REPLACING (2007-2011)

NOTE: The illustrations in this service information are used for different model years and/or models. Some variation may occur. However, the essential information in

the illustrations is always correct.

REMOVAL

Remove the auxiliary brackets.

Remove the subframe front. See: **SUB-FRAME FRONT, REPLACING (2007, 2008)** or **SUB-FRAME FRONT, REPLACING (2005, 2006)** .

NOTE: Leave the container in place for the next few procedures relating to removal.

REMOVING LEVEL PLUG/DRAINING PLUG

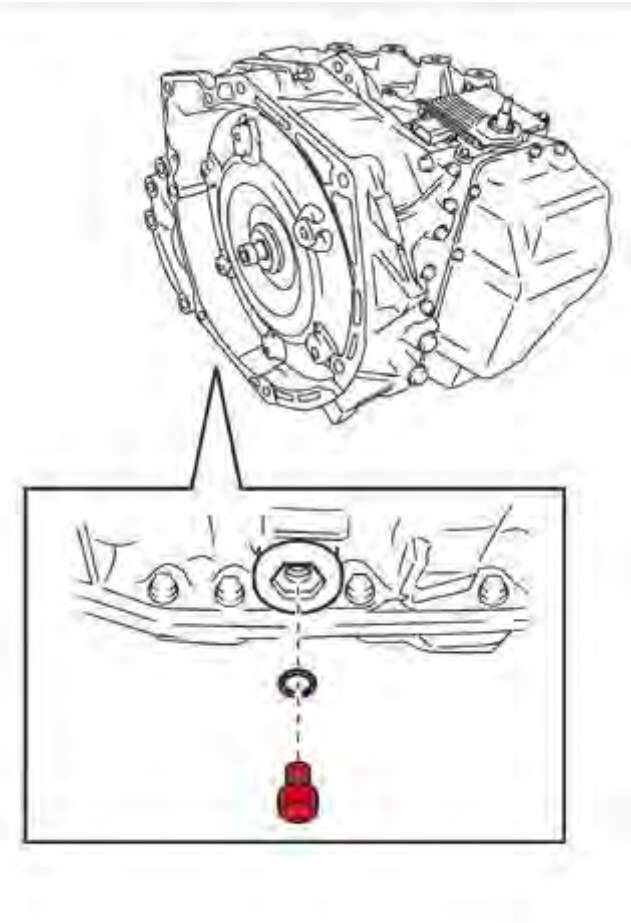

Fig. 791: Identifying Transmission Fluid Level Check
Courtesy of VOLVO CARS CORPORATION

Remove the integrated level plug/Torx.

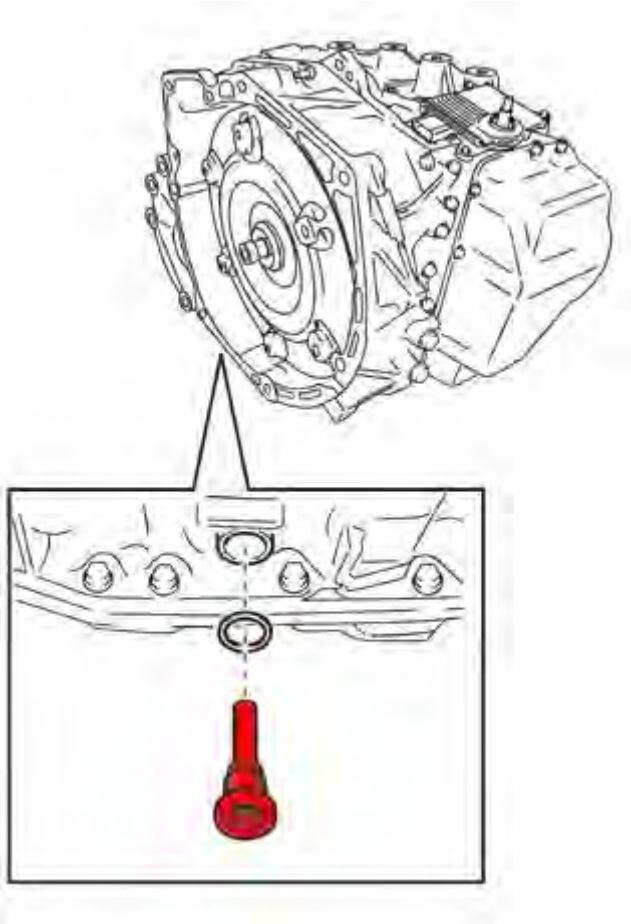

Fig. 792: Identifying Transmission Draining Plug
Courtesy of VOLVO CARS CORPORATION

Remove the draining plug.

When the transmission is empty:

- use **new** gaskets
- lubricate the gaskets. Use ATF-oil
- tighten both. See: **SUMMARY OF TIGHTENING TORQUES FOR SPECIFIC COMPONENTS** .

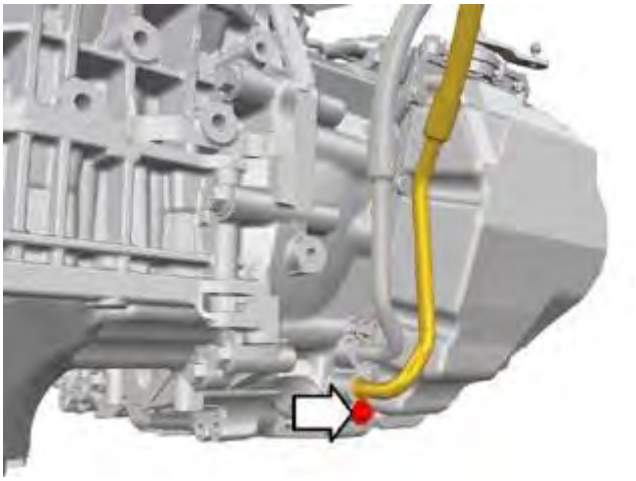

Fig. 793: Locating Plastic Plug In Drain Hole
Courtesy of VOLVO CARS CORPORATION

HINT: To prevent leakage, install a plastic plug in the hole.

REMOVING THE COVER

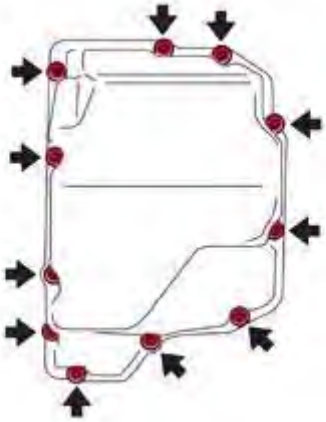

Fig. 794: Identifying Cover Bolts
Courtesy of VOLVO CARS CORPORATION

Remove torx TX40.

Clean off any sealant from the threads. Use thread tap M8 x 1.25.

REMOVING THE CONTROL SYSTEM COVER

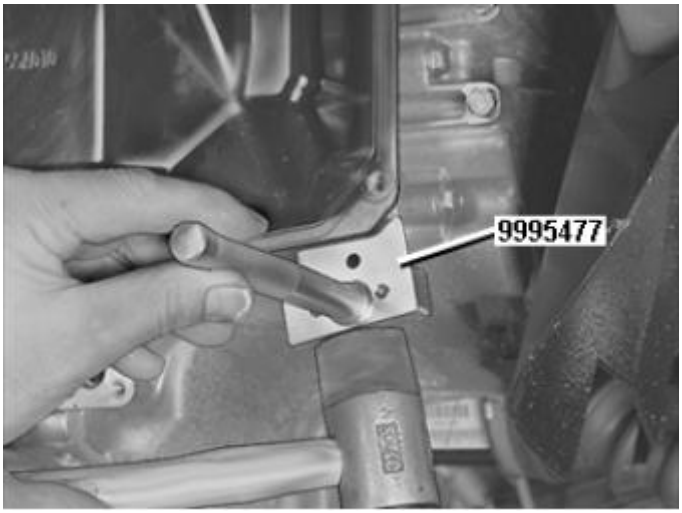

Fig. 795: Identifying Gasket Wedge Tapped Into Joint
Courtesy of VOLVO CARS CORPORATION

Remove the cover.

Use joint wedge **9995477** , which is carefully tapped in between the cover and transmission so that the cover's sealing flange is not warped.

CLEANING THE COVER

CAUTION: Ensure that no debris enters the transmission.

Clean gasket residue from the cover and transmission. Clean the cover thoroughly. Check that the contact surface of the cover is flat.

INSTALLATION

CLEANING COVER

Fig. 796: Applying Sealant To Cover
Courtesy of VOLVO CARS CORPORATION

Wipe the cleaned mating surfaces of the cover and the transmission dry. Use Isopropanol

Apply a bead of sealant, P/N 116 1409-6, approximately 3 mm thick on the cover.

Also apply sealant around the screw holes.

INSTALLING COVER

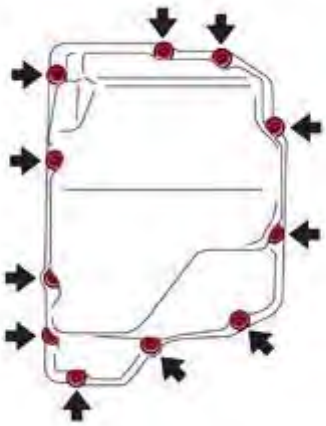

Fig. 797: Identifying Cover Bolts
Courtesy of VOLVO CARS CORPORATION

NOTE: Ensure that the sealant is not rubbed when the cover is installed.

Use **new** screws.

Tighten:

- alternately to light contact
- see: **SUMMARY OF TIGHTENING TORQUES FOR SPECIFIC COMPONENTS** .

INSTALLING THE SUBFRAME

Install the subframe front. See: **SUB-FRAME FRONT, REPLACING (2005, 2006)** or **SUB-FRAME FRONT, REPLACING (2007, 2008)** .

Install the auxiliary brackets.

FILLING OF OIL

Top up oil. See: **TRANSMISSION FLUID, CHANGING**.

REPLACING THE GEARBOX

Special tools:

9997077

9997185

REMOVAL

Remove the bevel gear. See: **BEVEL GEAR, REPLACING**

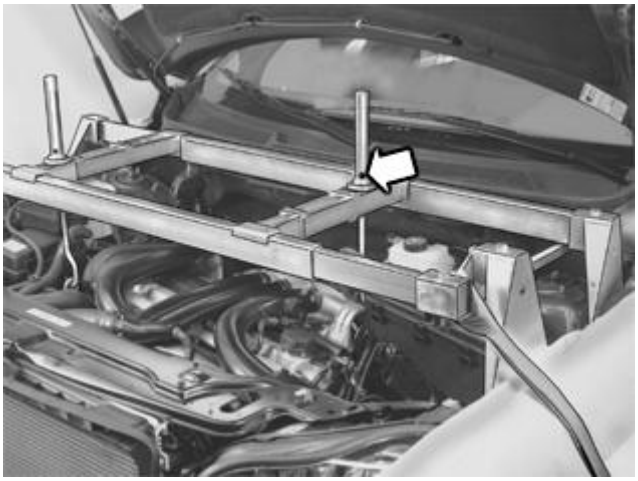

Fig. 798: Identifying Lowering Left Side
Courtesy of VOLVO CARS CORPORATION

Lower the left lifting beam **60 mm** .

HINT: Lower the lifting beam slowly when the end of the threaded joint is visible in the inspection hole.

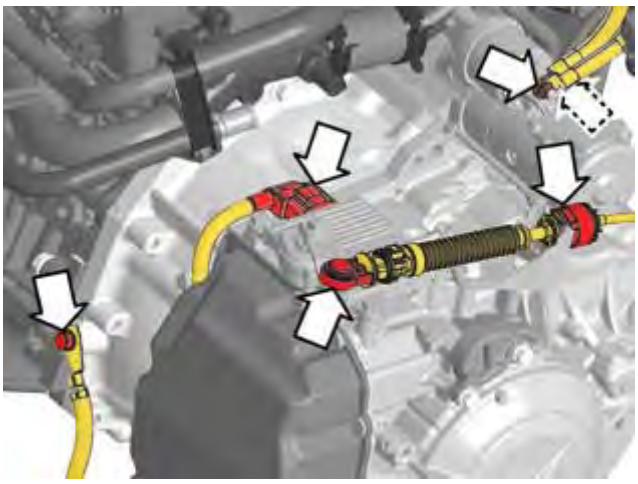

Fig. 799: Removing Identified Components
Courtesy of VOLVO CARS CORPORATION

Remove:

- the ground lead
- connection for transmission control module (TCM)
- the transmission cable. Use **9997077**
- both connections for the starter motor.

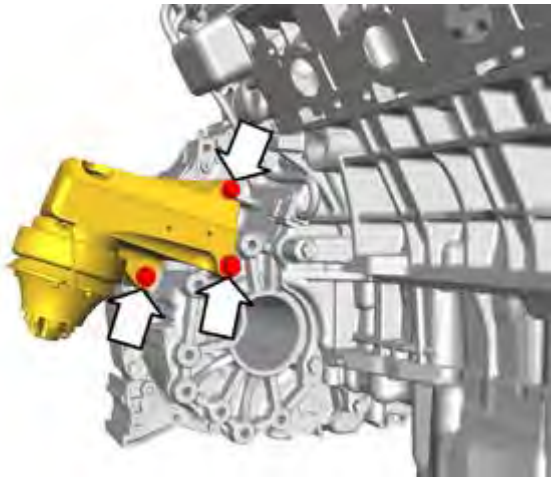

Fig. 800: Identifying Engine Mounting Bracket
Courtesy of VOLVO CARS CORPORATION

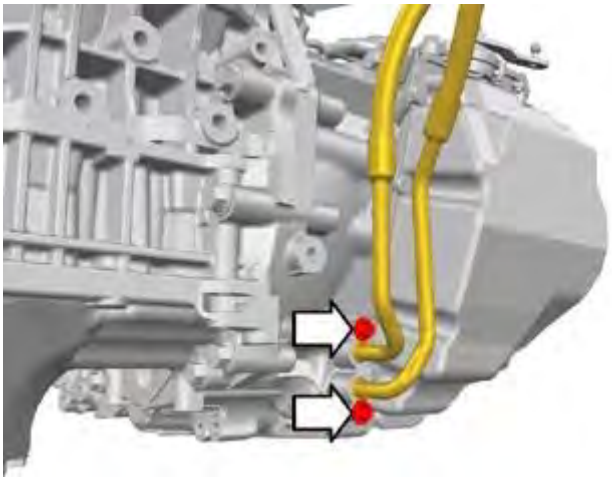

Fig. 801: Locating Cooling Tube Bolts
Courtesy of VOLVO CARS CORPORATION

HINT: To prevent leakage, install a plastic plug in the lower hole of the transmission.

Fig. 802: Identifying Cover Plate
Courtesy of VOLVO CARS CORPORATION

Fig. 803: Locating Torque Converter Bolts (6)
Courtesy of VOLVO CARS CORPORATION

x 6.

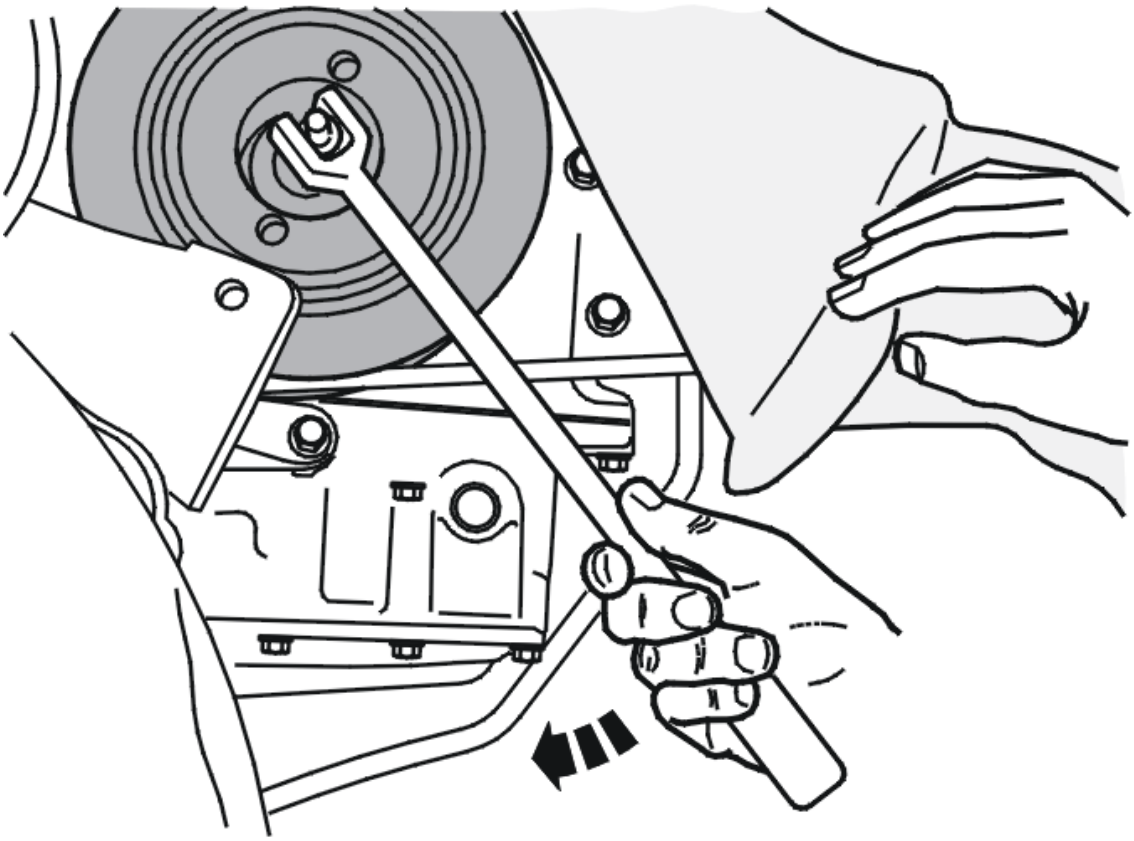

Fig. 804: Rotating Crank To Next Bolt
Courtesy of VOLVO CARS CORPORATION

Turn the next screw forward.

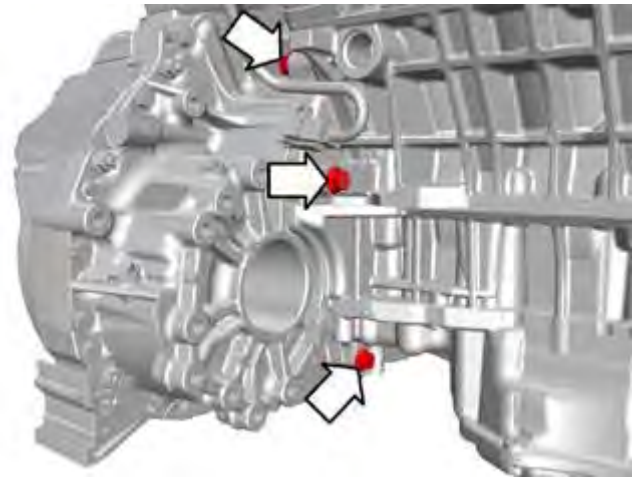

Fig. 805: Locating Engine/Transaxle Bolts
Courtesy of VOLVO CARS CORPORATION

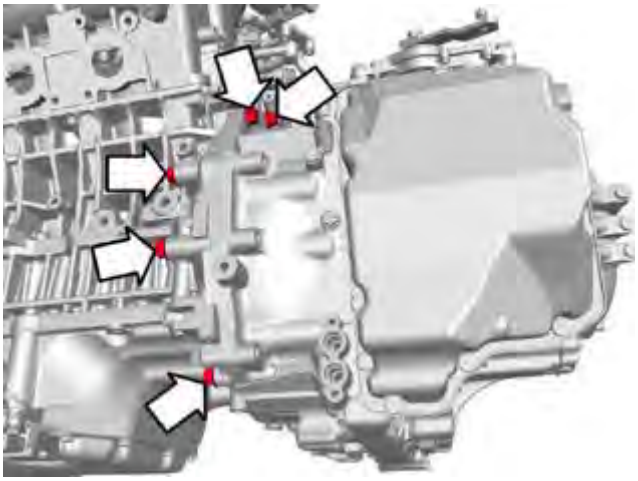

Fig. 806: Locating Engine/Transaxle Bolts
Courtesy of VOLVO CARS CORPORATION

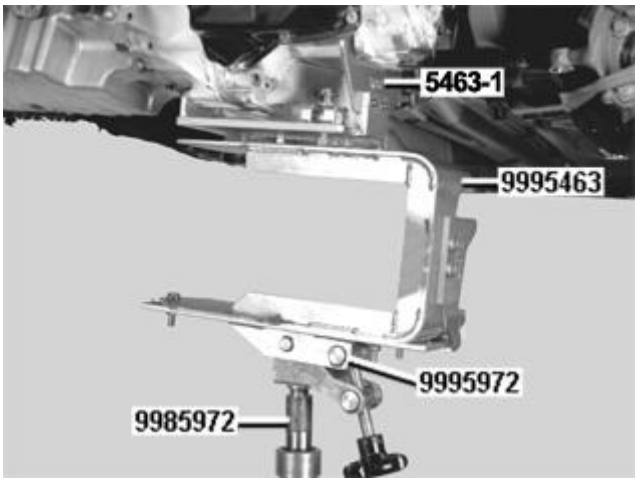

Fig. 807: Identifying Adapters for Transmssion Lift
Courtesy of VOLVO CARS CORPORATION

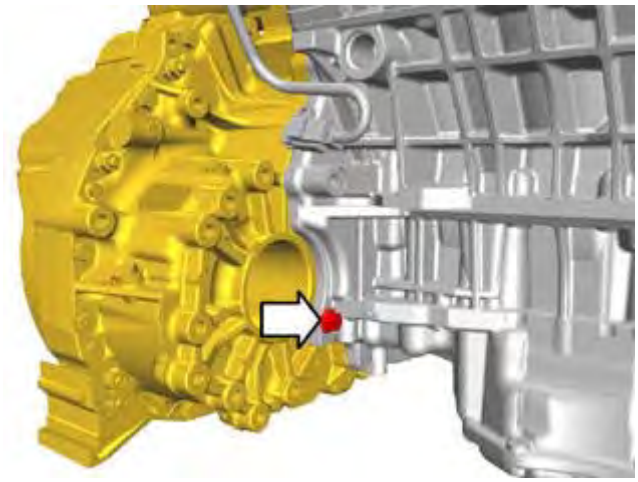

Fig. 808: Removing Final Bolt (1 of 2)
Courtesy of VOLVO CARS CORPORATION

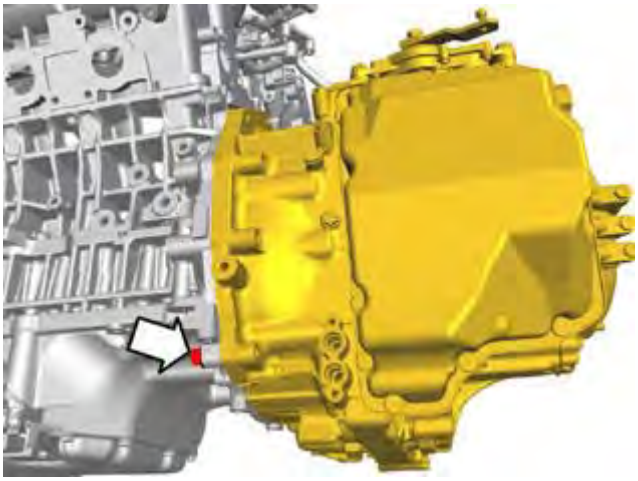

Fig. 809: Removing Final Bolt (2 of 2)
Courtesy of VOLVO CARS CORPORATION

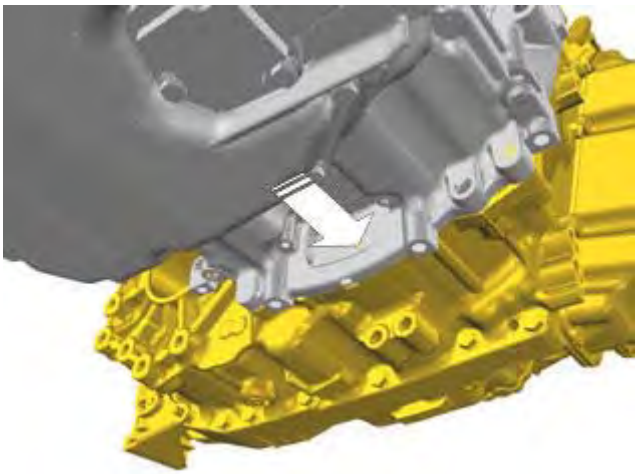

Fig. 810: Ensuring The Torque Converter Accompanies The Transmission
Courtesy of VOLVO CARS CORPORATION

WARNING: Ensure that the torque converter accompanies the transmission and that it does not slide off the stator shaft. Using a screwdriver, press through some of the screw holes.

Prepare the transmission. See: **TRANSMISSION, PREPARATIONS BEFORE INSTALLING** .

INSTALLATION

NOTE: For tightening torques, see: TIGHTENING TORQUE .

INSTALLING THE TRANSMISSION

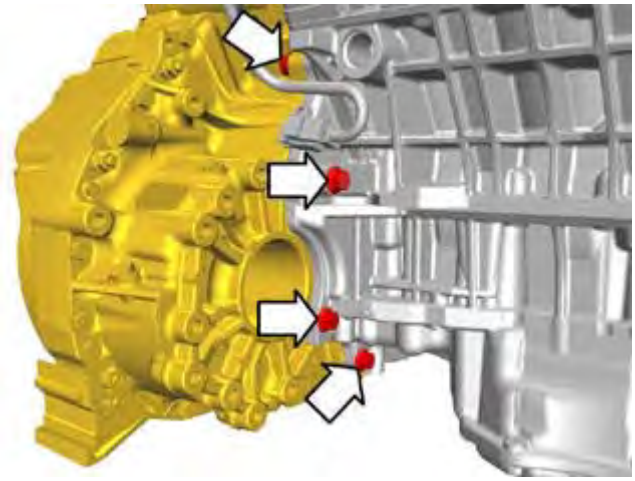

Fig. 811: Locating Engine/Transaxle Bolts
Courtesy of VOLVO CARS CORPORATION

M10

Use: **9997185** for the upper screw.

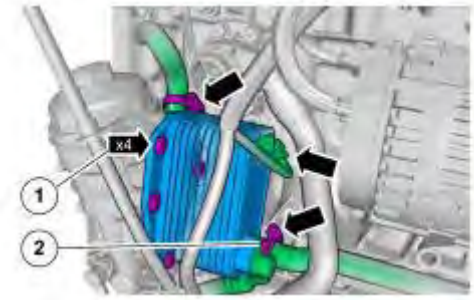

Fig. 812: Identifying Engine/Gearbox Bolts
Courtesy of VOLVO CARS CORPORATION

M10

Fig. 813: Locating Torque Converter Bolts (6)
Courtesy of VOLVO CARS CORPORATION

Install 6 x M10/Torx 50. First lightly tighten all screws.

Tighten, see: **TIGHTENING TORQUE** .

NOTE: Use new screws.

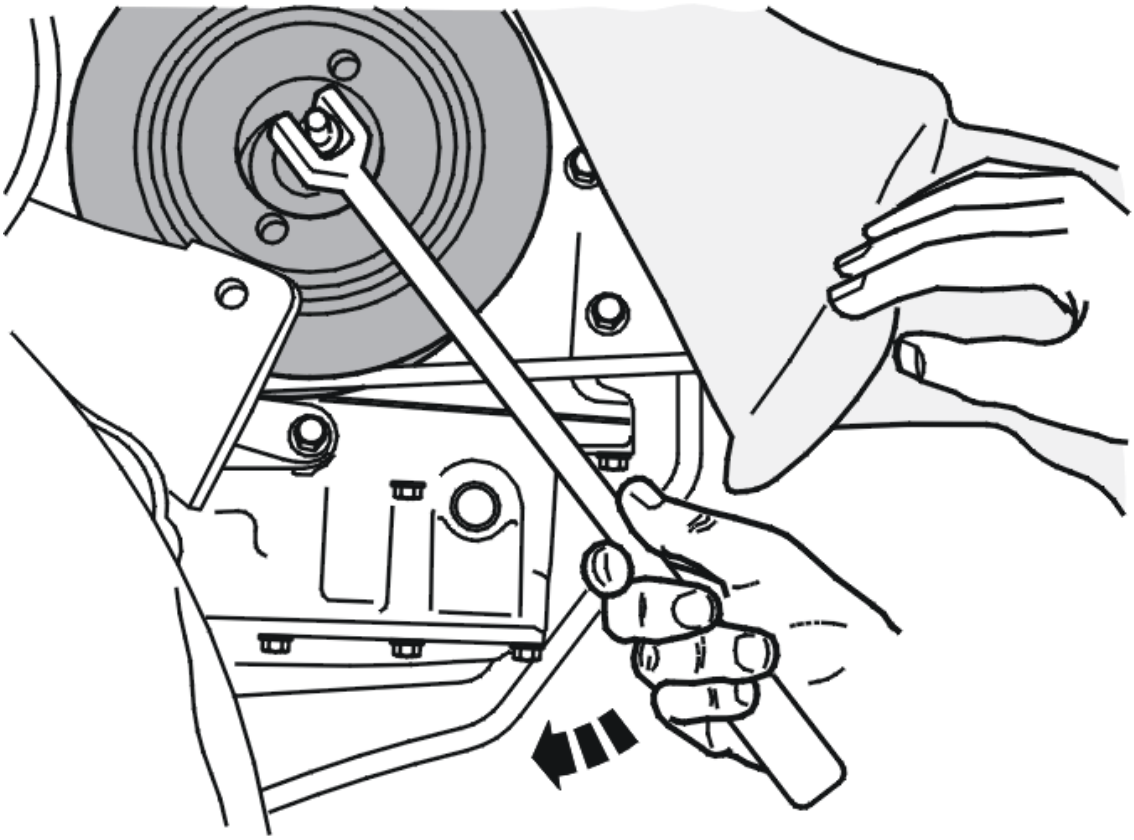

Fig. 814: Rotating Crank To Next Bolt
Courtesy of VOLVO CARS CORPORATION

Turn the next screw forward.

Fig. 815: Identifying Cover Plate
Courtesy of VOLVO CARS CORPORATION

M6

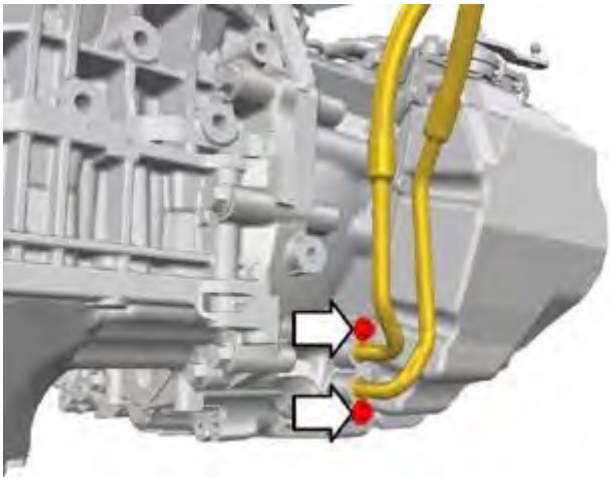

Fig. 816: Locating Cooling Tube Bolts
Courtesy of VOLVO CARS CORPORATION

M6

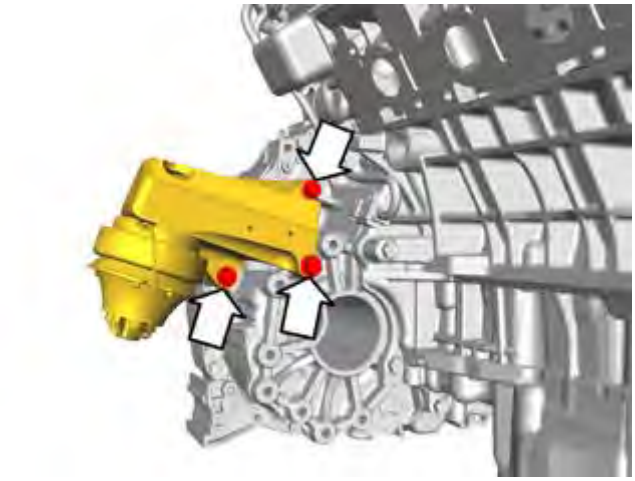

Fig. 817: Identifying Engine Mounting Bracket
Courtesy of VOLVO CARS CORPORATION

M10

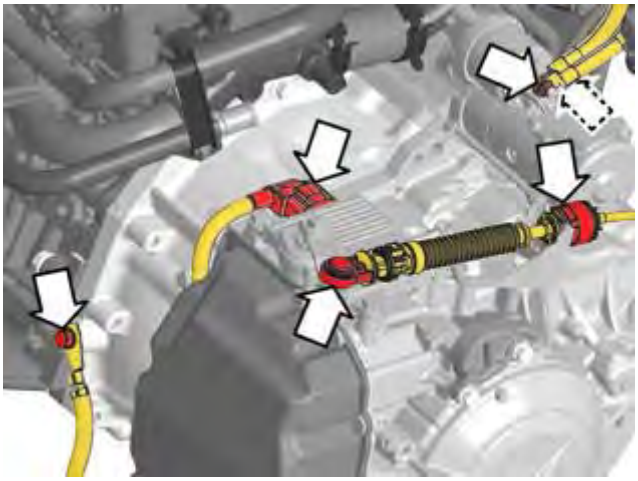

Fig. 818: Removing Identified Components
Courtesy of VOLVO CARS CORPORATION

Install:

- the ground lead, M8
- connection for transmission control module (TCM)
- the transmission cable
- the starter motor, blade terminal and B+. Tighten. See **TIGHTENING TORQUE** .

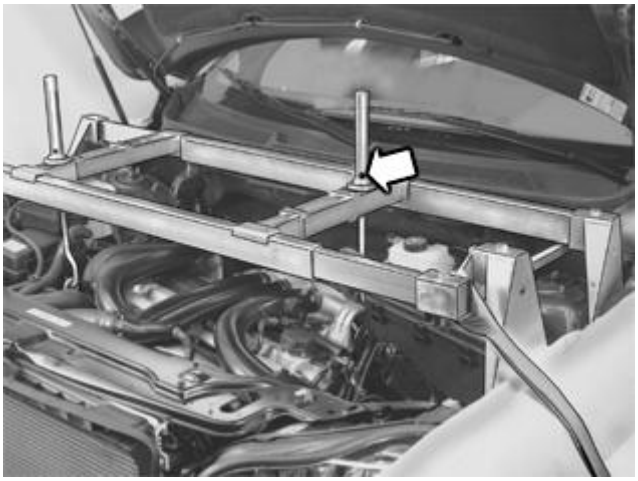

Fig. 819: Identifying Lowering Left Side
Courtesy of VOLVO CARS CORPORATION

Raise the left lifting beam **60 mm** .

Install the bevel gear. See: **BEVEL GEAR, REPLACING**

NOTE: This step is only necessary when installing a new component.

Order and download software 9438291

REPLACING THE GEAR-SHIFT POSITION SENSOR

REPLACING THE GEAR-SHIFT POSITION SENSOR

See **TRANSMISSION CONTROL MODULE (TCM), REPLACING**.

SEALING RING GEAR SHIFT LINKAGE ROD, REPLACING

Special tools:

9995919

9995476

NOTE: The illustrations in this service information are used for different model years and/or models. Some variation may occur. However, the essential information in the illustrations is always correct.

REMOVING/INSTALLING

Remove/install the transmission control module (TCM). See: **TRANSMISSION CONTROL MODULE (TCM), REPLACING**.

Fig. 820: Identifying Seal Pinion Pulled/Positioned
Courtesy of VOLVO CARS CORPORATION

Use **9995919** .

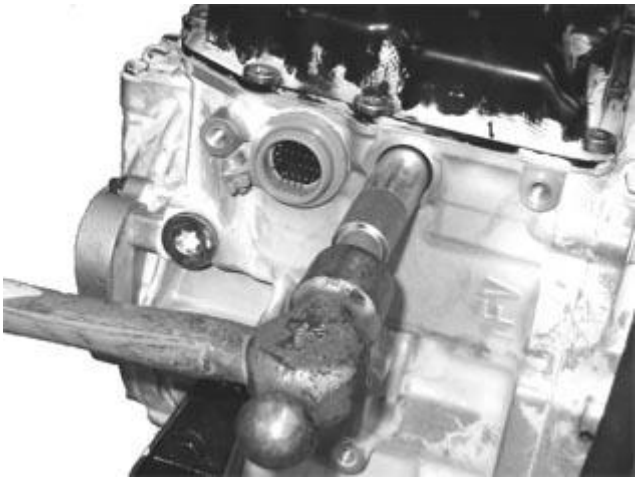

Fig. 821: Identifying Punch Installation
Courtesy of VOLVO CARS CORPORATION

Use **9995476** .

SOLENOID CONTROL SYSTEM, REPLACING (2007-2011)

REMOVAL

REMOVING COVER CONTROL SYSTEM

Remove the cover over the control system. See: **COVER CONTROL SYSTEM, REPLACING (2007-2011)**.

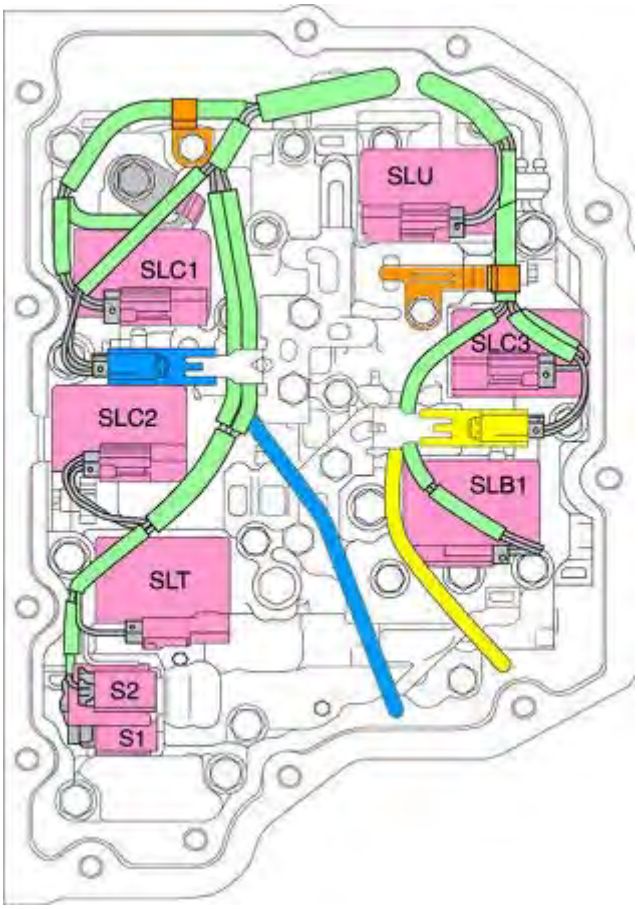

Fig. 822: Identifying Cable Harness
Courtesy of VOLVO CARS CORPORATION

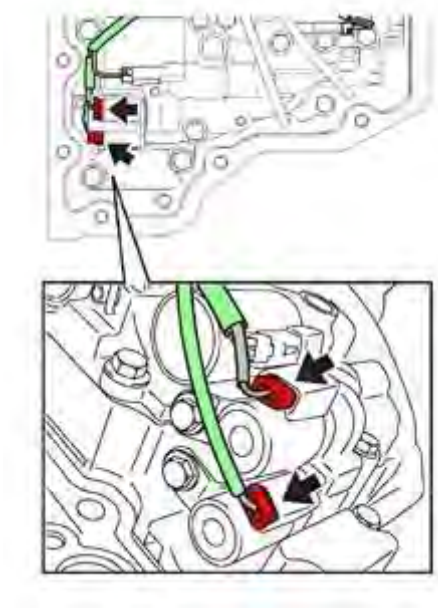

Fig. 823: Identifying Connector
Courtesy of VOLVO CARS CORPORATION

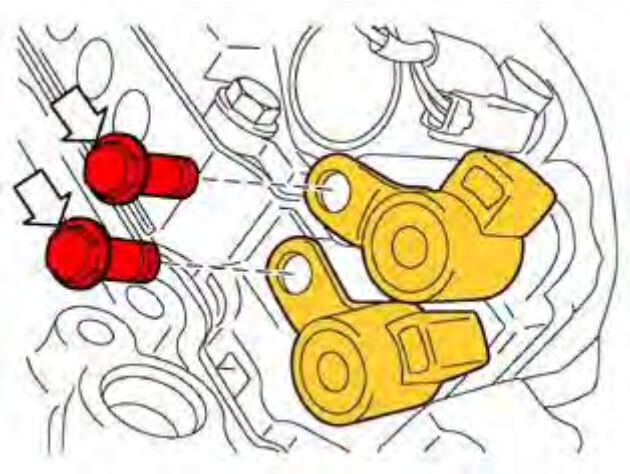

Fig. 824: Identifying Bolts
Courtesy of VOLVO CARS CORPORATION

S1, S2

INSTALLATION

NOTE: For tightening torques, see: TIGHTENING TORQUE .

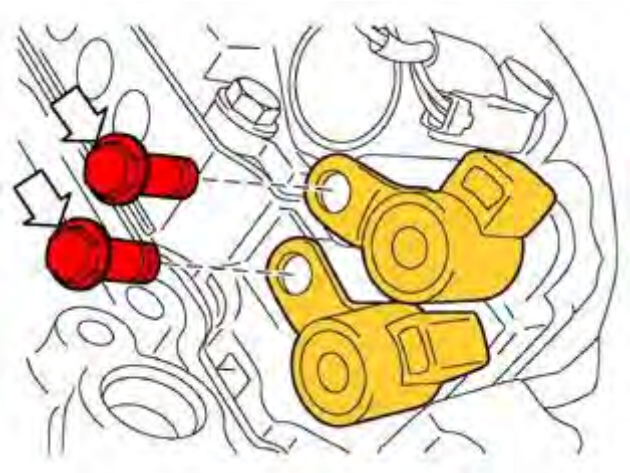

Fig. 825: Identifying Bolts
Courtesy of VOLVO CARS CORPORATION

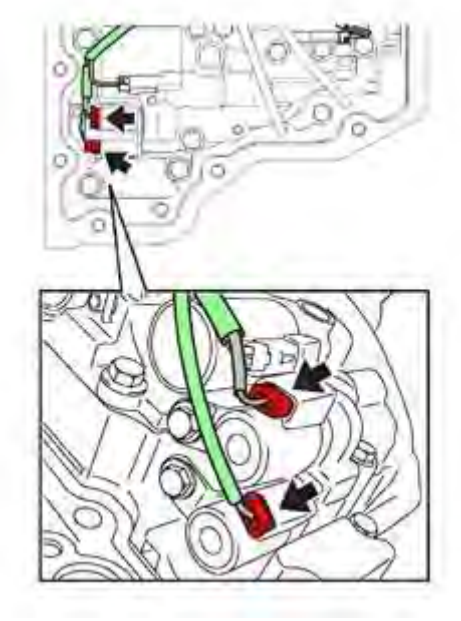

Fig. 826: Identifying Connector
Courtesy of VOLVO CARS CORPORATION

M6

Install the cover over the control system. See: **COVER CONTROL SYSTEM, REPLACING (2007-2011)**.

TRANSMISSION CONTROL MODULE (TCM), REPLACING

NOTE: The illustrations in this service information are used for different model years and/or models. Some variation may occur. However, the essential information in the illustrations is always correct.

PREPARATORY WORK

INFORMATION

CAUTION: New software can only be ordered when the control module is installed in the vehicle. The new control module identity is read off with ordering, which is required for ordering the correct software.

CAUTION: Wait for one minute after switching off the ignition. The main relay must have discharged the voltage before the control module may be removed from the vehicle. If the engine cooling fan is running after the ignition has been switched off then wait until it has stopped, and then wait for a further minute.

REMOVING THE BATTERY CABLE

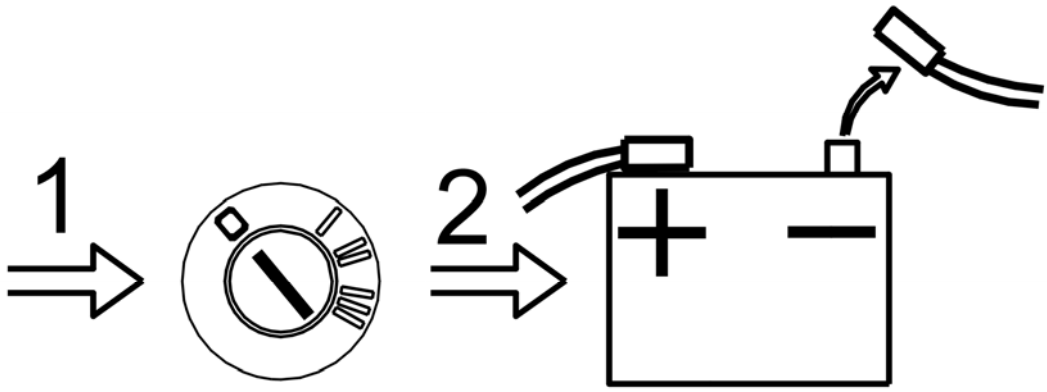

Fig. 827: Disconnecting Battery Negative Cable
Courtesy of VOLVO CARS CORPORATION

NOTE: Shift the gear selector lever to neutral.

Disconnect the battery negative cable. See: **BATTERY, DISCONNECTING** .

REMOVAL

REMOVING THE INLET PIPE

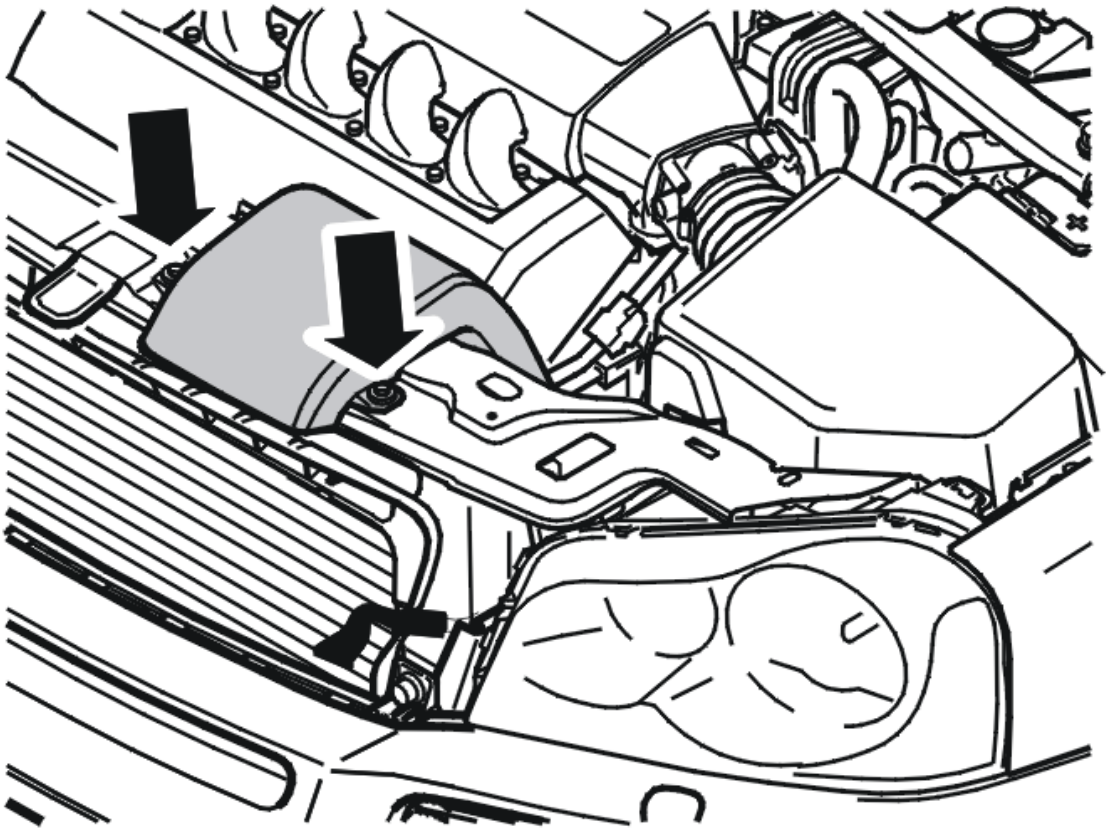

Fig. 828: Identifying Inlet Pipe
Courtesy of VOLVO CARS CORPORATION

Remove the inlet pipe to the air cleaner (ACL) housing.

REMOVING THE TRANSMISSION CONTROL MODULE (TCM)

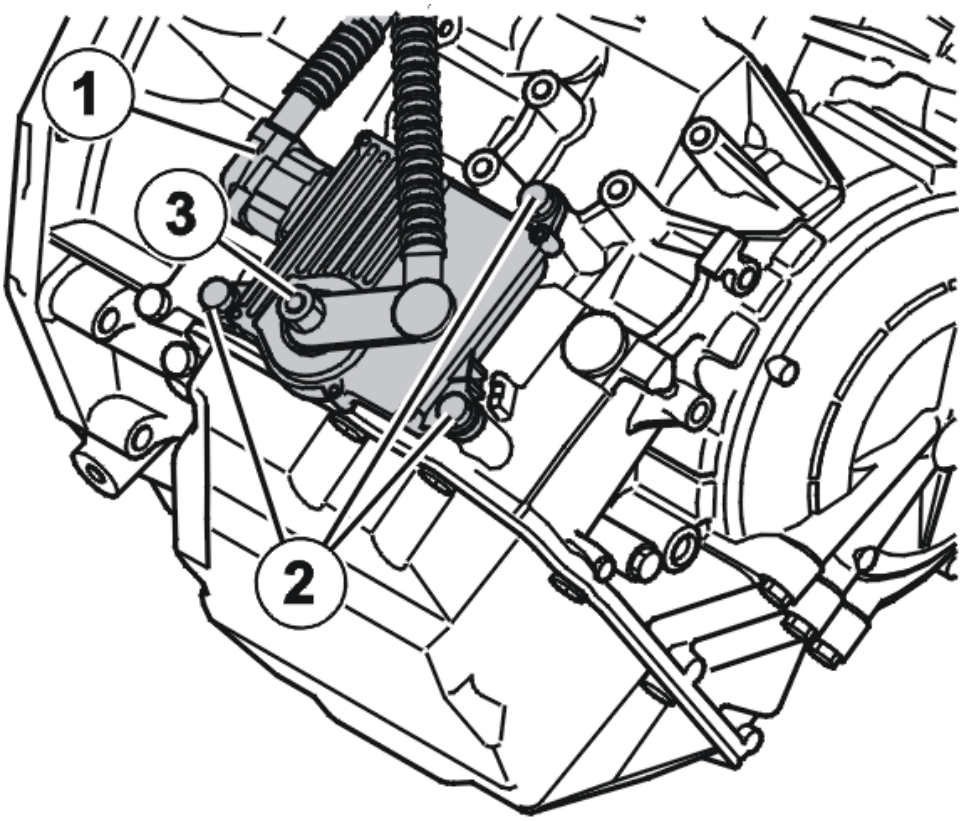

Fig. 829: Identifying Connector, Nut, Bolts And Connector
Courtesy of VOLVO CARS CORPORATION

CAUTION: Do not touch the control module terminal pins with your fingers. Static electricity can damage control module components.

Remove:

- the connector (1), x1
- the nut (3), x1
- the gear selector lever
- the bolts (2), x3
- the control module carefully, so that the pins are not damaged.

INSTALLATION

NOTE: For tightening torques, see: TIGHTENING TORQUE .

INSTALLING THE TRANSMISSION CONTROL MODULE (TCM)

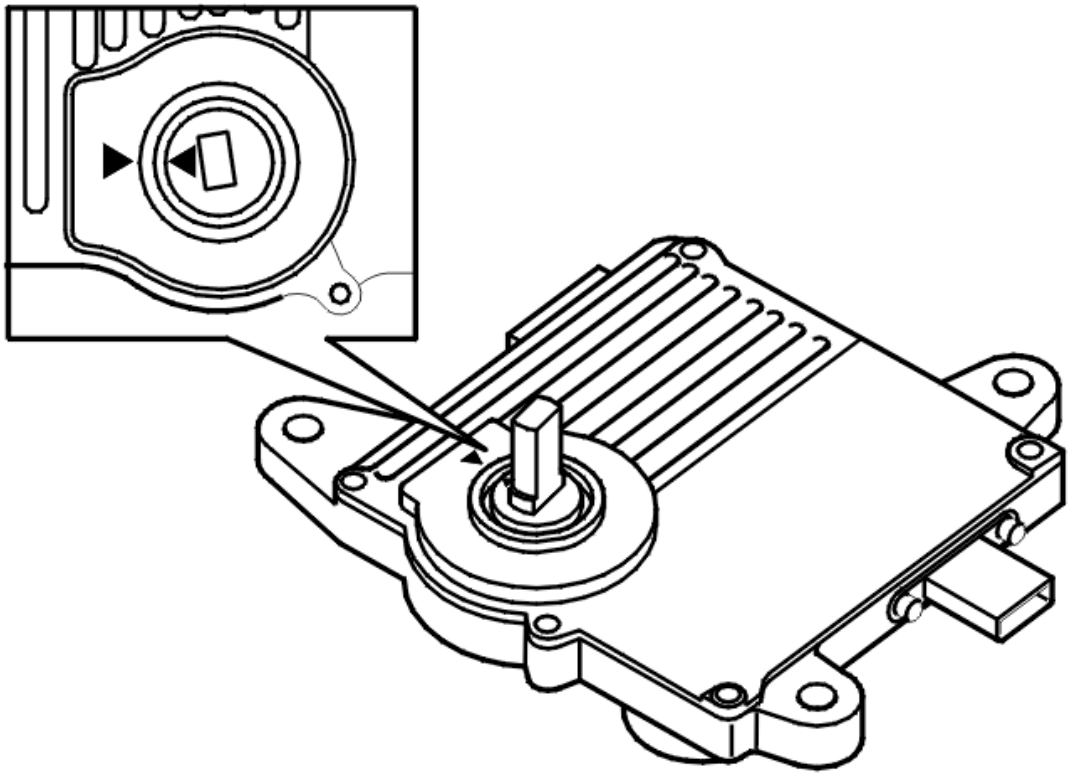

Fig. 830: Identifying Transmission Control Module (TCM)
Courtesy of VOLVO CARS CORPORATION

NOTE: **Make sure that the arrows correspond with each other and that the gear selector lever is in the neutral position.**

Install:

- the control module carefully, so that the pins are not damaged
- the bolts, M8 x3
- the connector, x1
- the gear selector lever, 1 nut, tighten in accordance with: **SUMMARY OF TIGHTENING TORQUES FOR SPECIFIC COMPONENTS** .

INSTALLING THE INLET PIPE

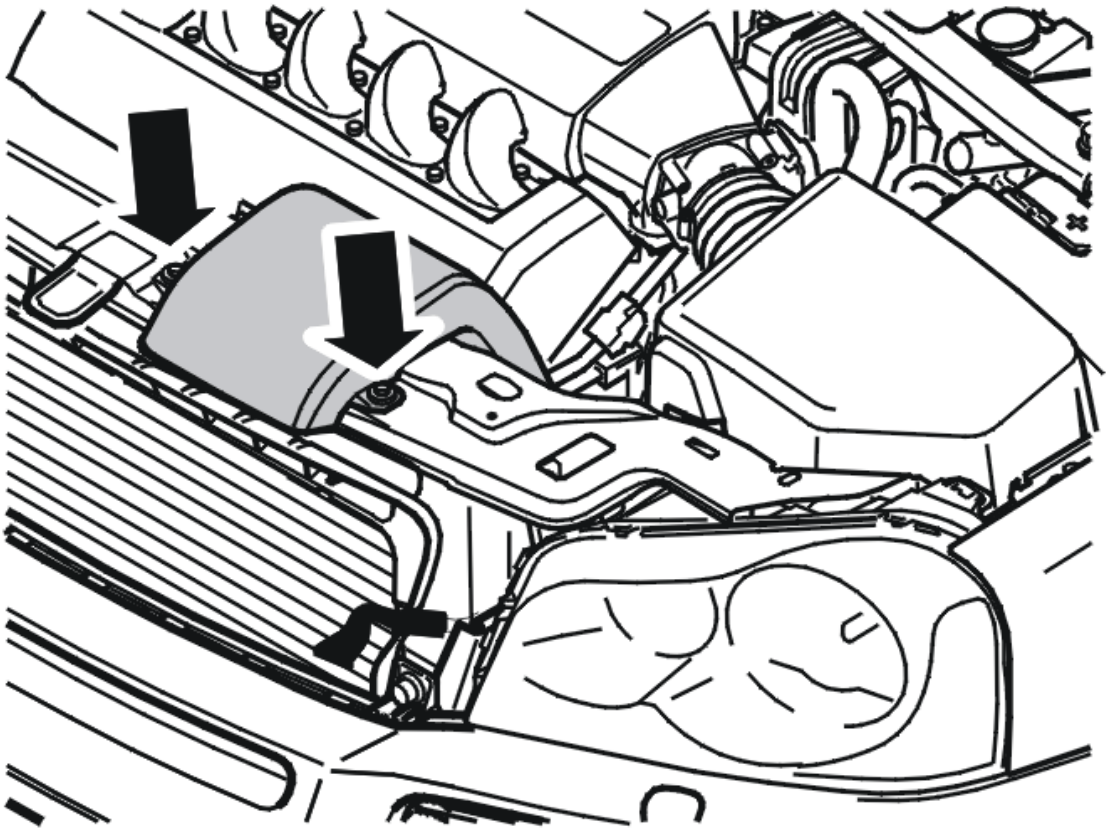

Fig. 831: Identifying Inlet Pipe
Courtesy of VOLVO CARS CORPORATION

Install the inlet pipe to the air cleaner (ACL) housing.

INSTALLING THE BATTERY CABLE

Fit the battery's negative cable in accordance with: **BATTERY, DISCONNECTING** .

FINISHING

ORDERING SOFTWARE

Order the software in accordance with: 9438291 .

CHECKING AND CALIBRATION

Check that no diagnostic trouble codes (DTC) have been stored in the control module during the replacement.

Calibrate the gear position sensor, see VIDA (Volvo scan tool) Vehicle communication.

TRANSMISSION, AUTOMATIC (TF-80SC; 2011-2012)

TRANSMISSION FLUID, CHANGING

Special tools	
	T9997278 WRENCH **Tool number:** T9997278 **Tool description:** WRENCH **Tool boards:**
	T9997363 HOSE **Tool number:** T9997363 **Tool description:** HOSE **Tool boards:**

NOTE: **Some variation may occur. However, the essential information in the illustrations is always correct.**

CHANGING TRANSMISSION FLUID

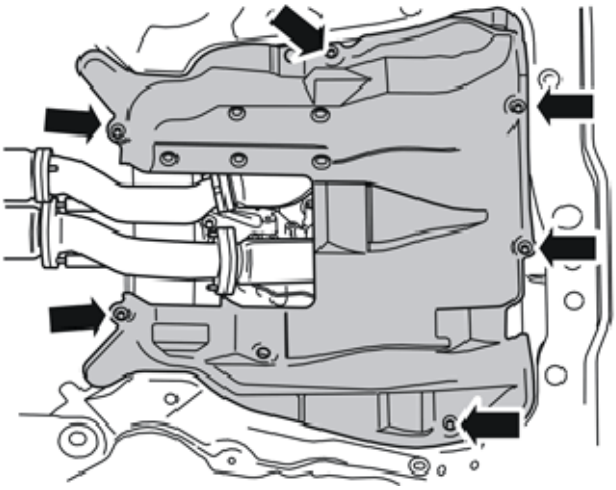

Fig. 832: Identifying Splash Guard
Courtesy of VOLVO CARS CORPORATION

Remove the splash guard.

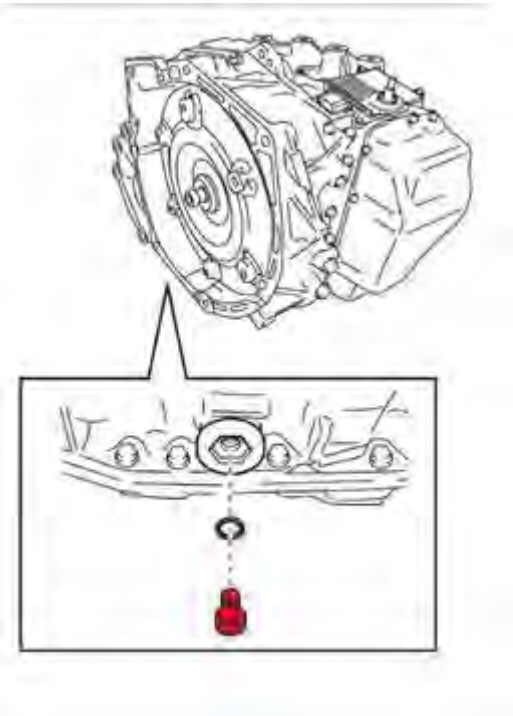

Fig. 833: Identifying Level Plug
Courtesy of VOLVO CARS CORPORATION

WARNING: Avoid skin contact with the specified material.

WARNING: Be prepared to collect escaping fluid.

Remove the integrated level plug (Torx 40).

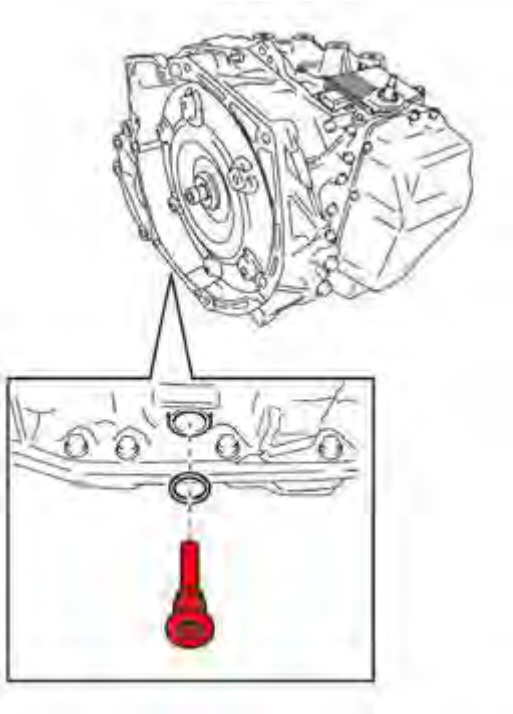

Fig. 834: Identifying Draining Plug
Courtesy of VOLVO CARS CORPORATION

Remove the draining plug.

Drain the transmission fluid.

Install the drain plug. Use a new gasket, lubricate it with ATF oil. Tighten to **TIGHTENING TORQUE**

9997278

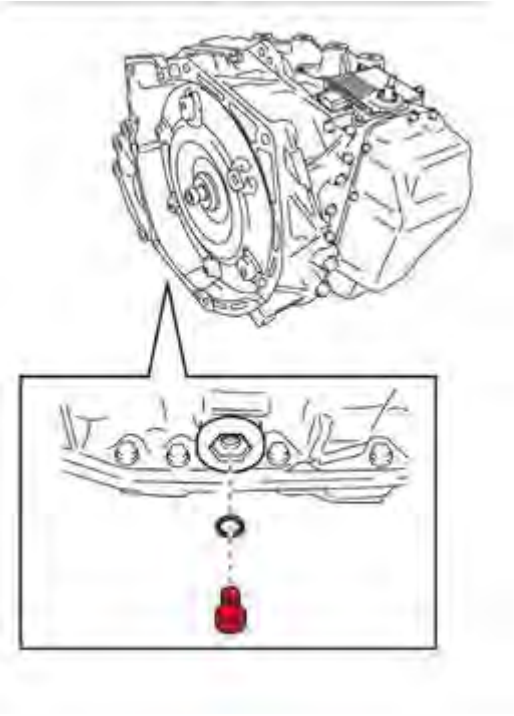

Fig. 835: Identifying Level Plug
Courtesy of VOLVO CARS CORPORATION

Install the level plug by hand, Reuse the O-ring.

Remove the air cleaner (ACL) housing

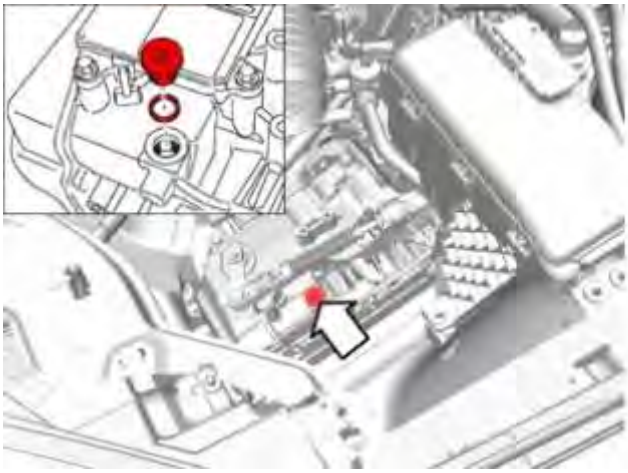

Fig. 836: Locating Transmission Filler Plug
Courtesy of VOLVO CARS CORPORATION

CAUTION: Make sure that tools and equipment are clean, free of foreign material and lubricant.

Remove the filler plug (Torx 55).

Lower a filler nozzle or a hose with funnel into the filler hole.

Install the air cleaner (ACL) housing.

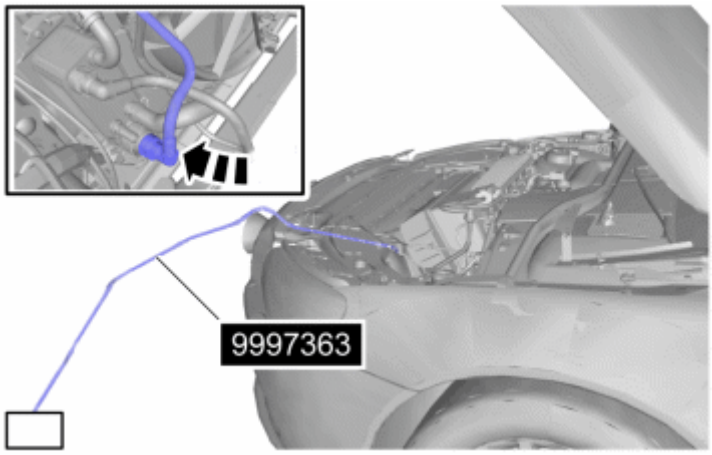

Fig. 837: Identifying Hose 9997363
Courtesy of VOLVO CARS CORPORATION

WARNING: Be prepared to collect escaping fluid.

9997363

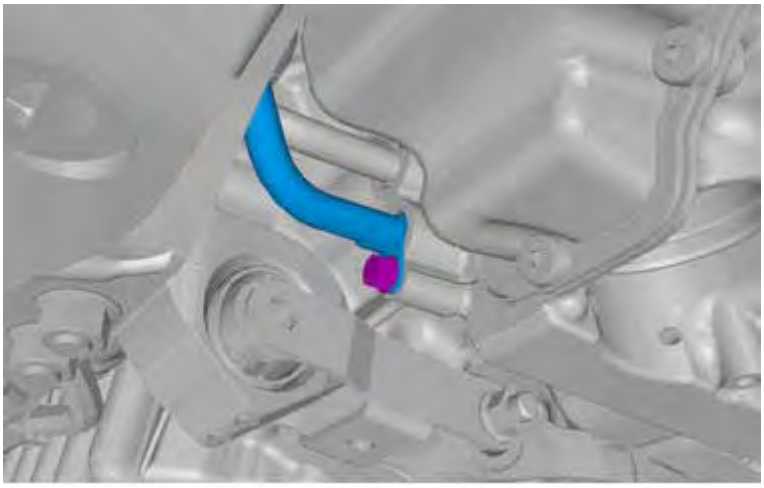

Fig. 838: Identifying Oil Cooler Return Line At Transmission
Courtesy of VOLVO CARS CORPORATION

Remove the oil cooler's return line from the transmission.

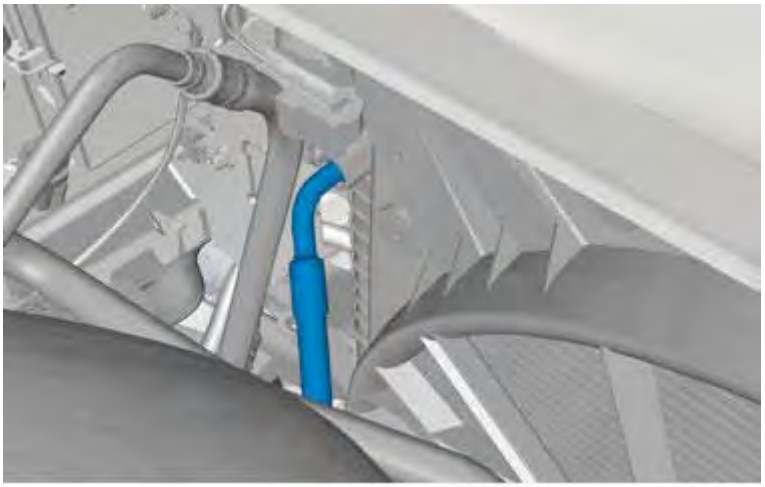

Fig. 839: Identifying Oil Cooler Return Hose At Oil Cooler
Courtesy of VOLVO CARS CORPORATION

Remove the oil cooler's return line from the oil cooler.

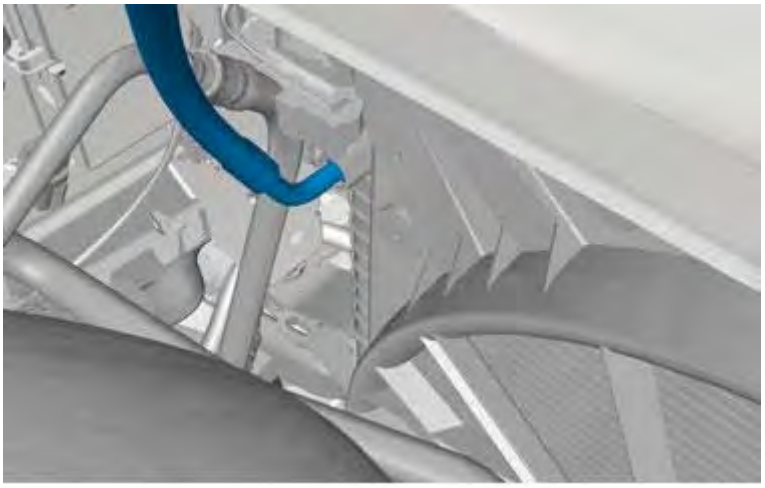

Fig. 840: Identifying Oil Cooler Return Line At Oil Cooler
Courtesy of VOLVO CARS CORPORATION

Install the return line on the oil cooler as shown.

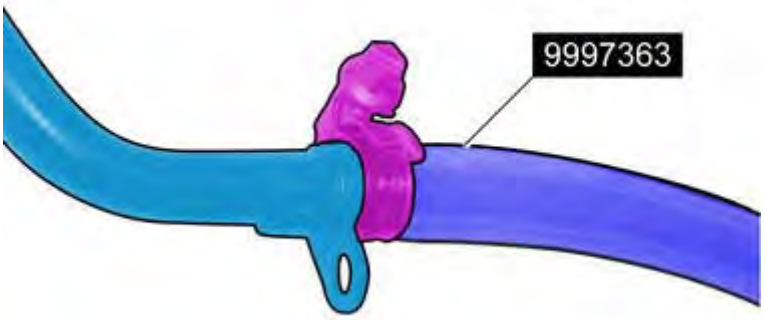

Fig. 841: Identifying Return Line, Hose 9997363, And Hose Clamp
Courtesy of VOLVO CARS CORPORATION

Install hose on the return line with a hose clamp. **9997363**

CAUTION: The plastic hose is quite hard. Tighten the hose clamp hard to avoid leakage in the connection.

WARNING: Be prepared to collect escaping fluid.

Fill with 4l of oil. Use transmission fluid. See **LUBRICANT TRANSMISSION**

Apply the parking brake. Move the gear selector lever to position P.

Start and run the engine at idle.

Shift through all the positions between P and D on the gear selector. Stop for 2 seconds per position. Switch off when air bubbles are visible in the hose.

Fill with 2 liters of oil. Start the engine again and allow it to idle. Switch off when air bubbles are visible in the hose.

Fill with 2 liters of oil again. Start the engine and allow it to idle. Switch off when air bubbles are visible in the hose.

Install return hose to transmission and oil cooler.

Remove the integrated level plug.

Top up with oil until it starts to run out of the transmission.

Install the level plug by hand.

Check the oil level. See **OIL LEVEL, CHECKING**

Reset the counter when replacing the transmission. See **RESETTING THE COUNTER FOR TRANSMISSION OIL, CHANGE**

TRANSMISSION, TRANSFERRING COMPONENTS

TRANSFERRING COMPONENTS

Fig. 842: Transferring Components
Courtesy of VOLVO CARS CORPORATION

Tighten:

- the starter motor. See: **SUMMARY OF TIGHTENING TORQUES FOR SPECIFIC COMPONENTS**
- brackets, M8

Fig. 843: Transferring Components

Courtesy of VOLVO CARS CORPORATION

M8

TRANSMISSION, AUTOMATIC (TF-80SC AWD; 2005-2012)

SEALING RING OIL PUMP, REPLACING

Special tools:

9995069

9997184

NOTE: **As the illustrations in this service information are used for different model years and / or models, some variation may occur. However, the essential information is always correct.**

PREPARATIONS/FINISHING WORK

Remove and install the transmission. See: **REPLACING THE GEARBOX**.

REMOVING/INSTALLING

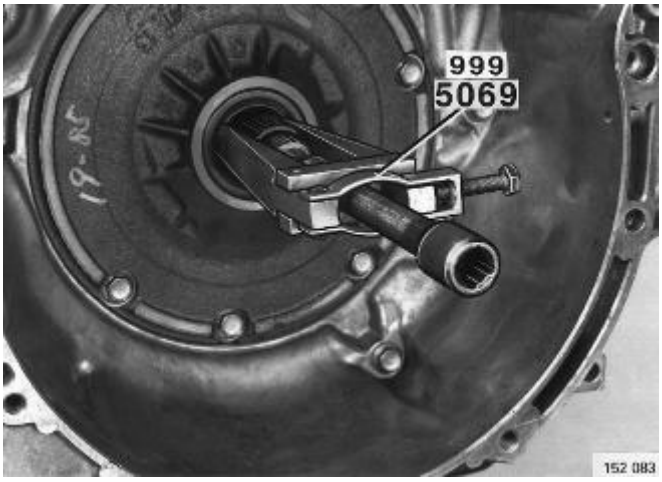

Fig. 844: Identifying Oil Pump Sealing Ring
Courtesy of VOLVO CARS CORPORATION

Use: **9995069** .

Fig. 845: Identifying Drift Tool 999 7184
Courtesy of VOLVO CARS CORPORATION

Use **9997184** .

TRANSMISSION FLUID, CHANGING

See **TRANSMISSION FLUID, CHANGING**

TRANSMISSION, TRANSFERRING COMPONENTS

TRANSMISSION, TRANSFERRING COMPONENTS

AUXILIARY TRANSMISSION, BEVEL GEAR AND OVERDRIVE (B6324S, TF-80SC AWD; 2007-2010)

SEALING RING, BEVEL GEAR, LEFT

REMOVING BEVEL GEAR

Remove the bevel gear. **BEVEL GEAR**.

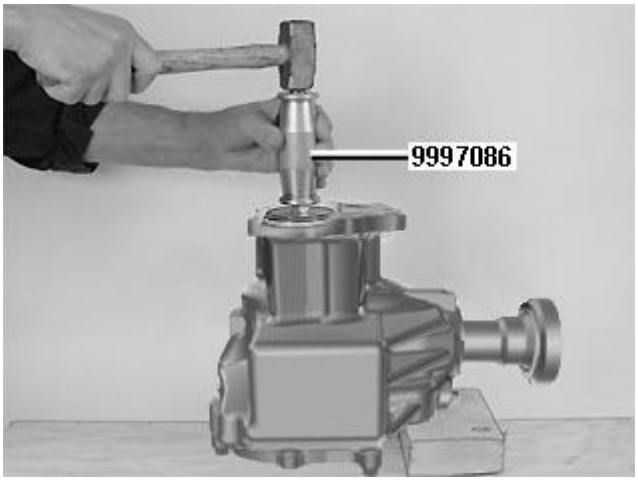

Fig. 846: Identifying Tool 9997086
Courtesy of VOLVO CARS CORPORATION

9997086 .

NOTE: Check thoroughly that no seal residue remains.

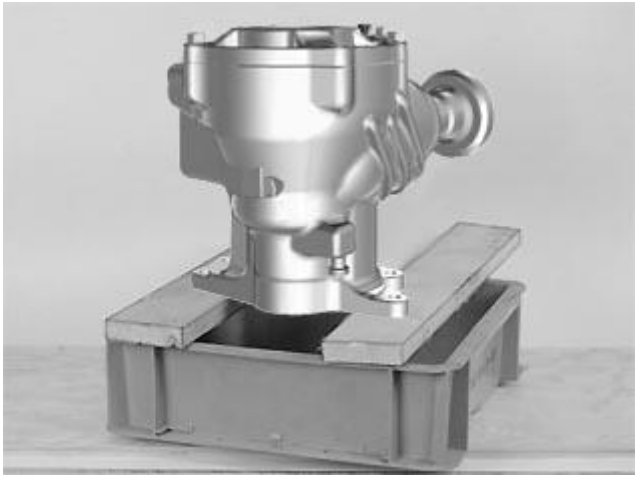

Fig. 847: Draining Oil
Courtesy of VOLVO CARS CORPORATION

Position the bevel gear over a receptacle.

Allow the oil to run out through the bearing.

Clean any spilled oil from the seal ring seat in the bevel gear using a lint-free cloth.

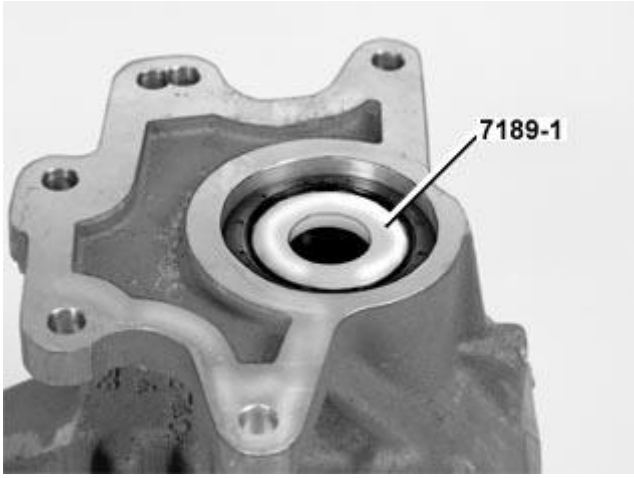

Fig. 848: Identifying Seal Installation Tool 9997086
Courtesy of VOLVO CARS CORPORATION

Install:

- **9997189**
- the gasket.

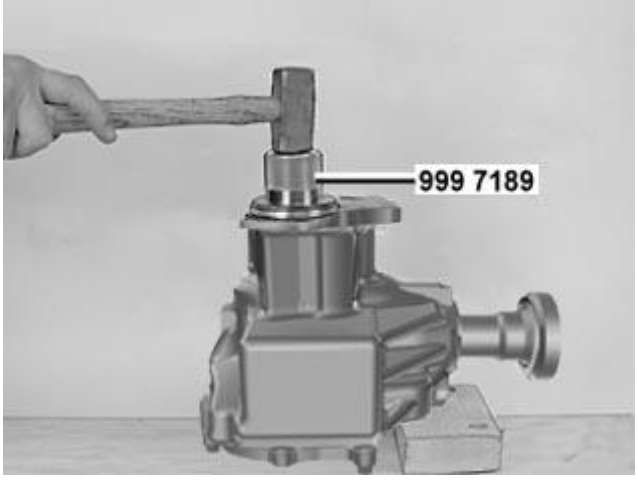

Fig. 849: Driving the Seal
Courtesy of VOLVO CARS CORPORATION

9997189 .

NOTE: When the tool is removed, check that 9997189 was removed with it.

INSTALLING THE ANGLE GEAR

Install the bevel gear. See **BEVEL GEAR**.

FINISHING

CHECKING THE OIL LEVEL

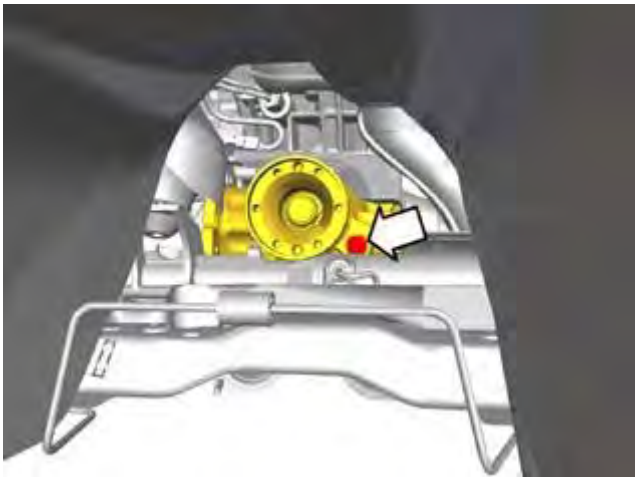

Fig. 850: Tunnel View of Filler
Courtesy of VOLVO CARS CORPORATION

Check the oil level in the bevel gear.

See **LUBRICATION TRANSMISSION** .

SEALING RING, BEVEL GEAR, RIGHT

Special tools:

9995919

9992943

9997190

9991801

REMOVAL

REMOVING DRIVE SHAFT RIGHT SIDE

Remove the right drive shaft. See: **DRIVE SHAFT RIGHT, REPLACING** .

REMOVING THE SEALING RING

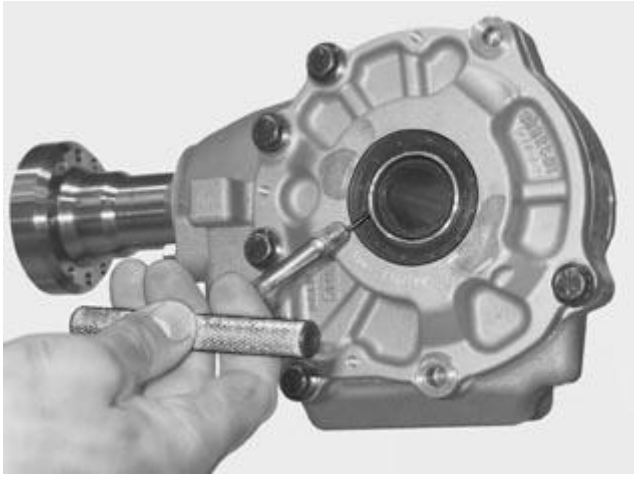

Fig. 851: Removing The Seal With Tool 9995919
Courtesy of VOLVO CARS CORPORATION

Outer sealing ring. Use: **9995919** .

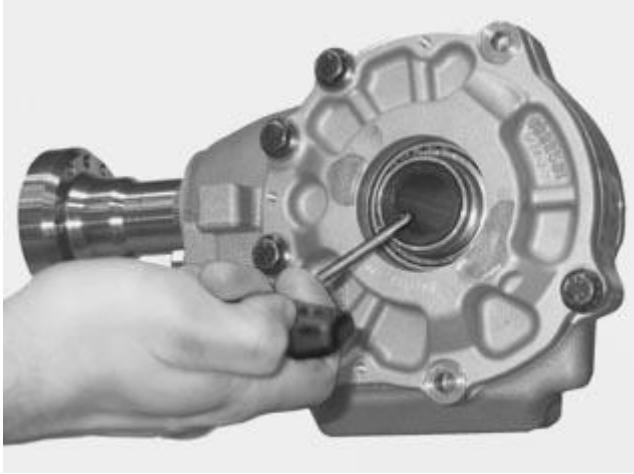

Fig. 852: Using Puller 9992943
Courtesy of VOLVO CARS CORPORATION

Use: **9992943** .

INSTALLATION

INSTALLING A NEW SEALING RING

Fig. 853: Installing A New Seal with Tools 9997190, 9991801
Courtesy of VOLVO CARS CORPORATION

Use **9997190** , extend if necessary using **9991801** .

Fig. 854: Identifying Installing
Courtesy of VOLVO CARS CORPORATION

Use **9997190** , extend if necessary using **9991801** .

FINISHING

CHECKING THE OIL LEVEL IN THE BEVEL GEAR

Check the oil level in the bevel gear. See **TRANSFERCASE REAR SEAL**.

Install the right driveshaft. See **DRIVE SHAFT RIGHT, REPLACING** .

TRANSFERCASE REAR SEAL

Information for this method will be produced at a later date.

TRANSFERCASE VENTILATION VALVE

Remove the bevel gear. See **BEVEL GEAR**.

Fig. 855: Replacing Vent Nipple
Courtesy of VOLVO CARS CORPORATION

Pull out the brass pipe using cutting nippers.

Tap in the nipple using a rubber mallet.

To install, reverse the removal procedure

AUXILIARY TRANSMISSION, BEVEL GEAR AND OVERDRIVE (B6324S5, TF-80SC AWD; 2011-2012)

SEALING RING, BEVEL GEAR, LEFT

SEALING RING, BEVEL GEAR, LEFT

SEALING RING, BEVEL GEAR, RIGHT

SEALING RING, BEVEL GEAR, RIGHT

TRANSFERCASE REAR SEAL

TRANSFERCASE REAR SEAL

TRANSFERCASE VENTILATION VALVE

TRANSFERCASE VENTILATION VALVE

AUXILIARY TRANSMISSION, BEVEL GEAR AND OVERDRIVE (TF-80SC

AWD; 2007-2012)

BEVEL GEAR

NOTE: Removal steps in this procedure may contain installation details.

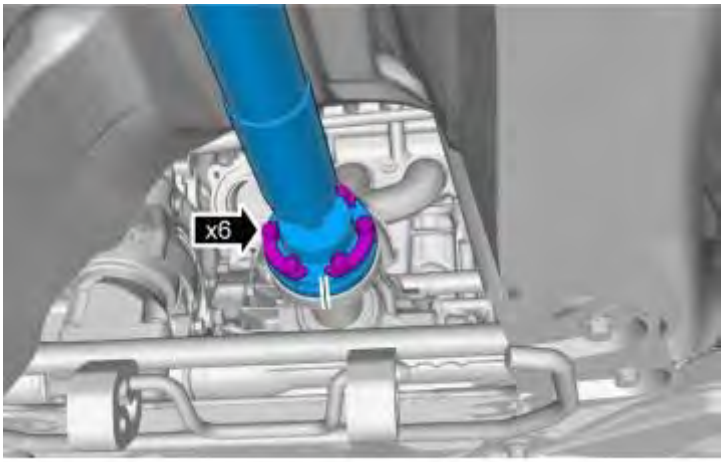

Fig. 856: MarkThe Relation Of The Flanges Before Removal
Courtesy of VOLVO CARS CORPORATION

NOTE: Note the position of the component before removal.

9995743

Tightening torque: Propeller shaft (CV joint, 6 screws). See **TIGHTENING TORQUE**

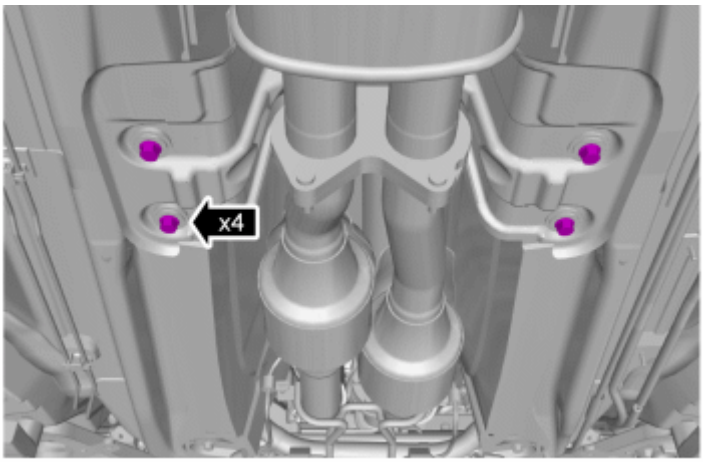

Fig. 857: Identifying Exhaust Hanger Bolts
Courtesy of VOLVO CARS CORPORATION

Tightening torque: M8 **TIGHTENING TORQUE**

Remove the starter motor. See **STARTER MOTOR**

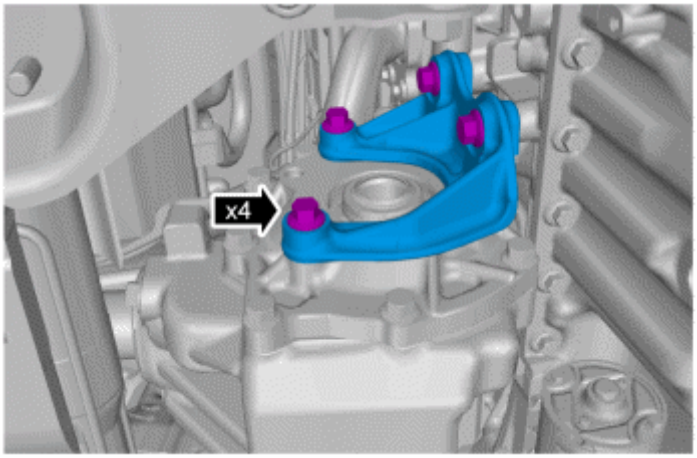

Fig. 858: Identifying Bevel Gear Bracket
Courtesy of VOLVO CARS CORPORATION

Tightening torque: Bevel gear bracket. See **TIGHTENING TORQUE**

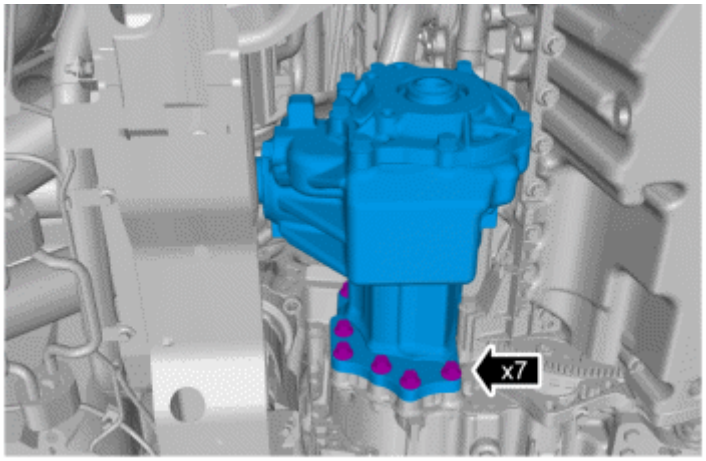

Fig. 859: Identifying Bevel Gear Fasteners
Courtesy of VOLVO CARS CORPORATION

Tightening torque: Bevel gear. See **TIGHTENING TORQUE** .

To install, reverse the removal procedure

TRANSMISSION

Transmission - Specifications, electrical/electronic

COMPONENT SPECIFICATIONS, TRANSMISSION CONTROL MODULE (TCM) (B6324S, TF-80SC; B6324S, TF-80SC AWD; 2007-2010)

COMPONENT SPECIFICATIONS

SHIFT SOLENOIDS

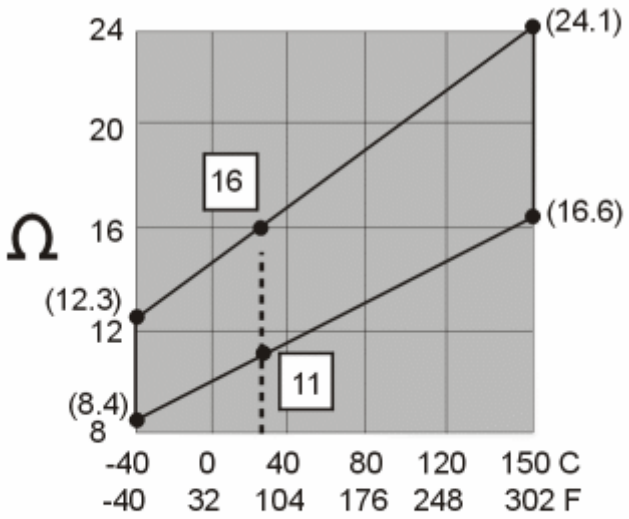

Fig. 1: Identifying Ohms Resistance Temperature Graph
Courtesy of VOLVO CARS CORPORATION

Component	Note	Resistance (ohms)
Gear shift solenoid S1, S2	Resistance between the solenoid pins and the solenoid casing/transmission housing.	+20 °C= 11-16 ohms

Other values, see diagram. When measuring at other temperature than +20 °C the check-measurement shall be performed at +20 °C. This is to ensure if the resistance is correct or not.

LINEAR PRESSURE SOLENOID SLT, SLB1, SLC1, SLC2, SLC3 AND LOCK-UP SOLENOID SLU

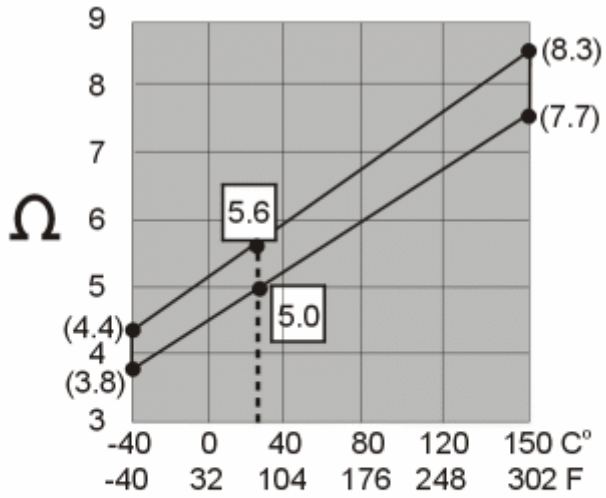

Fig. 2: Identifying Ohms Resistance Temperature Graph
Courtesy of VOLVO CARS CORPORATION

Component	Note	Resistance (ohms)
Lock-up solenoid (SLU) Line pressure solenoids (SLT), (SLB1),(SLC1),(SLC2),(SLC3)	Resistance between solenoid pins.	+20 °C= 5.0-5.6 ohms

Other values, see diagram. When measuring at other temperature than +20 °C the check-measurement shall be performed at +20 °C. This is to ensure if the resistance is correct or not.

OIL TEMPERATURE SENSOR

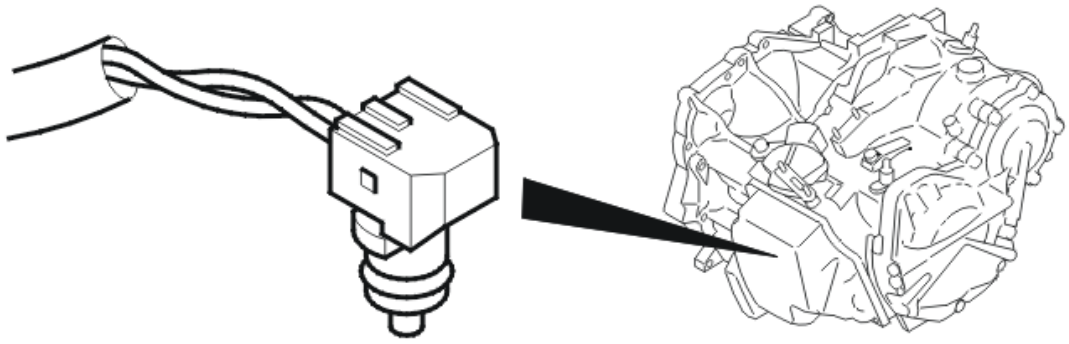

Fig. 3: Locating Oil Temperature Sensor
Courtesy of VOLVO CARS CORPORATION

Component	Note	Resistance (ohms)
Oil temperature sensor	Resistance between the temperature sensor terminals.	+10 °C = 5620-7310 ohms
		+25 °C = 3500 ohms
		+110 °C = 220-270 ohms

Resistance decreases with increasing temperature.

A test measurement must be taken at both temperatures. This is to establish if the resistance is correct or not.

SOLENOID P-POSITION LOCKOUT

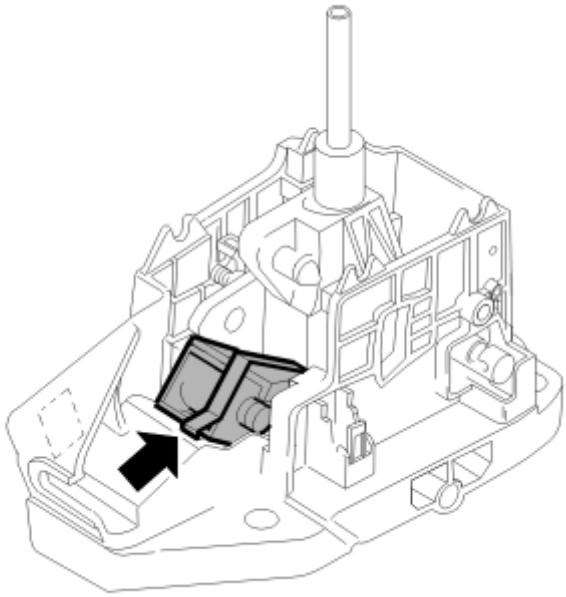

Fig. 4: Identifying Shift-Lock
Courtesy of VOLVO CARS CORPORATION

Component	Note	Resistance (ohms)
Solenoid p-position lockout	Resistance between the solenoid's connections	+20 °C= 24.5 - 29.3 ohms

COMPONENT SPECIFICATIONS, TRANSMISSION CONTROL MODULE (TCM) (B6324S5, TF-80SC; B6324S5, TF-80SC AWD; 2011-2012)

COMPONENT SPECIFICATIONS

see **COMPONENT SPECIFICATIONS**

COMPONENT SPECIFICATIONS, TRANSMISSION CONTROL MODULE

(TCM) (B8444S, TF-80SC AWD; 2006-2011)

COMPONENT SPECIFICATIONS

SHIFT SOLENOIDS

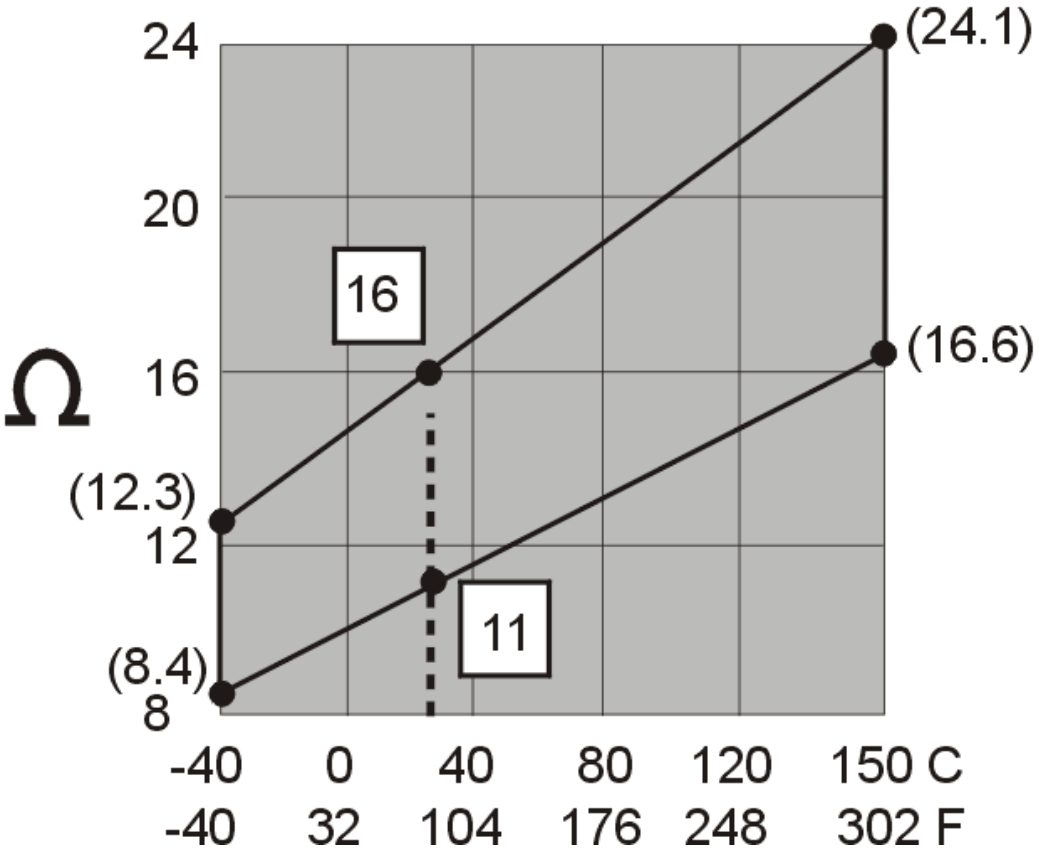

Fig. 5: Identifying Ohms Resistance Temperature Graph
Courtesy of VOLVO CARS CORPORATION

Component	Note	Resistance (ohms)
Gear shift solenoid S1, S2	Resistance between the solenoid pins and the solenoid casing/transmission housing.	+20 °C= 11-16 ohms

Other values, see diagram. When measuring at other temperature than +20 °C the check-measurement shall be performed at +20 °C. This is to ensure if the resistance is correct or not.

LINEAR PRESSURE SOLENOID SLT, SLB1, SLC1, SLC2, SLC3 AND LOCK-UP SOLENOID SLU

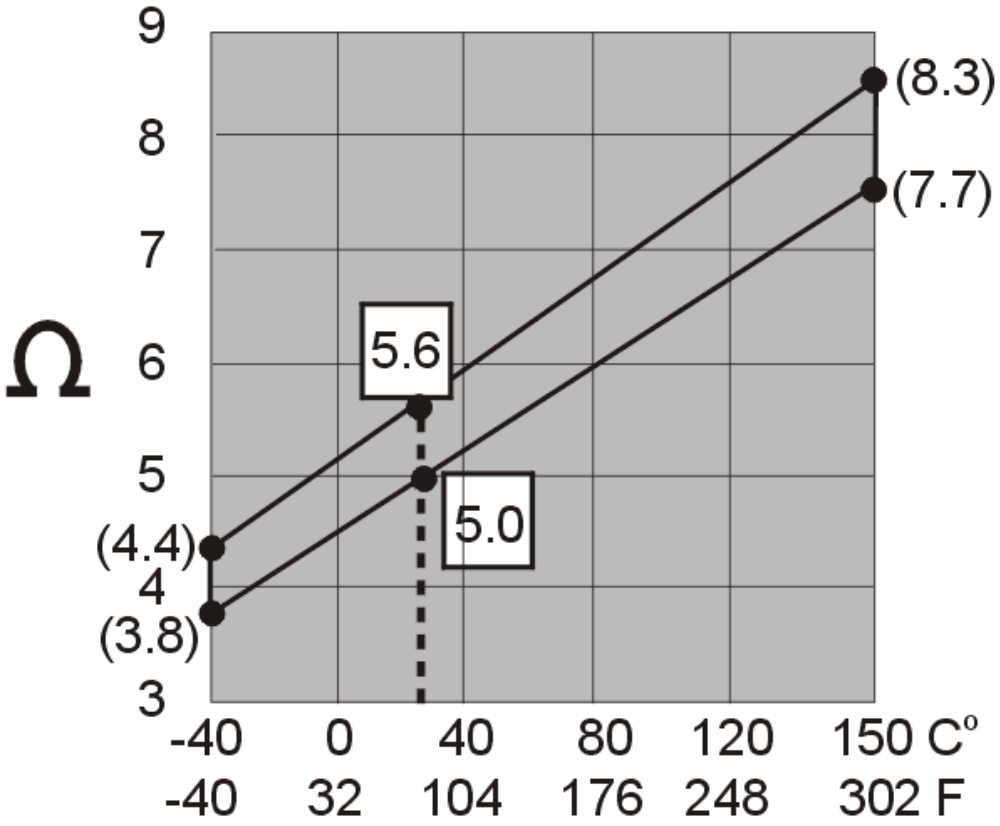

Fig. 6: Identifying Ohms Resistance Temperature Graph
Courtesy of VOLVO CARS CORPORATION

Component	Note	Resistance (ohms)
Lock-up solenoid (SLU) Line pressure solenoids (SLT), (SLB1),(SLC1),(SLC2),(SLC3)	Resistance between solenoid pins.	+20 °C= 5.0-5.6 ohms

Other values, see diagram. When measuring at other temperature than +20 °C the check-measurement shall be performed at +20 °C. This is to ensure if the resistance is correct or not.

OIL TEMPERATURE SENSOR

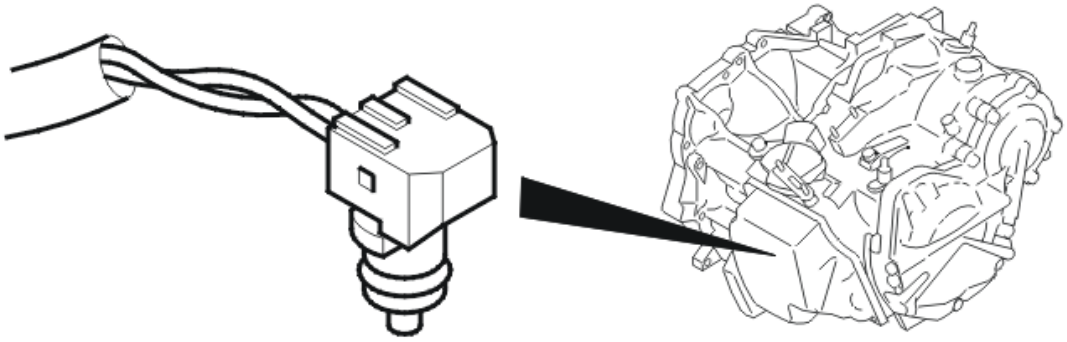

Fig. 7: Identifying Oil Temperature Sensor
Courtesy of VOLVO CARS CORPORATION

Component	Note	Resistance (ohms)
Oil temperature sensor	Resistance between the temperature sensor terminals.	+10 °C= 5620-7310 ohms
		+25 °C= 3500 ohms
		+110 °C= 220-270 ohms

Resistance decreases with increasing temperature.

A test measurement must be taken at both temperatures. This is to establish if the resistance is correct or not.

SOLENOID P-POSITION LOCKOUT

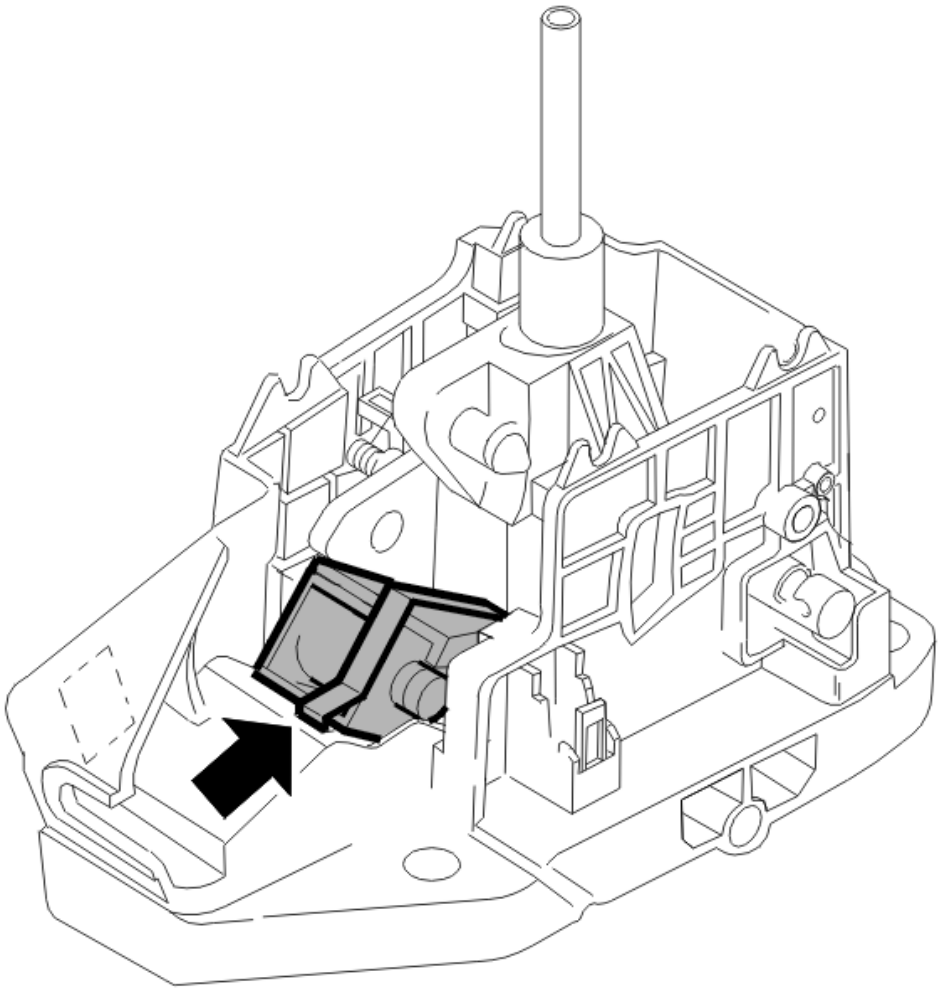

Fig. 8: Identifying Shift-Lock
Courtesy of VOLVO CARS CORPORATION

Component	Note	Resistance (ohms)
Solenoid p-position lockout	Resistance between the solenoid's connections	+20 °C= 24.5 - 29.3 ohms

COMPONENT SPECIFICATIONS, TRANSMISSION CONTROL MODULE (TCM) (TF-80SC AWD; 2005)

COMPONENT SPECIFICATIONS

see **COMPONENT SPECIFICATIONS**

ELECTRICAL / ELECTRONIC SYSTEM SPECIFICATIONS (AW50/51 AWD;

AW55-50/51SN; 2003-2007)

COMPONENT RESISTANCE VALUES

The resistance values assume a temperature of +20°C unless otherwise stated.

Component	Remarks	Resistance (ohms)
Shift solenoid S1	Resistance between the solenoid pin and the solenoid sleeve or transmission housing	12-16
Shift solenoid S2	Resistance between the solenoid pin and the solenoid sleeve or transmission housing	11-15
Shift solenoid S3	Resistance between the solenoid pin and the solenoid sleeve or transmission housing	11-15
Shift solenoid S4	Resistance between the solenoid pin and the solenoid sleeve or transmission housing	11-15
Shift solenoid S5	Resistance between the solenoid pin and the solenoid sleeve or transmission housing	11-15
Lock-up solenoid SLU	Resistance between the solenoid pins	5.0-5.6
Throttle solenoid SLT	Resistance between the solenoid pins	5.0-5.6
Throttle solenoid SLS	Resistance between the solenoid pins	5.0-5.6
Oil temperature sensor, temperature (°C)	0	
20	5800-7900	
40		
80		
100	261-263	
150		

CONNECTOR A, TRANSMISSION

4-PIN CONNECTOR

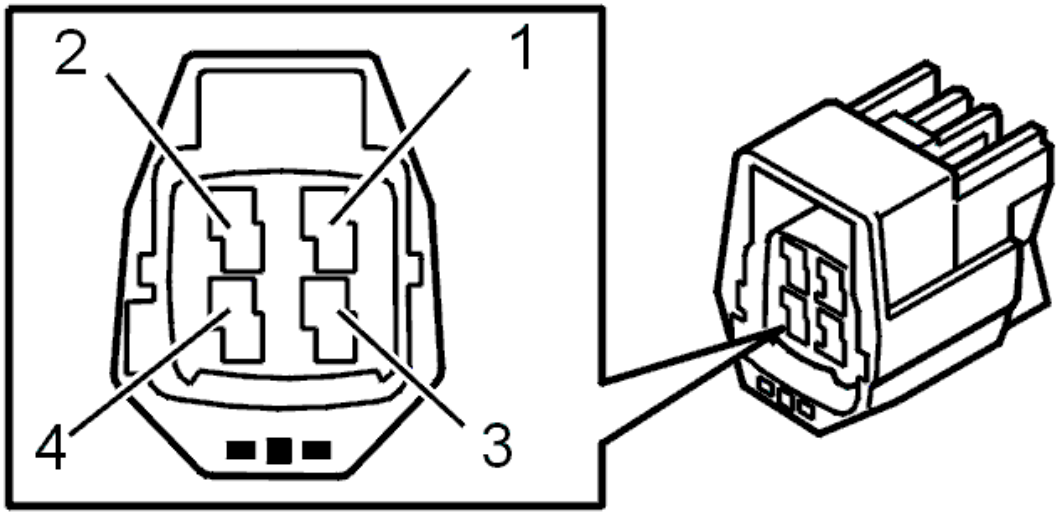

Fig. 9: Connector A, Transmission -- 4-Pin Connector
Courtesy of VOLVO CARS CORPORATION

Control module terminals #A1-#A60 correspond to terminals #A1-#A60 on the breakout box, terminals #A61-#A70 correspond to terminals #B1-#B10 on the breakout box.

Terminal	Signal	Connected to control module terminal #
A1	Signal ground, transmission input speed sensor (SP2)	A41
A2	Power supply, engine speed (RPM) sensor (SP2)	A59
A3	Signal ground, transmission output speed sensor (SP1)	A39
A4	Power supply, speed sensor (SP1)	A57

CONNECTOR B, TRANSMISSION

6-PIN CONNECTOR

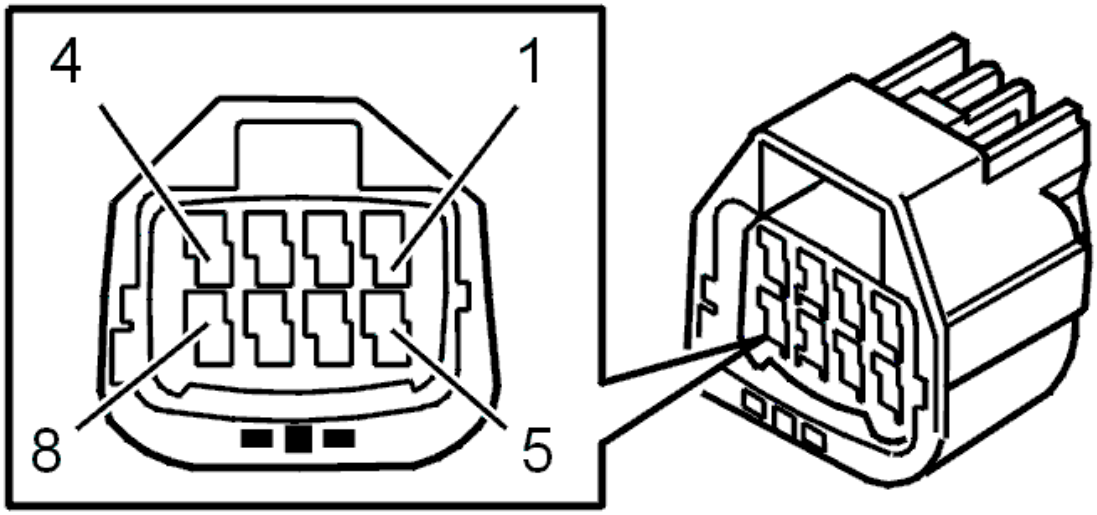

Fig. 10: Connector B, Transmission -- 6-Pin Connector
Courtesy of VOLVO CARS CORPORATION

Control module terminals #A1-#A60 correspond to terminals #A1-#A60 on the breakout box, terminals #A61-#A70 correspond to terminals #B1-#B10 on the breakout box.

Terminal	Signal	Connected to control module terminal #
B1	Shift lock solenoid, replacement	
B2	Shift lock solenoid, replacement	
B4	Ground terminal, gear-shift position sensor	
B5	Gear-shift position sensor, signal A	A46
B6	Gear-shift position sensor, signal B	A64
B7	Gear-shift position sensor, signal C	A45
B8	Gear-shift position sensor, signal PA	A63

CONNECTOR C, TRANSMISSION

6-PIN CONNECTOR

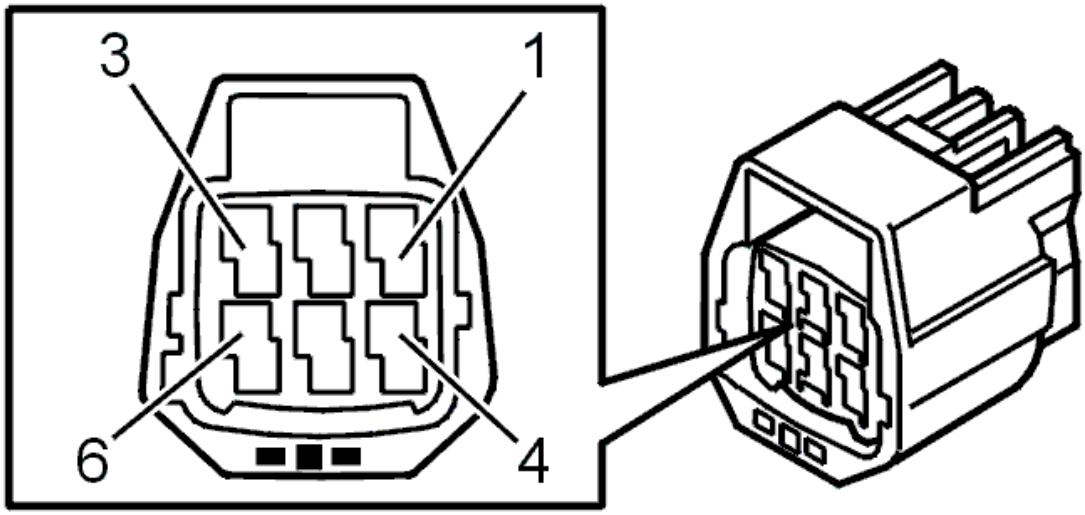

Fig. 11: Connector C, Transmission -- 6-Pin Connector
Courtesy of VOLVO CARS CORPORATION

Control module terminals #A1-#A60 correspond to terminals #A1-#A60 on the breakout box, terminals #A61-#A70 correspond to terminals #B1-#B10 on the breakout box.

Terminal	Signal	Connected to control module terminal #
C1	S1	A50
C2	S2	A68
C3	S3	A48
C4	S4	A47
C5	S5	A66
C6		

CONNECTOR D, TRANSMISSION

8-PIN CONNECTOR

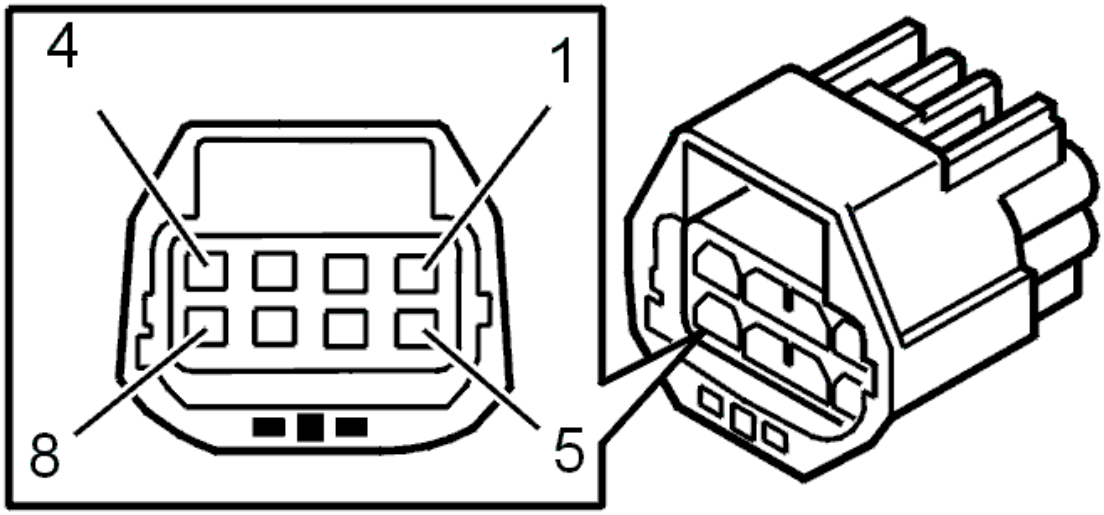

Fig. 12: Connector D, Transmission -- 6-Pin Connector
Courtesy of VOLVO CARS CORPORATION

Control module terminals #A1-#A60 correspond to terminals #A1-#A60 on the breakout box, terminals #A61-#A70 correspond to terminals #B1-#B10 on the breakout box.

Terminal	Signal	Connected to control module terminal #
D1	Control signal, Lock-up solenoid SLU	A51
D2	Signal ground, Lock-up solenoid SLUG	A69
D3	Control signal, line pressure solenoid SLT	A52
D4	Signal ground, line pressure solenoid SLTG	A70
D5	Control signal, line pressure solenoid SLS	A49
D6	Signal ground, line pressure solenoid SLSG	A67
D7	Power supply, oil temperature sensor OT	A37
D8	Signal ground, oil temperature sensor OTG	A55

ELECTRICAL/ELECTRONIC SYSTEM SPECIFICATIONS (4T65 AWD; 2003-2006)

COMPONENT RESISTANCE VALUES

Resistance values at 20 °C unless otherwise stated.

Component	Remarks	Resistance (ohms)
Shift solenoid S1	Resistance between automatic transmission connector #1 and #5	19-24
Shift solenoid S2	Resistance between automatic transmission connector #2 and #5	19-24

Lock-up solenoid SL	Resistance between automatic transmission connector #17 and #5		10.4-10.8
Line pressure solenoid STH	Resistance between automatic transmission connector #3 and #4		3.5-4.6
Oil temperature sensor	Temperature (°C) Resistance between automatic transmission connector #11 and #12	0	9400-9500
		20	3500-3600
		40	1400-1500
		80	330-350
		100	170-180
		150	45-50

SIGNAL DESCRIPTION (4T65 AWD; 2003-2005)

SIGNAL DESCRIPTION. CONNECTOR 4T65 EV/EV-GT

GENERAL

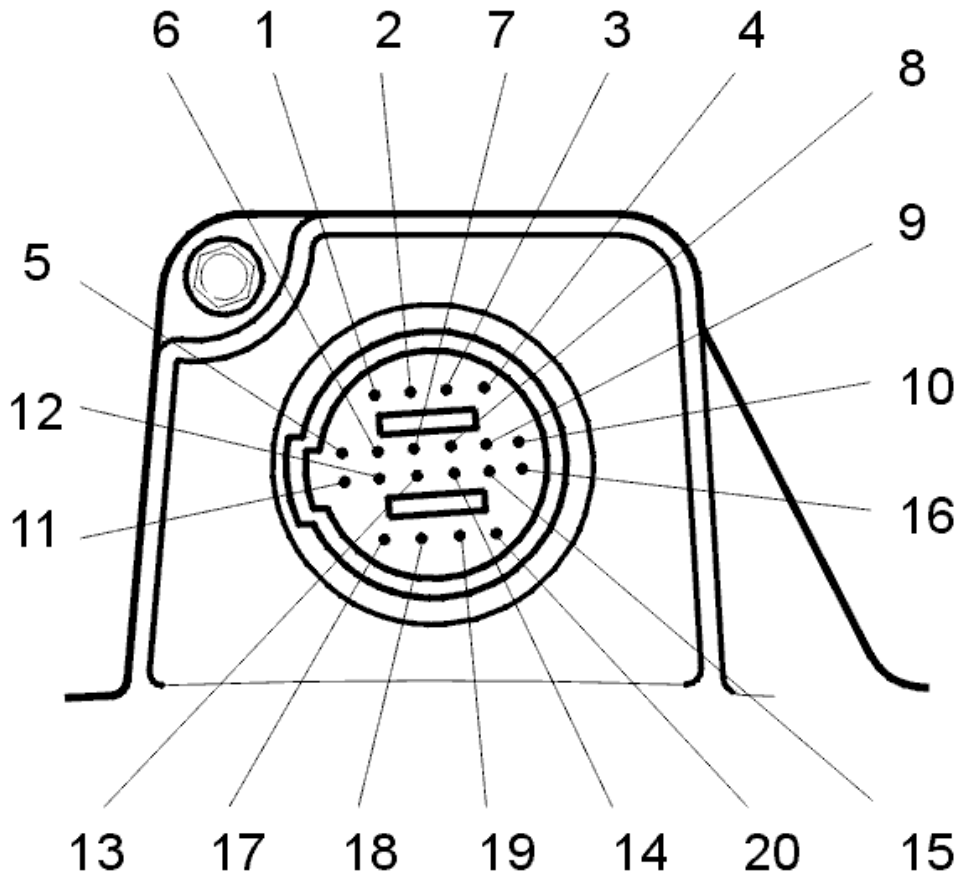

Fig. 13: Identifying Terminals
Courtesy of VOLVO CARS CORPORATION

The letters in parenthesis are the original GM marking for the automatic transmission connector.

#1 (A)

Solenoid S1 signal cable.

#2 (B)

Solenoid S2 signal cable.

#3 (C)

Solenoid STH signal cable.

#4 (D)

Solenoid STH (STHG) signal ground.

#5 (E)

Solenoids S1, S2, SL signal ground.

#6 (F)

Gear-shift position sensor signal cable, signal A.

#7 (G)

Gear-shift position sensor signal cable, signal B.

#8 (H)

Gear-shift position sensor signal cable, signal C.

#9 (J)

Gear-shift position sensor signal cable, signal PA.

#10 (K)

Gear-shift position sensor signal ground.

#11 (L)

Oil temperature sensor (OT) signal cable.

#12 (M)

Oil temperature sensor signal ground (OTG).

#13 (N)

Not used.

#14 (P)

Not used.

#15 (R)

Not used.

#16 (S)

Engine speed (RPM) sensor power supply (NC).

#17 (T)

Solenoid SL signal cable.

#18 (U)

Pressure sensor PS4 signal cable.

#19 (V)

Engine speed (RPM) sensor signal cable (NC).

#20 (X)

Not used.

SIGNAL SPECIFICATION

All the values listed below are between the terminal in column 1 and terminal #A53 (signal ground), unless otherwise indicated in brackets.

NOTE: Connect the breakout box and check the ground connections before starting to measure.

U =	DC voltage in volts (V)	U_{AC} =	AC voltage in volts (V)
U_{bat} =	battery voltage	F =	frequency in Hertz (Hz)
U_{low} =	voltage approximately 0 V	% duty =	duty cycle (pulse ratio) in percent (%)
t =	time in milliseconds (ms)		

CONNECTOR A TERMINALS #A35 - #A70

Breakout box terminal	Control module terminal	Signal type	Ignition on	Engine idling	Miscellaneous
#A35	#A35	Power supply	U_{bat}		Model year dependent: Up to and incl. 2004 Supply from CEM relay CMI21(2/101) From and incl. 2005 Supply from connection #B20 on Central electronic module (CEM)
#A37	#A37	Signal, oil temperature	Cold gearbox (+20°C):		U decreases with

		sensor	U=2.4 V Hot gearbox (+100°C): U=0.3-0.5 V	increasing temperature
#A39	#A39	Signal, gearbox output speed sensor signal	Tooth against sensor: 14 mA Cover against sensor: 7 mA	The sensor generates a pulsed signal (quadratic wave) with fixed pulse ratio when the pulse wheel rotates. Frequency increases with speed
#A41	#A41	Signal, gearbox input speed sensor	Tooth against sensor: 14 mA Cover against sensor: 7 mA	The sensor generates a pulsed signal (quadratic wave) with fixed pulse ratio when the pulse wheel rotates. Frequency increases with speed
#A44	#A44	Signal (-) from gear position sensor via Transmission Control Module (TCM) to Central Electronic Module (CEM)	Gear-shift selector in position P = U_{low} In all other positions U_{bat}	Start immobilizer. The signal is grounded when the gear selector is in position P and N, which makes engine start possible.
#A45	#A45	Signal, gear-shift position sensor C	Gear selector positions D, 3, L: U=0-0.5 V Other positions: U=0-2 V below U_{bat}	The signal is grounded in positions D, 3, L
#A46	#A46	Signal, gear-shift position sensor A	Gear selector position P, R, 3, L: U=0-0.5 V Other positions: U=0-2 V below U_{bat}	Signal is grounded in positions N, D
#A50	#A50	Control signal, shift solenoid S1	Activated: U=0-2 V below Ubat Not activated: U_{low}	The solenoid receives voltage when activated by the control module in 1st and 4th gears
#A51	#A51	Control signal, lock-up solenoid SL	Activated: U=0-2 V below U_{bat} Not activated: U_{low}	The solenoid is supplied with voltage when it is activated by the control module
#A52	#A52	Control signal, line pressure solenoid STH	U=1.6 V	Voltage decreases with increasing throttle opening
#A53	#A53	Signal ground	U_{low}	-
#A54	#A54	Signal ground for the gear selector module (GSM)	U_{low}	From and incl. 2001 Connection #A6 on the gear selector module (GSM)

#A55	#A55	Signal ground oil temperature sensor	U_{low}	Ground
#A57	#A57	Power supply, vehicle speed sensor (VSS)	Uapprox.1 V	-
#A59	#A59	Power supply, engine speed (RPM) sensor	Uapprox.1 V	-
#B3	#A63	Signal, gear-shift position sensor PA	Gear selector positions P, N, 3: U=0-0.5 V Other positions: U=0-2 V below U_{bat}	The signal is grounded in positions P, N, 3
#B4	#A64	Signal, gear-shift position sensor B	Gear selector position R, N, D, 3, L: U=0-0.5 V Other positions: U=0-2 V below U_{bat}	Signal grounded in positions R, N, D, 3
#B5	#A65	Pressure sensor signal PS4	Active = U_{bat} , Not active = 0 V	Pressure sensor PS4 is usually closed. It transmits a signal to the control module indicating the position of solenoid SL. When lock-up is requested, the pressure sensor must be **Not active** . When there is no lock-up, the pressure sensor must be **Active** .
#B8	#A68	Control signal, shift solenoid S2	Activated: U=0-2 V below Ubat Not activated: U_{low}	The solenoid receives voltage when activated by the control module in 1st and 2nd gears
#B10	#A70	Signal ground, line pressure solenoid STH	F=300 Hz Frequency is constant, irrespective of driving conditions. The signal duty cycle is modified when the line pressure is adapted	-

CONNECTOR B TERMINALS #B1 - #B22

Breakout box terminal	Control module terminal	Signal type	Ignition on	Engine idling	Miscellaneous
#B11	#B1	Communication cable for the control modules (CAN)	2-3 V		Between the transmission control module (TCM) and the engine control module (ECM)

#B12	#B2	Communication cable for the control modules (CAN)	2-3 V	Between the transmission control module (TCM) and the anti-lock brake system module (ABS) as well as the central electronic module (CEM)
#B23	#B13	Communication cable for the control modules (CAN)	2-3 V	Between the transmission control module (TCM) and the engine control module (ECM)
#B24	#B14	Communication cable for the control modules (CAN)	2-3 V	Between the transmission control module (TCM) and the anti-lock brake system module (ABS) as well as the central electronic module (CEM)
#B31	#B21	VOLCANO lite communication cable	8-11 V	Between the transmission control module (TCM) and the gear selector module (GSM)

SIGNAL DESCRIPTION (AW50/51 AWD; AW55-50/51SN; 2003-2007)

SIGNAL DESCRIPTION. TRANSMISSION CONTROL MODULE (TCM)

All the values listed below are between the terminal in column 1 and terminal #A53 (signal ground), unless otherwise indicated in brackets.

NOTE: **Connect the breakout box and check the ground terminals before taking readings.**

U =	DC voltage in volts (V)	U_{AC} =	AC voltage in volts (V)
U_{bat} =	battery voltage	f =	frequency in Hertz (Hz)
U_{low} =	voltage approximately 0 V	% duty =	duty cycle (pulse ratio) as a percentage (%)
t =	time in milliseconds (ms)		

CONNECTOR A TERMINALS #A35 - #A70

Breakout box terminal	Control module terminal	Signal type	Ignition on	Engine idling	Other

#A35	#A35	Power supply	Ubat	Supply from relay 2/101 CEM
#A37	#A37	Signal, oil temperature sensor (OT)	Cold gearbox (+20°C): U=2.4 V Hot gearbox (+100°C): U=0.3-0.5 V	U decreases with increasing temperature
#A39	#A39	Signal, vehicle speed sensor (SP1)	Tooth against sensor: 14 mA Cover against sensor: 7 mA	The sensor generates a pulsed signal (quadratic wave) with fixed pulse ratio when the pulse wheel rotates. Frequency increases with speed
#A41	#A41	Signal, engine speed (RPM) sensor (SP2)	Tooth against sensor: 14 mA Cover against sensor: 7 mA	The sensor generates a pulsed signal (quadratic wave) with a fixed pulse ratio when the pulse wheel rotates. Frequency increases with speed
#A45	#A45	Signal, gear-shift position sensor C	Gear selector positions D, 4, 3 and L: U=0-0.5 V Other positions: U=0-2 V below Ubat	The signal is grounded in positions D, 4, 3 and L
#A46	#A46	Signal, gear-shift position sensor A	Gear selector position P, R, 4, 3: U=0-0.5 V Other positions: U=0-2 V below Ubat	The signal is grounded in positions P, R, 4, and 3
#A47	#A47	Control signal, shift solenoid S4	Activated: U=0-2 V below Ubat Not activated: Ulow	The solenoid receives voltage when activated by the control module in 3rd, 4th and 5th gears
#A48	#A48	Control signal, shift solenoid S3	Activated: U=0-2 V below Ubat Not activated: Ulow	The solenoid is supplied with voltage when activated by the control module in 1st, 2nd and 3rd gears
#A49	#A49	Control signal, line pressure solenoid SLS	f=300 Hz Frequency is constant, independent of driving conditions. The signal duty cycle is modified when the line pressure is adapted	Voltage decreases with increasing throttle opening
#A50	#A50	Control signal, shift solenoid S1	Activated: U=0-2 V below Ubat Not activated: Ulow	The solenoid is supplied with voltage when activated by the control module in 1st gear
#A51	#A51	Control signal, lock-up	f=300 Hz Frequency is	The solenoid is supplied

		solenoid SLU	constant, independent of driving conditions. The signal duty cycle is modified when the line pressure is adapted	with voltage when it is activated by the control module
#A52	#A52	Control signal, line pressure solenoid SLT	f=300 Hz Frequency is constant, independent of driving conditions. The signal duty cycle is modified when the line pressure is adapted	The solenoid is supplied with voltage when it is activated by the control module
#A53	#A53	Power ground	Ulow	-
#A54	#A54	Signal ground for the gear selector module (GSM)	Ulow	From 2001 - Connection #6 on the gear selector module (GSM)
#A55	#A55	Signal ground, oil temperature sensor (OTG)	Ulow	Ground
#A57	#A57	Power supply, speed sensor (SP1)	Uapprox.1 V <Ubat	-
#A59	#A59	Power supply, engine speed (RPM) sensor (SP2)	Uapprox.1 V < Ubat	-
#B3	#A63	Signal, gear-shift position sensor PA	Gear selector position P, N, 4, L: U=0-0.5 V Other positions: U=0-2 V below Ubat	The signal is grounded in positions P, N, 4, and L
#B4	#A64	Signal, gear-shift position sensor B	Gear selector position R, N, D, 3: U=0-0.5 V Other positions: U=0-2 V below Ubat	Signal grounded in positions R, N, D, 3
#B6	#A66	Control signal, shift solenoid S5	Activated: U=0-2 V below Ubat Not activated: Ulow	The solenoid is supplied with voltage when it is activated by the control module in position R and during shifting from 2nd to 3rd gear
#B7	#A67	Signal ground, line pressure solenoid (SLSG)	U=Ulow	-
#B8	#A68	Control signal, shift solenoid S2	Activated: U=0-2 V below Ubat Not activated: Ulow	The solenoid is supplied with voltage when activated by the control module in 1st and 5th gears

#B9	#A69	Signal ground, lock-up solenoid (SLUG)	U=Ulow	-
#B10	#A70	Signal ground, throttle solenoid (SLTG)	U=Ulow	-

CONNECTOR B TERMINALS #B1 - #B22

Breakout box terminal	Control module terminal	Signal type	Ignition on	Engine idling	Other
#B11	#B1	Communication cable for the control modules (CAN)	2-3 V		Between the transmission control module (TCM) and the engine control module (ECM)
#B12	#B2	Communication cable for the control modules (CAN)	2-3 V		Between the transmission control module (TCM) and the anti-lock brake system module (ABS) as well as the central electronic module (CEM)
#B23	#B13	Communication cable for the control modules (CAN)	2-3 V		Between the transmission control module (TCM) and the engine control module (ECM)
#B24	#B14	Communication cable for the control modules (CAN)	2-3 V		Between the transmission control module (TCM) and the anti-lock brake system module (ABS) as well as the central electronic module (CEM)
#B31	#B21	VOLCANO lite communication cable	-		Between the transmission control module (TCM) and the gear selector module (GSM)
#B32	#B22	Diagnostic lead C-link	-		-

SIGNAL DESCRIPTION, TRANSMISSION CONTROL MODULE (TCM) (B6324S, TF-80SC; B6324S, TF-80SC AWD; 2007-2010)

SIGNAL SPECIFICATION

All values indicated below are between respective connection in column 1 and #A9 (#39 on the breakout box).

If this is not the case, it is indicated within brackets.

Connector A (16-pin) corresponds to #31 - #46 on the breakout box.

Connector B (22-pin to transmission) corresponds to #1 - #22 on the breakout box.

NOTE: Connect the breakout box and check the ground terminals before taking readings.

U=	DC voltage in volts (V)	U_{AC} =	AC voltage in volts (V)
U_{bat} =	battery voltage	F =	frequency in Hertz (Hz)
U_{low} =	voltage approximately 0 V	% duty =	duty cycle (pulse ratio) in percent (%)
t =	time in milliseconds (ms)		

Connector A

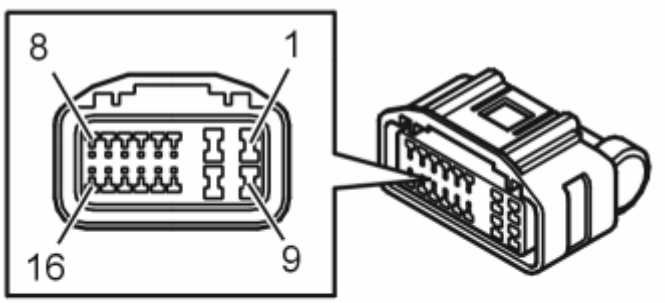

Fig. 14: Identifying Connector A Terminals
Courtesy of VOLVO CARS CORPORATION

CONNECTOR A, #A31 - #A46

Breakout box terminal	Control module terminal	Signal type	Ignition on	Engine idling	Other
#31	#A1	Power supply	U_{bat}		30-feed from fuse
#32	#A2	-	-		-
#33	#A3	-	-		-
#34	#A4	-	-		-
#35	#A5	Signal, start lockout	U_{low} when start is permitted		Signal to engine control module (ECM) if start is permitted

#36	#A6	Control module communication cable CAN_L	During communication the voltage is 1.5 - 2.5 V	-
#37	#A7	Communication cable LIN gear selector module (GSM)	During communication the voltage is 0 V - U_{bat}	-
#38	#A8	Communication cable K-line	-	For serial communication
#39	#A9	Power ground	U = U_{low}	-
#40	#A10	-	-	-
#41	#A11	Power supply	U = U_{bat}	15-feed from ignition via fuse
#42	#A12	-	-	-
#43	#A13	Signal, Shift lock solenoid for gear selector module (GSM)	Shift lock U = U_{bat} when the solenoid is not activated U_{low} when the solenoid is activated	Solenoid not activated = gear selector locked Solenoid activated = gear selector can be moved
#44	#A14	Communication cable, control module CAN_H	During communication the voltage is 2.0-3.5 V	-
#45	#A15	-	-	-
#46	#A16	Voltage feed, gear selector module (GSM)	U = U_{bat}	-

Connector B

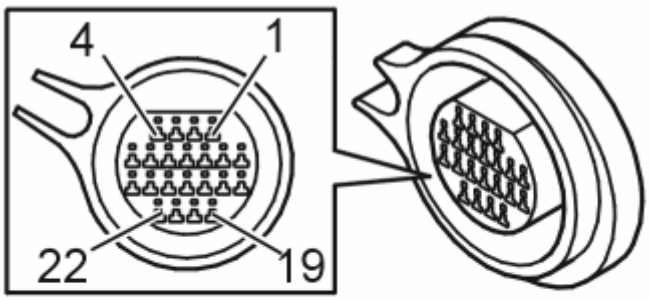

Fig. 15: Identifying 22--Pin Connector
Courtesy of VOLVO CARS CORPORATION

CONNECTOR B, #B1 - #B22

Breakout box terminal	Control module terminal	Signal type	Ignition on	Engine idling	Other
#1	#B1	Signal ground, linear pressure solenoid SLT	$U = U_{low}$		-
#2	#B2	Control signal, shift solenoid S2	Activated: U = 0 - 2 V below U_{bat} Not activated: U_{low}		The solenoid receives voltage when transmission control module (TCM) activates it during engine braking in 1st gear.
#3	#B3	Control signal, linear pressure solenoid SLT	f = 300 Hz. Frequency is constant, regardless of driving conditions. It is the signal's duty cycle that is modified when the system pressure is adapted.		The solenoid receives voltage when transmission control module (TCM) activates it.
#4	#B4	Signal ground Lock-up solenoid SLU	$U = U_{low}$		-
#5	#B5	Control signal, shift solenoid S1	Activated: U = 0 - 2 V below U_{bat} Not activated: U_{low}		The solenoid receives voltage when transmission control module (TCM) activates it during engine braking in 1st gear.
#6	#B6	-	-		-
#7	#B7	Signal ground, oil temperature sensor	U_{low}		Ground
#8	#B8	Signal, oil temperature sensor	Cold transmission (+20° C): U = 2.4 V Warm transmission (+100° C): U = 0.3 - 0.5 V		U decreases with increasing temperature.
#9	#B9	Control signal, lock-up solenoid SLU	f = 300 Hz. Frequency is constant, regardless of driving conditions. It is the signal's duty cycle that is modified when the system pressure is adapted.		The solenoid receives voltage when transmission control module (TCM) activates it.
#10	#B10	Signal ground, linear pressure solenoid SLC1	$U = U_{low}$		-
# 11	#B11	Control signal, lock-up solenoid SLC1	f = 300 Hz. Frequency is constant, regardless of driving conditions. It is the signal's duty cycle that is modified when the system		The solenoid receives voltage when transmission control module (TCM) activates it.

			pressure is adapted.	
#12	#B12	Voltage feed, rpm sensor (VSS)	Power supply, rpm sensor approx. 1-3 V < U_{bat}	-
#13	#B13	Signal, rpm sensor	Tooth against sensor: 14 mA Cover against sensor: 7 mA	When the toothed wheel rotates, the sensor generates a pulsating current (square wave) with fixed pulse ratio, the frequency increases with the speed.
#14	#B14	Control signal, linear pressure solenoid SLC3	f = 300 Hz. Frequency is constant, regardless of driving conditions. It is the signal's duty cycle that is modified when the system pressure is adapted.	The solenoid receives voltage when transmission control module (TCM) activates it.
#15	#B15	-	-	-
#16	#B16	Signal ground, linear pressure solenoid SLB1	U = U_{low}	-
#17	#B17	Control signal, linear pressure solenoid SLC2	f = 300 Hz. Frequency is constant, regardless of driving conditions. It is the signal's duty cycle that is modified when the system pressure is adapted.	The solenoid receives voltage when transmission control module (TCM) activates it.
#18	#B18	Signal ground, linear pressure solenoid SLC2	U = U_{low}	-
#19	#B19	Voltage feed, speed sensor	Power supply, speed sensor approx. 1-3 V < U_{bat}	-
#20	#B20	Signal, speed sensor	Tooth against sensor: 14 mA Cover against sensor: 7 mA	When the toothed wheel rotates, the sensor generates a pulsating current (square wave) with fixed pulse ratio, the frequency increases with the speed.
#21	#B21	Control signal, linear pressure solenoid SLB1	f = 300 Hz. Frequency is constant, regardless of driving conditions. It is the signal's duty cycle that is modified when the system pressure is adapted.	The solenoid receives voltage when transmission control module (TCM) activates it.

#22	#B22	Signal ground, linear pressure solenoid SLC3	U = U_{low}	-

SIGNAL DESCRIPTION, TRANSMISSION CONTROL MODULE (TCM) (B6324S5, TF-80SC; B6324S5, TF-80SC AWD; 2011-2012)

SIGNAL SPECIFICATION

see **SIGNAL SPECIFICATION**

SIGNAL DESCRIPTION, TRANSMISSION CONTROL MODULE (TCM) (B8444S, TF-80SC AWD; 2006-2011)

SIGNAL DESCRIPTION

All values indicated below are between respective connection in column 1 and #A9 (#39 on the breakout box). If this is not the case, it is indicated within brackets.

Connector A (16-pin) corresponds to #31 - #46 on the breakout box.

Connector B (22-pin to transmission) corresponds to #1 - #22 on the breakout box.

NOTE: Connect the breakout box and check the ground connections before taking readings.

U =	DC voltage in volts (V)	U_{AC} =	AC voltage in volts (V)
U_{bat} =	battery voltage	F =	frequency in Hertz (Hz)
U_{low} =	voltage approximately 0 V	% duty =	duty cycle (pulse ratio) as a percentage (%)
t =	time in milliseconds (ms)		

Connector A

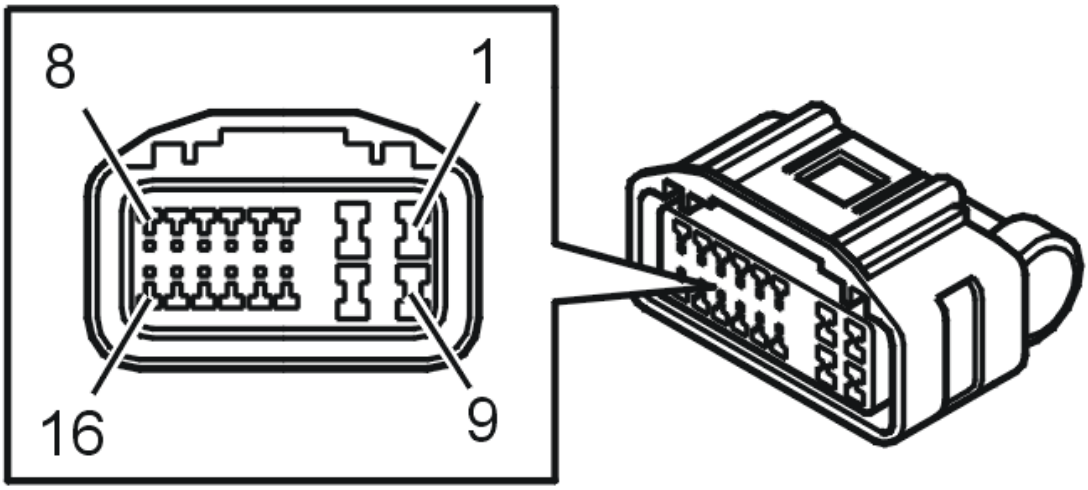

Fig. 16: Identifying Connector A Terminals
Courtesy of VOLVO CARS CORPORATION

CONNECTOR A, #A31 - #A46

Connection breakout box	Connection control module	Signal type	Ignition on	Engine idling	Other
#31	#A1	Voltage feed	U_{bat}		30-feed from fuse
#32	#A2	-	-		-
#33	#A3	-	-		-
#34	#A4	-	-		-
#35	#A5	Signal, start lockout	U_{low} when start is permitted		Signal to engine control module (ECM) if start is permitted
#36	#A6	Communication cable control module CAN_L	During communication the voltage is 1.5 - 2.5 V		-
#37	#A7	Communication cable LIN gear selector module (GSM)	During communication the voltage is 0 V - U_{bat}		-
#38	#A8	Communication cable K-line	-		For serial communication
#39	#A9	Power ground	$U = U_{low}$		
#40	#A10	-	-		-
#41	#A11	Voltage feed	$U = U_{bat}$		15-feed from ignition via fuse
#42	#A12	-	-		-
#43	#A13	Signal, Shift lock solenoid for gear selector module (GSM)	Shift lock $U = U_{bat}$ when the solenoid is not activated U_{low} when the solenoid		Solenoid not activated = gear selector locked Solenoid activated = gear selector can be

			is activated	moved
#44	#A14	Communication cable, control module CAN_H	During communication the voltage is 2.0 - 3.5 V	-
#45	#A15	-	-	-
#46	#A16	Voltage feed, gear selector module (GSM)	U = U_{bat}	-

Connector B

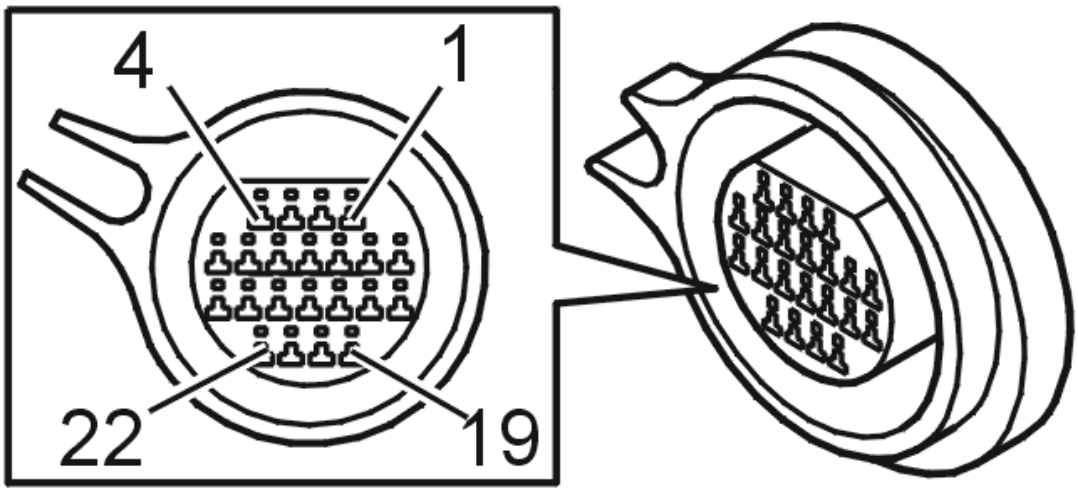

Fig. 17: Identifying Connector B Terminals
Courtesy of VOLVO CARS CORPORATION

CONNECTOR B, #B1 - #B22

Connection breakout box	Connection control module	Signal type	Ignition on	Engine idling	Other
#1	#B1	Signal ground, linear pressure solenoid SLT	U = U_{low}		
#2	#B2	Control signal, shift solenoid S2	Activated: U = 0 - 2 V below U_{bat} Not activated: U_{low}		The solenoid receives voltage when transmission control module (TCM) activates it during engine braking in 1st gear.
#3	#B3	Control signal, linear pressure solenoid SLT	f = 300 Hz. Frequency is constant, regardless of driving conditions. It is the signal's duty cycle that is modified when the		The solenoid receives voltage when transmission control module (TCM) activates it.

			system pressure is adapted.	
#4	#B4	Signal ground Lock-up solenoid SLU	U = U_{low}	-
#5	#B5	Control signal, shift solenoid S1	Activated: U = 0 - 2 V below U_{bat} Not activated: U_{low}	The solenoid receives voltage when transmission control module (TCM) activates it during engine braking in 1st gear.
#6	#B6	-	-	-
#7	#B7	Signal ground, oil temperature sensor	U_{low}	Ground
#8	#B8	Signal, oil temperature sensor	Cold transmission (+20° C): U = 2.4 V Warm transmission (+100°C): U = 0.3 - 0.5 V	U decreases with increasing temperature.
#9	#B9	Control signal, lock-up solenoid SLU	f = 300 Hz. Frequency is constant, regardless of driving conditions. It is the signal's duty cycle that is modified when the system pressure is adapted.	The solenoid receives voltage when transmission control module (TCM) activates it.
#10	#B10	Signal ground, linear pressure solenoid SLC1	U = U_{low}	-
# 11	#B11	Control signal, lock-up solenoid SLC1	f = 300 Hz. Frequency is constant, regardless of driving conditions. It is the signal's duty cycle that is modified when the system pressure is adapted.	The solenoid receives voltage when transmission control module (TCM) activates it.
#12	#B12	Voltage feed, rpm sensor (VSS)	Voltage feed rpm sensor approx. 1-3 V < U_{bat}	
#13	#B13	Signal, rpm sensor	Tooth against sensor: 14 mA Cover against sensor: 7 mA	When the toothed wheel rotates, the sensor generates a pulsating current (square wave) with fixed pulse ratio, the frequency increases

				with the speed.
#14	#B14	Control signal, linear pressure solenoid SLC3	f = 300 Hz. Frequency is constant, regardless of driving conditions. It is the signal's duty cycle that is modified when the system pressure is adapted.	The solenoid receives voltage when transmission control module (TCM) activates it.
#15	#B15	-	-	-
#16	#B16	Signal ground, linear pressure solenoid SLB1	U = U_{low}	-
#17	#B17	Control signal, linear pressure solenoid SLC2	f = 300 Hz. Frequency is constant, regardless of driving conditions. It is the signal's duty cycle that is modified when the system pressure is adapted.	The solenoid receives voltage when transmission control module (TCM) activates it.
#18	#B18	Signal ground, linear pressure solenoid SLC2	U = U_{low}	-
#19	#B19	Voltage feed, speed sensor	Voltage feed speed sensor approx. 1-3 V < U_{bat}	
#20	#B20	Signal, speed sensor	Tooth against sensor: 14 mA Cover against sensor: 7 mA	When the toothed wheel rotates, the sensor generates a pulsating current (square wave) with fixed pulse ratio, the frequency increases with the speed.
#21	#B21	Control signal, linear pressure solenoid SLB1	f = 300 Hz. Frequency is constant, regardless of driving conditions. It is the signal's duty cycle that is modified when the system pressure is adapted.	The solenoid receives voltage when transmission control module (TCM) activates it.
#22	#B22	Signal ground, linear pressure solenoid SLC3	U = U_{low}	-

SIGNAL DESCRIPTION, TRANSMISSION CONTROL MODULE (TCM) (TF-80SC AWD; 2005)

SIGNAL DESCRIPTION

see **SIGNAL DESCRIPTION**

TRANSMISSION

Transmission - Specifications, other

VEHICLE COMMUNICATION INFORMATION, TRANSMISSION CONTROL MODULE (TCM) (4T65 AWD; 2003-2006)

DESCRIPTION OF ACTIVATIONS

ACTIVATION OF COMPONENTS

Using this facility, a number of components can be activated to check their function. The following components can be activated:

SHIFT SOLENOID S1

Activating shift solenoid S1.

"Click sound" in the transaxle (use stethoscope) and status shall switch between OFF/ON.

SHIFT SOLENOID S2

Activating shift solenoid S2.

"Click sound" in the transaxle (use stethoscope) and status shall switch between OFF/ON.

LOCK-UP SOLENOID SL

Activating lockup solenoid SL.

Any "Click sounds" in the transaxle (use stethoscope) and status shall switch between OFF/ON.

SYSTEM PRESSURE SOLENOID STH

Activation of system pressure solenoid STH must occur via **VIDA** (Volvo scan tool).

DESCRIPTION OF PARAMETERS

PARAMETERS, STATUS

GENERAL

Certain values deviate from those contained in the signal specifications, see **SIGNAL SPECIFICATION** . This is because read off values are calculated and filtered by the control module. In certain cases the engine must be running to obtain the relevant values.

SHIFTING PROGRAM ACCORDING TO THE GEAR-SHIFT POSITION SENSOR

This value shows the shifting program selected by the gearbox control module (TCM), based on gear-shift position sensor signals. If the signals from the gear-shift position sensor are outside (ERROR) the normal range and a diagnostic trouble code (DTC) is stored, the gearbox control module (TCM) selects Limp home mode.

Depending on what gear selector assembly the car is equipped with:

P/R/N/D/3/L = normal gear positions. (Standard)

P/R/N/D/3/2/1 = normal gear positions. (Standard)

P/R/N/D/Geartronic = normal gear positions (Geartronic)

GEAR-SHIFT POSITION SENSOR POSITION

Depending on what gear selector assembly the car is equipped with:

P/R/N/D/3/L = normal gear positions. (Standard)

P/R/N/D/3/2/1 = normal gear positions. (Standard)

P/R/N/D/Geartronic = normal gear positions (Geartronic)

OR/OD = Undefined R or D positions, which means that the signals from the gear-shift position sensor are outside the normal range but are not interpreted as a fault. This may be because the gear selector is between positions or that the gear-shift position sensor is incorrectly adjusted.

FAULT = the gear-shift position sensor has transmitted the wrong combination of signals and a diagnostic trouble code (DTC) has been stored.

GEAR-SHIFT POSITION SENSOR SIGNAL A

Gear selector assembly with:

6 positions = PRND3L

7 positions = PRND321

Geartronic PRND3

Lever position/signal:

Position P: Signal A= LOW

Position R: Signal A= LOW

Position N: Signal A = HIGH

Position D: Signal A = HIGH

Position 3: Signal A= LOW

Position 2: Signal A = HIGH

Position 1: Signal A = HIGH

Position L: Signal A = HIGH

LOW = The signal is grounded in the gear-shift position sensor

HIGH = The signal is not grounded in the gear-shift position sensor

GEAR-SHIFT POSITION SENSOR SIGNAL B

Gear selector assembly with:

6 positions = PRND3L

7 positions = PRND321

Geartronic PRND3

Lever position/signal:

Position P: Signal B = HIGH

Position R: Signal B = LOW

Position N: Signal B = LOW

Position D: Signal B = LOW

Position 3: Signal B = LOW

Position 2: Signal A = HIGH

Position 1: Signal A = HIGH

Position L: Signal B = HIGH

HIGH = The signal is not grounded in the gear-shift position sensor

LOW = The signal is grounded in the gear-shift position sensor

GEAR-SHIFT POSITION SENSOR SIGNAL C

Gear selector assembly with:

6 positions = PRND3L

7 positions = PRND321

Geartronic PRND3

Lever position/signal:

Position P: Signal C= HIGH

Position R: Signal C= HIGH

Position N: Signal C= HIGH

Position D: Signal C= LOW

Position 3: Signal C= LOW

Position 2: Signal A= LOW

Position 1: Signal A= LOW

Position L: Signal C= LOW

HIGH = The signal is not grounded in the gear-shift position sensor

LOW = The signal is grounded in the gear-shift position sensor

GEAR-SHIFT POSITION SENSOR SIGNAL PA

Gear selector assembly with:

6 positions = PRND3L

7 positions = PRND321

Geartronic PRND3

Lever position/signal:

Position P: Signal PA= LOW

Position R: Signal PA= HIGH

Position N: Signal PA= LOW

Position D: Signal PA= HIGH

Position 3: Signal PA= LOW

Position 2: Signal A = HIGH

Position 1: Signal A= LOW

Position L: Signal PA= HIGH

HIGH = The signal is not grounded in the gear-shift position sensor

LOW = The signal is grounded in the gear-shift position sensor

QUICKSHIFT MODE (GEARTRONIC)

Applies to gear selector assembly with Geartronic.

The value indicates whether the quick shift mode is selected or not.

ON = The gear selector in position P/R/N/D

ON = The gear selector in Geartronic

QUICK SHIFT SHIFTING FROM THE GEAR SELECTOR MODULE (GEARTRONIC)

Applies to gear selector assembly with Geartronic.

The value indicates which function the gear selector module transmits to the gearbox control module (TCM).

No shift = no geartronic function

Increase gear = shift up

Decrease gear = shift down

QUICK SHIFT STATUS ACCORDING TO THE GEARBOX CONTROL MODULE (GEARTRONIC)

Applies to gear selector assembly with Geartronic.

This value indicates the shifting program selected by the control module based on the signal from the gear selector.

Normal = P/R/N/D

Quick shift = Geartronic

WINTER PROGRAM STATUS

This value indicates the shifting program selected by the control module based on the signal from the mode

selector. W = Winter mode.

Engaged = Winter mode engaged

Disengaged = Winter mode disengaged

CURRENT GEAR (ACCORDING TO GEAR RATIO)

- R, no lock-up
- Gear 1, no lock-up
- Gear 2, no lock-up
- Gear 3, no lock-up
- Gear 4, no lock-up
- Gear 5, no lock-up
- Gear 2, lock-up
- Gear 3, lock-up
- Gear 4, lock-up
- Gear 5, lock-up

RECOMMENDED GEAR FROM THE GEARBOX CONTROL MODULE (TCM)

- R, no lock-up
- Gear 1, no lock-up
- Gear 2, no lock-up
- Gear 3, no lock-up
- Gear 4, no lock-up
- Gear 5, no lock-up
- Gear 2, lock-up
- Gear 3, lock-up
- Gear 4, lock-up
- Gear 5, lock-up

SHIFT SOLENOID STATUS S1

OFF = The solenoid is not activated

ON = The solenoid is activated

SHIFT SOLENOID STATUS S2

OFF = The solenoid is not activated

ON = The solenoid is activated

LOCK-UP SOLENOID SL STATUS

OFF = The lock-up solenoid is not activated

ON = The lock-up solenoid is activated

LOCK-UP PRESSURE SWITCH

Applies only to 4T65EV-GT.

The pressure switch is affected by the gearbox line pressure. The control module uses the signal from the pressure switch to check whether the lock-up solenoid is activated when the control module has requested lock-up.

OFF = No lock-up activated

ON = Lock-up activated

BRAKE LAMP SWITCH

The engine control module (ECM) transmits a signal on the Control area network (CAN) indicating whether the brake lamp switch is activated or not. The gearbox control module (TCM) uses the signal for the internal gear functions and diagnosing the gearbox.

OFF = Brake lamp switch unaffected

ON = Brake lamp switch affected

KICKDOWN

If the kickdown function parameter in the accelerator pedal (AP) is passed (approx 87 %) kickdown is activated. During fast acceleration, the accelerator pedal (AP) is depressed to approximately 87 %, the gearbox control module (TCM) gives the signal for kickdown.

OFF = Kickdown is not activated

ON = Kickdown is activated

TCM DIAGNOSTIC TROUBLE CODES (DTCS) STATUS

The value indicates whether there are any diagnostic trouble codes (DTCs) stored in the gearbox control module (TCM).

- At least one diagnostic trouble code (DTC) stored
- No diagnostic trouble code (DTC) stored

TCM DIAGNOSTIC CHECK STATUS

The value indicates whether the gearbox control module (TCM) has carried out a complete diagnosis.

- At least one diagnostic test not completed
- All diagnostic tests complete

IGNITION KEY POSITION

Ignition key position in the ignition switch.

- Ignition key in position "0"
- Ignition key in position "I"
- Ignition key in position "II"
- Ignition key in position "III"

ENGINE IGNITION STATUS

YES = Ignition on

NO = Ignition off

ENGINE RUNNING

YES = Engine running

NO = Engine off

PARAMETERS, VALUE

ENGINE SPEED (RPM)

The engine control module (ECM) transmits the engine speed (RPM) on the Control area network (CAN) from which the gearbox control module (TCM) retrieves the signal which it then compares with its own speed sensor signal. The signal is used when shifting and when diagnosing the gearbox speed sensor.

Measurement range: 0 - 8191 rpm

Idling speed: 850 rpm

GEARBOX SPEED SENSOR, INPUT SPEED

The speed can be generated with the engine idling and the gear selector in P/N position. If the gear selector is in any other position, a gear is engaged and the gearbox input shaft is connected to the output shaft and an RPM will not be indicated until the car is driven. Depending on slippage in the torque converter the gearbox speed and the engine speed will differ when the lock-up function is not engaged. With lock-up engaged the gearbox speed should be the same as engine speed (RPM).

Measurement range (rpm): 0 -

TCM OUTPUT SPEED SENSOR, CALCULATED SPEED

The control module receives a signal from the gearbox speed sensor which is affected by a toothed pulse wheel and calculates the vehicle speed based on the signal. The speed sensor is an "active" sensor, magnet resistive with a current modulated interface. The speed is directly proportional to the frequency.

Measurement range: 0 km/h - top speed

VEHICLE SPEED ABS

The ABS control module transmits a signal indicating the vehicle speed on the Control area network (CAN) from where the gearbox control module retrieves the signal. The gearbox control module (TCM) compares it with the signal from the gearbox speed sensor.

Measurement range: 0 km/h - top speed

THROTTLE, POSITION

The engine control module (ECM) transmits the accelerator pedal (AP) position on the Control area network (CAN) from where the gearbox control module (TCM) retrieves the signal. The signal is used to regulate the system pressure in the gearbox.

Measurement range: 0 - 100 %

>99 % = kickdown

CALCULATED BATTERY VOLTAGE

The value indicates the calculated battery voltage at the control module.

Measurement range: 0.0 -25.5 V

BATTERY VOLTAGE

The value indicates battery voltage at the control module.

Measurement range: 0.0 -25.5 V

THE OIL TEMPERATURE SENSOR SIGNAL

The value indicates the oil temperature sensor signal. Voltage decreases with increased sensor temperature.

Measurement range: 0.0 -5.0 V

AW 50-42:

Cold gearbox (+20°C): approximately 2.4 V

Hot gearbox (+100°C): 0.3 -0.5 V

4T65EV/EV-GT:

Cold gearbox (+20°C): approximately 3-3.5- V

Hot gearbox (+100°C): 0.8-1.2 V

OIL TEMPERATURE

The gearbox control module (TCM) calculates the temperature from the oil temperature sensor signal.

Measurement range: -60 - +180°C

GEAR RATIOS

The value indicates the gearbox gear ratio. The control module uses the input and output speeds to calculate the gear ratio. For the correct gear ratio, see the table below

AW50-42 gearbox	
Gear	**Gear ratios**
R	3.949
1	3.606
2	2.060
3	1.366
4	0.982

Transmission GM (S80, (-06) non turbo, XC90)	
Gear	**Gear ratios**
R	2674
1	3.275
2	1.758
3	1.121
4	0.790

Transmission GM (S80, (-06) turbo)	
Gear	**Gear ratios**
R	2.385
1	2.921
2	1.568
3	1.000
4	0.705

EXPECTED GEAR RATIO

The value indicates the gear ratio anticipated by the gearbox control module (TCM). Compare the values with the "Gear ratio" table.

LINE PRESSURE SOLENOID STH AMPERAGE

The value indicates the amperage passing through the solenoid circuit. A lower amperage gives a higher reference pressure, which gives a higher line pressure. Solenoid control is directly dependent on the throttle sensor signal. The higher the signal from the throttle sensor the lower the amperage through the solenoid and therefore the higher the line pressure.

Measurement range: 0.0-1.5 A

Normal value at closed throttle:

LINE PRESSURE SOLENOID STH, CONTROL

Line pressure solenoid STH controls the reference pressure for the gearbox. The reference pressure in turn controls the system pressure in the gearbox so that the system pressure in gear D varies between 0.055 - 0.5 Mpa. Solenoid control is directly dependent on the signal from the throttle position (TP) sensor. The higher the signal from the throttle position (TP) sensor the greater the reference pressure and therefore line pressure.

Measurement range: 0 - 100 %

0 % control, minimal reference pressure, gives lowest line pressure.

100 % control, maximum reference pressure, gives highest line pressure.

TORQUE CONTROL

Torque reduction occurs through control of the ignition and is used to lower the engine torque while shifting for smoother gearshifts and longer service life. Torque reduction is activated at the same time that shifting starts.

Measurement range: 0 - 511 Nm

ENGINE TORQUE

The signal displays the calculated output torque of the engine.

Measurement range: -512 - +511 Nm

511 = No torque limiting request

TORQUE LIMITING REQUESTED

The signal displays torque limiting and is used to limit the torque of the engine continuously in those cases where the maximum permitted torque limit of the gearbox would otherwise have been exceeded. To reach the desired reduction level the engine control module (ECM) uses a mixture of ignition reduction and throttle control.

Measurement range: -512 - +511 Nm

511 = No torque limiting request

ENGINE CONTROL MODULE (ECM) ENGINE COOLANT TEMPERATURE (ECT)

The engine control module (ECM) transmits a signal indicating the engine coolant temperature (ECT) on the Control area network (CAN). The automatic gearbox uses the signal to govern lock-up.

Measurement range: -60 - +195°C

TEXT TRANSMITTED TO THE DRIVER INFORMATION MODULE

In the event of a service reminder indicator fault, the gearbox control module (TCM) transmits a message to the driver information module. The text is displayed in the combined instrument panel display.

1 = GEARBOX SERVICE URGENT

2 = GEARBOX SERVICE REQUIRED

3 = GEARBOXFIX NEXT SERVICE

4 = GEARBOX OIL TEMP HIGH

5 = CHANGE GEARBOX OIL AT NEXT SERVICE

DESCRIPTION OF READING OFF OF EXTENDED DIAGNOSTIC TROUBLE CODE (DTC) INFORMATION

CONTENT

Select type of description:

- see **STATUS IDENTIFIER, DESCRIPTION**
- see **COUNTERS, DESCRIPTION**
- see **FROZEN VALUES FOR THE TRANSMISSION CONTROL MODULE (TCM), DESCRIPTION**

VEHICLE COMMUNICATION INFORMATION, TRANSMISSION CONTROL MODULE (TCM) (AW50/51 AWD; AW55-50/51SN; 2003-2007)

DESCRIPTION OF ACTIVATIONS

ACTIVATING COMPONENTS

This function allows a number of components to be activated so that their functions can be checked. The following components can be activated:

SHIFT SOLENOID S1, S2, S3, S4, S5

Activating shift solenoids S1, S2, S3, S4, S5

"Clicking sound" in the transmission (use a stethoscope) and the status should change between OFF/ON.

LINE PRESSURE SOLENOID SLU, SLS, SLT

Activating line pressure solenoid STH.

"Clicking sound" in the transmission (use a stethoscope) and the current should vary.

DESCRIPTION OF PARAMETERS

PARAMETERS, STATUS

GENERAL

Certain values deviate from those contained in the signal specifications, see **SIGNAL DESCRIPTION. TRANSMISSION CONTROL MODULE (TCM)** . This is because read off values are calculated and filtered by the control module. In certain cases the engine must be running to obtain the relevant values.

SHIFTING PROGRAM ACCORDING TO THE GEAR-SHIFT POSITION SENSOR

The value P/R/N/D/4/3/L displays the shifting program selected by the gearbox control module (TCM), based on the signals from the gear-shift position sensor. If the signals from the gear-shift position sensor are outside the normal range and a diagnostic trouble code (DTC) is stored, the gearbox control module (TCM) selects Limp home mode.

Depending on what gear selector assembly the car is equipped with:

P/R/N/D/4/3/L = normal gear positions. (Standard)

P/R/N/D/Geartronic = normal gear positions (Geartronic)

GEAR-SHIFT POSITION SENSOR POSITION

Depending on what gear selector assembly the car is equipped with:

P/R/N/D/4/3/L = normal gear positions. (Standard)

P/R/N/D/Geartronic = normal gear positions (Geartronic)

OR/OD/OL = Undefined R, D or L-positions. The signals from the gearshift position sensor are outside the normal range but are not interpreted as a fault. This may be because the gear selector is between positions or that the gearshift position sensor is incorrectly adjusted.

FAULT = the gear-shift position sensor has transmitted the wrong combination of signals and a diagnostic

trouble code (DTC) has been stored.

GEAR-SHIFT POSITION SENSOR SIGNAL A

Gear selector assembly with:

7 positions = PRND43L

Geartronic = PRND3

LOW = The signal is grounded in the gear-shift position sensor

HIGH = The signal is not grounded in the gear-shift position sensor

Position P: Signal A= LOW

Position R: Signal A= LOW

Position N: Signal A = HIGH

Position D: Signal A = HIGH

Position 4: Signal A= LOW

Position 3: Signal A= LOW

Position L: Signal A = HIGH

GEAR-SHIFT POSITION SENSOR SIGNAL B

Gear selector assembly with:

7 positions = PRND43L

Geartronic = PRND3

LOW = The signal is grounded in the gear-shift position sensor

HIGH = The signal is not grounded in the gear-shift position sensor

Position P: Signal B = HIGH

Position R: Signal B = LOW

Position N: Signal B = LOW

Position D: Signal B = LOW

Position 4: Signal B = LOW

Position 3: Signal B = HIGH

Position L: Signal B = HIGH

GEAR-SHIFT POSITION SENSOR SIGNAL C

Gear selector assembly with:

7 positions = PRND43L

Geartronic = PRND3

LOW = The signal is grounded in the gear-shift position sensor

HIGH = The signal is not grounded in the gear-shift position sensor

Position P: Signal C= HIGH

Position R: Signal C= HIGH

Position N: Signal C= HIGH

Position D: Signal C= LOW

Position 4: Signal B = LOW

Position 3: Signal B = LOW

Position L: Signal C= LOW

GEAR-SHIFT POSITION SENSOR SIGNAL PA

Gear selector assembly with:

7 positions = PRND43L

Geartronic = PRND3

LOW = The signal is grounded in the gear-shift position sensor

HIGH = The signal is not grounded in the gear-shift position sensor

Position P: Signal C= LOW

Position R: Signal C= HIGH

Position N: Signal C= LOW

Position D: Signal C= HIGH

Position 4: Signal C= LOW

Position 3: Signal C= HIGH

Position L: Signal C= LOW

QUICK SHIFT MODE (GEARTRONIC)

Applies to gear selector assembly with Geartronic.

The value indicates whether the quick shift mode is selected or not.

ON = The gear selector in position P/R/N/D

ON = The gear selector in Geartronic

QUICK SHIFT SHIFTING FROM THE GEAR SELECTOR MODULE (GSM) (GEARTRONIC)

Applies to gear selector assembly with Geartronic.

The value indicates which function the gear selector module (GSM) transmits to the gearbox control module (TCM).

No shift = No geartronic function

Increase gear = Shift up

Decrease gear = Shift down

QUICK SHIFT STATUS ACCORDING TO THE GEARBOX CONTROL MODULE (TCM) (GEARTRONIC)

Applies to gear selector assembly with Geartronic.

The value indicates the shifting program that the control module has selected. The control module has selected the program based on the signal from the gear selector.

Normal = P/R/N/D

Quick shift = Geartronic

WINTER MODE

The value indicates the shifting program that the control module has selected. The control module has selected the program based on the signal from the mode selector. W = Winter mode.

Engaged = Winter mode engaged

Disengaged = Winter mode disengaged

SHIFT SOLENOIDS S1, S2, S3, S4, S5

OFF = The solenoid is not activated

ON = The solenoid is activated

BRAKE LAMP SWITCH

The engine control module (ECM) transmits a signal on the Control area network (CAN) indicating whether the brake lamp switch is activated or not. The gearbox control module (TCM) uses the signal for the internal gear functions and diagnosing the gearbox.

OFF = Brake lamp switch unaffected

ON = Brake lamp switch affected

KICKDOWN

If the kickdown function parameter in the accelerator pedal (AP) is passed (approx 87 %) kickdown is activated. During fast acceleration, the accelerator pedal (AP) is depressed to approximately 87 %, the gearbox control module (TCM) gives the signal for kickdown.

OFF = Kickdown is not activated

ON = Kickdown is activated

DIAGNOSTIC TROUBLE CODES (DTCS), GEARBOX CONTROL MODULE (TCM)

The value indicates whether there are any diagnostic trouble codes (DTCs) stored in the gearbox control module (TCM).

- At least one diagnostic trouble code (DTC) stored
- No diagnostic trouble code (DTC) stored.

DIAGNOSTIC CHECKS, GEARBOX CONTROL MODULE (TCM)

The value indicates whether the gearbox control module (TCM) has carried out a complete diagnosis.

- At least one diagnostic test not completed
- All diagnostic tests complete.

PARAMETERS, VALUE

ENGINE SPEED (RPM)

The engine control module (ECM) transmits the engine speed (RPM) on the Control area network (CAN) from which the gearbox control module (TCM) retrieves the signal which it then compares with its own speed sensor signal.

Measurement range: 0 - 8191 rpm

Idling speed: 850 rpm

GEARBOX SPEED SENSOR, INPUT SPEED

The speed can be generated with the engine idling and the gear selector in P/N position. If the gear selector is in any other position, a gear is engaged and the gearbox input shaft is connected to the output shaft and an RPM will not be indicated until the car is driven. Depending on slippage in the torque converter the gearbox speed and the engine speed will differ when the lock-up function is not engaged. With lock-up engaged the gearbox speed should be the same as engine speed (RPM).

Measuring range (rpm): 0 - max. rpm

TCM OUTPUT SPEED SENSOR, CALCULATED SPEED

The control module receives a signal from the gearbox speed sensor which is affected by a toothed pulse wheel and calculates the vehicle speed based on the signal. The speed sensor is an "active" sensor. The signal oscillates between a peak and a trough value. The control module calculates the speed which is directly proportional to the frequency.

Measurement range: 0 km/h - top speed

VEHICLE SPEED ABS

The ABS control module transmits a signal indicating the vehicle speed on the Control area network (CAN) from where the gearbox control module (TCM) retrieves the signal. The gearbox control module (TCM) compares it with the signal from the gearbox speed sensor.

Measurement range: 0 km/h - top speed

THROTTLE, POSITION

The engine control module (ECM) transmits the accelerator pedal (AP) position on the Control area network (CAN) from where the gearbox control module (TCM) retrieves the signal. The signal is used to regulate the system pressure in the gearbox.

Measurement range: 0 - 100 %

>99 % = kickdown

BATTERY VOLTAGE

The value indicates battery voltage at the control module.

Measurement range: 0.0 -25.5 V

THE OIL TEMPERATURE SENSOR SIGNAL

The value indicates the oil temperature sensor signal. Voltage decreases with increased sensor temperature.

Measurement range: 0.0 -5.0 V

AW 55-50:

Cold gearbox (+20°C): approximately 2.4 V

Hot gearbox (+100°C): 0.3 -0.5 V

OIL TEMPERATURE

The gearbox control module (TCM) calculates the temperature from the oil temperature sensor signal.

Measurement range: -60 - +180°C

LOCK-UP SOLENOID SLU, AMPERAGE

The value indicates the amperage passing through the solenoid circuit. A lower amperage gives a higher reference pressure, which gives a higher line pressure.

Measurement range: 0.0-1.5 A

Normal value at closed throttle: approximately 280 mA

LINE PRESSURE SOLENOID SLS, AMPERAGE

The value indicates the amperage passing through the solenoid circuit. A lower amperage gives a higher reference pressure, which gives a higher line pressure.

Measurement range: 0.0-1.5 A

Normal value at closed throttle: 280 mA

LINE PRESSURE SOLENOID SLT, AMPERAGE

The value indicates the amperage passing through the solenoid circuit. A lower amperage gives a higher reference pressure, which gives a higher line pressure. Solenoid control is directly dependent on the throttle sensor signal. The higher the signal from the throttle sensor the lower the amperage through the solenoid and therefore the higher the line pressure.

Measurement range: 0.0-1.5 A

Normal value at closed throttle: approximately 1000 mA

GEAR RATIOS

The value indicates the gearbox gear ratio. The control module uses the input and output speeds to calculate the gear ratio. For the correct gear ratio, see the table below

Gear	AW55-50
R	3.234
1	4.769
2	2.994
3	1.957
4	1.324
5	1.018

EXPECTED GEAR RATIO

The value indicates the gear ratio expected by the transmission control module (TCM). Compare the values with the " Gear ratio" table.

ENGINE TORQUE

The signal displays the calculated output torque of the engine.

Measurement range: -512 - +511 Nm

511 = No torque limiting request

TORQUE CONTROL

Torque reduction occurs through control of the ignition and is used to lower the engine torque while shifting for smoother gearshifts and longer service life. Torque reduction is activated at the same time that shifting starts.

Measurement range: 0 - 511 Nm

TORQUE LIMITING REQUESTED

The signal displays torque limiting and is used to limit the torque of the engine continuously in those cases where the maximum permitted torque limit of the gearbox would otherwise have been exceeded. To reach the desired reduction level the engine control module (ECM) uses a mixture of ignition reduction and throttle control.

Measurement range: -512 - +511 Nm

511 = No torque limiting request

ENGINE CONTROL MODULE (ECM) ENGINE COOLANT TEMPERATURE (ECT)

The engine control module (ECM) transmits a signal indicating the engine coolant temperature (ECT) on the

Control area network (CAN). The automatic gearbox uses the signal to govern lock-up.

Measurement range: -60 - +195°C

TEXT TRANSMITTED TO THE DRIVER INFORMATION MODULE (DIM)

In the event of a service reminder indicator fault, the gearbox control module (TCM) transmits a message to the driver information module (DIM). The text is displayed in the combined instrument panel display.

1 = GEARBOX SERVICE URGENT

2 = GEARBOXSERVICE REQUIRED

3 = GEARBOX FIX NEXT SERVICE

4 = GEARBOX OILTEMP HIGH

5 = CHANGE TRANS OIL AT NEXT SERVICE

DESCRIPTION OF READING OFF OF EXTENDED DIAGNOSTIC TROUBLE CODE (DTC) INFORMATION

CONTENT

Select type of description:

- see **STATUS IDENTIFIER, DESCRIPTION**
- see **COUNTERS, DESCRIPTION**
- see **FROZEN VALUES FOR THE TRANSMISSION CONTROL MODULE (TCM), DESCRIPTION**

VEHICLE COMMUNICATION INFORMATION, TRANSMISSION CONTROL MODULE (TCM) (B6324S, TF-80SC; B6324S, TF-80SC AWD; 2007-2010)

DESCRIPTION OF ACTIVATIONS

ACTIVATIONS OF COMPONENTS

With this feature a number of components can be activated for checking its function. Components that can be activated are as follows.

NOTE: **The noise level from the solenoids can be high, depending on the temperature of the transmission and the oil. When the transmission is warm or very cold, the noise level can be very low.**

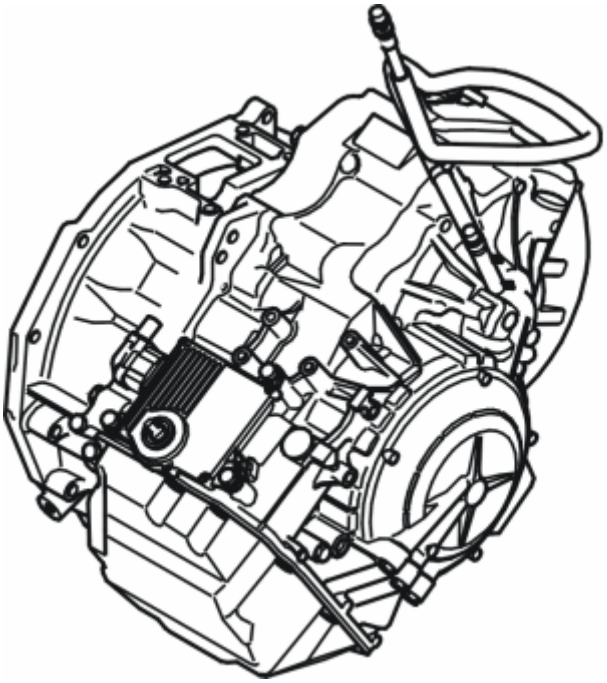

Fig. 1: Identifying Transmission
Courtesy of VOLVO CARS CORPORATION

GEAR SHIFT SOLENOID S1, S2

Activation of shift solenoid S1, S2

"Click sound" in the transmission (use stethoscope) and status shall switch between OFF/ON.

SYSTEM PRESSURE SOLENOID SLT, SLU, SLB1, SLC1, SLC2, SLC3

Activation of Linear pressure solenoid.

"Click sound" in the transmission (use stethoscope) and the current shall vary between 0 and approx.950 mA.

DESCRIPTION OF EXTENDED DIAGNOSTIC TROUBLE CODE (DTC) INFORMATION

CONTENTS

Select type of description.

- see **DESCRIPTION OF FROZEN VALUES**
- see **DESCRIPTION OF STATUS IDENTIFIER**
- see **DESCRIPTION OF COUNTER**

DESCRIPTION OF FROZEN VALUES

GENERAL

Frozen values are parameter values that are stored when a diagnostic trouble code (DTC) is stored.

Not all the parameters described need to be implemented in the control module. This varies from system to system. Parameters can also vary depending on with which type of transmission the vehicle is equipped.

Certain parameters can be displayed without a value or with unreasonable values. This can occur if the control module has not stored a value, when a basic value has been stored instead or if the parameter is received via the CAN-network when there is an error on the CAN-network. For example, the rpm values may be unreasonable if a malfunction occurs for the transmission's speed sensors.

Definition of an operating cycle

The definition of an operating cycle varies depending on the software version.

Alternative definitions

- Ignition switched off, then switched on and finally switched off again
- Ignition switched off, the engine started and finally the ignition switched off again
- Ignition switched off, engine started, driven at a speed above 30 km/h for more than 3 minutes and finally the ignition switched off again.

DIAGNOSTIC TROUBLE CODE (DTC)

The diagnostic trouble code (DTC) for which the frozen values are stored.

GLOBAL TIME

The value shows the time since the Central Electronic Module (CEM) was supplied with voltage the first time. Transmission Control Module (TCM) obtains the value via the CAN-net from Central Electronic Module (CEM). The value is given in minutes.

OUTSIDE TEMPERATURE

The value indicates the outside temperature when the diagnostic trouble code (DTC) was stored. The transmission control module (TCM) obtains the value via the CAN-net from the central electronic module (CEM). The value is given in °C.

MECU POWER SUPPLY

The value indicates the voltage in volts. The first and last time the diagnostic trouble code (DTC) was stored. The transmission control module (TCM) obtains the value via the CAN-net from the central electronic module (CEM). The value is given in volts (V).

POWER SUPPLY CONTROL MODULE

The value indicates the system voltage. The value is given in volts (V).

DISTANCE

The value indicates the total driving distance of the car when the diagnostic trouble code was stored. The transmission control module (TCM) obtains the value from the central electronic module (CEM) via the CAN network.

POWER SUPPLY MODE

The value indicates the current status of the power supply mode.

GEAR POSITION SENSOR, POSITION

The value indicates the position of the gear selector based on the signal from the gear position sensor. The following values can be displayed: P, R, N, D.

VEHICLE SPEED (TCM)

The value shows the vehicle's speed. The speed is calculated from the transmission's speed, rpm sensor (input and output rpm) as well as speed signal from Brake Control Module (BCM).

CALCULATED SPEED

The value indicates the speed calculated from the signal from the transmission's rpm sensor (output rpm)

ENGINE SPEED (RPM)

The engine control module (ECM) transmits engine speed on the CAN network. The transmission control module (TCM) retrieves the signal from the CAN network and compares it to the signal from its rpm sensor (input rpm).

The value indicates the engine speed (RPM).

ENGINE TORQUE

The value indicates the engine torque. The value is given in Nm.

GEAR ACCORDING TO THE SHIFT SOLENOIDS

The value indicates the selected gear (according to the shift solenoids). The value indicated depends on the transmission type.

The following values can be shown: reverse gear, gear 1, gear 2, gear 3, gear 4, gear 5 and gear 6.

LOCK-UP FUNCTION ACCORDING TO SOLENOIDS

The value indicates the status of the Lock-up function according to how the control module has activated the solenoids.

No Lock-up/Slipping lock-up/Locked lock-up.

OIL TEMPERATURE

The value indicates the temperature of the transmission oil. The value is calculated based on the oil temperature sensor's signal and is given in °C.

EXPECTED GEAR RATIO

The value shows the gear ratio that is expected by transmission's control module (TCM).

CURRENT GEAR RATIO

The value indicates the transmission's gear ratio.

INPUT SPEED

The value indicates the input rpm from the transmission's rpm sensor. Rpm can be generated with the engine idling and the gear selector in P/N position. If the gear selector is in any other position, a gear is engaged and the transmission input shaft is connected to the output shaft and an rpm is first shown when the vehicle is driven. Depending on the slip in the torque converter, the transmission's rpm and the engine rpm will differ when lock-up is not engaged. With lock-up engaged the rpm should be the same as engine rpm.

OUTPUT SPEED

The value indicates the output speed calculated based on the signal from the transmission's rpm sensor (output rpm). The value is given in rpm.

SHIFT SOLENOIDS S1-S2 STATUS

The value indicates the status of shift solenoids S1 - S2.

OFF = Solenoid not activated.

ON = Solenoid activated.

HINT: If the value for shift solenoid S1-S2, which is activated by the transmission control module (TCM), is OFF and the status of shift solenoid S1-S2 is ON, the solenoid circuit is either open or short circuited to supply voltage. If the value for shift solenoid S1-S2, which is activated by the transmission control module (TCM), ON and its status is OFF, the solenoid circuit is short circuited to ground.

LINEAR PRESSURE SOLENOID SLT, SLU, SLB1, SLC1, SLC2, SLC3 CURRENT

The value shows the current through the solenoid and is given in milliampere (mA).

LINEAR PRESSURE SOLENOID SLT, SLU, SLB1, SLC1, SLC2, SLC3 REQUESTED CURRENT

The value shows requested current for activating the solenoid. The value is given in milliampere (mA).

EXPECTED GEAR

The value indicates expected gears 1-6.

LOCK-UP FUNCTION ACCORDING TO SOLENOIDS

The value indicates the status of the Lock-up function.

- No Lock-up function.
- Slipping Lock-up function.
- Locked lock-up function.

EXPECTED LOCK-UP FUNCTION

The value indicates the status of the Lock-up function.

Active = Lock-up function engaged.

Not active = Lock-up function not engaged.

SLIPPING LOCK-UP

The value shows the difference in rpm between the engine and transmission.

START LOCKOUT, STATUS

The value indicates the status of the solenoid for the start lockout function.

Start permitted/Start not permitted.

ACCELERATOR PEDAL (AP) POSITION

The value indicates the position of the accelerator pedal (AP). The transmission control module (TCM) obtains the value via the CAN-net from the engine control module (ECM). The value is given in %.

LIN-COMMUNICATION STATUS

The value shows status of the communication between Gear Selector Module (GSM) and Transmission Control Module (TCM).

GEAR SELECTOR ASSEMBLY FUNCTIONALITY, STATUS

The value indicates the status of gear selector assembly functionality

DESCRIPTION OF PARAMETERS

PARAMETERS, STATUS

GENERAL

Some values differ from those indicated in the signal description, see **SIGNAL SPECIFICATION** . This is because the read values are calculated and filtered by the Transmission Control Module (TCM). In certain

cases, the engine must be running in order to obtain the relevant values.

KICKDOWN, STATUS

The value indicates the status of the kickdown function. If kickdown function's limit value in the accelerator pedal (approx. 87%) is passed, kickdown is activated. Upon quick acceleration (accelerator pedal depressed to approx. 87%), the Transmission Control Module (TCM) transmits a signal for kickdown.

Not active = Kickdown not activated

Active = Kickdown activated

STOP LAMP SWITCH, STATUS

The value indicates the status of the brake light switch. The Engine Control Module (ECM) transmits a signal on the CAN network to indicate the position of the brake light switch: activated or not activated. The Transmission Control Module (TCM) uses the signal for internal shift functions and for transmission diagnostics.

Not active = Stop lamp switch not affected

Active = Brake light switch actuated

LOCK-UP FUNCTION ACCORDING TO SOLENOIDS

The value displays the lock-up function status according to how the solenoids are controlled.

No lock-up

Slipping Lock-up

Lock up (engaged)

GEAR POSITION SENSOR

The values shows the position of the gear position sensor.

Position P/R/N/D can be indicated.

HINT: Position D is indicated in both D mode and Geartronic mode.

GEARTRONIC STATUS

The value indicates whether or not Geartronic is selected. Signal from the Gear Selector Module (GSM) to the Transmission Control Module (TCM).

Not active = Gear selector lever in P/R/N/D

Active = Gear selector lever in Geartronic

GEARTRONIC UPSHIFT (+)

The value displays which function the gear selector module (GSM) transmits to the transmission control module (TCM).

No = No request up shift

Yes = Request up shift

GEARTRONIC DOWNSHIFT (-)

The value displays which function the gear selector module (GSM) transmits to the transmission control module (TCM).

No = No request down shift

Yes = Request down shift

SHIFTLOCK, STATUS REQUEST

The value indicates the status for shiftlock in the shift lever bracket. The Transmission Control Module (TCM) regulates a solenoid in the shift lever bracket. The solenoid locks the gear selector.

Active = Solenoid locks the gear selector.

Not active = Solenoid allows gear selector movement.

IMMOBILIZER, STATUS REQUEST

The value displays the status of the park neutral position (PNP) switch. The transmission control module (TCM) receives a signal from the gear selector module (GSM) about which position the gear selector lever is in. If the gear selector lever is in a position other than P or N the engine is prevented form starting by the transmission control module (TCM) activating the park neutral position (PNP) switch relay.

Start permitted.

Start not permitted.

GEAR ACCORDING TO THE SOLENOIDS

The value indicates the currently engaged gear based on the position of the solenoids.

- R
- Gear 1
- Gear 2

- Gear 3
- Gear 4
- Gear 5
- Gear 6

GEAR SHIFT SOLENOID S1, S2

The value displays the solenoid status.

OFF = Solenoid not activated

ON = The solenoid is activated

REQUEST TO LIGHT MALFUNCTION INDICATOR LAMP (MIL)

The value displays which and in which way transmission control module (TCM) requests the malfunction indicator lamp (MIL) to light.

No = No request.

Yes (continuously) = Request for continuously lit lamp.

Yes (flashing) = Request for flashing lamp.

REQUESTED TEXT MESSAGE

The value displays if the transmission control module (TCM) requests that a text message is displayed in the driver information module (DIM).

No = No request.

Yes = Request to display message.

PARAMETERS, VALUE

ENGINE SPEED (RPM)

The value indicates engine speed. The Transmission Control Module (TCM) obtains the value from the Engine Control Module (ECM) via CAN. The Transmission Control Module (TCM) compares the signal with its own engine speed sensor signal.

Measurement range: 0 - 8191 rpm.

Idling speed: 850 rpm

ENGINE TORQUE

The value indicates current engine torque. The Transmission Control Module (TCM) obtains the value from the Engine Control Module (ECM) via CAN.

Measurement range: -512 - +511 Nm.

ACCELERATOR PEDAL (AP) POSITION

The value indicates the accelerator pedal position. The Transmission Control Module (TCM) obtains the value from the Engine Control Module (ECM) via CAN. The Transmission Control Module (TCM) uses the signal to regulate system pressure in the transmission.

Measurement range: 0-100%.

>87% = kickdown.

ENGINE COOLANT TEMPERATURE (ECT)

The value indicates engine temperature. The Transmission Control Module (TCM) obtains the value from the Engine Control Module (ECM) via CAN. The Transmission Control Module (TCM) uses the signal to regulate lock-up.

Measurement range: 60 - +195 °C.

OIL TEMPERATURE

The value indicates transmission fluid temperature. The Transmission Control Module (TCM) calculates the temperature from the oil temperature sensor signal.

Measurement range: -100 - +200 °C.

VEHICLE SPEED, TRANSMISSION CONTROL MODULE (TCM)

The value indicates vehicle speed. The Transmission Control Module (TCM) receives a signal from the transmission speed sensor, which is actuated by toothed pulse gear and uses the signal to calculate vehicle speed. The speed sensor is a so-called active sensor. The signal oscillates between a peak and a valley value. The Transmission Control Module (TCM) calculates speed, which is in direct proportion to the frequency.

Measurement range: 0 - 655 km/h.

SPEED SIGNAL FROM BRAKE CONTROL MODULE (BCM)

The value indicates output speed. The Transmission Control Module (TCM) obtains the value from the Brake Control Module (BCM) via CAN. The Transmission Control Module (TCM) compares the signal with the signal from the transmission speed sensor.

Measurement range: 0 - 320 km/h.

INPUT SPEED SENSOR, TRANSMISSION

The value displays the input speed (rpm). With the engine at idle speed and the gear selector lever in P/N position the speed (rpm) can be generated. If the gear selector lever is in another position a gear is engaged and the transmission input shaft engages with the output shaft. The speed (rpm) is displayed when the vehicle is driven. Depending on the slippage in the torque converter the transmission speed (rpm) and the engine speed (rpm) will differ when lock-up is not engaged. With lock-up engaged the transmission speed (rpm) must be the same as the engine speed (rpm).

Measurement range: 0 - 10000 rpm.

OUTPUT SPEED, TRANSMISSION SPEED SENSOR

the value displays the output speed (rpm). The transmission control module (TCM) receives a signal from the transmission speed sensor which is affected by a toothed wheel on the output shaft. The value can be compared with the calculated value from the brake control module (BCM).

Measurement range: 0 - 10 000 rpm.

OUTPUT SPEED FROM BRAKE CONTROL MODULE (BCM)

The value indicates output speed. The Transmission Control Module (TCM) converts the speed signal from the Brake Control Module (BCM) to rpm. This value can be compared with the rpm from the transmission speed sensor.

Measurement range: 0 - 10 000 rpm.

LINEAR PRESSURE SOLENOID SLC1, SLC2, SLC3, SLB1 CURRENT

The value indicates the amperage passing through the solenoid circuit. A lower amperage gives a higher reference pressure, which gives a higher line pressure.

Measurement range: 0 - 1000 mA.

LINEAR PRESSURE SOLENOID SLC1, SLC2, SLC3, SLB1 REQUESTED CURRENT

The value indicates requested current strength from the Transmission Control Module (TCM) to the solenoid. The value can be used for comparison with the read value in the circuit.

Measurement range: 0 - 1000 mA.

LOCK-UP SOLENOID SLU, CURRENT

The value displays the current passing through the solenoid circuit. Low current gives a higher control pressure which results in a higher line pressure.

Measurement range: 0 - 1000 mA.

LOCK-UP SOLENOID SLU, REQUESTED CURRENT

The value indicates requested current strength from the Transmission Control Module (TCM) to the solenoid. The value can be used for comparison with the read value in the circuit.

Measurement range: 0 - 1000 mA.

LINEAR PRESSURE SOLENOID SLT, CURRENT

The value indicates the current passing through the solenoid circuit. Low current gives a higher control pressure which results in a higher system pressure. Solenoid control is directly dependent on the accelerator pedal signal. The higher the signal from the accelerator pedal sensor, the lower the current through the solenoid and therefore the higher the system pressure.

Measurement range: 0 - 1000 mA.

Normal value with accelerator pedal released: approx. 1000 mA.

LINEAR PRESSURE SOLENOID SLT, REQUESTED CURRENT

The value indicates requested current strength from the Transmission Control Module (TCM) to the solenoid. The value can be used for comparison with the read value in the circuit.

Measurement range: 0 - 1000 mA.

POWER SUPPLY CONTROL MODULE

The value indicates battery voltage at Transmission Control Module (TCM).

Measurement range: 0 - 25.5 V.

CURRENT GEAR RATIO

The value indicates the transmission's gear ratio. The Transmission Control Module (TCM) uses input speed and output speed (vehicle speed) to calculate the gear ratio. For actual gear ratio, see the table below.

Gear	TF-80SC
R	3.394
1	4.148
2	2.370
3	1.556
4	1.155
5	0.859
6	0.686

EXPECTED GEAR RATIO

The value indicates which gear ratio the Transmission Control Module (TCM) expects. Compare the value with the table for "Current gear ratio."

PASSENGER COMPARTMENT TEMPERATURE

The value displays the passenger compartment temperature. The transmission control module (TCM) obtains the value from the central electronic module (CEM) via the controller area network (CAN).

Measurement range: -60 to +195 °C.

If a temperature of +194 °C or +195 °C is displayed the value from the controller area network (CAN) is faulty according to the transmission control module (TCM).

OUTSIDE TEMPERATURE

The value displays the outside temperature. The transmission control module (TCM) obtains the value from the central electronic module (CEM) via the controller area network (CAN).

Measurement range: -128 to +127 °C.

If a temperature of +126 °C or +127 °C is displayed the value from the controller area network (CAN) is faulty according to the transmission control module (TCM).

MECU POWER SUPPLY

The value indicates battery voltage at the Central Electronic Module (CEM). The Accessory Electronic Module (AEM) obtains the value from the Central Electronic Module (CEM) via CAN.

Measurement range: 5-38 V.

Normal value when alternator is charging: 13.0 - 14.5 V.

If a voltage of 36.75 V or 36.875 V is displayed, the value from the controller area network (CAN) is faulty according to the transmission control module (TCM).

DISTANCE

The value displays the distance driven. The transmission control module (TCM) obtains the value from the central electronic module (CEM) via the controller area network (CAN).

Measurement range: 0 - 1, 048, 575 km (651, 554 miles)

If a distance of 16, 777, 214 km or 16, 777, 215 km is displayed the value from the controller area network (CAN) is faulty according to the transmission control module (TCM).

POWER SUPPLY MODE

The value indicates the current status of the power supply mode.

- Key removed
- Key recently removed

- Key approved
- Ignition off after Accessory position
- Accessory position
- Accessory position after Ignition on
- Ignition on
- Running
- Start attempt
- Signal missing

VEHICLE COMMUNICATION INFORMATION, TRANSMISSION CONTROL MODULE (TCM) (B6324S5, TF-80SC; B6324S5, TF-80SC AWD; 2011-2012)

DESCRIPTION OF ACTIVATIONS

see **DESCRIPTION OF ACTIVATIONS**

DESCRIPTION OF EXTENDED DIAGNOSTIC TROUBLE CODE (DTC) INFORMATION

see **DESCRIPTION OF EXTENDED DIAGNOSTIC TROUBLE CODE (DTC) INFORMATION**

DESCRIPTION OF PARAMETERS

see **DESCRIPTION OF PARAMETERS**

VEHICLE COMMUNICATION INFORMATION, TRANSMISSION CONTROL MODULE (TCM) (B8444S, TF-80SC AWD; 2006-2011)

DESCRIPTION OF ACTIVATIONS

ACTIVATIONS OF COMPONENTS

With this feature a number of components can be activated for checking its function. Components that can be activated are as follows.

NOTE: **The noise level from the solenoids can be high, depending on the temperature of the transmission and the oil. When the transmission is warm or very cold, the noise level can be very low.**

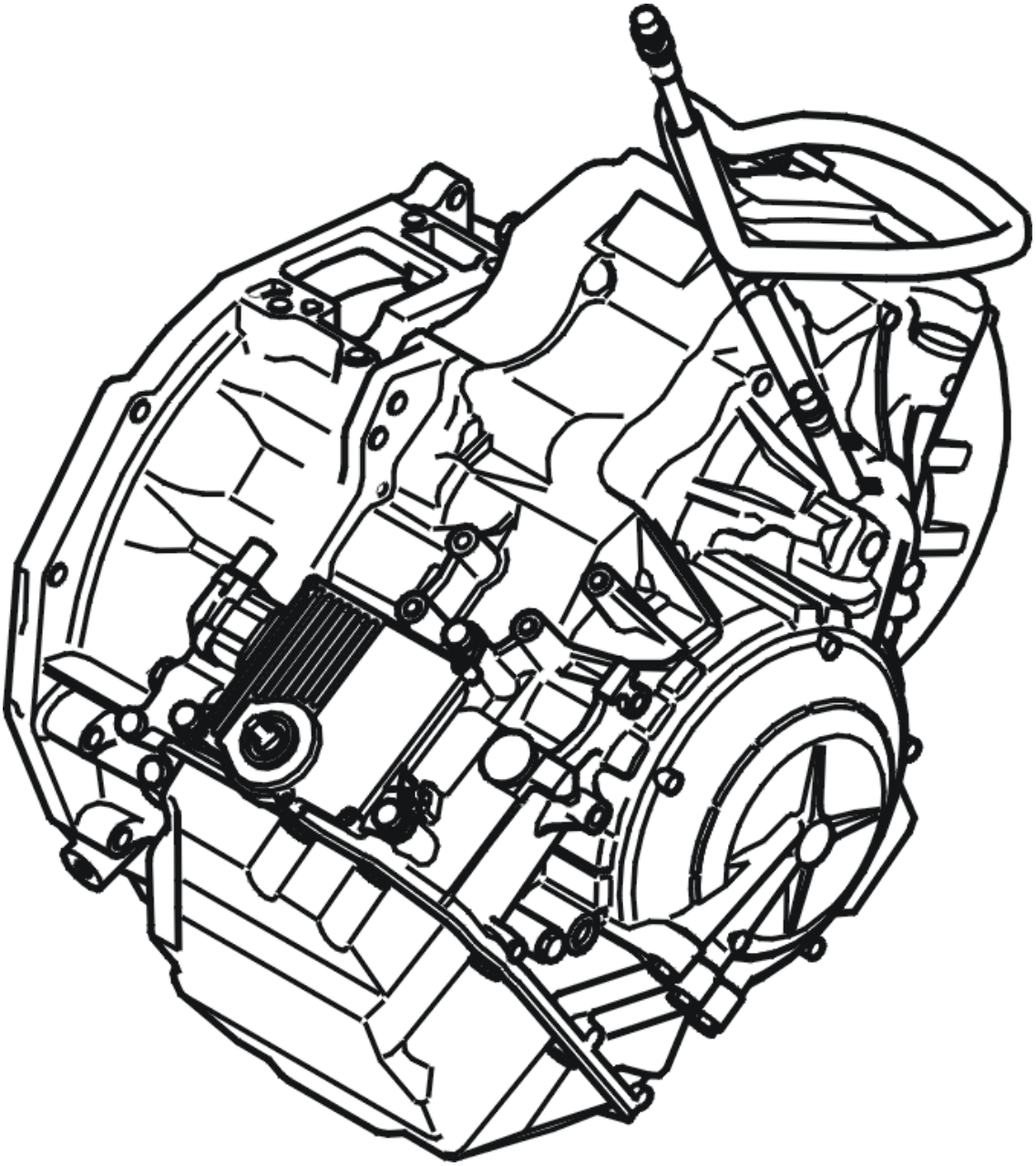

Fig. 2: Identifying Transmission
Courtesy of VOLVO CARS CORPORATION

GEAR SHIFT SOLENOID S1, S2

Activation of shift solenoid S1, S2

"Click sound" in the transmission (use stethoscope) and status shall switch between OFF/ON.

SYSTEM PRESSURE SOLENOID SLT, SLU, SLB1, SLC1, SLC2, SLC3

Activation of Linear pressure solenoid.

"Click sound" in the transmission (use stethoscope) and the current shall vary between 0 and approx.950 mA.

DESCRIPTION OF EXTENDED DIAGNOSTIC TROUBLE CODE (DTC) INFORMATION

CONTENTS

Select type of description.

- see **DESCRIPTION OF FROZEN VALUES**
- see **STATUS IDENTIFIER, DESCRIPTION**
- see **COUNTERS, DESCRIPTION**

DESCRIPTION OF FROZEN VALUES

GENERAL

Frozen values are parameter values that are stored when a diagnostic trouble code (DTC) is generated.

Not all the parameters described need to be implemented in the control module. This varies from system to system. Parameters can also vary depending on with which type of transmission the car is equipped.

Certain parameters can be displayed without a value or with unreasonable values. This can occur if the control module has not stored a value, when a basic value has been stored instead or if the parameter is received via the CAN-network when there is an error on the CAN-network. For example, the rpm values may be unreasonable if a malfunction occurs for the transmission's speed sensors.

Definition of an operating cycle

The definition of an operating cycle varies depending on the software version.

Alternative definitions

- The ignition has been switched off, then switched on and finally switched off again
- The ignition has been switched off, the engine started and finally the ignition switched off again
- The ignition has been off, the engine started, the car driven at a speed above 30 km/h for more than 3 minutes and finally the ignition switched off again.

DIAGNOSTIC TROUBLE CODE (DTC)

The diagnostic trouble code (DTC) for which the frozen values are stored.

ENGINE, RUNNING

The value indicates the status of the engine when the diagnostic trouble code (DTC) was stored.

OFF = Engine not running.

On = Engine running.

GLOBAL TIME

The value shows the time since the Central Electronic Module (CEM) was supplied with voltage the first time. Transmission Control Module (TCM) obtains the value via the CAN-net from Central Electronic Module (CEM). The value is given in minutes.

OUTSIDE TEMPERATURE

The value indicates the outside temperature when the diagnostic trouble code (DTC) was stored. The transmission control module (TCM) obtains the value via the controller area network (CAN) from the central electronic module (CEM). The value is given in °C.

BATTERY VOLTAGE, CENTRAL ELECTRONIC MODULE (CEM)

The value indicates the voltage in volts. The first and last time the diagnostic trouble code (DTC) was stored. The transmission control module (TCM) obtains the value via the controller area network (CAN) from the central electronic module (CEM). The value is given in volts (V).

VOLTAGE FEED CONTROL MODULE

The value indicates the system voltage. The value is given in volts (V).

MILEAGE

The value indicates the total mileage of the car at the time the diagnostic trouble code (DTC) was stored. The transmission control module (TCM) obtains the value via the controller area network (CAN) from the central electronic module.

START KEY POSITION

The value shows the start key's position.

GEAR POSITION SENSOR, POSITION

The value indicates the position of the gear selector based on the signal from the gear-shift position sensor. The following values can be displayed:

BRAKE PEDAL'S POSITION

The value shows the position of the brake pedal. Transmission Control Module (TCM) obtains the value via the CAN-net from Brake Control Module (BCM). The value is given in %.

VEHICLE SPEED (TCM)

The value shows the vehicle's speed. The speed is calculated from the transmission's speed, speed sensor and rpm sensor as well as speed signal from Brake Control Module (BCM).

ENGINE SPEED (RPM)

Engine Control Module (ECM) sends out the engine's rpm on the CAN-net. Transmission Control Module retrieves the signal via the CAN-net to compare it with the own rpm sensor's signal.

The value indicates the engine speed.

ENGINE TORQUE

The value indicates the engine torque. The value is given in Nm.

GEAR ACCORDING TO THE SHIFT SOLENOIDS

The value indicates the selected gear. The value indicated depends on the transmission type.

The following values can be shown: reverse gear, gear 1, gear 2, gear 3, gear 4, gear 5 and gear 6.

LOCK-UP FUNCTION ACCORDING TO SOLENOIDS

The value indicates the status of the Lock-up function according to how the control module has activated the solenoids.

No Lock-up/Slipping lock-up/Locked lock-up.

OIL TEMPERATURE

The value indicates the temperature of the transmission oil. The value is calculated based on the oil temperature sensor's signal and is given in °C.

EXPECTED GEAR RATIO

The value shows the gear ratio that is expected by transmission's control module.

CURRENT GEAR RATIO

The value indicates the transmission's gear ratio.

INPUT SPEED

The value indicates the input speed from the transmission's speed sensor. Rpm can be generated with the engine idling and the gear selector in P/N position. If the gear selector is in any other position, a gear is engaged and the transmission input shaft is connected to the output shaft and an rpm is first shown when the vehicle is driven. Depending on the slip in the torque converter, the transmission's rpm and the engine rpm will differ when lock-up is not engaged. With lock-up engaged the rpm should be the same as engine rpm.

OUTPUT SPEED

The value shows the output rpm calculated based on the signal from the transmission's speed sensor. The value is given in r/min.

SHIFT SOLENOID STATUS

The value indicates the status of shift solenoid.

OFF = Solenoid not activated.

ON = Solenoid activated.

HINT: If the value for Shift solenoid, is activated by the TCM OFF is displayed and Shift solenoid status displays ON, the circuit for the solenoid is either open or has a short-circuit to supply voltage. If the value for Shift solenoid, is activated by the TCM ON is displayed and Shift solenoid status displays OFF, the circuit for the solenoid has a short-circuit to ground.

LINEAR SOLENOID CURRENT

The value shows the current through the solenoid and is given in milliampere (mA).

LINEAR SOLENOID REQUESTED CURRENT

The value shows requested current for activating the solenoid. The value is given in milliampere (mA).

EXPECTED GEAR

The value indicates expected gears 1-6.

LOCK-UP FUNCTION ACCORDING TO SOLENOIDS

The value indicates the status of the Lock-up function.

- No Lock-up function.
- Slipping Lock-up function.
- Locked lock-up function.

EXPECTED LOCK-UP FUNCTION

The value indicates the status of the Lock-up function.

Active = Lock-up function engaged.

Not active = Lock-up function not engaged.

SLIPPING LOCK-UP

The value shows the difference in rpm between the engine and transmission.

SHIFT-LOCK STATUS

The value indicates the status of the solenoid for the shift-lock function.

Active / Not active.

START LOCKOUT, STATUS

The value indicates the status of the solenoid for the start lockout function.

Start permitted/Start not permitted.

BRAKE PEDAL POSITION

The value shows the brake pedal's position in %.

SPEED SIGNAL FROM THE BRAKE CONTROL MODULE (BCM)

The value displays the vehicle speed. The transmission control module (TCM) obtains the value from the brake control module (BCM) via the controller area network (CAN).

ACCELERATOR PEDAL (AP) POSITION

The value indicates the position of the accelerator pedal (AP). The transmission control module (TCM) obtains the value via the CAN-net from the engine control module (ECM). The value is given in %.

LIN-COMMUNICATION STATUS

The value shows status of the communication between Gear Selector Module (GSM) and Transmission Control Module (TCM).

DESCRIPTION OF PARAMETERS

PARAMETERS, STATUS

GENERAL

Some values differ from those indicated in the signal description, see **SIGNAL DESCRIPTION** . This is because the read values are calculated and filtered by the Transmission Control Module (TCM). In certain cases, the engine must be running in order to obtain the relevant values.

KICKDOWN, STATUS

The value indicates the status of the kickdown function. If kickdown function's limit value in the accelerator pedal (approx. 87%) is passed, kickdown is activated. Upon quick acceleration (accelerator pedal depressed to approx. 87%), the Transmission Control Module (TCM) transmits a signal for kickdown.

Not active = Kickdown not activated

Active = Kickdown activated

STOP LAMP SWITCH, STATUS

The value indicates the status of the brake light switch. The Engine Control Module (ECM) transmits a signal on the CAN network to indicate the position of the brake light switch: activated or not activated. The Transmission Control Module (TCM) uses the signal for internal shift functions and for transmission diagnostics.

Not active = Stop lamp switch not affected

Active = Brake light switch actuated

LOCK-UP FUNCTION ACCORDING TO SOLENOIDS

The value displays the lock-up function status according to how the solenoids are controlled.

No lock-up

Slipping lock up

Lock up (engaged)

GEAR POSITION SENSOR

The values shows the position of the gear position sensor.

Position P/R/N/D can be indicated.

HINT: Position D is indicated in both D mode and Geartronic mode.

GEARTRONIC STATUS

The value indicates whether or not Geartronic is selected. Signal from the Gear Selector Module (GSM) to the Transmission Control Module (TCM).

Not active = Gear selector lever in P/R/N/D

Active = Gear selector lever in Geartronic

GEARTRONIC UPSHIFT (+)

The value displays which function the gear selector module (GSM) transmits to the transmission control module (TCM).

No = No request up shift

Yes = Request up shift

GEARTRONIC DOWNSHIFT (-)

The value displays which function the gear selector module (GSM) transmits to the transmission control module

(TCM).

No = No request down shift

Yes = Request down shift

GEAR SELECTOR, START POSITION

The value indicates the calculated position of the gear selector to permit engine start. Start is permitted in positions P and N.

Position P/R/N/D can be indicated.

HINT: Position D is indicated in both D mode and Geartronic mode.

GEAR SELECTOR, DIAGNOSTICS

The value indicates the calculated position of the gear selector to diagnose a correct gear position.

Position P/R/N/D/undefined R position/undefined D position can be indicated.

HINT: Position D is indicated in both D mode and Geartronic mode.

SHIFTLOCK, STATUS REQUEST

The value indicates the status for shiftlock in the shift lever bracket. The Transmission Control Module (TCM) regulates a solenoid in the shift lever bracket. The solenoid locks the gear selector.

Active = Solenoid locks the gear selector.

Not active = Solenoid allows gear selector movement.

IMMOBILIZER, STATUS REQUEST

The value displays the status of the park neutral position (PNP) switch. The transmission control module (TCM) receives a signal from the gear selector module (GSM) about which position the gear selector lever is in. If the gear selector lever is in a position other than P or N the engine is prevented form starting by the transmission control module (TCM) activating the park neutral position (PNP) switch relay.

Start permitted.

Start not permitted.

WINTER PROGRAM, STATUS

The value displays the shifting program which the transmission control module (TCM) has selected. The control module has a selected program after the signal from the **W** (winter position) program selector. The signal from the gear selector module (GSM) to the transmission control module (TCM).

Active = Winter position engaged.

Not active = Winter position disengaged.

GEAR ACCORDING TO THE SOLENOIDS

The value indicates the currently engaged gear based on the position of the solenoids.

- R
- Gear 1
- Gear 2
- Gear 3
- Gear 4
- Gear 5

SHIFT SOLENOIDS S1, S2, S3, S4, S5

The value displays the solenoid status.

OFF = Solenoid not activated

ON = Solenoid activated

REQUEST TO LIGHT MALFUNCTION INDICATOR LAMP (MIL)

The value displays which and in which way transmission control module (TCM) requests the malfunction indicator lamp (MIL) to light.

No = No request.

Yes (continuously) = Request for continuously lit lamp.

Yes (flashing) = Request for flashing lamp.

REQUESTED TEXT MESSAGE

The value displays if the transmission control module (TCM) requests that a text message is displayed in the driver information module (DIM).

No = No request.

Yes = Request to display message.

ENGINE RUNNING

The value displays the engine status. The transmission control module (TCM) obtains the value from the central electronic module (CEM) via the controller area network (CAN).

Yes = Engine running.

No = Engine switched off.

PARAMETERS, VALUE

ENGINE SPEED (RPM)

The value indicates engine speed. The Transmission Control Module (TCM) obtains the value from the Engine Control Module (ECM) via CAN. The Transmission Control Module (TCM) compares the signal with its own engine speed sensor signal.

Measurement range: 0 - 8191 rpm.

Idling speed: 850 rpm

ENGINE TORQUE

The value indicates current engine torque. The Transmission Control Module (TCM) obtains the value from the Engine Control Module (ECM) via CAN.

Measurement range: -512 - +511 Nm.

CALCULATED TORQUE TO TRANSMISSION

The value indicates engine torque that the Transmission Control Module (TCM) calculates the transmission obtains from the engine.

Measurement range: -512 - +511 Nm.

ACCELERATOR PEDAL (AP) POSITION

The value indicates the accelerator pedal position. The Transmission Control Module (TCM) obtains the value from the Engine Control Module (ECM) via CAN. The Transmission Control Module (TCM) uses the signal to regulate system pressure in the transmission.

Measurement range: 0-100%.

>87% = kickdown.

ENGINE COOLANT TEMPERATURE (ECT)

The value indicates engine temperature. The Transmission Control Module (TCM) obtains the value from the Engine Control Module (ECM) via CAN. The Transmission Control Module (TCM) uses the signal to regulate lock-up.

Measurement range: 60 - +195 °C

OIL TEMPERATURE

The value indicates transmission fluid temperature. The Transmission Control Module (TCM) calculates the temperature from the oil temperature sensor signal.

Measurement range: -100 - +200 °C

TRANSMISSION FLUID TEMPERATURE UPON START

The value indicates the temperature of the transmission fluid when the engine began the current operating cycle.

Measurement range: -100 - + 200 °C

FLUID TEMPERATURE WITHIN THE RANGE 100 - 110 °C / 110 - 120 °C / 120 - 130 °C / 130 - 140 °C / 140 - 150 °C / 150 °C -

The value indicates the total time the fluid temperature was within the current temperature interval.

Time is indicated in hours.

Measurement range: 0 - 29826 h.

VEHICLE SPEED, TRANSMISSION CONTROL MODULE (TCM)

The value indicates vehicle speed. The Transmission Control Module (TCM) receives a signal from the transmission speed sensor, which is actuated by toothed pulse gear and uses the signal to calculate vehicle speed. The speed sensor is a so-called active sensor. The signal oscillates between a peak and a valley value. The Transmission Control Module (TCM) calculates speed, which is in direct proportion to the frequency.

Measurement range: 0 - 655 km/h.

SPEED SIGNAL FROM BRAKE CONTROL MODULE (BCM)

The value indicates output speed. The Transmission Control Module (TCM) obtains the value from the Brake Control Module (BCM) via CAN. The Transmission Control Module (TCM) compares the signal with the signal from the transmission speed sensor.

Measurement range: 0 - 320 km/h.

INPUT SPEED SENSOR, TRANSMISSION

The value displays the input speed (rpm). With the engine at idle speed and the gear selector lever in P/N position the speed (rpm) can be generated. If the gear selector lever is in another position a gear is engaged and the transmission input shaft engages with the output shaft. The speed (rpm) is displayed when the vehicle is driven. Depending on the slippage in the torque converter the transmission speed (rpm) and the engine speed (rpm) will differ when lock-up is not engaged. With lock-up engaged the transmission speed (rpm) must be the same as the engine speed (rpm).

Measurement range: 0 - 10000 rpm.

OUTPUT SPEED, TRANSMISSION SPEED SENSOR

the value displays the output speed (rpm). The transmission control module (TCM) receives a signal from the transmission speed sensor which is affected by a toothed wheel on the output shaft. The value can be compared with the calculated value from the brake control module (BCM).

Measurement range: 0 - 10 000 rpm.

OUTPUT SPEED FROM BRAKE CONTROL MODULE (BCM)

The value indicates output speed. The Transmission Control Module (TCM) converts the speed signal from the Brake Control Module (BCM) to rpm. This value can be compared with the rpm from the transmission speed sensor.

Measurement range: 0 - 10 000 rpm.

LINEAR PRESSURE SOLENOID SLS, CURRENT

The value indicates the current passing through the solenoid circuit. Low current gives a higher control pressure which results in a higher system pressure.

Measurement range: 0 - 1000 mA.

LINEAR PRESSURE SOLENOID SLS, REQUESTED CURRENT

The value indicates requested current strength from the Transmission Control Module (TCM) to the solenoid. The value can be used for comparison with the read value in the circuit.

Measurement range: 0 - 1000 mA.

LOCK-UP SOLENOID SLU, CURRENT

The value displays the current passing through the solenoid circuit. Low current gives a higher control pressure which results in a higher line pressure.

Measurement range: 0 - 1000 mA.

LOCK-UP SOLENOID SLU, REQUESTED CURRENT

The value indicates requested current strength from the Transmission Control Module (TCM) to the solenoid. The value can be used for comparison with the read value in the circuit.

Measurement range: 0 - 1000 mA.

LINEAR PRESSURE SOLENOID SLT, CURRENT

The value indicates the current passing through the solenoid circuit. Low current gives a higher control pressure which results in a higher system pressure. Solenoid control is directly dependent on the accelerator pedal signal. The higher the signal from the accelerator pedal sensor, the lower the current through the solenoid and therefore

the higher the system pressure.

Measurement range: 0 - 1000 mA.

Normal value with accelerator pedal released: approx. 1000 mA.

LINEAR PRESSURE SOLENOID SLT, REQUESTED CURRENT

The value indicates requested current strength from the Transmission Control Module (TCM) to the solenoid. The value can be used for comparison with the read value in the circuit.

Measurement range: 0 - 1000 mA.

VOLTAGE SUPPLY CONTROL MODULE

The value indicates battery voltage at Transmission Control Module (TCM).

Measurement range: 0 - 25.5 V

CURRENT GEAR RATIO

The value indicates the transmission's gear ratio. The Transmission Control Module (TCM) uses input speed and output speed (vehicle speed) to calculate the gear ratio. For actual gear ratio, see the table below.

Gear	**AW55-51**
R	3.234
1	4.769
2	2.994
3	1.957
4	1.324
5	1.018

EXPECTED GEAR RATIO

The value indicates which gear ratio the Transmission Control Module (TCM) expects. Compare the value with the table for "Current gear ratio."

PASSENGER COMPARTMENT TEMPERATURE

The value displays the passenger compartment temperature. The transmission control module (TCM) obtains the value from the central electronic module (CEM) via the controller area network (CAN).

Measurement range: -60 to +195 °C.

If a temperature of +194 °C or +195 °C is displayed the value from the controller area network (CAN) is faulty according to the transmission control module (TCM).

OUTSIDE TEMPERATURE

The value displays the outside temperature. The transmission control module (TCM) obtains the value from the central electronic module (CEM) via the controller area network (CAN).

Measurement range: -128 to +127 °C.

If a temperature of +126 °C or +127 °C is displayed the value from the controller area network (CAN) is faulty according to the transmission control module (TCM).

BATTERY VOLTAGE CENTRAL ELECTRONIC MODULE (CEM)

The value indicates battery voltage at the Central Electronic Module (CEM). The Accessory Electronic Module (AEM) obtains the value from the Central Electronic Module (CEM) via CAN.

Measurement range: 5-38 V.

Normal value when alternator is charging: 13.0 - 14.5 V.

If a voltage of 36.75 V or 36.875 V is displayed, the value from the controller area network (CAN) is faulty according to the transmission control module (TCM).

DISTANCE

The value displays the distance driven. The transmission control module (TCM) obtains the value from the central electronic module (CEM) via the controller area network (CAN).

Measurement range: 0 - 1, 048, 575 km (651, 554 miles)

If a distance of 16, 777, 214 km or 16, 777, 215 km is displayed the value from the controller area network (CAN) is faulty according to the transmission control module (TCM).

VEHICLE COMMUNICATION INFORMATION, TRANSMISSION CONTROL MODULE (TCM) (TF-80SC AWD; 2005)

DESCRIPTION OF ACTIVATIONS

see **DESCRIPTION OF ACTIVATIONS**

DESCRIPTION OF EXTENDED DIAGNOSTIC TROUBLE CODE (DTC) INFORMATION

see **DESCRIPTION OF EXTENDED DIAGNOSTIC TROUBLE CODE (DTC) INFORMATION**

DESCRIPTION OF PARAMETERS

see **DESCRIPTION OF PARAMETERS**

TRANSMISSION

Transmission - Symptom Related Diagnostic Procedures

CHECKING LOCK-UP FUNCTION (B6324S, TF-80SC; B6324S, TF-80SC AWD; 2007-2010)

CHECKING LOCK-UP FUNCTION

If Transmission control module (TCM) receives information from Brake control module (BCM) that a wheel sensor is off, then Transmission control module (TCM) turns off the lock-up function during engine braking. Then the Lock-up function will be constantly open and the engine receives idle rpm during engine braking.

Fault cause

- Look for the cause of the fault in the brake control module (BCM).

Fault symptom

- Automatic transmission/Lockup does not work

CHECKING LOCK-UP FUNCTION (B6324S5, TF-80SC; B6324S5, TF-80SC AWD; 2011-2012)

CHECKING LOCK-UP FUNCTION

see **CHECKING LOCK-UP FUNCTION**

CHECKING LOCK-UP FUNCTION (B8444S, TF-80SC AWD; 2005-2011)

CHECKING LOCK-UP FUNCTION

see **CHECKING LOCK-UP FUNCTION**

CHECKING AUTOMATIC TRANSMISSION (4T65 AWD; 2003-2006)

CHECKING AUTOMATIC TRANSMISSION

CHECK QUALITY OF TRANSMISSION OIL

CHECK QUALITY OF TRANSMISSION OIL

NOTE: **The transmission fluid quality is extremely important for transmission function. Therefore it is imperative that this is correct.**

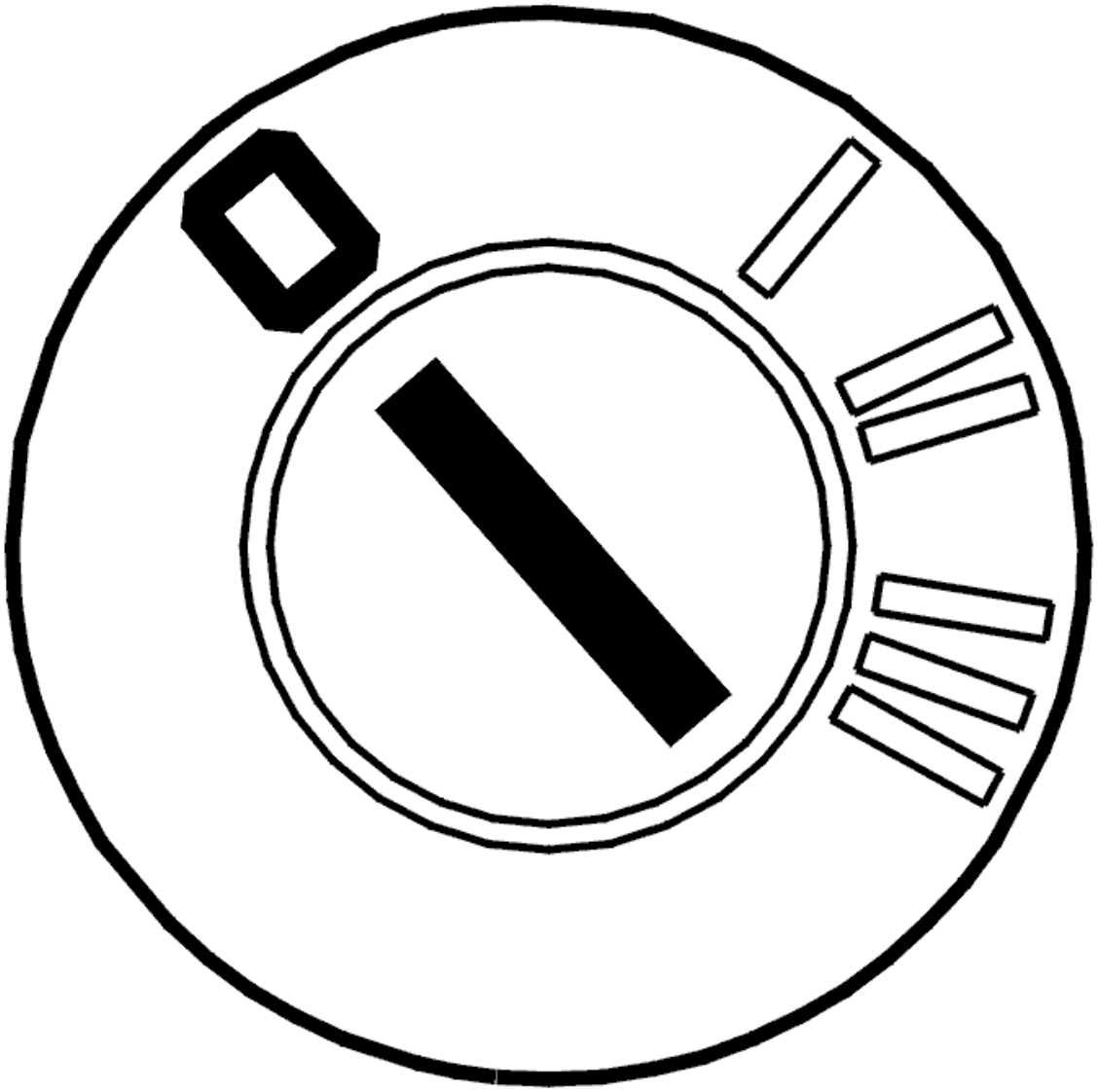

Fig. 1: Identifying Ignition OFF
Courtesy of VOLVO CARS CORPORATION

- Ignition off.

  Check the transmission oil quality. Take a sample using the dip stick.

  - Replace the transmission fluid if it smells burnt
  - Replace the fluid and filter if the transmission fluid contains particles
  - Check if there is oil or an oil film in the expansion tank. Oil in the expansion tank indicates leakage from the transmission oil cooler which is positioned in the cooler unit.

NOTE: **The transmission oil is red and must not be confused with black engine oil.**

- If the transmission fluid is cloudy or pink, it is contaminated with coolant. In such cases the transmission must be replaced. For checking coolant in transmission oil, see **CHECKING FOR COOLANT IN OIL**

  When replacing the transmission, the cooler unit, including the additional cooler must be replaced if installed. Replace the hoses between the cooler and the transmission.

Other information:

- To replace the transmission fluid and filter, see **TRANSMISSION OIL / OIL FILTER, REPLACING** .

Select an option:

1. The fluid contains water

   Refer to **REPLACING THE TRANSMISSION**

2. The fluid smells burnt or contains particles

   Refer to **RESETTING TRANSMISSION FLUID CHANGE COUNTER**

3. No fault detected.

   Refer to **CHECKING OIL LEVEL IN TRANSMISSION**

TEST DRIVING

TEST DRIVING

- Drive the car until the transmission oil reaches normal operating temperature. When test driving the transmission should be at operating temperature, approximately 80-90°C.

  Start in gear position D and accelerate using even throttle application.

  Drive the car to the gearshift from 2nd up to 3rd. Be observant when the transmission shifts up. Check if the car judders, vibrates or shifts harshly during the gearshift. Repeat the shift between 2nd and 3rd gears several times.

  If there are vibrations and judders when gear shifting, the line pressure solenoid STH is defective and the solenoid must be replaced.

  HINT: In order for the transmission control module (TCM) to adapt the gear shifting ratios to the correct level, the same gear shifting must be repeated 5-10 times.

  Other information:

- To replace solenoid STH, see **SOLENOID LINE PRESSURE, REPLACING** .

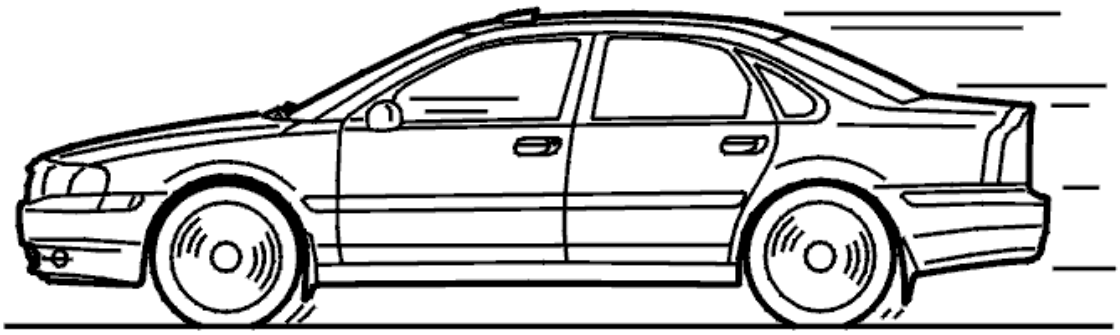

Fig. 2: Identifying Test Drive
Courtesy of VOLVO CARS CORPORATION

Did the transmission operate correctly?

- **YES**

  FAULT NOT FOUND: Troubleshooting has been completed.

- **NO**

  Refer to **RESETTING THE ADAPTATION**

TEST DRIVING

HINT: Test the transmission to check that the solenoid STH corrected the fault.

- Drive the car until the transmission oil reaches normal operating temperature. When test driving the transmission should be at operating temperature, approximately 80-90°C.

  Start in gear position D and accelerate using even throttle application.

Drive the car to the gearshift from 2nd up to 3rd. Be observant when the transmission shifts up. Check if the car judders, vibrates or shifts harshly during the gearshift. Repeat the shift between 2nd and 3rd gears several times.

If there are vibrations and judders when gear shifting, the line pressure solenoid STH is defective and the solenoid must be replaced.

HINT: In order for the transmission control module (TCM) to adapt the gear shifting ratios to the correct level, the same gear shifting must be repeated 5-10 times.

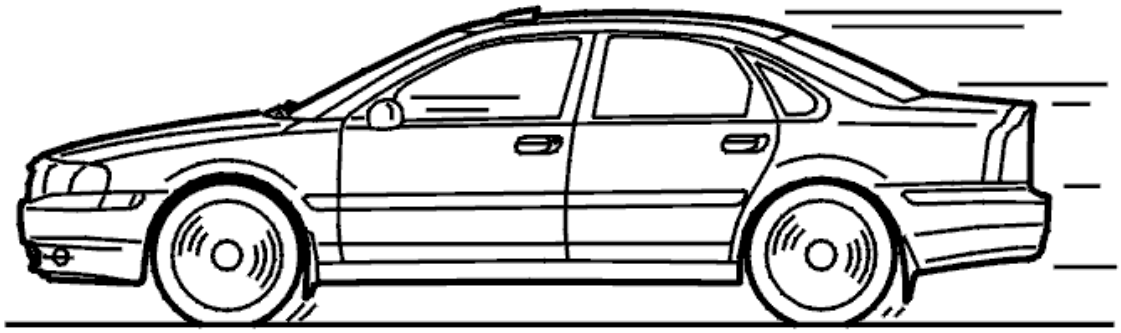

Fig. 3: Identifying Test Drive
Courtesy of VOLVO CARS CORPORATION

Is the transmission operating correctly?

- **YES**

  OKAY: Troubleshooting has been completed.

- **NO**

  Refer to **REPLACING THE TRANSMISSION**

REPLACING THE TRANSMISSION

Fault-tracing indicates a mechanical fault in the transmission. Replace the transmission.

Other information:

- To remove the transmission, see **TRANSMISSION, REMOVING**
- To install the transmission, see **TRANSMISSION, INSTALLING (2003, 2004)** or **TRANSMISSION, INSTALLING (2005, 2006)** .

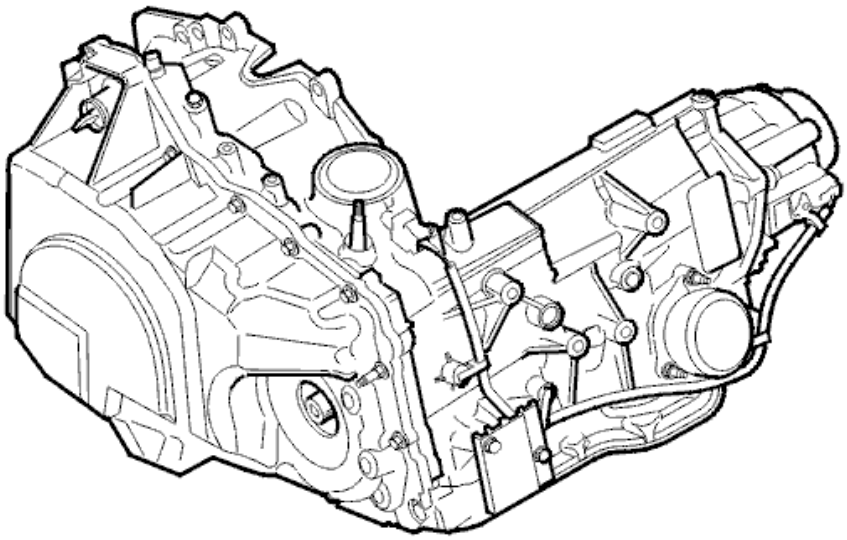

Fig. 4: Identifying Transmission
Courtesy of VOLVO CARS CORPORATION

- **Continue**

  Refer to **RESETTING THE ADAPTATION**

CHECKING OIL LEVEL IN TRANSMISSION

CHECK TRANSMISSION OIL LEVEL

NOTE: **The transmission fluid level is extremely important for transmission function. Therefore it is imperative that it is correct. In addition the oil level is dependent on oil temperature.**

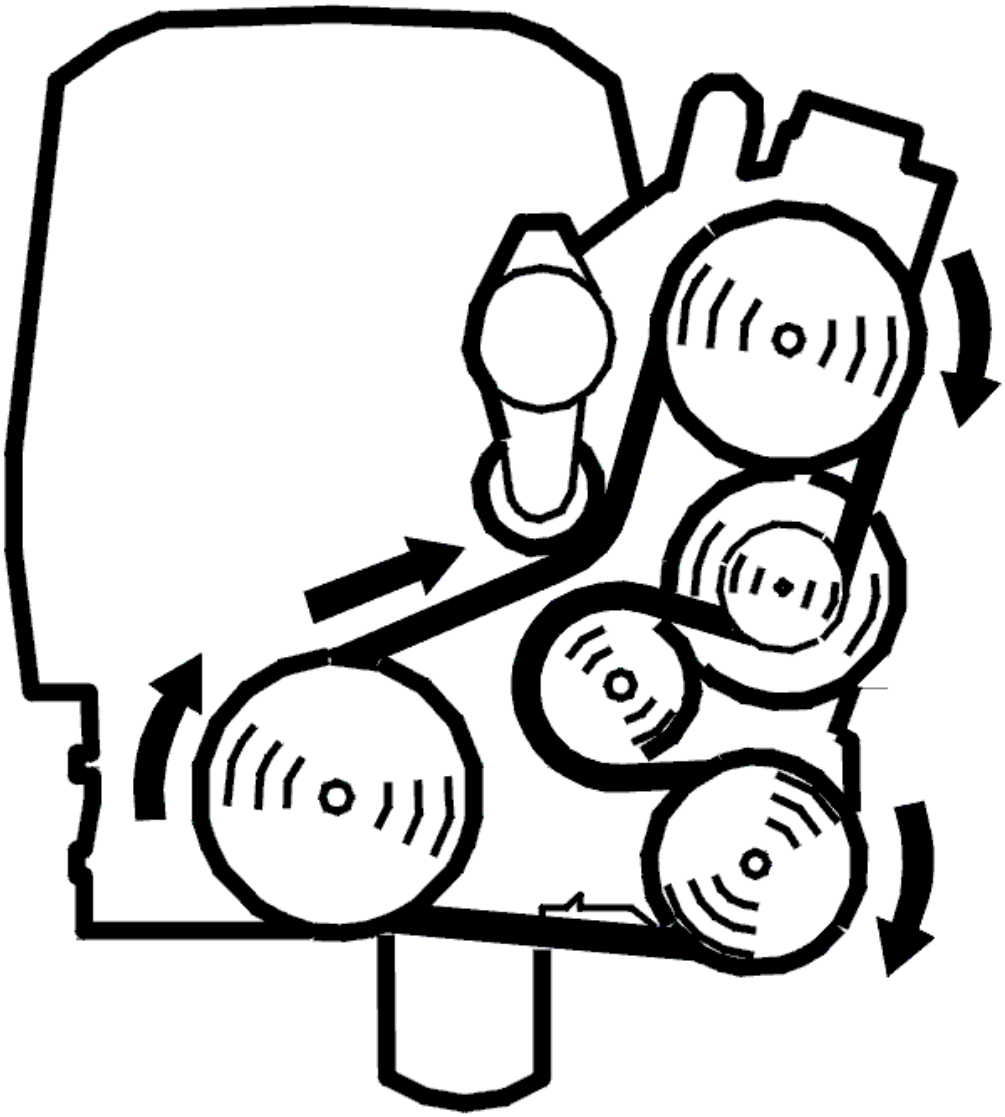

Fig. 5: Identifying Belt Routing
Courtesy of VOLVO CARS CORPORATION

- Start the car
- Read off the oil temperature.

When checking the gearbox oil level the oil temperature **must** be **80 °C - 90 °C** .

At the correct temperature, the oil level should be between "Min hot" and "Max hot".

Oil level

Too high: Drain the transmission fluid to the correct level
Too low: Check the transmission for leakage.

Remedy as necessary.

Other information:

- To check and adjust the oil level, see **OIL LEVEL, CHECKING** .

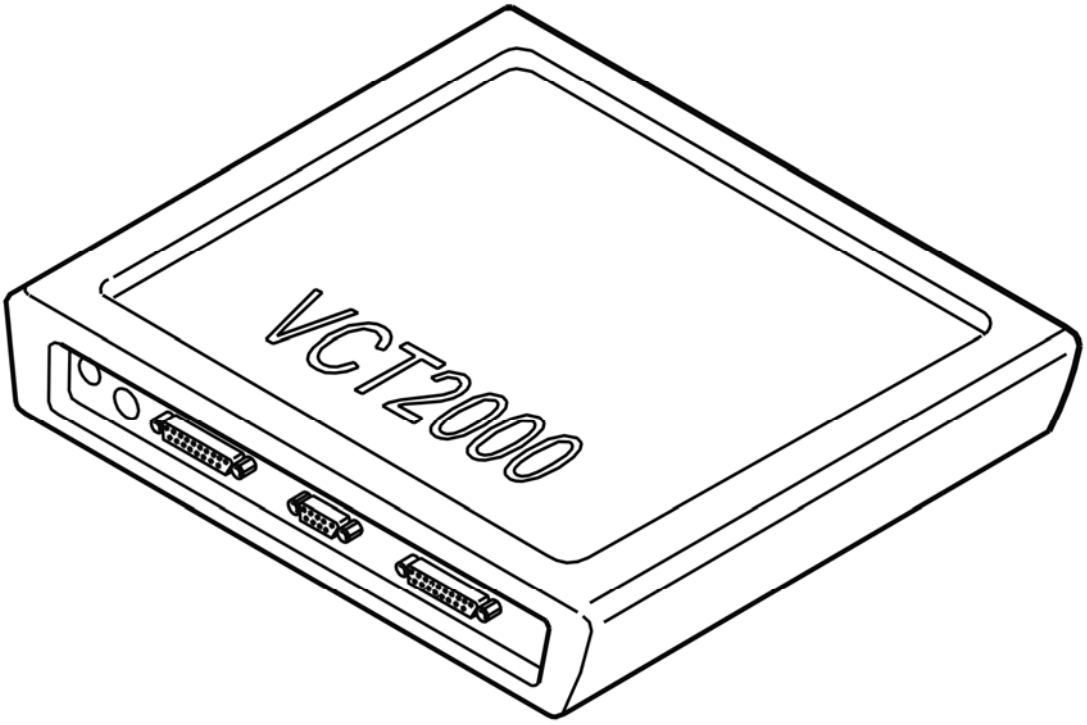

Fig. 6: Identifying VCT2000 Diagnostic Tool Symbol In VIDA
Courtesy of VOLVO CARS CORPORATION

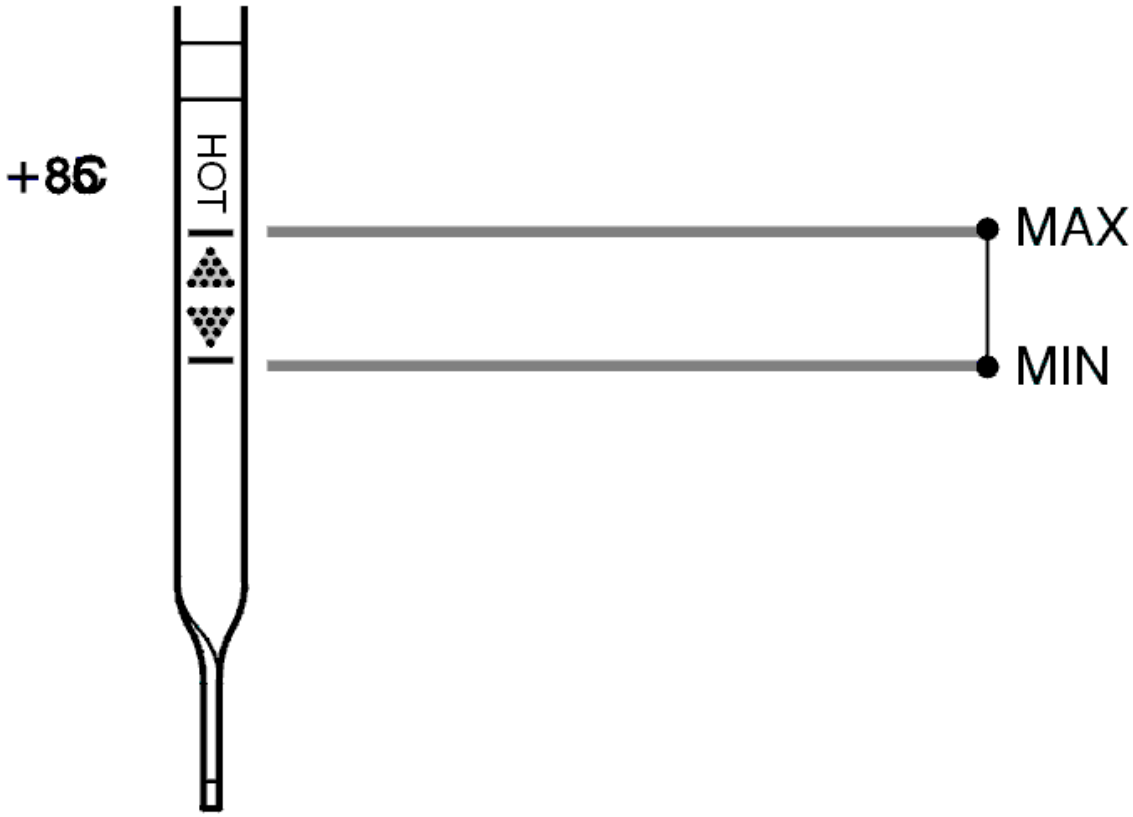

Fig. 7: Identifying Oil Level / Temperature
Courtesy of VOLVO CARS CORPORATION

Was the transmission fluid level correct?

- **YES**

  Refer to **TEST DRIVING**

- **NO**

  Refer to **RESETTING TRANSMISSION FLUID CHANGE COUNTER**

RESETTING THE ADAPTATION

RESETTING ADAPTATION AND THE COUNTER FOR "TRANSMISSION OIL CHANGE"

HINT: The transmission has torque controlled adaptive pressure control. Pressure control means that the transmission regulates the pressure itself during each gear shift. This avoids harsh gear shifting. Each gear shift is evaluated by the control module and stored in the memory. This allows for compensation for wear and tear in the transmission and clutch. It is important that the adaptation in the memory is reset after the transmission has been repaired. This is to ensure normal operation. The oil is replaced during repair; the "Transmission oil change" counter must be reset. If the counter is not reset when the fluid is drained and replaced, there is a risk that a diagnostic trouble code (DTC) will be stored in incorrect

circumstances.

NOTE: This applies only if the transmission or one of the components in the transmission have been replaced.

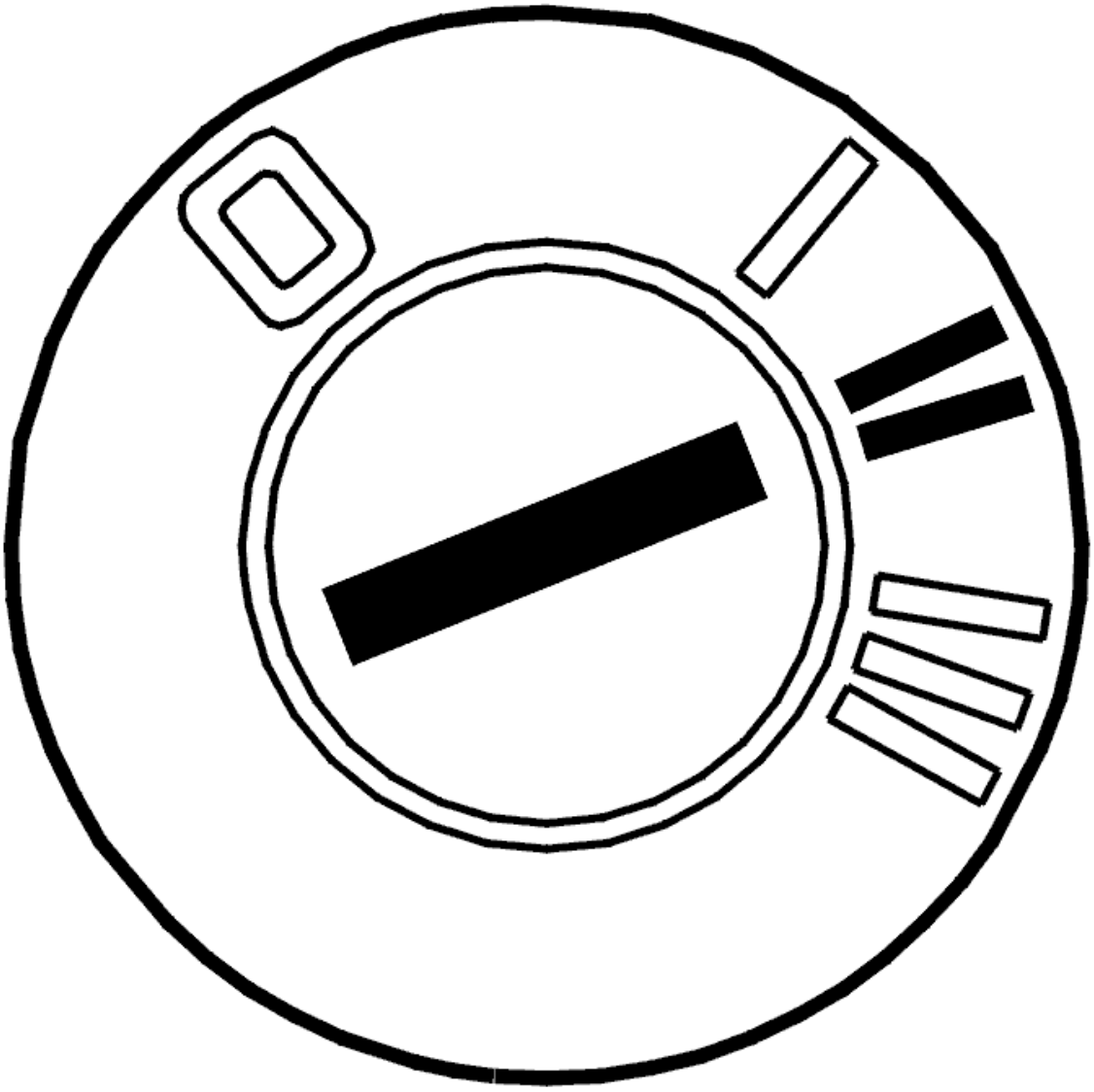

Fig. 8: Identifying Ignition ON
Courtesy of VOLVO CARS CORPORATION

- Ignition on.

  Click on the VCT2000 symbol to reset the adaptation and counter.

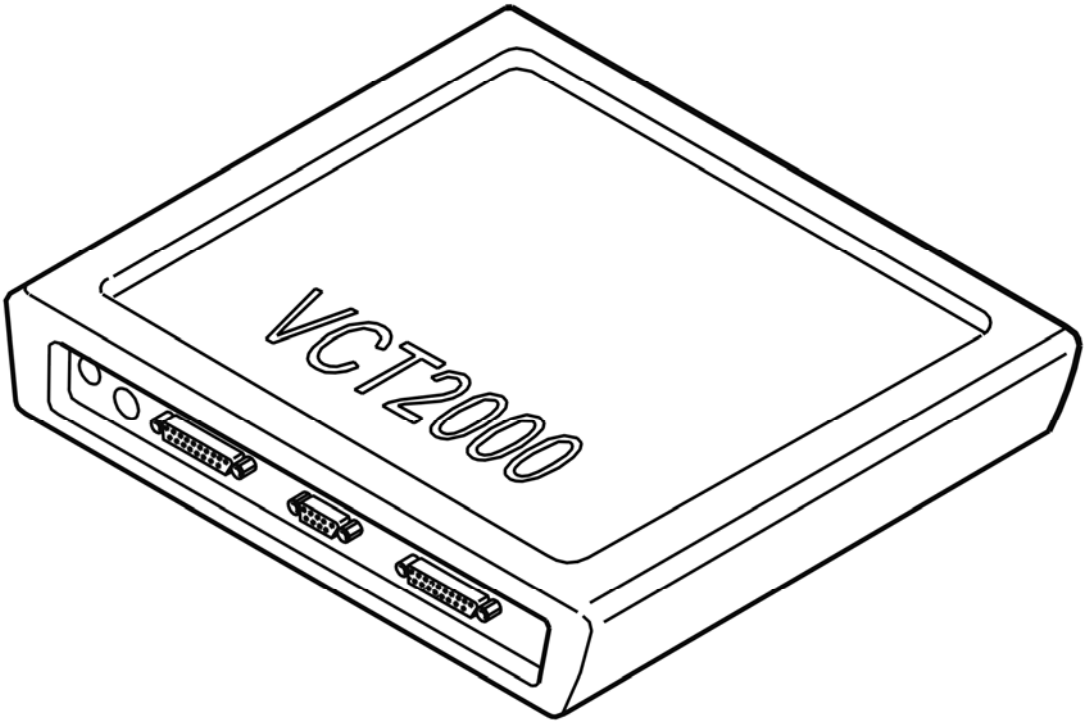

Fig. 9: Identifying VCT2000 Diagnostic Tool Symbol In VIDA
Courtesy of VOLVO CARS CORPORATION

- **Continue**

  Refer to **VERIFICATION**

RESETTING TRANSMISSION FLUID CHANGE COUNTER

RESETTING TRANSMISSION FLUID CHANGE COUNTER

HINT: The transmission control module (TCM) has a counter for the oil quality. The counter counts up if the transmission is exposed to too high a load or an ambient temperature that is too high. If the counter is not reset when the oil is drained or changed, there is a risk that a diagnostic trouble code (DTC) will be stored in faulty circumstances. Therefore it is important that the "Transmission oil change" counter is reset.

NOTE: **This applies only when the transmission fluid is changed and when the fluid is changed when repairs are carried out to the transmission temperature sensor.**

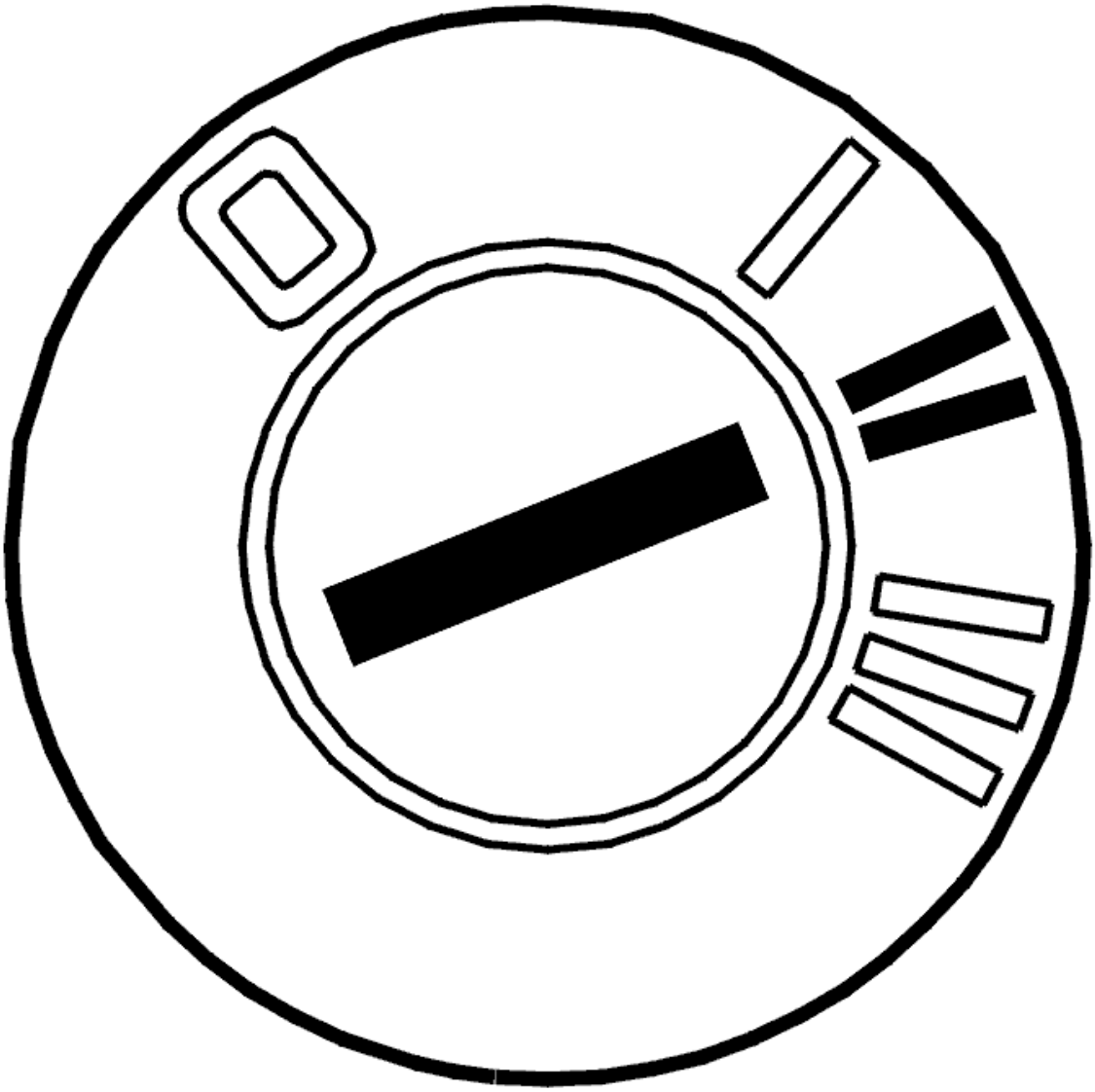

Fig. 10: Identifying Ignition ON
Courtesy of VOLVO CARS CORPORATION

- Ignition on.

  Reset the counter by clicking on the VCT 2000 symbol.

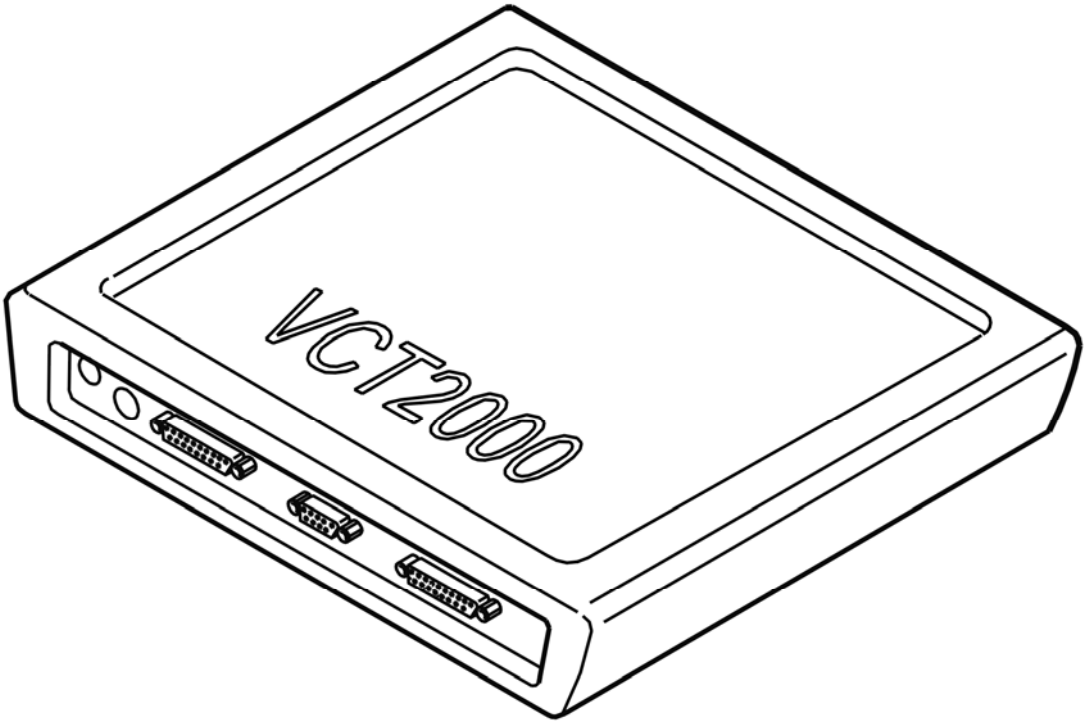

Fig. 11: Identifying VCT2000 Diagnostic Tool Symbol In VIDA
Courtesy of VOLVO CARS CORPORATION

- **Continue**

  Refer to **TEST DRIVING**

VERIFICATION

VERIFICATION

- Drive the car until the transmission oil reaches normal operating temperature. When test driving the transmission should be at operating temperature, approximately 80-90°C.

  Start in gear position D and accelerate using even throttle application.

  Drive the car to the gearshift from 2nd up to 3rd. Be observant when the transmission shifts up. Check if the car judders, vibrates or shifts harshly during the gearshift. Repeat the shift between 2nd and 3rd gears several times.

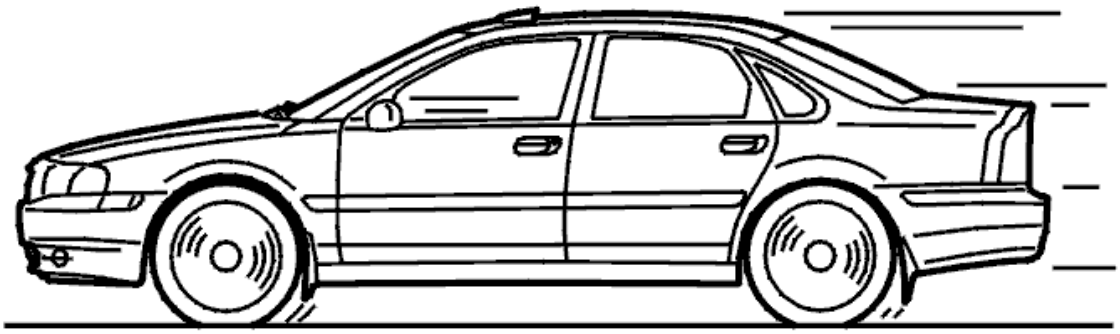

Fig. 12: Identifying Test Drive
Courtesy of VOLVO CARS CORPORATION

Is the transmission operating correctly?

- **YES**

  VERIFIED: Troubleshooting has been completed.

- **NO**

  Refer to **INFORMATION**

INFORMATION

FAULT-TRACING INFORMATION

The fault should have been detected and remedied. As this is not the case fault-tracing has failed.

Exit fault-tracing for this diagnostic trouble code (DTC) or make another attempt.

RESETTING THE ADAPTATION

RESETTING ADAPTATION AND THE COUNTER FOR "TRANSMISSION OIL CHANGE"

HINT: The transmission has torque controlled adaptive pressure control. Pressure control means that the transmission regulates the pressure itself during each gear shift. This avoids harsh gear shifting. Each gear shift is evaluated by the control module and stored in the memory. This allows for compensation for wear and tear in the transmission and clutch. It is important that the adaptation in the memory is reset after the transmission has been repaired. This is to ensure normal operation. The oil is replaced during repair; the "Transmission oil change" counter must be reset. If the counter is not reset when the fluid is drained and replaced, there is a risk that a diagnostic trouble code (DTC) will be stored in incorrect circumstances.

NOTE: **This applies only if the transmission or one of the components in the transmission have been replaced.**

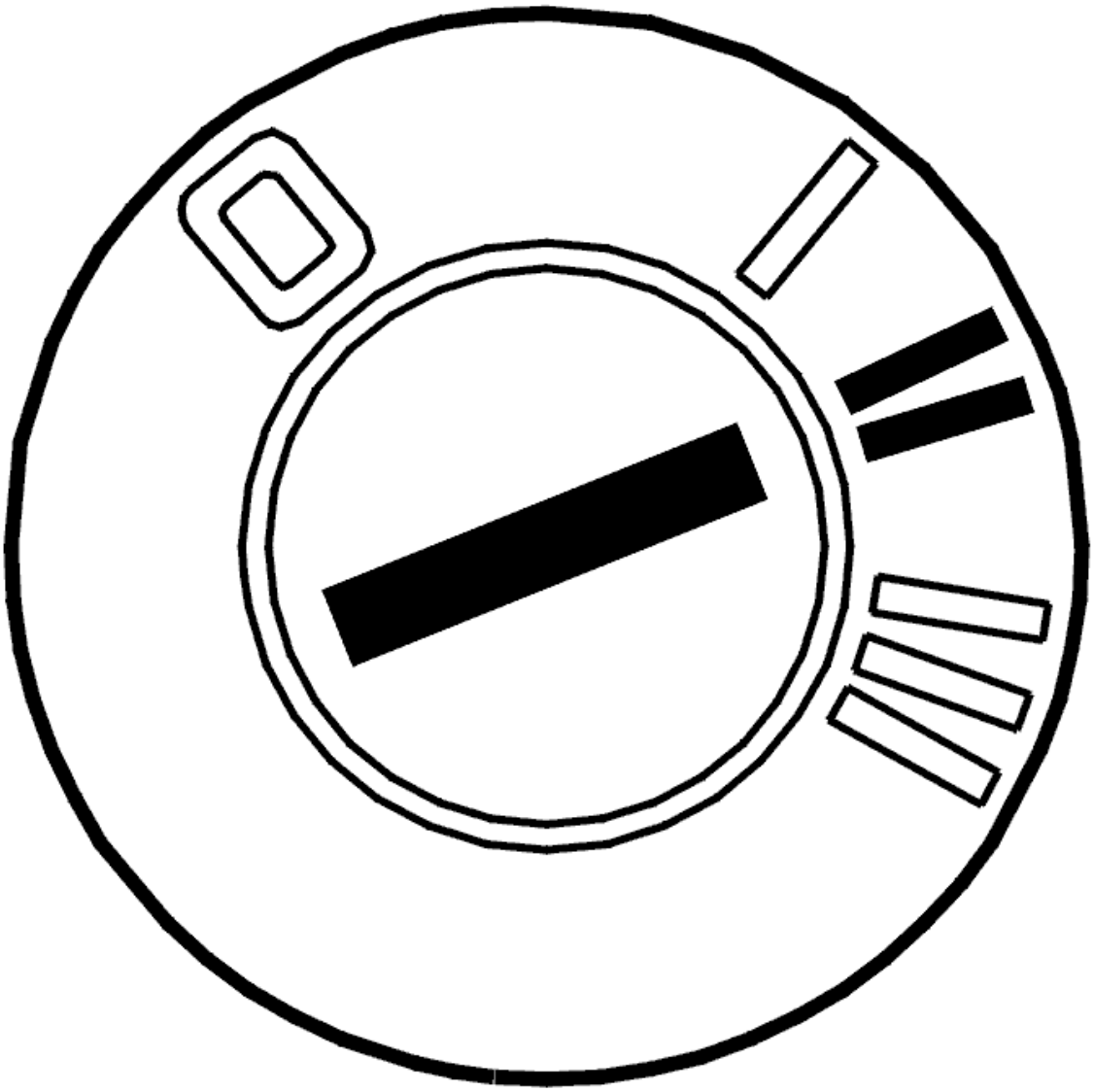

Fig. 13: Identifying Ignition ON
Courtesy of VOLVO CARS CORPORATION

- Ignition on.

Click on the VCT2000 symbol to reset the adaptation and counter.

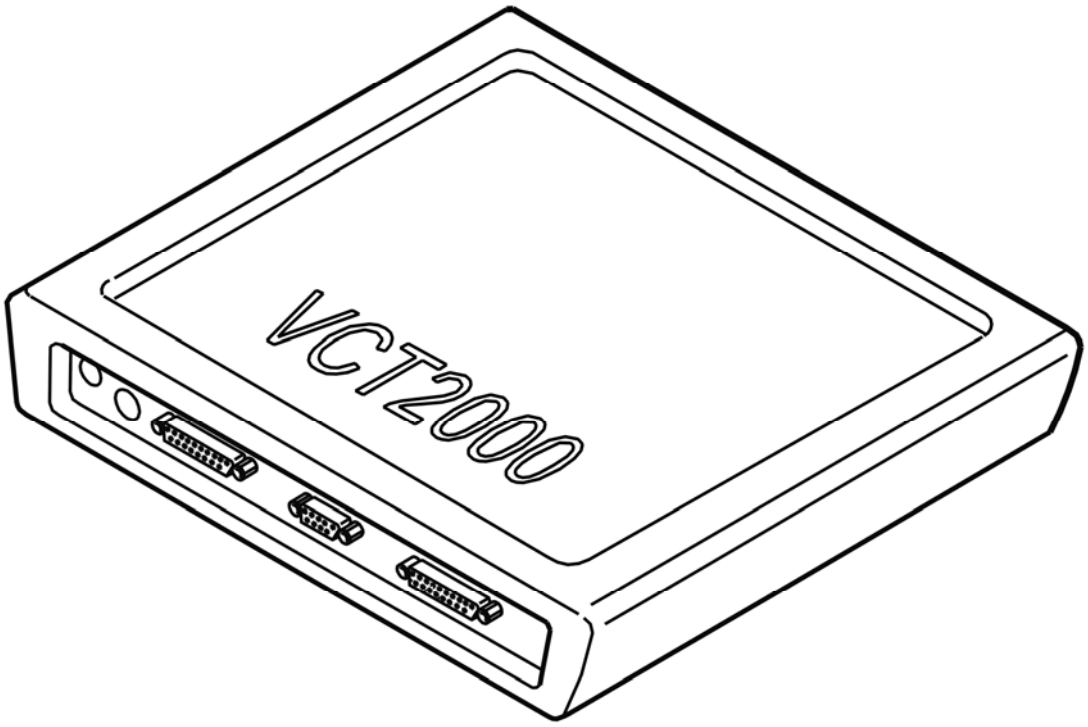

Fig. 14: Identifying VCT2000 Diagnostic Tool Symbol In VIDA
Courtesy of VOLVO CARS CORPORATION

- **Continue**

  Refer to **TEST DRIVING**

FAULT-TRACING INFORMATION

Condition

- No diagnostic trouble codes (DTCs) stored.

Possible Source

- Defective line pressure solenoid STH
- Particles in the transmission fluid
- Incorrect oil level in the transmission
- Water in the transmission fluid
- Worn or damaged constant velocity joints

- Defective transmission.

Fault symptom[s]

- Vibration and jerking when shifting
- Harsh gear shifting.

CHECKING CARRIER PLATE (4T65 AWD; 2003-2006)

CHECKING CARRIER PLATE

Check that the carrier plate is securely installed and the bolts are fully tightened. Replace the carrier plate if it is damaged.

Check the transmission housing. Replace the transmission it the housing is damaged.

Other information

- To expose and replace the carrier plate, see **CARRIER PLATE, REPLACING**
- To remove the transmission, see **TRANSMISSION, REMOVING**
- To install the transmission, see **TRANSMISSION, INSTALLING (2003, 2004)** or **TRANSMISSION, INSTALLING (2005, 2006)** .

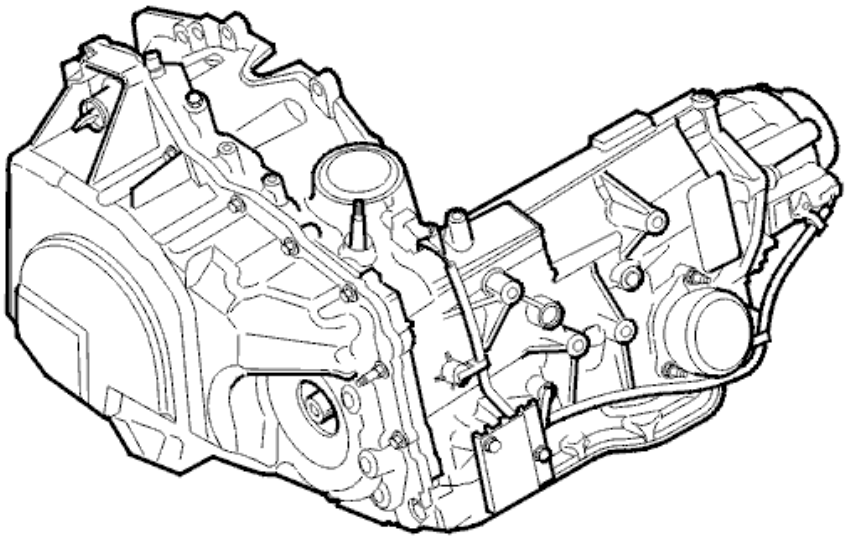

P2X

4301721D © VOLVO

Fig. 15: Identifying Transmission
Courtesy of VOLVO CARS CORPORATION

Was a fault detected?

- **YES**

  Refer to **RESETTING THE ADAPTATION**

- **NO**

  FAULT NOT FOUND: Troubleshooting has been completed.

RESETTING THE ADAPTATION

RESETTING ADAPTATION AND THE COUNTER FOR "TRANSMISSION OIL CHANGE"

HINT: The transmission has torque controlled adaptive pressure control. Pressure control means that the transmission regulates the pressure itself during each gear shift. This avoids harsh gear shifting. Each gear shift is evaluated by the control module and stored in the memory. This allows for compensation for wear and tear in the transmission and clutch. It is important that the adaptation in the memory is reset after the transmission has been repaired. This is to ensure normal operation. The oil is replaced during repair; the "Transmission oil change" counter must be reset. If the counter is not reset when the fluid is

drained and replaced, there is a risk that a diagnostic trouble code (DTC) will be stored in incorrect circumstances.

NOTE: This applies only if the transmission or one of the components in the transmission have been replaced.

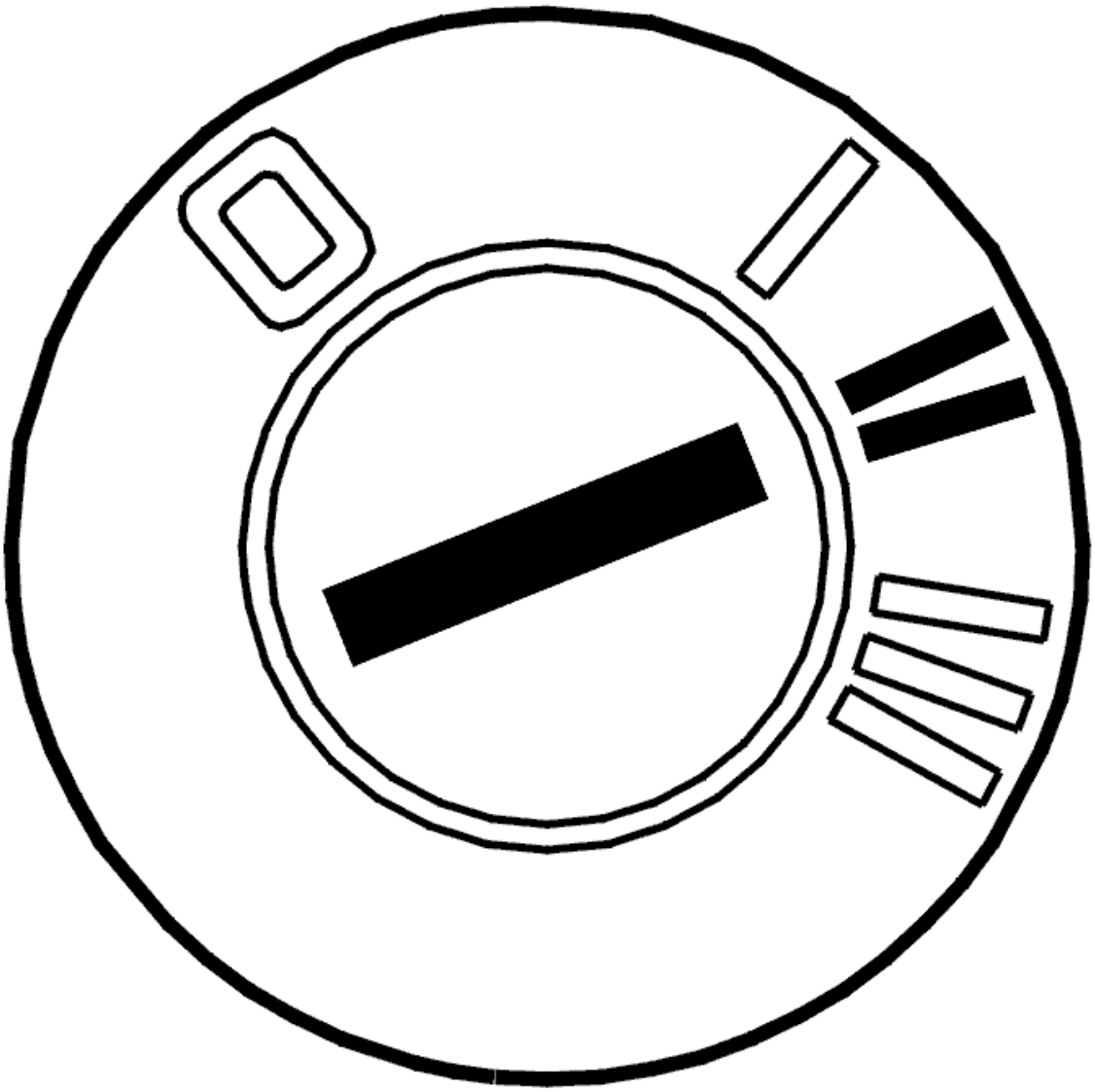

Fig. 16: Identifying Ignition ON
Courtesy of VOLVO CARS CORPORATION

- Ignition on.

  Click on the VCT2000 symbol to reset the adaptation and counter.

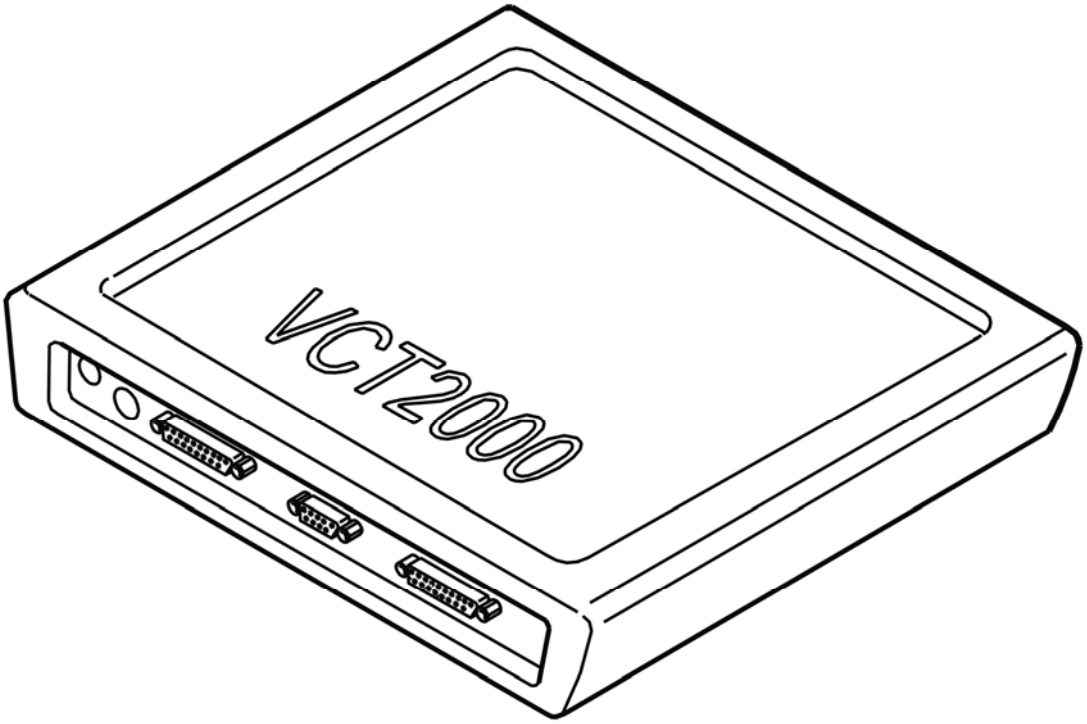

Fig. 17: Identifying VCT2000 Diagnostic Tool Symbol In VIDA
Courtesy of VOLVO CARS CORPORATION

CHECKING FOR COOLANT IN OIL (B5254T2, AW50/51 AWD; 2003-2007)

CHECKING FOR COOLANT IN OIL

This fault may be due to coolant that has leaked into the transaxle.

Inspect according to: **CHECKING FOR COOLANT IN OIL**

If coolant is detected in the transaxle oil, the transaxle, radiator and hoses between the radiator and transaxle must be replaced.

Other information

- see **TRANSMISSION, REMOVING**
- see **TRANSMISSION, INSTALLING**

Was a fault detected?

- **YES**

Refer to **INFORMATION**

- **NO**

  Refer to **INFORMATION**

INFORMATION

FAULT-TRACING INFORMATION

The fault should have been detected and remedied. As this is not the case fault-tracing has failed.

Exit fault-tracing for this diagnostic trouble code (DTC) or make another attempt.

INFORMATION

FAULT-TRACING INFORMATION

In case of this defect, troubleshooting is not followed by verification.

The information can be displayed again or the fault-tracing for this fault can be interrupted.

CHECKING FOR COOLANT IN OIL (B5254T2, AW55-50/51SN; 2004-2007)

CHECKING FOR COOLANT IN OIL

This fault may be due to coolant that has leaked into the transaxle.

Inspect according to: **CHECKING FOR COOLANT IN OIL**

If coolant is detected in the transaxle oil, the transaxle, radiator and hoses between the radiator and transaxle must be replaced.

Other information

- see **TRANSMISSION, REMOVING**
- see **TRANSMISSION, INSTALLING**

Was a fault detected?

- **YES**

  Refer to **INFORMATION**

- **NO**

  Refer to **INFORMATION**

INFORMATION

FAULT-TRACING INFORMATION

The fault should have been detected and remedied. As this is not the case fault-tracing has failed.

Exit fault-tracing for this diagnostic trouble code (DTC) or make another attempt.

INFORMATION

FAULT-TRACING INFORMATION

In case of this defect, troubleshooting is not followed by verification.

The information can be displayed again or the fault-tracing for this fault can be interrupted.

CHECKING FOR COOLANT IN OIL (B6294T, 4T65 AWD; 2003-2006)

CHECKING FOR COOLANT IN OIL

This fault may be due to coolant that has leaked into the transaxle.

Inspect according to: **CHECKING FOR COOLANT IN OIL**

If coolant is detected in the transaxle oil, the transaxle, radiator and hoses between the radiator and transaxle must be replaced.

Other information

- see **TRANSMISSION, REMOVING**
- see **TRANSMISSION, INSTALLING (2005, 2006)**

Was a fault detected?

- **YES**

  Refer to **INFORMATION**

- **NO**

  Refer to **INFORMATION**

INFORMATION

FAULT-TRACING INFORMATION

The fault should have been detected and remedied. As this is not the case fault-tracing has failed.

Exit fault-tracing for this diagnostic trouble code (DTC) or make another attempt.

INFORMATION

FAULT-TRACING INFORMATION

In case of this defect, troubleshooting is not followed by verification.

The information can be displayed again or the fault-tracing for this fault can be interrupted.

CHECKING OIL LEVEL (4T65 AWD; 2003-2006)

CHECKING OIL LEVEL IN TRANSMISSION

CHECKING OIL LEVEL IN TRANSMISSION

CHECK TRANSMISSION OIL LEVEL

NOTE: **The transmission fluid level is extremely important for transmission function. Therefore it is imperative that it is correct. In addition the oil level is dependent on oil temperature.**

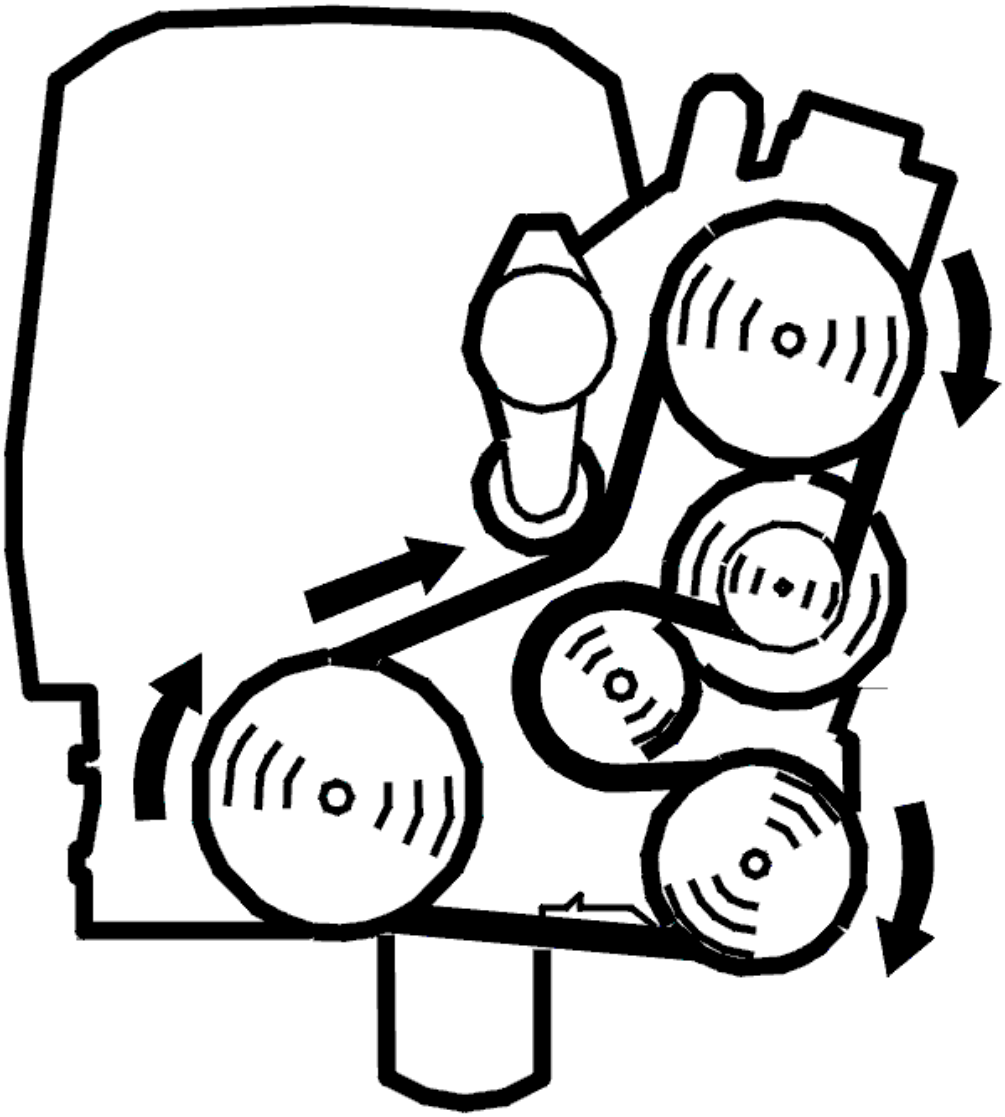

Fig. 18: Identifying Belt Routing
Courtesy of VOLVO CARS CORPORATION

- Start the car
- Read off the oil temperature.

When checking the gearbox oil level the oil temperature **must** be **80 °C - 90 °C** .

At the correct temperature, the oil level should be between "Min hot" and "Max hot".

Oil level

Too high: Drain the transmission fluid to the correct level
Too low: Check the transmission for leakage.

Remedy as necessary.

Other information:

- To check and adjust the oil level, see **OIL LEVEL, CHECKING** .

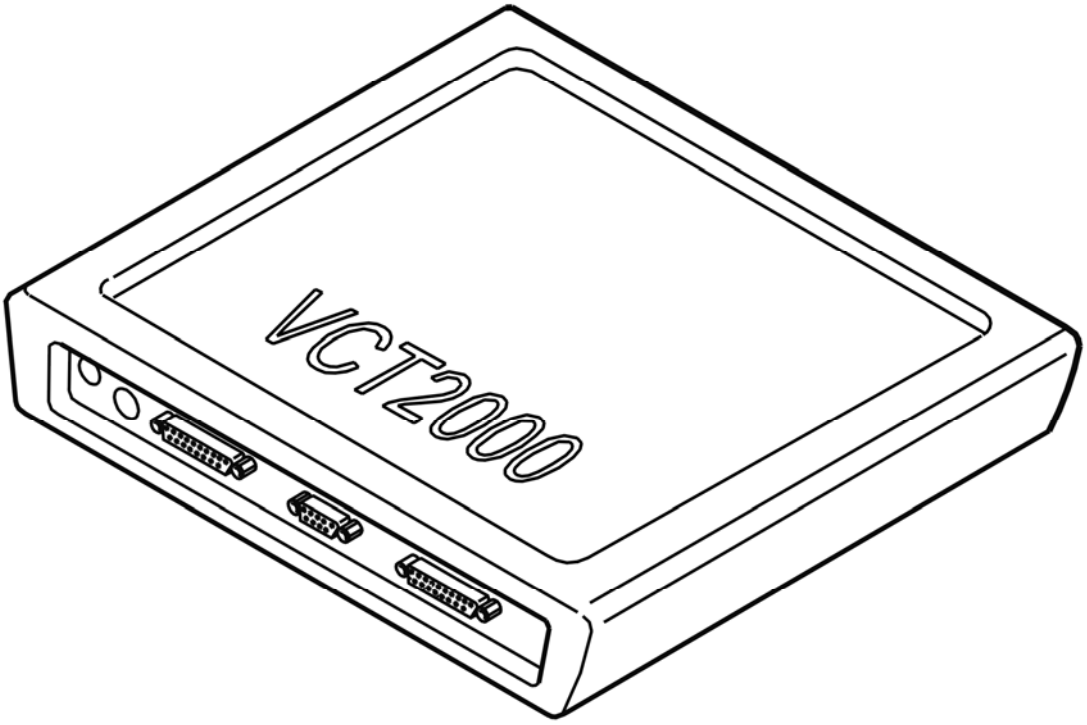

Fig. 19: Identifying VCT2000 Diagnostic Tool Symbol In VIDA
Courtesy of VOLVO CARS CORPORATION

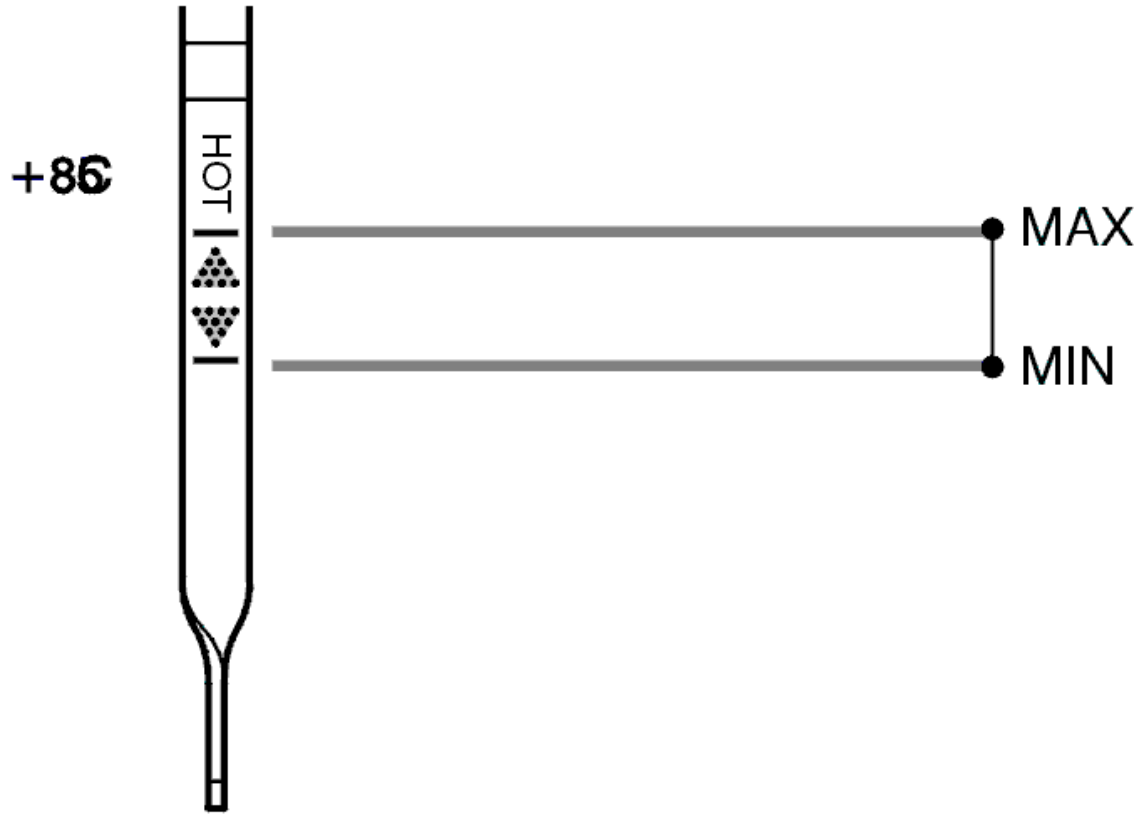

Fig. 20: Identifying Oil Level / Temperature
Courtesy of VOLVO CARS CORPORATION

Was the transmission fluid level correct?

- **YES**

  OK

- **NO**

  Refer to **RESETTING TRANSMISSION FLUID CHANGE COUNTER**

RESETTING TRANSMISSION FLUID CHANGE COUNTER

RESETTING TRANSMISSION FLUID CHANGE COUNTER

HINT: The transmission control module (TCM) has a counter for the oil quality. The counter counts up if the transmission is exposed to too high a load or an ambient temperature that is too high. If the counter is not reset when the oil is drained or changed, there is a risk that a diagnostic trouble code (DTC) will be stored in faulty circumstances. Therefore it is important that the "Transmission oil change" counter is reset.

NOTE: This applies only when the transmission fluid is changed and when the fluid is

changed when repairs are carried out to the transmission temperature sensor.

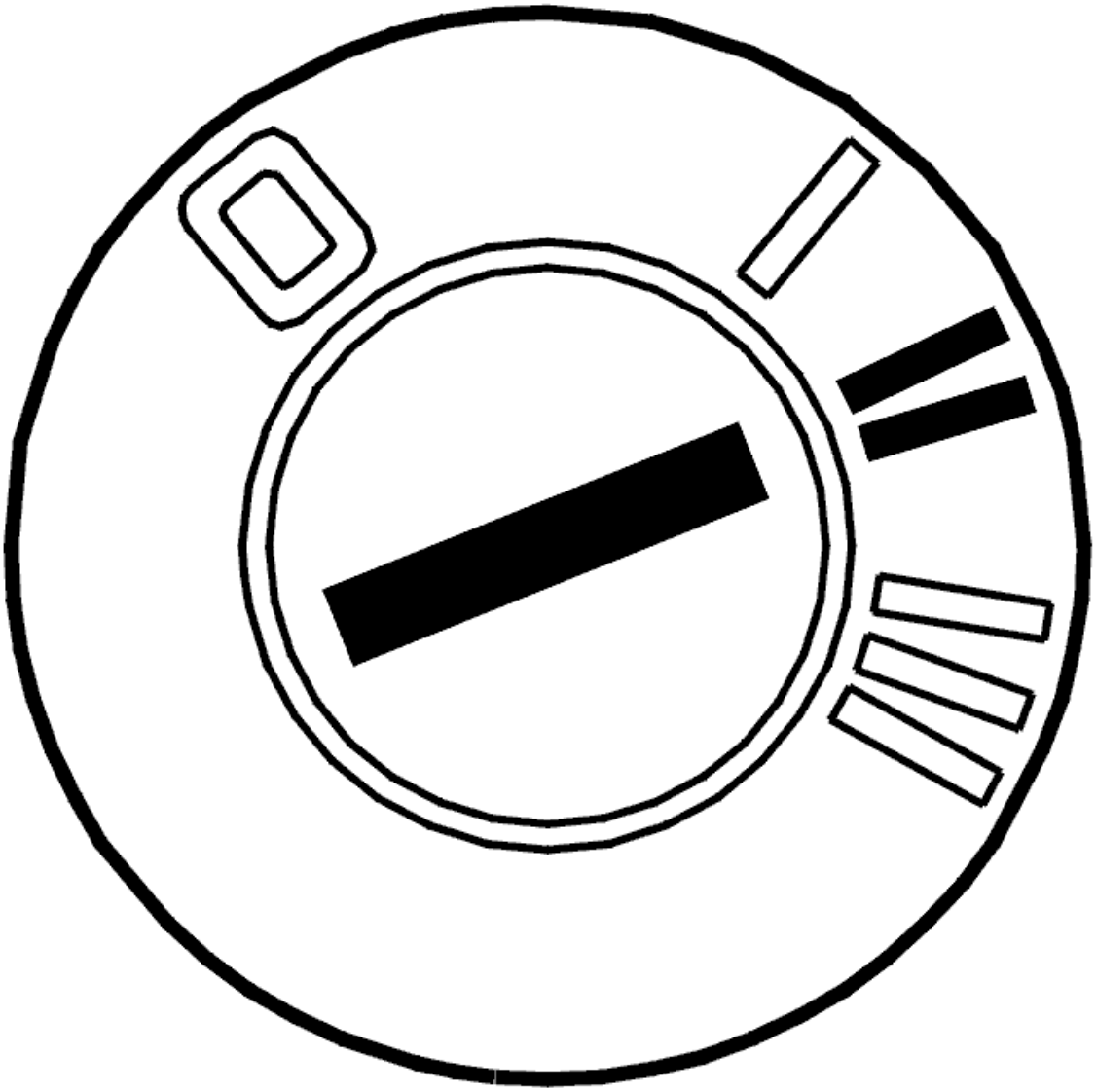

Fig. 21: Identifying Ignition ON
Courtesy of VOLVO CARS CORPORATION

- Ignition on.

  Reset the counter by clicking on the VCT 2000 symbol.

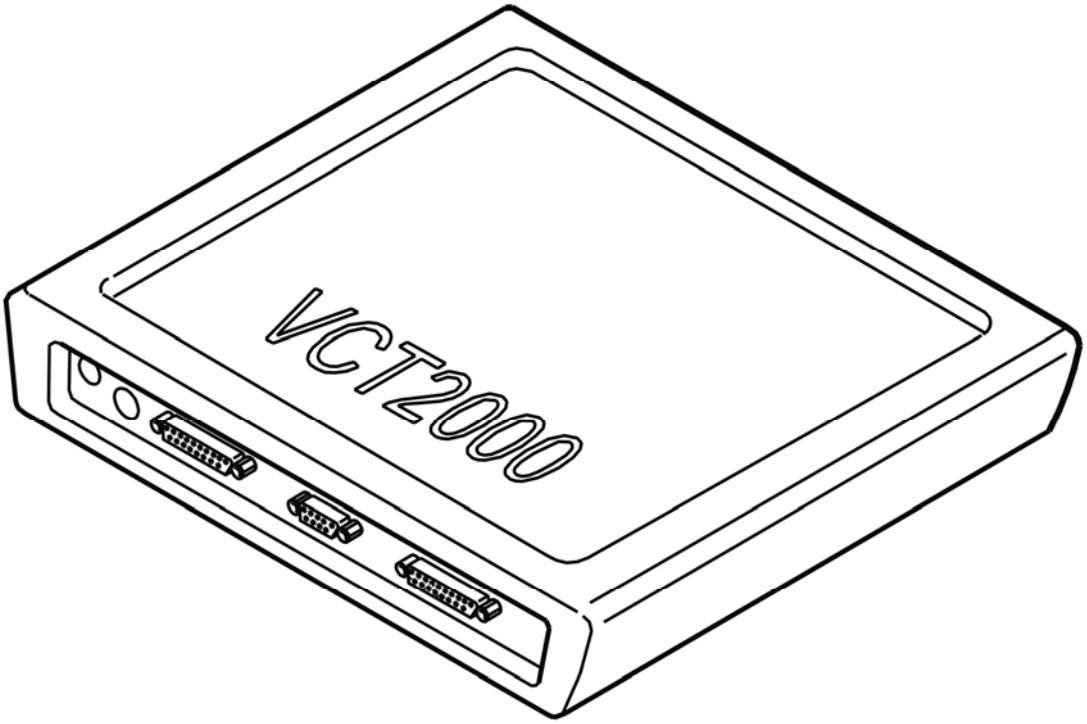

Fig. 22: Identifying VCT2000 Diagnostic Tool Symbol In VIDA
Courtesy of VOLVO CARS CORPORATION

CHECKING OIL PUMP SEALING RING (4T65 AWD; 2003-2006)

CHECKING SEALING RING, OIL PUMP

CHECKING SEALING RING, OIL PUMP

- If there is a suspicion that the oil pump sealing ring is damaged, replace the transmission. See **TRANSMISSION, REMOVING** and **TRANSMISSION, INSTALLING (2003, 2004)** or **TRANSMISSION, INSTALLING (2005, 2006)** .

Was the transmission replaced?

- **YES**

  Refer to **RESETTING THE ADAPTATION**

- **NO**

  FAULT NOT FOUND: Troubleshooting has been completed.

RESETTING THE ADAPTATION

RESETTING ADAPTATION AND THE COUNTER FOR "TRANSMISSION OIL CHANGE"

HINT: The transmission has torque controlled adaptive pressure control. Pressure control means that the transmission regulates the pressure itself during each gear shift. This avoids harsh gear shifting. Each gear shift is evaluated by the control module and stored in the memory. This allows for compensation for wear and tear in the transmission and clutch. It is important that the adaptation in the memory is reset after the transmission has been repaired. This is to ensure normal operation. The oil is replaced during repair; the "Transmission oil change" counter must be reset. If the counter is not reset when the fluid is drained and replaced, there is a risk that a diagnostic trouble code (DTC) will be stored in incorrect circumstances.

NOTE: **This applies only if the transmission or one of the components in the transmission have been replaced.**

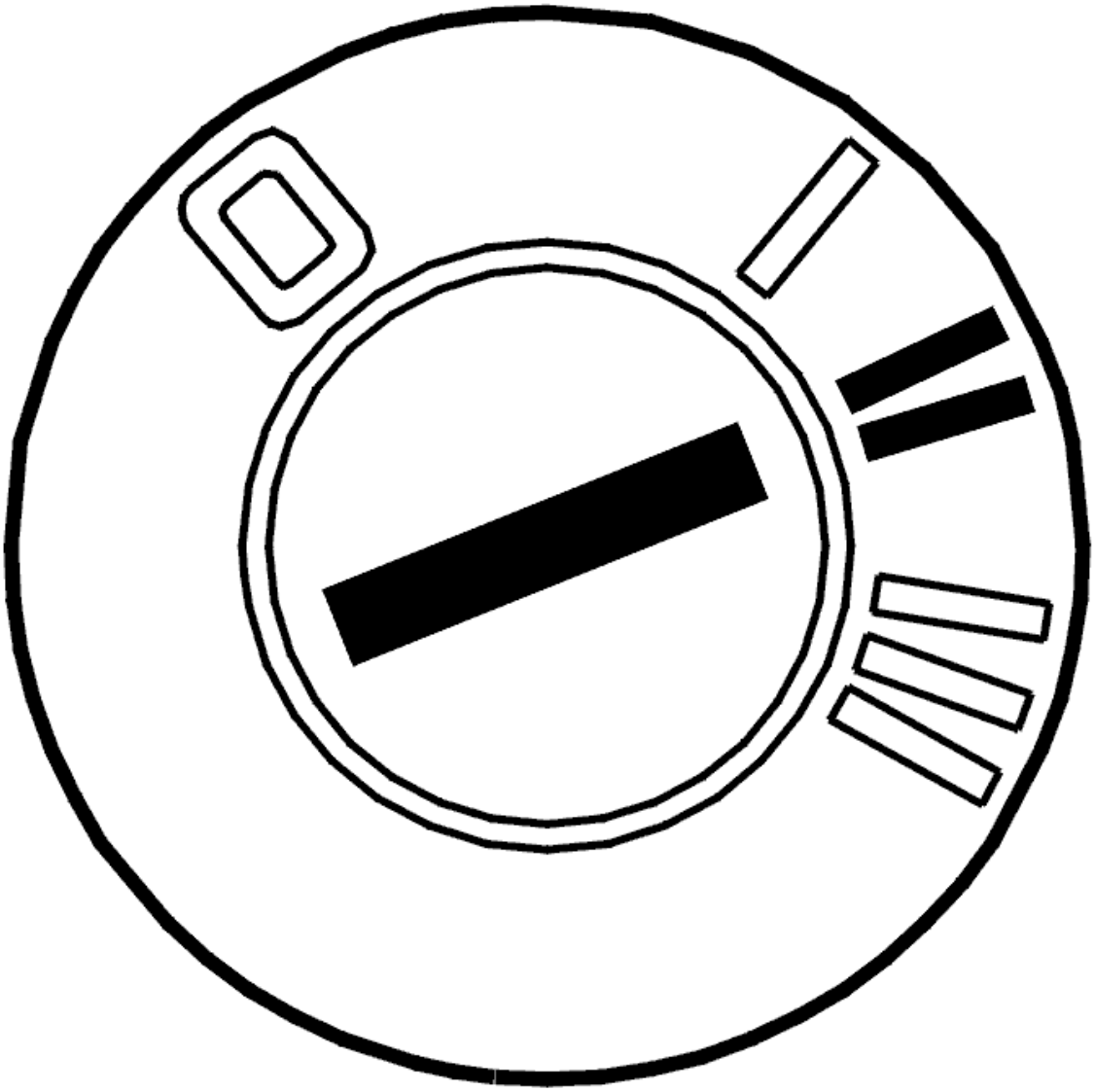

Fig. 23: Identifying Ignition ON
Courtesy of VOLVO CARS CORPORATION

- Ignition on.

  Click on the VCT2000 symbol to reset the adaptation and counter.

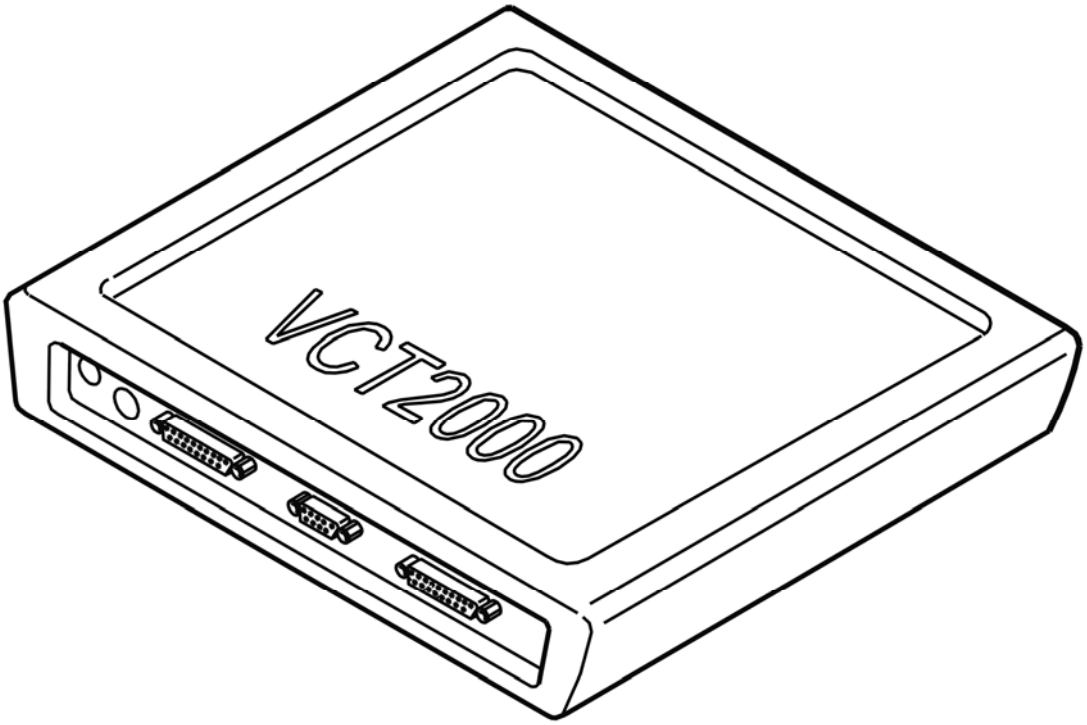

Fig. 24: Identifying VCT2000 Diagnostic Tool Symbol In VIDA
Courtesy of VOLVO CARS CORPORATION

CHECKING OIL QUALITY (4T65 AWD; 2003-2006)

CHECK TRANSMISSION OIL QUALITY

CHECK QUALITY OF TRANSMISSION OIL

CHECK QUALITY OF TRANSMISSION OIL

NOTE: The transmission fluid quality is extremely important for transmission function. Therefore it is imperative that this is correct.

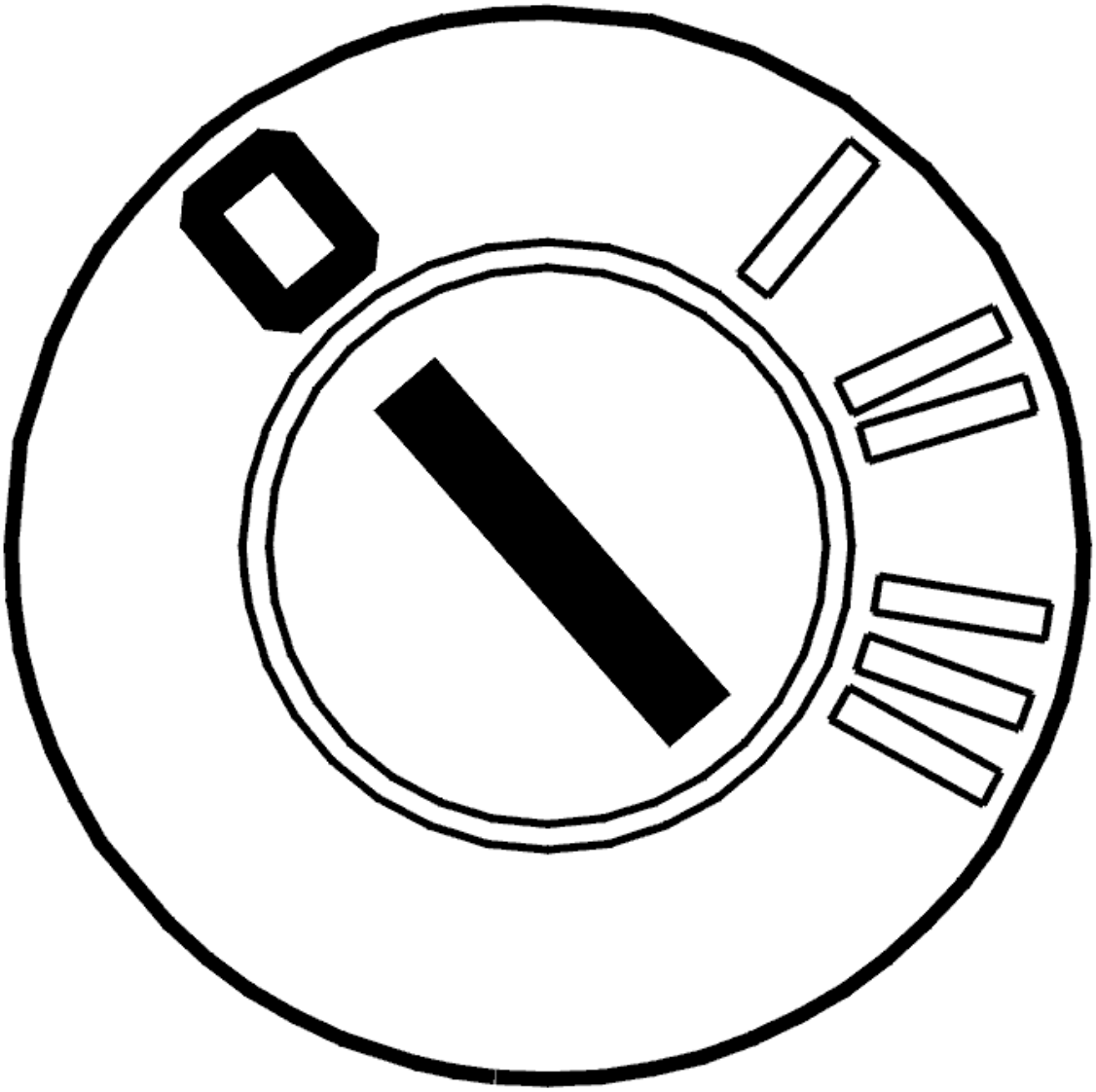

Fig. 25: Identifying Ignition OFF
Courtesy of VOLVO CARS CORPORATION

- Ignition off.

  Check the transmission oil quality. Take a sample using the dip stick.

  - Replace the transmission fluid if it smells burnt
  - Replace the fluid and filter if the transmission fluid contains particles
  - Check if there is oil or an oil film in the expansion tank. Oil in the expansion tank indicates leakage from the transmission oil cooler which is positioned in the cooler unit.

  NOTE: The transmission oil is red and must not be confused with black engine oil.

- If the transmission fluid is cloudy or pink, it is contaminated with coolant. In such cases the transmission must be replaced. For checking coolant in transmission oil, see **CHECKING FOR COOLANT IN OIL**

  When replacing the transmission, the cooler unit, including the additional cooler must be replaced if installed. Replace the hoses between the cooler and the transmission.

Other information:

- To replace the transmission fluid and filter, see **TRANSMISSION OIL / OIL FILTER, REPLACING** .

Select an option:

1. The fluid contains water

   Refer to **REPLACING THE TRANSMISSION**

2. The fluid smells burnt or contains particles

   Refer to **RESETTING TRANSMISSION FLUID CHANGE COUNTER**

3. No fault detected.

   NO FAULT

REPLACING THE TRANSMISSION

REPLACING THE TRANSMISSION

Replace the transmission. See **TRANSMISSION, REMOVING** and **TRANSMISSION, INSTALLING (2003, 2004)** or **TRANSMISSION, INSTALLING (2005, 2006)** .

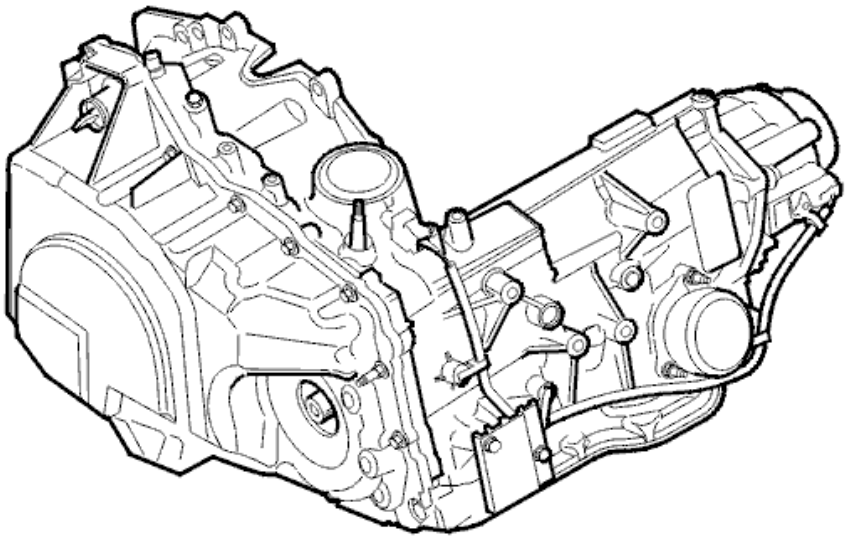

P2X

4301721D ©VOLVO

Fig. 26: Identifying Transmission
Courtesy of VOLVO CARS CORPORATION

- **Continue**

  Refer to **RESETTING THE ADAPTATION**

RESETTING TRANSMISSION FLUID CHANGE COUNTER

RESETTING TRANSMISSION FLUID CHANGE COUNTER

HINT: The transmission control module (TCM) has a counter for the oil quality. The counter counts up if the transmission is exposed to too high a load or an ambient temperature that is too high. If the counter is not reset when the oil is drained or changed, there is a risk that a diagnostic trouble code (DTC) will be stored in faulty circumstances. Therefore it is important that the "Transmission oil change" counter is reset.

NOTE: **This applies only when the transmission fluid is changed and when the fluid is changed when repairs are carried out to the transmission temperature sensor.**

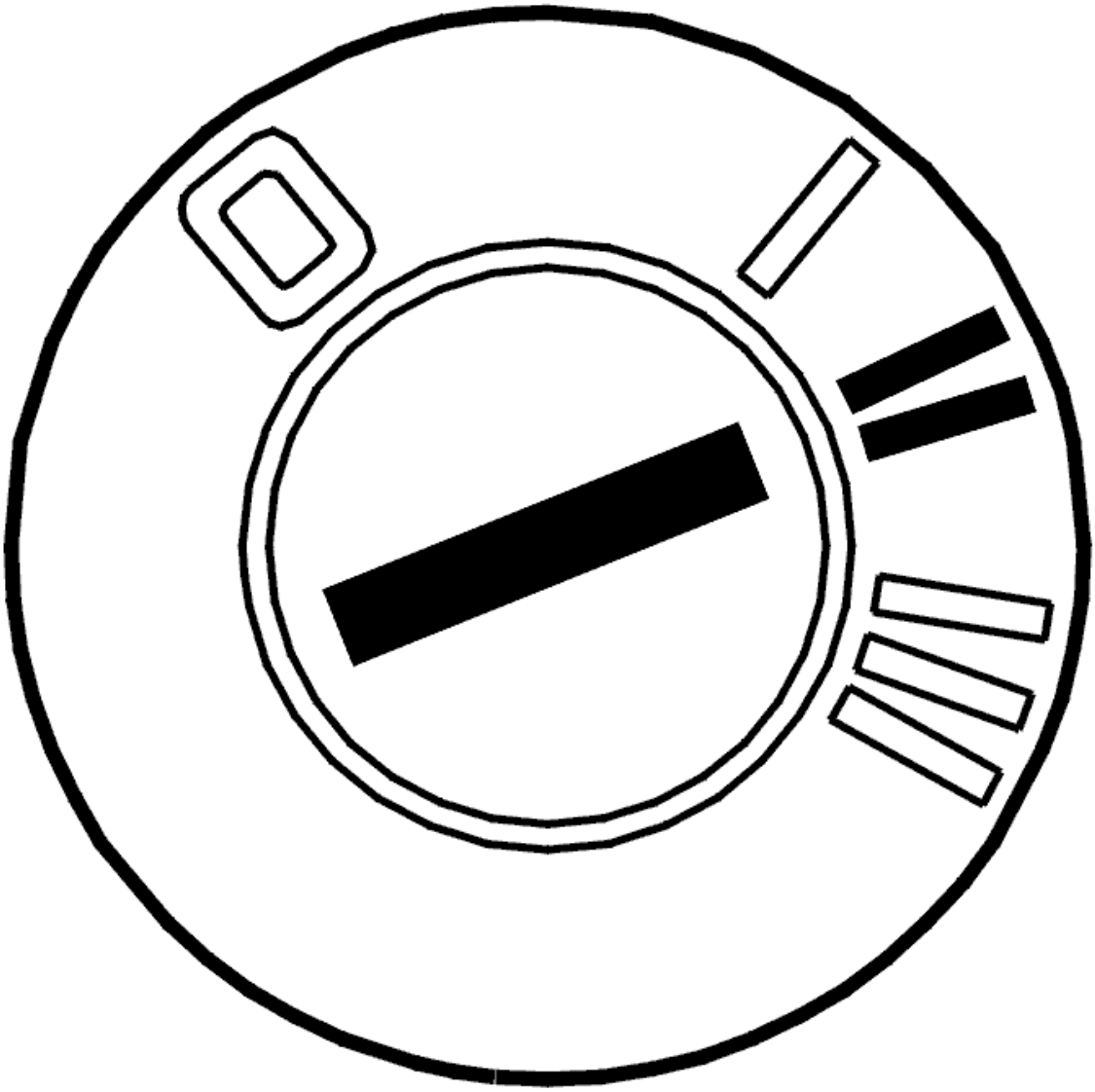

Fig. 27: Identifying Ignition ON
Courtesy of VOLVO CARS CORPORATION

- Ignition on.

  Reset the counter by clicking on the VCT 2000 symbol.

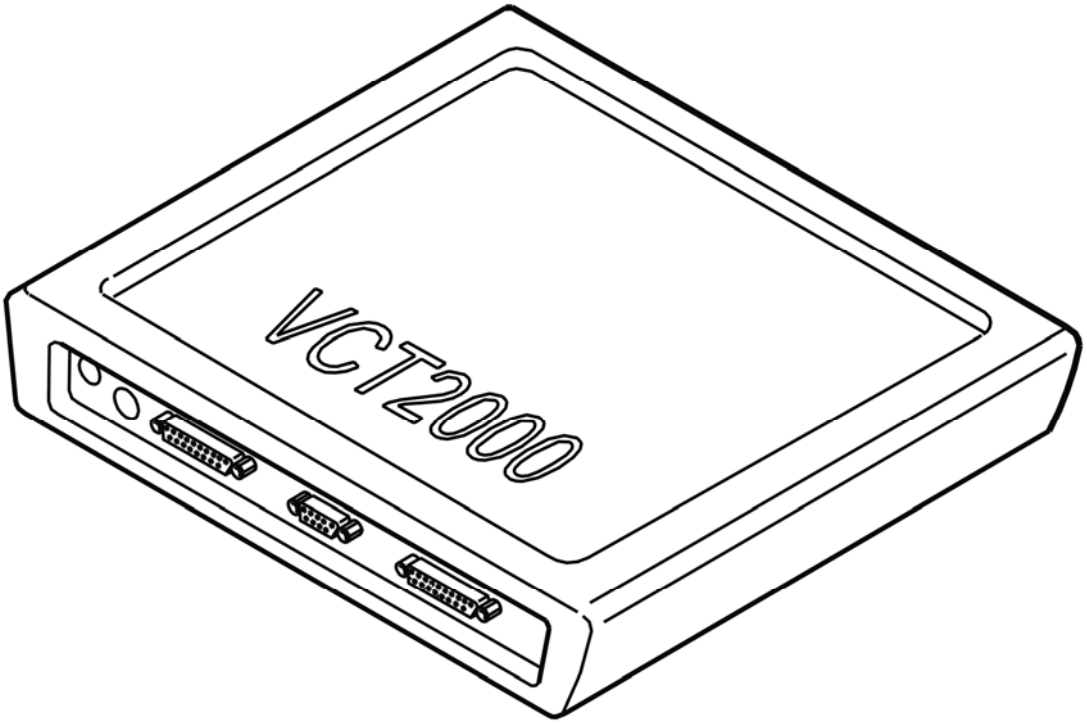

Fig. 28: Identifying VCT2000 Diagnostic Tool Symbol In VIDA
Courtesy of VOLVO CARS CORPORATION

RESETTING THE ADAPTATION

RESETTING ADAPTATION AND THE COUNTER FOR "TRANSMISSION OIL CHANGE"

HINT: The transmission has torque controlled adaptive pressure control. Pressure control means that the transmission regulates the pressure itself during each gear shift. This avoids harsh gear shifting. Each gear shift is evaluated by the control module and stored in the memory. This allows for compensation for wear and tear in the transmission and clutch. It is important that the adaptation in the memory is reset after the transmission has been repaired. This is to ensure normal operation. The oil is replaced during repair; the "Transmission oil change" counter must be reset. If the counter is not reset when the fluid is drained and replaced, there is a risk that a diagnostic trouble code (DTC) will be stored in incorrect circumstances.

NOTE: **This applies only if the transmission or one of the components in the transmission have been replaced.**

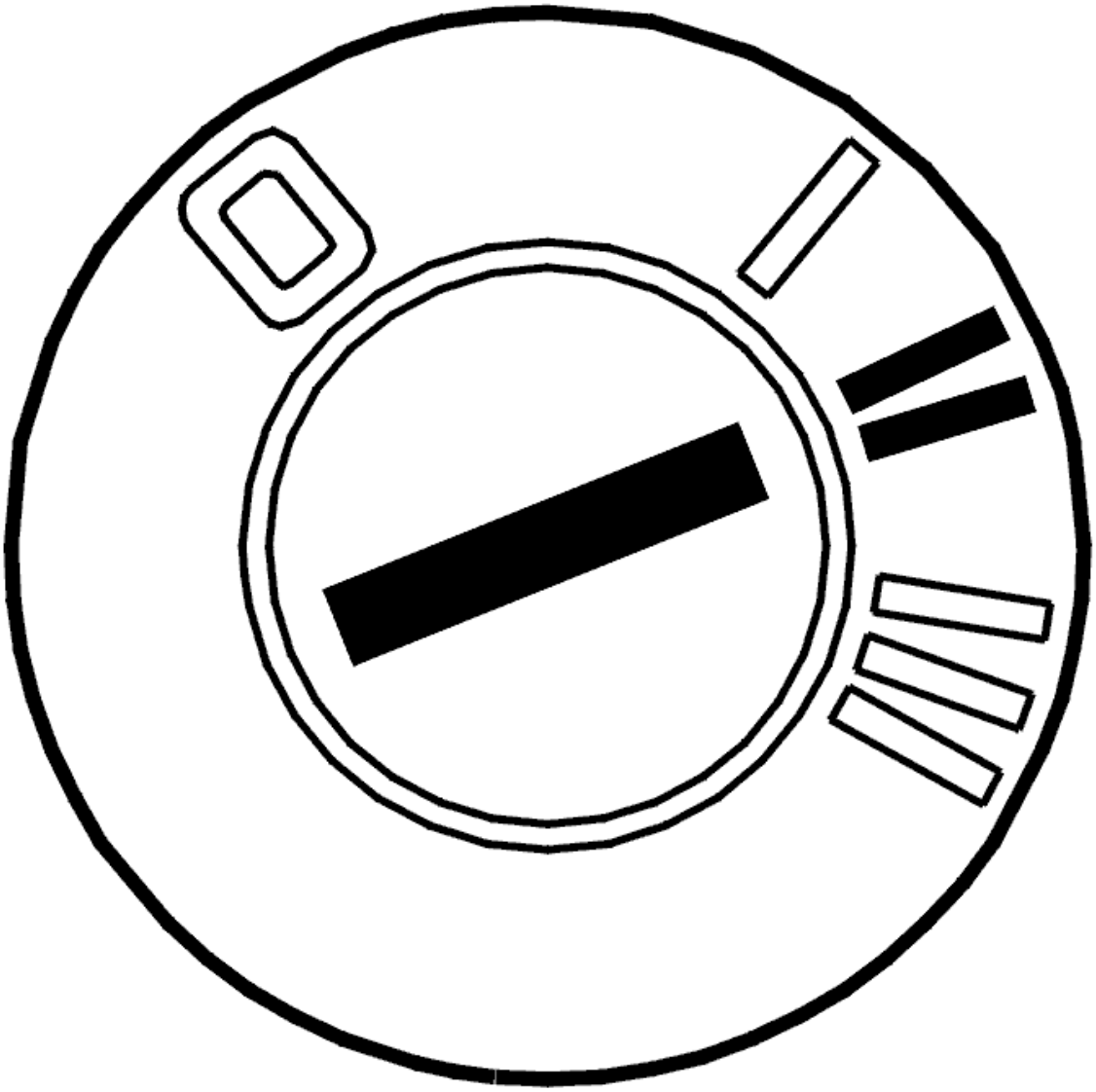

Fig. 29: Identifying Ignition ON
Courtesy of VOLVO CARS CORPORATION

- Ignition on.

  Click on the VCT2000 symbol to reset the adaptation and counter.

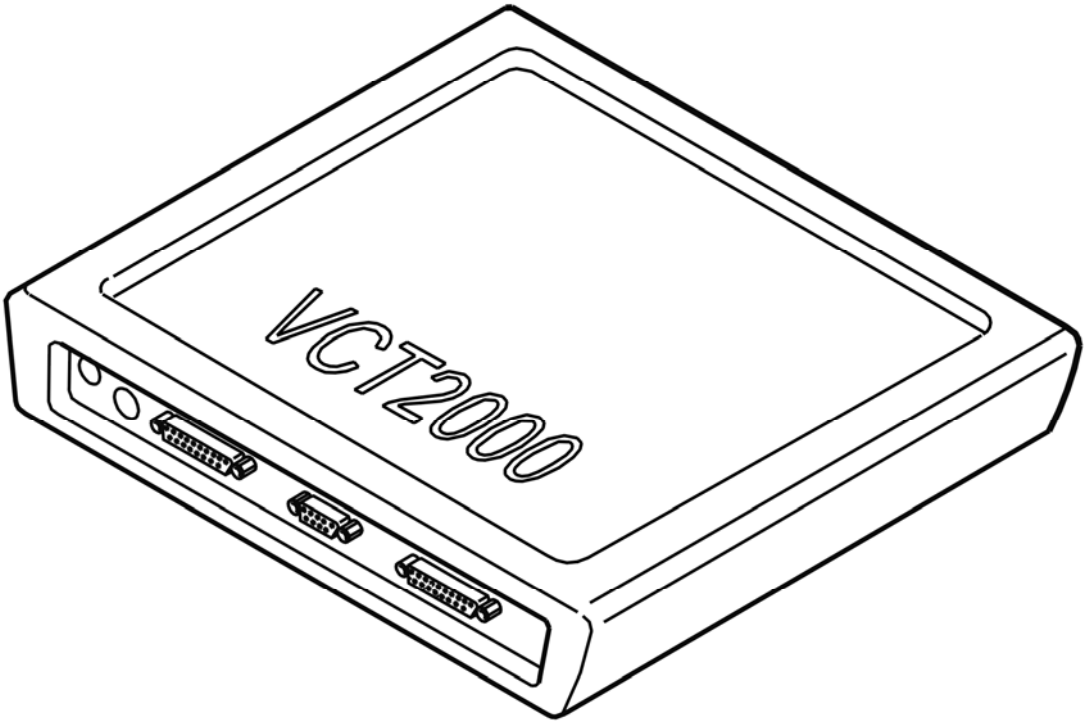

Fig. 30: Identifying VCT2000 Diagnostic Tool Symbol In VIDA
Courtesy of VOLVO CARS CORPORATION

FAULT-TRACING INFORMATION

Condition

Diagnostic trouble codes (DTCs) missing.

The fault is permanent.

Possible Source

- The oil is burnt or discolored
- Water in the oil
- Particles in the oil.
- Glycol in the transmission fluid.

Fault symptom[s]

- Harsh gear shifting
- Irregular shifting

- No shifting
- No lock-up function.

CHECKING PARK/NEUTRAL POSITION (PNP) SWITCH (4T65 AWD; 2003-2006)

CHECKING PARK / NEUTRAL POSITION (PNP) SWITCH

READING OFF DIAGNOSTIC TROUBLE CODES (DTCS)

HINT: If the starter motor does not run, the fault may be due to an internal fault in the gear-shift position sensor. In certain cases the transmission control module (TCM) has been unable to store diagnostic trouble codes (DTCs) because not all the conditions have been met.

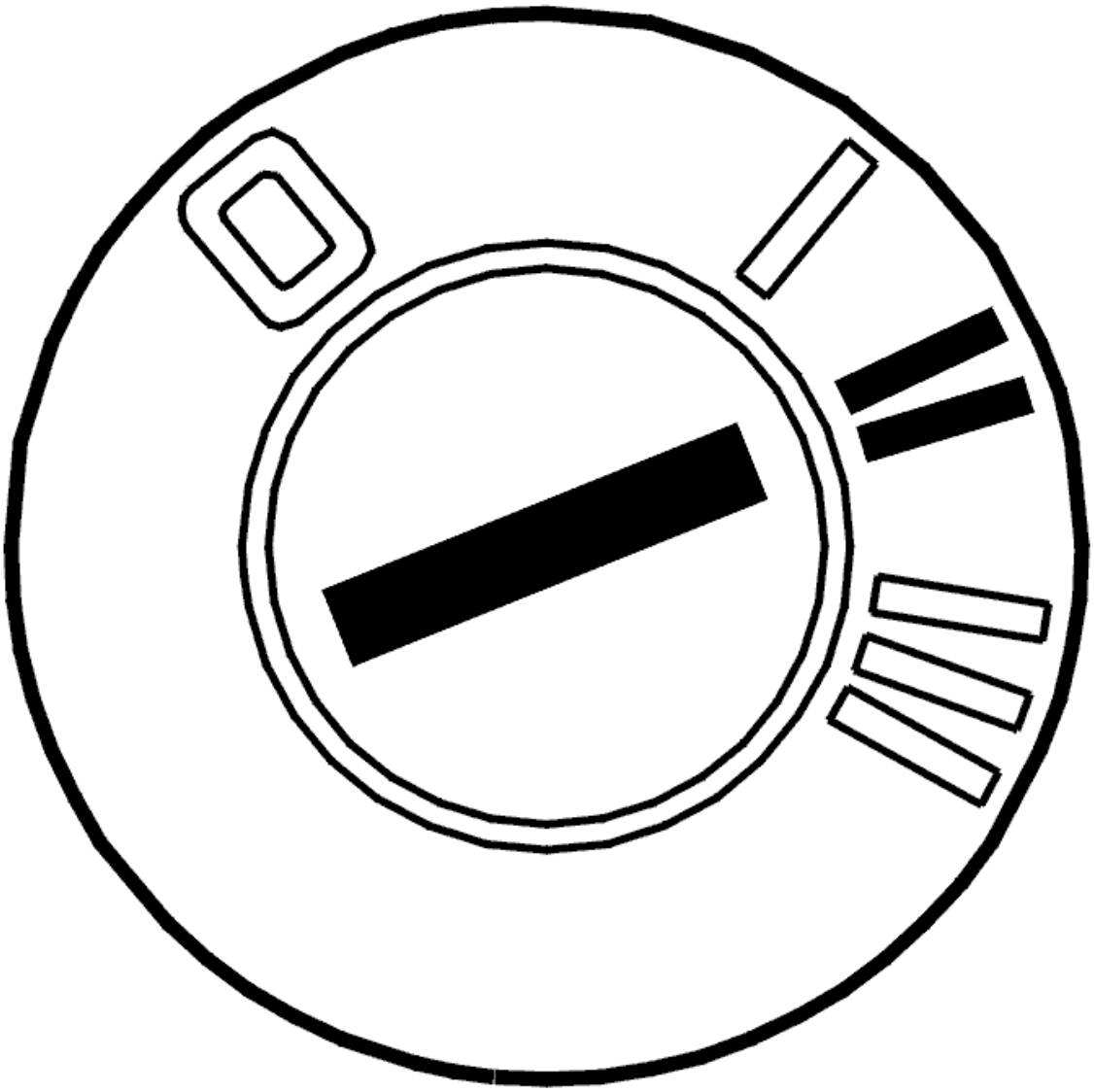

Fig. 31: Identifying Ignition ON

Courtesy of VOLVO CARS CORPORATION

- Ignition on or ignition switch position III for at least five seconds
- Read off diagnostic trouble codes (DTCs).

  Fault trace any stored diagnostic trouble codes (DTCs) before beginning this fault-tracing. Use the VIDA symptom input and select the same symptom as for this fault-tracing.

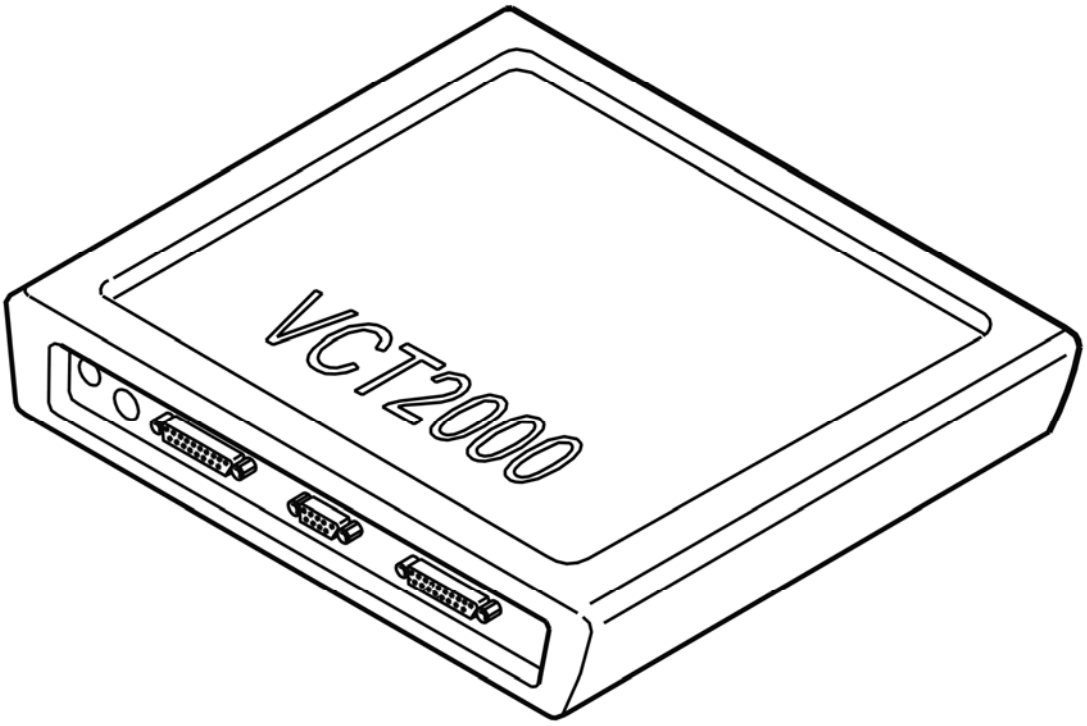

Fig. 32: Identifying VCT2000 Diagnostic Tool Symbol In VIDA
Courtesy of VOLVO CARS CORPORATION

Were diagnostic trouble codes (DTCs) stored in the transmission control module (TCM)?

- **YES**

  OKAY: Troubleshooting has been completed.

- **NO**

  Refer to **CHECKING PARK / NEUTRAL POSITION (PNP) SWITCH**

CHECKING PARK / NEUTRAL POSITION (PNP) SWITCH

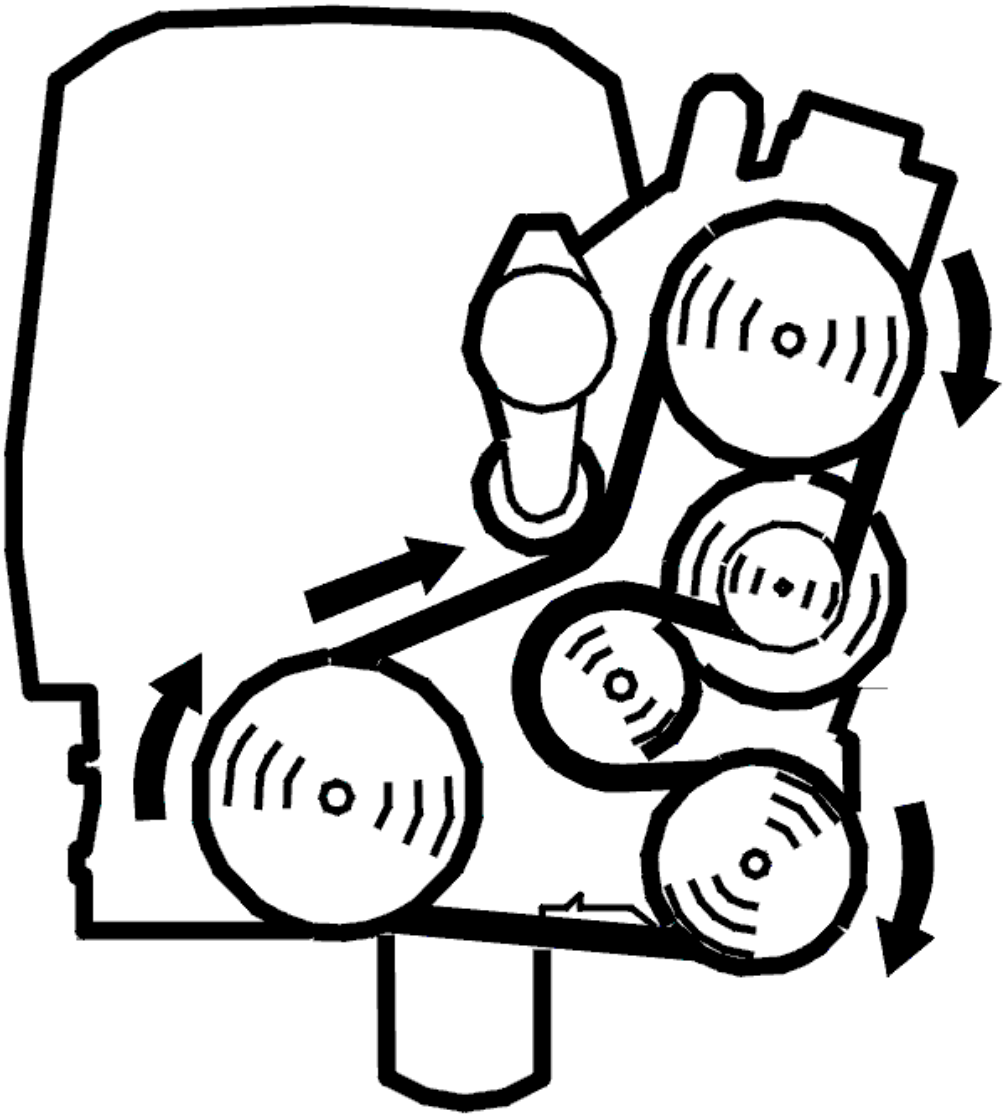

Fig. 33: Identifying Belt Routing
Courtesy of VOLVO CARS CORPORATION

- Ignition off
- Move the gear selector to position D
- Try to start the car. It should not be possible to start the car
- Ignition off
- Move the gear selector to position P or N.

  Try to start the car. It should now be possible to start the car.

Was the function OK?

- **YES**

FAULT NOT FOUND: Troubleshooting has been completed.

- **NO**

  Refer to **CHECKING WIRING AND COMPONENT**

CHECKING WIRING AND COMPONENT

Check the cable between transmission connector terminal #44 (#A44) and central electronic module (CEM) terminal #D9 (#B9). Check for an open-circuit according to **OPEN-CIRCUIT, PERMANENT FAULTS** . Check for a short-circuit to ground according to **SHORT-CIRCUIT TO GROUND, PERMANENT FAULTS** . Check for a short-circuit to supply voltage according to **SHORT-CIRCUIT TO SUPPLY VOLTAGE. PERMANENT FAULTS** .

If no faults are found in the wiring, try a new control module according to **TRANSMISSION CONTROL MODULE (TCM), REPLACING** .

Other information

- To connect the breakout box to the transmission control module (TCM), see **CONNECTING THE BREAKOUT BOX**
- To connect the breakout box to the central electronic module (CEM), see **CONNECTING THE BREAKOUT BOX** .

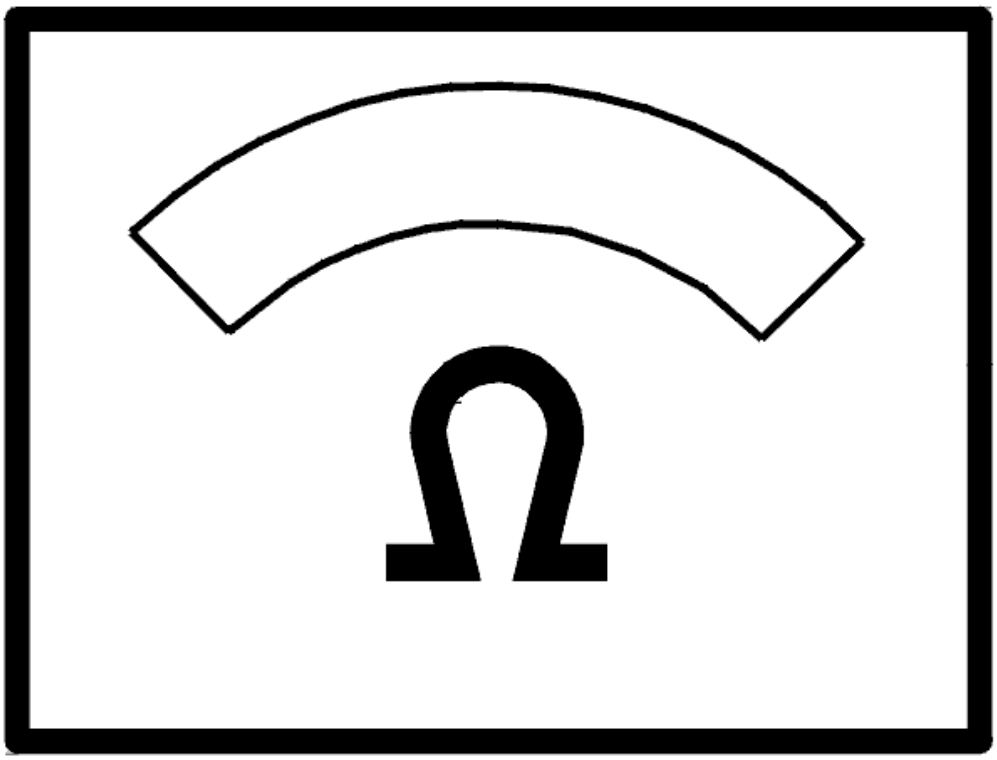

Fig. 34: Identifying Ohms Display
Courtesy of VOLVO CARS CORPORATION

Were any faults found in the cable?

- **YES**

  Refer to **VERIFICATION**

- **NO**

  Refer to **INFORMATION**

VERIFICATION

HINT: After carrying out the repair, check that the fault has been remedied.

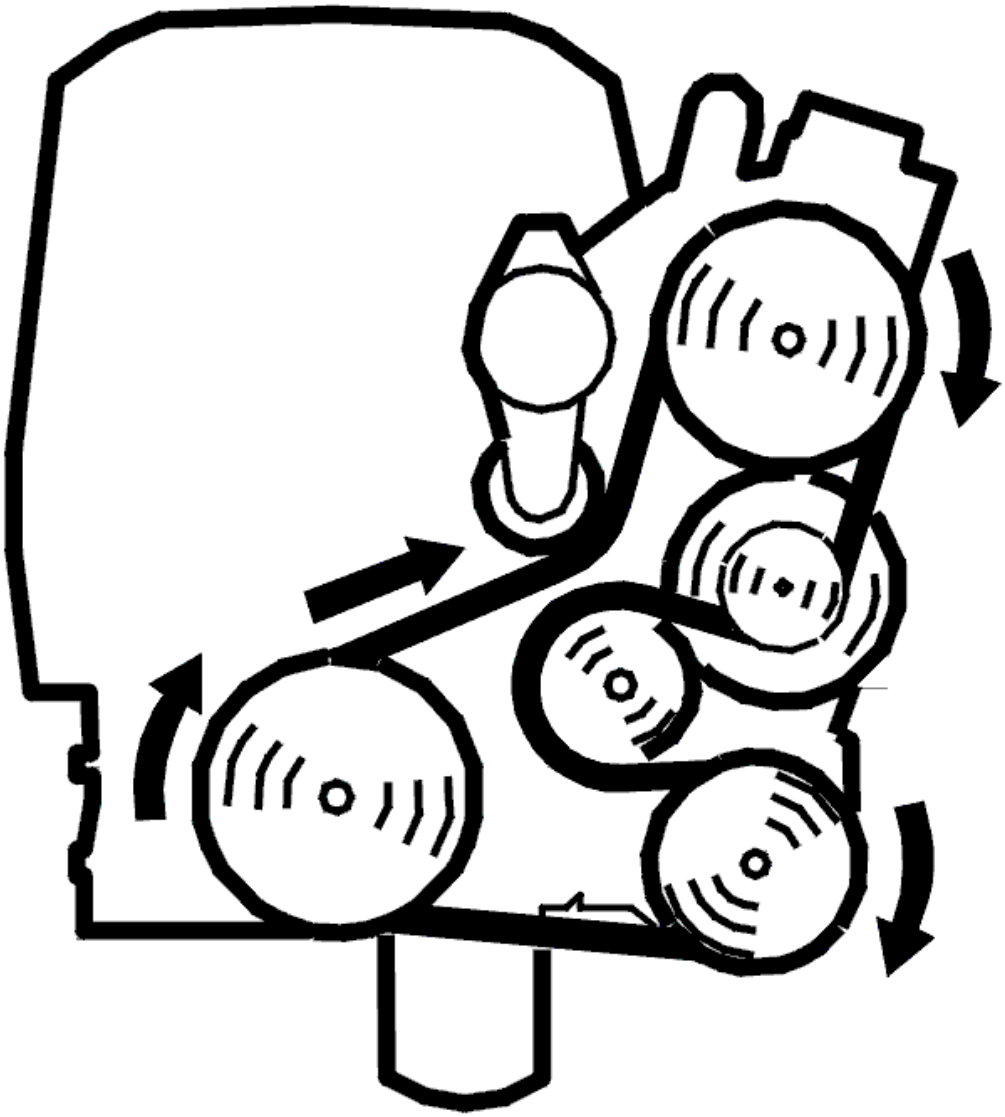

Fig. 35: Identifying Belt Routing
Courtesy of VOLVO CARS CORPORATION

- Ignition off
- Gear-shift position sensor in position D
- Try to start the engine. It should not now be possible to start the engine
- Ignition off
- Gear-shift position sensor in position P or N.

  Try to start the engine. It should now be possible to start the engine.

Was the function OK?

- **YES**

OKAY: Troubleshooting has been completed.

- **NO**

  Refer to **INFORMATION**

INFORMATION

FAULT-TRACING INFORMATION

The fault should have been detected and remedied. As this is not the case fault-tracing has failed.

Exit fault-tracing for this diagnostic trouble code (DTC) or make another attempt.

CHECKING POOR SHIFTING QUALITY (B6324S, TF-80SC; B6324S, TF-80SC AWD; 2007-2010)

CHECKING POOR SHIFTING QUALITY

FAULT-TRACING INFORMATION

CHECKING GEAR SYSTEM

Problems that the customer may experience are hard shifts or slipping shifts. The following test-drive contains several different driving situations that may provoke these symptoms if the transmission is damaged.

NOTE: It is important that the transmission oil is above 70 °C before the test-drive starts

Test 1

1. Driving at 100 km/h, 6th gear.
2. Perform a kickdown to 4th gear.
3. Let the transmission automatically shift up to 5th gear.
4. Let up the accelerator pedal and let the transmission shift up to 6th gear.

Test 2

1. Driving at 100 km/h, 6th gear.
2. Slight uphill grade, press accelerator pedal until you obtain shifting 6-5, not kickdown.

Test 3

1. Driving at 80 km/h.
2. Move the gear selector to position M and engage 6th gear.

3. Perform a kickdown and shift 6-5, 5-4, 4-3 at the same time.
4. Then upshift immediately to 6th gear.

Test 4

1. Stationary vehicle, engine running, parking brake applied, brake activated with left foot, gear selector in position R.
2. Press down the accelerator pedal (brake still activated).

NOTE: Let up the accelerator pedal in case of noise or slipping.

Test 5

1. Stationary vehicle, engine running, parking brake applied, brake activated with left foot, gear selector in position D.
2. Press down the accelerator pedal (brake still activated).

NOTE: Let up the accelerator pedal in case of noise or slipping.

If the symptoms hard shifts or slipping shifts arise during the test-drive, the transmission's control system must be replaced.

Other information

- see **CONTROL SYSTEMS**

Is the function OK?

- **YES**

  Refer to **FAULT-TRACING INFORMATION**

- **NO**

  Refer to **REPLACING THE CONTROL SYSTEM**

FAULT-TRACING INFORMATION

FAULT-TRACING INFORMATION

The automatic transmission's shifting quality may in some cases be dependent on the engine's function. If the automatic transmission's shifting quality is poor, troubleshoot the engine system as well.

REPLACING THE CONTROL SYSTEM

The previous test indicates that there is a fault in the transmission control system. Replace the control system.

Other information

- see **CONTROL SYSTEMS**

CHECKING POOR SHIFTING QUALITY (B6324S5, TF-80SC; B6324S5, TF-80SC AWD; 2011-2012)

CHECKING POOR SHIFTING QUALITY

see **CHECKING POOR SHIFTING QUALITY**

CHECKING POOR SHIFTING QUALITY (B8444S, TF-80SC AWD; 2006-2011)

CHECKING POOR SHIFTING QUALITY

FAULT-TRACING INFORMATION

CHECKING GEAR SYSTEM

Problems that the customer may experience are hard shifts or slipping shifts. The following test-drive contains several different driving situations that may provoke these symptoms if the transmission is damaged.

NOTE: It is important that the transmission oil is above 70 °C before the test-drive starts

Test 1

1. Driving at 100 km/h, 6th gear.
2. Perform a kickdown to 4th gear.
3. Let the transmission automatically shift up to 5th gear.
4. Let up the accelerator pedal and let the transmission shift up to 6th gear.

Test 2

1. Driving at 100 km/h, 6th gear.
2. Slight uphill grade, press accelerator pedal until you obtain shifting 6-5, not kickdown.

Test 3

1. Driving at 80 km/h.
2. Move the gear selector to position M and engage 6th gear.
3. Perform a kickdown and shift 6-5, 5-4, 4-3 at the same time.
4. Then upshift immediately to 6th gear.

Test 4

1. Stationary vehicle, engine running, parking brake applied, brake activated with left foot, gear selector in position R.
2. Press down the accelerator pedal (brake still activated).

NOTE: Let up the accelerator pedal in case of noise or slipping.

Test 5

1. Stationary vehicle, engine running, parking brake applied, brake activated with left foot, gear selector in position D.
2. Press down the accelerator pedal (brake still activated).

NOTE: Let up the accelerator pedal in case of noise or slipping.

If the symptoms hard shifts or slipping shifts arise during the test-drive, the transmission's control system must be replaced.

Other information

- see **CONTROL SYSTEM, REPLACING**

Is the function OK?

- **YES**

  Refer to **FAULT-TRACING INFORMATION**

- **NO**

  Refer to **REPLACING THE CONTROL SYSTEM**

FAULT-TRACING INFORMATION

FAULT-TRACING INFORMATION

The automatic transmission's shifting quality may in some cases be dependent on the engine's function. If the automatic transmission's shifting quality is poor, troubleshoot the engine system as well.

REPLACING THE CONTROL SYSTEM

The previous test indicates that there is a fault in the transmission control system. Replace the control system.

Other information

- see **CONTROL SYSTEM, REPLACING**

CHECKING POOR SHIFTING QUALITY (TF-80SC AWD; 2005)

CHECKING POOR SHIFTING QUALITY

see **CHECKING POOR SHIFTING QUALITY**

CHECKING POSITION INDICATOR (4T65 AWD; 2003-2006)

CHECKING POSITION INDICATOR

FAULT-TRACING INFORMATION

INFORMATION

Fault-tracing is under development.

For further information about this diagnostic trouble code (DTC), select Information, then DTC information.

CHECKING SEALS AND SEALING JOINTS (4T65 AWD; 2003-2006)

CHECKING SEALS AND SEALING JOINTS

Check the following seals and sealing joints:

- oil pan seal
- oil cooler with hoses and connections
- the speed sensor (O-ring)
- drive shaft seals
- the differential housing cover
- control system cover
- forward and back-up (reverse) servo
- torque converter/seal.

Remedy any leakage.

Other information

- see **TRANSMISSION OIL / OIL FILTER, REPLACING**
- see **AUXILIARY OIL COOLER, REPLACING**
- see **OUTPUT SPEED SENSOR TRANSMISSION, REPLACING**
- see **REPLACING DIFFERENTIAL HOUSING COVER**
- see **PISTON / COVER BACK-UP (REVERSE) SERVO, REPLACING**
- see **SEALING RING AND PISTON WITH O-RING FOR FRONT SERVO, REPLACING** and **SEALING RING AND PISTON WITH O-RING FOR FRONT SERVO, INSTALLING**

- see **GASKET/O RING SERVO CYLINDER, REPLACING**
- see **TORQUE CONVERTER/SEAL, REPLACING**

AUXILIARY OIL COOLER, REPLACING

- See **AUXILIARY OIL COOLER, REPLACING** .

REPLACING DIFFERENTIAL HOUSING COVER

PREPARATIONS

Fig. 36: Identifying Dip Stick Pipe & Oil Suction Device
Courtesy of VOLVO CARS CORPORATION

Collect the transmission fluid.

Remove the dipstick from the dip stick pipe.

Extract the oil (approximately 6 liters). Use an oil suction unit.

RAISE THE CAR. REMOVE THE SPLASH GUARD UNDER THE ENGINE

Fig. 37: Identifying Splash Guard
Courtesy of VOLVO CARS CORPORATION

REMOVE THE RIGHT-HAND SIDE SHAFT

See **DRIVE SHAFT RIGHT, REPLACING** .

REMOVE THE VEHICLE SPEED SENSOR (VSS) FROM THE DIFFERENTIAL HOUSING COVER

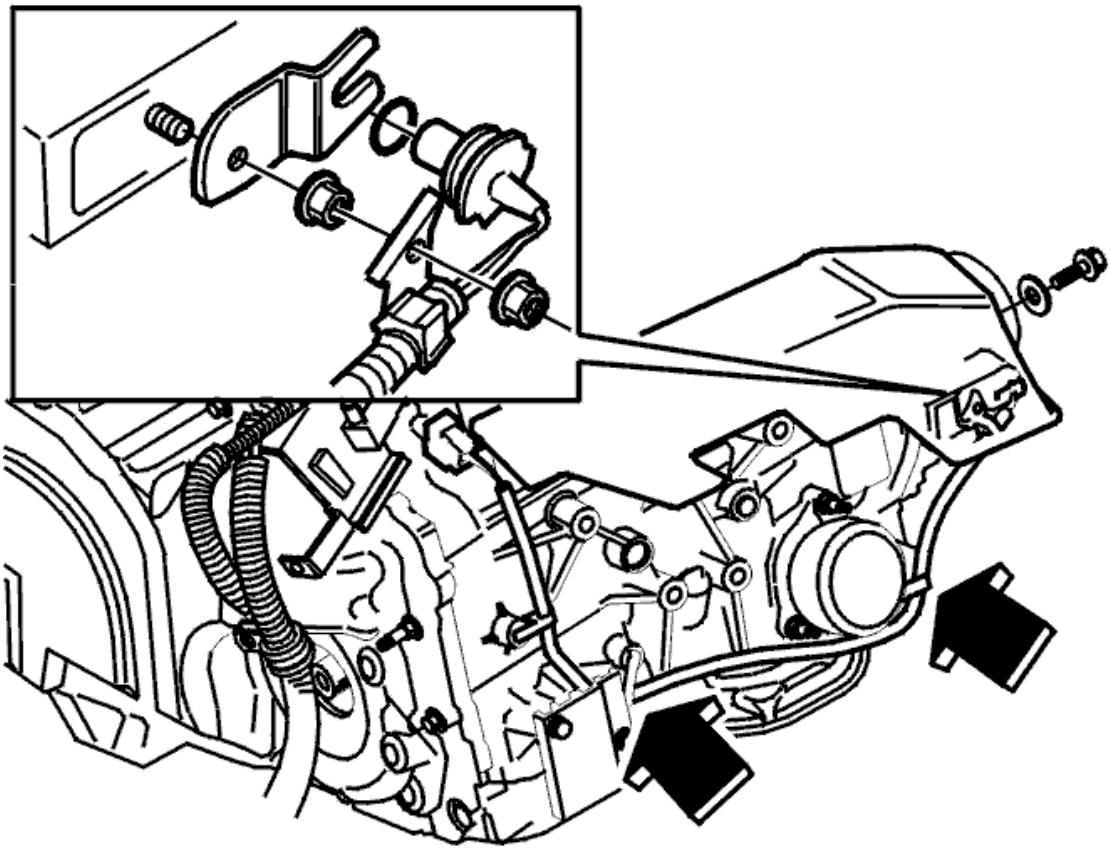

Fig. 38: Identifying Removing/Installing Sensor
Courtesy of VOLVO CARS CORPORATION

Remove the screw for the splash guard. Press up the deflector plate slightly so that the sensor is accessible.

Place a container underneath the transmission.

Remove:

- the screw holding the sensor
- the sensor.

REMOVE THE BRACKET BETWEEN THE TRANSMISSION AND THE ENGINE

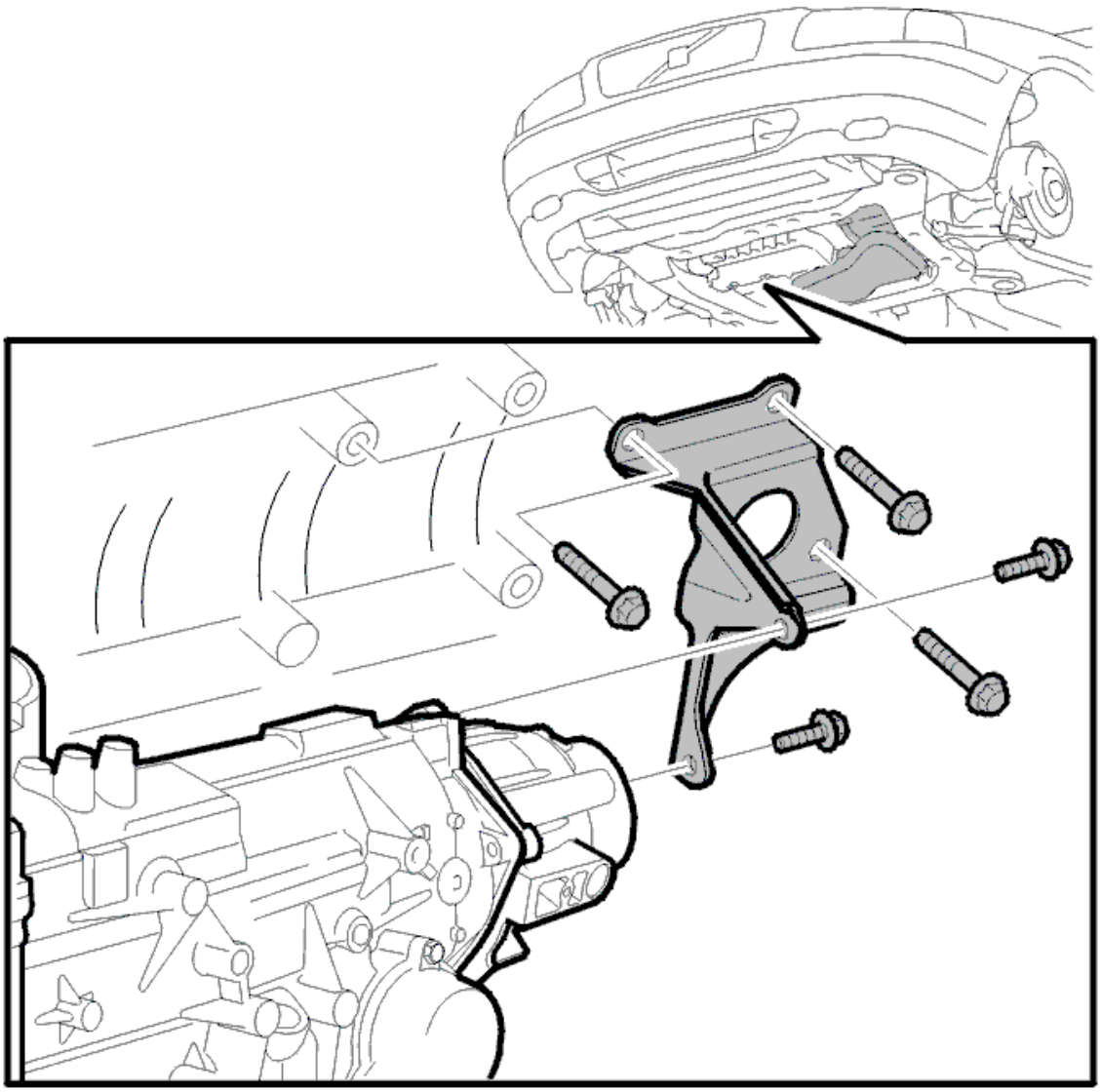

Fig. 39: Identifying Bracket Between Transmission And Engine
Courtesy of VOLVO CARS CORPORATION

Remove:

- the two screws in the differential housing cover
- the three screws for the bracket in the cylinder block
- the bracket.

REMOVE THE DIFFERENTIAL HOUSING COVER

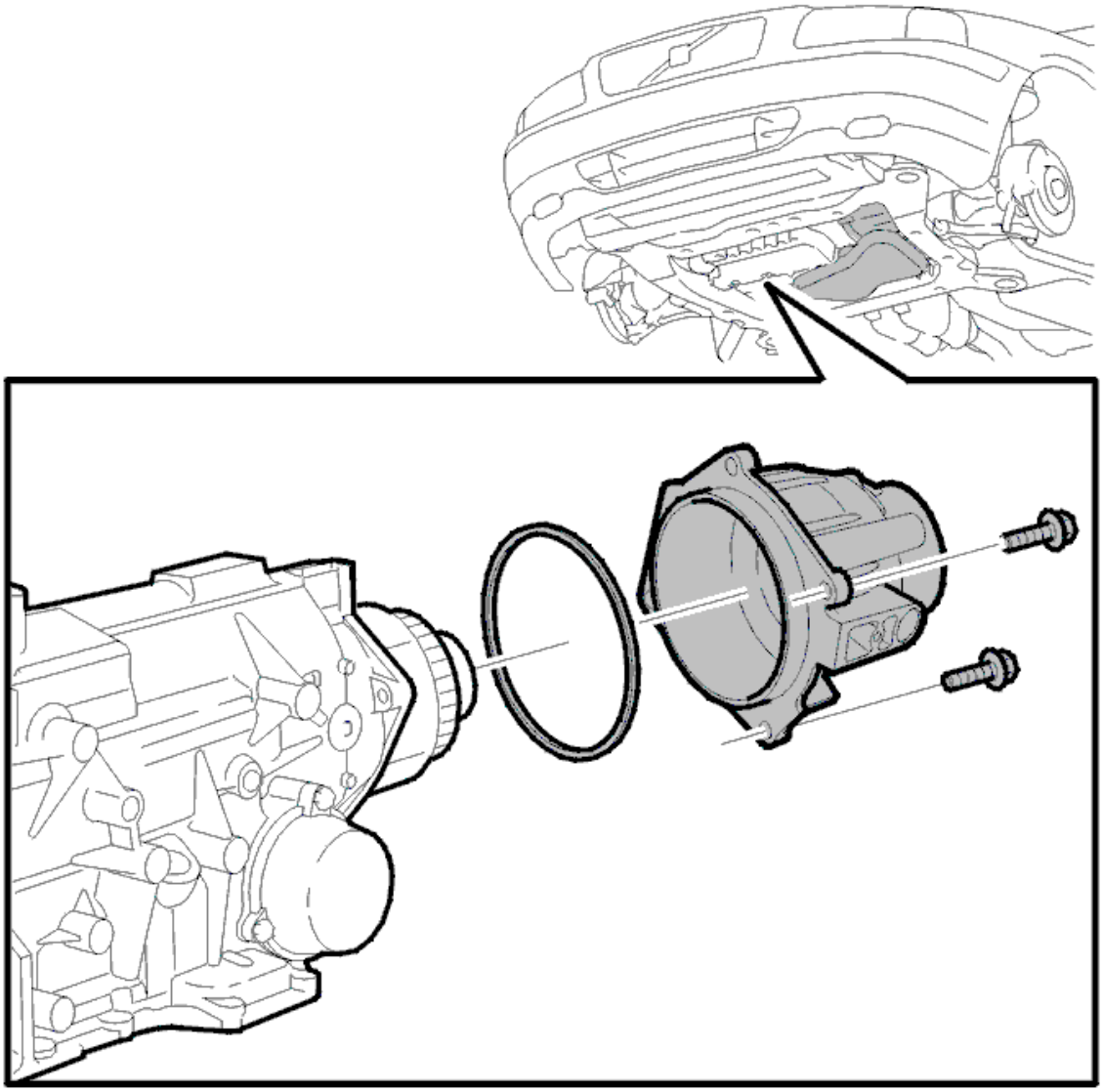

Fig. 40: Identifying Differential Housing Cover
Courtesy of VOLVO CARS CORPORATION

Remove:

- the remaining two screws
- the cover.

NOTE: Remove the throw-out bearing from the differential or the cover if it is still in

place.

CHECK BEARING SURFACE FOR THE DIFFERENTIAL

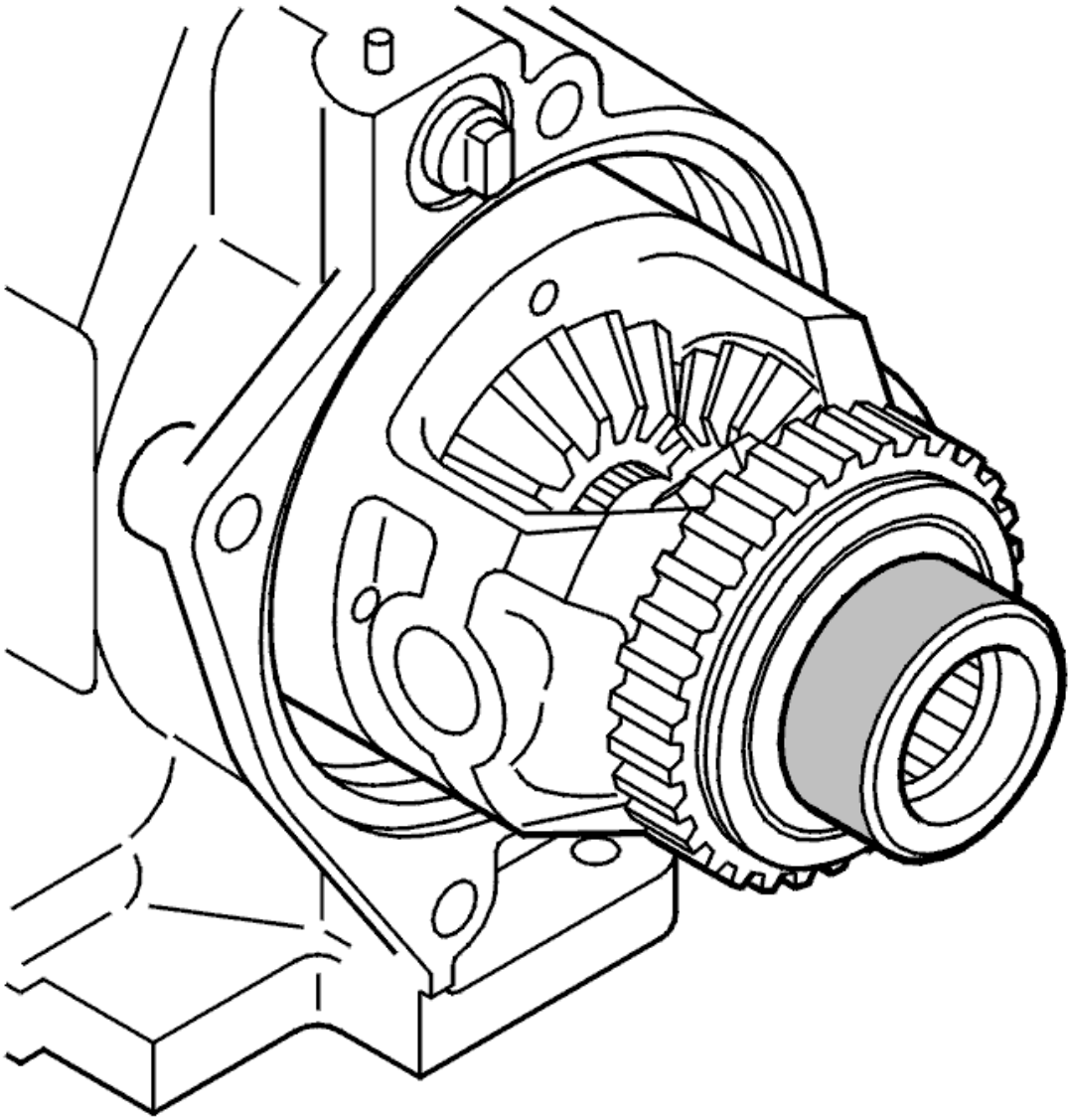

Fig. 41: Identifying Bearing Surface
Courtesy of VOLVO CARS CORPORATION

There must not be any visible scratches or abnormal wear on the bearing surface.

INSTALL THE SPACER WASHER AND THE THROW-OUT BEARING ON THE DIFFERENTIAL

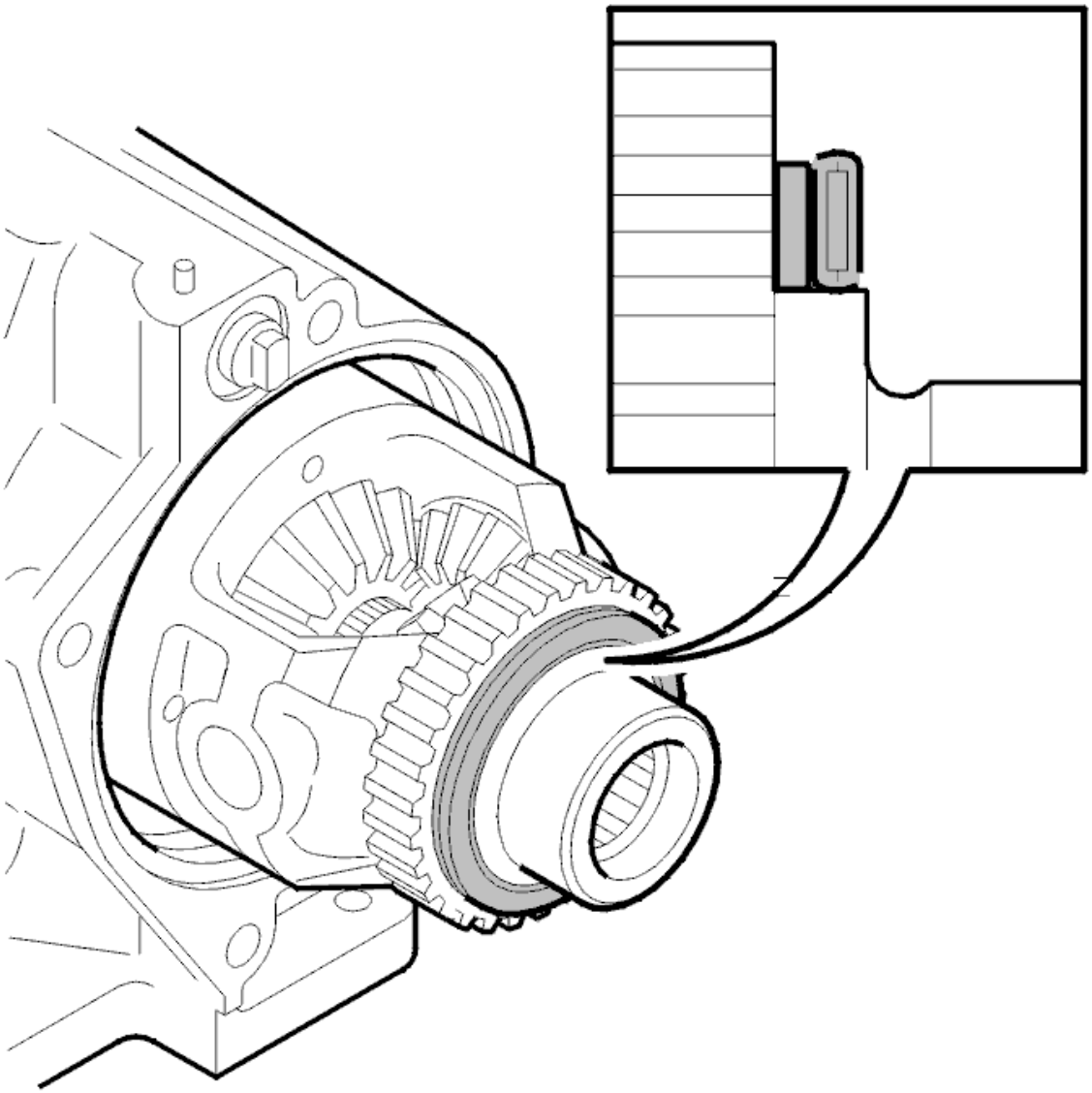

Fig. 42: Identifying Throw-Out Bearing
Courtesy of VOLVO CARS CORPORATION

Apply a little petroleum jelly on the throw-out bearing so that it secures against the spacer washer.

Install:

- the spacer washer against the gear wheel
- the throw-out bearing, see the illustration.

INSTALL THE DIFFERENTIAL HOUSING COVER

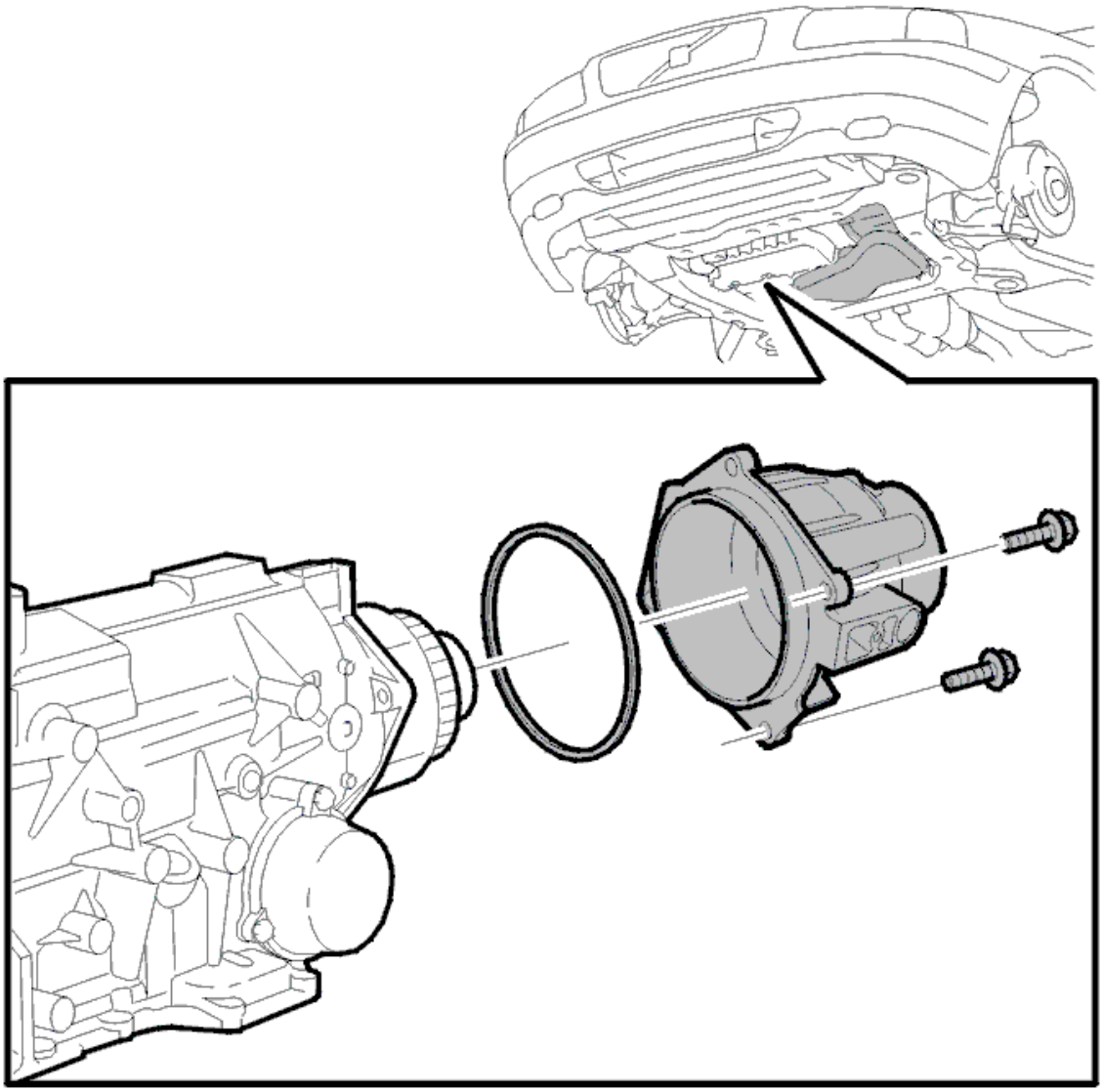

Fig. 43: Identifying Differential Housing Cover
Courtesy of VOLVO CARS CORPORATION

Use a new gasket.

Finger-tighten the screws.

INSTALL THE BRACKET ON THE CYLINDER BLOCK

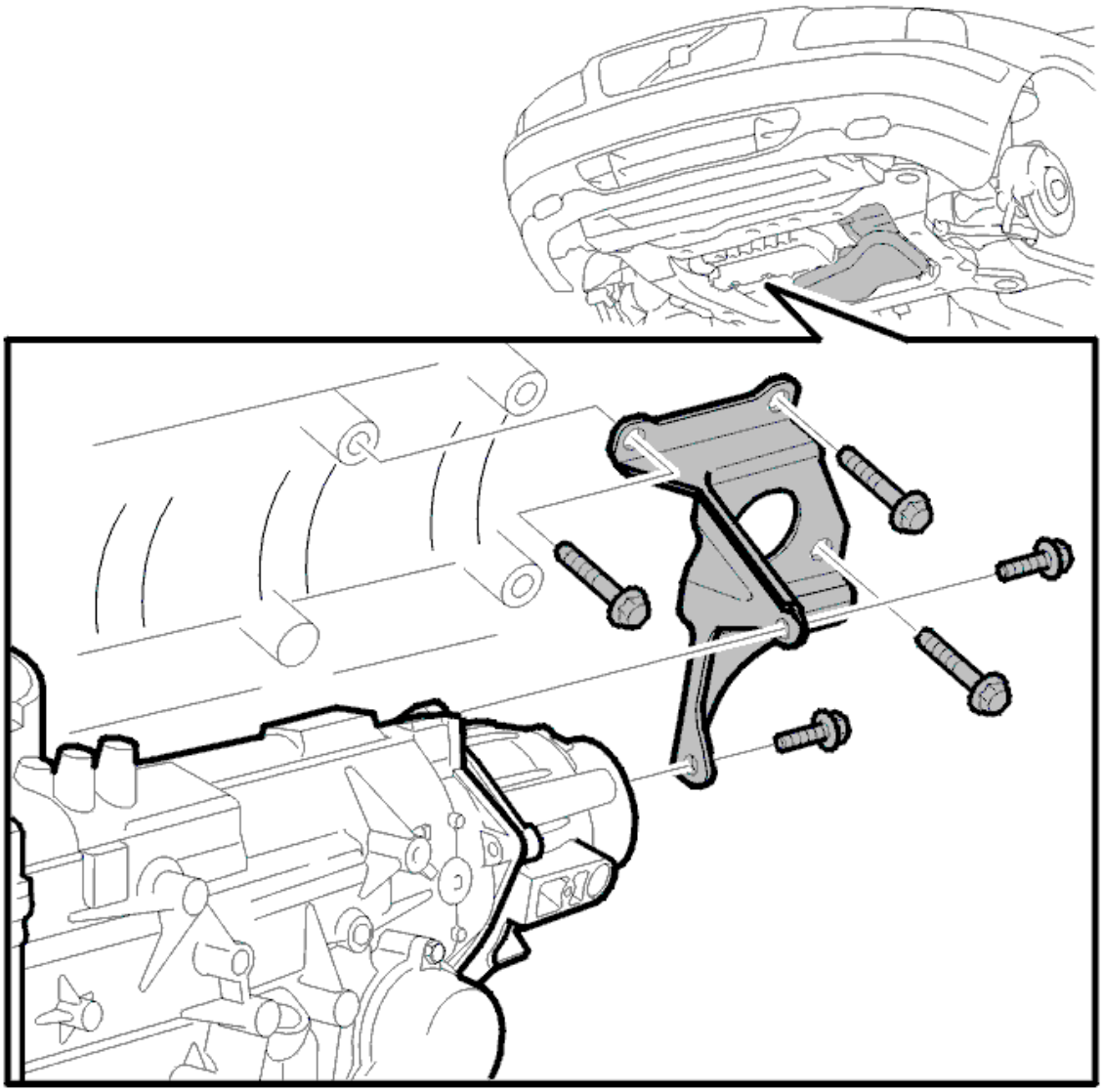

Fig. 44: Identifying Bracket Between Transmission And Engine
Courtesy of VOLVO CARS CORPORATION

Install:

- the three screws for the bracket for the differential housing cover
- the two screws in the differential housing cover.

Tighten all the screws in the differential housing cover. Tighten to **50 Nm** .

Tighten the bracket screws. Tighten to **50 Nm** .

NOTE: **There axial clearance must be 0.12 mm - 0.67 mm between the differential and the differential housing cover.**

INSTALL THE VEHICLE SPEED SENSOR (VSS)

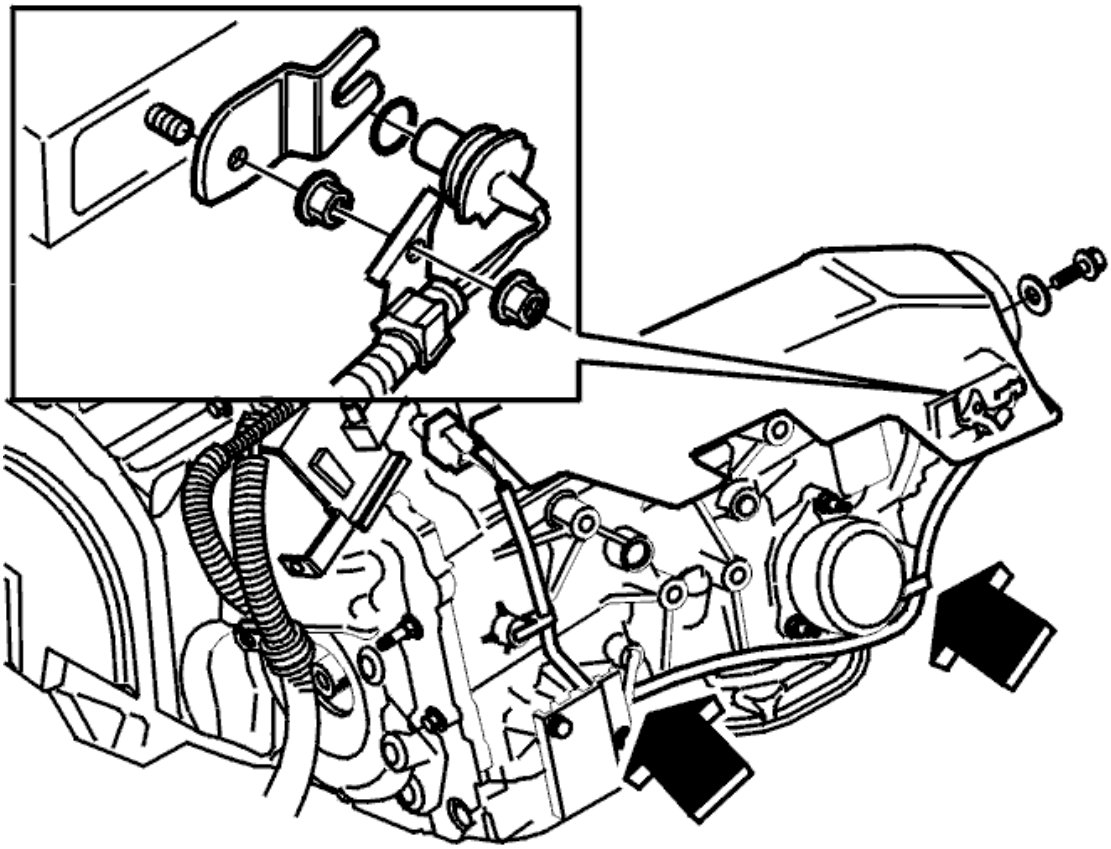

Fig. 45: Identifying Removing/Installing Sensor
Courtesy of VOLVO CARS CORPORATION

Tighten the screw. Tighten to **10 Nm** .

Install the screw for the splash guard. Tighten the screw. Tighten to **25 Nm** .

INSTALL THE RIGHT DRIVE SHAFT

See **DRIVE SHAFT RIGHT, REPLACING** .

FINISHING WORK

Install the right wheel

See **WHEELS** .

Fill the transmission with oil

Measure the amount of oil that was drained. Fill with the same amount of new oil.

CHECK OIL LEVEL

The oil level must be checked at a temperature of 80°C. This is to ensure that the read out is correct

Preparations:

- park the car on a level surface
- apply the parking brake
- let the engine idle
- move the gear selector lever to position P
- move the gear selector to each position. Stop for five seconds in each position
- move the gear selector lever to position P. Wait two minutes before checking the level.

NOTE: Wait two minutes before checking the level.

NOTE: Cars with Geartronic gear selector assemblies: P-R-N-D-Man. Do not shift up in the manual positions. Cars with conventional gear selector assemblies: P-R-N-D-3-2-1, stop for five seconds in each position.

OIL LEVEL / TEMPERATURE

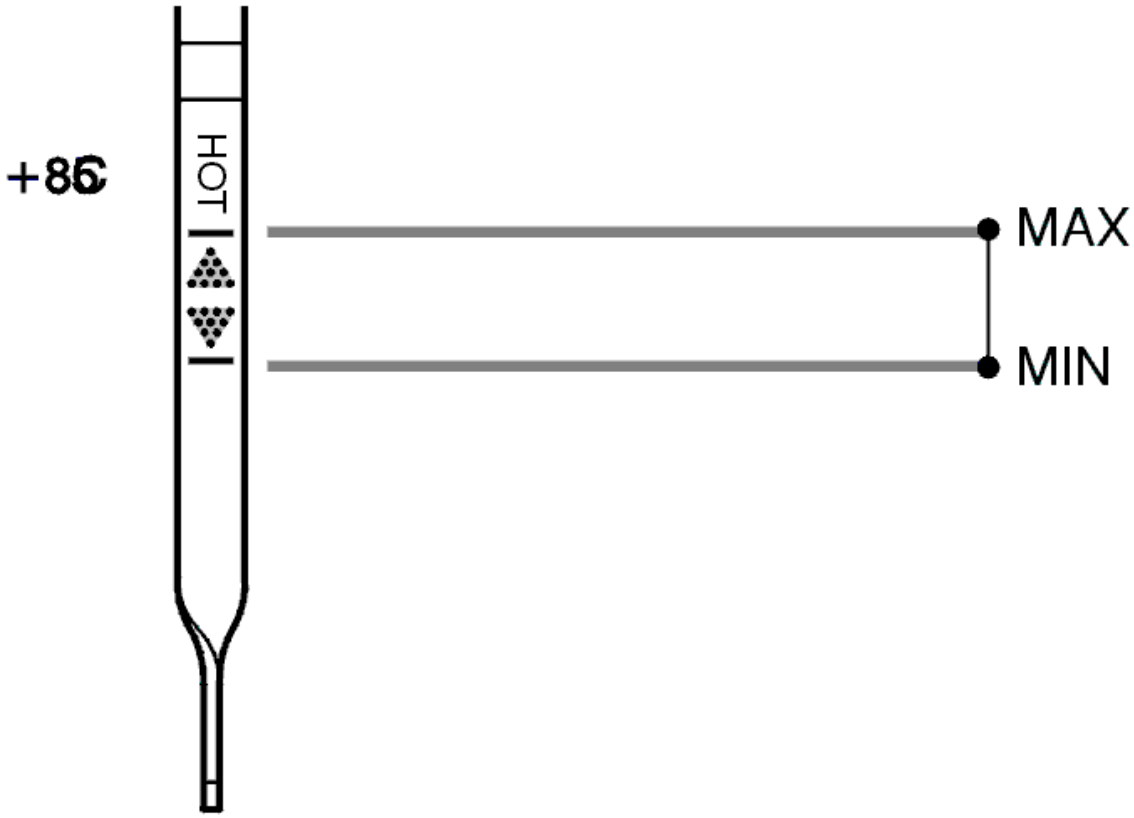

Fig. 46: Identifying Oil Level / Temperature
Courtesy of VOLVO CARS CORPORATION

Maximum level hot 80°C.

Maximum level cold 40°C.

Minimum level hot 80°C.

Minimum level cold 40°C.

Check that there is no oil leakage at the differential housing cover

Install the splashguard under the engine

Tighten the screws. Tighten to **25 Nm** .

CHECKING SEALS AND SEALING JOINTS (AW50/51 AWD; AW55-50/51SN; 2003-2007)

CHECKING SEALS AND SEALING JOINTS

CHECKING SEALS AND SEALING JOINTS

Check the following seals and sealing joints:

- drive shaft seals
- oil cooler hoses and connections
- control system cover
- cover differential
- speed sensor
- side cover.

Remedy as necessary.

Other information:

- For information about removal, see **TRANSMISSION, REMOVING**
- For information about installation, see **TRANSMISSION, INSTALLING (2003, 2004)** or **TRANSMISSION, INSTALLING (2005, 2006)** .

CHECKING SOFTWARE (B6324S, TF-80SC; B6324S, TF-80SC AWD; 2007)

CHECKING SOFTWARE

HINT: Stated symptom can be solved by upgrading the software in Transmission Control Module (TCM), Engine control module (ECM), and Differential Electronic Module (DEM).

NOTE: **If the control modules mentioned above contain diagnostic trouble codes that may cause a similar symptom, first troubleshoot and fix these diagnostic trouble codes.**

Go to the tab SOFTWARE and order an upgrade for each software.

HINT: All three control modules can be upgraded at the same time, on the condition that they do not already contain the latest software.

Make sure that the new software solved the symptom using the relevant verification procedure.

CHECKING SOFTWARE, TRANSMISSION CONTROL MODULE (TCM) (AW50/51 AWD; AW55-50/51SN; 2005-2007)

CHECKING SOFTWARE

CHECKING SOFTWARE

NOTE: **First investigate the diagnostic trouble codes that are stored in the Transmission Control Module (TCM) and, see if they could be the cause of the symptoms reported by the customer.**

Problems with hard or slipping shifts at low temperatures can be remedied via a software update. Go to the SOFTWARE tab and perform a software update, not reload!

HINT: If it is not possible to order an upgrade this means that the latest available software is already installed in the vehicle. If the software can be updated, this can solve the customer's problem.

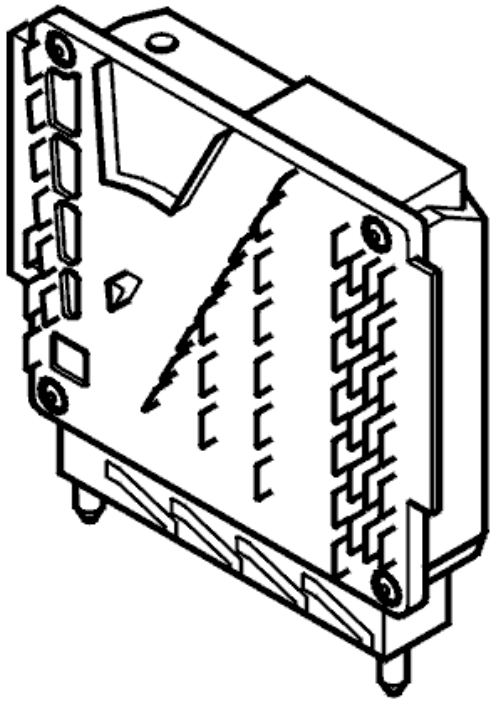

Fig. 47: Identifying Transmission Control Module (TCM)
Courtesy of VOLVO CARS CORPORATION

CHECKING THAT COVER FOR THE TORQUE CONVERTER IS CORRECTLY INSTALLED (AW50/51 AWD; AW55-50/51SN; 2003-2007)

CHECKING THAT THE COVER FOR THE TORQUE CONVERTER IS CORRECTLY INSTALLED

Check that the cover is secured to the engine.

Other information:

- For information about removal/installation, see **TRANSMISSION - REMOVAL, REPLACEMENT AND INSTALLATION**

Was it properly secured?

- **YES**

  FAULT NOT FOUND: Troubleshooting has been completed.

- **NO**

Refer to **RESETTING THE ADAPTATION**

RESETTING THE ADAPTATION

RESETTING ADAPTATION AND THE COUNTER FOR "TRANSMISSION OIL CHANGE"

HINT: The transmission has torque controlled adaptive pressure control. Pressure control means that the transmission regulates the pressure itself during each gear shift. This avoids harsh gear shifting. Each gear shift is evaluated by the control module and stored in the memory. This allows for compensation for wear and tear in the transmission and clutch. It is important that the adaptation in the memory is reset after the transmission has been repaired. This is to ensure normal operation. The oil is replaced during repair; the "Transmission oil change" counter must be reset. If the counter is not reset when the fluid is drained and replaced, there is a risk that a diagnostic trouble code (DTC) will be stored in incorrect circumstances.

NOTE: This applies only if the transmission or one of the components in the transmission have been replaced.

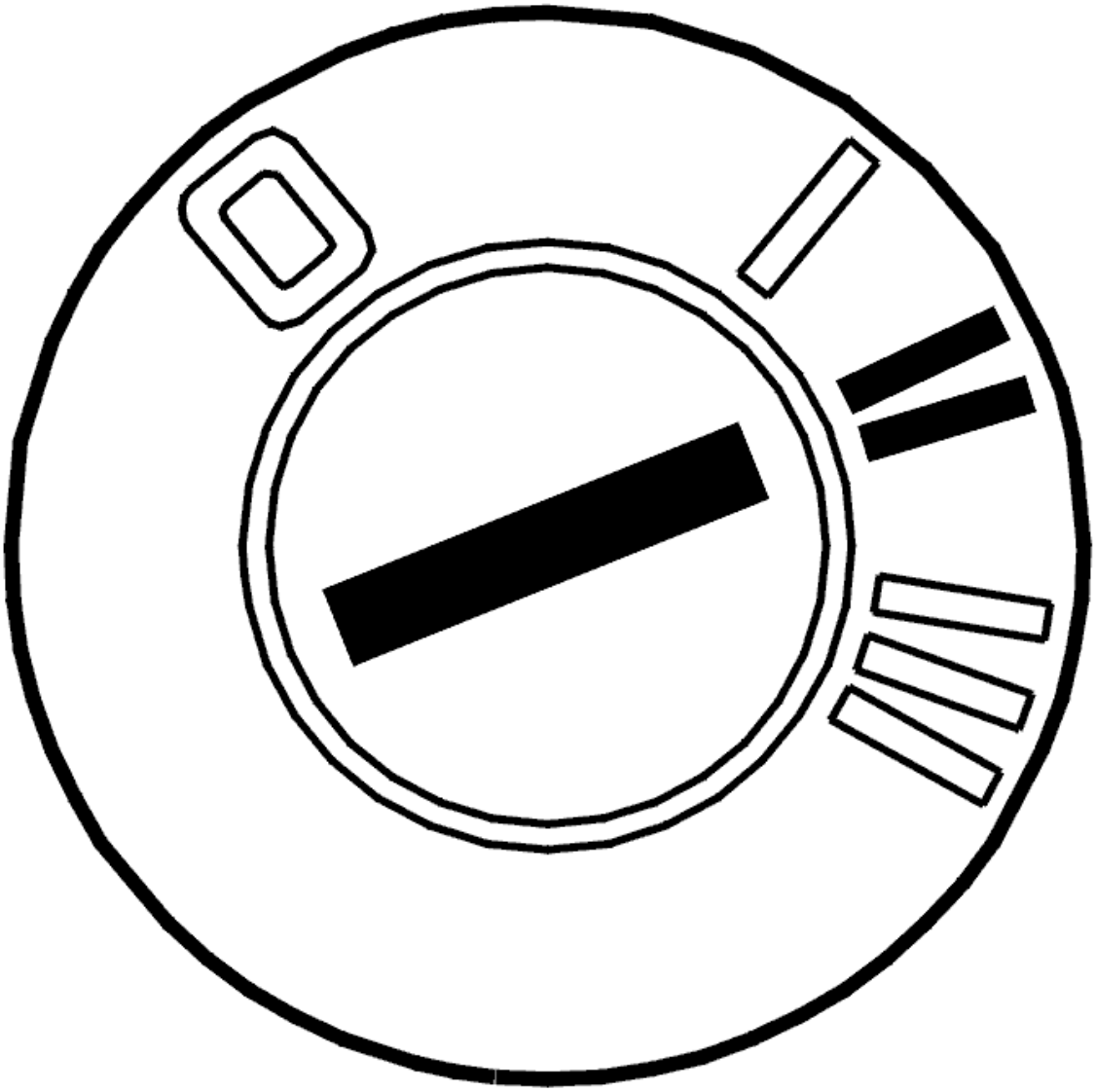

Fig. 48: Identifying Ignition ON
Courtesy of VOLVO CARS CORPORATION

- Ignition on.

  Click on the VCT2000 symbol to reset the adaptation and counter.

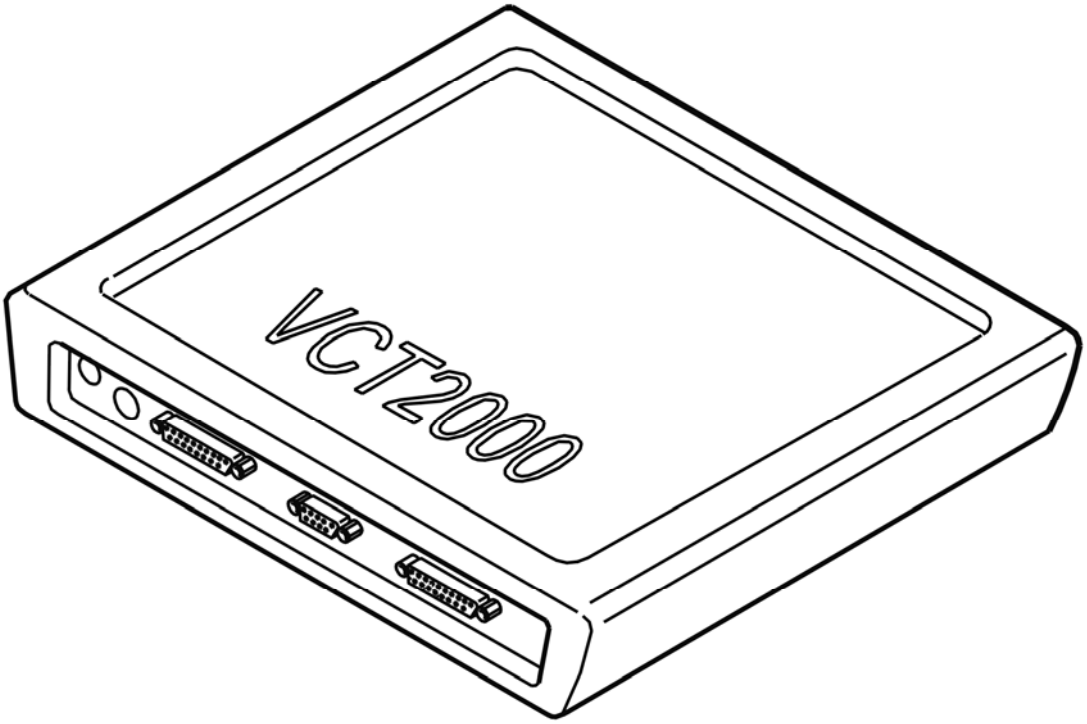

Fig. 49: Identifying VCT2000 Diagnostic Tool Symbol In VIDA
Courtesy of VOLVO CARS CORPORATION

CHECKING THAT TORQUE CONVERTER IS CORRECTLY INSTALLED (AW50/51 AWD; AW55-50/51SN; 2003-2007)

CHECKING THAT THE TORQUE CONVERTER IS CORRECTLY INSTALLED

- Check whether the screws for the carrier plate are loose
- If this is the case, replace with new screws
- Tighten according to **TRANSMISSION - REMOVAL, REPLACEMENT AND INSTALLATION** .

Was it properly secured?

- **YES**

  FAULT NOT FOUND: Troubleshooting has been completed.

- **NO**

  Refer to **RESETTING THE ADAPTATION**

RESETTING THE ADAPTATION

RESETTING ADAPTATION AND THE COUNTER FOR "TRANSMISSION OIL CHANGE"

HINT: The transmission has torque controlled adaptive pressure control. Pressure control means that the transmission regulates the pressure itself during each gear shift. This avoids harsh gear shifting. Each gear shift is evaluated by the control module and stored in the memory. This allows for compensation for wear and tear in the transmission and clutch. It is important that the adaptation in the memory is reset after the transmission has been repaired. This is to ensure normal operation. The oil is replaced during repair; the "Transmission oil change" counter must be reset. If the counter is not reset when the fluid is drained and replaced, there is a risk that a diagnostic trouble code (DTC) will be stored in incorrect circumstances.

NOTE: **This applies only if the transmission or one of the components in the transmission have been replaced.**

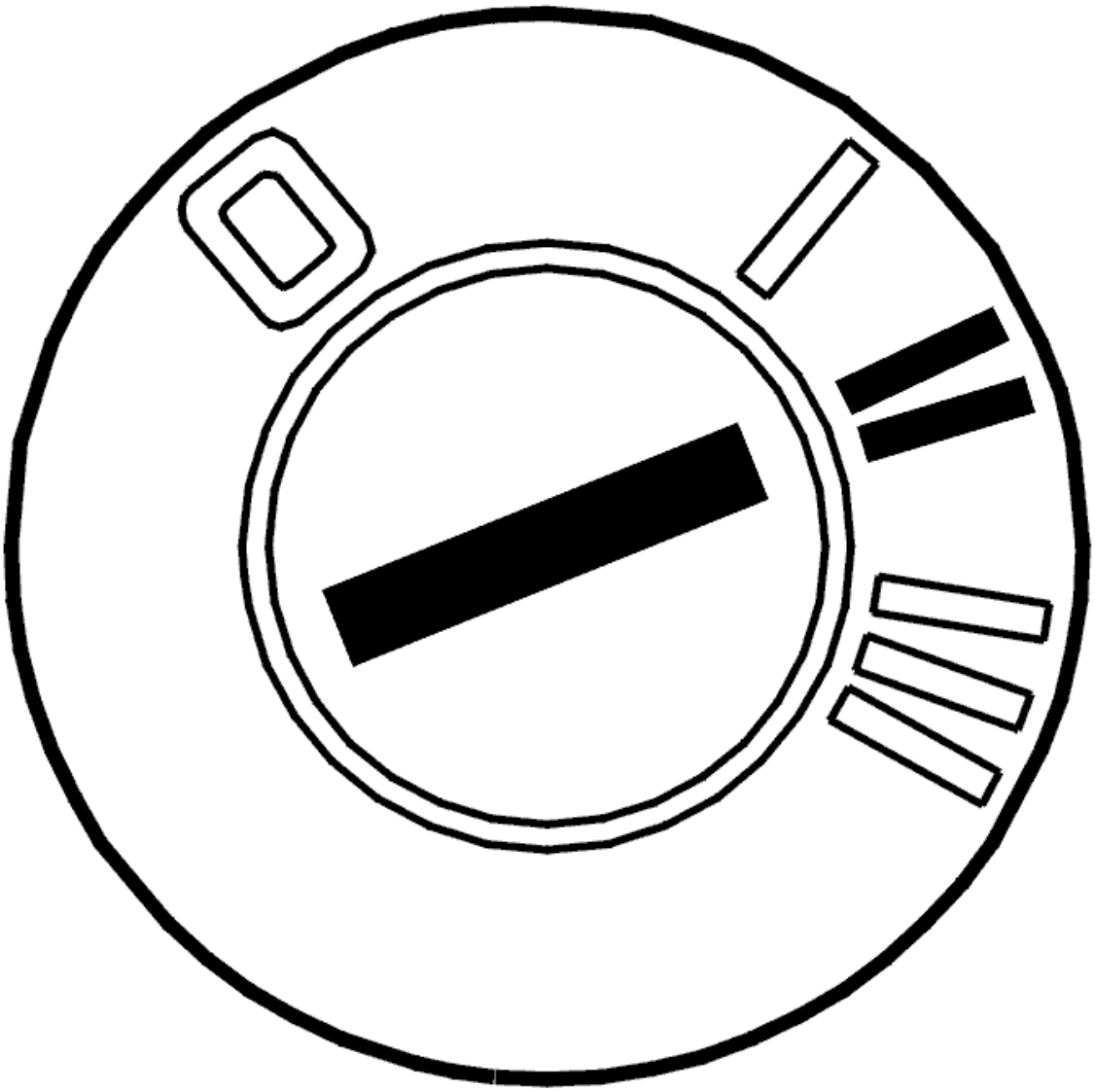

Fig. 50: Identifying Ignition ON
Courtesy of VOLVO CARS CORPORATION

- Ignition on.

  Click on the VCT2000 symbol to reset the adaptation and counter.

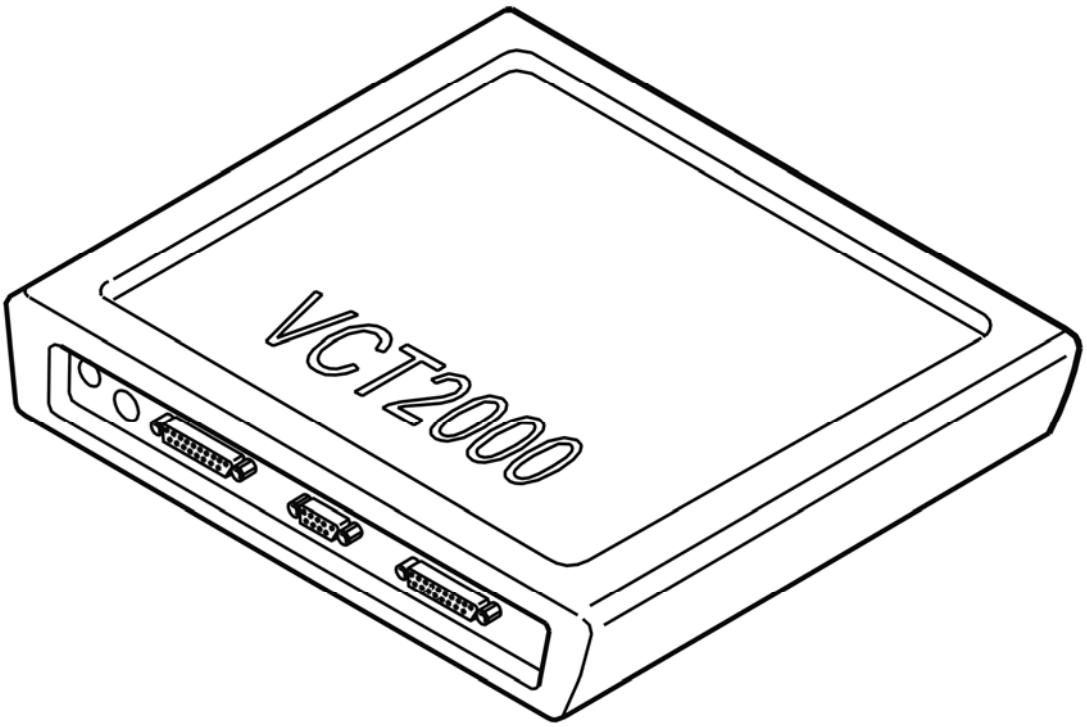

Fig. 51: Identifying VCT2000 Diagnostic Tool Symbol In VIDA
Courtesy of VOLVO CARS CORPORATION

CHECKING CARRIER PLATE (AW50/51 AWD; AW55-50/51SN; 2003-2007)

CHECKING CARRIER PLATE

Check the carrier plate.

Replace the carrier plate if it is damaged. See **CARRIER PLATE, REPLACING** .

Other information:

- For information about removal/installation, see **TRANSMISSION - REMOVAL, REPLACEMENT AND INSTALLATION**

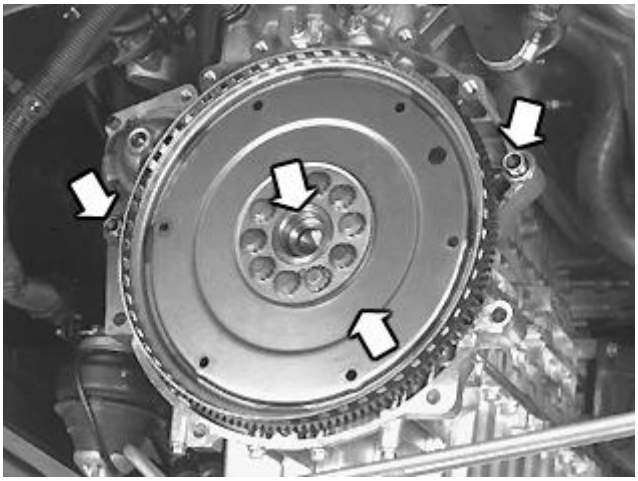

Fig. 52: Identifying Carrier Plate
Courtesy of VOLVO CARS CORPORATION

Was the carrier plate undamaged?

- **YES**

  Refer to **RESETTING THE ADAPTATION**

- **NO**

  FAULT NOT FOUND: Troubleshooting has been completed.

RESETTING THE ADAPTATION

RESETTING ADAPTATION AND THE COUNTER FOR "TRANSMISSION OIL CHANGE"

HINT: The transmission has torque controlled adaptive pressure control. Pressure control means that the transmission regulates the pressure itself during each gear shift. This avoids harsh gear shifting. Each gear shift is evaluated by the control module and stored in the memory. This allows for compensation for wear and tear in the transmission and clutch. It is important that the adaptation in the memory is reset after the transmission has been repaired. This is to ensure normal operation. The oil is replaced during repair; the "Transmission oil change" counter must be reset. If the counter is not reset when the fluid is drained and replaced, there is a risk that a diagnostic trouble code (DTC) will be stored in incorrect circumstances.

NOTE: **This applies only if the transmission or one of the components in the transmission have been replaced.**

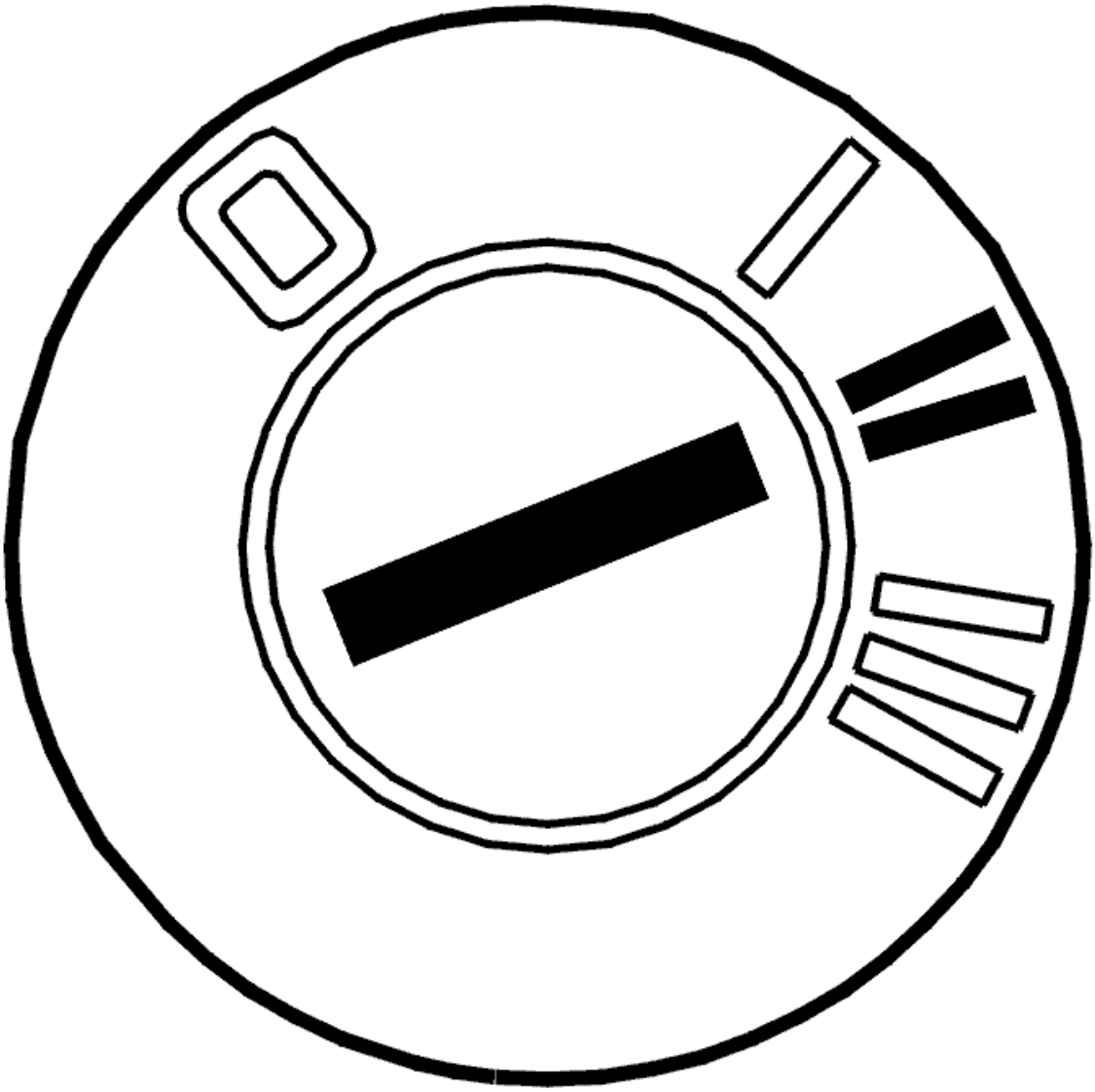

Fig. 53: Identifying Ignition ON
Courtesy of VOLVO CARS CORPORATION

- Ignition on.

  Click on the VCT2000 symbol to reset the adaptation and counter.

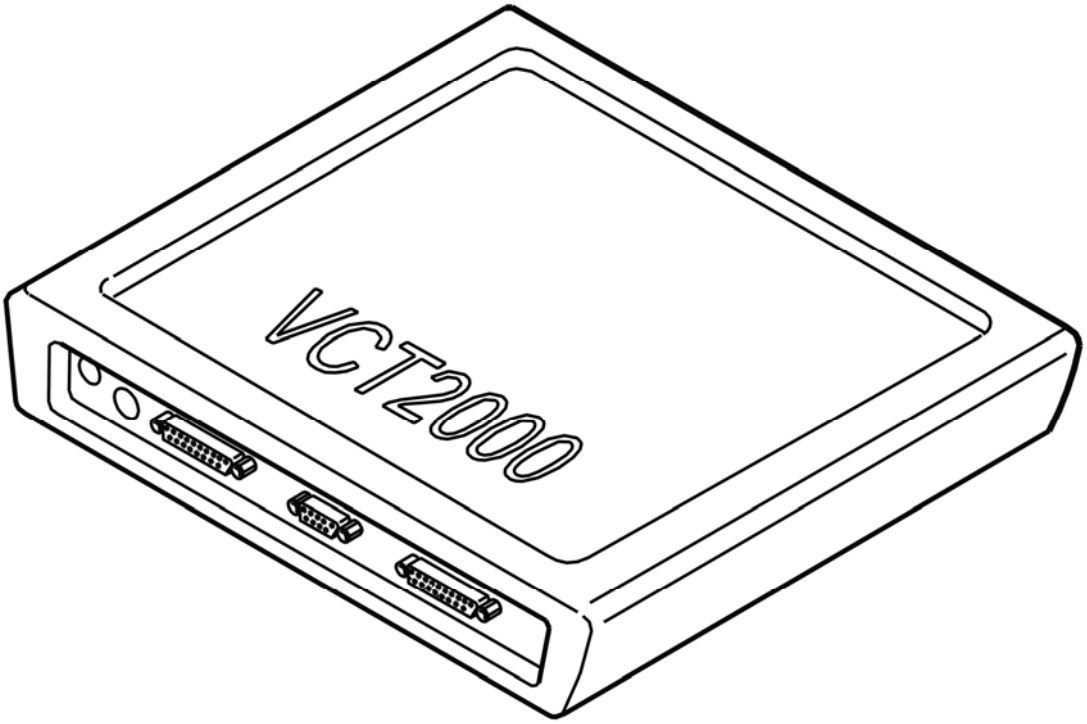

Fig. 54: Identifying VCT2000 Diagnostic Tool Symbol In VIDA
Courtesy of VOLVO CARS CORPORATION

CHECKING FRONT AND REAR SERVO AND ACCUMULATOR PISTONS (4T65 AWD; 2003-2006)

CHECKING FRONT AND REAR SERVO AND ACCUMULATOR PISTONS

- If there is no second gear or if it slips this could be due to a leaking seal for 1-2 accumulator piston
- If it is difficult to shift from 1st to 2nd gear this may be due to a defective spring on a sticking 1-2 accumulator piston
- If there is no 3rd gear this could be due to a leaking seal for 2-3 accumulator piston
- If it is difficult to shift from 2nd to 3rd gear this may be due to a defective spring on a sticking 2-3 accumulator piston
- If there is no forward drive in manual 3rd gear (Geartronic) but in 1st and 2nd the front servo may be defective.

NOTE: **If there is no 4th gear this could be due to a leaking seal for 3-4 accumulator piston. Harsh shifting from 3rd to 4th gear may be due to a sticking 3-4 accumulator piston. In these cases the transmission must be replaced.**

Other information

- see **PISTON / COVER BACK-UP (REVERSE) SERVO, REPLACING**
- see **SEALING RING AND PISTON WITH O-RING FOR FRONT SERVO, REPLACING** and **SEALING RING AND PISTON WITH O-RING FOR FRONT SERVO, INSTALLING**
- see **GASKET/O RING SERVO CYLINDER, REPLACING**
- To check/replace the accumulator piston 1-2 and 2-3, see **GASKET / PISTON ACCUMULATOR, REPLACING**
- see **TRANSMISSION, REMOVING**
- see **TRANSMISSION, INSTALLING (2003, 2004)** or **TRANSMISSION, INSTALLING (2005, 2006)**

Was any corrective action taken?

- **YES**

  Refer to **RESETTING THE ADAPTATION**

- **NO**

  FAULT NOT FOUND: Troubleshooting has been completed.

RESETTING THE ADAPTATION

RESETTING ADAPTATION AND THE COUNTER FOR "TRANSMISSION OIL CHANGE"

HINT: The transmission has torque controlled adaptive pressure control. Pressure control means that the transmission regulates the pressure itself during each gear shift. This avoids harsh gear shifting. Each gear shift is evaluated by the control module and stored in the memory. This allows for compensation for wear and tear in the transmission and clutch. It is important that the adaptation in the memory is reset after the transmission has been repaired. This is to ensure normal operation. The oil is replaced during repair; the "Transmission oil change" counter must be reset. If the counter is not reset when the fluid is drained and replaced, there is a risk that a diagnostic trouble code (DTC) will be stored in incorrect circumstances.

NOTE: **This applies only if the transmission or one of the components in the transmission have been replaced.**

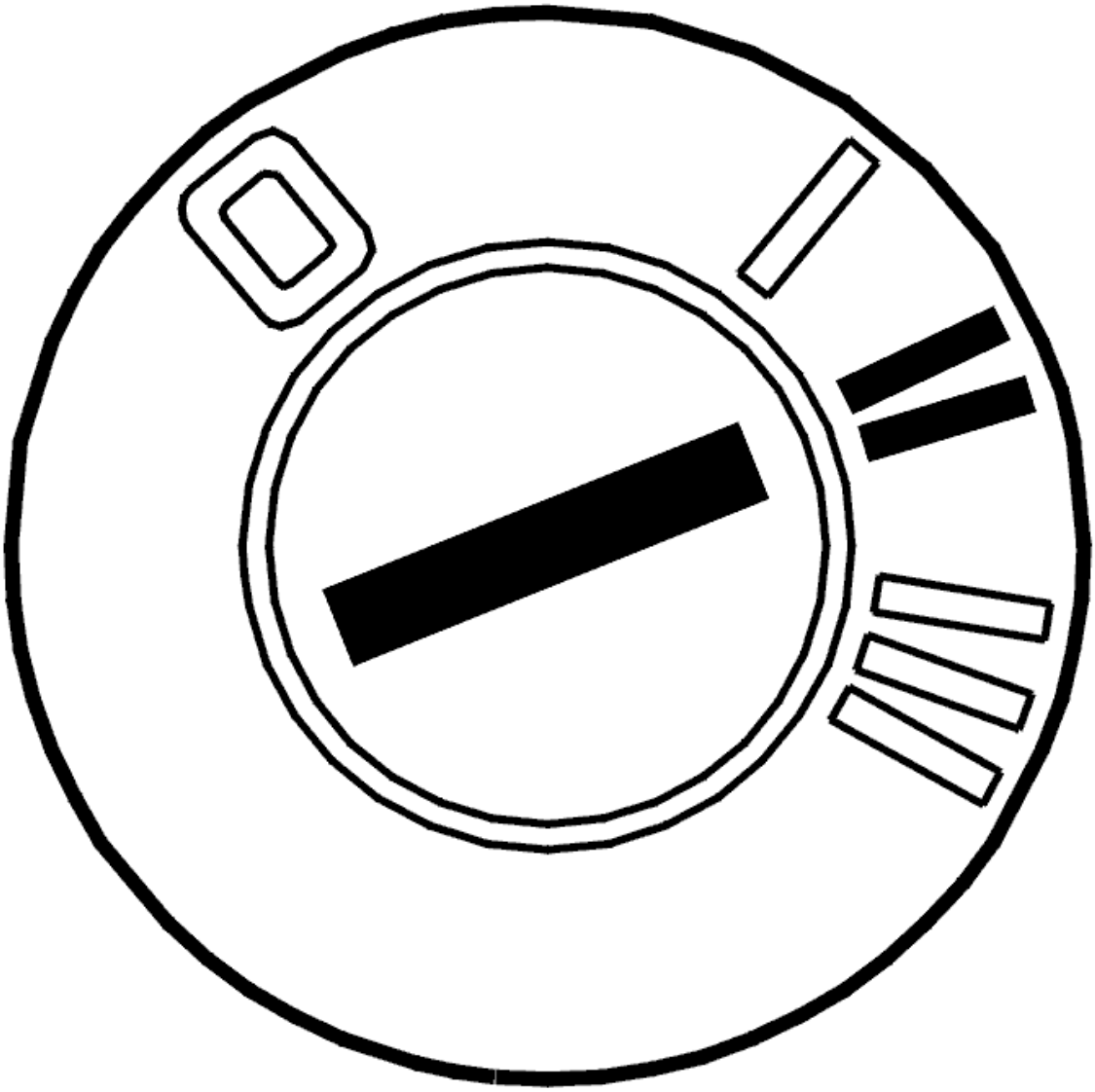

Fig. 55: Identifying Ignition ON
Courtesy of VOLVO CARS CORPORATION

- Ignition on.

  Click on the VCT2000 symbol to reset the adaptation and counter.

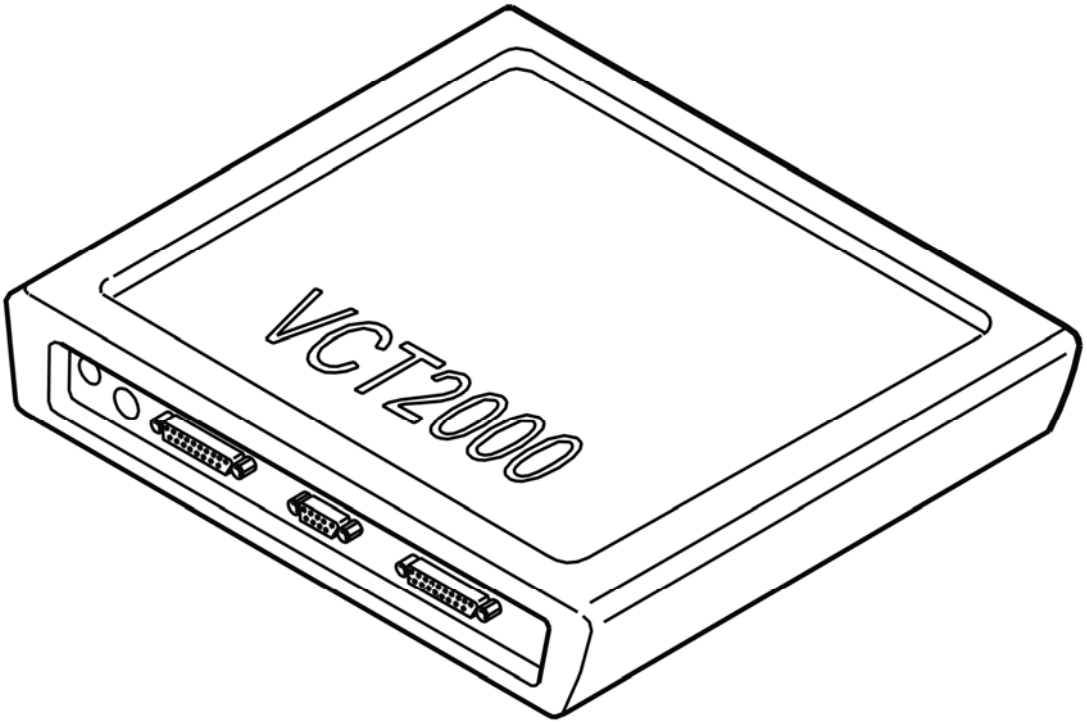

Fig. 56: Identifying VCT2000 Diagnostic Tool Symbol In VIDA
Courtesy of VOLVO CARS CORPORATION

- **Continue**

  Refer to **CHECKING AUTOMATIC TRANSMISSION**

CHECKING AUTOMATIC TRANSMISSION

CHECKING AUTOMATIC TRANSMISSION

NOTE: After carrying out the repair check that the symptom has been remedied.

Check the automatic transmission as follows:

- Test drive the car to test the function of the automatic transmission. See **TEST DRIVE FORM, DESCRIPTION**
- If hydraulic hoses, gaskets or other components have been replaced, check that there is no oil leakage after the test drive.

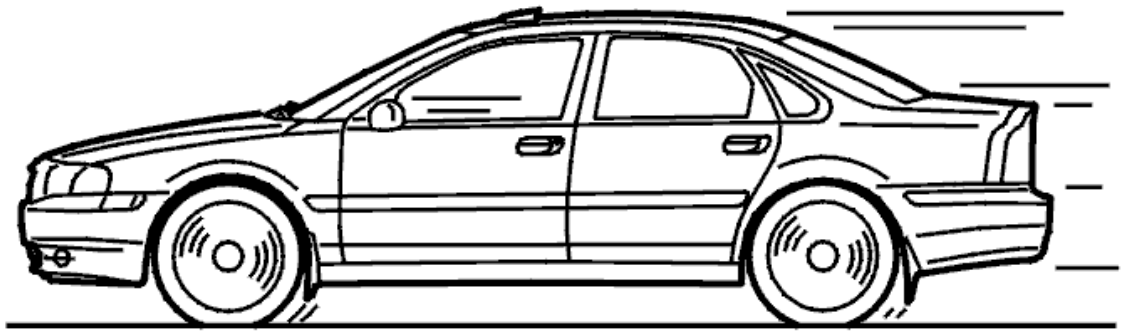

Fig. 57: Identifying Test Drive
Courtesy of VOLVO CARS CORPORATION

INFORMATION

FAULT-TRACING INFORMATION

The fault should have been detected and remedied. As this is not the case fault-tracing has failed.

Exit fault-tracing for this diagnostic trouble code (DTC) or make another attempt.

GASKET / PISTON ACCUMULATOR, REPLACING

- See **GASKET / PISTON ACCUMULATOR, REPLACING** .

CHECKING FUNCTION OF TRANSMISSION (AW50/51 AWD; AW55-50/51SN; 2003-2007)

CHECKING FUNCTION OF TRANSMISSION

NOTE: **The information can be used when all other troubleshooting has failed and the problem symptoms still remain.**

HINT: Information for checking lost drive in other gears than 1st gear and reverse:

Lever carrier, standard

- D = 1st gear.
- L + Winter mode = 2nd gear.
- D + Winter mode = 3rd gear.

Lever carrier, Geartronic (MAN)

- Manual gear position = 3rd gear.

SYMPTOMS

Symptoms	Cause	Action
2nd, 3rd, 4th, and 5th gear not working.	Brake band B2 is defective.	Replace the transmission.
2nd, 3rd, and 4th gear not working.	Free-wheel F1 or brake band B1 defective.	Replace the transmission.
1st gear not working.	Free-wheel F2 is defective.	Replace the transmission.
Reverse gear not working. Engine brake does not work in lever position **L** , 1st gear and 0 % accelerator pedal position. Engine brake does not work in lever position **MAN** , 1st gear and 0 % accelerator pedal position.	Brake band B3 is defective.	Replace the transmission.
No drive in lever position **D** .	Clutch C1 is defective.	Replace the transmission.
No drive in reverse and 5th gear.	Clutch C2 is defective.	Replace the transmission.
No drive in 3rd gear.	Brake band B4 is defective. Anchor bolt for brake band B4 is loose.	Replace the transmission.
No reverse and 1st and 2nd gear.	Brake band B5 is defective.	Replace the transmission.

Other information

- see **COMPONENT/FUNCTION**

COMPONENT/FUNCTION

GEAR POSITION - FUNCTION OF GEAR BOX

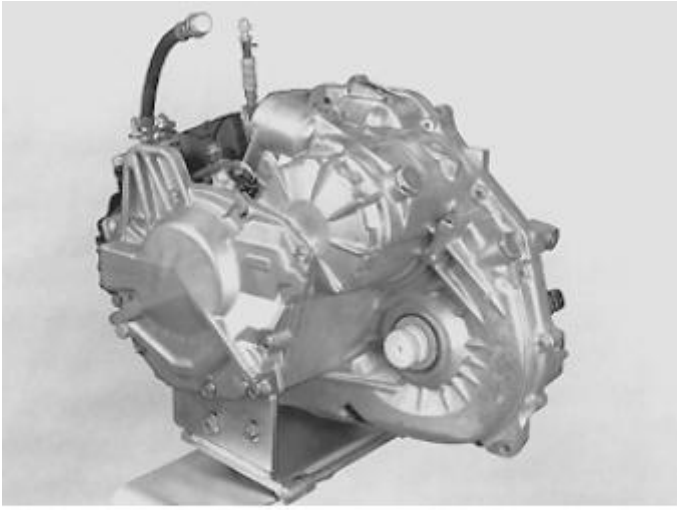

Fig. 58: Identifying Transmission
Courtesy of VOLVO CARS CORPORATION

GEAR POSITION/INTERNAL COMPONENTS OF GEAR BOX

Lever position	Gear	S1	S2	S3	S4	S5	B1	B2	B3	B4	B5	C1	C2	C3	F1	F2
Parking	P	0	0	0	0	0	0	0	1	0	1	0	0	0	0	0
Reverse	R	0	0	X	0	X	0	0	0	0	1	0	1	0	0	0
Reverse	R	X	0	0	0	0	0	0	0	0	1	0	0	0	0	0
Neutral	N	0	0	0	0	0	0	0	0	0	1	0	0	0	0	0
D	1	X	0	X	0	0	0	0	0	0	1	1	0	0	0	2
	2	0	X	X	0	0	1	1	0	0	1	1	0	0	2	0
	3	0	X	X	X	0	1	1	0	1	0	1	0	0	2	0
	4	0	X	0	X	0	1	1	0	0	0	1	0	1	2	0
	5	0	0	0	X	0	0	1	0	0	0	1	1	1	0	0
	Emergency mode	0	0	0	0	0	0	1	0	0	0	1	1	1	0	0
4	1	X	0	X	0	0	0	0	0	0	0	1	0	0	0	2
	2	0	X	X	0	0	1	0	0	0	0	1	0	0	2	0
	3	0	X	X	X	0	1	0	0	0	0	1	0	0	2	0
L	1	X	0	X	X	0	0	0	1	0	0	1	0	0	0	2
	2	0	X	X	0	0	0	0	0	0	0	1	0	0	2	0

Explanation:

S1-S5 shift solenoids: 0 = Not active, X = Active.

B1-B5 Brake strap: 0 = Not applied, 1 = Applied.

C1-C3 Clutch: 0 = Not applied, 1 = Applied.

F1-F2 Freewheel: 0 = Not applied, 2 = Applied.

FAULT-TRACING INFORMATION

Condition

No diagnostic trouble codes are stored.

The fault is permanent.

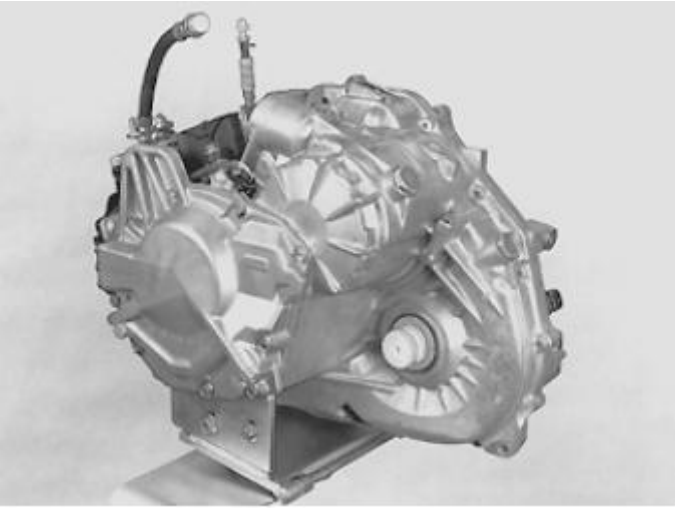

Fig. 59: Identifying Transmission
Courtesy of VOLVO CARS CORPORATION

Substitute Value

- None.

Possible Source

- Internal malfunction in the transmission

Fault symptom[s]

- Automatic transmission/No automatic gearshift

CHECKING GEAR POSITION INDICATOR (AW50/51 AWD; AW55-50/51SN; 2003-2007)

CHECKING GEAR POSITION INDICATOR

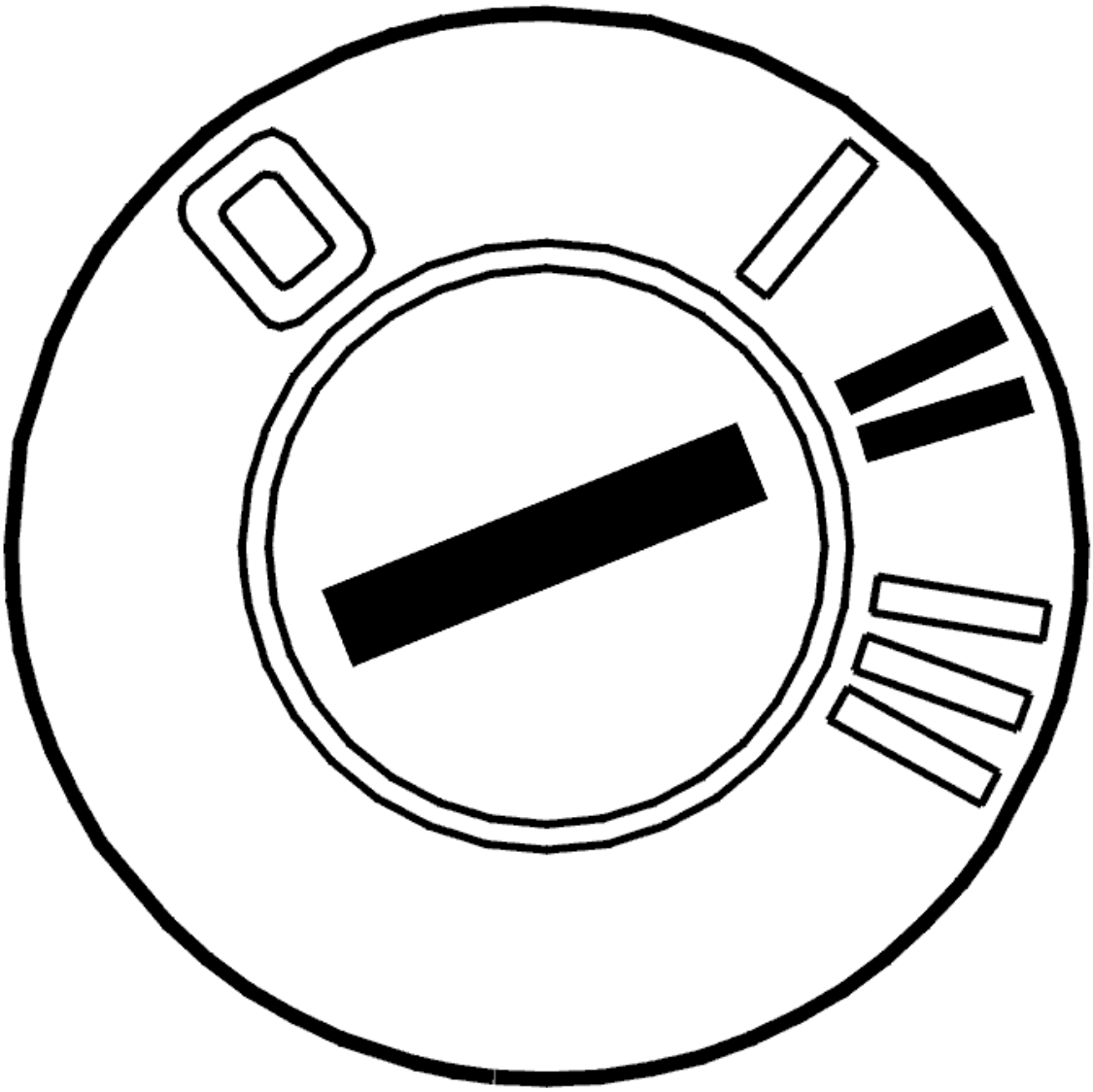

Fig. 60: Identifying Ignition ON
Courtesy of VOLVO CARS CORPORATION

- Ignition on.

  Depress the brake pedal. Move the gear shift selector to the different positions. Check that the gear position indicator LED in the gear selector assembly panel displays the selected gear position.

  Replace the printed circuit board in the gear selector assembly if the gear position indicator LED does not display the selected gear.

  Other information:

  - To replace the printed circuit board, see **PRINTED CIRCUIT BOARD GEAR SELECTOR**

ASSEMBLY/TOP PANEL, REPLACING .

Was a fault detected?

- **YES**

  Refer to **VERIFICATION**

- **NO**

  FAULT NOT FOUND: Troubleshooting has been completed.

VERIFICATION

VERIFICATION

HINT: After carrying out the repair, check that the fault has been remedied.

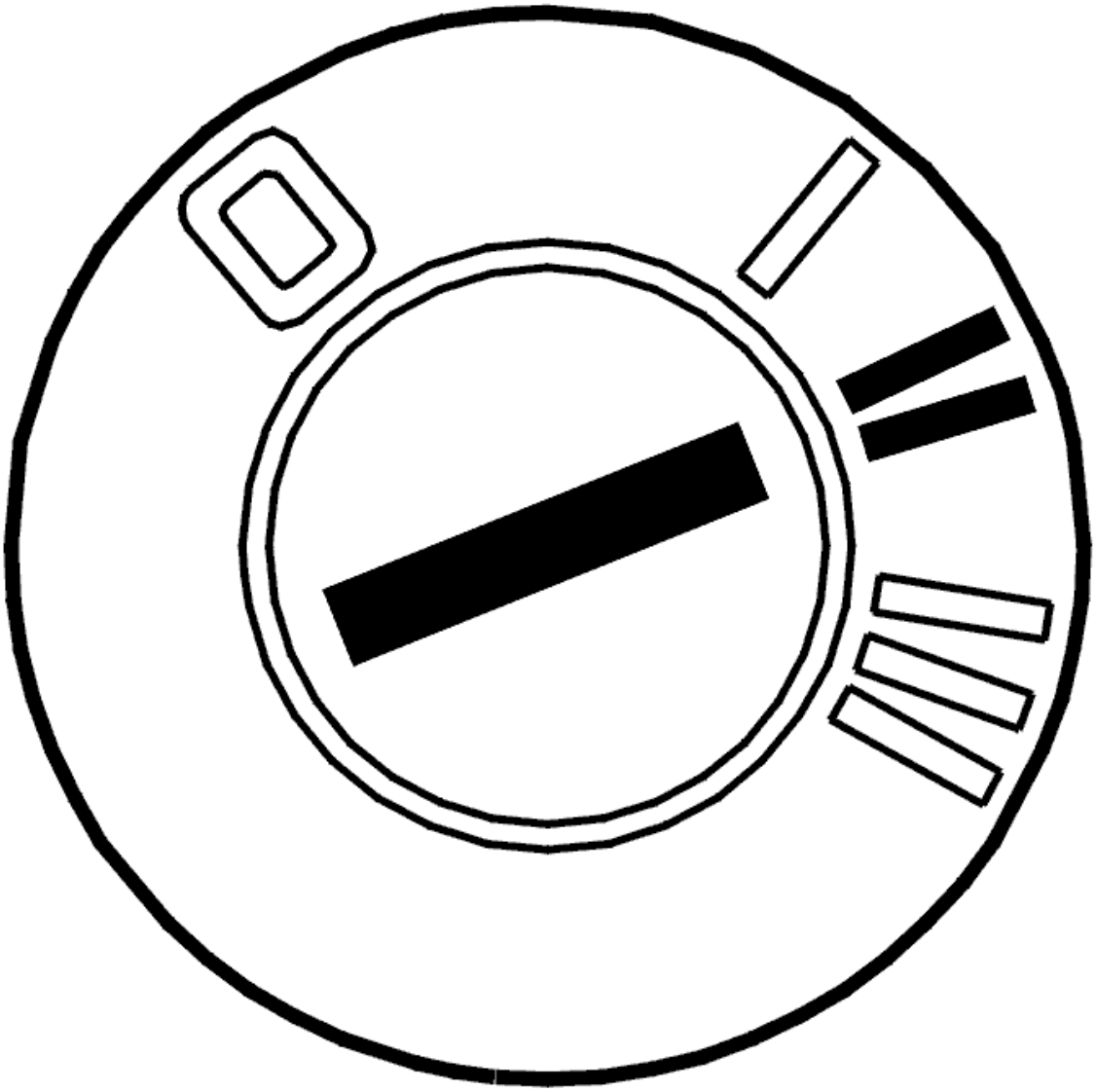

Fig. 61: Identifying Ignition ON
Courtesy of VOLVO CARS CORPORATION

- Ignition on.

  Depress the brake pedal. Move the gear shift selector to the different positions. Check that the gear position indicator LED in the gear selector assembly panel displays the selected gear position.

Do the gear indicator LEDs follow the gear position?

- **YES**

  VERIFIED: Troubleshooting has been completed.

- **NO**

Refer to **INFORMATION**

INFORMATION

FAULT-TRACING INFORMATION

The fault should have been detected and remedied. As this is not the case fault-tracing has failed.

Exit fault-tracing for this diagnostic trouble code (DTC) or make another attempt.

CHECKING GEAR RATIO (4T65 AWD; 2003-2006)

CHECKING GEAR RATIO

NOTE: **If the car has STC or DSTC, these functions must be disengaged. Press in the STC/DSTC button on the center console. Hold the button in for at least 2 seconds. The LED on the button must go out.**

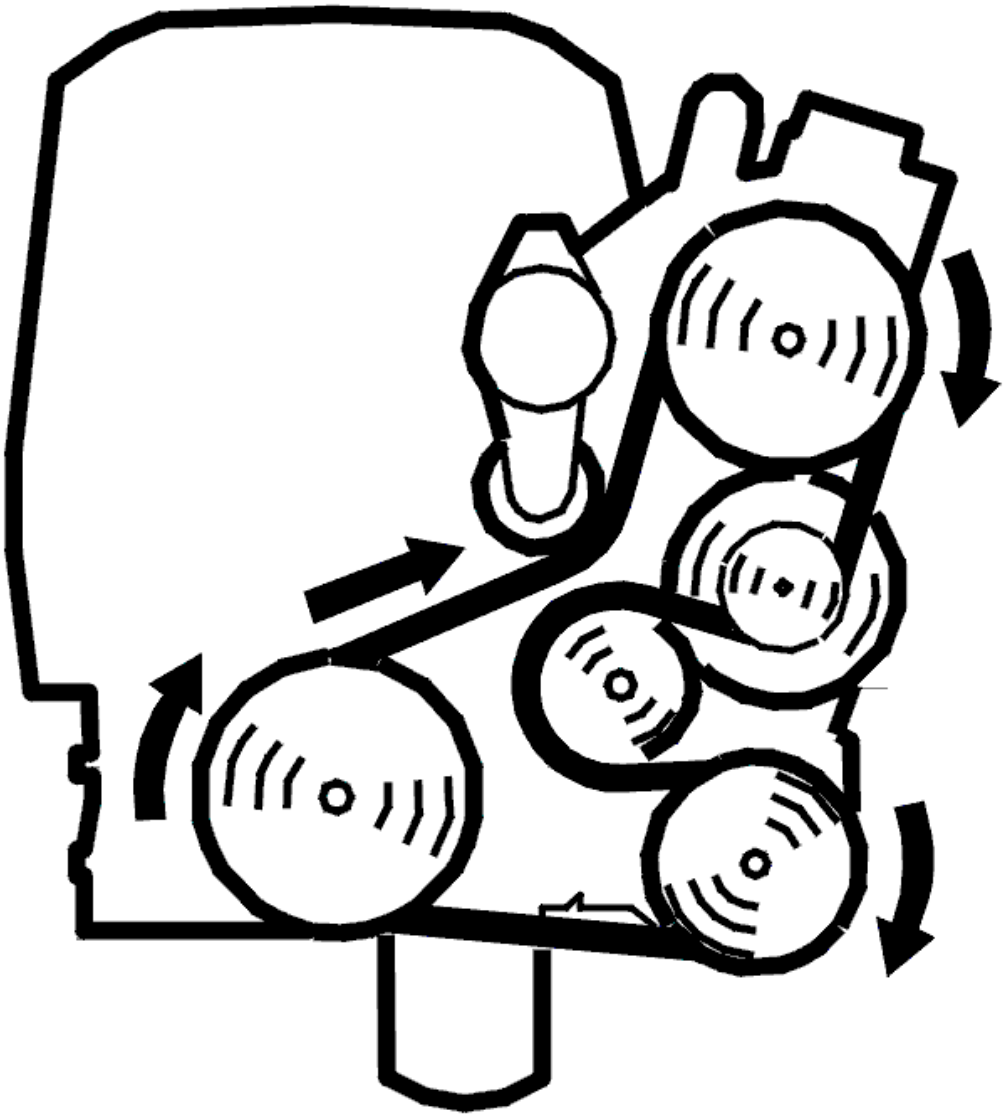

Fig. 62: Identifying Belt Routing
Courtesy of VOLVO CARS CORPORATION

- Ignition off
- Raise the car so that the drive wheels are clear of the ground.

WARNING: **Ensure that the car is safely raised.**

WARNING: **Check that there are no objects caught in the front tire treads.**

- Start the engine
- Read off the gear ratio during shifting.

Move the gear shift selector to position 1. Accelerate carefully until the engine speed (RPM) is approximately 2000 rpm.

Try to maintain a constant engine speed throughout the test.

NOTE: The gear ratio varies if a constant vehicle speed and engine speed (RPM) are not maintained. This is because the transmission will free wheel.

Then move the gear selector to position 2 within 10 seconds, to position 3 within a further 10 seconds and then to position D (fourth gear).

Check that the shifts are carried out correctly by comparing the selected gear with the gear ratio.

Make a note of the shifting pattern and then compare with the table.

Gear / gear ratio (during normal function)

- 1 / 2.921 (corresponds to gear 1)
- 2 / 1.568 (corresponds to gear 2)
- 3 / 1.000 (corresponds to gear 3)
- D / 0.705 (corresponds to gear 4).

Table 1	
Obtained gear ratio	Corrective action
Only 2.921 (1)	Internal fault in the transmission - replace the transmission
Only 1.568 (2)	Internal fault in the transmission - replace the transmission
Only 1.000 (3)	Internal fault in the control system - replace the control system
Only 0.705 (4)	Internal fault in the control system - replace the control system
2.921 - 2.921- 0.705 - 0.705	Internal fault in the control system - replace the control system
1.568 - 1.568 - 1.000 - 1.000	Internal fault in the control system - replace the control system
2.921 - 1.568 - 1.568 - 2.921	Internal fault in the control system - replace the control system

0.705 - 1.000 - 1.000 - 0.705	Internal fault in the control system - replace the control system
1.000 - 1.000 - 1.000 - 0.705	Internal fault in the control system - replace the control system
2.921 - 1.568 -1.000 - 1.000	Internal fault in the transmission - replace the transmission
2.921 - 1.568 -1.568 - 1.568	Test drive the car. Test engine braking by selecting 1st gear, accelerate up to approximately 20 km/h and then stop accelerating. If engine braking is OK - replace the control system. If engine braking is **not** OK - replace the transmission.
2.921 - 2.921 - 1.000 - 0.705	If 3rd and 4th gears are OK - replace the control system. If N (neutral) is obtained when shifting to 3rd - replace the transmission.
1.568 - 1.568 - 1.000 - 0.705	Test drive the car. Test engine braking by selecting 3rd gear, accelerate up to approximately 50 km/h and then stop accelerating. If engine braking is OK - replace the control system. If engine braking is **not** OK - replace the transmission.

NOTE: **Diagnostic trouble codes (DTCs) may be stored in the ABS system when the rear wheels are stationary and the front wheels rotate. Erase any diagnostic trouble codes (DTCs) stored in the ABS system after fault-tracing.**

Other information:

- To remove the transmission, see **TRANSMISSION, REMOVING**
- To install the transmission, see **TRANSMISSION, INSTALLING (2003, 2004)** or **TRANSMISSION, INSTALLING (2005, 2006)**
- To replace the control system
  - For removal, see **CONTROL SYSTEM/VALVE HOUSING, REMOVING**

- To install, see **CONTROL SYSTEM / VALVE HOUSING, INSTALLING** .
- For removal, see **CONTROL SYSTEM/VALVE HOUSING, REMOVING**
- To install, see **CONTROL SYSTEM / VALVE HOUSING, INSTALLING** .

.

Select an alternative

1. Replaced control system or transmission
2. Transmission operating normally.

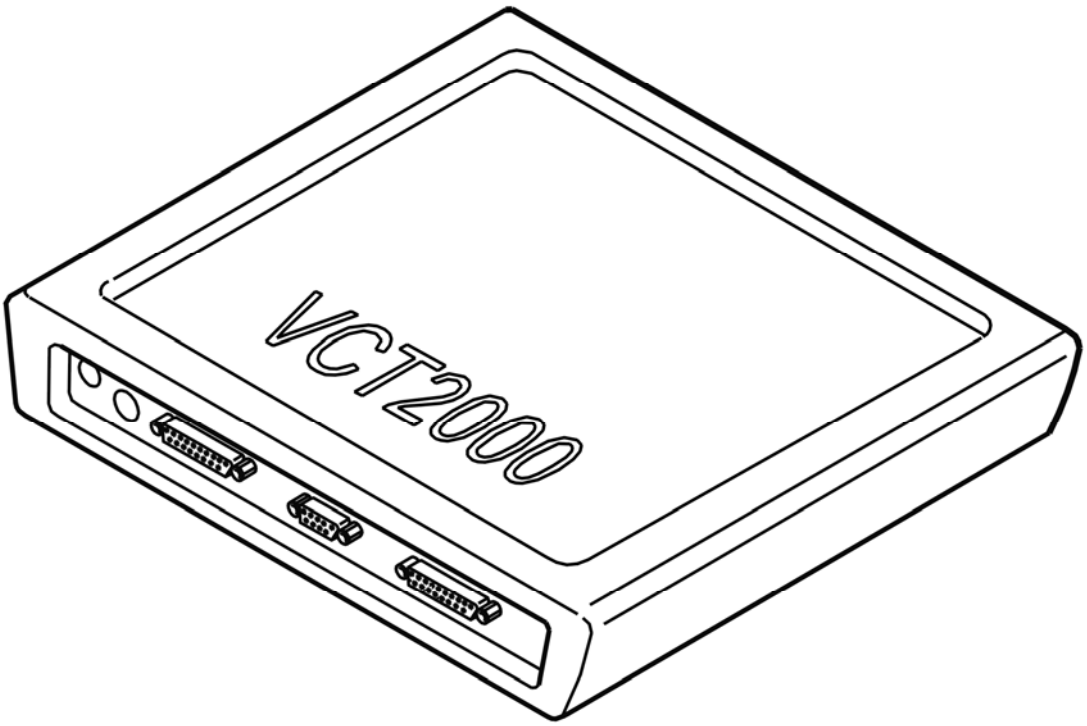

Fig. 63: Identifying VCT2000 Diagnostic Tool Symbol In VIDA
Courtesy of VOLVO CARS CORPORATION

- **1**

  Refer to **RESETTING THE ADAPTATION**

- **2**

  FAULT NOT FOUND: Troubleshooting has been completed.

RESETTING THE ADAPTATION

RESETTING ADAPTATION AND THE COUNTER FOR "TRANSMISSION OIL CHANGE"

HINT: The transmission has torque controlled adaptive pressure control. Pressure control means that the transmission regulates the pressure itself during each gear shift. This avoids harsh gear shifting. Each gear shift is evaluated by the control module and stored in the memory. This allows for compensation for wear and tear in the transmission and clutch. It is important that the adaptation in the memory is reset after the transmission has been repaired. This is to ensure normal operation. The oil is replaced during repair; the "Transmission oil change" counter must be reset. If the counter is not reset when the fluid is drained and replaced, there is a risk that a diagnostic trouble code (DTC) will be stored in incorrect circumstances.

NOTE: **This applies only if the transmission or one of the components in the transmission have been replaced.**

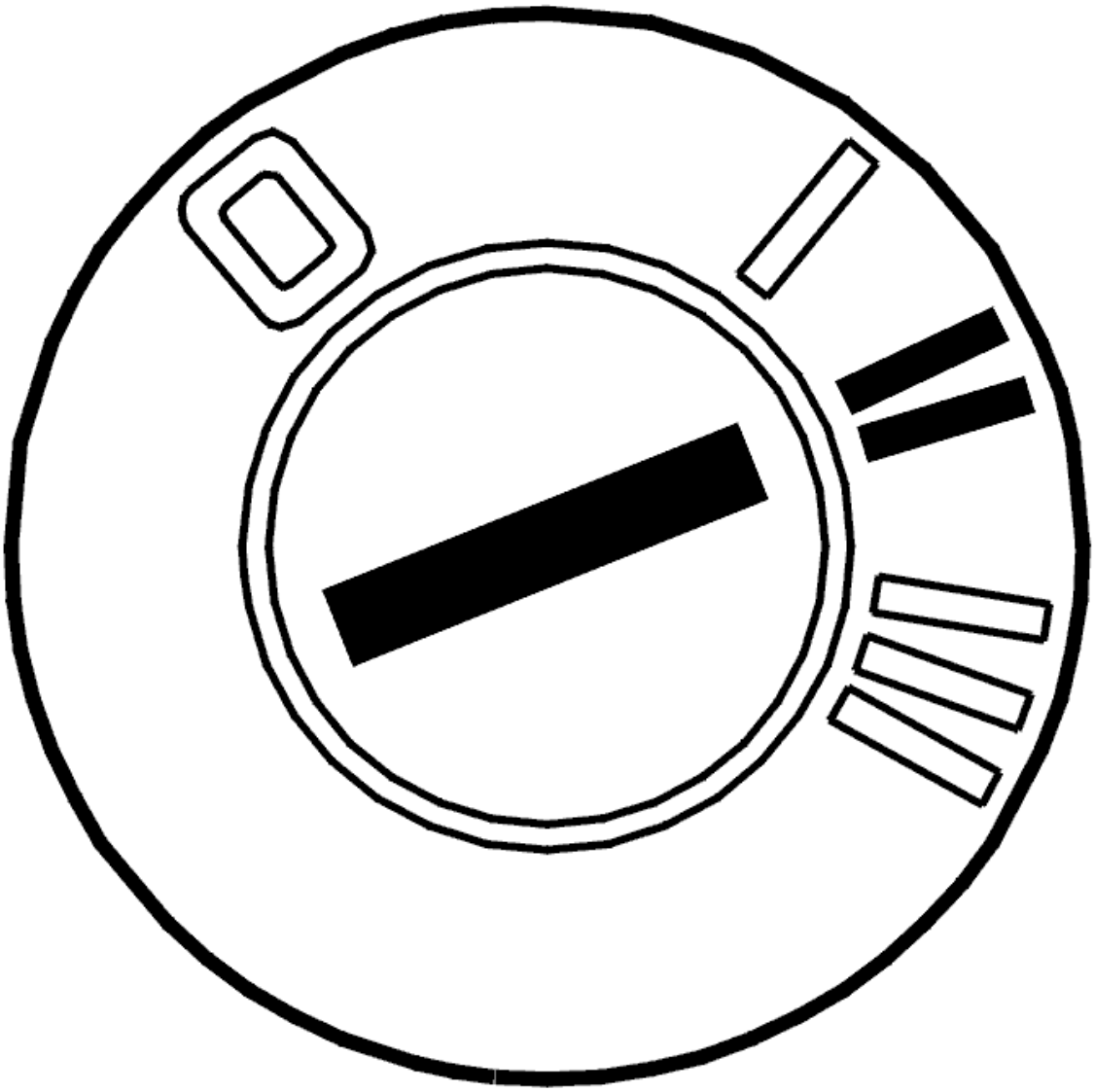

Fig. 64: Identifying Ignition ON
Courtesy of VOLVO CARS CORPORATION

- Ignition on.

  Click on the VCT2000 symbol to reset the adaptation and counter.

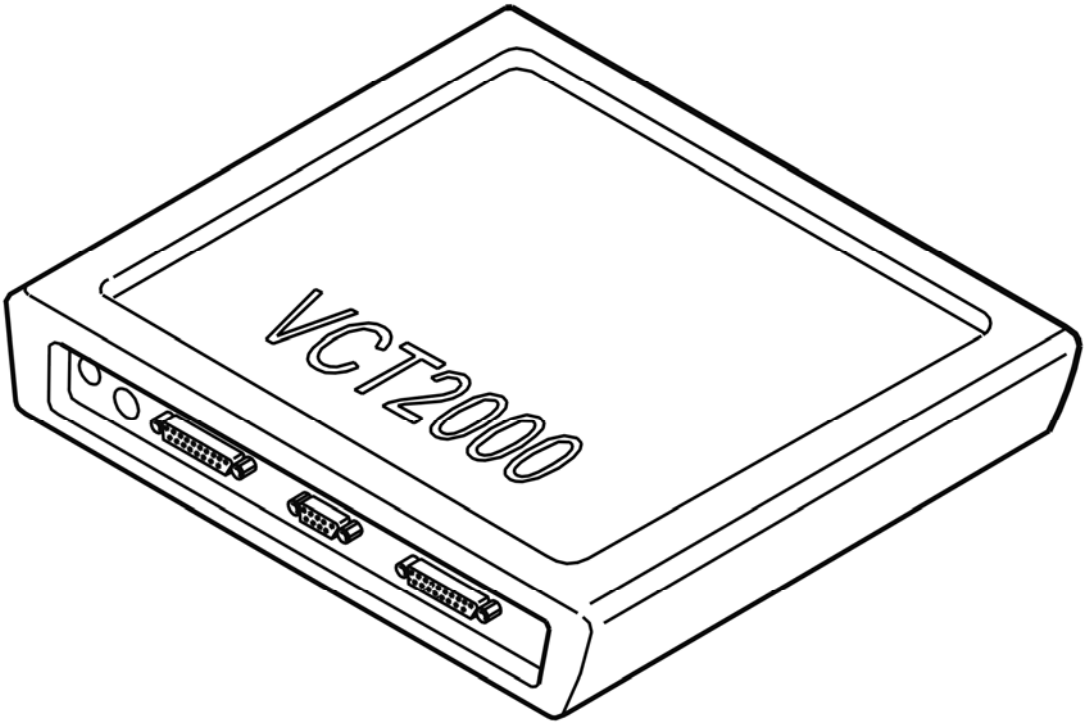

Fig. 65: Identifying VCT2000 Diagnostic Tool Symbol In VIDA
Courtesy of VOLVO CARS CORPORATION

CHECKING DIAGNOSTIC TROUBLE CODES (DTCS)

ERASING DIAGNOSTIC TROUBLE CODES (DTCS)

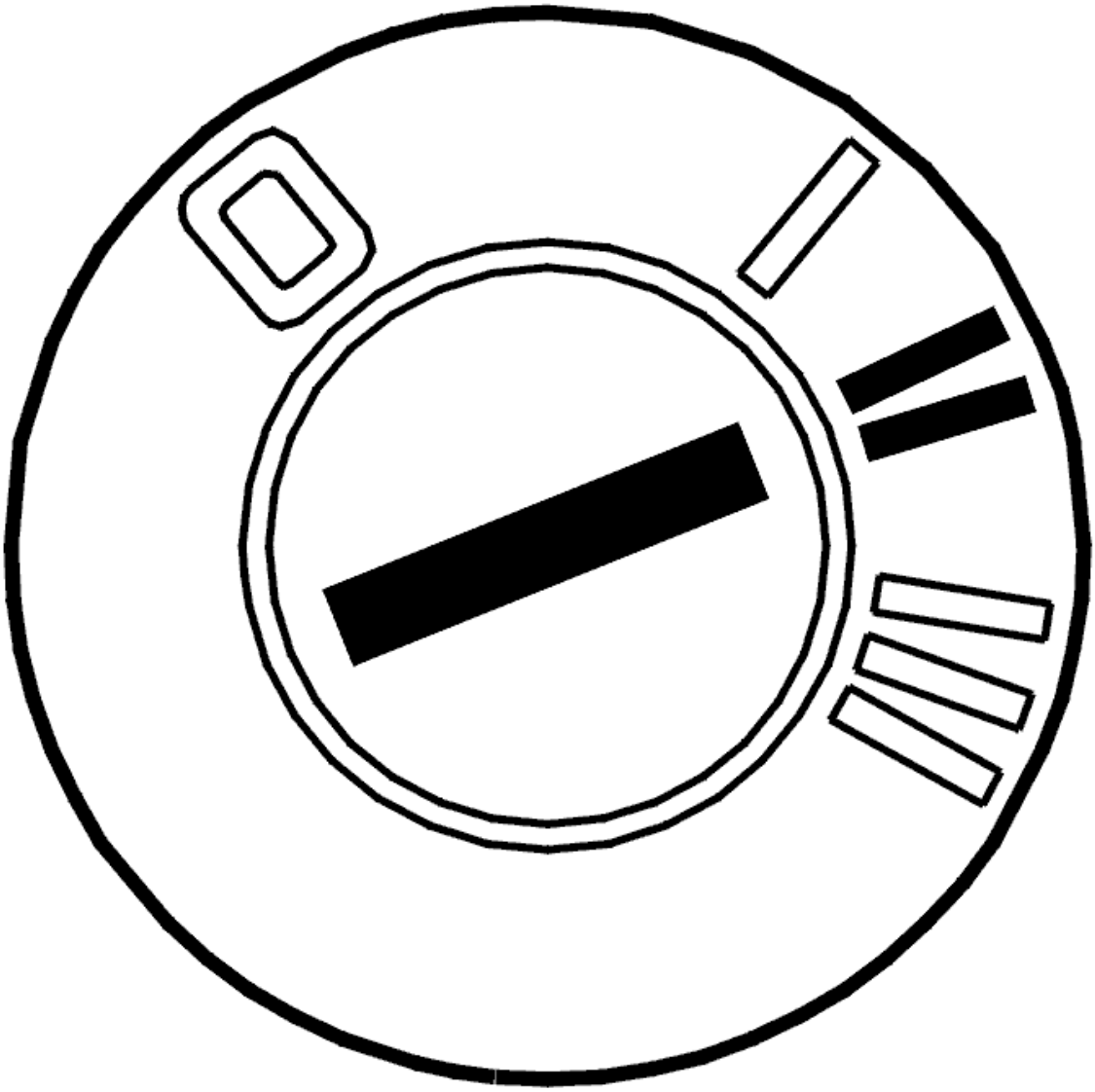

Fig. 66: Identifying Ignition ON
Courtesy of VOLVO CARS CORPORATION

- Ignition on
- Erase diagnostic trouble codes (DTCs).

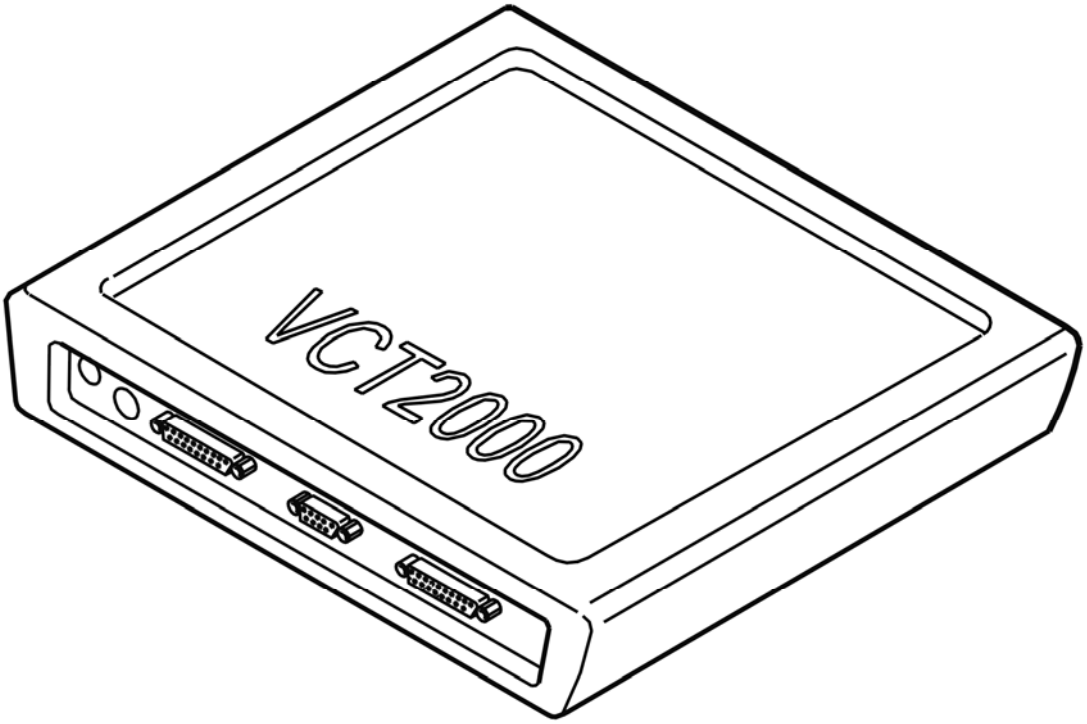

Fig. 67: Identifying VCT2000 Diagnostic Tool Symbol In VIDA
Courtesy of VOLVO CARS CORPORATION

- **Continue**

  Refer to **CHECKING SOFTWARE**

TEST DRIVING

NOTE: **Test drive the car according to the driving schedule below to check whether the fault is still active. The test drive is compiled in order to create the conditions in which the diagnostic trouble code (DTC) will be stored again if the fault is active.**

The TEST MODE function can be used to provoke any diagnostic trouble codes (DTC). The function reduces the conditions for how quickly diagnostic trouble codes (DTCs) are stored in the control module and the test drive becomes easier.

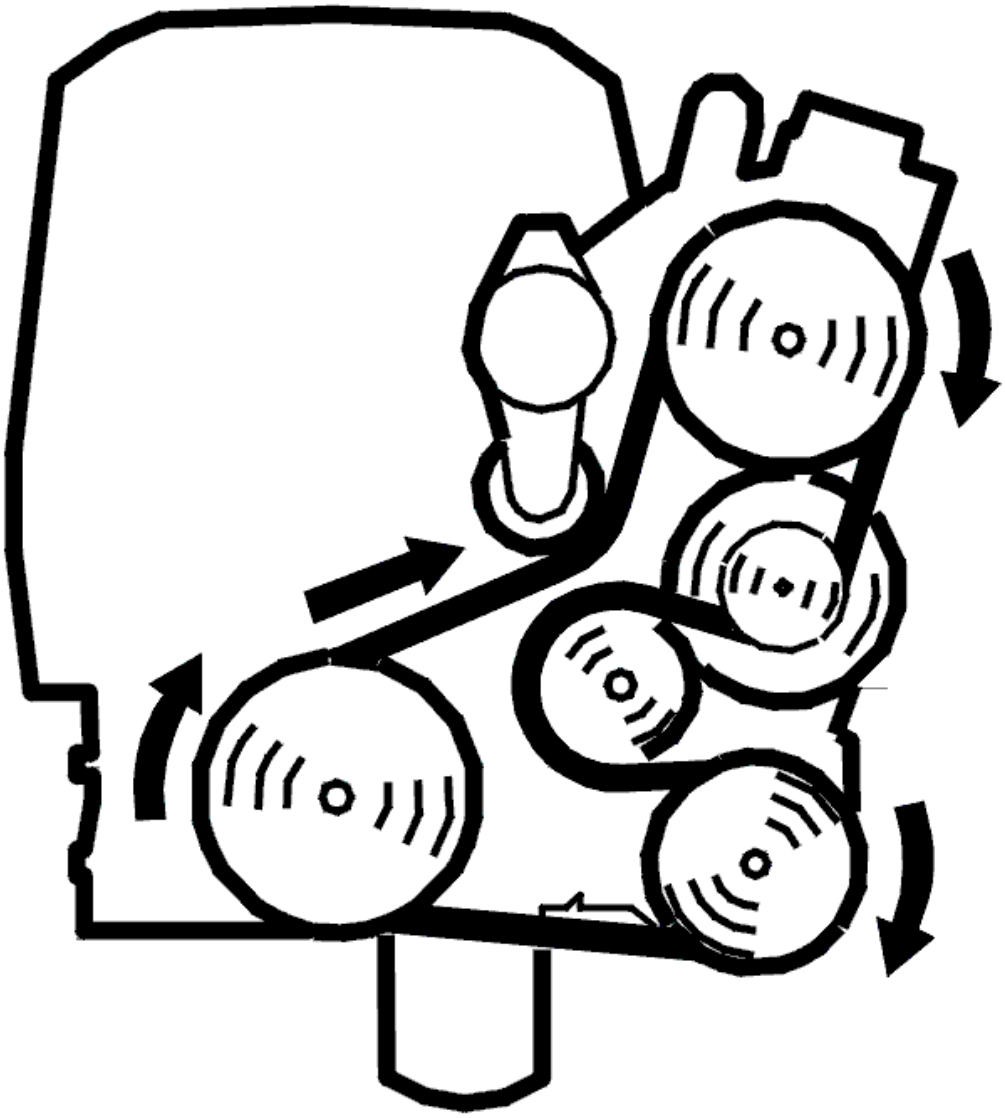

Fig. 68: Identifying Belt Routing
Courtesy of VOLVO CARS CORPORATION

- Start the engine
- Activate TEST MODE.

NOTE: **Do not switch off the engine**

- Disconnect the VIDA station. Test drive the car as described below.

WARNING: **Please observe traffic regulations.**

NOTE: **Before test driving, the transmission should be at operating temperature,**

approximately 80-90°C.

Move the gear selector to position 1. Accelerate carefully until the speed is just above 55 km/h.

Maintain a steady speed for approximately 20 seconds.

Shift the gear selector to positions 2, 3 and D. Maintain a steady speed for approximately 20 seconds after each up-shift.

Criteria for diagnostic trouble code (DTC):

- The gear selector is in the desired gear position for at least 15 seconds
- Speed above 30 km/h
- Positive engine torque (no engine braking)
- Engine speed in excess of 2000 rpm.

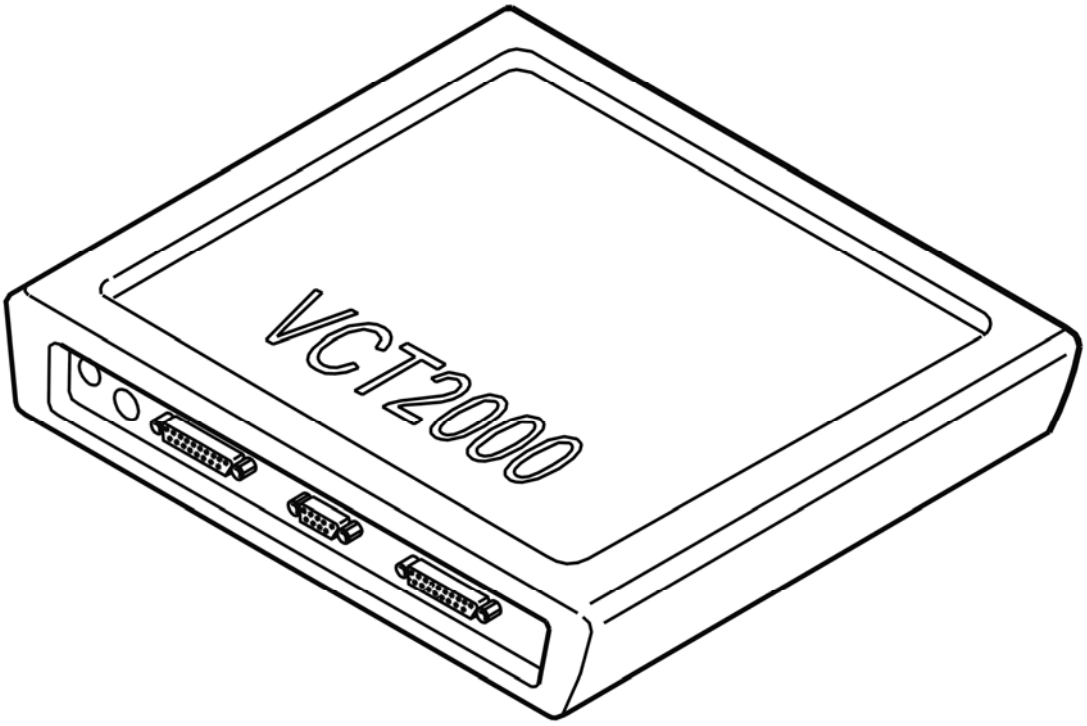

Fig. 69: Identifying VCT2000 Diagnostic Tool Symbol In VIDA
Courtesy of VOLVO CARS CORPORATION

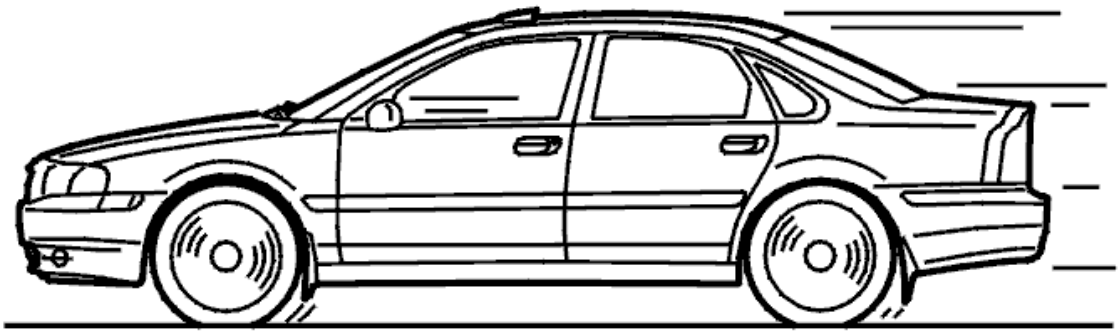

Fig. 70: Identifying Test Drive
Courtesy of VOLVO CARS CORPORATION

- **Continue**

Refer to **CHECKING DIAGNOSTIC TROUBLE CODES (DTCS)**

CHECKING DIAGNOSTIC TROUBLE CODES (DTCS)

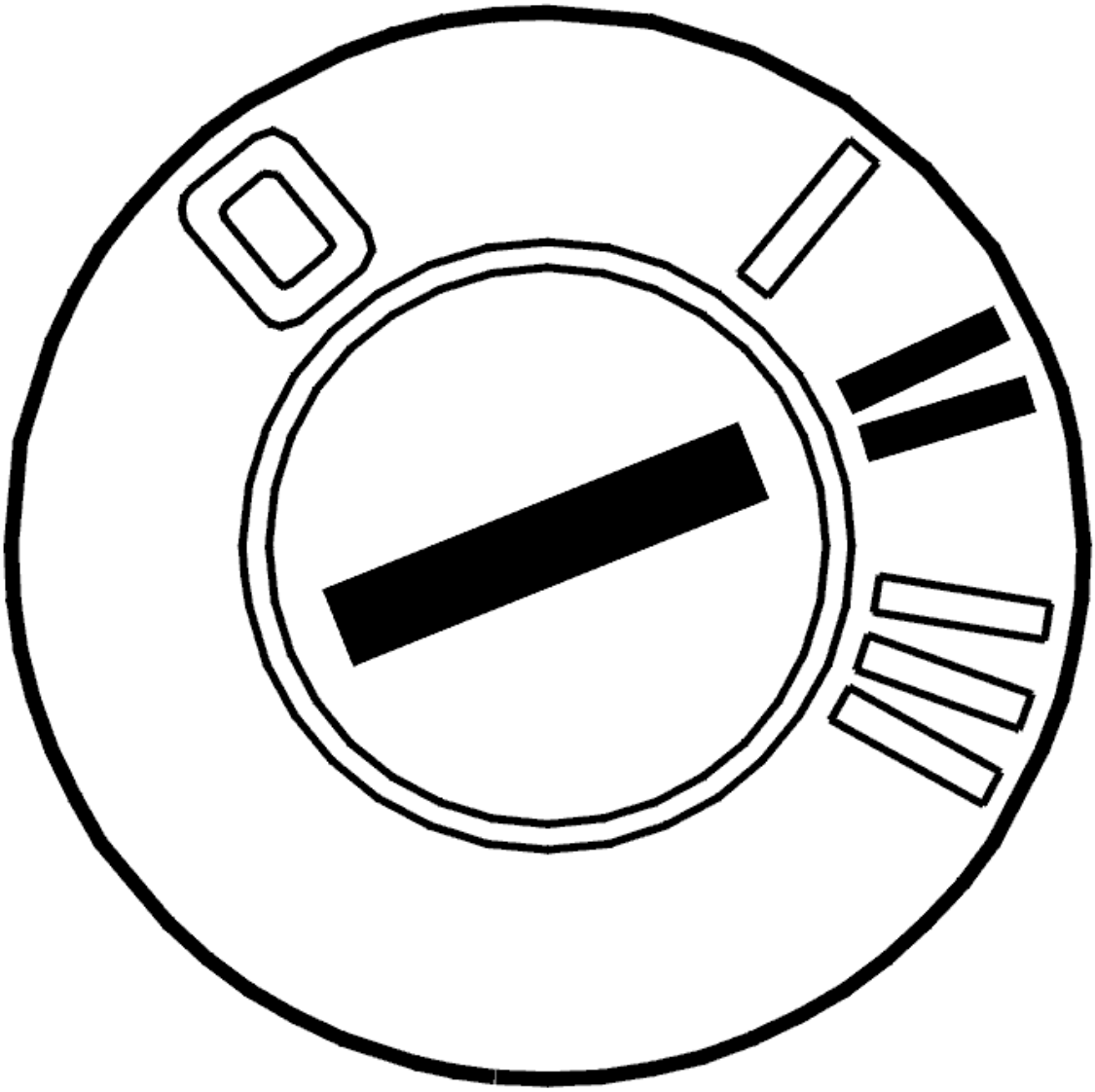

Fig. 71: Identifying Ignition ON
Courtesy of VOLVO CARS CORPORATION

- Ignition on
- Read off diagnostic trouble codes (DTCs).

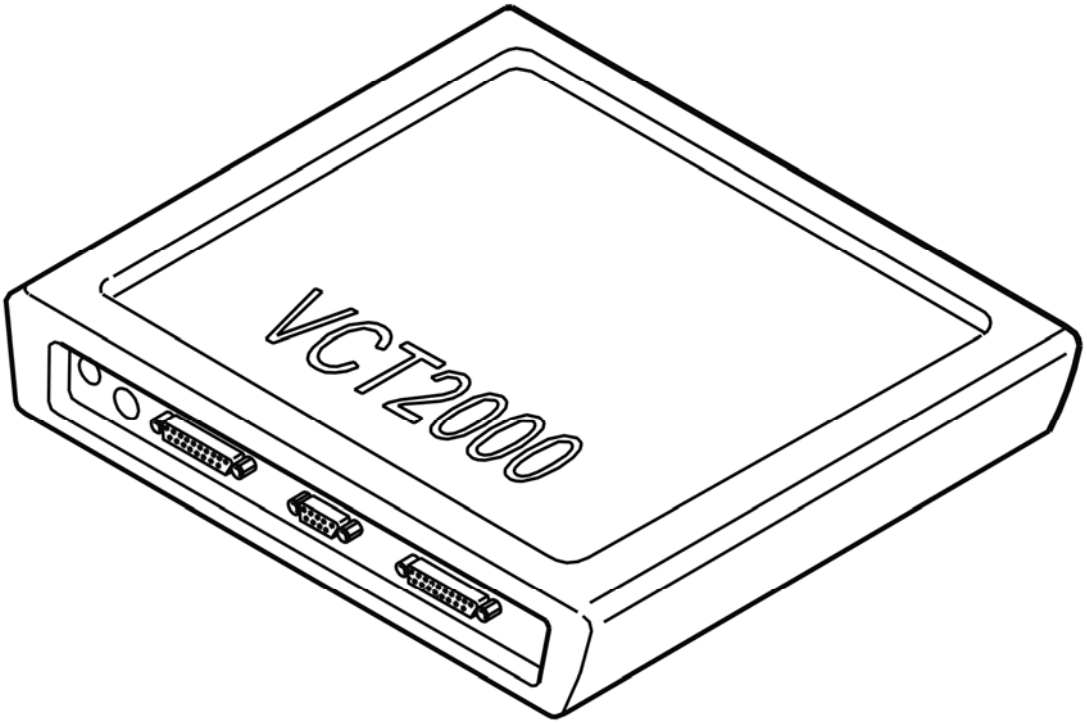

Fig. 72: Identifying VCT2000 Diagnostic Tool Symbol In VIDA
Courtesy of VOLVO CARS CORPORATION

Is diagnostic trouble code (DTC) TCM 000B or TCM-000C stored?

- **YES**

  Refer to **INFORMATION**

- **NO**

  NO DTC

CHECKING SOFTWARE

CHECKING SOFTWARE

NOTE: **To carry out fault-tracing, the transmission control module (TCM) must be programmed with specific software.**

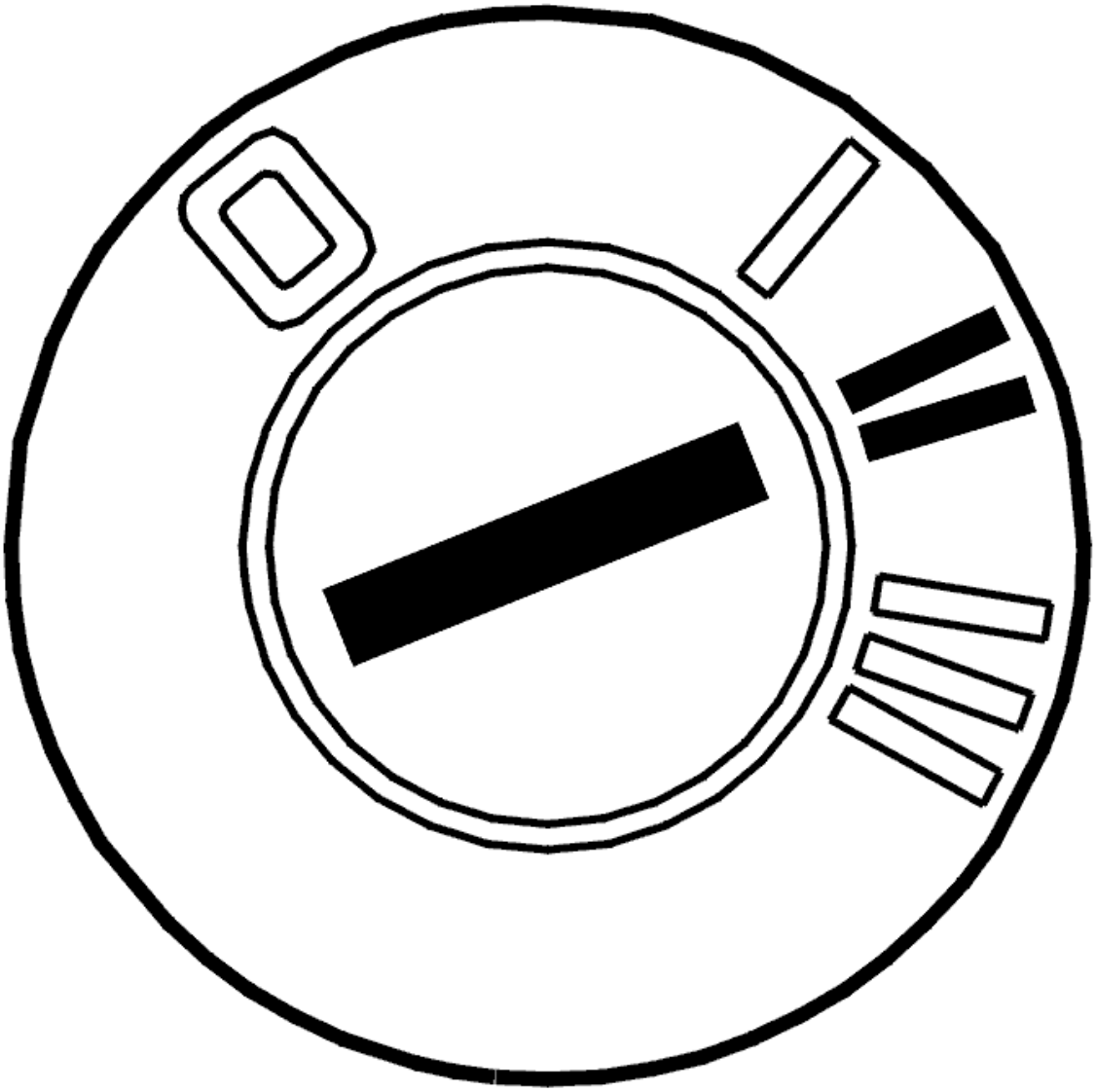

Fig. 73: Identifying Ignition ON
Courtesy of VOLVO CARS CORPORATION

- Ignition on
- Read off the control module diagnostic number.

  Check the read off diagnostic number against the diagnostic numbers given in the center table.

  If the diagnostic number is included in the table, the control module must be programmed with the latest software.

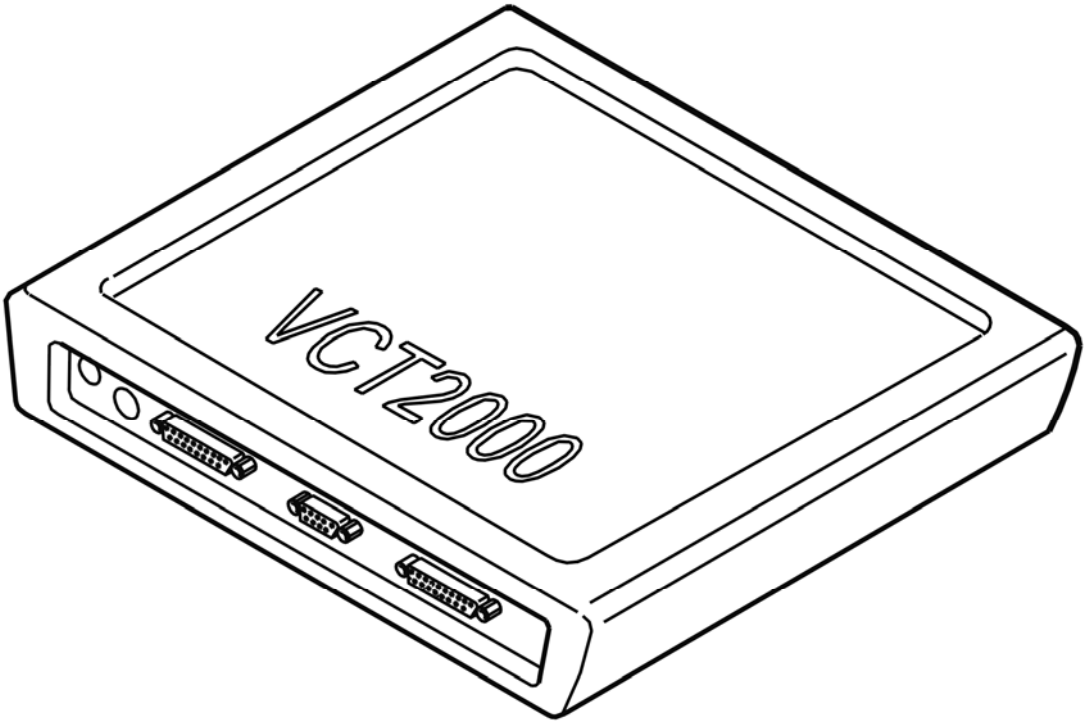

Fig. 74: Identifying VCT2000 Diagnostic Tool Symbol In VIDA
Courtesy of VOLVO CARS CORPORATION

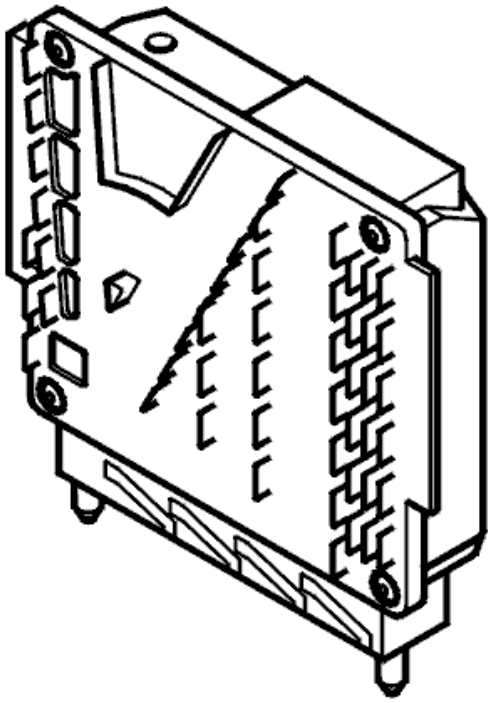

Fig. 75: Identifying Transmission Control Module (TCM)
Courtesy of VOLVO CARS CORPORATION

- **Continue**

  Refer to **TEST DRIVING**

INFORMATION

FAULT-TRACING INFORMATION

The fault should have been detected and remedied. As this is not the case fault-tracing has failed.

Exit fault-tracing for this diagnostic trouble code (DTC) or make another attempt.

CHECKING GEAR SELECTOR (4T65 AWD; 2003-2006)

CHECKING GEAR SELECTOR

CHECKING MECHANICAL TRANSMISSION CABLE

Check the adjustment of the transmission cable. Adjust if necessary.

Other information

- To adjust the mechanical transmission cable at the gear selector assembly:
  - For B5xx4T2, see **GEAR SELECTOR CABLES, ADJUSTING**
  - For B6xx4T, see **GEAR SELECTOR CABLE, ADJUSTING** .

CHECKING IGNITION SWITCH INTERLOCK (4T65 AWD; 2003-2006)

CHECKING IGNITION SWITCH INTERLOCK

FUNCTION TEST

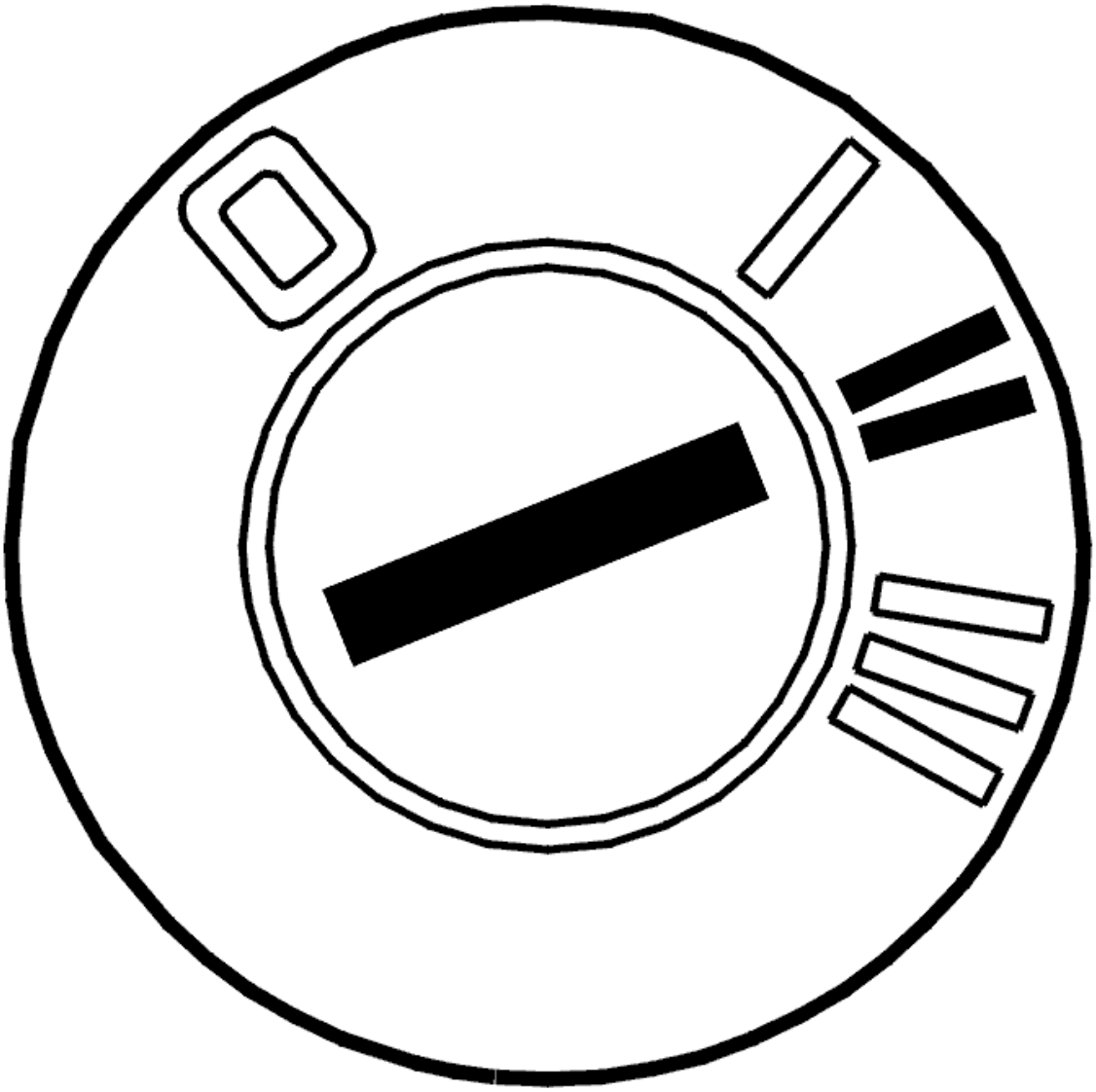

Fig. 76: Identifying Ignition ON
Courtesy of VOLVO CARS CORPORATION

- Ignition on
- Depress the brake pedal.

Check if the gear selector can be moved from gear position P.

Could the gear selector be moved?

- **YES**

  FAULT NOT FOUND: Troubleshooting has been completed.

- **NO**

  Refer to **CHECKING MECHANICAL CABLE FOR THE IGNITION SWITCH INTERLOCK**

CHECKING MECHANICAL CABLE FOR THE IGNITION SWITCH INTERLOCK

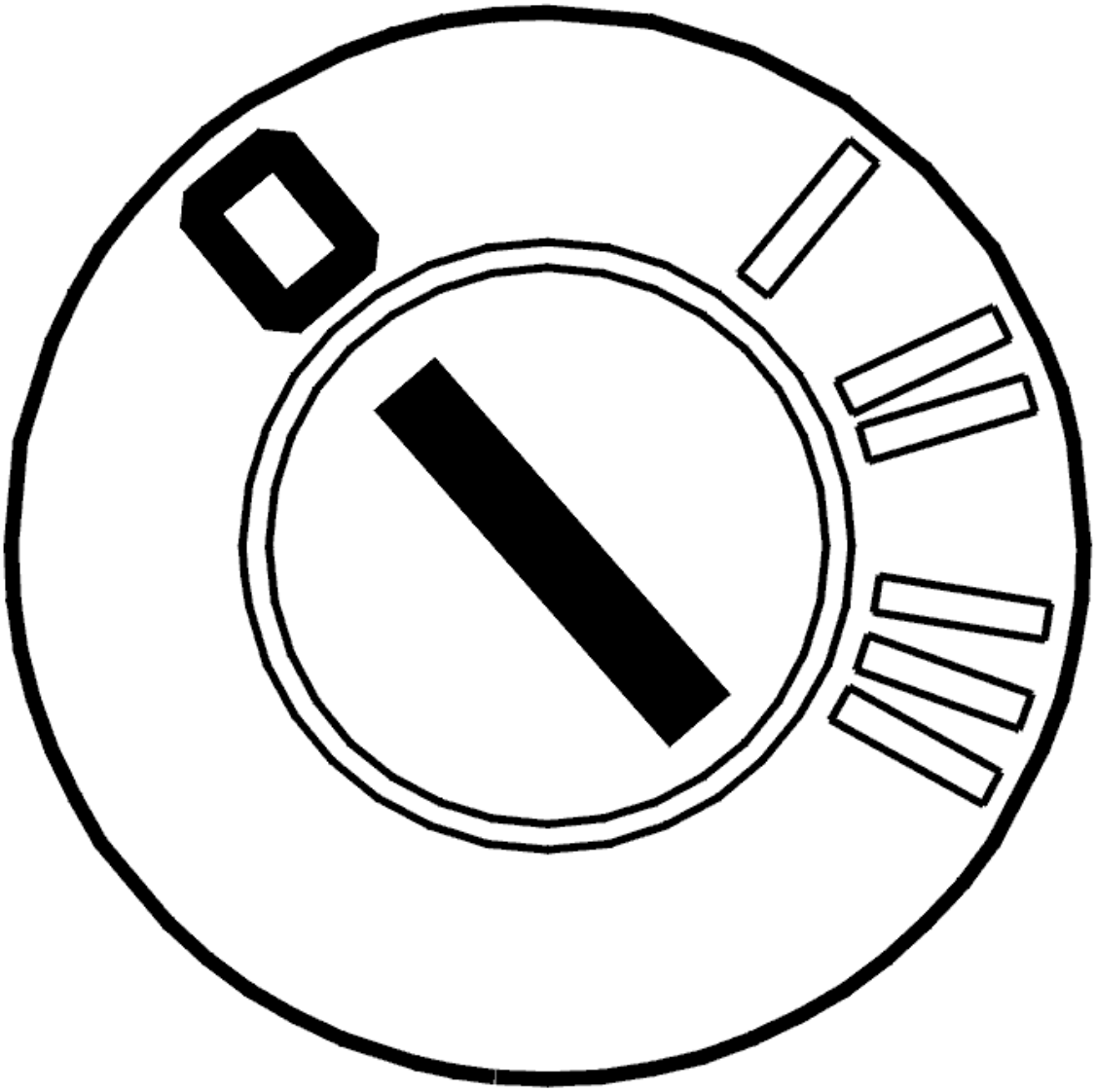

Fig. 77: Identifying Ignition OFF
Courtesy of VOLVO CARS CORPORATION

- Ignition off.

  Check if the mechanical cable for the ignition switch interlock requires adjustment. See **CABLE KEY INTERLOCK, REPLACING** .

  Remedy as necessary.

Was the mechanical cable correctly adjusted?

- **YES**

  Refer to **CHECKING GEAR-SHIFT POSITION SENSOR**

- **NO**

  Refer to **VERIFICATION**

CHECKING GEAR-SHIFT POSITION SENSOR

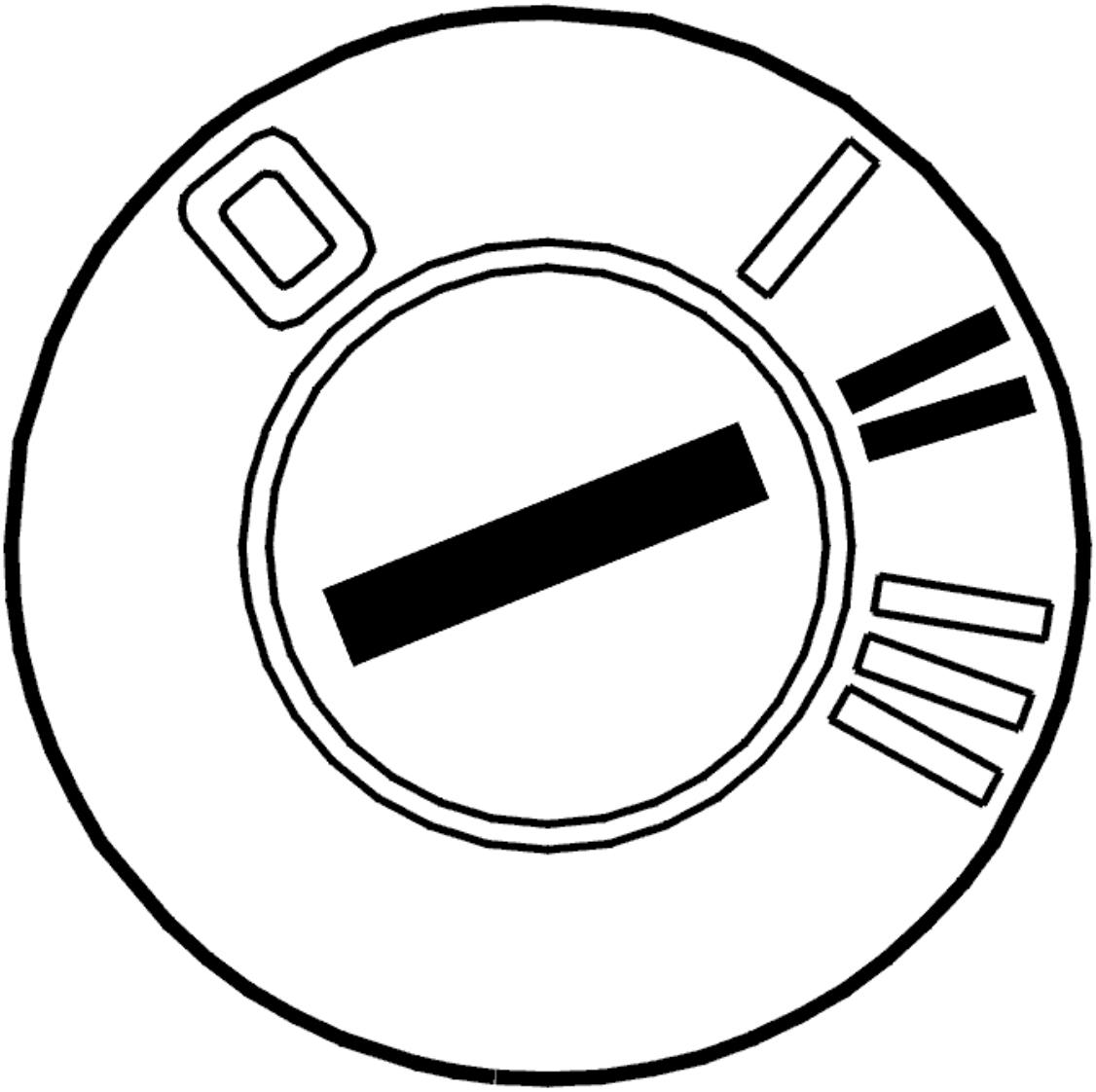

Fig. 78: Identifying Ignition ON
Courtesy of VOLVO CARS CORPORATION

- Ignition on
- Read off the position of the gear-shift position sensor

NOTE: **Select the correct gear selector assembly from the list.**

NOTE: **An undefined position may be displayed between the fixed gear positions. This is not a fault.**

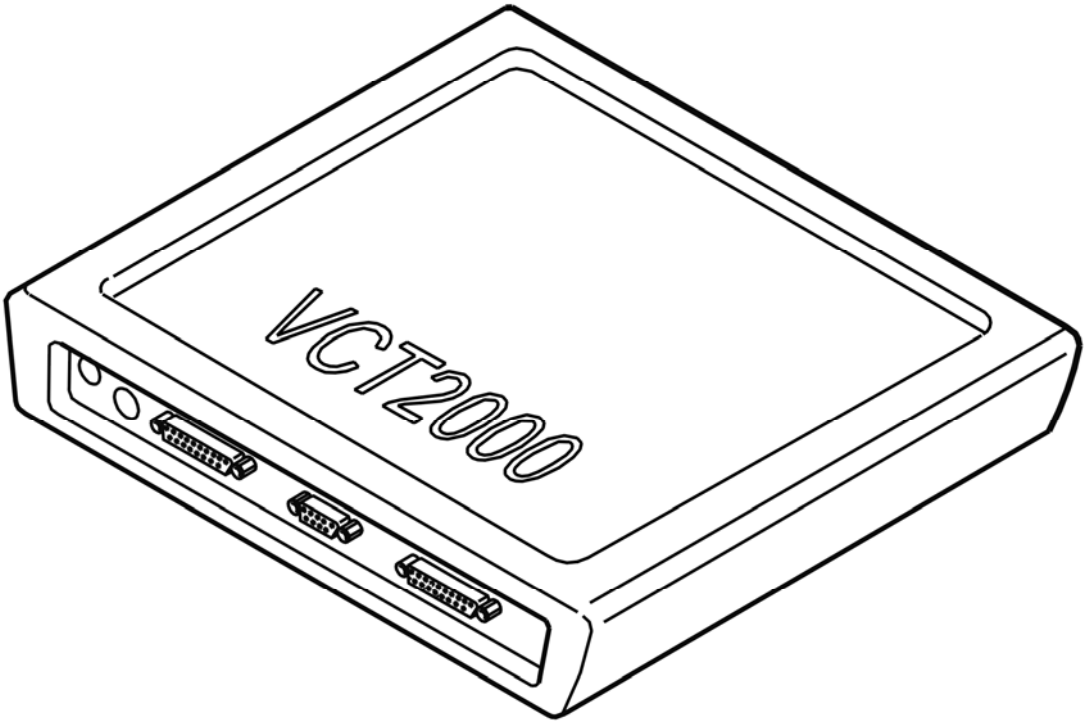

Fig. 79: Identifying VCT2000 Diagnostic Tool Symbol In VIDA
Courtesy of VOLVO CARS CORPORATION

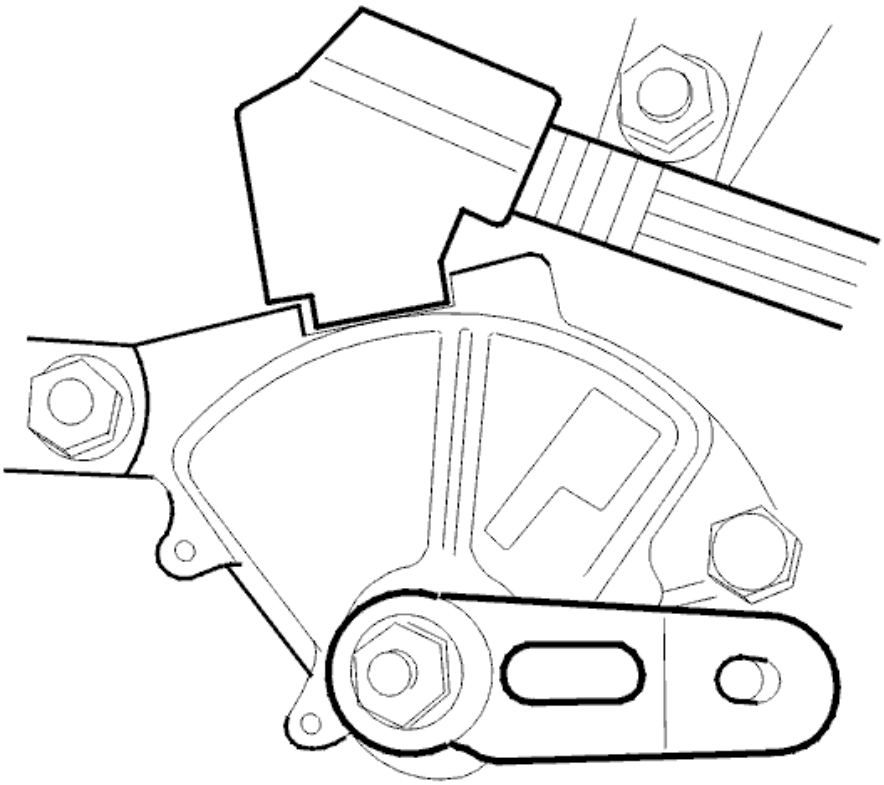

Fig. 80: Identifying Gear-Shift Position Sensor
Courtesy of VOLVO CARS CORPORATION

- Check the gear-shift position sensor by moving the gear selector several times to all the gear positions.

  The selected position must be the same as that displayed in VIDA (Volvo scan tool). If the display shows an undefined position (e. g. OR) when a specific gear is selected, the transmission cable needs adjusting.

  If the mechanical cable is incorrectly adjusted, check that the transmission cable is correctly installed in the mounting on the transmission.

  The transmission cable adjustment should sit upwards.

  Remedy as necessary.

  Other information:

  - To adjust the transmission cable:
    - For B5xx4T2, see **GEAR SELECTOR CABLES, ADJUSTING**
    - For B6xx4T, see **GEAR SELECTOR CABLE, ADJUSTING** .

Was the gear-shift position sensor or the control incorrectly adjusted?

- **YES**

  Refer to **VERIFICATION**

- **NO**

  FAULT NOT FOUND: Troubleshooting has been completed.

VERIFICATION

VERIFICATION

HINT: After carrying out the repair, check that the fault has been remedied.

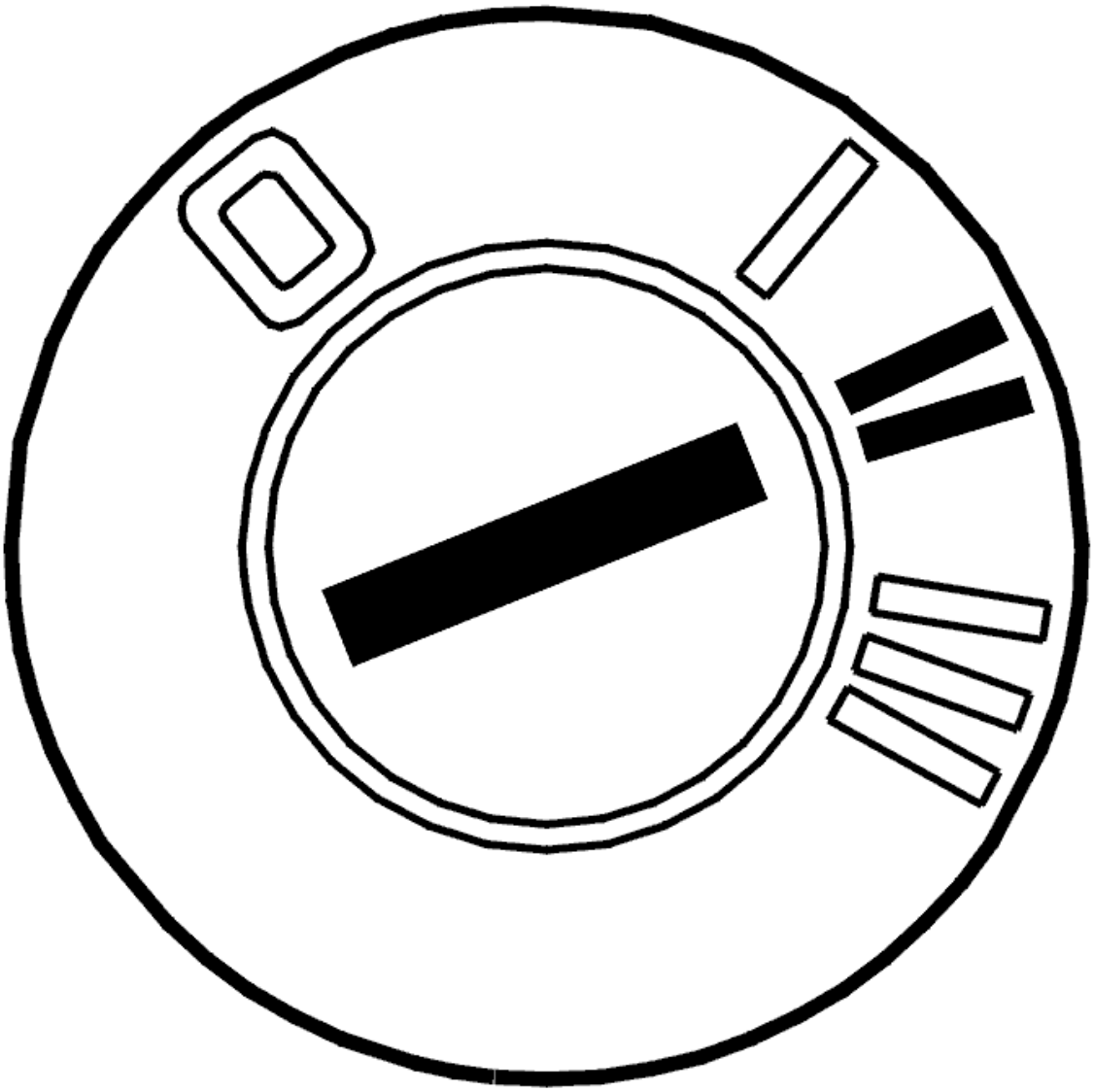

Fig. 81: Identifying Ignition ON
Courtesy of VOLVO CARS CORPORATION

- Ignition on.
- Gear selector in position P.

  Try moving the gear selector to another position without depressing the brake pedal. It should not be possible to move the gear selector.

  Depress the brake pedal and try moving the gear selector to another position. It should now be possible to move the gear selector.

Was the function OK?

- **YES**

  VERIFIED: Troubleshooting has been completed.

- **NO**

  Refer to **INFORMATION**

INFORMATION

FAULT-TRACING INFORMATION

The fault should have been detected and remedied. As this is not the case fault-tracing has failed.

Exit fault-tracing for this diagnostic trouble code (DTC) or make another attempt.

CABLE KEY INTERLOCK, REPLACING

- See **CABLE KEY INTERLOCK, REPLACING** .

FAULT-TRACING INFORMATION

Condition

- No diagnostic trouble codes (DTCs) stored.

Possible Source

- The mechanical cable for the ignition switch interlock cable is incorrectly adjusted
- The transmission cable is incorrectly adjusted.

Fault symptom[s]

- The gear selector is jammed in position P.

CHECKING JOIN BETWEEN THE TRANSMISSION HOUSING AND MATING FLANGE FOR LEAKS (AW50/51 AWD; AW55-50/51SN; 2003-2007)

CHECKING JOIN BETWEEN THE TRANSMISSION HOUSING AND MATING FLANGE FOR LEAKS

CHECKING JOIN BETWEEN THE TRANSMISSION HOUSING AND MATING FLANGE FOR LEAKS

Check the join between the transmission housing and mating flange for leaks.

In case of leakage, replace the transmission.

Other information:

- For information about removal/installation, see **TRANSMISSION - REMOVAL, REPLACEMENT AND INSTALLATION**

CHECKING LOCK-UP FUNCTION (4T65 AWD; 2003-2006)

CHECKING LOCK-UP FUNCTION

CHECKING SOFTWARE

CHECKING SOFTWARE

NOTE: To carry out fault-tracing, the transmission control module (TCM) must be programmed with specific software.

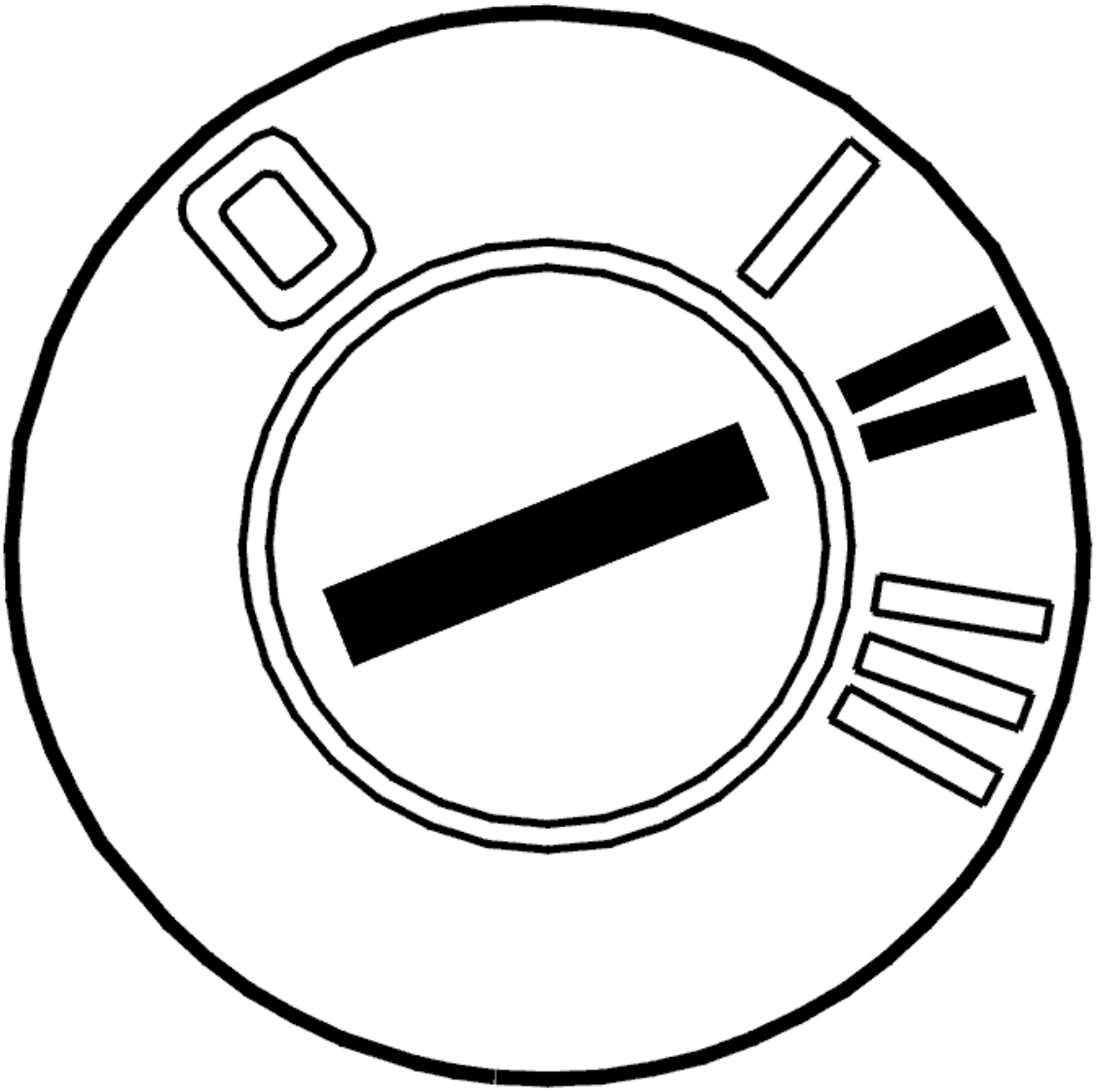

Fig. 82: Identifying Ignition ON
Courtesy of VOLVO CARS CORPORATION

- Ignition on
- Read off the control module diagnostic number.

  Check the read off diagnostic number against the diagnostic numbers given in the center table.

  If the diagnostic number is included in the table, the control module must be programmed with the latest software.

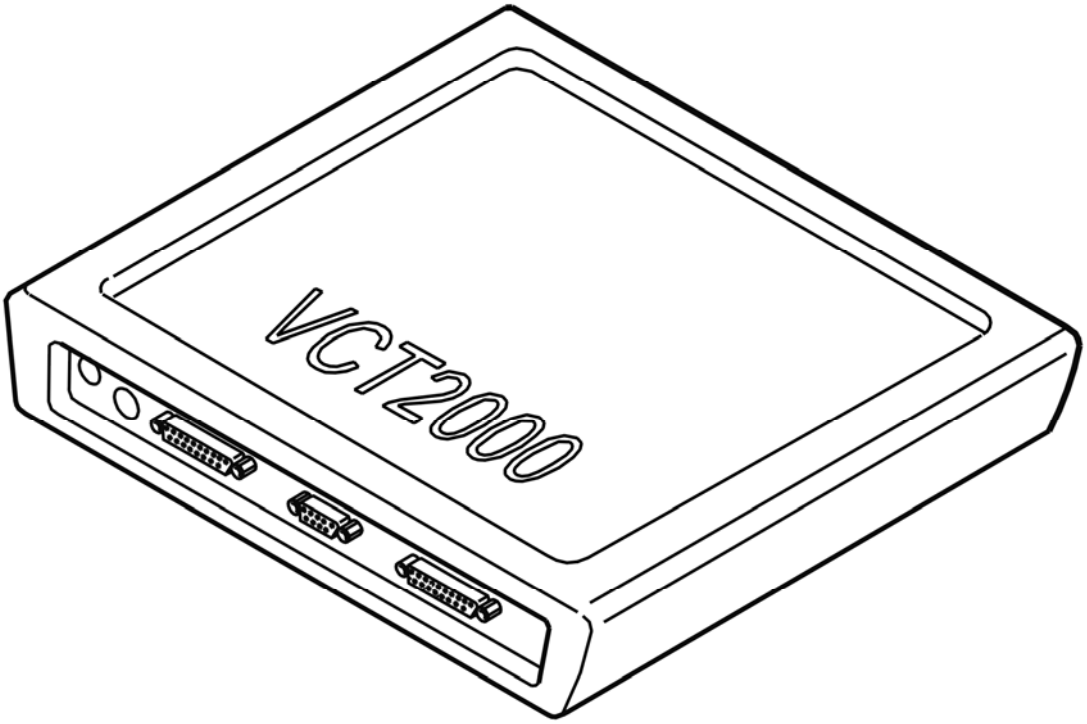

Fig. 83: Identifying VCT2000 Diagnostic Tool Symbol In VIDA
Courtesy of VOLVO CARS CORPORATION

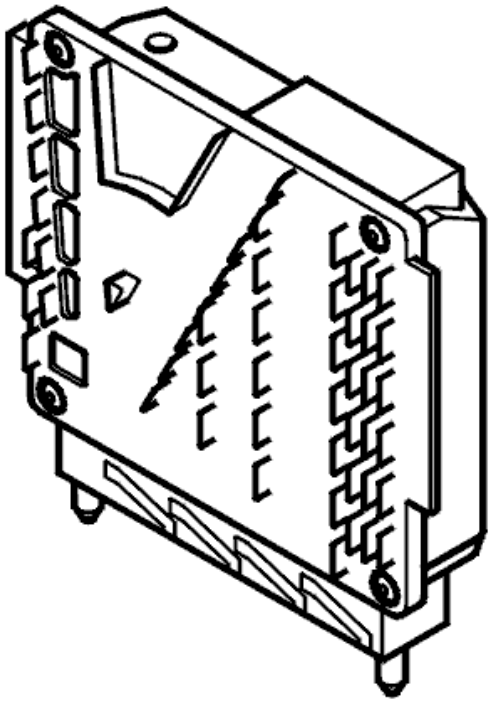

Fig. 84: Identifying Transmission Control Module (TCM)
Courtesy of VOLVO CARS CORPORATION

- **Continue**

  Refer to **CONNECTING THE T PIPE**

CONNECTING THE T PIPE

CONNECTING THE T PIPE

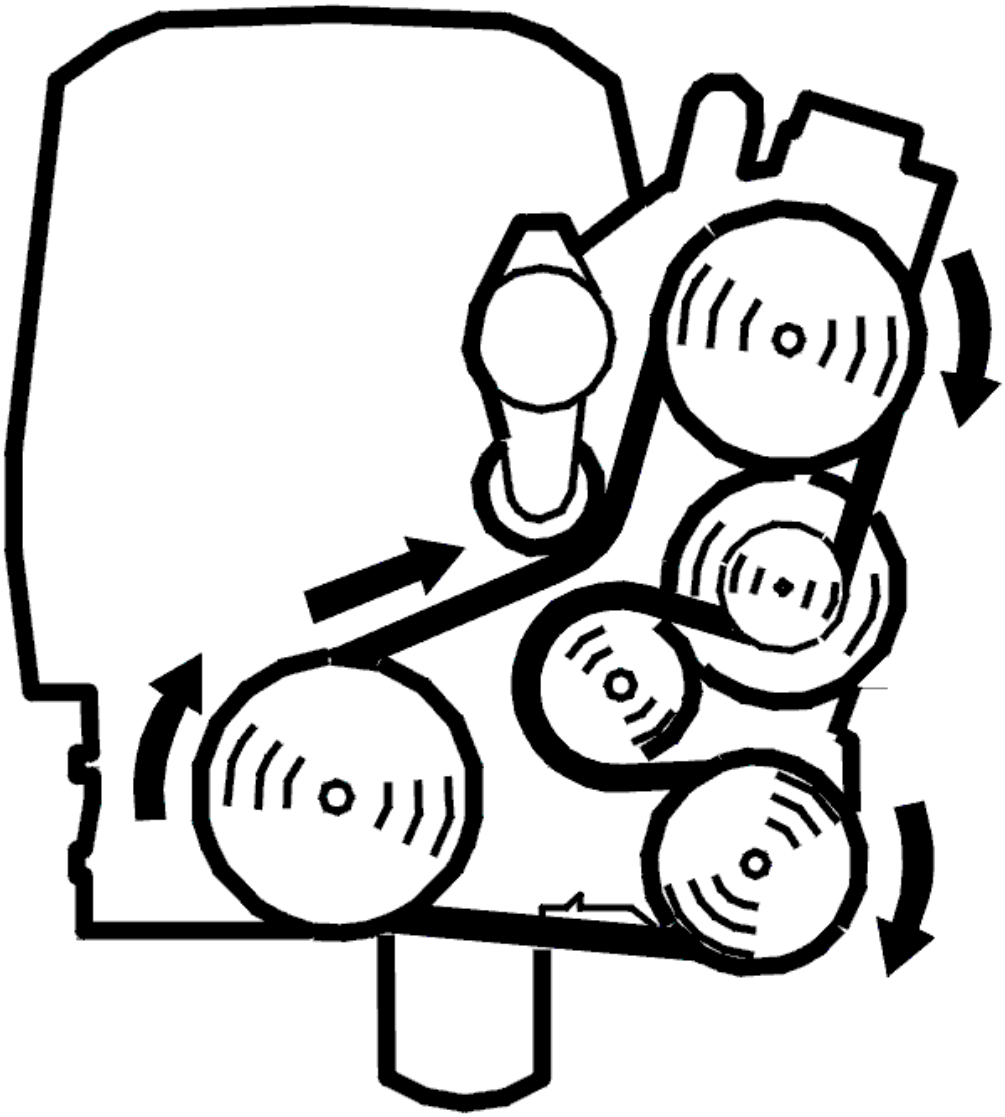

Fig. 85: Identifying Belt Routing
Courtesy of VOLVO CARS CORPORATION

- Deactivate the function for STC/DSTC by pressing in the button for STC/DSTC for approximately 2 seconds
- Ignition off
- Connect the T-pipe see **9997002** with oil pressure gauge see **9995114** to the coolant hose from the transmission for the oil cooler
- Raise the car so that the drive wheels are clear of the ground.

WARNING: **Ensure that the car safely raised. Ensure that there are no objects caught in the front wheels.**

- Start the engine

- Gear selector in position P
- Activate the function "Block automatic shifting".

Other information

- To connect the T-pipe to the oil cooler for the transmission. See **T-PIPE, CONNECTION TO OIL COOLER** .

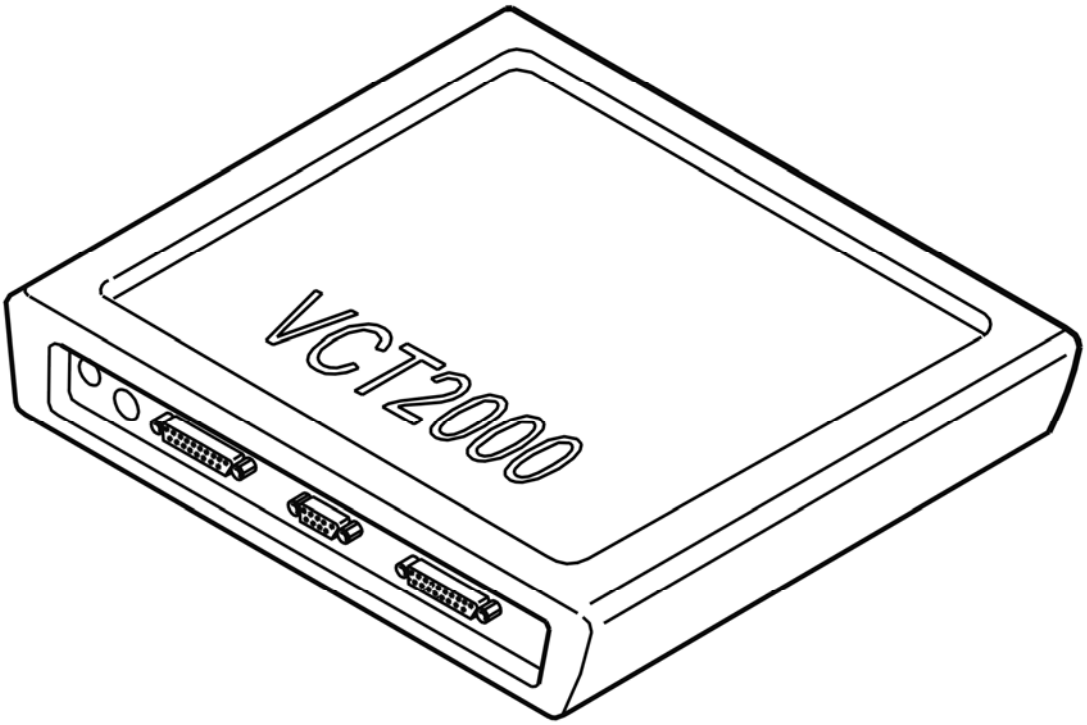

Fig. 86: Identifying VCT2000 Diagnostic Tool Symbol In VIDA
Courtesy of VOLVO CARS CORPORATION

Allow the engine to run.

- **Continue**

Refer to **CHECKING SOLENOID SL**

CHECKING SOLENOID SL

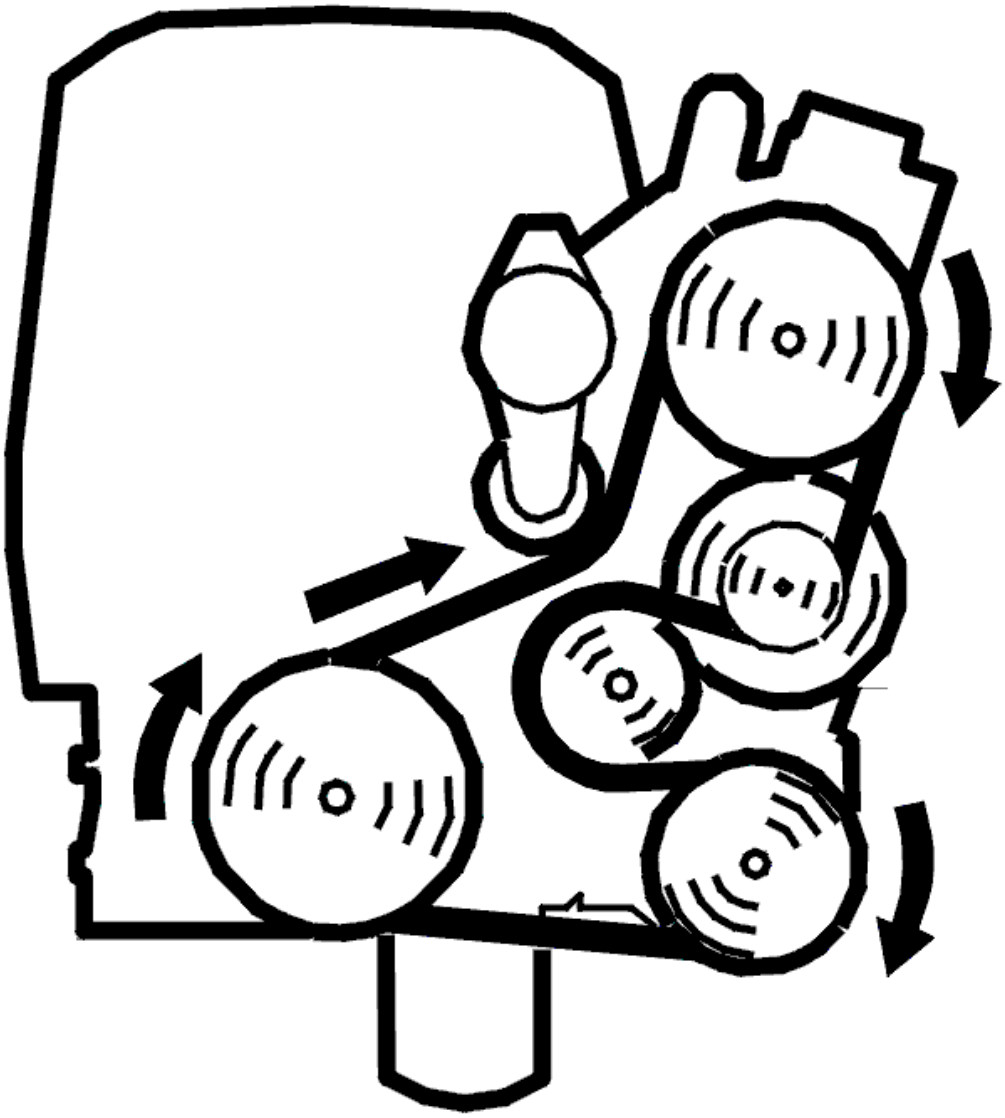

Fig. 87: Identifying Belt Routing
Courtesy of VOLVO CARS CORPORATION

- Engine running
- Move the gear selector to position D
- Activate the solenoid for gear 2 and then the lock-up function
- Check the pressure change on the oil pressure gauge. A considerable change in pressure should be observed
- Deactivate the lock-up function. Check the pressure change.

  Repeat the activation and deactivation of the lock-up function a few times to ensure accurate results.

  HINT: Unchanged pressure means that the control system is defective.

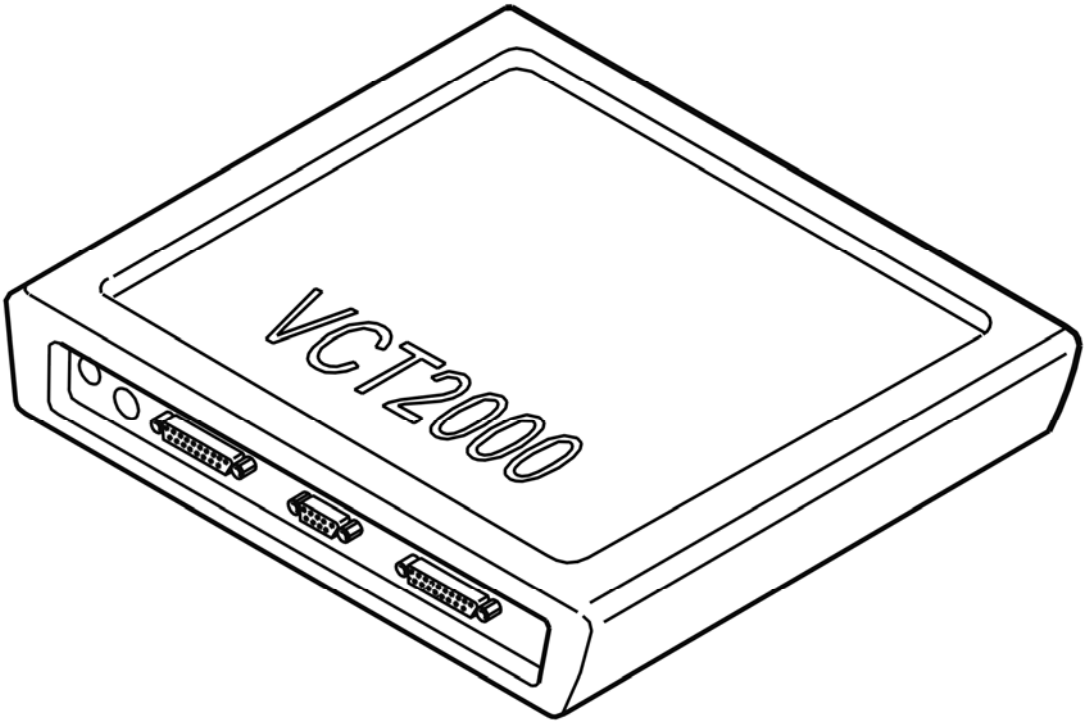

Fig. 88: Identifying VCT2000 Diagnostic Tool Symbol In VIDA
Courtesy of VOLVO CARS CORPORATION

Did the pressure change?

- **YES**

  Refer to **CHECKING LOCK-UP FUNCTION**

- **NO**

  Refer to **REPLACING THE TRANSMISSION CONTROL SYSTEM**

CHECKING LOCK-UP FUNCTION

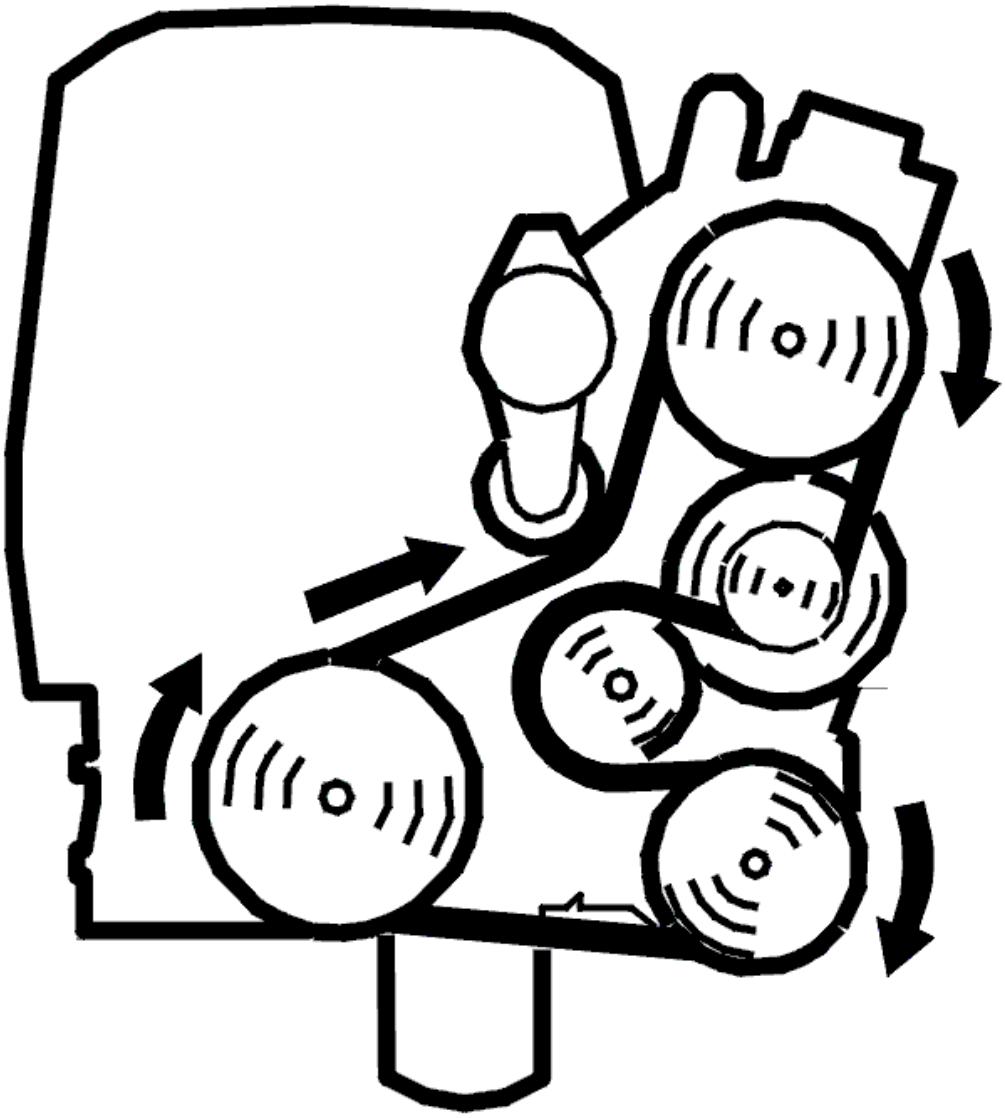

Fig. 89: Identifying Belt Routing
Courtesy of VOLVO CARS CORPORATION

- Engine running
- Car raised so that the driven wheels hang freely
- Move the gear selector to position D
- Read the transmission input speed, the engine speed (RPM), the status of the lock-up function and the position of the accelerator pedal (AP).

  Depress the accelerator pedal (AP) and check the lock-up function by comparing the input speed of the transmission and the engine speed (RPM). The transmission and the engine speed (RPM) must be approximately the same. The lock-up function is not functioning if the difference is greater than 100 rpm.

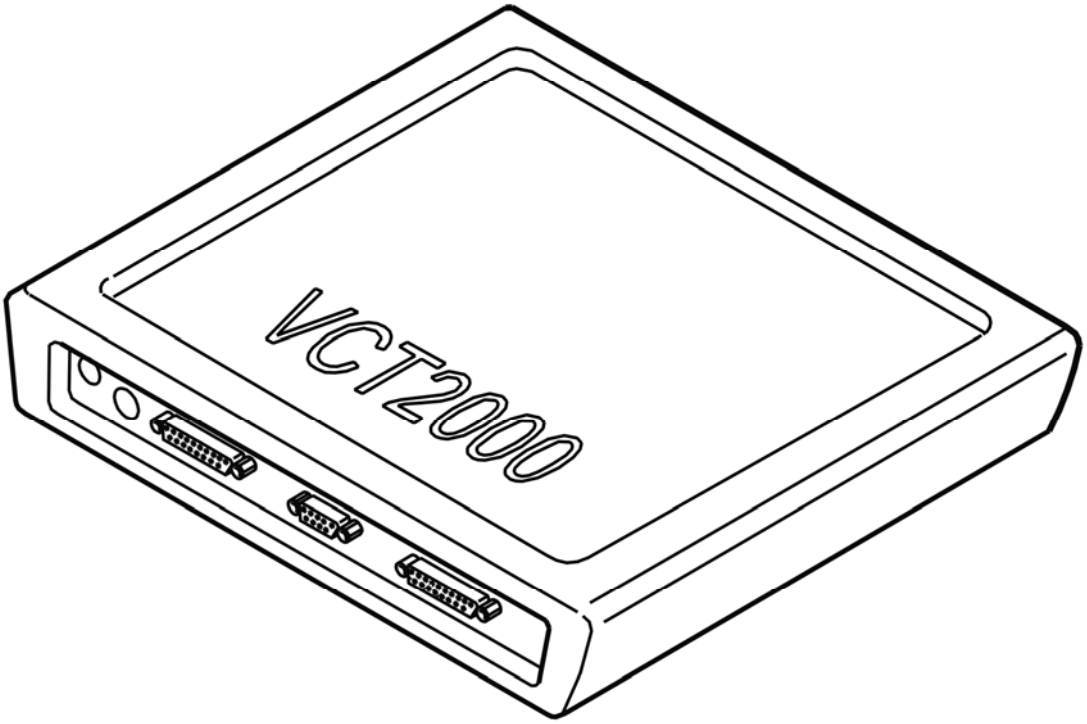

Fig. 90: Identifying VCT2000 Diagnostic Tool Symbol In VIDA
Courtesy of VOLVO CARS CORPORATION

Is the difference in speed (RPM) greater than 100 rpm?

- **YES**

  Refer to **REPLACING A FAULTY TRANSMISSION**

- **NO**

  Refer to **CHECKING RESISTANCE, SOLENOID SL**

CHECKING RESISTANCE, SOLENOID SL

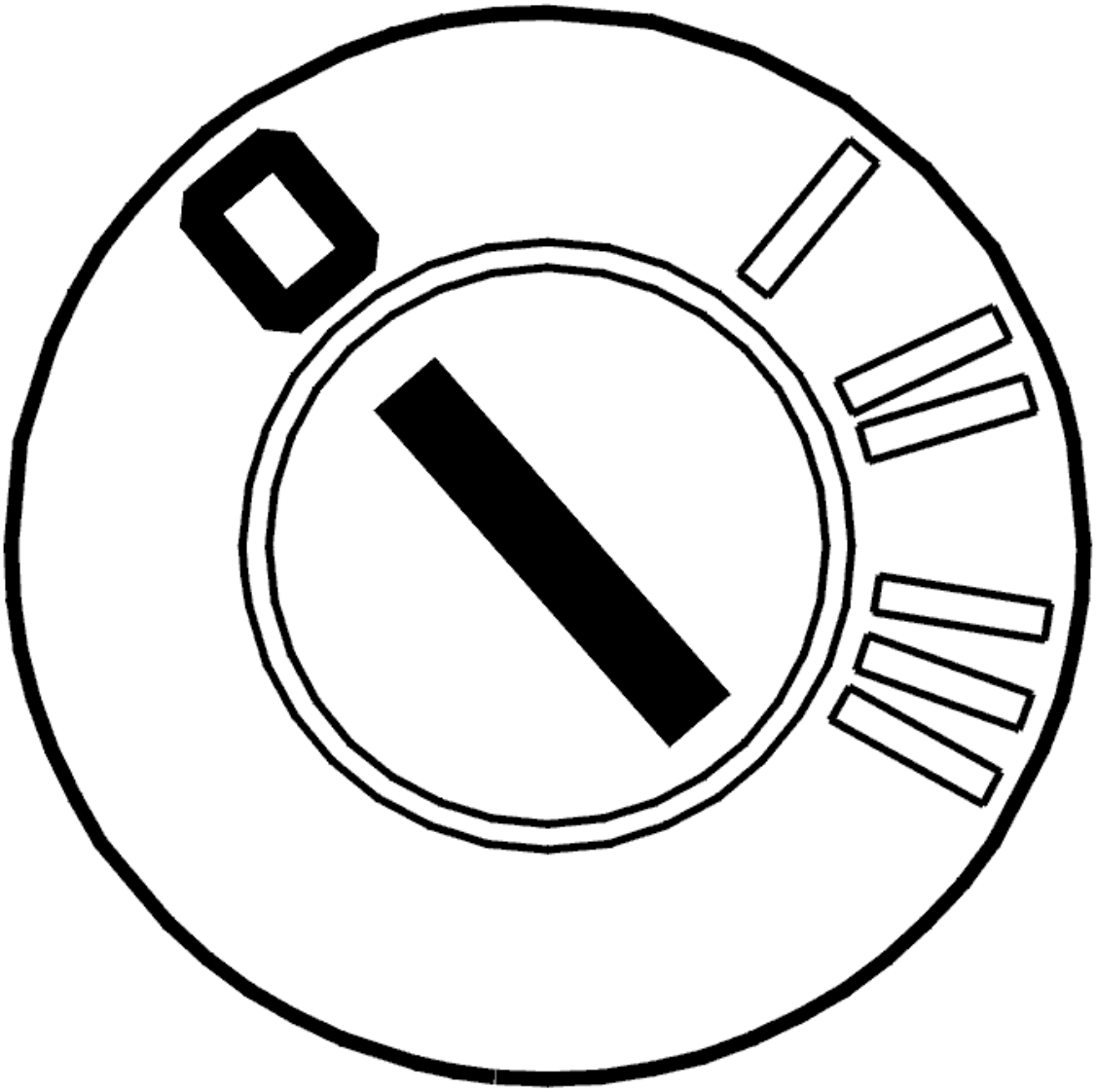

Fig. 91: Identifying Ignition OFF
Courtesy of VOLVO CARS CORPORATION

- Ignition off
- Connect the breakout box to the control module connector (transmission side).

  Check solenoid SL by measuring the resistance between terminals #A51 (#A51) and #A53 (#A53).

  When the transmission is cold (20 °C), the resistance must be 10-11 ohms. When the transmission is at operating temperature (150 °C), the resistance must not exceed 16 ohms.

  Other information

  - To connect the breakout box, see **CONNECTING THE BREAKOUT BOX**
  - For information about signals, see **SIGNAL SPECIFICATION** .

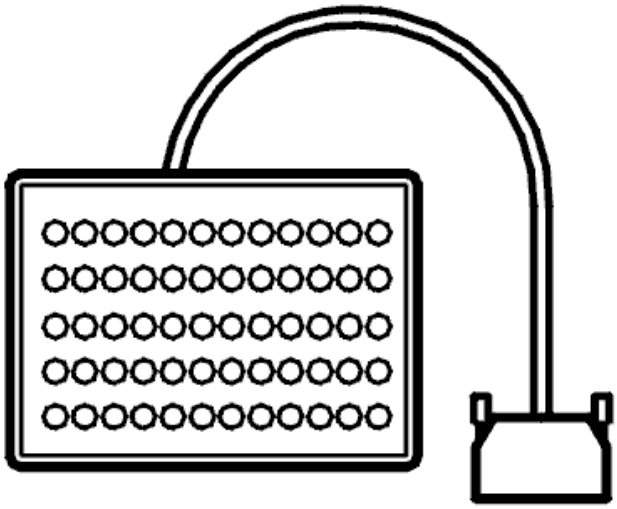

Fig. 92: Identifying Breakout Box
Courtesy of VOLVO CARS CORPORATION

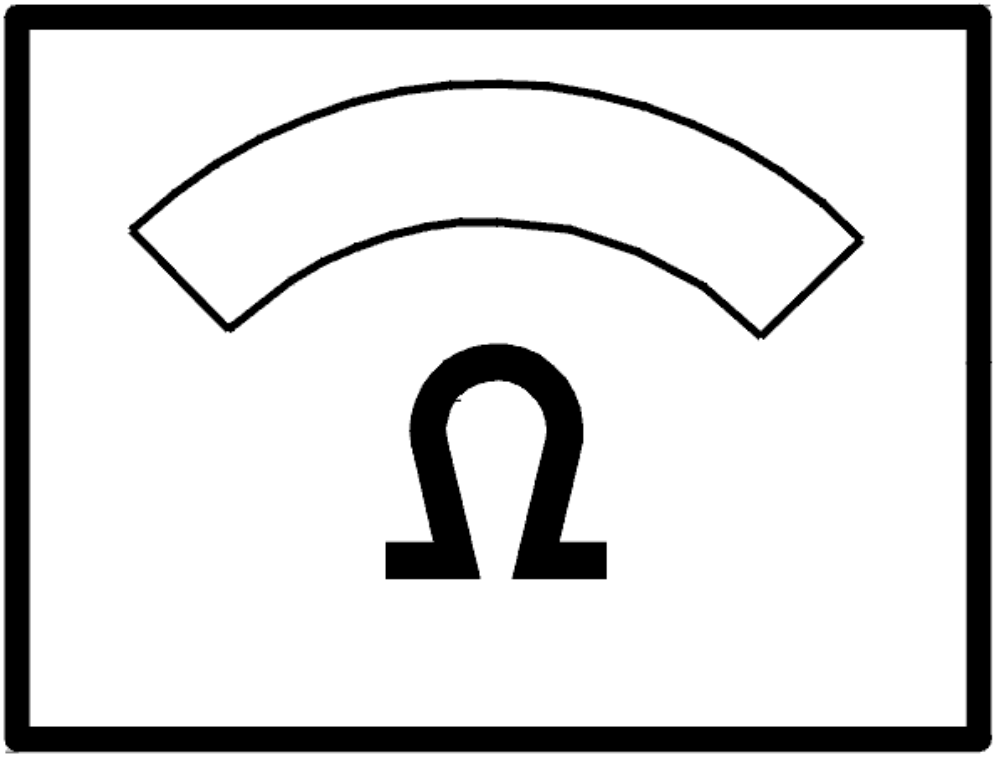

Fig. 93: Identifying Ohms Display
Courtesy of VOLVO CARS CORPORATION

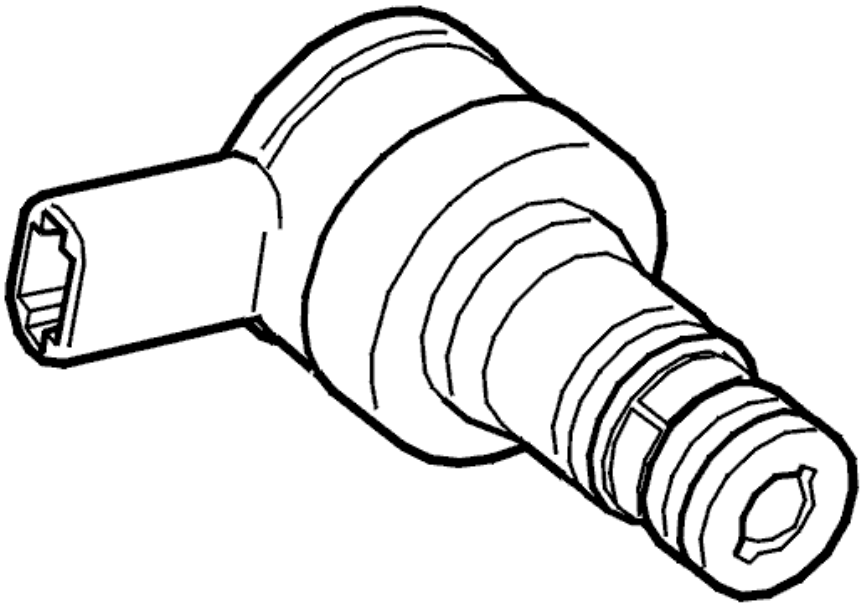

Fig. 94: Identifying Lock-Up Solenoid, SL
Courtesy of VOLVO CARS CORPORATION

Was the resistance OK?

- **YES**

  FAULT NOT FOUND: Troubleshooting has been completed.

- **NO**

  Refer to **CHECKING WIRING**

CHECKING WIRING

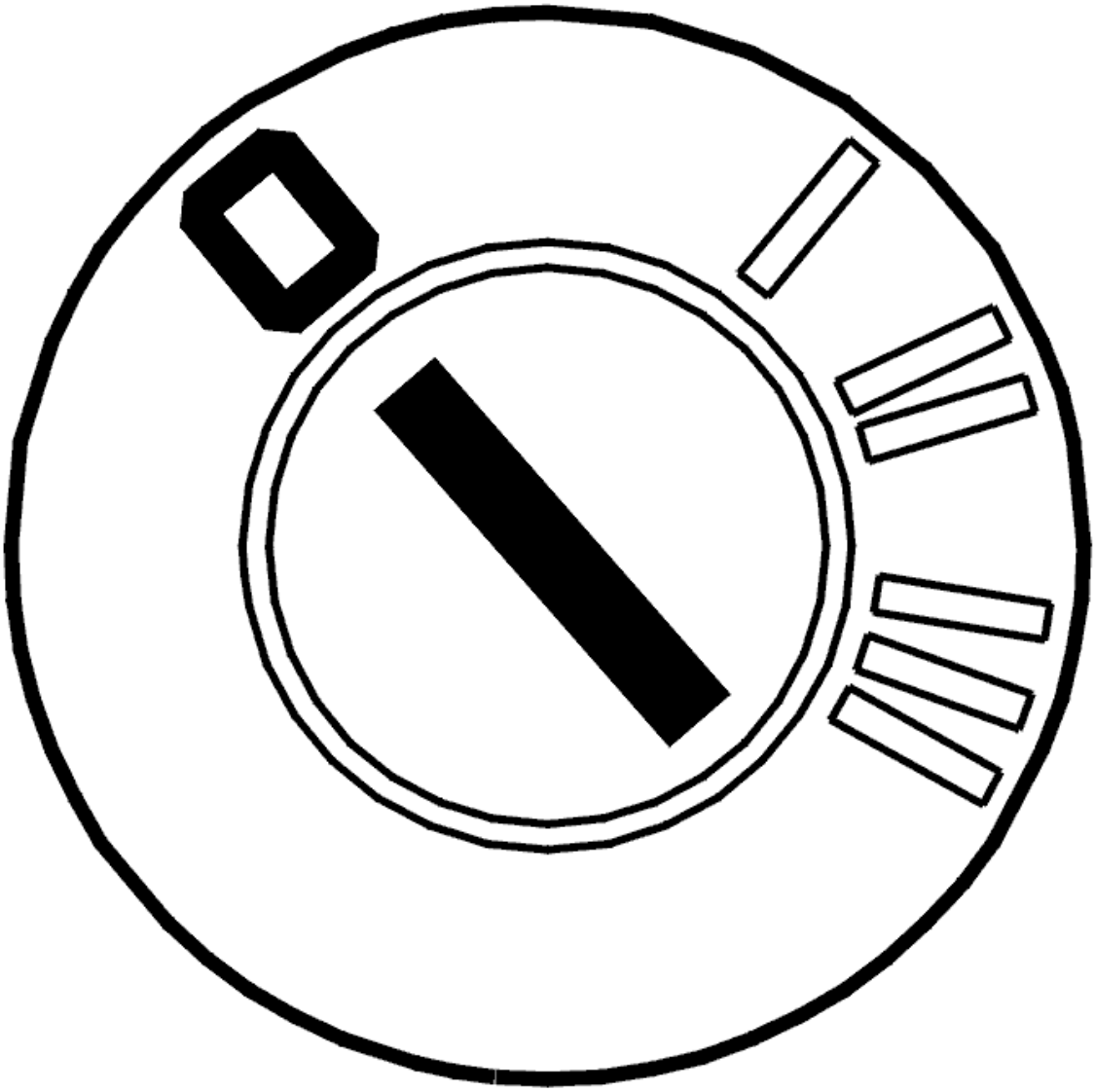

Fig. 95: Identifying Ignition OFF
Courtesy of VOLVO CARS CORPORATION

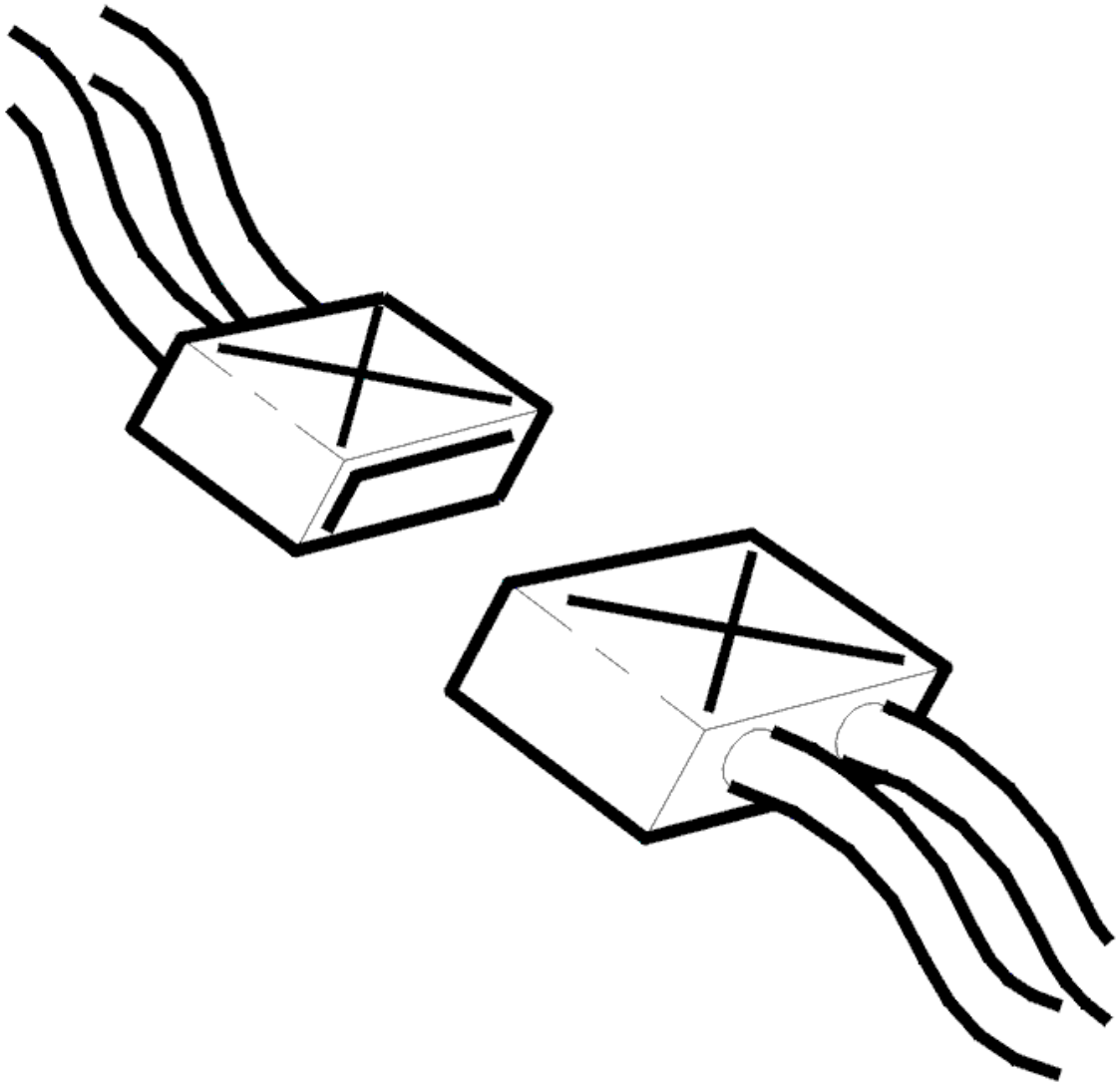

Fig. 96: Identifying Connector
Courtesy of VOLVO CARS CORPORATION

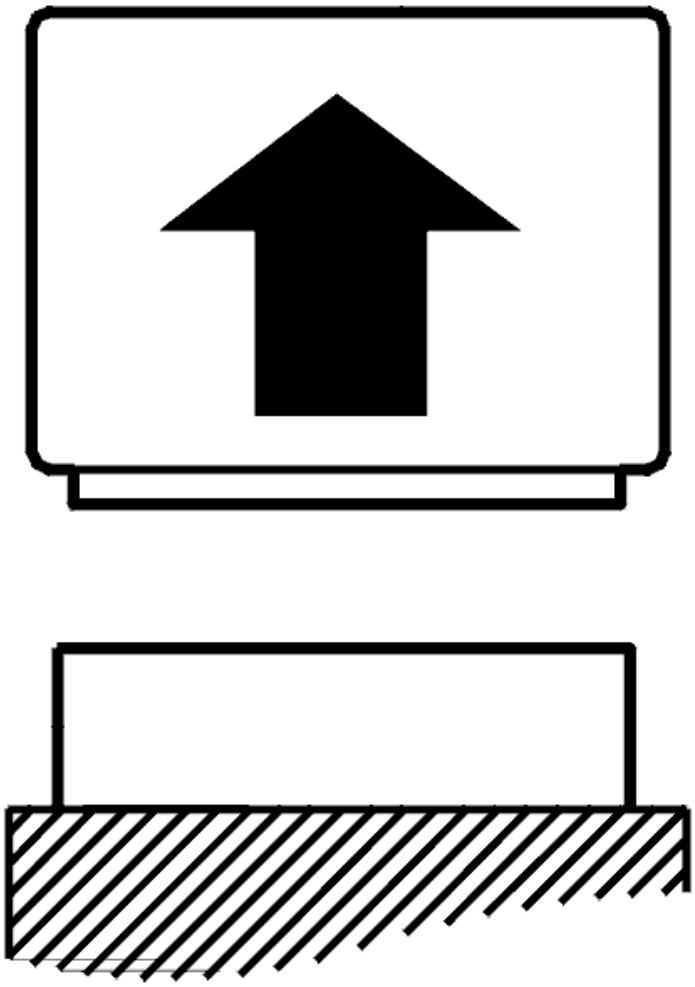

Fig. 97: Disconnecting Connector
Courtesy of VOLVO CARS CORPORATION

- Ignition off
- Control module disconnected
- Connect the breakout box to the control module connector (transmission side)
- Disconnect the transmission connector
- Adapter see **9511505** and breakout box see **9511428** connected to the transmission connector (control module side).

  Check the wiring between control module terminal #A51 (#A51) and transmission connector terminal #T (#A17). Check for an open-circuit. Check for a short-circuit to ground. Check for a short-circuit to supply voltage.

  Check the wiring between control module terminal #A53 (#A53) and transmission connector terminal #E

(#A5). Check for an open-circuit. Check for a short-circuit to ground. Check for a short-circuit to supply voltage.

Remedy as necessary.

Other information:

- To connect the breakout box, see **CONNECTING THE BREAKOUT BOX**
- To connect the breakout box to the transmission connector, see **CONNECTING THE BREAKOUT BOX, GM AUTOMATIC TRANSMISSIONS**
- For information about signals, see **SIGNAL SPECIFICATION**
- see **CHECKING WIRING AND TERMINALS**

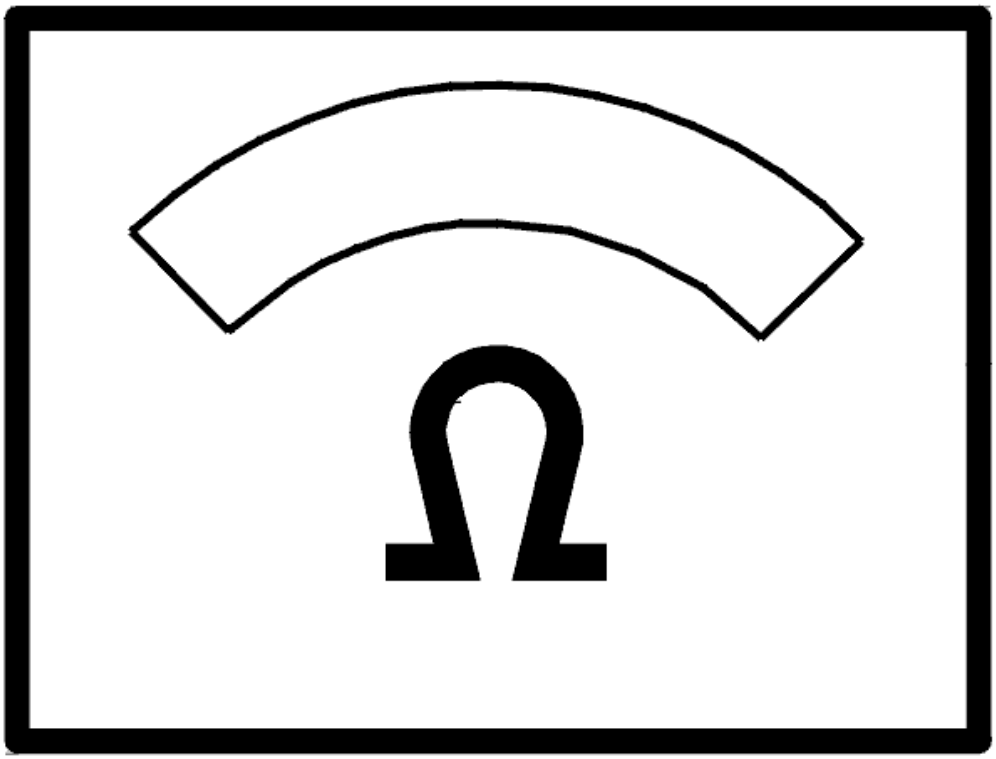

Fig. 98: Identifying Ohms Display
Courtesy of VOLVO CARS CORPORATION

Was a fault detected?

- **YES**

  Refer to **VERIFICATION**

- **NO**

  Refer to **CHECKING WIRING AND COMPONENT**

CHECKING WIRING AND COMPONENT

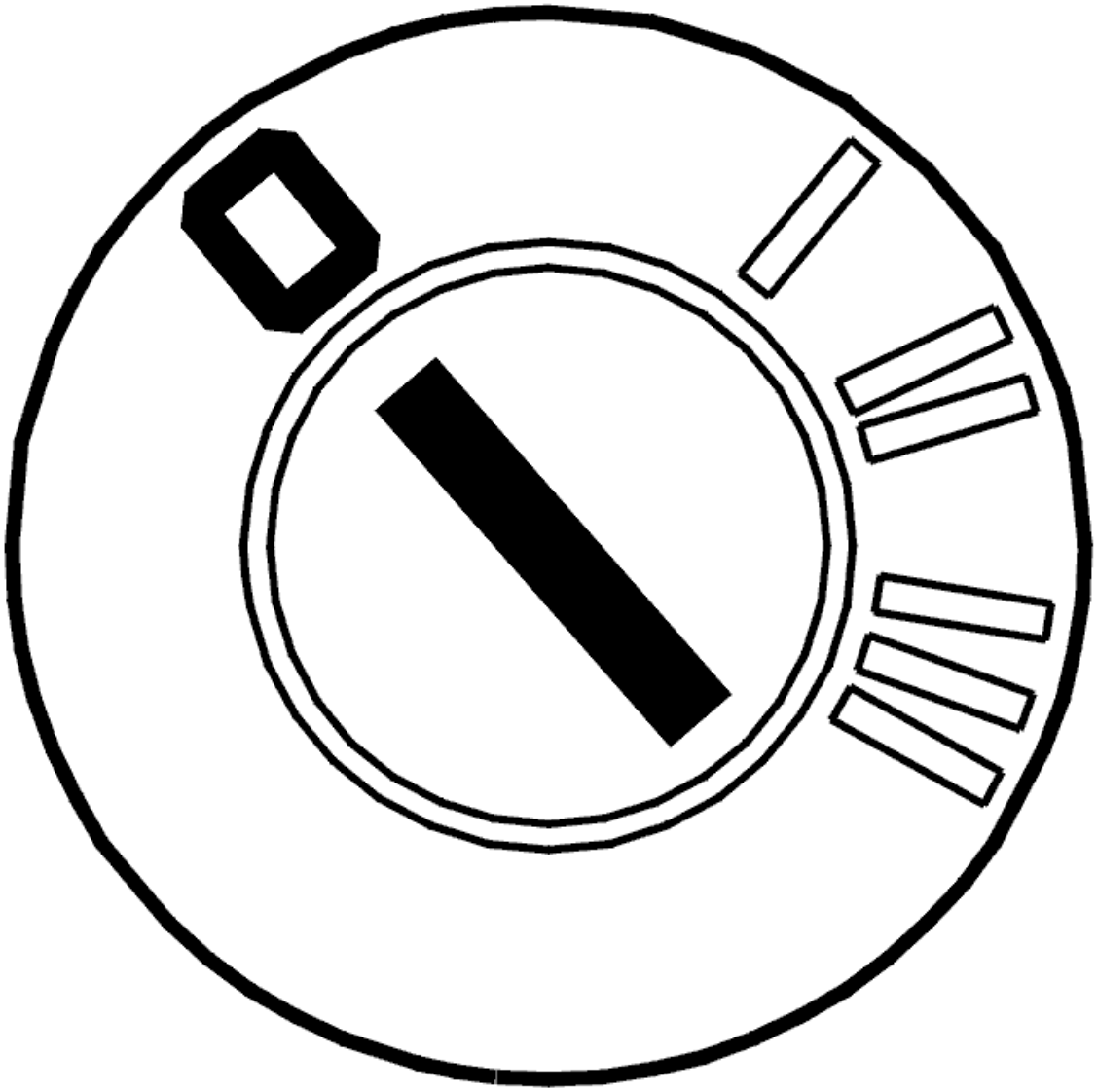

Fig. 99: Identifying Ignition OFF
Courtesy of VOLVO CARS CORPORATION

- Ignition off

- Open the transmission control system
- Connect adapter see **9511505** and breakout box see **9511428** to the transmission connector (transmission side).

  Check the cable between transmission connector terminal #T (#A17) and solenoid SL terminal #A. Check the cable between transmission connector terminal #E (#A5) and solenoid SL terminal #B. Check these cables for an open-circuit.

  HINT: Check solenoid SL by measuring the resistance between solenoid SL terminals #A and #B. When the transmission is cold (approximately 20 °C), the resistance must be 10-11 ohms.

  Remedy as necessary.

  Other information:

  - To open the transmission control system:
    - see **SIDE COVER TRANSMISSION, REMOVING**
  - To connect the breakout box to the transmission connector, see **CONNECTING THE BREAKOUT BOX, GM AUTOMATIC TRANSMISSIONS**
  - To replace solenoid SL, see **SOLENOID LOCK-UP FUNCTION, REPLACING**
  - To replace the cable harness:
    - For AW50/51 AWD or AW55-50/51SN 2003-, see **TEMPERATURE SENSOR FLUID, TRANSAXLE, (TFT)**
    - For 4T65AWD 2003-, see **TEMPERATURE SENSOR FLUID, TRANSAXLE, (TFT)** .
  - For information about signals, see **SIGNAL SPECIFICATION**
  - see **CHECKING WIRING AND TERMINALS**

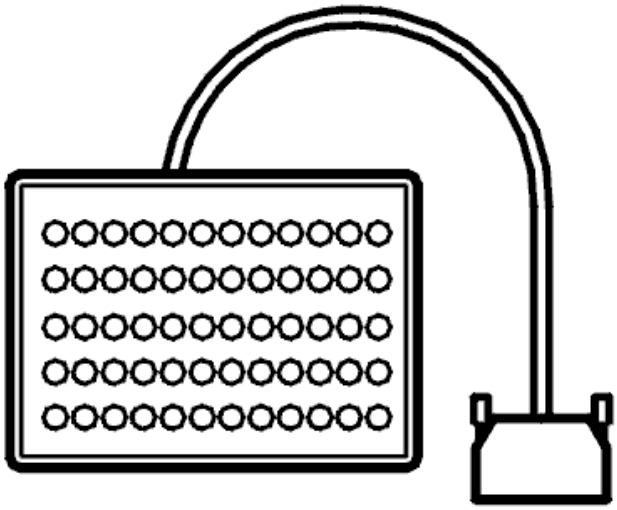

Fig. 100: Identifying Breakout Box
Courtesy of VOLVO CARS CORPORATION

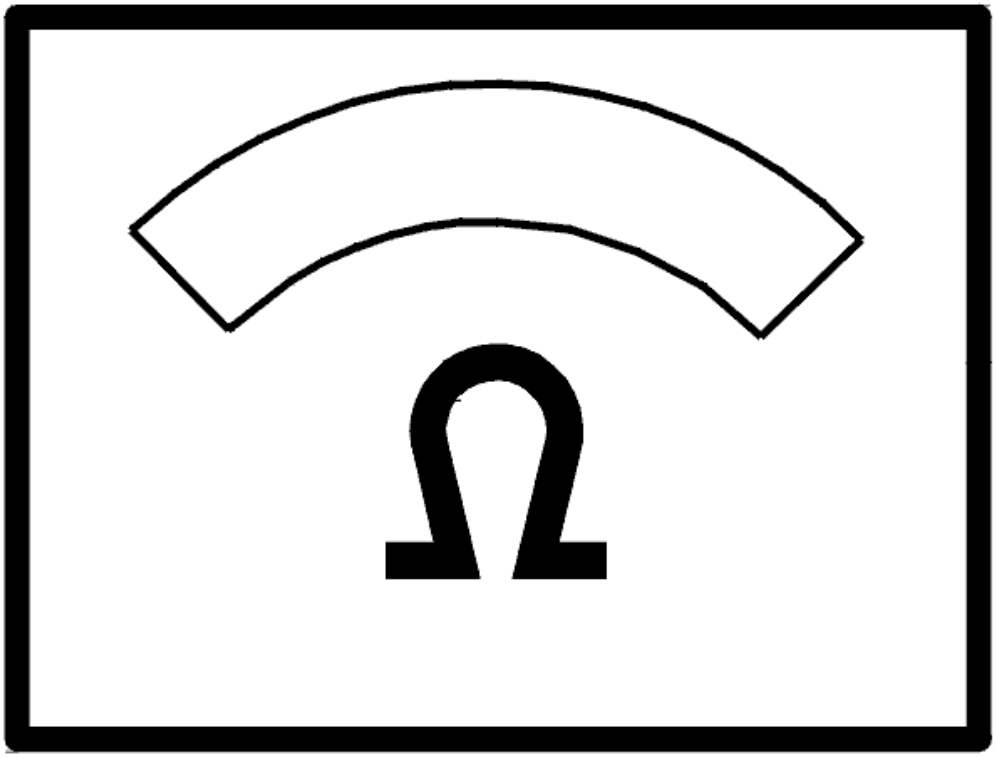

Fig. 101: Identifying Ohms Display
Courtesy of VOLVO CARS CORPORATION

- **Continue**

  Refer to **RESETTING TRANSMISSION FLUID CHANGE COUNTER**

REPLACING THE TRANSMISSION CONTROL SYSTEM

REPLACING THE CONTROL SYSTEM

The fault was probably caused by an internal fault in the transmission control system. Replace the control system.

Other information

- To replace the transmission control system
  - For removal, see **CONTROL SYSTEM/VALVE HOUSING, REMOVING**
  - To install, see **CONTROL SYSTEM / VALVE HOUSING, INSTALLING** .

.

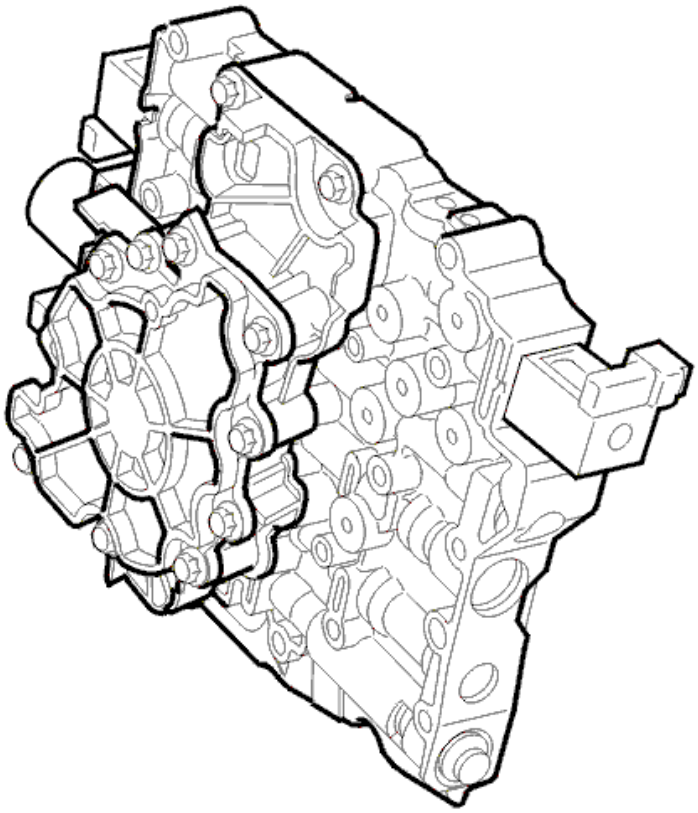

Fig. 102: Identifying Valve Housing
Courtesy of VOLVO CARS CORPORATION

- **Continue**

  Refer to **RESETTING TRANSMISSION FLUID CHANGE COUNTER**

REPLACING A FAULTY TRANSMISSION

REPLACING A FAULTY TRANSMISSION

- In the event of an internal fault in the transmission, replace the transmission. See **TRANSMISSION, REMOVING** and **TRANSMISSION, INSTALLING (2003, 2004)** or **TRANSMISSION, INSTALLING (2005, 2006)** .

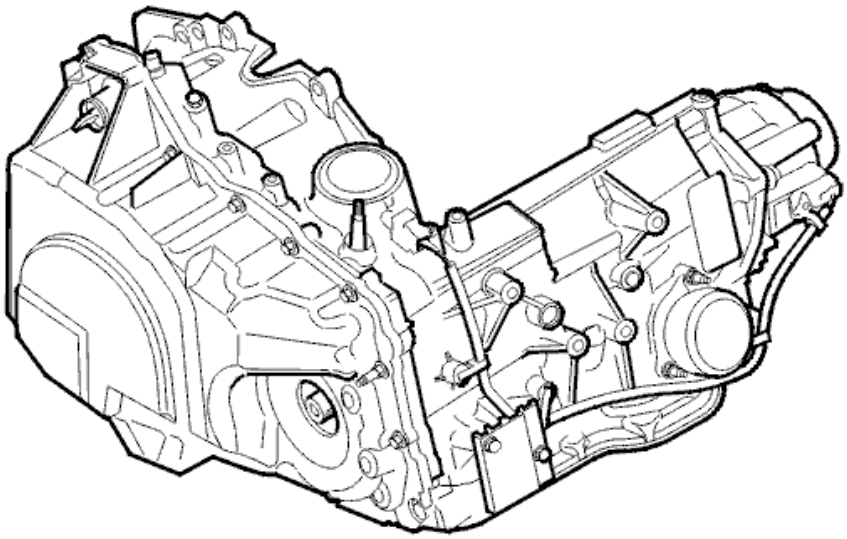

P2X

4301721D ©VOLVO

Fig. 103: Identifying Transmission
Courtesy of VOLVO CARS CORPORATION

- **Continue**

  Refer to **RESETTING THE ADAPTATION**

RESETTING THE ADAPTATION

RESETTING ADAPTATION AND THE COUNTER FOR "TRANSMISSION OIL CHANGE"

HINT: The transmission has torque controlled adaptive pressure control. Pressure control means that the transmission regulates the pressure itself during each gear shift. This avoids harsh gear shifting. Each gear shift is evaluated by the control module and stored in the memory. This allows for compensation for wear and tear in the transmission and clutch. It is important that the adaptation in the memory is reset after the transmission has been repaired. This is to ensure normal operation. The oil is replaced during repair; the "Transmission oil change" counter must be reset. If the counter is not reset when the fluid is drained and replaced, there is a risk that a diagnostic trouble code (DTC) will be stored in incorrect circumstances.

NOTE: This applies only if the transmission or one of the components in the transmission have been replaced.

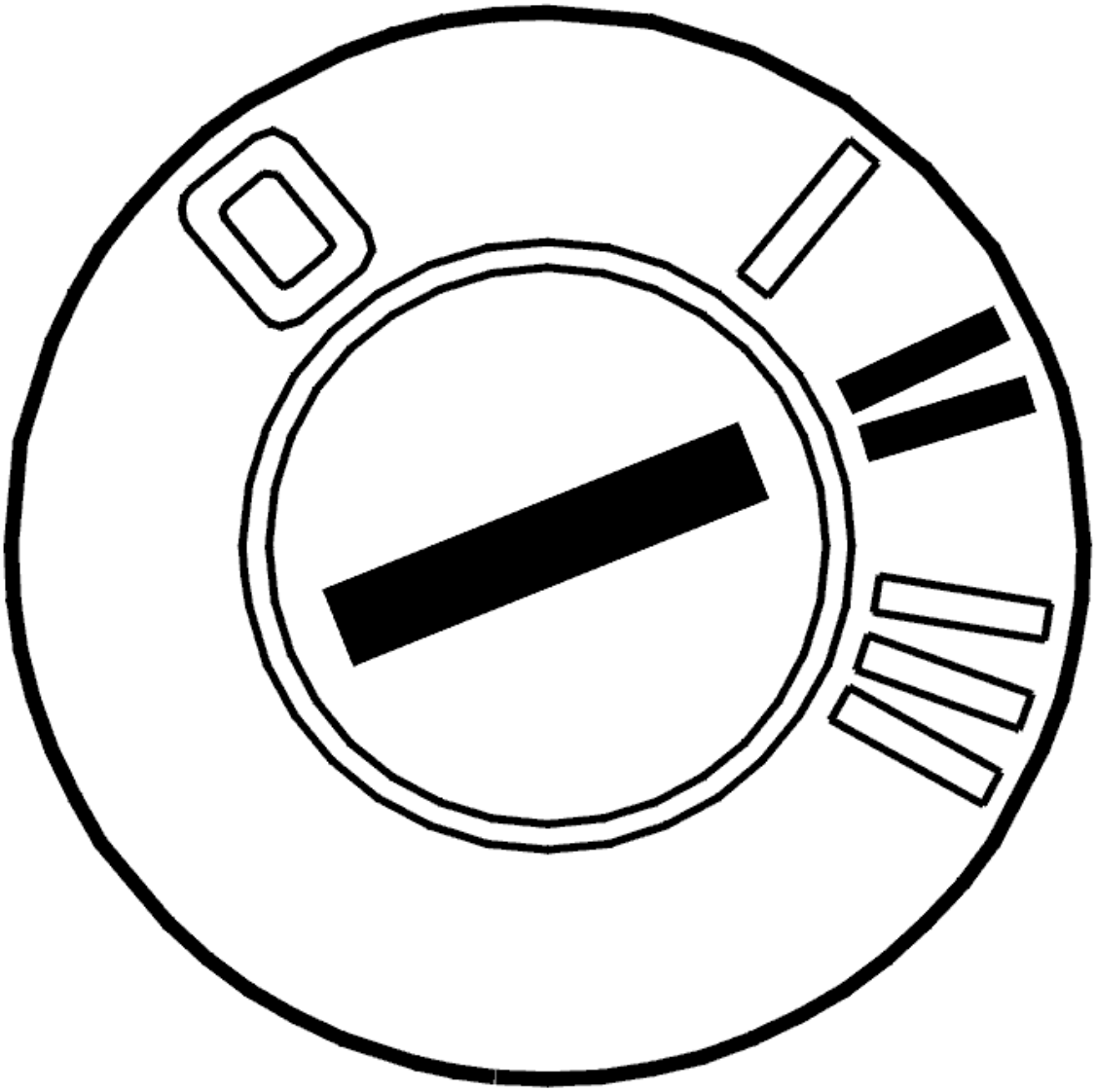

Fig. 104: Identifying Ignition ON
Courtesy of VOLVO CARS CORPORATION

- Ignition on.

  Click on the VCT2000 symbol to reset the adaptation and counter.

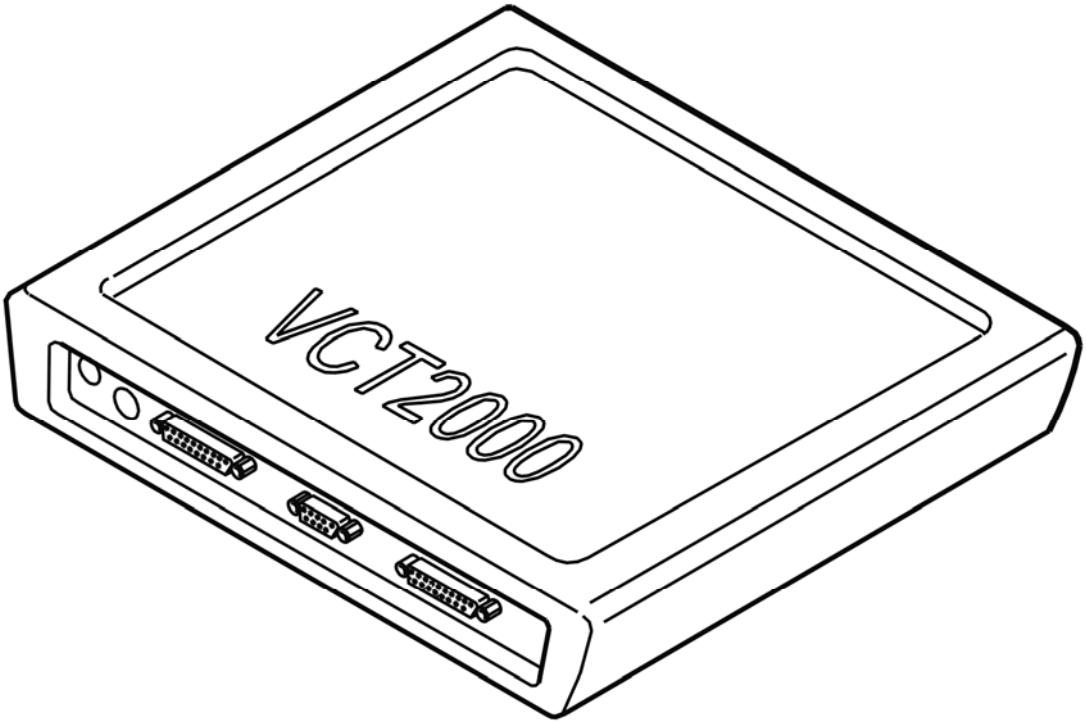

Fig. 105: Identifying VCT2000 Diagnostic Tool Symbol In VIDA
Courtesy of VOLVO CARS CORPORATION

RESETTING TRANSMISSION FLUID CHANGE COUNTER

RESETTING TRANSMISSION FLUID CHANGE COUNTER

HINT: The transmission control module (TCM) has a counter for the oil quality. The counter counts up if the transmission is exposed to too high a load or an ambient temperature that is too high. If the counter is not reset when the oil is drained or changed, there is a risk that a diagnostic trouble code (DTC) will be stored in faulty circumstances. Therefore it is important that the "Transmission oil change" counter is reset.

NOTE: **This applies only when the transmission fluid is changed and when the fluid is changed when repairs are carried out to the transmission temperature sensor.**

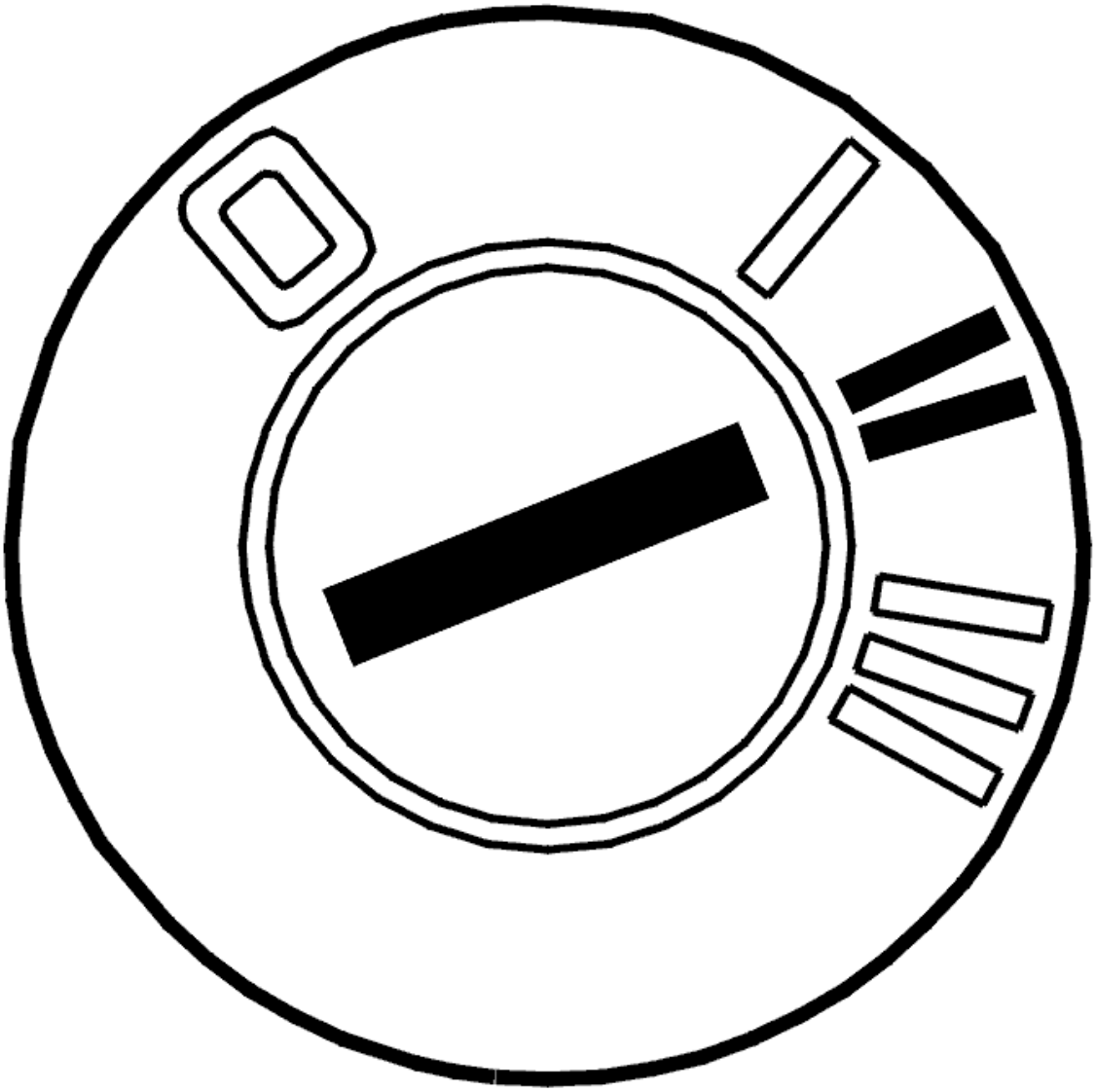

Fig. 106: Identifying Ignition ON
Courtesy of VOLVO CARS CORPORATION

- Ignition on.

  Reset the counter by clicking on the VCT 2000 symbol.

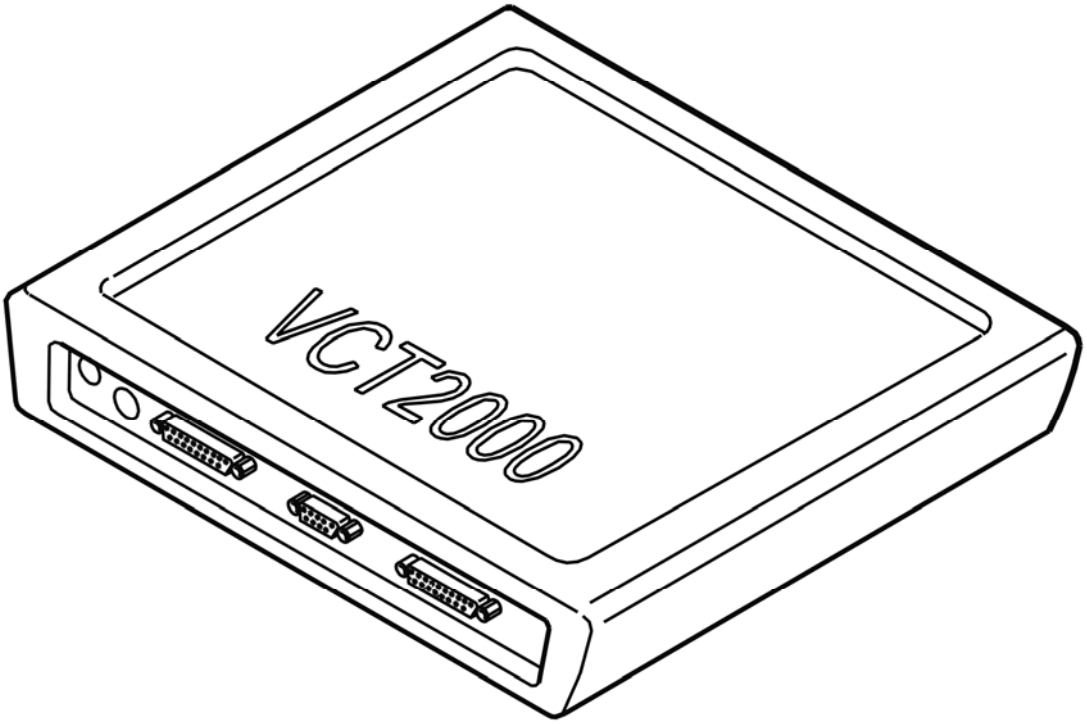

Fig. 107: Identifying VCT2000 Diagnostic Tool Symbol In VIDA
Courtesy of VOLVO CARS CORPORATION

- **Continue**

  Refer to **VERIFICATION**

VERIFICATION

VERIFICATION

HINT: After carrying out the repair, check that the fault has been remedied.

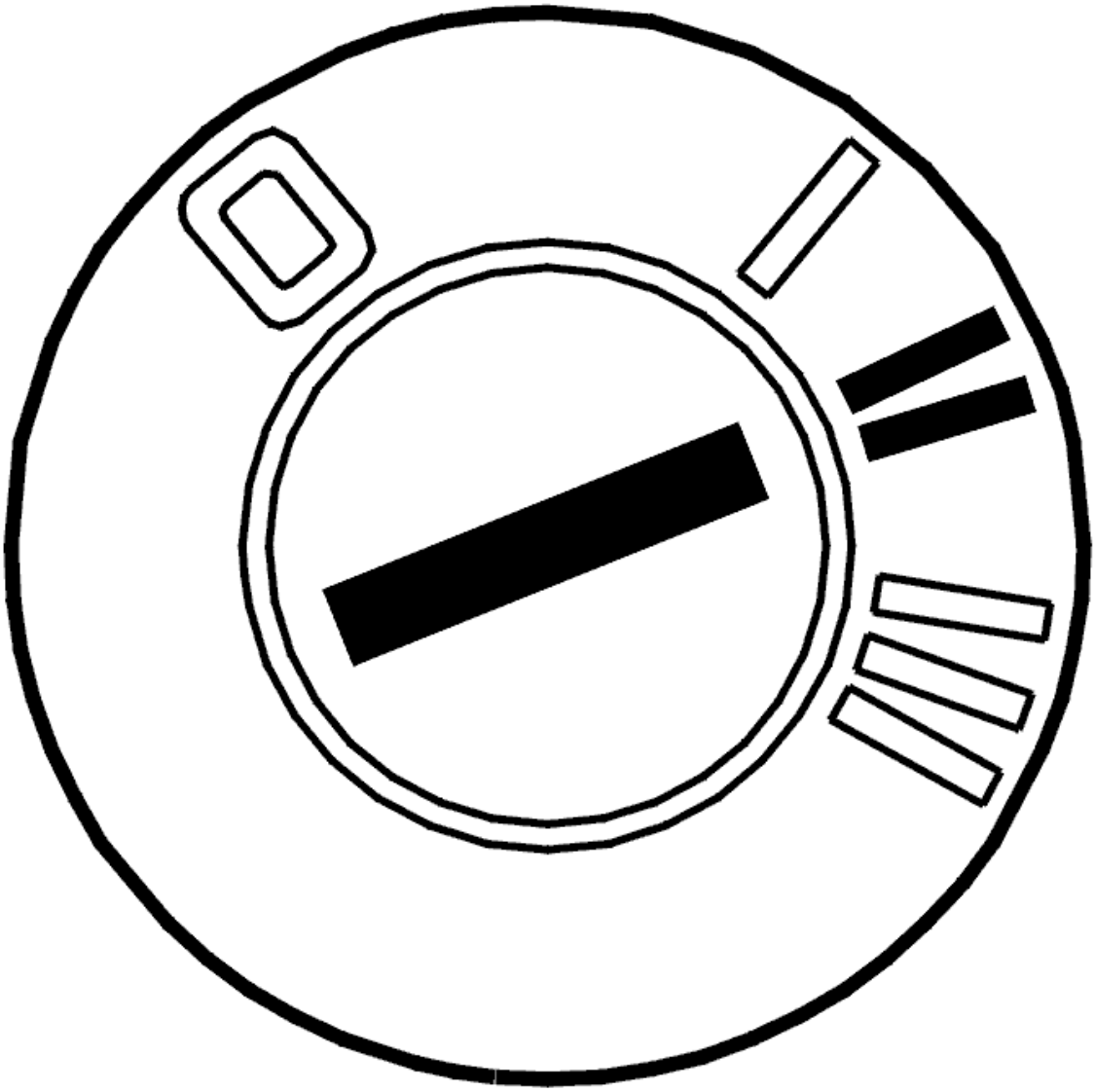

Fig. 108: Identifying Ignition ON
Courtesy of VOLVO CARS CORPORATION

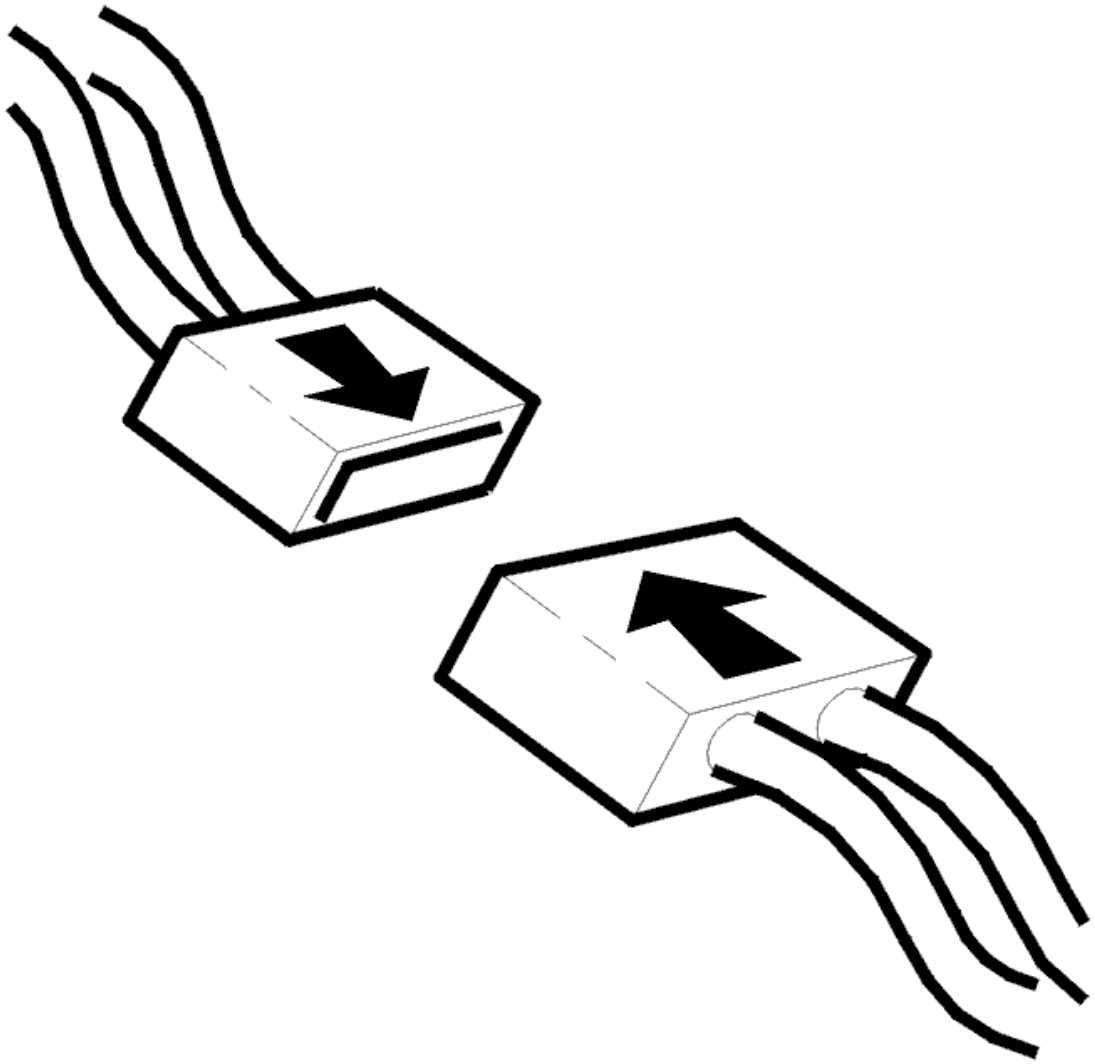

Fig. 109: Identifying Connector(s) Reinstallation
Courtesy of VOLVO CARS CORPORATION

- Ignition off
- Reconnect the connectors, components, etc.
- Ignition on

  Test drive the vehicle following:**TEST DRIVE FORM, DESCRIPTION**

  During the test drive, oil temperature should be over 20 °C.

  Note any deviations in transmission function.

CHECKING OIL FILTER AND OIL TROUGH (4T65 AWD; 2003-2006)

CHECKING OIL FILTER AND OIL TROUGH

- Drain the transmission fluid
- Remove the transmission oil trough.

  If the oil filter is loose, check that the plastic pipe and O-ring are intact and reinstall if possible. Also check whether the oil trough or oil filter are damaged. Replace if necessary.

  Check the bottom of the trough and the magnet. Check for contaminants in the fluid. Replace the fluid and the filter if the transmission fluid contains contaminants.

  HINT: If there are a lot of contaminants or larger particles, there may be an internal fault in the transmission.

  Other information

  - To replace the transmission fluid and filter, see **TRANSMISSION OIL / OIL FILTER, REPLACING** .

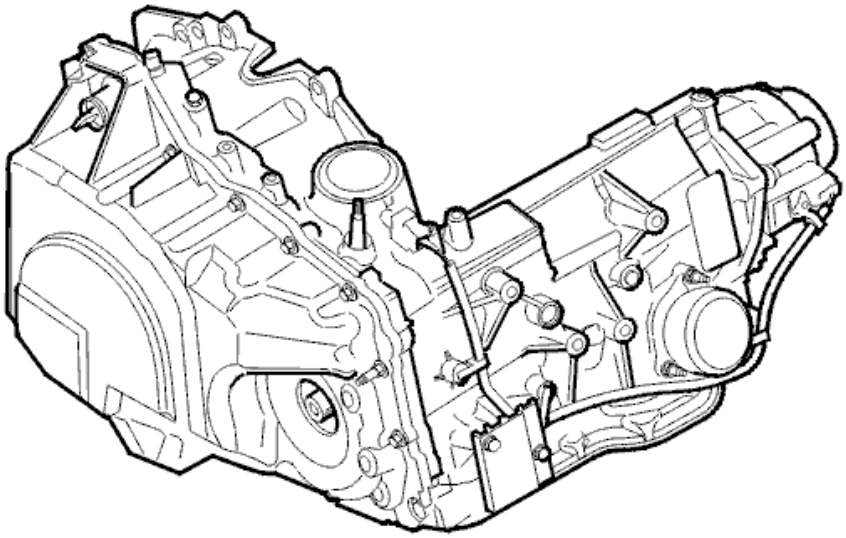

Fig. 110: Identifying Transmission
Courtesy of VOLVO CARS CORPORATION

Was a fault detected?

- **YES**

  Refer to **RESETTING TRANSMISSION FLUID CHANGE COUNTER**

- **NO**

  FAULT NOT FOUND: Troubleshooting has been completed.

RESETTING TRANSMISSION FLUID CHANGE COUNTER

RESETTING TRANSMISSION FLUID CHANGE COUNTER

HINT: The transmission control module (TCM) has a counter for the oil quality. The counter counts up if the transmission is exposed to too high a load or an ambient temperature that is too high. If the counter is not reset when the oil is drained or changed, there is a risk that a diagnostic trouble code (DTC) will be stored in faulty circumstances. Therefore it is important that the "Transmission oil change" counter is reset.

NOTE: **This applies only when the transmission fluid is changed and when the fluid is changed when repairs are carried out to the transmission temperature sensor.**

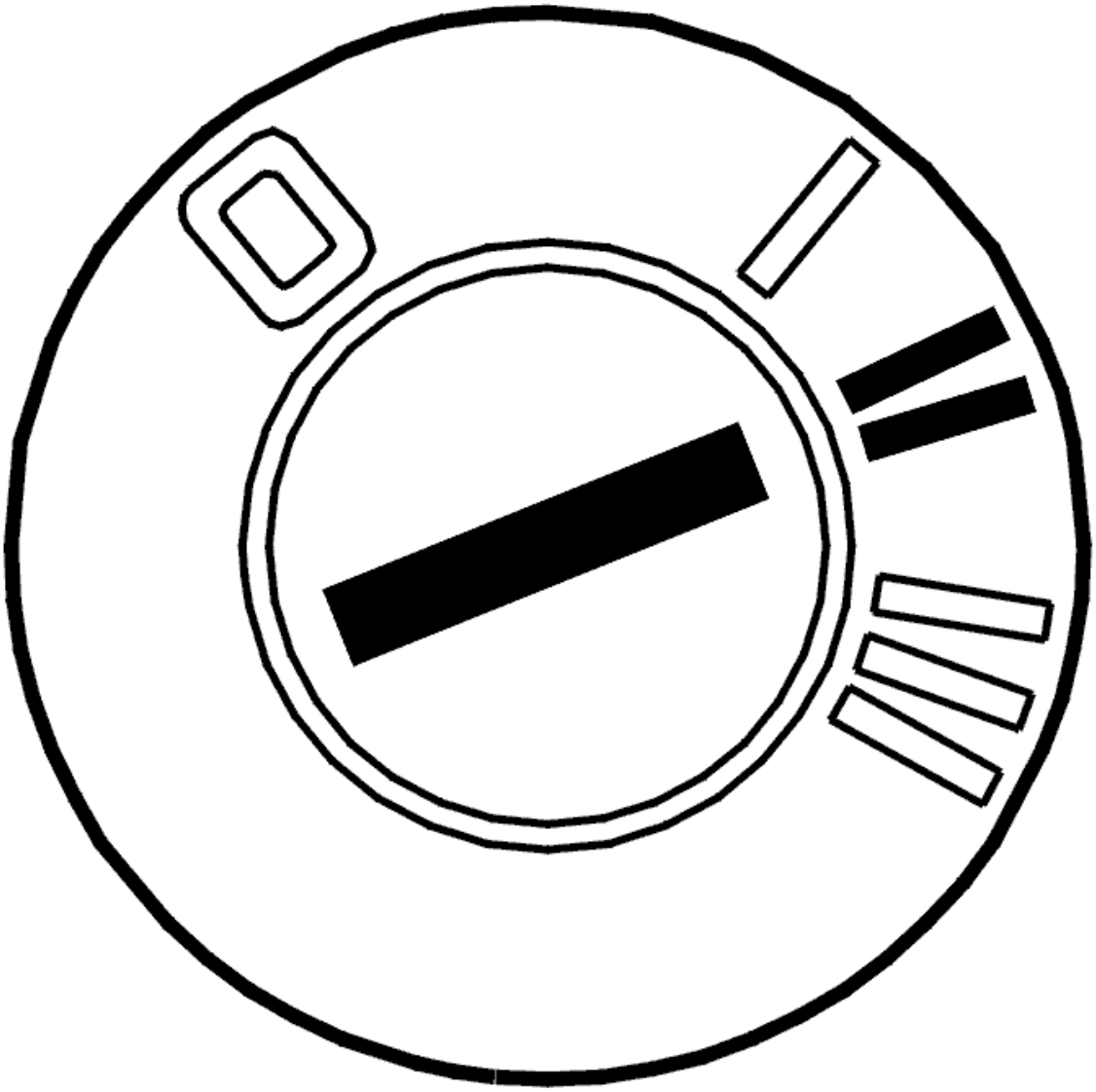

Fig. 111: Identifying Ignition ON
Courtesy of VOLVO CARS CORPORATION

- Ignition on.

  Reset the counter by clicking on the VCT 2000 symbol.

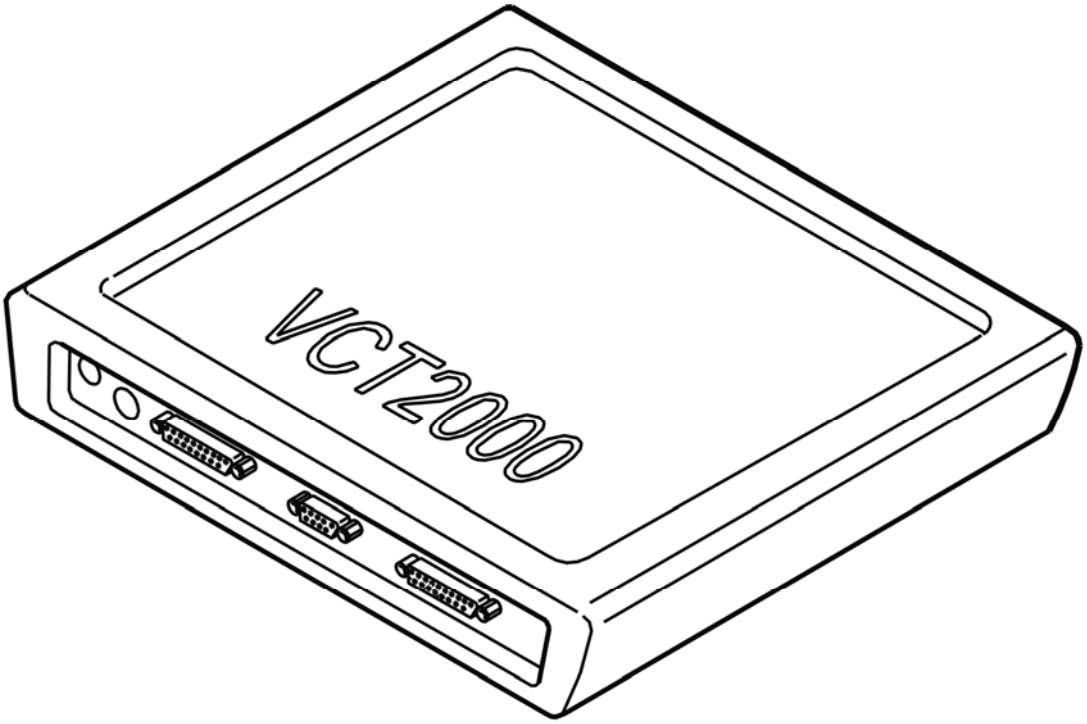

Fig. 112: Identifying VCT2000 Diagnostic Tool Symbol In VIDA
Courtesy of VOLVO CARS CORPORATION

- **Continue**

  Refer to **CHECKING AUTOMATIC TRANSMISSION**

CHECKING AUTOMATIC TRANSMISSION

CHECKING AUTOMATIC TRANSMISSION

NOTE: After carrying out the repair check that the symptom has been remedied.

Check the automatic transmission as follows:

- Test drive the car to test the function of the automatic transmission. See **TEST DRIVE FORM, DESCRIPTION**
- If hydraulic hoses, gaskets or other components have been replaced, check that there is no oil leakage after the test drive.

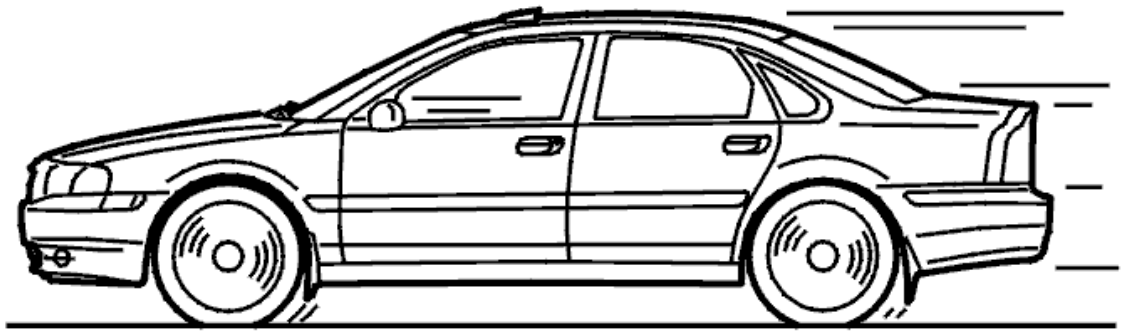

Fig. 113: Identifying Test Drive
Courtesy of VOLVO CARS CORPORATION

Is the automatic transmission OK?

- **YES**

  VERIFIED: Troubleshooting has been completed.

- **NO**

  Refer to **INFORMATION**

INFORMATION

FAULT-TRACING INFORMATION

The fault should have been detected and remedied. As this is not the case fault-tracing has failed.

Exit fault-tracing for this diagnostic trouble code (DTC) or make another attempt.

CHECKING OIL LEVEL (AW50/51 AWD; AW55-50/51SN; 2003-2007)

CHECKING OIL LEVEL

- Check the oil level according to **OIL LEVEL, CHECKING** .

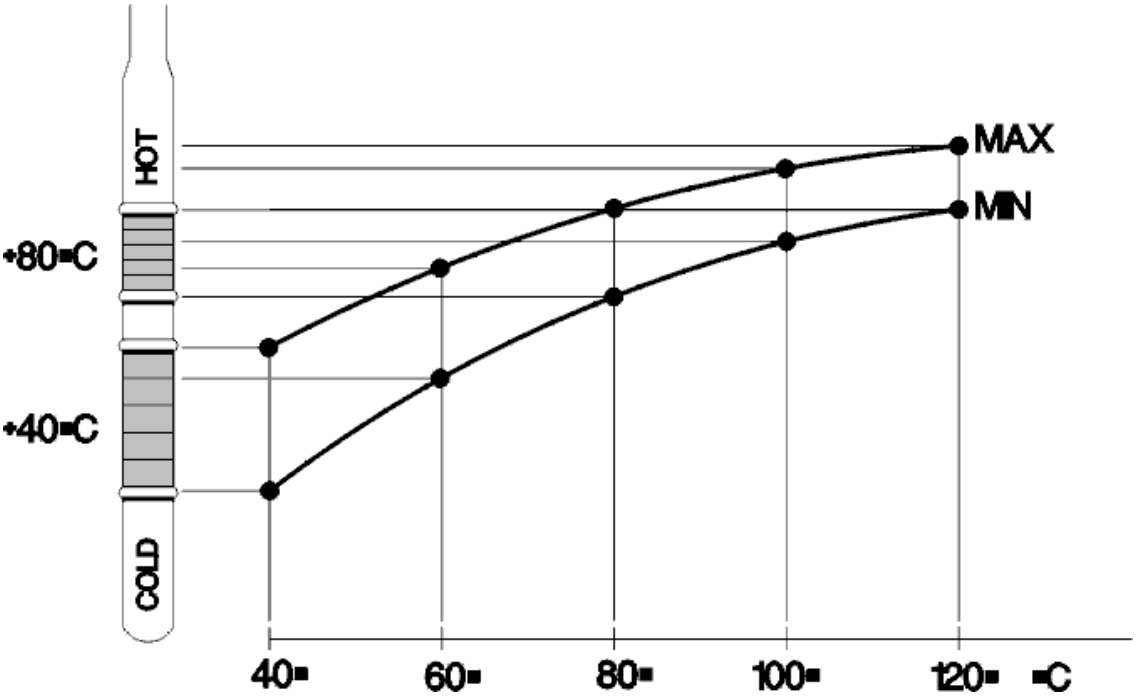

Fig. 114: Identifying Oil Level Temperature Graph
Courtesy of VOLVO CARS CORPORATION

Was the oil level correct?

- **YES**

  FAULT NOT FOUND: Troubleshooting has been completed.

- **NO**

  Refer to **RESETTING TRANSMISSION FLUID CHANGE COUNTER**

RESETTING TRANSMISSION FLUID CHANGE COUNTER

RESETTING TRANSMISSION FLUID CHANGE COUNTER

HINT: The transmission control module (TCM) has a counter for the oil quality. The counter counts up if the transmission is exposed to too high a load or an ambient temperature that is too high. If the counter is not reset when the oil is drained or changed, there is a risk that a diagnostic trouble code (DTC) will be stored in faulty circumstances. Therefore it is important that the "Transmission oil change" counter is reset.

NOTE: **This applies only when the transmission fluid is changed and when the fluid is changed when repairs are carried out to the transmission temperature sensor.**

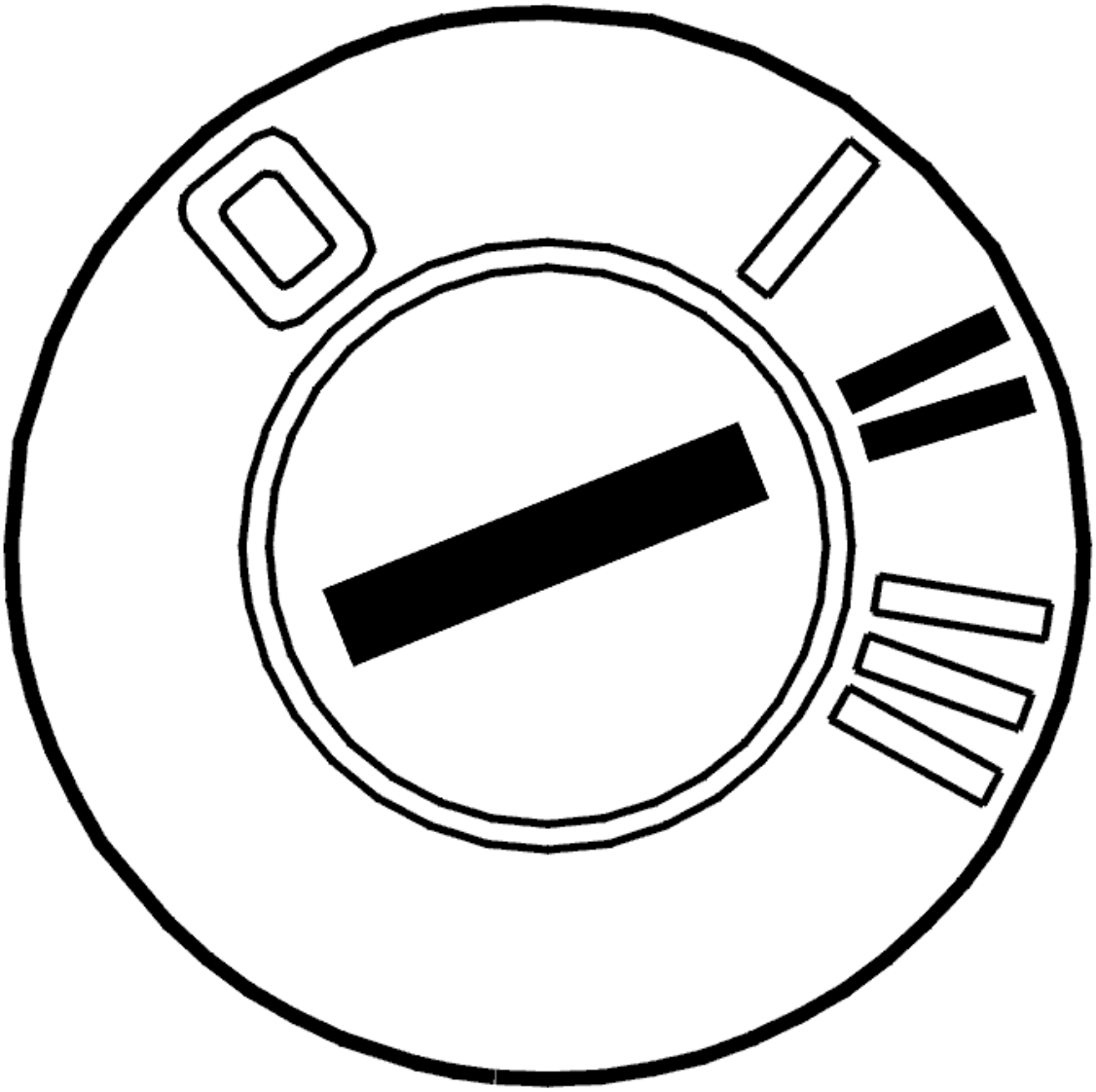

Fig. 115: Identifying Ignition ON
Courtesy of VOLVO CARS CORPORATION

- Ignition on.

  Reset the counter by clicking on the VCT 2000 symbol.

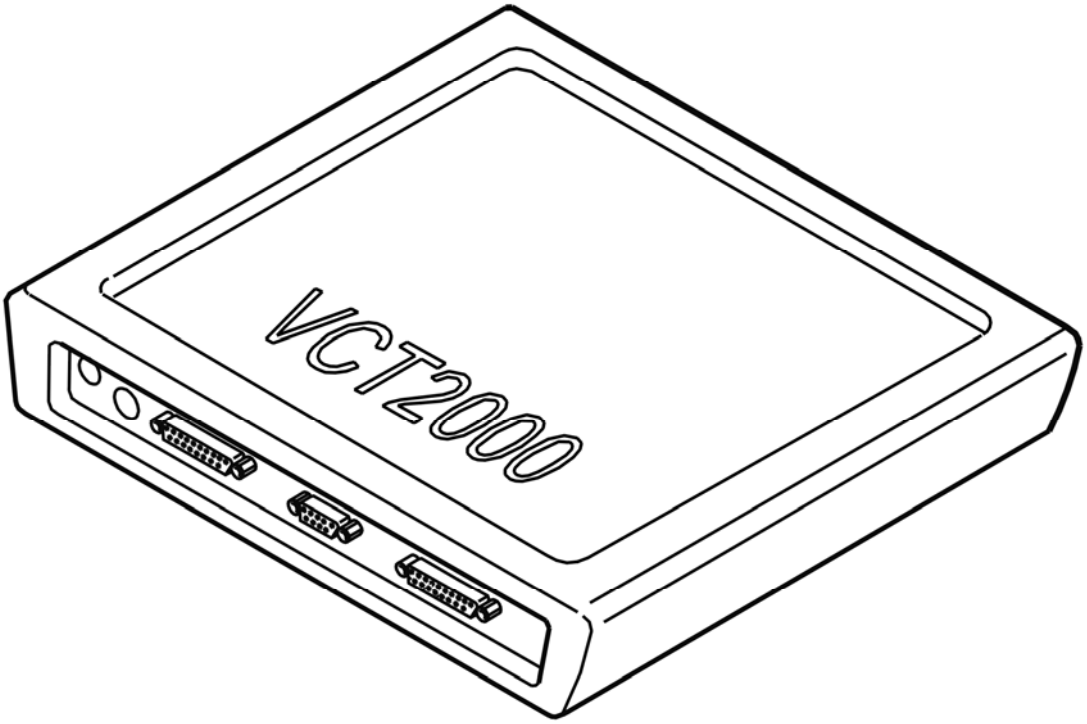

Fig. 116: Identifying VCT2000 Diagnostic Tool Symbol In VIDA
Courtesy of VOLVO CARS CORPORATION

CHECKING OIL QUALITY (AW50/51 AWD; AW55-50/51SN; 2003-2007)

FAULT-TRACING INFORMATION

Condition

Diagnostic trouble codes (DTCs) missing.

The fault is permanent.

Possible Source

- Oil is burnt or discolored.
- Water in the oil.
- Glycol in the transmission fluid.

Fault symptom[s]

- Harsh gear shifting.
- Irregular shifting.

- No shifting.
- No lock-up function.

CHECKING OIL QUALITY (B5254T2, AW50/51 AWD; 2003-2007)

CHECKING OIL QUALITY

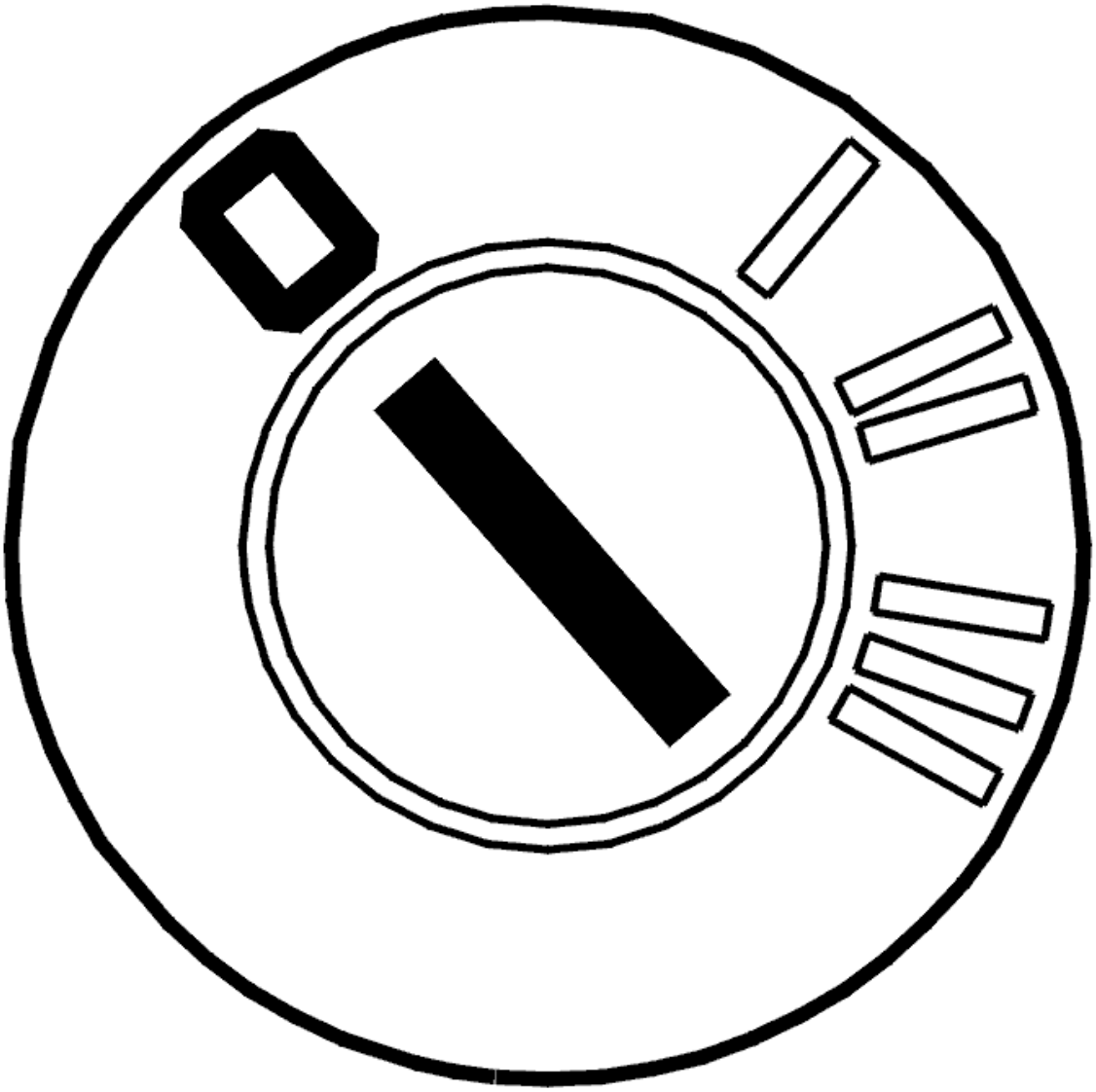

Fig. 117: Identifying Ignition OFF
Courtesy of VOLVO CARS CORPORATION

- Ignition off.

  Check the oil. Take a sample with the dipstick.

  Options:

1. The oil is OK.

   Refer to **CHECKING OIL LEVEL**

2. The oil is discolored or smells burnt.

   Refer to **CHANGING OIL**

3. The oil contains water (the oil is colored gray)

   Refer to **REPLACING A COMPONENT**

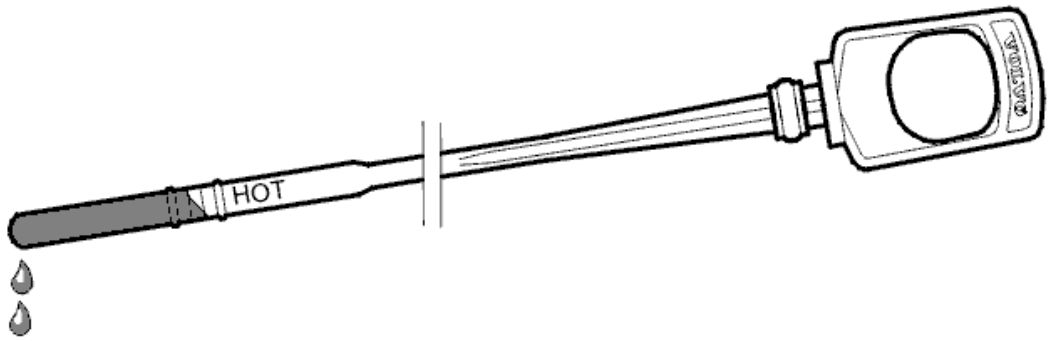

Fig. 118: Identifying Oil Dipstick
Courtesy of VOLVO CARS CORPORATION

CHECKING FOR COOLANT IN OIL

This fault may be due to coolant that has leaked into the transaxle.

Inspect according to: **CHECKING FOR COOLANT IN OIL**

If coolant is detected in the transaxle oil, the transaxle, radiator and hoses between the radiator and transaxle must be replaced.

Other information

- see **TRANSMISSION, REMOVING**
- see **TRANSMISSION, INSTALLING**

Was a fault detected?

- **YES**

  Refer to **INFORMATION**

- **NO**

Refer to **INFORMATION**

CHANGING OIL

Changing oil according to: **TRANSMISSION OIL / OIL FILTER, REPLACING**

- **Continue**

  Refer to **RESETTING TRANSMISSION FLUID CHANGE COUNTER**

REPLACING A COMPONENT

Find out the reason and remedy the cause of water in the oil.

Replace the transmission.

Flush clean the oil cooler, pipes and hoses according to: **TRANSMISSION - REMOVAL, REPLACEMENT AND INSTALLATION**

Other information

- see **TRANSMISSION, REMOVING**
- see **TRANSMISSION, INSTALLING**

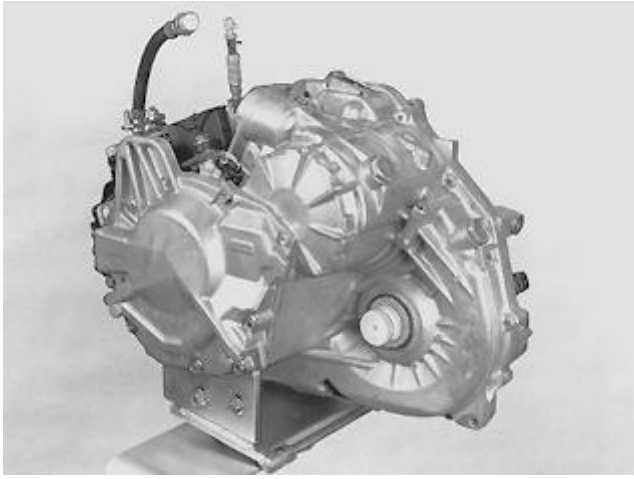

Fig. 119: Identifying Transmission
Courtesy of VOLVO CARS CORPORATION

- **Continue**

  Refer to **RESETTING THE ADAPTATION**

CHECKING OIL LEVEL

Check the oil level. See **OIL LEVEL, CHECKING**

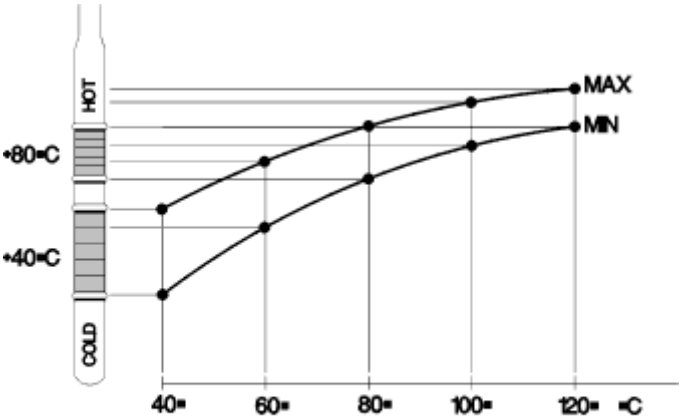

Fig. 120: Identifying Oil Level Graph
Courtesy of VOLVO CARS CORPORATION

Was the oil level correct?

- **YES**

  Refer to **CHECKING FOR COOLANT IN OIL**

- **NO**

  Refer to **RESETTING TRANSMISSION FLUID CHANGE COUNTER**

TEST DRIVING THE TRANSMISSION

Test drive the car as follows: **TEST DRIVE SCHEDULE, DESCRIPTION**

If the function of the transaxle is OK, the fault has been traced and rectified and fault tracing can stopped. If not, select continue to advance with fault tracing.

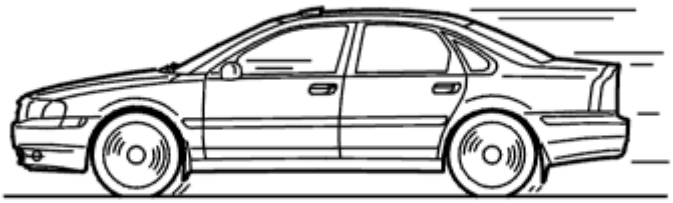

Fig. 121: Identifying Test Driving
Courtesy of VOLVO CARS CORPORATION

- **Continue**

  Refer to **CHECKING FOR COOLANT IN OIL**

RESETTING TRANSMISSION FLUID CHANGE COUNTER

RESETTING TRANSMISSION FLUID CHANGE COUNTER

HINT: The transmission control module (TCM) has a counter for the oil quality. The counter counts up if the transmission is exposed to too high a load or an ambient temperature that is too high. If the counter is not reset when the oil is drained or changed, there is a risk that a diagnostic trouble code (DTC) will be stored in faulty circumstances. Therefore it is important that the "Transmission oil change" counter is reset.

NOTE: **This applies only when the transmission fluid is changed and when the fluid is changed when repairs are carried out to the transmission temperature sensor.**

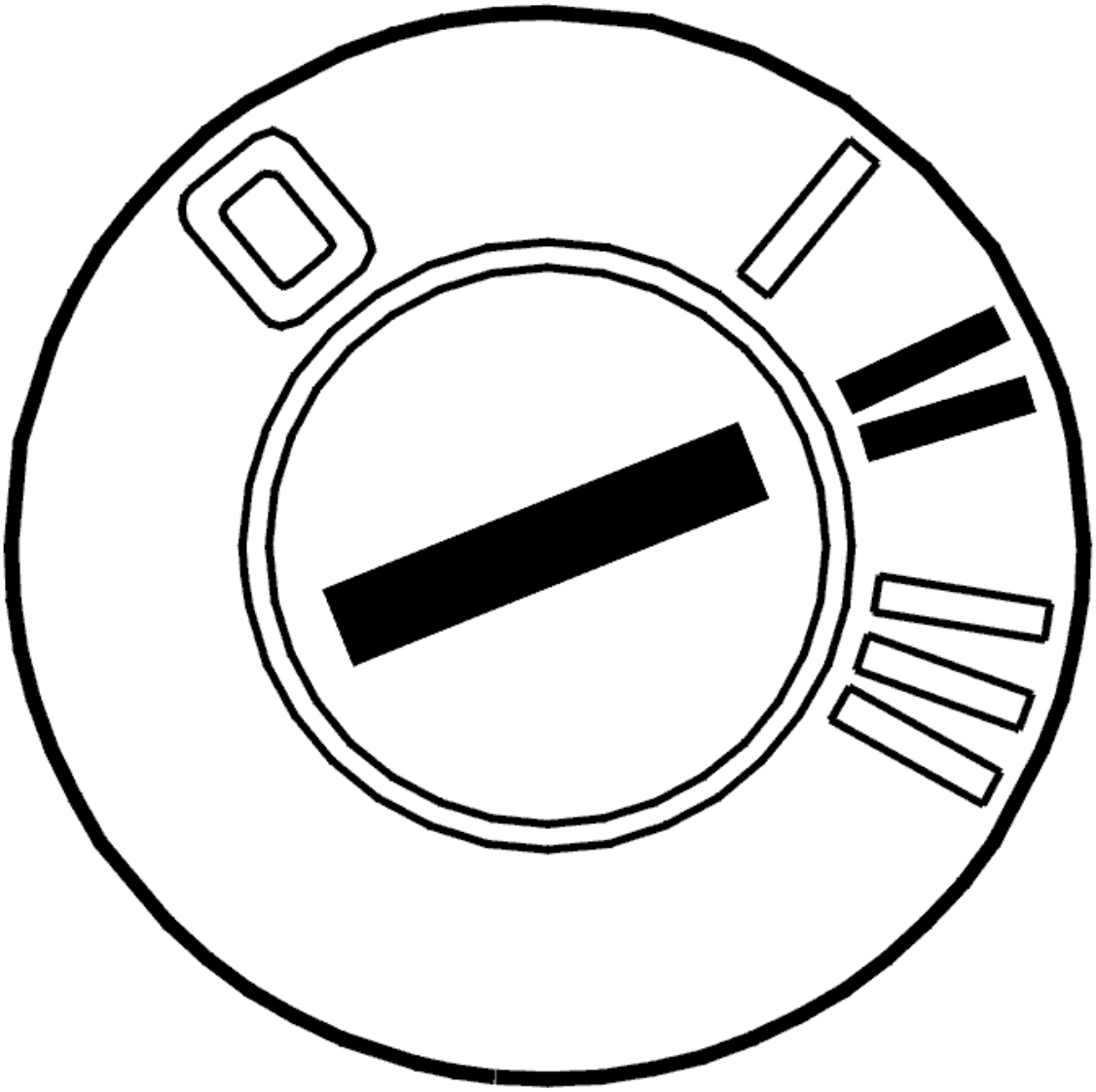

Fig. 122: Identifying Ignition ON
Courtesy of VOLVO CARS CORPORATION

- Ignition on.

  Reset the counter by clicking on the VCT 2000 symbol.

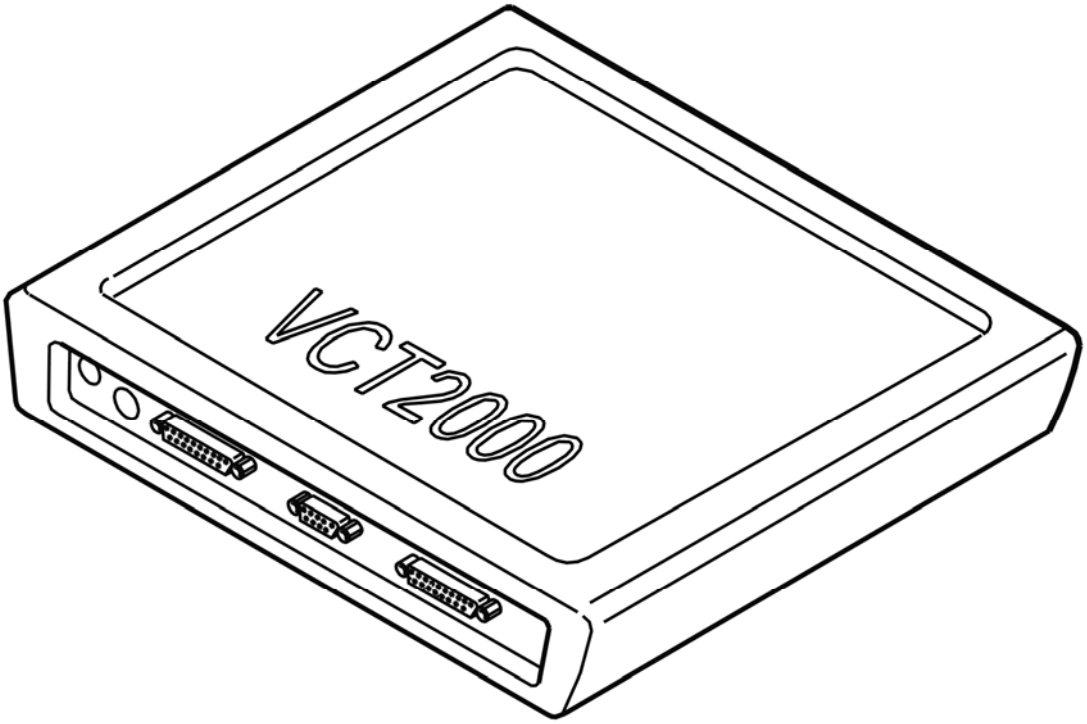

Fig. 123: Identifying VCT2000 Diagnostic Tool Symbol In VIDA
Courtesy of VOLVO CARS CORPORATION

- **Continue**

  Refer to **TEST DRIVING THE TRANSMISSION**

RESETTING THE ADAPTATION

RESETTING ADAPTATION AND THE COUNTER FOR "TRANSMISSION OIL CHANGE"

HINT: The transmission has torque controlled adaptive pressure control. Pressure control means that the transmission regulates the pressure itself during each gear shift. This avoids harsh gear shifting. Each gear shift is evaluated by the control module and stored in the memory. This allows for compensation for wear and tear in the transmission and clutch. It is important that the adaptation in the memory is reset after the transmission has been repaired. This is to ensure normal operation. The oil is replaced during repair; the "Transmission oil change" counter must be reset. If the counter is not reset when the fluid is drained and replaced, there is a risk that a diagnostic trouble code (DTC) will be stored in incorrect circumstances.

NOTE: **This applies only if the transmission or one of the components in the transmission have been replaced.**

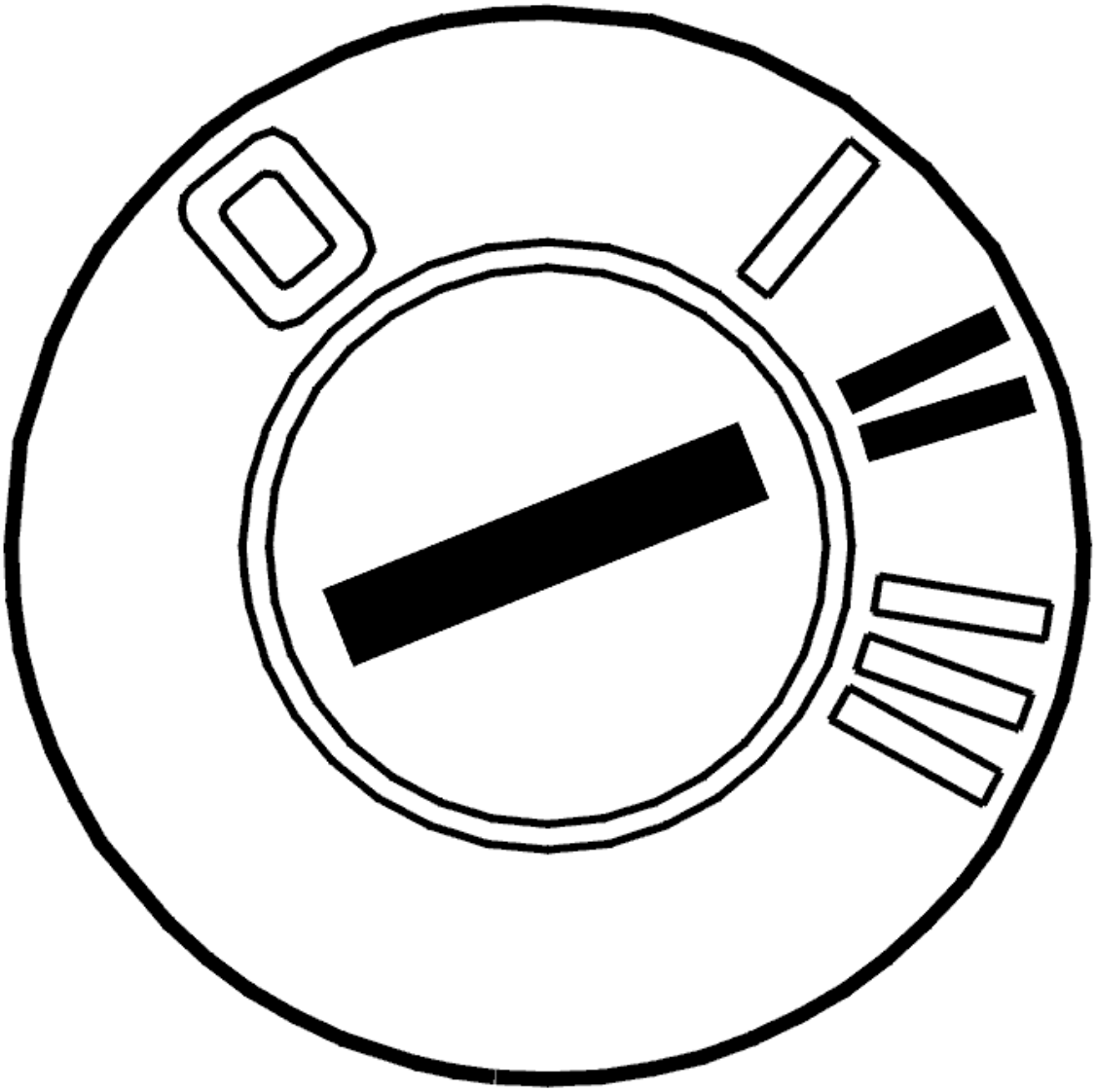

Fig. 124: Identifying Ignition ON
Courtesy of VOLVO CARS CORPORATION

- Ignition on.

  Click on the VCT2000 symbol to reset the adaptation and counter.

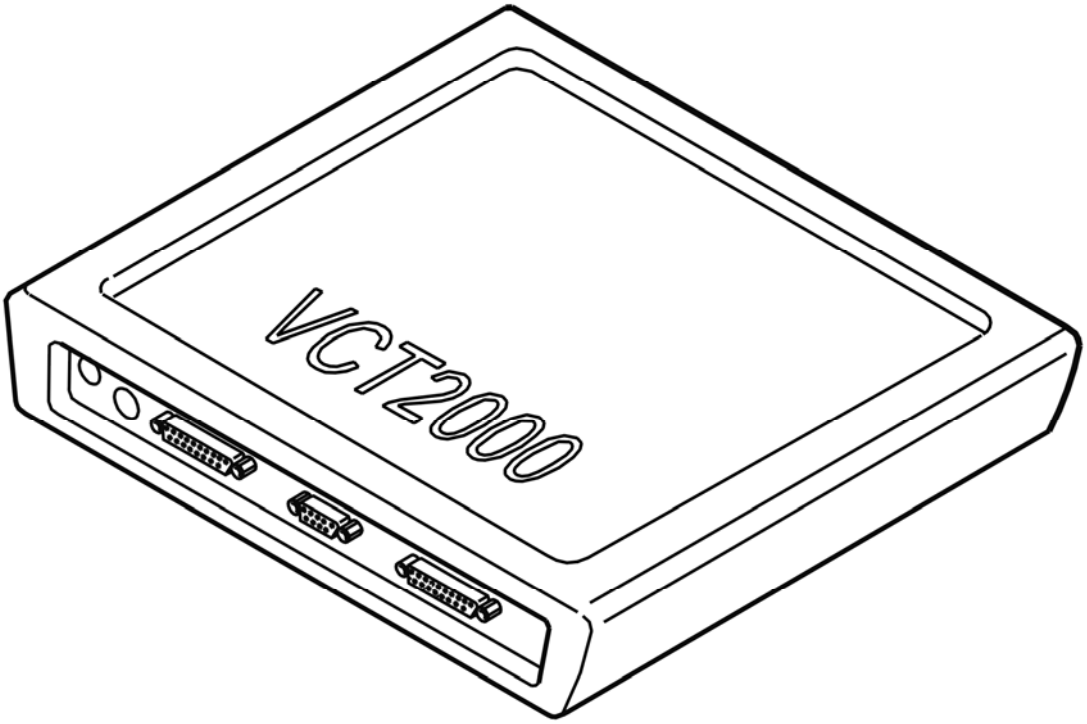

Fig. 125: Identifying VCT2000 Diagnostic Tool Symbol In VIDA
Courtesy of VOLVO CARS CORPORATION

INFORMATION

FAULT-TRACING INFORMATION

The fault should have been detected and remedied. As this is not the case fault-tracing has failed.

Exit fault-tracing for this diagnostic trouble code (DTC) or make another attempt.

INFORMATION

FAULT-TRACING INFORMATION

In case of this defect, troubleshooting is not followed by verification.

The information can be displayed again or the fault-tracing for this fault can be interrupted.

CHECKING OIL QUALITY (B5254T2, AW55-50/51SN; 2004-2007)

CHECKING OIL QUALITY

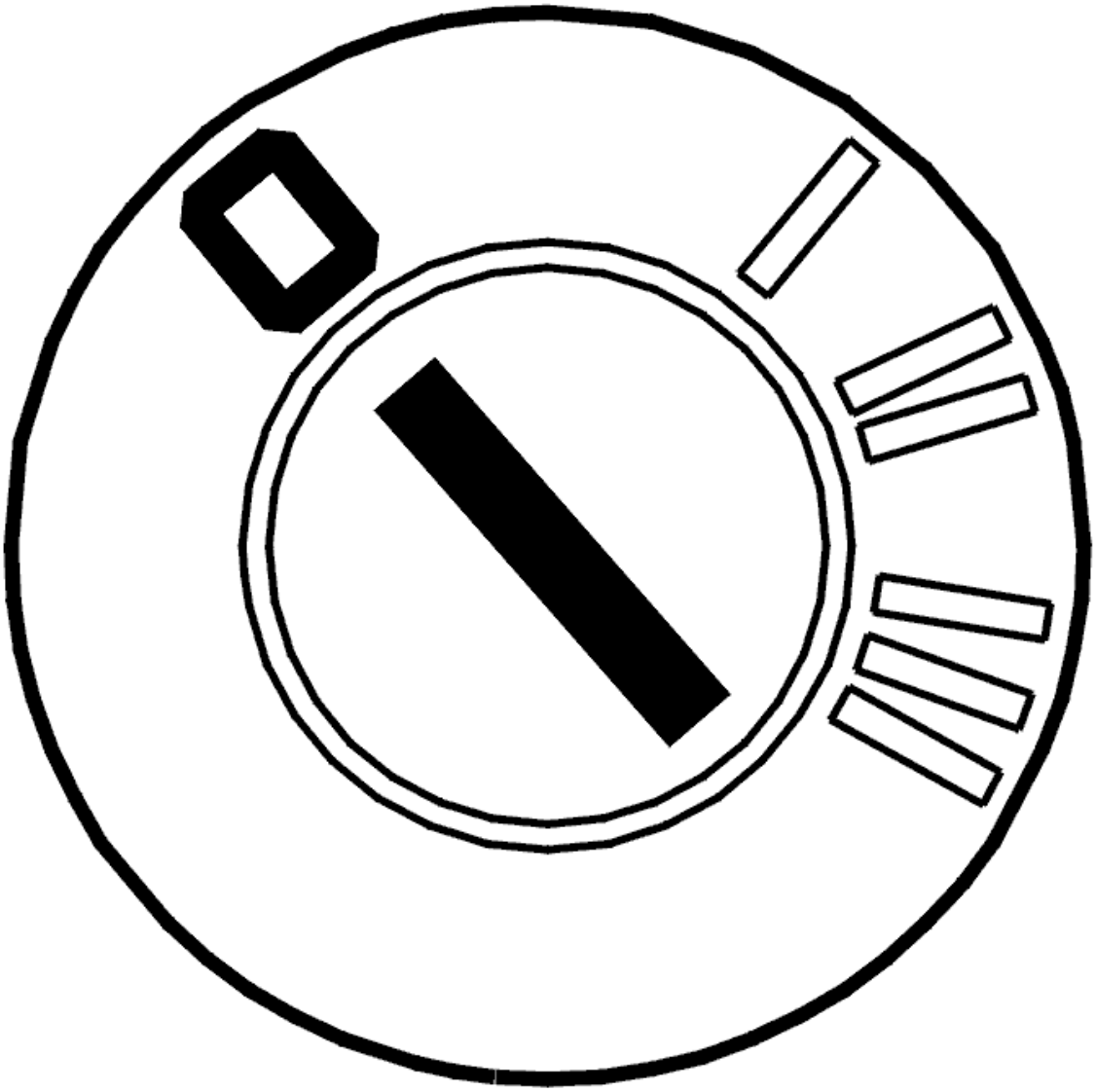

Fig. 126: Identifying Ignition OFF
Courtesy of VOLVO CARS CORPORATION

- Ignition off.

  Check the oil. Take a sample with the dipstick.

  Options:

  1. The oil is OK.

     Refer to **CHECKING OIL LEVEL**

  2. The oil is discolored or smells burnt.

     Refer to **CHANGING OIL**

3. The oil contains water (the oil is colored gray)

   Refer to **REPLACING A COMPONENT**

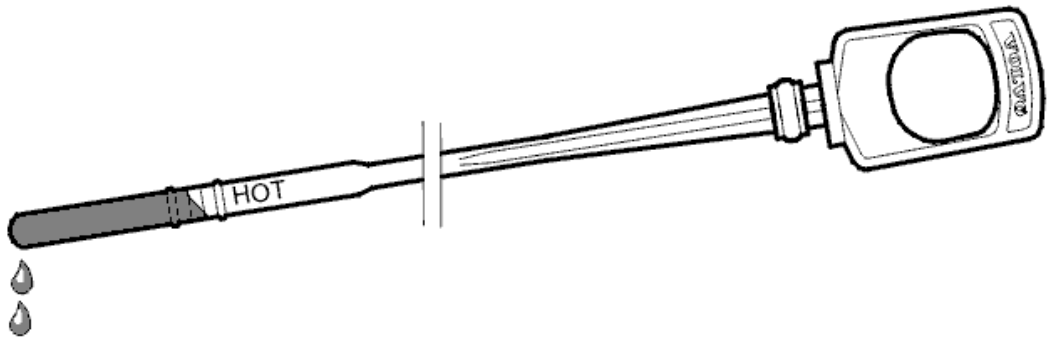

Fig. 127: Identifying Oil Dipstick
Courtesy of VOLVO CARS CORPORATION

CHECKING FOR COOLANT IN OIL

This fault may be due to coolant that has leaked into the transaxle.

Inspect according to: **CHECKING FOR COOLANT IN OIL**

If coolant is detected in the transaxle oil, the transaxle, radiator and hoses between the radiator and transaxle must be replaced.

Other information

- see **TRANSMISSION, REMOVING**
- see **TRANSMISSION, INSTALLING**

Was a fault detected?

- **YES**

  Refer to **INFORMATION**

- **NO**

  Refer to **INFORMATION**

CHANGING OIL

Changing oil according to: **TRANSMISSION OIL / OIL FILTER, REPLACING**

- **Continue**

Refer to **RESETTING TRANSMISSION FLUID CHANGE COUNTER**

REPLACING A COMPONENT

Find out the reason and remedy the cause of water in the oil.

Replace the transmission.

Flush clean the oil cooler, pipes and hoses according to: **TRANSMISSION - REMOVAL, REPLACEMENT AND INSTALLATION**

Other information

- see **TRANSMISSION, REMOVING**
- see **TRANSMISSION, INSTALLING**

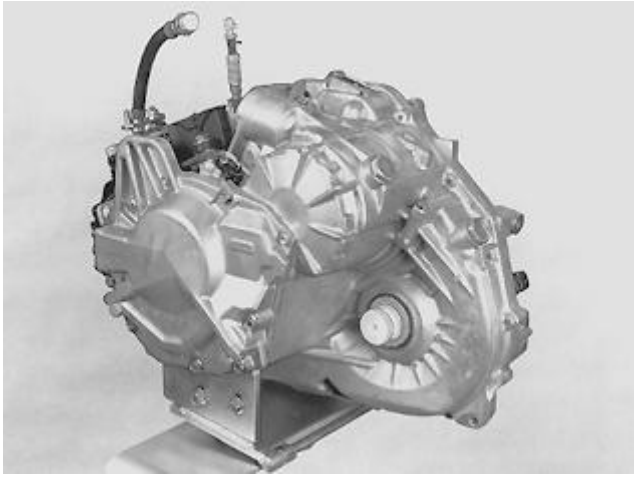

Fig. 128: Identifying Transmission
Courtesy of VOLVO CARS CORPORATION

- **Continue**

Refer to **RESETTING THE ADAPTATION**

CHECKING OIL LEVEL

Check the oil level. See **OIL LEVEL, CHECKING**

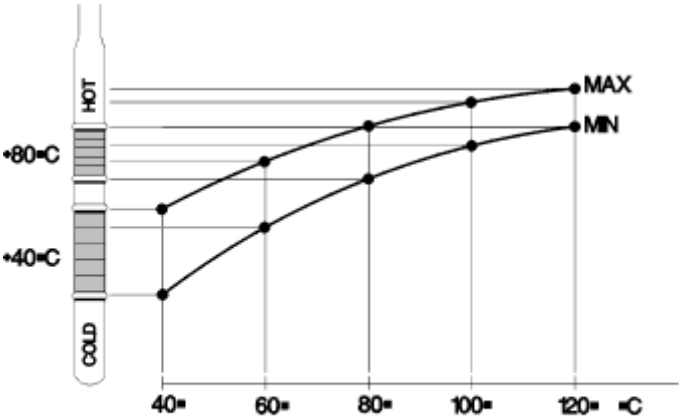

Fig. 129: Identifying Oil Level Graph
Courtesy of VOLVO CARS CORPORATION

Was the oil level correct?

- **YES**

  Refer to **CHECKING FOR COOLANT IN OIL**

- **NO**

  Refer to **RESETTING TRANSMISSION FLUID CHANGE COUNTER**

TEST DRIVING THE TRANSMISSION

Test drive the car as follows: **TEST DRIVE SCHEDULE, DESCRIPTION**

If the function of the transaxle is OK, the fault has been traced and rectified and fault tracing can stopped. If not, select continue to advance with fault tracing.

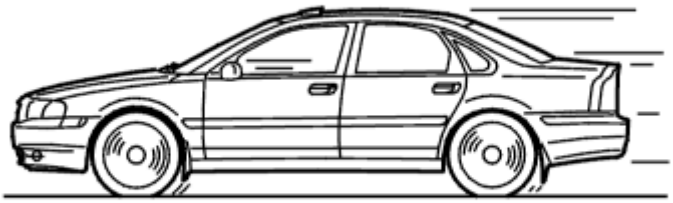

Fig. 130: Identifying Test Driving
Courtesy of VOLVO CARS CORPORATION

- **Continue**

  Refer to **CHECKING FOR COOLANT IN OIL**

RESETTING TRANSMISSION FLUID CHANGE COUNTER

RESETTING TRANSMISSION FLUID CHANGE COUNTER

HINT: The transmission control module (TCM) has a counter for the oil quality. The counter counts up if the transmission is exposed to too high a load or an ambient temperature that is too high. If the counter is not reset when the oil is drained or changed, there is a risk that a diagnostic trouble code (DTC) will be stored in faulty circumstances. Therefore it is important that the "Transmission oil change" counter is reset.

NOTE: **This applies only when the transmission fluid is changed and when the fluid is changed when repairs are carried out to the transmission temperature sensor.**

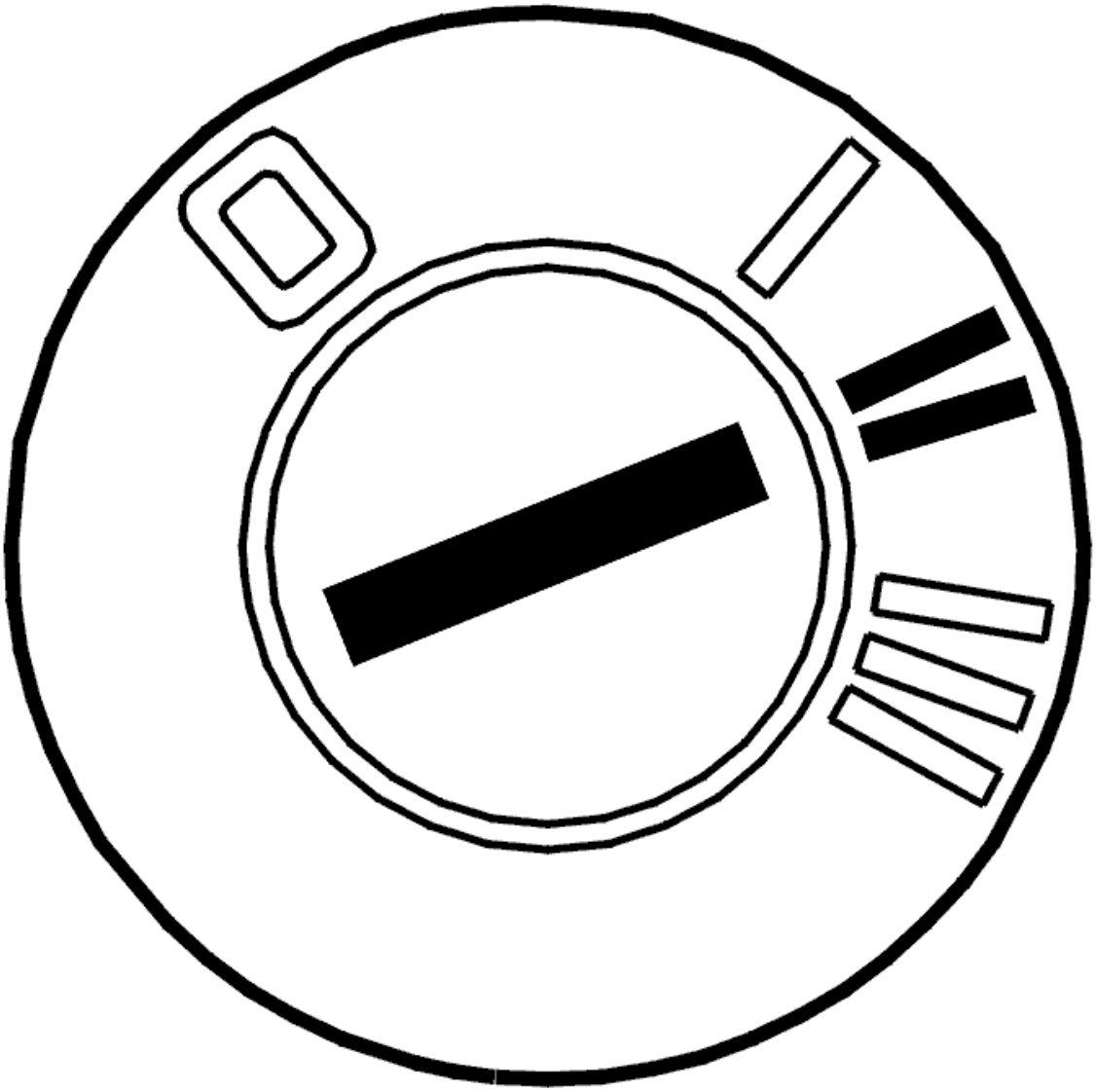

Fig. 131: Identifying Ignition ON
Courtesy of VOLVO CARS CORPORATION

- Ignition on.

  Reset the counter by clicking on the VCT 2000 symbol.

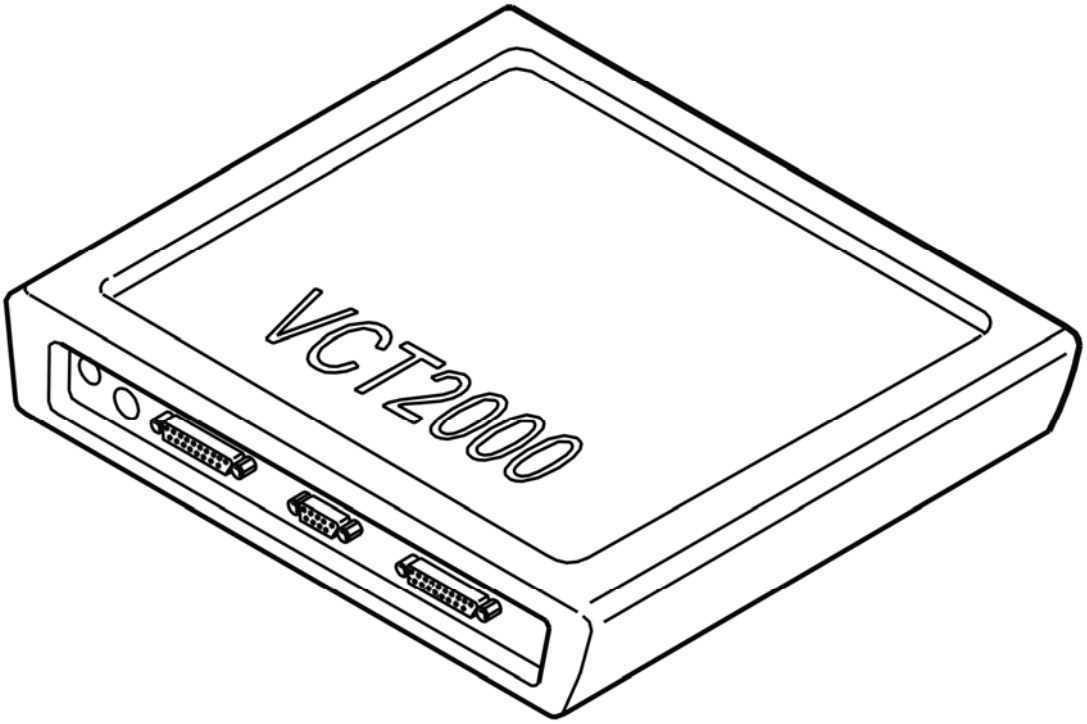

Fig. 132: Identifying VCT2000 Diagnostic Tool Symbol In VIDA
Courtesy of VOLVO CARS CORPORATION

- **Continue**

  Refer to **TEST DRIVING THE TRANSMISSION**

RESETTING THE ADAPTATION

RESETTING ADAPTATION AND THE COUNTER FOR "TRANSMISSION OIL CHANGE"

HINT: The transmission has torque controlled adaptive pressure control. Pressure control means that the transmission regulates the pressure itself during each gear shift. This avoids harsh gear shifting. Each gear shift is evaluated by the control module and stored in the memory. This allows for compensation for wear and tear in the transmission and clutch. It is important that the adaptation in the memory is reset after the transmission has been repaired. This is to ensure normal operation. The oil is replaced during repair; the "Transmission oil change" counter must be reset. If the counter is not reset when the fluid is drained and replaced, there is a risk that a diagnostic trouble code (DTC) will be stored in incorrect circumstances.

NOTE: **This applies only if the transmission or one of the components in the transmission have been replaced.**

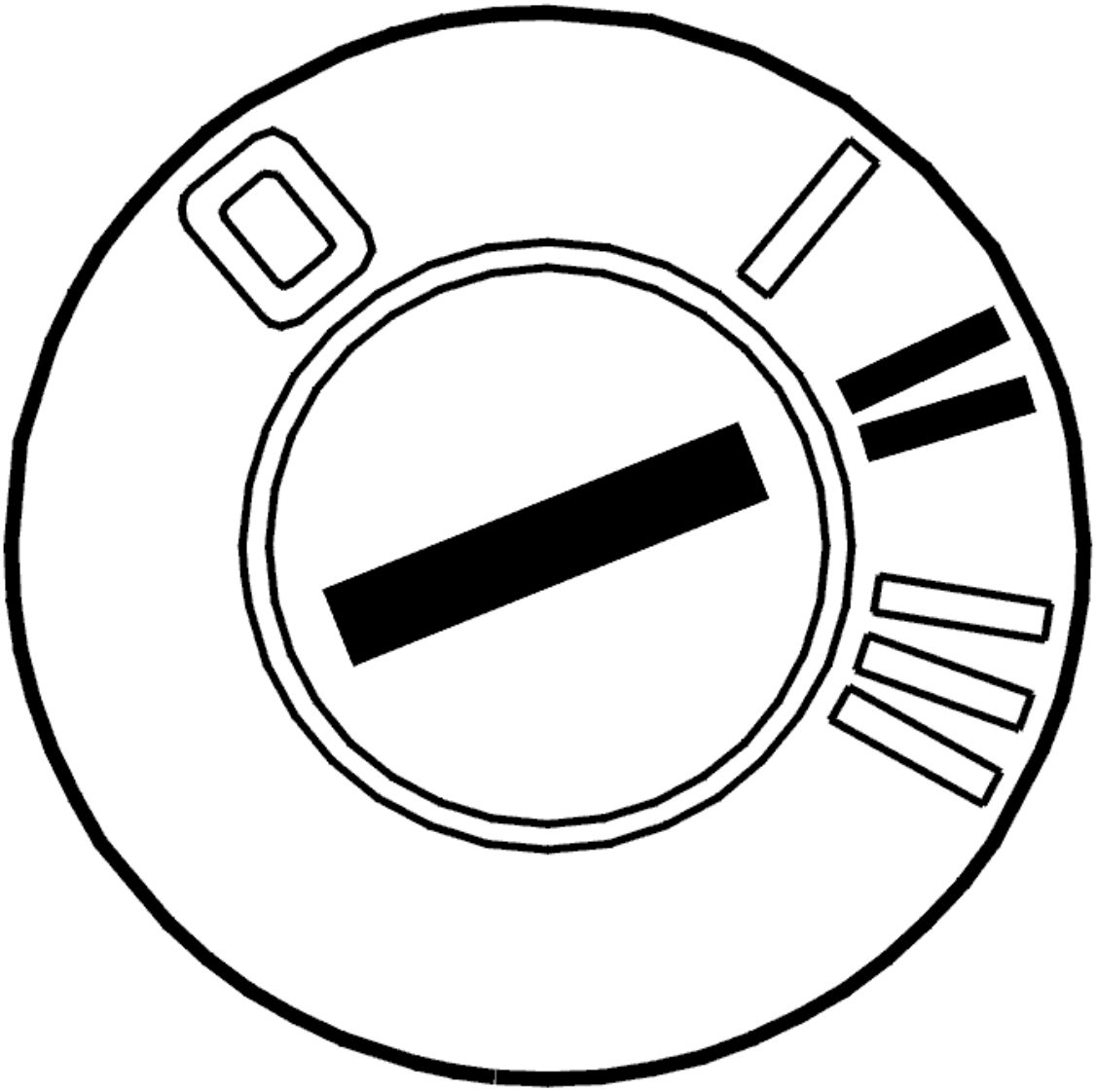

Fig. 133: Identifying Ignition ON
Courtesy of VOLVO CARS CORPORATION

- Ignition on.

  Click on the VCT2000 symbol to reset the adaptation and counter.

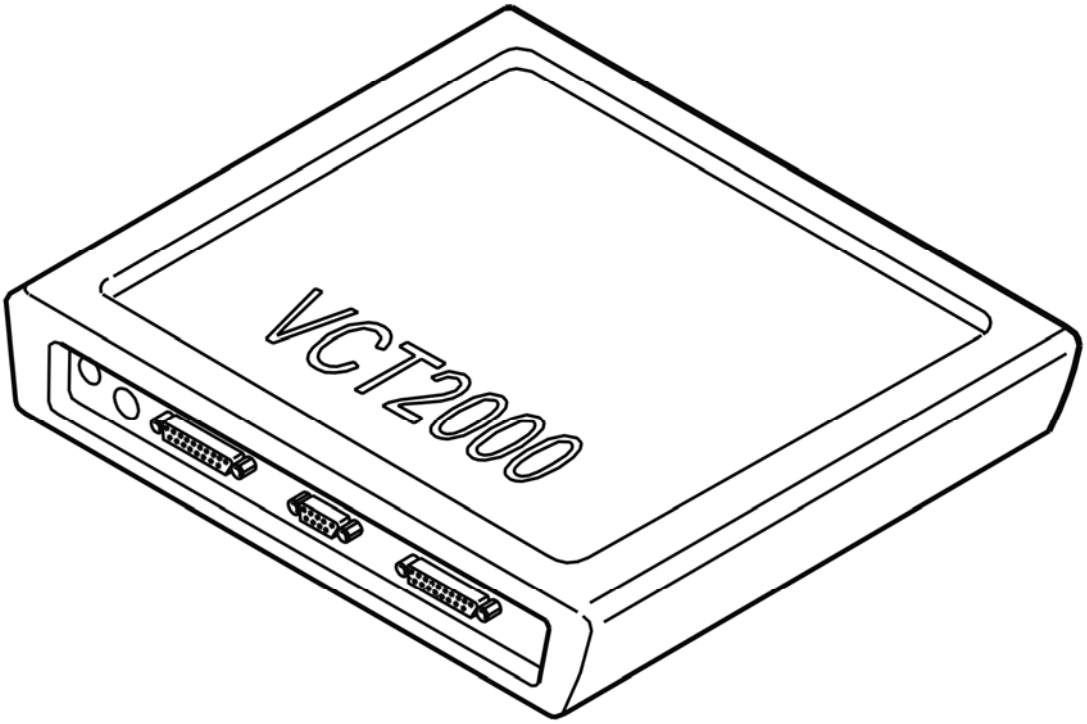

Fig. 134: Identifying VCT2000 Diagnostic Tool Symbol In VIDA
Courtesy of VOLVO CARS CORPORATION

INFORMATION

FAULT-TRACING INFORMATION

The fault should have been detected and remedied. As this is not the case fault-tracing has failed.

Exit fault-tracing for this diagnostic trouble code (DTC) or make another attempt.

INFORMATION

FAULT-TRACING INFORMATION

In case of this defect, troubleshooting is not followed by verification.

The information can be displayed again or the fault-tracing for this fault can be interrupted.

CHECKING PARK LOCK, DRIVE SHAFT (AW50/51 AWD; AW55-50/51SN; 2003-2007)

CHECKING PARK LOCK, DRIVE SHAFT

FAULT-TRACING INFORMATION

Check that the drive shaft is engaged in the transmission. This determines whether the park lock in the transmission is not functioning.

If one of the drive shafts is out of position, this can result in the symptom "park lock not working".

Causes of interference can be:

- that one or both of the drive shafts is not in position, so that there is no engagement in the transmission.
- **Continue**

  Refer to **CHECKING PARK LOCK, DRIVE SHAFT**

CHECKING PARK LOCK, DRIVE SHAFT

Checking the Park lock, drive shaft

With the car on a flat surface, shift the gear selector to position P. Release the brake. Can the car be rolled forwards or backwards? The drive shafts may be out of position if the car moves.

Remedy as necessary

CHECKING P-SHIFT LOCK SOLENOID (4T65 AWD; 2003-2006)

CHECKING P-SHIFT LOCK SOLENOID

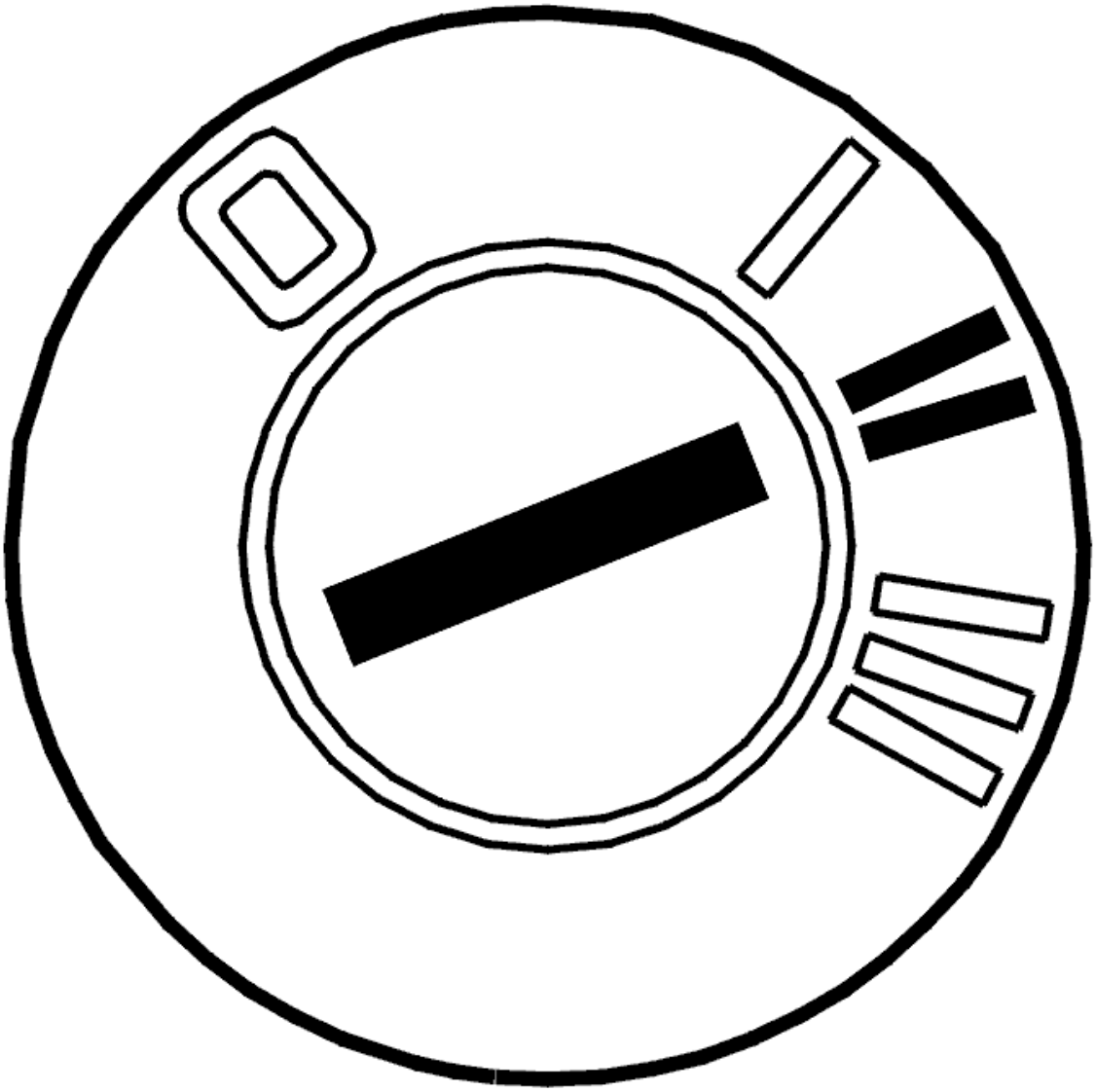

Fig. 135: Identifying Ignition ON
Courtesy of VOLVO CARS CORPORATION

- Ignition on
- Gear selector in position P.

  Try moving the gear selector to another position without depressing the brake pedal. It should not be possible to move the gear selector.

  Depress the brake pedal and try moving the gear selector to another position. It should now be possible to move the gear selector.

Was the function OK?

- **YES**

FAULT NOT FOUND: Troubleshooting has been completed.

- **NO**

  Refer to **CHECKING WIRING AND COMPONENT**

CHECKING WIRING AND COMPONENT

Check the cable between the control module for the gear selector and solenoid connectors. Check for an open-circuit, short-circuit to ground and a short-circuit to supply voltage.

HINT: The resistance must be 15 -25 ohms with an ohmmeter connected to the solenoid connector terminals #1 and #2 (solenoid side). Replace the solenoid if the resistance is incorrect

Remedy as necessary.

Other information

- To check or replace the shift lock solenoid, see **SOLENOID SHIFT LOCK, REPLACE**
- To check the wiring and connections, see **CHECKING WIRING AND TERMINALS** .

- **Continue**

  Refer to **VERIFICATION**

VERIFICATION

VERIFICATION

HINT: After carrying out the repair, check that the fault has been remedied.

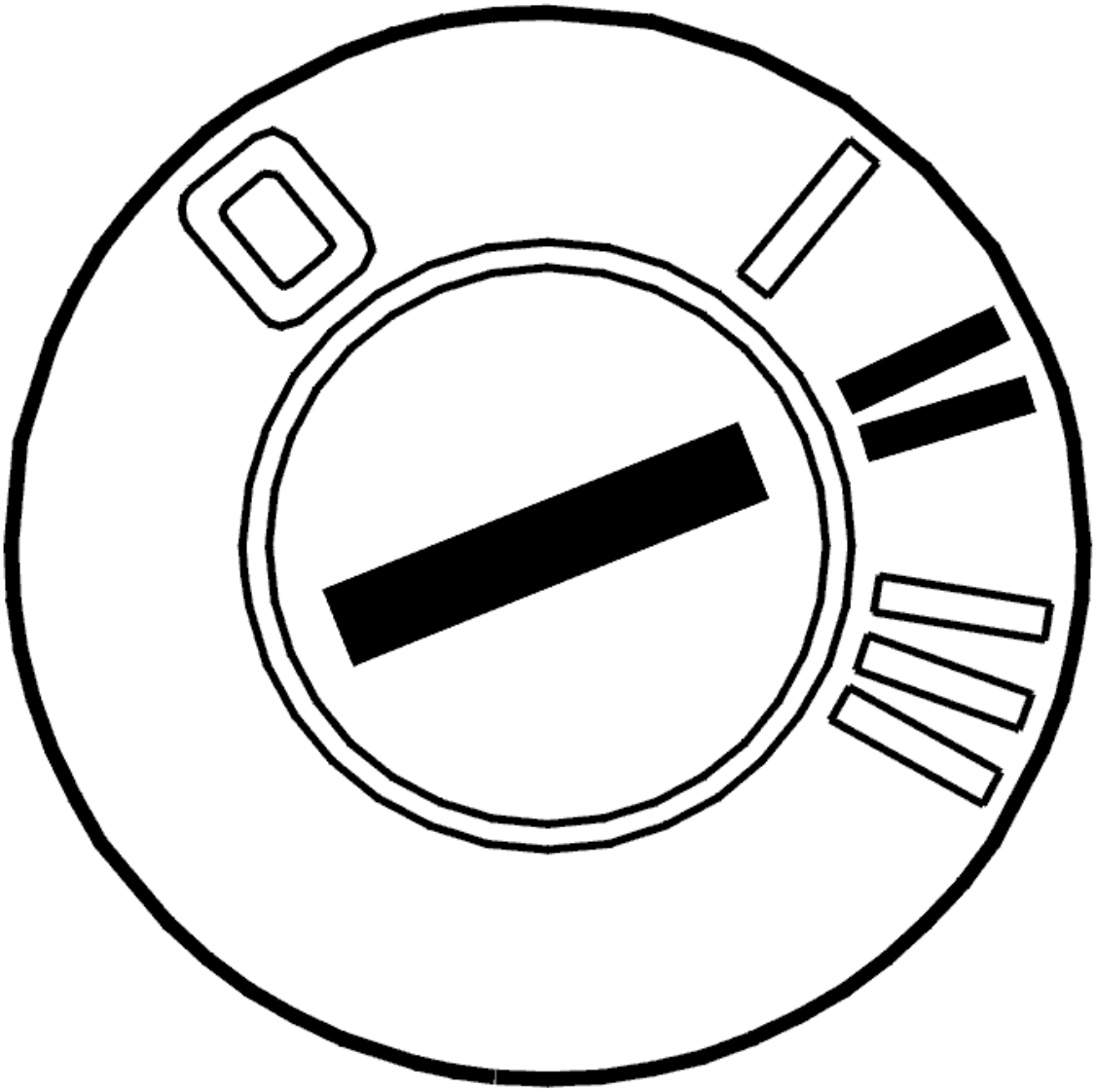

Fig. 136: Identifying Ignition ON
Courtesy of VOLVO CARS CORPORATION

- Ignition on.
- Gear selector in position P.

  Try moving the gear selector to another position without depressing the brake pedal. It should not be possible to move the gear selector.

  Depress the brake pedal and try moving the gear selector to another position. It should now be possible to move the gear selector.

Was the function OK?

- **YES**

VERIFIED: Troubleshooting has been completed.

- **NO**

  Refer to **INFORMATION**

INFORMATION

FAULT-TRACING INFORMATION

The fault should have been detected and remedied. As this is not the case fault-tracing has failed.

Exit fault-tracing for this diagnostic trouble code (DTC) or make another attempt.

CHECKING SEALING RING FOR THE OIL PUMP (AW50/51 AWD; AW55-50/51SN; 2003-2007)

CHECKING SEALING RING IN OIL PUMP

Check the oil pump sealing ring for damage.

Replace the sealing ring if it is damaged. See **REPLACING THE SEALING RING FOR THE OIL PUMP** .

Other information:

- For information about removal/installation, see **TRANSMISSION - REMOVAL, REPLACEMENT AND INSTALLATION**

Was the sealing ring damaged?

- **YES**

  Refer to **RESETTING THE ADAPTATION**

- **NO**

  FAULT NOT FOUND: Troubleshooting has been completed.

RESETTING THE ADAPTATION

RESETTING ADAPTATION AND THE COUNTER FOR "TRANSMISSION OIL CHANGE"

HINT: The transmission has torque controlled adaptive pressure control. Pressure control means that the transmission regulates the pressure itself during each gear shift. This avoids harsh gear shifting. Each gear shift is evaluated by the control module and stored in the memory. This allows for compensation for wear and tear in the transmission and clutch. It is important that the adaptation in the memory is reset after the transmission has been repaired. This is to ensure normal operation. The oil is replaced during

repair; the "Transmission oil change" counter must be reset. If the counter is not reset when the fluid is drained and replaced, there is a risk that a diagnostic trouble code (DTC) will be stored in incorrect circumstances.

NOTE: **This applies only if the transmission or one of the components in the transmission have been replaced.**

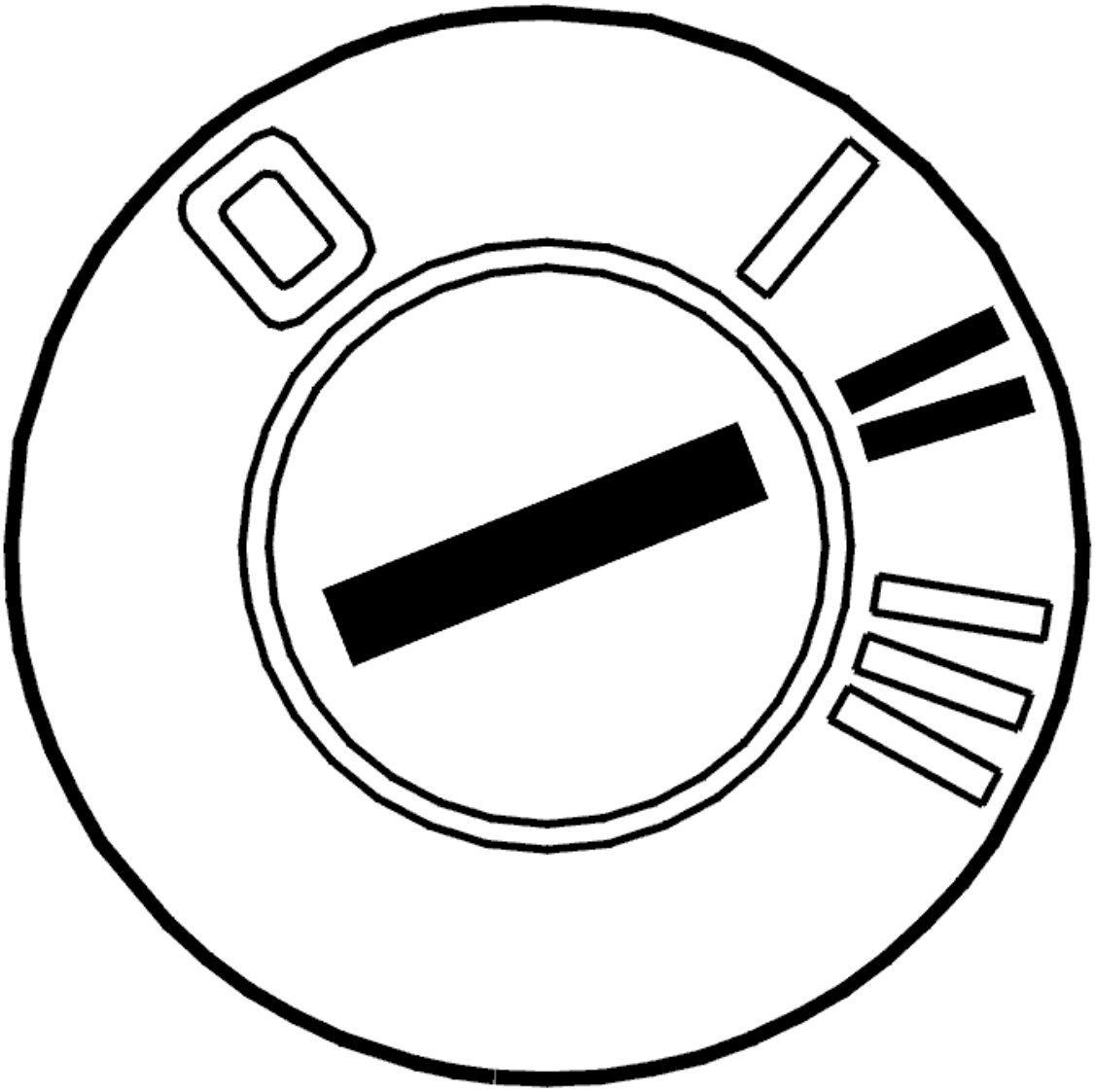

Fig. 137: Identifying Ignition ON
Courtesy of VOLVO CARS CORPORATION

- Ignition on.

  Click on the VCT2000 symbol to reset the adaptation and counter.

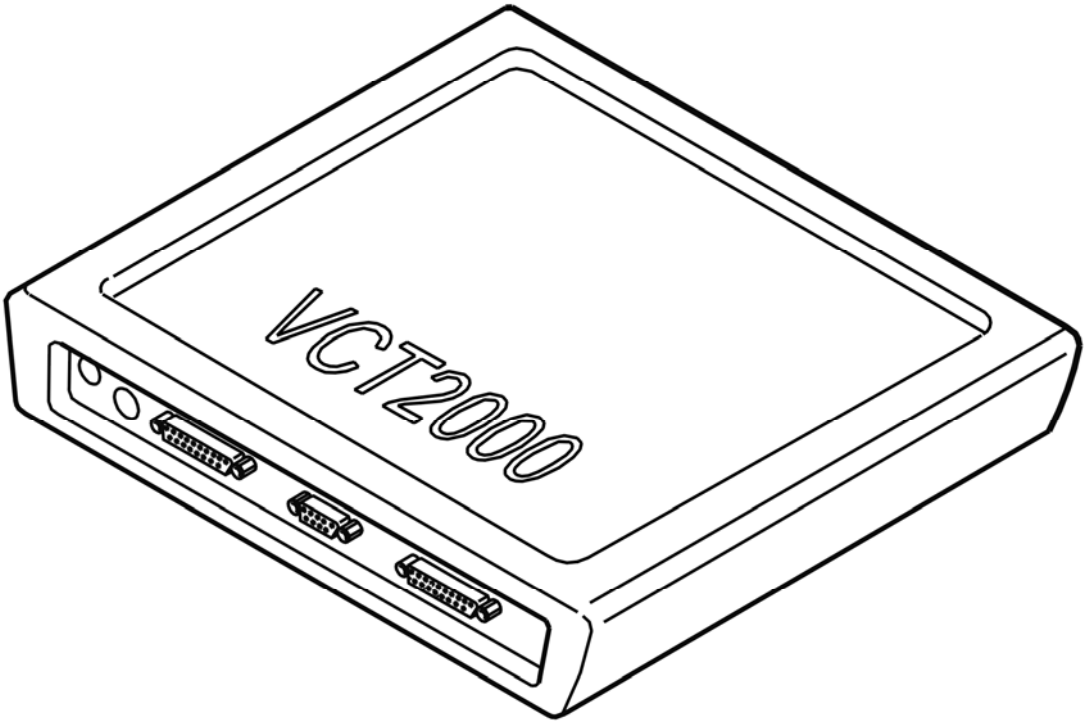

Fig. 138: Identifying VCT2000 Diagnostic Tool Symbol In VIDA
Courtesy of VOLVO CARS CORPORATION

CHECKING STATUS, SLT (AW50/51 AWD; AW55-50/51SN; 2003-2007)

CHECKING STATUS, SLT

CHECKING STATUS

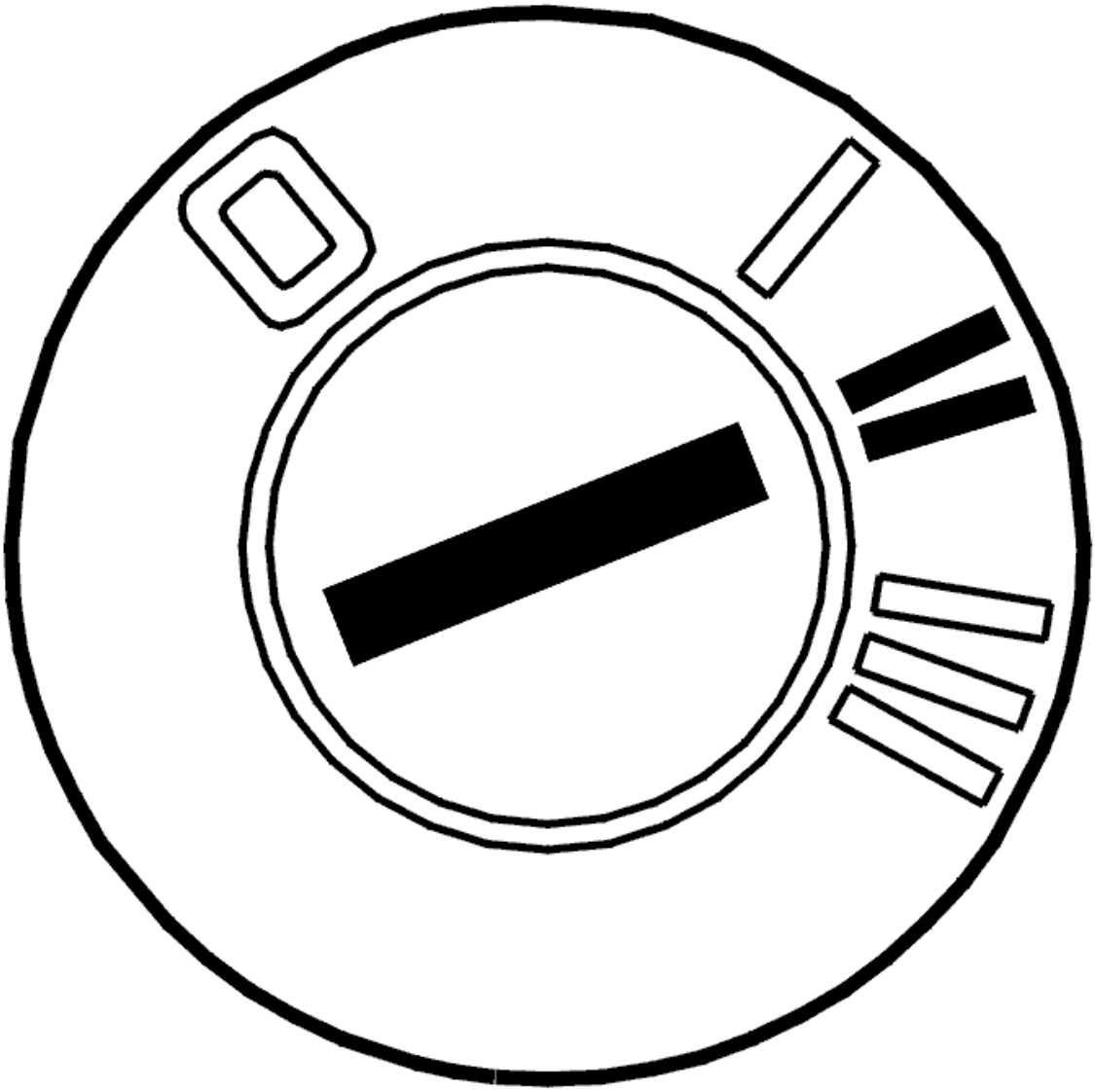

Fig. 139: Identifying Ignition ON
Courtesy of VOLVO CARS CORPORATION

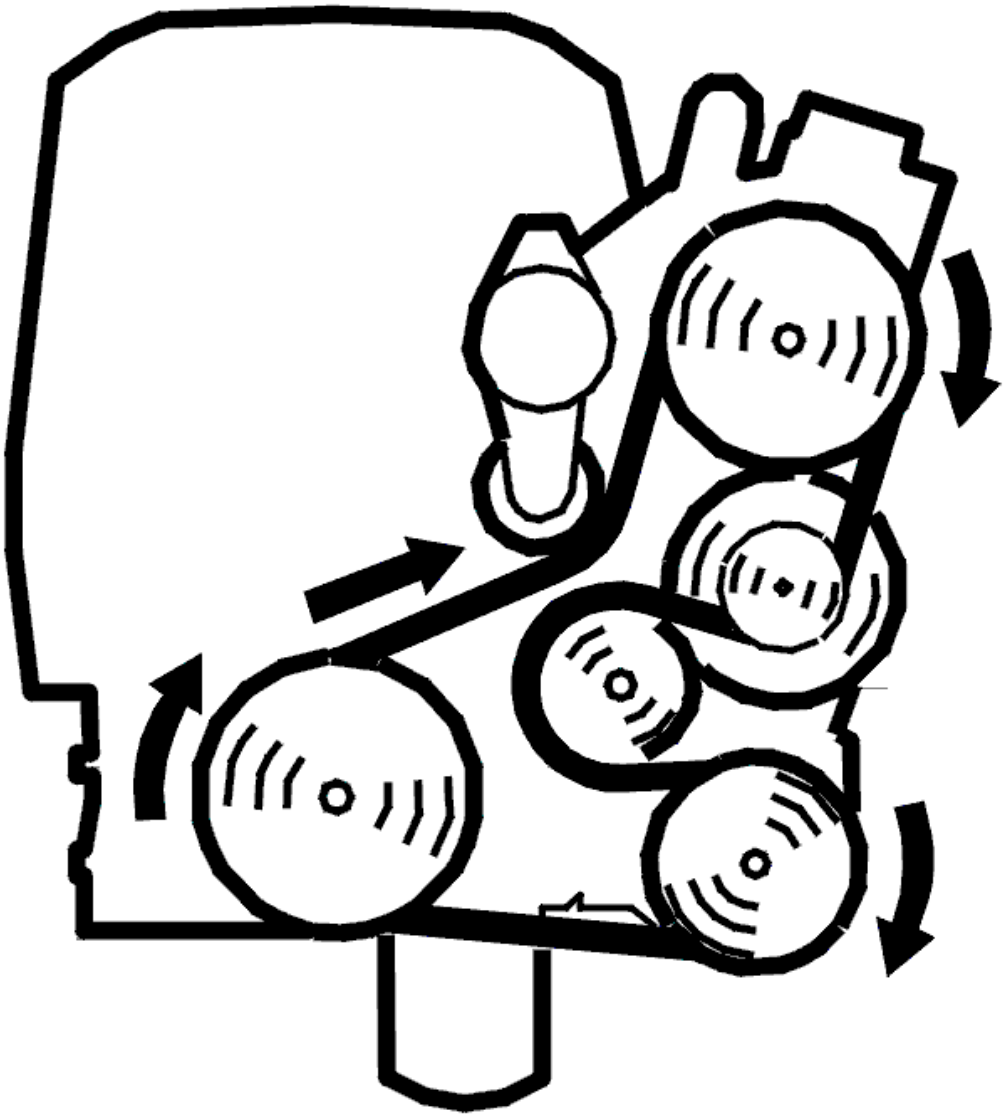

Fig. 140: Identifying Belt Routing
Courtesy of VOLVO CARS CORPORATION

- Check the resistance of the throttle solenoid (SLT).

  Check that the resistance of the solenoid is between 4.5-5.5 ohms.

  Other information:

  - For information about signal specifications, see **SIGNAL DESCRIPTION. TRANSMISSION CONTROL MODULE (TCM)**
  - To connect the breakout box, see **CONNECTING THE BREAKOUT BOX**

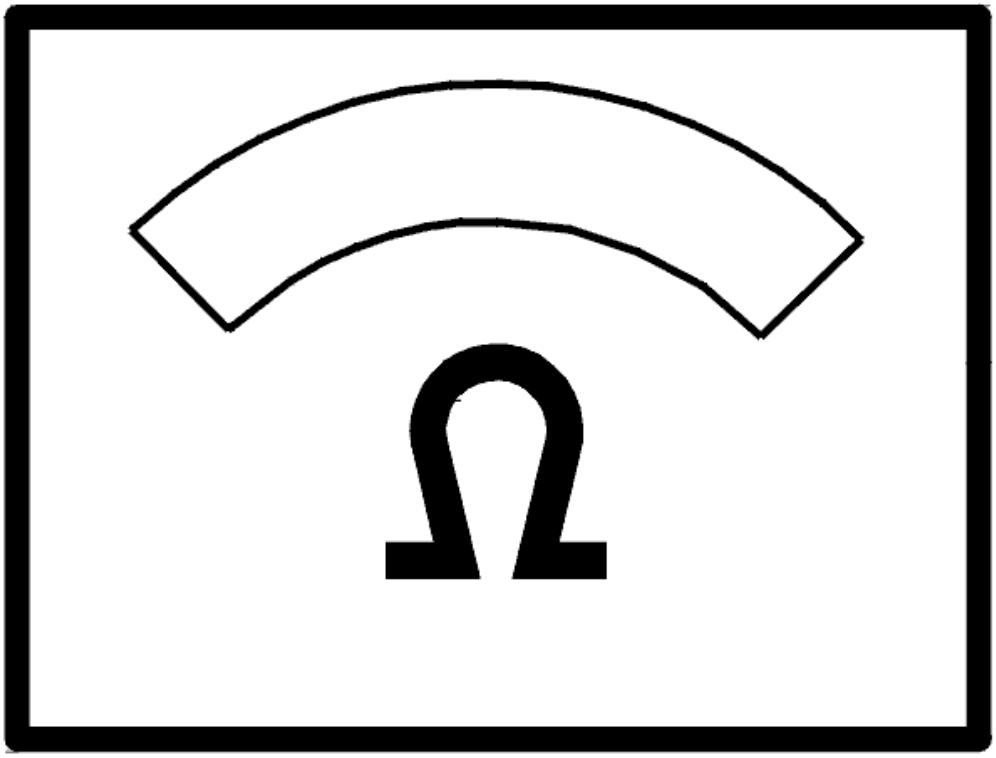

Fig. 141: Identifying Ohms Display
Courtesy of VOLVO CARS CORPORATION

Is the resistance between 4.5-5.5 ohms?

- **YES**

  FAULT NOT FOUND: Troubleshooting has been completed.

- **NO**

  Refer to **INCORRECT RESISTANCE VALUE**

INCORRECT RESISTANCE VALUE

Replace the control system solenoid.

Other information:

- To access and replace the control system solenoid, see **SOLENOIDS, CONTROL SYSTEM, REPLACING**.

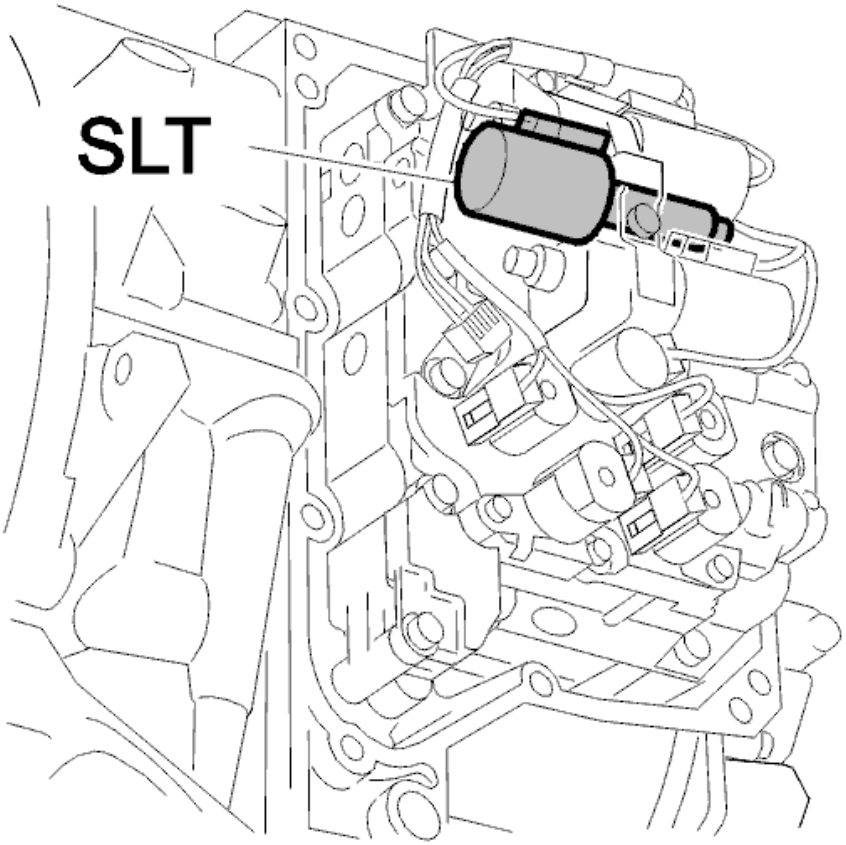

Fig. 142: Identifying Line Pressure Solenoid
Courtesy of VOLVO CARS CORPORATION

SOLENOIDS, CONTROL SYSTEM, REPLACING

REPLACING AND CHECKING SOLENOIDS

PREPARATIONS

NOTE: The operations which affect the cable harness and connectors and mountings for the control system solenoids must not be carried out when replacing the solenoids or the control system.

Remove.

- For AW50/51 AWD or AW55-50/51SN 2003-, see **TEMPERATURE SENSOR FLUID, TRANSAXLE, (TFT)**
- For 4T65AWD 2003-, see **TEMPERATURE SENSOR FLUID, TRANSAXLE, (TFT)** .

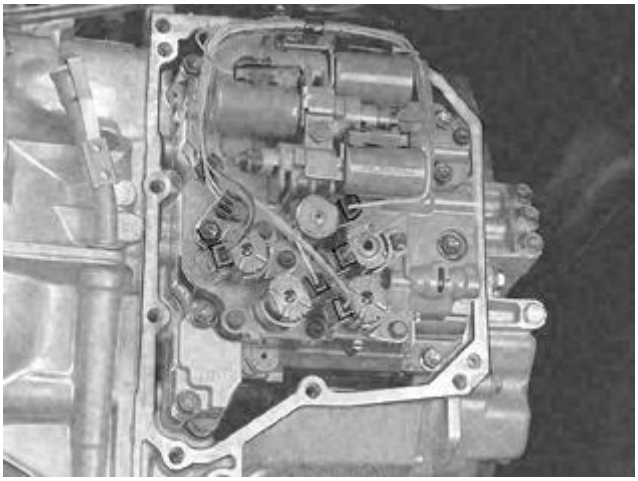

Fig. 143: Identifying Solenoid Connectors
Courtesy of VOLVO CARS CORPORATION

Disconnect the connectors from the solenoids.

CHECK RESISTANCE IN S1-S5

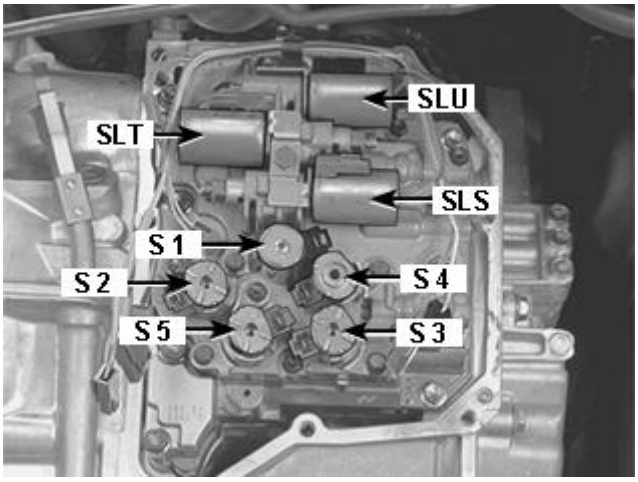

Fig. 144: Identifying S1-S5, SLT, SLU And SLS Solenoids
Courtesy of VOLVO CARS CORPORATION

NOTE: Readings should be taken at approximately 20°C.

Solenoid S1

Measure the resistance between the pin in the solenoid connector and the transmission ground terminal.

Correct value: 12-16 ohms.

Solenoids S2-S5

Measure the resistance between the pin in the solenoid connector and the transmission ground terminal.

Correct value: 11-15 ohms.

If the resistance of any of solenoids S1-S5 is incorrect

Replace the solenoid. See **TRANSMISSION - REMOVAL, REPLACEMENT AND INSTALLATION** .

CHECKING RESISTANCE OF SLT, SLS AND SLU

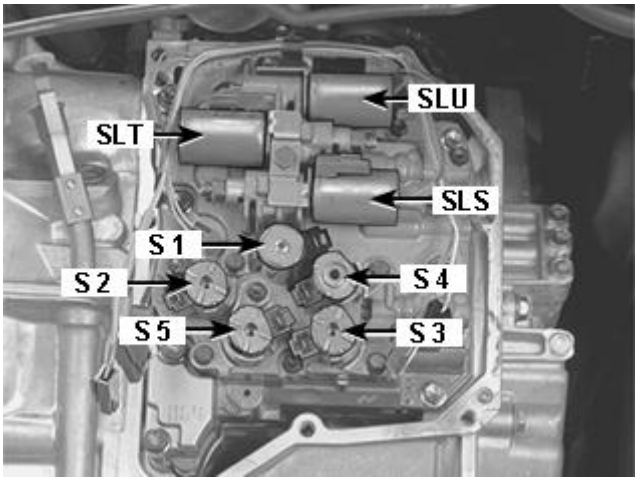

Fig. 145: Identifying S1-S5, SLT, SLU And SLS Solenoids
Courtesy of VOLVO CARS CORPORATION

NOTE: Readings should be taken at approximately 20°C.

Solenoid SLT, SLS and SLU

Measure the resistance between both the pins in the solenoid connector.

Correct value: 5.0-5.6 ohms.

If the value of any of solenoids SLT, SLS and SLU is incorrect

Replace the control system. See **SOLENOIDS, CONTROL SYSTEM, REPLACING**.

The control system is calibrated together with the solenoids.

REPLACING SOLENOIDS S1-S5

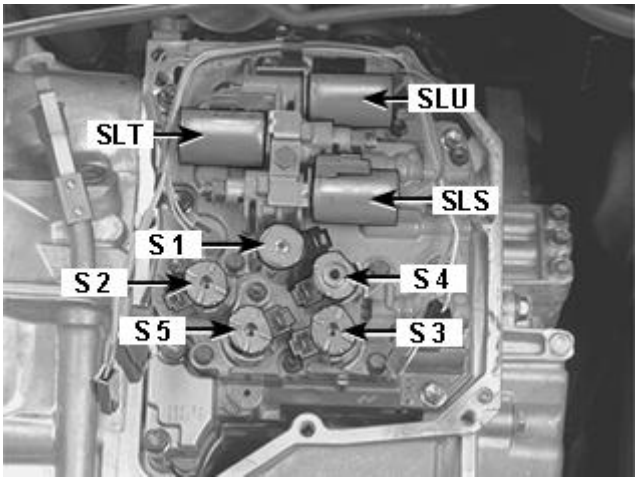

Fig. 146: Identifying S1-S5, SLT, SLU And SLS Solenoids
Courtesy of VOLVO CARS CORPORATION

Remove the screw from the solenoid. Remove the solenoid from the control system.

Lubricate the O-ring on the new solenoid. Use automatic transmission fluid.

Install the solenoid. Tighten the screw. Tighten to **7 Nm** .

FINISHING

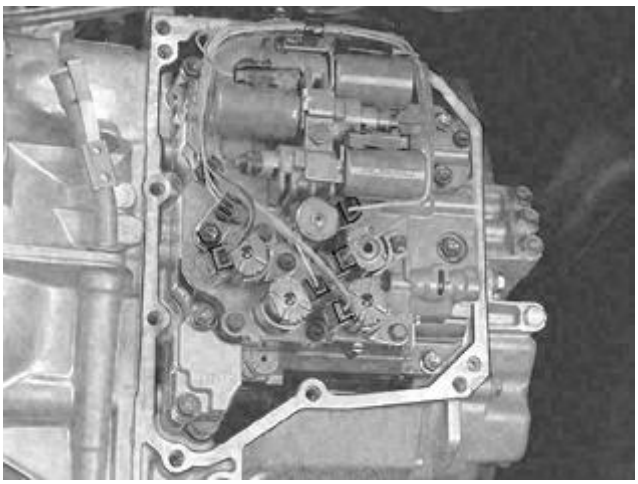

Fig. 147: Identifying Solenoid Connectors
Courtesy of VOLVO CARS CORPORATION

Connect the connectors to the solenoids.

Reinstall.

- For AW50/51 AWD or AW55-50/51SN 2003-, see **TEMPERATURE SENSOR FLUID, TRANSAXLE, (TFT)**

- For 4T65AWD 2003-, see **TEMPERATURE SENSOR FLUID, TRANSAXLE, (TFT)** .

REPLACING THE CONTROL SYSTEM

PREPARATIONS

Remove.

- For AW50/51 AWD or AW55-50/51SN 2003-, see **TEMPERATURE SENSOR FLUID, TRANSAXLE, (TFT)**
- For 4T65AWD 2003-, see **TEMPERATURE SENSOR FLUID, TRANSAXLE, (TFT)** .

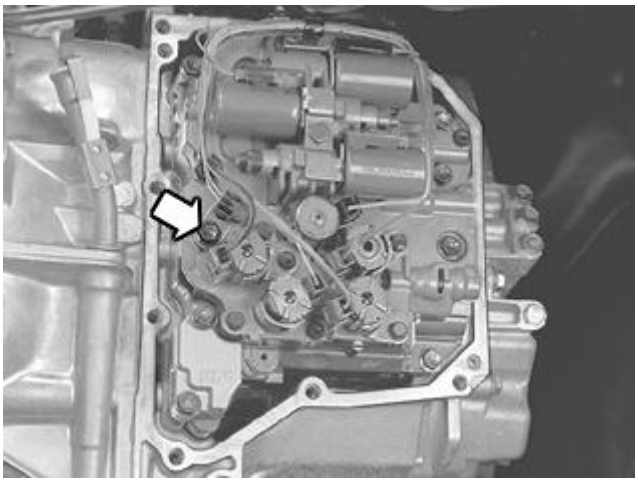

Fig. 148: Identifying Oil Temperature Sensor And Holder Screw
Courtesy of VOLVO CARS CORPORATION

Remove:

- the connectors for the solenoid valves
- the screw for the oil temperature sensor holder. Remove the sensor from the control system
- the cable harness from the holders on the control system.

Push the cable harness to one side.

REMOVING THE CONTROL SYSTEM

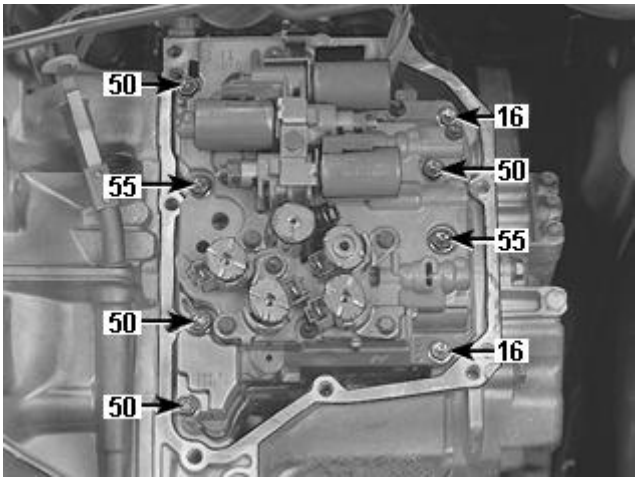

Fig. 149: Identifying Control System Screws
Courtesy of VOLVO CARS CORPORATION

Remove the screws from the control system. Remove the cover from the transmission.

NOTE: Ensure that there are no cracks on the top of the lever for the gear selector slider.

REPLACING SEALING RINGS

Fig. 150: Identifying Control System Sealing Rings
Courtesy of VOLVO CARS CORPORATION

Remove the sealing rings from the transmission.

NOTE: Ensure that no debris enters the transmission.

Install **new** sealing rings in the transmission

Use petroleum jelly to hold the seals in position.

CHECKING GEAR SELECTOR SLIDER

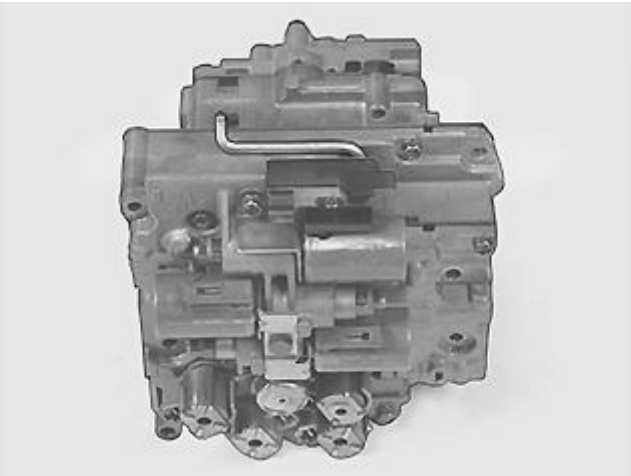

Fig. 151: Identifying Gear Selector Slider
Courtesy of VOLVO CARS CORPORATION

Check that the lever for the gear selector slider is correctly positioned.

INSTALLING THE CONTROL SYSTEM

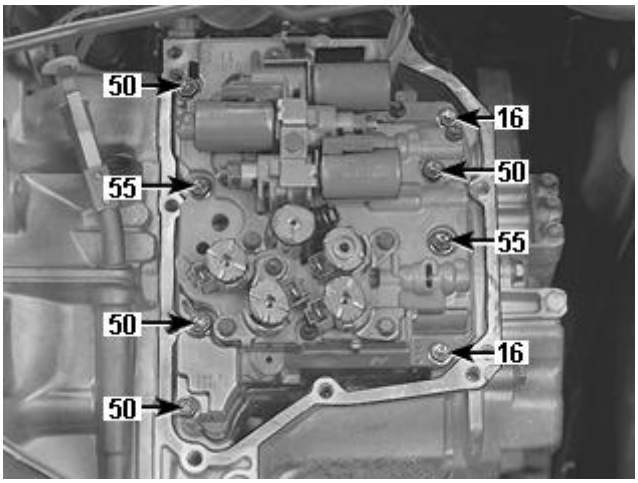

Fig. 152: Identifying Control System Screws
Courtesy of VOLVO CARS CORPORATION

NOTE: Ensure the lever for the gear selector is set to neutral.

Align the control system on the lever for the gear selector.

Install:

- the screws for the control system
- a new gasket for the cover on the control system. Note that the screws are of different lengths (measured

in mm).

Tighten the screws alternately to light contact. Then tighten alternately. Tighten to **10 Nm** .

FINISHING

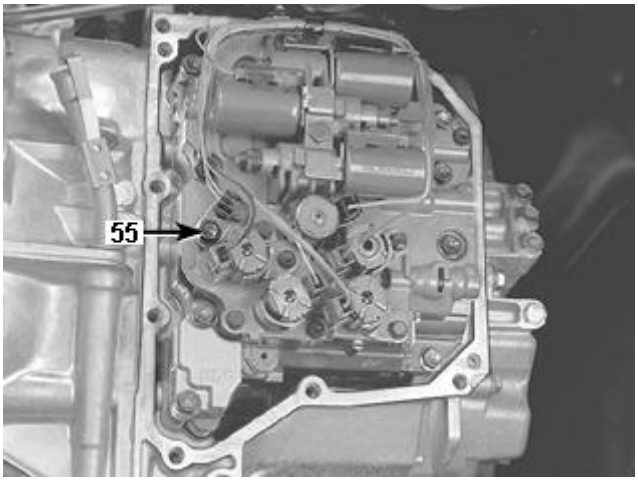

Fig. 153: Identifying Oil Temperature Sensor Screw
Courtesy of VOLVO CARS CORPORATION

Install the cable harness. Connect the connectors to the solenoids.

Install the oil temperature sensor with the holder and the screw. Note that the length of the screw is given in mm. Tighten to **10 Nm** .

Install the cable harness on the holder. Check that the cable harness is correctly positioned.

Reinstall.

- For AW50/51 AWD or AW55-50/51SN 2003-, see **TEMPERATURE SENSOR FLUID, TRANSAXLE, (TFT)**
- For 4T65AWD 2003-, see **TEMPERATURE SENSOR FLUID, TRANSAXLE, (TFT)** .

CHECKING STEERING SHAFT BOOT (4T65 AWD; 2003-2006)

CHECKING STEERING SHAFT BOOT

CHECKING STEERING SHAFT BOOT

HINT: If the steering shaft boot is not correctly located or is damaged noise from the engine compartment can penetrate the passenger compartment.

- Fold the floor carpet out of the way.

  Check that the steering shaft boot which seals at the base of the lower steering shaft is correctly located

and not damaged.

Remedy as necessary.

Other information:

- see **STEERING SHAFT, LOWER, REPLACING**

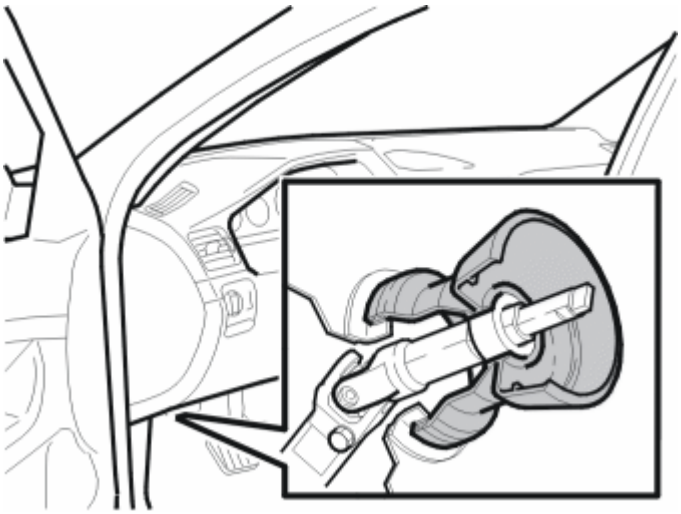

Fig. 154: Identifying Steering Shaft Boot
Courtesy of VOLVO CARS CORPORATION

FAULT-TRACING INFORMATION

Condition

- No diagnostic trouble codes (DTCs) stored.

Possible Source

- The steering shaft boot is damaged or does not seal correctly.

Fault symptom[s]

- Undefined engine noise.

CHECKING TORQUE CONVERTER (AW50/51 AWD; AW55-50/51SN; 2003-2007)

CHECKING TORQUE CONVERTER

Check the torque converter throat for damage.

If it is damaged, replace the torque converter according to **TRANSMISSION - REMOVAL, REPLACEMENT AND INSTALLATION** .

If it is damaged, also replace the sealing ring in the oil pump according to **REPLACING THE SEALING RING FOR THE OIL PUMP** .

Install the torque converter according to **TRANSMISSION - REMOVAL, REPLACEMENT AND INSTALLATION** .

Other information:

- For information about removal/installation, see **TRANSMISSION - REMOVAL, REPLACEMENT AND INSTALLATION**

Was the torque converter throat damaged?

- **YES**

  Refer to **RESETTING THE ADAPTATION**

- **NO**

  FAULT NOT FOUND: Troubleshooting has been completed.

RESETTING THE ADAPTATION

RESETTING ADAPTATION AND THE COUNTER FOR "TRANSMISSION OIL CHANGE"

HINT: The transmission has torque controlled adaptive pressure control. Pressure control means that the transmission regulates the pressure itself during each gear shift. This avoids harsh gear shifting. Each gear shift is evaluated by the control module and stored in the memory. This allows for compensation for wear and tear in the transmission and clutch. It is important that the adaptation in the memory is reset after the transmission has been repaired. This is to ensure normal operation. The oil is replaced during repair; the "Transmission oil change" counter must be reset. If the counter is not reset when the fluid is drained and replaced, there is a risk that a diagnostic trouble code (DTC) will be stored in incorrect circumstances.

NOTE: **This applies only if the transmission or one of the components in the transmission have been replaced.**

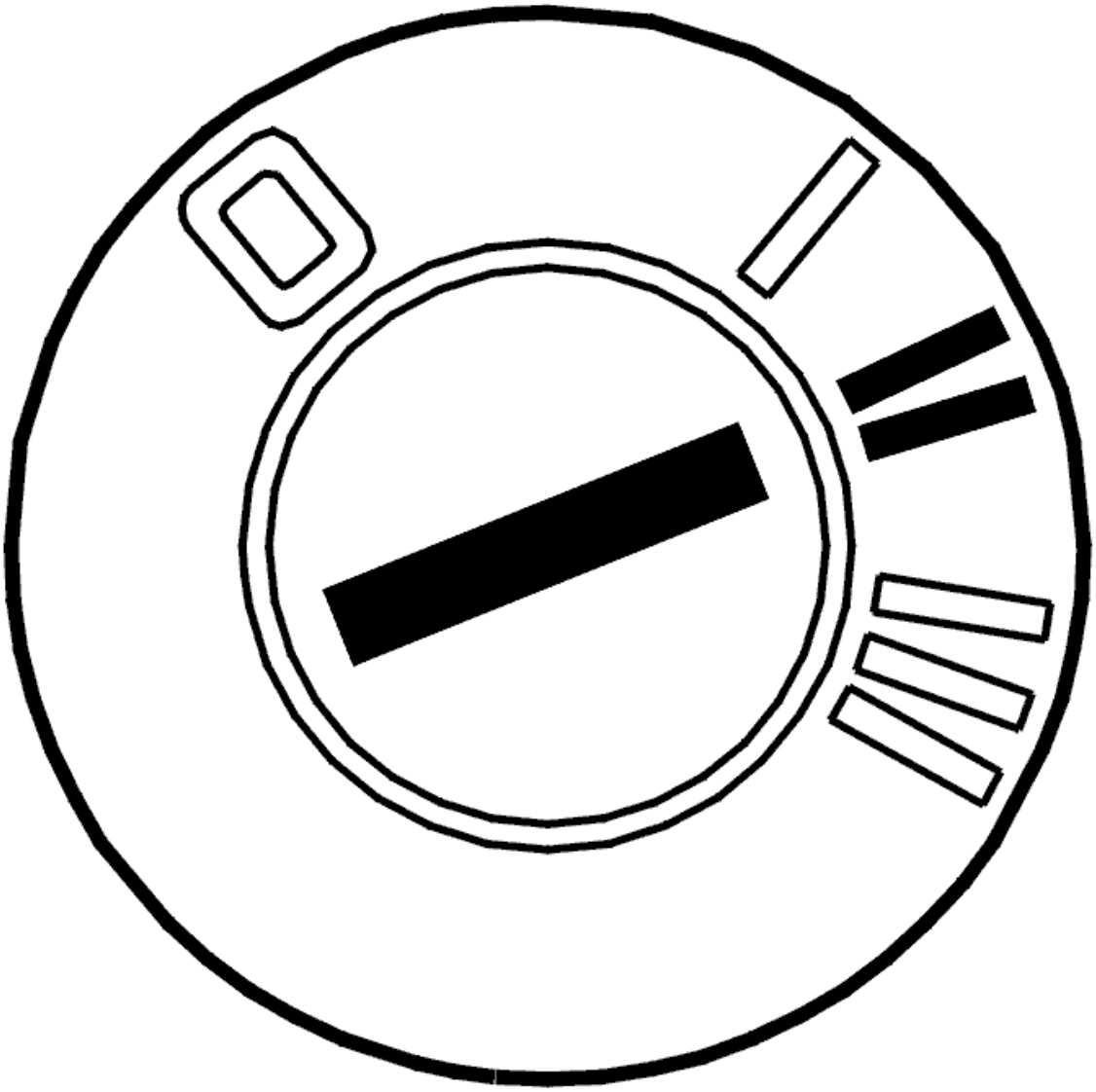

Fig. 155: Identifying Ignition ON
Courtesy of VOLVO CARS CORPORATION

- Ignition on.

  Click on the VCT2000 symbol to reset the adaptation and counter.

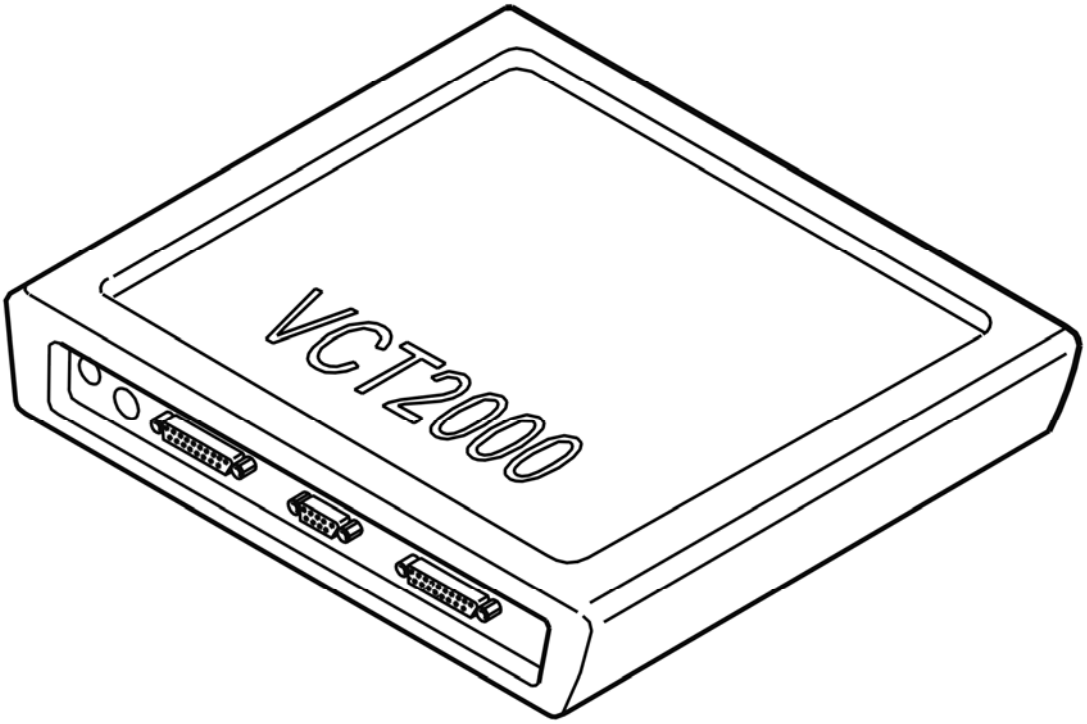

Fig. 156: Identifying VCT2000 Diagnostic Tool Symbol In VIDA
Courtesy of VOLVO CARS CORPORATION

CHECKING TORQUE CONVERTER PLAY (AW50/51 AWD; AW55-50/51SN; 2003-2007)

CHECKING TORQUE CONVERTER PLAY

Check whether the torque converter catches on the housing.

If this is the case, replace the transmission.

Other information:

- For information about removal/installation, see **TRANSMISSION - REMOVAL, REPLACEMENT AND INSTALLATION**

Did the torque converter run free?

- **YES**

  FAULT NOT FOUND: Troubleshooting has been completed.

- **NO**

  Refer to **RESETTING THE ADAPTATION**

RESETTING THE ADAPTATION

RESETTING ADAPTATION AND THE COUNTER FOR "TRANSMISSION OIL CHANGE"

HINT: The transmission has torque controlled adaptive pressure control. Pressure control means that the transmission regulates the pressure itself during each gear shift. This avoids harsh gear shifting. Each gear shift is evaluated by the control module and stored in the memory. This allows for compensation for wear and tear in the transmission and clutch. It is important that the adaptation in the memory is reset after the transmission has been repaired. This is to ensure normal operation. The oil is replaced during repair; the "Transmission oil change" counter must be reset. If the counter is not reset when the fluid is drained and replaced, there is a risk that a diagnostic trouble code (DTC) will be stored in incorrect circumstances.

NOTE: **This applies only if the transmission or one of the components in the transmission have been replaced.**

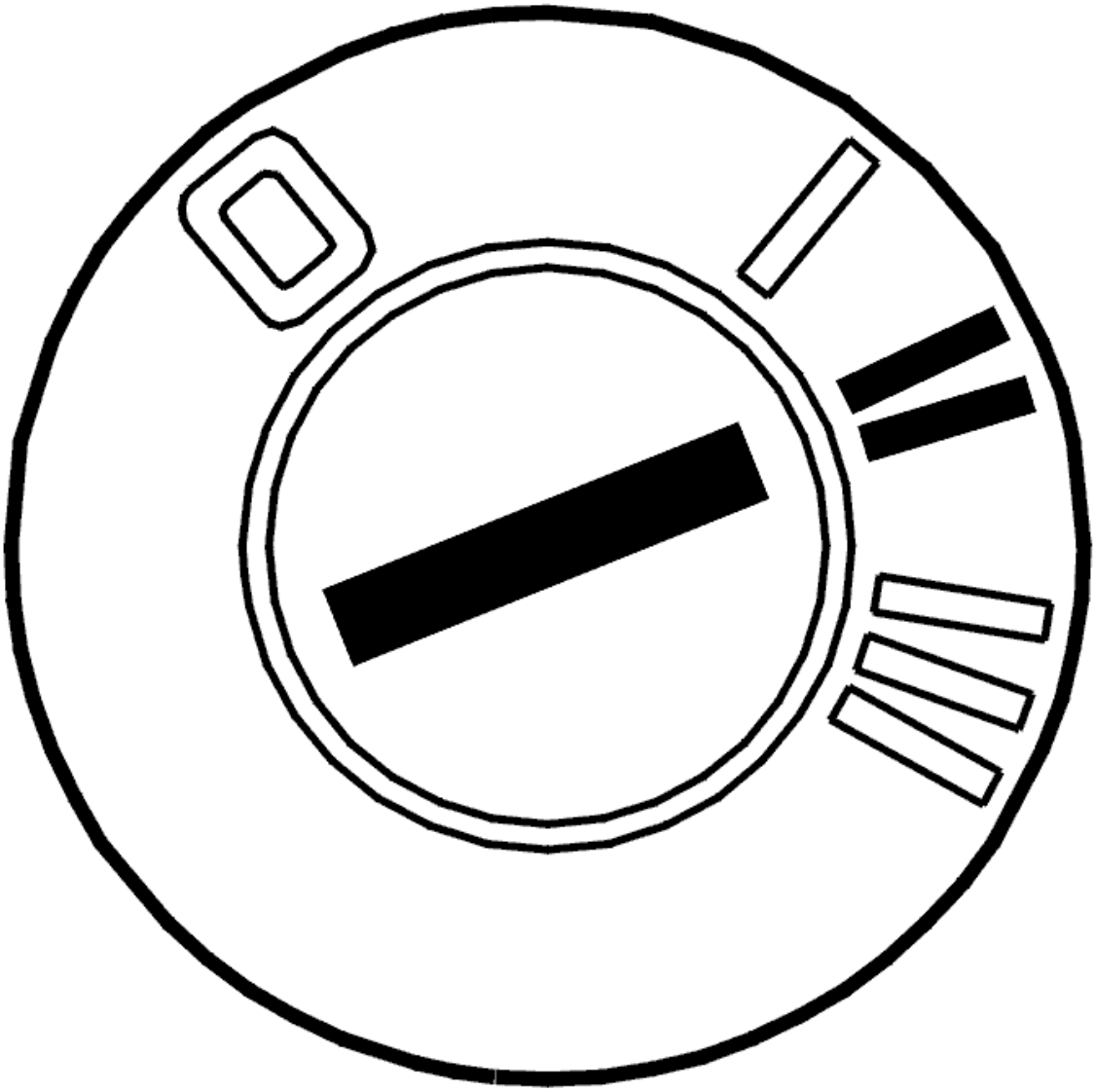

Fig. 157: Identifying Ignition ON
Courtesy of VOLVO CARS CORPORATION

- Ignition on.

  Click on the VCT2000 symbol to reset the adaptation and counter.

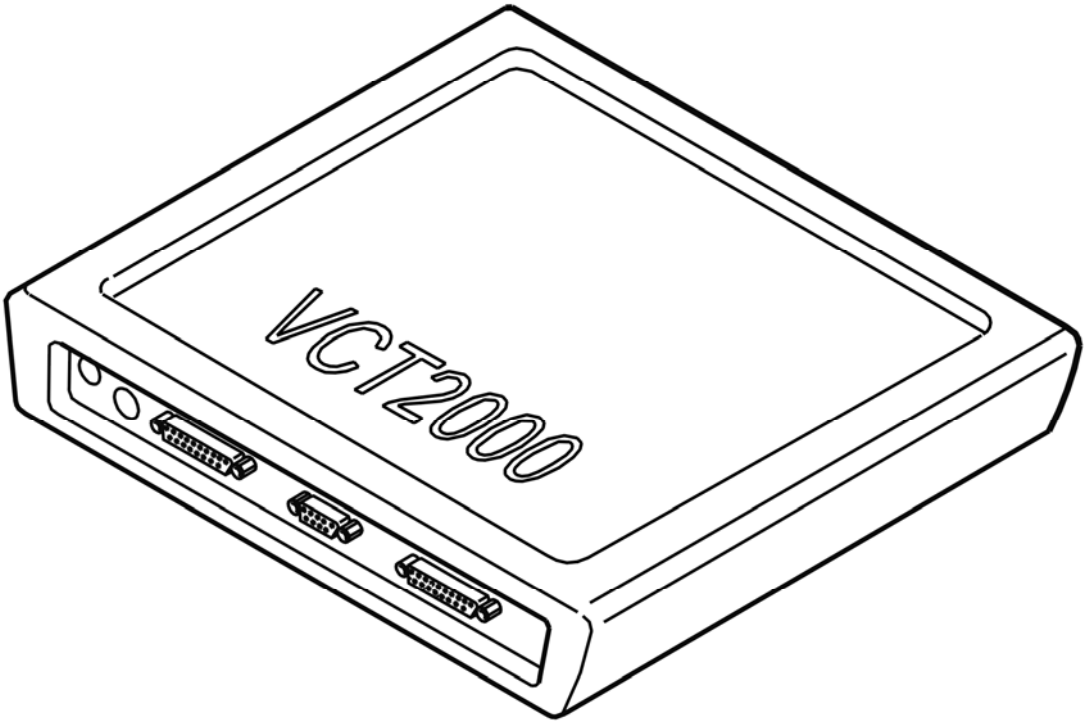

Fig. 158: Identifying VCT2000 Diagnostic Tool Symbol In VIDA
Courtesy of VOLVO CARS CORPORATION

CHECKING TRANSMISSION CONTROL MODULE (TCM) POWER SUPPLY AND GROUND TERMINALS (4T65 AWD; 2003-2006)

CHECKING TRANSMISSION CONTROL MODULE (TCM) POWER SUPPLY AND GROUND TERMINALS

CHECKING POWER SUPPLY AND GROUND TERMINALS

Check the power supply cable for the transmission control module (TCM). Check for an intermittent open-circuit.

Check the transmission control module (TCM) connector. Check for damaged terminal pins. Check for contact resistance and oxidation.

Check the ground terminal between the transmission control module (TCM) and ground terminal. Check for an intermittent open-circuit. Check for contact resistance and oxidation.

Other information

- see **CHECKING WIRING AND TERMINALS**

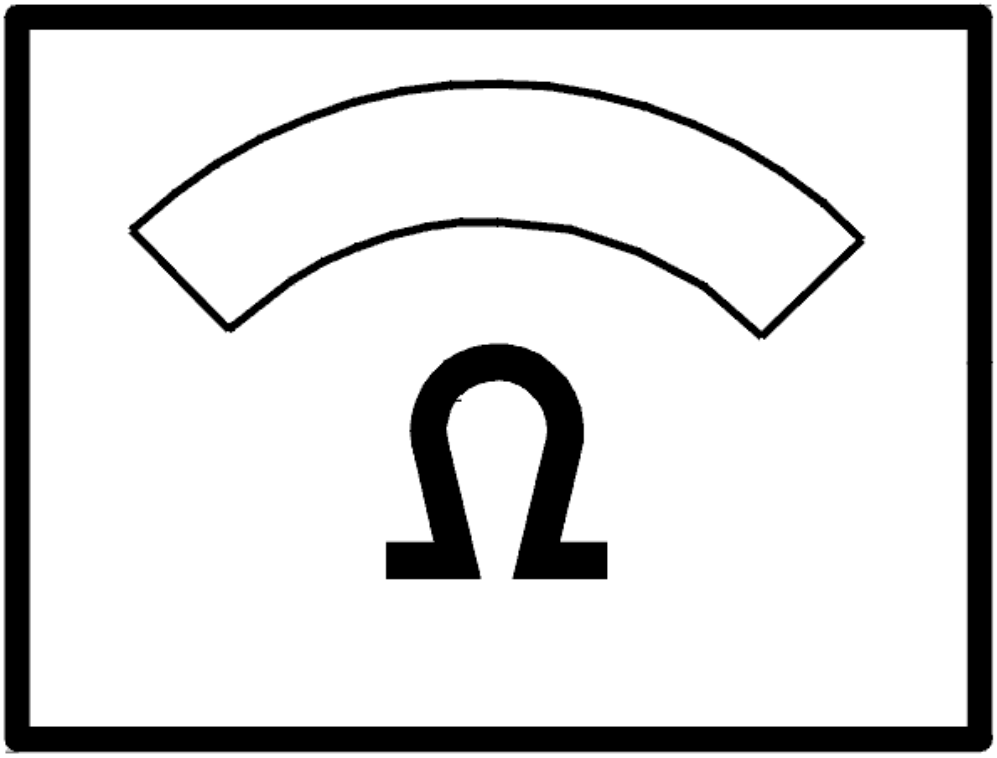

Fig. 159: Identifying Ohms Display
Courtesy of VOLVO CARS CORPORATION

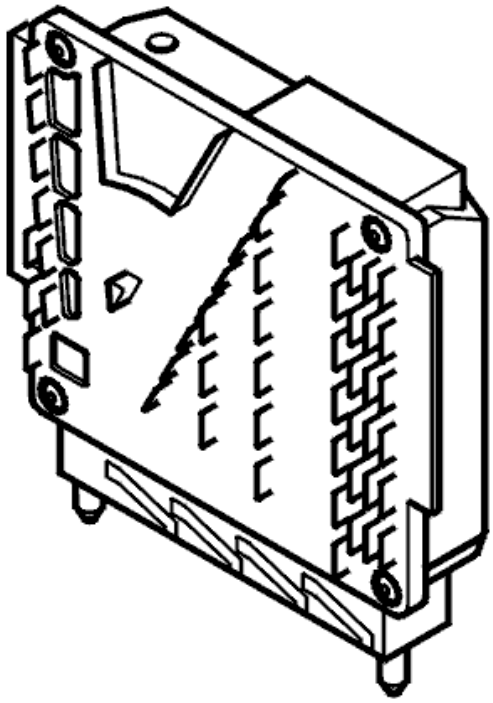

Fig. 160: Identifying Transmission Control Module (TCM)
Courtesy of VOLVO CARS CORPORATION

CHECKING TRANSMISSION FLUID TEMPERATURE SENSOR (4T65 AWD; 2003-2006)

CHECKING TRANSMISSION FLUID TEMPERATURE SENSOR

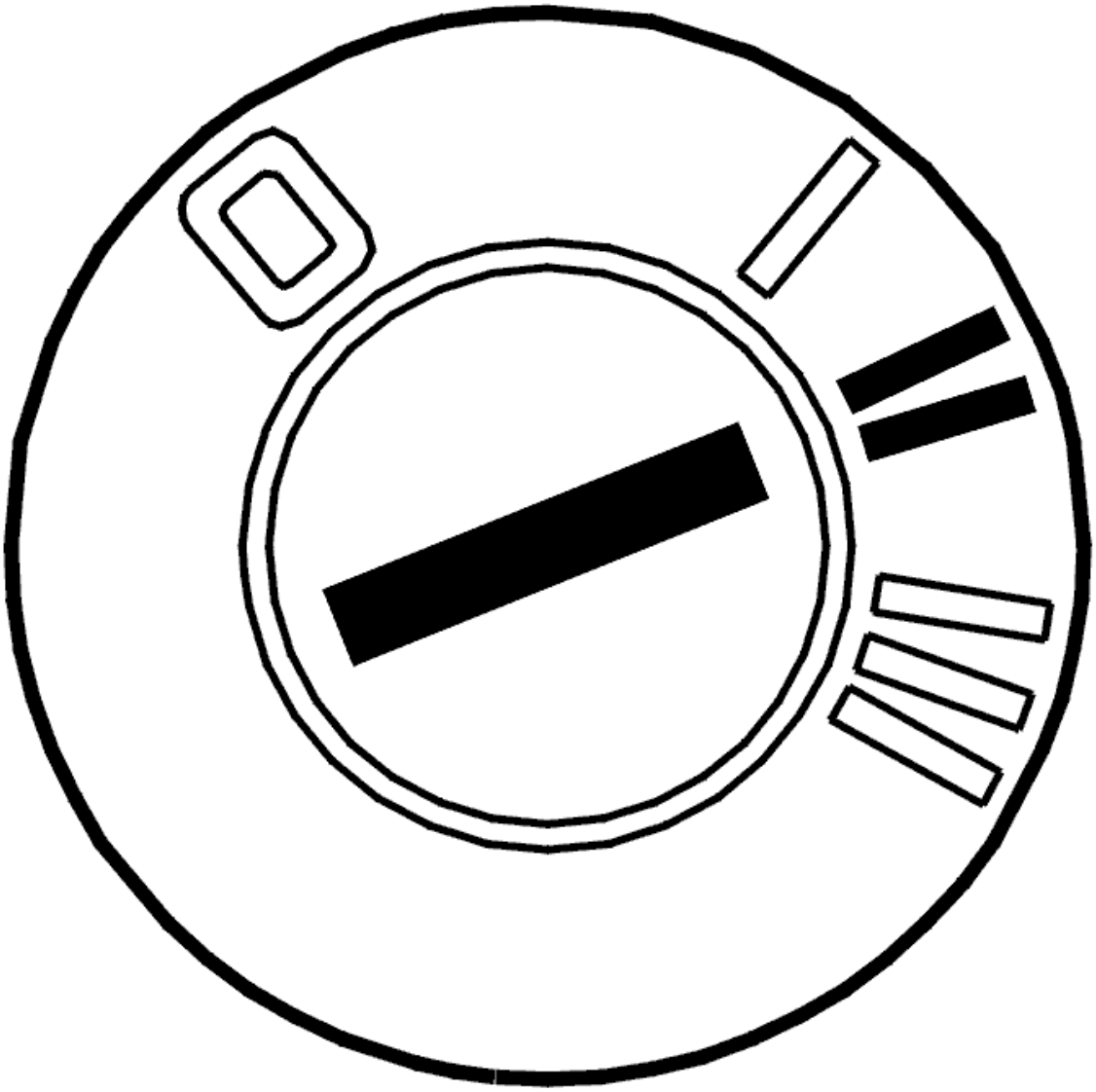

Fig. 161: Identifying Ignition ON
Courtesy of VOLVO CARS CORPORATION

- Ignition on
- Read off the oil temperature.

  Check that the temperature is within its permitted range.

  Compare with the transmission temperature.

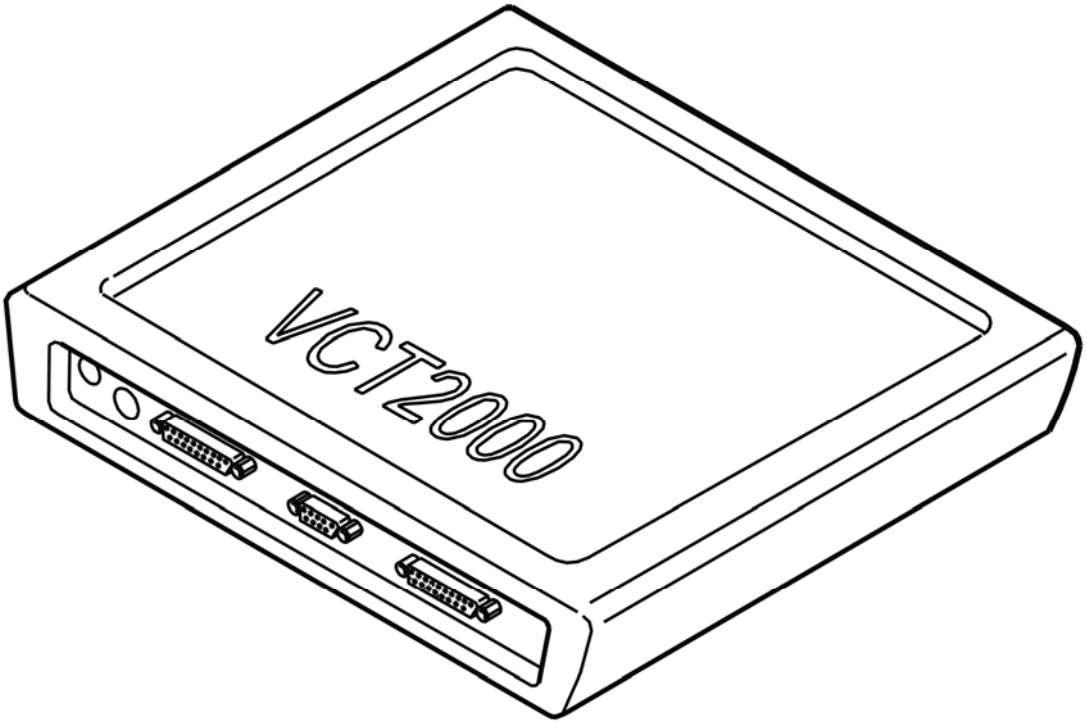

Fig. 162: Identifying VCT2000 Diagnostic Tool Symbol In VIDA
Courtesy of VOLVO CARS CORPORATION

Is the transmission temperature within its permitted range?

- **YES**

  FAULT NOT FOUND: Troubleshooting has been completed.

- **NO**

  Refer to **CHECKING TRANSMISSION FLUID TEMPERATURE SENSOR**

CHECKING TRANSMISSION FLUID TEMPERATURE SENSOR

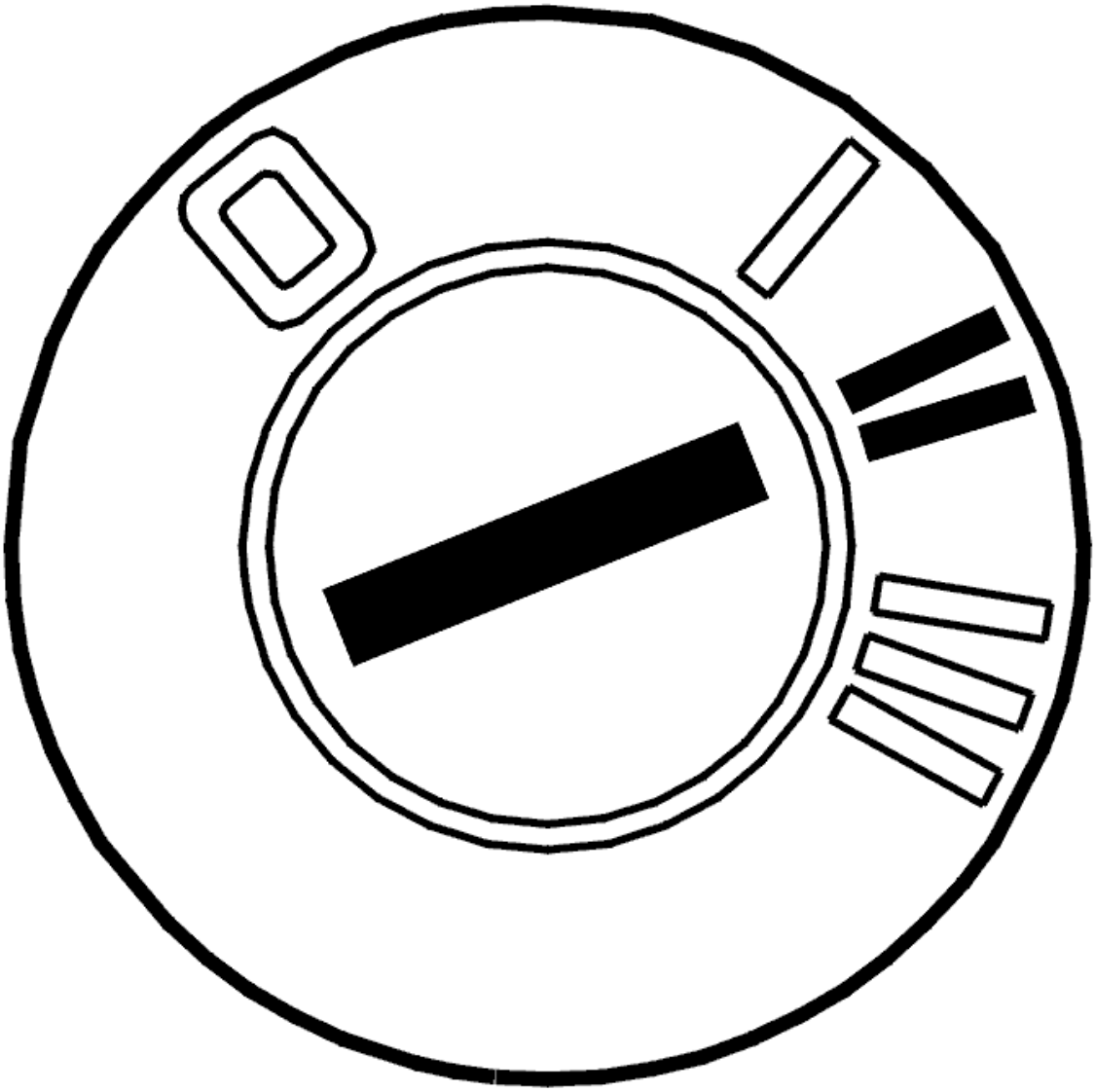

Fig. 163: Identifying Ignition ON
Courtesy of VOLVO CARS CORPORATION

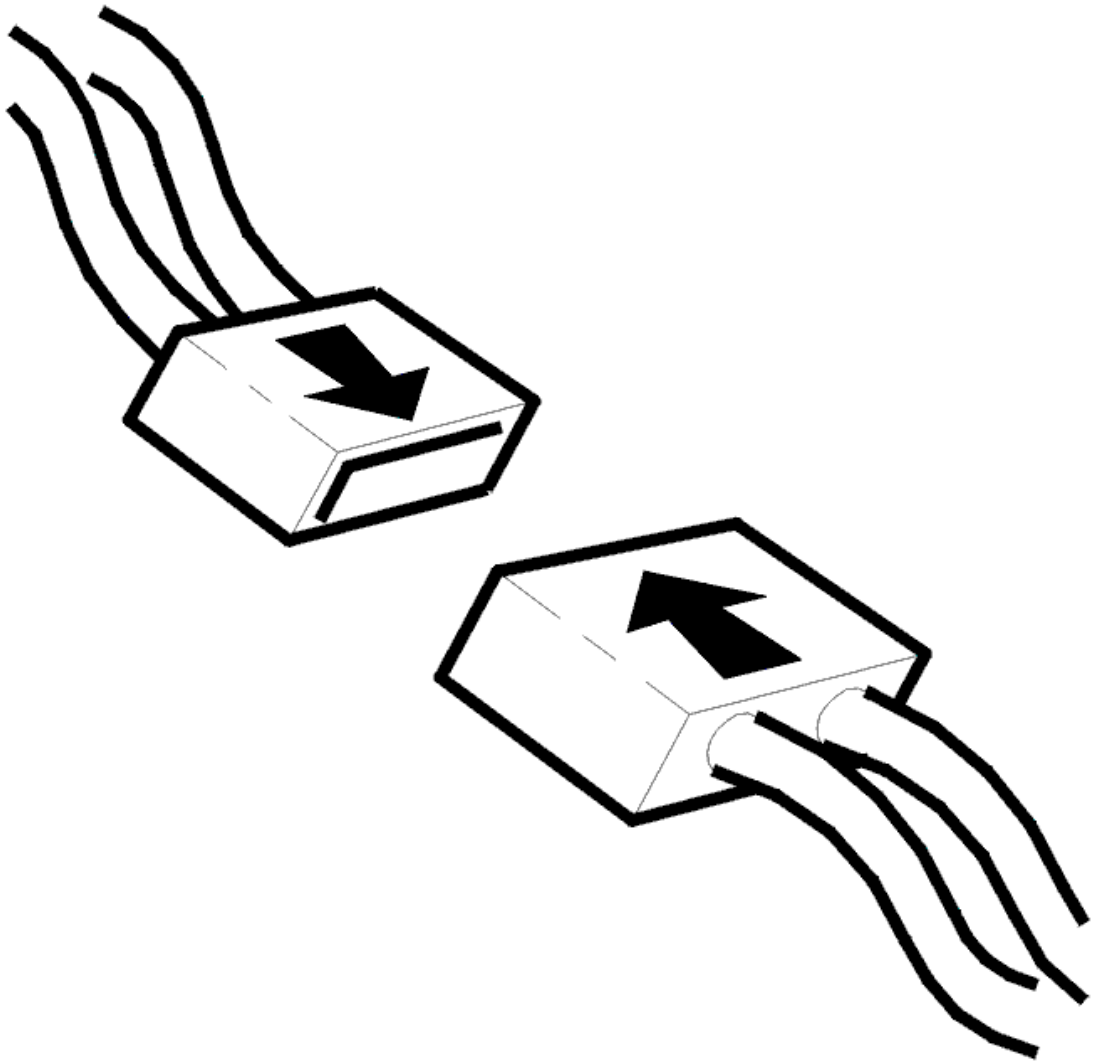

Fig. 164: Identifying Connector(s) Reinstallation
Courtesy of VOLVO CARS CORPORATION

- Ignition off
- Check the transmission control module (TCM) and transmission connectors. Check for contact resistance and oxidation
- Reconnect control module and transmission connector
- Ignition on
- Read off the oil temperature.

  Check that the temperature is within its permitted range.

  Compare with the transmission temperature.

  If the transmission temperature is within its permitted range, the cause of the diagnostic trouble code

(DTC) was contact resistance or oxidation in the control module or transmission connector.

Other information

- see **CHECKING WIRING AND TERMINALS**

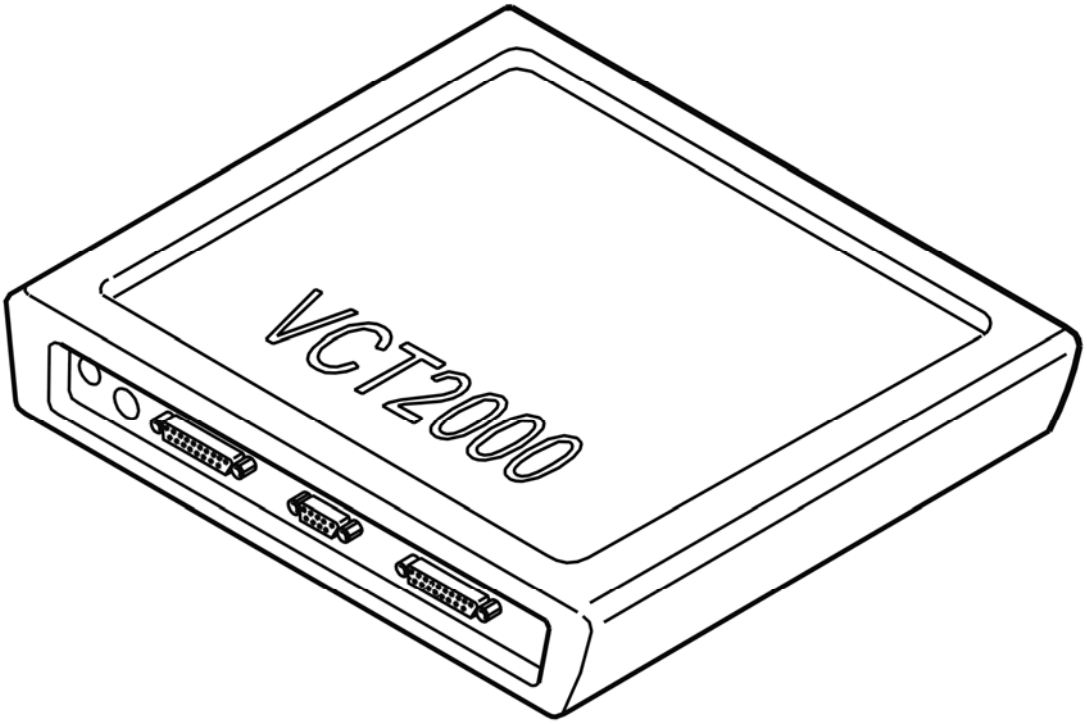

Fig. 165: Identifying VCT2000 Diagnostic Tool Symbol In VIDA
Courtesy of VOLVO CARS CORPORATION

Was the transmission temperature within its permitted range?

- **YES**

  OKAY: Troubleshooting has been completed.

- **NO**

  Refer to **CHECKING TEMPERATURE SENSOR**

CHECKING TEMPERATURE SENSOR

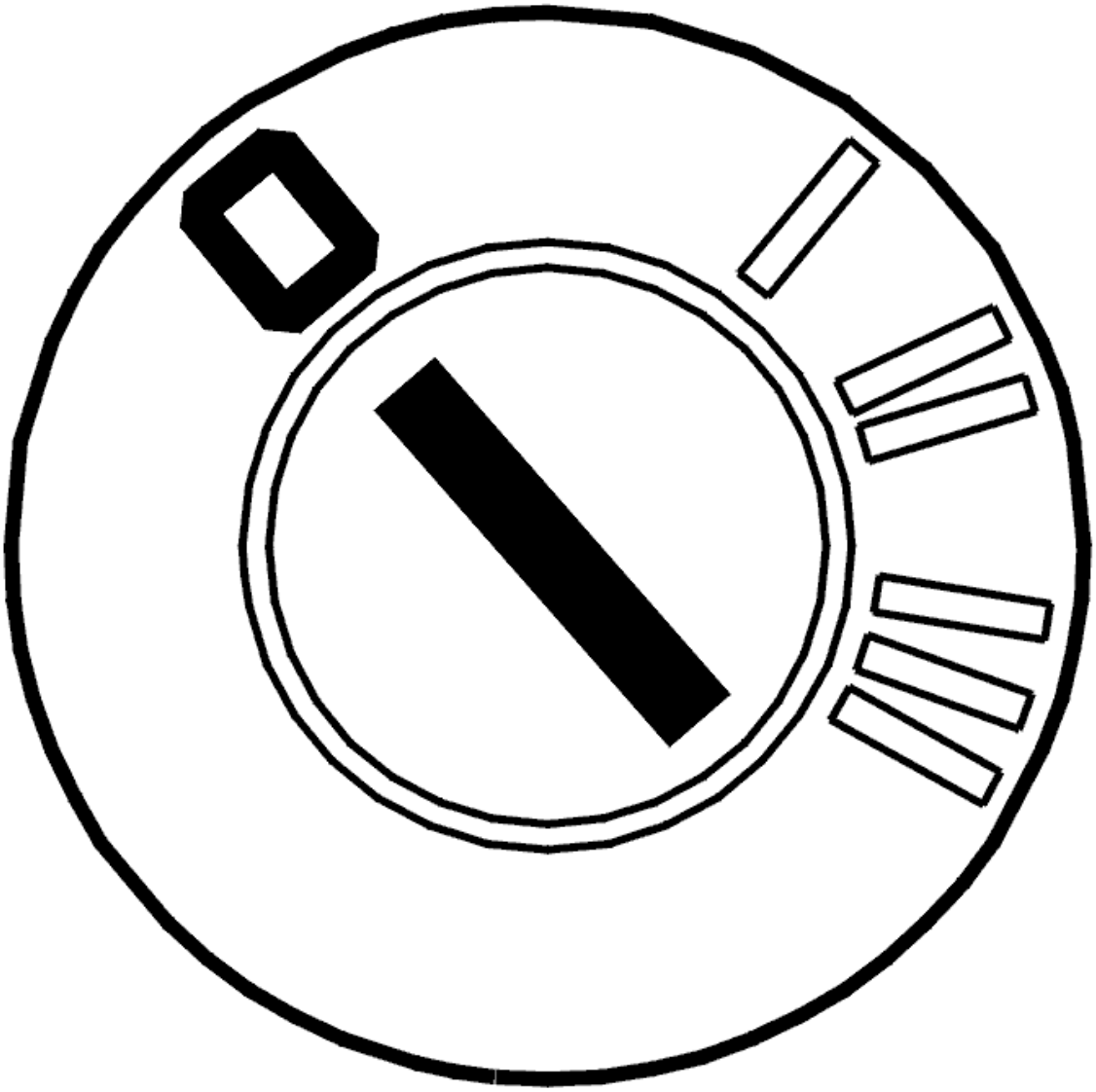

Fig. 166: Identifying Ignition OFF
Courtesy of VOLVO CARS CORPORATION

- Ignition off
- Disconnect the transmission connector
- Connect adapter see **9511505** and see **9813190** to the transmission connector (transmission side)
- Connect an ohmmeter between terminals #L (terminal #A11) and #M (terminal #A12).

  The resistance must be 3.4-3.6 kohms at 20 °C.

  Other information

  - To connect the breakout box to the transmission connector, see **CONNECTING THE BREAKOUT BOX, GM AUTOMATIC TRANSMISSIONS**
  - For information about signals, see **SIGNAL SPECIFICATION**

- For information about the resistance values, see **COMPONENT RESISTANCE VALUES** .

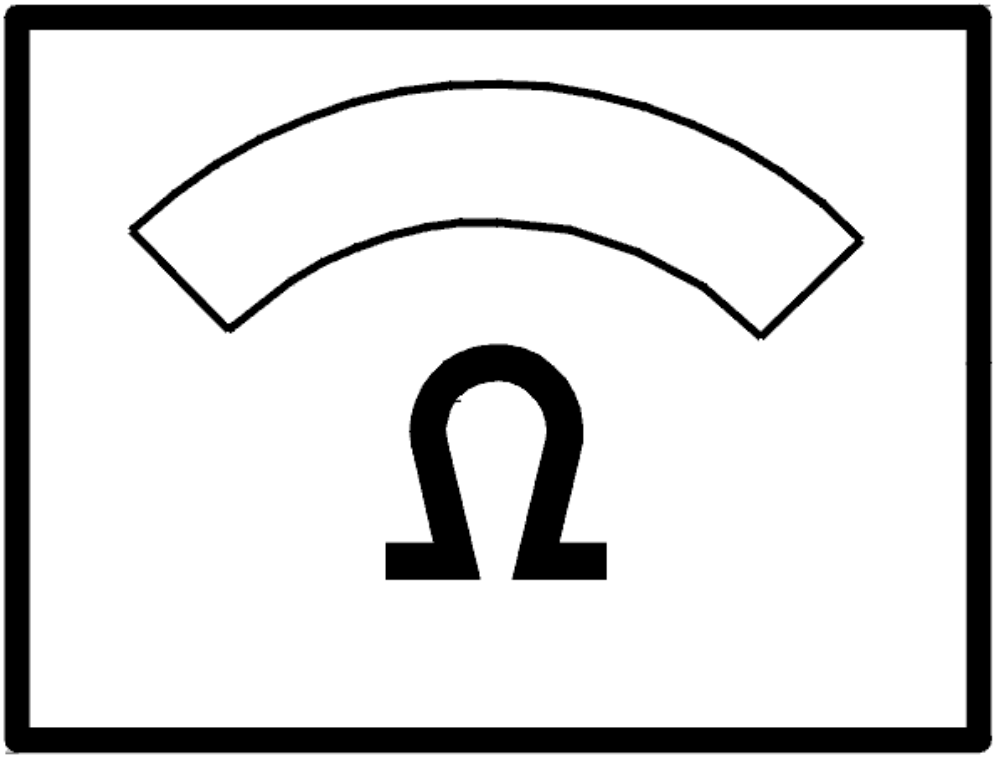

Fig. 167: Identifying Ohms Display
Courtesy of VOLVO CARS CORPORATION

Was the resistance OK?

- **YES**

  Refer to **CHECKING SIGNAL CABLE**

- **NO**

  Refer to **CHECKING WIRING AND COMPONENT**

CHECKING SIGNAL CABLE

Check the cable between control module terminal #37 (terminal #A37) and transmission connector (control module side) terminal #L (terminal #11). Check for a short-circuit to ground. Check for a short-circuit to supply voltage.

HINT: With the ignition on, the transmission connector disconnected and a voltmeter connected between terminal #L (terminal #A11) and ground, the voltage should be 5 V.

NOTE: Diagnostic trouble codes (DTCs) for the gear-shift position sensor and the solenoids may be stored when disconnecting the transmission connector.

Remedy as necessary.

Other information:

- To connect the breakout box, see **CONNECTING THE BREAKOUT BOX**
- To connect the breakout box to the transmission connector, see **CONNECTING THE BREAKOUT BOX, GM AUTOMATIC TRANSMISSIONS**
- For information about signals, see **SIGNAL SPECIFICATION**
- see **CHECKING WIRING AND TERMINALS**

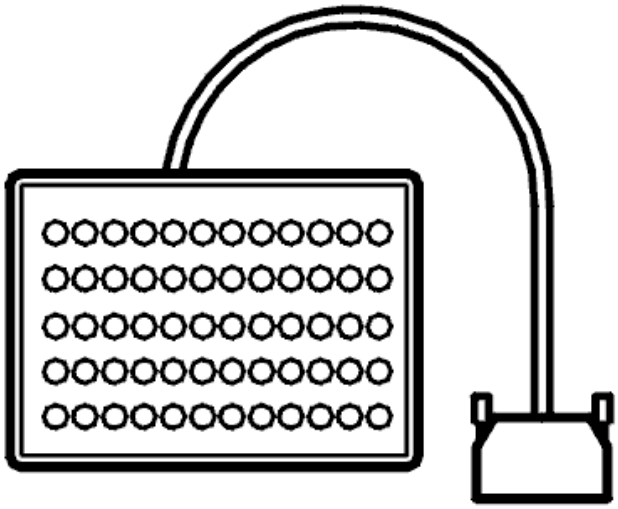

Fig. 168: Identifying Breakout Box
Courtesy of VOLVO CARS CORPORATION

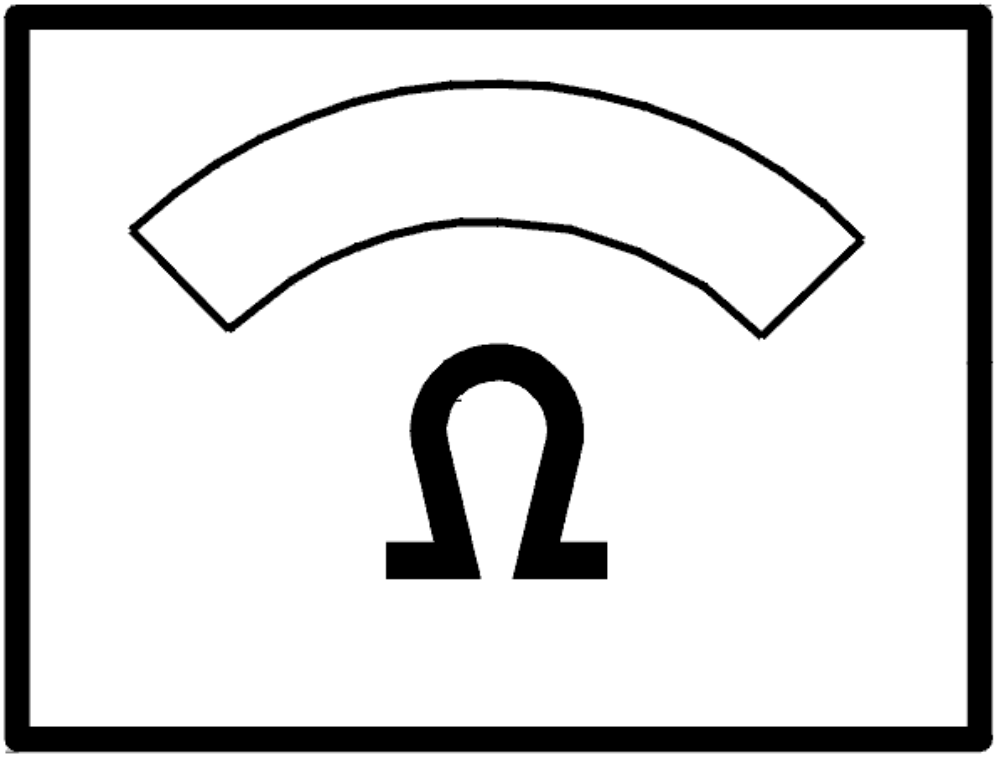

Fig. 169: Identifying Ohms Display
Courtesy of VOLVO CARS CORPORATION

Was a fault detected?

- **YES**

  Refer to **VERIFICATION**

- **NO**

  Refer to **CHECKING WIRING AND COMPONENT**

CHECKING WIRING AND COMPONENT

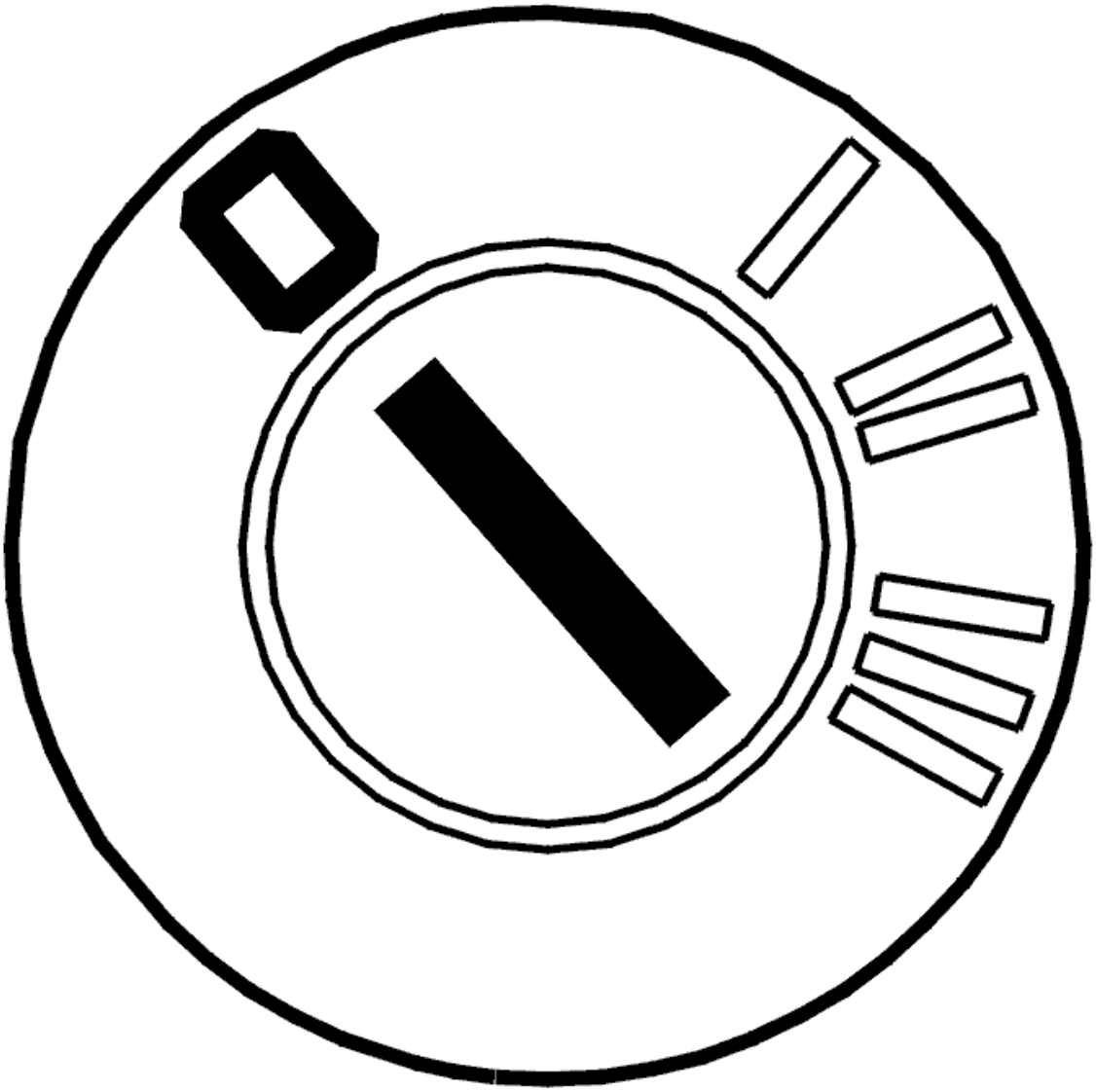

Fig. 170: Identifying Ignition OFF
Courtesy of VOLVO CARS CORPORATION

- Ignition off
- Open the transmission control system.

  Check the cable between transmission terminal #L (terminal #A11) and temperature sensor terminal #A. Check for a short-circuit to ground. Check for a short-circuit to supply voltage.

  HINT: Check the temperature sensor: Measure the resistance between temperature sensor connector terminals #A and #B. The resistance should be between 3.5-3.6 kohms at 20 °C.

  Remedy as necessary.

  Other information:

- To connect the breakout box, see **CONNECTING THE BREAKOUT BOX**
- To connect the breakout box to the transmission connector, see **CONNECTING THE BREAKOUT BOX, GM AUTOMATIC TRANSMISSIONS**
- To replace the cable harness:
  - For AW50/51 AWD or AW55-50/51SN 2003-, see **TEMPERATURE SENSOR FLUID, TRANSAXLE, (TFT)**
  - For 4T65AWD 2003-, see **TEMPERATURE SENSOR FLUID, TRANSAXLE, (TFT)** .
- To replace the temperature sensor, see **TEMPERATURE SENSOR FLUID GEARBOX, REPLACING**
- For information about signals, see **SIGNAL SPECIFICATION**
- For information about the resistance values, see **COMPONENT RESISTANCE VALUES**
- see **CHECKING WIRING AND TERMINALS**

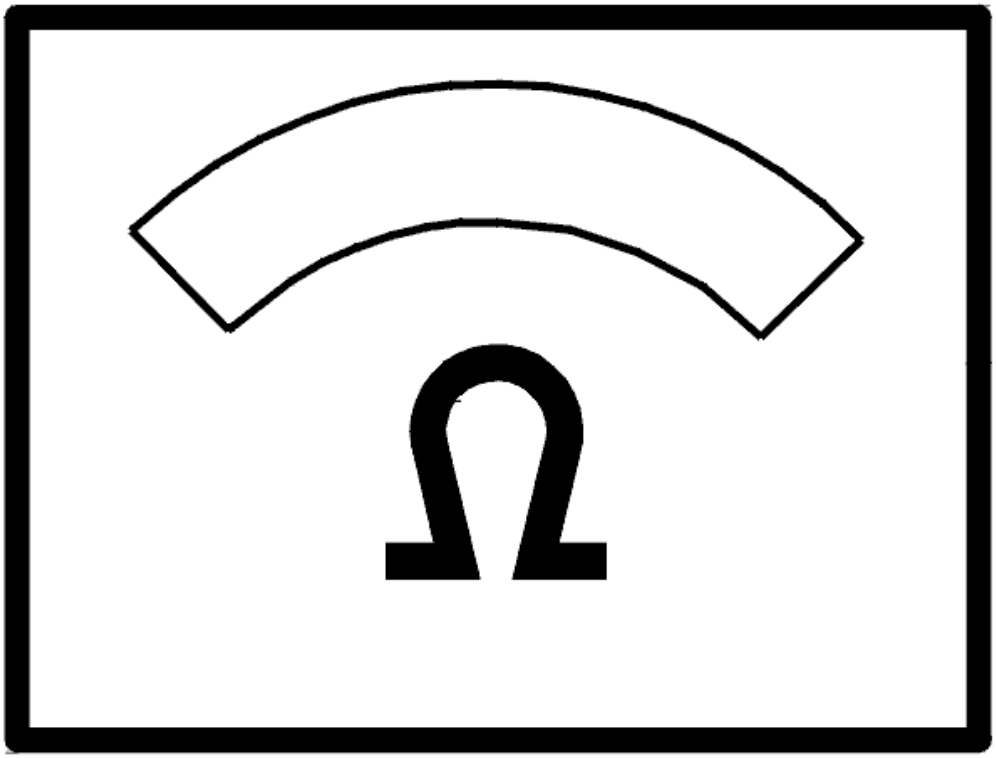

Fig. 171: Identifying Ohms Display

Courtesy of VOLVO CARS CORPORATION

- **Continue**

Refer to **RESETTING THE ADAPTATION**

RESETTING THE ADAPTATION

RESETTING ADAPTATION AND THE COUNTER FOR "TRANSMISSION OIL CHANGE"

HINT: The transmission has torque controlled adaptive pressure control. Pressure control means that the transmission regulates the pressure itself during each gear shift. This avoids harsh gear shifting. Each gear shift is evaluated by the control module and stored in the memory. This allows for compensation for wear and tear in the transmission and clutch. It is important that the adaptation in the memory is reset after the transmission has been repaired. This is to ensure normal operation. The oil is replaced during repair; the "Transmission oil change" counter must be reset. If the counter is not reset when the fluid is drained and replaced, there is a risk that a diagnostic trouble code (DTC) will be stored in incorrect circumstances.

NOTE: This applies only if the transmission or one of the components in the transmission have been replaced.

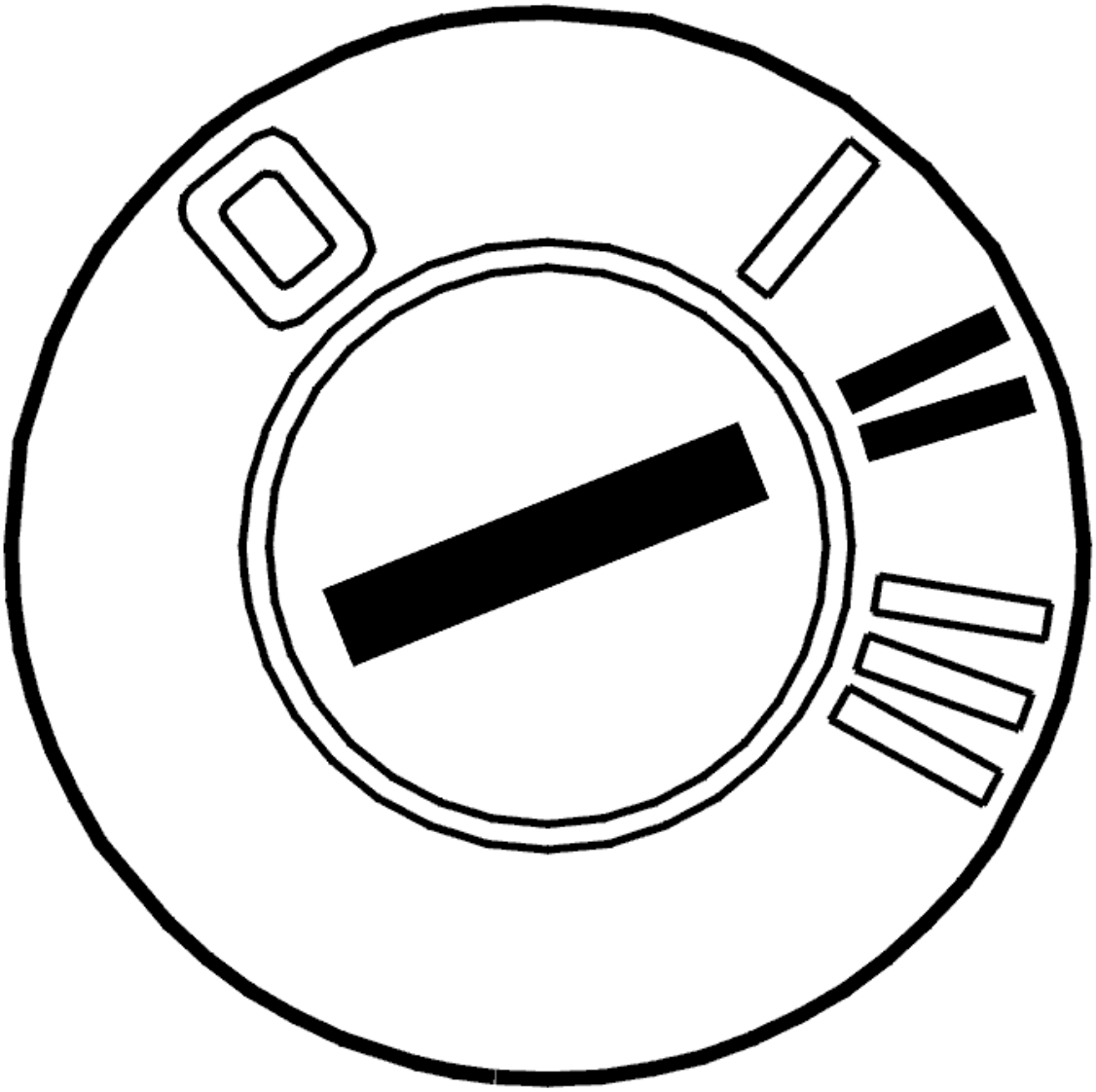

Fig. 172: Identifying Ignition ON
Courtesy of VOLVO CARS CORPORATION

- Ignition on.

  Click on the VCT2000 symbol to reset the adaptation and counter.

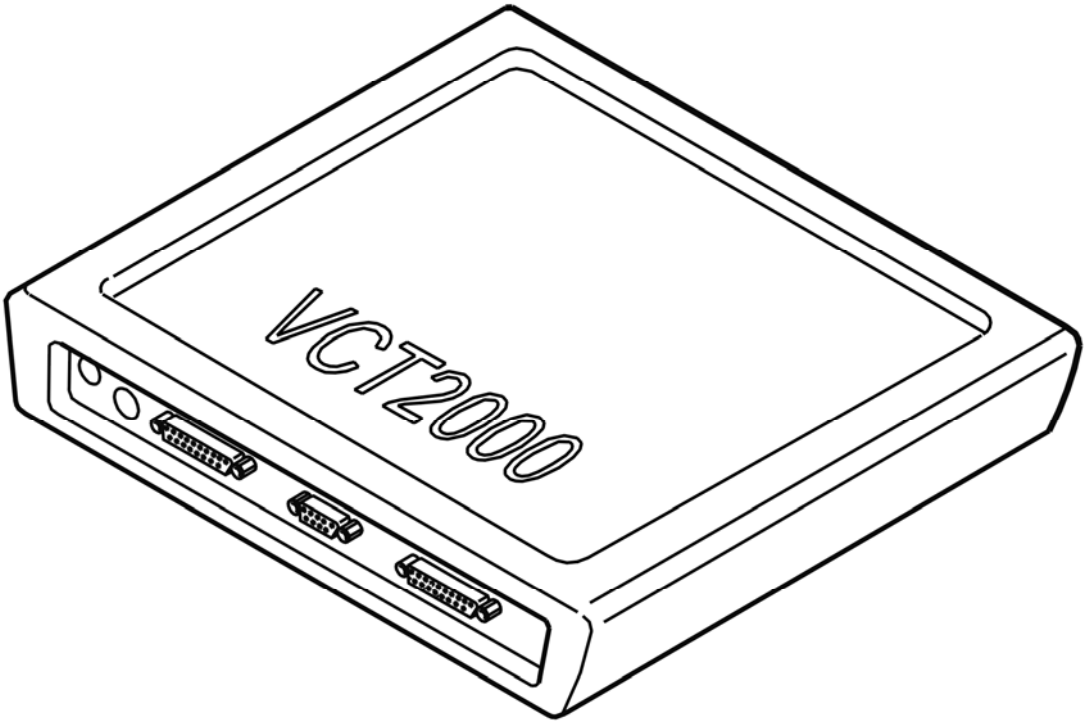

Fig. 173: Identifying VCT2000 Diagnostic Tool Symbol In VIDA
Courtesy of VOLVO CARS CORPORATION

- **Continue**

  Refer to **VERIFICATION**

VERIFICATION

VERIFICATION

HINT: After carrying out the repair check that the fault has been remedied.

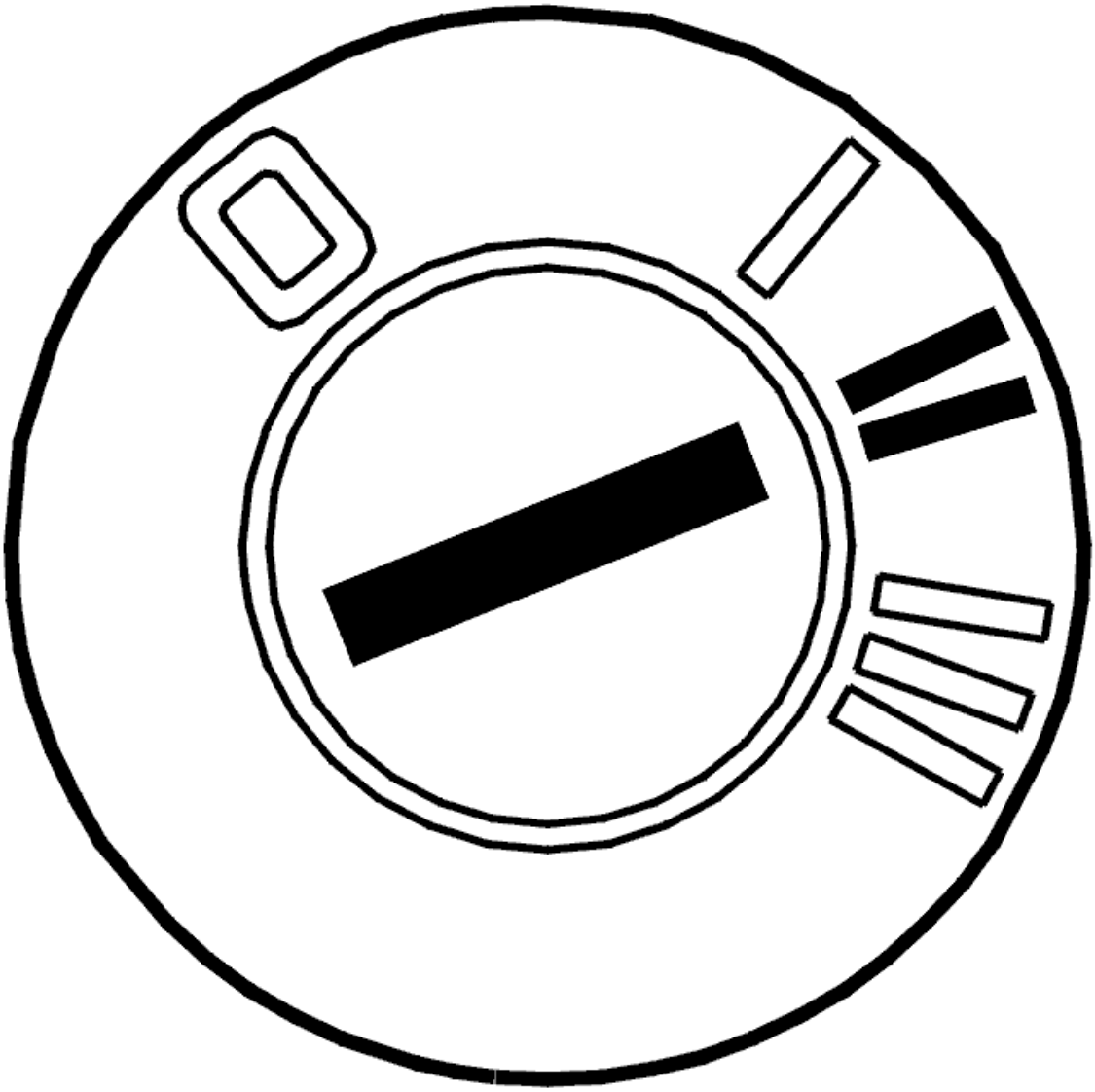

Fig. 174: Identifying Ignition ON
Courtesy of VOLVO CARS CORPORATION

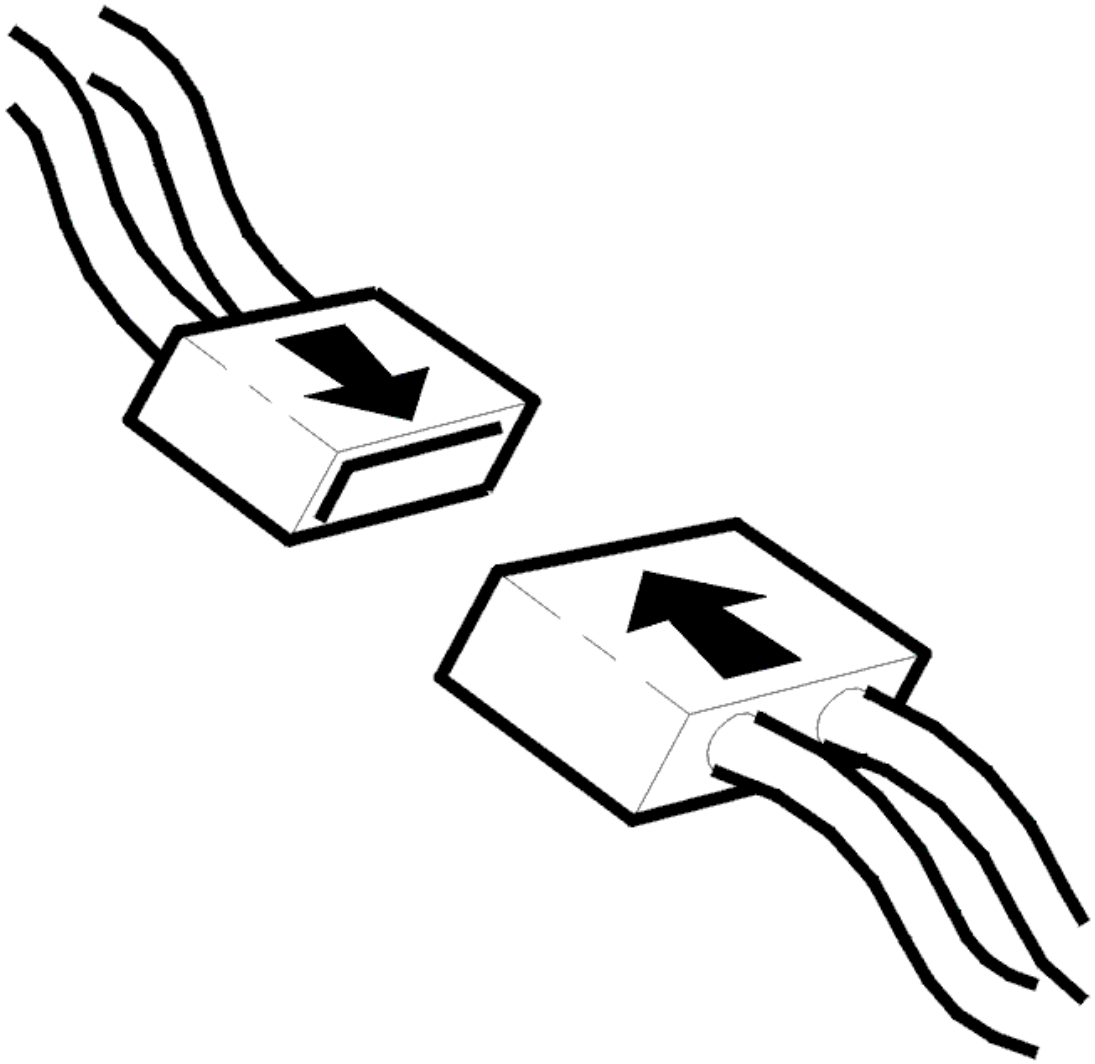

Fig. 175: Identifying Connector(s) Reinstallation
Courtesy of VOLVO CARS CORPORATION

- Ignition off.
- Reinstall connectors, components etc.
- Ignition on.
- Read off oil temperature.

  Check that the transmission oil temperature is within its permitted range. Compare with the transmission temperature.

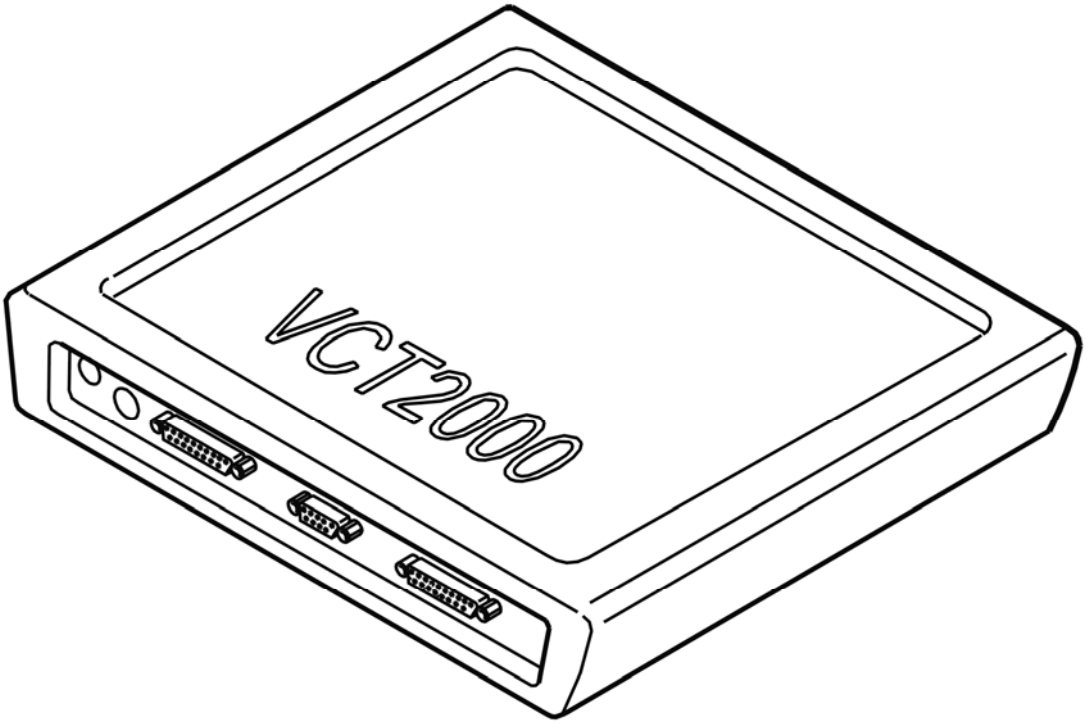

Fig. 176: Identifying VCT2000 Diagnostic Tool Symbol In VIDA
Courtesy of VOLVO CARS CORPORATION

Is the oil temperature within its permitted range?

- **YES**

  VERIFIED: Troubleshooting has been completed.

- **NO**

  Refer to **INFORMATION**

INFORMATION

FAULT-TRACING INFORMATION

The fault should have been detected and remedied. As this is not the case fault-tracing has failed.

Exit fault-tracing for this diagnostic trouble code (DTC) or make another attempt.

CHECKING TRANSMISSION LINE PRESSURE (4T65 AWD; 2003-2006)

CHECKING TRANSMISSION LINE PRESSURE

FUNCTION TEST

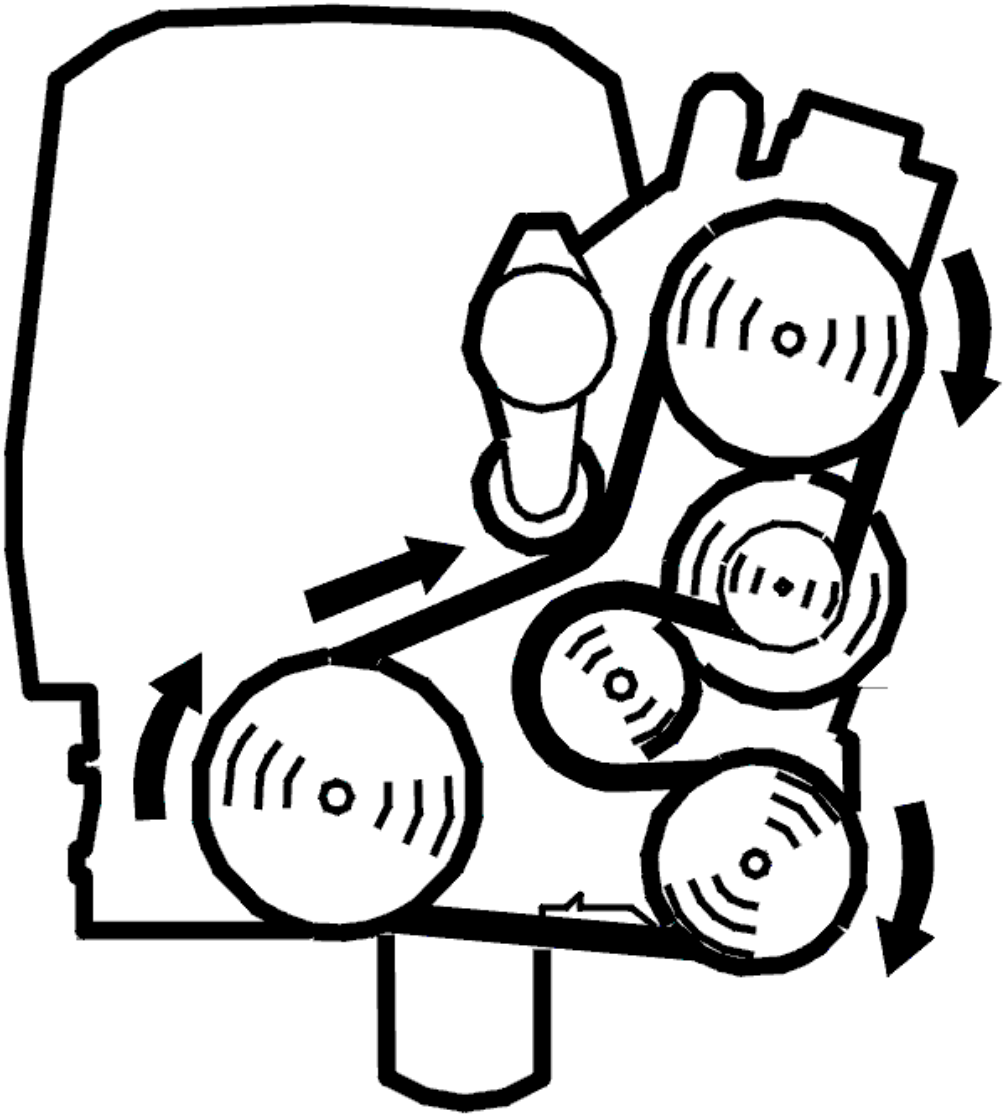

Fig. 177: Identifying Belt Routing
Courtesy of VOLVO CARS CORPORATION

- Ignition off
- Connect a manometer to the transmission test output
- Block all four wheels
- Start the engine
- Switch off the air conditioning (A/C).

Check that the transmission line pressure reaches 0.5 MPa at idle (650 rpm).

Check the transmission line pressure at maximum rpm:

NOTE: **Apply the parking brake. Press down hard on the brake pedal with your left foot.**

- Move the gear selector to position D
- Fully depress the accelerator pedal (AP) for a maximum of 5 seconds
- Read off the highest engine speed (RPM) and the line pressure. Compare to the table.

ENGINE B6XXXS

Maximum engine speed (rpm)	Gear shift position	Line pressure
2600- 2800 rpm	D	1.0 MPa
2600- 2800 rpm	R	1.1 MPa

ENGINE B6XXXT

Maximum engine speed (rpm)	Gear shift position	Line pressure
2100- 2400 rpm	D	1.1 MPa
2100- 2400 rpm	R	1.2 MPa

Check the transmission for leakage if the line pressure is too low. If there is no leakage, replace the transmission oil pump.

If the line pressure is too high, replace the control system.

Other information

- To connect the manometer to the transmission test output, see **LINE PRESSURE/STALL SPEED, CHECK**
- To replace the control system,
  - For removal, see **CONTROL SYSTEM/VALVE HOUSING, REMOVING**
  - To install, see **CONTROL SYSTEM / VALVE HOUSING, INSTALLING** .

Is the line pressure OK?

- **YES**

  OKAY: Troubleshooting has been completed.

- **NO**

  Refer to **RESETTING THE ADAPTATION**

RESETTING THE ADAPTATION

RESETTING ADAPTATION AND THE COUNTER FOR "TRANSMISSION OIL CHANGE"

HINT: The transmission has torque controlled adaptive pressure control. Pressure control means that the transmission regulates the pressure itself during each gear shift. This avoids harsh gear shifting. Each gear shift is evaluated by the control module and stored in the memory. This allows for compensation for wear and tear in the transmission and clutch. It is important that the adaptation in the memory is reset after the transmission has been repaired. This is to ensure normal operation. The oil is replaced during repair; the "Transmission oil change" counter must be reset. If the counter is not reset when the fluid is drained and replaced, there is a risk that a diagnostic trouble code (DTC) will be stored in incorrect circumstances.

NOTE: **This applies only if the transmission or one of the components in the transmission have been replaced.**

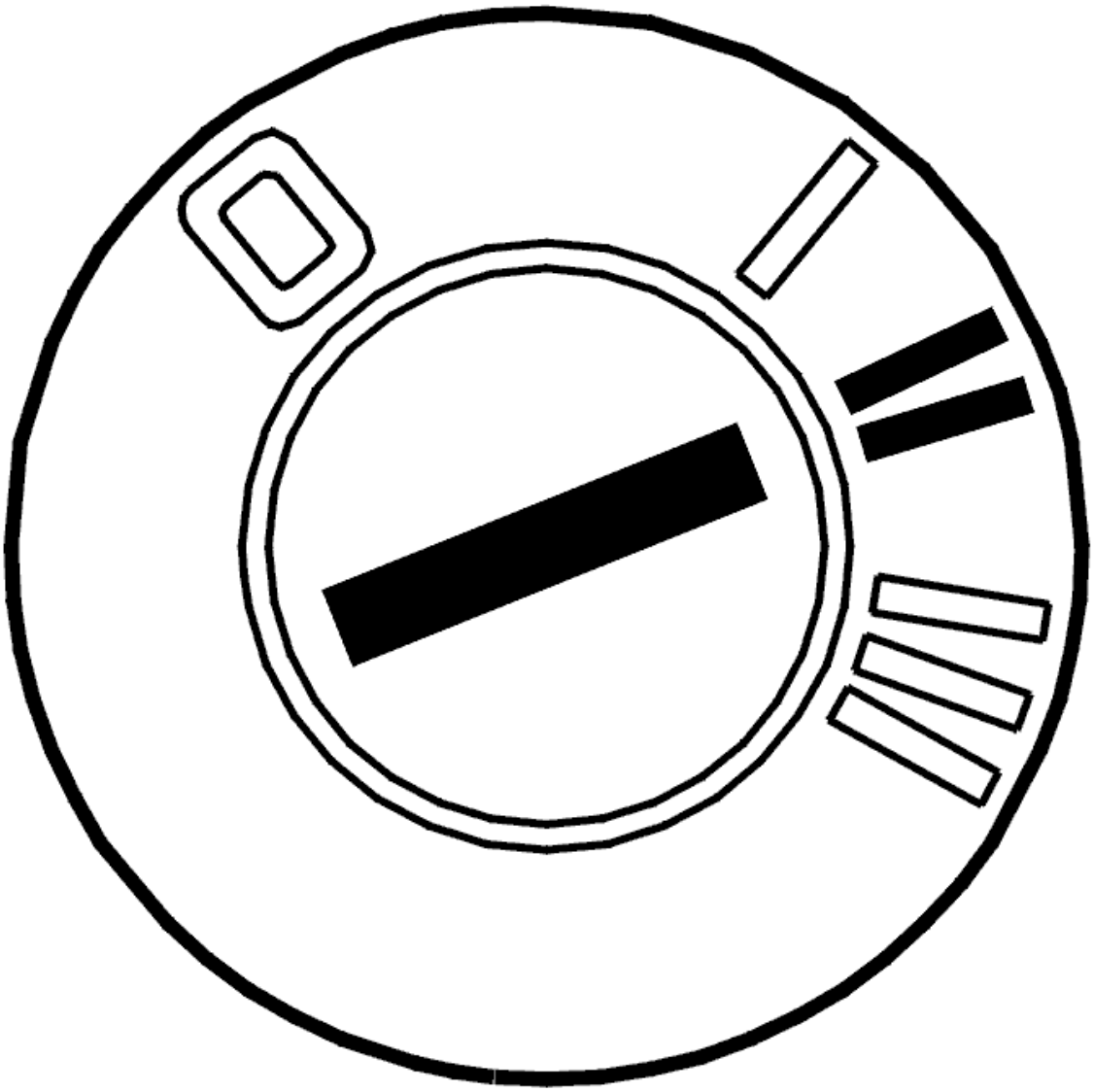

Fig. 178: Identifying Ignition ON
Courtesy of VOLVO CARS CORPORATION

- Ignition on.

Click on the VCT2000 symbol to reset the adaptation and counter.

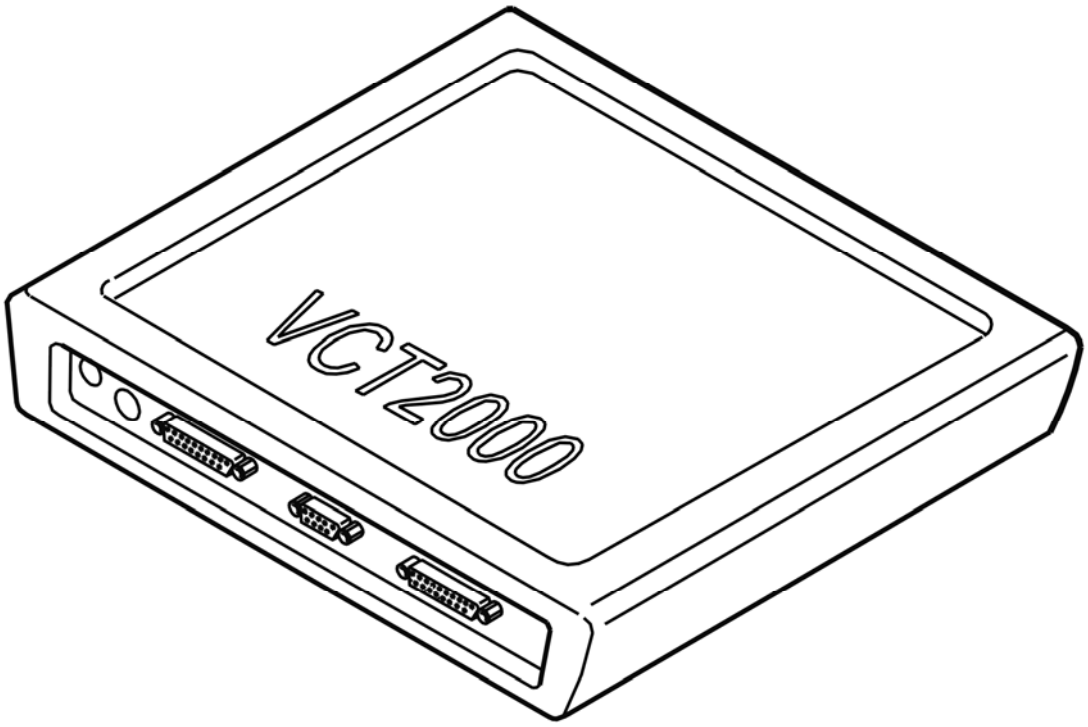

Fig. 179: Identifying VCT2000 Diagnostic Tool Symbol In VIDA
Courtesy of VOLVO CARS CORPORATION

- **Continue**

  Refer to **CHECKING AUTOMATIC TRANSMISSION**

CHECKING AUTOMATIC TRANSMISSION

CHECKING AUTOMATIC TRANSMISSION

NOTE: After carrying out the repair check that the symptom has been remedied.

Check the automatic transmission as follows:

- Test drive the car to test the function of the automatic transmission. See **TEST DRIVE FORM, DESCRIPTION**
- If hydraulic hoses, gaskets or other components have been replaced, check that there is no oil leakage after the test drive.

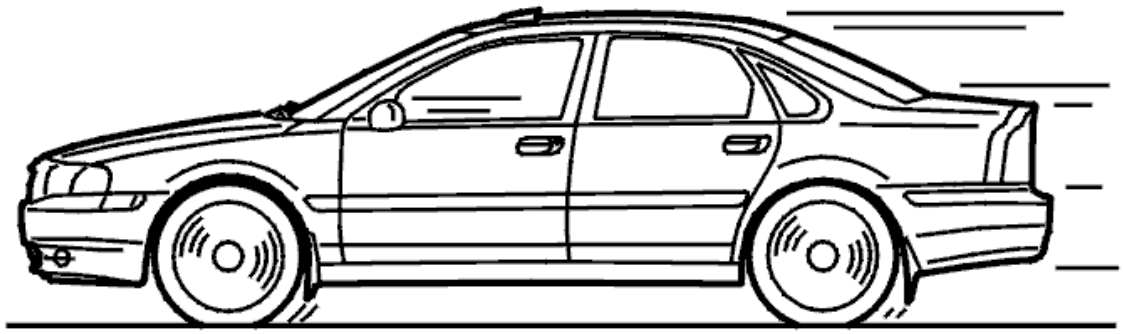

Fig. 180: Identifying Test Drive
Courtesy of VOLVO CARS CORPORATION

Is the automatic transmission OK?

- **YES**

  VERIFIED: Troubleshooting has been completed.

- **NO**

  Refer to **INFORMATION**

INFORMATION

FAULT-TRACING INFORMATION

The fault should have been detected and remedied. As this is not the case fault-tracing has failed.

Exit fault-tracing for this diagnostic trouble code (DTC) or make another attempt.

OIL PUMP, REPLACING

- See **OIL PUMP, REPLACING** .

LINE PRESSURE/STALL SPEED, CHECK

- For gearbox 4T65EV/-GT, see **LINE PRESSURE/STALL SPEED, CHECKING**
- For gearbox AW50AWD, see **LINE PRESSURE/STALL SPEED, CHECK** .
- For TF-80SCAWD D5244TX 2006-, see **LINE PRESSURE/STALL SPEED, CHECKING** .

CHECKING TRANSMISSION P/N (4T65 AWD; 2003-2006)

CHECKING TRANSMISSION P/N

CHECKING P/N

NOTE: Only applies if the transmission has been replaced.

Check that the transmission identification plate and the transmission P/N correspond to the specification of the car. If the incorrect transmission has been installed, for example, 4T65EV instead of 4T65EV-GT, the transmission will not function correctly Replace the transmission if it is the incorrect type.

Other information

- To remove the transmission, see **TRANSMISSION, REMOVING**
- To install the transmission, see **TRANSMISSION, INSTALLING (2003, 2004)** or **TRANSMISSION, INSTALLING (2005, 2006)** .

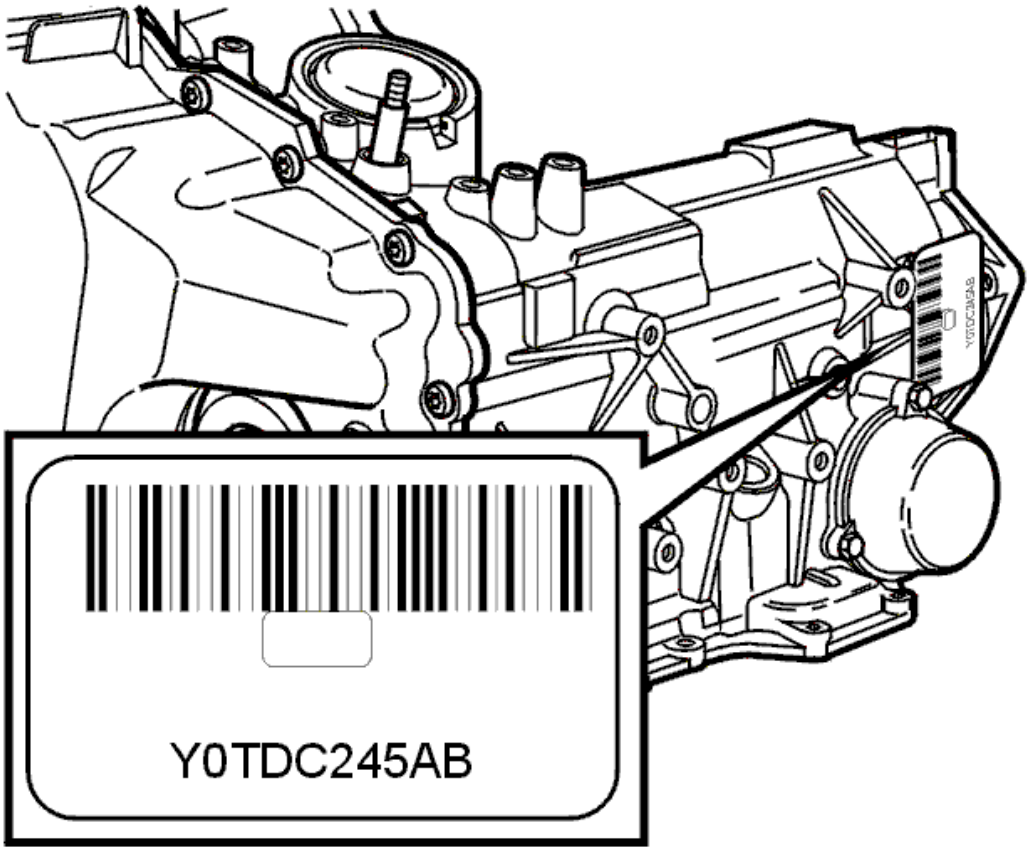

Fig. 181: Identification Plate On Transmission
Courtesy of VOLVO CARS CORPORATION

CHECKING TORQUE CONVERTER (4T65 AWD; 2003-2006)

CHECKING TORQUE CONVERTER

If there is a suspicion that the torque converter is damaged, replace the torque converter. See **TORQUE CONVERTER/SEAL, REPLACING** .

Remedy as necessary.

Other information

- To remove the transmission, see **TRANSMISSION, REMOVING**
- To install the transmission, see **TRANSMISSION, INSTALLING (2003, 2004)** or **TRANSMISSION, INSTALLING (2005, 2006)** .

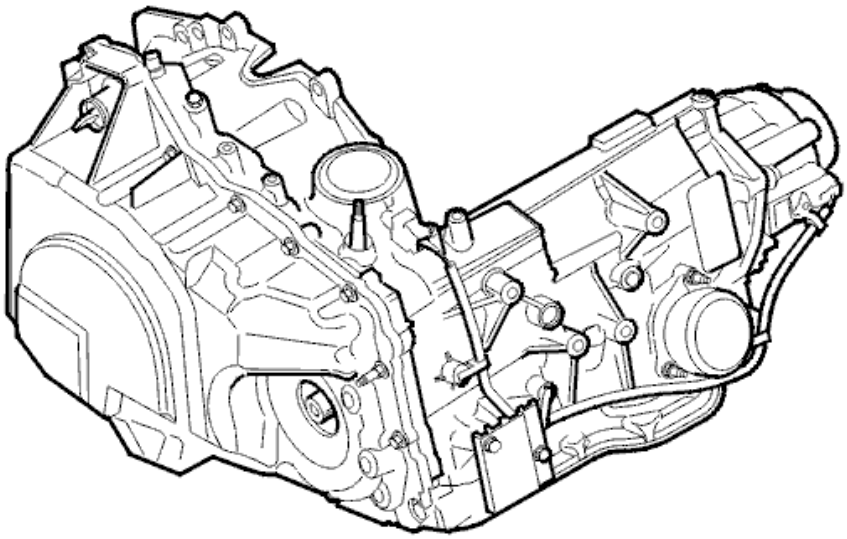

P2X

4301721D ©VOLVO

Fig. 182: Identifying Transmission
Courtesy of VOLVO CARS CORPORATION

Was a fault detected?

- **YES**

  Refer to **RESETTING THE ADAPTATION**

- **NO**

  FAULT NOT FOUND: Troubleshooting has been completed.

RESETTING THE ADAPTATION

RESETTING ADAPTATION AND THE COUNTER FOR "TRANSMISSION OIL CHANGE"

HINT: The transmission has torque controlled adaptive pressure control. Pressure control means that the transmission regulates the pressure itself during each gear shift. This avoids harsh gear shifting. Each gear shift is evaluated by the control module and stored in the memory. This allows for compensation for wear and tear in the transmission and clutch. It is important that the adaptation in the memory is reset after the transmission has been repaired. This is to ensure normal operation. The oil is replaced during repair; the "Transmission oil change" counter must be reset. If the counter is not reset when the fluid is

drained and replaced, there is a risk that a diagnostic trouble code (DTC) will be stored in incorrect circumstances.

NOTE: This applies only if the transmission or one of the components in the transmission have been replaced.

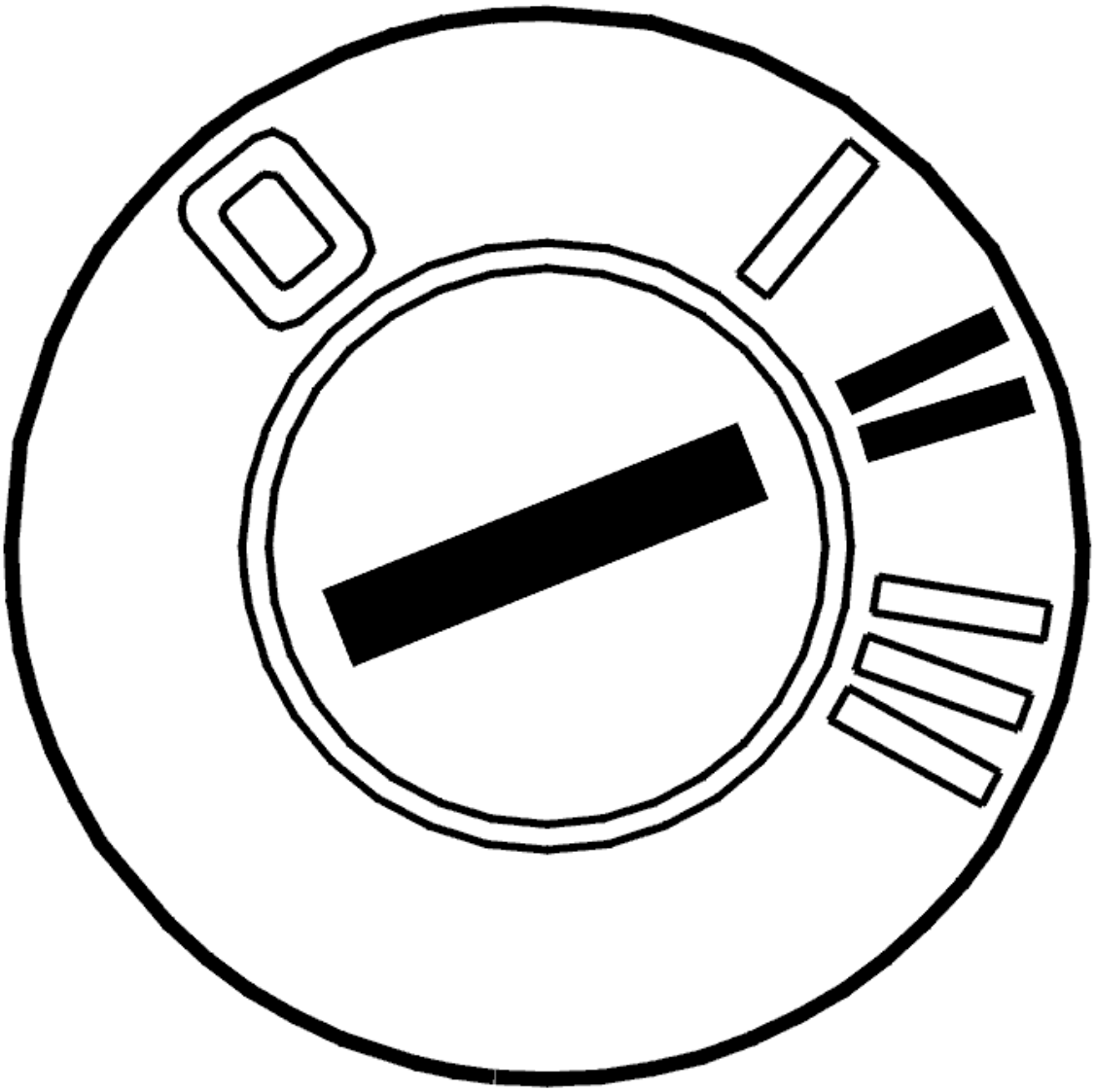

Fig. 183: Identifying Ignition ON
Courtesy of VOLVO CARS CORPORATION

- Ignition on.

  Click on the VCT2000 symbol to reset the adaptation and counter.

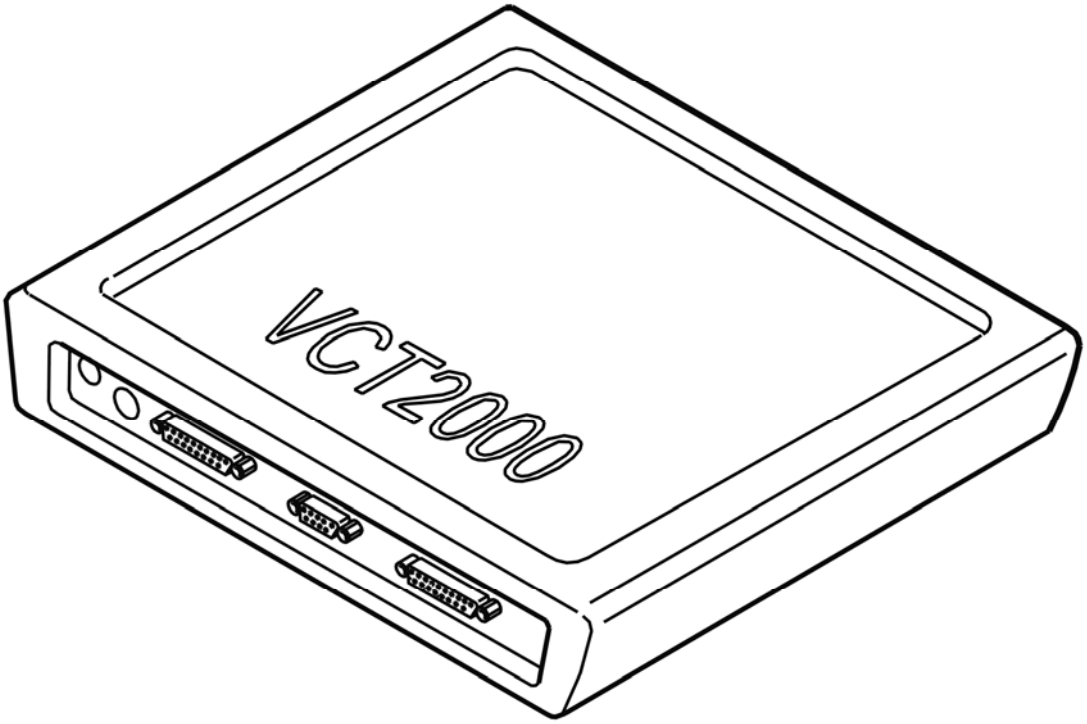

Fig. 184: Identifying VCT2000 Diagnostic Tool Symbol In VIDA
Courtesy of VOLVO CARS CORPORATION

CHECKING TORQUE CONVERTER HOUSING MOUNTING (4T65 AWD; 2003-2006)

CHECKING THAT THE COVER FOR THE TORQUE CONVERTER IS CORRECTLY INSTALLED

Check that the cover is secured.

- See **SIDE COVER TRANSMISSION, INSTALLING** .

Was it properly secured?

- **YES**

  FAULT NOT FOUND: Troubleshooting has been completed.

- **NO**

  Refer to **RESETTING THE ADAPTATION**

RESETTING THE ADAPTATION

RESETTING ADAPTATION AND THE COUNTER FOR "TRANSMISSION OIL CHANGE"

HINT: The transmission has torque controlled adaptive pressure control. Pressure control means that the transmission regulates the pressure itself during each gear shift. This avoids harsh gear shifting. Each gear shift is evaluated by the control module and stored in the memory. This allows for compensation for wear and tear in the transmission and clutch. It is important that the adaptation in the memory is reset after the transmission has been repaired. This is to ensure normal operation. The oil is replaced during repair; the "Transmission oil change" counter must be reset. If the counter is not reset when the fluid is drained and replaced, there is a risk that a diagnostic trouble code (DTC) will be stored in incorrect circumstances.

NOTE: **This applies only if the transmission or one of the components in the transmission have been replaced.**

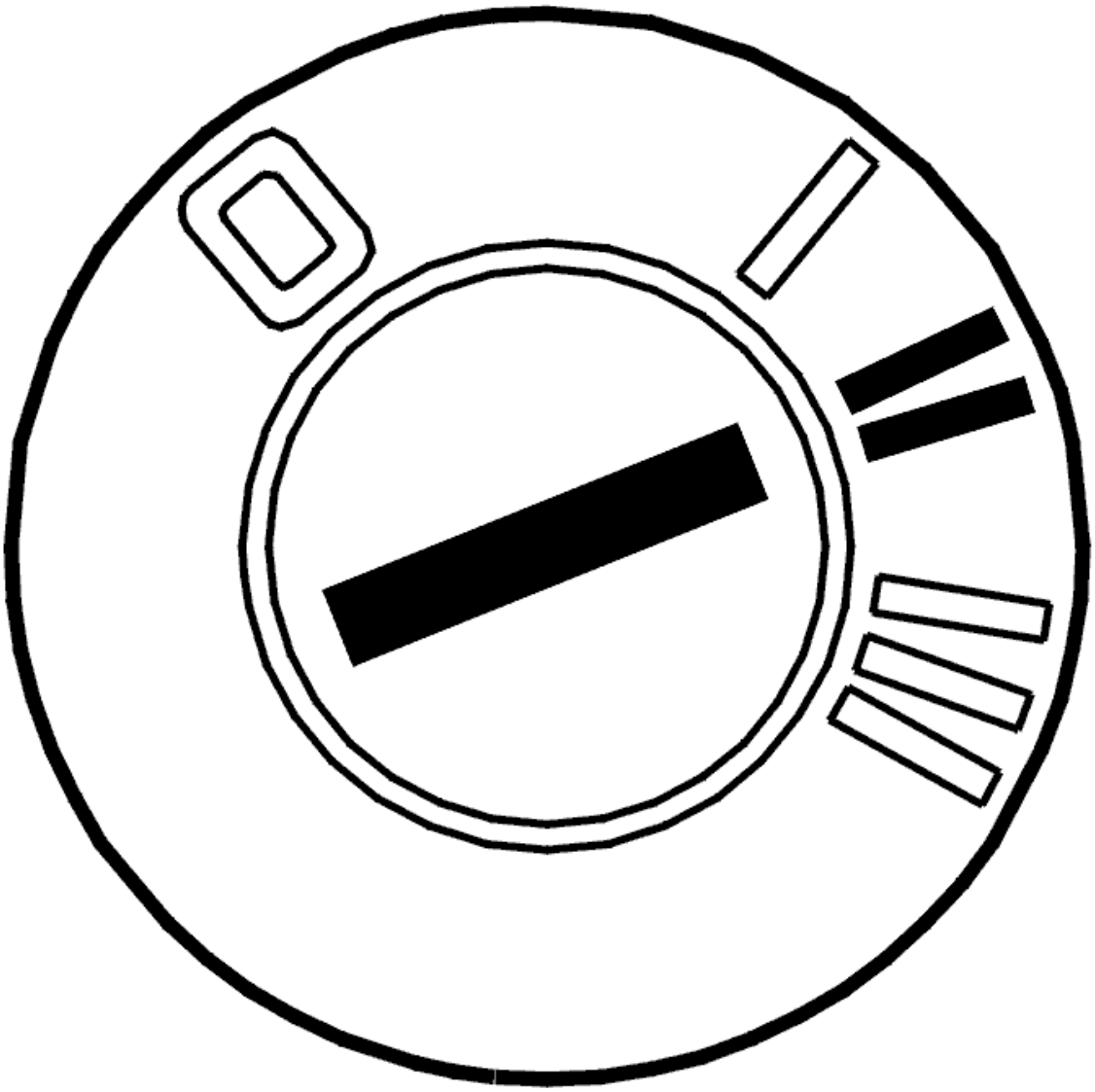

Fig. 185: Identifying Ignition ON
Courtesy of VOLVO CARS CORPORATION

- Ignition on.

  Click on the VCT2000 symbol to reset the adaptation and counter.

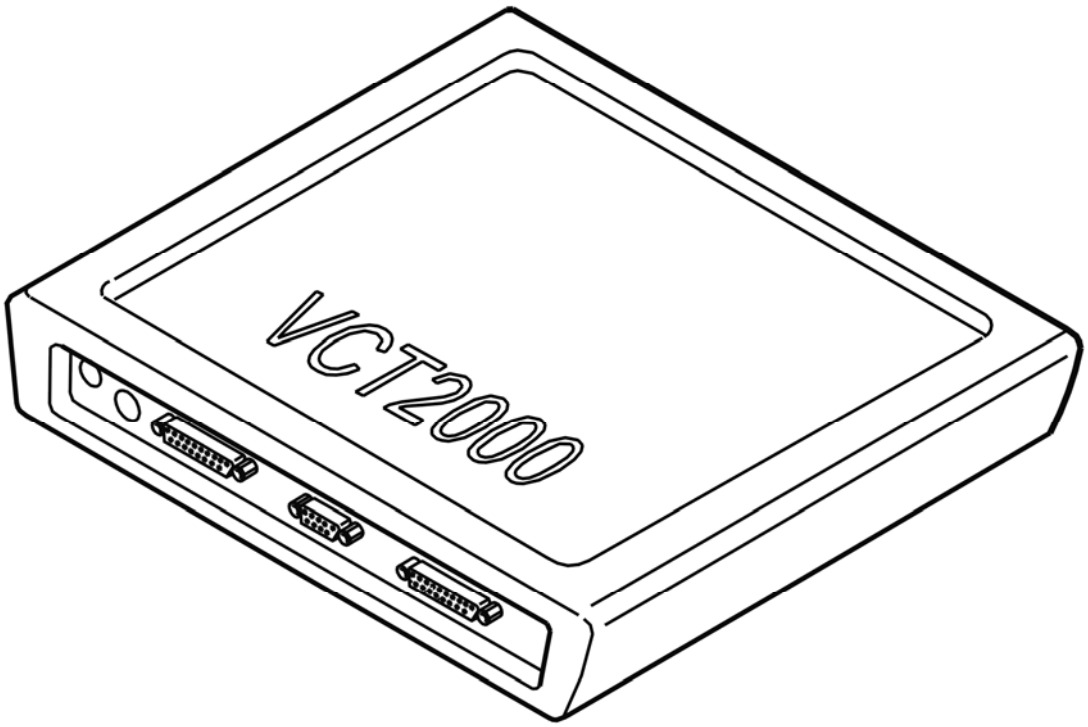

Fig. 186: Identifying VCT2000 Diagnostic Tool Symbol In VIDA
Courtesy of VOLVO CARS CORPORATION

CHECKING TORQUE CONVERTER MOUNTING (4T65 AWD; 2003-2006)

CHECKING TORQUE CONVERTER MOUNTING

- Check to, see if the carrier plate screws are loose.
- If this is the case, replace the screws.

Was it properly mounted?

- **YES**

  FAULT NOT FOUND: Troubleshooting has been completed.

- **NO**

  Refer to **RESETTING THE ADAPTATION**

RESETTING THE ADAPTATION

RESETTING ADAPTATION AND THE COUNTER FOR "TRANSMISSION OIL CHANGE"

HINT: The transmission has torque controlled adaptive pressure control. Pressure control means that the transmission regulates the pressure itself during each gear shift. This avoids harsh gear shifting. Each gear shift is evaluated by the control module and stored in the memory. This allows for compensation for wear and tear in the transmission and clutch. It is important that the adaptation in the memory is reset after the transmission has been repaired. This is to ensure normal operation. The oil is replaced during repair; the "Transmission oil change" counter must be reset. If the counter is not reset when the fluid is drained and replaced, there is a risk that a diagnostic trouble code (DTC) will be stored in incorrect circumstances.

NOTE: **This applies only if the transmission or one of the components in the transmission have been replaced.**

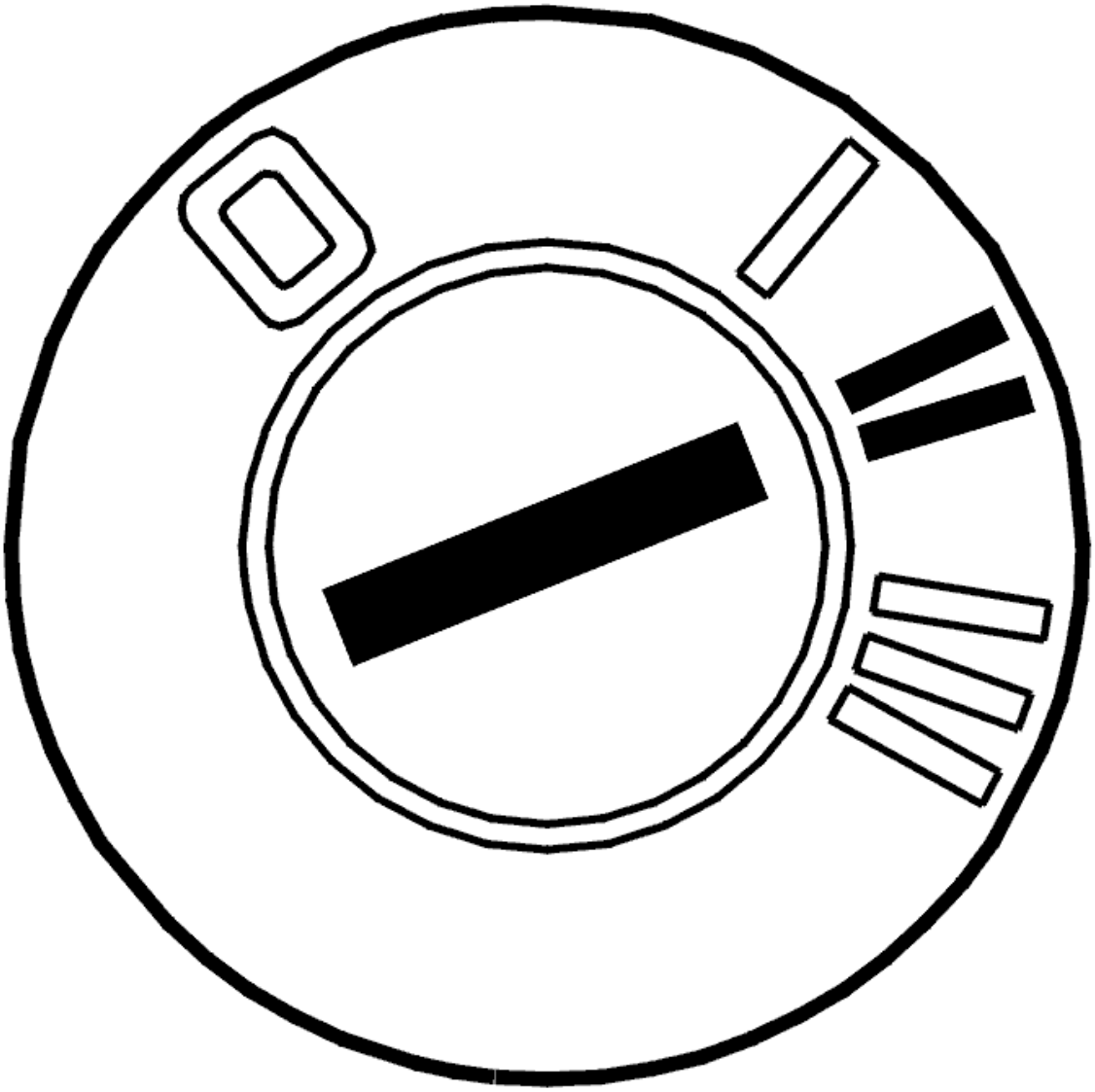

Fig. 187: Identifying Ignition ON
Courtesy of VOLVO CARS CORPORATION

- Ignition on.

  Click on the VCT2000 symbol to reset the adaptation and counter.

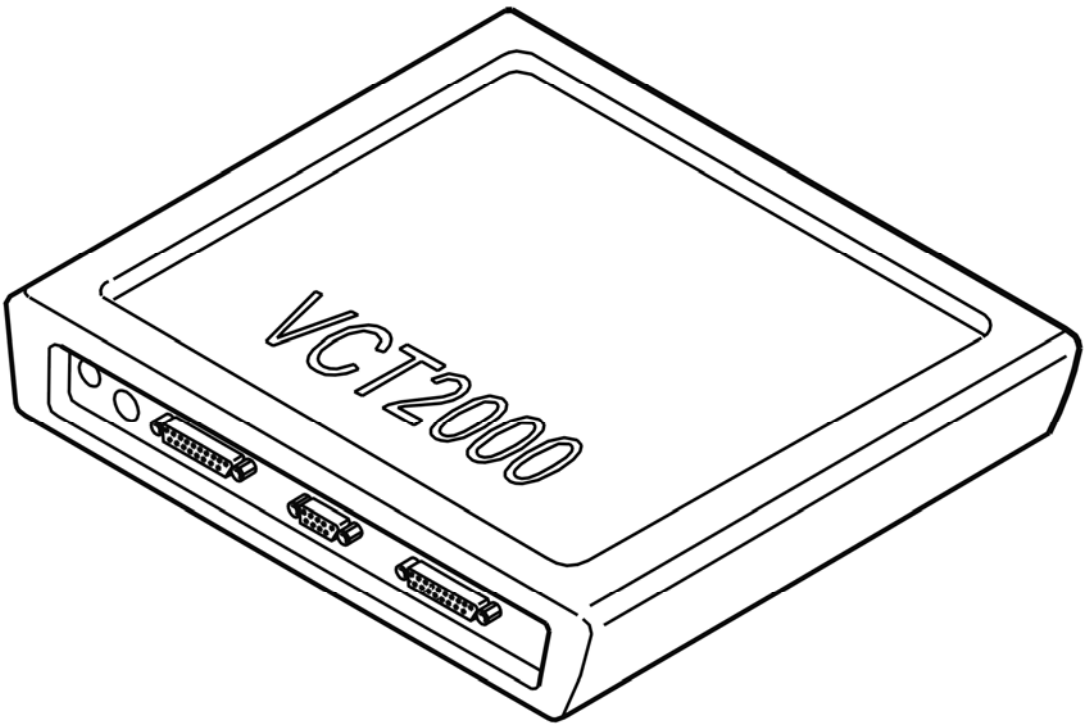

Fig. 188: Identifying VCT2000 Diagnostic Tool Symbol In VIDA
Courtesy of VOLVO CARS CORPORATION

CHECKING WINTER POSITION (4T65 AWD; 2003-2006)

CHECKING WINTER MODE

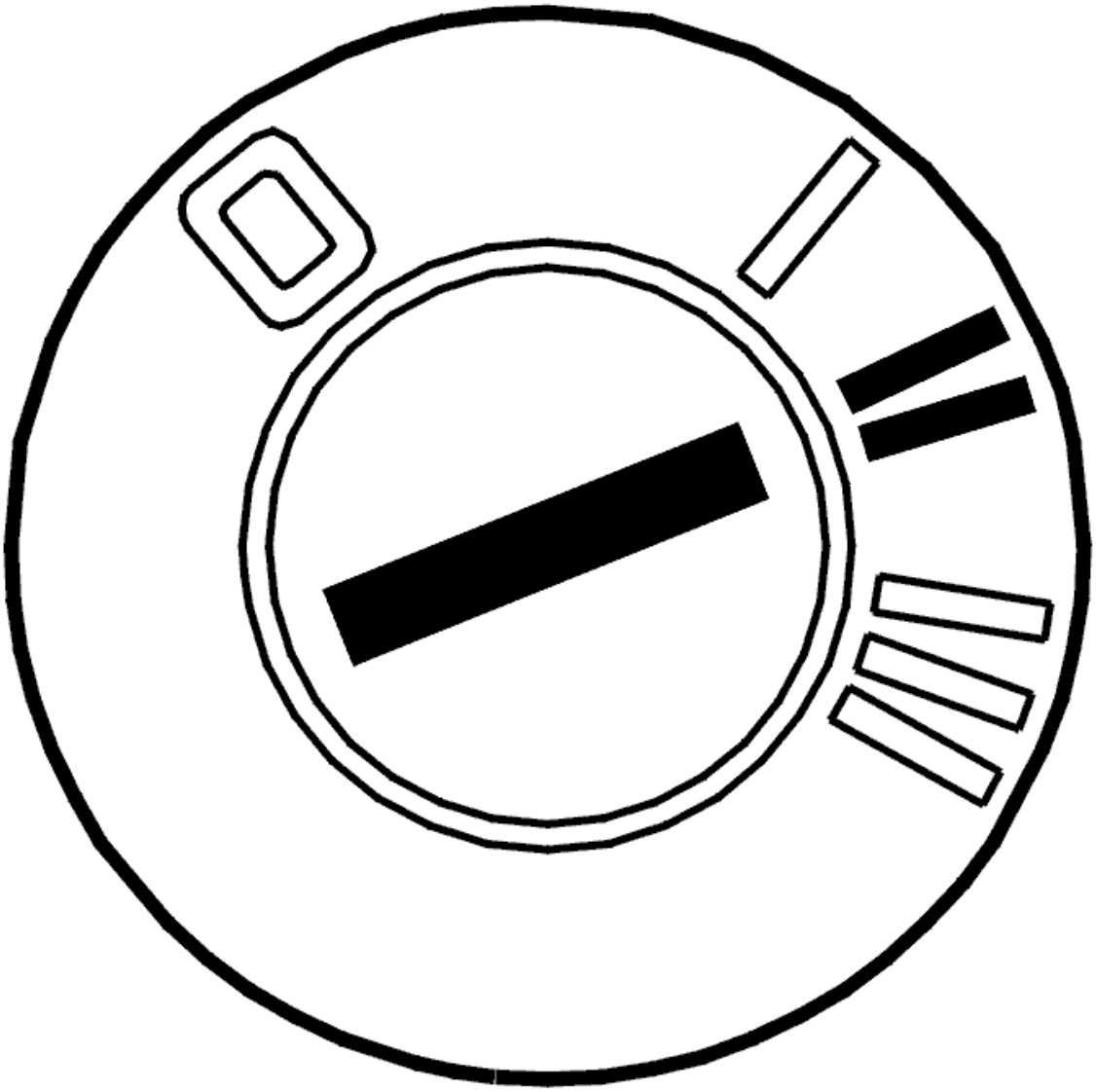

Fig. 189: Identifying Ignition ON
Courtesy of VOLVO CARS CORPORATION

- Ignition on
- Check the winter mode function by clicking on the VCT2000 symbol
- Start reading off the winter mode status
- Press in the winter position (W) button.

  The status must change between Normal mode / Winter mode.

  If the status does not change, try replacing the printed circuit board in the gear selector assembly. See **PRINTED CIRCUIT BOARD GEAR SELECTOR ASSEMBLY/TOP PANEL, GEARTRONIC, REPLACING** .

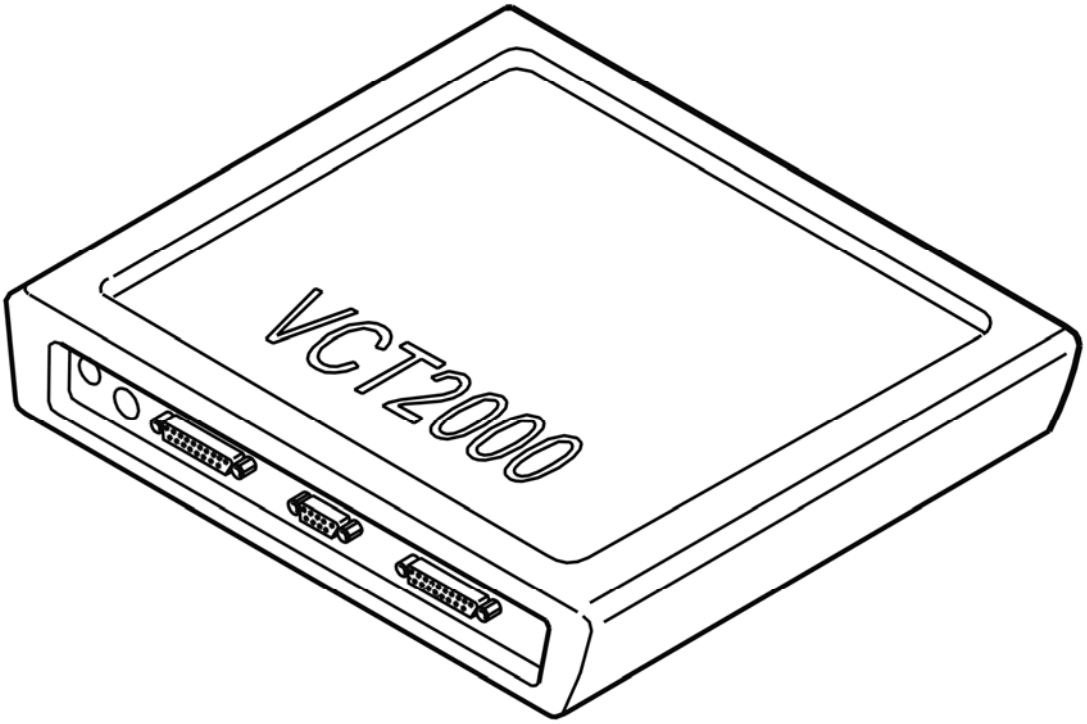

Fig. 190: Identifying VCT2000 Diagnostic Tool Symbol In VIDA
Courtesy of VOLVO CARS CORPORATION

Does the status change?

- **YES**

  FAULT NOT FOUND: Troubleshooting has been completed.

- **NO**

  Refer to **VERIFICATION**

VERIFICATION

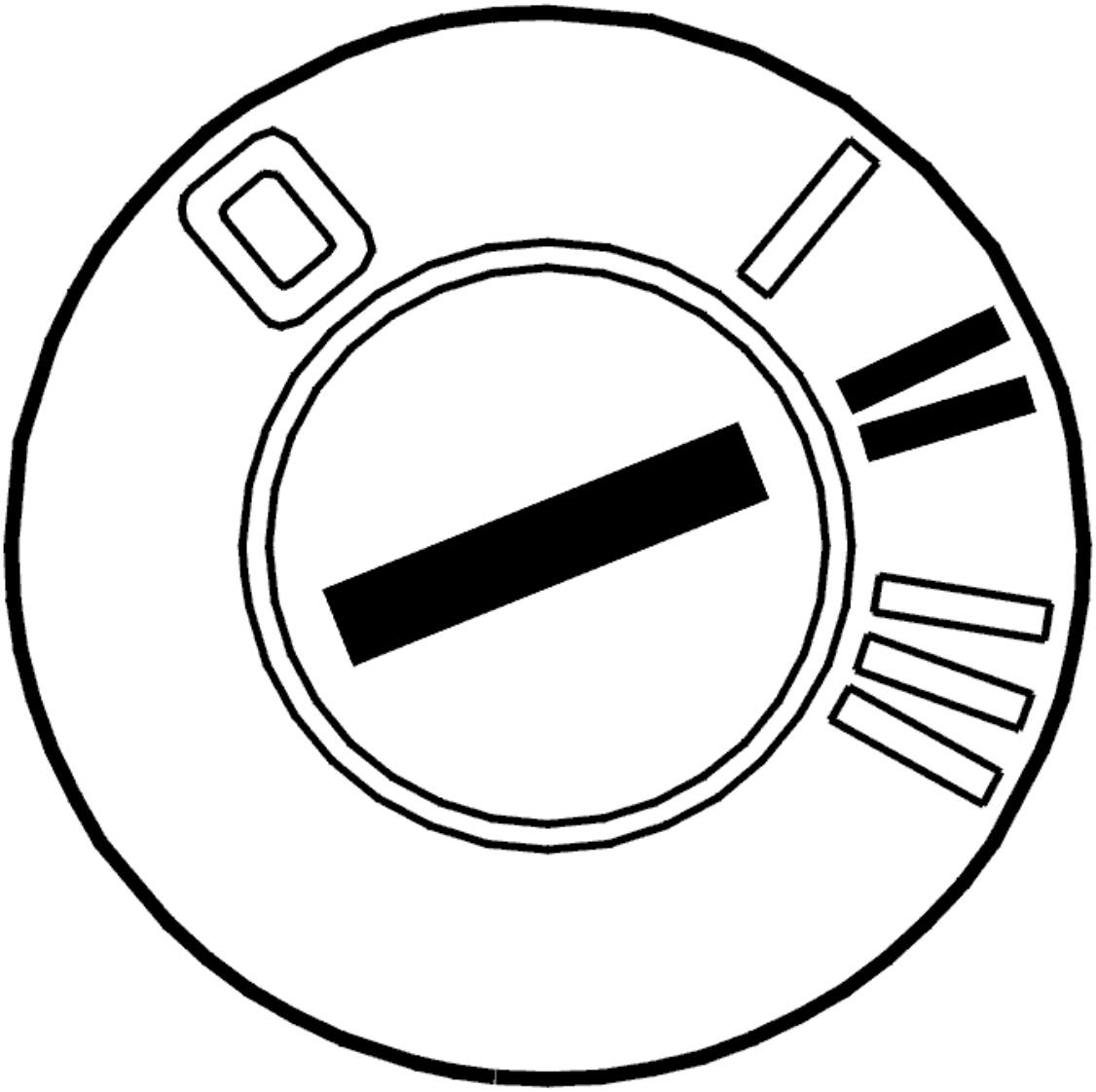

Fig. 191: Identifying Ignition ON
Courtesy of VOLVO CARS CORPORATION

- Ignition on
- Check the winter mode function by clicking on the VCT2000 symbol
- Press in the winter position (W) button.

  The status must change between Normal mode / Winter mode.

  If the status does not change, try replacing the printed circuit board in the gear selector assembly. See **PRINTED CIRCUIT BOARD GEAR SELECTOR ASSEMBLY/TOP PANEL, GEARTRONIC, REPLACING** .

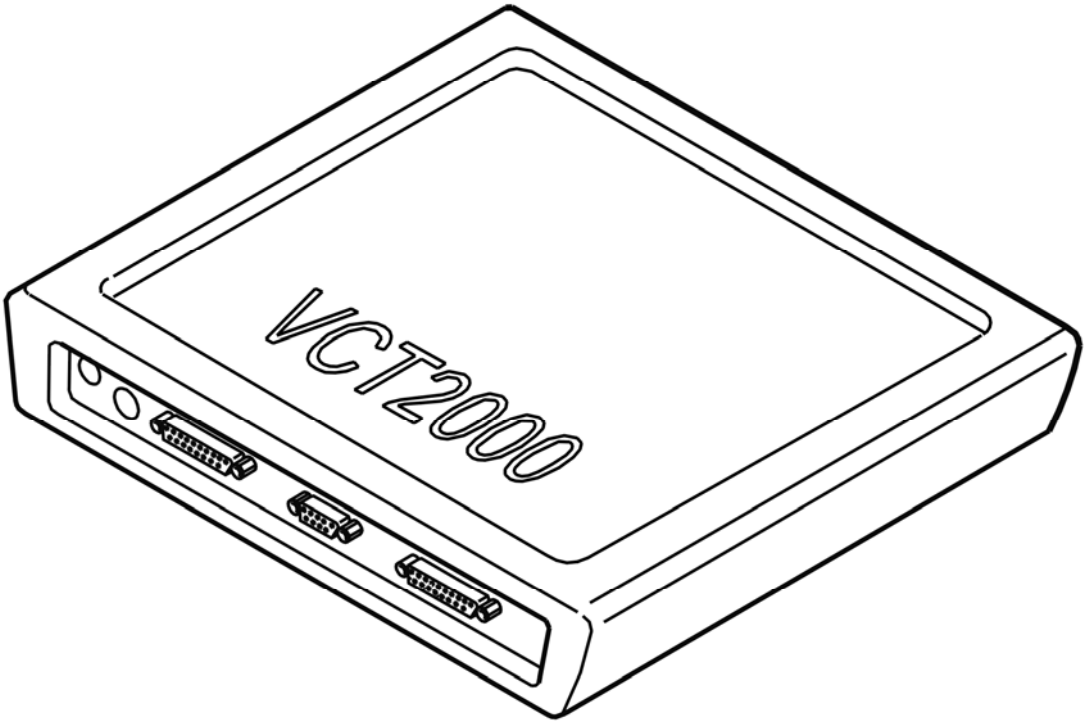

Fig. 192: Identifying VCT2000 Diagnostic Tool Symbol In VIDA
Courtesy of VOLVO CARS CORPORATION

Does the status change?

- **YES**

  OKAY: Troubleshooting has been completed.

- **NO**

  Refer to **INFORMATION**

INFORMATION

FAULT-TRACING INFORMATION

The fault should have been detected and remedied. As this is not the case fault-tracing has failed.

Exit fault-tracing for this diagnostic trouble code (DTC) or make another attempt.

FAULT-TRACING INFORMATION

Condition

The fault is permanent, no diagnostic trouble code (DTC) is stored

Possible Source

- Defective Winter (W) mode selector position.
- Open-circuit in signal cable or ground lead.

Fault symptom[s]

- Winter mode does not function.

CHECKING WINTER POSITION (4T65 AWD; 2003-2006)

CHECKING WINTER MODE

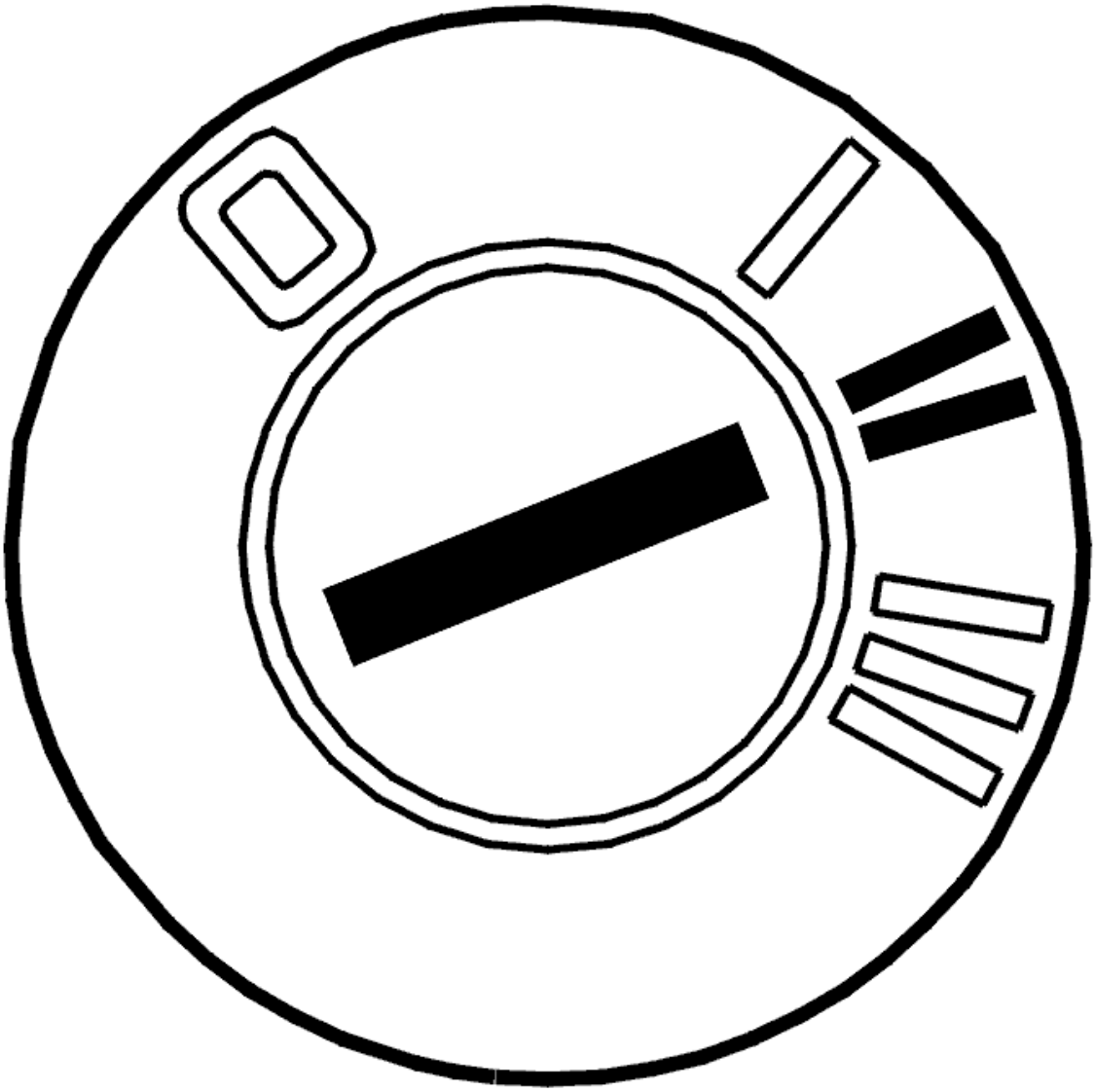

Fig. 193: Identifying Ignition ON
Courtesy of VOLVO CARS CORPORATION

- Ignition on
- Check the winter mode function by clicking on the VCT2000 symbol
- Start reading off the winter mode status
- Press in the winter position (W) button.

  The status must change between Normal mode / Winter mode.

  If the status does not change, try replacing the printed circuit board in the gear selector assembly. See **PRINTED CIRCUIT BOARD GEAR SELECTOR ASSEMBLY/TOP PANEL, REPLACING** .

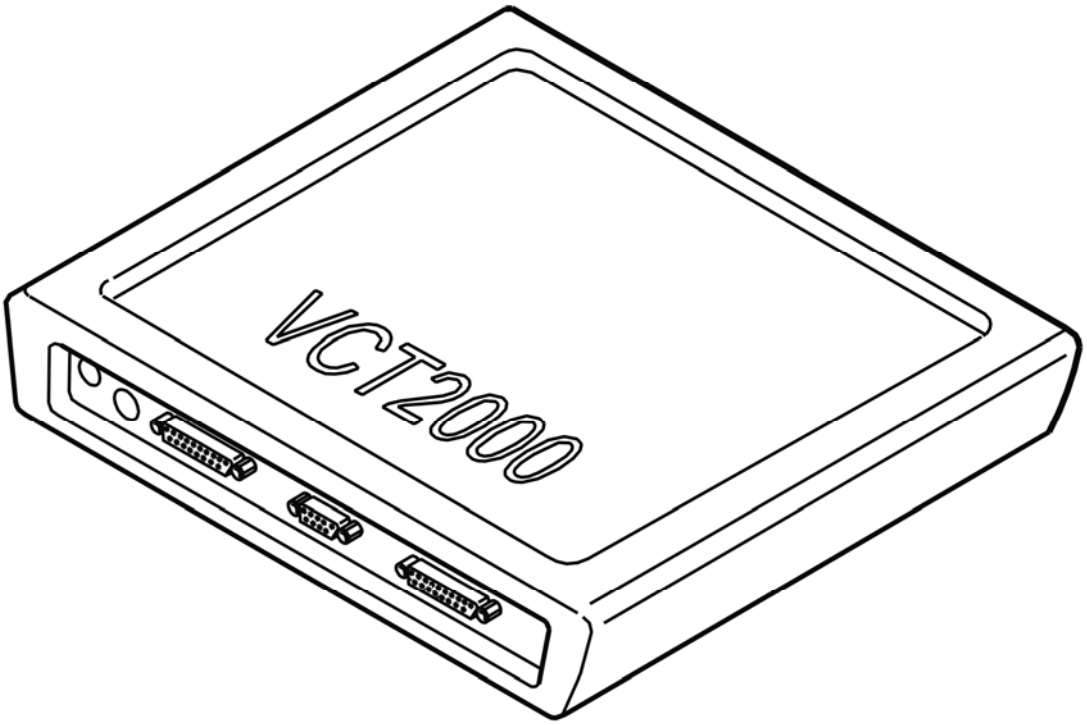

Fig. 194: Identifying VCT2000 Diagnostic Tool Symbol In VIDA
Courtesy of VOLVO CARS CORPORATION

Does the status change?

- **YES**

  FAULT NOT FOUND: Troubleshooting has been completed.

- **NO**

Refer to **VERIFICATION**

VERIFICATION

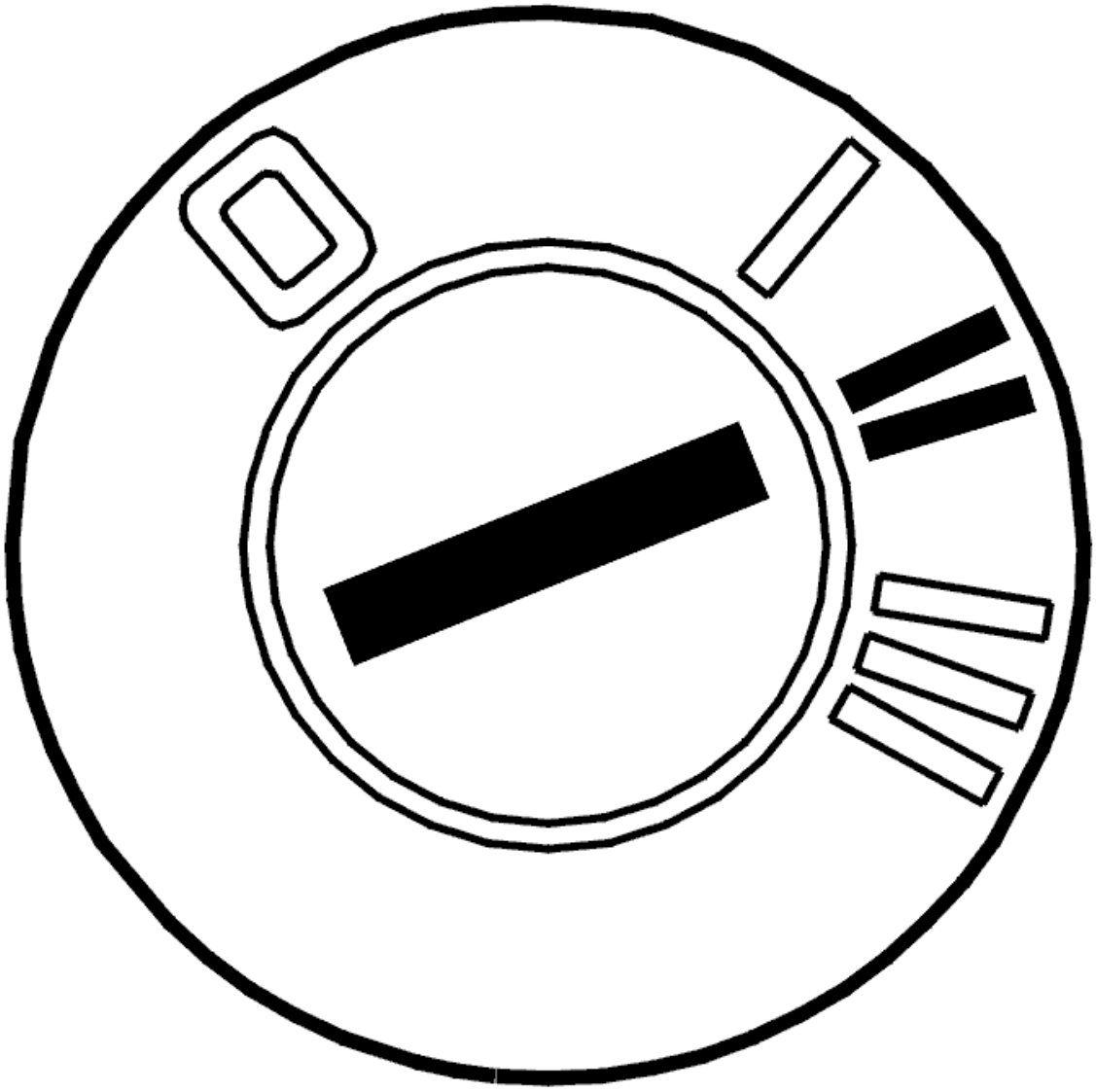

Fig. 195: Identifying Ignition ON
Courtesy of VOLVO CARS CORPORATION

- Ignition on
- Check the winter mode function by clicking on the VCT2000 symbol
- Press in the winter position (W) button.

The status must change between Normal mode / Winter mode.

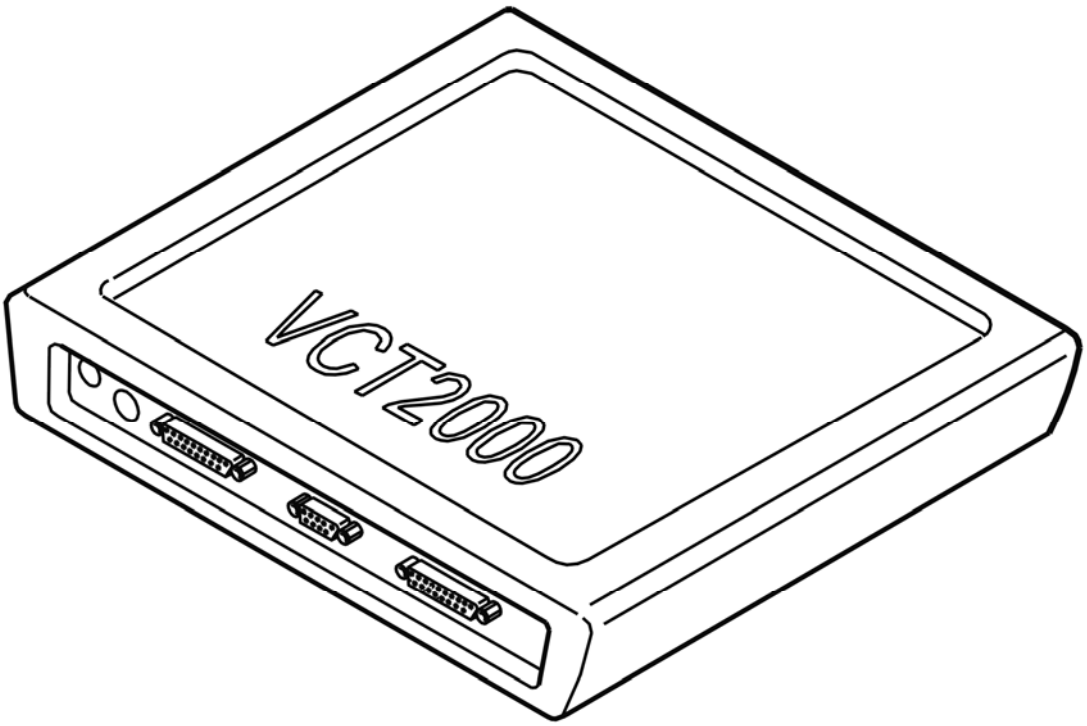

Fig. 196: Identifying VCT2000 Diagnostic Tool Symbol In VIDA
Courtesy of VOLVO CARS CORPORATION

Does the status change?

- **YES**

  OKAY: Troubleshooting has been completed.

- **NO**

  Refer to **INFORMATION**

INFORMATION

FAULT-TRACING INFORMATION

The fault should have been detected and remedied. As this is not the case fault-tracing has failed.

Exit fault-tracing for this diagnostic trouble code (DTC) or make another attempt.

see **FAULT-TRACING INFORMATION**

CHECKING WINTER POSITION (AW50/51 AWD; AW55-50/51SN; 2003-2007)

CHECKING WINTER MODE

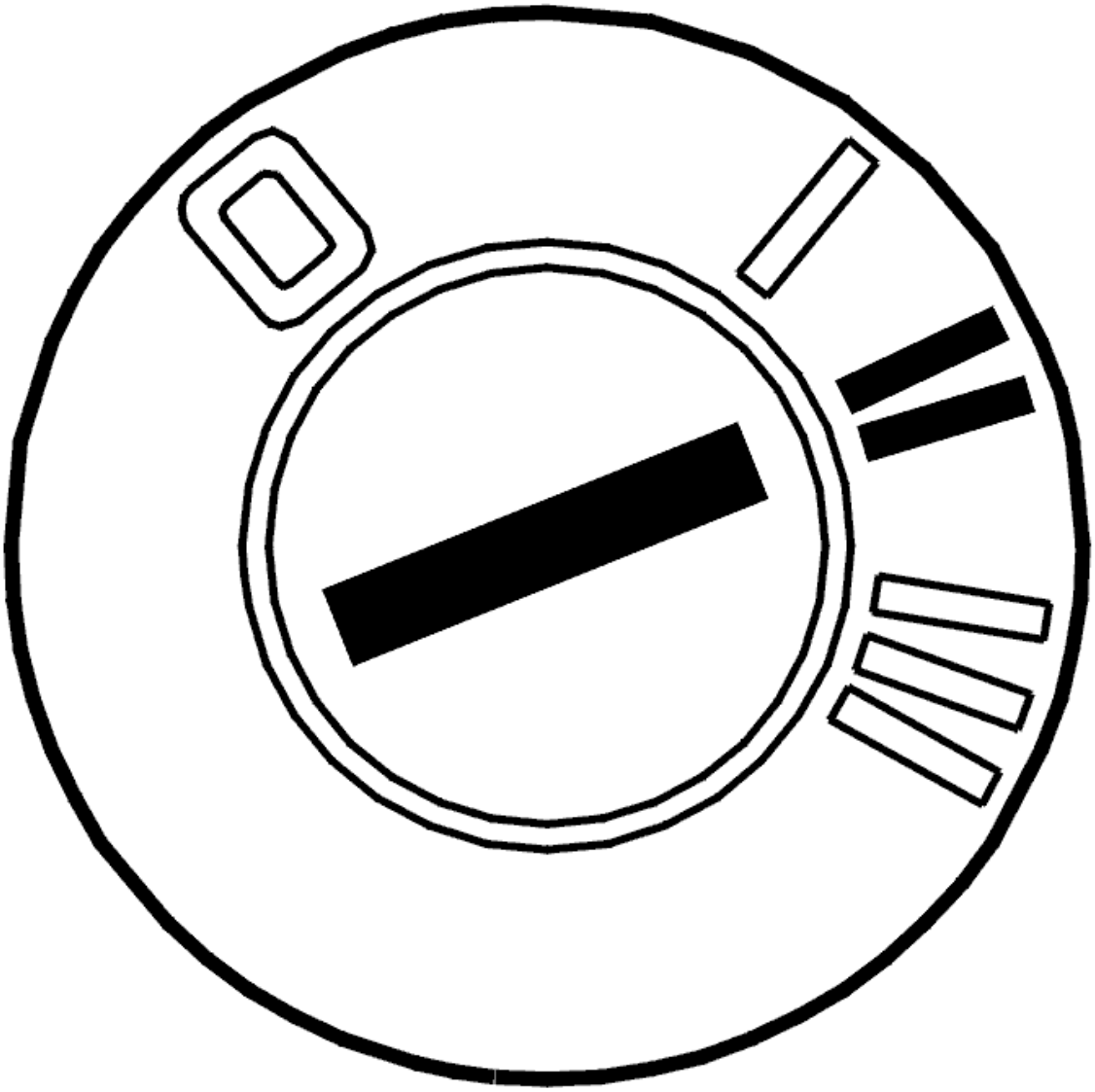

Fig. 197: Identifying Ignition ON
Courtesy of VOLVO CARS CORPORATION

- Ignition on
- Check the winter mode function by clicking on the VCT2000 symbol
- Start reading off the winter mode status
- Press in the winter position (W) button.

  The status must change between Normal mode / Winter mode.

  If the status does not change, try replacing the printed circuit board in the gear selector assembly. See **PRINTED CIRCUIT BOARD GEAR SELECTOR ASSEMBLY/TOP PANEL, REPLACING** .

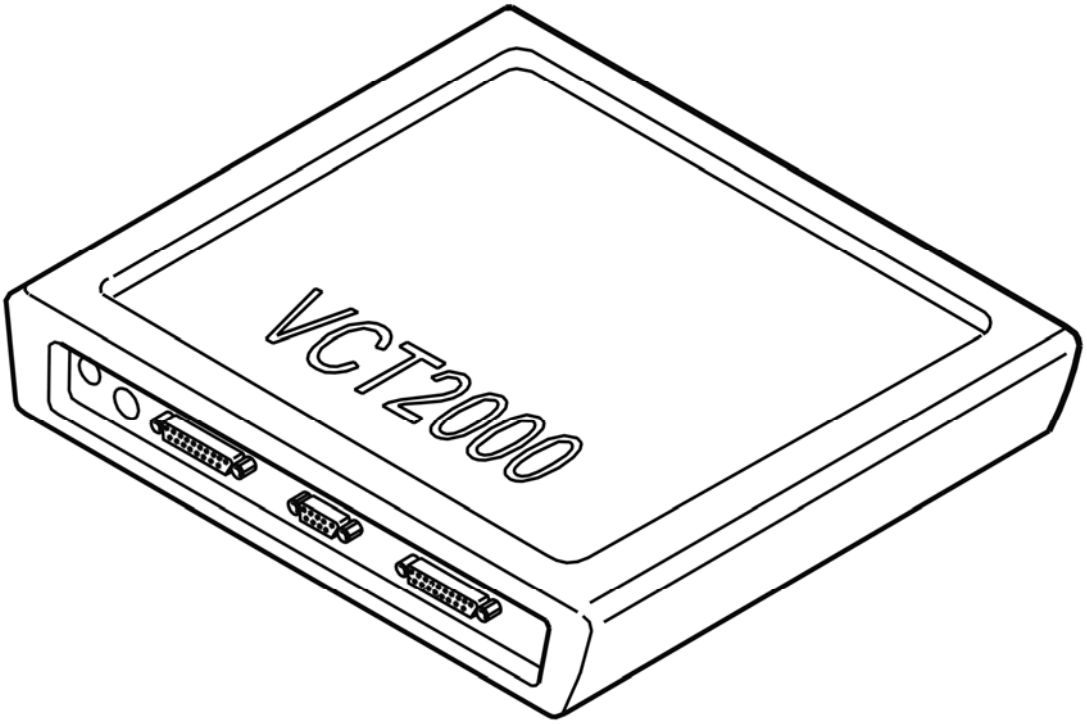

Fig. 198: Identifying VCT2000 Diagnostic Tool Symbol In VIDA
Courtesy of VOLVO CARS CORPORATION

Does the status change?

- **YES**

  FAULT NOT FOUND: Troubleshooting has been completed.

- **NO**

  Refer to **VERIFICATION**

VERIFICATION

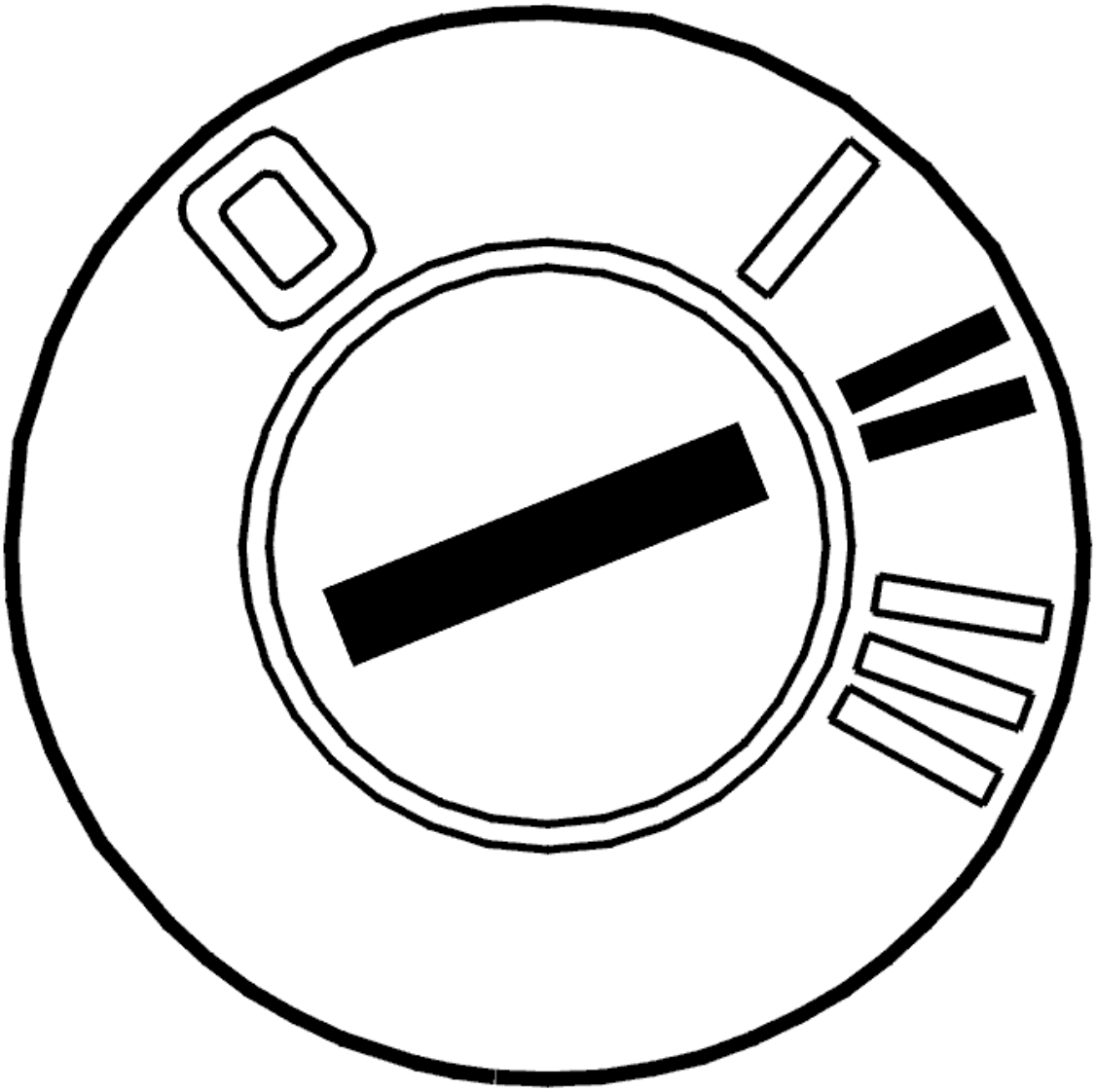

Fig. 199: Identifying Ignition ON
Courtesy of VOLVO CARS CORPORATION

- Ignition on
- Check the winter mode function by clicking on the VCT2000 symbol
- Press in the winter position (W) button.

  The status must change between Normal mode / Winter mode.

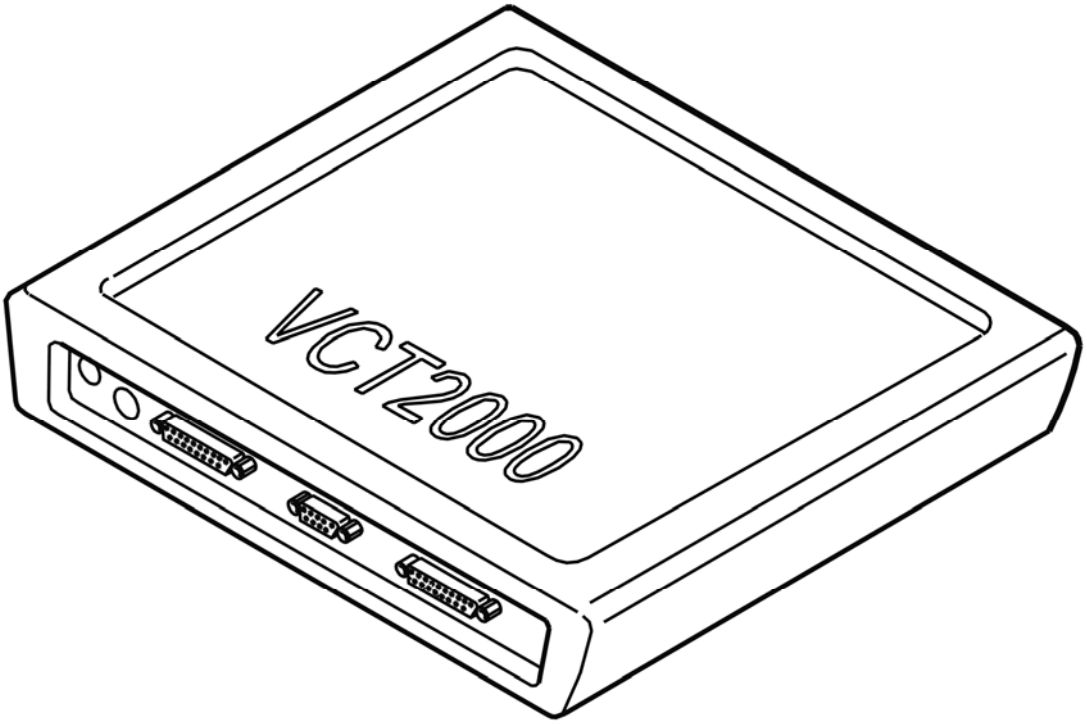

Fig. 200: Identifying VCT2000 Diagnostic Tool Symbol In VIDA
Courtesy of VOLVO CARS CORPORATION

Does the status change?

- **YES**

  OKAY: Troubleshooting has been completed.

- **NO**

  Refer to **INFORMATION**

INFORMATION

FAULT-TRACING INFORMATION

The fault should have been detected and remedied. As this is not the case fault-tracing has failed.

Exit fault-tracing for this diagnostic trouble code (DTC) or make another attempt.

see **FAULT-TRACING INFORMATION**

CHECKING WIRING AND CONNECTORS (GEAR SELECTOR MODULE)

(4T65 AWD; 2003-2006)

CHECKING WIRING AND CONNECTORS (GEAR SELECTOR MODULE (GSM)

CHECKING WIRING AND CONNECTORS (GEAR SELECTOR MODULE (GSM)

- Ignition off
- Detach the panel on the gear selector assembly top panel.

  Check the connectors for the gear selector module (GSM). Check for damaged pins. Check the wiring between the gear selector module (GSM) and the transmission control module (TCM). Check for damage, open-circuits and short-circuits.

  Other information:

  - To check or replace the printed circuit board (standard), see **PRINTED CIRCUIT BOARD GEAR SELECTOR ASSEMBLY/TOP PANEL, REPLACING**
  - To check or replace the printed circuit board (Geartronic), see **PRINTED CIRCUIT BOARD GEAR SELECTOR ASSEMBLY/TOP PANEL, GEARTRONIC, REPLACING** .

DOWNLOADING SOFTWARE (4T65 AWD; 2003-2006)

DOWNLOADING SOFTWARE

HINT: The fault may be due to incorrect or damaged software in the transmission control module (TCM). The fault can be remedied by downloading new software.

Select "PAUSE" and save as a bookmark.

Then cancel the fault-tracing and select the software manager.

Download the latest software into the transmission control module (TCM). Then resume the fault tracing.

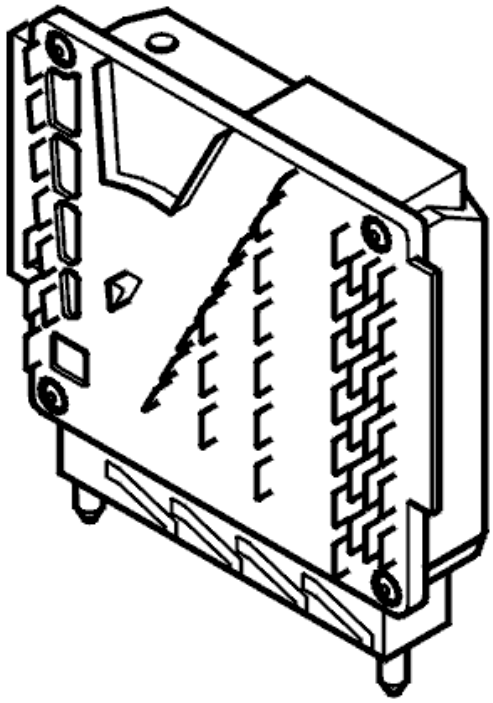

Fig. 201: Identifying Transmission Control Module (TCM)
Courtesy of VOLVO CARS CORPORATION

- **Continue**

  Refer to **CHECKING AUTOMATIC TRANSMISSION**

CHECKING AUTOMATIC TRANSMISSION

CHECKING AUTOMATIC TRANSMISSION

NOTE: After carrying out the repair check that the symptom has been remedied.

Check the automatic transmission as follows:

- Test drive the car to test the function of the automatic transmission. See **TEST DRIVE FORM, DESCRIPTION**
- If hydraulic hoses, gaskets or other components have been replaced, check that there is no oil leakage after the test drive.

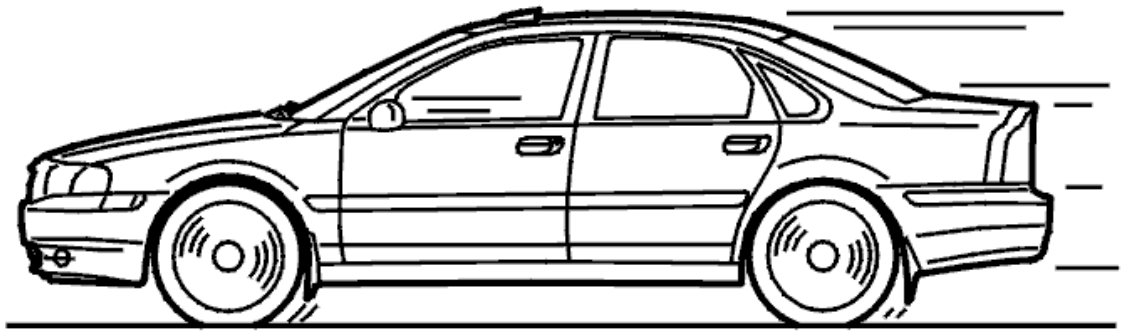

Fig. 202: Identifying Test Drive
Courtesy of VOLVO CARS CORPORATION

Is the automatic transmission OK?

- **YES**

  VERIFIED: Troubleshooting has been completed.

- **NO**

  Refer to **INFORMATION**

INFORMATION

FAULT-TRACING INFORMATION

The fault should have been detected and remedied. As this is not the case fault-tracing has failed.

Exit fault-tracing for this diagnostic trouble code (DTC) or make another attempt.

DOWNLOADING SOFTWARE (AW50/51 AWD; AW55-50/51SN; 2003-2005)

DOWNLOADING SOFTWARE

DOWNLOADING SOFTWARE

HINT: The fault may be due to incorrect or corrupted software in the Transmission control module (TCM). The fault may be rectified by downloading new software.

Select the tab Software and reprogram the control module with the latest software.

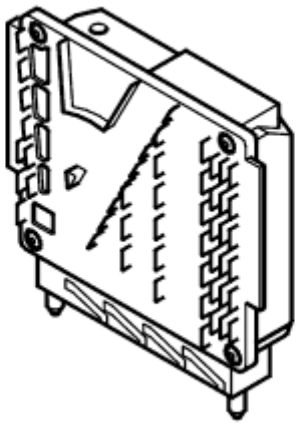

Fig. 203: Identifying Transmission Control Module (TCM)
Courtesy of VOLVO CARS CORPORATION

DOWNLOADING SOFTWARE (AW50/51 AWD; AW55-50/51SN; 2003-2007)

DOWNLOADING SOFTWARE

HINT: The fault may be due to incorrect or damaged software in the transmission control module (TCM). The fault can be remedied by downloading new software.

Cancel fault-tracing.

Download the latest software into the transmission control module (TCM). Then resume the fault tracing.

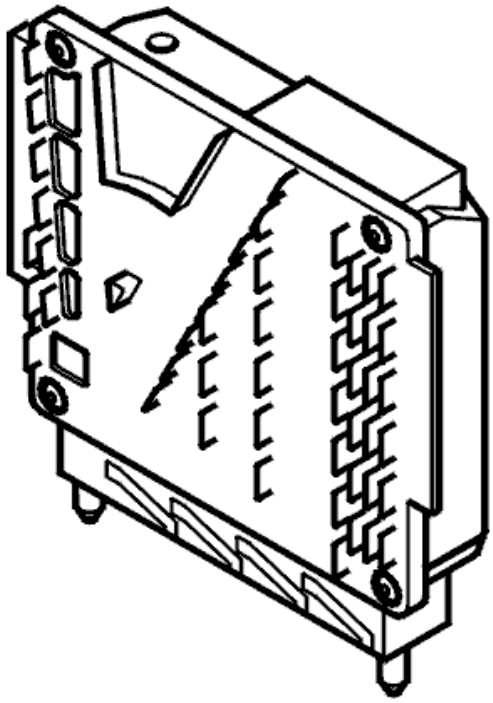

Fig. 204: Identifying Transmission Control Module (TCM)
Courtesy of VOLVO CARS CORPORATION

- **Continue**

  Refer to **CHECKING AUTOMATIC TRANSMISSION**

CHECKING AUTOMATIC TRANSMISSION

CHECKING AUTOMATIC TRANSMISSION

NOTE: After carrying out the repair check that the symptom has been remedied.

Check the automatic transmission as follows:

- Test drive the car to test the function of the automatic transmission. See **TEST DRIVE SCHEDULE, DESCRIPTION**
- If hydraulic hoses, gaskets or other components have been replaced, check that there is no oil leakage after the test drive.

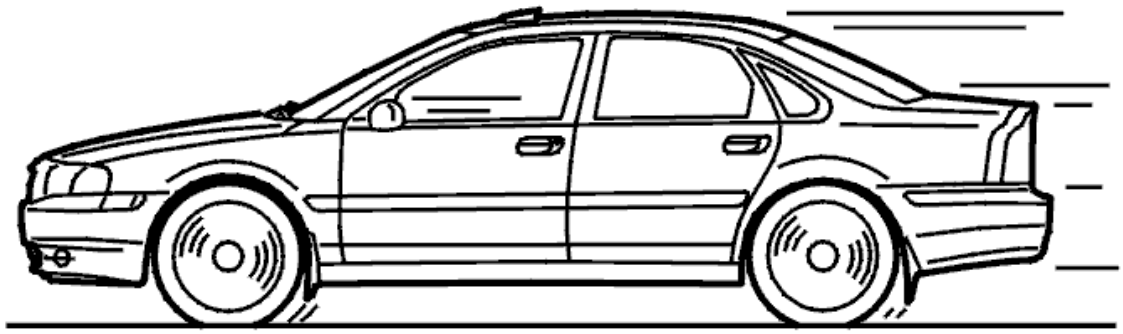

Fig. 205: Identifying Test Drive
Courtesy of VOLVO CARS CORPORATION

Is the automatic transmission OK?

- **YES**

  VERIFIED: Troubleshooting has been completed.

- **NO**

  Refer to **INFORMATION**

INFORMATION

FAULT-TRACING INFORMATION

The fault should have been detected and remedied. As this is not the case fault-tracing has failed.

Exit fault-tracing for this diagnostic trouble code (DTC) or make another attempt.

REPLACING A FAULTY TORQUE CONVERTER (4T65 AWD; 2003-2006)

REPLACING A FAULTY TORQUE CONVERTER

- Replace the transmission. See **TRANSMISSION, REMOVING** and **TRANSMISSION, INSTALLING (2003, 2004)** or **TRANSMISSION, INSTALLING (2005, 2006)** .

- **Continue**

  Refer to **RESETTING THE ADAPTATION**

RESETTING THE ADAPTATION

RESETTING ADAPTATION AND THE COUNTER FOR "TRANSMISSION OIL CHANGE"

HINT: The transmission has torque controlled adaptive pressure control. Pressure control means that the transmission regulates the pressure itself during each gear shift. This avoids harsh gear shifting. Each gear shift is evaluated by the control module and stored in the memory. This allows for compensation for wear and tear in the transmission and clutch. It is important that the adaptation in the memory is reset after the transmission has been repaired. This is to ensure normal operation. The oil is replaced during repair; the "Transmission oil change" counter must be reset. If the counter is not reset when the fluid is drained and replaced, there is a risk that a diagnostic trouble code (DTC) will be stored in incorrect circumstances.

NOTE: This applies only if the transmission or one of the components in the transmission have been replaced.

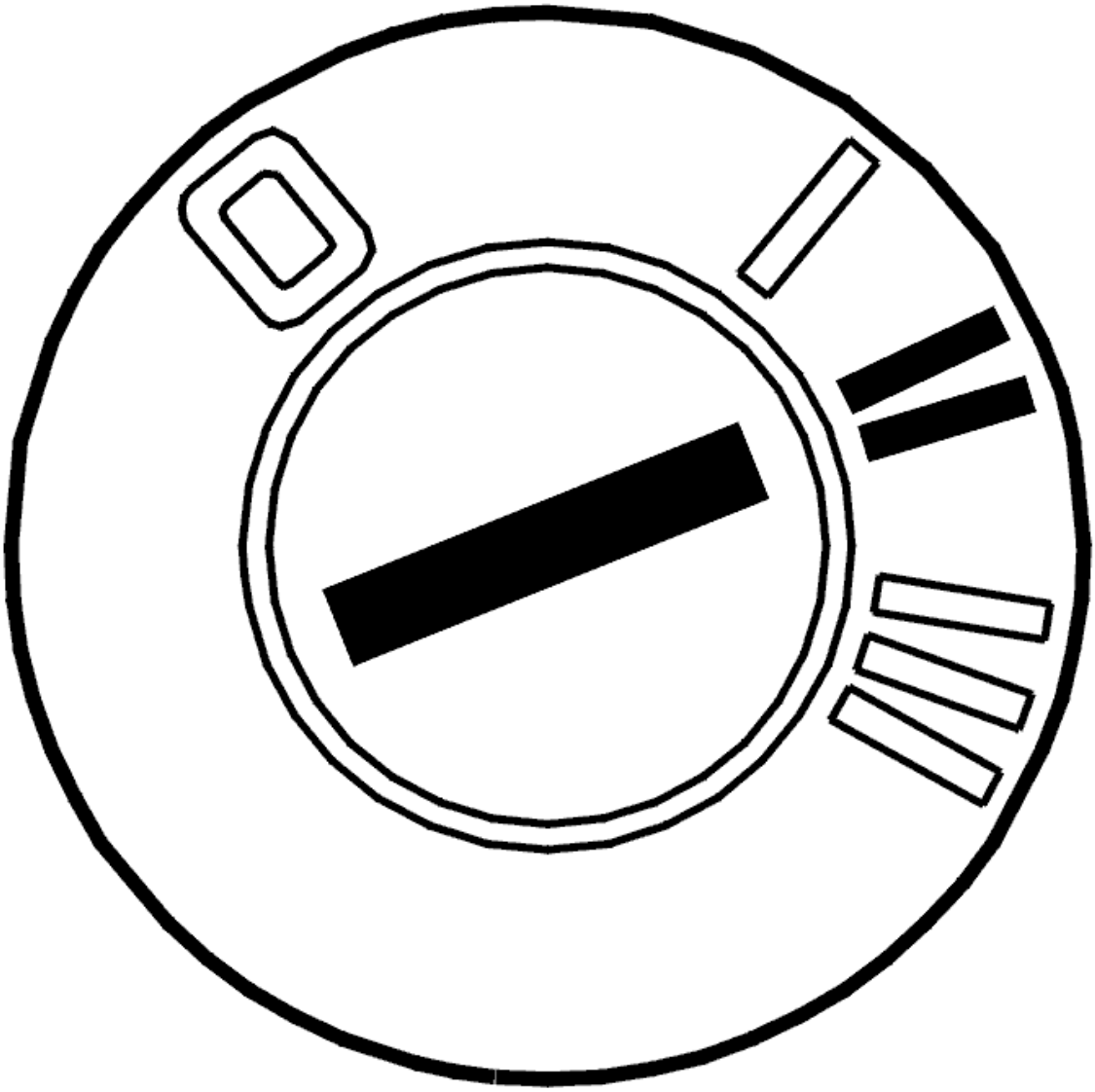

Fig. 206: Identifying Ignition ON
Courtesy of VOLVO CARS CORPORATION

- Ignition on.

  Click on the VCT2000 symbol to reset the adaptation and counter.

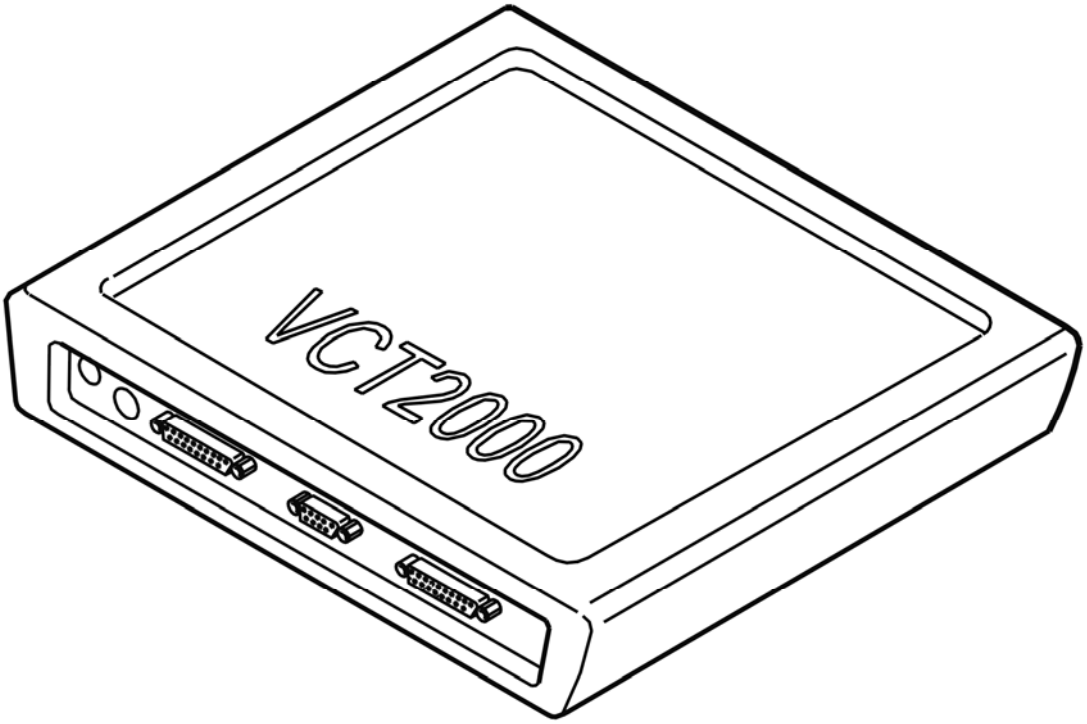

Fig. 207: Identifying VCT2000 Diagnostic Tool Symbol In VIDA
Courtesy of VOLVO CARS CORPORATION

REPLACING A FAULTY TRANSMISSION (4T65 AWD; 2003-2006)

REPLACING A FAULTY TRANSMISSION

- In the event of an internal fault in the transmission, replace the transmission. See **TRANSMISSION, REMOVING** and **TRANSMISSION, INSTALLING (2003, 2004)** or **TRANSMISSION, INSTALLING (2005, 2006)** .

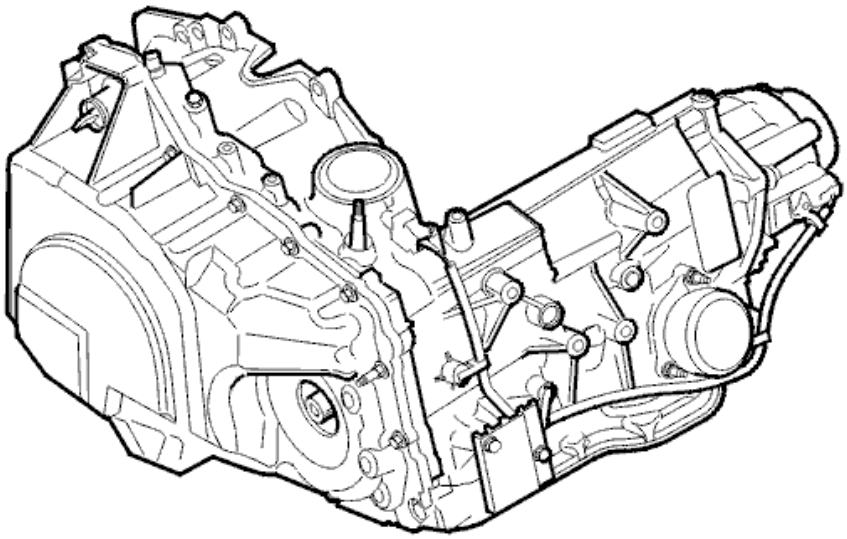

P2X

4301721D ©VOLVO

Fig. 208: Identifying Transmission
Courtesy of VOLVO CARS CORPORATION

- **Continue**

  Refer to **RESETTING THE ADAPTATION**

RESETTING THE ADAPTATION

RESETTING ADAPTATION AND THE COUNTER FOR "TRANSMISSION OIL CHANGE"

HINT: The transmission has torque controlled adaptive pressure control. Pressure control means that the transmission regulates the pressure itself during each gear shift. This avoids harsh gear shifting. Each gear shift is evaluated by the control module and stored in the memory. This allows for compensation for wear and tear in the transmission and clutch. It is important that the adaptation in the memory is reset after the transmission has been repaired. This is to ensure normal operation. The oil is replaced during repair; the "Transmission oil change" counter must be reset. If the counter is not reset when the fluid is drained and replaced, there is a risk that a diagnostic trouble code (DTC) will be stored in incorrect circumstances.

NOTE: This applies only if the transmission or one of the components in the transmission have been replaced.

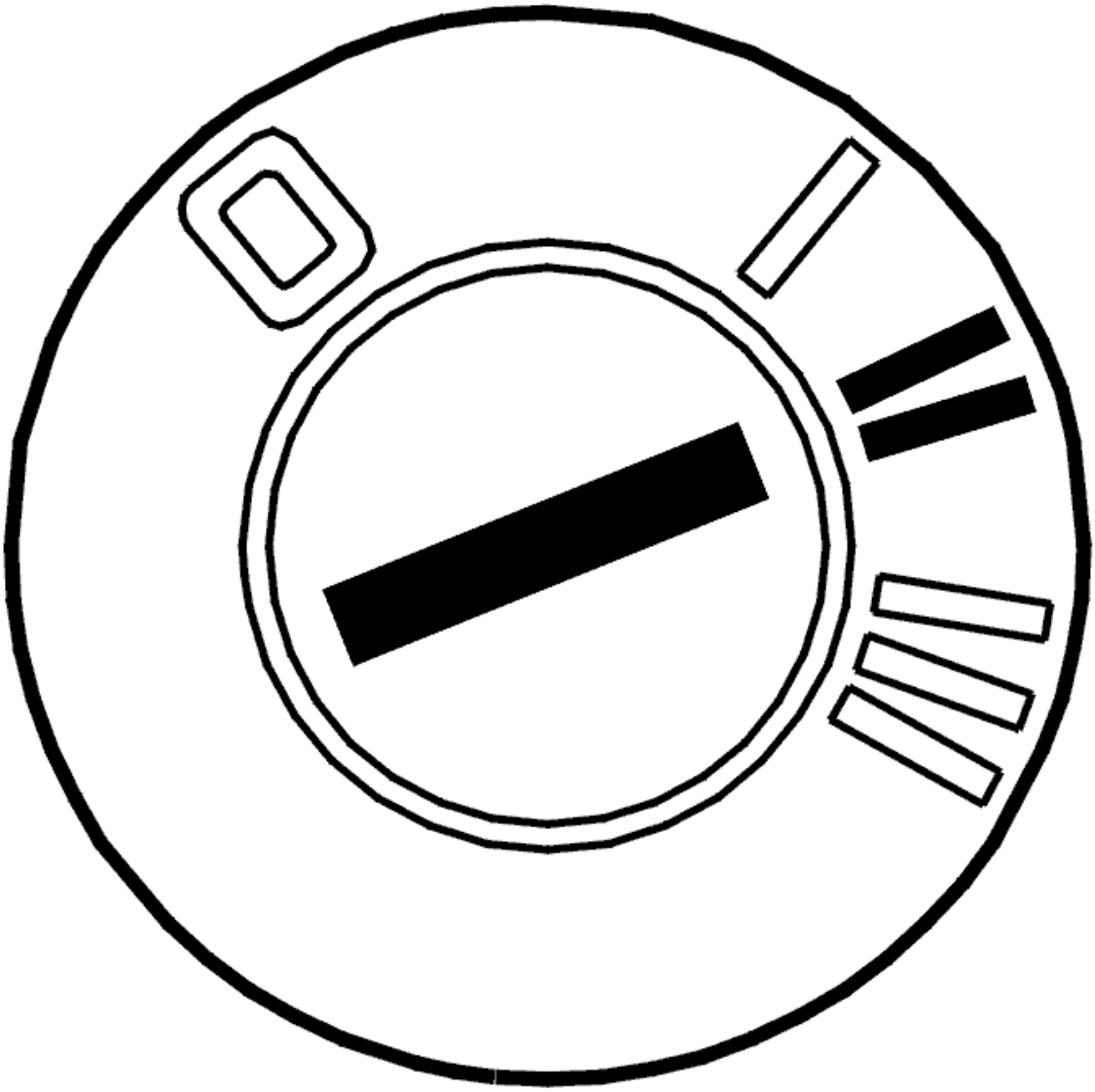

Fig. 209: Identifying Ignition ON
Courtesy of VOLVO CARS CORPORATION

- Ignition on.

  Click on the VCT2000 symbol to reset the adaptation and counter.

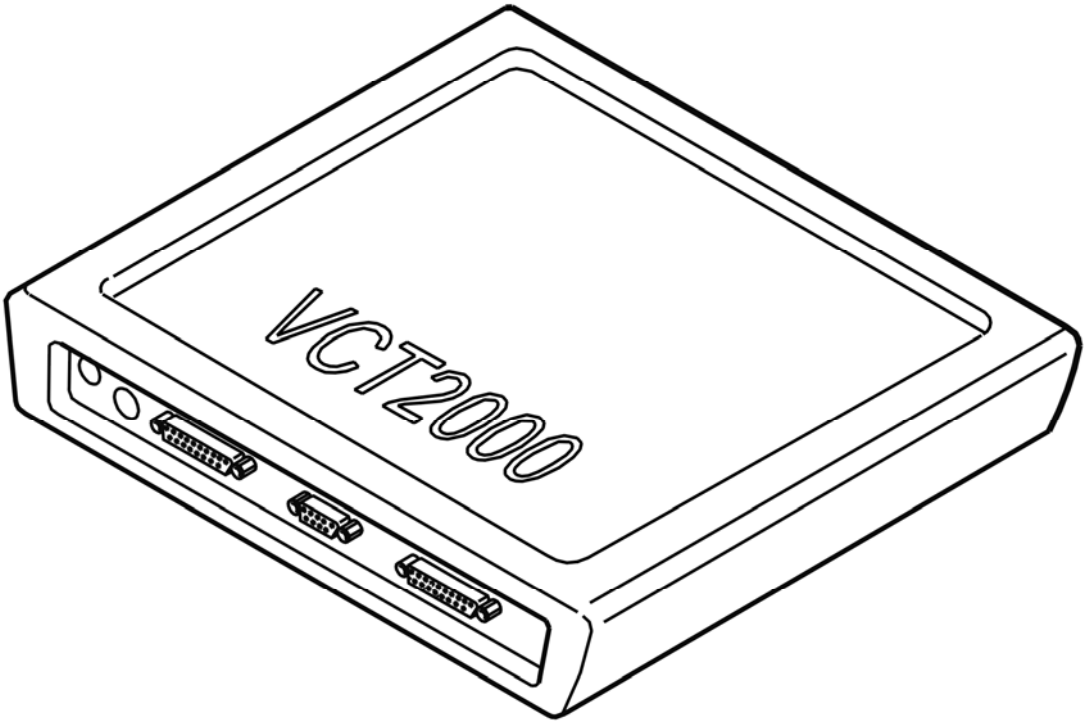

Fig. 210: Identifying VCT2000 Diagnostic Tool Symbol In VIDA
Courtesy of VOLVO CARS CORPORATION

REPLACING THE GEAR SELECTOR CONTROL MODULE (4T65 AWD; 2003-2006)

REPLACING THE GEAR SELECTOR CONTROL MODULE

REPLACING THE GEAR SELECTOR CONTROL MODULE

Replacing the printed circuit board in the top panel (gear selector module (GSM).

Other information:

- To check or replace the printed circuit board (Geartronic), see **PRINTED CIRCUIT BOARD GEAR SELECTOR ASSEMBLY/TOP PANEL, GEARTRONIC, REPLACING**
- To check or replace the printed circuit board (standard), see **PRINTED CIRCUIT BOARD GEAR SELECTOR ASSEMBLY/TOP PANEL, REPLACING** .

REPLACING THE TORQUE CONVERTER (AW50/51 AWD; AW55-50/51SN; 2003-2007)

REPLACING THE TORQUE CONVERTER

Replace the torque converter according to **TRANSMISSION - REMOVAL, REPLACEMENT AND INSTALLATION** .

Other information:

- For information about removal/installation, see **TRANSMISSION - REMOVAL, REPLACEMENT AND INSTALLATION**
- **Continue**

  Refer to **RESETTING THE ADAPTATION**

RESETTING THE ADAPTATION

RESETTING ADAPTATION AND THE COUNTER FOR "TRANSMISSION OIL CHANGE"

HINT: The transmission has torque controlled adaptive pressure control. Pressure control means that the transmission regulates the pressure itself during each gear shift. This avoids harsh gear shifting. Each gear shift is evaluated by the control module and stored in the memory. This allows for compensation for wear and tear in the transmission and clutch. It is important that the adaptation in the memory is reset after the transmission has been repaired. This is to ensure normal operation. The oil is replaced during repair; the "Transmission oil change" counter must be reset. If the counter is not reset when the fluid is drained and replaced, there is a risk that a diagnostic trouble code (DTC) will be stored in incorrect circumstances.

NOTE: This applies only if the transmission or one of the components in the transmission have been replaced.

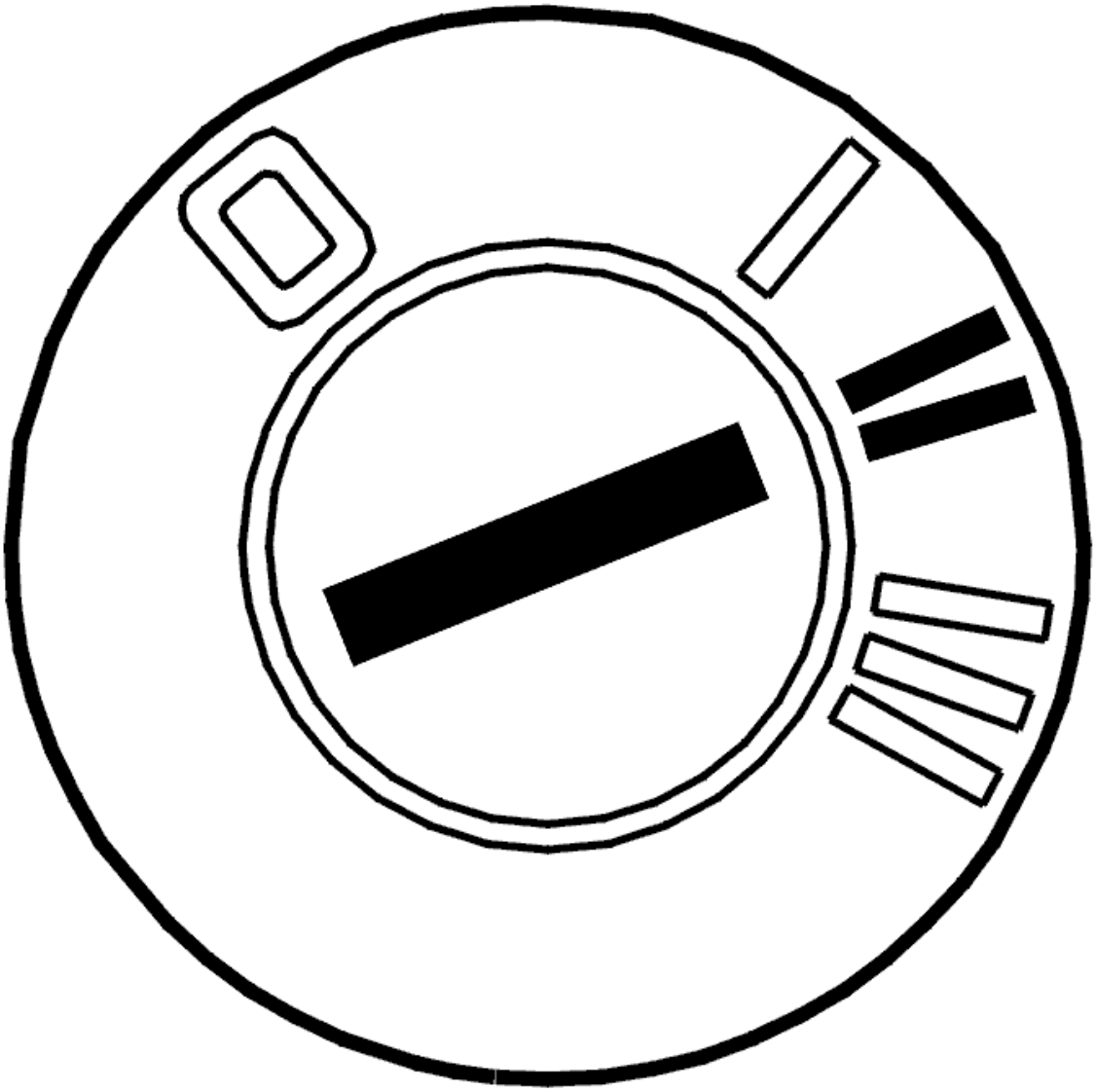

Fig. 211: Identifying Ignition ON
Courtesy of VOLVO CARS CORPORATION

- Ignition on.

  Click on the VCT2000 symbol to reset the adaptation and counter.

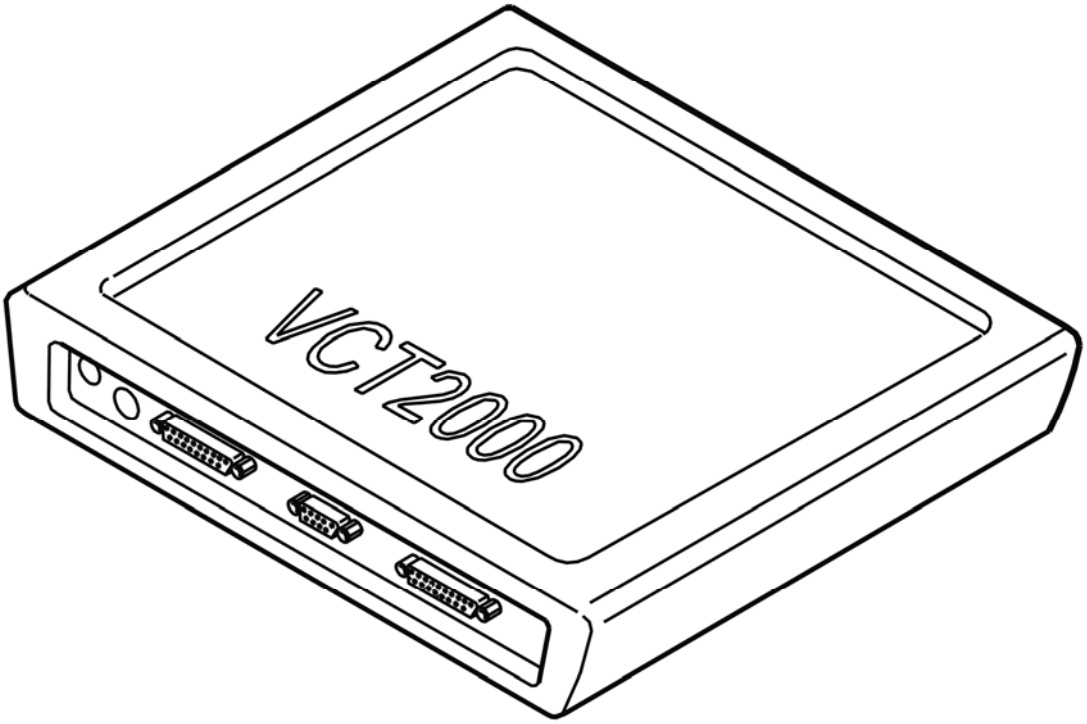

Fig. 212: Identifying VCT2000 Diagnostic Tool Symbol In VIDA
Courtesy of VOLVO CARS CORPORATION

REPLACING THE TRANSMISSION (AW50/51 AWD; AW55-50/51SN; 2003-2007)

REPLACING THE TRANSMISSION

In the event of an internal fault in the gearbox.

- see **TRANSMISSION - REMOVAL, REPLACEMENT AND INSTALLATION**

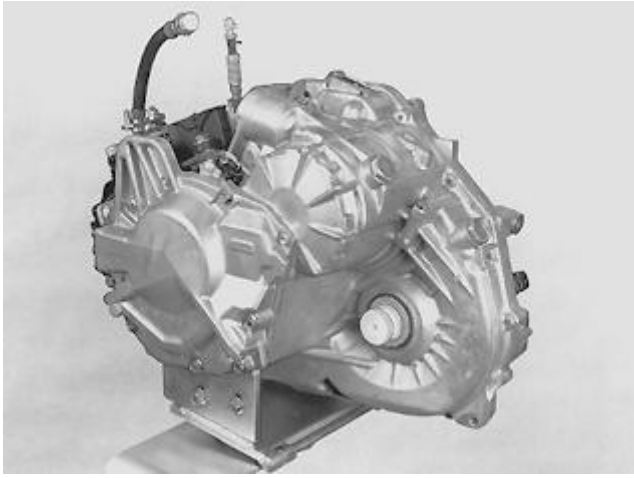

Fig. 213: Identifying Transmission
Courtesy of VOLVO CARS CORPORATION

- **Continue**

  Refer to **RESETTING THE ADAPTATION**

RESETTING THE ADAPTATION

RESETTING ADAPTATION AND THE COUNTER FOR "TRANSMISSION OIL CHANGE"

HINT: The transmission has torque controlled adaptive pressure control. Pressure control means that the transmission regulates the pressure itself during each gear shift. This avoids harsh gear shifting. Each gear shift is evaluated by the control module and stored in the memory. This allows for compensation for wear and tear in the transmission and clutch. It is important that the adaptation in the memory is reset after the transmission has been repaired. This is to ensure normal operation. The oil is replaced during repair; the "Transmission oil change" counter must be reset. If the counter is not reset when the fluid is drained and replaced, there is a risk that a diagnostic trouble code (DTC) will be stored in incorrect circumstances.

NOTE: **This applies only if the transmission or one of the components in the transmission have been replaced.**

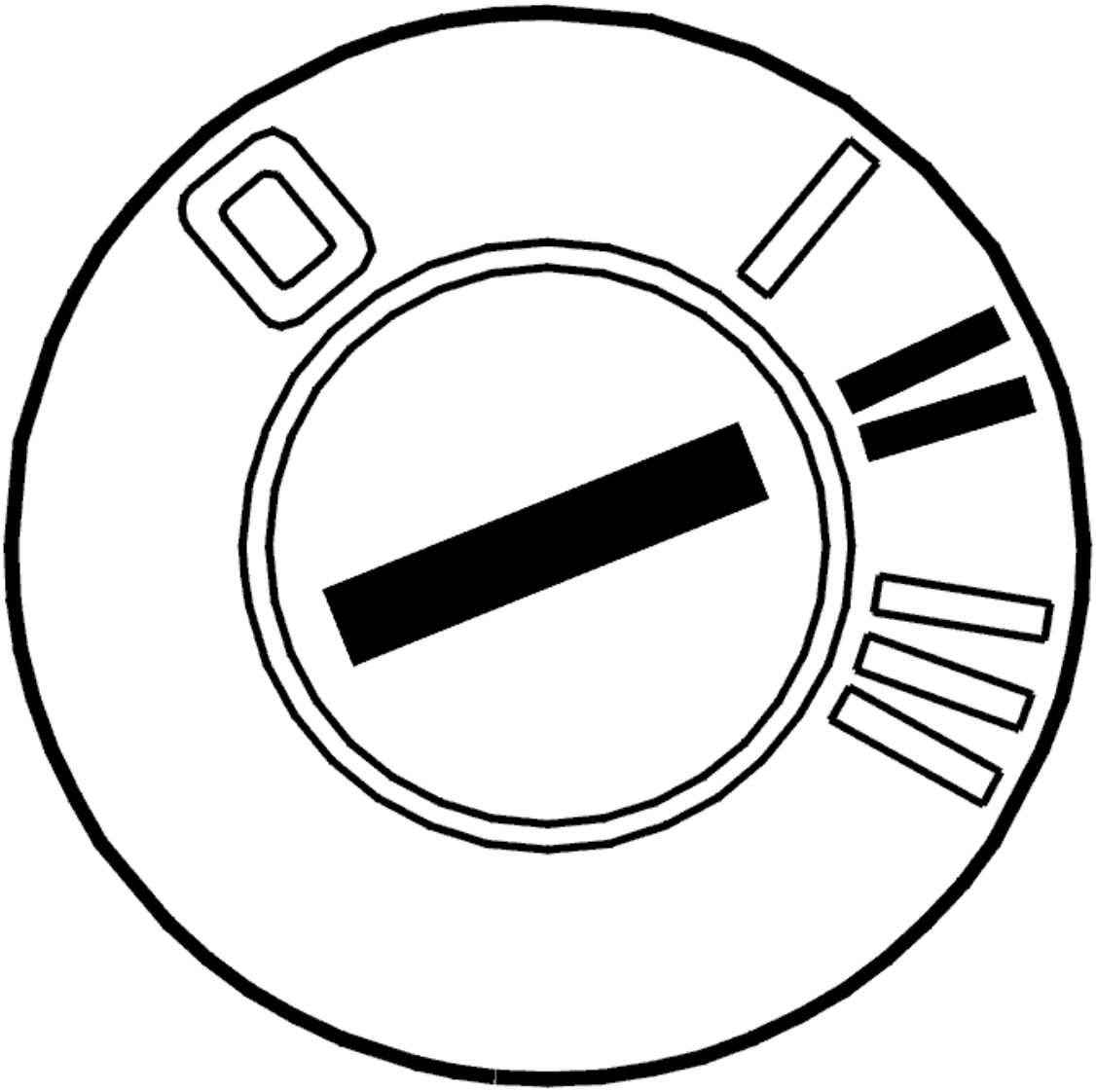

Fig. 214: Identifying Ignition ON
Courtesy of VOLVO CARS CORPORATION

- Ignition on.

  Click on the VCT2000 symbol to reset the adaptation and counter.

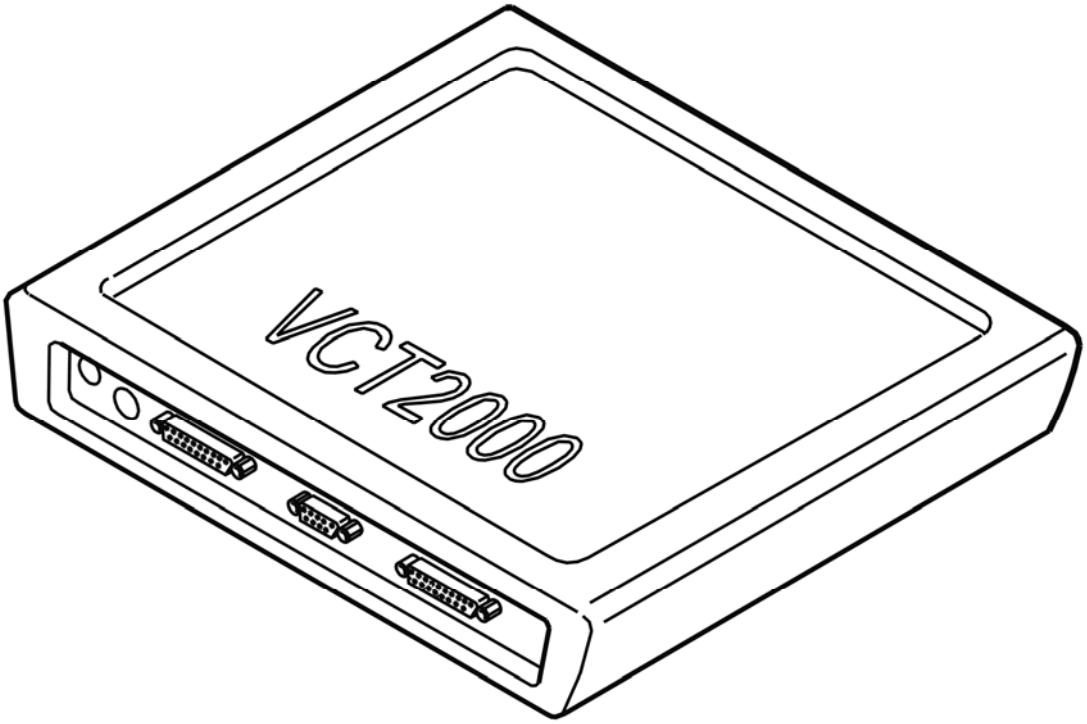

Fig. 215: Identifying VCT2000 Diagnostic Tool Symbol In VIDA
Courtesy of VOLVO CARS CORPORATION

REPLACING THE TRANSMISSION CONTROL MODULE (TCM) (4T65 AWD; 2003-2006)

REPLACING THE TRANSMISSION CONTROL MODULE (TCM)

REPLACING THE TRANSMISSION CONTROL MODULE (TCM)

The control module probably has an internal fault. Replace the transmission control module.

Other information

- To replace the transmission control module (TCM), see **TRANSMISSION CONTROL MODULE (TCM), REPLACING** .

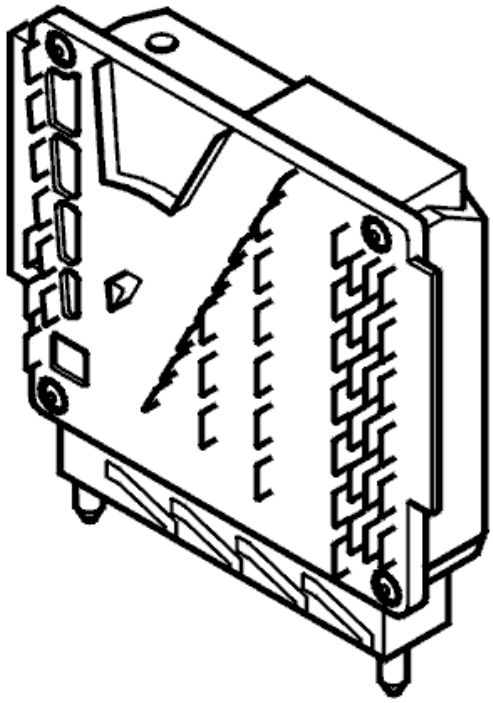

Fig. 216: Identifying Transmission Control Module (TCM)
Courtesy of VOLVO CARS CORPORATION

REPLACING THE TRANSMISSION CONTROL SYSTEM (4T65 AWD; 2003-2006)

REPLACING THE TRANSMISSION CONTROL SYSTEM

REPLACING THE CONTROL SYSTEM

The fault was probably caused by an internal fault in the transmission control system. Replace the control system.

Other information

- To replace the transmission control system, see
  - For removal, see **CONTROL SYSTEM/VALVE HOUSING, REMOVING**
  - To install, see **CONTROL SYSTEM / VALVE HOUSING, INSTALLING** .

.

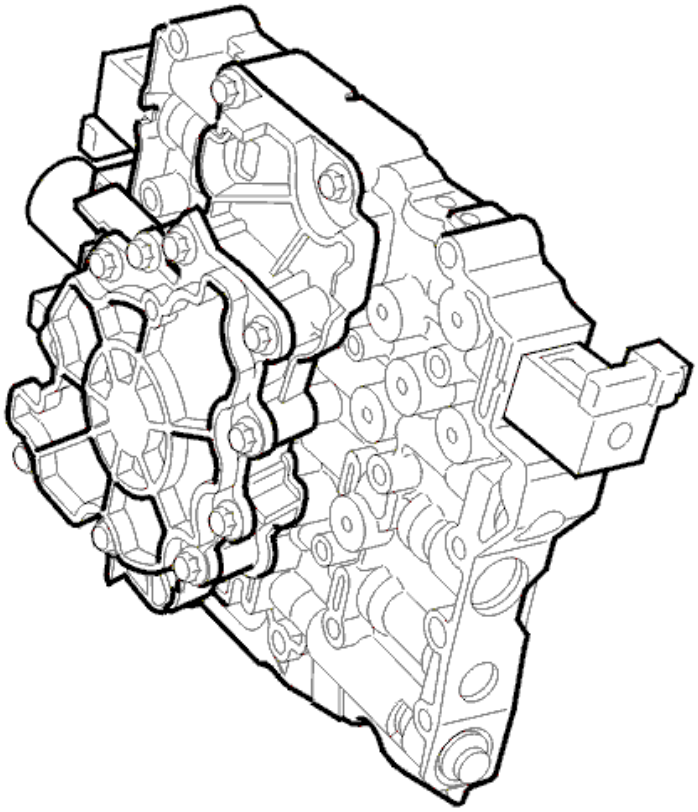

Fig. 217: Identifying Valve Housing
Courtesy of VOLVO CARS CORPORATION

GENERAL INFORMATION

Power transmission

TRANSMISSION

TRANSMISSION CONTROL MODULE (TCM), REPLACING

POINTS TO OBSERVE WHEN REPLACING THE CONTROL MODULE

CAUTION: Software can only be ordered when the control module is installed in the vehicle. VIDA (Volvo scan tool) reads off the new control module identity which is required to order the correct software.

CAUTION: Wait two minutes after the ignition has been switched off. The main relay must be voltage-free before the control module can be removed from the car. If the engine cooling fan runs on after the ignition has been switched off, wait until it stops. Then wait another two minutes.

CAUTION: Always check that the control module and control module box connector pins and sleeves are not bent or damaged. This may have caused the fault.

PREPARATIONS FOR REPLACEMENT

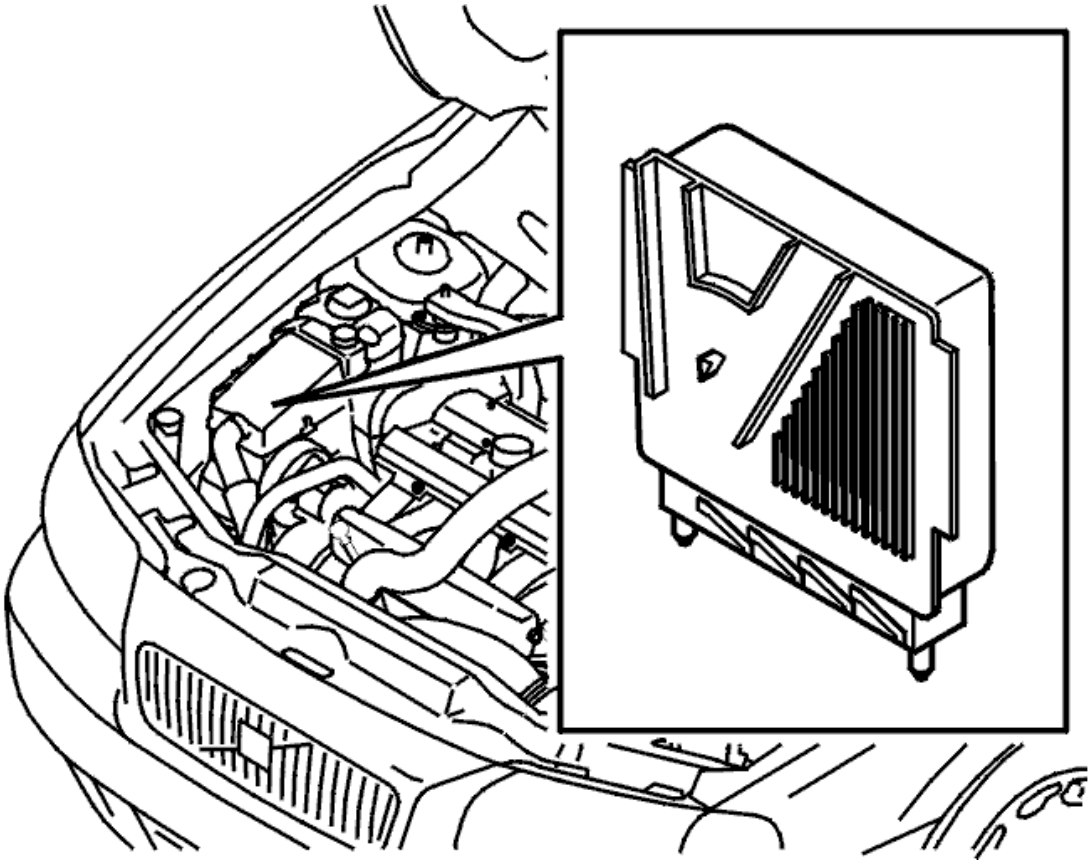

Fig. 1: Identifying Transmission Control Module
Courtesy of VOLVO CARS CORPORATION

Remove:

- the cable from the battery negative terminal. See **BATTERY, DISCONNECTING**
- the cover over the control module.

REMOVING THE CONTROL MODULE

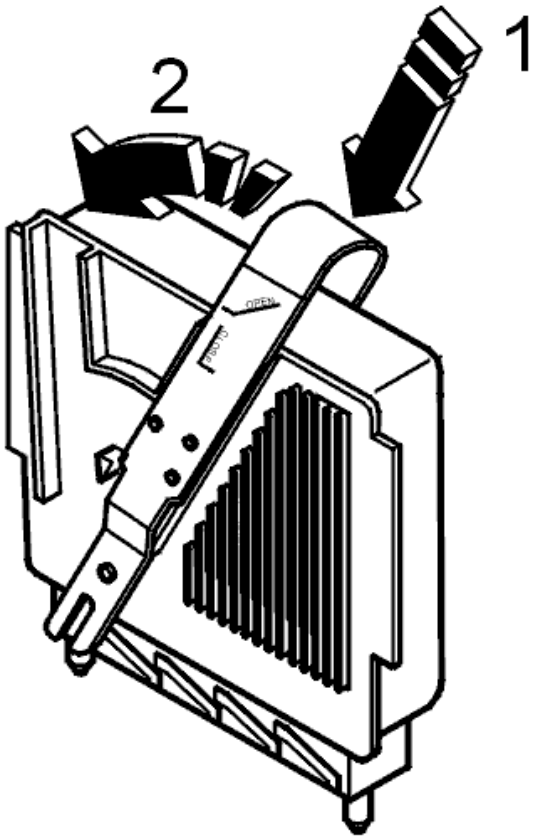

Fig. 2: Identifying Control Module Removal
Courtesy of VOLVO CARS CORPORATION

NOTE: **Do not touch the control module terminal pins with your fingers. Static electricity may damage components in the control module.**

Insert tool see **9995722** (1) in the car around the control module. Move the upper section of the tool backwards as far as it will go (2). Pull up the tool.

Carefully pull up the control module.

INSTALLING THE CONTROL MODULE

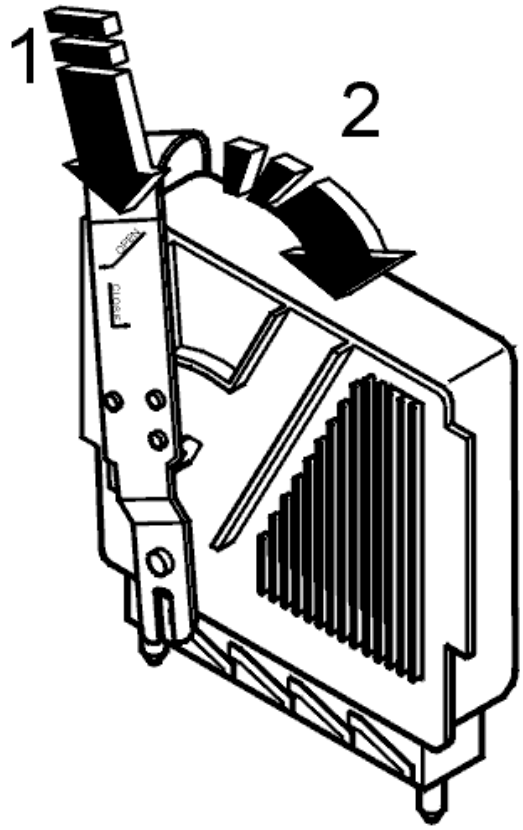

Fig. 3: Identifying Control Module Installation
Courtesy of VOLVO CARS CORPORATION

Carefully press the control module down into the grooves on the inside of the control module box. Press down all the way.

Insert tool see **9995722** around the control module.

Move the upper section of the tool forwards to stop and pull it up.

Press the cover into place over the control modules.

Check that the air ducts are correctly positioned.

Connect the battery negative lead. First read, see **BATTERY, DISCONNECTING** .

ORDERING SOFTWARE

Order software. See: 9438291

FINISHING

Check that no diagnostic trouble codes have been stored during the repair.

TRANSMISSION CONTROL UNIT WIRING HARNESS

REMOVING COVER CONTROL SYSTEM

Remove the cover over the control system. See **COVER CONTROL SYSTEM, REPLACING** .

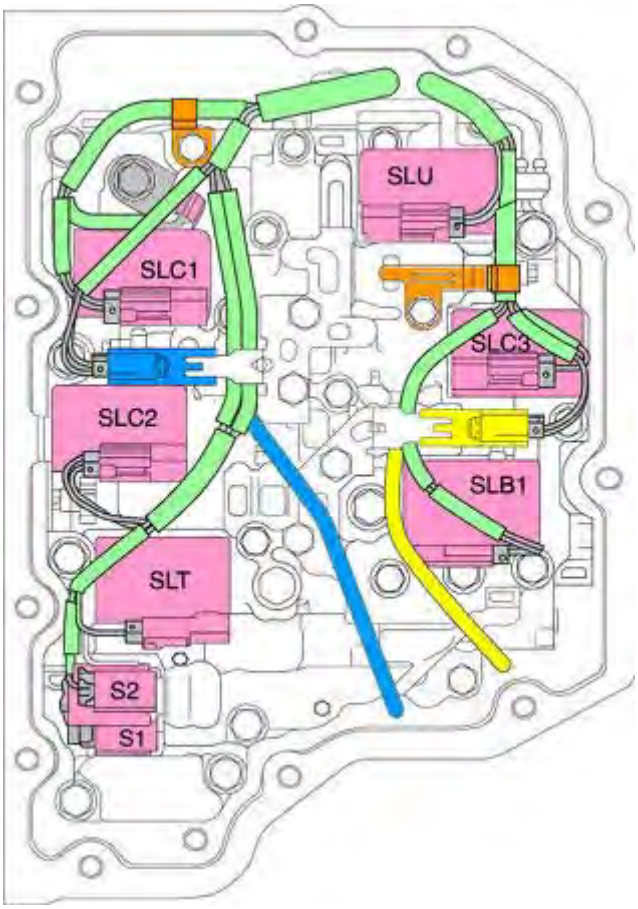

Fig. 4: Identifying Cable Harness
Courtesy of VOLVO CARS CORPORATION

TEMPERATURE SENSOR, FLUID TRANSMISSION

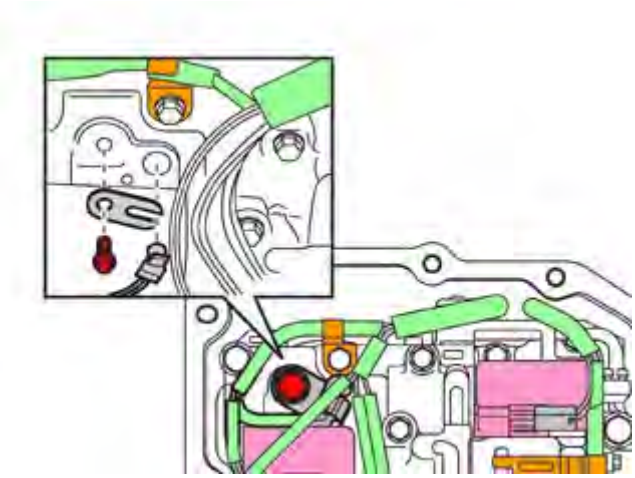

Fig. 5: Identifying Temperature Sensor & Connector
Courtesy of VOLVO CARS CORPORATION

CONNECTING TO TRANSMISSION INPUT SPEED SENSOR

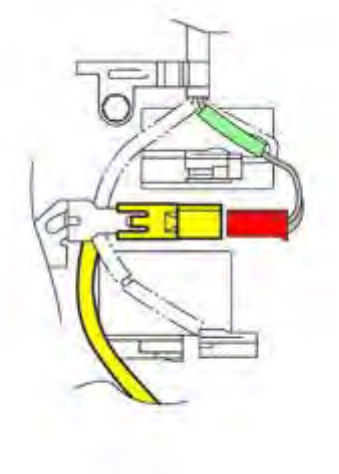

Fig. 6: Identifying Transmission Input Speed Sensor And Connector
Courtesy of VOLVO CARS CORPORATION

CONNECTING TO VEHICLE SPEED SENSOR

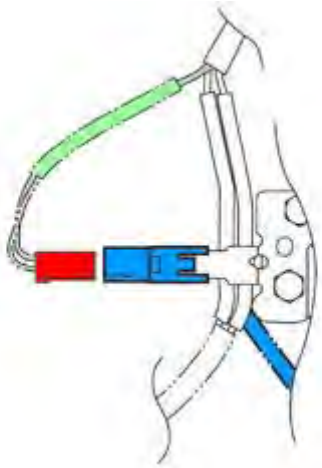

Fig. 7: Identifying Vehicle Speed Sensor And Connector
Courtesy of VOLVO CARS CORPORATION

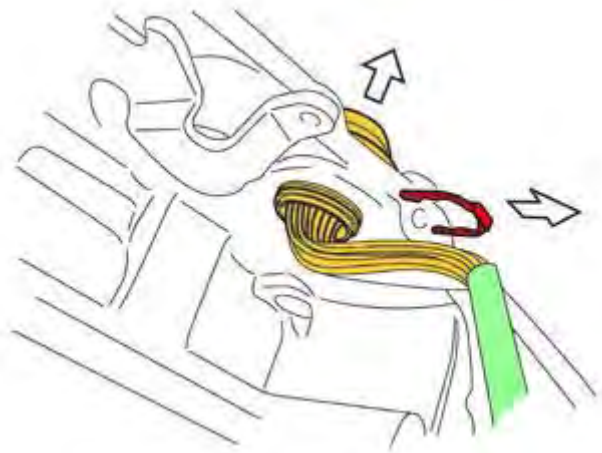

Fig. 8: Identifying Wire Harness Clip & Connector
Courtesy of VOLVO CARS CORPORATION

Fig. 9: Identifying Cable And Connector
Courtesy of VOLVO CARS CORPORATION

Fig. 10: Identifying Cable, Connector, And Clip
Courtesy of VOLVO CARS CORPORATION

TEMPERATURE SENSOR, FLUID TRANSMISSION

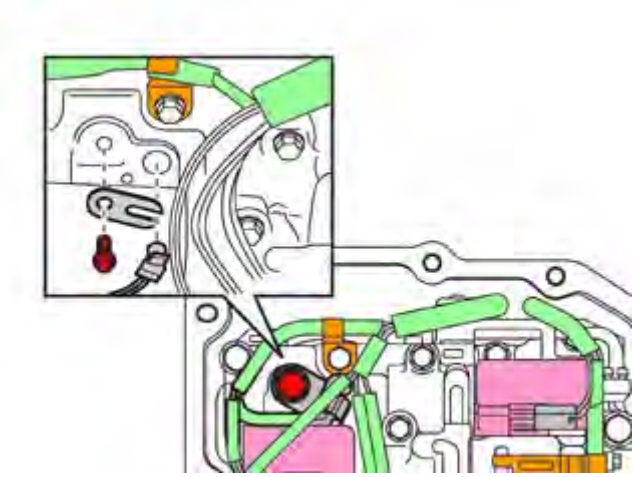

Fig. 11: Identifying Temperature Sensor & Connector
Courtesy of VOLVO CARS CORPORATION

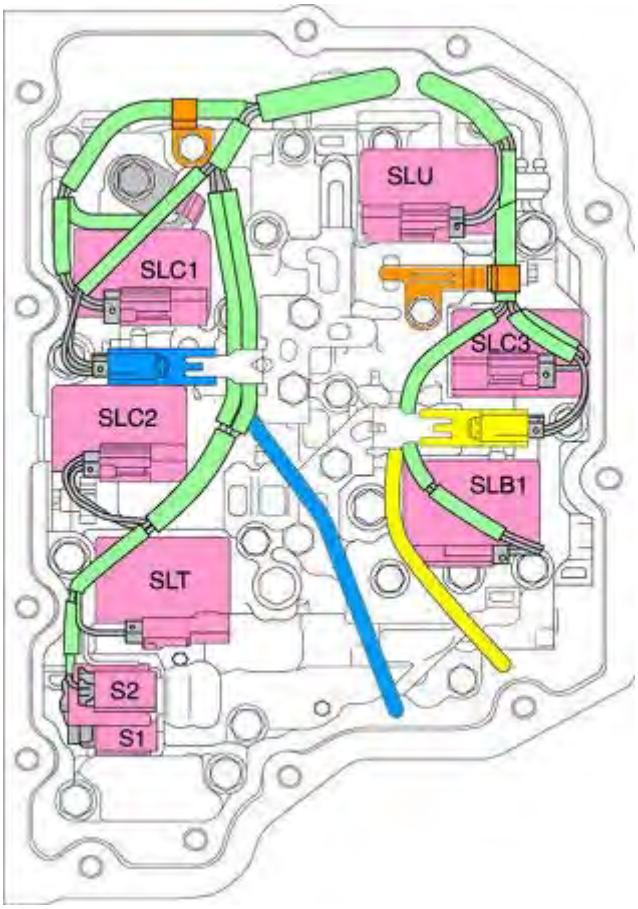

Fig. 12: Identifying Cable Harness
Courtesy of VOLVO CARS CORPORATION

INSTALLING COVER CONTROL SYSTEM

Install the cover over the control system. See **COVER CONTROL SYSTEM, REPLACING** .

TRANSMISSION FLUID, REPLACING

NOTE: **Oil grade: Only automatic transmission fluid (ATF). Dexron III (the fluid must have a G license). This is usually given as "Dexron III (G-xxxxx)" where xxxxx is a 5 digit serial number. "Dexron III-G" (without a number) may also occur. The Volvo P/N for this oil is 1161521-8 (1 liter container).**

WARNING: **Avoid skin contact with the transmission fluid.**

CONDITIONS

The oil should be replaced only in the two following instances:

Where diagnostic trouble codes (DTCs) TCM 0042 and TCM 0046 are stored, in which case the diagnostic function activates the warning lamp in the following circumstances.

The transmission control module (TCM) receives data about the operating temperature of the transmission fluid while the car is being driven. TCM 0042 is stored after an accumulated amount of time.

Diagnostic trouble code (DTC) TCM 0046 is stored if the transmission fluid temperature exceeds 150° C for more than two minutes.

In cars used in continuous taxi service or used for towing a trailer or caravan for most of its mileage, the oil must be replaced at a service interval of 75, 000 km ± 5000 km. This is to conform to the regular service program.

WARNING: **The oil may be very hot if the car has just been driven. Avoid skin contact.**

DRAINING

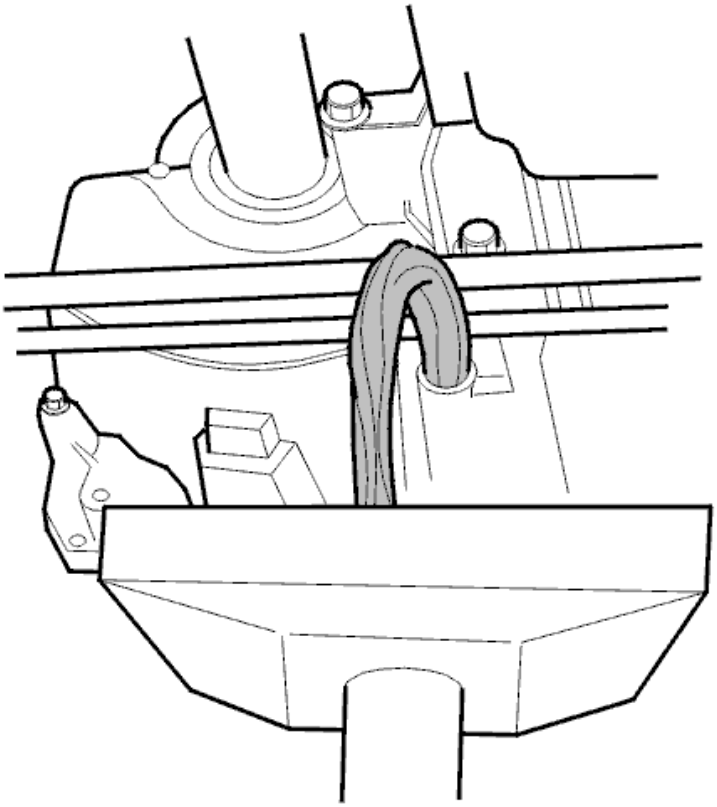

Fig. 13: Draining Off Oil
Courtesy of VOLVO CARS CORPORATION

Remove:

- the splash guard under the engine
- the oil plug. Drain the transmission oil.

INSTALLING THE OIL PLUG

Use a new gasket.

Tighten the plug. Tighten to **40 Nm** .

Install the protective cover.

DRAINING OIL

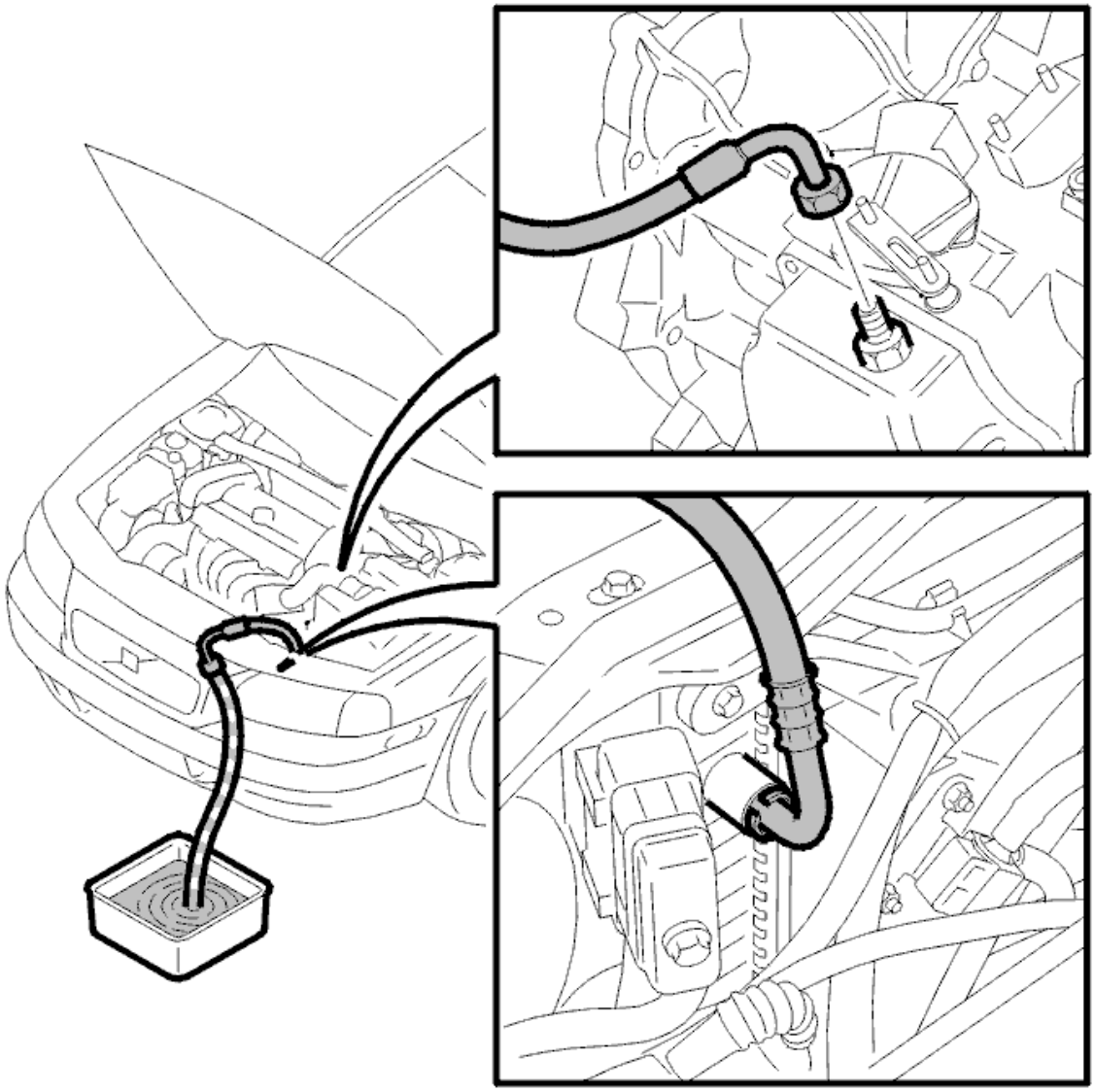

Fig. 14: Draining Cooler
Courtesy of VOLVO CARS CORPORATION

Remove the return hose on the control system cover.

Install a plastic plug in the connection on the cover.

Detach the return hose in the cooler. Align the hose upwards and reconnect it to the cooler.

Install a transparent plastic hose on the oil return hose connection.

Place a container beneath the hose to catch the oil.

REFILLING

Apply the parking brake. Move the gear selector lever to position P.

Fill with approximately 2 liters of oil.

Start the engine. Allow the engine to idle.

Turn the engine off when air bubbles start to become visible in the hose.

Fill with approximately 2 liters of oil.

Start the engine again and let it idle.

Turn the engine off when air bubbles start to become visible in the hose.

Remove the hose from the oil cooler hose. Detach it from the connection to the cooler. Install the hose in the normal position on the cooler and the transmission.

FURTHER FILLING

Fill with approximately 2 liters of oil.

Apply the parking brake.

Start the engine. Allow the engine to idle. Move the gear selector through all the gear positions. Wait 4-5 seconds in each gear.

CHECKING THE OIL LEVEL

See **OIL LEVEL, CHECKING** .

The capacity of the transmission is 7.6± 0.25 liters. (MAX, MIN).

NOTE: **After replacing the transmission, the adaptation and the "Transmission oil change" counter must be reset. See RESETTING TRANSMISSION FLUID CHANGE COUNTER .**

TRANSMISSION OIL LEVEL - CHECKING

NOTE: **The illustrations in this service information are used for different model years and/or models. Some variation may occur. However, the essential information in the illustrations is always correct.**

WARNING: **Take great care when the vehicle is raised, the splashguard under the engine is removed and the engine is running. Watch out for rotating components on the engine and the radiator fan. Be especially careful with your hair and fingers.**

WARNING: **Avoid skin contact with the oil.**

NOTE: **Only use transmission oil with Volvo part no.: 116 1540-8 (1-litre), 116 1640-6 (4-litre).**

CHECK

CONDITIONS

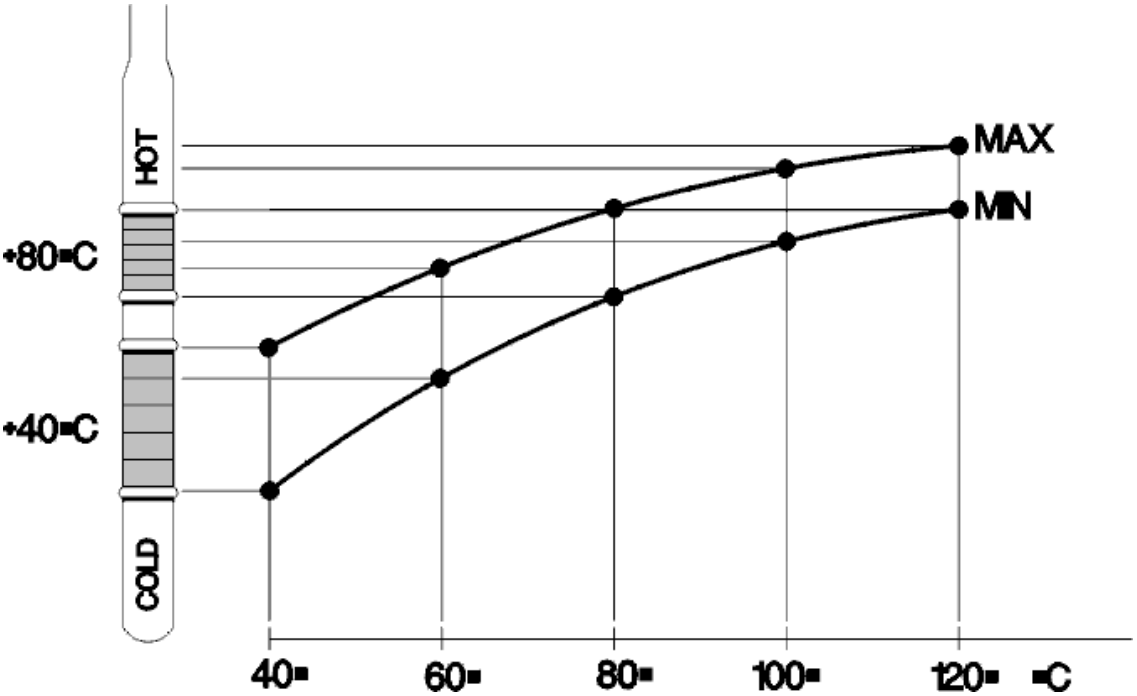

Fig. 15: Identifying Oil Level Graph
Courtesy of VOLVO CARS CORPORATION

The difference between MAX and MIN volume is 0.3 liters. Check the oil temperature in the transmission.

At room temperature (+20 °C) the oil level is near the MIN marking on the "cold area".

At room temperature (+20 °C) and **low oil level** the oil barely reaches the dipstick.

The "cold range" (+40 °C) is reached after approximately 15 minutes idling in the workshop, while the "hot range" (+80 °C) is reached after approximately 30 minutes highway driving at an air temperature above +15 °C.

NOTE: Carry out the check at an oil temperature of +80 °C. Go to car communication function group 4. Select the digital display parameter. Select the parameter for the transmission oil temperature.

PREPARING TO CHECK THE OIL LEVEL

Position the car on a hoist.

Apply the parking brake.

Apply the foot brake.

Let the engine idle.

Set the gear selector in position P. Move the gear selector through the various gear positions, stopping for approximately 3 seconds in each position.

Return the gear selector to position P. Wait 2 minutes before checking the oil level.

CHECKING OIL LEVEL

Fig. 16: Identifying Dipstick Position
Courtesy of VOLVO CARS CORPORATION

Allow the engine to idle with the gear selector in position P.

Raise the vehicle. Remove the splashguard from under the engine.

The dipstick must be pushed down completely in the dipstick tube.

CAUTION: Wipe off the dipstick with a nylon cloth or similar. Do not use a rag which may leave lint or threads.

LOW LEVEL (TOPPING UP)

Top up with oil through the dipstick pipe. Take the temperature into account when topping up with oil.

Check the oil level again.

HIGH LEVEL (OVERFILLING)

WARNING: The oil may be very hot if the vehicle has just been driven. Avoid skin contact with the transmission oil.

WARNING: The transmission must not be operated if the oil level is too high. This can cause increased operating temperatures and oil leakage.

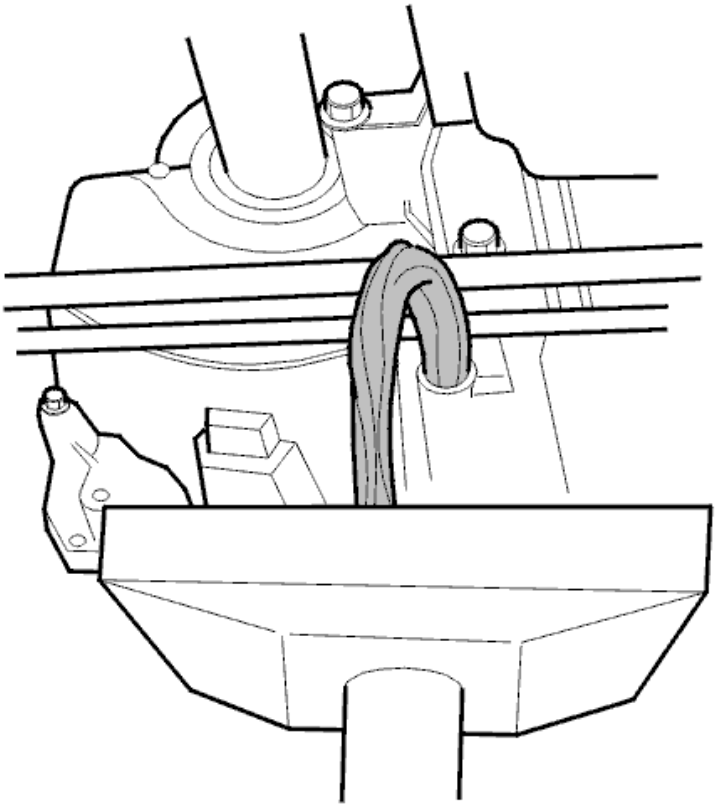

Fig. 17: Draining Off Oil
Courtesy of VOLVO CARS CORPORATION

NOTE: Strict cleanliness is important.

Drain off oil.

Undo the drain plug.

Allow some of the oil to drain out and reinstall the plug. Tighten. See: **TIGHTENING TORQUE** .

HINT: The oil can also be sucked out through the dipstick pipe using an oil suction syringe with a narrow gauge hose.

Check the oil level again.

FINISHING

INSTALLING THE SPLASH GUARD

After checking, install the splashguard under the engine.

TRANSMISSION

Power transmission

TRANSMISSION

VALVE HOUSING

Special tools	
	999 7426 Position setting **Tool number:** 999 7426 **Tool description:** Position setting **Tool boards:** 43

Materials	
Designation	**Part number**
Transmission oil	1161838

REMOVAL

NOTE: Removal steps in this procedure may contain installation details.

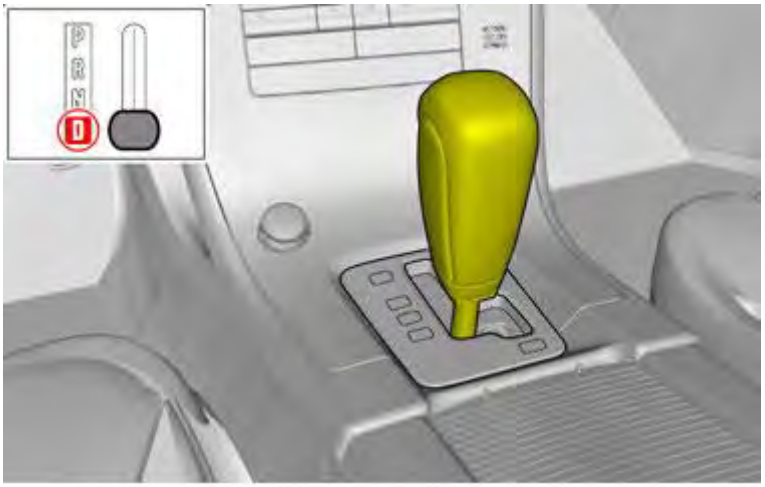

Fig. 1: Setting Gear Selector To Drive Position
Courtesy of VOLVO CARS CORPORATION

Perform battery disconnecting and connecting, see **BATTERY - DISCONNECTING AND CONNECTING**

Remove the engine cooling fan (FC). See **COOLING SYSTEM - REMOVAL, REPLACEMENT AND INSTALLATION** .

Drain the cooling system, see **COOLING SYSTEM - DRAINING, CHARGING AND BLEEDING**

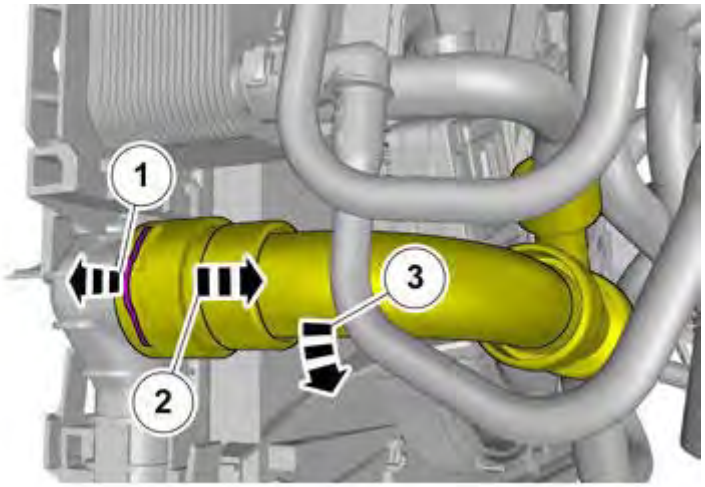

Fig. 2: Removing Lower Radiator Hose
Courtesy of VOLVO CARS CORPORATION

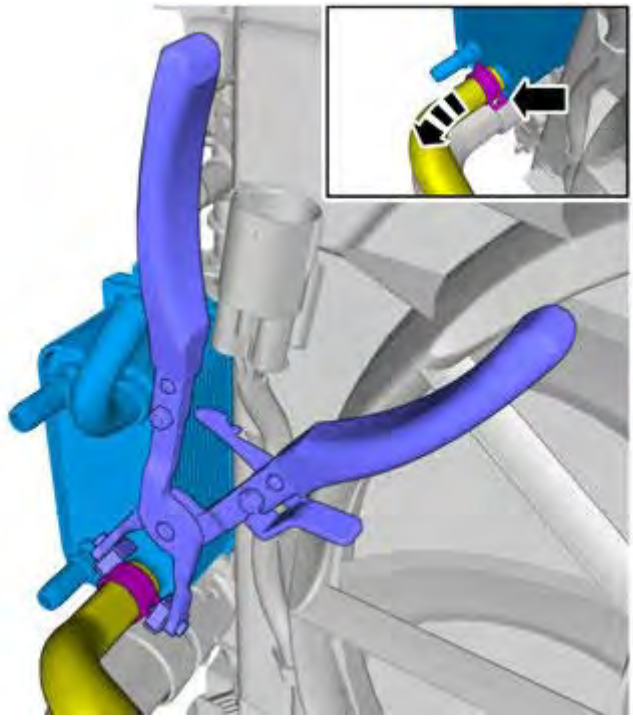

Fig. 3: Removing Cooler Line
Courtesy of VOLVO CARS CORPORATION

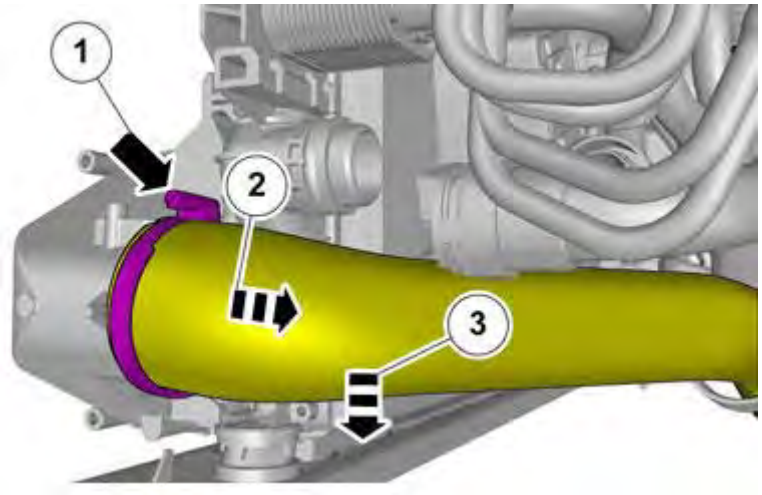

Fig. 4: Removing Upper Radiator Hose
Courtesy of VOLVO CARS CORPORATION

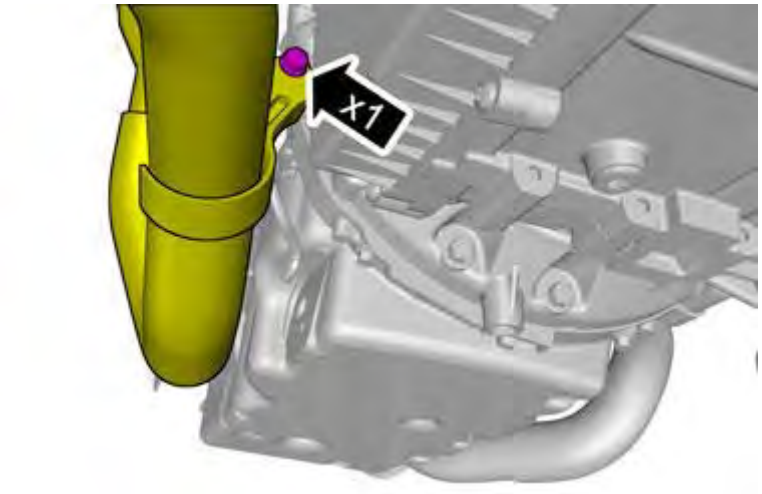

Fig. 5: Locating Hose Clamp Mounting Bolt
Courtesy of VOLVO CARS CORPORATION

Torque: M8

24 Nm

Remove cover control system, see **COVER CONTROL SYSTEM, REPLACING**

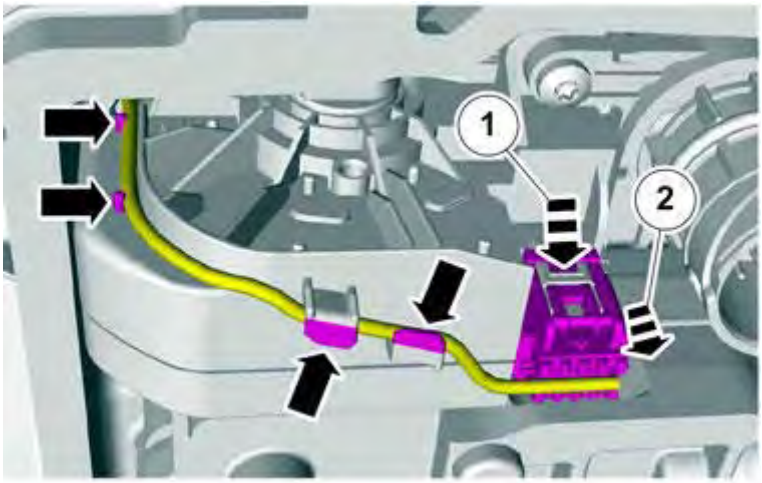

Fig. 6: Identifying Cable, Connector, And Clips
Courtesy of VOLVO CARS CORPORATION

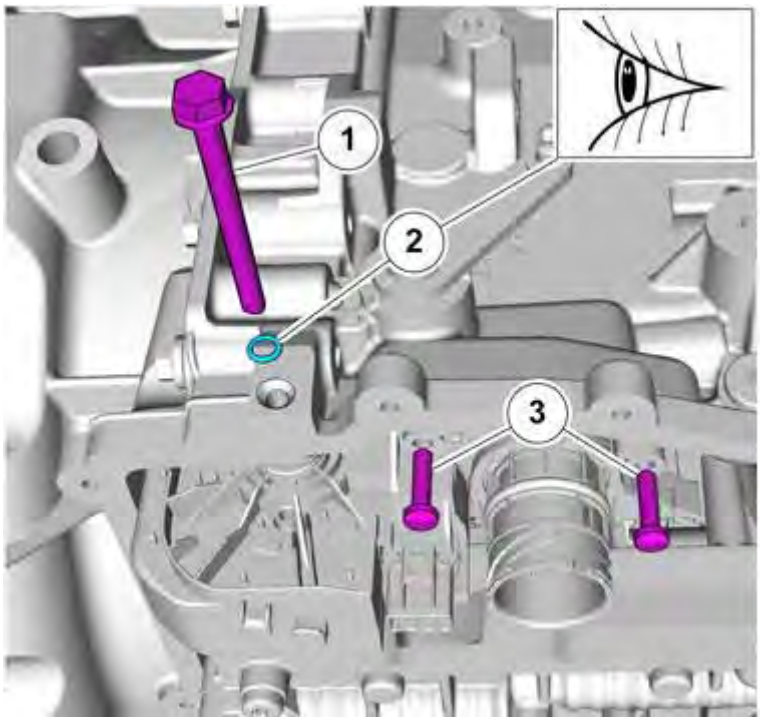

Fig. 7: Identifying Mounting Bolts
Courtesy of VOLVO CARS CORPORATION

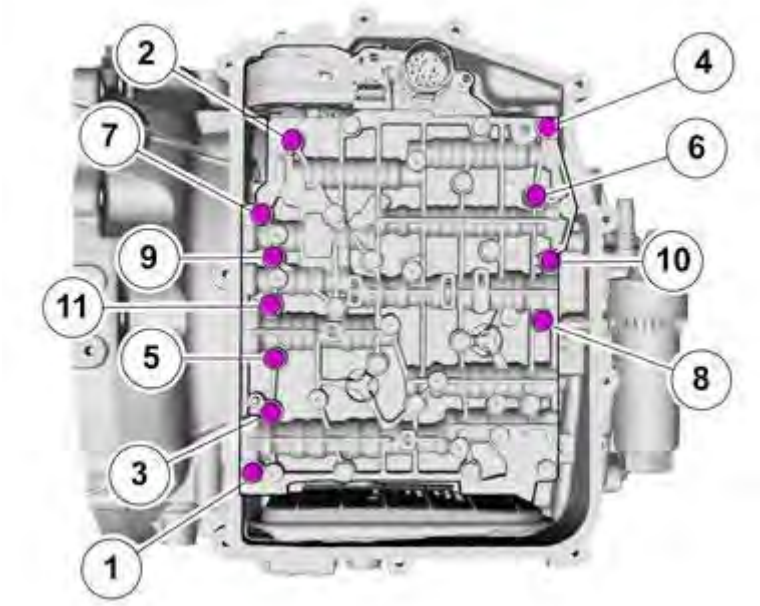

Fig. 8: Locating Bolts
Courtesy of VOLVO CARS CORPORATION

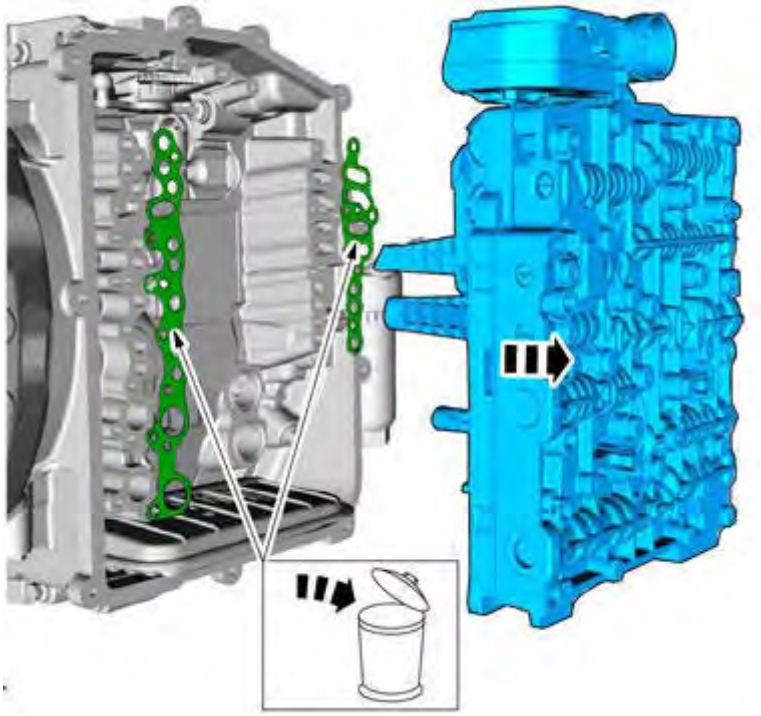

Fig. 9: Removing And Discarding Gaskets
Courtesy of VOLVO CARS CORPORATION

WARNING: **Be prepared to collect escaping fluid.**

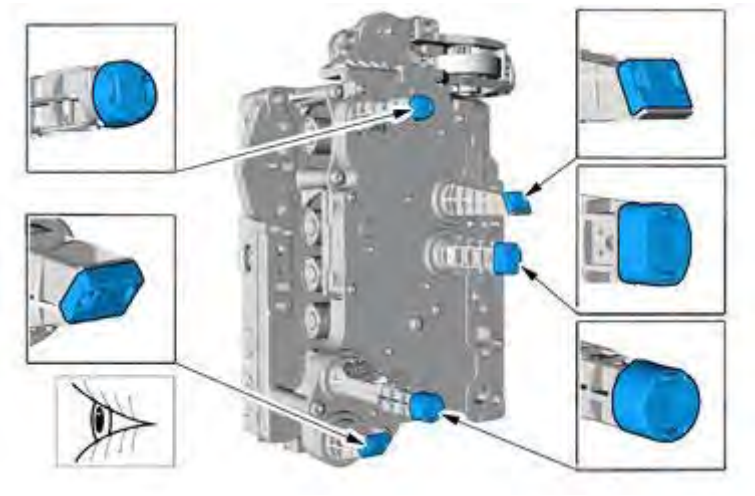

Fig. 10: Visual Check (1 Of 2)
Courtesy of VOLVO CARS CORPORATION

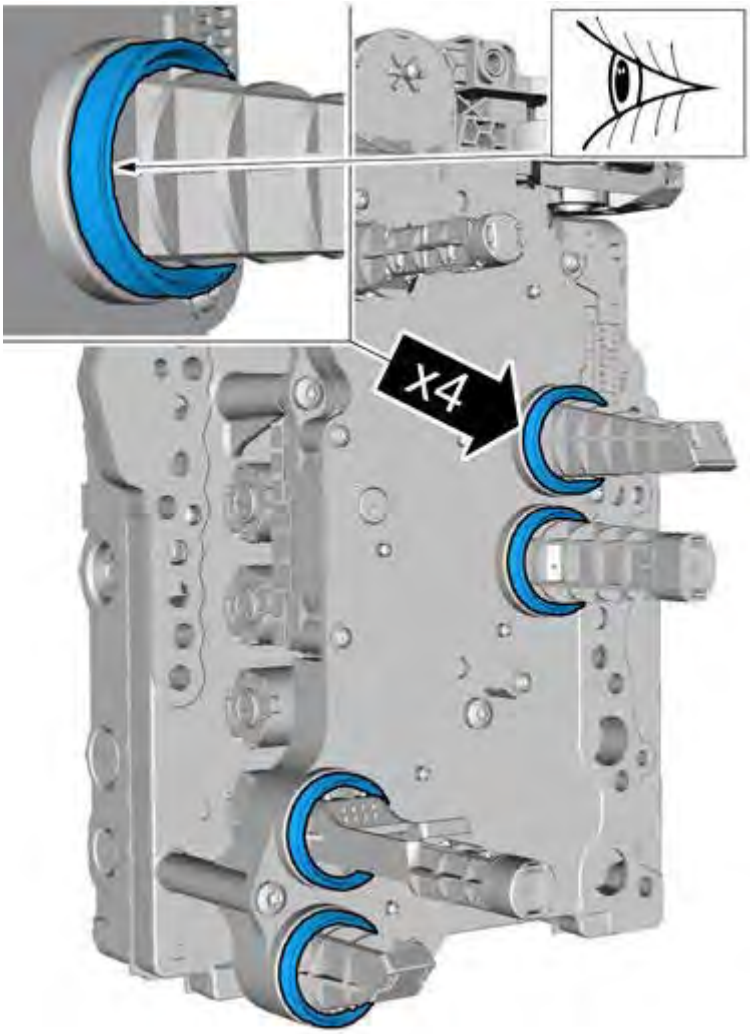

Fig. 11: Visual Check (2 Of 2)
Courtesy of VOLVO CARS CORPORATION

INSTALLATION

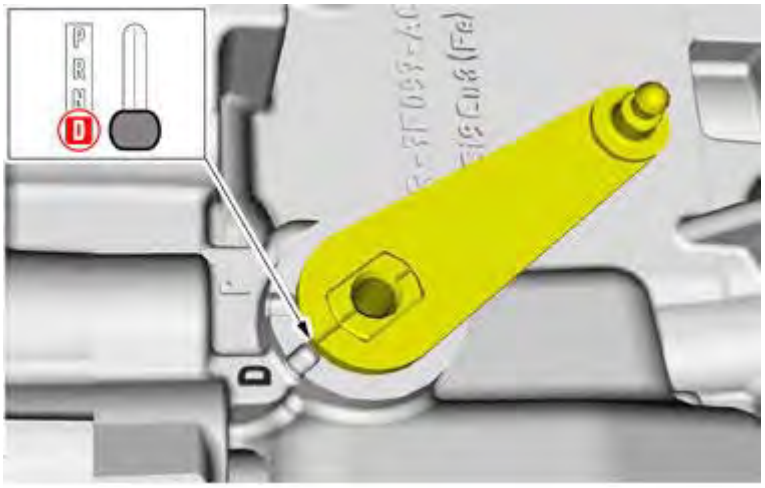

Fig. 12: Identifying Shift Lever Drive Position
Courtesy of VOLVO CARS CORPORATION

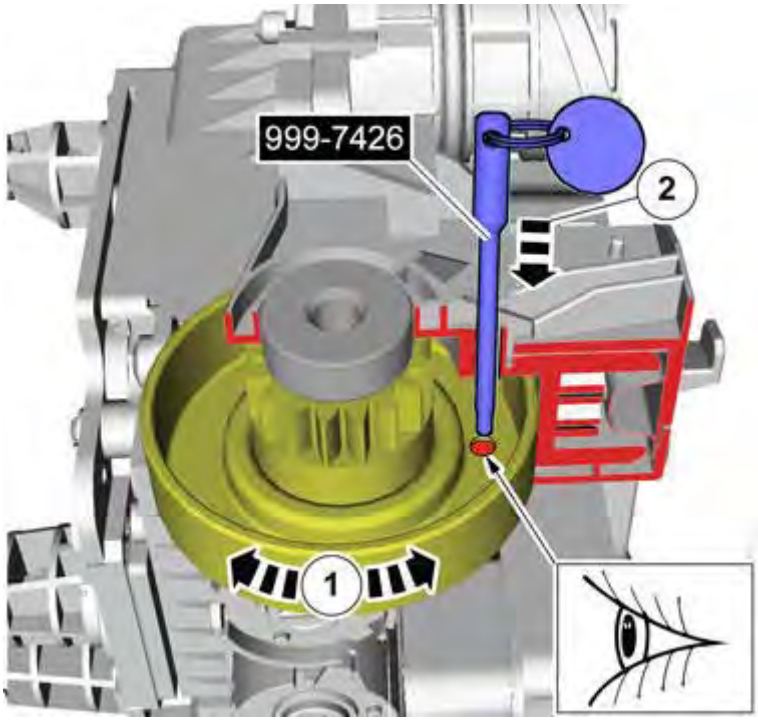

Fig. 13: Inspecting Pin
Courtesy of VOLVO CARS CORPORATION

see **9997426**

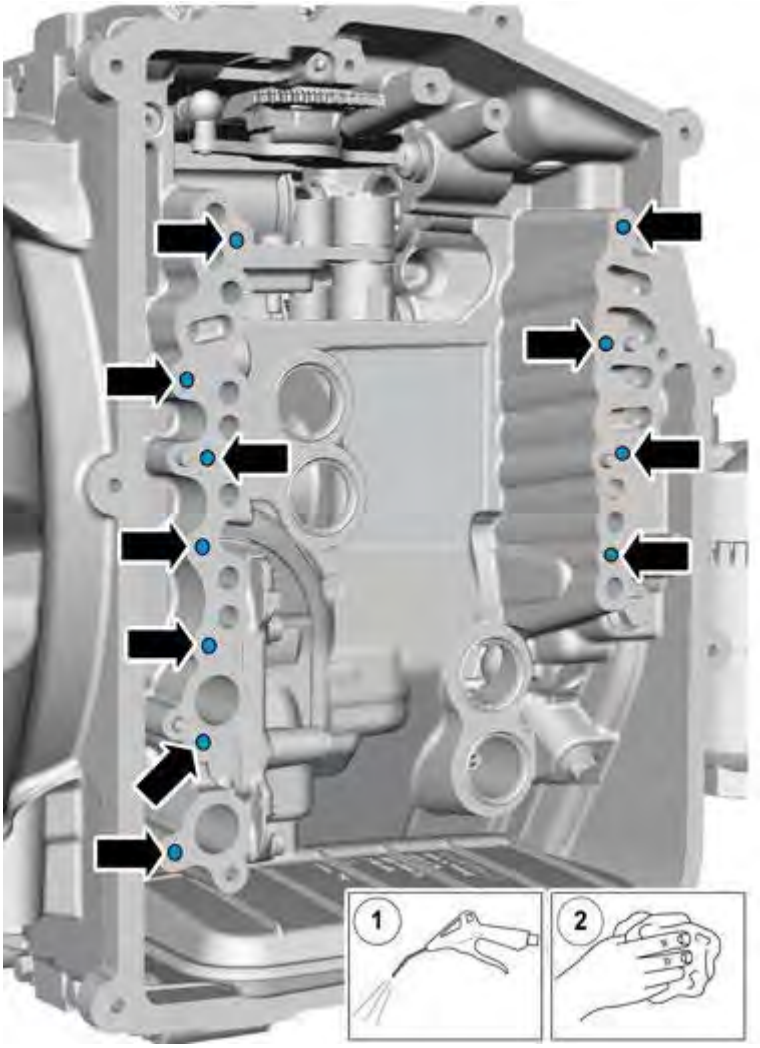

Fig. 14: Locating Bolt Holes
Courtesy of VOLVO CARS CORPORATION

CAUTION: Use lint free cloth.

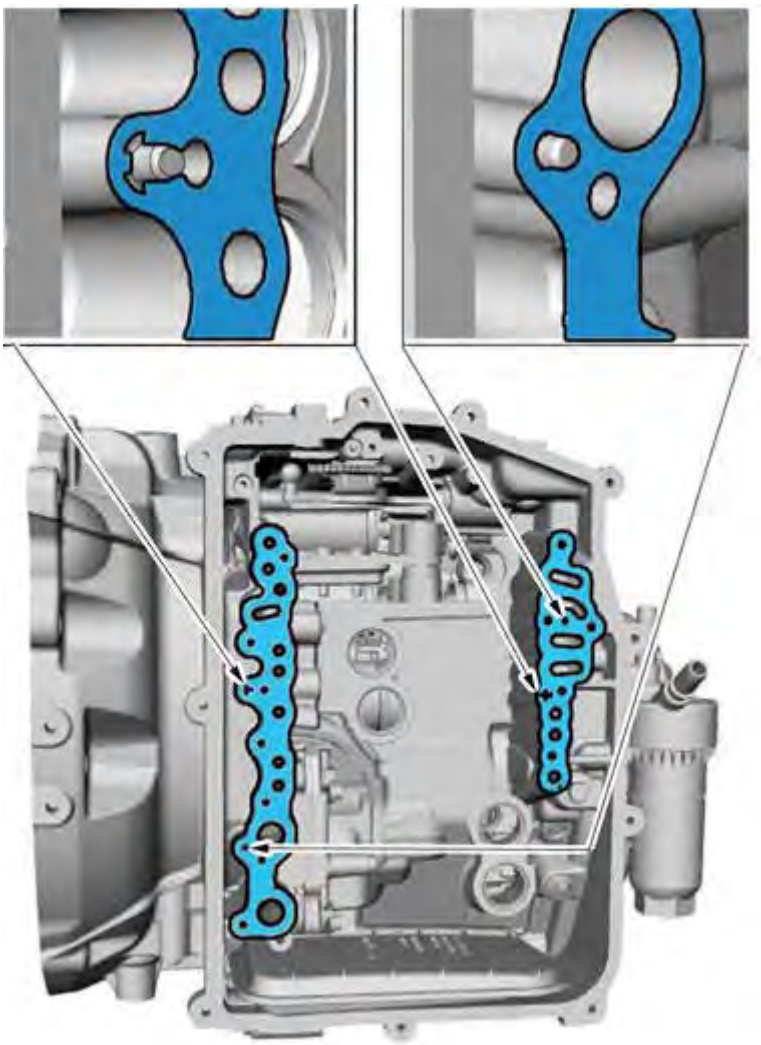

Fig. 15: Installing New Gaskets
Courtesy of VOLVO CARS CORPORATION

NOTE: **Use new seals.**

NOTE: **Make sure that the seal is correctly located.**

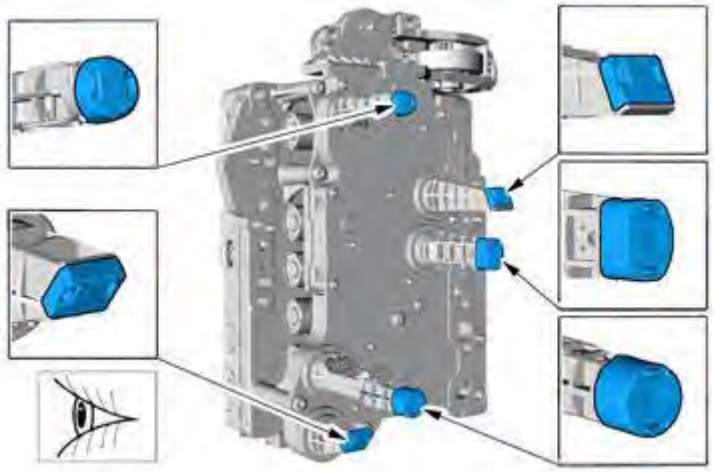

Fig. 16: Visual Check (1 Of 2)
Courtesy of VOLVO CARS CORPORATION

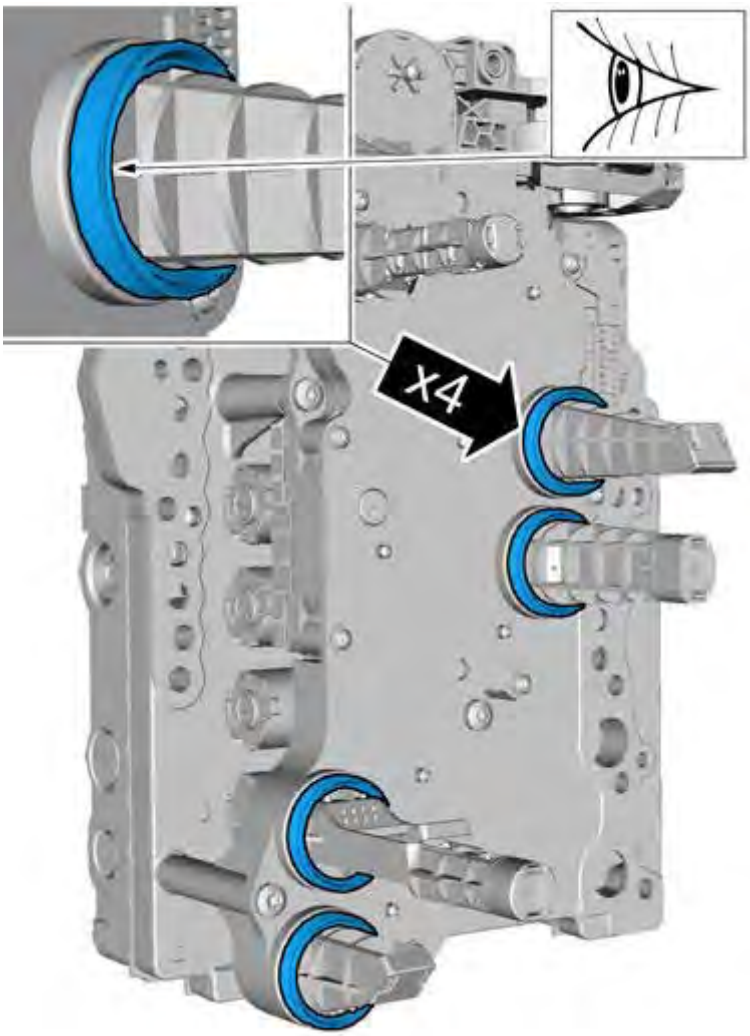

Fig. 17: Visual Check (2 Of 2)
Courtesy of VOLVO CARS CORPORATION

NOTE: **Make sure that the seal is correctly located.**

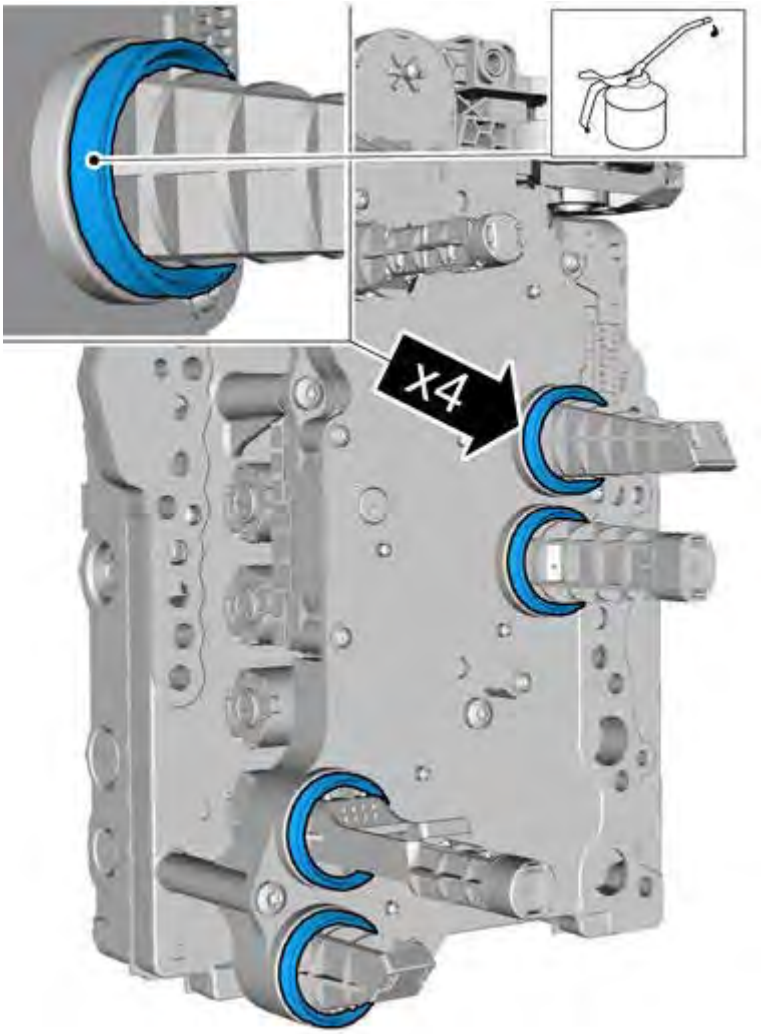

Fig. 18: Transmission Oil, 1161838
Courtesy of VOLVO CARS CORPORATION

CAUTION: Only use the specified material to lubricate the seals.

Use: Transmission oil, 1161838

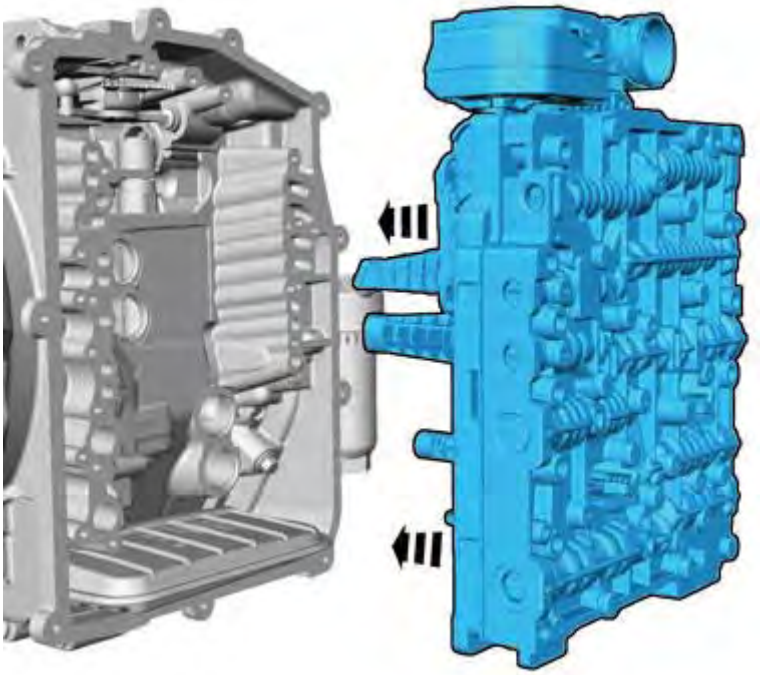

Fig. 19: Installing Valve Housing
Courtesy of VOLVO CARS CORPORATION

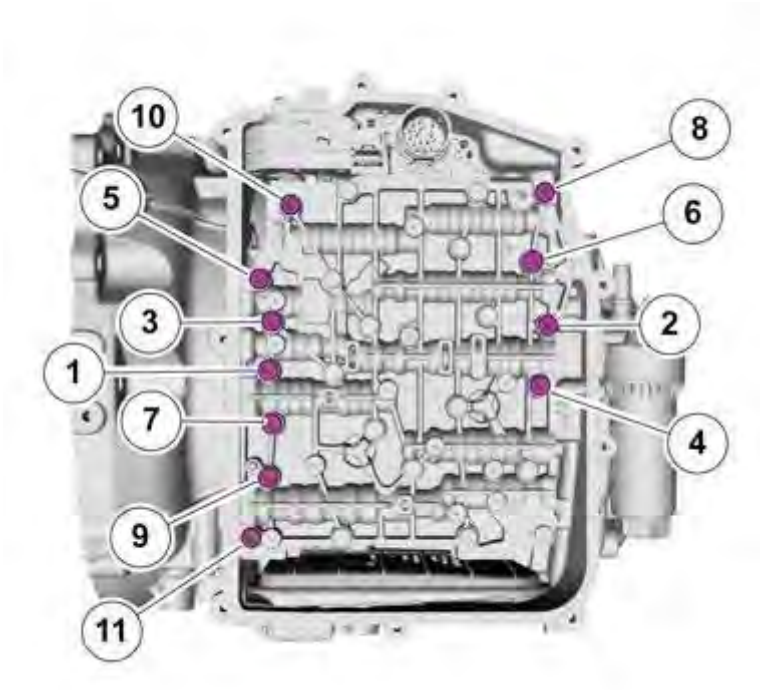

Fig. 20: Locating Bolts
Courtesy of VOLVO CARS CORPORATION

Torque: M6

10 Nm

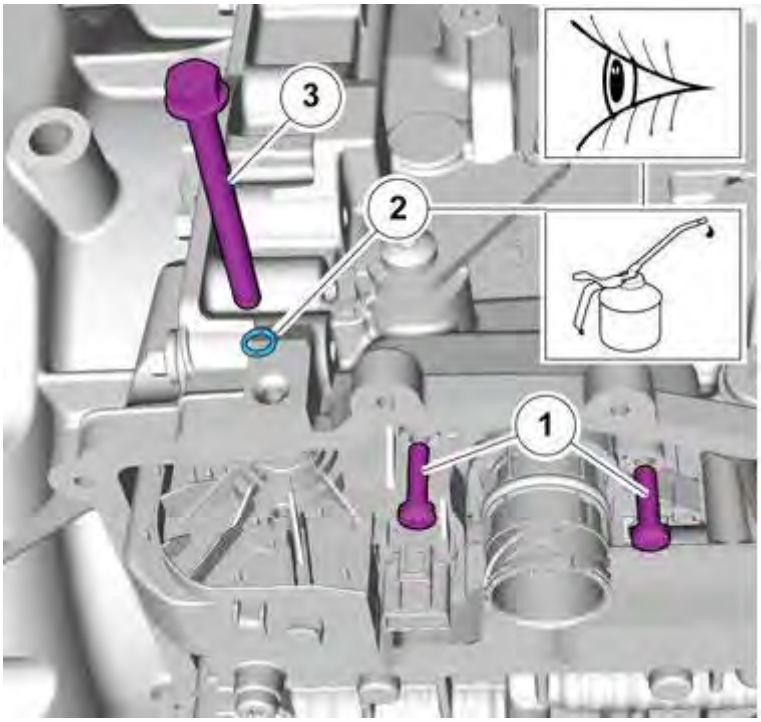

Fig. 21: Transmission Oil, 1161838
Courtesy of VOLVO CARS CORPORATION

1. **Torque:** M5

   5 Nm

2. **Use:** Transmission oil, 1161838
3. **Torque:** Screw gear position sensor

   7 Nm

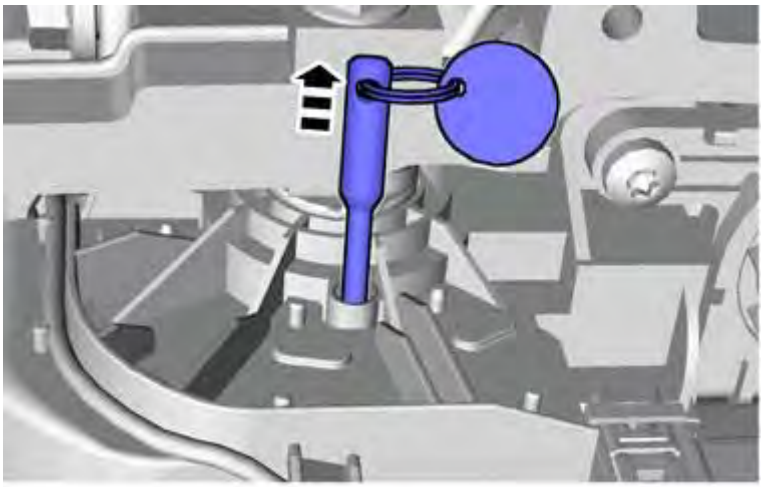

Fig. 22: Pulling Out Pin
Courtesy of VOLVO CARS CORPORATION

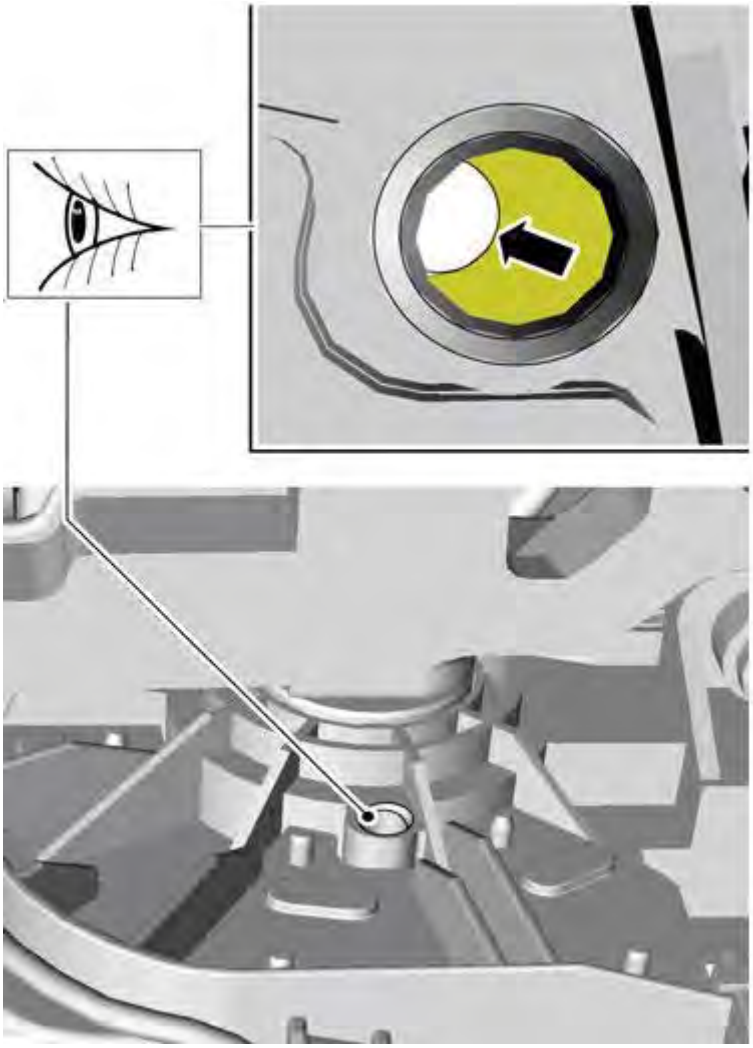

Fig. 23: Visual Inspection
Courtesy of VOLVO CARS CORPORATION

To install, reverse the removal procedure.

Fill the cooling system. See **COOLING SYSTEM - DRAINING, CHARGING AND BLEEDING**

Order and download software according to: 30788939

Adapt according to "Initial adaption" using VIDA (Volvo scan tool)

2008 SYSTEM WIRING DIAGRAMS

Volvo - XC90

AIR CONDITIONING

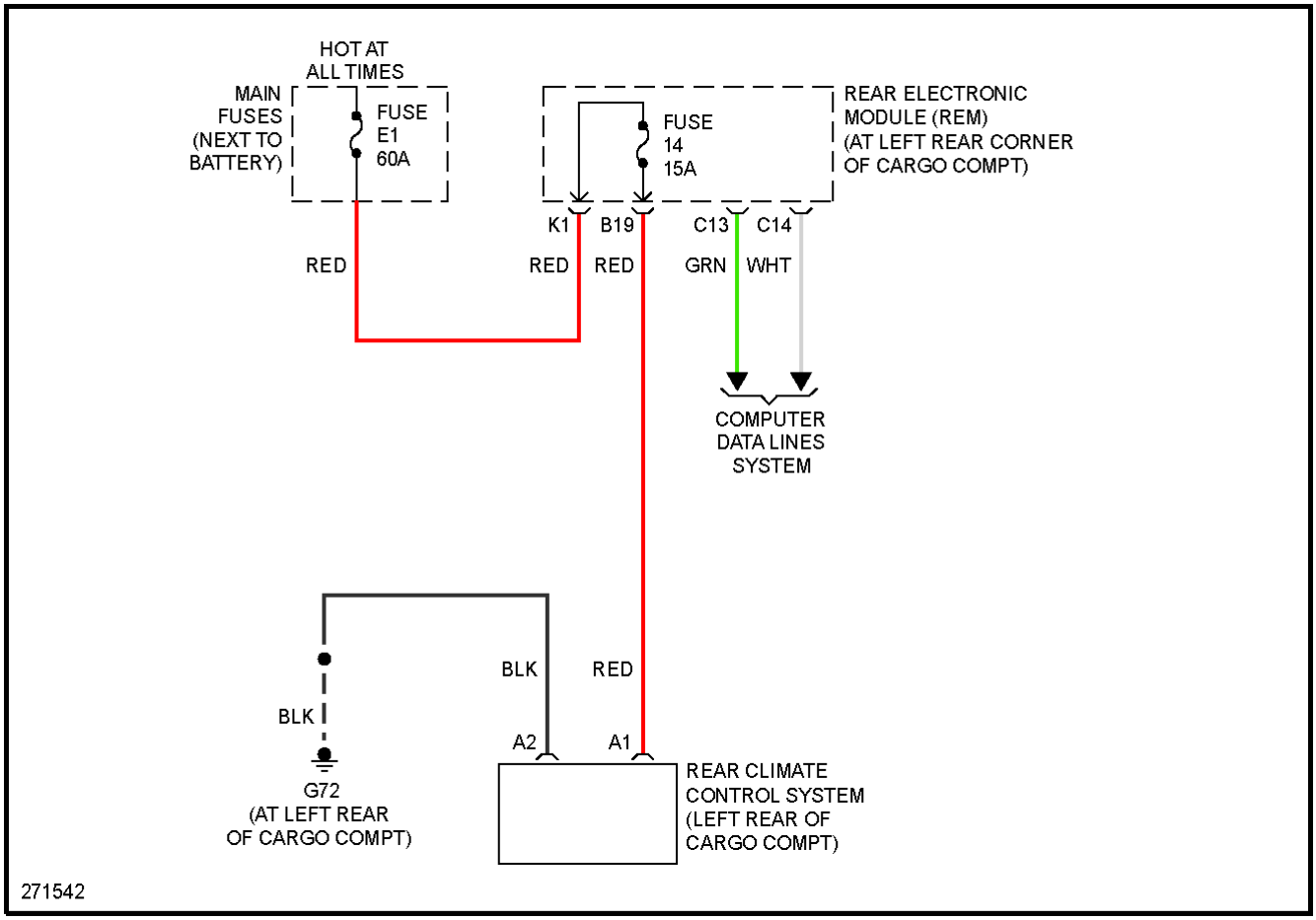

Fig. 1: Rear A/C Circuit

3.2L

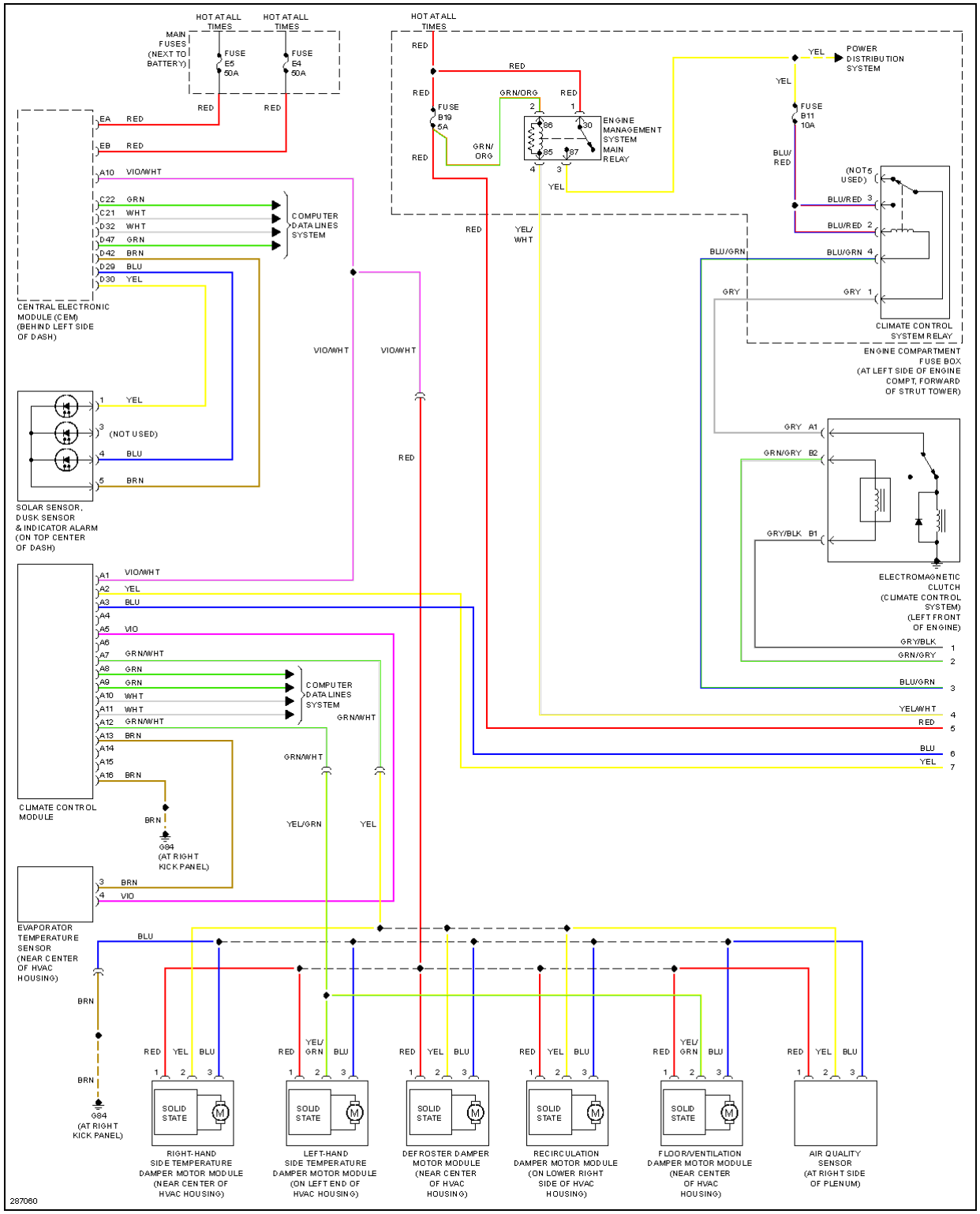

Fig. 2: 3.2L, Automatic A/C Circuit (1 of 2)

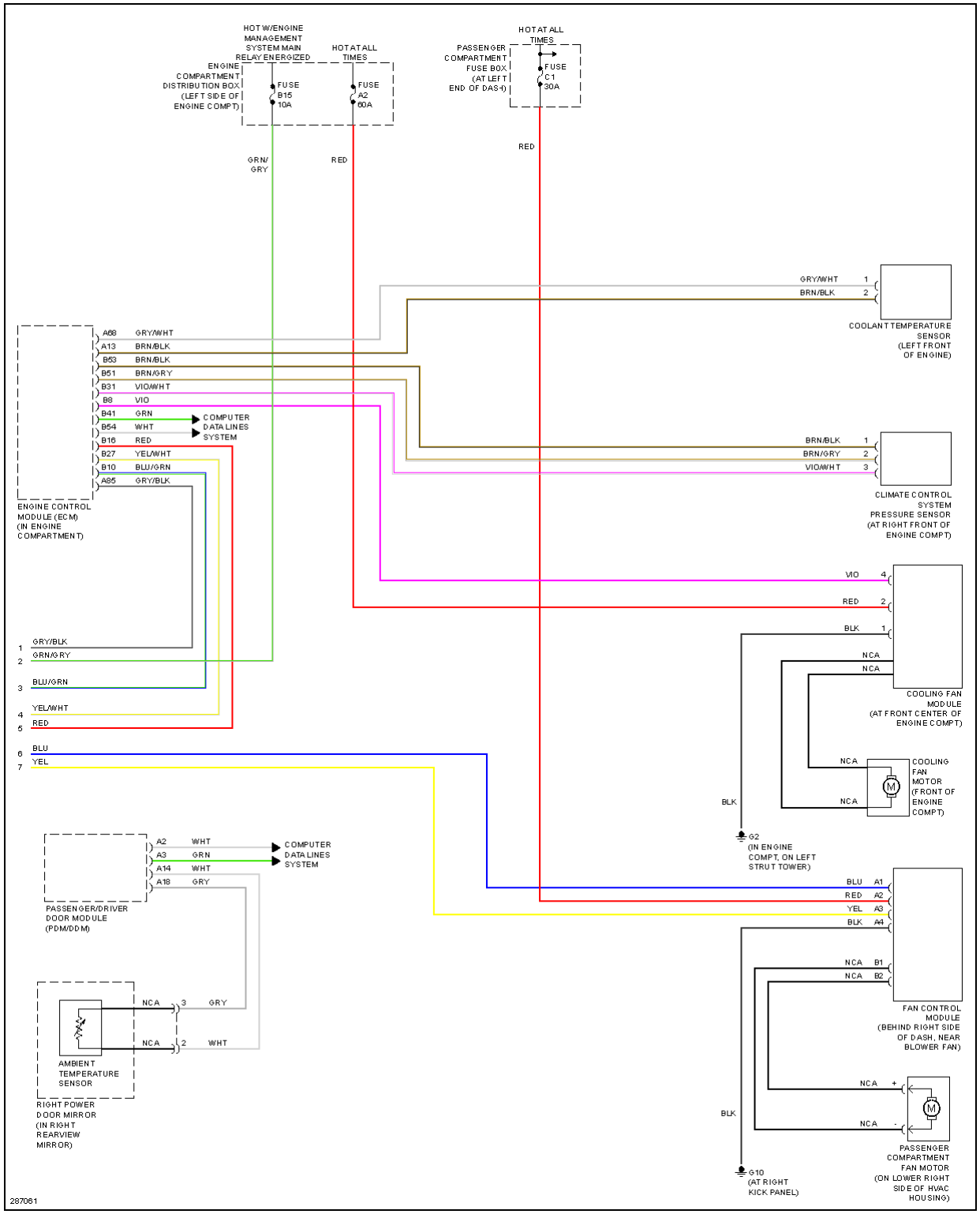

Fig. 3: 3.2L, Automatic A/C Circuit (2 of 2)

4.4L

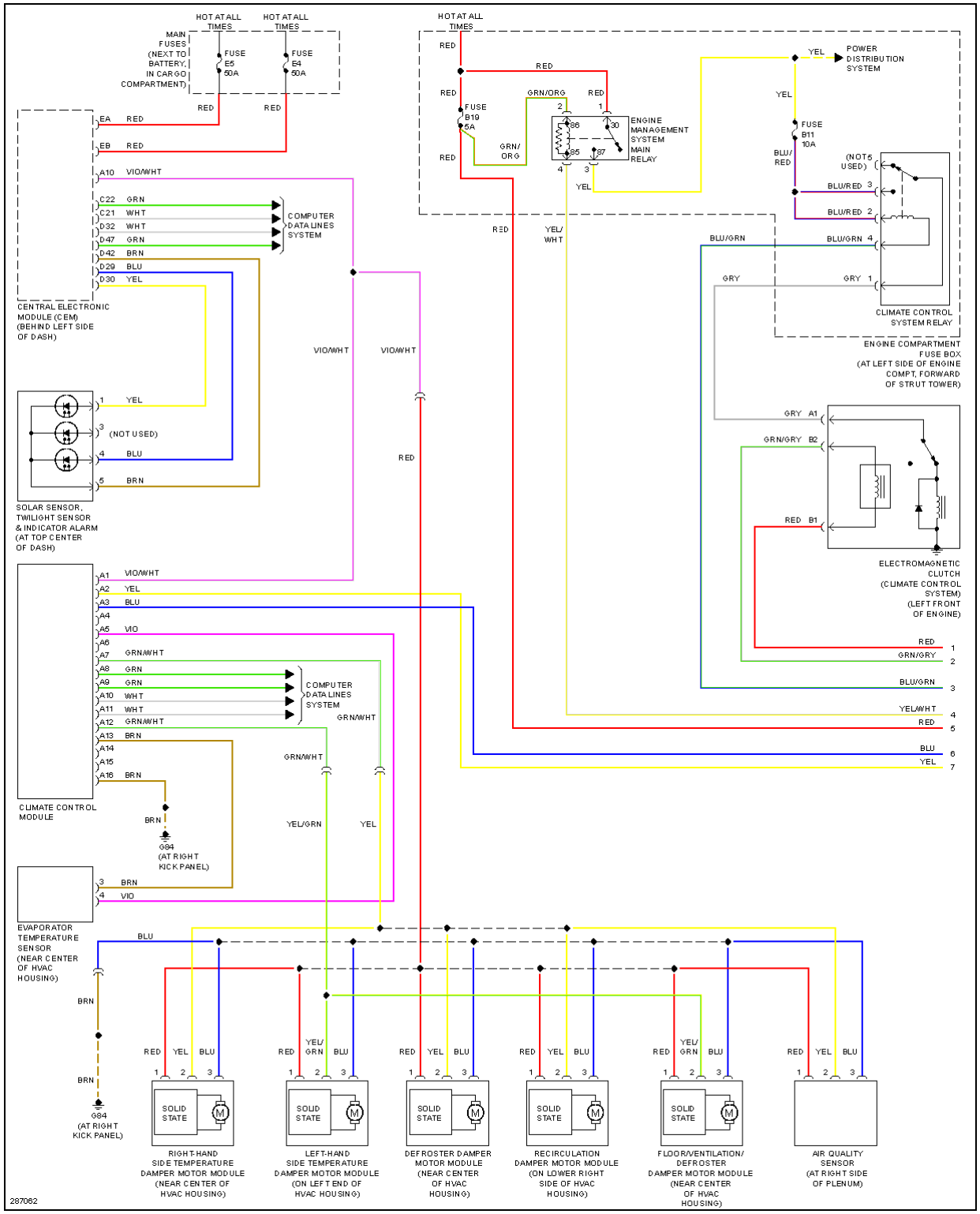

Fig. 4: 4.4L, Automatic A/C Circuit (1 of 2)

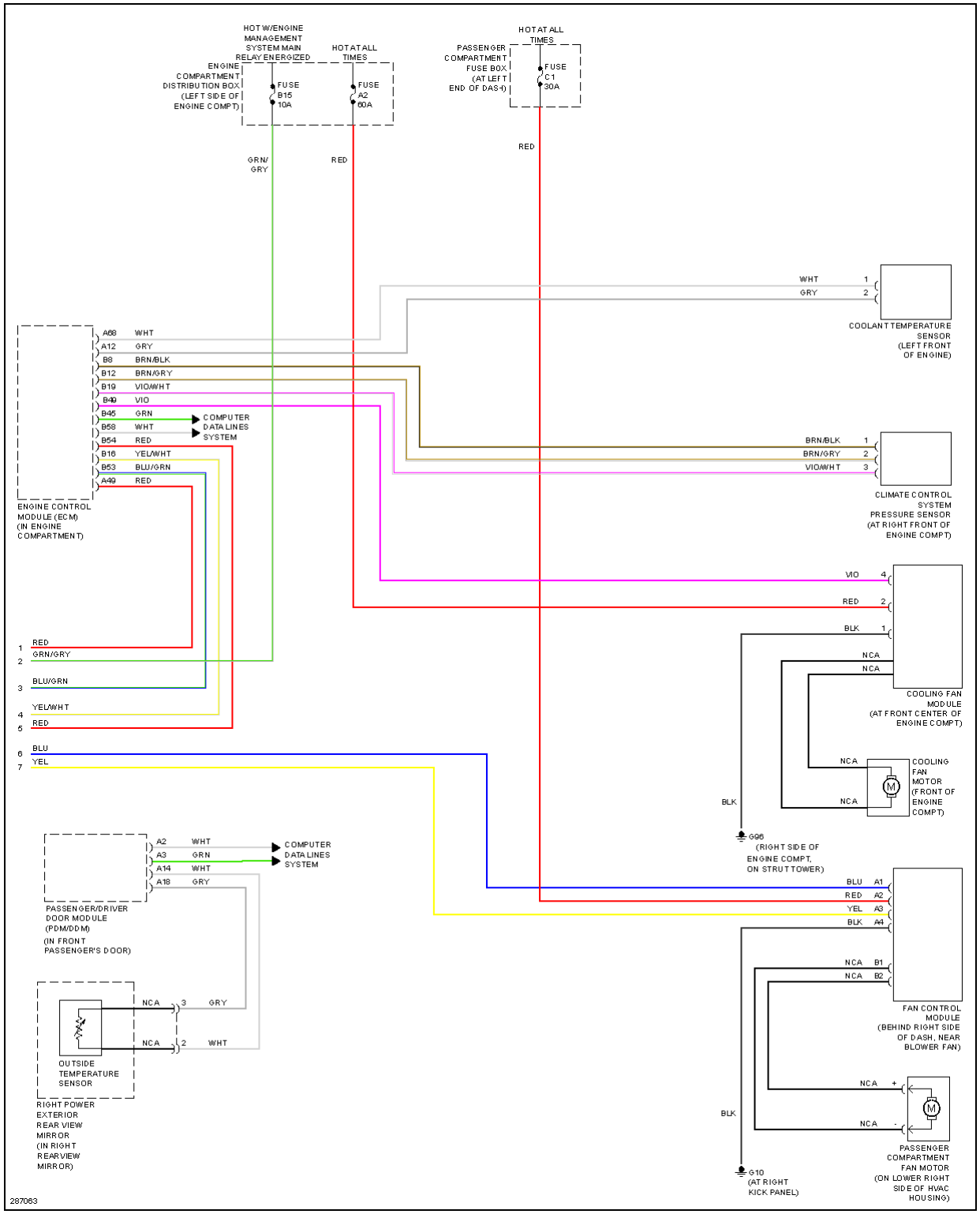

Fig. 5: 4.4L, Automatic A/C Circuit (2 of 2)

ANTI-LOCK BRAKES

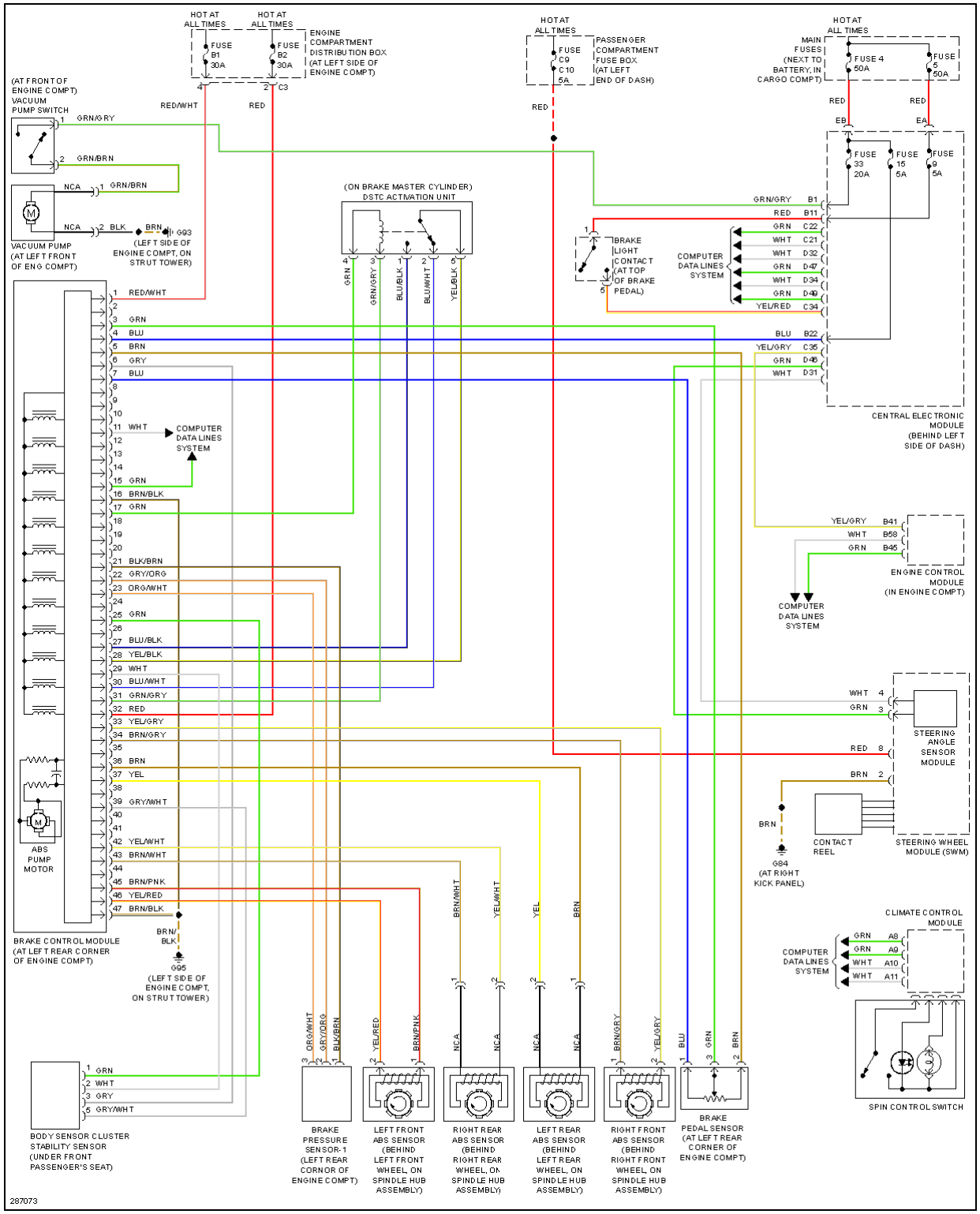

Fig. 6: Anti-lock Brakes Circuit, W/ Dynamic Stability Control

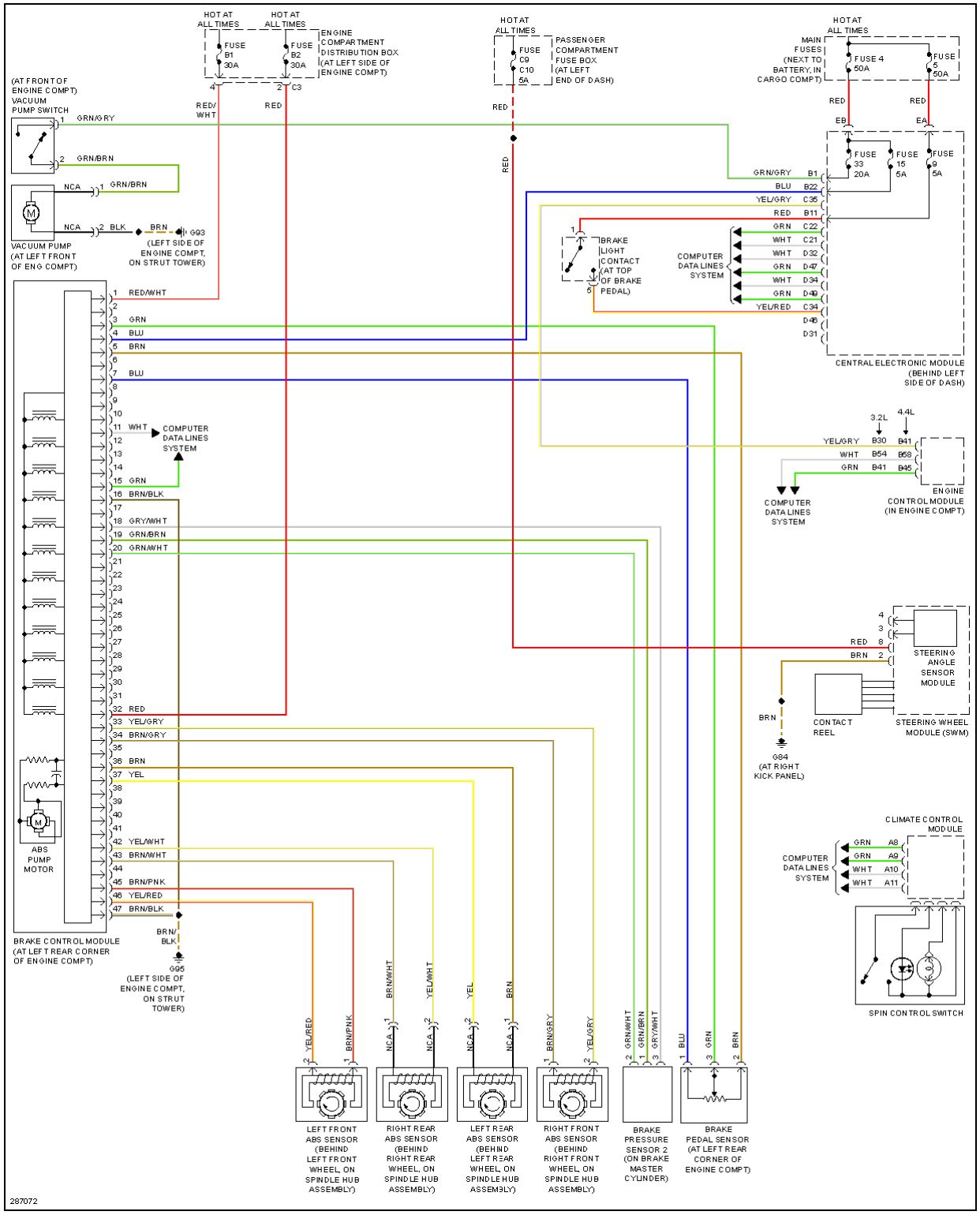

Fig. 7: Anti-lock Brakes Circuit, W/O Dynamic Stability Control

ANTI-THEFT

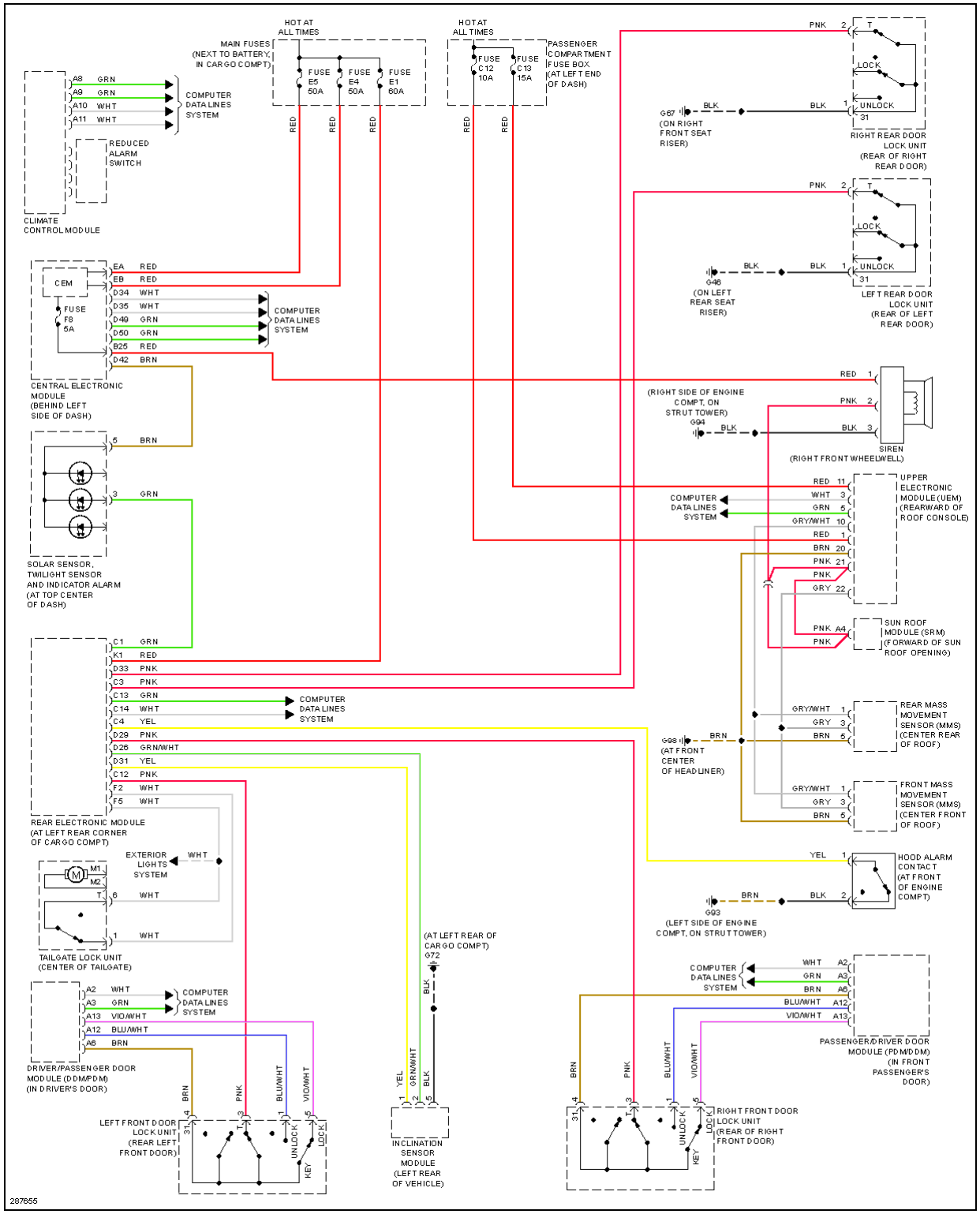

Fig. 8: Forced Entry Circuit

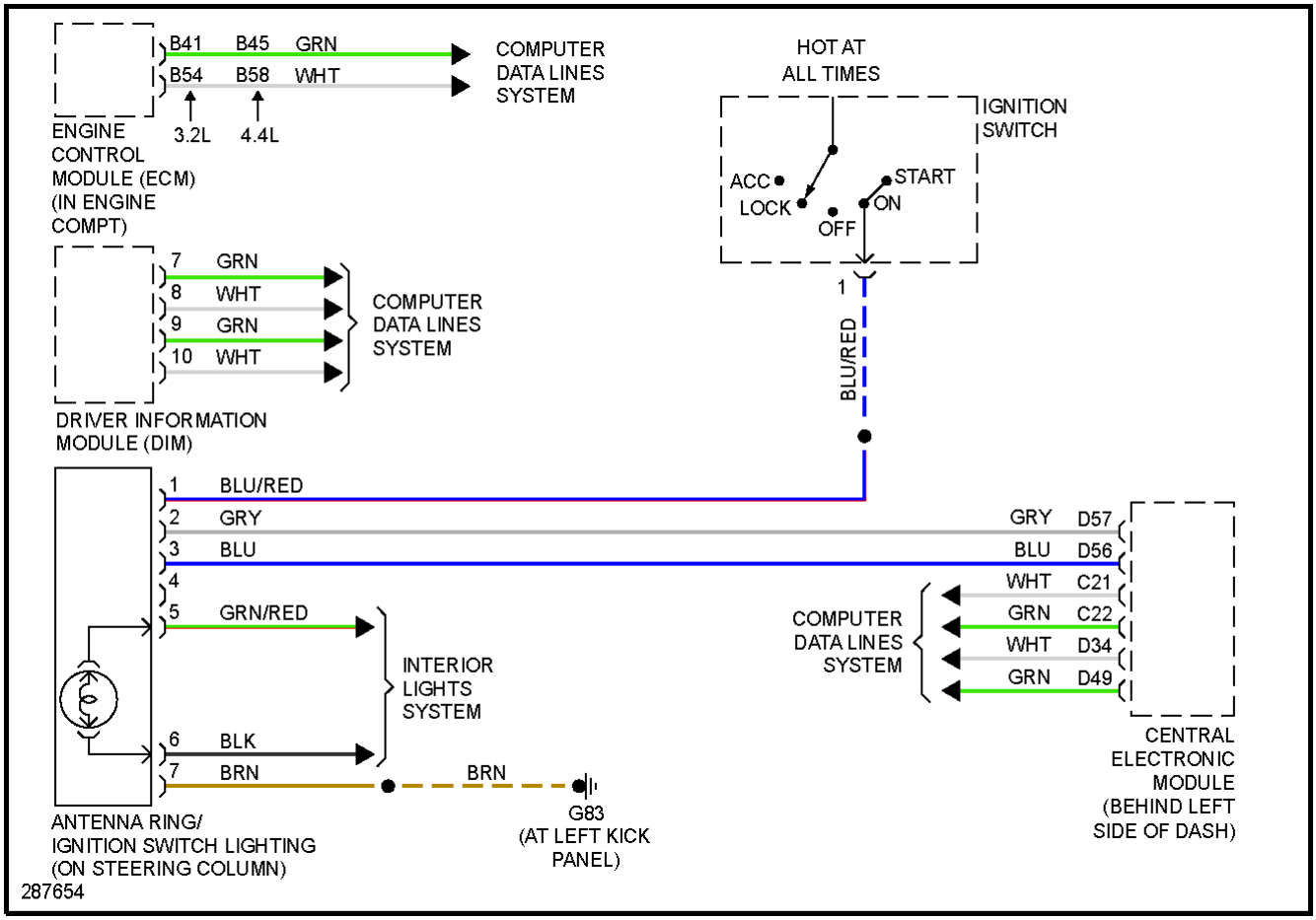

Fig. 9: Immobilizer Circuit

BODY CONTROL MODULES

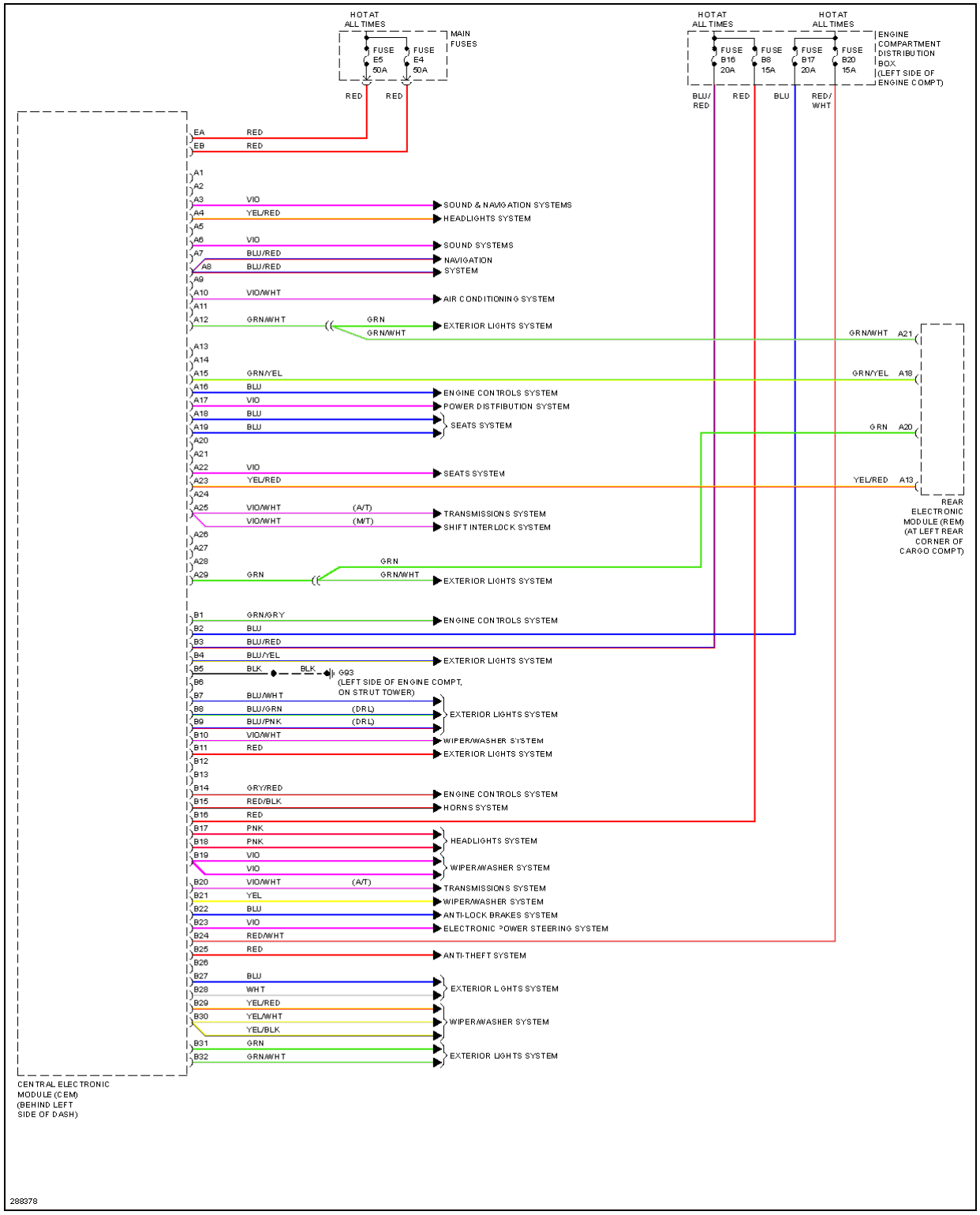

Fig. 10: Central Electronic Module Circuit (1 of 2)

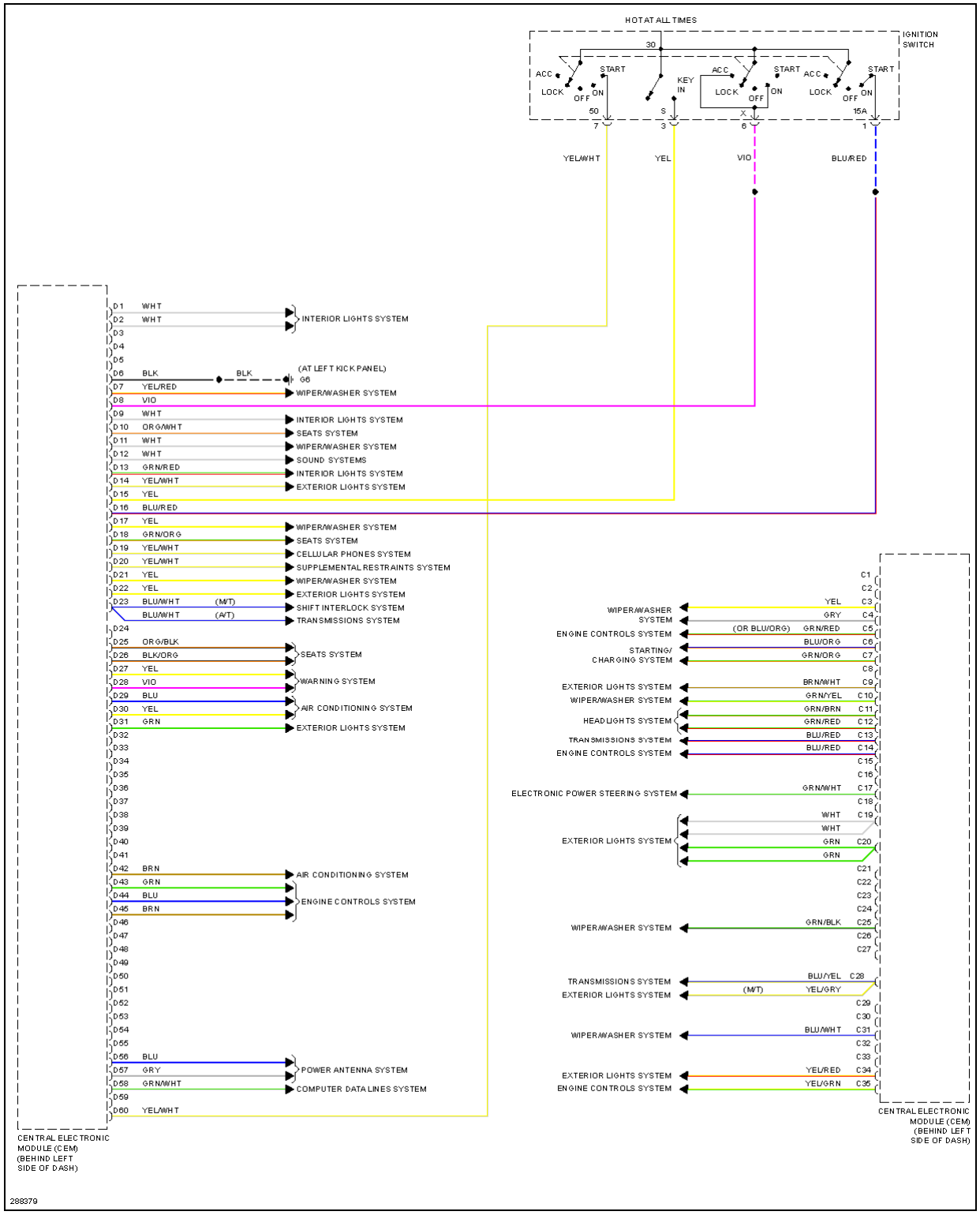

Fig. 11: Central Electronic Module Circuit (2 of 2)

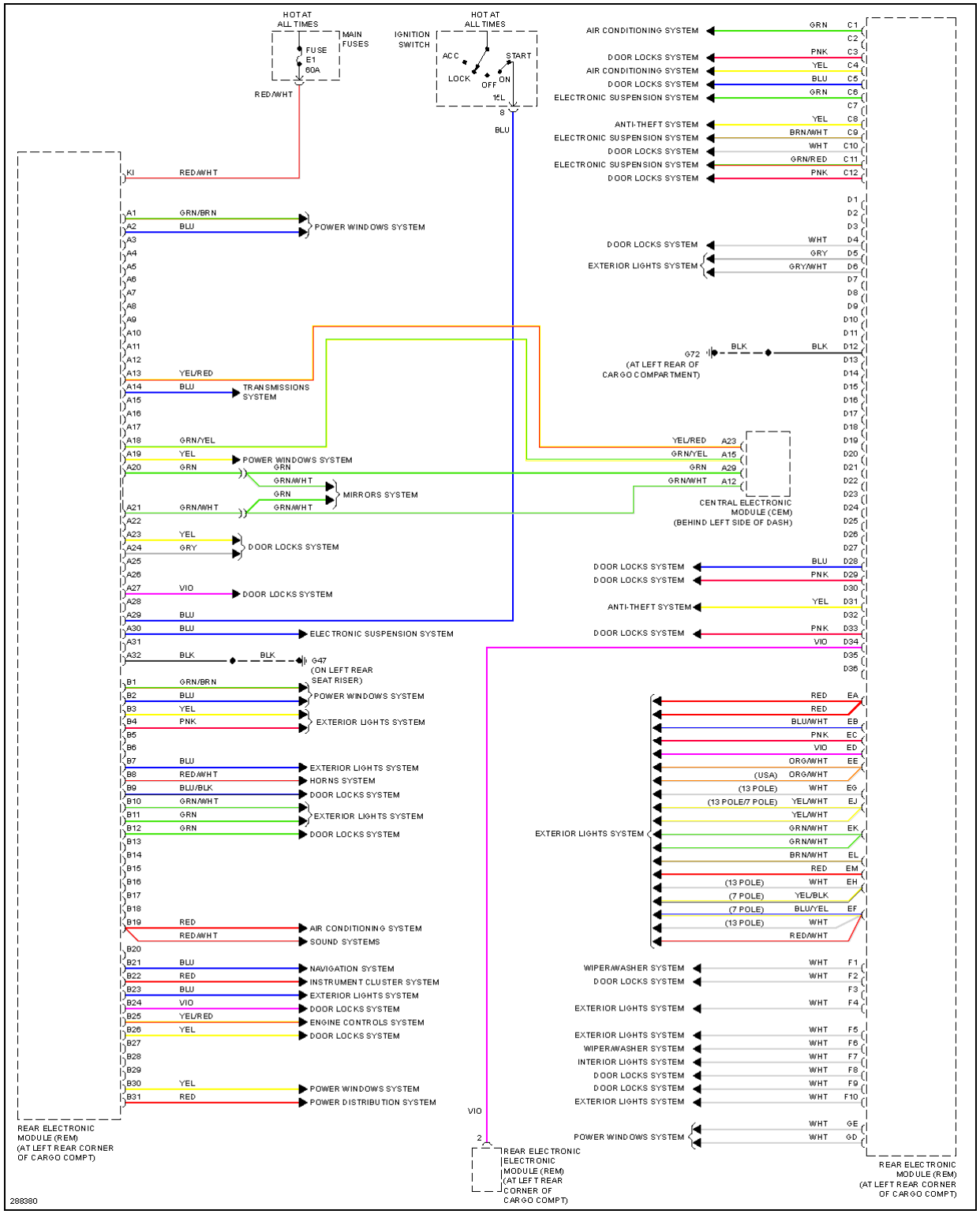

Fig. 12: Rear Electronic Module Circuit

COMPUTER DATA LINES

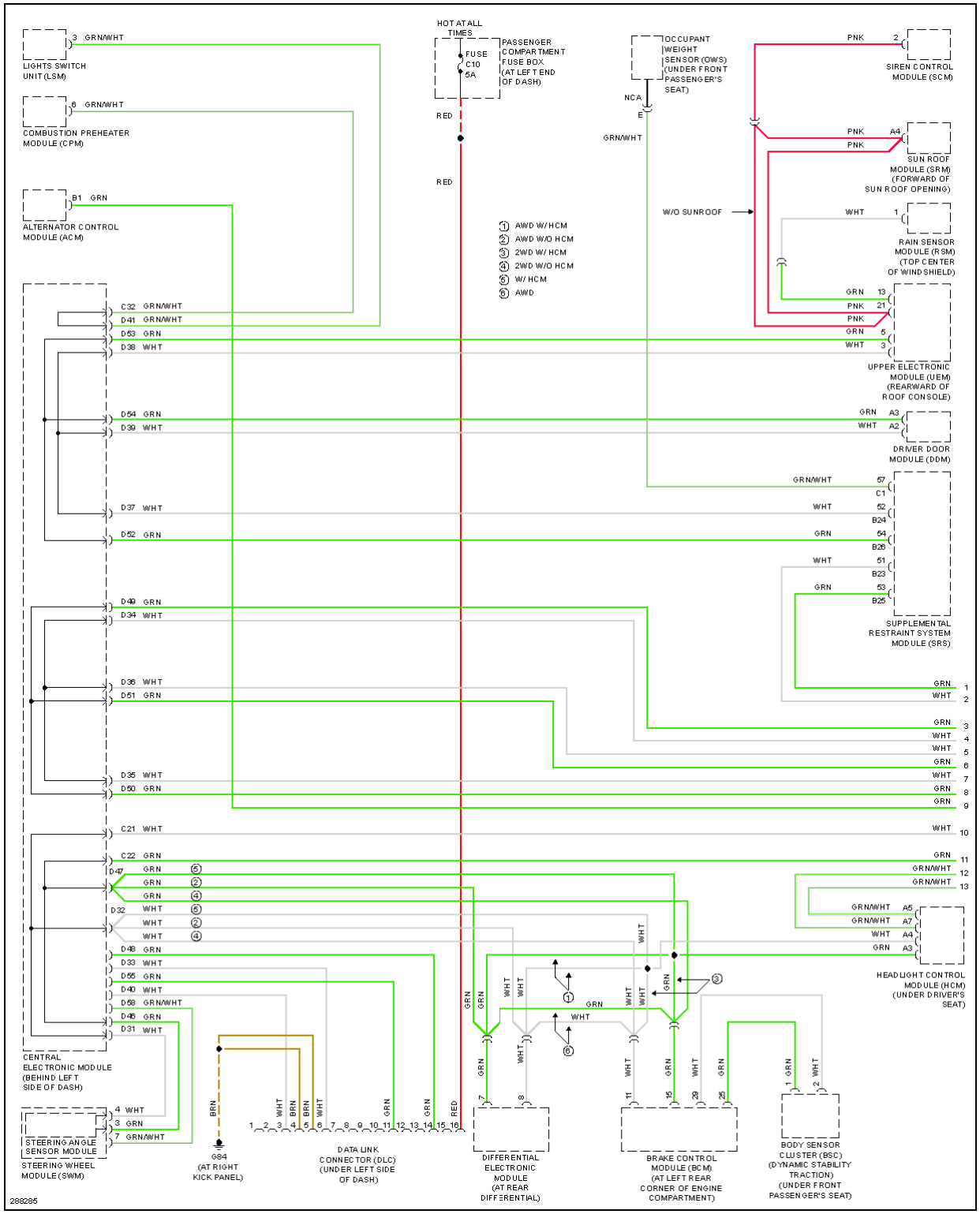

Fig. 13: Computer Data Lines Circuit (1 of 2)

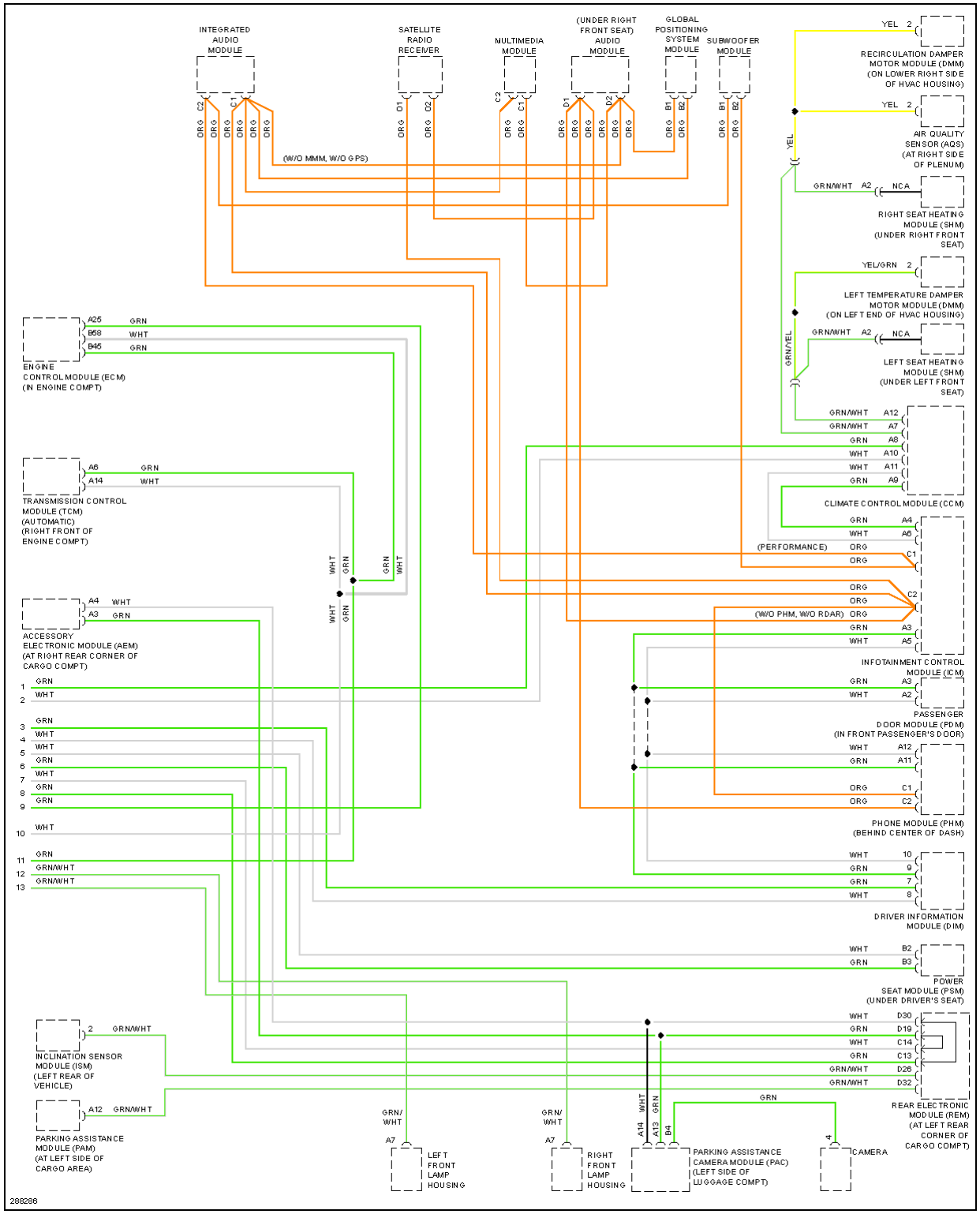

Fig. 14: Computer Data Lines Circuit (2 of 2)

COOLING FAN

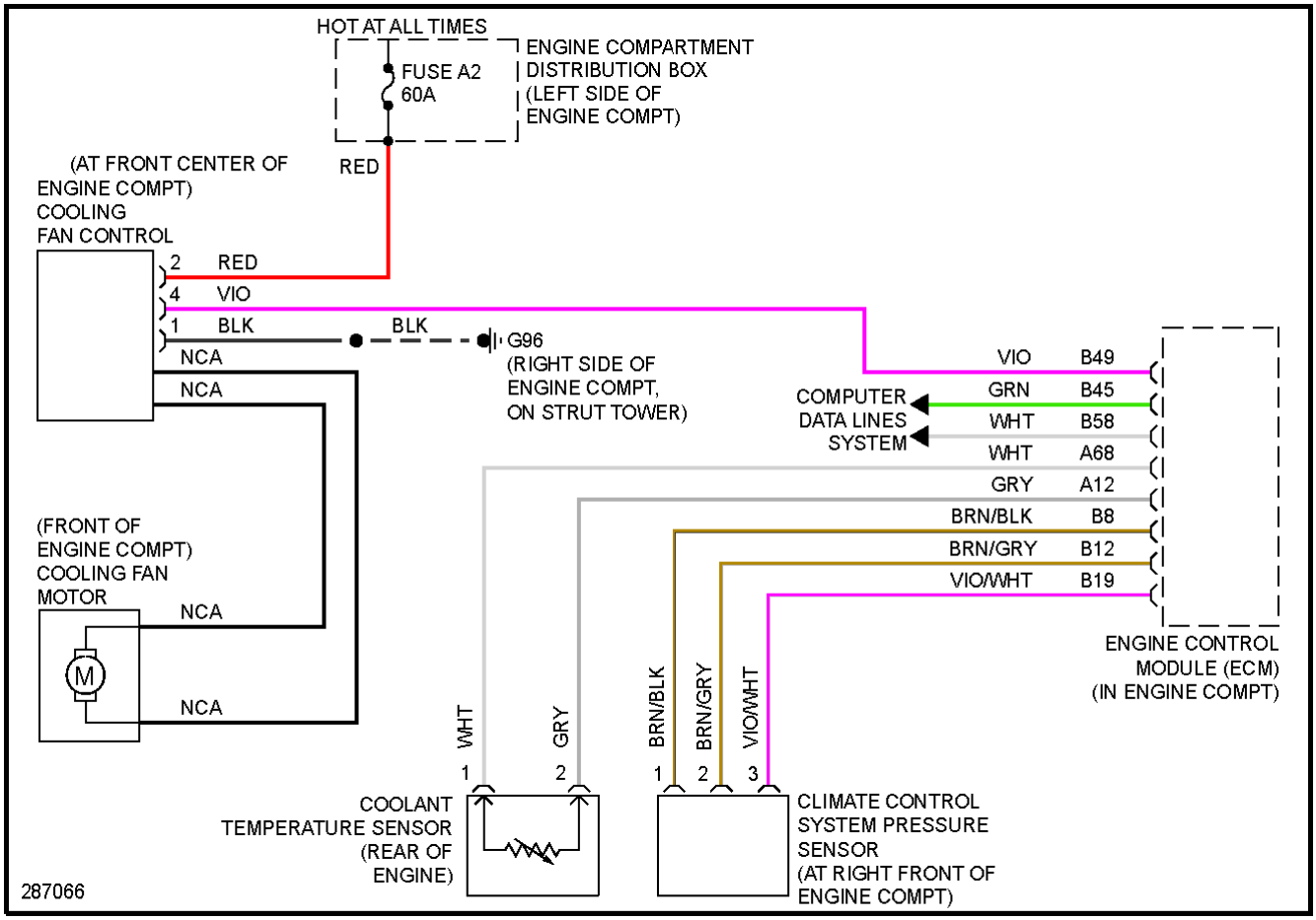

Fig. 15: Cooling Fan Circuit

CRUISE CONTROL

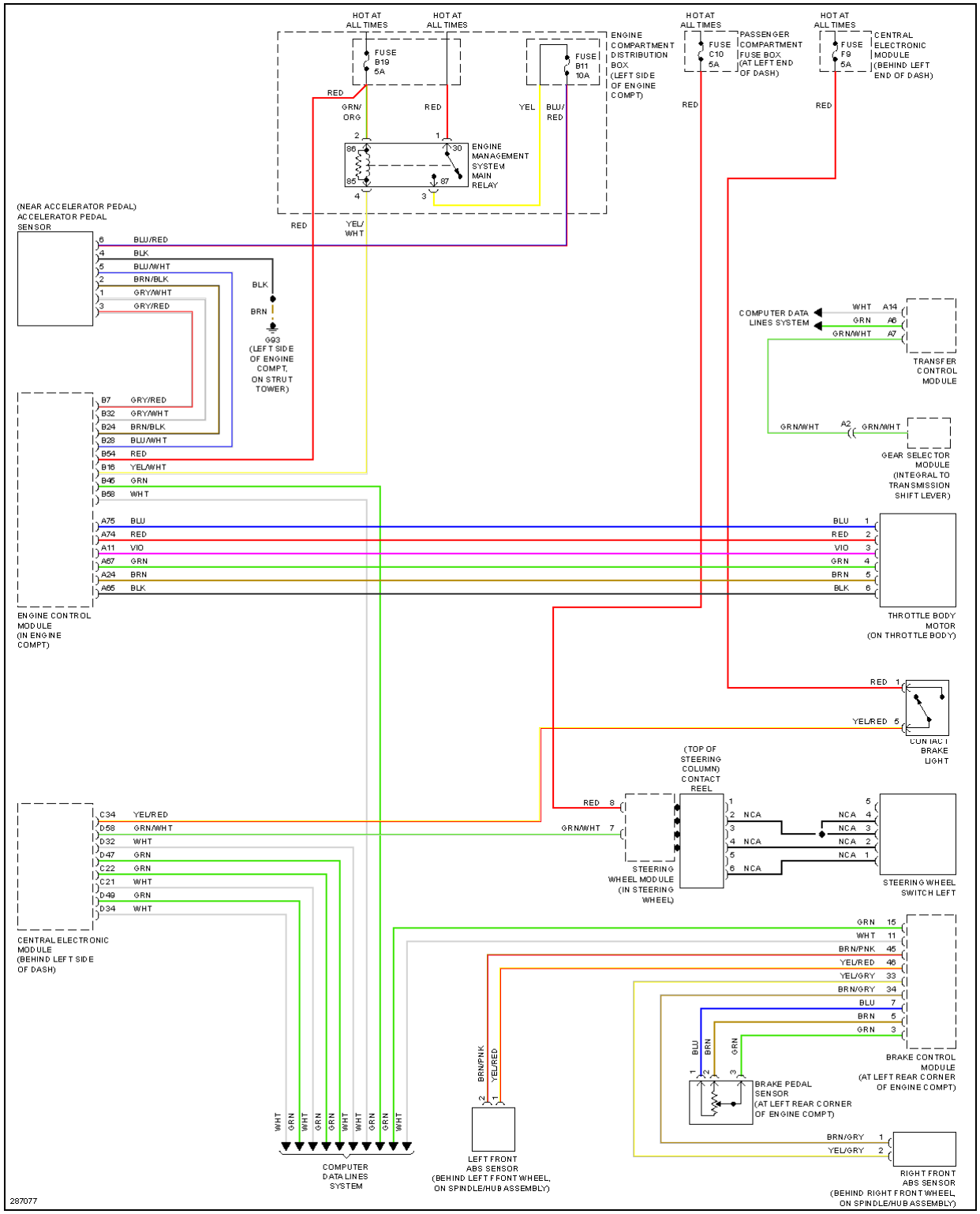

Fig. 16: Cruise Control Circuit

DEFOGGERS

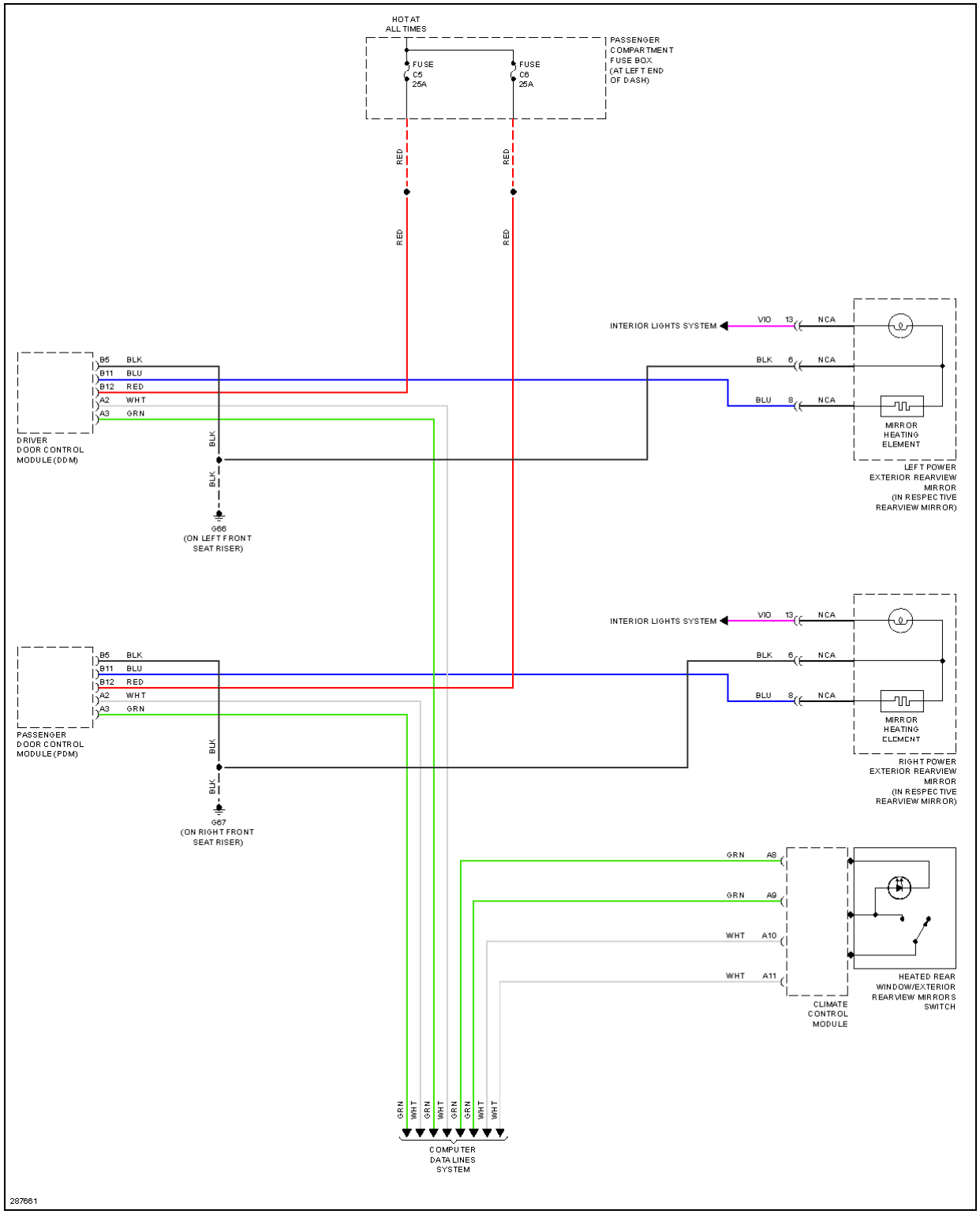

Fig. 17: Heated Mirrors Circuit

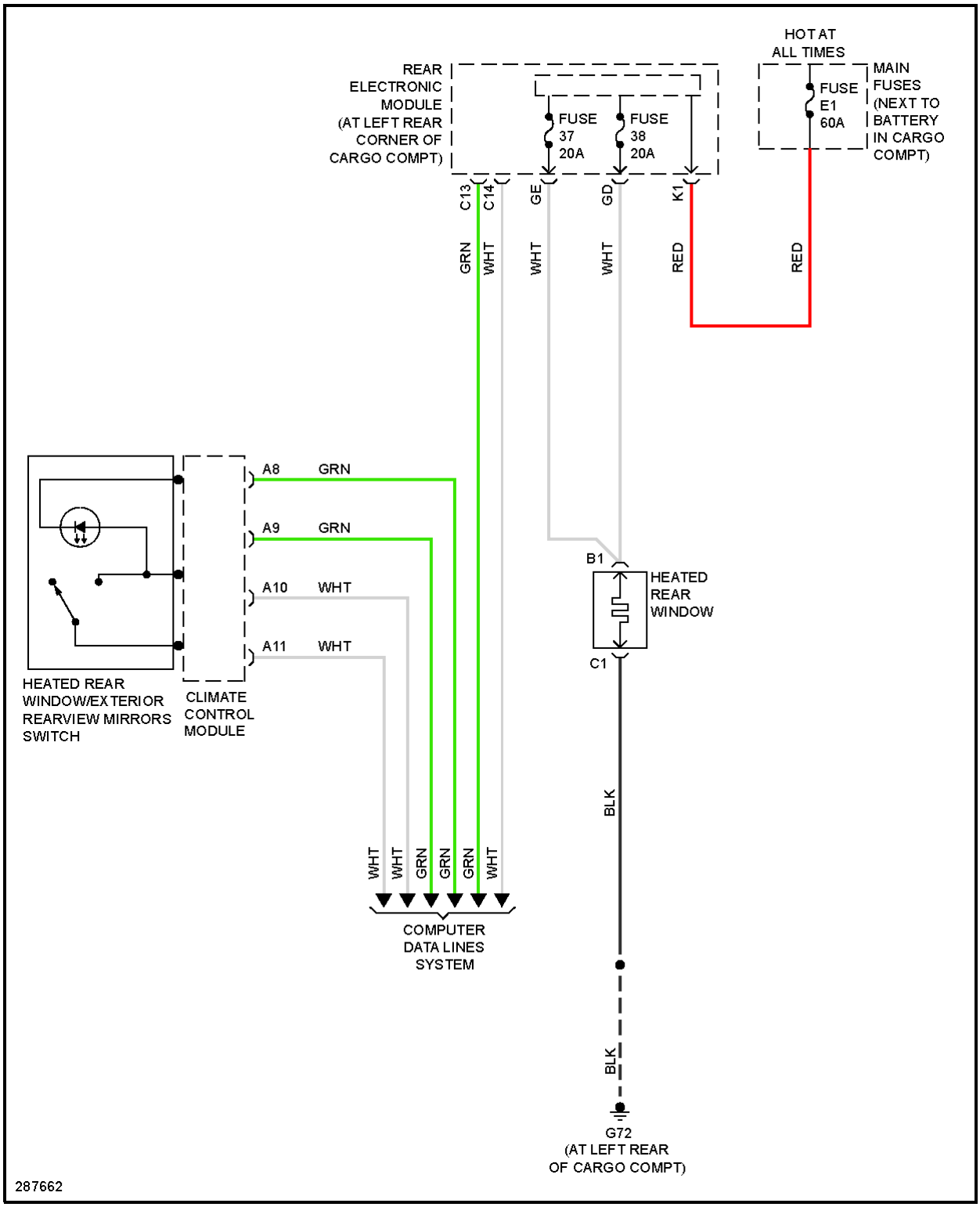

Fig. 18: Rear Defogger Circuit

ELECTRONIC POWER STEERING

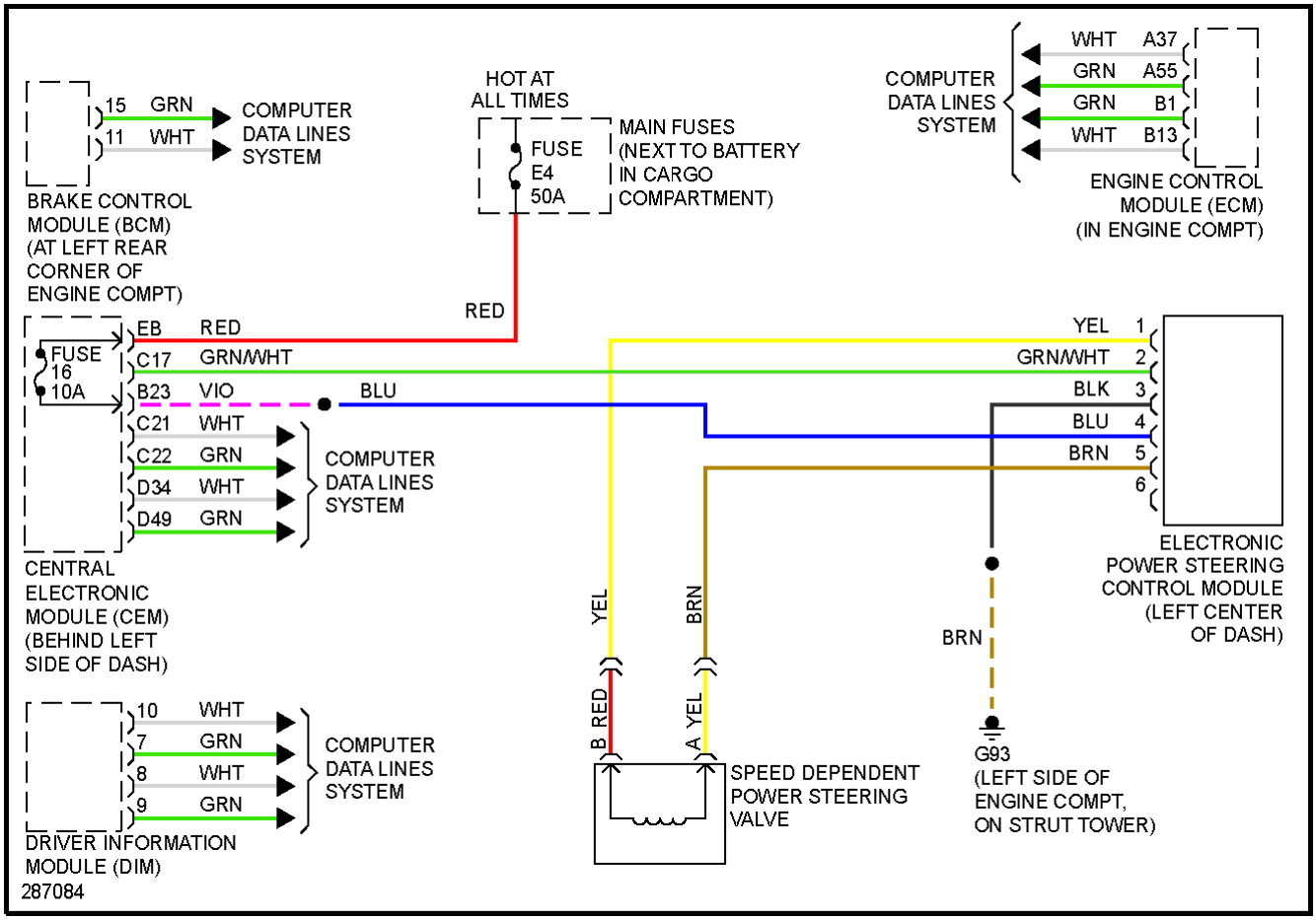

Fig. 19: Electronic Power Steering Circuit

ENGINE PERFORMANCE

3.2L

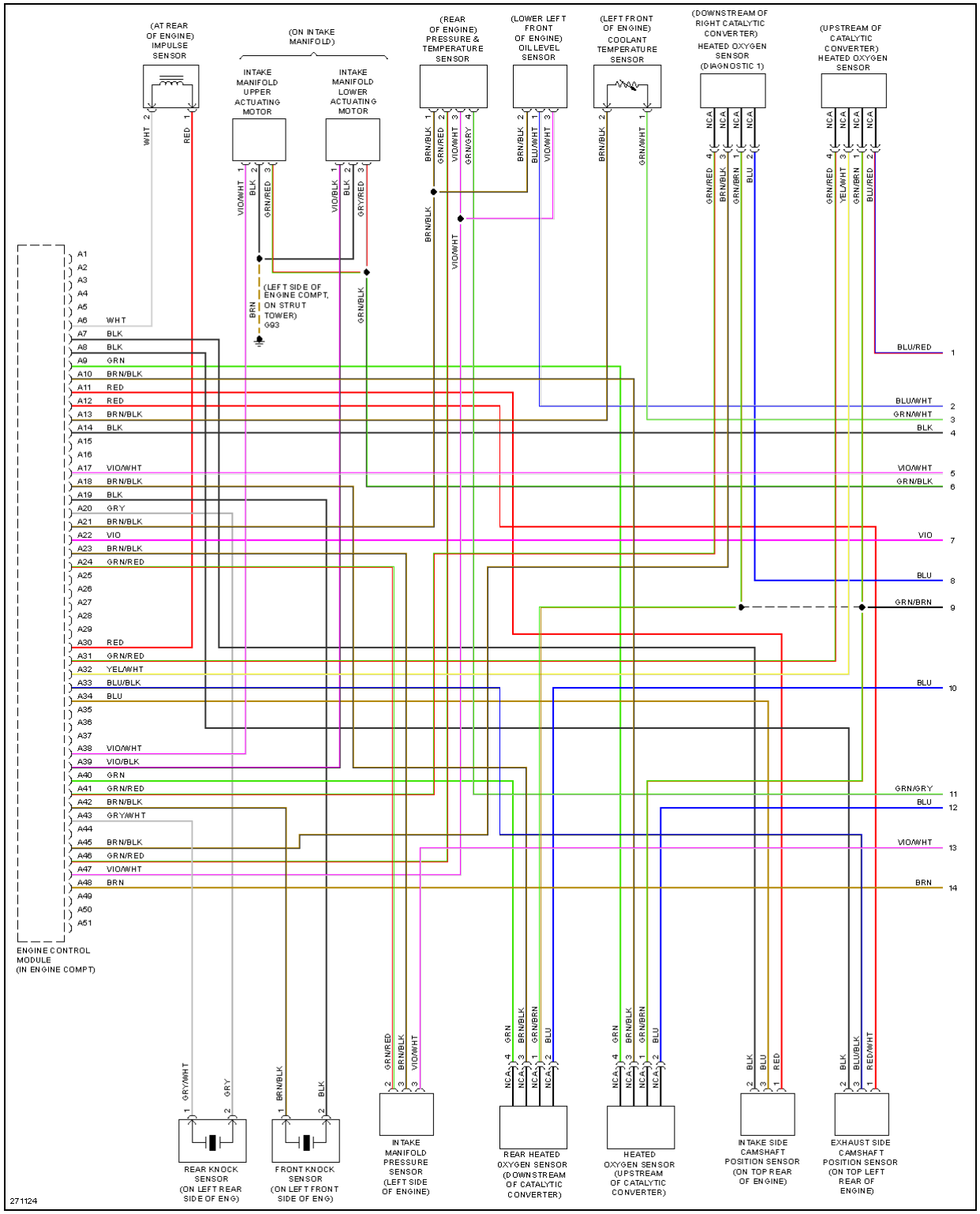

Fig. 20: 3.2L, Engine Performance Circuit (1 of 4)

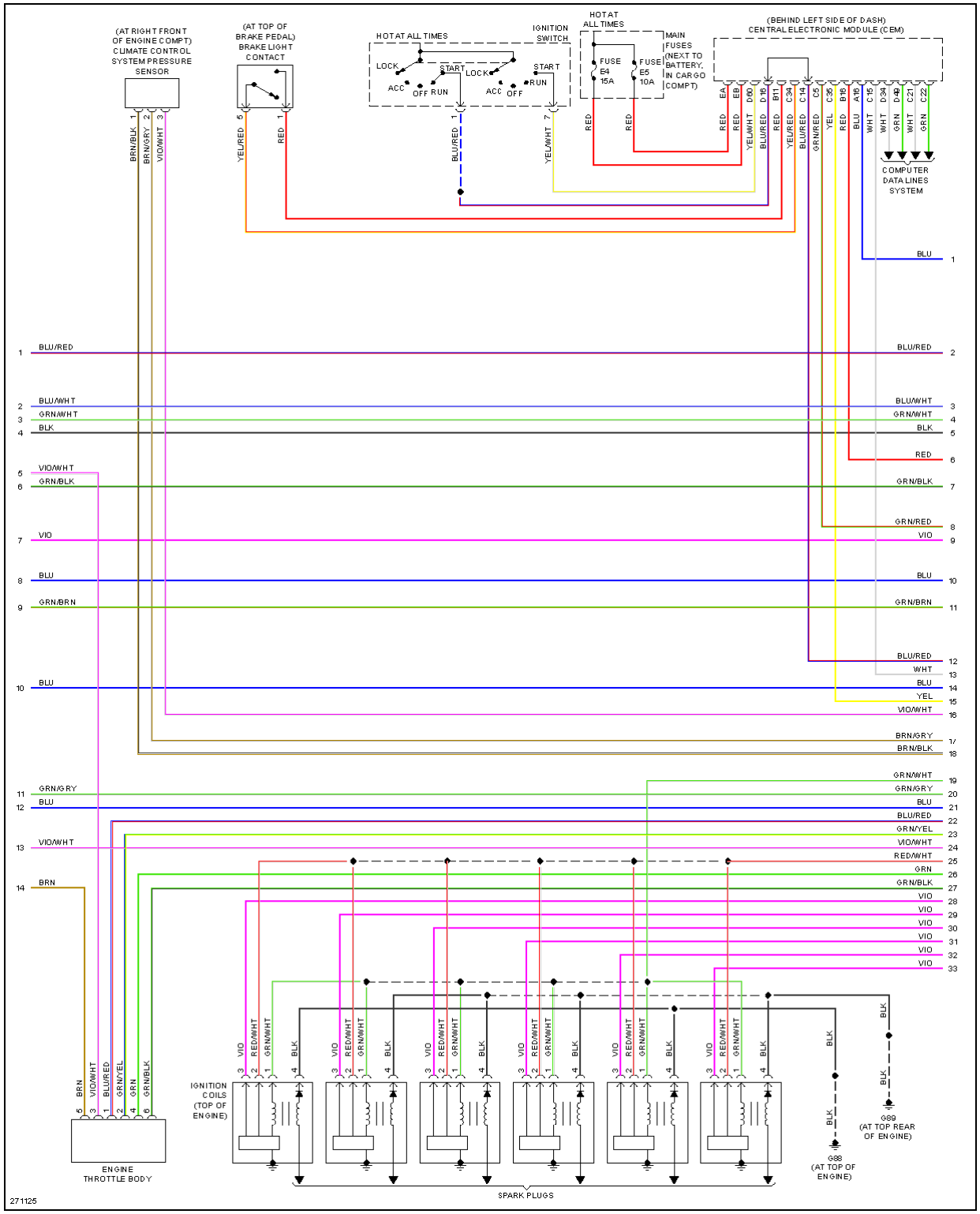

Fig. 21: 3.2L, Engine Performance Circuit (2 of 4)

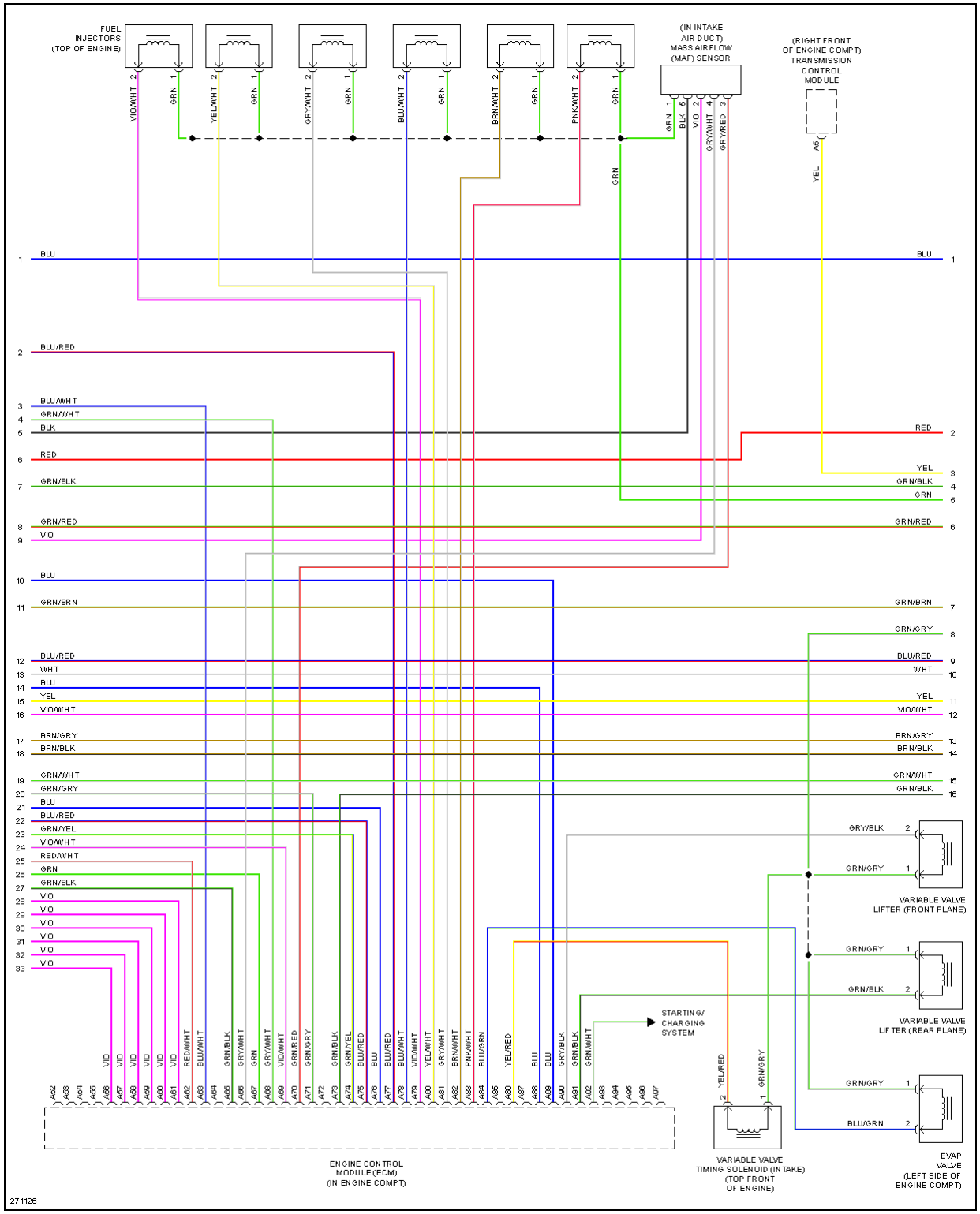

Fig. 22: 3.2L, Engine Performance Circuit (3 of 4)

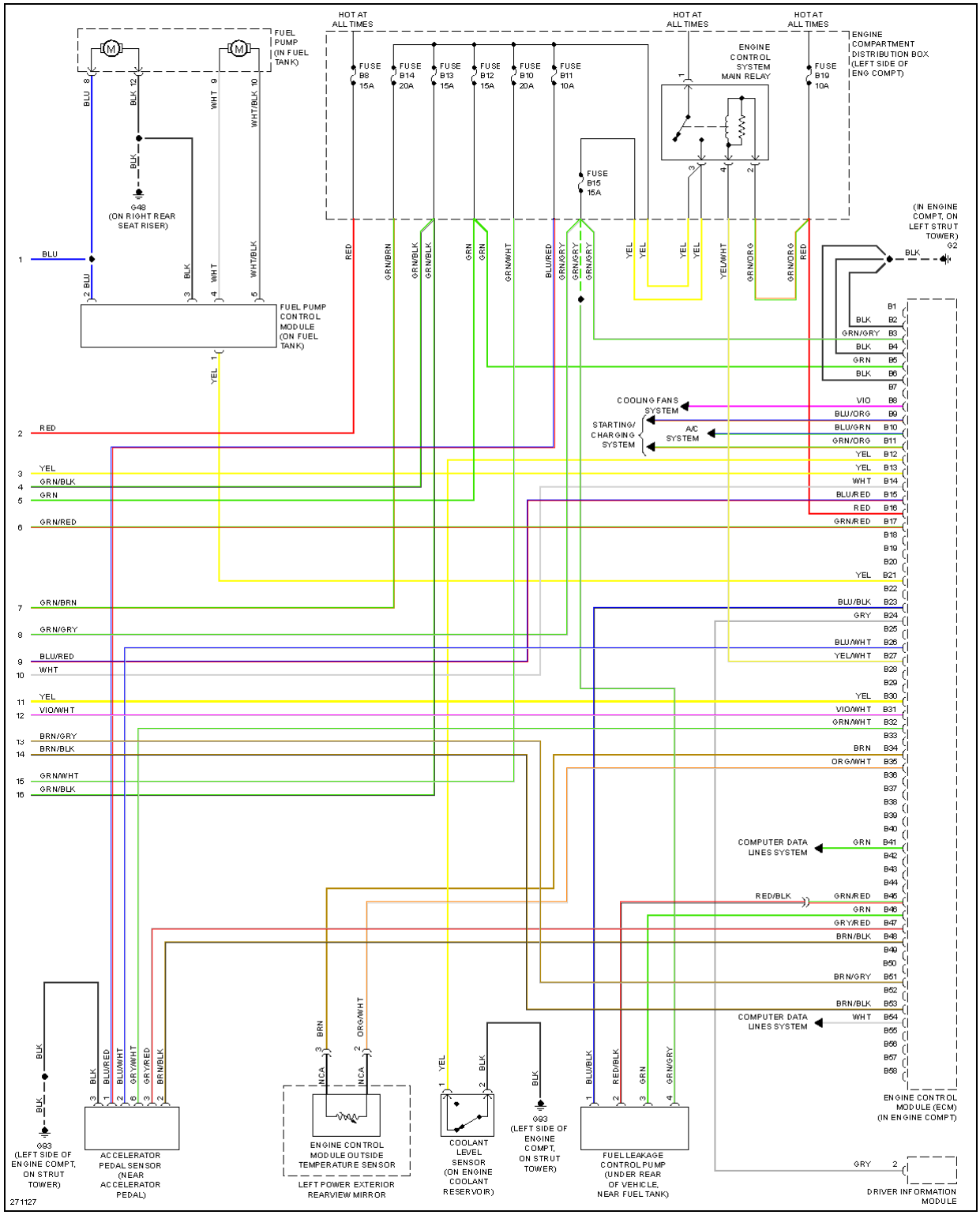

Fig. 23: 3.2L, Engine Performance Circuit (4 of 4)

4.4L

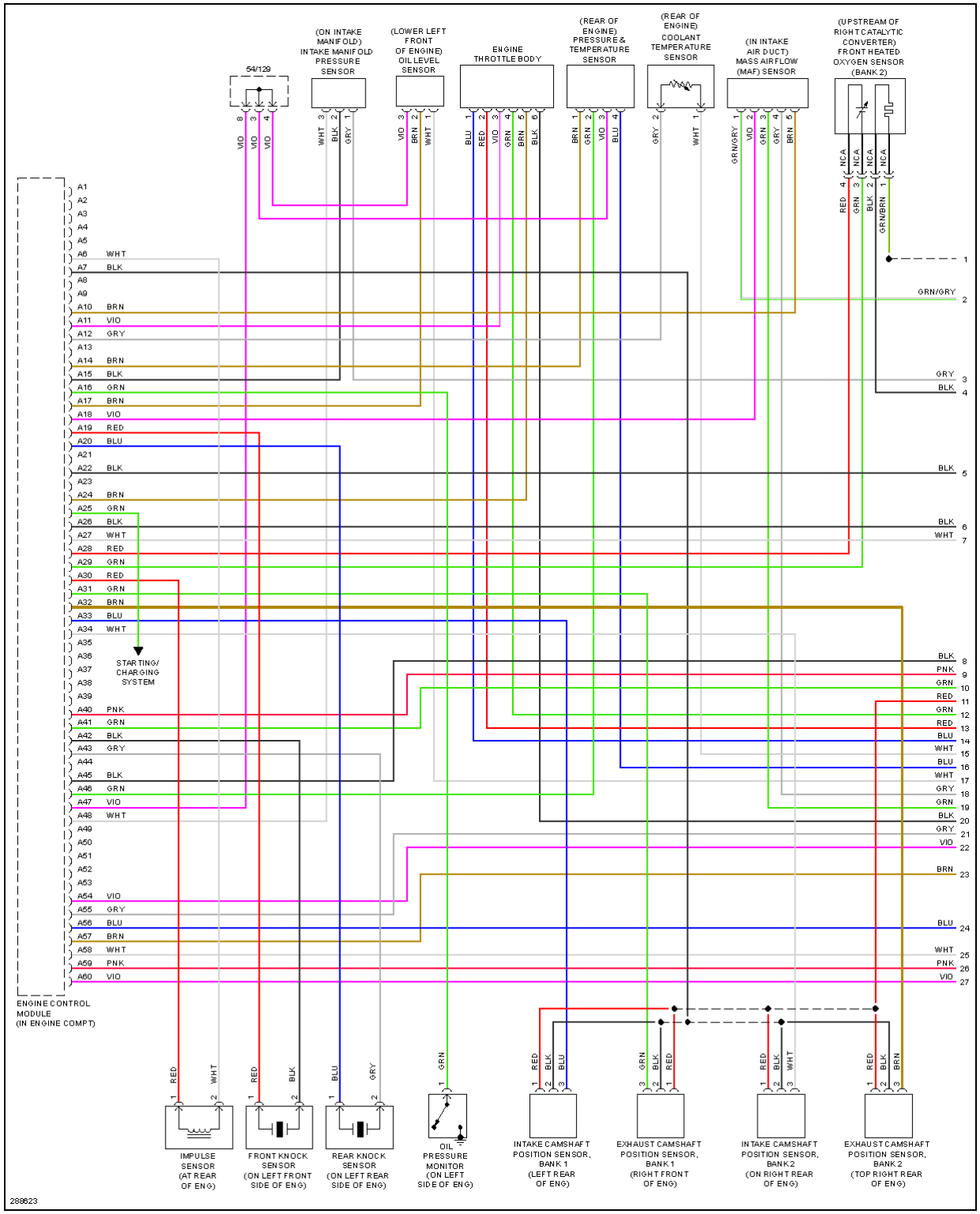

Fig. 24: 4.4L, Engine Performance Circuit (1 of 4)

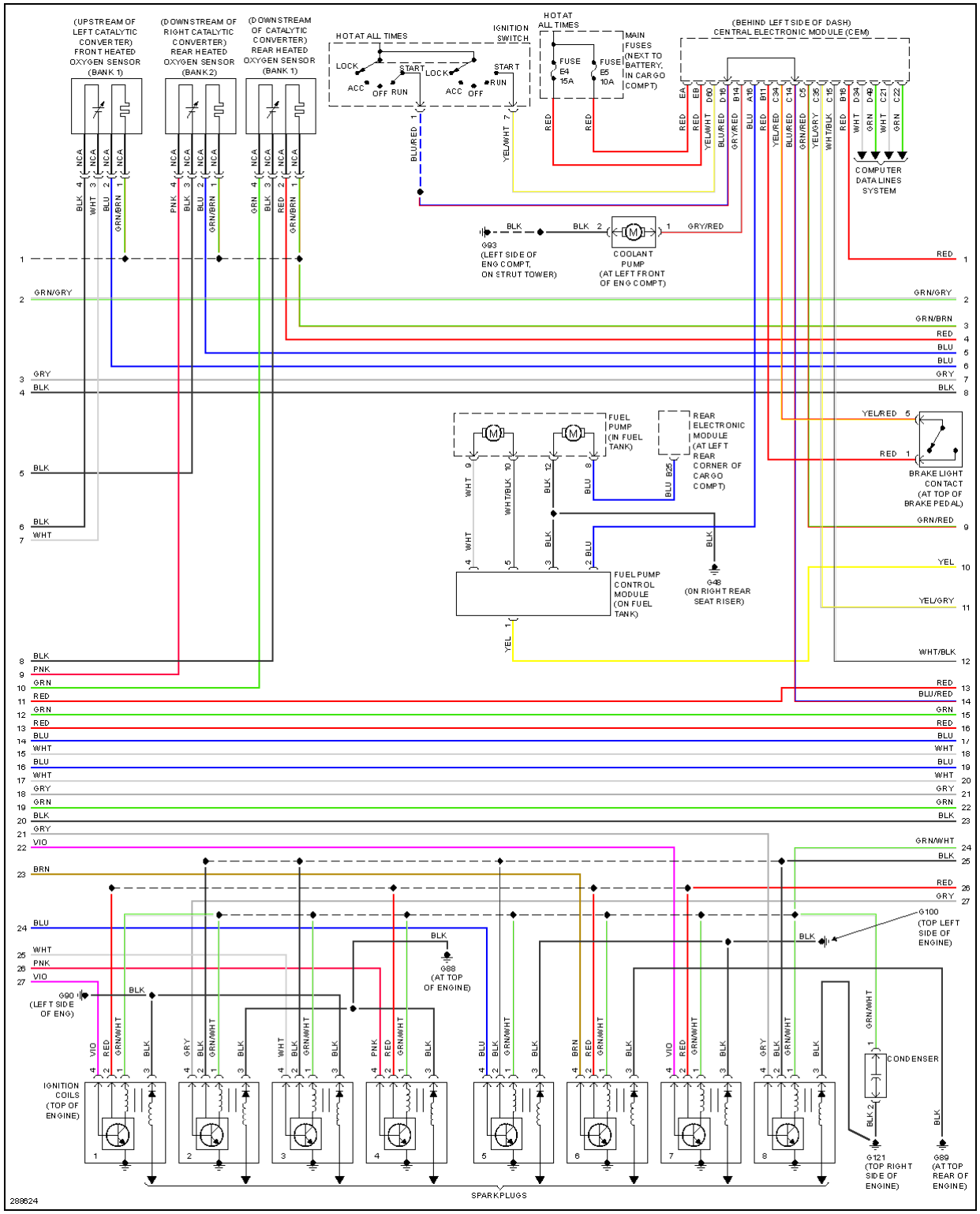

Fig. 25: 4.4L, Engine Performance Circuit (2 of 4)

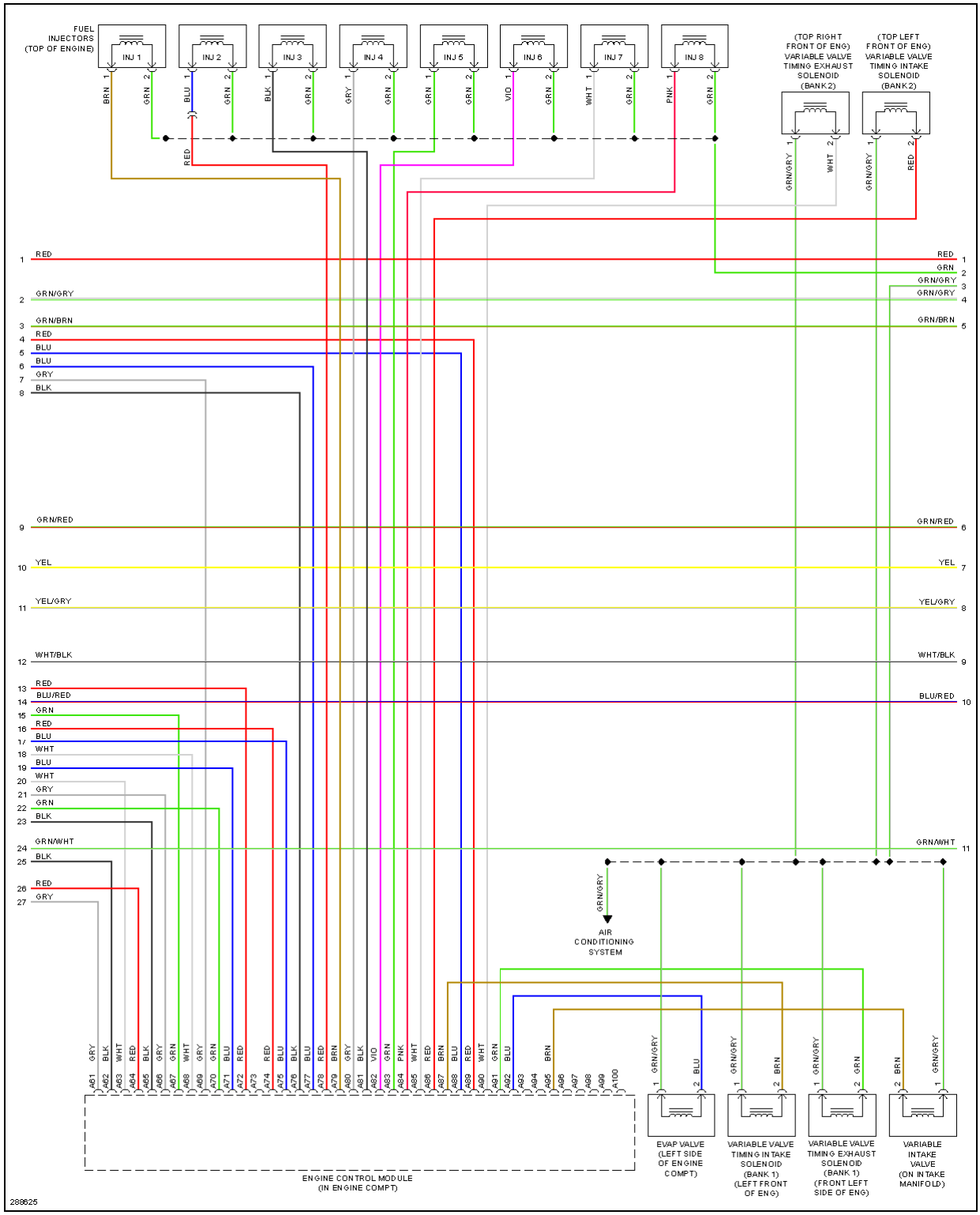

Fig. 26: 4.4L, Engine Performance Circuit (3 of 4)

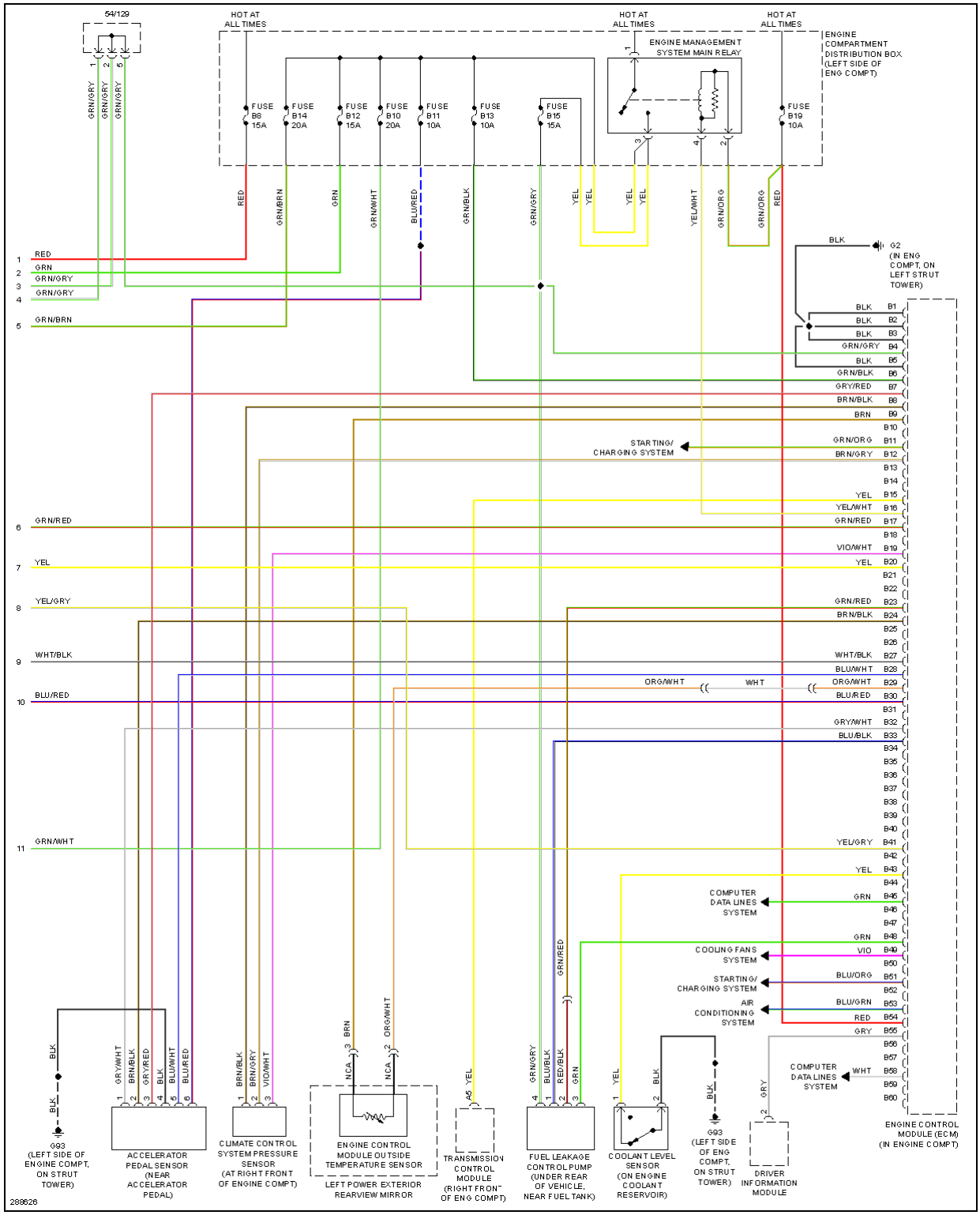

Fig. 27: 4.4L, Engine Performance Circuit (4 of 4)

EXTERIOR LIGHTS

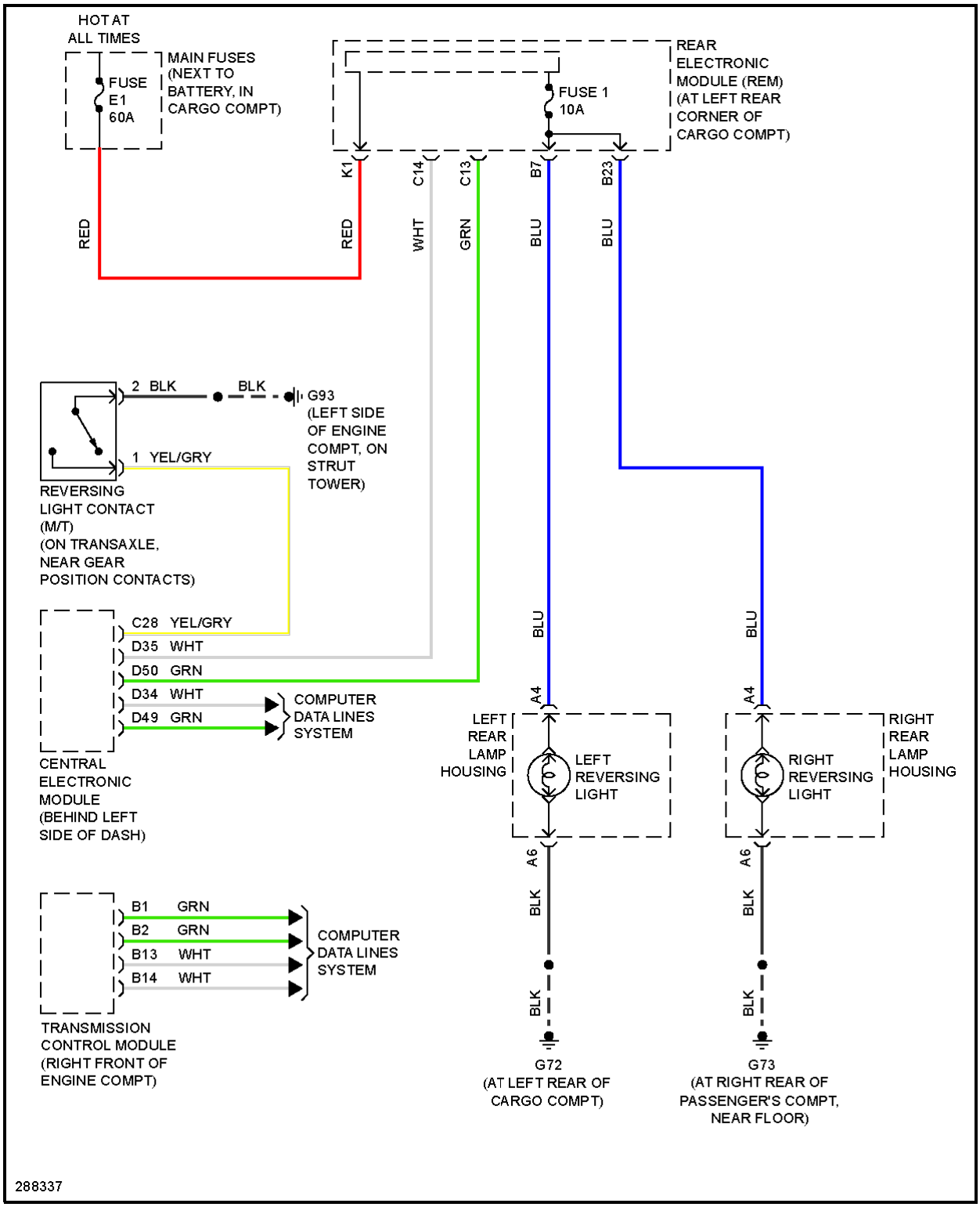

Fig. 28: Back-up Lamps Circuit

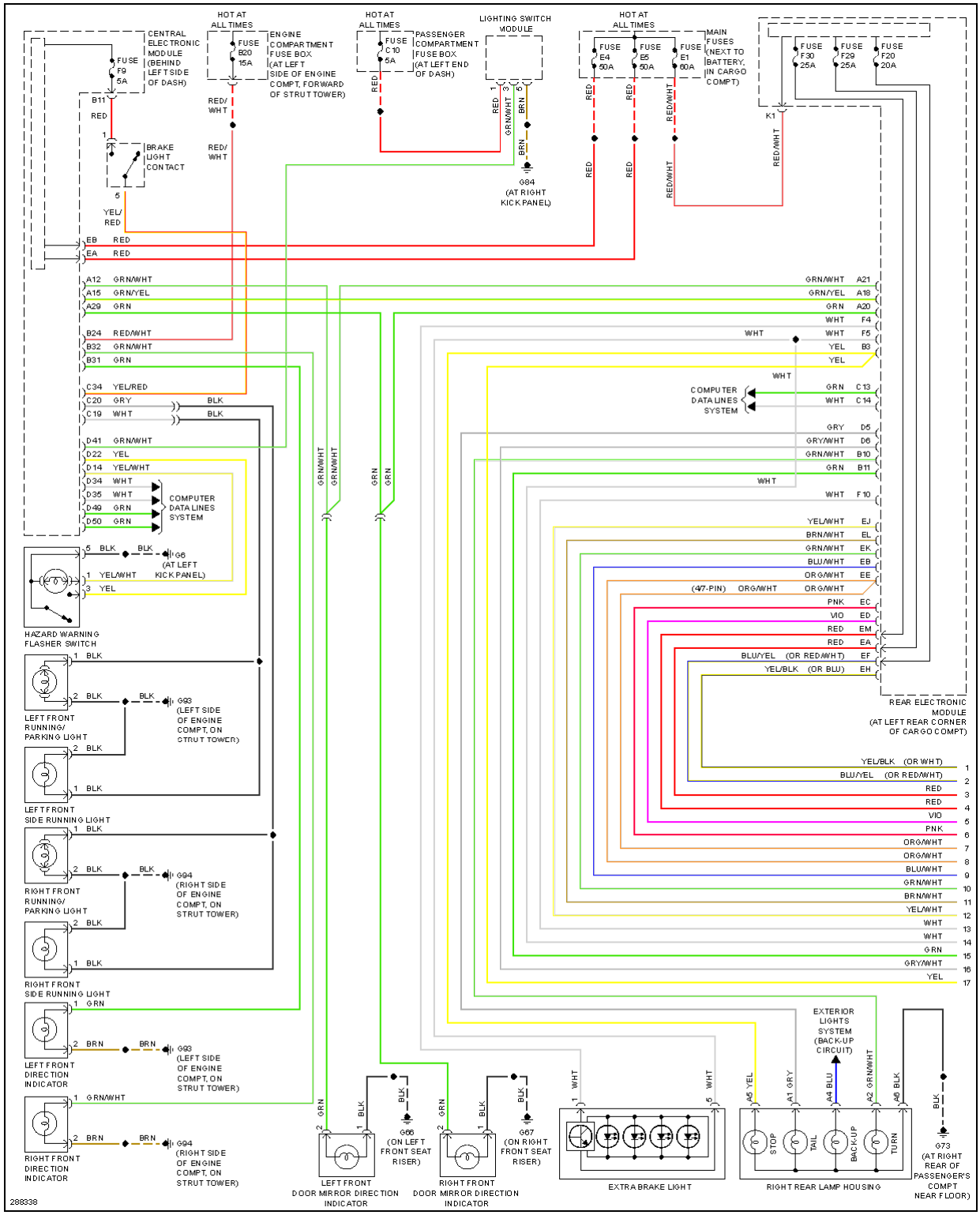

Fig. 29: Exterior Lamps Circuit (1 of 2)

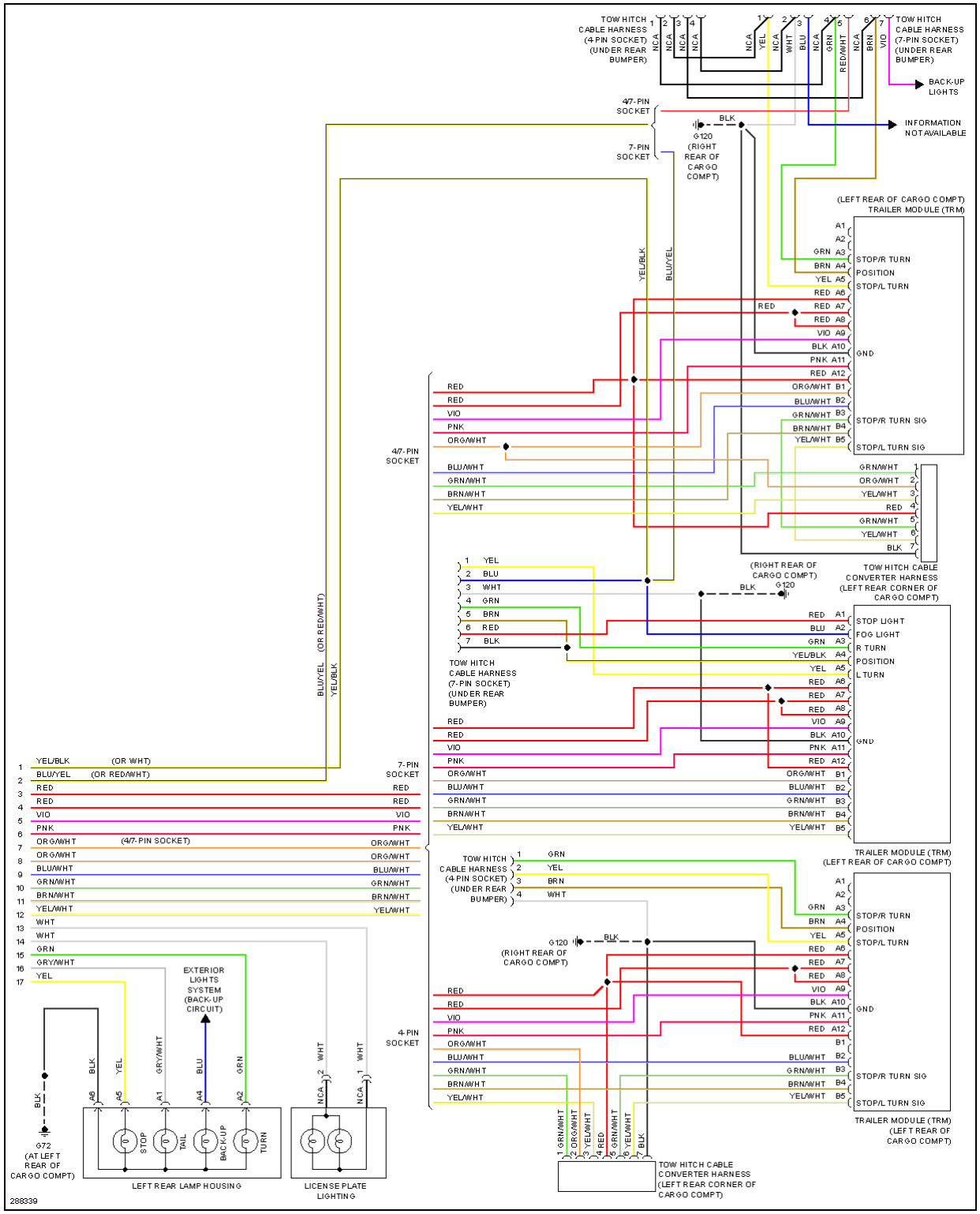

Fig. 30: Exterior Lamps Circuit (2 of 2)

GROUND DISTRIBUTION

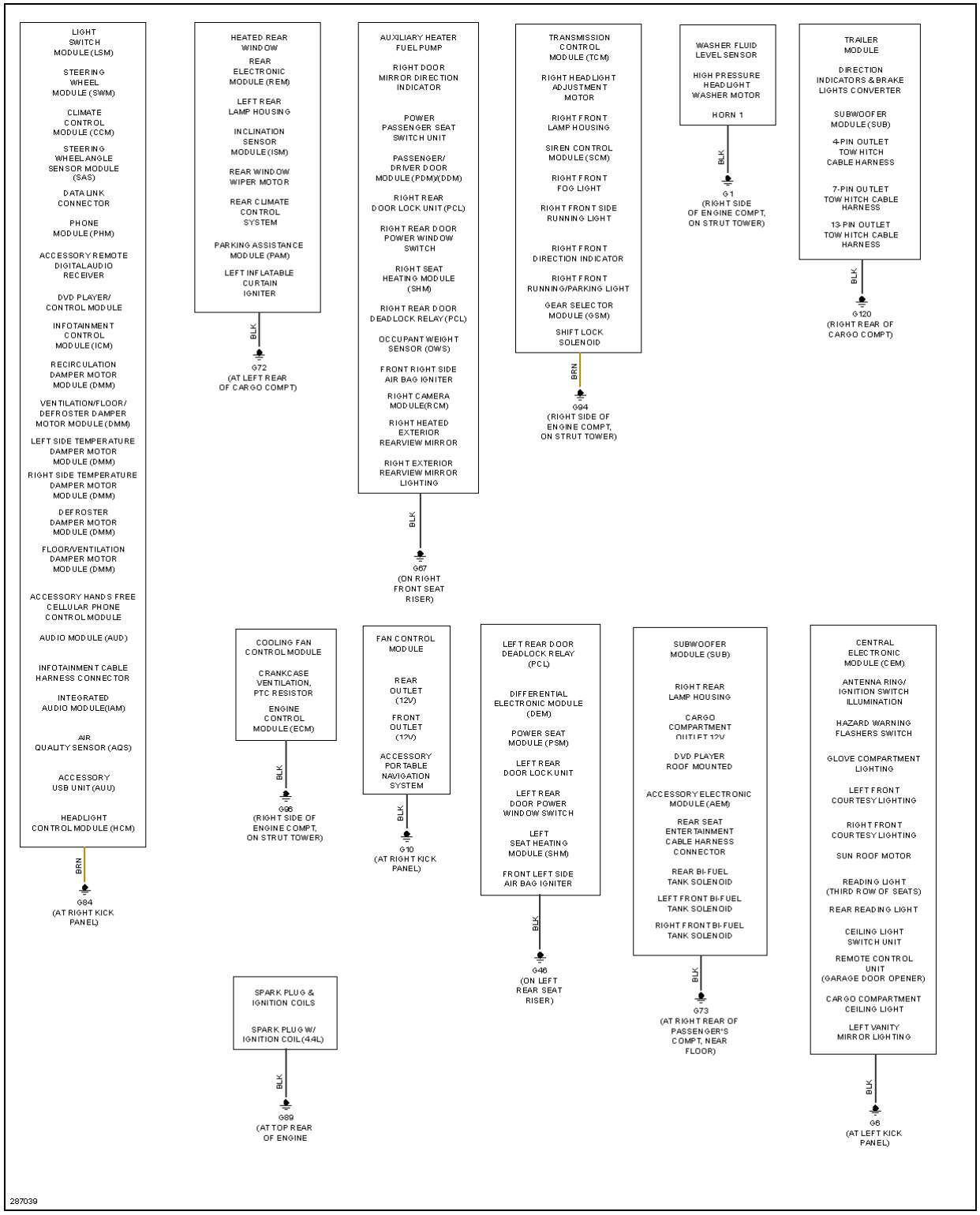

Fig. 31: Ground Distribution Circuit (1 of 2)

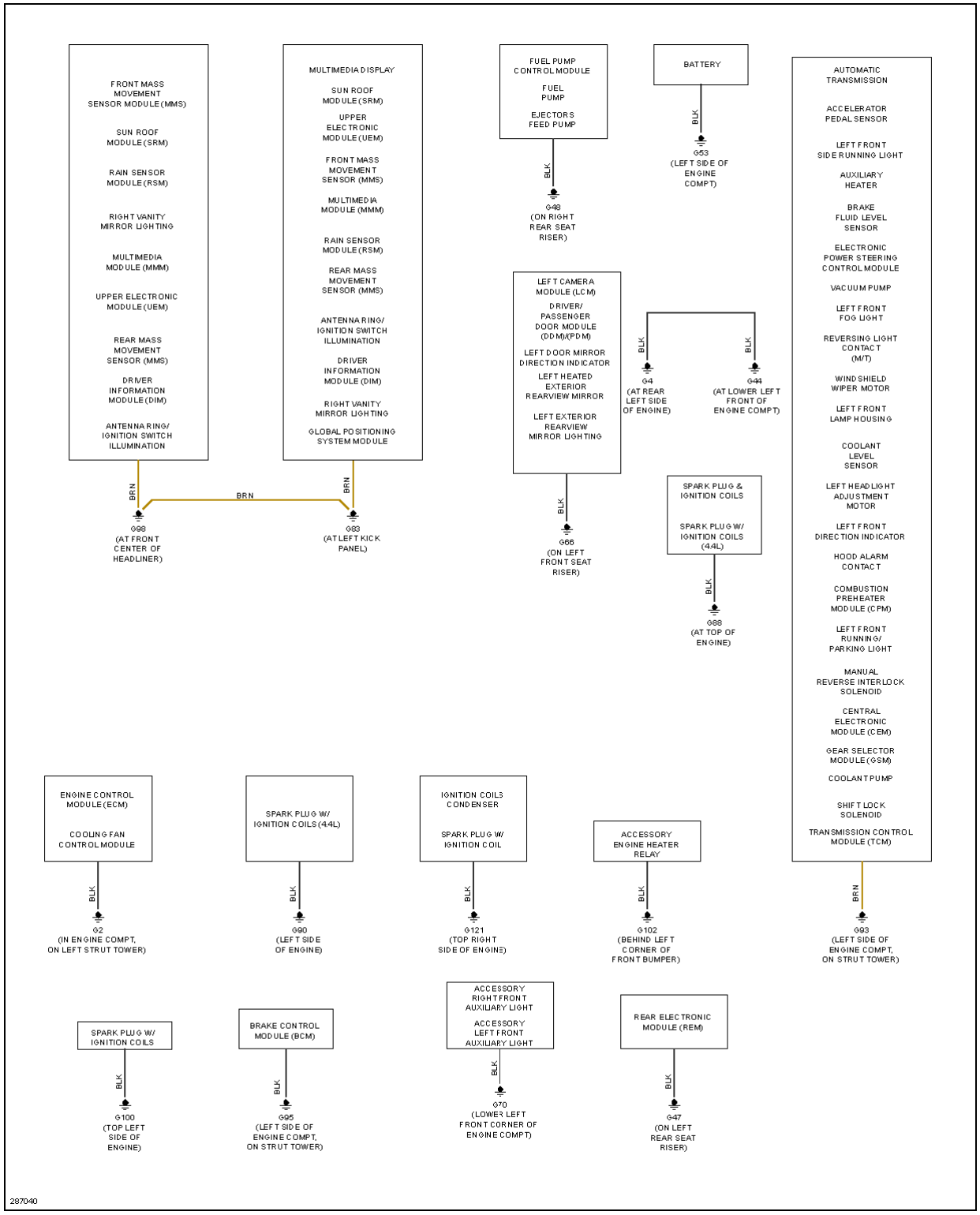

Fig. 32: Ground Distribution Circuit (2 of 2)

HEADLIGHTS

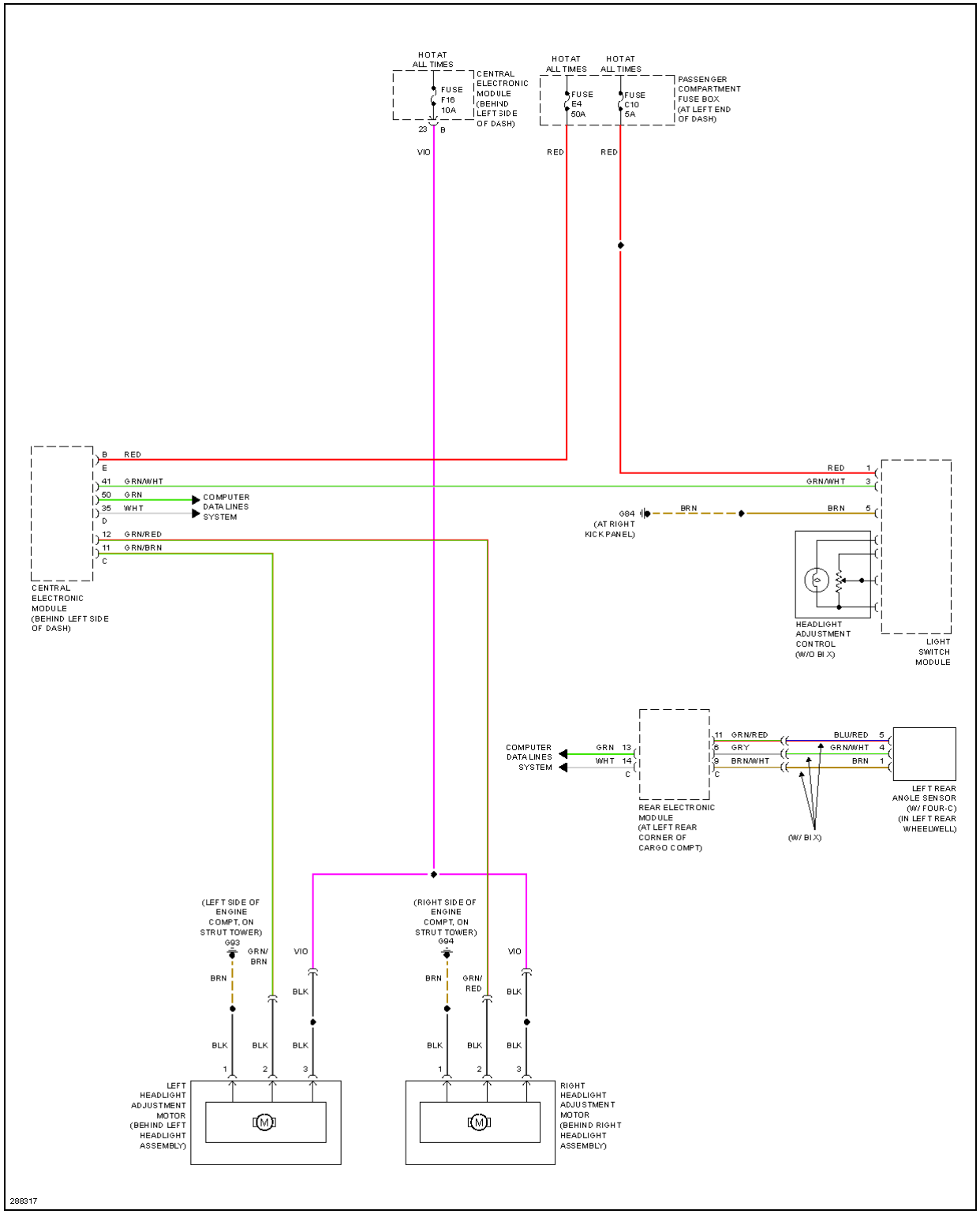

Fig. 33: Headlamp Beam Adjustment Circuit

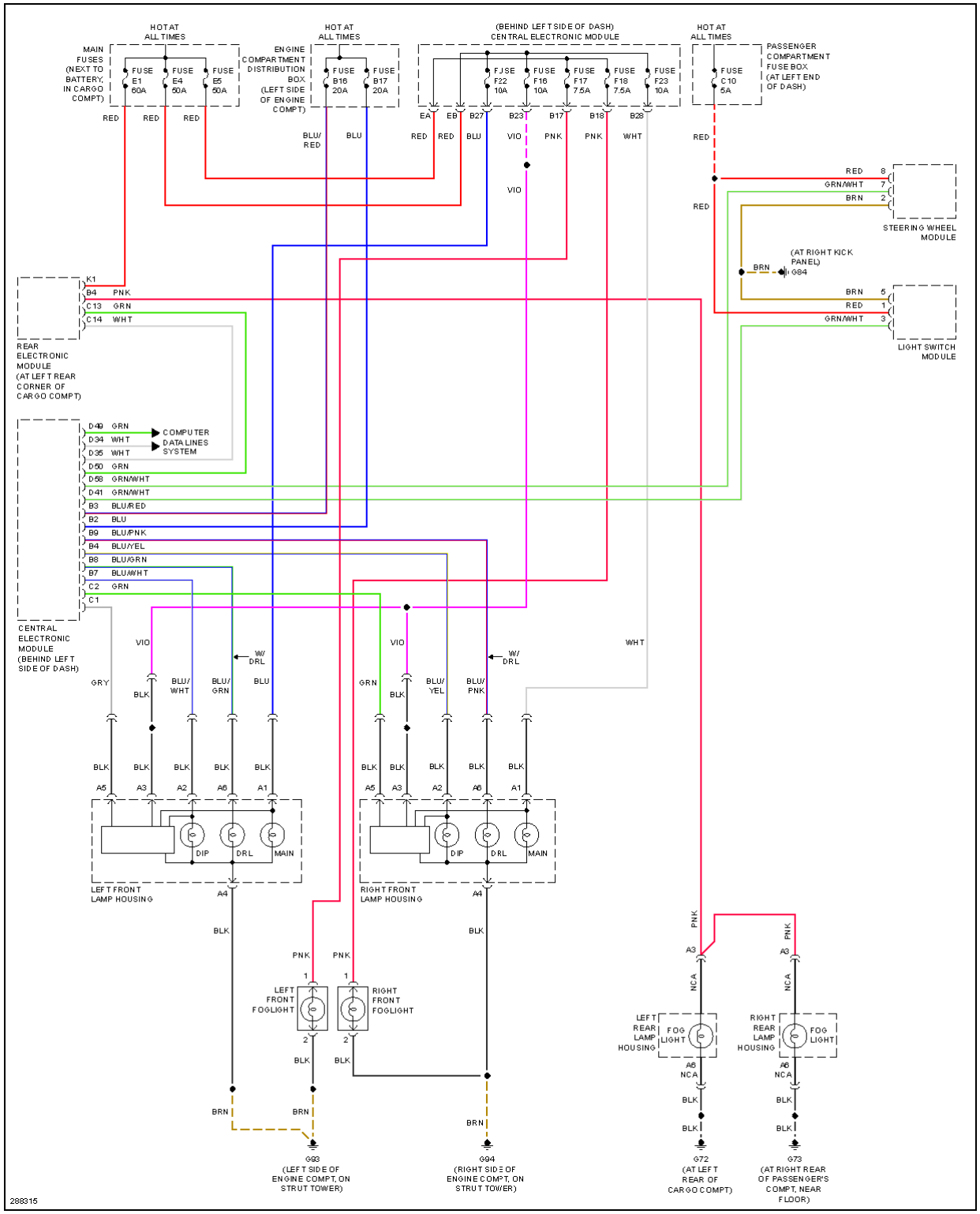

Fig. 34: Headlamps & Fog Lamps Circuit

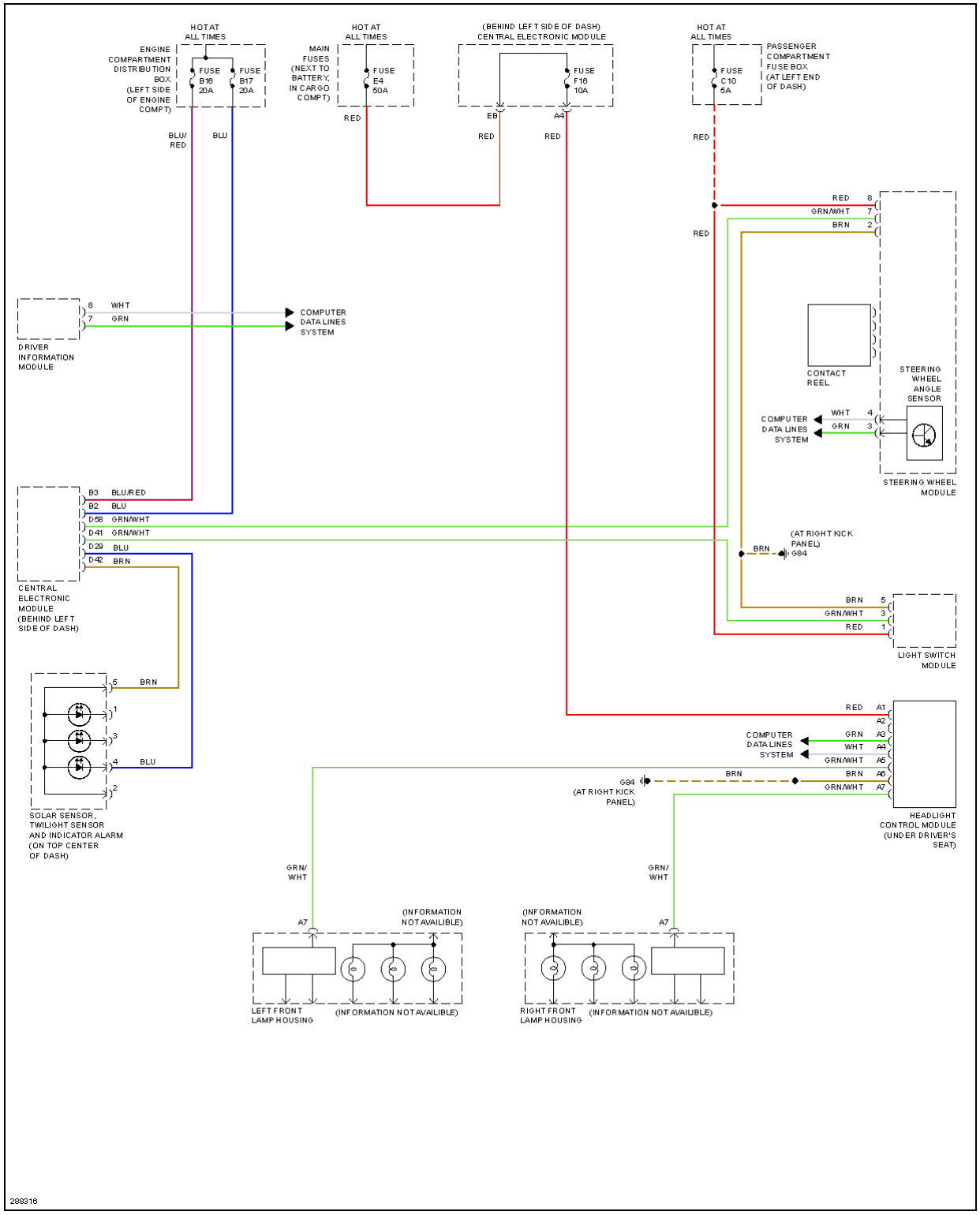

Fig. 35: Headlamps Leveling Circuit

HORN

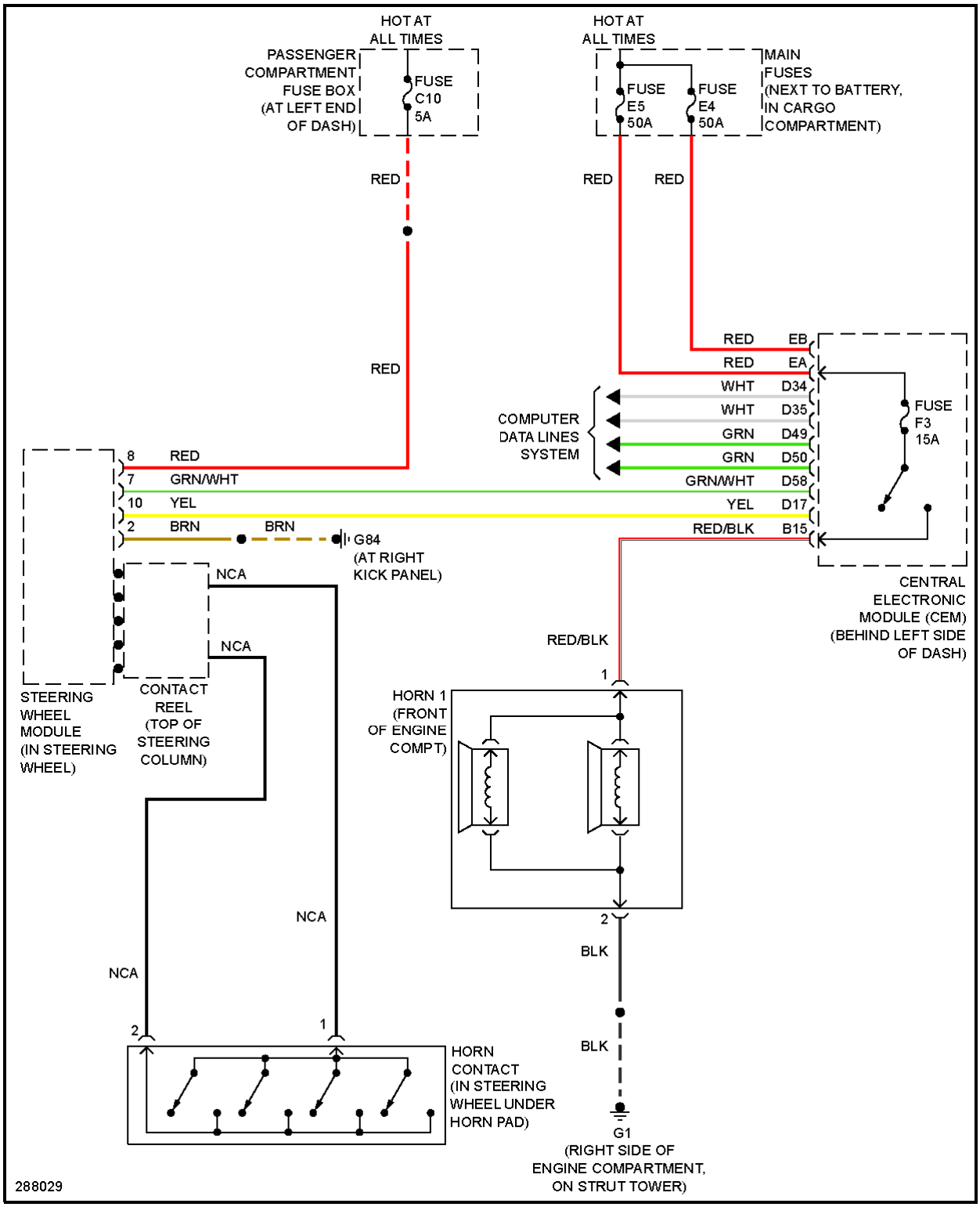

Fig. 36: Horn Circuit

INSTRUMENT CLUSTER

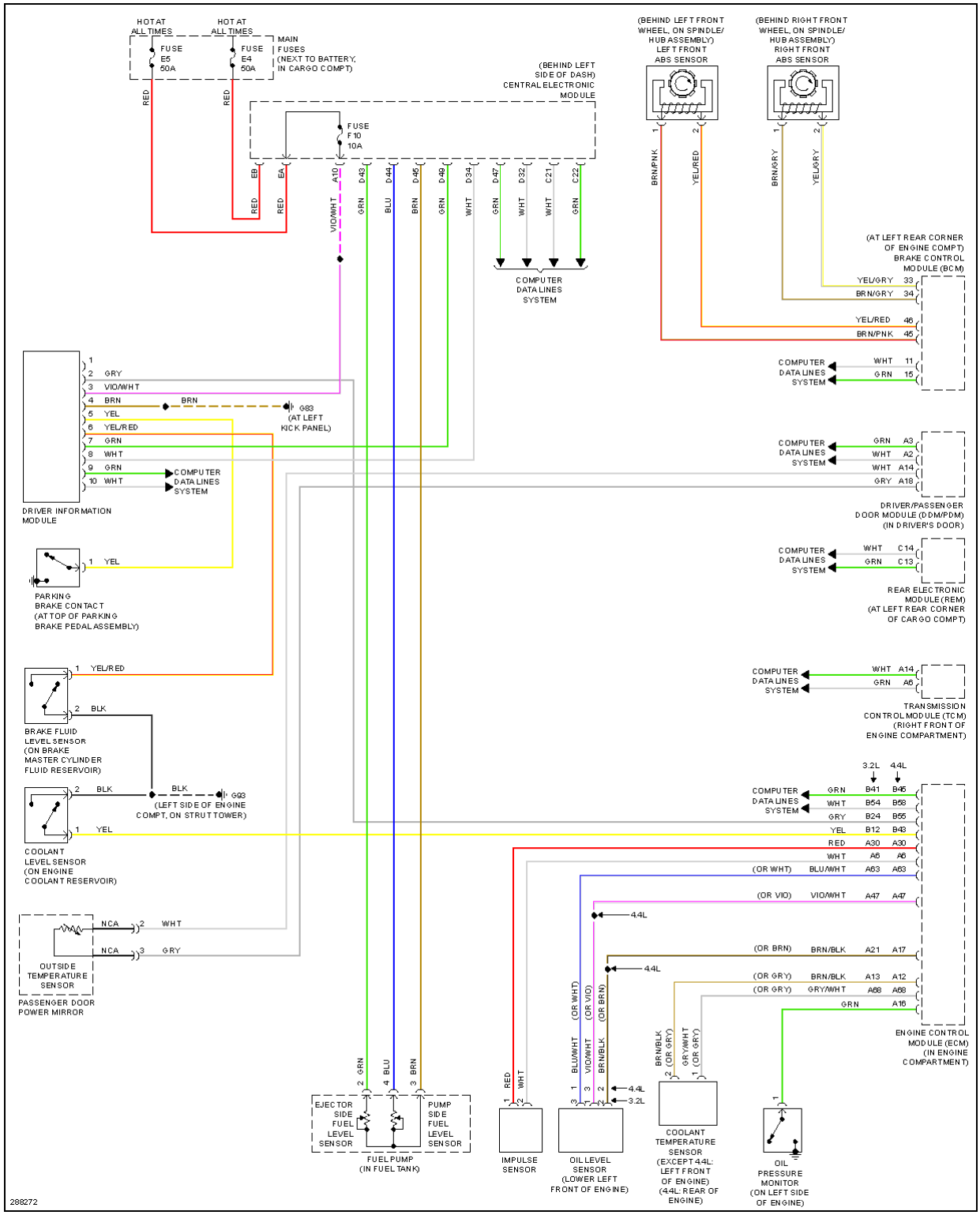

Fig. 37: Instrument Cluster Circuit

INTERIOR LIGHTS

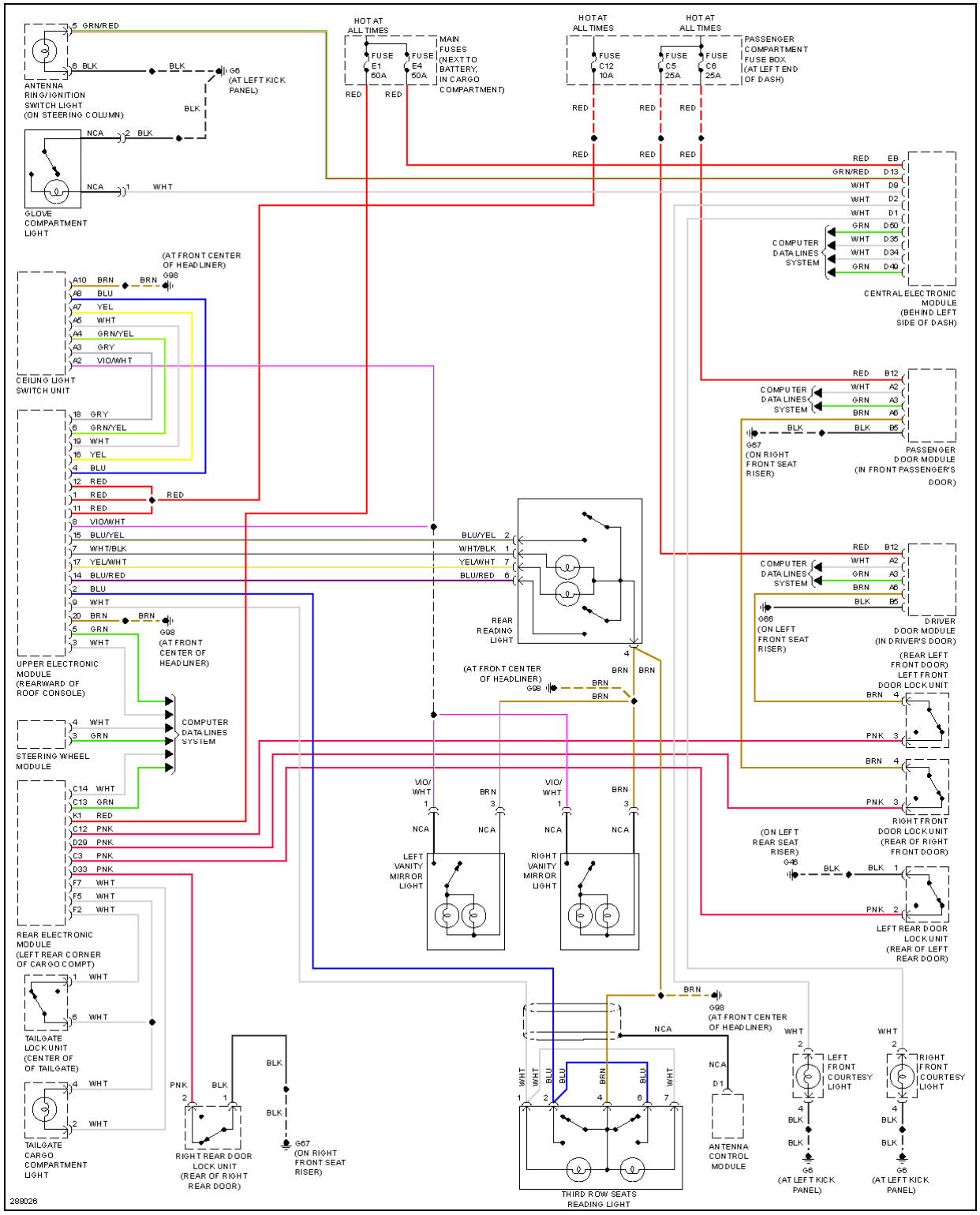

Fig. 38: Courtesy Lamps Circuit

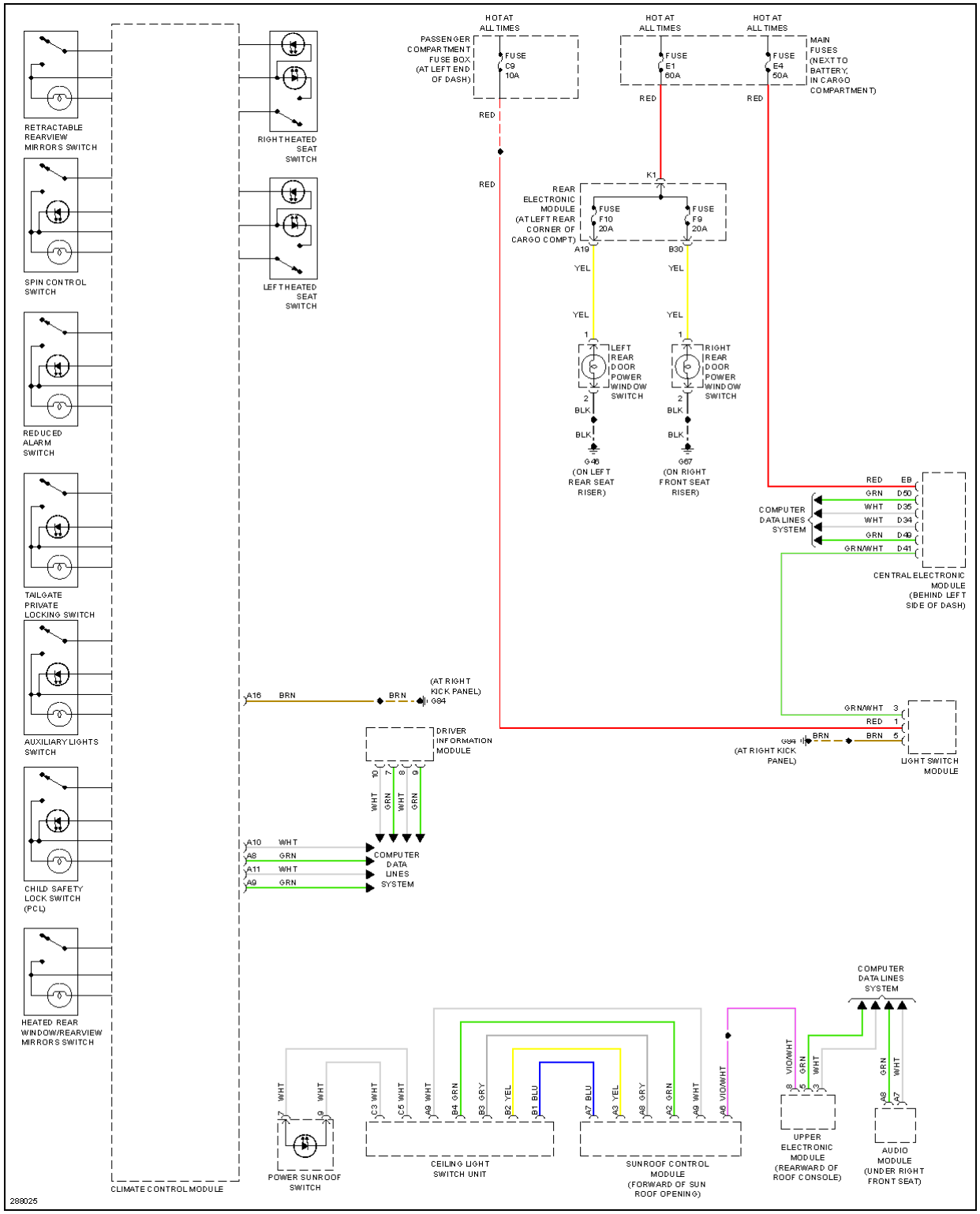

Fig. 39: Instrument Illumination Circuit

MEMORY SYSTEMS

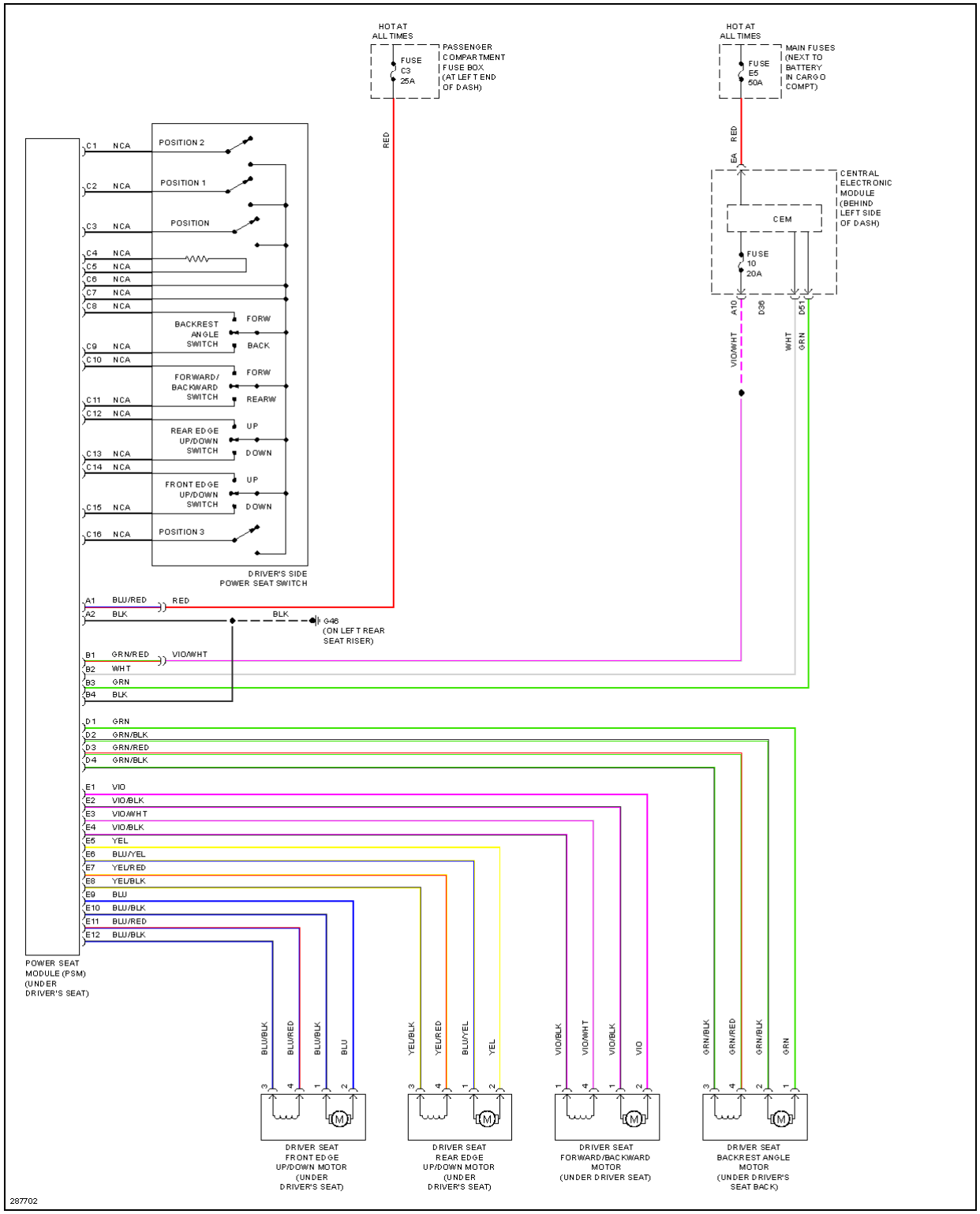

Fig. 40: Driver"s Memory Seat Circuit

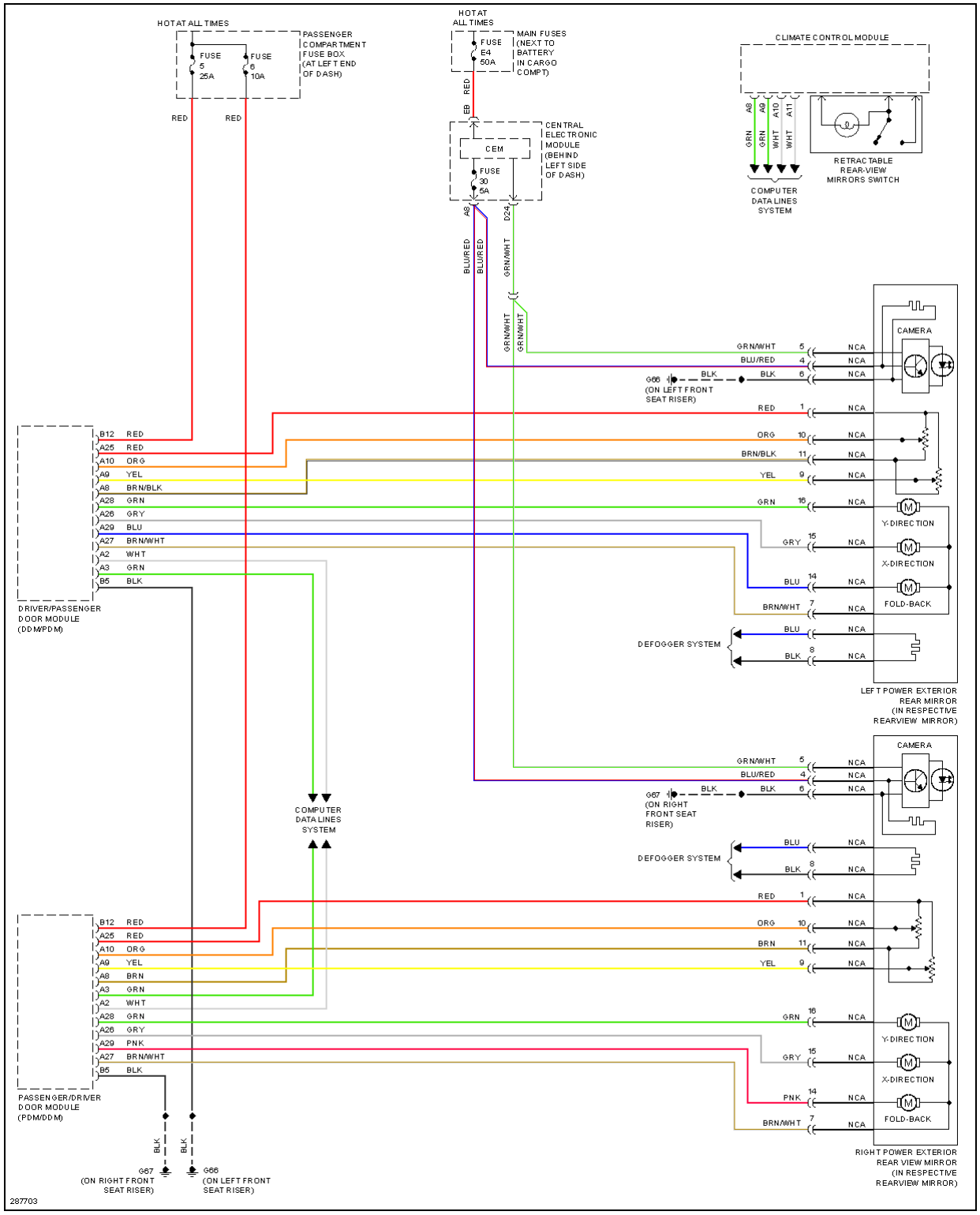

Fig. 41: Memory Mirrors Circuit

NAVIGATION

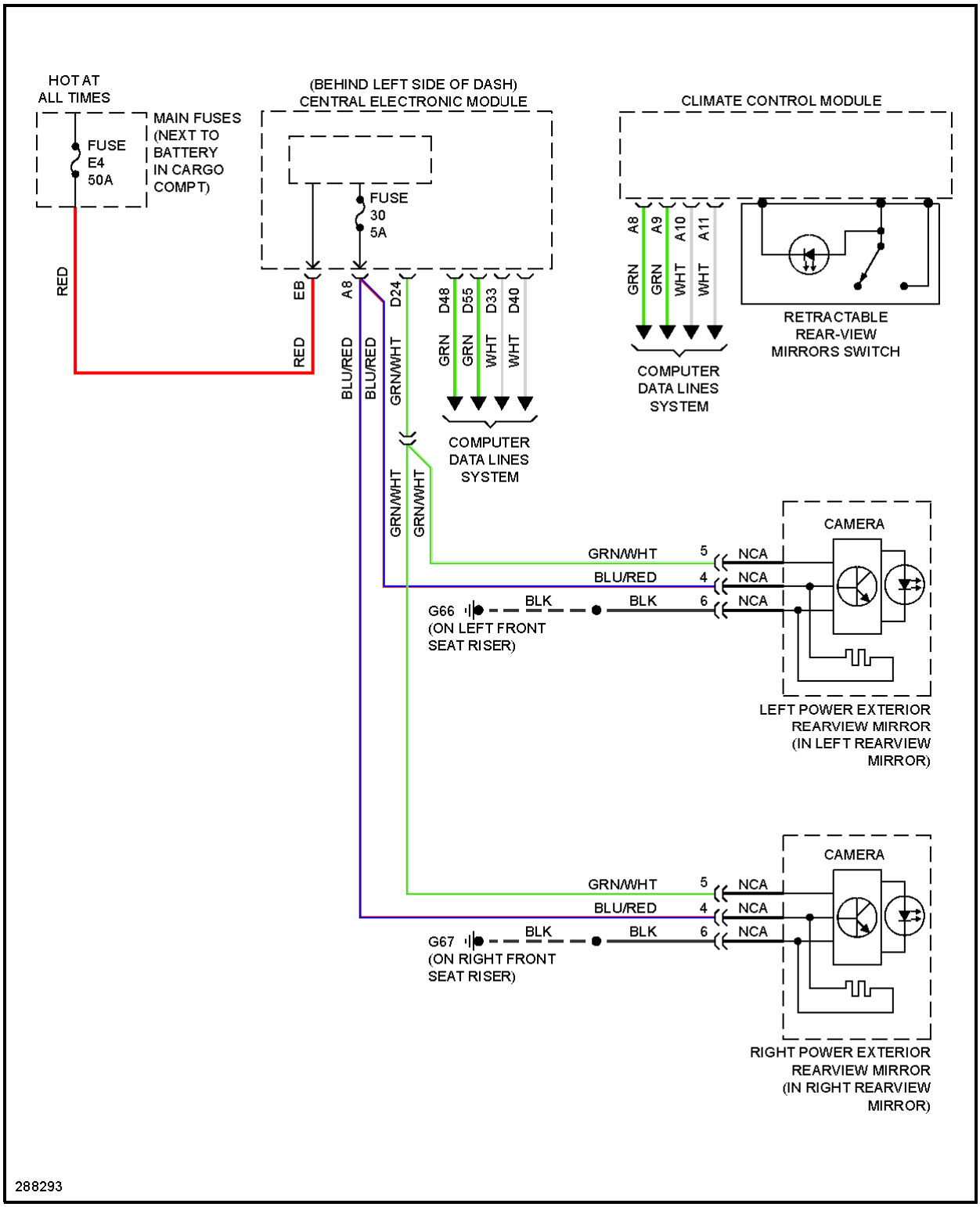

Fig. 42: Blind Spot Information System Circuit

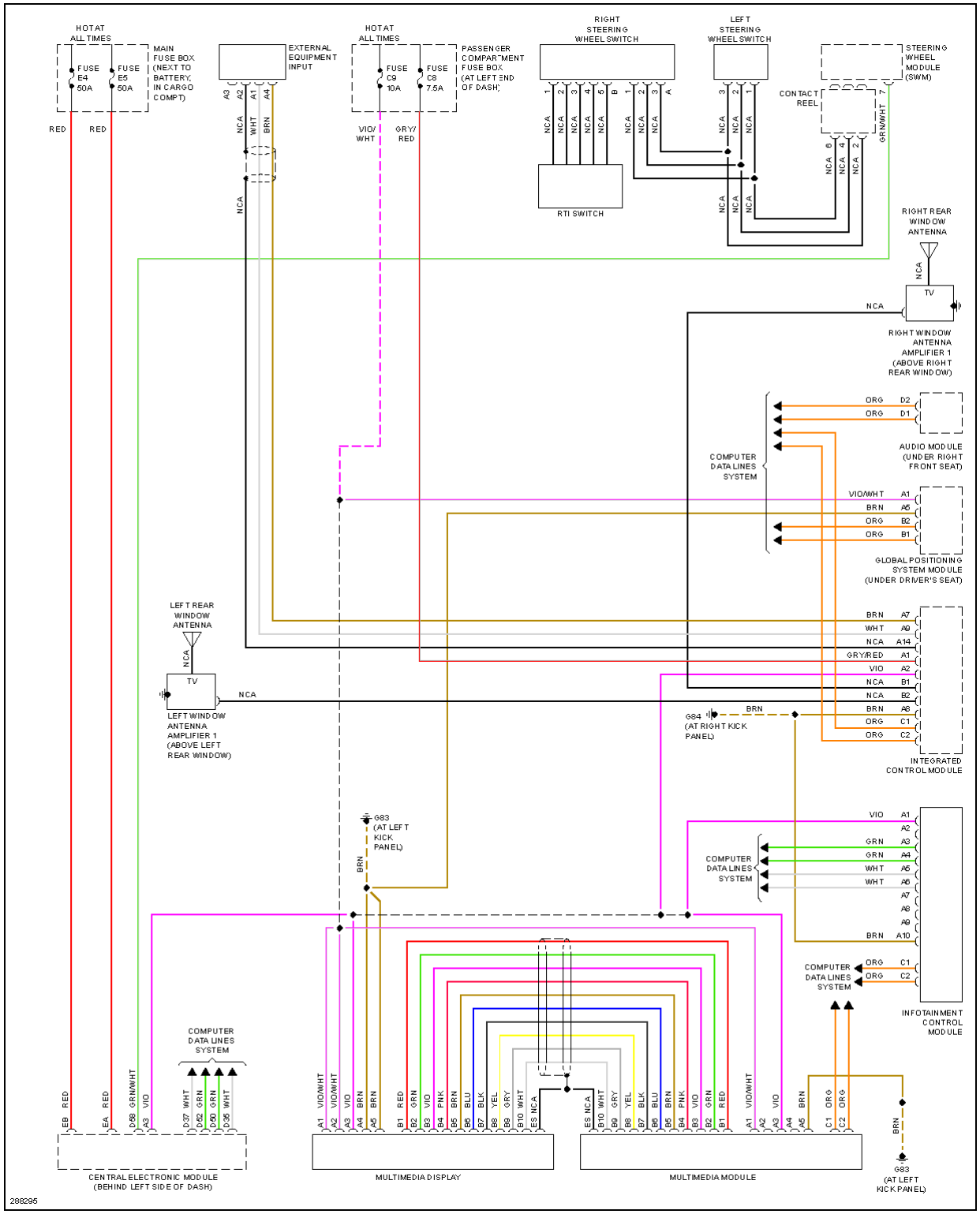

Fig. 43: Infotainment Circuit

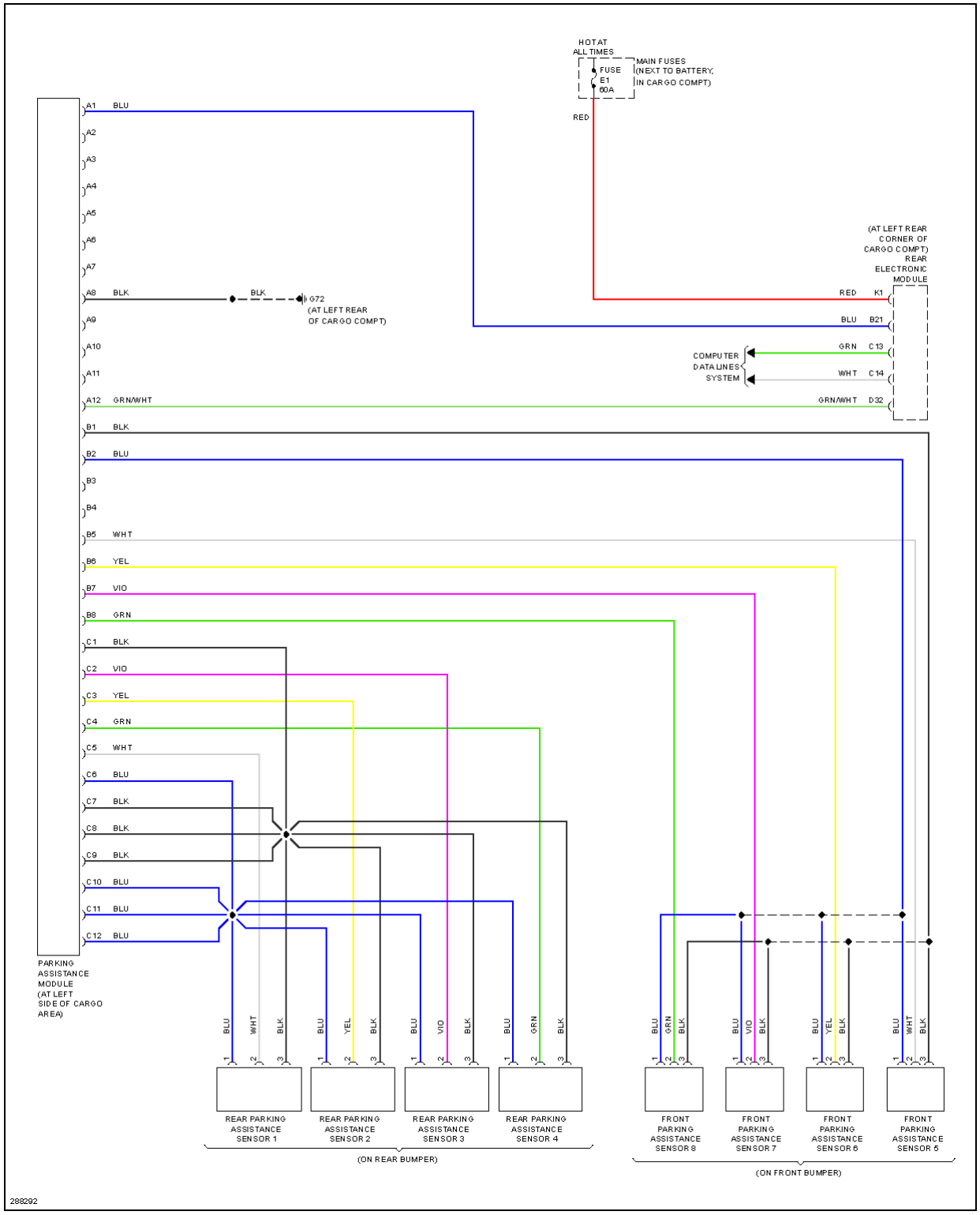

Fig. 44: Parking Assistant Circuit

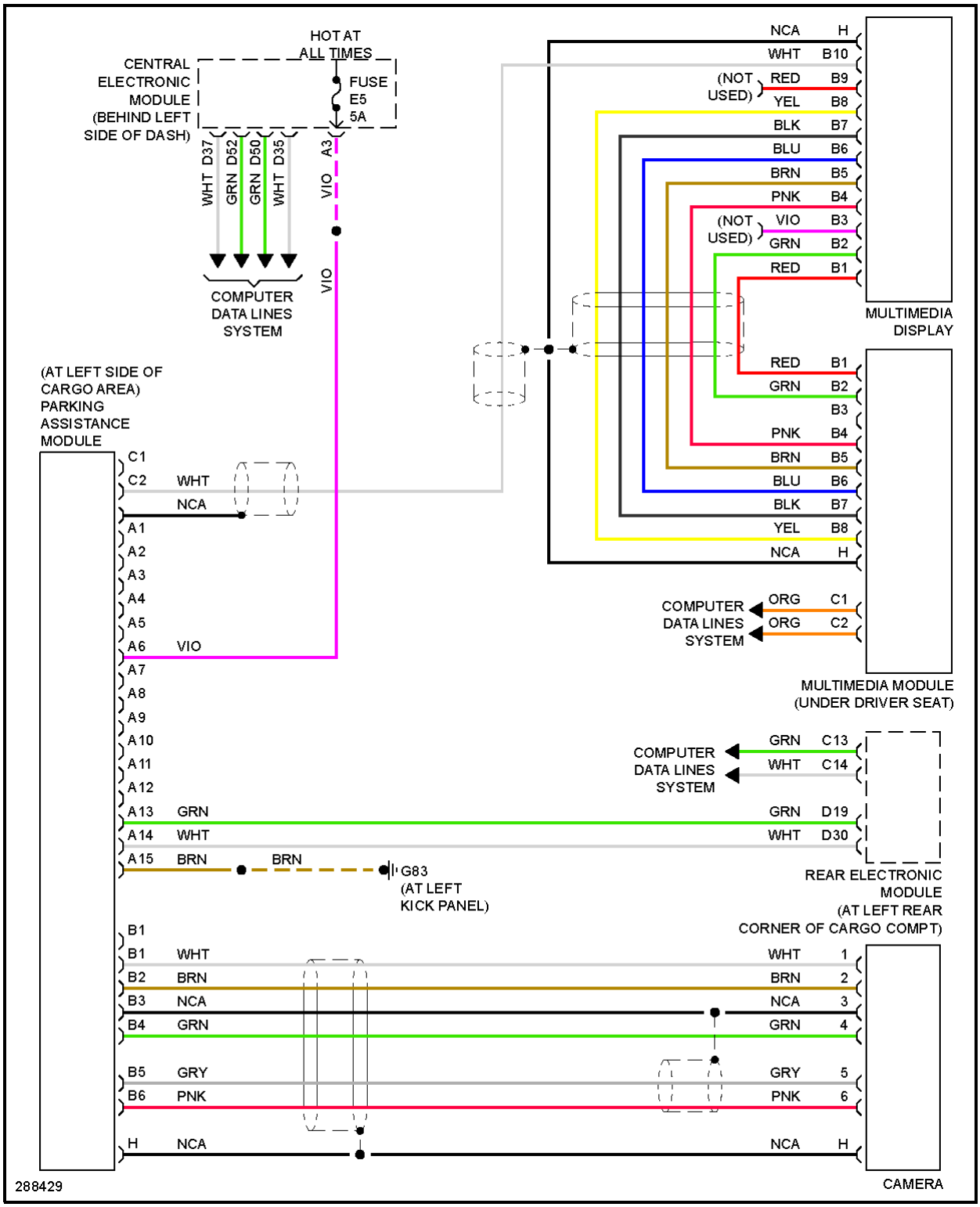

Fig. 45: Rear Camera Circuit

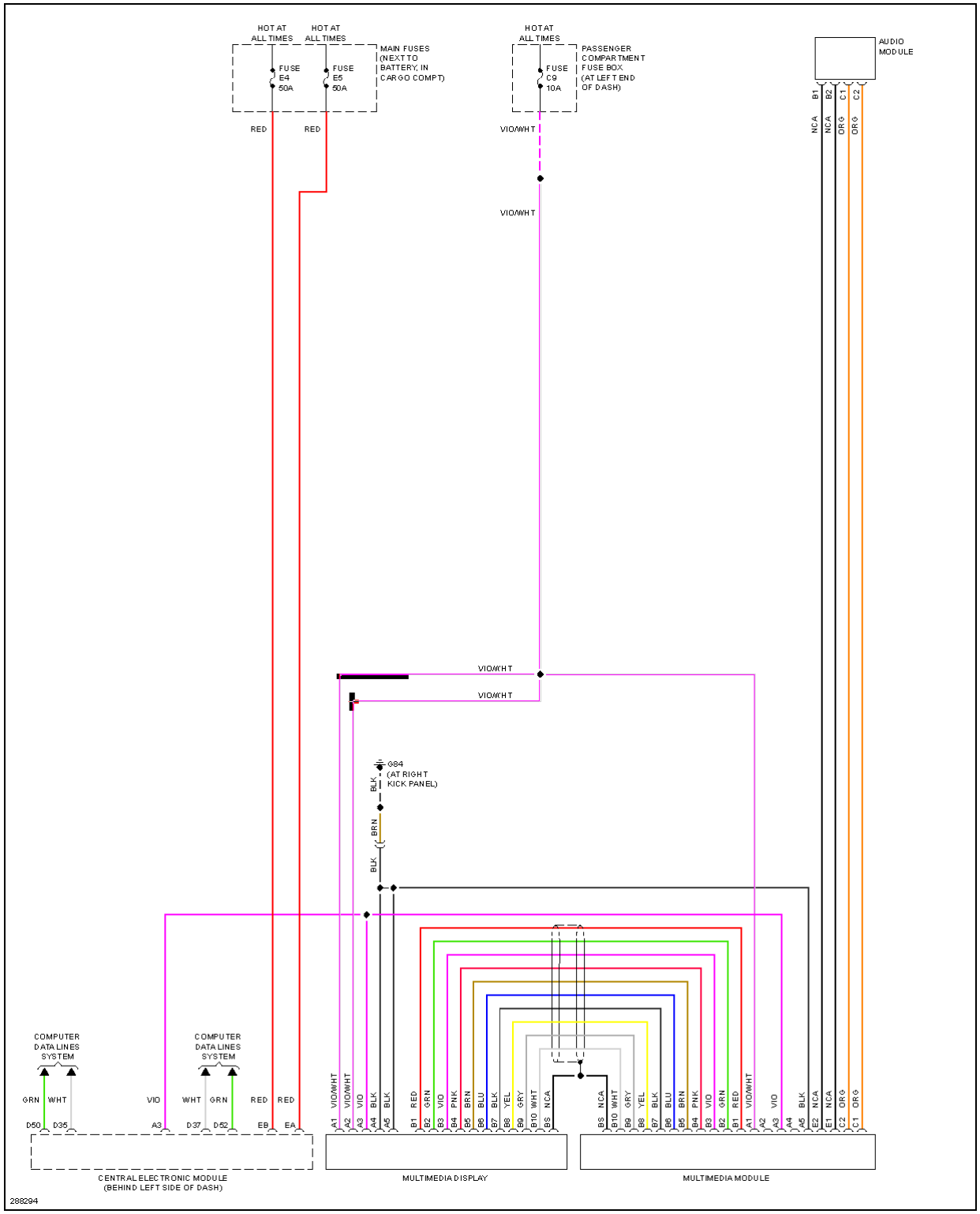

Fig. 46: Road Traffic Information Circuit

POWER DISTRIBUTION

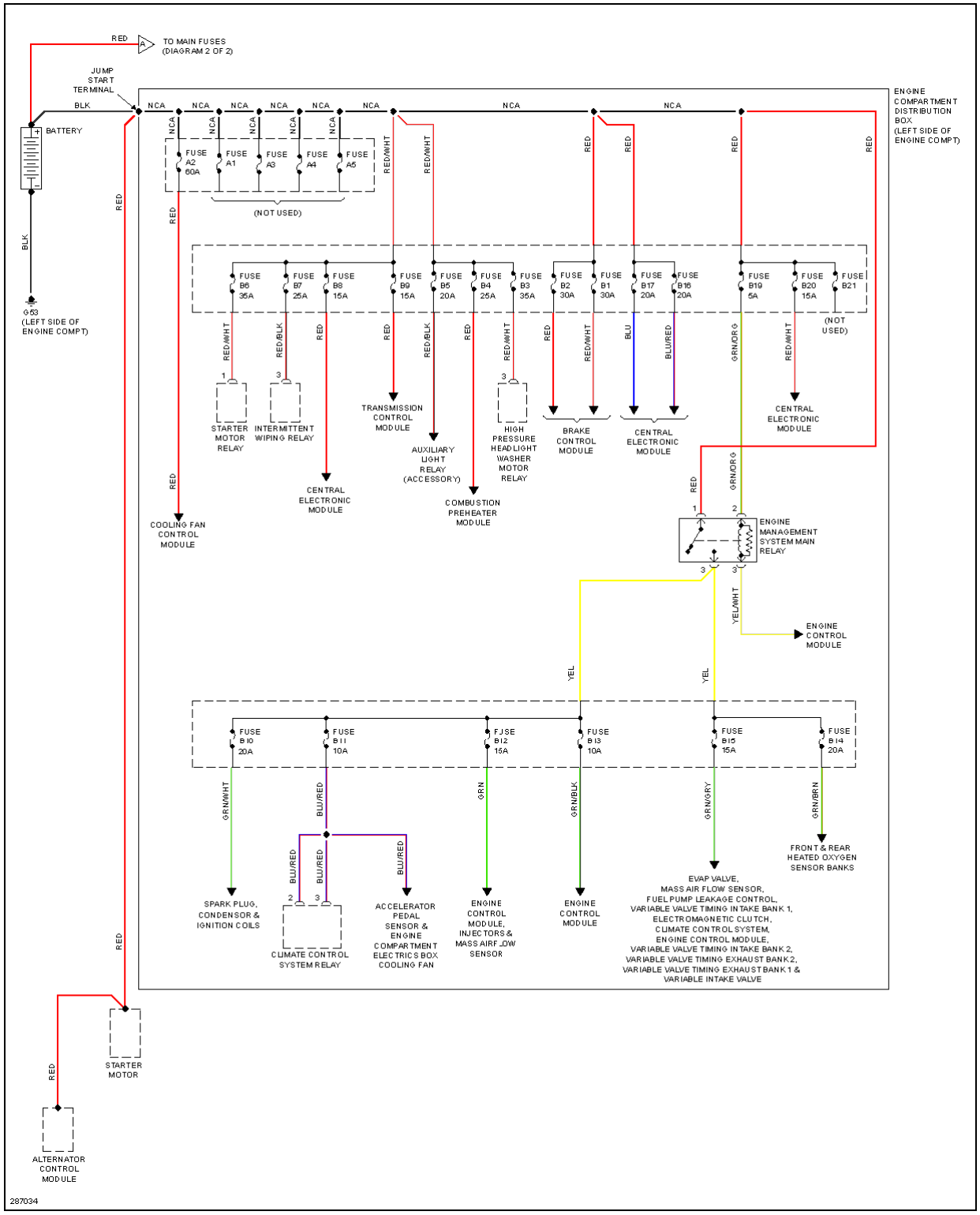

Fig. 47: Power Distribution Circuit (1 of 2)

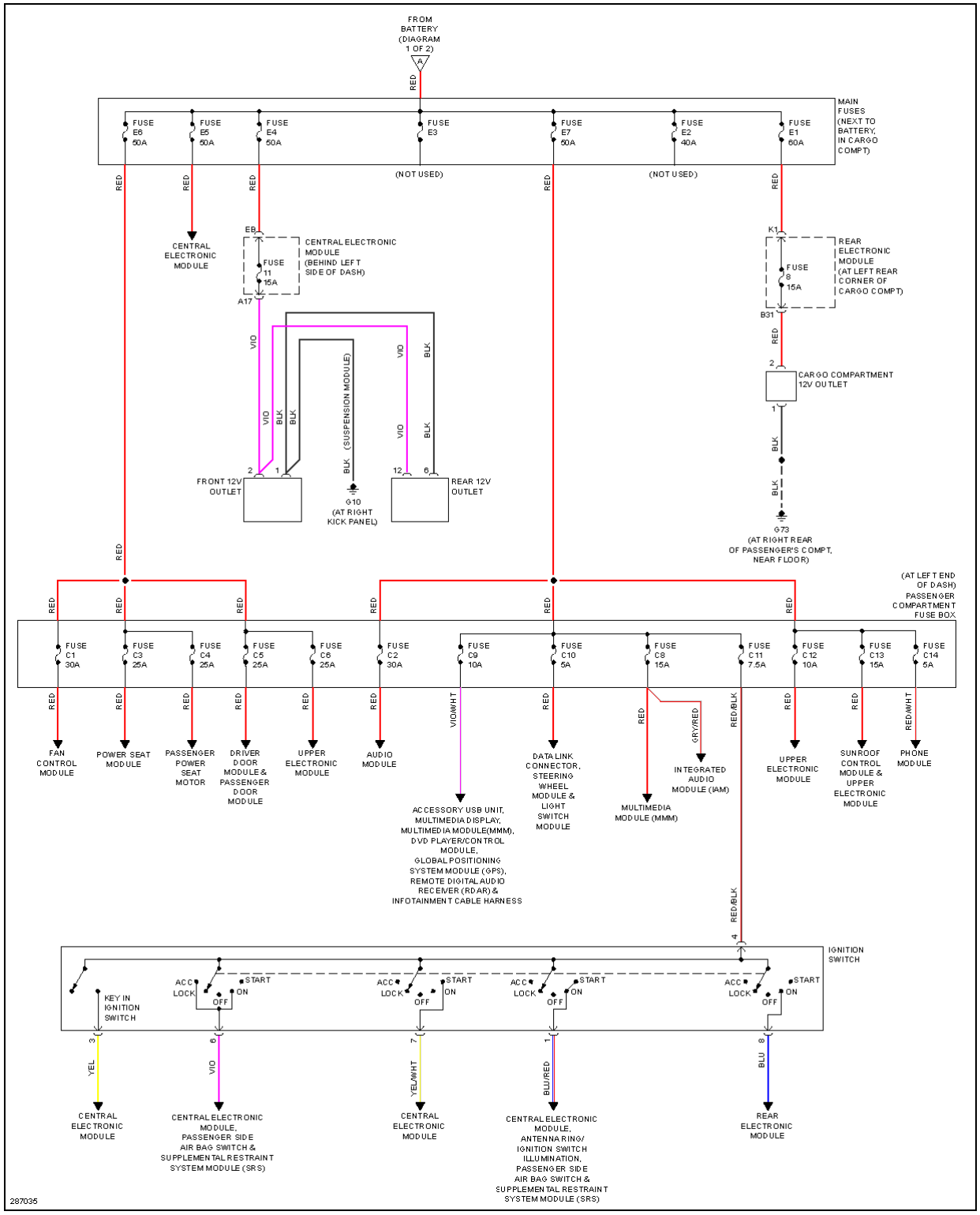

Fig. 48: Power Distribution Circuit (2 of 2)

POWER DOOR LOCKS

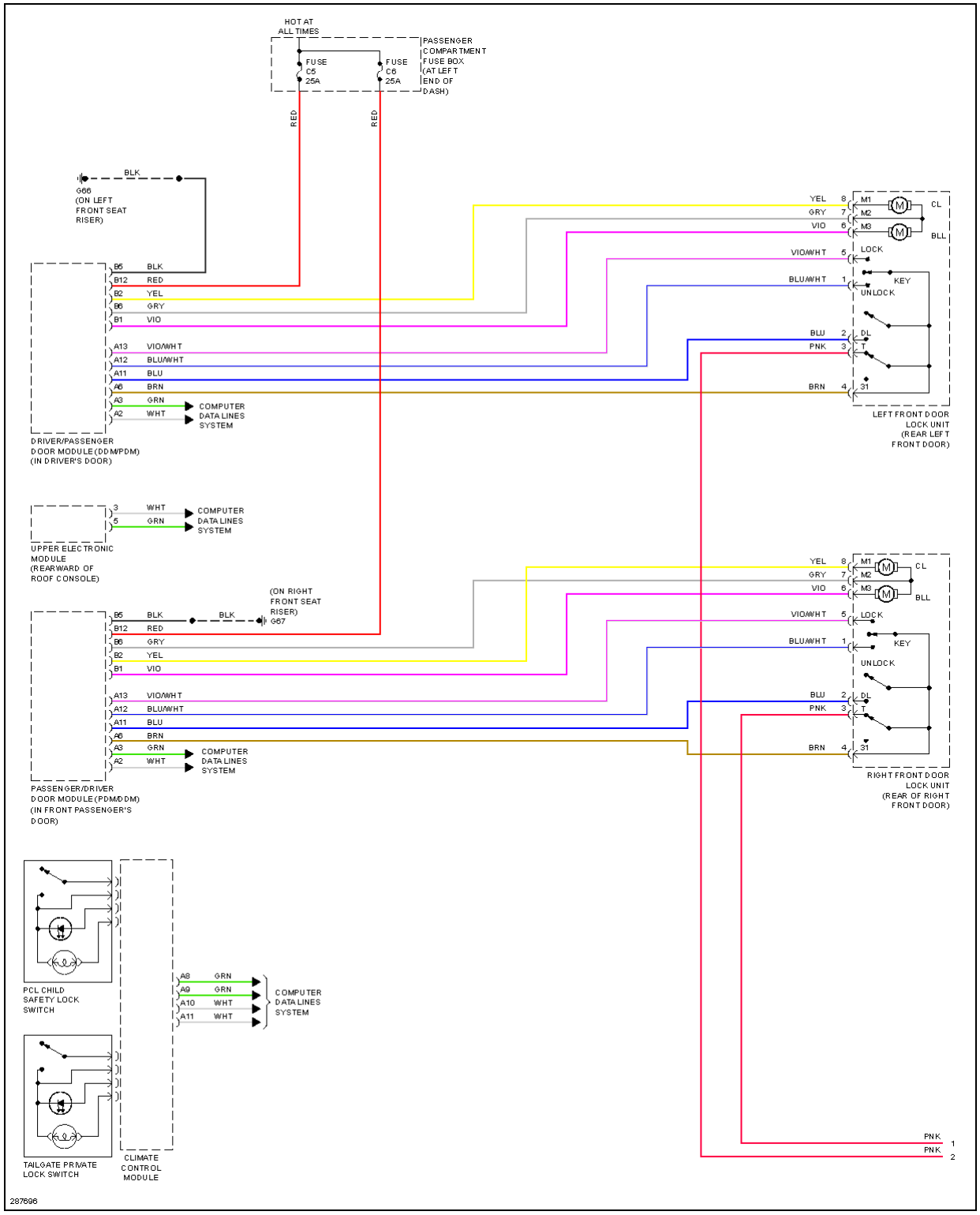

Fig. 49: Power Door Locks Circuit (1 of 2)

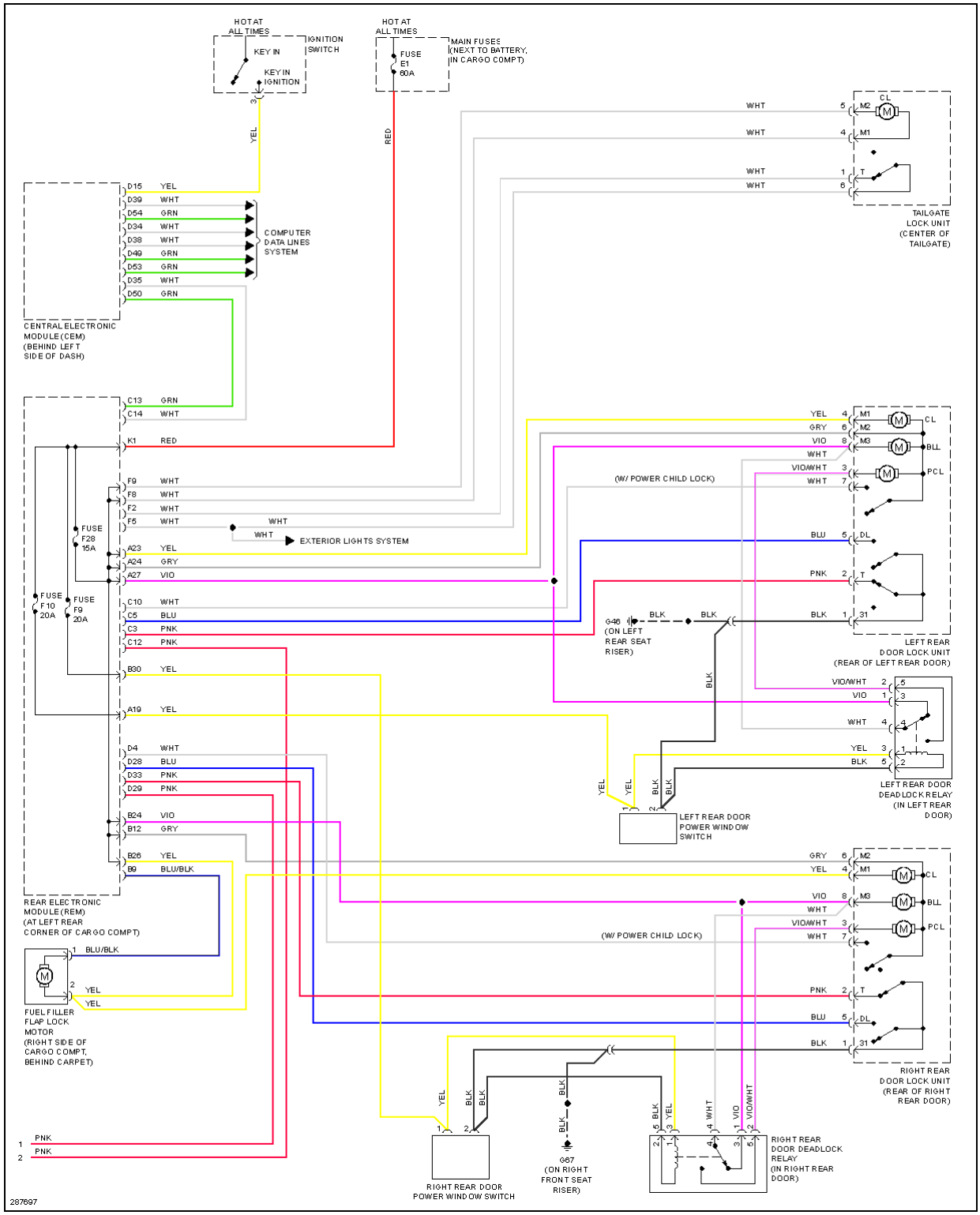

Fig. 50: Power Door Locks Circuit (2 of 2)

POWER SEATS

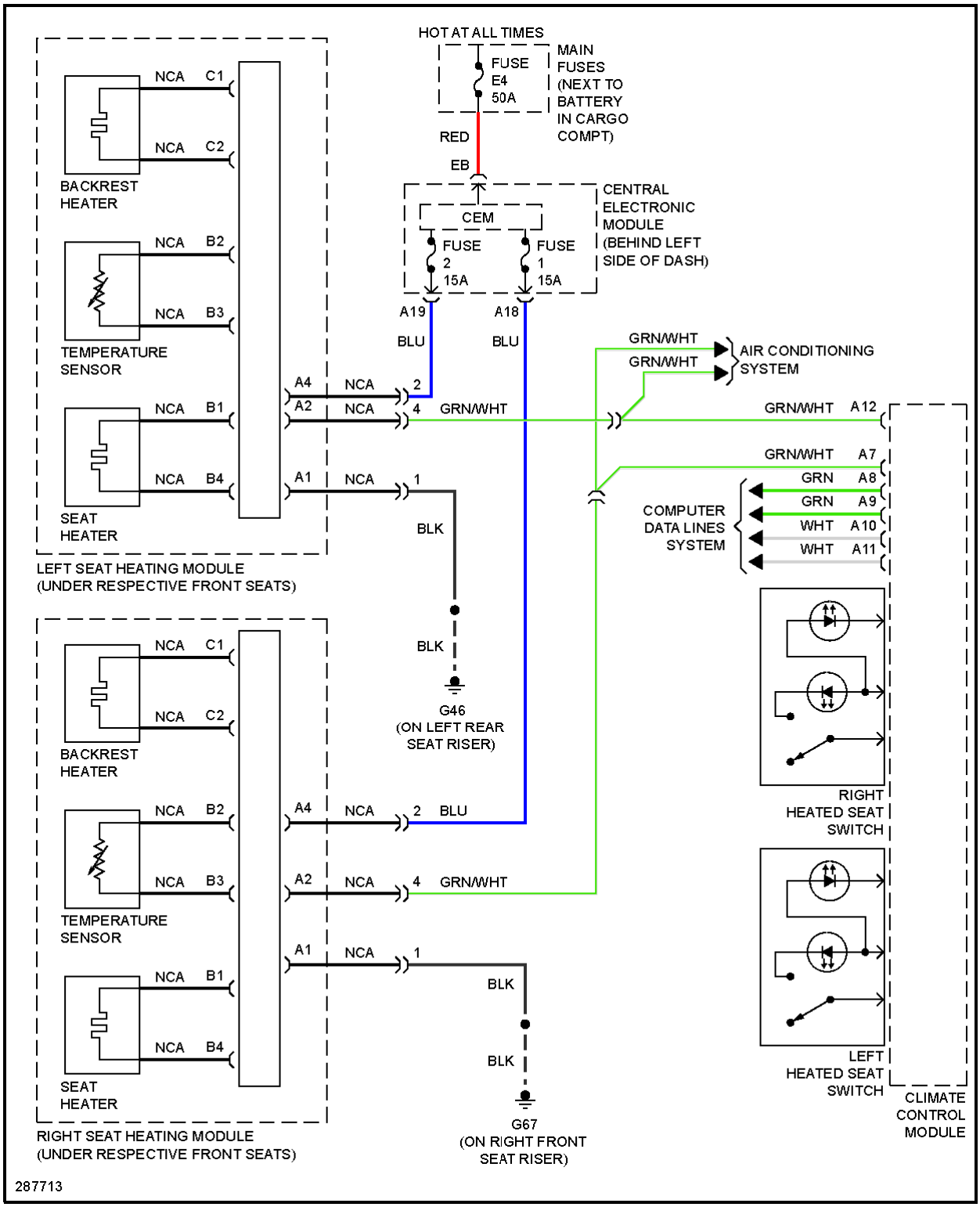

Fig. 51: Heated Seats Circuit

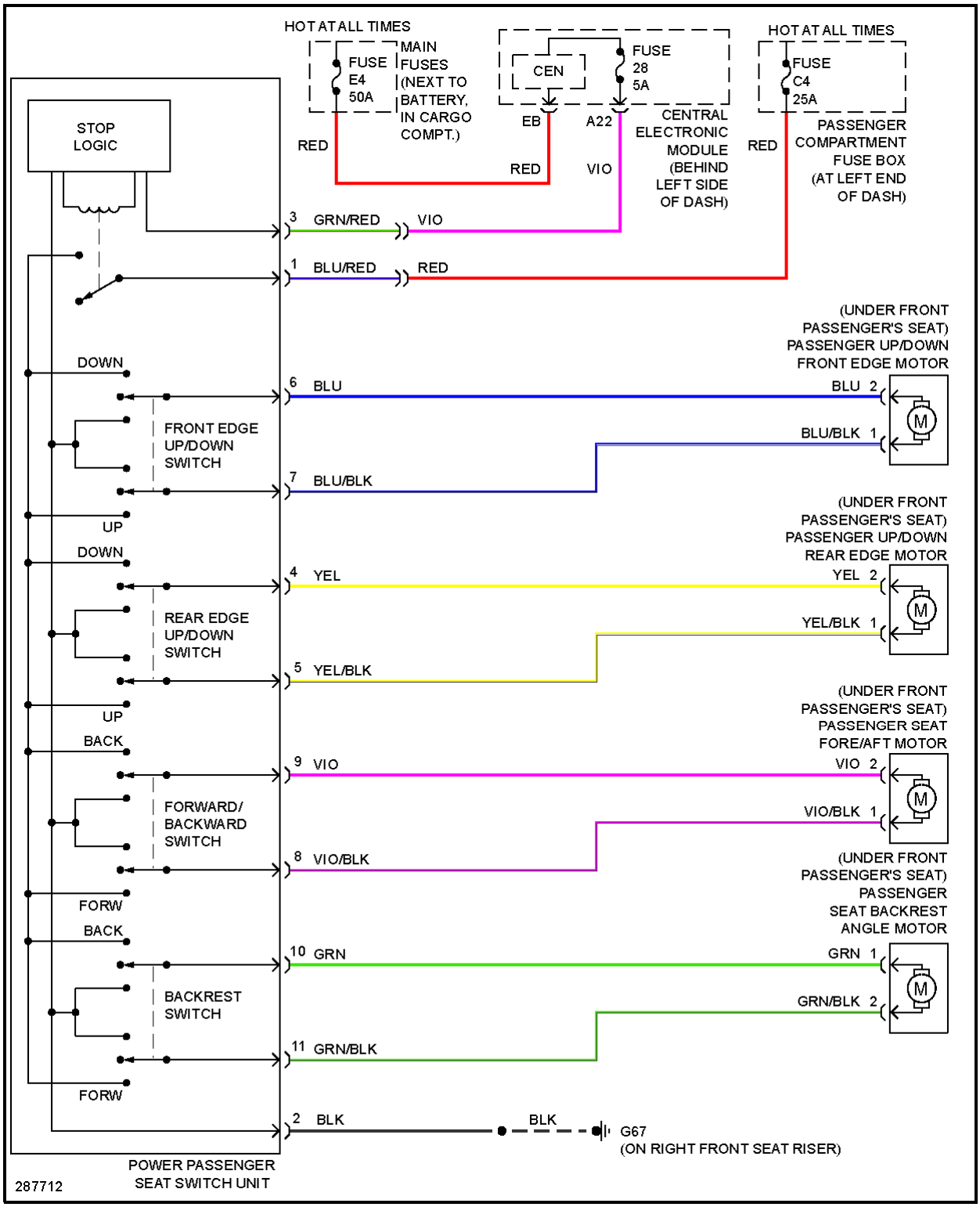

Fig. 52: Passenger"s Power Seat Circuit

POWER TOP/SUNROOF

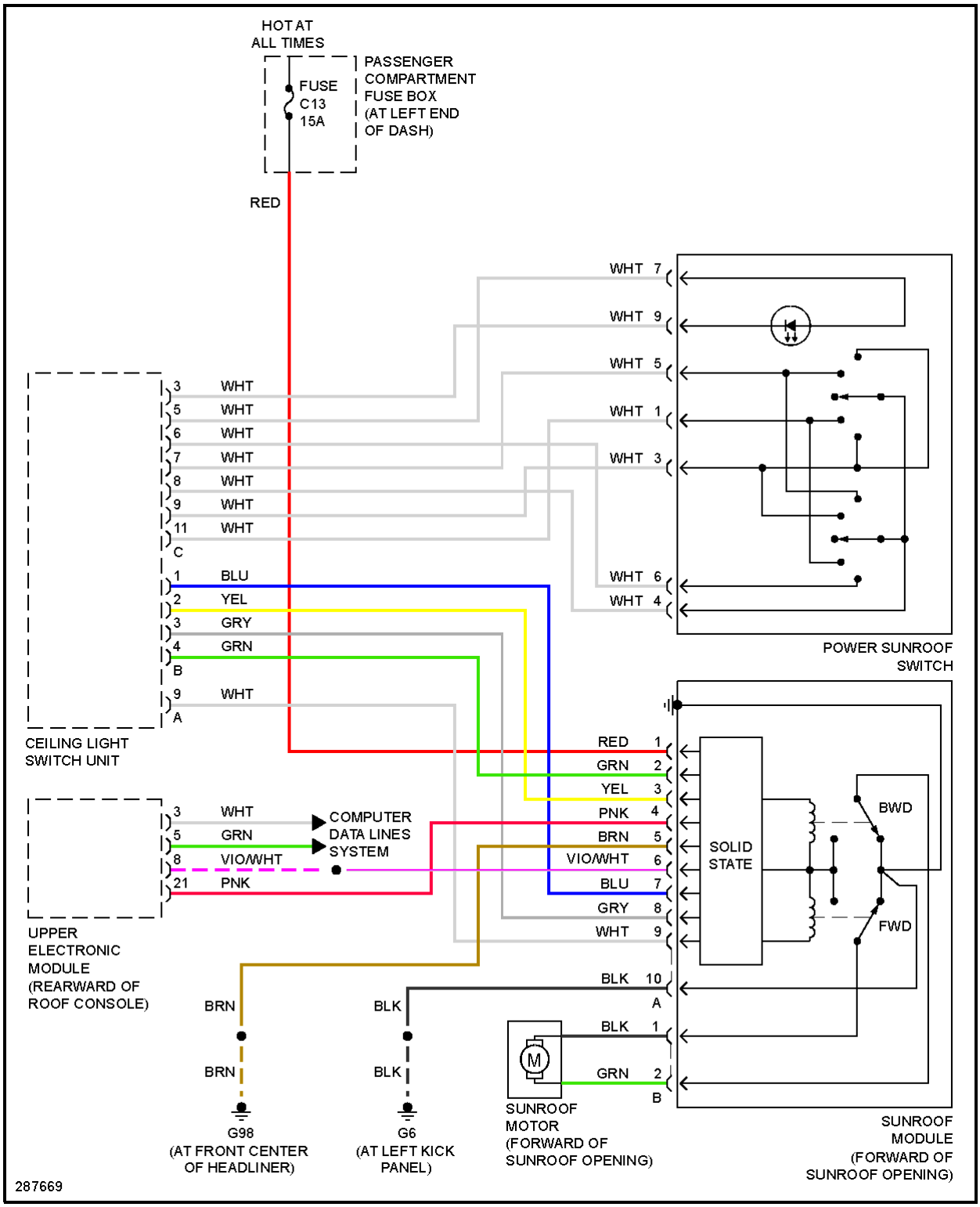

Fig. 53: Power Top/Sunroof Circuit

POWER WINDOWS

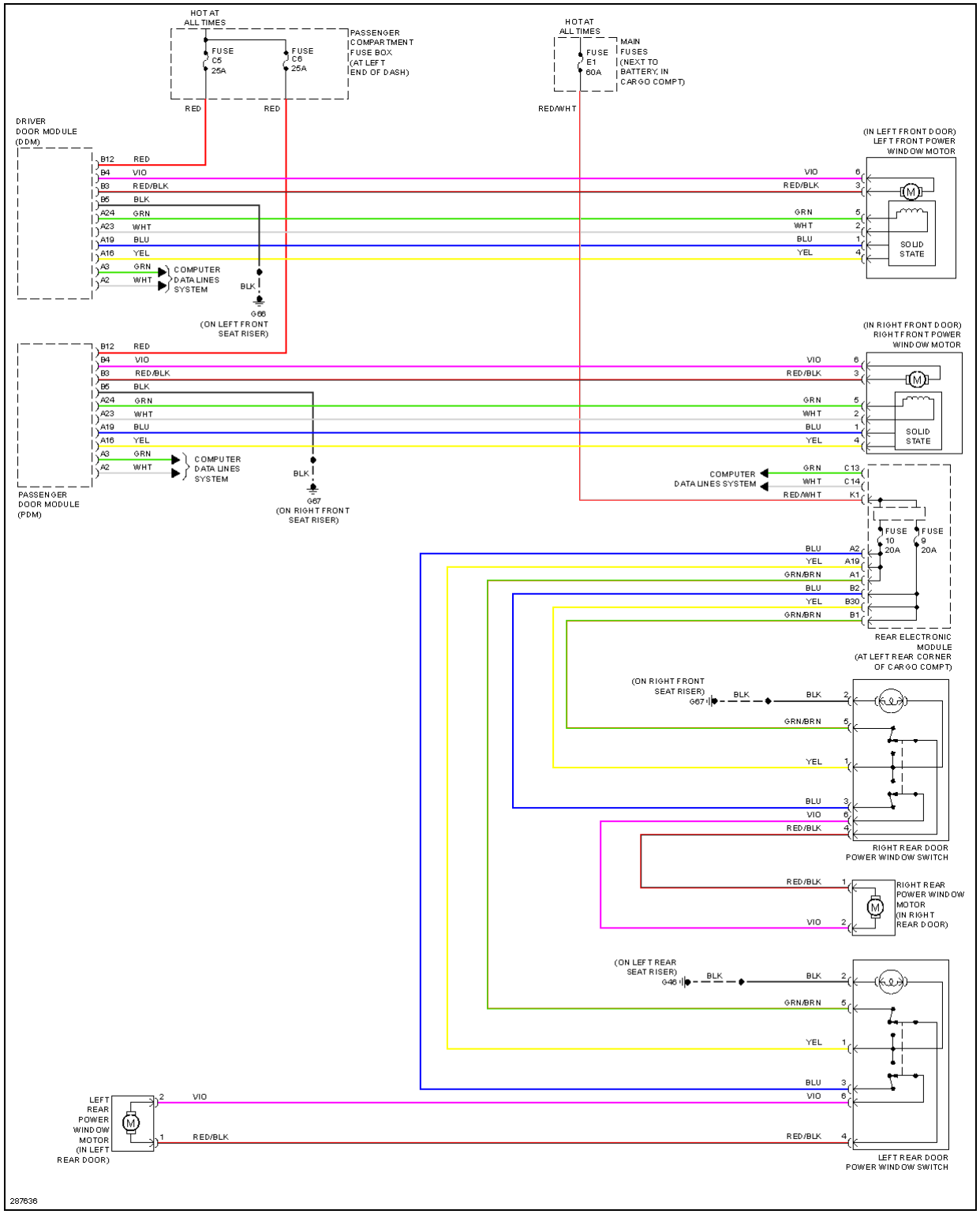

Fig. 54: Power Windows Circuit

RADIO

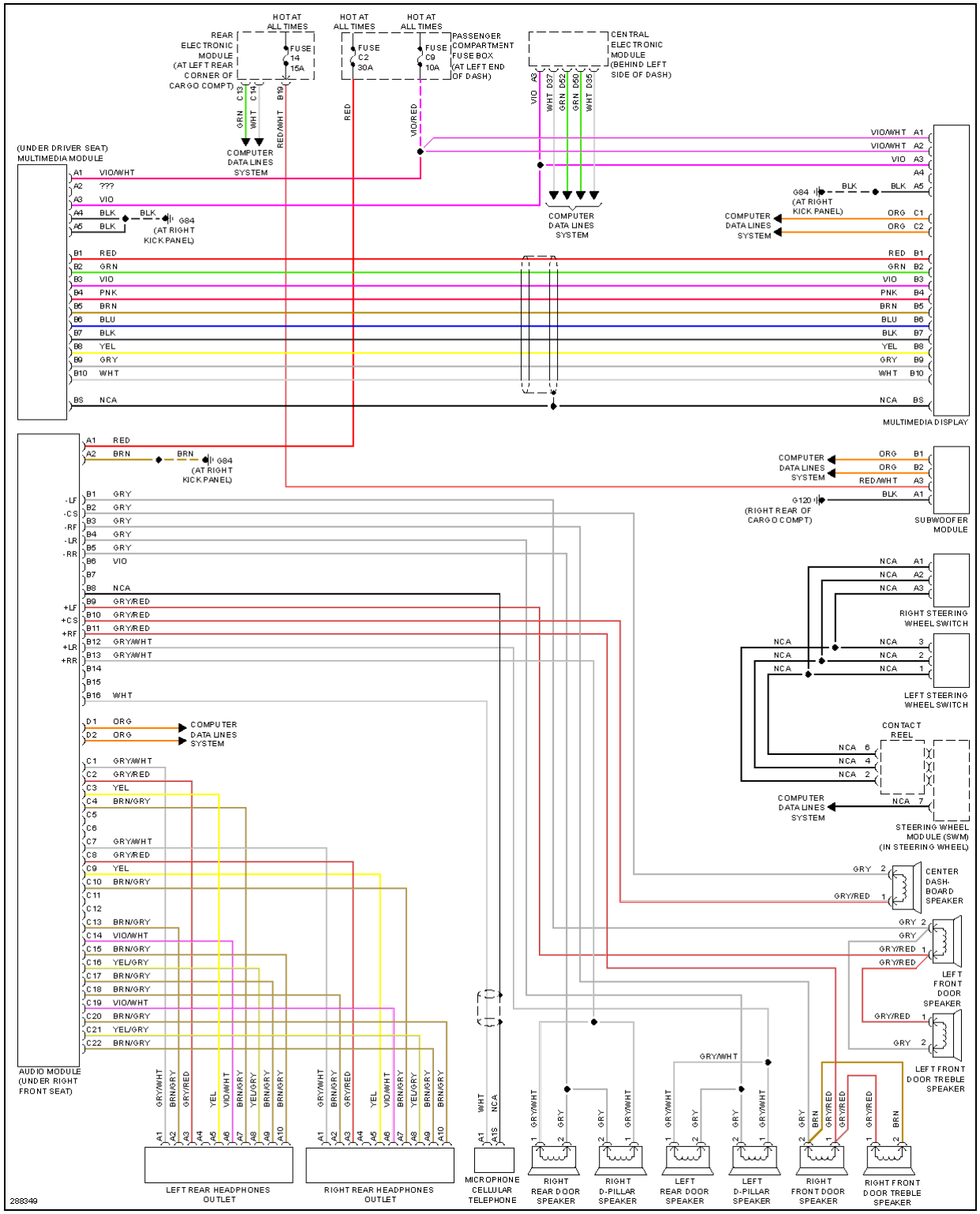

Fig. 55: Radio Circuit, Base

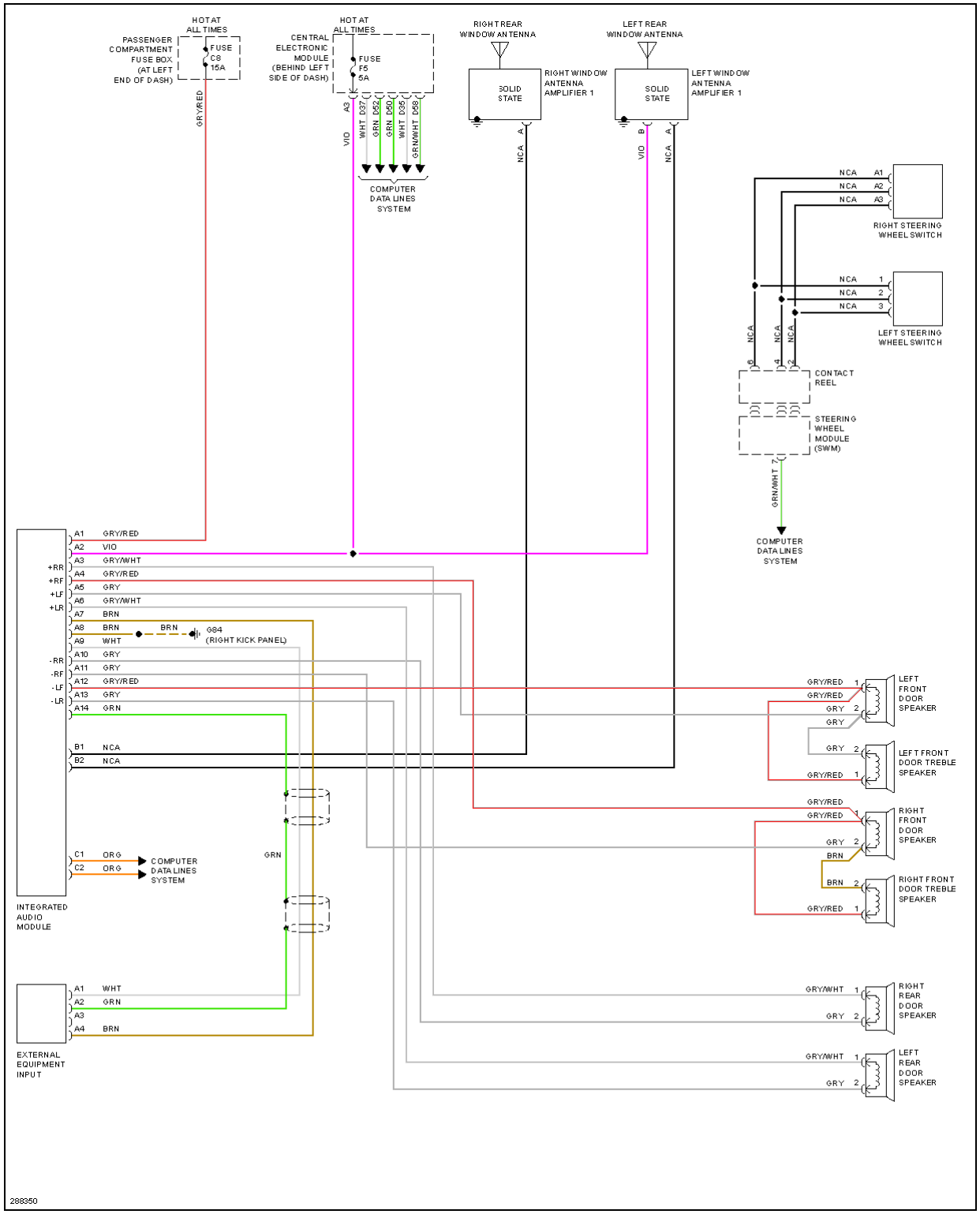

Fig. 56: Radio Circuit, Premium

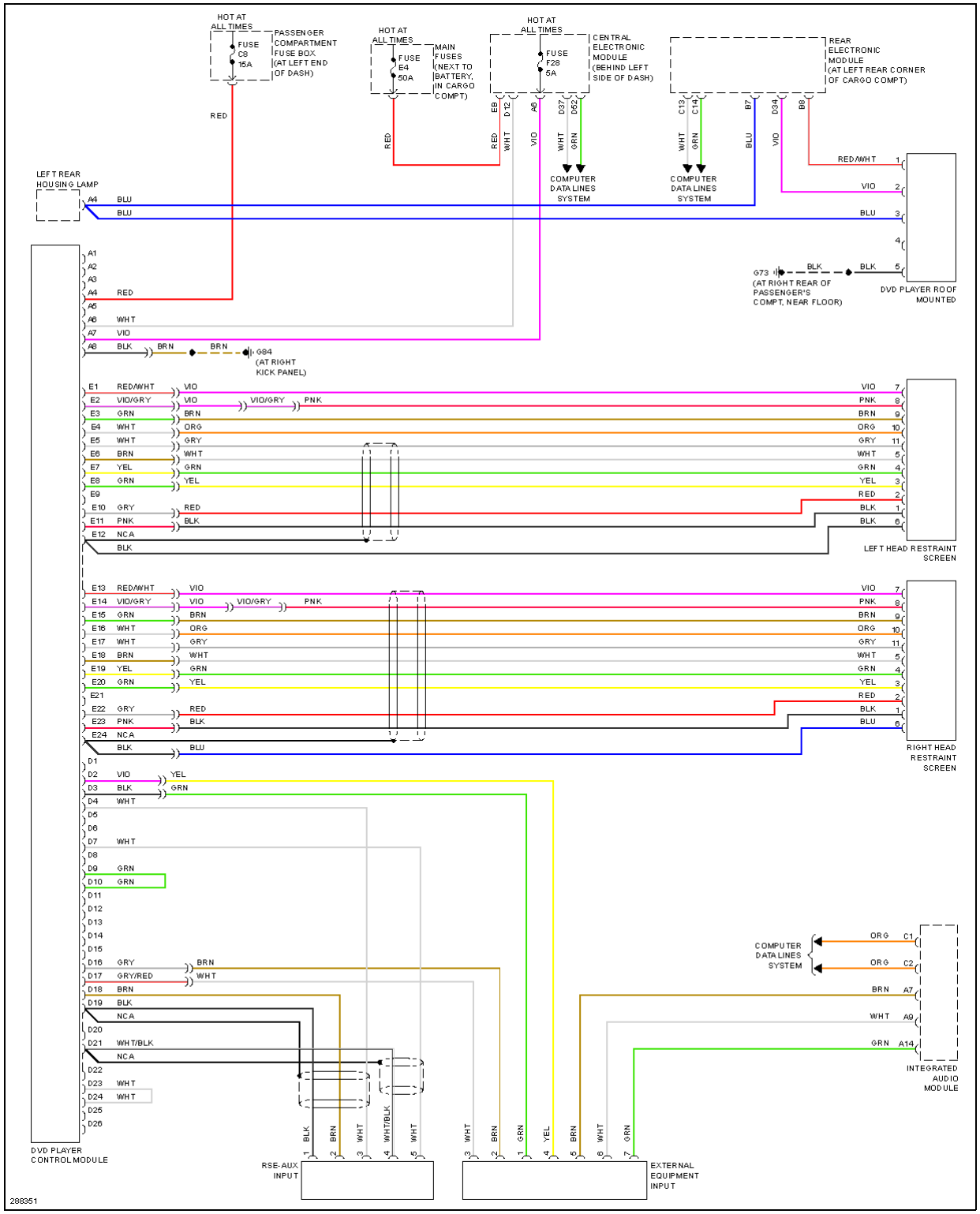

Fig. 57: Rear Seat Entertainment Circuit

SHIFT INTERLOCK

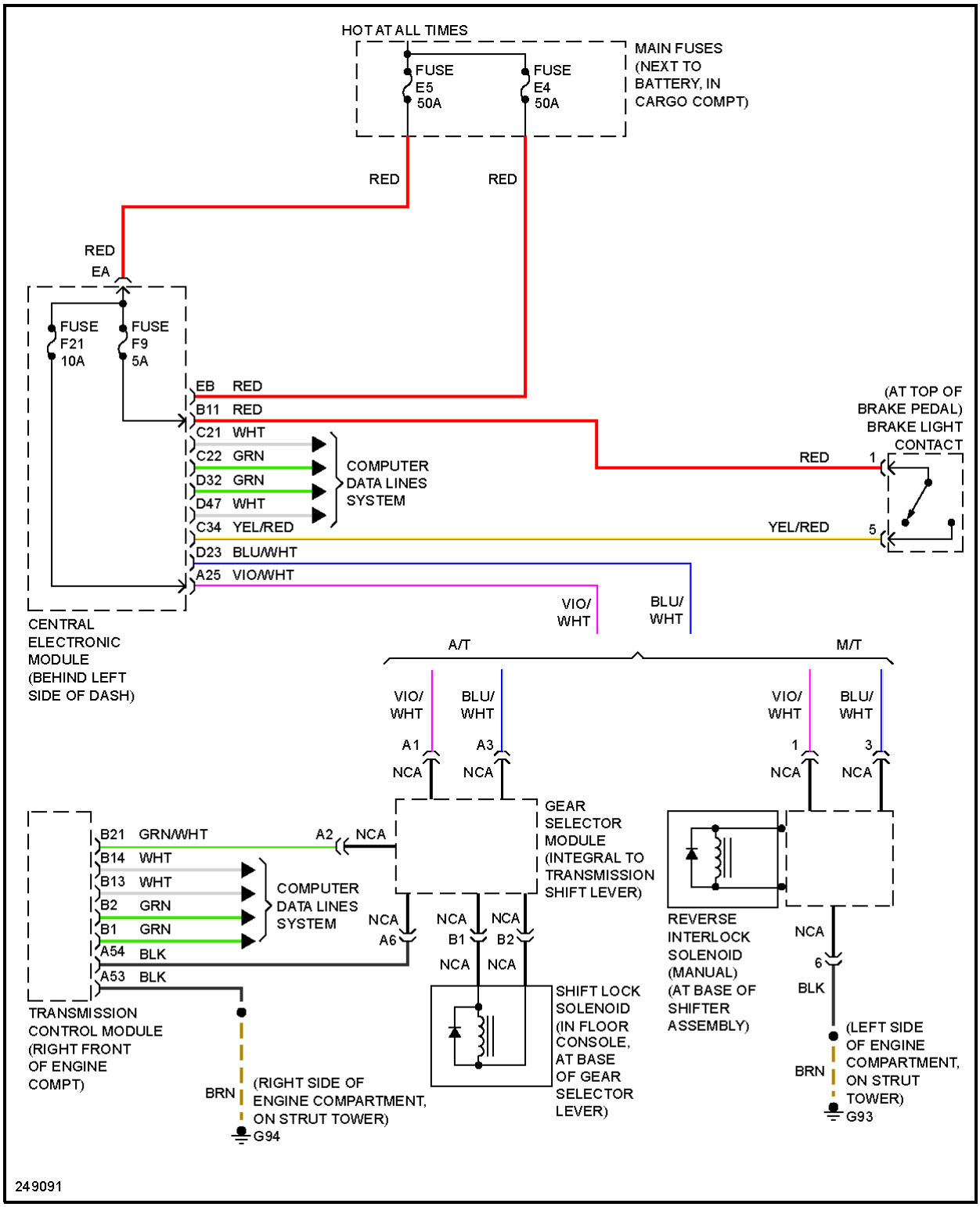

Fig. 58: Shift Interlock Circuit

STARTING/CHARGING

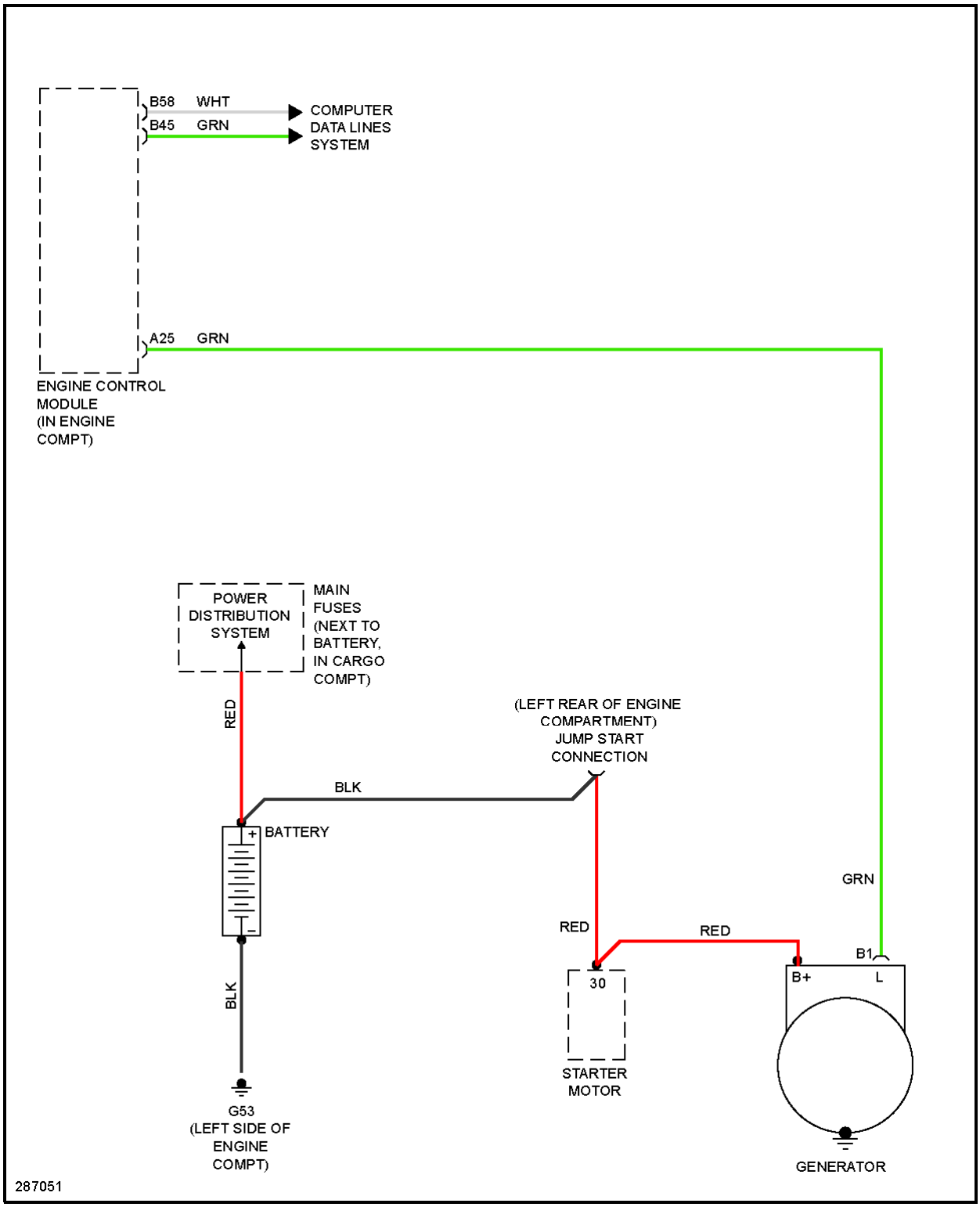

Fig. 59: Charging Circuit

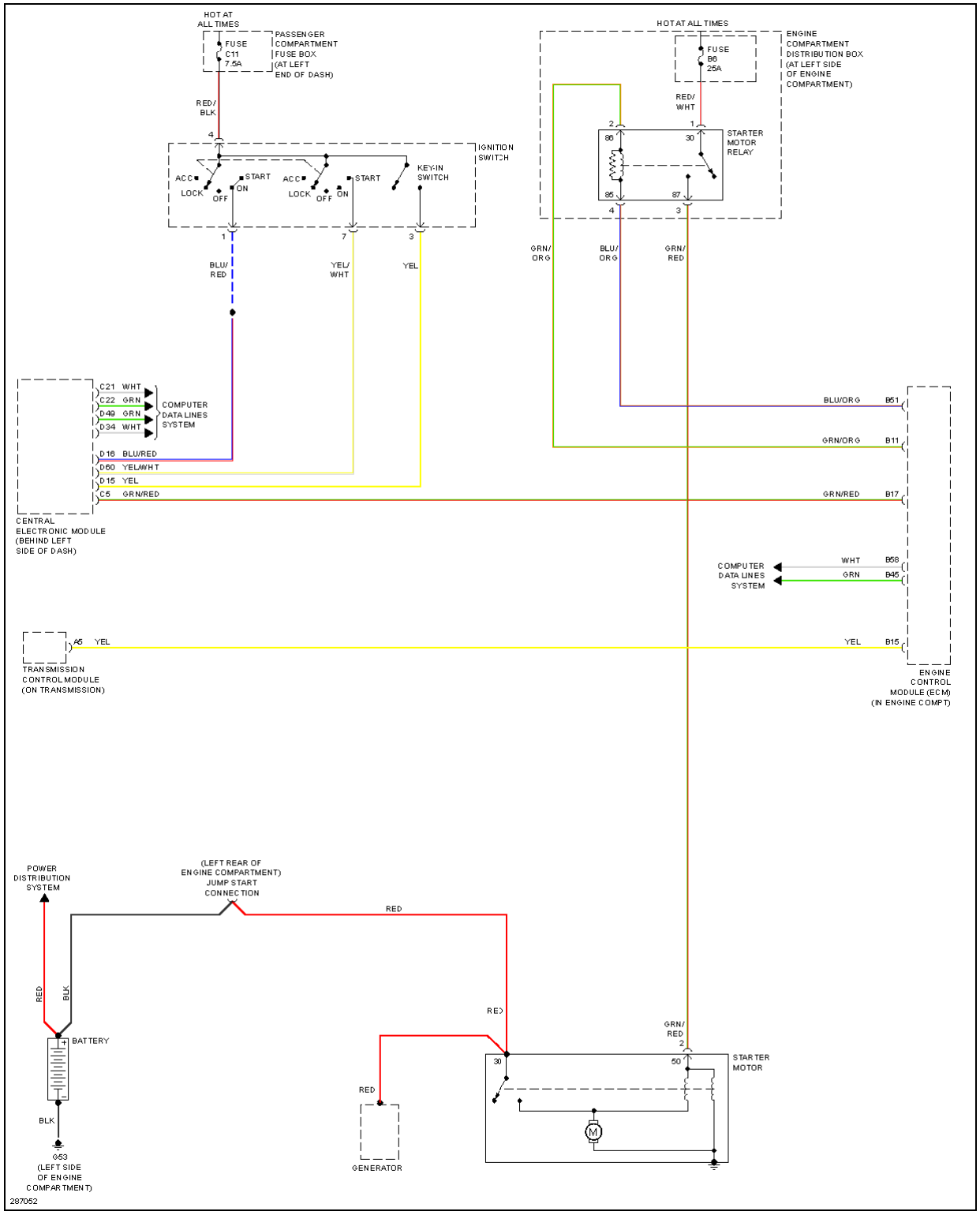

Fig. 60: Starting Circuit

SUPPLEMENTAL RESTRAINTS

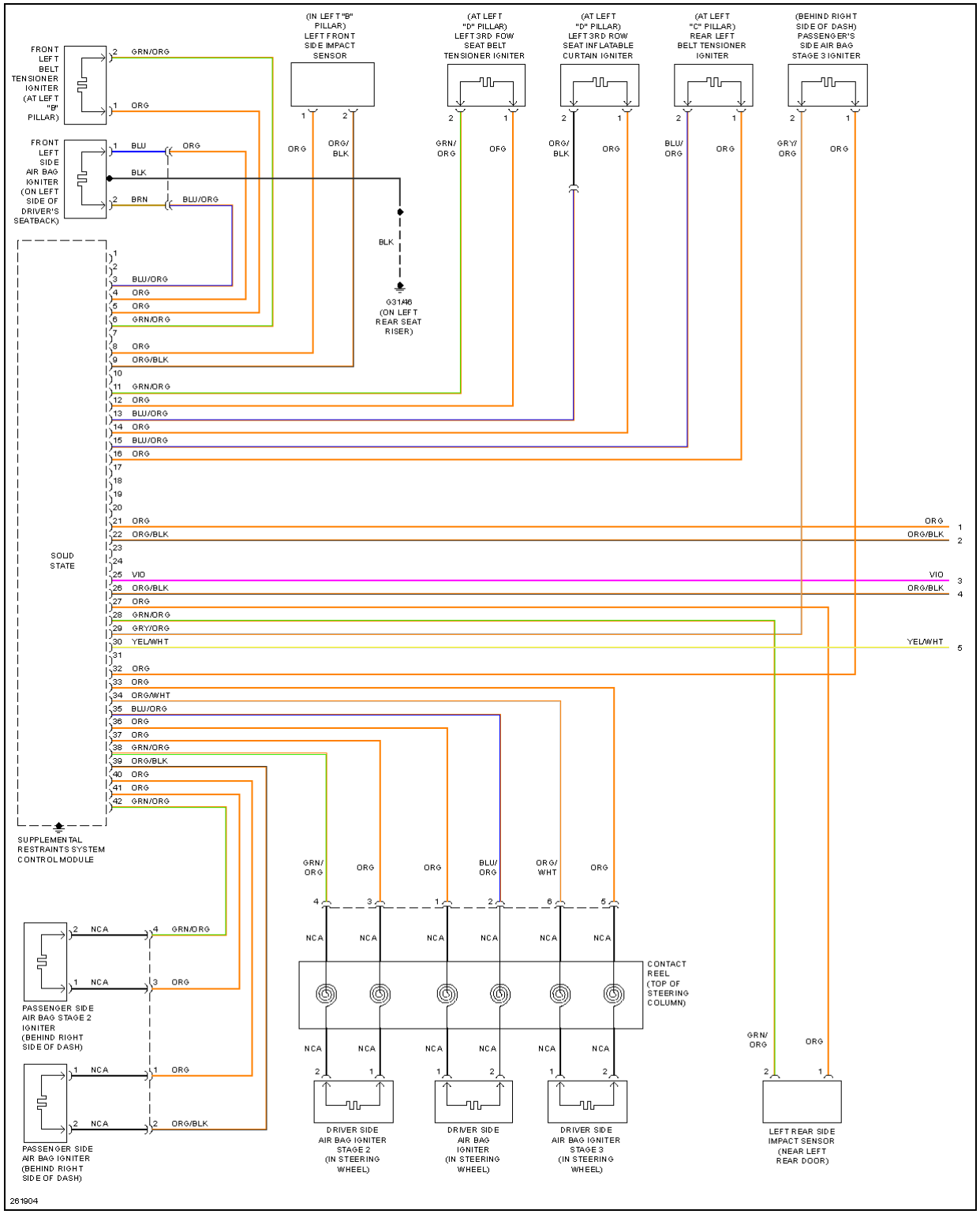

Fig. 61: Supplemental Restraints Circuit (1 of 3)

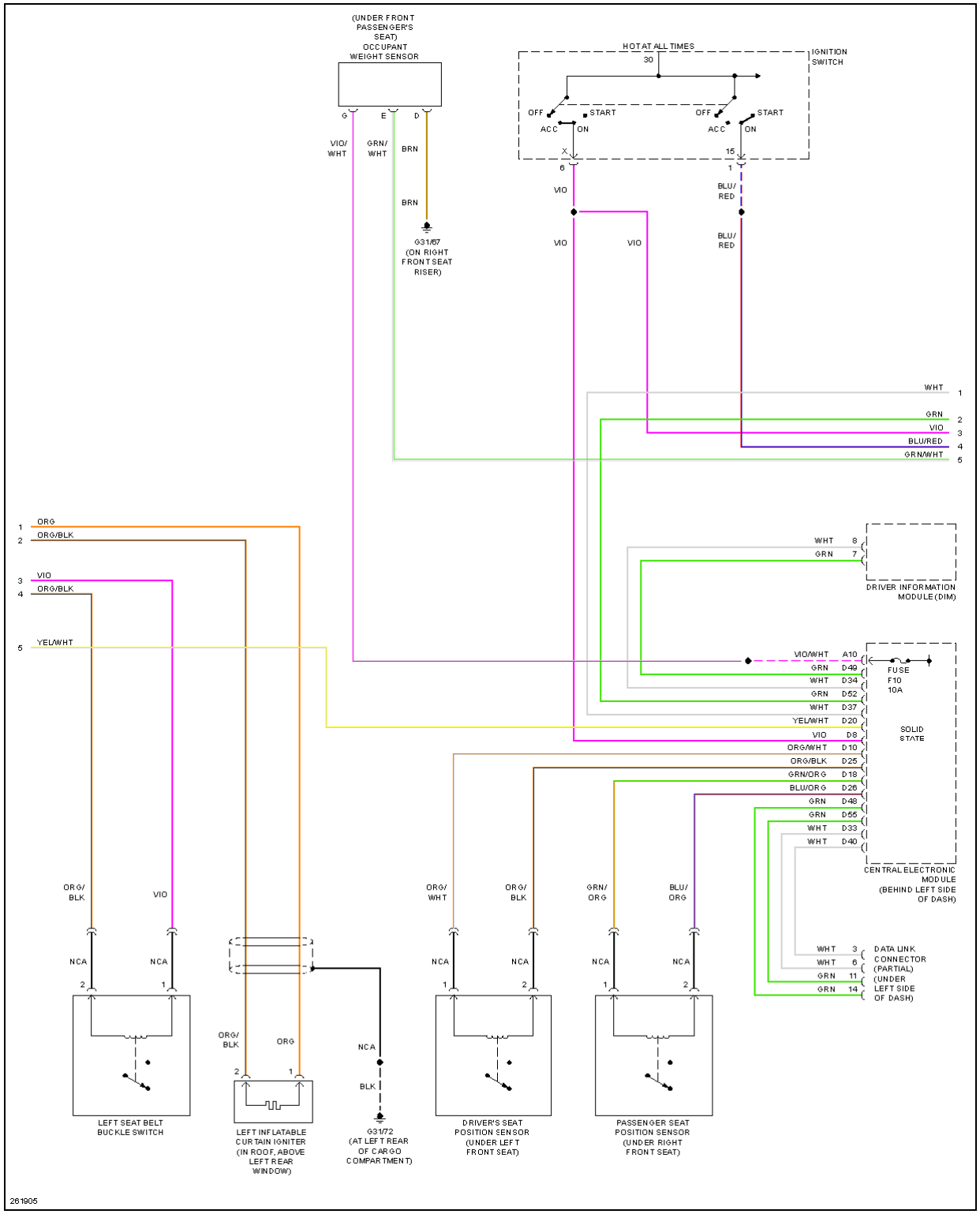

Fig. 62: Supplemental Restraints Circuit (2 of 3)

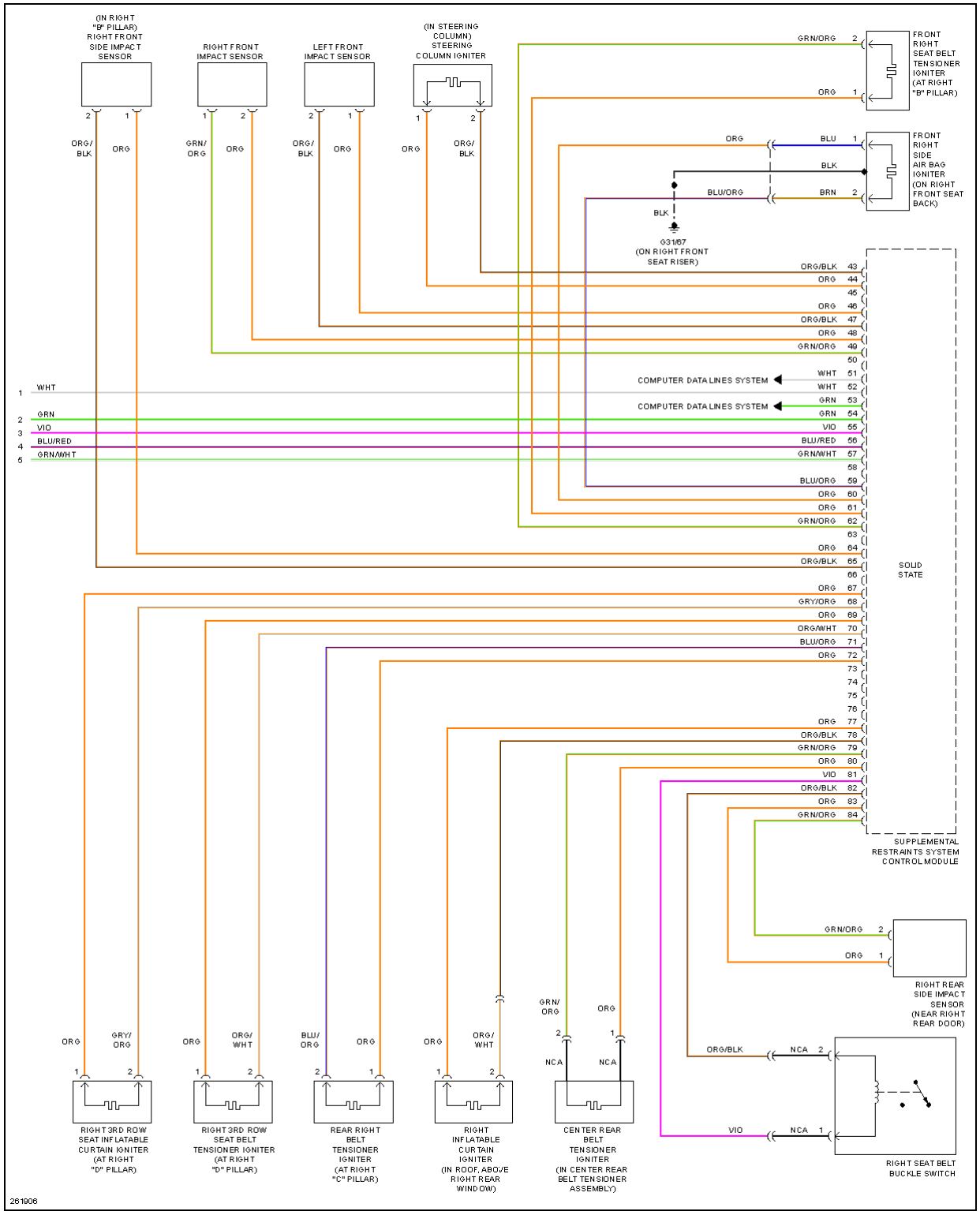

Fig. 63: Supplemental Restraints Circuit (3 of 3)

TRANSMISSION

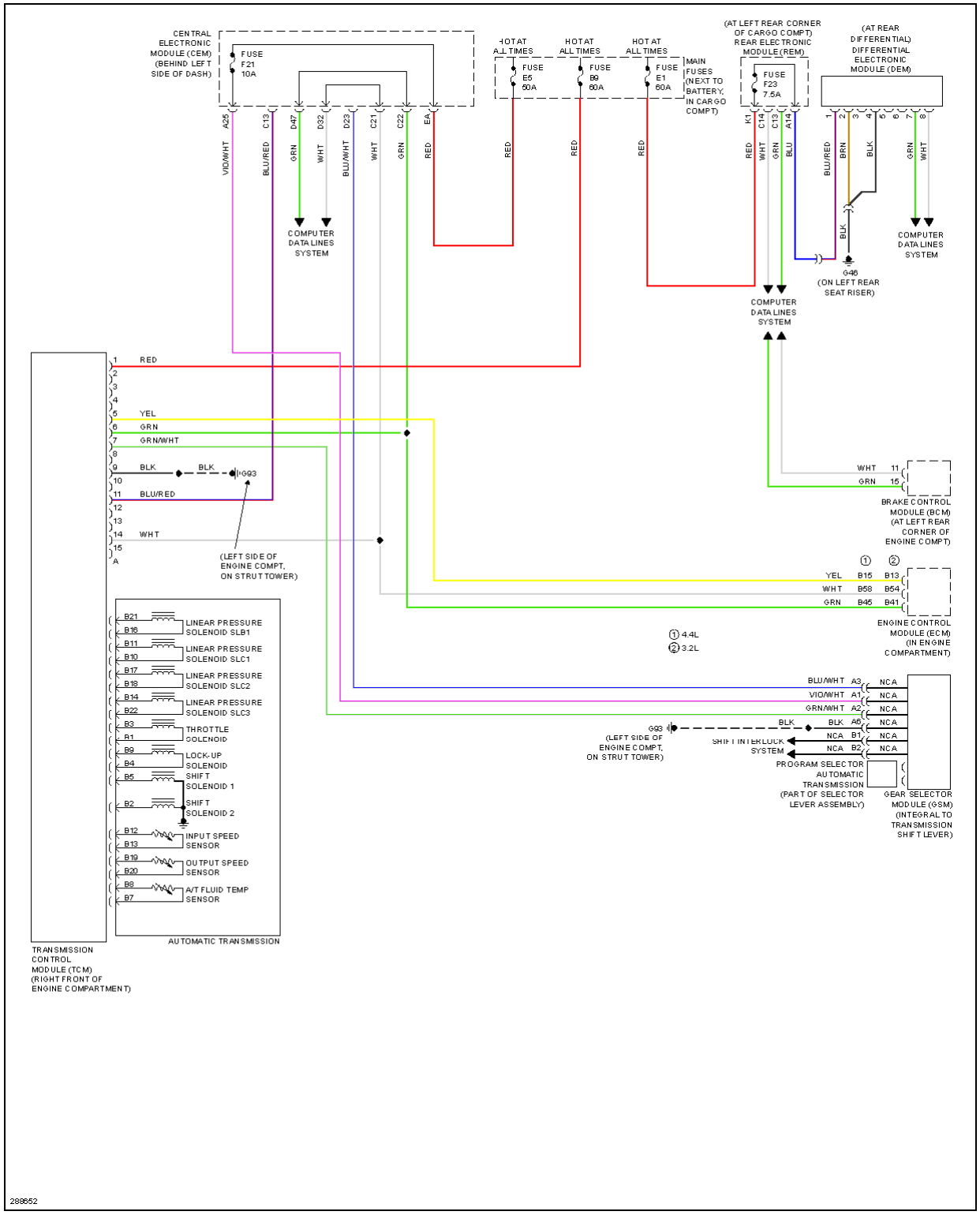

Fig. 64: Transmission Circuit

WARNING SYSTEMS

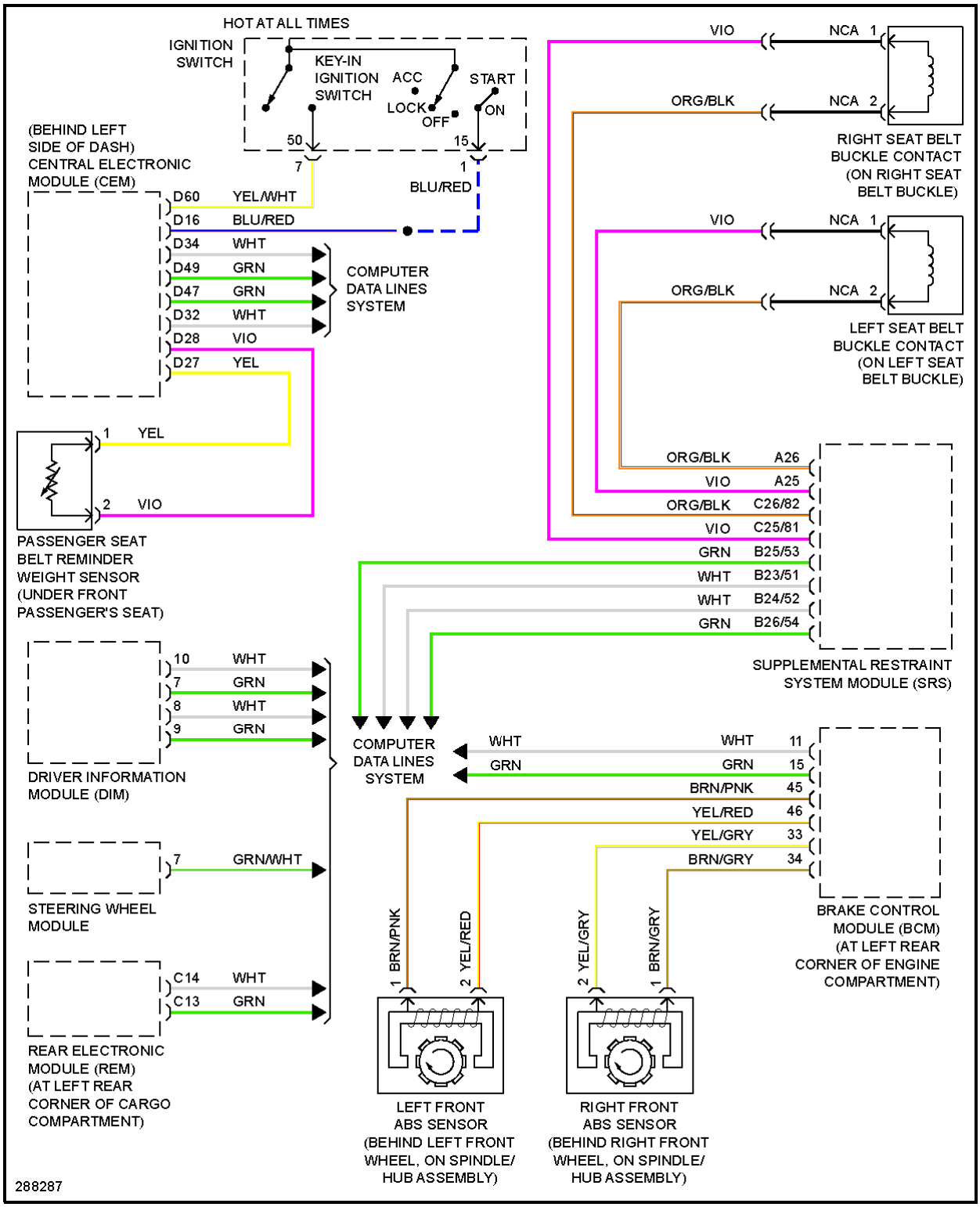

Fig. 65: Warning Systems Circuit

WIPER/WASHER

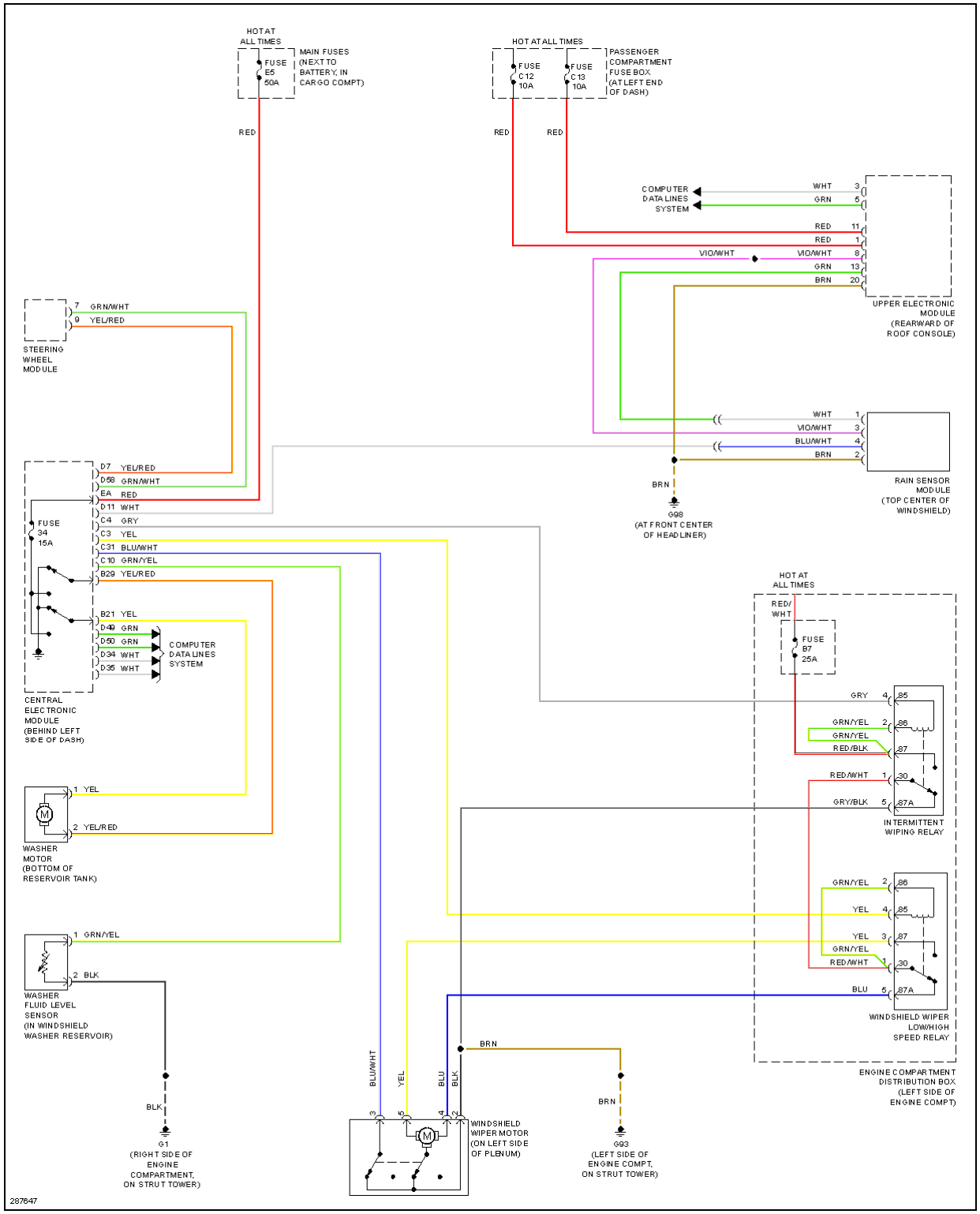

Fig. 66: Front Wiper/Washer Circuit

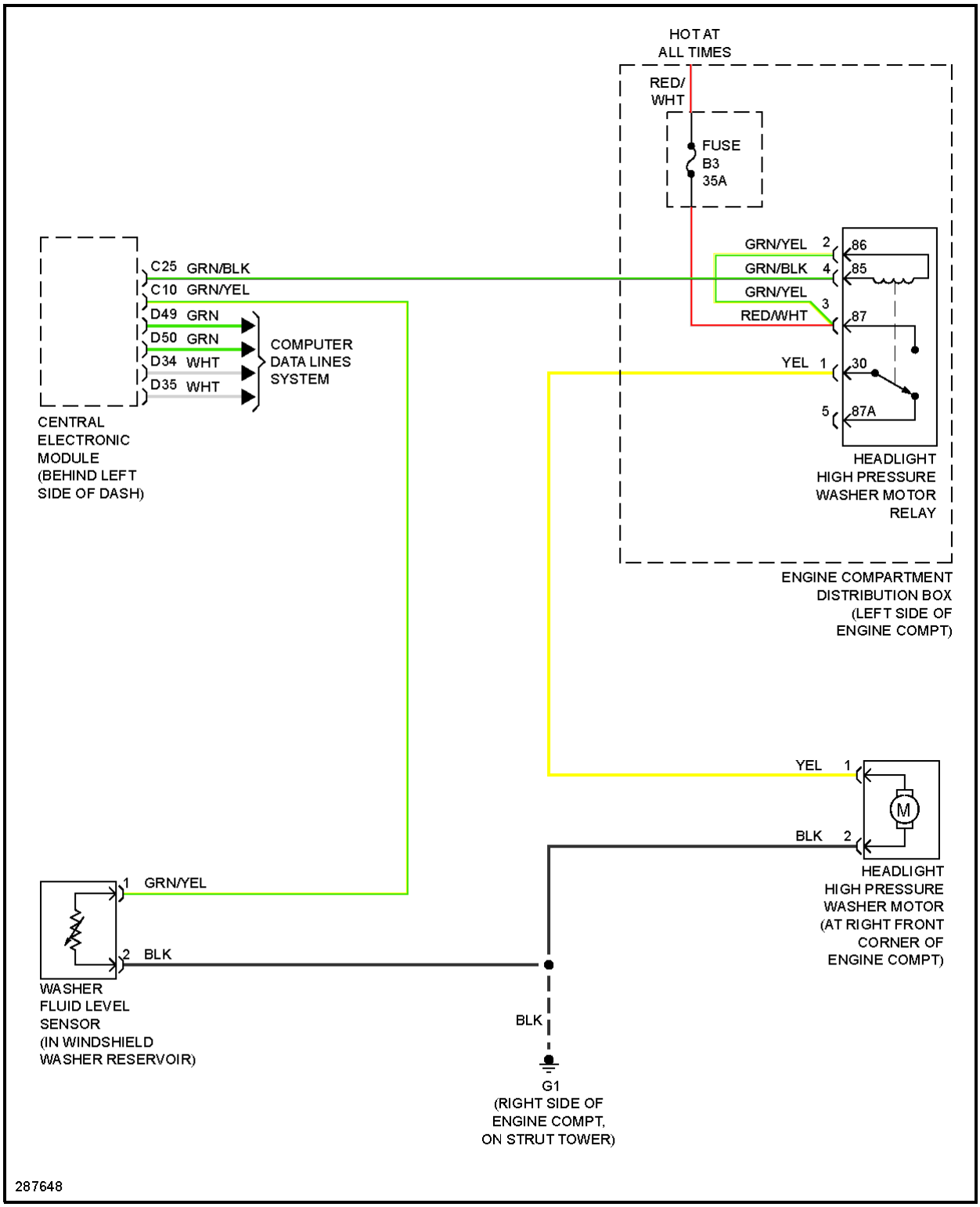

Fig. 67: Headlamp High Pressure Washer Circuit